CATERPILLAR®

SEBP6122
September 2010

RUTHZIL TRATOR COMERCIAL DE PEÇAS LTDA 11 97083-6812 ROLANDO CITRANGULO

Parts Manual

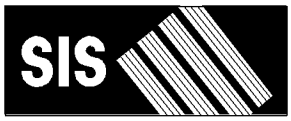

See "General Information" for New Parts Manual Features.

14M Motor Grader

R9J1-Up (Machine)
RSX1037-Up (Engine)
DGY1-Up (Transmission)
DZM1-Up (Transmission)

Powered By C11 Engine
This Parts Manual is also available in .PDF format on Compact Disc (CD-ROM) - Caterpillar Form No. SERP6122

Product and Dealer Information

Note: For product identification plate locations, see the section “Product Identification Information” in the Operation and Maintenance Manual.

Delivery Date: _____

Product Information

Model: _____

Product Identification Number: _____

Engine Serial Number: _____

Transmission Serial Number: _____

Generator Serial Number: _____

Attachment Serial Numbers: _____

Attachment Information: _____

Customer Equipment Number: _____

Dealer Equipment Number: _____

Dealer Information

Name: _____ Branch: _____

Address: _____

_____

_____

	Dealer Contact	Phone Number	Hours
Sales:	_____	_____	_____
Parts:	_____	_____	_____
Service:	_____	_____	_____

MEMORANDA

TABLE OF CONTENTS

Name	Page
GENERAL INFORMATION	A5
REPAIR ALTERNATIVES	A8
SUPPLEMENTAL COOLANT ADDITIVES	A9
MAINTENANCE PARTS	A10
INDEX	A14
MACHINE ARRANGEMENT	1
COMMON AR	1
DISTRIBUTION AR	2
OPTION AR-CAB	5
OPTION AR-COLD WEATHER	6
OPTION AR-STARTING	6
OPTION AR-LIGHTING	6
OPTION AR-MACHINE	7
OPTION AR-REGIONAL	8
OPTION AR-WORK TOOL	9
SNOW AR-MOTOR GRADER	9
ENGINE ARRANGEMENT	11
ENGINE AR	11
ENGINE AR-COMPLETE	12
ENGINE AR-CORE	14
BASIC ENGINE	16
AIR COMPRESSOR AR	16
AIR COMPRESSOR GP	17
BASE GP-VALVE COVER	22
CAMSHAFT GP	25
COVER GP-FLYWHEEL HOUSING	26
COVER GP-FRONT HOUSING	29
COVER GP-VALVE MECHANISM	32
CRANKSHAFT GP	33
CYLINDER BLOCK AS	35
CYLINDER BLOCK GP	38
CYLINDER HEAD AS	40
CYLINDER HEAD GP	44
DAMPER GP	49
DRIVE GP-ACCESSORY	50
FASTENER GP-CYLINDER HEAD	51
FASTENER GP-DAMPER & PULLEY	52
FLYWHEEL GP	53
GEAR GP-FRONT	54
GEAR GP-REAR	55
HOUSING GP-FLYWHEEL	57
HOUSING GP-FRONT	59
LIFTER GP-VALVE	61
LIFTING GP-ENGINE	62
MOUNTING GP-ENGINE & XMSN	63
MOUNTING GP-FAN DRIVE	65
MOUNTING GP-VALVE MECHANISM	66
PAN GP-OIL	67
PISTON & ROD GP	68
PLUG GP-CYLINDER BLOCK	70
PLUG GP-ENGINE	73
PULLEY GP-CRANKSHAFT	74
ROCKER ARM GP	75
SEAL GP-CRANKSHAFT	83
SUPPORT GP-ENGINE	84
VALVE MECHANISM GP	85
LUBRICATION SYSTEM	89
BASE GP-OIL FILTER	89
BREATHER GP	93
COVER GP-OIL FILTER BASE	94
FILLER GP-ENGINE OIL	95
FILTER GP-ENGINE OIL	96
FUMES DISPOSAL GP	97
GAUGE GP-OIL LEVEL (DIPSTICK)	98
LINES GP-ENGINE OIL DRAIN	100
LINES GP-TURBOCHARGER OIL	101
PUMP GP-ENGINE OIL	102
COOLING SYSTEM	105
COOLER GP-ENGINE OIL	105
COOLING AR	108
FAN & MOTOR GP	109
GUARD GP-FAN	112
LINES GP-WATER	113
PUMP GP-WATER	118
RADIATOR GP	124
TANK GP-COOLANT	126
AIR INLET AND EXHAUST SYSTEM	128
AFTERCOOLER GP-AIR	128
AIR CLEANER GP	129
LINES GP-AFTERCOOLER AIR	131
LINES GP-AIR	133
MANIFOLD GP-EXHAUST	136
MANIFOLD GP-INLET	137
MUFFLER & MOUNTING GP	138
PRECLEANER GP	139
TURBOCHARGER GP	140
FUEL SYSTEM	141
ADAPTER GP-FAST FILL FUEL	141
COVER GP-FUEL TANK	143
FILTER GP-FUEL	144
FILTER GP-WATER SEP & FUEL	154
INJECTOR GP-FUEL	155
LINES GP-FUEL	156
MOUNTING GP-FUEL TANK	160
PUMP GP-FUEL INJECTION	162
PUMP GP-FUEL PRIMING	163
PUMP GP-FUEL PRM & WATER SEP	166
PUMP GP-FUEL TRANSFER	167
RECEIVER GP-FAST FILL FUEL	170

TABLE OF CONTENTS

Name	Page
TANK & MTG GP-FUEL	171
TANK GP-FUEL	173
VALVE GP-CHECK	189
VALVE GP-FLUID SAMPLING	193
ELECTRICAL AND STARTING SYSTEM	194
ALARM GP	194
ALTERNATOR GP-CHARGING	195
BATTERY & WIRING GP	199
BRACKET GP-MOUNTING	204
CABLE GP-STARTING MOTOR	207
CAMERA AR	209
CONNECTION GP-ELECTRICAL	210
CONTROL & MTG GP-ENGINE ELEK	211
CONTROL & MTG GP-IMPLEMENT	214
CONTROL GP-ENGINE ELECTRONIC	215
CONTROL GP-UNPROGRAMMED	216
CONVERTER GP-ELECTRICAL	217
ELECTRONICS GP-COMMUNICATION	219
ELECTRONICS GP-IMPLEMENT	219
ELECTRONICS GP-MONITOR	220
ELECTRONICS GP-POWER TRAIN	222
GRADE CONTROL AR	222
GRADE CONTROL AR-LASER	223
GRADE CONTROL GP	224
HEATER GP-JACKET WATER	225
INSTALLATION AR-COMMUNICATION	227
INSTALLATION GP-LIGHTING	229
INSTALLATION GP-SECURITY	230
INSTALLATION GP-WARNING BEACON	232
LAMP GP	233
LAMP GP-DOME	234
LAMP GP-FLOOD	235
LAMP GP-HEAD	240
LAMP GP-HEAD & SIGNAL	241
LAMP GP-SIGNAL	244
LAMP GP-WARNING BEACON	246
LIGHTING AR-ROADING	247
LIGHTING GP-FLOOD	248
LIGHTING GP-ROADING	251
MAST GP	251
MOTOR GP-ELECTRIC	252
MOUNTING GP-LAMP	253
MOUNTING GP-LIGHTING	254
MOUNTING GP-MAST	258
MOUNTING GP-RECEIVER	259
PANEL GP-CIRCUIT BREAKER	261
POWER SUPPLY GP	265
RADIO GP-COMMUNICATION	266
RECEIVER AR-LASER	266
RECEIVER AR-SATELLITE	267
RECEIVER GP-LASER	267
RECEIVER GP-SATELLITE	268
SENSOR & MOUNTING GP	269
SENSOR & MTG GP-POSITION	270
SENSOR AR-GRADE	271
SENSOR GP-ENGINE	272
SENSOR GP-POSITION	276
SENSOR GP-PRESSURE	277
SENSOR GP-SONIC	286
SENSOR GP-SPEED	288
SENSOR GP-TEMPERATURE	293
STARTING AID GP-ETHER	300
STARTING AR-COLD WEATHER	301
STARTING MOTOR GP-ELECTRIC	302
SUPPORT GP-LIGHT	310
SWITCH GP-BYPASS	311
SWITCH GP-DISCONNECT	312
SWITCH GP-LIGHT	313
SWITCH GP-LIMIT	314
SWITCH GP-MAGNETIC	315
SWITCH GP-PRESSURE	318
SWITCH GP-ROADING	320
SWITCH GP-ROCKER	321
SWITCH GP-WIPER	324
TARGET GP-LASER	326
VALVE GP-ETHER STARTING	328
WARNING GP-BACKUP	329
WIRING GP-CAB	330
WIRING GP-CAMERA	338
WIRING GP-ELECTRONIC CONTROL	339
WIRING GP-FRONT	345
WIRING GP-GRADE CONTROL	358
WIRING GP-LIGHTING	368
WIRING GP-MONITOR	371
WIRING GP-REAR	375
WIRING GP-REAR LIGHTING	383
WIRING GP-SECONDARY STEERING	387
WIRING GP-UNIT INJECTOR	389
POWER TRAIN	391
AUTOSHIFT AR	391
AXLE GP-FRONT	392
AXLE GP-REAR	398
BASE GP-OIL FILTER	400
CARRIER GP-FINAL DRIVE	401
CASE & PARTS GP-TRANSMISSION	402
CHAIN GP-DRIVE	405
CLUTCH GP-TRANSMISSION	406
CONTROL GP-DIFFERENTIAL LOCK	416
CONTROL GP-TRANSMISSION HYD	418
COOLER GP-TRANSMISSION OIL	422
COUPLING GP-TORSIONAL	424
COVER GP-SHIPPING	425
DIFFERENTIAL & BEVEL GEAR GP	427
DIFFERENTIAL GP	429
DRIVE GP-FINAL	430
FILLER GP-POWER TRAIN OIL	434

TABLE OF CONTENTS

Name	Page
FILTER GP-OIL	435
LINES GP-LUBRICATION	437
LINES GP-TRANSMISSION OIL	438
MOUNTING GP-WHEEL	443
POWER TRAIN AR	443
PUMP GP-GEAR	444
SCREEN GP-MAGNETIC	447
SHAFT GP-DRIVE	448
SHAFT GP-INPUT	449
TANDEM & COVER GP	450
TRANSMISSION AR	451
UNIVERSAL JOINT GP	452
VALVE & MTG GP-SOLENOID	453
VALVE GP-MODULATING	454
VALVE GP-RELIEF	455
WHEEL & TIRE AR	457
WHEEL & TIRE GP	459
WHEEL AR	461
WHEEL GP	463
FRAME AND BODY	470
COVER GP-CONTROL VALVE	470
COVER GP-PROTECTION	474
ENCLOSURE GP-ENGINE	475
FASTENER GP-ENCLOSURE	479
FASTENER GP-SENSOR	480
FENDER & SUPPORT GP	482
FRAME GP-FRONT	484
FRAME GP-REAR	487
GUARD GP-BOTTOM	488
GUARD GP-DEBRIS	489
HITCH GP-ARTICULATING	490
HITCH GP-TOWING	492
HOOD GP	493
INSULATION GP-SOUND SUPPR	494
LINES GP-LUBRICATION	496
LINK GP-STEERING	497
LUBRICATION AR-CENTRAL	498
MOUNTING GP-AXLE	513
MOUNTING GP-VALVE	515
REFLECTOR GP	516
SERVICE CENTER AR	518
SHIELD GP-ENGINE COMPARTMENT	519
STEP GP	521
SUPPORT GP-RADIATOR	523
SUPPRESSION GP-SOUND	525
VALVE & MTG GP-LUBE DISTR	527
VALVE GP-LUBE DISTRIBUTION	529
WALKWAY GP	533
BRAKING SYSTEM	534
ACCUMULATOR GP-BRAKE	534
BRAKE GP-PARKING	538
CONTROL GP-SERVICE BRAKE	540
LINES GP-ACCUMULATOR	544
LINES GP-AIR TANK	550
LINES GP-SERVICE BRAKE	552
HYDRAULIC SYSTEM	558
ACCUMULATOR GP-BLADE CUSHION	558
ACCUMULATOR GP-HYDRAULIC	559
BASE GP-OIL FILTER	560
CONTROL AR-HYDRAULIC	561
CYLINDER & MTG GP-ARTICULATION	567
CYLINDER & MTG GP-BLADE LIFT	568
CYLINDER & MTG GP-BLADE TIP	569
CYLINDER & MTG GP-CENTERSHIFT	570
CYLINDER & MTG GP-SIDESHIFT	571
CYLINDER & MTG GP-STEERING	572
CYLINDER & MTG GP-WHEEL LEAN	573
CYLINDER GP-ARTICULATION	574
CYLINDER GP-BLADE TIP	575
CYLINDER GP-CENTERSHIFT	577
CYLINDER GP-LIFT	578
CYLINDER GP-RIPPER	579
CYLINDER GP-SIDESHIFT	580
CYLINDER GP-STEERING	581
CYLINDER GP-WHEEL LEAN	585
DRIVE GP-CIRCLE	587
FILTER & MTG GP-HYDRAULIC	589
FILTER GP-OIL	591
LINES GP-ACCUMULATOR	595
LINES GP-CENTERSHIFT LOCK	603
LINES GP-HYDRAULIC	607
LINES GP-HYDRAULIC FAN	648
LINES GP-HYDRAULIC OIL COOLER	651
LINES GP-PUMP	653
LINES GP-RIPPER	670
LINES GP-SECONDARY STEERING	673
LINES GP-STEERING	675
LOCK GP-CENTERSHIFT	679
MANIFOLD GP-CONTROL	680
MANIFOLD GP-VALVE	685
MOTOR GP-GEROTOR	688
PUMP & MTG GP-HYDRAULIC FAN	690
PUMP & MTG GP-PISTON	691
PUMP & MTG GP-SECONDARY STEER	692
PUMP GP-GEAR	693
PUMP GP-PISTON	694
ROTATING GP-PUMP	698
SWASHPLATE GP	700
SWIVEL GP	701
TANK & MTG GP-HYDRAULIC	703
TANK GP-HYDRAULIC	705
VALVE GP-BANK 1	706
VALVE GP-BANK 3	708
VALVE GP-BANK 4	709
VALVE GP-BANK 5	710

TABLE OF CONTENTS

Name	Page
VALVE GP-BANK 6	711
VALVE GP-BANK 7	716
VALVE GP-BANK 8	718
VALVE GP-CHECK	720
VALVE GP-CONTROL	721
VALVE GP-DIVERTER	747
VALVE GP-PRESSURE REDUCING	748
VALVE GP-PUMP CONTROL	751
VALVE GP-RELIEF	754
VALVE GP-SHUTTLE	756
VALVE GP-SOLENOID	757
IMPLEMENTS	760
CIRCLE & BEAM AS	760
CIRCLE GP	761
DRAWBAR GP	763
PLATE GP-PUSH	765
OPERATOR STATION	766
ADJUSTER GP-SEAT	766
AIR COMPRESSOR GP-SEAT	767
AIR CONDITIONER & MOUNTING GP	768
AIR CONDITIONER AR	769
AIR CONDITIONER GP	770
ARMREST GP	773
CAB AR	775
COIL GP-EVAPORATOR & HEATER	777
COMPRESSOR GP-REFRIGERANT	778
CONDENSER & MTG GP-REFRIGERANT	780
CONTROL & MTG GP-JOYSTICK	781
CONTROL GP-ELECTROHYDRAULIC	784
CONTROL GP-JOYSTICK	789
COVER GP-CAB	795
CUSHION GP-ARM	796
DISPLAY AR-MONITOR	797
DISPLAY GP-CAMERA	798
DISPLAY GP-MONITOR	799
DOOR GP-CAB	802
DUCT & FILTER GP-CAB AIR	816
FAN GP-CIRCULATING	817
HORN GP-AIR	820
HORN GP-ELECTRIC	822
HOUSING GP-SEAT SUSPENSION	823
LINER GP-CAB	825
LINES GP-AIR CONDITIONER	829
LINES GP-HEATER	833
MIRROR GP	835
MIRROR GP-REAR VIEW	837
MOTOR GP-WINDOW WIPER	841
MOUNTING GP-ANTENNA	843
MOUNTING GP-CONTROL	844
PAN GP-BACKREST	845
PAN GP-SEAT	847
PANEL GP-CAB	848
PANEL GP-CONTROL	851
PANEL GP-INSTRUMENT	854
PEDAL GP-BRAKE, XMSN & GOV	858
RADIO GP	859
RECLINER GP-SEAT	861
ROOF GP-CAB	862
SEAT & MOUNTING GP	863
SEAT GP	864
SEAT GP-SUSPENSION	867
SUPPORT GP-CONTROL	869
SUSPENSION GP-SEAT	875
TANK GP-WINDOW WASHER	879
WINDOW GP-CAB	880
WIPER & WASHER GP-WINDOW	884
WIPER GP-WINDOW	886
WORK TOOLS	893
BIT GP-END	893
BLADE GP	894
EDGE GP-CUTTING	896
EDGE-CUTTING	897
LIFT GP-BLADE	899
MOUNTING GP-RIPPER	901
MOUNTING GP-SNOW WING	902
RIPPER AR	904
RIPPER GP	906
TOOTH GP-RIPPER	908
SERVICE EQUIPMENT AND SUPPLIES	909
BOX GP-TOOL	909
FILM GP	910
FILM GP-INTERNATIONAL	912
FILM GP-U.S.	913
PLATE & FILM GP	914
TANK GP-AIR	930
PART NUMBER INDEX	B1

GENERAL INFORMATION

1. MACHINE IDENTIFICATION

Caterpillar machines are identified by Product Identification Numbers (PIN). Some components included in a machine may be identified by Serial Numbers (S/N). Typical components that will be serialized include engines, transmissions, bulldozers, and rippers. The machine and engine are further identified by arrangement numbers and in some cases modification numbers. These numbers are shown on the product identification plate(s) and on the master plate in the operator's compartment.

Caterpillar dealers need all of these numbers to determine accurate parts identification.

SIS *New Feature*

Effective First Quarter 2001 the Caterpillar Product Identification Number (PIN) changed from 8 to 17 characters. In an effort to provide uniform equipment identification, Caterpillar and other construction equipment manufacturers are moving to comply with the latest version of the product identification numbering standard. Non-road machine PINs are defined by ISO 10261. The new PIN format will apply to all Caterpillar machines and generator sets. The PIN plates and frame marking will display the 17 character PIN. The new format will look like the following:

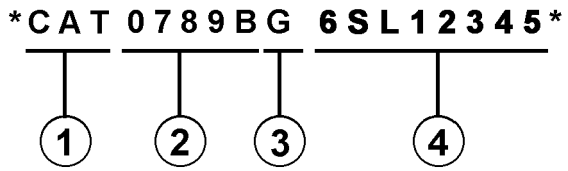

Where:

1. Caterpillar's World Manufacturing Code (characters 1-3)

2. Machine Descriptor (characters 4-8)

3. Check Character (character 9)

4. Machine Indicator Section (MIS) or Product Sequence Number (characters 10-17). These were previously referred to as the Serial Number.

Machines and generator sets produced before First Quarter 2001 will maintain their 8 character PIN format.

Components such as engines, transmissions, axles, etc. and work tools will continue to use an 8 character Serial Number (S/N).

2. ORDERING PARTS

WARNING

When replacement parts are required for this product Caterpillar recommends using Caterpillar replacement parts or parts with equivalent specifications including, but not limited to, physical dimensions, type, strength and material.

Failure to heed this warning can lead to premature failures, product damage, personal injury or death.

Quality Caterpillar replacement parts are available from Caterpillar dealers throughout the world. Their parts inventories are up to date and include all parts normally required to protect your investment in Caterpillar machines. Dealers may offer repair kits or remanufactured parts to allow selection of the most effective repair alternative for a particular situation. When ordering parts, your order should specify the quantity, part number, part name, and the serial number/product identification number of the machine for which the parts are needed.

3. PARTS MANUAL ORGANIZATION

Product information in this manual is presented as "information elements" that represent all of the components for the specific model. Engine Arrangement and Seat Group are examples of information elements. The information elements are organized alphabetically by part name and secondarily by part number within each major section of the manual.

4. TABLE OF CONTENTS

A table of contents (TOC) is found at the beginning of the manual. The TOC lists each section of the manual with a complete list of all information elements organized as they appear in the manual. Page numbers are provided for quick reference to detailed parts identification illustrations and serviceable consist lists.

5. MAINTENANCE PARTS INDEX

The Maintenance Parts Index, located near the beginning of the manual, references most frequently used maintenance part numbers, providing description, quantity, usage and page number. This information is organized alphabetically by part description.

6. INDEX

The index located near the front of the manual is an alphabetical listing of all information elements included in the manual. Page numbers are provided for quick reference to detailed parts identification illustrations and serviceable consist lists.

7. PART NUMBER INDEX

A numerical index listing all part numbers and the corresponding page number(s) appears at the back of the manual.

8. CAPTIONS

Captions located at the beginning of each information element identify the part number and part name along with additional descriptive information. PIN and S/N information found in each caption should be used to select correct information for a specific machine. Field replacement options, identification of optional attachment components, and where used ("part of") information is also provided.

The first line of a caption is shown in larger type font to indicate the beginning of an information element. Captions for additional pages that may be required to illustrate an information element will be shown in standard type font and will include the term *(contd.)* .

9. NON-SERVICED PARTS

In some instances it is necessary to display non-serviced parts that are a link to a lower level serviceable consist lists. These non-serviced part numbers are shown in *italic* type indicating that they are not available.

10. PARTS LIST REFERENCE NUMBERS

Numbers shown in the Ref No column correspond to numbers used in the associated graphic(s). An alphabetic suffix may be added to a reference number to identify lower level consist items. Numbers shown in the Graphic Ref column refer to the graphic number identifier displayed in the lower left corner of each illustration. The Graphic Ref number may be used in combination with the item Ref No to determine the correct part number. There may be intentional omission of a Ref No in a consist list as information is updated to reflect the latest serviceable part numbers.

11. INDENTED PART NAMES

When a part name is indented in a parts list, it is part of (included in) the group or assembly under which it is indented.

12. ILLUSTRATION REFERENCE LETTERS

When necessary, illustrations contain reference letters (A, B, C etc.) that are intended to track lines and harnesses from one point to another. They are also used to show where to reconnect illustrations that have been separated.

13. ABBREVIATIONS AND SYMBOLS

O.D. – Outside Diameter
I.D. – Inside Diameter
A – Not Part Of This Group
B – Use As Required
C – Change From Previous Type
D – Order By The Meter
E – Order By The Centimeter
F – Not Shown
G – Order By The Inch
I – Refer To Hydraulic Information System
M – Metric Part
R – Remfg Part May Be Available
Y – Separate Illustration
Z – Not Serviced Separately

SIS *New Feature*

14. DESCRIPTION OF TYPE CHANGES

Type - A type is defined as any configuration change that requires an additional Information Element for an Arrangement, Group, or Assembly. If serial number breaks for types are not available, a type # (Type 1, Type 2, etc.) will be displayed in the caption. These "type" changes are identified with a "C" note (change from previous type) in the Parts List. Only the "types" that apply to this Parts Manual will be included. Additional types may exist causing "C" notes to appear on an Information Element when no other types are shown.

15.<END>

This symbol indicates the end of an information element.

NOTE:

Continuing improvement and advancement of product design may cause changes to your machine which may not be included in this publication. Whenever a question arises regarding your Caterpillar product or this publication, please consult your Caterpillar dealer for the latest available information.

FRAME AND BODY

8E-3299 PLATFORM GP-CAB

PIN 3SK1-99999

SMCS-7253 100090751

NOTE	REF NO	GRAPHIC REF	PART NUMBER	QTY	PART NAME 1 2 3 4 5 6 (PRODUCT LEVEL)	SEE PAGE
		1	3T-3863	1	PLATE AS	
	2	1	6E-2662	25	BOLT (3/8-16X.750IN)	
	3	1	6P-1076	41	WASHER-HARD (38MM THK)	
	4	1	9P-1644	2	SUPPORT AS-FOOT	
	5	1	7P-2229	18	BOLT (1/2-13X1IN)	
		1	6P-	18	WASHER-HARD (44MM THK)	
	6	1	8E-6136		COVER AS-LH	
		1	9F-2978	6	NUT-WELD (3/8-16 THD)	
		1	1P-0188	1	CLIP	
	7	1	7S-3411	4	COVER	
	8		9J-0488	18	SCREW-HEAD (3/8-16X.875IN)	
	9	1	-4474	1	COVER	
		1	8E-897		GASKET	
	10	1	8E-3249	1		
		1	8E-3260	1	GASKET	
	11	1	3T-3638	1	HANDHOLD	
	12	1	8E-8678	1	COVER AS	
		1	9F-2978	8	NUT-WELD (3/8-16 THD)	
		1	8E-8679	1	GASKET	
	13	1	7T-0131	1	FLOORPLATE AS	
		1	1F-0748	4	NUT-WELD (1/2-13 THD)	
	14	1	7V-8067	1	PLUG-BUTTON	
	15	1	7T-0136	1	PLATE AS	
		1	9F-2978	5	NUT-WELD (3/8-16 THD)	
	16	1	7T-8066	1	COVER	
		1	7T-8779	1	GASKET	
	17	1	3T-3861	1	PLATE AS	
	18	1	6T-8364	4	BOLT (1/4-20X.625IN)	
M		1	9T-4205	4	WASHER-HARD (20MM THK)	
	19	1	6L-8494	1	FLOOR MAT	
	20	1	8E-8846	1	MODULE AS-OPERATOR	
	21	1	3T-3834	1	HANDHOLD	
	22	1	9P-8671	2	PLUG	
	23	2	6T-8364	4	BOLT (1/4-20X.625IN)	
M		2	9T-4205	4	WASHER-HARD (20MM THK)	
	24	2	6E-2662	17	BOLT (3/8-16X.750IN)	
	26	2	6P-1076	21	WASHER-HARD (38MM THK)	
	26	2	7T-0135	1	SEAL	
	27	2	7X-0075	2	BOLT (3/4-10X5IN)	
		2	7X-0682	2	WASHER-HARD (64MM THK)	
	28	2	3T-3462	2	PLATE	
	29	2	3T-8290	1	PLATE AS	
		2	7S-8828	8	SPACER	
	30	2	3T-8281	1	SEAL	
	31	2	7S-8817	1	GASKET	
	32	2	7S-8816	1	COVER AS	
		2	2R-2276	2	WASHER	
		2	6P-8626	2	SCREW-KNURLED	
	33	2	9W-3429	1	COVER	
	34	2	8E-8697	1	COVER	
	35	2	6D-3931	8	SCREW-SOCKET HEAD	
	36	2	9W-3142	8	MOUNTING	
	37	2	9W-8027	2	PLATE	
	38	2	7X-0090	2	BOLT (7/8-9X5IN)	
		2	7X-0672	2	WASHER-HARD	
	39	2	4L-8454	4	BOLT (3/8-16X1.0IN)	
	40	2	3T-4788	1	COVER	

12 FRAME AND BODY 1 of 4 SELP4570-01

FRAME AND BODY

8E-3299 PLATFORM GP-CAB (contd.)

100090751

NOTE	REF NO	GRAPHIC REF	PART NUMBER	QTY	PART NAME 1 2 3 4 5 6 (PRODUCT LEVEL)	SEE PAGE
	41	2	6E-2616	1	COVER	
	42	2	7T-0134	1	PLATE	
	43	2	7T-0138	1	GASKET	
	44	2	7S-8724	1	GASKET	
	45	2	7S-8723	1	COVER	
	46	2	6V-1950	2	PLUG-BUTTON	

M-METRIC PART

SELP4570-01 2 of 4 FRAME AND BODY 13

FRAME AND BODY

8E-3299 PLATFORM GP-CAB (contd.)

100090751

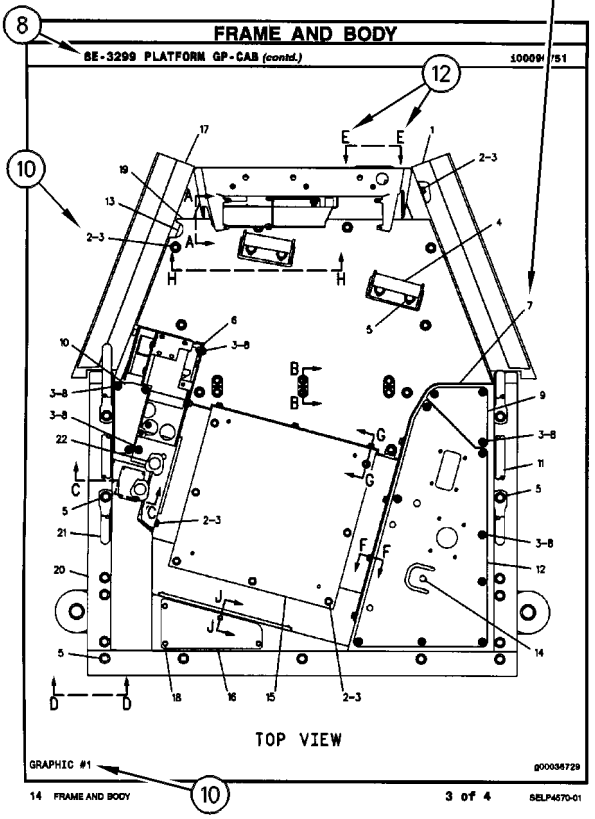

14 FRAME AND BODY 3 of 4 SELP4570-01

FRAME AND BODY

8E-3299 PLATFORM GP-CAB (contd.)

100090751

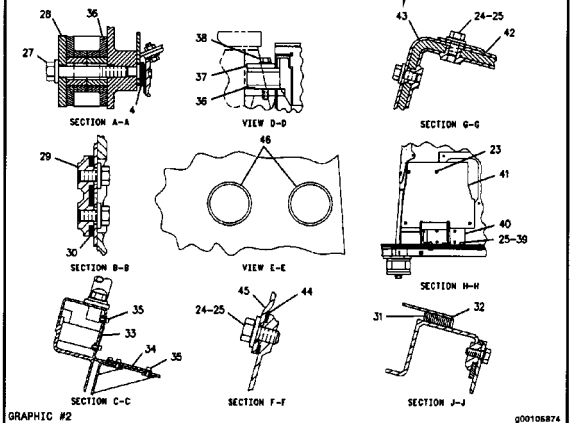

SELP4570-01 4 of 4 FRAME AND BODY 15

REPAIR ALTERNATIVES

REMANUFACTURED COMPONENTS

As an option when making repairs consider Caterpillar Remanufactured Components. Components that are available through the Caterpillar Remanufactured Program are identified three ways in the parts book:

- with the letter R in the note field of the parts list
- with an R* at the beginning of the first line of the caption
- with an *R at the end of the first line of the caption

Typical components included in the Remanufacturing Program include:

ALTERNATORS
CONNECTING RODS
CRANKSHAFTS - UNDERSIZE
CRANKSHAFTS - UPGRADE TO NEW
CYLINDER HEADS
ELECTRONIC CONTROL MODULES (ECM)
ELECTRONIC SENSORS
FUEL INJECTORS
FUEL NOZZLES
FUEL PUMPS
GOVERNORS
OIL PUMPS
PISTONS
SHORT BLOCKS
STARTERS
TURBOCHARGERS - COMPLETE
TURBOCHARGER CARTRIDGES
WATER PUMPS

Caterpillar Remanufactured engines for many engine arrangements are also available.

SUPPLEMENTAL COOLANT ADDITIVES

CUSTOMER BENEFITS:

Protects against cavitation, foam, erosion, corrosion, and scale buildup in cooling systems.

- Provides measured coolant conditioner.

DESCRIPTION:

Additives deplete from the coolant with normal operation. For this reason, Supplemental Coolant Additives (SCA) must be added to all heavy duty coolants at regular intervals. In addition, when not using a fully formulated, pre-charged antifreeze, like Caterpillar's DEAC, an initial charge of SCA must be added to the cooling system. The amount of SCA added to the system is dependent on the capacity of the system.

The SCA for initial fill is provided as a liquid. SCA's for maintenance intervals are available in liquid form and as a spin-on element. (No Spin-on available for 3600 Family of Engines)

NOTE:

The amount of SCA added at initial fill is not the same as the amount added at maintenance intervals.

The coolant additive elements can be used with any ethylene or propylene glycol type antifreeze which meets ASTM D4985 or ASTM D5345 Specifications.

NOTE:

For use with standard heavy duty coolant only, not for use with Extended Life Coolant.

PARTS NEEDED:

Cooling System Capacity		Liquid SCA at Initial Fill	Liquid SCA at Maintenance*	Spin-on SCA Maintenance Element*
Liters	Gallons			
22-30	(6-8)	3P-2044 (1)	6V-3542 (1)	111-2370 (1)
30-38	(8-10)	3P-2044 (1) 6V-3542 (1)	111-2372 (1)	111-2369 (1)
38-49	(10-13)	3P-2044 (1) 8T-1589 (1)	111-2372 (1)	111-2369 (1)
49-64	(13-17)	3P-2044 (2)	8T-1589 (1)	9N-3368 (1)
64-83	(17-22)	3P-2044 (2) 8T-1589 (1)	111-2372 (1) 6V-3542 (1)	111-2371 (1)
83-114	(22-30)	3P-2044 (3) 8T-1589 (1)	3P-2044 (1)	9N-3718 (1)
114-163	(30-43)	3P-2044 (5)	3P-2044 (1) 6V-3542 (1)	111-2371 (2)
163-242	(43-64)	3P-2044 (8)	3P-2044 (2)	9N-3718 (2)

** Normal maintenance period is 250 hrs. See your Operation and Maintenance Manual for complete coolant maintenance instructions.*

( ) Indicates quantity required.

MAINTENANCE PARTS

DESCRIPTION	PART NUMBER	QTY	WHERE USED	PAGE
AIR INLET AND EXHAUST SYSTEM				
CAP-PROTECTIVE	248-4840	1	LINES GP-AIR	135
FILTER ELEMENT AS-AIR (PRIMARY)	245-3818	1	AIR CLEANER GP	130
FILTER ELEMENT AS-AIR (SECONDARY)	245-3819	1	AIR CLEANER GP	130
BASIC ENGINE				
PLUG-DRAIN (ENGINE OIL PAN)	9X-6451	2	PAN GP-OIL	67
SEAL-VALVE COVER	229-5711	1	COVER GP-VALVE MECHANISM	32
COOLING SYSTEM				
CAP AS-COOLANT TANK	251-3227	1	TANK GP-COOLANT	126
REGULATOR-TEMPERATURE (92-DEG C) (COOLANT)	248-5513	1	LINES GP-WATER	115
SEAL-LIP TYPE (WATER TEMPERATURE REGULATOR)	3S-9643	1	LINES GP-WATER	115

MAINTENANCE PARTS

DESCRIPTION	PART NUMBER	QTY	WHERE USED	PAGE
ELECTRICAL AND STARTING SYSTEM				
BATTERY (12-VOLT, 1125-CCA) (WET)	153-5700	2	BATTERY & WIRING GP	201
BATTERY (12-VOLT, 1400-CCA) (MAINTENANCE FREE, WET)	153-5710	2	BATTERY & WIRING GP	199
CIRCUIT BREAKER AS (15-AMPERE) (FLOODLIGHTS, LH)	3T-2662	1	PANEL GP-CIRCUIT BREAKER	262
CIRCUIT BREAKER AS (15-AMPERE) (FLOODLIGHTS, RH)	3T-2662	1	PANEL GP-CIRCUIT BREAKER	262
CIRCUIT BREAKER AS (15-AMPERE) (KEY SWITCH)	230-9174	1	PANEL GP-CIRCUIT BREAKER	261
CIRCUIT BREAKER AS (15-AMPERE) (TRANSMISSION CONTROL)	230-9174	1	PANEL GP-CIRCUIT BREAKER	261
CIRCUIT BREAKER AS (150-AMPERE) (ALTERNATOR)	171-2215	1	PANEL GP-CIRCUIT BREAKER	261
CIRCUIT BREAKER AS (20-AMPERE) (ACCUGRADE)	288-3687	1	PANEL GP-CIRCUIT BREAKER	261
CIRCUIT BREAKER AS (20-AMPERE) (CAB)	6T-3644	1	WIRING GP-CAB	333
CIRCUIT BREAKER AS (20-AMPERE) (ENGINE CONTROL)	288-3687	1	PANEL GP-CIRCUIT BREAKER	261
CIRCUIT BREAKER AS (80-AMPERE) (LOAD)	171-2210	1	PANEL GP-CIRCUIT BREAKER	261
CIRCUIT BREAKER AS (80-AMPERE) (MAIN)	171-2210	1	PANEL GP-CIRCUIT BREAKER	261
FILTER (ETHER START)	358-4889	1	VALVE GP-ETHER STARTING	328
FLASHER AS	252-5224	1	WIRING GP-CAB	330
FUSE (10-AMPERE)	9W-1442	19	WIRING GP-CAB	330
FUSE (15-AMPERE)	9W-1441	17	WIRING GP-CAB	330
FUSE (20-AMPERE)	9W-1446	4	WIRING GP-CAB	330
KEY (BATTERY DISCONNECT)	8H-5306	1	SWITCH GP-DISCONNECT	312
KEY AS-ELECTRONIC (SECURITY)	206-5162	2	INSTALLATION GP-SECURITY	230
LAMP (24-VOLT) (DOME)	7N-9943	1	LAMP GP-DOME	234
LAMP (24-VOLT, 21-WATT)	9X-4493	1	LAMP GP	233
LAMP (24-VOLT, 5-WATT)	130-3515	1	LAMP GP-HEAD & SIGNAL	241
		1	LAMP GP-HEAD & SIGNAL	242
		1	LAMP GP-HEAD & SIGNAL	243
LAMP (24-VOLT, 75/70-WATT)	9X-3465	1	LAMP GP-HEAD & SIGNAL	241
		1	LAMP GP-HEAD & SIGNAL	242
		1	LAMP GP-HEAD & SIGNAL	243
LAMP AS-LED (24-VOLT, GREEN)	250-2299	1	SWITCH GP-ROCKER	321
	279-5308	1	WIRING GP-CAB	330
LAMP AS-LED (24-VOLT, RED)	242-3282	1	INSTALLATION GP-SECURITY	230
LAMP-HALOGEN (24-VOLT, 70-WATT)	9X-3463	1	LAMP GP-FLOOD	235
		1	LAMP GP-FLOOD	237
		1	LAMP GP-FLOOD	238
		1	LAMP GP-FLOOD	239
		1	LAMP GP-HEAD	240

MAINTENANCE PARTS

DESCRIPTION	PART NUMBER	QTY	WHERE USED	PAGE
FUEL SYSTEM				
CAP AS-FILLER (FUEL TANK)	7X-7700	1	TANK GP-FUEL	174
		1	TANK GP-FUEL	176
		1	TANK GP-FUEL	178
		1	TANK GP-FUEL	182
FILTER (FUEL)	357-5031	1	TANK GP-FUEL	188
FILTER AS-WATER SEP & FUEL (PRIMARY)	326-1644	1	FILTER GP-WATER SEP & FUEL	154
FILTER-FUEL (ADVANCED EFFICIENCY)	1R-0762	1	FILTER GP-FUEL	144
		1	FILTER GP-FUEL	146
		1	FILTER GP-FUEL	148
		1	FILTER GP-FUEL	150
		1	FILTER GP-FUEL	152
STRAINER-FUEL	199-9907	1	TANK GP-FUEL	174
		1	TANK GP-FUEL	176
		1	TANK GP-FUEL	178
		1	TANK GP-FUEL	182
HYDRAULIC SYSTEM				
CAP AS-FILLER (HYDRAULIC TANK)	142-8937	1	TANK GP-HYDRAULIC	705
FILTER ELEMENT-BREATHER (HYDRAULIC TANK)	9R-9925	1	TANK & MTG GP-HYDRAULIC	703
FILTER ELEMENT-OIL (ULTRA HIGH EFFICIENCY) (HYDRAULIC TANK)	338-3540	1	FILTER GP-OIL	592
FILTER-OIL (ADVANCED EFFICIENCY) (PRIMARY)	1G-8878	1	FILTER GP-OIL	591
SCREEN (CONTROL MANIFOLD)	6E-5066	1	MANIFOLD GP-CONTROL	680
		1	MANIFOLD GP-CONTROL	682
STRAINER (HYDRAULIC TANK)	206-8818	1	TANK GP-HYDRAULIC	705
LUBRICATION SYSTEM				
BREATHER AS (CRANKCASE)	9Y-4357	1	BREATHER GP	93
CAP AS (ENGINE OIL)	246-1127	1	FILLER GP-ENGINE OIL	95
FILTER-ENGINE OIL (ADVANCED EFFICIENCY)	1R-1808	1	FILTER GP-ENGINE OIL	96
MACHINE ARRANGEMENT				
FILTER GP-OIL	260-3140	1	COMMON AR	1
SCREEN AS-CAB (REAR)	266-4296	1	OPTION AR-CAB	5

MAINTENANCE PARTS

DESCRIPTION	PART NUMBER	QTY	WHERE USED	PAGE
OPERATOR STATION				
BLADE AS-WIPER (400-MM) (FRONT)	6V-5851	2	WIPER GP-WINDOW	887
BLADE AS-WIPER (400-MM) (LOWER DOOR WINDOW, LH)	6V-5851	1	WIPER GP-WINDOW	891
BLADE AS-WIPER (400-MM) (LOWER DOOR WINDOW, RH)	6V-5851	1	WIPER GP-WINDOW	889
BLADE AS-WIPER (450-MM) (FRONT)	6V-5853	1	WIPER & WASHER GP-WINDOW	884
BLADE AS-WIPER (500-MM) (REAR)	146-6433	1	WIPER GP-WINDOW	886
BLADE AS-WIPER (500-MM) (UPPER DOOR WINDOW, LH)	5C-8811	1	WIPER GP-WINDOW	891
BLADE AS-WIPER (500-MM) (UPPER DOOR WINDOW, RH)	5C-8811	1	WIPER GP-WINDOW	889
CAP-VENTED (WASHER TANK)	276-3884	1	WIPER & WASHER GP-WINDOW	884
DRYER-REFRIGERANT (IN-LINE)	257-3226	1	LINES GP-AIR CONDITIONER	829
FILTER ELEMENT-AIR (CAB HEATER, AIR CONDITIONER)	211-2660	1	DUCT & FILTER GP-CAB AIR	816
FILTER ELEMENT-CAB AIR (ACTIVATED CHARCOAL)	220-8800	1	DUCT & FILTER GP-CAB AIR	816
FILTER ELEMENT-CAB AIR (CAB HEATER, AIR CONDITIONER)	149-1912	1	DUCT & FILTER GP-CAB AIR	816
FUSE (15-AMPERE) (AIR CONDITIONER, HEATER)	133-9012	2	AIR CONDITIONER GP	771
LAMP AS (24-VOLT)	250-8335	2	LINER GP-CAB	825
LAMP AS (24-VOLT) (IMPLEMENT CONTROL)	250-8335	2	LINER GP-CAB	827
SEAT BELT GP (RETRACTABLE)	222-0345	1	SEAT GP	864
POWER TRAIN				
BREATHER (POWER TRAIN OIL)	9G-5127	1	FILLER GP-POWER TRAIN OIL	434
BREATHER (TANDEM)	4H-6112	1	TANDEM & COVER GP	450
FILTER ELEMENT AS-OIL (ADVANCED EFFICIENCY)	328-3655	1	LINES GP-TRANSMISSION OIL	439
FILTER ELEMENT AS-OIL (ADVANCED EFFICIENCY) (TRANSMISSION)	328-3655	1	FILTER GP-OIL	436
FILTER-MAGNETIC (TRANSMISSION CHARGING)	251-6673	1	SCREEN GP-MAGNETIC	447
FILTER-MAGNETIC (TRANSMISSION SUMP)	251-6673	1	CASE & PARTS GP-TRANSMISSION	402
PLUG-MAGNETIC	5P-4484	1	CASE & PARTS GP-TRANSMISSION	403
PLUG-MAGNETIC (TANDEM DRIVE OIL DRAIN)	304-8032	2	TANDEM & COVER GP	450
SCREEN-SUCTION (TRANSMISSION CHARGING)	251-6674	1	SCREEN GP-MAGNETIC	447
SCREEN-SUCTION (TRANSMISSION SUMP)	251-6674	1	CASE & PARTS GP-TRANSMISSION	402

INDEX

Name	Page

A

ACCUMULATOR GP-BLADE CUSHION–CHARGED 558
ACCUMULATOR GP-BRAKE–CHARGED 534, 535, 536
ACCUMULATOR GP-BRAKE–UNCHARGED 537
ACCUMULATOR GP-HYDRAULIC 559
ACCUMULATOR-REFRIGERANT 829
ADAPTER GP-FAST FILL FUEL 141
ADJUSTER GP-SEAT 766
AFTERCOOLER GP-AIR 128
AIR CLEANER GP 129, 130
AIR COMPRESSOR AR–SERVICE AIR 16
AIR COMPRESSOR GP 17, 20
AIR COMPRESSOR GP-SEAT 767
AIR CONDITIONER & MOUNTING GP 768
AIR CONDITIONER AR 769
AIR CONDITIONER GP 770, 771
ALARM GP 194
ALTERNATOR GP-CHARGING 195, 196, 198
ARM GP-WINDOW WIPER (LOWER DOOR WINDOW, LH) 891
ARM GP-WINDOW WIPER (LOWER DOOR WINDOW, RH) 889
ARM GP-WINDOW WIPER (UPPER DOOR WINDOW, LH) 891
ARM GP-WINDOW WIPER (UPPER DOOR WINDOW, RH) 889
ARM GP-WINDOW WIPER (WINDOW WASHER, WIPER) 884
ARMREST GP–LH 774
ARMREST GP–RH 773
AUTOSHIFT AR–TRANSMISSION 391
AXLE GP-FRONT 392, 394
AXLE GP-REAR 398

B

BASE GP-OIL FILTER 593
BASE GP-OIL FILTER–ENGINE 89, 90, 92
BASE GP-OIL FILTER–POWER TRAIN 400
BASE GP-OIL FILTER–STEERING 560
BASE GP-VALVE COVER 24
BASE GP-VALVE COVER–ENGINE 22, 23
BATTERY & WIRING GP–EXTREME SERVICE 199
BATTERY & WIRING GP–HEAVY-DUTY 201
BATTERY (12-VOLT, 1125-CCA) (WET) 201
BATTERY (12-VOLT, 1400-CCA) (MAINTENANCE FREE, WET) 199
BIT GP-END 893
BLADE AS-WIPER (400-MM) (FRONT) 887
BLADE AS-WIPER (400-MM) (LOWER DOOR WINDOW, LH) 891
BLADE AS-WIPER (400-MM) (LOWER DOOR WINDOW, RH) 889
BLADE AS-WIPER (450-MM) (FRONT) 884
BLADE AS-WIPER (500-MM) (REAR) 886
BLADE AS-WIPER (500-MM) (UPPER DOOR WINDOW, LH) 891
BLADE AS-WIPER (500-MM) (UPPER DOOR WINDOW, RH) 889
BLADE GP 894, 895
BOX GP-TOOL 909
BRACKET GP-MOUNTING 206, 223, 266
BRACKET GP-MOUNTING–FUSE PANEL 205
BRACKET GP-MOUNTING–MAST 206
BRACKET GP-MOUNTING–SONIC SENSOR . . . 204
BRAKE GP-PARKING 538
BREATHER (POWER TRAIN OIL) 434
BREATHER (TANDEM) 450
BREATHER AS (CRANKCASE) 93
BREATHER GP 450
BREATHER GP–CRANKCASE 93

C

CAB AR 775, 776
CABLE GP-STARTING MOTOR 207, 208
CAMERA AR–WORK AREA VISUAL SYSTEM . . . 209
CAMERA GP (115-DEG, COLOR) (REAR VIEW) 338
CAMSHAFT GP 25
CAP AS (ENGINE OIL) 95
CAP AS-COOLANT TANK 126
CAP AS-FILLER (FUEL TANK) 174, 176, 178, 182
CAP AS-FILLER (HYDRAULIC TANK) 705
CAP-PROTECTIVE 135
CAP-VENTED (WASHER TANK) 884
CARRIER GP-FINAL DRIVE 401
CASE & PARTS GP-TRANSMISSION 402

INDEX

Name	Page
CHAIN GP-DRIVE–TANDEM	405
CIRCLE & BEAM AS	760
CIRCLE GP	761
CIRCUIT BREAKER AS (15-AMPERE) (FLOODLIGHTS, LH)	262
CIRCUIT BREAKER AS (15-AMPERE) (FLOODLIGHTS, RH)	262
CIRCUIT BREAKER AS (15-AMPERE) (KEY SWITCH)	261
CIRCUIT BREAKER AS (15-AMPERE) (TRANSMISSION CONTROL)	261
CIRCUIT BREAKER AS (150-AMPERE) (ALTERNATOR)	261
CIRCUIT BREAKER AS (20-AMPERE) (ACCUGRADE)	261
CIRCUIT BREAKER AS (20-AMPERE) (CAB)	333
CIRCUIT BREAKER AS (20-AMPERE) (ENGINE CONTROL)	261
CIRCUIT BREAKER AS (80-AMPERE) (LOAD)	261
CIRCUIT BREAKER AS (80-AMPERE) (MAIN)	261
CLUTCH GP-TRANSMISSION–1ST, 3RD	411
CLUTCH GP-TRANSMISSION–FORWARD	406
CLUTCH GP-TRANSMISSION–HIGH, LOW	413
CLUTCH GP-TRANSMISSION–REVERSE, SECOND	408
COIL GP-EVAPORATOR & HEATER–AIR CONDITIONER	777
COMMON AR	1
COMPRESSOR GP-REFRIGERANT	778 779
CONDENSER & MTG GP-REFRIGERANT	780
CONNECTION GP-ELECTRICAL	210
CONNECTOR GP-ELECTRONIC	798
CONTROL & MTG GP-ENGINE ELEK	211 213
CONTROL & MTG GP-IMPLEMENT	214
CONTROL & MTG GP-JOYSTICK	784
CONTROL & MTG GP-JOYSTICK–OPERATOR PLATFORM	781
CONTROL AR-HYDRAULIC	561 565 566
CONTROL AR-HYDRAULIC–DOZER ANGLE, FRONT LIFT, RIPPER	562
CONTROL AR-HYDRAULIC–DOZER ANGLE, FRONT LIFT, RIPPER, WING MAST, WING TILT	564
CONTROL AR-HYDRAULIC–DOZER ANGLE, FRONT LIFT, RIPPER, WING MAST, WING TILT FLOAT	565
CONTROL AR-HYDRAULIC–FRONT LIFT, RIPPER, WING MAST, WING TILT	563
CONTROL AR-HYDRAULIC–RIPPER	561
CONTROL GP-AIR & TEMPERATURE	770
CONTROL GP-DIFFERENTIAL LOCK	416
CONTROL GP-ELECTROHYDRAULIC	786 787 788
CONTROL GP-ELECTROHYDRAULIC–WITH AUXILIARY LEVER	784 787
CONTROL GP-ELECTROHYDRAULIC–WITHOUT AUXILIARY LEVER	785 786
CONTROL GP-ENGINE ELECTRONIC	215
CONTROL GP-JOYSTICK	794
CONTROL GP-JOYSTICK (ELECTRONIC CONTROL)	787
CONTROL GP-JOYSTICK–LH	790 792
CONTROL GP-JOYSTICK–RH	789 791 793
CONTROL GP-SERVICE BRAKE	540 542 543
CONTROL GP-TRANSMISSION HYD	418
CONTROL GP-UNPRGMED MONITOR (MESSENGER)	220
CONTROL GP-UNPROGRAMMED (ENGINE)	215
CONTROL GP-UNPROGRAMMED (HYDRAULIC ELECTRONIC)	341
CONTROL GP-UNPROGRAMMED (IMPLEMENT 1)	216
CONTROL GP-UNPROGRAMMED (IMPLEMENT 2)	216
CONTROL GP-UNPROGRAMMED (TRANSMISSION)	418
CONTROL GP-UNPROGRAMMED–IMPLEMENT 1	216
CONTROL GP-UNPROGRAMMED–IMPLEMENT 2	216
CONVERTER GP-ELECTRICAL	218
CONVERTER GP-ELECTRICAL–RADIO	217
COOLER GP-ENGINE OIL	105 106
COOLER GP-TRANSMISSION OIL	422
COOLING AR	108
CORE	558
CORE AS (TRANSMISSION OIL COOLER)	422
CORE AS-OIL COOLER (ENGINE)	105 106
CORE AS-OIL COOLER (HYDRAULIC)	651
CORE AS-RADIATOR	124
COUPLING GP-TORSIONAL	424
COVER GP-CAB–BULKHEAD	795
COVER GP-CONTROL VALVE	470 472
COVER GP-FLYWHEEL HOUSING	27 28

INDEX

Name	Page
COVER GP-FLYWHEEL HOUSING–BOTTOM	26
COVER GP-FRONT HOUSING	29
COVER GP-FRONT HOUSING–AIR COMPRESSOR	31
COVER GP-FRONT HOUSING–HYDRAULIC PUMP DRIVE	30
COVER GP-FUEL TANK–W/O FAST FILL FUEL ADAPTER	143
COVER GP-OIL FILTER BASE–ENGINE	94
COVER GP-PROTECTION	474
COVER GP-SHIPPING	425
COVER GP-VALVE MECHANISM	32
CRANKSHAFT GP	33
CUSHION GP-ARM	796
CYLINDER & MTG GP-ARTICULATION	567
CYLINDER & MTG GP-BLADE LIFT	568
CYLINDER & MTG GP-BLADE TIP	569
CYLINDER & MTG GP-CENTERSHIFT	570
CYLINDER & MTG GP-SIDESHIFT	571
CYLINDER & MTG GP-STEERING	572
CYLINDER & MTG GP-WHEEL LEAN	573
CYLINDER BLOCK AS	35 36 37
CYLINDER BLOCK GP	38
CYLINDER GP-ARTICULATION	574
CYLINDER GP-BLADE TIP	575
CYLINDER GP-CENTERSHIFT	577
CYLINDER GP-LIFT	578
CYLINDER GP-RIPPER	579
CYLINDER GP-SIDESHIFT	580
CYLINDER GP-STEERING–LH	583
CYLINDER GP-STEERING–RH	581
CYLINDER GP-WHEEL LEAN	585
CYLINDER HEAD AS	40 42 43
CYLINDER HEAD GP	44 45 47 48

D

Name	Page
DAMPER GP	49
DIFFERENTIAL & BEVEL GEAR GP	427
DIFFERENTIAL GP	429
DISPLAY AR-MONITOR	797
DISPLAY AR-MONITOR–CD610	797
DISPLAY AR-MONITOR–CD700	797
DISPLAY GP-CAMERA–WORK AREA VISUAL SYSTEM	798
DISPLAY GP-MONITOR (CD610)	801
DISPLAY GP-MONITOR (CD700C)	799
DISPLAY GP-MONITOR–CD610	801
DISPLAY GP-MONITOR–CD700C	799
DISPLAY GP-MONITOR–LIGHT BAR	800
DISTRIBUTION AR	2 3 4
DOOR GP-ACCESS (BREAKERS, 24-VOLT OUTLET)	475
DOOR GP-CAB–LH	802 809
DOOR GP-CAB–RH	805 812
DRAIN GP-ECOLOGY (REAR AXLE)	398
DRAWBAR GP	763
DRIVE GP-ACCESSORY	50
DRIVE GP-CIRCLE	587
DRIVE GP-FINAL	430 432
DRYER-REFRIGERANT (IN-LINE)	829
DUCT & FILTER GP-CAB AIR	816

E

Name	Page
EDGE GP-CUTTING	896
EDGE-CUTTING–SERRATED	897 898
ELECTRONICS GP-COMMUNICATION–PRODUCT LINK 300	219
ELECTRONICS GP-IMPLEMENT	219
ELECTRONICS GP-IMPLEMENT–IMPLEMENT 2	219
ELECTRONICS GP-IMPLEMENT–IMPLEMENT 3	220
ELECTRONICS GP-MONITOR–ARABIC, CHINESE, ENGLISH, PORTUGUESE, RUSSIAN	221
ELECTRONICS GP-MONITOR–DANISH, ENGLISH, FINNISH, NORWEGIAN, PORTUGUESE, SWEDISH	221
ELECTRONICS GP-MONITOR–DUTCH, ENGLISH, FRENCH, GERMAN, PORTUGUESE, SPANISH	220
ELECTRONICS GP-MONITOR–ENGLISH, GREEK, HEBREW, ITALIAN, PORTUGUESE, TURKISH	221
ELECTRONICS GP-MONITOR–ENGLISH, PORTUGUESE, ROMANIAN, SLOVENIAN	222
ELECTRONICS GP-MONITOR–MESSENGER	220
ELECTRONICS GP-POWER TRAIN	222
ENCLOSURE GP-ENGINE	475
ENGINE AR	11
ENGINE AR-COMPLETE	12
ENGINE AR-CORE	14 15

INDEX

Name	Page
F	
FAN & MOTOR GP–RADIATOR COOLING	109
FAN GP-CIRCULATING	819
FAN GP-CIRCULATING–DEFROST	817
FASTENER GP-CYLINDER HEAD	51
FASTENER GP-DAMPER & PULLEY	52
FASTENER GP-ENCLOSURE	479
FASTENER GP-SENSOR	480
FASTENER GP-SENSOR–SONIC	481
FENDER & SUPPORT GP–REAR	482
FILLER GP-ENGINE OIL–FRONT, LH	95
FILLER GP-POWER TRAIN OIL	434
	443
FILM GP	911
FILM GP–VARIABLE HORSEPOWER PLUS	910
FILM GP-INTERNATIONAL	912
FILM GP-U.S.	913
FILM-CERTIFICATION (OPS, READ OMM) (ROPS, FOPS)	775
FILM-FUSE PANEL (FUSE IDENTIFICATION)	205
FILM-IDENTIFICATION (DASH, LH)	854
FILM-IDENTIFICATION (DASH, RH)	854
FILM-IDENTIFICATION (FAST FILL FUEL, READ OMM)	176
	178
FILM-IDENTIFICATION (FUSE PANEL)	262
FILM-IDENTIFICATION (HORN)	781
	873
FILM-IDENTIFICATION (IGNITION SWITCH)	230
FILM-IDENTIFICATION (LOWER)	848
FILM-IDENTIFICATION (LUBRICATION CHART)	498
	508
	527
	528
FILM-IDENTIFICATION (PANEL SWITCHES)	851
FILM-IDENTIFICATION (POWER RECEPTACLE, 12-VOLT)	218
FILM-IDENTIFICATION (SERIAL NUMBER)	771
FILM-IDENTIFICATION (UPPER)	848
FILM-INFORMATION (CONSOLE, LH)	856
FILM-INFORMATION (CONSOLE, RH)	856
FILM-INFORMATION (EXTERIOR SOUND, 107-DB)	8
FILM-INFORMATION (PRODUCT LINK, READ OMM)	912
	913
FILM-INSTRUCTION (ADJUSTMENT CONTROL)	782
	873
FILM-INSTRUCTION (ALTERNATE EXIT, REMOVE WINDOW)	912
	913
FILM-INSTRUCTION (AUXILIARY)	786
	787
FILM-INSTRUCTION (BELT ROUTING)	195
	198
FILM-INSTRUCTION (BLADE CONTROL, LH)	852
FILM-INSTRUCTION (BLADE CONTROL, RH)	852
	853
FILM-INSTRUCTION (ENGINE OIL DRAIN)	100
FILM-INSTRUCTION (ENGINE SHUTDOWN)	915
	920
FILM-INSTRUCTION (HVAC WATER, DRAINING, FILLING)	771
	833
FILM-INSTRUCTION (LH, BLADE CONTROL)	853
FILM-INSTRUCTION (MACHINE SECURITY, CONSOLE)	230
FILM-INSTRUCTION (NO FLOAT)	788
FILM-INSTRUCTION (OPERATOR CONSOLE, LH)	781
	873
FILM-INSTRUCTION (OPERATOR CONSOLE, RH)	781
	873
FILM-INSTRUCTION (SEAT ADJUSTMENT)	875
	877
FILM-INSTRUCTION (WIPER)	825
	827
FILM-WARNING (BLADE, DO NOT CLIMB, READ OMM)	206
	258
	327
FILM-WARNING (HAND CRUSH HAZARD, STAY BACK)	383
FILM-WARNING (HIGH PRESSURE CYLINDER)	915
FILM-WARNING (HIGH PRESSURE, READ OMM)	535
	536
	537
	558
	559
FILM-WARNING (HOT FLUID)	920
FILM-WARNING (LASER TRANSMITTER)	258
FILM-WARNING (NO WELD, NO DRILL, READ OMM)	912
FILM-WARNING (PRODUCT LINK, READ OMM)	912
FILM-WARNING (UNIVERSAL, READ OMM, U.S.)	913
FILTER & MTG GP-HYDRAULIC	589
FILTER (ETHER START)	328
FILTER (FUEL)	188
FILTER AS-WATER SEP & FUEL (PRIMARY)	154
FILTER ELEMENT AS-AIR (PRIMARY)	130
FILTER ELEMENT AS-AIR (SECONDARY)	130

INDEX

Name	Page
FILTER ELEMENT AS-OIL (ADVANCED EFFICIENCY)	439
FILTER ELEMENT AS-OIL (ADVANCED EFFICIENCY) (TRANSMISSION)	436
FILTER ELEMENT-AIR (CAB HEATER, AIR CONDITIONER)	816
FILTER ELEMENT-BREATHER (HYDRAULIC TANK)	703
FILTER ELEMENT-CAB AIR (ACTIVATED CHARCOAL)	816
FILTER ELEMENT-CAB AIR (CAB HEATER, AIR CONDITIONER)	816
FILTER ELEMENT-OIL (ULTRA HIGH EFFICIENCY) (HYDRAULIC TANK)	592
FILTER GP-ENGINE OIL	96
FILTER GP-FUEL	144 146 148 150 152
FILTER GP-OIL	1 591 593
FILTER GP-OIL–HYDRAULIC TANK RETURN	592
FILTER GP-OIL–TRANSMISSION	435 436
FILTER GP-WATER SEP & FUEL–PRIMARY	154
FILTER-ENGINE OIL (ADVANCED EFFICIENCY)	96
FILTER-FUEL (ADVANCED EFFICIENCY)	144 146 148 150 152
FILTER-MAGNETIC (TRANSMISSION CHARGING)	447
FILTER-MAGNETIC (TRANSMISSION SUMP)	402
FILTER-OIL (ADVANCED EFFICIENCY) (PRIMARY)	591
FINAL DRIVE GP	430 432
FLASHER AS	330
FLYWHEEL GP	53
FRAME GP-FRONT	484 485
FRAME GP-REAR	487
FUMES DISPOSAL GP	97
FUSE (10-AMPERE)	330
FUSE (15-AMPERE)	330
FUSE (15-AMPERE) (AIR CONDITIONER, HEATER)	771
FUSE (20-AMPERE)	330

G

Name	Page
GAUGE AS-OIL LEVEL (DIPSTICK) (ENGINE)	98 99
GAUGE AS-OIL LEVEL (DIPSTICK) (POWER TRAIN OIL)	434
GAUGE GP-OIL LEVEL (DIPSTICK)–ENGINE	98 99
GAUGE GP-SIGHT (HYDRAULIC TANK OIL)	705
GEAR GP-FRONT	54
GEAR GP-REAR	55 56
GRADE CONTROL AR–ACCUGRADE	222 223
GRADE CONTROL AR–CD610	223
GRADE CONTROL AR-LASER–ADVANCED TRACKING SYSTEM	223
GRADE CONTROL GP–ACCUGRADE	224
GUARD GP-BOTTOM	488
GUARD GP-DEBRIS	489
GUARD GP-FAN–RADIATOR	112

H

Name	Page
HARNESS AS-BOX	261
HARNESS AS-CAB (MAIN)	331
HARNESS AS-CHASSIS	345 349 351 356
HARNESS AS-CHASSIS (MACHINE SECURITY SYSTEM)	230
HARNESS AS-CONTROL	331
HARNESS AS-CONTROL (ACCUGRADE)	358
HARNESS AS-CONTROL (HYDRAULIC ELECTRONIC)	341
HARNESS AS-CONTROL (LH)	781
HARNESS AS-CONTROL (RH)	781
HARNESS AS-ENGINE	343
HARNESS AS-ENGINE (ELECTRONIC CONTROL MODULE)	339
HARNESS AS-ENGINE (UNIT INJECTOR)	389
HARNESS AS-FRONT	360 365
HARNESS AS-FRONT CHASSIS	371
HARNESS AS-FRONT LIGHTING	254 256
HARNESS AS-LIGHTING	333 345 351 368 369
HARNESS AS-MONITOR	373
HARNESS AS-MOTOR (HVAC)	771
HARNESS AS-PANEL	852

INDEX

Name	Page
HARNESS AS-PANEL (GRADE CONTROL)	853
HARNESS AS-POWER (PRODUCT LINK RADIO)	227
HARNESS AS-PUMP (FUEL)	375
HARNESS AS-RADIO	371, 859
HARNESS AS-REAR LIGHTING	383, 385
HARNESS AS-SENSOR	152, 163, 418, 784, 785
HARNESS AS-SENSOR (ANGLE)	360, 364
HARNESS AS-SENSOR (FRONT)	360, 364
HARNESS AS-SENSOR (FUEL SENSOR)	144, 146, 148
HARNESS AS-SENSOR (FUEL)	150
HARNESS AS-SENSOR (ROTATION)	360, 364
HARNESS AS-SOLENOID	376
HARNESS AS-SWITCH	847
HARNESS AS-SWITCH (GRADE CONTROL)	852
HARNESS AS-TRANSMISSION	261, 418
HARNESS AS-VALVE (SEAT AIR COMPRESSOR)	877
HARNESS AS-WINDOW WIPER	802, 805, 809, 812, 883
HARNESS AS-WIRING	350
HARNESS AS-WIRING (LIGHT BAR)	371
HARNESS AS-WIRING (MAST)	251
HEATER GP-JACKET WATER	225, 226
HITCH GP-ARTICULATING	490
HITCH GP-TOWING	492
HOOD GP	493
HORN GP-AIR	820, 821
HORN GP-ELECTRIC	822
HOUSING GP-FILTER	436
HOUSING GP-FILTER (OIL)	592
HOUSING GP-FLYWHEEL	57
HOUSING GP-FRONT	59
HOUSING GP-SEAT SUSPENSION	823

I

Name	Page
INDICATOR-LEVEL	881
INJECTOR GP-FUEL	155
INSTALLATION AR-COMMUNICATION–PRODUCT LINK 321SR	227
INSTALLATION GP-LIGHTING	229
INSTALLATION GP-SECURITY	230
INSTALLATION GP-WARNING BEACON	232
INSULATION GP-SOUND SUPPR	494

K

Name	Page
KEY (BATTERY DISCONNECT)	312
KEY AS-ELECTRONIC (SECURITY)	230
KIT-RECEPTACLE (2-PIN)	820
KIT-SEAL (MOTOR)	688

L

Name	Page
LAMP (24-VOLT) (DOME)	234
LAMP (24-VOLT, 21-WATT)	233
LAMP (24-VOLT, 5-WATT)	241, 242, 243
LAMP (24-VOLT, 75/70-WATT)	241, 242, 243
LAMP AS (24-VOLT)	825
LAMP AS (24-VOLT) (IMPLEMENT CONTROL)	827
LAMP AS-LED (24-VOLT, GREEN)	321, 330
LAMP AS-LED (24-VOLT, RED)	230
LAMP GP	233
LAMP GP-DOME–WITH SWITCH	234
LAMP GP-FLOOD	235, 236, 237, 238
LAMP GP-FLOOD–CAB ROOF, REAR	239
LAMP GP-HEAD	240
LAMP GP-HEAD & SIGNAL–LH	241, 243
LAMP GP-HEAD & SIGNAL–RH	242
LAMP GP-SIGNAL–STOP, TAIL	245
LAMP GP-SIGNAL–TURN	244
LAMP GP-WARNING BEACON–AMBER, STROBE	246
LAMP-HALOGEN (24-VOLT, 70-WATT)	235, 237, 238, 239, 240
LIFT GP-BLADE	899
LIFTER GP-VALVE–MECHANISM	61
LIFTING GP-ENGINE	62
LIGHTING AR-ROADING–SNOW REMOVAL	247

INDEX

Name	Page
LIGHTING GP-FLOOD	248
LIGHTING GP-FLOOD–CAB	249
LIGHTING GP-FLOOD–CAB ROOF	250
LIGHTING GP-ROADING	251
LINER GP-CAB	825
	827
LINES GP-ACCUMULATOR	595
LINES GP-ACCUMULATOR–BRAKE	544
	546
	548
LINES GP-AFTERCOOLER AIR	131
LINES GP-AIR	133
LINES GP-AIR–AIR CLEANER	134
LINES GP-AIR CONDITIONER	829
	831
LINES GP-AIR–INLET	135
LINES GP-AIR TANK	550
LINES GP-CENTERSHIFT LOCK	603
	605
LINES GP-ENGINE OIL DRAIN	100
LINES GP-FUEL	156
	158
LINES GP-HEATER	834
LINES GP-HEATER–CAB	833
LINES GP-HYDRAULIC	609
	617
	624
	632
	640
LINES GP-HYDRAULIC–DOZER ANGLE, SNOW PLOW	607
	608
LINES GP-HYDRAULIC FAN	648
LINES GP-HYDRAULIC–FRONT LIFT	616
LINES GP-HYDRAULIC OIL COOLER	651
LINES GP-LUBRICATION–ARTICULATION HITCH BEARING	496
LINES GP-LUBRICATION–PUMP DRIVE	437
LINES GP-PUMP–STANDARD STEERING	662
LINES GP-PUMP–STEERING	653
LINES GP-RIPPER	670
	671
LINES GP-SECONDARY STEERING	673
LINES GP-SERVICE BRAKE	552
	557
LINES GP-SERVICE BRAKE–TANDEM	555
LINES GP-STEERING	675
LINES GP-TRANSMISSION OIL	438
	439
LINES GP-TURBOCHARGER OIL	101
LINES GP-WATER	113
LINES GP-WATER–PUMP HOUSING	117
LINES GP-WATER–SINGLE WATER REGULATOR	115
LINK GP-STEERING	497
LINKAGE GP-WIPER (DOOR, RH)	889
LINKAGE GP-WIPER (LH)	891
LITERATURE GP	2
LOCK GP-CENTERSHIFT	679
LOCKOUT-SWITCH (BATTERY DISCONNECT)	199
	201
LUBRICATION AR-CENTRAL	498
	508
LUBRICATION AR-CENTRAL–RIPPER	503
	505

M

MANIFOLD GP-CONTROL	682
MANIFOLD GP-CONTROL–ACCUMULATOR	681
MANIFOLD GP-CONTROL–IMPLEMENT, STEERING	684
MANIFOLD GP-CONTROL–STEERING	680
MANIFOLD GP-EXHAUST	136
MANIFOLD GP-INLET	137
MANIFOLD GP-VALVE–INLET	685
	686
MAST GP–LASER RECEIVER	251
MIRROR GP–EXTERIOR	836
MIRROR GP–INTERIOR, FRONT	835
MIRROR GP-REAR VIEW–EXTERIOR	839
MIRROR GP-REAR VIEW–EXTERIOR, HEATED	840
MIRROR GP-REAR VIEW–INTERIOR	837
	838
MODULE AS-POWER SUPPLY	265
MODULE GP-DISPLAY	331
MODULE GP-DISPLAY (WORK AREA VISUAL SYSTEM)	798
MODULE GP-INTERFACE (KEY) (MACHINE SECURITY SYSTEM)	230
MOTOR GP-ELECTRIC–CIRCULATING FAN	252
MOTOR GP-GEAR (FAN) (RADIATOR FAN DRIVE)	109
MOTOR GP-GEROTOR	688
MOTOR GP-WINDOW WIPER	842
MOTOR GP-WINDOW WIPER (24-VOLT) (LH)	887
MOTOR GP-WINDOW WIPER (24-VOLT) (RH)	887
MOTOR GP-WINDOW WIPER (24-VOLT, 2-SPEED) (DOOR, RH)	889
MOTOR GP-WINDOW WIPER (24-VOLT, 2-SPEED) (FRONT)	841
MOTOR GP-WINDOW WIPER (24-VOLT, 2-SPEED) (LH)	891
MOTOR GP-WINDOW WIPER–FRONT	841
MOUNTING GP-ANTENNA–RADIO	843
MOUNTING GP-AXLE	513
MOUNTING GP-AXLE–FRONT	514

INDEX

Name	Page
MOUNTING GP-CONTROL–WITH ENCLOSURE	844
MOUNTING GP-ENGINE & XMSN	63
MOUNTING GP-FAN DRIVE	65
MOUNTING GP-FUEL TANK	160
MOUNTING GP-LAMP	253
MOUNTING GP-LIGHTING	254
MOUNTING GP-LIGHTING–SNOW REMOVAL	256
MOUNTING GP-MAST–LASER RECEIVER	258
MOUNTING GP-RECEIVER–MAST	259
MOUNTING GP-RIPPER	901
MOUNTING GP-SNOW WING	902 903
MOUNTING GP-VALVE	515
MOUNTING GP-VALVE MECHANISM	66
MOUNTING GP-WHEEL	443
MUFFLER & MOUNTING GP	138

O

OPTION AR-CAB	5
OPTION AR-CAB–COMFORT CAB	5
OPTION AR-COLD WEATHER	6
OPTION AR-LIGHTING	7
OPTION AR-LIGHTING–WORK LIGHTS	6
OPTION AR-LIGHTING–WORK LIGHTS, RIPPER	6
OPTION AR-MACHINE	7 8
OPTION AR-REGIONAL	8
OPTION AR-STARTING	6
OPTION AR-WORK TOOL	9
ORIFICE AS-AIR CONDITIONER	829

P

PADLOCK GP	909 915 920
PAN GP-BACKREST–LUMBAR	845 846
PAN GP-OIL–ENGINE	67
PAN GP-SEAT–LUMBAR	847
PANEL GP-CAB–HVAC	848
PANEL GP-CIRCUIT BREAKER	261
PANEL GP-CONTROL	853
PANEL GP-CONTROL–ACCUGRADE	852
PANEL GP-CONTROL–ACCUGRADE, LH	851
PANEL GP-INSTRUMENT	854
PANEL GP-INSTRUMENT–FRONT CONSOLE	856
PEDAL GP-BRAKE, XMSN & GOV	858
PISTON & ROD GP	68 69
PLATE & FILM GP	915 920
PLATE & FILM GP–ARABIC, WITH MONITOR SOFTWARE	928
PLATE & FILM GP–BRITISH, WITH MONITOR SOFTWARE	929
PLATE & FILM GP–CHINESE, WITH MONITOR SOFTWARE	929
PLATE & FILM GP–DANISH, WITH MONITOR SOFTWARE	926
PLATE & FILM GP–DUTCH, WITH MONITOR SOFTWARE	926
PLATE & FILM GP–ENGLISH, WITH MONITOR SOFTWARE	925
PLATE & FILM GP–FINNISH, WITH MONITOR SOFTWARE	926
PLATE & FILM GP–FRENCH, WITH MONITOR SOFTWARE	925
PLATE & FILM GP–GERMAN, WITH MONITOR SOFTWARE	926
PLATE & FILM GP–GREEK, WITH MONITOR SOFTWARE	927
PLATE & FILM GP–HEBREW, WITH MONITOR SOFTWARE	928
PLATE & FILM GP–ITALIAN, WITH MONITOR SOFTWARE	927
PLATE & FILM GP–NORWEGIAN, WITH MONITOR SOFTWARE	927
PLATE & FILM GP–PORTUGUESE, WITH MONITOR SOFTWARE	925
PLATE & FILM GP–ROMANIAN, WITH MONITOR SOFTWARE	929
PLATE & FILM GP–RUSSIAN, WITH MONITOR SOFTWARE	928
PLATE & FILM GP–SLOVENIAN, WITH MONITOR SOFTWARE	929
PLATE & FILM GP–SPANISH, WITH MONITOR SOFTWARE	925
PLATE & FILM GP–SWEDISH, WITH MONITOR SOFTWARE	927
PLATE & FILM GP–TURKISH, WITH MONITOR SOFTWARE	928
PLATE & FILM GP–VARIABLE HORSEPOWER	914
PLATE GP-PUSH	765
PLUG GP-CYLINDER BLOCK	71
PLUG GP-CYLINDER BLOCK–OIL GALLERY, END	70
PLUG GP-CYLINDER BLOCK–OIL GALLERY, RH	72
PLUG GP-ENGINE	73
PLUG-DRAIN (ENGINE OIL PAN)	67
PLUG-MAGNETIC	403
PLUG-MAGNETIC (TANDEM DRIVE OIL DRAIN)	450

INDEX

Name	Page
POWER SUPPLY GP–GRADE CONTROL	265
POWER TRAIN AR	443
PRECLEANER AS	139
PRECLEANER GP	139
PULLEY GP-CRANKSHAFT	74
PUMP & MTG GP-HYDRAULIC FAN	690
PUMP & MTG GP-PISTON	691
PUMP & MTG GP-SECONDARY STEER	692
PUMP GP-ENGINE OIL	102
	103
PUMP GP-FUEL INJECTION	162
PUMP GP-FUEL PRIMING	163
PUMP GP-FUEL PRM & WATER SEP	166
PUMP GP-FUEL TRANSFER	167
	168
	169
PUMP GP-GEAR	444
	445
PUMP GP-GEAR–SECONDARY STEERING	693
PUMP GP-PISTON–BRAKE, HYDRAULIC FAN	696
PUMP GP-PISTON–IMPLEMENT, STEERING	694
PUMP GP-WATER	118
	119
	120
	121
	122
	123

R

Name	Page
RADIATOR GP	124
RADIO GP–AM, FM	860
RADIO GP–AM/FM/WB	859
RADIO GP-COMMUNICATION–PRODUCT LINK 121SR	266
RECEIVER AR-LASER–ACCUGRADE, DUAL	266
RECEIVER AR-LASER–ACCUGRADE, SINGLE	266
RECEIVER AR-SATELLITE–DUAL GNSS, MS992	267
RECEIVER AR-SATELLITE–SINGLE GNSS, MS992	267
RECEIVER GP-FAST FILL FUEL	170
RECEIVER GP-LASER	267
RECEIVER GP-SATELLITE–DUAL GNSS, MS992	268
RECEIVER GP-SATELLITE–SINGLE GNSS, MS992	268
RECLINER GP-SEAT	861
REFLECTOR GP–MACHINE	516
REFLECTOR GP–RIPPER	517
REGULATOR AS-VOLTAGE (24-VOLT) (ALTERNATOR)	196
REGULATOR-TEMPERATURE (92-DEG C) (COOLANT)	115
RELAY AS (24-VDC, 20-AMPERE) (HEATED MIRROR TIMER)	323
RELAY AS (24-VOLT)	358
RELAY AS (24-VOLT) (A/C CLUTCH SOLENOID)	377
RELAY AS (24-VOLT) (A/C FAN, HIGH SPEED)	330
RELAY AS (24-VOLT) (ACCUGRADE)	330
RELAY AS (24-VOLT) (AIR CLEANER)	330
RELAY AS (24-VOLT) (BACKLIGHT)	330
RELAY AS (24-VOLT) (BACKUP ALARM)	377
RELAY AS (24-VOLT) (BLADE FLOOD LAMP ONE)	330
RELAY AS (24-VOLT) (BLADE FLOOD LAMP TWO)	330
RELAY AS (24-VOLT) (CAB FLOODLIGHTS ONE)	330
RELAY AS (24-VOLT) (CAB FLOODLIGHTS TWO)	330
RELAY AS (24-VOLT) (CAB FLOODLIGHTS, REAR)	330
RELAY AS (24-VOLT) (CONDENSER FAN ONE)	330
RELAY AS (24-VOLT) (CONDENSER FAN TWO)	330
RELAY AS (24-VOLT) (DIFFERENTIAL LOCK)	330
RELAY AS (24-VOLT) (FUEL PRIMING)	377
RELAY AS (24-VOLT) (HEADLIGHT DIMMER)	330
RELAY AS (24-VOLT) (HEADLIGHTS)	330
RELAY AS (24-VOLT) (HORN)	330
RELAY AS (24-VOLT) (POSITION LAMP, LH)	330
RELAY AS (24-VOLT) (POSITION LAMP, RH)	330
RELAY AS (24-VOLT) (REAR FLOODLIGHT)	330
RELAY AS (24-VOLT) (SECONDARY STEERING)	377
RIPPER AR	904
	905
RIPPER GP	906
ROCKER ARM GP	77
	80
ROCKER ARM GP–EXHAUST	76
	82
ROCKER ARM GP–INLET	75
	81
ROCKER ARM GP–UNIT INJECTOR	78
	79
ROOF GP-CAB	862
ROTATING GP-PUMP–BRAKE, HYDRAULIC FAN	699
ROTATING GP-PUMP–HYDRAULIC STEERING	698

INDEX

Name	Page
S	
SCREEN (CONTROL MANIFOLD)	680, 682
SCREEN AS-CAB (REAR)	5
SCREEN GP-MAGNETIC	447
SCREEN-SUCTION (TRANSMISSION CHARGING)	447
SCREEN-SUCTION (TRANSMISSION SUMP)	402
SEAL GP-CRANKSHAFT (FRONT)	59
SEAL GP-CRANKSHAFT–REAR	83
SEAL GP-DUO-CONE	394, 466, 468
SEAL-LIP TYPE (WATER TEMPERATURE REGULATOR)	115
SEAL-VALVE COVER	32
SEAT & MOUNTING GP	863
SEAT BELT GP (RETRACTABLE)	864
SEAT GP–CLOTH	864, 865
SEAT GP-SUSPENSION	867, 868
SENDER AS-FUEL LEVEL	174, 176, 178, 182
SENSOR & MOUNTING GP	269
SENSOR & MTG GP-POSITION	270
SENSOR & MTG GP-POSITION (ARTICULATION)	375
SENSOR AR-GRADE–CD700	271
SENSOR AR-GRADE–CROSS SLOPE	271
SENSOR AS-ANGLE	269
SENSOR AS-ANGLE (AS400TC) (ANGLE)	269
SENSOR AS-SONIC (ST400)	286, 287
SENSOR AS-TEMPERATURE	296, 297
SENSOR GP-ENGINE	13, 15, 272, 273, 274
SENSOR GP-POSITION (BLADE ROTATION)	269
SENSOR GP-POSITION (ROTARY)	858
SENSOR GP-POSITION (ROTARY) (XMSN MODULATOR CONTROL)	858
SENSOR GP-POSITION (STEERING CYLINDER)	581, 583
SENSOR GP-POSITION–ROTARY	276
SENSOR GP-PRESSURE	277, 278, 280, 281, 282, 283, 285, 682
SENSOR GP-PRESSURE (AIR INLET MANIFOLD)	272, 273
SENSOR GP-PRESSURE (ATMOSPHERIC AIR)	272, 273
SENSOR GP-PRESSURE (ATMOSPHERIC)	274, 279
SENSOR GP-PRESSURE (ENGINE OIL)	274
SENSOR GP-PRESSURE (FUEL)	144, 146, 152
SENSOR GP-PRESSURE (INTAKE AIR MANIFOLD)	274
SENSOR GP-PRESSURE (SECONDARY STEERING)	684
SENSOR GP-PRESSURE–AIR INLET MANIFOLD	282
SENSOR GP-PRESSURE–ATMOSPHERIC	284
SENSOR GP-PRESSURE–ATMOSPHERIC AIR	279
SENSOR GP-PRESSURE–ENGINE OIL, FUEL	285
SENSOR GP-PRESSURE–INTAKE AIR MANIFOLD	283
SENSOR GP-SONIC	286, 287
SENSOR GP-SONIC (ST400C)	286
SENSOR GP-SPEED	288, 289, 290
SENSOR GP-SPEED (CAM GEAR)	292
SENSOR GP-SPEED (CRANKSHAFT)	291
SENSOR GP-SPEED (PRIMARY, TIMING)	274
SENSOR GP-SPEED (SECONDARY, TIMING)	274
SENSOR GP-SPEED (TIMING, CAMSHAFT)	272, 273
SENSOR GP-SPEED (TIMING, CRANKSHAFT)	272, 273
SENSOR GP-SPEED (TRANSMISSION OUTPUT, HIGH)	418
SENSOR GP-SPEED (TRANSMISSION OUTPUT, LOW)	418
SENSOR GP-SPEED–PRIMARY, TIMING	291
SENSOR GP-SPEED–SECONDARY, TIMING	292
SENSOR GP-SPEED–TIMING, CAMSHAFT	290
SENSOR GP-SPEED–TIMING, CRANKSHAFT	289
SENSOR GP-TEMPERATURE	293

INDEX

Name	Page
	294
	295
	297
	298
	299
	351
SENSOR GP-TEMPERATURE (COOLANT)	274
SENSOR GP-TEMPERATURE (COOLANT, WATER)	272
SENSOR GP-TEMPERATURE (FUEL)	144
	146
	148
	150
	152
	272
SENSOR GP-TEMPERATURE (HYDRAULIC FAN OIL)	109
SENSOR GP-TEMPERATURE (INTAKE AIR MANIFOLD)	274
SENSOR GP-TEMPERATURE (STEERING OIL)	345
SENSOR GP-TEMPERATURE (TRANSMISSION OIL)	418
SENSOR GP-TEMPERATURE–AIR INLET MANIFOLD	298
SENSOR GP-TEMPERATURE–COOLANT	296
SENSOR GP-TEMPERATURE–COOLANT, WATER	299
SENSOR GP-TEMPERATURE–FUEL	294
SENSOR-PRESSURE	284
SENSOR-PRESSURE (TURBOCHARGER INLET)	375
SERVICE CENTER AR	518
SERVICE GP-IMPLEMENT	219
	220
SERVICE GP-MONITOR	221
	222
SERVICE GP-POWER TRAIN	222
SHAFT GP-DRIVE	448
SHAFT GP-INPUT	449
SHIELD GP-ENGINE COMPARTMENT	519
	520
SNOW AR-MOTOR GRADER	9
	10
SOFTWARE	801
SOFTWARE GP-COMMUNICATION	219
SOFTWARE GP-COMMUNICATION (PRODUCT LINK 121SR)	266
SOFTWARE GP-IMPLEMENT	219
	220
SOFTWARE GP-MONITOR	221
	222
SOFTWARE GP-POWER TRAIN	222
SOLENOID AS-STARTING MOTOR (24-VOLT)	305
STARTING AID GP-ETHER	300
STARTING AR-COLD WEATHER	301
STARTING MOTOR GP-ELECTRIC	302
	304
	307
	308
	309
STEP GP–LH	522
STEP GP–RH	521
STRAINER (HYDRAULIC TANK)	705
STRAINER-FUEL	174
	176
	178
	182
SUPPORT GP-CONTROL–JOYSTICK, LH	869
SUPPORT GP-CONTROL–JOYSTICK, RH	871
SUPPORT GP-CONTROL–OPERATOR PLATFORM	873
SUPPORT GP-ENGINE	84
SUPPORT GP-LIGHT–CAB ROOF	310
SUPPORT GP-RADIATOR	523
SUPPRESSION GP-SOUND	526
SUPPRESSION GP-SOUND–ENGINE	525
SUSPENSION GP-SEAT	875
SUSPENSION GP-SEAT–AIR, HEATED	877
SWASHPLATE GP	700
SWITCH AS (FORWARD, NEUTRAL, REVERSE)	790
	792
	794
SWITCH AS (LOWER LIMIT)	251
SWITCH AS (UPPER LIMIT)	251
SWITCH AS-BALL	351
SWITCH AS-BALL (CENTERSHIFT INDICATOR)	345
SWITCH AS-LIMIT (BRAKE LIGHT)	858
SWITCH AS-LIMIT (SEAT ADJUSTMENT)	847
SWITCH AS-PRESSURE (FILTER BYPASS)	591
SWITCH AS-PRESSURE (HIGH, LOW)	831
SWITCH AS-PRESSURE (REFRIGERANT COMPR, LOW SIDE)	831
SWITCH AS-PUSH BUTTON (AUTO/MANUAL SIDESHIFT)	851
SWITCH AS-PUSH BUTTON (BLADE CONTROL)	852
	853
SWITCH AS-PUSH BUTTON (HORN)	330
	781
SWITCH AS-ROCKER (24-VOLT)	770
SWITCH AS-ROCKER (24-VOLT) (BLADE OFFSET, LH)	851
SWITCH AS-ROCKER (24-VOLT) (BLADE OFFSET, RH)	851
SWITCH AS-ROCKER (24-VOLT) (CENTERSHIFT PIN)	330

INDEX

Name	Page
SWITCH AS-ROCKER (24-VOLT) (FOG LIGHT, REAR)	229
SWITCH AS-ROCKER (24-VOLT) (HEADLIGHT DIMMER)	320
SWITCH AS-ROCKER (24-VOLT) (TURN SIGNAL)	320
SWITCH AS-ROCKER (AUTOSHIFT)	321
SWITCH AS-ROCKER (BLADE CUSHION)	322
SWITCH AS-ROCKER (CAB FLOODLIGHTS)	250
SWITCH AS-ROCKER (FAN BLOWER SPEED)	819
SWITCH AS-ROCKER (HAZARD)	320
SWITCH AS-ROCKER (HEADLIGHTS, TAIL LIGHTS)	320 330
SWITCH AS-ROCKER (HEATED MIRRORS)	323
SWITCH AS-ROCKER (HYDRAULIC LOCKOUT)	331
SWITCH AS-ROCKER (PARKING BRAKE)	330
SWITCH AS-ROCKER (SECONDARY STEERING)	330
SWITCH AS-ROCKER (THROTTLE LOCK ON, OFF)	330
SWITCH AS-ROCKER (THROTTLE LOCK SET)	330
SWITCH AS-ROCKER (WARNING BEACON)	232
SWITCH AS-ROCKER (WORK LIGHT)	313
SWITCH AS-START (KEY)	330
SWITCH AS-TOGGLE (GROUND LEVEL SHUTDOWN)	375
SWITCH GP-BYPASS	311
SWITCH GP-DISCONNECT (BATTERY)	199 201
SWITCH GP-DISCONNECT–BATTERY	312
SWITCH GP-LIGHT (FOG LIGHT, REAR)	229
SWITCH GP-LIGHT–WORK LIGHT	313
SWITCH GP-LIMIT	314
SWITCH GP-MAGNETIC	316
SWITCH GP-MAGNETIC–MAIN RELAY	317
SWITCH GP-MAGNETIC–START RELAY	315
SWITCH GP-PRESSURE–FUEL	318 319
SWITCH GP-ROADING	320
SWITCH GP-ROCKER	322
SWITCH GP-ROCKER–AUTOSHIFT	321
SWITCH GP-ROCKER–HEATED MIRRORS	323
SWITCH GP-TOGGLE (GROUND LEVEL SHUTDOWN)	375
SWITCH GP-WIPER (24-VOLT, INTERMITTENT)	325 886
SWITCH GP-WIPER (24-VOLT, INTERMITTENT) (DOOR WIPER, LH)	333
SWITCH GP-WIPER (24-VOLT, INTERMITTENT) (DOOR WIPER, RH)	333
SWITCH GP-WIPER (24-VOLT, INTERMITTENT) (FRONT WIPER)	333
SWITCH GP-WIPER–INTERMITTENT	324 325
SWITCH-PRESSURE	529
SWITCH-PRESSURE (GREASE PRESSURE PORTS)	531
SWIVEL GP–CIRCLE DRIVE	701

T

TANDEM & COVER GP	450
TANK & MTG GP-FUEL	171
TANK & MTG GP-HYDRAULIC	703
TANK GP-AIR	930
TANK GP-COOLANT	126
TANK GP-FUEL	173 174 176 178 180 182 184 186 187 188
TANK GP-HYDRAULIC	705
TANK GP-LUBRICATION	508
TANK GP-WINDOW WASHER	879
TARGET GP-LASER	223 326 327
TOOTH GP-RIPPER–RIPPER	908
TRANSMISSION AR	451
TURBOCHARGER GP	140

U

UNIVERSAL JOINT GP	452

V

VALVE & MTG GP-LUBE DISTR	528
VALVE & MTG GP-LUBE DISTR– AUTOMATIC LUBRICATION SYSTEM	527
VALVE & MTG GP-SOLENOID	453
VALVE & MTG GP-SOLENOID (DIFFERENTIAL LOCK)	416
VALVE AS-GAS (HYDRAULIC ACCUMULATOR)	558
VALVE AS-PRESSURE RELIEF (AIR COMPRESSOR)	20
VALVE AS-PRESSURE RELIEF (REFRIGERANT COMPRESSOR)	778
VALVE GP-ACTUATOR	706

INDEX

Name	Page
VALVE GP-BANK 1	706
VALVE GP-BANK 3	708
VALVE GP-BANK 4–REAR FRAME	709
VALVE GP-BANK 5	710
VALVE GP-BANK 6	711
	713
	715
VALVE GP-BANK 7	716
VALVE GP-BANK 8	718
VALVE GP-BRAKE CONTROL	542
VALVE GP-CHECK	653
	662
	676
	720
VALVE GP-CHECK & RELIEF (BLADE TIP)	721
VALVE GP-CHECK & RELIEF (PLOW ANGLE)	733
VALVE GP-CHECK & RELIEF (SIDESHIFT)	723
VALVE GP-CHECK & RELIEF (WING LIFT)	737
	739
VALVE GP-CHECK & RELIEF (WING TILT)	741
	745
VALVE GP-CHECK (ARTICULATION)	735
VALVE GP-CHECK (BLADE LIFT)	743
VALVE GP-CHECK (BLADE TIP)	721
VALVE GP-CHECK (BULLDOZER LIFT, PLOW)	731
VALVE GP-CHECK (CENTERSHIFT)	725
VALVE GP-CHECK (CIRCLE DRIVE)	727
VALVE GP-CHECK (PLOW ANGLE)	733
VALVE GP-CHECK (RIPPER)	737
VALVE GP-CHECK (SIDESHIFT)	723
VALVE GP-CHECK (WHEEL LEAN)	729
VALVE GP-CHECK–FUEL	189
	190
	191
	192
VALVE GP-CONTROL–ARTICULATION	735
VALVE GP-CONTROL–BLADE LIFT	743
VALVE GP-CONTROL–BLADE TIP	721
VALVE GP-CONTROL–BULLDOZER LIFT, PLOW	731
VALVE GP-CONTROL–CENTERSHIFT	725
VALVE GP-CONTROL–CIRCLE DRIVE	727
VALVE GP-CONTROL–PLOW, BULLDOZER LIFT	733
VALVE GP-CONTROL–RIPPER	737
VALVE GP-CONTROL–SIDESHIFT	723
VALVE GP-CONTROL–WHEEL LEAN	729
VALVE GP-CONTROL–WING LIFT	739
VALVE GP-CONTROL–WING TILT	741
	745
VALVE GP-DIVERTER–FAN DRIVE	747
VALVE GP-DRAIN (RADIATOR DRAIN)	113
VALVE GP-ETHER STARTING	328
VALVE GP-FLUID SAMPLING	193
VALVE GP-LUBE DISTRIBUTION	529
	531
VALVE GP-MODULATING–TRANSMISSION CLUTCH	454
VALVE GP-PRESSURE REDUCING	748
	749
	750
VALVE GP-PUMP CONTROL–PRESSURE, FLOW COMPENSATOR	753
VALVE GP-PUMP CONTROL–PRESSURE, FLOW COMPENSATOR–BRAKE, HYDRAULIC FAN	751
VALVE GP-RELIEF	455
	754
	755
VALVE GP-RELIEF (SECONDARY STEERING)	673
VALVE GP-RELIEF (STEERING PILOT PRESSURE)	706
VALVE GP-SHUTOFF	653
	662
VALVE GP-SHUTTLE	756
VALVE GP-SHUTTLE (HYDRAULIC FAN)	682
VALVE GP-SOLENOID	757
	758
	759
VALVE GP-SOLENOID (24-VOLT) (CENTERSHIFT)	679
VALVE GP-SOLENOID (24-VOLT) (PARKING BRAKE)	418
VALVE GP-SOLENOID (ARTICULATION)	735
VALVE GP-SOLENOID (BLADE FLOAT, WING TILT)	745
VALVE GP-SOLENOID (BLADE LIFT)	743
VALVE GP-SOLENOID (BLADE TIP)	721
VALVE GP-SOLENOID (BULLDOZER LIFT, PLOW)	731
VALVE GP-SOLENOID (CENTERSHIFT)	725
VALVE GP-SOLENOID (CIRCLE DRIVE)	727
VALVE GP-SOLENOID (DIFFERENTIAL LOCK)	453
VALVE GP-SOLENOID (HYDRAULIC ACCUMULATOR)	681
VALVE GP-SOLENOID (HYDRAULIC FAN)	682
VALVE GP-SOLENOID (IMPLEMENT PILOT OIL)	684
VALVE GP-SOLENOID (PLOW ANGLE)	733
VALVE GP-SOLENOID (RIPPER)	737
VALVE GP-SOLENOID (SIDESHIFT)	723
VALVE GP-SOLENOID (WHEEL LEAN)	729
VALVE GP-SOLENOID (WING LIFT)	739
VALVE GP-SOLENOID (WING TILT)	741
VALVE GP-TIRE	459
VALVE GP-TIRE (TIRE INFLATION)	464
VALVE MECHANISM GP	85

INDEX

Name	Page
	87
VALVE-RELIEF	418
	419

W

WALKWAY GP–TANDEM	533
WARNING GP-BACKUP	329
WATER SEP & FUEL PRM PUMP GP	166
WHEEL & TIRE AR	457
	458
WHEEL & TIRE GP	459
	460
	461
WHEEL AR	461
	462
WHEEL GP	463
	464
	465
WHEEL GP–FRONT TANDEM	466
WHEEL GP–REAR TANDEM	468
WINDOW GP-CAB–FRONT	880
	881
WINDOW GP-CAB– REAR, LH, RH, SIDE WIPERS	883
WINDOW GP-CAB–SIDE, REAR, RH, LH	882
WIPER & WASHER GP-WINDOW–FRONT	884
WIPER GP-WINDOW–DOOR, LH	891
WIPER GP-WINDOW–DOOR, RH	889
WIPER GP-WINDOW–REAR	886
WIPER GP-WINDOW–SIDE, RH, LH	887
WIRING GP-CAB	330
WIRING GP-CAMERA– WORK AREA VISUAL SYSTEM	338
WIRING GP-ELECTRONIC CONTROL	339
	343
WIRING GP-ELECTRONIC CONTROL– HYDRAULIC IMPLEMENT	341
WIRING GP-FRONT	345
	350
	351
	356
WIRING GP-FRONT–LIGHTING	349
WIRING GP-GRADE CONTROL	364
WIRING GP-GRADE CONTROL–CAB	358
WIRING GP-GRADE CONTROL–DRAWBAR	360
WIRING GP-LIGHTING– FLOODLIGHTS, WARNING BEACON	368
WIRING GP-LIGHTING–WORK LIGHTS	369
WIRING GP-MONITOR	371
	373
WIRING GP-REAR	375
	381
WIRING GP-REAR LIGHTING– STOP, TAIL, TURN, BACKUP	383
WIRING GP-REAR LIGHTING–TAIL	385
WIRING GP-SECONDARY STEERING	387
WIRING GP-UNIT INJECTOR	389
	390

MEMORANDA

MACHINE ARRANGEMENT

349-2555 COMMON AR

S/N: R9J1-UP

SMCS-7000 **i04033304**

NOTE	PART NUMBER	QTY	PART NAME 1 2 3 4 5 6 (PRODUCT LEVEL)	SEE PAGE
Y	*231-2115*	1	AIR CLEANER GP	129
Y	*248-1254*	1	AIR CONDITIONER AR	769
Y	*256-3894*	1	AXLE GP-FRONT	392
Y	*247-8622*	1	BOX GP-TOOL	909
Y	*253-4650*	1	CIRCLE GP	761
Y	*356-2979*	1	CONTROL GP-DIFFERENTIAL LOCK	416
Y	*268-6570*	1	COOLING AR	108
Y	**250-0154**	1	COUPLING GP-TORSIONAL	424
Y	*282-8865*	1	CYLINDER & MTG GP-ARTICULATION	567
Y	*271-6420*	1	CYLINDER & MTG GP-BLADE LIFT	568
Y	*260-3646*	1	CYLINDER & MTG GP-BLADE TIP	569
Y	*274-2141*	1	CYLINDER & MTG GP-CENTERSHIFT	570
Y	*257-6804*	1	CYLINDER & MTG GP-SIDESHIFT	571
Y	*257-4929*	1	DRAWBAR GP	763
Y	**259-5580**	1	DRIVE GP-CIRCLE	587
Y	*285-9020*	1	ENCLOSURE GP-ENGINE	475
Y	**226-9770**	1	ENGINE AR-COMPLETE	12
Y	*231-2313*	1	FAN & MOTOR GP (RADIATOR COOLING)	109
Y	*319-7078*	1	FASTENER GP-ENCLOSURE	479
Y	*349-6142*	1	FILLER GP-POWER TRAIN OIL	434
Y	*260-3140*	1	FILTER GP-OIL	593
Y	*284-6086*	1	FRAME GP-REAR	487
Y	*235-8119*	1	HITCH GP-ARTICULATING	490
Y	*253-4631*	1	LIFT GP-BLADE	899
Y	*291-4038*	1	LIGHTING GP-FLOOD (CAB ROOF)	250
Y	*231-2137*	1	LINES GP-AFTERCOOLER AIR	131
Y	*231-2145*	1	LINES GP-ENGINE OIL DRAIN	100
Y	*332-3946*	1	LINES GP-HYDRAULIC FAN	648
Y	*331-7005*	1	LINES GP-HYDRAULIC OIL COOLER	651
Y	*246-6111*	1	LINES GP-LUBRICATION (PUMP DRIVE)	437
Y	*282-8866*	1	LINES GP-LUBRICATION (ARTICULATION HITCH BEARING)	496
Y	*282-8871*	1	LINES GP-SECONDARY STEERING	673
Y	*356-2955*	1	LINES GP-SERVICE BRAKE	552
Y	*344-7823*	1	LINES GP-STEERING	675
Y	*282-9083*	1	LINES GP-TRANSMISSION OIL	439
Y	*231-2153*	1	LINES GP-WATER	113
Y	*298-2600*	1	LOCK GP-CENTERSHIFT	679
Y	*233-3122*	1	MOUNTING GP-ANTENNA (RADIO)	843
Y	*284-5046*	1	MOUNTING GP-AXLE	513
Y	*231-2157*	1	MOUNTING GP-ENGINE & XMSN	63
Y	*235-6412*	1	MOUNTING GP-VALVE	515
Y	*250-8213*	1	MOUNTING GP-WHEEL	443
Y	*231-2160*	1	MUFFLER & MOUNTING GP	138
Y	*349-5187*	1	POWER TRAIN AR	443
Y	*235-8553*	1	PUMP & MTG GP-HYDRAULIC FAN	690
Y	**235-6409**	1	PUMP & MTG GP-PISTON	691
Y	*282-8872*	1	PUMP & MTG GP-SECONDARY STEER (ELECTRIC DRIVE)	692
Y	*231-2149*	1	PUMP GP-FUEL PRIMING	163
Y	*289-2108*	1	SERVICE CENTER AR	518
Y	*237-8199*	1	SHAFT GP-DRIVE	448
Y	*231-2161*	1	STARTING AID GP-ETHER	300
Y	*312-6371*	1	STEP GP (RH)	521
Y	*314-4860*	1	STEP GP (LH)	522
Y	*238-8825*	1	SUPPORT GP-LIGHT (CAB ROOF)	310
Y	*250-1172*	1	TANK GP-COOLANT	126

MACHINE ARRANGEMENT

349-2555 **COMMON AR** ***(contd.)*** **i04033304**

NOTE	PART NUMBER	QTY	PART NAME 1 2 3 4 5 6 (PRODUCT LEVEL)	SEE PAGE
YR	**253-8407**	1	TRANSMISSION AR	451
Y	*266-2422*	1	WALKWAY GP (TANDEM)	533
Y	*257-7224*	1	WARNING GP-BACKUP	329
Y	*285-3173*	1	WIRING GP-REAR	375
Y	*285-3174*	1	WIRING GP-REAR (CIRCUIT BREAKER PANEL)	381
Y	*285-3176*	1	WIRING GP-SECONDARY STEERING	387
	6V-1970	1	LITERATURE GP	
	5P-7958	1	SLEEVE-CABLE SPLICE	
	5P-8500	2	KEY	

R-REMFG PART MAY BE AVAILABLE
Y-SEPARATE ILLUSTRATION

<END>

353-5005 DISTRIBUTION AR

S/N: R9J1-UP
AN ATTACHMENT

SMCS-7000 **i04036779**

NOTE	PART NUMBER	QTY	PART NAME 1 2 3 4 5 6 (PRODUCT LEVEL)	SEE PAGE
Y	*235-4189*	1	ALTERNATOR GP-CHARGING	195
Y	*252-4676*	1	CONTROL AR-HYDRAULIC (RIPPER)	561
Y	*233-3142*	1	CONTROL GP-SERVICE BRAKE	540
Y	*297-3244*	1	HORN GP-ELECTRIC	822
Y	*299-3880*	1	LIGHTING GP-ROADING	251
Y	*282-8869*	1	LINES GP-ACCUMULATOR	595
Y	*250-0358*	1	LINES GP-AIR	133
Y	*233-3295*	1	MIRROR GP-REAR VIEW (EXTERIOR)	839
Y	*349-3049*	1	OPTION AR-CAB	5
Y	*351-2594*	1	OPTION AR-ELECTRICAL (STARTING)	6
Y	*351-2597*	1	OPTION AR-WORK TOOL	9
Y	*235-4180*	1	PLATE & FILM GP (VARIABLE HORSEPOWER)	914
Y	*259-4479*	1	PLATE GP-PUSH	765
Y	*257-3574*	1	RIPPER AR	904
Y	*270-9382*	1	SHIELD GP-ENGINE COMPARTMENT	519
Y	*285-2263*	1	TANK GP-FUEL	174

Y-SEPARATE ILLUSTRATION

<END>

MACHINE ARRANGEMENT

358-7877 DISTRIBUTION AR

S/N: R9J1-UP

AN ATTACHMENT

SMCS-7000 **i04040076**

NOTE	PART NUMBER	QTY	PART NAME 1 2 3 4 5 6 (PRODUCT LEVEL)	SEE PAGE
Y	*235-4189*	1	ALTERNATOR GP-CHARGING	195
Y	*252-4676*	1	CONTROL AR-HYDRAULIC (RIPPER)	561
Y	*354-8462*	1	CONTROL AR-HYDRAULIC (BLADE LIFT)	565
Y	*233-3142*	1	CONTROL GP-SERVICE BRAKE	540
Y	*297-3244*	1	HORN GP-ELECTRIC	822
Y	*299-3880*	1	LIGHTING GP-ROADING	251
Y	*250-0358*	1	LINES GP-AIR	133
Y	*233-3295*	1	MIRROR GP-REAR VIEW (EXTERIOR)	839
Y	*349-3049*	1	OPTION AR-CAB	5
Y	*351-2594*	1	OPTION AR-ELECTRICAL (STARTING)	6
Y	*351-2597*	1	OPTION AR-WORK TOOL	9
Y	*235-4180*	1	PLATE & FILM GP (VARIABLE HORSEPOWER)	914
Y	*259-4479*	1	PLATE GP-PUSH	765
Y	*257-3574*	1	RIPPER AR	904
Y	*270-9382*	1	SHIELD GP-ENGINE COMPARTMENT	519
Y	*285-2263*	1	TANK GP-FUEL	174

Y-SEPARATE ILLUSTRATION

<END>

361-1731 DISTRIBUTION AR

S/N: R9J1-UP

AN ATTACHMENT

SMCS-7000 **i04040080**

NOTE	PART NUMBER	QTY	PART NAME 1 2 3 4 5 6 (PRODUCT LEVEL)	SEE PAGE
Y	*235-4189*	1	ALTERNATOR GP-CHARGING	195
Y	*252-4676*	1	CONTROL AR-HYDRAULIC (RIPPER)	561
Y	*354-8462*	1	CONTROL AR-HYDRAULIC (BLADE LIFT)	565
Y	*233-3142*	1	CONTROL GP-SERVICE BRAKE	540
Y	*297-3244*	1	HORN GP-ELECTRIC	822
Y	*356-3071*	1	OPTION AR-MACHINE	7
Y	*299-3880*	1	LIGHTING GP-ROADING	251
Y	*250-0358*	1	LINES GP-AIR	133
Y	*233-3295*	1	MIRROR GP-REAR VIEW (EXTERIOR)	839
Y	*349-3049*	1	OPTION AR-CAB	5
Y	*351-2594*	1	OPTION AR-ELECTRICAL (STARTING)	6
Y	*351-2597*	1	OPTION AR-WORK TOOL	9
Y	*235-4180*	1	PLATE & FILM GP (VARIABLE HORSEPOWER)	914
Y	*259-4479*	1	PLATE GP-PUSH	765
Y	*257-3574*	1	RIPPER AR	904
Y	*270-9382*	1	SHIELD GP-ENGINE COMPARTMENT	519
Y	*285-2263*	1	TANK GP-FUEL	174

Y-SEPARATE ILLUSTRATION

<END>

MACHINE ARRANGEMENT

361-4363 DISTRIBUTION AR

S/N: R9J1-UP

AN ATTACHMENT

SMCS-7000 **i04040082**

NOTE	PART NUMBER	QTY	PART NAME 1 2 3 4 5 6 (PRODUCT LEVEL)	SEE PAGE
Y	*235-4189*	1	ALTERNATOR GP-CHARGING	195
Y	*252-4676*	1	CONTROL AR-HYDRAULIC (RIPPER)	561
Y	*354-8462*	1	CONTROL AR-HYDRAULIC (BLADE LIFT)	565
Y	*233-3142*	1	CONTROL GP-SERVICE BRAKE	540
Y	*285-2258*	1	GUARD GP-BOTTOM	488
Y	*297-3244*	1	HORN GP-ELECTRIC	822
Y	*275-7864*	1	INSULATION GP-SOUND SUPPR	494
Y	*299-3880*	1	LIGHTING GP-ROADING	251
Y	*250-0358*	1	LINES GP-AIR	133
Y	*233-3295*	1	MIRROR GP-REAR VIEW (EXTERIOR)	839
Y	*349-3049*	1	OPTION AR-CAB	5
Y	*351-2594*	1	OPTION AR-ELECTRICAL (STARTING)	6
Y	*356-3071*	1	OPTION AR-MACHINE	7
Y	*351-2597*	1	OPTION AR-WORK TOOL	9
Y	*235-4180*	1	PLATE & FILM GP (VARIABLE HORSEPOWER)	914
Y	*259-4479*	1	PLATE GP-PUSH	765
Y	*257-3574*	1	RIPPER AR	904
Y	*285-2263*	1	TANK GP-FUEL	174

Y-SEPARATE ILLUSTRATION

<END>

363-0414 DISTRIBUTION AR

S/N: R9J1-UP

AN ATTACHMENT

SMCS-7000 **i04040083**

NOTE	PART NUMBER	QTY	PART NAME 1 2 3 4 5 6 (PRODUCT LEVEL)	SEE PAGE
Y	*235-4189*	1	ALTERNATOR GP-CHARGING	195
Y	*252-4676*	1	CONTROL AR-HYDRAULIC (RIPPER)	561
Y	*356-3723*	1	CONTROL AR-HYDRAULIC (BLADE LIFT)	565
Y	*233-3142*	1	CONTROL GP-SERVICE BRAKE	540
Y	*285-2258*	1	GUARD GP-BOTTOM	488
Y	*297-3244*	1	HORN GP-ELECTRIC	822
Y	*356-3072*	1	OPTION AR-MACHINE	8
Y	*275-7864*	1	INSULATION GP-SOUND SUPPR	494
Y	*299-3880*	1	LIGHTING GP-ROADING	251
Y	*250-0358*	1	LINES GP-AIR	133
Y	*233-3295*	1	MIRROR GP-REAR VIEW (EXTERIOR)	839
Y	*349-3049*	1	OPTION AR-CAB	5
Y	*351-2594*	1	OPTION AR-ELECTRICAL (STARTING)	6
Y	*351-2597*	1	OPTION AR-WORK TOOL	9
Y	*235-4180*	1	PLATE & FILM GP (VARIABLE HORSEPOWER)	914
Y	*259-4479*	1	PLATE GP-PUSH	765
Y	*257-3574*	1	RIPPER AR	904
Y	*270-9382*	1	SHIELD GP-ENGINE COMPARTMENT	519
Y	*355-3347*	1	TANK GP-FUEL	186

Y-SEPARATE ILLUSTRATION

<END>

MACHINE ARRANGEMENT

349-3049 OPTION AR-CAB

S/N: R9J1-UP

PART OF 353-5005, 358-7877, 361-1731, 361-4363, 363-0414 DISTRIBUTION AR

AN ATTACHMENT

SMCS-7301 **i03796552**

NOTE	PART NUMBER	QTY	PART NAME 1 2 3 4 5 6 (PRODUCT LEVEL)	SEE PAGE
Y	*233-3116*	1	SEAT & MOUNTING GP	863
Y	*300-1870*	1	WINDOW GP-CAB (SIDE, REAR, RH, LH)	882

Y-SEPARATE ILLUSTRATION

<END>

349-3050 OPTION AR-CAB

S/N: R9J1-UP

PART OF 351-2601, 357-3000 SNOW AR-MOTOR GRADER

AN ATTACHMENT

SMCS-7301 **i03684552**

NOTE	PART NUMBER	QTY	PART NAME 1 2 3 4 5 6 (PRODUCT LEVEL)	SEE PAGE
Y	*233-3137*	1	FAN GP-CIRCULATING (WITH SWITCH)	819
Y	*233-3150*	1	SEAT & MOUNTING GP	863
Y	*300-1873*	1	WINDOW GP-CAB (REAR, LH, RH, SIDE WIPERS)	883
Y	*233-3139*	1	WIPER GP-WINDOW (REAR)	886

Y-SEPARATE ILLUSTRATION

<END>

349-3067 OPTION AR-CAB–COMFORT CAB

S/N: R9J1-UP

AN ATTACHMENT

SMCS-7301 **i04033065**

NOTE	PART NUMBER	QTY	PART NAME 1 2 3 4 5 6 (PRODUCT LEVEL)	SEE PAGE
Y	*233-3134*	1	CONVERTER GP-ELECTRICAL (RADIO)	217
Y	*233-3123*	1	RADIO GP (AM/FM/WB)	859
	266-4296	1	SCREEN AS-CAB (REAR)	

Y-SEPARATE ILLUSTRATION

<END>

MACHINE ARRANGEMENT

351-2596 OPTION AR-COLD WEATHER

S/N: R9J1-UP
PART OF 351-2601, 357-3000 SNOW AR-MOTOR GRADER
AN ATTACHMENT

SMCS-7000 **i03837830**

NOTE	PART NUMBER	QTY	PART NAME 1 2 3 4 5 6 (PRODUCT LEVEL)	SEE PAGE
Y	*308-2897*	1	STARTING AR-COLD WEATHER	301
Y	*233-4611*	1	BATTERY & WIRING GP (EXTREME SERVICE)	199
Y	**334-5370**	1	COVER GP-PROTECTION (HYDRAULIC OIL COOLER, SNOW)	474
Y	*249-6692*	1	GUARD GP-DEBRIS	489

Y-SEPARATE ILLUSTRATION

<END>

351-2594 OPTION AR-STARTING

S/N: R9J1-UP
PART OF 353-5005, 358-7877, 361-1731, 361-4363, 363-0414 DISTRIBUTION AR
AN ATTACHMENT

SMCS-7000 **i03677935**

NOTE	PART NUMBER	QTY	PART NAME 1 2 3 4 5 6 (PRODUCT LEVEL)	SEE PAGE
Y	*236-1924*	1	BATTERY & WIRING GP (HEAVY-DUTY)	201
Y	*298-3699*	1	STARTING MOTOR GP-ELECTRIC	309

Y-SEPARATE ILLUSTRATION

<END>

349-3068 OPTION AR-LIGHTING—WORK LIGHTS

S/N: R9J1-UP
AN ATTACHMENT

SMCS-7000 **i03686460**

NOTE	PART NUMBER	QTY	PART NAME 1 2 3 4 5 6 (PRODUCT LEVEL)	SEE PAGE
Y	*233-4615*	1	LIGHTING GP-FLOOD (FRONT FRAME)	248
Y	*286-7909*	1	LIGHTING GP-FLOOD (CAB, FRONT, RH, LH)	249
Y	*238-8763*	1	SWITCH GP-LIGHT (WORK LIGHT)	313

Y-SEPARATE ILLUSTRATION

<END>

349-3069 OPTION AR-LIGHTING—WORK LIGHTS, RIPPER

S/N: R9J1-UP
PART OF 351-2601, 357-3000 SNOW AR-MOTOR GRADER
AN ATTACHMENT

SMCS-7000 **i03686561**

NOTE	PART NUMBER	QTY	PART NAME 1 2 3 4 5 6 (PRODUCT LEVEL)	SEE PAGE
Y	*233-4620*	1	LAMP GP-FLOOD (RIPPER)	236
Y	*233-4615*	1	LIGHTING GP-FLOOD (FRONT FRAME)	248
Y	*286-7909*	1	LIGHTING GP-FLOOD (CAB, FRONT, RH, LH)	249
Y	*238-8763*	1	SWITCH GP-LIGHT (WORK LIGHT)	313

Y-SEPARATE ILLUSTRATION

<END>

MACHINE ARRANGEMENT

351-2599 OPTION AR-LIGHTING

S/N: R9J1-UP
PART OF 351-2601 SNOW AR-MOTOR GRADER
AN ATTACHMENT

SMCS-7000 **i03839989**

NOTE	PART NUMBER	QTY	PART NAME 1 2 3 4 5 6 (PRODUCT LEVEL)	SEE PAGE
Y	*233-3126*	1	INSTALLATION GP-LIGHTING	229
Y	*252-0976*	1	MOUNTING GP-SNOW WING	902
Y-SEPARATE ILLUSTRATION				

<END>

357-3001 OPTION AR-LIGHTING

S/N: R9J1-UP
PART OF 357-3000 SNOW AR-MOTOR GRADER
AN ATTACHMENT

SMCS-7000 **i04018819**

NOTE	PART NUMBER	QTY	PART NAME 1 2 3 4 5 6 (PRODUCT LEVEL)	SEE PAGE
Y	*233-3126*	1	INSTALLATION GP-LIGHTING	229
Y	*352-4780*	1	MOUNTING GP-SNOW WING	903
Y-SEPARATE ILLUSTRATION				

<END>

356-3071 OPTION AR-MACHINE

S/N: R9J1-UP
PART OF 361-1731, 361-4363 DISTRIBUTION AR
AN ATTACHMENT

SMCS-7000 **i03957711**

NOTE	PART NUMBER	QTY	PART NAME 1 2 3 4 5 6 (PRODUCT LEVEL)	SEE PAGE
Y	*233-3110*	1	CAB AR	775
Y	*243-7239*	1	COVER GP-CONTROL VALVE	470
Y	*294-1024*	1	DOOR GP-CAB	805
Y	*285-7586*	1	FRAME GP-FRONT	484
Y	*235-6405*	1	LINES GP-CENTERSHIFT LOCK	603
Y	*282-8870*	1	LINES GP-PUMP (STEERING)	653
Y	*285-2265*	1	TANK & MTG GP-FUEL	171
Y	*285-3175*	1	WIRING GP-FRONT (SENSORS, SOLENOIDS)	345
Y	*285-3178*	1	WIRING GP-FRONT (LIGHTING)	349
Y-SEPARATE ILLUSTRATION				

<END>

MACHINE ARRANGEMENT

356-3072 OPTION AR-MACHINE

S/N: R9J1-UP
PART OF 363-0414 DISTRIBUTION AR
AN ATTACHMENT

SMCS-7000 **i03957110**

NOTE	PART NUMBER	QTY	PART NAME 1 2 3 4 5 6 (PRODUCT LEVEL)	SEE PAGE
Y	*325-5227*	1	CAB AR	776
Y	*355-2945*	1	COVER GP-CONTROL VALVE	472
Y	**294-1034**	1	DOOR GP-CAB (RH)	812
Y	*348-3560*	1	FRAME GP-FRONT	485
Y	*351-8250*	1	LINES GP-CENTERSHIFT LOCK	605
Y	*351-8251*	1	LINES GP-PUMP	662
Y	*355-2952*	1	MOUNTING GP-FUEL TANK	160
Y	*354-4778*	1	WIRING GP-FRONT	351
Y	*355-1051*	1	WIRING GP-FRONT (IMPLEMENT)	356

Y-SEPARATE ILLUSTRATION

<END>

350-5390 OPTION AR-REGIONAL

S/N: R9J1-UP
AN ATTACHMENT

SMCS-7000 **i04033068**

NOTE	PART NUMBER	QTY	PART NAME 1 2 3 4 5 6 (PRODUCT LEVEL)	SEE PAGE
Y	*252-1810*	1	CONTROL GP-SERVICE BRAKE	543
Y	*285-2258*	1	GUARD GP-BOTTOM	488
Y	*275-7864*	1	INSULATION GP-SOUND SUPPR	494
Y	*339-6165*	1	MIRROR GP (INTERIOR, FRONT)	835
Y	*339-8788*	1	MIRROR GP (EXTERIOR)	836
Y	*233-3295*	1	MIRROR GP-REAR VIEW (EXTERIOR)	839
Y	*296-0011*	1	REFLECTOR GP (MACHINE)	516
Y	*296-0012*	1	REFLECTOR GP (RIPPER)	517
Y	*231-5056*	1	SUPPRESSION GP-SOUND (ENGINE)	525

Y-SEPARATE ILLUSTRATION

<END>

364-3739 OPTION AR-REGIONAL

S/N: R9J1-UP
AN ATTACHMENT

SMCS-7000 **i04040088**

NOTE	PART NUMBER	QTY	PART NAME 1 2 3 4 5 6 (PRODUCT LEVEL)	SEE PAGE
Y	*252-1810*	1	CONTROL GP-SERVICE BRAKE	543
Y	*285-2258*	1	GUARD GP-BOTTOM	488
Y	*275-7864*	1	INSULATION GP-SOUND SUPPR	494
Y	*339-6165*	1	MIRROR GP (INTERIOR, FRONT)	835
Y	*339-8788*	1	MIRROR GP (EXTERIOR)	836
Y	*296-0011*	1	REFLECTOR GP (MACHINE)	516
Y	*296-0012*	1	REFLECTOR GP (RIPPER)	517
Y	*231-5056*	1	SUPPRESSION GP-SOUND (ENGINE)	525
	205-3235	1	FILM-INFORMATION (EXTERIOR SOUND, 107-DB)	

Y-SEPARATE ILLUSTRATION

<END>

MACHINE ARRANGEMENT

351-2597 OPTION AR-WORK TOOL

S/N: R9J1-UP

PART OF 353-5005, 358-7877, 361-1731, 361-4363, 363-0414 DISTRIBUTION AR

AN ATTACHMENT

SMCS-6700, 7000 **i04033069**

NOTE	PART NUMBER	QTY	PART NAME 1 2 3 4 5 6 (PRODUCT LEVEL)	SEE PAGE
Y	*233-7148*	1	BIT GP-END	893
Y	*246-2610*	1	BLADE GP (14-FT)	894
Y	*233-7143*	1	EDGE GP-CUTTING	896

Y-SEPARATE ILLUSTRATION

<END>

351-2598 OPTION AR-WORK TOOL

S/N: R9J1-UP

AN ATTACHMENT

SMCS-6700, 7000 **i03842429**

NOTE	PART NUMBER	QTY	PART NAME 1 2 3 4 5 6 (PRODUCT LEVEL)	SEE PAGE
Y	*233-7148*	1	BIT GP-END	893
Y	*252-7080*	1	BLADE GP (14X16-FT)	895
Y	*233-7147*	1	EDGE GP-CUTTING	896

Y-SEPARATE ILLUSTRATION

<END>

351-2601 SNOW AR-MOTOR GRADER

S/N: R9J1-UP

AN ATTACHMENT

SMCS-7000 **i04036770**

NOTE	PART NUMBER	QTY	PART NAME 1 2 3 4 5 6 (PRODUCT LEVEL)	SEE PAGE
Y	*248-6925*	1	AUTOSHIFT AR (TRANSMISSION)	391
Y	*299-3881*	1	LIGHTING AR-ROADING (SNOW REMOVAL)	247
Y	*349-3050*	1	OPTION AR-CAB	5
Y	*351-2596*	1	OPTION AR-COLD WEATHER	6
Y	*349-3069*	1	OPTION AR-LIGHTING (WORK LIGHTS, RIPPER)	6
Y	*351-2599*	1	OPTION AR-LIGHTING (WORK LIGHTS, SNOW REMOVAL)	7
Y	*247-9851*	1	ALTERNATOR GP-CHARGING (WITH AIR CONDITIONER)	198
Y	*235-4186*	1	FILM GP (VARIABLE HORSEPOWER PLUS)	910
Y	*310-2078*	1	INSTALLATION GP-WARNING BEACON	232

Y-SEPARATE ILLUSTRATION

<END>

MACHINE ARRANGEMENT

357-3000 SNOW AR-MOTOR GRADER

S/N: R9J1-UP

AN ATTACHMENT

SMCS-7000 **i04033075**

NOTE	PART NUMBER	QTY	PART NAME 1 2 3 4 5 6 (PRODUCT LEVEL)	SEE PAGE
Y	*247-9851*	1	ALTERNATOR GP-CHARGING (WITH AIR CONDITIONER)	198
Y	*248-6925*	1	AUTOSHIFT AR (TRANSMISSION)	391
Y	*235-4186*	1	FILM GP (VARIABLE HORSEPOWER PLUS)	910
Y	*310-2078*	1	INSTALLATION GP-WARNING BEACON	232
Y	*299-3881*	1	LIGHTING AR-ROADING (SNOW REMOVAL)	247
Y	*349-3050*	1	OPTION AR-CAB	5
Y	*351-2596*	1	OPTION AR-COLD WEATHER	6
Y	*357-3001*	1	OPTION AR-LIGHTING (WORK LIGHTS, SNOW REMOVAL)	7
Y	*349-3069*	1	OPTION AR-LIGHTING (WORK LIGHTS, RIPPER)	6

Y-SEPARATE ILLUSTRATION

<END>

ENGINE ARRANGEMENT

357-6587 ENGINE AR

S/N: RSX16720-UP
259 BRAKE KW (347 BHP) AT 1850 RPM
PART OF 226-9770 ENGINE AR-COMPLETE

SMCS-1000 **i04020863**

NOTE	PART NUMBER	QTY	PART NAME 1 2 3 4 5 6 (PRODUCT LEVEL)	SEE PAGE
Y	*357-6586*	1	ENGINE AR-CORE	15
	231-0307	1	ELECTRONICS GP-ENGINE RATINGS	

Y-SEPARATE ILLUSTRATION

ENGINE ARRANGEMENT

226-9770 ENGINE AR-COMPLETE

S/N: RSX1037-UP

PART OF 349-2555 COMMON AR

SMCS-1000 **i04022114**

NOTE	PART NUMBER	QTY	PART NAME 1 2 3 4 5 6 (PRODUCT LEVEL)	SEE PAGE
Y	*247-9665*	1	BASE GP-OIL FILTER	92
Y	*267-0007*	1	BREATHER GP	93
Y	*241-7601*	1	CONNECTION GP-ELECTRICAL	210
Y	*233-6191*	1	CONTROL & MTG GP-ENGINE ELEK	211
Y	*231-0152*	1	COOLER GP-ENGINE OIL	105
Y	*240-5403*	1	COOLER GP-TRANSMISSION OIL	422
Y	*136-4307*	1	COVER GP-FRONT HOUSING (HYDRAULIC PUMP DRIVE)	30
			S/N: RSX1037-7537	
Y	*113-8987*	1	COVER GP-FRONT HOUSING (HYDRAULIC PUMP DRIVE)	29
			S/N: RSX7538-UP	
Y	*220-6390*	1	COVER GP-FLYWHEEL HOUSING	27
			S/N: RSX3630-11084	
Y	*323-1682*	1	COVER GP-FLYWHEEL HOUSING	28
			S/N: RSX11085-UP	
Y	*227-2574*	1	COVER GP-FRONT HOUSING (AIR COMPRESSOR)	31
Y	*117-2786*	1	COVER GP-OIL FILTER BASE	94
Y	*229-2615*	1	COVER GP-VALVE MECHANISM	32
Y	*117-2766*	1	DAMPER GP	49
Y	*260-1406*	1	DRIVE GP-ACCESSORY	50
Y	*263-6681*	1	ENGINE AR-CORE	14
			S/N: RSX1037-16719	
Y	*357-6587*	1	ENGINE AR	11
			S/N: RSX16720-UP	
Y	*117-2771*	1	FASTENER GP-DAMPER & PULLEY	52
Y	*219-7440*	1	MOUNTING GP-FAN DRIVE	65
Y	*237-6445*	1	FILLER GP-ENGINE OIL	95
Y	*231-3492*	1	FILTER GP-ENGINE OIL	96
Y	*254-4998*	1	FILTER GP-FUEL	144
			S/N: RSX1037-16669	
Y	*356-8382*	1	FILTER GP-FUEL	152
			S/N: RSX16670-UP	
Y	*252-6185*	1	FLYWHEEL GP	53
Y	*258-4484*	1	FUMES DISPOSAL GP	97
Y	*262-0596*	1	GAUGE GP-OIL LEVEL (DIPSTICK) (ENGINE)	98
Y	*277-5425*	1	GEAR GP-REAR	55
Y	*277-4435*	1	HOUSING GP-FLYWHEEL	57
Y	*218-7272*	1	HOUSING GP-FRONT	59
			S/N: RSX16720-UP	
Y	*224-0880*	1	LIFTING GP-ENGINE	62
Y	*268-6686*	1	LINES GP-AIR	135
Y	*278-0018*	1	LINES GP-FUEL	156
Y	*224-8170*	1	LINES GP-TURBOCHARGER OIL	101
Y	*243-1667*	1	LINES GP-WATER (SINGLE WATER REGULATOR)	115
Y	*255-2396*	1	LINES GP-WATER (PUMP HOUSING)	117
Y	*247-2833*	1	MANIFOLD GP-EXHAUST	136
Y	*222-3092*	1	MANIFOLD GP-INLET (MID)	137
Y	*229-8084*	1	MOUNTING GP-VALVE MECHANISM	66
			S/N: RSX16720-UP	
Y	*240-3279*	1	PAN GP-OIL	67
Y	*117-0165*	1	PLUG GP-CYLINDER BLOCK (OIL GALLERY, END)	70
Y	*227-9545*	1	PLUG GP-CYLINDER BLOCK (OIL GALLERY, RH)	72
Y	*223-3875*	1	PLUG GP-CYLINDER BLOCK	71
			S/N: RSX16720-UP	
Y	*238-8962*	1	PLUG GP-ENGINE	73
Y	*207-8103*	1	PULLEY GP-CRANKSHAFT	74

226-9770 ENGINE AR-COMPLETE *(contd.)* i04022114

NOTE	PART NUMBER	QTY	PART NAME 1 2 3 4 5 6 (PRODUCT LEVEL)	SEE PAGE
Y	*227-5723*	1	PUMP GP-FUEL TRANSFER	167
			S/N: RSX16720-UP	
Y	*231-1975*	1	SENSOR GP-ENGINE	272
			S/N: RSX1037-16669	
Y	*357-0523*	1	SENSOR GP-ENGINE	274
			S/N: RSX16670-16719	
Y	*248-0716*	1	STARTING MOTOR GP-ELECTRIC (24-VOLT)	307
			S/N: RSX1037-3629	
Y	*250-7017*	1	SUPPORT GP-ENGINE	84
Y	*275-1286*	1	TURBOCHARGER GP	140
Y	*219-7462*	1	WIRING GP-ELECTRONIC CONTROL	339
			S/N: RSX1037-16669	
Y	*354-0045*	1	WIRING GP-ELECTRONIC CONTROL	343
			S/N: RSX16670-UP	
			PLEASE USE THE GASKET KIT LINK IN SIS OR CONTACT YOUR LOCAL DEALER FOR THE LATEST GASKET KIT INFORMATION	

Y-SEPARATE ILLUSTRATION

ENGINE ARRANGEMENT

263-6681 ENGINE AR-CORE

S/N: RSX1037-16719

PART OF 226-9770 ENGINE AR-COMPLETE

SMCS-1000 **i04039997**

NOTE	PART NUMBER	QTY	PART NAME 1 2 3 4 5 6 (PRODUCT LEVEL)	SEE PAGE
Y	*267-0010*	1	BASE GP-VALVE COVER	22
Y	*223-7463*	1	CAMSHAFT GP	25
Y	*224-3882*	1	CRANKSHAFT GP	33
YR	*240-7271*	1	CYLINDER BLOCK GP	38
Y	*240-7679*	1	CYLINDER HEAD GP	44
			S/N: RSX1037-10390	
Y	*305-0618*	1	CYLINDER HEAD GP	48
			S/N: RSX10391-16719	
Y	*222-3088*	1	GEAR GP-FRONT	54
Y	*218-7272*	1	HOUSING GP-FRONT	59
Y	*229-8084*	1	MOUNTING GP-VALVE MECHANISM	66
Y	*238-2721*	6	PISTON & ROD GP	68
Y	*223-3875*	1	PLUG GP-CYLINDER BLOCK	71
Y	*233-5221*	1	PUMP GP-ENGINE OIL	103
Y	*253-1459*	6	PUMP GP-FUEL INJECTION	162
Y	*227-5723*	1	PUMP GP-FUEL TRANSFER	167
Y	*228-5812*	1	PUMP GP-WATER	120
Y	*240-7272*	1	VALVE MECHANISM GP	85
Y	*230-0961*	1	WIRING GP-UNIT INJECTOR	389

R-REMFG PART MAY BE AVAILABLE
Y-SEPARATE ILLUSTRATION

ENGINE ARRANGEMENT

357-6586 ENGINE AR-CORE

S/N: RSX16720-UP

PART OF 357-6587 ENGINE AR

SMCS-1000 **i04020864**

NOTE	PART NUMBER	QTY	PART NAME 1 2 3 4 5 6 (PRODUCT LEVEL)	SEE PAGE
Y	*267-0010*	1	BASE GP-VALVE COVER	22
Y	*223-7463*	1	CAMSHAFT GP	25
Y	*224-3882*	1	CRANKSHAFT GP	33
YR	*240-7271*	1	CYLINDER BLOCK GP	38
Y	*305-0618*	1	CYLINDER HEAD GP	48
Y	*222-3088*	1	GEAR GP-FRONT	54
Y	*238-2721*	6	PISTON & ROD GP	68
Y	*233-5221*	1	PUMP GP-ENGINE OIL	103
Y	*253-1459*	6	PUMP GP-FUEL INJECTION	162
Y	*228-5812*	1	PUMP GP-WATER	120
Y	*357-0523*	1	SENSOR GP-ENGINE	274
Y	*240-7272*	1	VALVE MECHANISM GP	85
Y	*230-0961*	1	WIRING GP-UNIT INJECTOR	389

R-REMFG PART MAY BE AVAILABLE
Y-SEPARATE ILLUSTRATION

BASIC ENGINE

256-6983 AIR COMPRESSOR AR—SERVICE AIR

S/N: R9J1-UP

AN ATTACHMENT

SMCS-1803, 1804, 5502 **i02631006**

NOTE	PART NUMBER	QTY	PART NAME 1 2 3 4 5 6 (PRODUCT LEVEL)	SEE PAGE
Y	*250-0778*	1	AIR COMPRESSOR GP	17
Y	*250-0359*	1	LINES GP-AIR (AIR CLEANER)	134
Y	*248-5071*	1	LINES GP-AIR TANK	550
Y	*246-6129*	1	TANK GP-AIR	930

Y-SEPARATE ILLUSTRATION

<END>

250-0778 AIR COMPRESSOR GP

S/N: R9J1-UP
PART OF 256-6983 AIR COMPRESSOR AR
AN ATTACHMENT

SMCS-1803 **i04033077**

NOTE	REF NO	GRAPHIC REF	PART NUMBER	QTY	PART NAME 1 2 3 4 5 6 (PRODUCT LEVEL)	SEE PAGE
C	1	1	**7W-9094**	1	SPACER (10.5X20X9-MM THK)	
C	2	1	**032-8487**	1	ELBOW	
C	3	1	**033-6783**	1	FITTING	
	4	1	**160-6506**	1	SPACER (12.52X17.14X17.5-MM THK)	
	5	1	**199-9923**	3	BOLT (M12X1.75X40-MM)	
	6	1	**222-2889**	1	BRACKET	
	7	1	**223-3505**	1	SEAL (AIR COMPRESSOR)	
C	8	1	**240-5881**	1	VALVE AS (INLET, AIR COMPRESSOR)	
C	9	1	**241-4330**	1	TUBE AS	
C	10	1	**241-6388**	1	HOSE	
C	11	1	**250-6591**	1	GASKET	
C	12	1	**252-8402**	1	CHAMBER AS	
I	13	1	**253-7135**	1	HOSE AS	
I	14	1	**253-7136**	1	HOSE AS	
YR	15	1	**255-4160**	1	AIR COMPRESSOR GP	20
I	16	1	**257-9950**	1	HOSE AS	
C	17	1	**269-4759**	1	TUBE AS	
	18	1	**8Y-1816**	2	SPACER (12.5X25X25-MM THK)	
	19	1	**030-7946**	1	ELBOW	
C	20	1	**030-7950**	1	ELBOW	
	21	1	*148-8340*	1	CONNECTOR AS	
		1	**3K-0360**	1	SEAL-O-RING	
		1	**6V-8398**	1	SEAL-O-RING	
		1	**6V-8639**	1	CONNECTOR	
	22	1	*148-8345*	1	CONNECTOR AS	
		1	**2M-9780**	1	SEAL-O-RING	
		1	**6V-8398**	1	SEAL-O-RING	
		1	**6V-8638**	1	CONNECTOR	
	23	1	*148-8364*	2	ELBOW AS	
					(EACH INCLUDES)	
		1	**3K-0360**	1	SEAL-O-RING	
		1	**6V-8398**	1	SEAL-O-RING	
		1	**6V-8625**	1	ELBOW	
	24	1	**164-4227**	1	CLIP	
	25	1	**3J-7354**	1	SEAL-O-RING	
	26	1	**4K-8864**	1	CLIP	
	27	1	**6D-4636**	3	CLIP	
C	28	1	**6V-1903**	1	SEAL-O-RING	
C	29	1	**6V-5050**	3	SEAL-O-RING	
CM	30	1	**8C-8451**	4	BOLT (M6X1X40-MM)	
C	31	1	**8T-0154**	4	CLAMP-HOSE	
C	32	1	**8T-4121**	5	WASHER-HARD (11X21X2.5-MM THK)	
M	33	1	**8T-4136**	4	BOLT (M10X1.5X25-MM)	
CM	34	1	**8T-4178**	1	BOLT (M10X1.5X90-MM)	
M	35	1	**8T-4185**	1	BOLT (M10X1.5X50-MM)	
M	36	1	**8T-4194**	2	BOLT (M12X1.75X50-MM)	
	37	1	**8T-4223**	6	WASHER-HARD (13.5X25.5X3-MM THK)	
M	38	1	**8T-6868**	1	BOLT (M12X1.75X80-MM)	
C	39	1	**9K-1242**	1	CONNECTOR	
C	40	1	**9X-8256**	4	WASHER (6.6X12X2-MM THK)	
CE	41	1	**136-1955**		HOSE (8-CM)	

C-CHANGE FROM PREVIOUS TYPE
E-ORDER BY THE CENTIMETER
I-REFER TO HYDRAULIC INFORMATION SYSTEM
M-METRIC PART
R-REMFG PART MAY BE AVAILABLE
Y-SEPARATE ILLUSTRATION

250-0778 **AIR COMPRESSOR GP** *(contd.)* **i04033077**

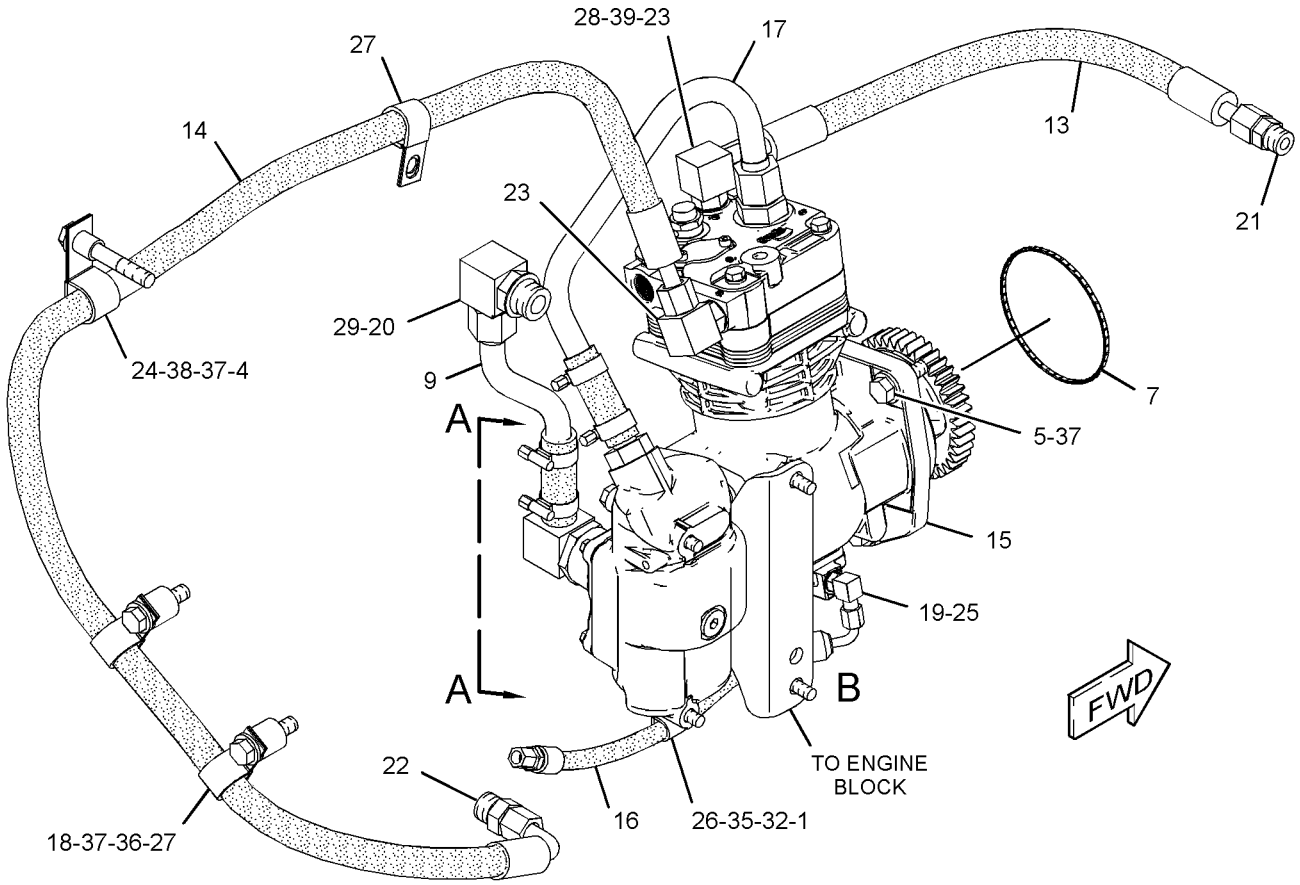

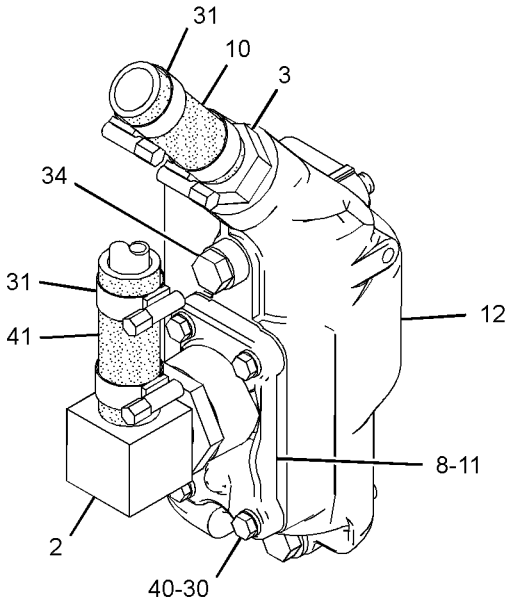

VIEW A-A

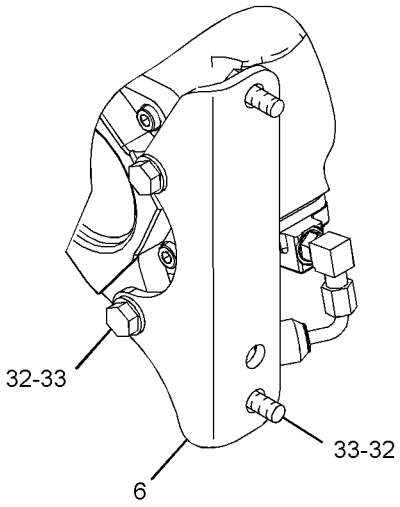

VIEW OF AREA B

GRAPHIC #1 **<END>** g01409046

255-4160 AIR COMPRESSOR GP*R

S/N: R9J1-UP

PART OF 250-0778 AIR COMPRESSOR GP

AN ATTACHMENT

SMCS-1803 **i03612196**

NOTE	REF NO	GRAPHIC REF	PART NUMBER	QTY	PART NAME 1 2 3 4 5 6 (PRODUCT LEVEL)	SEE PAGE
M	1	1	**099-2374**	2	BOLT-SOCKET HEAD (M5X0.8X12-MM)	
	2	1	**225-5222**	1	VALVE AS-PRESSURE RELIEF (AIR COMPRESSOR)	
		1	**2M-9780**	1	SEAL-O-RING	
M	4	1	**6V-5221**	4	BOLT (M8X1.25X80-MM)	
	5	1	**255-0696**	4	BOLT-SOCKET HEAD (M6X1X14-MM)	
	6	1	**9M-1974**	4	WASHER-HARD (8.8X16X2-MM THK)	
	8	1	**3J-7354**	2	SEAL-O-RING	
	9	1	**030-7946**	2	ELBOW	
	11	1	**255-4161**	1	COVER AS	
	12	1	**254-3364**	1	TUBE AS	
					AVAILABLE REPAIR KIT(S):	
			217-5232	1	KIT-GASKET (AIR COMPRESSOR)	
					(INCLUDES INLET REED VALVE/GASKET & CYLINDER HEAD GASKET)	
			335-6328	1	KIT-UNLOADER (AIR COMPRESSOR)	
					(INCLUDES RETURN SPRING, GASKET, BALANCE PISTON, O-RING, ESS PISTON AS, & LUBRICANT)	
			260-6821	1	KIT-SEAL	
					(INCLUDES O-RING-END COVER, CRANKCASE COVER GASKETS, REAR COVER GASKET, & INSTRUCTION SHEET)	
			329-0223	1	KIT-HEAD (AIR COMPRESSOR)	
					(INCLUDES CYLINDER HEAD ASSEMBLY, INLET REED/GASKET, CYLINDER HEAD BOLTS & INSTRUCTION SHEET)	

M-METRIC PART

255-4160 AIR COMPRESSOR GP *(contd.)* **i03612196**

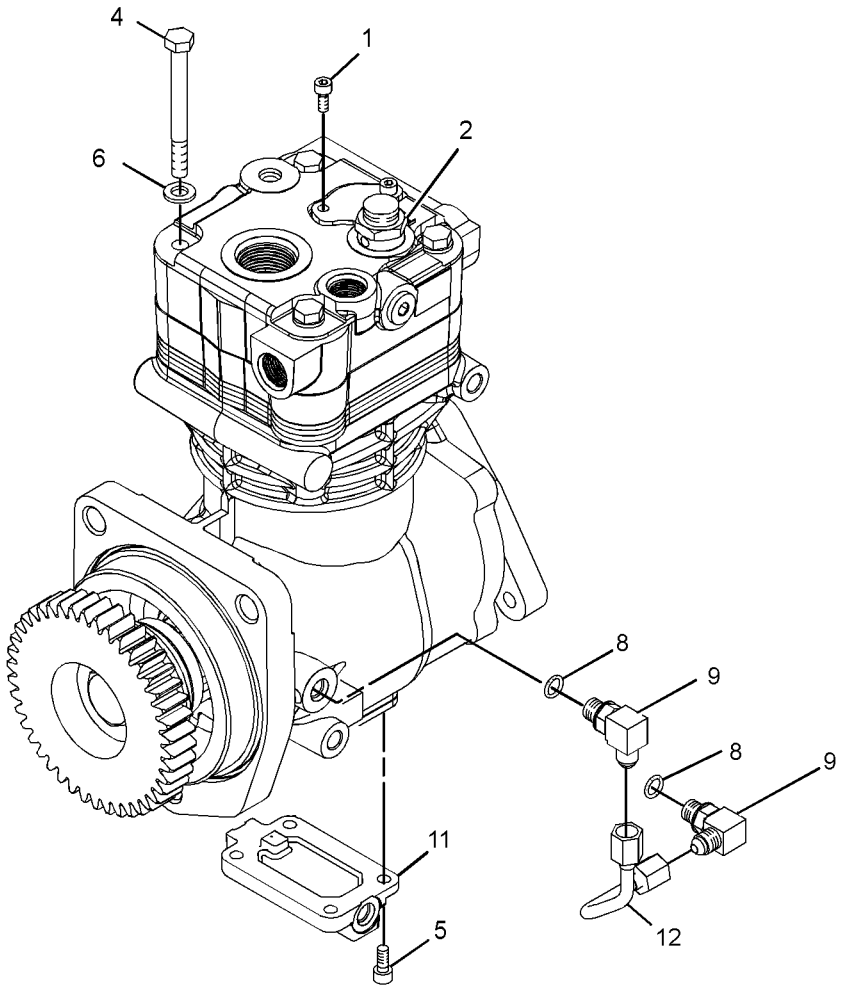

GRAPHIC #1 **<END>** g01383458

BASIC ENGINE

267-0010 BASE GP-VALVE COVER—ENGINE

S/N: RSX1037-1279

PART OF 263-6681 ENGINE AR-CORE

SMCS-1120 **i02289413**

NOTE	REF NO	GRAPHIC REF	PART NUMBER	QTY	PART NAME 1 2 3 4 5 6 (PRODUCT LEVEL)	SEE PAGE
	1	1	**180-1538**	2	DOWEL	
	2	1	**248-6661**	1	BASE	
	3	1	**132-5789**	1	CLIP	
M	4	1	**6V-3918**	13	BOLT (M8X1.25X50-MM)	
	5	1	**9M-1974**	13	WASHER-HARD (8.8X16X2-MM THK)	
D	6	1	**5P-5678**		SEAL (3-M)	

D-ORDER BY THE METER
M-METRIC PART

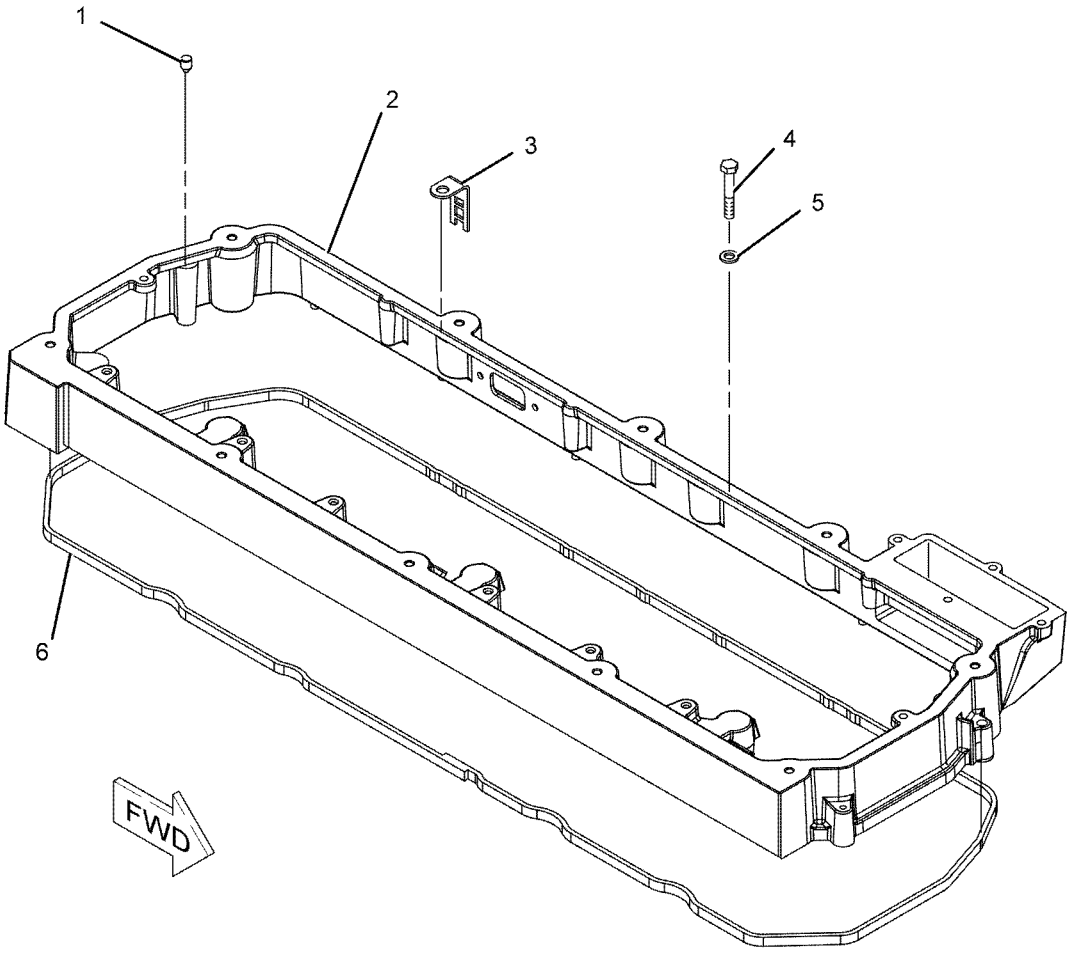

GRAPHIC #1 **<END>** g01143753

BASIC ENGINE

267-0010 BASE GP-VALVE COVER—ENGINE

S/N: RSX1280-UP

PART OF 263-6681, 357-6586 ENGINE AR-CORE

SMCS-1120 **i03546103**

NOTE	REF NO	GRAPHIC REF	PART NUMBER	QTY	PART NAME 1 2 3 4 5 6 (PRODUCT LEVEL)	SEE PAGE
CY	1	1	**325-4505**	1	BASE GP-VALVE COVER	24
M	2	1	**6V-5221**	6	BOLT (M8X1.25X80-MM)	
	3	1	**132-5789**	1	CLIP	
M	4	1	**6V-3918**	7	BOLT (M8X1.25X50-MM)	
	5	1	**9M-1974**	13	WASHER-HARD (8.8X16X2-MM THK)	
C	6	1	**272-0389**	1	SEAL	

C-CHANGE FROM PREVIOUS TYPE
M-METRIC PART
Y-SEPARATE ILLUSTRATION

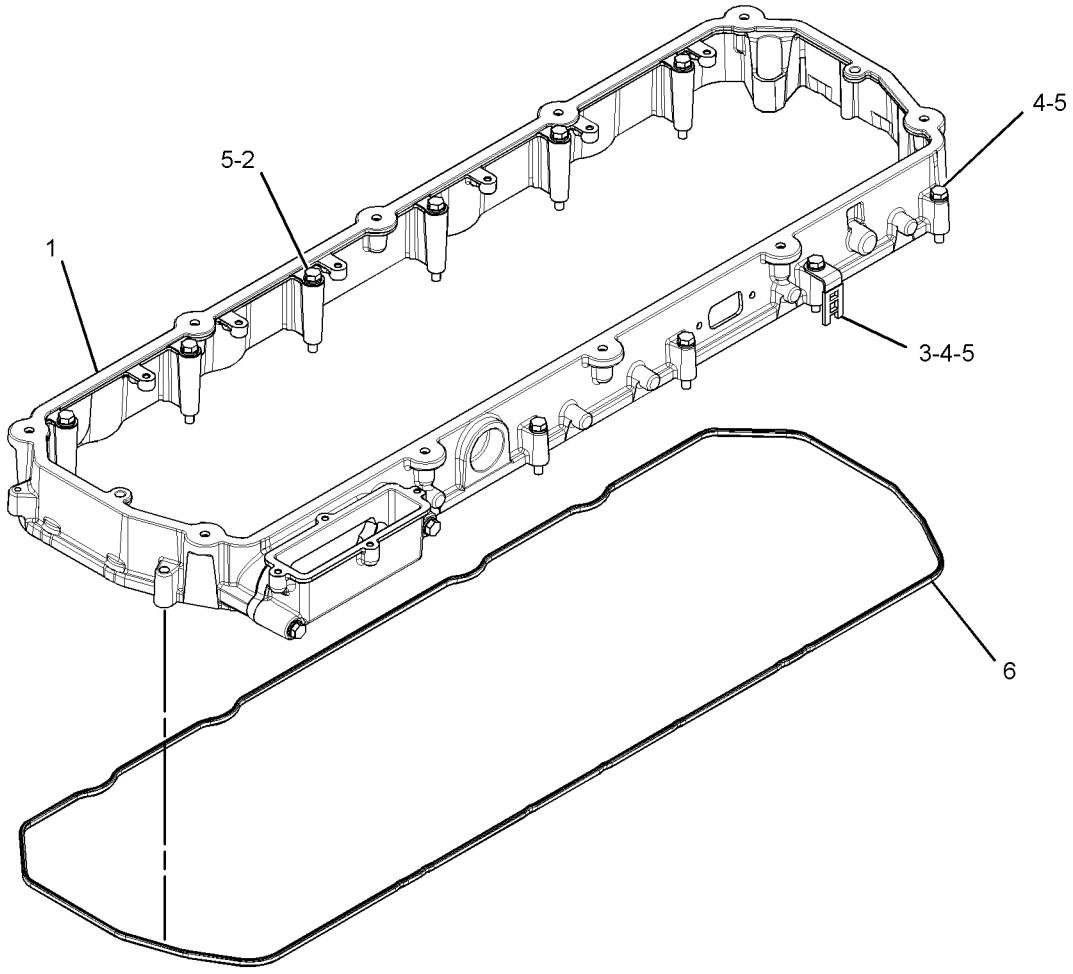

GRAPHIC #1 **<END>** g01881166

BASIC ENGINE

325-4505 BASE GP-VALVE COVER

S/N: RSX1280-UP

PART OF 267-0010 BASE GP-VALVE COVER

SMCS-1120 **i03460120**

NOTE	REF NO	GRAPHIC REF	PART NUMBER	QTY	PART NAME 1 2 3 4 5 6 (PRODUCT LEVEL)	SEE PAGE
	1	1	**321-5639**	1	SEAL	
	2	1	**332-3707**	1	ADAPTER	
M	3	1	**5P-8347**	2	BOLT (M8X1.25X70-MM)	
	4	1	**9M-1974**	2	WASHER-HARD (8.8X16X2-MM THK)	

M-METRIC PART

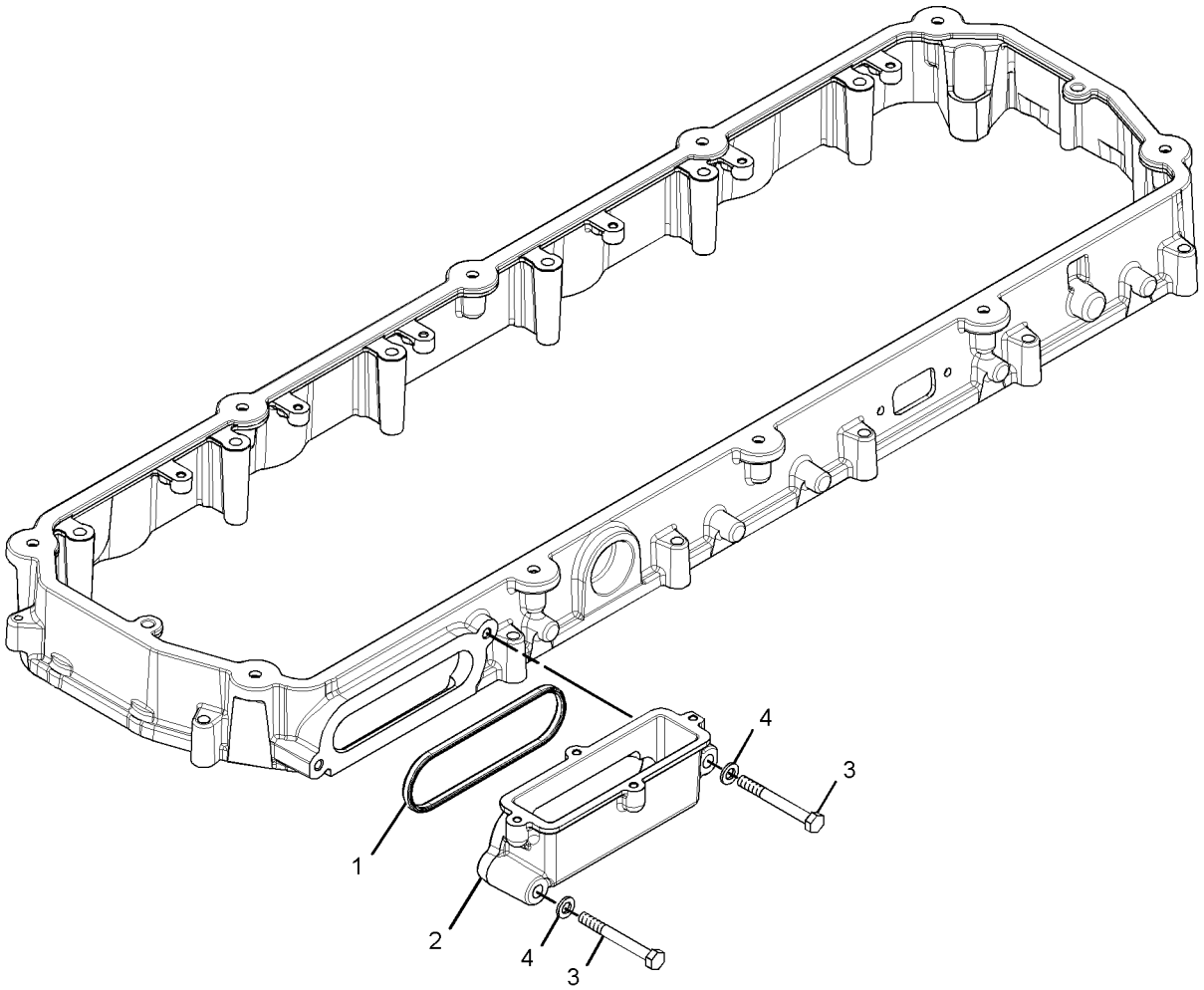

GRAPHIC #1 **<END>** g01880575

223-7463 CAMSHAFT GP

S/N: RSX1037-UP

PART OF 263-6681, 357-6586 ENGINE AR-CORE

SMCS-1210 **i01966584**

NOTE	REF NO	GRAPHIC REF	PART NUMBER	QTY	PART NAME 1 2 3 4 5 6 (PRODUCT LEVEL)	SEE PAGE
R	1	1	**223-7468**	1	CAMSHAFT AS	
	1A	1	**1B-8705**	1	KEY-WOODRUFF	
	1B	1	**222-3907**	1	GEAR (96-TEETH)	
	1C	1	**223-7471**	1	PLATE-THRUST	
	2	1	**229-5684**	1	COVER	
	3	1	**131-3718**	1	SEAL-O-RING	
M	4	1	**6V-5217**	4	BOLT (M8X1.25X20-MM)	
	5	1	**9M-1974**	4	WASHER-HARD (8.8X16X2-MM THK)	
M	6	1	**8T-0338**	4	BOLT-SOCKET HEAD (M8X1.25X45-MM)	

M-METRIC PART
R-REMFG PART MAY BE AVAILABLE

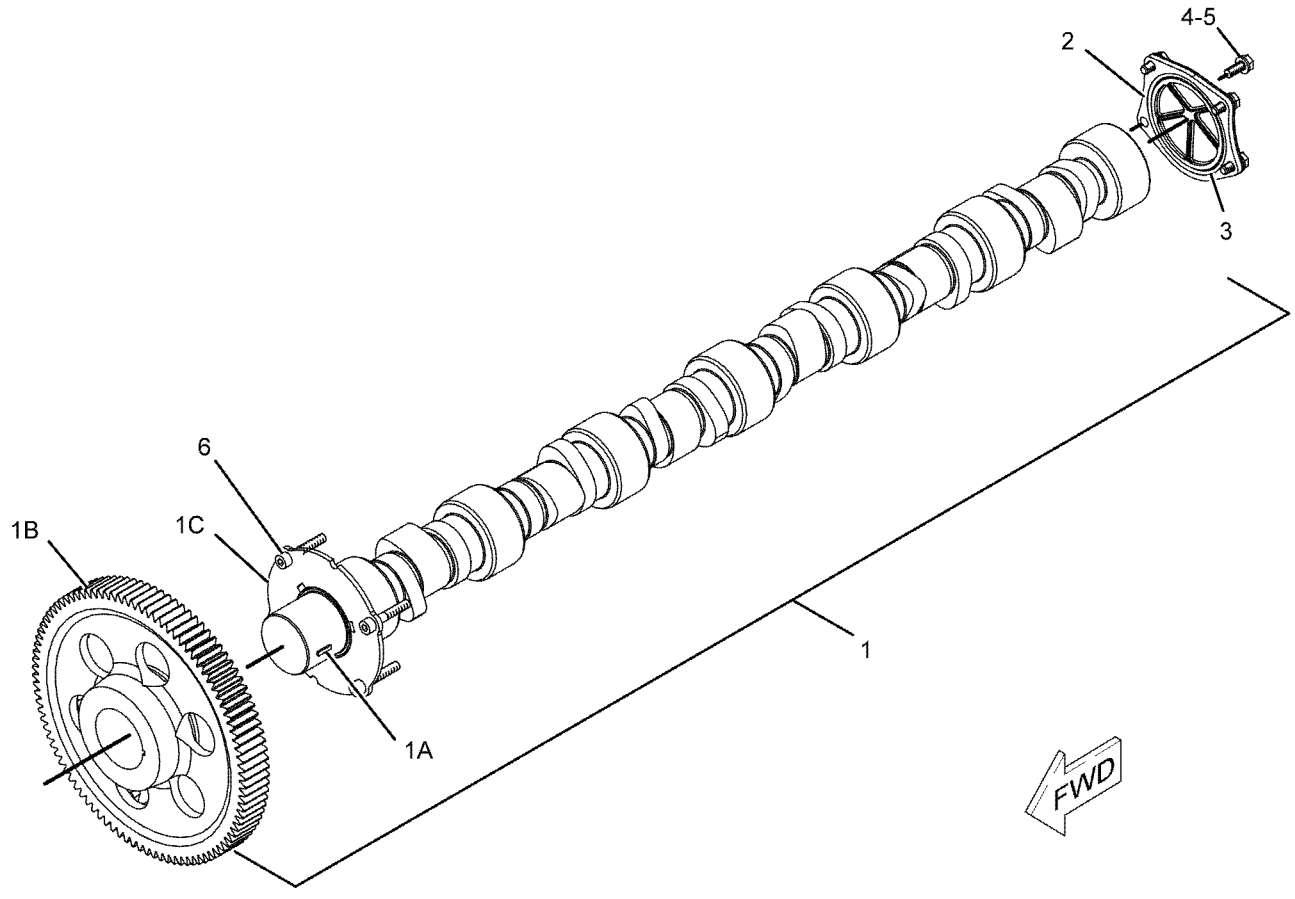

GRAPHIC #1 **<END>** g01043782

216-5540 COVER GP-FLYWHEEL HOUSING—BOTTOM

S/N: RSX1037-UP

PART OF 277-4435 HOUSING GP-FLYWHEEL

SMCS-1157 **i01963594**

NOTE	REF NO	GRAPHIC REF	PART NUMBER	QTY	PART NAME 1 2 3 4 5 6 (PRODUCT LEVEL)	SEE PAGE
	1	1	**217-5900**	1	COVER	
	2	1	**4M-6480**	1	GASKET	
M	3	1	**6V-4248**	2	BOLT (M10X1.5X25-MM)	
	4	1	**6V-5839**	2	WASHER (11X21X2.5-MM THK)	

M-METRIC PART

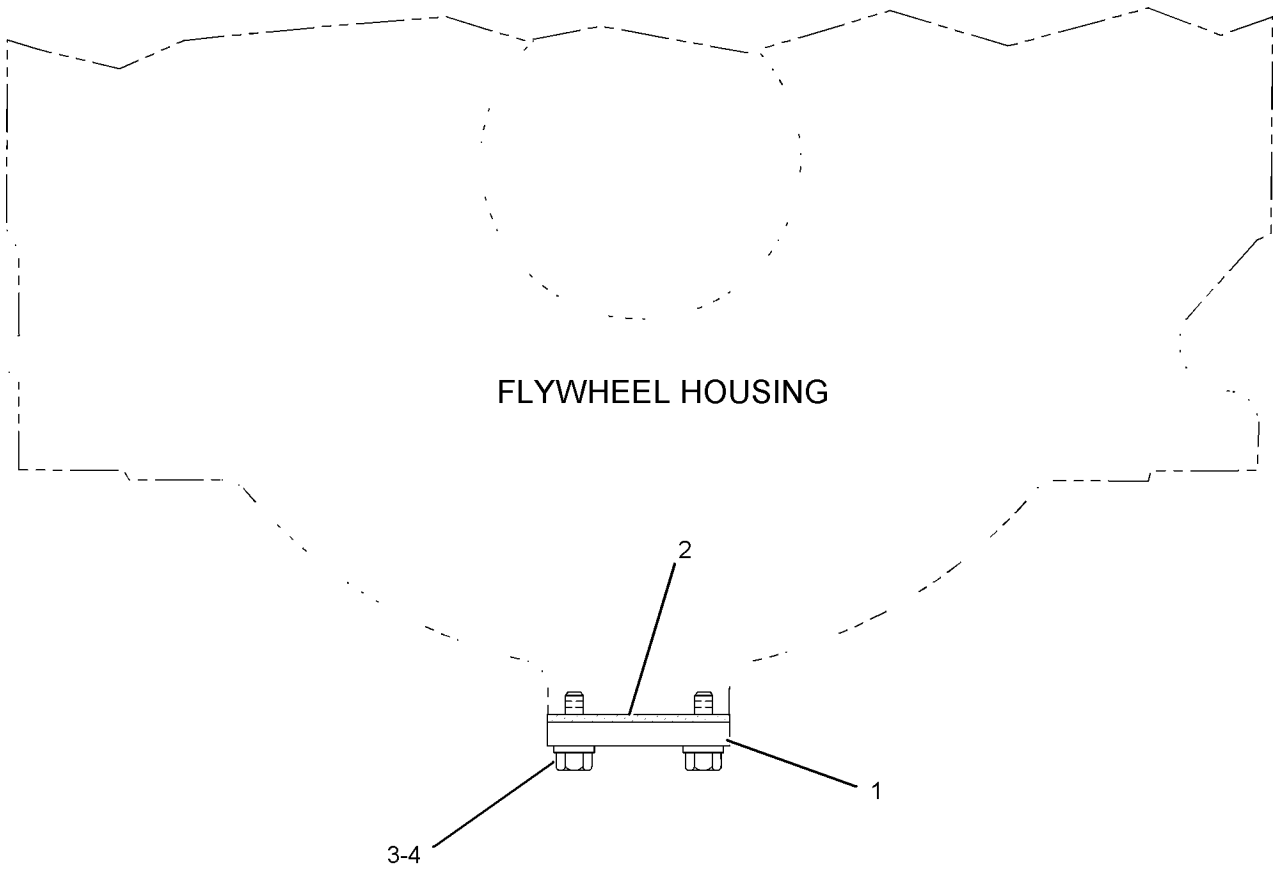

GRAPHIC #1 **<END>** g01020213

220-6390 COVER GP-FLYWHEEL HOUSING

S/N: RSX3630-11084

PART OF 226-9770 ENGINE AR-COMPLETE

SMCS-1157 **i01964481**

NOTE	REF NO	GRAPHIC REF	PART NUMBER	QTY	PART NAME 1 2 3 4 5 6 (PRODUCT LEVEL)	SEE PAGE
	1	1	**9Y-6089**	1	GASKET	
M	2	1	**6V-4429**	3	BOLT (M16X2X40-MM)	
	3	1	**9X-8268**	3	WASHER (17.5X30X3.5-MM THK)	
	4	1	**4N-1114**	1	COVER	

M-METRIC PART

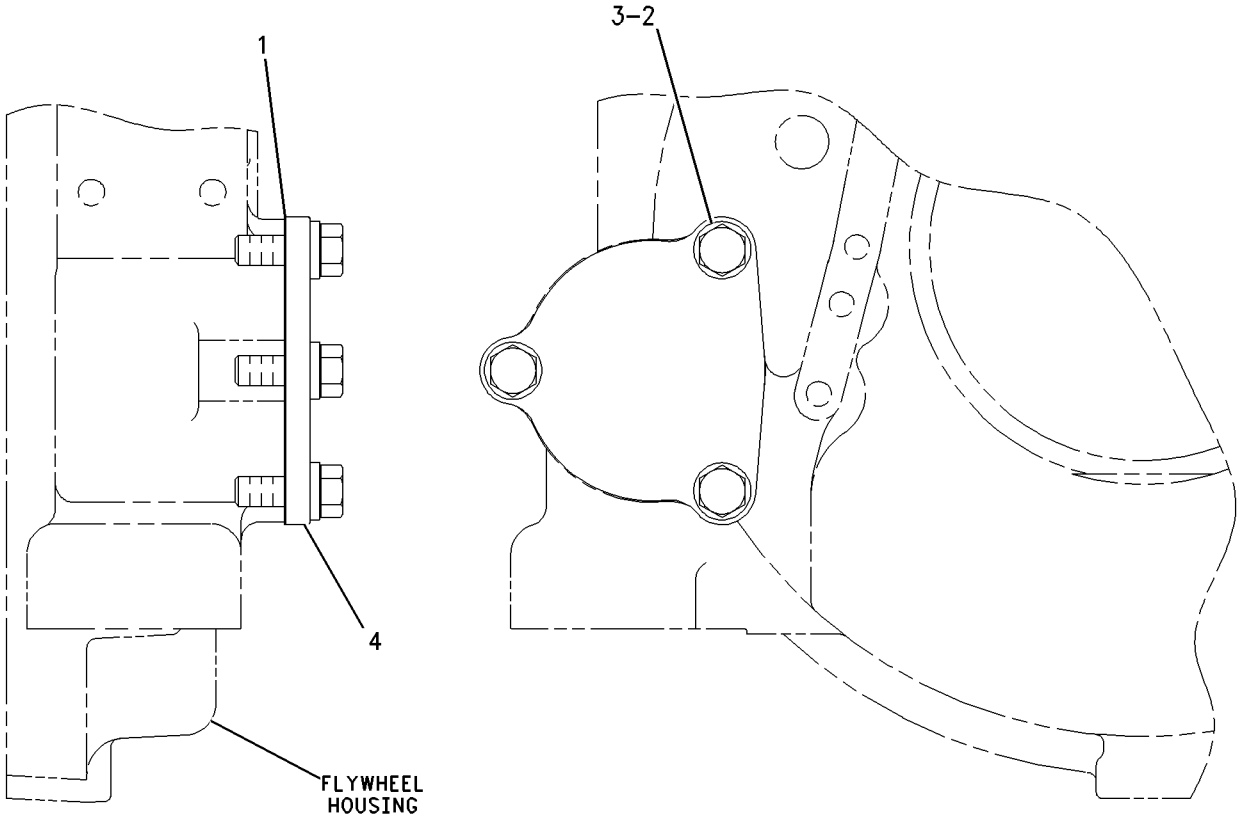

RIGHT SIDE VIEW FRONT VIEW

GRAPHIC #1 **<END>** g00783561

BASIC ENGINE

323-1682 COVER GP-FLYWHEEL HOUSING

S/N: RSX11085-UP

PART OF 226-9770 ENGINE AR-COMPLETE

SMCS-1157 **i02987004**

NOTE	REF NO	GRAPHIC REF	PART NUMBER	QTY	PART NAME 1 2 3 4 5 6 (PRODUCT LEVEL)	SEE PAGE
	1	1	**4N-1114**	1	COVER	
	2	1	**9Y-6089**	1	GASKET	
M	3	1	**6V-4429**	3	BOLT (M16X2X40-MM)	
	4	1	**9X-8268**	3	WASHER (17.5X30X3.5-MM THK)	

M-METRIC PART

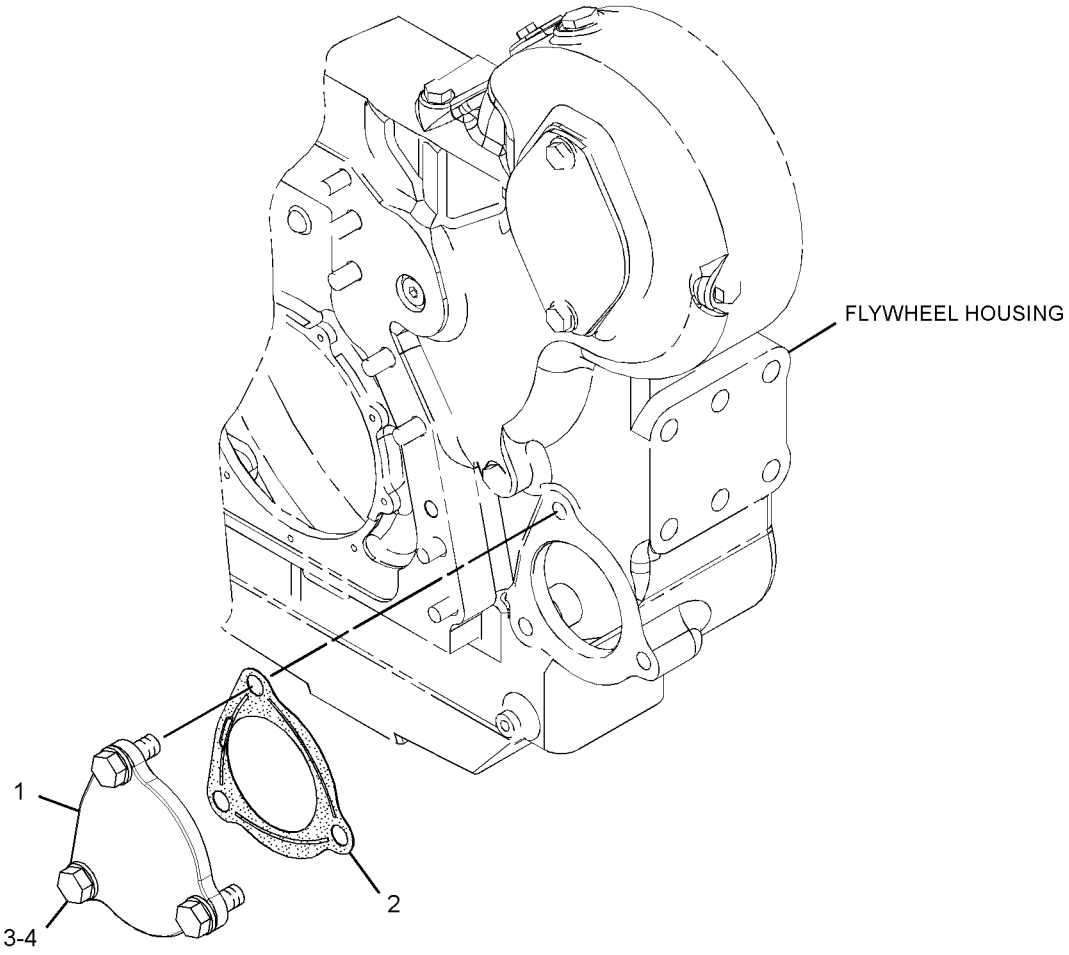

GRAPHIC #1 **<END>** g01519751

113-8987 COVER GP-FRONT HOUSING

S/N: RSX7538-UP
POWER TAKE-OFF
PART OF 226-9770 ENGINE AR-COMPLETE

SMCS-1151, 1166 **i01659298**

NOTE	REF NO	GRAPHIC REF	PART NUMBER	QTY	PART NAME 1 2 3 4 5 6 (PRODUCT LEVEL)	SEE PAGE
M	1	1	**6V-5842**	2	BOLT (M10X1.5X40-MM)	
	2	1	**6V-5839**	2	WASHER (11X21X2.5-MM THK)	
	3	1	**129-2905**	1	COVER	
	4	1	**107-5769**	1	SEAL-O-RING	

M-METRIC PART

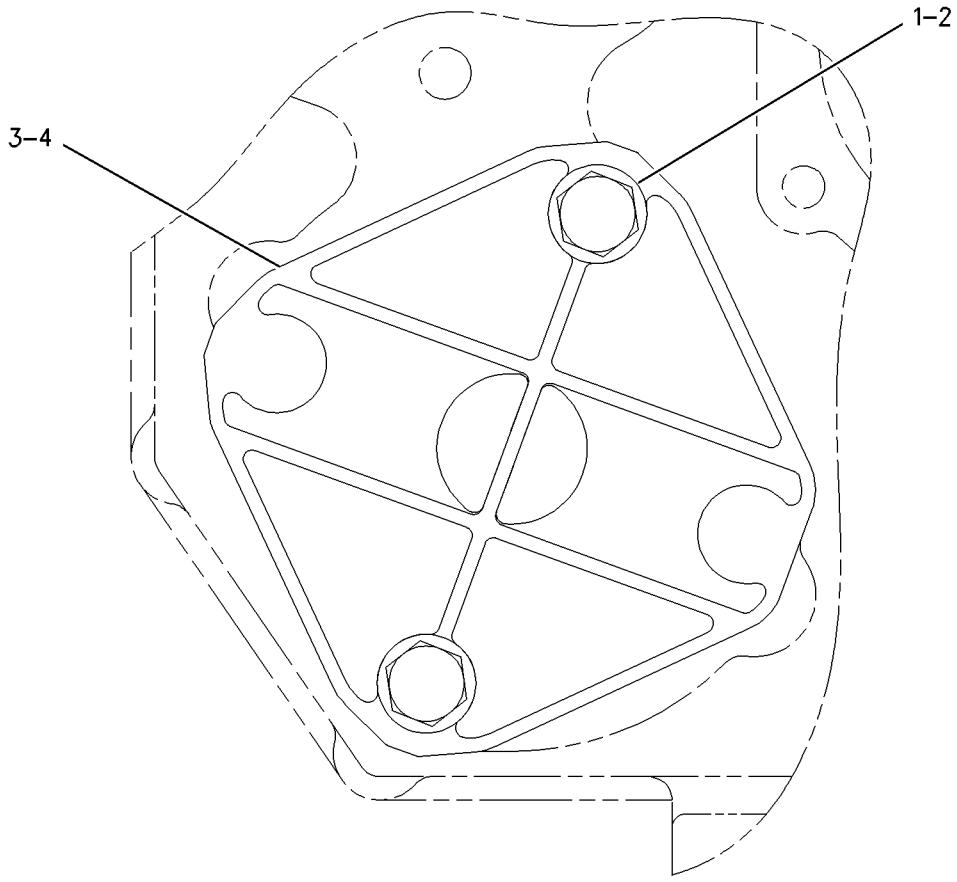

GRAPHIC #1 **<END>** g00856137

136-4307 COVER GP-FRONT HOUSING—HYDRAULIC PUMP DRIVE

S/N: RSX1037-7537

PART OF 226-9770 ENGINE AR-COMPLETE

SMCS-1151, 1166 **i01509352**

NOTE	REF NO	GRAPHIC REF	PART NUMBER	QTY	PART NAME 1 2 3 4 5 6 (PRODUCT LEVEL)	SEE PAGE
	1	1	**4P-1650**	1	COVER	
	2	1	**1H-7339**	1	SEAL-O-RING	
M	3	1	**6V-1820**	2	BOLT (M10X1.50X30MM)	
	4	1	**6V-5839**	2	WASHER (11X21X2.5MM THK)	

M-METRIC PART

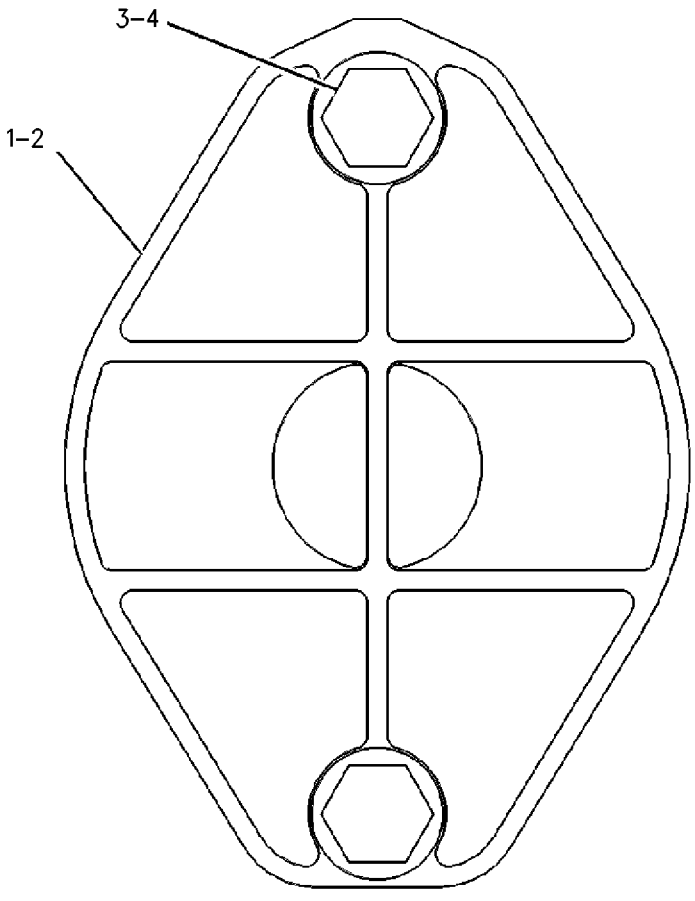

REAR VIEW

GRAPHIC #1 **<END>** g00783785

227-2574 COVER GP-FRONT HOUSING—AIR COMPRESSOR

S/N: RSX1037-UP

PROVIDES COVER WHEN AIR COMPRESSOR IS NOT USED

PART OF 226-9770 ENGINE AR-COMPLETE

SMCS-1151, 1166 **i03833937**

NOTE	REF NO	GRAPHIC REF	PART NUMBER	QTY	PART NAME 1 2 3 4 5 6 (PRODUCT LEVEL)	SEE PAGE
	1	1	**285-0823**	1	COVER	
M	2	1	**6V-8197**	3	BOLT (M12X1.75X40-MM)	
	3	1	**117-8801**	1	SEAL-O-RING	
	4	1	**5P-8245**	3	WASHER-HARD (13.5X25.5X3-MM THK)	

M-METRIC PART

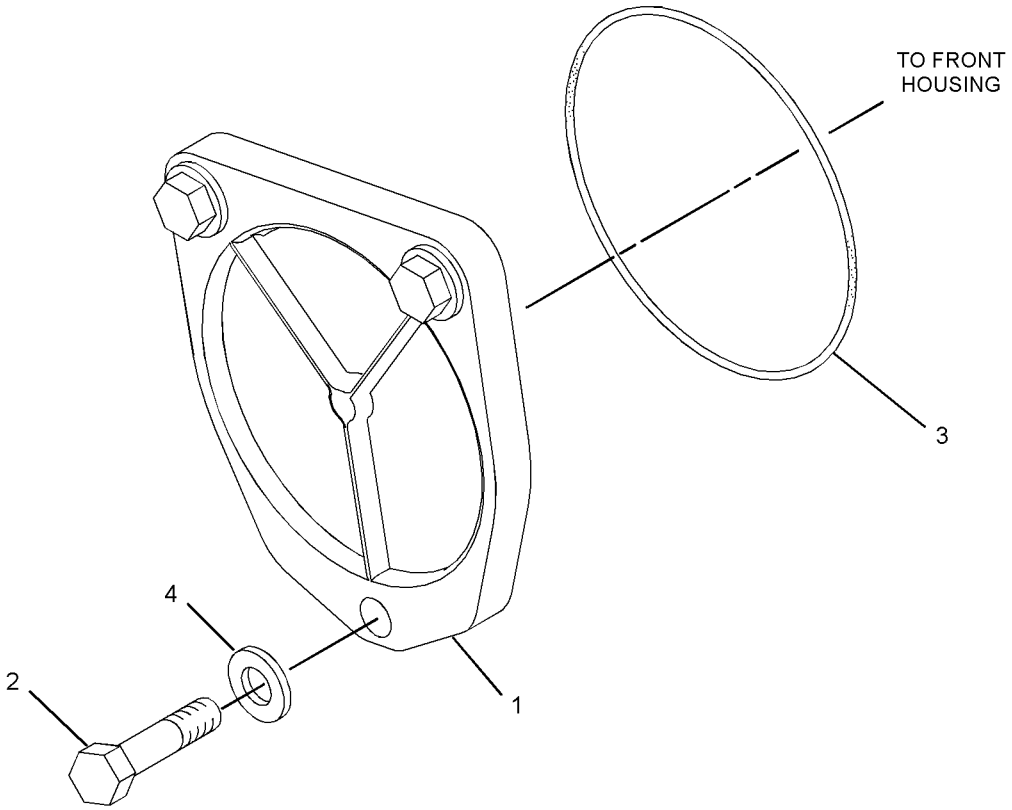

GRAPHIC #1 **<END>** g01345052

229-2615 COVER GP-VALVE MECHANISM

S/N: RSX1037-UP

PART OF 226-9770 ENGINE AR-COMPLETE

FOR USE WITH ENGINES THAT DO NOT REQUIRE A VARIABLE VALVE ACTUATOR

SMCS-1107, 1120 **i03668320**

NOTE	REF NO	GRAPHIC REF	PART NUMBER	QTY	PART NAME 1 2 3 4 5 6 (PRODUCT LEVEL)	SEE PAGE
	1	1	**212-7728**	10	WASHER-ISOLATOR	
	2	1	**342-7923**	1	COVER	
	3	1	**229-5711**	1	SEAL-VALVE COVER	
M	4	1	**8T-6912**	10	BOLT (M8X1.25X50-MM)	
	5	1	**8T-4224**	10	WASHER-HARD (8.8X16X2-MM THK)	

M-METRIC PART

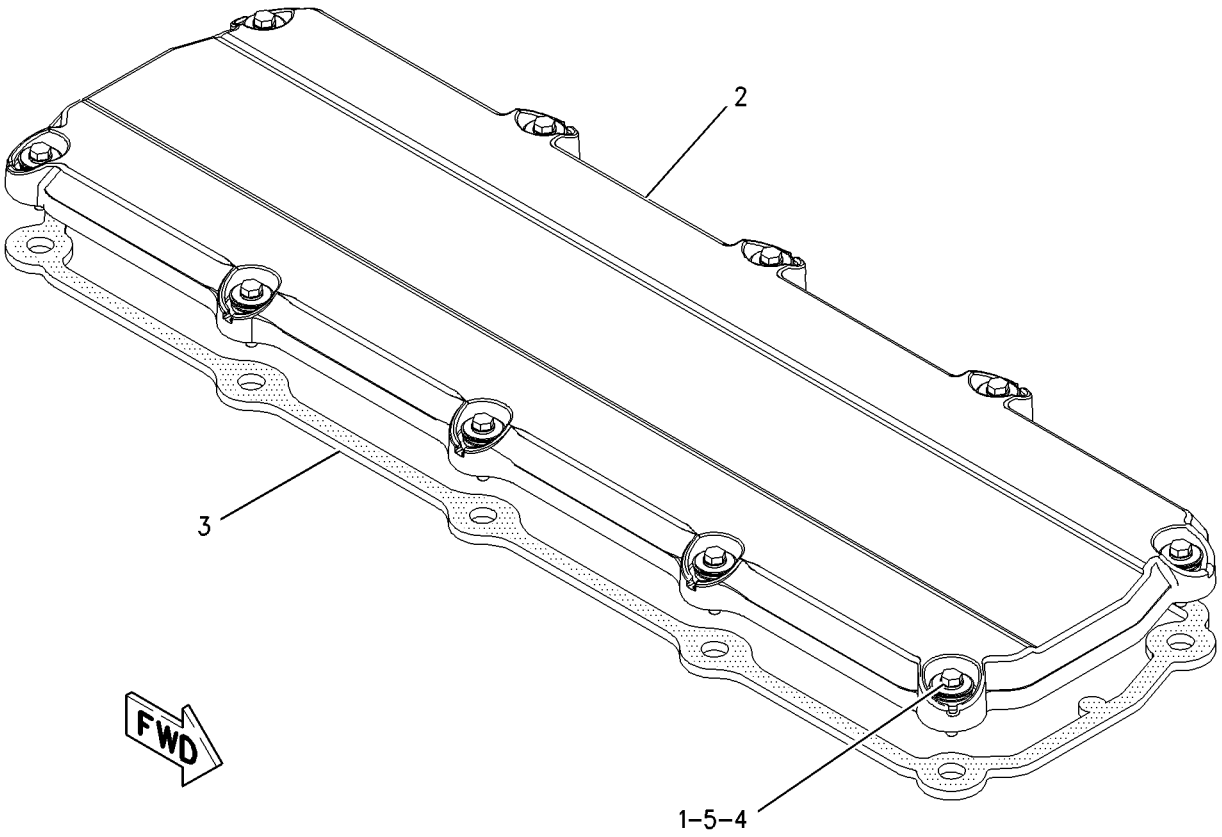

GRAPHIC #1 **<END>** g00951733

BASIC ENGINE

224-3882 CRANKSHAFT GP

S/N: RSX1037-UP

PART OF 263-6681, 357-6586 ENGINE AR-CORE

SMCS-1202, 1203, 1204, 1232 **i03111424**

NOTE	REF NO	GRAPHIC REF	PART NUMBER	QTY	PART NAME 1 2 3 4 5 6 (PRODUCT LEVEL)	SEE PAGE
J	1	1	**246-3144**	2	PLATE-THRUST	
J	2	1	**211-0587**	4	BEARING-MAIN (STANDARD)	
AB		1	**128-0400**		BEARING-MAIN (0.51-MM US)	
AB		1	**128-0401**		BEARING-MAIN (0.76-MM US)	
AB		1	**128-0402**		BEARING-MAIN (0.51-MM OS)	
AB		1	**128-0403**		BEARING-MAIN (0.51-MM OS, 0.51-MM US)	
J	3	1	**211-0588**	3	BEARING-MAIN (STANDARD)	
AB		1	**128-0382**		BEARING-MAIN (0.51-MM US)	
AB		1	**128-0383**		BEARING-MAIN (0.76-MM US)	
AB		1	**128-0384**		BEARING-MAIN (0.51-MM OS)	
AB		1	**128-0385**		BEARING-MAIN (0.51-MM OS, 0.51-MM US)	
R	4	1	**313-3996**	1	CRANKSHAFT AS	
		1	**6V-3536**	1	DOWEL	
		1	**9Y-0810**	1	SLEEVE-WEAR (REAR SEAL)	
		1	**9Y-0821**	1	SLEEVE (FRONT SEAL)	
		1	**187-8972**	1	GEAR-CRANKSHAFT (48-TEETH)	
					AVAILABLE REPAIR KIT(S):	
J			**243-6717**	1	KIT-CRANKSHAFT BEARING	
					(INCLUDES STANDARD BEARINGS & THRUST PLATES)	

A-NOT PART OF THIS GROUP
B-USE AS REQUIRED
J-KIT MARKED J INCLUDES PARTS MARKED J
R-REMFG PART MAY BE AVAILABLE

224-3882 **CRANKSHAFT GP** *(contd.)* **i03111424**

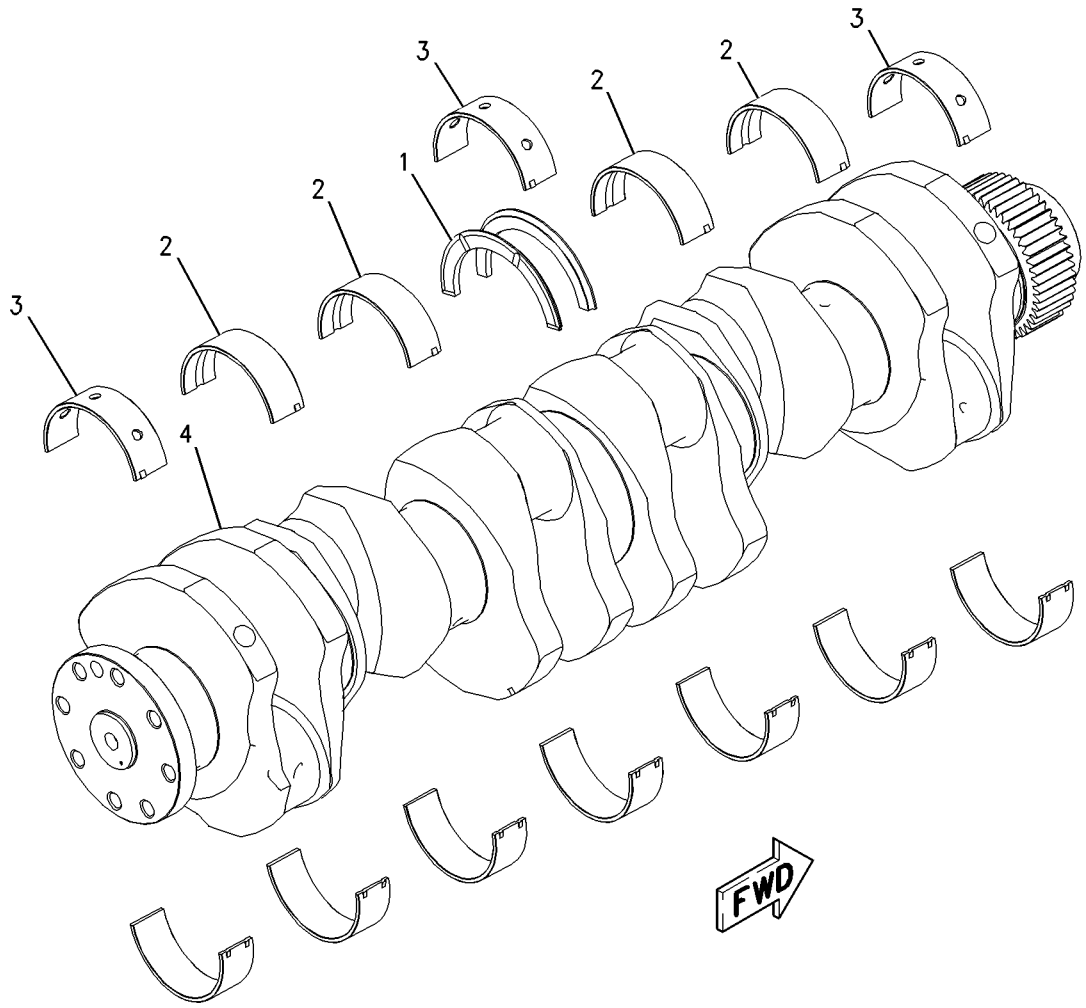

GRAPHIC #1 **<END>** g00939576

303-1382 CYLINDER BLOCK AS

S/N: RSX1037-UP

PART OF 303-1383 CYLINDER BLOCK AS

SMCS-1201 **i03562880**

NOTE	REF NO	GRAPHIC REF	PART NUMBER	QTY	PART NAME 1 2 3 4 5 6 (PRODUCT LEVEL)	SEE PAGE
	1	1	**223-6546**	14	BOLT (M18X2.5X170-MM)	
	2	1	**293-9397**	14	WASHER-HARD (19X34X3.5-MM THK)	
	3	1	**207-8572**	7	CAP-BEARING	

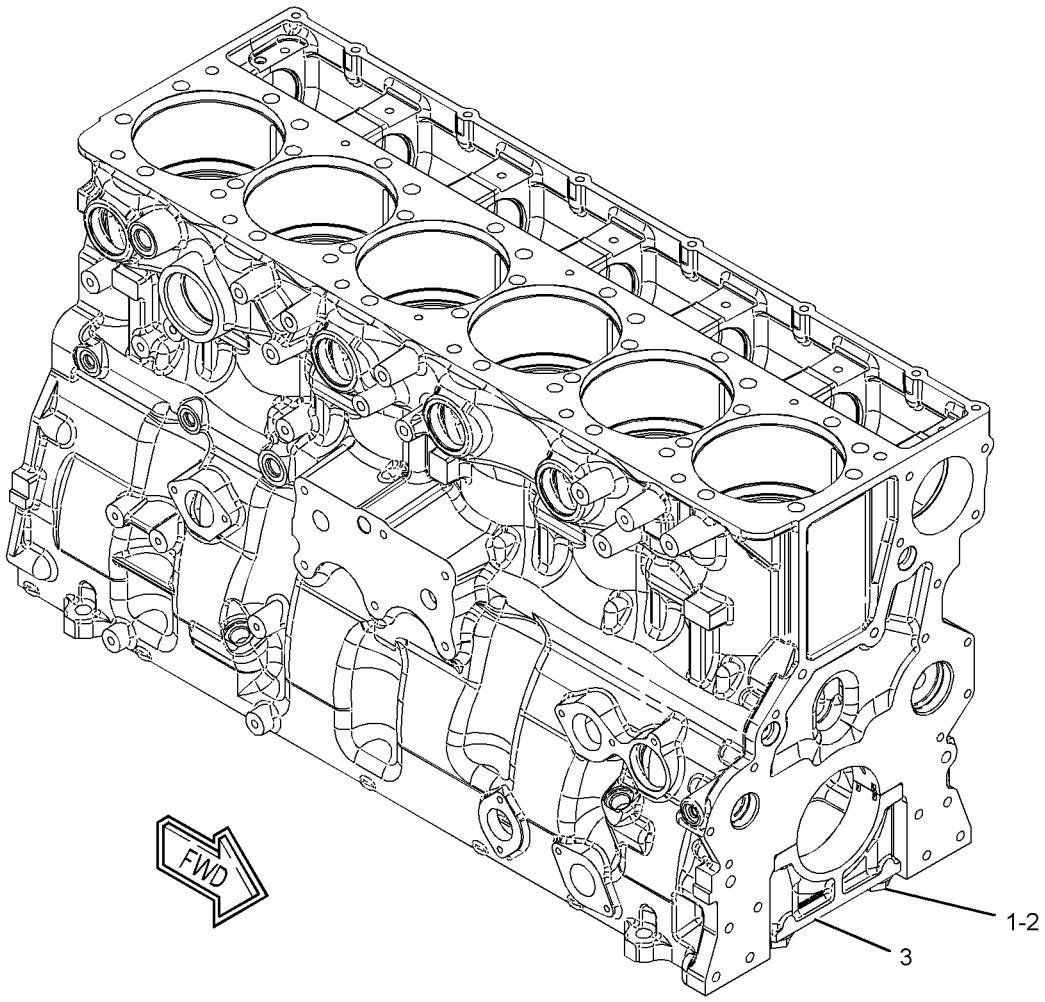

GRAPHIC #1 **<END>** g01338467

BASIC ENGINE

303-1383 CYLINDER BLOCK AS

S/N: RSX1037-UP

PART OF 303-1384 CYLINDER BLOCK AS

SMCS-1201 **i02662418**

NOTE	REF NO	GRAPHIC REF	PART NUMBER	QTY	PART NAME 1 2 3 4 5 6 (PRODUCT LEVEL)	SEE PAGE
	1	1	**187-8969**	7	BEARING	
Y	2	1	*303-1382*	1	CYLINDER BLOCK AS	35

Y-SEPARATE ILLUSTRATION

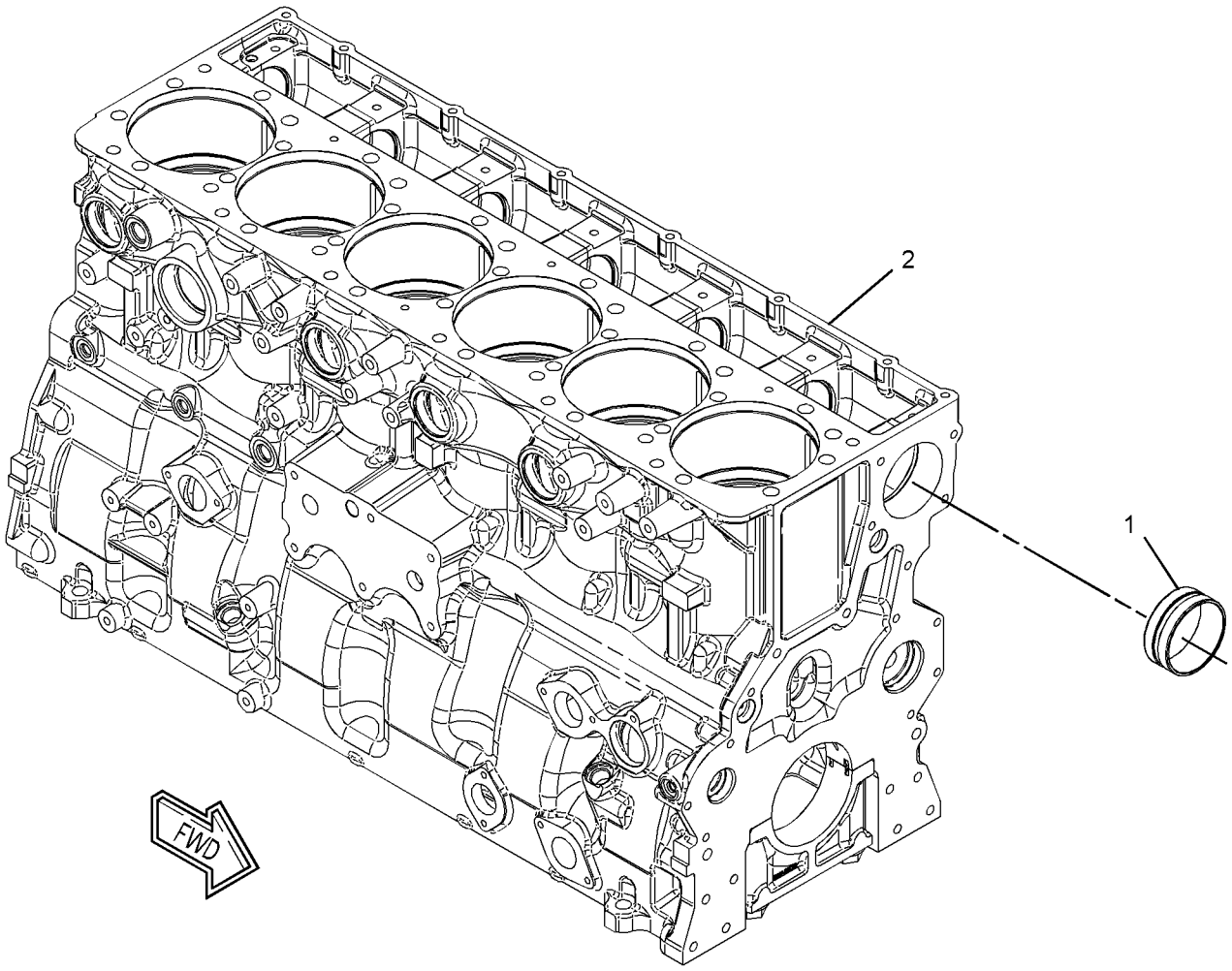

GRAPHIC #1 **<END>** g01338428

303-1384 CYLINDER BLOCK AS

S/N: RSX1037-UP

PART OF 240-7271 CYLINDER BLOCK GP

SMCS-1201 **i02662417**

NOTE	REF NO	GRAPHIC REF	PART NUMBER	QTY	PART NAME 1 2 3 4 5 6 (PRODUCT LEVEL)	SEE PAGE
	1	1	**4F-5695**	5	PLUG-CUP	
	2	1	**104-3560**	6	SEAL-LINER	
	3	1	**197-9330**	6	LINER-CYLINDER	
Y	4	1	*303-1383*	1	CYLINDER BLOCK AS	36

Y-SEPARATE ILLUSTRATION

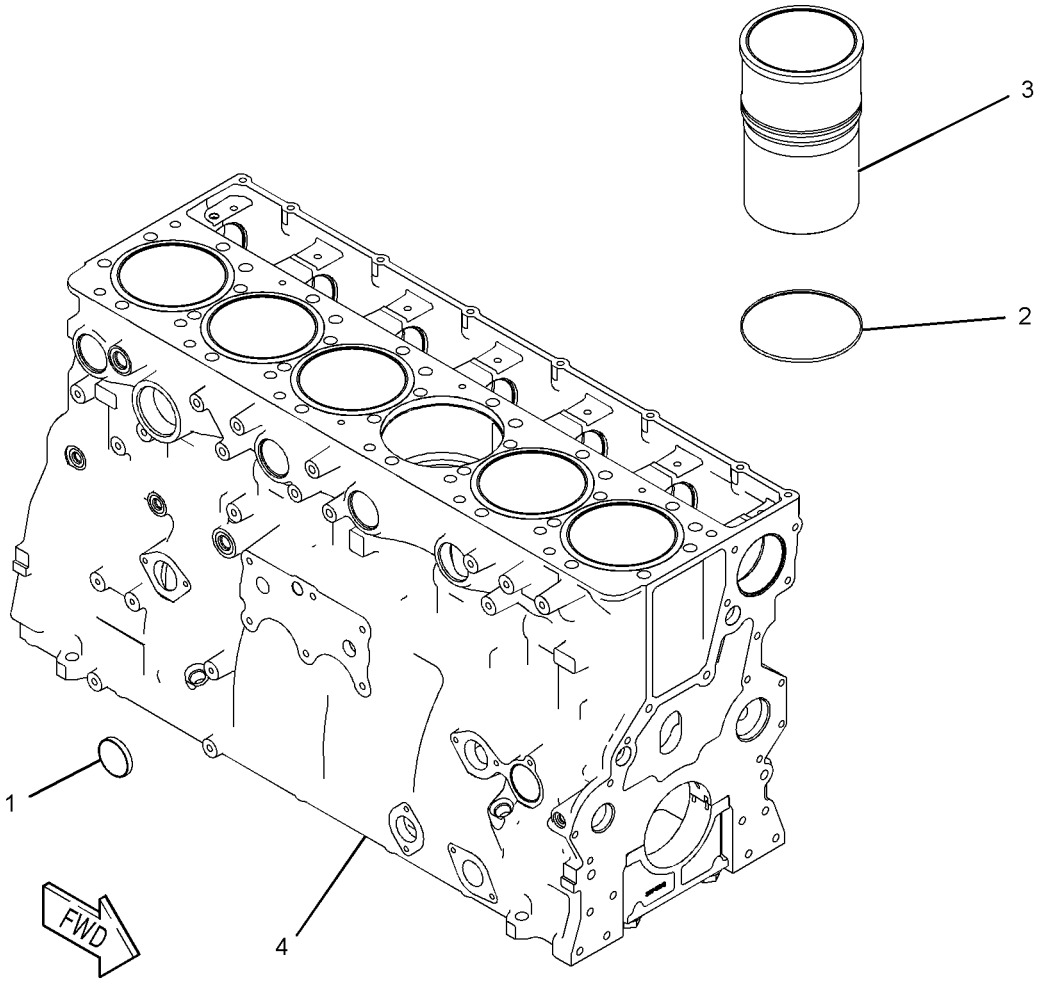

GRAPHIC #1 **<END>** g01009480

BASIC ENGINE

240-7271 CYLINDER BLOCK GP*R

S/N: RSX1037-UP

PART OF 263-6681, 357-6586 ENGINE AR-CORE

SMCS-1201 **i03873733**

NOTE	REF NO	GRAPHIC REF	PART NUMBER	QTY	PART NAME 1 2 3 4 5 6 (PRODUCT LEVEL)	SEE PAGE
	1	1	**3B-0623**	3	PLUG-CUP	
CYR	2	1	**303-1384**	1	CYLINDER BLOCK AS	37
	3	1	**9X-7378**	2	SEAL-O-RING	
	4	1	**9S-8002**	2	PLUG-O-RING (7/16-2 THD)	
	5	1	*307-2671*	1	PLUG AS	
		1	**9S-8002**	1	PLUG-O-RING	
	5A	1	**214-7566**	1	SEAL-O-RING	
	6	1	**6V-3538**	2	DOWEL	
	7	1	**7N-5683**	6	DOWEL	

C-CHANGE FROM PREVIOUS TYPE
R-REMFG PART MAY BE AVAILABLE
Y-SEPARATE ILLUSTRATION

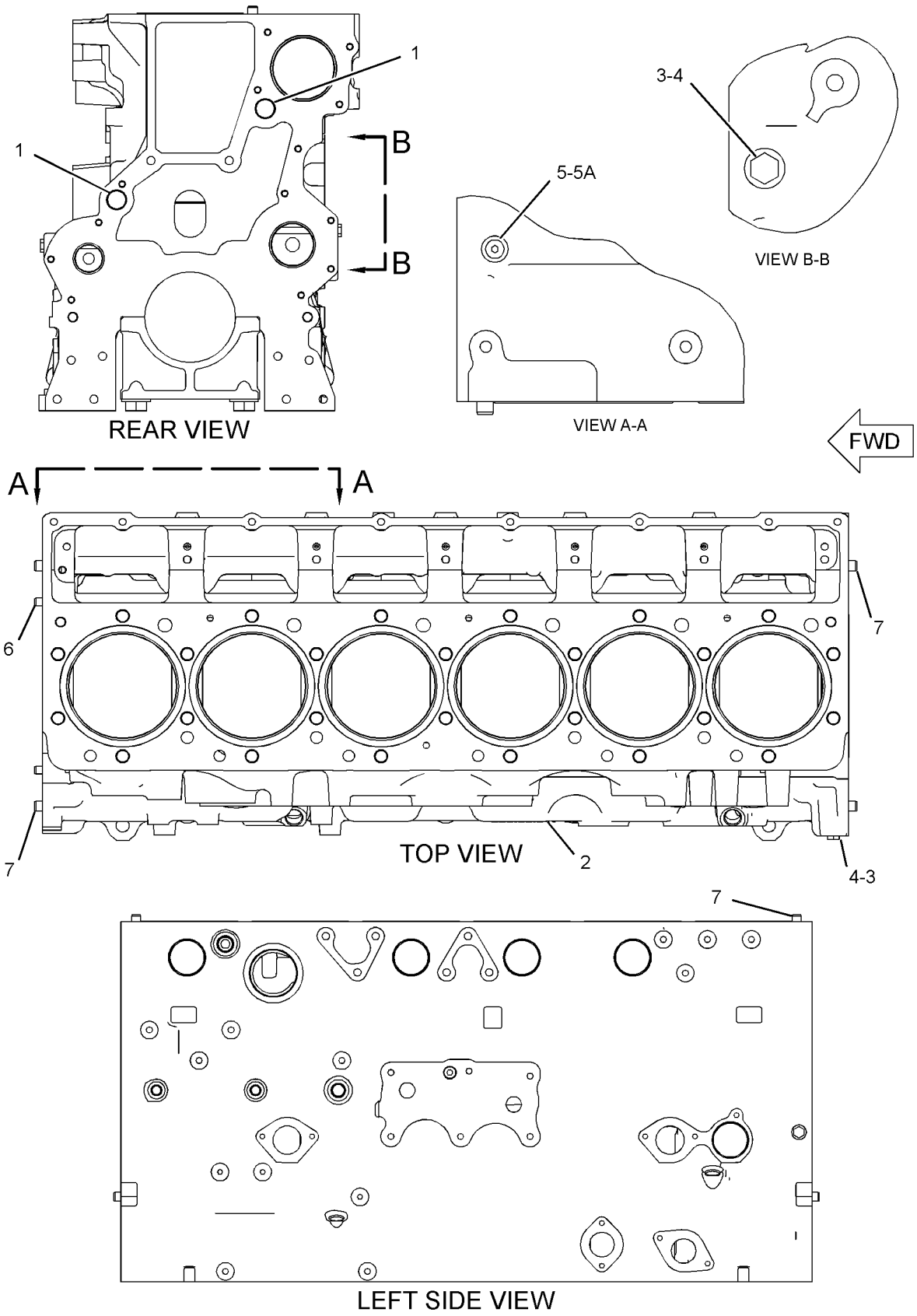

GRAPHIC #1

<END>

g02116214

BASIC ENGINE

308-6358 CYLINDER HEAD AS

S/N: RSX1037-UP

PART OF 257-4095 CYLINDER HEAD GP

OPTIONAL FIELD REPLACEMENT ORDER 342-4397—PAGE 42

SMCS-1100 **i03553006**

NOTE	REF NO	GRAPHIC REF	PART NUMBER	QTY	PART NAME 1 2 3 4 5 6 (PRODUCT LEVEL)	SEE PAGE
	1	2	**224-1270**	12	INSERT-VALVE SEAT (EXHAUST) (STANDARD)	
AB		2	**254-3944**		INSERT-VALVE SEAT (0.51-MM OS) (EXHAUST)	
AB		2	**331-5010**		INSERT-VALVE (0.13-MM OS) (EXHAUST)	
AB		2	**331-5011**		INSERT-VALVE (0.26-MM OS) (EXHAUST)	
	2	2	**260-4855**	12	INSERT-VALVE (INLET) (STANDARD)	
AB		2	**331-5007**		INSERT-VALVE (0.13-MM OS, INLET)	
AB		2	**331-5008**		INSERT-VALVE (0.26-MM OS, INLET)	
AB		2	**331-5009**		INSERT-VALVE (0.51-MM OS, INLET)	
	3	2	**263-4920**	6	SLEEVE-INJECTOR (INLET)	
	4	2	**268-2953**	24	GUIDE-VALVE	
	6	2	**166-2904**	12	SEAL-O-RING	
	7	1,2	**3B-0623**	35	PLUG-CUP	
	8	1,2	**6V-5049**	7	SEAL-O-RING	
	9	2	**6V-5063**	1	SEAL-O-RING	
	10	1,2	**9S-8004**	7	PLUG-O-RING	
	11	2	**9S-8008**	1	PLUG-O-RING	
	12	2	**9X-7430**	6	SEAL-O-RING	

A-NOT PART OF THIS GROUP
B-USE AS REQUIRED

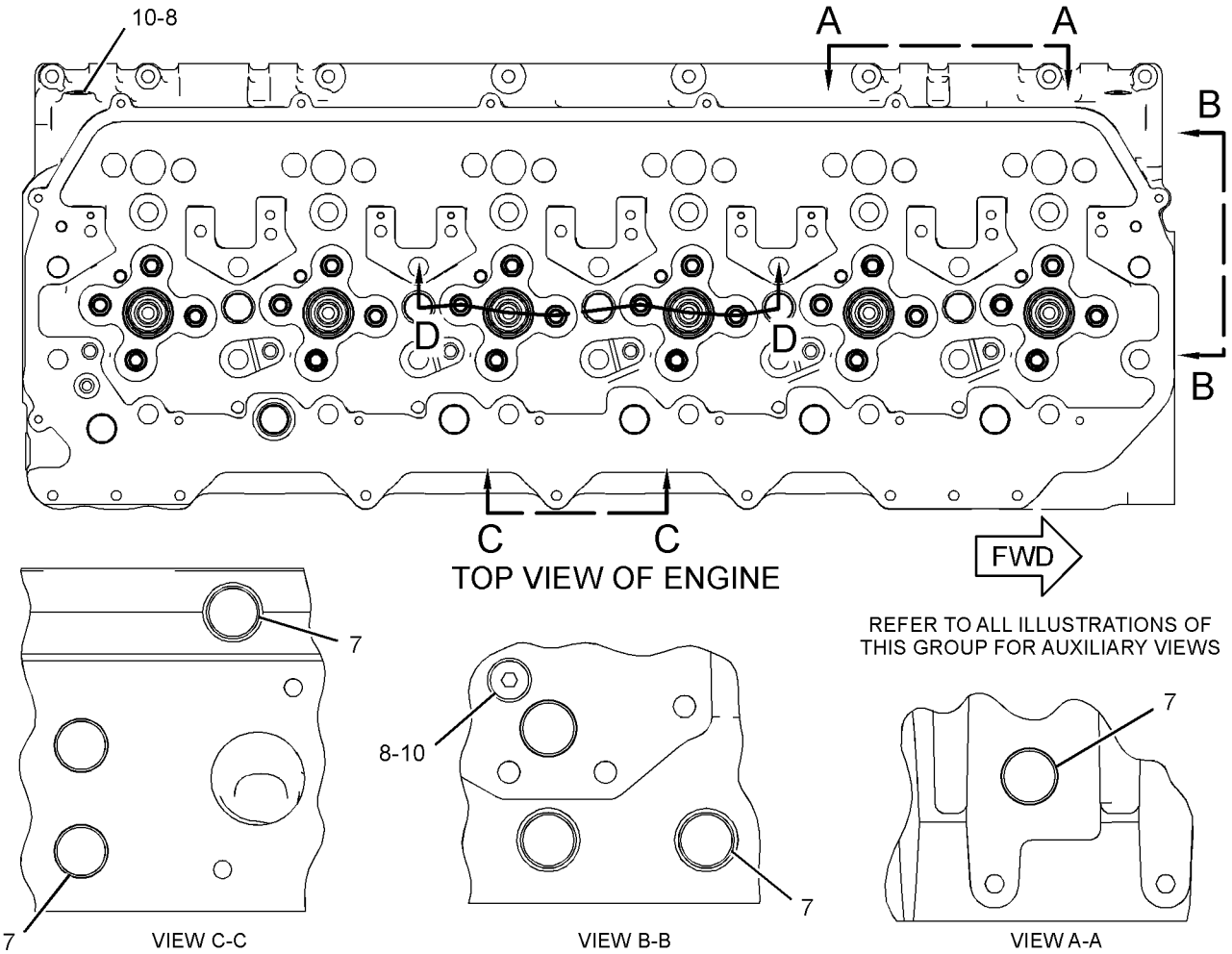

GRAPHIC #1

g01453409

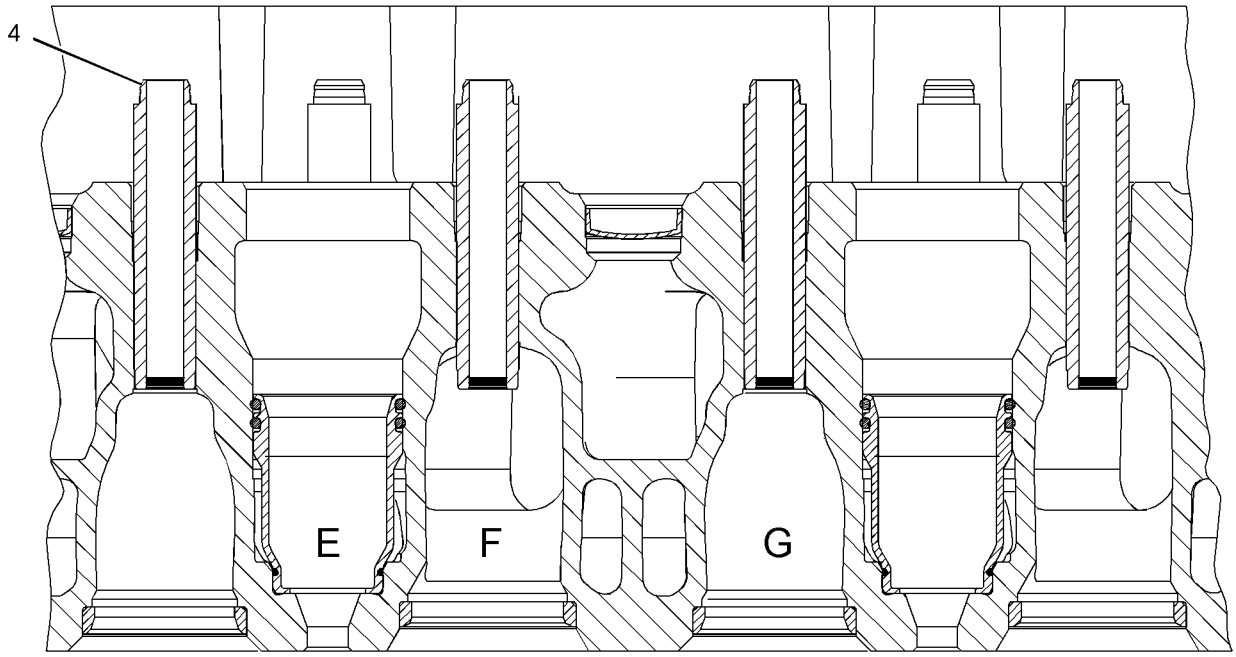

SECTION D-D

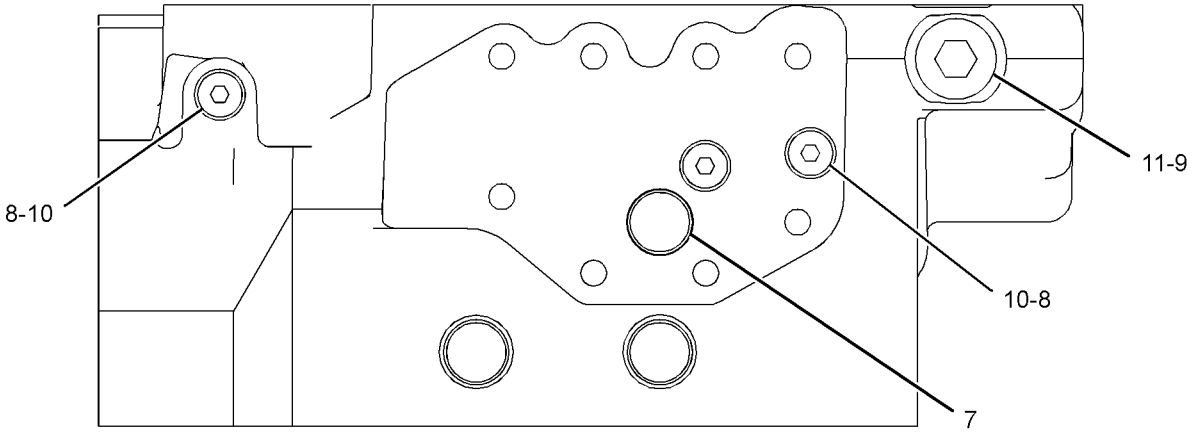

REAR VIEW OF ENGINE

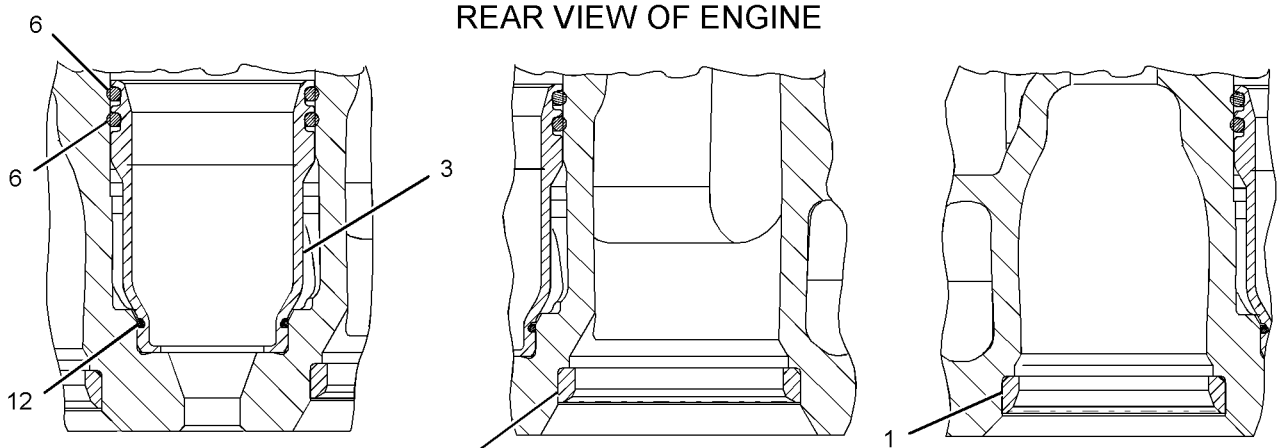

VIEW OF AREA E VIEW OF AREA F VIEW OF AREA G

GRAPHIC #2 **<END>** g01453410

BASIC ENGINE

342-4397 CYLINDER HEAD AS

S/N: RSX1037-UP

FIELD REPLACEMENT FOR 308-6358—PAGE 40

SMCS-1100 **i03873460**

NOTE	REF NO	GRAPHIC REF	PART NUMBER	QTY	PART NAME 1 2 3 4 5 6 (PRODUCT LEVEL)	SEE PAGE
	1	1	**224-1270**	12	INSERT-VALVE SEAT (EXHAUST) (STANDARD)	
AB		1	**254-3944**		INSERT-VALVE SEAT (0.51-MM OS)	
AB		1	**331-5010**		INSERT-VALVE (0.13-MM OS)	
AB		1	**331-5011**		INSERT-VALVE (0.26-MM OS)	
	2	1	**260-4855**	12	INSERT-VALVE (INLET) (STANDARD)	
AB		1	**331-5007**		INSERT-VALVE (0.13-MM OS, INLET)	
AB		1	**331-5008**		INSERT-VALVE (0.26-MM OS, INLET)	
AB		1	**331-5009**		INSERT-VALVE (0.51-MM OS, INLET)	
	3	1	**9X-7430**	6	SEAL-O-RING	
	4	1	**268-2953**	24	GUIDE-VALVE	
	6	1	**166-2904**	12	SEAL-O-RING	
	7	1	**3B-0623**	35	PLUG-CUP	
	8	1	**214-7568**	7	SEAL-O-RING	
	9	1	**6V-5063**	1	SEAL-O-RING	
	10	1	**9S-8004**	7	PLUG-O-RING	
	11	1	**9S-8008**	1	PLUG-O-RING	

A-NOT PART OF THIS GROUP
B-USE AS REQUIRED

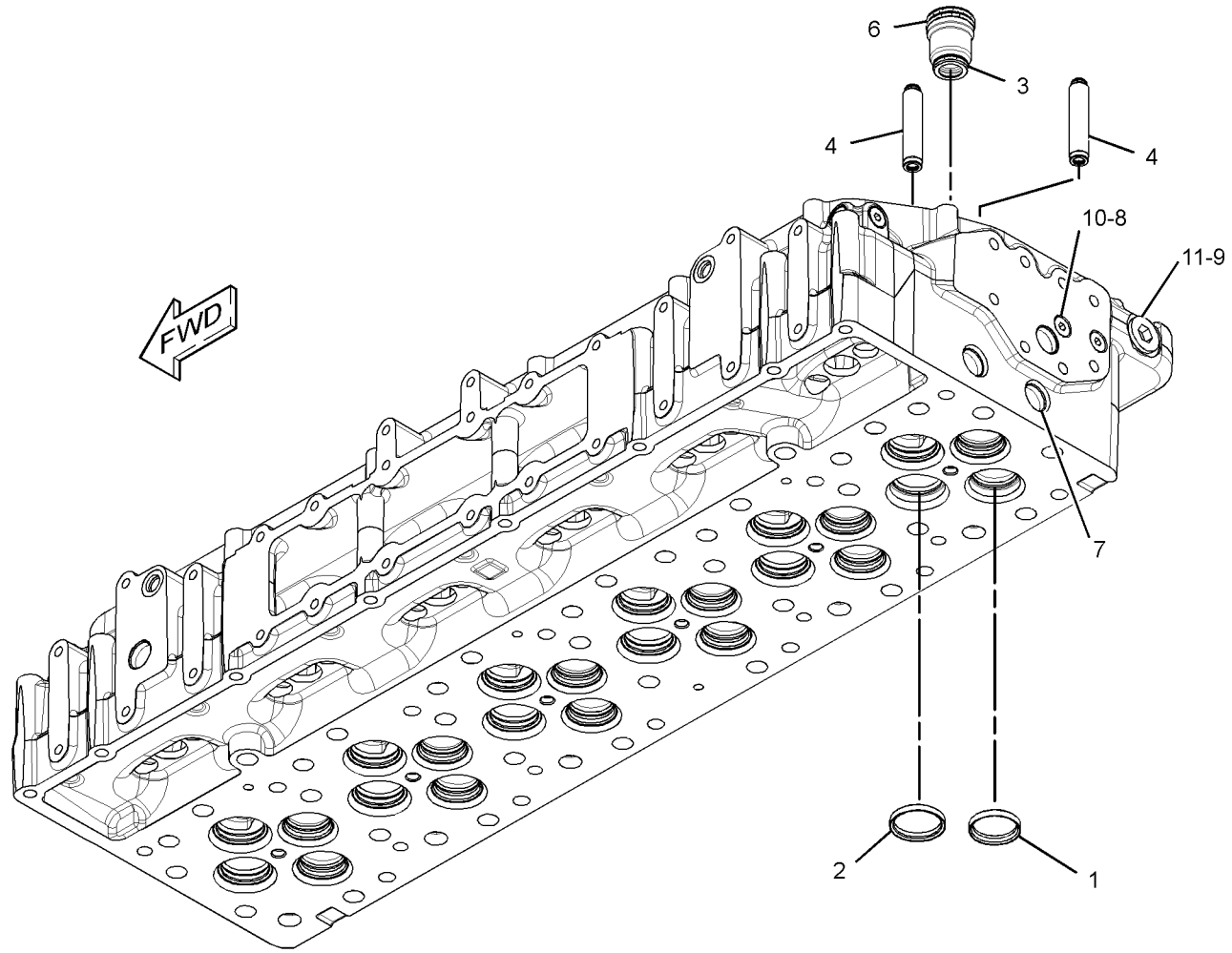

GRAPHIC #1 **<END>** g02144139

345-3752 CYLINDER HEAD AS

S/N: RSX10391-UP

PART OF 305-0617 CYLINDER HEAD GP

SMCS-1100 **i03733646**

NOTE	REF NO	GRAPHIC REF	PART NUMBER	QTY	PART NAME 1 2 3 4 5 6 (PRODUCT LEVEL)	SEE PAGE
	1	1	**224-1270**	12	INSERT-VALVE SEAT (EXHAUST) (STANDARD)	
AB		1	**254-3944**		INSERT-VALVE SEAT (0.51-MM OS)	
AB		1	**331-5010**		INSERT-VALVE (0.13-MM OS)	
AB		1	**331-5011**		INSERT-VALVE (0.26-MM OS)	
	2	1	**260-4855**	12	INSERT-VALVE (INLET) (STANDARD)	
AB		1	**331-5007**		INSERT-VALVE (0.13-MM OS, INLET)	
AB		1	**331-5008**		INSERT-VALVE (0.26-MM OS, INLET)	
AB		1	**331-5009**		INSERT-VALVE (0.51-MM OS, INLET)	
	3	1	**263-4920**	6	SLEEVE-INJECTOR (INLET)	
	4	1	**268-2953**	24	GUIDE-VALVE	
	6	1	**166-2904**	12	SEAL-O-RING	
	7	1	**214-7568**	7	SEAL-O-RING	
	8	1	**3B-0623**	35	PLUG-CUP	
	9	1	**6V-5063**	1	SEAL-O-RING	
	10	1	**9S-8004**	7	PLUG-O-RING	
	11	1	**9S-8008**	1	PLUG-O-RING	
	12	1	**9X-7430**	6	SEAL-O-RING	

A-NOT PART OF THIS GROUP
B-USE AS REQUIRED

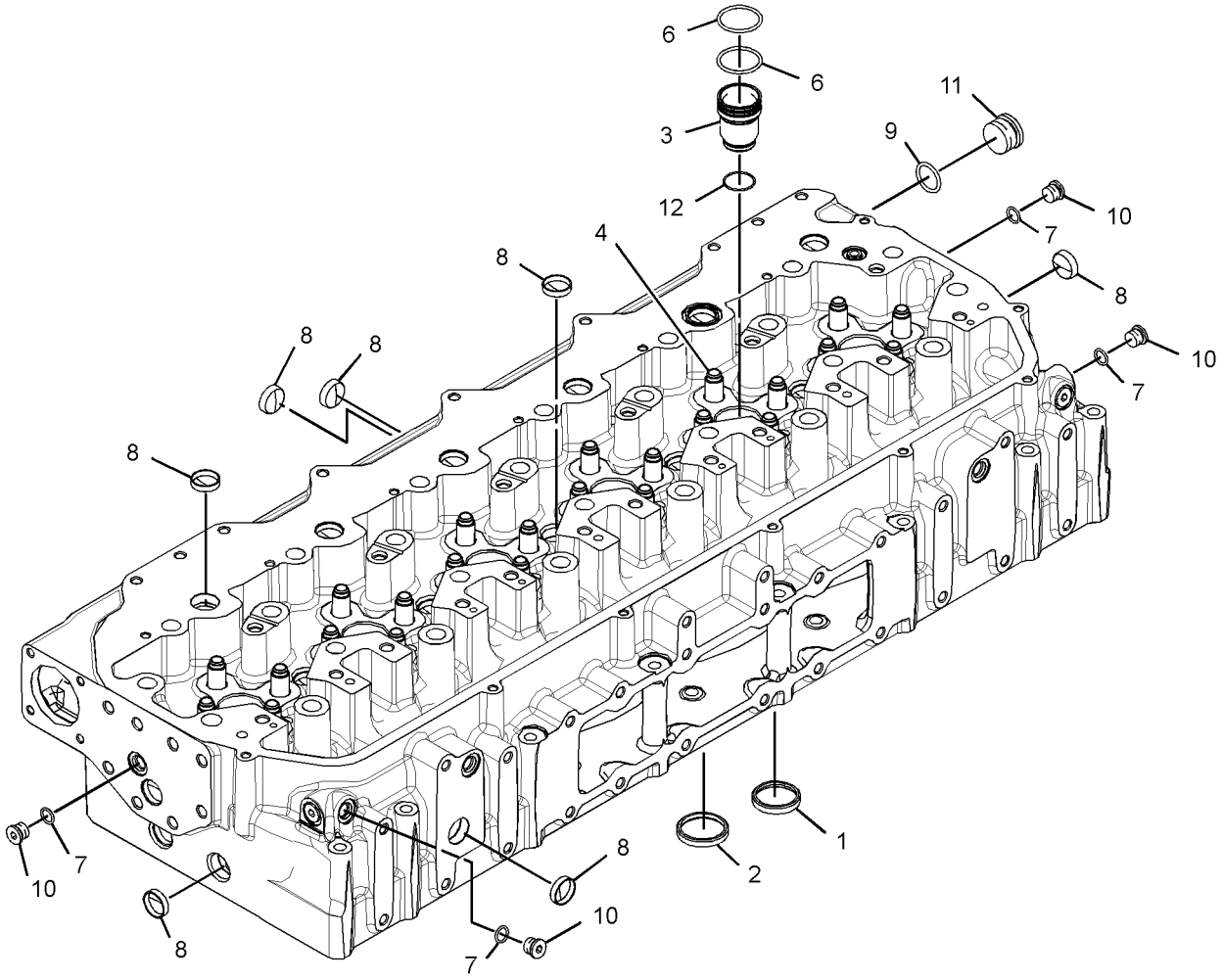

GRAPHIC #1 **<END>** g01994933

BASIC ENGINE

240-7679 CYLINDER HEAD GP

S/N: RSX1037-10390

PART OF 263-6681 ENGINE AR-CORE

SMCS-1100 **i02250642**

NOTE	REF NO	GRAPHIC REF	PART NUMBER	QTY	PART NAME 1 2 3 4 5 6 (PRODUCT LEVEL)	SEE PAGE
Y	1	1	*198-4963*	1	FASTENER GP-CYLINDER HEAD	51
	2	1	**221-9392**	1	GASKET (CYLINDER HEAD)	
CY	3	1	**257-4095**	1	CYLINDER HEAD GP	45

C-CHANGE FROM PREVIOUS TYPE
Y-SEPARATE ILLUSTRATION

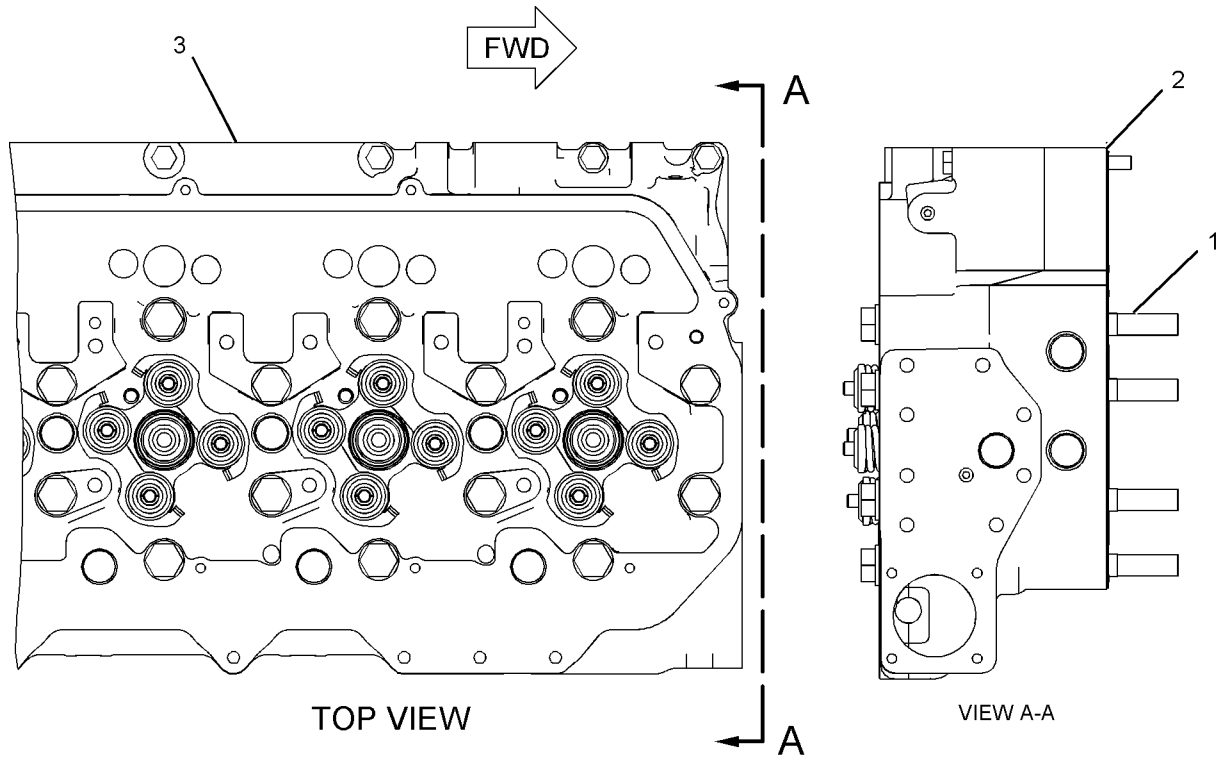

GRAPHIC #1 **<END>** g01018879

257-4095 CYLINDER HEAD GP*R

S/N: RSX1037-UP

PART OF 240-7679 CYLINDER HEAD GP

SMCS-1100 **i02909175**

NOTE	REF NO	GRAPHIC REF	PART NUMBER	QTY	PART NAME 1 2 3 4 5 6 (PRODUCT LEVEL)	SEE PAGE
	1	1	**2A-4429**	48	LOCK-RETAINER	
	2	1	**214-0586**	24	SPRING (OUTER)	
	3	1	**6V-5063**	2	SEAL-O-RING	
	4	1	**224-3028**	12	VALVE-INLET	
	5	1	**9S-8008**	2	PLUG-O-RING	
	6	1	**224-3030**	12	VALVE-EXHAUST	
	7	1	**7E-7977**	24	ROTOCOIL AS	
					(EACH INCLUDES)	
		1	**7E-7978**	1	SHIELD	
	8	1	**224-3125**	12	BASE	
	9	1	**224-4441**	24	SPRING (INNER)	
Y	10	1	**308-6358**	1	CYLINDER HEAD AS	40
	11	1	**5P-5598**	1	SEAL-O-RING	
	12	1	**163-2478**	24	SEAL-VALVE STEM	

Y-SEPARATE ILLUSTRATION

257-4095 CYLINDER HEAD GP *(contd.)* **i02909175**

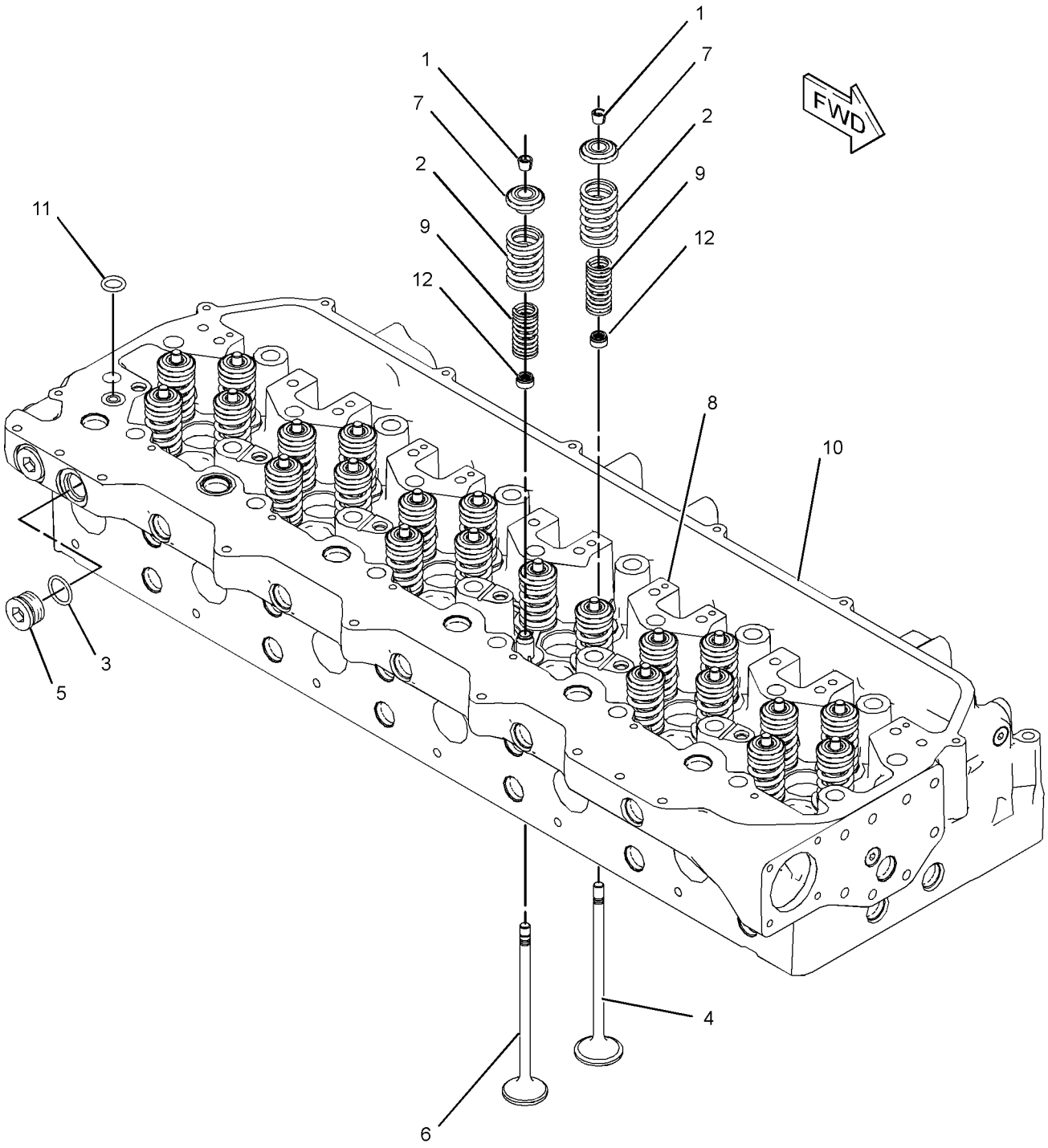

GRAPHIC #1 **<END>** g01447906

305-0617 CYLINDER HEAD GP

S/N: RSX10391-UP

PART OF 305-0618 CYLINDER HEAD GP

SMCS-1100 **i03997510**

NOTE	REF NO	GRAPHIC REF	PART NUMBER	QTY	PART NAME 1 2 3 4 5 6 (PRODUCT LEVEL)	SEE PAGE
	1	1	**2A-4429**	48	LOCK-RETAINER	
	2	1	**332-2152**	24	SPRING-VALVE	
	3	1	*353-5140*	2	PLUG AS	
					(EACH INCLUDES)	
	3A	1	**6V-5063**	1	SEAL-O-RING	
		1	**9S-8008**	1	PLUG-O-RING	
	4	1	**224-3030**	12	VALVE-EXHAUST	
	5	1	**163-2478**	24	SEAL-VALVE STEM	
	6	1	**224-3125**	12	BASE	
	7	1	**7E-7977**	24	ROTOCOIL AS	
					(EACH INCLUDES)	
		1	**7E-7978**	1	SHIELD	
	8	1	**224-4441**	24	SPRING	
	9	1	**252-7802**	12	VALVE-INLET	
Y	10	1	**345-3752**	1	CYLINDER HEAD AS	43
	11	1	**5P-5598**	1	SEAL-O-RING	

Y-SEPARATE ILLUSTRATION

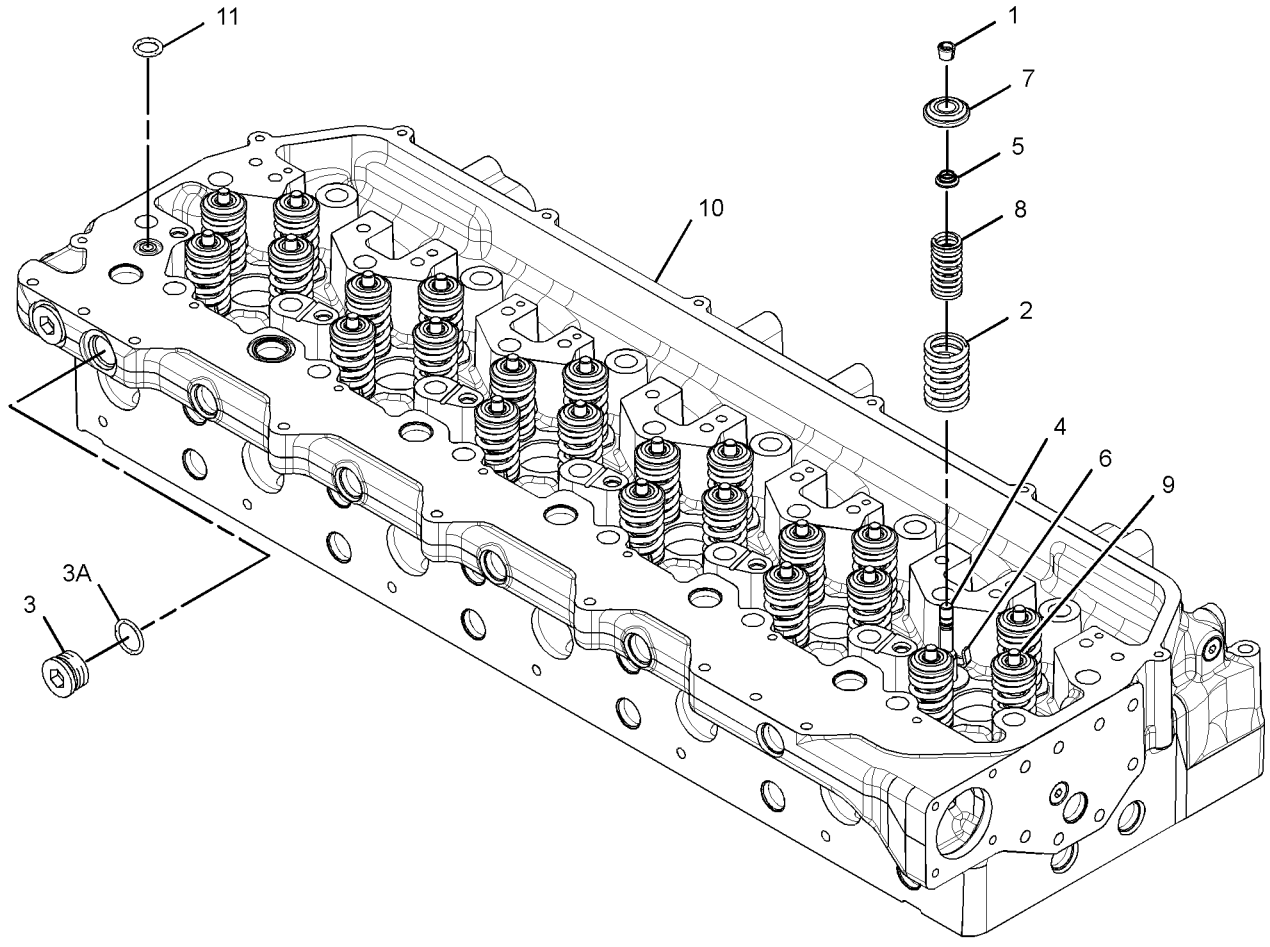

GRAPHIC #1 **<END>** g02176877

BASIC ENGINE

305-0618 CYLINDER HEAD GP

S/N: RSX10391-UP

PART OF 263-6681, 357-6586 ENGINE AR-CORE

SMCS-1100 **i02694690**

NOTE	REF NO	GRAPHIC REF	PART NUMBER	QTY	PART NAME 1 2 3 4 5 6 (PRODUCT LEVEL)	SEE PAGE
Y	1	1	*198-4963*	1	FASTENER GP-CYLINDER HEAD	51
	2	1	**221-9392**	1	GASKET (CYLINDER HEAD)	
Y	3	1	**305-0617**	1	CYLINDER HEAD GP	47

Y-SEPARATE ILLUSTRATION

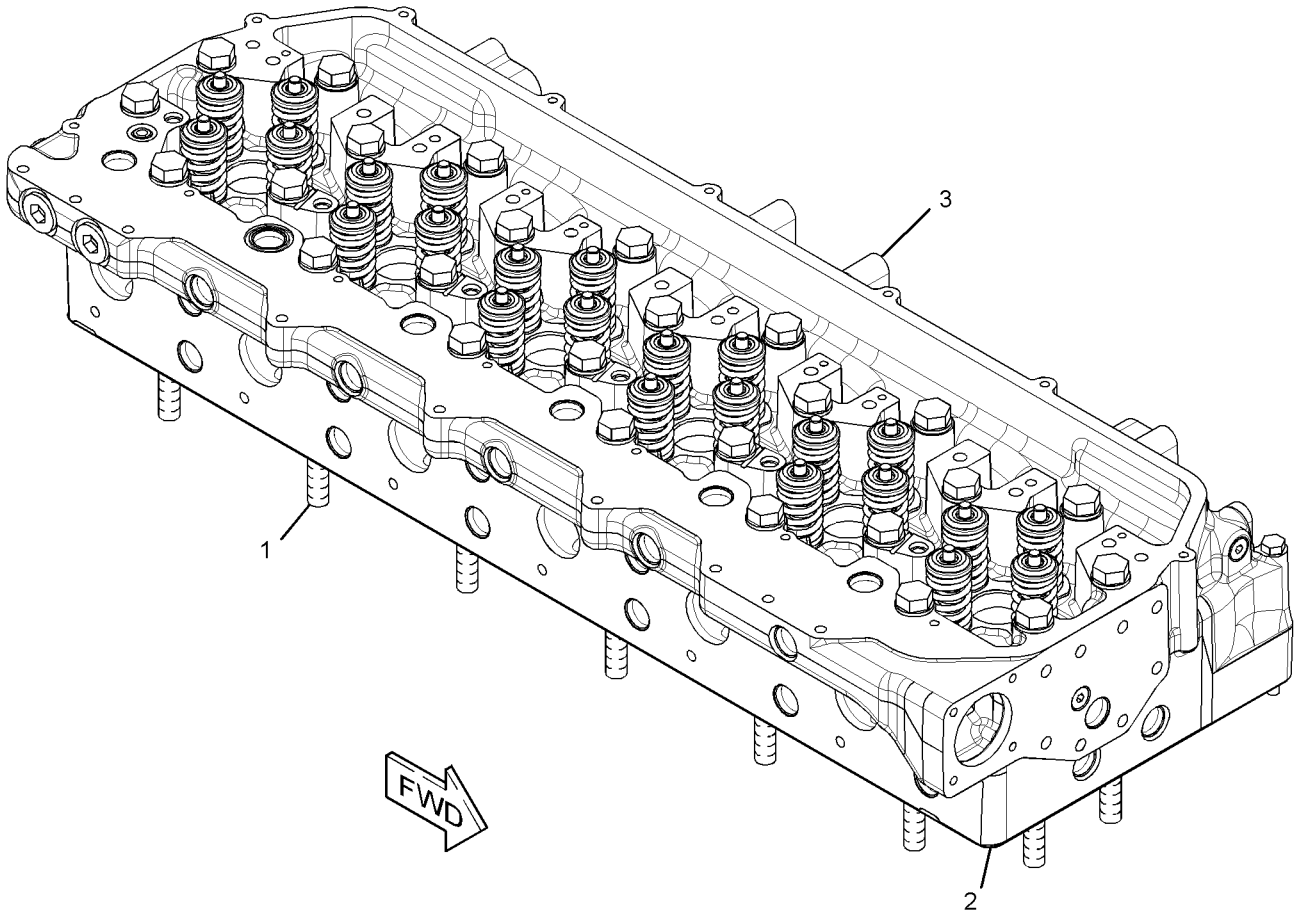

GRAPHIC #1 **<END>** g01364440

117-2766 DAMPER GP

S/N: RSX1037-UP

PROVIDES A VISCONIC DAMPER, ADAPTER AND FASTENING HARDWARE TO ATTACH THE DAMPER TO THE ADAPTER.

PART OF 226-9770 ENGINE AR-COMPLETE

SMCS-1205 **i02663349**

NOTE	REF NO	GRAPHIC REF	PART NUMBER	QTY	PART NAME 1 2 3 4 5 6 (PRODUCT LEVEL)	SEE PAGE
	1	1	**179-0092**	1	ADAPTER	
	2	1	**167-8125**	1	DAMPER AS	
M	3	1	**136-4183**	8	BOLT-12 POINT HEAD (M10X1.5X30-MM)	
	4	1	**9X-2027**	8	WASHER (11X18X2-MM THK)	

M-METRIC PART

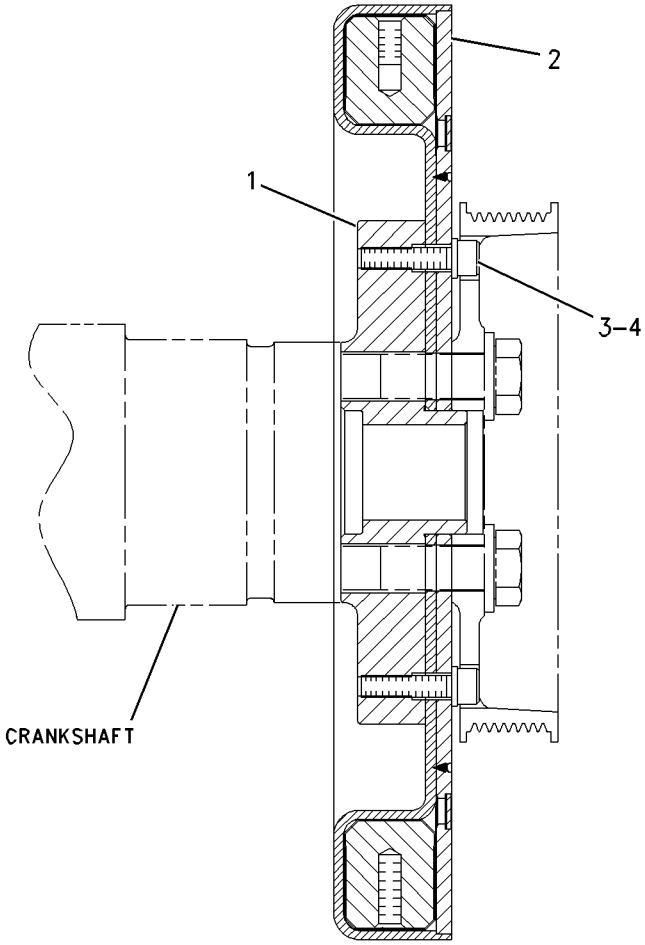

RIGHT SIDE VIEW

GRAPHIC #1 **<END>** g00783687

BASIC ENGINE

260-1406 DRIVE GP-ACCESSORY

S/N: RSX1037-UP

PART OF 226-9770 ENGINE AR-COMPLETE

SMCS-1207 **i03332742**

NOTE	REF NO	GRAPHIC REF	PART NUMBER	QTY	PART NAME 1 2 3 4 5 6 (PRODUCT LEVEL)	SEE PAGE
	1	1	**197-9642**	1	PULLEY AS-IDLER (8-GROOVE)	
	2	1	**211-7895**	1	BELT TENSIONER	
	3	1	**222-2899**	1	BRACKET-SUPPORT	
	4	1	**243-1557**	1	BRACKET	
	5	1	**5P-8245**	4	WASHER-HARD (13.5X25.5X3-MM THK)	
M	6	1	**6V-2317**	2	BOLT (M8X1.25X30-MM)	
	7	1	**6V-5839**	3	WASHER (11X21X2.5-MM THK)	
M	8	1	**6V-5842**	3	BOLT (M10X1.5X40-MM)	
M	9	1	**6V-8149**	2	NUT (M12X1.75-THD)	
M	10	1	**8T-0646**	2	BOLT (M12X1.75X110-MM)	
	11	1	**8T-4121**	1	WASHER-HARD (11X21X2.5-MM THK)	
M	12	1	**8T-4178**	1	BOLT (M10X1.5X90-MM)	
	13	1	**9M-1974**	2	WASHER-HARD (8.8X16X2-MM THK)	
M	14	1	**6V-6317**	1	BOLT (M10X1.5X20-MM)	
	15	1	**8T-4222**	1	WASHER-PLATED (11X32X2.5-MM THK)	

M-METRIC PART

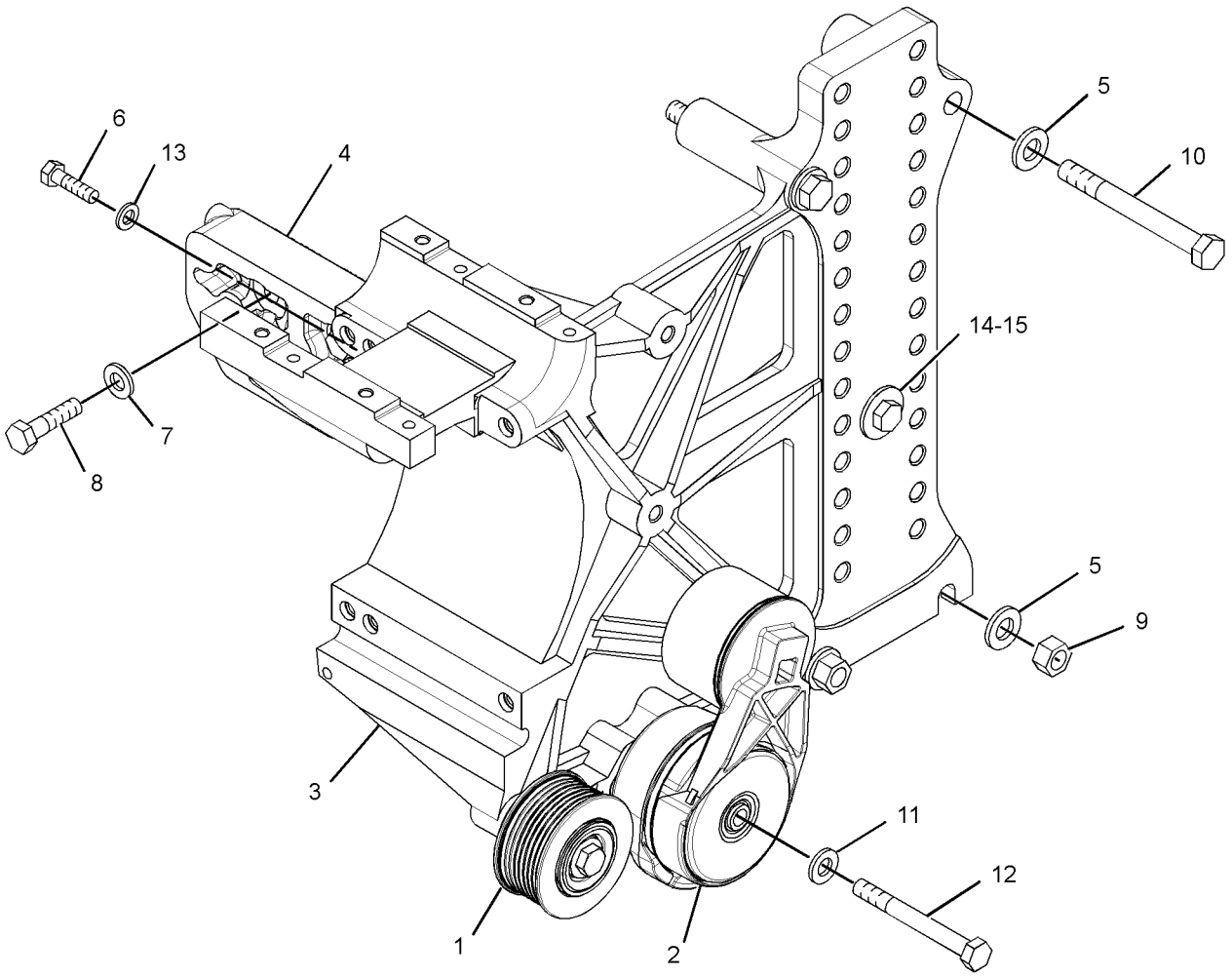

GRAPHIC #1 **<END>** g01794296

198-4963 FASTENER GP-CYLINDER HEAD

S/N: RSX1037-UP

PART OF 240-7679, 305-0618 CYLINDER HEAD GP

SMCS-1100 **i02697758**

NOTE	REF NO	GRAPHIC REF	PART NUMBER	QTY	PART NAME 1 2 3 4 5 6 (PRODUCT LEVEL)	SEE PAGE
M	1	1	**242-1811**	26	BOLT-CYLINDER HEAD (M16X2X220-MM)	
	2	1	**210-4460**	8	BOLT (M10X1.5X130-MM)	
	3	1	**2S-5658**	26	WASHER-HARD (17X29X3-MM THK)	

M-METRIC PART

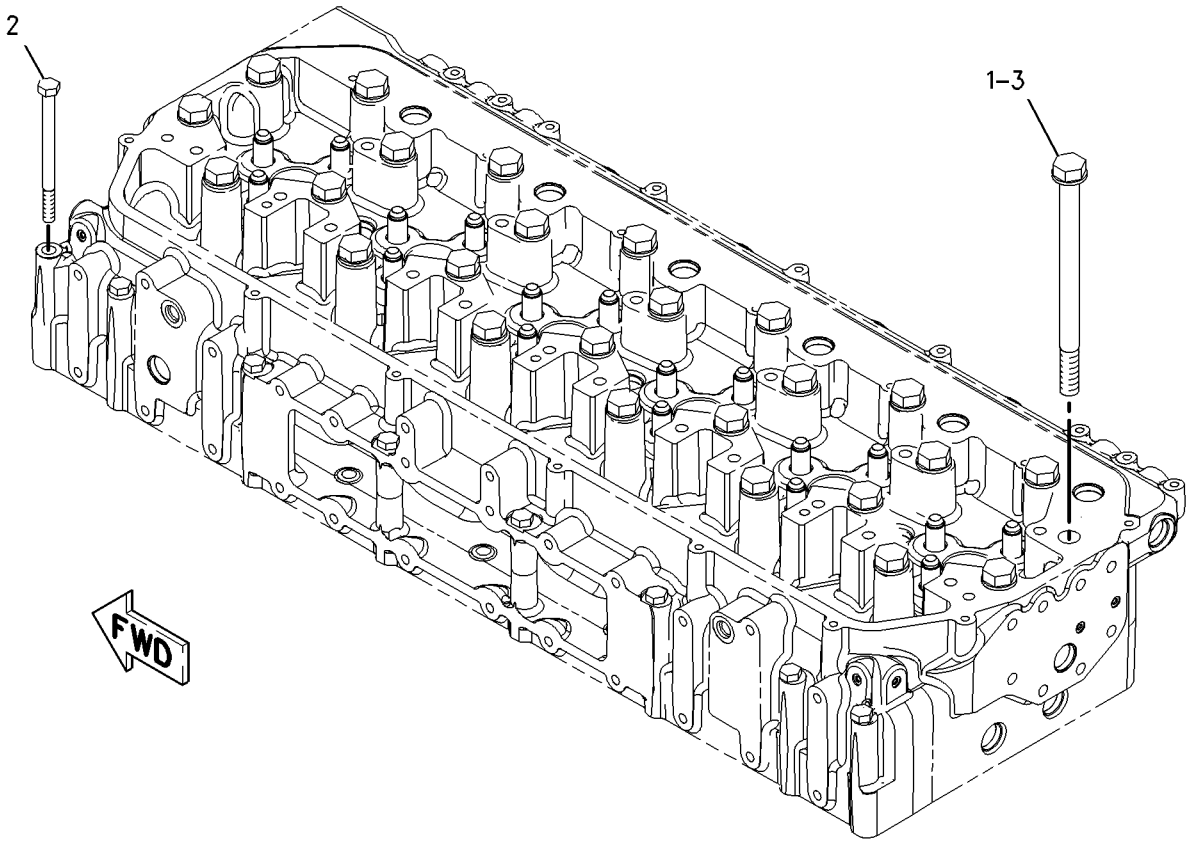

GRAPHIC #1 **<END>** g00949755

BASIC ENGINE

117-2771 FASTENER GP-DAMPER & PULLEY

S/N: RSX1037-UP

PART OF 226-9770 ENGINE AR-COMPLETE

SMCS-1205, 7553 **i03317325**

NOTE	REF NO	GRAPHIC REF	PART NUMBER	QTY	PART NAME 1 2 3 4 5 6 (PRODUCT LEVEL)	SEE PAGE
C	1	1	**213-1585**	1	SPACER (10.5-MM THK)	
M	2	1	**8T-0281**	6	BOLT (M16X2X80-MM)	

C-CHANGE FROM PREVIOUS TYPE
M-METRIC PART

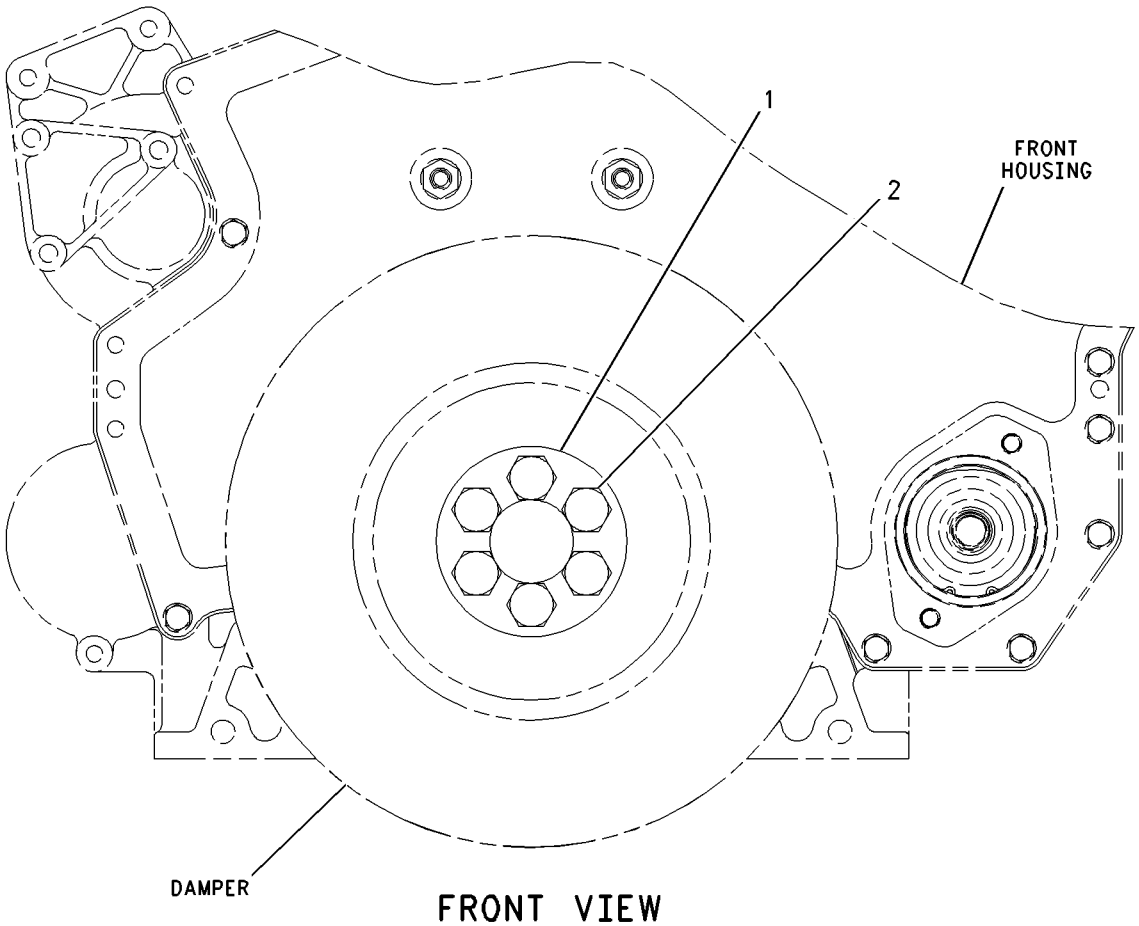

FRONT VIEW

GRAPHIC #1 **<END>** g00783716

BASIC ENGINE

252-6185 FLYWHEEL GP

S/N: RSX1037-UP

PART OF 226-9770 ENGINE AR-COMPLETE

SMCS-1156, 1158 **i02283881**

NOTE	REF NO	GRAPHIC REF	PART NUMBER	QTY	PART NAME 1 2 3 4 5 6 (PRODUCT LEVEL)	SEE PAGE
M	1	1	**9X-2053**	8	BOLT	
	2	1	**252-5188**	1	FLYWHEEL AS	
		1	**256-9651**	1	GEAR-FLYWHEEL (113-TEETH)	
	3	1	**5P-8247**	8	WASHER-HARD (17X32X3.5-MM THK)	

M-METRIC PART

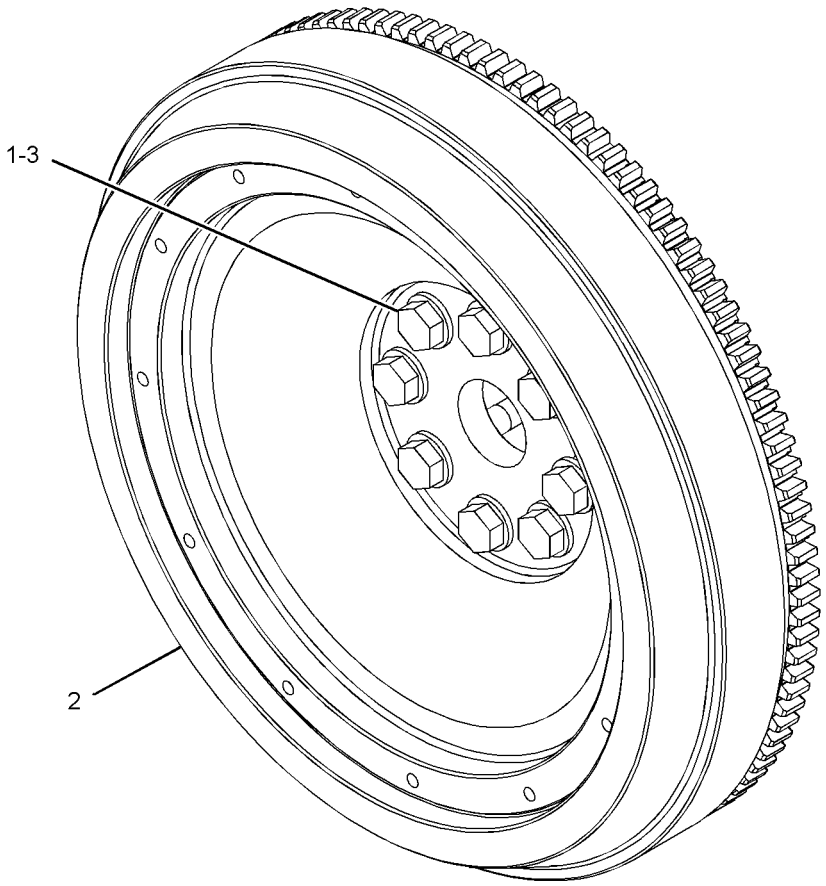

GRAPHIC #1 **<END>** g01143883

222-3088 GEAR GP-FRONT

S/N: RSX1037-UP

PART OF 263-6681, 357-6586 ENGINE AR-CORE

SMCS-1151, 1162, 1206 **i02434273**

NOTE	REF NO	GRAPHIC REF	PART NUMBER	QTY	PART NAME 1 2 3 4 5 6 (PRODUCT LEVEL)	SEE PAGE
	1	1	**7C-7851**	1	SHAFT	
	2	1	**218-7270**	1	SHAFT	
	3	1	**222-3902**	1	GEAR AS (64-TEETH)	
		1	**7C-7852**	1	BEARING	
	4	1	**222-3905**	1	GEAR AS (CAMSHAFT IDLER, 71-TEETH)	
M	5	1	**8T-0281**	1	BOLT (M16X2X80-MM)	
M	6	1	**8T-0360**	1	BOLT (M20X2.5X90-MM)	

M-METRIC PART

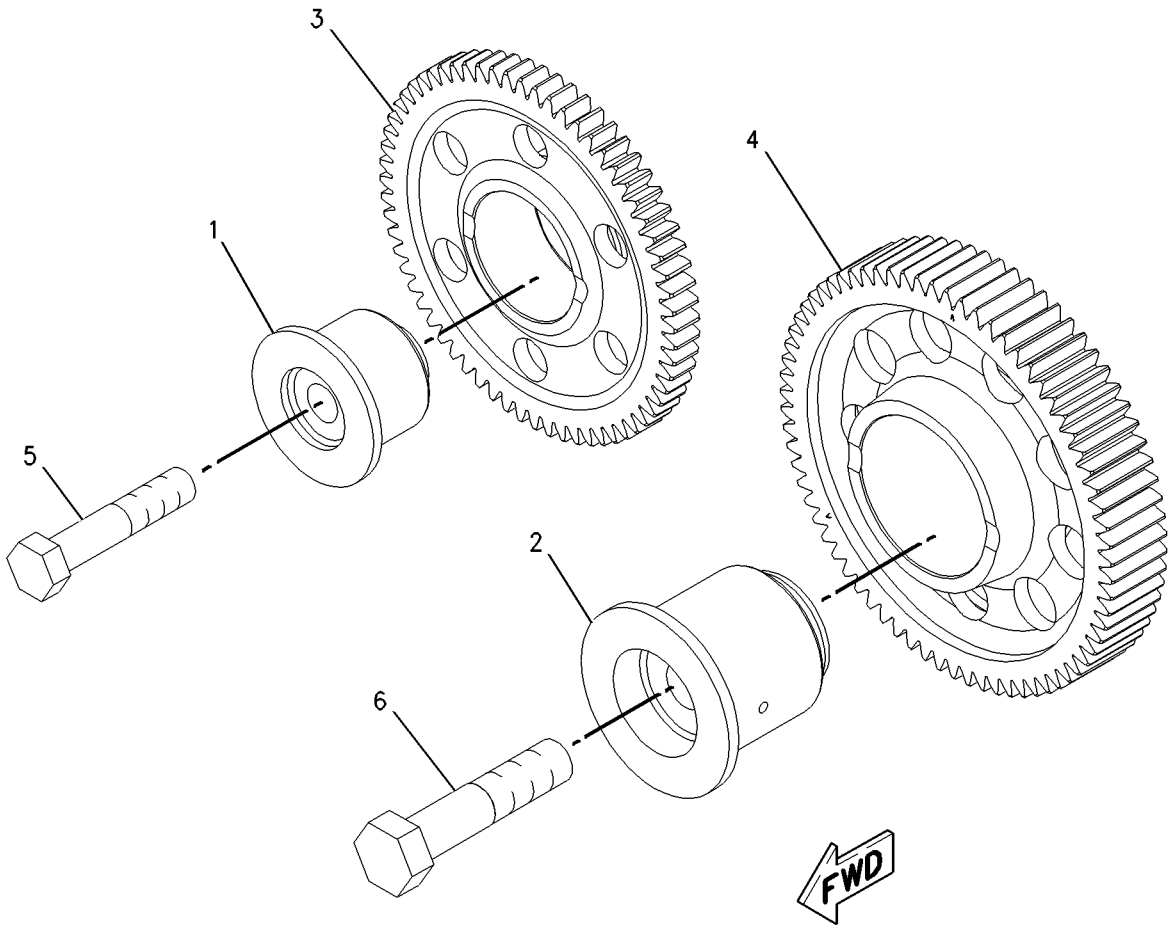

GRAPHIC #1 **<END>** g00939640

BASIC ENGINE

277-5425 GEAR GP-REAR

S/N: RSX1037-3629

PART OF 226-9770 ENGINE AR-COMPLETE

SMCS-1204, 1206 **i02547170**

NOTE	REF NO	GRAPHIC REF	PART NUMBER	QTY	PART NAME 1 2 3 4 5 6 (PRODUCT LEVEL)	SEE PAGE
	1	1	**1W-4741**	1	GEAR AS-IDLER (70-TEETH)	
		1	**1W-4738**	1	BEARING-SLEEVE	
	2	1	**1W-4746**	1	RETAINER-GEAR	
	3	1	**154-3358**	1	GEAR-ADAPTER (68-TEETH)	
	4	1	**187-8194**	1	GEAR AS-DRIVE (64-TEETH)	
		1	**4F-6024**	1	PIN	
	5	1	**261-3246**	2	ADAPTER AS	
					(EACH INCLUDES)	
		1	**160-8184**	1	BEARING-SLEEVE	
	6	1	**266-0482**	1	COVER	
	7	1	**266-0483**	1	GASKET	
	8	1	**4N-1230**	2	SEAL-O-RING	
M	9	1	**6V-1820**	12	BOLT (M10X1.5X30-MM)	
	10	1	**6V-5839**	12	WASHER (11X21X2.5-MM THK)	
M	11	1	**6V-7673**	3	BOLT (M12X1.75X50-MM)	
M	12	1	**8T-4183**	4	BOLT (M12X1.75X40-MM)	
	13	1	**8T-4223**	4	WASHER-HARD (13.5X25.5X3-MM THK)	

M-METRIC PART

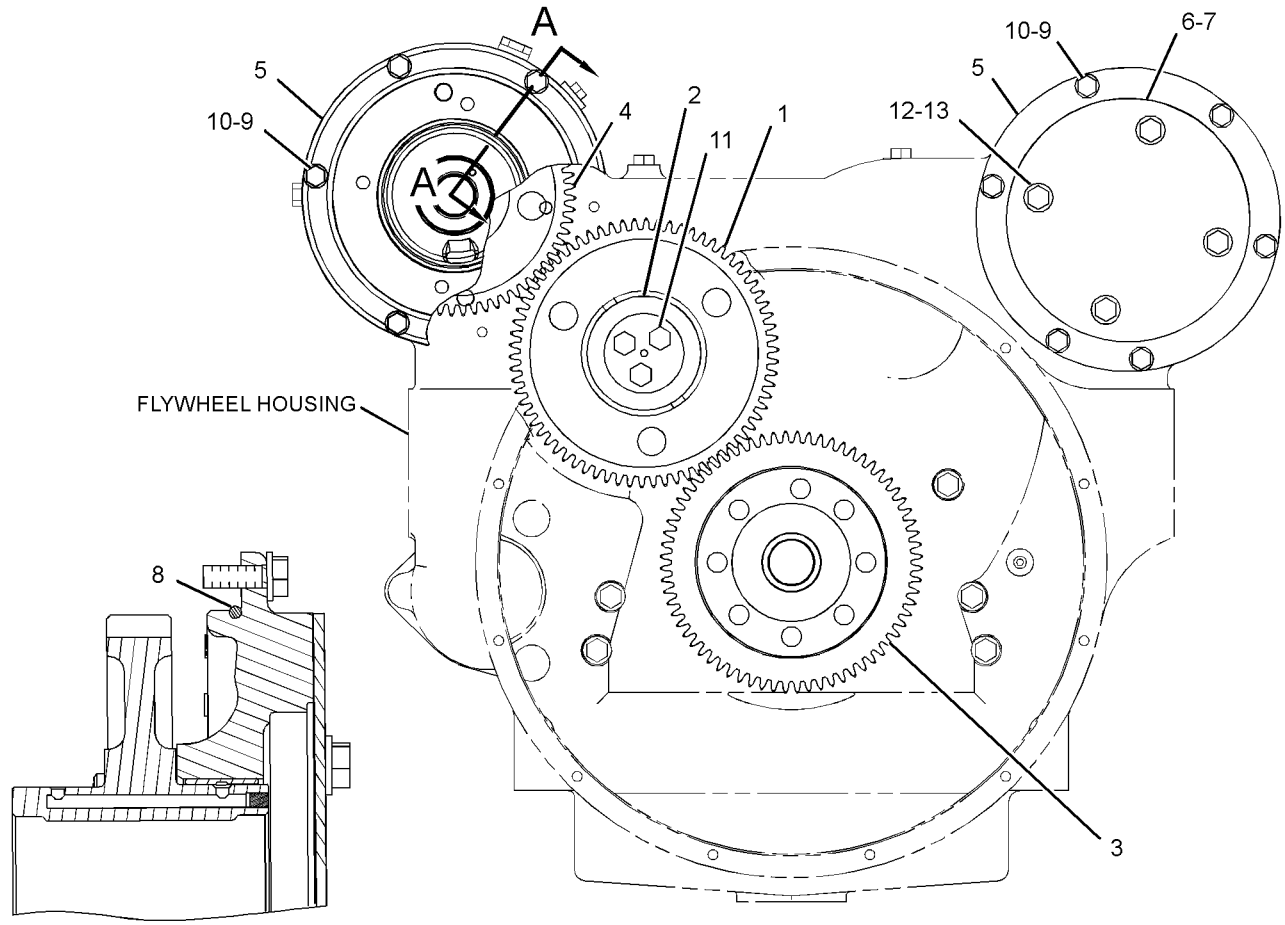

SECTION A-A

REAR VIEW OF ENGINE

GRAPHIC #1

<END>

g01308279

BASIC ENGINE

277-5425 GEAR GP-REAR

S/N: RSX3630-UP

PART OF 226-9770 ENGINE AR-COMPLETE

SMCS-1204, 1206 **i03016011**

NOTE	REF NO	GRAPHIC REF	PART NUMBER	QTY	PART NAME 1 2 3 4 5 6 (PRODUCT LEVEL)	SEE PAGE
	1	1	**1W-4741**	1	GEAR AS-IDLER (70-TEETH)	
		1	**1W-4738**	1	BEARING-SLEEVE	
	2	1	**1W-4746**	1	RETAINER-GEAR	
	3	1	**154-3358**	1	GEAR-ADAPTER (68-TEETH)	
C	4	1	**287-8357**	1	GEAR AS-DRIVE (64-TEETH)	
		1	**4F-6024**	1	PIN	
C	5	1	**261-3246**	1	ADAPTER AS	
		1	**160-8184**	1	BEARING-SLEEVE	
C	6	1	**277-8283**	1	COVER	
	8	1	**4N-1230**	2	SEAL-O-RING	
CM	9	1	**6V-1820**	6	BOLT (M10X1.5X30-MM)	
	10	1	**6V-5839**	12	WASHER (11X21X2.5-MM THK)	
M	11	1	**6V-7673**	3	BOLT (M12X1.75X50-MM)	
CM	12	1	**6V-6317**	6	BOLT (M10X1.5X20-MM)	

C-CHANGE FROM PREVIOUS TYPE
M-METRIC PART

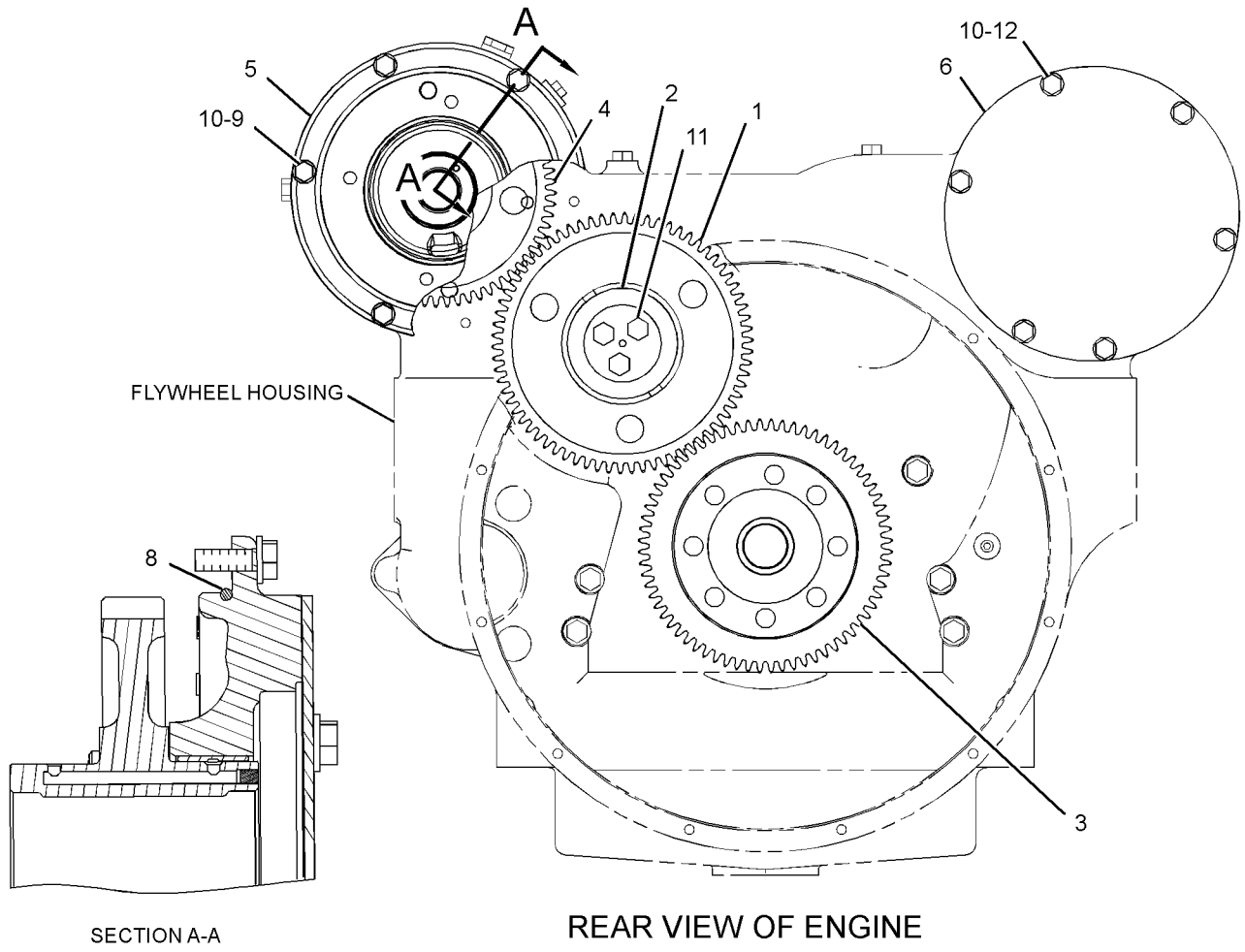

GRAPHIC #1

<END>

g01330140

BASIC ENGINE

277-4435 HOUSING GP-FLYWHEEL

S/N: RSX1037-UP

PART OF 226-9770 ENGINE AR-COMPLETE

SMCS-1157 **i03624091**

NOTE	REF NO	GRAPHIC REF	PART NUMBER	QTY	PART NAME 1 2 3 4 5 6 (PRODUCT LEVEL)	SEE PAGE
	1	1	**175-3721**	1	COVER	
Y	2	1	*227-0838*	1	SEAL GP-CRANKSHAFT	83
	3	1	**277-4434**	1	HOUSING AS-FLYWHEEL	
	3A	1	**2A-1162**	1	GASKET	
	3B	1	**5F-0304**	1	PLUG	
	3C	1	**8M-9315**	1	BUSHING	
	4	1	**101-3934**	1	COVER	
M	5	1	**191-2857**	4	BOLT (M14X2X70-MM)	
Y	6	1	*216-5540*	1	COVER GP-FLYWHEEL HOUSING	26
	7	1	**3F-5792**	1	SEAL-O-RING	
	8	1	**4M-0189**	1	SEAL-O-RING	
	10	1	**5P-8245**	4	WASHER-HARD (13.5X25.5X3-MM THK)	
	11	1	**5P-8246**	11	WASHER-HARD (15.5X29X3-MM THK)	
M	12	1	**6A-5591**	2	BOLT (M12X1.75X25-MM)	
M	14	1	**6V-5684**	2	BOLT (M12X1.75X45-MM)	
M	16	1	**6V-5844**	2	BOLT (M16X2X35-MM)	
M	17	1	**6V-7727**	9	BOLT (M6X1X16-MM)	
M	18	1	**8T-0226**	7	BOLT (M14X2X45-MM)	
	19	1	**9X-8267**	9	WASHER (6.6X12X2-MM THK)	
	20	1	**9X-8268**	2	WASHER (17.5X30X3.5-MM THK)	
BF			**1U-8846**	10	SEALANT-GASKET	

B-USE AS REQUIRED
F-NOT SHOWN
M-METRIC PART
Y-SEPARATE ILLUSTRATION

277-4435 **HOUSING GP-FLYWHEEL** *(contd.)* **i03624091**

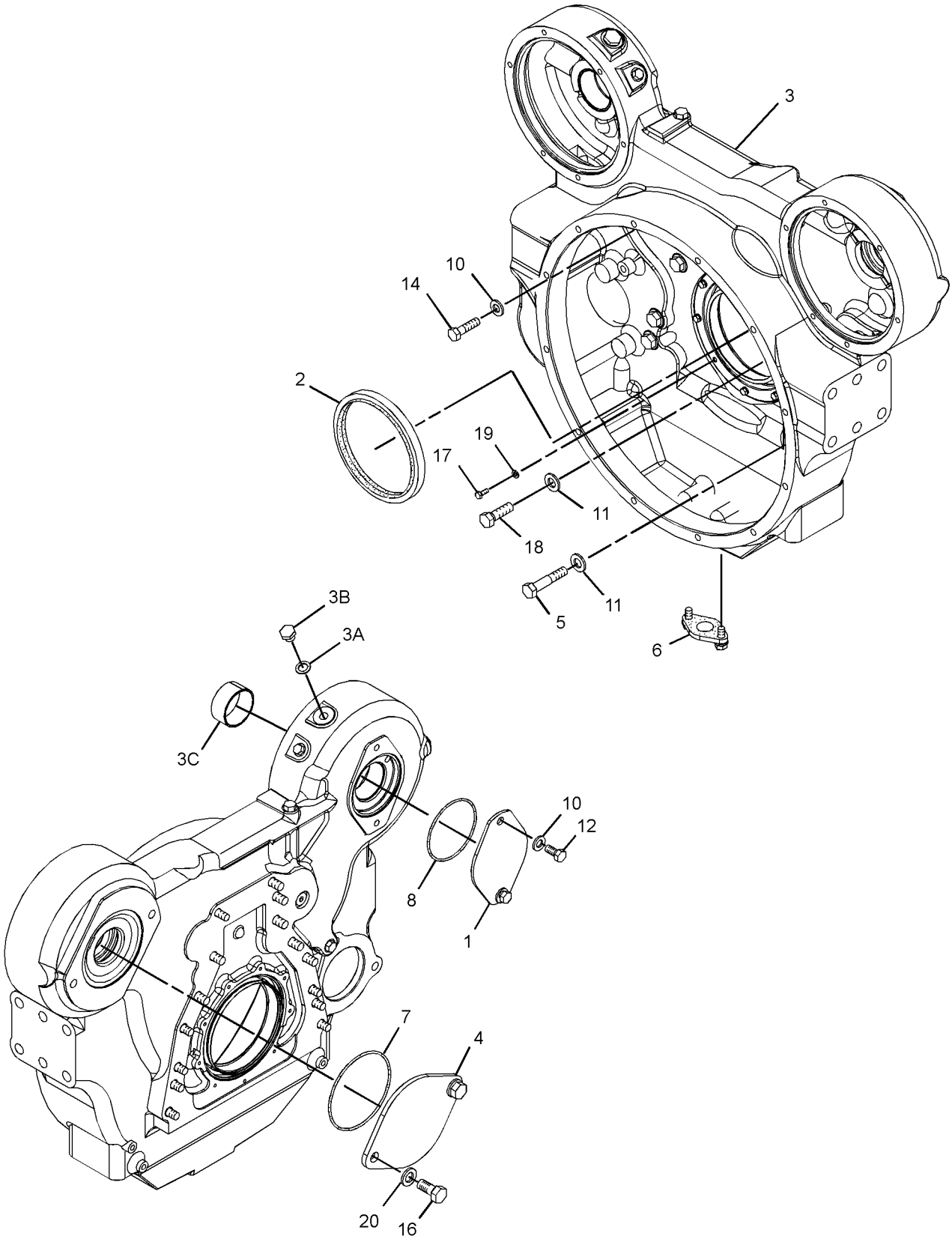

GRAPHIC #1 **<END>** g01637342

218-7272 HOUSING GP-FRONT

S/N: RSX1037-UP

PART OF 226-9770 ENGINE AR-COMPLETE, 263-6681 ENGINE AR-CORE

SMCS-1151, 1162, 1206 **i03997814**

NOTE	REF NO	GRAPHIC REF	PART NUMBER	QTY	PART NAME 1 2 3 4 5 6 (PRODUCT LEVEL)	SEE PAGE
	1	1	*356-0955*	1	GEAR AS-DRIVE	
		1	**5P-6727**	1	BALL BEARING	
		1	**8H-9789**	1	BEARING AS-BALL	
		1	**221-9357**	1	GEAR-AUXILIARY DRIVE (40-TEETH)	
	2	1	**9M-1974**	30	WASHER-HARD (8.8X16X2-MM THK)	
	3	1	**251-4314**	1	ADAPTER	
	4	1	**278-7093**	1	COVER AS	
	5	1	**9X-8256**	5	WASHER (6.6X12X2-MM THK)	
	6	1	**257-2015**	1	GASKET	
	7	1	**223-7852**	1	SEAL-INTEGRAL	
	8	1	**226-4755**	1	SEAL GP-CRANKSHAFT (FRONT)	
		1	**169-4166**	1	SEAL GP-CRANKSHAFT (FRONT)	
		1	**220-3373**	1	SEAL-RING	
	9	1	**329-3061**	1	HOUSING AS-FRONT	
	9A	1	**6V-3535**	2	DOWEL	
	10	1	**117-8801**	1	SEAL-O-RING	
M	11	1	**6V-2317**	17	BOLT (M8X1.25X30-MM)	
M	12	1	**6V-5192**	3	BOLT-SOCKET HEAD (M8X1.25X30-MM)	
M	13	1	**6V-5219**	9	BOLT (M8X1.25X40-MM)	
M	14	1	**6V-8225**	5	NUT (M6X1-THD)	
M	15	1	**3E-8016**	1	BOLT-SELF-LOCKING (M8X1.25X25-MM)	

M-METRIC PART

218-7272 **HOUSING GP-FRONT** *(contd.)* **i03997814**

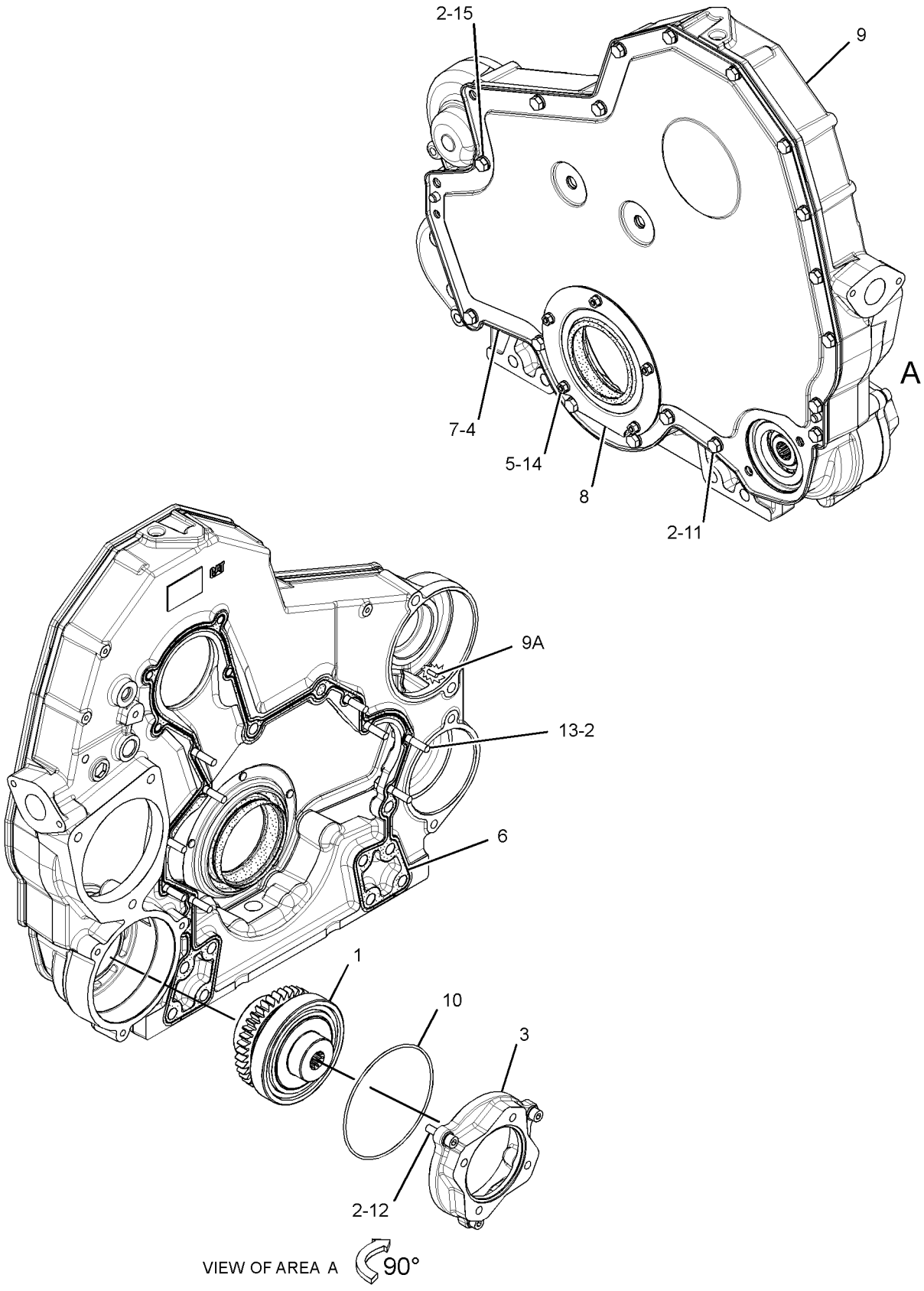

GRAPHIC #1 **<END>** g02218914

237-4376 LIFTER GP-VALVE—MECHANISM

S/N: RSX1037-UP

PART OF 240-7272 VALVE MECHANISM GP

SMCS-1209 **i03596460**

NOTE	REF NO	GRAPHIC REF	PART NUMBER	QTY	PART NAME 1 2 3 4 5 6 (PRODUCT LEVEL)	SEE PAGE
	1	1	**202-7475**	6	LIFTER AS-UNIT INJECTOR	
	2	1	**251-1005**	12	LIFTER AS-VALVE	
	3	1	**269-2862**	5	BRACKET AS (INTERMEDIATE)	
					(EACH INCLUDES)	
		1	**129-2893**	1	DOWEL	
	4	1	**269-2860**	1	BRACKET AS (FRONT)	
		1	**129-2893**	1	DOWEL	
	5	1	**240-2636**	1	SHAFT AS	
	5A	1	**0L-1026**	2	PLUG-CUP	
	6	1	**269-2864**	1	BRACKET AS (REAR)	
	6A	1	**5L-4763**	1	PIN-SPRING	
M	7	1	**6V-5843**	7	BOLT (M10X1.5X45-MM)	
	8	1	**8E-8439**	1	DOWEL	

M-METRIC PART

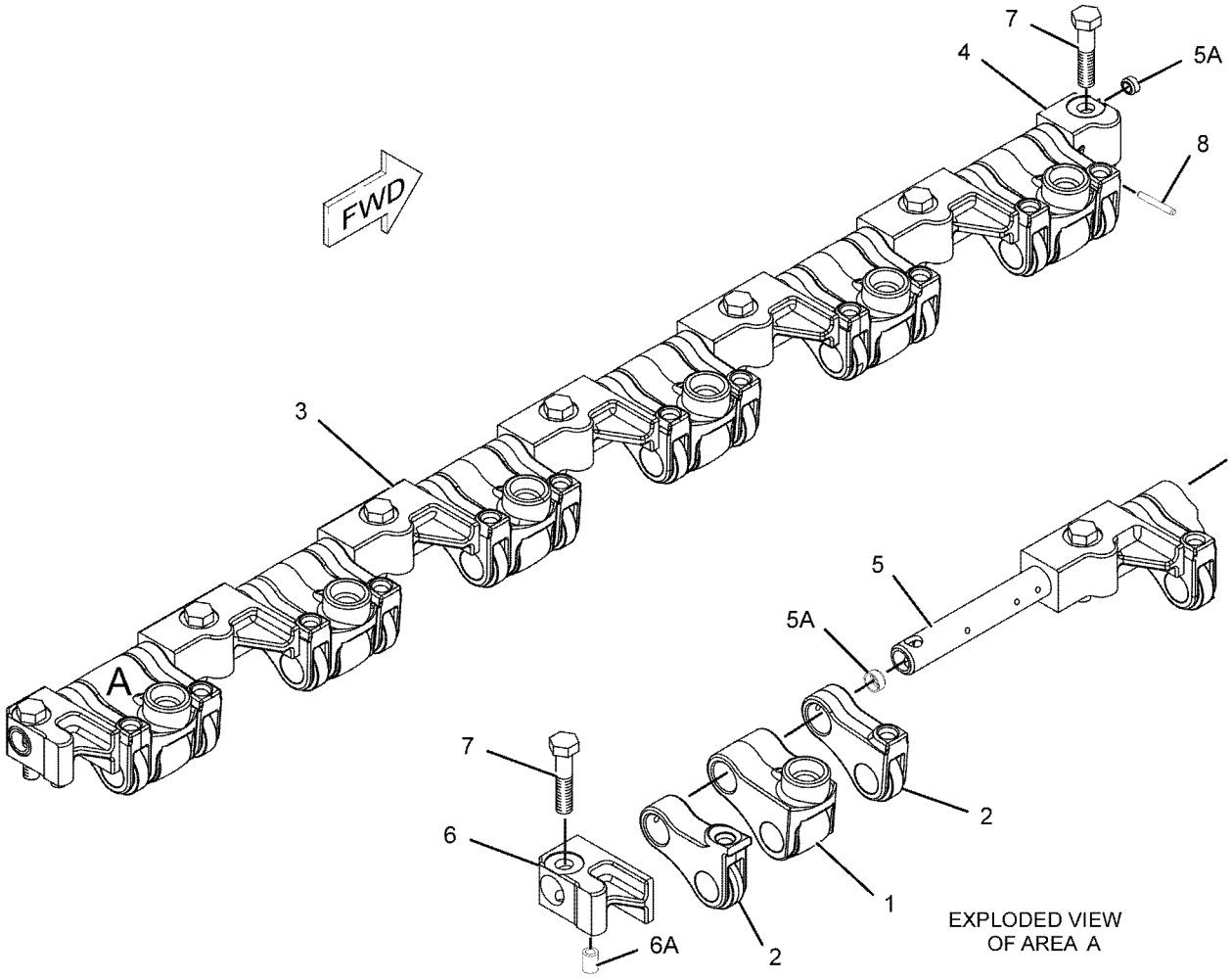

GRAPHIC #1 **<END>** g01119838

BASIC ENGINE

224-0880 LIFTING GP-ENGINE

S/N: RSX1037-UP

PART OF 226-9770 ENGINE AR-COMPLETE

SMCS-1122 **i01861300**

NOTE	REF NO	GRAPHIC REF	PART NUMBER	QTY	PART NAME 1 2 3 4 5 6 (PRODUCT LEVEL)	SEE PAGE
	1	1	**224-4140**	2	EYE-LIFTING	
	2	1	**5P-8245**	8	WASHER-HARD (13.5X25.5X3-MM THK)	
M	3	1	**6V-3668**	8	BOLT (M12X1.75X30-MM)	

M-METRIC PART

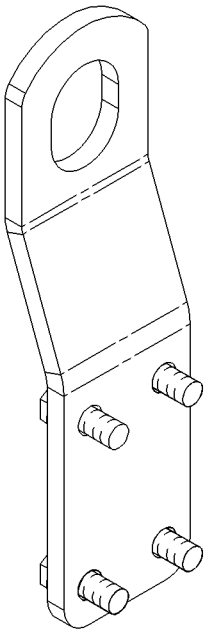

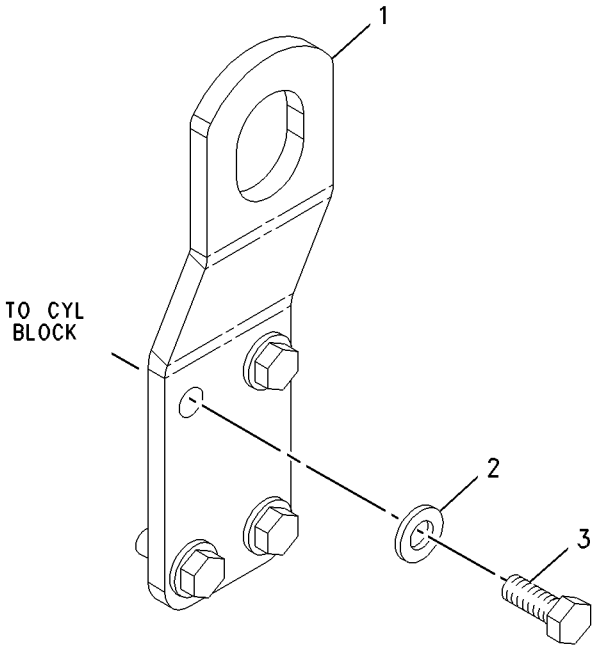

GRAPHIC #1 **<END>** g00950265

231-2157 MOUNTING GP-ENGINE & XMSN

S/N: R9J1-UP

PART OF 349-2555 COMMON AR

SMCS-1152, 1153, 1154, 3082 **i02570476**

NOTE	REF NO	GRAPHIC REF	PART NUMBER	QTY	PART NAME 1 2 3 4 5 6 (PRODUCT LEVEL)	SEE PAGE
	1	1	**7X-0568**	12	WASHER-HARD (13.5X25.5X5-MM THK)	
	2	1	**8R-8525**	2	WASHER (20.5X120X5-MM THK)	
	3	1	**174-9527**	2	MOUNT AS	
					(EACH INCLUDES)	
		1	**9W-6582**	1	SLEEVE	
		1	**9W-6584**	1	WASHER (20.5X114X10-MM THK)	
		1	**9W-9930**	1	MOUNT AS	
	4	1	**252-2177**	2	MOUNT AS	
					(EACH INCLUDES)	
		1	**3E-4887**	1	SLEEVE	
		1	**3E-4888**	2	WASHER (32X144X12-MM THK)	
		1	**6Y-9960**	1	MOUNT AS	
	5	1	**295-4857**	1	SUPPORT (LH)	
M	6	1	**107-3953**	2	BOLT (M30X3.5X150-MM)	
	7	1	**198-4781**	8	WASHER-HARD (22X40X10-MM THK)	
	8	1	**295-4856**	1	SUPPORT (RH)	
M	9	1	**7X-2564**	8	BOLT (M20X2.5X90-MM)	
	10	1	**8T-4123**	2	WASHER (22X35X3.5-MM THK)	
M	11	1	**8T-4183**	10	BOLT (M12X1.75X40-MM)	
M	12	1	**8T-4194**	2	BOLT (M12X1.75X50-MM)	
M	13	1	**8T-6381**	2	BOLT (M20X2.5X120-MM)	
	14	1	**9X-8258**	2	WASHER (33X56X6-MM THK)	

M-METRIC PART

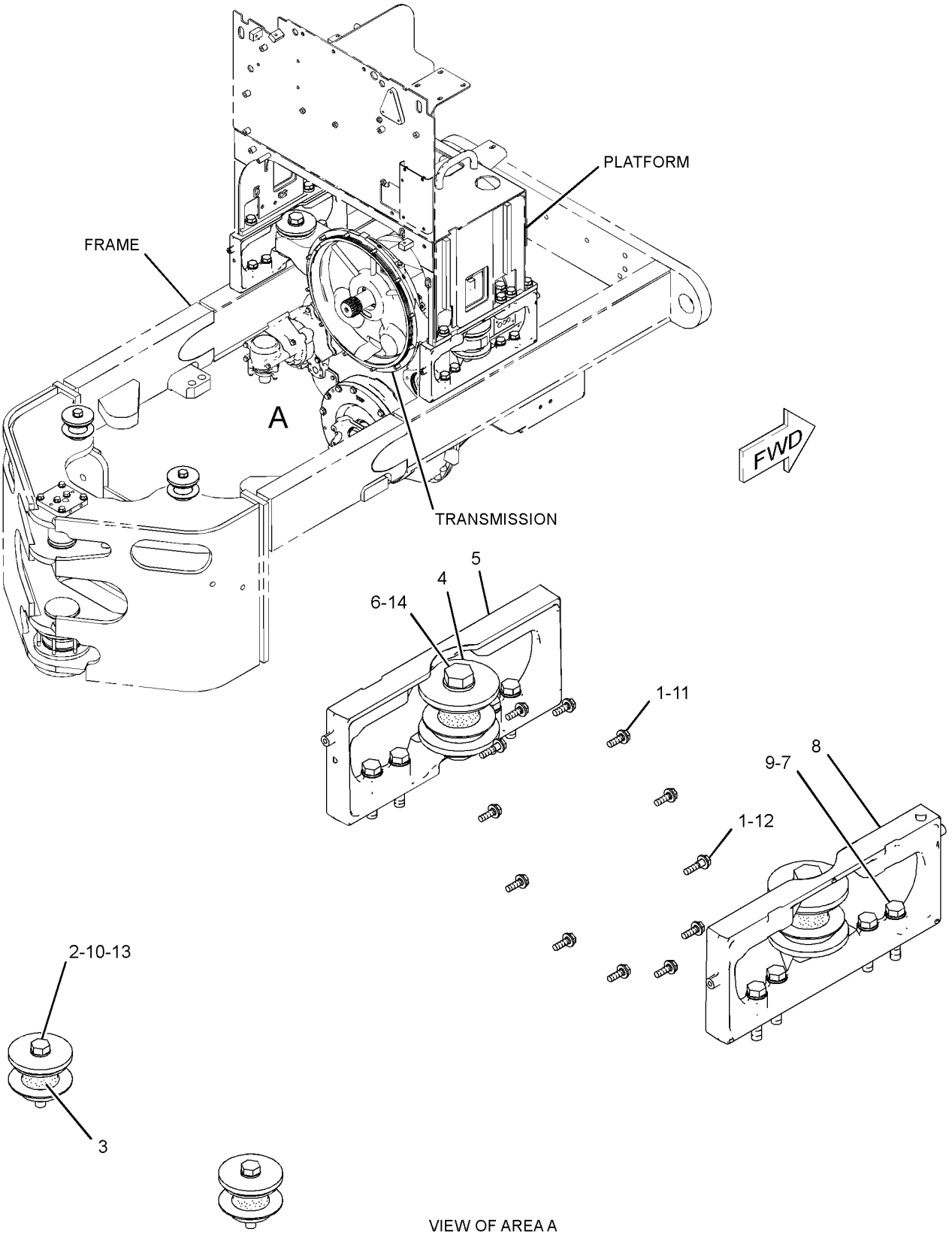

VIEW OF AREA A

GRAPHIC #1 **<END>** g01288830

219-7440 MOUNTING GP-FAN DRIVE

S/N: RSX1037-UP
52-MM
PART OF 226-9770 ENGINE AR-COMPLETE

SMCS-1359 **i01879231**

NOTE	REF NO	GRAPHIC REF	PART NUMBER	QTY	PART NAME 1 2 3 4 5 6 (PRODUCT LEVEL)	SEE PAGE
M	1	1	**123-0764**	2	STUD-TAPERLOCK (BOLT)	
	2	1	**5P-8245**	2	WASHER-HARD (13.5X25.5X3-MM THK)	

M-METRIC PART

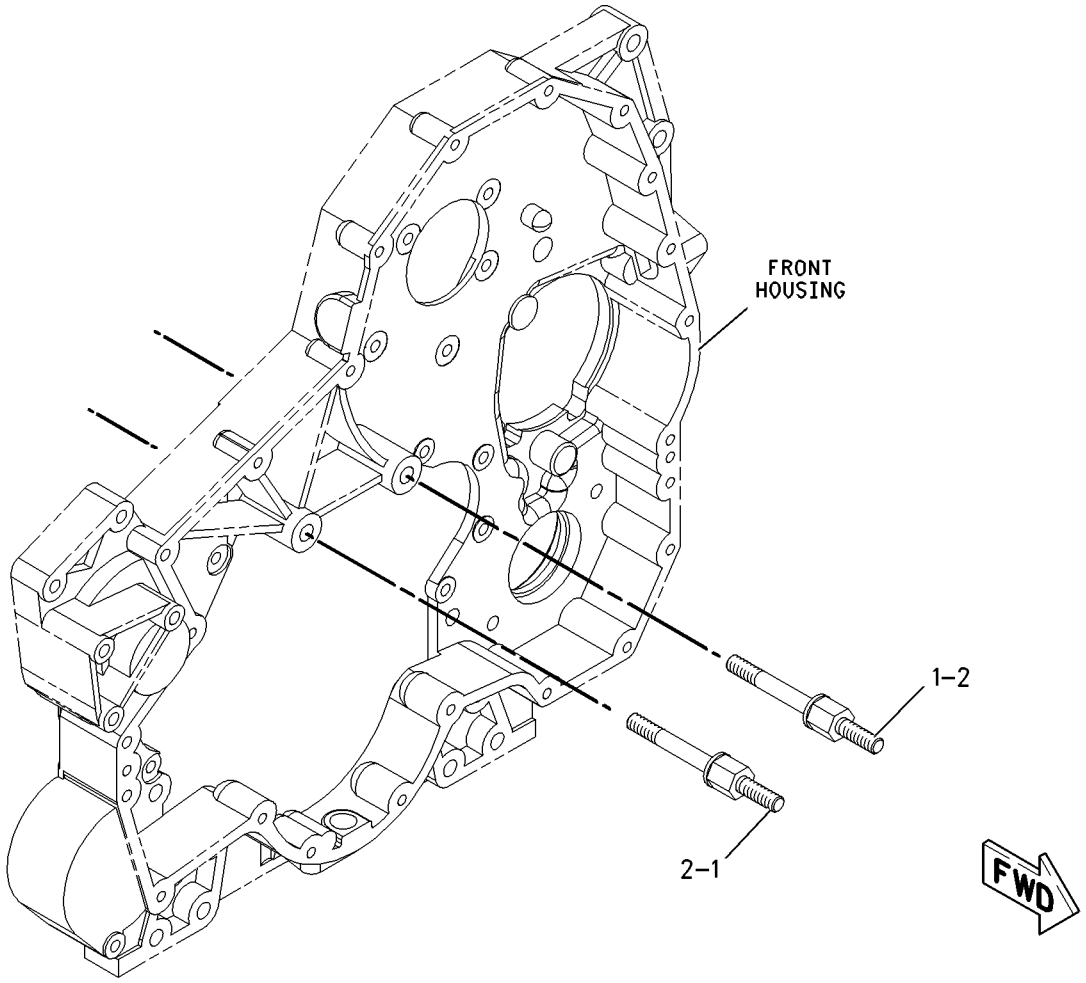

GRAPHIC #1 **<END>** g00948687

229-8084 MOUNTING GP-VALVE MECHANISM

S/N: RSX1037-UP
NON-VARIABLE VALVE ACTUATOR
PART OF 226-9770 ENGINE AR-COMPLETE, 263-6681 ENGINE AR-CORE
FOR USE WITH NON-VARIABLE VALVE ACTUATOR ENGINES

SMCS-1102, 1107, 1154 **i02038719**

NOTE	REF NO	GRAPHIC REF	PART NUMBER	QTY	PART NAME 1 2 3 4 5 6 (PRODUCT LEVEL)	SEE PAGE
	1	1	**241-0847**	6	BOLT (M12-1.75X93-MM THD)	

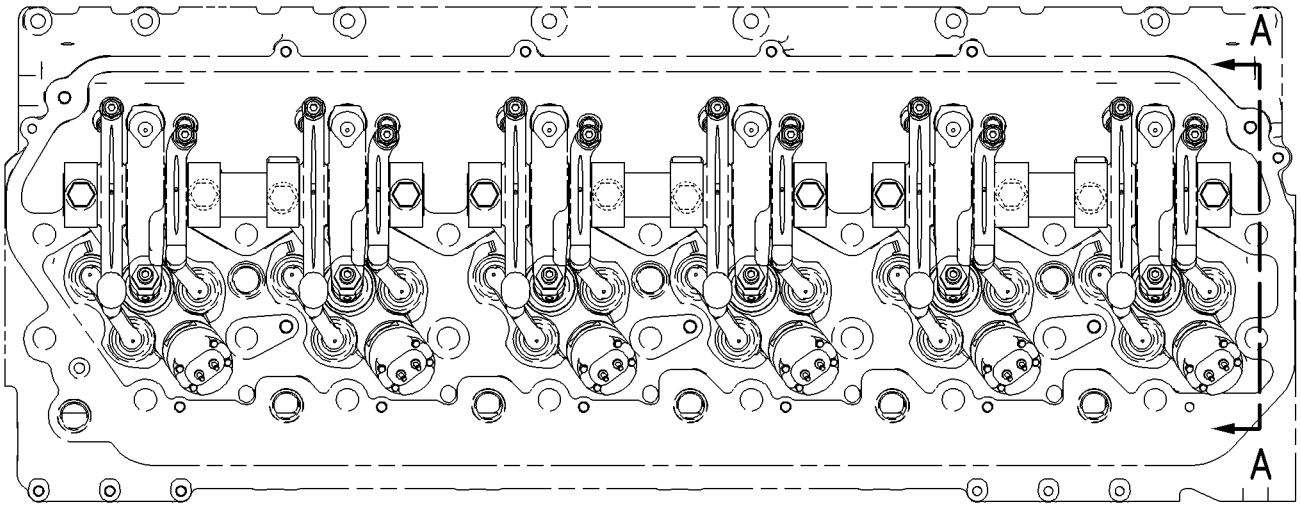

TOP VIEW

FWD

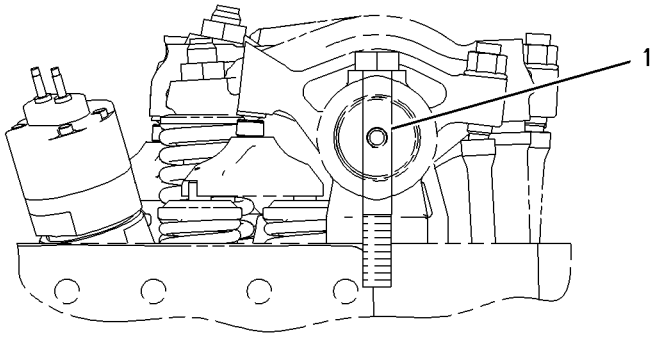

VIEW A-A

GRAPHIC #1 **<END>** g00950829

240-3279 PAN GP-OIL–ENGINE

S/N: RSX1037-UP
34 LITER. REAR SUMP
PART OF 226-9770 ENGINE AR-COMPLETE

SMCS-1302 **i03766313**

NOTE	REF NO	GRAPHIC REF	PART NUMBER	QTY	PART NAME 1 2 3 4 5 6 (PRODUCT LEVEL)	SEE PAGE
	1	1	**9X-6451**	2	PLUG-DRAIN (ENGINE OIL PAN)	
	2	1	**210-1746**	1	BELL AS-SUCTION	
		1	**210-1743**	1	ELBOW	
	3	1	**217-3673**	1	SEAL-ISOLATION	
	4	1	**217-3674**	14	FASTENER AS	
	5	1	**240-3277**	1	PAN-OIL	
	6	1	**061-9458**	2	SEAL-O-RING	
M	7	1	**3E-8016**	2	BOLT-SELF-LOCKING (M8X1.25X25-MM)	
	9	1	**5P-8211**	1	SEAL-O-RING	
	10	1	**5P-8245**	4	WASHER-HARD (13.5X25.5X3-MM THK)	
M	11	1	**6A-5591**	4	BOLT (M12X1.75X25-MM)	
	12	1	**6N-8863**	14	WASHER (10.2X32X2.5-MM THK)	
M	13	1	**6V-4249**	13	BOLT (M10X1.5X50-MM)	
	14	1	**9M-1974**	2	WASHER-HARD (8.8X16X2-MM THK)	
	15	1	*319-6234*	2	PLUG AS	
					(EACH INCLUDES)	
	15A	1	**9S-9334**	1	PLUG-O-RING	
	15B	1	**238-5084**	1	SEAL-O-RING	
	16	1	**287-3049**	1	STUD (M10X1.5X50-MM)	

M-METRIC PART

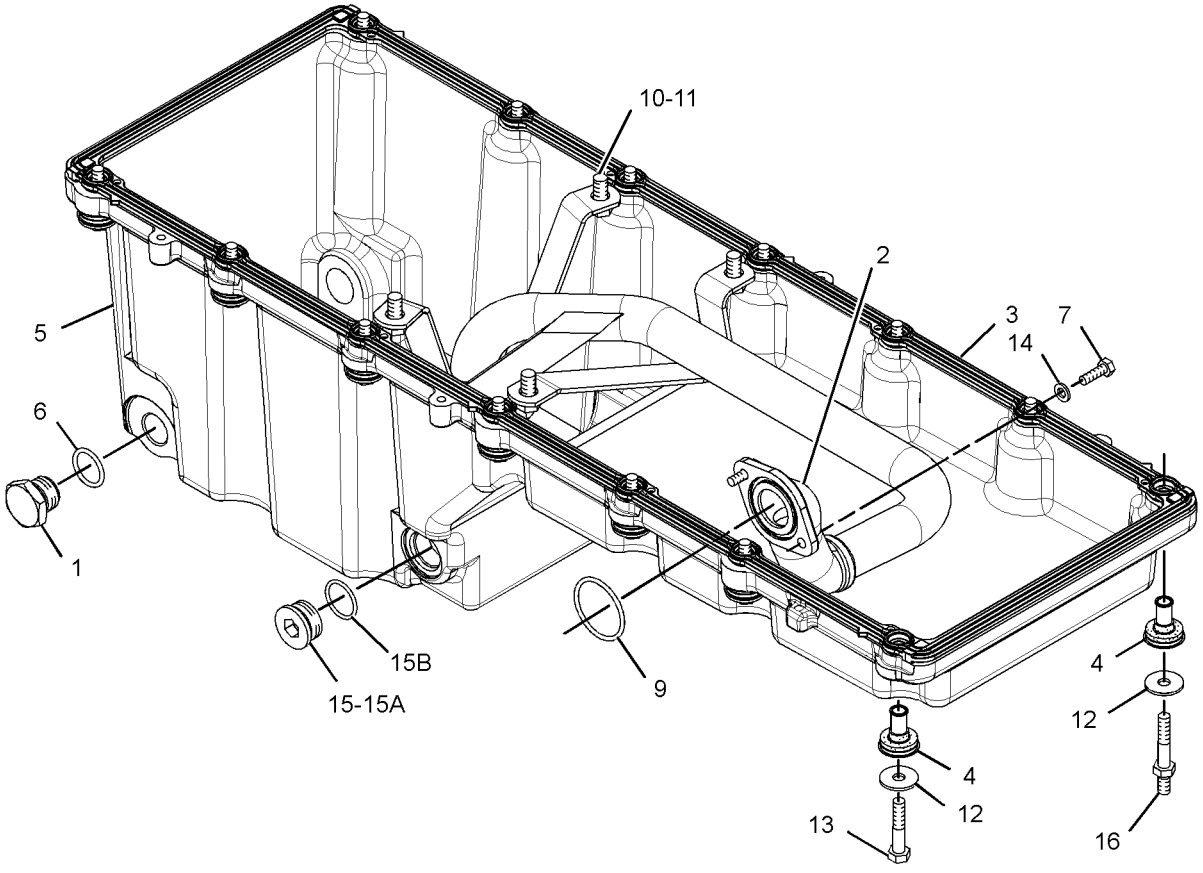

GRAPHIC #1 **<END>** g02033197

BASIC ENGINE

238-2721 PISTON & ROD GP

S/N: RSX1037-2411

PART OF 263-6681 ENGINE AR-CORE

SMCS-1225 **i02616556**

NOTE	REF NO	GRAPHIC REF	PART NUMBER	QTY	PART NAME 1 2 3 4 5 6 (PRODUCT LEVEL)	SEE PAGE
	1	1	**116-1089**	1	BEARING-CONNECTING ROD (STANDARD)	
AB		1	**128-0395**		BEARING-CONNECTING ROD (0.51-MM US)	
AB		1	**128-0396**		BEARING-CONNECTING ROD (0.76-MM US)	
	2	1	**265-1113**	1	RING-PISTON (OIL CONTROL)	
R	3	1	**160-8192**	1	ROD AS-CONNECTING	
	3A	1	**219-4458**	2	PIN-DOWEL	
	3B	1	**115-2972**	1	BEARING-CONNECTING ROD	
M	3C	1	**115-2973**	2	BOLT-CONNECTING ROD	
	4	1	**197-9326**	2	RETAINER	
	5	1	**197-9327**	1	PIN-PISTON	
	6	1	**238-2717**	1	RING-PISTON-TOP	
R	7	1	**265-1111**	1	BODY AS-PISTON	
	8	1	**197-9257**	1	RING-PISTON (INTERMEDIATE)	
	9	1	**226-6478**	1	JET AS-PISTON COOLING	
	10	1	**3E-4352**	1	WASHER-HARD (8.8X20.5X2.5-MM THK)	
M	11	1	**8T-0100**	1	BOLT (M8X1.25X60-MM)	

A-NOT PART OF THIS GROUP
B-USE AS REQUIRED
M-METRIC PART
R-REMFG PART MAY BE AVAILABLE

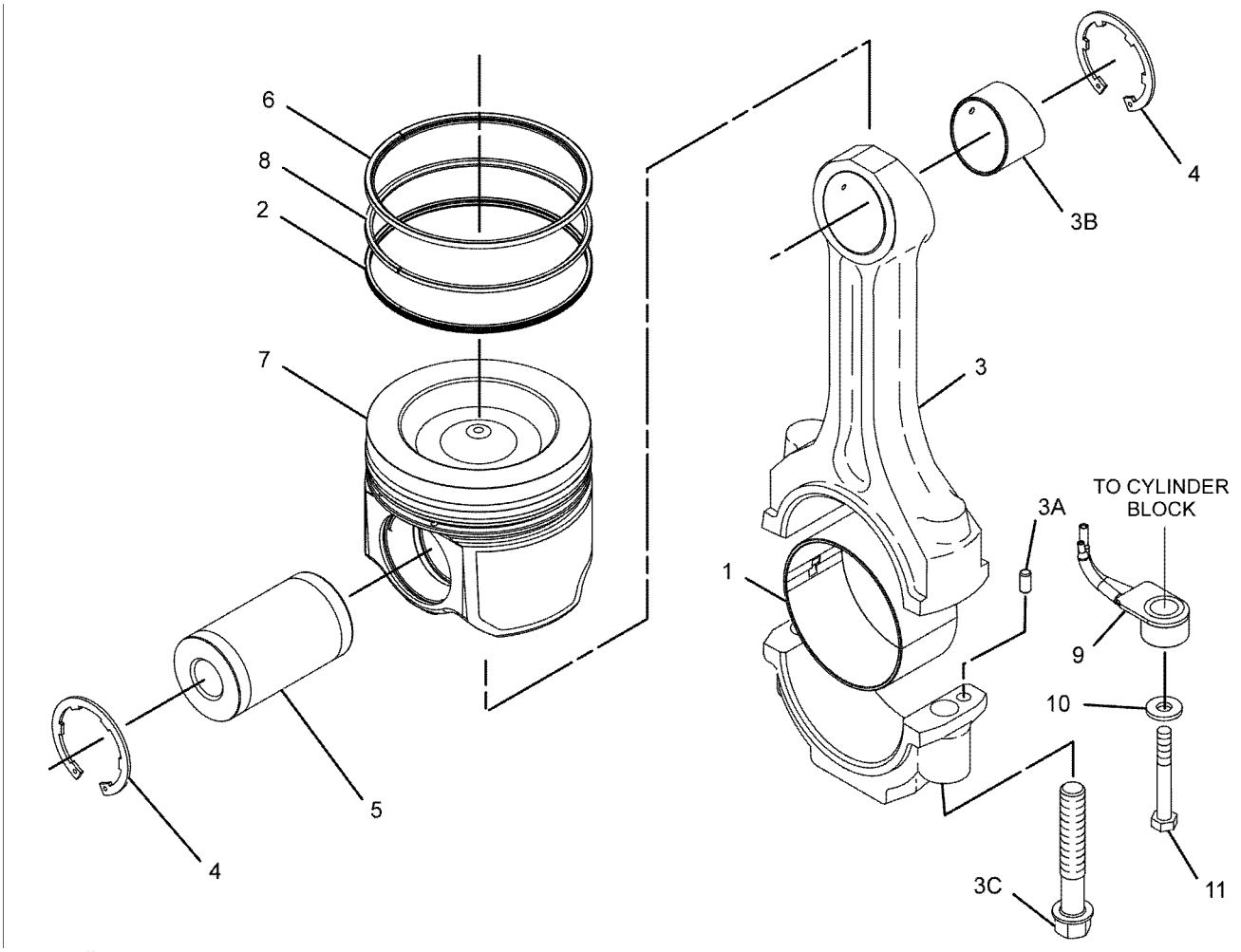

GRAPHIC #1 **<END>** g01137115

238-2721 PISTON & ROD GP

S/N: RSX2412-UP

PART OF 263-6681, 357-6586 ENGINE AR-CORE

SMCS-1225 **i03861233**

NOTE	REF NO	GRAPHIC REF	PART NUMBER	QTY	PART NAME 1 2 3 4 5 6 (PRODUCT LEVEL)	SEE PAGE
	1	1	**292-0484**	1	BEARING-CONNECTING ROD	
	2	1	**197-9257**	1	RING-PISTON (INTERMEDIATE)	
	3	1	**197-9326**	2	RETAINER	
	4	1	**197-9327**	1	PIN-PISTON	
CR	5	1	**223-9133**	1	ROD AS-CONNECTING	
	5A	1	**115-2972**	1	BEARING-CONNECTING ROD	
M	5B	1	**115-2973**	2	BOLT-CONNECTING ROD	
	6	1	**238-2717**	1	RING-PISTON-TOP	
	7	1	**339-8176**	1	BODY AS-PISTON	
	8	1	**265-1113**	1	RING-PISTON (OIL CONTROL)	
C	9	1	**276-7222**	1	TUBE AS-OIL JET	
	10	1	**3E-4352**	1	WASHER-HARD (8.8X20.5X2.5-MM THK)	
M	11	1	**8T-0100**	1	BOLT (M8X1.25X60-MM)	

C-CHANGE FROM PREVIOUS TYPE
M-METRIC PART
R-REMFG PART MAY BE AVAILABLE

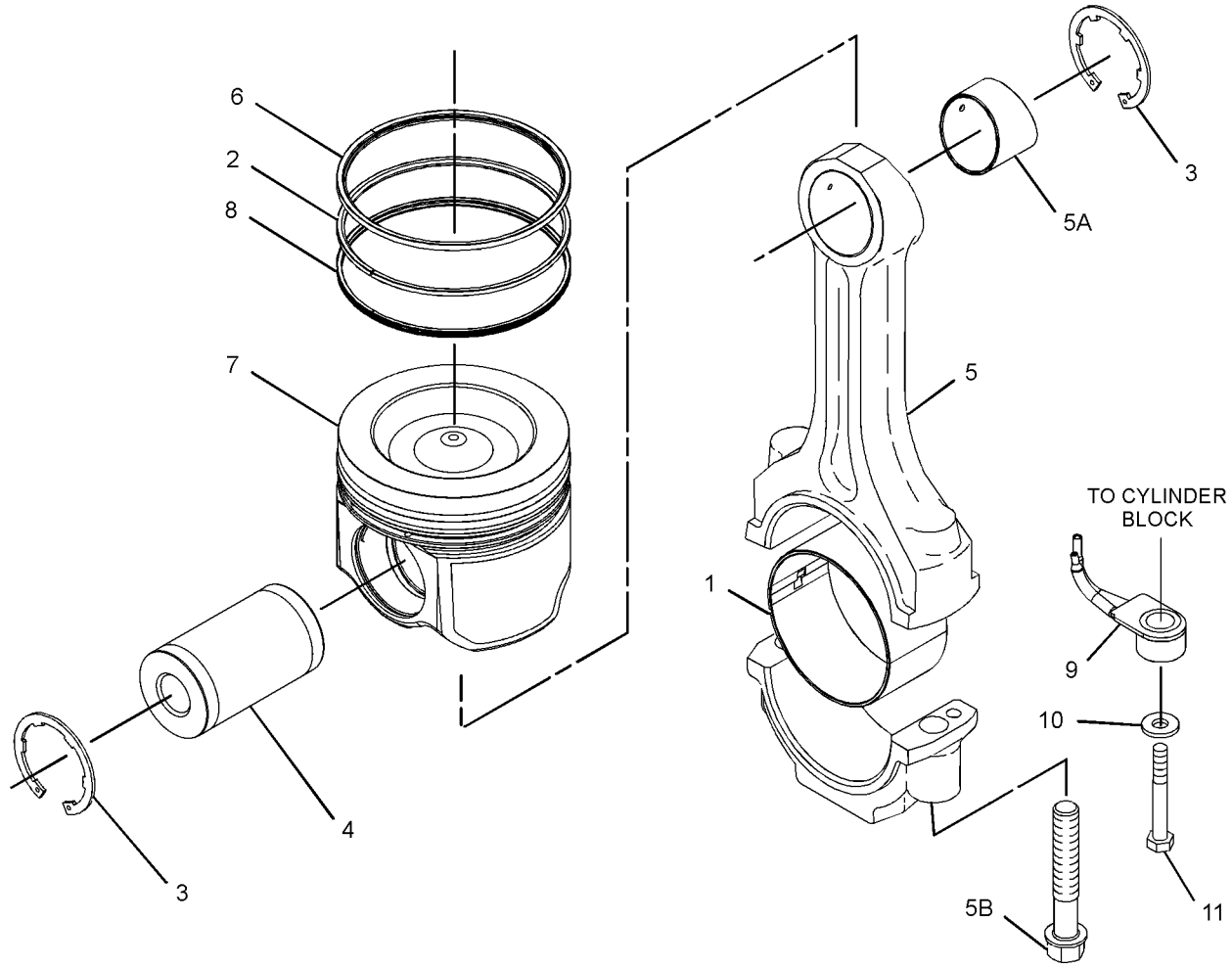

GRAPHIC #1 **<END>** g01272560

117-0165 PLUG GP-CYLINDER BLOCK–OIL GALLERY, END

S/N: RSX1037-UP

PART OF 226-9770 ENGINE AR-COMPLETE

SMCS-1201 **i01534512**

NOTE	REF NO	GRAPHIC REF	PART NUMBER	QTY	PART NAME 1 2 3 4 5 6 (PRODUCT LEVEL)	SEE PAGE
	1	1	**3B-0623**	1	PLUG-CUP	

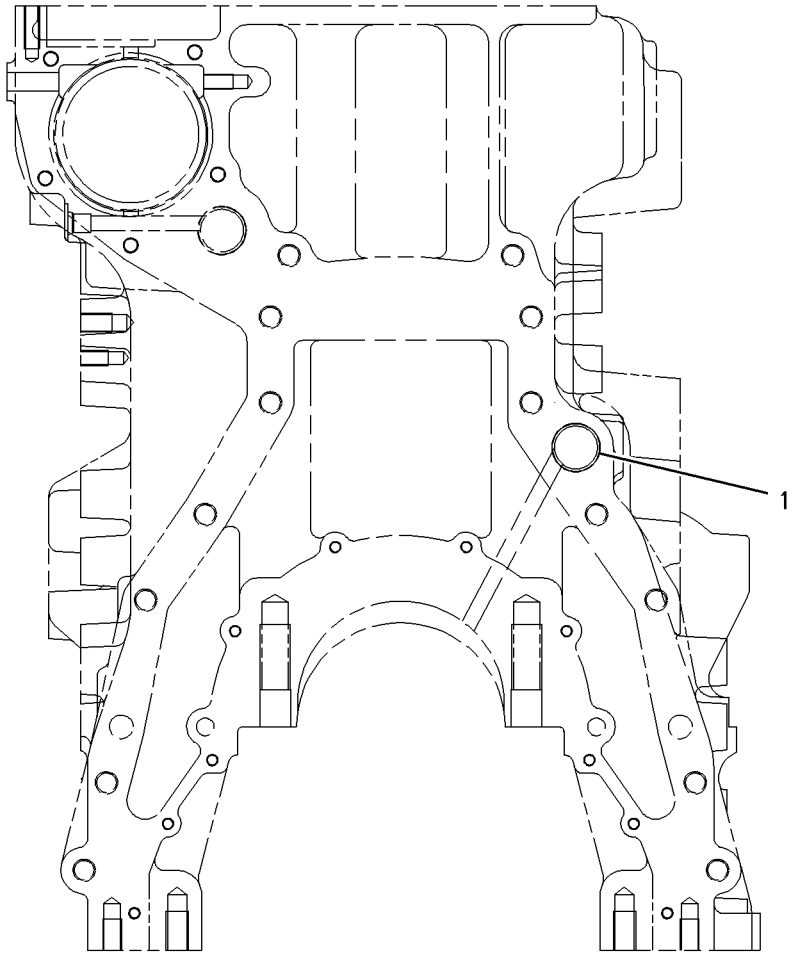

REAR VIEW

GRAPHIC #1 **<END>** g00796766

223-3875 PLUG GP-CYLINDER BLOCK

S/N: RSX1037-UP

PART OF 226-9770 ENGINE AR-COMPLETE, 263-6681 ENGINE AR-CORE

SMCS-1201 **i03997500**

NOTE	REF NO	GRAPHIC REF	PART NUMBER	QTY	PART NAME 1 2 3 4 5 6 (PRODUCT LEVEL)	SEE PAGE
	1	1	*307-2671*	1	PLUG AS	
		1	**9S-8002**	1	PLUG-O-RING	
		1	**214-7566**	1	SEAL-O-RING	

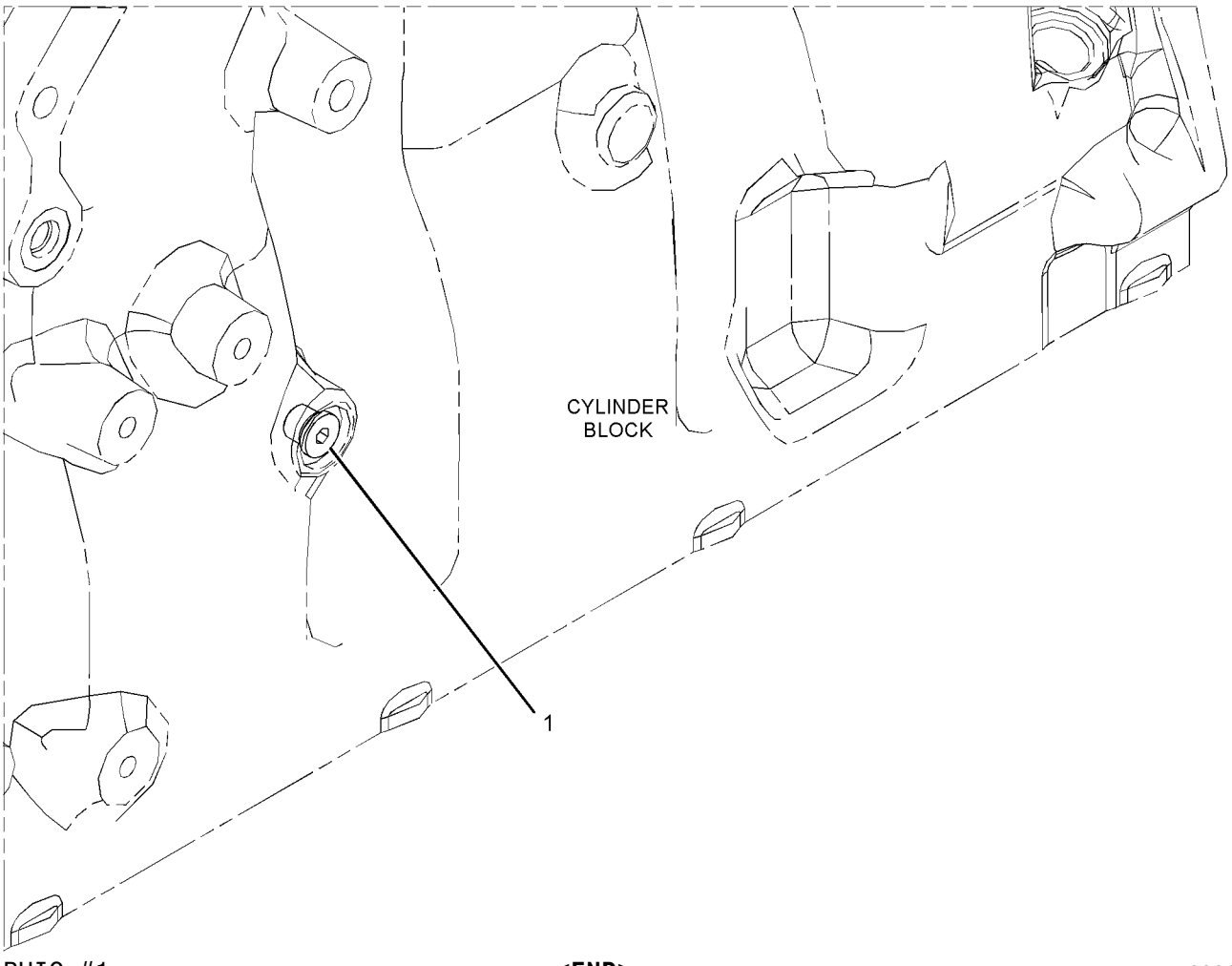

GRAPHIC #1 **<END>** g02218974

227-9545 PLUG GP-CYLINDER BLOCK–OIL GALLERY, RH

S/N: RSX1037-UP

PART OF 226-9770 ENGINE AR-COMPLETE

SMCS-1201 **i03833947**

NOTE	REF NO	GRAPHIC REF	PART NUMBER	QTY	PART NAME 1 2 3 4 5 6 (PRODUCT LEVEL)	SEE PAGE
	1	1	*183-3407*	2	PLUG AS	
					(EACH INCLUDES)	
		1	**9S-8004**	1	PLUG-O-RING	
	1A	1	**214-7568**	1	SEAL-O-RING	
	2	1	*307-2673*	1	PLUG AS	
		1	**9S-8005**	1	PLUG-O-RING	
	2A	1	**238-5080**	1	SEAL-O-RING	

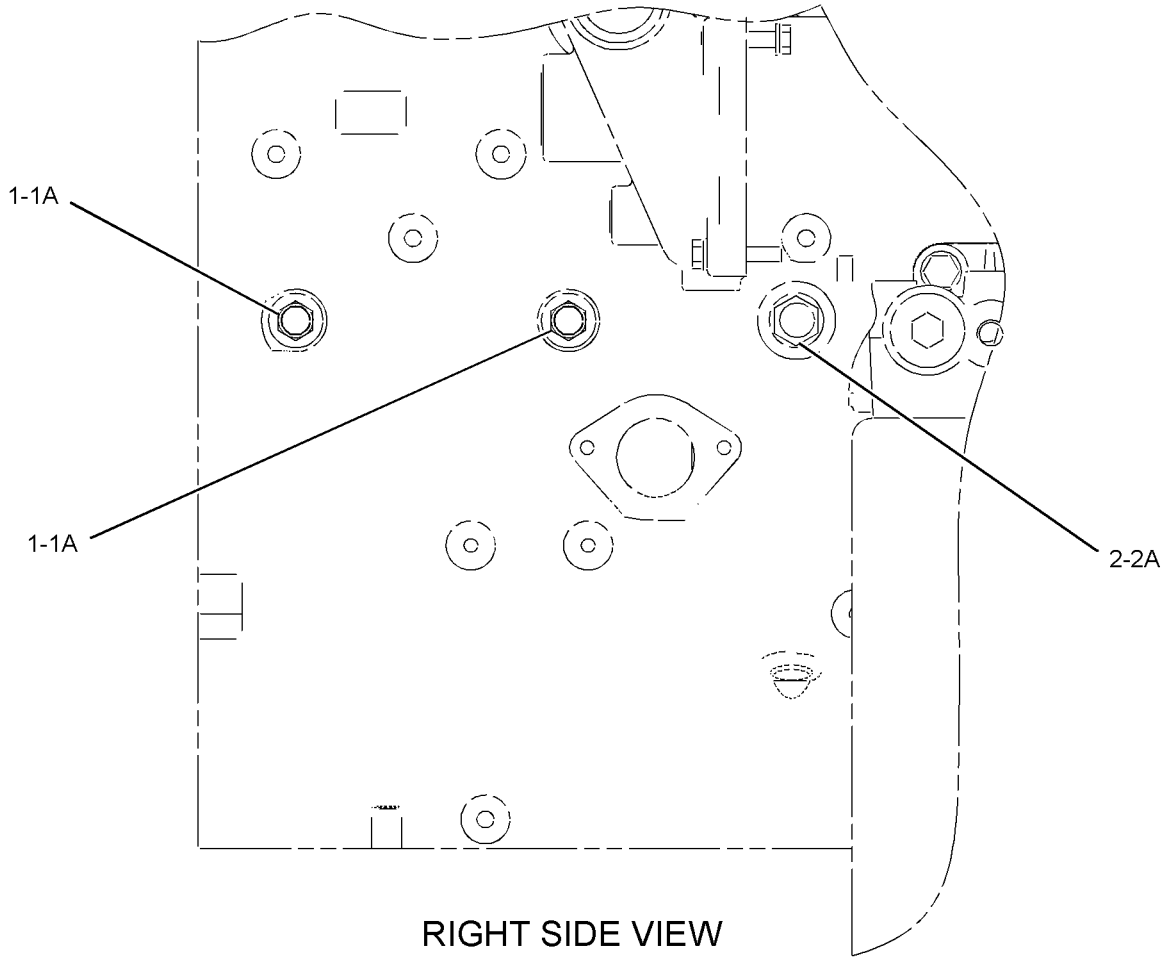

RIGHT SIDE VIEW

GRAPHIC #1 **<END>** g02083373

238-8962 PLUG GP-ENGINE

S/N: RSX1037-UP

PART OF 226-9770 ENGINE AR-COMPLETE

SMCS-1000, 1201 **i02663350**

NOTE	REF NO	GRAPHIC REF	PART NUMBER	QTY	PART NAME 1 2 3 4 5 6 (PRODUCT LEVEL)	SEE PAGE
	1	1	**9L-8493**	1	CAP-FLARED	
	2	1	**3D-2824**	1	SEAL-O-RING	
	3	1	**6V-3251**	1	SEAL-O-RING	
	4	1	**6V-6609**	1	SEAL-O-RING	
	5	1	**9S-8005**	1	PLUG-O-RING	
	6	1	**9S-8006**	1	PLUG-O-RING	
	7	1	**9S-8008**	1	PLUG-O-RING	

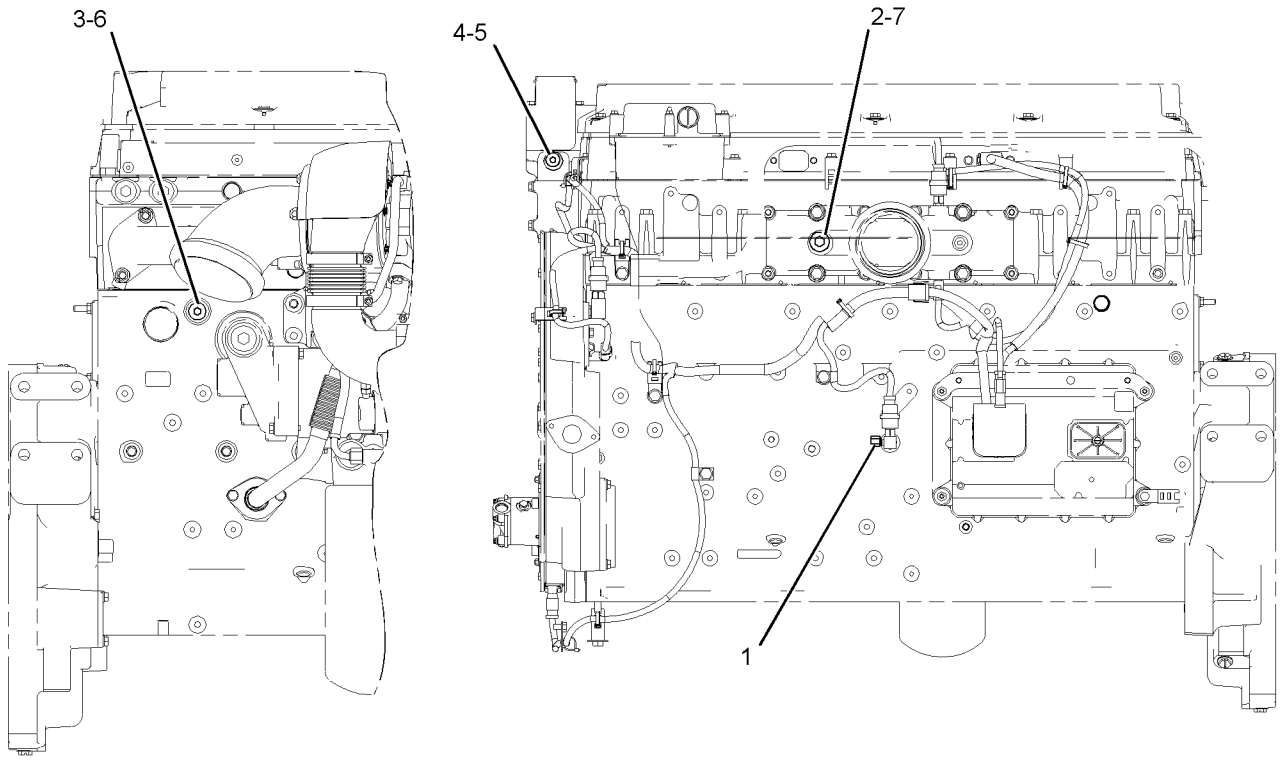

RIGHT SIDE VIEW

LEFT SIDE VIEW

GRAPHIC #1

<END>

g01061571

BASIC ENGINE

207-8103 PULLEY GP-CRANKSHAFT

S/N: RSX1037-UP
261.2MM DIAMETER, 8 GROOVE "K" SECTION
PART OF 226-9770 ENGINE AR-COMPLETE
FOR USE WITH ADAPTER OR FASTENER

SMCS-1205 **i02144251**

NOTE	REF NO	GRAPHIC REF	PART NUMBER	QTY	PART NAME 1 2 3 4 5 6 (PRODUCT LEVEL)	SEE PAGE
	1	1	**207-8107**	1	PULLEY (8 GROOVE)	

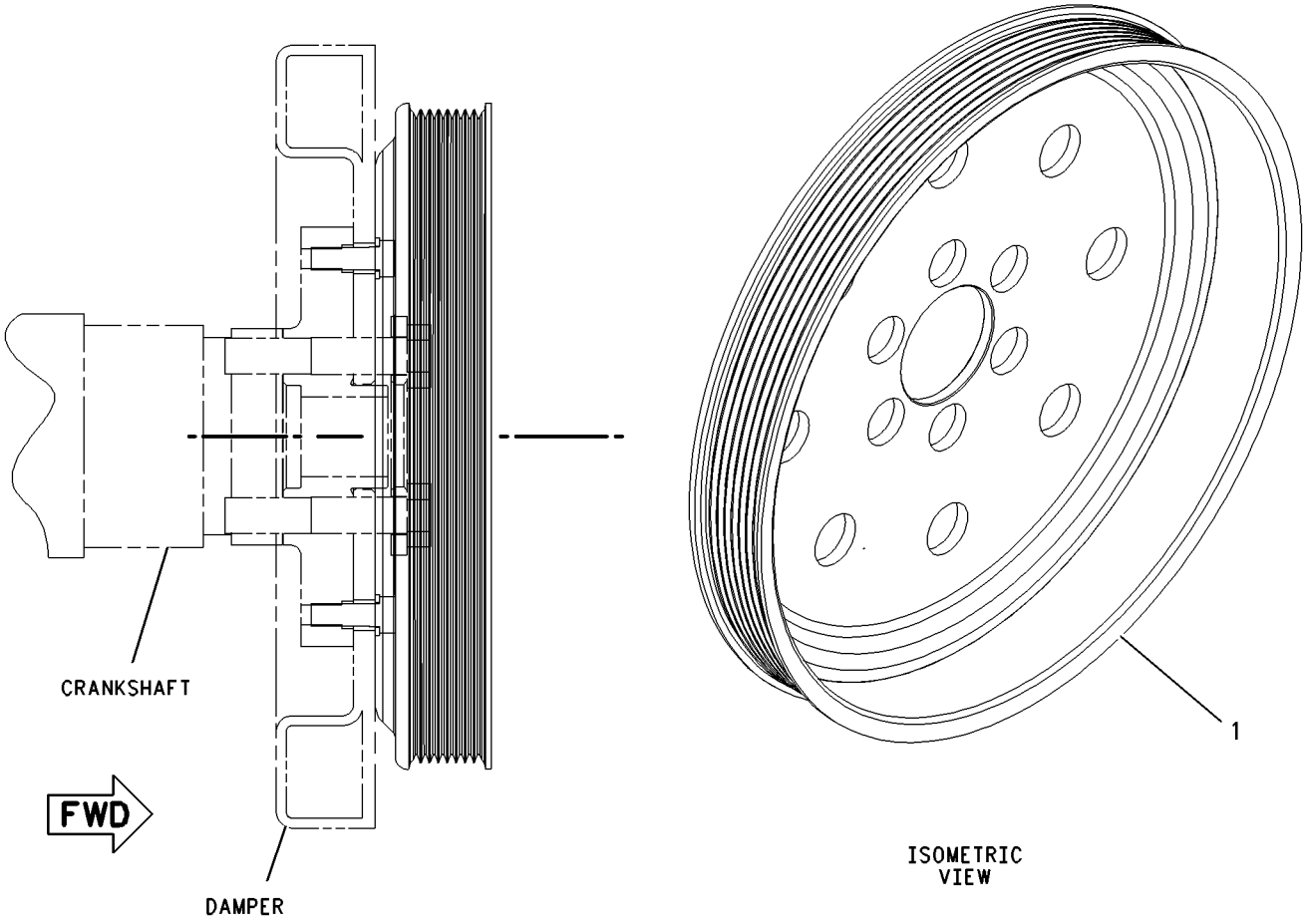

GRAPHIC #1 **<END>** g00951710

240-8461 ROCKER ARM GP–INLET

S/N: RSX1037-5663

PART OF 241-0835 ROCKER ARM GP

SMCS-1102, 1123 **i02663353**

NOTE	REF NO	GRAPHIC REF	PART NUMBER	QTY	PART NAME 1 2 3 4 5 6 (PRODUCT LEVEL)	SEE PAGE
M	1	1	**183-4365**	1	SCREW-ADJUSTMENT (M10X1.5-THD)	
M	2	1	**2Y-5829**	1	NUT (M10X1.5-THD)	
R	3	1	**240-8460**	1	ROCKER ARM AS (INLET)	

M-METRIC PART
R-REMFG PART MAY BE AVAILABLE

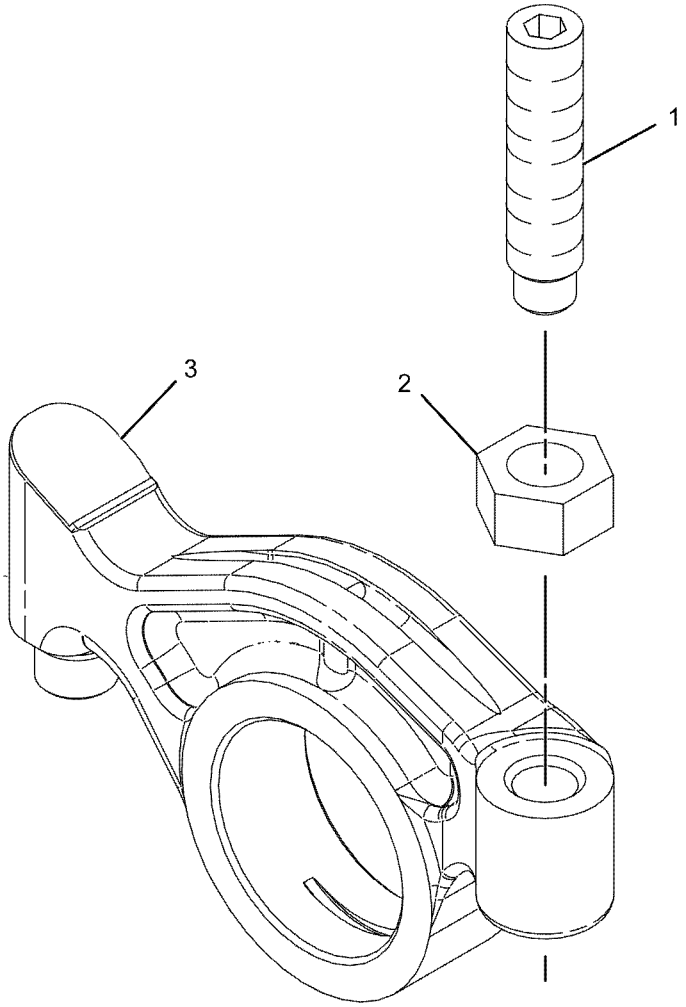

GRAPHIC #1 **<END>** g01030820

BASIC ENGINE

240-8463 ROCKER ARM GP–EXHAUST

S/N: RSX1037-5663

PART OF 241-0835 ROCKER ARM GP

SMCS-1102, 1123 **i02663354**

NOTE	REF NO	GRAPHIC REF	PART NUMBER	QTY	PART NAME 1 2 3 4 5 6 (PRODUCT LEVEL)	SEE PAGE
M	1	1	**183-4365**	1	SCREW-ADJUSTMENT (M10X1.5-THD)	
R	2	1	**240-8462**	1	ROCKER ARM AS (EXHAUST)	
M	3	1	**2Y-5829**	1	NUT (M10X1.5-THD)	

M-METRIC PART
R-REMFG PART MAY BE AVAILABLE

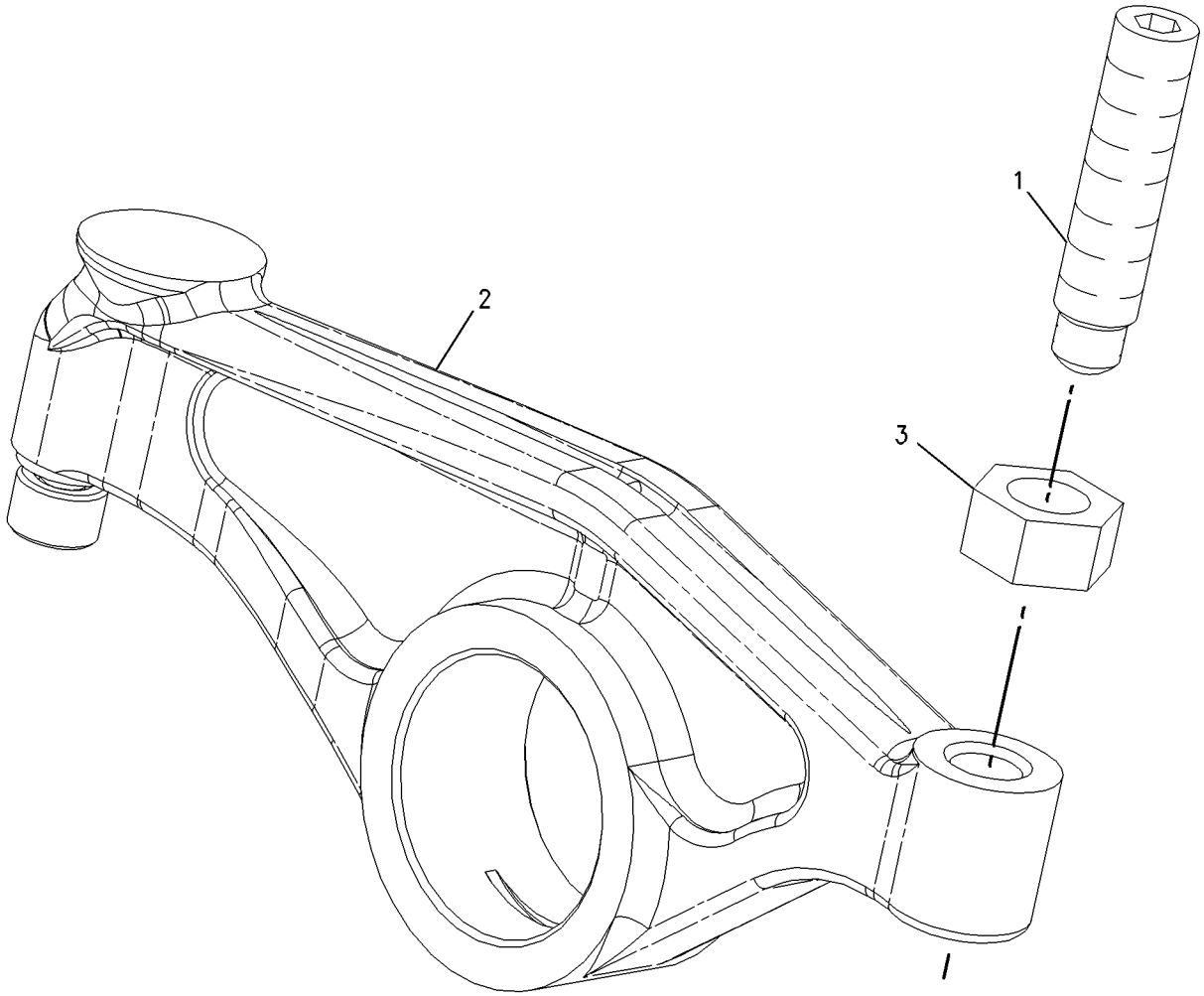

GRAPHIC #1 **<END>** g00956228

241-0835 ROCKER ARM GP

S/N: RSX1037-5663

PART OF 240-7272 VALVE MECHANISM GP

SMCS-1102, 1123 **i02697818**

NOTE	REF NO	GRAPHIC REF	PART NUMBER	QTY	PART NAME 1 2 3 4 5 6 (PRODUCT LEVEL)	SEE PAGE
	1	1	**242-7418**	1	BASE	
	2	1	**242-1401**	2	BASE AS	
	3	1	**224-4418**	1	SHAFT AS	
		1	**3S-6605**	2	PLUG-CUP	
CY	4	1	*241-0845*	2	ROCKER ARM GP (UNIT INJECTOR)	78
Y	5	1	*240-8461*	2	ROCKER ARM GP (INLET)	75
Y	6	1	*240-8463*	2	ROCKER ARM GP (EXHAUST)	76
	7	1	**241-0847**	2	BOLT (M12X1.75X93-MM)	

C-CHANGE FROM PREVIOUS TYPE
Y-SEPARATE ILLUSTRATION

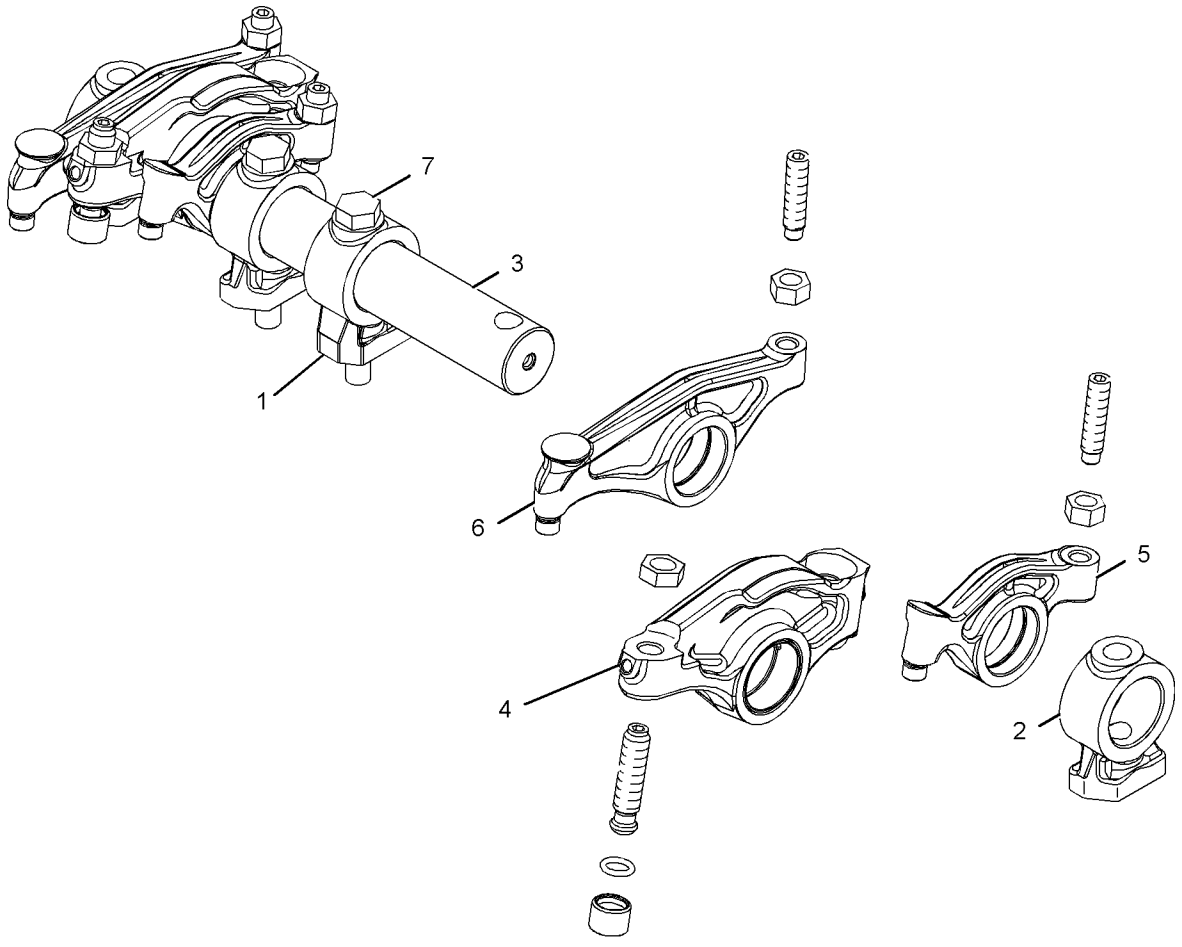

GRAPHIC #1 **<END>** g01083998

241-0845 ROCKER ARM GP–UNIT INJECTOR

S/N: RSX1037-5663

PART OF 241-0835 ROCKER ARM GP

SMCS-1102, 1123 **i02364624**

NOTE	REF NO	GRAPHIC REF	PART NUMBER	QTY	PART NAME 1 2 3 4 5 6 (PRODUCT LEVEL)	SEE PAGE
	1	1	**258-8721**	1	BUTTON	
	2	1	**229-5279**	1	SCREW-ADJUSTMENT	
R	3	1	**241-0844**	1	ROCKER ARM AS (UNIT INJECTOR)	
		1	**2D-6642**	2	BALL	
	4	1	**8L-2777**	1	SEAL-O-RING	
	5	1	**245-6095**	1	NUT-HEX THIN (M12X1.5-THD)	

R-REMFG PART MAY BE AVAILABLE

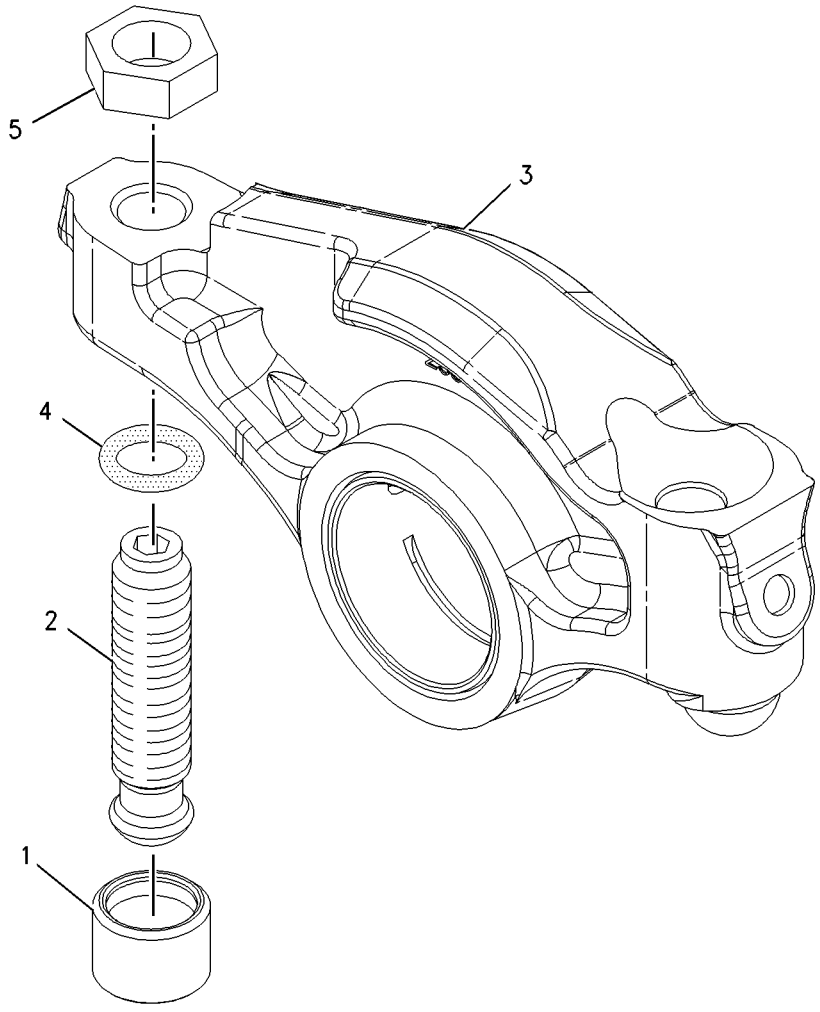

GRAPHIC #1 **<END>** g01007579

260-0251 ROCKER ARM GP—UNIT INJECTOR

S/N: RSX5664-UP

PART OF 260-0252 ROCKER ARM GP

SMCS-1102, 1123 **i02343172**

NOTE	REF NO	GRAPHIC REF	PART NUMBER	QTY	PART NAME 1 2 3 4 5 6 (PRODUCT LEVEL)	SEE PAGE
	1	1	**258-8721**	1	BUTTON	
	2	1	**274-4490**	1	SCREW-ADJUSTMENT	
R	3	1	**260-0915**	1	ROCKER ARM AS (UNIT INJECTOR)	
		1	**2D-6642**	1	BALL	
	4	1	**8L-2777**	1	SEAL-O-RING	
	5	1	**245-6095**	1	NUT-HEX THIN (M12X1.5-THD)	

R-REMFG PART MAY BE AVAILABLE

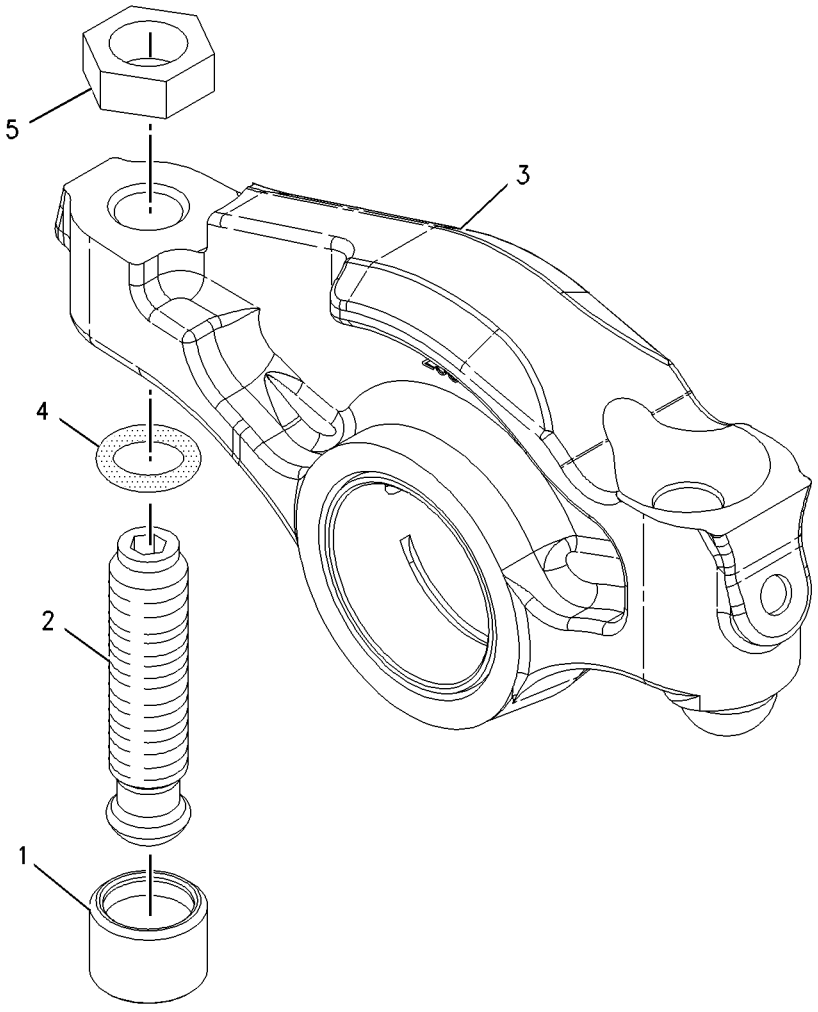

GRAPHIC #1 **<END>** g01007579

260-0252 ROCKER ARM GP

S/N: RSX5664-UP

PART OF 240-7272 VALVE MECHANISM GP

SMCS-1102, 1123 **i02667392**

NOTE	REF NO	GRAPHIC REF	PART NUMBER	QTY	PART NAME 1 2 3 4 5 6 (PRODUCT LEVEL)	SEE PAGE
	1	1	**224-4418**	1	SHAFT AS	
	1A	1	**3S-6605**	2	PLUG-CUP	
	2	1	**242-1401**	2	BASE AS	
	3	1	**242-7418**	1	BASE	
Y	4	1	*260-0251*	2	ROCKER ARM GP (UNIT INJECTOR)	79
Y	5	1	*261-2290*	2	ROCKER ARM GP (INLET)	81
Y	6	1	*261-2294*	2	ROCKER ARM GP (EXHAUST)	82
	7	1	**241-0847**	2	BOLT (M12X1.75X93-MM)	

Y-SEPARATE ILLUSTRATION

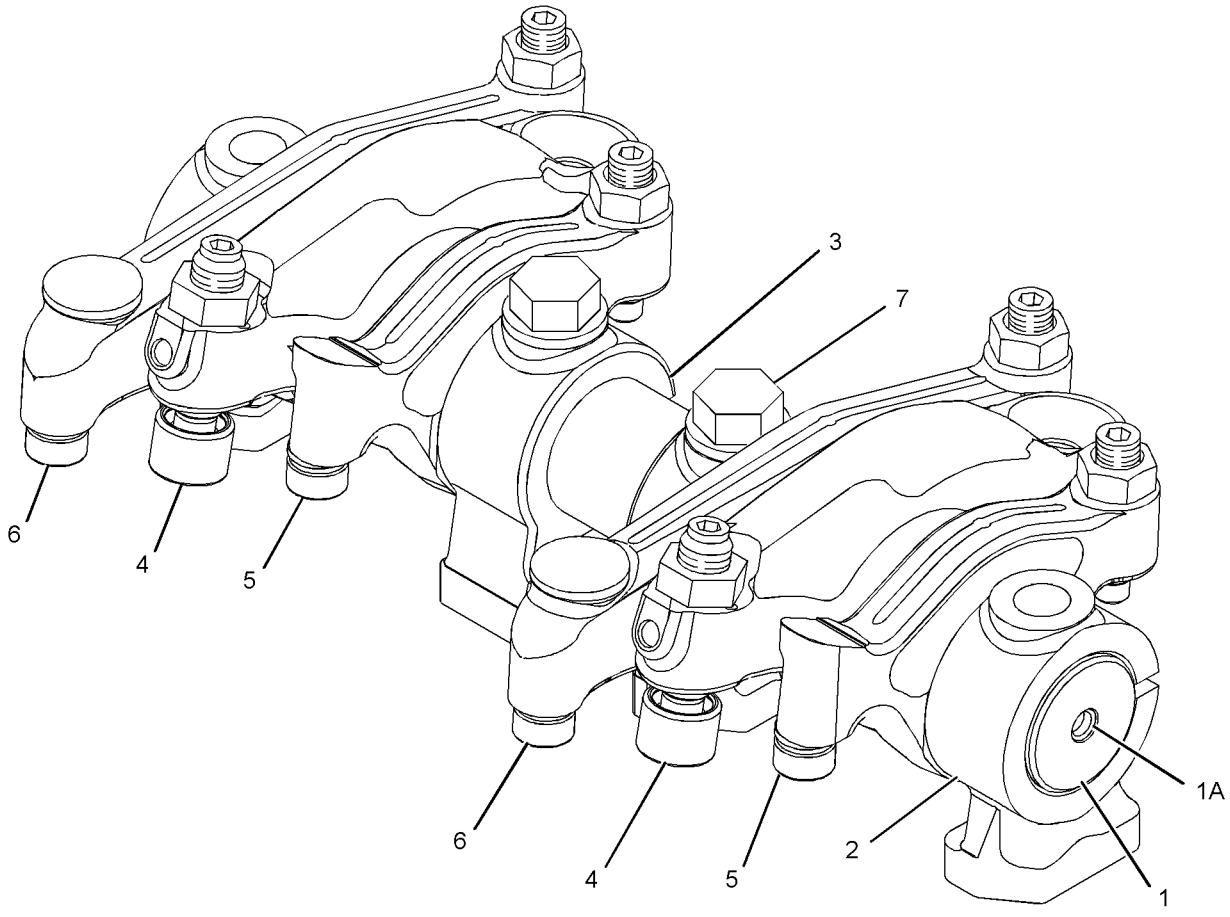

GRAPHIC #1 **<END>** g01207508

261-2290 ROCKER ARM GP–INLET

S/N: RSX5664-UP

PART OF 260-0252 ROCKER ARM GP

SMCS-1102, 1123 **i02663355**

NOTE	REF NO	GRAPHIC REF	PART NUMBER	QTY	PART NAME 1 2 3 4 5 6 (PRODUCT LEVEL)	SEE PAGE
M	1	1	**260-7524**	1	SCREW-VALVE ADJUSTMENT (M10X1.5-THD)	
M	2	1	**2Y-5829**	1	NUT (M10X1.5-THD)	
R	3	1	**261-2291**	1	ROCKER ARM AS (INLET)	

M-METRIC PART
R-REMFG PART MAY BE AVAILABLE

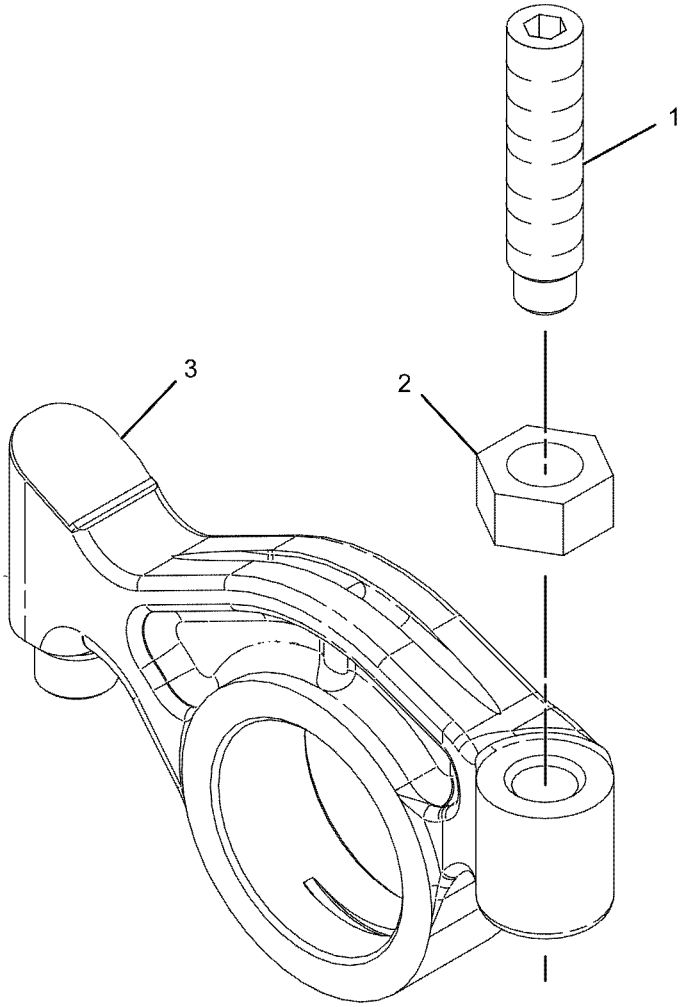

GRAPHIC #1 **<END>** g01030820

BASIC ENGINE

261-2294 ROCKER ARM GP–EXHAUST

S/N: RSX5664-UP

PART OF 260-0252 ROCKER ARM GP

SMCS-1102, 1123 **i02663356**

NOTE	REF NO	GRAPHIC REF	PART NUMBER	QTY	PART NAME 1 2 3 4 5 6 (PRODUCT LEVEL)	SEE PAGE
M	1	1	**260-7524**	1	SCREW-VALVE ADJUSTMENT (M10X1.5-THD)	
R	2	1	**261-2293**	1	ROCKER ARM AS (EXHAUST)	
M	3	1	**2Y-5829**	1	NUT (M10X1.5-THD)	

M-METRIC PART
R-REMFG PART MAY BE AVAILABLE

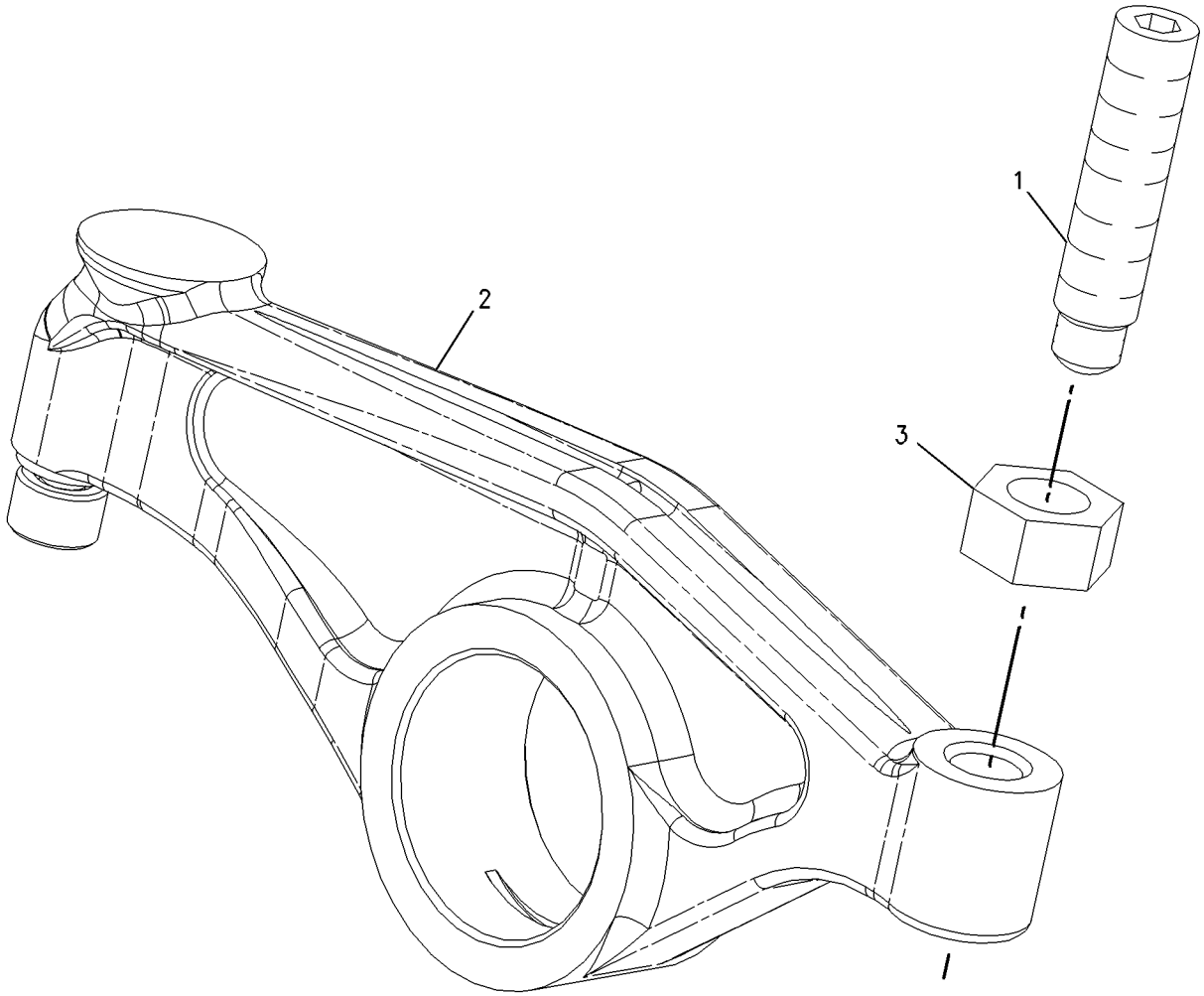

GRAPHIC #1 **<END>** g00956228

227-0838 SEAL GP-CRANKSHAFT–REAR

S/N: RSX1037-UP
COUNTER CLOCKWISE ROTATION
PART OF 277-4435 HOUSING GP-FLYWHEEL

SMCS-1160, 1161 **i01891808**

NOTE	REF NO	GRAPHIC REF	PART NUMBER	QTY	PART NAME 1 2 3 4 5 6 (PRODUCT LEVEL)	SEE PAGE
	1	1	**100-5421**	1	SEAL GP-CRANKSHAFT	
	2	1	**107-6280**	1	SEAL-O-RING	

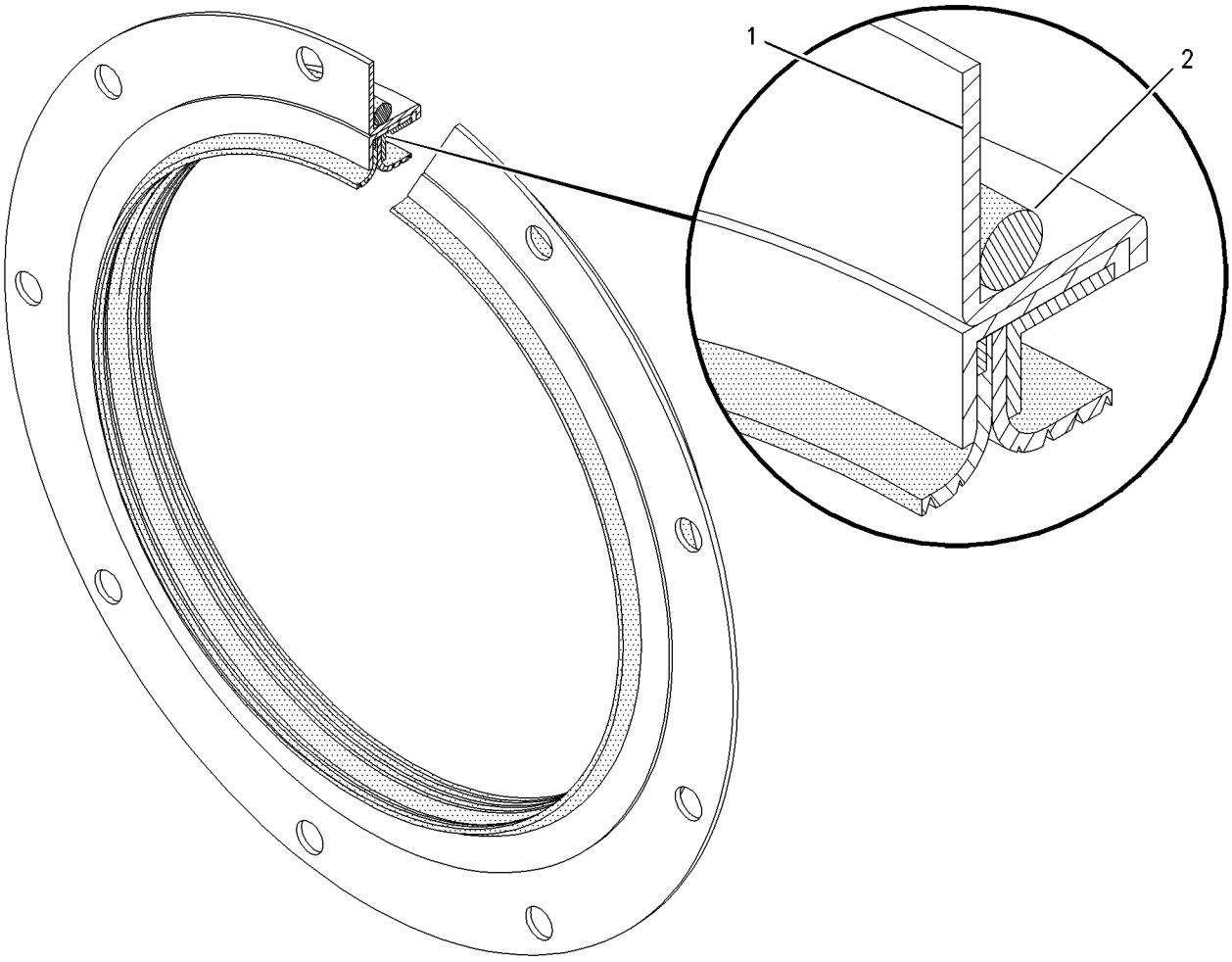

GRAPHIC #1 **<END>** g00985056

250-7017 SUPPORT GP-ENGINE

S/N: RSX1037-UP

PART OF 226-9770 ENGINE AR-COMPLETE

SMCS-1152, 1153, 1154 **i02283874**

NOTE	REF NO	GRAPHIC REF	PART NUMBER	QTY	PART NAME 1 2 3 4 5 6 (PRODUCT LEVEL)	SEE PAGE
	1	1	**250-7012**	1	SUPPORT	
	2	1	**5P-8245**	8	WASHER-HARD (13.5X25.5X3-MM THK)	
M	3	1	**6V-5696**	8	BOLT (M12X1.75X80-MM)	

M-METRIC PART

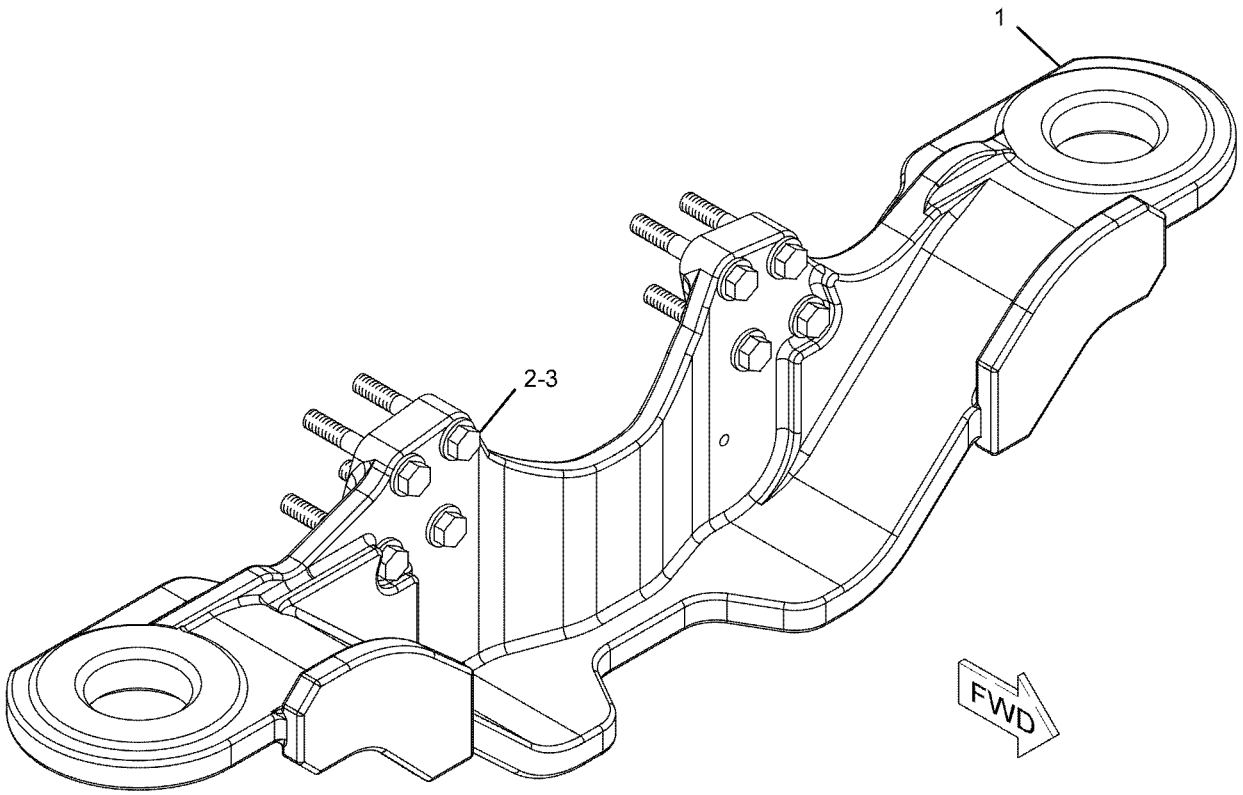

GRAPHIC #1 **<END>** g01143638

BASIC ENGINE

240-7272 VALVE MECHANISM GP

S/N: RSX1037-5663

PART OF 263-6681 ENGINE AR-CORE

SMCS-1102 **i02663383**

NOTE	REF NO	GRAPHIC REF	PART NUMBER	QTY	PART NAME 1 2 3 4 5 6 (PRODUCT LEVEL)	SEE PAGE
	1	1	**224-3117**	6	PUSHROD (INJECTOR)	
Y	2	1	*241-0835*	3	ROCKER ARM GP	77
Y	3	1	*237-4376*	1	LIFTER GP-VALVE (MECHANISM)	61
	4	1	**237-6469**	12	PUSHROD-VALVE	
	5	1	**237-7253**	12	BRIDGE-VALVE	

Y-SEPARATE ILLUSTRATION

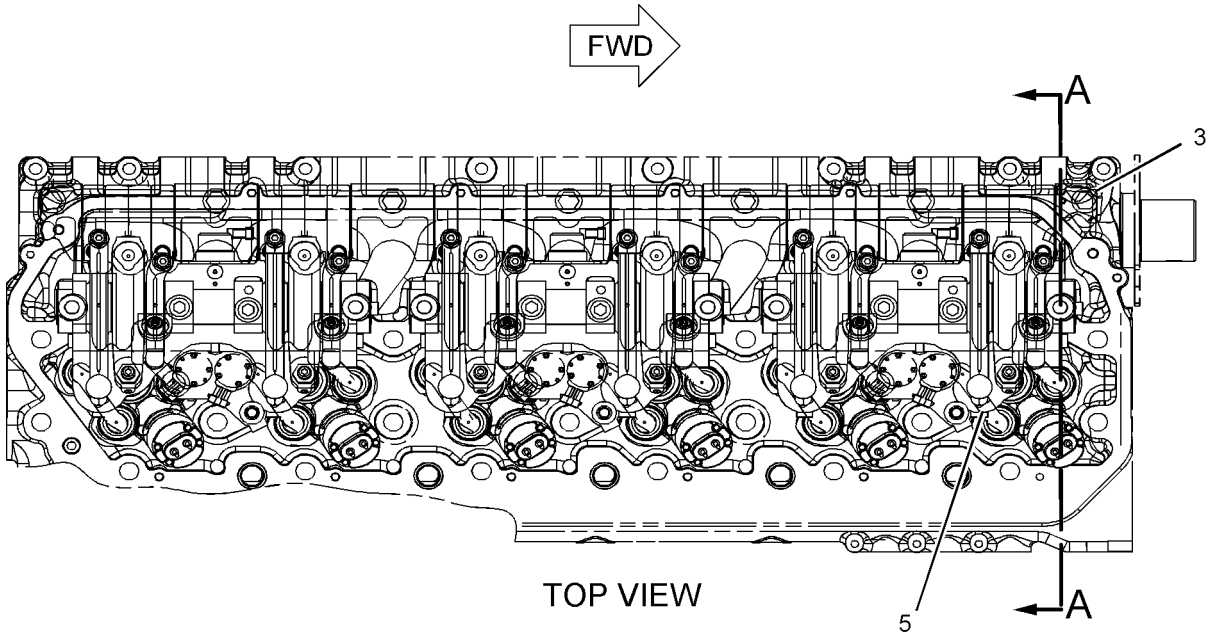

TOP VIEW

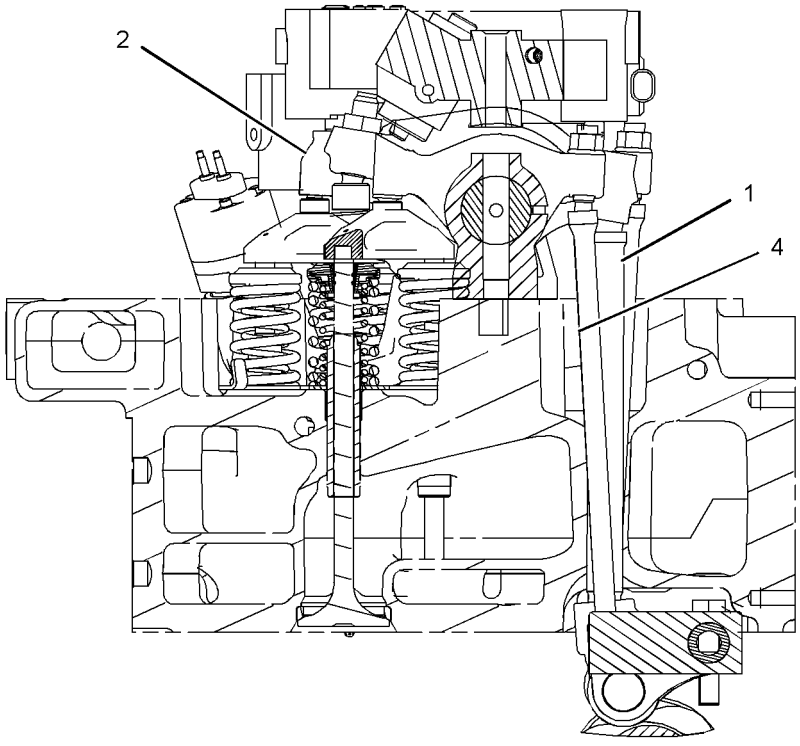

VIEW A-A

GRAPHIC #1 **<END>** g01017512

BASIC ENGINE

240-7272 VALVE MECHANISM GP

S/N: RSX5664-UP

PART OF 263-6681, 357-6586 ENGINE AR-CORE

SMCS-1102 **i03493686**

NOTE	REF NO	GRAPHIC REF	PART NUMBER	QTY	PART NAME 1 2 3 4 5 6 (PRODUCT LEVEL)	SEE PAGE
	1	1	**319-0271**	6	PUSHROD-INJECTOR	
Y	2	1	*237-4376*	1	LIFTER GP-VALVE (MECHANISM)	61
	3	1	**319-0270**	12	PUSHROD-VALVE	
	4	1	**237-7253**	12	BRIDGE-VALVE	
CY	5	1	*260-0252*	3	ROCKER ARM GP	80

C-CHANGE FROM PREVIOUS TYPE
Y-SEPARATE ILLUSTRATION

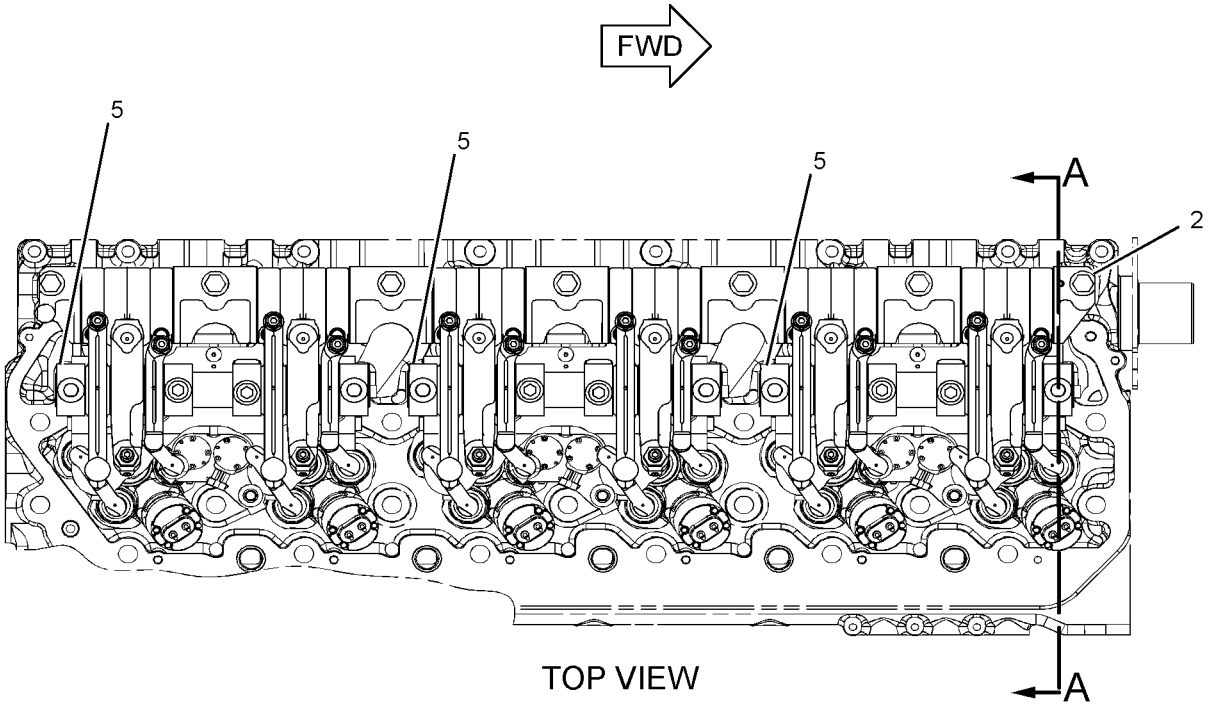

TOP VIEW

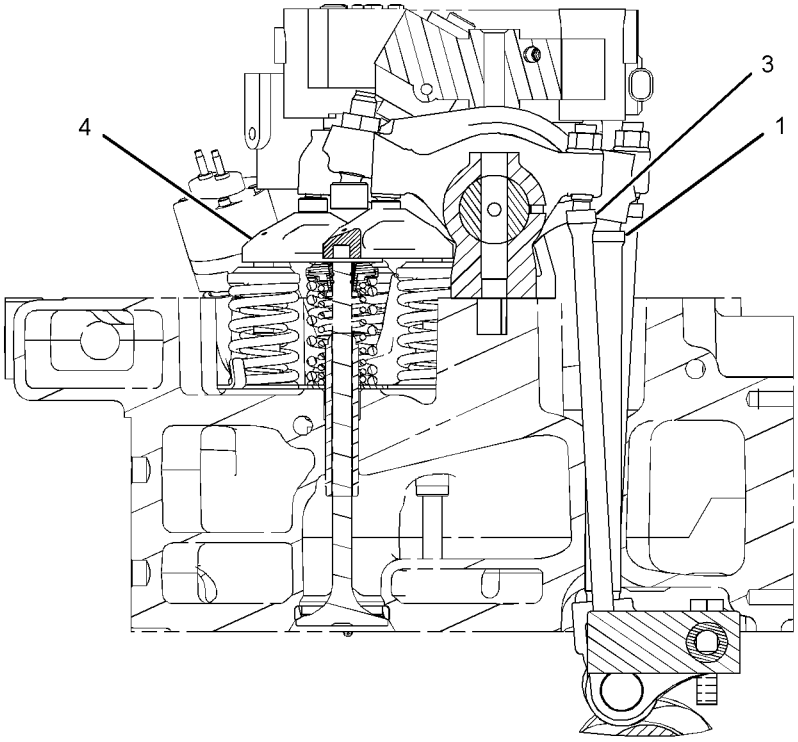

SECTION A-A

GRAPHIC #1 **<END>** g01291144

104-7995 BASE GP-OIL FILTER–ENGINE

S/N: R9J1-UP

PART OF 260-3140 FILTER GP-OIL

SMCS-1306, 751F **i02203393**

NOTE	REF NO	GRAPHIC REF	PART NUMBER	QTY	PART NAME 1 2 3 4 5 6 (PRODUCT LEVEL)	SEE PAGE
	1	1	**2P-4304**	1	STUD-HOLLOW	

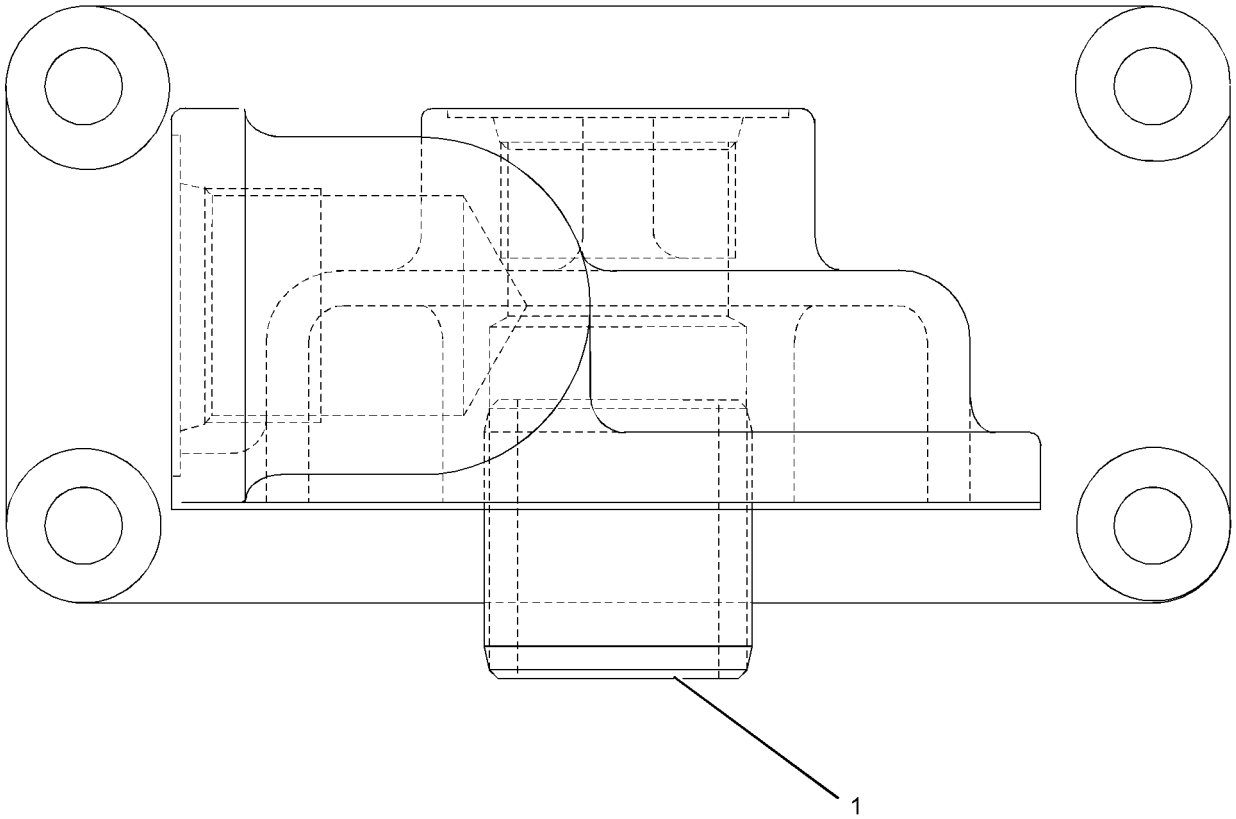

GRAPHIC #1 **<END>** g01111242

LUBRICATION SYSTEM

247-9664 BASE GP-OIL FILTER—ENGINE

S/N: RSX1037-UP

PART OF 247-9665 BASE GP-OIL FILTER

SMCS-1306, 751F **i04001240**

NOTE	REF NO	GRAPHIC REF	PART NUMBER	QTY	PART NAME 1 2 3 4 5 6 (PRODUCT LEVEL)	SEE PAGE
	1	1	**4N-8150**	2	SPRING	
	2	1	**7C-3081**	1	SPACER (6.88X9.53X50-MM THK)	
	3	1	**7C-3082**	1	RETAINER	
	4	1	**7C-3083**	1	SEAT-RELIEF VALVE SPRING	
	5	1	**7C-3954**	1	SPRING AS	
	6	1	**8C-3445**	1	CAP-DUST	
	7	1	**9M-0853**	2	PLUNGER-VALVE	
	8	1	**224-3405**	1	VALVE AS (OIL PUMP BYPASS)	
	9	1	**251-6668**	1	BASE AS	
		1	**2P-4304**	1	STUD-HOLLOW	
		1	**3B-0623**	1	PLUG-CUP	
		1	**3P-1896**	2	PLUG-CUP	
		1	**7W-6390**	1	STUD-FILTER BASE	
	10	1	**1A-2170**	1	SPRING-RETAINER	
	11	1	**321-8649**	1	VALVE AS-FLUID SAMPLING (ENGINE OIL)	
	11A	1	**214-7566**	1	SEAL-O-RING	
		1	**8C-3446**	1	VALVE-FLUID SAMPLING (ENGINE OIL)	
	12	1	*183-3407*	1	PLUG AS	
	12A	1	**214-7568**	1	SEAL-O-RING	
		1	**9S-8004**	1	PLUG-O-RING	
	13	1	*319-6234*	3	PLUG AS	
					(EACH INCLUDES)	
	13A	1	**238-5084**	1	SEAL-O-RING	
		1	**9S-9334**	1	PLUG-O-RING	
M	14	1	**6V-8359**	1	BOLT (M6X1X70-MM)	

M-METRIC PART

247-9664 **BASE GP-OIL FILTER** *(contd.)* **i04001240**

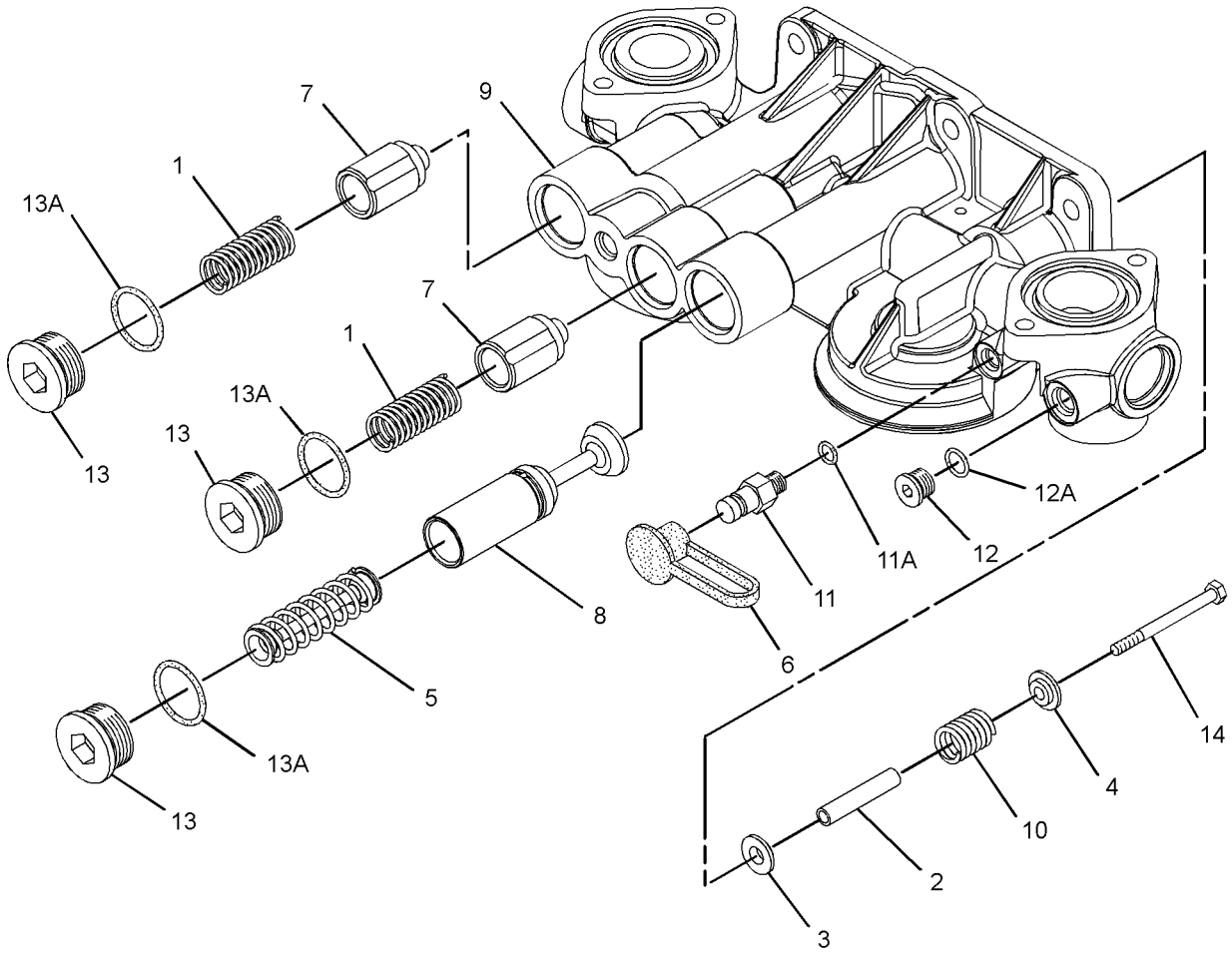

GRAPHIC #1 **<END>** g02235993

247-9665 BASE GP-OIL FILTER–ENGINE

S/N: RSX1037-UP
PART OF 226-9770 ENGINE AR-COMPLETE
CANNOT BE USED WITH RH STARTER GPS

SMCS-1306, 751F **i03997505**

NOTE	REF NO	GRAPHIC REF	PART NUMBER	QTY	PART NAME 1 2 3 4 5 6 (PRODUCT LEVEL)	SEE PAGE
M	1	1	**134-5245**	6	BOLT (M10X1.5X30-MM)	
	2	1	**227-4892**	1	GASKET	
Y	3	1	*247-9664*	1	BASE GP-OIL FILTER (ENGINE)	90
	4	1	**113-5304**	2	SEAL-O-RING	
	5	1	**6V-5839**	6	WASHER (11X21X2.5-MM THK)	

M-METRIC PART
Y-SEPARATE ILLUSTRATION

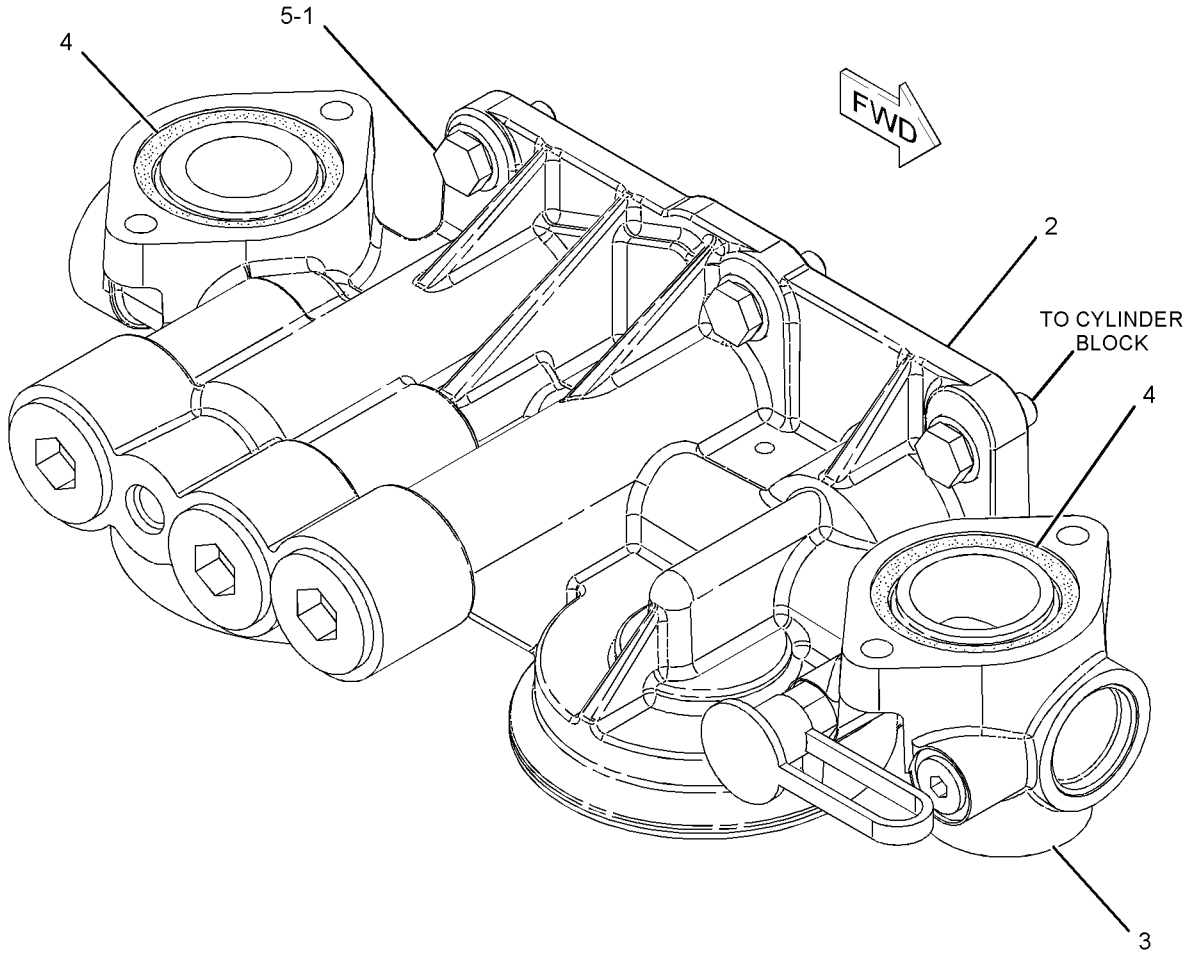

GRAPHIC #1 **<END>** g01118311

267-0007 BREATHER GP–CRANKCASE

S/N: RSX1037-UP
SHORT
PART OF 226-9770 ENGINE AR-COMPLETE

SMCS-1317 **i02285535**

NOTE	REF NO	GRAPHIC REF	PART NUMBER	QTY	PART NAME 1 2 3 4 5 6 (PRODUCT LEVEL)	SEE PAGE
	1	1	**9Y-1758**	1	GASKET (CRANKCASE BREATHER)	
	2	1	**9Y-4357**	1	BREATHER AS (CRANKCASE)	
M	3	1	**8T-0275**	4	BOLT (M6X1X50-MM)	
	4	1	**9X-8267**	4	WASHER (6.6X12X2-MM THK)	

M-METRIC PART

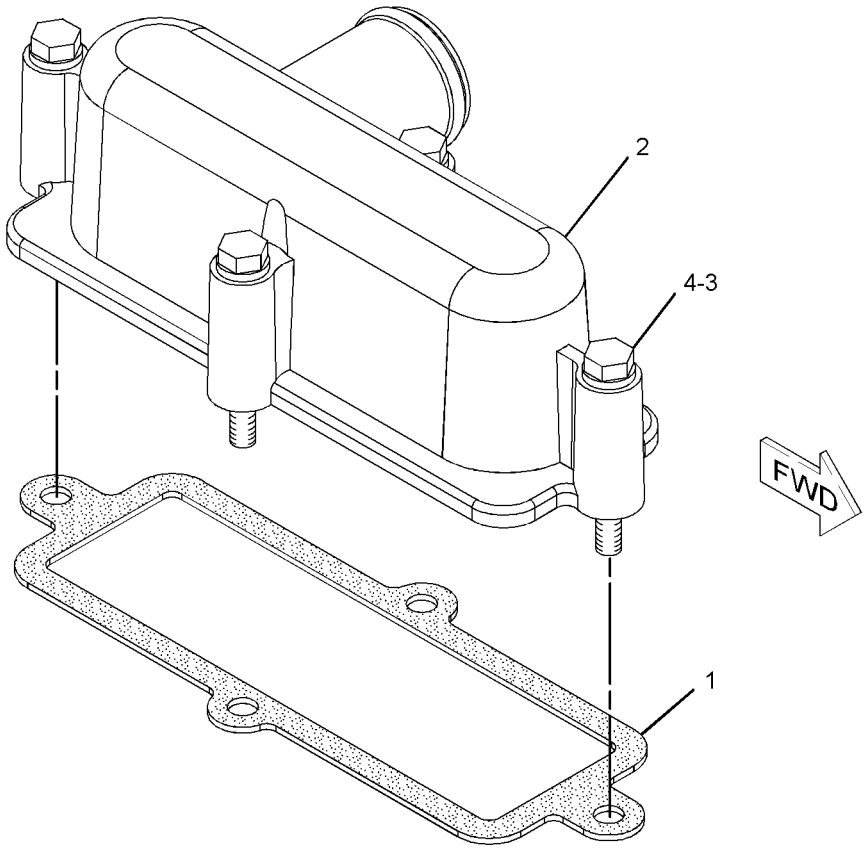

GRAPHIC #1 **<END>** g01145028

117-2786 COVER GP-OIL FILTER BASE–ENGINE

S/N: RSX1037-UP
NO BYPASS
PART OF 226-9770 ENGINE AR-COMPLETE

SMCS-1306 **i01008840**

NOTE	REF NO	GRAPHIC REF	PART NUMBER	QTY	PART NAME 1 2 3 4 5 6 (PRODUCT LEVEL)	SEE PAGE
	1	1	**7C-9542**	1	COVER-FILTER BASE	
	2	1	**5S-9134**	1	SEAL-O-RING	

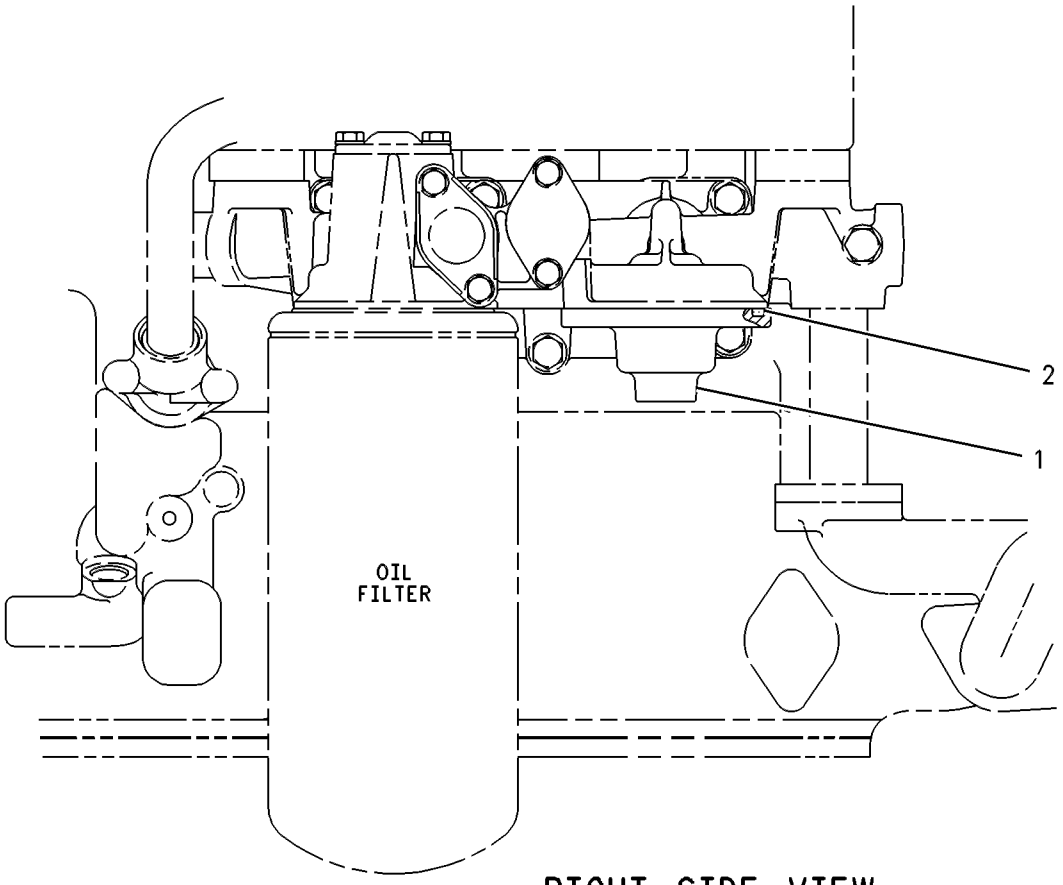

RIGHT SIDE VIEW

GRAPHIC #1 **<END>** g00251382

237-6445 FILLER GP-ENGINE OIL–FRONT, LH

S/N: RSX1037-UP

PART OF 226-9770 ENGINE AR-COMPLETE

SMCS-1316, 7513 **i02625603**

NOTE	REF NO	GRAPHIC REF	PART NUMBER	QTY	PART NAME 1 2 3 4 5 6 (PRODUCT LEVEL)	SEE PAGE
	1	1	**7C-1445**	3	COVER	
	2	1	**251-3204**	1	TUBE-OIL FILLER	
	3	1	**246-1127**	1	CAP AS (ENGINE OIL)	
	4	1	**061-9455**	4	SEAL-O-RING	
M	5	1	**6V-3940**	6	BOLT (M8X1.25X25-MM)	
M	6	1	**6V-5217**	2	BOLT (M8X1.25X20-MM)	
	7	1	**9M-1974**	8	WASHER-HARD (8.8X16X2-MM THK)	

M-METRIC PART

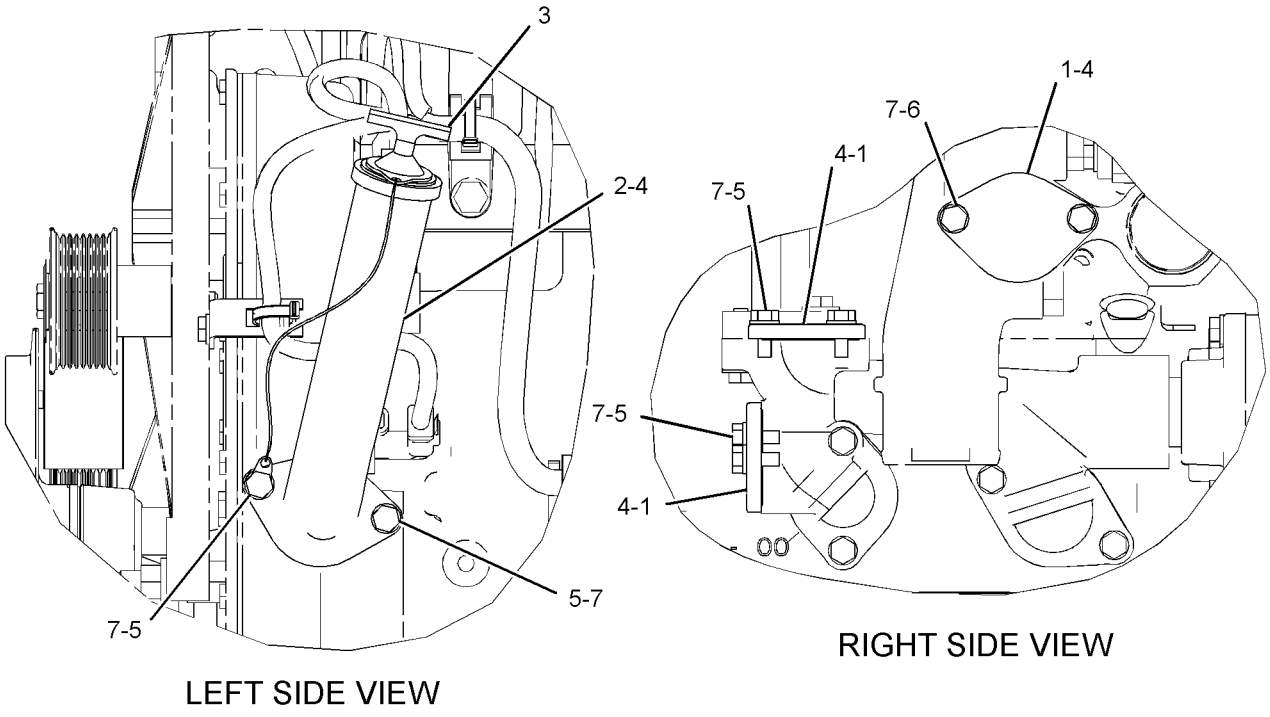

GRAPHIC #1 **<END>** g01323194

LUBRICATION SYSTEM

231-3492 FILTER GP-ENGINE OIL

S/N: RSX1037-UP
PROVIDES PRIMARY ADVANCED EFFICIENCY OIL FILTER
PART OF 226-9770 ENGINE AR-COMPLETE

SMCS-1306, 1308 **i02021373**

NOTE	REF NO	GRAPHIC REF	PART NUMBER	QTY	PART NAME 1 2 3 4 5 6 (PRODUCT LEVEL)	SEE PAGE
	1	1	**1R-1808**	1	FILTER-ENGINE OIL (ADVANCED EFFICIENCY)	

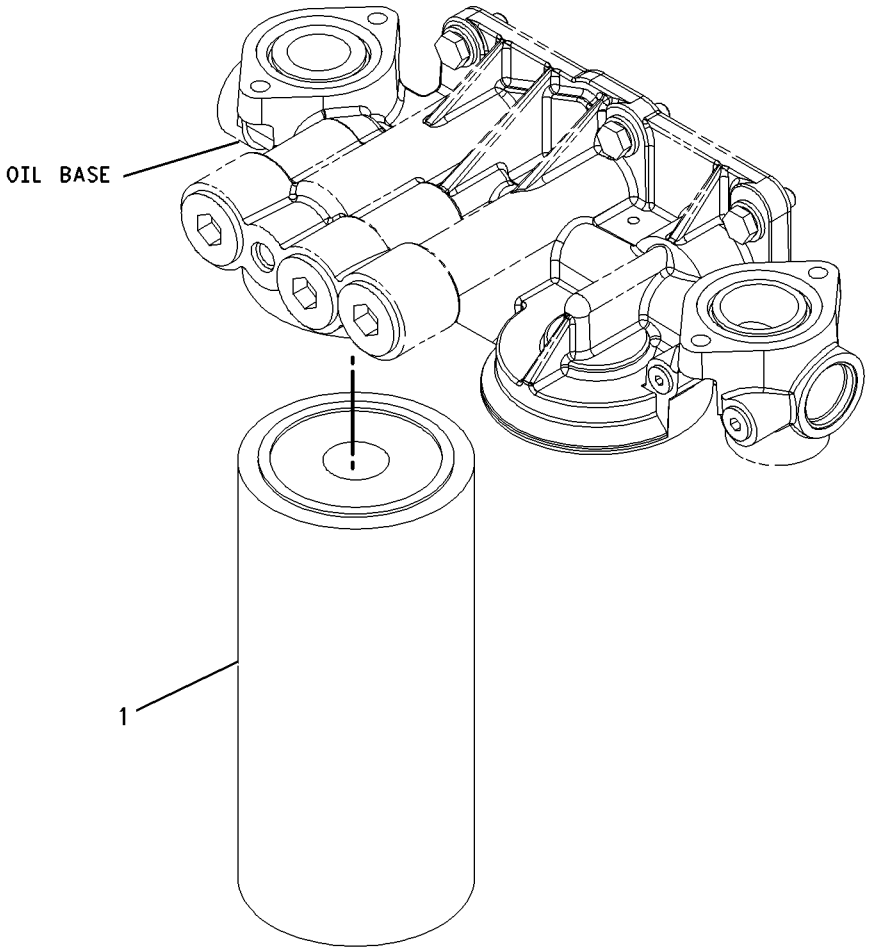

GRAPHIC #1 **<END>** g00951313

LUBRICATION SYSTEM

258-4484 FUMES DISPOSAL GP

S/N: RSX1037-UP

PART OF 226-9770 ENGINE AR-COMPLETE

SMCS-1317 **i02870201**

NOTE	REF NO	GRAPHIC REF	PART NUMBER	QTY	PART NAME 1 2 3 4 5 6 (PRODUCT LEVEL)	SEE PAGE
	1	1	**9M-2904**	1	CLAMP-HOSE	
	2	1	**224-5539**	1	HOSE-FUMES DISPOSAL	
M	3	1	**8T-4133**	1	NUT (M10X1.5-THD)	
	4	1	**8T-4121**	1	WASHER-HARD (11X21X2.5-MM THK)	
	5	1	**7L-3203**	1	CLIP	

M-METRIC PART

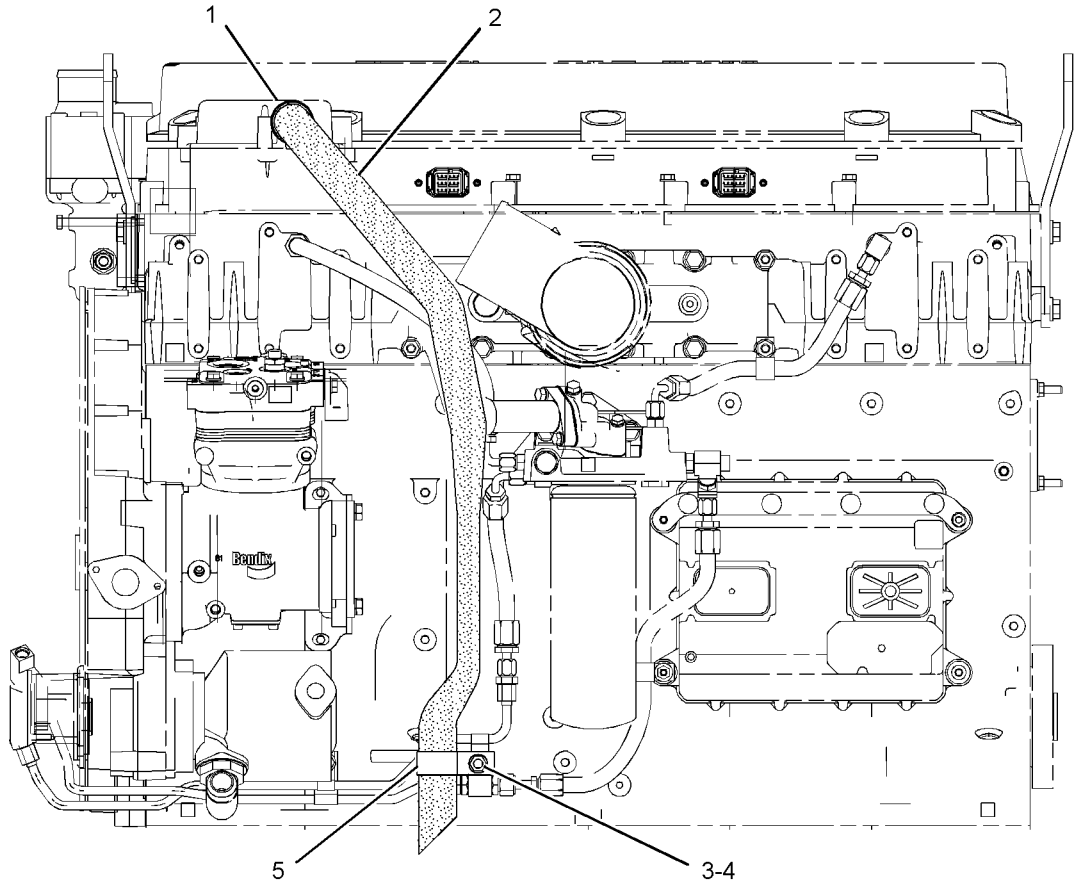

LEFT SIDE VIEW

GRAPHIC #1

<END>

g01086224

LUBRICATION SYSTEM

262-0596 GAUGE GP-OIL LEVEL (DIPSTICK)—ENGINE

S/N: RSX1037-3629

PART OF 226-9770 ENGINE AR-COMPLETE

SMCS-1326 **i02284229**

NOTE	REF NO	GRAPHIC REF	PART NUMBER	QTY	PART NAME 1 2 3 4 5 6 (PRODUCT LEVEL)	SEE PAGE
J	1	1	**209-7309**	3	PLUG	
	2	1	**262-0595**	1	GAUGE AS-OIL LEVEL (DIPSTICK) (ENGINE)	
	3	1	**268-3299**	1	TUBE AS	
	4	1	**212-0431**	1	STUD	
	5	1	**3P-0647**	1	SEAL-O-RING	
	6	1	**6V-5839**	1	WASHER (11X21X2.5-MM THK)	

J-USE TO PLUG OPTIONAL DIPSTICK LOCATIONS

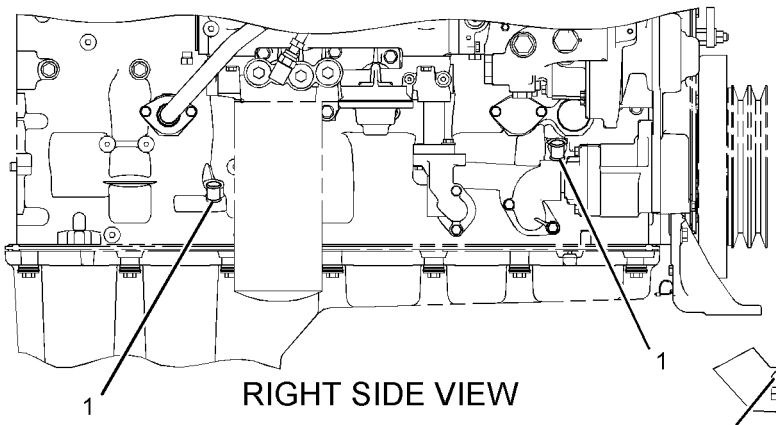

RIGHT SIDE VIEW

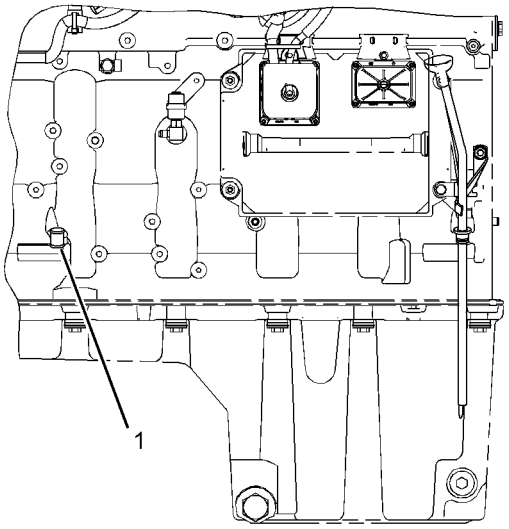

LEFT SIDE VIEW

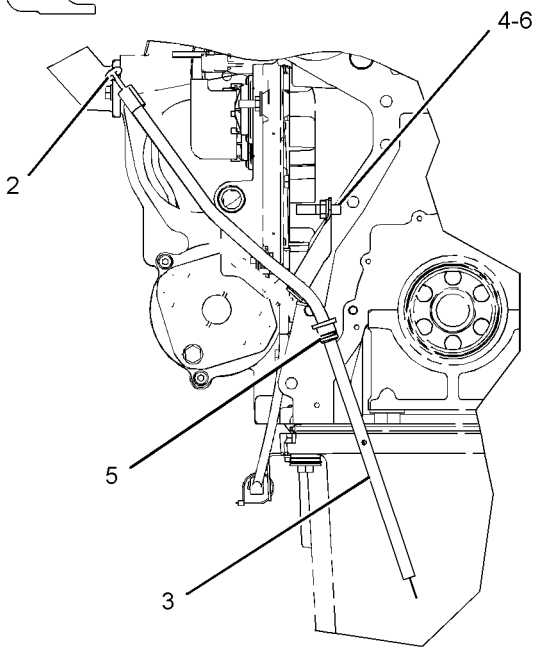

REAR VIEW

GRAPHIC #1 **<END>** g01143835

262-0596 GAUGE GP-OIL LEVEL (DIPSTICK)—ENGINE

S/N: RSX3630-UP

PART OF 226-9770 ENGINE AR-COMPLETE

SMCS-1326 **i03997817**

NOTE	REF NO	GRAPHIC REF	PART NUMBER	QTY	PART NAME 1 2 3 4 5 6 (PRODUCT LEVEL)	SEE PAGE
J	1	1	**209-7309**	3	PLUG	
	2	1	**262-0595**	1	GAUGE AS-OIL LEVEL (DIPSTICK) (ENGINE)	
	3	1	**268-3299**	1	TUBE AS	
CM	4	1	**101-3129**	1	STUD (M10X1.5-THD)	
	5	1	**228-4947**	1	SEAL-O-RING	
	6	1	**6V-5839**	1	WASHER (11X21X2.5-MM THK)	

C-CHANGE FROM PREVIOUS TYPE
J-USE TO PLUG OPTIONAL DIPSTICK LOCATIONS
M-METRIC PART

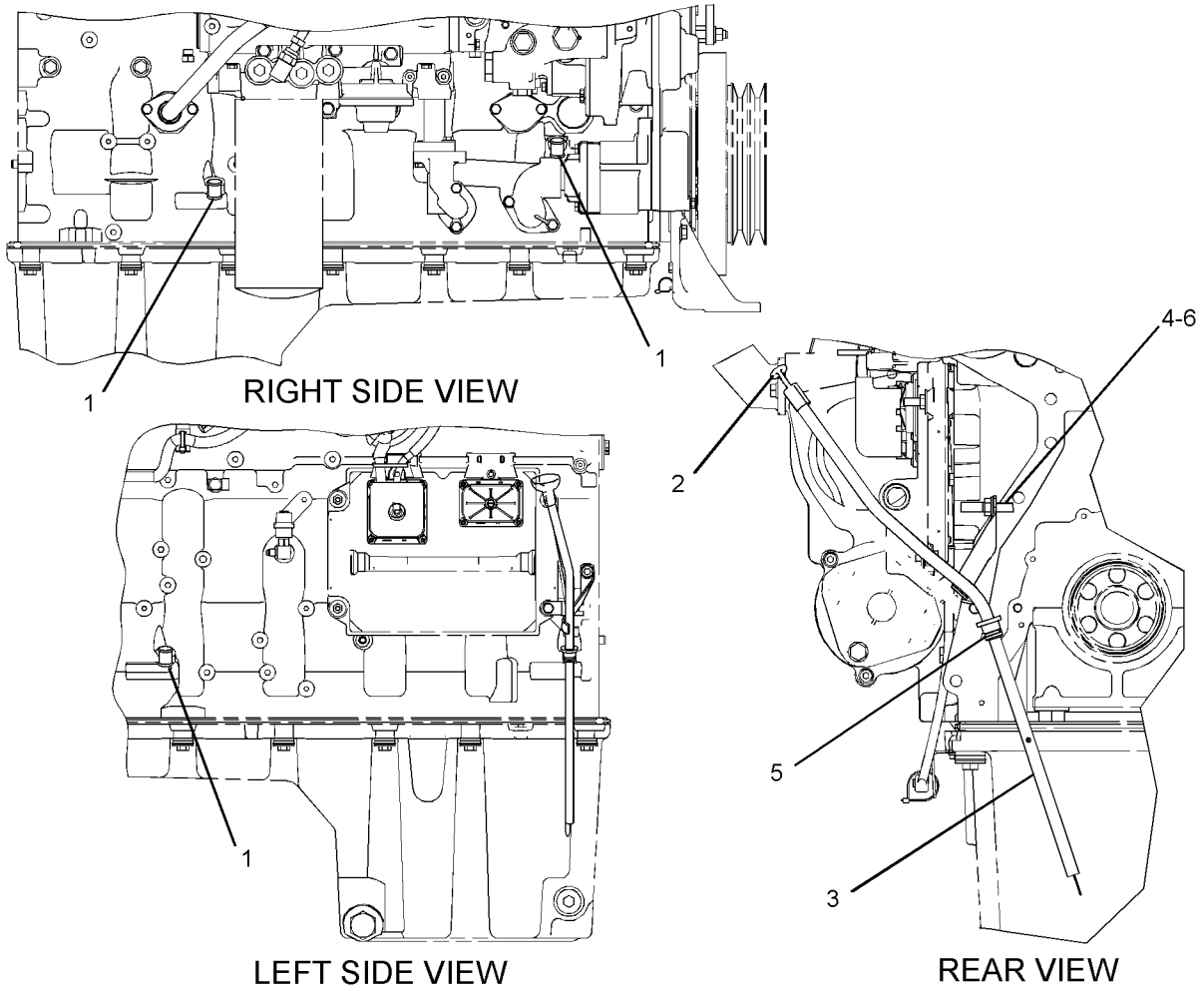

GRAPHIC #1 **<END>** g01282291

LUBRICATION SYSTEM

231-2145 LINES GP-ENGINE OIL DRAIN

S/N: R9J1-UP

PART OF 349-2555 COMMON AR

SMCS-1307 **i02673869**

NOTE	REF NO	GRAPHIC REF	PART NUMBER	QTY	PART NAME 1 2 3 4 5 6 (PRODUCT LEVEL)	SEE PAGE
	1	1	**7X-7958**	1	CLAMP-HOSE	
	2	1	**129-7679**	1	FILM-INSTRUCTION (ENGINE OIL DRAIN)	
	3	1	**206-4669**	1	VALVE-DRAIN (ENGINE OIL)	
	4	1	**212-4174**	1	LOCKWASHER	
	5	1	**229-5431**	1	ADAPTER	
	6	1	**249-8540**	1	PLATE	
I	7	1	**250-8467**	1	HOSE AS	
	8	1	**061-9458**	1	SEAL-O-RING	
	9	1	**5K-9090**	1	SEAL-O-RING	
	10	1	**6V-1889**	2	CLIP	
	11	1	**7D-7233**	2	CLIP	
	12	1	**8T-4121**	6	WASHER-HARD (11X21X2.5-MM THK)	
M	13	1	**8T-4133**	2	NUT (M10X1.5-THD)	
M	14	1	**8T-4136**	2	BOLT (M10X1.5X25-MM)	
E	15	1	**146-7453**		HOSE (12-CM)	
	16	1	**6W-6672**	2	SPACER (10.5X20X38-MM THK)	
M	17	1	**8T-6466**	2	BOLT (M10X1.5X60-MM)	

E-ORDER BY THE CENTIMETER
I-REFER TO HYDRAULIC INFORMATION SYSTEM
M-METRIC PART

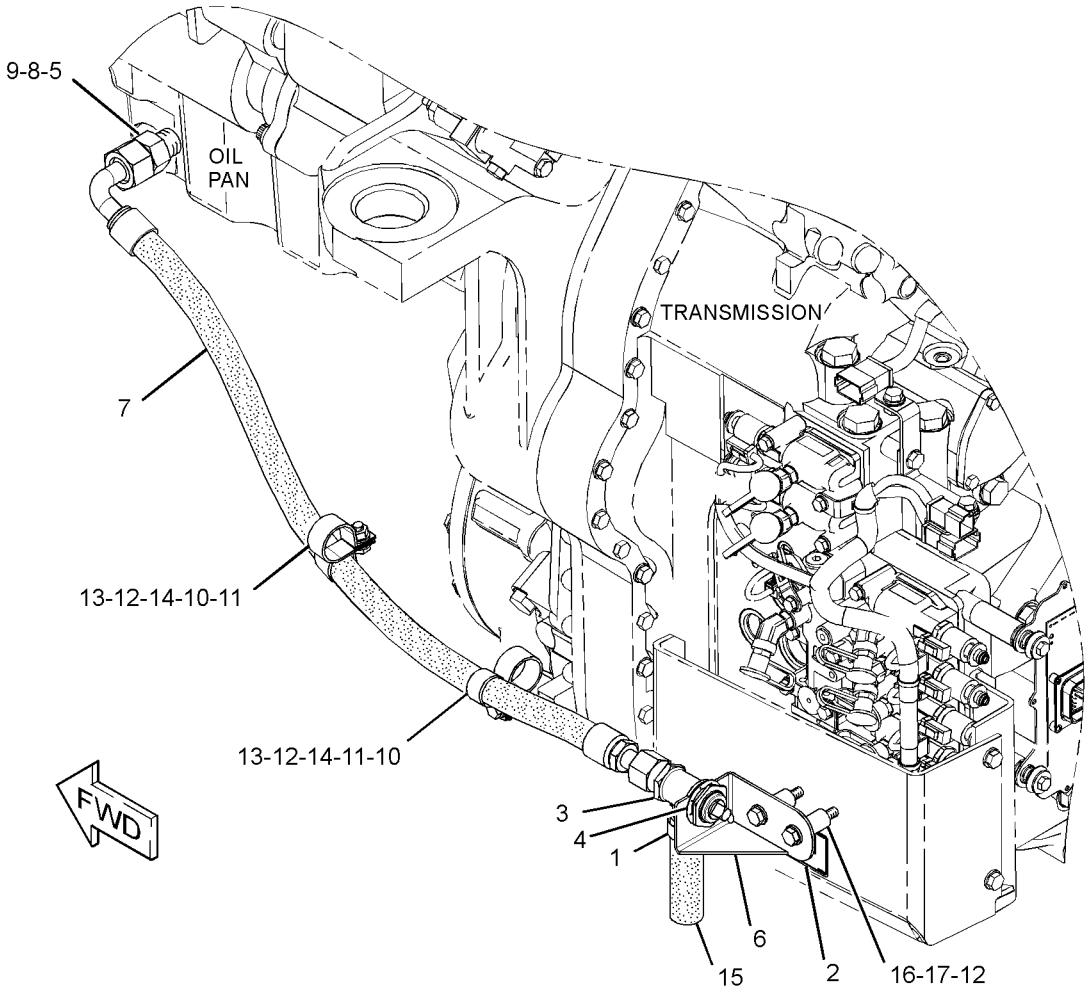

GRAPHIC #1 **<END>** g01353861

LUBRICATION SYSTEM

224-8170 LINES GP-TURBOCHARGER OIL

S/N: RSX1037-UP

PART OF 226-9770 ENGINE AR-COMPLETE

SMCS-1052, 1307 **i03794634**

NOTE	REF NO	GRAPHIC REF	PART NUMBER	QTY	PART NAME 1 2 3 4 5 6 (PRODUCT LEVEL)	SEE PAGE
	1	1	**197-8418**	1	GASKET	
	2	1	**197-8419**	1	GASKET	
	3	1	**224-8171**	1	HOSE AS (SUPPLY)	
	4	1	**224-8172**	1	TUBE AS (DRAIN)	
	5	1	**228-7090**	1	SEAL-O-RING	
	6	1	**225-6948**	1	SEAL-O-RING	
	7	1	**214-7568**	1	SEAL-O-RING	
M	8	1	**6V-5218**	6	BOLT (M8X1.25X35-MM)	
	9	1	**9M-1974**	6	WASHER-HARD (8.8X16X2-MM THK)	
	10	1	**8T-6876**	1	ELBOW	

M-METRIC PART

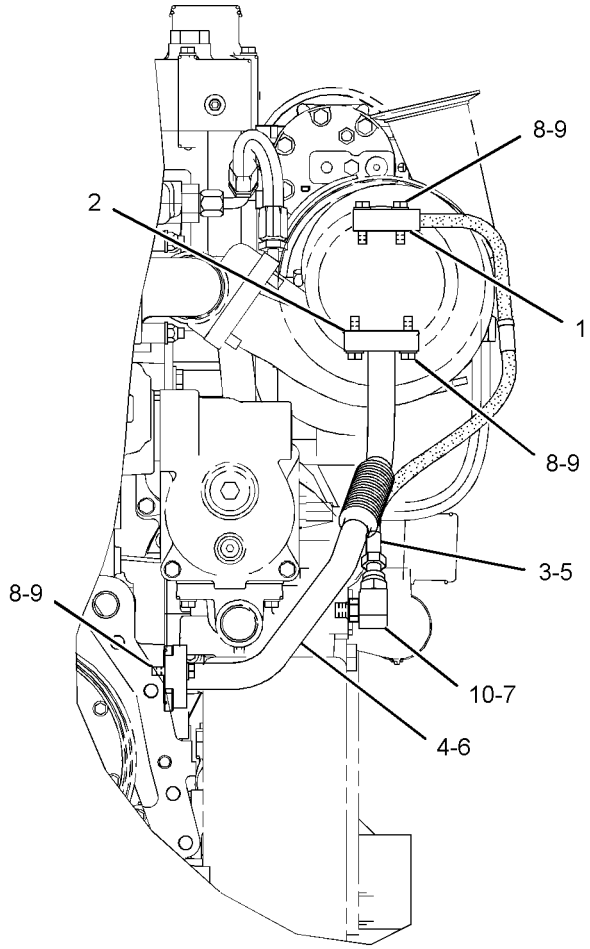

REAR VIEW

GRAPHIC #1

<END>

g01060502

233-5220 PUMP GP-ENGINE OIL*R

S/N: RSX1037-UP

PART OF 233-5221 PUMP GP-ENGINE OIL

SMCS-1304, 1315 **i03681550**

NOTE	REF NO	GRAPHIC REF	PART NUMBER	QTY	PART NAME 1 2 3 4 5 6 (PRODUCT LEVEL)	SEE PAGE
	1	1	**9Y-8076**	1	SHAFT AS-OIL PUMP (8-TEETH) (ENGINE)	
	2	1	**6D-7146**	1	SEAL-O-RING	
M	3	1	**6V-2317**	4	BOLT (M8X1.25X30-MM)	
	4	1	**9M-1974**	4	WASHER-HARD (8.8X16X2-MM THK)	
	5	1	**9Y-8075**	1	SHAFT AS-OIL PUMP (8-TEETH) (ENGINE)	

M-METRIC PART

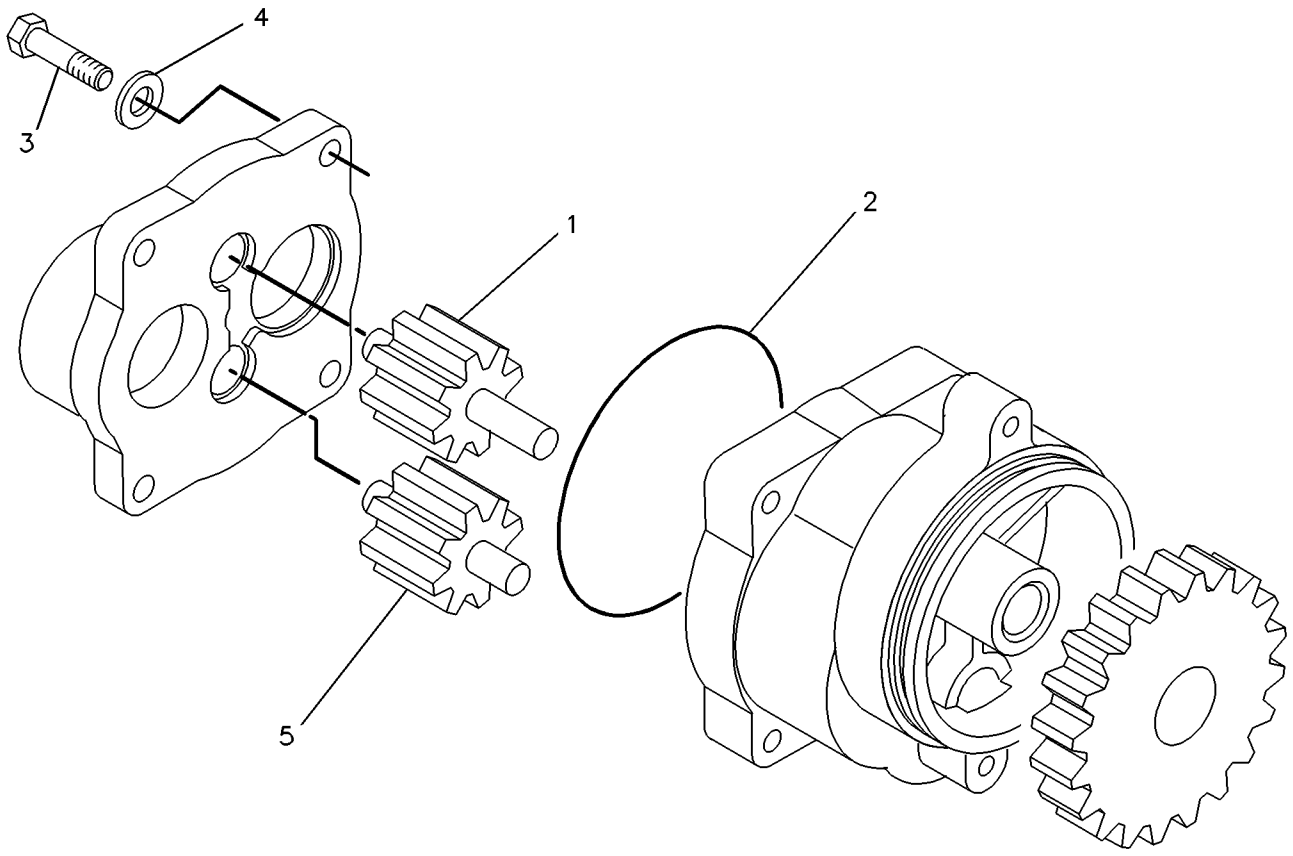

GRAPHIC #1 **<END>** g00228139

233-5221 PUMP GP-ENGINE OIL

S/N: RSX1037-UP
CONTAINS ALL LINES AND FASTENERS
PART OF 263-6681, 357-6586 ENGINE AR-CORE

SMCS-1304, 1315 **i03821113**

NOTE	REF NO	GRAPHIC REF	PART NUMBER	QTY	PART NAME 1 2 3 4 5 6 (PRODUCT LEVEL)	SEE PAGE
	1	1	**7C-1821**	1	COUPLING	
	2	1	**7C-1822**	1	COUPLING	
YR	3	1	**233-5220**	1	PUMP GP-ENGINE OIL	102
	4	1	**235-1448**	1	TUBE AS	
	5	1	**235-1451**	1	ELBOW-OIL PUMP	
	6	1	**346-4897**	1	SEAL-O-RING	
	8	1	**3E-6788**	1	SEAL-O-RING	
	9	1	**5P-8068**	2	SEAL-O-RING	
	10	1	**6V-3834**	1	SEAL-O-RING	
	11	1	**6V-5134**	3	SEAL-O-RING	
M	12	1	**6V-2317**	2	BOLT (M8X1.25X30-MM)	
M	13	1	**6V-5221**	5	BOLT (M8X1.25X80-MM)	
M	14	1	**7X-0870**	1	BOLT (M8X1.25X140-MM)	
	15	1	**8J-4351**	1	SEAL-O-RING	
	16	1	**9M-1974**	8	WASHER-HARD (8.8X16X2-MM THK)	

M-METRIC PART
R-REMFG PART MAY BE AVAILABLE
Y-SEPARATE ILLUSTRATION

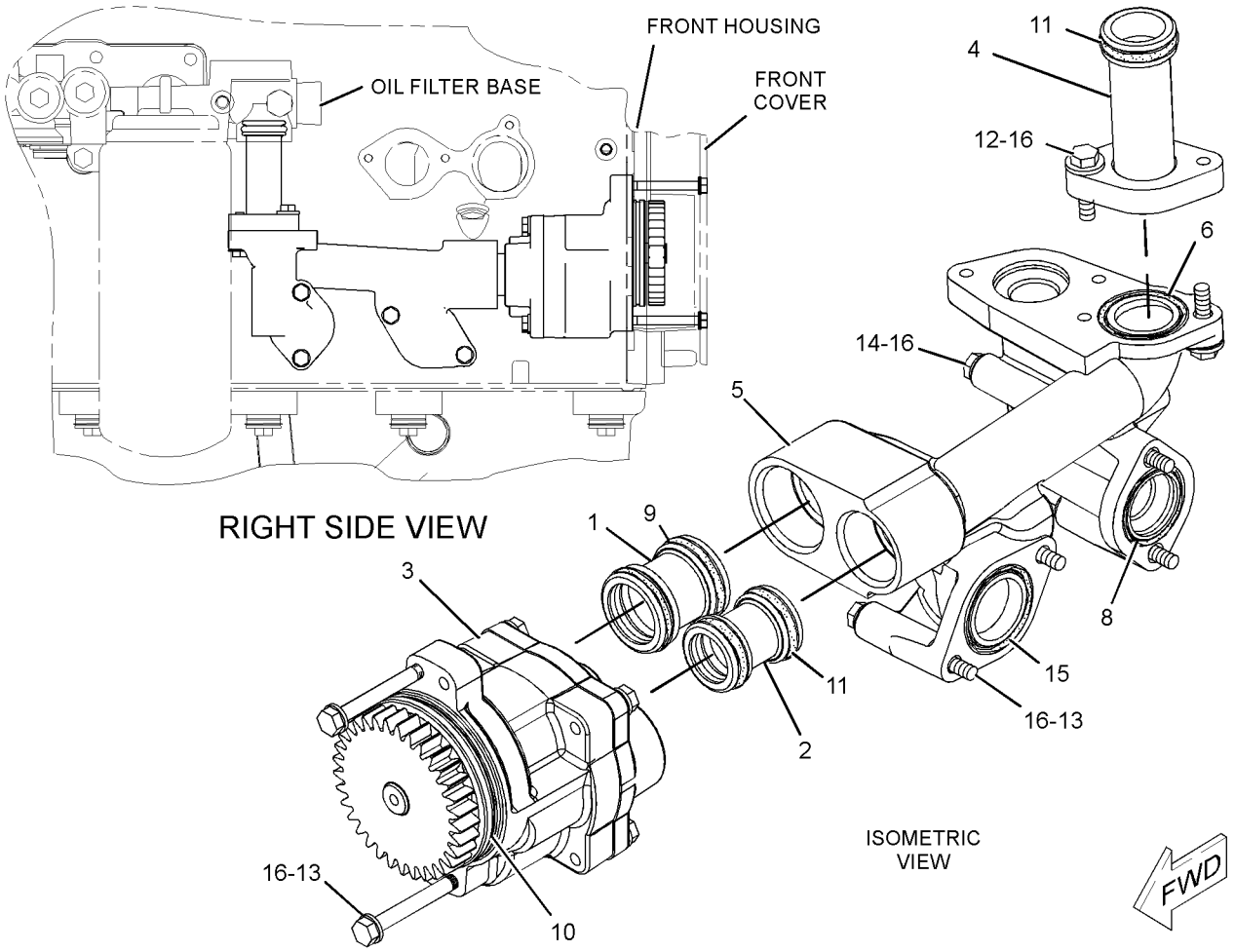

GRAPHIC #1 **<END>** g01246677

231-0152 COOLER GP-ENGINE OIL

S/N: RSX1037-7783

PART OF 226-9770 ENGINE AR-COMPLETE

SMCS-1378 **i02499879**

NOTE	REF NO	GRAPHIC REF	PART NUMBER	QTY	PART NAME 1 2 3 4 5 6 (PRODUCT LEVEL)	SEE PAGE
	1	1	**8E-9571**	1	WASHER-HARD (8.8X16X7-MM THK)	
	2	1	**224-2675**	1	SEAL	
	3	1	**224-5757**	1	HOSE	
	4	1	**224-6360**	2	SEAL	
	5	1	**8T-4984**	2	CLAMP-HOSE	
	6	1	**230-4518**	1	ELBOW	
	7	1	**230-4519**	1	BONNET (OIL COOLER)	
R	8	1	**236-8745**	1	CORE AS-OIL COOLER (ENGINE)	
	9	1	**3J-7354**	1	SEAL-O-RING	
M	10	1	**6V-2317**	5	BOLT (M8X1.25X30-MM)	
	11	1	**6V-4589**	1	SEAL-O-RING	
	12	1	**6V-5049**	1	SEAL-O-RING	
M	13	1	**6V-5219**	5	BOLT (M8X1.25X40-MM)	
M	14	1	**6V-5221**	1	BOLT (M8X1.25X80-MM)	
	15	1	**9M-1974**	10	WASHER-HARD (8.8X16X2-MM THK)	
	16	1	**9S-8002**	1	PLUG-O-RING (7/16-20-THD)	
	17	1	**9S-4191**	1	PLUG-O-RING (9/16-18-THD)	
	18	1	**9S-8006**	1	PLUG-O-RING (7/8-14-THD)	

M-METRIC PART
R-REMFG PART MAY BE AVAILABLE

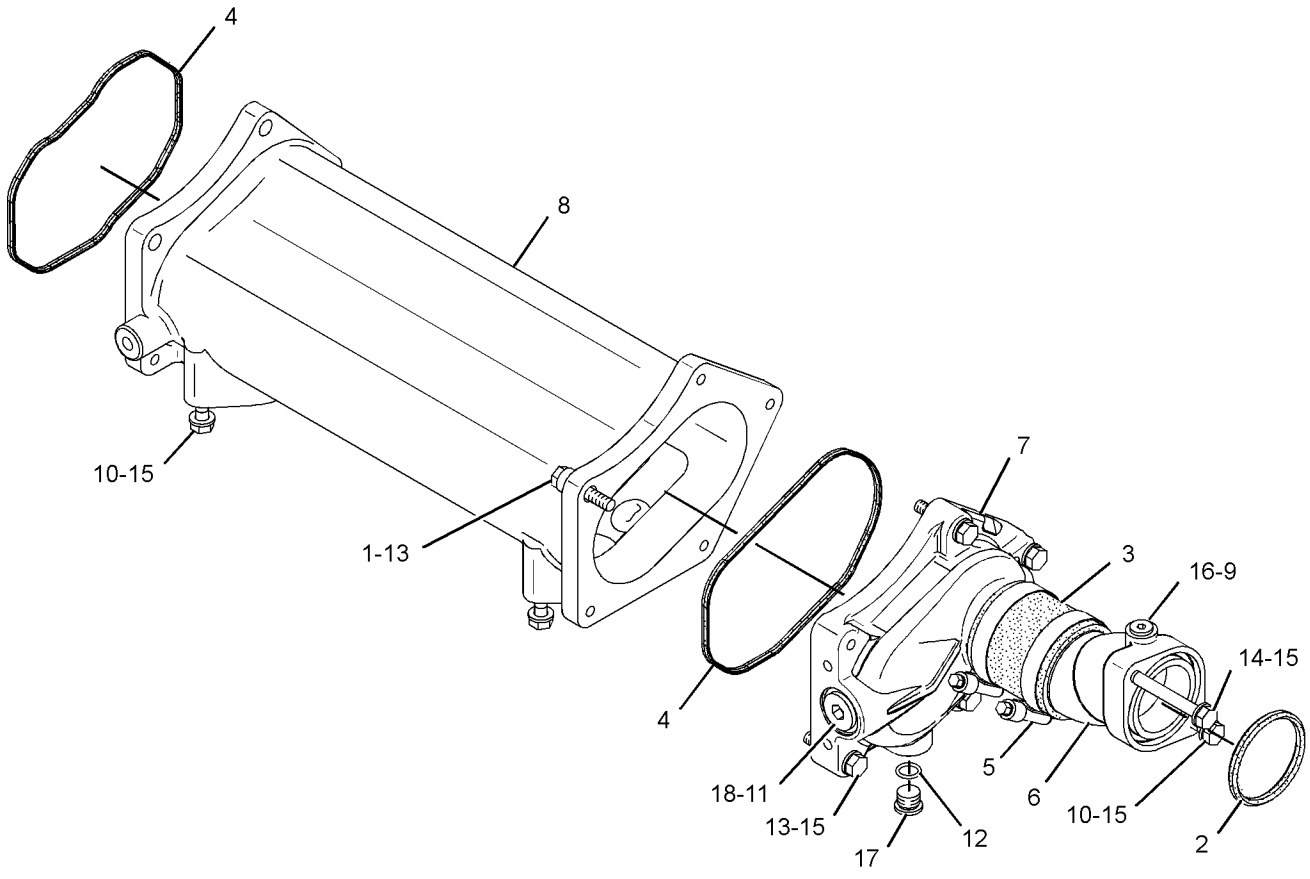

GRAPHIC #1 **<END>** g01259762

COOLING SYSTEM

231-0152 COOLER GP-ENGINE OIL

S/N: RSX7784-UP

PART OF 226-9770 ENGINE AR-COMPLETE

SMCS-1378 **i03909359**

NOTE	REF NO	GRAPHIC REF	PART NUMBER	QTY	PART NAME 1 2 3 4 5 6 (PRODUCT LEVEL)	SEE PAGE
C	1	1	**131-6645**	1	HOSE	
	2	1	**230-4518**	1	ELBOW	
R	3	1	**236-8745**	1	CORE AS-OIL COOLER (ENGINE)	
	4	1	**341-1429**	2	SEAL (FRONT)	
	5	1	**349-3313**	1	BONNET	
	6	1	*353-5124*	1	PLUG AS (7/16-20-THD)	
		1	**6V-3250**	1	SEAL-O-RING	
		1	**9S-8004**	1	PLUG-O-RING	
	7	1	*353-5125*	1	PLUG AS (9/16-18-THD)	
		1	**6V-3251**	1	SEAL-O-RING	
		1	**9S-8006**	1	PLUG-O-RING	
	8	1	**224-2675**	1	SEAL	
	9	1	*304-8008*	1	PLUG AS	
		1	**6V-9027**	1	SEAL-O-RING	
		1	**9S-8002**	1	PLUG-O-RING	
	10	1	**335-9214**	2	CLAMP-BAND	
M	11	1	**6V-2317**	5	BOLT (M8X1.25X30-MM)	
M	12	1	**6V-5219**	5	BOLT (M8X1.25X40-MM)	
M	13	1	**6V-5221**	1	BOLT (M8X1.25X80-MM)	
	14	1	**8E-9571**	1	WASHER-HARD (8.8X16X7-MM THK)	
	15	1	**9M-1974**	10	WASHER-HARD (8.8X16X2-MM THK)	

C-CHANGE FROM PREVIOUS TYPE
M-METRIC PART
R-REMFG PART MAY BE AVAILABLE

231-0152 **COOLER GP-ENGINE OIL** *(contd.)* **i03909359**

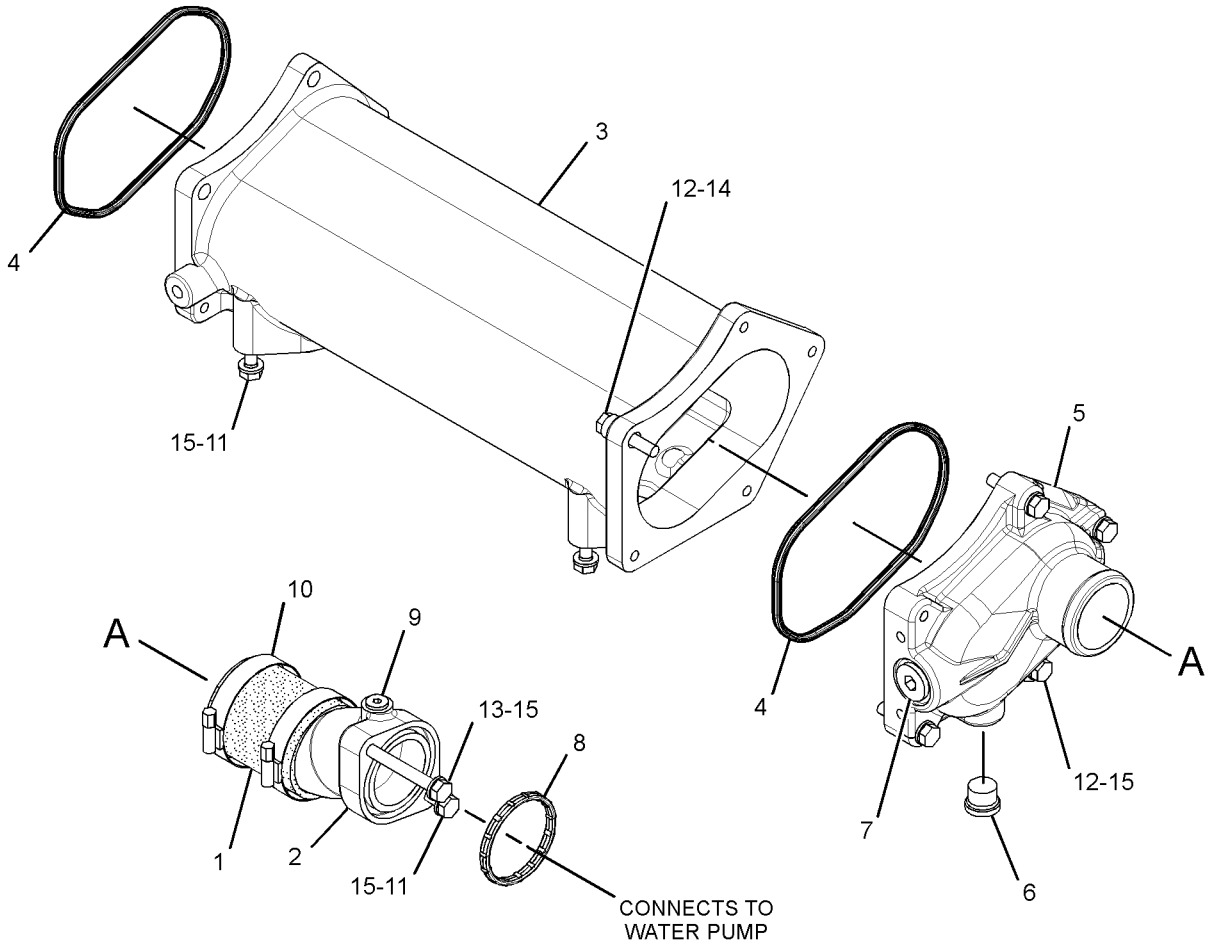

GRAPHIC #1 **<END>** g02143861

COOLING SYSTEM

268-6570 COOLING AR

S/N: R9J1-UP

PART OF 349-2555 COMMON AR

SMCS-1350 **i02295044**

NOTE	REF NO	GRAPHIC REF	PART NUMBER	QTY	PART NAME 1 2 3 4 5 6 (PRODUCT LEVEL)	SEE PAGE
Y	1	1	*231-2311*	1	AFTERCOOLER GP-AIR	128
Y	2	1	*231-2315*	1	RADIATOR GP	124
Y	3	1	*231-2316*	1	SUPPORT GP-RADIATOR	523
	4	1	**198-4782**	4	WASHER-HARD (26X47X12-MM THK)	
M	5	1	**7X-2576**	4	BOLT (M24X3X70-MM)	

M-METRIC PART
Y-SEPARATE ILLUSTRATION

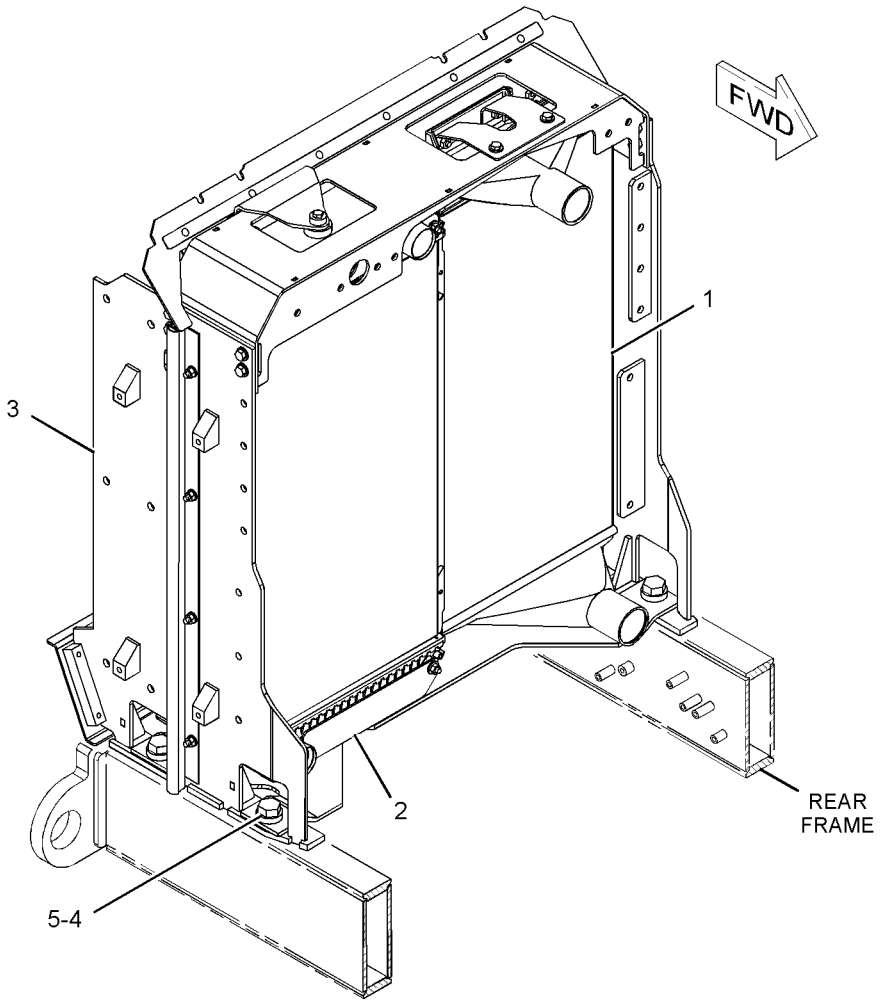

GRAPHIC #1 **<END>** g01150518

COOLING SYSTEM

231-2313 FAN & MOTOR GP—RADIATOR COOLING

S/N: R9J1-UP

PART OF 349-2555 COMMON AR

SMCS-1356, 1386 **i04033093**

NOTE	REF NO	GRAPHIC REF	PART NUMBER	QTY	PART NAME 1 2 3 4 5 6 (PRODUCT LEVEL)	SEE PAGE
	1	1	**241-8534**	1	SPIDER AS (8-BLADE)	
	2	1	**248-0409**	1	ADAPTER-FAN	
Y	3	1	*248-0671*	1	GUARD GP-FAN (RADIATOR)	112
CJ	4	1	**341-2719**	1	MOTOR GP-GEAR (FAN) (RADIATOR FAN DRIVE)	
	5	1	**310-4972**	2	BRACKET AS	
					(EACH INCLUDES)	
		1	**5D-9629**	1	ROD	
		1	**7T-1099**	3	LINK	
		1	**248-0678**	1	BRACKET AS	
M		1	**8T-3490**	2	NUT-WELD (M10X1.5-THD)	
M		1	**8T-3597**	8	NUT-WELD (M12X1.75-THD)	
	6	1	**252-9513**	1	SUPPORT AS	
	7	1	**264-4297**	1	SENSOR GP-TEMPERATURE (HYDRAULIC FAN OIL)	
	8	1	**266-7711**	1	BAFFLE	
	9	1	**266-7712**	1	BAFFLE	
	10	1	**266-7713**	2	STRIP	
	11	1	**291-1348**	1	BLOCK	
	12	1	**295-2349**	1	PLATE AS	
I	13	1	**296-3491**	1	HOSE AS	
	14	1	*148-8339*	1	CONNECTOR AS	
		1	**6V-8716**	1	CONNECTOR	
		1	**6V-9746**	1	SEAL-O-RING	
		1	**7M-8485**	1	SEAL-O-RING	
	15	1	*148-8360*	1	ELBOW AS	
		1	**6V-9182**	1	ELBOW	
		1	**6V-9746**	1	SEAL-O-RING	
		1	**7M-8485**	1	SEAL-O-RING	
	16	1	*148-8408*	1	PLUG AS	
		1	**9S-4183**	1	PLUG-O-RING	
		1	**3D-2824**	1	SEAL-O-RING	
	17	1	*153-6237*	1	ELBOW AS	
		1	**6V-9004**	1	ELBOW	
		1	**3D-2824**	1	SEAL-O-RING	
		1	**6V-9746**	1	SEAL-O-RING	
	18	1	**3K-0360**	1	SEAL-O-RING	
	19	1	**5P-1076**	16	WASHER-HARD (13.5X30X4-MM THK)	
	20	1	**5P-8245**	1	WASHER-HARD (13.5X25.5X3-MM THK)	
	21	1	**6B-6684**	1	NUT-FULL (1/2-20-THD)	
	22	1	**6V-4604**	8	RIVET-POP	
	23	1	**7X-7729**	2	WASHER (11X25X3-MM THK)	
	24	1	**8T-4121**	10	WASHER-HARD (11X21X2.5-MM THK)	
M	25	1	**8T-4136**	2	BOLT (M10X1.5X25-MM)	
M	26	1	**8T-4137**	6	BOLT (M10X1.5X20-MM)	
M	27	1	**8T-4139**	4	BOLT (M12X1.75X30-MM)	
M	28	1	**8T-4172**	2	BOLT (M10X1.5X80-MM)	
M	29	1	**8T-4195**	2	BOLT (M10X1.5X30-MM)	
M	30	1	**8T-4956**	12	BOLT (M12X1.75X35-MM)	
E	31	1	**112-9736**		SEAL (8-CM EACH)	
E	32	1	**266-8568**		SEAL-BULK (3-CM EACH)	
E	32A	1	**266-8568**		SEAL-BULK (9-CM)	
E	32B	1	**266-8568**		SEAL-BULK (6-CM)	
					AVAILABLE REPAIR KIT(S):	
J			**343-1211**	1	KIT-SEAL	
					(INCLUDES RETAINIG RINGS, DUST SEAL, SHAFT SEAL, BI ROTATIONAL SEALS & O-RINGS)	

231-2313 **FAN & MOTOR GP** *(contd.)* **i04033093**

C-CHANGE FROM PREVIOUS TYPE
E-ORDER BY THE CENTIMETER
I-REFER TO HYDRAULIC INFORMATION SYSTEM
J-KIT MARKED J SERVICES PART(S) MARKED J
M-METRIC PART
Y-SEPARATE ILLUSTRATION

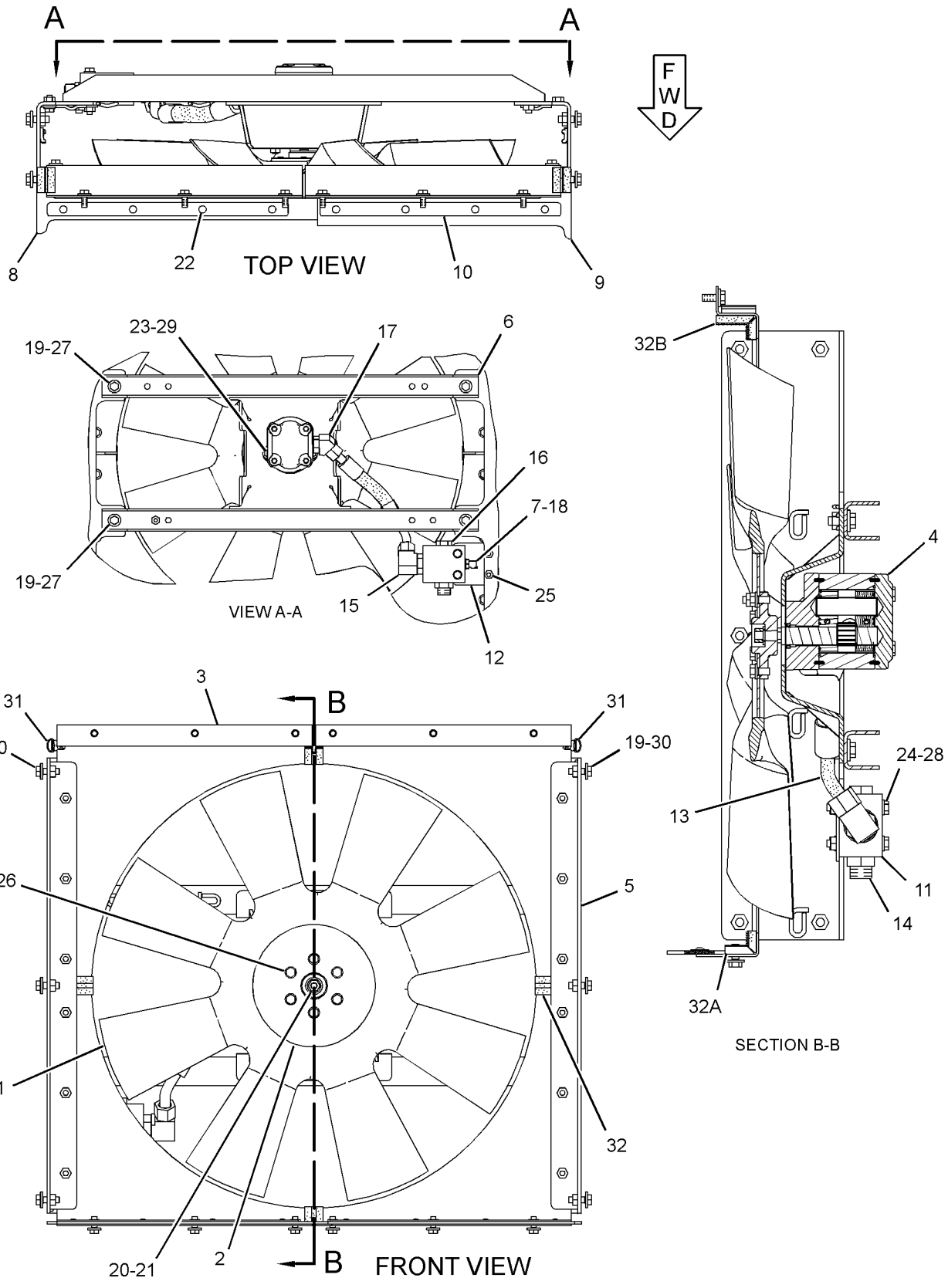

GRAPHIC #1 **<END>** g01862656

COOLING SYSTEM

248-0671 GUARD GP-FAN–RADIATOR

S/N: R9J1-UP

PART OF 231-2313 FAN & MOTOR GP

SMCS-1360 **i02726014**

NOTE	REF NO	GRAPHIC REF	PART NUMBER	QTY	PART NAME 1 2 3 4 5 6 (PRODUCT LEVEL)	SEE PAGE
	1	1	**309-1833**	1	SHIELD-FAN	
	2	1	**309-1834**	1	SHIELD-FAN	
	3	1	**309-1835**	1	SHIELD AS	
	4	1	**309-1836**	1	SHIELD AS	
					(EACH SHIELD AS INCLUDES)	
M		1	**8T-3490**	3	NUT-WELD (M10X1.5-THD)	
	5	1	**7X-7729**	24	WASHER (11X25X3-MM THK)	
M	6	1	**8T-4136**	24	BOLT (M10X1.5X25-MM)	

M-METRIC PART

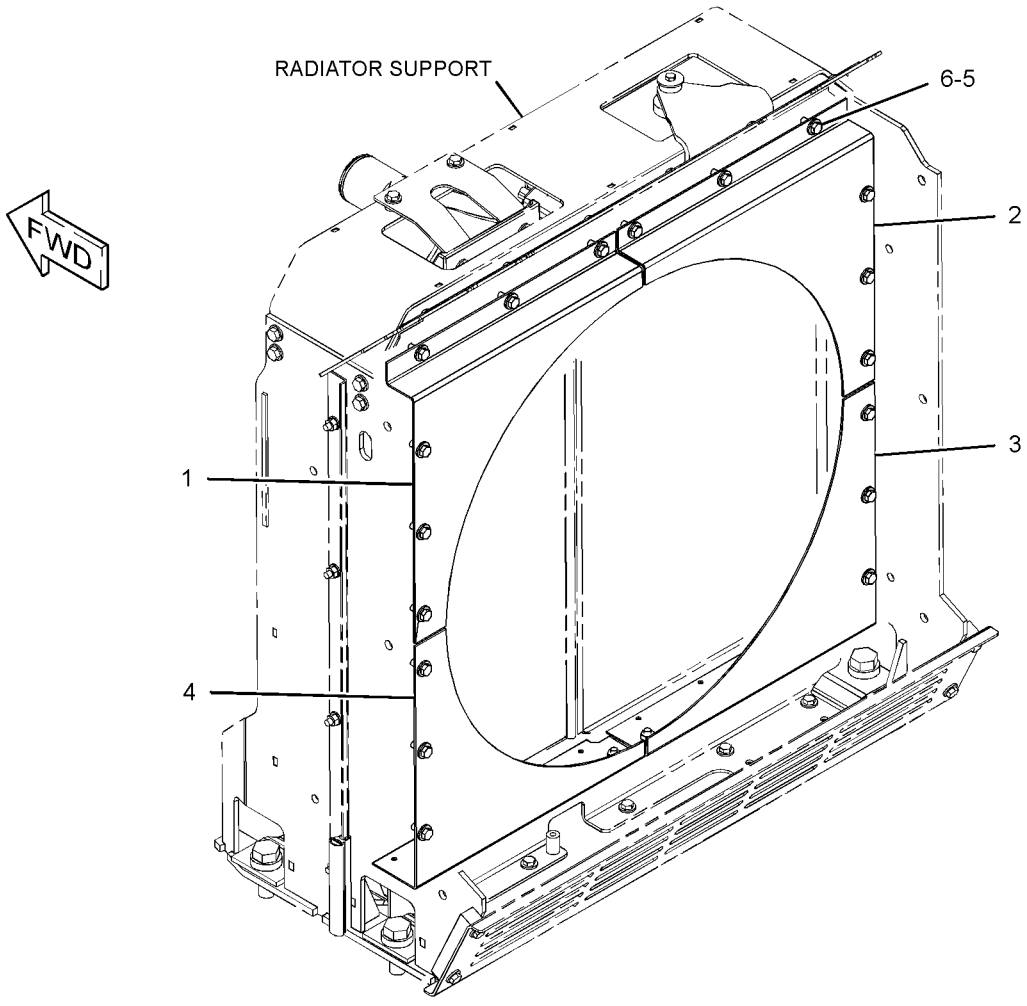

GRAPHIC #1 **<END>** g01369630

COOLING SYSTEM

231-2153 LINES GP-WATER

S/N: R9J1-UP

PART OF 349-2555 COMMON AR

SMCS-1355, 1380, 1393 **i03201221**

NOTE	REF NO	GRAPHIC REF	PART NUMBER	QTY	PART NAME 1 2 3 4 5 6 (PRODUCT LEVEL)	SEE PAGE
	1	1	**5D-1026**	1	CLAMP-BAND	
	2	1	**5P-4961**	2	CLAMP-HOSE	
E	3	1	**5P-1262**		HOSE (16-CM EACH)	
	4	1	**003-7764**	1	END-HOSE	
	5	1	**157-0670**	1	CAP-DUST	
	6	1	**163-2919**	1	HOSE	
	7	1	*184-2420*	1	ADAPTER AS	
		1	**3E-7401**	1	ADAPTER	
		1	**6V-8397**	1	SEAL-O-RING	
	8	1	*184-2509*	1	VALVE GP-DRAIN (RADIATOR DRAIN)	
		1	**3K-0360**	1	SEAL-O-RING	
		1	**7E-4761**	1	VALVE-DRAIN	
	9	1	**250-2153**	1	TUBE AS	
	10	1	**300-6864**	1	TUBE AS	
	11	1	**266-8804**	1	PLATE	
	12	1	**269-6650**	1	COUPLING AS	
	13	1	*148-8367*	1	ELBOW AS	
		1	**6V-8397**	1	SEAL-O-RING	
		1	**6V-9850**	1	ELBOW	
	14	1	**154-9025**	1	VALVE-FLUID SAMPLING (RADIATOR COOLANT)	
	15	1	**209-4575**	2	CLAMP	
	16	1	**7J-8611**	1	ELBOW-PIPE	
	17	1	**4P-0916**	1	SPACER (11X25X38.8-MM THK)	
	18	1	**6V-1581**	2	CLIP (SLOT)	
	19	1	**6V-1582**	2	CLIP (TAB)	
	20	1	**6V-9168**	1	NUT (11/16-16-THD)	
	21	1	**8T-4121**	4	WASHER-HARD (11X21X2.5-MM THK)	
	22	1	**8T-4123**	2	WASHER (22X35X3.5-MM THK)	
M	23	1	**8T-4137**	2	BOLT (M10X1.5X20-MM)	
M	24	1	**8T-4195**	1	BOLT (M10X1.5X30-MM)	
M	25	1	**8T-4780**	2	BOLT (M20X2.5X30-MM)	
M	26	1	**8T-5005**	1	BOLT (M10X1.5X70-MM)	
	27	1	**255-5415**	1	BRACKET AS	
E	28	1	**5P-0767**		HOSE (29-CM)	
E	29	1	**6V-8523**		HOSE (29-CM)	
	32	1	**3E-4096**	8	CAP	
	33	1	**208-6054**	6	CLAMP	

E-ORDER BY THE CENTIMETER
M-METRIC PART

231-2153 **LINES GP-WATER** *(contd.)* **i03201221**

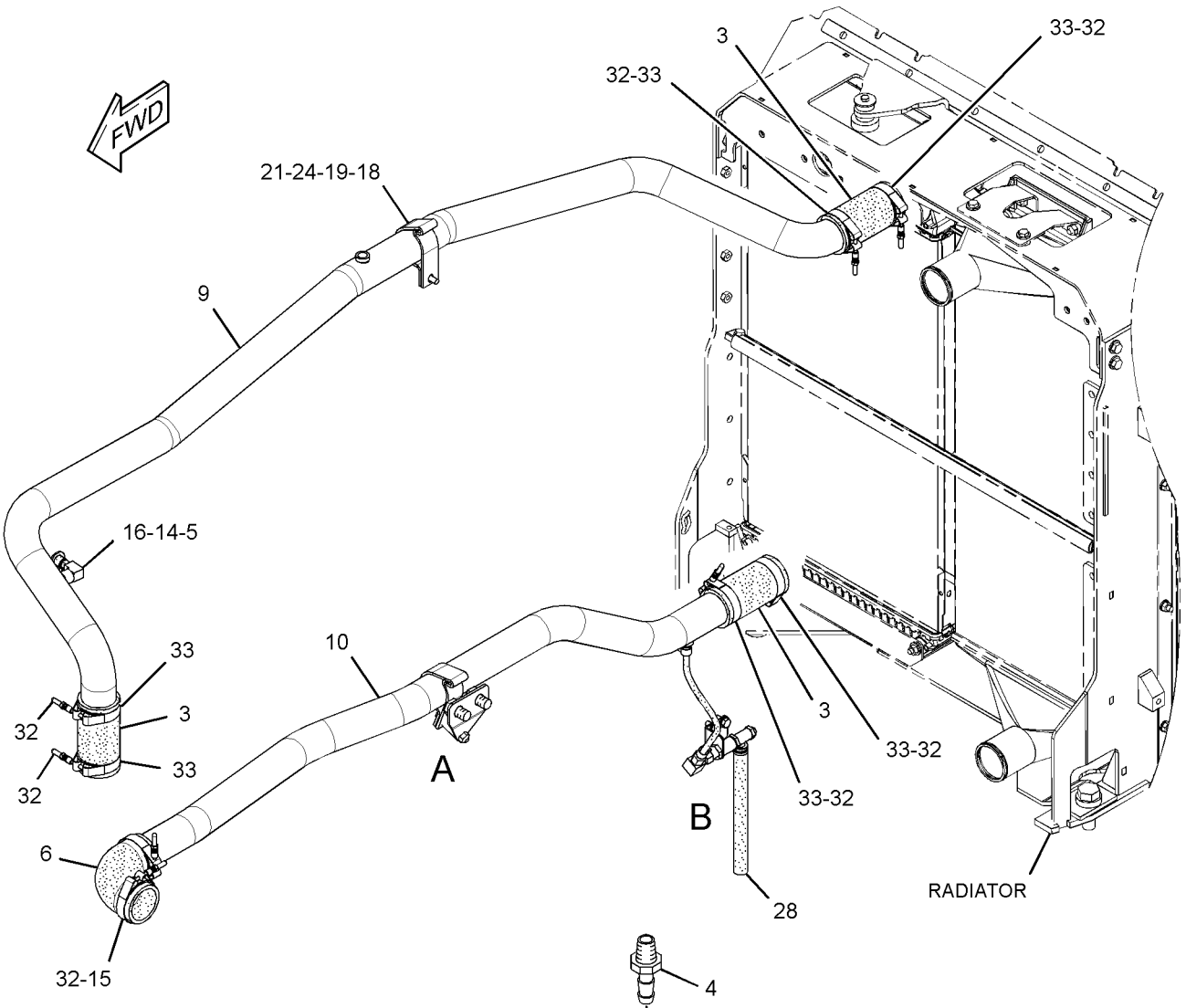

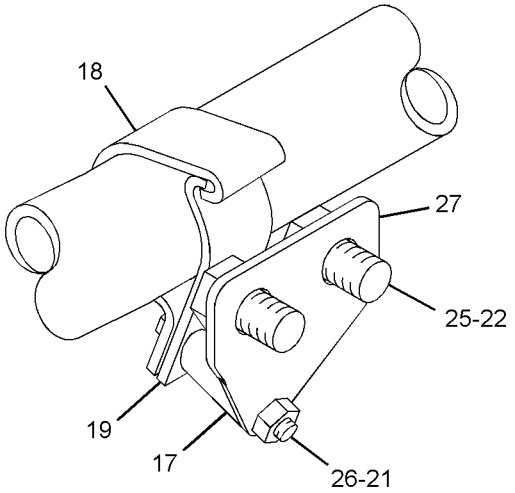

VIEW OF AREA A

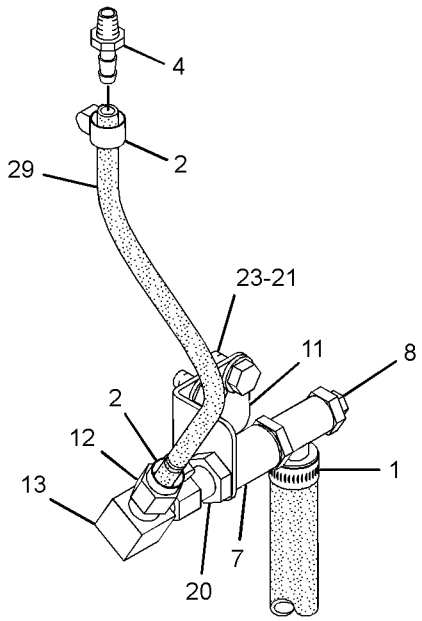

VIEW OF AREA B
(EXPLODED)

GRAPHIC #1 **<END>** g01893214

243-1667 LINES GP-WATER—SINGLE WATER REGULATOR

S/N: RSX1037-UP

PART OF 226-9770 ENGINE AR-COMPLETE

SMCS-1355, 1380, 1393 **i03997502**

NOTE	REF NO	GRAPHIC REF	PART NUMBER	QTY	PART NAME 1 2 3 4 5 6 (PRODUCT LEVEL)	SEE PAGE
	1	1	**224-6361**	1	SEAL (TEMPERATURE REGULATOR)	
	2	1	**227-5075**	1	SEAL (TEMPERATURE REGULATOR HOUSING)	
	3	1	**238-6721**	1	BASE	
	4	1	**238-6728**	1	TUBE-BYPASS	
	5	1	**238-6730**	1	HOUSING AS-REGULATOR	
		1	**3S-9643**	1	SEAL-LIP TYPE (WATER TEMPERATURE REGULATOR)	
	6	1	**239-8135**	1	VALVE AS-VENT (TEMPERATURE REGULATOR) (WATER LINES)	
		1	**9X-7380**	1	SEAL-O-RING	
	7	1	**248-5513**	1	REGULATOR-TEMPERATURE (92-DEG C) (COOLANT)	
	8	1	**230-2603**	4	BOLT (M8X1.25X90-MM)	
M	9	1	**8T-0292**	4	BOLT (M8X1.25X90-MM)	
	10	1	*353-5140*	2	PLUG AS	
					(EACH INCLUDES)	
		1	**6V-5063**	1	SEAL-O-RING	
		1	**9S-8008**	1	PLUG-O-RING	
	11	1	**9M-1974**	4	WASHER-HARD (8.8X16X2-MM THK)	
	12	1	*353-5126*	3	PLUG AS	
					(EACH INCLUDES)	
		1	**6V-6609**	1	SEAL-O-RING	
		1	**9S-8005**	1	PLUG-O-RING	
	13	1	*304-8008*	2	PLUG AS	
					(EACH INCLUDES)	
		1	**6V-9027**	1	SEAL-O-RING	
		1	**9S-8002**	1	PLUG-O-RING	
	14	1	**7L-6580**	2	SEAL-O-RING	

M-METRIC PART

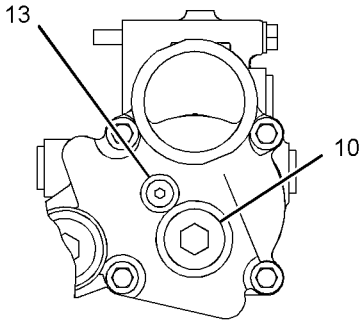

VIEW C-C

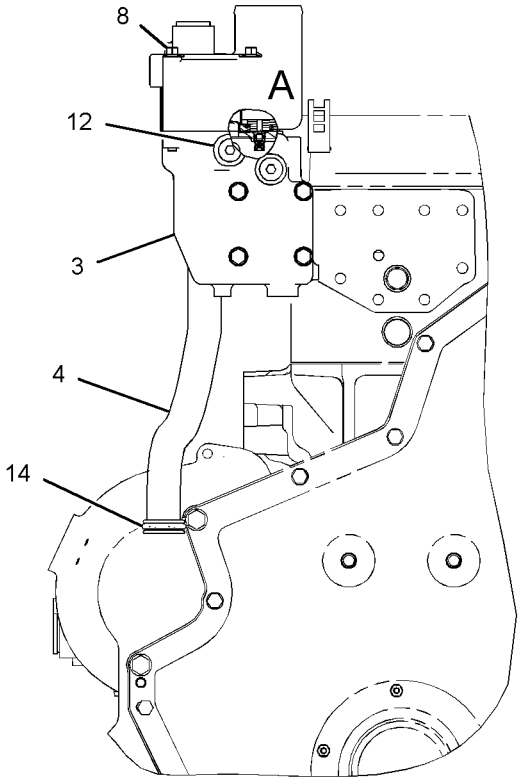

FRONT VIEW OF ENGINE

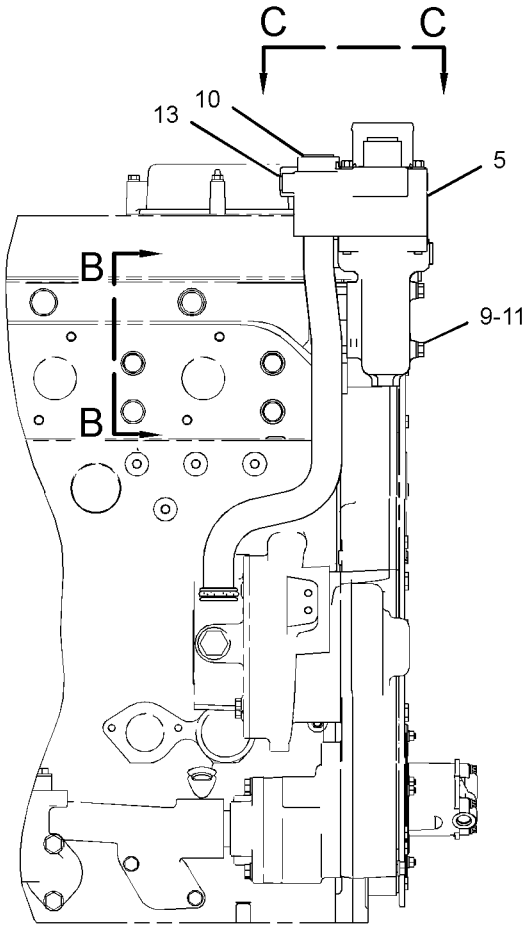

RIGHT SIDE VIEW OF ENGINE

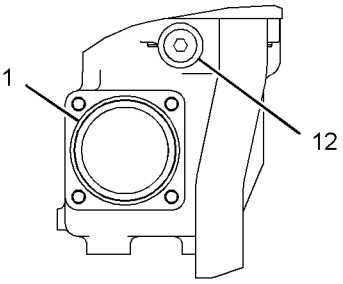

VIEW B-B

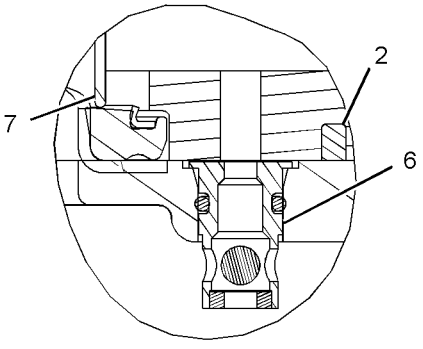

VIEW OF AREA A

GRAPHIC #1 **<END>** g02224234

255-2396 LINES GP-WATER—PUMP HOUSING

S/N: RSX1037-UP

PART OF 226-9770 ENGINE AR-COMPLETE

SMCS-1355, 1380, 1393 **i03997816**

NOTE	REF NO	GRAPHIC REF	PART NUMBER	QTY	PART NAME 1 2 3 4 5 6 (PRODUCT LEVEL)	SEE PAGE
	1	1	**255-2395**	1	ELBOW-WATER PUMP	
	2	1	*353-5140*	2	PLUG AS	
					(EACH INCLUDES)	
	2A	1	**6V-5063**	1	SEAL-O-RING	
		1	**9S-8008**	1	PLUG-O-RING	
M	3	1	**6V-3940**	3	BOLT (M8X1.25X25-MM)	
	4	1	**9M-1974**	3	WASHER-HARD (8.8X16X2-MM THK)	

M-METRIC PART

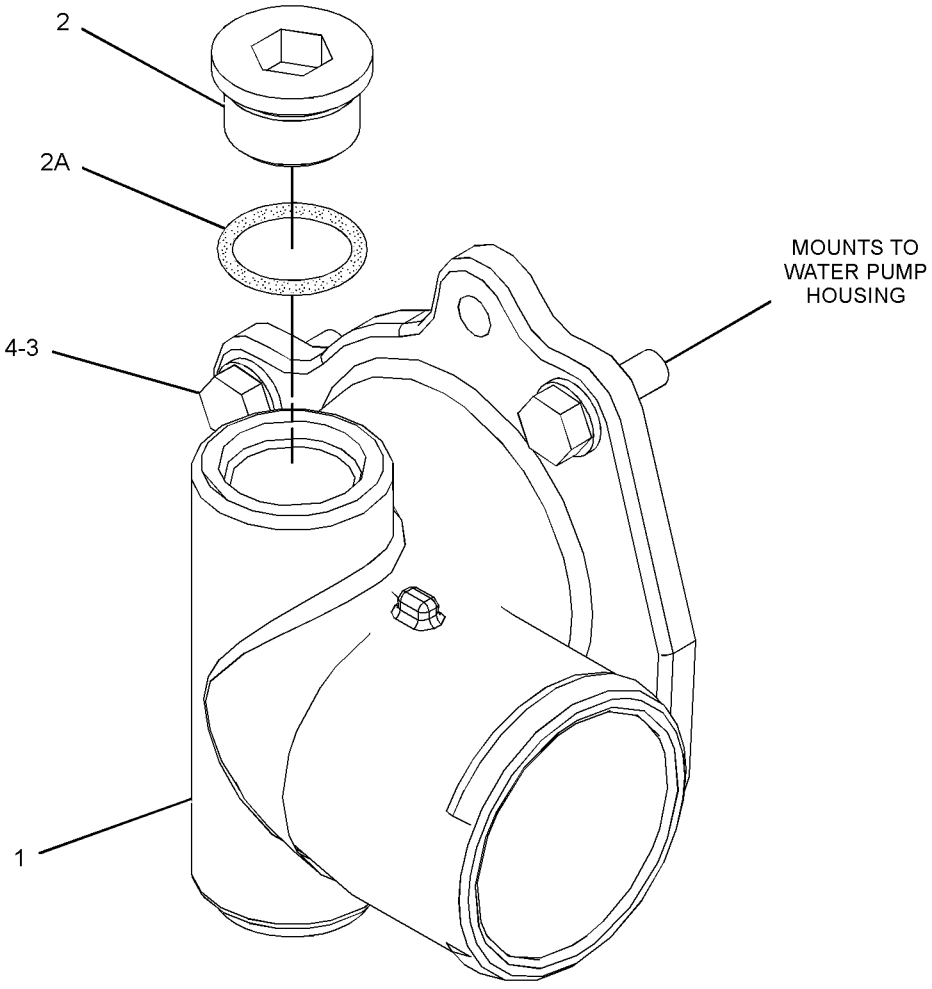

GRAPHIC #1 **<END>** g02224513

COOLING SYSTEM

223-9147 PUMP GP-WATER

S/N: RSX1037-UP

PART OF 228-5811 PUMP GP-WATER

SMCS-1361 **i02663391**

NOTE	REF NO	GRAPHIC REF	PART NUMBER	QTY	PART NAME 1 2 3 4 5 6 (PRODUCT LEVEL)	SEE PAGE
	1	1	**128-0317**	1	SEAL GP (WATER PUMP)	
	2	1	**176-6994**	1	WASHER	
	4	1	**222-3904**	1	GEAR (35-TEETH)	
	5	1	**223-9143**	1	IMPELLER	
	6	1	**223-9144**	1	SHAFT-PUMP	
	7	1	**223-9145**	1	HOUSING-PUMP	
	8	1	**1B-3867**	2	BALL BEARING	
	9	1	**8C-3100**	1	SEAL-LIP TYPE	
M	10	1	**8T-9515**	1	BOLT-SOCKET HEAD (M10X1.5X40-MM)	
	11	1	**8T-9598**	1	RING-RETAINING	

M-METRIC PART

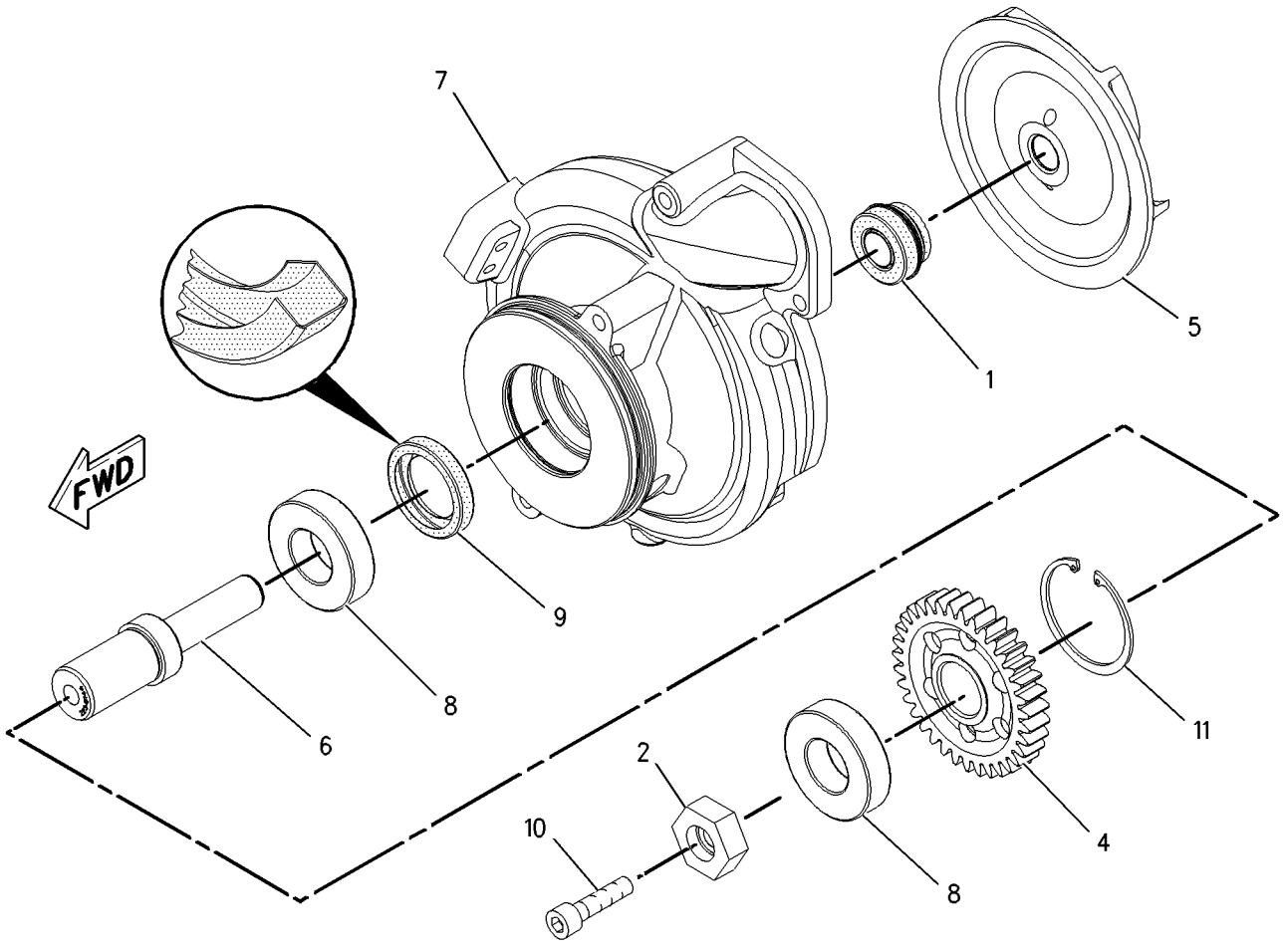

GRAPHIC #1 **<END>** g00950215

228-5811 PUMP GP-WATER*R

S/N: RSX1037-UP

PART OF 228-5812 PUMP GP-WATER

SMCS-1361 **i02090986**

NOTE	REF NO	GRAPHIC REF	PART NUMBER	QTY	PART NAME 1 2 3 4 5 6 (PRODUCT LEVEL)	SEE PAGE
	1	1	**208-9281**	4	BOLT-FLANGE HEAD (M8X1.25X20-MM)	
Y	2	1	**223-9147**	1	PUMP GP-WATER	118
	3	1	**225-7003**	1	SEAL-O-RING	
	4	1	**228-5810**	1	COVER	
	5	1	**229-8810**	1	SEAL	
	6	1	**6V-3251**	1	SEAL-O-RING	
	7	1	**9S-4190**	1	PLUG-O RING	

Y-SEPARATE ILLUSTRATION

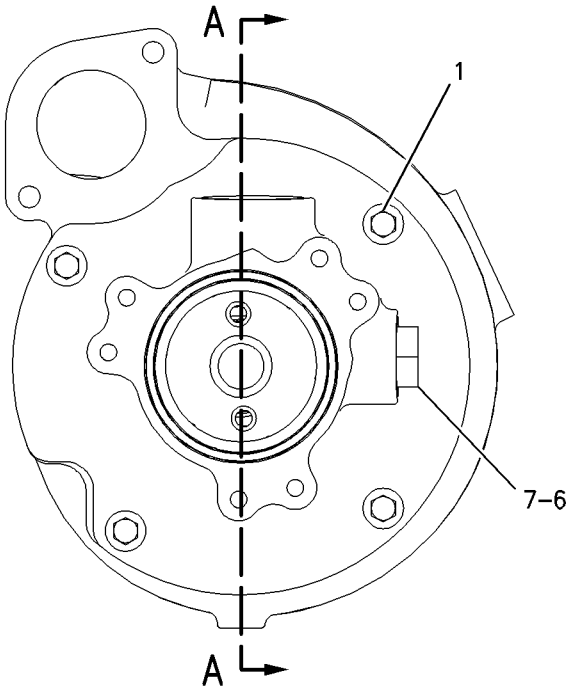

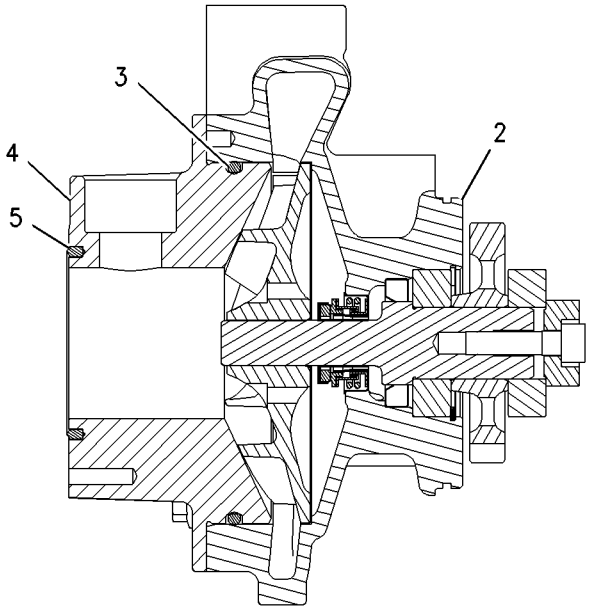

SECTION A-A

GRAPHIC #1 **<END>** g00950338

COOLING SYSTEM

228-5812 PUMP GP-WATER

S/N: RSX1037-16719

PART OF 263-6681 ENGINE AR-CORE

SMCS-1361 **i02667435**

NOTE	REF NO	GRAPHIC REF	PART NUMBER	QTY	PART NAME 1 2 3 4 5 6 (PRODUCT LEVEL)	SEE PAGE
YR	1	1	**228-5811**	1	PUMP GP-WATER	119
	2	1	**6V-5839**	2	WASHER (11X21X2.5-MM THK)	
	3	1	**6V-7350**	1	SEAL-O-RING	
M	4	1	**8T-0643**	2	BOLT (M10X1.5X80-MM)	

M-METRIC PART
R-REMFG PART MAY BE AVAILABLE
Y-SEPARATE ILLUSTRATION

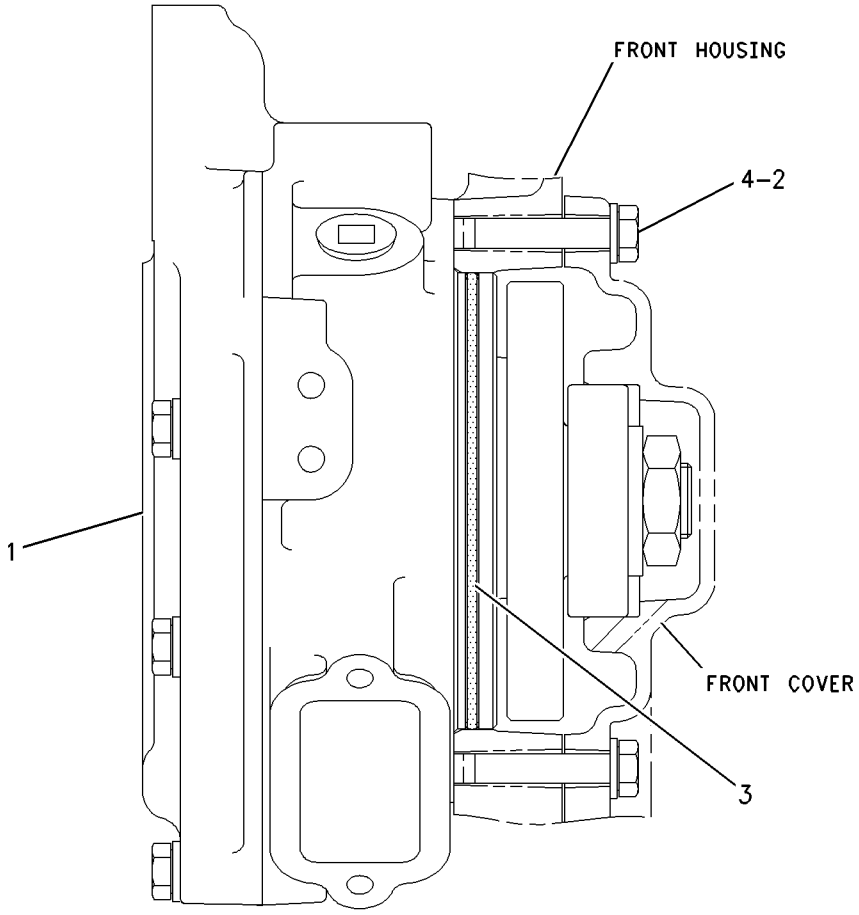

RIGHT SIDE VIEW

GRAPHIC #1 **<END>** g00942142

COOLING SYSTEM

228-5812 PUMP GP-WATER

S/N: RSX1037-UP

PART OF 263-6681, 357-6586 ENGINE AR-CORE

SMCS-1361 **i02663393**

NOTE	REF NO	GRAPHIC REF	PART NUMBER	QTY	PART NAME 1 2 3 4 5 6 (PRODUCT LEVEL)	SEE PAGE
CYR	1	1	**292-9252**	1	PUMP GP-WATER	122
	2	1	**6V-5839**	2	WASHER (11X21X2.5-MM THK)	
	3	1	**6V-7350**	1	SEAL-O-RING	
M	4	1	**8T-0643**	2	BOLT (M10X1.5X80-MM)	

C-CHANGE FROM PREVIOUS TYPE
M-METRIC PART
R-REMFG PART MAY BE AVAILABLE
Y-SEPARATE ILLUSTRATION

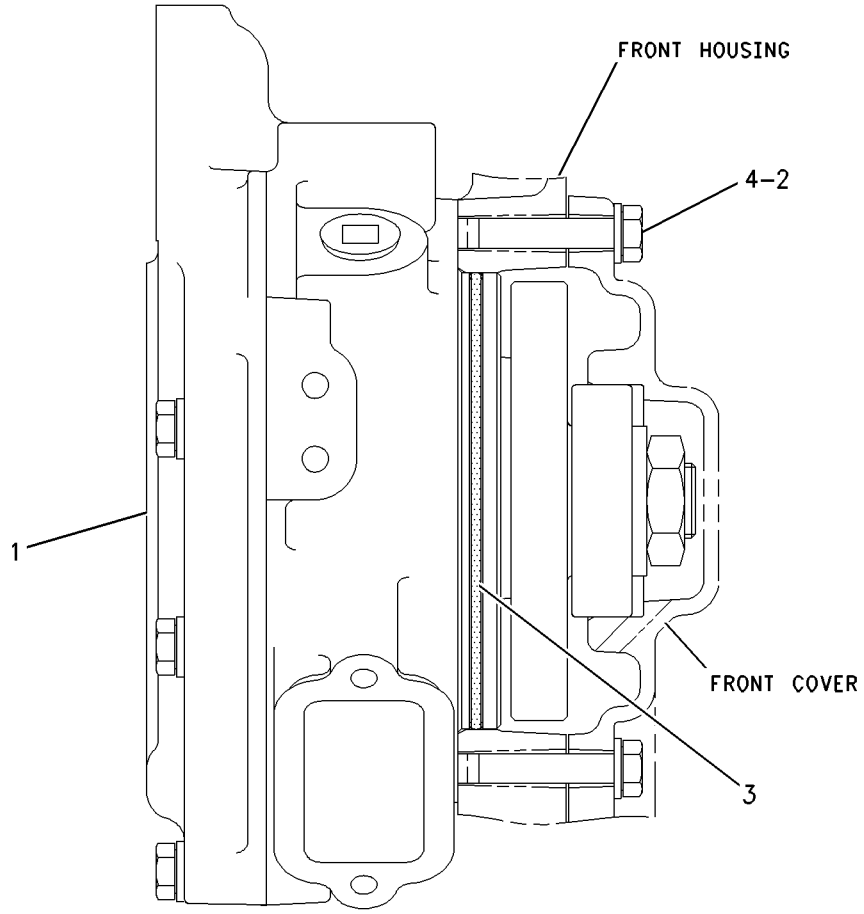

RIGHT SIDE VIEW

GRAPHIC #1 **<END>** g00942142

COOLING SYSTEM

292-9252 PUMP GP-WATER*R

S/N: RSX1037-UP

PART OF 228-5812 PUMP GP-WATER

SMCS-1361 **i03883054**

NOTE	REF NO	GRAPHIC REF	PART NUMBER	QTY	PART NAME 1 2 3 4 5 6 (PRODUCT LEVEL)	SEE PAGE
	1	1	**208-9281**	4	BOLT-FLANGE HEAD (M8X1.25X20-MM)	
Y	2	1	**293-0818**	1	PUMP GP-WATER	123
	3	1	**225-7003**	1	SEAL-O-RING	
	4	1	**228-5810**	1	COVER	
	5	1	**229-8810**	1	SEAL	
	6	1	*353-5125*	1	PLUG AS	
		1	**6V-3251**	1	SEAL-O-RING	
		1	**9S-8006**	1	PLUG-O-RING	

Y-SEPARATE ILLUSTRATION

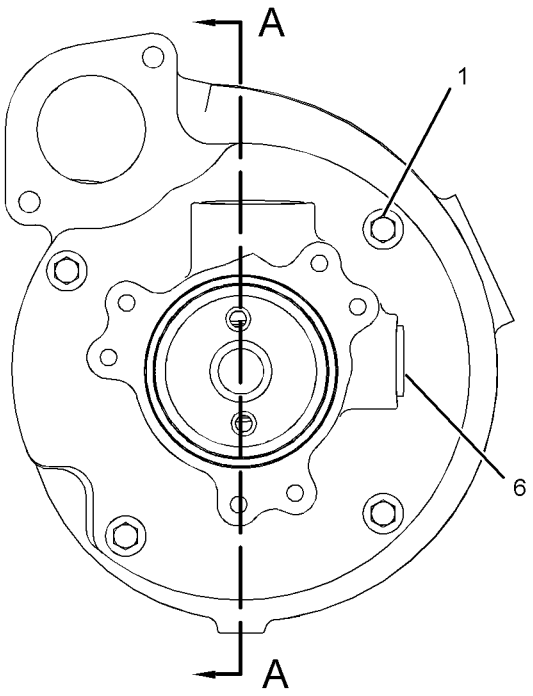

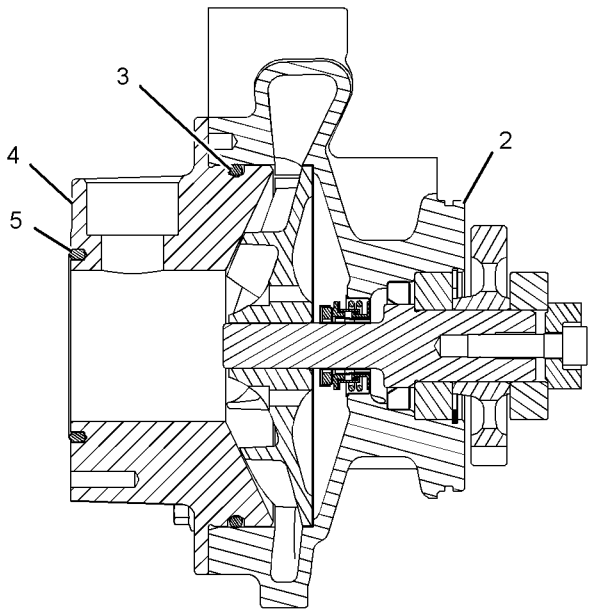

SECTION A-A

GRAPHIC #1 **<END>** g02128624

293-0818 PUMP GP-WATER

S/N: RSX1037-UP

PART OF 292-9252 PUMP GP-WATER

SMCS-1361 **i03596455**

NOTE	REF NO	GRAPHIC REF	PART NUMBER	QTY	PART NAME 1 2 3 4 5 6 (PRODUCT LEVEL)	SEE PAGE
	1	1	**6V-9666**	1	WASHER-HARD	
	2	1	**128-0317**	1	SEAL GP (WATER PUMP)	
	3	1	**203-3831**	1	PLUG-CUP	
	4	1	**223-9143**	1	IMPELLER	
	5	1	**223-9145**	1	HOUSING-PUMP	
	6	1	**291-6905**	1	SHAFT-WATER PUMP	
	7	1	**292-1200**	1	GEAR-WATER PUMP (35-TEETH)	
	8	1	**1B-3867**	2	BALL BEARING	
M	9	1	**6V-5842**	1	BOLT (M10X1.5X40-MM)	
	10	1	**8C-3100**	1	SEAL-LIP TYPE	
	11	1	**8T-9598**	1	RING-RETAINING	

M-METRIC PART

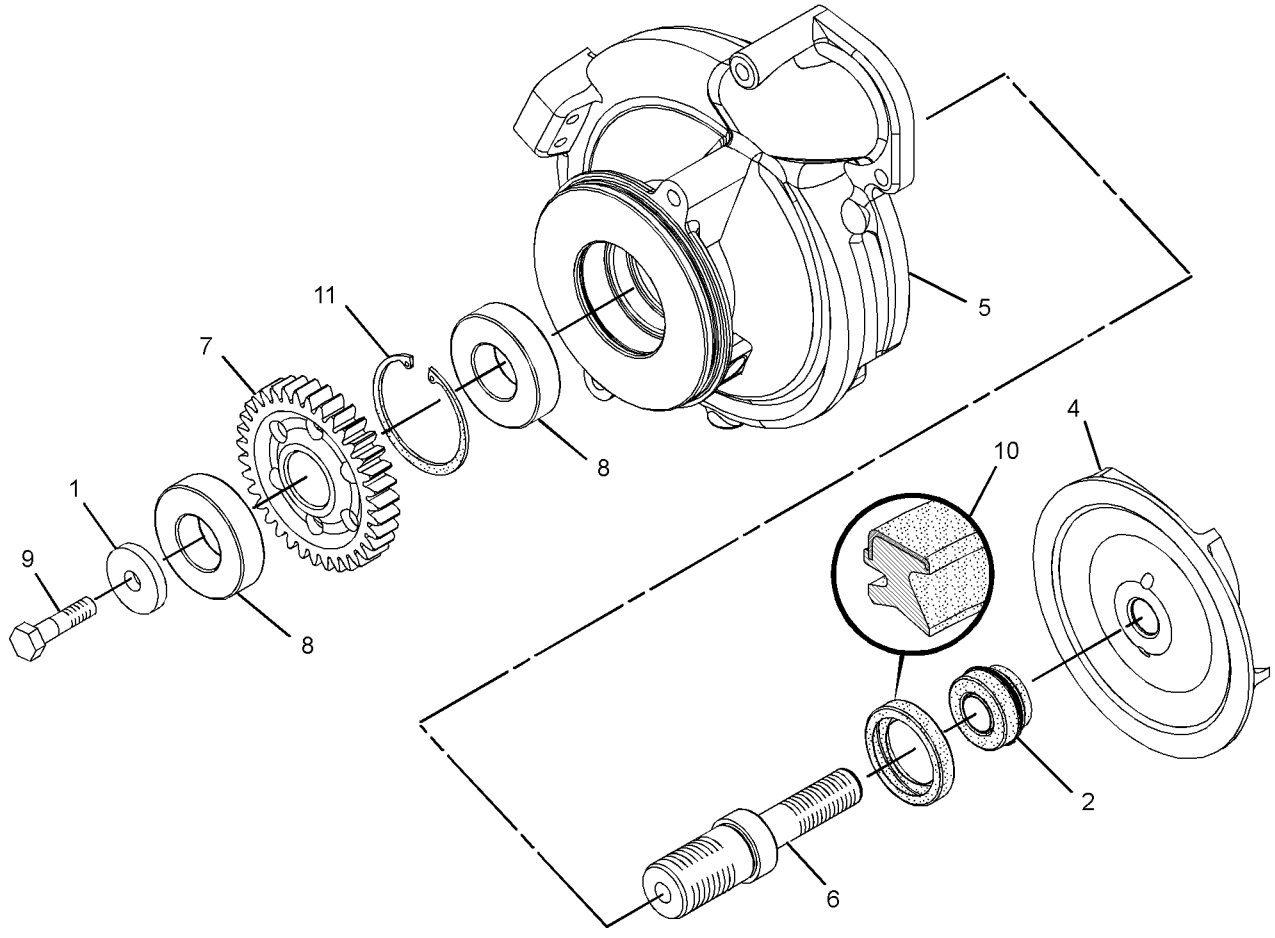

GRAPHIC #1 **<END>** g01324739

COOLING SYSTEM

231-2315 RADIATOR GP

S/N: R9J1-UP

PART OF 268-6570 COOLING AR

SMCS-1353 **i02673759**

NOTE	REF NO	GRAPHIC REF	PART NUMBER	QTY	PART NAME 1 2 3 4 5 6 (PRODUCT LEVEL)	SEE PAGE
	1	1	**243-2289**	2	MOUNT AS	
	2	1	**248-0677**	1	BRACKET AS	
	3	1	**249-7386**	1	BRACKET AS	
	4	1	**275-3393**	1	BRACKET	
	5	1	**256-5308**	1	CORE AS-RADIATOR	
	6	1	**198-4778**	2	WASHER-HARD (13.5X30X12-MM THK)	
	7	1	**3J-5390**	1	PLUG	
M	8	1	**7X-2546**	4	BOLT (M10X1.5X180-MM)	
	9	1	**7X-7729**	10	WASHER (11X25X3-MM THK)	
M	10	1	**8T-4133**	4	NUT (M10X1.5-THD)	
M	11	1	**8T-4186**	2	BOLT (M10X1.5X40-MM)	
M	12	1	**8T-4182**	2	BOLT (M10X1.5X45-MM)	
	13	1	**8T-4226**	2	WASHER-PLATED (10.5X45X3-MM THK)	
D	14	1	**5P-8309**		SEAL (0.9-M EACH)	
M	15	1	**8T-6912**	1	BOLT (M8X1.25X50-MM)	
M	16	1	**174-4181**	1	WASHER-HARD (8.5X40X3-MM THK)	
	17	1	**121-3307**	1	MOUNT AS-RESILIENT	

D-ORDER BY THE METER
M-METRIC PART

231-2315 **RADIATOR GP** *(contd.)* **i02673759**

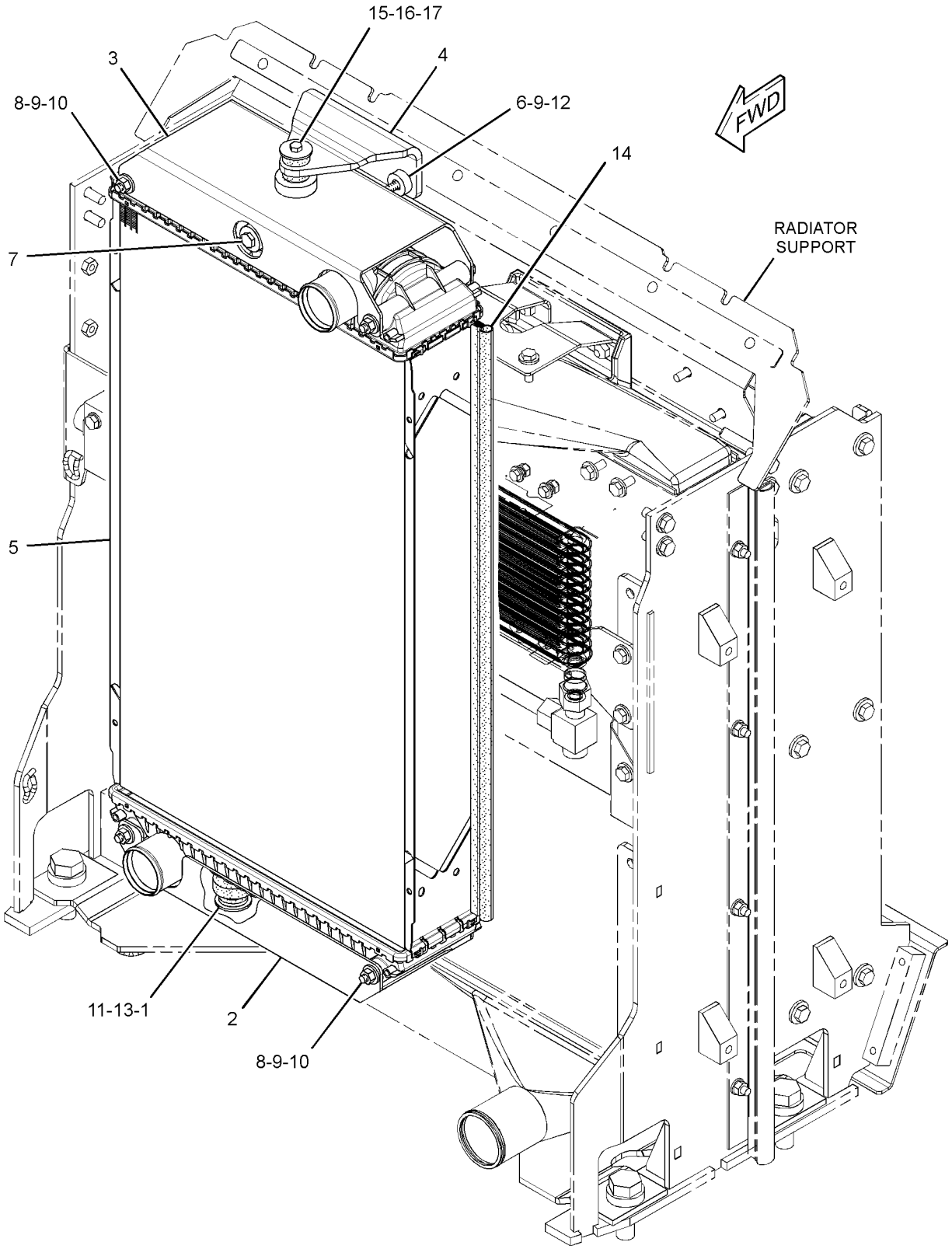

GRAPHIC #1 **<END>** g01346681

COOLING SYSTEM

250-1172 TANK GP-COOLANT

S/N: R9J1-UP

PART OF 349-2555 COMMON AR

SMCS-1354, 1377 **i02854261**

NOTE	REF NO	GRAPHIC REF	PART NUMBER	QTY	PART NAME 1 2 3 4 5 6 (PRODUCT LEVEL)	SEE PAGE
C	1	1	**5P-9768**	2	PLUG-HOLE	
C	2	1	**6V-9313**	1	PLUG	
C	3	1	**7X-7729**	4	WASHER (11X25X3-MM THK)	
	4	1	**251-4174**	1	ELBOW	
	5	1	**277-4837**	1	TANK GP-COOLANT	
		1	**251-3227**	1	CAP AS-COOLANT TANK	
	6	1	**033-8248**	2	CLIP	
	7	1	**069-4269**	1	STEM	
C	8	1	**124-2528**	1	SPACER (11X20X10-MM THK)	
C	9	1	**151-8190**	1	CLAMP	
	10	1	**189-4523**	2	BOSS	
	11	1	**3D-2824**	1	SEAL-O-RING	
	12	1	**5D-1026**	2	CLAMP-BAND	
	13	1	**6D-4244**	4	CLIP	
C	14	1	**7D-7233**	1	CLIP	
M	15	1	**7X-2536**	4	BOLT (M8X1.25X14-MM)	
	16	1	**8T-1117**	2	CLAMP-HOSE	
C	17	1	**8T-4121**	6	WASHER-HARD (11X21X2.5-MM THK)	
CM	18	1	**8T-4133**	1	NUT (M10X1.5-THD)	
M	19	1	**8T-4136**	3	BOLT (M10X1.5X25-MM)	
CM	20	1	**8T-4137**	4	BOLT (M10X1.5X20-MM)	
CM	21	1	**8T-4138**	4	BOLT (M6X1X20-MM)	
M	22	1	**8T-4195**	1	BOLT (M10X1.5X30-MM)	
CM	23	1	**8T-4196**	1	BOLT (M10X1.5X35-MM)	
	24	1	**8T-4224**	6	WASHER-HARD (8.8X16X2-MM THK)	
M	25	1	**8T-7547**	2	BOLT (M8X1.25X30-MM)	
C	26	1	**9X-8256**	4	WASHER (6.6X12X2-MM THK)	
E	27	1	**9X-2133**		HOSE (113.1-CM)	
E	28	1	**8C-3681**		HOSE (190.3-CM)	
E	29	1	**302-7410**		HOSE (97-CM)	

C-CHANGE FROM PREVIOUS TYPE
E-ORDER BY THE CENTIMETER
M-METRIC PART

250-1172 **TANK GP-COOLANT** *(contd.)* **i02854261**

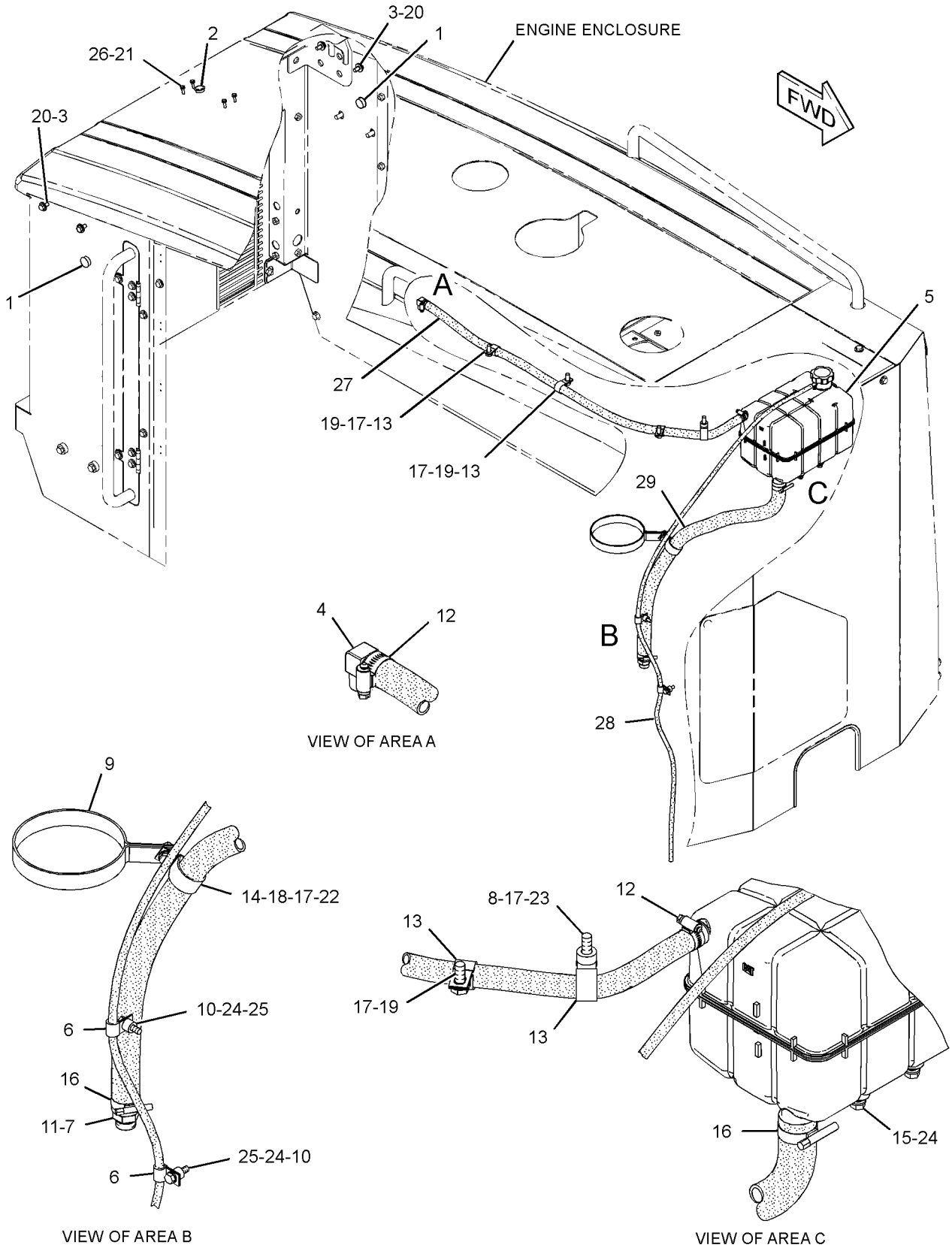

GRAPHIC #1 **<END>** g01446529

AIR INLET AND EXHAUST SYSTEM

231-2311 AFTERCOOLER GP-AIR

S/N: R9J1-UP

PART OF 268-6570 COOLING AR

SMCS-1063, 1064, 1079 **i02183831**

NOTE	REF NO	GRAPHIC REF	PART NUMBER	QTY	PART NAME 1 2 3 4 5 6 (PRODUCT LEVEL)	SEE PAGE
	1	1	**121-3307**	2	MOUNT AS-RESILIENT	
	2	1	**243-5063**	1	AFTERCOOLER AS	
	3	1	**248-0676**	1	BRACKET AS	
	4	1	**198-4777**	2	WASHER-HARD (11X25X10-MM THK)	
	5	1	**7X-7729**	4	WASHER (11X25X3-MM THK)	
M	6	1	**8T-4185**	2	BOLT (M10X1.5X50-MM)	
M	7	1	**8T-4195**	2	BOLT (M10X1.5X30-MM)	
M	8	1	**8T-4196**	2	BOLT (M10X1.5X35-MM)	
	9	1	**8T-4226**	2	WASHER-PLATED (10.5X45X3-MM THK)	

M-METRIC PART

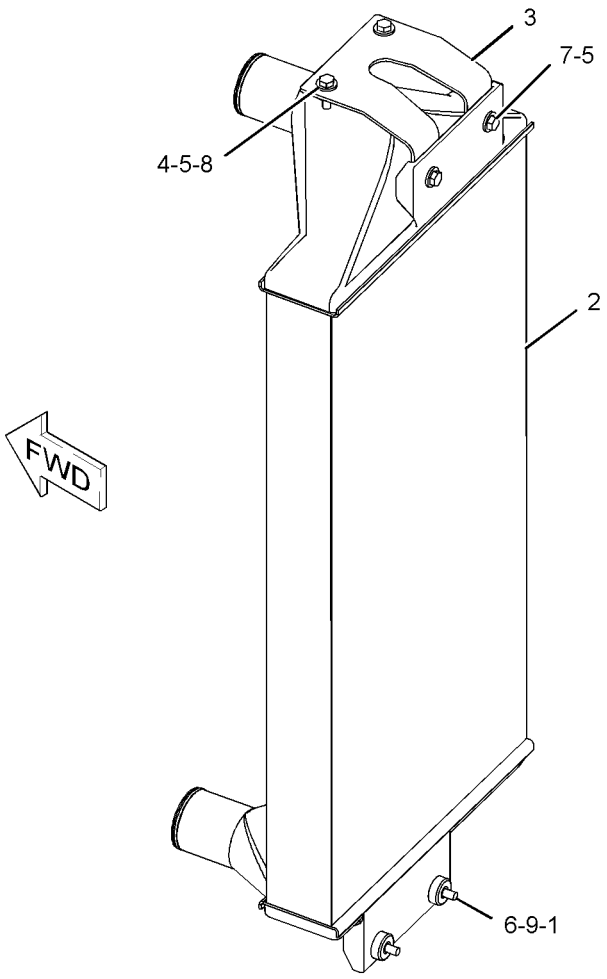

GRAPHIC #1 **<END>** g01109137

AIR INLET AND EXHAUST SYSTEM

231-2115 AIR CLEANER GP

S/N: R9J1-UP

PART OF 349-2555 COMMON AR

SMCS-1051, 1054 **i03789800**

NOTE	REF NO	GRAPHIC REF	PART NUMBER	QTY	PART NAME 1 2 3 4 5 6 (PRODUCT LEVEL)	SEE PAGE
	1	1	**245-3816**	1	CAP AS-AIR CLEANER	
Y	2	1	**250-0366**	1	AIR CLEANER GP	130
	3	1	**251-2192**	1	TUBE	
M	4	1	**099-3649**	4	BOLT (M8X1.25X40-MM)	
	5	1	**8T-4987**	1	CLAMP-HOSE	
	6	1	**5P-4116**	4	WASHER-HARD (8.8X20.5X2-MM THK)	

M-METRIC PART
Y-SEPARATE ILLUSTRATION

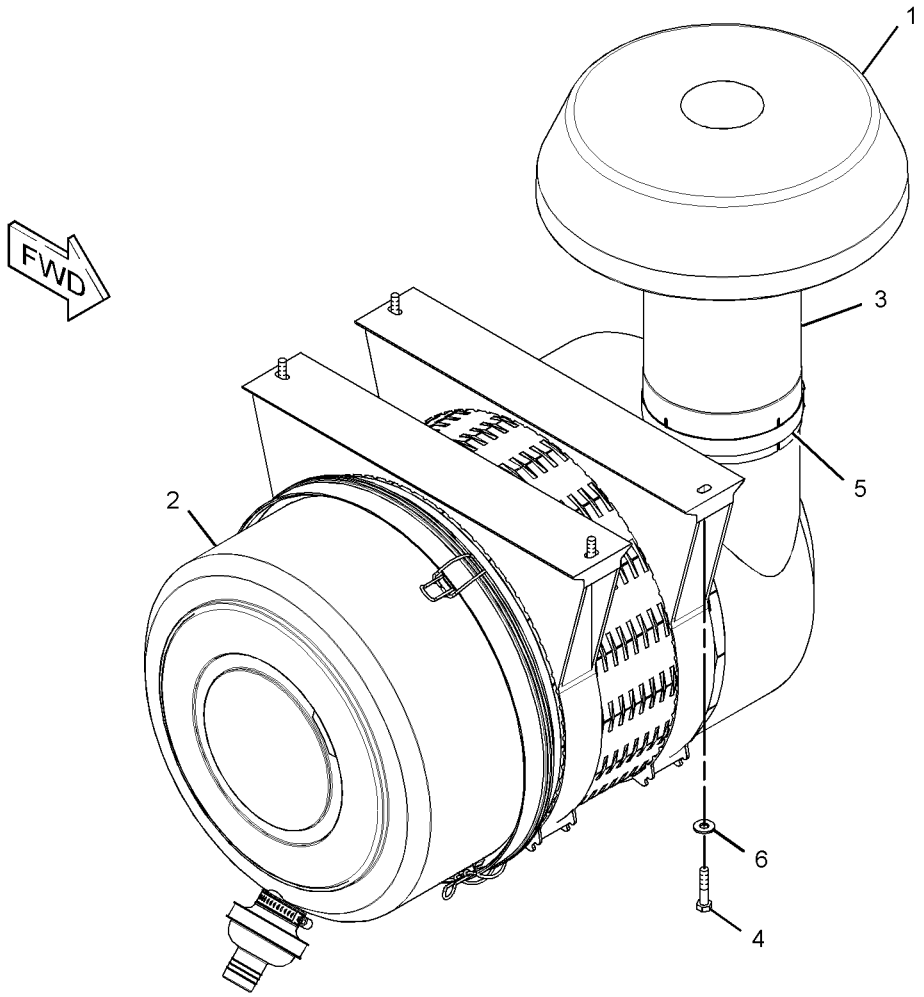

GRAPHIC #1 **<END>** g01415691

AIR INLET AND EXHAUST SYSTEM

250-0366 AIR CLEANER GP

S/N: R9J1-UP

PART OF 231-2115 AIR CLEANER GP

SMCS-1051, 1054 **i02549660**

NOTE	REF NO	GRAPHIC REF	PART NUMBER	QTY	PART NAME 1 2 3 4 5 6 (PRODUCT LEVEL)	SEE PAGE
	1	1	**245-3818**	1	FILTER ELEMENT AS-AIR (PRIMARY)	
	2	1	**245-3819**	1	FILTER ELEMENT AS-AIR (SECONDARY)	
	3	1	**246-4617**	2	BRACKET AS	
	4	1	**247-9730**	1	VALVE AS-CHECK (AIR CLEANER)	
	5	1	**262-0569**	1	COVER AS	

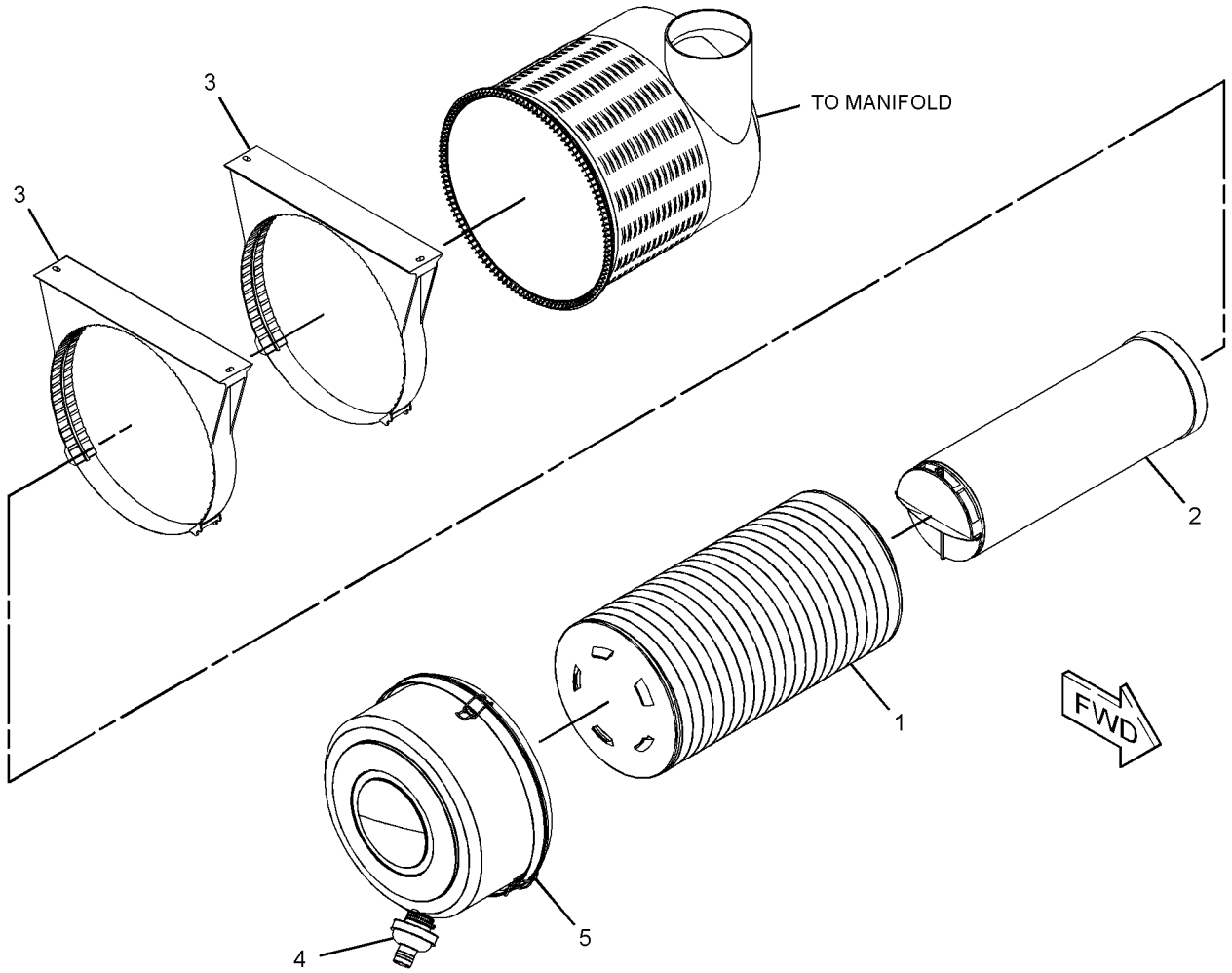

GRAPHIC #1 **<END>** g01278467

AIR INLET AND EXHAUST SYSTEM

231-2137 LINES GP-AFTERCOOLER AIR

S/N: R9J1-UP

PART OF 349-2555 COMMON AR

SMCS-1063, 1071 **i02807970**

NOTE	REF NO	GRAPHIC REF	PART NUMBER	QTY	PART NAME 1 2 3 4 5 6 (PRODUCT LEVEL)	SEE PAGE
	1	1	**7E-8629**	2	HOSE-REDUCER	
	2	1	**9R-5008**	2	SPACER (11X20X6-MM THK)	
	3	1	**127-0929**	1	CLAMP	
	4	1	**129-6400**	1	ADAPTER	
	5	1	**208-7448**	2	CLAMP	
	6	1	**209-4578**	6	CLAMP	
	7	1	**247-8602**	1	HOSE-ELBOW	
	8	1	**248-6364**	1	HOSE-ELBOW	
	9	1	**250-2151**	1	TUBE	
	10	1	**250-2152**	1	TUBE	
	11	1	**271-3567**	1	BOLT (M10X1.5X86-MM)	
	12	1	**2A-3034**	2	CLAMP-AIR CLEANER	
	13	1	**9G-7101**	1	SPACER (10.5X20X30-MM THK)	
	14	1	**7X-7729**	2	WASHER (11X25X3-MM THK)	
	15	1	**8C-3089**	1	SEAL-O-RING	
M	16	1	**8T-4186**	1	BOLT (M10X1.5X40-MM)	
	17	1	**8C-0620**	9	PROTECTOR-THREAD	

M-METRIC PART

231-2137 **LINES GP-AFTERCOOLER AIR** *(contd.)* **i02807970**

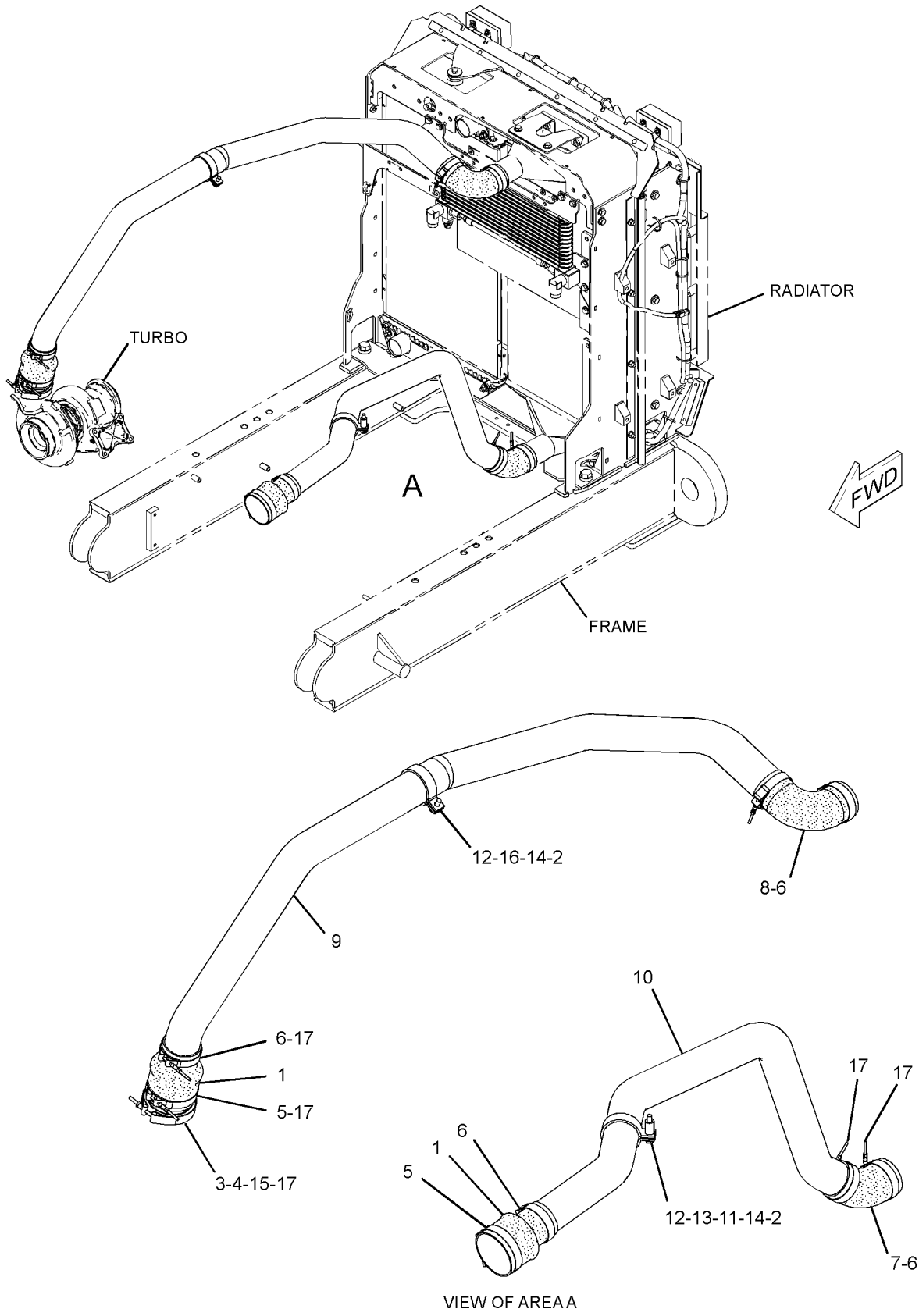

GRAPHIC #1 **<END>** g01343994

AIR INLET AND EXHAUST SYSTEM

250-0358 LINES GP-AIR

S/N: R9J1-UP

PART OF 353-5005, 358-7877, 361-1731, 361-4363, 363-0414 DISTRIBUTION AR AN ATTACHMENT

SMCS-1071 **i02837101**

NOTE	REF NO	GRAPHIC REF	PART NUMBER	QTY	PART NAME 1 2 3 4 5 6 (PRODUCT LEVEL)	SEE PAGE
C	1	1	**223-7485**	1	CLAMP	
C	2	1	**309-8817**	1	HOSE	
C	3	1	**237-0226**	1	CLAMP	

C-CHANGE FROM PREVIOUS TYPE

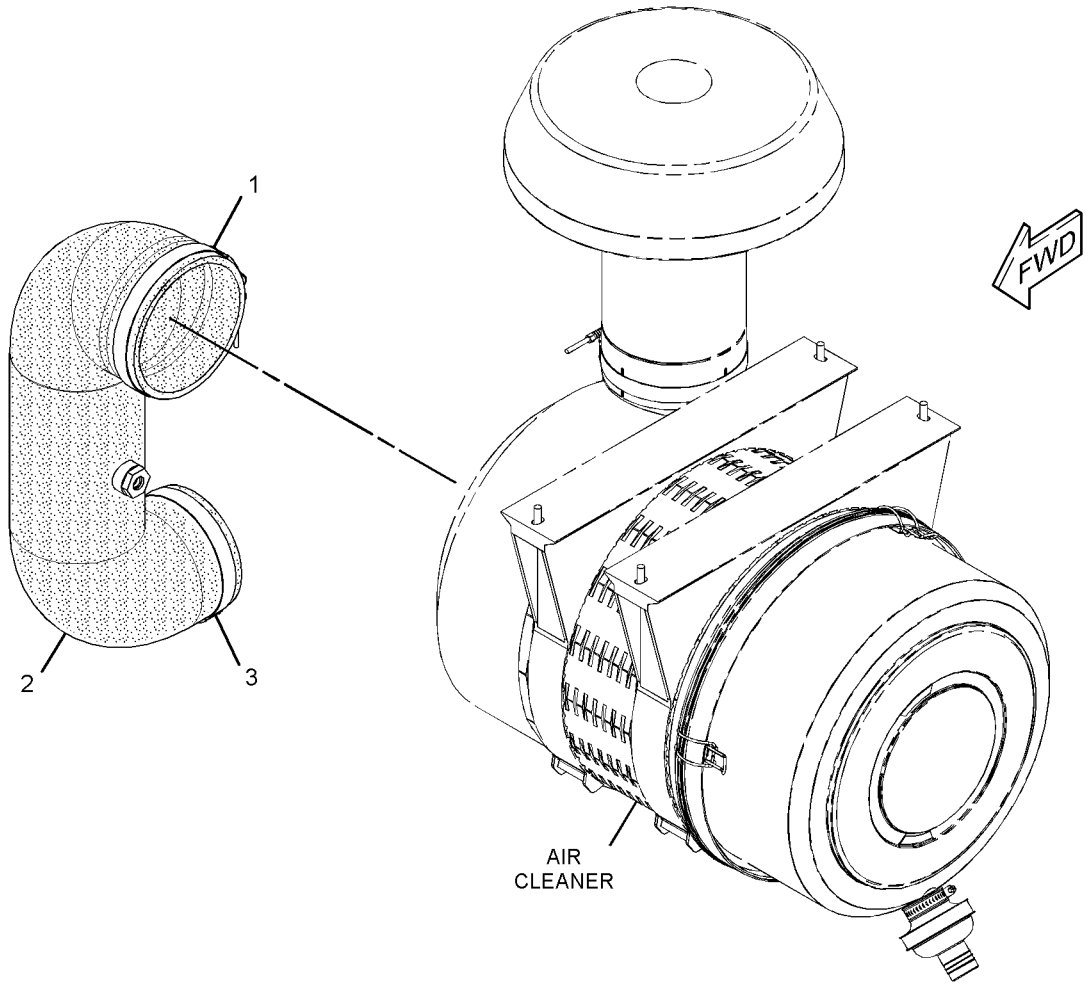

GRAPHIC #1 **<END>** g01419010

AIR INLET AND EXHAUST SYSTEM

250-0359 LINES GP-AIR–AIR CLEANER

S/N: R9J1-UP
PART OF 256-6983 AIR COMPRESSOR AR
AN ATTACHMENT

SMCS-1071 **i02837121**

NOTE	REF NO	GRAPHIC REF	PART NUMBER	QTY	PART NAME 1 2 3 4 5 6 (PRODUCT LEVEL)	SEE PAGE
	1	1	**135-6261**	1	CLAMP	
C	2	1	**147-1685**	1	CLAMP	
C	3	1	**309-8817**	1	HOSE	

C-CHANGE FROM PREVIOUS TYPE

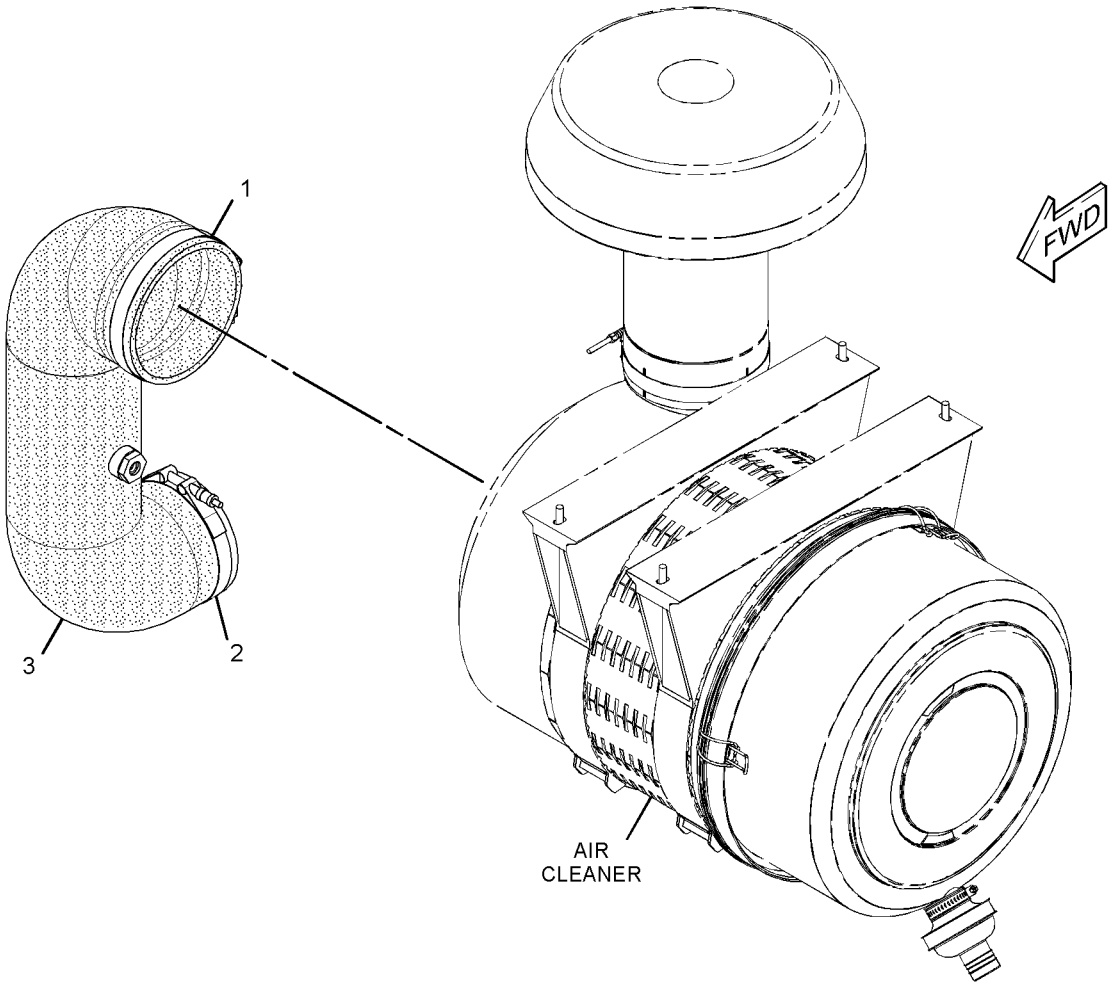

GRAPHIC #1 **<END>** g01419012

AIR INLET AND EXHAUST SYSTEM

268-6686 LINES GP-AIR–INLET

S/N: RSX1037-UP
PROVIDES REAR FACING AIR INLET ELBOW
PART OF 226-9770 ENGINE AR-COMPLETE

SMCS-1071 **i03992050**

NOTE	REF NO	GRAPHIC REF	PART NUMBER	QTY	PART NAME 1 2 3 4 5 6 (PRODUCT LEVEL)	SEE PAGE
	1	1	**203-0351**	1	ELBOW-AIR	
	2	1	**248-4840**	1	CAP-PROTECTIVE	
	3	1	**248-4841**	1	CLAMP-BAND	
	4	1	*307-2671*	1	PLUG AS	
	4A	1	**214-7566**	1	SEAL-O-RING	
		1	**9S-8002**	1	PLUG-O-RING	

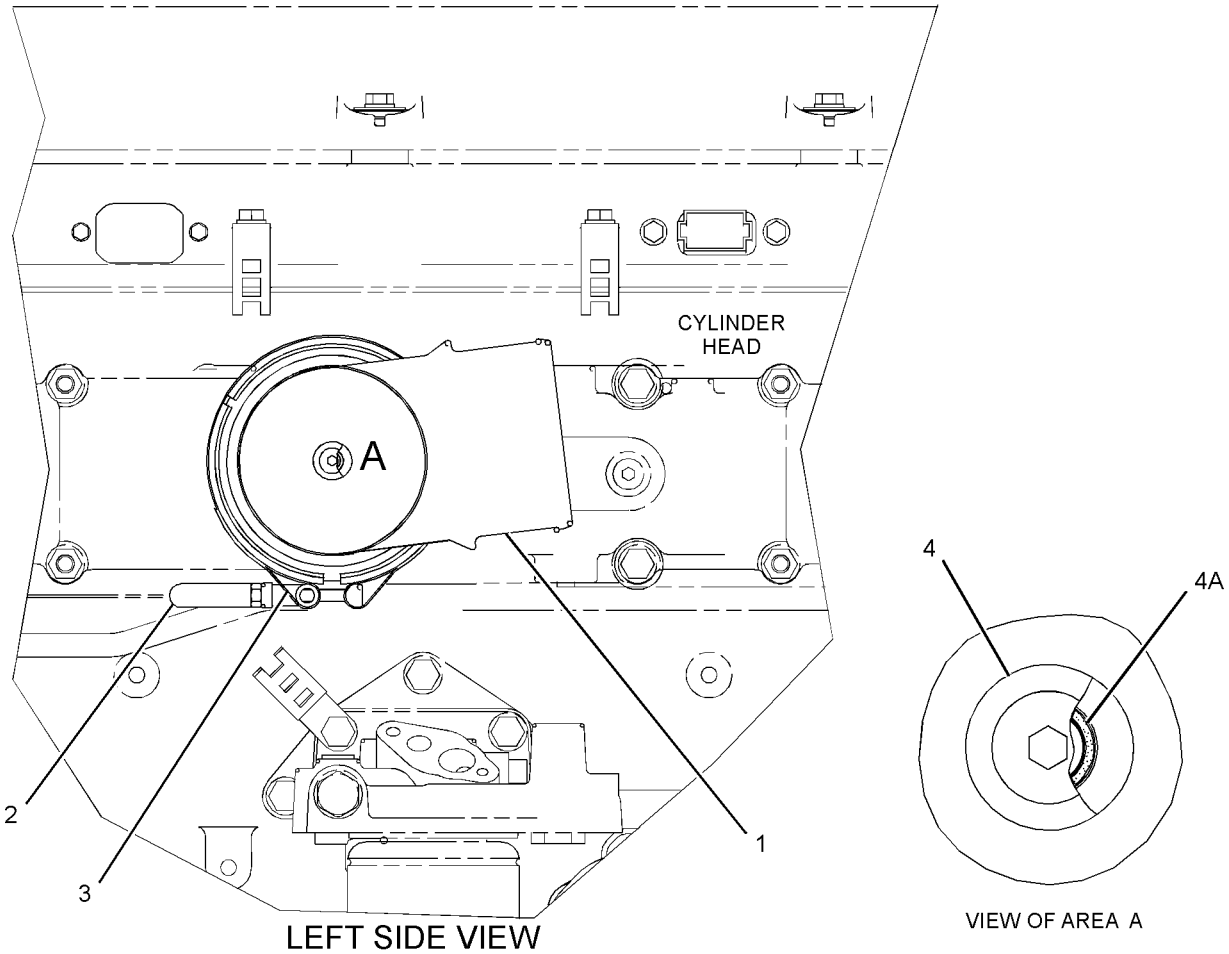

GRAPHIC #1 **<END>** g01160770

247-2833 MANIFOLD GP-EXHAUST

S/N: RSX1037-UP
PROVIDES A LOW STRESS FOOT CENTER SECTION
PART OF 226-9770 ENGINE AR-COMPLETE

SMCS-1059 **i03798766**

NOTE	REF NO	GRAPHIC REF	PART NUMBER	QTY	PART NAME 1 2 3 4 5 6 (PRODUCT LEVEL)	SEE PAGE
	1	1	**4P-4369**	12	SPACER (12X19X23.5-MM THK)	
	2	1	**283-2238**	6	GASKET	
	3	1	**247-2834**	1	MANIFOLD-EXHAUST (CENTER)	
	4	1	**231-9030**	2	MANIFOLD-EXHAUST (END)	
M	5	1	**116-3715**	12	STUD-TAPERLOCK (M10X1.5X85-MM)	
M	6	1	**9X-6620**	12	LOCKNUT (M10X1.5-THD)	
	7	1	**6V-5839**	12	WASHER (11X21X2.5-MM THK)	
M	8	1	**9X-8281**	4	STUD-TAPERLOCK (M10X1.5X45-MM)	

M-METRIC PART

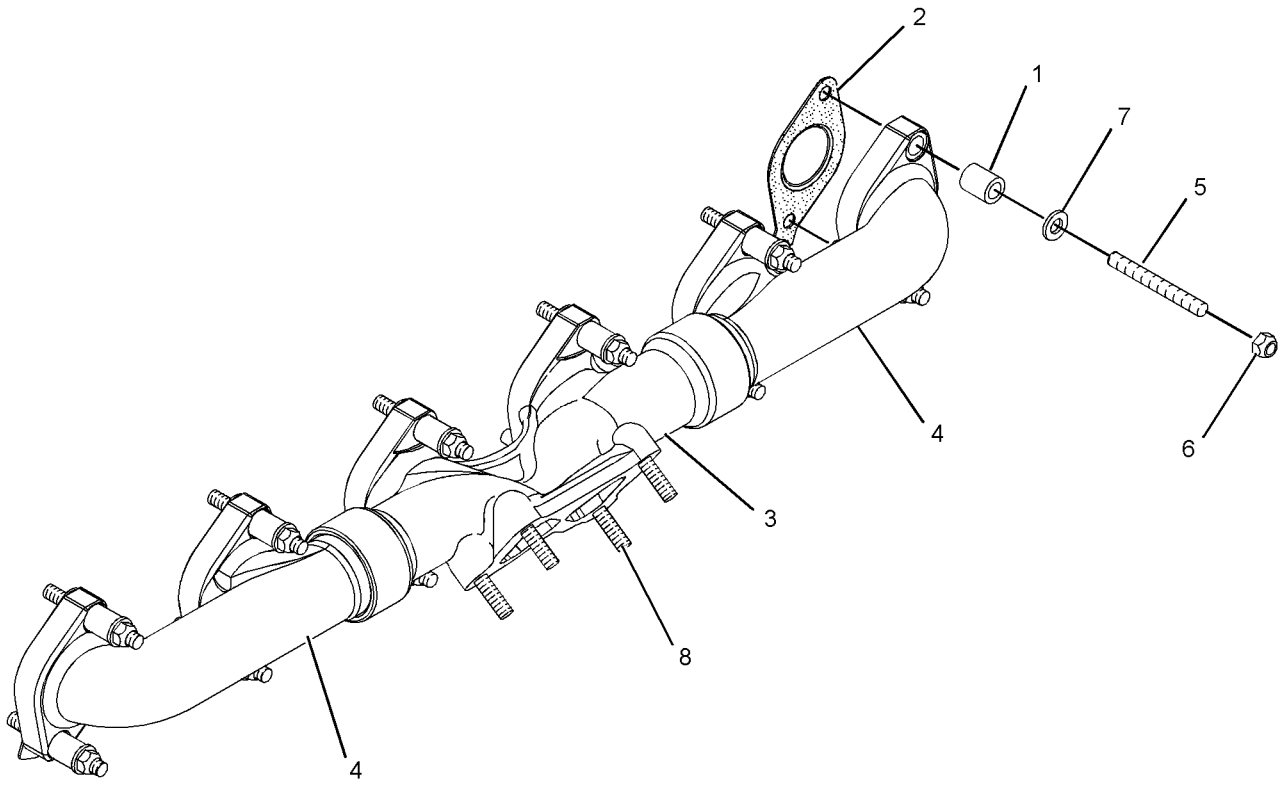

GRAPHIC #1 **<END>** g01256828

AIR INLET AND EXHAUST SYSTEM

222-3092 MANIFOLD GP-INLET

S/N: RSX1037-UP

PART OF 226-9770 ENGINE AR-COMPLETE

SMCS-1058 **i03997494**

NOTE	REF NO	GRAPHIC REF	PART NUMBER	QTY	PART NAME 1 2 3 4 5 6 (PRODUCT LEVEL)	SEE PAGE
	1	1	**121-5908**	1	STUD (M10X1.5X30-MM)	
	2	1	**281-2925**	1	MANIFOLD-INLET	
	3	1	**230-3518**	1	GASKET-MANIFOLD	
	4	1	**132-5789**	1	CLIP	
	5	1	*183-3407*	2	PLUG AS	
					(EACH INCLUDES)	
	5A	1	**214-7568**	1	SEAL-O-RING	
		1	**9S-8004**	1	PLUG-O-RING	
M	6	1	**176-9237**	1	BOLT-SPECIAL	
M	7	1	**6V-3822**	10	BOLT (M10X1.5X35-MM)	
	8	1	**6V-6353**	1	SEAL-O-RING	
	9	1	**6V-5839**	12	WASHER (11X21X2.5-MM THK)	

M-METRIC PART

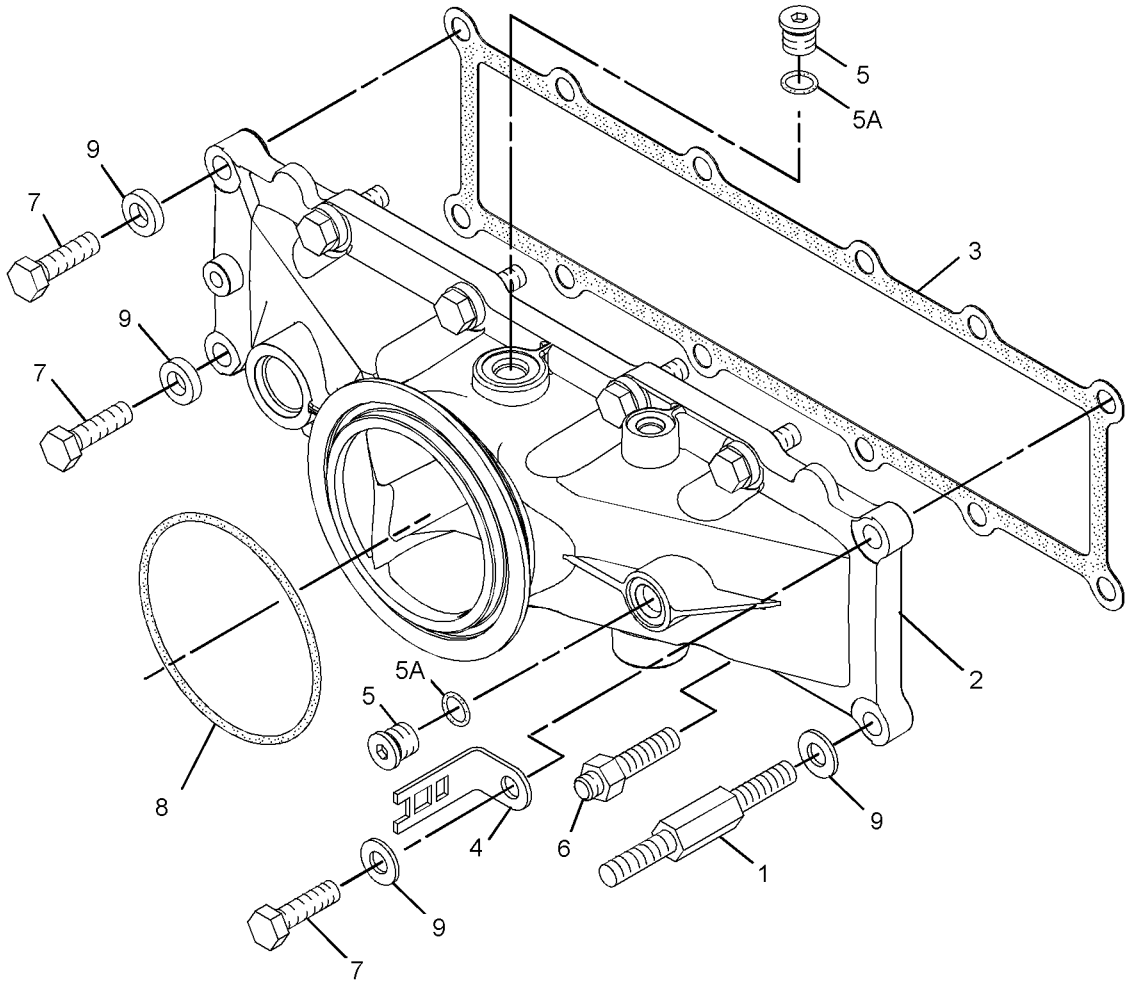

GRAPHIC #1 **<END>** g02176902

AIR INLET AND EXHAUST SYSTEM

231-2160 MUFFLER & MOUNTING GP

S/N: R9J1-UP

PART OF 349-2555 COMMON AR

SMCS-1062 **i03685363**

NOTE	REF NO	GRAPHIC REF	PART NUMBER	QTY	PART NAME 1 2 3 4 5 6 (PRODUCT LEVEL)	SEE PAGE
	1	1	**5P-2230**	2	CLAMP-HOSE	
	2	1	**9L-1566**	1	SUPPORT	
	3	1	**141-1480**	1	CLAMP AS	
	4	1	**241-9265**	1	CLAMP-MUFFLER	
	5	1	**250-0832**	1	TUBE	
	6	1	**260-7717**	1	BRACKET AS	
	7	1	**292-1005**	1	HOSE	
	8	1	**297-1711**	1	MUFFLER AS	
	9	1	**297-4244**	1	EJECTOR AS	
	10	1	**297-4392**	1	BRACKET AS	
M		1	**159-9541**	2	NUT-WELD (M10X1.5-THD)	
	11	1	**297-5434**	1	BRACKET	
	12	1	**198-4777**	8	WASHER-HARD (11X25X10-MM THK)	
	13	1	**139-1398**	2	CLIP	
	14	1	**8T-4121**	2	WASHER-HARD (11X21X2.5-MM THK)	
M	15	1	**8T-4133**	1	NUT (M10X1.5-THD)	
M	16	1	**8T-4136**	1	BOLT (M10X1.5X25-MM)	
M	17	1	**8T-4195**	4	BOLT (M10X1.5X30-MM)	
M	18	1	**8T-4196**	4	BOLT (M10X1.5X35-MM)	
	19	1	**9N-1941**	1	CLAMP-V-BAND	

M-METRIC PART

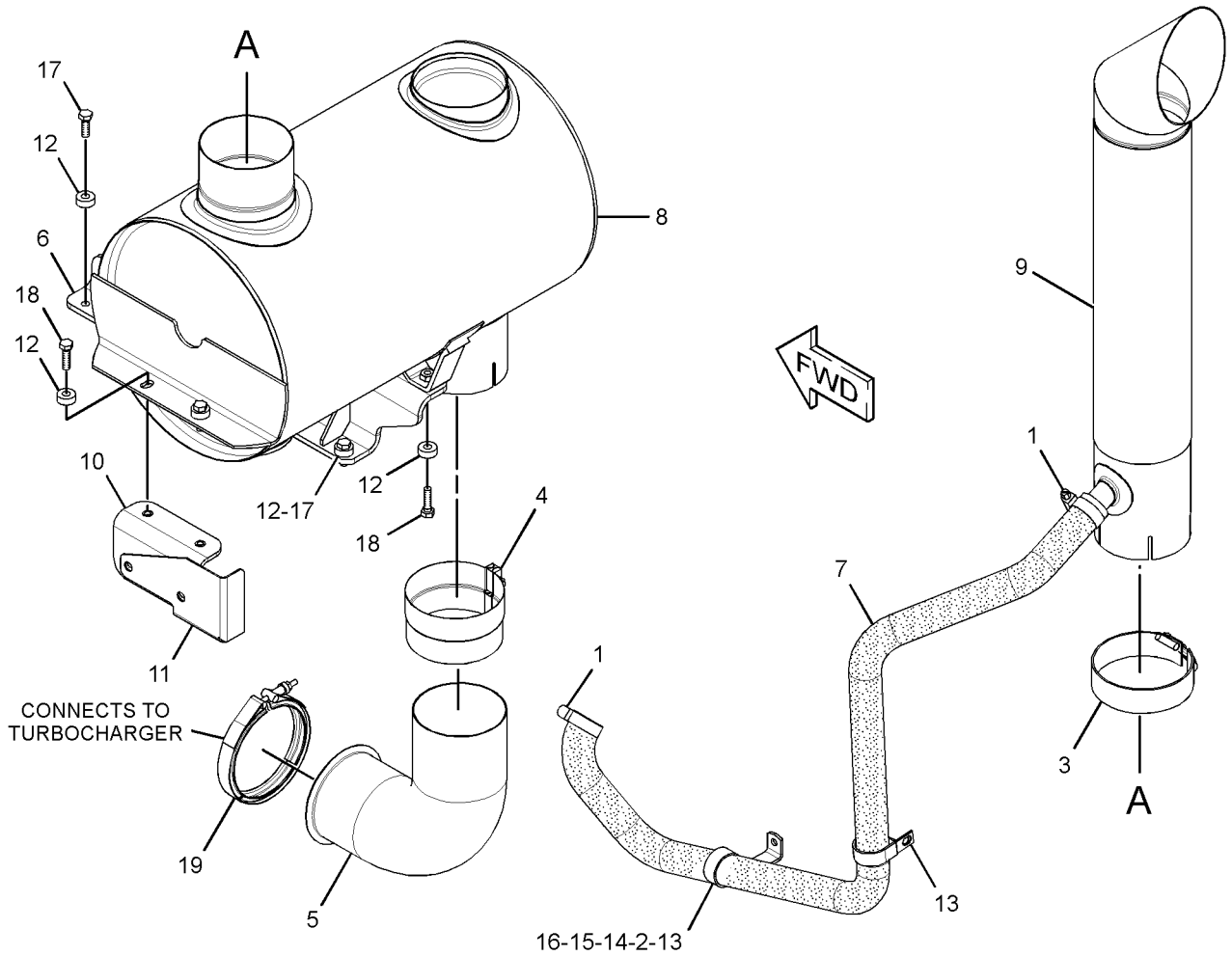

GRAPHIC #1 **<END>** g01445656

AIR INLET AND EXHAUST SYSTEM

249-7345 PRECLEANER GP

S/N: R9J1-UP

AN ATTACHMENT

SMCS-1055 **i02183952**

NOTE	REF NO	GRAPHIC REF	PART NUMBER	QTY	PART NAME 1 2 3 4 5 6 (PRODUCT LEVEL)	SEE PAGE
	1	1	**070-0107**	1	PRECLEANER AS	
	2	1	**254-5471**	1	TUBE AS	
	3	1	**220-4126**	1	CLAMP	
	4	1	**8T-4121**	4	WASHER-HARD (11X21X2.5-MM THK)	
M	5	1	**8T-4137**	4	BOLT (M10X1.5X20-MM)	

M-METRIC PART

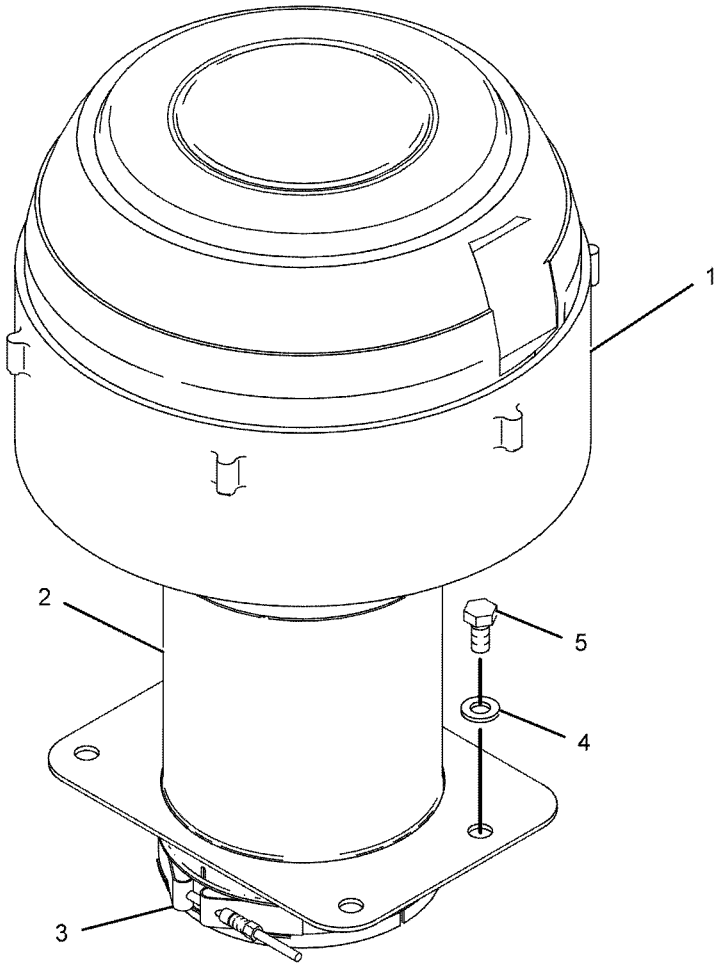

GRAPHIC #1 **<END>** g01108588

AIR INLET AND EXHAUST SYSTEM

275-1286 TURBOCHARGER GP

S/N: RSX1037-UP

PART OF 226-9770 ENGINE AR-COMPLETE

SMCS-1052, 1053 **i03834352**

NOTE	REF NO	GRAPHIC REF	PART NUMBER	QTY	PART NAME 1 2 3 4 5 6 (PRODUCT LEVEL)	SEE PAGE
R	1	1	**247-2956**	1	TURBOCHARGER GP	
	2	1	**274-6851**	1	GASKET-TURBOCHARGER	
M	3	1	**9X-6620**	4	LOCKNUT (M10X1.5-THD)	

M-METRIC PART
R-REMFG PART MAY BE AVAILABLE

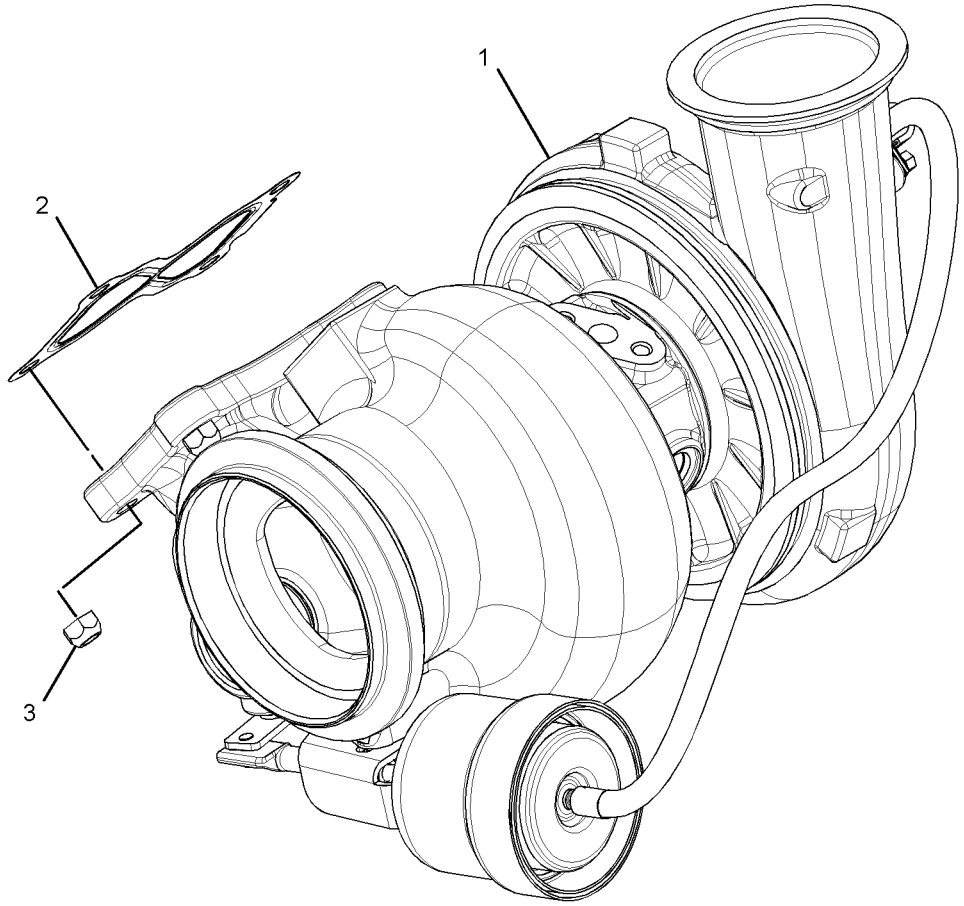

GRAPHIC #1 **<END>** g01311371

241-9584 ADAPTER GP-FAST FILL FUEL

S/N: R9J1-UP
PART OF 285-2264 TANK GP-FUEL
CANNOT BE USED WITH 241-9585—PAGE 143
AN ATTACHMENT

SMCS-1710 **i03001945**

NOTE	REF NO	GRAPHIC REF	PART NUMBER	QTY	PART NAME 1 2 3 4 5 6 (PRODUCT LEVEL)	SEE PAGE
	1	1	**9D-0630**	1	CAP-DUST	
	2	1	**212-4669**	1	VENT AS	
Y	3	1	**250-9200**	1	RECEIVER GP-FAST FILL FUEL	170
	4	1	**276-1297**	1	FLOAT AS	
		1	**212-4621**	1	MOUNT AS	
		1	**212-4670**	1	FLOAT AS	
		1	**221-0319**	1	GASKET	
	5	1	**277-4844**	1	GASKET	
	6	1	**277-4845**	1	GASKET	
	7	1	**287-3754**	1	TUBE	
	8	1	**1J-9671**	2	SEAL-O-RING	
	9	1	**4B-4863**	6	WASHER (4.7X11X1.2-MM THK)	
	10	1	**5P-2618**	2	CONNECTOR	
	11	1	**5P-4295**	1	CLIP	
	12	1	**7K-4129**	2	UNION-FLARED	
M	13	1	**8T-0309**	4	SCREW-MACHINE (M4X0.7X10-MM)	
M	14	1	**8T-4189**	6	BOLT (M8X1.25X20-MM)	
M	15	1	**8T-4908**	12	BOLT (M8X1.25X25-MM)	
M	16	1	**8T-9405**	6	BOLT-SOCKET HEAD (M4X0.7X16-MM)	
	17	1	**9M-1974**	18	WASHER-HARD (8.8X16X2-MM THK)	
	18	1	**251-1217**	3	HOSE AS	

M-METRIC PART
Y-SEPARATE ILLUSTRATION

241-9584 **ADAPTER GP-FAST FILL FUEL** *(contd.)* **i03001945**

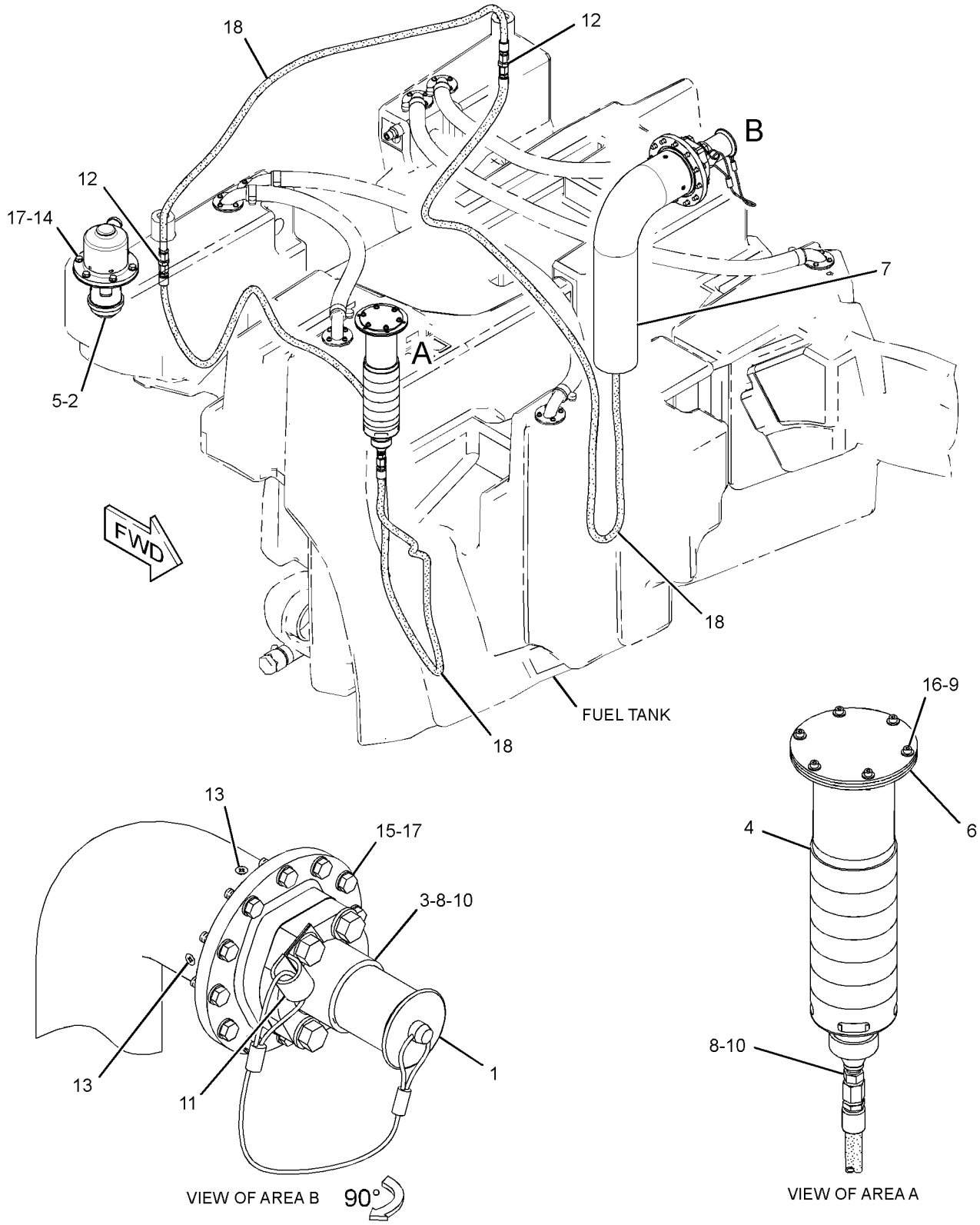

GRAPHIC #1 **<END>** g01345833

241-9585 COVER GP-FUEL TANK—W/O FAST FILL FUEL ADAPTER

S/N: R9J1-UP
PART OF 285-2263 TANK GP-FUEL
CANNOT BE USED WITH 241-9584—PAGE 141
AN ATTACHMENT

SMCS-1273 **i02549647**

NOTE	REF NO	GRAPHIC REF	PART NUMBER	QTY	PART NAME 1 2 3 4 5 6 (PRODUCT LEVEL)	SEE PAGE
	1	1	**199-9985**	1	PLATE	
	2	1	**221-0318**	1	PLATE	
	3	1	**250-9304**	1	PLATE	
	4	1	**276-3276**	1	GASKET	
	5	1	**277-4844**	1	GASKET	
	6	1	**277-4845**	1	GASKET	
M	7	1	**162-2165**	6	BOLT-SOCKET HEAD (M4X0.7X16-MM)	
	8	1	**4B-4863**	6	WASHER (4.7X11X1.2-MM THK)	
M	9	1	**8T-4189**	18	BOLT (M8X1.25X20-MM)	
	10	1	**8T-4224**	18	WASHER-HARD (8.8X16X2-MM THK)	

M-METRIC PART

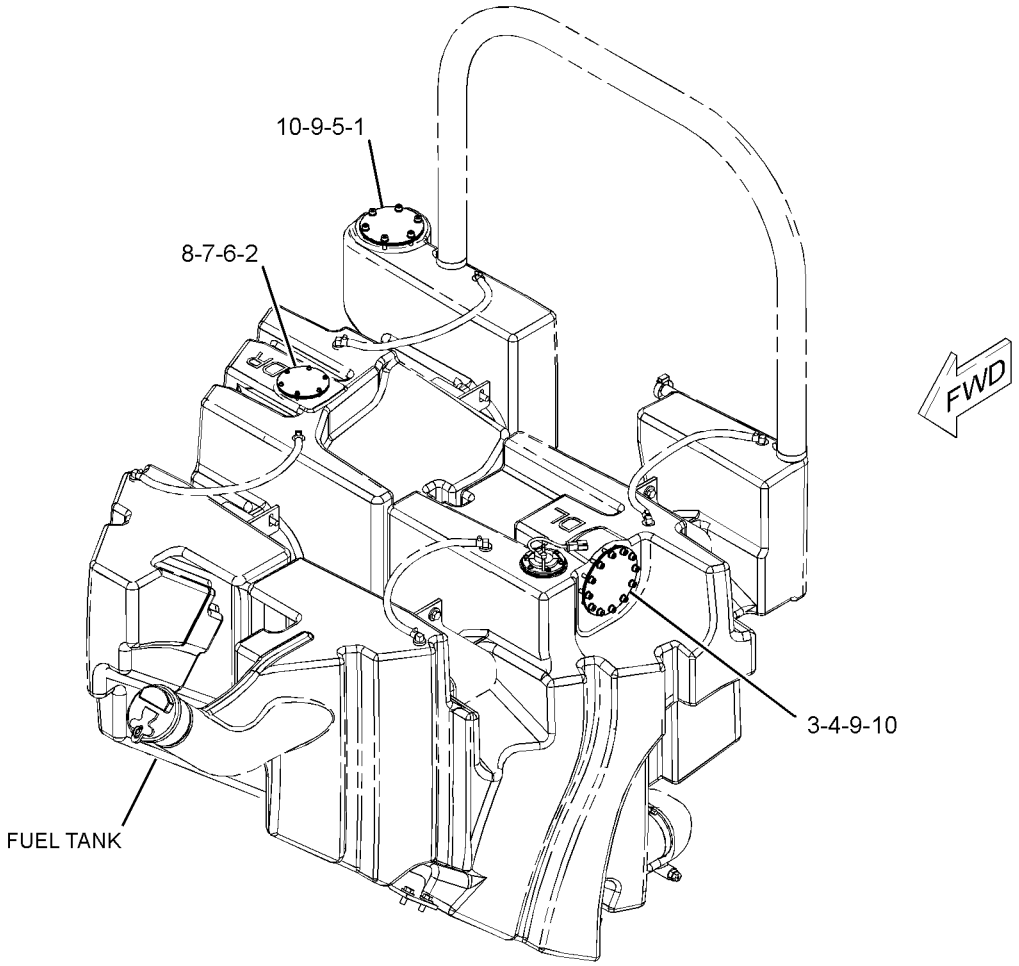

GRAPHIC #1 **<END>** g01276314

FUEL SYSTEM

254-4998 FILTER GP-FUEL

S/N: RSX1037-1669

PART OF 226-9770 ENGINE AR-COMPLETE

SMCS-1261 **i02700056**

NOTE	REF NO	GRAPHIC REF	PART NUMBER	QTY	PART NAME 1 2 3 4 5 6 (PRODUCT LEVEL)	SEE PAGE
	1	1	**3S-2093**	3	STRAP-CABLE	
Y	2	1	*197-8391*	1	SENSOR GP-TEMPERATURE (FUEL)	294
	3	1	**227-3812**	1	HARNESS AS-SENSOR (FUEL SENSOR)	
		1	**102-8803**	1	KIT-RECEPTACLE (3-PIN)	
					(INCLUDES RECEPTACLE AS AND WEDGE)	
		1	**102-8806**	1	KIT-RECEPTACLE (8-PIN)	
					(INCLUDES RECEPTACLE AS AND WEDGE)	
		1	**8T-8737**	1	PLUG-SEAL	
		1	**155-2270**	2	KIT-CONNECTING PLUG (2-PIN)	
					(EACH INCLUDES PLUG AS AND WEDGE)	
Y	4	1	*233-6742*	1	VALVE GP-CHECK (FUEL)	189
	5	1	**237-9310**	1	BASE AS	
		1	**9S-4167**	1	STUD-HOLLOW (1-14X1.47-IN)	
Y	6	1	*239-2396*	1	SENSOR GP-PRESSURE (FUEL)	280
	7	1	**252-5738**	1	BRACKET AS	
Y	8	1	**258-0883**	1	SWITCH GP-PRESSURE (FUEL)	318
	9	1	**030-7947**	1	ELBOW	
	10	1	**030-8188**	2	CONNECTOR	
	11	1	**1R-0762**	1	FILTER-FUEL (ADVANCED EFFICIENCY)	
	12	1	**212-0431**	1	STUD (M10X1.5-THD)	
	13	1	**3J-1907**	3	SEAL-O-RING	
	14	1	**3K-0360**	3	SEAL-O-RING	
	15	1	**4J-5477**	1	SEAL-O-RING	
	16	1	**5P-6944**	1	ADAPTER	
M	17	1	**6V-4248**	3	BOLT (M10X1.5X25-MM)	
	18	1	**6V-5048**	1	SEAL-O-RING	
	19	1	**6V-5049**	2	SEAL-O-RING	
	20	1	**6V-5839**	6	WASHER (11X21X2.5-MM THK)	
M	21	1	**6V-5842**	2	BOLT (M10X1.5X40-MM)	
	22	1	**6V-8641**	1	CONNECTOR	
	23	1	**6V-9828**	1	CAP AS	
	24	1	**9S-4185**	2	PLUG-O-RING	
	25	1	**9X-0261**	1	ADAPTER	

M-METRIC PART
Y-SEPARATE ILLUSTRATION

254-4998 **FILTER GP-FUEL** *(contd.)* **i02700056**

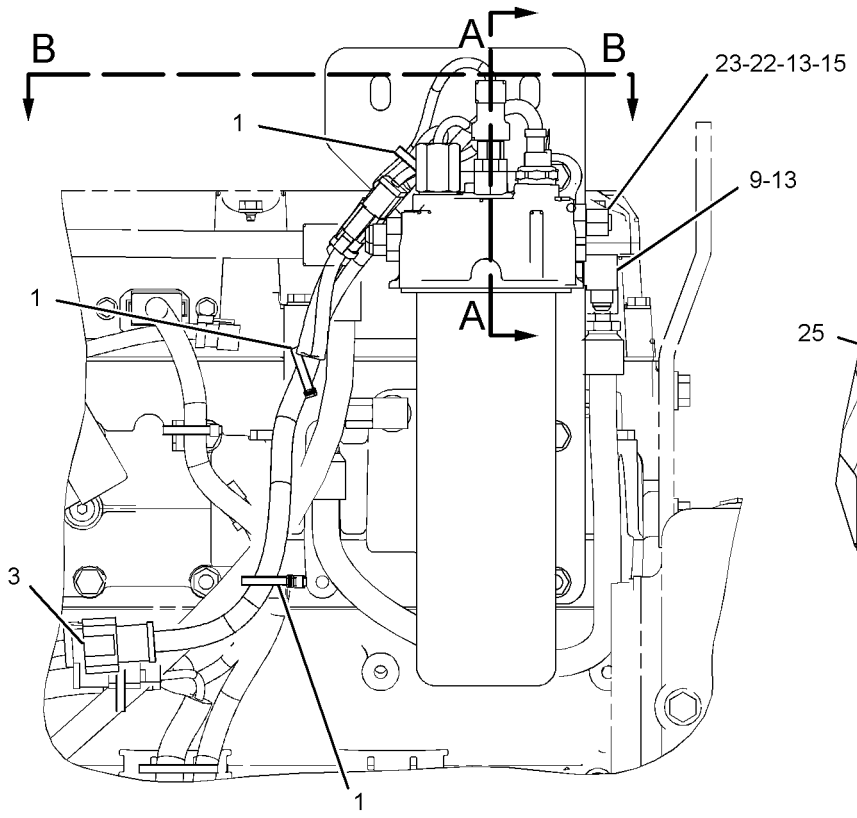

LEFT SIDE VIEW

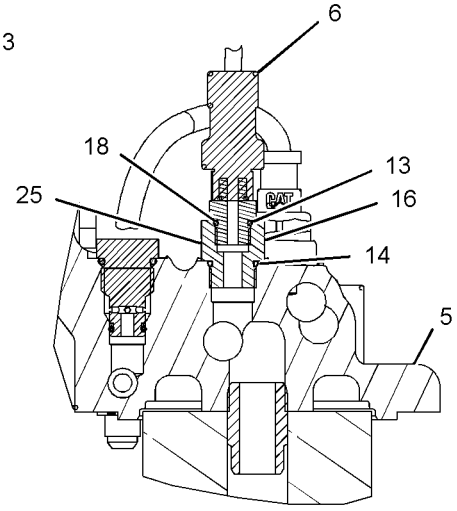

SECTION A-A

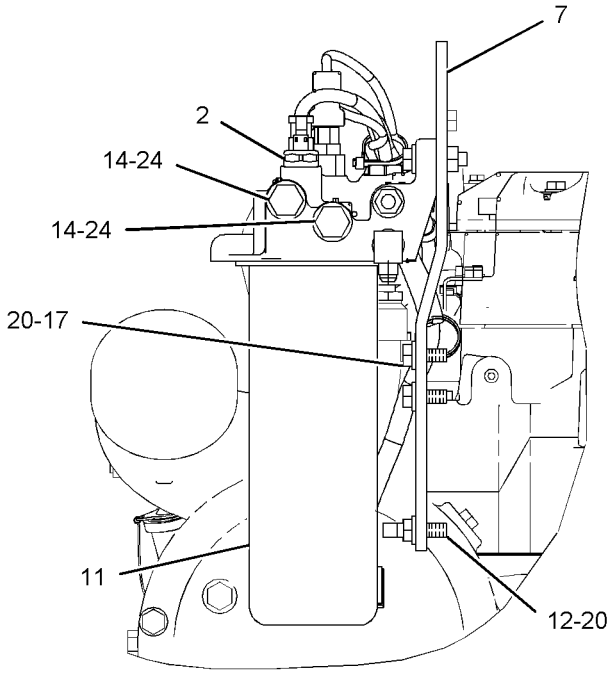

REAR VIEW

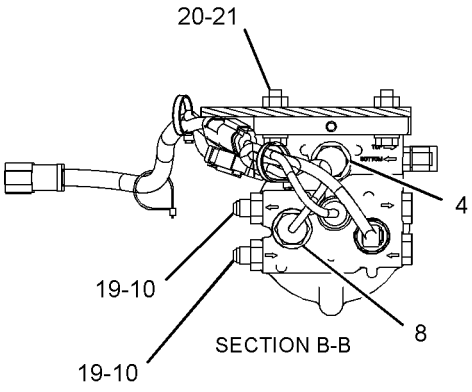

SECTION B-B

GRAPHIC #1 **<END>** g01143608

254-4998 FILTER GP-FUEL

S/N: RSX1670-2288

PART OF 226-9770 ENGINE AR-COMPLETE

SMCS-1261 **i02700055**

NOTE	REF NO	GRAPHIC REF	PART NUMBER	QTY	PART NAME 1 2 3 4 5 6 (PRODUCT LEVEL)	SEE PAGE
C	1	1	**3S-2093**	4	STRAP-CABLE	
CY	2	1	*123-0783*	1	VALVE GP-FLUID SAMPLING	193
Y	3	1	*197-8391*	1	SENSOR GP-TEMPERATURE (FUEL)	294
	4	1	**227-3812**	1	HARNESS AS-SENSOR (FUEL SENSOR)	
		1	**102-8803**	1	KIT-RECEPTACLE (3-PIN)	
					(INCLUDES RECEPTACLE AS AND WEDGE)	
		1	**102-8806**	1	KIT-RECEPTACLE (8-PIN)	
					(INCLUDES RECEPTACLE AS AND WEDGE)	
		1	**8T-8737**	1	PLUG-SEAL	
		1	**155-2270**	2	KIT-CONNECTING PLUG (2-PIN)	
					(EACH INCLUDES PLUG AS AND WEDGE)	
Y	5	1	*233-6742*	1	VALVE GP-CHECK (FUEL)	189
	6	1	**237-9310**	1	BASE AS	
		1	**9S-4167**	1	STUD-HOLLOW (1-14X1.47-IN)	
Y	7	1	*239-2396*	1	SENSOR GP-PRESSURE (FUEL)	280
	8	1	**252-5738**	1	BRACKET AS	
Y	9	1	**258-0883**	1	SWITCH GP-PRESSURE (FUEL)	318
	10	1	**030-7947**	1	ELBOW	
	11	1	**030-8188**	2	CONNECTOR	
C	12	1	*148-8313*	1	ADAPTER AS	
		1	**3K-0360**	1	SEAL-O-RING	
		1	**5P-6944**	1	ADAPTER	
	13	1	**1R-0762**	1	FILTER-FUEL (ADVANCED EFFICIENCY)	
	14	1	**212-0431**	1	STUD (M10X1.5-THD)	
	15	1	**3J-1907**	3	SEAL-O-RING	
C	16	1	**3K-0360**	2	SEAL-O-RING	
	17	1	**4J-5477**	1	SEAL-O-RING	
C	18	1	**4P-7581**	1	CLIP	
	19	1	**5P-6944**	1	ADAPTER	
M	20	1	**6V-4248**	3	BOLT (M10X1.5X25-MM)	
	21	1	**6V-5048**	1	SEAL-O-RING	
	22	1	**6V-5049**	2	SEAL-O-RING	
C	23	1	**6V-5839**	7	WASHER (11X21X2.5-MM THK)	
M	24	1	**6V-5842**	2	BOLT (M10X1.5X40-MM)	
CM	25	1	**6V-8212**	1	BOLT (M10X1.5X16-MM)	
	26	1	**6V-8641**	1	CONNECTOR	
	27	1	**6V-9828**	1	CAP AS	
C	28	1	**9S-4185**	1	PLUG-O-RING	
	29	1	**9X-0261**	1	ADAPTER	

C-CHANGE FROM PREVIOUS TYPE
M-METRIC PART
Y-SEPARATE ILLUSTRATION

254-4998 **FILTER GP-FUEL** *(contd.)* **i02700055**

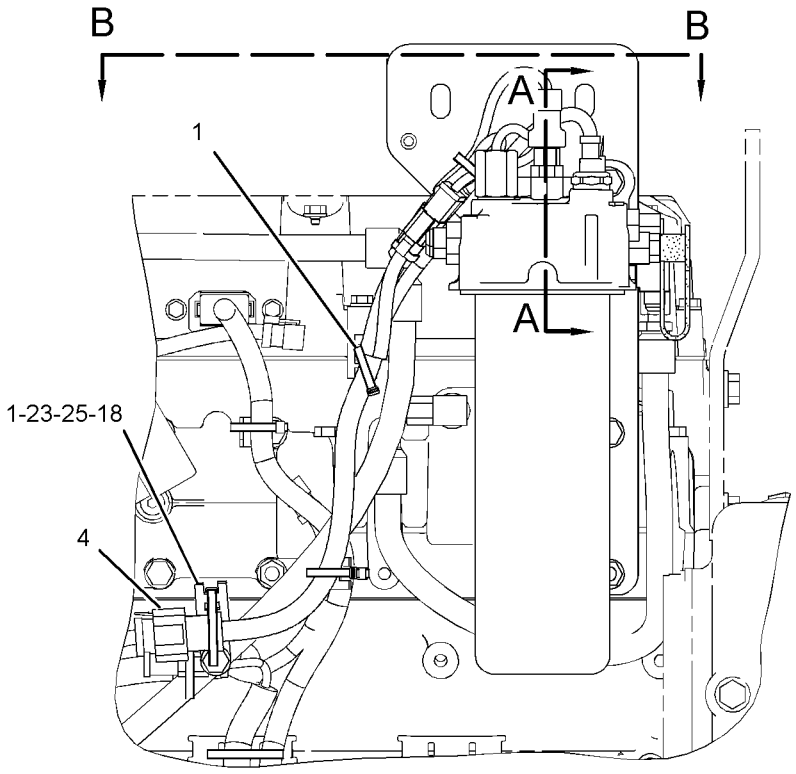

LEFT SIDE VIEW OF ENGINE

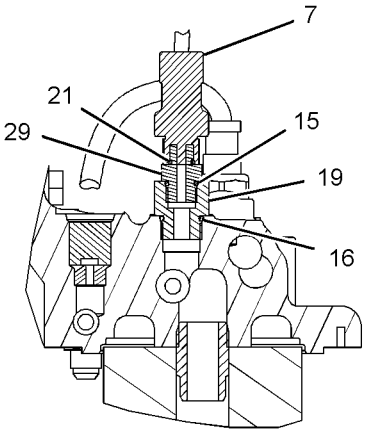

SECTION A-A

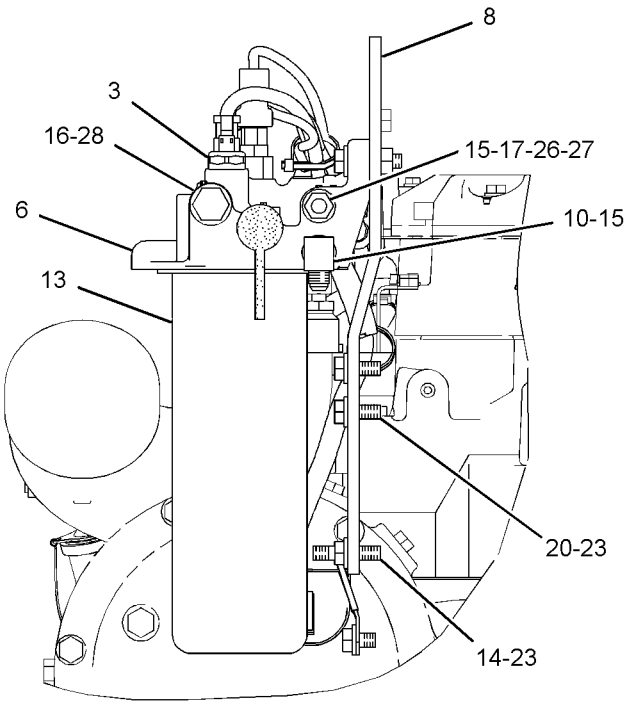

REAR VIEW OF ENGINE

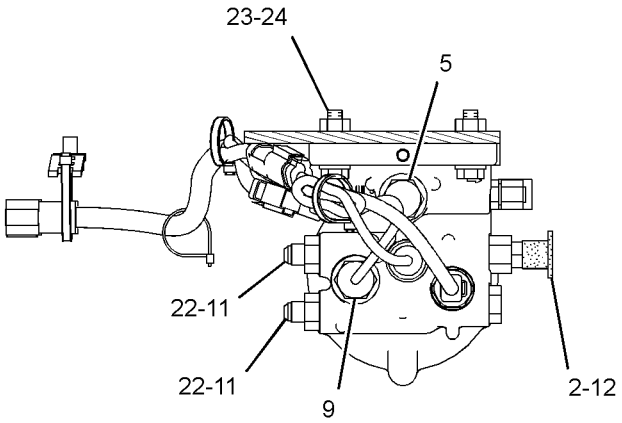

SECTION B-B

GRAPHIC #1 **<END>** g01308593

254-4998 FILTER GP-FUEL

S/N: RSX2289-3629

PART OF 226-9770 ENGINE AR-COMPLETE

SMCS-1261 **i02643431**

NOTE	REF NO	GRAPHIC REF	PART NUMBER	QTY	PART NAME 1 2 3 4 5 6 (PRODUCT LEVEL)	SEE PAGE
	1	1	**3S-2093**	4	STRAP-CABLE	
Y	2	1	*123-0783*	1	VALVE GP-FLUID SAMPLING	193
CY	3	1	*234-5013*	1	SENSOR GP-TEMPERATURE (FUEL)	297
C	4	1	**276-3091**	1	HARNESS AS-SENSOR (FUEL SENSOR)	
		1	**102-8803**	1	KIT-RECEPTACLE (3-PIN)	
					(INCLUDES RECEPTACLE AS & WEDGE)	
		1	**102-8806**	1	KIT-RECEPTACLE (8-PIN)	
					(INCLUDES RECEPTACLE AS & WEDGE)	
		1	**114-8844**		SLEEVE-PLASTIC (60-CM)	
		1	**230-4011**	1	PLUG AS-CONNECTOR (2-PIN)	
		1	**230-4012**	1	RECEPTACLE AS-CONNECTOR (2-PIN)	
Y	5	1	*233-6742*	1	VALVE GP-CHECK (FUEL)	189
	6	1	**237-9310**	1	BASE AS	
		1	**9S-4167**	1	STUD-HOLLOW (1-14X1.47-IN)	
Y	7	1	*239-2396*	1	SENSOR GP-PRESSURE (FUEL)	280
	8	1	**252-5738**	1	BRACKET AS	
CY	9	1	**275-1253**	1	SWITCH GP-PRESSURE	319
	10	1	**030-7947**	1	ELBOW	
	11	1	**030-8188**	2	CONNECTOR	
	12	1	*148-8313*	1	ADAPTER AS	
		1	**3K-0360**	1	SEAL-O-RING	
		1	**5P-6944**	1	ADAPTER	
	13	1	**1R-0762**	1	FILTER-FUEL (ADVANCED EFFICIENCY)	
	14	1	**212-0431**	1	STUD (M10X1.5-THD)	
	15	1	**3J-1907**	3	SEAL-O-RING	
	16	1	**3K-0360**	2	SEAL-O-RING	
	17	1	**4J-5477**	1	SEAL-O-RING	
	18	1	**4P-7581**	1	CLIP	
	19	1	**5P-6944**	1	ADAPTER	
M	20	1	**6V-4248**	3	BOLT (M10X1.5X25-MM)	
	21	1	**6V-5048**	1	SEAL-O-RING	
	22	1	**6V-5049**	2	SEAL-O-RING	
	23	1	**6V-5839**	7	WASHER (11X21X2.5-MM THK)	
M	24	1	**6V-5842**	2	BOLT (M10X1.5X40-MM)	
M	25	1	**6V-8212**	1	BOLT (M10X1.5X16-MM)	
	26	1	**6V-8641**	1	CONNECTOR	
	27	1	**6V-9828**	1	CAP AS	
	28	1	**9S-4185**	1	PLUG-O-RING	
	29	1	**9X-0261**	1	ADAPTER	

C-CHANGE FROM PREVIOUS TYPE
M-METRIC PART
Y-SEPARATE ILLUSTRATION

254-4998 **FILTER GP-FUEL** *(contd.)* **i02643431**

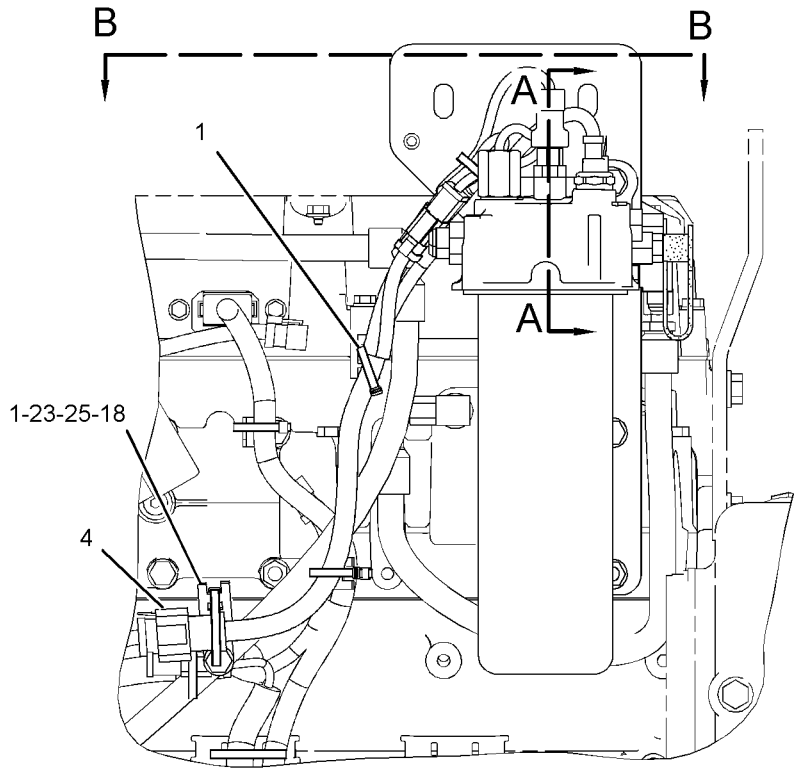

LEFT SIDE VIEW OF ENGINE

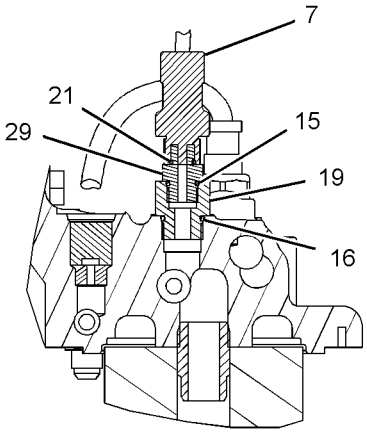

SECTION A-A

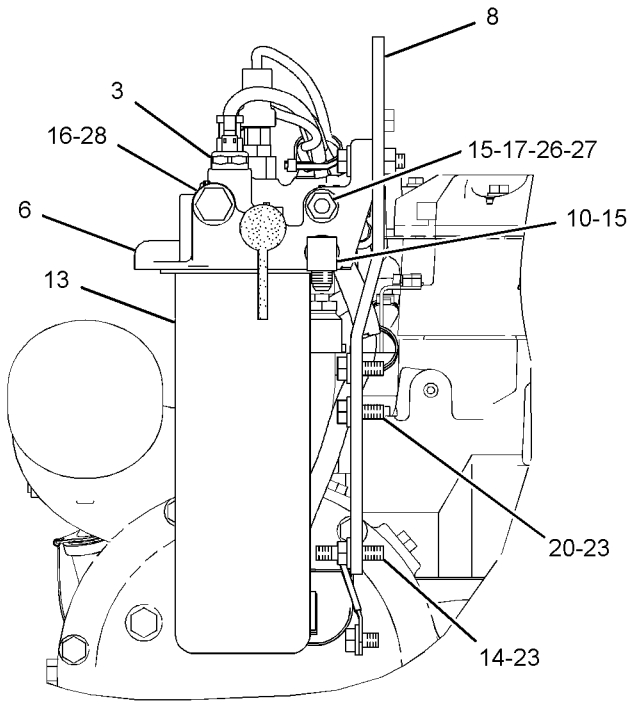

REAR VIEW OF ENGINE

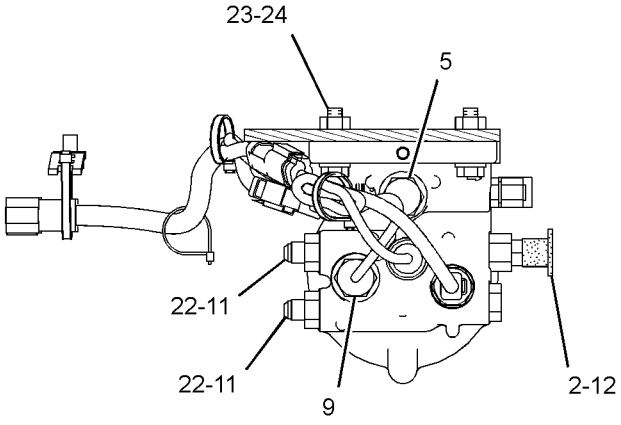

SECTION B-B

GRAPHIC #1 **<END>** g01308593

FUEL SYSTEM

254-4998 FILTER GP-FUEL

S/N: RSX3630-16669

PART OF 226-9770 ENGINE AR-COMPLETE

SMCS-1261 **i02975264**

NOTE	REF NO	GRAPHIC REF	PART NUMBER	QTY	PART NAME 1 2 3 4 5 6 (PRODUCT LEVEL)	SEE PAGE
	1	1	**3S-2093**	4	STRAP-CABLE	
Y	2	1	*123-0783*	1	VALVE GP-FLUID SAMPLING (FUEL)	193
Y	3	1	*234-5013*	1	SENSOR GP-TEMPERATURE (FUEL)	297
	4	1	**276-3091**	1	HARNESS AS-SENSOR (FUEL)	
		1	**102-8803**	1	KIT-RECEPTACLE (3-PIN)	
					(INCLUDES RECEPTACLE AS & WEDGE)	
		1	**102-8806**	1	KIT-RECEPTACLE (8-PIN)	
					(INCLUDES RECEPTACLE AS & WEDGE)	
		1	**114-8844**		SLEEVE-PLASTIC (60-CM)	
		1	**230-4011**	1	PLUG AS-CONNECTOR (2-PIN)	
		1	**230-4012**	1	RECEPTACLE AS-CONNECTOR (2-PIN)	
Y	5	1	*233-6742*	1	VALVE GP-CHECK (FUEL)	189
	6	1	**237-9310**	1	BASE AS	
		1	**9S-4167**	1	STUD-HOLLOW (1-14X1.47-IN)	
Y	7	1	*239-2396*	1	SENSOR GP-PRESSURE (FUEL)	280
	8	1	**252-5738**	1	BRACKET AS	
M		1	**8T-3490**	2	NUT-WELD (M10X1.5-THD)	
Y	9	1	**275-1253**	1	SWITCH GP-PRESSURE (FUEL)	319
	10	1	**030-7947**	1	ELBOW	
	11	1	**030-8188**	2	CONNECTOR	
	12	1	*148-8313*	1	ADAPTER AS	
		1	**3K-0360**	1	SEAL-O-RING	
		1	**5P-6944**	1	ADAPTER	
	13	1	**1R-0762**	1	FILTER-FUEL (ADVANCED EFFICIENCY)	
C	15	1	**3J-1907**	2	SEAL-O-RING	
	16	1	**3K-0360**	2	SEAL-O-RING	
	17	1	**4J-5477**	1	SEAL-O-RING	
	18	1	**4P-7581**	1	CLIP	
CM	20	1	**6V-4248**	4	BOLT (M10X1.5X25-MM)	
	21	1	**6V-5048**	1	SEAL-O-RING	
	22	1	**214-7568**	2	SEAL-O-RING	
	23	1	**6V-5839**	7	WASHER (11X21X2.5-MM THK)	
M	24	1	**6V-5842**	2	BOLT (M10X1.5X40-MM)	
M	25	1	**6V-8212**	1	BOLT (M10X1.5X16-MM)	
	26	1	**6V-8641**	1	CONNECTOR	
	27	1	**6V-9828**	1	CAP AS	
	28	1	*148-8411*	1	PLUG AS	
		1	**3K-0360**	1	SEAL-O-RING	
		1	**9S-4185**	1	PLUG-O-RING	
C	29	1	**235-3595**	1	ADAPTER	
	30	1	**8T-0119**	1	ELBOW	

C-CHANGE FROM PREVIOUS TYPE
M-METRIC PART
Y-SEPARATE ILLUSTRATION

254-4998 **FILTER GP-FUEL** *(contd.)* **i02975264**

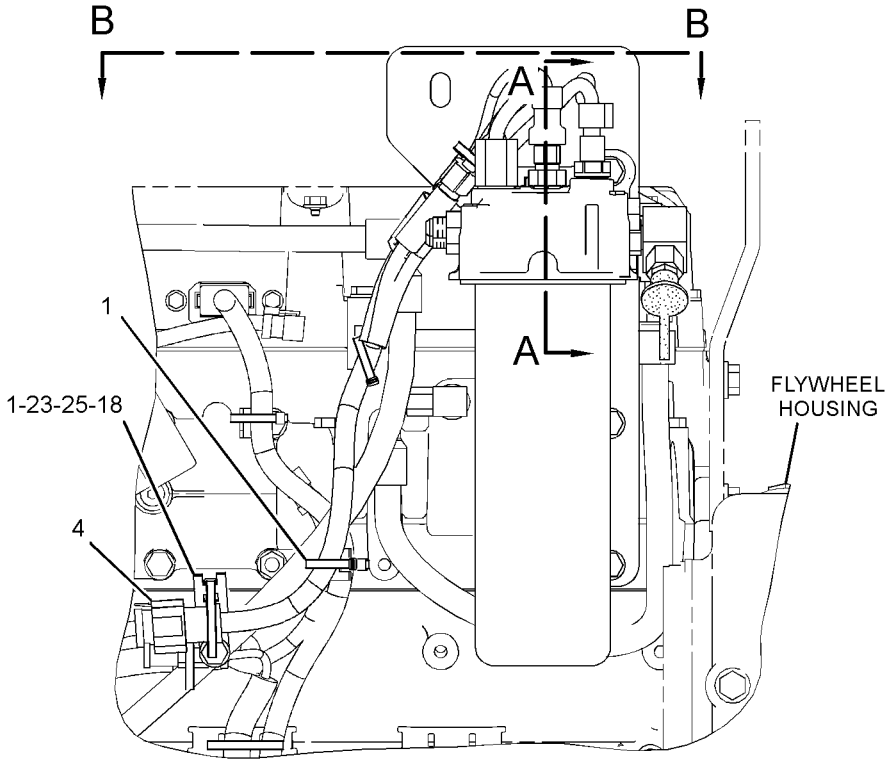

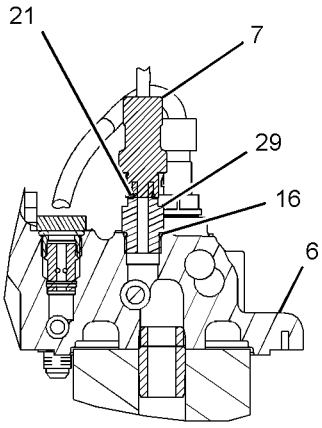

SECTION A-A

LEFT SIDE VIEW OF ENGINE

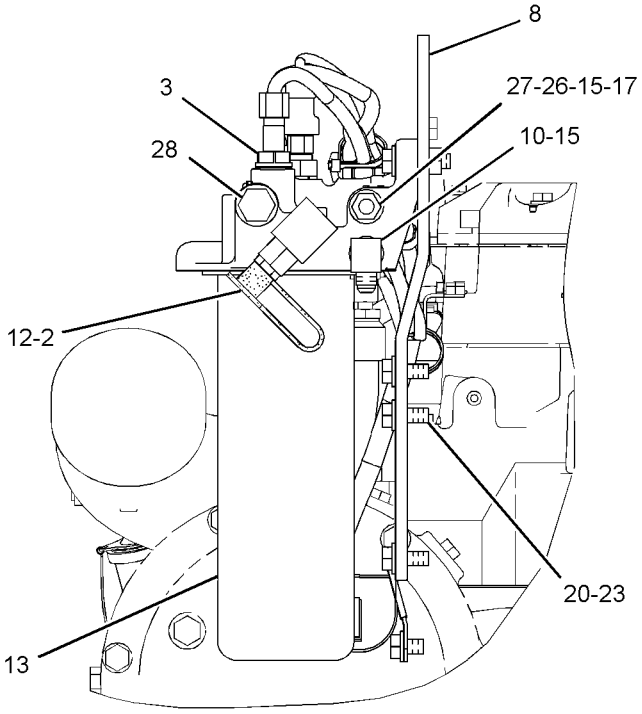

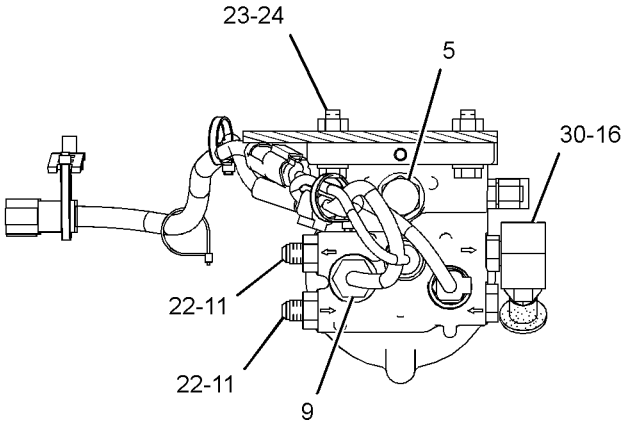

SECTION B-B

REAR VIEW OF ENGINE

GRAPHIC #1 **<END>** g01623287

356-8382 FILTER GP-FUEL

S/N: RSX16670-UP

PROVIDES A FILTER GP-FUEL WITH SENSORS AND HARNESS WITH AMPSEAL CONNECTORS

PART OF 226-9770 ENGINE AR-COMPLETE

FOR USE WITH 354-0045—PAGE 343

SMCS-1261 **i04020802**

NOTE	REF NO	GRAPHIC REF	PART NUMBER	QTY	PART NAME 1 2 3 4 5 6 (PRODUCT LEVEL)	SEE PAGE
	1	1	**3S-2093**	4	STRAP-CABLE	
Y	2	1	*123-0783*	1	VALVE GP-FLUID SAMPLING (FUEL)	193
Y	3	1	*233-6742*	1	VALVE GP-CHECK (FUEL)	189
Y	4	1	*234-5013*	1	SENSOR GP-TEMPERATURE (FUEL)	297
	5	1	**235-3595**	1	ADAPTER	
	6	1	**237-9310**	1	BASE AS	
		1	**9S-4167**	1	STUD-HOLLOW (1-14X1.47-IN)	
	7	1	**252-5738**	1	BRACKET AS	
Y	8	1	**275-1253**	1	SWITCH GP-PRESSURE (FUEL)	319
Y	9	1	*276-9067*	1	SENSOR GP-PRESSURE (FUEL)	285
	10	1	**357-0673**	1	HARNESS AS-SENSOR	
		1	**102-8806**	1	KIT-RECEPTACLE (8-PIN)	
					(INCLUDES RECEPTACLE AS & WEDGE)	
		1	**8T-8737**	1	PLUG-SEAL	
		1	**9X-3402**	5	SOCKET-CONNECTOR (16-GA TO 18-GA)	
					—OR—	
		1	**126-1768**	5	SOCKET-CONNECTOR (14-GA)	
		1	**9X-3401**	9	PIN-CONNECTOR (16-GA TO 18-GA)	
					—OR—	
		1	**126-1767**	9	PIN-CONNECTOR (14-GA TO 16-GA)	
		1	**230-4011**	1	PLUG AS-CONNECTOR (2-PIN)	
		1	**264-7029**	1	SEAL-CONNECTOR	
		1	**230-4012**	1	RECEPTACLE AS-CONNECTOR (2-PIN)	
		1	**237-0227**	1	PLUG AS-CONNECTOR (3-PIN)	
		1	**264-7030**	1	SEAL-CONNECTOR	
E		1	**289-5150**		SLEEVE (13-CM)	
	11	1	*191-7805*	1	ELBOW AS	
		1	**030-7947**	1	ELBOW	
		1	**214-7568**	1	SEAL-O-RING	
	12	1	**1R-0762**	1	FILTER-FUEL (ADVANCED EFFICIENCY)	
	13	1	**238-5080**	1	SEAL-O-RING	
	14	1	*307-2673*	1	PLUG AS	
		1	**9S-8005**	1	PLUG-O-RING	
		1	**238-5080**	1	SEAL-O-RING	
	15	1	*321-8671*	2	CONNECTOR AS	
					(EACH INCLUDES)	
		1	**030-8188**	1	CONNECTOR	
		1	**238-5080**	1	SEAL-O-RING	
	16	1	*321-8675*	1	CONNECTOR AS	
		1	**6V-8641**	1	CONNECTOR	
		1	**214-7568**	1	SEAL-O-RING	
		1	**228-7088**	1	SEAL-O-RING	
	17	1	*330-9732*	1	ADAPTER AS	
		1	**5P-6944**	1	ADAPTER	
		1	**238-5080**	1	SEAL-O-RING	
	18	1	*335-3976*	1	ELBOW AS	
		1	**8T-0119**	1	ELBOW	
		1	**238-5080**	1	SEAL-O-RING	
	19	1	**4P-7581**	1	CLIP	
M	20	1	**6V-4248**	4	BOLT (M10X1.5X25-MM)	
	21	1	**6V-5839**	7	WASHER (11X21X2.5-MM THK)	
M	22	1	**6V-5842**	2	BOLT (M10X1.5X40-MM)	
M	23	1	**6V-8212**	1	BOLT (M10X1.5X16-MM)	
	24	1	**6V-9828**	1	CAP AS	

356-8382 **FILTER GP-FUEL** *(contd.)* **i04020802**

E-ORDER BY THE CENTIMETER
M-METRIC PART
Y-SEPARATE ILLUSTRATION

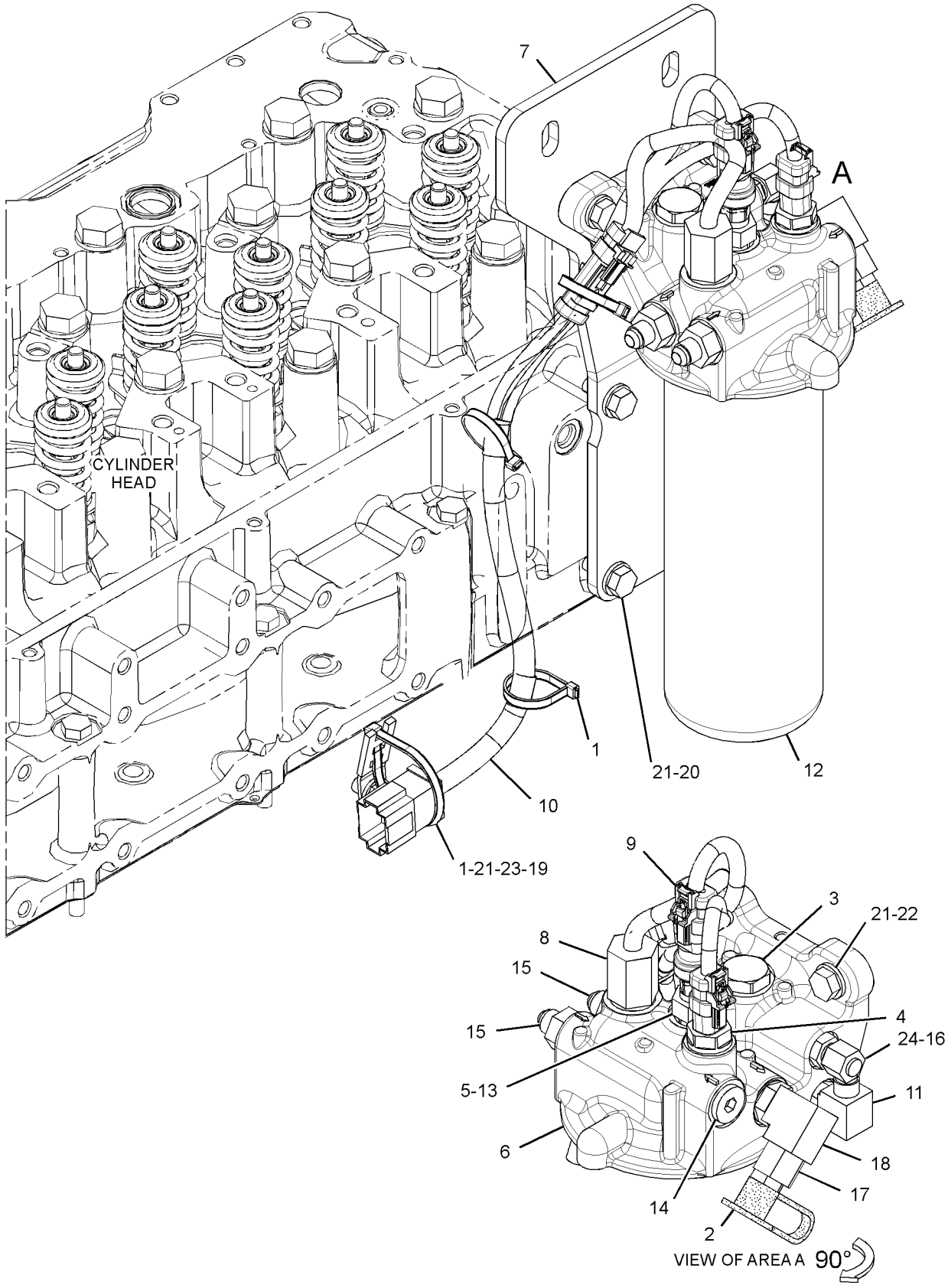

GRAPHIC #1 **<END>** g02231200

174-9570 FILTER GP-WATER SEP & FUEL–PRIMARY

S/N: R9J1-UP

PART OF 190-8977 PUMP GP-FUEL PRM & WATER SEP

SMCS-1261, 1263 **i03671378**

NOTE	REF NO	GRAPHIC REF	PART NUMBER	QTY	PART NAME 1 2 3 4 5 6 (PRODUCT LEVEL)	SEE PAGE
	1	1	**326-1644**	1	FILTER AS-WATER SEP & FUEL (PRIMARY)	
	1A	1	**220-8678**	1	SEAL-RING (FUEL, WATER SEPARATOR)	
	2	1	**343-5527**	1	BOWL AS	
	2A	1	**3J-1907**	1	SEAL-O-RING	
	2B	1	**5F-9144**	1	SEAL-O-RING	
	2C	1	**8F-7219**	1	SEAL-O-RING	
	2D	1	**9S-8004**	1	PLUG-O-RING	

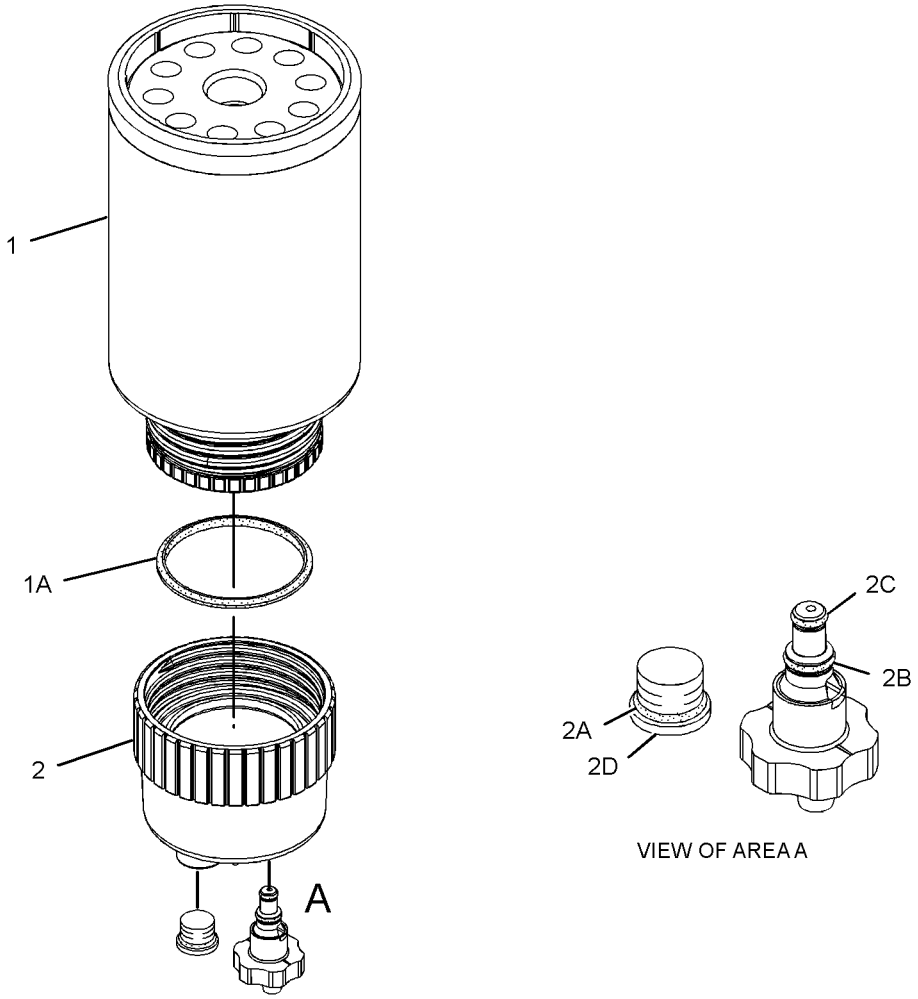

GRAPHIC #1 **<END>** g01960053

249-0712 INJECTOR GP-FUEL*R

S/N: RSX1037-UP

PART OF 253-1459 PUMP GP-FUEL INJECTION

SMCS-1251, 1254, 1290, 1713 **i02117262**

NOTE	REF NO	GRAPHIC REF	PART NUMBER	QTY	PART NAME 1 2 3 4 5 6 (PRODUCT LEVEL)	SEE PAGE
	1	1	**230-3728**	1	SEAL-O-RING	
	2	1	**230-3775**	1	SEAL-O-RING	
	3	1	**9X-7317**	1	SEAL-O-RING	

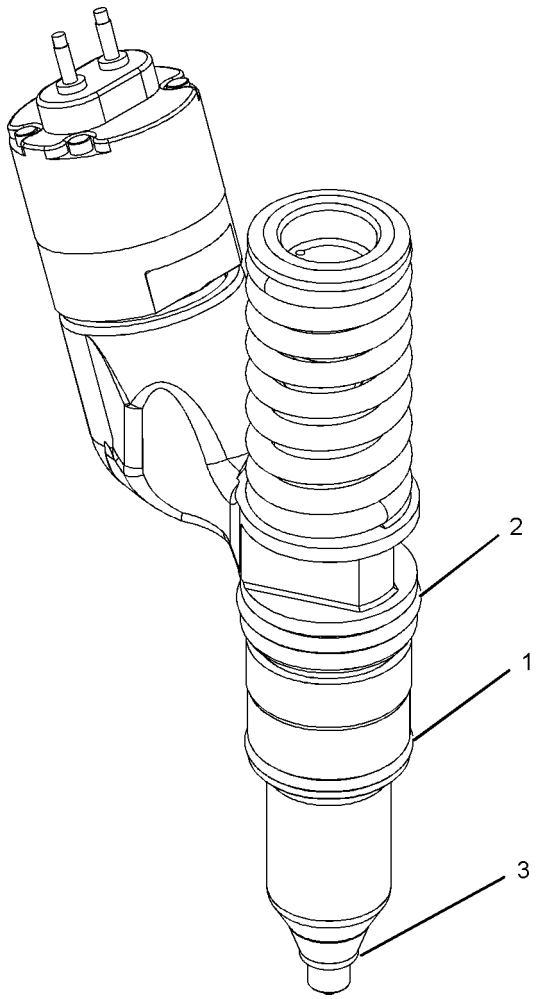

GRAPHIC #1 **<END>** g01065270

FUEL SYSTEM

278-0018 LINES GP-FUEL

S/N: RSX1037-17528

PART OF 226-9770 ENGINE AR-COMPLETE

SMCS-1274 **i03035154**

NOTE	REF NO	GRAPHIC REF	PART NUMBER	QTY	PART NAME 1 2 3 4 5 6 (PRODUCT LEVEL)	SEE PAGE
	1	1	**7K-4129**	1	UNION-FLARED	
	2	1	**7C-8246**	2	SPACER (10.5X20X24-MM THK)	
	4	1	**108-3612**	1	SPACER (11.13X19.05X53-MM THK)	
I	5	1	**125-4369**	1	HOSE AS	
I	6	1	**160-9449**	1	HOSE AS	
	7	1	**301-6343**	1	STUD	
I	8	1	**186-6438**	1	HOSE AS	
	9	1	**244-1420**	1	TUBE AS	
	10	1	**030-7942**	1	ELBOW	
	11	1	**030-7947**	2	ELBOW	
	12	1	**067-2551**	1	CLIP	
	13	1	*148-8318*	1	CONNECTOR AS	
		1	**3K-0360**	1	SEAL-O-RING	
		1	**6V-8397**	1	SEAL-O-RING	
		1	**6V-8634**	1	CONNECTOR	
	14	1	**3J-1907**	3	SEAL-O-RING	
M	15	1	**6V-7981**	1	BOLT (M10X1.5X70-MM)	
	16	1	**6V-5839**	3	WASHER (11X21X2.5-MM THK)	
M	17	1	**6V-5842**	1	BOLT (M10X1.5X40-MM)	
	18	1	**7H-7055**	2	CLIP	

I-REFER TO HYDRAULIC INFORMATION SYSTEM
M-METRIC PART

278-0018 **LINES GP-FUEL** *(contd.)* **i03035154**

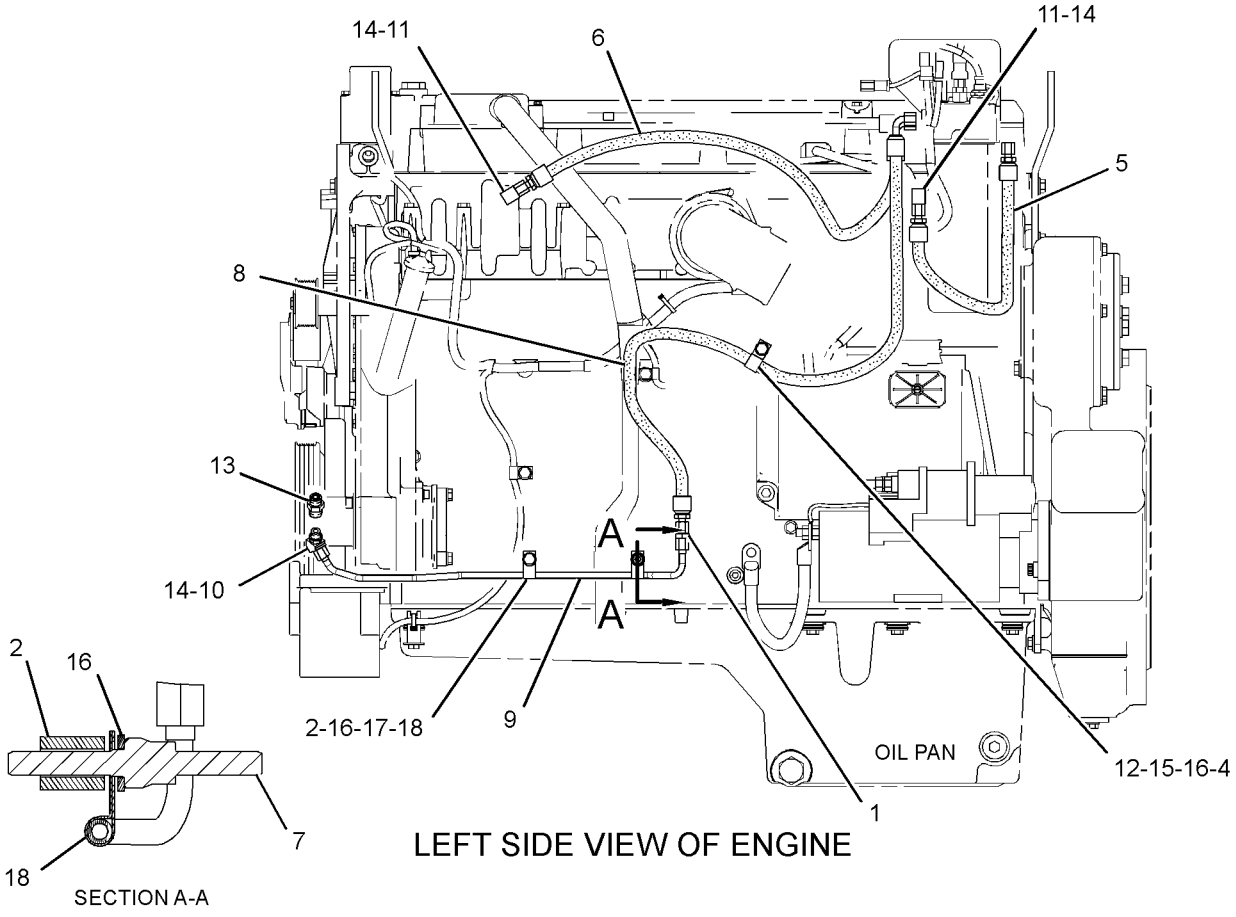

GRAPHIC #1 **<END>** g01522176

FUEL SYSTEM

278-0018 LINES GP-FUEL

S/N: RSX17529-UP

PART OF 226-9770 ENGINE AR-COMPLETE

SMCS-1274 **i04024242**

NOTE	REF NO	GRAPHIC REF	PART NUMBER	QTY	PART NAME 1 2 3 4 5 6 (PRODUCT LEVEL)	SEE PAGE
I	1	1	**125-4369**	1	HOSE AS	
I	2	1	**160-9449**	1	HOSE AS	
I	3	1	**186-6438**	1	HOSE AS	
C	4	1	**203-3768**	1	SPACER (11X16X60-MM THK)	
	5	1	**244-1420**	1	TUBE AS	
M	6	1	**175-9079**	2	ROD-LINK	
C	7	1	*191-7805*	2	ELBOW AS	
					(EACH INCLUDES)	
		1	**030-7947**	1	ELBOW	
		1	**214-7568**	1	SEAL-O-RING	
C	8	1	*319-6213*	1	CONNECTOR AS	
		1	**6V-8634**	1	CONNECTOR	
		1	**228-7089**	1	SEAL-O-RING	
		1	**238-5080**	1	SEAL-O-RING	
C	9	1	*353-5103*	1	ADAPTER AS	
		1	**030-7942**	1	ELBOW	
		1	**214-7568**	1	SEAL-O-RING	
	10	1	**6V-5839**	3	WASHER (11X21X2.5-MM THK)	
	12	1	**6Y-1352**	2	SPACER (10.5X20X27-MM THK)	
	13	1	**7H-7055**	2	CLIP	
	14	1	**7K-4129**	1	UNION-FLARED	
C	15	1	**7V-6571**	1	GROMMET	
CM	16	1	**8T-0643**	1	BOLT (M10X1.5X80-MM)	
C	17	1	**8T-1889**	1	CLIP (SLOT)	
C	18	1	**8T-1890**	1	CLIP (TAB)	
	19	1	**9R-2860**	1	SPACER (11X16.5X11-MM THK)	

C-CHANGE FROM PREVIOUS TYPE
I-REFER TO HYDRAULIC INFORMATION SYSTEM
M-METRIC PART

278-0018 **LINES GP-FUEL** *(contd.)* **i04024242**

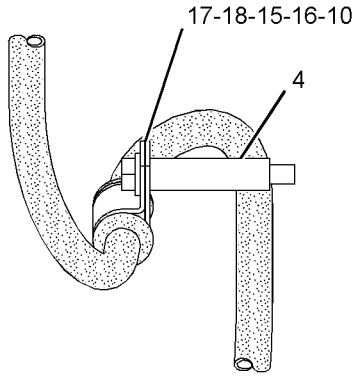

VIEW C-C

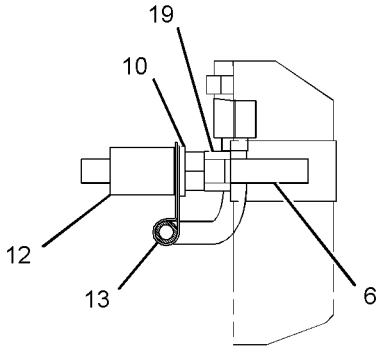

SECTION B-B

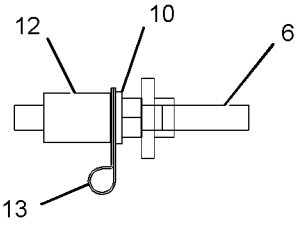

SECTION A-A

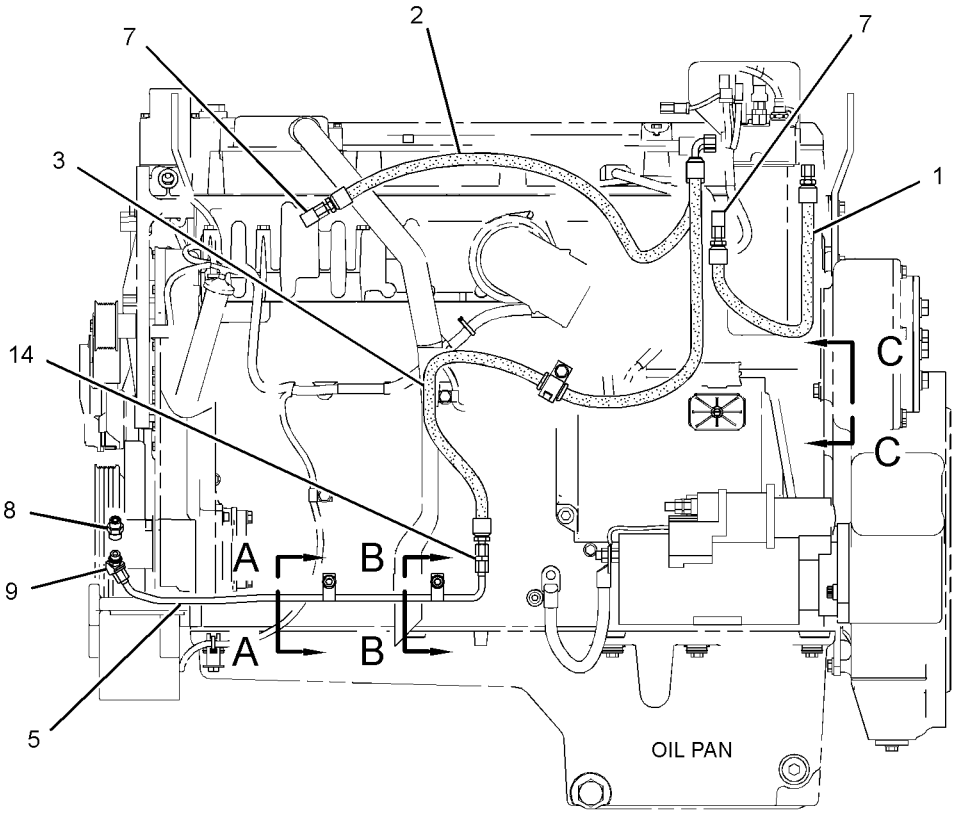

LEFT SIDE VIEW OF ENGINE

GRAPHIC #1 **<END>** g02224116

355-2952 MOUNTING GP-FUEL TANK

S/N: R9J1-UP
PART OF 356-3072 OPTION AR-MACHINE
AN ATTACHMENT

SMCS-1273 **i03972410**

NOTE	REF NO	GRAPHIC REF	PART NUMBER	QTY	PART NAME 1 2 3 4 5 6 (PRODUCT LEVEL)	SEE PAGE
	1	1	**3E-4096**	2	CAP	
	2	1	**8C-0620**	6	PROTECTOR-THREAD	
	3	1	**9W-5477**	2	TUBE	
	4	1	**217-6885**	4	CLAMP	
	5	1	**258-8699**	2	HOSE	
	6	1	**270-3650**	8	PLATE	
	7	1	**270-3651**	4	PLATE AS	
					(EACH INCLUDES)	
M		1	**8T-3597**	4	NUT-WELD (M12X1.75-THD)	
	8	1	**281-3432**	1	TUBE	
	9	1	**281-3433**	2	HOSE	
	10	1	**289-2786**	1	PLATE AS	
	11	1	**331-1080**	1	GUARD	
	12	1	**331-1081**	1	GUARD	
	13	1	**355-2959**	1	GUARD	
	14	1	**133-6934**	2	SPACER (11X20X25-MM THK)	
	15	1	**1V-7801**	2	SPACER (0.546X0.840X2.38-IN THK)	
	16	1	**216-2211**	4	CLAMP	
	17	1	**3E-4369**	2	WASHER (20.6X50.8X5-MM THK)	
	18	1	**3J-5696**	8	PIPE	
	19	1	**5P-1076**	30	WASHER-HARD (13.5X30X4-MM THK)	
	20	1	**5P-4116**	6	WASHER-HARD (8.8X20.5X2-MM THK)	
	21	1	**5P-7470**	1	CLIP (SLOT)	
	22	1	**5P-7471**	1	CLIP (TAB)	
	23	1	**5P-7703**	1	GROMMET	
	24	1	**6V-8397**	1	SEAL-O-RING	
	25	1	**6V-8936**	1	REDUCER	
M	26	1	**7X-2475**	2	BOLT (M16X2X130-MM)	
M	27	1	**7X-2549**	2	BOLT (M12X1.75X100-MM)	
	28	1	**7X-7729**	2	WASHER (11X25X3-MM THK)	
M	29	1	**8T-4136**	1	BOLT (M10X1.5X25-MM)	
M	30	1	**8T-4139**	8	BOLT (M12X1.75X30-MM)	
M	31	1	**8T-4185**	2	BOLT (M10X1.5X50-MM)	
M	32	1	**8T-4189**	6	BOLT (M8X1.25X20-MM)	
M	33	1	**8T-4192**	12	BOLT (M12X1.75X25-MM)	
M	34	1	**8T-4195**	1	BOLT (M10X1.5X30-MM)	
M	35	1	**8T-4910**	8	BOLT (M12X1.75X60-MM)	

M-METRIC PART

355-2952 **MOUNTING GP-FUEL TANK** *(contd.)* **i03972410**

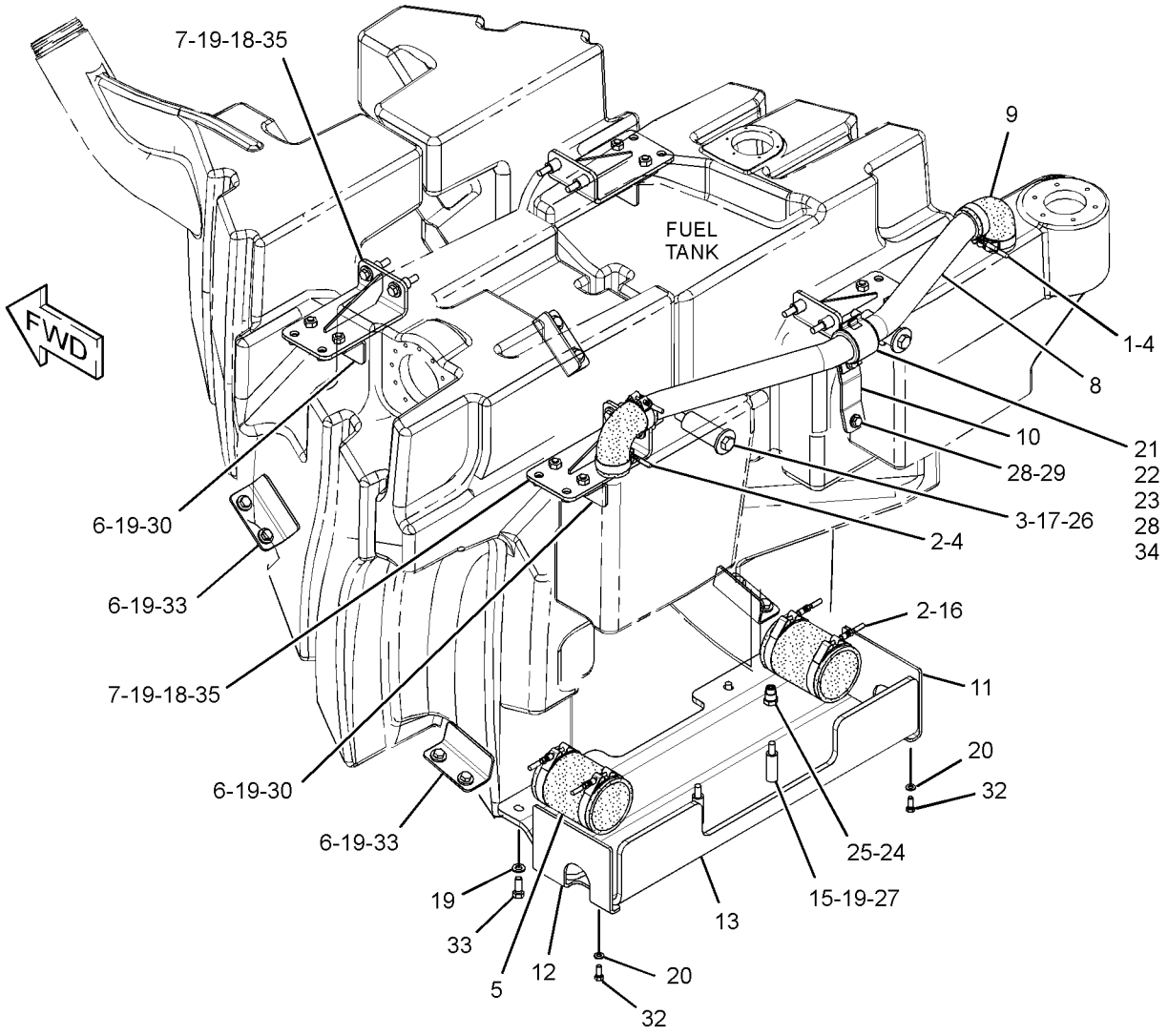

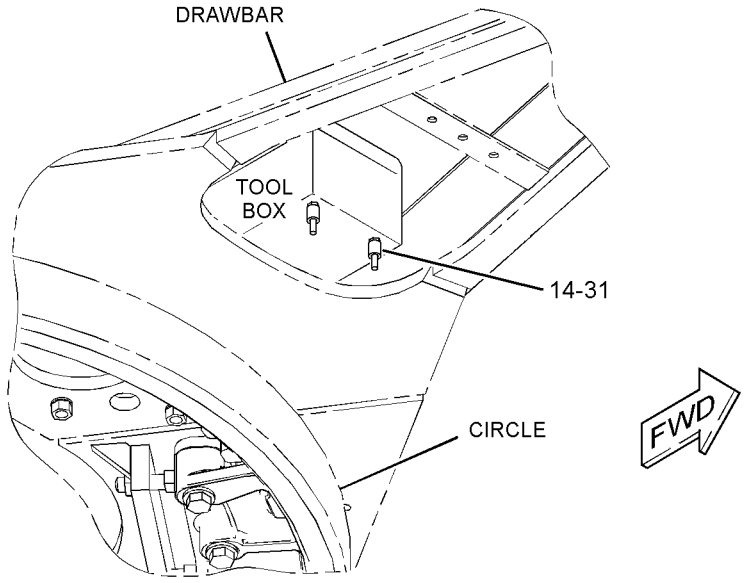

GRAPHIC #1 **<END>** g02205076

253-1459 PUMP GP-FUEL INJECTION

S/N: RSX1037-UP

PART OF 263-6681, 357-6586 ENGINE AR-CORE

SMCS-1251, 1290 **i02151135**

NOTE	REF NO	GRAPHIC REF	PART NUMBER	QTY	PART NAME 1 2 3 4 5 6 (PRODUCT LEVEL)	SEE PAGE
	1	1	**224-4991**	1	CLAMP-INJECTOR	
Y	2	1	**249-0712**	1	INJECTOR GP-FUEL	155
M	3	1	**8T-0644**	1	BOLT (M10X1.50X90-MM)	

M-METRIC PART
Y-SEPARATE ILLUSTRATION

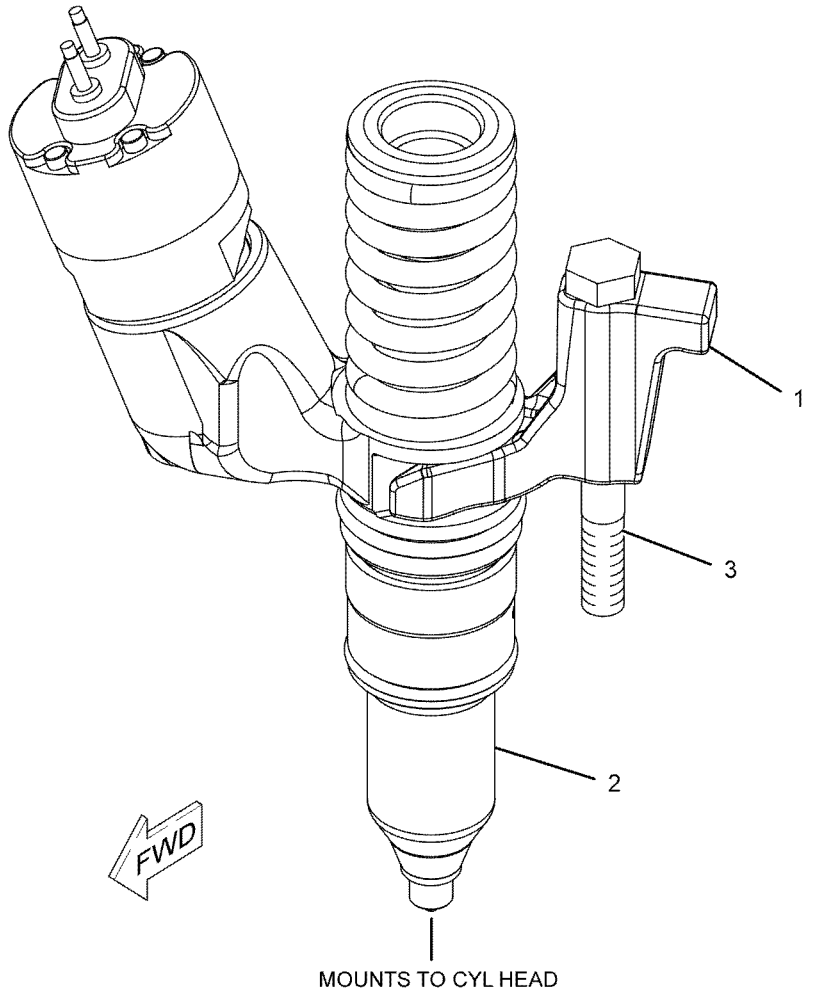

GRAPHIC #1 **<END>** g01065170

FUEL SYSTEM

231-2149 PUMP GP-FUEL PRIMING

S/N: R9J1-UP

PART OF 349-2555 COMMON AR

SMCS-1258 **i03998352**

NOTE	REF NO	GRAPHIC REF	PART NUMBER	QTY	PART NAME 1 2 3 4 5 6 (PRODUCT LEVEL)	SEE PAGE
	1	1	**3S-2093**	1	STRAP-CABLE	
	2	1	**8T-9655**	6	MOUNT-ISOLATION	
	3	1	**9R-5008**	1	SPACER (11X20X6-MM THK)	
I	4	1	**150-1112**	1	HOSE AS	
Y	5	1	**190-8977**	1	PUMP GP-FUEL PRM & WATER SEP (PRIMARY FUEL FILTER)	166
	6	1	**191-1782**	1	SPACER (8.5X12.7X38.2-MM THK)	
B	7	1	**191-1783**	2	SPACER (8.5X12.7X87.3-MM THK)	
	8	1	**222-1206**	1	SPACER (11X25X83-MM THK)	
	9	1	**253-7576**	1	BRACKET AS (RH)	
M		1	**8T-3612**	1	NUT-WELD (M8X1.25-THD)	
	10	1	**279-9991**	1	BRACKET	
I	11	1	**288-6735**	1	HOSE AS	
I	12	1	**288-6736**	1	HOSE AS	
	13	1	**067-2551**	8	CLIP	
CM	14	1	**8T-4195**	1	BOLT (M10X1.5X30-MM)	
	15	1	*148-8345*	1	CONNECTOR AS	
		1	**2M-9780**	1	SEAL-O-RING	
		1	**6V-8398**	1	SEAL-O-RING	
		1	**6V-8638**	1	CONNECTOR	
	16	1	*164-5619*	2	PLUG AS	
					(EACH INCLUDES)	
		1	**9S-8006**	1	PLUG-O-RING	
		1	**2M-9780**	1	SEAL-O-RING	
	17	1	**174-5907**	1	CLIP	
	18	1	**198-4777**	1	WASHER-HARD (11X25X10-MM THK)	
	19	1	*205-3692*	1	ELBOW AS	
		1	**9X-2134**	1	ELBOW	
		1	**6V-8397**	1	SEAL-O-RING	
		1	**2M-9780**	1	SEAL-O-RING	
C	20	1	**1S-0994**	4	CLIP	
C	21	1	**1S-6420**	2	CLIP	
	22	1	**2A-3034**	1	CLAMP-AIR CLEANER	
	23	1	**4D-7733**	2	CLIP	
	24	1	**4I-7889**	1	SPACER (11X25X45-MM THK)	
	25	1	**5L-4504**	1	CLIP	
	26	1	**5P-4116**	1	WASHER-HARD (8.8X20.5X2-MM THK)	
	27	1	**7X-0579**	3	WASHER-HARD (8.8X25.5X2-MM THK)	
M	28	1	**7X-2539**	2	BOLT (M8X1.25X110-MM)	
M	29	1	**7X-2543**	1	BOLT (M10X1.5X120-MM)	
C	30	1	**8D-9671**	1	CLIP	
	31	1	**8M-2773**	1	CLIP	
M	32	1	**8T-3647**	1	BOLT (M8X1.25X80-MM)	
C	33	1	**8T-4121**	16	WASHER-HARD (11X21X2.5-MM THK)	
CM	34	1	**8T-4133**	7	NUT (M10X1.5-THD)	
M	35	1	**8T-4136**	5	BOLT (M10X1.5X25-MM)	
M	36	1	**8T-4137**	1	BOLT (M10X1.5X20-MM)	
M	37	1	**8T-4178**	1	BOLT (M10X1.5X90-MM)	
M	38	1	**8T-4189**	1	BOLT (M8X1.25X20-MM)	
	39	1	**8T-4224**	1	WASHER-HARD (8.8X16X2-MM THK)	
CE	40	1	**8C-6959**		HOSE (125-CM)	
	41	1	**266-9363**	1	HARNESS AS-SENSOR	
		1	**180-9340**	7	SOCKET-CONNECTOR (14-GA TO 18-GA)	
		1	**8T-8737**	2	PLUG-SEAL	
E		1	**114-8844**		SLEEVE-PLASTIC (40-CM)	

231-2149 **PUMP GP-FUEL PRIMING** *(contd.)* **i03998352**

NOTE	REF NO	GRAPHIC REF	PART NUMBER	QTY	PART NAME 1 2 3 4 5 6 (PRODUCT LEVEL)	SEE PAGE
		1	**9X-3401**	7	PIN-CONNECTOR (16-GA TO 18-GA)	
					-OR-	
		1	**126-1767**	7	PIN-CONNECTOR (14-GA TO 16-GA)	
		1	**102-8806**	1	KIT-RECEPTACLE (8-PIN)	
					(INCLUDES RECEPTACLE AS & WEDGE)	
		1	**155-2265**	1	KIT-CONNECTING PLUG (8-PIN)	
					(INCLUDES PLUG AS, WEDGE & INTERFACE SEAL)	
	42	1	**198-4778**	1	WASHER-HARD (13.5X30X12-MM THK)	
	43	1	**4P-7428**	2	CLIP	
	44	1	**7K-1181**	7	STRAP-CABLE	
	45	1	**8T-4223**	1	WASHER-HARD (13.5X25.5X3-MM THK)	
M	46	1	**8T-6868**	1	BOLT (M12X1.75X80-MM)	
	47	1	**291-9976**	1	BRACKET	
C	49	1	**9S-6524**	1	BRACKET	

B-USE AS REQUIRED
C-CHANGE FROM PREVIOUS TYPE
E-ORDER BY THE CENTIMETER
I-REFER TO HYDRAULIC INFORMATION SYSTEM
M-METRIC PART
Y-SEPARATE ILLUSTRATION

231-2149 **PUMP GP-FUEL PRIMING** *(contd.)* **i03998352**

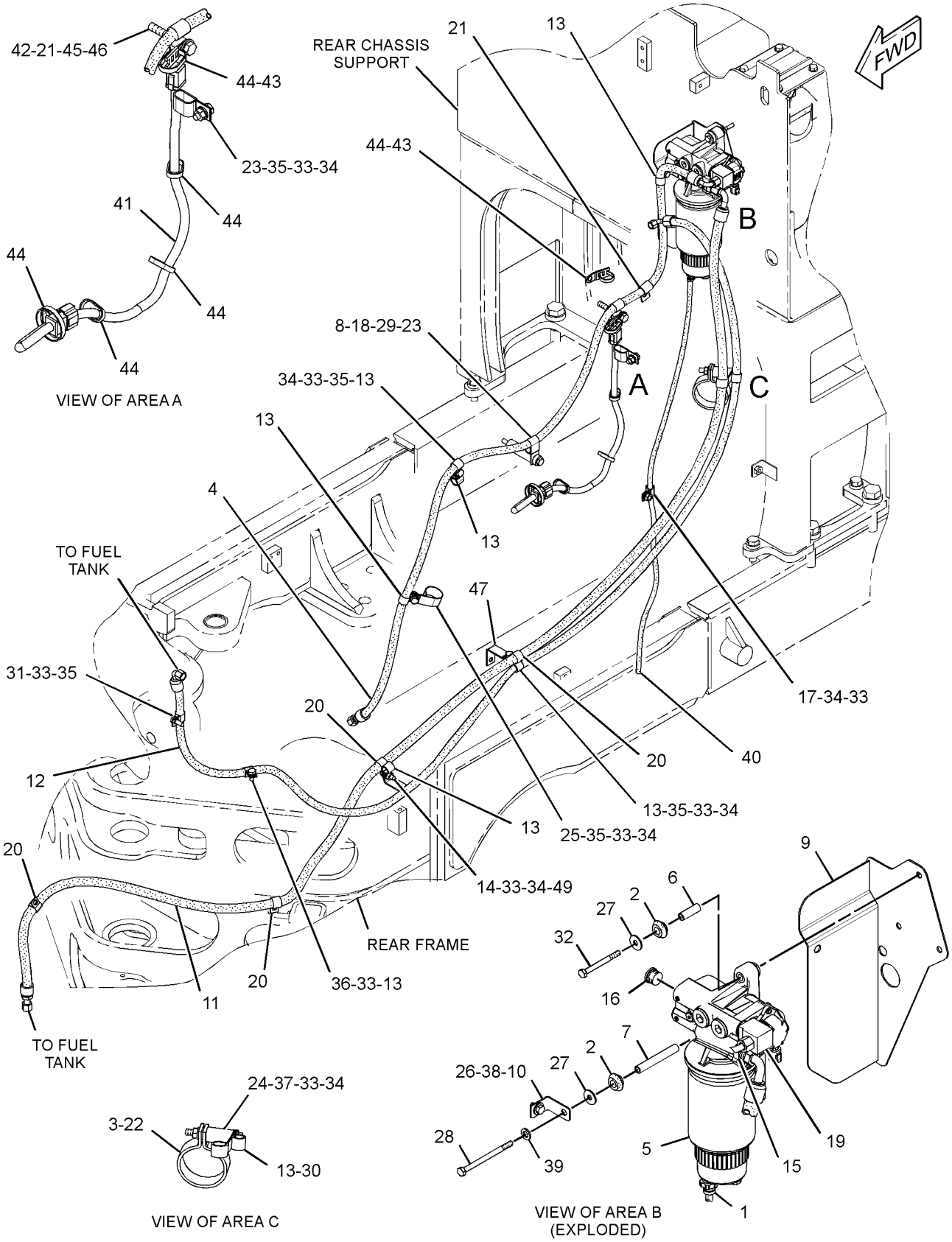

GRAPHIC #1 **<END>** g01547493

FUEL SYSTEM

190-8977 PUMP GP-FUEL PRM & WATER SEP

S/N: R9J1-UP

PART OF 231-2149 PUMP GP-FUEL PRIMING

SMCS-1258, 1261, 1263 **i04014532**

NOTE	REF NO	GRAPHIC REF	PART NUMBER	QTY	PART NAME 1 2 3 4 5 6 (PRODUCT LEVEL)	SEE PAGE
Y	1	1	*174-9570*	1	FILTER GP-WATER SEP & FUEL (PRIMARY)	154
	2	1	**190-8970**	1	PUMP AS-FUEL PRIMING	

Y-SEPARATE ILLUSTRATION

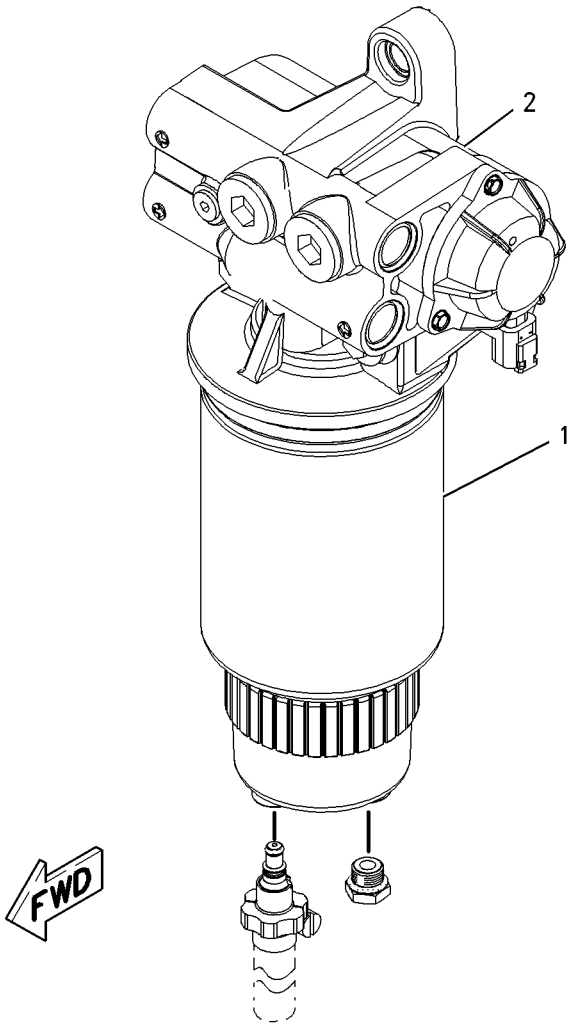

GRAPHIC #1 **<END>** g00904493

227-5723 PUMP GP-FUEL TRANSFER

S/N: RSX1037-4197

PART OF 263-6681 ENGINE AR-CORE

SMCS-1256 **i02406861**

NOTE	REF NO	GRAPHIC REF	PART NUMBER	QTY	PART NAME 1 2 3 4 5 6 (PRODUCT LEVEL)	SEE PAGE
	1	1	**266-2522**	1	PUMP GP-FUEL TRANSFER	
	2	1	**5P-4889**	1	SEAL-O-RING	
	3	1	**5M-2894**	2	WASHER-HARD (10.2X18.5X2.5-MM THK)	
M	4	1	**136-4183**	2	BOLT-12 POINT HEAD (M10X1.5X30-MM)	

M-METRIC PART

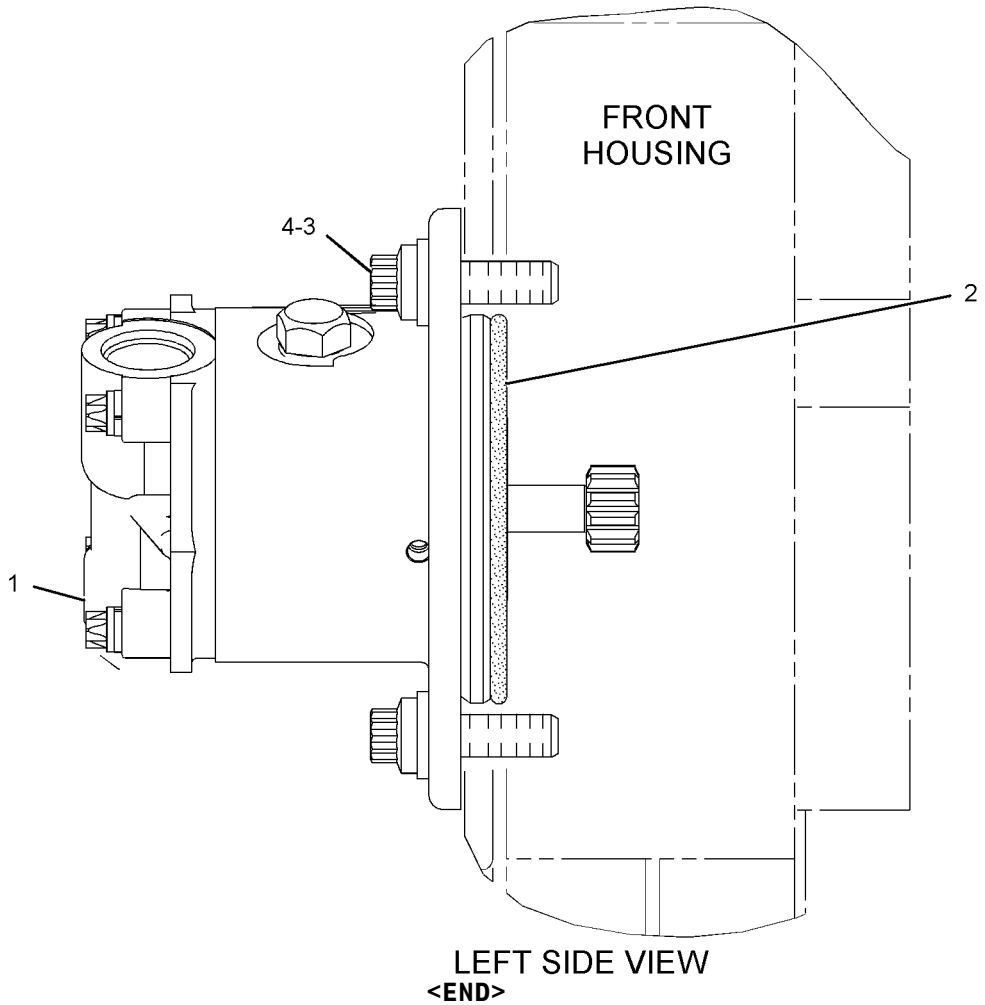

GRAPHIC #1

<END>

g01101661

FUEL SYSTEM

227-5723 PUMP GP-FUEL TRANSFER

S/N: RSX4198-7912

PART OF 263-6681 ENGINE AR-CORE

SMCS-1256 **i02676574**

NOTE	REF NO	GRAPHIC REF	PART NUMBER	QTY	PART NAME 1 2 3 4 5 6 (PRODUCT LEVEL)	SEE PAGE
C	1	1	**295-9260**	1	PUMP GP-FUEL TRANSFER	
M	2	1	**136-4183**	2	BOLT-12 POINT HEAD (M10X1.5X30-MM)	
	3	1	**5M-2894**	2	WASHER-HARD (10.2X18.5X2.5-MM THK)	
	4	1	**5P-4889**	1	SEAL-O-RING	

C-CHANGE FROM PREVIOUS TYPE
M-METRIC PART

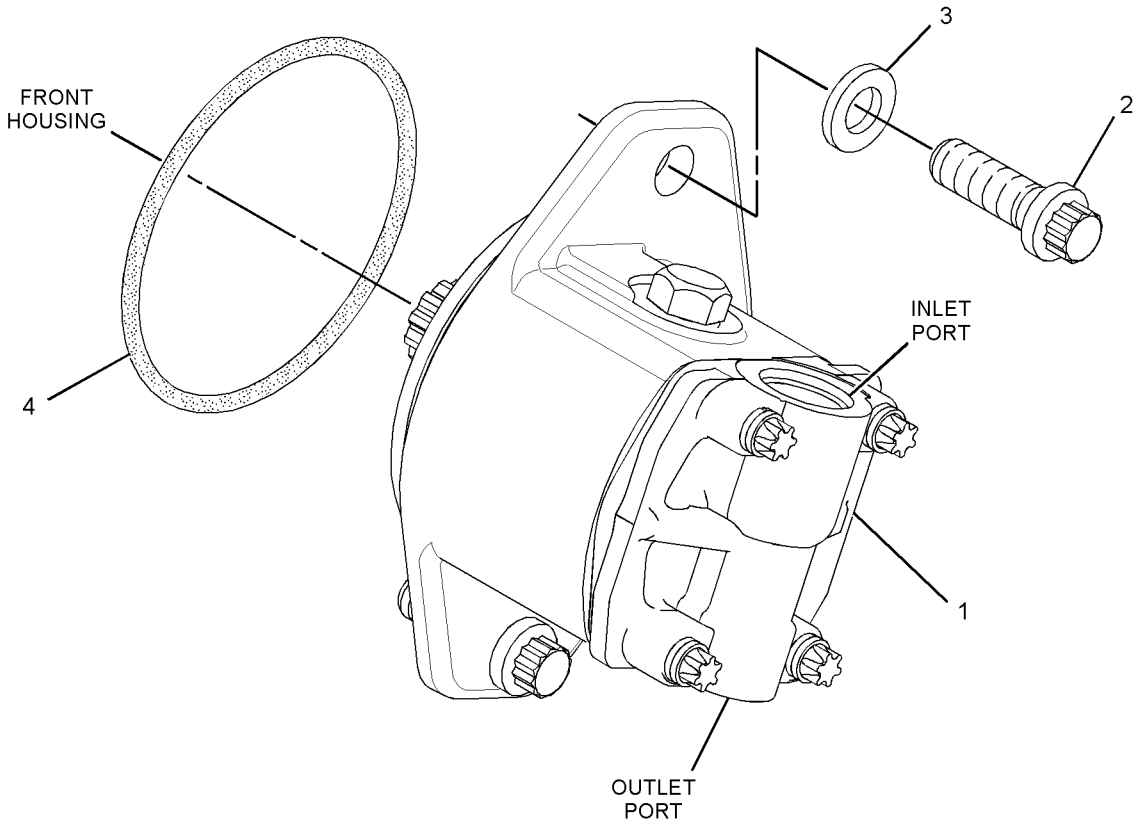

GRAPHIC #1 **<END>** g01345008

227-5723 PUMP GP-FUEL TRANSFER

S/N: RSX7913-UP

PART OF 226-9770 ENGINE AR-COMPLETE, 263-6681 ENGINE AR-CORE

SMCS-1256 **i02891299**

NOTE	REF NO	GRAPHIC REF	PART NUMBER	QTY	PART NAME 1 2 3 4 5 6 (PRODUCT LEVEL)	SEE PAGE
CR	1	1	**316-6864**	1	PUMP GP-FUEL TRANSFER	
M	2	1	**136-4183**	2	BOLT-12 POINT HEAD (M10X1.5X30-MM)	
	3	1	**5M-2894**	2	WASHER-HARD (10.2X18.5X2.5-MM THK)	
	4	1	**5P-4889**	1	SEAL-O-RING	

C-CHANGE FROM PREVIOUS TYPE
M-METRIC PART
R-REMFG PART MAY BE AVAILABLE

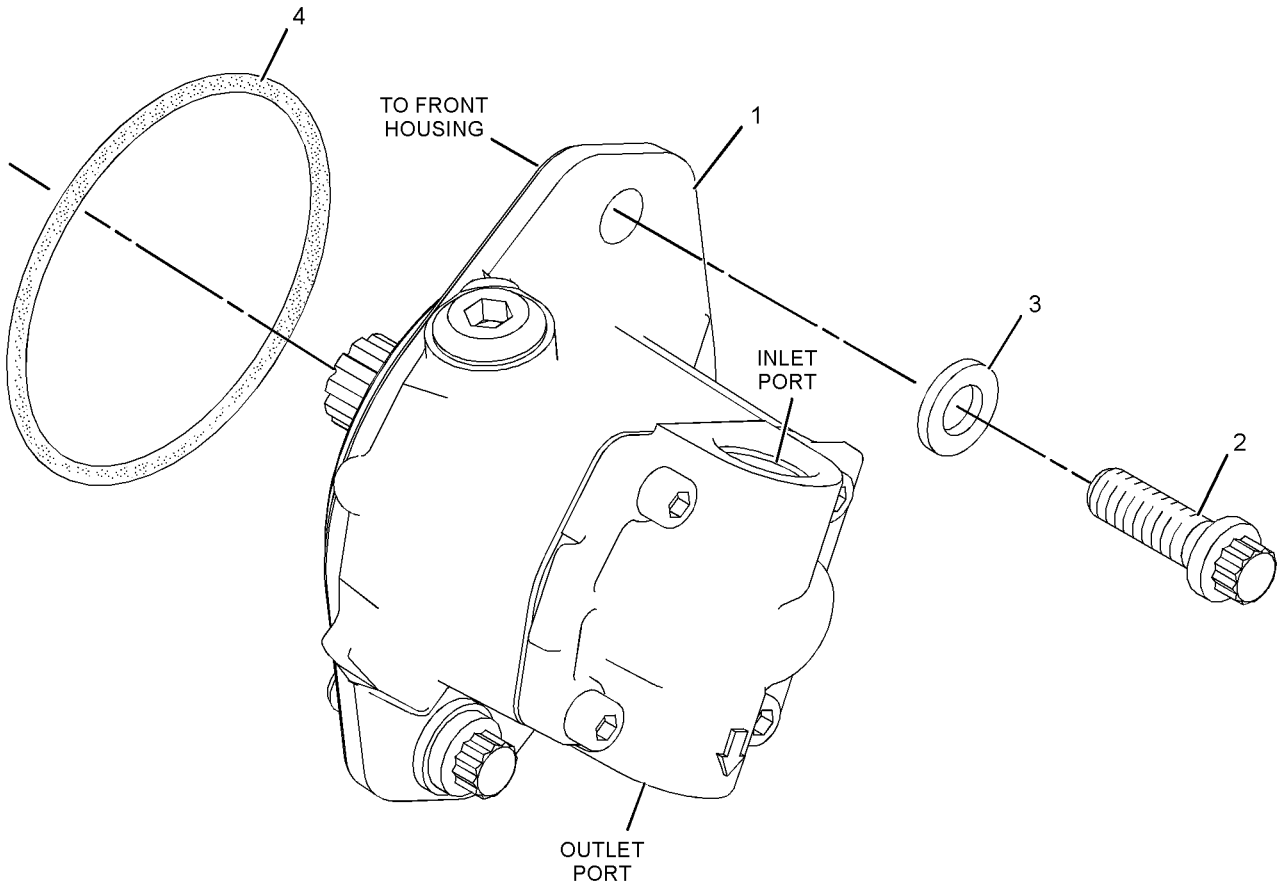

GRAPHIC #1 **<END>** g01366656

250-9200 RECEIVER GP-FAST FILL FUEL

S/N: R9J1-UP

PART OF 241-9584 ADAPTER GP-FAST FILL FUEL, 347-1545 TANK GP-FUEL

AN ATTACHMENT

SMCS-1710 **i02756761**

NOTE	REF NO	GRAPHIC REF	PART NUMBER	QTY	PART NAME 1 2 3 4 5 6 (PRODUCT LEVEL)	SEE PAGE
	1	1	**232-1767**	1	RECEIVER AS (FAST FILL FUEL)	
	2	1	**250-3865**	1	VALVE AS-SHUTOFF (FAST FILL FUEL)	
	3	1	**1P-4582**	2	FLANGE-HALF	
	4	1	**4J-0527**	1	SEAL-O-RING	
	5	1	**8T-4223**	4	WASHER-HARD (13.5X25.5X3-MM THK)	
	6	1	**8T-8919**	4	BOLT (1/2-13X1.75-IN)	

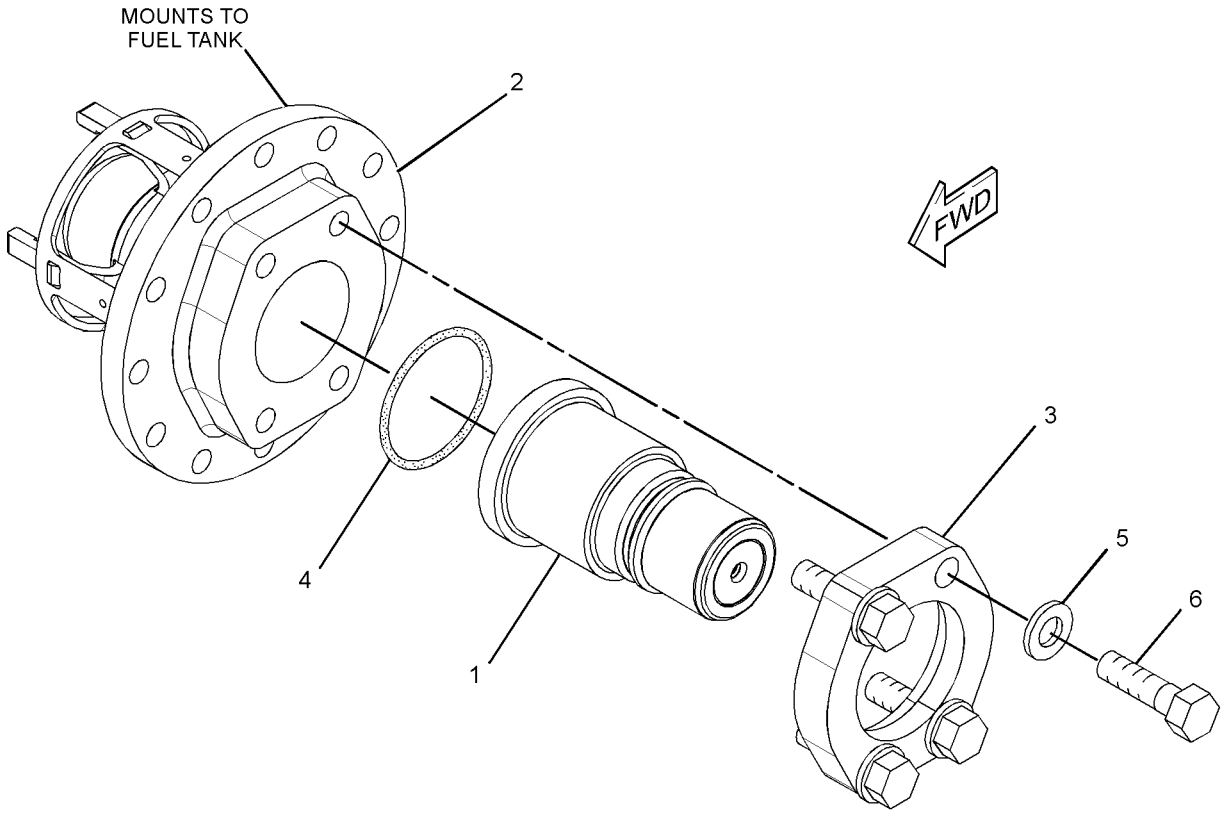

GRAPHIC #1 **<END>** g01393122

285-2265 TANK & MTG GP-FUEL

S/N: R9J1-UP
PART OF 356-3071 OPTION AR-MACHINE
AN ATTACHMENT

SMCS-1273 **i03317160**

NOTE	REF NO	GRAPHIC REF	PART NUMBER	QTY	PART NAME 1 2 3 4 5 6 (PRODUCT LEVEL)	SEE PAGE
C	1	1	**8C-0620**	8	PROTECTOR-THREAD	
	2	1	**9W-5477**	2	TUBE	
	3	1	**217-6885**	4	CLAMP	
	4	1	**258-8699**	2	HOSE	
	5	1	**261-0154**	1	GUARD	
	6	1	**270-3650**	8	PLATE	
	7	1	**270-3651**	4	PLATE AS	
					(EACH INCLUDES)	
M		1	**8T-3597**	4	NUT-WELD (M12X1.75-THD)	
	8	1	**281-3432**	1	TUBE	
	9	1	**281-3433**	2	HOSE	
	10	1	**289-2786**	1	PLATE AS	
	11	1	**331-1080**	1	GUARD	
	12	1	**133-6934**	2	SPACER (11X20X25-MM THK)	
	13	1	**1V-7801**	2	SPACER (0.546X0.840X2.38-IN THK)	
	14	1	**216-2211**	4	CLAMP	
	15	1	**3E-4369**	2	WASHER (20.6X50.8X5-MM THK)	
	16	1	**3J-5696**	8	PIPE	
	17	1	**5P-1076**	30	WASHER-HARD (13.5X30X4-MM THK)	
	18	1	**5P-4116**	6	WASHER-HARD (8.8X20.5X2-MM THK)	
	19	1	**5P-7470**	1	CLIP (SLOT)	
	20	1	**5P-7471**	1	CLIP (TAB)	
	21	1	**5P-7703**	1	GROMMET	
M	22	1	**7X-2475**	2	BOLT (M16X2X130-MM)	
M	23	1	**7X-2549**	2	BOLT (M12X1.75X100-MM)	
	24	1	**7X-7729**	2	WASHER (11X25X3-MM THK)	
M	25	1	**8T-4136**	1	BOLT (M10X1.5X25-MM)	
M	26	1	**8T-4139**	8	BOLT (M12X1.75X30-MM)	
M	27	1	**8T-4185**	2	BOLT (M10X1.5X50-MM)	
CM	28	1	**8T-4189**	6	BOLT (M8X1.25X20-MM)	
M	29	1	**8T-4192**	12	BOLT (M12X1.75X25-MM)	
M	30	1	**8T-4195**	1	BOLT (M10X1.5X30-MM)	
M	31	1	**8T-4910**	8	BOLT (M12X1.75X60-MM)	
	32	1	**331-1081**	1	GUARD	

C-CHANGE FROM PREVIOUS TYPE
M-METRIC PART

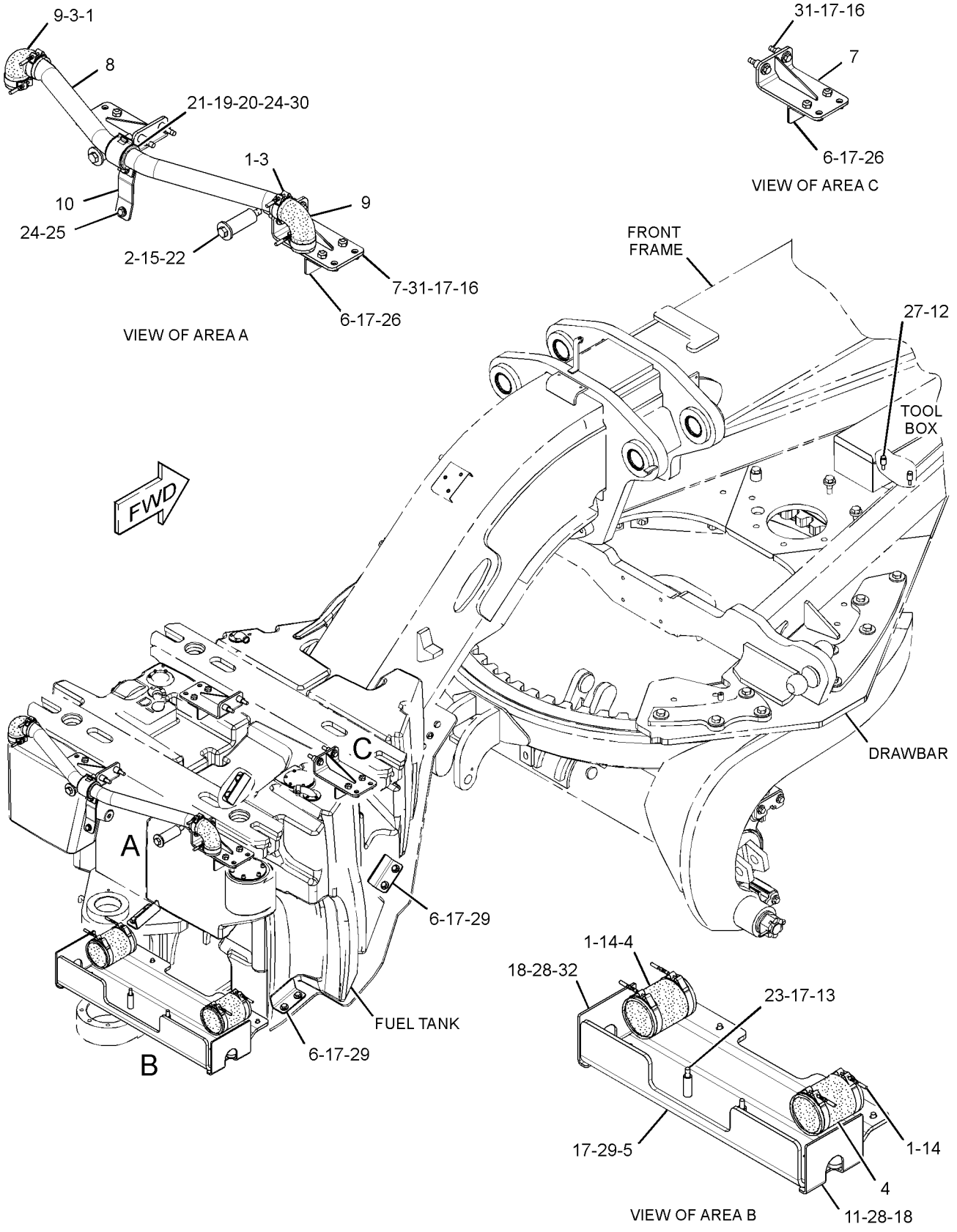

GRAPHIC #1 **<END>** g01923916

248-4765 TANK GP-FUEL

S/N: R9J1-UP
PART OF 285-2263, 285-2264 TANK GP-FUEL
AN ATTACHMENT

SMCS-1273 **i02736417**

NOTE	REF NO	GRAPHIC REF	PART NUMBER	QTY	PART NAME 1 2 3 4 5 6 (PRODUCT LEVEL)	SEE PAGE
	1	1	**8C-5053**	1	ADAPTER	
	2	1	**250-9305**	1	BUSHING	
	3	1	*268-1543*	1	ELBOW AS	
		1	**2T-1925**	1	ELBOW	
		1	**6V-8397**	1	SEAL-O-RING	
	4	1	**3J-1907**	1	SEAL-O-RING	
	5	1	**7M-8485**	1	SEAL-O-RING	
	6	1	**9M-7958**	3	CLAMP-HOSE	
	7	1	**9S-4181**	1	PLUG-O-RING	
	8	1	**9S-4191**	1	PLUG-O-RING	

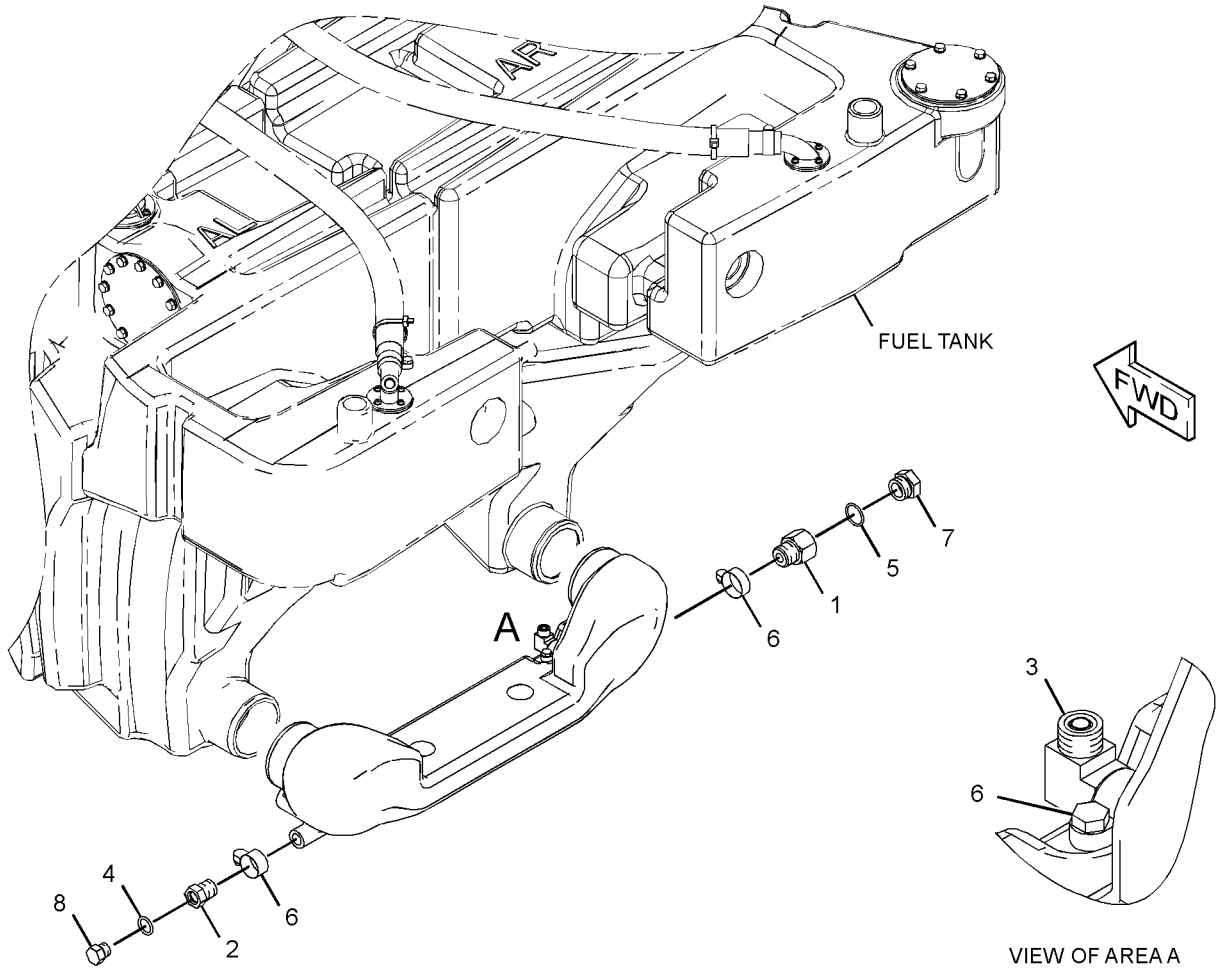

GRAPHIC #1 **<END>** g01373950

FUEL SYSTEM

285-2263 TANK GP-FUEL

S/N: R9J1-UP

PART OF 353-5005, 358-7877, 361-1731, 361-4363 DISTRIBUTION AR

AN ATTACHMENT

SMCS-1273 **i02754874**

NOTE	REF NO	GRAPHIC REF	PART NUMBER	QTY	PART NAME 1 2 3 4 5 6 (PRODUCT LEVEL)	SEE PAGE
J	1	1	**7X-7700**	1	CAP AS-FILLER (FUEL TANK)	
		1	**9X-8600**	1	SEAL-O-RING	
	2	1	**103-2006**	1	SCREW-PAN HEAD (6-19X0.37-IN)	
	3	1	**199-9907**	1	STRAINER-FUEL	
	4	1	**203-9807**	8	GASKET	
	5	1	**208-0800**	1	GASKET	
Y	6	1	*241-9585*	1	COVER GP-FUEL TANK (WITHOUT FAST FILL FUEL ADAPTER)	143
Y	7	1	**248-4765**	1	TANK GP-FUEL	173
	8	1	**256-3351**	1	TANK AS-FUEL (RH)	
		1	**265-8970**	6	INSERT	
		1	**265-8971**	22	INSERT	
	9	1	**256-3352**	1	TANK AS-FUEL (LH)	
		1	**9M-7958**	1	CLAMP-HOSE	
		1	*164-5597*	1	CONNECTOR AS	
		1	**8C-6868**	1	CONNECTOR	
		1	**6V-8397**	1	SEAL-O-RING	
		1	**265-8970**	12	INSERT	
		1	**265-8971**	22	INSERT	
		1	**268-9602**	3	INSERT	
	10	1	**259-8455**	1	SENDER AS-FUEL LEVEL	
		1	**283-9503**	1	KIT-DIAL SENSOR (FUEL LEVEL GAUGE)	
	11	1	**288-7312**	8	VENT AS	
M	12	1	**162-2165**	38	BOLT-SOCKET HEAD (M4X0.7X16-MM)	
	13	1	**194-6523**	1	ADAPTER	
	14	1	**4B-4863**	38	WASHER (4.7X11X1.2-MM THK)	
	16	1	**9M-7958**	8	CLAMP-HOSE	
E	17	1	**146-7453**		HOSE (112.5-CM EACH)	
E	17A	1	**146-7453**		HOSE (60-CM EACH)	
G	18	1	**160-2246**		SLEEVE-ABRASION (40.3-IN)	
G	18A	1	**160-2246**		SLEEVE-ABRASION (19.6-IN)	
G	18B	1	**160-2246**		SLEEVE-ABRASION (40.3-IN)	
G	18C	1	**160-2246**		SLEEVE-ABRASION (19.6-IN)	
					AVAILABLE REPAIR KIT(S):	
J			**9X-2205**	1	KIT-CAP FILTER (FUEL TANK)	
					(INCLUDES FILTER AS, SCREWS, GASKETS, & A VALVE)	

E-ORDER BY THE CENTIMETER
G-ORDER BY THE INCH
J-KIT MARKED J IS SERVICED BY PART MARKED J
M-METRIC PART
Y-SEPARATE ILLUSTRATION

285-2263 **TANK GP-FUEL** *(contd.)* **i02754874**

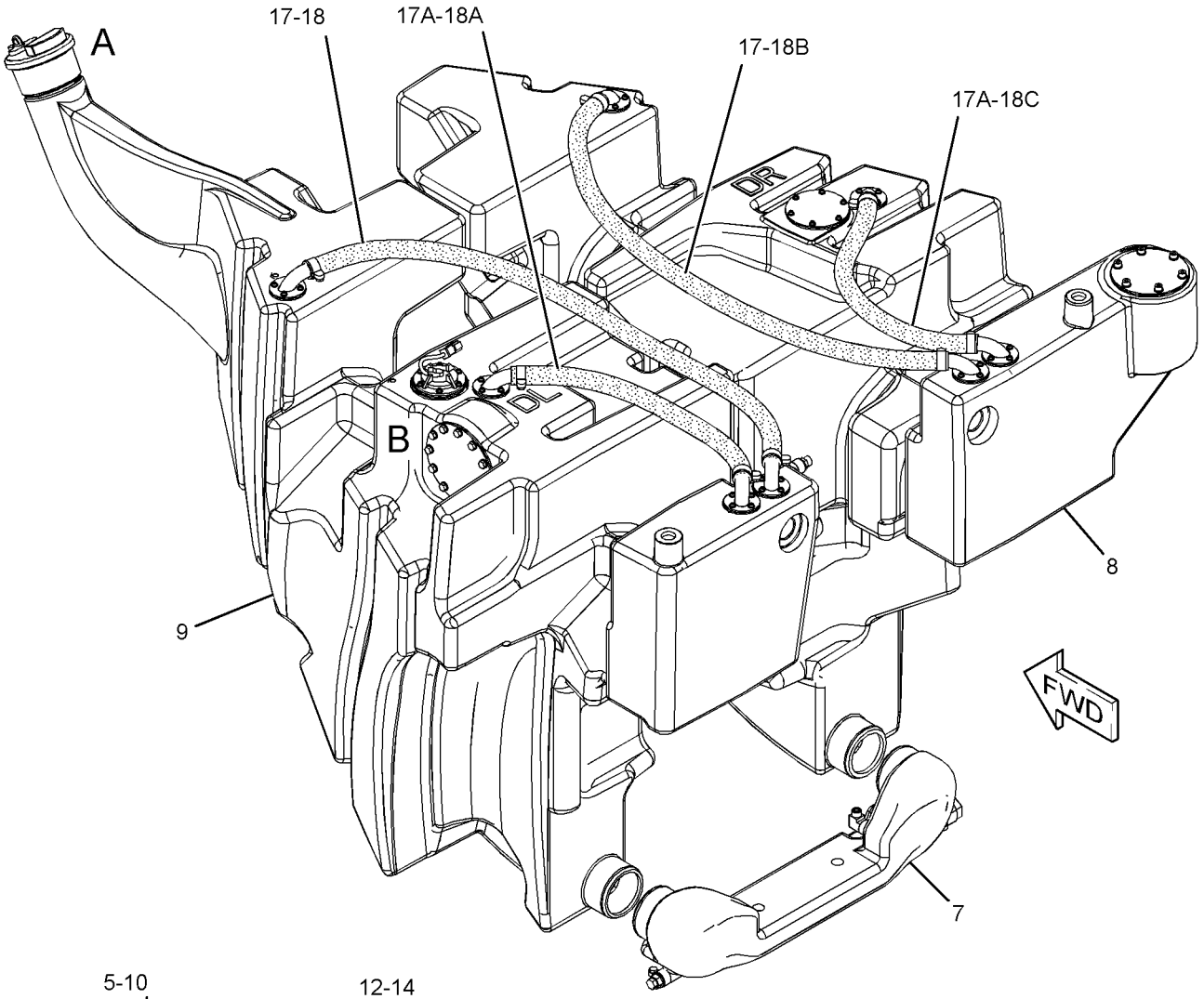

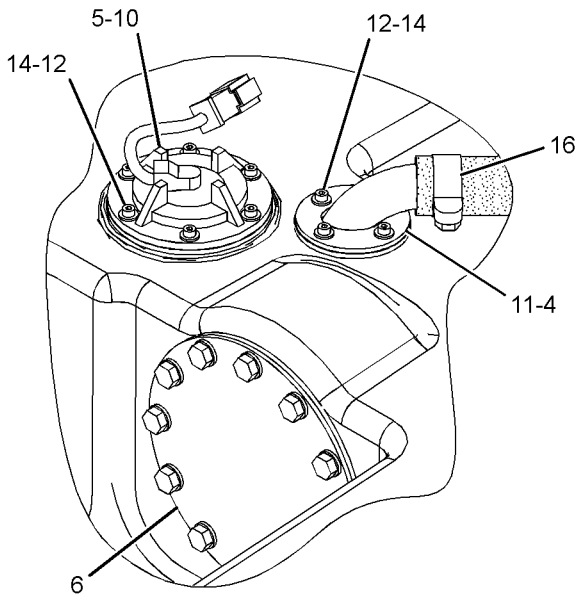

VIEW OF AREA B

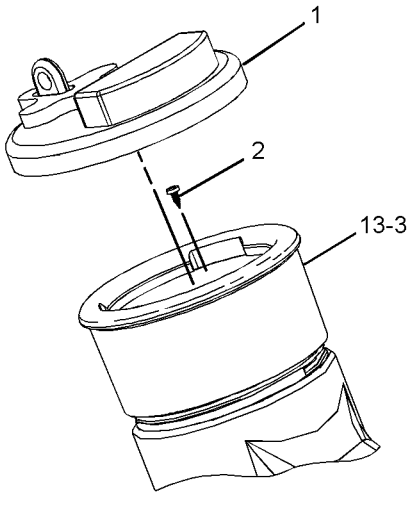

VIEW OF AREA A

GRAPHIC #1 **<END>** g01381576

FUEL SYSTEM

285-2264 TANK GP-FUEL

S/N: R9J1-UP
CANNOT BE USED WITH 285-2263—PAGE 174
AN ATTACHMENT

SMCS-1273 **i02789790**

NOTE	REF NO	GRAPHIC REF	PART NUMBER	QTY	PART NAME 1 2 3 4 5 6 (PRODUCT LEVEL)	SEE PAGE
	1	1	**7X-7700**	1	CAP AS-FILLER (FUEL TANK)	
		1	**9X-2205**	1	KIT-CAP FILTER (FUEL TANK)	
					(INCLUDES FILTER AS., SCREWS, GASKETS & VALVE)	
		1	**9X-8600**	1	SEAL-O-RING	
	2	1	**103-2006**	1	SCREW-PAN HEAD (6-19X0.37-IN)	
	3	1	**199-9907**	1	STRAINER-FUEL	
	4	1	**203-9807**	8	GASKET	
	5	1	**208-0800**	1	GASKET	
Y	6	1	*241-9584*	1	ADAPTER GP-FAST FILL FUEL	141
Y	7	1	**248-4765**	1	TANK GP-FUEL	173
	8	1	**256-3351**	1	TANK AS-FUEL (RH)	
		1	**265-8970**	6	INSERT	
		1	**265-8971**	22	INSERT	
	9	1	**256-3352**	1	TANK AS-FUEL (LH)	
		1	**9M-7958**	1	CLAMP-HOSE	
		1	*164-5597*	1	CONNECTOR AS	
		1	**8C-6868**	1	CONNECTOR	
		1	**6V-8397**	1	SEAL-O-RING	
		1	**265-8970**	12	INSERT	
		1	**265-8971**	22	INSERT	
		1	**268-9602**	3	INSERT	
	10	1	**259-8455**	1	SENDER AS-FUEL LEVEL	
		1	**283-9503**	1	KIT-DIAL SENSOR (FUEL LEVEL GAUGE)	
					(INCLUDES SENSOR AS, SCREWS, RECEPTACLE KIT & PIN CONNECTOR)	
		1	**6C-3060**	1	GASKET	
	11	1	**288-7312**	8	VENT AS	
M	12	1	**162-2165**	38	BOLT-SOCKET HEAD (M4X0.7X16-MM)	
	13	1	**194-6523**	1	ADAPTER	
	14	1	**249-7742**	1	FILM-IDENTIFICATION (FAST FILL FUEL, READ OMM)	
	15	1	**4B-4863**	38	WASHER (4.7X11X1.2-MM THK)	
	17	1	**9M-7958**	8	CLAMP-HOSE	
E	18	1	**146-7453**		HOSE (112.5-CM EACH)	
E	18A	1	**146-7453**		HOSE (60-CM EACH)	
G	19	1	**160-2246**		SLEEVE-ABRASION (40.4-INCH)	
G	19A	1	**160-2246**		SLEEVE-ABRASION (19.7-INCH)	
	20	1	**7K-1181**	8	STRAP-CABLE	

E-ORDER BY THE CENTIMETER
G-ORDER BY THE INCH
M-METRIC PART
Y-SEPARATE ILLUSTRATION

285-2264 **TANK GP-FUEL** *(contd.)* **i02789790**

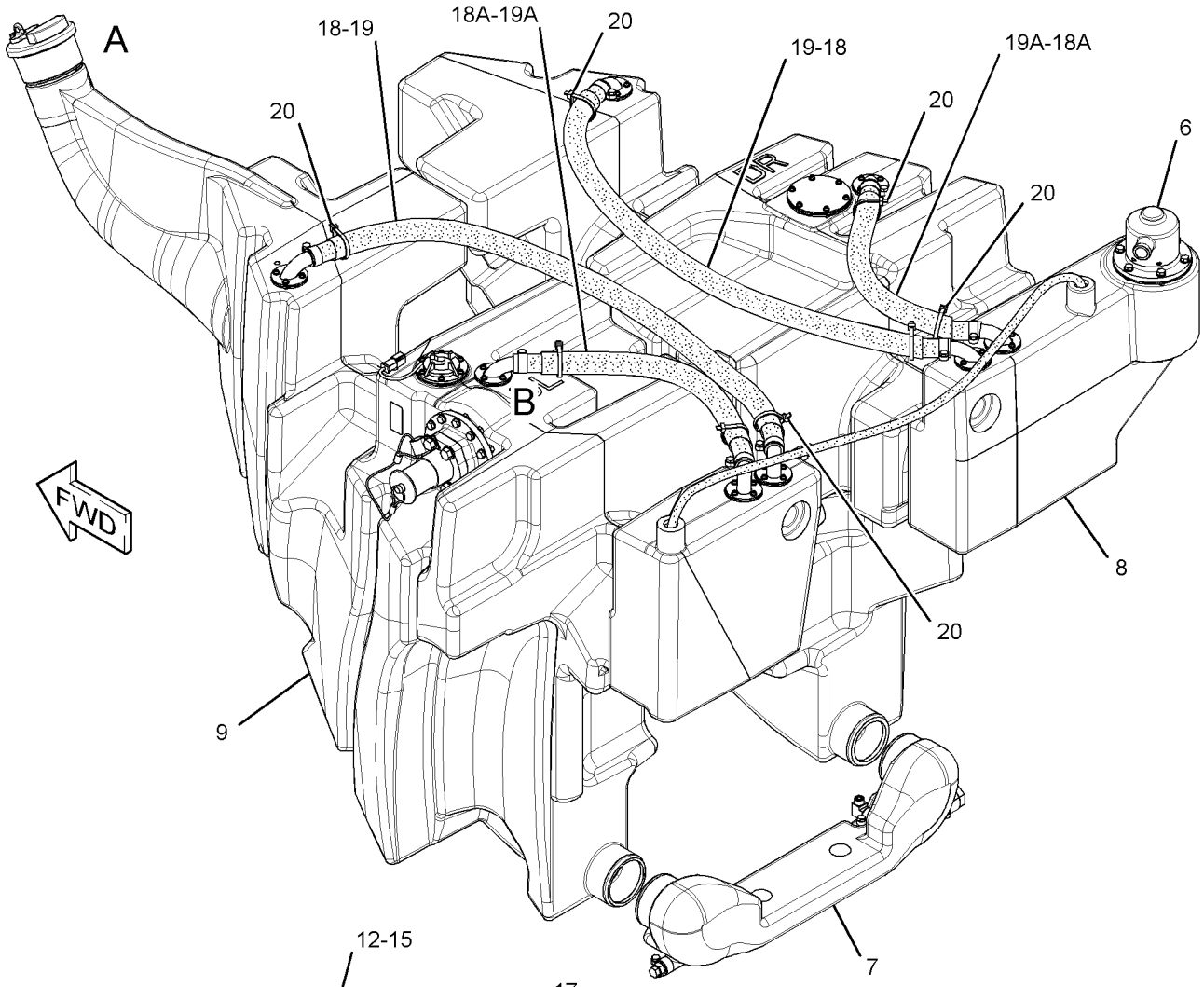

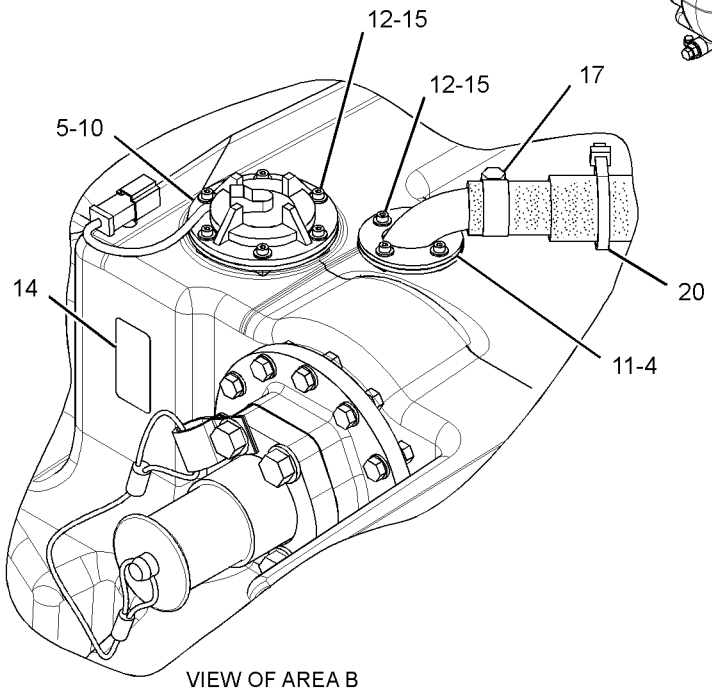

VIEW OF AREA B

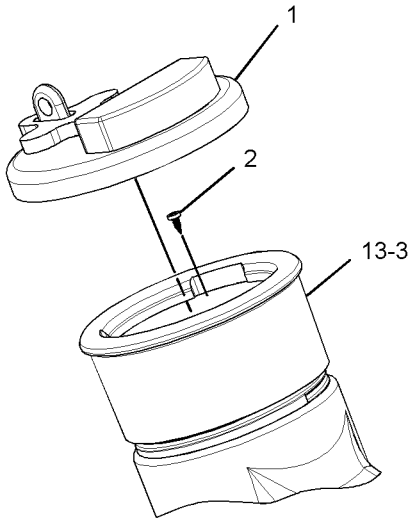

VIEW OF AREA A

GRAPHIC #1 **<END>** g01407522

FUEL SYSTEM

347-1545 TANK GP-FUEL

S/N: R9J1-UP
PART OF 355-3348 TANK GP-FUEL
AN ATTACHMENT

SMCS-1273 **i04021430**

NOTE	REF NO	GRAPHIC REF	PART NUMBER	QTY	PART NAME 1 2 3 4 5 6 (PRODUCT LEVEL)	SEE PAGE
	1	1	**5P-2618**	1	CONNECTOR	
	2	1	**7K-1181**	4	STRAP-CABLE	
	3	1	**7X-7700**	1	CAP AS-FILLER (FUEL TANK)	
		1	**9X-2205**	1	KIT-CAP FILTER (FUEL TANK)	
		1	**9X-8600**	1	SEAL-O-RING	
	4	1	**9D-0630**	1	CAP-DUST	
	5	1	**103-2006**	1	SCREW-PAN HEAD (6-19X0.37-IN)	
	6	1	**199-9907**	1	STRAINER-FUEL	
Y	7	1	**250-9200**	1	RECEIVER GP-FAST FILL FUEL	170
	8	1	**251-1217**	1	HOSE AS	
	9	1	**256-3352**	1	TANK AS-FUEL (LH)	
		1	**9M-7958**	1	CLAMP-HOSE	
		1	*164-5597*	1	CONNECTOR AS	
		1	**6V-8397**	1	SEAL-O-RING	
		1	**8C-6868**	1	CONNECTOR	
		1	**265-8970**	12	INSERT	
		1	**265-8971**	22	INSERT	
		1	**268-9602**	3	INSERT	
	10	1	**259-8455**	1	SENDER AS-FUEL LEVEL	
		1	**6C-3060**	1	GASKET	
		1	**317-9191**	1	KIT-DIAL SENSOR (FUEL LEVEL GAUGE)	
		1	**102-8802**	1	KIT-RECEPTACLE (2-PIN)	
					(INCLUDES RECEPTACLE ASSEMBLY & WEDGE)	
		1	**186-3735**	2	PIN-CONNECTOR (16-GA TO 18-GA)	
	11	1	**276-3276**	1	GASKET	
	12	1	**287-3754**	1	TUBE	
	13	1	**288-7312**	4	VENT AS	
	14	1	**330-3566**	4	GASKET	
	15	1	**330-3568**	1	GASKET	
	16	1	**149-9129**	1	CLIP	
M	17	1	**162-2165**	22	BOLT-SOCKET HEAD (M4X0.7X16-MM)	
	18	1	**249-7742**	1	FILM-IDENTIFICATION (FAST FILL FUEL, READ OMM)	
	19	1	**306-8127**	1	ADAPTER	
	20	1	**1J-9671**	1	SEAL-O-RING	
	21	1	**4B-4863**	22	WASHER (4.7X11X1.2-MM THK)	
M	22	1	**8T-0309**	4	SCREW-MACHINE (M4X0.7X10-MM)	
	23	1	**8T-4224**	12	WASHER-HARD (8.8X16X2-MM THK)	
M	24	1	**8T-4908**	12	BOLT (M8X1.25X25-MM)	
	25	1	**9M-7958**	4	CLAMP-HOSE	
E	26	1	**146-7453**		HOSE (60-CM)	
E	26A	1	**146-7453**		HOSE (112.5-CM)	
E	27	1	**160-2246**		SLEEVE-ABRASION (50-CM)	
E	27A	1	**160-2246**		SLEEVE-ABRASION (102.5-CM)	

E-ORDER BY THE CENTIMETER
M-METRIC PART
Y-SEPARATE ILLUSTRATION

347-1545 **TANK GP-FUEL** *(contd.)* **i04021430**

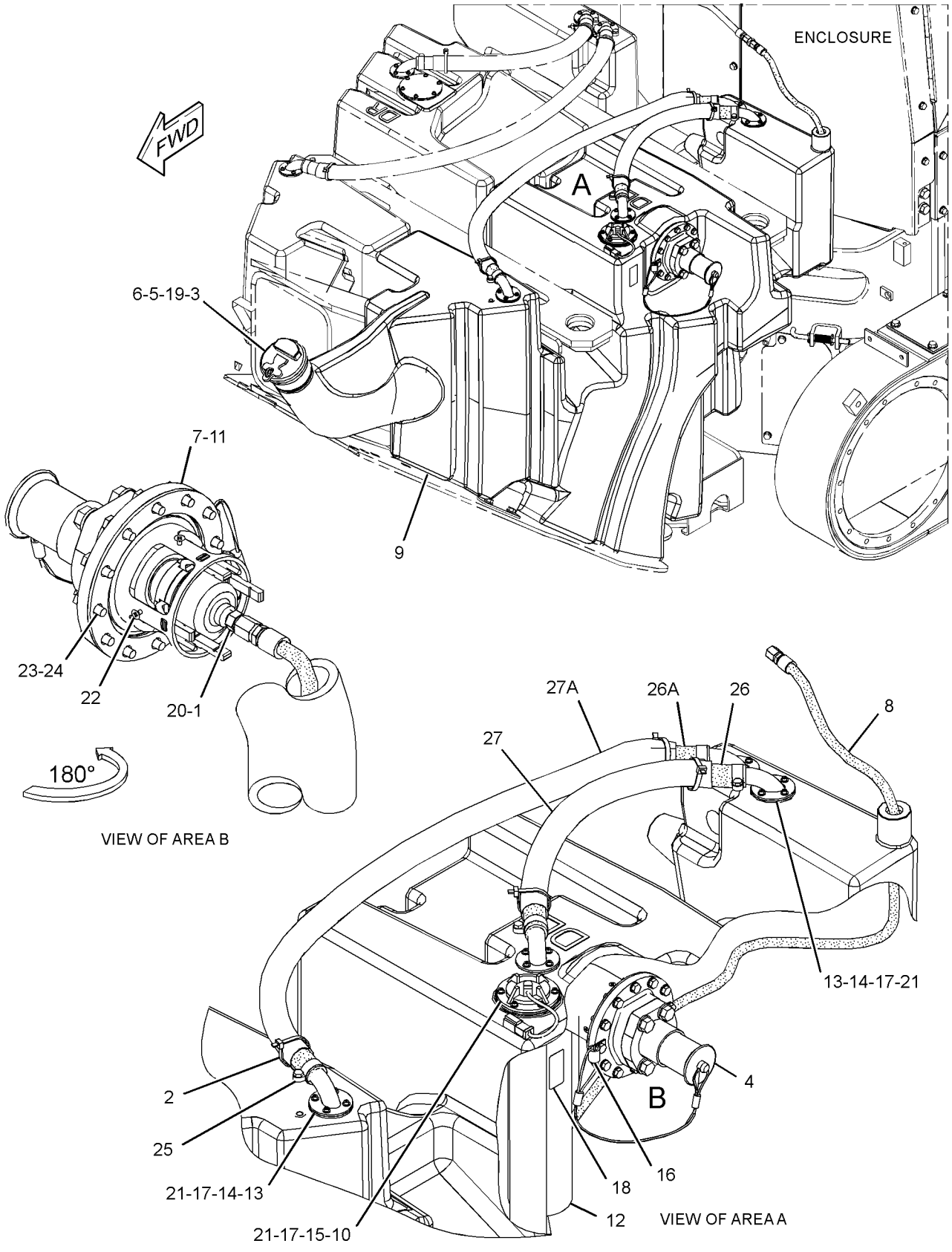

GRAPHIC #1 **<END>** g02210277

FUEL SYSTEM

347-1546 TANK GP-FUEL

S/N: R9J1-UP
PART OF 355-3348 TANK GP-FUEL
AN ATTACHMENT

SMCS-1273 **i04021431**

NOTE	REF NO	GRAPHIC REF	PART NUMBER	QTY	PART NAME 1 2 3 4 5 6 (PRODUCT LEVEL)	SEE PAGE
	1	1	**5P-2618**	1	CONNECTOR	
	2	1	**7K-1181**	4	STRAP-CABLE	
	3	1	**212-4669**	1	VENT AS	
	4	1	**251-1217**	1	HOSE AS	
	5	1	**256-3351**	1	TANK AS-FUEL (RH)	
		1	**265-8970**	6	INSERT	
		1	**265-8971**	22	INSERT	
	6	1	**276-1297**	1	FLOAT AS	
		1	**212-4621**	1	MOUNT AS	
		1	**212-4670**	1	FLOAT AS	
		1	**221-0319**	1	GASKET	
	7	1	**277-4844**	1	GASKET	
	8	1	**288-7312**	4	VENT AS	
	9	1	**330-3566**	4	GASKET	
M	10	1	**162-2165**	16	BOLT-SOCKET HEAD (M4X0.7X16-MM)	
	11	1	**1J-9671**	1	SEAL-O-RING	
	12	1	**4B-4863**	22	WASHER (4.7X11X1.2-MM THK)	
	13	1	**7K-4129**	1	UNION-FLARED	
M	14	1	**8T-4189**	6	BOLT (M8X1.25X20-MM)	
	15	1	**8T-4224**	6	WASHER-HARD (8.8X16X2-MM THK)	
M	16	1	**8T-9405**	6	BOLT-SOCKET HEAD (M4X0.7X16-MM)	
	17	1	**9M-7958**	4	CLAMP-HOSE	
E	18	1	**146-7453**		HOSE (113-CM)	
E	18A	1	**146-7453**		HOSE (60-CM)	
G	19	1	**160-2246**		SLEEVE-ABRASION (41-IN)	
G	19A	1	**160-2246**		SLEEVE-ABRASION (20-IN)	

E-ORDER BY THE CENTIMETER
G-ORDER BY THE INCH
M-METRIC PART

347-1546 **TANK GP-FUEL** *(contd.)* **i04021431**

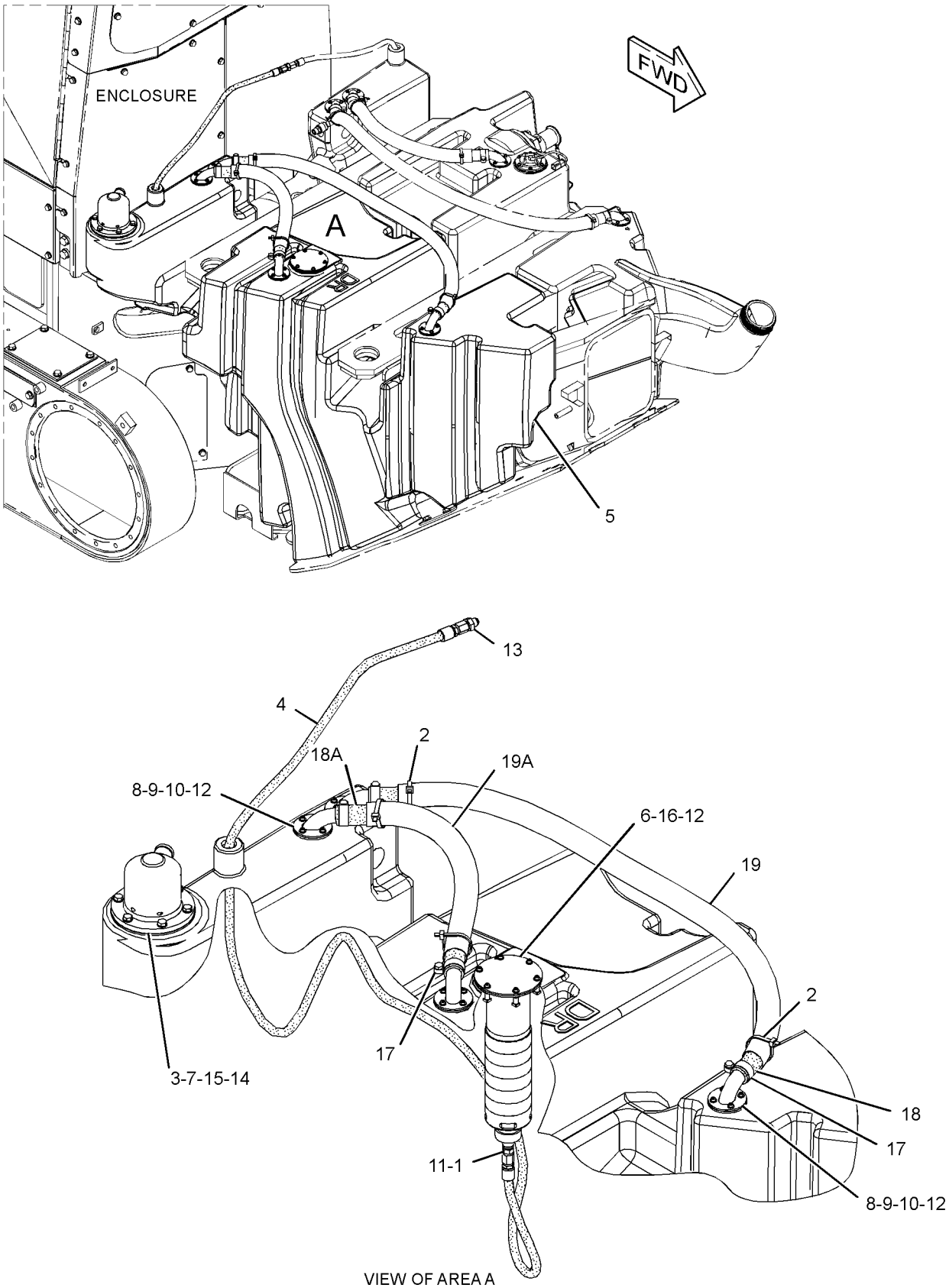

VIEW OF AREA A

GRAPHIC #1 **<END>** g02210275

FUEL SYSTEM

347-1547 TANK GP-FUEL

S/N: R9J1-UP
PART OF 355-3347 TANK GP-FUEL
AN ATTACHMENT

SMCS-1273 **i04015746**

NOTE	REF NO	GRAPHIC REF	PART NUMBER	QTY	PART NAME 1 2 3 4 5 6 (PRODUCT LEVEL)	SEE PAGE
	1	1	**7K-1181**	4	STRAP-CABLE	
	2	1	**7X-7700**	1	CAP AS-FILLER (FUEL TANK)	
		1	**9X-2205**	1	KIT-CAP FILTER (FUEL TANK)	
		1	**9X-8600**	1	SEAL-O-RING	
	3	1	**103-2006**	1	SCREW-PAN HEAD (6-19X0.37-IN)	
	4	1	**199-9907**	1	STRAINER-FUEL	
	5	1	**250-9304**	1	PLATE	
	6	1	**256-3352**	1	TANK AS-FUEL (LH)	
		1	**9M-7958**	1	CLAMP-HOSE	
		1	*164-5597*	1	CONNECTOR AS	
		1	**6V-8397**	1	SEAL-O-RING	
		1	**8C-6868**	1	CONNECTOR	
	7	1	**259-8455**	1	SENDER AS-FUEL LEVEL	
		1	**6C-3060**	1	GASKET	
		1	**317-9191**	1	KIT-DIAL SENSOR (FUEL LEVEL GAUGE)	
		1	**102-8802**	1	KIT-RECEPTACLE (2-PIN)	
					(INCLUDES RECEPTACLE AS & WEDGE)	
		1	**186-3735**	2	PIN-CONNECTOR (16-GA TO 18-GA)	
	8	1	**276-3276**	1	GASKET	
	9	1	**288-7312**	4	VENT AS	
	10	1	**330-3566**	4	GASKET	
	11	1	**330-3568**	1	GASKET	
M	12	1	**162-2165**	22	BOLT-SOCKET HEAD (M4X0.7X16-MM)	
	13	1	**306-8127**	1	ADAPTER	
	14	1	**4B-4863**	22	WASHER (4.7X11X1.2-MM THK)	
	15	1	**8T-4224**	12	WASHER-HARD (8.8X16X2-MM THK)	
M	16	1	**8T-4908**	12	BOLT (M8X1.25X25-MM)	
	17	1	**9M-7958**	4	CLAMP-HOSE	
E	18	1	**146-7453**		HOSE (60-CM)	
E	18A	1	**146-7453**		HOSE (103-CM)	
G	19	1	**160-2246**		SLEEVE-ABRASION (19.7-IN)	
	19A	1	**160-2246**		SLEEVE-ABRASION (44.5-IN)	

E-ORDER BY THE CENTIMETER
G-ORDER BY THE INCH
M-METRIC PART

347-1547 **TANK GP-FUEL** *(contd.)* **i04015746**

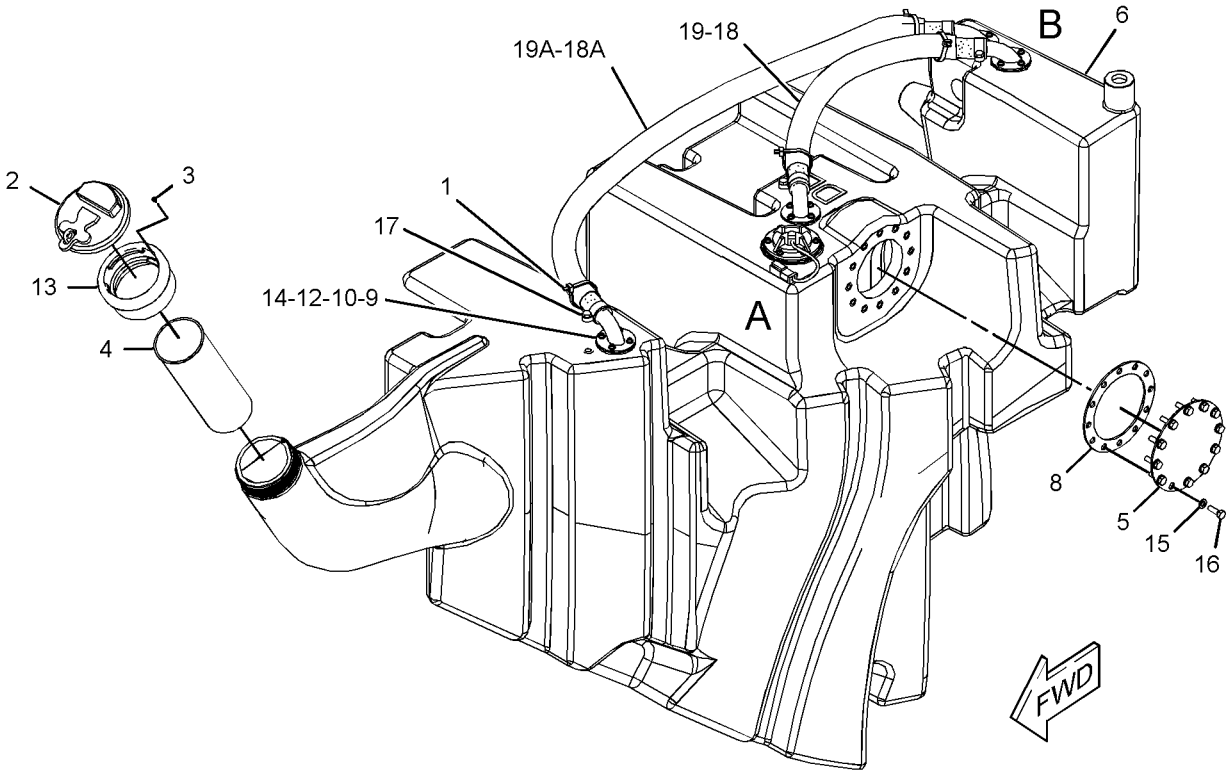

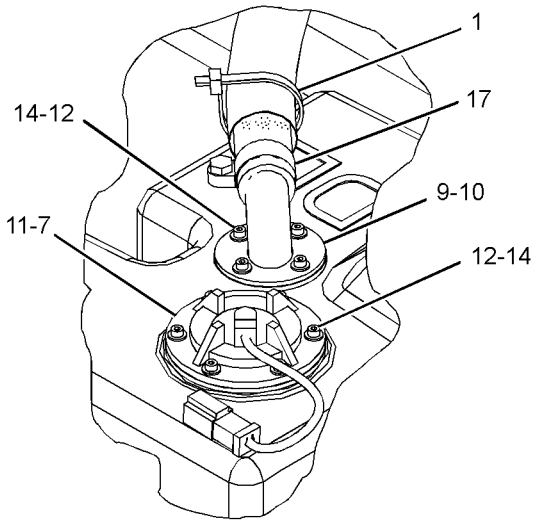

VIEW OF AREA A

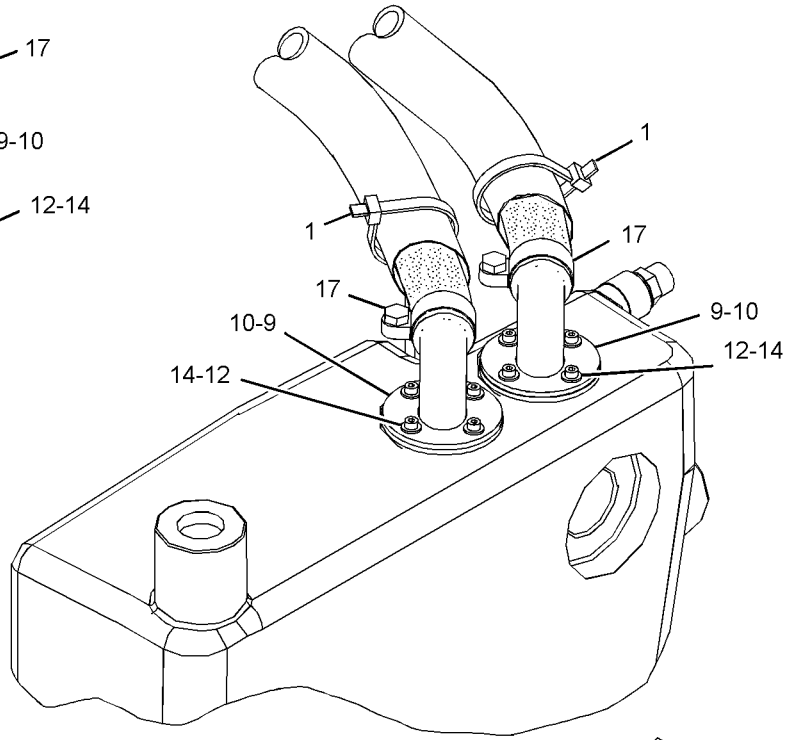

VIEW OF AREA B

GRAPHIC #1 **<END>** g02204698

FUEL SYSTEM

347-1548 TANK GP-FUEL

S/N: R9J1-UP
PART OF 355-3347 TANK GP-FUEL
AN ATTACHMENT

SMCS-1273 **i04015744**

NOTE	REF NO	GRAPHIC REF	PART NUMBER	QTY	PART NAME 1 2 3 4 5 6 (PRODUCT LEVEL)	SEE PAGE
	1	1	**7K-1181**	4	STRAP-CABLE	
	2	1	**199-9985**	1	PLATE	
	3	1	**221-0318**	1	PLATE	
	4	1	**256-3351**	1	TANK AS-FUEL (RH)	
	5	1	**277-4844**	1	GASKET	
	6	1	**277-4845**	1	GASKET	
	7	1	**288-7312**	4	VENT AS	
	8	1	**330-3566**	4	GASKET	
M	9	1	**162-2165**	16	BOLT-SOCKET HEAD (M4X0.7X16-MM)	
	10	1	**4B-4863**	22	WASHER (4.7X11X1.2-MM THK)	
M	11	1	**8T-4189**	6	BOLT (M8X1.25X20-MM)	
	12	1	**8T-4224**	6	WASHER-HARD (8.8X16X2-MM THK)	
M	13	1	**8T-9405**	6	BOLT-SOCKET HEAD (M4X0.7X16-MM)	
	14	1	**9M-7958**	4	CLAMP-HOSE	
E	15	1	**146-7453**		HOSE (60-CM)	
E	15A	1	**146-7453**		HOSE (113-CM)	
G	16	1	**160-2246**		SLEEVE-ABRASION (19.7-IN)	
G	16A	1	**160-2246**		SLEEVE-ABRASION (14.3-IN)	

E-ORDER BY THE CENTIMETER
G-ORDER BY THE INCH
M-METRIC PART

347-1548 **TANK GP-FUEL** *(contd.)* **i04015744**

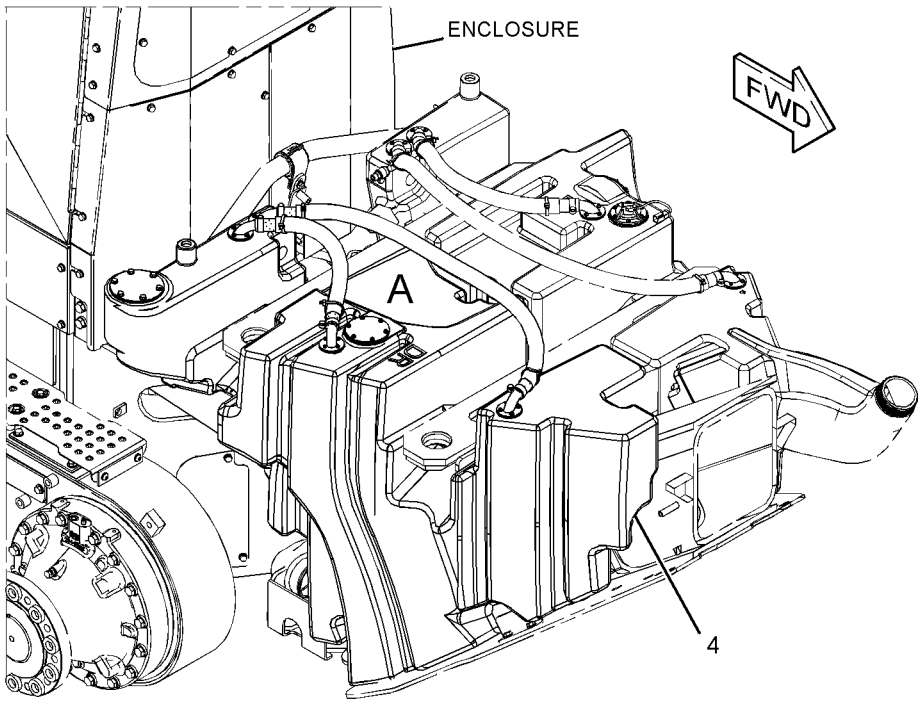

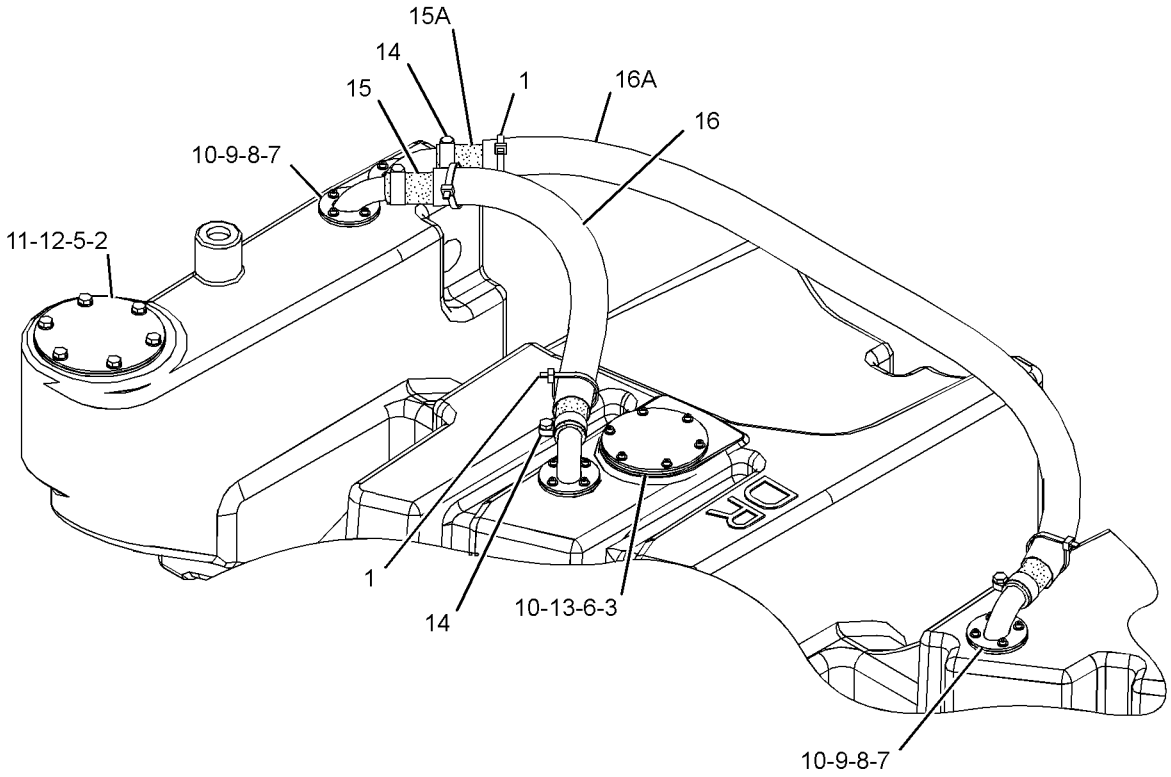

VIEW OF AREA A

GRAPHIC #1 **<END>** g02208593

FUEL SYSTEM

355-3347 TANK GP-FUEL

S/N: R9J1-UP
PART OF 363-0414 DISTRIBUTION AR
CANNOT BE USED WITH 355-3348—PAGE 187
AN ATTACHMENT

SMCS-1273 **i04012754**

NOTE	REF NO	GRAPHIC REF	PART NUMBER	QTY	PART NAME 1 2 3 4 5 6 (PRODUCT LEVEL)	SEE PAGE
Y	1	1	*347-1547*	1	TANK GP-FUEL (LH)	182
Y	2	1	*347-1548*	1	TANK GP-FUEL (RH)	184
Y	3	1	**357-5030**	1	TANK GP-FUEL (CROSSOVER)	188

Y-SEPARATE ILLUSTRATION

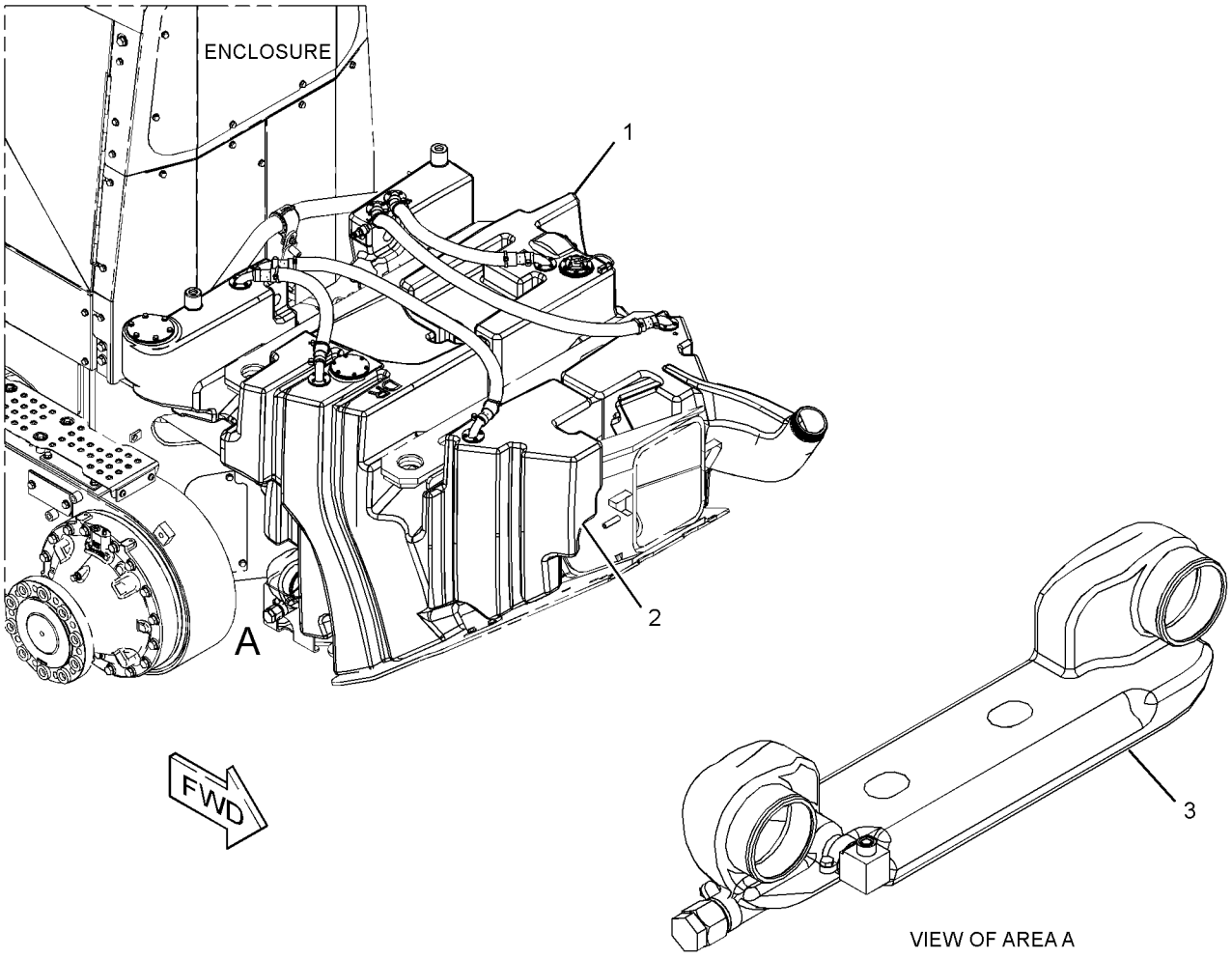

GRAPHIC #1 **<END>** g02208594

355-3348 TANK GP-FUEL

S/N: R9J1-UP
AN ATTACHMENT

SMCS-1273 **i04021427**

NOTE	REF NO	GRAPHIC REF	PART NUMBER	QTY	PART NAME 1 2 3 4 5 6 (PRODUCT LEVEL)	SEE PAGE
Y	1	1	*347-1545*	1	TANK GP-FUEL (LH)	178
Y	2	1	*347-1546*	1	TANK GP-FUEL (RH)	180
Y	3	1	**357-5030**	1	TANK GP-FUEL	188

Y-SEPARATE ILLUSTRATION

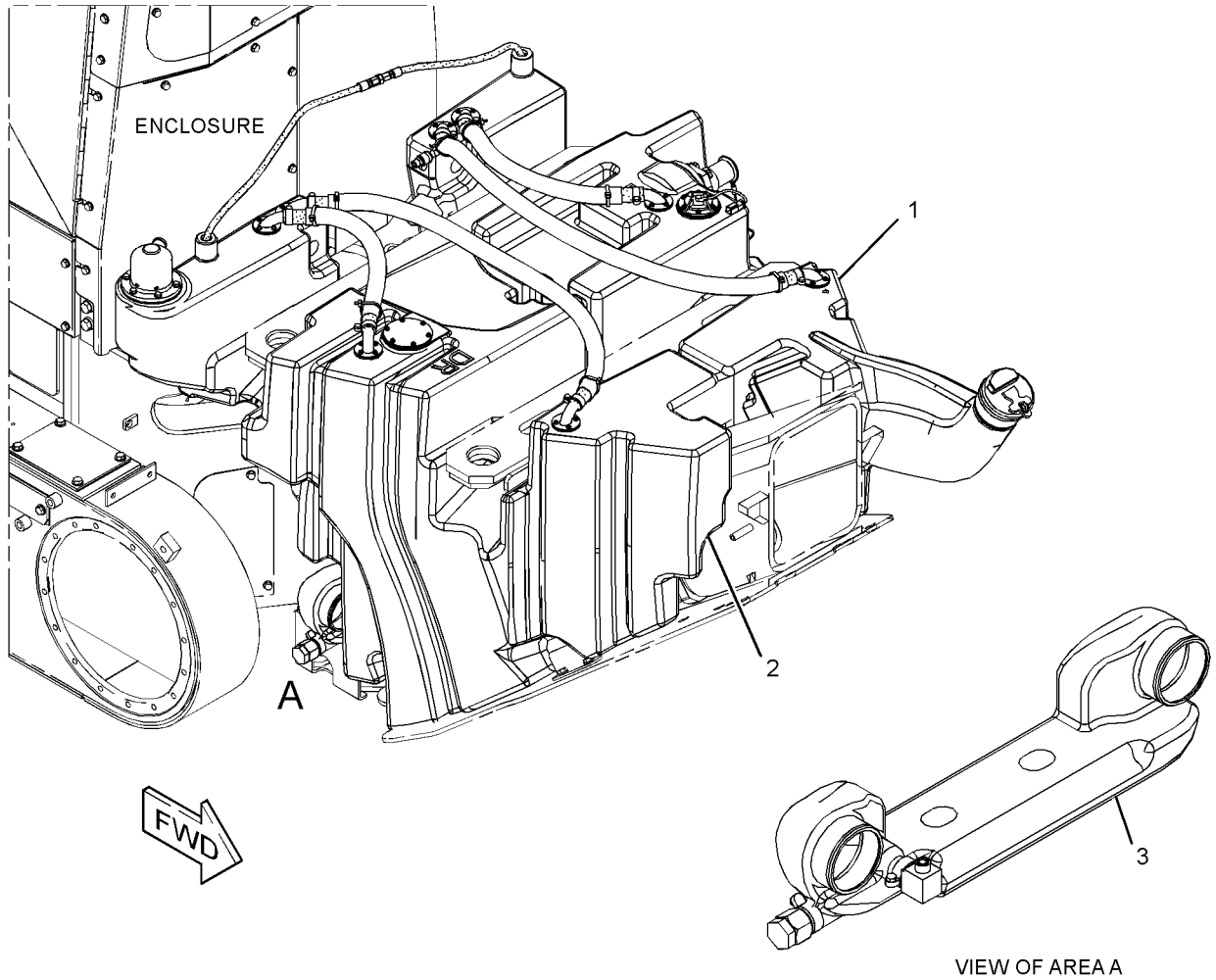

VIEW OF AREA A

GRAPHIC #1 **<END>** g02209994

357-5030 TANK GP-FUEL

S/N: R9J1-UP

PART OF 355-3347, 355-3348 TANK GP-FUEL

AN ATTACHMENT

SMCS-1273 **i04016364**

NOTE	REF NO	GRAPHIC REF	PART NUMBER	QTY	PART NAME 1 2 3 4 5 6 (PRODUCT LEVEL)	SEE PAGE
	1	1	**361-2115**	1	PLUG-DRAIN	
	2	1	**8C-5053**	1	ADAPTER	
	3	1	**250-9305**	1	BUSHING	
	4	1	**122-8905**	1	ELBOW	
	5	1	**228-7090**	1	SEAL-O-RING	
	6	1	**3J-1907**	1	SEAL-O-RING	
	7	1	**7M-8485**	1	SEAL-O-RING	
	8	1	**9M-7958**	3	CLAMP-HOSE	
	9	1	**9S-4181**	1	PLUG-O-RING	
	10	1	**357-5031**	1	FILTER (FUEL)	

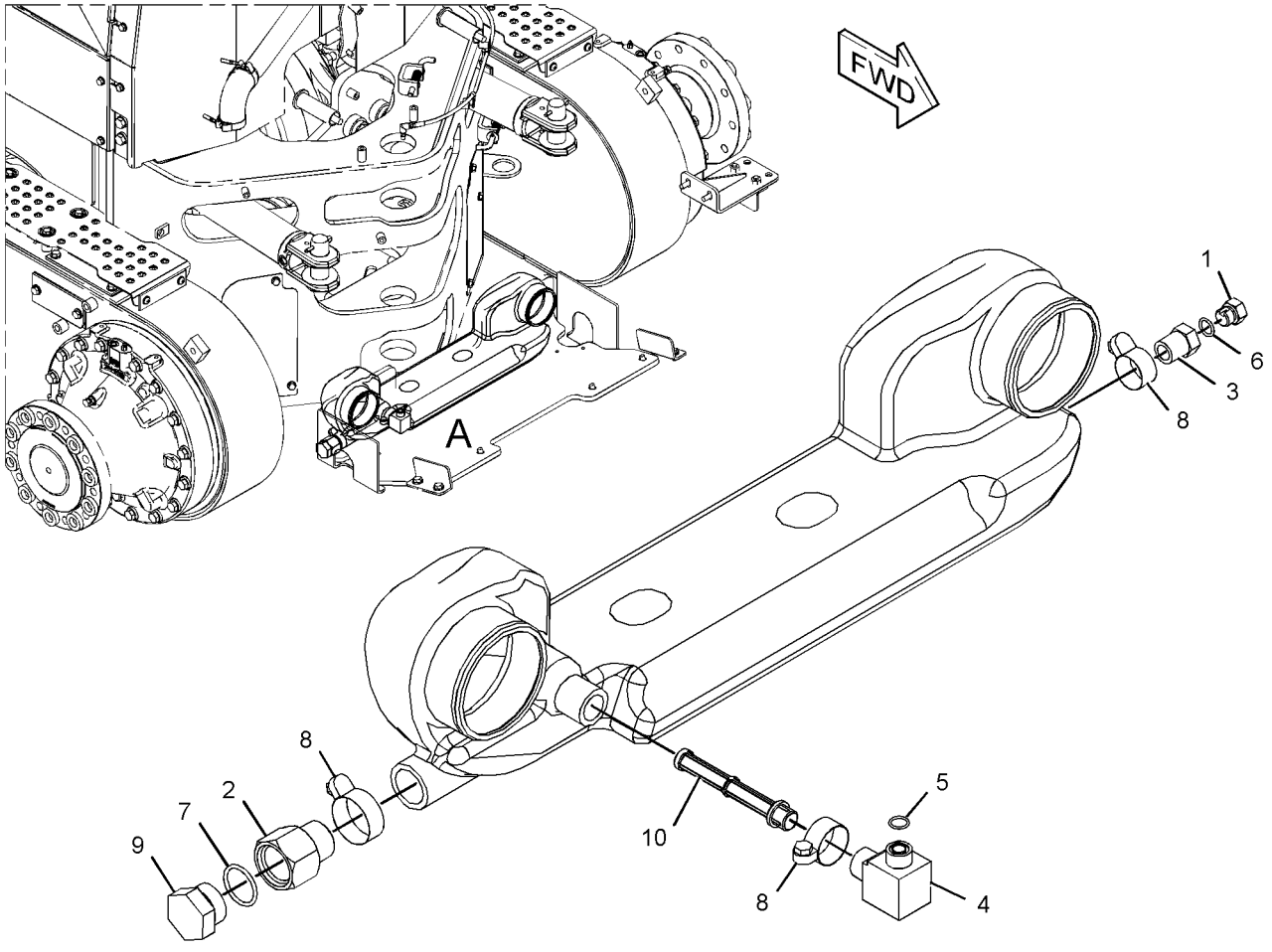

VIEW OF AREA A

GRAPHIC #1 **<END>** g02209017

233-6742 VALVE GP-CHECK–FUEL

S/N: RSX1037-2518

PART OF 254-4998 FILTER GP-FUEL

SMCS-1250, 1274 **i02274525**

NOTE	REF NO	GRAPHIC REF	PART NUMBER	QTY	PART NAME 1 2 3 4 5 6 (PRODUCT LEVEL)	SEE PAGE
Y	1	1	**238-0296**	1	VALVE GP-CHECK (FUEL)	191
	2	1	**6V-4589**	1	SEAL-O-RING	

Y-SEPARATE ILLUSTRATION

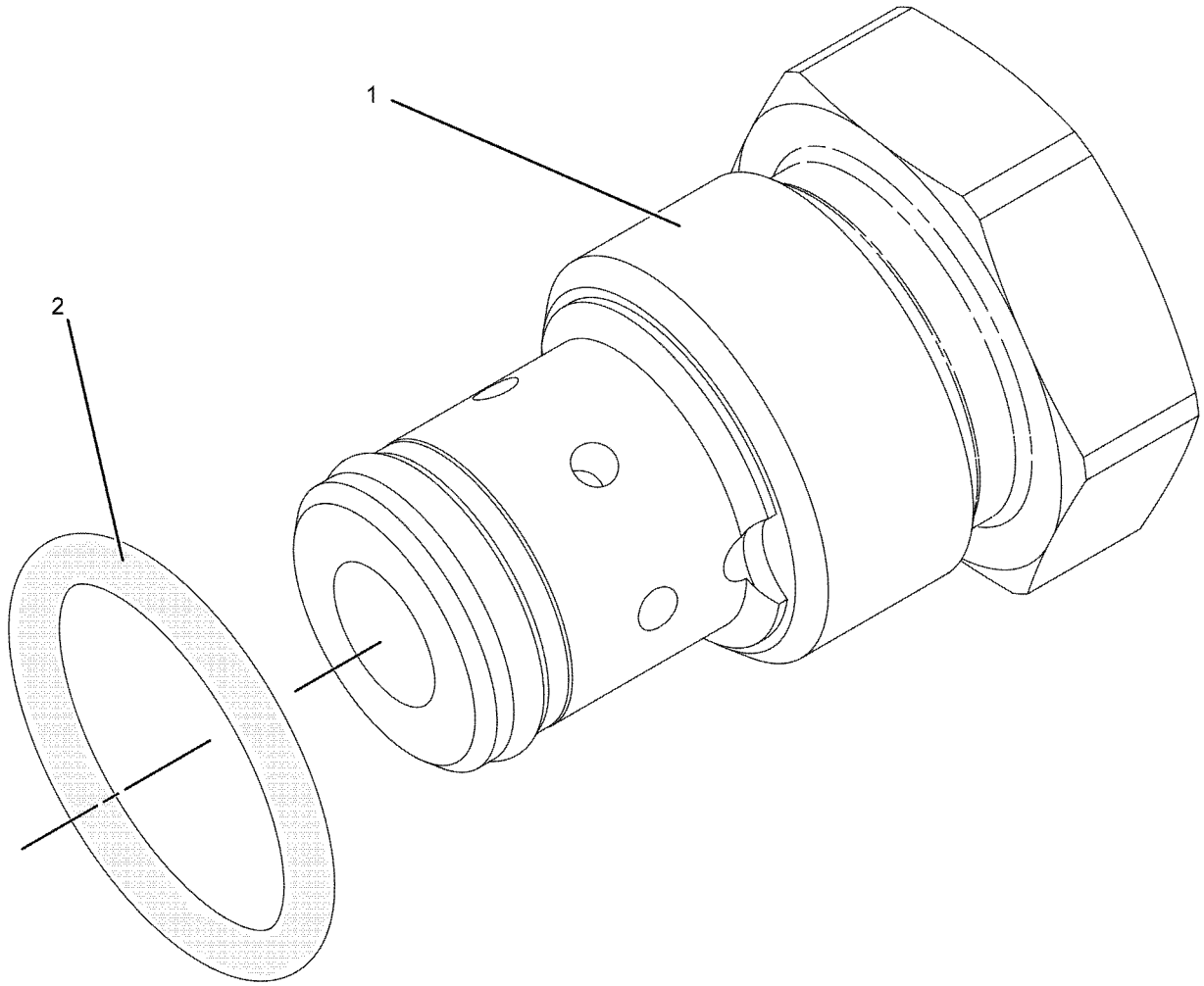

GRAPHIC #1 **<END>** g01031823

FUEL SYSTEM

233-6742 VALVE GP-CHECK–FUEL

S/N: RSX2519-UP

PART OF 254-4998, 356-8382 FILTER GP-FUEL

SMCS-1250, 1274 **i03808154**

NOTE	REF NO	GRAPHIC REF	PART NUMBER	QTY	PART NAME 1 2 3 4 5 6 (PRODUCT LEVEL)	SEE PAGE
CY	1	1	**281-2725**	1	VALVE GP-CHECK (FUEL)	192
	2	1	**238-5081**	1	SEAL-O-RING	

C-CHANGE FROM PREVIOUS TYPE
Y-SEPARATE ILLUSTRATION

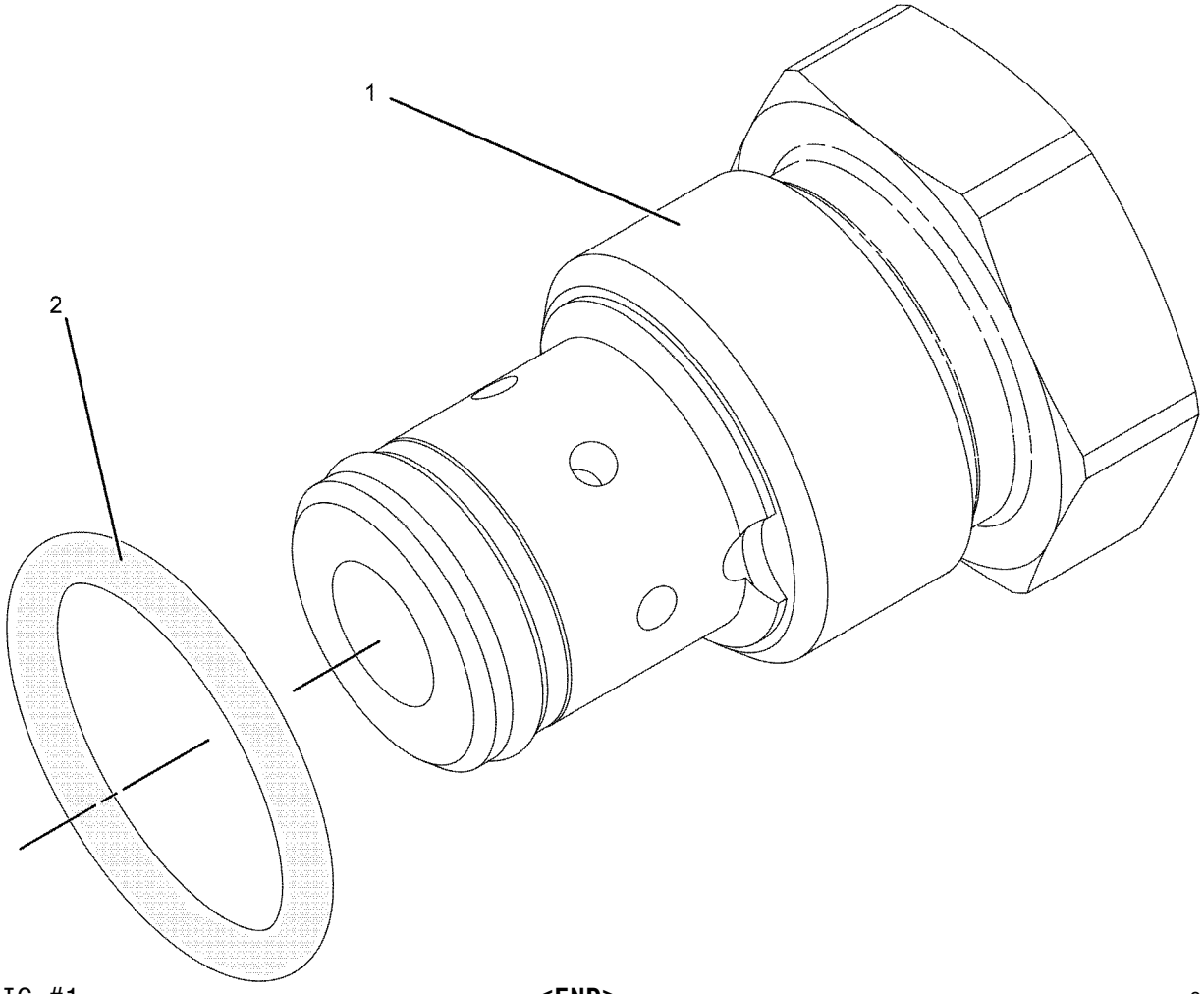

GRAPHIC #1 **<END>** g01031823

238-0296 VALVE GP-CHECK–FUEL

S/N: RSX1037-2518

PART OF 233-6742 VALVE GP-CHECK

SMCS-1250, 1274 **i02140024**

NOTE	REF NO	GRAPHIC REF	PART NUMBER	QTY	PART NAME 1 2 3 4 5 6 (PRODUCT LEVEL)	SEE PAGE
	1	1	**6V-6923**	1	RING-BACKUP	
	2	1	**033-6033**	1	SEAL-O-RING	

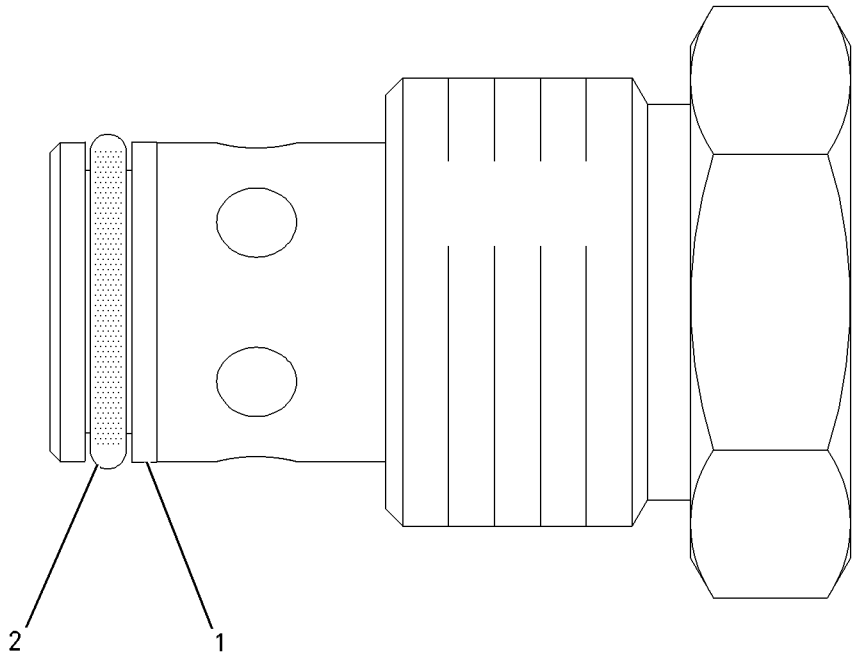

GRAPHIC #1 **<END>** g00864141

281-2725 VALVE GP-CHECK–FUEL

S/N: RSX1037-UP

PART OF 233-6742 VALVE GP-CHECK

SMCS-1250, 1274 **i02444582**

NOTE	REF NO	GRAPHIC REF	PART NUMBER	QTY	PART NAME 1 2 3 4 5 6 (PRODUCT LEVEL)	SEE PAGE
	1	1	**6V-6923**	1	RING-BACKUP	
	2	1	**033-6033**	1	SEAL-O-RING	

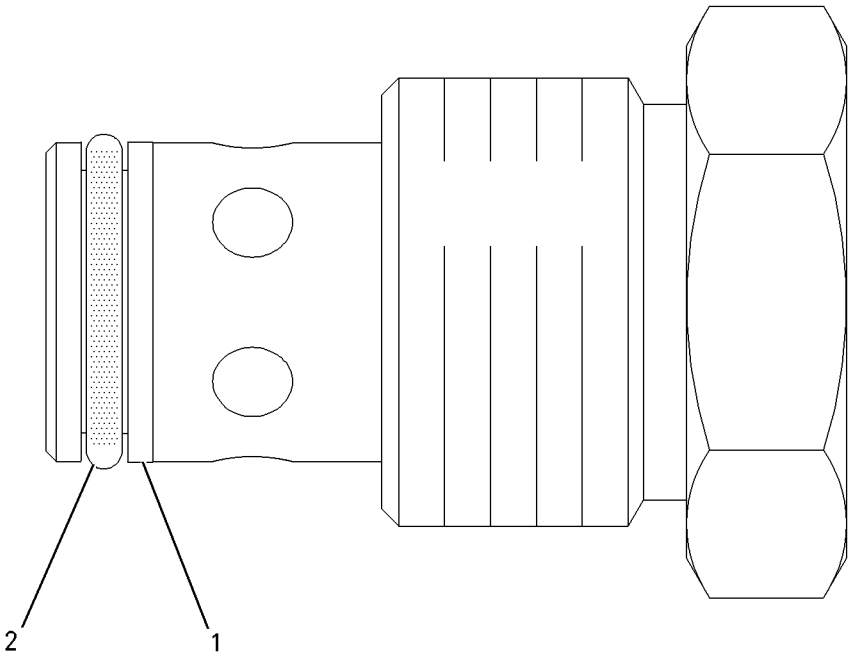

GRAPHIC #1 **<END>** g00864141

123-0783 VALVE GP-FLUID SAMPLING

S/N: RSX1670-UP
QUICK DISCONNECT FUEL CONNECTION
PART OF 254-4998, 356-8382 FILTER GP-FUEL

SMCS-1280 **i03785011**

NOTE	REF NO	GRAPHIC REF	PART NUMBER	QTY	PART NAME 1 2 3 4 5 6 (PRODUCT LEVEL)	SEE PAGE
	1	1	**6V-3965**	1	FITTING (QUICK DISCONNECT)	
	2	1	**6V-0852**	1	CAP-DUST	
	3	1	**214-7568**	1	SEAL-O-RING	

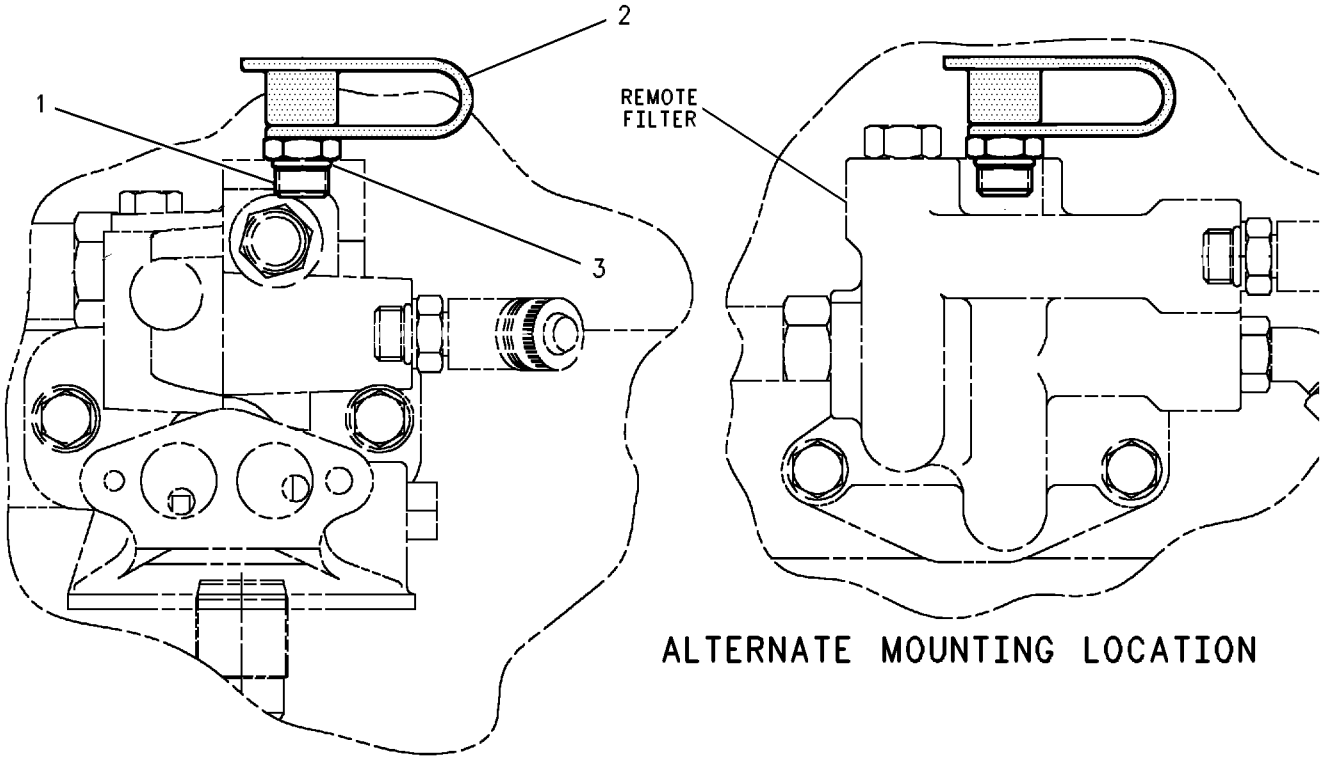

GRAPHIC #1 **<END>** g00609530

3E-6328 ALARM GP

S/N: R9J1-UP
24-VOLT
PART OF 351-7026 WIRING GP-CAB
AN ATTACHMENT

SMCS-7400, 7402, 7407 **i03540520**

NOTE	REF NO	GRAPHIC REF	PART NUMBER	QTY	PART NAME 1 2 3 4 5 6 (PRODUCT LEVEL)	SEE PAGE
	1	1	**102-8802**	1	KIT-RECEPTACLE (2-PIN)	
					(INCLUDES RECEPTACLE AS & WEDGE)	
	2	1	**186-3735**	2	PIN-CONNECTOR (16-GA TO 18-GA)	

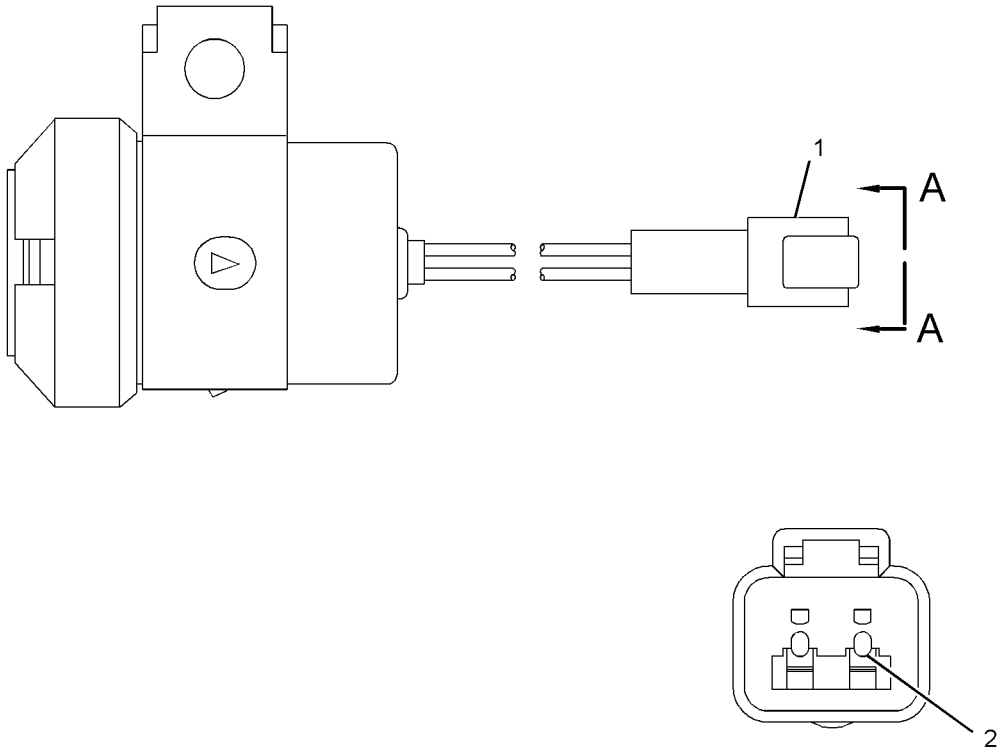

VIEW A-A

GRAPHIC #1 **<END>** g01342739

235-4189 ALTERNATOR GP-CHARGING

S/N: R9J1-UP

PART OF 353-5005, 358-7877, 361-1731, 361-4363, 363-0414 DISTRIBUTION AR AN ATTACHMENT

SMCS-1405 **i03788829**

NOTE	REF NO	GRAPHIC REF	PART NUMBER	QTY	PART NAME 1 2 3 4 5 6 (PRODUCT LEVEL)	SEE PAGE
	1	1	**124-7792**	1	PULLEY AS-IDLER	
	2	1	**138-2515**	1	PULLEY	
	3	1	**145-2901**	1	COVER-DUST	
	4	1	**348-7889**	1	BELT-SERPENTINE	
YR	5	1	**235-7133**	1	ALTERNATOR GP-CHARGING (24-VOLT, 80-AMPERE)	196
	6	1	**250-5757**	1	SPACER	
	7	1	**260-0723**	1	FILM-INSTRUCTION (BELT ROUTING)	
	8	1	**264-7021**	1	GUARD AS-BELT	
		1	**8R-8088**	2	SPACER (11.66X15.88X18-MM THK)	
	9	1	**293-5896**	1	BRACKET	
	10	1	**7X-7729**	2	WASHER (11X25X3-MM THK)	
	11	1	**8T-4121**	5	WASHER-HARD (11X21X2.5-MM THK)	
M	12	1	**8T-4133**	1	NUT (M10X1.5-THD)	
M	13	1	**8T-4172**	1	BOLT (M10X1.5X80-MM)	
M	14	1	**8T-4182**	1	BOLT (M10X1.5X45-MM)	
M	15	1	**8T-4198**	2	BOLT (M10X1.5X100-MM)	
M	16	1	**8T-6685**	2	BOLT (M10X1.5X110-MM)	

M-METRIC PART
R-REMFG PART MAY BE AVAILABLE
Y-SEPARATE ILLUSTRATION

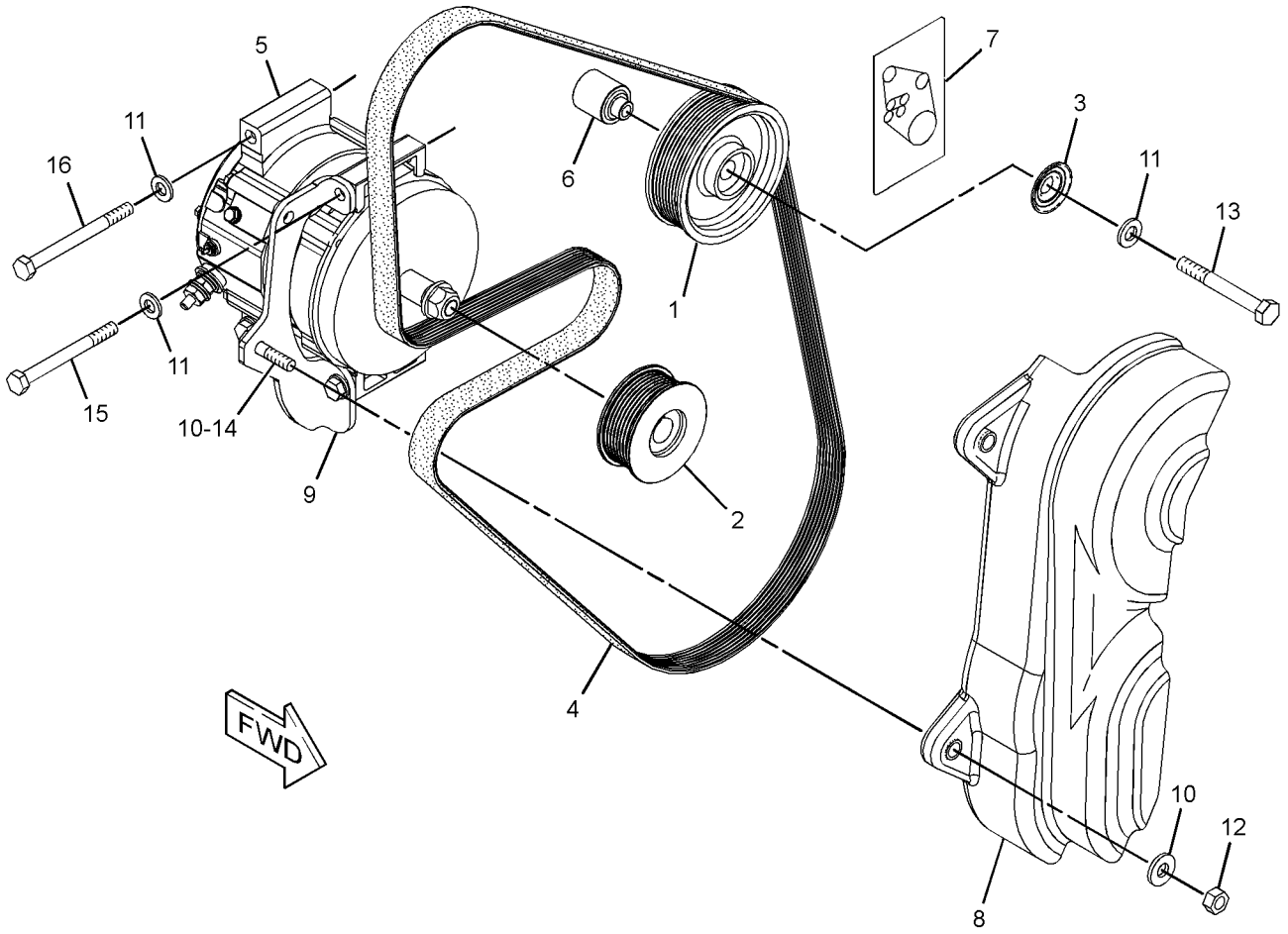

GRAPHIC #1 **<END>** g01288274

235-7133 ALTERNATOR GP-CHARGING

S/N: R9J1-UP
24-VOLT, 80-AMPERE
PART OF 235-4189 ALTERNATOR GP-CHARGING
AN ATTACHMENT

SMCS-1405 **i02730929**

NOTE	REF NO	GRAPHIC REF	PART NUMBER	QTY	PART NAME 1 2 3 4 5 6 (PRODUCT LEVEL)	SEE PAGE
	1	1	**228-9656**	1	FRAME AS-DRIVE END	
	2	1	**5S-7349**	1	BOLT (1/4-20X0.5-IN)	
	3	1	**185-2639**	1	FAN AS	
	4	1	**1H-3244**	1	LOCKWASHER	
	5	1	**228-9655**	1	FRAME AS-ALTERNATOR	
	6	1	**2K-4821**	1	LOCKNUT (5/8-18-THD)	
	7	1	**5P-8247**	1	WASHER-HARD (17X32X3.5-MM THK)	
	8	1	**228-9657**	1	COVER AS	
	9	1	**8T-4205**	1	WASHER-HARD (7.2X14.5X2-MM THK)	
	10	1	**185-2647**	1	GROMMET	
	11	1	**9L-6770**	1	CAP-DUST	
	12	1	**185-2643**	1	STATOR AS	
	13	1	**185-2638**	2	COLLAR	
	14	1	**185-2654**	1	PLATE	
	15	1	**185-2650**	1	ROTOR AS	
	16	1	**185-2644**	1	COIL AS	
	17	1	**185-2648**	1	REGULATOR AS-VOLTAGE (24-VOLT) (ALTERNATOR)	
	18	1	**6V-8189**	1	NUT (5/16-18-THD)	
	19	1	**8T-4224**	1	WASHER-HARD (8.8X16X2-MM THK)	
	20	1	**3F-9556**	1	LOCKWASHER	
					AVAILABLE REPAIR KIT(S):	
			185-2655	1	KIT-BEARING (ALTERNATOR)	
					(INCLUDES 3 BEARINGS)	
			185-2658	1	KIT-HARDWARE (ALTERNATOR)	
					(INCLUDES BOLTS)	
			199-7891	1	KIT-TERMINAL (ALTERNATOR)	
					(INCLUDES INSULATORS, WASHERS, NUT & STEP NUT)	
			199-8436	1	KIT-TERMINAL (ALTERNATOR)	
					(INCLUDES HOLDER AS, PLATE, INSULATOR, PIN, BOLT, GROMMET, & NUT)	

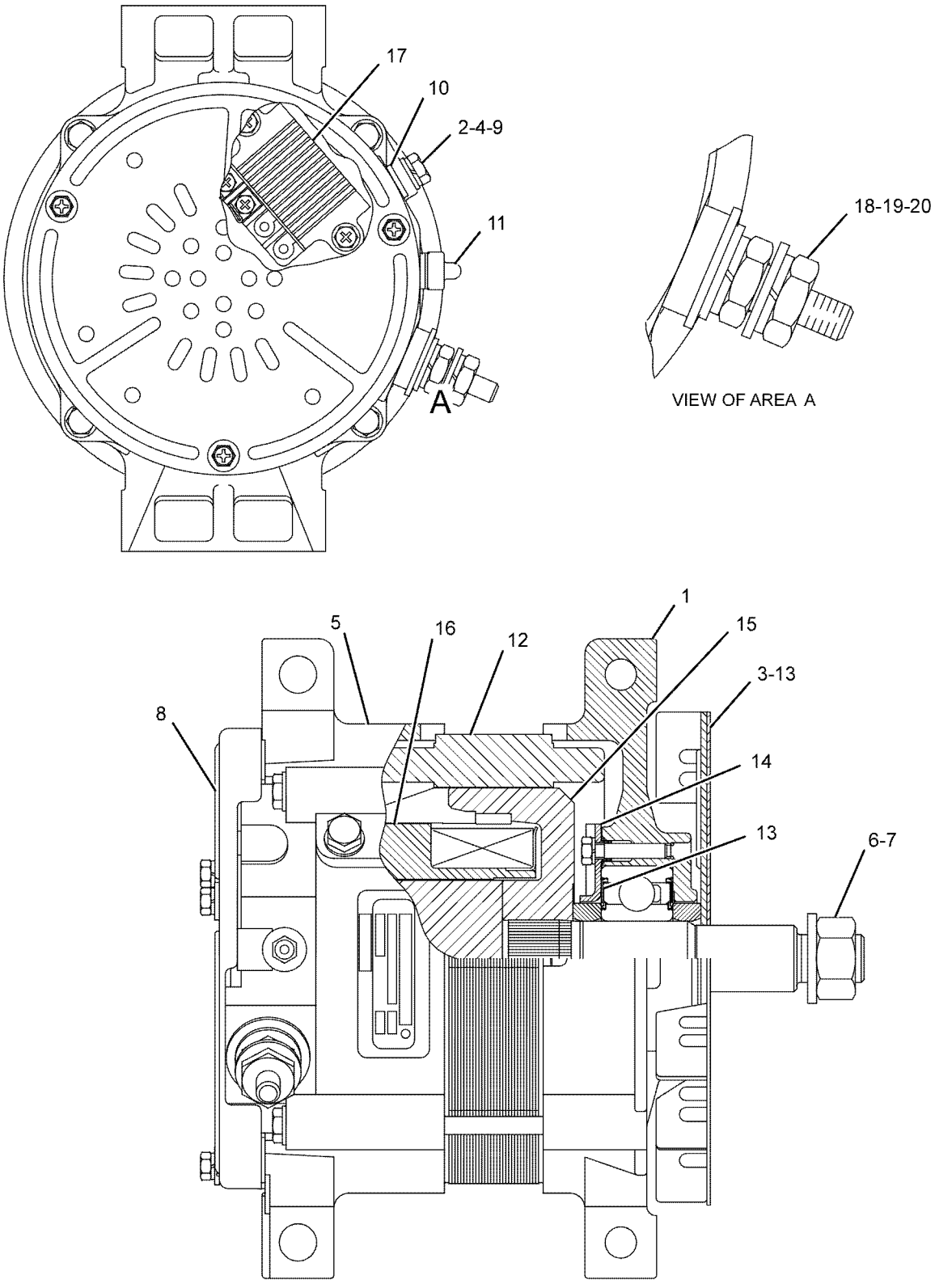

GRAPHIC #1 **<END>** g01102532

ELECTRICAL AND STARTING SYSTEM

247-9851 ALTERNATOR GP-CHARGING

S/N: R9J1-UP
WITH AIR CONDITIONER
PART OF 351-2601, 357-3000 SNOW AR-MOTOR GRADER
AN ATTACHMENT

SMCS-1405 **i03788830**

NOTE	REF NO	GRAPHIC REF	PART NUMBER	QTY	PART NAME 1 2 3 4 5 6 (PRODUCT LEVEL)	SEE PAGE
	1	1	**124-7792**	1	PULLEY AS-IDLER	
	2	1	**138-2515**	1	PULLEY	
	3	1	**145-2901**	1	COVER-DUST	
	4	1	**348-7889**	1	BELT-SERPENTINE	
	5	1	**250-5757**	1	SPACER	
	6	1	**260-0723**	1	FILM-INSTRUCTION (BELT ROUTING)	
	7	1	**264-7021**	1	GUARD AS-BELT	
		1	**8R-8088**	2	SPACER (11.66X15.88X18-MM THK)	
	8	1	**272-1889**	1	ALTERNATOR GP-CHARGING (24-VOLT, 150-AMPERE)	
	9	1	**293-5896**	1	BRACKET	
	10	1	**7X-7729**	2	WASHER (11X25X3-MM THK)	
	11	1	**8T-4121**	5	WASHER-HARD (11X21X2.5-MM THK)	
M	12	1	**8T-4133**	1	NUT (M10X1.5-THD)	
M	13	1	**8T-4172**	1	BOLT (M10X1.5X80-MM)	
M	14	1	**8T-4182**	1	BOLT (M10X1.5X45-MM)	
M	15	1	**8T-4198**	2	BOLT (M10X1.5X100-MM)	
M	16	1	**8T-6685**	2	BOLT (M10X1.5X110-MM)	

M-METRIC PART

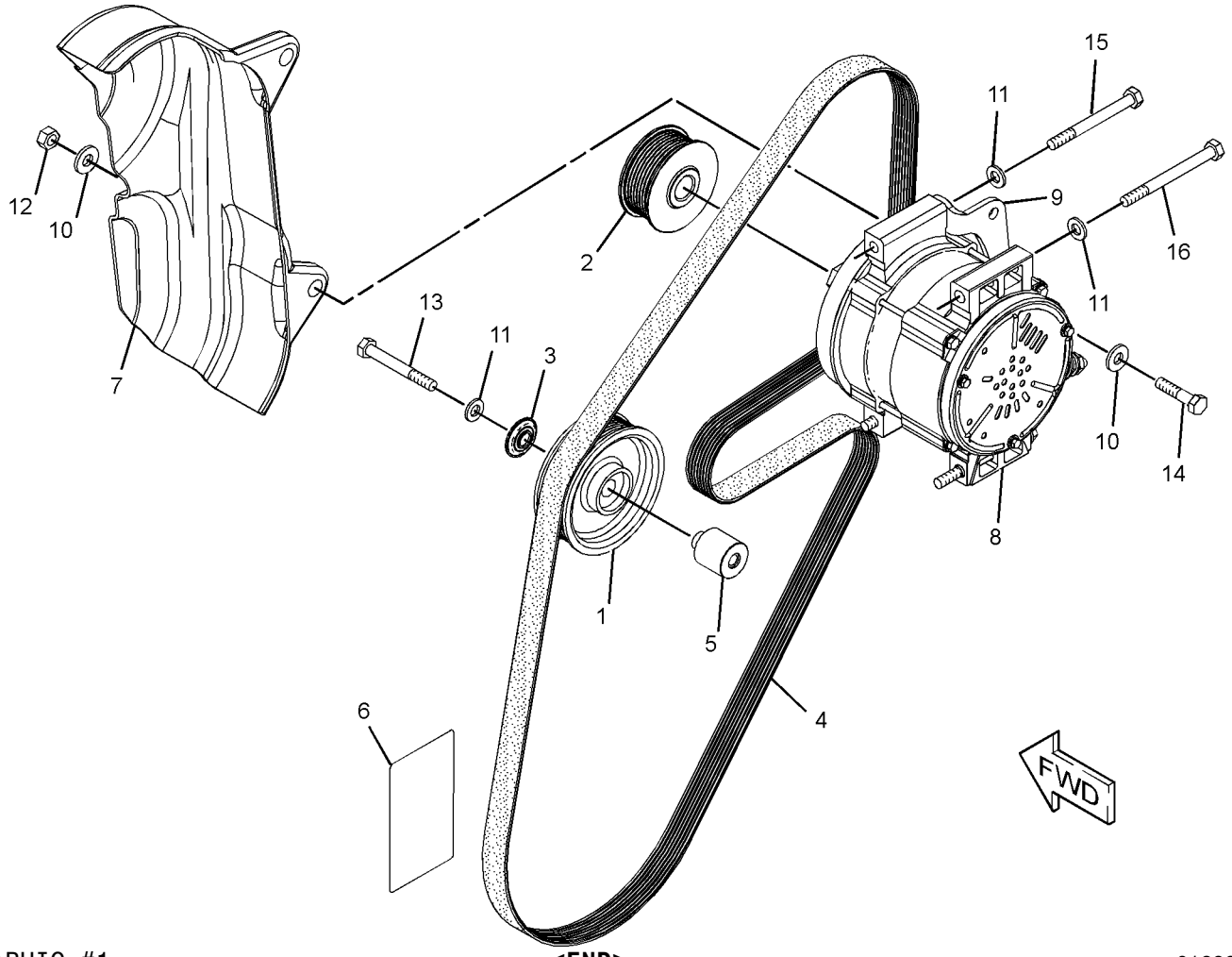

GRAPHIC #1 **<END>** g01288196

233-4611 BATTERY & WIRING GP–EXTREME SERVICE

S/N: R9J1-UP

PART OF 351-2596 OPTION AR-COLD WEATHER

AN ATTACHMENT

SMCS-1401, 1402, 1408 **i03792425**

NOTE	REF NO	GRAPHIC REF	PART NUMBER	QTY	PART NAME 1 2 3 4 5 6 (PRODUCT LEVEL)	SEE PAGE
	1	1	**3S-2093**	4	STRAP-CABLE	
Y	2	1	**7N-0718**	1	SWITCH GP-DISCONNECT (BATTERY)	312
J	3	1	**9G-2758**	1	LOCKOUT-SWITCH (BATTERY DISCONNECT)	
	4	1	**9R-6414**	2	ROD	
	5	1	**153-5710**	2	BATTERY (12-VOLT, 1400-CCA) (MAINTENANCE FREE, WET)	
	6	1	**188-3959**	1	BRACKET	
	7	1	**236-2340**	1	CABLE AS-BATTERY (JUMPER)	
		1	**8T-9756**	1	TERMINAL AS (POSITIVE)	
		1	**8C-5918**	1	TERMINAL AS (NEGATIVE)	
					(EACH TERMINAL AS INCLUDES)	
		1	**1M-6119**	1	BOLT (5/16-18X1.375-IN)	
		1	**1M-6120**	1	NUT (5/16-18-THD)	
		1	**9G-0002**	1	COVER AS-TERMINAL (RED)	
		1	**9G-0005**	1	COVER AS-TERMINAL (BLACK)	
E		1	**159-8049**		CABLE (00-GA, RED) (17-CM)	
	8	1	**246-1670**	1	BAR	
	9	1	**263-6891**	1	HOLD-DOWN AS	
	10	1	**272-7239**	1	BLOCK AS-JUNCTION	
	11	1	**292-4305**	1	CABLE AS	
		1	**1S-7252**	1	TERMINAL-CABLE (00-GA, 3/8-IN SCREW)	
		1	**3S-6050**	1	TERMINAL AS-BATTERY (NEGATIVE)	
		1	**1M-6119**	1	BOLT (5/16-18X1.375-IN)	
		1	**1M-6120**	1	NUT (5/16-18-THD)	
		1	**7N-5274**	1	COVER-TERMINAL (BLACK)	
		1	**9G-8909**	1	COVER-TERMINAL (BLACK)	
E		1	**159-8050**		CABLE (00-GA, BLACK) (153-CM)	
	12	1	**134-3344**	1	STRAP AS	
M	13	1	**150-4086**	4	SCREW (M4X0.7X16-MM)	
	14	1	**174-5907**	4	CLIP	
	15	1	**245-8842**	2	CLIP	
	16	1	**7X-7729**	2	WASHER (11X25X3-MM THK)	
M	17	1	**8T-0389**	2	LOCKNUT (M10X1.5-THD)	
	18	1	**8T-4121**	10	WASHER-HARD (11X21X2.5-MM THK)	
M	19	1	**8T-4136**	7	BOLT (M10X1.5X25-MM)	
M	20	1	**8T-4137**	1	BOLT (M10X1.5X20-MM)	
M	21	1	**8T-4185**	2	BOLT (M10X1.5X50-MM)	

E-ORDER BY THE CENTIMETER
J-REQUIRES CORPORATE KEY
M-METRIC PART
Y-SEPARATE ILLUSTRATION

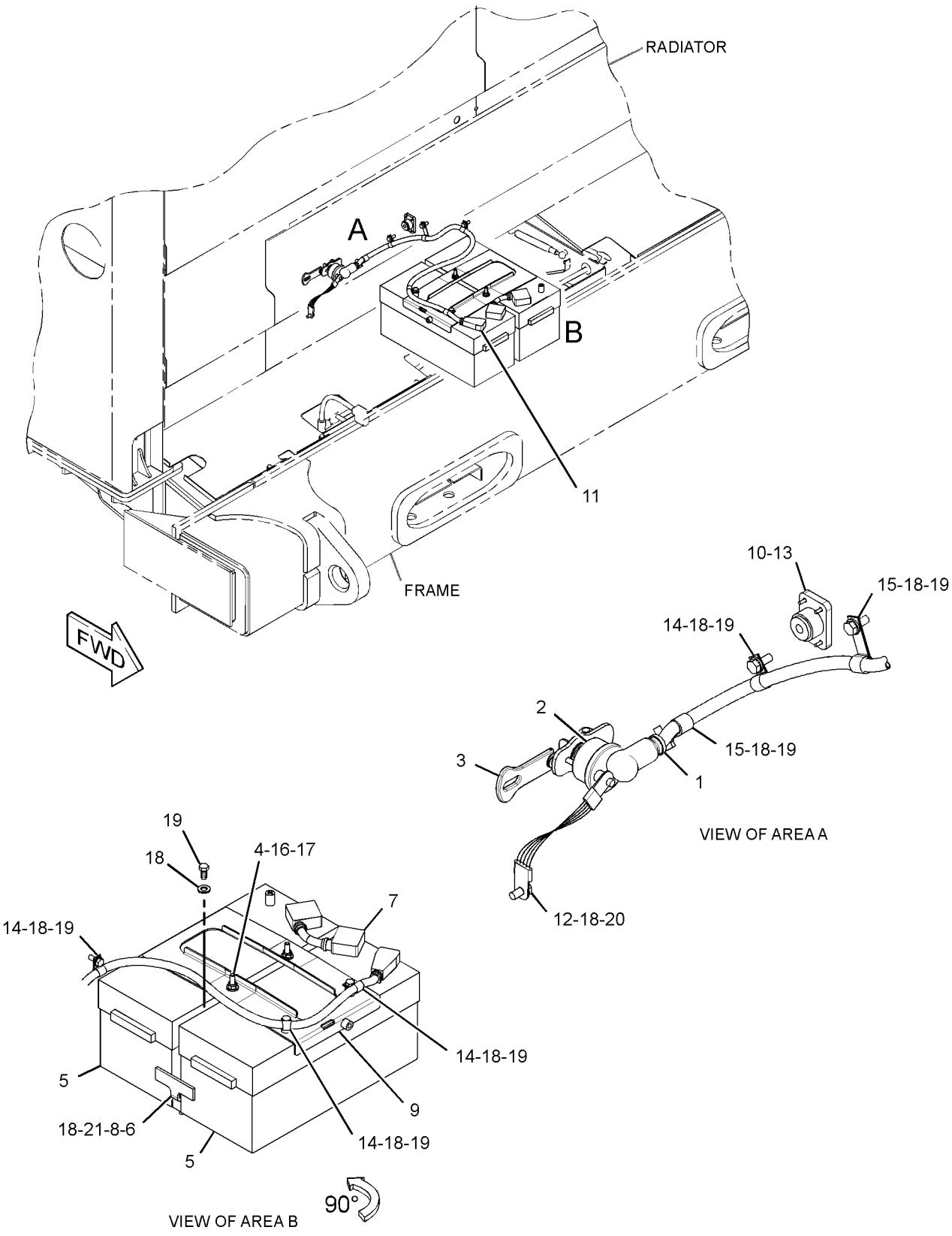

GRAPHIC #1 **<END>** g02032841

236-1924 BATTERY & WIRING GP–HEAVY-DUTY

S/N: R9J1-UP
PART OF 351-2594 OPTION AR-ELECTRICAL
CANNOT BE USED WITH 233-4611–PAGE 199
AN ATTACHMENT

SMCS-1401, 1402, 1408 **i03865911**

NOTE	REF NO	GRAPHIC REF	PART NUMBER	QTY	PART NAME 1 2 3 4 5 6 (PRODUCT LEVEL)	SEE PAGE
	1	1,2	**3S-2093**	4	STRAP-CABLE	
Y	2	1	**7N-0718**	1	SWITCH GP-DISCONNECT (BATTERY)	312
J	3	1	**9G-2758**	1	LOCKOUT-SWITCH (BATTERY DISCONNECT)	
	4	2	**153-5700**	2	BATTERY (12-VOLT, 1125-CCA) (WET)	
	5	2	**188-3959**	1	BRACKET	
	6	2	**236-2340**	1	CABLE AS-BATTERY (JUMPER)	
		2	**8C-5918**	1	TERMINAL AS (NEGATIVE)	
		2	**8T-9756**	1	TERMINAL AS (POSITIVE)	
					(EACH TERMINAL AS INCLUDES)	
		2	**1M-6119**	1	BOLT (5/16-18X1.375-IN)	
		2	**1M-6120**	1	NUT (5/16-18-THD)	
		2	**9G-0002**	1	COVER AS-TERMINAL (RED)	
		2	**9G-0005**	1	COVER AS-TERMINAL (BLACK)	
E		2	**159-8049**		CABLE (00-GA, RED) (17-CM)	
	8	2	**246-1670**	1	BAR	
	9	2	**263-6891**	1	HOLD-DOWN AS	
	11	1	**272-7239**	1	BLOCK AS-JUNCTION	
	12	1,2	**292-4305**	1	CABLE AS	
		1,2	**1S-7252**	1	TERMINAL-CABLE (00-GA, 3/8-IN SCREW)	
		1,2	**3S-6050**	1	TERMINAL AS-BATTERY (NEGATIVE)	
		1,2	**1M-6119**	1	BOLT (5/16-18X1.375-IN)	
		1,2	**1M-6120**	1	NUT (5/16-18-THD)	
		1,2	**7N-5274**	1	COVER-TERMINAL (BLACK)	
		1,2	**9G-8909**	1	COVER-TERMINAL (BLACK)	
E		1,2	**159-8050**		CABLE (00-GA, BLACK) (149-CM)	
	14	1	**134-3344**	1	STRAP AS	
	15	1,2	**174-5907**	4	CLIP	
	16	1	**245-8842**	2	CLIP	
	19	2	**7X-7729**	2	WASHER (11X25X3-MM THK)	
M	21	2	**8T-0389**	2	LOCKNUT (M10X1.5-THD)	
	22	1,2	**8T-4121**	10	WASHER-HARD (11X21X2.5-MM THK)	
M	23	1,2	**8T-4136**	7	BOLT (M10X1.5X25-MM)	
M	24	1	**8T-4137**	1	BOLT (M10X1.5X20-MM)	
M	25	1	**8T-4179**	1	BOLT (M12X1.75X20-MM)	
M	26	2	**8T-4185**	2	BOLT (M10X1.5X50-MM)	
	27	1	**8T-4223**	1	WASHER-HARD (13.5X25.5X3-MM THK)	
M	28	1	**150-4086**	4	SCREW (M4X0.7X16-MM)	
	29	2	**9R-6414**	2	ROD	

E-ORDER BY THE CENTIMETER
J-REQUIRES CORPORATE KEY
M-METRIC PART
Y-SEPARATE ILLUSTRATION

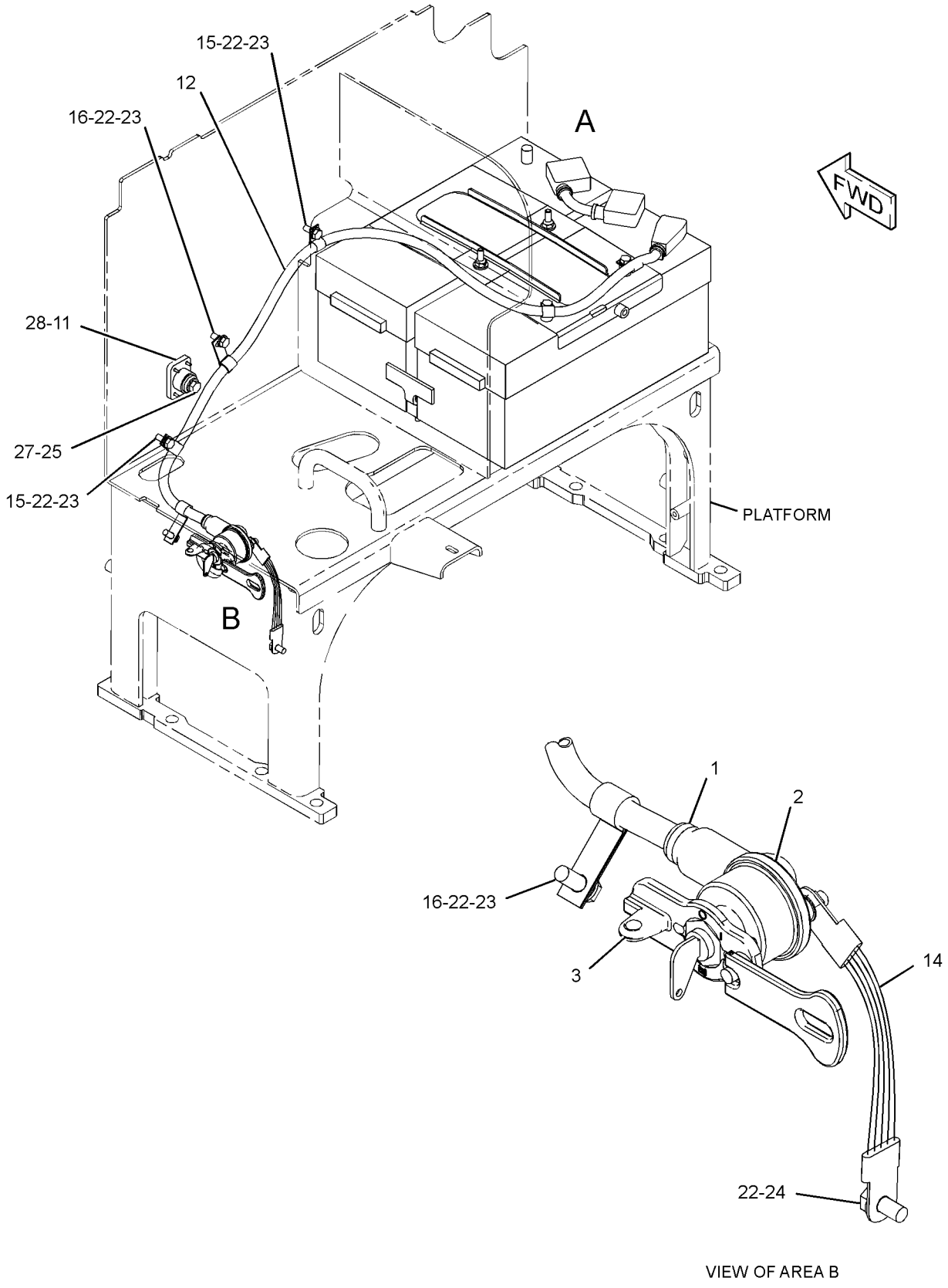

GRAPHIC #1

g02219177

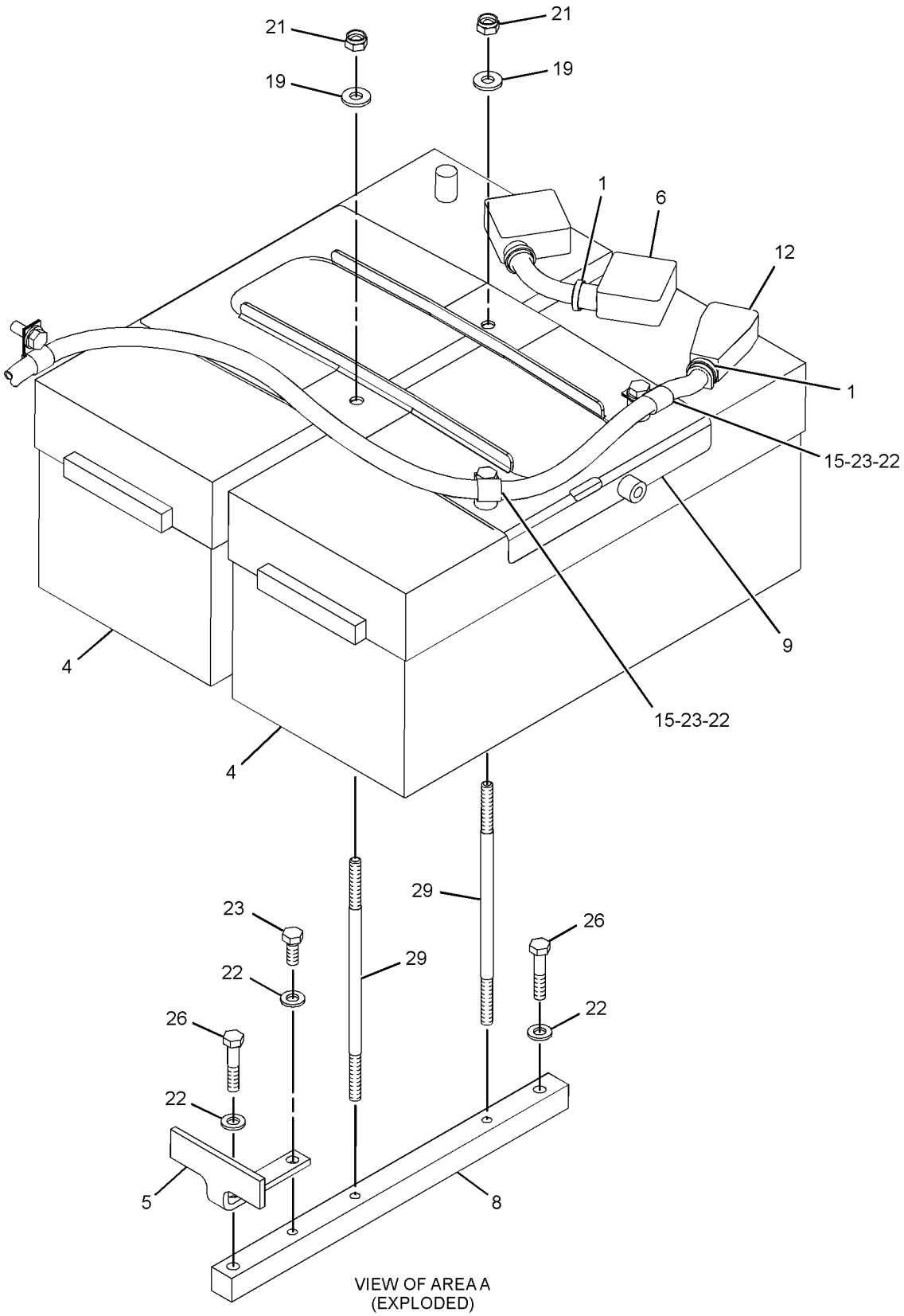

VIEW OF AREA A
(EXPLODED)

GRAPHIC #2 **<END>** g02219178

248-1488 BRACKET GP-MOUNTING—SONIC SENSOR

S/N: R9J1-UP

PART OF 286-0132, 286-0133 SENSOR GP-SONIC

SMCS-0635, 7010 **i03070592**

NOTE	REF NO	GRAPHIC REF	PART NUMBER	QTY	PART NAME 1 2 3 4 5 6 (PRODUCT LEVEL)	SEE PAGE
	1	1	**096-4836**	1	PIN-COTTER	
	2	1	**1B-2578**	2	NUT (3/8-16-THD)	
	3	1	**5P-1075**	1	WASHER-HARD (10.2X22.5X3-MM THK)	
	4	1	**289-0488**	1	HANDLE AS	
	5	1	**289-0487**	1	HANDLE AS	

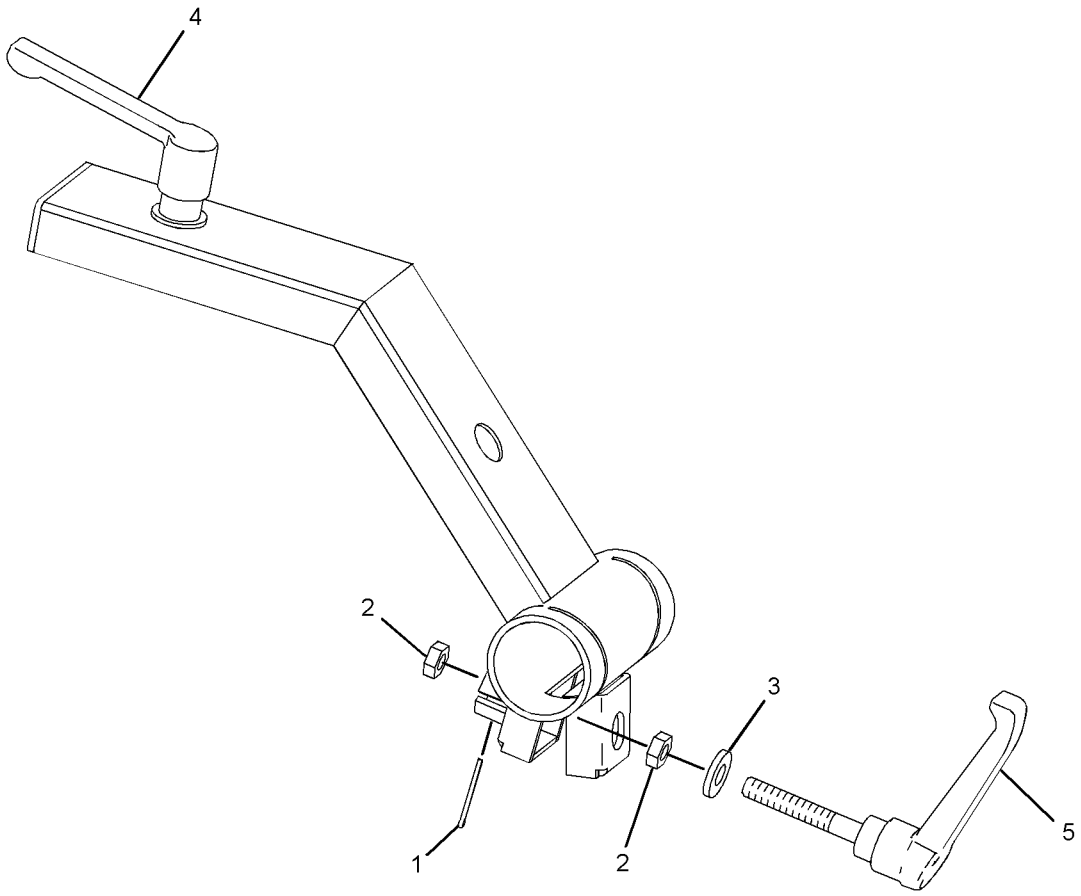

GRAPHIC #1 **<END>** g01393795

265-8937 BRACKET GP-MOUNTING–FUSE PANEL

S/N: R9J1-UP
PART OF 351-7026 WIRING GP-CAB
AN ATTACHMENT

SMCS-0635, 7010 **i02571591**

NOTE	REF NO	GRAPHIC REF	PART NUMBER	QTY	PART NAME 1 2 3 4 5 6 (PRODUCT LEVEL)	SEE PAGE
	1	1	**114-6658**	4	WASHER (6.5X17X1-MM THK)	
	2	1	**265-8932**	1	PLATE AS	
	3	1	**265-8933**	1	PLATE AS	
	4	1	**265-8934**	1	PLATE	
	5	1	**265-8936**	1	FILM-FUSE PANEL (FUSE IDENTIFICATION)	
M	6	1	**5C-9553**	4	BOLT (M6X1X16-MM)	
M	7	1	**9X-2044**	4	SCREW-TRUSS HEAD (M6X1X16-MM)	
	8	1	**9X-8256**	4	WASHER (6.6X12X2-MM THK)	

M-METRIC PART

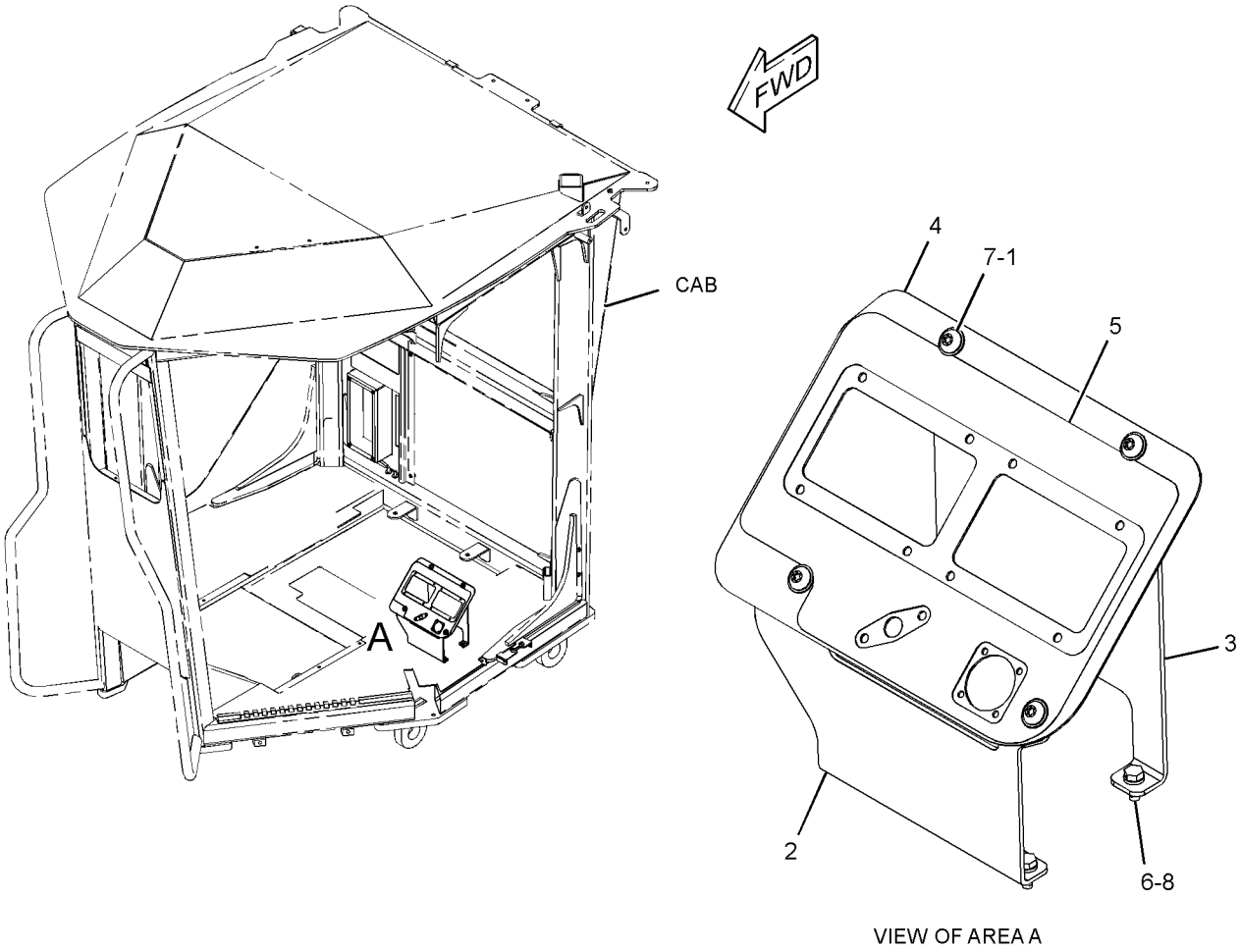

VIEW OF AREA A

GRAPHIC #1 **<END>** g01289329

272-2286 BRACKET GP-MOUNTING–MAST

S/N: R9J1-UP

PART OF 292-7971, 292-7972 RECEIVER AR-SATELLITE, 323-8139 SENSOR AR-GRADE

SMCS-0635, 7010 **i03753210**

NOTE	PART NUMBER	QTY	PART NAME 1 2 3 4 5 6 (PRODUCT LEVEL)	SEE PAGE
	248-1503	1	BRACKET GP-MOUNTING	
	7X-0343	4	BOLT (5/8-11X1.25-IN)	
	7X-0366	3	BOLT (3/4-10X2-IN)	
	8T-4122	4	WASHER-HARD (17X32X3.5-MM THK)	
	8T-4994	3	WASHER-HARD (20X36.5X3.5-MM THK)	
	254-9136	1	CABLE-COILED (RECEIVER)	
	252-8744	1	FILM-WARNING (BLADE, DO NOT CLIMB, READ OMM)	

<END>

304-6808 CABLE GP-STARTING MOTOR

S/N: R9J1-UP
PART OF 298-3699 STARTING MOTOR GP-ELECTRIC
FOR USE WITH 42MT-SERIES STARTING ARRANGEMENT
AN ATTACHMENT

SMCS-1408 **i02822275**

NOTE	REF NO	GRAPHIC REF	PART NUMBER	QTY	PART NAME 1 2 3 4 5 6 (PRODUCT LEVEL)	SEE PAGE
	1	1	**3S-2093**	1	STRAP-CABLE	
	2	1	**257-9989**	1	CABLE AS	
		1	**1S-7251**	2	TERMINAL-CABLE (00-GA, 1/2-IN SCREW)	
		1	**8N-0869**	1	COVER-TERMINAL (RED)	
E		1	**159-8049**		CABLE (00-GA, RED) (94-CM)	
	3	1	**8Y-1816**	2	SPACER (12.5X25X25-MM THK)	
	4	1	**4K-8302**	2	CLIP	
	5	1	**8T-4121**	1	WASHER-HARD (11X21X2.5-MM THK)	
M	6	1	**8T-4136**	1	BOLT (M10X1.5X25-MM)	
M	7	1	**8T-4194**	2	BOLT (M12X1.75X50-MM)	
	8	1	**9M-8406**	1	CLIP	

E-ORDER BY THE CENTIMETER
M-METRIC PART

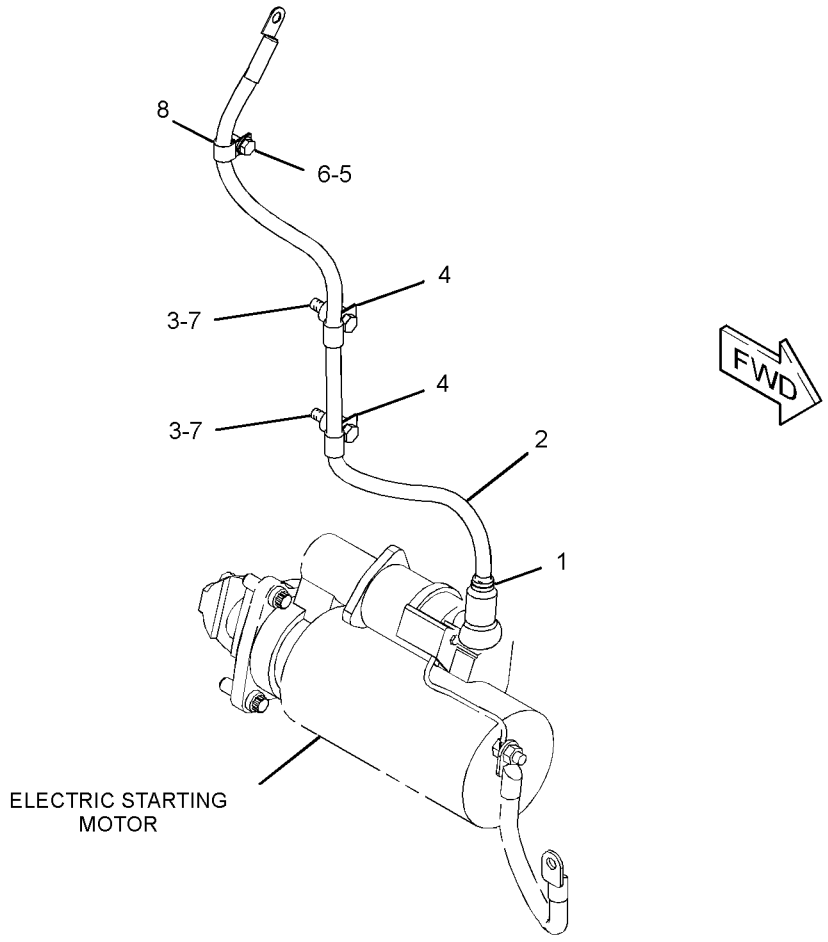

GRAPHIC #1 **<END>** g01409482

304-6809 CABLE GP-STARTING MOTOR

S/N: R9J1-UP
PART OF 308-2897 STARTING AR-COLD WEATHER
AN ATTACHMENT

SMCS-1408 **i02821937**

NOTE	REF NO	GRAPHIC REF	PART NUMBER	QTY	PART NAME 1 2 3 4 5 6 (PRODUCT LEVEL)	SEE PAGE
	1	1	**3S-2093**	1	STRAP-CABLE	
	2	1	**300-5583**	1	BRACKET AS	
M		1	**8T-3490**	3	NUT-WELD (M10X1.5-THD)	
	3	1	**302-3917**	1	CABLE AS	
		1	**1S-7251**	1	TERMINAL-CABLE (00-GA, 1/2-IN BOLT)	
		1	**9X-9120**	1	BOOT (RED)	
		1	**9X-9825**	1	TERMINAL-CABLE (00-GA, 1/2-IN BOLT)	
E		1	**159-8049**		CABLE (00-GA, RED) (115-CM)	
	4	1	**8Y-1816**	2	SPACER (12.5X25X25-MM THK)	
	5	1	**4K-8302**	2	CLIP	
M	6	1	**5C-7261**	2	NUT (M8X1.25-THD)	
	7	1	**8T-4121**	3	WASHER-HARD (11X21X2.5-MM THK)	
M	8	1	**8T-4137**	3	BOLT (M10X1.5X20-MM)	
M	9	1	**8T-4194**	2	BOLT (M12X1.75X50-MM)	
	10	1	**8T-4224**	2	WASHER-HARD (8.8X16X2-MM THK)	
	11	1	**9M-8406**	3	CLIP	

E-ORDER BY THE CENTIMETER
M-METRIC PART

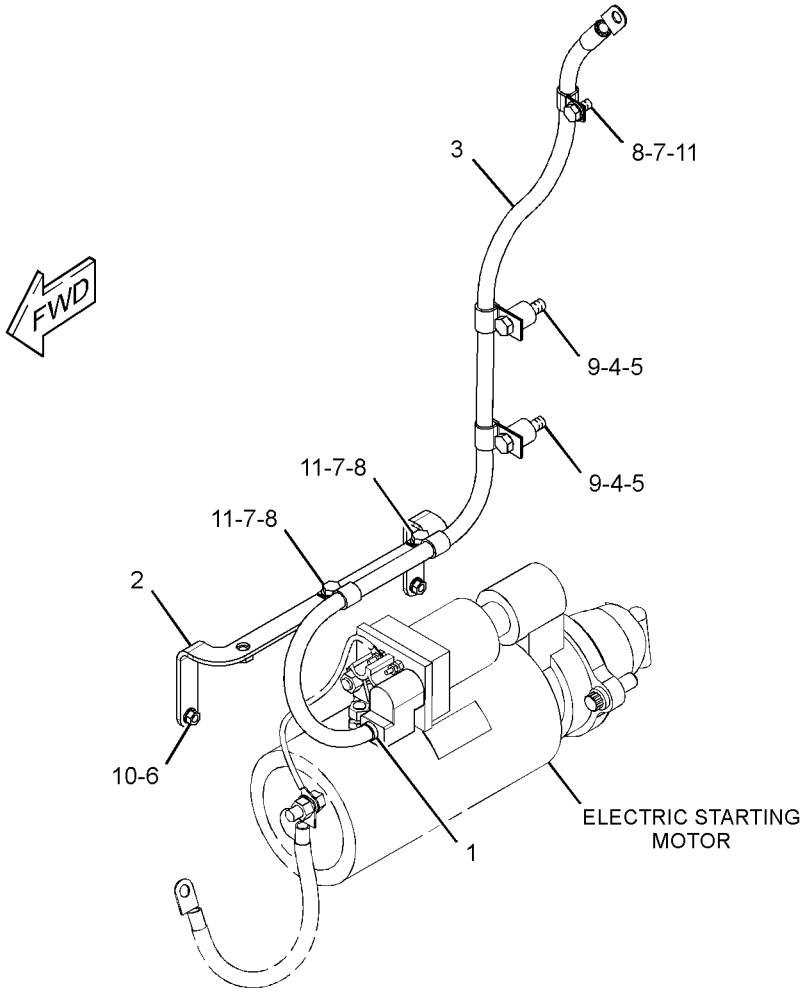

GRAPHIC #1 **<END>** g01504313

278-1842 CAMERA AR—WORK AREA VISUAL SYSTEM

S/N: R9J1-UP

AN ATTACHMENT

SMCS-7348 **i02747094**

NOTE	PART NUMBER	QTY	PART NAME 1 2 3 4 5 6 (PRODUCT LEVEL)	SEE PAGE
Y	*278-0668*	1	DISPLAY GP-CAMERA (WORK AREA VISUAL SYSTEM)	798
Y	*252-8000*	1	WIRING GP-CAMERA (WORK AREA VISUAL SYSTEM)	338

Y-SEPARATE ILLUSTRATION

<END>

241-7601 CONNECTION GP-ELECTRICAL

S/N: RSX1037-UP

PROVIDES ADDITIONAL 8-MM GROUND STUD BELOW ECM

PART OF 226-9770 ENGINE AR-COMPLETE

SMCS-1408, 4459, 7553 **i01986748**

NOTE	REF NO	GRAPHIC REF	PART NUMBER	QTY	PART NAME 1 2 3 4 5 6 (PRODUCT LEVEL)	SEE PAGE
M	1	1	**9X-2097**	1	STUD (M8X1.25-THD)	
M	2	1	**5C-7261**	1	NUT (M8X1.25-THD)	
	3	1	**6V-3964**	1	WASHER-HARD (8.8X25.5X5-MM THK)	
	4	1	**8T-4224**	2	WASHER-HARD (8.8X16X2-MM THK)	

M-METRIC PART

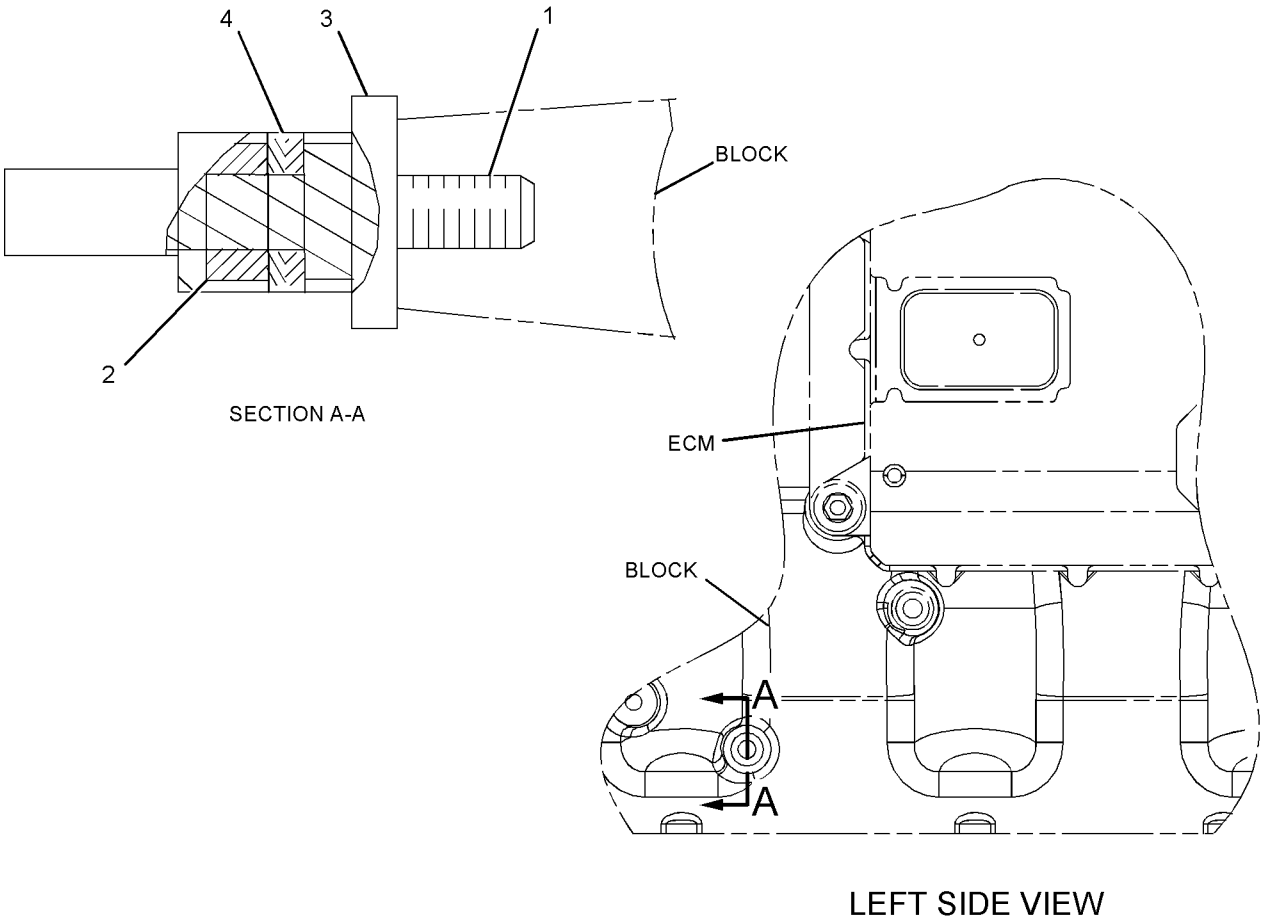

GRAPHIC #1 **<END>** g01015601

ELECTRICAL AND STARTING SYSTEM

233-6191 CONTROL & MTG GP-ENGINE ELEK

S/N: RSX1037-4946

PART OF 226-9770 ENGINE AR-COMPLETE

SMCS-1901 **i03553821**

NOTE	REF NO	GRAPHIC REF	PART NUMBER	QTY	PART NAME 1 2 3 4 5 6 (PRODUCT LEVEL)	SEE PAGE
	1	1	**8T-9655**	8	MOUNT-ISOLATION	
M	2	1	**9X-2098**	2	STUD-TAPERLOCK (BOLT)	
Y	3	1	**226-7473**	1	CONTROL GP-ENGINE ELECTRONIC	215
	5	1	**233-0891**	2	BRACKET AS	
					(EACH INCLUDES)	
M		1	**232-1693**	1	BOLT-FLANGE HEAD (M6X1X35-MM)	
	6	1	**6I-1418**	4	SPACER (8.2X12.7X28.7-MM THK)	
M	7	1	**8T-0276**	2	BOLT (M8X1.25X45-MM)	
	8	1	**9N-0869**	4	WASHER-HARD (8.8X25.5X2-MM THK)	

M-METRIC PART
Y-SEPARATE ILLUSTRATION

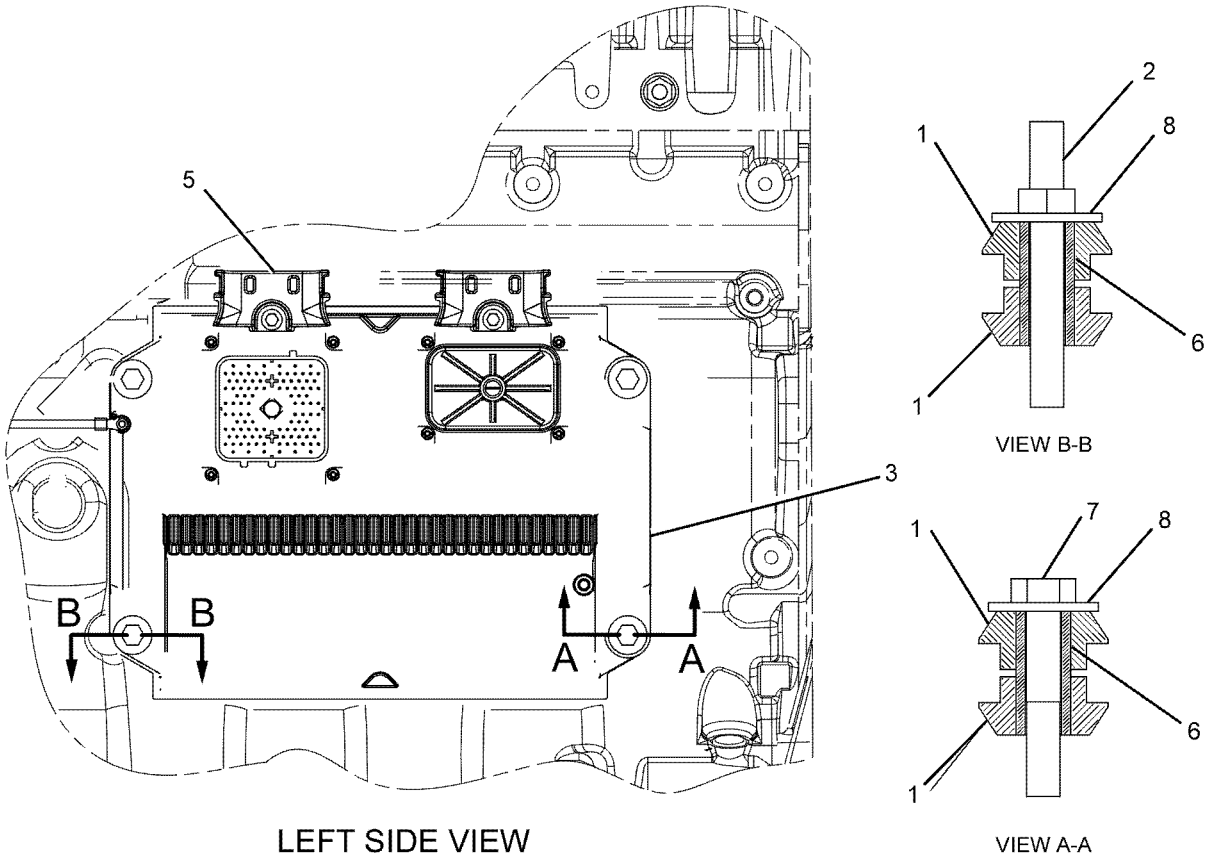

GRAPHIC #1 **<END>** g01094987

233-6191 CONTROL & MTG GP-ENGINE ELEK

S/N: RSX4947-UP

PART OF 226-9770 ENGINE AR-COMPLETE

SMCS-1901 **i03554000**

NOTE	REF NO	GRAPHIC REF	PART NUMBER	QTY	PART NAME 1 2 3 4 5 6 (PRODUCT LEVEL)	SEE PAGE
	1	1	**8T-9655**	8	MOUNT-ISOLATION	
CM	2	1	**9X-2098**	4	STUD-TAPERLOCK (BOLT)	
Y	3	1	**226-7473**	1	CONTROL GP-ENGINE ELECTRONIC	215
	5	1	**233-0891**	2	BRACKET AS	
					(EACH INCLUDES)	
M		1	**232-1693**	1	BOLT-FLANGE HEAD (M6X1X35-MM)	
	6	1	**6I-1418**	4	SPACER (8.2X12.7X28.7-MM THK)	
	7	1	**9N-0869**	4	WASHER-HARD (8.8X25.5X2-MM THK)	

C-CHANGE FROM PREVIOUS TYPE
M-METRIC PART
Y-SEPARATE ILLUSTRATION

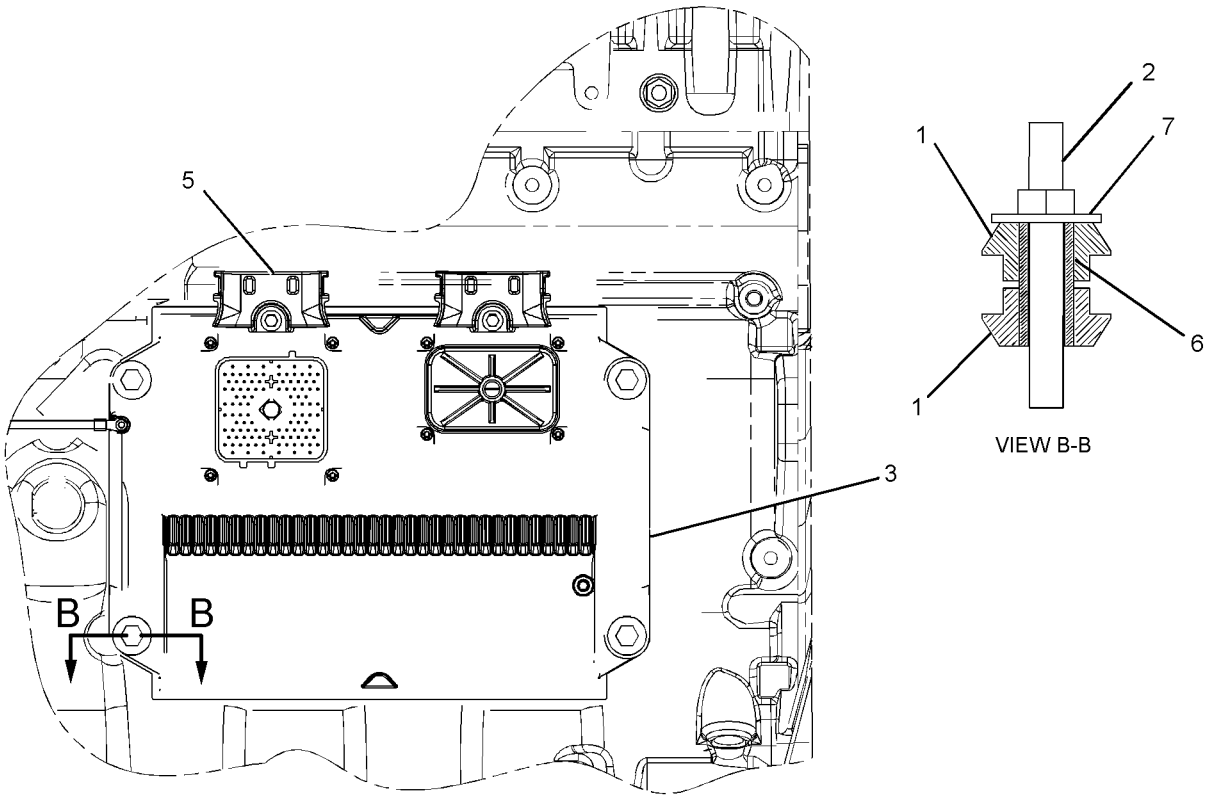

LEFT SIDE VIEW

GRAPHIC #1 **<END>** g01308133

233-3145 CONTROL & MTG GP-IMPLEMENT

S/N: R9J1-UP

PART OF 233-3110, 325-5227 CAB AR

AN ATTACHMENT

SMCS-5700, 5701 **i03904740**

NOTE	REF NO	GRAPHIC REF	PART NUMBER	QTY	PART NAME 1 2 3 4 5 6 (PRODUCT LEVEL)	SEE PAGE
	1	1	**6I-1418**	8	SPACER (8.2X12.7X28.7-MM THK)	
	2	1	**8T-9655**	16	MOUNT-ISOLATION	
Y	3	1	*275-8969*	1	CONTROL GP-UNPROGRAMMED (IMPLEMENT 2)	216
Y	4	1	*275-8970*	1	CONTROL GP-UNPROGRAMMED (IMPLEMENT 1)	216
	5	1	**324-8176**	1	BRACKET	
	6	1	**5P-4116**	8	WASHER-HARD (8.8X20.5X2-MM THK)	
M	7	1	**7X-0818**	8	BOLT (M8X1.25X45-MM)	
	8	1	**8T-4224**	2	WASHER-HARD (8.8X16X2-MM THK)	

M-METRIC PART
Y-SEPARATE ILLUSTRATION

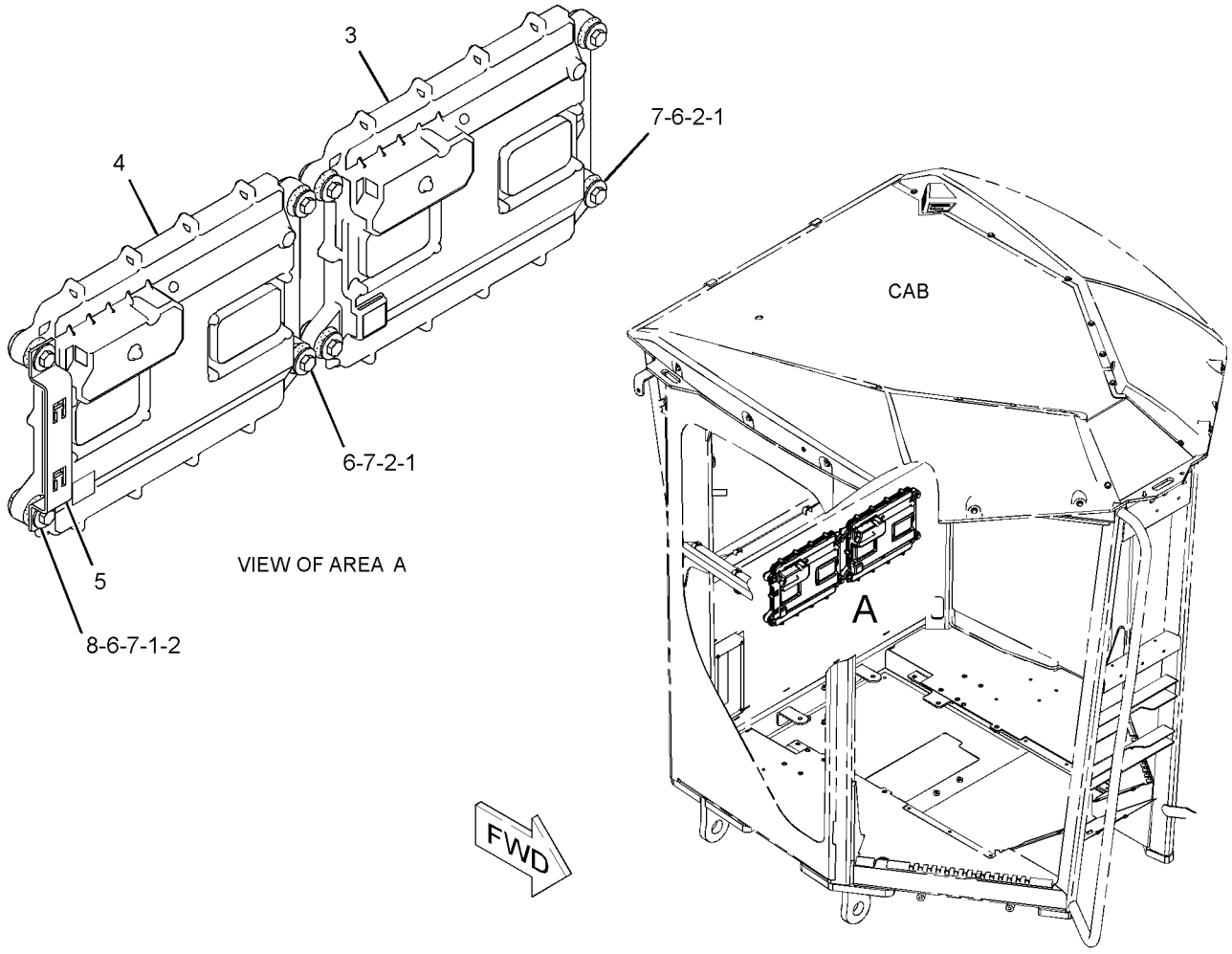

GRAPHIC #1 **<END>** g02149080

226-7473 CONTROL GP-ENGINE ELECTRONIC

S/N: RSX1037-UP

PART OF 233-6191 CONTROL & MTG GP-ENGINE ELEK

SMCS-1901 **i03137825**

NOTE	REF NO	GRAPHIC REF	PART NUMBER	QTY	PART NAME 1 2 3 4 5 6 (PRODUCT LEVEL)	SEE PAGE
R	1	1	**262-2878**	1	CONTROL GP-UNPROGRAMMED (ENGINE)	

R-REMFG PART MAY BE AVAILABLE

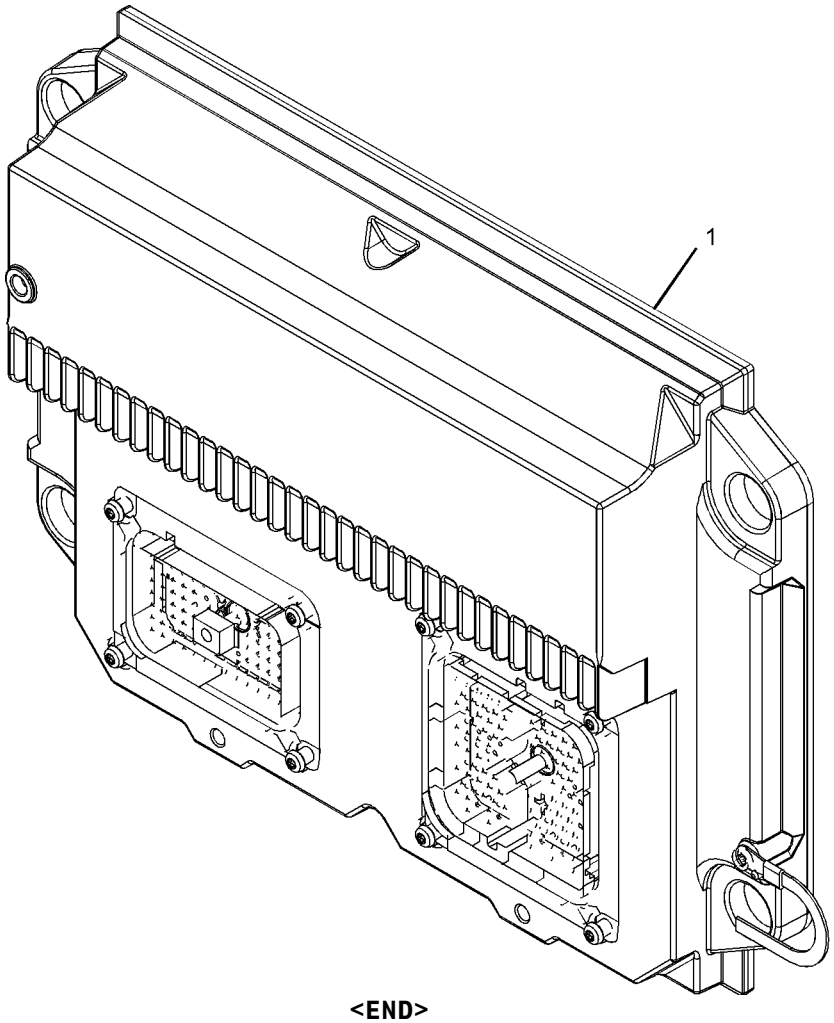

GRAPHIC #1 **<END>** g01101798

275-8969 CONTROL GP-UNPROGRAMMED–IMPLEMENT 2

S/N: R9J1-UP
PART OF 233-3145 CONTROL & MTG GP-IMPLEMENT
AN ATTACHMENT

SMCS-7610 **i03027249**

NOTE	PART NUMBER	QTY	PART NAME 1 2 3 4 5 6 (PRODUCT LEVEL)	SEE PAGE
R	**304-5687**	1	CONTROL GP-UNPROGRAMMED (IMPLEMENT 2)	

R-REMFG PART MAY BE AVAILABLE

<END>

275-8970 CONTROL GP-UNPROGRAMMED–IMPLEMENT 1

S/N: R9J1-UP
PART OF 233-3145 CONTROL & MTG GP-IMPLEMENT
AN ATTACHMENT

SMCS-7610 **i03817490**

NOTE	PART NUMBER	QTY	PART NAME 1 2 3 4 5 6 (PRODUCT LEVEL)	SEE PAGE
R	**304-5687**	1	CONTROL GP-UNPROGRAMMED (IMPLEMENT 1)	

R-REMFG PART MAY BE AVAILABLE

<END>

233-3134 CONVERTER GP-ELECTRICAL–RADIO

S/N: R9J1-UP
PART OF 349-3067 OPTION AR-CAB
AN ATTACHMENT

SMCS-1421 **i02193584**

NOTE	REF NO	GRAPHIC REF	PART NUMBER	QTY	PART NAME 1 2 3 4 5 6 (PRODUCT LEVEL)	SEE PAGE
	1	1	**184-3579**	1	CONVERTER-POWER (20-AMPERE)	
M	2	1	**174-8131**	4	SCREW-TRUSS HEAD (M4X0.7X12-MM)	
	3	1	**8T-0328**	4	WASHER-HARD (5.5X10X1-MM THK)	

M-METRIC PART

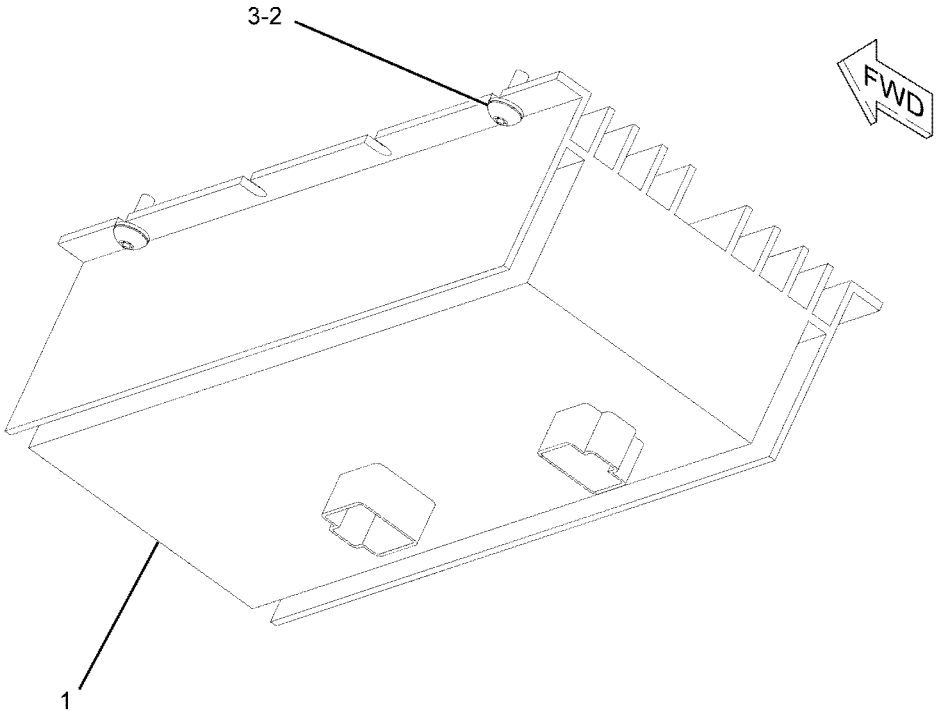

GRAPHIC #1 **<END>** g01110748

233-3135 CONVERTER GP-ELECTRICAL

S/N: R9J1-UP

PART OF 233-3110, 325-5227 CAB AR

AN ATTACHMENT

SMCS-1421 **i02713600**

NOTE	REF NO	GRAPHIC REF	PART NUMBER	QTY	PART NAME 1 2 3 4 5 6 (PRODUCT LEVEL)	SEE PAGE
	1	1	**117-2311**	1	SOCKET-AUXILIARY POWER (12-VOLT) (AUXILIARY)	
	2	1	**169-2876**	1	FILM-IDENTIFICATION (POWER RECEPTACLE, 12-VOLT)	
	3	1	**209-0381**	1	CONVERTER-POWER (24-VOLT TO 12-VOLT)	
M	4	1	**174-8131**	4	SCREW-TRUSS HEAD (M4X0.7X12-MM)	
	5	1	**8T-0328**	4	WASHER-HARD (5.5X10X1-MM THK)	

M-METRIC PART

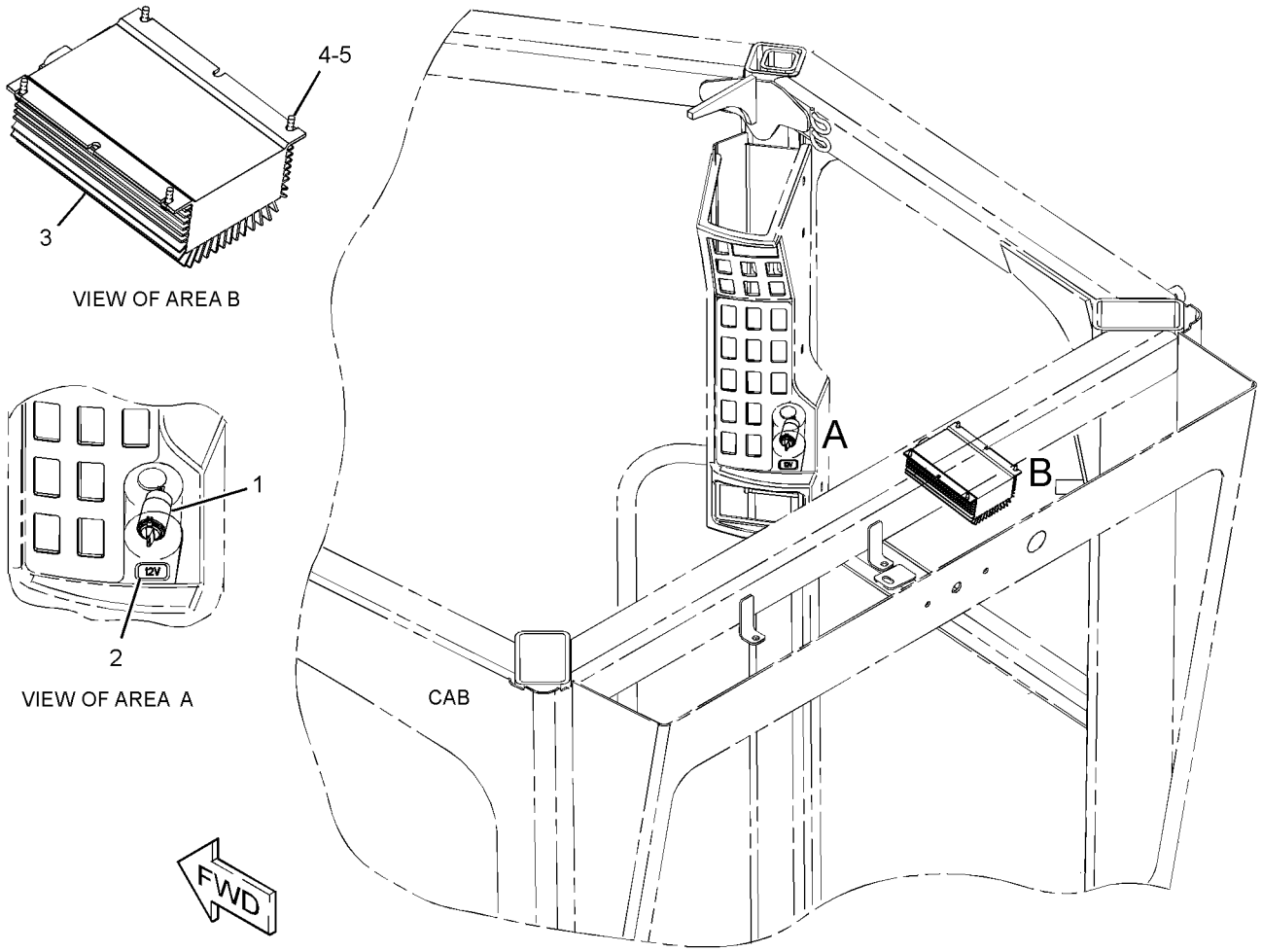

GRAPHIC #1 **<END>** g01372060

262-1421 ELECTRONICS GP-COMMUNICATION–PRODUCT LINK 300

S/N: R9J1-UP

PART OF 235-6188 INSTALLATION AR-COMMUNICATION

AN ATTACHMENT

SMCS-7606, 7610, 7620 **i03915092**

NOTE	PART NUMBER	QTY	PART NAME 1 2 3 4 5 6 (PRODUCT LEVEL)	SEE PAGE
	355-5105	1	SOFTWARE GP-COMMUNICATION	
			-OR-	
	355-9764	1	SERVICE GP-COMMUNICATION	
			(OPTIONAL SERVICE REPLACEMENT)(INCLUDES CONTROL GP & SOFTWARE)	
	7X-6315	1	STRAP AS-GROUND	
	126-7574	1	SCREW-PAN HEAD (8-32X9.52-MM)	
	134-4126	1	WASHER (4.52X8.28X0.76-MM THK)	

<END>

250-9257 ELECTRONICS GP-IMPLEMENT

S/N: R9J1-UP

PART OF 233-3110, 325-5227 CAB AR

AN ATTACHMENT

SMCS-5701, 7610, 7620 **i03992254**

NOTE	PART NUMBER	QTY	PART NAME 1 2 3 4 5 6 (PRODUCT LEVEL)	SEE PAGE
	358-7810	1	SOFTWARE GP-IMPLEMENT	
			-OR-	
	358-7811	1	SERVICE GP-IMPLEMENT	
			(OPTIONAL SERVICE REPLACEMENT)(INCLUDES CONTROL GP & SOFTWARE)	

<END>

250-9258 ELECTRONICS GP-IMPLEMENT–IMPLEMENT 2

S/N: R9J1-UP

PART OF 233-3110, 325-5227 CAB AR

AN ATTACHMENT

SMCS-5701, 7610, 7620 **i03644922**

NOTE	PART NUMBER	QTY	PART NAME 1 2 3 4 5 6 (PRODUCT LEVEL)	SEE PAGE
	349-6967	1	SOFTWARE GP-IMPLEMENT	
			-OR-	
	349-6988	1	SERVICE GP-IMPLEMENT	
			(OPTIONAL SERVICE REPLACEMENT)(INCLUDES CONTROL GP & SOFTWARE)	

<END>

250-9259 ELECTRONICS GP-IMPLEMENT—IMPLEMENT 3

S/N: R9J1-UP

PART OF 351-2406, 351-2407, 351-2408, 351-2409, 351-2410, 351-2411, 351-2412 CONTROL AR-HYDRAULIC

AN ATTACHMENT

SMCS-5701, 7610, 7620 **i03655182**

NOTE	PART NUMBER	QTY	PART NAME 1 2 3 4 5 6 (PRODUCT LEVEL)	SEE PAGE
	349-6967	1	SOFTWARE GP-IMPLEMENT	
			-OR-	
	349-6988	1	SERVICE GP-IMPLEMENT	
			(OPTIONAL SERVICE REPLACEMENT)(INCLUDES CONTROL GP & SOFTWARE)	

<END>

250-9254 ELECTRONICS GP-MONITOR—

DUTCH, ENGLISH, FRENCH, GERMAN, PORTUGUESE, SPANISH

S/N: R9J1-UP

PART OF 302-1292, 302-1293, 302-1294, 302-1295, 302-1296, 302-1297, 302-5135 PLATE & FILM GP

AN ATTACHMENT

SMCS-7490, 7610, 7620 **i03988775**

NOTE	PART NUMBER	QTY	PART NAME 1 2 3 4 5 6 (PRODUCT LEVEL)	SEE PAGE
	360-7545	1	SOFTWARE GP-MONITOR (MESSENGER)	
			-OR-	
	360-7546	1	SERVICE GP-MONITOR (MESSENGER)	
			(OPTIONAL SERVICE REPLACEMENT)(INCLUDES CONTROL GP & SOFTWARE)	

<END>

275-9650 ELECTRONICS GP-MONITOR—MESSENGER

S/N: R9J1-UP

PART OF 351-7026 WIRING GP-CAB

AN ATTACHMENT

SMCS-7490, 7610, 7620 **i03812870**

NOTE	PART NUMBER	QTY	PART NAME 1 2 3 4 5 6 (PRODUCT LEVEL)	SEE PAGE
	308-3869	1	CONTROL GP-UNPRGMED MONITOR (MESSENGER)	

<END>

302-0359 ELECTRONICS GP-MONITOR–
DANISH, ENGLISH, FINNISH, NORWEGIAN, PORTUGUESE, SWEDISH
S/N: R9J1-UP
PART OF 302-1298, 302-1299, 302-1300, 302-1301 PLATE & FILM GP
AN ATTACHMENT

SMCS-7490, 7610, 7620 **i03988779**

NOTE	PART NUMBER	QTY	PART NAME 1 2 3 4 5 6 (PRODUCT LEVEL)	SEE PAGE
	360-7547	1	SOFTWARE GP-MONITOR (MESSENGER)	
			-OR-	
	360-7548	1	SERVICE GP-MONITOR (MESSENGER)	
			(OPTIONAL SERVICE REPLACEMENT) (INCLUDES CONTROL GP & SOFTWARE)	

<END>

302-0360 ELECTRONICS GP-MONITOR–
ENGLISH, GREEK, HEBREW, ITALIAN, PORTUGUESE, TURKISH
S/N: R9J1-UP
PART OF 302-1302, 302-1303, 302-1304, 302-1305 PLATE & FILM GP
AN ATTACHMENT

SMCS-7490, 7610, 7620 **i03995965**

NOTE	PART NUMBER	QTY	PART NAME 1 2 3 4 5 6 (PRODUCT LEVEL)	SEE PAGE
	360-7549	1	SOFTWARE GP-MONITOR	
			-OR-	
	360-7550	1	SERVICE GP-MONITOR	
			(OPTIONAL SERVICE REPLACEMENT) (INCLUDES CONTROL GP & SOFTWARE)	

<END>

302-0361 ELECTRONICS GP-MONITOR–
ARABIC, CHINESE, ENGLISH, PORTUGUESE, RUSSIAN
S/N: R9J1-UP
PART OF 302-1306, 302-1307, 302-1308 PLATE & FILM GP
AN ATTACHMENT

SMCS-7490, 7610, 7620 **i03995968**

NOTE	PART NUMBER	QTY	PART NAME 1 2 3 4 5 6 (PRODUCT LEVEL)	SEE PAGE
	360-7551	1	SOFTWARE GP-MONITOR	
			-OR-	
	360-7552	1	SERVICE GP-MONITOR	
			(OPTIONAL SERVICE REPLACEMENT)(INCLUDES CONTROL GP & SOFTWARE)	

<END>

302-0362 ELECTRONICS GP-MONITOR–ENGLISH, PORTUGUESE, ROMANIAN, SLOVENIAN

S/N: R9J1-UP

PART OF 302-1309, 302-1310 PLATE & FILM GP

AN ATTACHMENT

SMCS-7490, 7610, 7620 **i03995969**

NOTE	PART NUMBER	QTY	PART NAME 1 2 3 4 5 6 (PRODUCT LEVEL)	SEE PAGE
	360-7553	1	SOFTWARE GP-MONITOR	
			-OR-	
	360-7554	1	SERVICE GP-MONITOR	
			(OPTIONAL SERVICE REPLACEMENT)(INCLUDES CONTROL GP & SOFTWARE)	

<END>

310-3221 ELECTRONICS GP-POWER TRAIN

S/N: DZM300-UP

PART OF 253-8407 TRANSMISSION AR

SMCS-4800, 4808, 7610, 7620 **i03992363**

NOTE	PART NUMBER	QTY	PART NAME 1 2 3 4 5 6 (PRODUCT LEVEL)	SEE PAGE
	358-6192	1	SOFTWARE GP-POWER TRAIN	
			-OR-	
	358-6193	1	SERVICE GP-POWER TRAIN	
			(OPTIONAL SERVICE REPLACEMENT)(INCLUDES CONTROL GP & SOFTWARE)	

<END>

255-5321 GRADE CONTROL AR–ACCUGRADE

S/N: R9J1-UP

FOR USE WITH MOTOR GRADER TIER 3

AN ATTACHMENT

SMCS-7220 **i02899454**

NOTE	PART NUMBER	QTY	PART NAME 1 2 3 4 5 6 (PRODUCT LEVEL)	SEE PAGE
Y	*307-0155*	1	GRADE CONTROL GP (ACCUGRADE)	224
Y	*255-5322*	1	WIRING GP-GRADE CONTROL (DRAWBAR)	360

Y-SEPARATE ILLUSTRATION

<END>

323-8140 GRADE CONTROL AR—CD610

S/N: R9J1-UP
FOR USE WITH ACCUGRADE ARRANGEMENT
FIELD INSTALLATION

SMCS-7220 **i03795951**

NOTE	PART NUMBER	QTY	PART NAME 1 2 3 4 5 6 (PRODUCT LEVEL)	SEE PAGE
Y	*292-0309*	1	DISPLAY GP-MONITOR (CD610)	801
Y	*249-7789*	1	SENSOR & MOUNTING GP (CROSS SLOPE)	269
Y	*253-1967*	1	WIRING GP-MONITOR (CD610)	373
	324-2694	1	FASTENER GP-SENSOR (ANGLE)	
M	**5C-2890**	4	NUT (M6X1-THD)	
M	**9X-2537**	4	BOLT-SOCKET HEAD (M6X1X70-MM)	
	9X-8256	8	WASHER (6.6X12X2-MM THK)	
	061-6665	2	BOLT (1/2-13X1.25-IN)	
	186-0359	1	CLIP	

M-METRIC PART
Y-SEPARATE ILLUSTRATION

<END>

356-3073 GRADE CONTROL AR—ACCUGRADE

S/N: R9J1-UP
AN ATTACHMENT

SMCS-7220 **i03968652**

NOTE	PART NUMBER	QTY	PART NAME 1 2 3 4 5 6 (PRODUCT LEVEL)	SEE PAGE
Y	*307-0155*	1	GRADE CONTROL GP (ACCUGRADE)	224
Y	*355-1050*	1	WIRING GP-GRADE CONTROL	364

Y-SEPARATE ILLUSTRATION

<END>

317-6526 GRADE CONTROL AR-LASER—ADVANCED TRACKING SYSTEM

S/N: R9J1-UP
FIELD INSTALLATION

SMCS-7220 **i03910928**

NOTE	PART NUMBER	QTY	PART NAME 1 2 3 4 5 6 (PRODUCT LEVEL)	SEE PAGE
Y	**226-2333**	1	MAST GP (LASER RECEIVER)	251
Y	**234-9970**	1	MOUNTING GP-RECEIVER (MAST)	259
Y	**295-9880**	1	TARGET GP-LASER	327
	248-1503	1	BRACKET GP-MOUNTING	
	7X-0343	4	BOLT (5/8-11X1.25-IN)	
	7X-0366	3	BOLT (3/4-10X2-IN)	
	8T-4122	4	WASHER-HARD (17X32X3.5-MM THK)	
	8T-4994	3	WASHER-HARD (20X36.5X3.5-MM THK)	
	248-1496	1	RISER AS (MAST)	
	3B-4512	1	LOCKWASHER	
	9S-1362	1	BOLT (3/4-16X2-IN)	
	231-0049	1	CABLE-COILED (MAST)	

Y-SEPARATE ILLUSTRATION

<END>

307-0155 GRADE CONTROL GP–ACCUGRADE

S/N: R9J1-UP
PART OF 255-5321, 356-3073 GRADE CONTROL AR
AN ATTACHMENT

SMCS-7220 **i03934451**

NOTE	REF NO	GRAPHIC REF	PART NUMBER	QTY	PART NAME 1 2 3 4 5 6 (PRODUCT LEVEL)	SEE PAGE
Y	1	1	**283-7960**	1	POWER SUPPLY GP (GRADE CONTROL)	265
CY	2	1	**314-3323**	1	PANEL GP-CONTROL (ACCUGRADE) (LH)	851
Y	3	1	**319-1617**	1	PANEL GP-CONTROL (ACCUGRADE) (RH)	852

C-CHANGE FROM PREVIOUS TYPE
Y-SEPARATE ILLUSTRATION

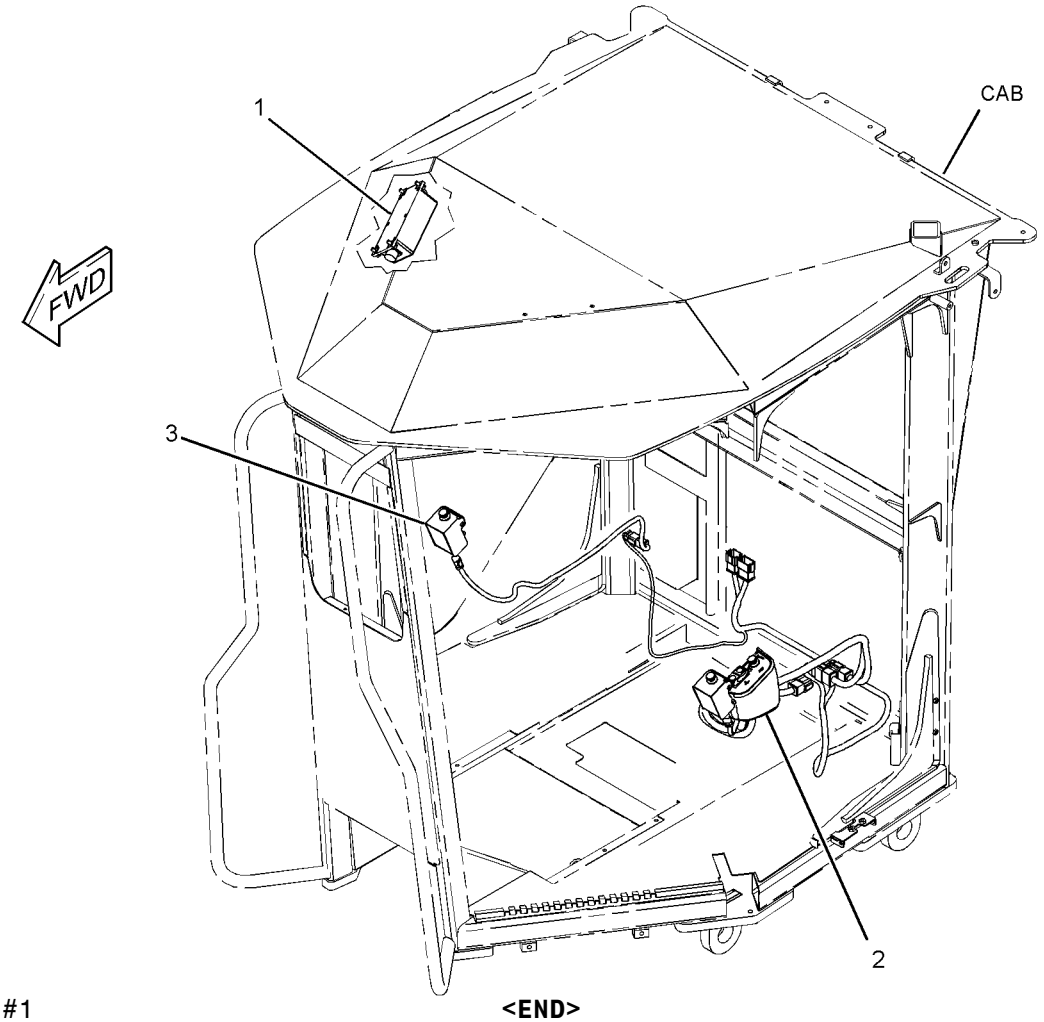

GRAPHIC #1 **<END>** g01536713

249-5511 HEATER GP-JACKET WATER

S/N: R9J1-UP
240-VOLT, 1250-WATT
CANNOT BE USED WITH 249-5516—PAGE 226
AN ATTACHMENT

SMCS-1383 **i02193537**

NOTE	REF NO	GRAPHIC REF	PART NUMBER	QTY	PART NAME 1 2 3 4 5 6 (PRODUCT LEVEL)	SEE PAGE
	1	1	**127-8609**	1	CORD AS-HEATER ELEMENT (240-VOLT, 15-AMPERE)	
	2	1	**249-5508**	1	ELEMENT AS-JACKET WATER HEATER (240-VOLT, 1250-WATT)	
	2A	1	**7M-8485**	1	SEAL-O-RING	
	2B	1	**133-6517**	1	CAP AS-DUST	

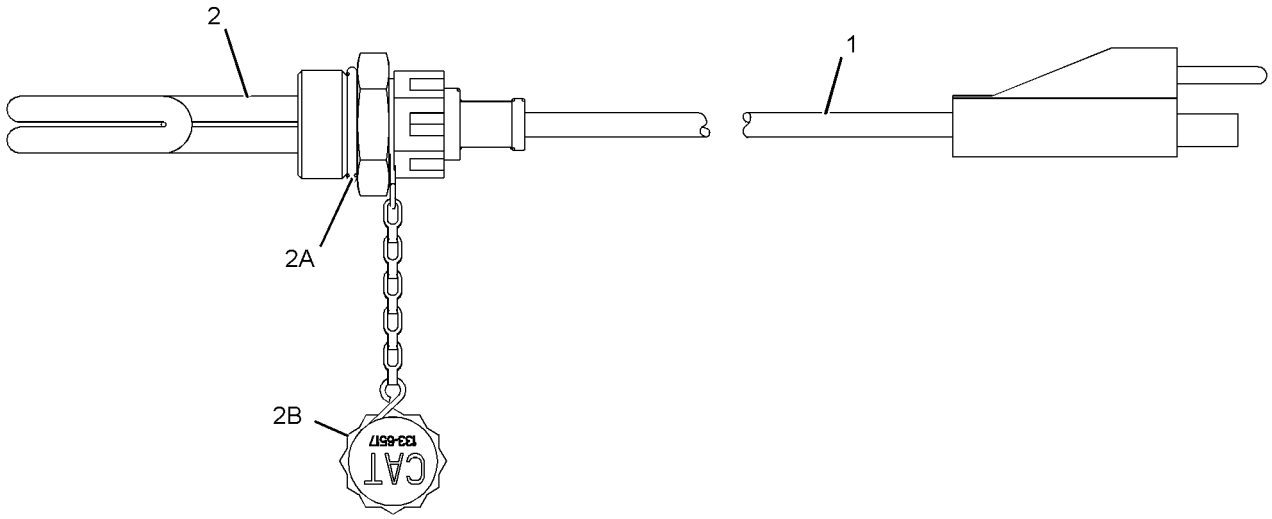

GRAPHIC #1 **<END>** g01112849

249-5516 HEATER GP-JACKET WATER

S/N: R9J1-UP
120-VOLT, 1250-WATT
CANNOT BE USED WITH 249-5511—PAGE 225
AN ATTACHMENT

SMCS-1383 **i02567081**

NOTE	REF NO	GRAPHIC REF	PART NUMBER	QTY	PART NAME 1 2 3 4 5 6 (PRODUCT LEVEL)	SEE PAGE
	1	1	**239-7342**	1	ELEMENT AS-JACKET WATER HEATER (120-VOLT, 1250-WATT)	
	1A	1	**7M-8485**	1	SEAL-O-RING	
	1B	1	**133-6517**	1	CAP AS-DUST	
	2	1	**7X-6312**	1	CORD AS-HEATER ELEMENT (120-VOLT, 15-AMPERE)	

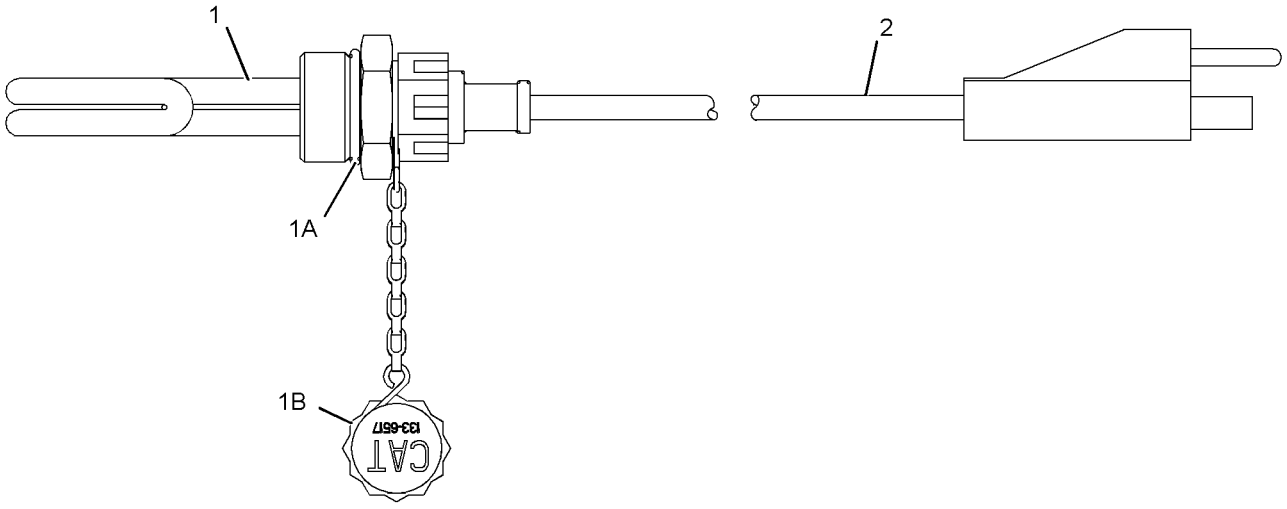

GRAPHIC #1 **<END>** g01112866

235-6188 INSTALLATION AR-COMMUNICATION–
PRODUCT LINK 321SR
S/N: R9J1-UP
AN ATTACHMENT

SMCS-7606 **i04002853**

NOTE	REF NO	GRAPHIC REF	PART NUMBER	QTY	PART NAME 1 2 3 4 5 6 (PRODUCT LEVEL)	SEE PAGE
	1	1	**8C-5607**	8	MOUNT-ISOLATION	
	2	1	**8C-5608**	4	SPACER (6.5X9.5X25.4-MM THK)	
	3	1	**261-9391**	1	HARNESS AS-POWER (PRODUCT LINK RADIO)	
		1	**102-8801**	1	KIT-RECEPTACLE (12-PIN)	
					(INCLUDES RECEPTACLE AS & WEDGE)	
		1	**155-2255**	1	KIT-CONNECTING PLUG (12-PIN)	
					(INCLUDES PLUG AS, WEDGE, & INTERFACE SEAL)	
		1	**160-7690**	1	PLUG AS-CONNECTOR (70-PIN)	
		1	**9X-6772**	2	STRAP-CABLE	
		1	**126-1774**	1	COVER-CONNECTOR	
	4	1	**284-8533**	1	ANTENNA AS	
		1	**301-0589**	1	ANTENNA (FLEXIBLE)	
Y	5	1	**336-3545**	1	RADIO GP-COMMUNICATION (PRODUCT LINK 121SR)	266
	6	1	**272-8325**	1	PLATE AS	
	7	1	**272-8326**	1	PLATE AS	
Y	8	1	**262-1421**	1	ELECTRONICS GP-COMMUNICATION (PRODUCT LINK 300)	219
M	10	1	**8T-2947**	4	BOLT (M6X1X45-MM)	
M	11	1	**8T-4138**	8	BOLT (M6X1X20-MM)	
	12	1	**9X-6165**	4	WASHER (6.5X22X2.5-MM THK)	
	13	1	**9X-8256**	8	WASHER (6.6X12X2-MM THK)	
	14	1	**3S-2093**	1	STRAP-CABLE	

M-METRIC PART
Y-SEPARATE ILLUSTRATION

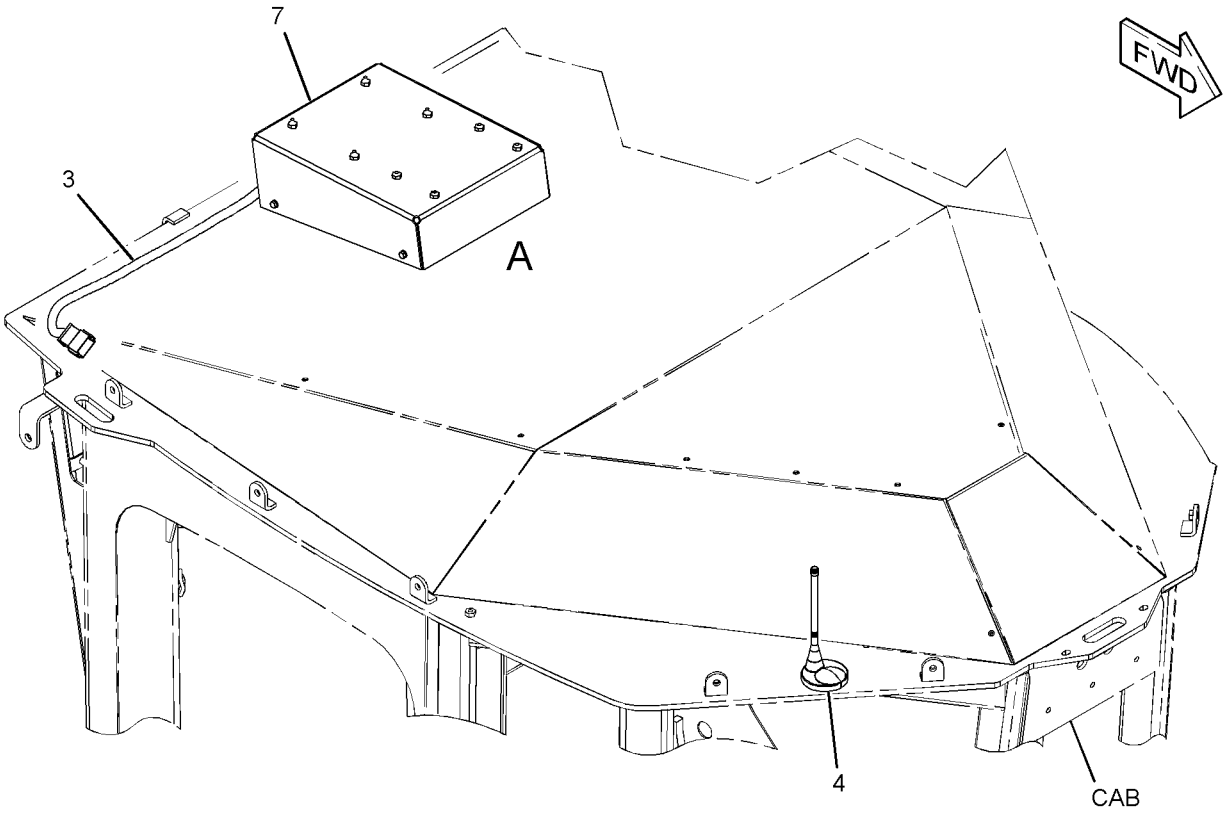

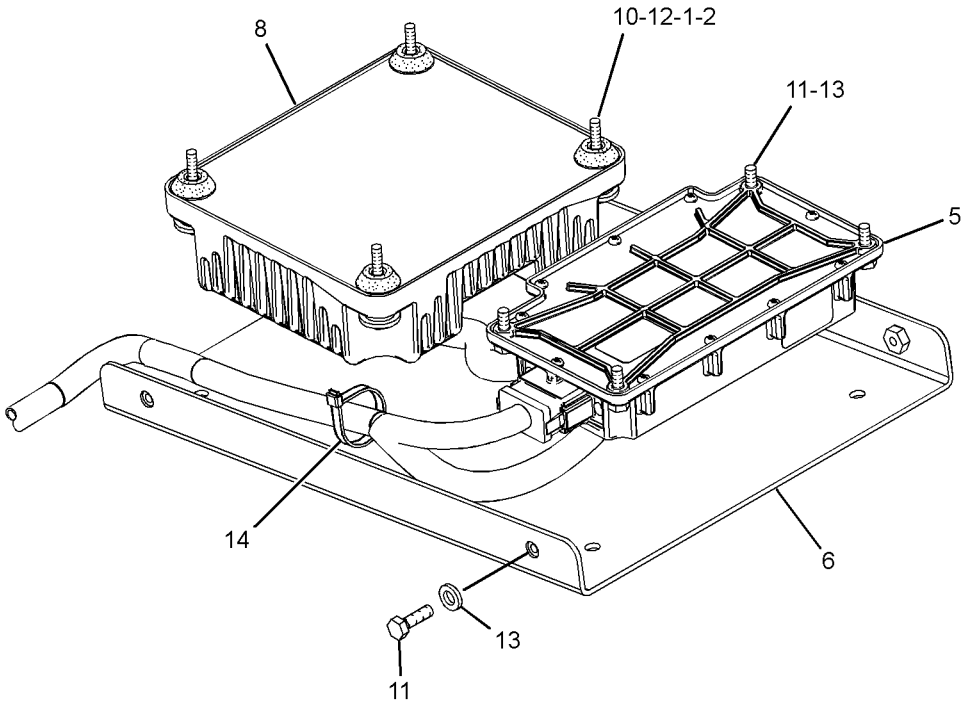

VIEW OF AREA A
(COVER REMOVED)

GRAPHIC #1 **<END>** g02218694

233-3126 INSTALLATION GP-LIGHTING

S/N: R9J1-UP

PART OF 351-2599, 357-3001 OPTION AR-LIGHTING

AN ATTACHMENT

SMCS-1429, 7553 **i03893951**

NOTE	REF NO	GRAPHIC REF	PART NUMBER	QTY	PART NAME 1 2 3 4 5 6 (PRODUCT LEVEL)	SEE PAGE
	1	1	**8K-1433**	1	GROMMET	
Y	2	1	**234-4326**	2	LAMP GP-FLOOD (24-VOLT) (WORK LIGHTS)	238
	3	1	*354-8028*	1	SWITCH GP-LIGHT (FOG LIGHT, REAR)	
		1	**284-3619**	1	SWITCH AS-ROCKER (24-VOLT) (FOG LIGHT, REAR)	
Y	4	1	*290-2016*	1	MOUNTING GP-LAMP	253

Y-SEPARATE ILLUSTRATION

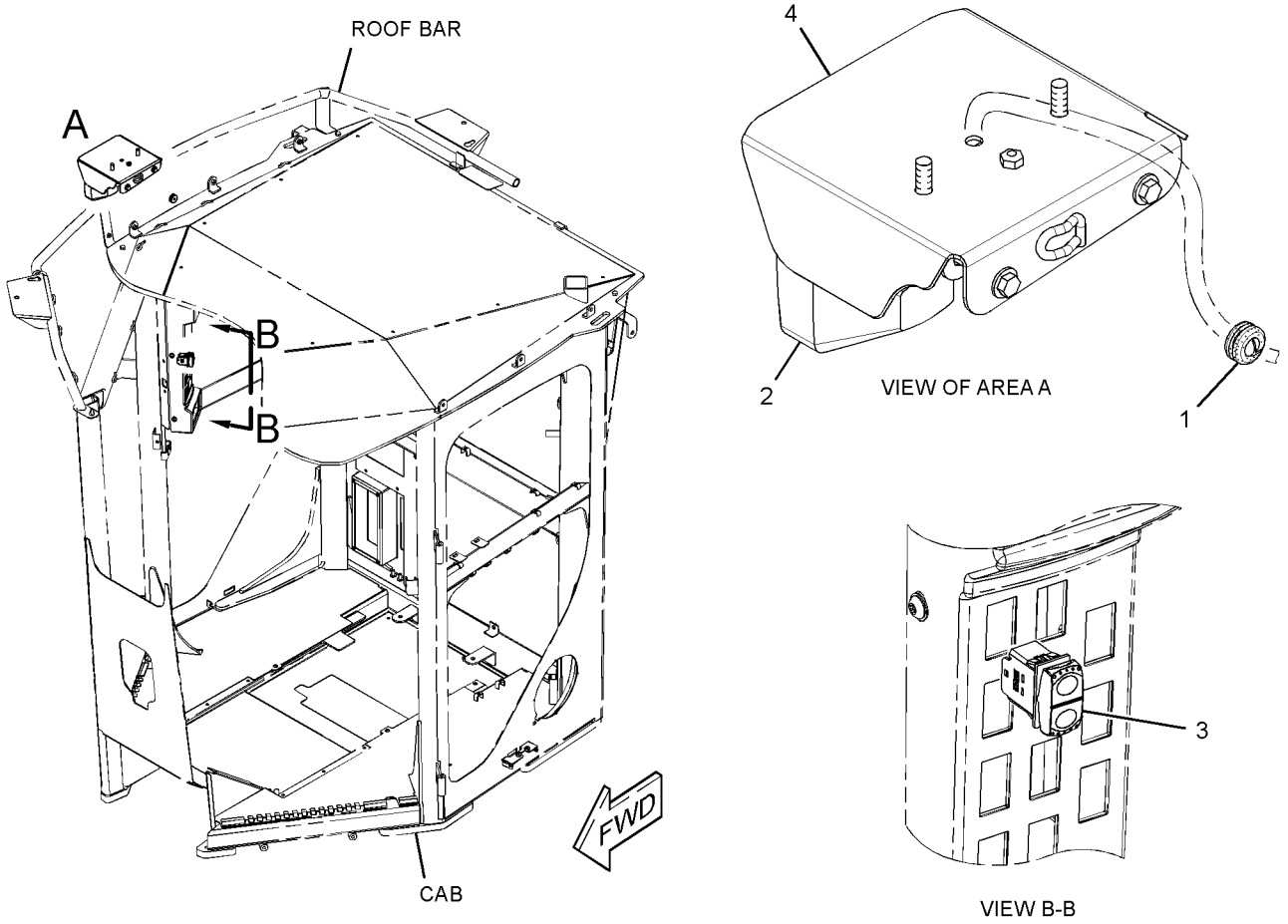

GRAPHIC #1 **<END>** g01872035

ELECTRICAL AND STARTING SYSTEM

238-8827 INSTALLATION GP-SECURITY

S/N: R9J1-UP

AN ATTACHMENT

SMCS-7631 **i03895661**

NOTE	REF NO	GRAPHIC REF	PART NUMBER	QTY	PART NAME 1 2 3 4 5 6 (PRODUCT LEVEL)	SEE PAGE
	1	1	**102-8803**	1	KIT-RECEPTACLE (3-PIN)	
					(INCLUDES RECEPTACLE AS & WEDGE)	
	2	1	**3S-2093**	2	STRAP-CABLE	
	3	1	**198-5389**	1	FILM-IDENTIFICATION (IGNITION SWITCH)	
	4	1	**205-0826**	1	FILM-INSTRUCTION (MACHINE SECURITY, CONSOLE)	
J	5	1	**206-5162**	2	KEY AS-ELECTRONIC (SECURITY)	
	6	1	**206-5208**	1	COIL AS (EXCITER)	
		1	**102-8802**	2	KIT-RECEPTACLE (2-PIN)	
					(EACH INCLUDES RECEPTACLE AS & WEDGE)	
		1	**205-8257**	1	COIL AS (EXCITER)	
	7	1	**218-0404**	1	MODULE GP-INTERFACE (KEY) (MACHINE SECURITY SYSTEM)	
	8	1	**219-6314**	2	KEY RING (IDENTIFICATION)	
	11	1	**238-8813**	1	HARNESS AS-CHASSIS (MACHINE SECURITY SYSTEM)	
		1	**8T-8729**	6	PIN-CONNECTOR (16-GA TO 18-GA)	
		1	**8T-8730**	10	SOCKET-CONNECTOR (16-GA TO 18-GA)	
		1	**8T-8737**	2	PLUG-SEAL	
		1	**102-8805**	1	KIT-RECEPTACLE (6-PIN)	
					(INCLUDES RECEPTACLE AS & WEDGE)	
		1	**155-2265**	1	KIT-CONNECTING PLUG (8-PIN)	
		1	**155-2270**	2	KIT-CONNECTING PLUG (2-PIN)	
					(EACH PLUG KIT INCLUDES PLUG AS,WEDGE,& INTERFACE SEAL)	
	12	1	**242-3282**	1	LAMP AS-LED (24-VOLT, RED)	
	14	1	**204-0813**	2	BOLT (M6X1X40-MM)	
	15	1	**102-8802**	1	KIT-RECEPTACLE (2-PIN)	
					(INCLUDES RECEPTACLE AS & WEDGE)	
	16	1	**8C-5607**	4	MOUNT-ISOLATION	
	17	1	**8C-5608**	2	SPACER (6.5X9.5X25.4-MM THK)	
	18	1	**9X-6165**	4	WASHER (6.5X22X2.5-MM THK)	

J-REQUIRES CORPORATE KEY

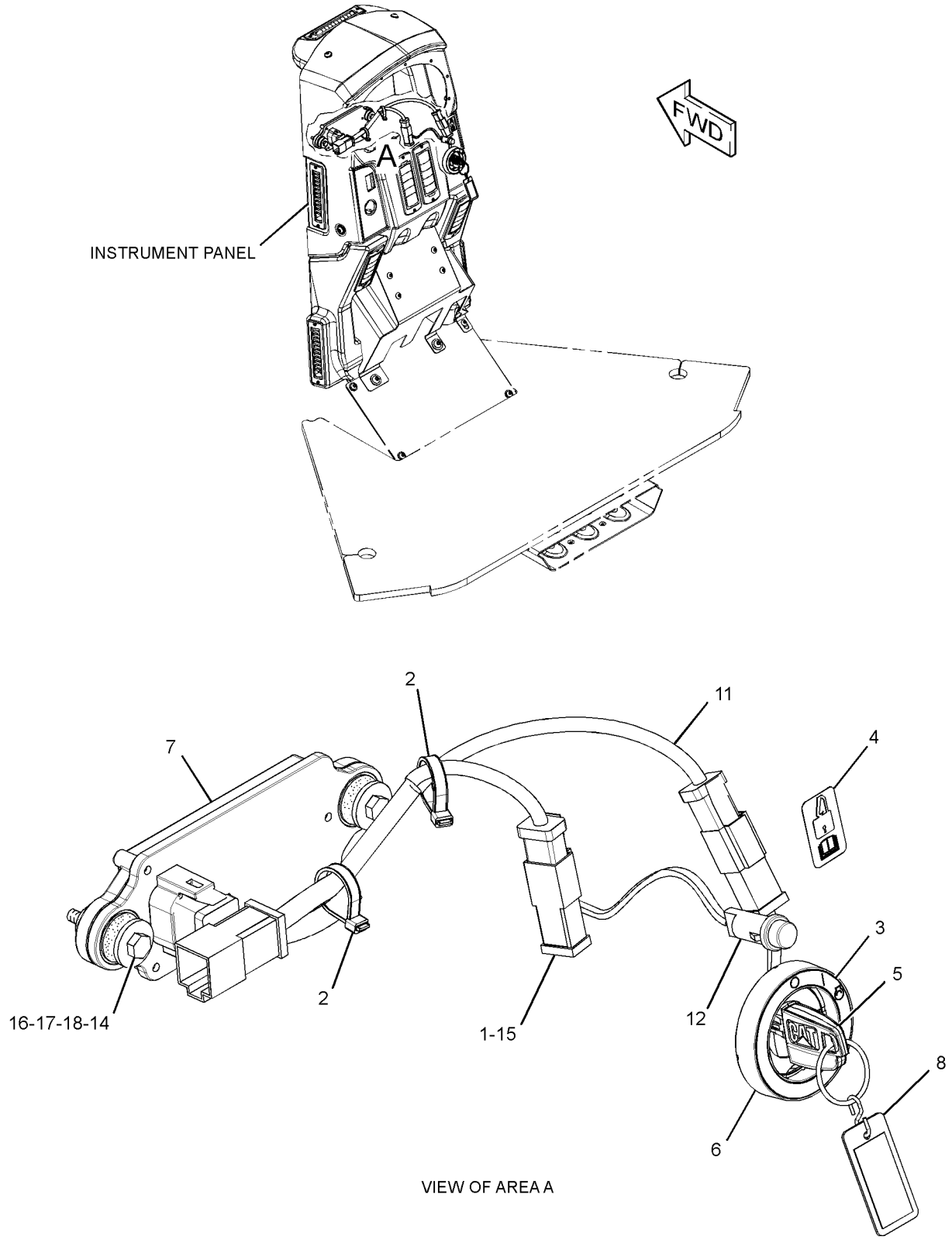

VIEW OF AREA A

GRAPHIC #1 **<END>** g01444538

310-2078 INSTALLATION GP-WARNING BEACON

S/N: R9J1-UP
PART OF 351-2601, 357-3000 SNOW AR-MOTOR GRADER
AN ATTACHMENT

SMCS-1408, 1429, 1431, 7553 **i03894753**

NOTE	REF NO	GRAPHIC REF	PART NUMBER	QTY	PART NAME 1 2 3 4 5 6 (PRODUCT LEVEL)	SEE PAGE
	1	1	**237-9736**	1	SWITCH AS-ROCKER (WARNING BEACON)	
	2	1	**310-2088**	1	PLATE AS	

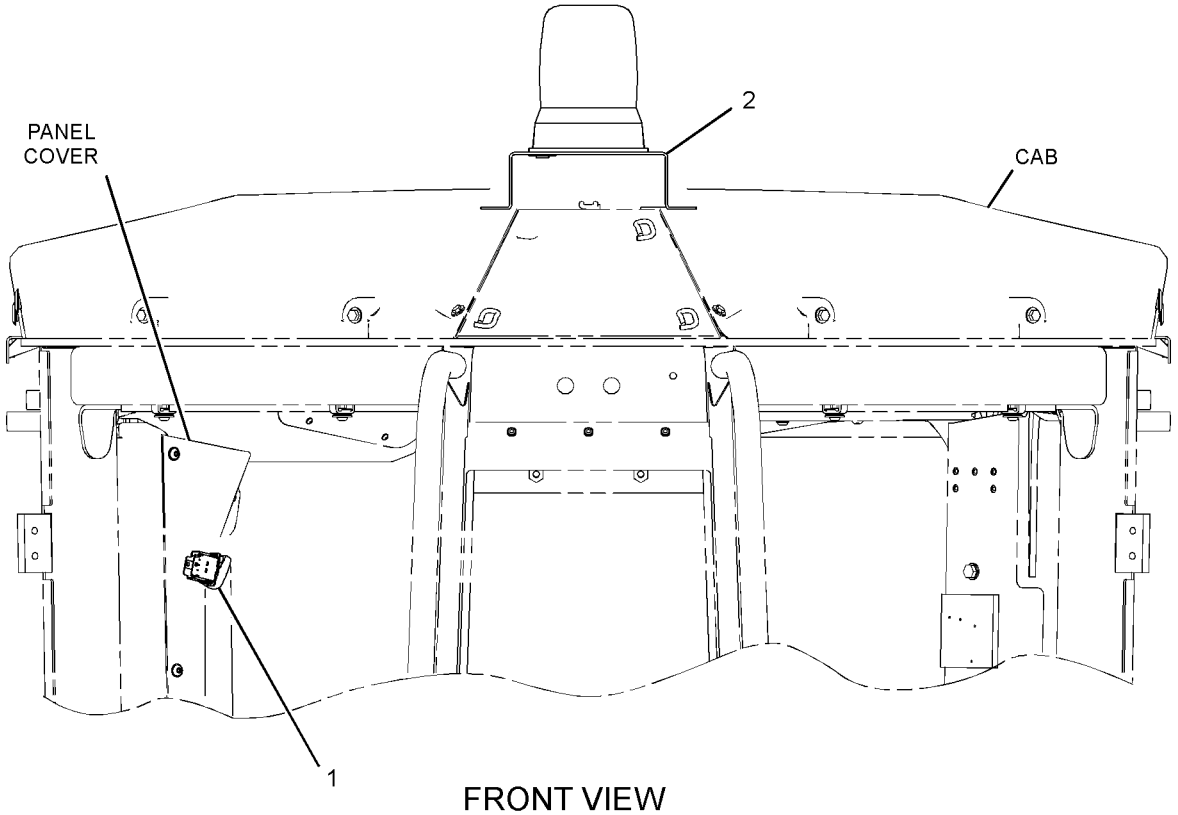

FRONT VIEW

GRAPHIC #1 **<END>** g01832313

261-1502 LAMP GP

S/N: R9J1-UP
24 VOLT
PART OF 233-4623, 247-6430 WIRING GP-REAR LIGHTING
AN ATTACHMENT

SMCS-1429 **i02556523**

NOTE	REF NO	GRAPHIC REF	PART NUMBER	QTY	PART NAME 1 2 3 4 5 6 (PRODUCT LEVEL)	SEE PAGE
	1	1	**264-5346**	1	LENS	
	2	1	**9X-4493**	1	LAMP (24-VOLT, 21-WATT)	
	3	1	**186-3735**	2	PIN-CONNECTOR (16-GA TO 18-GA)	
	4	1	**102-8802**	1	KIT-RECEPTACLE (2-PIN)	
					(INCLUDES RECEPTACLE AS & WEDGE)	

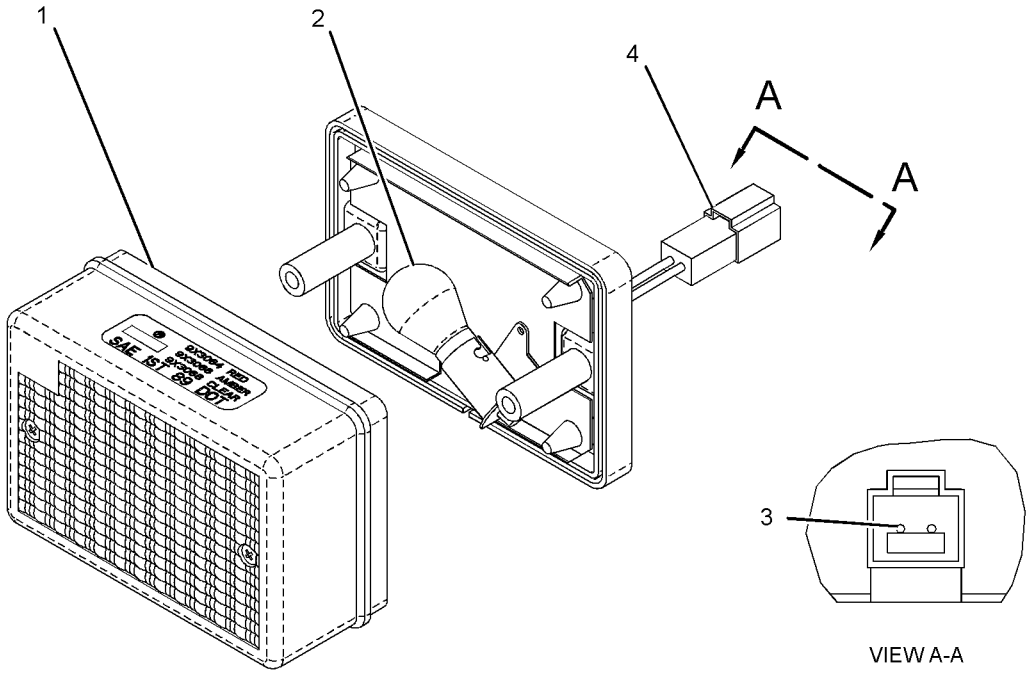

GRAPHIC #1 **<END>** g01279825

3E-6389 LAMP GP-DOME—WITH SWITCH

S/N: R9J1-UP
24-VOLT
PART OF 294-0987, 294-0995 LINER GP-CAB
AN ATTACHMENT

SMCS-1433 **i03205534**

NOTE	REF NO	GRAPHIC REF	PART NUMBER	QTY	PART NAME 1 2 3 4 5 6 (PRODUCT LEVEL)	SEE PAGE
	1	1	**7N-9943**	1	LAMP (24-VOLT) (DOME)	
	2	1	**102-8803**	1	KIT-RECEPTACLE (3-PIN)	
					(INCLUDES RECEPTACLE AS & WEDGE)	
	3	1	**186-3735**	3	PIN-CONNECTOR (16-GA TO 18-GA)	
	4	1	**7T-0020**	1	LENS-DOME LAMP	

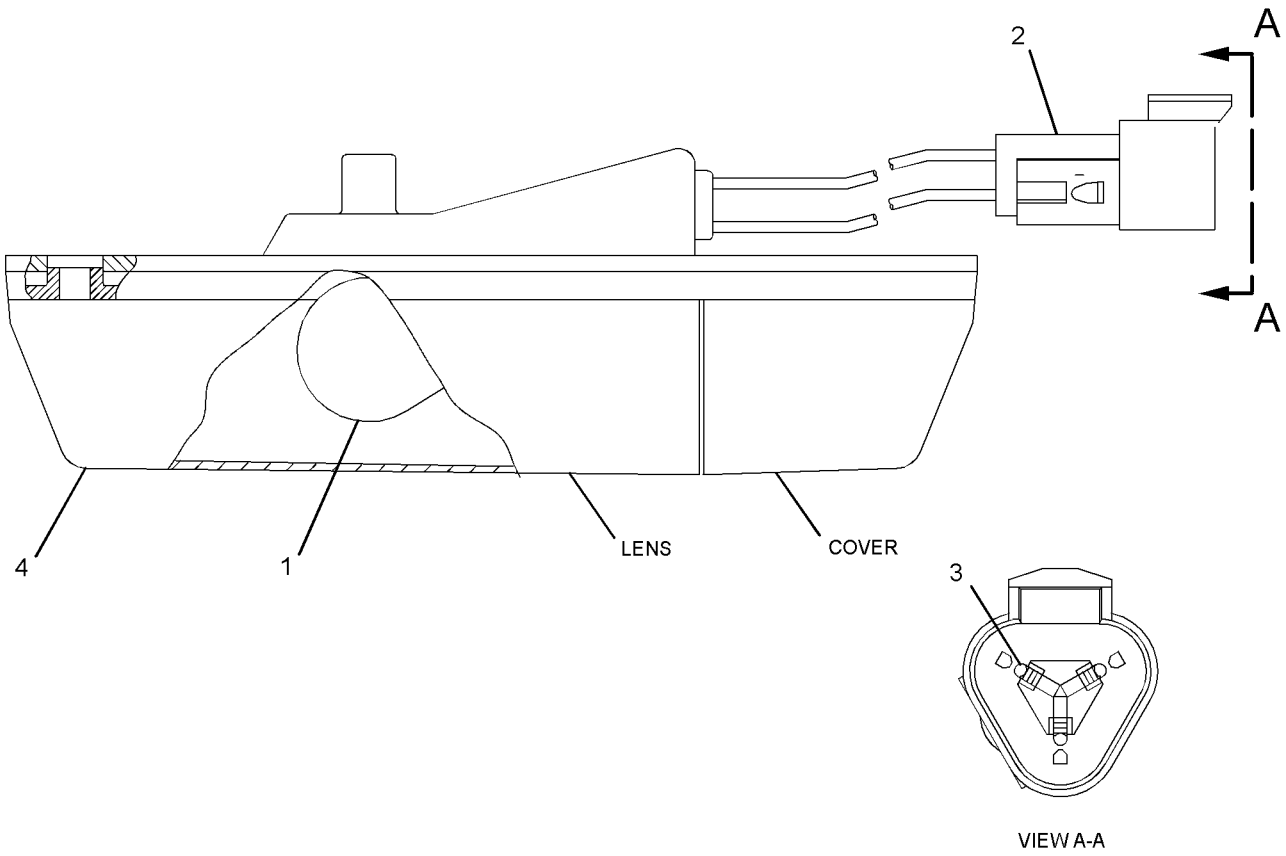

GRAPHIC #1 **<END>** g01270113

219-6488 LAMP GP-FLOOD

S/N: R9J1-UP
24-VOLT
PART OF 291-4038 LIGHTING GP-FLOOD

SMCS-1434 **i02956329**

NOTE	REF NO	GRAPHIC REF	PART NUMBER	QTY	PART NAME 1 2 3 4 5 6 (PRODUCT LEVEL)	SEE PAGE
	1	1	**9X-3463**	1	LAMP-HALOGEN (24-VOLT, 70-WATT)	
M	2	1	**8T-6912**	1	BOLT (M8X1.25X50-MM)	
M	3	1	**6V-9189**	1	LOCKNUT (M8X1.25-THD)	
	4	1	**8T-4224**	2	WASHER-HARD (8.8X16X2-MM THK)	
	5	1	**9X-4244**	2	SCREW-SPECIAL (M4X1.79X25-MM)	
	7	1	**202-6611**	1	LENS AS	
	8	1	**175-4292**	1	BODY AS	
	9	1	**164-7556**	1	BRACKET (LAMP RETAINING)	
	10	1	**175-4291**	1	BRACKET AS	

M-METRIC PART

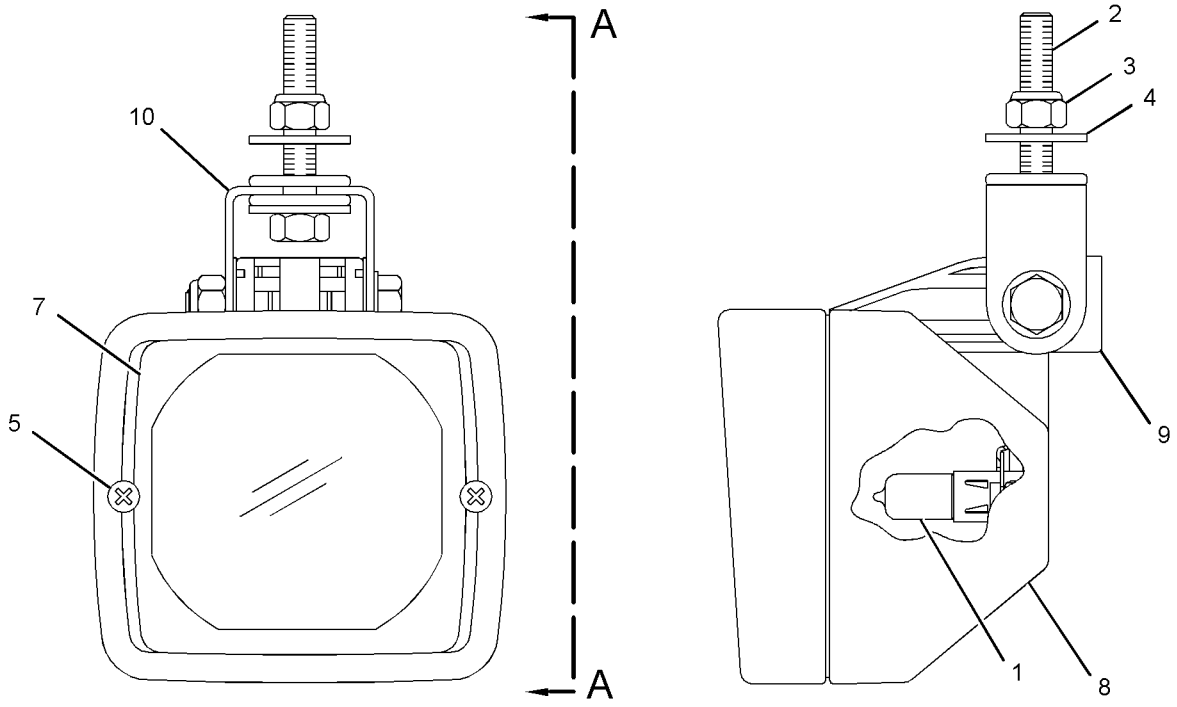

VIEW A-A

GRAPHIC #1 **<END>** g01475061

233-4620 LAMP GP-FLOOD

S/N: R9J1-UP
24-VOLT
PART OF 349-3069 OPTION AR-LIGHTING
AN ATTACHMENT

SMCS-1434 **i03895810**

NOTE	REF NO	GRAPHIC REF	PART NUMBER	QTY	PART NAME 1 2 3 4 5 6 (PRODUCT LEVEL)	SEE PAGE
Y	1	1	**234-4325**	2	LAMP GP-FLOOD (24-VOLT)	237
	2	1	**9X-9365**	2	BRACKET	
	3	1	**8T-4121**	2	WASHER-HARD (11X21X2.5-MM THK)	
M	4	1	**8T-4137**	2	BOLT (M10X1.5X20-MM)	
	5	1	**9X-7345**	2	GROMMET	

M-METRIC PART
Y-SEPARATE ILLUSTRATION

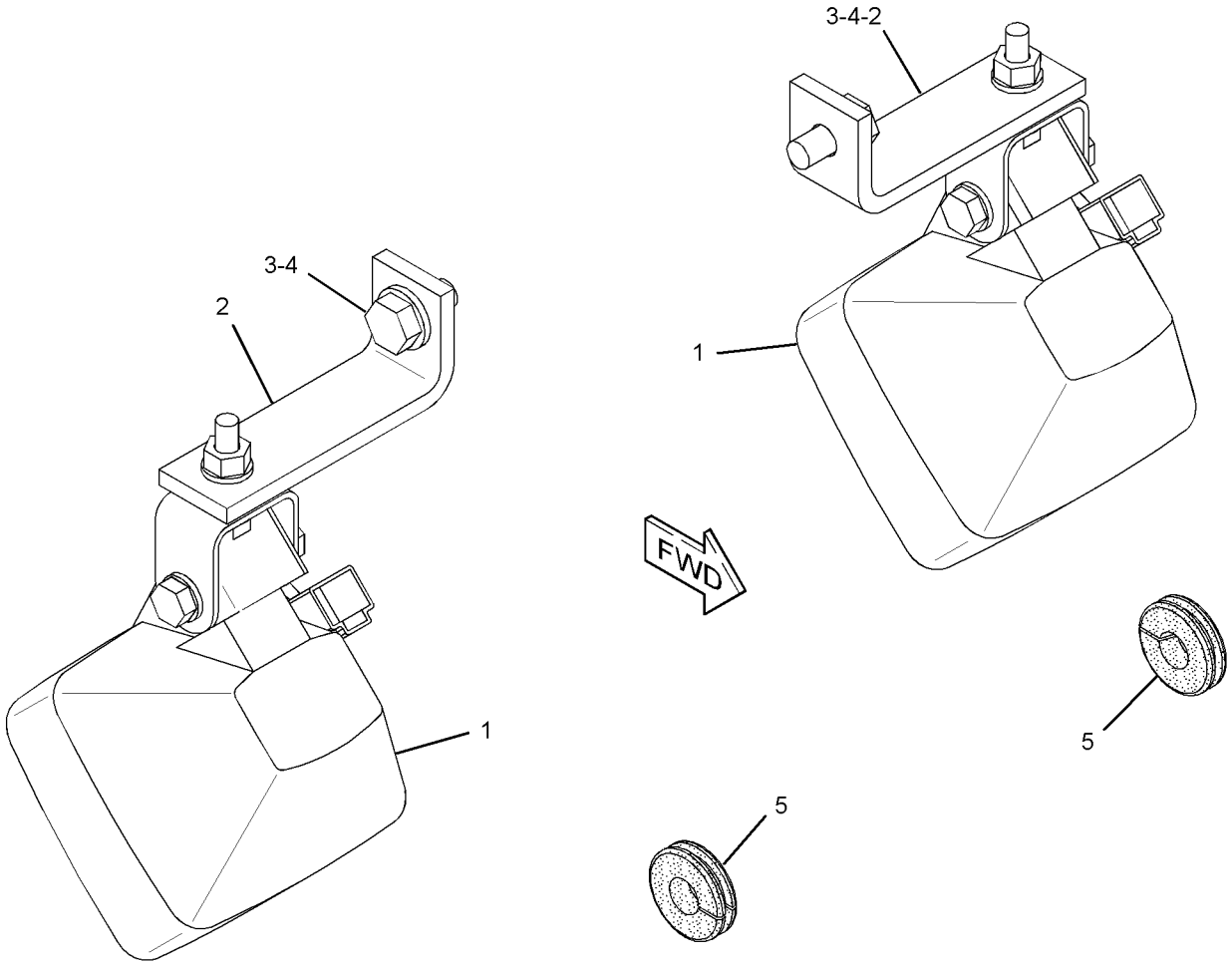

GRAPHIC #1 **<END>** g02127226

234-4325 LAMP GP-FLOOD

S/N: R9J1-UP
24-VOLT
PART OF 233-4620 LAMP GP-FLOOD, 233-4615, 286-7909 LIGHTING GP-FLOOD
AN ATTACHMENT

SMCS-1434 **i03801030**

NOTE	REF NO	GRAPHIC REF	PART NUMBER	QTY	PART NAME 1 2 3 4 5 6 (PRODUCT LEVEL)	SEE PAGE
	1	1	**9X-3463**	1	LAMP-HALOGEN (24-VOLT, 70-WATT)	
M	2	1	**8T-0389**	1	LOCKNUT (M10X1.5-THD)	
	3	1	**9X-4244**	2	SCREW-SPECIAL (M4X1.79X25-MM)	
	4	1	**202-6614**	1	LENS AS (FLOODLIGHT)	
	5	1	**234-7730**	1	BODY AS	
	6	1	**164-7556**	1	BRACKET (LAMP RETAINING)	
	7	1	**234-7731**	1	BRACKET AS	
	8	1	**8T-4121**	1	WASHER-HARD (11X21X2.5-MM THK)	

M-METRIC PART

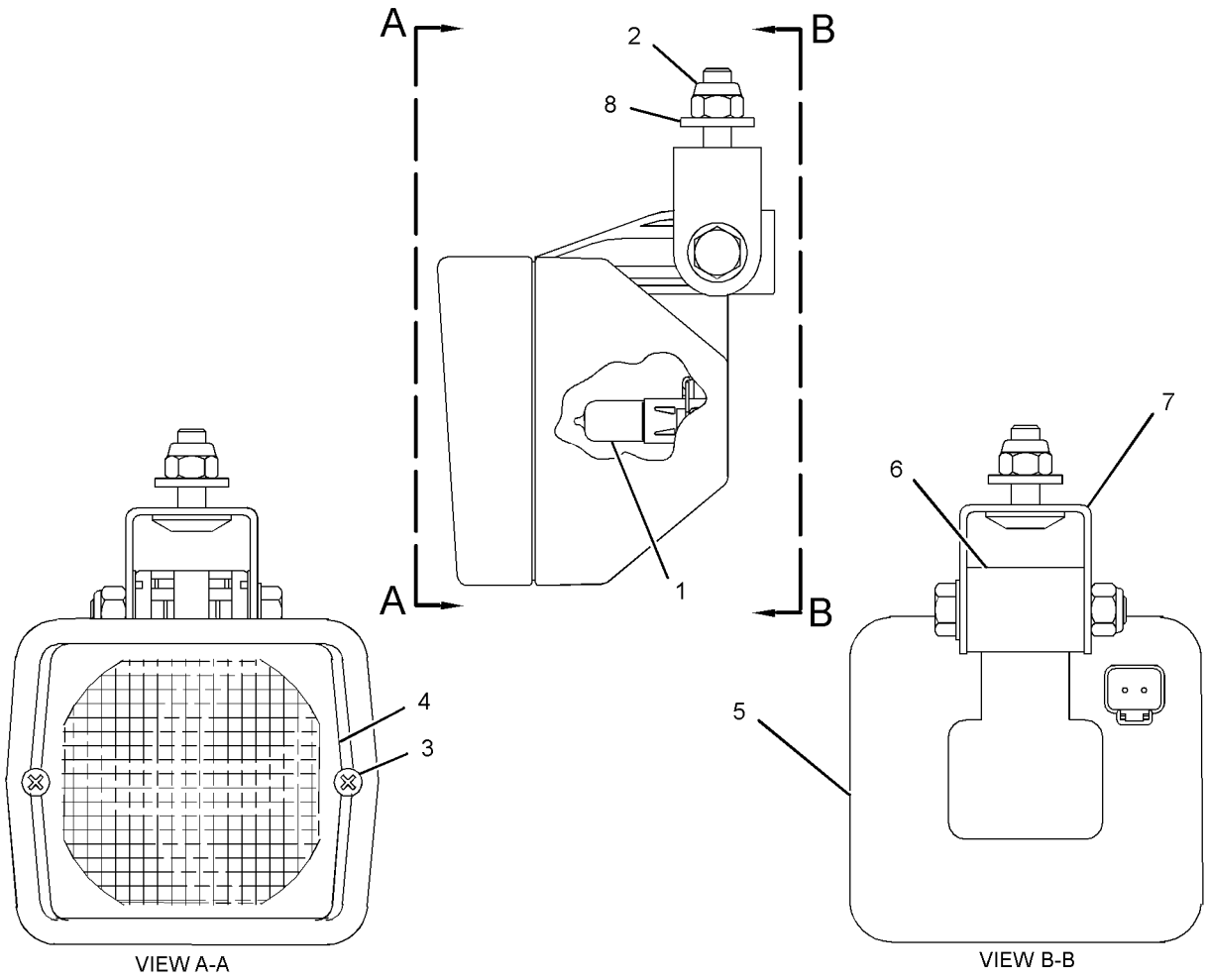

GRAPHIC #1 **<END>** g01246703

234-4326 LAMP GP-FLOOD

S/N: R9J1-UP
24-VOLT
PART OF 233-3126 INSTALLATION GP-LIGHTING
AN ATTACHMENT

SMCS-1434 **i02809625**

NOTE	REF NO	GRAPHIC REF	PART NUMBER	QTY	PART NAME 1 2 3 4 5 6 (PRODUCT LEVEL)	SEE PAGE
	1	1	**9X-3463**	1	LAMP-HALOGEN (24-VOLT, 70-WATT)	
M	2	1	**8T-0389**	1	LOCKNUT (M10X1.5-THD)	
	3	1	**9X-4244**	2	SCREW-SPECIAL (M4X1.79X25-MM)	
	4	1	**202-6611**	1	LENS AS	
	5	1	**234-7730**	1	BODY AS	
	6	1	**164-7556**	1	BRACKET (LAMP RETAINING)	
	7	1	**234-7731**	1	BRACKET AS	
	8	1	**8T-4121**	1	WASHER-HARD (11X21X2.5-MM THK)	

M-METRIC PART

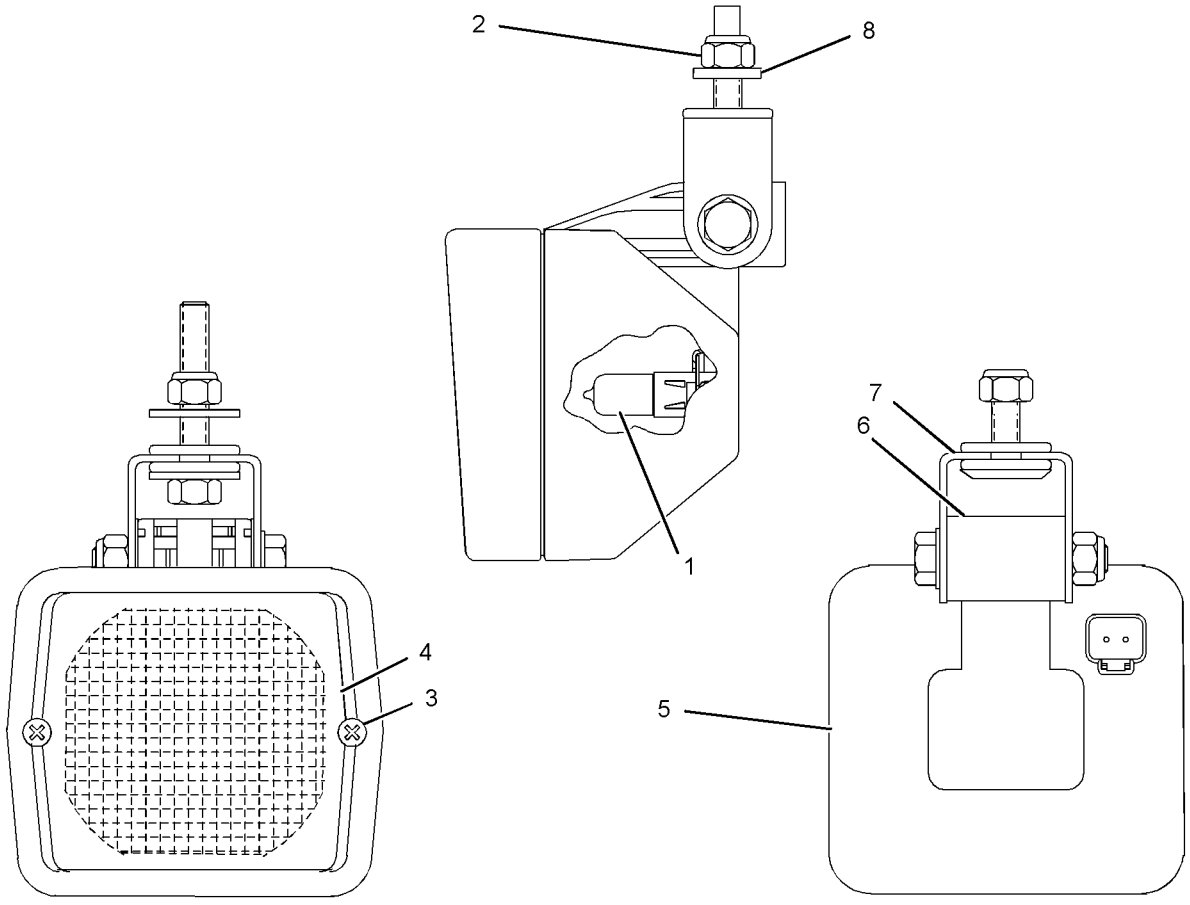

GRAPHIC #1 **<END>** g01270966

315-1251 LAMP GP-FLOOD–CAB ROOF, REAR

S/N: R9J1-UP
24-VOLT, 65-WATT
PART OF 291-4038 LIGHTING GP-FLOOD

SMCS-1434 **i02982440**

NOTE	REF NO	GRAPHIC REF	PART NUMBER	QTY	PART NAME 1 2 3 4 5 6 (PRODUCT LEVEL)	SEE PAGE
	1	1	**9X-3463**	1	LAMP-HALOGEN (24-VOLT, 70-WATT)	
	2	1	**9X-4244**	2	SCREW-SPECIAL (M4X1.79X25-MM)	
	3	1	**202-6614**	1	LENS AS	
	4	1	**175-4292**	1	BODY AS	
	5	1	**164-7556**	1	BRACKET (LAMP RETAINING)	
M	6	1	**8T-6912**	1	BOLT (M8X1.25X50-MM)	
M	7	1	**6V-9189**	1	LOCKNUT (M8X1.25-THD)	
	8	1	**8T-4224**	2	WASHER-HARD (8.8X16X2-MM THK)	
	9	1	**317-7684**	1	BRACKET AS	

M-METRIC PART

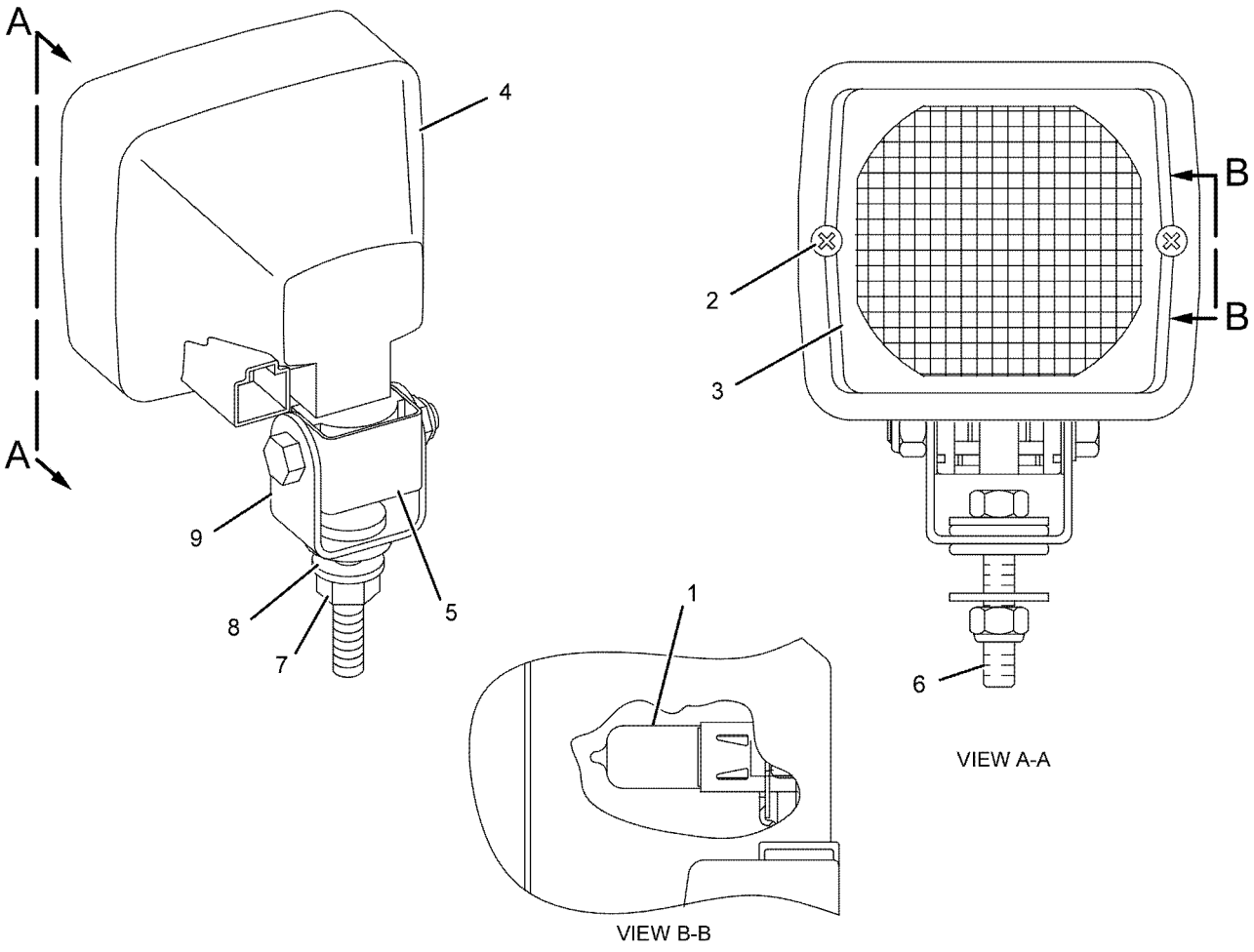

GRAPHIC #1 **<END>** g01071978

290-5749 LAMP GP-HEAD

S/N: R9J1-UP
24-VOLT
PART OF 291-4038 LIGHTING GP-FLOOD

SMCS-1429 **i02715986**

NOTE	REF NO	GRAPHIC REF	PART NUMBER	QTY	PART NAME 1 2 3 4 5 6 (PRODUCT LEVEL)	SEE PAGE
	1	1	**308-2129**	1	BRACKET-LIGHT	
M	2	1	**3E-9854**	1	BOLT (M8X1.25X20-MM)	
M	3	1	**6V-9189**	2	LOCKNUT (M8X1.25-THD)	
M	4	1	**8C-5748**	1	BOLT (M8X1.25X55-MM)	
	5	1	**8T-4224**	1	WASHER-HARD (8.8X16X2-MM THK)	
	6	1	**9X-3463**	1	LAMP-HALOGEN (24-VOLT, 70-WATT)	

M-METRIC PART

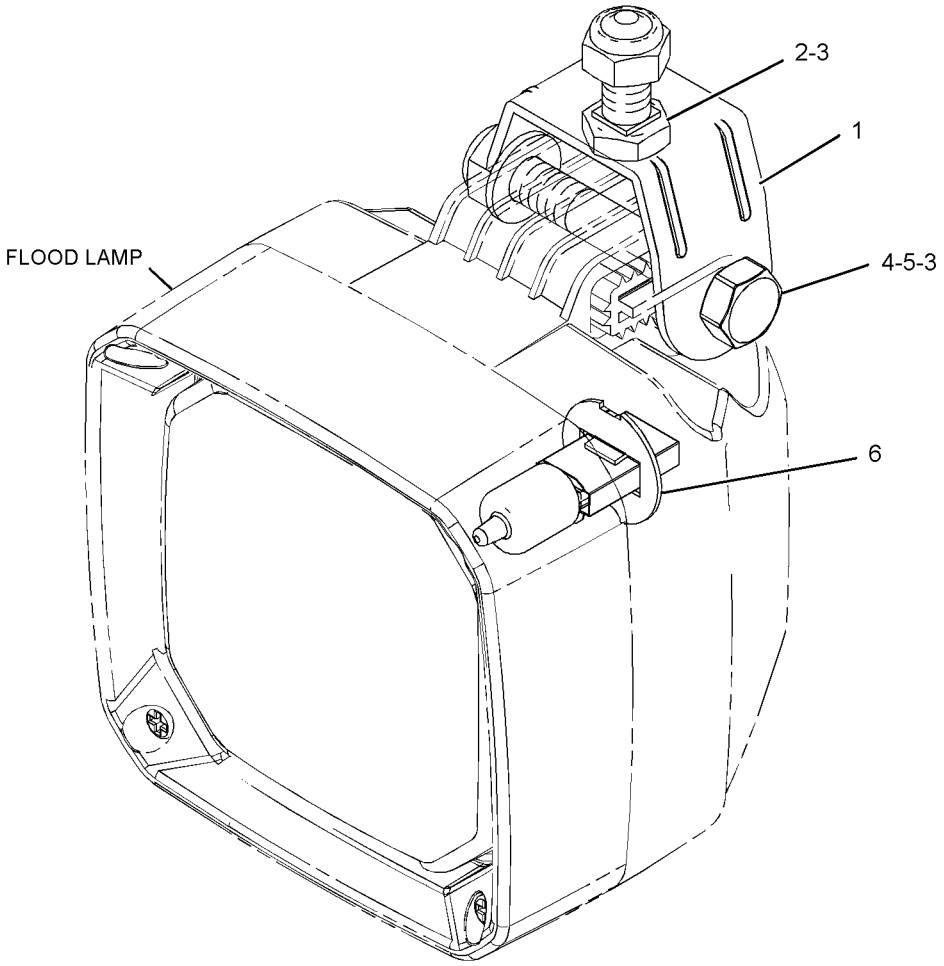

GRAPHIC #1 **<END>** g01364236

259-9287 LAMP GP-HEAD & SIGNAL–LH

S/N: R9J1-UP
24-VOLT
PART OF 235-5955, 260-1909 MOUNTING GP-LIGHTING
AN ATTACHMENT

SMCS-1429, 1430 **i04004497**

NOTE	REF NO	GRAPHIC REF	PART NUMBER	QTY	PART NAME 1 2 3 4 5 6 (PRODUCT LEVEL)	SEE PAGE
	1	1	**228-6053**	1	BODY AS	
	2	1	**228-6054**	1	BEZEL	
	3	1	**348-7240**	1	LENS AS (HEADLIGHT)	
	4	1	**272-9850**	1	LENS AS (TURN SIGNAL)	
	5	1	**228-6056**	6	SCREW (4-32X1.26-IN)	
	6	1	**9X-3465**	1	LAMP (24-VOLT, 75/70-WATT)	
	7	1	**130-3515**	1	LAMP (24-VOLT, 5-WATT)	
M	8	1	**8T-0389**	1	LOCKNUT (M10X1.5-THD)	
	9	1	**100-3253**	1	SPACER (SPHERICAL)	
	10	1	**100-3254**	1	SPACER (SPHERICAL)	
	11	1	**100-3255**	2	WASHER (SPHERICAL)	
	12	1	**102-8805**	1	KIT-RECEPTACLE (6-PIN)	
					(INCLUDES RECEPTACLE AS & WEDGE)	
	13	1	**8T-8729**	5	PIN-CONNECTOR (16-GA TO 18-GA)	
	14	1	**8T-8737**	1	PLUG-SEAL	

M-METRIC PART

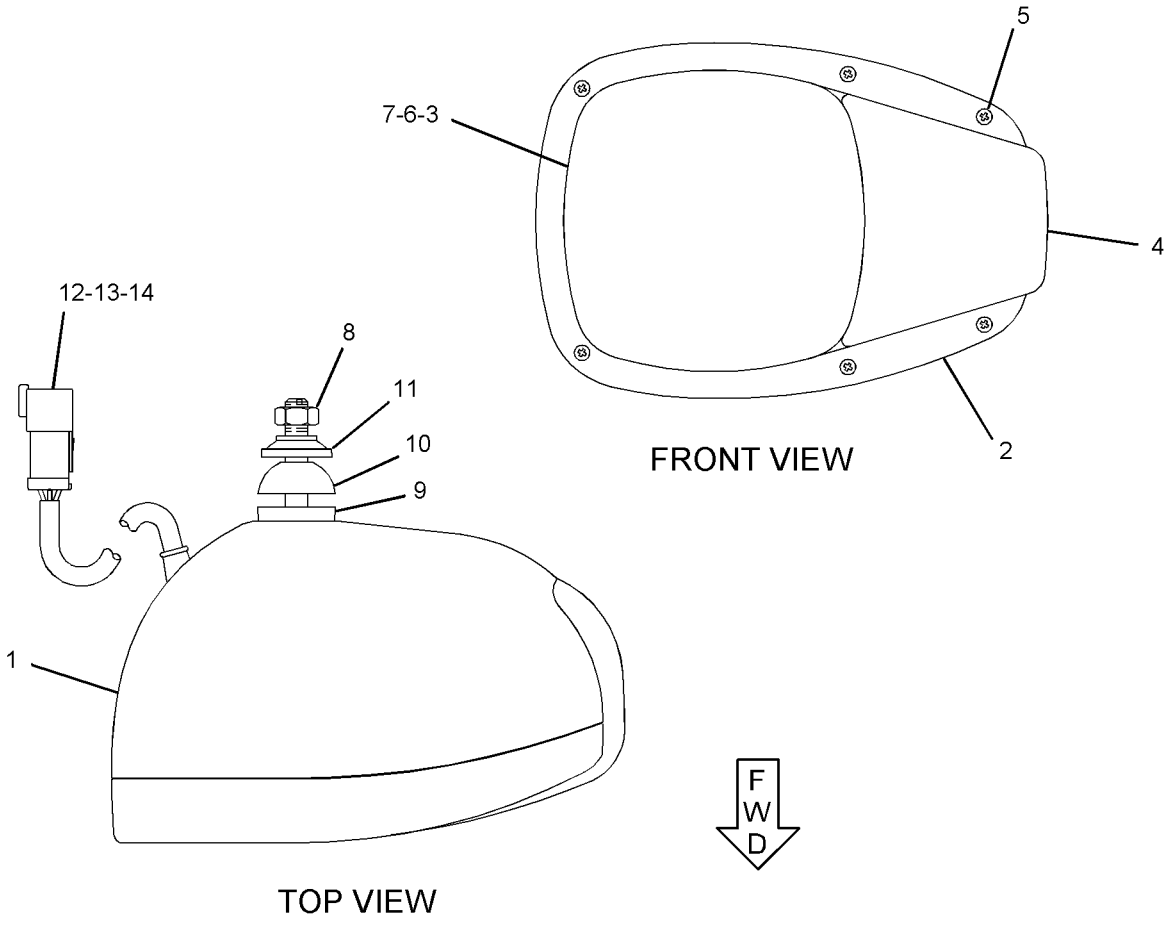

GRAPHIC #1 **<END>** g02149088

259-9288 LAMP GP-HEAD & SIGNAL–RH

S/N: R9J1-UP
24-VOLT
PART OF 235-5955, 260-1909 MOUNTING GP-LIGHTING
FIELD REPLACEMENT ORDER 344-3460–PAGE 243
AN ATTACHMENT

SMCS-1429, 1430 **i03960010**

NOTE	REF NO	GRAPHIC REF	PART NUMBER	QTY	PART NAME 1 2 3 4 5 6 (PRODUCT LEVEL)	SEE PAGE
	1	1	**228-6053**	1	BODY AS	
	2	1	**228-6054**	1	BEZEL	
	3	1	**348-7240**	1	LENS AS (HEADLIGHT)	
	4	1	**272-9850**	1	LENS AS (TURN SIGNAL)	
	5	1	**228-6056**	6	SCREW (4-32X1.26-IN)	
	6	1	**9X-3465**	1	LAMP (24-VOLT, 75/70-WATT)	
	7	1	**130-3515**	1	LAMP (24-VOLT, 5-WATT)	
M	8	1	**8T-0389**	1	LOCKNUT (M10X1.5-THD)	
	9	1	**100-3253**	1	SPACER (SPHERICAL)	
	10	1	**100-3254**	1	SPACER (SPHERICAL)	
	11	1	**100-3255**	2	WASHER (SPHERICAL)	
	12	1	**102-8805**	1	KIT-RECEPTACLE (6-PIN)	
					(INCLUDES RECEPTACLE AS & WEDGE)	
	13	1	**8T-8729**	5	PIN-CONNECTOR (16-GA TO 18-GA)	
	14	1	**8T-8737**	1	PLUG-SEAL	

M-METRIC PART

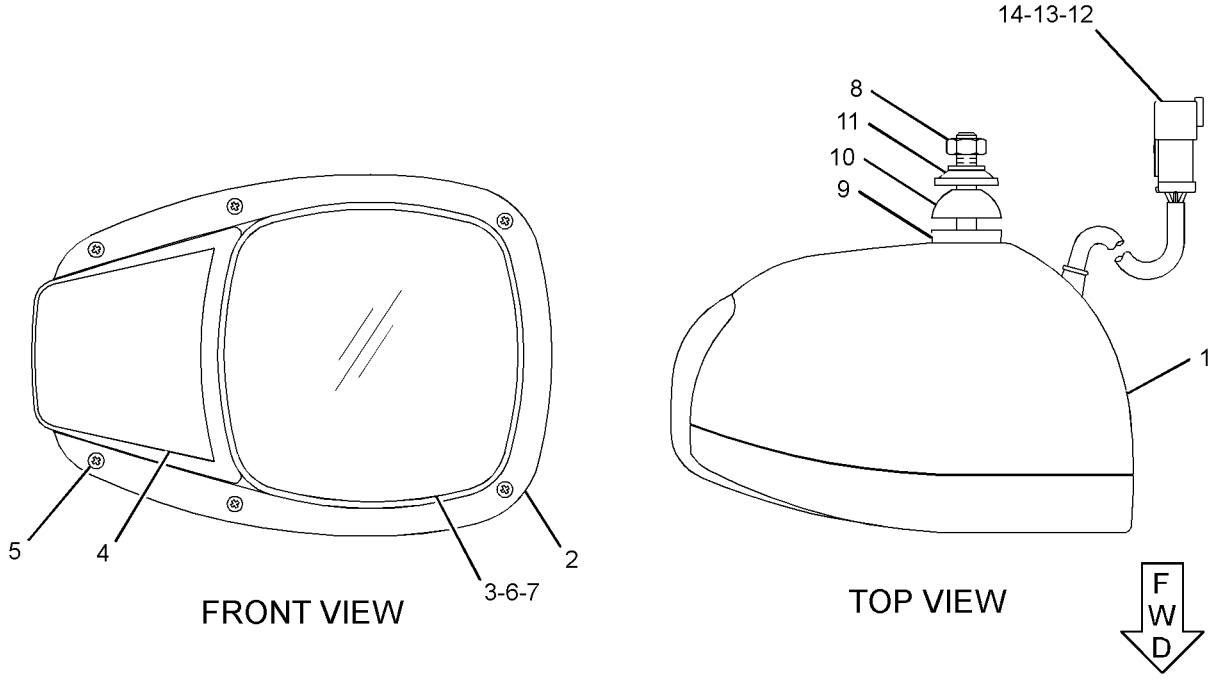

GRAPHIC #1 **<END>** g01259951

344-3460 LAMP GP-HEAD & SIGNAL–LH

S/N: R9J1-UP
24-VOLT
PART OF 259-9288 LAMP GP-HEAD & SIGNAL
FIELD REPLACEMENT FOR 259-9288–PAGE 242

SMCS-1429, 1430 **i04025332**

NOTE	REF NO	GRAPHIC REF	PART NUMBER	QTY	PART NAME 1 2 3 4 5 6 (PRODUCT LEVEL)	SEE PAGE
	1	1	**320-1515**	1	BODY AS	
	2	1	**228-6054**	1	BEZEL	
	3	1	**348-7240**	1	LENS AS (HEADLIGHT)	
	4	1	**272-9850**	1	LENS AS (TURN SIGNAL)	
	5	1	**228-6056**	6	SCREW (4-32X1.26-IN)	
	6	1	**9X-3465**	1	LAMP (24-VOLT, 75/70-WATT)	
	7	1	**130-3515**	1	LAMP (24-VOLT, 5-WATT)	
M	8	1	**8T-0389**	1	LOCKNUT (M10X1.5-THD)	
	9	1	**100-3253**	1	SPACER (SPHERICAL)	
	10	1	**100-3254**	1	SPACER (SPHERICAL)	
	11	1	**100-3255**	2	WASHER (SPHERICAL)	
	12	1	**102-8805**	1	KIT-RECEPTACLE (6-PIN)	
					(INCLUDES RECEPTACLE AS & WEDGE)	
	13	1	**8T-8729**	5	PIN-CONNECTOR (16-GA TO 18-GA)	
	14	1	**8T-8737**	1	PLUG-SEAL	

M-METRIC PART

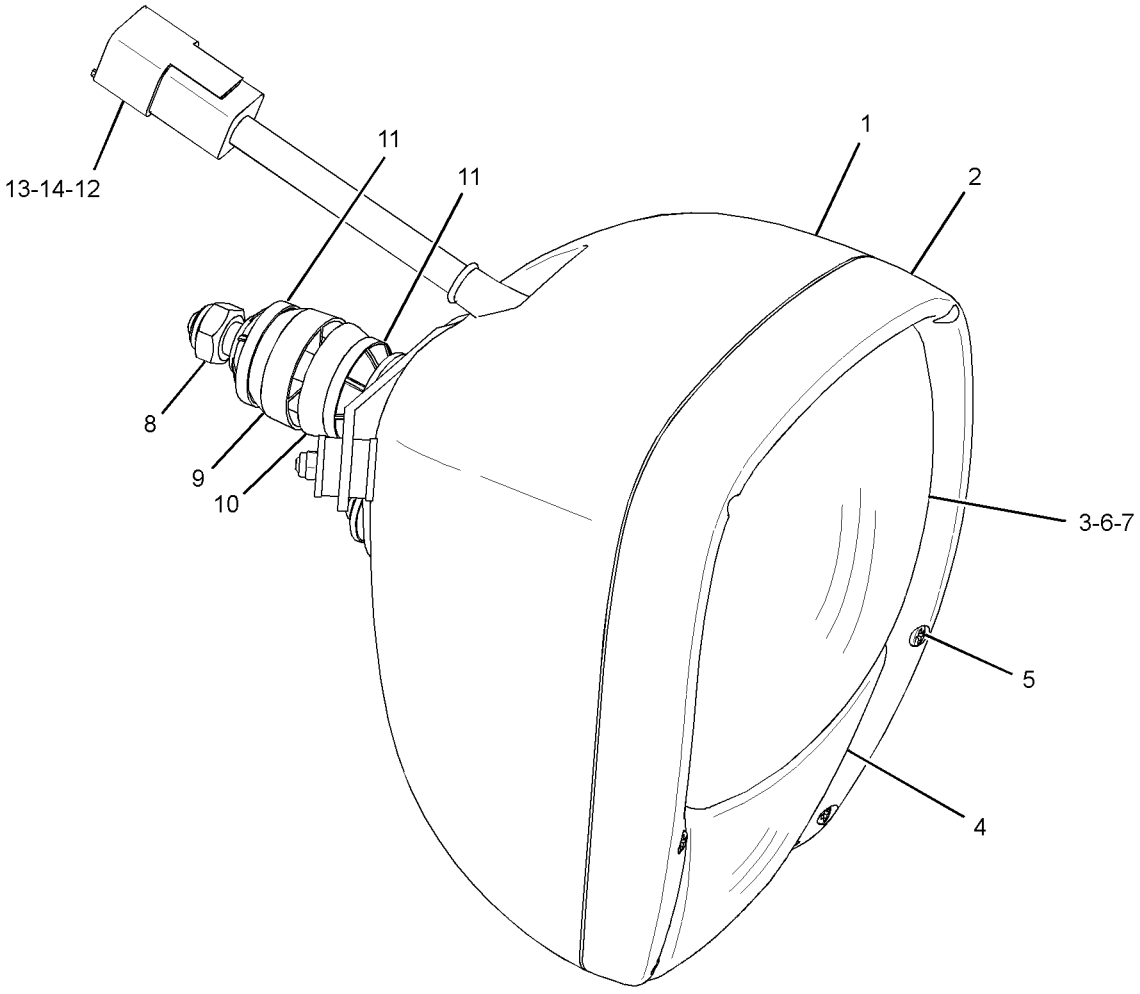

GRAPHIC #1 **<END>** g02163842

201-5464 LAMP GP-SIGNAL–TURN

S/N: R9J1-UP
12-VOLT, 24-VOLT
PART OF 233-4623 WIRING GP-REAR LIGHTING
AN ATTACHMENT

SMCS-1430, 1432 **i03364123**

NOTE	REF NO	GRAPHIC REF	PART NUMBER	QTY	PART NAME 1 2 3 4 5 6 (PRODUCT LEVEL)	SEE PAGE
	1	1	**102-8802**	1	KIT-RECEPTACLE (2-PIN)	
					(INCLUDES RECEPTACLE AS & WEDGE)	
	2	1	**186-3735**	2	PIN-CONNECTOR (16-GA TO 18-GA)	

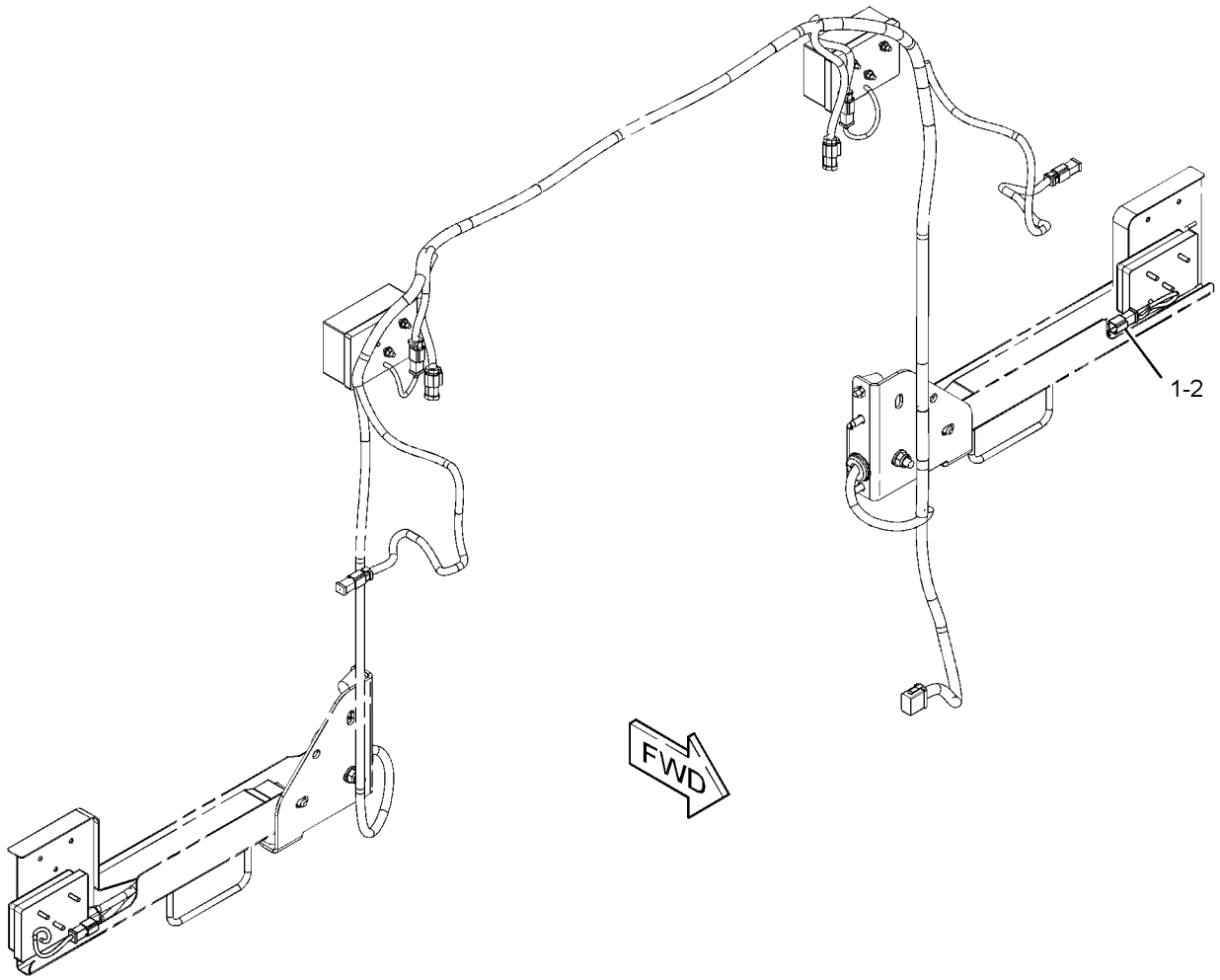

GRAPHIC #1 **<END>** g01792295

334-8049 LAMP GP-SIGNAL–STOP, TAIL

S/N: R9J1-UP
12-VOLT TO 24-VOLT
PART OF 233-4623, 247-6430 WIRING GP-REAR LIGHTING
AN ATTACHMENT

SMCS-1430, 1432 **i03361044**

NOTE	REF NO	GRAPHIC REF	PART NUMBER	QTY	PART NAME 1 2 3 4 5 6 (PRODUCT LEVEL)	SEE PAGE
	1	1	**102-8803**	1	KIT-RECEPTACLE (3-PIN)	
					(INCLUDES RECEPTACLE AS & WEDGE)	
	2	1	**186-3735**	3	PIN-CONNECTOR (16-GA TO 18-GA)	

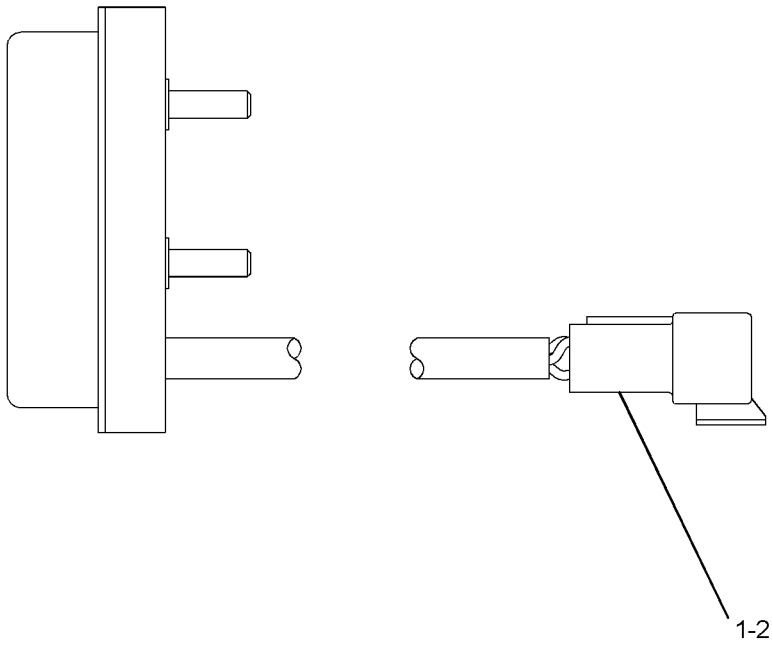

GRAPHIC #1 **<END>** g01213248

284-3757 LAMP GP-WARNING BEACON–AMBER, STROBE

S/N: R9J1-UP
12-VOLT, 24-VOLT
AN ATTACHMENT

SMCS-1431 **i02733504**

NOTE	REF NO	GRAPHIC REF	PART NUMBER	QTY	PART NAME 1 2 3 4 5 6 (PRODUCT LEVEL)	SEE PAGE
	1	1	**102-8802**	1	KIT-RECEPTACLE (2-PIN)	
					(INCLUDES RECEPTACLE AS & WEDGE)	
	2	1	**186-3735**	2	PIN-CONNECTOR (16-GA TO 18-GA)	

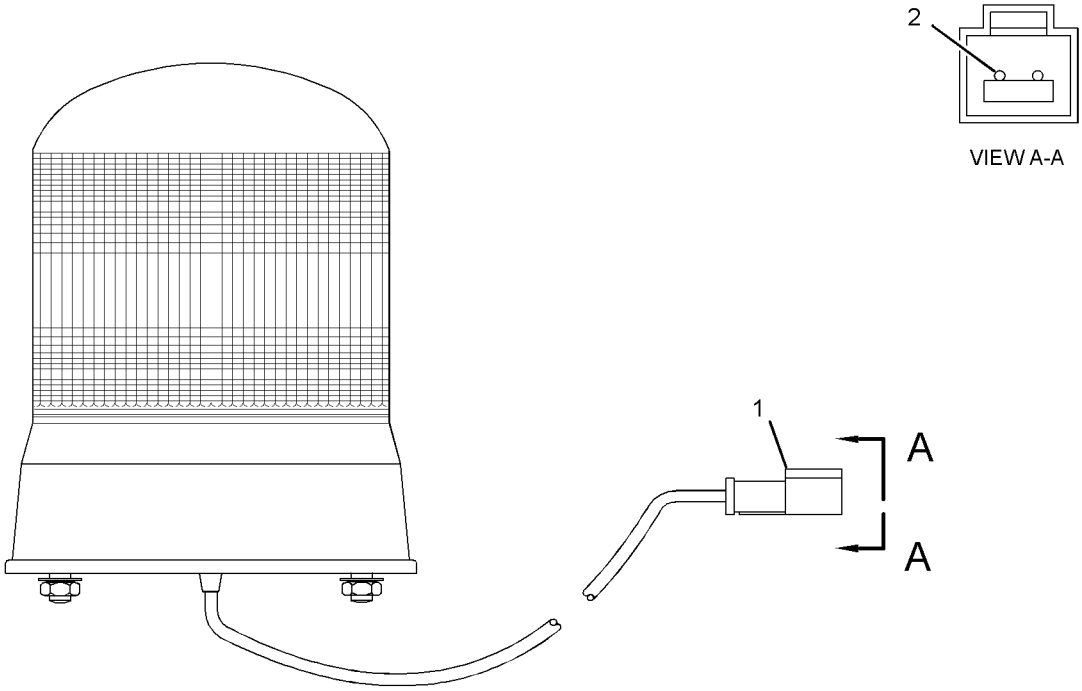

GRAPHIC #1 **<END>** g01373385

299-3881 LIGHTING AR-ROADING—SNOW REMOVAL

S/N: R9J1-UP

PART OF 351-2601, 357-3000 SNOW AR-MOTOR GRADER

AN ATTACHMENT

SMCS-1408, 1429 **i02835954**

NOTE	PART NUMBER	QTY	PART NAME 1 2 3 4 5 6 (PRODUCT LEVEL)	SEE PAGE
Y	*260-1909*	1	MOUNTING GP-LIGHTING (SNOW REMOVAL)	256
Y	*233-3124*	1	SWITCH GP-ROADING (LIGHTS)	320
Y	*233-4623*	1	WIRING GP-REAR LIGHTING (STOP, TAIL, TURN, BACKUP)	383

Y-SEPARATE ILLUSTRATION

<END>

233-4615 LIGHTING GP-FLOOD

S/N: R9J1-UP
PART OF 349-3068, 349-3069 OPTION AR-LIGHTING
AN ATTACHMENT

SMCS-1434 **i02659300**

NOTE	REF NO	GRAPHIC REF	PART NUMBER	QTY	PART NAME 1 2 3 4 5 6 (PRODUCT LEVEL)	SEE PAGE
	1	1	**3S-2093**	2	STRAP-CABLE	
Y	2	1	**234-4325**	2	LAMP GP-FLOOD (24-VOLT)	237
	3	1	**243-1352**	2	BRACKET AS	
	4	1	**4P-7581**	2	CLIP	
	5	1	**8T-4121**	4	WASHER-HARD (11X21X2.5-MM THK)	
M	6	1	**8T-4136**	4	BOLT (M10X1.5X25-MM)	

M-METRIC PART
Y-SEPARATE ILLUSTRATION

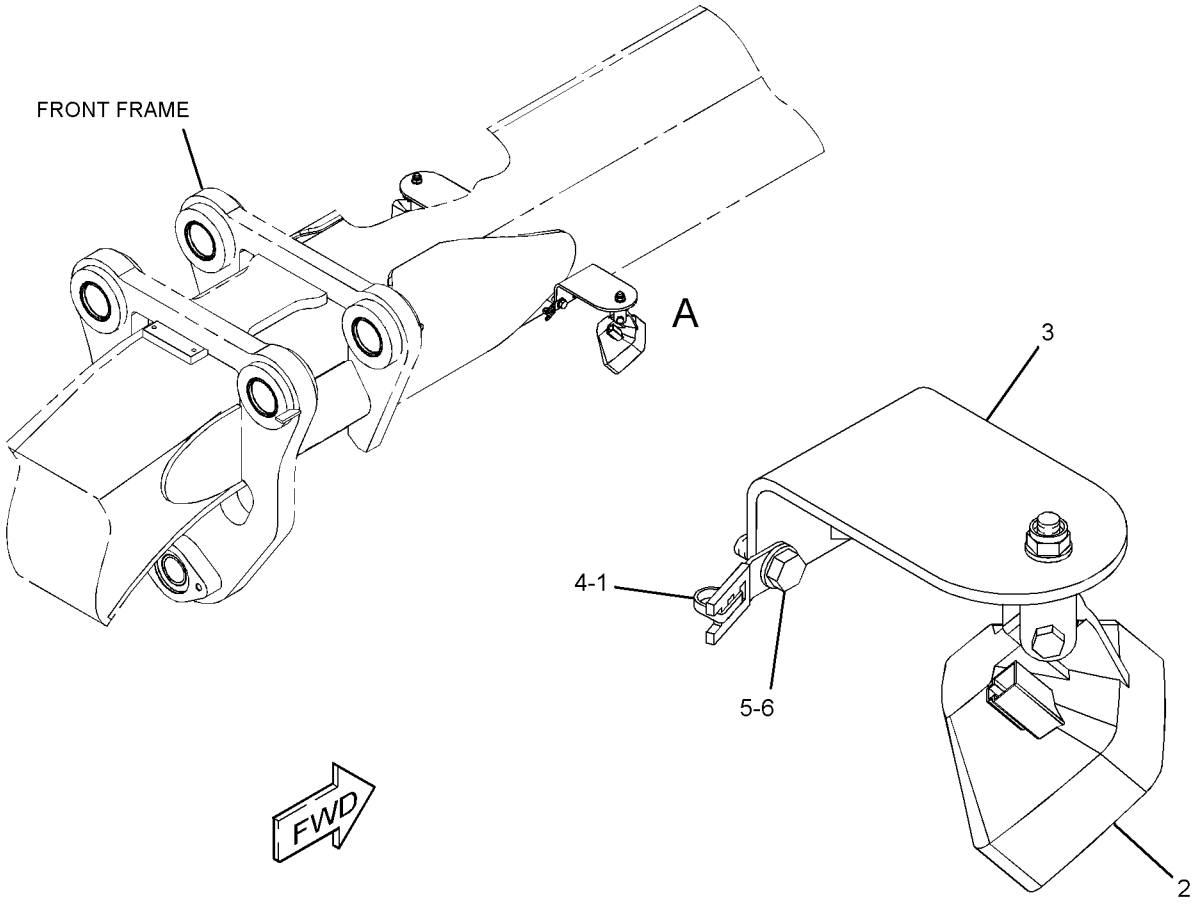

VIEW OF AREA A

GRAPHIC #1 **<END>** g01341350

286-7909 LIGHTING GP-FLOOD–CAB

S/N: R9J1-UP
24-VOLT
PART OF 349-3068, 349-3069 OPTION AR-LIGHTING
AN ATTACHMENT

SMCS-1434 **i02668193**

NOTE	REF NO	GRAPHIC REF	PART NUMBER	QTY	PART NAME 1 2 3 4 5 6 (PRODUCT LEVEL)	SEE PAGE
Y	1	1	**234-4325**	2	LAMP GP-FLOOD (24-VOLT)	237
	2	1	**281-0228**	2	PLATE	
	3	1	**5P-9085**	2	CLIP	
	4	1	**8T-4121**	6	WASHER-HARD (11X21X2.5-MM THK)	
M	5	1	**8T-4133**	2	NUT (M10X1.5-THD)	
M	6	1	**8T-4136**	2	BOLT (M10X1.5X25-MM)	
M	7	1	**8T-4195**	2	BOLT (M10X1.5X30-MM)	

QUANTITIES SHOWN ARE THOSE REQUIRED FOR BOTH LH AND RH SIDES
M-METRIC PART
Y-SEPARATE ILLUSTRATION

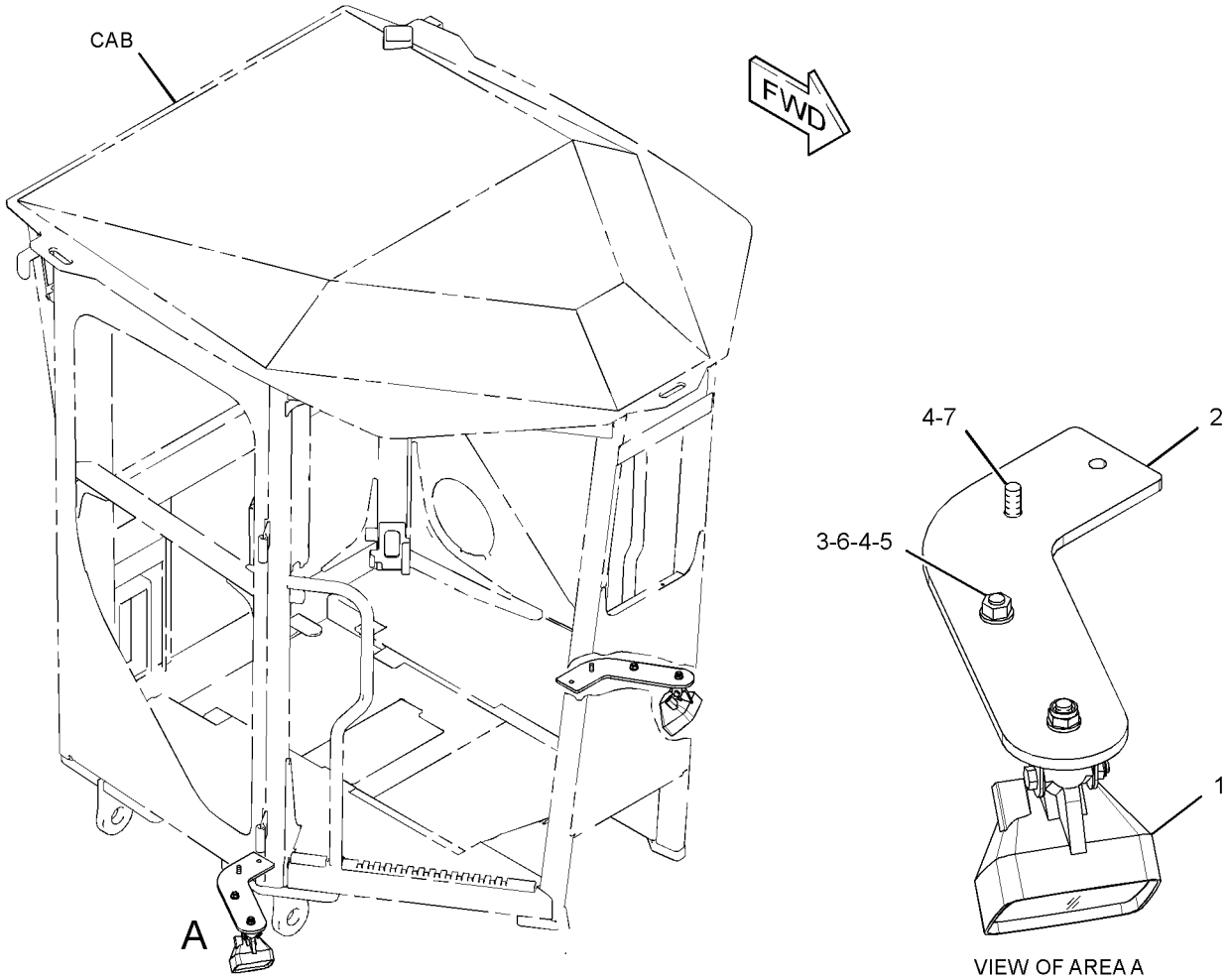

GRAPHIC #1 **<END>** g01343039

291-4038 LIGHTING GP-FLOOD—CAB ROOF

S/N: R9J1-UP

PART OF 349-2555 COMMON AR

SMCS-1434 **i04033113**

NOTE	REF NO	GRAPHIC REF	PART NUMBER	QTY	PART NAME 1 2 3 4 5 6 (PRODUCT LEVEL)	SEE PAGE
CY	1	1	**219-6488**	2	LAMP GP-FLOOD (24-VOLT) (CAB ROOF, FRONT)	235
Y	2	1	**290-5749**	2	LAMP GP-HEAD (24-VOLT) (HIGH BEAM)	240
CY	3	1	**315-1251**	2	LAMP GP-FLOOD (24-VOLT) (CAB ROOF, REAR)	239
	4	1	**249-5480**	1	SWITCH AS-ROCKER (CAB FLOODLIGHTS)	

C-CHANGE FROM PREVIOUS TYPE
Y-SEPARATE ILLUSTRATION

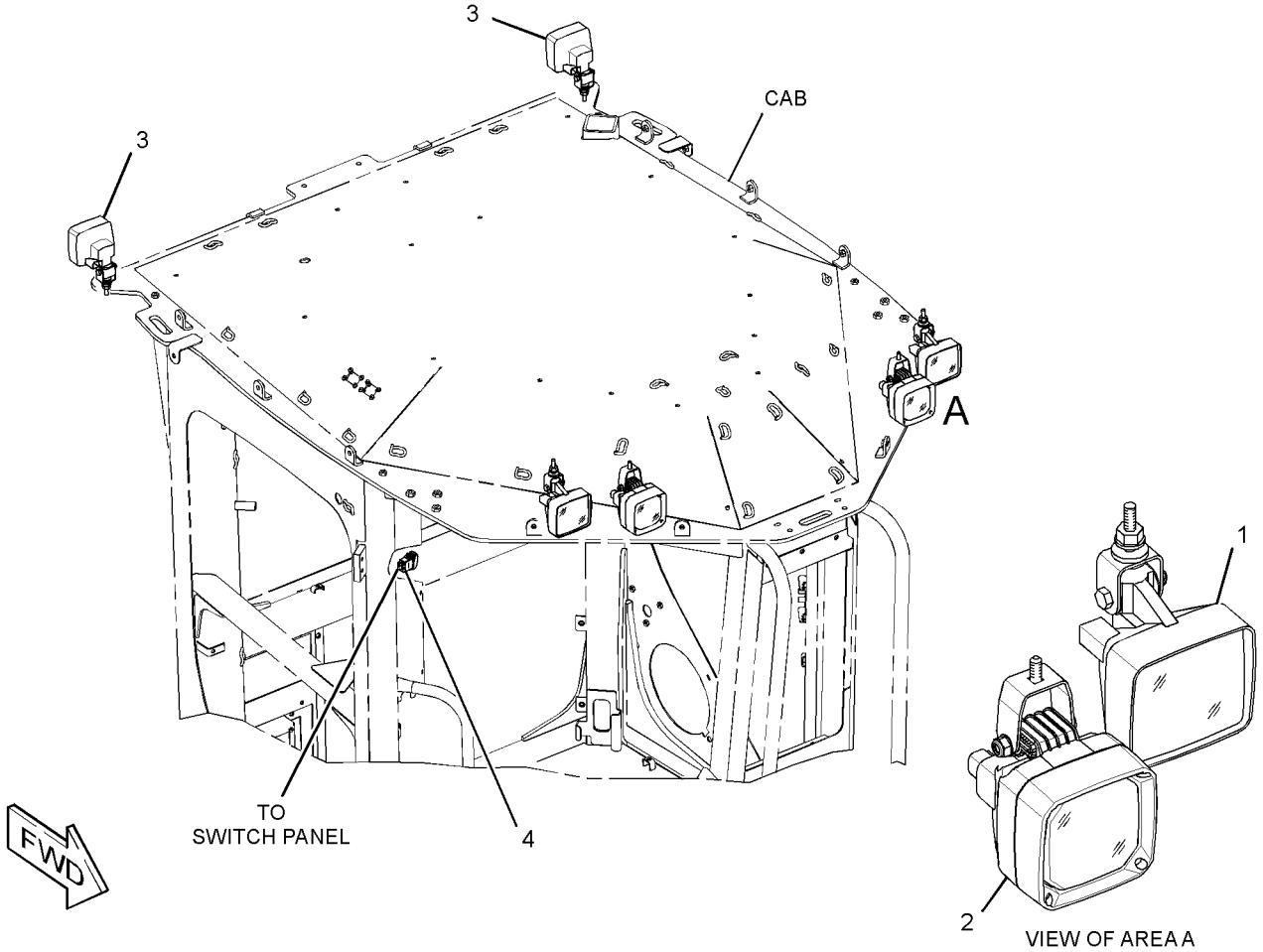

GRAPHIC #1 **<END>** g01528460

ELECTRICAL AND STARTING SYSTEM

299-3880 LIGHTING GP-ROADING

S/N: R9J1-UP

PART OF 353-5005, 358-7877, 361-1731, 361-4363, 363-0414 DISTRIBUTION AR

AN ATTACHMENT

SMCS-1429 **i02640245**

NOTE	PART NUMBER	QTY	PART NAME 1 2 3 4 5 6 (PRODUCT LEVEL)	SEE PAGE
Y	*235-5955*	1	MOUNTING GP-LIGHTING	254
Y	*233-3124*	1	SWITCH GP-ROADING (LIGHTS) (HEADLIGHT DIMMER)	320
Y	*233-4623*	1	WIRING GP-REAR LIGHTING (STOP, TAIL, TURN, BACKUP)	383

Y-SEPARATE ILLUSTRATION

<END>

226-2333 MAST GP—LASER RECEIVER

S/N: R9J1-UP

PART OF 317-6526 GRADE CONTROL AR-LASER, 292-0281 MAST GP, 292-0310 RECEIVER AR-LASER

SMCS-7220, 79NS **i03588632**

NOTE	PART NUMBER	QTY	PART NAME 1 2 3 4 5 6 (PRODUCT LEVEL)	SEE PAGE
	256-5732	1	HARNESS AS-WIRING (MAST)	
	256-4580	1	MOTOR AS	
	256-4579	1	SCREW AS	
	256-5720	1	SWITCH AS (UPPER LIMIT)	
	256-5721	1	SWITCH AS (LOWER LIMIT)	
	256-4581	1	BUSHING	
	256-4582	1	GEAR (141-TEETH)	
	256-5722	1	GEAR (15-TEETH)	
	260-6480	1	RING-SNAP	
	260-6478	1	SEAL-O-RING	
	256-5719	1	SEAL-WIPER	
			AVAILABLE REPAIR KIT(S):	
	295-8930	1	KIT-CIRCUIT BOARD	
			(INCLUDES BOARD AS, SCREWS, LOCKWASHERS, LOCTITE & GREASE)	
A	**245-4747**	1	KIT-ADAPTER (MAST)	
			(INCLUDES ADAPTER, BOLTS & WASHER)	
			(FOR USE WITH LR400 RECEIVER)	

A-NOT PART OF THIS GROUP

<END>

292-0281 MAST GP—LASER RECEIVER

S/N: R9J1-UP

PART OF 292-0301 RECEIVER AR-LASER

SMCS-7220, 79NS **i03091092**

NOTE	PART NUMBER	QTY	PART NAME 1 2 3 4 5 6 (PRODUCT LEVEL)	SEE PAGE
Y	**226-2333**	1	MAST GP (LASER RECEIVER)	251
Y	*292-0302*	1	MOUNTING GP-MAST (LASER RECEIVER)	258
Y	**234-9970**	1	MOUNTING GP-RECEIVER (MAST)	259

Y-SEPARATE ILLUSTRATION

<END>

170-5335 MOTOR GP-ELECTRIC—CIRCULATING FAN

S/N: R9J1-UP
27-VOLT
PART OF 170-5334 FAN GP-CIRCULATING
AN ATTACHMENT

SMCS-5927 **i02427690**

NOTE	REF NO	GRAPHIC REF	PART NUMBER	QTY	PART NAME 1 2 3 4 5 6 (PRODUCT LEVEL)	SEE PAGE
	1	1	**102-8802**	1	KIT-RECEPTACLE (2-PIN)	
					(INCLUDES RECEPTACLE AS & WEDGE)	
	2	1	**9W-0852**	2	PIN-CONNECTOR (14-GA TO 16-GA)	

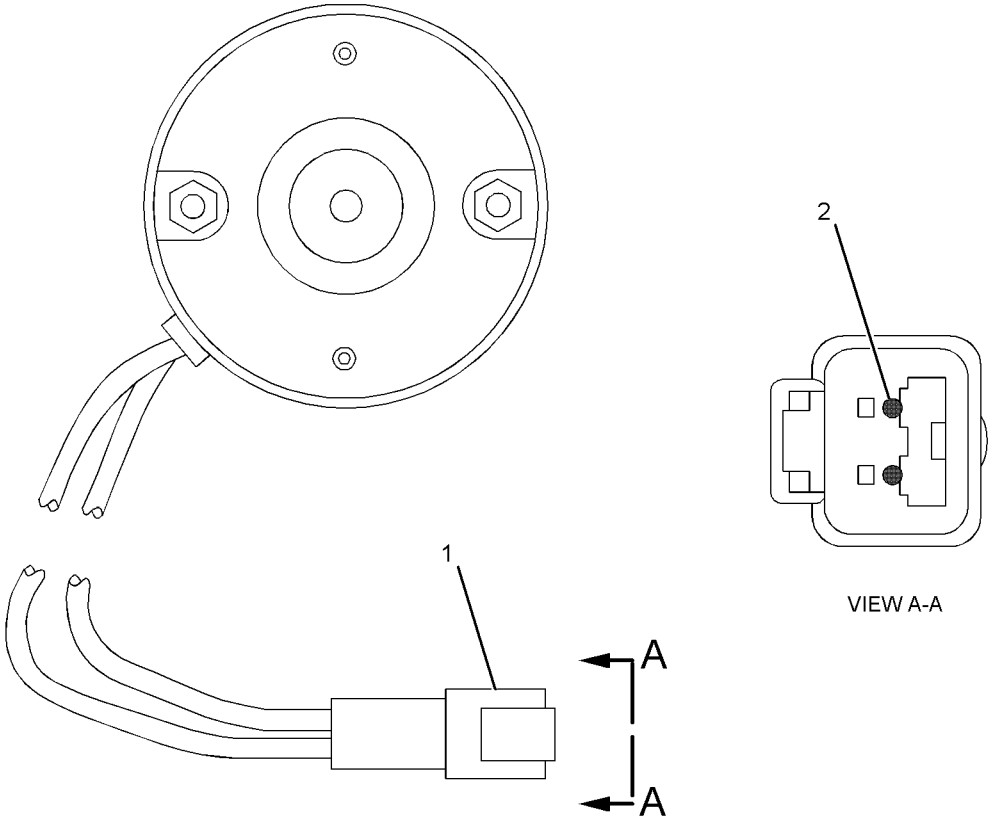

GRAPHIC #1 **<END>** g01224350

290-2016 MOUNTING GP-LAMP

S/N: R9J1-UP

PART OF 233-3126 INSTALLATION GP-LIGHTING

AN ATTACHMENT

SMCS-1429 **i02568560**

NOTE	REF NO	GRAPHIC REF	PART NUMBER	QTY	PART NAME 1 2 3 4 5 6 (PRODUCT LEVEL)	SEE PAGE
	1	1	**114-6658**	1	WASHER (6.5X17X1-MM THK)	
	2	1	**290-2015**	1	PLATE AS	
	3	1	**290-2018**	1	PLATE AS	
	4	1	**5P-4116**	2	WASHER-HARD (8.8X20.5X2-MM THK)	
M	5	1	**8T-6912**	2	BOLT (M8X1.25X50-MM)	
M	6	1	**9X-2043**	1	SCREW-TRUSS HEAD (M6X1X14-MM)	

M-METRIC PART

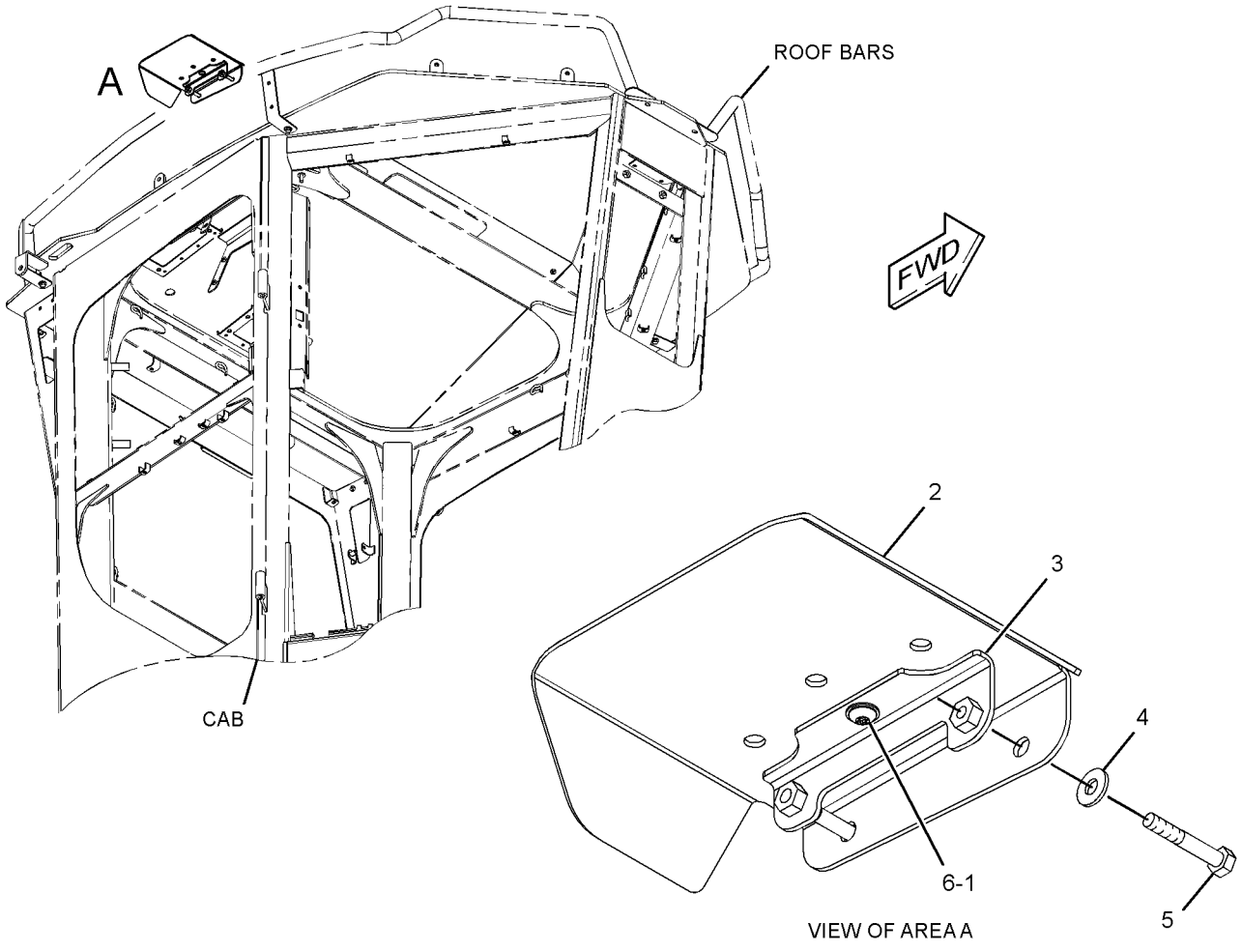

GRAPHIC #1 **<END>** g01289677

235-5955 MOUNTING GP-LIGHTING

S/N: R9J1-UP
PART OF 299-3880 LIGHTING GP-ROADING
AN ATTACHMENT

SMCS-1429 **i02832512**

NOTE	REF NO	GRAPHIC REF	PART NUMBER	QTY	PART NAME 1 2 3 4 5 6 (PRODUCT LEVEL)	SEE PAGE
	1	1	**2G-0617**	2	CLAMP	
	2	1	**2G-0988**	2	CAP	
	3	1	**3K-9520**	3	GROMMET	
	4	1	**137-9410**	2	CLAMP	
	5	1	**284-8379**	1	BRACKET	
	6	1	**236-2335**	1	HARNESS AS-FRONT LIGHTING	
		1	**102-8802**	1	KIT-RECEPTACLE (2-PIN)	
		1	**102-8805**	1	KIT-RECEPTACLE (6-PIN)	
					(EACH RECEPTACLE KIT INCLUDES RECEPTACLE AS & WEDGE)	
		1	**155-2274**	2	KIT-CONNECTING PLUG (6-PIN)	
					(EACH INCLUDES PLUG AS, WEDGE & INTERFACE SEAL)	
E		1	**114-8843**		SLEEVE-PLASTIC (80-CM)	
E		1	**119-3662**		TUBE-HEAT SHRINK (10.85-MM DIA) (20-CM)	
	7	1	**130-5300**	2	CLIP	
	8	1	**130-5301**	2	CLIP	
Y	9	1	**259-9288**	1	LAMP GP-HEAD & SIGNAL (24-VOLT, RH)	242
Y	10	1	**259-9287**	1	LAMP GP-HEAD & SIGNAL (24-VOLT, LH)	241
	11	1	**257-7226**	1	TUBE	
	12	1	**8T-4121**	4	WASHER-HARD (11X21X2.5-MM THK)	
M	13	1	**8T-4133**	2	NUT (M10X1.5-THD)	
M	14	1	**8T-4195**	2	BOLT (M10X1.5X30-MM)	
	15	1	**8T-4223**	4	WASHER-HARD (13.5X25.5X3-MM THK)	
M	16	1	**8T-5412**	4	BOLT (M12X1.75X140-MM)	
	17	1	**5K-3294**	1	CLIP	
	18	1	**5P-9135**	1	GROMMET	
	19	1	**310-7637**	1	BRACKET	

E-ORDER BY THE CENTIMETER
M-METRIC PART
Y-SEPARATE ILLUSTRATION

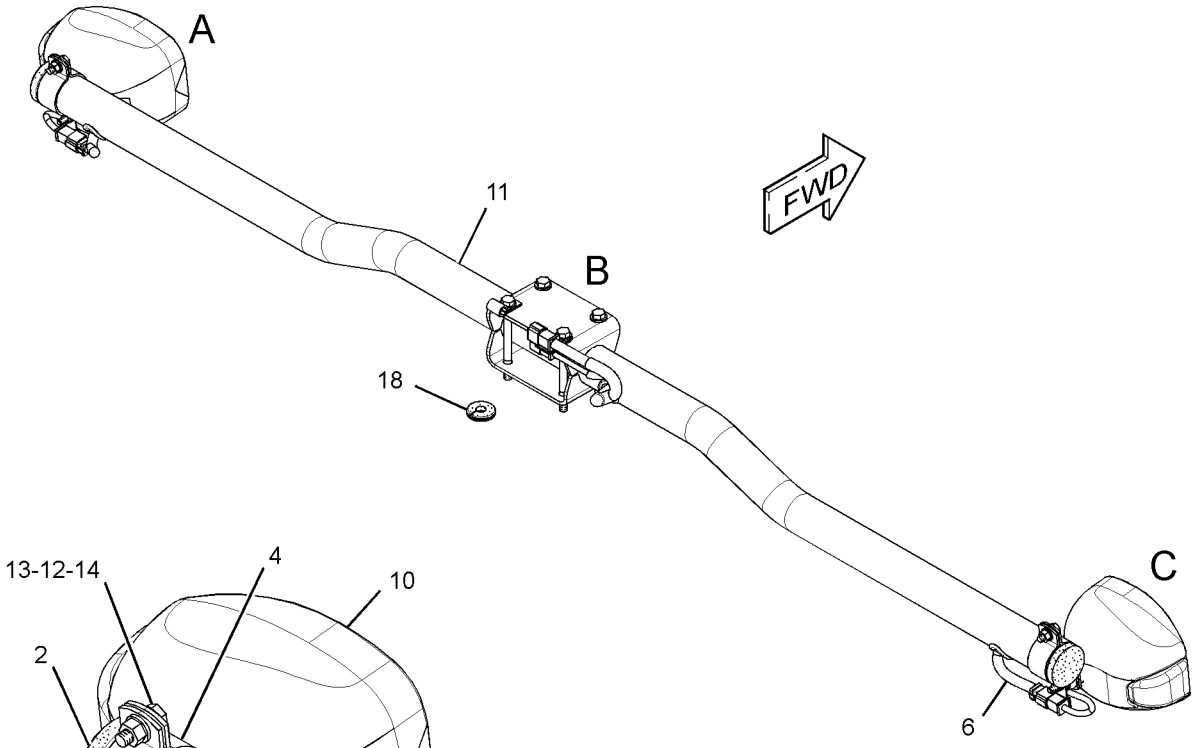

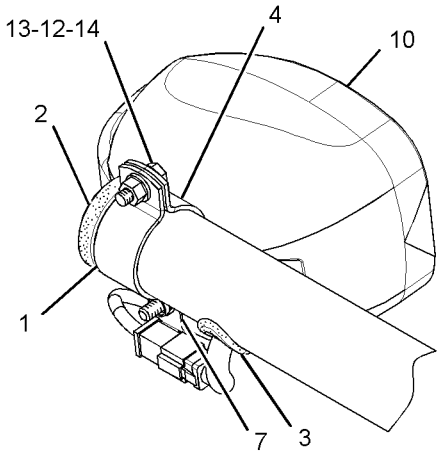

VIEW OF AREA A

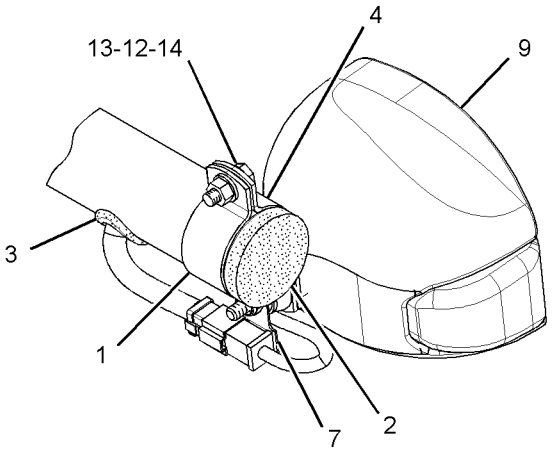

VIEW OF AREA C

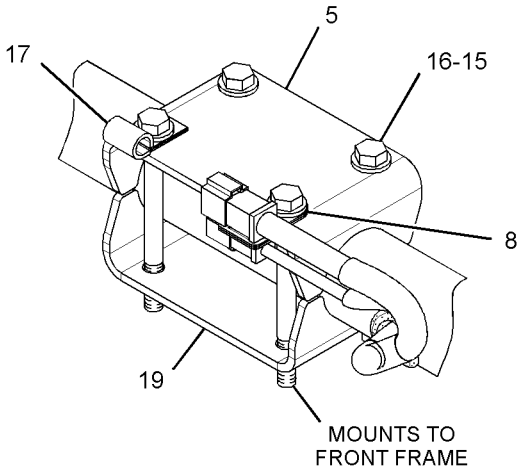

VIEW OF AREA B

GRAPHIC #1 **<END>** g01415138

260-1909 MOUNTING GP-LIGHTING—SNOW REMOVAL

S/N: R9J1-UP
PART OF 299-3881 LIGHTING AR-ROADING
AN ATTACHMENT

SMCS-1429 **i02959800**

NOTE	REF NO	GRAPHIC REF	PART NUMBER	QTY	PART NAME 1 2 3 4 5 6 (PRODUCT LEVEL)	SEE PAGE
	1	1	**2G-0617**	2	CLAMP	
	2	1	**2G-0988**	2	CAP	
	3	1	**3K-9520**	3	GROMMET	
	4	1	**137-9410**	2	CLAMP	
	5	1	**236-2335**	1	HARNESS AS-FRONT LIGHTING	
		1	**102-8802**	1	KIT-RECEPTACLE (2-PIN)	
		1	**102-8805**	1	KIT-RECEPTACLE (6-PIN)	
					(EACH INCLUDES RECEPTACLE AS & WEDGE)	
		1	**155-2274**	2	KIT-CONNECTING PLUG (6-PIN)	
					(EACH INCLUDES PLUG AS, WEDGE, & INTERFACE SEAL)	
	6	1	**310-7636**	1	TUBE	
Y	7	1	**259-9287**	1	LAMP GP-HEAD & SIGNAL (24-VOLT, LH)	241
Y	8	1	**259-9288**	1	LAMP GP-HEAD & SIGNAL (24-VOLT, RH)	242
	9	1	**284-8379**	1	BRACKET	
	10	1	**130-5300**	2	CLIP	
	11	1	**130-5301**	2	CLIP	
	12	1	**5K-3294**	1	CLIP	
	13	1	**5P-9135**	1	GROMMET	
	14	1	**8T-4121**	4	WASHER-HARD (11X21X2.5-MM THK)	
M	15	1	**8T-4133**	2	NUT (M10X1.5-THD)	
M	16	1	**8T-4195**	2	BOLT (M10X1.5X30-MM)	
	17	1	**8T-4223**	4	WASHER-HARD (13.5X25.5X3-MM THK)	
M	18	1	**8T-5412**	4	BOLT (M12X1.75X140-MM)	
	19	1	**310-7637**	1	BRACKET	

M-METRIC PART
Y-SEPARATE ILLUSTRATION

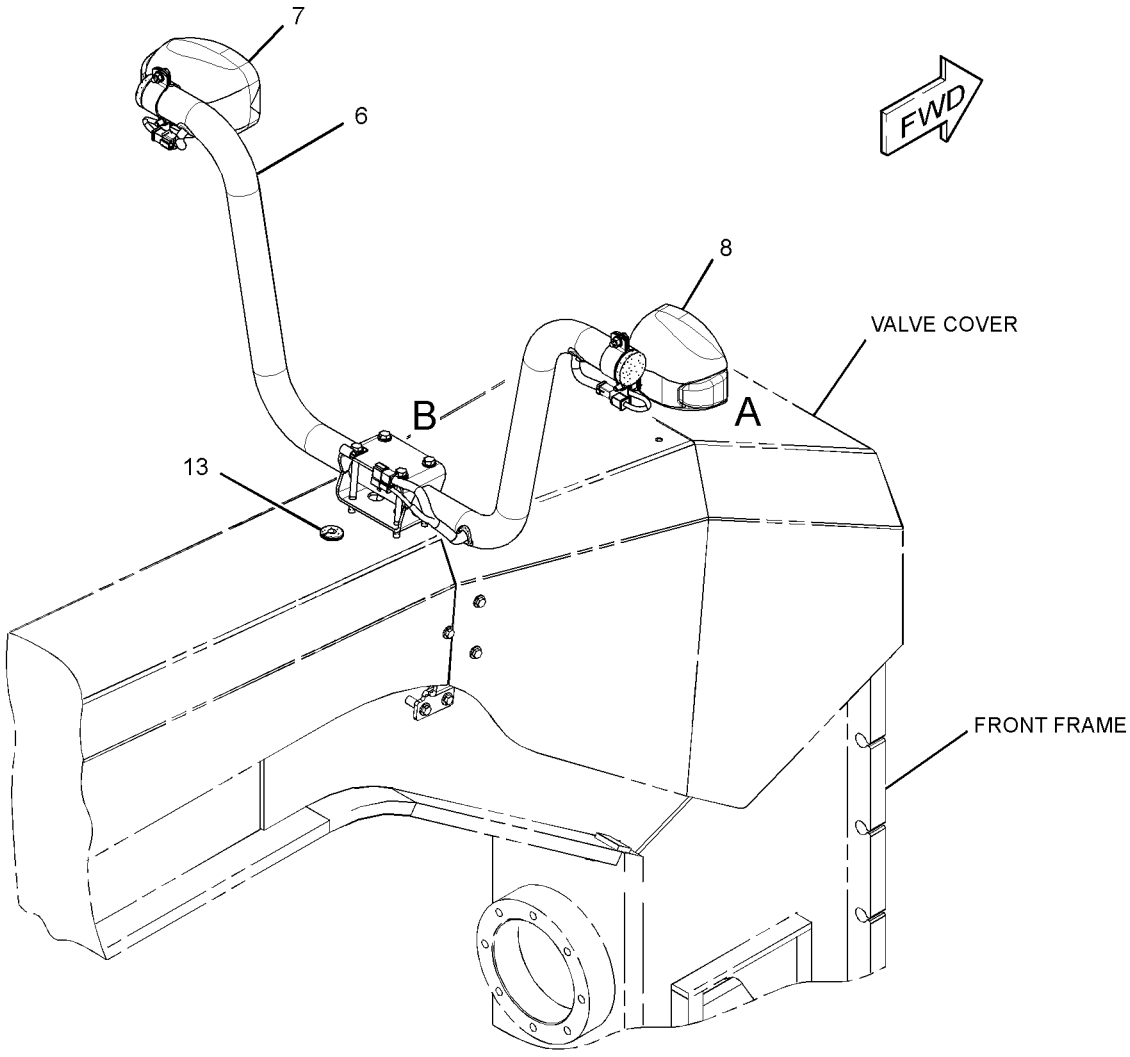

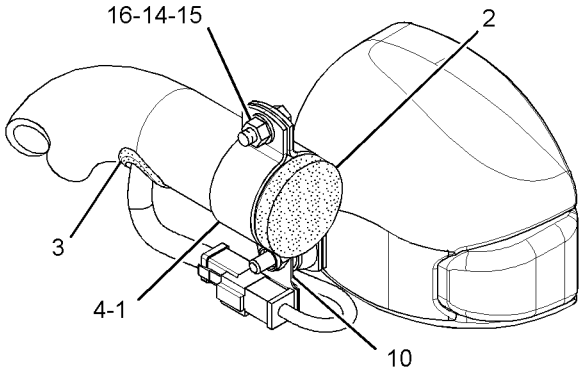

VIEW OF AREA A

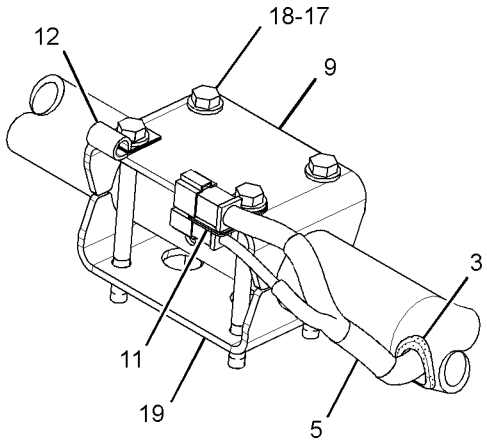

VIEW OF AREA B

GRAPHIC #1 **<END>** g01502584

292-0302 MOUNTING GP-MAST—LASER RECEIVER

S/N: R9J1-UP

PART OF 292-0281 MAST GP, 292-0310 RECEIVER AR-LASER

SMCS-79NS **i02622638**

NOTE	PART NUMBER	QTY	PART NAME 1 2 3 4 5 6 (PRODUCT LEVEL)	SEE PAGE
M	**8T-4648**	4	BOLT (M12X1.75X70-MM)	
	237-7552	3	FILM-WARNING (LASER TRANSMITTER)	
	252-8744	1	FILM-WARNING (BLADE, DO NOT CLIMB, READ OMM)	
M	**8T-4244**	4	NUT (M12X1.75-THD)	
	8T-4223	8	WASHER-HARD (13.5X25.5X3-MM THK)	

M-METRIC PART

<END>

292-0908 MOUNTING GP-MAST—LASER RECEIVER

S/N: R9J1-UP

PART OF 292-0301 RECEIVER AR-LASER

SMCS-79NS **i02674350**

NOTE	PART NUMBER	QTY	PART NAME 1 2 3 4 5 6 (PRODUCT LEVEL)	SEE PAGE
	231-0049	1	CABLE-COILED (MAST)	
	248-1503	1	BRACKET GP-MOUNTING	
	7X-0343	4	BOLT (5/8-11X1.25-IN)	
	7X-0366	3	BOLT (3/4-10X2-IN)	
	8T-4122	4	WASHER-HARD (17X32X3.5-MM THK)	
	8T-4994	3	WASHER-HARD (20X36.5X3.5-MM THK)	
	248-1496	1	RISER AS (MAST)	
	3B-4512	1	LOCKWASHER	
	9S-1362	1	BOLT (3/4-16X2-IN)	

<END>

234-9970 MOUNTING GP-RECEIVER–MAST

S/N: R9J1-UP

PART OF 317-6526 GRADE CONTROL AR-LASER, 292-0281 MAST GP, 292-0310 RECEIVER AR-LASER

SMCS-7009, 7010 **i02294016**

NOTE	REF NO	GRAPHIC REF	PART NUMBER	QTY	PART NAME 1 2 3 4 5 6 (PRODUCT LEVEL)	SEE PAGE
	1	2	**253-8967**	1	ROD-THREADED	
	2	2	**253-8969**	1	BRACKET	
	3	2	**237-4132**	4	MOUNT-FLEXIBLE	
	4	1	**237-4133**	2	GASKET	
	5	1	**237-4134**	1	CLAMP	
	6	1	**237-4135**	1	MOUNT-FLEXIBLE	
	7	2	**237-7252**	1	BOLT (3/4-16X1.25-IN)	
	8	2	**3B-4508**	4	LOCKWASHER	
	9	2	**3B-4512**	1	LOCKWASHER	
	10	2	**4M-6425**	2	BOLT (5/16-18X1-IN)	
	11	2	**5W-1437**	2	LOCKWASHER	
	12	2	**8T-9383**	2	BOLT (1/2-13X0.75-IN)	
	13	2	**9B-0453**	2	LOCKWASHER	
	14	2	**253-8981**	4	ROD-THREADED	
	15	2	**6V-8188**	6	NUT (1/2-13-THD)	

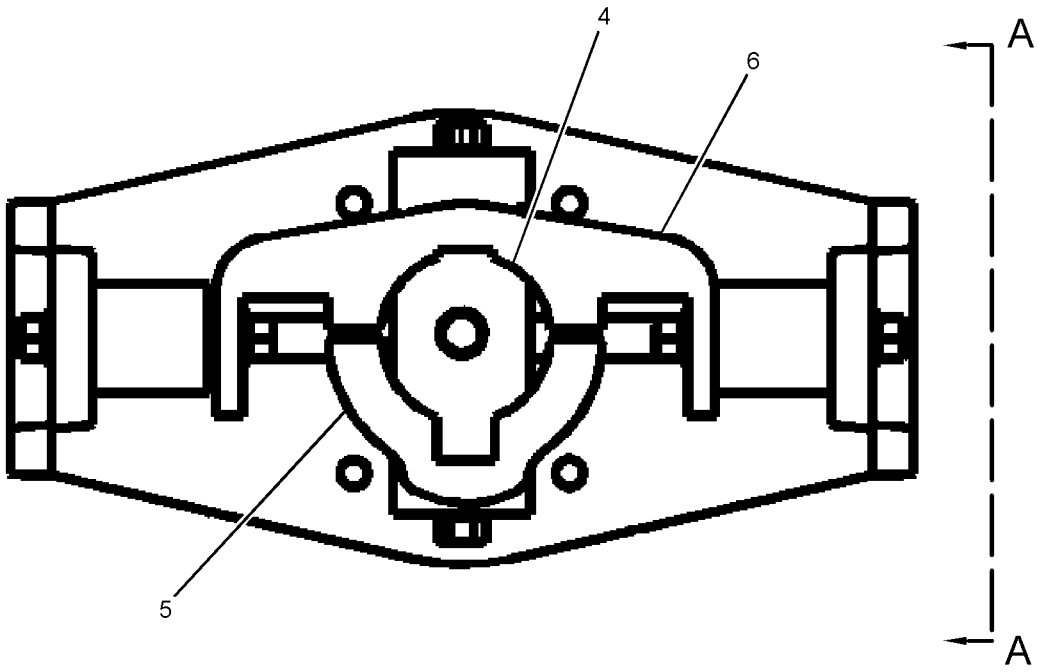

REFER TO ALL ILLUSTRATIONS OF
THIS GROUP FOR AUXILIARY VIEWS

GRAPHIC #1 g01186401

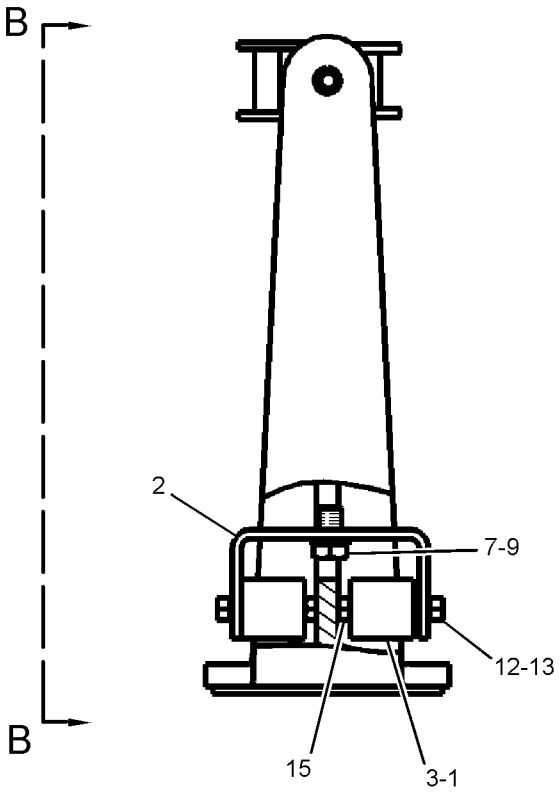

VIEW A-A

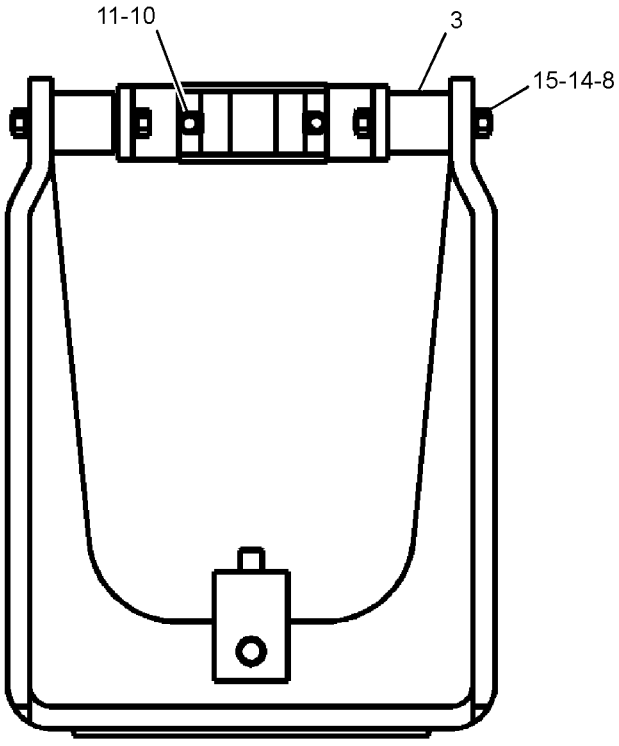

VIEW B-B

GRAPHIC #2 **<END>** g01186365

ELECTRICAL AND STARTING SYSTEM

280-8969 PANEL GP-CIRCUIT BREAKER

S/N: R9J1-UP

PART OF 285-3174 WIRING GP-REAR

SMCS-1417, 1420, 1422 **i02659287**

NOTE	REF NO	GRAPHIC REF	PART NUMBER	QTY	PART NAME 1 2 3 4 5 6 (PRODUCT LEVEL)	SEE PAGE
	1	2	**3S-2093**	2	STRAP-CABLE	
	2	2	**9X-0352**	1	RECEPTACLE AS	
Y	3	2	**125-1302**	1	SWITCH GP-MAGNETIC (24-VOLT) (START RELAY)	315
	4	1	**171-2210**	1	CIRCUIT BREAKER AS (80-AMPERE) (MAIN)	
	4A	1	**171-2210**	1	CIRCUIT BREAKER AS (80-AMPERE) (LOAD)	
	5	1	**171-2215**	1	CIRCUIT BREAKER AS (150-AMPERE) (ALTERNATOR)	
					(EACH CIRCUIT BREAKER AS INCLUDES)	
		1	**253-2111**	2	LOCKWASHER	
		1	**6V-8187**	2	NUT (1/4-28-THD)	
		1	**8T-4205**	2	WASHER-HARD (7.2X14.5X2-MM THK)	
	6	2	**172-4863**	1	JUNCTION BLOCK	
Y	7	2	**241-8368**	1	SWITCH GP-MAGNETIC (24-VOLT) (MAIN POWER RELAY)	317
	8	2	**280-8973**	1	BRACKET AS	
M		2	**8T-3490**	6	NUT-WELD (M10X1.5-THD)	
	9	1	**280-8974**	1	BOX AS	
M		1	**6V-9632**	1	NUT-WELD (M6X1-THD)	
M		1	**8T-3490**	7	NUT-WELD (M10X1.5-THD)	
M		1	**9R-2672**	1	BOSS-THREADED (M10X1.5-THD)	
M		1	**9R-2821**	2	BOSS (M10X1.5X15-MM)	
	10	1	**280-8976**	1	HARNESS AS-BOX	
		1	**8N-1523**	1	LOCKWASHER	
		1	**189-3158**	1	SUPPRESSOR-ARC	
		1	**8N-1517**	1	RECEPTACLE AS-CONNECTOR (25-PIN)	
		1	**102-8802**	1	KIT-RECEPTACLE (2-PIN)	
					(INCLUDES RECEPTACLE AS & WEDGE)	
		1	**155-2270**	2	KIT-CONNECTING PLUG (2-PIN)	
					(EACH INCLUDES PLUG AS, WEDGE, & INTERFACE SEAL)	
	11	2	**306-9997**	1	PLATE	
	12	2	**280-9455**	1	PLATE	
	13	1	**281-5825**	1	COVER	
	14	2	**306-9998**	1	PLATE	
	15	2	**287-1686**	1	WIRE AS	
	16	2	**287-1687**	1	WIRE AS	
	17	1	**287-1688**	1	HARNESS AS-TRANSMISSION	
		1	**155-2270**	1	KIT-CONNECTING PLUG (2-PIN)	
					(INCLUDES PLUG AS, WEDGE, & INTERFACE SEAL)	
	18	2	**289-2527**	1	WIRE AS	
	19	2	**289-2528**	1	WIRE AS	
	20	1	**113-8373**	6	SCREW-BUTTON HEAD (10-32X0.75-IN)	
	21	2	**130-5300**	2	CLIP	
	22	1	**230-9174**	1	CIRCUIT BREAKER AS (15-AMPERE) (TRANSMISSION CONTROL)	
	22A	1	**230-9174**	1	CIRCUIT BREAKER AS (15-AMPERE) (KEY SWITCH)	
					(EACH CIRCUIT BREAKER AS INCLUDES)	
		1	**8F-1434**	2	LOCKWASHER	
		1	**6V-8378**	2	NUT (10-32-THD)	
		1	**8T-0328**	2	WASHER-HARD (5.5X10X1-MM THK)	
	23	1	**288-3687**	1	CIRCUIT BREAKER AS (20-AMPERE) (ACCUGRADE)	
	23A	1	**288-3687**	1	CIRCUIT BREAKER AS (20-AMPERE) (ENGINE CONTROL)	
					(EACH CIRCUIT BREAKER INCLUDES)	
		1	**8F-1434**	2	LOCKWASHER	
		1	**6V-8378**	2	NUT (10-32-THD)	
		1	**8T-0328**	2	WASHER-HARD (5.5X10X1-MM THK)	

280-8969 **PANEL GP-CIRCUIT BREAKER** *(contd.)* **i02659287**

NOTE	REF NO	GRAPHIC REF	PART NUMBER	QTY	PART NAME 1 2 3 4 5 6 (PRODUCT LEVEL)	SEE PAGE
	24	1	**3T-2662**	1	CIRCUIT BREAKER AS (15-AMPERE) (FLOODLIGHTS, LH)	
	24A	1	**3T-2662**	1	CIRCUIT BREAKER AS (15-AMPERE) (FLOODLIGHTS, RH)	
					(EACH CIRCUIT BREAKER AS INCLUDES)	
		1	**9B-7233**	2	LOCKWASHER	
		1	**6V-8376**	2	SCREW-MACHINE (8-32X0.25-IN)	
	25	1	**4B-4274**	6	WASHER (5.5X13X1.2-MM THK)	
M	26	2	**5C-2890**	4	NUT (M6X1-THD)	
M	27	2	**6V-7744**	1	LOCKNUT (M10X1.5-THD)	
	28	1,2	**7K-1181**	3	STRAP-CABLE	
	29	1	**9X-6016**	12	SCREW-HEX SOCKET (8-32X0.875-IN)	
M	30	2	**8T-4179**	1	BOLT (M12X1.75X20-MM)	
M	31	2	**8C-8580**	3	BOLT-SOCKET HEAD (M5X0.8X16-MM)	
	32	2	**8T-0328**	3	WASHER-HARD (5.5X10X1-MM THK)	
	33	1,2	**8T-4121**	12	WASHER-HARD (11X21X2.5-MM THK)	
M	34	1,2	**8T-4137**	10	BOLT (M10X1.5X20-MM)	
M	35	2	**8T-4138**	1	BOLT (M6X1X20-MM)	
	37	2	**8T-4205**	1	WASHER-HARD (7.2X14.5X2-MM THK)	
	38	2	**8T-4223**	1	WASHER-HARD (13.5X25.5X3-MM THK)	
	39	1	**9B-7233**	12	LOCKWASHER	
	40	1,2	**9X-8256**	8	WASHER (6.6X12X2-MM THK)	
	41	2	**296-9931**	1	PLATE AS	
M		2	**8T-8874**	3	NUT-WELD (M5X0.8-THD)	
	42	1	**262-2827**	1	FILM-IDENTIFICATION (FUSE PANEL)	
	43	2	**253-2111**	1	LOCKWASHER	
M	44	2	**8T-4136**	1	BOLT (M10X1.5X25-MM)	

M-METRIC PART
Y-SEPARATE ILLUSTRATION

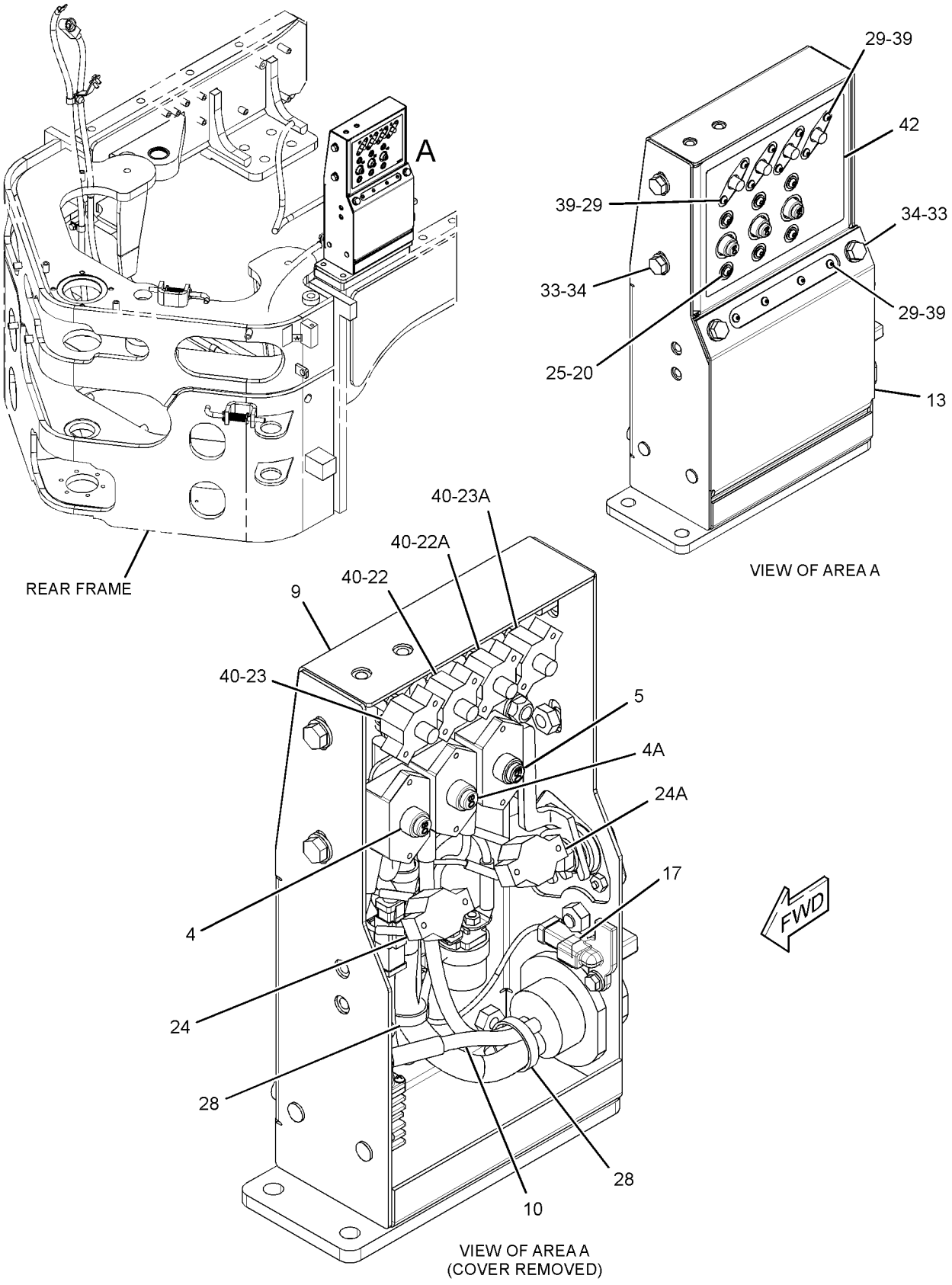

GRAPHIC #1 g01369756

280-8969 **PANEL GP-CIRCUIT BREAKER** *(contd.)* **i02659287**

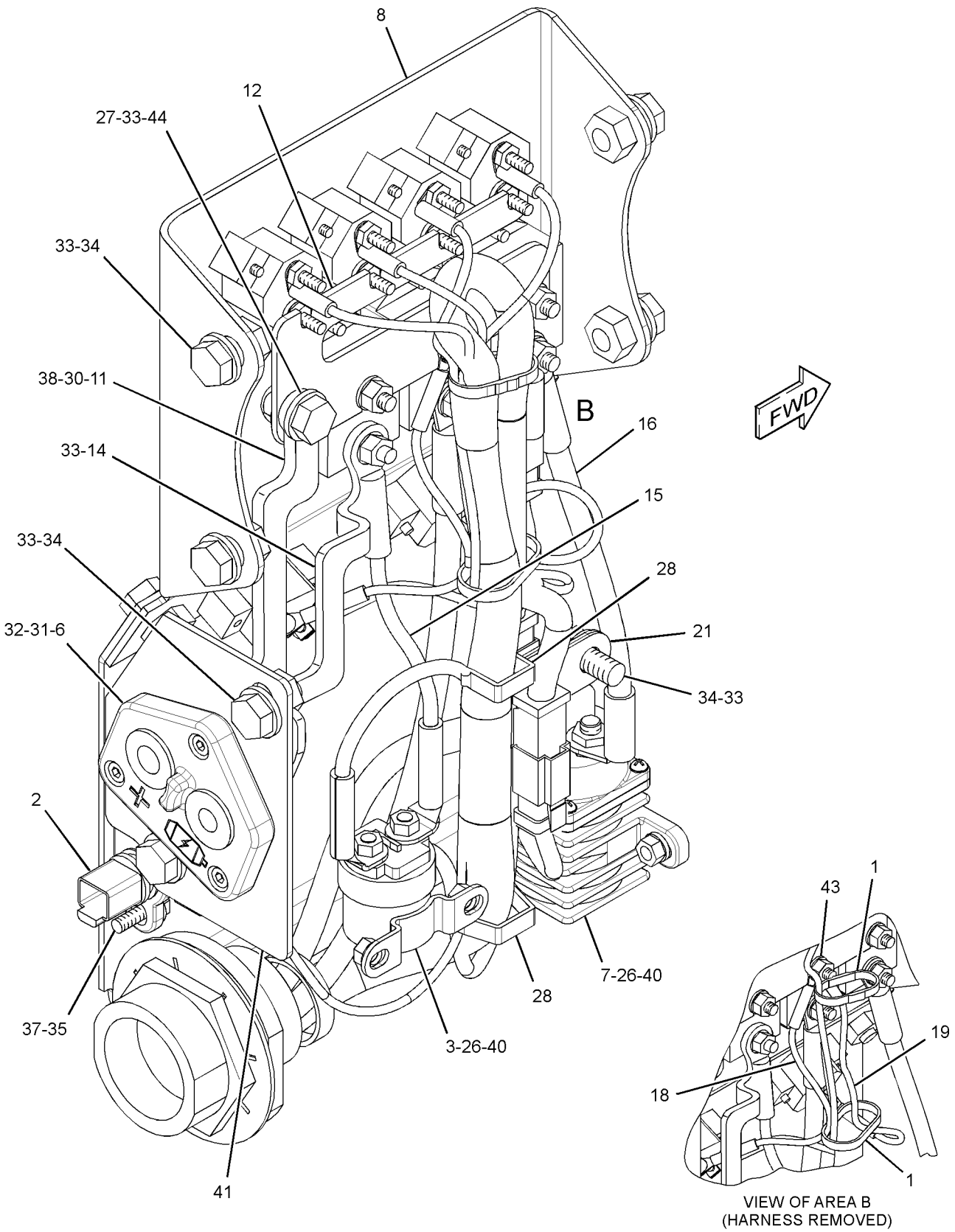

GRAPHIC #2 **<END>** g01369757

283-7960 POWER SUPPLY GP–GRADE CONTROL

S/N: R9J1-UP

PART OF 307-0155 GRADE CONTROL GP

AN ATTACHMENT

SMCS-5201, 7220 **i02756636**

NOTE	REF NO	GRAPHIC REF	PART NUMBER	QTY	PART NAME 1 2 3 4 5 6 (PRODUCT LEVEL)	SEE PAGE
	1	1	**226-9169**	1	MODULE AS-POWER SUPPLY	
	2	1	**8T-4224**	4	WASHER-HARD (8.8X16X2-MM THK)	
M	3	1	**8T-4189**	4	BOLT (M8X1.25X20-MM)	

M-METRIC PART

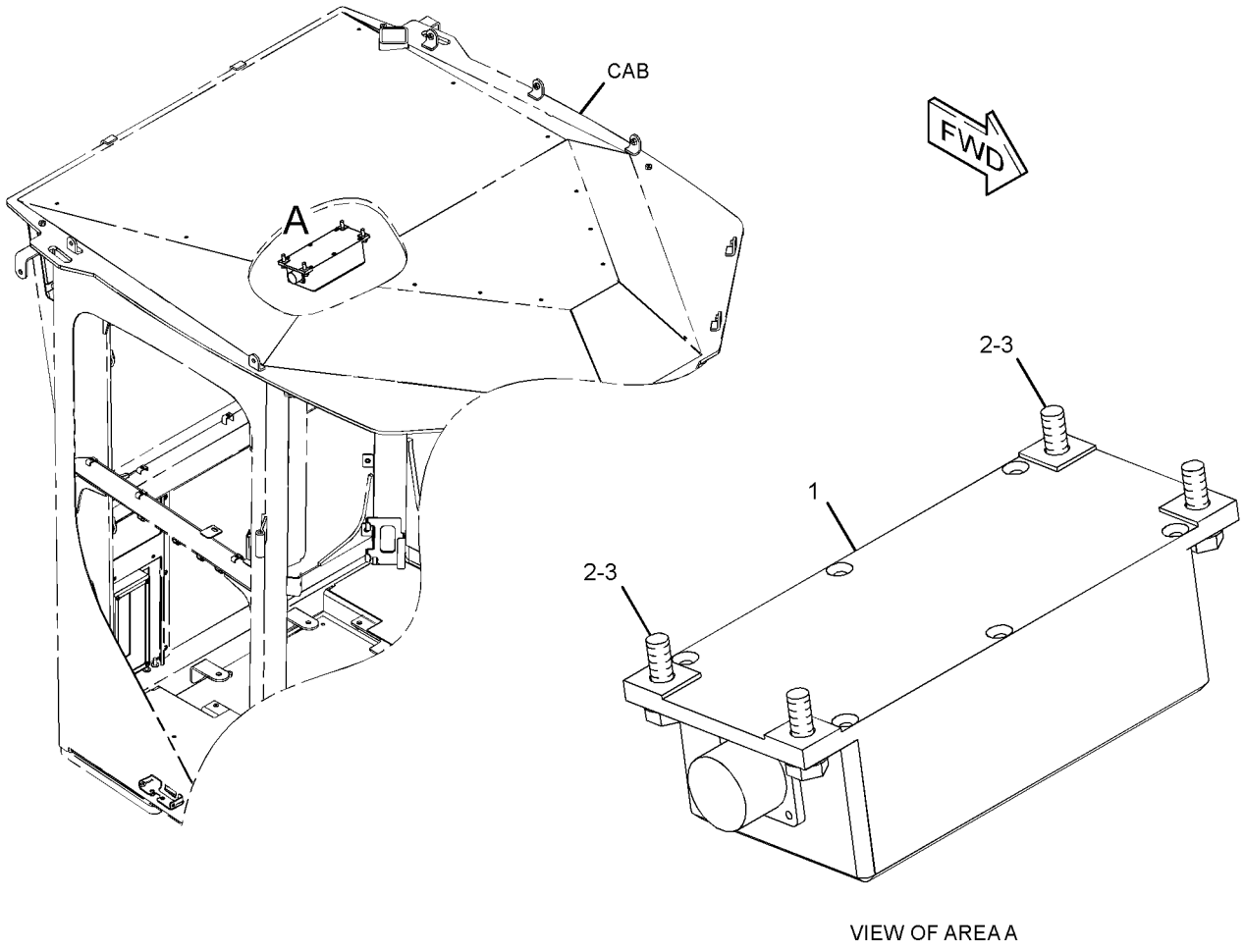

VIEW OF AREA A

GRAPHIC #1 **<END>** g01288314

336-3545 RADIO GP-COMMUNICATION—PRODUCT LINK 121SR

S/N: R9J1-UP
PART OF 235-6188 INSTALLATION AR-COMMUNICATION
AN ATTACHMENT

SMCS-733T **i03729461**

NOTE	PART NUMBER	QTY	PART NAME 1 2 3 4 5 6 (PRODUCT LEVEL)	SEE PAGE
	336-3566	1	SOFTWARE GP-COMMUNICATION (PRODUCT LINK 121SR)	

<END>

292-0301 RECEIVER AR-LASER—ACCUGRADE, SINGLE

S/N: R9J1-UP
FOR USE WITH MOTOR GRADER
FIELD INSTALLATION

SMCS-7009 **i04040006**

NOTE	PART NUMBER	QTY	PART NAME 1 2 3 4 5 6 (PRODUCT LEVEL)	SEE PAGE
Y	*292-0281*	1	MAST GP (LASER RECEIVER)	251
Y	*292-0908*	1	MOUNTING GP-MAST (LASER RECEIVER)	258
Y	*292-0285*	1	RECEIVER GP-LASER	267
	235-4587	1	CASE-PLASTIC	

Y-SEPARATE ILLUSTRATION

<END>

292-0310 RECEIVER AR-LASER—ACCUGRADE, DUAL

S/N: R9J1-UP
FOR USE WITH MOTOR GRADER
FIELD INSTALLATION

SMCS-7009 **i04040007**

NOTE	PART NUMBER	QTY	PART NAME 1 2 3 4 5 6 (PRODUCT LEVEL)	SEE PAGE
Y	**226-2333**	2	MAST GP (LASER RECEIVER)	251
Y	*292-0302*	2	MOUNTING GP-MAST (LASER RECEIVER)	258
Y	**234-9970**	2	MOUNTING GP-RECEIVER	259
Y	*292-0285*	2	RECEIVER GP-LASER (ACCUGRADE, DUAL)	267
	248-1503	2	BRACKET GP-MOUNTING	
			(EACH INCLUDES)	
	7X-0343	4	BOLT (5/8-11X1.25-IN)	
	7X-0366	3	BOLT (3/4-10X2-IN)	
	8T-4122	4	WASHER-HARD (17X32X3.5-MM THK)	
	8T-4994	3	WASHER-HARD (20X36.5X3.5-MM THK)	
	248-1496	2	RISER AS (MAST)	
			(EACH INCLUDES)	
	3B-4512	1	LOCKWASHER	
	9S-1362	1	BOLT (3/4-16X2-IN)	
	231-0049	2	CABLE-COILED (MAST)	
	235-4587	1	CASE-PLASTIC	

Y-SEPARATE ILLUSTRATION

<END>

292-7971 RECEIVER AR-SATELLITE—SINGLE GNSS, MS992

S/N: R9J1-UP

FIELD INSTALLATION

SMCS-7010 **i04036805**

NOTE	PART NUMBER	QTY	PART NAME 1 2 3 4 5 6 (PRODUCT LEVEL)	SEE PAGE
Y	*272-2286*	1	BRACKET GP-MOUNTING (MAST)	206
Y	*292-0292*	1	RECEIVER GP-SATELLITE (SINGLE GNSS, MS992)	268
	271-6373	1	MAST AS	
	248-1502	1	RISER (ANGLE)	
	3E-9861	4	LOCKNUT (5/8-11-THD)	
	7X-0347	4	BOLT (5/8-11X2.25-IN)	
	8T-4122	8	WASHER-HARD (17X32X3.5-MM THK)	

Y-SEPARATE ILLUSTRATION

<END>

292-7972 RECEIVER AR-SATELLITE—DUAL GNSS, MS992

S/N: R9J1-UP

FIELD INSTALLATION

SMCS-7010 **i04036804**

NOTE	PART NUMBER	QTY	PART NAME 1 2 3 4 5 6 (PRODUCT LEVEL)	SEE PAGE
Y	*272-2286*	1	BRACKET GP-MOUNTING (MAST)	206
Y	*292-0291*	1	RECEIVER GP-SATELLITE (DUAL GNSS, MS992) (ACCUGRADE)	268
	271-6373	1	MAST AS	
	248-1502	1	RISER (ANGLE)	
	3E-9861	4	LOCKNUT (5/8-11-THD)	
	7X-0347	4	BOLT (5/8-11X2.25-IN)	
	8T-4122	8	WASHER-HARD (17X32X3.5-MM THK)	

Y-SEPARATE ILLUSTRATION

<END>

292-0285 RECEIVER GP-LASER

S/N: R9J1-UP

PART OF 292-0301, 292-0310 RECEIVER AR-LASER

SMCS-7009 **i03768195**

NOTE	PART NUMBER	QTY	PART NAME 1 2 3 4 5 6 (PRODUCT LEVEL)	SEE PAGE
	342-9559	1	RECEIVER AS-LASER	
	276-0764	1	CABLE-COILED (LASER RECEIVER)	

<END>

292-0291 RECEIVER GP-SATELLITE—DUAL GNSS, MS992

S/N: R9J1-UP

PART OF 292-7972 RECEIVER AR-SATELLITE, 323-8139 SENSOR AR-GRADE

SMCS-7010 **i03939430**

NOTE	PART NUMBER	QTY	PART NAME 1 2 3 4 5 6 (PRODUCT LEVEL)	SEE PAGE
	252-9628	2	MOUNTING GP-RECEIVER (TARGET)	
			(EACH INCLUDES)	
	8R-1803	5	WASHER (10.5X18X1-MM THK)	
M	**8T-9388**	4	BOLT (M10X1.5X25-MM)	
	113-0693	5	LOCKWASHER	
	289-8449	1	HANDLE AS	
	353-2794	2	RECEIVER AS-SATELLITE (GNSS, MS992)	
	255-0939	1	CASE-PLASTIC (RECEIVER)	
	286-3017	2	HANDLE (RECEIVER)	

M-METRIC PART

<END>

292-0292 RECEIVER GP-SATELLITE—SINGLE GNSS, MS992

S/N: R9J1-UP

PART OF 292-7971 RECEIVER AR-SATELLITE

SMCS-7010 **i03939432**

NOTE	PART NUMBER	QTY	PART NAME 1 2 3 4 5 6 (PRODUCT LEVEL)	SEE PAGE
	252-9628	1	MOUNTING GP-RECEIVER (TARGET)	
	8R-1803	5	WASHER (10.5X18X1-MM THK)	
M	**8T-9388**	4	BOLT (M10X1.5X25-MM)	
	113-0693	5	LOCKWASHER	
	289-8449	1	HANDLE AS	
	353-2794	1	RECEIVER AS-SATELLITE (GNSS, MS992)	
	255-0939	1	CASE-PLASTIC (RECEIVER)	
	286-3017	1	HANDLE (RECEIVER)	

M-METRIC PART

<END>

249-7789 SENSOR & MOUNTING GP

S/N: R9J1-UP

PART OF 323-8140 GRADE CONTROL AR, 262-2017, 323-8139 SENSOR AR-GRADE

SMCS-1408, 1439, 1906, 1907, 1912, 1917, 1923, 1924, 7400 **i03091096**

NOTE	PART NUMBER	QTY	PART NAME 1 2 3 4 5 6 (PRODUCT LEVEL)	SEE PAGE
	244-1714	1	SENSOR GP-POSITION (BLADE ROTATION)	
	269-3277	1	RING	
	284-5170	1	SOFTWARE (ROTATION SENSOR)	
	276-6146	2	SENSOR AS-ANGLE (AS400TC) (ANGLE)	
	255-0941	1	BRACKET AS-SENSOR	
	269-3303	3	SCREW (M6X1-THD)	
	269-3304	3	SPACER-SPECIAL	
	250-2172	1	KIT-BRACKET	
			(INCLUDES BOLTS & WASHER-HARD)	

<END>

295-9879 SENSOR & MOUNTING GP

S/N: R9J1-UP

AN ATTACHMENT

SMCS-1408, 1439, 1906, 1907, 1912, 1917, 1923, 1924, 7400 **i02922405**

NOTE	PART NUMBER	QTY	PART NAME 1 2 3 4 5 6 (PRODUCT LEVEL)	SEE PAGE
M	**8T-3844**	2	BOLT (M6X1X70-MM)	
M	**143-6020**	2	BOLT-SOCKET HEAD (M6X1X75-MM)	
M	**5C-2890**	2	NUT (M6X1-THD)	
	276-6146	1	SENSOR AS-ANGLE	
	9X-8256	2	WASHER (6.6X12X2-MM THK)	

M-METRIC PART

<END>

336-4806 SENSOR & MOUNTING GP

S/N: R9J1-UP

FIELD INSTALLATION

SMCS-1408, 1439, 1906, 1907, 1912, 1917, 1923, 1924, 7400 **i03421165**

NOTE	PART NUMBER	QTY	PART NAME 1 2 3 4 5 6 (PRODUCT LEVEL)	SEE PAGE
	276-6146	1	SENSOR AS-ANGLE	
	6B-5310	1	BOLT (3/4-16X3.25-IN)	
	7X-0265	2	BOLT (1/4-20X2.75-IN)	
	7X-0346	3	BOLT (5/8-11X2-IN)	
	7X-0349	1	BOLT (5/8-11X3-IN)	
	254-9951	1	CABLE-COILED (ANGLE SENSOR)	
	7X-0448	1	NUT (5/8-11-THD)	
	336-4808	1	PLATE-MOUNTING	
	5P-8248	1	WASHER-HARD (20X36.5X3.5-MM THK)	
	8T-4122	5	WASHER-HARD (17X32X3.5-MM THK)	
	8T-4205	2	WASHER-HARD (7.2X14.5X2-MM THK)	

<END>

288-9443 SENSOR & MTG GP-POSITION

S/N: R9J1-UP

PART OF 285-3173 WIRING GP-REAR

SMCS-1408, 4806, 7400 **i02849029**

NOTE	REF NO	GRAPHIC REF	PART NUMBER	QTY	PART NAME 1 2 3 4 5 6 (PRODUCT LEVEL)	SEE PAGE
	1	1	**6V-0894**	2	SEAL-O-RING	
CY	2	1	**266-1467**	2	SENSOR GP-POSITION (ROTARY) (ARTICULATION)	276
	3	1	**166-0690**	2	BLOCK AS-MOUNTING	
	4	1	**287-6155**	2	LEVER	
	5	1	**288-9439**	1	BRACKET	
	6	1	**2F-7888**	4	SCREW-MACHINE (10-32X1.25-IN)	
	7	1	**3B-4619**	2	PIN-COTTER	
	8	1	**4B-4274**	4	WASHER (5.5X13X1.2-MM THK)	
	9	1	**4M-5281**	4	BOLT (1/4-20X0.75-IN)	
	10	1	**8T-4205**	4	WASHER-HARD (7.2X14.5X2-MM THK)	

C-CHANGE FROM PREVIOUS TYPE
Y-SEPARATE ILLUSTRATION

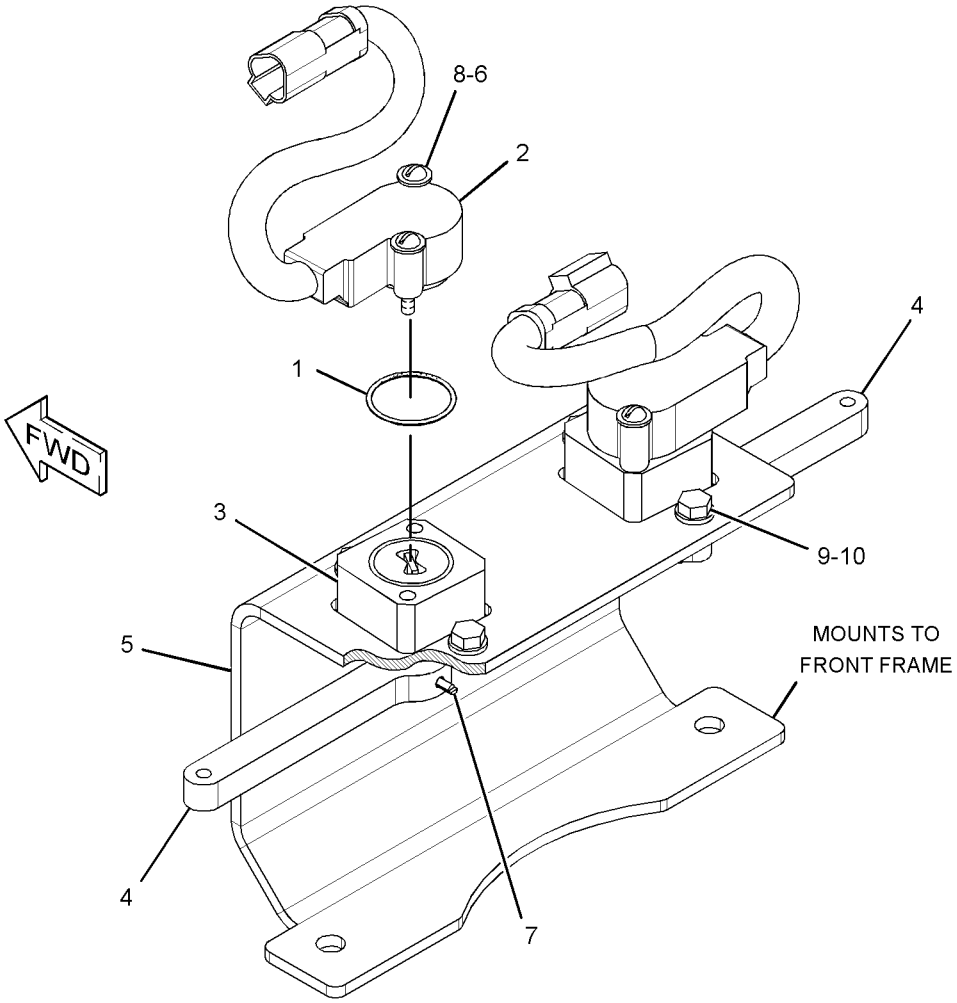

GRAPHIC #1 **<END>** g01457337

262-2017 SENSOR AR-GRADE–CROSS SLOPE

S/N: R9J1-UP
FOR USE WITH M SERIES MOTOR GRADER
FIELD INSTALLATION

SMCS-5953, 6060 **i03645916**

NOTE	PART NUMBER	QTY	PART NAME 1 2 3 4 5 6 (PRODUCT LEVEL)	SEE PAGE
Y	*249-7789*	1	SENSOR & MOUNTING GP (CROSS SLOPE)	269
	324-2694	1	FASTENER GP-SENSOR (ANGLE)	
	061-6665	2	BOLT (1/2-13X1.25-IN)	
M	**9X-2537**	4	BOLT-SOCKET HEAD (M6X1X70-MM)	
	186-0359	1	CLIP	
M	**5C-2890**	4	NUT (M6X1-THD)	
	9X-8256	8	WASHER (6.6X12X2-MM THK)	

M-METRIC PART
Y-SEPARATE ILLUSTRATION

<END>

323-8139 SENSOR AR-GRADE–CD700

S/N: R9J1-UP
FOR USE WITH ACCUGRADE
FIELD INSTALLATION

SMCS-5953, 6060 **i04040313**

NOTE	PART NUMBER	QTY	PART NAME 1 2 3 4 5 6 (PRODUCT LEVEL)	SEE PAGE
Y	*272-2286*	2	BRACKET GP-MOUNTING (MAST)	206
Y	*286-0134*	1	DISPLAY GP-MONITOR (CD700)	799
Y	**286-9124**	3	DISPLAY GP-MONITOR (LIGHT BAR)	800
Y	*292-0291*	1	RECEIVER GP-SATELLITE (DUAL GNSS, MS992)	268
Y	*249-7789*	1	SENSOR & MOUNTING GP (CROSS SLOPE)	269
Y	*253-1964*	1	WIRING GP-MONITOR (CD700)	371
	324-2694	1	FASTENER GP-SENSOR (ANGLE)	
M	**5C-2890**	4	NUT (M6X1-THD)	
M	**9X-2537**	4	BOLT-SOCKET HEAD (M6X1X70-MM)	
	9X-8256	8	WASHER (6.6X12X2-MM THK)	
	061-6665	2	BOLT (1/2-13X1.25-IN)	
	186-0359	1	CLIP	
	271-6373	2	MAST AS	
	248-1502	2	RISER (ANGLE)	
	3E-9861	4	LOCKNUT (5/8-11-THD)	
	7X-0347	4	BOLT (5/8-11X2.25-IN)	
	8T-4122	8	WASHER-HARD (17X32X3.5-MM THK)	

M-METRIC PART
Y-SEPARATE ILLUSTRATION

<END>

231-1975 SENSOR GP-ENGINE

S/N: RSX1037-16669
PART OF 226-9770 ENGINE AR-COMPLETE
TYPE 1

SMCS-1052, 1087, 1439, 1906, 1912, 1917, 1923, 1924, 1925

i02832177

NOTE	REF NO	GRAPHIC REF	PART NUMBER	QTY	PART NAME 1 2 3 4 5 6 (PRODUCT LEVEL)	SEE PAGE
	1	1	**9X-0262**	1	ADAPTER	
Y	2	1	*197-8391*	1	SENSOR GP-TEMPERATURE (FUEL)	294
Y	3	1	*197-8392*	1	SENSOR GP-TEMPERATURE (COOLANT, WATER)	295
Y	4	1	**230-7149**	1	SENSOR GP-SPEED (TIMING, CRANKSHAFT)	289
	5	1	**234-4355**	1	ADAPTER-O-RING	
Y	6	1	*239-2395*	1	SENSOR GP-PRESSURE (ATMOSPHERIC AIR)	279
Y	7	1	*239-2396*	1	SENSOR GP-PRESSURE (FUEL)	280
Y	8	1	*239-2397*	1	SENSOR GP-SPEED (TIMING, CAMSHAFT)	290
	9	1	**164-9609**	1	ELBOW	
Y	10	1	*239-5674*	1	SENSOR GP-PRESSURE (AIR INLET MANIFOLD)	282
	11	1	**6V-5048**	2	SEAL-O-RING	
	12	1	**6V-5049**	1	SEAL-O-RING	
M	13	1	**8T-0642**	2	BOLT (M8X1.25X14-MM)	
	14	1	**9M-1974**	2	WASHER-HARD (8.8X16X2-MM THK)	

M-METRIC PART
Y-SEPARATE ILLUSTRATION

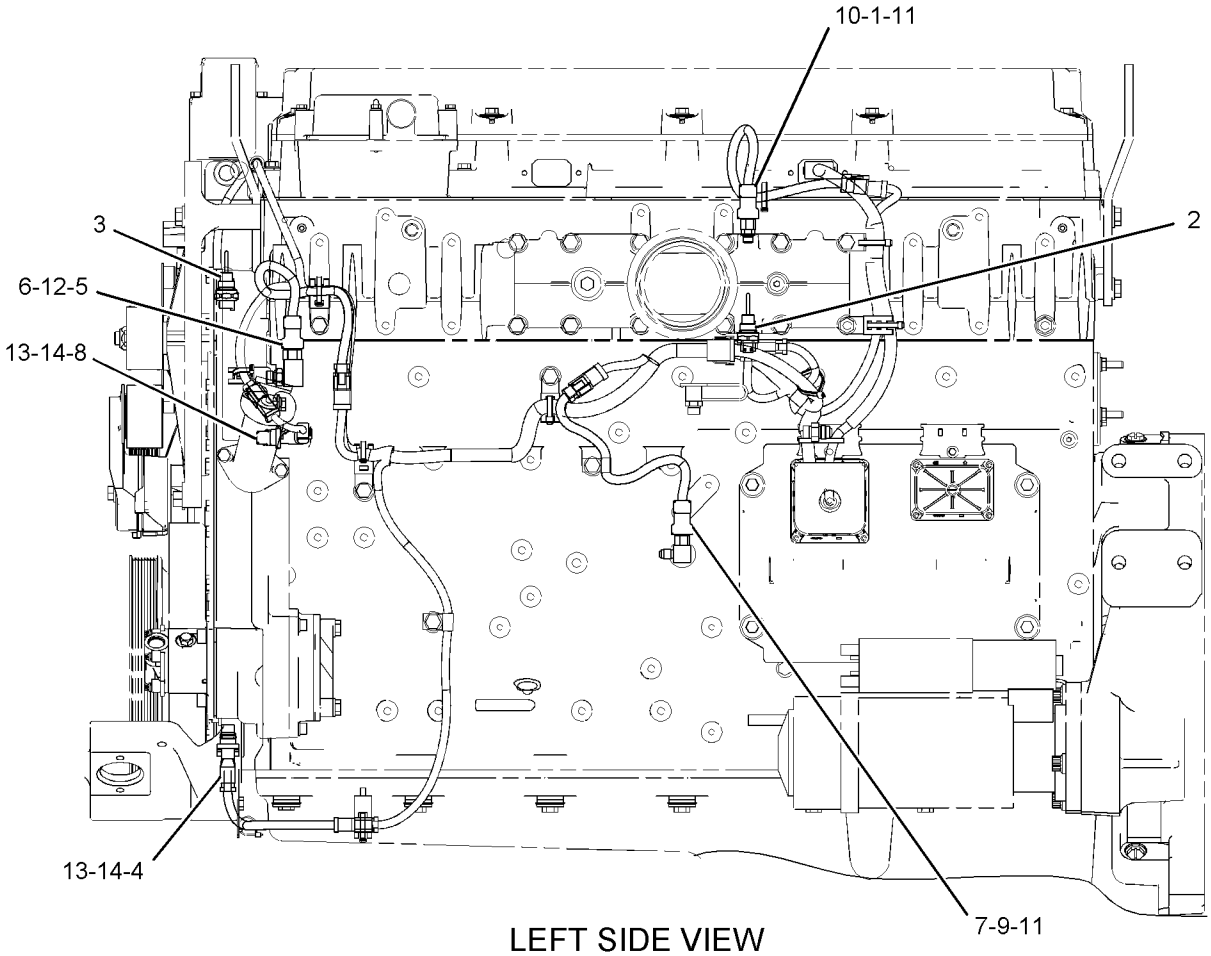

LEFT SIDE VIEW

GRAPHIC #1

<END>

g01061281

231-1975 SENSOR GP-ENGINE

S/N: RSX1037-16669
PART OF 226-9770 ENGINE AR-COMPLETE
TYPE 2

SMCS-1052, 1087, 1439, 1906, 1912, 1917, 1923, 1924, 1925

i03554041

NOTE	REF NO	GRAPHIC REF	PART NUMBER	QTY	PART NAME 1 2 3 4 5 6 (PRODUCT LEVEL)	SEE PAGE
	1	1	**9X-0262**	1	ADAPTER	
Y	2	1	**230-7149**	1	SENSOR GP-SPEED (TIMING, CRANKSHAFT)	289
	3	1	**234-4355**	1	ADAPTER-O-RING	
Y	4	1	*239-2395*	1	SENSOR GP-PRESSURE (ATMOSPHERIC AIR)	279
Y	5	1	*239-2396*	1	SENSOR GP-PRESSURE (ENGINE OIL)	280
Y	6	1	*239-2397*	1	SENSOR GP-SPEED (TIMING, CAMSHAFT)	290
CY	7	1	*274-7395*	1	SENSOR GP-TEMPERATURE (AIR INLET MANIFOLD)	298
CY	8	1	*274-7396*	1	SENSOR GP-TEMPERATURE (COOLANT, WATER)	299
	9	1	**164-9609**	1	ELBOW	
Y	10	1	*239-5674*	1	SENSOR GP-PRESSURE (AIR INLET MANIFOLD)	282
	11	1	**6V-5048**	2	SEAL-O-RING	
	12	1	**6V-5049**	1	SEAL-O-RING	
M	13	1	**6V-5215**	2	BOLT (M8X1.25X16-MM)	
	14	1	**9M-1974**	2	WASHER-HARD (8.8X16X2-MM THK)	

C-CHANGE FROM PREVIOUS TYPE
M-METRIC PART
Y-SEPARATE ILLUSTRATION

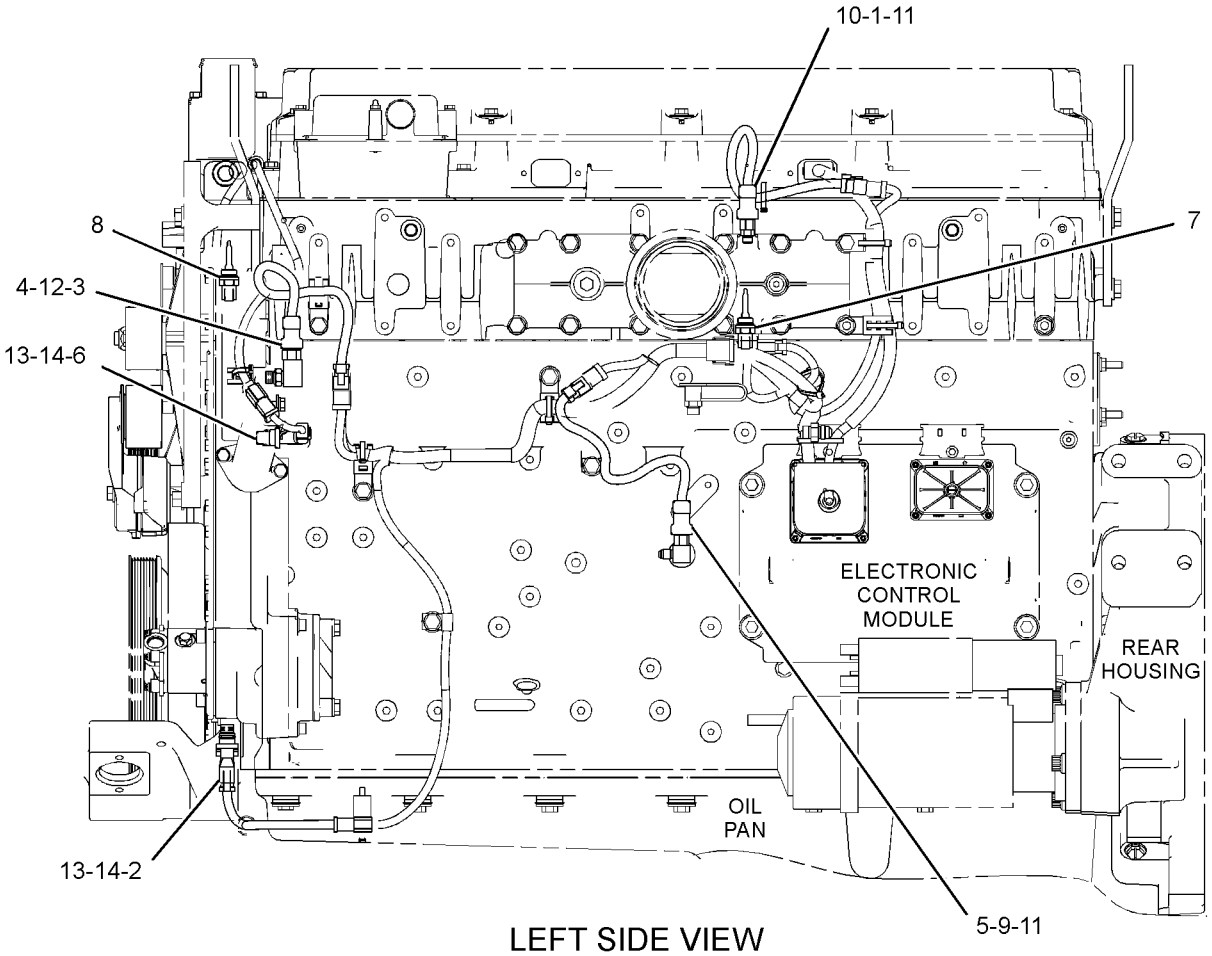

LEFT SIDE VIEW

GRAPHIC #1

<END>

g01274929

357-0523 SENSOR GP-ENGINE

S/N: RSX16670-UP

PART OF 226-9770 ENGINE AR-COMPLETE, 357-6586 ENGINE AR-CORE

SMCS-1052, 1087, 1439, 1906, 1912, 1917, 1923, 1924, 1925

i04039994

NOTE	REF NO	GRAPHIC REF	PART NUMBER	QTY	PART NAME 1 2 3 4 5 6 (PRODUCT LEVEL)	SEE PAGE
	1	1	**234-4355**	1	ADAPTER-O-RING	
Y	2	1	*234-5012*	1	SENSOR GP-TEMPERATURE (COOLANT)	296
Y	3	1	*234-5013*	1	SENSOR GP-TEMPERATURE (INTAKE AIR MANIFOLD)	297
Y	4	1	*249-0096*	1	SENSOR GP-PRESSURE (INTAKE AIR MANIFOLD)	283
Y	5	1	*276-8548*	1	SENSOR GP-PRESSURE (ATMOSPHERIC)	284
Y	6	1	*276-9067*	1	SENSOR GP-PRESSURE (ENGINE OIL)	285
Y	7	1	*300-9805*	1	SENSOR GP-SPEED (PRIMARY, TIMING)	291
Y	8	1	*300-9806*	1	SENSOR GP-SPEED (SECONDARY, TIMING)	292
	9	1	**164-9609**	1	ELBOW	
	10	1	**214-7566**	1	SEAL-O-RING	
	11	1	**214-7568**	1	SEAL-O-RING	
M	12	1	**6V-5215**	2	BOLT (M8X1.25X16-MM)	
	13	1	**9M-1974**	2	WASHER-HARD (8.8X16X2-MM THK)	

M-METRIC PART
Y-SEPARATE ILLUSTRATION

357-0523 **SENSOR GP-ENGINE** *(contd.)* **i04039994**

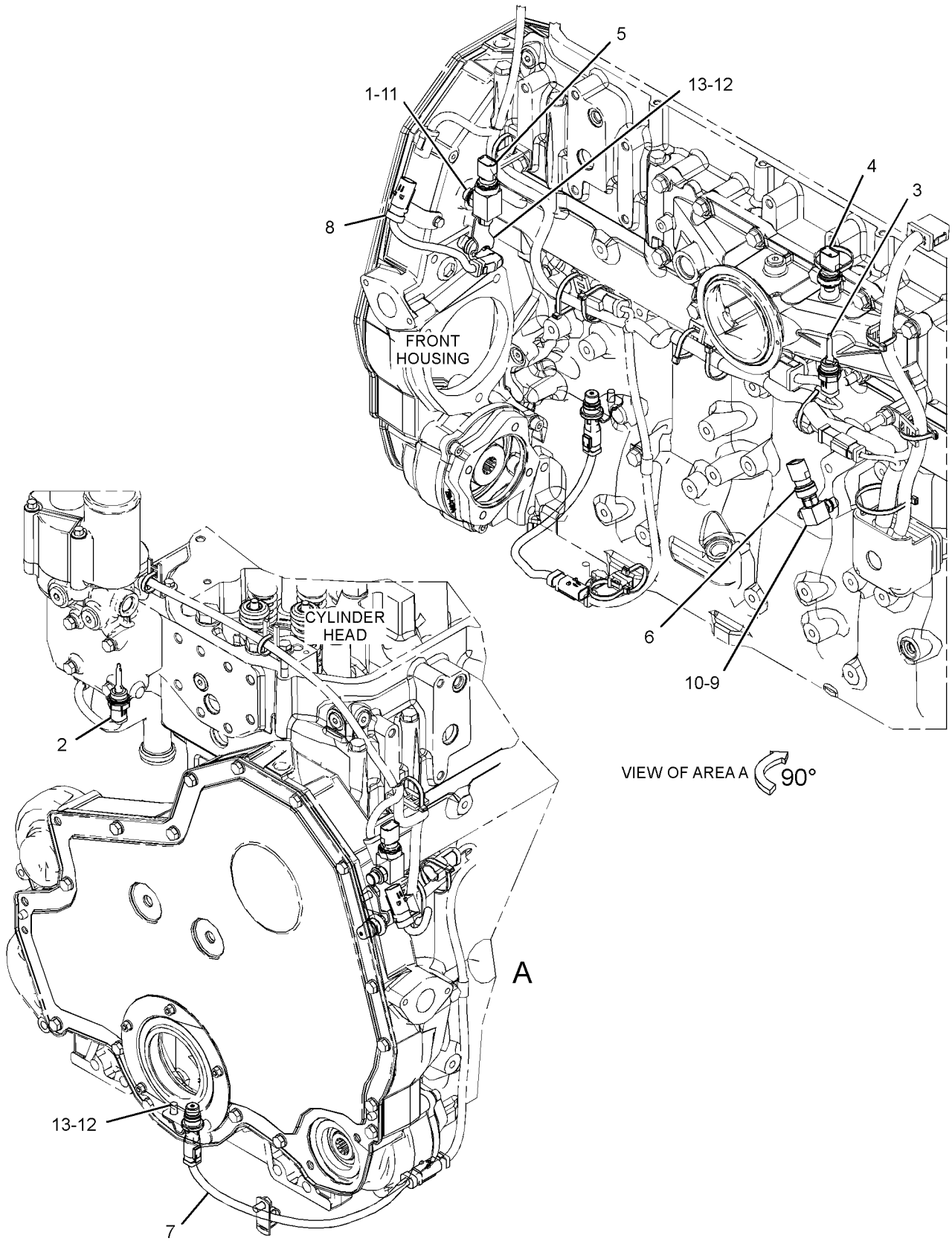

GRAPHIC #1 **<END>** g02232113

266-1467 SENSOR GP-POSITION–ROTARY

S/N: R9J1-UP

PART OF 265-8943 PEDAL GP-BRAKE, XMSN & GOV, 288-9443 SENSOR & MTG GP-POSITION

ALSO AN ATTACHMENT

SMCS-1408, 3168, 3175, 4269, 4809 **i03371123**

NOTE	REF NO	GRAPHIC REF	PART NUMBER	QTY	PART NAME 1 2 3 4 5 6 (PRODUCT LEVEL)	SEE PAGE
	1	1	**9X-3401**	3	PIN-CONNECTOR (16-GA TO 18-GA)	
					–OR–	
		1	**126-1767**	3	PIN-CONNECTOR (14-GA TO 16-GA)	
	2	1	**102-8803**	1	KIT-RECEPTACLE (3-PIN)	
					(INCLUDES RECEPTACLE AS & WEDGE)	

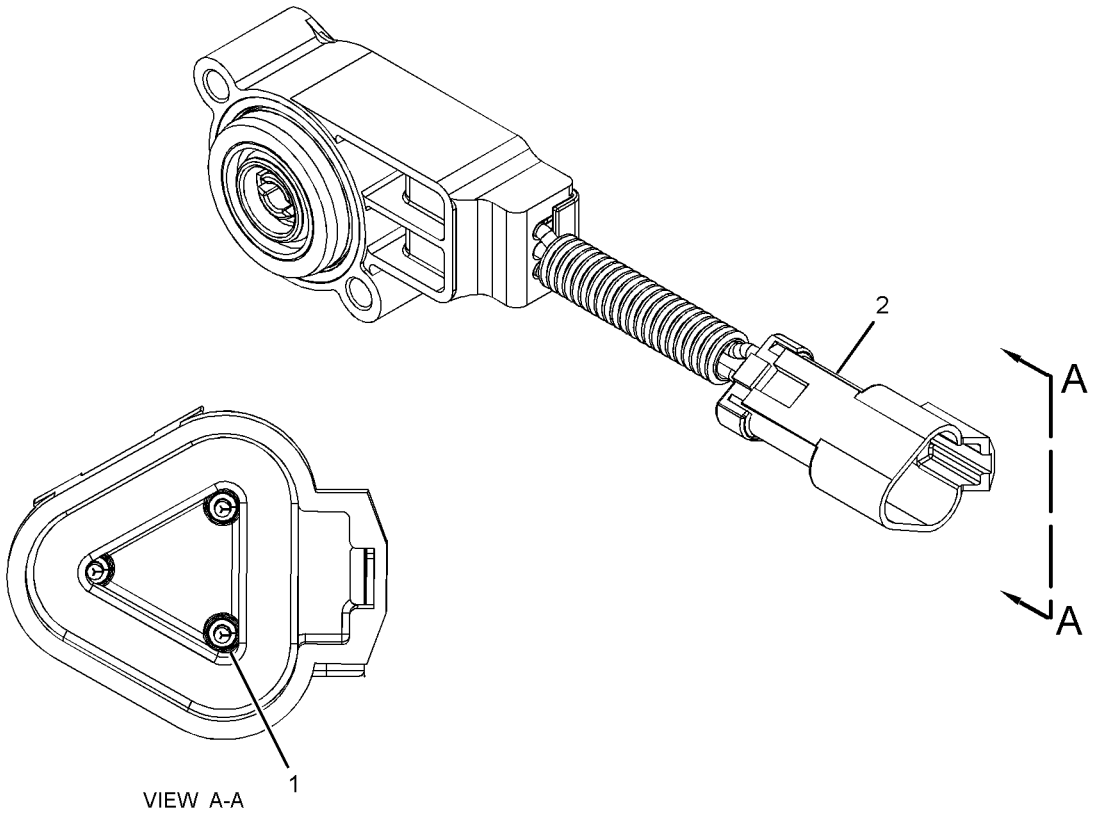

GRAPHIC #1 **<END>** g01740694

194-6722 SENSOR GP-PRESSURE

S/N: RSX1037-UP

PART OF 239-2395 SENSOR GP-PRESSURE

SMCS-1052, 1058, 1408, 1718, 1907, 1912, 1916, 1917, 1923, 1924, 1925, 3175, 4351, 4352, 7400, 7494

i03698115

NOTE	REF NO	GRAPHIC REF	PART NUMBER	QTY	PART NAME 1 2 3 4 5 6 (PRODUCT LEVEL)	SEE PAGE
E	1	1	**9X-1813**		SLEEVE (34-CM)	
	2	1	**155-2260**	1	KIT-CONNECTING PLUG (3-PIN)	
					(INCLUDES PLUG AS, WEDGE & INTERFACE SEAL)	
	3	1	**180-9340**	3	SOCKET-CONNECTOR (14-GA TO 18-GA)	

E-ORDER BY THE CENTIMETER

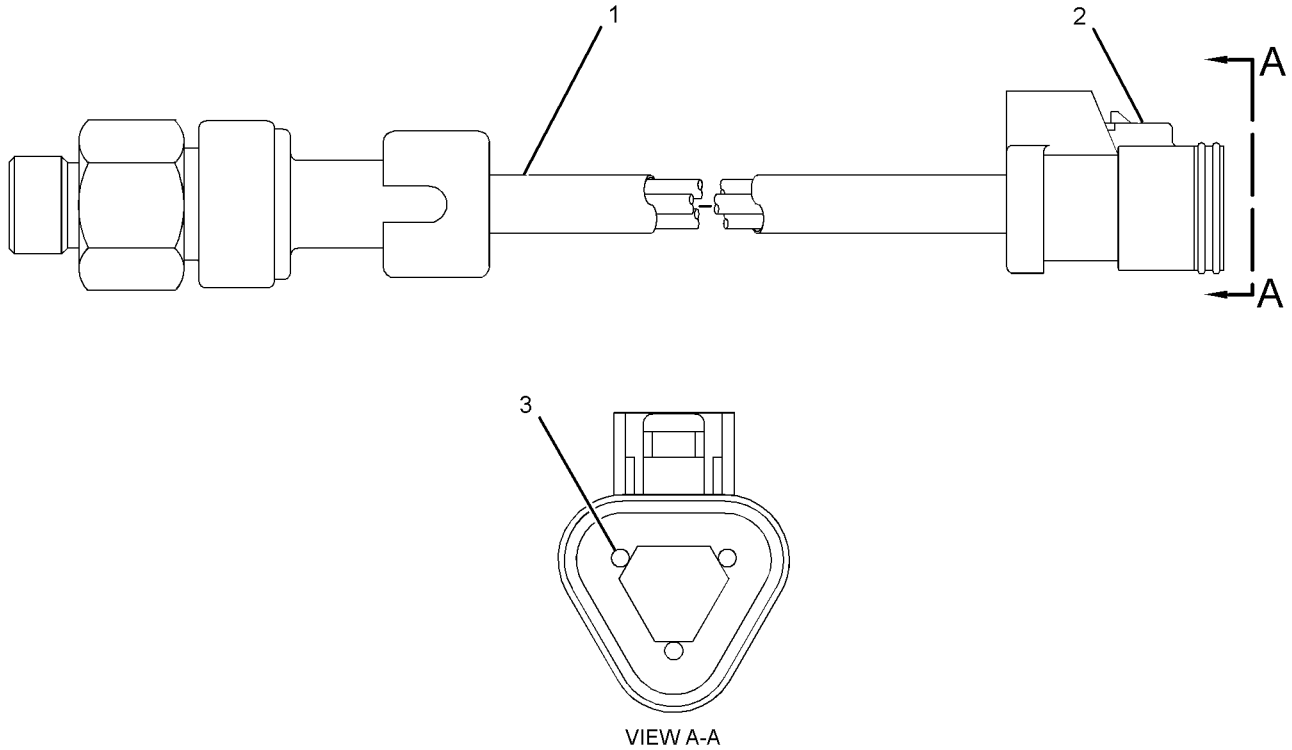

VIEW A-A

GRAPHIC #1

<END>

g01991395

194-6725 SENSOR GP-PRESSURE

S/N: RSX1037-UP

PART OF 239-2396 SENSOR GP-PRESSURE

SMCS-1052, 1058, 1408, 1718, 1907, 1912, 1916, 1917, 1923, 1924, 1925, 3175, 4351, 4352, 7400, 7494 **i03642385**

NOTE	REF NO	GRAPHIC REF	PART NUMBER	QTY	PART NAME 1 2 3 4 5 6 (PRODUCT LEVEL)	SEE PAGE
E	1	1	**9X-1813**		SLEEVE (34-CM)	
	2	1	**155-2260**	1	KIT-CONNECTING PLUG (3-PIN)	
					(INCLUDES PLUG AS, INTERFACE SEAL & WEDGE)	
	3	1	**180-9340**	3	SOCKET-CONNECTOR (14-GA TO 18-GA)	

E-ORDER BY THE CENTIMETER

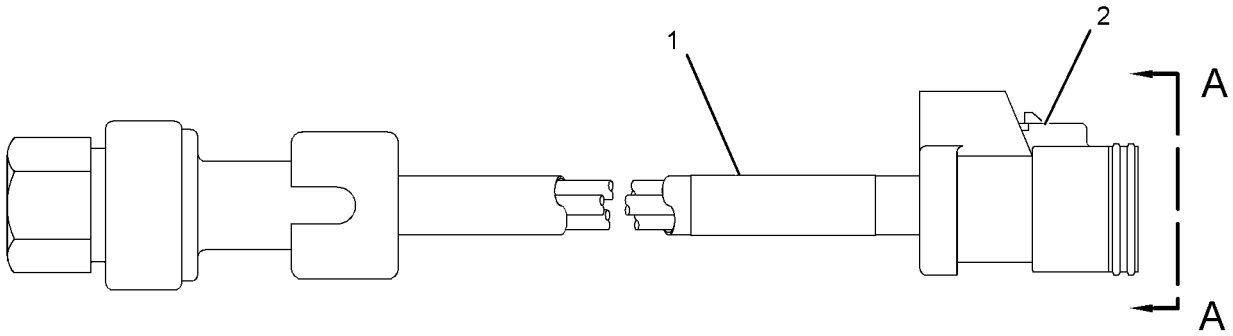

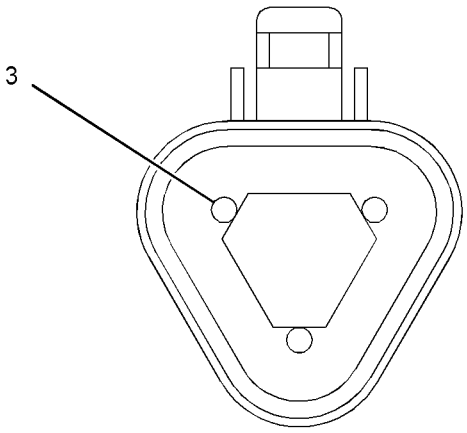

VIEW A-A

GRAPHIC #1 **<END>** g01662003

239-2395 SENSOR GP-PRESSURE–ATMOSPHERIC AIR

S/N: RSX1037-16669

PART OF 231-1975 SENSOR GP-ENGINE

SMCS-1052, 1058, 1408, 1718, 1907, 1912, 1916, 1917, 1923, 1924, 1925, 3175, 4351, 4352, 7400, 7494

i03993925

NOTE	REF NO	GRAPHIC REF	PART NUMBER	QTY	PART NAME 1 2 3 4 5 6 (PRODUCT LEVEL)	SEE PAGE
Y	1	1	**194-6722**	1	SENSOR GP-PRESSURE (ATMOSPHERIC)	277
	2	1	**214-7568**	1	SEAL-O-RING	

Y-SEPARATE ILLUSTRATION

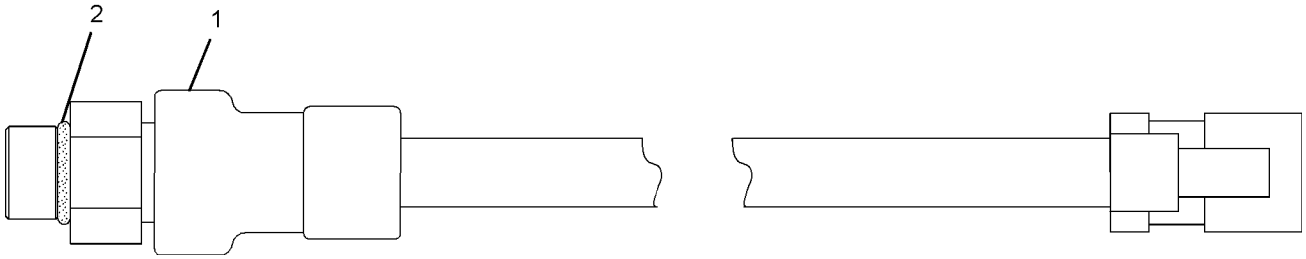

GRAPHIC #1

<END>

g01019702

239-2396 SENSOR GP-PRESSURE

S/N: RSX1037-16669

PART OF 254-4998 FILTER GP-FUEL, 231-1975 SENSOR GP-ENGINE

SMCS-1052, 1058, 1408, 1718, 1907, 1912, 1916, 1917, 1923, 1924, 1925, 3175, 4351, 4352, 7400, 7494 **i03821338**

NOTE	REF NO	GRAPHIC REF	PART NUMBER	QTY	PART NAME 1 2 3 4 5 6 (PRODUCT LEVEL)	SEE PAGE
Y	1	1	**194-6725**	1	SENSOR GP-PRESSURE	278
	2	1	**214-7566**	1	SEAL-O-RING	

Y-SEPARATE ILLUSTRATION

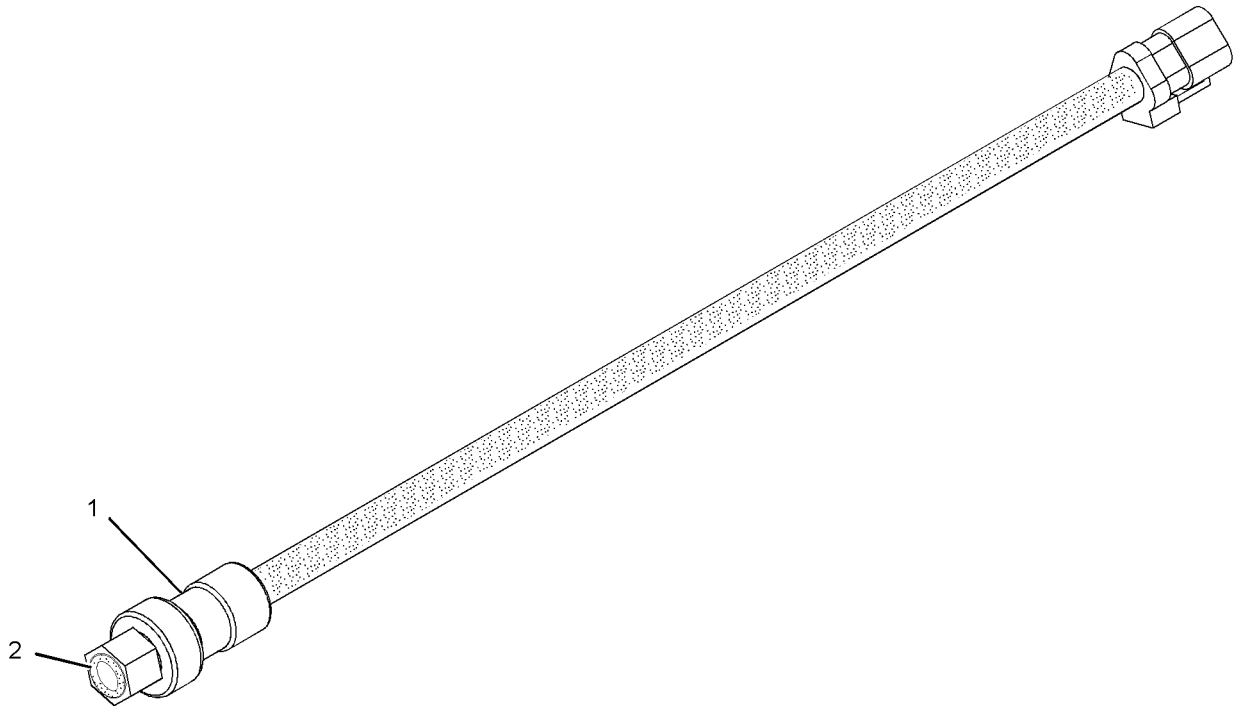

GRAPHIC #1 **<END>** g01019323

239-3478 SENSOR GP-PRESSURE

S/N: RSX1037-UP

PART OF 239-5674 SENSOR GP-PRESSURE

SMCS-1052, 1058, 1408, 1718, 1907, 1912, 1916, 1917, 1923, 1924, 1925, 3175, 4351, 4352, 7400, 7494

i03570562

NOTE	REF NO	GRAPHIC REF	PART NUMBER	QTY	PART NAME 1 2 3 4 5 6 (PRODUCT LEVEL)	SEE PAGE
	1	1	**102-8803**	1	KIT-RECEPTACLE (3-PIN)	
					(INCLUDES RECEPTACLE AS & WEDGE)	
	2	1	**180-9339**	3	PIN-CONNECTOR (14-GA TO 18-GA)	
E	3	1	**9X-1813**		SLEEVE (34-CM)	

E-ORDER BY THE CENTIMETER

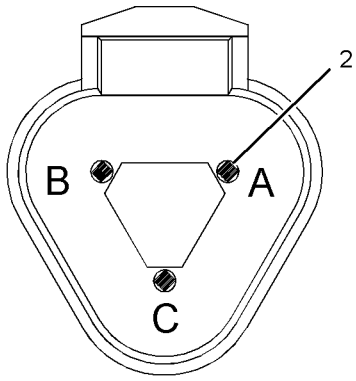

VIEW A-A

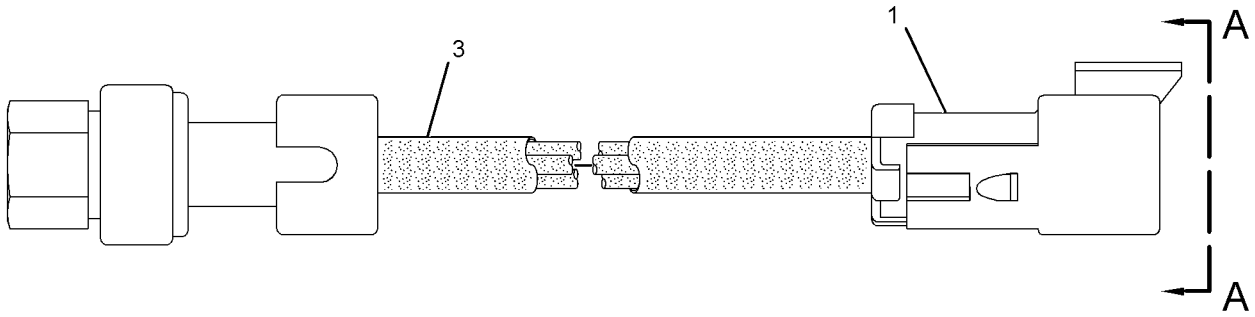

GRAPHIC #1

<END>

g01896473

239-5674 SENSOR GP-PRESSURE–AIR INLET MANIFOLD

S/N: RSX1037-16669

PART OF 231-1975 SENSOR GP-ENGINE

SMCS-1052, 1058, 1408, 1718, 1907, 1912, 1916, 1917, 1923, 1924, 1925, 3175, 4351, 4352, 7400, 7494 **i03821202**

NOTE	REF NO	GRAPHIC REF	PART NUMBER	QTY	PART NAME 1 2 3 4 5 6 (PRODUCT LEVEL)	SEE PAGE
Y	1	1	**239-3478**	1	SENSOR GP-PRESSURE	281
	2	1	**214-7566**	1	SEAL-O-RING	

Y-SEPARATE ILLUSTRATION

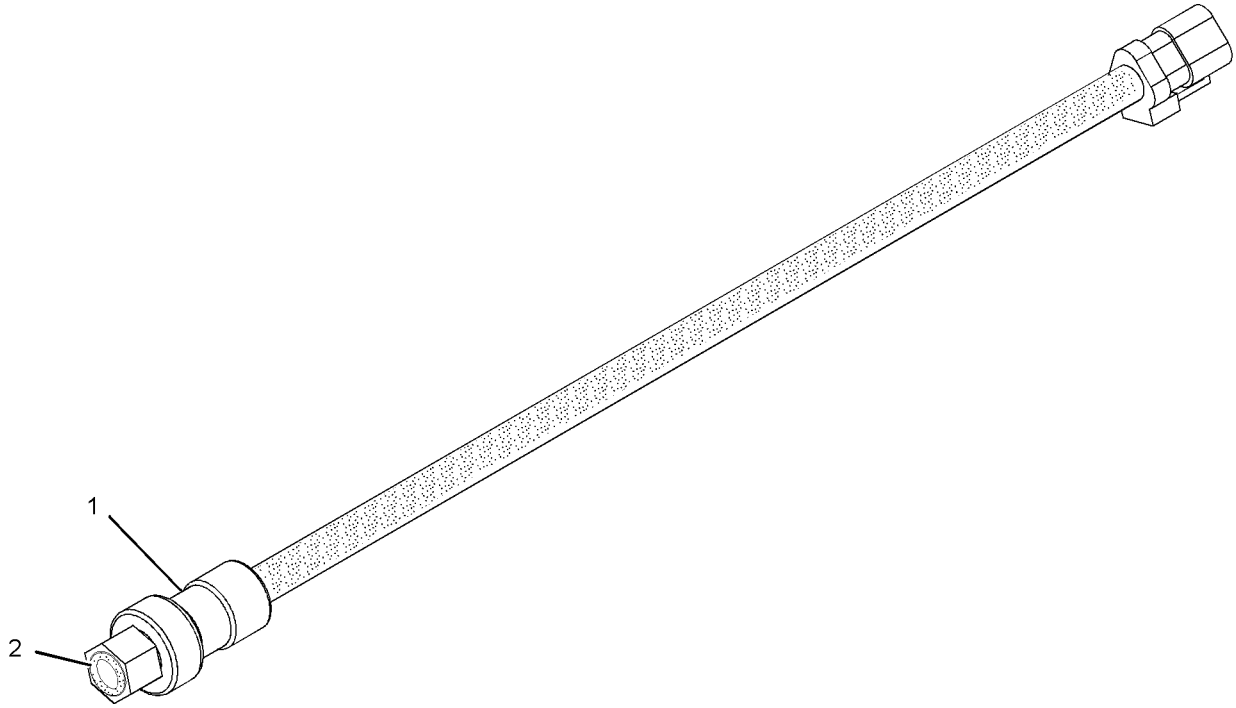

GRAPHIC #1 **<END>** g01019323

249-0096 SENSOR GP-PRESSURE–INTAKE AIR MANIFOLD

S/N: RSX16670-UP

PART OF 357-0523 SENSOR GP-ENGINE

SMCS-1052, 1058, 1408, 1718, 1907, 1912, 1916, 1917, 1923, 1924, 1925, 3175, 4351, 4352, 7400, 7494

i03821357

NOTE	REF NO	GRAPHIC REF	PART NUMBER	QTY	PART NAME 1 2 3 4 5 6 (PRODUCT LEVEL)	SEE PAGE
	1	1	**274-6718**	1	SENSOR GP-PRESSURE	
	2	1	**214-7566**	1	SEAL-O-RING	

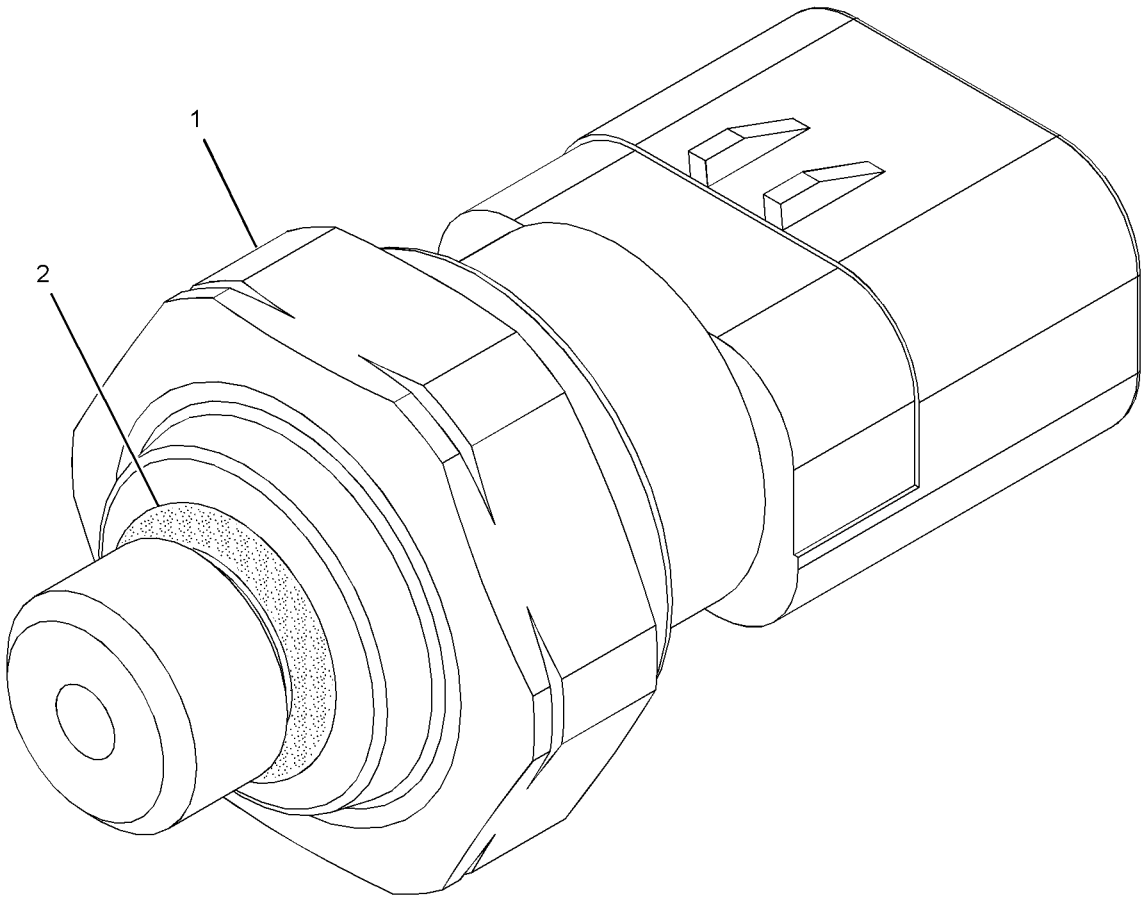

GRAPHIC #1

<END>

g01224445

276-8548 SENSOR GP-PRESSURE–ATMOSPHERIC

S/N: RSX16670-UP
AMPSEAL CONNECTOR
PART OF 357-0523 SENSOR GP-ENGINE

SMCS-1052, 1058, 1408, 1718, 1907, 1912, 1916, 1917, 1923, 1924, 1925, 3175, 4351, 4352, 7400, 7494

i03784732

NOTE	REF NO	GRAPHIC REF	PART NUMBER	QTY	PART NAME 1 2 3 4 5 6 (PRODUCT LEVEL)	SEE PAGE
	1	1	**274-6717**	1	SENSOR-PRESSURE	
	2	1	**214-7568**	1	SEAL-O-RING	

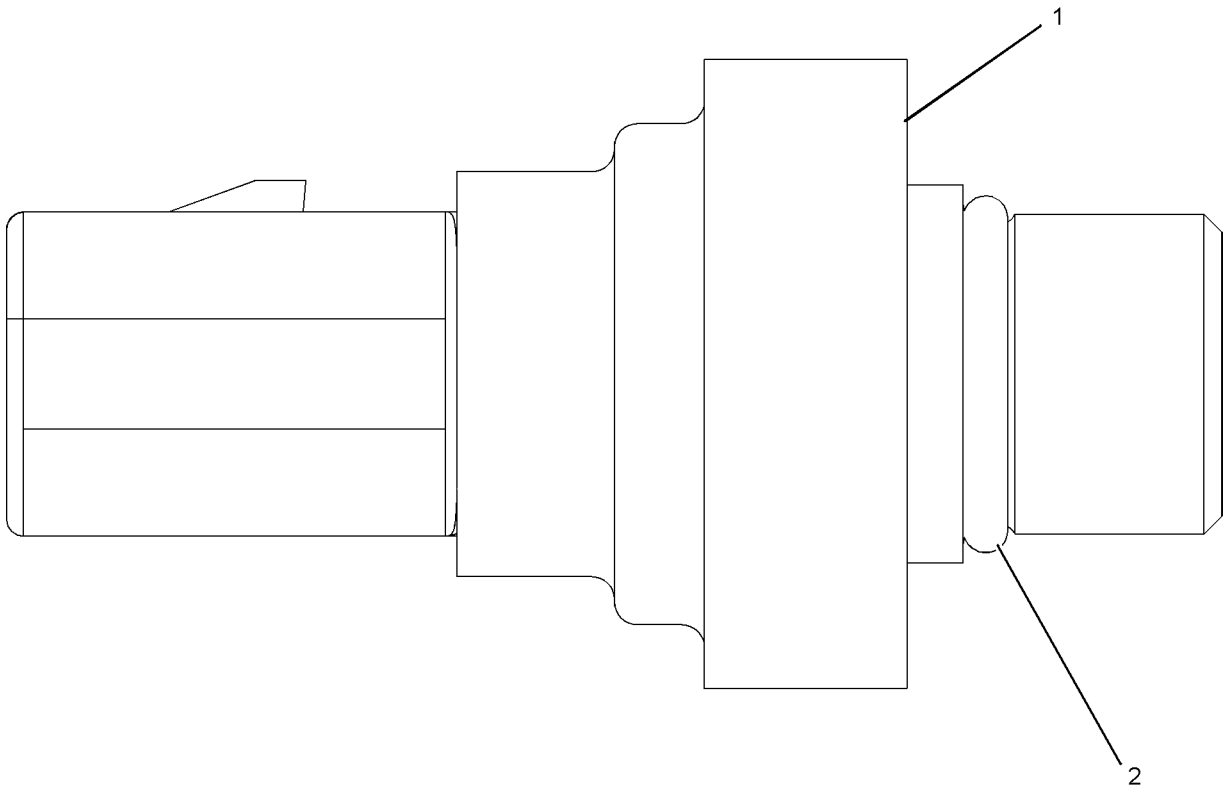

GRAPHIC #1 **<END>** g01064278

276-9067 SENSOR GP-PRESSURE–ENGINE OIL, FUEL

S/N: RSX16670-UP
AMPSEAL CONNECTOR
PART OF 356-8382 FILTER GP-FUEL, 357-0523 SENSOR GP-ENGINE

SMCS-1052, 1058, 1408, 1718, 1907, 1912, 1916, 1917, 1923, 1924, 1925, 3175, 4351, 4352, 7400, 7494

i03920338

NOTE	REF NO	GRAPHIC REF	PART NUMBER	QTY	PART NAME 1 2 3 4 5 6 (PRODUCT LEVEL)	SEE PAGE
	1	1	**274-6719**	1	SENSOR GP-PRESSURE	
		1	**3J-7354**	1	SEAL-O-RING	
		1	**237-0227**	1	PLUG AS-CONNECTOR (3-PIN)	
	2	1	**214-7566**	1	SEAL-O-RING	

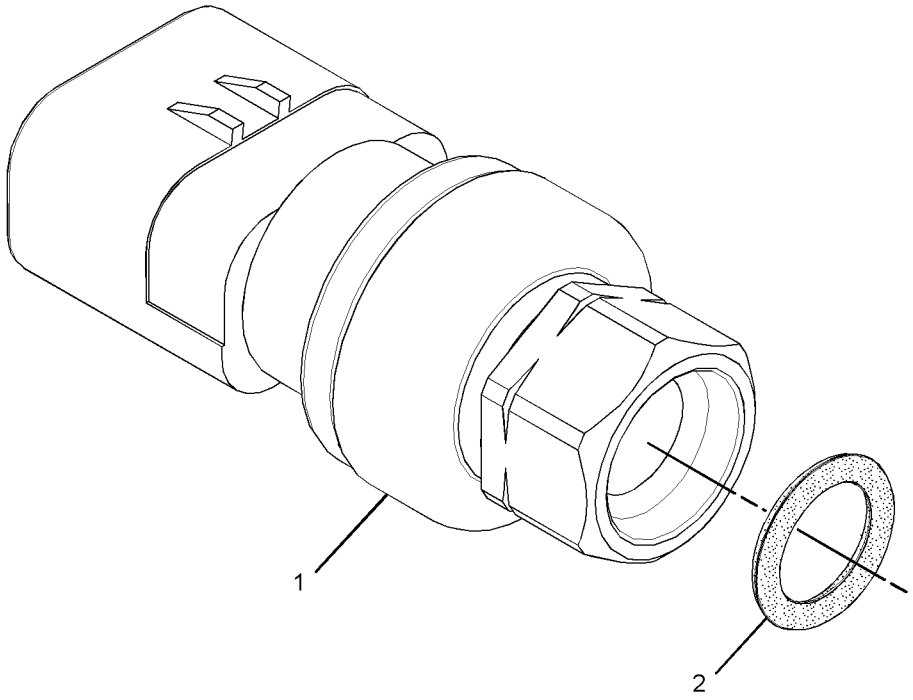

GRAPHIC #1

<END>

g01994176

286-0132 SENSOR GP-SONIC

S/N: R9J1-UP
FOR USE WITH M SERIES MOTOR GRADER
FIELD INSTALLATION

SMCS-1408, 5645 **i04034989**

NOTE	PART NUMBER	QTY	PART NAME 1 2 3 4 5 6 (PRODUCT LEVEL)	SEE PAGE
Y	**248-1488**	2	BRACKET GP-MOUNTING (SONIC SENSOR)	204
Y	**321-1458**	1	FASTENER GP-SENSOR (SONIC)	481
Y	**321-1456**	1	SENSOR GP-SONIC (ST400C)	287
	248-1487	2	ROD	

Y-SEPARATE ILLUSTRATION

<END>

286-0133 SENSOR GP-SONIC

S/N: R9J1-UP
FOR USE WITH M SERIES MOTOR GRADER
FIELD INSTALLATION

SMCS-1408, 5645 **i04034993**

NOTE	PART NUMBER	QTY	PART NAME 1 2 3 4 5 6 (PRODUCT LEVEL)	SEE PAGE
Y	**248-1488**	1	BRACKET GP-MOUNTING (SONIC SENSOR)	204
Y	**321-1458**	1	FASTENER GP-SENSOR (SONIC)	481
Y	**321-1455**	1	SENSOR GP-SONIC (ST400C)	286
	248-1487	1	ROD	

Y-SEPARATE ILLUSTRATION

<END>

321-1455 SENSOR GP-SONIC

S/N: R9J1-UP
PART OF 286-0133 SENSOR GP-SONIC

SMCS-1408, 5645 **i03091101**

NOTE	PART NUMBER	QTY	PART NAME 1 2 3 4 5 6 (PRODUCT LEVEL)	SEE PAGE
	253-8330	1	SENSOR AS-SONIC (ST400)	
	258-7593	1	KIT-FOAM (POLYURETHANE)	
			(INCLUDES FOAMS)	
	258-7598	1	KIT-FOAM (STAINLESS STEEL,POLYURETHANE)	
			(INCLUDES BAR, BOLT, LOCTITE & FOAMS)	
	293-0773	1	SOFTWARE	
	248-1497	1	CABLE-COILED (SENSOR)	
	256-6944	1	CASE-CARRYING	

<END>

321-1456 SENSOR GP-SONIC

S/N: R9J1-UP

PART OF 286-0132 SENSOR GP-SONIC

SMCS-1408, 5645 **i03091102**

NOTE	PART NUMBER	QTY	PART NAME 1 2 3 4 5 6 (PRODUCT LEVEL)	SEE PAGE
	253-8330	2	SENSOR AS-SONIC (ST400)	
			(EACH INCLUDES)	
	258-7593	1	KIT-FOAM	
			(INCLUDES FOAM)	
	258-7598	1	KIT-FOAM	
			(INCLUDES BAR-REFERENCE, BOLTS, FOAM, & LOCKTITE)	
	248-1497	2	CABLE-COILED (SENSOR)	
	256-6944	1	CASE-CARRYING	

<END>

191-8303 SENSOR GP-SPEED

S/N: DZM1-UP

PART OF 253-8428 CONTROL GP-TRANSMISSION HYD

SMCS-1907, 1912, 3141, 3175, 4803, 7493 **i03630713**

NOTE	REF NO	GRAPHIC REF	PART NUMBER	QTY	PART NAME 1 2 3 4 5 6 (PRODUCT LEVEL)	SEE PAGE
	1		**137-6645**	1	PAD	
	2		**133-0260**	1	BRACKET	

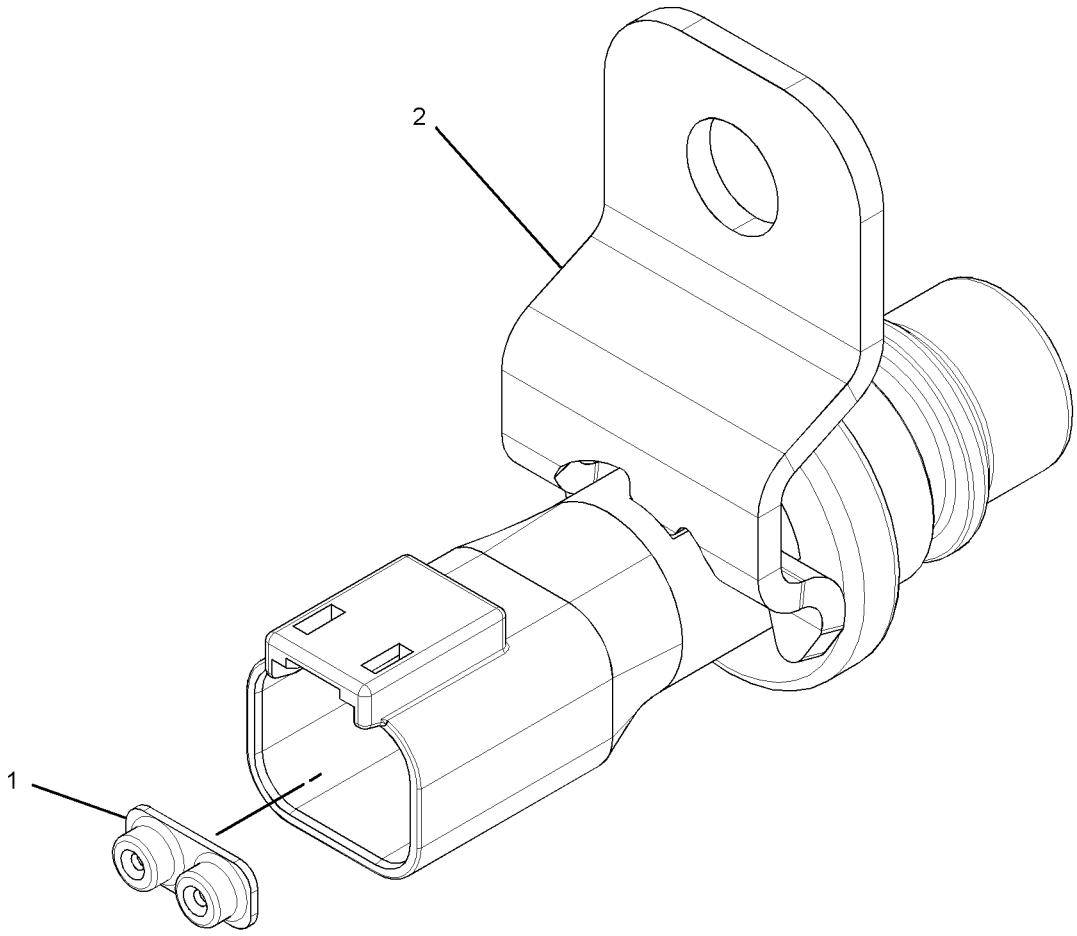

GRAPHIC #1 **<END>** g01699415

230-7149 SENSOR GP-SPEED—TIMING, CRANKSHAFT

S/N: RSX1037-16669

PART OF 231-1975 SENSOR GP-ENGINE

SMCS-1907, 1912, 3141, 3175, 4803, 7493 **i03574642**

NOTE	REF NO	GRAPHIC REF	PART NUMBER	QTY	PART NAME 1 2 3 4 5 6 (PRODUCT LEVEL)	SEE PAGE
	1	1	**201-6615**	1	SENSOR GP-SPEED	
	2	1	**228-4947**	1	SEAL-O-RING	

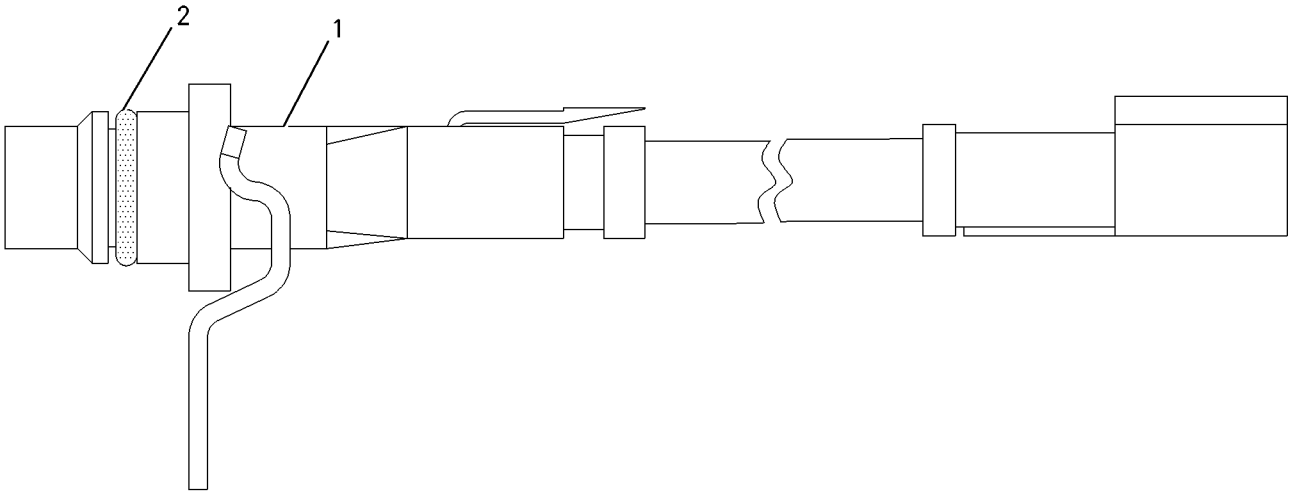

GRAPHIC #1 **<END>** g01007584

239-2397 SENSOR GP-SPEED–TIMING, CAMSHAFT

S/N: RSX1037-16669

PART OF 231-1975 SENSOR GP-ENGINE

SMCS-1907, 1912, 3141, 3175, 4803, 7493 **i03574654**

NOTE	REF NO	GRAPHIC REF	PART NUMBER	QTY	PART NAME 1 2 3 4 5 6 (PRODUCT LEVEL)	SEE PAGE
	1	1	**228-4947**	1	SEAL-O-RING	
	2	1	**201-6616**	1	SENSOR GP-SPEED	

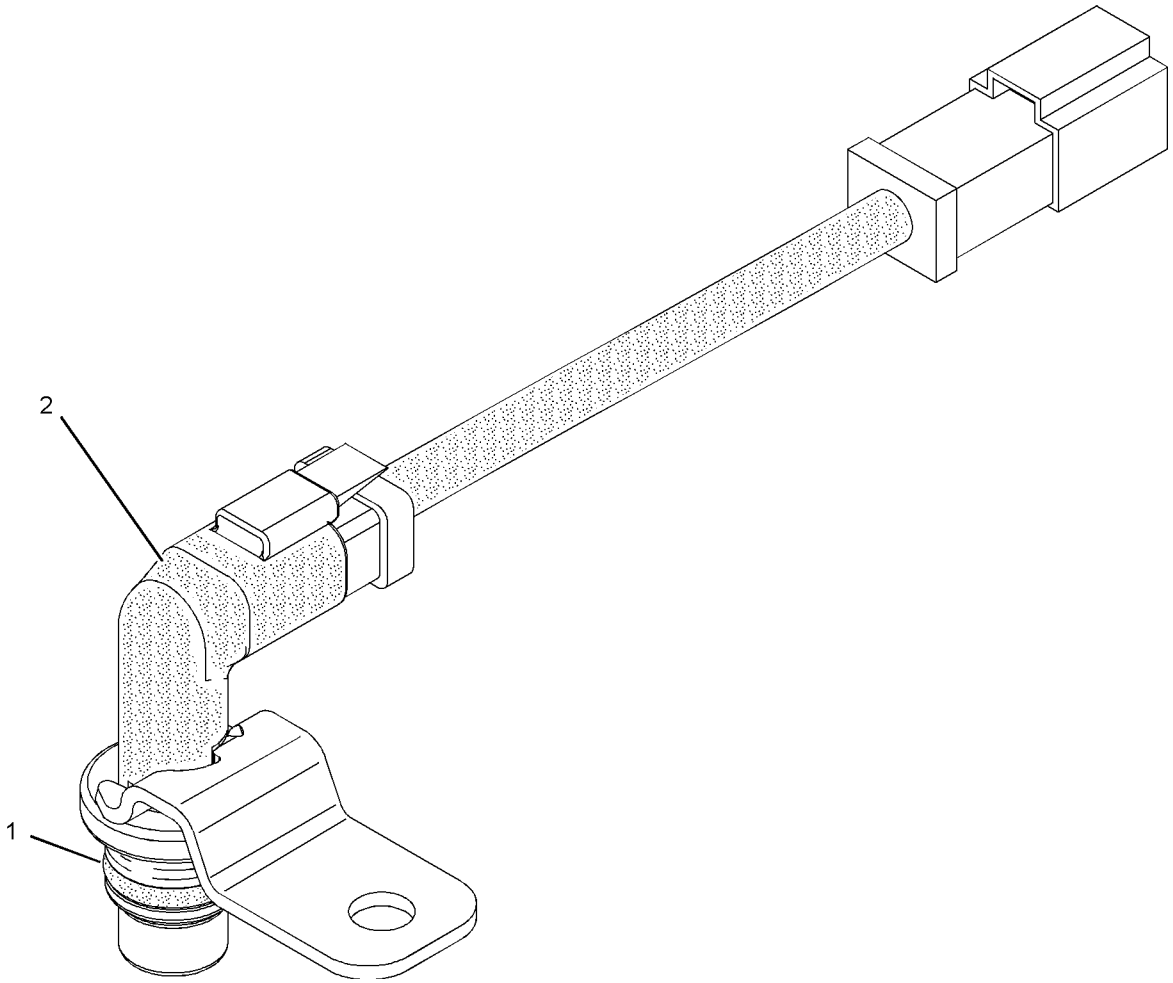

GRAPHIC #1 **<END>** g01019337

300-9805 SENSOR GP-SPEED–PRIMARY, TIMING

S/N: RSX16670-UP

PART OF 357-0523 SENSOR GP-ENGINE

SMCS-1907, 1912, 3141, 3175, 4803, 7493 **i03953716**

NOTE	REF NO	GRAPHIC REF	PART NUMBER	QTY	PART NAME 1 2 3 4 5 6 (PRODUCT LEVEL)	SEE PAGE
	1	1	**228-4947**	1	SEAL-O-RING	
	2	1	**279-9828**	1	SENSOR GP-SPEED (CRANKSHAFT)	

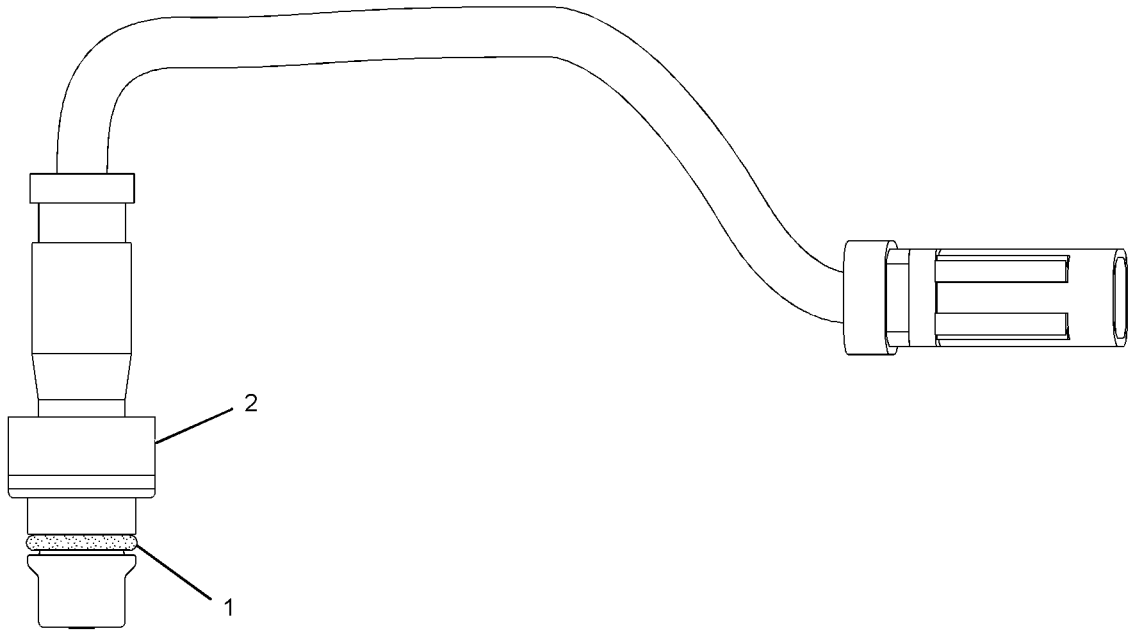

GRAPHIC #1 **<END>** g02168513

300-9806 SENSOR GP-SPEED–SECONDARY, TIMING

S/N: RSX16670-UP

PART OF 357-0523 SENSOR GP-ENGINE

SMCS-1907, 1912, 3141, 3175, 4803, 7493 **i03354549**

NOTE	REF NO	GRAPHIC REF	PART NUMBER	QTY	PART NAME 1 2 3 4 5 6 (PRODUCT LEVEL)	SEE PAGE
	1	1	**228-4947**	1	SEAL-O-RING	
	2	1	**279-9829**	1	SENSOR GP-SPEED (CAM GEAR)	

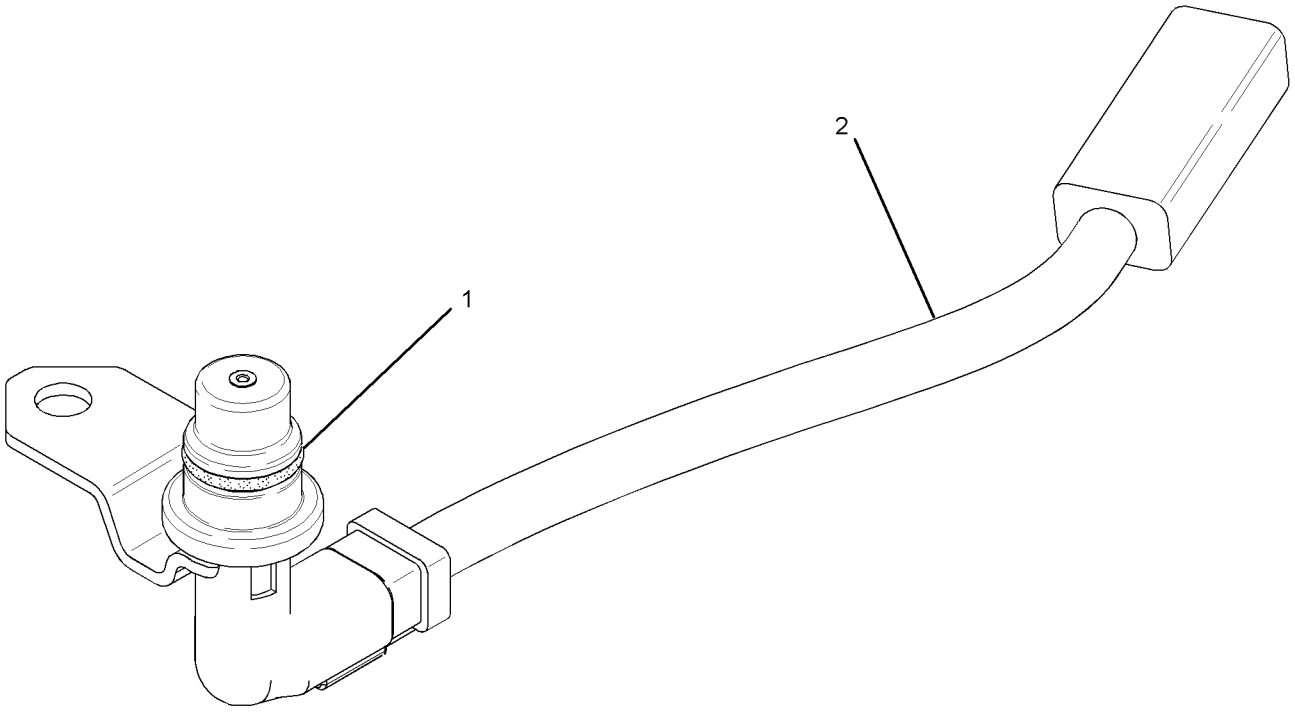

GRAPHIC #1 **<END>** g01333640

191-6587 SENSOR GP-TEMPERATURE

S/N: R9J1-UP

PART OF 285-3175, 354-4778 WIRING GP-FRONT

AN ATTACHMENT

SMCS-1087, 1439, 1906, 1919, 1921, 1922, 1928, 1929, 192T, 1932, 301T, 3194, 3290, 429T, 509T, 7344

i03817529

NOTE	REF NO	GRAPHIC REF	PART NUMBER	QTY	PART NAME 1 2 3 4 5 6 (PRODUCT LEVEL)	SEE PAGE
J	1	1	**153-5043**		SLEEVE (2-DM)	
	2	1	**155-2270**	1	KIT-CONNECTING PLUG (2-PIN)	
					(INCLUDES PLUG AS, WEDGE & INTERFACE SEAL)	
	3	1	**180-9340**	2	SOCKET-CONNECTOR (14-GA TO 18-GA)	

J-ORDER BY THE DECIMETER

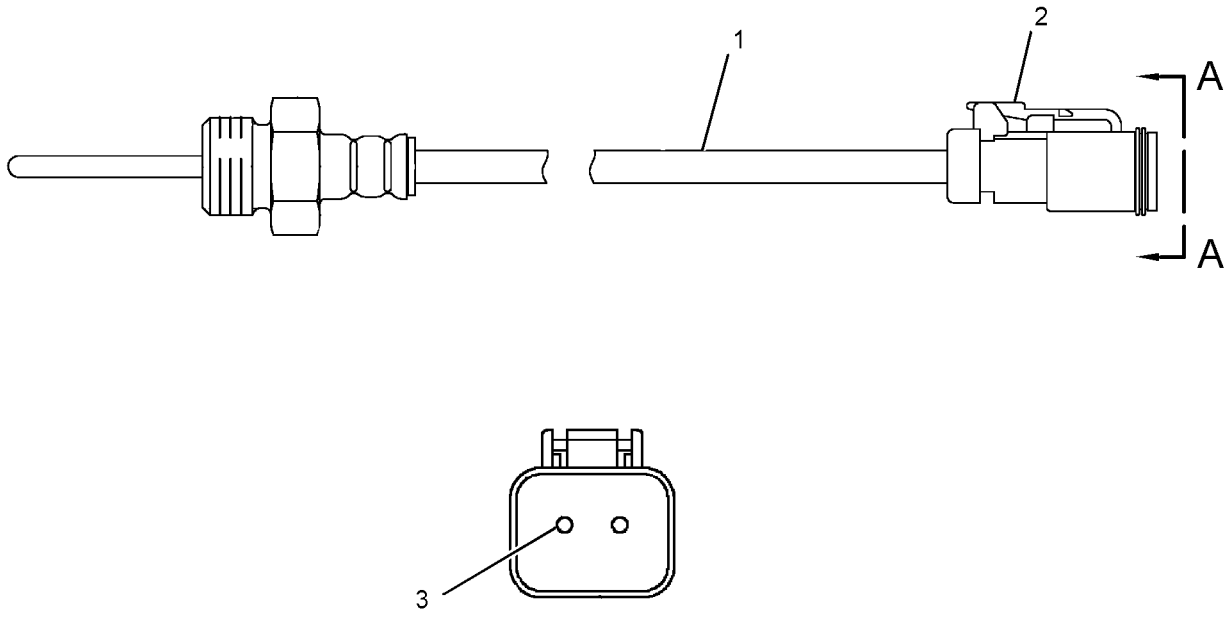

VIEW A-A

GRAPHIC #1

<END>

g02069919

197-8391 SENSOR GP-TEMPERATURE–FUEL

S/N: RSX1037-16669

PART OF 254-4998 FILTER GP-FUEL, 231-1975 SENSOR GP-ENGINE

SMCS-1087, 1439, 1906, 1919, 1921, 1922, 1928, 1929, 192T, 1932, 301T, 3194, 3290, 429T, 509T, 7344 **i02938842**

NOTE	REF NO	GRAPHIC REF	PART NUMBER	QTY	PART NAME 1 2 3 4 5 6 (PRODUCT LEVEL)	SEE PAGE
	1	1	**130-9811**	1	SENSOR GP-TEMPERATURE	
		1	**137-6645**	1	PAD	
	2	1	**8L-2786**	1	SEAL-O-RING	

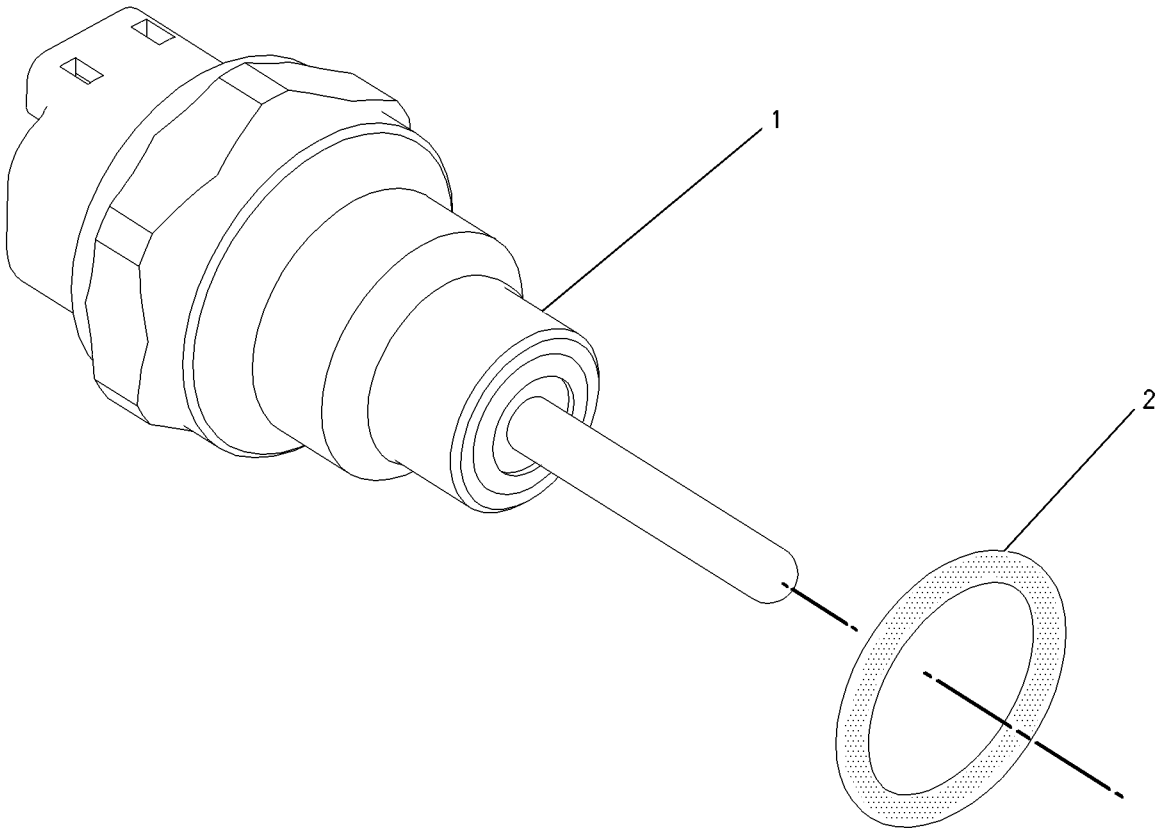

GRAPHIC #1 **<END>** g00856011

197-8392 SENSOR GP-TEMPERATURE

S/N: RSX1037-UP

PART OF 231-1975 SENSOR GP-ENGINE

SMCS-1087, 1439, 1906, 1919, 1921, 1922, 1928, 1929, 192T, 1932, 301T, 3194, 3290, 429T, 509T, 7344

i03151493

NOTE	REF NO	GRAPHIC REF	PART NUMBER	QTY	PART NAME 1 2 3 4 5 6 (PRODUCT LEVEL)	SEE PAGE
	1	1	**130-9811**	1	SENSOR GP-TEMPERATURE	
		1	**137-6645**		PAD	
	2	1	**6V-6609**	1	SEAL-O-RING	

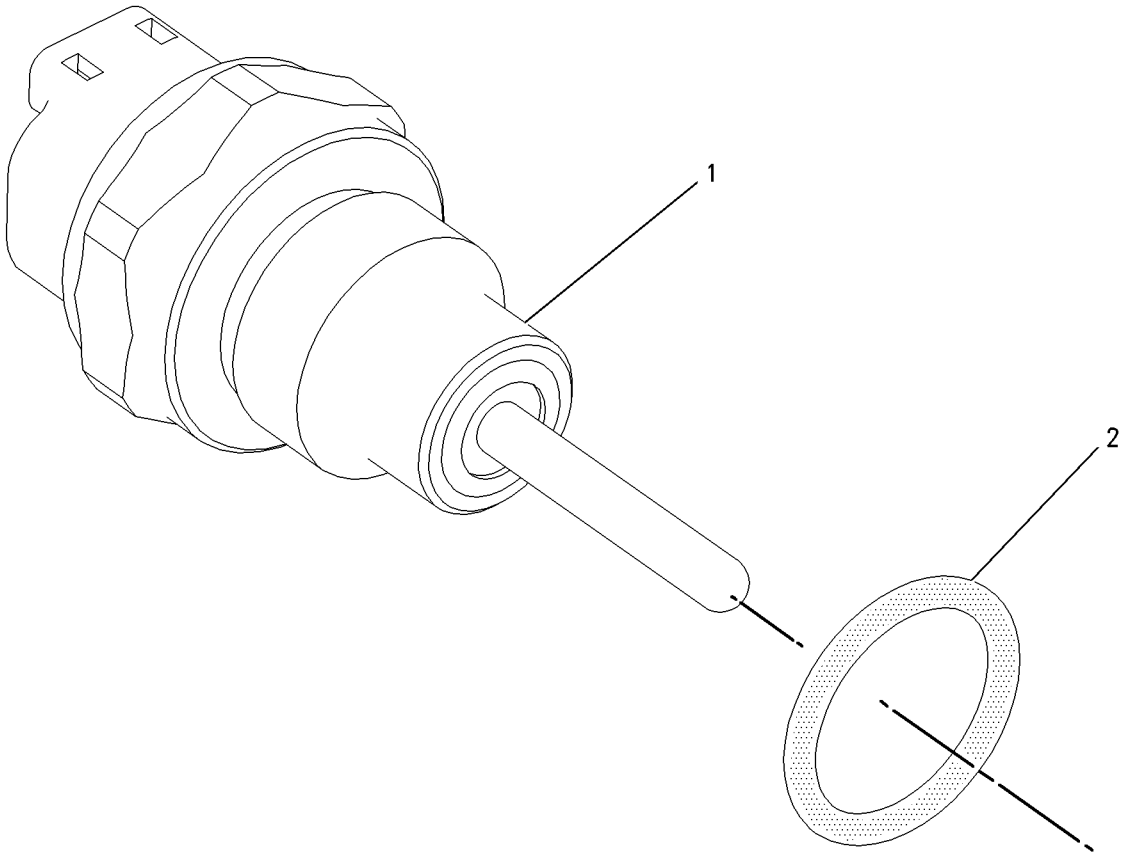

GRAPHIC #1

<END>

g00856005

234-5012 SENSOR GP-TEMPERATURE–COOLANT

S/N: RSX16670-UP

PART OF 357-0523 SENSOR GP-ENGINE

SMCS-1087, 1439, 1906, 1919, 1921, 1922, 1928, 1929, 192T, 1932, 301T, 3194, 3290, 429T, 509T, 7344 **i02660829**

NOTE	REF NO	GRAPHIC REF	PART NUMBER	QTY	PART NAME 1 2 3 4 5 6 (PRODUCT LEVEL)	SEE PAGE
	1	1	**256-6453**	1	SENSOR AS-TEMPERATURE	
	2	1	**6V-6609**	1	SEAL-O-RING	

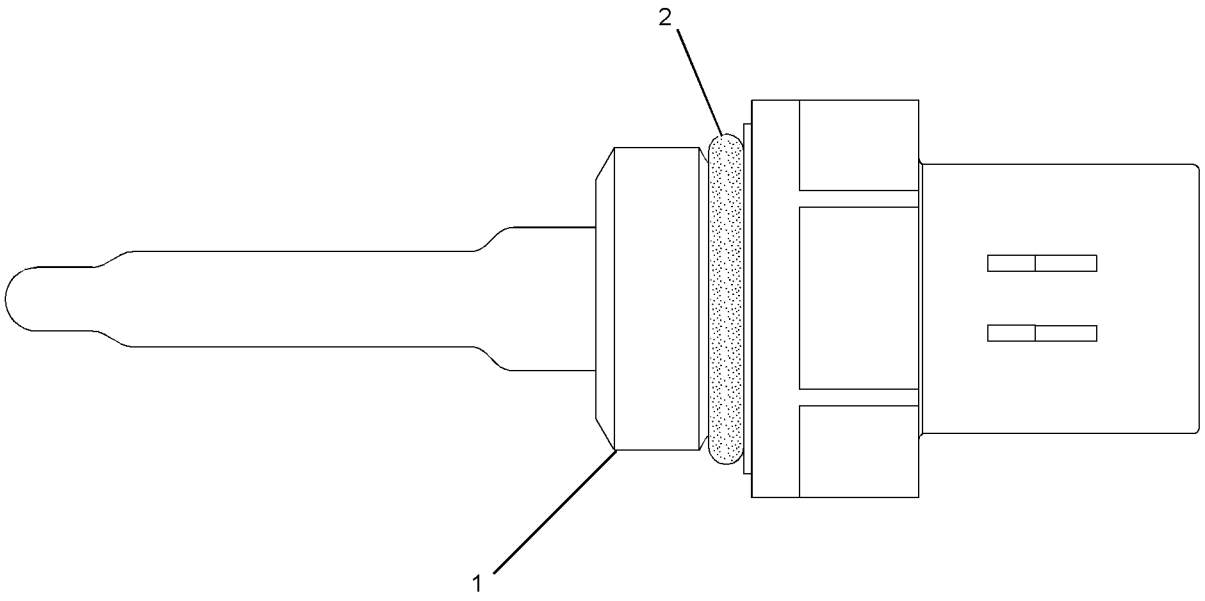

GRAPHIC #1 **<END>** g01164284

234-5013 SENSOR GP-TEMPERATURE

S/N: RSX2289-UP

PART OF 254-4998, 356-8382 FILTER GP-FUEL, 357-0523 SENSOR GP-ENGINE

SMCS-1087, 1439, 1906, 1919, 1921, 1922, 1928, 1929, 192T, 1932, 301T, 3194, 3290, 429T, 509T, 7344

i03603728

NOTE	REF NO	GRAPHIC REF	PART NUMBER	QTY	PART NAME 1 2 3 4 5 6 (PRODUCT LEVEL)	SEE PAGE
	1	1	**256-6453**	1	SENSOR AS-TEMPERATURE	
	2	1	**238-5080**	1	SEAL-O-RING	

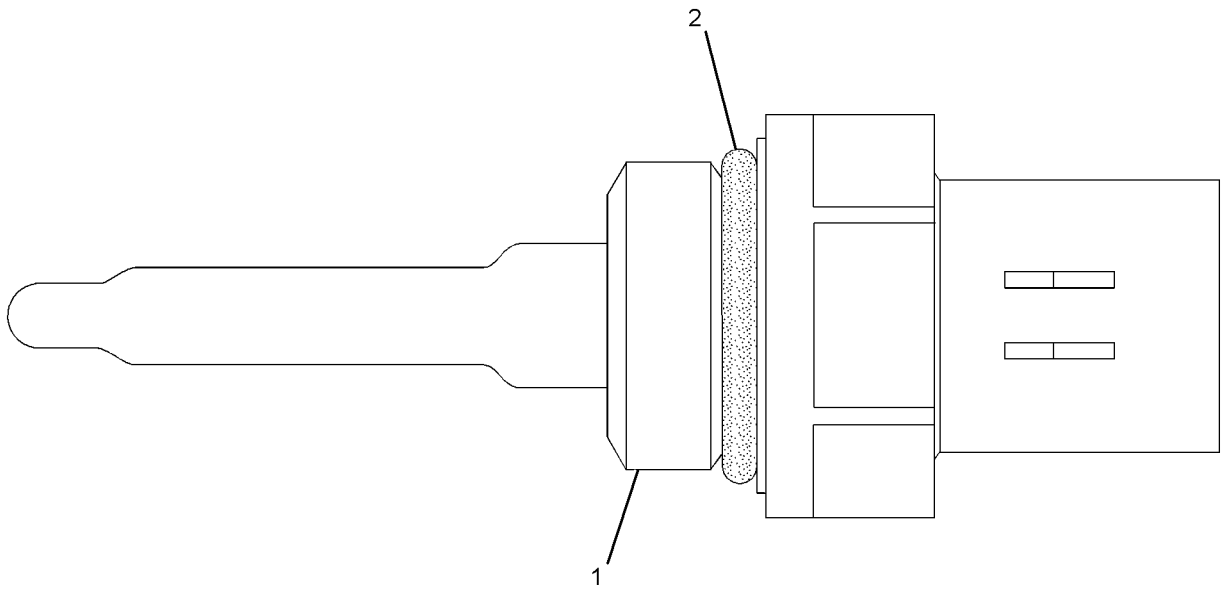

GRAPHIC #1

<END>

g01164268

274-7395 SENSOR GP-TEMPERATURE–AIR INLET MANIFOLD

S/N: RSX1037-16669

PART OF 231-1975 SENSOR GP-ENGINE

SMCS-1087, 1439, 1906, 1919, 1921, 1922, 1928, 1929, 192T, 1932, 301T, 3194, 3290, 429T, 509T, 7344 **i03886183**

NOTE	REF NO	GRAPHIC REF	PART NUMBER	QTY	PART NAME 1 2 3 4 5 6 (PRODUCT LEVEL)	SEE PAGE
	1	1	**264-4297**	1	SENSOR GP-TEMPERATURE	
		1	**137-6645**	1	PAD	
	2	1	**238-5080**	1	SEAL-O-RING	

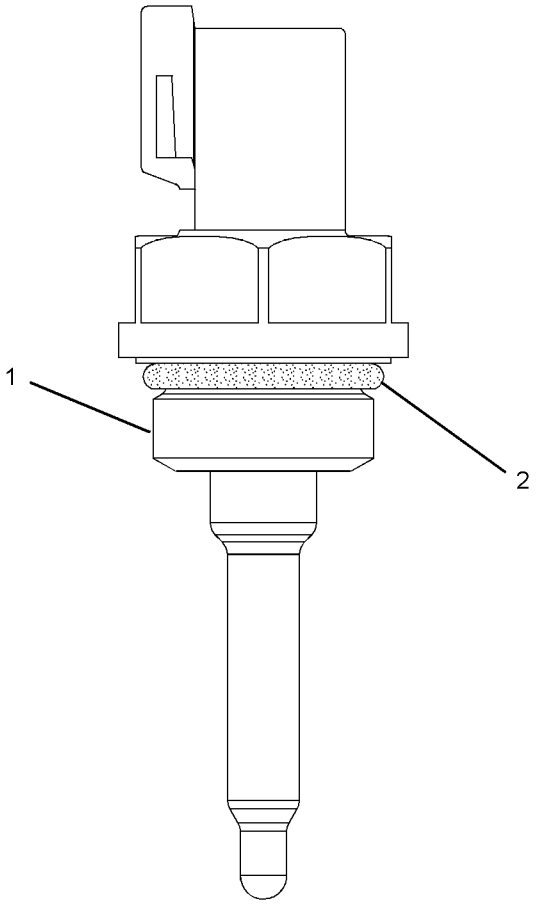

GRAPHIC #1 **<END>** g01353734

274-7396 SENSOR GP-TEMPERATURE–COOLANT, WATER

S/N: RSX1037-16669

PART OF 231-1975 SENSOR GP-ENGINE

SMCS-1087, 1439, 1906, 1919, 1921, 1922, 1928, 1929, 192T, 1932, 301T, 3194, 3290, 429T, 509T, 7344 **i03442340**

NOTE	REF NO	GRAPHIC REF	PART NUMBER	QTY	PART NAME 1 2 3 4 5 6 (PRODUCT LEVEL)	SEE PAGE
	1	1	**264-4297**	1	SENSOR GP-TEMPERATURE	
		1	**137-6645**	1	PAD	
	2	1	**6V-6609**	1	SEAL-O-RING	

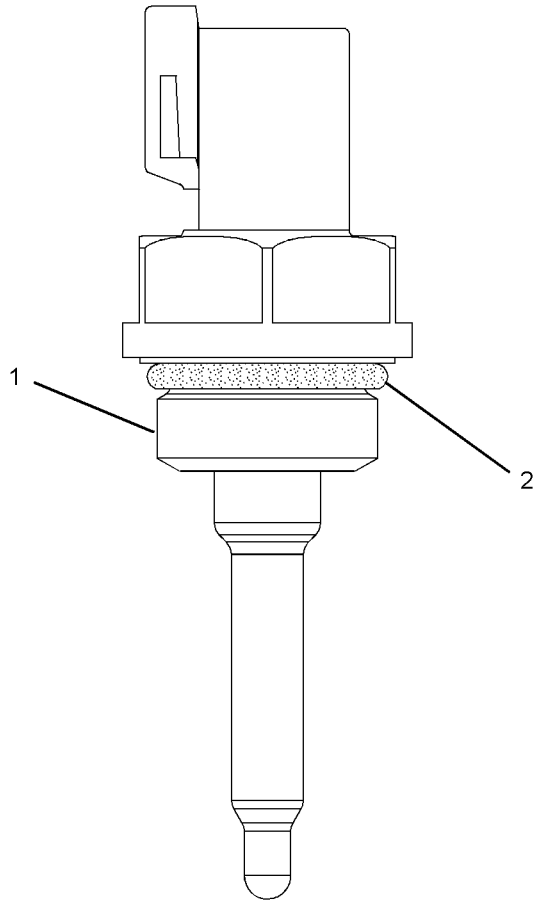

GRAPHIC #1 **<END>** g01353734

ELECTRICAL AND STARTING SYSTEM

231-2161 STARTING AID GP-ETHER

S/N: R9J1-UP

PART OF 349-2555 COMMON AR

SMCS-1456 **i02954447**

NOTE	REF NO	GRAPHIC REF	PART NUMBER	QTY	PART NAME 1 2 3 4 5 6 (PRODUCT LEVEL)	SEE PAGE
	1	1	**5P-5528**	1	ADAPTER-O-RING	
	2	1	**7N-2059**	1	CLAMP AS	
	3	1	**230-0917**	1	FITTING AS	
		1	**236-4545**	1	NUT-SLEEVE (5/16-24-THD)	
Y	4	1	**239-1134**	1	VALVE GP-ETHER STARTING (24-VOLT)	328
	5	1	**252-1607**	1	ATOMIZER AS	
		1	**236-4545**	1	NUT-SLEEVE (5/16-24-THD)	
	6	1	**6V-2686**	1	CLIP	
	7	1	**6V-5048**	1	SEAL-O-RING	
M	8	1	**8T-4189**	4	BOLT (M8X1.25X20-MM)	
	9	1	**8T-4224**	4	WASHER-HARD (8.8X16X2-MM THK)	
D	10	1	**5P-5630**		TUBE (0.7-M)	
AF			**7N-0296**		CYLINDER AS-ETHER	
					(MUST BE PROCURED LOCALLY FROM YOUR CATERPILLAR DEALER)	

A-NOT PART OF THIS GROUP
D-ORDER BY THE METER
F-NOT SHOWN
M-METRIC PART
Y-SEPARATE ILLUSTRATION

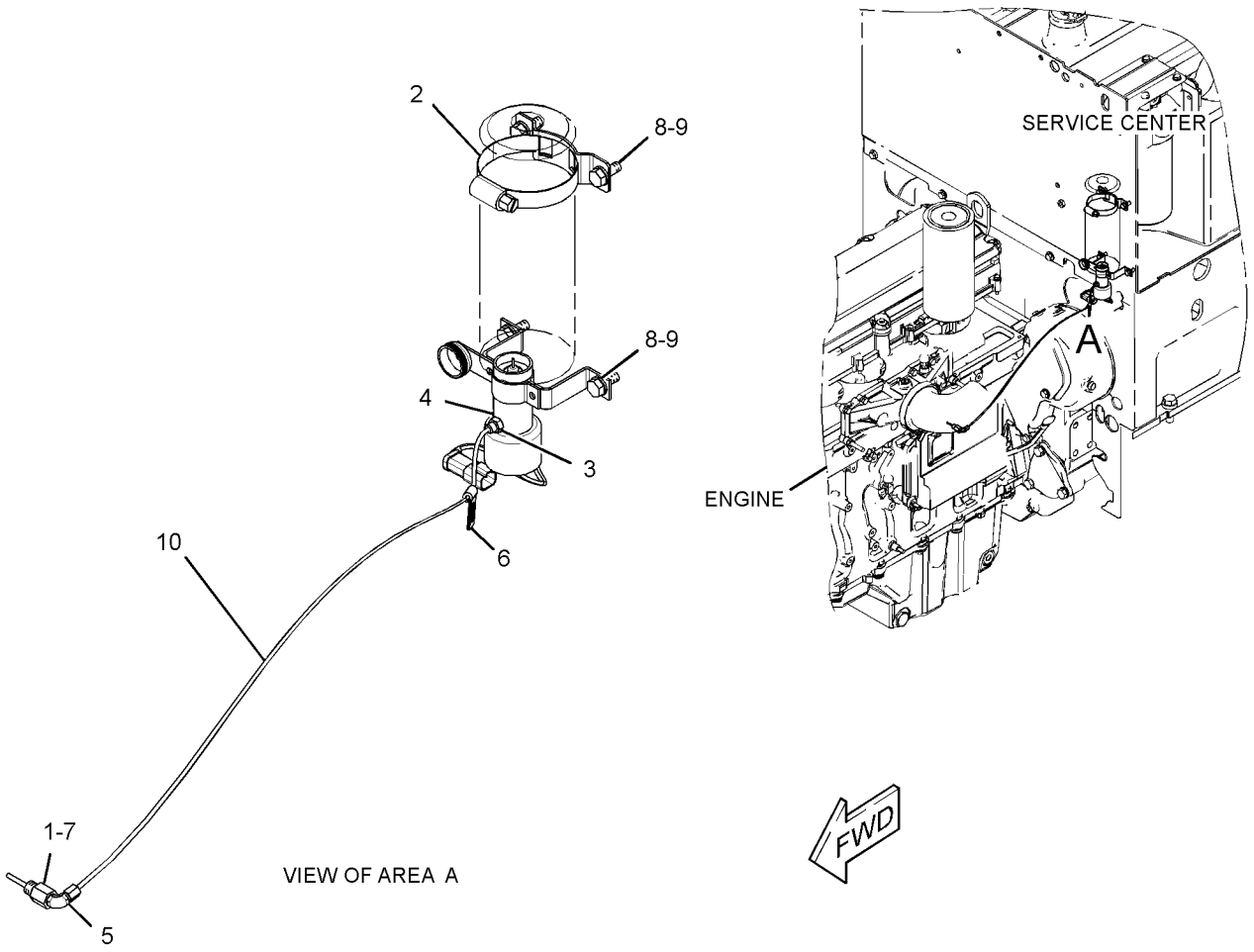

GRAPHIC #1 **<END>** g01482273

308-2897 STARTING AR-COLD WEATHER

S/N: R9J1-UP
24-VOLT, 50MT-SERIES
PART OF 351-2596 OPTION AR-COLD WEATHER
CANNOT BE USED WITH 248-0716—PAGE 307
AN ATTACHMENT

SMCS-1450 **i02821844**

NOTE	PART NUMBER	QTY	PART NAME 1 2 3 4 5 6 (PRODUCT LEVEL)	SEE PAGE
Y	*304-6809*	1	CABLE GP-STARTING MOTOR	208
Y	*287-5794*	1	STARTING MOTOR GP-ELECTRIC	308

Y-SEPARATE ILLUSTRATION

<END>

ELECTRICAL AND STARTING SYSTEM

207-1556 STARTING MOTOR GP-ELECTRIC*R

S/N: R9J1-UP; RSX1037-3629
24-VOLT
PART OF 248-0716 STARTING MOTOR GP-ELECTRIC
OPTIONAL FIELD REPLACEMENT ORDER 237-1962—PAGE 304
ALSO AN ATTACHMENT

SMCS-1453 **i03629299**

NOTE	REF NO	GRAPHIC REF	PART NUMBER	QTY	PART NAME 1 2 3 4 5 6 (PRODUCT LEVEL)	SEE PAGE
	1	1	**3T-3434**	6	PLUG	
	2	1	**7T-3279**	1	HOUSING AS	
	3	1	**8T-8566**	1	TERMINAL AS	
	4	1	**6V-8188**	4	NUT (1/2-13-THD)	
	5	1	**7X-0562**	4	WASHER-HARD (13.5X19X0.8-MM THK)	
	6	1	**3T-3422**	1	WIRE AS	
	7	1	**7T-3278**	1	HOLDER AS-BRUSH	
	8	1	**7T-3277**	1	COIL AS-FIELD	
	9	1	**7T-3454**	1	INSULATOR	
	10	1	**283-1107**	1	KIT-CONNECTOR (STARTING MOTOR)	
					(INCLUDES CONNECTORS, BOLT & TERMINAL-STARTER)	
	11	1	**7T-3451**	1	KIT-INSULATOR (TERMINAL)	
					(INCLUDES INSULATORS & GROMMET)	
	12	1	**8T-8569**	1	INSULATOR-TERMINAL	
	13	1	**5S-7349**	4	BOLT (1/4-20X0.5-IN)	
	14	1	**8T-4205**	4	WASHER-HARD (7.2X14.5X2-MM THK)	
	15	1	**8H-1141**	4	SHOE-POLE	
	16	1	**3R-8797**	8	SCREW & WASHER AS (3/8-24X0.72-IN)	
	17	1	**7T-3276**	1	ARMATURE AS (24-VOLT)	
	18	1	**3E-7775**	1	HOUSING AS	
	19	1	**4M-1831**	1	PLUG-LEVER HOUSING	
	20	1	**7L-2894**	1	GASKET	
	21	1	**0S-1597**	5	BOLT (1/4-28X1-IN)	
	22	1	**6N-3826**	1	DRIVE AS-MOTOR	
	23	1	**7T-3974**	1	HOUSING AS-DRIVE	
	24	1	**7X-3373**	6	BOLT (5/16-18X0.88-IN)	
	25	1	**250-8279**	1	KIT-SOLENOID (24-VOLT)	
					(INCLUDES SOLENOID AS, BOLT, NUTS, COVER & CONNECTORS)	
	26	1	**6V-8378**	3	NUT (10-32-THD)	
	27	1	**8F-1434**	2	LOCKWASHER	
	28	1	**8T-0328**	3	WASHER-HARD (5.5X10X1-MM THK)	
	29	1	**9X-4824**	1	COVER-STARTING MOTOR	
	30	1	**8T-9884**	1	KIT-INSULATOR (STARTING MOTOR)	
					(INCLUDES INSULATORS & BUSHING)	
	31	1	**8C-3655**	1	KIT-BRUSH (STARTING MOTOR)	
					(INCLUDES BRUSHES, SPRINGS, SCREWS, SCREW ASSEMBLIES & SEAL)	
	32	1	**7T-3268**	1	KIT-LEVER (STARTING MOTOR)	
					(INCLUDES LEVER ASSEMBLIES, SEAL, NUT, GASKET & RETAINER)	
					AVAILABLE REPAIR KIT(S):	
			7T-3267	1	KIT-BUSHING (STARTING MOTOR)	
					(INCLUDES BUSHINGS, WICKS, CUPS, SEALS, GASKET, SCREW AS, WASHERS, SPACER & NUT)	

207-1556 STARTING MOTOR GP-ELECTRIC *(contd.)* i03629299

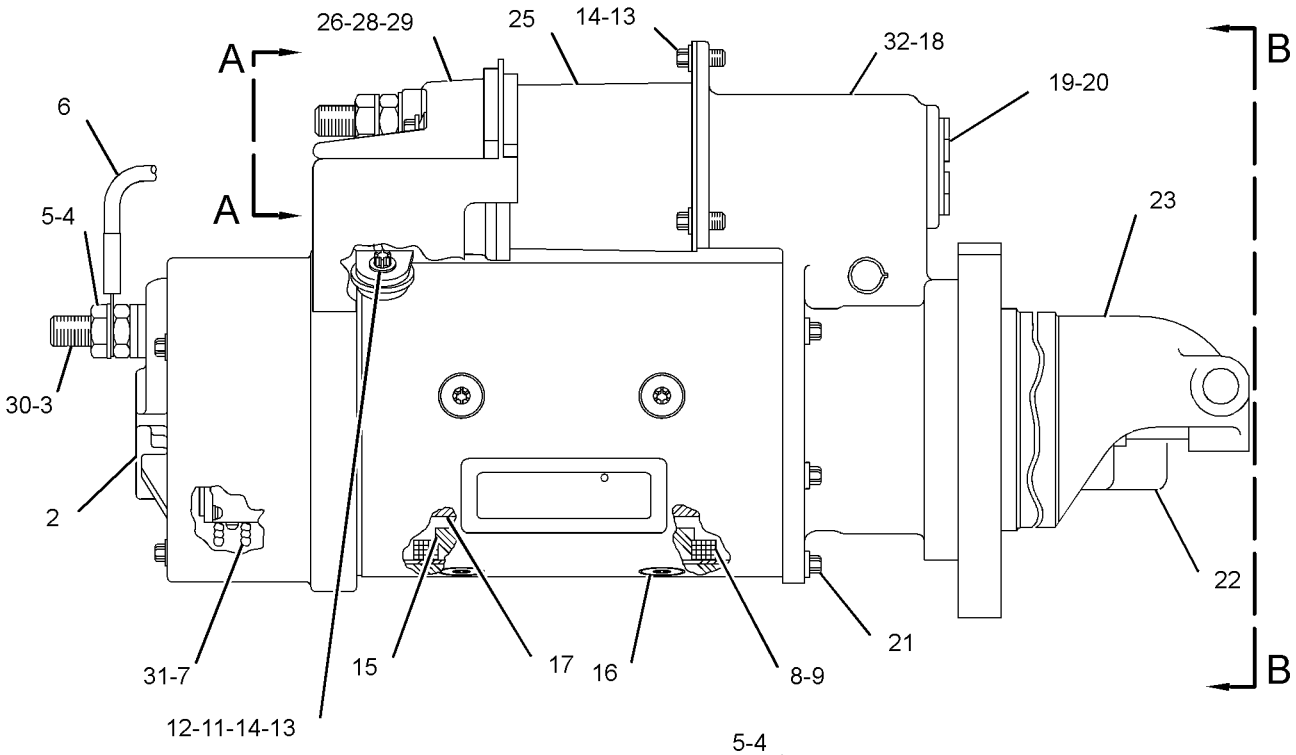

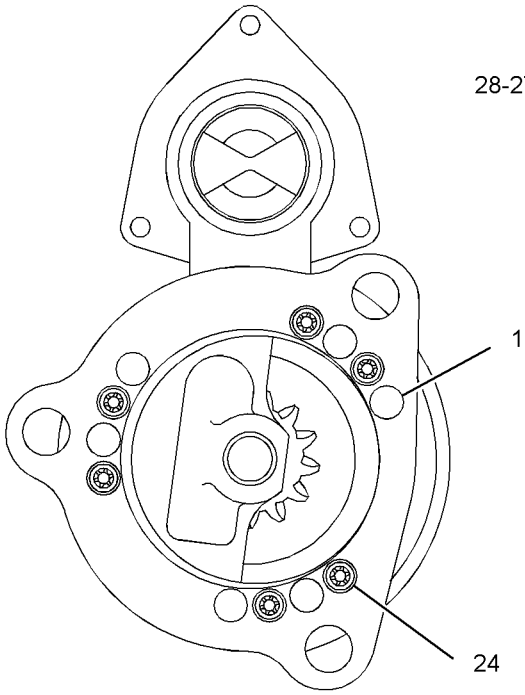

VIEW B-B

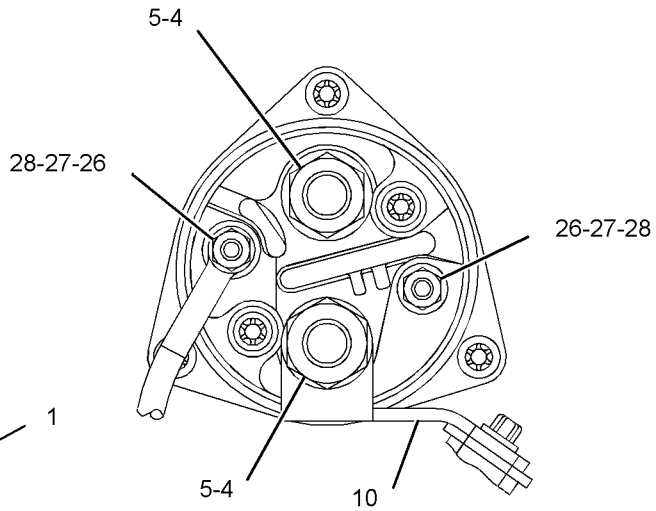

VIEW A-A

GRAPHIC #1 **<END>** g01478692

ELECTRICAL AND STARTING SYSTEM

237-1962 STARTING MOTOR GP-ELECTRIC*R

S/N: R9J1-UP
24-VOLT
PART OF 287-5794 STARTING MOTOR GP-ELECTRIC
FIELD REPLACEMENT FOR 207-1556—PAGE 302
AN ATTACHMENT

SMCS-1453 **i03630206**

NOTE	REF NO	GRAPHIC REF	PART NUMBER	QTY	PART NAME 1 2 3 4 5 6 (PRODUCT LEVEL)	SEE PAGE
	1	1	**7M-0326**	1	CONNECTOR	
	2	1	**9H-3757**	2	WASHER (0.516X1X0.094-IN THK)	
	3	1	**1S-7446**	3	SCREW-MACHINE (8-32X0.437-IN)	
	4	1	**8C-9660**	3	WASHER (4.6X7.9X0.8-MM THK)	
	5	1	**9S-2544**	9	SCREW-HEX HEAD (8-32X11.13-MM)	
	6	1	**7M-0327**	1	WASHER-THRUST (17.4X25.4X1.6-MM THK)	
	7	1	**3T-3418**	1	FRAME AS-END	
		1	**3T-3423**	1	CUP	
		1	**3T-3424**	1	PLUG-FELT	
		1	**9G-4101**	1	BUSHING-END	
	8	1	**3T-9525**	1	PLATE AS-BRUSH	
	8A	1	**6T-0371**	1	INSULATOR	
	8B	1	**5P-6298**	12	SCREW-MACHINE (10-32X0.5-IN)	
		1	**9F-5599**	12	LOCKWASHER	
	8C	1	**7F-3525**	6	WASHER-BUSHING (0.207X0.39X0.09-IN THK)	
	8D	1	**6T-0372**	1	PLATE	
	8E	1	**3T-4709**	3	PLATE	
	8F	1	**2L-6679**	3	PLATE-INSULATOR	
	8G	1	**3T-4710**	3	PLATE	
	8H	1	**6T-0363**	6	HOLDER AS-BRUSH (STARTING MOTOR)	
					(EACH INCLUDES)	
	8J	1	**3T-9494**	1	SPRING	
	9	1	**1T-0808**	2	WASHER (0.516X0.812X0.09-IN THK)	
	10	1	**3T-3422**	1	WIRE AS (STARTING MOTOR)	
	11	1	**2J-8163**	2	SEAL-O-RING	
	12	1	**7X-3373**	1	BOLT (5/16-18X0.88-IN)	
	13	1	**3T-3434**	6	PLUG	
	14	1	**5J-5314**	5	BOLT (5/16-18X1.5-IN)	
	15	1	**3L-3380**	1	BUSHING-TERMINAL	
	16	1	**036-9821**	1	WASHER	
	17	1	**4M-1828**	1	RETAINER-SPRING	
	18	1	**306-3998**	1	BOOT-RUBBER	
	19	1	**9M-7609**	1	SPRING (SHIFT LEVER)	
	20	1	**4M-1827**	1	RETAINER-SPRING	
	21	1	**8C-3089**	1	SEAL-O-RING	
	22	1	**4M-1853**	1	LEVER AS-SHIFT	
	23	1	**5M-3034**	1	LOCKNUT (5/16-24-THD)	
	24	1	**7L-2894**	4	GASKET	
	25	1	**4M-1831**	4	PLUG-LEVER HOUSING	
	26	1	**4M-1854**	1	SHAFT-LEVER	
	27	1	**1H-1023**	1	SEAL-O-RING	
	28	1	**2D-6392**	1	SEAL-O-RING	
	29	1	**7T-3974**	1	HOUSING AS-DRIVE	
	30	1	**6N-3826**	1	DRIVE AS-MOTOR	
	31	1	**2H-3429**	2	RING-RETAINING	
	32	1	**6V-1322**	4	BOLT (1/4-20X0.375-IN)	
	33	1	**8T-4205**	4	WASHER-HARD (7.2X14.5X2-MM THK)	
	34	1	**6N-3279**	1	INSULATOR	
	35	1	**0S-1597**	13	BOLT (1/4-28X1-IN)	
	36	1	**1M-9971**	1	SPACER (0.835X1.72X0.188-IN THK)	
	37	1	**1H-2629**	3	STRIP-INSULATION	
	38	1	**7M-0324**	1	COIL AS-FIELD	
	39	1	**3R-8797**	12	SCREW & WASHER AS (3/8-24X0.72-IN)	

237-1962 STARTING MOTOR GP-ELECTRIC *(contd.)* i03630206

NOTE	REF NO	GRAPHIC REF	PART NUMBER	QTY	PART NAME 1 2 3 4 5 6 (PRODUCT LEVEL)	SEE PAGE
	40	1	**7F-3488**	6	SHOE-POLE	
	41	1	**7M-8651**	1	ARMATURE AS	
	42	1	**7M-0325**	1	INSULATOR	
	43	1	**3T-9524**	6	BRUSH AS	
	44	1	**3N-3763**	1	KIT-TERMINAL (STARTING MOTOR)	
					(INCLUDES BUSHINGS & WASHERS)	
	45	1	**125-6537**	1	INSULATOR	
	46	1	**3R-8801**	1	CLAMP	
	47	1	**8F-1434**	2	LOCKWASHER	
	48	1	**6V-8188**	6	NUT (1/2-13-THD)	
	49	1	**7X-0562**	6	WASHER-HARD (13.5X19X0.8-MM THK)	
	50	1	**4B-2049**	6	NUT (10-32-THD)	
	51	1	**8T-0328**	10	WASHER-HARD (5.5X10X1-MM THK)	
	52	1	**3T-9494**	6	SPRING (STARTING MOTOR)	
	53	1	**3E-7771**	1	HOUSING AS (STARTING MOTOR)	
	54	1	**9G-4101**	1	BUSHING-END	
	55	1	**3T-3424**	3	PLUG-FELT	
	56	1	**3T-3423**	3	CUP	
	57	1	**1M-9968**	1	BUSHING	
	58	1	**2F-6678**	1	SEAL-LIP TYPE	
	59	1	**4L-2729**	1	WASHER (0.844X1.9X0.188-IN THK)	
	60	1	**4M-1896**	1	BUSHING-TERMINAL	
	61	1	**045-4065**	4	SCREW-MACHINE (10-32X0.75-IN)	
	62	1	**125-6535**	1	COVER-STARTING MOTOR	
	63	1	**7T-9123**	1	GASKET-PLATE	
	64	1	**318-2082**	1	SOLENOID AS-STARTING MOTOR (24-VOLT)	
	65	1	**125-6536**	1	TERMINAL AS	

237-1962 STARTING MOTOR GP-ELECTRIC *(contd.)* i03630206

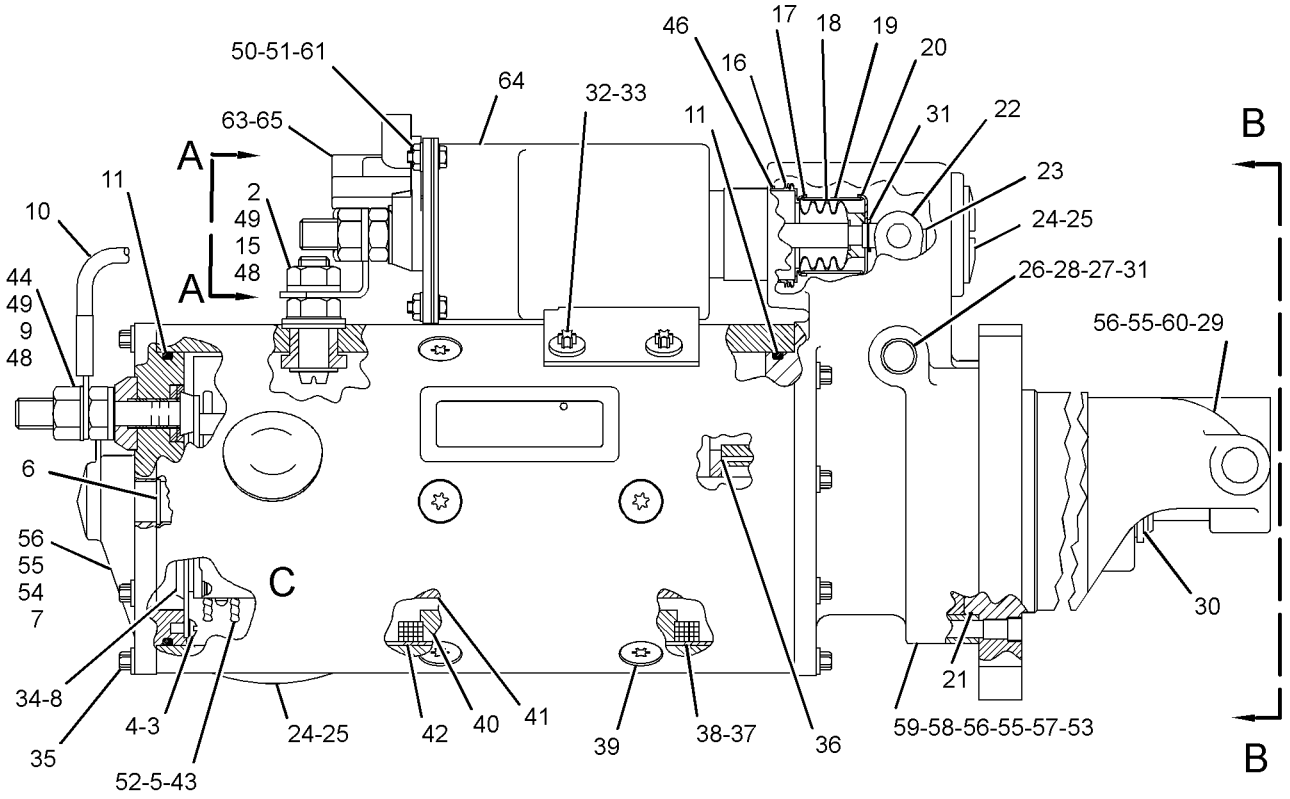

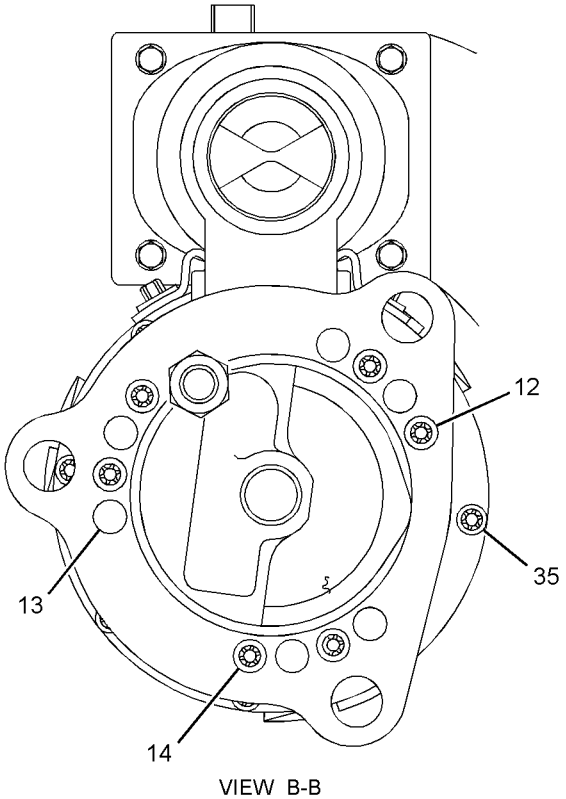

VIEW B-B

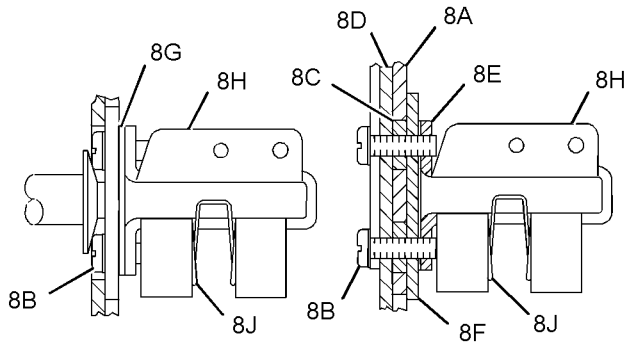

VIEW OF AREA C

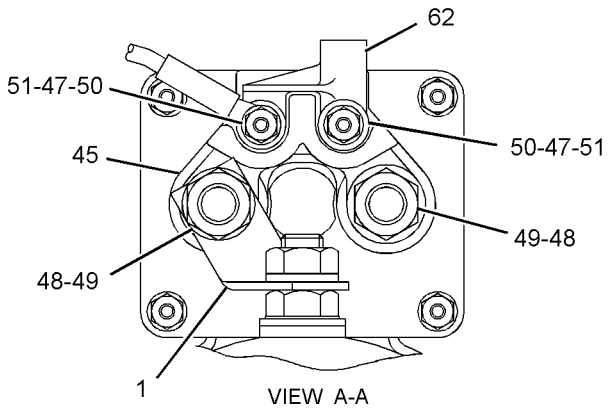

VIEW A-A

GRAPHIC #1 **<END>** g01453239

248-0716 STARTING MOTOR GP-ELECTRIC

S/N: R9J1-UP; RSX1037-3629
24-VOLT, 42-MT SERIES
PART OF 226-9770 ENGINE AR-COMPLETE, 298-3699 STARTING MOTOR GP-ELECTRIC
CANNOT BE USED WITH 287-5794—PAGE 308
ALSO AN ATTACHMENT

SMCS-1453 **i02159966**

NOTE	REF NO	GRAPHIC REF	PART NUMBER	QTY	PART NAME 1 2 3 4 5 6 (PRODUCT LEVEL)	SEE PAGE
	1	1	**4H-7869**	1	GASKET	
	2	1	**8Y-9603**	1	CABLE AS-STARTING MOTOR	
		1	**1S-7251**	1	TERMINAL-CABLE (00-GA, 1/2-IN SCREW)	
		1	**1S-7252**	1	TERMINAL-CABLE (00-GA, 3/8-IN SCREW)	
E		1	**5P-0747**	28	CABLE (00-GA, BLACK)	
YR	3	1	**207-1556**	1	STARTING MOTOR GP-ELECTRIC (24-VOLT)	302
	4	1	**220-0771**	3	BOLT-12 POINT HEAD (M16X2X45-MM)	

E-ORDER BY THE CENTIMETER
R-REMFG PART MAY BE AVAILABLE
Y-SEPARATE ILLUSTRATION

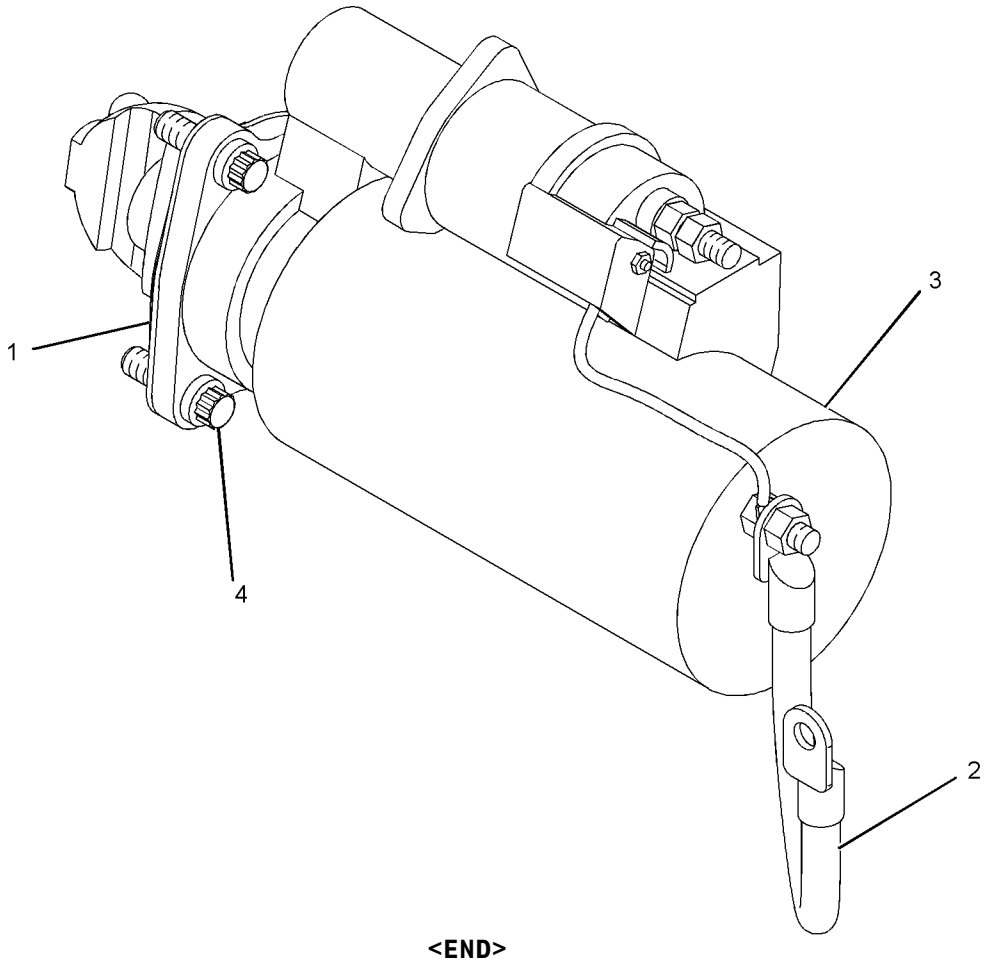

GRAPHIC #1 **<END>** g01097831

ELECTRICAL AND STARTING SYSTEM

287-5794 STARTING MOTOR GP-ELECTRIC

S/N: R9J1-UP
24-VOLT, 50MT-SERIES
PART OF 308-2897 STARTING AR-COLD WEATHER
AN ATTACHMENT

SMCS-1453 **i02822443**

NOTE	REF NO	GRAPHIC REF	PART NUMBER	QTY	PART NAME 1 2 3 4 5 6 (PRODUCT LEVEL)	SEE PAGE
	1	1	**4H-7869**	1	GASKET	
	2	1	**8Y-9603**	1	CABLE AS-STARTING MOTOR (GROUND)	
		1	**1S-7251**	1	TERMINAL-CABLE (00-GA, 1/2-IN SCREW)	
		1	**1S-7252**	1	TERMINAL-CABLE (00-GA, 3/8-IN SCREW)	
E		1	**5P-0747**		CABLE (00-GA, BLACK) (28-CM)	
YR	3	1	**237-1962**	1	STARTING MOTOR GP-ELECTRIC (24-VOLT) (COLD WEATHER)	304
	4	1	**220-0771**	3	BOLT-12 POINT HEAD (M16X2X45-MM)	

E-ORDER BY THE CENTIMETER
R-REMFG PART MAY BE AVAILABLE
Y-SEPARATE ILLUSTRATION

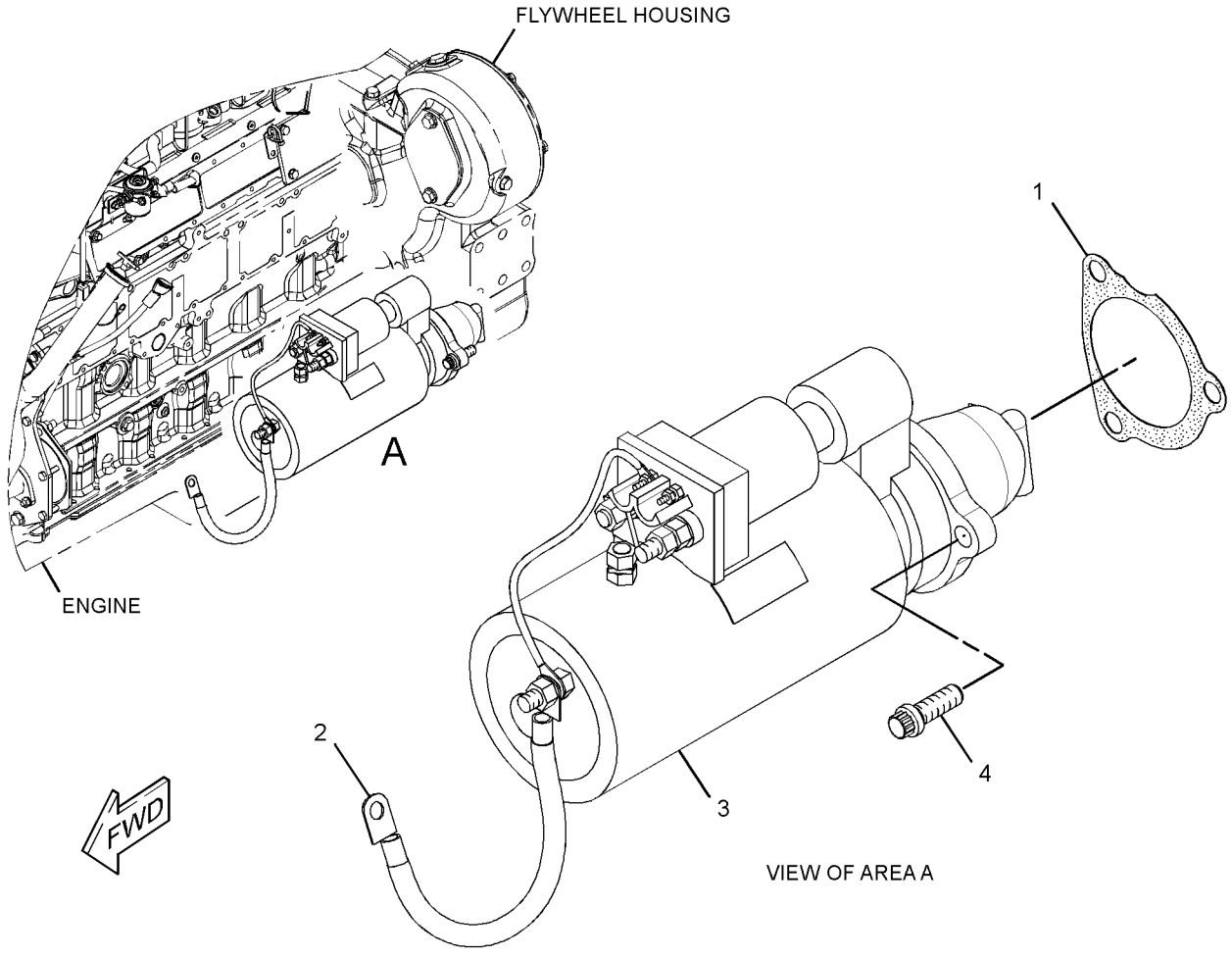

GRAPHIC #1 **<END>** g01411314

ELECTRICAL AND STARTING SYSTEM

298-3699 STARTING MOTOR GP-ELECTRIC

S/N: R9J1-UP
PART OF 351-2594 OPTION AR-ELECTRICAL
AN ATTACHMENT

SMCS-1453 **i02835274**

NOTE	PART NUMBER	QTY	PART NAME 1 2 3 4 5 6 (PRODUCT LEVEL)	SEE PAGE
Y	*304-6808*	1	CABLE GP-STARTING MOTOR	207
Y	*248-0716*	1	STARTING MOTOR GP-ELECTRIC (24-VOLT)	307

Y-SEPARATE ILLUSTRATION

<END>

238-8825 SUPPORT GP-LIGHT–CAB ROOF

S/N: R9J1-UP
PART OF 349-2555 COMMON AR
FOR USE WITH 233-3126–PAGE 229

SMCS-1429, 1434 **i02663310**

NOTE	REF NO	GRAPHIC REF	PART NUMBER	QTY	PART NAME 1 2 3 4 5 6 (PRODUCT LEVEL)	SEE PAGE
	1	1	**244-2713**	1	BAR AS (RH)	
	2	1	**244-2714**	1	BAR AS (LH)	
	3	1	**290-2014**	1	TUBE AS	
	4	1	**5P-4116**	8	WASHER-HARD (8.8X20.5X2-MM THK)	
	5	1	**8T-4224**	4	WASHER-HARD (8.8X16X2-MM THK)	
M	6	1	**8T-4908**	12	BOLT (M8X1.25X25-MM)	

M-METRIC PART

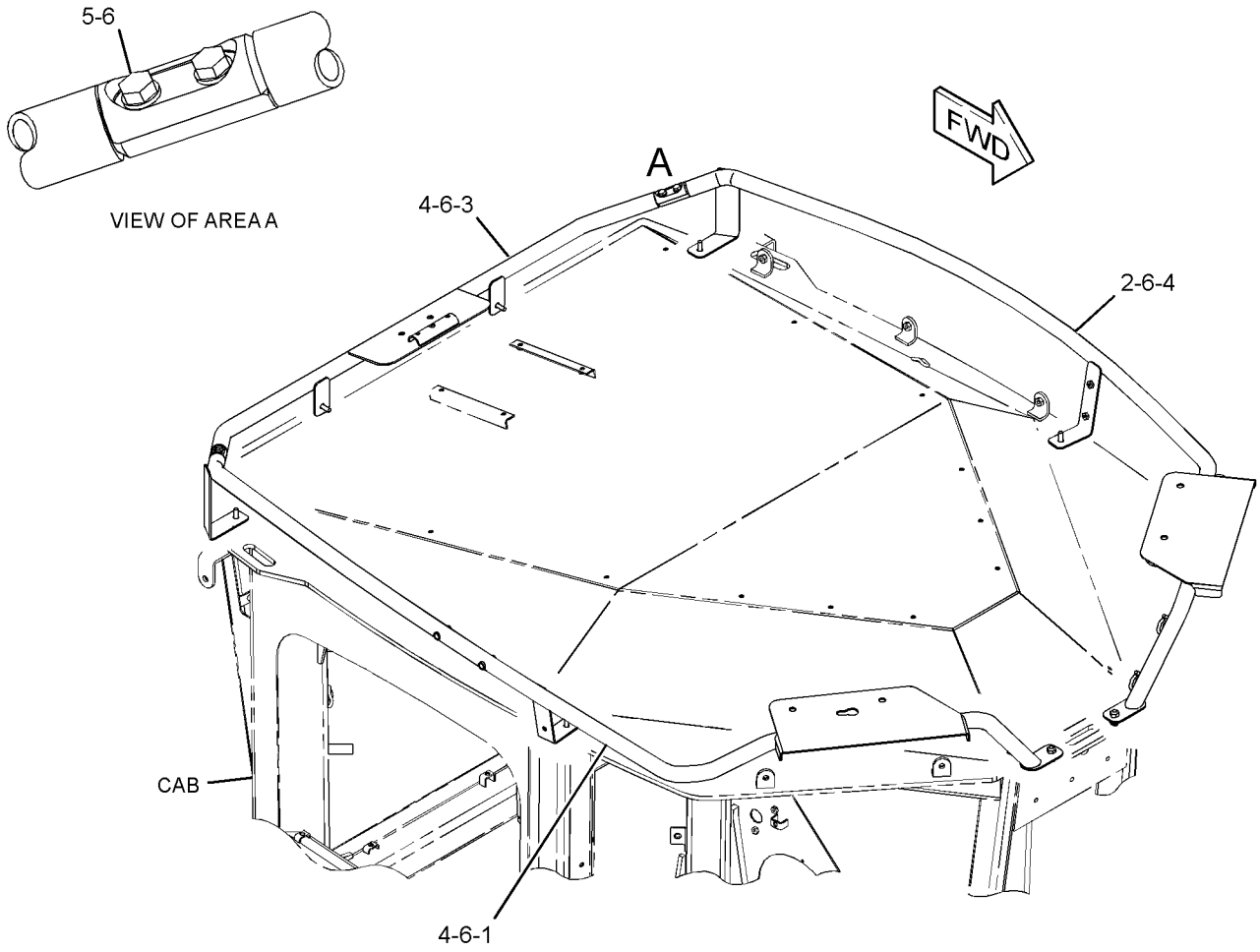

GRAPHIC #1 **<END>** g01297815

164-7577 SWITCH GP-BYPASS

S/N: DZM1601-UP

PART OF 333-9310 BASE GP-OIL FILTER

SMCS-1408, 1435 **i03948449**

NOTE	REF NO	GRAPHIC REF	PART NUMBER	QTY	PART NAME 1 2 3 4 5 6 (PRODUCT LEVEL)	SEE PAGE
E	1	1	**9X-1813**		SLEEVE (19-CM)	
	2	1	**102-8802**	1	KIT-RECEPTACLE (2-PIN)	
					(INCLUDES RECEPTACLE AS & WEDGE)	
	3	1	**186-3735**	2	PIN-CONNECTOR (16-GA TO 18-GA)	
	4	1	**3D-2824**	1	SEAL-O-RING	

E-ORDER BY THE CENTIMETER

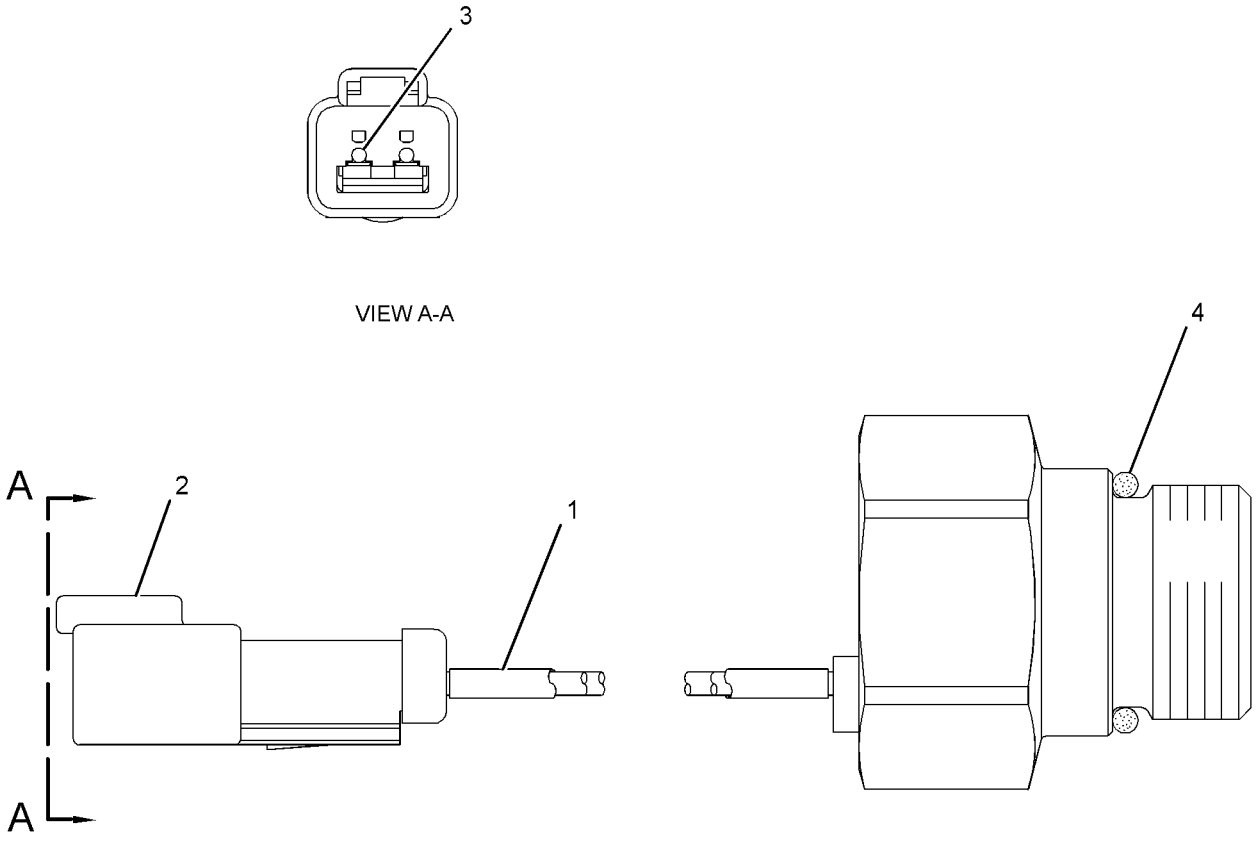

GRAPHIC #1 **<END>** g02157795

7N-0718 SWITCH GP-DISCONNECT–BATTERY

S/N: R9J1-UP
12-VOLT
PART OF 233-4611, 236-1924 BATTERY & WIRING GP
AN ATTACHMENT

SMCS-1411 **i02459121**

NOTE	REF NO	GRAPHIC REF	PART NUMBER	QTY	PART NAME 1 2 3 4 5 6 (PRODUCT LEVEL)	SEE PAGE
	1	1	**8H-5306**	1	KEY (BATTERY DISCONNECT)	
	2	1	**8H-5303**	1	NUT (3/4-16-THD)	
	3	1	**2H-3922**	2	LOCKWASHER	
	4	1	**9F-5644**	2	LOCKWASHER	
	5	1	**6F-7045**	2	NUT-FULL (3/8-24-THD)	

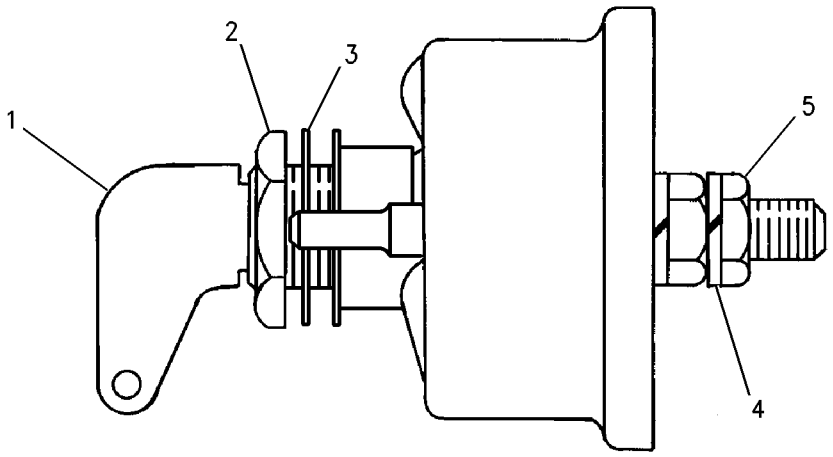

GRAPHIC #1 **<END>** g00715584

238-8763 SWITCH GP-LIGHT–WORK LIGHT

S/N: R9J1-UP
PART OF 349-3068, 349-3069 OPTION AR-LIGHTING
FOR USE WITH 233-4620–PAGE 236, 233-4615–PAGE 248
AN ATTACHMENT

SMCS-1429, 1430, 7332 **i02556076**

NOTE	PART NUMBER	QTY	PART NAME 1 2 3 4 5 6 (PRODUCT LEVEL)	SEE PAGE
	249-5488	1	SWITCH AS-ROCKER (WORK LIGHT)	

<END>

171-3759 SWITCH GP-LIMIT

S/N: R9J1-UP
PART OF 265-8943 PEDAL GP-BRAKE, XMSN & GOV
AN ATTACHMENT

SMCS-1435, 7332 **i03110481**

NOTE	REF NO	GRAPHIC REF	PART NUMBER	QTY	PART NAME 1 2 3 4 5 6 (PRODUCT LEVEL)	SEE PAGE
	2	1	**144-1636**	3	PIN-CONNECTOR (14-GA TO 18-GA)	
	3	1	**3E-3377**	1	WEDGE-RECEPTACLE LOCK (4-PIN)	
	4	1	**102-8804**	1	KIT-RECEPTACLE (4-PIN)	
					(INCLUDES RECEPTACLE AS AND WEDGE)	
BE	5	1	**9X-1386**		SLEEVE	
BE	6	1	**125-7874**		TUBE-HEAT SHRINK (5.72-MM DIA)	
BD	7	1	**6V-1614**		TUBE-HEAT SHRINK (9.52-MM DIA)	
BD	8	1	**5P-5677**		WIRE (18-GA, BLACK)	
	9	1	**9G-3695**	1	PLUG-SEAL	

B-USE AS REQUIRED
D-ORDER BY THE METER
E-ORDER BY THE CENTIMETER

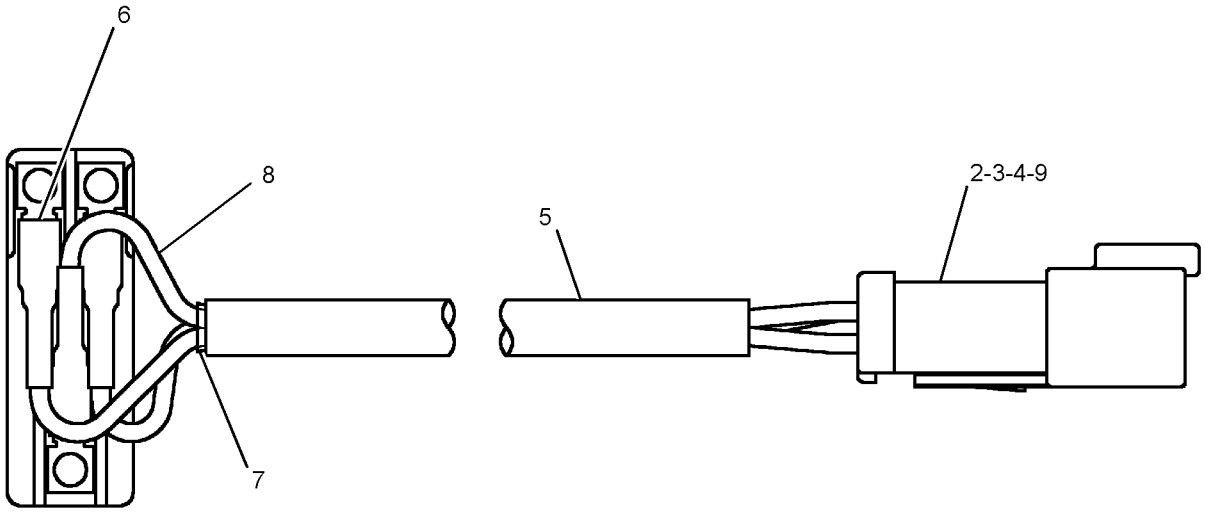

GRAPHIC #1 **<END>** g01231938

125-1302 SWITCH GP-MAGNETIC–START RELAY

S/N: R9J1-UP
24-VOLT
PART OF 280-8969 PANEL GP-CIRCUIT BREAKER

SMCS-7499 **i03260001**

NOTE	REF NO	GRAPHIC REF	PART NUMBER	QTY	PART NAME 1 2 3 4 5 6 (PRODUCT LEVEL)	SEE PAGE
	1	1	**102-8802**	1	KIT-RECEPTACLE (2-PIN)	
					(INCLUDES RECEPTACLE AS & WEDGE)	
	2	1	**186-3735**	2	PIN-CONNECTOR (16-GA TO 18-GA)	
	3	1	**1H-3338**	2	LOCKWASHER (EXTERNAL TOOTH)	
	4	1	**012-0380**	2	LOCKWASHER	
M	5	1	**5C-2890**	2	NUT (M6X1-THD)	
E	6	1	**9X-1813**		SLEEVE (16-CM)	

E-ORDER BY THE CENTIMETER
M-METRIC PART

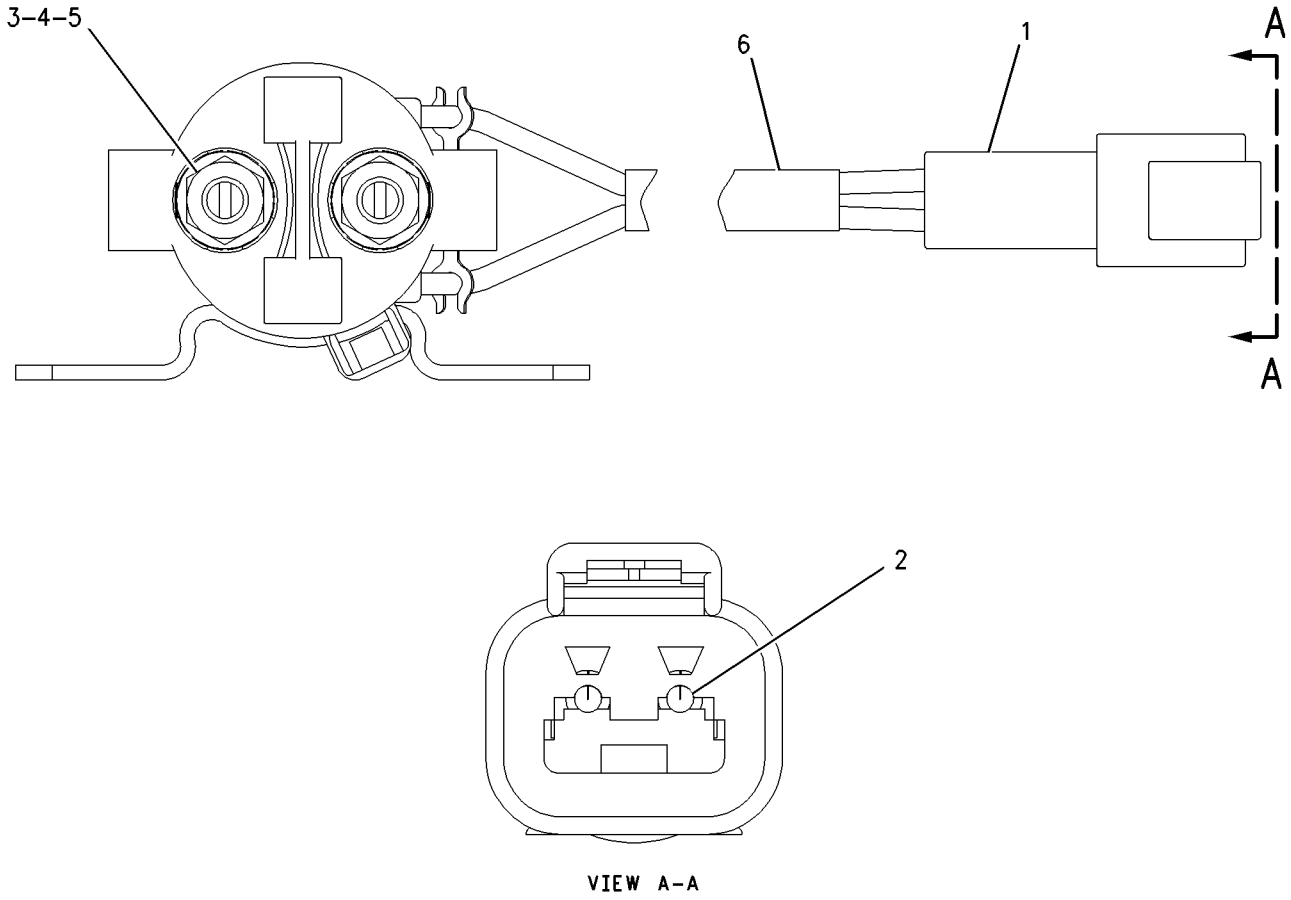

GRAPHIC #1 **<END>** g00988001

179-0006 SWITCH GP-MAGNETIC

S/N: R9J1-UP
24-VOLT TO 32-VOLT
PART OF 285-3176 WIRING GP-SECONDARY STEERING

SMCS-7499 **i02605913**

NOTE	REF NO	GRAPHIC REF	PART NUMBER	QTY	PART NAME 1 2 3 4 5 6 (PRODUCT LEVEL)	SEE PAGE
	1	1	**7X-0620**	2	WASHER-HARD (5.5X13X1.6-MM THK)	
	2	1	**8F-1434**	2	LOCKWASHER	
	3	1	**6V-8378**	2	NUT (10-32-THD)	
	4	1	**4L-6499**	2	WASHER (0.38X0.88X0.06-IN THK)	
	5	1	**4D-1326**	2	LOCKWASHER	
	6	1	**1B-2578**	2	NUT (3/8-16-THD)	

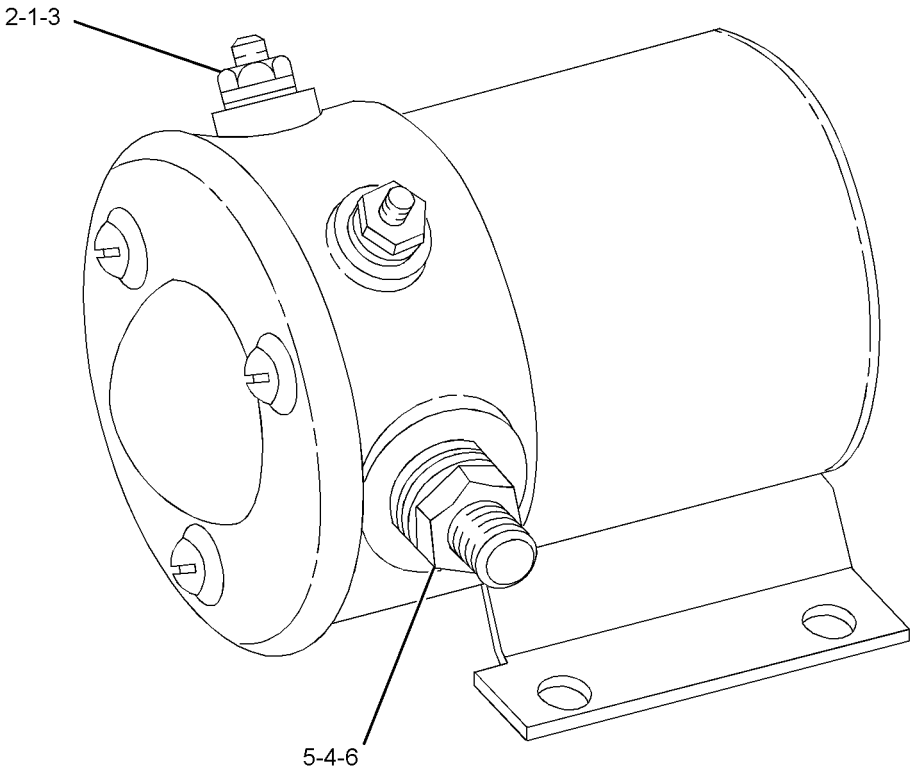

GRAPHIC #1 **<END>** g01132022

241-8368 SWITCH GP-MAGNETIC–MAIN RELAY

S/N: R9J1-UP
24-VOLT
PART OF 280-8969 PANEL GP-CIRCUIT BREAKER

SMCS-7499 **i03570587**

NOTE	REF NO	GRAPHIC REF	PART NUMBER	QTY	PART NAME 1 2 3 4 5 6 (PRODUCT LEVEL)	SEE PAGE
	1	1	**155-2270**	1	KIT-CONNECTING PLUG (2-PIN)	
					(INCLUDES PLUG AS, WEDGE & INTERFACE SEAL)	
	2	1	**4F-2294**	2	NUT-JAM (5/16-24-THD)	
	3	1	**186-3736**	2	SOCKET-CONNECTOR (16-GA TO 18-GA)	

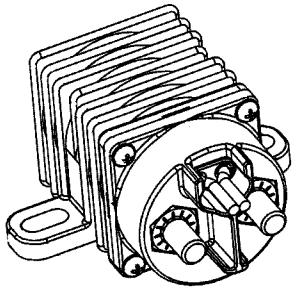

ISOMETRIC VIEW

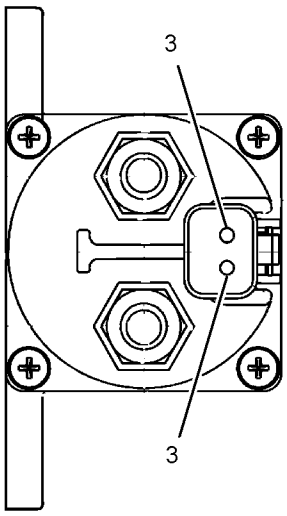

VIEW A-A

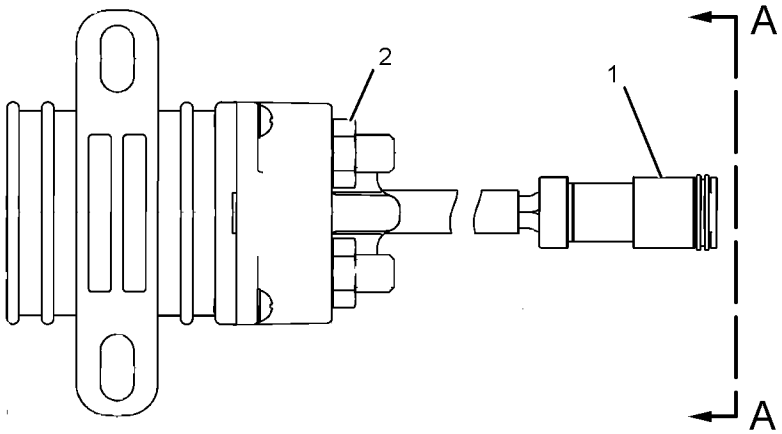

GRAPHIC #1 **<END>** g01077362

258-0883 SWITCH GP-PRESSURE–FUEL

S/N: RSX1037-2288

PART OF 254-4998 FILTER GP-FUEL

SMCS-1435 **i03540160**

NOTE	REF NO	GRAPHIC REF	PART NUMBER	QTY	PART NAME 1 2 3 4 5 6 (PRODUCT LEVEL)	SEE PAGE
	1	1	**102-8802**	1	KIT-RECEPTACLE (2-PIN)	
					(INCLUDES RECEPTACLE AS & WEDGE)	
	2	1	**9X-7737**	1	SEAL-O-RING	
	3	1	**186-3735**	2	PIN-CONNECTOR (16-GA TO 18-GA)	
E	4	1	**9X-1813**		SLEEVE (14-CM)	
	5	1	**6V-4589**	1	SEAL-O-RING	

E-ORDER BY THE CENTIMETER

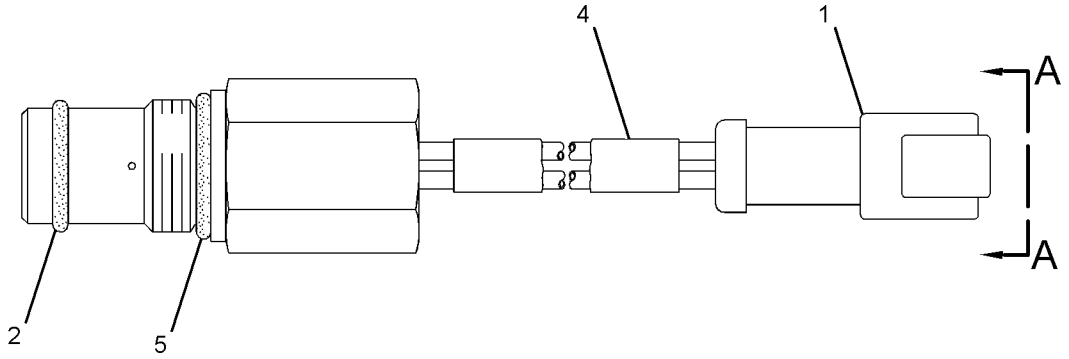

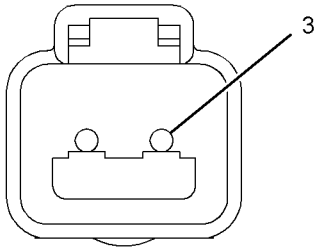

VIEW A-A

GRAPHIC #1 **<END>** g01862835

275-1253 SWITCH GP-PRESSURE–FUEL

S/N: RSX2289-UP
AMPSEAL CONNECTOR
PART OF 254-4998, 356-8382 FILTER GP-FUEL

SMCS-1435 **i03524880**

NOTE	REF NO	GRAPHIC REF	PART NUMBER	QTY	PART NAME 1 2 3 4 5 6 (PRODUCT LEVEL)	SEE PAGE
	1	1	**230-4011**	1	PLUG AS-CONNECTOR (2-PIN)	
			264-7029	1	SEAL-CONNECTOR	
E	2	1	**9X-1813**		SLEEVE (14-CM)	
	3	1	**6V-4589**	1	SEAL-O-RING	
	4	1	**9X-7737**	1	SEAL-O-RING	
	5	1	**144-1636**	2	PIN-CONNECTOR (14-GA TO 18-GA)	

E-ORDER BY THE CENTIMETER

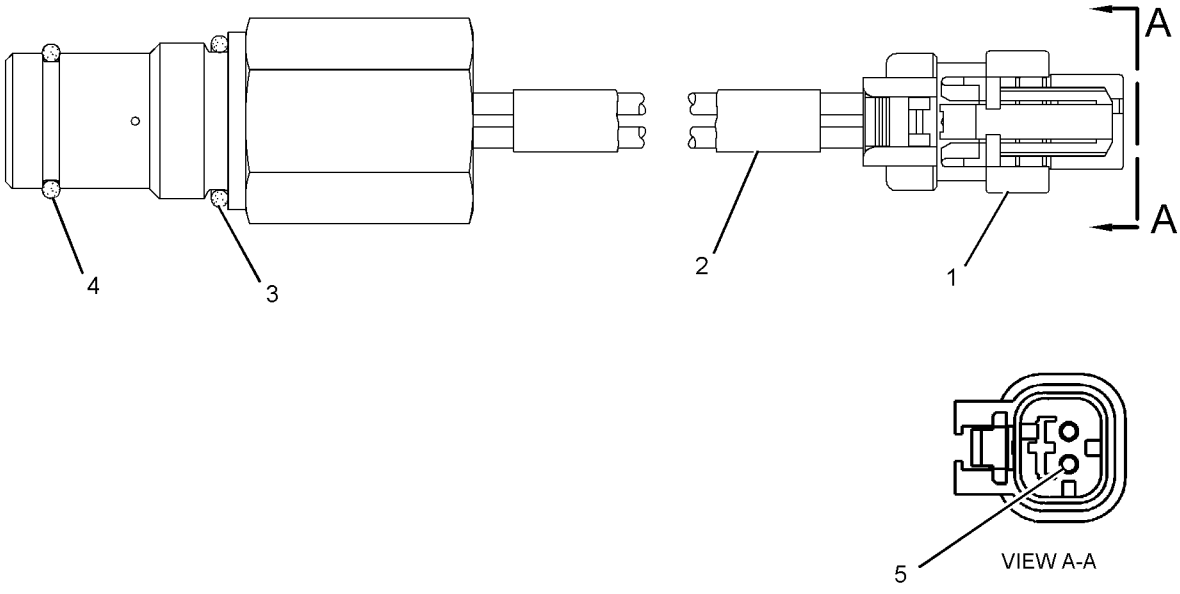

GRAPHIC #1 **<END>** g01238534

233-3124 SWITCH GP-ROADING

S/N: R9J1-UP

PART OF 299-3881 LIGHTING AR-ROADING, 299-3880 LIGHTING GP-ROADING AN ATTACHMENT

SMCS-7332 **i02976031**

NOTE	REF NO	GRAPHIC REF	PART NUMBER	QTY	PART NAME 1 2 3 4 5 6 (PRODUCT LEVEL)	SEE PAGE
	1	1	**236-4616**	1	SWITCH AS-ROCKER (HAZARD)	
	2	1	**249-5479**	1	SWITCH AS-ROCKER (24-VOLT) (HEADLIGHT DIMMER)	
	3	1	**249-5482**	1	SWITCH AS-ROCKER (24-VOLT) (TURN SIGNAL)	
	4	1	**249-5486**	1	SWITCH AS-ROCKER (HEADLIGHTS, TAIL LIGHTS)	

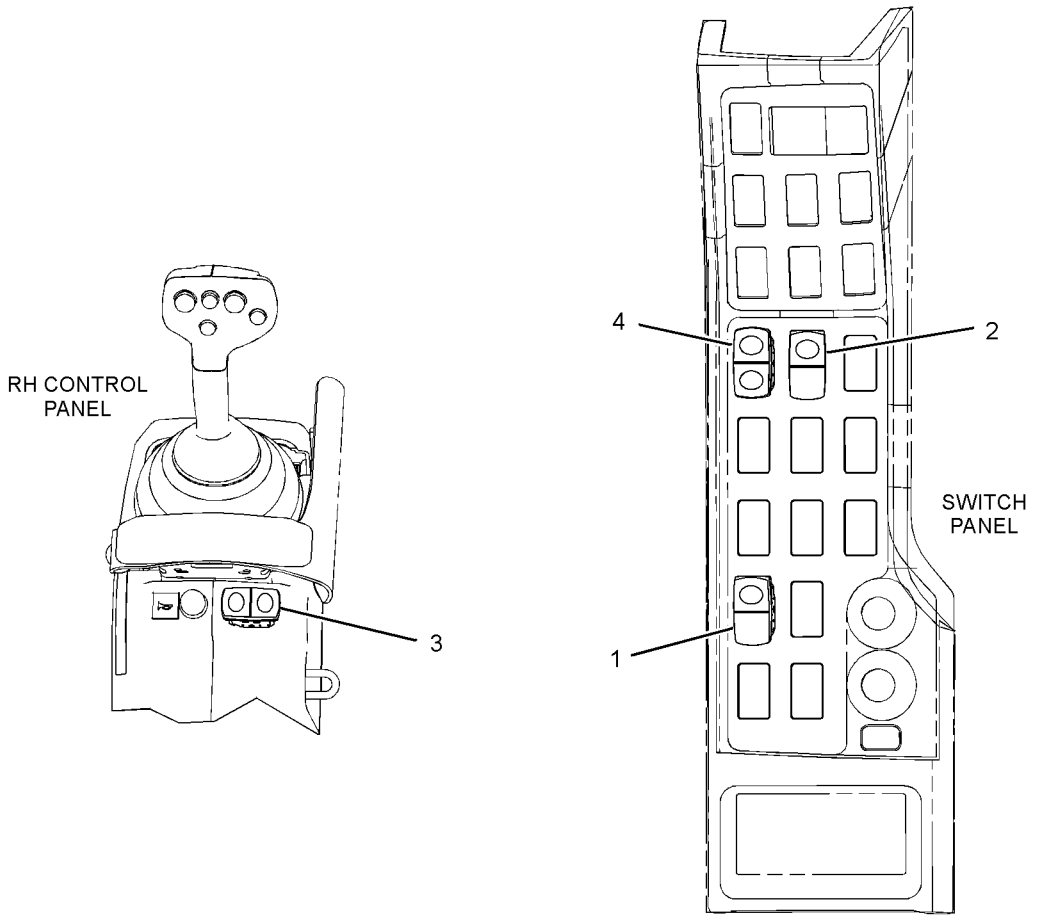

GRAPHIC #1 **<END>** g01469931

238-8824 SWITCH GP-ROCKER–AUTOSHIFT

S/N: R9J1-UP
PART OF 248-6925 AUTOSHIFT AR
AN ATTACHMENT

SMCS-7332 **i02615592**

NOTE	REF NO	GRAPHIC REF	PART NUMBER	QTY	PART NAME 1 2 3 4 5 6 (PRODUCT LEVEL)	SEE PAGE
	1	1	**102-8802**	1	KIT-RECEPTACLE (2-PIN)	
					(INCLUDES RECEPTACLE AS & WEDGE)	
	2	1	**249-5478**	1	SWITCH AS-ROCKER (AUTOSHIFT)	
	3	1	**250-2299**	1	LAMP AS-LED (24-VOLT, GREEN)	

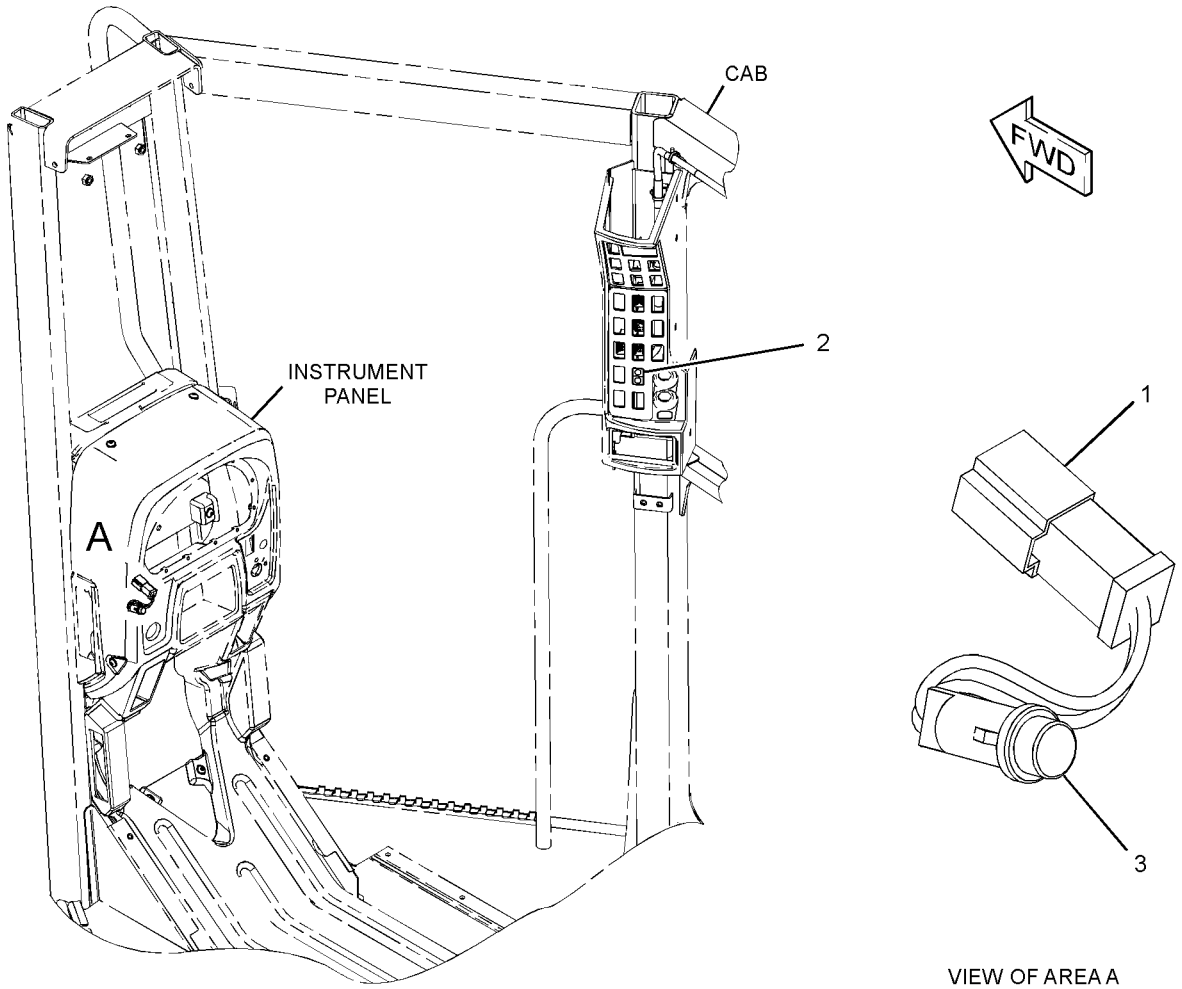

GRAPHIC #1 **<END>** g01313358

ELECTRICAL AND STARTING SYSTEM

321-6987 SWITCH GP-ROCKER

S/N: R9J1-UP

PART OF 354-8462, 356-3723, 364-2441, 366-3373 CONTROL AR-HYDRAULIC

AN ATTACHMENT

SMCS-7332 **i03378642**

NOTE	REF NO	GRAPHIC REF	PART NUMBER	QTY	PART NAME 1 2 3 4 5 6 (PRODUCT LEVEL)	SEE PAGE
	1	1	**249-5487**	1	SWITCH AS-ROCKER (BLADE CUSHION)	

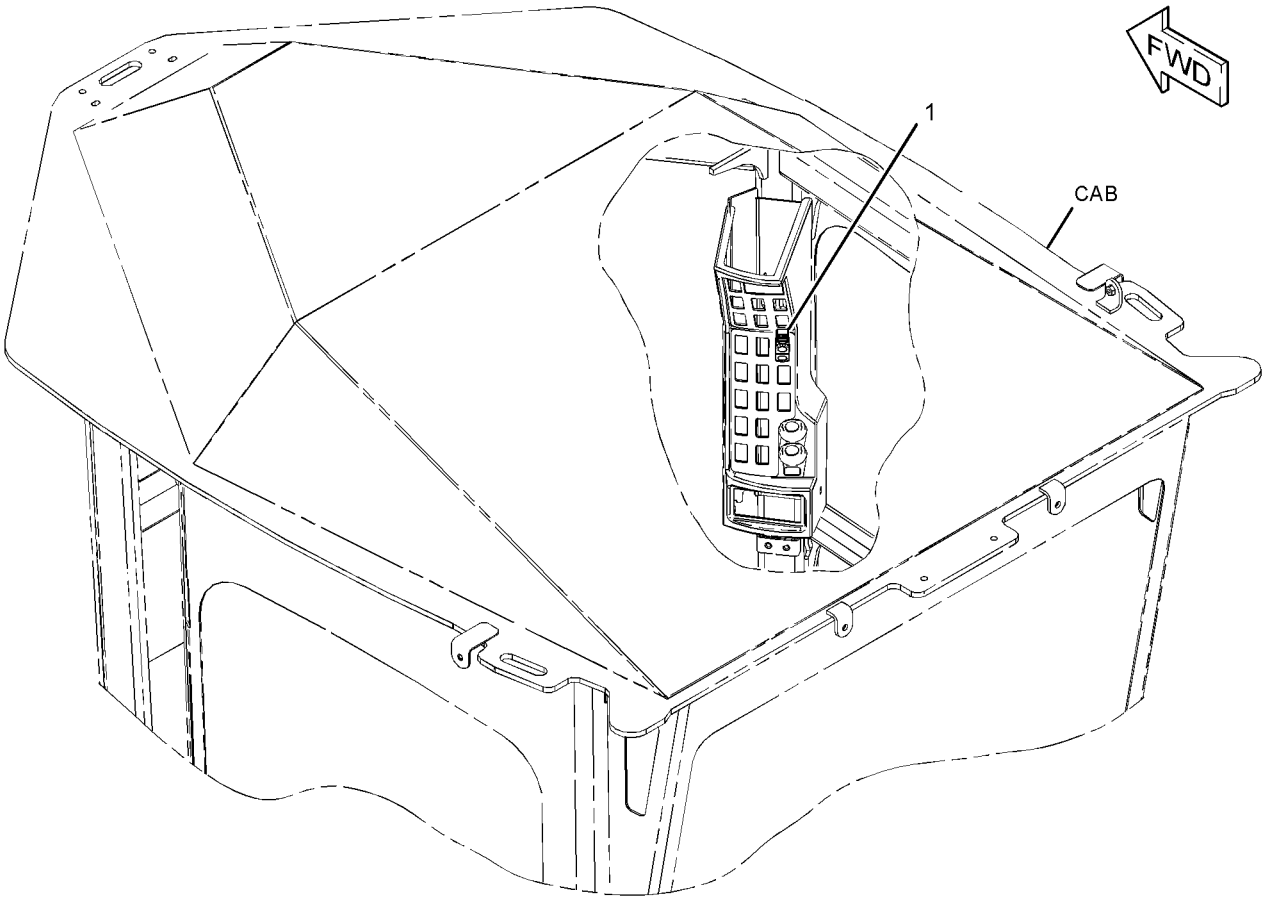

GRAPHIC #1 **<END>** g01747874

343-1824 SWITCH GP-ROCKER—HEATED MIRRORS

S/N: R9J1-UP

PART OF 233-3296 MIRROR GP-REAR VIEW

AN ATTACHMENT

SMCS-7332 **i03546519**

NOTE	REF NO	GRAPHIC REF	PART NUMBER	QTY	PART NAME 1 2 3 4 5 6 (PRODUCT LEVEL)	SEE PAGE
	1	1	**236-4630**	1	SWITCH AS-ROCKER (HEATED MIRRORS)	
	2	1	**297-0760**	1	RELAY AS (24-VDC, 20-AMPERE) (HEATED MIRROR TIMER)	
M	3	1	**5C-9553**	1	BOLT (M6X1X16-MM)	
	4	1	**9X-8256**	1	WASHER (6.6X12X2-MM THK)	

M-METRIC PART

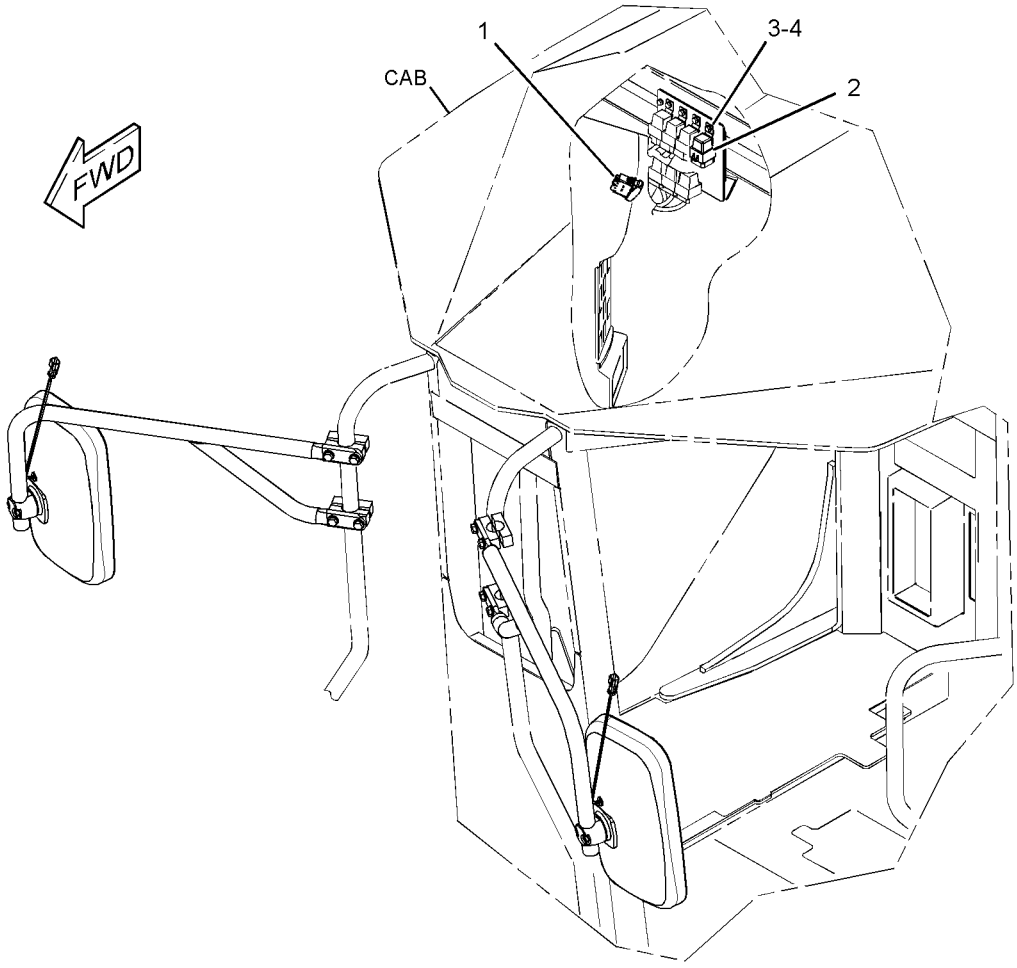

GRAPHIC #1 **<END>** g01923033

275-7741 SWITCH GP-WIPER—INTERMITTENT

S/N: R9J1-UP
24-VOLT
PART OF 275-7764 SWITCH GP-WIPER
AN ATTACHMENT

SMCS-7305, 7332 **i02895040**

NOTE	REF NO	GRAPHIC REF	PART NUMBER	QTY	PART NAME 1 2 3 4 5 6 (PRODUCT LEVEL)	SEE PAGE
	1	1	**6V-8369**	1	NUT (7/16-28-THD)	
	2	1	**2H-3920**	1	LOCKWASHER	
	3	1	**8T-8737**	2	PLUG-SEAL	
	4	1	**186-3735**	6	PIN-CONNECTOR (16-GA TO 18-GA)	
	5	1	**102-8806**	1	KIT-RECEPTACLE (8-PIN)	
					(INCLUDES RECEPTACLE AS & WEDGE)	

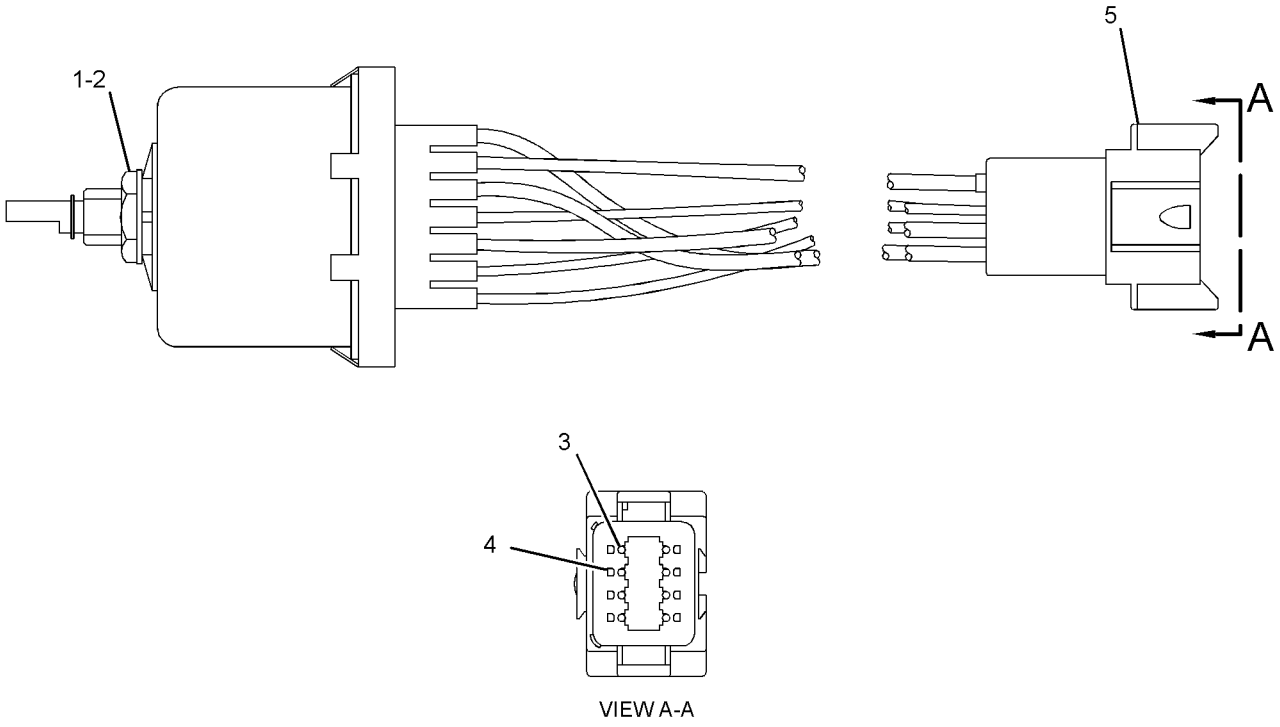

GRAPHIC #1 **<END>** g01445891

275-7764 SWITCH GP-WIPER—INTERMITTENT

S/N: R9J1-UP
24-VOLT
PART OF 233-3139 WIPER GP-WINDOW, 351-7026 WIRING GP-CAB
AN ATTACHMENT

SMCS-7305, 7332 **i02980144**

NOTE	REF NO	GRAPHIC REF	PART NUMBER	QTY	PART NAME 1 2 3 4 5 6 (PRODUCT LEVEL)	SEE PAGE
Y	1	1	**275-7741**	1	SWITCH GP-WIPER (24-VOLT, INTERMITTENT)	324
	2	1	**7T-9302**	1	KNOB AS-WIPER SWITCH	
		1	**014-0816**	1	SETSCREW (8-32X0.5-IN)	

Y-SEPARATE ILLUSTRATION

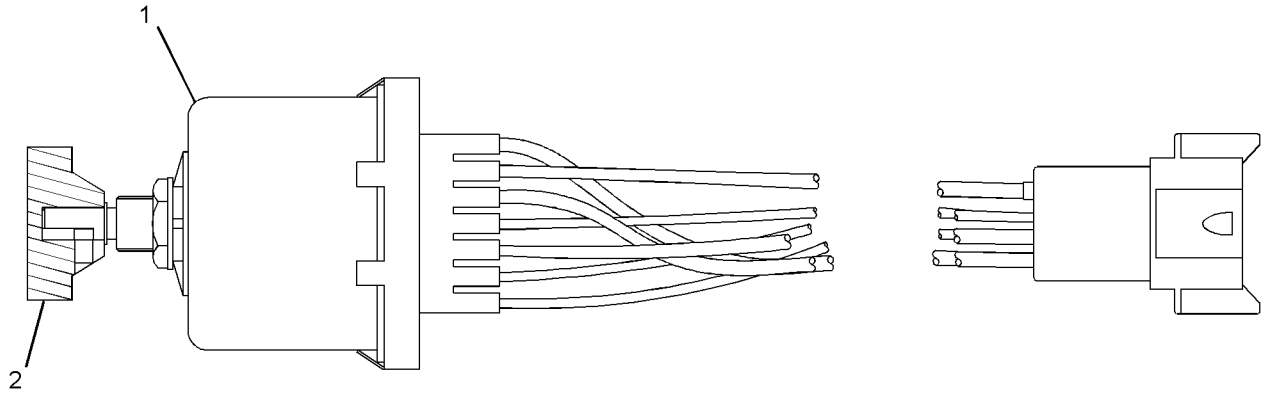

GRAPHIC #1 **<END>** g01516002

256-2907 TARGET GP-LASER

S/N: R9J1-UP

PART OF 295-9880 TARGET GP-LASER

SMCS-7009 **i03778209**

NOTE	REF NO	GRAPHIC REF	PART NUMBER	QTY	PART NAME 1 2 3 4 5 6 (PRODUCT LEVEL)	SEE PAGE
	1	1	**291-1915**	1	TARGET AS-LASER	
	2	1	**275-3378**	1	SPACER (16.7X38.1X12.7-MM THK)	
	3	1	**7X-0345**	1	BOLT (5/8-11X1.75-IN)	
	4	1	**7M-4672**	1	WASHER (0.656X1.31X0.109-IN THK)	
	5	1	**8T-9368**	4	BOLT (1/4-20X2.25-IN)	
	6	1	**9X-6165**	8	WASHER (6.5X22X2.5-MM THK)	
	7	1	**8C-5607**	8	MOUNT-ISOLATION	
	8	1	**8C-5608**	4	SPACER (6.5X9.5X25.4-MM THK)	
	9	1	**275-4012**	4	BUSHING	
	10	1	**6V-8185**	4	NUT (1/4-20-THD)	
	11	1	**5P-4115**	4	WASHER-HARD (7.2X19X2-MM THK)	
	12	1	**252-9628**	1	MOUNTING GP-RECEIVER (TARGET)	
	12A	1	**113-0693**	1	LOCKWASHER	
	12B	1	**8R-1803**	1	WASHER (10.5X18X1-MM THK)	
	12C	1	**289-8449**	1	HANDLE AS	
	13	1	**264-3171**	1	PLATE-SHOCK	

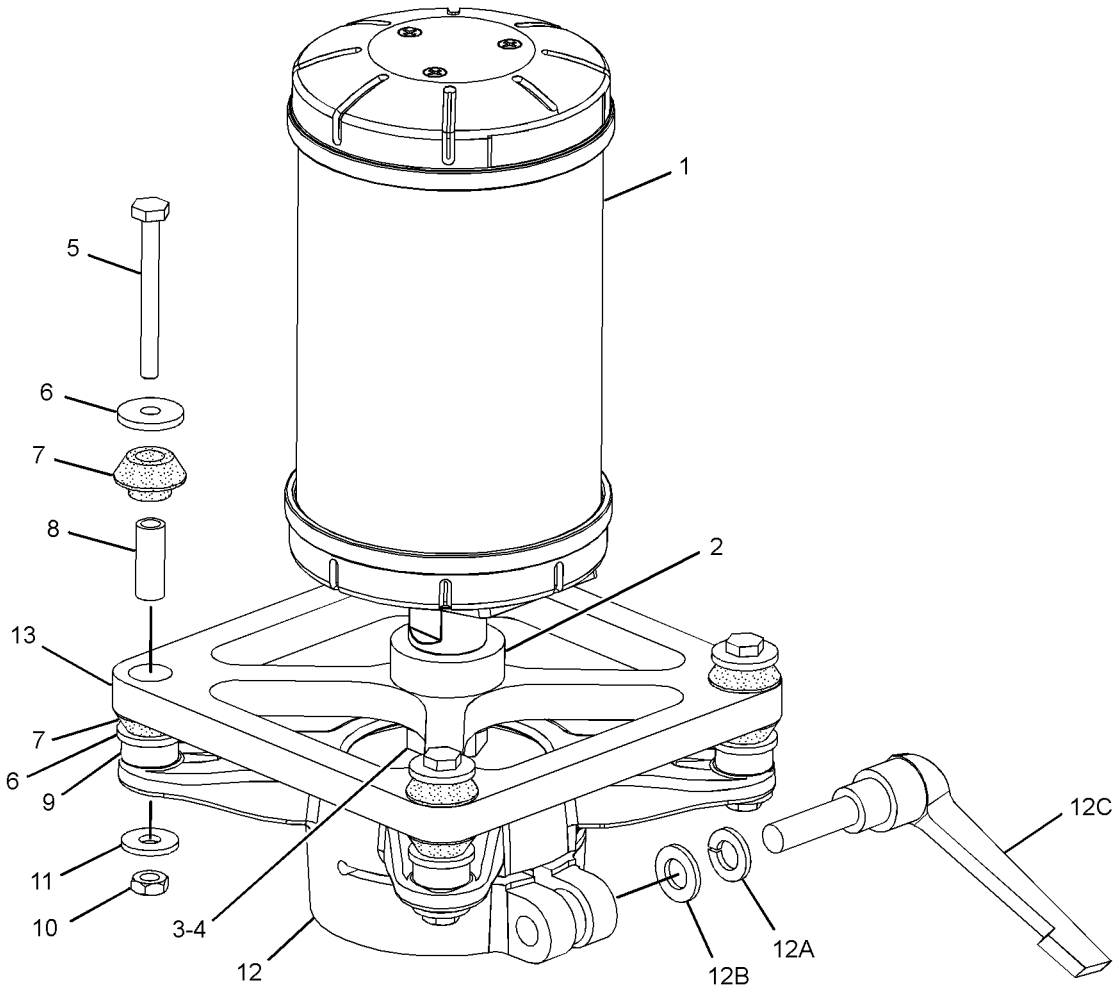

GRAPHIC #1 **<END>** g02059833

295-9880 TARGET GP-LASER

S/N: R9J1-UP

PART OF 317-6526 GRADE CONTROL AR-LASER

FIELD INSTALLATION

SMCS-7009 **i03910854**

NOTE	PART NUMBER	QTY	PART NAME 1 2 3 4 5 6 (PRODUCT LEVEL)	SEE PAGE
Y	*256-2907*	1	TARGET GP-LASER (GRADE CONTROL)	326
	275-3376	1	BLOCK	
	276-0764	1	CABLE-COILED (LASER RECEIVER)	
	244-1719	1	CASE-CARRYING	
	252-8744	1	FILM-WARNING (BLADE, DO NOT CLIMB, READ OMM)	

Y-SEPARATE ILLUSTRATION

<END>

239-1134 VALVE GP-ETHER STARTING

S/N: R9J1-UP
24-VOLT
PART OF 231-2161 STARTING AID GP-ETHER

SMCS-1456 **i03894416**

NOTE	REF NO	GRAPHIC REF	PART NUMBER	QTY	PART NAME 1 2 3 4 5 6 (PRODUCT LEVEL)	SEE PAGE
	1	1	**7N-9801**	1	GASKET	
	2	1	**102-8802**	1	KIT-RECEPTACLE (2-PIN)	
					(INCLUDES RECEPTACLE AS & WEDGE)	
	3	1	**8T-8729**	2	PIN-CONNECTOR (16-GA TO 18-GA)	
	4	1	**358-4889**	1	FILTER (ETHER START)	

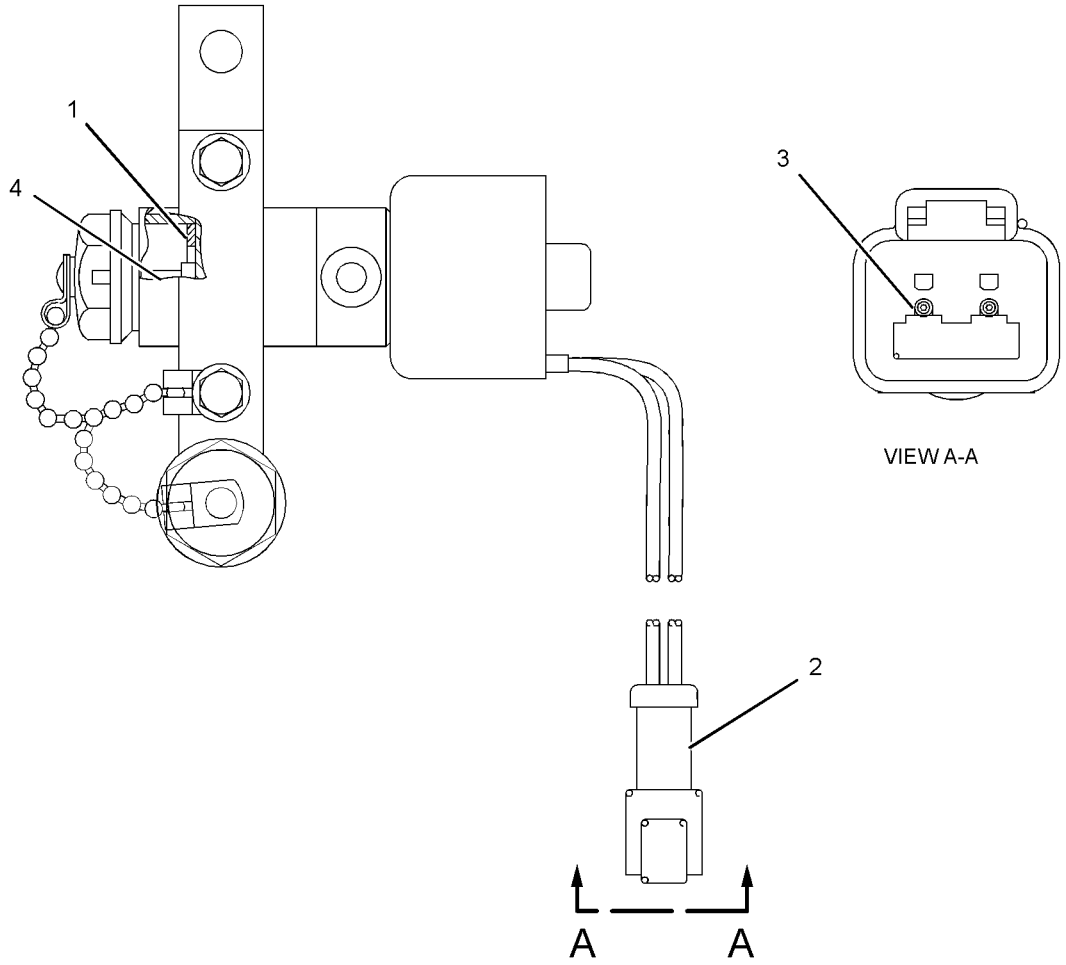

GRAPHIC #1 **<END>** g02138138

257-7224 WARNING GP-BACKUP

S/N: R9J1-UP

PART OF 349-2555 COMMON AR

SMCS-7406 **i02179481**

NOTE	REF NO	GRAPHIC REF	PART NUMBER	QTY	PART NAME 1 2 3 4 5 6 (PRODUCT LEVEL)	SEE PAGE
	1	1	**3S-2093**	1	STRAP-CABLE	
	2	1	**213-9100**	1	ALARM GP	
BE		1	**9X-1813**		SLEEVE	
		1	**102-8802**	1	KIT-RECEPTACLE (2-PIN)	
					(INCLUDES RECEPTACLE AS & WEDGE)	
	3	1	**5P-4116**	4	WASHER-HARD (8.8X20.5X2-MM THK)	
M	4	1	**8T-4189**	4	BOLT (M8X1.25X20-MM)	

B-USE AS REQUIRED
E-ORDER BY THE CENTIMETER
M-METRIC PART

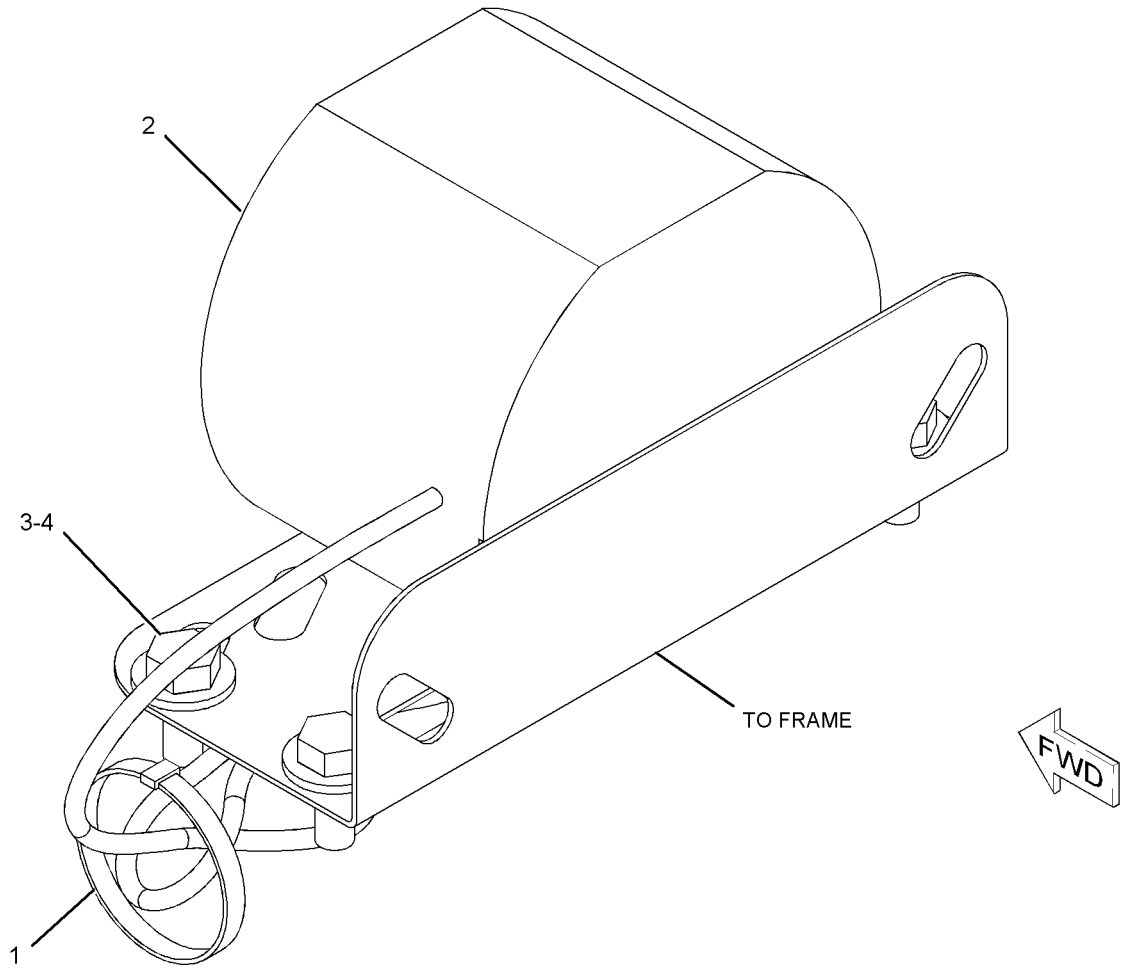

GRAPHIC #1 **<END>** g01109906

ELECTRICAL AND STARTING SYSTEM

351-7026 WIRING GP-CAB

S/N: R9J1-UP
PART OF 233-3110, 325-5227 CAB AR
AN ATTACHMENT

SMCS-1408, 7301 **i04025475**

NOTE	REF NO	GRAPHIC REF	PART NUMBER	QTY	PART NAME 1 2 3 4 5 6 (PRODUCT LEVEL)	SEE PAGE
	1	2	**102-8802**	2	KIT-RECEPTACLE (2-PIN)	
					(EACH INCLUDES RECEPTACLE AS & WEDGE)	
	2	3	**3E-5239**	1	RELAY AS (24-VOLT) (BLADE FLOOD LAMP TWO)	
	2A	3	**3E-5239**	1	RELAY AS (24-VOLT) (CONDENSER FAN TWO)	
	2B	3	**3E-5239**	1	RELAY AS (24-VOLT) (CONDENSER FAN ONE)	
	2C	3	**3E-5239**	1	RELAY AS (24-VOLT) (HEADLIGHT DIMMER)	
	2D	3	**3E-5239**	1	RELAY AS (24-VOLT) (CAB FLOODLIGHTS TWO)	
	2E	3	**3E-5239**	1	RELAY AS (24-VOLT) (CAB FLOODLIGHTS, REAR)	
	2F	2	**3E-5239**	1	RELAY AS (24-VOLT) (ACCUGRADE)	
	2G	2	**3E-5239**	1	RELAY AS (24-VOLT) (AIR CLEANER)	
	2H	2	**3E-5239**	1	RELAY AS (24-VOLT) (CAB FLOODLIGHTS ONE)	
	2J	2	**3E-5239**	1	RELAY AS (24-VOLT) (HORN)	
	2K	2	**3E-5239**	1	RELAY AS (24-VOLT) (POSITION LAMP, LH)	
	2L	2	**3E-5239**	1	RELAY AS (24-VOLT) (DIFFERENTIAL LOCK)	
	2M	2	**3E-5239**	1	RELAY AS (24-VOLT) (BLADE FLOOD LAMP ONE)	
	2N	2	**3E-5239**	1	RELAY AS (24-VOLT) (A/C FAN, HIGH SPEED)	
	2P	2	**3E-5239**	1	RELAY AS (24-VOLT) (REAR FLOODLIGHT)	
	2R	2	**3E-5239**	1	RELAY AS (24-VOLT) (POSITION LAMP, RH)	
	2S	2	**3E-5239**	1	RELAY AS (24-VOLT) (BACKLIGHT)	
	2T	3	**3E-5239**	1	RELAY AS (24-VOLT) (HEADLIGHTS)	
Y	3	2	**3E-6328**	1	ALARM GP (24-VOLT) (CATERPILLAR MONITORING SYSTEM)	194
	4	3	**6T-1999**	1	HOUSING AS (CIGAR LIGHTER)	
	5	1	**7U-4891**	8	SCREW (10-32X1-IN)	
	6	1	**9W-1441**	17	FUSE (15-AMPERE)	
	7	1	**9W-1442**	19	FUSE (10-AMPERE)	
	8	1	**9W-1446**	4	FUSE (20-AMPERE)	
	10	2	**092-4924**	1	PLUG-BUTTON	
	11	2	**110-7887**	1	SWITCH AS-START (KEY)	
		2	**7T-6799**	1	NUT-MOUNTING (1-32-THD)	
		2	**102-8804**	1	KIT-RECEPTACLE (4-PIN)	
					(INCLUDES RECEPTACLE AS & WEDGE)	
		2	**186-3735**	4	PIN-CONNECTOR (16-GA TO 18-GA)	
	12	2	**170-1821**	1	SWITCH AS-PUSH BUTTON (HORN)	
		2	**6F-0253**	1	LOCKWASHER	
		2	**8T-8729**	2	PIN-CONNECTOR (16-GA TO 18-GA)	
		2	**172-3511**	1	NUT (5/8-24-THD)	
	13	1	**180-9900**	1	CAP AS	
	14	1	**189-2512**	1	PLATE	
	15	2	**195-7988**	1	GASKET	
	16	2	**222-7890**	1	SWITCH AS-ROCKER (PARKING BRAKE)	
	17	2,3	**228-6089**	16	PLUG (ROCKER SWITCH)	
	18	3	**229-2580**	1	SWITCH AS-ROCKER (THROTTLE LOCK SET)	
	19	2	**236-4615**	1	SWITCH AS-ROCKER (SECONDARY STEERING)	
	20	2	**246-4311**	1	GUARD (SWITCH)	
	21	3	**249-5486**	1	SWITCH AS-ROCKER (HEADLIGHTS, TAIL LIGHTS)	
	22	3	**249-5493**	1	SWITCH AS-ROCKER (THROTTLE LOCK ON, OFF)	
	23	3	**252-5224**	1	FLASHER AS	
	24	2	**253-3485**	1	PLATE	
	25	2	**253-3489**	2	PLATE	
	26	2	**262-4961**	1	PLATE	
Y	27	1	**265-8937**	1	BRACKET GP-MOUNTING (FUSE PANEL)	205
Y	28	3	*275-9650*	1	ELECTRONICS GP-MONITOR	220
	29	2	**279-5308**	1	LAMP AS-LED (24-VOLT, GREEN)	
	30	3	**280-4244**	1	SWITCH AS-ROCKER (24-VOLT) (CENTERSHIFT PIN)	

351-7026 **WIRING GP-CAB** ***(contd.)*** **i04025475**

NOTE	REF NO	GRAPHIC REF	PART NUMBER	QTY	PART NAME 1 2 3 4 5 6 (PRODUCT LEVEL)	SEE PAGE
	31	3	**284-3623**	1	SWITCH AS-ROCKER (HYDRAULIC LOCKOUT)	
	32	2,3	**286-0323**	5	GASKET	
	33	2	**288-1402**	1	GASKET	
	34	1	**296-4925**	1	HARNESS AS-CONTROL	
		1	**102-8804**	1	KIT-RECEPTACLE (4-PIN)	
		1	**102-8806**	1	KIT-RECEPTACLE (8-PIN)	
		1	**102-8801**	1	KIT-RECEPTACLE (12-PIN)	
		1	**190-7614**	1	KIT-RECEPTACLE (12-PIN)	
					(EACH KIT INCLUDES RECEPTACLE AS & WEDGE)	
		1	**3R-9965**	1	PLUG AS-CONNECTOR (8-PIN)	
		1	**6D-5257**	1	PLUG AS-CONNECTOR (8-PIN)	
		1	**8T-8729**	18	PIN-CONNECTOR (16-GA TO 18-GA)	
		1	**8T-8730**	8	SOCKET-CONNECTOR (16-GA TO 18-GA)	
		1	**8T-8737**	69	PLUG-SEAL	
		1	**9W-0844**	7	SOCKET-CONNECTOR (14-GA)	
		1	**9W-0852**	7	PIN-CONNECTOR (14-GA TO 16-GA)	
		1	**9X-1054**	1	PLUG AS-CONNECTOR (4-PIN)	
		1	**9X-1056**	4	TERMINAL-RECEPTACLE (14-GA TO 16-GA)	
		1	**9X-3401**	4	PIN-CONNECTOR (16-GA TO 18-GA)	
		1	**9X-3402**	14	SOCKET-CONNECTOR (16-GA TO 18-GA)	
		1	**9X-7145**	1	RECEPTACLE AS-CONNECTOR (24-PIN)	
		1	**9X-7146**	1	PLUG AS-CONNECTOR (24-PIN)	
		1	**3E-4367**	1	RING-RETAINING	
M		1	**3E-8558**	1	BOLT (M5X0.8X39.37-MM)	
		1	**9X-3265**	2	SEAL-CONNECTOR (24-PIN)	
E		1	**119-3662**		TUBE-HEAT SHRINK (10.85-MM DIA) (26-CM)	
E		1	**125-7875**		TUBE-HEAT SHRINK (7.44-MM DIA) (30-CM)	
		1	**155-2255**	2	KIT-CONNECTING PLUG (12-PIN)	
		1	**155-2256**	1	KIT-CONNECTING PLUG (12-PIN)	
		1	**155-2271**	1	KIT-CONNECTING PLUG (4-PIN)	
		1	**174-0503**	1	KIT-CONNECTING PLUG (3-PIN)	
					(EACH KIT INCLUDES PLUG AS, WEDGE & INTERFACE SEAL)	
E		1	**1P-0810**		TAPE-ELECTRICAL (229-CM)	
Y	35	2	*357-9151*	1	CONTROL & MTG GP-JOYSTICK	784
	37	2	**313-2152**	1	MODULE GP-DISPLAY	
	38	2	**320-9861**	2	GASKET	
	39	2	**337-0072**	1	PLATE AS	
	40	3	**337-8764**	1	PLATE AS	
	41	1	**351-5962**	1	HARNESS AS-CAB (MAIN)	
		1	**102-8802**	6	KIT-RECEPTACLE (2-PIN)	
		1	**102-8803**	2	KIT-RECEPTACLE (3-PIN)	
		1	**102-8804**	4	KIT-RECEPTACLE (4-PIN)	
		1	**102-8805**	3	KIT-RECEPTACLE (6-PIN)	
		1	**102-8806**	2	KIT-RECEPTACLE (8-PIN)	
		1	**102-8801**	1	KIT-RECEPTACLE (12-PIN)	
		1	**166-5229**	2	KIT-RECEPTACLE (12-PIN)	
		1	**190-7615**	3	KIT-RECEPTACLE (12-PIN)	
		1	**194-4254**	2	KIT-RECEPTACLE (8-PIN)	
					(EACH KIT INCLUDES RECEPTACLE AS & WEDGE)	
		1	**3E-5226**	2	CONNECTOR-SOCKET	
		1	**3E-5519**	1	PLUG AS-CONNECTOR (5-PIN)	
		1	**3S-2093**	8	STRAP-CABLE	
		1	**5P-4571**	14	TERMINAL-BLADE (14-GA TO 16-GA)	
		1	**7G-7917**	2	PLUG-SEAL	
		1	**7G-7919**	3	PLUG-SEAL	
		1	**7R-2751**	2	PLUG-CONNECTOR	
		1	**7T-0094**	5	SOCKET-CONNECTOR (12-GA TO 14-GA)	
		1	**9X-0196**	7	WIRE AS	
		1	**5P-4571**	1	TERMINAL-BLADE (14-GA TO 16-GA)	

351-7026 **WIRING GP-CAB** ***(contd.)*** **i04025475**

NOTE	REF NO	GRAPHIC REF	PART NUMBER	QTY	PART NAME 1 2 3 4 5 6 (PRODUCT LEVEL)	SEE PAGE
		1	**7X-6222**	1	PLUG AS-CONNECTOR (24-PIN)	
		1	**3E-4367**	1	RING-RETAINING	
M		1	**3E-8558**	1	BOLT (M5X0.8X39.37-MM)	
		1	**9X-3265**	2	SEAL-CONNECTOR (24-PIN)	
		1	**8C-6354**	1	CAP-RECEPTACLE	
		1	**8N-1517**	1	RECEPTACLE AS-CONNECTOR (25-PIN)	
		1	**8N-1522**	1	NUT (2-1/4-16-THD)	
		1	**8N-1540**	4	PIN-CONNECTOR (12-GA TO 14-GA)	
		1	**8N-1548**	2	PIN-CONNECTOR (4-GA)	
		1	**8T-8737**	383	PLUG-SEAL	
		1	**9R-9806**	10	TERMINAL-BLADE (18-GA TO 20-GA)	
		1	**9W-1951**	1	RECEPTACLE-CONNECTOR (9-PIN)	
		1	**9W-2032**	1	TERMINAL-BLADE (10-GA TO 12-GA)	
		1	**9W-2033**	27	TERMINAL-BLADE (14-GA TO 16-GA)	
		1	**9X-0145**	1	RECEPTACLE AS-CONNECTOR (24-PIN)	
		1	**9X-1054**	16	PLUG AS-CONNECTOR (4-PIN)	
		1	**9X-1055**	2	TERMINAL-RECEPTACLE (12-GA)	
		1	**9X-1056**	29	TERMINAL-RECEPTACLE (14-GA TO 16-GA)	
		1	**9X-3402**	21	SOCKET-CONNECTOR (16-GA TO 18-GA)	
		1	**9X-6856**	14	PIN-CONNECTOR (16-GA TO 18-GA)	
		1	**100-5041**	38	TERMINAL-RECEPTACLE (18-GA TO 20-GA)	
		1	**103-0213**	2	RECEPTACLE AS-CONNECTOR (70-PIN)	
E		1	**119-3662**		TUBE-HEAT SHRINK (10.85-MM DIA) (13-CM)	
E		1	**125-7874**		TUBE-HEAT SHRINK (5.72-MM DIA) (775-CM)	
E		1	**125-7875**		TUBE-HEAT SHRINK (7.44-MM DIA) (170-CM)	
		1	**9X-3402**	383	SOCKET-CONNECTOR (16-GA TO 18-GA)	
		1	**126-1774**	4	COVER-CONNECTOR	
		1	**9G-4343**	2	TERMINAL-RING (4-GA, 1/4-IN SCREW)	
		1	**2L-8069**	3	TERMINAL-RING (2-GA TO 10-GA, 3/8-IN SCREW)	
		1	**2L-8079**	3	TERMINAL-RING (14-GA TO 16-GA, 3/8-IN SCREW)	
		1	**128-5016**	4	SEAL-CABLE	
		1	**5P-5618**	1	TERMINAL-BLADE (10-GA TO 12-GA)	
		1	**5P-4571**	3	TERMINAL-BLADE (14-GA TO 16-GA)	
		1	**097-7234**	2	TERMINAL-BLADE (18-GA TO 22-GA)	
		1	**131-1475**	1	TERMINAL AS	
		1	**2L-8065**	2	TERMINAL-RING (10-GA TO 12-GA, NO. 8 SCREW)	
		1	**2L-8067**	1	TERMINAL-RING (10-GA TO 12-GA, 1/4-IN SCREW)	
		1	**2L-8069**	2	TERMINAL-RING (2-GA TO 10-GA, 3/8-IN SCREW)	
		1	**2L-8079**	6	TERMINAL-RING (14-GA TO 16-GA, 3/8-IN SCREW)	
		1	**134-2540**	4	RESISTOR AS-CONNECTION (3-PIN)	
		1	**144-1636**	206	PIN-CONNECTOR (14-GA TO 18-GA)	
		1	**147-1445**	2	PLUG AS-CONNECTOR (70-PIN)	
		1	**147-1446**	2	PLUG AS-CONNECTOR (70-PIN)	
					(EACH PLUG AS INCLUDES)	
		1	**159-9322**	1	SEAL-O-RING	
		1	**155-2255**	5	KIT-CONNECTING PLUG (12-PIN)	
		1	**155-2256**	2	KIT-CONNECTING PLUG (12-PIN)	
		1	**155-2257**	3	KIT-CONNECTING PLUG (12-PIN)	
		1	**155-2265**	9	KIT-CONNECTING PLUG (8-PIN)	
		1	**155-2260**	11	KIT-CONNECTING PLUG (3-PIN)	
		1	**155-2270**	10	KIT-CONNECTING PLUG (2-PIN)	
		1	**155-2271**	9	KIT-CONNECTING PLUG (4-PIN)	
		1	**155-2274**	8	KIT-CONNECTING PLUG (6-PIN)	
					(EACH KIT INCLUDES PLUG AS, WEDGE & INTERFACE SEAL)	
		1	**177-9648**	2	KIT-CONNECTING PLUG (2-PIN)	

351-7026 **WIRING GP-CAB** ***(contd.)*** **i04025475**

NOTE	REF NO	GRAPHIC REF	PART NUMBER	QTY	PART NAME 1 2 3 4 5 6 (PRODUCT LEVEL)	SEE PAGE
		1	**177-9656**	1	KIT-CONNECTING PLUG (4-PIN)	
					(EACH KIT INCLUDES PLUG AS & WEDGE)	
		1	**185-1860**	133	SEAL-WIRE	
		1	**185-1861**	13	SEAL-WIRE	
		1	**189-3158**	1	SUPPRESSOR-ARC	
		1	**200-8788**	6	SEAL (FUSE BLOCK)	
		1	**202-5397**	74	PLUG	
		1	**245-7434**	22	KIT-CONNECTING PLUG (10-PIN)	
					(EACH KIT INCLUDES PLUG CONNECTOR, WIRE ASSEMBLIES & PLUGS)	
		1	**230-4011**	1	PLUG AS-CONNECTOR (2-PIN)	
		1	**264-7029**	1	SEAL-CONNECTOR	
		1	**230-4012**	1	RECEPTACLE AS-CONNECTOR (2-PIN)	
		1	**230-5011**	1	RECEPTACLE AS-CONNECTOR (6-PIN)	
		1	**230-5010**	1	PLUG AS-CONNECTOR (6-PIN)	
		1	**239-7352**	1	PLUG AS-CONNECTOR (6-PIN)	
					(EACH PLUG AS INCLUDES)	
		1	**264-7032**	1	SEAL-CONNECTOR	
		1	**239-7353**	1	RECEPTACLE AS-CONNECTOR (6-PIN)	
		1	**250-9819**	3	BLOCK AS-FUSE	
		1	**151-1398**	1	KIT-TERMINAL (LOCK)	
		1	**250-9830**	1	BLOCK AS-FUSE	
		1	**161-7338**	1	COVER	
		1	**200-8788**	1	SEAL (FUSE BLOCK)	
		1	**1H-3244**	2	LOCKWASHER	
		1	**6V-8185**	2	NUT (1/4-20-THD)	
		1	**8T-4205**	2	WASHER-HARD (7.2X14.5X2-MM THK)	
	42	1,3	**351-5963**	1	HARNESS AS-LIGHTING	
		1,3	**102-8802**	14	KIT-RECEPTACLE (2-PIN)	
		1,3	**102-8801**	1	KIT-RECEPTACLE (12-PIN)	
					(EACH KIT INCLUDES RECEPTACLE AS & WEDGE)	
		1,3	**8T-8737**	44	PLUG-SEAL	
E		1,3	**125-7874**		TUBE-HEAT SHRINK (5.72-MM DIA) (25-CM)	
E		1,3	**125-7875**		TUBE-HEAT SHRINK (7.44-MM DIA) (15-CM)	
		1,3	**9X-3402**	56	SOCKET-CONNECTOR (16-GA TO 18-GA)	
		1,3	**155-2255**	2	KIT-CONNECTING PLUG (12-PIN)	
		1,3	**155-2265**	1	KIT-CONNECTING PLUG (8-PIN)	
		1,3	**155-2270**	14	KIT-CONNECTING PLUG (2-PIN)	
					(EACH KIT INCLUDES PLUG AS, WEDGE & INTERFACE SEAL)	
	43	1,2,3	**096-6166**	52	WASHER-HARD (4.5X9X1-MM THK)	
	44	2,3	**130-5300**	5	CLIP	
M	45	1	**155-4098**	4	SCREW-BUTTON HEAD (M3X0.5X1-MM)	
	46	2	**156-6175**	1	CLIP	
M	47	2,3	**162-2165**	51	BOLT-SOCKET HEAD (M4X0.7X16-MM)	
	48	1	**1H-4393**	2	LOCKWASHER	
	49	2	**246-9371**	1	COVER-RELAY (HEATED MIRROR)	
Y	50	3	**275-7764**	1	SWITCH GP-WIPER (24-VOLT, INTERMITTENT) (FRONT WIPER)	325
Y	50A	3	**275-7764**	1	SWITCH GP-WIPER (24-VOLT, INTERMITTENT) (DOOR WIPER, LH)	325
Y	50B	3	**275-7764**	1	SWITCH GP-WIPER (24-VOLT, INTERMITTENT) (DOOR WIPER, RH)	325
	52	1,2,3	**3S-2093**	65	STRAP-CABLE	
M	53	2,3	**5C-9553**	27	BOLT (M6X1X16-MM)	
	54	2	**5P-4115**	1	WASHER-HARD (7.2X19X2-MM THK)	
	55	1	**6T-3644**	1	CIRCUIT BREAKER AS (20-AMPERE) (CAB)	
	56	1,2,3	**7K-1181**	37	STRAP-CABLE	
	57	1	**7U-4892**	2	SCREW (8-32X0.75-IN)	
	58	3	**8N-2353**	1	KNOB AS-LIGHTER (24-VOLT)	

351-7026 **WIRING GP-CAB** ***(contd.)*** **i04025475**

NOTE	REF NO	GRAPHIC REF	PART NUMBER	QTY	PART NAME 1 2 3 4 5 6 (PRODUCT LEVEL)	SEE PAGE
	59	1	**8T-0328**	2	WASHER-HARD (5.5X10X1-MM THK)	
	60	2,3	**8T-4121**	4	WASHER-HARD (11X21X2.5-MM THK)	
M	61	2,3	**8T-4133**	4	NUT (M10X1.5-THD)	
M	62	3	**8T-4189**	2	BOLT (M8X1.25X20-MM)	
	63	3	**8T-4224**	2	WASHER-HARD (8.8X16X2-MM THK)	
M	64	2	**9X-1046**	12	SCREW (M4X0.7X18-MM)	
	65	2,3	**9X-8256**	26	WASHER (6.6X12X2-MM THK)	

E-ORDER BY THE CENTIMETER
M-METRIC PART
Y-SEPARATE ILLUSTRATION

REFER TO ALL ILLUSTRATIONS OF
THIS GROUP FOR AUXILIARY VIEWS

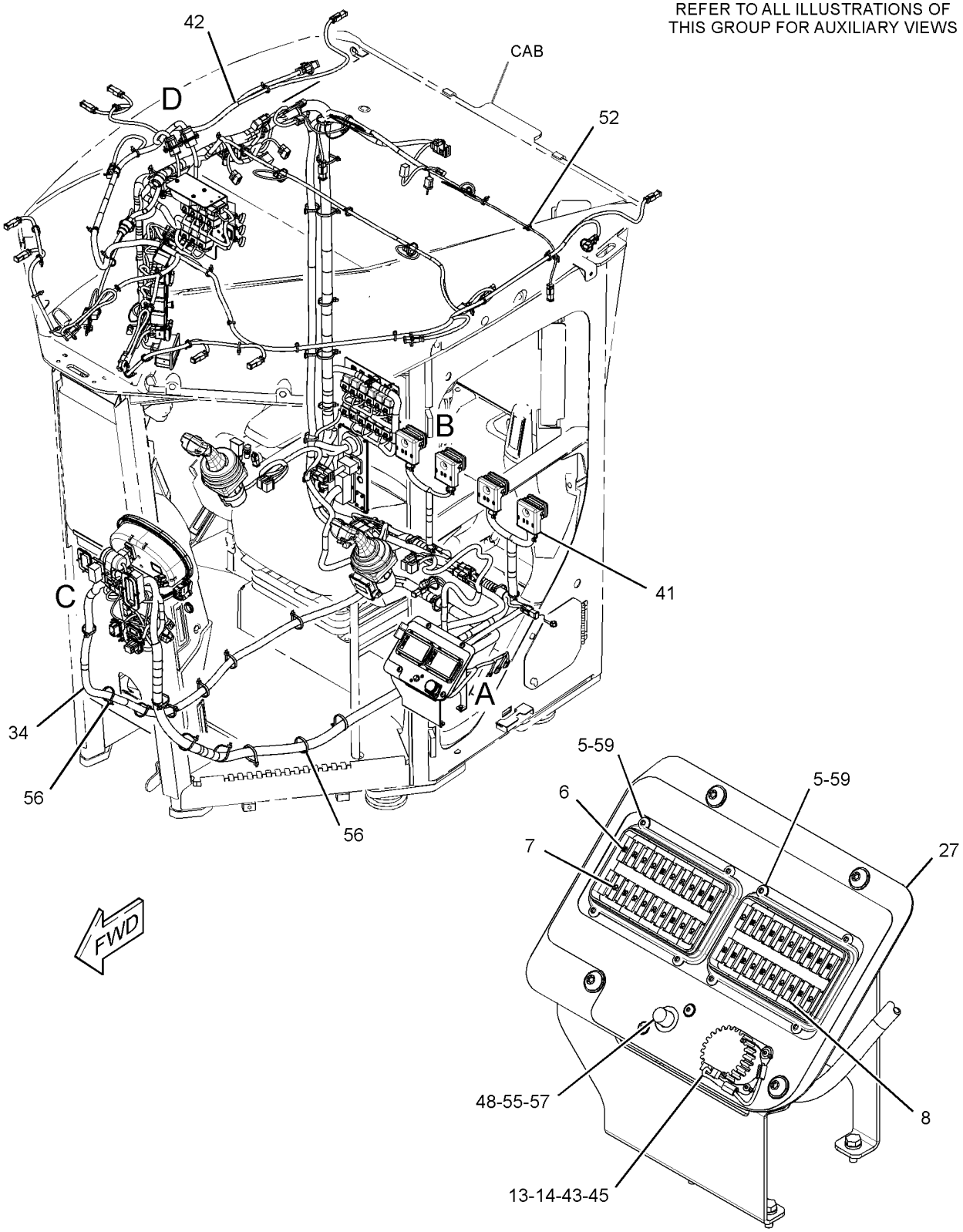

VIEW OF AREA A
(COVERS REMOVED FOR CLARITY)

GRAPHIC #1

g02155341

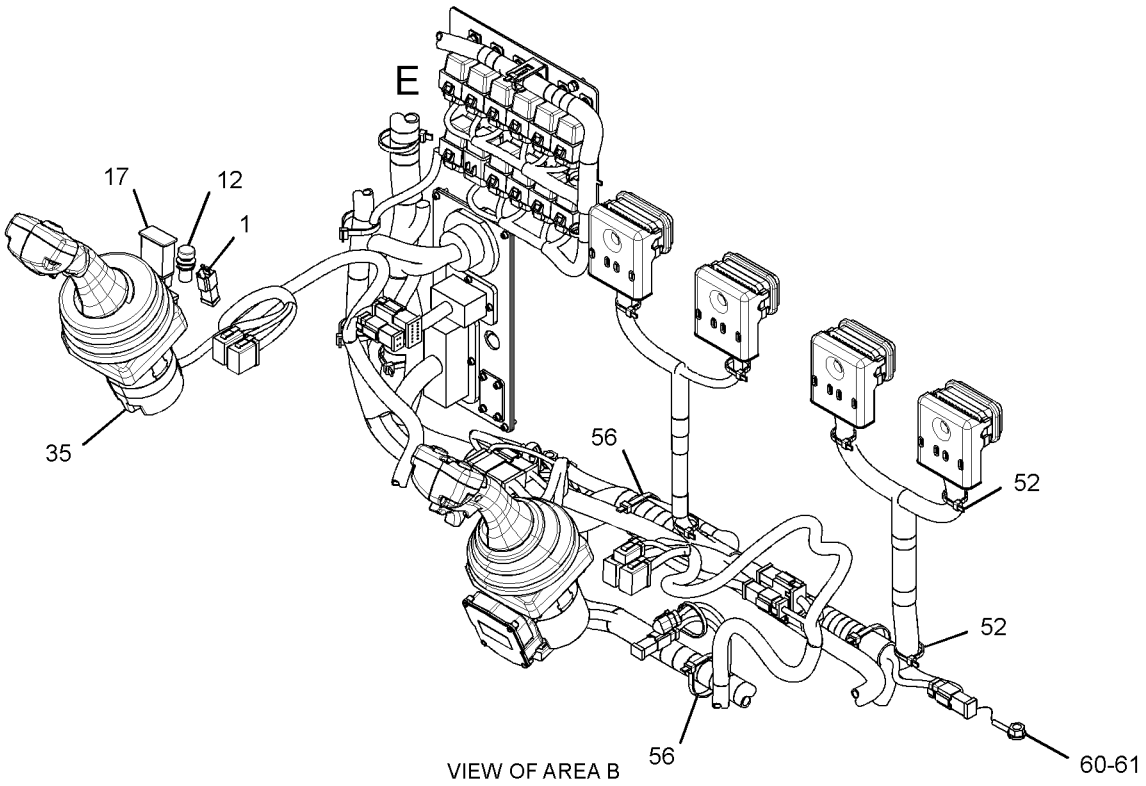

VIEW OF AREA B

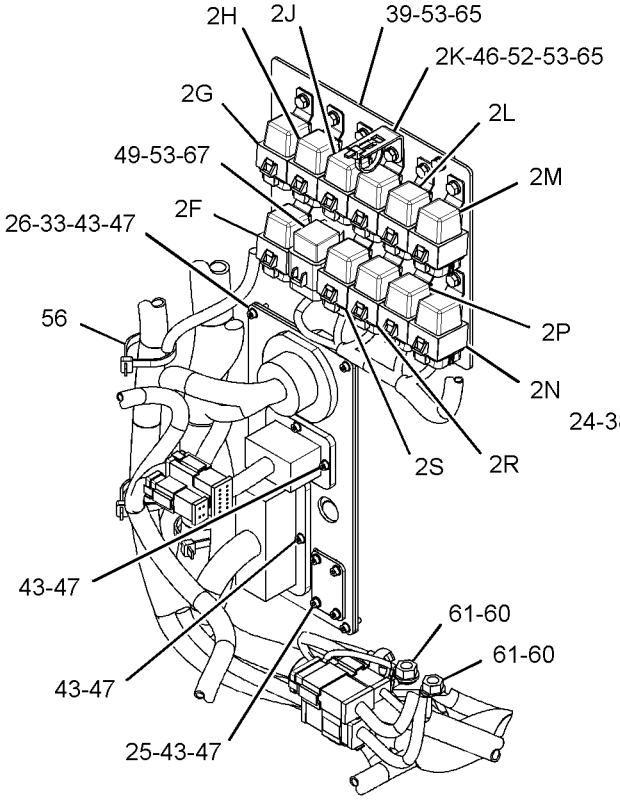

VIEW OF AREA E

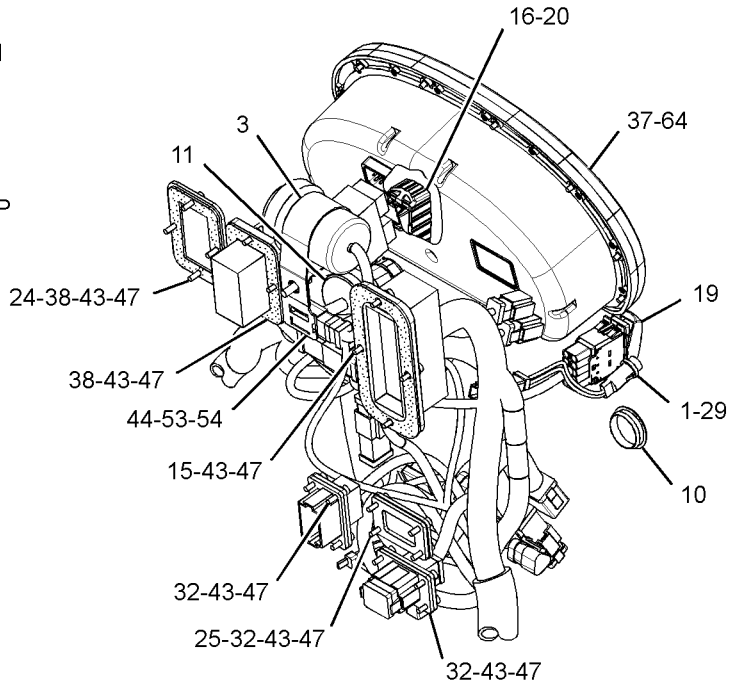

VIEW OF AREA C

GRAPHIC #2

g02208873

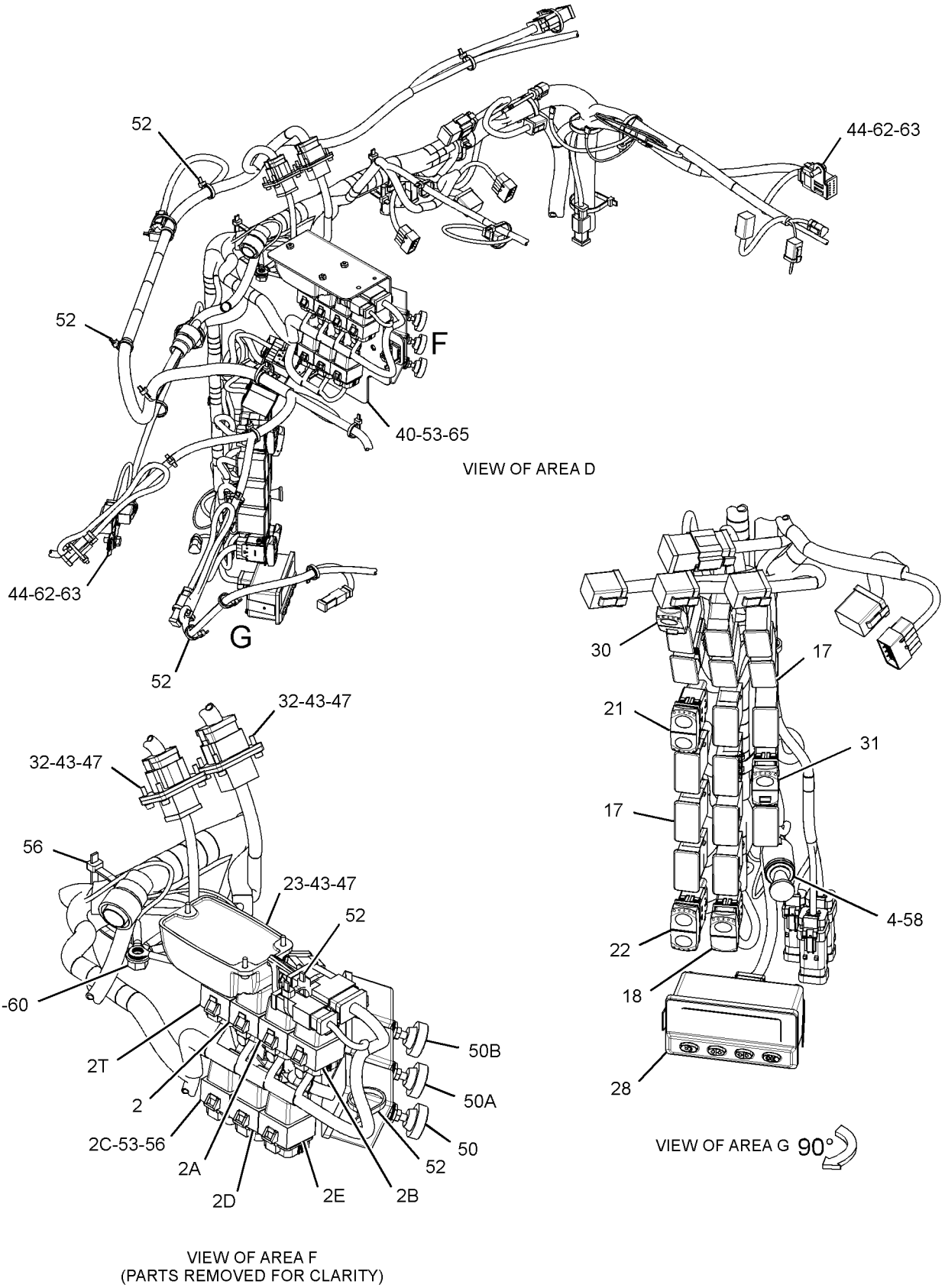

GRAPHIC #3 **<END>** g02155345

252-8000 WIRING GP-CAMERA–WORK AREA VISUAL SYSTEM

S/N: R9J1-UP
PART OF 278-1842 CAMERA AR
AN ATTACHMENT

SMCS-1408, 7348 **i04022028**

NOTE	REF NO	GRAPHIC REF	PART NUMBER	QTY	PART NAME 1 2 3 4 5 6 (PRODUCT LEVEL)	SEE PAGE
	1	1	**268-8080**	1	MOUNTING AS	
M		1	**6V-9632**	4	NUT-WELD (M6X1-THD)	
		1	**160-2169**	4	SPACER (7X11X8.4-MM THK)	
	2	1	**268-8082**	1	COVER	
J	3	1	**347-1668**	1	CAMERA GP (115-DEG, COLOR) (REAR VIEW)	
	4	1	**251-8248**	1	CABLE AS-COMMUNICATION (CAMERA)	
	5	1	**261-3223**	1	CABLE AS-COAXIAL (3-M)	
M	6	1	**5C-2890**	2	NUT (M6X1-THD)	
	7	1	**5P-8525**	2	GROMMET	
	8	1	**7K-1181**	18	STRAP-CABLE	
M	9	1	**8T-4138**	8	BOLT (M6X1X20-MM)	
M	10	1	**8T-4970**	2	BOLT (M6X1X14-MM)	
	11	1	**9X-2026**	2	WASHER (6.5X17X1-MM THK)	
	12	1	**9X-8256**	8	WASHER (6.6X12X2-MM THK)	
					AVAILABLE REPAIR KIT(S):	
J			**251-4162**	1	KIT-BRACKET (CAMERA) (CAMERA)	
					(INCLUDES BRACKET, BOLTS, LOCKNUTS, BOLT-SOCKETS, GASKET, & ALLENKEY)	

J-KIT MARKED J SERVICES PART MARKED J
M-METRIC PART

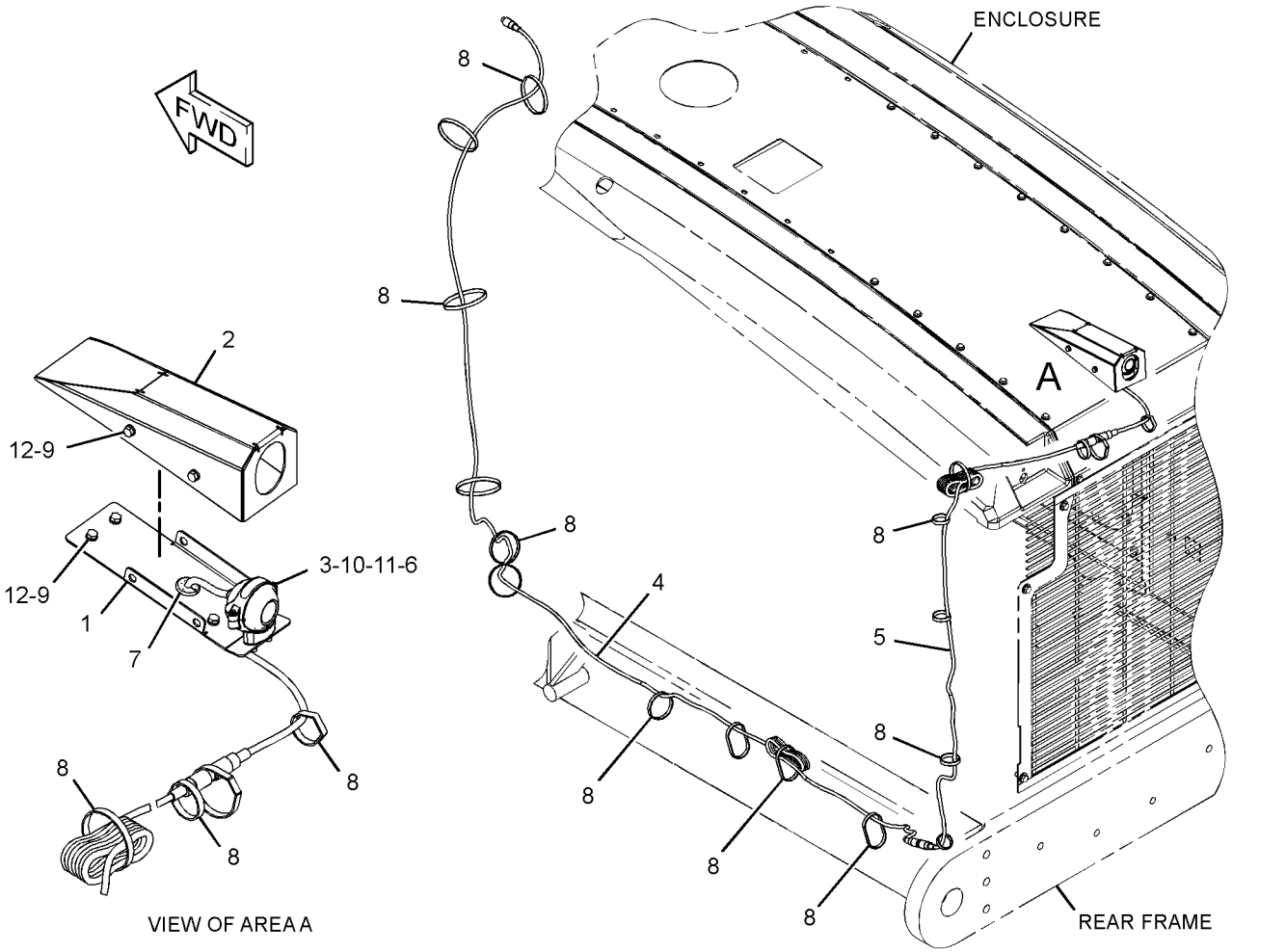

GRAPHIC #1 **<END>** g01306652

219-7462 WIRING GP-ELECTRONIC CONTROL

S/N: RSX1037-16669

PART OF 226-9770 ENGINE AR-COMPLETE

SMCS-1408, 1900 **i03873447**

NOTE	REF NO	GRAPHIC REF	PART NUMBER	QTY	PART NAME 1 2 3 4 5 6 (PRODUCT LEVEL)	SEE PAGE
	1	1	**3S-2093**	16	STRAP-CABLE	
	2	1	**4P-5918**	1	CLIP	
M	3	1	**9X-2097**	1	STUD (M8X1.25-THD)	
	4	1	**206-2423**	1	SADDLE	
	5	1	**219-7461**	1	HARNESS AS-ENGINE (ELECTRONIC CONTROL MODULE)	
		1	**102-8802**	1	KIT-RECEPTACLE (2-PIN)	
		1	**102-8803**	2	KIT-RECEPTACLE (3-PIN)	
					(EACH KIT INCLUDES RECEPTACLE AS & WEDGE)	
		1	**3S-2093**	2	STRAP-CABLE	
		1	**8T-8737**	81	PLUG-SEAL	
		1	**105-1797**	1	MOUNT	
		1	**155-2255**	1	KIT-CONNECTING PLUG (12-PIN)	
		1	**155-2265**	1	KIT-CONNECTING PLUG (8-PIN)	
		1	**155-2260**	1	KIT-CONNECTING PLUG (3-PIN)	
		1	**155-2270**	5	KIT-CONNECTING PLUG (2-PIN)	
					(EACH KIT INCLUDES PLUG AS, WEDGE & INTERFACE SEAL)	
		1	**180-9340**	62	SOCKET-CONNECTOR (14-GA TO 18-GA)	
		1	**180-9339**	6	PIN-CONNECTOR (14-GA TO 18-GA)	
		1	**211-6807**	1	COVER (CONNECTOR)	
		1	**264-5732**	1	PLUG AS-CONNECTOR (120-PIN)	
		1	**288-7324**	1	SEAL-CONNECTOR	
E		1	**125-7874**		TUBE-HEAT SHRINK (5.72-MM DIA) (5-CM)	
E		1	**125-7875**		TUBE-HEAT SHRINK (7.44-MM DIA) (15-CM)	
	6	1	**303-5952**	1	STRAP-CABLE	
	7	1	**132-5789**	2	CLIP	
	8	1	**156-6175**	2	CLIP	
M	10	1	**2Y-5829**	1	NUT (M10X1.5-THD)	
	11	1	**4P-7581**	3	CLIP	
	12	1	**5P-9085**	1	CLIP	
M	13	1	**6V-3918**	1	BOLT (M8X1.25X50-MM)	
	14	1	**6V-5839**	5	WASHER (11X21X2.5-MM THK)	
M	15	1	**6V-8212**	4	BOLT (M10X1.5X16-MM)	
M	16	1	**6V-8836**	2	BOLT (M6X1X14-MM)	
M	18	1	**8T-0642**	1	BOLT (M8X1.25X14-MM)	
	19	1	**9M-1974**	1	WASHER-HARD (8.8X16X2-MM THK)	
	20	1	**9X-8267**	2	WASHER (6.6X12X2-MM THK)	

E-ORDER BY THE CENTIMETER
M-METRIC PART

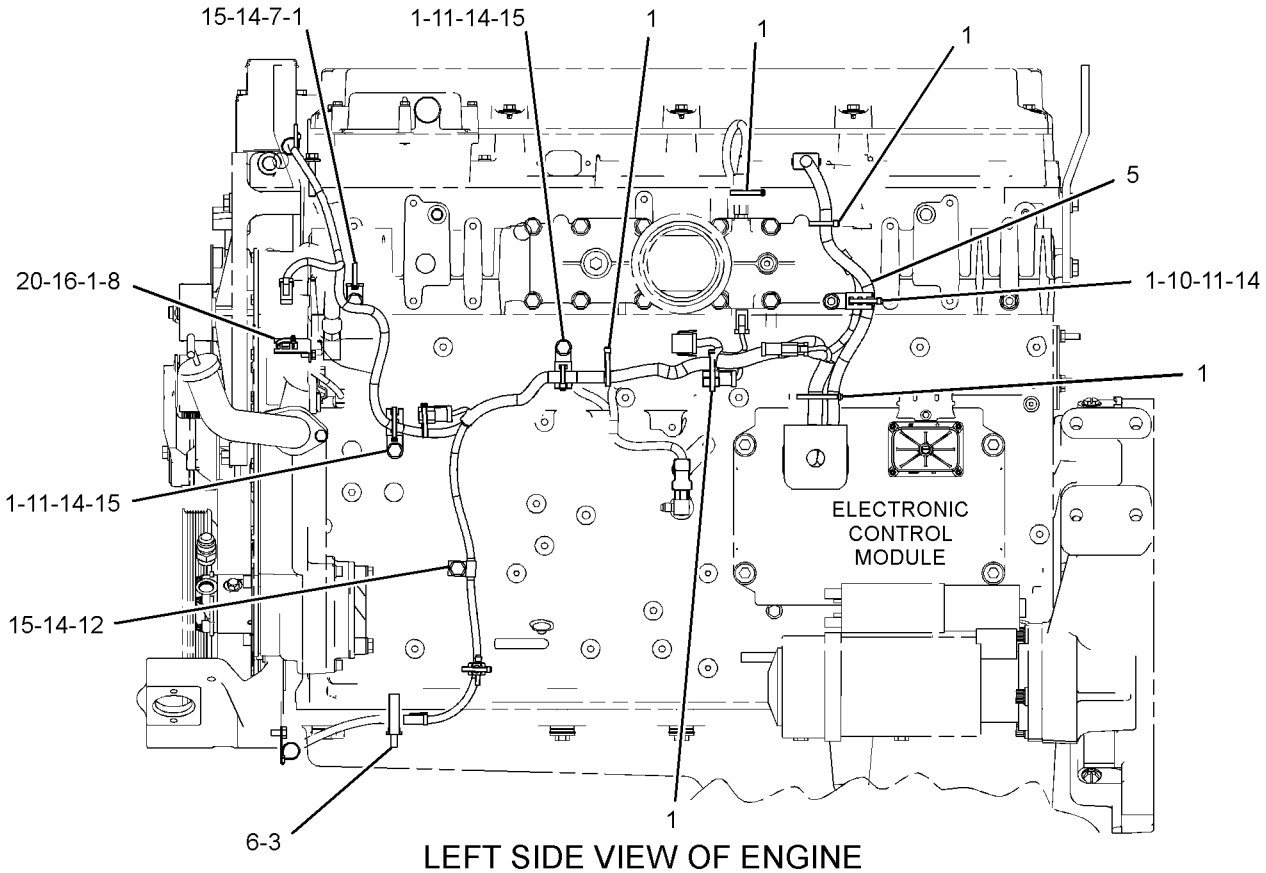

LEFT SIDE VIEW OF ENGINE

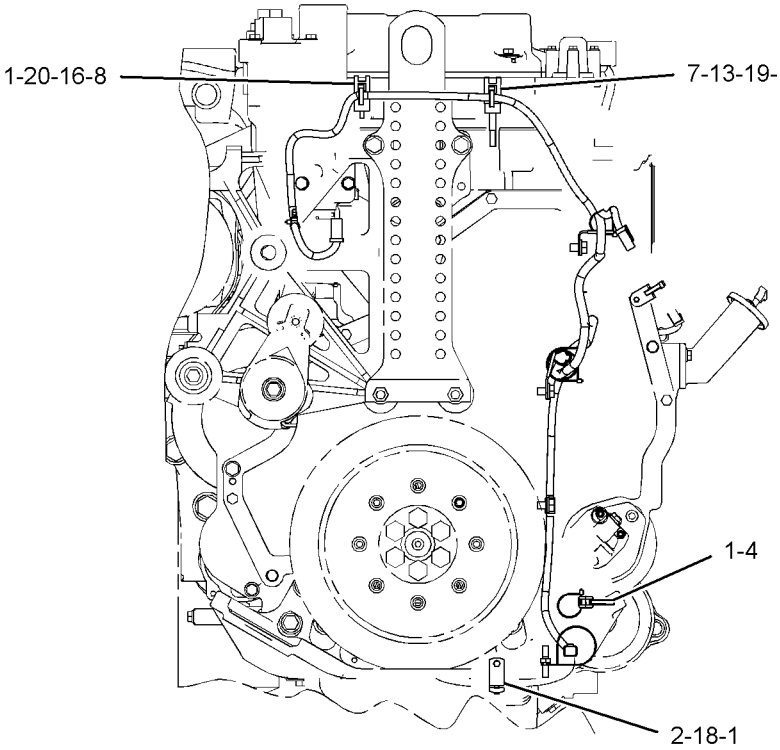

FRONT VIEW OF ENGINE

GRAPHIC #1 **<END>** g02118073

238-8828 WIRING GP-ELECTRONIC CONTROL–

HYDRAULIC IMPLEMENT

S/N: R9J1-UP

PART OF 351-2406, 351-2407, 351-2408, 351-2409, 351-2410, 351-2411, 351-2412

CONTROL AR-HYDRAULIC

AN ATTACHMENT

SMCS-1408, 1900 **i02957214**

NOTE	REF NO	GRAPHIC REF	PART NUMBER	QTY	PART NAME 1 2 3 4 5 6 (PRODUCT LEVEL)	SEE PAGE
	1	1	**3S-2093**	3	STRAP-CABLE	
	2	1	**6I-1418**	4	SPACER (8.2X12.7X28.7-MM THK)	
	3	1	**8T-9655**	8	MOUNT-ISOLATION	
	4	1	**235-6183**	1	HARNESS AS-CONTROL (HYDRAULIC ELECTRONIC)	
		1	**3S-2093**	5	STRAP-CABLE	
		1	**126-1774**	2	COVER-CONNECTOR	
		1	**147-1445**	1	PLUG AS-CONNECTOR (70-PIN)	
		1	**147-1446**	1	PLUG AS-CONNECTOR (70-PIN)	
		1	**155-2272**	1	PLUG AS-CONNECTOR (4-PIN)	
		1	**190-7613**	1	RECEPTACLE AS-CONNECTOR (12-PIN)	
		1	**102-8804**	1	KIT-RECEPTACLE (4-PIN)	
		1	**166-5229**	1	KIT-RECEPTACLE (12-PIN)	
					(EACH INCLUDES RECEPTACLE AS & WEDGE)	
R	5	1	**262-1408**	1	CONTROL GP-UNPROGRAMMED (HYDRAULIC ELECTRONIC)	
	6	1	**286-0323**	1	GASKET	
	7	1	**5P-4116**	4	WASHER-HARD (8.8X20.5X2-MM THK)	
M	8	1	**8T-0285**	4	SCREW-MACHINE (M4X0.7X12-MM)	
	9	1	**8T-0328**	4	WASHER-HARD (5.5X10X1-MM THK)	
M	10	1	**8T-6912**	4	BOLT (M8X1.25X50-MM)	

M-METRIC PART
R-REMFG PART MAY BE AVAILABLE

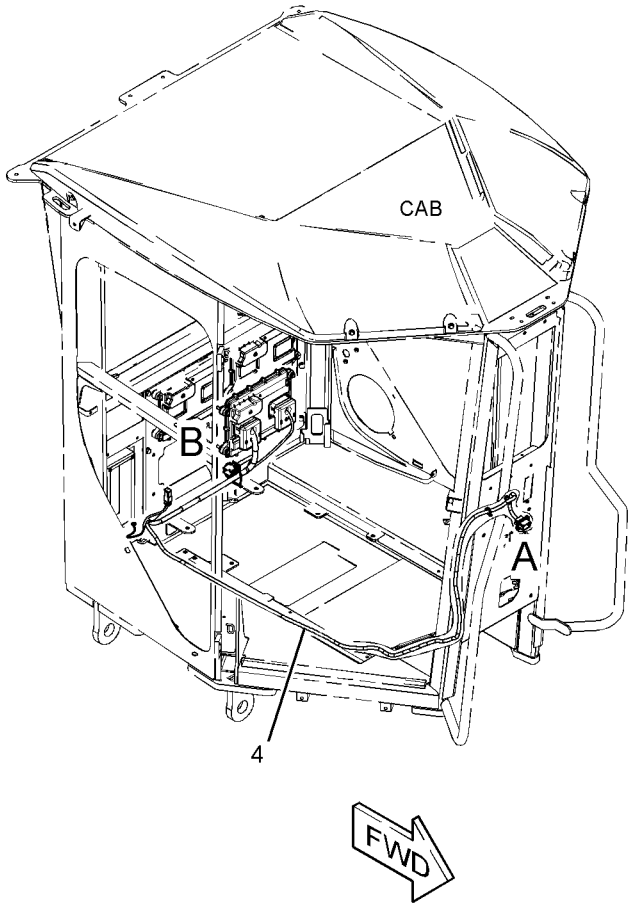

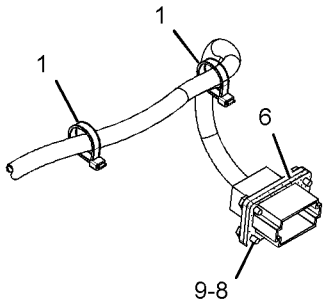

VIEW OF AREA A

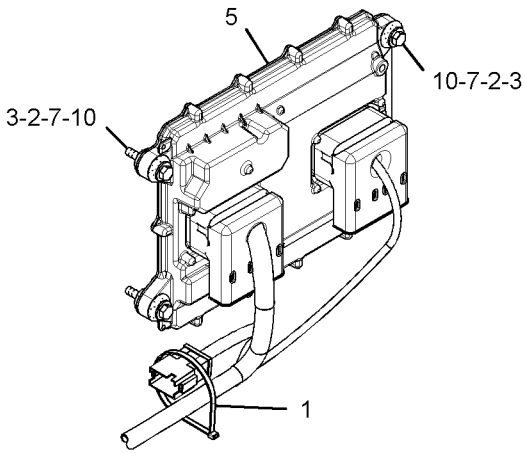

VIEW OF AREA B

GRAPHIC #1 **<END>** g01525207

354-0045 WIRING GP-ELECTRONIC CONTROL

S/N: RSX16670-UP

PART OF 226-9770 ENGINE AR-COMPLETE

SMCS-1408, 1900 **i03957677**

NOTE	REF NO	GRAPHIC REF	PART NUMBER	QTY	PART NAME 1 2 3 4 5 6 (PRODUCT LEVEL)	SEE PAGE
	1	1	**3S-2093**	15	STRAP-CABLE	
	2	1	**4P-5918**	1	CLIP	
	3	1	**354-0048**	1	HARNESS AS-ENGINE	
		1	**102-8802**	1	KIT-RECEPTACLE (2-PIN)	
					(INCLUDES RECEPTACLE AS & WEDGE)	
		1	**3S-2093**	2	STRAP-CABLE	
		1	**211-6807**	1	COVER (CONNECTOR)	
		1	**8T-8737**	93	PLUG-SEAL	
		1	**105-1797**	1	MOUNT	
E		1	**125-7875**		TUBE-HEAT SHRINK (7.44-MM DIA) (15-CM)	
		1	**126-1766**	68	SOCKET-CONNECTOR (14-GA TO 18-GA)	
		1	**155-2255**	1	KIT-CONNECTING PLUG (12-PIN)	
		1	**155-2270**	1	KIT-CONNECTING PLUG (2-PIN)	
		1	**155-2270**	1	KIT-CONNECTING PLUG (2-PIN)	
		1	**155-2265**	1	KIT-CONNECTING PLUG (8-PIN)	
		1	**155-2270**	1	KIT-CONNECTING PLUG (2-PIN)	
					(EACH PLUG KIT NCLUDES PLUG AS, WEDGE, & INTERFACE SEAL)	
		1	**211-6807**	1	COVER (CONNECTOR)	
		1	**230-4011**	4	PLUG AS-CONNECTOR (2-PIN)	
		1	**264-7029**	1	SEAL-CONNECTOR	
		1	**230-4013**	1	PLUG AS-CONNECTOR (3-PIN)	
		1	**264-7030**	1	SEAL-CONNECTOR	
		1	**237-0227**	2	PLUG AS-CONNECTOR (3-PIN)	
					(EACH INCLUDES)	
		1	**264-7030**	1	SEAL-CONNECTOR	
		1	**264-5732**	1	PLUG AS-CONNECTOR (12O-PIN)	
		1	**288-7324**	1	SEAL-CONNECTOR	
	4	1	**132-5789**	2	CLIP	
	5	1	**156-6175**	2	CLIP	
M	6	1	**2Y-5829**	2	NUT (M10X1.5-THD)	
	7	1	**4P-7581**	6	CLIP	
M	8	1	**6V-3918**	1	BOLT (M8X1.25X50-MM)	
	9	1	**6V-5839**	6	WASHER (11X21X2.5-MM THK)	
M	10	1	**6V-8212**	4	BOLT (M10X1.5X16-MM)	
M	11	1	**6V-8836**	2	BOLT (M6X1X14-MM)	
M	12	1	**8T-0642**	1	BOLT (M8X1.25X14-MM)	
	13	1	**9M-1974**	2	WASHER-HARD (8.8X16X2-MM THK)	
M	14	1	**9X-2097**	1	STUD (M8X1.25-THD)	
	15	1	**9X-8267**	2	WASHER (6.6X12X2-MM THK)	

E-ORDER BY THE CENTIMETER
M-METRIC PART

354-0045 **WIRING GP-ELECTRONIC CONTROL** *(contd.)* **i03957677**

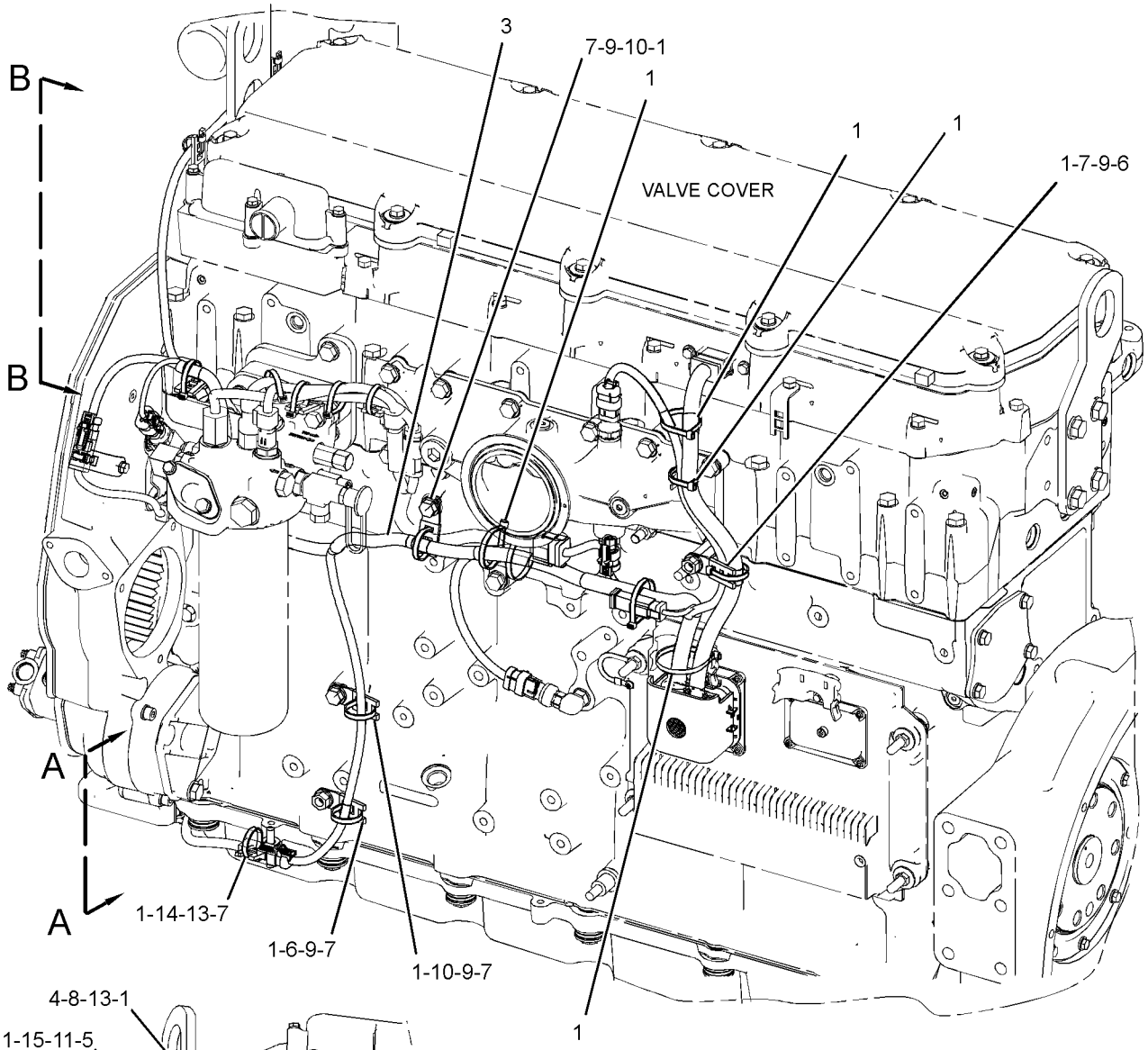

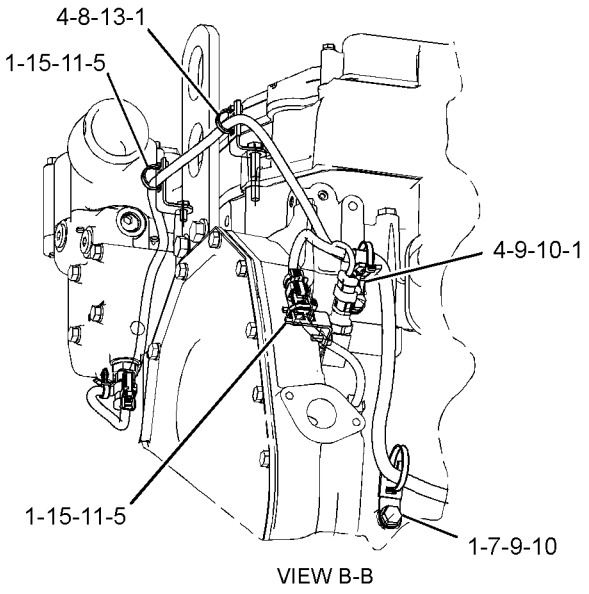

VIEW B-B

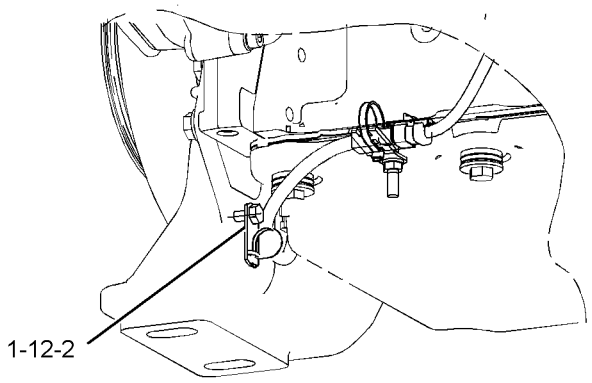

VIEW A-A

GRAPHIC #1 **<END>** g02173542

ELECTRICAL AND STARTING SYSTEM

285-3175 WIRING GP-FRONT

S/N: R9J1-UP
PART OF 356-3071 OPTION AR-MACHINE
AN ATTACHMENT

SMCS-1408 **i03734801**

NOTE	REF NO	GRAPHIC REF	PART NUMBER	QTY	PART NAME 1 2 3 4 5 6 (PRODUCT LEVEL)	SEE PAGE
	1	2	**3E-3636**	1	SWITCH AS-BALL (CENTERSHIFT INDICATOR)	
		2	**8T-8729**	4	PIN-CONNECTOR (16-GA TO 18-GA)	
		2	**102-8804**	1	KIT-RECEPTACLE (4-PIN)	
					(INCLUDES RECEPTACLE AS & WEDGE)	
C	2	1,2	**3S-2093**	18	STRAP-CABLE	
	3	1,2	**7K-1181**	33	STRAP-CABLE	
	4	2	**134-3344**	1	STRAP AS	
CY	5	1	**191-6587**	1	SENSOR GP-TEMPERATURE (STEERING OIL)	293
	6	2	**240-7193**	1	RESISTOR AS (500-OHM, 2-WATT)	
		2	**102-8802**	1	KIT-RECEPTACLE (2-PIN)	
					(INCLUDES RECEPTACLE AS & WEDGE)	
		2	**9X-3401**	2	PIN-CONNECTOR (16-GA TO 18-GA)	
	7	2	**283-5830**	1	BRACKET AS	
		2	**7T-1099**	1	LINK	
M		2	**8T-3490**	1	NUT-WELD (M10X1.5-THD)	
	8	2	**283-6385**	1	BRACKET AS	
	9	1	**287-6642**	1	HARNESS AS-LIGHTING	
		1	**102-8802**	2	KIT-RECEPTACLE (2-PIN)	
		1	**102-8804**	1	KIT-RECEPTACLE (4-PIN)	
					(EACH KIT INCLUDES RECEPTACLE AS & WEDGE)	
		1	**8T-8729**	2	PIN-CONNECTOR (16-GA TO 18-GA)	
		1	**8T-8730**	2	SOCKET-CONNECTOR (16-GA TO 18-GA)	
		1	**8T-8737**	4	PLUG-SEAL	
		1	**9W-0844**	4	SOCKET-CONNECTOR (14-GA)	
		1	**9W-0852**	2	PIN-CONNECTOR (14-GA TO 16-GA)	
E		1	**125-7875**		TUBE-HEAT SHRINK (7.44-MM DIA) (10-CM)	
		1	**155-2270**	3	KIT-CONNECTING PLUG (2-PIN)	
					(EACH KIT INCLUDES PLUG AS, WEDGE & INTERFACE SEAL)	
	10	2	**288-5529**	1	BRACKET AS	
M		2	**8T-3490**	1	NUT-WELD (M10X1.5-THD)	
	11	2	**288-5531**	1	CHANNEL AS	
M		2	**8T-3490**	4	NUT-WELD (M10X1.5-THD)	
	12	1	**288-5532**	1	CHANNEL	
	13	1	**288-5533**	1	CHANNEL	
Y	14	1	*295-5509*	1	WIRING GP-FRONT (STEERING POSITION SENSOR)	350
	15	1	**297-8049**	2	GROMMET	
C	16	1	**347-1354**	1	HARNESS AS-CHASSIS	
		1	**102-8802**	10	KIT-RECEPTACLE (2-PIN)	
		1	**102-8803**	1	KIT-RECEPTACLE (3-PIN)	
		1	**102-8804**	1	KIT-RECEPTACLE (4-PIN)	
					(EACH KIT INCLUDES RECEPTACLE AS & WEDGE)	
		1	**8T-8729**	4	PIN-CONNECTOR (16-GA TO 18-GA)	
		1	**8T-8730**	103	SOCKET-CONNECTOR (16-GA TO 18-GA)	
		1	**8T-8737**	54	PLUG-SEAL	
		1	**9W-0844**	3	SOCKET-CONNECTOR (14-GA)	
		1	**9X-3401**	4	PIN-CONNECTOR (16-GA TO 18-GA)	
		1	**9X-3402**	13	SOCKET-CONNECTOR (16-GA TO 18-GA)	
		1	**9X-4391**	1	PLUG AS-CONNECTOR (70-PIN)	
		1	**3E-4367**	1	RING-RETAINING	
M		1	**3E-8557**	1	BOLT (M5X0.8X39.37-MM)	
		1	**9X-5615**	2	SEAL (INTERFACE, 70-PIN)	
E		1	**125-7874**		TUBE-HEAT SHRINK (5.72-MM DIA) (25-CM)	
E		1	**125-7875**		TUBE-HEAT SHRINK (7.44-MM DIA) (35-CM)	

285-3175 **WIRING GP-FRONT** ***(contd.)*** **i03734801**

NOTE	REF NO	GRAPHIC REF	PART NUMBER	QTY	PART NAME 1 2 3 4 5 6 (PRODUCT LEVEL)	SEE PAGE
		1	**2L-8079**	1	TERMINAL-RING (14-GA TO 16-GA, 3/8-IN SCREW)	
		1	**155-2255**	1	KIT-CONNECTING PLUG (12-PIN)	
		1	**155-2270**	29	KIT-CONNECTING PLUG (2-PIN)	
		1	**155-2271**	2	KIT-CONNECTING PLUG (4-PIN)	
		1	**155-2274**	1	KIT-CONNECTING PLUG (6-PIN)	
					(EACH KIT INCLUDES PLUG AS, WEDGE & INTERFACE SEAL)	
	17	1	**091-0081**	2	SPACER (10.5X20X10-MM THK)	
C	18	1,2	**130-5300**	7	CLIP	
	19	1,2	**132-5789**	4	CLIP	
	20	2	**2K-5232**	1	SPACER (0.406X0.75X1.81-IN THK)	
C	21	1,2	**3J-1907**	2	SEAL-O-RING	
	22	2	**4D-7794**	3	CLIP	
	23	1	**4D-9517**	1	CLIP	
	24	1,2	**4P-7581**	11	CLIP	
	25	2	**4S-1962**	2	CLIP	
	26	1,2	**7X-7729**	11	WASHER (11X25X3-MM THK)	
B	27	2	**8F-1974**	10	SHIM (0.13-MM THK)	
	28	1	**8M-2770**	1	CLIP	
	29	2	**8S-0948**	1	CLIP	
C	30	1,2	**8T-4121**	34	WASHER-HARD (11X21X2.5-MM THK)	
M	31	2	**8T-4133**	1	NUT (M10X1.5-THD)	
M	32	1,2	**8T-4136**	5	BOLT (M10X1.5X25-MM)	
M	33	1,2	**8T-4137**	32	BOLT (M10X1.5X20-MM)	
CM	34	1,2	**8T-4191**	2	BOLT (M10X1.5X16-MM)	
M	35	1,2	**8T-4195**	4	BOLT (M10X1.5X30-MM)	
M	36	2	**8T-5005**	1	BOLT (M10X1.5X70-MM)	
	37	1	**9M-8406**	2	CLIP	

B-USE AS REQUIRED
C-CHANGE FROM PREVIOUS TYPE
E-ORDER BY THE CENTIMETER
M-METRIC PART
Y-SEPARATE ILLUSTRATION

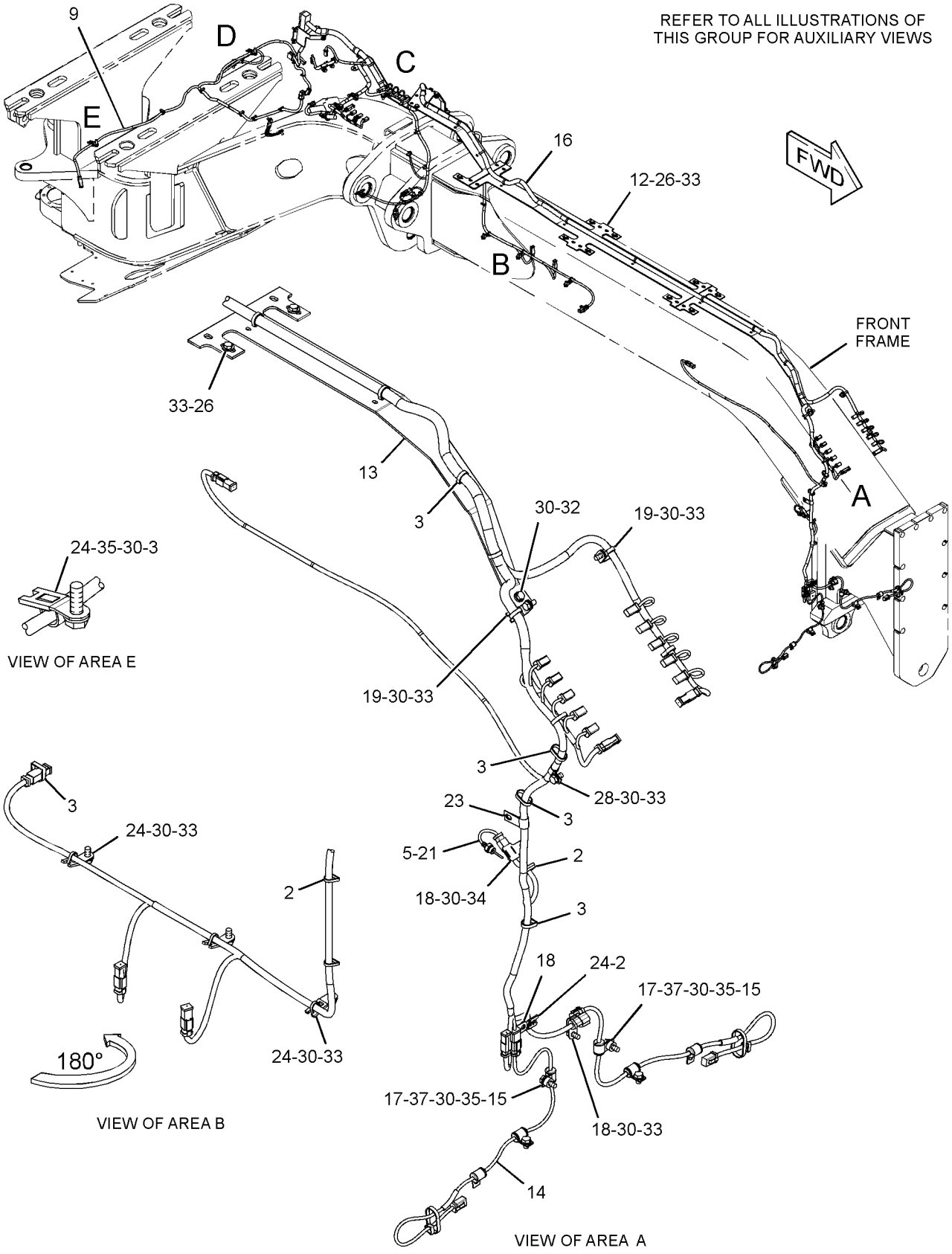

GRAPHIC #1 g02023531

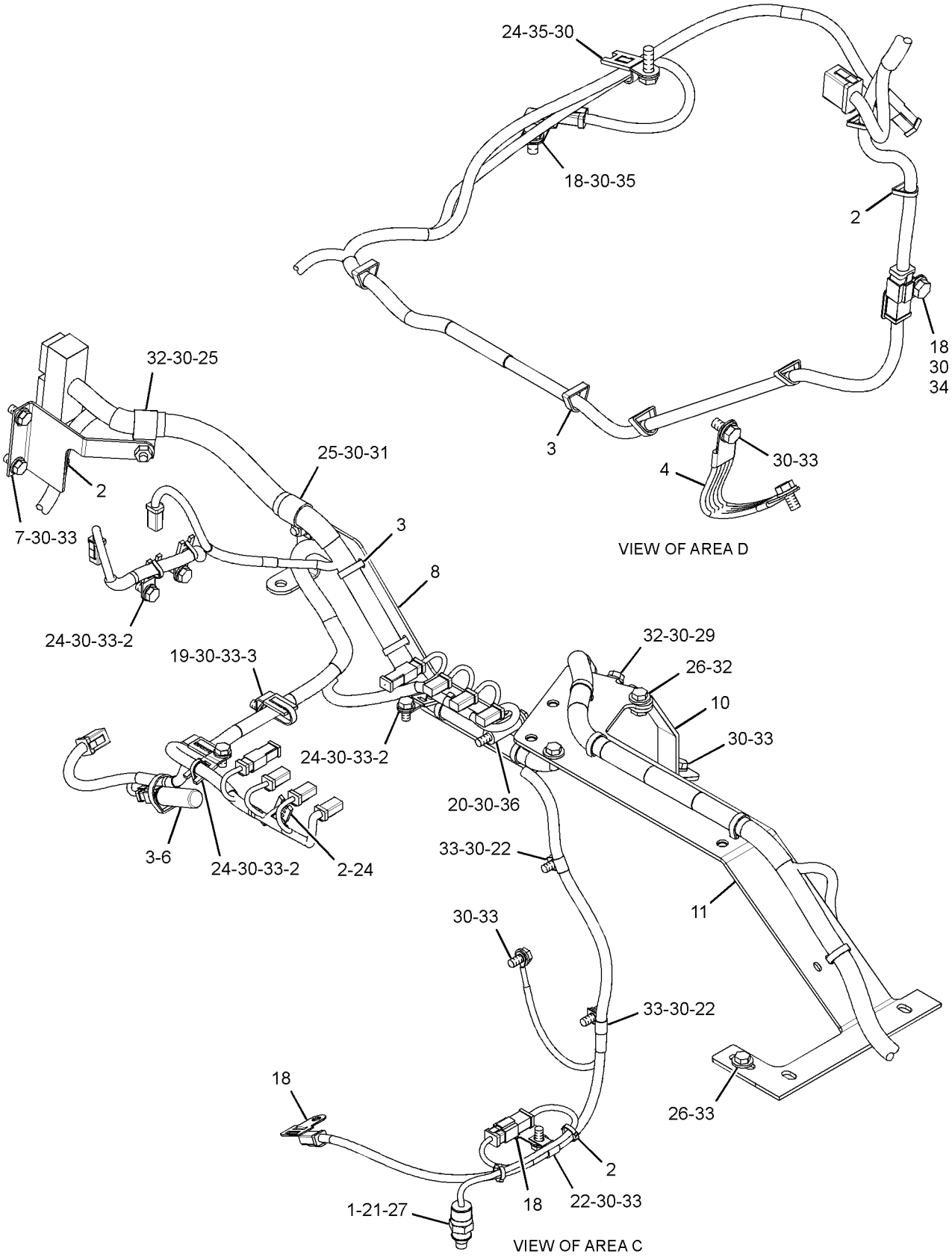

GRAPHIC #2 **<END>** g02023532

285-3178 WIRING GP-FRONT–LIGHTING

S/N: R9J1-UP
PART OF 356-3071 OPTION AR-MACHINE
AN ATTACHMENT

SMCS-1408 **i02791371**

NOTE	REF NO	GRAPHIC REF	PART NUMBER	QTY	PART NAME 1 2 3 4 5 6 (PRODUCT LEVEL)	SEE PAGE
C	1	1	**295-2039**	1	HARNESS AS-CHASSIS	
C	2	1	**4P-7581**	1	CLIP	
C	3	1	**7K-1181**	33	STRAP-CABLE	
C	4	1	**8M-2773**	2	CLIP	
C	5	1	**8T-4121**	1	WASHER-HARD (11X21X2.5-MM THK)	
CM	6	1	**8T-4137**	1	BOLT (M10X1.5X20-MM)	
C	7	1	**9M-8406**	1	CLIP	

C-CHANGE FROM PREVIOUS TYPE
M-METRIC PART

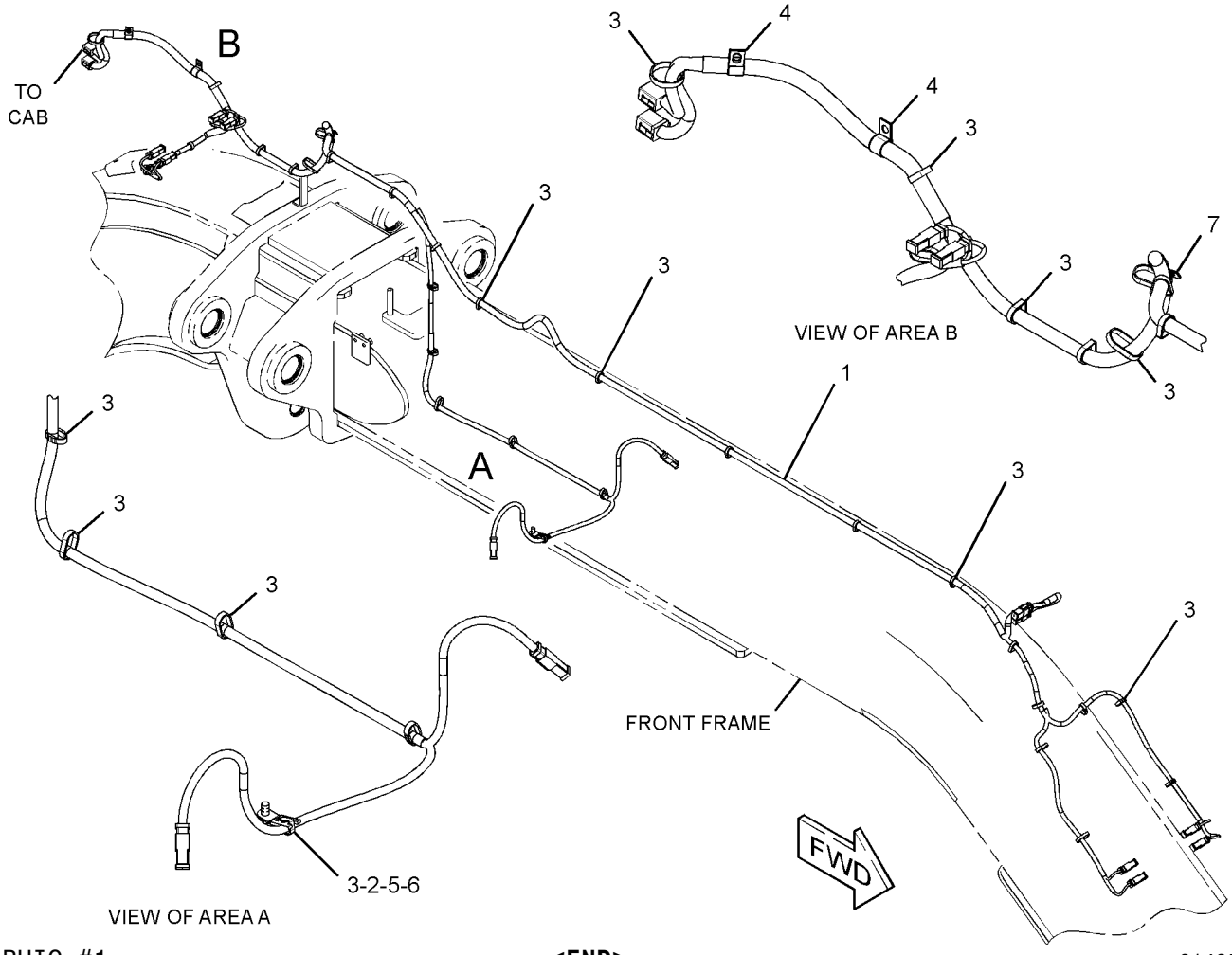

GRAPHIC #1 **<END>** g01405453

ELECTRICAL AND STARTING SYSTEM

295-5509 WIRING GP-FRONT

S/N: R9J1-UP

PART OF 285-3175, 354-4778 WIRING GP-FRONT

AN ATTACHMENT

SMCS-1408 **i02770198**

NOTE	REF NO	GRAPHIC REF	PART NUMBER	QTY	PART NAME 1 2 3 4 5 6 (PRODUCT LEVEL)	SEE PAGE
	1	1	**295-2037**	1	HARNESS AS-WIRING	
	2	1	**295-2038**	1	HARNESS AS-WIRING	
	3	1	**297-8049**	4	GROMMET	
	4	1	**7K-1181**	4	STRAP-CABLE	
	5	1	**8T-4121**	2	WASHER-HARD (11X21X2.5-MM THK)	
M	6	1	**8T-4191**	2	BOLT (M10X1.5X16-MM)	
	7	1	**9M-8406**	4	CLIP	

M-METRIC PART

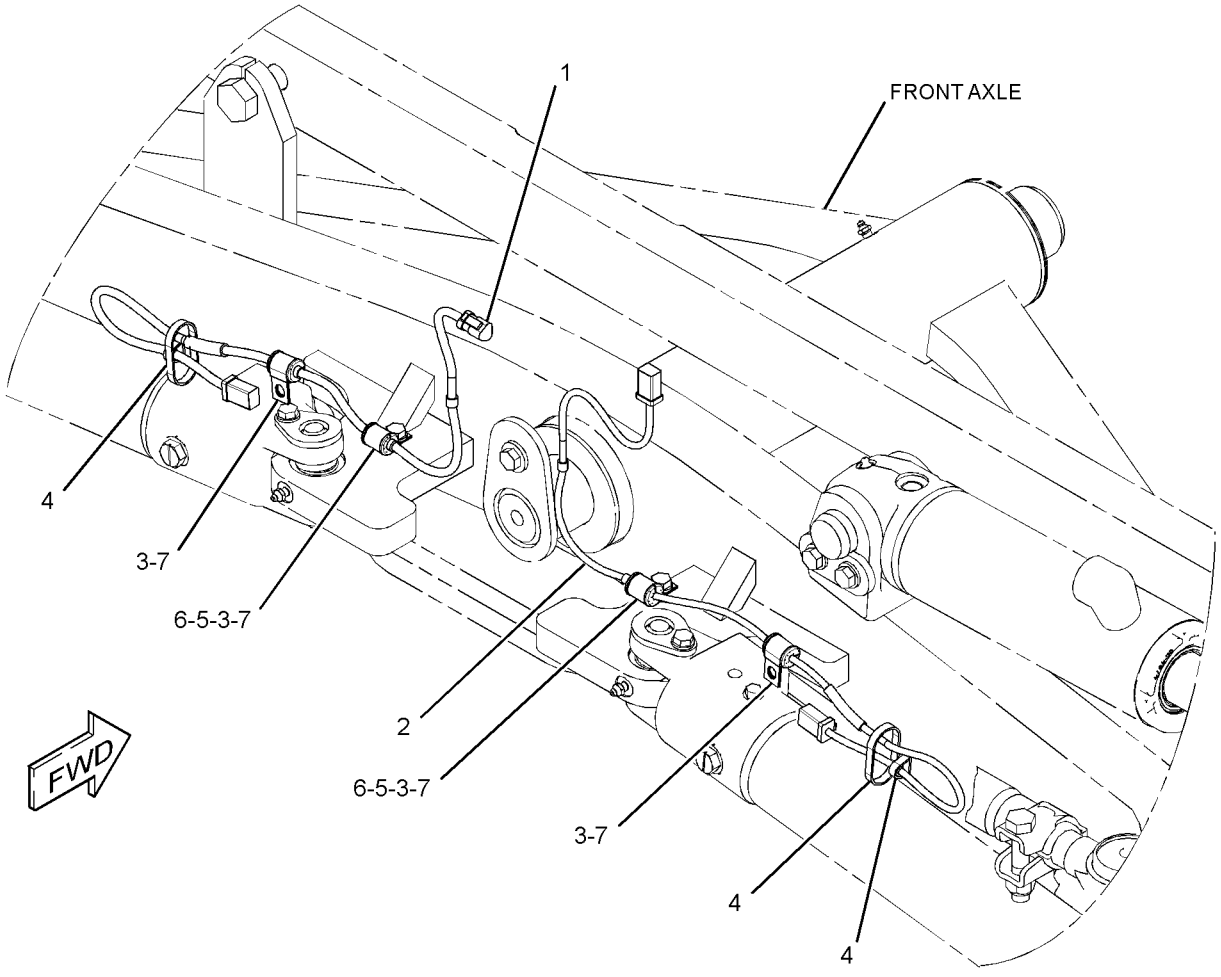

GRAPHIC #1 **<END>** g01402754

ELECTRICAL AND STARTING SYSTEM

354-4778 WIRING GP-FRONT

S/N: R9J1-UP
PART OF 356-3072 OPTION AR-MACHINE
AN ATTACHMENT

SMCS-1408 **i03972515**

NOTE	REF NO	GRAPHIC REF	PART NUMBER	QTY	PART NAME 1 2 3 4 5 6 (PRODUCT LEVEL)	SEE PAGE
	1	3	**3E-3636**	1	SWITCH AS-BALL	
		3	**8T-8729**	4	PIN-CONNECTOR (16-GA TO 18-GA)	
		3	**102-8804**	1	KIT-RECEPTACLE (4-PIN)	
					(INCLUDES RECEPTACLE AS & WEDGE)	
	2	1,2,3	**3S-2093**	19	STRAP-CABLE	
	3	1,2,3	**7K-1181**	38	STRAP-CABLE	
	4	2	**132-1805**	1	STRAP AS-GROUND	
Y	5	1	**191-6587**	1	SENSOR GP-TEMPERATURE	293
	6	3	**240-7193**	1	RESISTOR AS (500-OHM, 2-WATT)	
		3	**102-8802**	1	KIT-RECEPTACLE (2-PIN)	
					(INCLUDES RECEPTACLE AS & WEDGE)	
		3	**9X-3401**	2	PIN-CONNECTOR (16-GA TO 18-GA)	
	7	3	**283-5830**	1	BRACKET AS	
		3	**7T-1099**	1	LINK	
M		3	**8T-3490**	1	NUT-WELD (M10X1.5-THD)	
	8	3	**283-6385**	1	BRACKET AS	
M		3	**8T-5413**	1	STUD-WELD (M10X1.5X25-MM OAL)	
	9	2	**287-6642**	1	HARNESS AS-LIGHTING	
		2	**102-8802**	2	KIT-RECEPTACLE (2-PIN)	
		2	**102-8804**	1	KIT-RECEPTACLE (4-PIN)	
					(EACH RECEPTACLE KIT INCLUDES RECEPTACLE AS & WEDGE)	
		2	**8T-8729**	2	PIN-CONNECTOR (16-GA TO 18-GA)	
		2	**8T-8730**	2	SOCKET-CONNECTOR (16-GA TO 18-GA)	
		2	**8T-8737**	4	PLUG-SEAL	
		2	**9W-0844**	4	SOCKET-CONNECTOR (14-GA)	
		2	**9W-0852**	2	PIN-CONNECTOR (14-GA TO 16-GA)	
E		2	**125-7875**		TUBE-HEAT SHRINK (7.44-MM DIA) (10-CM)	
		2	**155-2270**	6	KIT-CONNECTING PLUG (2-PIN)	
					(EACH INCLUDES PLUG AS, WEDGE & INTERFACE SEAL)	
	10	2	**288-5532**	1	CHANNEL	
	11	2	**288-5533**	1	CHANNEL	
Y	12	1	*295-5509*	1	WIRING GP-FRONT (STEERING POSITION SENSOR)	350
	13	1	**297-8049**	2	GROMMET	
	14	1	**354-4776**	1	HARNESS AS-CHASSIS	
		1	**102-8802**	1	KIT-RECEPTACLE (2-PIN)	
		1	**102-8803**	1	KIT-RECEPTACLE (3-PIN)	
		1	**102-8804**	1	KIT-RECEPTACLE (4-PIN)	
					(EACH RECEPTACLE KIT INCLUDES RECEPTACLE AS & WEDGE)	
		1	**8T-8730**	96	SOCKET-CONNECTOR (16-GA TO 18-GA)	
		1	**8T-8737**	36	PLUG-SEAL	
		1	**9W-0844**	3	SOCKET-CONNECTOR (14-GA)	
		1	**9X-3401**	8	PIN-CONNECTOR (16-GA TO 18-GA)	
		1	**9X-3402**	20	SOCKET-CONNECTOR (16-GA TO 18-GA)	
		1	**9X-4391**	1	PLUG AS-CONNECTOR (70-PIN)	
		1	**3E-4367**	1	RING-RETAINING	
M		1	**3E-8557**	1	BOLT (M5X0.8X39.37-MM)	
		1	**9X-5615**	2	SEAL (INTERFACE, 70-PIN)	
B		1	**125-7874**	25	TUBE-HEAT SHRINK (5.72-MM DIA) (25-CM)	
B		1	**125-7875**	35	TUBE-HEAT SHRINK (7.44-MM DIA) (35-CM)	
		1	**2L-8079**	1	TERMINAL-RING (14-GA TO 16-GA, 3/8-IN SCREW)	
		1	**155-2255**	1	KIT-CONNECTING PLUG (12-PIN)	
		1	**155-2270**	29	KIT-CONNECTING PLUG (2-PIN)	

354-4778 **WIRING GP-FRONT** *(contd.)* **i03972515**

NOTE	REF NO	GRAPHIC REF	PART NUMBER	QTY	PART NAME 1 2 3 4 5 6 (PRODUCT LEVEL)	SEE PAGE
		1	**155-2271**	2	KIT-CONNECTING PLUG (4-PIN)	
		1	**155-2274**	1	KIT-CONNECTING PLUG (6-PIN)	
					(EACH PLUG KIT INCLUDES PLUG AS, WEDGE & INTERFACE SEAL)	
		1	**274-3774**	9	CAP-CONNECTOR	
	15	2	**354-4811**	1	CHANNEL AS	
M		2	**8T-3490**	4	NUT-WELD (M10X1.5-THD)	
	16	3	**354-8415**	1	BRACKET AS	
M		3	**8T-3490**	3	NUT-WELD (M10X1.5-THD)	
	17	1	**091-0081**	2	SPACER (10.5X20X10-MM THK)	
	18	1,2,3	**130-5300**	7	CLIP	
	19	3	**132-5789**	4	CLIP	
	20	3	**2K-5232**	1	SPACER (0.406X0.75X1.81-IN THK)	
	21	1,3	**3J-1907**	2	SEAL-O-RING	
	22	1	**4D-9517**	1	CLIP	
	23	1,2,3	**4P-7581**	11	CLIP	
	24	3	**4P-8134**	3	CLIP	
	25	3	**4S-1962**	2	CLIP	
	26	2,3	**7X-7729**	11	WASHER (11X25X3-MM THK)	
B	27	3	**8F-1974**	10	SHIM (0.13-MM THK)	
	28	1	**8M-2770**	1	CLIP	
	30	1,2,3	**8T-4121**	32	WASHER-HARD (11X21X2.5-MM THK)	
M	31	3	**8T-4133**	1	NUT (M10X1.5-THD)	
M	32	2,3	**8T-4136**	3	BOLT (M10X1.5X25-MM)	
M	33	1,2,3	**8T-4137**	33	BOLT (M10X1.5X20-MM)	
M	34	2	**8T-4191**	1	BOLT (M10X1.5X16-MM)	
M	35	1,2	**8T-4195**	4	BOLT (M10X1.5X30-MM)	
M	36	3	**8T-5005**	1	BOLT (M10X1.5X70-MM)	
	37	1	**9M-8406**	2	CLIP	

B-USE AS REQUIRED
E-ORDER BY THE CENTIMETER
M-METRIC PART
Y-SEPARATE ILLUSTRATION

REFER TO ALL ILLUSTRATIONS OF
THIS GROUP FOR AUXILIARY VIEWS

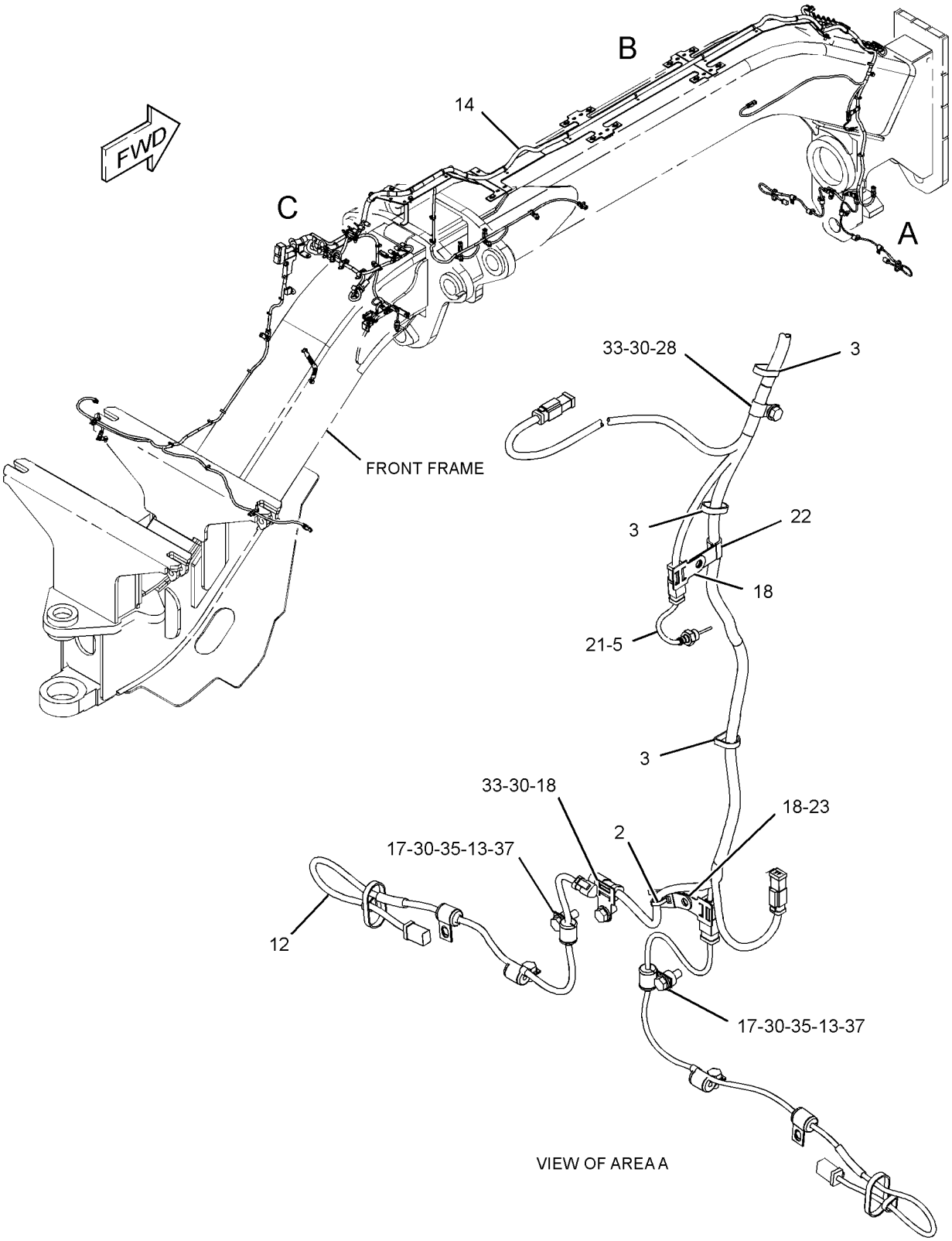

GRAPHIC #1

g02228493

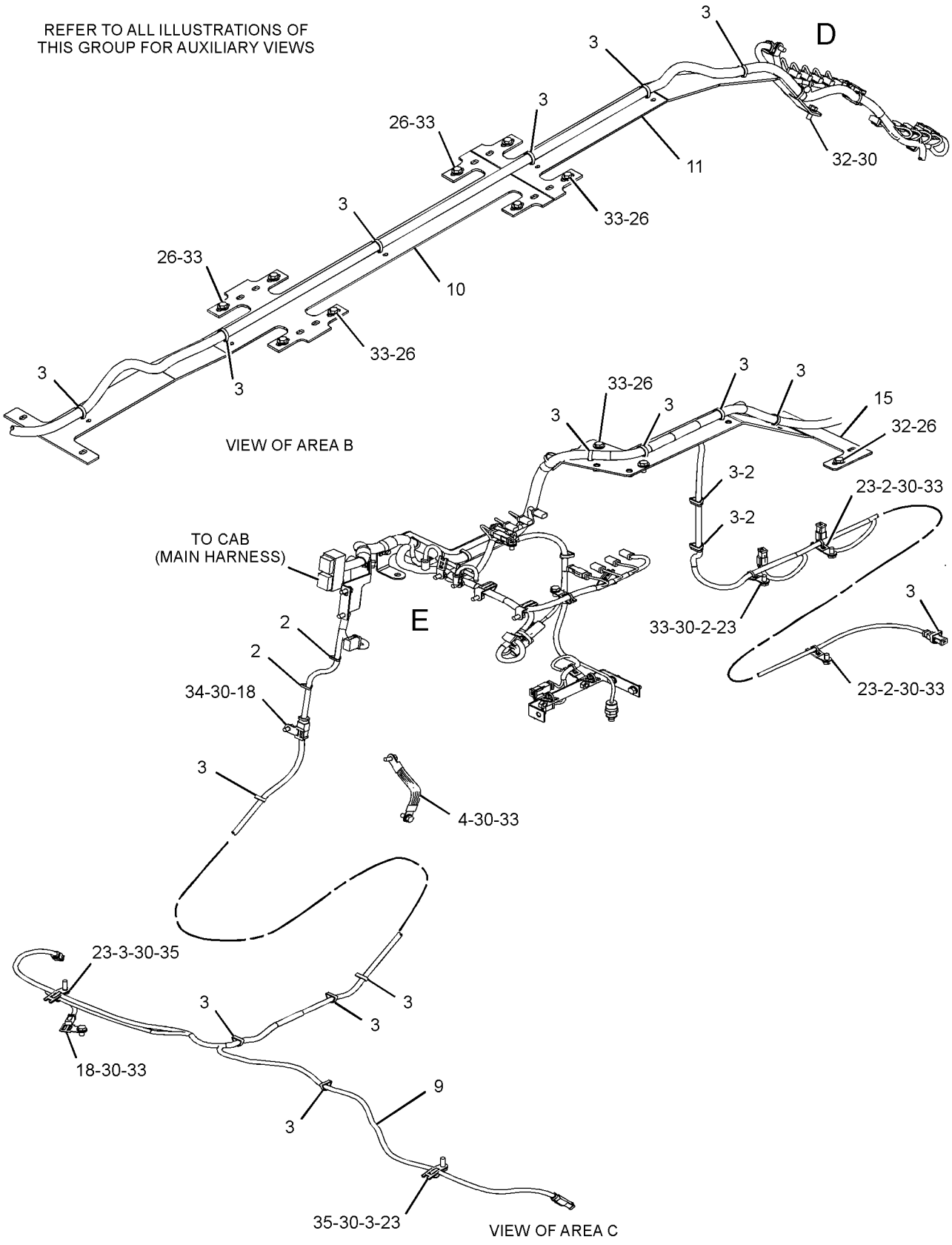

GRAPHIC #2

g02228494

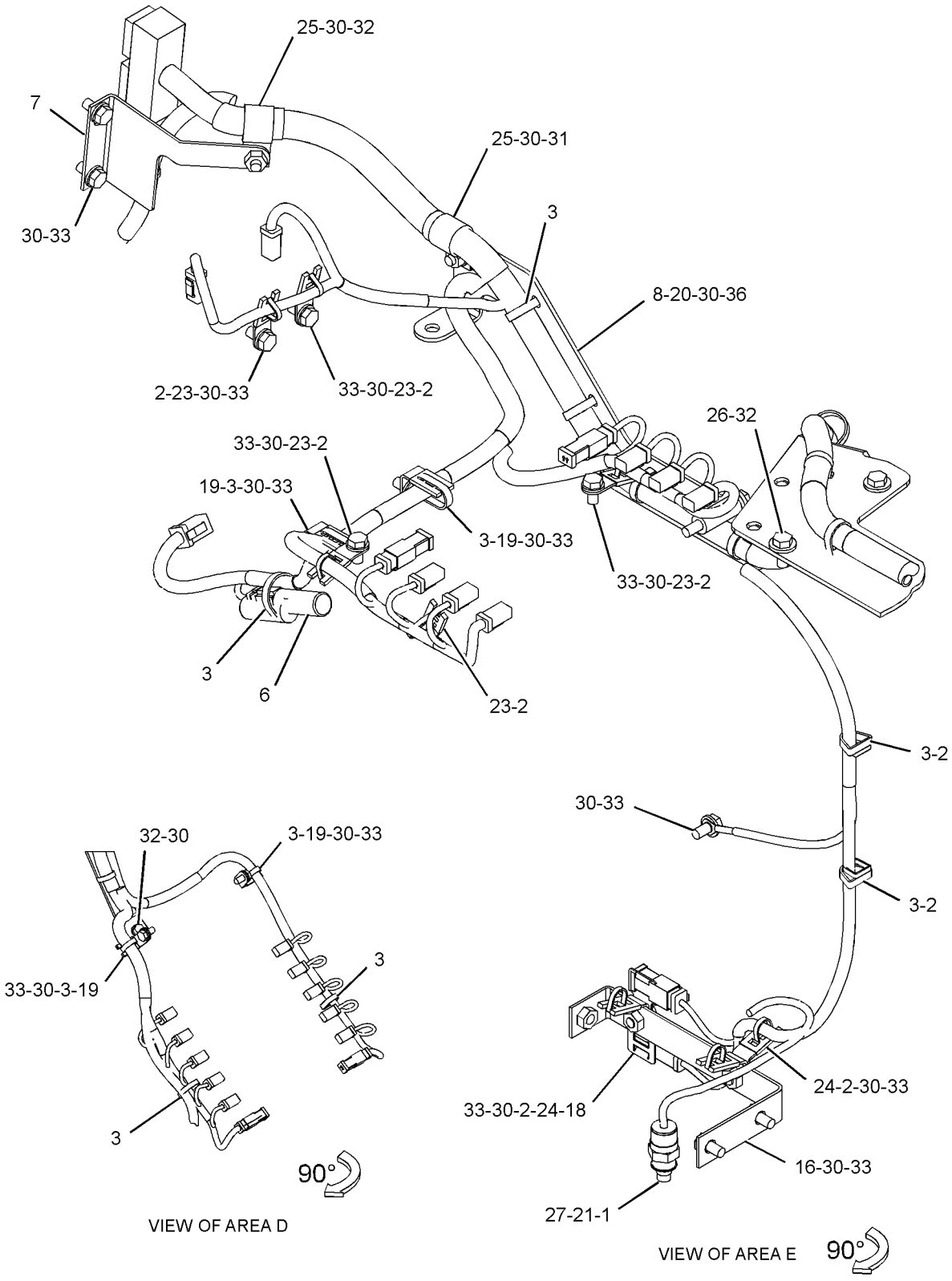

GRAPHIC #3 **<END>** g02228495

ELECTRICAL AND STARTING SYSTEM

355-1051 WIRING GP-FRONT

S/N: R9J1-UP
PART OF 356-3072 OPTION AR-MACHINE
AN ATTACHMENT

SMCS-1408 **i03972075**

NOTE	REF NO	GRAPHIC REF	PART NUMBER	QTY	PART NAME 1 2 3 4 5 6 (PRODUCT LEVEL)	SEE PAGE
	1	1	**295-2039**	1	HARNESS AS-CHASSIS	
		1	**102-8802**	11	KIT-RECEPTACLE (2-PIN)	
		1	**102-8805**	1	KIT-RECEPTACLE (6-PIN)	
		1	**102-8806**	1	KIT-RECEPTACLE (8-PIN)	
		1	**190-7614**	1	KIT-RECEPTACLE (12-PIN)	
					(EACH KIT INCLUDES RECEPTACLE AS & WEDGE)	
		1	**8T-8730**	26	SOCKET-CONNECTOR (16-GA TO 18-GA)	
		1	**8T-8737**	51	PLUG-SEAL	
		1	**9W-0844**	19	SOCKET-CONNECTOR (14-GA)	
E		1	**125-7875**		TUBE-HEAT SHRINK (7.44-MM DIA) (20-CM)	
		1	**155-2256**	1	KIT-CONNECTING PLUG (12-PIN)	
		1	**155-2265**	1	KIT-CONNECTING PLUG (8-PIN)	
		1	**155-2270**	11	KIT-CONNECTING PLUG (2-PIN)	
		1	**155-2274**	1	KIT-CONNECTING PLUG (6-PIN)	
					(EACH KIT INCLUDES PLUG AS, WEDGE & INTERFACE SEAL)	
	2	1	**4P-7581**	1	CLIP	
	3	1	**7K-1181**	33	STRAP-CABLE	
	4	1	**8M-2773**	2	CLIP	
	5	1	**8T-4121**	1	WASHER-HARD (11X21X2.5-MM THK)	
M	6	1	**8T-4137**	1	BOLT (M10X1.5X20-MM)	
	7	1	**9M-8406**	1	CLIP	

E-ORDER BY THE CENTIMETER
M-METRIC PART

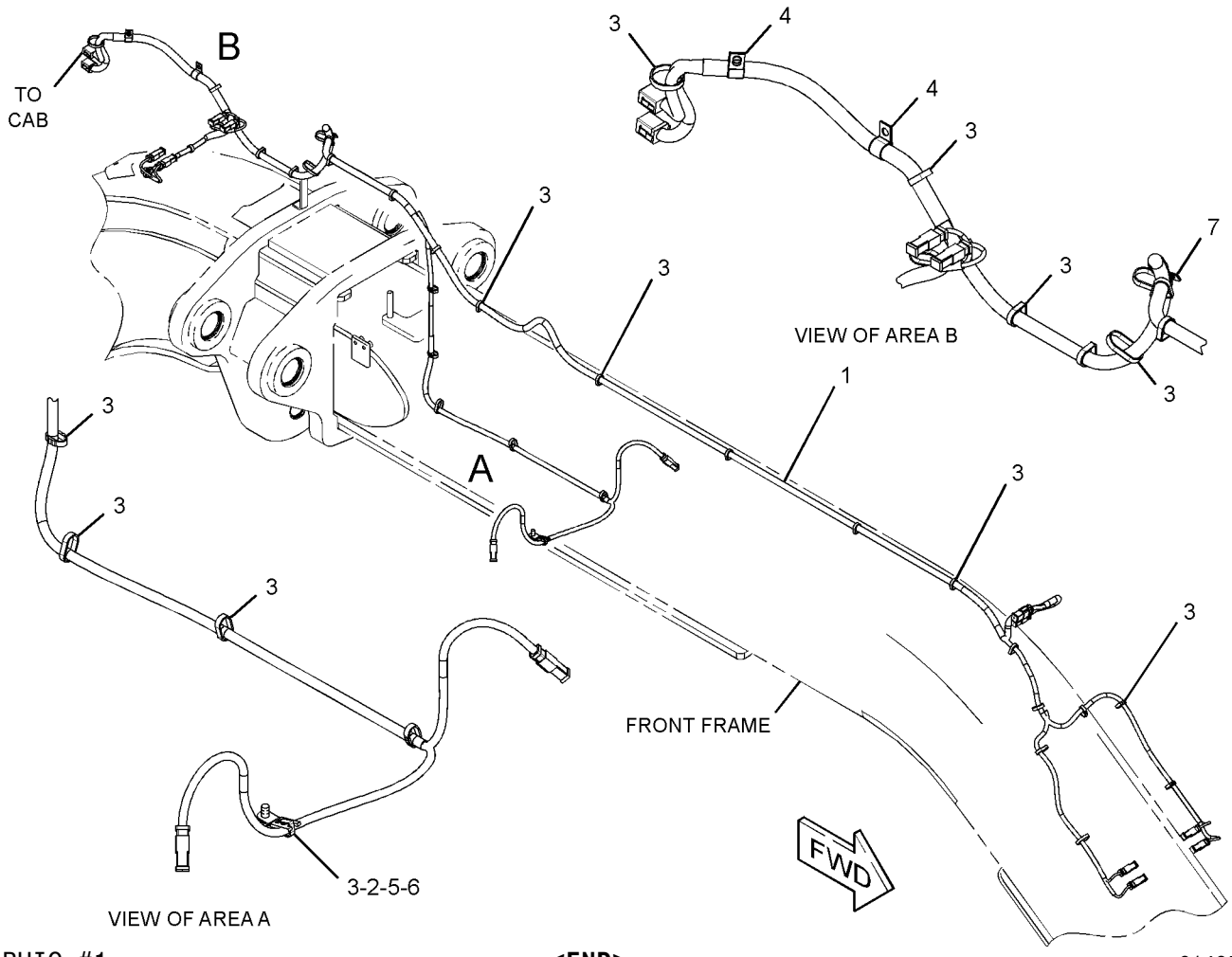

GRAPHIC #1 **<END>** g01405453

ELECTRICAL AND STARTING SYSTEM

233-3288 WIRING GP-GRADE CONTROL–CAB

S/N: R9J1-UP
PART OF 325-5227 CAB AR
AN ATTACHMENT

SMCS-1408 **i03002544**

NOTE	REF NO	GRAPHIC REF	PART NUMBER	QTY	PART NAME 1 2 3 4 5 6 (PRODUCT LEVEL)	SEE PAGE
	1	1	**3E-5239**	1	RELAY AS (24-VOLT)	
	2	1	**3S-2093**	17	STRAP-CABLE	
	3	1	**296-4925**	1	HARNESS AS-CONTROL (ACCUGRADE)	
		1	**155-2256**	1	KIT-CONNECTING PLUG (12-PIN)	
		1	**155-2265**	1	KIT-CONNECTING PLUG (8-PIN)	
		1	**155-2255**	2	KIT-CONNECTING PLUG (12-PIN)	
		1	**155-2271**	1	KIT-CONNECTING PLUG (4-PIN)	
		1	**174-0503**	2	KIT-CONNECTING PLUG (3-PIN)	
					(EACH INCLUDES PLUG AS, WEDGE, & INTERFACE SEAL)	
		1	**102-8801**	1	KIT-RECEPTACLE (12-PIN)	
		1	**102-8804**	1	KIT-RECEPTACLE (4-PIN)	
		1	**102-8806**	1	KIT-RECEPTACLE (8-PIN)	
		1	**190-7614**	1	KIT-RECEPTACLE (12-PIN)	
					(EACH INCLUDES RECEPTACLE AS & WEDGE)	
		1	**9X-7145**	1	RECEPTACLE AS-CONNECTOR (24-PIN)	
		1	**3R-9965**	1	PLUG AS-CONNECTOR (8-PIN)	
		1	**6D-5257**	1	PLUG AS-CONNECTOR (8-PIN)	
		1	**9X-1054**	1	PLUG AS-CONNECTOR (4-PIN)	
	4	1	**320-9861**	1	GASKET	
	5	1	**130-5300**	1	CLIP	
	6	1	**134-2540**	1	RESISTOR AS-CONNECTION (3-PIN)	
M	7	1	**5C-9553**	1	BOLT (M6X1X16-MM)	
M	8	1	**8T-0285**	4	SCREW-MACHINE (M4X0.7X12-MM)	
	9	1	**8T-0328**	4	WASHER-HARD (5.5X10X1-MM THK)	
	10	1	**9X-8256**	1	WASHER (6.6X12X2-MM THK)	

M-METRIC PART

233-3288 **WIRING GP-GRADE CONTROL** *(contd.)* **i03002544**

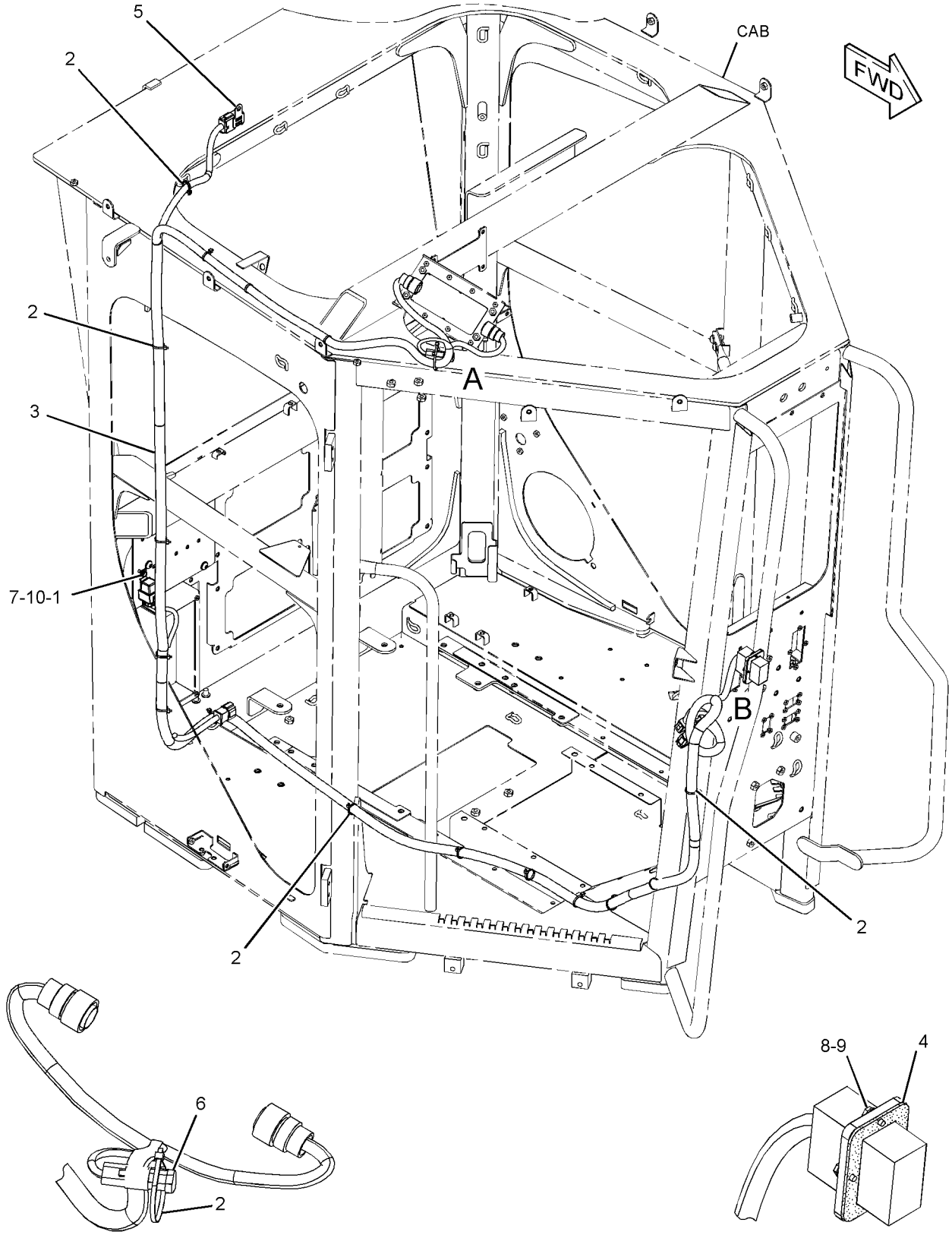

VIEW OF AREA A

VIEW OF AREA B

GRAPHIC #1 **<END>** g01520393

ELECTRICAL AND STARTING SYSTEM

255-5322 WIRING GP-GRADE CONTROL–DRAWBAR

S/N: R9J1-UP
PART OF 255-5321 GRADE CONTROL AR
AN ATTACHMENT

SMCS-1408 **i03814489**

NOTE	REF NO	GRAPHIC REF	PART NUMBER	QTY	PART NAME 1 2 3 4 5 6 (PRODUCT LEVEL)	SEE PAGE
	1	1,2	**9X-8257**	8	WASHER (17.5X30X3.5-MM THK)	
	2	1	**6D-3033**	16	SCREW-SOCKET HEAD (4-40X0.5-IN)	
	3	1,2	**6V-7555**	2	STRAP-CABLE	
	4	2	**6W-6672**	1	SPACER (10.5X20X38-MM THK)	
	5	2	**9L-1775**	2	BRACKET	
	6	1	**132-8487**	4	NUT-RING	
	7	2	**236-2356**	1	HARNESS AS-SENSOR (ANGLE)	
		2	**102-8804**	1	KIT-RECEPTACLE (4-PIN)	
					(INCLUDES RECEPTACLE AS & WEDGE)	
E		2	**9X-2383**		HOSE (127-CM)	
E		2	**8T-5346**		TUBE-HEAT SHRINK (19.1-MM DIA) (10-CM)	
		2	**9X-3401**	4	PIN-CONNECTOR (16-GA TO 18-GA)	
		2	**9X-4385**	1	PLUG AS-CONNECTOR (6-PIN)	
E		2	**114-8843**		SLEEVE-PLASTIC (20-CM)	
E		2	**114-8844**		SLEEVE-PLASTIC (20-CM)	
E		2	**125-7875**		TUBE-HEAT SHRINK (7.44-MM DIA) (5-CM)	
		2	**243-5362**	1	CAP-DUST	
	8	1	**236-8826**	4	BOSS (1-1/8-18X0.708-IN)	
	9	2	**243-3250**	1	HARNESS AS-SENSOR (ROTATION)	
		2	**9X-3402**	4	SOCKET-CONNECTOR (16-GA TO 18-GA)	
		2	**9X-4385**	1	PLUG AS-CONNECTOR (6-PIN)	
E		2	**114-8844**		SLEEVE-PLASTIC (40-CM)	
E		2	**125-7875**		TUBE-HEAT SHRINK (7.44-MM DIA) (5-CM)	
		2	**155-2271**	1	KIT-CONNECTING PLUG (4-PIN)	
					(INCLUDES PLUG AS, WEDGE & INTERFACE SEAL)	
		2	**243-5362**	1	CAP-DUST	
	10	2	**251-1133**	1	TUBE	
	11	1	**255-3482**	1	BRACKET	
	12	1	**257-7111**	1	HARNESS AS-SENSOR (FRONT)	
		1	**186-3735**	2	PIN-CONNECTOR (16-GA TO 18-GA)	
		1	**186-3736**	2	SOCKET-CONNECTOR (16-GA TO 18-GA)	
		1	**102-8804**	2	KIT-RECEPTACLE (4-PIN)	
					(INCLUDES RECEPTACLE AS & WEDGE)	
		1	**3E-3377**	1	WEDGE-RECEPTACLE LOCK (4-PIN)	
E		1	**5P-1424**		HOSE (251-CM)	
		1	**8T-8737**	9	PLUG-SEAL	
		1	**9W-0844**	2	SOCKET-CONNECTOR (14-GA)	
		1	**9X-3401**	2	PIN-CONNECTOR (16-GA TO 18-GA)	
		1	**9X-3402**	6	SOCKET-CONNECTOR (16-GA TO 18-GA)	
E		1	**125-7875**		TUBE-HEAT SHRINK (7.44-MM DIA) (32-CM)	
		1	**155-2262**	3	WEDGE-PLUG LOCK (4-PIN)	
		1	**174-0503**	1	KIT-CONNECTING PLUG (3-PIN)	
		1	**155-2271**	3	KIT-CONNECTING PLUG (4-PIN)	
		1	**174-0503**	1	KIT-CONNECTING PLUG (3-PIN)	
					(EACH PLUG KIT INCLUDES PLUG AS & WEDGE)	
	13	1	**327-3871**	1	BRACKET (LH)	
	14	2	**327-3872**	1	BRACKET (RH)	
	15	1	**287-6688**	2	PLATE	
	16	1	**288-0693**	4	BLOCK	
	17	2	**288-5508**	1	BRACKET AS (LH)	
	18	1	**288-5509**	1	BRACKET AS (RH)	
	19	1	**288-5515**	1	PLATE AS	
	20	1	**288-5516**	1	PLATE AS	
	21	1	**288-5517**	1	BRACKET AS	
	22	1	**295-4322**	1	HARNESS AS-FRONT	

255-5322 WIRING GP-GRADE CONTROL *(contd.)* i03814489

NOTE	REF NO	GRAPHIC REF	PART NUMBER	QTY	PART NAME 1 2 3 4 5 6 (PRODUCT LEVEL)	SEE PAGE
		1	**102-8804**	1	KIT-RECEPTACLE (4-PIN)	
					(INCLUDES RECEPTACLE AS & WEDGE)	
		1	**7R-3029**	4	CAP-DUST	
		1	**8T-8730**	2	SOCKET-CONNECTOR (16-GA TO 18-GA)	
		1	**8T-8737**	15	PLUG-SEAL	
		1	**9W-0844**	4	SOCKET-CONNECTOR (14-GA)	
		1	**9W-0852**	2	PIN-CONNECTOR (14-GA TO 16-GA)	
		1	**9X-3401**	2	PIN-CONNECTOR (16-GA TO 18-GA)	
		1	**9X-3402**	6	SOCKET-CONNECTOR (16-GA TO 18-GA)	
		1	**9X-4385**	1	PLUG AS-CONNECTOR (6-PIN)	
		1	**9X-7146**	1	PLUG AS-CONNECTOR (24-PIN)	
		1	**3E-4367**	1	RING-RETAINING	
M		1	**3E-8558**	1	BOLT (M5X0.8X39.37-MM)	
		1	**9X-3265**	2	SEAL-CONNECTOR (24-PIN)	
E		1	**119-3662**		TUBE-HEAT SHRINK (10.85-MM DIA) (39-CM)	
E		1	**125-7875**		TUBE-HEAT SHRINK (7.44-MM DIA) (115-CM)	
		1	**134-2540**	1	RESISTOR AS-CONNECTION (3-PIN)	
		1	**174-0503**	1	KIT-CONNECTING PLUG (3-PIN)	
					(INCLUDES PLUG AS, WEDGE & INTERFACE SEAL)	
		1	**228-3323**	4	CLIP-SPRING	
M	23	1	**096-4883**	4	LOCKNUT (M10X1.5-THD)	
	24	2	**130-5300**	3	CLIP	
	25	1	**132-5789**	1	CLIP	
	26	2	**134-2540**	1	RESISTOR AS-CONNECTION (3-PIN)	
	27	2	**174-5907**	1	CLIP	
M	28	1	**188-9644**	4	SCREW-FLAT HEAD (M8X1.25X25-MM)	
	29	1,2	**226-4192**	8	WASHER-HARD (21.5X35X8-MM THK)	
	30	1,2	**2J-3506**	4	NUT-FULL (3/4-10-THD)	
	31	2	**4P-7428**	1	CLIP	
	32	2	**4P-7429**	2	CLIP	
	33	2	**4P-7581**	2	CLIP	
	34	1,2	**1J-6762**	4	BOLT-PLOW (3/4-10X3-IN)	
	35	1,2	**6D-4244**	4	CLIP	
	36	1,2	**7K-1181**	19	STRAP-CABLE	
M	37	2	**7Y-0589**	2	BOLT (M12X1.75X90-MM)	
	38	1,2	**8C-6857**	4	BOLT (3/4-10X2.75-IN)	
	39	1,2	**8M-2773**	4	CLIP	
	40	1,2	**8T-4121**	26	WASHER-HARD (11X21X2.5-MM THK)	
	41	1,2	**8T-4123**	4	WASHER (22X35X3.5-MM THK)	
M	42	2	**8T-4133**	3	NUT (M10X1.5-THD)	
M	43	1,2	**8T-4137**	18	BOLT (M10X1.5X20-MM)	
M	44	1,2	**8T-4140**	4	BOLT (M16X2X60-MM)	
M	45	2	**8T-4192**	1	BOLT (M12X1.75X25-MM)	
	46	2	**8T-4223**	3	WASHER-HARD (13.5X25.5X3-MM THK)	
	47	2	**8T-4224**	2	WASHER-HARD (8.8X16X2-MM THK)	
M	48	2	**8T-6466**	1	BOLT (M10X1.5X60-MM)	
	49	1,2	**9M-8406**	3	CLIP	
	50	2	**1K-6870**	1	LOCKNUT (3/4-10-THD)	
	51	2	**5P-4135**	1	BOLT (3/4-10X8-IN)	
M	52	2	**8T-4195**	1	BOLT (M10X1.5X30-MM)	
	53	2	**8T-4994**	4	WASHER-HARD (20X36.5X3.5-MM THK)	

E-ORDER BY THE CENTIMETER
M-METRIC PART

255-5322 WIRING GP-GRADE CONTROL *(contd.)* i03814489

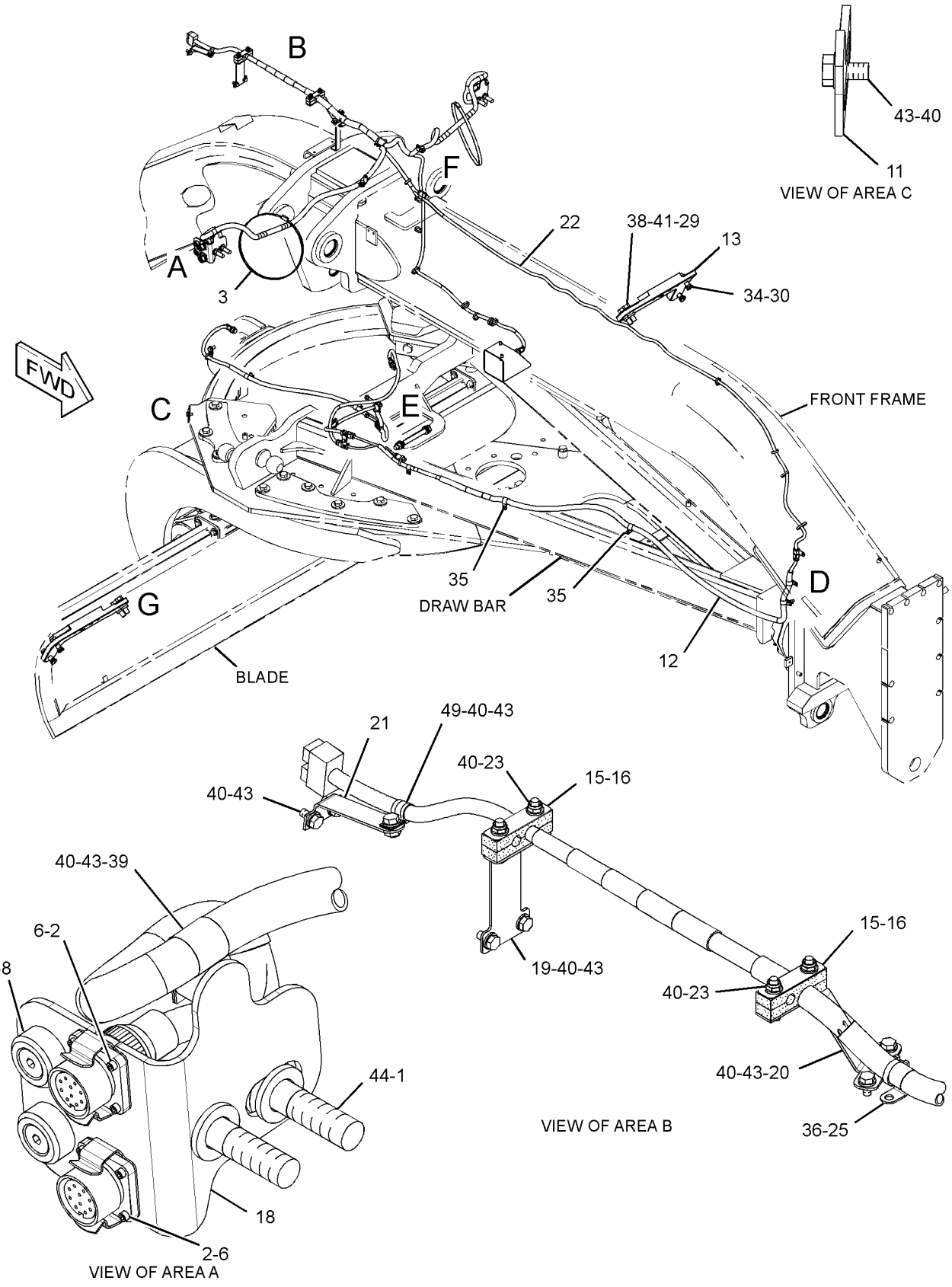

GRAPHIC #1 g02053253

255-5322 WIRING GP-GRADE CONTROL *(contd.)* i03814489

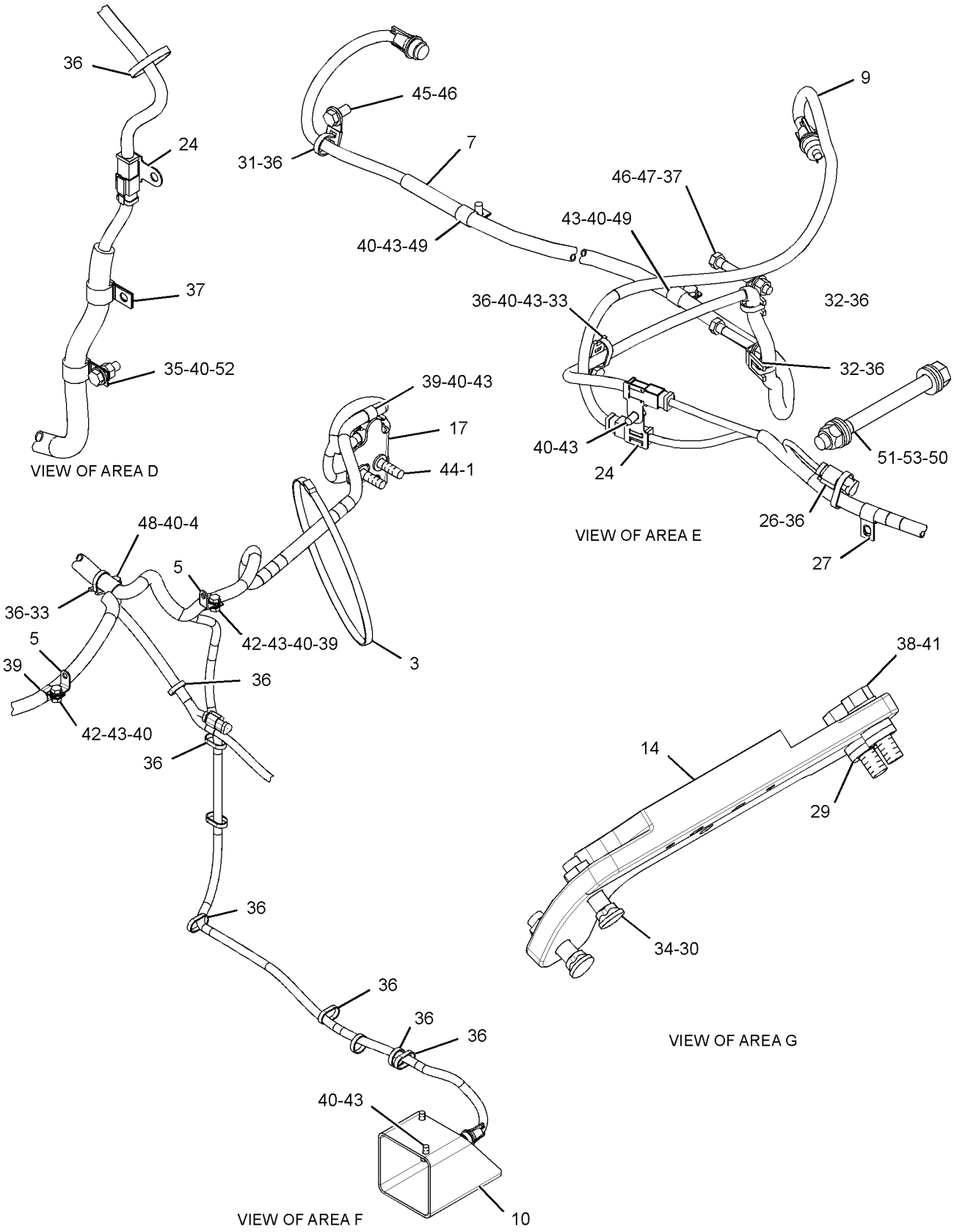

GRAPHIC #2 **<END>** g02053254

ELECTRICAL AND STARTING SYSTEM

355-1050 WIRING GP-GRADE CONTROL

S/N: R9J1-UP
PART OF 356-3073 GRADE CONTROL AR
AN ATTACHMENT

SMCS-1408 **i03968653**

NOTE	REF NO	GRAPHIC REF	PART NUMBER	QTY	PART NAME 1 2 3 4 5 6 (PRODUCT LEVEL)	SEE PAGE
	1	1,2	**9X-8257**	8	WASHER (17.5X30X3.5-MM THK)	
	2	1	**6D-3033**	16	SCREW-SOCKET HEAD (4-40X0.5-IN)	
	3	1,2	**6V-7555**	2	STRAP-CABLE	
	4	2	**6W-6672**	1	SPACER (10.5X20X38-MM THK)	
	5	2	**9L-1775**	2	BRACKET	
	6	1	**132-8487**	4	NUT-RING	
	7	2	**236-2356**	1	HARNESS AS-SENSOR (ANGLE)	
		2	**102-8804**	1	KIT-RECEPTACLE (4-PIN)	
					(INCLUDES RECEPTACLE ASSEMBLY & WEDGE)	
E		2	**9X-2388**		HOSE (127-CM)	
E		2	**8T-5346**		TUBE-HEAT SHRINK (19.1-MM DIA) (10-CM)	
		2	**9X-3401**	4	PIN-CONNECTOR (16-GA TO 18-GA)	
		2	**9X-4385**	1	PLUG AS-CONNECTOR (6-PIN)	
E		2	**114-8843**		SLEEVE-PLASTIC (20-CM)	
E		2	**114-8844**		SLEEVE-PLASTIC (20-CM)	
E		2	**125-7875**		TUBE-HEAT SHRINK (7.44-MM DIA) (5-CM)	
		2	**243-5362**	1	CAP-DUST	
	8	1	**236-8826**	4	BOSS (1-1/8-18X0.708-IN)	
	9	2	**243-3250**	1	HARNESS AS-SENSOR (ROTATION)	
		2	**9X-3402**	4	SOCKET-CONNECTOR (16-GA TO 18-GA)	
		2	**9X-4385**	1	PLUG AS-CONNECTOR (6-PIN)	
E		2	**114-8844**		SLEEVE-PLASTIC (40-CM)	
E		2	**125-7875**		TUBE-HEAT SHRINK (7.44-MM DIA) (5-CM)	
		2	**155-2271**	1	KIT-CONNECTING PLUG (4-PIN)	
					(INCLUDES PLUG ASSEMBLY, WEDGE & INTERFACE SEAL)	
		2	**243-5362**	1	CAP-DUST	
	10	2	**251-1133**	1	TUBE	
	11	1	**255-3482**	1	BRACKET	
	12	1	**257-7111**	1	HARNESS AS-SENSOR (FRONT)	
		1	**102-8804**	2	KIT-RECEPTACLE (4-PIN)	
					(EACH INCLUDES RECEPTACLE ASSEMBLY & WEDGE)	
E		1	**5P-1424**		HOSE (251-CM)	
		1	**8T-8737**	9	PLUG-SEAL	
		1	**9W-0844**	2	SOCKET-CONNECTOR (14-GA)	
		1	**9X-3401**	2	PIN-CONNECTOR (16-GA TO 18-GA)	
		1	**9X-3402**	6	SOCKET-CONNECTOR (16-GA TO 18-GA)	
E		1	**125-7875**		TUBE-HEAT SHRINK (7.44-MM DIA) (32-CM)	
		1	**155-2271**	3	KIT-CONNECTING PLUG (4-PIN)	
		1	**174-0503**	1	KIT-CONNECTING PLUG (3-PIN)	
					(EACH PLUG KIT INCLUDES PLUG ASSEMBLY, WEDGE & INTERFACE SEAL)	
		1	**8T-8729**	2	PIN-CONNECTOR (16-GA TO 18-GA)	
		1	**8T-8730**	2	SOCKET-CONNECTOR (16-GA TO 18-GA)	
	13	1	**327-3871**	1	BRACKET (LH)	
	14	2	**327-3872**	1	BRACKET (RH)	
	15	1	**287-6688**	2	PLATE	
	16	1	**288-0693**	4	BLOCK	
	17	2	**288-5508**	1	BRACKET AS (LH)	
M		2	**8T-3612**	2	NUT-WELD (M8X1.25-THD)	
M		2	**9R-2672**	1	BOSS-THREADED (M10X1.5-THD)	
	18	1	**288-5509**	1	BRACKET AS (RH)	
M		1	**8T-3612**	2	NUT-WELD (M8X1.25-THD)	
M		1	**9R-2672**	1	BOSS-THREADED (M10X1.5-THD)	
	19	1	**288-5515**	1	PLATE AS	

355-1050 **WIRING GP-GRADE CONTROL** *(contd.)* **i03968653**

NOTE	REF NO	GRAPHIC REF	PART NUMBER	QTY	PART NAME 1 2 3 4 5 6 (PRODUCT LEVEL)	SEE PAGE
M		1	**8T-4185**	2	BOLT (M10X1.5X50-MM)	
	20	1	**288-5516**	1	PLATE AS	
M		1	**8T-4185**	2	BOLT (M10X1.5X50-MM)	
	21	1	**288-5517**	1	BRACKET AS	
M		1	**8T-3490**	1	NUT-WELD (M10X1.5-THD)	
	22	1	**295-4322**	1	HARNESS AS-FRONT	
		1	**102-8804**	1	KIT-RECEPTACLE (4-PIN)	
					(INCLUDES RECEPTACLE ASSEMBLY & WEDGE)	
		1	**7R-3029**	4	CAP-DUST	
		1	**8T-8730**	2	SOCKET-CONNECTOR (16-GA TO 18-GA)	
		1	**8T-8737**	15	PLUG-SEAL	
		1	**9W-0844**	4	SOCKET-CONNECTOR (14-GA)	
		1	**9W-0852**	2	PIN-CONNECTOR (14-GA TO 16-GA)	
		1	**9X-3401**	2	PIN-CONNECTOR (16-GA TO 18-GA)	
		1	**9X-3402**	6	SOCKET-CONNECTOR (16-GA TO 18-GA)	
		1	**9X-4385**	1	PLUG AS-CONNECTOR (6-PIN)	
		1	**9X-7146**	1	PLUG AS-CONNECTOR (24-PIN)	
		1	**3E-4367**	1	RING-RETAINING	
M		1	**3E-8558**	1	BOLT (M5X0.8X39.37-MM)	
		1	**9X-3265**	2	SEAL-CONNECTOR (24-PIN)	
E		1	**119-3662**		TUBE-HEAT SHRINK (10.85-MM DIA) (39-CM)	
E		1	**125-7875**		TUBE-HEAT SHRINK (7.44-MM DIA) (115-CM)	
		1	**134-2540**	1	RESISTOR AS-CONNECTION (3-PIN)	
		1	**174-0503**	1	KIT-CONNECTING PLUG (3-PIN)	
		1	**228-3323**	4	CLIP-SPRING	
M	23	1	**096-4883**	4	LOCKNUT (M10X1.5-THD)	
	24	2	**130-5300**	3	CLIP	
	25	1	**132-5789**	1	CLIP	
	26	2	**134-2540**	1	RESISTOR AS-CONNECTION (3-PIN)	
	27	2	**174-5907**	1	CLIP	
M	28	1	**188-9644**	4	SCREW-FLAT HEAD (M8X1.25X25-MM)	
	29	1,2	**226-4192**	8	WASHER-HARD (21.5X35X8-MM THK)	
	30	1,2	**2J-3506**	4	NUT-FULL (3/4-10-THD)	
	31	2	**4P-7428**	1	CLIP	
	32	2	**4P-7429**	2	CLIP	
	33	2	**4P-7581**	2	CLIP	
	34	1,2	**1J-6762**	4	BOLT-PLOW (3/4-10X3-IN)	
	35	1,2	**6D-4244**	4	CLIP	
	36	1,2	**7K-1181**	19	STRAP-CABLE	
M	37	2	**7Y-0589**	2	BOLT (M12X1.75X90-MM)	
	38	1,2	**8C-6857**	4	BOLT (3/4-10X2.75-IN)	
	39	1,2	**8M-2773**	4	CLIP	
	40	1,2	**8T-4121**	26	WASHER-HARD (11X21X2.5-MM THK)	
	41	1,2	**8T-4123**	4	WASHER (22X35X3.5-MM THK)	
M	42	2	**8T-4133**	3	NUT (M10X1.5-THD)	
M	43	1,2	**8T-4137**	18	BOLT (M10X1.5X20-MM)	
M	44	1,2	**8T-4140**	4	BOLT (M16X2X60-MM)	
M	45	2	**8T-4192**	1	BOLT (M12X1.75X25-MM)	
	46	2	**8T-4223**	3	WASHER-HARD (13.5X25.5X3-MM THK)	
M	47	2	**8T-4244**	2	NUT (M12X1.75-THD)	
M	48	2	**8T-6466**	1	BOLT (M10X1.5X60-MM)	
	49	1,2	**9M-8406**	3	CLIP	
	50	2	**1K-6870**	1	LOCKNUT (3/4-10-THD)	
	51	2	**5P-4135**	1	BOLT (3/4-10X8-IN)	
M	52	2	**8T-4195**	1	BOLT (M10X1.5X30-MM)	
	53	2	**8T-4994**	4	WASHER-HARD (20X36.5X3.5-MM THK)	

E-ORDER BY THE CENTIMETER
M-METRIC PART

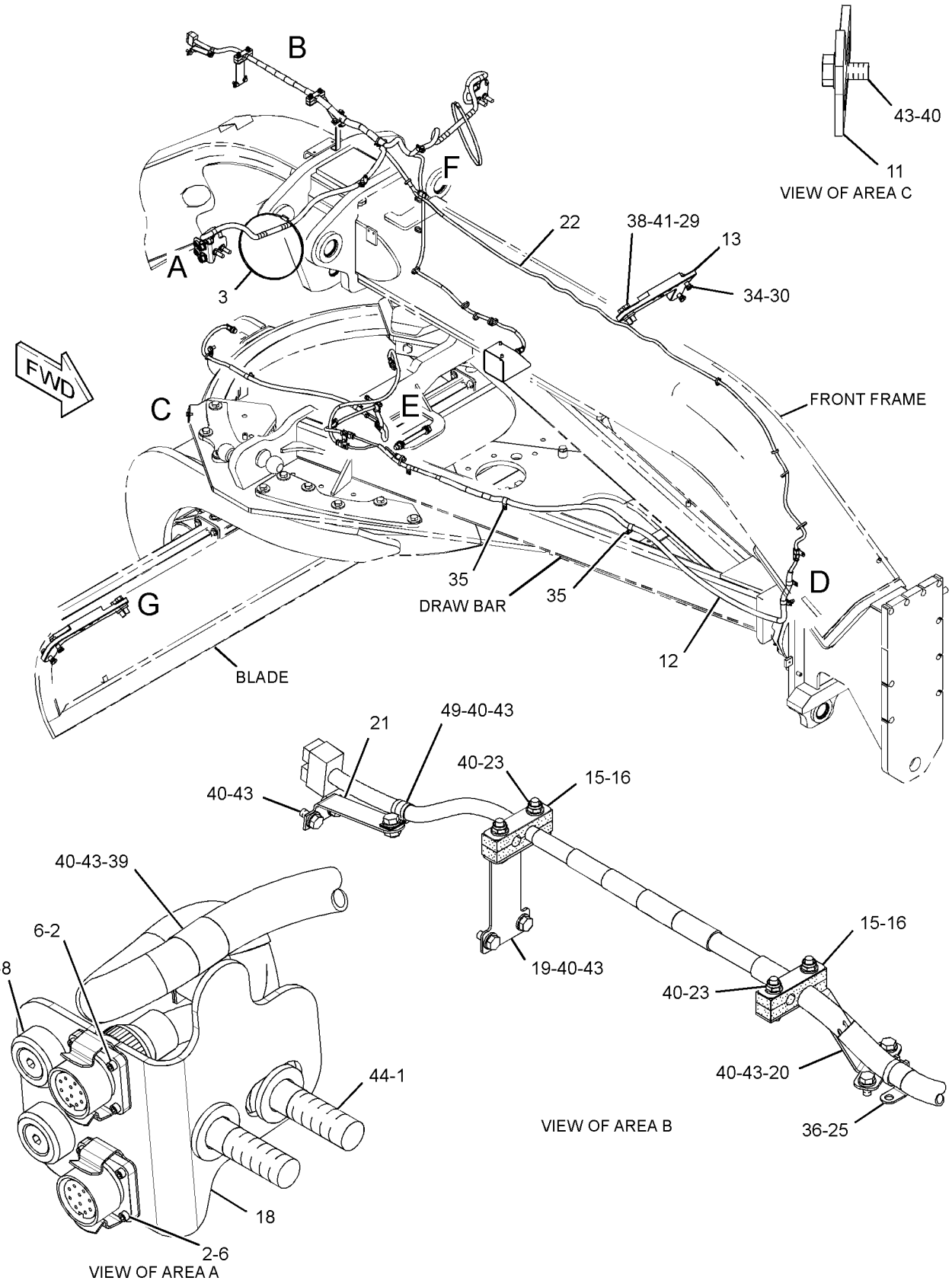

GRAPHIC #1 g02053253

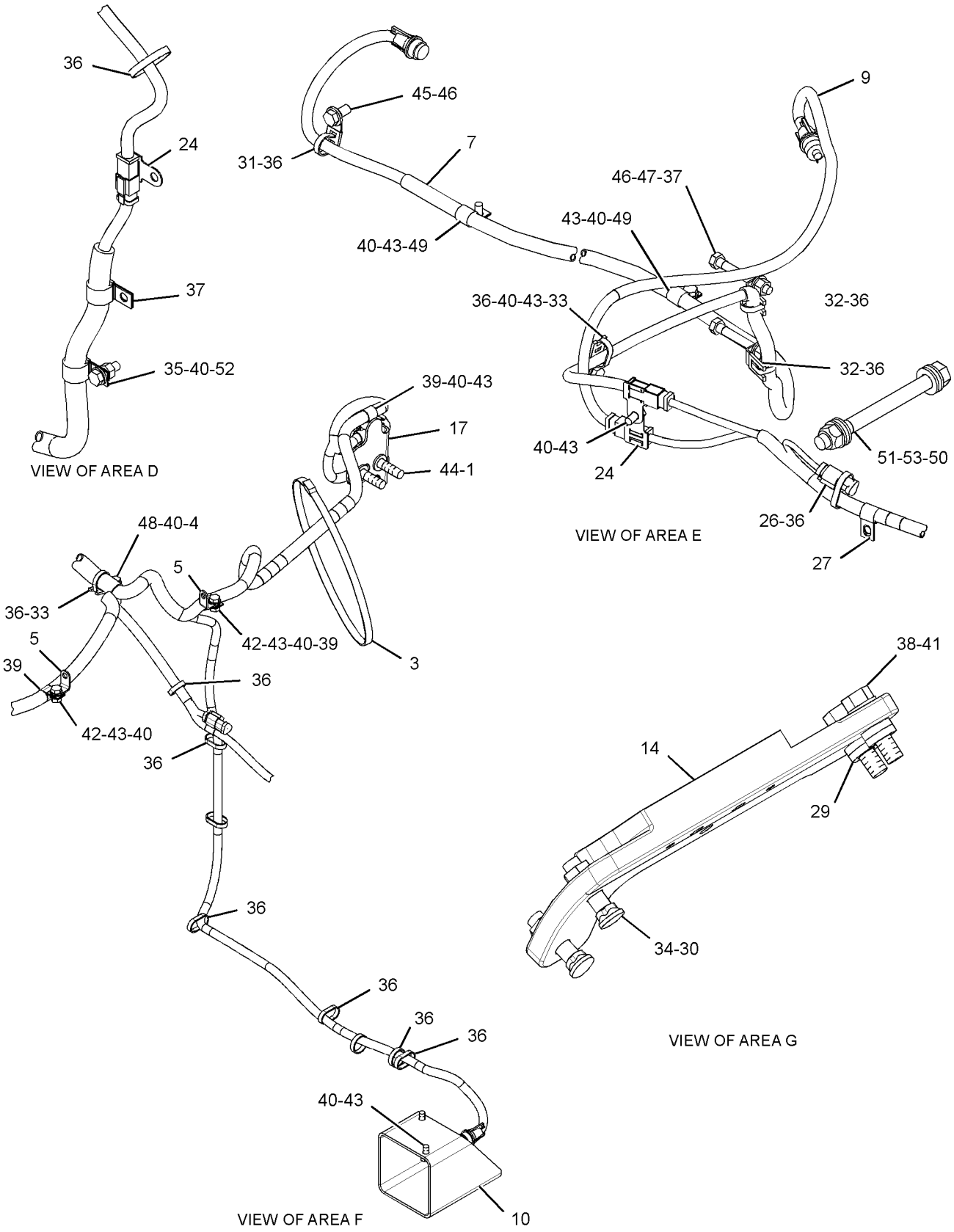

GRAPHIC #2 **<END>** g02053254

291-2909 WIRING GP-LIGHTING–
FLOODLIGHTS, WARNING BEACON

S/N: R9J1-UP
PART OF 325-5227 CAB AR
AN ATTACHMENT

SMCS-1408, 1429 **i02970561**

NOTE	REF NO	GRAPHIC REF	PART NUMBER	QTY	PART NAME 1 2 3 4 5 6 (PRODUCT LEVEL)	SEE PAGE
	1	1	**3S-2093**	34	STRAP-CABLE	
	2	1	**291-2908**	1	HARNESS AS-LIGHTING	
		1	**102-8801**	1	KIT-RECEPTACLE (12-PIN)	
		1	**102-8802**	14	KIT-RECEPTACLE (2-PIN)	
					(EACH INCLUDES RECEPTACLE AS & WEDGE)	
		1	**155-2255**	2	KIT-CONNECTING PLUG (12-PIN)	
		1	**155-2265**	1	KIT-CONNECTING PLUG (8-PIN)	
		1	**155-2270**	14	KIT-CONNECTING PLUG (2-PIN)	
					(EACH INCLUDES PLUG AS, WEDGE, & INTERFACE SEAL)	

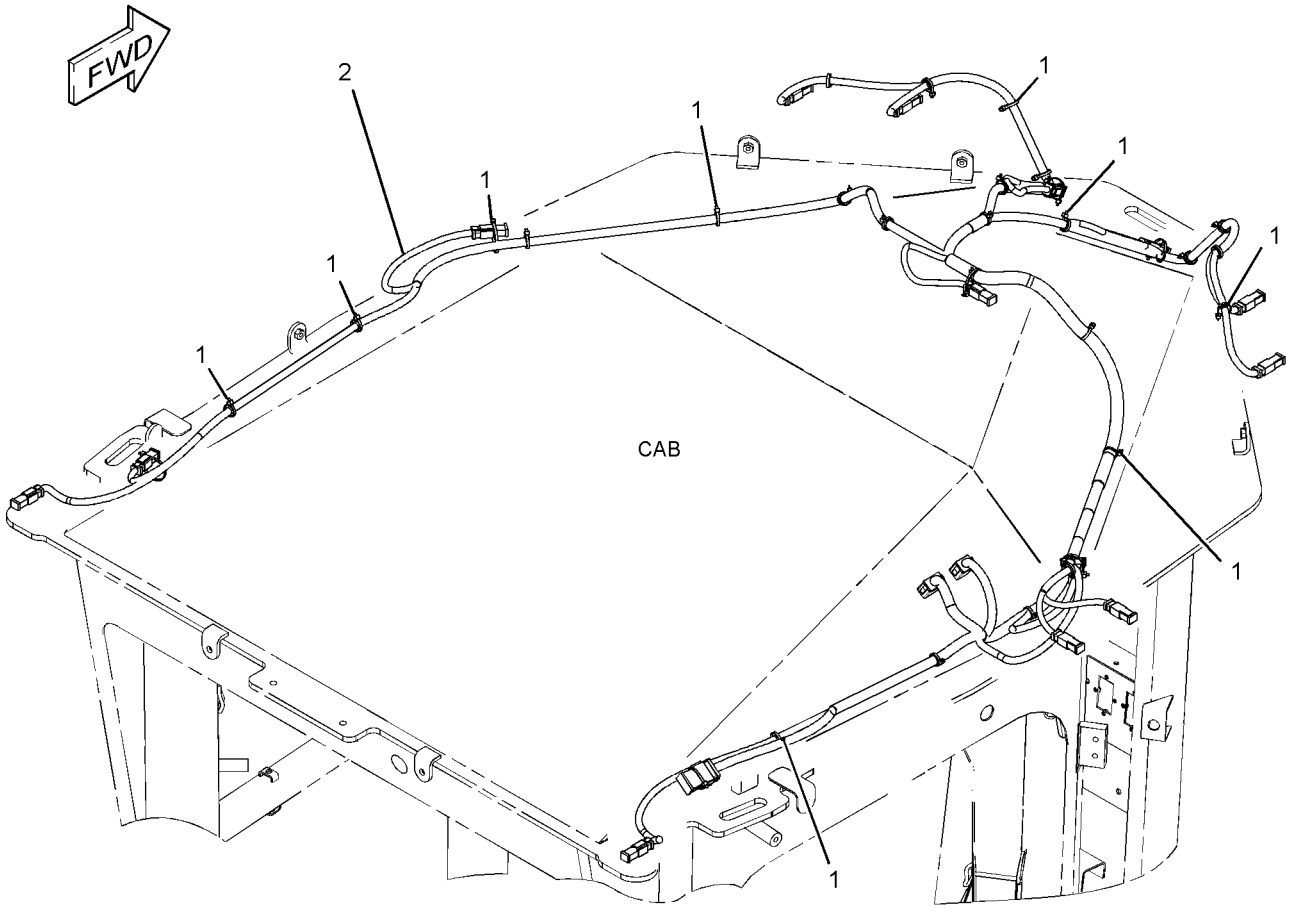

GRAPHIC #1 **<END>** g01515786

292-1874 WIRING GP-LIGHTING—WORK LIGHTS

S/N: R9J1-UP
PART OF 325-5227 CAB AR
AN ATTACHMENT

SMCS-1408, 1429 **i02568678**

NOTE	REF NO	GRAPHIC REF	PART NUMBER	QTY	PART NAME 1 2 3 4 5 6 (PRODUCT LEVEL)	SEE PAGE
	1	1	**3S-2093**	7	STRAP-CABLE	
	2	1	**292-1868**	1	HARNESS AS-LIGHTING	
		1	**155-2255**	1	KIT-CONNECTING PLUG (12-PIN)	
		1	**155-2274**	1	KIT-CONNECTING PLUG (6-PIN)	
					(EACH INCLUDES PLUG AS, WEDGE & INTERFACE SEAL)	

292-1874 **WIRING GP-LIGHTING** *(contd.)* **i02568678**

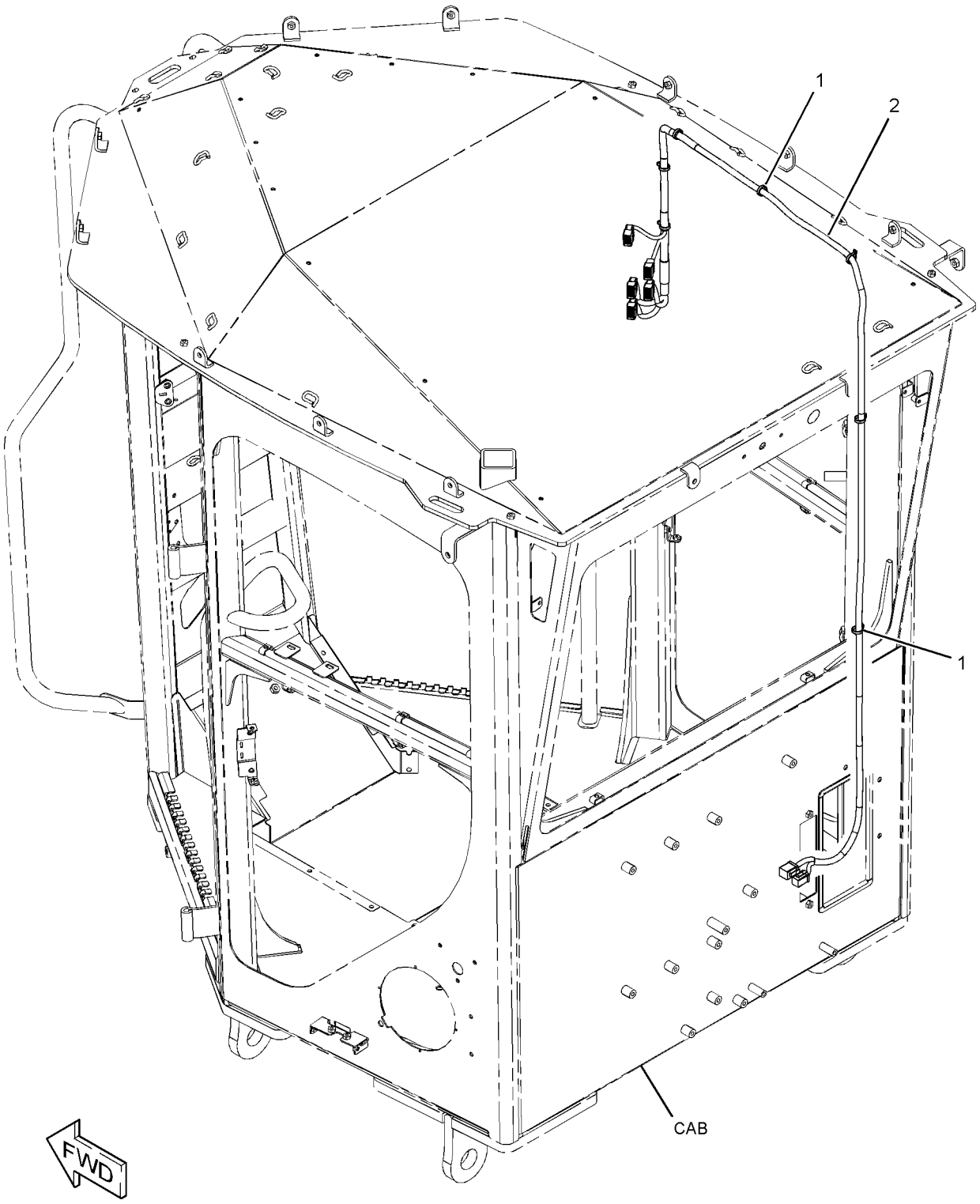

GRAPHIC #1 **<END>** g01161537

253-1964 WIRING GP-MONITOR

S/N: R9J1-UP

PART OF 292-7975, 331-7530 DISPLAY AR-MONITOR, 323-8139 SENSOR AR-GRADE

SMCS-1408 **i02902266**

NOTE	REF NO	GRAPHIC REF	PART NUMBER	QTY	PART NAME 1 2 3 4 5 6 (PRODUCT LEVEL)	SEE PAGE
	1	1	**7K-1181**	1	STRAP-CABLE	
	2	1	**140-7480**	1	BRACKET-MOUNTING	
	3	1	**167-8610**	1	BRACKET AS	
	4	1	**222-9151**	2	WASHER-HARD (11X32X5-MM THK)	
	5	1	**245-8334**	2	KNOB	
	6	1	**252-5190**	1	HARNESS AS-FRONT CHASSIS	
		1	**102-8801**	1	KIT-RECEPTACLE (12-PIN)	
					(INCLUDES RECEPTACLE AS & WEDGE)	
		1	**248-5358**	1	PLUG AS-CONNECTOR (39-PIN)	
		1	**155-2255**	1	KIT-CONNECTING PLUG (12-PIN)	
					(INCLUDES PLUG AS, WEDGE, & INTERFACE SEAL)	
	7	1	**253-1963**	1	BRACKET AS	
	8	1	**253-7461**	1	HARNESS AS-RADIO	
		1	**190-7614**	1	KIT-RECEPTACLE (12-PIN)	
					(INCLUDES RECEPTACLE AS & WEDGE)	
		1	**167-8987**	1	PLUG AS-CONNECTOR (8-PIN)	
	9	1	**273-1719**	1	BRACKET AS	
	10	1	**273-5924**	1	KNOB	
	11	1	**295-8369**	1	PLATE	
	12	1	**295-8370**	1	BRACKET AS	
		1	**7T-1099**	2	LINK	
M		1	**6V-9632**	1	NUT-WELD (M6X1-THD)	
M		1	**8T-3490**	2	NUT-WELD (M10X1.5-THD)	
M		1	**9X-2032**	4	NUT-WELD (M4X0.7-THD)	
	13	1	**295-8381**	1	PLATE AS	
	14	1	**296-1067**	1	HARNESS AS-WIRING (LIGHT BAR)	
		1	**102-8804**	1	KIT-RECEPTACLE (4-PIN)	
					(INCLUDES RECEPTACLE AS & WEDGE)	
		1	**230-5008**	3	PLUG AS-CONNECTOR (4-PIN)	
	15	1	**300-7909**	1	BRACKET AS	
		1	**205-7047**	2	INSERT-THREADED (M4X0.7-THD)	
	16	1	**114-6658**	2	WASHER (6.5X17X1-MM THK)	
	17	1	**096-6166**	6	WASHER-HARD (4.5X9X1-MM THK)	
	18	1	**117-8929**	1	WASHER (6.6X22X2-MM THK)	
	19	1	**130-5300**	2	CLIP	
	20	1	**204-0813**	3	BOLT (M6X1X40-MM)	
	21	1	**3B-4610**	2	PIN-COTTER	
	22	1	**4L-7125**	4	LOCKWASHER	
M	23	1	**5C-7261**	2	NUT (M8X1.25-THD)	
	24	1	**5P-4116**	6	WASHER-HARD (8.8X20.5X2-MM THK)	
	25	1	**5P-6419**	1	GROMMET	
	26	1	**5S-7349**	2	BOLT (1/4-20X0.5-IN)	
	27	1	**6B-8193**	2	PIN-CLEVIS	
M	28	1	**7X-2537**	2	BOLT (M8X1.25X35-MM)	
	29	1	**8C-5607**	6	MOUNT-ISOLATION	
	30	1	**8C-5608**	3	SPACER (6.5X9.5X25.4-MM THK)	
	31	1	**8T-4205**	2	WASHER-HARD (7.2X14.5X2-MM THK)	
	32	1	**8T-4224**	4	WASHER-HARD (8.8X16X2-MM THK)	
M	33	1	**8T-4908**	2	BOLT (M8X1.25X25-MM)	
M	34	1	**8T-7852**	6	BOLT (M4X0.7X10-MM)	
M	35	1	**9X-1046**	6	SCREW (M4X0.7X18-MM)	
M	36	1	**9X-2045**	2	SCREW-TRUSS HEAD (M6X1X20-MM)	
	37	1	**9X-6165**	3	WASHER (6.5X22X2.5-MM THK)	
D	38	1	**5P-7657**		SEAL (0.2-M)	

D-ORDER BY THE METER
M-METRIC PART

253-1964 **WIRING GP-MONITOR** *(contd.)* **i02902266**

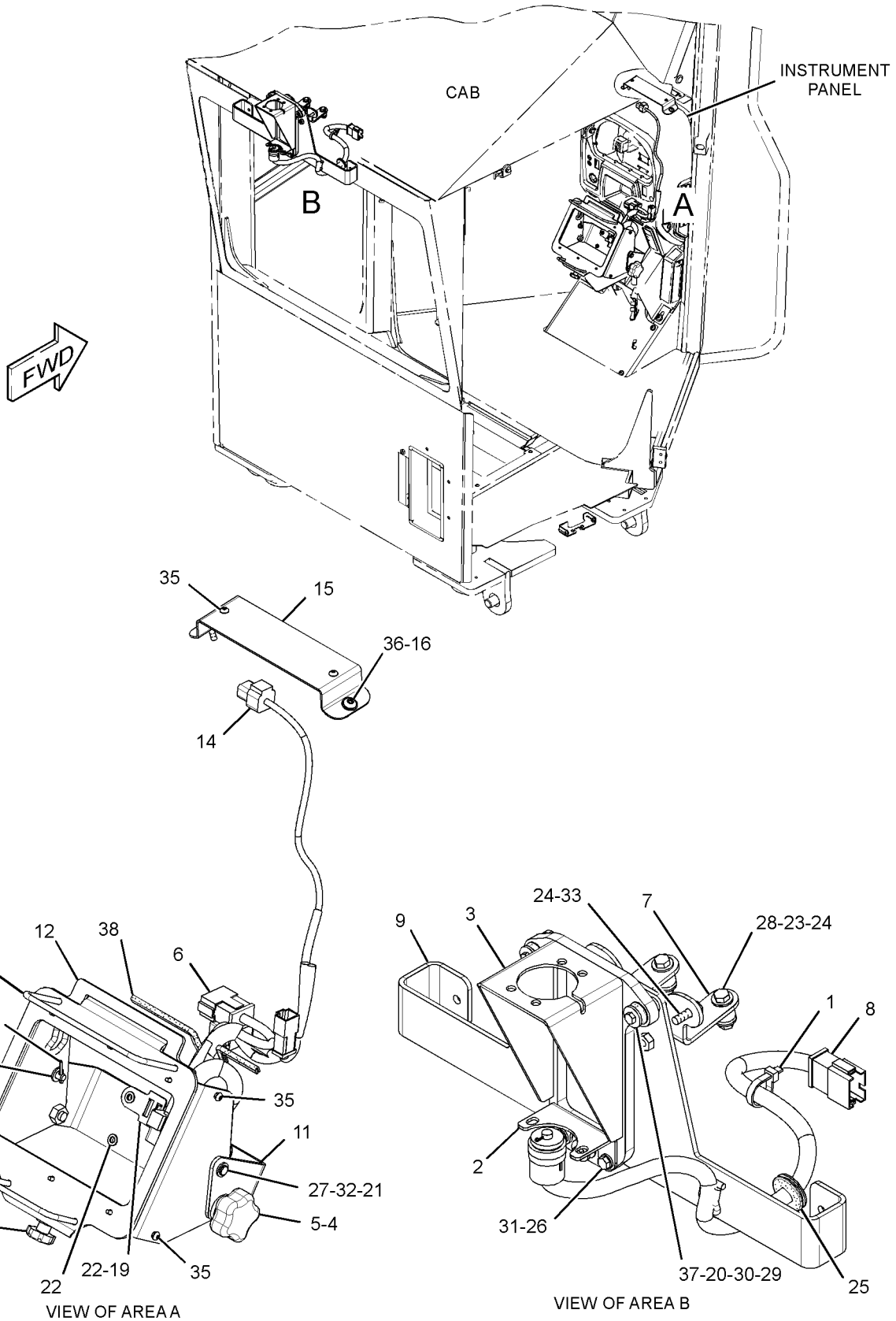

GRAPHIC #1 **<END>** g01524819

253-1967 WIRING GP-MONITOR

S/N: R9J1-UP

PART OF 292-7980 DISPLAY AR-MONITOR, 323-8140 GRADE CONTROL AR AN ATTACHMENT

SMCS-1408 **i03495740**

NOTE	REF NO	GRAPHIC REF	PART NUMBER	QTY	PART NAME 1 2 3 4 5 6 (PRODUCT LEVEL)	SEE PAGE
	1	1	**095-0817**	2	LOCKWASHER	
	2	1	**167-8712**	1	ALARM	
	3	1	**167-8713**	1	BAFFLE AS	
	4	1	**167-8714**	1	WIRE AS	
	5	1	**248-2284**	2	KNOB-CONTROL	
	6	1	**251-0077**	1	BRACKET AS	
M		1	**8T-3490**	1	NUT-WELD (M10X1.5-THD)	
	7	1	**251-9571**	1	BRACKET AS	
M		1	**8T-3490**	1	NUT-WELD (M10X1.5-THD)	
	8	1	**295-8963**	1	PLATE	
	9	1	**296-4922**	1	HARNESS AS-MONITOR	
		1	**102-8801**	1	KIT-RECEPTACLE (12-PIN)	
					(INCLUDES RECEPTACLE AS & WEDGE)	
		1	**9X-6772**	2	STRAP-CABLE	
		1	**126-1774**	1	COVER-CONNECTOR	
		1	**147-1444**	1	PLUG AS-CONNECTOR (70-PIN)	
		1	**155-2255**	1	KIT-CONNECTING PLUG (12-PIN)	
		1	**155-2270**	1	KIT-CONNECTING PLUG (2-PIN)	
					(EACH INCLUDES PLUG AS, WEDGE, & INTERFACE SEAL)	
	10	1	**130-5300**	3	CLIP	
	11	1	**4L-7125**	4	LOCKWASHER	
	12	1	**8T-4121**	2	WASHER-HARD (11X21X2.5-MM THK)	
M	13	1	**8T-4171**	4	BOLT (M6X1X12-MM)	
	14	1	**8T-4205**	4	WASHER-HARD (7.2X14.5X2-MM THK)	
D	15	1	**5P-7657**		SEAL (0.2-M)	

D-ORDER BY THE METER
M-METRIC PART

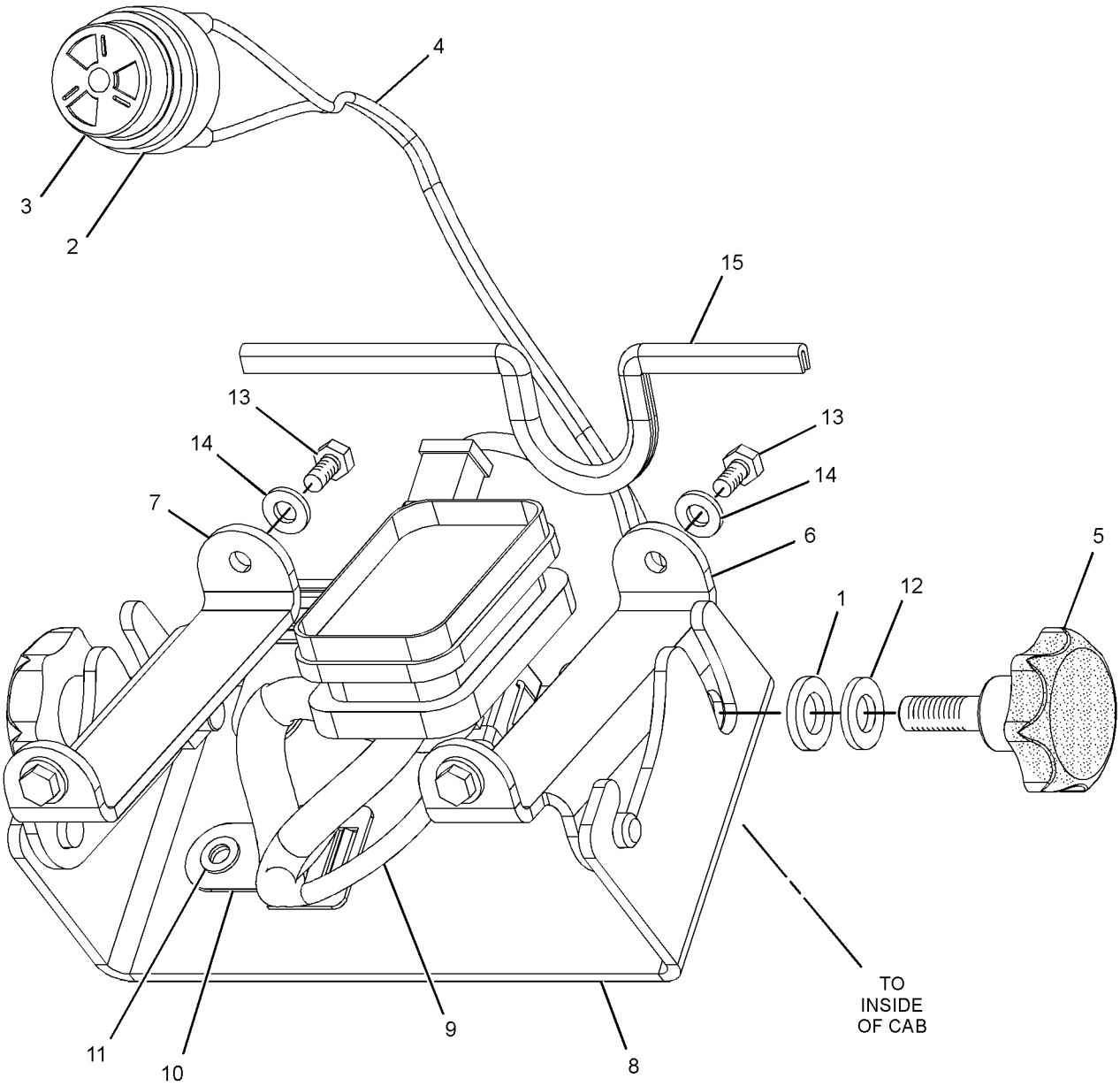

GRAPHIC #1 **<END>** g01332375

285-3173 WIRING GP-REAR

S/N: R9J1-UP

PART OF 349-2555 COMMON AR

SMCS-1408 **i04014056**

NOTE	REF NO	GRAPHIC REF	PART NUMBER	QTY	PART NAME 1 2 3 4 5 6 (PRODUCT LEVEL)	SEE PAGE
	1	1,2	**3S-2093**	4	STRAP-CABLE	
	2	3	**134-3355**	1	STRAP AS	
	3	1	**353-4515**	1	SWITCH GP-TOGGLE (GROUND LEVEL SHUTDOWN)	
		1	**102-8803**	1	KIT-RECEPTACLE (3-PIN)	
					(INCLUDES RECEPTACLE AS & WEDGE)	
		1	**8T-8729**	3	PIN-CONNECTOR (16-GA TO 18-GA)	
E		1	**112-4550**		SLEEVE (19-CM)	
		1	**271-2178**	1	SWITCH AS-TOGGLE (GROUND LEVEL SHUTDOWN)	
		1	**6T-3631**	2	NUT-HEX (15/32-32-THD)	
		1	**6T-3632**	1	LOCKWASHER	
		1	**6T-3633**	1	RING-LOCKING	
	4	2,3	**189-3158**	3	SUPPRESSOR-ARC	
C	5	3	**274-6717**	1	SENSOR-PRESSURE (TURBOCHARGER INLET)	
	6	2	**240-7193**	1	RESISTOR AS (500-OHM, 2-WATT)	
		2	**102-8802**	1	KIT-RECEPTACLE (2-PIN)	
					(INCLUDES RECEPTACLE AS & WEDGE)	
		2	**9X-3401**	2	PIN-CONNECTOR (16-GA TO 18-GA)	
	7	2	**254-5036**	1	HARNESS AS-PUMP (FUEL)	
		2	**102-8802**	1	KIT-RECEPTACLE (2-PIN)	
		2	**102-8805**	1	KIT-RECEPTACLE (6-PIN)	
					(EACH KIT INCLUDES RECEPTACLE AS & WEDGE)	
		2	**8T-8729**	3	PIN-CONNECTOR (16-GA TO 18-GA)	
		2	**8T-8730**	2	SOCKET-CONNECTOR (16-GA TO 18-GA)	
		2	**8T-8737**	3	PLUG-SEAL	
		2	**9W-0844**	2	SOCKET-CONNECTOR (14-GA)	
		2	**9W-0852**	2	PIN-CONNECTOR (14-GA TO 16-GA)	
		2	**9X-1054**	1	PLUG AS-CONNECTOR (4-PIN)	
		2	**9X-1056**	4	TERMINAL-RECEPTACLE (14-GA TO 16-GA)	
E		2	**125-7875**		TUBE-HEAT SHRINK (7.44-MM DIA) (5-CM)	
		2	**155-2270**	2	KIT-CONNECTING PLUG (2-PIN)	
					(EACH KIT INCLUDES PLUG AS, WEDGE & INTERFACE SEAL)	
	8	3	**288-9441**	2	LINK AS	
					(EACH INCLUDES)	
		3	**6F-0612**	1	NUT-JAM (1/4-28-THD)	
		3	**8S-7048**	1	ROD END	
		3	**9L-3334**	1	NUT-PLATED (1/4-28-THD, LH)	
		3	**036-7232**	1	ROD END	
		3	**288-9442**	1	ROD	
Y	9	3	*288-9443*	1	SENSOR & MTG GP-POSITION (ARTICULATION)	270
	10	1	**289-9519**	1	BRACKET	
C	11	1	**358-3850**	1	HARNESS AS-SWITCH	
		1	**102-8802**	4	KIT-RECEPTACLE (2-PIN)	
					(KIT INCLUDES RECEPTACLE AS & WEDGE)	
		1	**8T-8729**	2	PIN-CONNECTOR (16-GA TO 18-GA)	
		1	**8T-8730**	18	SOCKET-CONNECTOR (16-GA TO 18-GA)	
		1	**8T-8737**	11	PLUG-SEAL	
		1	**9X-3401**	1	PIN-CONNECTOR (16-GA TO 18-GA)	
		1	**9X-3402**	1	SOCKET-CONNECTOR (16-GA TO 18-GA)	
E		1	**125-7874**		TUBE-HEAT SHRINK (5.72-MM DIA) (10-CM)	
		1	**155-2255**	1	KIT-CONNECTING PLUG (12-PIN)	
		1	**155-2270**	5	KIT-CONNECTING PLUG (2-PIN)	
					(EACH PLUG KIT INCLUDES PLUG AS, WEDGE & INTERFACE SEAL)	
C	12	1	**357-6276**	1	HARNESS AS-REAR	
		1	**102-8802**	1	KIT-RECEPTACLE (2-PIN)	

285-3173 **WIRING GP-REAR** *(contd.)* **i04014056**

NOTE	REF NO	GRAPHIC REF	PART NUMBER	QTY	PART NAME 1 2 3 4 5 6 (PRODUCT LEVEL)	SEE PAGE
		1	**102-8801**	2	KIT-RECEPTACLE (12-PIN)	
					(EACH KIT INCLUDES RECEPTACLE AS & WEDGE)	
		1	**3S-2093**	4	STRAP-CABLE	
E		1	**5P-1255**		HOSE (149-CM)	
		1	**7G-7917**	16	PLUG-SEAL	
		1	**7G-7918**	3	PLUG-SEAL	
		1	**7G-7919**	5	PLUG-SEAL	
		1	**7X-6222**	1	PLUG AS-CONNECTOR (24-PIN)	
		1	**3E-4367**	1	RING-RETAINING	
M		1	**3E-8558**	1	BOLT (M5X0.8X39.37-MM)	
		1	**9X-3265**	2	SEAL-CONNECTOR (24-PIN)	
		1	**8N-1518**	2	PLUG AS-CONNECTOR (25-PIN)	
		1	**8N-1521**	2	BELL AS-END	
		1	**9X-6857**	16	SOCKET-CONNECTOR (16-GA TO 18-GA)	
		1	**8N-1541**	5	SOCKET-CONNECTOR (12-GA TO 14-GA)	
		1	**8N-1545**	1	SOCKET-CONNECTOR (8-GA)	
		1	**8N-1549**	4	SOCKET-CONNECTOR (4-GA)	
		1	**8T-8729**	26	PIN-CONNECTOR (16-GA TO 18-GA)	
		1	**8T-8730**	119	SOCKET-CONNECTOR (16-GA TO 18-GA)	
		1	**8T-8737**	105	PLUG-SEAL	
		1	**9W-0844**	20	SOCKET-CONNECTOR (14-GA)	
		1	**9W-0852**	5	PIN-CONNECTOR (14-GA TO 16-GA)	
		1	**9X-1054**	3	PLUG AS-CONNECTOR (4-PIN)	
		1	**9X-1056**	5	TERMINAL-RECEPTACLE (14-GA TO 16-GA)	
		1	**9X-3402**	113	SOCKET-CONNECTOR (16-GA TO 18-GA)	
		1	**9X-4391**	1	PLUG AS-CONNECTOR (70-PIN)	
		1	**3E-4367**	1	RING-RETAINING	
M		1	**3E-8557**	1	BOLT (M5X0.8X39.37-MM)	
		1	**9X-5615**	2	SEAL (INTERFACE, 70-PIN)	
		1	**9X-6772**	4	STRAP-CABLE	
E		1	**9X-8243**		TUBE-HEAT SHRINK (39.9-MM DIA) (40-CM)	
		1	**100-5041**	7	TERMINAL-RECEPTACLE (18-GA TO 20-GA)	
E		1	**119-3662**		TUBE-HEAT SHRINK (10.85-MM DIA) (65-CM)	
E		1	**125-7874**		TUBE-HEAT SHRINK (5.72-MM DIA) (80-CM)	
E		1	**125-7875**		TUBE-HEAT SHRINK (7.44-MM DIA) (40-CM)	
		1	**9X-3402**	5	SOCKET-CONNECTOR (16-GA TO 18-GA)	
		1	**126-1768**	19	SOCKET-CONNECTOR (14-GA)	
		1	**126-1774**	3	COVER-CONNECTOR	
		1	**2L-8069**	4	TERMINAL-RING (2-GA TO 10-GA, 3/8-IN SCREW)	
		1	**131-1487**	1	TERMINAL AS (6-GA TO 8-GA)	
		1	**131-1490**	1	TERMINAL AS (6-GA TO 8-GA)	
		1	**2L-8079**	1	TERMINAL-RING (14-GA TO 16-GA, 3/8-IN SCREW)	
		1	**147-1445**	1	PLUG AS-CONNECTOR (70-PIN)	
		1	**147-1446**	1	PLUG AS-CONNECTOR (70-PIN)	
					(EACH PLUG AS INCLUDES)	
		1	**159-9322**	1	SEAL-O-RING	
		1	**7N-9017**	3	TERMINAL-RING (18-GA TO 22-GA, NO. 10 SCREW)	
		1	**155-2255**	2	KIT-CONNECTING PLUG (12-PIN)	
		1	**155-2270**	8	KIT-CONNECTING PLUG (2-PIN)	
		1	**174-0503**	1	KIT-CONNECTING PLUG (3-PIN)	
					(EACH KIT INCLUDES PLUG AS, WEDGE & INTERFACE SEAL)	
		1	**160-7689**	1	PLUG AS-CONNECTOR (70-PIN)	
		1	**159-9322**	1	SEAL-O-RING	
		1	**237-0227**	1	PLUG AS-CONNECTOR (3-PIN)	
		1	**264-7030**	1	SEAL-CONNECTOR	
	13	2	**353-3817**	1	HARNESS AS-SOLENOID	
		2	**8T-8730**	9	SOCKET-CONNECTOR (16-GA TO 18-GA)	

285-3173 **WIRING GP-REAR** ***(contd.)*** **i04014056**

NOTE	REF NO	GRAPHIC REF	PART NUMBER	QTY	PART NAME 1 2 3 4 5 6 (PRODUCT LEVEL)	SEE PAGE
		2	**8T-8737**	1	PLUG-SEAL	
		2	**9X-3402**	1	SOCKET-CONNECTOR (16-GA TO 18-GA)	
		2	**155-2270**	1	KIT-CONNECTING PLUG (2-PIN)	
		2	**155-2274**	1	KIT-CONNECTING PLUG (6-PIN)	
					(EACH KIT INCLUDES PLUG AS, WEDGE & INTERFACE SEAL)	
		2	**237-0227**	1	PLUG AS-CONNECTOR (3-PIN)	
		2	**264-7030**	1	SEAL-CONNECTOR	
	14	1,2,3	**130-5300**	11	CLIP	
C	15	2,3	**132-5789**	4	CLIP	
	16	2	**134-2540**	1	RESISTOR AS-CONNECTION (3-PIN)	
	17	2	**134-3987**	2	CLIP	
	18	3	**174-5907**	1	CLIP	
	19	1	**3E-5169**	1	GUARD-SWITCH	
	20	2	**3E-5239**	1	RELAY AS (24-VOLT) (FUEL PRIMING)	
	20A	1	**3E-5239**	1	RELAY AS (24-VOLT) (SECONDARY STEERING)	
	20B	1	**3E-5239**	1	RELAY AS (24-VOLT) (A/C CLUTCH SOLENOID)	
	20C	1	**3E-5239**	1	RELAY AS (24-VOLT) (BACKUP ALARM)	
	21	3	**3J-1907**	1	SEAL-O-RING	
	22	1	**4D-7794**	1	CLIP	
	23	2	**4D-9517**	1	CLIP	
	24	2	**4P-7581**	4	CLIP	
	25	1,2	**4P-8134**	3	CLIP	
	26	1	**4S-4455**	1	CLIP	
M	27	1,2	**5C-9553**	4	BOLT (M6X1X16-MM)	
	28	1,2,3	**5P-9297**	4	CLIP	
	29	1	**6D-4244**	1	CLIP	
	30	1,3	**6V-1889**	3	CLIP	
	31	3	**7C-4354**	2	CLIP	
	32	1	**7D-7233**	6	CLIP	
C	33	1,2,3	**7K-1181**	21	STRAP-CABLE	
	34	3	**7X-7729**	2	WASHER (11X25X3-MM THK)	
	35	1,2,3	**8M-2770**	4	CLIP	
	36	2	**8M-2773**	1	CLIP	
	37	1,2,3	**8T-4121**	28	WASHER-HARD (11X21X2.5-MM THK)	
M	38	1,2,3	**8T-4133**	4	NUT (M10X1.5-THD)	
M	39	1,2,3	**8T-4136**	13	BOLT (M10X1.5X25-MM)	
M	40	1,2,3	**8T-4137**	13	BOLT (M10X1.5X20-MM)	
M	41	3	**8T-4138**	2	BOLT (M6X1X20-MM)	
	42	3	**8T-4205**	2	WASHER-HARD (7.2X14.5X2-MM THK)	
	43	1,2	**9X-8256**	4	WASHER (6.6X12X2-MM THK)	
E	44	2	**5P-1265**		HOSE (16-CM)	

C-CHANGE FROM PREVIOUS TYPE
E-ORDER BY THE CENTIMETER
M-METRIC PART
Y-SEPARATE ILLUSTRATION

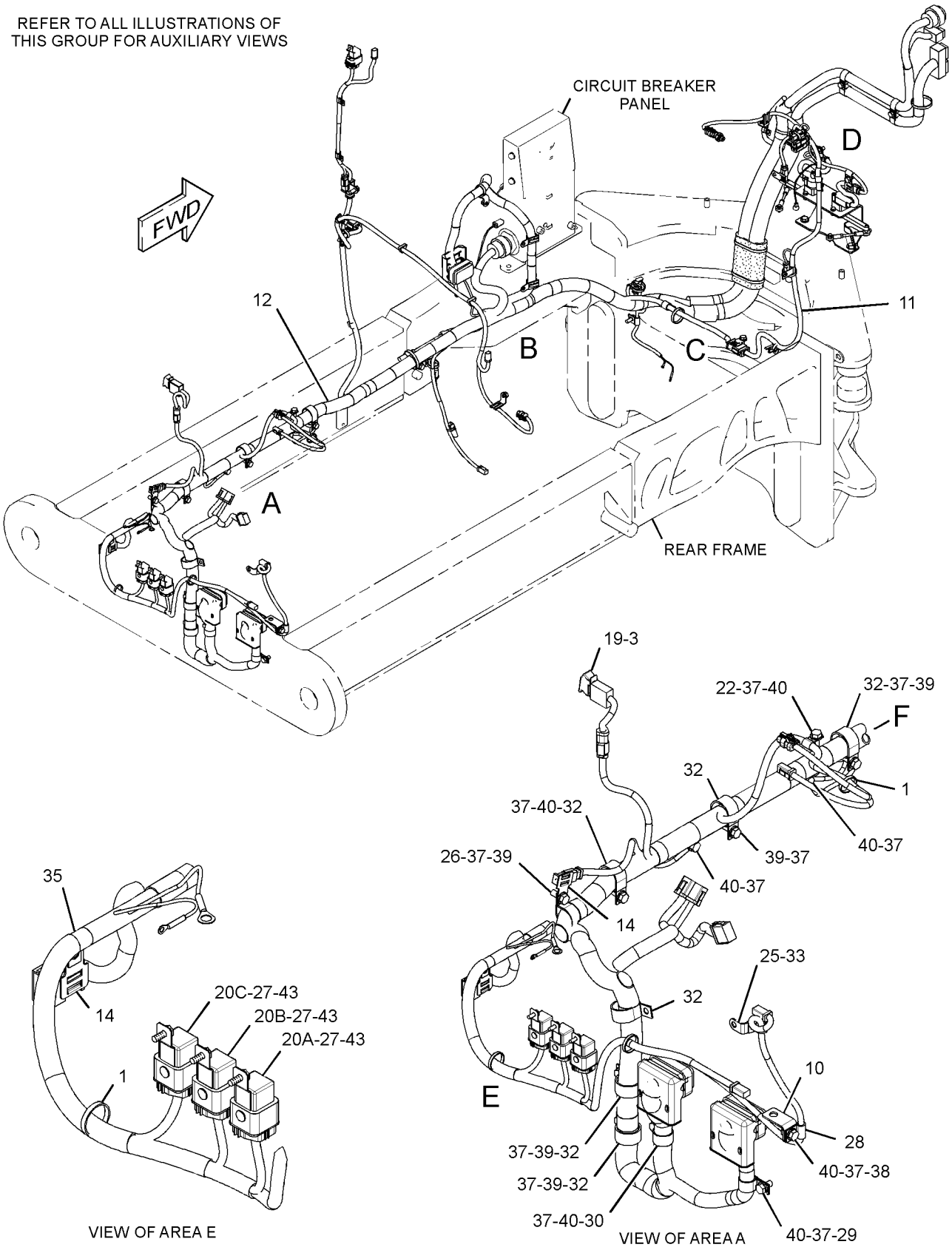

GRAPHIC #1 g02213133

285-3173 **WIRING GP-REAR** *(contd.)* **i04014056**

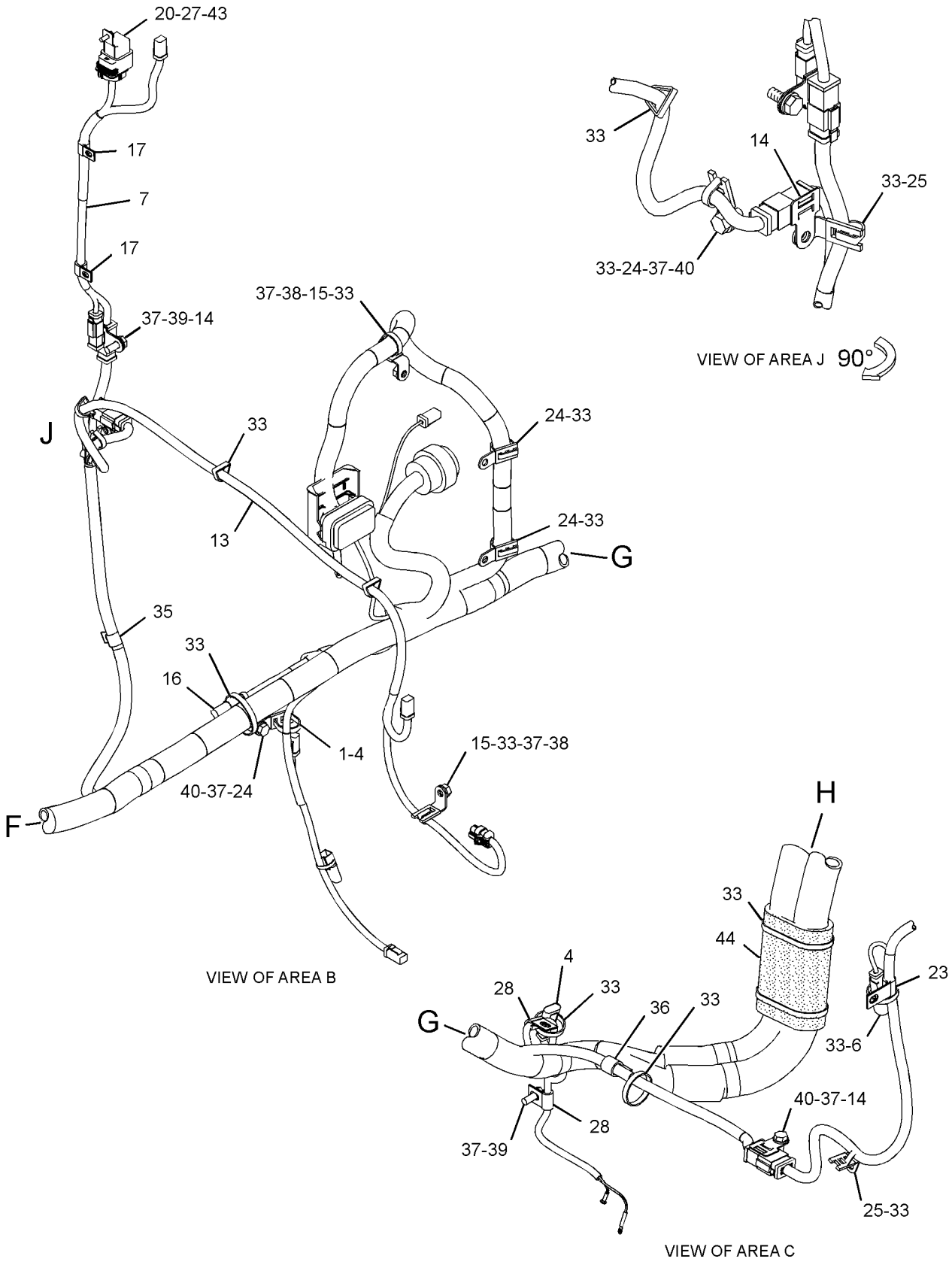

GRAPHIC #2

g02213155

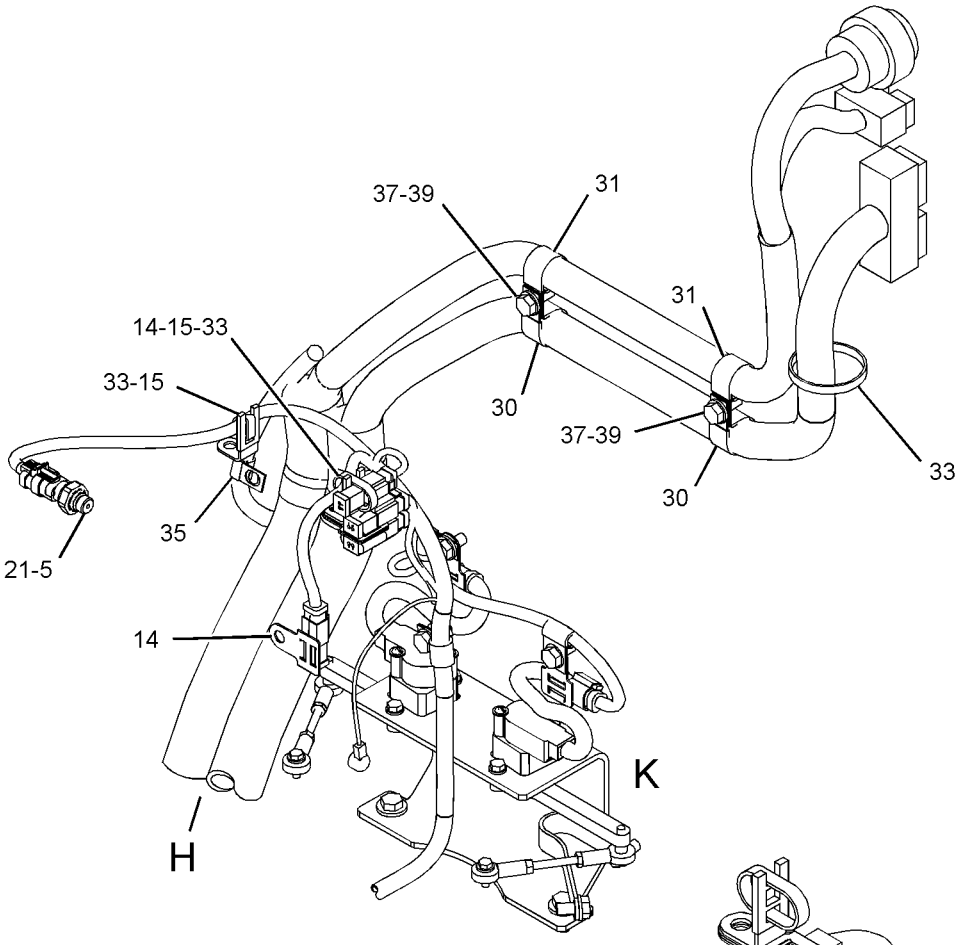

VIEW OF AREA D

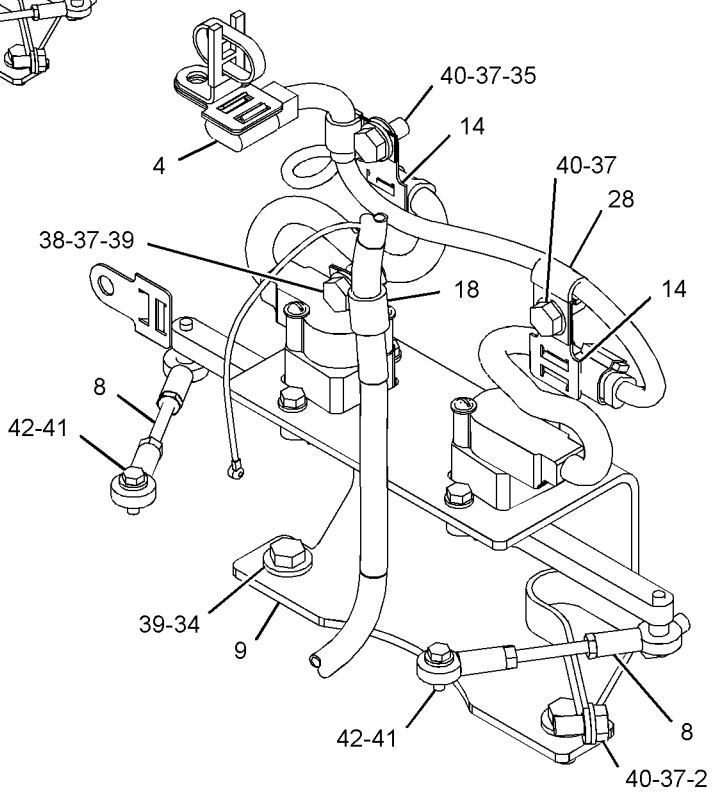

VIEW OF AREA K

GRAPHIC #3 **<END>** g02213157

ELECTRICAL AND STARTING SYSTEM

285-3174 WIRING GP-REAR

S/N: R9J1-UP

PART OF 349-2555 COMMON AR

SMCS-1408 **i03893609**

NOTE	REF NO	GRAPHIC REF	PART NUMBER	QTY	PART NAME 1 2 3 4 5 6 (PRODUCT LEVEL)	SEE PAGE
C	1	1	**3S-2093**	5	STRAP-CABLE	
	2	1	**8W-8528**	2	SLEEVE	
	3	1	**256-6631**	1	BRACKET	
	4	1	**257-9990**	1	CABLE AS	
		1	**1S-7251**	1	TERMINAL-CABLE (00-GA, 1/2-IN SCREW)	
		1	**8N-0869**	1	COVER-TERMINAL (RED)	
		1	**9X-9825**	1	TERMINAL-CABLE (00-GA, 1/2-IN SCREW)	
E		1	**159-8049**		CABLE (00-GA, RED) (160-CM)	
	5	1	**267-2102**	1	CABLE AS	
		1	**8N-0869**	1	COVER-TERMINAL (RED)	
		1	**170-3794**	1	RING-TERMINAL	
		1	**8T-8827**	1	BOOT (RED)	
E		1	**159-8047**		CABLE-ELECTRICAL (0-GA, RED) (221-CM)	
		1	**030-1707**	1	TERMINAL-RING (0-GA, 3/8-IN SCREW)	
	6	1	**267-2103**	1	CABLE AS	
		1	**030-1707**	1	TERMINAL-RING (0-GA, 3/8-IN SCREW)	
		1	**030-1709**	1	TERMINAL-RING (0-GA, 1/4-IN SCREW)	
	7	1	**270-3528**	1	BRACKET AS	
M		1	**8T-3490**	1	NUT-WELD (M10X1.5-THD)	
Y	8	1	*280-8969*	1	PANEL GP-CIRCUIT BREAKER	261
	9	1	**287-8828**	1	PLATE	
	10	1	**289-0723**	1	CABLE AS	
		1	**1S-7251**	2	TERMINAL-CABLE (00-GA, 1/2-IN SCREW)	
E		1	**159-8050**		CABLE (00-GA, BLACK) (59-CM)	
	11	1	**140-0860**	1	STRAP AS-GROUND	
M	12	1	**160-0018**	2	SCREW-FLAT HEAD (M12X1.75X45-MM)	
	13	1	**4K-8864**	11	CLIP	
	14	1	**6K-8178**	1	CLIP	
C	16	1	**8T-4121**	18	WASHER-HARD (11X21X2.5-MM THK)	
M	17	1	**8T-4133**	1	NUT (M10X1.5-THD)	
M	18	1	**8T-4136**	5	BOLT (M10X1.5X25-MM)	
CM	19	1	**8T-4137**	11	BOLT (M10X1.5X20-MM)	
M	20	1	**8T-4139**	3	BOLT (M12X1.75X30-MM)	
CM	21	1	**8T-4179**	6	BOLT (M12X1.75X20-MM)	
M	22	1	**8T-4189**	2	BOLT (M8X1.25X20-MM)	
M	23	1	**8T-4191**	1	BOLT (M10X1.5X16-MM)	
	24	1	**8T-4223**	9	WASHER-HARD (13.5X25.5X3-MM THK)	
	25	1	**8T-4224**	2	WASHER-HARD (8.8X16X2-MM THK)	
C	26	1	**9M-8406**	2	CLIP	
	27	1	**5P-4116**	4	WASHER-HARD (8.8X20.5X2-MM THK)	
M	28	1	**6V-8202**	4	BOLT-SOCKET HEAD (M8X1.25X16-MM)	
	29	1	**8S-2634**	1	COVER AS	
	30	1	**174-5907**	5	CLIP	
	31	1	**236-2341**	1	CABLE AS	
		1	**1S-7251**	1	TERMINAL-CABLE (00-GA, 1/2-IN SCREW)	
		1	**8N-1725**	1	COVER AS-TERMINAL (RED)	
		1	**3S-6049**	1	TERMINAL AS-BATTERY (POSITIVE)	
		1	**159-8049**		CABLE (00-GA, RED) (85-CM)	
	32	1	**265-6631**	1	RECEPTACLE AS-AUXILIARY START	
		1	**1S-7251**	2	TERMINAL-CABLE (00-GA, 1/2-IN SCREW)	
		1	**159-8049**		CABLE (00-GA, RED) (46-CM)	
		1	**159-8050**		CABLE (00-GA, BLACK) (14-CM)	

C-CHANGE FROM PREVIOUS TYPE
E-ORDER BY THE CENTIMETER
M-METRIC PART
Y-SEPARATE ILLUSTRATION

285-3174 **WIRING GP-REAR** *(contd.)* **i03893609**

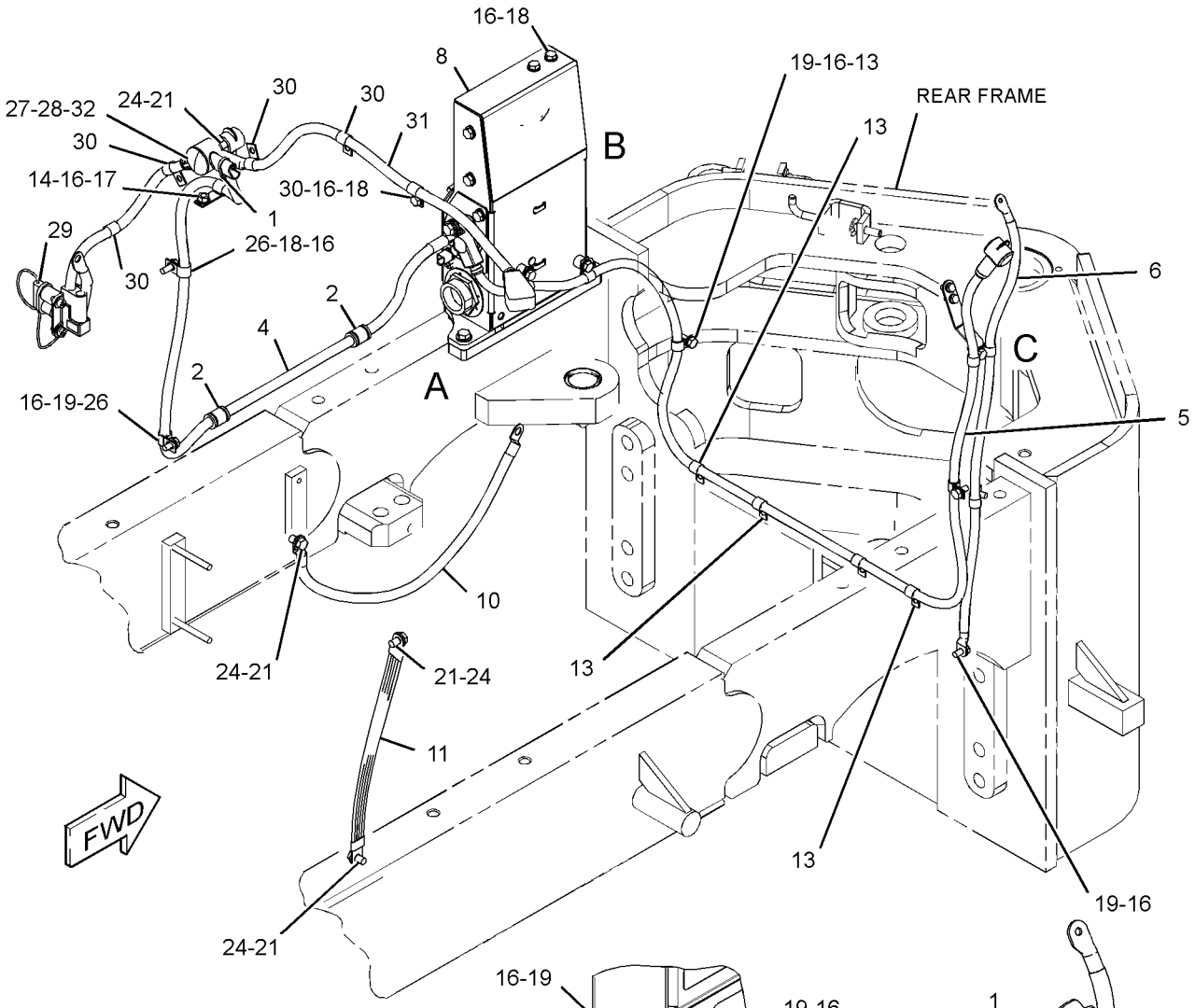

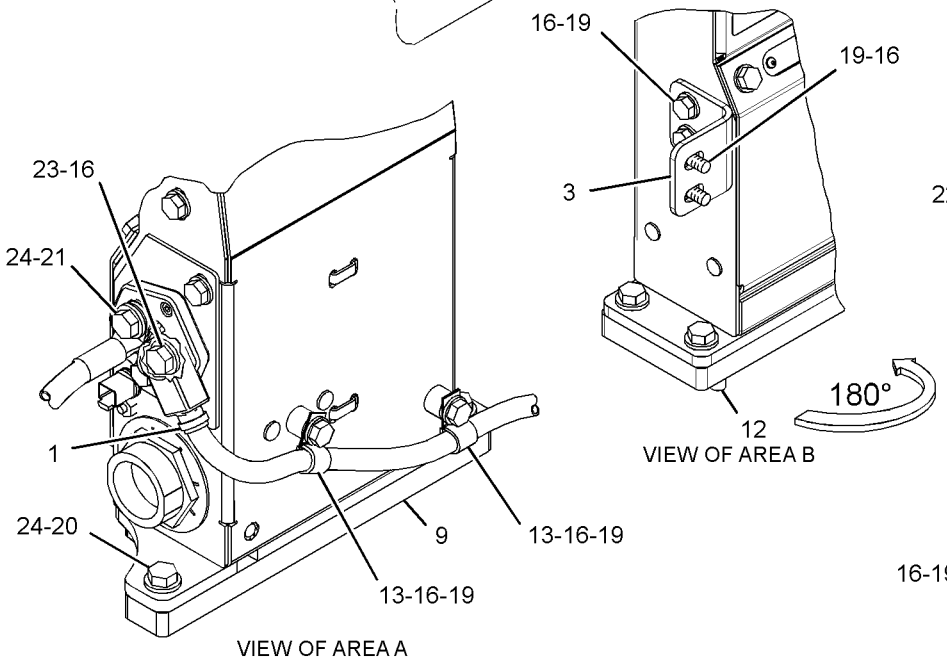

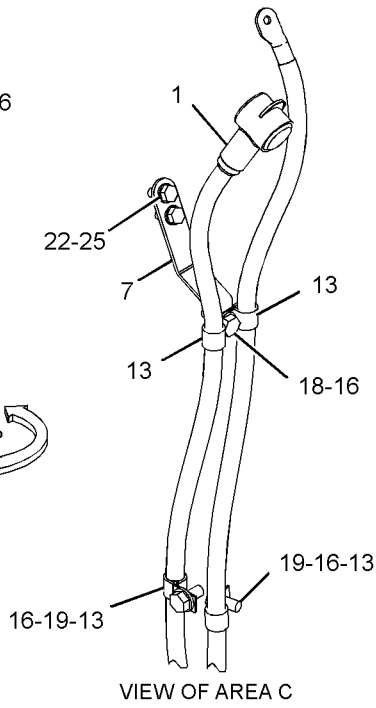

GRAPHIC #1 **<END>** g02213833

233-4623 WIRING GP-REAR LIGHTING–
STOP, TAIL, TURN, BACKUP

S/N: R9J1-UP

PART OF 299-3881 LIGHTING AR-ROADING, 299-3880 LIGHTING GP-ROADING AN ATTACHMENT

SMCS-1408, 1429 **i03867389**

NOTE	REF NO	GRAPHIC REF	PART NUMBER	QTY	PART NAME 1 2 3 4 5 6 (PRODUCT LEVEL)	SEE PAGE
	1	1	**3S-2093**	22	STRAP-CABLE	
	2	1	**7X-2393**	4	BUMPER-CONICAL	
	3	1	**9S-1316**	2	SPRING	
	4	1	**116-0118**	2	CLIP	
CY	5	1	**334-8049**	2	LAMP GP-SIGNAL (12-VOLT, 24-VOLT, STOP, TAIL)	245
Y	6	1	**201-5464**	2	LAMP GP-SIGNAL (12-VOLT, 24-VOLT, TURN)	244
	7	1	**245-2810**	1	BRACKET AS (RH)	
	8	1	**245-2811**	1	BRACKET AS (LH)	
	9	1	**245-2812**	1	ARM AS (RH)	
		1	**5D-9629**	2	ROD	
	10	1	**245-2813**	1	ARM AS (LH)	
		1	**5D-9629**	3	ROD	
	11	1	**245-2814**	2	ROD	
Y	12	1	**261-1502**	2	LAMP GP (24-VOLT)	233
	13	1	**286-9718**	1	HARNESS AS-REAR LIGHTING	
		1	**102-8802**	5	KIT-RECEPTACLE (2-PIN)	
		1	**102-8803**	4	KIT-RECEPTACLE (3-PIN)	
					(EACH KIT INCLUDES RECEPTACLE AS & WEDGE)	
		1	**8T-8730**	11	SOCKET-CONNECTOR (16-GA TO 18-GA)	
		1	**8T-8737**	26	PLUG-SEAL	
		1	**9W-0844**	23	SOCKET-CONNECTOR (14-GA)	
E		1	**119-3662**		TUBE-HEAT SHRINK (10.85-MM DIA) (13-CM)	
E		1	**125-7875**		TUBE-HEAT SHRINK (7.44-MM DIA) (25-CM)	
		1	**155-2255**	1	KIT-CONNECTING PLUG (12-PIN)	
		1	**155-2260**	4	KIT-CONNECTING PLUG (3-PIN)	
		1	**155-2270**	7	KIT-CONNECTING PLUG (2-PIN)	
					(EACH KIT INCLUDES PLUG AS, WEDGE & INTERFACE SEAL)	
B	14	1	**292-9390**	2	FILM-WARNING (HAND CRUSH HAZARD, STAY BACK)	
B	15	1	**292-9391**	2	FILM-WARNING (HAND CRUSH HAZARD, STAY BACK)	
	16	1	**117-9409**	2	GROMMET	
	17	1	**156-6175**	2	CLIP	
	18	1	**1V-6688**	1	GROMMET	
	19	1	**3B-4623**	2	PIN-COTTER	
M	20	1	**5C-2890**	18	NUT (M6X1-THD)	
	21	1	**5P-1076**	4	WASHER-HARD (13.5X30X4-MM THK)	
	22	1	**5P-4115**	6	WASHER-HARD (7.2X19X2-MM THK)	
M	23	1	**6V-7687**	2	LOCKNUT (M12X1.75-THD)	
	24	1	**7X-7729**	4	WASHER (11X25X3-MM THK)	
B	25	1	**132-0338**	8	WASHER-PLASTIC (13X31.7X0.8-MM THK)	
M	26	1	**8T-4136**	4	BOLT (M10X1.5X25-MM)	
M	27	1	**8T-4176**	2	BOLT (M12X1.75X90-MM)	
	28	1	**8T-4223**	2	WASHER-HARD (13.5X25.5X3-MM THK)	
	29	1	**9X-8256**	12	WASHER (6.6X12X2-MM THK)	

B-USE AS REQUIRED
C-CHANGE FROM PREVIOUS TYPE
E-ORDER BY THE CENTIMETER
M-METRIC PART
Y-SEPARATE ILLUSTRATION

233-4623 **WIRING GP-REAR LIGHTING** *(contd.)* **i03867389**

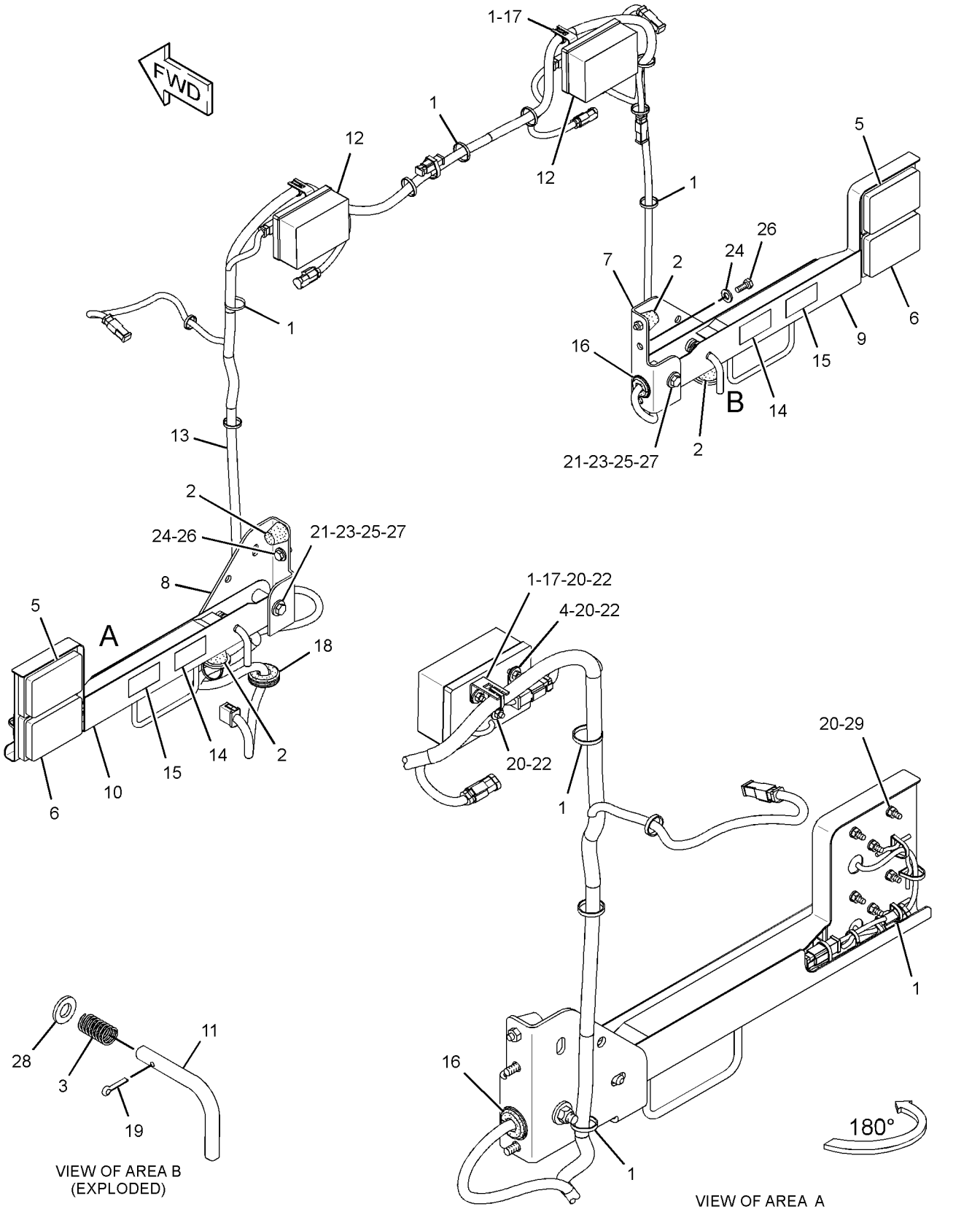

GRAPHIC #1 **<END>** g01522783

247-6430 WIRING GP-REAR LIGHTING—TAIL

S/N: R9J1-UP
AN ATTACHMENT

SMCS-1408, 1429 **i03631949**

NOTE	REF NO	GRAPHIC REF	PART NUMBER	QTY	PART NAME 1 2 3 4 5 6 (PRODUCT LEVEL)	SEE PAGE
	1	1	**3S-2093**	25	STRAP-CABLE	
	2	1	**116-0118**	2	CLIP	
CY	3	1	**334-8049**	2	LAMP GP-SIGNAL (12-VOLT, 24-VOLT, STOP, TAIL)	245
	4	1	**236-1928**	1	BRACKET AS	
	5	1	**239-6379**	1	BRACKET AS	
Y	6	1	**261-1502**	2	LAMP GP (24-VOLT)	233
	7	1	**286-9718**	1	HARNESS AS-REAR LIGHTING	
		1	**102-8802**	5	KIT-RECEPTACLE (2-PIN)	
		1	**102-8803**	4	KIT-RECEPTACLE (3-PIN)	
					(EACH KIT INCLUDES RECEPTACLE AS & WEDGE)	
		1	**8T-8730**	11	SOCKET-CONNECTOR (16-GA TO 18-GA)	
		1	**8T-8737**	26	PLUG-SEAL	
		1	**9W-0844**	23	SOCKET-CONNECTOR (14-GA)	
E		1	**119-3662**		TUBE-HEAT SHRINK (10.85-MM DIA) (13-CM)	
E		1	**125-7875**		TUBE-HEAT SHRINK (7.44-MM DIA) (25-CM)	
		1	**155-2255**	1	KIT-CONNECTING PLUG (12-PIN)	
		1	**155-2260**	4	KIT-CONNECTING PLUG (3-PIN)	
		1	**155-2270**	7	KIT-CONNECTING PLUG (2-PIN)	
					(EACH KIT INCLUDES PLUG AS, WEDGE, & INTERFACE SEAL)	
	8	1	**156-6175**	2	CLIP	
	9	1	**1V-6688**	1	GROMMET	
M	10	1	**5C-2890**	12	NUT (M6X1-THD)	
	11	1	**5P-4115**	6	WASHER-HARD (7.2X19X2-MM THK)	
	13	1	**8T-4121**	6	WASHER-HARD (11X21X2.5-MM THK)	
M	14	1	**8T-4172**	6	BOLT (M10X1.5X80-MM)	
	15	1	**9X-8256**	6	WASHER (6.6X12X2-MM THK)	

C-CHANGE FROM PREVIOUS TYPE
E-ORDER BY THE CENTIMETER
M-METRIC PART
Y-SEPARATE ILLUSTRATION

247-6430 **WIRING GP-REAR LIGHTING** *(contd.)* **i03631949**

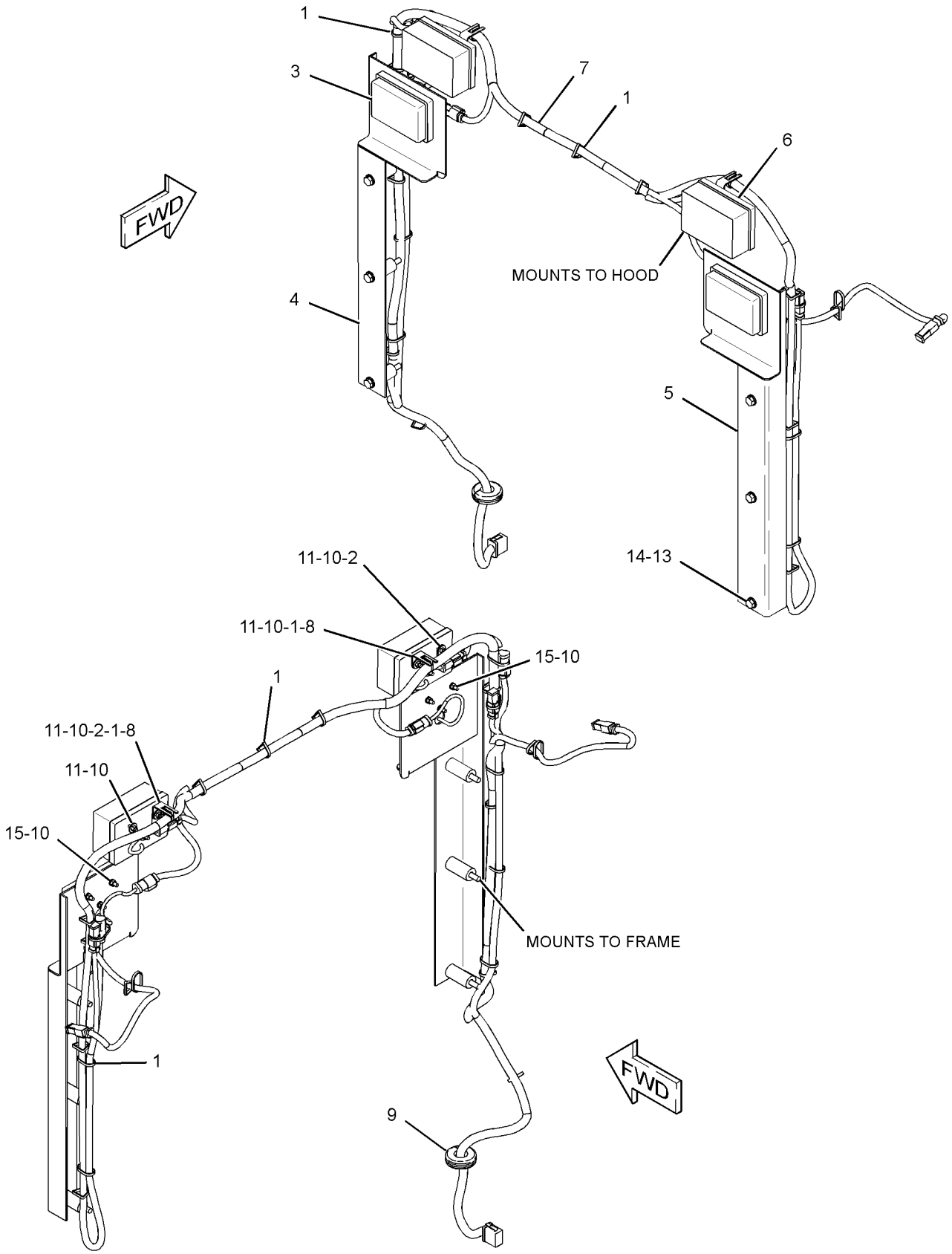

GRAPHIC #1 **<END>** g01522891

285-3176 WIRING GP-SECONDARY STEERING

S/N: R9J1-UP

PART OF 349-2555 COMMON AR

SMCS-1408, 4334 **i02770209**

NOTE	REF NO	GRAPHIC REF	PART NUMBER	QTY	PART NAME 1 2 3 4 5 6 (PRODUCT LEVEL)	SEE PAGE
	1	1	**3S-2093**	5	STRAP-CABLE	
	2	1	**260-3404**	1	CABLE AS	
		1	**1S-7252**	2	TERMINAL-CABLE (00-GA, 3/8-IN BOLT)	
E		1	**5P-0747**		CABLE (00-GA, BLACK) (29-CM)	
		1	**9G-8909**	2	COVER-TERMINAL (BLACK)	
	3	1	**286-2439**	1	CABLE AS	
		1	**8S-3020**	1	TERMINAL-CABLE (00-GA, 3/8-IN BOLT)	
		1	**9X-9120**	1	BOOT (RED)	
		1	**1S-7252**	1	TERMINAL-CABLE (00-GA, 3/8-IN BOLT)	
		1	**8N-0869**	1	COVER-TERMINAL (RED)	
E		1	**159-8049**		CABLE (00-GA, RED) (62-CM)	
	4	1	**286-2501**	1	CABLE AS	
		1	**190-3848**	1	TERMINAL-RING	
		1	**1S-7252**	1	TERMINAL-CABLE (00-GA, 3/8-IN BOLT)	
		1	**8N-0869**	1	COVER-TERMINAL (RED)	
E		1	**159-8049**		CABLE (00-GA, RED) (118-CM)	
		1	**190-3849**	1	COVER-TERMINAL	
	5	1	**174-5907**	3	CLIP	
Y	6	1	**179-0006**	1	SWITCH GP-MAGNETIC (24-VOLT TO 32-VOLT) (SECONDARY STEERING RELAY)	316
C	9	1	**8T-4121**	2	WASHER-HARD (11X21X2.5-MM THK)	
CM	10	1	**8T-4136**	1	BOLT (M10X1.5X25-MM)	
M	11	1	**8T-4137**	1	BOLT (M10X1.5X20-MM)	
M	12	1	**8T-4171**	4	BOLT (M6X1X12-MM)	
	13	1	**9X-8256**	4	WASHER (6.6X12X2-MM THK)	
C	14	1	**6K-8178**	2	CLIP	

C-CHANGE FROM PREVIOUS TYPE
E-ORDER BY THE CENTIMETER
M-METRIC PART
Y-SEPARATE ILLUSTRATION

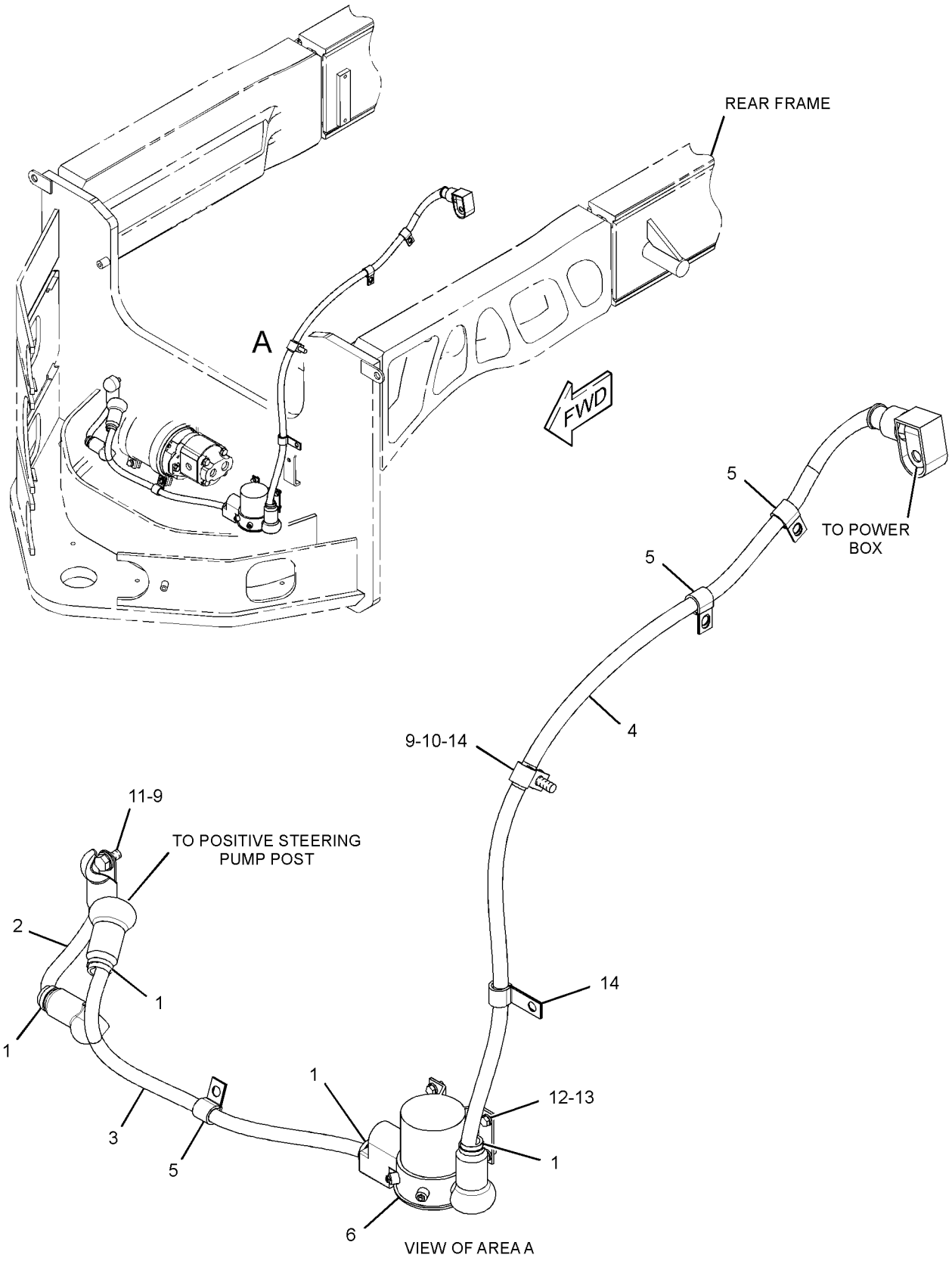

GRAPHIC #1 **<END>** g01405401

230-0961 WIRING GP-UNIT INJECTOR

S/N: RSX1037-UP

PART OF 263-6681, 357-6586 ENGINE AR-CORE

SMCS-1408 **i03574019**

NOTE	REF NO	GRAPHIC REF	PART NUMBER	QTY	PART NAME 1 2 3 4 5 6 (PRODUCT LEVEL)	SEE PAGE
	1	1	**3S-2093**	1	STRAP-CABLE	
	2	1	**7E-6508**	6	CAP AS	
	3	1	**230-0960**	1	HARNESS AS-ENGINE (UNIT INJECTOR)	
		1	**172-6063**	1	RECEPTACLE AS	
		1	**3S-2093**	2	STRAP-CABLE	
		1	**103-8133**	1	KIT-RECEPTACLE (12-PIN)	
					(INCLUDES A RECEPTACLE AS & WEDGE)	
	4	1	**237-9960**	1	CLIP	
	5	1	**4P-8525**	4	SPACER (9X16X30-MM THK)	
	6	1	**2V-3216**	4	CLIP	
	7	1	**5P-0537**	7	WASHER-HARD (7.2X14.5X2-MM THK)	
M	8	1	**6V-7728**	4	BOLT (M6X1X45-MM)	
M	9	1	**6V-8214**	2	BOLT (M6X1X20-MM)	
M	10	1	**6V-8836**	1	BOLT (M6X1X14-MM)	

M-METRIC PART

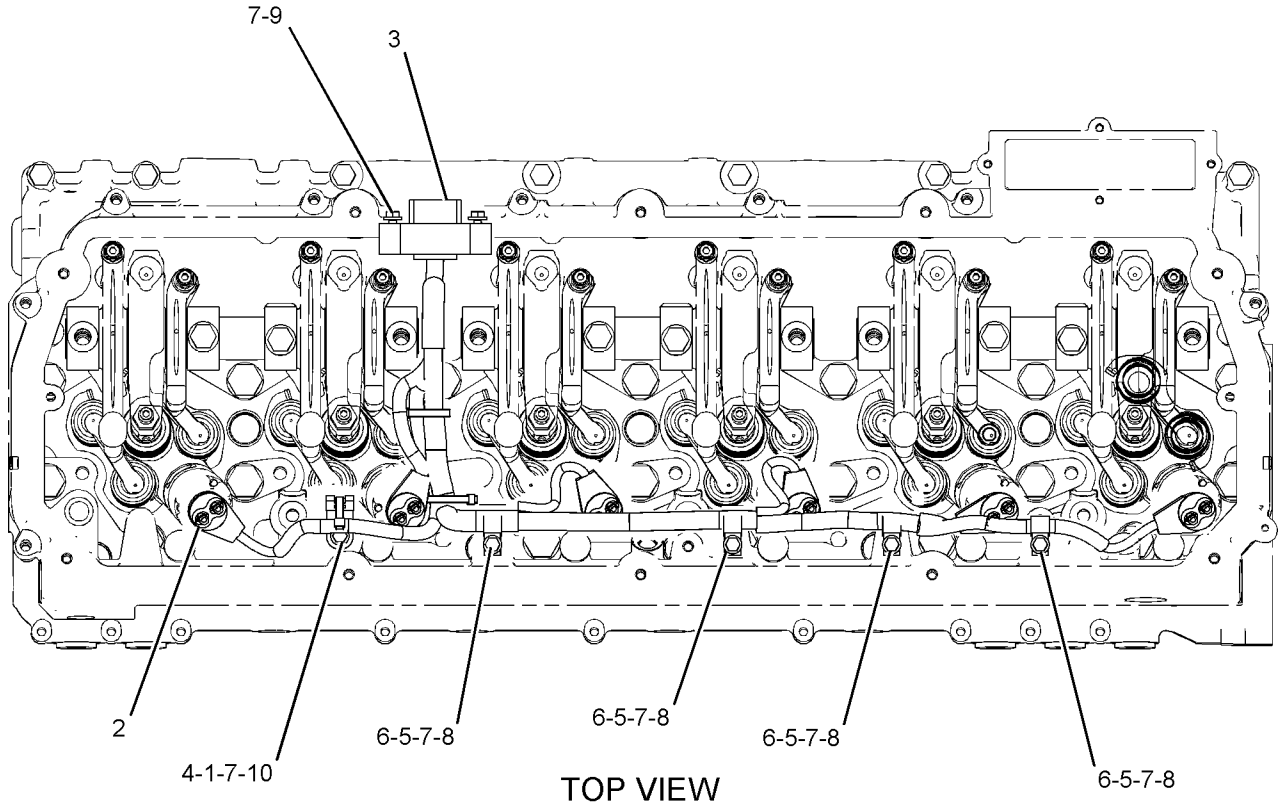

TOP VIEW

GRAPHIC #1

<END>

g01064811

257-4183 WIRING GP-UNIT INJECTOR

S/N: R9J1-UP

FOR USE AS SERVICE REPAIR FOR INJECTOR HARNESSES WITH THE 7E-6513 CONNECTOR

FIELD INSTALLATION

SMCS-1408 **i03691128**

NOTE	REF NO	GRAPHIC REF	PART NUMBER	QTY	PART NAME 1 2 3 4 5 6 (PRODUCT LEVEL)	SEE PAGE
					(NO SERVICED PARTS)	

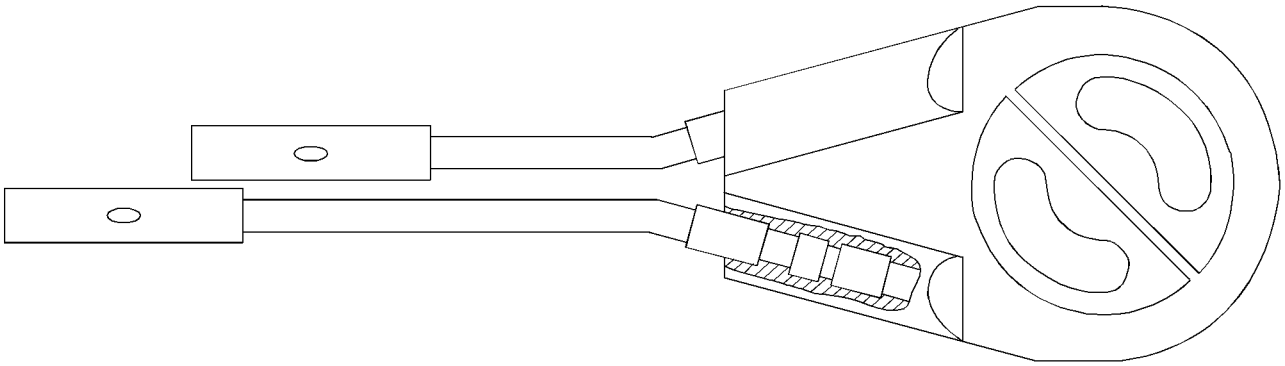

GRAPHIC #1 **<END>** g01986713

248-6925 AUTOSHIFT AR–TRANSMISSION

S/N: R9J1-UP

PART OF 351-2601, 357-3000 SNOW AR-MOTOR GRADER

AN ATTACHMENT

SMCS-3168 **i02615622**

NOTE	PART NUMBER	QTY	PART NAME 1 2 3 4 5 6 (PRODUCT LEVEL)	SEE PAGE
Y	*238-8824*	1	SWITCH GP-ROCKER (AUTOSHIFT)	321
	214-2470	1	CONFIGURATION-PREMIUM	
			(DLR INSTALL CONFIG: SEE IRM: EES03-01)	

Y-SEPARATE ILLUSTRATION

<END>

256-3894 AXLE GP-FRONT

S/N: R9J1-UP

PART OF 349-2555 COMMON AR

SMCS-3020, 3282, 4303, 4305, 5225 **i04033130**

NOTE	REF NO	GRAPHIC REF	PART NUMBER	QTY	PART NAME 1 2 3 4 5 6 (PRODUCT LEVEL)	SEE PAGE
Y	1	1	*256-3895*	1	AXLE GP-FRONT	394
Y	2	1	*288-6306*	1	MOUNTING GP-AXLE (FRONT)	514

Y-SEPARATE ILLUSTRATION

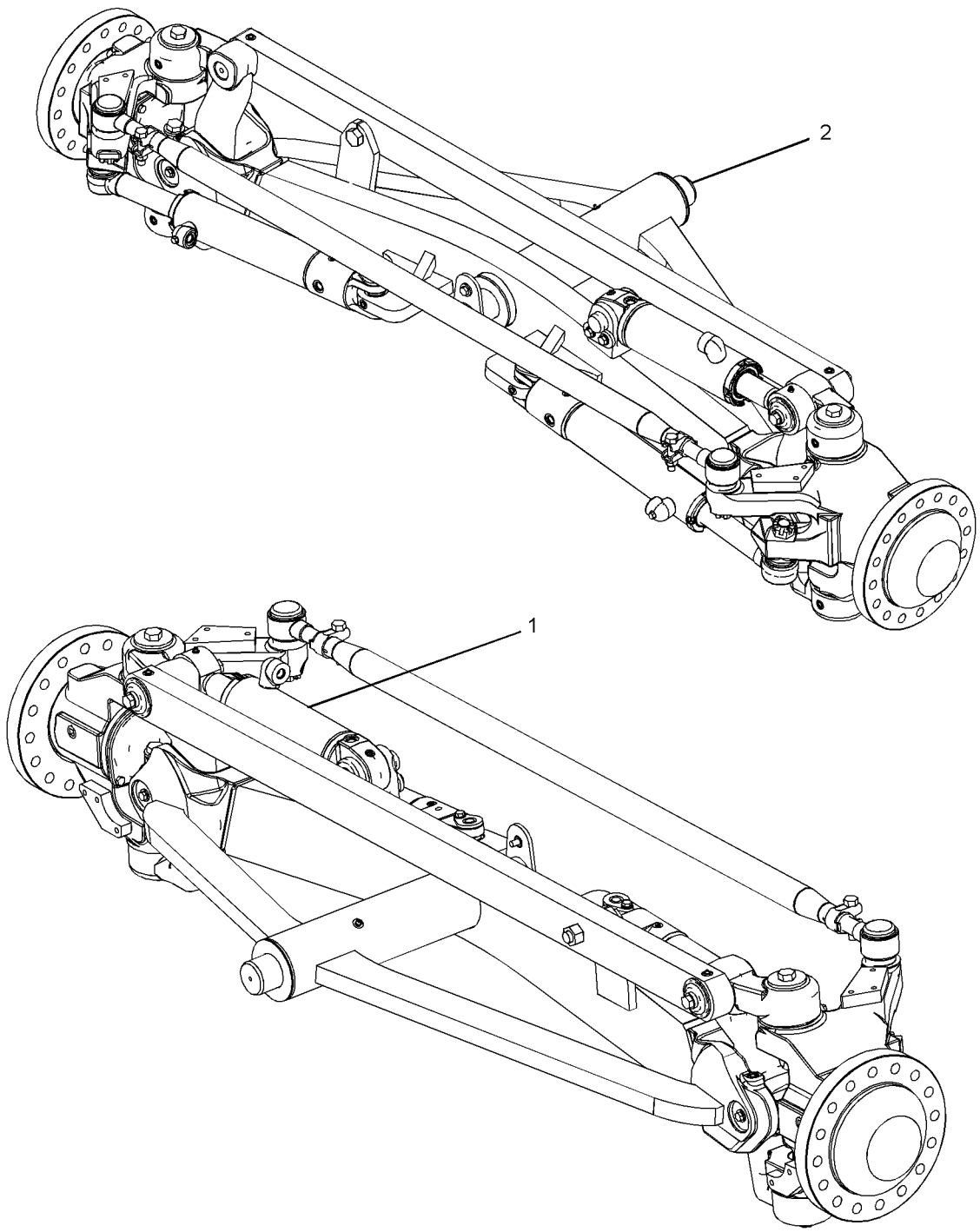

GRAPHIC #1 **<END>** g01284889

POWER TRAIN

256-3895 AXLE GP-FRONT

S/N: R9J1-UP

PART OF 256-3894 AXLE GP-FRONT

SMCS-3020, 3282, 4303, 4305, 5225 **i02837087**

NOTE	REF NO	GRAPHIC REF	PART NUMBER	QTY	PART NAME 1 2 3 4 5 6 (PRODUCT LEVEL)	SEE PAGE
	1	2	**1P-3934**	2	CUP-BEARING	
	2	2	**1P-3935**	2	CONE-BEARING	
	3	2	**1P-4693**	2	CUP-BEARING	
	4	2	**1P-4694**	2	CONE-BEARING	
	5	1,2	**2G-5667**	3	RETAINER	
	6	2	**2G-8615**	4	WASHER-THRUST (2.015X3.625X0.11-IN THK)	
	7	2	**2G-8626**	2	WASHER-THRUST (2.02X3.63X0.16-IN THK)	
	8	1,2	**2G-8741**	4	RING-METAL SEAL	
	9	2	**2G-8777**	4	SEAL	
	10	1,2	**3B-8489**	11	FITTING-GREASE	
R	11	2	**5K-1078**	2	SEAL GP-DUO-CONE	
					(EACH INCLUDES)	
	11A	2	**5K-1075**	2	RING-SEALING	
	12	2	**5T-0907**	2	COVER	
	13	1,2	**7K-9202**	4	SEAL-LIP TYPE	
	14	2	**297-2538**	2	LOCK	
	15	2	**8D-3615**	2	RETAINER	
	16	1	**256-3904**	1	AXLE AS-FRONT	
	16A	1	**2D-8652**	2	BEARING	
	16B	2	**2G-8793**	4	BUSHING	
		1	**5P-8843**	4	SEAL-LIP TYPE	
		1	**5P-8847**	2	SEAL-LIP TYPE	
	17	1,2	**257-9799**	4	PIN	
	18	2	**258-8716**	1	ARM AS (LH)	
	19	1	**258-8719**	1	ARM AS (RH)	
					(EACH ARM AS INCLUDES)	
	19A	1,2	**2G-7387**	1	BUSHING	
	19B	1,2	**2G-7388**	1	BUSHING	
	20	2	**258-8739**	2	PIN	
	21	1	**259-1843**	1	BAR AS	
	21A	2	**2G-8631**	2	BUSHING	
	22	2	**259-2622**	4	WASHER (11X60X3-MM THK)	
Y	23	1	*260-8713*	1	CYLINDER & MTG GP-WHEEL LEAN	573
	24	2	**266-9715**	1	HOUSING-SPINDLE (LH)	
	25	1	**266-9716**	1	HOUSING-SPINDLE (RH)	
Y	26	1	*274-6817*	1	LINK GP-STEERING	497
Y	27	1	*277-0688*	1	CYLINDER & MTG GP-STEERING	572
	28	2	**280-2822**	2	SPINDLE (FRONT AXLE)	
	29	2	**6V-8237**	2	WASHER (26X44X4-MM THK)	
	30	2	*164-5619*	2	PLUG AS	
					(EACH INCLUDES)	
		2	**2M-9780**	1	SEAL-O-RING	
		2	**9S-8006**	1	PLUG-O-RING	
	31	1,2	**198-4768**	3	WASHER-HARD (17.5X32X8-MM THK)	
	32	1,2	**266-7315**	2	WASHER-HARD (22X65X6-MM THK)	
	33	1	**3B-4629**	2	PIN-COTTER	
	34	2	**5P-8890**	2	SEAL-LIP TYPE	
M	35	2	**6V-5696**	6	BOLT (M12X1.75X80-MM)	
M	36	1,2	**6V-5844**	3	BOLT (M16X2X35-MM)	
M	37	2	**7X-0851**	2	NUT (M24X3-THD)	
M	38	1,2	**7X-2561**	4	BOLT (M20X2.5X35-MM)	
	39	2	**7X-7729**	4	WASHER (11X25X3-MM THK)	
	40	2	**8F-9516**	2	SEAL-O-RING	
M	41	2	**8T-4137**	4	BOLT (M10X1.5X20-MM)	
	42	2	**9M-2092**	4	SEAL-O-RING	
M	43	2	**9X-2125**	4	BOLT-LOCKING (M10X1.5X25-MM)	

256-3895 **AXLE GP-FRONT** ***(contd.)*** **i02837087**

NOTE	REF NO	GRAPHIC REF	PART NUMBER	QTY	PART NAME 1 2 3 4 5 6 (PRODUCT LEVEL)	SEE PAGE
M	44	2	**8T-0667**	2	BOLT (M24X3X100-MM)	
B	45	2	**2G-3867**	6	SHIM (0.005-IN THK)	
	46	1	**3B-8486**	2	FITTING-GREASE	

B-USE AS REQUIRED
M-METRIC PART
R-REMFG PART MAY BE AVAILABLE
Y-SEPARATE ILLUSTRATION

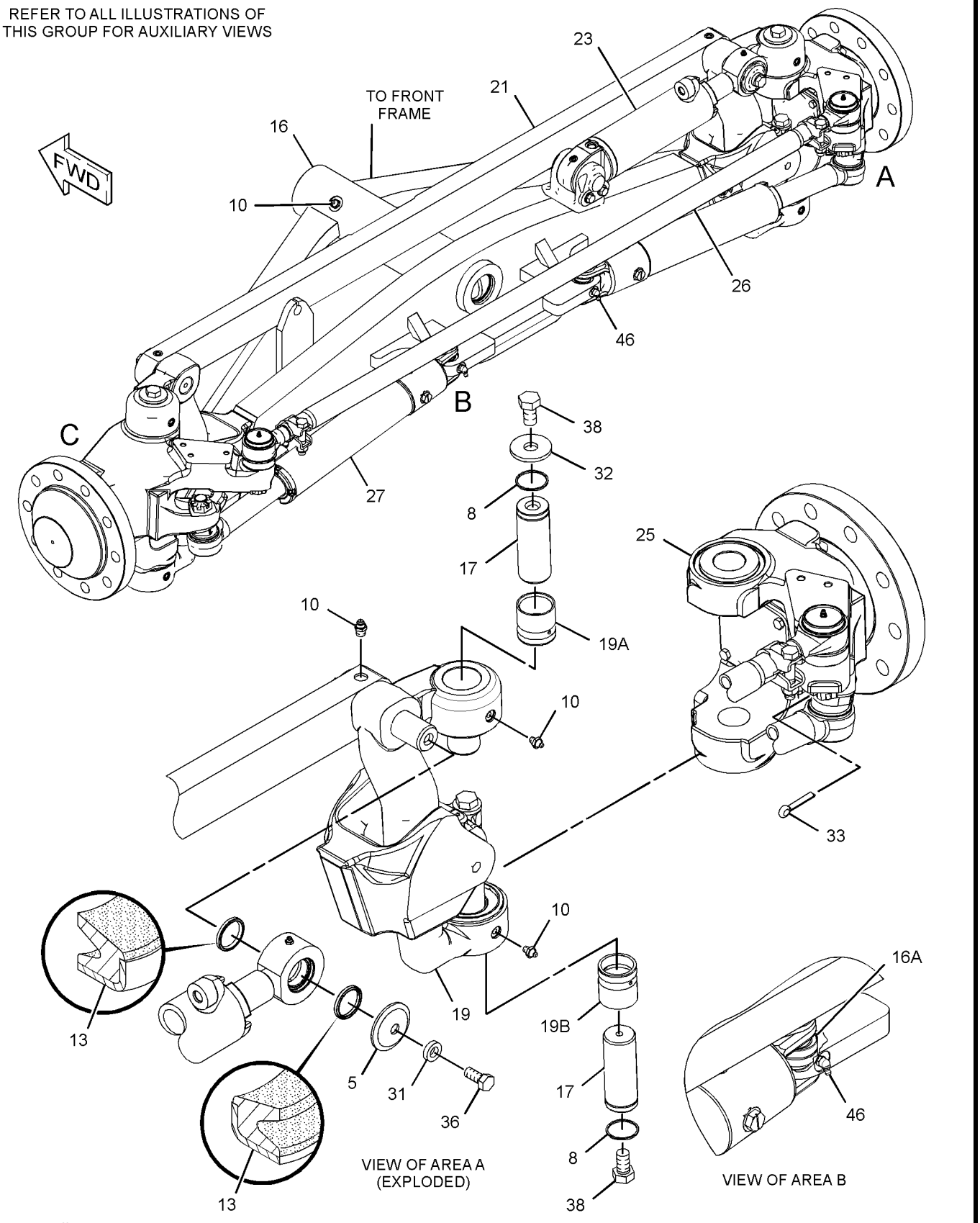

GRAPHIC #1 g01522116

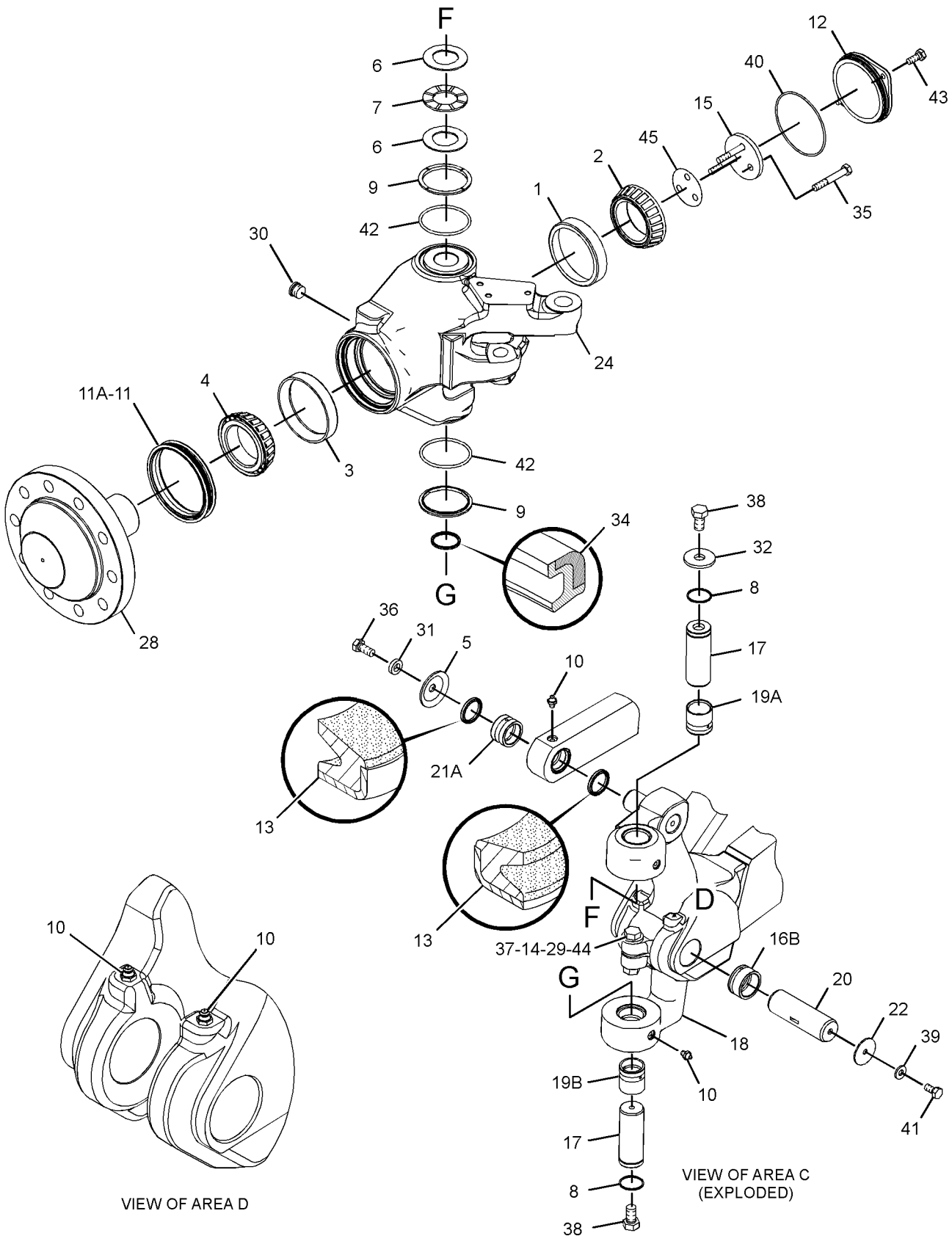

GRAPHIC #2 **<END>** g01522117

POWER TRAIN

270-9037 AXLE GP-REAR

S/N: R9J1-UP

PART OF 349-5187 POWER TRAIN AR

SMCS-3278, 3282, 4068 **i02879296**

NOTE	REF NO	GRAPHIC REF	PART NUMBER	QTY	PART NAME 1 2 3 4 5 6 (PRODUCT LEVEL)	SEE PAGE
	1	1	**195-7493**	2	GEAR-SUN (17-TEETH)	
	2	1	**205-4120**	1	PISTON	
	3	1	**215-8202**	1	BEARING AS-ROLLER	
B	4	1	**215-9665**	1	SHIM PACK (INCLUDES 12-SHIMS)	
B	5	1	**215-9666**	1	SHIM PACK (INCLUDES 11-SHIMS)	
	6	1	**235-5869**	1	SEAL-D-RING	
	7	1	**235-5871**	1	SEAL-D-RING	
	8	1	**248-0833**	1	DRAIN GP-ECOLOGY (REAR AXLE)	
		1	**3S-9233**	1	SEAL-O-RING	
		1	**5L-4759**	1	SEAL-O-RING	
		1	**259-7138**	1	PLUG	
	9	1	**253-9736**	2	SHAFT-AXLE	
	10	1	**259-6939**	54	STUD-TAPERLOCK	
Y	11	1	*272-5612*	1	DIFFERENTIAL & BEVEL GEAR GP	427
	12	1	**308-0888**	1	BEARING AS	
	13	1	**280-4436**	1	TUBE AS	
	14	1	**317-1009**	2	WASHER (18X35X8-MM THK)	
	15	1	**280-4438**	2	PLUG	
Y	16	1	*285-0256*	1	DRIVE GP-FINAL	430
	17	1	**287-6933**	1	HOUSING AS	
		1	**5P-8245**	4	WASHER-HARD (13.5X25.5X3-MM THK)	
M		1	**160-8749**	4	BOLT (M12X1.75X60-MM)	
M		1	**8T-3957**	4	BOLT-SOCKET HEAD (M12X1.75X30-MM)	
	18	1	**290-2544**	6	DOWEL	
	19	1	**290-4050**	1	TUBE AS	
	20	1	*148-8369*	1	ELBOW AS	
		1	**3J-7354**	1	SEAL-O-RING	
		1	**4J-5477**	1	SEAL-O-RING	
		1	**6V-8628**	1	ELBOW (90-DEG)	
	21	1	**198-4769**	54	WASHER (22X40X10-MM THK)	
	22	1	**1S-5008**	2	RING-RETAINING	
Y	23	1	*285-0258*	1	DRIVE GP-FINAL	432
	24	1	**4J-5351**	2	SEAL-O-RING	
	25	1	**4K-1388**	2	SEAL-O-RING	
	26	1	**4K-6804**	1	SEAL-O-RING	
M	27	1	**6V-3532**	8	BOLT (M20X2.5X60-MM)	
M	28	1	**6V-7742**	54	NUT-FULL (M20X2.5-THD)	
	29	1	**6V-8397**	2	SEAL-O-RING	
	30	1	**6V-9168**	2	NUT (11/16-16-THD)	
	31	1	**7M-8485**	1	SEAL-O-RING	
	32	1	**7S-2942**	2	RING-RETAINING	
M	33	1	**8T-0088**	8	BOLT (M16X2X65-MM)	
	34	1	**8T-3282**	8	WASHER-HARD (22X35X3.5-MM THK)	
	35	1	**9X-8268**	8	WASHER (17.5X30X3.5-MM THK)	

B-USE AS REQUIRED
M-METRIC PART
Y-SEPARATE ILLUSTRATION

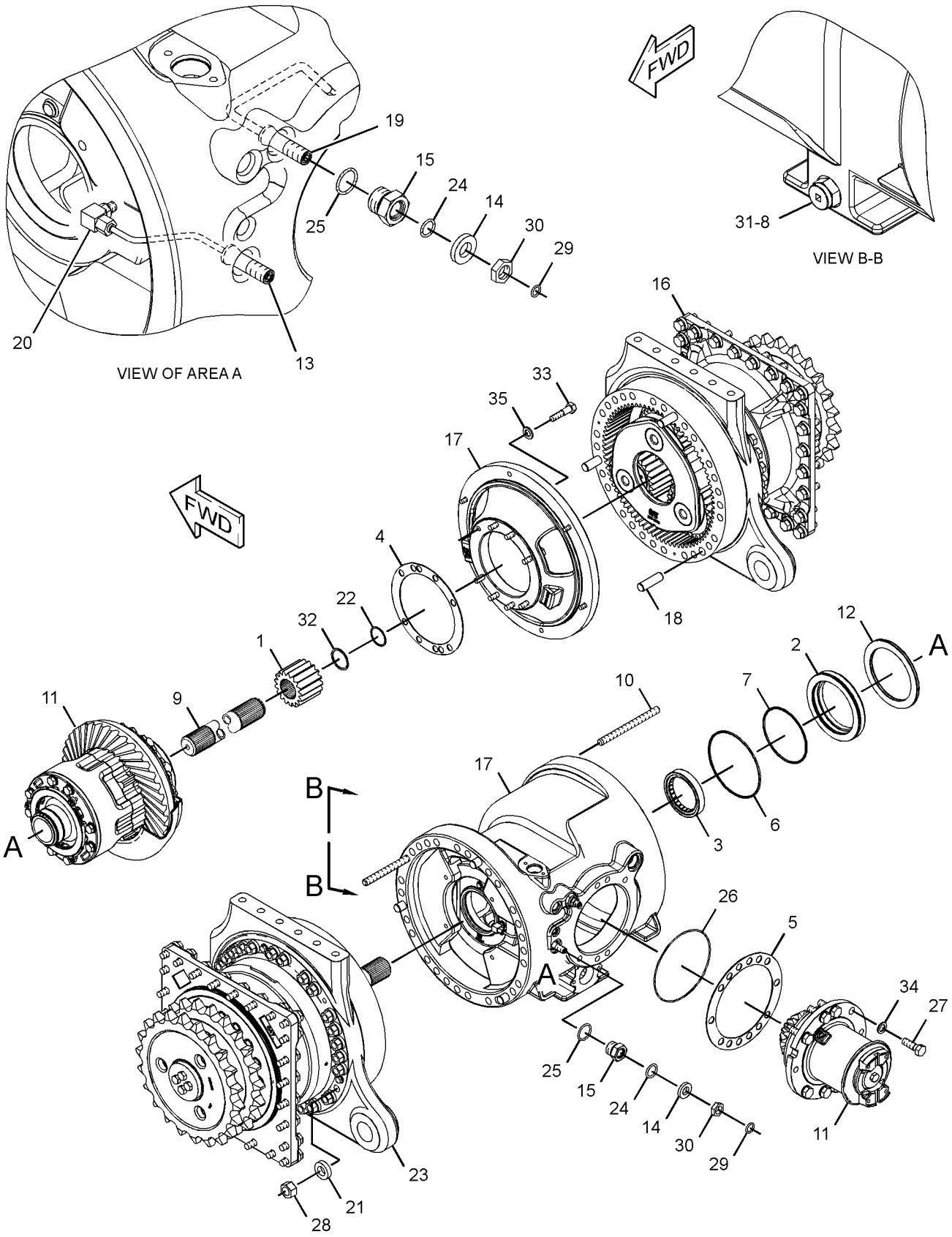

GRAPHIC #1 **<END>** g01283731

333-9310 BASE GP-OIL FILTER—POWER TRAIN

S/N: DZM1601-UP

PART OF 333-6432 FILTER GP-OIL

SMCS-3004, 3067 **i03607279**

NOTE	REF NO	GRAPHIC REF	PART NUMBER	QTY	PART NAME 1 2 3 4 5 6 (PRODUCT LEVEL)	SEE PAGE
	1	1	**3T-9549**	1	ADAPTER	
	2	1	**7G-4998**	1	SPOOL-BYPASS	
Y	3	1	**164-7577**	1	SWITCH GP-BYPASS (POWER TRAIN OIL FILTER)	311
	4	1	**334-2679**	1	SPRING	
	5	1	**334-2680**	1	SPRING	
	6	1	**5P-7815**	1	SEAL-O-RING	
	7	1	**5P-7701**	1	SEAL-O-RING	
	8	1	**9S-9334**	1	PLUG-O-RING	

Y-SEPARATE ILLUSTRATION

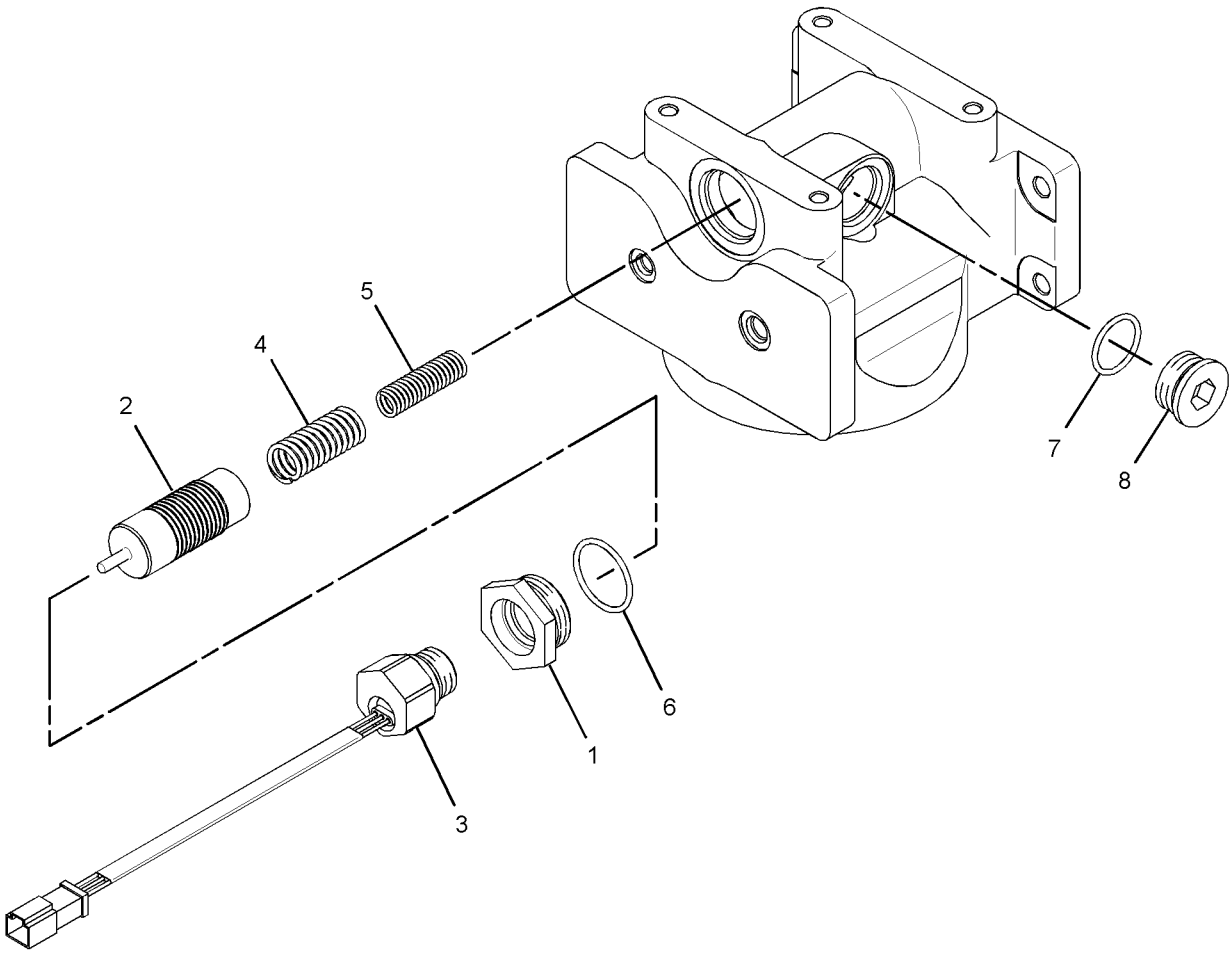

GRAPHIC #1 **<END>** g01721773

272-8010 CARRIER GP-FINAL DRIVE

S/N: R9J1-UP

PART OF 285-0256, 285-0258 DRIVE GP-FINAL

SMCS-4050 **i02778730**

NOTE	REF NO	GRAPHIC REF	PART NUMBER	QTY	PART NAME 1 2 3 4 5 6 (PRODUCT LEVEL)	SEE PAGE
	1	1	**307-6492**	6	WASHER-THRUST	
	2	1	**195-7495**	3	GEAR-PLANETARY (29-TEETH)	
	3	1	**304-8429**	6	BEARING	
	4	1	**263-4902**	3	RETAINER	
	5	1	**263-4903**	1	CARRIER-PLANETARY (66-TEETH)	
	6	1	**263-4904**	3	SHAFT	
	7	1	**3E-4353**	6	WASHER-HARD (11X25X3-MM THK)	
M	8	1	**6V-7732**	6	BOLT (M10X1.5X25-MM)	

M-METRIC PART

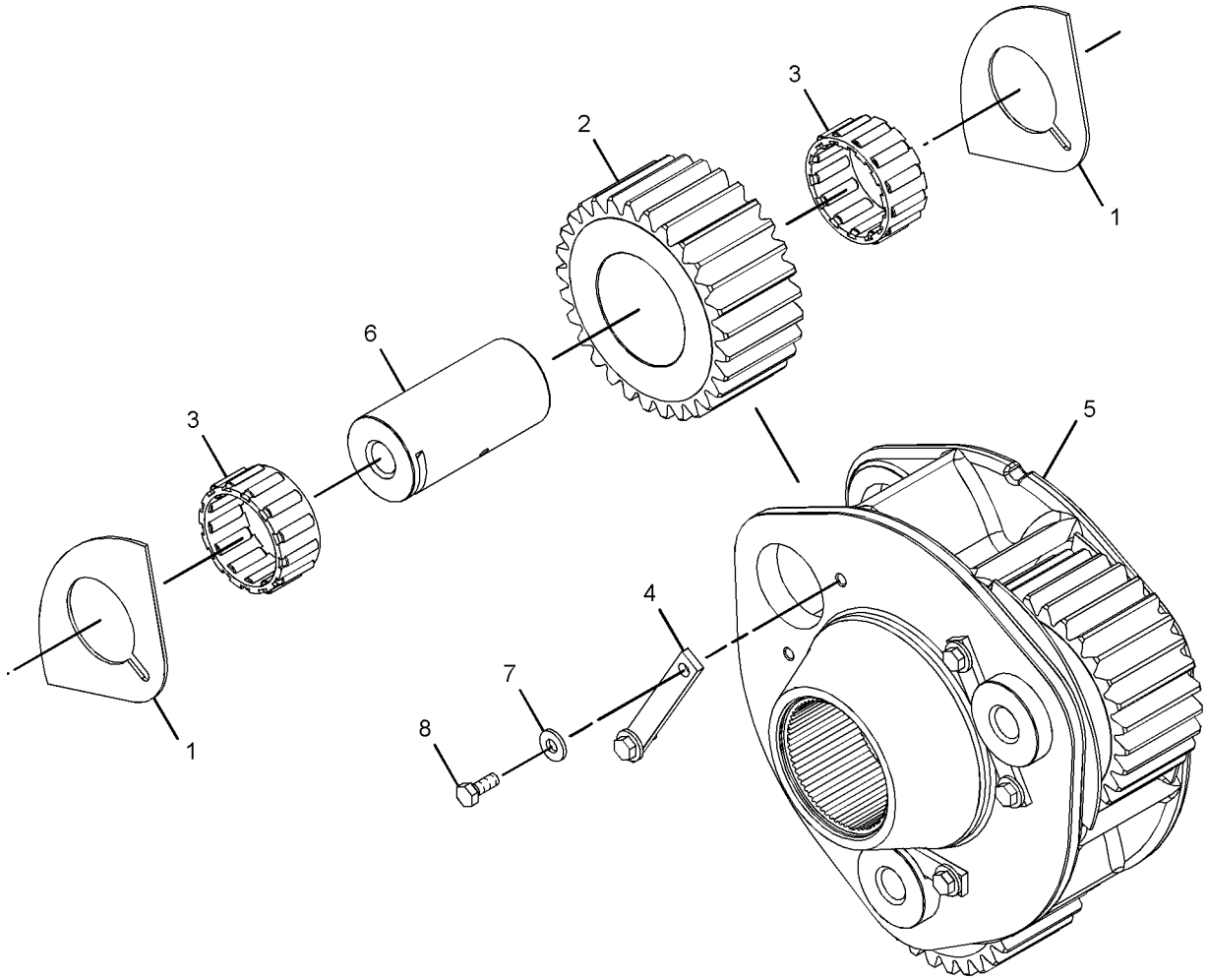

GRAPHIC #1 **<END>** g01283360

POWER TRAIN

253-8429 CASE & PARTS GP-TRANSMISSION

S/N: DZM1-UP

PART OF 253-8407 TRANSMISSION AR

SMCS-3064 **i03747920**

NOTE	REF NO	GRAPHIC REF	PART NUMBER	QTY	PART NAME 1 2 3 4 5 6 (PRODUCT LEVEL)	SEE PAGE
	1	1	**250-0951**	1	RACE-BEARING (OUTER)	
	2	1	**250-0953**	1	RACE-BEARING (OUTER)	
	3	1	**1T-0043**	1	BALL BEARING	
	4	1	**2H-6489**	1	RACE-BEARING OUTER	
	5	1	**2S-3029**	1	BALL BEARING	
	6	1	**5P-2304**	2	RACE & ROLLER AS (OUTER)	
	7	1	**6K-4718**	1	BEARING (OUTER)	
	8	1	**8E-5157**	4	RACE-BEARING OUTER	
	9	1	**1T-0205**	1	RING-SNAP	
	10	1	**8T-0707**	1	RING-RETAINING (INTERNAL)	
	12	1	**6V-0852**	1	CAP-DUST	
	13	1	**6V-1720**	1	PLATE-SERIAL NUMBER (TRANSMISSION)	
	14	1	**9W-1454**	4	COVER	
	15	1	**9W-6465**	1	RETAINER-BEARING	
	16	1	**9W-7038**	1	RING-SNAP	
	17	1	**145-8039**	3	LOCK	
	18	1	**188-2162**	1	COVER	
	19	1	**197-4977**	1	PLUG AS	
		1	**5P-4483**	1	PLUG-O-RING	
		1	**7M-8485**		SEAL-O-RING	
	20	1	**233-8134**	1	GEAR AS (44-TEETH)	
		1	**4K-8603**	1	PLUG-CUP	
	21	1	**251-6673**	1	FILTER-MAGNETIC (TRANSMISSION SUMP)	
	22	1	**251-6674**	1	SCREEN-SUCTION (TRANSMISSION SUMP)	
	23	1	**253-5303**	1	GUARD	
	24	1	**253-5322**	1	GUARD	
	25	1	**284-2421**	1	COVER AS-TRANSMISSION	
		1	**7T-6496**	1	PLUG	
		1	**5M-7937**	2	DOWEL	
	26	1	**347-8616**	1	CASE AS-TRANSMISSION	
		1	**6Y-3083**	6	PLUG	
		1	**7T-6496**	2	PLUG	
		1	**8M-6521**	2	DOWEL	
	27	1	**290-3263**	1	PLATE	
	28	1	**345-1999**	1	PLATE AS	
	29	1	**299-8905**	1	PLATE AS	
	30	1	**306-4148**	1	GEAR (38-TEETH)	
	31	1	*148-8309*	1	ADAPTER AS	
		1	**2P-8421**	1	ADAPTER-O-RING	
		1	**3D-2824**	1	SEAL-O-RING	
	32	1	*148-8406*	6	PLUG AS	
					(EACH INCLUDES)	
		1	**9S-9334**	1	PLUG-O-RING	
		1	**7M-8485**	1	SEAL-O-RING	
	33	1	*148-8409*	6	PLUG AS	
					(EACH INCLUDES)	
		1	**9S-8008**	1	PLUG-O-RING	
		1	**3D-2824**	1	SEAL-O-RING	
M	34	1	**160-8492**	1	BOLT (M10X1.5X85-MM)	
	35	1	*164-5567*	1	COUPLER AS-QUICK DISCONNECT (MALE)	
		1	**6V-3965**	1	FITTING (QUICK DISCONNECT)	
		1	**3J-1907**	1	SEAL-O-RING	
	36	1	*164-5619*	5	PLUG AS	
					(EACH INCLUDES)	
		1	**9S-8006**	1	PLUG-O-RING	
		1	**2M-9780**	1	SEAL-O-RING	

253-8429 **CASE & PARTS GP-TRANSMISSION** *(contd.)* **i03747920**

NOTE	REF NO	GRAPHIC REF	PART NUMBER	QTY	PART NAME 1 2 3 4 5 6 (PRODUCT LEVEL)	SEE PAGE
	37	1	*183-7262*	2	PLUG AS	
					(EACH INCLUDES)	
		1	**9S-8010**	1	PLUG	
		1	**2S-4078**	1	SEAL-O-RING	
	38	1	**1B-5170**	1	PLUG-PIPE	
	39	1	**263-7429**	1	TUBE AS	
	40	1	**3K-0715**	1	SEAL-O-RING	
	41	1	**4J-8996**	1	SEAL-O-RING	
	42	1	**5F-3092**	1	SEAL-O-RING	
	43	1	**5P-3863**	4	SEAL-O-RING	
	44	1	*165-4929*	2	PLUG AS (TRANSMISSION DRAIN)	
					(EACH INCLUDES)	
		1	**5P-4484**	1	PLUG-MAGNETIC	
		1	**7M-8485**	1	SEAL-O-RING	
M	45	1	**6V-1820**	1	BOLT (M10X1.5X30-MM)	
M	46	1	**6V-3940**	4	BOLT (M8X1.25X25-MM)	
M	47	1	**6V-8212**	1	BOLT (M10X1.5X16-MM)	
M	49	1	**8C-3210**	2	BOLT (M6X1X16-MM)	
	50	1	**8M-4992**	1	SEAL-O-RING	
	51	1	**8T-4121**	50	WASHER-HARD (11X21X2.5-MM THK)	
M	52	1	**8T-4137**	7	BOLT (M10X1.5X20-MM)	
M	53	1	**8T-4178**	43	BOLT (M10X1.5X90-MM)	
M	54	1	**8T-4189**	4	BOLT (M8X1.25X20-MM)	
M	55	1	**8T-4908**	12	BOLT (M8X1.25X25-MM)	
	56	1	**9M-1974**	1	WASHER-HARD (8.8X16X2-MM THK)	
	57	1	**9X-8256**	2	WASHER (6.6X12X2-MM THK)	
B	58	1	**1U-8846**		SEALANT-GASKET	

B-USE AS REQUIRED
M-METRIC PART

253-8429 **CASE & PARTS GP-TRANSMISSION** *(contd.)* **i03747920**

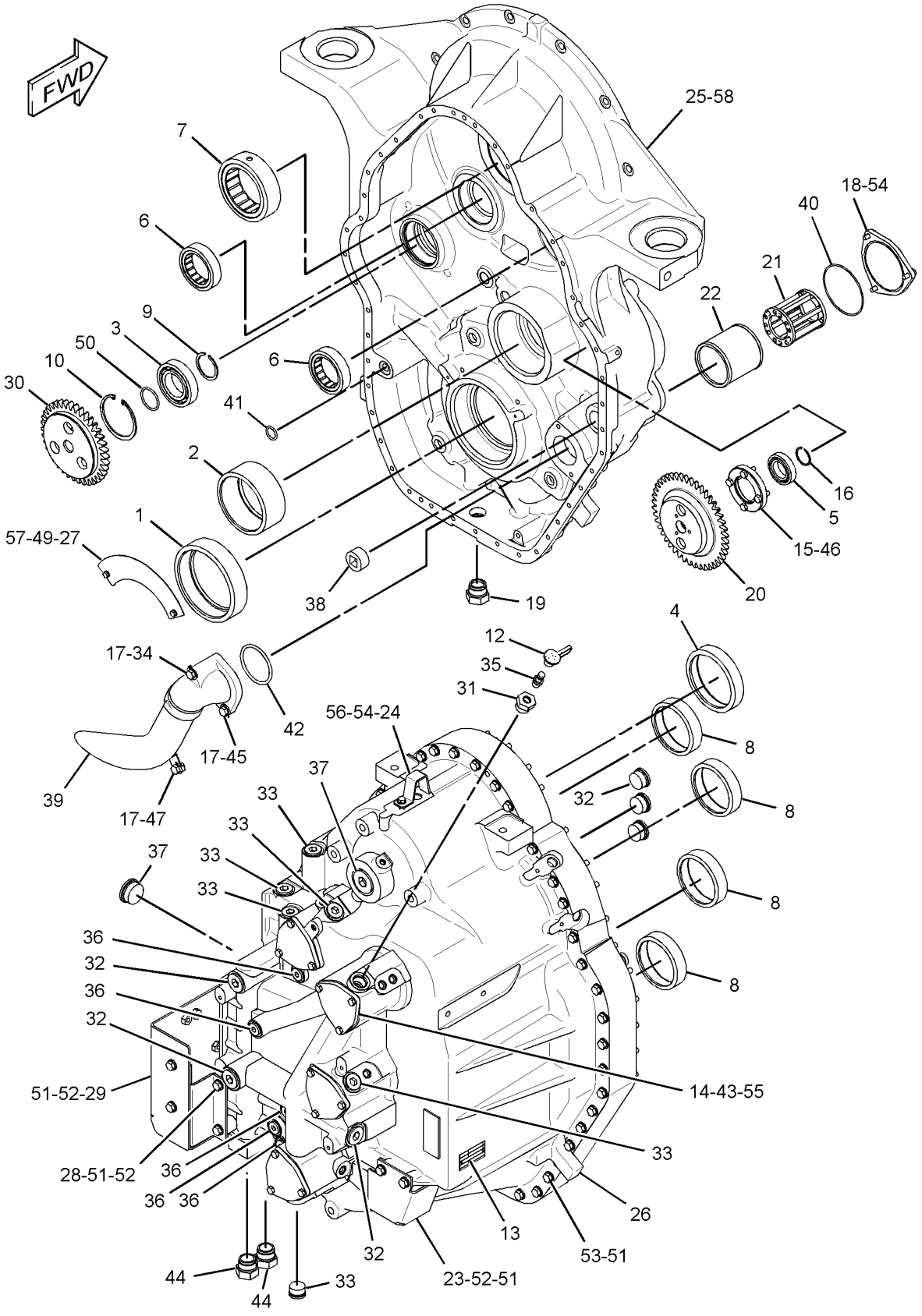

GRAPHIC #1 **<END>** g02088537

237-8197 CHAIN GP-DRIVE–TANDEM

S/N: R9J1-UP

PART OF 349-5187 POWER TRAIN AR

SMCS-3261, 4063 **i02179415**

NOTE	REF NO	GRAPHIC REF	PART NUMBER	QTY	PART NAME 1 2 3 4 5 6 (PRODUCT LEVEL)	SEE PAGE
	1	1	**6G-1670**	4	CHAIN GP	
					(EACH INCLUDES)	
		1	**6G-1667**	1	LINK-CONNECTING	

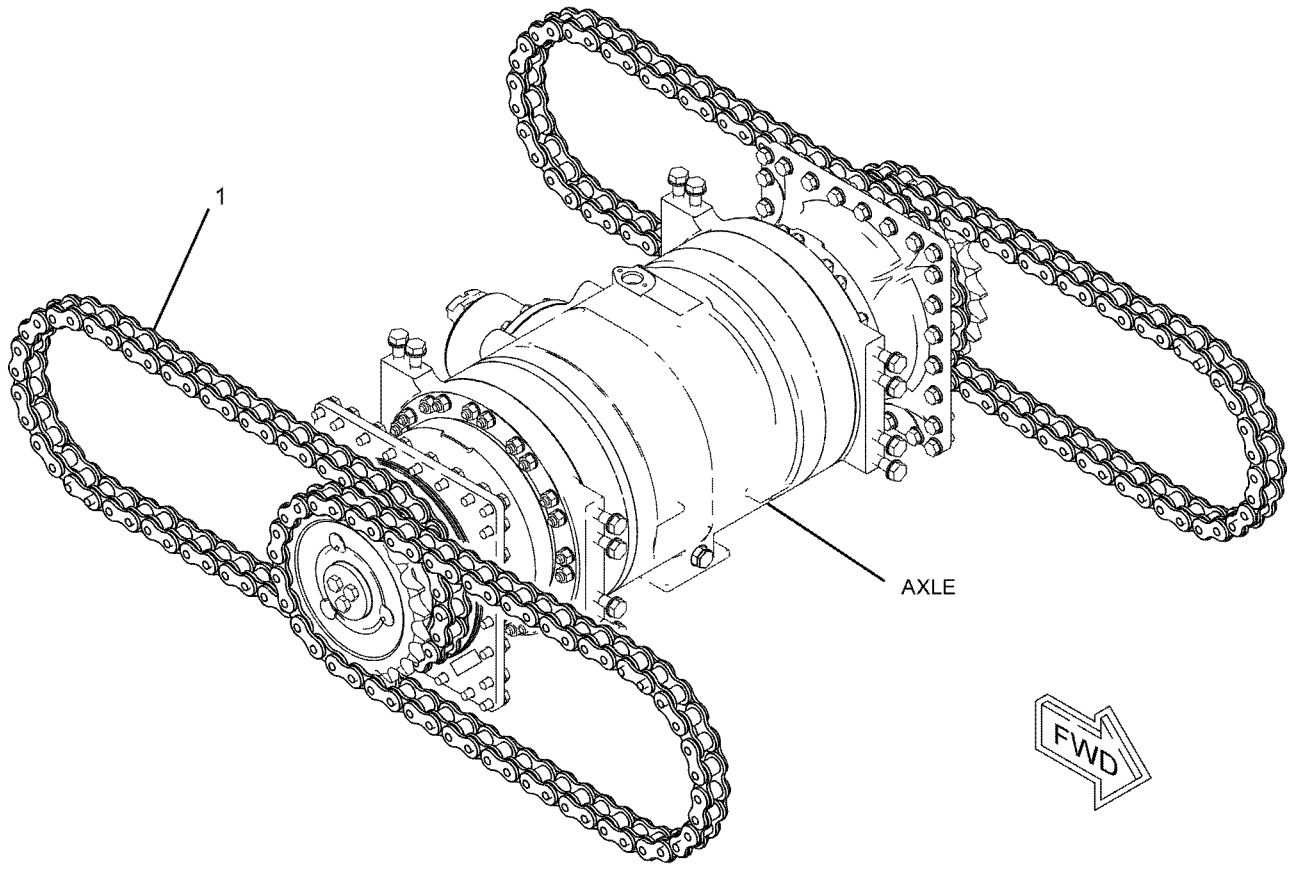

GRAPHIC #1 **<END>** g01108274

246-8728 CLUTCH GP-TRANSMISSION—FORWARD

S/N: DZM1-UP

PART OF 253-8407 TRANSMISSION AR

SMCS-3063, 3155, 3170 **i03025210**

NOTE	REF NO	GRAPHIC REF	PART NUMBER	QTY	PART NAME 1 2 3 4 5 6 (PRODUCT LEVEL)	SEE PAGE
	1	1	**4D-7889**	2	RING	
	2	1	**5P-3114**	2	SEAL-O-RING	
	3	1	**6I-8911**	16	DISC-FRICTION	
	4	1	**6Y-1119**	1	CARRIER-SEAL	
	5	1	**7G-4822**	3	RING-SEAL	
	6	1	**7T-4897**	1	DISC-THRUST	
	7	1	**8E-8319**	4	DISC-THRUST	
	8	1	**8F-3469**	4	SEAL-O-RING	
	9	1	**9F-8477**	2	RING-METAL SEAL	
	10	1	**9W-2029**	1	RACE-THRUST BEARING	
	11	1	**161-8313**	2	RING-SEAL	
	12	1	**165-0488**	2	RING-SEAL	
	13	1	**246-8749**	2	PISTON	
	14	1	**263-1649**	2	SLIDER	
	15	1	**246-8772**	1	SPACER (61X95.25X43.46-MM THK)	
	16	1	**246-8793**	2	RING-RETAINING	
	17	1	**246-8794**	2	RETAINER	
	18	1	**246-8800**	2	SPRING-WAVE	
	19	1	**248-2222**	2	PLATE-END	
	20	1	**248-2226**	16	PLATE-SEPARATOR	
	21	1	**258-7562**	1	GEAR (50-TEETH)	
	22	1	**258-7561**	1	GEAR (43-TEETH)	
	23	1	**307-4611**	1	SHAFT AS	
	23A	1	**1P-0604**	1	PLUG-CUP	
	24	1	**140-8010**	1	BEARING AS	
	25	1	**5H-8985**	1	PIN-SPRING	
M	26	1	**6V-1819**	2	BOLT (M10X1.5X100-MM)	
	27	1	**8E-1263**	2	BEARING-ROLLER	
	28	1	**8E-6558**	1	RACE-ROLLER BEARING	

M-METRIC PART

246-8728 **CLUTCH GP-TRANSMISSION** *(contd.)* **i03025210**

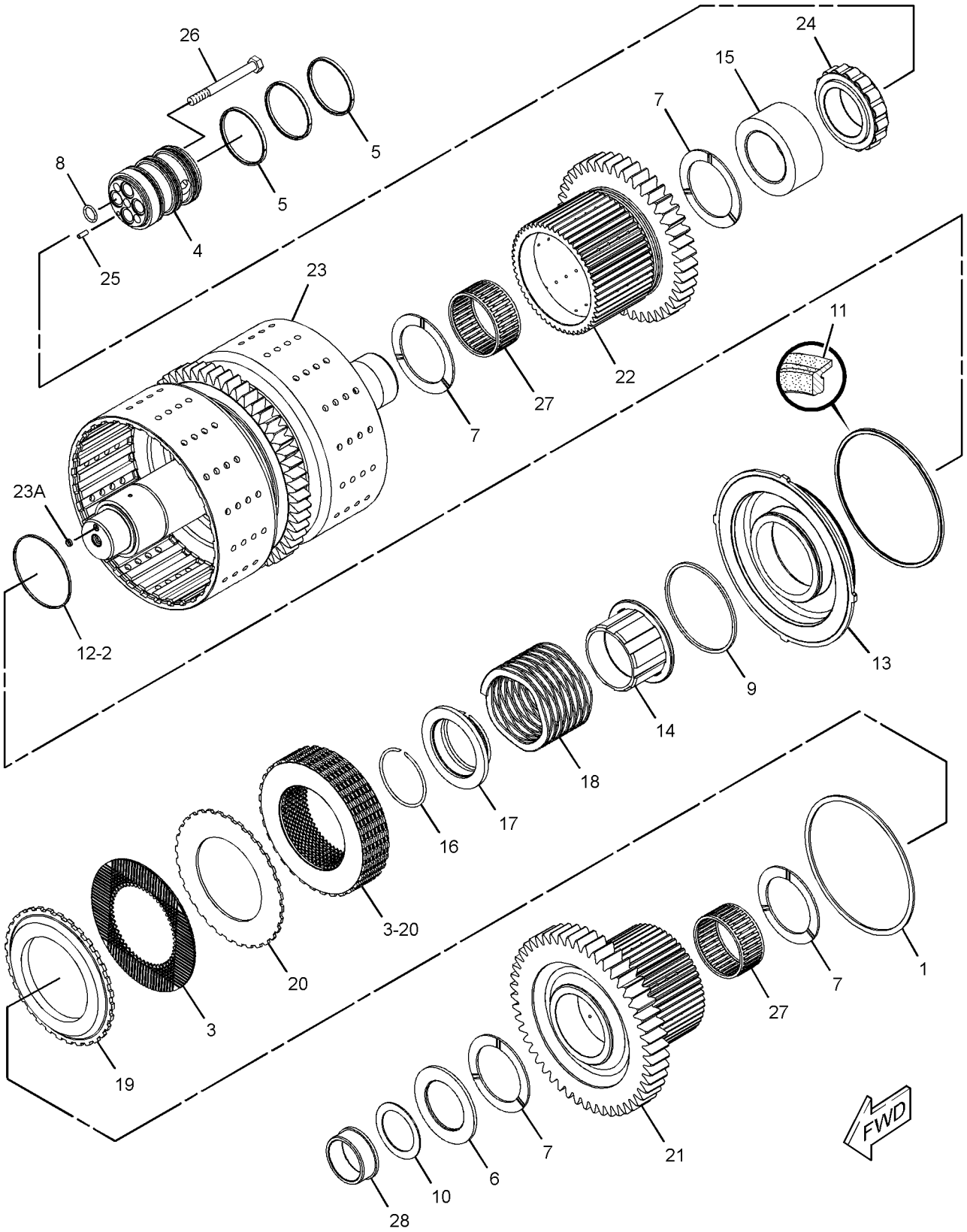

GRAPHIC #1 **<END>** g01532413

246-8731 CLUTCH GP-TRANSMISSION–REVERSE, SECOND

S/N: DZM1-UP

PART OF 253-8407 TRANSMISSION AR

SMCS-3063, 3155, 3170 **i02655795**

NOTE	REF NO	GRAPHIC REF	PART NUMBER	QTY	PART NAME 1 2 3 4 5 6 (PRODUCT LEVEL)	SEE PAGE
	1	2	**140-8010**	1	BEARING AS	
	2	1	**8E-1263**	1	BEARING-ROLLER	
	3	2	**8E-6558**	1	RACE-ROLLER BEARING	
	4	1	**5P-3114**	2	SEAL-O-RING	
	5	1	**6I-8912**	12	DISC-FRICTION	
	6	2	**6Y-1119**	1	CARRIER-SEAL	
	7	2	**7G-4822**	3	RING-SEAL	
	8	2	**7T-4897**	1	DISC-THRUST	
	9	2	**8E-0401**	12	PLATE-CLUTCH	
	10	1	**8E-8319**	4	DISC-THRUST	
	11	1,2	**8F-3469**	4	SEAL-O-RING	
	12	2	**9F-8477**	1	RING-METAL SEAL	
	13	1	**9W-2029**	1	RACE-THRUST BEARING	
	14	2	**161-8313**	2	RING-SEAL	
	15	1,2	**165-0367**	2	PLATE-END	
	16	1	**165-0488**	2	RING-SEAL	
	17	2	**246-8747**	1	PISTON	
	18	2	**246-8748**	1	PISTON	
	19	1	**263-1649**	1	SLIDER	
	20	2	**246-8757**	1	GEAR (25-TEETH)	
	21	1,2	**246-8793**	2	RING-RETAINING	
	22	1	**246-8794**	2	RETAINER	
	23	2	**246-8800**	1	SPRING-WAVE	
	24	2	**246-8801**	1	SPRING-WAVE	
	25	2	**246-8804**	1	SPACER (61X82.55X54.24-MM THK)	
	26	2	**258-7564**	1	GEAR (52-TEETH)	
	27	1	**282-7842**	1	SHAFT AS	
		1	**1P-0604**	1	PLUG-CUP	
	28	2	**280-6895**	1	GEAR AS	
		2	**258-7563**	1	GEAR (35-TEETH)	
		2	**6Y-1895**	1	BEARING-SLEEVE	
	29	2	**291-0996**	1	SPACER AS	
	30	2	**5H-8985**	1	PIN-SPRING	
	31	2	**6V-1586**	2	RING-RETAINING	
M	32	1	**6V-1819**	2	BOLT (M10X1.5X100-MM)	
	33	1	**263-1650**	1	SLIDER	

M-METRIC PART

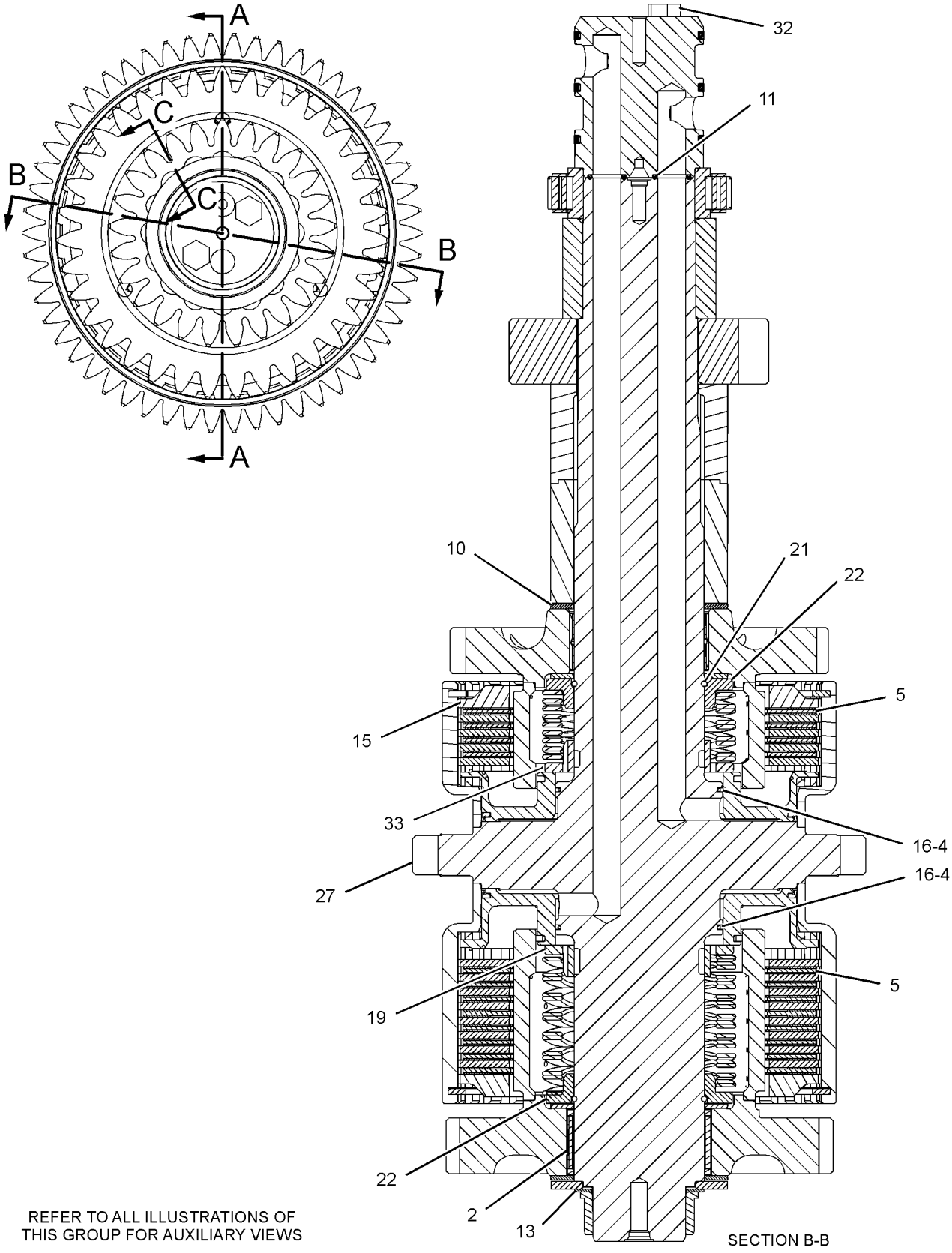

REFER TO ALL ILLUSTRATIONS OF THIS GROUP FOR AUXILIARY VIEWS

GRAPHIC #1

g01156483

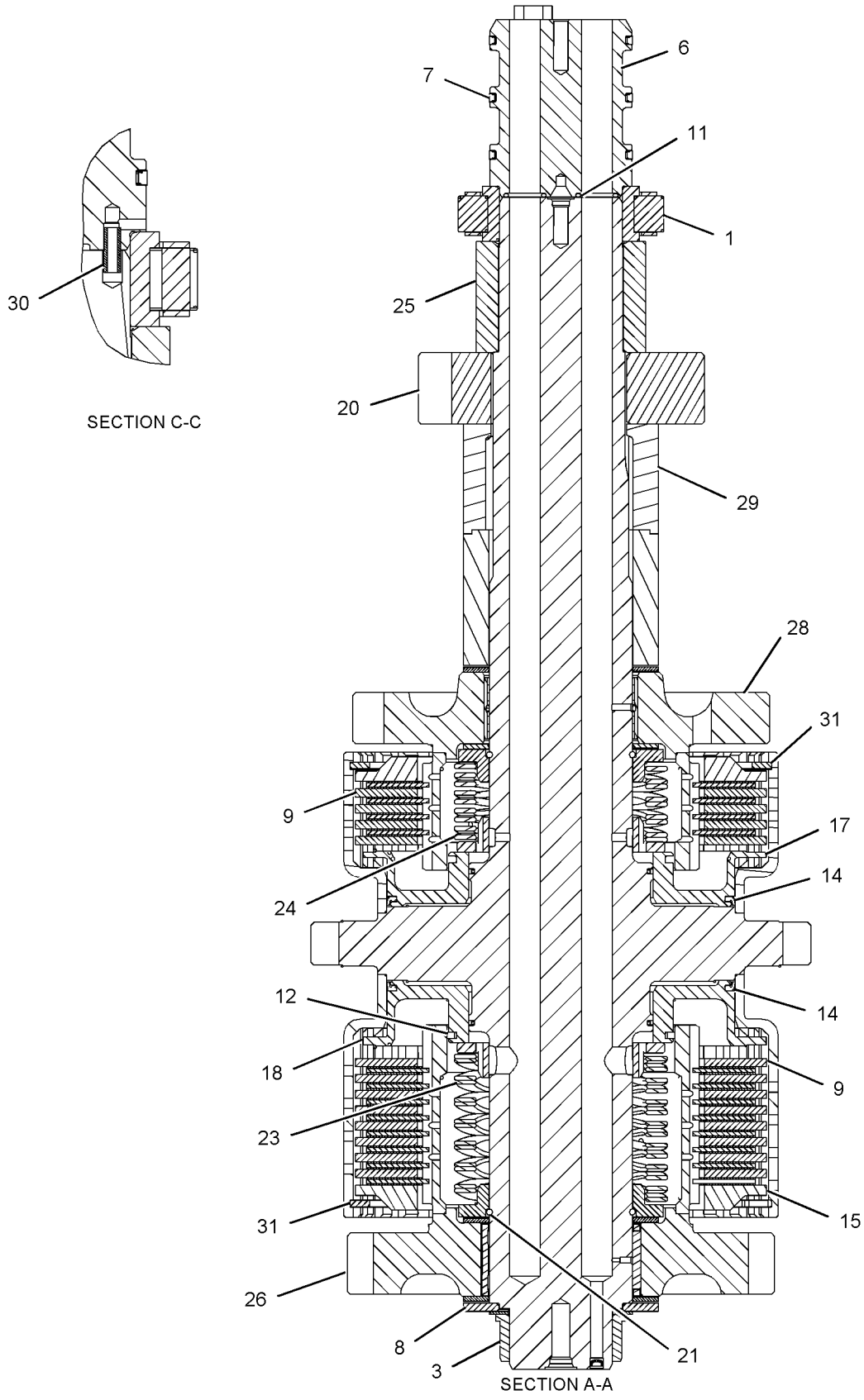

GRAPHIC #2 **<END>** g01108977

246-8734 CLUTCH GP-TRANSMISSION–1ST, 3RD

S/N: DZM1-UP

PART OF 253-8407 TRANSMISSION AR

SMCS-3063, 3155, 3170 **i03894855**

NOTE	REF NO	GRAPHIC REF	PART NUMBER	QTY	PART NAME 1 2 3 4 5 6 (PRODUCT LEVEL)	SEE PAGE
	1	1	**250-0952**	1	BEARING AS-ROLLER	
	2	1	**140-8010**	1	BEARING AS	
	3	1	**5P-3114**	2	SEAL-O-RING	
	4	1	**6I-8912**	12	DISC-FRICTION	
	5	1	**6Y-1119**	1	CARRIER-SEAL	
	6	1	**7G-4822**	3	RING-SEAL	
	7	1	**7T-4897**	1	DISC-THRUST	
	8	1	**8E-0401**	12	PLATE-CLUTCH	
	9	1	**8E-8319**	4	DISC-THRUST	
	10	1	**8F-3469**	4	SEAL-O-RING	
	11	1	**161-8313**	2	RING-SEAL	
	12	1	**165-0367**	2	PLATE-END	
	13	1	**165-0488**	2	RING-SEAL	
	14	1	**323-3935**	1	SHAFT AS	
	15	1	**246-8747**	1	PISTON	
	16	1	**246-8748**	1	PISTON	
	17	1	**263-1649**	1	SLIDER	
	18	1	**323-3933**	1	GEAR	
	19	1	**246-8764**	1	GEAR (56-TEETH)	
	20	1	**246-8793**	2	RING-RETAINING	
	21	1	**246-8794**	2	RETAINER	
	22	1	**246-8800**	1	SPRING-WAVE	
	23	1	**246-8801**	1	SPRING-WAVE	
	25	1	**280-6896**	1	GEAR AS (54-TEETH)	
	25A	1	**6Y-2419**	1	BEARING-SLEEVE	
	25B	1	**258-7566**	1	GEAR	
	26	1	**280-6897**	1	GEAR AS (68-TEETH)	
	26A	1	**6Y-2419**	1	BEARING-SLEEVE	
	26B	1	**258-7565**	1	GEAR	
	27	1	**5H-8985**	1	PIN-SPRING	
	28	1	**6V-1586**	2	RING-RETAINING	
M	29	1	**6V-1819**	2	BOLT (M10X1.5X100-MM)	
	30	1	**263-1650**	1	SLIDER	

M-METRIC PART

246-8734 **CLUTCH GP-TRANSMISSION** *(contd.)* **i03894855**

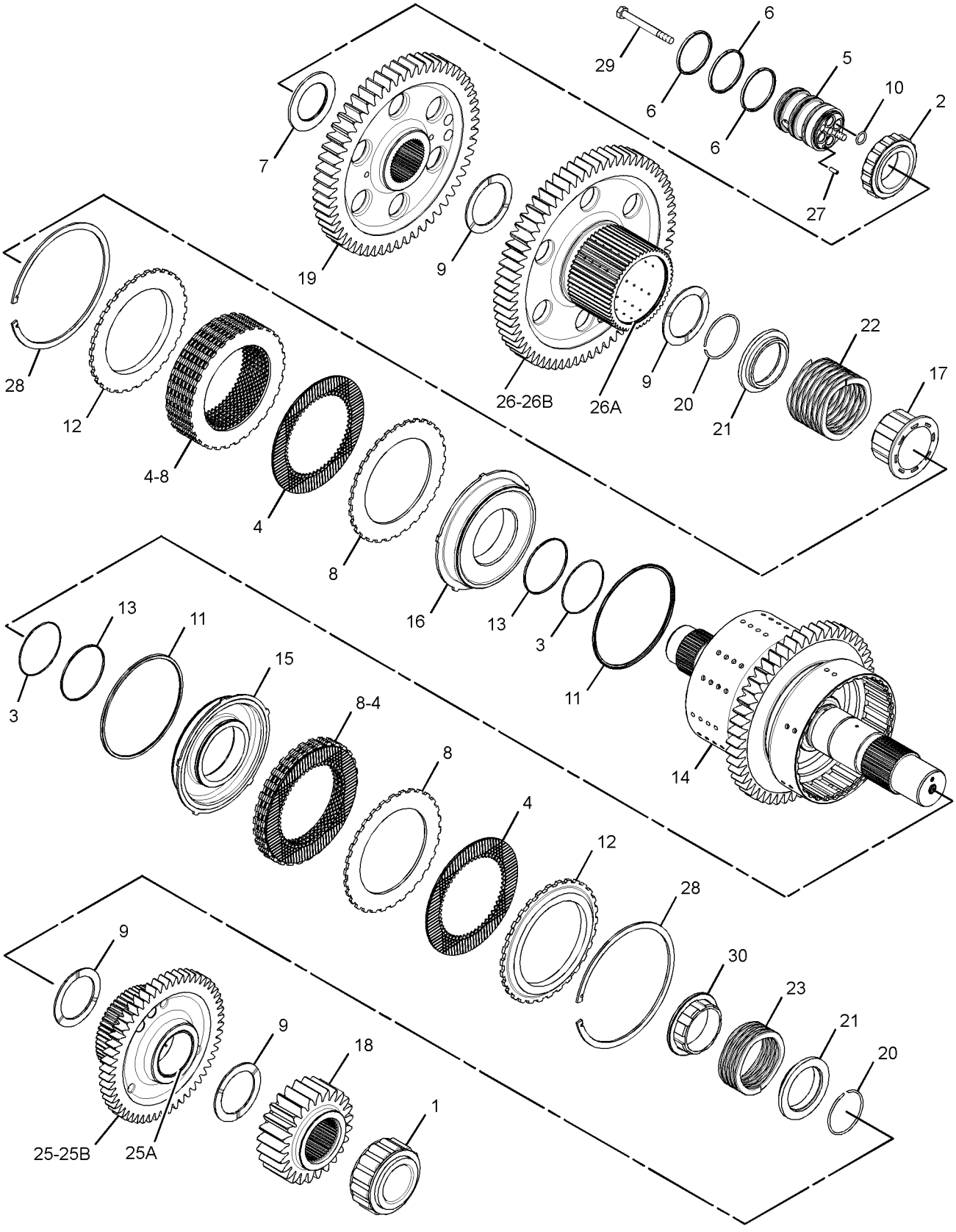

GRAPHIC #1 **<END>** g02138596

246-8737 CLUTCH GP-TRANSMISSION—HIGH, LOW

S/N: DZM1-UP

PART OF 253-8407 TRANSMISSION AR

SMCS-3063, 3155, 3170 **i03898472**

NOTE	REF NO	GRAPHIC REF	PART NUMBER	QTY	PART NAME 1 2 3 4 5 6 (PRODUCT LEVEL)	SEE PAGE
	1	2	**140-8010**	1	BEARING AS	
	2	1	**6B-5154**	1	BEARING AS-ROLLER	
	3	1	**4D-7889**	1	RING	
	4	1,2	**5P-3114**	2	SEAL-O-RING	
	5	1	**6I-8911**	8	DISC-FRICTION	
	6	2	**6I-8912**	4	DISC-FRICTION	
	7	2	**6Y-1119**	1	CARRIER-SEAL	
	8	2	**7G-4822**	3	RING-SEAL	
	9	2	**8E-0401**	4	PLATE-CLUTCH	
	10	2	**8E-8319**	2	DISC-THRUST	
	11	2	**8F-3469**	4	SEAL-O-RING	
	12	2	**161-8313**	1	RING-SEAL	
	13	2	**165-0367**	1	PLATE-END	
	14	1,2	**165-0488**	2	RING-SEAL	
	15	1	**246-8738**	1	SHAFT AS	
M		1	**201-9331**	1	SETSCREW (M12X1.75X19.5-MM)	
		1	**1P-0604**	1	PLUG-CUP	
	16	2	**246-8747**	1	PISTON	
	17	1	**246-8774**	2	DISC-THRUST	
	18	2	**246-8793**	1	RING-RETAINING	
	19	2	**246-8794**	1	RETAINER	
	20	1	**246-8795**	1	RING-RETAINING	
	21	1	**246-8796**	1	RETAINER	
	22	1	**246-8797**	1	SEAL-PISTON	
	23	1,2	**246-8800**	2	SPRING-WAVE	
	24	1	**248-2222**	1	PLATE-END	
	25	1	**248-2226**	8	PLATE-SEPARATOR	
	26	1	**254-0312**	1	PISTON	
	27	2	**260-7596**	1	ROTOR	
	28	2	**263-1649**	1	SLIDER	
	29	1	**273-2827**	1	SPACER (75.5X110X1.7-MM THK)	
	30	1	**280-6898**	1	GEAR AS	
		1	**246-8761**	2	BUSHING	
	31	2	**280-6899**	1	GEAR AS	
		2	**9W-6467**	2	BUSHING	
	32	2	**5H-8985**	1	PIN-SPRING	
	33	2	**6V-1586**	1	RING-RETAINING	
M	34	2	**6V-1819**	2	BOLT (M10X1.5X100-MM)	

M-METRIC PART

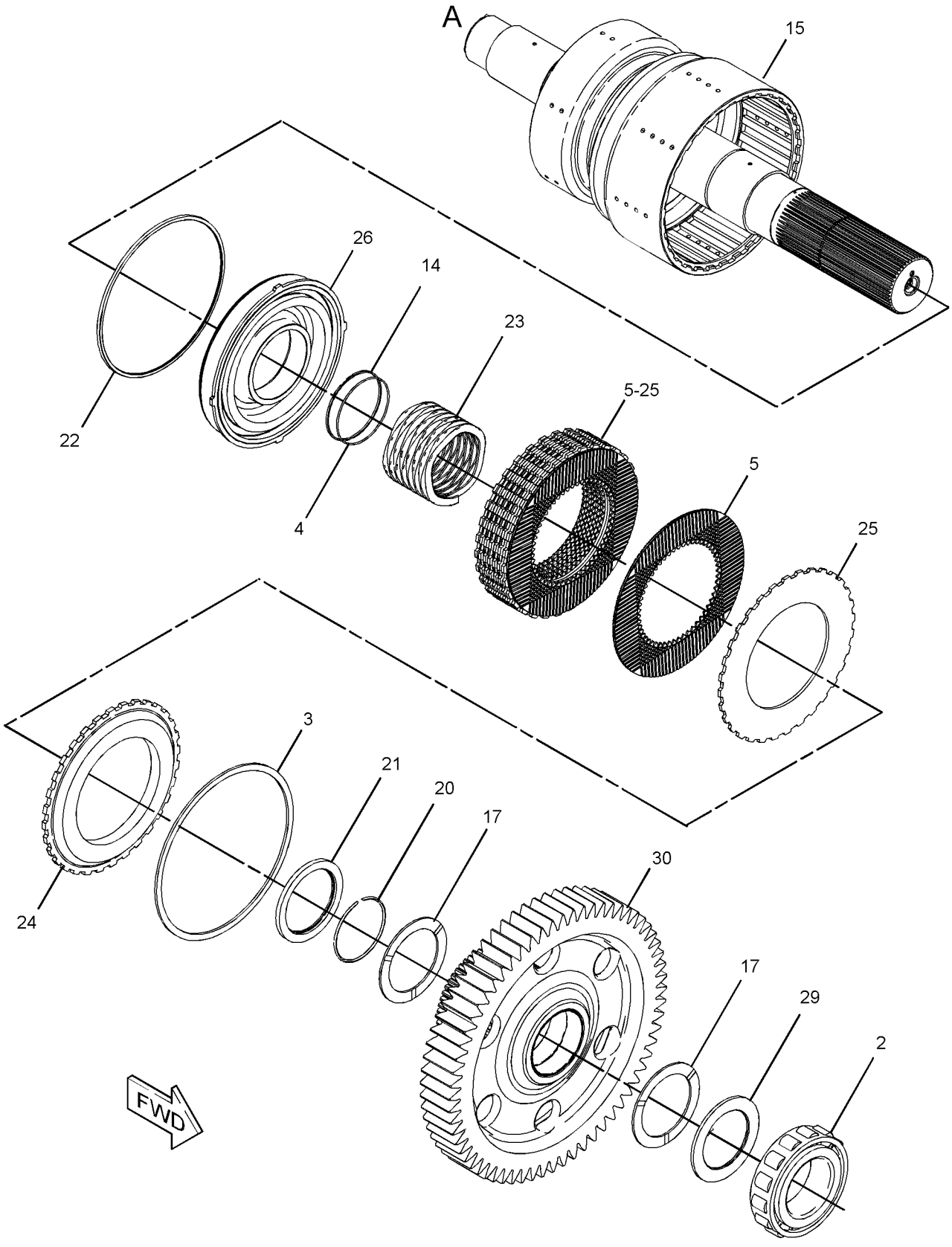

GRAPHIC #1 g01267624

246-8737 **CLUTCH GP-TRANSMISSION** *(contd.)* **i03898472**

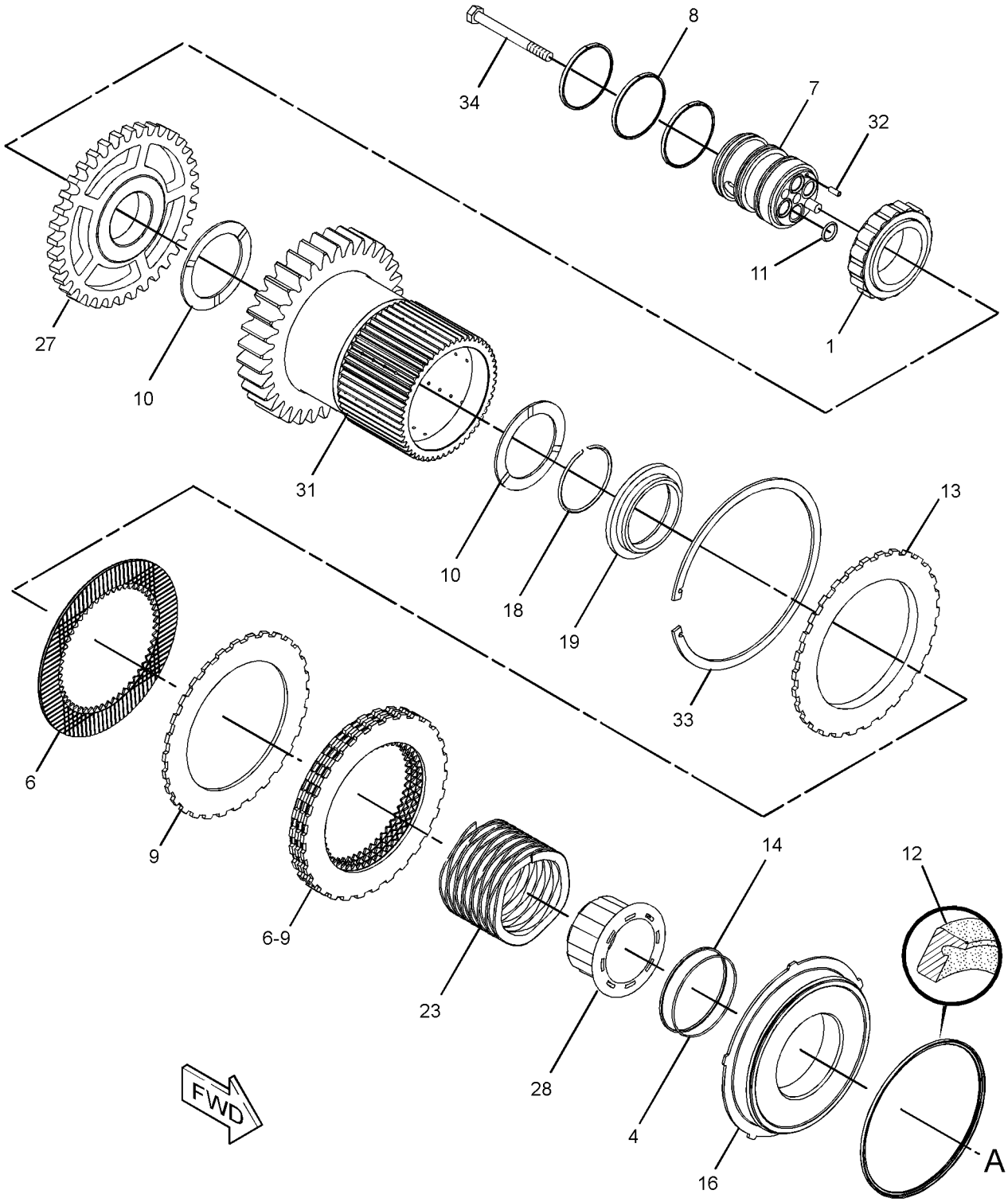

GRAPHIC #2 **<END>** g01964254

356-2979 CONTROL GP-DIFFERENTIAL LOCK

S/N: R9J1-UP

PART OF 349-2555 COMMON AR, 349-5187 POWER TRAIN AR

SMCS-3264 **i03984178**

NOTE	REF NO	GRAPHIC REF	PART NUMBER	QTY	PART NAME 1 2 3 4 5 6 (PRODUCT LEVEL)	SEE PAGE
	1	1	*148-8443*	1	TEE AS	
		1	**7X-2459**	1	TEE-O-RING	
		1	**3J-1907**	1	SEAL-O-RING	
		1	**6V-8397**	1	SEAL-O-RING	
	2	1	*164-5567*	1	COUPLER AS-QUICK DISCONNECT (MALE)	
		1	**6V-3965**	1	FITTING (QUICK DISCONNECT)	
		1	**214-7568**	1	SEAL-O-RING	
	3	1	**270-0550**	1	PLATE AS	
	4	1	**291-2609**	1	TUBE AS	
	5	1	**291-2610**	1	TUBE AS	
	6	1	*148-8368*	1	ELBOW AS	
		1	**6V-8627**	1	ELBOW	
		1	**3J-1907**	1	SEAL-O-RING	
		1	**4J-5477**	1	SEAL-O-RING	
	7	1	*148-8374*	1	ELBOW AS	
		1	**6V-8723**	1	ELBOW	
		1	**3K-0360**	1	SEAL-O-RING	
		1	**6V-8397**	1	SEAL-O-RING	
	8	1	*148-8378*	1	ELBOW AS	
		1	**6V-8724**	1	ELBOW	
		1	**3J-1907**	1	SEAL-O-RING	
		1	**6V-8397**	1	SEAL-O-RING	
Y	9	1	**250-2139**	1	VALVE & MTG GP-SOLENOID (DIFFERENTIAL LOCK)	453
	10	1	**6V-0852**	1	CAP-DUST	
	11	1	**8T-4121**	2	WASHER-HARD (11X21X2.5-MM THK)	
M	12	1	**8T-5005**	2	BOLT (M10X1.5X70-MM)	

M-METRIC PART
Y-SEPARATE ILLUSTRATION

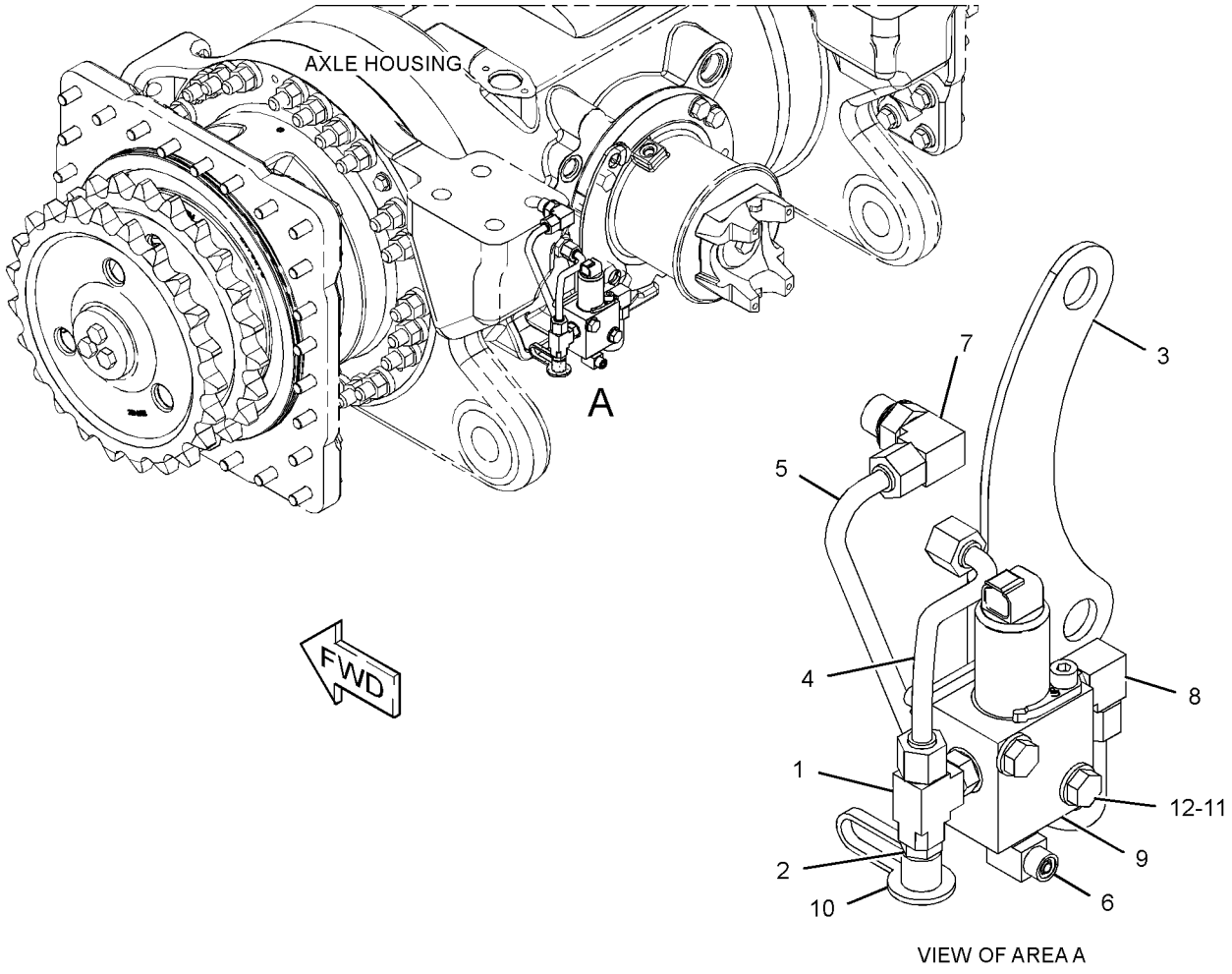

VIEW OF AREA A

GRAPHIC #1 **<END>** g02217815

253-8428 CONTROL GP-TRANSMISSION HYD

S/N: DZM1-UP

PART OF 253-8407 TRANSMISSION AR

SMCS-3073, 3167 **i03877573**

NOTE	REF NO	GRAPHIC REF	PART NUMBER	QTY	PART NAME 1 2 3 4 5 6 (PRODUCT LEVEL)	SEE PAGE
	1	1	**2P-1692**	1	SEAL-O-RING	
	2	1	**3K-0360**	1	SEAL-O-RING	
	3	1,2	**3S-2093**	24	STRAP-CABLE	
	4	1	**6V-0852**	8	CAP-DUST	
	6	1	**6D-7889**	8	SEAL-O-RING	
	7	1	**148-1925**	1	VALVE-RELIEF	
	8	2	**155-5114**	3	SPACER-SPECIAL	
Y	9	2	**191-8303**	2	SENSOR GP-SPEED (TRANSMISSION OUTPUT, LOW)	288
	10	2	**191-8304**	3	SENSOR GP-SPEED (TRANSMISSION OUTPUT, HIGH)	
					(EACH SENSOR GP-SPEED INCLUDES)	
		2	**137-6645**	1	PAD	
	11	1	**356-0841**	1	SWITCH AS-PRESSURE (PARKING BRAKE)	
		1	**102-8803**	1	KIT-RECEPTACLE (3-PIN)	
					(INCLUDES RECEPTACLE AS & WEDGE)	
		1	**9X-3401**	3	PIN-CONNECTOR (16-GA TO 18-GA)	
E		1	**9X-1813**		SLEEVE (15-CM)	
	12	1	**238-0112**	1	SENSOR GP-TEMPERATURE (TRANSMISSION OIL)	
Y	13	1	**244-3114**	8	VALVE GP-MODULATING (24-VOLT) (TRANSMISSION CLUTCH)	454
	14	2	**247-4993**	1	SPACER	
	15	1	**352-5517**	1	VALVE GP-SOLENOID (24-VOLT) (PARKING BRAKE)	
		1	**286-8172**	1	KIT-SEAL (SOLENOID VALVE)	
					(INCLUDES O-RINGS)	
		1	**245-1181**	1	FLANGE	
	16	2	**253-5306**	1	HARNESS AS-SENSOR	
E		2	**114-8843**		SLEEVE-PLASTIC (120-CM)	
E		2	**114-8844**		SLEEVE-PLASTIC (20-CM)	
		2	**9X-3402**	12	SOCKET-CONNECTOR (16-GA TO 18-GA)	
		2	**144-1636**	12	PIN-CONNECTOR (14-GA TO 18-GA)	
E		2	**1P-0810**		TAPE-ELECTRICAL (36-CM)	
		2	**102-8801**	1	KIT-RECEPTACLE (12-PIN)	
					(INCLUDES RECEPTACLE AS & WEDGE)	
		2	**155-2270**	6	KIT-CONNECTING PLUG (2-PIN)	
					(EACH INCLUDES PLUG AS, WEDGE & INTERFACE SEAL)	
	17	1	**253-5323**	1	HARNESS AS-TRANSMISSION	
		1	**8T-8737**	2	PLUG-SEAL	
E		1	**114-8843**		SLEEVE-PLASTIC (240-CM)	
E		1	**114-8844**		SLEEVE-PLASTIC (20-CM)	
E		1	**119-3662**		TUBE-HEAT SHRINK (10.85-MM DIA) (13-CM)	
E		1	**125-7874**		TUBE-HEAT SHRINK (5.72-MM DIA) (5-CM)	
		1	**9X-3402**	23	SOCKET-CONNECTOR (16-GA TO 18-GA)	
		1	**144-1636**	16	PIN-CONNECTOR (14-GA TO 18-GA)	
E		1	**1P-0810**		TAPE-ELECTRICAL (36-CM)	
		1	**102-8805**	1	KIT-RECEPTACLE (6-PIN)	
		1	**102-8801**	1	KIT-RECEPTACLE (12-PIN)	
					(EACH INCLUDES RECEPTACLE AS & WEDGE)	
		1	**155-2260**	1	KIT-CONNECTING PLUG (3-PIN)	
		1	**155-2270**	9	KIT-CONNECTING PLUG (2-PIN)	
					(EACH INCLUDES PLUG AS, WEDGE & INTERFACE SEAL)	
		1	**230-4011**	1	PLUG AS-CONNECTOR (2-PIN)	
		1	**264-7029**	1	SEAL-CONNECTOR	
Y	18	1	**257-5026**	1	VALVE GP-RELIEF (TRANSMISSION CONTROL VALVE)	455
	19	1	**260-7595**	1	VALVE-RELIEF	
R	20	2	**304-5687**	1	CONTROL GP-UNPROGRAMMED (TRANSMISSION)	

253-8428 **CONTROL GP-TRANSMISSION HYD** *(contd.)* **i03877573**

NOTE	REF NO	GRAPHIC REF	PART NUMBER	QTY	PART NAME 1 2 3 4 5 6 (PRODUCT LEVEL)	SEE PAGE
	21	2	**288-5507**	1	PLATE AS	
	22	1	**290-4134**	1	VALVE-RELIEF	
	23	2	**117-1385**	5	SEAL-O-RING	
	24	1,2	**130-5300**	5	CLIP	
	25	1,2	**132-5789**	10	CLIP	
	26	1	**2H-1142**	1	RING-RETAINING	
	27	1	**2K-8199**	1	SEAL-O-RING	
	29	2	**4P-7428**	1	CLIP	
	30	1	**4P-7429**	3	CLIP	
	31	1,2	**4P-7581**	8	CLIP	
	32	2	**4P-7582**	1	CLIP	
M	33	1	**5P-8347**	2	BOLT (M8X1.25X70-MM)	
	34	1	**6F-6672**	1	SEAL-O-RING	
M	35	1,2	**6V-5215**	6	BOLT (M8X1.25X16-MM)	
M	36	2	**6V-5222**	3	BOLT (M8X1.25X85-MM) (M8X1.25X85-MM)	
	37	1,2	**6V-5839**	3	WASHER (11X21X2.5-MM THK)	
M	38	1,2	**6V-8212**	3	BOLT (M10X1.5X16-MM)	
	39	1	**6V-9028**	1	SEAL-O-RING	
M	40	2	**8C-5748**	1	BOLT (M8X1.25X55-MM)	
M	41	1	**8T-0100**	20	BOLT (M8X1.25X60-MM)	
M	42	1	**8T-1158**	1	BOLT-SOCKET HEAD (M8X1.25X20-MM)	
	43	2	**8T-9655**	8	MOUNT-ISOLATION	
	44	1,2	**9M-1974**	29	WASHER-HARD (8.8X16X2-MM THK)	
	45	2	**9N-0869**	4	WASHER-HARD (8.8X25.5X2-MM THK)	
	46	1	**9X-4609**	1	SEAL-O-RING	
	47	2	**4K-8864**	1	CLIP	
	48	1	*165-4931*	3	ELBOW AS	
					(EACH INCLUDES)	
		1	**6V-8077**	1	ELBOW	
		1	**3J-1907**	1	SEAL-O-RING	

E-ORDER BY THE CENTIMETER
M-METRIC PART
R-REMFG PART MAY BE AVAILABLE
Y-SEPARATE ILLUSTRATION

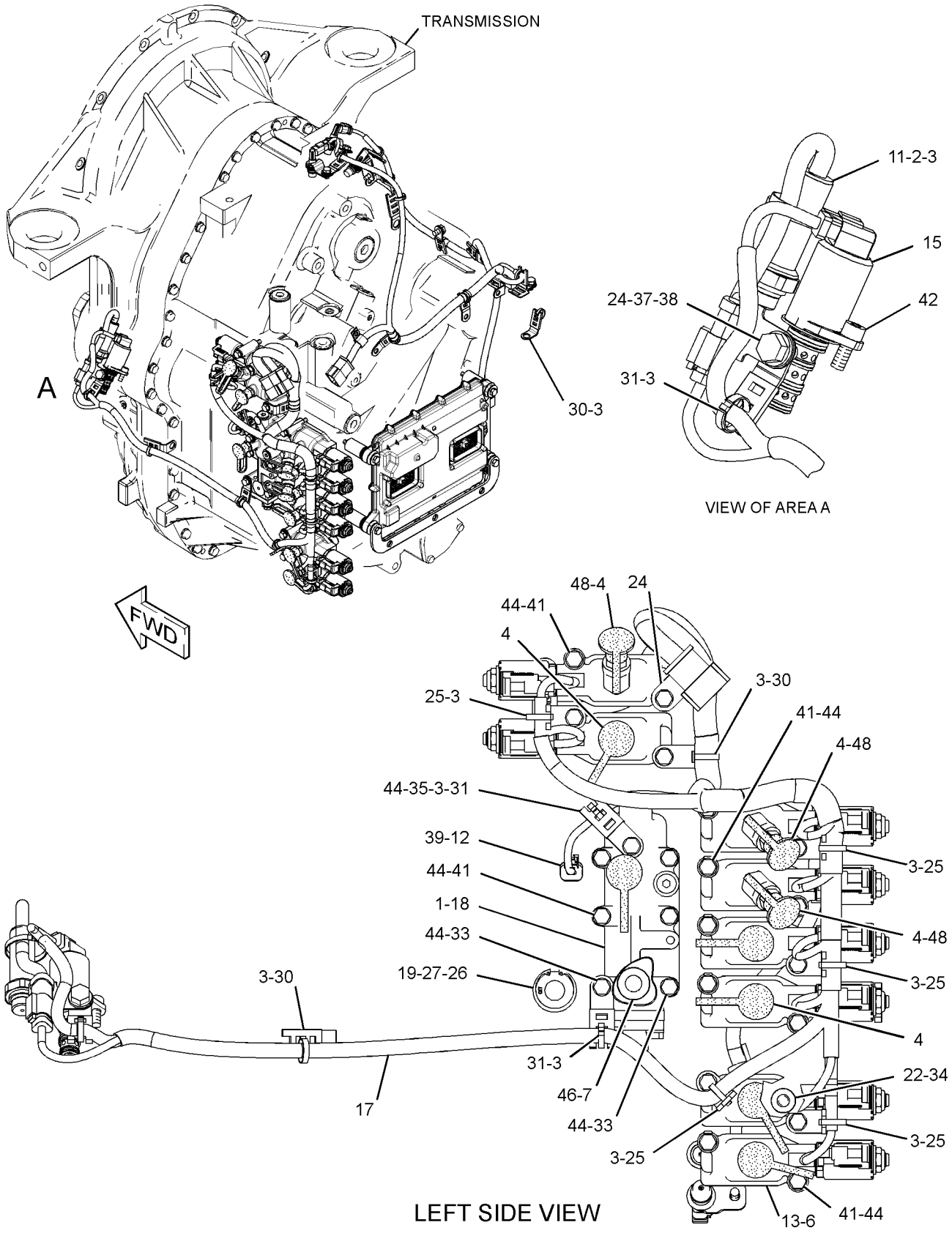

GRAPHIC #1

g01620846

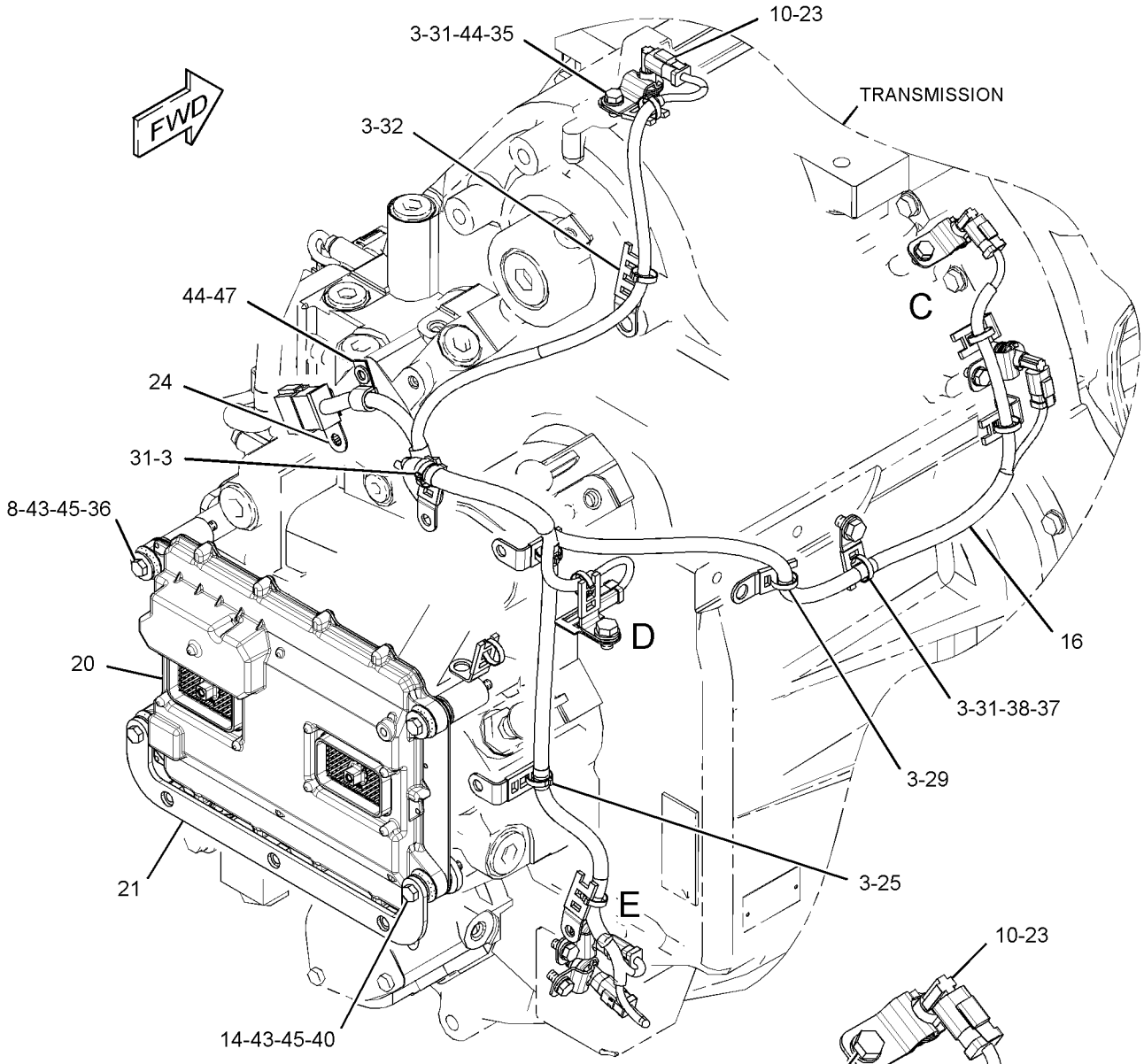

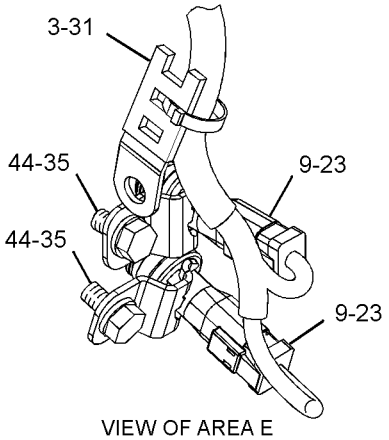

VIEW OF AREA E

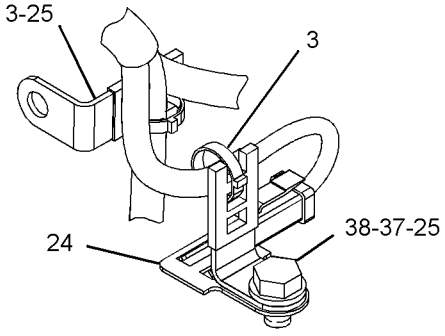

VIEW OF AREA D

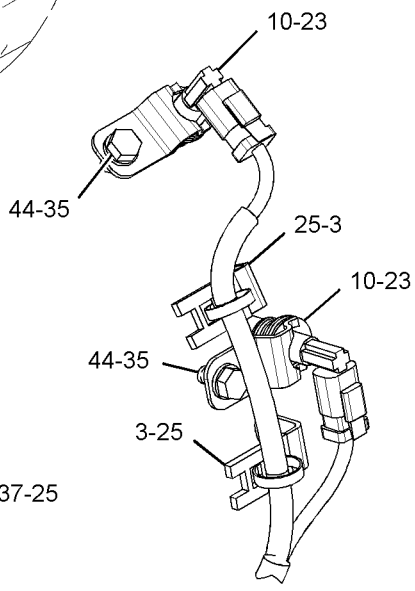

VIEW OF AREA C

GRAPHIC #2

<END>

g01620847

240-5403 COOLER GP-TRANSMISSION OIL

S/N: RSX1037-UP

PART OF 226-9770 ENGINE AR-COMPLETE

SMCS-1375 **i04003981**

NOTE	REF NO	GRAPHIC REF	PART NUMBER	QTY	PART NAME 1 2 3 4 5 6 (PRODUCT LEVEL)	SEE PAGE
	1	1	**2S-0795**	2	GASKET	
	2	1	**8E-9571**	2	WASHER-HARD (8.8X16X7-MM THK)	
	3	1	**8M-9307**	1	PLUG (TRANSMISSION OIL COOLER)	
	4	1	**8S-4304**	1	BONNET-XMSN OIL COOLER	
	5	1	**124-5043**	1	COUPLING	
	6	1	**349-3309**	1	ELBOW	
	7	1	**231-3178**	1	BRACKET	
	8	1	**244-1987**	1	BRACKET	
R	9	1	**250-2313**	1	CORE AS (TRANSMISSION OIL COOLER)	
	10	1	*353-5144*	1	PLUG AS	
		1	**9S-9334**	1	PLUG-O-RING	
		1	**6V-5064**	1	SEAL-O-RING	
	11	1	*353-5124*	1	PLUG AS	
		1	**9S-8004**	1	PLUG-O-RING	
		1	**6V-3250**	1	SEAL-O-RING	
	12	1	**2N-5243**	2	SEAL-O-RING	
	13	1	**3E-4353**	4	WASHER-HARD (11X25X3-MM THK)	
	14	1	**5P-8245**	12	WASHER-HARD (13.5X25.5X3-MM THK)	
M	15	1	**6A-5591**	8	BOLT (M12X1.75X25-MM)	
	16	1	**6F-7062**	1	WASHER (12.7X19.05X1.83-MM THK)	
M	17	1	**6V-1820**	4	BOLT (M10X1.5X30-MM)	
M	18	1	**6V-3668**	6	BOLT (M12X1.75X30-MM)	
M	19	1	**6V-3823**	2	BOLT (M12X1.75X60-MM)	
M	20	1	**6V-5219**	5	BOLT (M8X1.25X40-MM)	
	21	1	**8E-7366**	2	GASKET	
M	22	1	**6V-7673**	4	BOLT (M12X1.75X50-MM)	
	23	1	**8T-4223**	6	WASHER-HARD (13.5X25.5X3-MM THK)	
M	24	1	**6V-8004**	2	BOLT (M12X1.75X120-MM)	
	25	1	**8X-6166**	2	COVER	
	26	1	**9M-1974**	3	WASHER-HARD (8.8X16X2-MM THK)	

M-METRIC PART
R-REMFG PART MAY BE AVAILABLE

240-5403 **COOLER GP-TRANSMISSION OIL** *(contd.)* **i04003981**

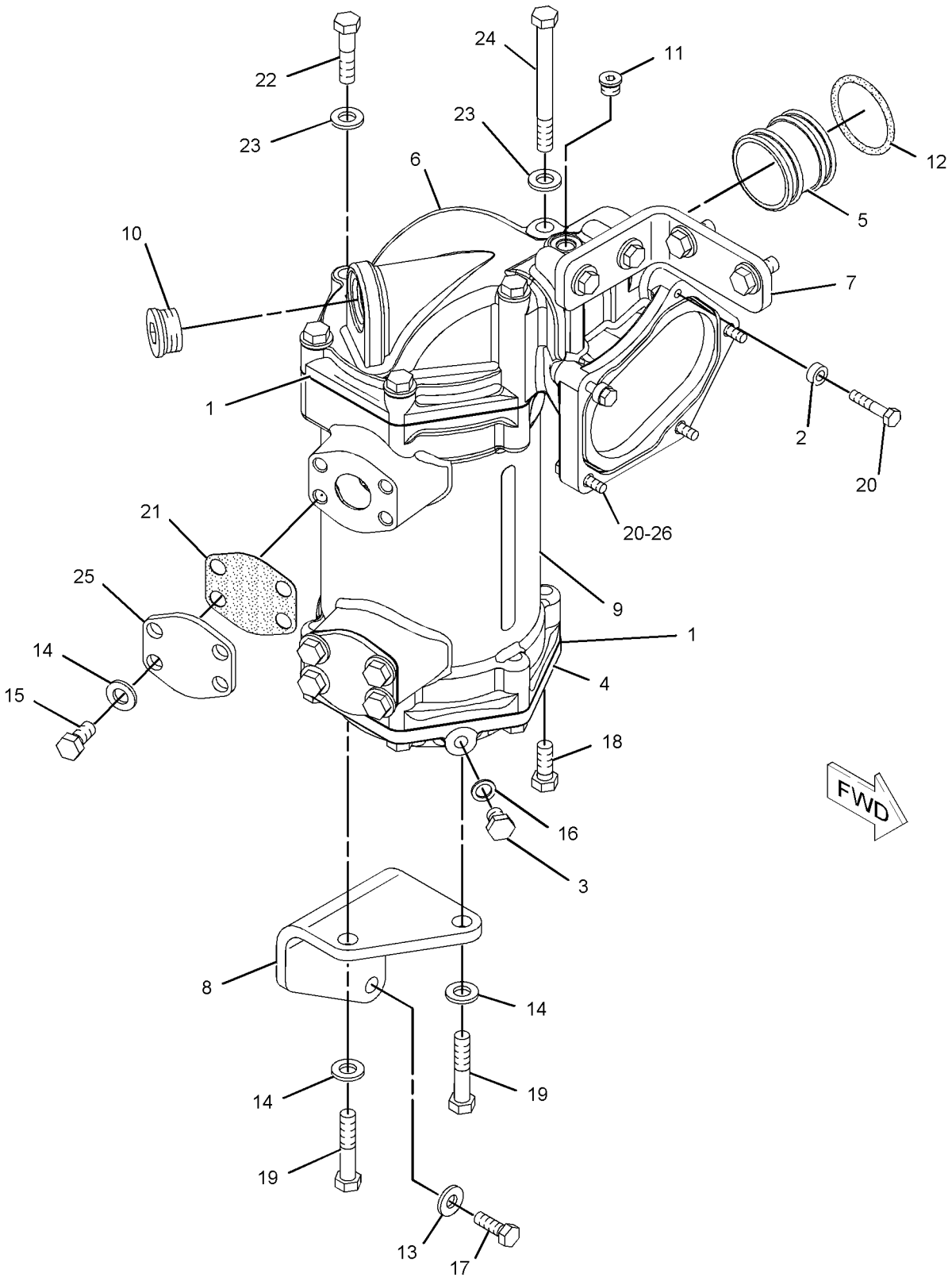

GRAPHIC #1 **<END>** g01143619

250-0154 COUPLING GP-TORSIONAL

S/N: R9J1-UP

PART OF 349-2555 COMMON AR

SMCS-3252, 3279 **i03646675**

NOTE	REF NO	GRAPHIC REF	PART NUMBER	QTY	PART NAME 1 2 3 4 5 6 (PRODUCT LEVEL)	SEE PAGE
	1	1	**268-8794**	1	COUPLING AS	
		1	**1A-2029**	12	BOLT (3/8-16X1.125-IN)	
		1	**9S-8752**	12	NUT-FULL (3/8-16-THD)	
		1	**244-6849**	12	SPRING (33-MM ODX46-MM LG)	
		1	**244-6850**	8	SPRING (23-MM ODX46-MM LG)	
		1	**244-6851**	4	SPRING (23-MM ODX34-MM LG)	
	2	1	**165-3929**	12	BOLT (3/8-16X1.5-IN)	
	3	1	**5J-4715**	12	WASHER (10.3X20.6X4.2-MM THK)	

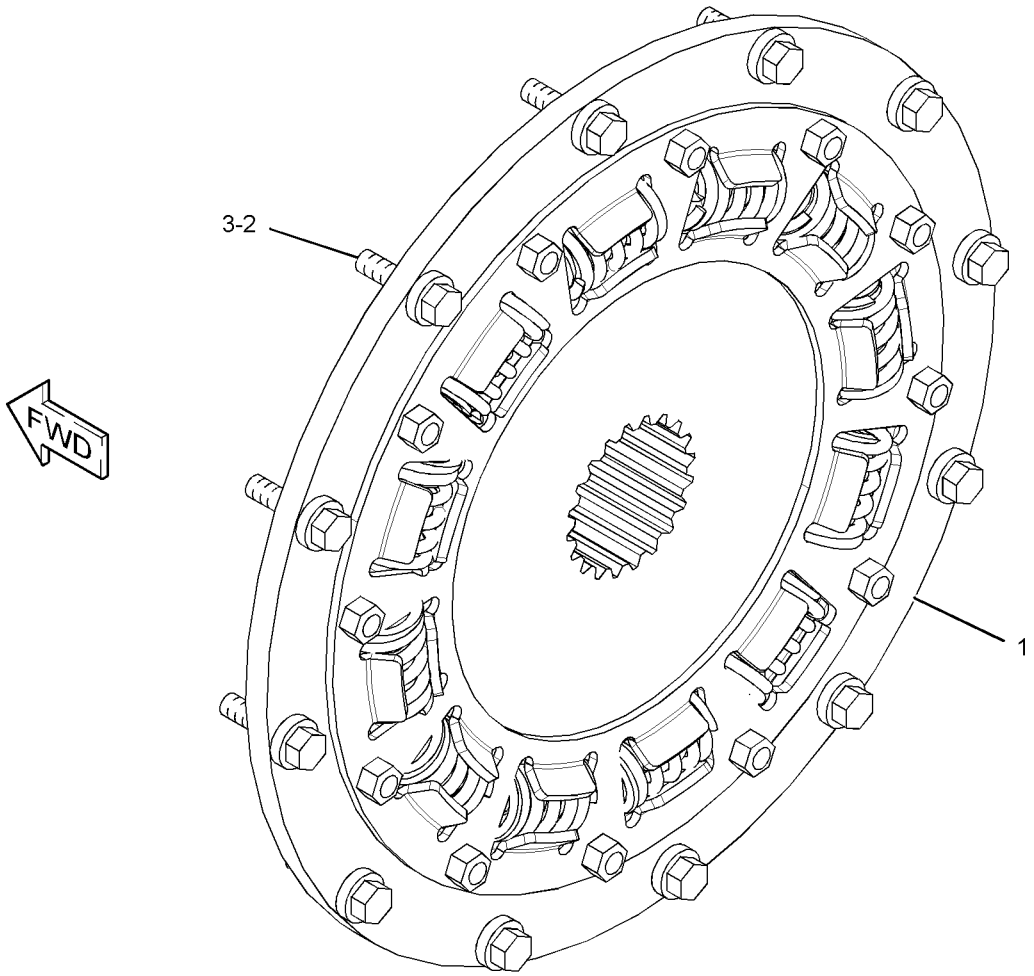

GRAPHIC #1 **<END>** g01402321

260-9479 COVER GP-SHIPPING

S/N: DZM1-UP

PART OF 253-8407 TRANSMISSION AR

SMCS-3030, 3064 **i02662788**

NOTE	REF NO	GRAPHIC REF	PART NUMBER	QTY	PART NAME 1 2 3 4 5 6 (PRODUCT LEVEL)	SEE PAGE
	1	1	**117-2927**	1	COVER-SHIPPING	
	2	1	**126-1773**	2	CAP-CONNECTOR	
	3	1	**175-3721**	1	COVER	
	6	1	**4M-0189**	1	SEAL-O-RING	
	7	1	**5P-0597**	1	CLAMP-HOSE	
	8	1	**8T-8737**	30	PLUG-SEAL	
	9	1	**155-2258**	2	WEDGE-PLUG LOCK (12-PIN)	
	10	1	**155-2263**	1	WEDGE-PLUG LOCK (6-PIN)	
	11	1	**276-9496**	1	PLUG-EXPANSION	
	12	1	*148-8406*	2	PLUG AS	
					(EACH INCLUDES)	
		1	**7M-8485**	1	SEAL-O-RING	
		1	**9S-9334**	1	PLUG-O-RING	
	13	1	*148-8407*	2	PLUG AS	
					(EACH INCLUDES)	
		1	**3J-1907**	1	SEAL-O-RING	
		1	**9S-4191**	1	PLUG-O-RING	
	14	1	*148-8408*	1	PLUG AS	
		1	**3D-2824**	1	SEAL-O-RING	
		1	**9S-4183**	1	PLUG-O-RING	
	15	1	**155-2255**	2	KIT-CONNECTING PLUG (12-PIN)	
					(EACH INCLUDES PLUG AS, WEDGE & INTERFACE SEAL)	
	16	1	**155-2274**	1	KIT-CONNECTING PLUG (6-PIN)	
	17	1	**1S-3725**	2	COVER	
	18	1	**1S-3730**	1	COVER	
	19	1	**5P-8245**	14	WASHER-HARD (13.5X25.5X3-MM THK)	
M	20	1	**6V-3823**	10	BOLT (M12X1.75X60-MM)	
M	21	1	**6V-8149**	10	NUT (M12X1.75-THD)	
	22	1	**8E-7365**	1	GASKET	
	23	1	**8E-7366**	2	GASKET	
M	24	1	**8T-0293**	4	BOLT (M12X1.75X20-MM)	
M	25	1	**8T-4137**	8	BOLT (M10X1.5X20-MM)	
M	26	1	**8T-4139**	4	BOLT (M12X1.75X30-MM)	
	27	1	**9H-0846**	1	SEAL-O-RING	

M-METRIC PART

260-9479 **COVER GP-SHIPPING** *(contd.)* **i02662788**

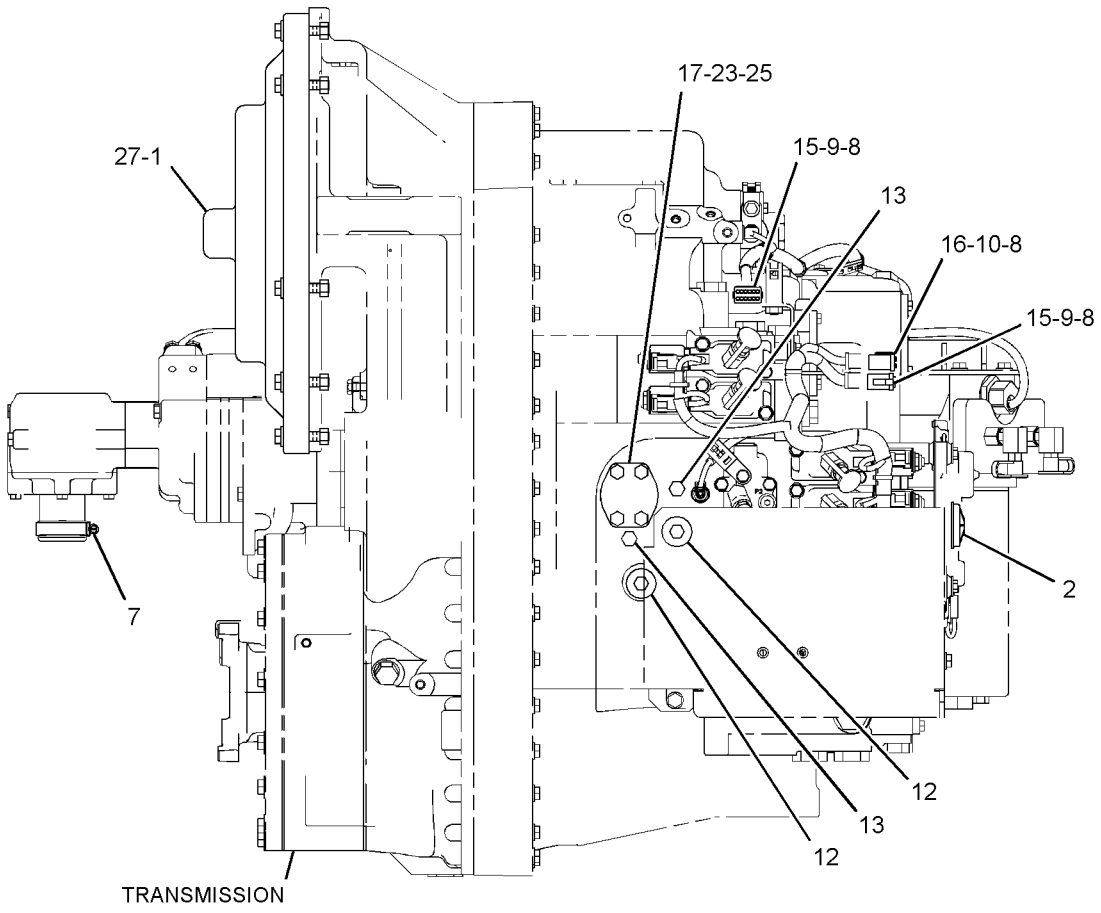

LEFT SIDE VIEW

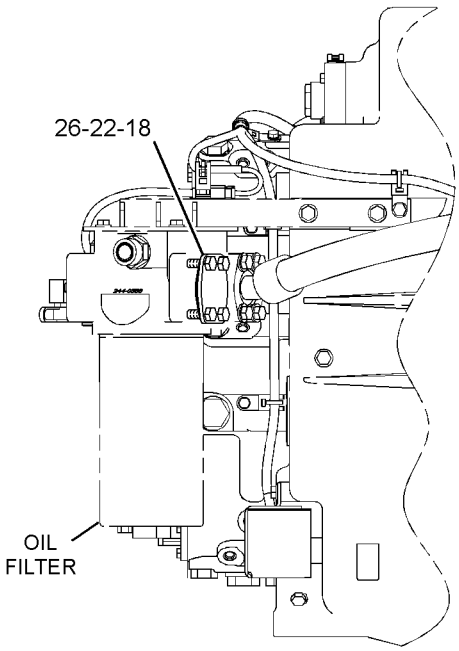

RIGHT SIDE VIEW

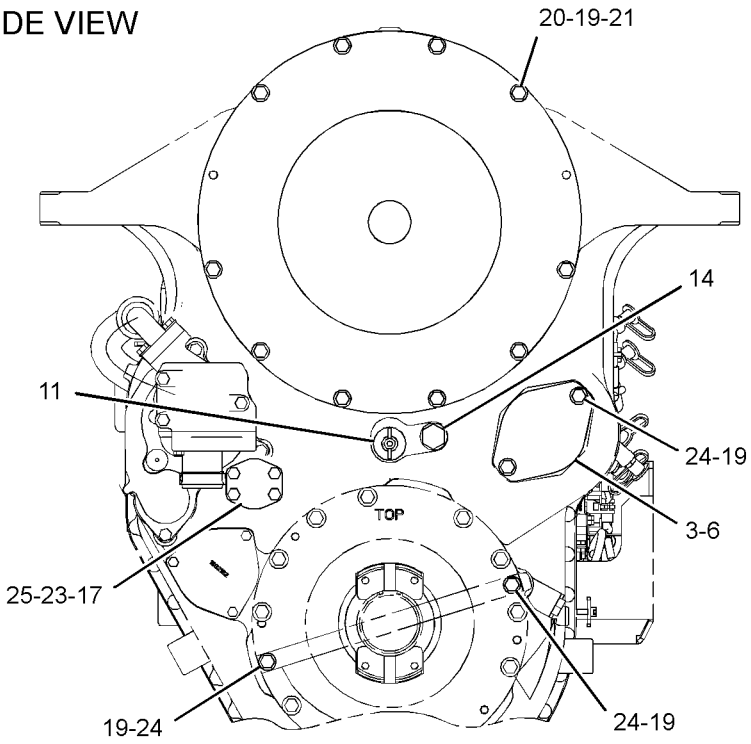

FRONT VIEW

GRAPHIC #1 **<END>** g01306989

272-5612 DIFFERENTIAL & BEVEL GEAR GP

S/N: R9J1-UP

PART OF 270-9037 AXLE GP-REAR

SMCS-3256, 3258 **i03628450**

NOTE	REF NO	GRAPHIC REF	PART NUMBER	QTY	PART NAME 1 2 3 4 5 6 (PRODUCT LEVEL)	SEE PAGE
	1	1	**2D-9455**	1	CONE-BEARING	
	2	1	**7S-4001**	1	SEAL-O-RING	
	3	1	**132-6598**	1	CUP-BEARING	
	4	1	**215-8200**	1	BEARING AS	
	5	1	**215-8201**	1	RACE-BEARING	
	6	1	**215-9664**	1	LOCKNUT AS	
		1	**159-3046**	4	BOLT (M8X1.25X20-MM)	
	7	1	**219-4683**	1	SHROUD	
	8	1	**264-0575**	1	SEAL-LIP TYPE	
B	9	1	**271-8528**	1	SHIM PACK (INCLUDES 18-SHIMS)	
	10	1	**271-8529**	1	RETAINER	
	11	1	**272-7118**	1	HOUSING-PINION	
	12	1	**272-7121**	1	YOKE AS	
		1	**271-8680**	1	GUARD	
Y	13	1	**287-8233**	1	DIFFERENTIAL GP	429
	14	1	**290-7296**	24	BOLT (M16X2X40-MM)	
C	15	1	**309-8764**	1	GEAR-BEVEL (45-TEETH)	
M	16	1	**5A-3604**	3	BOLT-SOCKET HEAD (M8X1.25X25-MM)	
	17	1	**2D-9454**	1	CUP-BEARING (TAPERED ROLLER)	
	18	1	**6V-2394**	1	RING-RETAINING	
	19	1	**8F-4452**	1	CONE-BEARING	
M	20	1	**286-9155**	1	BOLT-SELF-LOCKING (M16X2X120-MM)	
	21	1	**9X-8268**	24	WASHER (17.5X30X3.5-MM THK)	
C	22	1	**293-0214**	1	SHAFT-BEVEL PINION	

B-USE AS REQUIRED
C-CHANGE FROM PREVIOUS TYPE
M-METRIC PART
Y-SEPARATE ILLUSTRATION

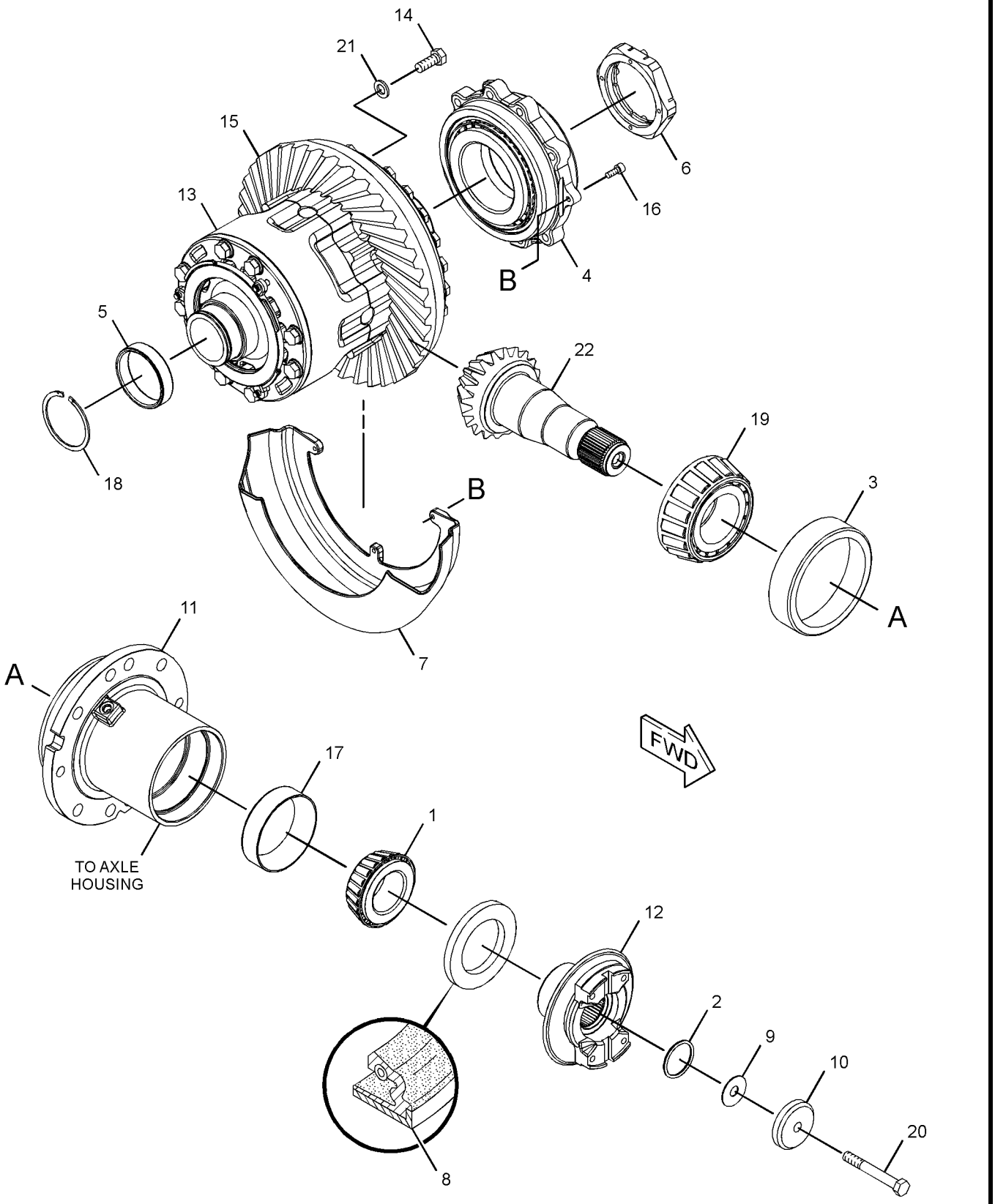

GRAPHIC #1 **<END>** g01394197

287-8233 DIFFERENTIAL GP

S/N: R9J1-UP

PART OF 272-5612 DIFFERENTIAL & BEVEL GEAR GP

SMCS-3258 **i02762700**

NOTE	REF NO	GRAPHIC REF	PART NUMBER	QTY	PART NAME 1 2 3 4 5 6 (PRODUCT LEVEL)	SEE PAGE
	1	1	**5F-9144**	3	SEAL-O-RING	
	2	1	**148-7841**	3	SPRING	
	3	1	**293-5369**	4	BEARING-SLEEVE	
	4	1	**205-4121**	1	RING-THRUST	
	5	1	**205-4122**	1	PLATE-THRUST	
	6	1	**205-4641**	9	PLATE-SEPARATOR	
	7	1	**217-4537**	9	DISC-FRICTION	
	8	1	**272-0353**	3	DOWEL	
	9	1	**306-5630**	1	GEAR-DIFFERENTIAL (18-TEETH)	
	10	1	**306-5631**	1	GEAR-DIFFERENTIAL (18-TEETH)	
	11	1	**306-5636**	4	PINION	
	12	1	**305-3344**	2	WASHER-THRUST	
	13	1	**287-8228**	1	CASE AS-DIFFERENTIAL	
M		1	**8T-5002**	9	BOLT (M16X180-MM)	
		1	**9X-8268**	8	WASHER (17.5X30X3.5-MM THK)	
	14	1	**306-5623**	1	SPIDER	
	15	1	**305-3343**	4	WASHER-THRUST	

M-METRIC PART

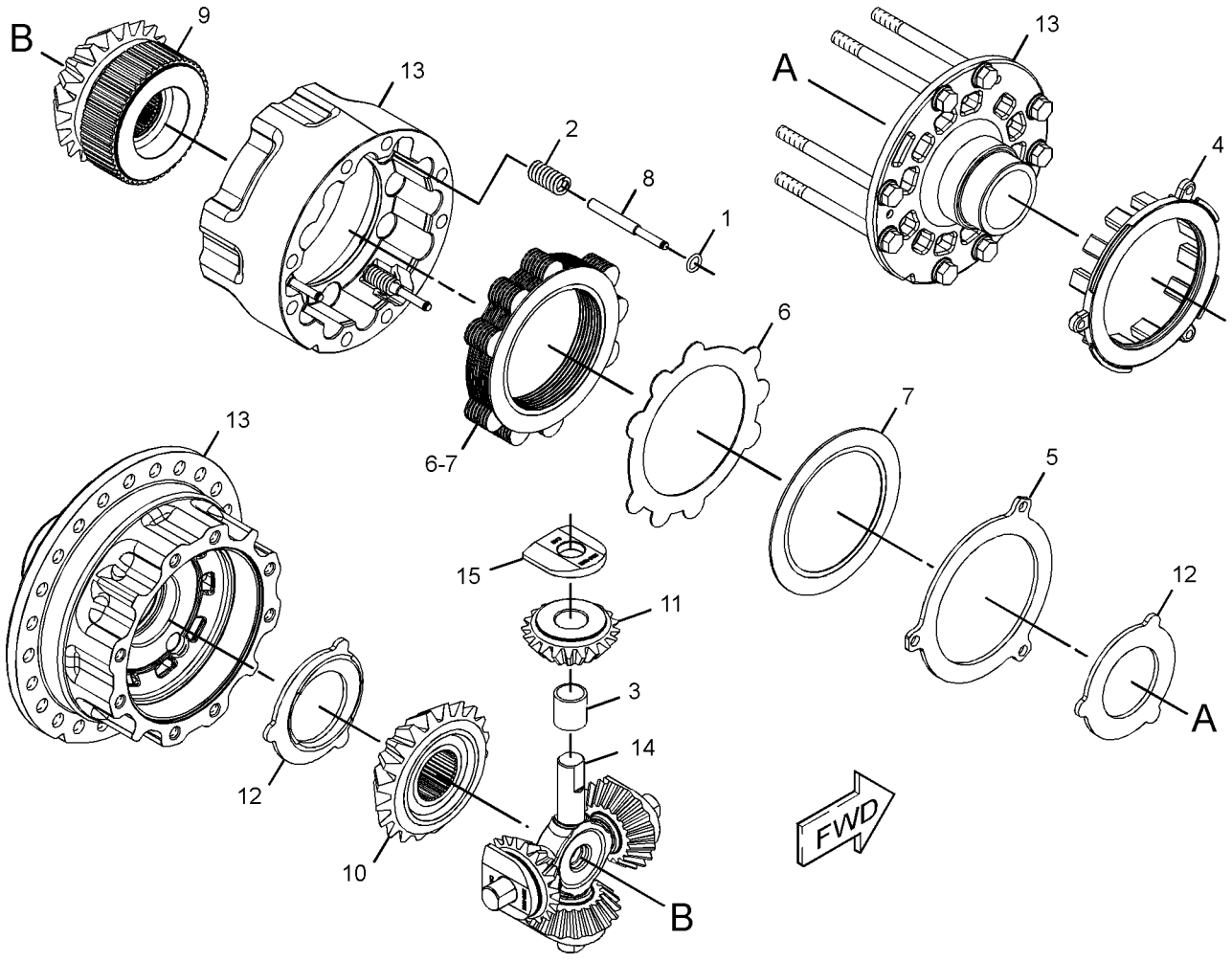

GRAPHIC #1 **<END>** g01283281

POWER TRAIN

285-0256 DRIVE GP-FINAL

S/N: R9J1-UP

PART OF 270-9037 AXLE GP-REAR

SMCS-4050 **i03654715**

NOTE	REF NO	GRAPHIC REF	PART NUMBER	QTY	PART NAME 1 2 3 4 5 6 (PRODUCT LEVEL)	SEE PAGE
	1	1	**3F-1396**	1	CONE-BEARING	
	2	1	**6G-3207**	1	WASHER-THRUST (357.02X405.08X6.97-MM THK)	
	3	1	**8S-9075**	1	CONE-BEARING	
	4	1	**8S-9076**	1	CUP-BEARING	
	5	1	**254-3303**	1	SHAFT-DRIVE	
	6	1	**255-9331**	2	RING-WEAR	
	7	1	**257-1985**	2	SPROCKET (22-TEETH)	
	8	1	**259-4462**	1	RETAINER	
	9	1	**270-6941**	1	RETAINER	
B	10	1	**270-6942**	5	SHIM (0.12-MM THK)	
B	11	1	**270-6943**	5	SHIM (0.18-MM THK)	
B	12	1	**270-6944**	2	SHIM (0.5-MM THK)	
Y	13	1	**272-8010**	1	CARRIER GP-FINAL DRIVE	401
	14	1	**279-2569**	1	GEAR-RING	
	15	1	**316-9769**	1	HOUSING	
	16	1	**290-2543**	3	DOWEL	
	17	1	**291-6872**	1	HOUSING	
M	18	1	**103-6169**	4	BOLT-SELF-LOCKING (M16X2X60-MM)	
	19	1	**109-6495**	1	RING-RETAINING	
M	20	1	**160-8510**	16	BOLT-SELF-LOCKING (M20X2.5X60-MM) (M20X2.5X50-MM)	
	22	1	**3L-3313**	1	SEAL-LIP TYPE	
	23	1	**5P-8245**	3	WASHER-HARD (13.5X25.5X3-MM THK)	
M	24	1	**6V-3669**	16	BOLT (M20X2.5X80-MM)	
	25	1	**330-7851**	1	SEAL-LIP TYPE	
	26	1	**8B-6343**	1	CUP-BEARING	
M	27	1	**8T-0372**	3	BOLT (M12X1.75X90-MM)	
	28	1	**8T-3282**	16	WASHER-HARD (22X35X3.5-MM THK)	
	29	1	**9F-2247**	1	PLUG-PIPE	
	30	1	**9L-5650**	1	SEAL-O-RING	
B	31	1	**260-2989**	1	SHIM PACK (INCLUDES 10-SHIMS)	
	32	1	**4E-5685**	28	SPACER (20.5X35X16-MM THK)	
M	33	1	**178-2991**	12	BOLT-SELF-LOCKING (M20X2.5X70-MM)	
	34	1	**317-2403**	1	SEAL-O-RING	
	35	1	**328-9668**	1	WASHER-THRUST (399.1X357X7-MM THK)	

B-USE AS REQUIRED
M-METRIC PART
Y-SEPARATE ILLUSTRATION

285-0256 **DRIVE GP-FINAL** *(contd.)* **i03654715**

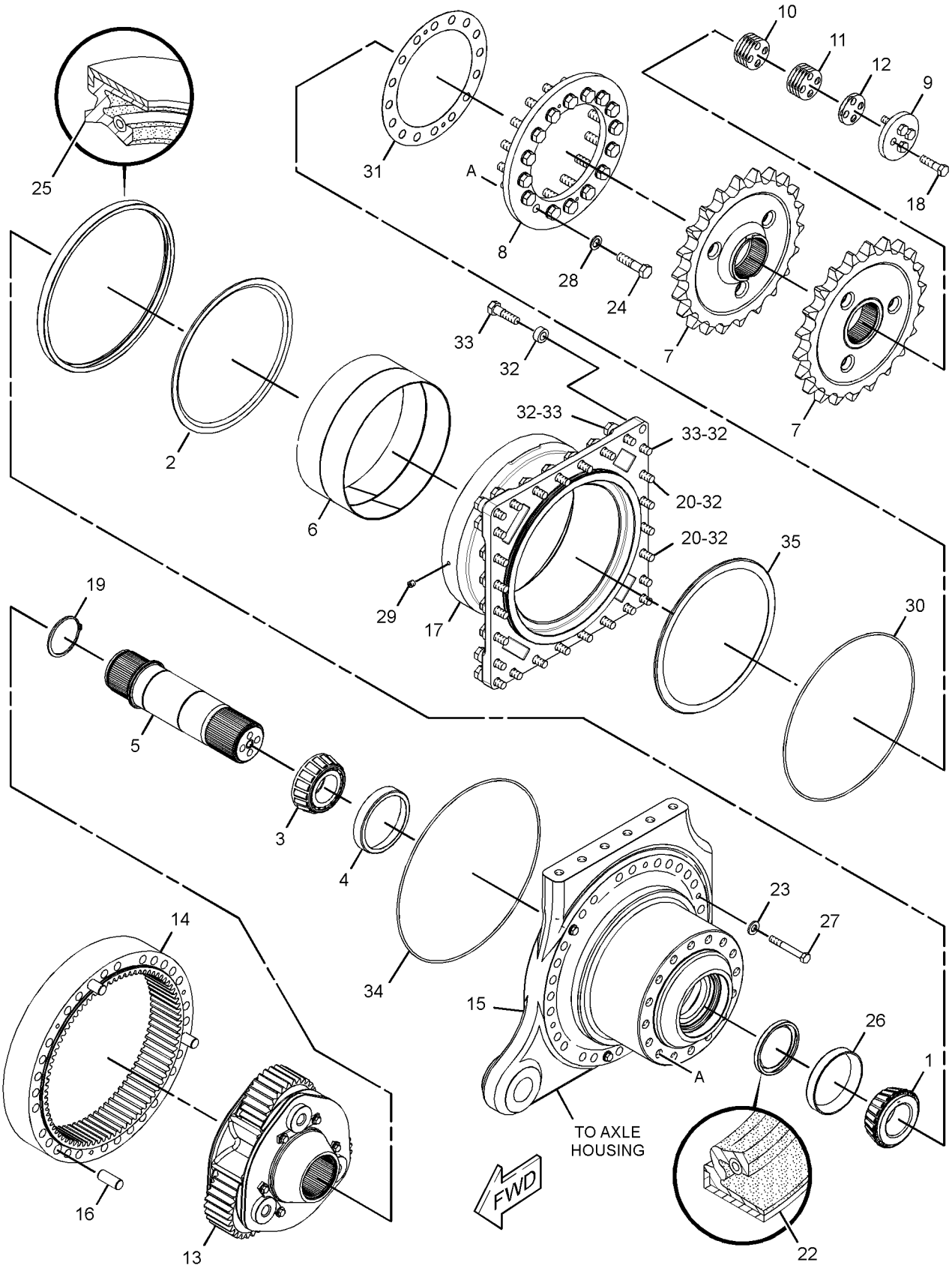

GRAPHIC #1 **<END>** g02051493

285-0258 DRIVE GP-FINAL

S/N: R9J1-UP

PART OF 270-9037 AXLE GP-REAR

SMCS-4050 **i03654713**

NOTE	REF NO	GRAPHIC REF	PART NUMBER	QTY	PART NAME 1 2 3 4 5 6 (PRODUCT LEVEL)	SEE PAGE
	1	1	**3F-1396**	1	CONE-BEARING	
	2	1	**6G-3207**	1	WASHER-THRUST (357.02X405.08X6.97-MM THK)	
	3	1	**8S-9075**	1	CONE-BEARING	
	4	1	**8S-9076**	1	CUP-BEARING	
	5	1	**254-3303**	1	SHAFT-DRIVE	
	6	1	**255-9331**	2	RING-WEAR	
	7	1	**257-1985**	2	SPROCKET (22-TEETH)	
	8	1	**259-4462**	1	RETAINER	
	9	1	**270-6941**	1	RETAINER	
B	10	1	**270-6942**	5	SHIM (0.12-MM THK)	
B	11	1	**270-6943**	5	SHIM (0.18-MM THK)	
B	12	1	**270-6944**	2	SHIM (0.5-MM THK)	
Y	13	1	**272-8010**	1	CARRIER GP-FINAL DRIVE	401
	14	1	**279-2569**	1	GEAR-RING	
	15	1	**316-9771**	1	HOUSING	
	16	1	**290-2543**	3	DOWEL	
	17	1	**291-6872**	1	HOUSING	
M	18	1	**103-6169**	4	BOLT-SELF-LOCKING (M16X2X60-MM)	
	19	1	**109-6495**	1	RING-RETAINING	
M	20	1	**160-8510**	16	BOLT-SELF-LOCKING (M20X2.5X60-MM)	
	22	1	**3L-3313**	1	SEAL-LIP TYPE	
	23	1	**5P-8245**	3	WASHER-HARD (13.5X25.5X3-MM THK)	
M	24	1	**6V-3669**	16	BOLT (M20X2.5X80-MM)	
	25	1	**330-7851**	1	SEAL-LIP TYPE	
	26	1	**8B-6343**	1	CUP-BEARING	
M	27	1	**8T-0372**	3	BOLT (M12X1.75X90-MM)	
	28	1	**8T-3282**	16	WASHER-HARD (22X35X3.5-MM THK)	
	29	1	**9F-2247**	1	PLUG-PIPE	
	30	1	**9L-5650**	1	SEAL-O-RING	
B	31	1	**260-2989**	1	SHIM PACK (INCLUDES 10-SHIMS)	
	32	1	**4E-5685**	28	SPACER (20.5X35X16-MM THK)	
M	33	1	**178-2991**	12	BOLT-SELF-LOCKING (M20X2.5X70-MM)	
	34	1	**317-2403**	1	SEAL-O-RING	
	35	1	**328-9668**	1	WASHER-THRUST (399.1X357X7-MM THK)	

B-USE AS REQUIRED
M-METRIC PART
Y-SEPARATE ILLUSTRATION

285-0258 **DRIVE GP-FINAL** *(contd.)* **i03654713**

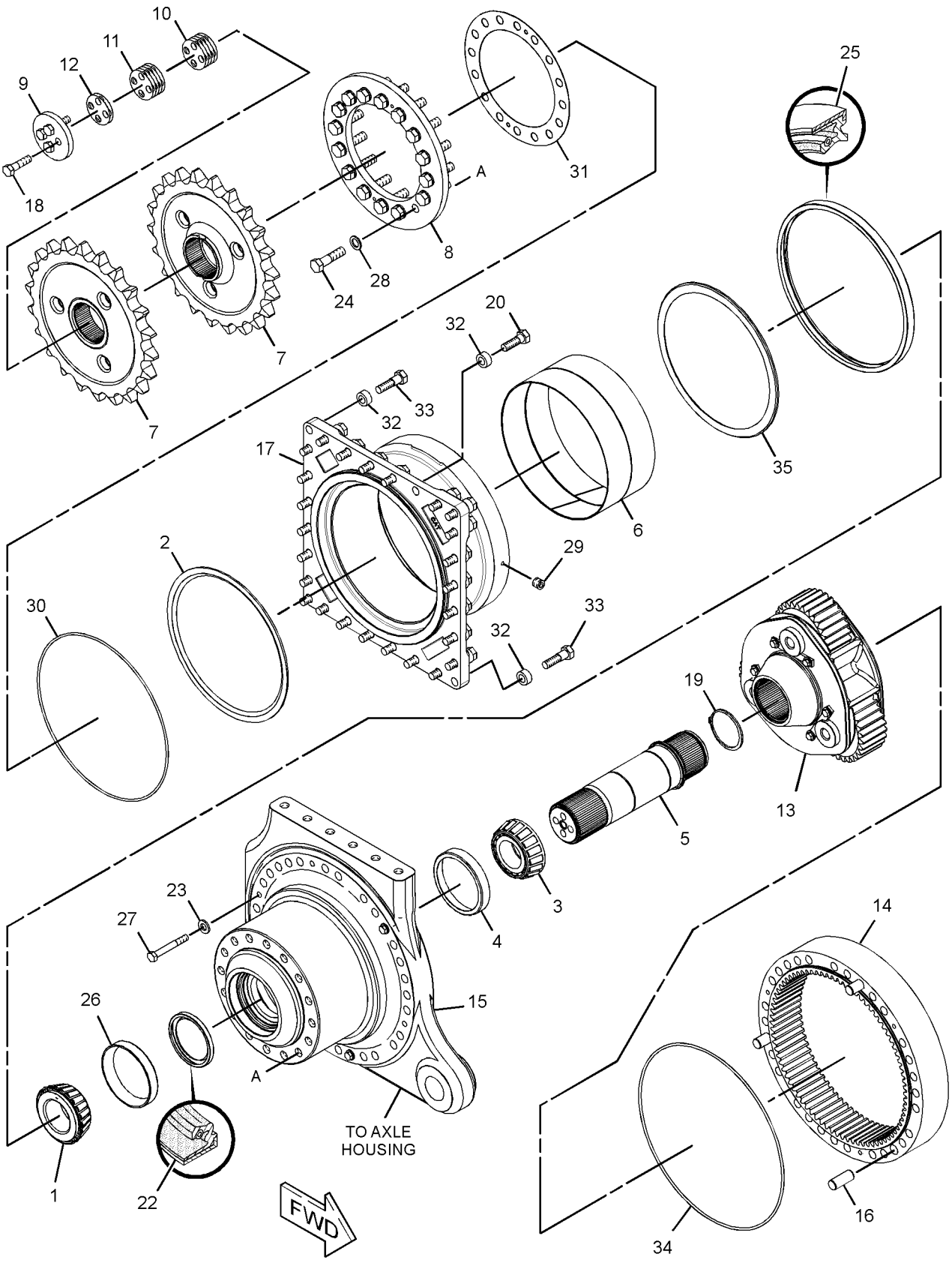

GRAPHIC #1 **<END>** g02116413

349-6142 FILLER GP-POWER TRAIN OIL

S/N: R9J1-UP

PART OF 349-2555 COMMON AR

SMCS-3005, 3081, 7513 **i03957326**

NOTE	REF NO	GRAPHIC REF	PART NUMBER	QTY	PART NAME 1 2 3 4 5 6 (PRODUCT LEVEL)	SEE PAGE
	1	1	**9G-5127**	1	BREATHER (POWER TRAIN OIL)	
	2	1	**254-3286**	1	GAUGE AS-OIL LEVEL (DIPSTICK) (POWER TRAIN OIL)	
	3	1	**310-1891**	1	TUBE AS	
	4	1	**3N-2945**	1	GASKET	
	5	1	**7J-8611**	1	ELBOW-PIPE	
	6	1	**8T-4121**	2	WASHER-HARD (11X21X2.5-MM THK)	
M	7	1	**8T-4196**	2	BOLT (M10X1.5X35-MM)	

M-METRIC PART

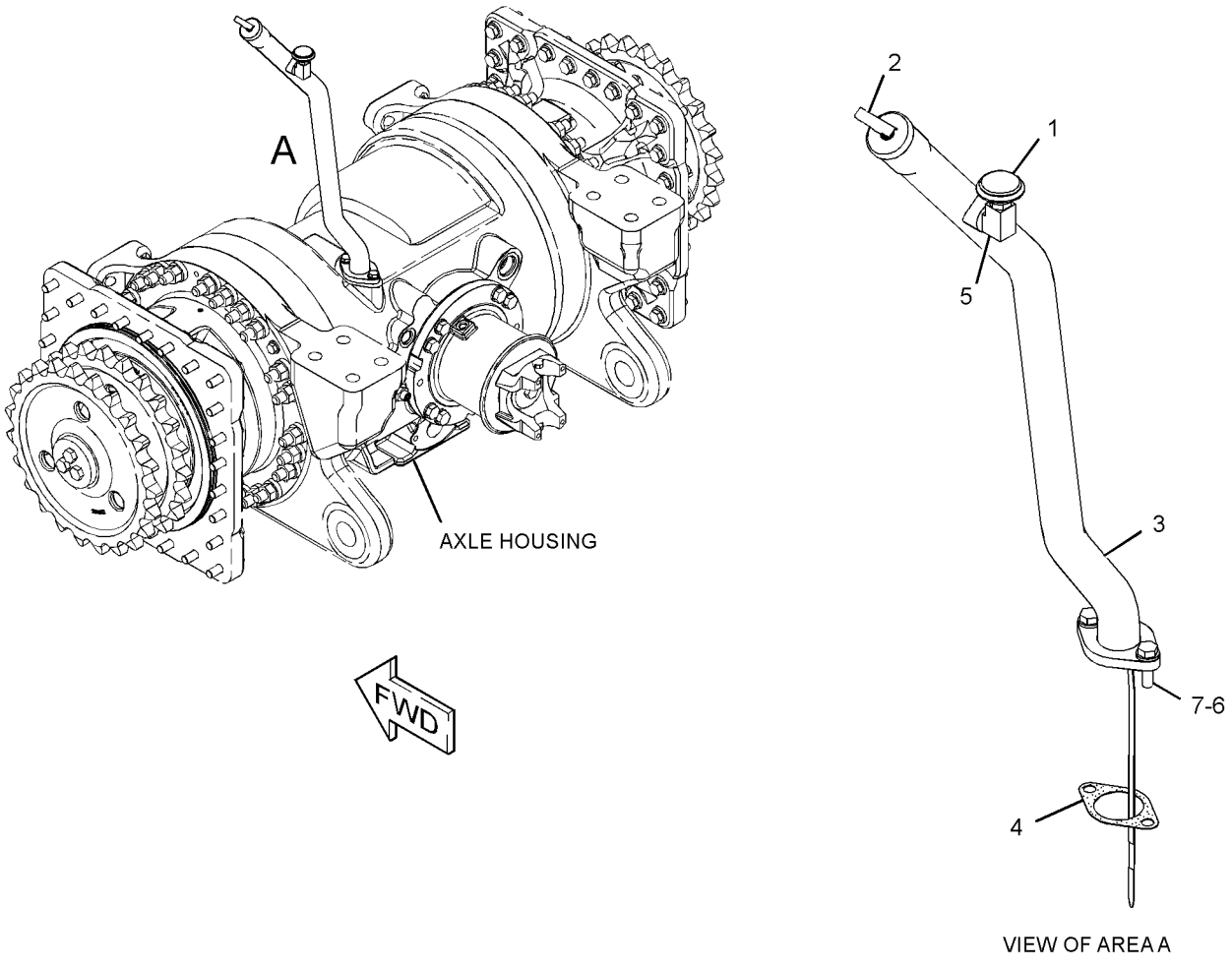

GRAPHIC #1 **<END>** g02218855

253-7939 FILTER GP-OIL–TRANSMISSION

S/N: DZM1601-UP

PART OF 253-8407 TRANSMISSION AR

SMCS-3004, 3067 **i03390825**

NOTE	REF NO	GRAPHIC REF	PART NUMBER	QTY	PART NAME 1 2 3 4 5 6 (PRODUCT LEVEL)	SEE PAGE
	1	1	**257-9850**	1	BRACKET AS	
CY	2	1	*333-6432*	1	FILTER GP-OIL	436
	3	1	**8T-4121**	4	WASHER-HARD (11X21X2.5-MM THK)	
M	4	1	**8T-4184**	2	BOLT (M12X1.75X45-MM)	
M	5	1	**8T-4195**	4	BOLT (M10X1.5X30-MM)	
	6	1	**8T-4223**	2	WASHER-HARD (13.5X25.5X3-MM THK)	

C-CHANGE FROM PREVIOUS TYPE
M-METRIC PART
Y-SEPARATE ILLUSTRATION

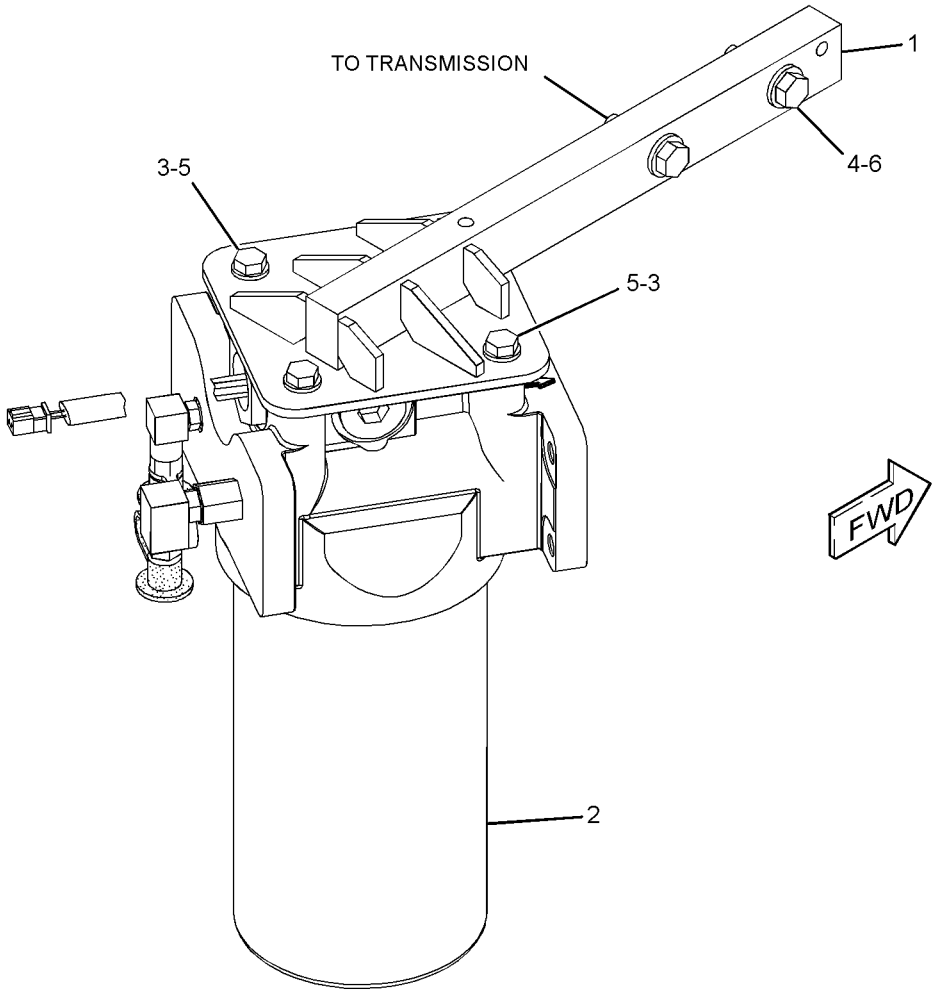

GRAPHIC #1 **<END>** g01336245

333-6432 FILTER GP-OIL—TRANSMISSION

S/N: DZM1601-UP

PART OF 253-7939 FILTER GP-OIL

SMCS-3004, 3067 **i03784089**

NOTE	REF NO	GRAPHIC REF	PART NUMBER	QTY	PART NAME 1 2 3 4 5 6 (PRODUCT LEVEL)	SEE PAGE
	1	1	**6V-0852**	1	CAP-DUST	
	2	1	**8C-3447**	1	CAP-DUST	
	3	1	**124-8909**	1	ELBOW	
	4	1	**321-5967**	1	HOUSING GP-FILTER	
		1	**9S-8004**	1	PLUG-O-RING	
		1	**214-7568**	1	SEAL-O-RING	
	5	1	**328-3655**	1	FILTER ELEMENT AS-OIL (ADVANCED EFFICIENCY) (TRANSMISSION)	
Y	6	1	**333-9310**	1	BASE GP-OIL FILTER	400
	7	1	**214-7568**	3	SEAL-O-RING	
	8	1	**6V-5048**	2	SEAL-O-RING	
	9	1	**6V-0484**	1	ADAPTER-O-RING	
	10	1	**6V-3965**	1	FITTING (QUICK DISCONNECT)	
	11	1	**7W-7381**	1	FITTING-OUTLET	
	12	1	**8C-3446**	1	VALVE-FLUID SAMPLING	
	13	1	**130-0229**	1	SEAL-O-RING	
	14	1	**8L-2786**	1	SEAL-O-RING	
	15	1	**3P-1932**	1	ADAPTER	

Y-SEPARATE ILLUSTRATION

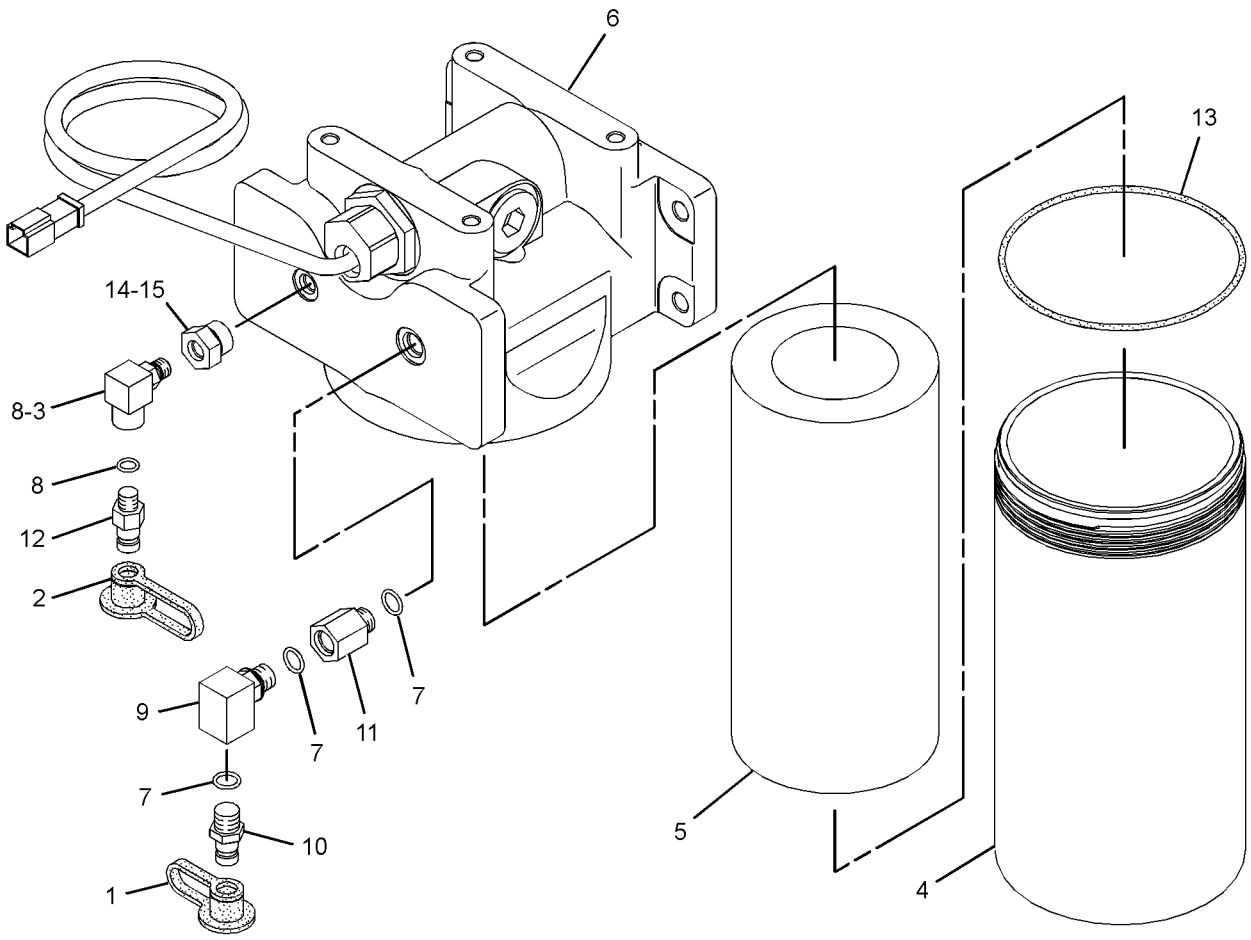

GRAPHIC #1 **<END>** g02099694

246-6111 LINES GP-LUBRICATION—PUMP DRIVE

S/N: R9J1-UP

PART OF 349-2555 COMMON AR

SMCS-5057, 7517 **i02710899**

NOTE	REF NO	GRAPHIC REF	PART NUMBER	QTY	PART NAME 1 2 3 4 5 6 (PRODUCT LEVEL)	SEE PAGE
I	1	1	**265-3700**	1	HOSE AS	
	2	1	**265-3701**	1	BRACKET AS	
	3	1	*148-8336*	2	CONNECTOR AS	
					(EACH INCLUDES)	
		1	**6V-8636**	1	CONNECTOR	
		1	**3J-1907**	1	SEAL-O-RING	
		1	**6V-8397**	1	SEAL-O-RING	
	4	1	*148-8367*	1	ELBOW AS	
		1	**6V-9850**	1	ELBOW	
		1	**6V-8397**	1	SEAL-O-RING	
	5	1	**4D-7388**	1	CLIP	
	6	1	**8M-2773**	2	CLIP	
	7	1	**8T-4121**	3	WASHER-HARD (11X21X2.5-MM THK)	
M	8	1	**8T-4133**	1	NUT (M10X1.5-THD)	
M	9	1	**8T-4136**	1	BOLT (M10X1.5X25-MM)	
M	10	1	**8T-4137**	1	BOLT (M10X1.5X20-MM)	

I-REFER TO HYDRAULIC INFORMATION SYSTEM
M-METRIC PART

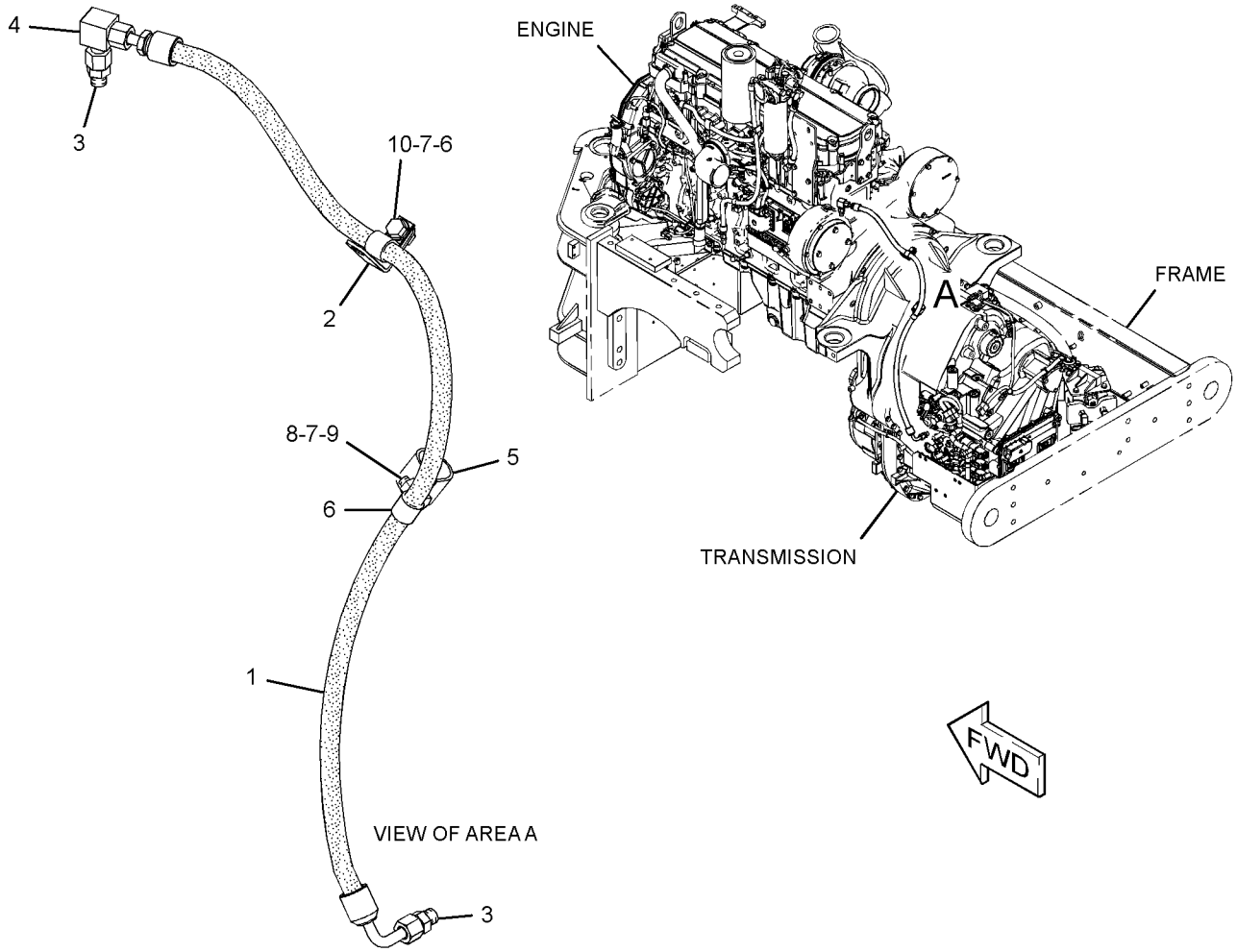

GRAPHIC #1 **<END>** g01362919

253-7931 LINES GP-TRANSMISSION OIL

S/N: DZM1-UP

PART OF 253-8407 TRANSMISSION AR

SMCS-3154 **i02534586**

NOTE	REF NO	GRAPHIC REF	PART NUMBER	QTY	PART NAME 1 2 3 4 5 6 (PRODUCT LEVEL)	SEE PAGE
I	1	1	**280-6900**	1	HOSE AS	
	2	1	**1P-4579**	2	FLANGE-HALF	
	3	1	**4J-0522**	1	SEAL-O-RING	
	4	1	**4J-0524**	1	SEAL-O-RING	
	5	1	**1P-4578**	2	FLANGE-HALF	
	6	1	**8T-4121**	4	WASHER-HARD (11X21X2.5-MM THK)	
M	7	1	**8T-4184**	4	BOLT (M12X1.75X45-MM)	
M	8	1	**8T-4196**	4	BOLT (M10X1.5X35-MM)	
	9	1	**8T-4223**	4	WASHER-HARD (13.5X25.5X3-MM THK)	

I-REFER TO HYDRAULIC INFORMATION SYSTEM
M-METRIC PART

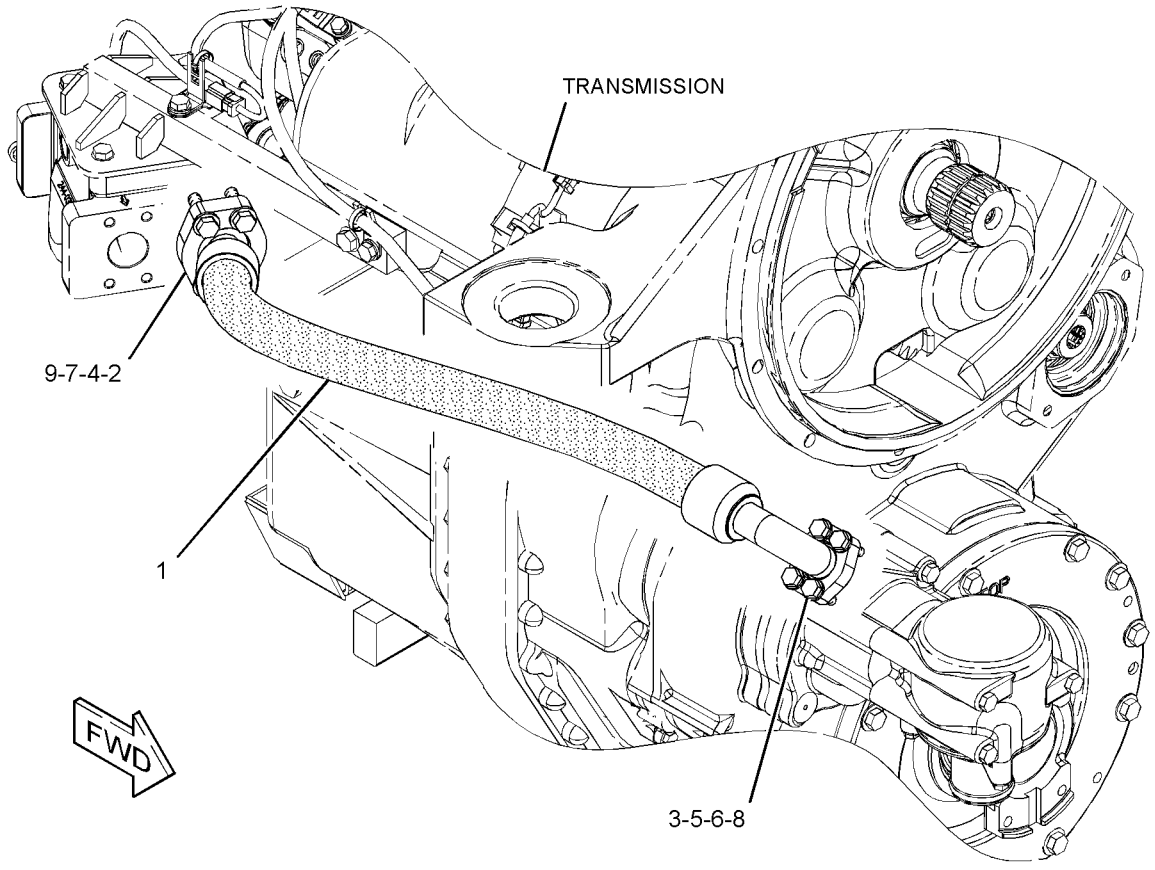

GRAPHIC #1 **<END>** g01206902

282-9083 LINES GP-TRANSMISSION OIL

S/N: R9J1-UP

PART OF 349-2555 COMMON AR

SMCS-3154 **i04016131**

NOTE	REF NO	GRAPHIC REF	PART NUMBER	QTY	PART NAME 1 2 3 4 5 6 (PRODUCT LEVEL)	SEE PAGE
	1	1	**328-3655**	1	FILTER ELEMENT AS-OIL (ADVANCED EFFICIENCY)	
	2	2	**6G-2168**	1	BLOCK	
	3	2	**9M-7958**	2	CLAMP-HOSE	
	4	2	**124-6262**	2	CLAMP-HOSE	
	5	2	*169-5864*	2	STEM AS	
					(EACH INCLUDES)	
		2	**069-4269**	1	STEM	
		2	**3D-2824**	1	SEAL-O-RING	
	6	2	**210-4458**	1	ELBOW	
I	7	2	**256-9347**	1	HOSE AS	
	8	2	**271-9038**	1	HOSE	
	9	2	**280-1766**	1	SLEEVE	
I	10	1	**287-5777**	1	HOSE AS	
I	11	2	**287-5778**	1	HOSE AS	
	12	2	**287-5839**	1	TUBE AS	
	13	1	**287-5840**	1	TUBE AS	
	14	1	**287-5841**	1	TUBE AS	
	15	2	**287-7843**	1	PLATE AS	
I	16	2	**289-4113**	1	HOSE AS	
I	17	2	**291-3878**	1	HOSE AS	
I	18	2	**309-4559**	1	HOSE AS	
	19	1	*148-8335*	2	CONNECTOR AS	
					(EACH INCLUDES)	
		1	**5K-9090**	1	SEAL-O-RING	
		1	**6V-8635**	1	CONNECTOR	
		1	**7M-8485**	1	SEAL-O-RING	
	20	2	*148-8336*	1	CONNECTOR AS	
		2	**6V-8636**	1	CONNECTOR	
		2	**3J-1907**	1	SEAL-O-RING	
		2	**6V-8397**	1	SEAL-O-RING	
	21	2	*148-8371*	1	ELBOW AS	
		2	**8C-8988**	1	ELBOW	
		2	**6V-8397**	1	SEAL-O-RING	
	22	2	*148-8382*	1	ELBOW AS	
		2	**8T-0404**	1	ELBOW	
		2	**3D-2824**	1	SEAL-O-RING	
		2	**7J-9108**	1	SEAL-O-RING	
	23	2	*148-8416*	2	REDUCER AS	
					(EACH INCLUDES)	
		2	**6V-8939**	1	REDUCER-O-RING	
		2	**6V-8398**	1	SEAL-O-RING	
	24	2	*148-8446*	1	TEE AS-SWIVEL	
		2	**6V-9838**	1	TEE-SWIVEL	
		2	**7J-9108**	2	SEAL-O-RING	
	25	2	*153-6237*	1	ELBOW AS	
		2	**3D-2824**	1	SEAL-O-RING	
		2	**6V-9004**	1	ELBOW	
		2	**6V-9746**	1	SEAL-O-RING	
	26	2	*164-5555*	1	ADAPTER AS	
		2	**2S-4078**	1	SEAL-O-RING	
		2	**4S-6679**	1	ADAPTER	
	27	2	**165-4854**	2	SEAL-O-RING	
	28	2	**173-1437**	4	FLANGE-HALF	
C	29	1,2	**205-8125**	2	CLIP	
	30	1	**286-7126**	1	TUBE AS	
	31	2	**1P-4578**	2	FLANGE-HALF	

282-9083 LINES GP-TRANSMISSION OIL *(contd.)* i04016131

NOTE	REF NO	GRAPHIC REF	PART NUMBER	QTY	PART NAME 1 2 3 4 5 6 (PRODUCT LEVEL)	SEE PAGE
	32	1	**1P-4579**	2	FLANGE-HALF	
	33	2	**1S-9799**	1	SEAL-O-RING	
	34	2	**4D-7388**	2	CLIP	
	35	1,2	**4J-0522**	5	SEAL-O-RING	
	36	1	**4J-0524**	1	SEAL-O-RING	
	37	2	**149-7738**	1	CLIP	
	38	2	**5K-9090**	2	SEAL-O-RING	
	39	2	**5P-2369**	1	CLIP	
	40	1	**5P-7470**	1	CLIP (SLOT)	
	41	1	**5P-7471**	1	CLIP (TAB)	
	42	1	**5P-8182**	1	GROMMET	
	43	2	**6J-2680**	1	SEAL-O-RING	
	44	1	**6V-8400**	1	SEAL-O-RING	
	45	1	**7X-7729**	1	WASHER (11X25X3-MM THK)	
C	46	1,2	**8T-4121**	18	WASHER-HARD (11X21X2.5-MM THK)	
CM	47	1,2	**8T-4133**	4	NUT (M10X1.5-THD)	
CM	48	1,2	**8T-4136**	5	BOLT (M10X1.5X25-MM)	
M	49	2	**8T-4137**	1	BOLT (M10X1.5X20-MM)	
M	50	2	**8T-4172**	4	BOLT (M10X1.5X80-MM)	
M	51	1	**8T-4182**	4	BOLT (M10X1.5X45-MM)	
M	52	2	**8T-4183**	8	BOLT (M12X1.75X40-MM)	
M	53	1	**8T-4184**	4	BOLT (M12X1.75X45-MM)	
M	54	1	**8T-4195**	1	BOLT (M10X1.5X30-MM)	
	55	1,2	**8T-4223**	14	WASHER-HARD (13.5X25.5X3-MM THK)	
M	56	2	**8T-4956**	2	BOLT (M12X1.75X35-MM)	
	57	2	**9X-6581**	2	NUT-O-RING SEAL (1-14-THD)	
E	58	2	**8I-1362**		HOSE (64-CM)	
CI	59	1	**164-3493**	1	HOSE AS	
C	60	1	*150-3033*	1	ELBOW AS	
		1	**8T-0164**	1	ELBOW	
		1	**4J-5477**	1	SEAL-O-RING	
		1	**3J-1907**	1	SEAL-O-RING	
C	61	1	**6D-3479**	2	CLIP	

C-CHANGE FROM PREVIOUS TYPE
E-ORDER BY THE CENTIMETER
I-REFER TO HYDRAULIC INFORMATION SYSTEM
M-METRIC PART

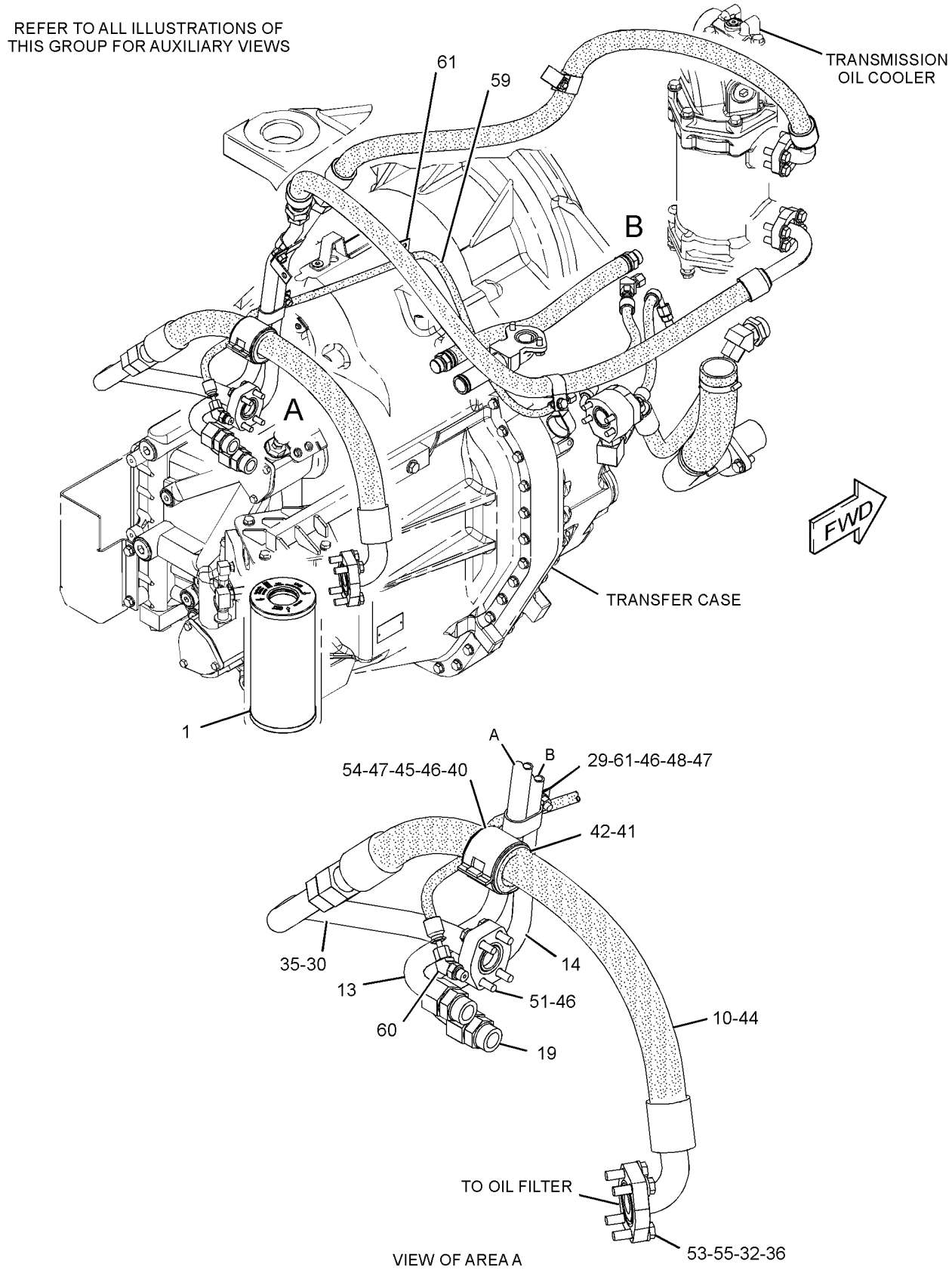

GRAPHIC #1

g02218555

282-9083 **LINES GP-TRANSMISSION OIL** *(contd.)* **i04016131**

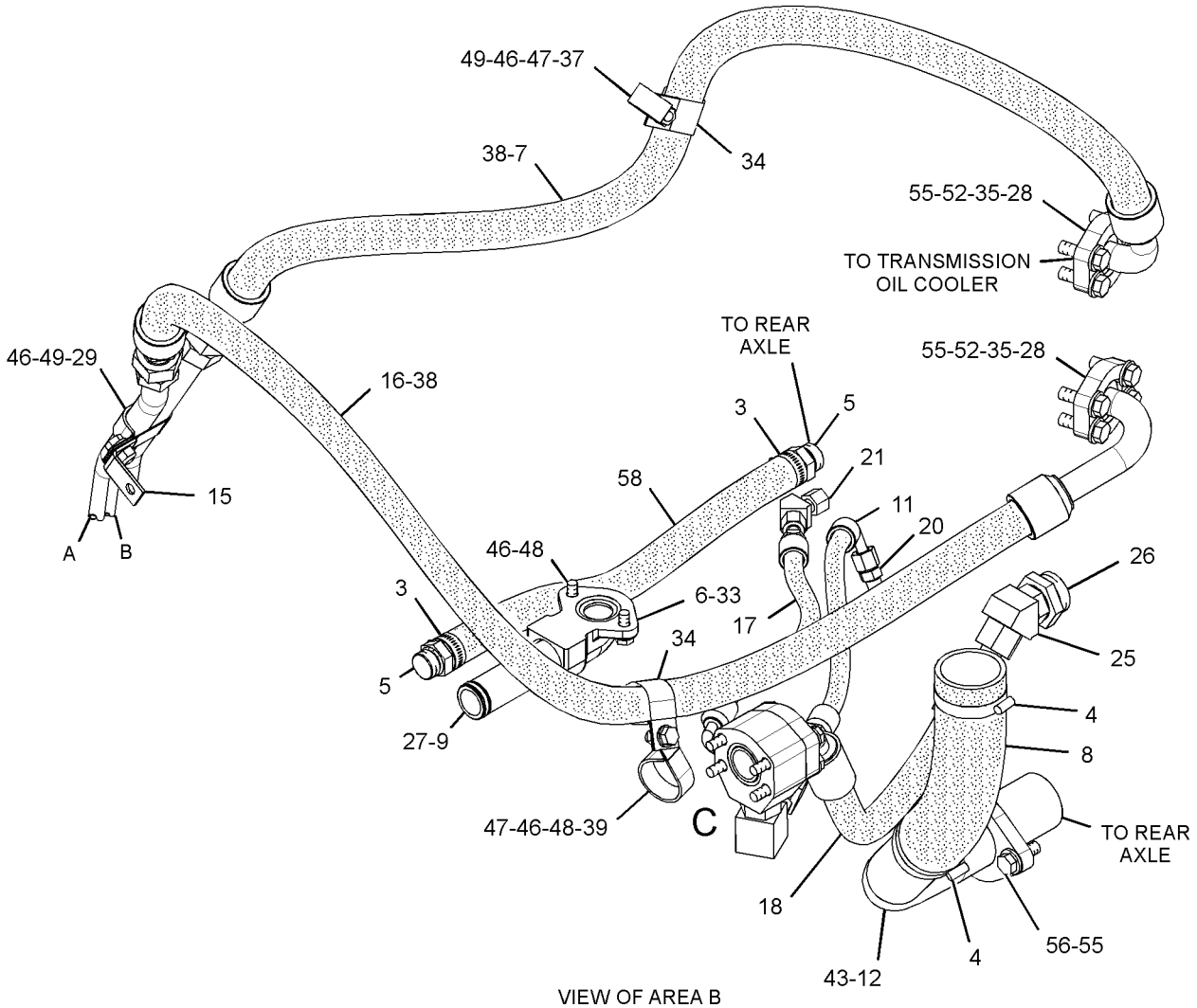

VIEW OF AREA B

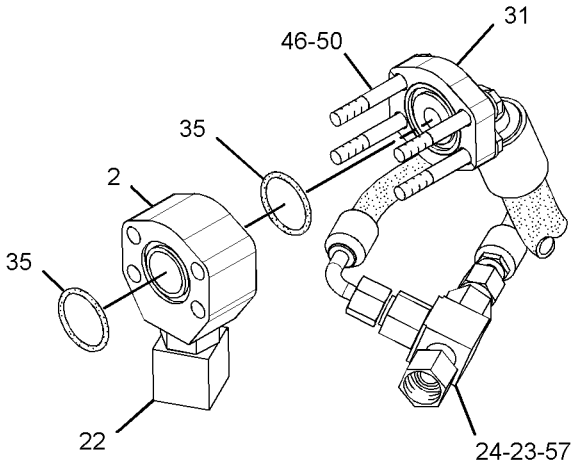

VIEW OF AREA C
(EXPLODED)

GRAPHIC #2 **<END>** g01427313

250-8213 MOUNTING GP-WHEEL

S/N: R9J1-UP
PART OF 349-2555 COMMON AR

SMCS-4201 **i02585614**

NOTE	PART NUMBER	QTY	PART NAME 1 2 3 4 5 6 (PRODUCT LEVEL)	SEE PAGE
	280-3616	60	BOLT (M30X3.5X70-MM)	
	282-0882	60	WASHER-HARD (33X56X6-MM THK)	

<END>

349-5187 POWER TRAIN AR

S/N: R9J1-UP
PART OF 349-2555 COMMON AR

SMCS-3000, 4000 **i03951012**

NOTE	PART NUMBER	QTY	PART NAME 1 2 3 4 5 6 (PRODUCT LEVEL)	SEE PAGE
Y	**270-9037**	1	AXLE GP-REAR	398
Y	*237-8197*	1	CHAIN GP-DRIVE (TANDEM)	405
Y	*356-2979*	1	CONTROL GP-DIFFERENTIAL LOCK	416
Y	*356-2975*	1	LINES GP-SERVICE BRAKE	555
Y	*285-0600*	1	TANDEM & COVER GP	450
Y	*284-5040*	1	WHEEL AR	462
	349-6141	1	FILLER GP-POWER TRAIN OIL	
	259-2620	1	TUBE AS	
	3N-2945	1	GASKET	

Y-SEPARATE ILLUSTRATION

<END>

246-8065 PUMP GP-GEAR

S/N: DZM1-UP
2-SECTION
PART OF 253-8407 TRANSMISSION AR

SMCS-3066, 3115, 3203, 5073 **i02178257**

NOTE	REF NO	GRAPHIC REF	PART NUMBER	QTY	PART NAME 1 2 3 4 5 6 (PRODUCT LEVEL)	SEE PAGE
Y	1	1	**246-8066**	1	PUMP GP-GEAR	445
	2	1	**112-1574**	1	SEAL-O-RING	
	3	1	**4F-7952**	1	SEAL-O-RING	
M	4	1	**6V-5230**	2	BOLT (M10X1.5X60-MM)	
M	5	1	**8C-2926**	1	BOLT (M10X1.5X140-MM)	

M-METRIC PART
Y-SEPARATE ILLUSTRATION

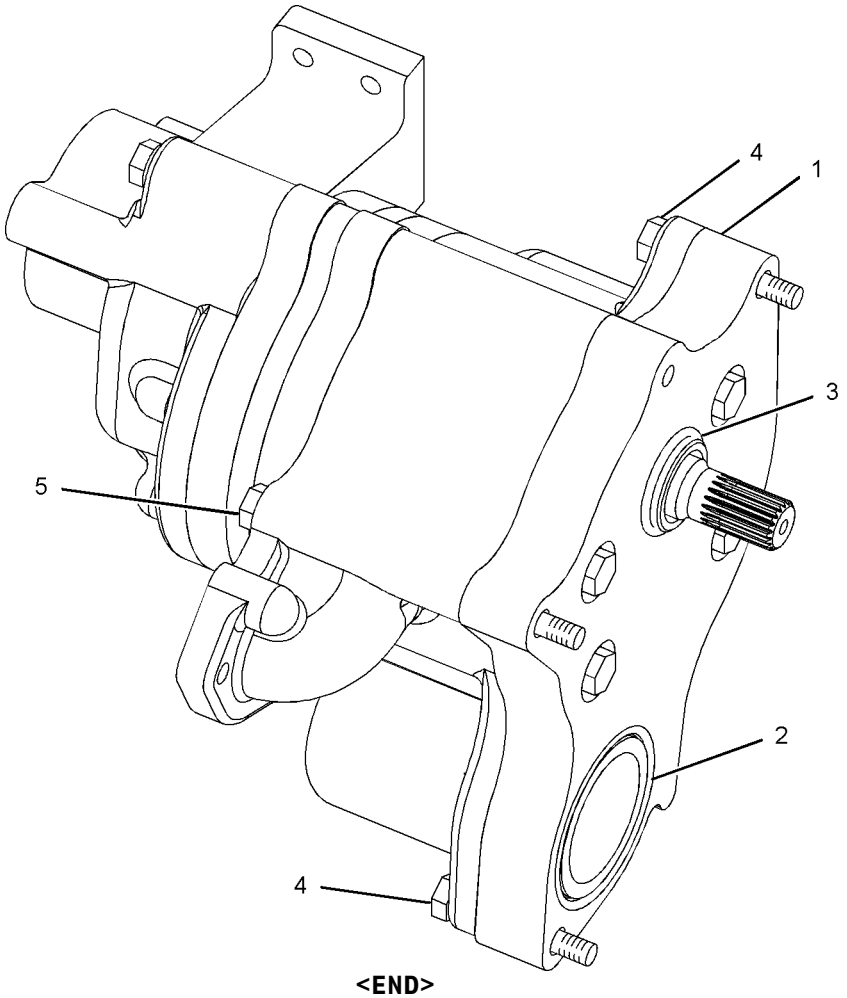

GRAPHIC #1 **<END>** g01102956

246-8066 PUMP GP-GEAR

S/N: DZM1-UP
2-SECTION
PART OF 246-8065 PUMP GP-GEAR

SMCS-3066, 3115, 3203, 5073 **i02976076**

NOTE	REF NO	GRAPHIC REF	PART NUMBER	QTY	PART NAME 1 2 3 4 5 6 (PRODUCT LEVEL)	SEE PAGE
	1	1	**3S-0004**	5	WASHER (0.406X0.728X0.09-IN THK)	
	2	1	**3T-3663**	4	GEAR (8-TEETH)	
	3	1	**6Y-5010**	8	WASHER (10.16X19X0.84-MM THK)	
	5	1	**9W-3273**	1	SPACER (OIL PUMP)	
	6	1	**231-6565**	2	BODY AS (OIL PUMP)	
	7	1	**246-8068**	1	MANIFOLD AS	
		1	**1M-3909**	2	BEARING-SLEEVE	
	8	1	**246-8071**	1	BODY AS	
		1	**1M-3909**	2	BEARING-SLEEVE	
	9	1	**246-8073**	1	COVER AS	
		1	**8M-8489**	2	DOWEL	
		1	**9M-4370**	2	BEARING	
		1	**9N-4155**	1	ADAPTER	
	10	1	**246-8075**	1	GEAR AS (8-TEETH)	
	11	1	**246-8078**	1	GEAR AS (8-TEETH)	
	13	1	**112-1574**	1	SEAL-O-RING	
	14	1	**1B-8705**	2	KEY-WOODRUFF	
	15	1	**161-8068**	5	SEAL-O-RING	
M	16	1	**7X-0474**	1	BOLT (M10X1.5X220-MM)	
M	17	1	**7X-2546**	4	BOLT (M10X1.5X180-MM)	

M-METRIC PART

246-8066 PUMP GP-GEAR *(contd.)* **i02976076**

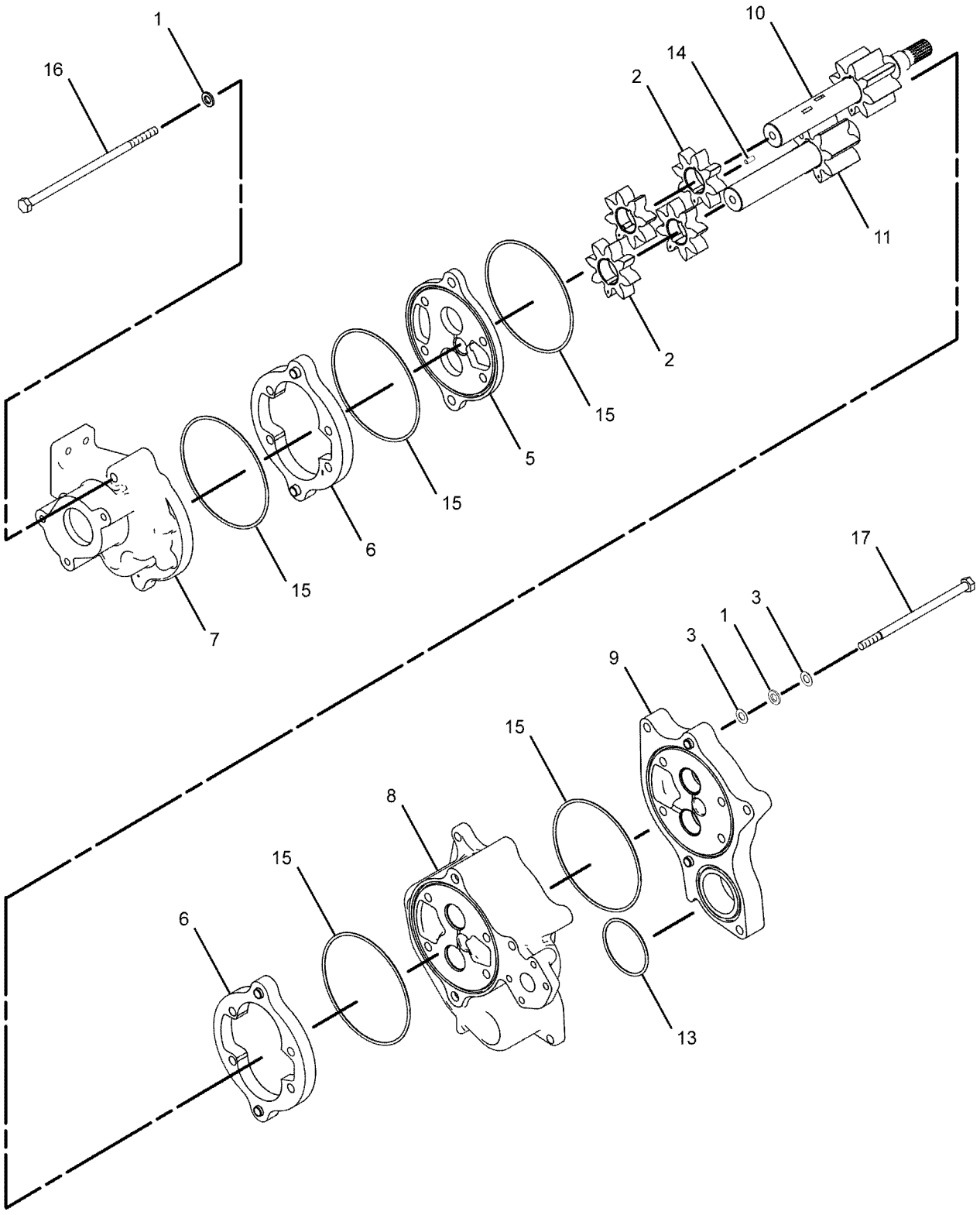

GRAPHIC #1 **<END>** g01103191

316-5385 SCREEN GP-MAGNETIC

S/N: DZM1601-UP

PART OF 253-8407 TRANSMISSION AR

SMCS-3067 **i03345760**

NOTE	REF NO	GRAPHIC REF	PART NUMBER	QTY	PART NAME 1 2 3 4 5 6 (PRODUCT LEVEL)	SEE PAGE
	1	1	**251-6673**	1	FILTER-MAGNETIC (TRANSMISSION CHARGING)	
	2	1	**251-6674**	1	SCREEN-SUCTION (TRANSMISSION CHARGING)	
	3	1	**316-5382**	1	COVER AS	
	4	1	**316-5384**	1	HOUSING-FILTER	
	5	1	**3E-6785**	1	SEAL-O-RING	
	6	1	**5P-4892**	1	SEAL-O-RING	
M	7	1	**6V-5219**	3	BOLT (M8X1.25X40-MM)	
M	8	1	**8T-6408**	3	BOLT (M10X1.5X160-MM)	

M-METRIC PART

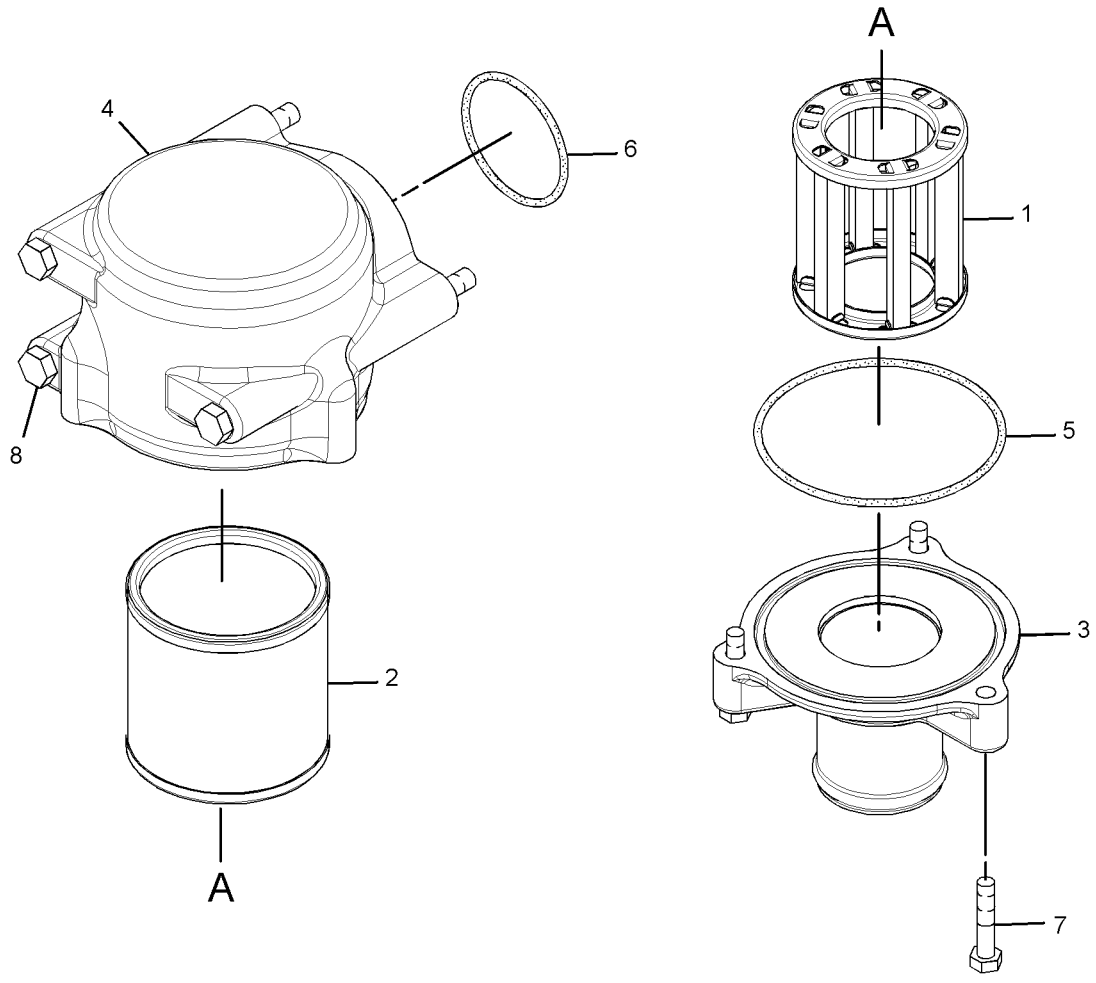

GRAPHIC #1 **<END>** g01935942

POWER TRAIN

237-8199 SHAFT GP-DRIVE

S/N: R9J1-UP

PART OF 349-2555 COMMON AR

SMCS-3253 **i03090462**

NOTE	REF NO	GRAPHIC REF	PART NUMBER	QTY	PART NAME 1 2 3 4 5 6 (PRODUCT LEVEL)	SEE PAGE
Y	1	1	**246-6466**	1	UNIVERSAL JOINT GP	452
M	2	1	**290-7514**	8	BOLT (M12X1.75X60-MM)	

M-METRIC PART
Y-SEPARATE ILLUSTRATION

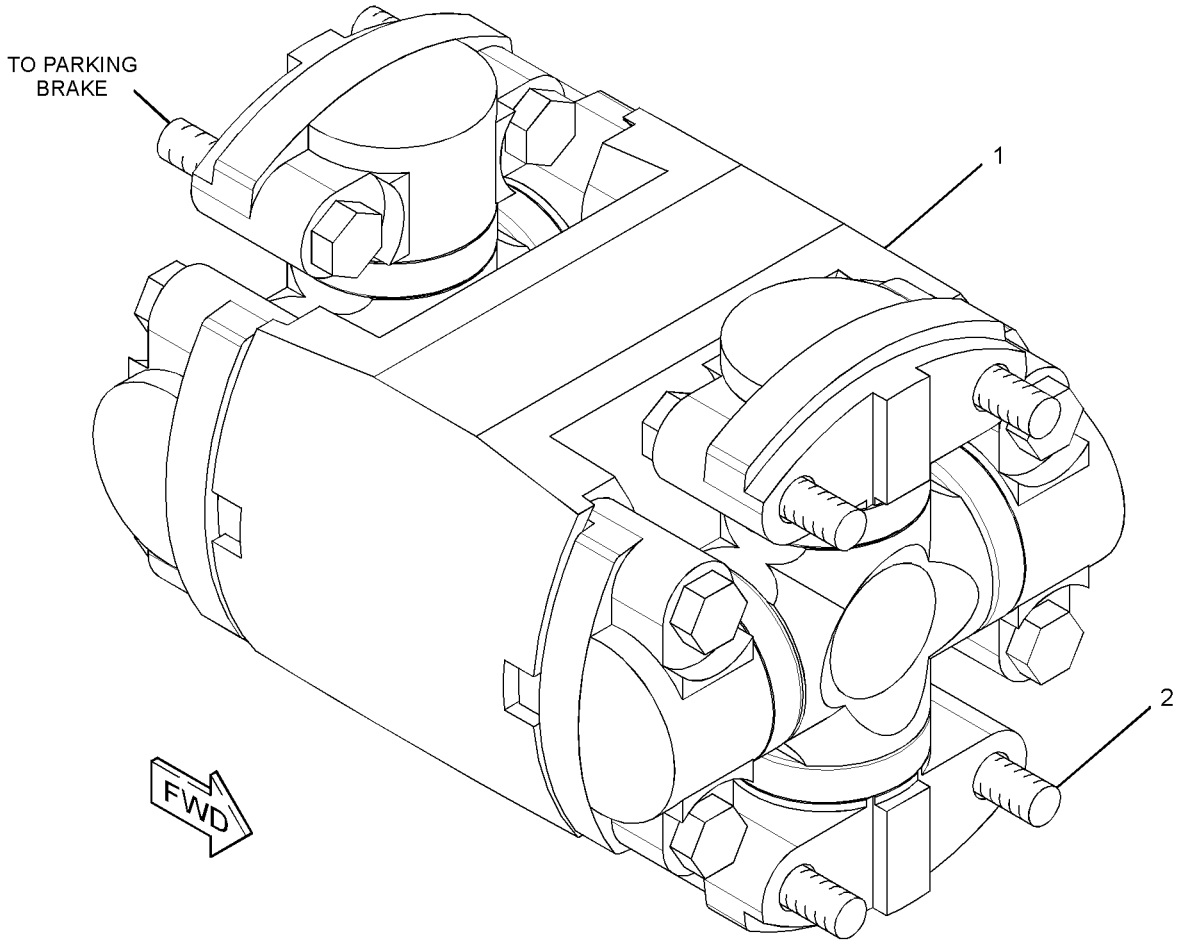

GRAPHIC #1 **<END>** g01365730

253-5307 SHAFT GP-INPUT

S/N: DZM1-UP

PART OF 253-8407 TRANSMISSION AR

SMCS-3063 **i02861005**

NOTE	REF NO	GRAPHIC REF	PART NUMBER	QTY	PART NAME 1 2 3 4 5 6 (PRODUCT LEVEL)	SEE PAGE
	1	1	**251-1545**	1	RACE-BEARING	
	2	1	**2H-6490**	1	BEARING-INNER	
	3	1	**3T-4377**	1	SEAL-RING	
	4	1	**246-8773**	1	SPACER (76X97.55X44.75-MM THK)	
	5	1	**305-2230**	1	SHAFT	
	6	1	**246-8746**	1	GEAR (38-TEETH)	
	7	1	**246-8752**	1	GEAR (45-TEETH)	

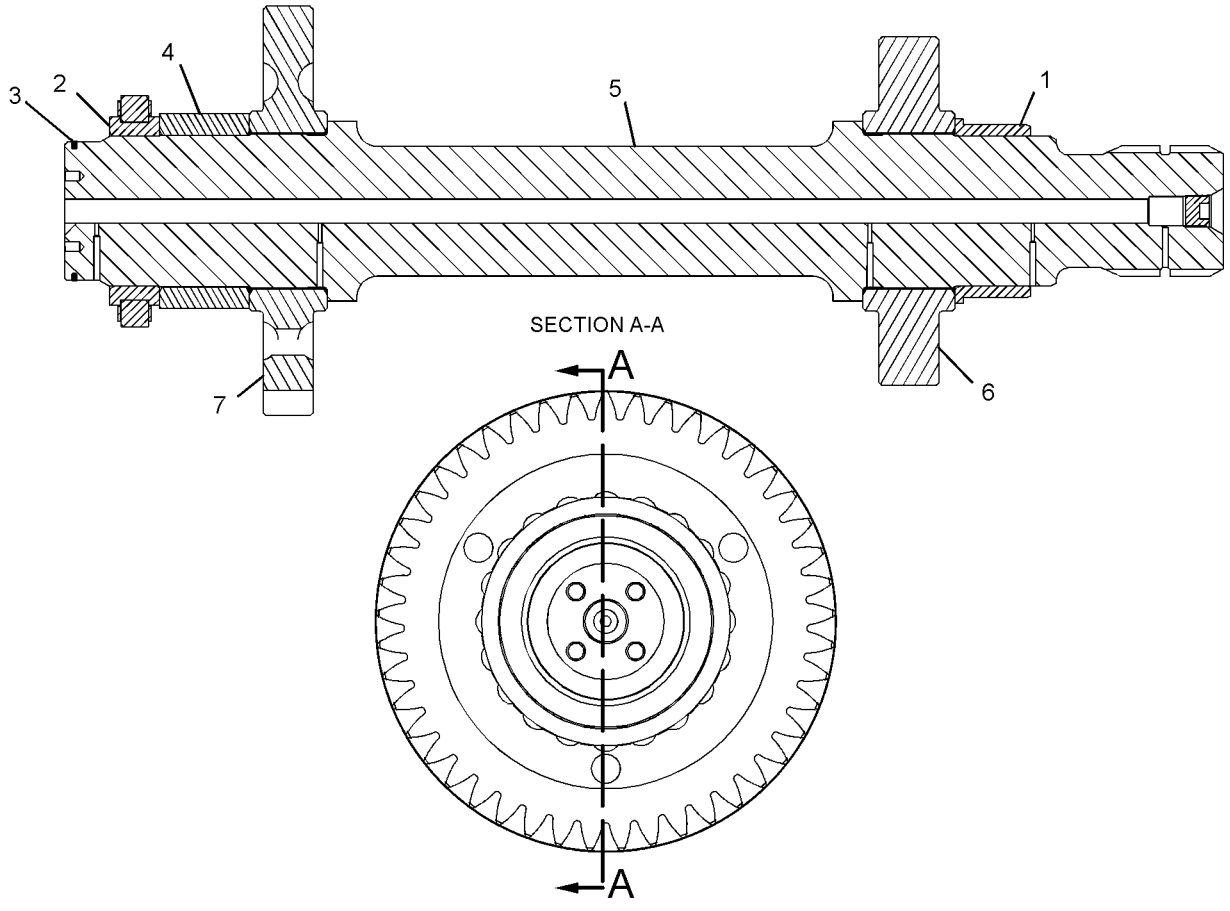

GRAPHIC #1

<END>

g01285917

POWER TRAIN

285-0600 TANDEM & COVER GP

S/N: R9J1-UP

PART OF 349-5187 POWER TRAIN AR

SMCS-4062, 4064 **i03879775**

NOTE	REF NO	GRAPHIC REF	PART NUMBER	QTY	PART NAME 1 2 3 4 5 6 (PRODUCT LEVEL)	SEE PAGE
	1	1	**2G-9793**	4	GASKET	
	2	1	**248-8735**	4	COVER	
	3	1	**266-9727**	8	GASKET	
	4	1	**266-9728**	6	COVER	
	5	1	**266-9729**	2	BREATHER GP	
					(EACH INCLUDES)	
		1	**4H-6112**	1	BREATHER (TANDEM)	
		1	**6B-5072**	1	BUSHING-REDUCING	
		1	**002-6453**	1	ELBOW	
	6	1	**285-0601**	1	HOUSING AS (TANDEM) (RH)	
	7	1	**285-0602**	1	HOUSING AS (TANDEM) (LH)	
M	8	1	**311-8290**	32	BOLT (M12X1.75X25-MM)	
	9	1	**304-8032**	2	PLUG-MAGNETIC (TANDEM DRIVE OIL DRAIN)	
	10	1	**2M-9780**	2	SEAL-O-RING	
	11	1	**3K-0360**	2	SEAL-O-RING	
	12	1	**7H-3171**	2	PLUG-PIPE	
	13	1	**8T-4223**	32	WASHER-HARD (13.5X25.5X3-MM THK)	
	14	1	**9S-4190**	2	PLUG-O-RING (FILL)	

M-METRIC PART

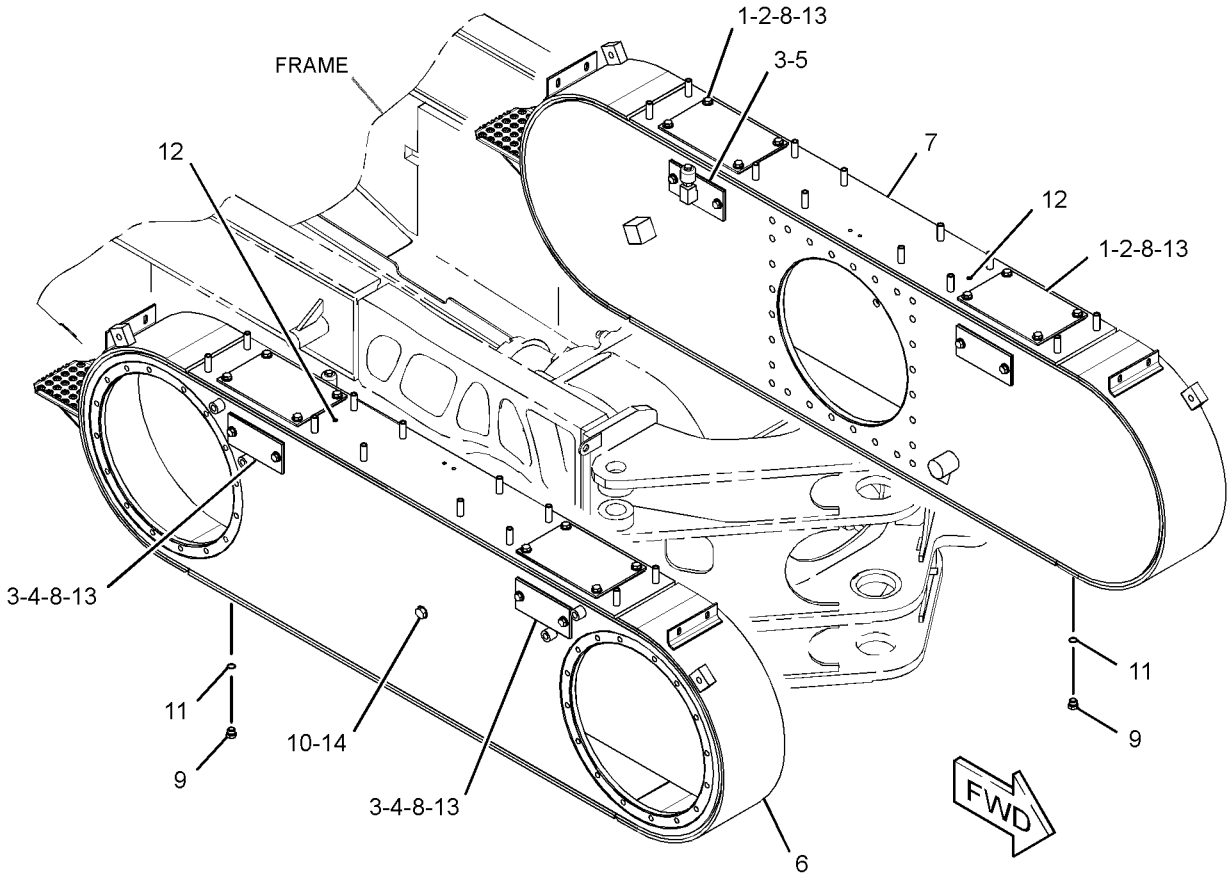

GRAPHIC #1 **<END>** g02126315

253-8407 TRANSMISSION AR*R

S/N: DZM1601-UP

PART OF 349-2555 COMMON AR

SMCS-3030 **i04033151**

NOTE	PART NUMBER	QTY	PART NAME 1 2 3 4 5 6 (PRODUCT LEVEL)	SEE PAGE
Y	*253-8427*	1	BRAKE GP-PARKING	538
Y	*253-8429*	1	CASE & PARTS GP-TRANSMISSION	402
Y	*246-8728*	1	CLUTCH GP-TRANSMISSION (FORWARD)	406
Y	*246-8731*	1	CLUTCH GP-TRANSMISSION (REVERSE, SECOND)	408
Y	*246-8734*	1	CLUTCH GP-TRANSMISSION (1ST, 3RD)	411
Y	*246-8737*	1	CLUTCH GP-TRANSMISSION (HIGH, LOW)	413
Y	*253-8428*	1	CONTROL GP-TRANSMISSION HYD	418
Y	*260-9479*	1	COVER GP-SHIPPING (TRANSMISSION)	425
Y	*310-3221*	1	ELECTRONICS GP-POWER TRAIN	222
Y	*253-7939*	1	FILTER GP-OIL (TRANSMISSION)	435
Y	*253-7931*	1	LINES GP-TRANSMISSION OIL	438
Y	*246-8065*	1	PUMP GP-GEAR	444
Y	*316-5385*	1	SCREEN GP-MAGNETIC	447
Y	*253-5307*	1	SHAFT GP-INPUT	449

Y-SEPARATE ILLUSTRATION

<END>

246-6466 UNIVERSAL JOINT GP

S/N: R9J1-UP

PART OF 237-8199 SHAFT GP-DRIVE

SMCS-3251, 3253 **i02179433**

NOTE	REF NO	GRAPHIC REF	PART NUMBER	QTY	PART NAME 1 2 3 4 5 6 (PRODUCT LEVEL)	SEE PAGE
	1	1	**2T-3013**	2	SPIDER & BEARING GP (UNIVERSAL JOINT)	
	2	1	**253-9738**	1	SHAFT	
M	3	1	**6V-3823**	8	BOLT (M12X1.75X60-MM)	

M-METRIC PART

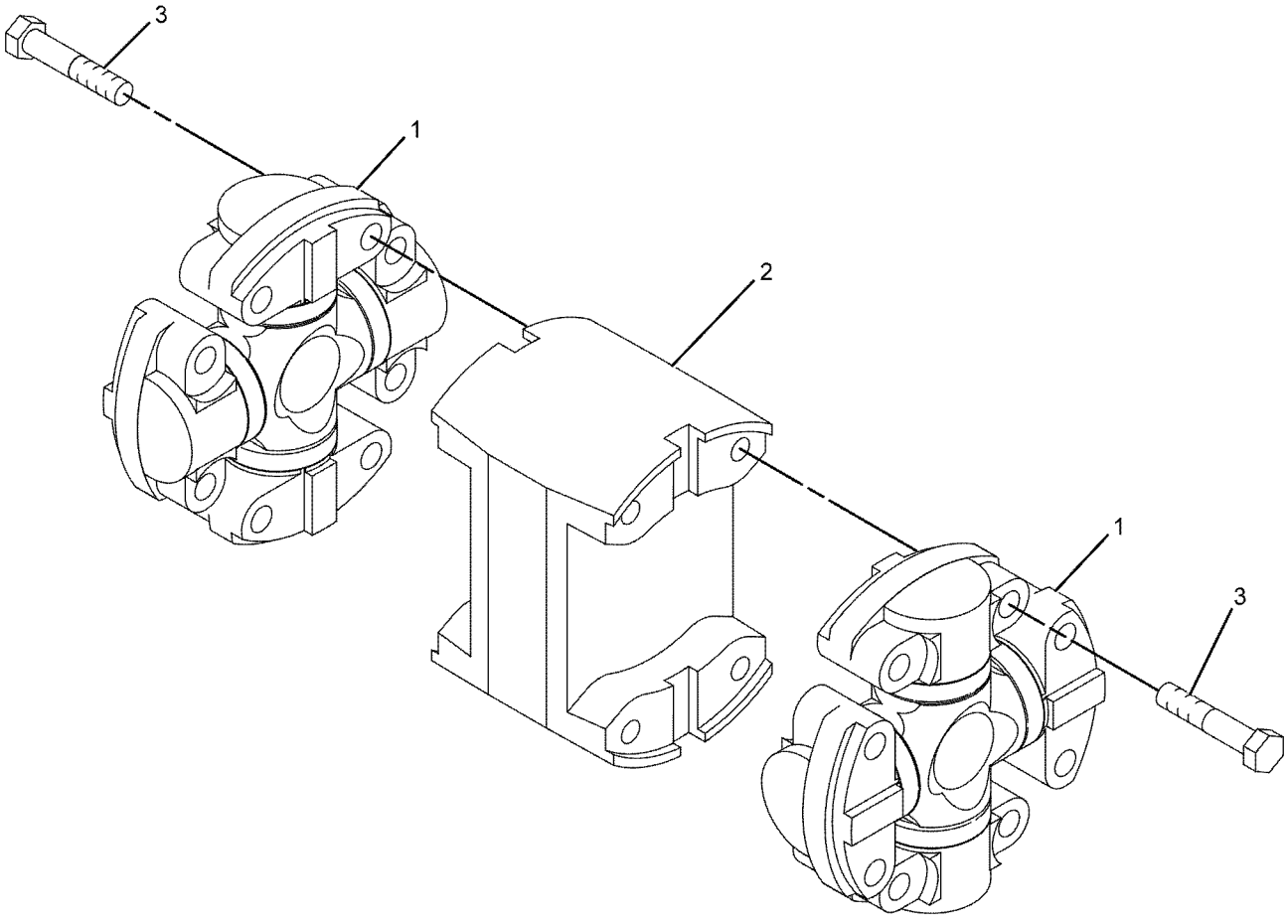

GRAPHIC #1 **<END>** g01109172

250-2139 VALVE & MTG GP-SOLENOID

S/N: R9J1-UP

PART OF 356-2979 CONTROL GP-DIFFERENTIAL LOCK

SMCS-5479 **i02787799**

NOTE	REF NO	GRAPHIC REF	PART NUMBER	QTY	PART NAME 1 2 3 4 5 6 (PRODUCT LEVEL)	SEE PAGE
M	1	1	**8T-1158**	1	BOLT-SOCKET HEAD (M8X1.25X20-MM)	
	2	1	**245-1181**	1	FLANGE	
	3	1	**245-3555**	1	VALVE GP-SOLENOID (DIFFERENTIAL LOCK)	
		1	**245-1811**	1	COVER-BASE	
		1	**245-1912**	1	KIT-SEAL (SOLENOID VALVE)	
					(INCLUDES SEAL-O-RINGS)	
	4	1	**250-2138**	1	MANIFOLD	

M-METRIC PART

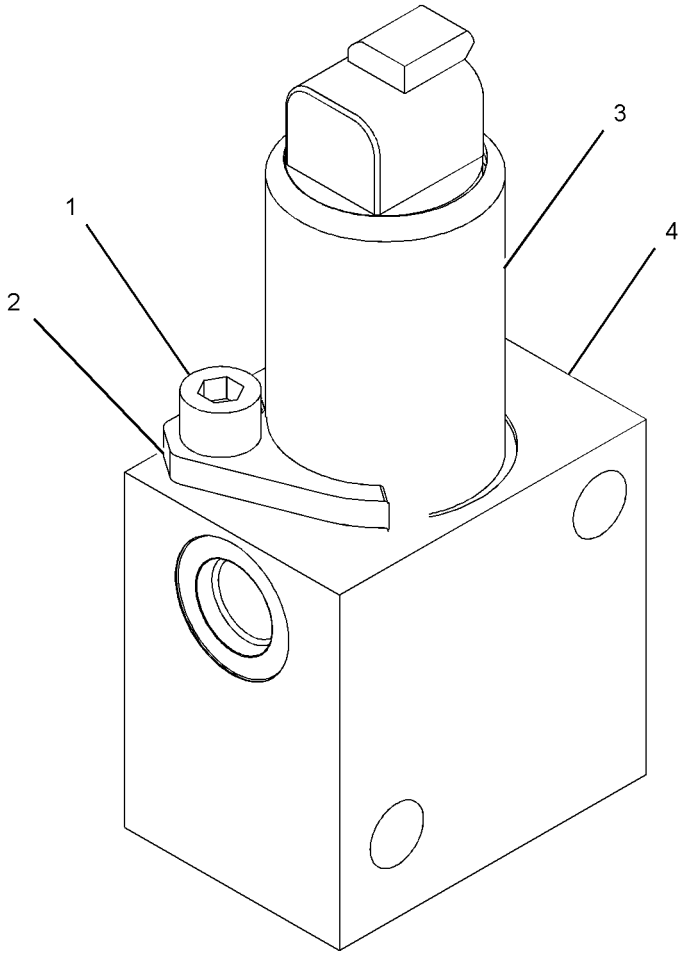

GRAPHIC #1 **<END>** g01109363

244-3114 VALVE GP-MODULATING–TRANSMISSION CLUTCH

S/N: DZM1-UP
24-VOLT
PART OF 253-8428 CONTROL GP-TRANSMISSION HYD

SMCS-3139 **i03435880**

NOTE	REF NO	GRAPHIC REF	PART NUMBER	QTY	PART NAME 1 2 3 4 5 6 (PRODUCT LEVEL)	SEE PAGE
	1	1	**6V-3965**	1	FITTING (QUICK DISCONNECT)	
	2	1	**323-9531**	1	COIL AS (24-VOLT)	
	3	1	**214-7568**	1	SEAL-O-RING	
	4	1	**164-2108**	1	WASHER (13.03X25.4X2.38-MM THK)	
	5	1	**218-2373**	1	NUT (1/2-28-THD)	
					PARTS SHOWN IN GRAPHIC(S) WITHOUT A REFERENCE NUMBER ARE NOT SERVICED SEPARATELY	

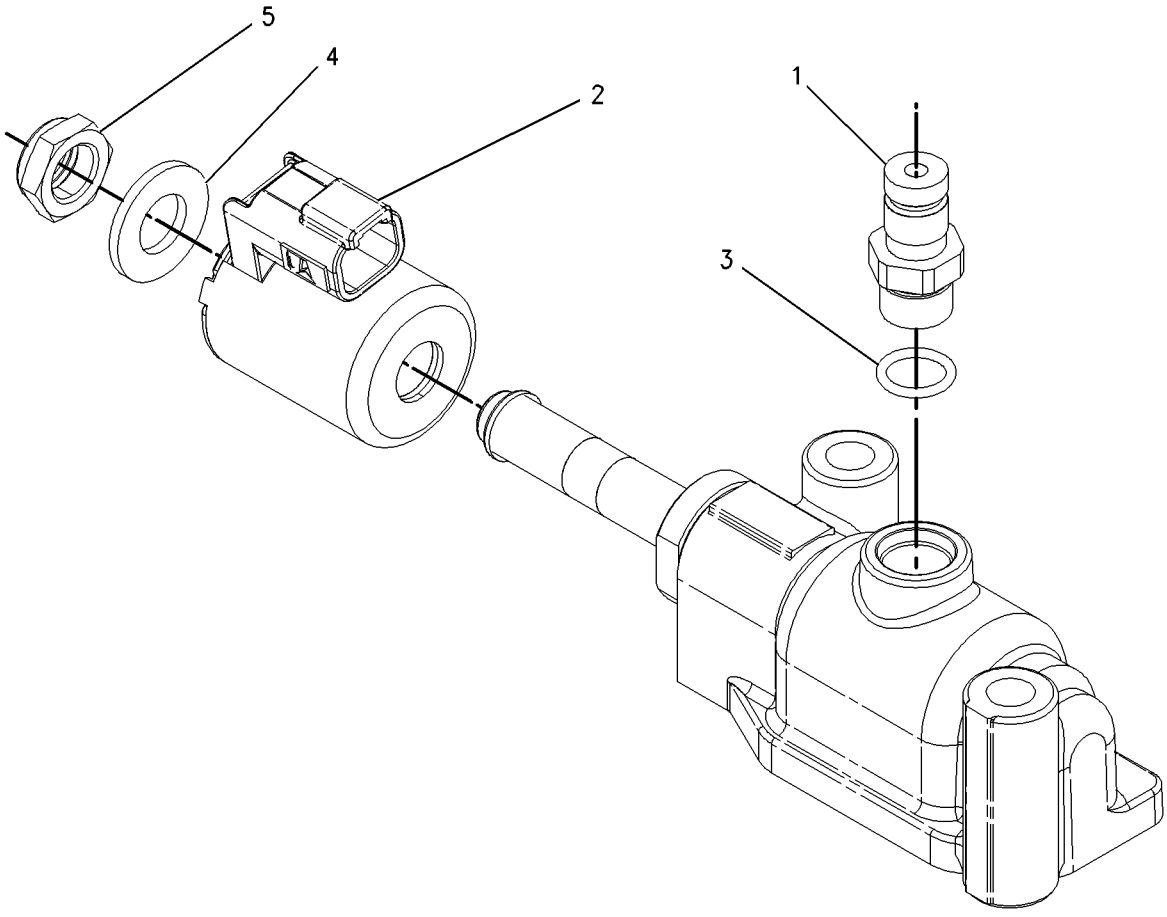

GRAPHIC #1 **<END>** g00919065

257-5026 VALVE GP-RELIEF

S/N: DZM1-UP

PART OF 253-8428 CONTROL GP-TRANSMISSION HYD

SMCS-3133 **i03321161**

NOTE	REF NO	GRAPHIC REF	PART NUMBER	QTY	PART NAME 1 2 3 4 5 6 (PRODUCT LEVEL)	SEE PAGE
	1	1	**2S-4663**	1	SEAL-O-RING	
	2	1	**2S-5835**	1	PISTON-LOAD	
	4	1	*241-6218*	1	PLUG AS	
		1	**9S-8005**	1	PLUG-O-RING	
		1	**3K-0360**	1	SEAL-O-RING	
	5	1	**4M-5905**	1	SCREW-ADJUSTMENT (5/16-18X1-IN)	
	6	1	**6V-0852**	1	CAP-DUST	
	7	1	*164-5567*	1	COUPLER AS-QUICK DISCONNECT (MALE)	
		1	**3J-1907**	1	SEAL-O-RING	
		1	**6V-3965**	1	FITTING (QUICK DISCONNECT)	
	10	1	**8E-1143**	1	SLUG	
	11	1	**8M-5253**	1	SEAL-O-RING	
	12	1	**9M-2110**	1	COVER-ADJUSTMENT	
	13	1	**115-4550**	1	COVER	
	14	1	**172-7966**	1	BODY	
	15	1	**172-7968**	1	SPOOL AS	
		1	**3D-8317**	1	RING-RETAINING	
		1	**4B-9880**	1	BALL	
		1	**4M-2381**	1	SPRING	
		1	**9U-8669**	1	RETAINER	
	16	1	**174-7449**	1	SPRING	
M	18	1	**6V-3940**	2	BOLT (M8X1.25X25-MM)	
M	19	1	**6V-5218**	2	BOLT (M8X1.25X35-MM)	
	20	1	**9M-1974**	2	WASHER-HARD (8.8X16X2-MM THK)	
	21	1	*162-0177*	1	PLUG AS	
		1	**3J-1907**	1	SEAL-O-RING	
		1	**9S-8004**	1	PLUG-O-RING	
	22	1	*165-4931*	1	ELBOW AS	
		1	**3J-1907**	1	SEAL-O-RING	
		1	**6V-8077**	1	ELBOW	

M-METRIC PART

257-5026 VALVE GP-RELIEF *(contd.)* **i03321161**

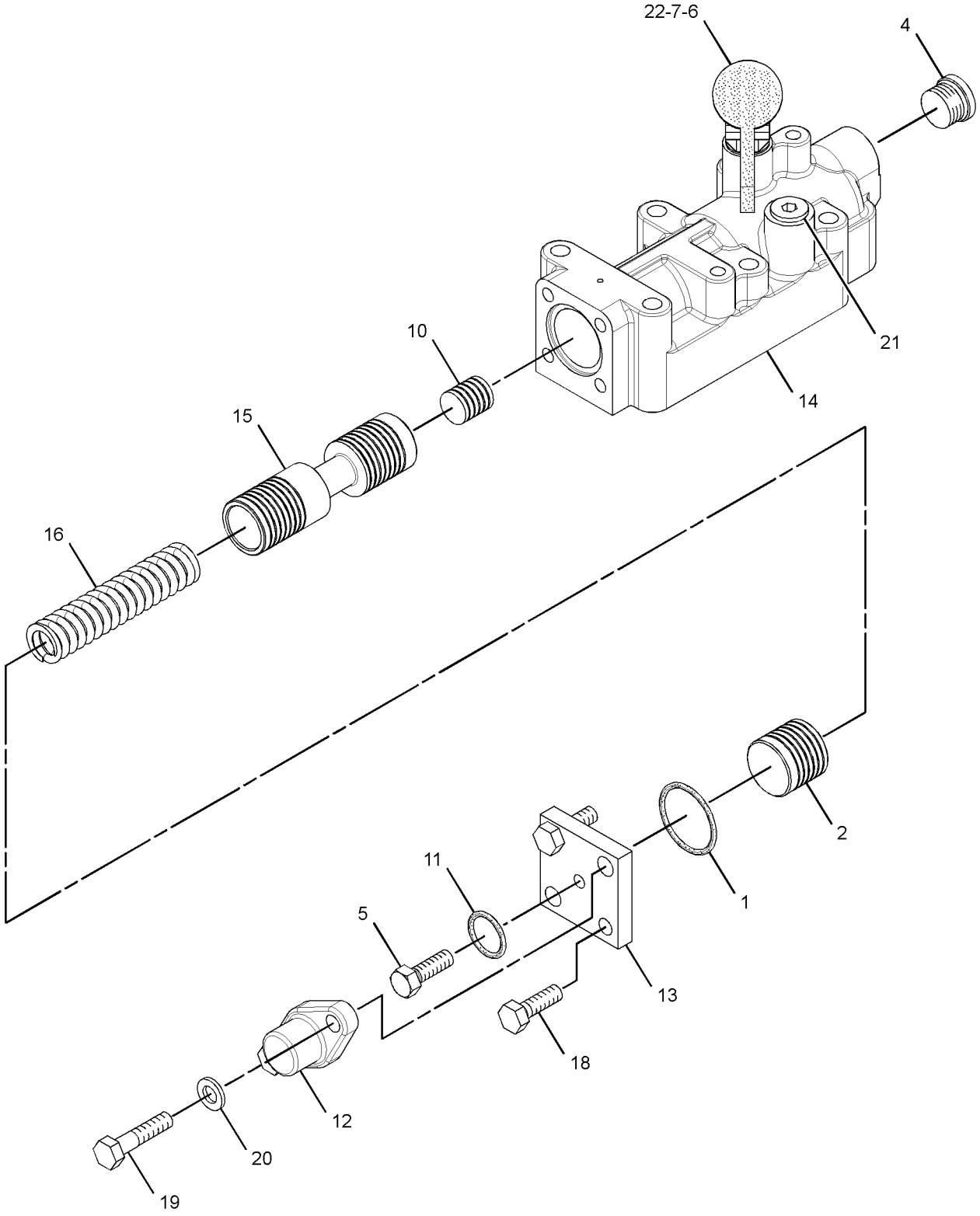

GRAPHIC #1 **<END>** g01923797

152-3988 WHEEL & TIRE AR

S/N: R9J1-UP
AN ATTACHMENT

SMCS-4200 **i00708582**

NOTE	PART NUMBER	QTY	PART NAME 1 2 3 4 5 6 (PRODUCT LEVEL)	SEE PAGE
Y	*142-6433*	6	WHEEL & TIRE GP	459
Y-SEPARATE ILLUSTRATION				

<END>

255-4984 WHEEL & TIRE AR

S/N: R9J1-UP
AN ATTACHMENT

SMCS-4200 **i02229321**

NOTE	PART NUMBER	QTY	PART NAME 1 2 3 4 5 6 (PRODUCT LEVEL)	SEE PAGE
Y	*255-4983*	6	WHEEL & TIRE GP	459
Y-SEPARATE ILLUSTRATION				

<END>

255-4986 WHEEL & TIRE AR

S/N: R9J1-UP
AN ATTACHMENT

SMCS-4200 **i02229325**

NOTE	PART NUMBER	QTY	PART NAME 1 2 3 4 5 6 (PRODUCT LEVEL)	SEE PAGE
Y	*255-4985*	6	WHEEL & TIRE GP	459
Y-SEPARATE ILLUSTRATION				

<END>

255-4996 WHEEL & TIRE AR

S/N: R9J1-UP
AN ATTACHMENT

SMCS-4200 **i02229295**

NOTE	PART NUMBER	QTY	PART NAME 1 2 3 4 5 6 (PRODUCT LEVEL)	SEE PAGE
Y	*255-4995*	6	WHEEL & TIRE GP	460
Y-SEPARATE ILLUSTRATION				

<END>

255-5002 WHEEL & TIRE AR

S/N: R9J1-UP
AN ATTACHMENT

SMCS-4200 **i02229435**

NOTE	PART NUMBER	QTY	PART NAME 1 2 3 4 5 6 (PRODUCT LEVEL)	SEE PAGE
Y	*255-5001*	6	WHEEL & TIRE GP	460
Y-SEPARATE ILLUSTRATION				

<END>

POWER TRAIN

255-5004 WHEEL & TIRE AR

S/N: R9J1-UP

AN ATTACHMENT

SMCS-4200 **i02229439**

NOTE	PART NUMBER	QTY	PART NAME 1 2 3 4 5 6 (PRODUCT LEVEL)	SEE PAGE
Y	*255-5003*	6	WHEEL & TIRE GP	460

Y-SEPARATE ILLUSTRATION

<END>

290-2759 WHEEL & TIRE AR

S/N: R9J1-UP

AN ATTACHMENT

SMCS-4200 **i02565677**

NOTE	PART NUMBER	QTY	PART NAME 1 2 3 4 5 6 (PRODUCT LEVEL)	SEE PAGE
Y	*290-2758*	6	WHEEL & TIRE GP	461

Y-SEPARATE ILLUSTRATION

<END>

310-7334 WHEEL & TIRE AR

S/N: R9J1-UP

AN ATTACHMENT

SMCS-4200 **i02836952**

NOTE	PART NUMBER	QTY	PART NAME 1 2 3 4 5 6 (PRODUCT LEVEL)	SEE PAGE
Y	*310-7316*	6	WHEEL & TIRE GP	461

Y-SEPARATE ILLUSTRATION

<END>

311-6568 WHEEL & TIRE AR

S/N: R9J1-UP

AN ATTACHMENT

SMCS-4200 **i02836995**

NOTE	PART NUMBER	QTY	PART NAME 1 2 3 4 5 6 (PRODUCT LEVEL)	SEE PAGE
Y	*311-6567*	6	WHEEL & TIRE GP	461

Y-SEPARATE ILLUSTRATION

<END>

142-6433 WHEEL & TIRE GP

S/N: R9J1-UP
19.5X25
PART OF 152-3988 WHEEL & TIRE AR
AN ATTACHMENT

SMCS-4200 **i04004202**

NOTE	PART NUMBER	QTY	PART NAME 1 2 3 4 5 6 (PRODUCT LEVEL)	SEE PAGE
Y	*226-1885*	1	WHEEL GP	463
	2D-2443	1	SEAL-O-RING	
	354-1627	1	TIRE (23.1-R25)	
	2G-6595	1	VALVE GP-TIRE	
	9K-7951	1	CAP-VALVE (STEM)	
	6F-3930	1	CORE-VALVE	
	7D-5252	1	SPUD AS	
	2D-2508	1	GROMMET	
	2D-2509	1	LOCKNUT (11/16-16-THD)	
	2D-2507	1	SPUD	
Y-SEPARATE ILLUSTRATION				

<END>

255-4983 WHEEL & TIRE GP

S/N: R9J1-UP
(16X24)
PART OF 255-4984 WHEEL & TIRE AR
AN ATTACHMENT

SMCS-4200 **i02228240**

NOTE	PART NUMBER	QTY	PART NAME 1 2 3 4 5 6 (PRODUCT LEVEL)	SEE PAGE
Y	*255-4966*	1	WHEEL GP	464
	153-7645	1	TIRE (16-R24)	
Y-SEPARATE ILLUSTRATION				

<END>

255-4985 WHEEL & TIRE GP

S/N: R9J1-UP
(16X24)
PART OF 255-4986 WHEEL & TIRE AR
AN ATTACHMENT

SMCS-4200 **i02229328**

NOTE	PART NUMBER	QTY	PART NAME 1 2 3 4 5 6 (PRODUCT LEVEL)	SEE PAGE
Y	*255-4966*	1	WHEEL GP	464
	8X-8452	1	TIRE (16-R24)	
Y-SEPARATE ILLUSTRATION				

<END>

255-4995 WHEEL & TIRE GP

S/N: R9J1-UP
(20.5X25)
PART OF 255-4996 WHEEL & TIRE AR
AN ATTACHMENT

SMCS-4200 **i02229012**

NOTE	PART NUMBER	QTY	PART NAME 1 2 3 4 5 6 (PRODUCT LEVEL)	SEE PAGE
Y	*255-4972*	1	WHEEL GP	464
	6C-3247	1	TIRE (20.5-R25)	

Y-SEPARATE ILLUSTRATION

<END>

255-5001 WHEEL & TIRE GP

S/N: R9J1-UP
(20.5X25)
PART OF 255-5002 WHEEL & TIRE AR
AN ATTACHMENT

SMCS-4200 **i02228965**

NOTE	PART NUMBER	QTY	PART NAME 1 2 3 4 5 6 (PRODUCT LEVEL)	SEE PAGE
Y	*255-4972*	1	WHEEL GP	464
	138-7828	1	TIRE (20.5-R25)	

Y-SEPARATE ILLUSTRATION

<END>

255-5003 WHEEL & TIRE GP

S/N: R9J1-UP
(20.5X25)
PART OF 255-5004 WHEEL & TIRE AR
AN ATTACHMENT

SMCS-4200 **i02228967**

NOTE	PART NUMBER	QTY	PART NAME 1 2 3 4 5 6 (PRODUCT LEVEL)	SEE PAGE
Y	*255-4972*	1	WHEEL GP	464
	184-5465	1	TIRE (20.5-R25)	

Y-SEPARATE ILLUSTRATION

<END>

290-2758 WHEEL & TIRE GP

S/N: R9J1-UP
PART OF 290-2759 WHEEL & TIRE AR
AN ATTACHMENT

SMCS-4200 **i02565676**

NOTE	PART NUMBER	QTY	PART NAME 1 2 3 4 5 6 (PRODUCT LEVEL)	SEE PAGE
Y	*255-4966*	1	WHEEL GP (10X24)	464
	285-5589	1	TIRE (16-24)	

Y-SEPARATE ILLUSTRATION

<END>

310-7316 WHEEL & TIRE GP

S/N: R9J1-UP
PART OF 310-7334 WHEEL & TIRE AR
AN ATTACHMENT

SMCS-4200 **i02836953**

NOTE	PART NUMBER	QTY	PART NAME 1 2 3 4 5 6 (PRODUCT LEVEL)	SEE PAGE
Y	*255-4972*	1	WHEEL GP	464
	207-6031	1	TIRE (20.5-R25)	

Y-SEPARATE ILLUSTRATION

<END>

311-6567 WHEEL & TIRE GP

S/N: R9J1-UP
PART OF 311-6568 WHEEL & TIRE AR
AN ATTACHMENT

SMCS-4200 **i02836990**

NOTE	PART NUMBER	QTY	PART NAME 1 2 3 4 5 6 (PRODUCT LEVEL)	SEE PAGE
Y	*255-4972*	1	WHEEL GP	464
	229-5039	1	TIRE (20.5-R25)	

Y-SEPARATE ILLUSTRATION

<END>

255-4973 WHEEL AR

S/N: R9J1-UP
AN ATTACHMENT

SMCS-4208 **i02229478**

NOTE	PART NUMBER	QTY	PART NAME 1 2 3 4 5 6 (PRODUCT LEVEL)	SEE PAGE
Y	*255-4972*	6	WHEEL GP	464

Y-SEPARATE ILLUSTRATION

<END>

284-5040 WHEEL AR

S/N: R9J1-UP

PART OF 349-5187 POWER TRAIN AR

SMCS-4208 **i02562546**

NOTE	PART NUMBER	QTY	PART NAME 1 2 3 4 5 6 (PRODUCT LEVEL)	SEE PAGE
Y	*284-5041*	2	WHEEL GP (FRONT TANDEM)	466
Y	*284-5042*	2	WHEEL GP (REAR TANDEM)	468

Y-SEPARATE ILLUSTRATION

<END>

226-1885 WHEEL GP

S/N: R9J1-UP
(19.5X25)
PART OF 142-6433 WHEEL & TIRE GP
AN ATTACHMENT

SMCS-4006, 4201, 4208 **i02229527**

NOTE	REF NO	GRAPHIC REF	PART NUMBER	QTY	PART NAME 1 2 3 4 5 6 (PRODUCT LEVEL)	SEE PAGE
	1	1	**7D-7469**	1	RING-LOCK	
	2	1	**226-1886**	1	FLANGE AS	
	3	1	**228-0902**	1	RIM AS (19.5X25)	

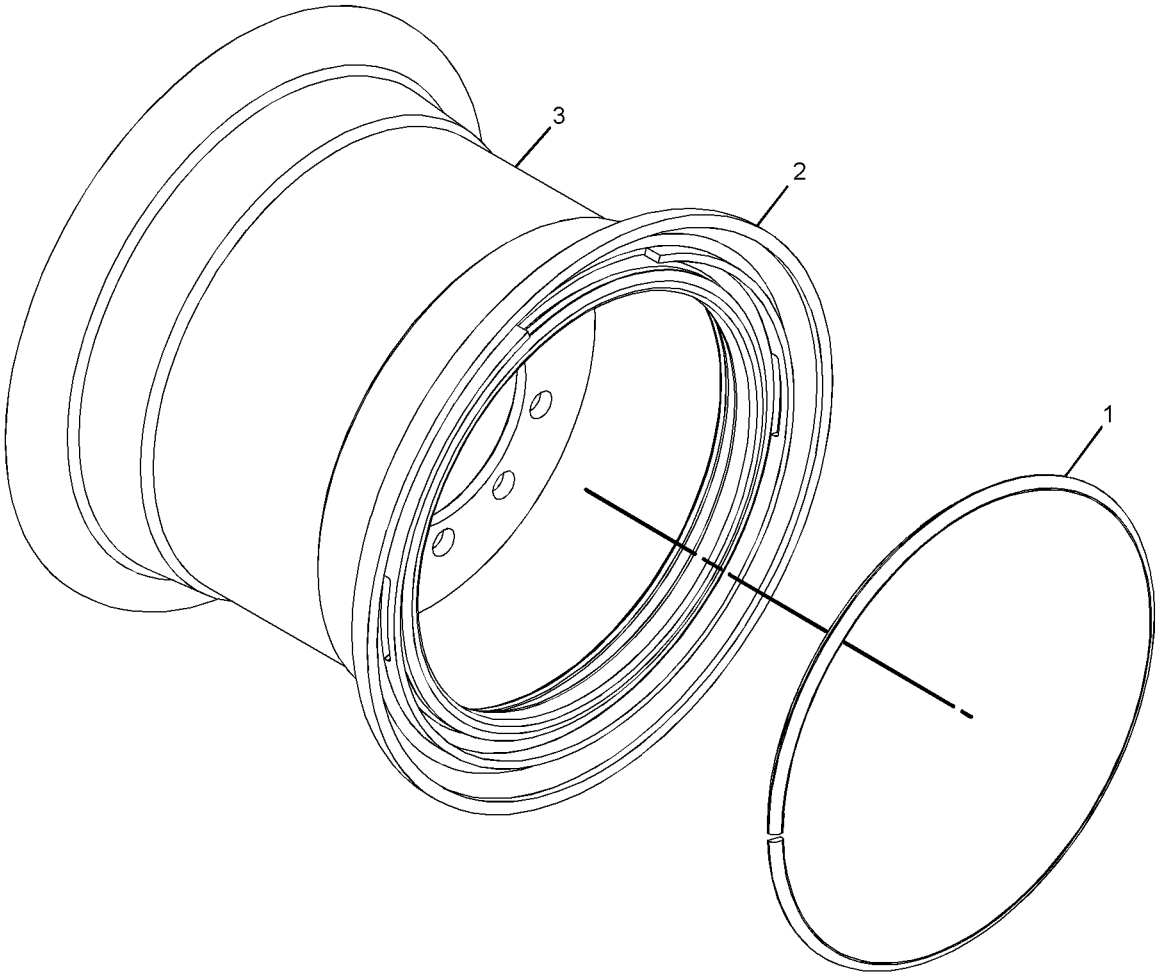

GRAPHIC #1 **<END>** g01151567

255-4966 WHEEL GP

S/N: R9J1-UP
(10X24)
PART OF 255-4983, 255-4985, 290-2758 WHEEL & TIRE GP
AN ATTACHMENT

SMCS-4006, 4201, 4208 **i02566009**

NOTE	PART NUMBER	QTY	PART NAME 1 2 3 4 5 6 (PRODUCT LEVEL)	SEE PAGE
Y	*275-2146*	1	WHEEL GP	465
	2D-2565	1	SEAL-O-RING	
	5T-5119	1	VALVE GP-TIRE (TIRE INFLATION)	
	5T-5120	1	STEM AS	
	6F-3930	1	CORE-VALVE	
	9K-7951	1	CAP-VALVE (STEM)	
	7D-5252	1	SPUD AS	
	2D-2507	1	SPUD	
	2D-2508	1	GROMMET	
	2D-2509	1	LOCKNUT (11/16-16-THD)	
Y-SEPARATE ILLUSTRATION				

<END>

255-4972 WHEEL GP

S/N: R9J1-UP
PART OF 255-4995, 255-5001, 255-5003, 310-7316, 311-6567 WHEEL & TIRE GP,
255-4973 WHEEL AR
AN ATTACHMENT

SMCS-4006, 4201, 4208 **i02563515**

NOTE	PART NUMBER	QTY	PART NAME 1 2 3 4 5 6 (PRODUCT LEVEL)	SEE PAGE
Y	*275-2147*	1	WHEEL GP	465
	4K-4879	1	SEAL-O-RING	
	2G-6595	1	VALVE GP-TIRE (TIRE INFLATION)	
	6F-3930	1	CORE-VALVE	
	7D-5252	1	SPUD AS	
	2D-2507	1	SPUD	
	2D-2508	1	GROMMET	
	2D-2509	1	LOCKNUT (11/16-16-THD)	
	9K-7951	1	CAP-VALVE (STEM)	
Y-SEPARATE ILLUSTRATION				

<END>

275-2146 WHEEL GP

S/N: R9J1-UP
(10X24)
PART OF 255-4966 WHEEL GP
AN ATTACHMENT

SMCS-4006, 4201, 4208 **i02770726**

NOTE	PART NUMBER	QTY	PART NAME 1 2 3 4 5 6 (PRODUCT LEVEL)	SEE PAGE
	8W-9566	1	FLANGE AS	
	290-8166	1	RIM AS (10X24)	
	2D-2654	1	RING-LOCK	

<END>

275-2147 WHEEL GP

S/N: R9J1-UP
(17X25)
PART OF 255-4972 WHEEL GP
AN ATTACHMENT

SMCS-4006, 4201, 4208 **i02563513**

NOTE	PART NUMBER	QTY	PART NAME 1 2 3 4 5 6 (PRODUCT LEVEL)	SEE PAGE
	179-5774	1	FLANGE AS	
	274-5551	1	RIM AS (17X25)	
	4K-4881	1	RING-LOCK	

<END>

284-5041 WHEEL GP–FRONT TANDEM

S/N: R9J1-UP

PART OF 284-5040 WHEEL AR

SMCS-4006, 4201, 4208 **i03951710**

NOTE	REF NO	GRAPHIC REF	PART NUMBER	QTY	PART NAME 1 2 3 4 5 6 (PRODUCT LEVEL)	SEE PAGE
	1	1	**5H-3701**	1	SCREW-PURGE	
R	2	1	**5K-5288**	1	SEAL GP-DUO-CONE	
	2A	1	**5K-5129**	2	RING-SEALING	
	3	1	**5P-3490**	1	CONE-BEARING	
	4	1	**6B-3223**	2	CUP-BEARING	
	5	1	**9D-1586**	1	SPACER (3.762X4.562X0.75-IN)	
	6	1	**110-7149**	1	RING-RETAINING	
	7	1	**252-8678**	1	SPROCKET	
	8	1	**257-1702**	1	PISTON	
	9	1	**351-0925**	9	DISC-FRICTION	
	10	1	**261-1957**	1	HUB	
	11	1	**266-6049**	4	DOWEL	
	12	1	**270-6941**	1	RETAINER	
B	13	1	**270-6942**	4	SHIM (0.12-MM THK)	
B	14	1	**270-6943**	1	SHIM (0.18-MM THK)	
B	15	1	**270-6944**	4	SHIM (0.5-MM THK)	
C	16	1	**220-4336**	1	SEAL-BRAKE	
C	17	1	**220-4335**	1	SEAL-BRAKE	
	20	1	**284-5043**	1	HOUSING	
	21	1	**284-5044**	1	SPINDLE-WHEEL	
	22	1	**284-5045**	1	COVER	
B	23	1	**284-8959**	1	WASHER (13X22X2-MM THK)	
B	24	1	**284-8960**	3	WASHER (13X22X0.5-MM THK)	
C	25	1	**296-8274**	4	DOWEL	
	26	1	**284-9556**	4	SPACER-SPECIAL	
	27	1	**284-9557**	10	PLATE	
	28	1	**285-0613**	1	COMPENSATOR	
M	29	1	**286-9155**	16	BOLT-SELF-LOCKING (M16X2X120-MM)	
	30	1	**288-3882**	4	SPRING	
M	31	1	**103-6169**	4	BOLT-SELF-LOCKING (M16X2X60-MM)	
	32	1	**198-4768**	16	WASHER-HARD (17.5X32X8-MM THK)	
	33	1	**4B-7270**	1	CONE-BEARING	
M	34	1	**4I-0755**	1	NUT (M12X1.25-THD)	
	35	1	**7X-1548**	1	SEAL	
	36	1	**8F-9538**	1	SEAL-O-RING	
M	37	1	**8T-1159**	4	BOLT-SOCKET HEAD (M10X1.5X25-MM)	

B-USE AS REQUIRED
C-CHANGE FROM PREVIOUS TYPE
M-METRIC PART
R-REMFG PART MAY BE AVAILABLE

284-5041 **WHEEL GP** ***(contd.)*** **i03951710**

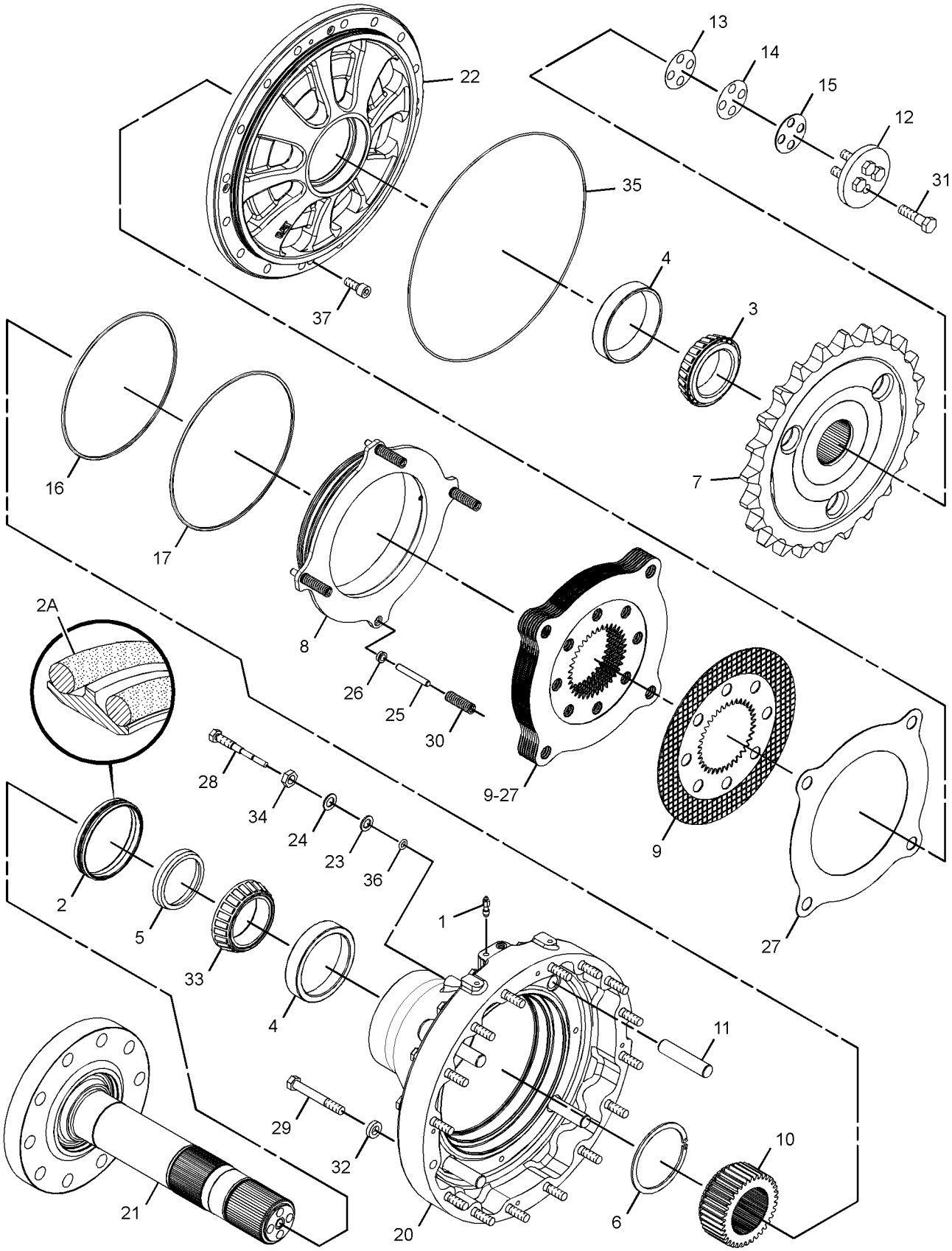

GRAPHIC #1 **<END>** g01525973

284-5042 WHEEL GP–REAR TANDEM

S/N: R9J1-UP

PART OF 284-5040 WHEEL AR

SMCS-4006, 4201, 4208 **i03951709**

NOTE	REF NO	GRAPHIC REF	PART NUMBER	QTY	PART NAME 1 2 3 4 5 6 (PRODUCT LEVEL)	SEE PAGE
	1	1	**5H-3701**	1	SCREW-PURGE	
R	2	1	**5K-5288**	1	SEAL GP-DUO-CONE	
	2A	1	**5K-5129**	2	RING-SEALING	
	3	1	**5P-3490**	1	CONE-BEARING	
	4	1	**6B-3223**	2	CUP-BEARING	
	5	1	**9D-1586**	1	SPACER (3.762X4.562X0.75-IN)	
	6	1	**110-7149**	1	RING-RETAINING	
	7	1	**252-8678**	1	SPROCKET	
	8	1	**257-1702**	1	PISTON	
	9	1	**351-0925**	9	DISC-FRICTION	
	10	1	**261-1957**	1	HUB	
	11	1	**266-6049**	4	DOWEL	
	12	1	**270-6941**	1	RETAINER	
B	13	1	**270-6942**	4	SHIM (0.12-MM THK)	
B	14	1	**270-6943**	1	SHIM (0.18-MM THK)	
B	15	1	**270-6944**	4	SHIM (0.5-MM THK)	
C	16	1	**220-4336**	1	SEAL-BRAKE	
C	17	1	**220-4335**	1	SEAL-BRAKE	
	20	1	**284-5043**	1	HOUSING	
	21	1	**284-5044**	1	SPINDLE-WHEEL	
	22	1	**284-5045**	1	COVER	
B	23	1	**284-8959**	1	WASHER (13X22X2-MM THK)	
B	24	1	**284-8960**	3	WASHER (13X22X0.5-MM THK)	
C	25	1	**296-8274**	4	DOWEL	
	26	1	**284-9556**	4	SPACER-SPECIAL	
	27	1	**284-9557**	10	PLATE	
	28	1	**285-0613**	1	COMPENSATOR	
M	29	1	**286-9155**	16	BOLT-SELF-LOCKING (M16X2X120-MM)	
	30	1	**288-3882**	4	SPRING	
M	31	1	**103-6169**	4	BOLT-SELF-LOCKING (M16X2X60-MM)	
	32	1	**198-4768**	16	WASHER-HARD (17.5X32X8-MM THK)	
	33	1	**4B-7270**	1	CONE-BEARING	
M	34	1	**4I-0755**	1	NUT (M12X1.25-THD)	
	35	1	**7X-1548**	1	SEAL	
	36	1	**8F-9538**	1	SEAL-O-RING	
M	37	1	**8T-1159**	4	BOLT-SOCKET HEAD (M10X1.5X25-MM)	
					PARTS SHOWN IN GRAPHIC(S) WITHOUT A REFERENCE NUMBER ARE NOT SERVICED SEPARATELY	

B-USE AS REQUIRED
C-CHANGE FROM PREVIOUS TYPE
M-METRIC PART
R-REMFG PART MAY BE AVAILABLE

284-5042 **WHEEL GP** ***(contd.)*** **i03951709**

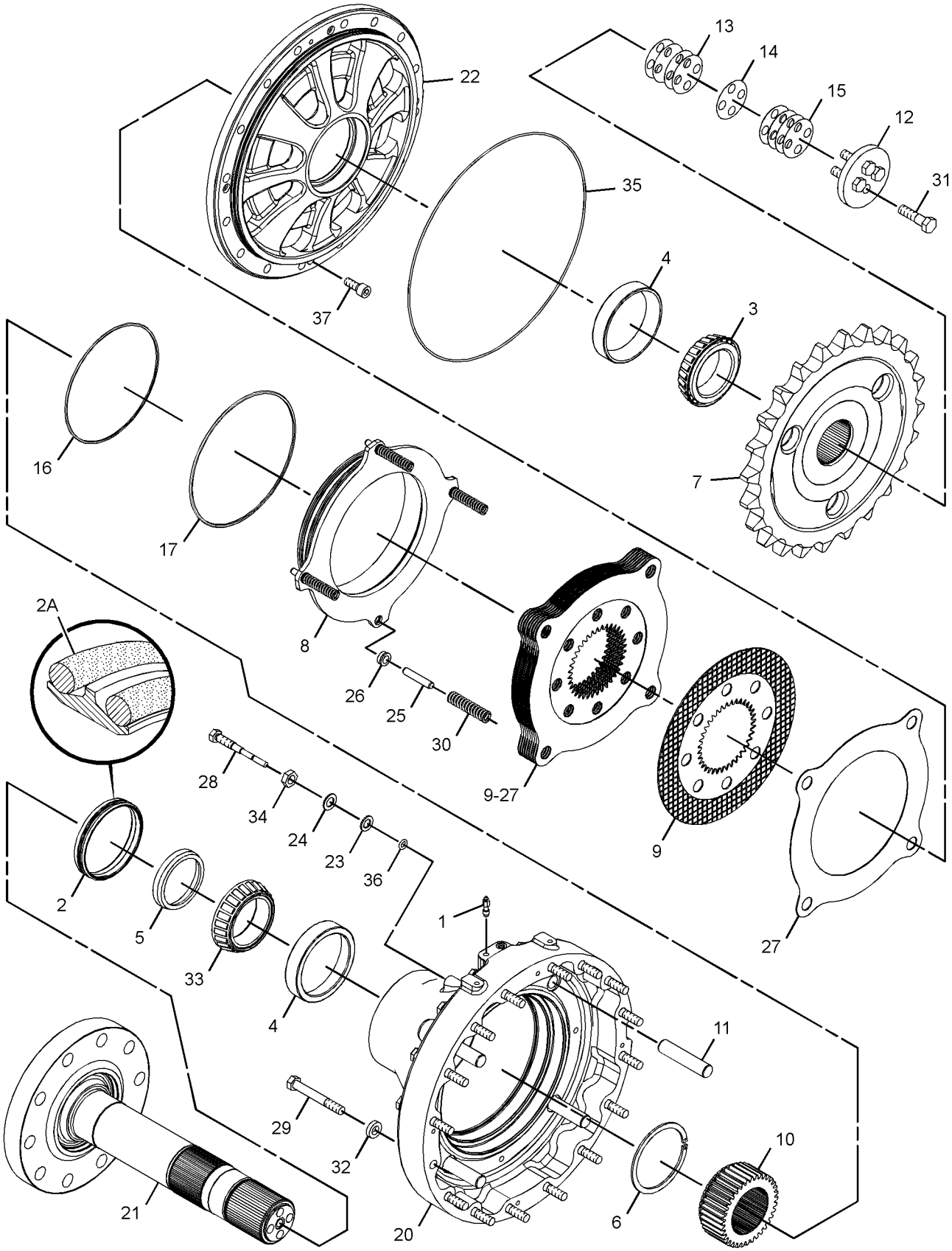

GRAPHIC #1 **<END>** g02159839

243-7239 COVER GP-CONTROL VALVE

S/N: R9J1-UP
PART OF 356-3071 OPTION AR-MACHINE
AN ATTACHMENT

SMCS-7150 **i03994839**

NOTE	REF NO	GRAPHIC REF	PART NUMBER	QTY	PART NAME 1 2 3 4 5 6 (PRODUCT LEVEL)	SEE PAGE
	1	1	**116-5763**	14	CLIP-SPRING	
	2	1	**248-0322**	2	BRACKET AS	
	4	1	**280-2228**	1	BRACKET AS	
	5	1	**289-3464**	1	COVER AS	
	6	1	**295-1544**	1	COVER (LH)	
	7	1	**295-1545**	1	COVER (RH)	
	8	1	**310-1516**	1	BRACKET AS	
M		1	**8T-3490**	6	NUT-WELD (M10X1.5-THD)	
M		1	**8T-3597**	4	NUT-WELD (M12X1.75-THD)	
M		1	**9R-2672**	4	BOSS-THREADED (M10X1.5-THD)	
	9	1	**312-8430**	1	COVER AS	
M		1	**8T-3490**	2	NUT-WELD (M10X1.5-THD)	
	10	1	**336-8899**	1	PLATE	
C	11	1	**198-4777**	36	WASHER-HARD (11X25X10-MM THK)	
C	12	1	**7X-0578**	11	WASHER-HARD (10.2X32X2.5-MM THK)	
	13	1	**7X-0579**	14	WASHER-HARD (8.8X25.5X2-MM THK)	
C	14	1	**7X-7729**	9	WASHER (11X25X3-MM THK)	
M	15	1	**8T-0722**	2	BOLT-LOCKING (M10X1.5X30-MM)	
M	16	1	**8T-4136**	3	BOLT (M10X1.5X25-MM)	
M	17	1	**8T-4189**	14	BOLT (M8X1.25X20-MM)	
M	18	1	**8T-4195**	40	BOLT (M10X1.5X30-MM)	
M	19	1	**9X-2125**	7	BOLT-LOCKING (M10X1.5X25-MM)	
C	20	1	**362-6081**	1	BRACKET AS	
C	21	1	**362-6082**	1	BRACKET AS	
C	22	1	**362-6534**	1	BRACKET AS	

C-CHANGE FROM PREVIOUS TYPE
M-METRIC PART

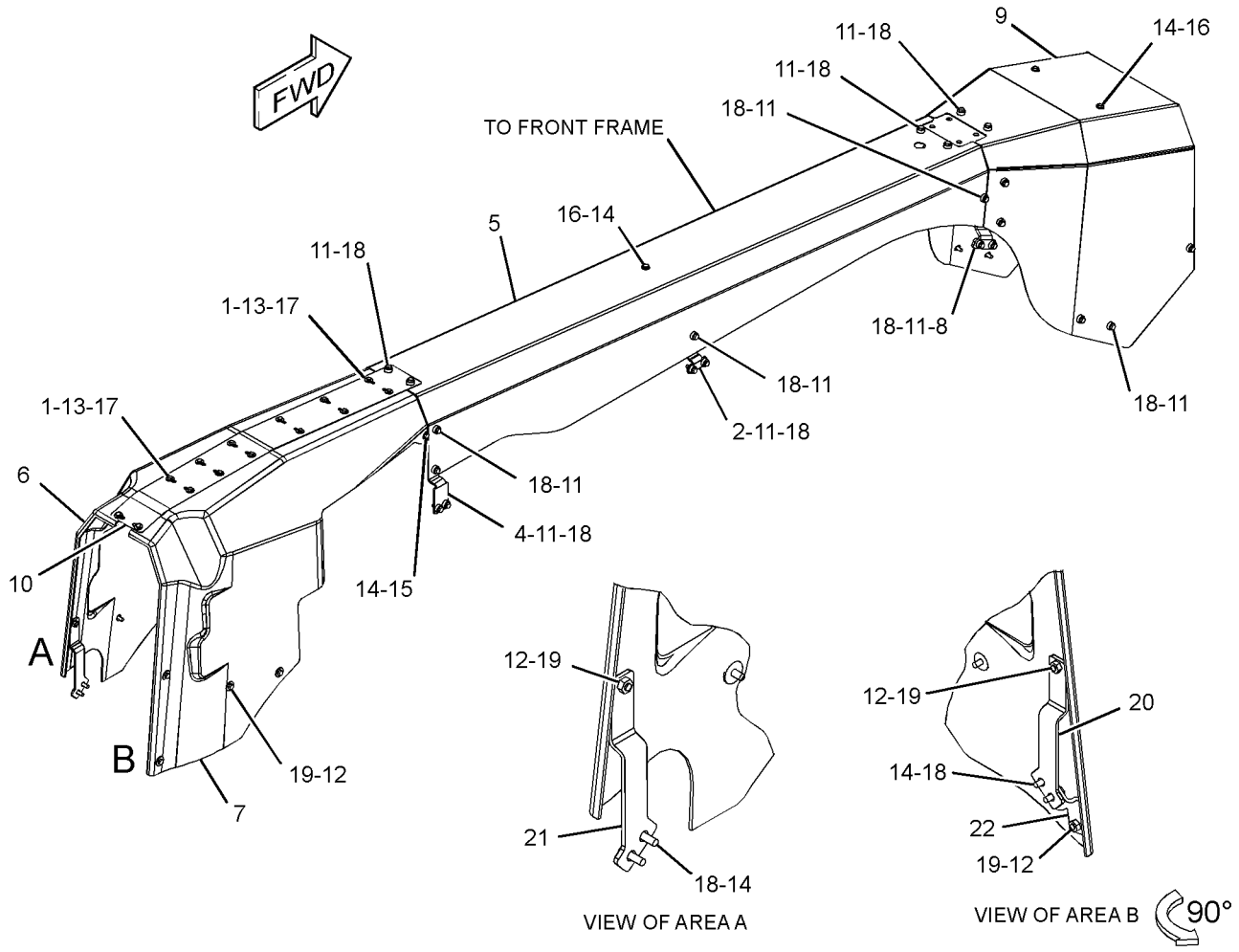

GRAPHIC #1

<END>

g02175857

355-2945 COVER GP-CONTROL VALVE

S/N: R9J1-UP
PART OF 356-3072 OPTION AR-MACHINE
AN ATTACHMENT

SMCS-7150 **i03972531**

NOTE	REF NO	GRAPHIC REF	PART NUMBER	QTY	PART NAME 1 2 3 4 5 6 (PRODUCT LEVEL)	SEE PAGE
	1	1	**116-5763**	14	CLIP-SPRING	
	2	1	**337-4161**	1	COVER (LH)	
	3	1	**337-4162**	1	COVER (RH)	
	4	1	**337-4166**	1	BRACKET AS	
M		1	**8T-3490**	1	NUT-WELD (M10X1.5-THD)	
	5	1	**339-3845**	1	PLATE	
	6	1	**340-0625**	1	BRACKET AS	
	7	1	**340-0627**	1	BRACKET AS	
	8	1	**355-2955**	1	BRACKET AS	
	9	1	**355-3081**	1	COVER AS	
	10	1	**355-3083**	1	COVER AS	
	11	1	**198-4777**	40	WASHER-HARD (11X25X10-MM THK)	
	12	1	**7X-0578**	6	WASHER-HARD (10.2X32X2.5-MM THK)	
	13	1	**7X-0579**	14	WASHER-HARD (8.8X25.5X2-MM THK)	
	14	1	**7X-7729**	4	WASHER (11X25X3-MM THK)	
M	15	1	**8T-0722**	2	BOLT-LOCKING (M10X1.5X30-MM)	
M	16	1	**8T-4136**	2	BOLT (M10X1.5X25-MM)	
M	17	1	**8T-4189**	14	BOLT (M8X1.25X20-MM)	
M	18	1	**8T-4195**	40	BOLT (M10X1.5X30-MM)	
M	19	1	**9X-2125**	6	BOLT-LOCKING (M10X1.5X25-MM)	

M-METRIC PART

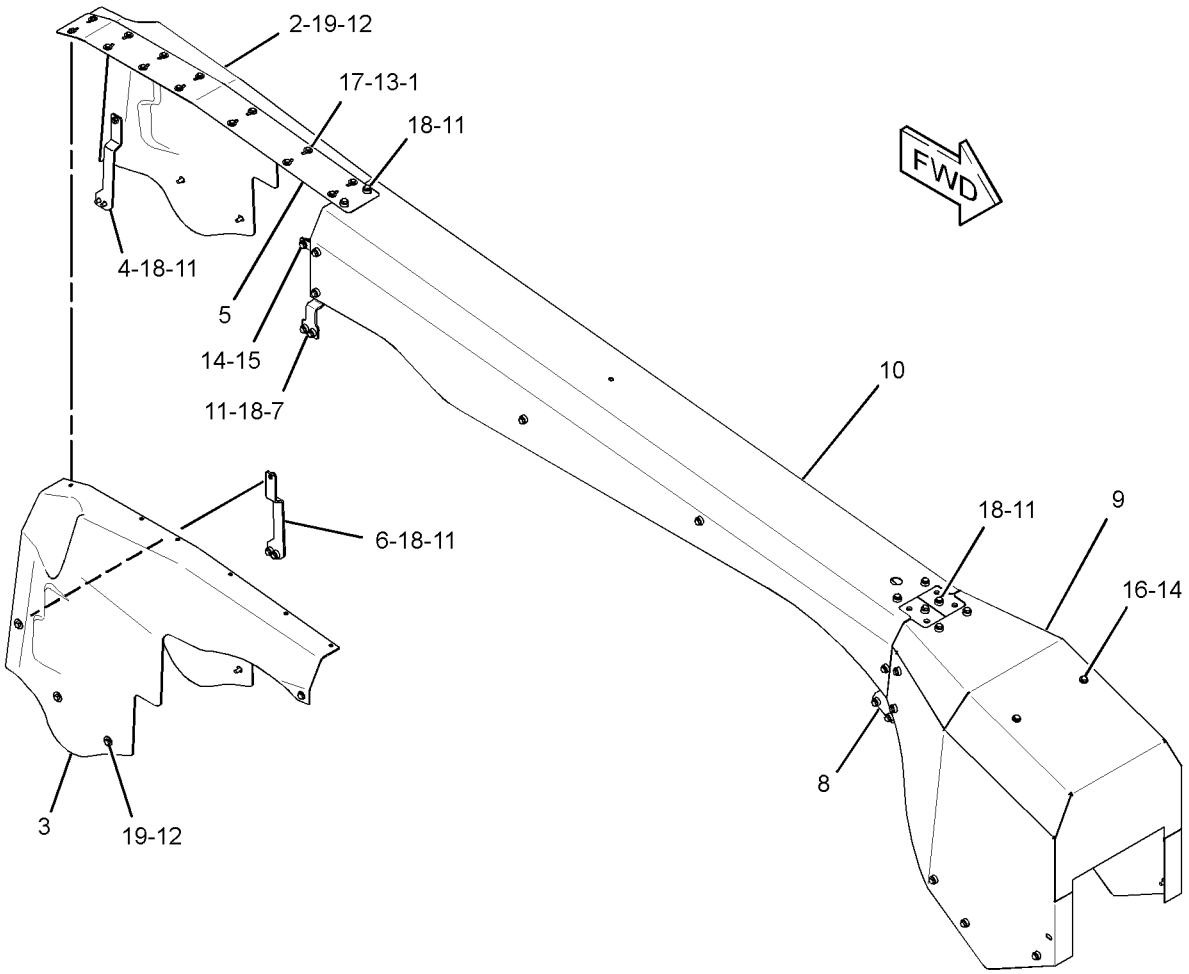

GRAPHIC #1 **<END>** g02213795

334-5370 COVER GP-PROTECTION

S/N: R9J1-UP
PART OF 351-2596 OPTION AR-COLD WEATHER
AN ATTACHMENT

SMCS-7315, 795C **i03416284**

NOTE	REF NO	GRAPHIC REF	PART NUMBER	QTY	PART NAME 1 2 3 4 5 6 (PRODUCT LEVEL)	SEE PAGE
	1	1	**199-4318**	4	TURNBUCKLE	
	2	1	**343-8140**	1	COVER AS	
	3	1	**6K-3273**	8	RIVET-POP	

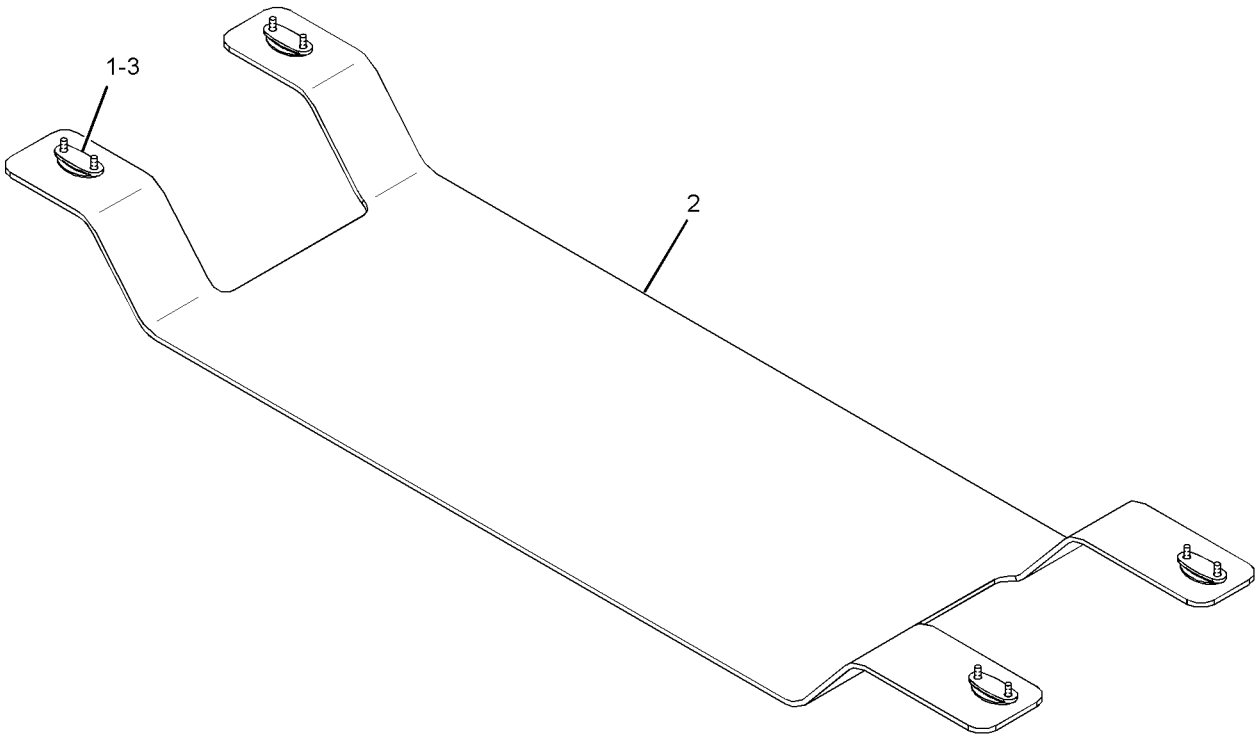

GRAPHIC #1 **<END>** g01924354

FRAME AND BODY

285-9020 ENCLOSURE GP-ENGINE

S/N: R9J1-UP

PART OF 349-2555 COMMON AR

SMCS-7263 **i03909376**

NOTE	REF NO	GRAPHIC REF	PART NUMBER	QTY	PART NAME 1 2 3 4 5 6 (PRODUCT LEVEL)	SEE PAGE
	1	1,2	**7X-1387**	6	WASHER (10.26X22.22X1.9-MM THK)	
	2	1	*201-9109*	1	DOOR GP-ACCESS (BREAKERS, 24-VOLT OUTLET)	
		1	**203-6066**	1	LATCH AS	
		1	**219-6036**	1	DOOR AS	
		1	**1V-8284**	1	HINGE	
	3	2	**227-3101**	2	STRIKER AS	
	4	2	**227-3103**	2	PLATE	
	5	1,2	**245-2806**	2	HANDHOLD	
	6	1,2	**245-2827**	2	HANDRAIL	
	7	1	**253-7154**	2	HANDRAIL	
	8	2	**284-0565**	1	GUARD AS	
	9	1	**284-2277**	1	COVER AS (LH)	
	10	1	**284-2288**	1	PLATE AS	
M		1	**8T-3490**	5	NUT-WELD (M10X1.5-THD)	
	11	2	**285-9034**	2	ROD AS	
	12	1	**285-9036**	1	ROD AS	
Y	13	1	*286-0175*	1	HOOD GP	493
	14	1	**286-1172**	1	COVER AS (RH)	
M		1	**8T-3490**	2	NUT-WELD (M10X1.5-THD)	
C	15	2	**286-1605**	1	PLATE	
C	16	2	**286-8292**	2	PLATE-STRIKER	
	17	2	**292-3091**	2	BAR	
	18	2	**295-1578**	2	BRACKET AS	
	19	2	**295-3839**	3	PAWL	
	20	1,2	**308-7777**	2	PLATE (RH)	
C	21	2	**318-6433**	1	PANEL AS-ENCLOSURE (LH)	
C	22	1,2	**321-3884**	2	HINGE AS	
C	23	1	**321-7238**	1	PANEL (RH)	
C	24	1	**321-7241**	1	PANEL AS (RH)	
C	25	2	**321-7242**	1	PANEL AS (LH)	
C	26	1	**321-7260**	1	BRACKET AS	
C	27	1	**321-7265**	1	FRAME AS (RH)	
C	28	2	**321-7266**	1	FRAME AS (LH)	
	29	1	**322-1172**	1	PLATE AS	
	30	1	**323-1776**	1	BRACKET AS	
C	31	1	**323-2184**	1	PLATE AS	
M		1	**8T-3490**	8	NUT-WELD (M10X1.5-THD)	
C	32	1	**323-2186**	1	DOOR AS (RH)	
C	33	2	**323-2187**	1	DOOR AS (LH)	
C	34	1	**323-2550**	1	FRAME AS (RH)	
C	35	2	**323-2551**	1	PLATE AS (LH)	
C	36	2	**326-0610**	3	LATCH AS	
					(EACH INCLUDES)	
M		2	**5C-2890**	4	NUT (M6X1-THD)	
		2	**8C-3398**	4	LOCKWASHER	
M		2	**160-8499**	2	NUT (M12X1.5-THD)	
		2	**326-0612**	2	WASHER-TAB	
	37	1	**342-7222**	1	BRACKET	
	38	1	**342-7223**	1	BRACKET	
C	39	2	**348-0424**	1	DOOR AS (LH)	
C	40	1	**349-5332**	1	DASH AS	
	41	1	**349-6273**	1	PLATE AS	
	42	1,2	**198-4777**	8	WASHER-HARD (11X25X10-MM THK)	
	43	1,2	**3B-4615**	9	PIN-COTTER	
M	44	1	**5C-7261**	4	NUT (M8X1.25-THD)	
	45	1	**5P-4116**	8	WASHER-HARD (8.8X20.5X2-MM THK)	

285-9020 **ENCLOSURE GP-ENGINE** *(contd.)* **i03909376**

NOTE	REF NO	GRAPHIC REF	PART NUMBER	QTY	PART NAME 1 2 3 4 5 6 (PRODUCT LEVEL)	SEE PAGE
	46	1,2	**5P-8439**	3	GROMMET	
	47	1	**6P-6256**	2	RETAINER-SPRING	
M	48	1	**6V-7744**	3	LOCKNUT (M10X1.5-THD)	
C	49	1,2	**7X-7729**	151	WASHER (11X25X3-MM THK)	
	50	1,2	**8T-4121**	3	WASHER-HARD (11X21X2.5-MM THK)	
M	51	1,2	**8T-4133**	18	NUT (M10X1.5-THD)	
CM	52	1,2	**8T-4136**	96	BOLT (M10X1.5X25-MM)	
M	53	2	**8T-4184**	4	BOLT (M12X1.75X45-MM)	
CM	54	1,2	**8T-4189**	49	BOLT (M8X1.25X20-MM)	
M	55	1,2	**8T-4195**	36	BOLT (M10X1.5X30-MM)	
M	56	1	**8T-4196**	3	BOLT (M10X1.5X35-MM)	
M	57	1	**8T-4198**	4	BOLT (M10X1.5X100-MM)	
C	58	1,2	**8T-4224**	49	WASHER-HARD (8.8X16X2-MM THK)	
CM	59	2	**8T-4908**	4	BOLT (M8X1.25X25-MM)	
D	60	1	**6V-5746**		TRIM (0.6-M)	
	61	1	**8T-4222**	2	WASHER-PLATED (11X32X2.5-MM THK)	

C-CHANGE FROM PREVIOUS TYPE
D-ORDER BY THE METER
M-METRIC PART
Y-SEPARATE ILLUSTRATION

285-9020 **ENCLOSURE GP-ENGINE** *(contd.)* **i03909376**

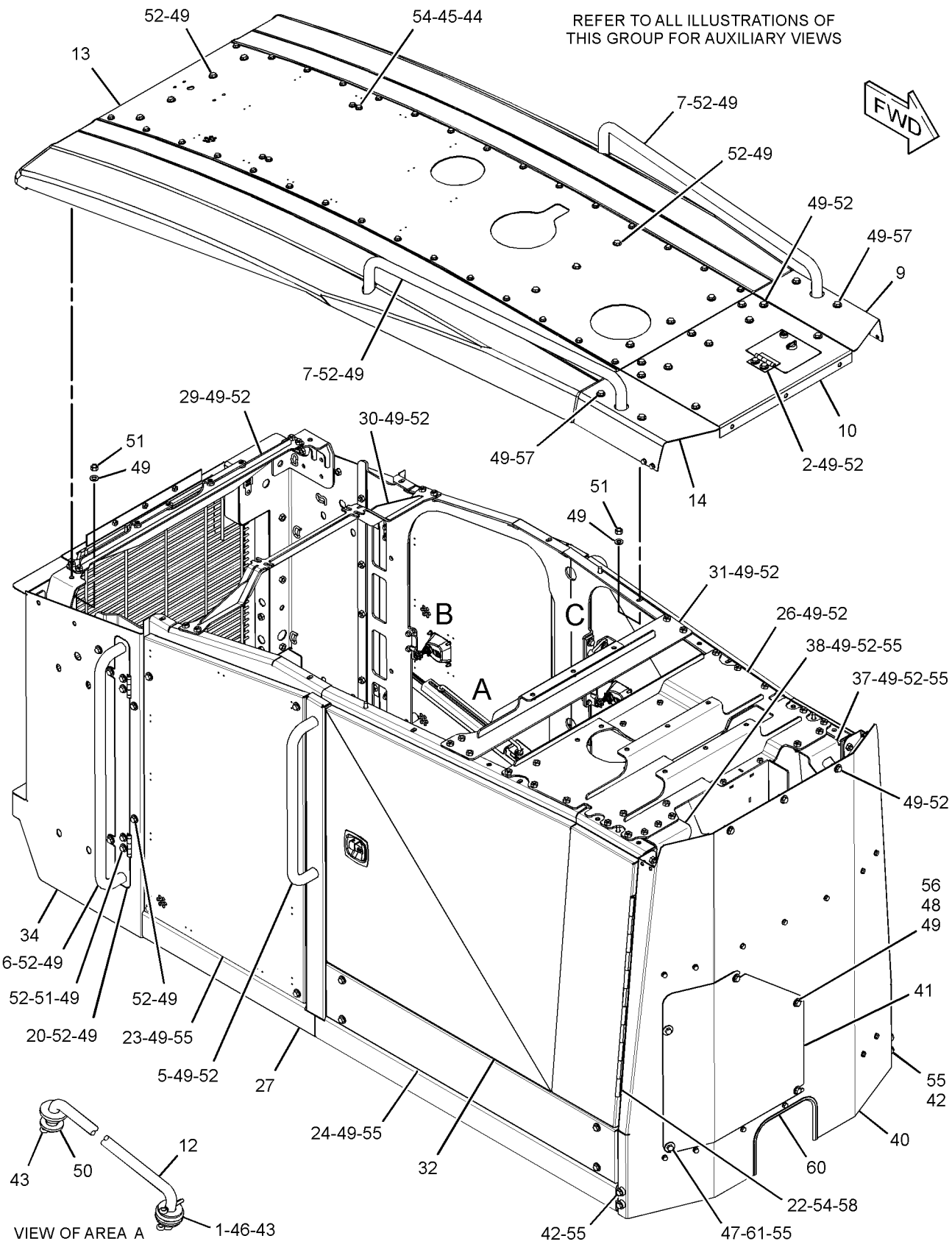

GRAPHIC #1 g02219138

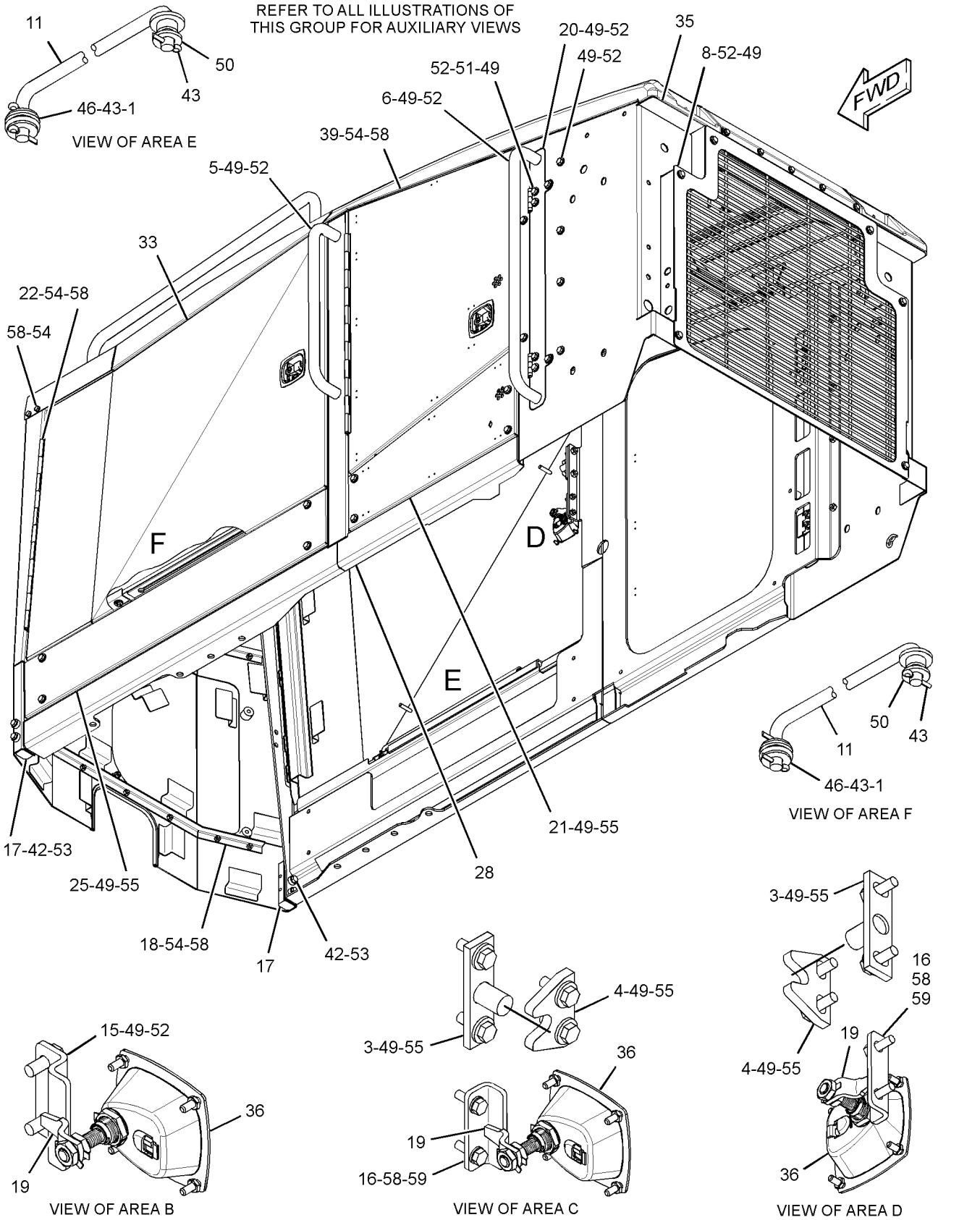

GRAPHIC #2

<END>

g02075078

319-7078 FASTENER GP-ENCLOSURE

S/N: R9J1-UP

PART OF 349-2555 COMMON AR

SMCS-7263, 7553 **i03744085**

NOTE	REF NO	GRAPHIC REF	PART NUMBER	QTY	PART NAME 1 2 3 4 5 6 (PRODUCT LEVEL)	SEE PAGE
	1	1	**5P-9768**	2	PLUG-HOLE	
	2	1	**8X-1904**	8	SPACER (20X35X26-MM THK)	
	3	1	**198-4778**	8	WASHER-HARD (13.5X30X12-MM THK)	
	4	1	**7X-0591**	8	WASHER-HARD (17X29X3-MM THK)	
	5	1	**7X-7729**	4	WASHER (11X25X3-MM THK)	
M	6	1	**8T-4136**	4	BOLT (M10X1.5X25-MM)	
M	7	1	**8T-4138**	4	BOLT (M6X1X20-MM)	
M	8	1	**8T-4140**	8	BOLT (M16X2X60-MM)	
M	9	1	**8T-4956**	8	BOLT (M12X1.75X35-MM)	
	10	1	**9R-2620**	1	PLUG	
	11	1	**9X-8256**	4	WASHER (6.6X12X2-MM THK)	

M-METRIC PART

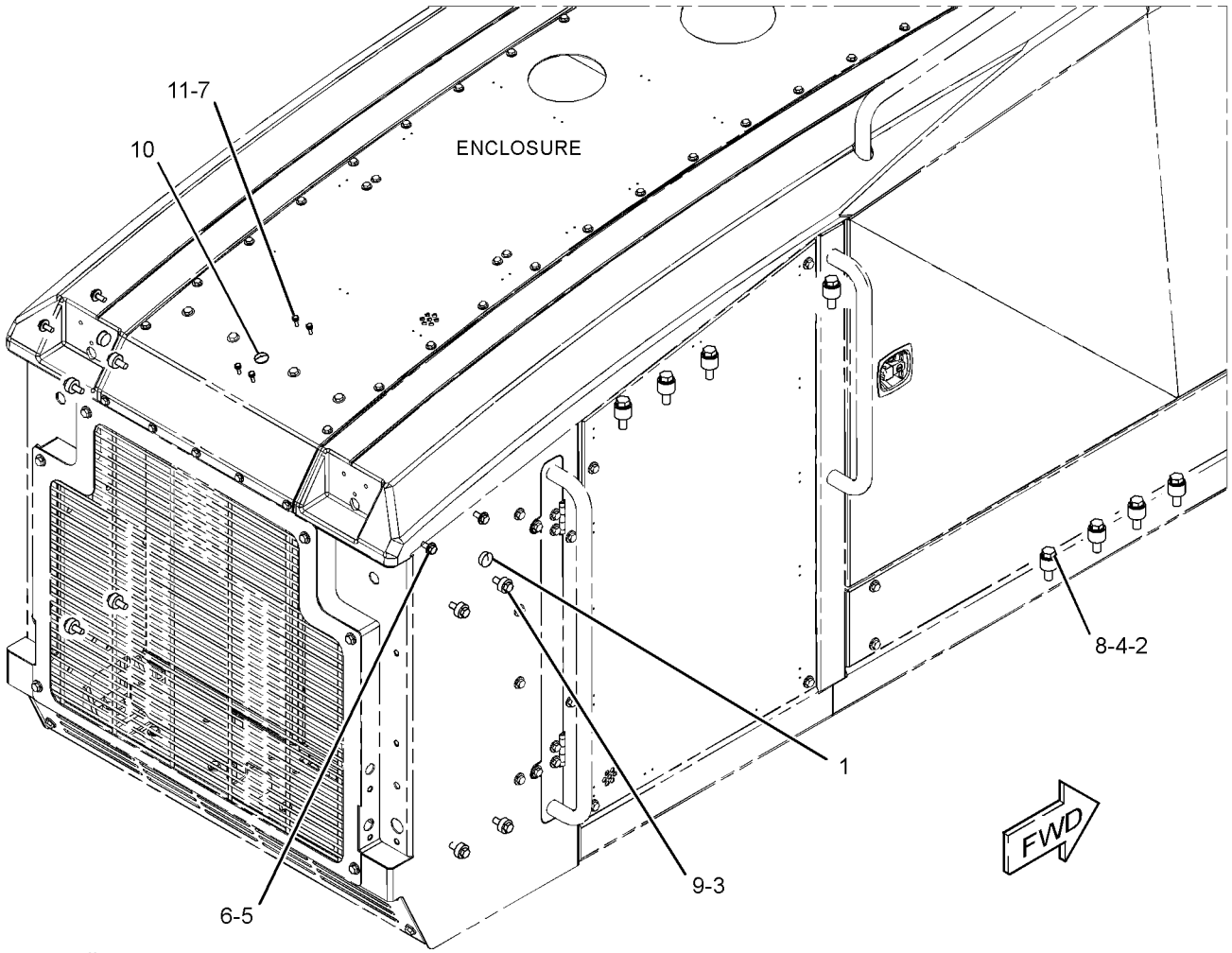

GRAPHIC #1 **<END>** g02064314

248-1484 FASTENER GP-SENSOR

S/N: R9J1-UP

PART OF 321-1458 FASTENER GP-SENSOR

SMCS-5645, 7268, 7553 **i04035019**

NOTE	REF NO	GRAPHIC REF	PART NUMBER	QTY	PART NAME 1 2 3 4 5 6 (PRODUCT LEVEL)	SEE PAGE
	1	1	**8T-9389**	2	BOLT (1/2-13X2.75-IN)	
	2	1	**8T-8917**	2	BOLT (1/2-13X1.25-IN)	
	3	1	**5S-7385**	2	LOCKWASHER	
	4	1	**6V-8188**	2	NUT (1/2-13-THD)	
	5	1	**5P-1076**	2	WASHER-HARD (13.5X30X4-MM THK)	

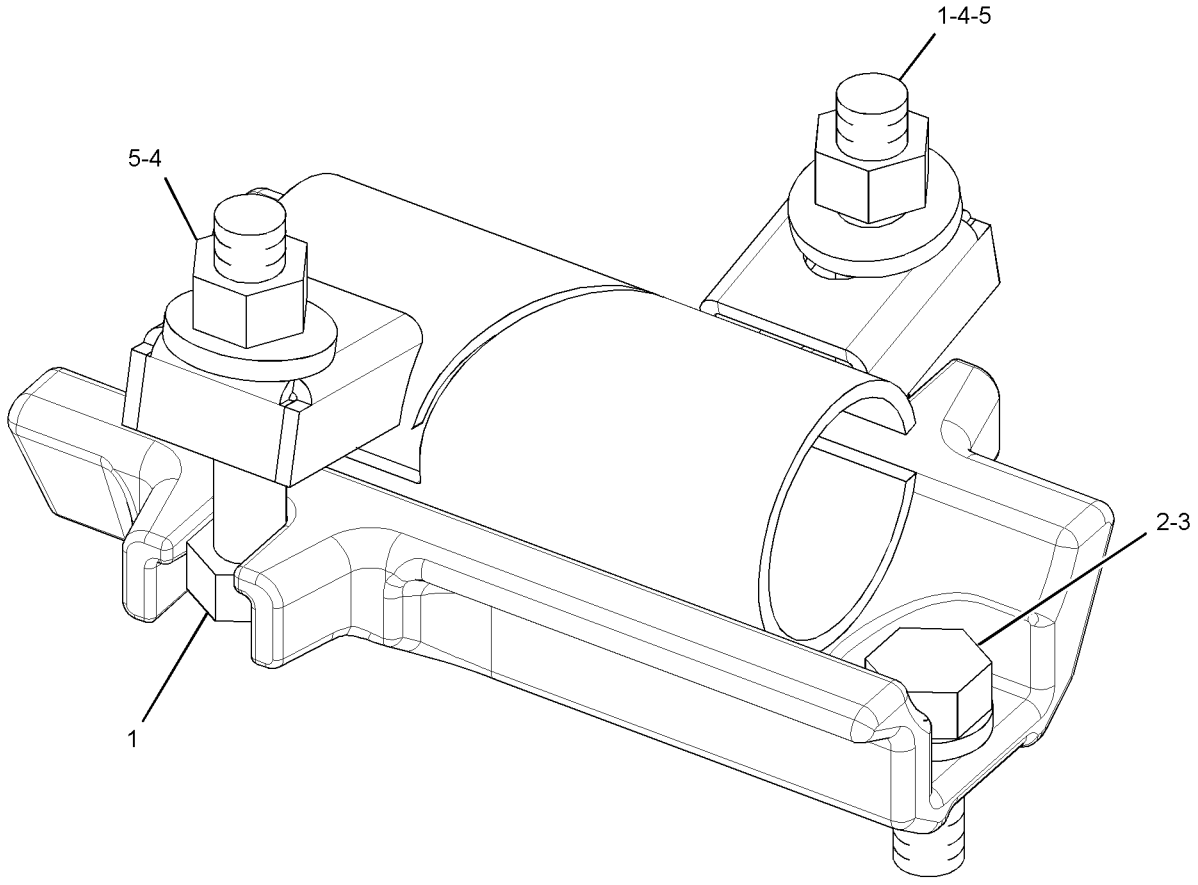

GRAPHIC #1 **<END>** g01455682

321-1458 FASTENER GP-SENSOR—SONIC

S/N: R9J1-UP

PART OF 286-0132, 286-0133 SENSOR GP-SONIC

SMCS-5645, 7268, 7553 **i03004696**

NOTE	PART NUMBER	QTY	PART NAME 1 2 3 4 5 6 (PRODUCT LEVEL)	SEE PAGE
Y	**248-1484**	2	FASTENER GP-SENSOR	480
	8T-8917	4	BOLT (1/2-13X1.25-IN)	
	3B-4507	4	LOCKWASHER	

Y-SEPARATE ILLUSTRATION

<END>

FRAME AND BODY

255-5090 FENDER & SUPPORT GP–REAR

S/N: R9J1-UP

AN ATTACHMENT

SMCS-7252 **i02848704**

NOTE	REF NO	GRAPHIC REF	PART NUMBER	QTY	PART NAME 1 2 3 4 5 6 (PRODUCT LEVEL)	SEE PAGE
C	1	1	**190-5386**	2	FILM-STRIPE (ROUND RED REFLECTIVE) (FENDER)	
	2	1	**256-3355**	2	FENDER	
	3	1	**256-3356**	2	FENDER	
C	4	1	**310-9423**	1	COVER	
C	5	1	**310-9422**	1	COVER	
C	6	1	**310-9421**	1	COVER	
C	7	1	**310-9420**	1	COVER	
C	8	1	**310-9412**	1	SUPPORT AS	
M		1	**8T-3490**	4	NUT-WELD (M10X1.5-THD)	
M		1	**8T-3612**	4	NUT-WELD (M8X1.25-THD)	
C	9	1	**310-9413**	1	SUPPORT AS	
M		1	**8T-3490**	4	NUT-WELD (M10X1.5-THD)	
M		1	**8T-3612**	4	NUT-WELD (M8X1.25-THD)	
C	10	1	**310-9414**	1	SUPPORT AS	
M		1	**8T-3490**	6	NUT-WELD (M10X1.5-THD)	
M		1	**8T-3612**	5	NUT-WELD (M8X1.25-THD)	
C	11	1	**310-9417**	1	SUPPORT AS	
M		1	**8T-3490**	6	NUT-WELD (M10X1.5-THD)	
M		1	**8T-3612**	5	NUT-WELD (M8X1.25-THD)	
	12	1	**256-6068**	2	PLATE AS	
	13	1	**256-6072**	2	PLATE AS	
	14	1	**256-6073**	1	BRACKET AS	
	15	1	**256-6074**	1	BRACKET AS	
	16	1	**256-6075**	1	BRACKET AS	
	17	1	**256-6076**	1	BRACKET AS	
	18	1	**289-7646**	10	PLATE AS	
M	19	1	**099-3649**	10	BOLT (M8X1.25X40-MM)	
	20	1	**5P-4116**	56	WASHER-HARD (8.8X20.5X2-MM THK)	
M	21	1	**7X-2554**	4	BOLT (M16X2X70-MM)	
	22	1	**7X-7729**	20	WASHER (11X25X3-MM THK)	
M	23	1	**8T-4186**	20	BOLT (M10X1.5X40-MM)	
M	24	1	**8T-4189**	20	BOLT (M8X1.25X20-MM)	
M	25	1	**8T-4779**	8	BOLT (M16X2X35-MM)	
M	26	1	**8T-4908**	26	BOLT (M8X1.25X25-MM)	
	27	1	**9X-8257**	12	WASHER (17.5X30X3.5-MM THK)	

C-CHANGE FROM PREVIOUS TYPE
M-METRIC PART

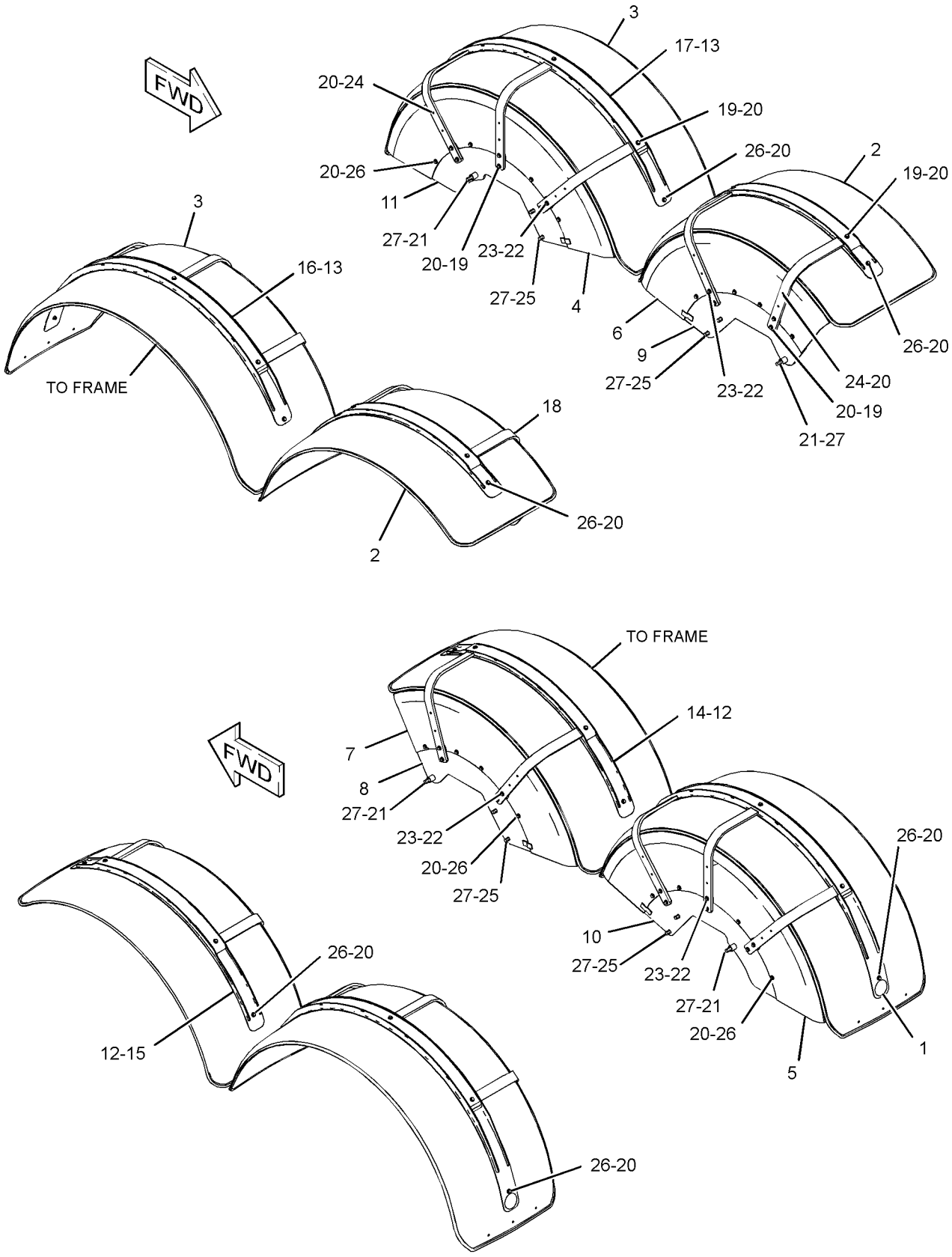

GRAPHIC #1 **<END>** g01289327

FRAME AND BODY

285-7586 FRAME GP-FRONT

S/N: R9J1-UP
PART OF 356-3071 OPTION AR-MACHINE
AN ATTACHMENT

SMCS-7050, 7051 **i02562815**

NOTE	REF NO	GRAPHIC REF	PART NUMBER	QTY	PART NAME 1 2 3 4 5 6 (PRODUCT LEVEL)	SEE PAGE
	1	1	**2G-8607**	1	BEARING-SLEEVE	
	2	1	**5D-3887**	1	ROD	
	3	1	**5P-8843**	4	SEAL-LIP TYPE	
	4	1	**9D-6584**	1	SEAL-LIP TYPE	
	5	1	**054-3788**	2	WASHER (13.5X30X3-MM THK)	
	6	1	**285-7588**	1	FRAME AS	
	7	1	**3B-4615**	2	PIN-COTTER	
	8	1	**5P-8847**	1	SEAL-LIP TYPE	
	9	1	**6F-8499**	1	SPRING	
	10	1	**8D-7685**	2	BEARING	
	11	1	**8D-9159**	4	BEARING-SLEEVE	
	12	1	**9D-3311**	1	BEARING-SLEEVE	
	13	1	**9D-6589**	8	SEAL-LIP TYPE	

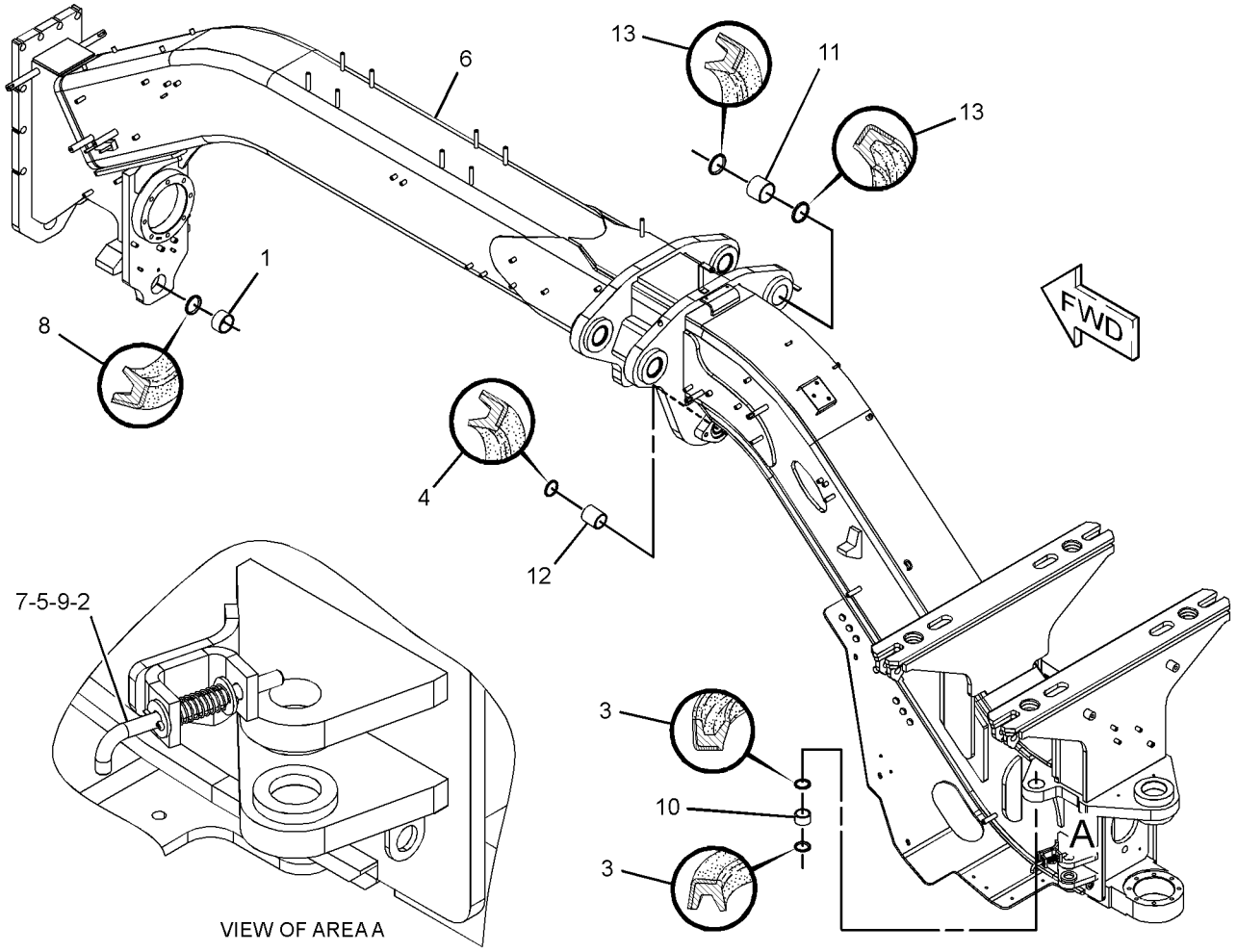

GRAPHIC #1 **<END>** g01284262

FRAME AND BODY

348-3560 FRAME GP-FRONT

S/N: R9J1-UP
PART OF 356-3072 OPTION AR-MACHINE
AN ATTACHMENT

SMCS-7050, 7051 **i03972429**

NOTE	REF NO	GRAPHIC REF	PART NUMBER	QTY	PART NAME 1 2 3 4 5 6 (PRODUCT LEVEL)	SEE PAGE
	1	1	**2G-8607**	1	BUSHING	
	2	1	**5D-3887**	1	ROD	
	3	1	**5P-8843**	4	SEAL-LIP TYPE	
	4	1	**9D-6584**	1	SEAL-LIP TYPE	
	5	1	**054-3788**	2	WASHER (13.5X30X3-MM THK)	
	6	1	**343-6734**	1	FRAME AS	
	7	1	**348-3547**	4	BRACKET AS	
	8	1	**348-3549**	1	BRACKET AS	
	9	1	**348-3551**	1	BRACKET AS	
	10	1	**348-3553**	1	PLATE AS	
	11	1	**348-3563**	1	PLATE AS	
	12	1	**351-3302**	1	PLATE AS	
	13	1	**351-3303**	1	BRACKET AS	
	14	1	**351-3549**	1	BRACKET AS	
	15	1	**198-4777**	31	WASHER-HARD (11X25X10-MM THK)	
	16	1	**3B-4615**	2	PIN-COTTER	
	17	1	**5P-8847**	1	SEAL-LIP TYPE	
	18	1	**6F-8499**	1	SPRING	
	19	1	**8D-7685**	2	BEARING	
	20	1	**8D-9159**	4	BUSHING	
M	21	1	**8T-4195**	31	BOLT (M10X1.5X30-MM)	
	22	1	**9D-3311**	1	BUSHING	
	23	1	**9D-6589**	8	SEAL-LIP TYPE	

M-METRIC PART

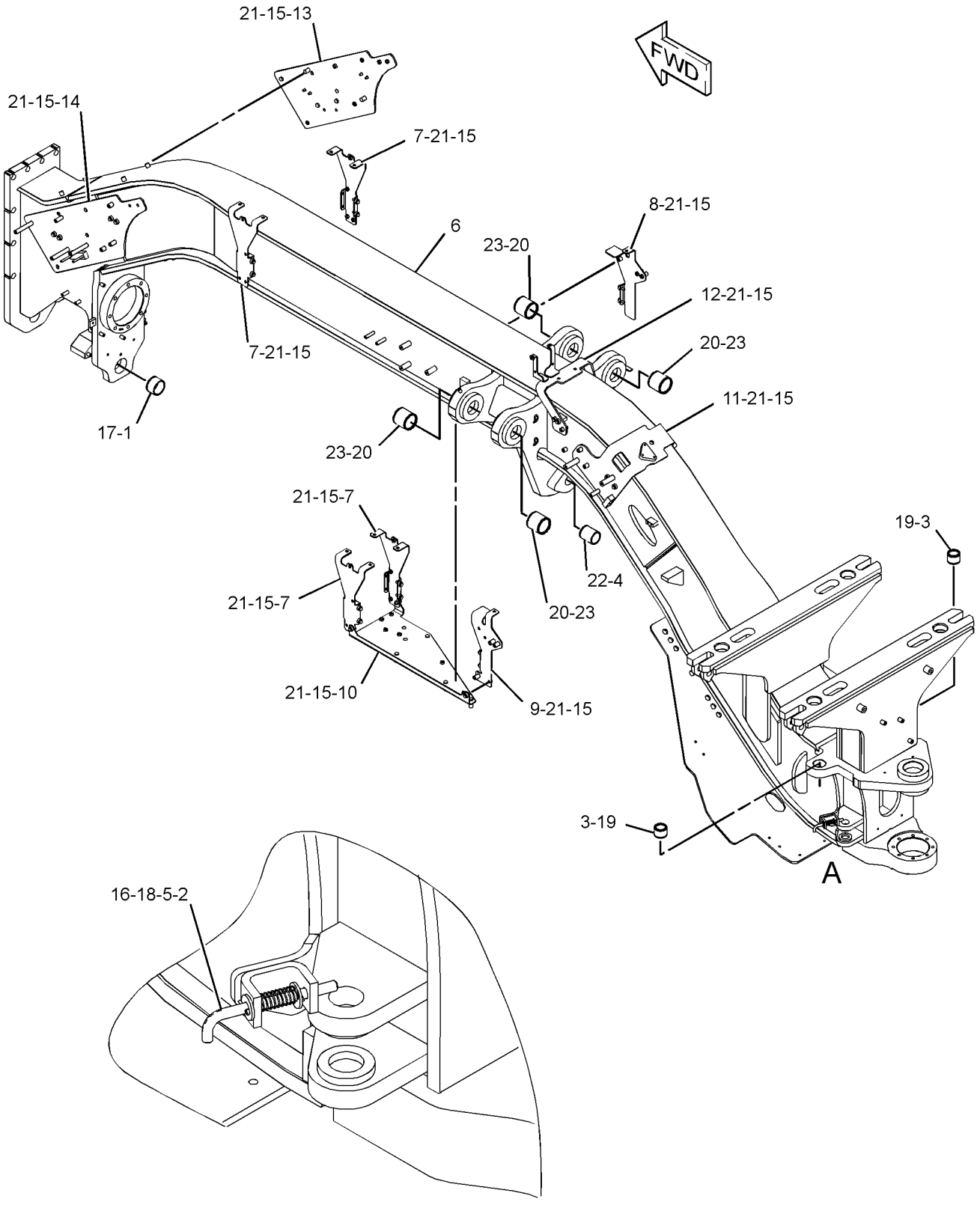

VIEW OF AREA A

GRAPHIC #1 **<END>** g02221193

FRAME AND BODY

284-6086 FRAME GP-REAR

S/N: R9J1-UP

PART OF 349-2555 COMMON AR

SMCS-7050, 7051 **i02562687**

NOTE	REF NO	GRAPHIC REF	PART NUMBER	QTY	PART NAME 1 2 3 4 5 6 (PRODUCT LEVEL)	SEE PAGE
	1	1	**5D-3887**	1	ROD	
	2	1	**8D-3791**	1	PIN	
	3	1	**054-3788**	2	WASHER (13.5X30X3-MM THK)	
	4	1	**284-6087**	1	FRAME AS	
		1	**4I-3884**	1	PLATE	
		1	**5P-2249**	2	GUSSET	
		1	**7D-5081**	1	BRACKET	
M		1	**8C-8499**	3	BOSS-WELD (M10X1.5X50-MM)	
M		1	**8T-3734**	2	BOSS-WELD (M10X1.5X40-MM)	
M		1	**8T-3851**	8	BOSS-WELD (M10X1.5X17.5-MM)	
M		1	**8T-6462**	3	BOSS-WELD (M10X1.5X25-MM OAL)	
M		1	**9R-2613**	2	BOSS-WELD (M10X1.5X25-MM)	
M		1	**9R-2672**	2	BOSS-THREADED (M10X1.5-THD)	
M		1	**9X-8487**	6	BOSS-WELD (M10X1.5X35-MM)	
	5	1	**285-7600**	1	PLATE	
	6	1	**285-7608**	1	PIN	
	7	1	**3B-4615**	2	PIN-COTTER	
	8	1	**5G-2373**	1	PIN	
	9	1	**6F-8499**	1	SPRING	

M-METRIC PART

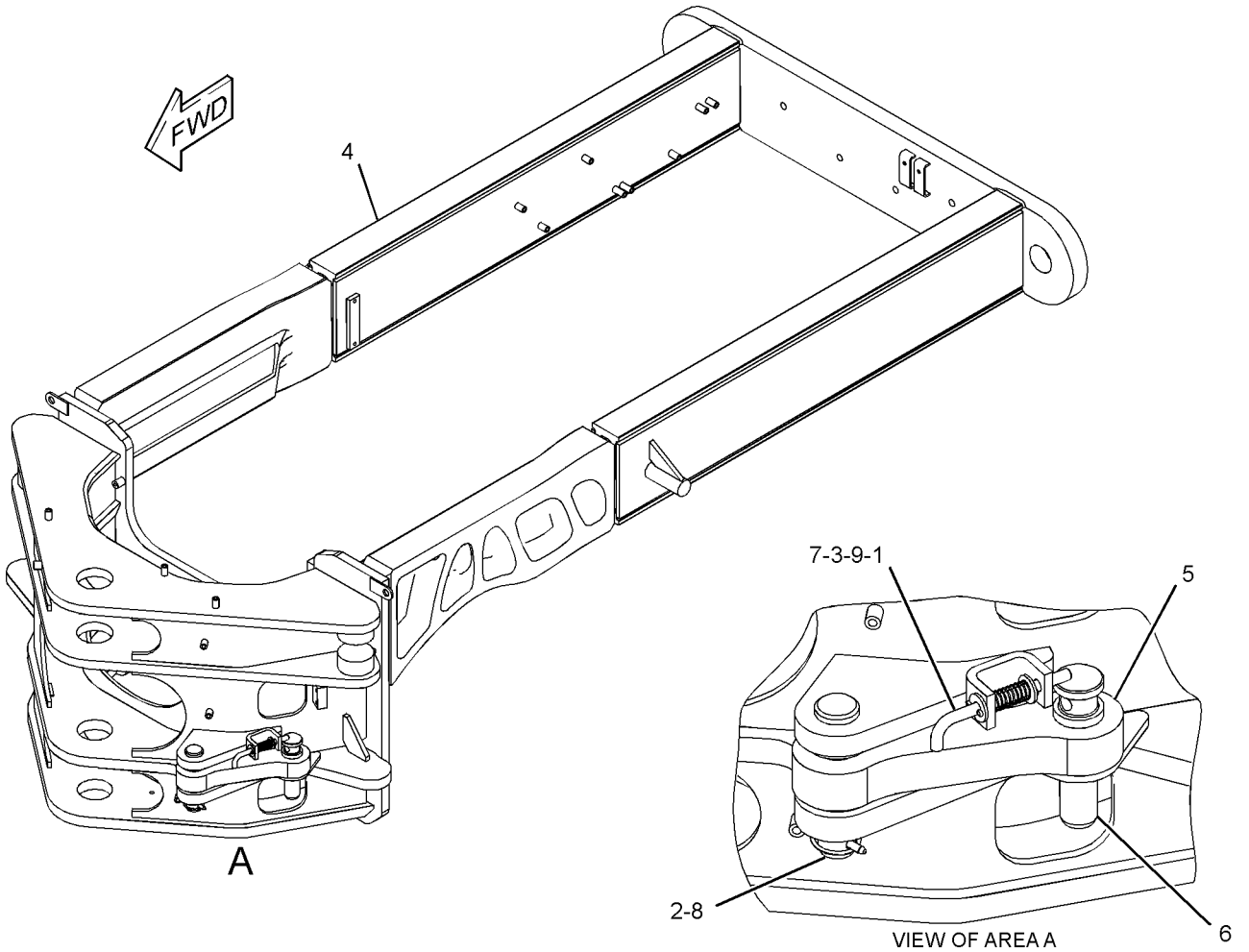

GRAPHIC #1 **<END>** g01283401

285-2258 GUARD GP-BOTTOM

S/N: R9J1-UP
PART OF 361-4363, 363-0414 DISTRIBUTION AR, 350-5390, 364-3739 OPTION
AR-REGIONAL
AN ATTACHMENT

SMCS-7153 **i02754887**

NOTE	REF NO	GRAPHIC REF	PART NUMBER	QTY	PART NAME 1 2 3 4 5 6 (PRODUCT LEVEL)	SEE PAGE
	1	1	**7D-7496**	2	PIN AS	
	2	1	**8W-6626**	2	CAP	
	3	1	**259-2569**	1	SUPPORT AS	
	4	1	**289-5231**	1	PLATE AS	
	5		**289-5234**	1	GUARD AS	
	6	1	**8K-0530**	2	PIN-CABLE SOCKET	
	7	1	**8T-4121**	4	WASHER-HARD (11X21X2.5-MM THK)	
M	8	1	**8T-4139**	8	BOLT (M12X1.75X30-MM)	
M	9	1	**8T-4175**	4	BOLT (M16X2X90-MM)	
M	10	1	**8T-4185**	4	BOLT (M10X1.5X50-MM)	
	11	1	**8T-4223**	8	WASHER-HARD (13.5X25.5X3-MM THK)	
	12	1	**9X-8257**	4	WASHER (17.5X30X3.5-MM THK)	
	13	1	**296-0727**	1	PLATE	
M	14	1	**8T-4136**	3	BOLT (M10X1.5X25-MM)	
	15	1	**7X-7729**	3	WASHER (11X25X3-MM THK)	

M-METRIC PART

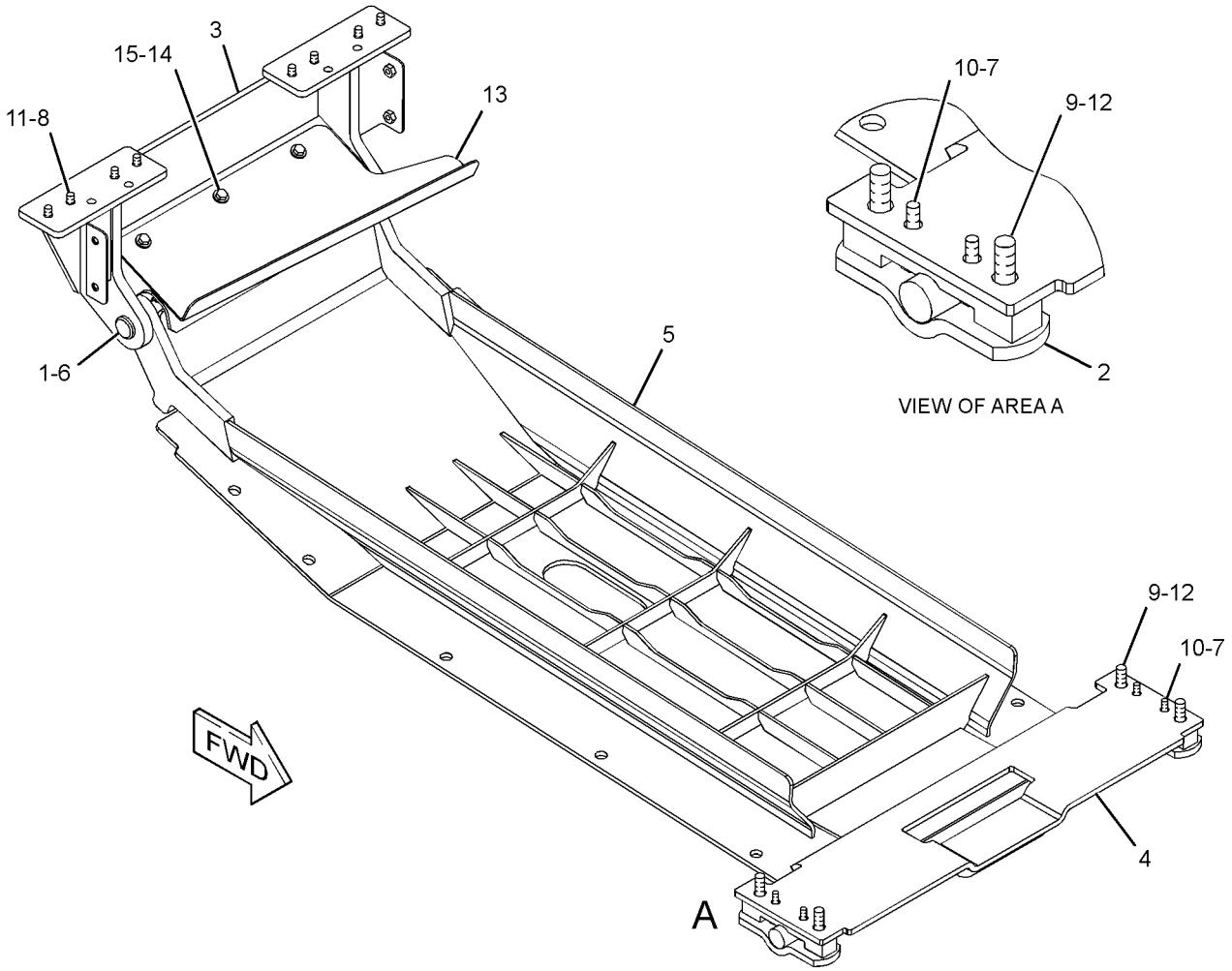

GRAPHIC #1 **<END>** g01388048

249-6692 GUARD GP-DEBRIS

S/N: R9J1-UP
PART OF 351-2596 OPTION AR-COLD WEATHER
AN ATTACHMENT

SMCS-7158 **i03001561**

NOTE	REF NO	GRAPHIC REF	PART NUMBER	QTY	PART NAME 1 2 3 4 5 6 (PRODUCT LEVEL)	SEE PAGE
	1	1	**199-4318**	44	TURNBUCKLE	
	2	1	**250-4357**	1	COVER (TOP)	
	3	1	**250-4358**	1	COVER (DOOR, RH)	
	4	1	**250-4359**	1	GUARD AS-SCREEN (DOOR, LH)	
	5	1	**250-4360**	1	COVER (LOWER, LH)	
M	6	1	**7Y-5288**	88	SCREW-PAN HEAD (4X10-MM)	

M-METRIC PART

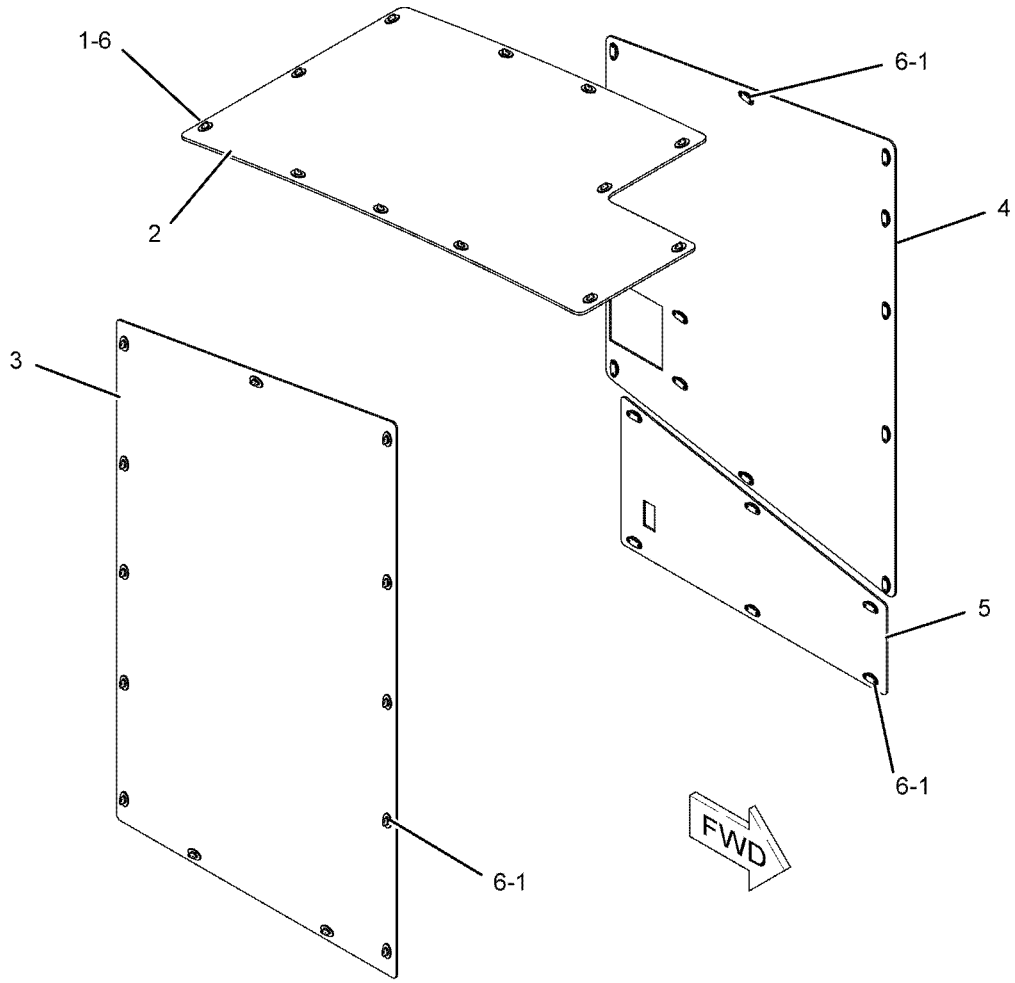

GRAPHIC #1 **<END>** g01126962

FRAME AND BODY

235-8119 HITCH GP-ARTICULATING

S/N: R9J1-UP

PART OF 349-2555 COMMON AR

SMCS-7057, 7100 **i02549641**

NOTE	REF NO	GRAPHIC REF	PART NUMBER	QTY	PART NAME 1 2 3 4 5 6 (PRODUCT LEVEL)	SEE PAGE
	1	1	**2V-4332**	1	COLLAR	
	2	1	**4K-6781**	1	SPACER	
B	3	1	**4K-7464**	1	SHIM PACK (INCLUDES 19-SHIMS)	
B	4	1	**4K-7465**	1	SHIM PACK (INCLUDES 19-SHIMS)	
	5	1	**4K-7467**	1	BEARING AS-ROLLER	
	6	1	**4V-0015**	1	PLATE-LOCK	
	7	1	**252-0980**	1	PIN-LOWER	
	8	1	**252-0989**	1	SPACER	
	9	1	**252-0990**	1	BEARING-SLEEVE	
	10	1	**252-1824**	1	PIN	
	11	1	**259-9282**	1	CAP-LOWER	
	12	1	**259-9283**	1	COVER	
	13	1	**4K-6761**	1	CAP-UPPER	
	14	1	**4K-7461**	1	SEAL-LIP TYPE	
	15	1	**4K-7462**	1	SEAL-LIP TYPE	
	16	1	**4K-7463**	2	SEAL-LIP TYPE	
	17	1	**4K-8734**	1	BEARING	
	18	1	**5P-8245**	20	WASHER-HARD (13.5X25.5X3-MM THK)	
M	19	1	**6V-3823**	4	BOLT (M12X1.75X60-MM)	
M	20	1	**6V-5684**	2	BOLT (M12X1.75X45-MM)	
M	21	1	**6V-8004**	8	BOLT (M12X1.75X120-MM)	
M	22	1	**6V-8197**	6	BOLT (M12X1.75X40-MM)	
M	23	1	**8T-0375**	4	BOLT (M16X2X45-MM)	
	24	1	**9X-8257**	4	WASHER (17.5X30X3.5-MM THK)	

B-USE AS REQUIRED
M-METRIC PART

235-8119 **HITCH GP-ARTICULATING** *(contd.)* **i02549641**

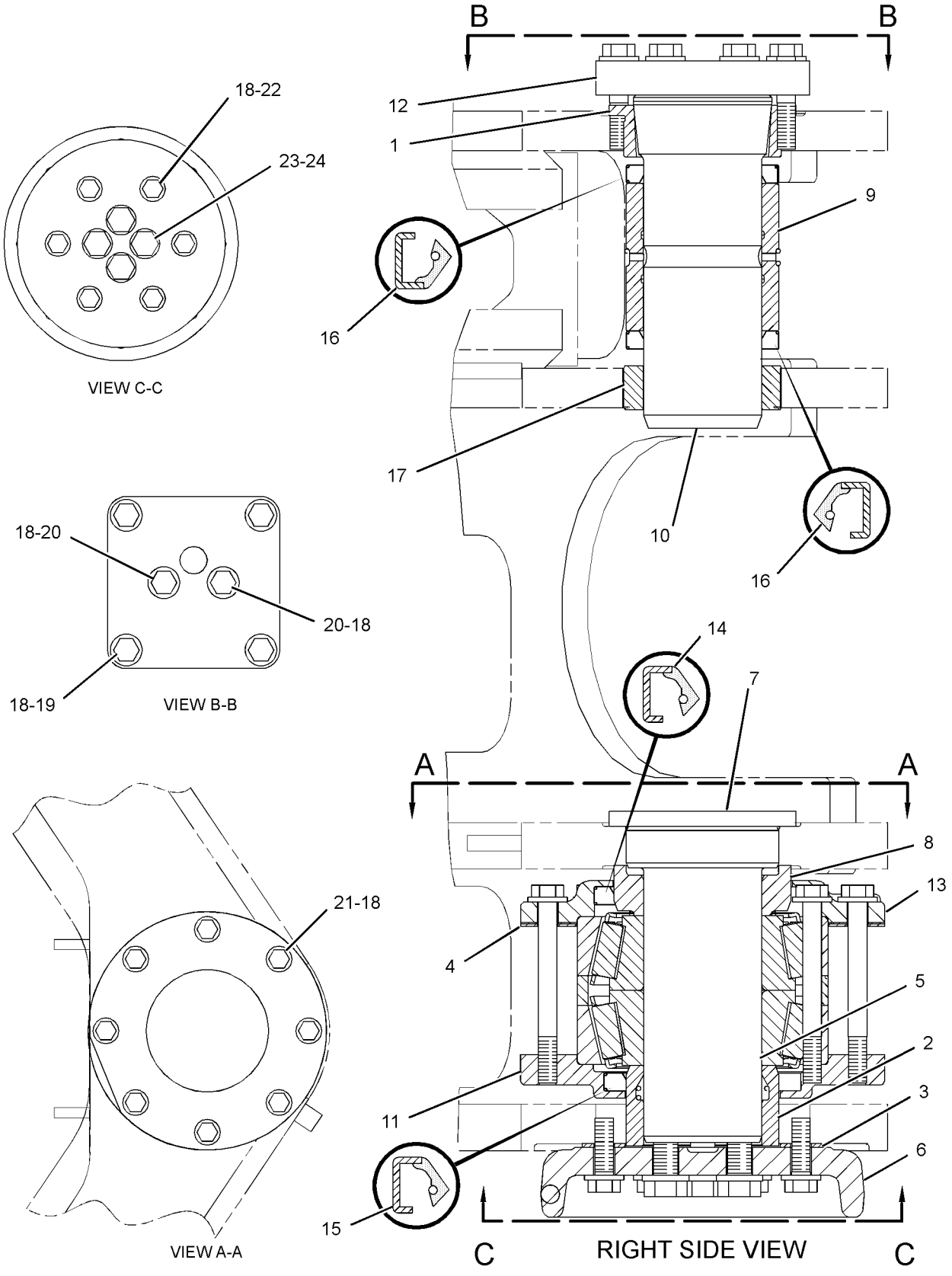

GRAPHIC #1

<END>

g01276416

FRAME AND BODY

257-7150 HITCH GP-TOWING

S/N: R9J1-UP
PART OF 291-4792 RIPPER AR
AN ATTACHMENT

SMCS-7100 **i02812744**

NOTE	REF NO	GRAPHIC REF	PART NUMBER	QTY	PART NAME 1 2 3 4 5 6 (PRODUCT LEVEL)	SEE PAGE
	1	1	**257-7192**	1	HITCH AS	
CM	2	1	**106-4175**	2	BOLT (M20X2.5X60-MM)	
C	3	1	**267-3506**	6	WASHER-HARD (26X44X4-MM THK)	
CM	4	1	**9X-2615**	6	BOLT (M24X3X60-MM)	
C	5	1	**267-3508**	2	WASHER-HARD (22X35X3.5-MM THK)	

C-CHANGE FROM PREVIOUS TYPE
M-METRIC PART

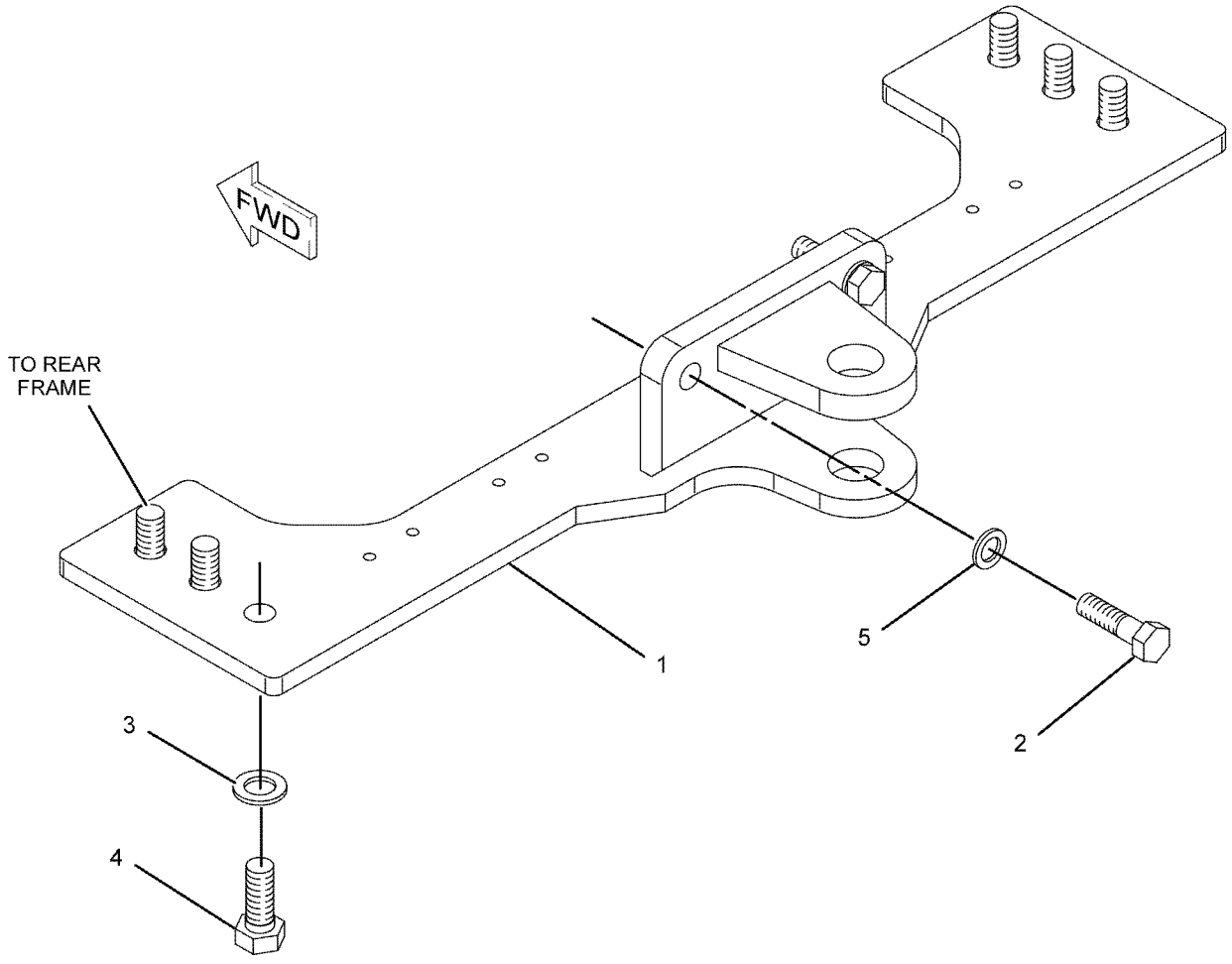

GRAPHIC #1 **<END>** g01112842

FRAME AND BODY

286-0175 HOOD GP

S/N: R9J1-UP

PART OF 285-9020 ENCLOSURE GP-ENGINE

SMCS-7251 **i02562807**

NOTE	REF NO	GRAPHIC REF	PART NUMBER	QTY	PART NAME 1 2 3 4 5 6 (PRODUCT LEVEL)	SEE PAGE
	1	1	**245-2860**	1	CORNER AS (LH)	
	2	1	**245-2861**	1	CORNER AS (RH)	
	3	1	**286-0174**	1	SHEET AS	
M		1	**6V-9632**	4	NUT-WELD (M6X1-THD)	
		1	**7T-1099**	3	LINK	
M		1	**8T-3490**	3	NUT-WELD (M10X1.5-THD)	
	4	1	**5P-4116**	35	WASHER-HARD (8.8X20.5X2-MM THK)	
M	5	1	**8T-4908**	35	BOLT (M8X1.25X25-MM)	

M-METRIC PART

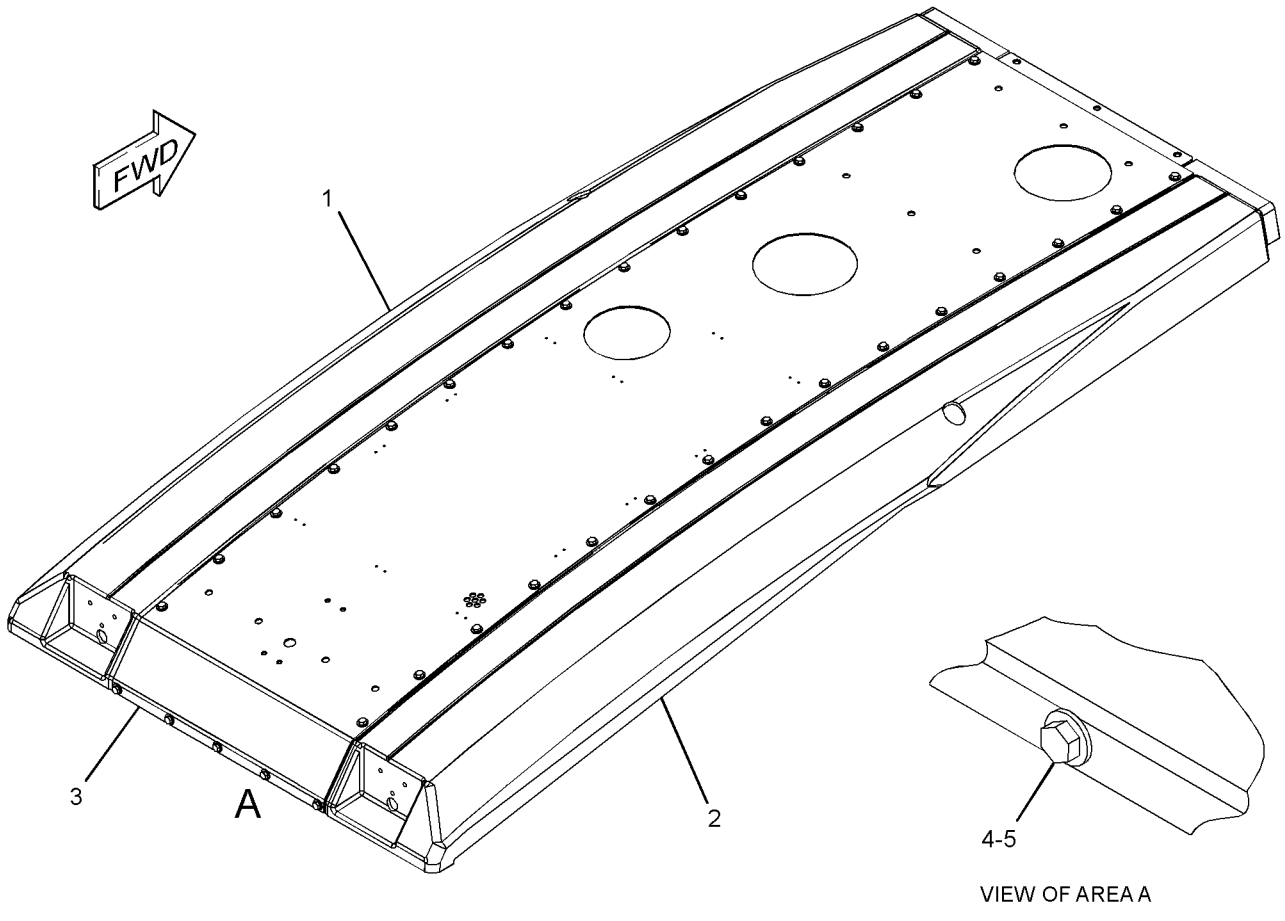

VIEW OF AREA A

GRAPHIC #1 **<END>** g01284903

FRAME AND BODY

275-7864 INSULATION GP-SOUND SUPPR

S/N: R9J1-UP
PART OF 361-4363, 363-0414 DISTRIBUTION AR, 350-5390, 364-3739 OPTION
AR-REGIONAL
AN ATTACHMENT

SMCS-1801, 7076, 7261 **i04002944**

NOTE	REF NO	GRAPHIC REF	PART NUMBER	QTY	PART NAME 1 2 3 4 5 6 (PRODUCT LEVEL)	SEE PAGE
	1	1	**275-7870**	1	PLATE	
C	2	1	**296-0089**	2	PLATE	
C	3	1	**296-0091**	2	PLATE	
C	4	1	**296-0101**	1	PLATE AS	
C	5	1	**296-0102**	1	PLATE AS	
M		1	**8T-3612**	6	NUT-WELD (M8X1.25-THD)	
C	6	1	**296-0103**	1	PLATE AS	
M		1	**8T-3490**	5	NUT-WELD (M10X1.5-THD)	
M		1	**8T-3612**	6	NUT-WELD (M8X1.25-THD)	
C	7	1	**296-0104**	1	PLATE AS	
M		1	**8T-3490**	5	NUT-WELD (M10X1.5-THD)	
M		1	**8T-3612**	6	NUT-WELD (M8X1.25-THD)	
C	8	1	**296-0105**	1	PLATE AS	
C	9	1	**296-0106**	1	PLATE AS	
M		1	**8T-3612**	6	NUT-WELD (M8X1.25-THD)	
C	10	1	**296-0107**	1	INSULATION	
C	11	1	**296-0108**	1	INSULATION	
C	12	1	**296-0109**	1	INSULATION	
C	13	1	**296-0110**	1	INSULATION	
C	14	1	**296-0111**	1	INSULATION	
C	15	1	**296-0702**	1	INSULATION	
	16	1	**5P-1076**	8	WASHER-HARD (13.5X30X4-MM THK)	
C	17	1	**5P-4116**	24	WASHER-HARD (8.8X20.5X2-MM THK)	
C	18	1	**7X-7729**	22	WASHER (11X25X3-MM THK)	
CM	19	1	**8T-4136**	12	BOLT (M10X1.5X25-MM)	
M	20	1	**8T-4139**	4	BOLT (M12X1.75X30-MM)	
CM	21	1	**8T-4189**	12	BOLT (M8X1.25X20-MM)	
CM	22	1	**8T-4195**	14	BOLT (M10X1.5X30-MM)	
CM	23	1	**8T-4908**	12	BOLT (M8X1.25X25-MM)	

C-CHANGE FROM PREVIOUS TYPE
M-METRIC PART

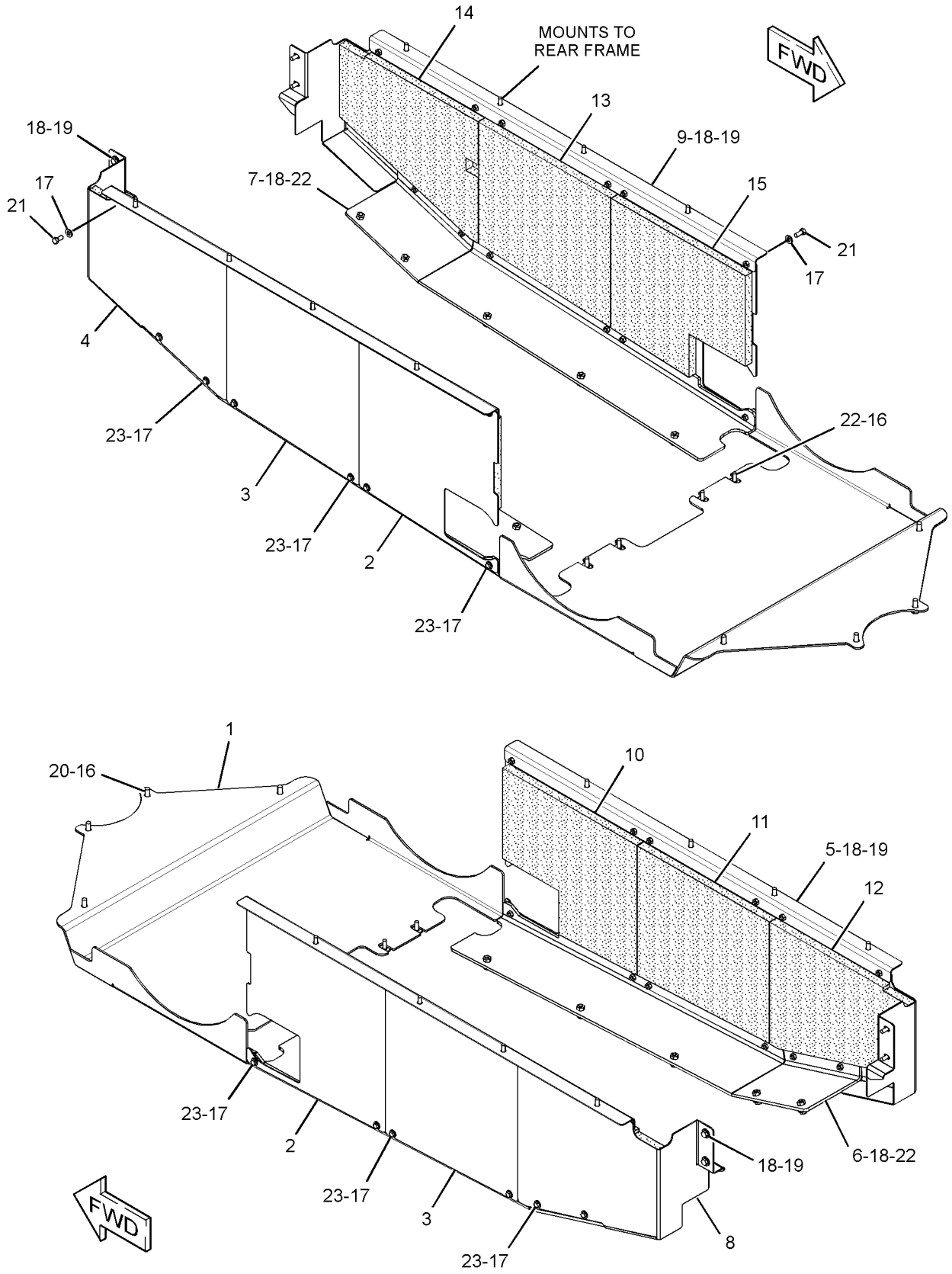

GRAPHIC #1 **<END>** g02191313

282-8866 LINES GP-LUBRICATION–
ARTICULATION HITCH BEARING
S/N: R9J1-UP
PART OF 349-2555 COMMON AR

SMCS-7510, 7540 **i02912378**

NOTE	REF NO	GRAPHIC REF	PART NUMBER	QTY	PART NAME 1 2 3 4 5 6 (PRODUCT LEVEL)	SEE PAGE
	1	1	**3B-8488**	2	FITTING-GREASE	
	2	1	**5D-0269**	2	ELBOW	
C	3	1	**307-0718**	1	HOSE AS	
C	4	1	**307-0719**	1	HOSE AS	
	5	1	**3B-7733**	2	FITTING	
C	6	1	**5P-9085**	2	CLIP	
C	7	1	**8T-4121**	2	WASHER-HARD (11X21X2.5-MM THK)	
CM	8	1	**8T-4191**	2	BOLT (M10X1.5X16-MM)	

C-CHANGE FROM PREVIOUS TYPE
M-METRIC PART

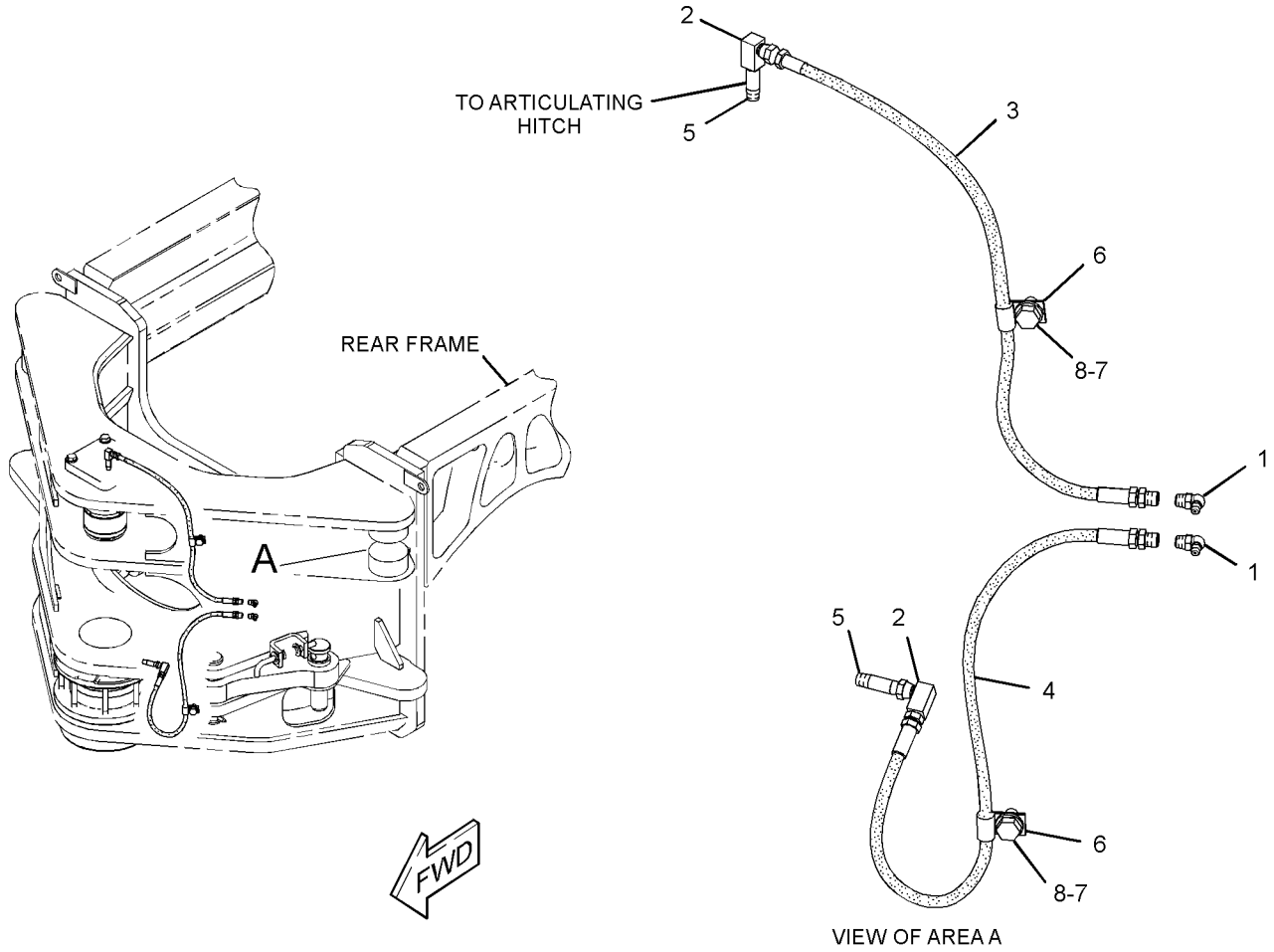

GRAPHIC #1 **<END>** g01456934

274-6817 LINK GP-STEERING

S/N: R9J1-UP

PART OF 256-3895 AXLE GP-FRONT

SMCS-4305 **i02675727**

NOTE	REF NO	GRAPHIC REF	PART NUMBER	QTY	PART NAME 1 2 3 4 5 6 (PRODUCT LEVEL)	SEE PAGE
	1	1	**274-6809**	2	CLAMP	
	2	1	**274-6810**	1	TIE ROD GP (LH) (LH)	
		1	**1D-0906**	1	NUT-SLOTTED	
		1	**199-7819**	1	SEAL-BOOT	
	3	1	**274-6811**	1	TIE ROD GP (RH) (RH)	
		1	**1D-0906**	1	NUT-SLOTTED	
		1	**199-7819**	1	SEAL-BOOT	
	4	1	**276-8193**	1	ROD	
M	5	1	**8T-0281**	2	BOLT (M16X2X80-MM)	
M	6	1	**8T-4778**	2	LOCKNUT (M16X2-THD)	

M-METRIC PART

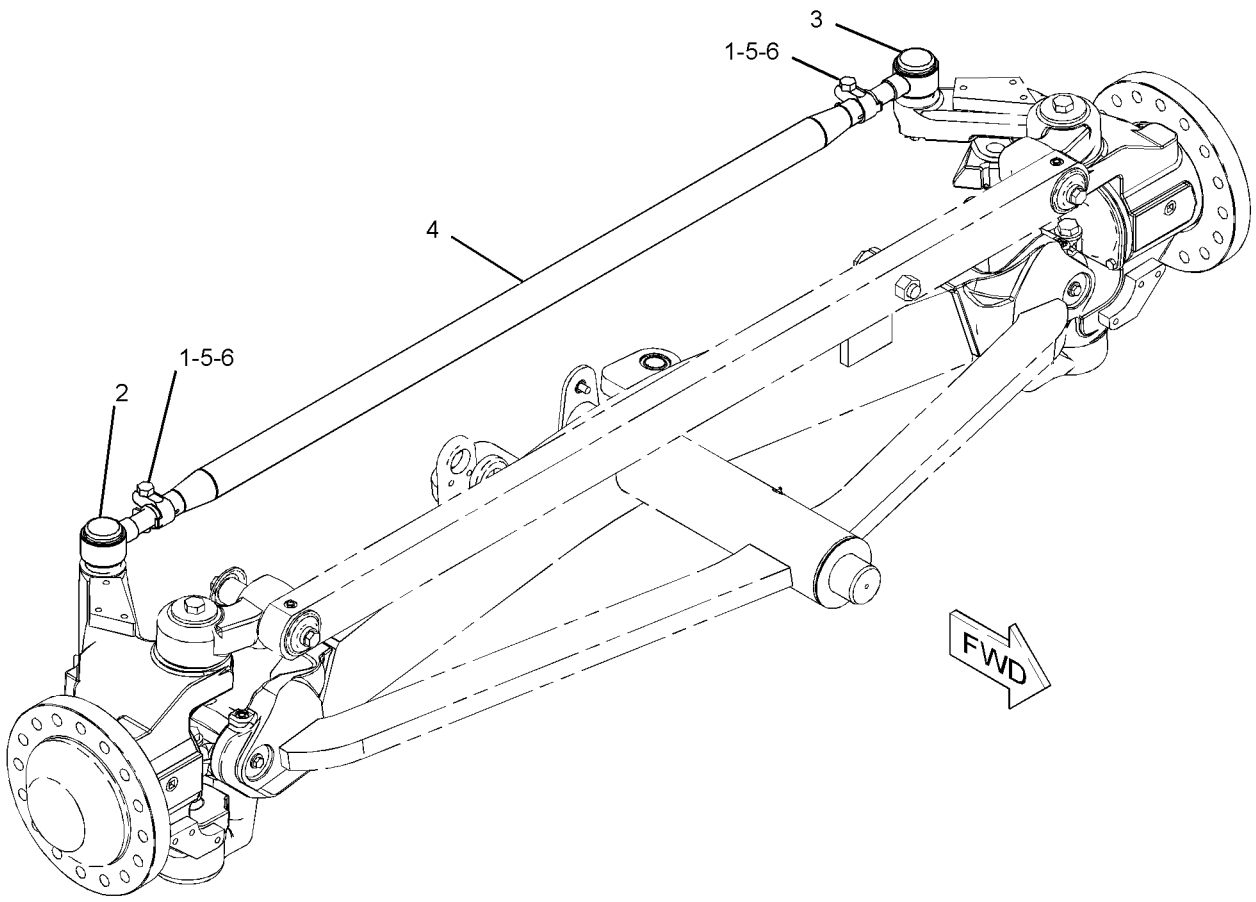

GRAPHIC #1 **<END>** g01284879

FRAME AND BODY

292-1128 LUBRICATION AR-CENTRAL

S/N: R9J1-UP

AN ATTACHMENT

SMCS-7510, 7540 **i03545420**

NOTE	REF NO	GRAPHIC REF	PART NUMBER	QTY	PART NAME 1 2 3 4 5 6 (PRODUCT LEVEL)	SEE PAGE
	1	1,2,3	**2D-1683**	10	FITTING	
B	2	1,2	**3S-2093**	7	STRAP-CABLE	
B	3	1	**7K-1181**	1	STRAP-CABLE	
	4	2	**276-7247**	26	CAP	
I	5	2	**276-8826**	1	HOSE AS	
Y	6	1	*292-1148*	1	VALVE GP-LUBE DISTRIBUTION	529
	7	1,3	**292-4311**	6	FITTING-SWIVEL	
I	8	2	**294-0675**	1	HOSE AS	
	9	1	**298-6182**	1	HOSE AS	
	10	1	**298-6183**	2	HOSE AS	
	11	1	**298-6184**	1	HOSE AS	
	12	3	**298-6185**	1	HOSE AS	
	13	3	**298-6186**	1	HOSE AS	
	14	3	**298-6187**	1	HOSE AS	
	15	3	**298-6188**	1	HOSE AS	
	16	1	**298-6189**	1	HOSE AS	
	17	1	**298-6190**	1	HOSE AS	
	18	3	**298-6191**	1	HOSE AS	
	19	3	**298-6192**	1	HOSE AS	
	20	3	**298-6193**	1	HOSE AS	
	21	3	**298-6194**	1	HOSE AS	
	22	3	**298-6195**	1	HOSE AS	
	23	3	**298-6196**	1	HOSE AS	
	24	3	**298-6197**	1	HOSE AS	
	25	3	**298-6198**	1	HOSE AS	
	26	3	**298-6199**	1	HOSE AS	
	27	3	**298-6200**	1	HOSE AS	
I	28	2	**298-8482**	1	HOSE AS	
I	29	2	**298-8483**	1	HOSE AS	
I	30	1	**298-8484**	2	HOSE AS	
	31	1	**298-8485**	1	TANK AS	
		1	**4M-5317**	1	BUSHING-REDUCING	
		1	**5P-3422**	1	TEE-PIPE	
		1	**8T-4224**	3	WASHER-HARD (8.8X16X2-MM THK)	
M		1	**8T-7547**	3	BOLT (M8X1.25X30-MM)	
		1	**157-2014**	1	FITTING-HYDRAULIC	
		1	**157-2016**	1	CAP-GREASE	
Y	32	2	**298-8486**	1	VALVE & MTG GP-LUBE DISTR	527
	33	3	**298-8487**	2	BRACKET	
	34	3	**298-8488**	1	HOSE AS	
	35	3	**298-8489**	1	HOSE AS	
	36	3	**298-8490**	1	HOSE AS	
	37	3	**299-4833**	1	HOSE AS	
	38	3	**299-4834**	1	HOSE AS	
	39	3	**299-4835**	1	HOSE AS	
	40	3	**302-8255**	2	ADAPTER	
	41	1,2	**067-2551**	4	CLIP	
	42	3	**124-1479**	8	CLIP	
	43	2	**130-5300**	2	CLIP	
	44	1,3	**133-3260**	3	SPACER (11X19X10-MM THK)	
	45	3	**1L-3613**	2	CLIP	
I	46	2	**283-0820**	1	HOSE AS	
	47	1	**299-4839**	1	FILM-IDENTIFICATION (LUBRICATION CHART)	
	48	2	**4D-8123**	2	CLIP	
	49	1	**4I-0472**	2	CLIP	
	50	3	**4K-8302**	2	CLIP	

292-1128 **LUBRICATION AR-CENTRAL** *(contd.)* **i03545420**

NOTE	REF NO	GRAPHIC REF	PART NUMBER	QTY	PART NAME 1 2 3 4 5 6 (PRODUCT LEVEL)	SEE PAGE
	51	1,3	**4M-8973**	9	ELBOW	
	52	1,2	**4P-7581**	6	CLIP	
	53	2,3	**4S-1962**	17	CLIP	
	54	2	**5M-6214**	2	PLUG-PIPE	
	55	1,2,3	**5P-9085**	16	CLIP	
	56	2,3	**6D-4244**	10	CLIP	
	57	3	**8L-5008**	10	ELBOW-PIPE	
	58	1,2,3	**8T-4121**	67	WASHER-HARD (11X21X2.5-MM THK)	
M	59	1,2,3	**8T-4133**	7	NUT (M10X1.5-THD)	
M	60	1	**8T-4136**	2	BOLT (M10X1.5X25-MM)	
M	61	1,2,3	**8T-4137**	32	BOLT (M10X1.5X20-MM)	
M	62	3	**8T-4191**	6	BOLT (M10X1.5X16-MM)	
M	63	3	**8T-4192**	2	BOLT (M12X1.75X25-MM)	
M	64	1,2,3	**8T-4195**	20	BOLT (M10X1.5X30-MM)	
	65	3	**8T-4223**	2	WASHER-HARD (13.5X25.5X3-MM THK)	
	66	1,3	**9M-4995**	5	CLIP	
	67	1,2	**9X-8582**	11	CLIP	
E	68	3	**7I-7439**		GUARD (43-CM EACH)	
E	69	3	**7I-1024**		GUARD-HOSE (108-CM EACH)	
E	69A	3	**7I-1024**		GUARD-HOSE (135-CM)	
E	69B	3	**7I-1024**		GUARD-HOSE (79-CM)	

B-USE AS REQUIRED
E-ORDER BY THE CENTIMETER
I-REFER TO HYDRAULIC INFORMATION SYSTEM
M-METRIC PART
Y-SEPARATE ILLUSTRATION

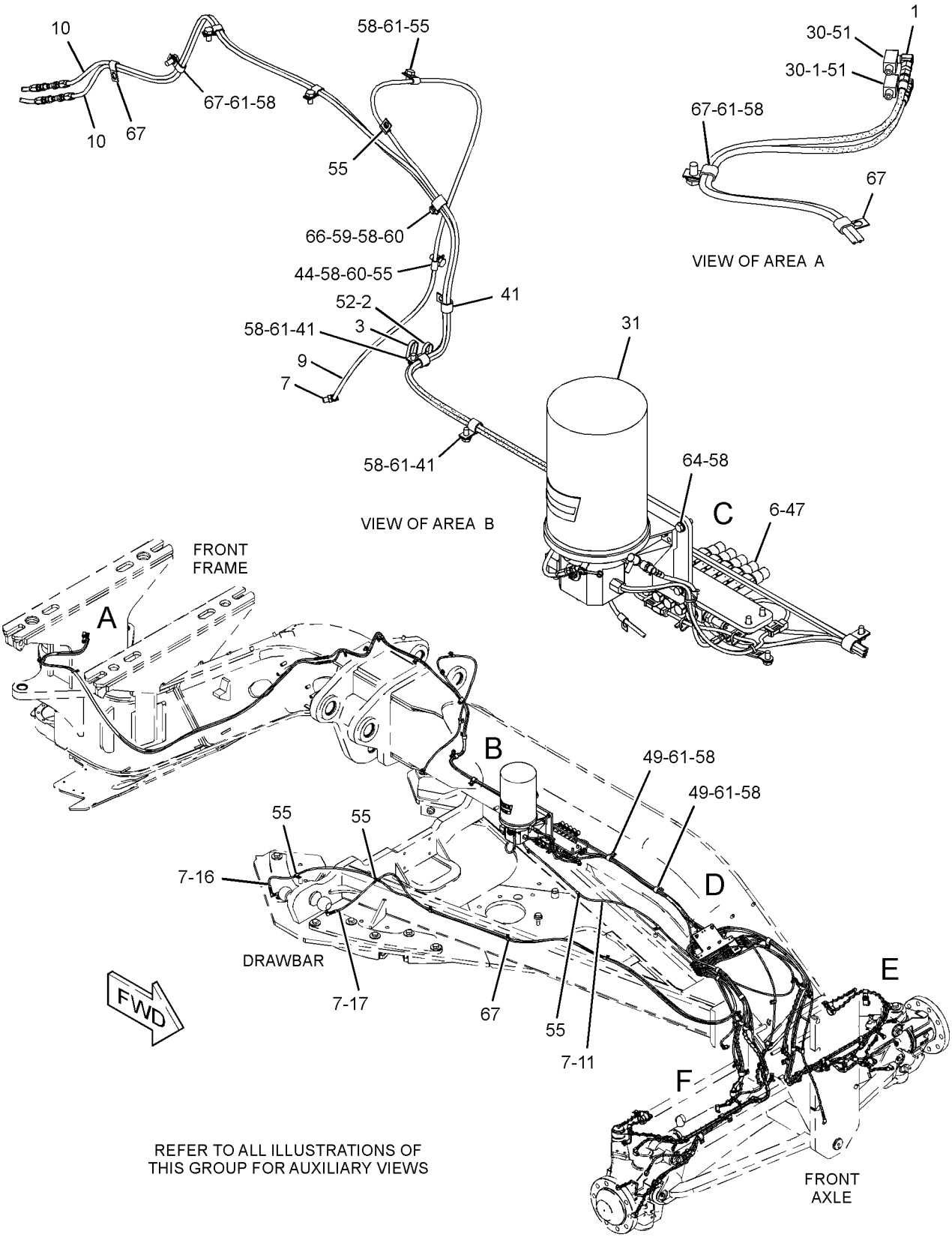

GRAPHIC #1

g02227216

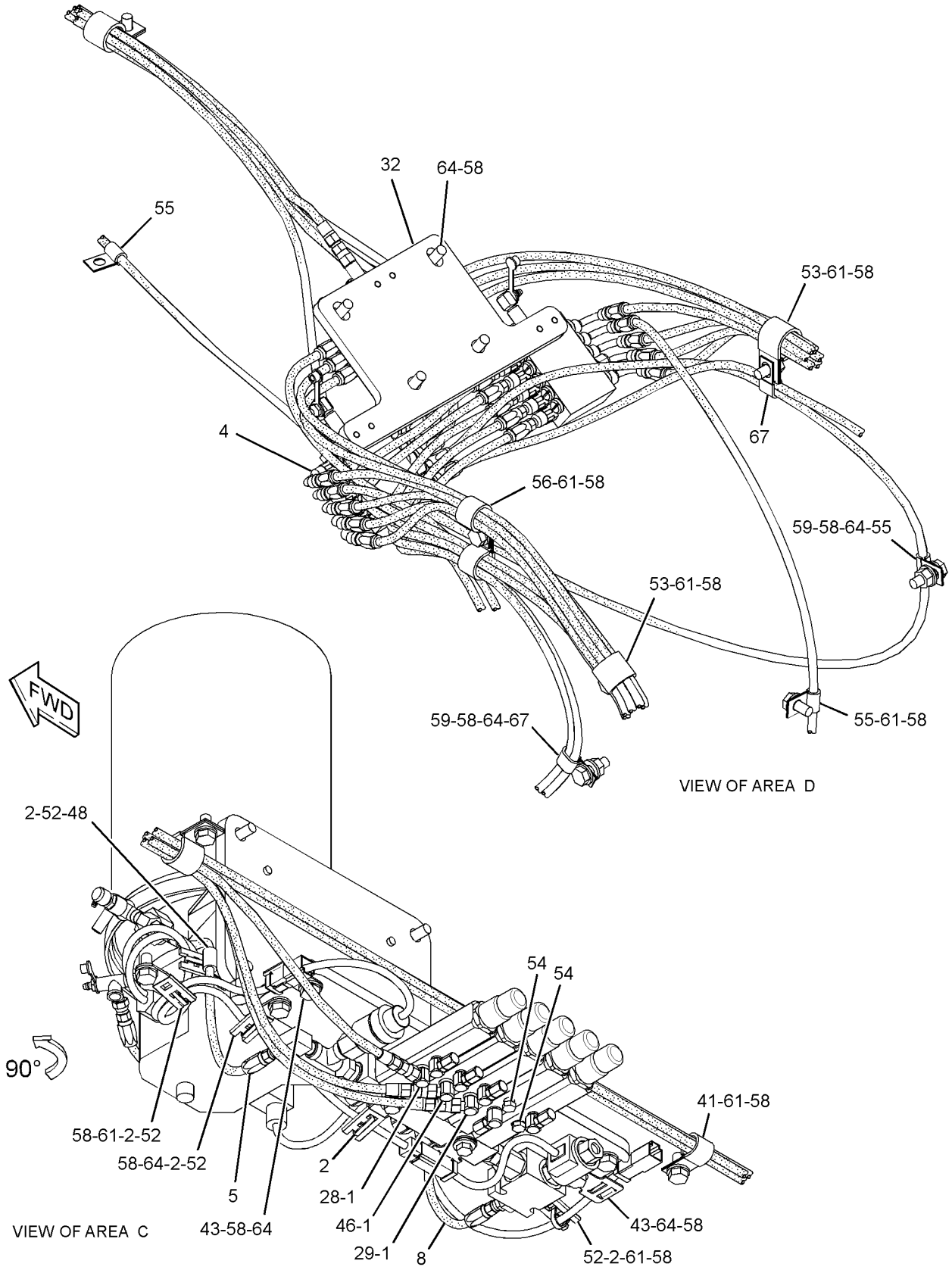

GRAPHIC #2

g02230979

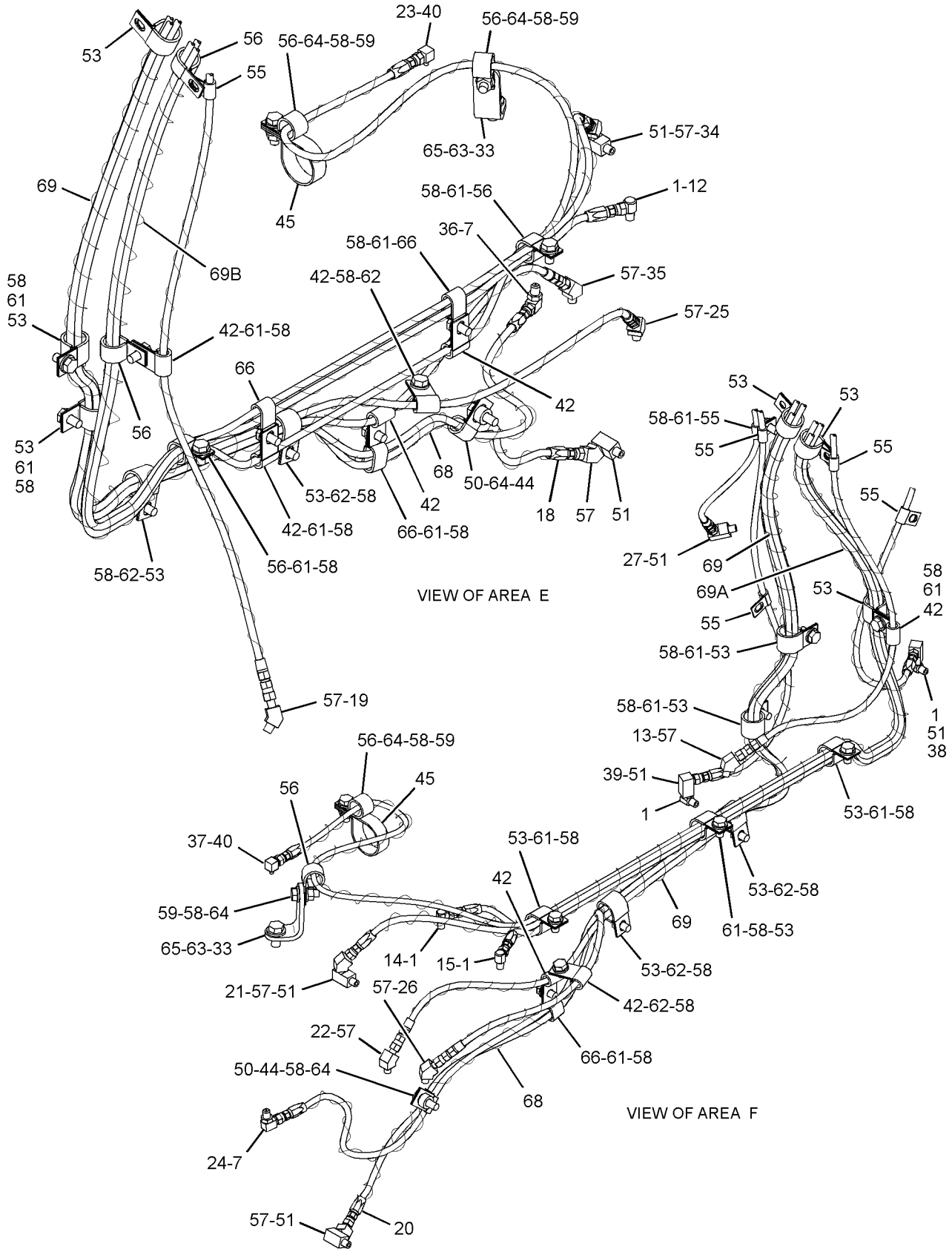

GRAPHIC #3 **<END>** g02230980

295-1783 LUBRICATION AR-CENTRAL—RIPPER

S/N: R9J1-UP
FOR USE WITH 257-3574—PAGE 904
AN ATTACHMENT

SMCS-7510, 7540 **i02919662**

NOTE	REF NO	GRAPHIC REF	PART NUMBER	QTY	PART NAME 1 2 3 4 5 6 (PRODUCT LEVEL)	SEE PAGE
	1	1	**2D-1683**	2	FITTING	
	2	1	**5P-3422**	1	TEE-PIPE	
	7	1	**276-7247**	3	CAP	
	8	1	**304-9131**	1	UNION	
	9	1	**304-9667**	1	HOSE AS	
	10	1	**304-9668**	1	HOSE AS	
	11	1	**304-9669**	1	HOSE AS	
	12	1	**002-0639**	1	ADAPTER-PIPE	
	13	1	**111-9251**	1	WASHER-HARD (20X35X1.6-MM THK)	
	15	1	**157-2014**	1	FITTING-HYDRAULIC	
	16	1	**157-2016**	1	CAP-GREASE	
I	17	1	**283-0827**	1	HOSE AS	
	18	1	**296-0653**	1	HOSE AS	
	19	1	**304-2671**	1	HOSE AS	
	20	1	**3B-7896**	1	ELBOW-STREET	
C	21	1	**4D-8123**	1	CLIP	
	22	1	**4M-8973**	2	ELBOW	
	23	1	**5K-5338**	4	CLIP	
	24	1	**5P-9085**	18	CLIP	
	25	1	**6D-4246**	2	CLIP	
	26	1	**6V-9168**	1	NUT (11/16-16-THD)	
M	27	1	**8C-8451**	2	BOLT (M6X1X40-MM)	
C	28	1	**8L-5008**	3	ELBOW-PIPE	
C	29	1	**8T-4121**	5	WASHER-HARD (11X21X2.5-MM THK)	
M	30	1	**8T-4137**	5	BOLT (M10X1.5X20-MM)	
	32	1	**9X-8256**	2	WASHER (6.6X12X2-MM THK)	
E	33	1	**7Y-5074**		GUARD-HOSE (45-CM)	
	34	1	**314-5694**	1	VALVE AS-LUBE DISTRIBUTION	
C	35	1	**6V-2383**	2	CLIP	

C-CHANGE FROM PREVIOUS TYPE
E-ORDER BY THE CENTIMETER
I-REFER TO HYDRAULIC INFORMATION SYSTEM
M-METRIC PART

295-1783 **LUBRICATION AR-CENTRAL** *(contd.)* **i02919662**

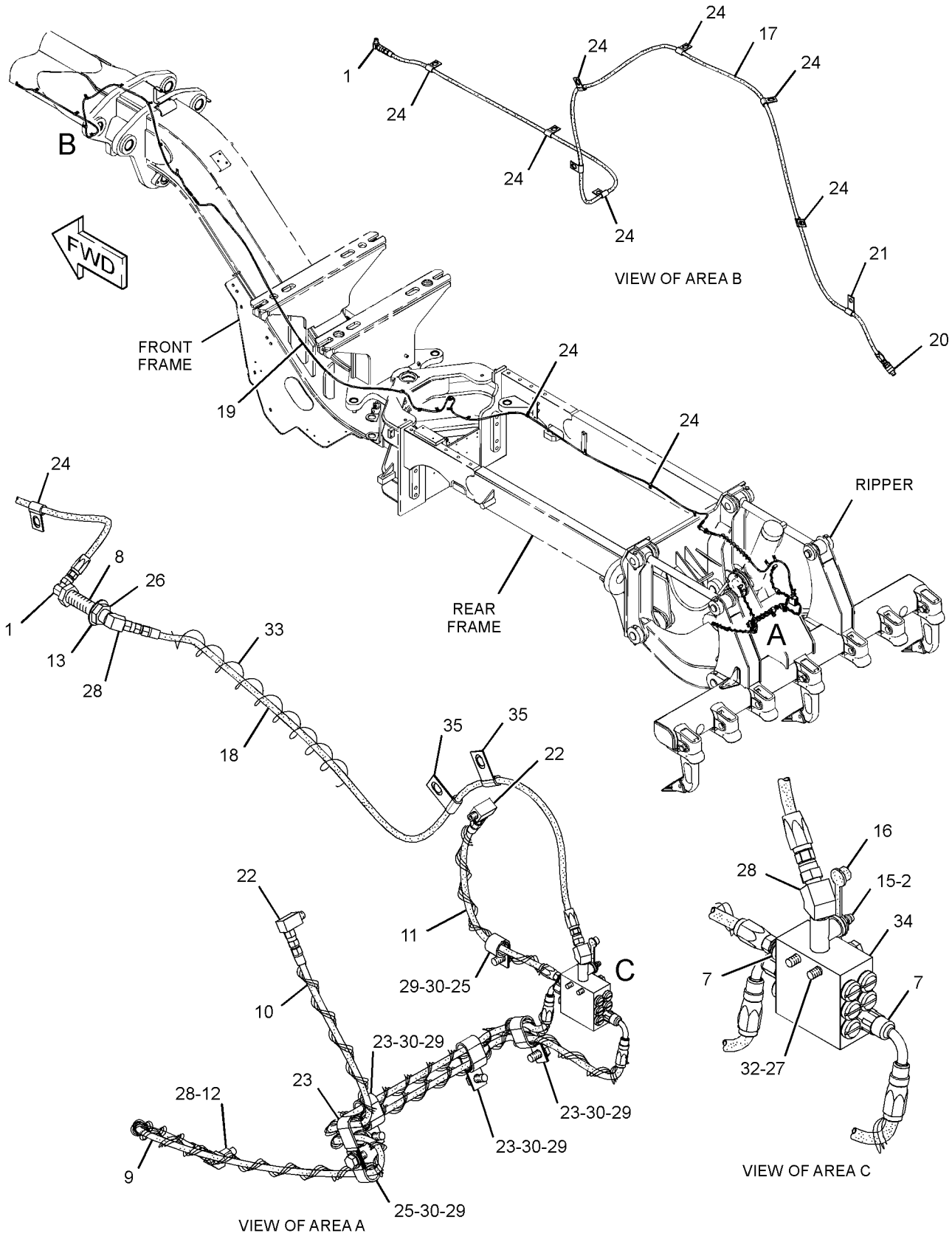

GRAPHIC #1 **<END>** g01717253

351-8255 LUBRICATION AR-CENTRAL—RIPPER

S/N: R9J1-UP

AN ATTACHMENT

SMCS-7510, 7540 **i03996031**

NOTE	REF NO	GRAPHIC REF	PART NUMBER	QTY	PART NAME 1 2 3 4 5 6 (PRODUCT LEVEL)	SEE PAGE
	1	1,2	**2D-1683**	2	FITTING	
	2	2	**5P-3422**	1	TEE-PIPE	
	3	2	**276-7247**	3	CAP	
	4	2	**296-0653**	1	HOSE AS	
	5	2	**304-9131**	1	UNION	
	6	2	**304-9667**	1	HOSE AS	
	7	2	**304-9668**	1	HOSE AS	
	8	2	**304-9669**	1	HOSE AS	
	9	2	**314-5694**	1	VALVE AS-LUBE DISTRIBUTION	
	10	1	**356-1521**	1	HOSE AS	
	11	2	**002-0639**	1	ADAPTER-PIPE	
	12	2	**111-9251**	1	WASHER-HARD (20X35X1.6-MM THK)	
	13	2	**157-2014**	1	FITTING-HYDRAULIC	
	14	2	**157-2016**	1	CAP-GREASE	
	15	2	**304-2671**	1	HOSE AS	
	16	1	**3B-7896**	1	ELBOW-STREET	
	17	2	**3E-4321**	4	CLIP	
	18	1	**4D-8123**	1	CLIP	
	19	2	**4M-8973**	2	ELBOW	
	20	1,2	**5P-9085**	18	CLIP	
	21	2	**6D-4244**	2	CLIP	
	22	2	**6V-2383**	2	CLIP	
	23	2	**6V-9168**	1	NUT (11/16-16-THD)	
M	24	2	**8C-8451**	2	BOLT (M6X1X40-MM)	
	25	2	**8L-5008**	3	ELBOW-PIPE	
	26	1,2	**8T-4121**	6	WASHER-HARD (11X21X2.5-MM THK)	
M	27	1,2	**8T-4137**	6	BOLT (M10X1.5X20-MM)	
	28	2	**9X-8256**	2	WASHER (6.6X12X2-MM THK)	
E	29	2	**7Y-5074**		GUARD-HOSE (45-CM)	

E-ORDER BY THE CENTIMETER
M-METRIC PART

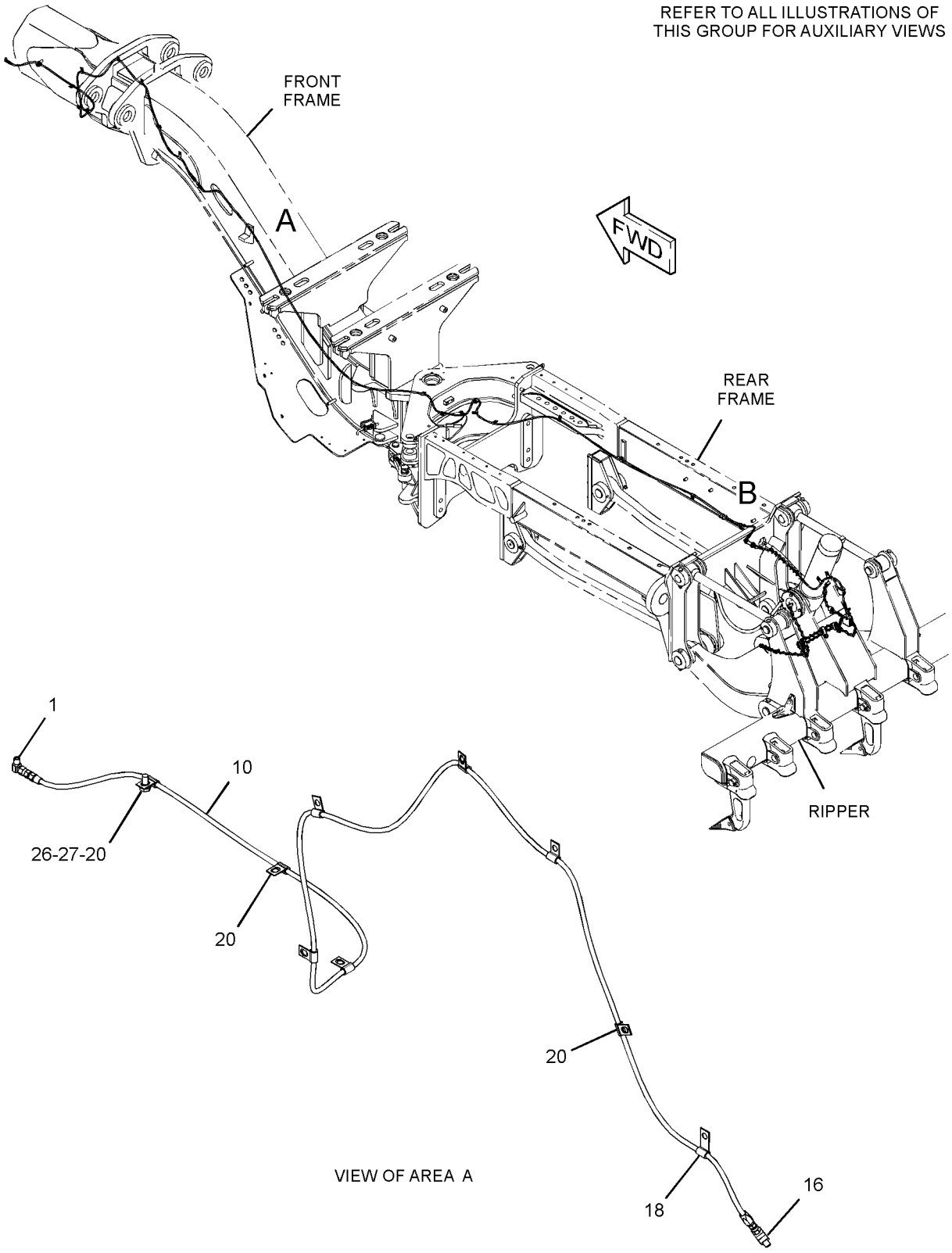

GRAPHIC #1 g02192497

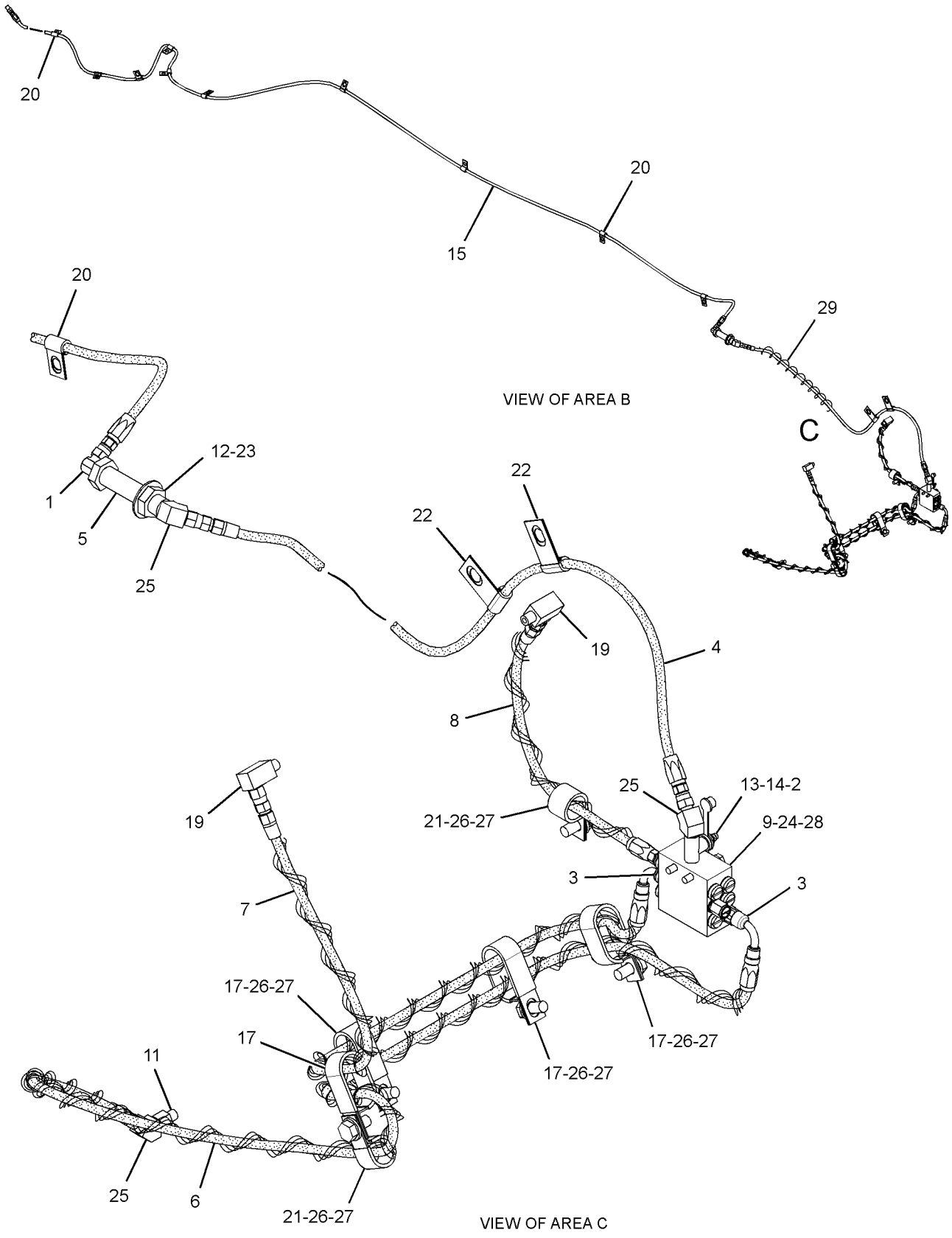

GRAPHIC #2 **<END>** g02192498

FRAME AND BODY

351-8256 LUBRICATION AR-CENTRAL

S/N: R9J1-UP

AN ATTACHMENT

SMCS-7510, 7540 **i04024820**

NOTE	REF NO	GRAPHIC REF	PART NUMBER	QTY	PART NAME 1 2 3 4 5 6 (PRODUCT LEVEL)	SEE PAGE
	1	1,2,3	**2D-1683**	10	FITTING	
B	2	1,2	**3S-2093**	7	STRAP-CABLE	
B	3	1	**7K-1181**	1	STRAP-CABLE	
	4	2	**276-7247**	26	CAP	
I	5	2	**276-8826**	1	HOSE AS	
	6	1,2,3	**292-4311**	6	FITTING-SWIVEL	
I	7	2	**294-0675**	1	HOSE AS	
	8	1	**298-6184**	1	HOSE AS	
	9	3	**298-6185**	1	HOSE AS	
	10	3	**298-6186**	1	HOSE AS	
	11	3	**298-6187**	1	HOSE AS	
	12	3	**298-6188**	1	HOSE AS	
	13	1	**298-6189**	1	HOSE AS	
	14	1	**298-6190**	1	HOSE AS	
	15	3	**298-6191**	1	HOSE AS	
	16	3	**298-6192**	1	HOSE AS	
	17	3	**298-6193**	1	HOSE AS	
	18	3	**298-6194**	1	HOSE AS	
	19	3	**298-6195**	1	HOSE AS	
	20	3	**298-6196**	1	HOSE AS	
	21	3	**298-6197**	1	HOSE AS	
	22	3	**298-6198**	1	HOSE AS	
	23	3	**298-6199**	1	HOSE AS	
	24	3	**298-6200**	1	HOSE AS	
I	25	2	**298-8482**	1	HOSE AS	
I	26	2	**298-8483**	1	HOSE AS	
I	27	1	**298-8484**	2	HOSE AS	
	28	3	**298-8487**	2	BRACKET	
	29	3	**298-8488**	1	HOSE AS	
	30	3	**298-8489**	1	HOSE AS	
	31	3	**298-8490**	1	HOSE AS	
	32	3	**299-4833**	1	HOSE AS	
	33	1	**299-4834**	1	HOSE AS	
	34	3	**299-4835**	1	HOSE AS	
	35	3	**302-8255**	2	ADAPTER	
	36	2	**348-3555**	1	PLATE AS	
Y	37	2	*354-0133*	1	VALVE GP-LUBE DISTRIBUTION	531
Y	38	2	**354-0134**	1	VALVE & MTG GP-LUBE DISTR	528
	39	1	**354-0196**	1	TANK GP-LUBRICATION	
		1	**4M-5317**	1	BUSHING-REDUCING	
		1	**5P-3422**	1	TEE-PIPE	
		1	**157-2014**	1	FITTING-HYDRAULIC	
		1	**157-2016**	1	CAP-GREASE	
	40	1	**356-1379**	1	HOSE AS	
	41	1	**356-1381**	2	HOSE AS	
	42	1,2	**067-2551**	4	CLIP	
	43	3	**124-1479**	8	CLIP	
	44	2	**130-5300**	2	CLIP	
	45	1,3	**133-3260**	3	SPACER (11X19X10-MM THK)	
	46	3	**1L-3613**	2	CLIP	
	47	1	**205-7299**	1	CLIP	
I	48	2	**283-0820**	1	HOSE AS	
	49	2	**299-4839**	1	FILM-IDENTIFICATION (LUBRICATION CHART)	
	50	2	**4D-8123**	2	CLIP	
	51	2	**4I-0472**	2	CLIP	
	52	3	**4K-8302**	2	CLIP	

351-8256 **LUBRICATION AR-CENTRAL** *(contd.)* **i04024820**

NOTE	REF NO	GRAPHIC REF	PART NUMBER	QTY	PART NAME 1 2 3 4 5 6 (PRODUCT LEVEL)	SEE PAGE
	53	1,3	**4M-8973**	9	ELBOW	
	54	1,2	**4P-7581**	6	CLIP	
	55	2,3	**4S-1962**	17	CLIP	
	56	2	**5M-6214**	2	PLUG-PIPE	
	57	1,2,3	**5P-9085**	15	CLIP	
	58	2,3	**6D-4244**	10	CLIP	
	59	2	**7C-6921**	1	SPACER (11X20X22.8-MM THK)	
M	60	2	**7X-2537**	3	BOLT (M8X1.25X35-MM)	
	61	3	**8L-5008**	10	ELBOW-PIPE	
	62	1,2,3	**8T-4121**	73	WASHER-HARD (11X21X2.5-MM THK)	
M	63	1,3	**8T-4133**	8	NUT (M10X1.5-THD)	
M	64	1,2	**8T-4136**	15	BOLT (M10X1.5X25-MM)	
M	65	1,2,3	**8T-4137**	31	BOLT (M10X1.5X20-MM)	
M	66	2	**8T-4186**	1	BOLT (M10X1.5X40-MM)	
M	67	3	**8T-4191**	6	BOLT (M10X1.5X16-MM)	
M	68	3	**8T-4192**	2	BOLT (M12X1.75X25-MM)	
M	69	1,2,3	**8T-4195**	11	BOLT (M10X1.5X30-MM)	
M	70	1	**8T-4196**	1	BOLT (M10X1.5X35-MM)	
	71	3	**8T-4223**	2	WASHER-HARD (13.5X25.5X3-MM THK)	
	72	2	**8T-4224**	3	WASHER-HARD (8.8X16X2-MM THK)	
	73	1,3	**9M-4995**	5	CLIP	
	74	1,2,3	**9X-8582**	11	CLIP	
E	75	3	**7I-7439**		GUARD (43-CM EACH)	
E	76	3	**7I-1024**		GUARD-HOSE (108-CM EACH)	
E	76A	3	**7I-1024**		GUARD-HOSE (79-CM)	
E	76B	3	**7I-1024**		GUARD-HOSE (135-CM)	

B-USE AS REQUIRED
E-ORDER BY THE CENTIMETER
I-REFER TO HYDRAULIC INFORMATION SYSTEM
M-METRIC PART
Y-SEPARATE ILLUSTRATION

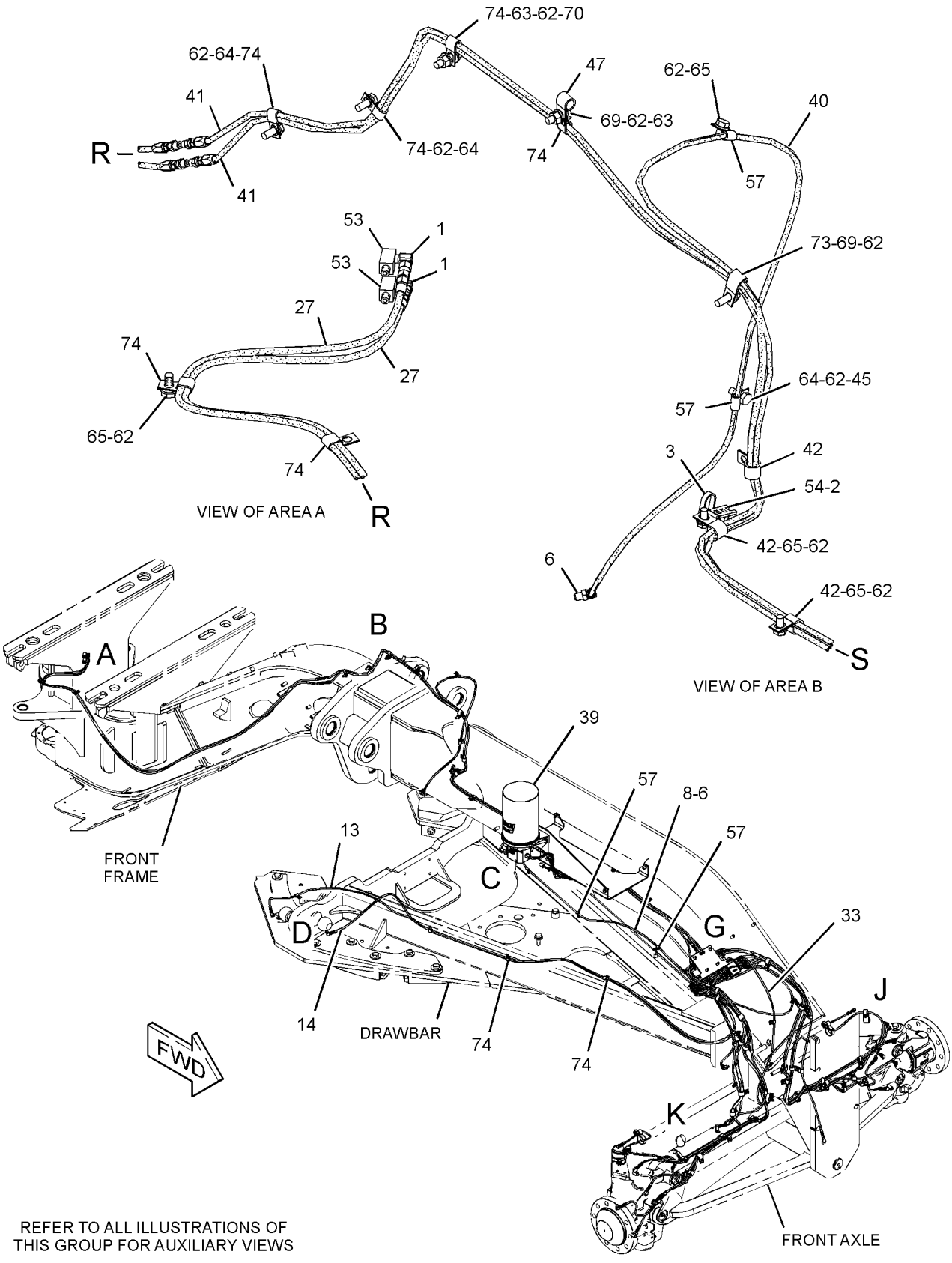

REFER TO ALL ILLUSTRATIONS OF
THIS GROUP FOR AUXILIARY VIEWS

GRAPHIC #1

g02223153

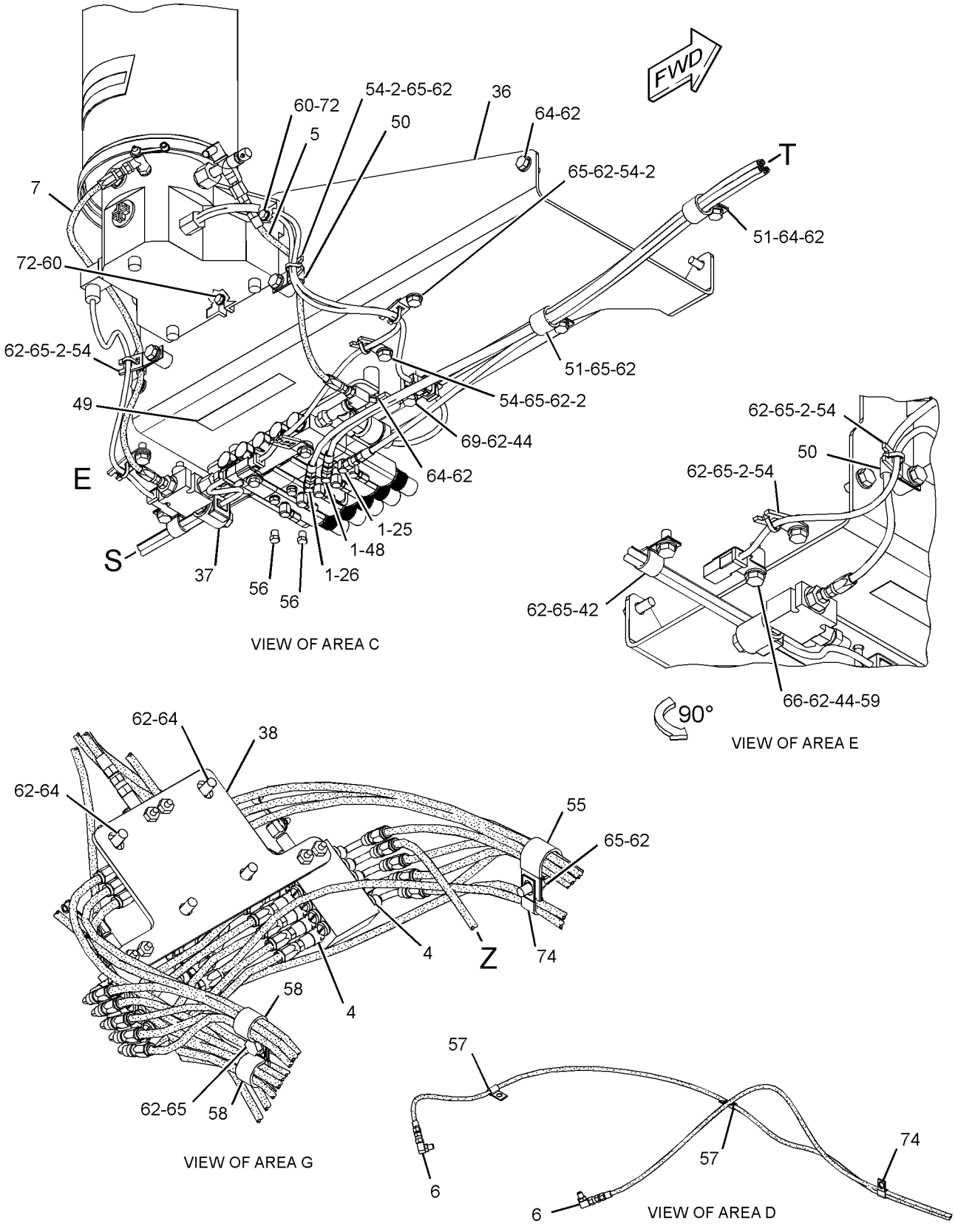

GRAPHIC #2

g02226257

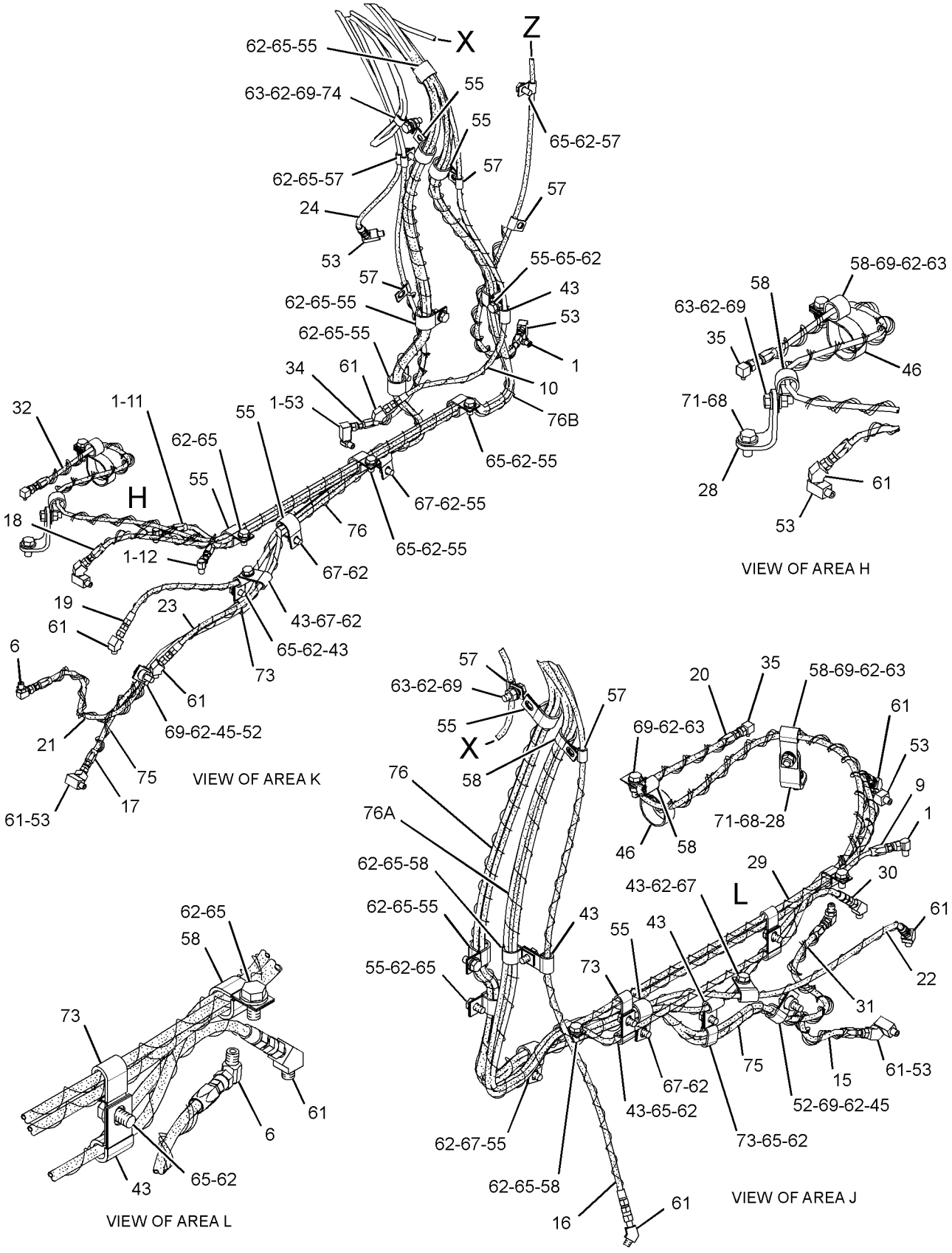

GRAPHIC #3 **<END>** g02226258

FRAME AND BODY

284-5046 MOUNTING GP-AXLE

S/N: R9J1-UP

PART OF 349-2555 COMMON AR

SMCS-3268, 3278 **i02830904**

NOTE	REF NO	GRAPHIC REF	PART NUMBER	QTY	PART NAME 1 2 3 4 5 6 (PRODUCT LEVEL)	SEE PAGE
	1	1	**294-9322**	6	WASHER-HARD (26X47X29-MM THK)	
	2	1	**294-9835**	12	SPACER (26X61X12-MM THK)	
	3	1	**267-3507**	12	WASHER-HARD (26X47X12-MM THK)	
M	4	1	**112-3931**	18	BOLT (M24X3X120-MM)	
	5	1	**292-9277**	6	WASHER-HARD (26X40X8-MM THK)	

M-METRIC PART

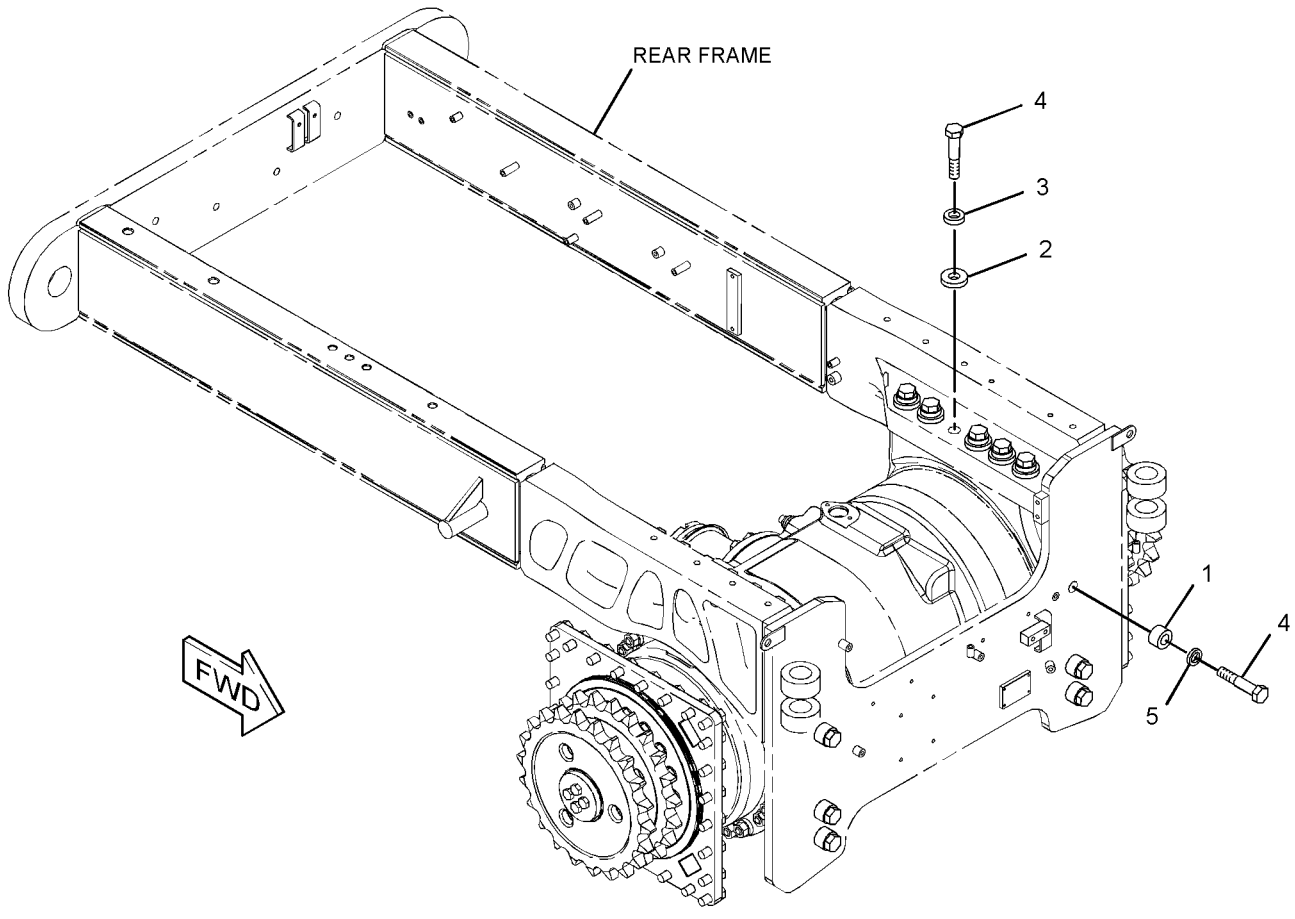

GRAPHIC #1 **<END>** g01416063

288-6306 MOUNTING GP-AXLE–FRONT

S/N: R9J1-UP

PART OF 256-3894 AXLE GP-FRONT

SMCS-3268, 3278 **i02564807**

NOTE	REF NO	GRAPHIC REF	PART NUMBER	QTY	PART NAME 1 2 3 4 5 6 (PRODUCT LEVEL)	SEE PAGE
	1	1	**2G-5668**	2	WASHER (2.781X5X0.188-IN THK)	
	2	1	**9G-5211**	1	SPACER (12.95X19.05X9-MM THK)	
	3	1	**257-2291**	1	PIN AS	
	4	1	**5P-1076**	1	WASHER-HARD (13.5X30X4-MM THK)	
M	5	1	**8T-4139**	1	BOLT (M12X1.75X30-MM)	
	6	1	**2G-5669**	2	WASHER (71X127X1.5)	

M-METRIC PART

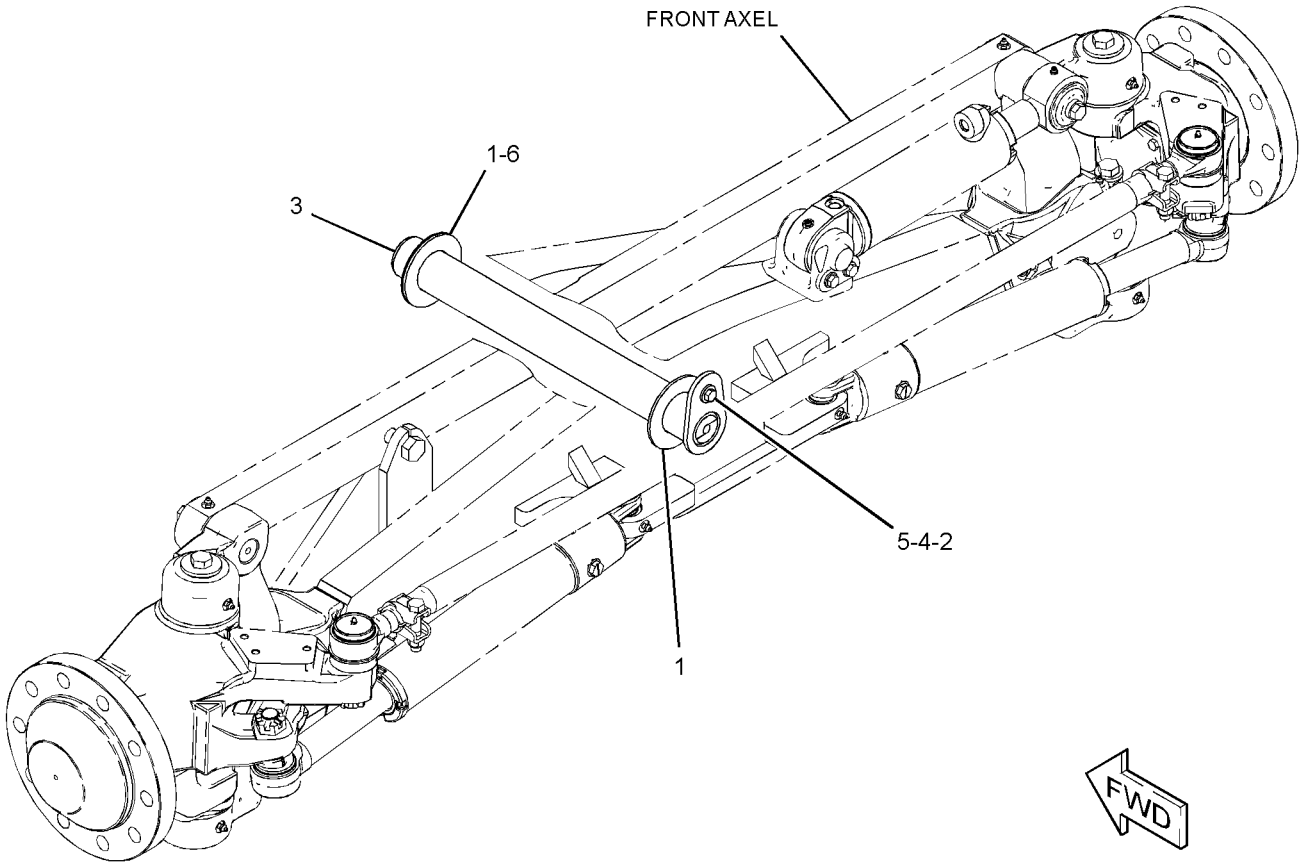

GRAPHIC #1 **<END>** g01302298

FRAME AND BODY

235-6412 MOUNTING GP-VALVE

S/N: R9J1-UP

PART OF 349-2555 COMMON AR

SMCS-5051 **i03880947**

NOTE	REF NO	GRAPHIC REF	PART NUMBER	QTY	PART NAME 1 2 3 4 5 6 (PRODUCT LEVEL)	SEE PAGE
	1	1	**270-5411**	1	PLATE AS	
	2	1	**344-7771**	1	BRACKET AS-MOUNTING	
	3	1	**8T-4121**	9	WASHER-HARD (11X21X2.5-MM THK)	
M	4	1	**8T-4136**	5	BOLT (M10X1.5X25-MM)	
M	5	1	**8T-4137**	4	BOLT (M10X1.5X20-MM)	

M-METRIC PART

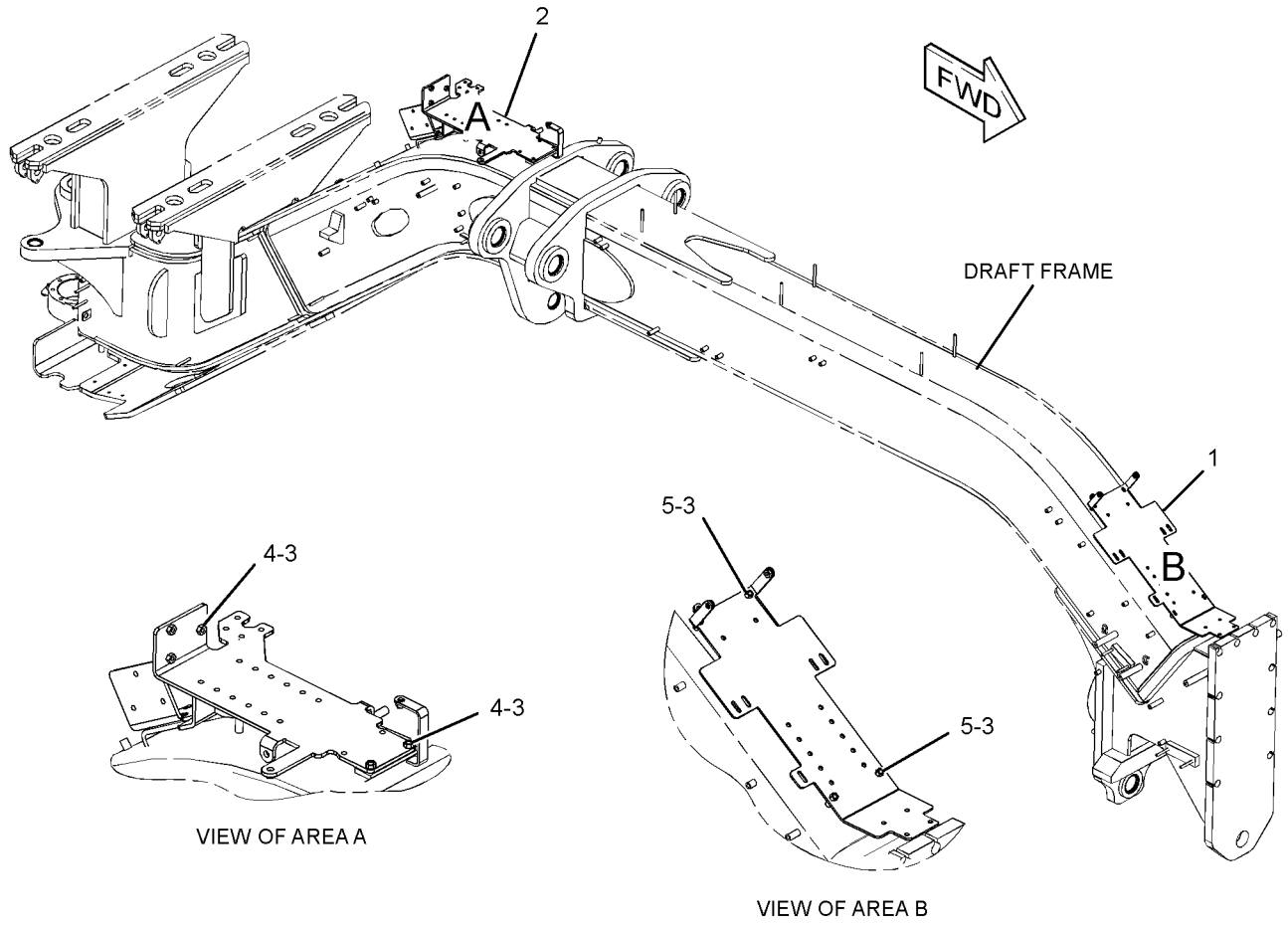

VIEW OF AREA A

VIEW OF AREA B

GRAPHIC #1 **<END>** g01156927

296-0011 REFLECTOR GP—MACHINE

S/N: R9J1-UP
PART OF 350-5390, 364-3739 OPTION AR-REGIONAL
AN ATTACHMENT

SMCS-7430 **i02808212**

NOTE	REF NO	GRAPHIC REF	PART NUMBER	QTY	PART NAME 1 2 3 4 5 6 (PRODUCT LEVEL)	SEE PAGE
	1	1	**313-5270**	8	REFLECTOR (AMBER) (AMBER)	
	2	1	**313-5271**	2	REFLECTOR (RED)	

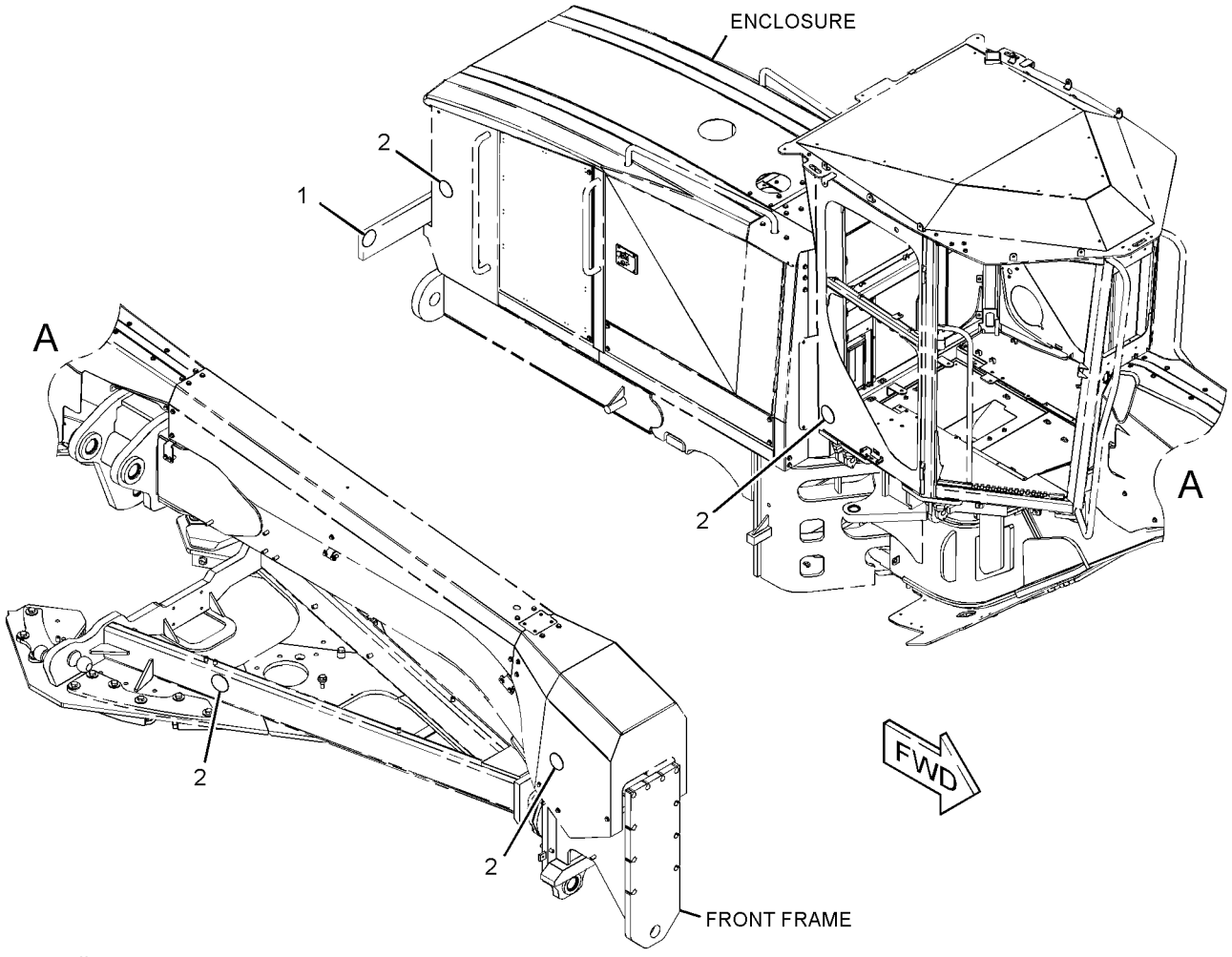

GRAPHIC #1 **<END>** g01336501

296-0012 REFLECTOR GP–RIPPER

S/N: R9J1-UP
PART OF 350-5390, 364-3739 OPTION AR-REGIONAL
AN ATTACHMENT

SMCS-7430 **i02831655**

NOTE	REF NO	GRAPHIC REF	PART NUMBER	QTY	PART NAME 1 2 3 4 5 6 (PRODUCT LEVEL)	SEE PAGE
	1	1	**313-5270**	2	REFLECTOR (AMBER)	

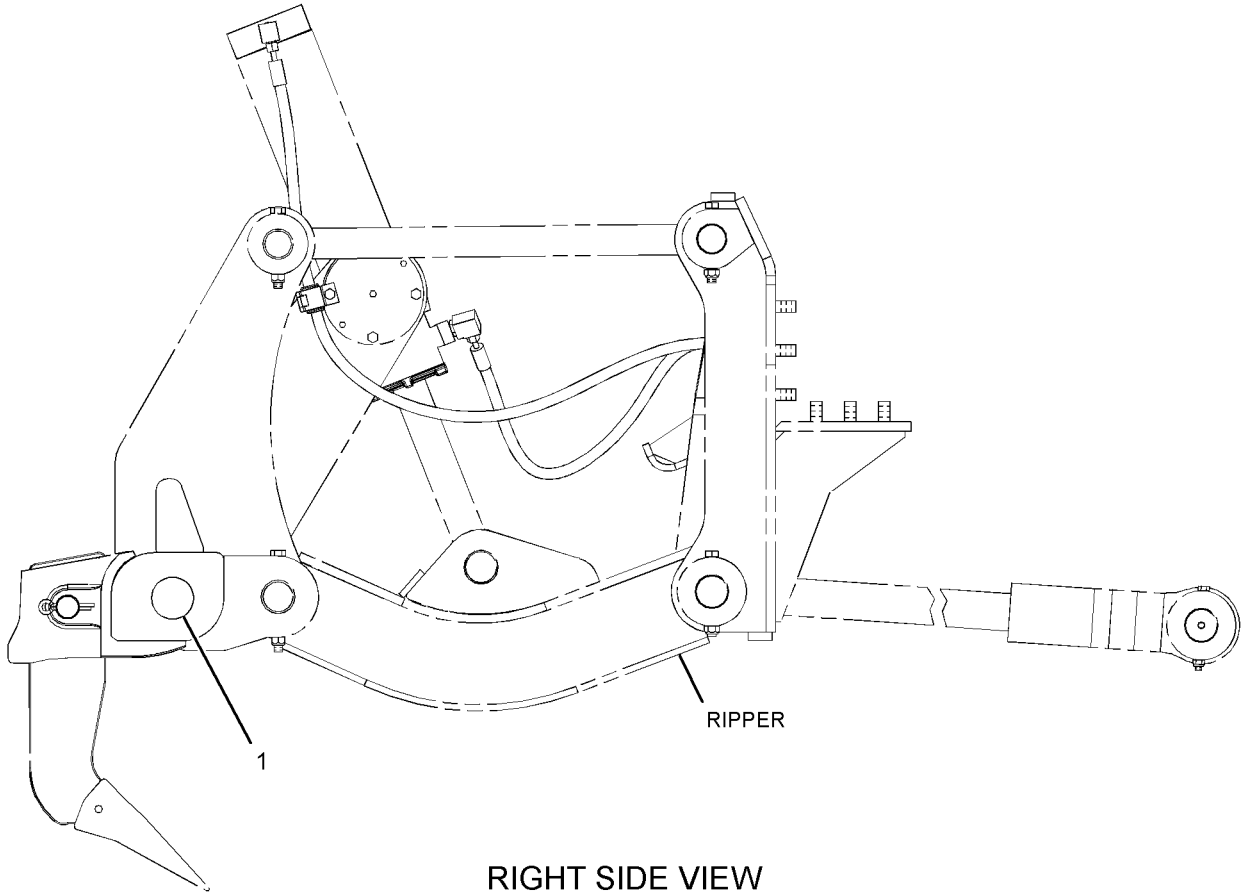

RIGHT SIDE VIEW

GRAPHIC #1 **<END>** g01336382

FRAME AND BODY

289-2108 SERVICE CENTER AR

S/N: R9J1-UP

PART OF 349-2555 COMMON AR

SMCS-7513 **i02770706**

NOTE	REF NO	GRAPHIC REF	PART NUMBER	QTY	PART NAME 1 2 3 4 5 6 (PRODUCT LEVEL)	SEE PAGE
	1	1	**225-0313**	1	FILM-WARNING (JUMP START, READ OMM, U.S.)	
					—OR—	
		1	**225-0312**	1	FILM-WARNING (JUMP START, READ OMM, INTL)	
C	2	1	**295-4661**	1	PLATFORM AS	
Y	3	1	*233-4259*	1	TANK & MTG GP-HYDRAULIC	703
Y	4	1	*250-3507*	1	FILTER & MTG GP-HYDRAULIC	589
Y	6	1	*293-8697*	1	SHIELD GP-ENGINE COMPARTMENT	520
	7	1	**198-4781**	6	WASHER-HARD (22X40X10-MM THK)	
M	8	1	**7X-2563**	6	BOLT (M20X2.5X60-MM)	

C-CHANGE FROM PREVIOUS TYPE
M-METRIC PART
Y-SEPARATE ILLUSTRATION

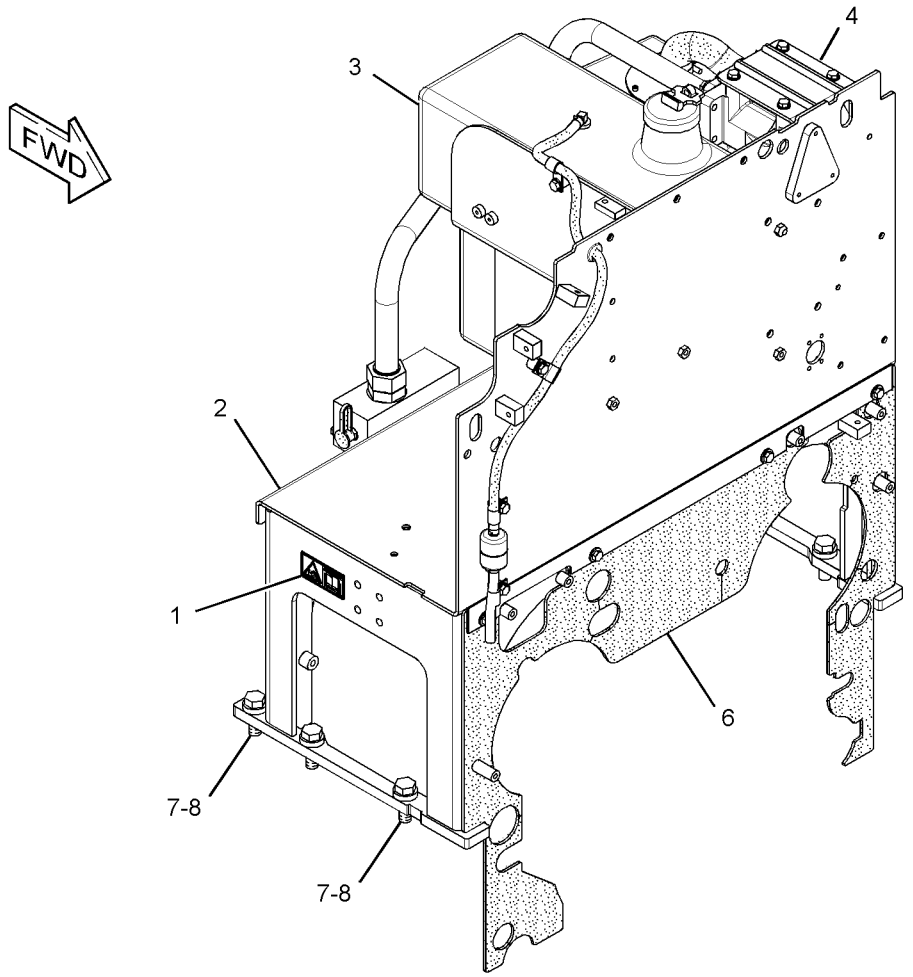

GRAPHIC #1 **<END>** g01421149

270-9382 SHIELD GP-ENGINE COMPARTMENT

S/N: R9J1-UP
PART OF 353-5005, 358-7877, 361-1731, 363-0414 DISTRIBUTION AR
CANNOT BE USED WITH 275-7864—PAGE 494
AN ATTACHMENT

SMCS-7263 **i02848939**

NOTE	REF NO	GRAPHIC REF	PART NUMBER	QTY	PART NAME 1 2 3 4 5 6 (PRODUCT LEVEL)	SEE PAGE
	1	1	**269-2259**	1	PLATE AS	
M		1	**8T-3490**	2	NUT-WELD (M10X1.5-THD)	
	2	1	**270-3839**	1	COVER	
C	3	1	**300-5004**	1	COVER	
C	4	1	**300-8639**	1	COVER	
	5	1	**7X-7729**	10	WASHER (11X25X3-MM THK)	
M	6	1	**8T-4136**	10	BOLT (M10X1.5X25-MM)	

C-CHANGE FROM PREVIOUS TYPE
M-METRIC PART

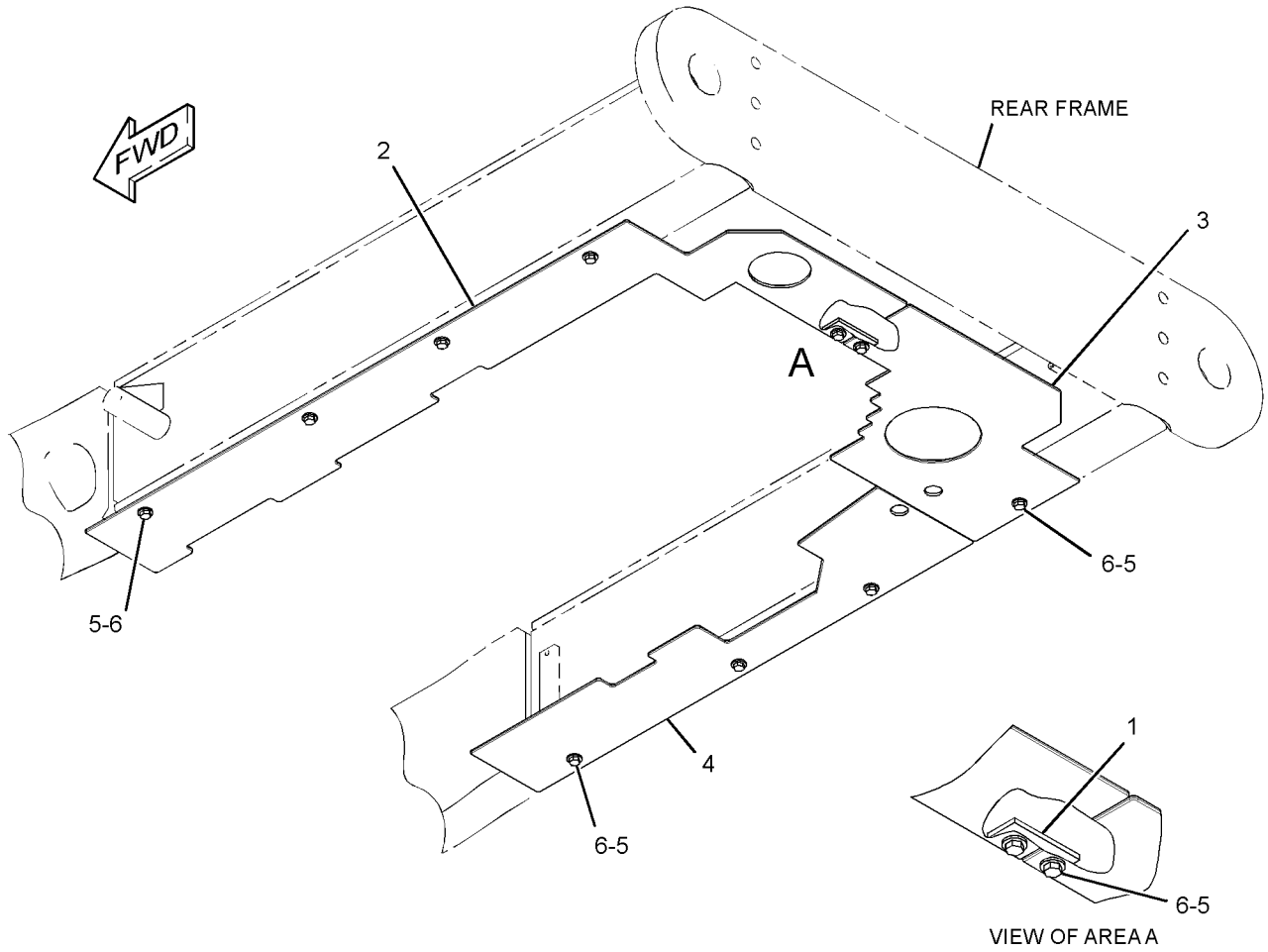

GRAPHIC #1 **<END>** g01435178

FRAME AND BODY

293-8697 SHIELD GP-ENGINE COMPARTMENT

S/N: R9J1-UP

PART OF 289-2108 SERVICE CENTER AR

SMCS-7263 **i02795948**

NOTE	REF NO	GRAPHIC REF	PART NUMBER	QTY	PART NAME 1 2 3 4 5 6 (PRODUCT LEVEL)	SEE PAGE
	1	1	**270-3840**	1	COVER-RUBBER	
	2	1	**270-8407**	1	PLATE	
	3	1	**7X-7729**	4	WASHER (11X25X3-MM THK)	
M	4	1	**8T-4195**	4	BOLT (M10X1.5X30-MM)	

M-METRIC PART

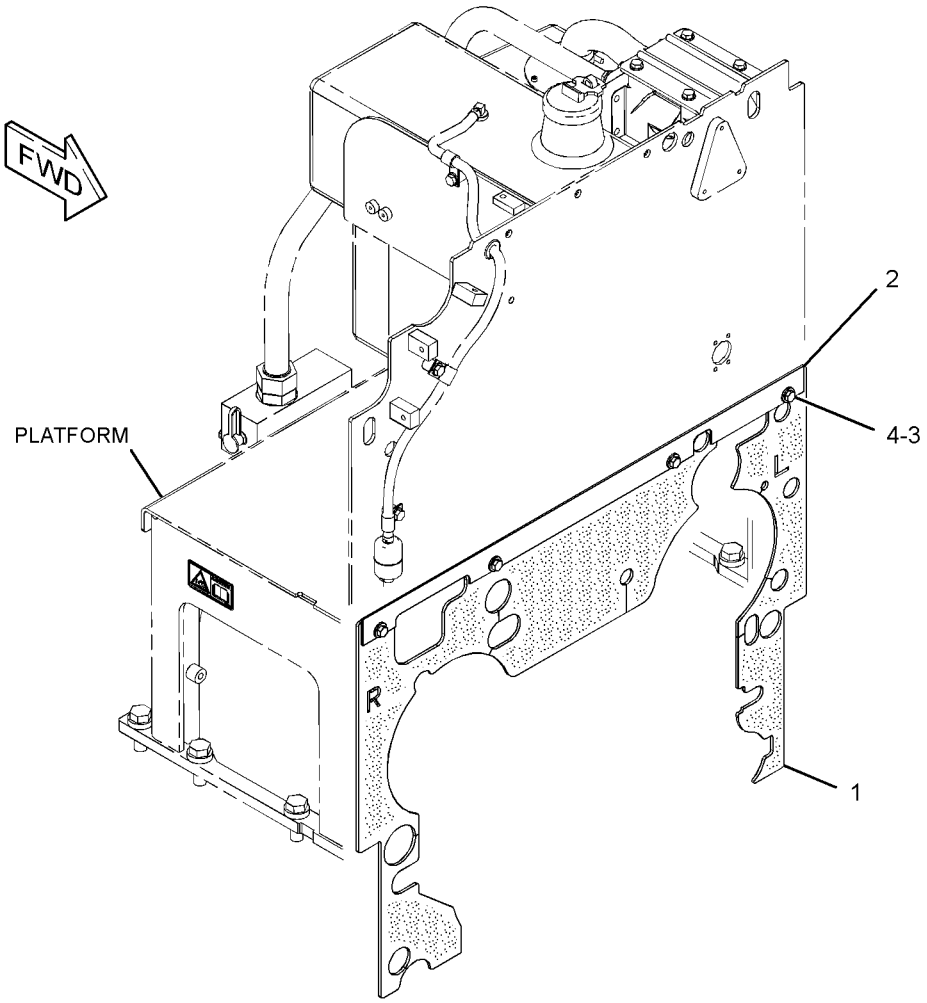

GRAPHIC #1 **<END>** g01404542

FRAME AND BODY

312-6371 STEP GP–RH

S/N: R9J1-UP

PART OF 349-2555 COMMON AR

SMCS-7254 **i03586744**

NOTE	REF NO	GRAPHIC REF	PART NUMBER	QTY	PART NAME 1 2 3 4 5 6 (PRODUCT LEVEL)	SEE PAGE
	1	1	**4V-9804**	8	PLATE	
	2	1	**141-4043**	2	SUPPORT-STEP (RUBBER)	
	3	1	**244-2729**	2	STEP	
	4	1	**311-7500**	1	PLATE AS	
		1	**244-2729**	2	STEP	
	5	1	**1D-4689**	4	BOLT (1/2-13X1.75-IN)	
	6	1	**1D-4691**	4	BOLT-CARRIAGE (1/2-13X2.5-IN)	
	7	1	**1D-4692**	4	BOLT-CARRIAGE (1/2-13X2.75-IN)	
	8	1	**1K-6872**	16	LOCKNUT (1/2-13-THD)	
	9	1	**5P-1076**	3	WASHER-HARD (13.5X30X4-MM THK)	
	10	1	**8T-4223**	16	WASHER-HARD (13.5X25.5X3-MM THK)	
M	11	1	**8T-4956**	3	BOLT (M12X1.75X35-MM)	
	12	1	**1B-2709**	4	BOLT-CARRIAGE (1/2-13X3.2-IN)	
	13	1	**311-1956**	2	HANDHOLD	

M-METRIC PART

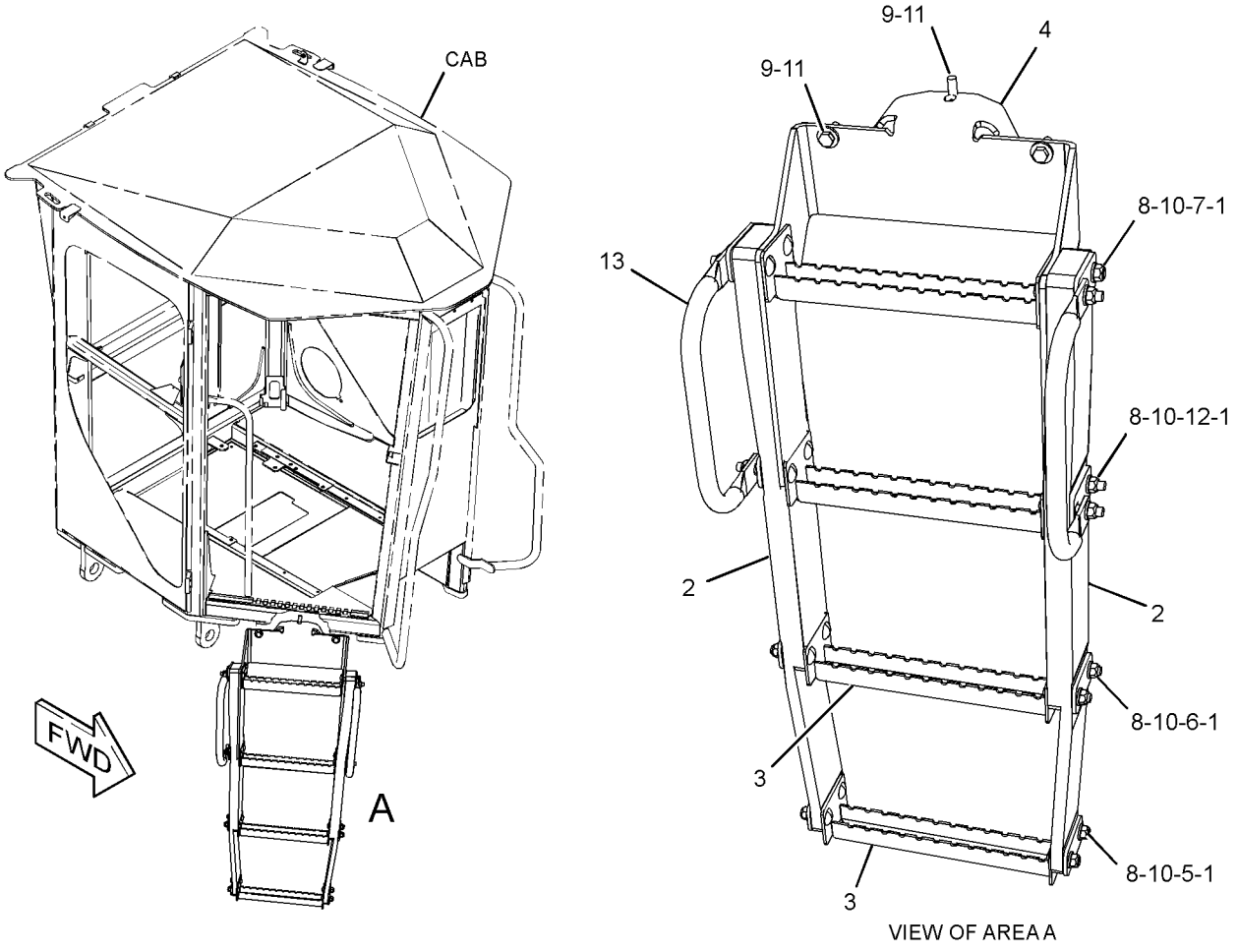

GRAPHIC #1 **<END>** g01945749

FRAME AND BODY

314-4860 STEP GP–LH

S/N: R9J1-UP

PART OF 349-2555 COMMON AR

SMCS-7254 **i03586580**

NOTE	REF NO	GRAPHIC REF	PART NUMBER	QTY	PART NAME 1 2 3 4 5 6 (PRODUCT LEVEL)	SEE PAGE
	1	1	**4V-9804**	8	PLATE	
	2	1	**141-4043**	2	SUPPORT-STEP (RUBBER)	
	3	1	**244-2729**	2	STEP	
	4	1	**311-7500**	1	PLATE AS	
		1	**244-2729**	2	STEP	
	5	1	**1D-4689**	4	BOLT (1/2-13X1.75-IN)	
	6	1	**1D-4691**	4	BOLT-CARRIAGE (1/2-13X2.5-IN)	
	7	1	**1D-4692**	4	BOLT-CARRIAGE (1/2-13X2.75-IN)	
	8	1	**1K-6872**	16	LOCKNUT (1/2-13-THD)	
	9	1	**5P-1076**	3	WASHER-HARD (13.5X30X4-MM THK)	
	10	1	**8T-4223**	16	WASHER-HARD (13.5X25.5X3-MM THK)	
M	11	1	**8T-4956**	3	BOLT (M12X1.75X35-MM)	
	12	1	**1B-2709**	4	BOLT-CARRIAGE (1/2-13X3.2-IN)	
	13	1	**311-1956**	2	HANDHOLD	

M-METRIC PART

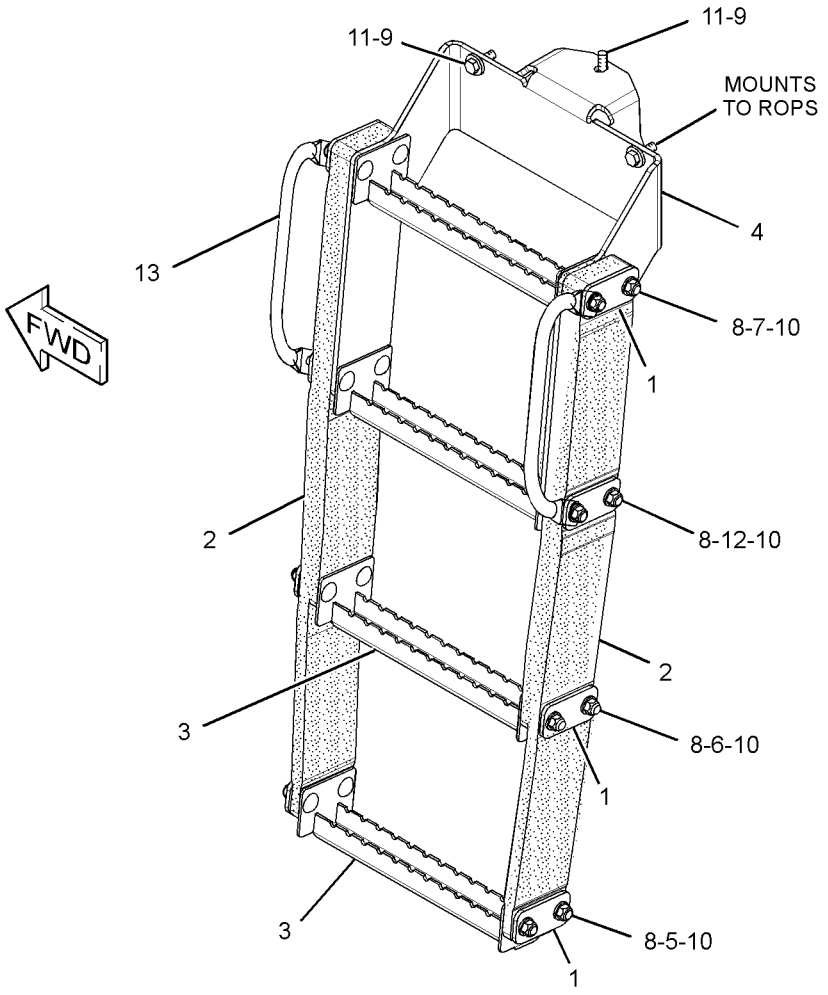

GRAPHIC #1 **<END>** g01945413

231-2316 SUPPORT GP-RADIATOR

S/N: R9J1-UP

PART OF 268-6570 COOLING AR

SMCS-1353 **i02919895**

NOTE	REF NO	GRAPHIC REF	PART NUMBER	QTY	PART NAME 1 2 3 4 5 6 (PRODUCT LEVEL)	SEE PAGE
	1	1	**247-9764**	1	SUPPORT AS (LH)	
	2	1	**247-9765**	1	SUPPORT AS (RH)	
	3	1	**247-9766**	1	BRACKET AS	
	4	1	**247-9769**	1	BRACKET AS	
	5	1	**248-0679**	1	BRACKET AS	
	6	1	**250-0684**	1	BAFFLE AS	
	7	1	**260-6878**	1	PLATE AS	
C	8	1	**308-3071**	2	PLATE	
C	9	1	**308-3072**	2	PLATE	
C	10	1	**308-3073**	2	PLATE	
CM	11	1	**141-9203**	12	SCREW-BUTTON HEAD (M10X1.5X30-MM)	
	12	1	**7X-7729**	11	WASHER (11X25X3-MM THK)	
C	13	1	**8T-4121**	12	WASHER-HARD (11X21X2.5-MM THK)	
M	14	1	**8T-4133**	8	NUT (M10X1.5-THD)	
M	15	1	**8T-4136**	2	BOLT (M10X1.5X25-MM)	
CM	16	1	**8T-4137**	8	BOLT (M10X1.5X20-MM)	
M	17	1	**8T-4195**	5	BOLT (M10X1.5X30-MM)	
C	18	1	**9X-2027**	12	WASHER (11X18X2-MM THK)	
E	19	1	**247-5838**		SEAL (8-CM)	
E	20	1	**103-2543**		SEAL (93-CM)	
CE	21	1	**112-9736**		SEAL (16.5-CM EACH)	
CE	21A	1	**112-9736**		SEAL (50-CM EACH)	
CE	21B	1	**112-9736**		SEAL (44-CM)	
CE	21C	1	**112-9736**		SEAL (51-CM)	
CE	21D	1	**112-9736**		SEAL (15-CM EACH)	

C-CHANGE FROM PREVIOUS TYPE
E-ORDER BY THE CENTIMETER
M-METRIC PART

231-2316 **SUPPORT GP-RADIATOR** *(contd.)* **i02919895**

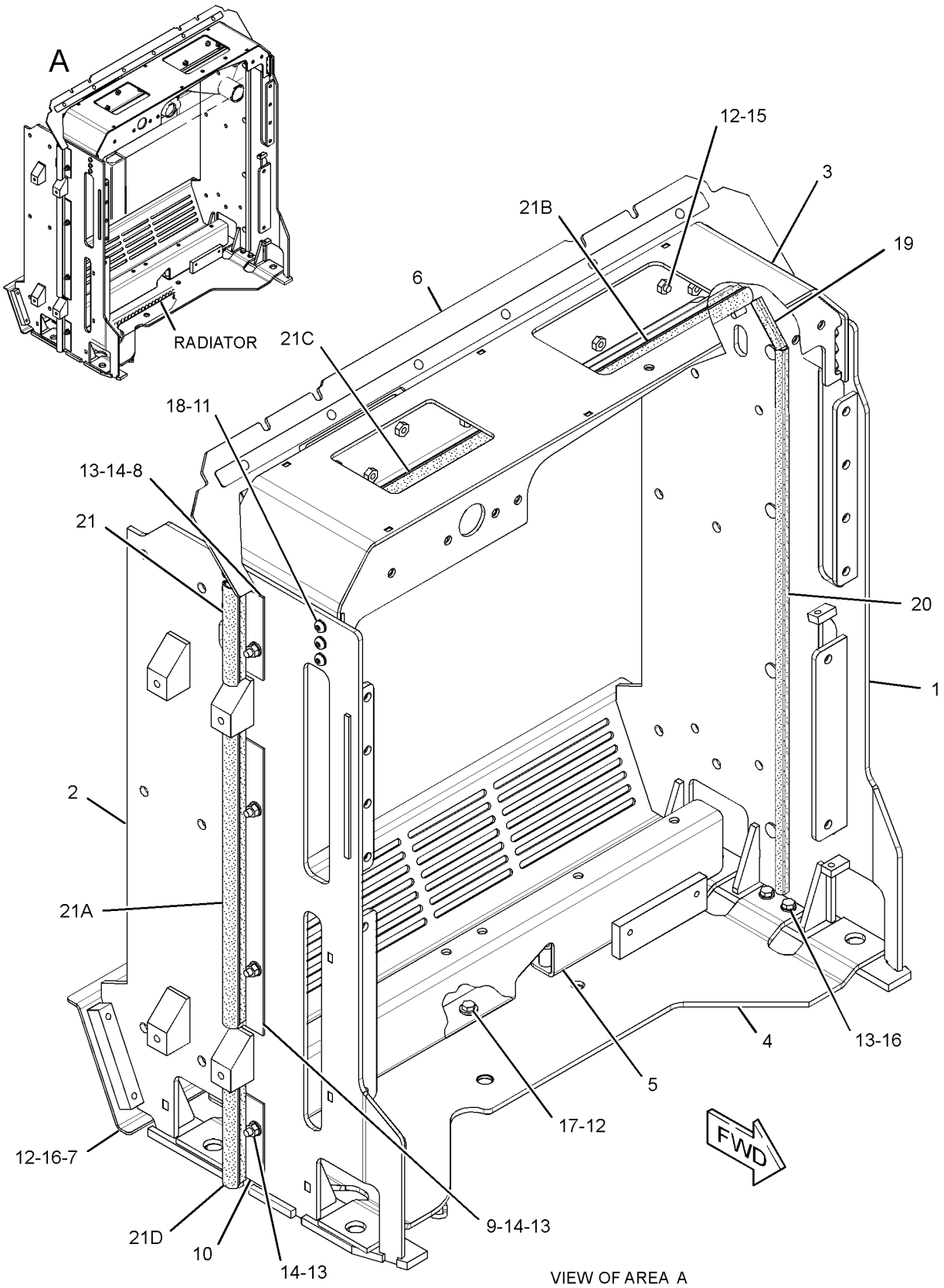

VIEW OF AREA A

GRAPHIC #1 **<END>** g01457787

231-5056 SUPPRESSION GP-SOUND–ENGINE

S/N: R9J1-UP
EUROPEAN MARKET
PART OF 350-5390, 364-3739 OPTION AR-REGIONAL
AN ATTACHMENT

SMCS-1801, 7076 **i02563298**

NOTE	REF NO	GRAPHIC REF	PART NUMBER	QTY	PART NAME 1 2 3 4 5 6 (PRODUCT LEVEL)	SEE PAGE
	1	1	**7V-0638**	4	SPACER (16X28X25-MM THK)	
	2	1	**254-3955**	2	STRAP	
Y	3	1	*289-4090*	1	SUPPRESSION GP-SOUND	526
	4	1	**7X-7729**	4	WASHER (11X25X3-MM THK)	
M	5	1	**8T-4133**	4	NUT (M10X1.5-THD)	

M-METRIC PART
Y-SEPARATE ILLUSTRATION

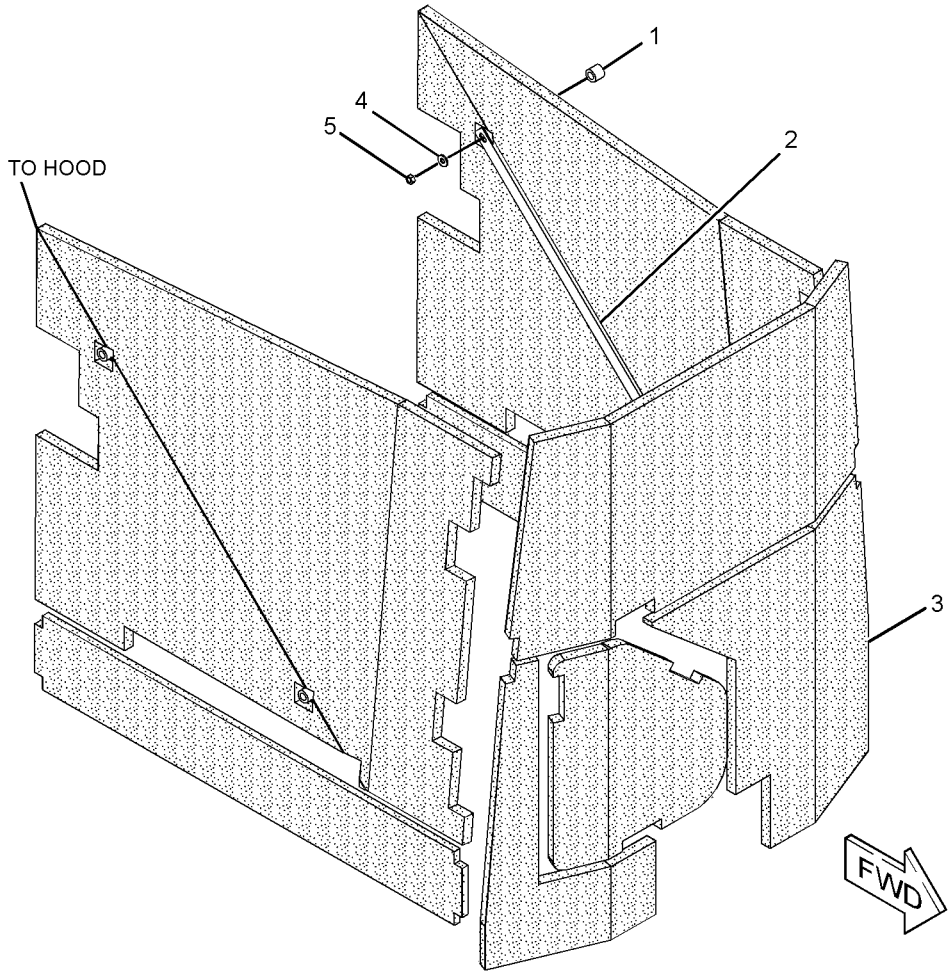

GRAPHIC #1 **<END>** g01292135

289-4090 SUPPRESSION GP-SOUND

S/N: R9J1-UP
PART OF 231-5056 SUPPRESSION GP-SOUND
AN ATTACHMENT

SMCS-1801, 7076 **i03896591**

NOTE	REF NO	GRAPHIC REF	PART NUMBER	QTY	PART NAME 1 2 3 4 5 6 (PRODUCT LEVEL)	SEE PAGE
	1	1	**254-1618**	1	INSULATION	
	2	1	**254-1619**	1	INSULATION	
	3	1	**254-3292**	2	INSULATION	
	4	1	**289-4086**	1	INSULATION	
	5	1	**289-4087**	1	INSULATION	
	6	1	**289-4088**	1	INSULATION	
C	7	1	**349-5335**	1	INSULATION	
	8	1	**296-7739**	2	INSULATION	

C-CHANGE FROM PREVIOUS TYPE

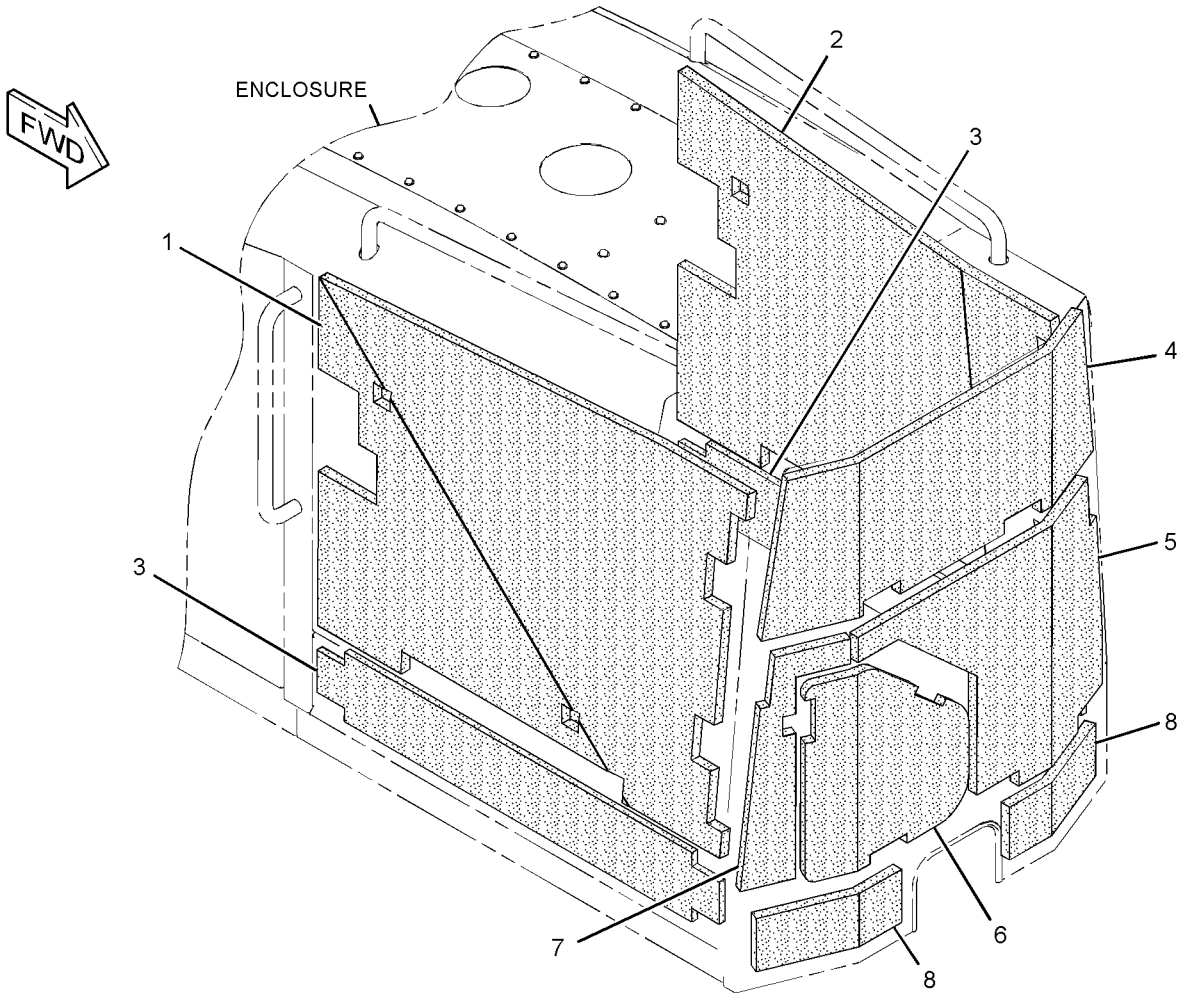

GRAPHIC #1 **<END>** g02193995

298-8486 VALVE & MTG GP-LUBE DISTR–

AUTOMATIC LUBRICATION SYSTEM

S/N: R9J1-UP

PART OF 292-1128 LUBRICATION AR-CENTRAL

AN ATTACHMENT

SMCS-7540 **i02822453**

NOTE	REF NO	GRAPHIC REF	PART NUMBER	QTY	PART NAME 1 2 3 4 5 6 (PRODUCT LEVEL)	SEE PAGE
	1	1	**2D-1683**	4	FITTING	
	2	1	**5P-3422**	3	TEE-PIPE	
	3	1	**171-8867**	1	VALVE AS-LUBE DISTRIBUTION	
	4	1	**171-8869**	2	GASKET	
	5	1	**171-8870**	2	PLUG	
	6	1	**177-4687**	2	VALVE AS-LUBE DISTRIBUTION	
	7	1	**275-0961**	26	ADAPTER	
	8	1	**288-1544**	1	PLATE	
	9	1	**157-2014**	3	FITTING-HYDRAULIC	
	10	1	**157-2016**	3	CAP-GREASE	
	11	1	**299-4836**	1	FILM-IDENTIFICATION (LUBRICATION CHART)	
	12	1	**299-4837**	1	FILM-IDENTIFICATION (LUBRICATION CHART)	
	13	1	**299-4838**	1	FILM-IDENTIFICATION (LUBRICATION CHART)	
M	14	1	**8C-8451**	6	BOLT (M6X1X40-MM)	
	15	1	**9X-8256**	6	WASHER (6.6X12X2-MM THK)	

M-METRIC PART

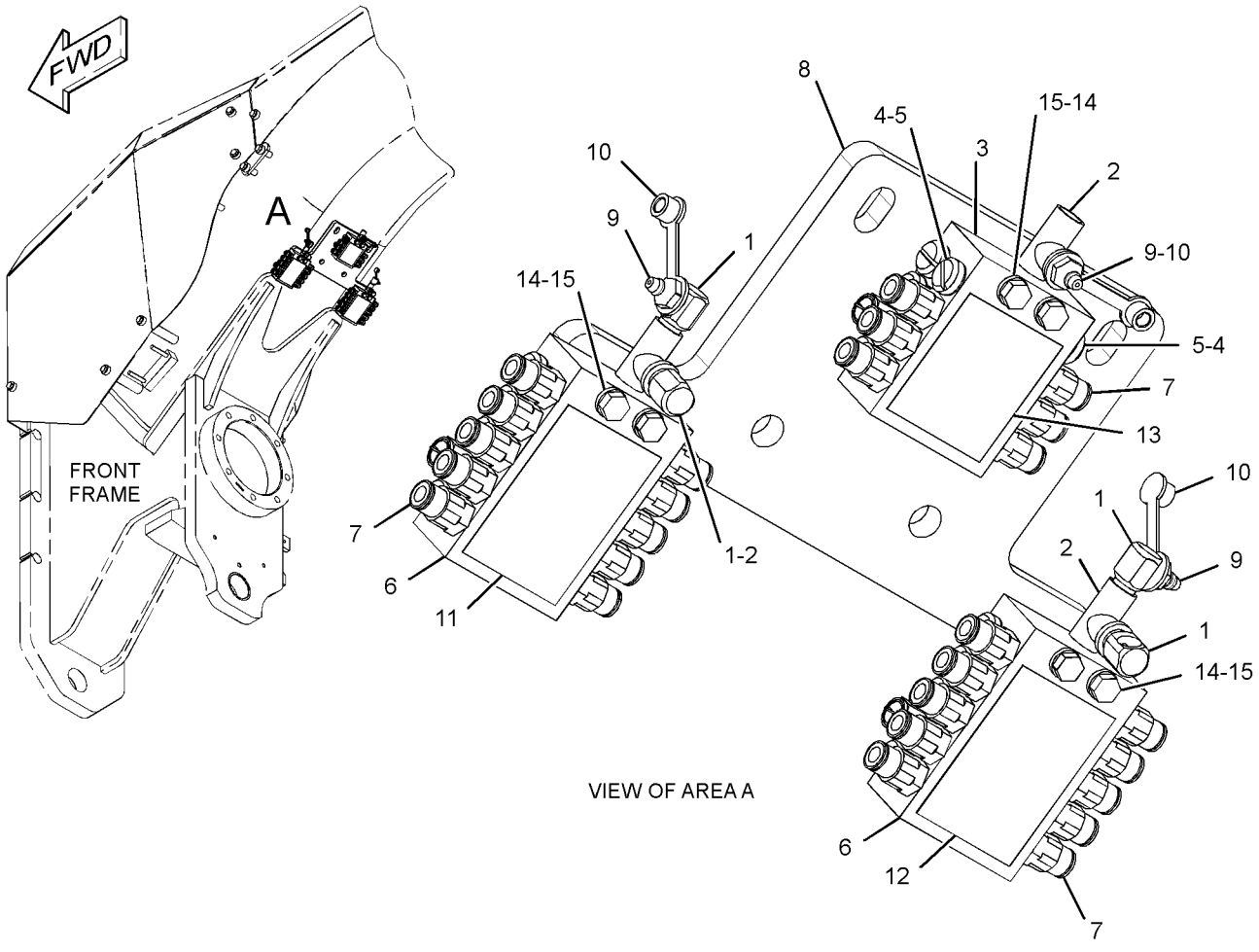

GRAPHIC #1 **<END>** g01410070

354-0134 VALVE & MTG GP-LUBE DISTR

S/N: R9J1-UP
PART OF 351-8256 LUBRICATION AR-CENTRAL
AN ATTACHMENT

SMCS-7540 **i04024830**

NOTE	REF NO	GRAPHIC REF	PART NUMBER	QTY	PART NAME 1 2 3 4 5 6 (PRODUCT LEVEL)	SEE PAGE
	1	1	**2D-1683**	4	FITTING	
	2	1	**5P-3422**	3	TEE-PIPE	
	3	1	**171-8867**	1	VALVE AS-LUBE DISTRIBUTION	
	4	1	**118-6050**	2	WASHER-COPPER (10X14X1-MM THK)	
	5	1	**171-8870**	2	PLUG	
	6	1	**177-4687**	2	VALVE AS-LUBE DISTRIBUTION	
	7	1	**275-0961**	26	ADAPTER	
	8	1	**353-9856**	1	PLATE AS	
	9	1	**157-2014**	3	FITTING-HYDRAULIC	
	10	1	**157-2016**	3	CAP-GREASE	
	11	1	**299-4836**	1	FILM-IDENTIFICATION (LUBRICATION CHART)	
	12	1	**299-4837**	1	FILM-IDENTIFICATION (LUBRICATION CHART)	
	13	1	**299-4838**	1	FILM-IDENTIFICATION (LUBRICATION CHART)	
M	14	1	**7X-2534**	6	BOLT (M6X1X50-MM)	
	15	1	**9X-8256**	6	WASHER (6.6X12X2-MM THK)	

M-METRIC PART

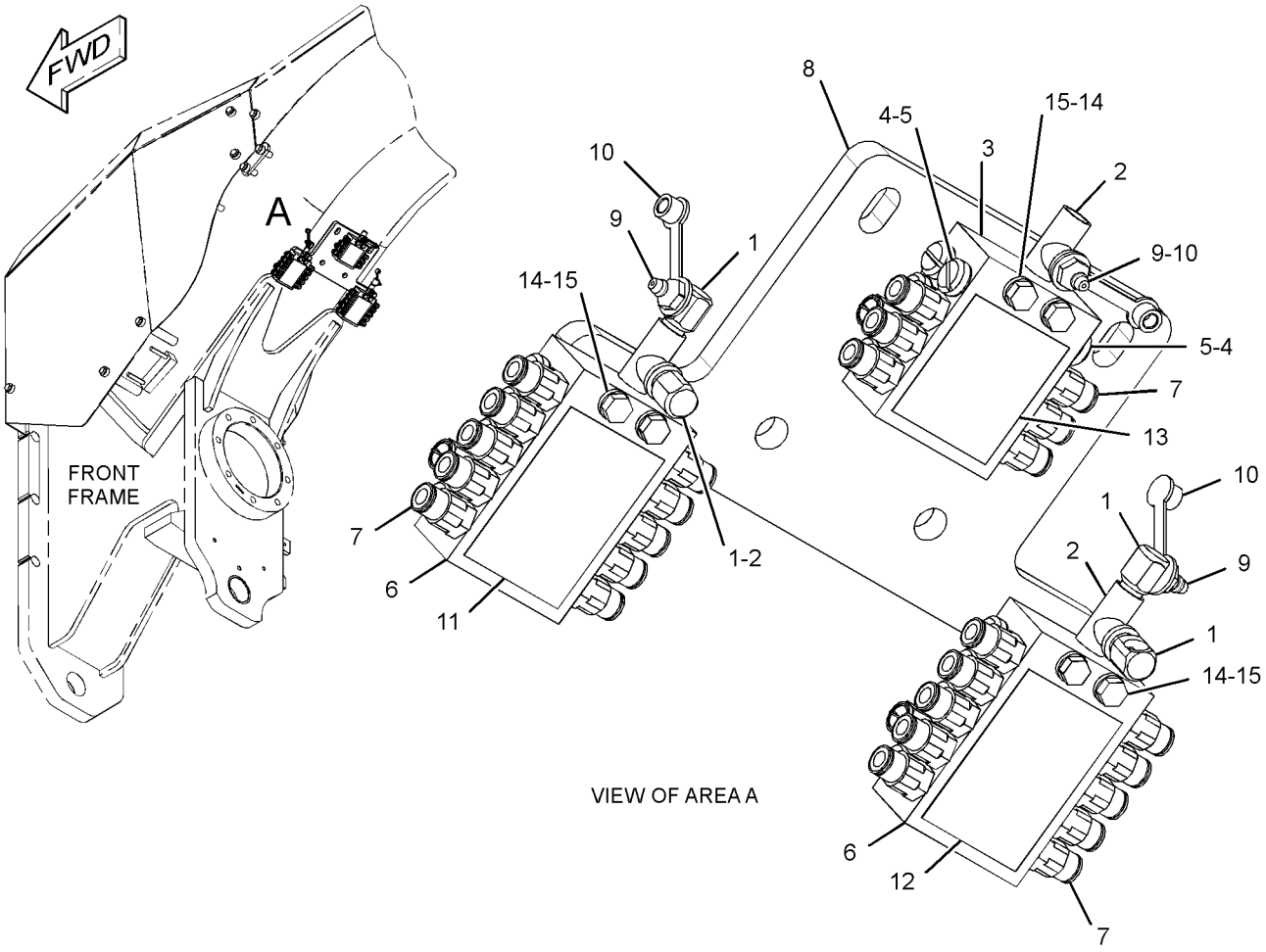

VIEW OF AREA A

GRAPHIC #1 **<END>** g01410070

292-1148 VALVE GP-LUBE DISTRIBUTION

S/N: R9J1-UP
PART OF 292-1128 LUBRICATION AR-CENTRAL
AN ATTACHMENT

SMCS-7540 **i03588540**

NOTE	REF NO	GRAPHIC REF	PART NUMBER	QTY	PART NAME 1 2 3 4 5 6 (PRODUCT LEVEL)	SEE PAGE
C	1	1	**2D-1683**	5	FITTING	
C	2	1	**2D-7325**	1	TEE-PIPE	
	3	1	**5P-1838**	1	ADAPTER	
	4	1	**269-5353**	1	VALVE AS-LUBE DISTRIBUTION (5-INJECTOR)	
		1	**307-3245**	5	INJECTOR	
		1	**8X-1106**	5	FITTING AS-GREASE (1/8-27-THD)	
	5	1	**291-8574**	1	PLATE	
	6	1	**292-4313**	1	VALVE-SOLENOID	
	7	1	**292-4314**	1	SWITCH-PRESSURE	
	8	1	**004-6683**	1	FITTING	
	9	1	**130-5300**	1	CLIP	
	10	1	**132-7551**	2	SPACER (11X19X6-MM THK)	
	11	1	**3B-7722**	1	BUSHING-PIPE	
C	12	1	**3K-0360**	2	SEAL-O-RING	
	13	1	**4P-7581**	1	CLIP	
	14	1	**5P-4116**	2	WASHER-HARD (8.8X20.5X2-MM THK)	
C	15	1	**6V-4245**	1	ELBOW	
M	16	1	**8T-6869**	2	BOLT (M8X1.25X60-MM)	
C	17	1	**9T-6635**	1	PLUG	

C-CHANGE FROM PREVIOUS TYPE
M-METRIC PART

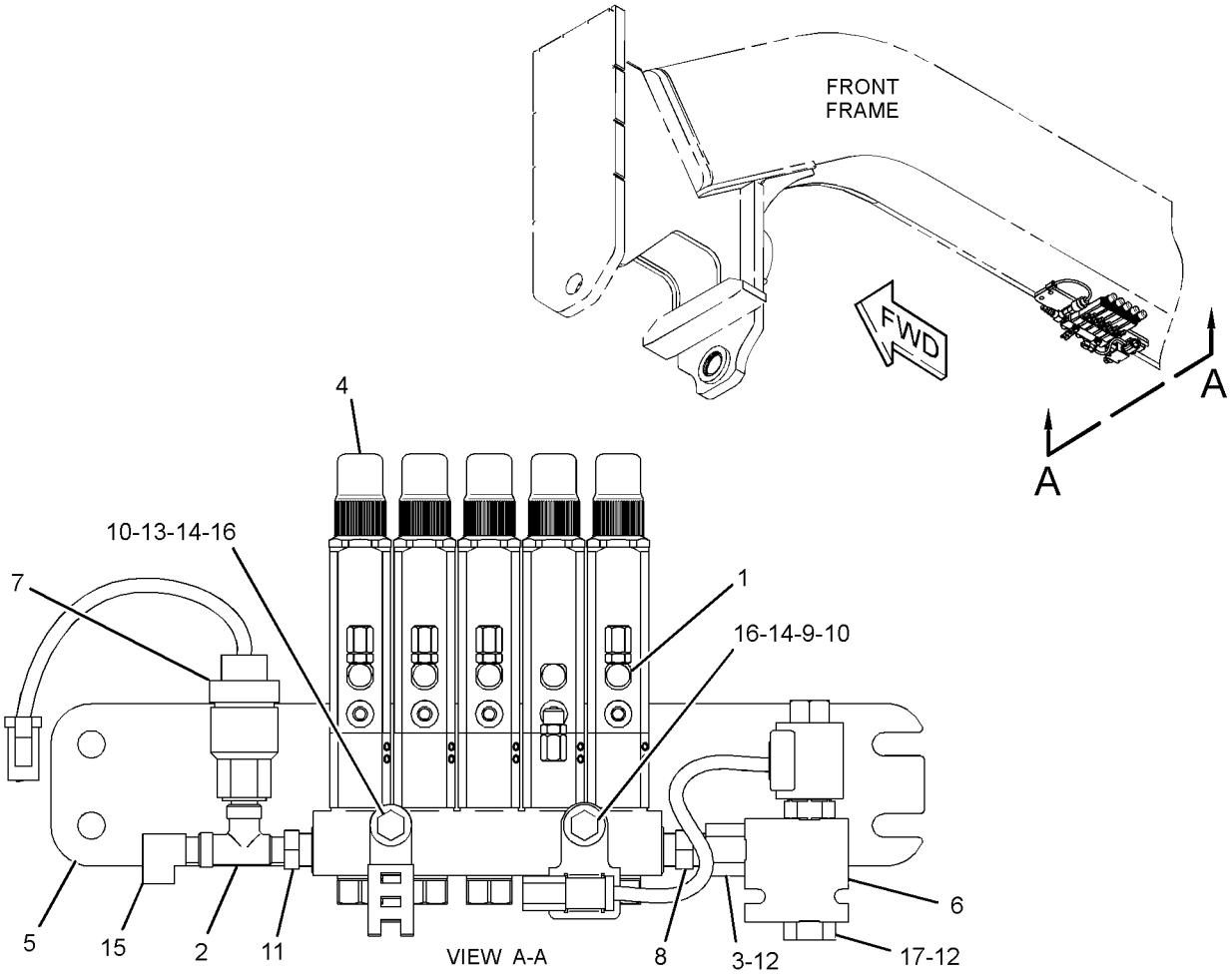

GRAPHIC #1 **<END>** g01946602

354-0133 VALVE GP-LUBE DISTRIBUTION

S/N: R9J1-UP
PART OF 351-8256 LUBRICATION AR-CENTRAL
AN ATTACHMENT

SMCS-7540 **i04024829**

NOTE	REF NO	GRAPHIC REF	PART NUMBER	QTY	PART NAME 1 2 3 4 5 6 (PRODUCT LEVEL)	SEE PAGE
	1	1	**2D-1683**	5	FITTING	
	2	1	**2D-7325**	1	TEE-PIPE	
	3	1	**5P-1838**	1	ADAPTER	
	4	1	**269-5353**	1	VALVE AS-LUBE DISTRIBUTION (5-INJECTOR)	
		1	**8X-1106**	5	FITTING AS-GREASE (1/8-27-THD)	
		1	**307-3245**	5	INJECTOR	
	5	1	**292-4313**	1	VALVE-SOLENOID	
	6	1	**292-4314**	1	SWITCH-PRESSURE (GREASE PRESSURE PORTS)	
	7	1	**353-9855**	1	PLATE AS	
M		1	**8T-3612**	2	NUT-WELD (M8X1.25-THD)	
	8	1	**004-6683**	1	FITTING	
	9	1	**130-5300**	1	CLIP	
	10	1	**132-7551**	2	SPACER (11X19X6-MM THK)	
	11	1	**3B-7722**	1	BUSHING-PIPE	
	12	1	**3K-0360**	2	SEAL-O-RING	
	13	1	**4P-7581**	1	CLIP	
	14	1	**5P-4116**	2	WASHER-HARD (8.8X20.5X2-MM THK)	
	15	1	**6V-4245**	1	ELBOW	
M	16	1	**8T-6869**	2	BOLT (M8X1.25X60-MM)	
	17	1	**9T-6635**	1	PLUG	

M-METRIC PART

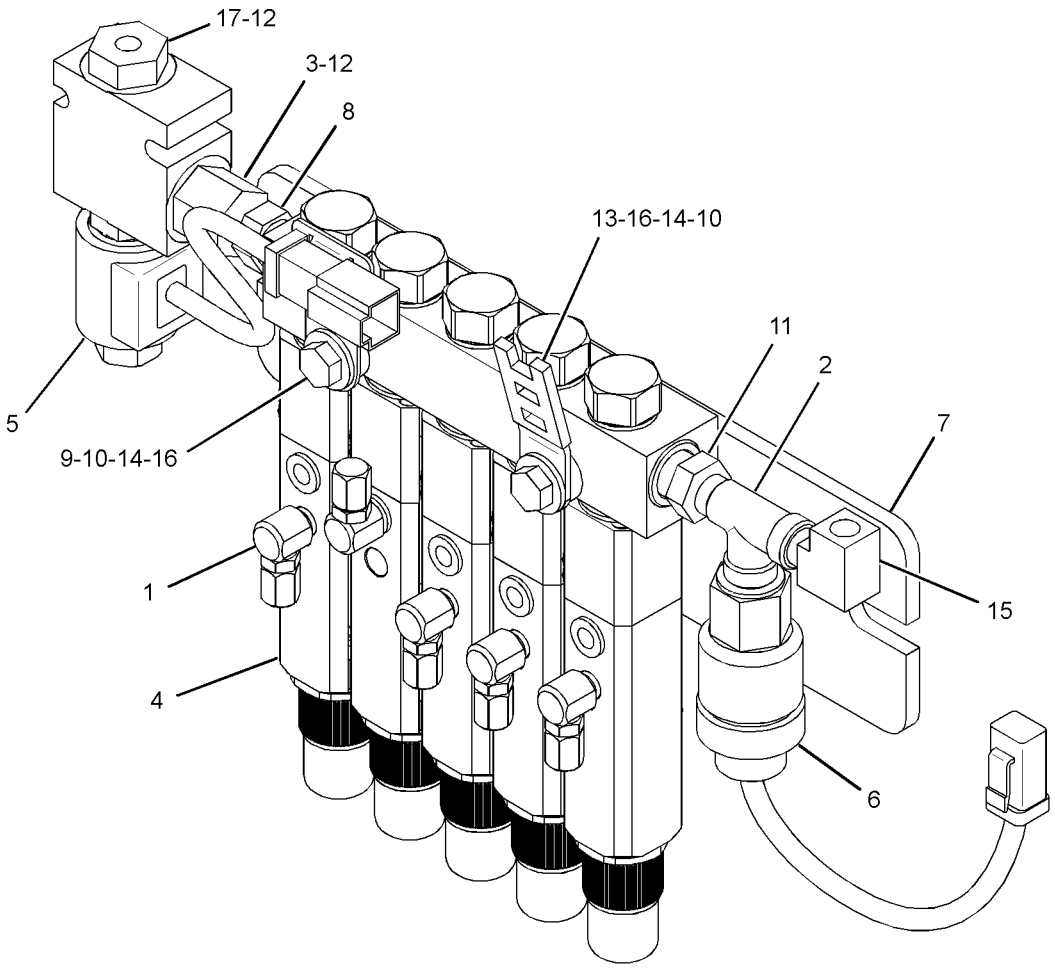

GRAPHIC #1 **<END>** g02221733

FRAME AND BODY

266-2422 WALKWAY GP–TANDEM

S/N: R9J1-UP

PART OF 349-2555 COMMON AR

SMCS-7255 **i02762695**

NOTE	REF NO	GRAPHIC REF	PART NUMBER	QTY	PART NAME 1 2 3 4 5 6 (PRODUCT LEVEL)	SEE PAGE
	1	1	**289-3874**	2	PLATE AS	
	2	1	**289-3875**	2	PLATE AS	
	3	1	**8T-4121**	32	WASHER-HARD (11X21X2.5-MM THK)	
M	4	1	**8C-8585**	24	SCREW-BUTTON HEAD (M10X1.5X20-MM)	
M	5	1	**238-0251**	8	SCREW-BUTTON HEAD (M10X1.5X25-MM)	

M-METRIC PART

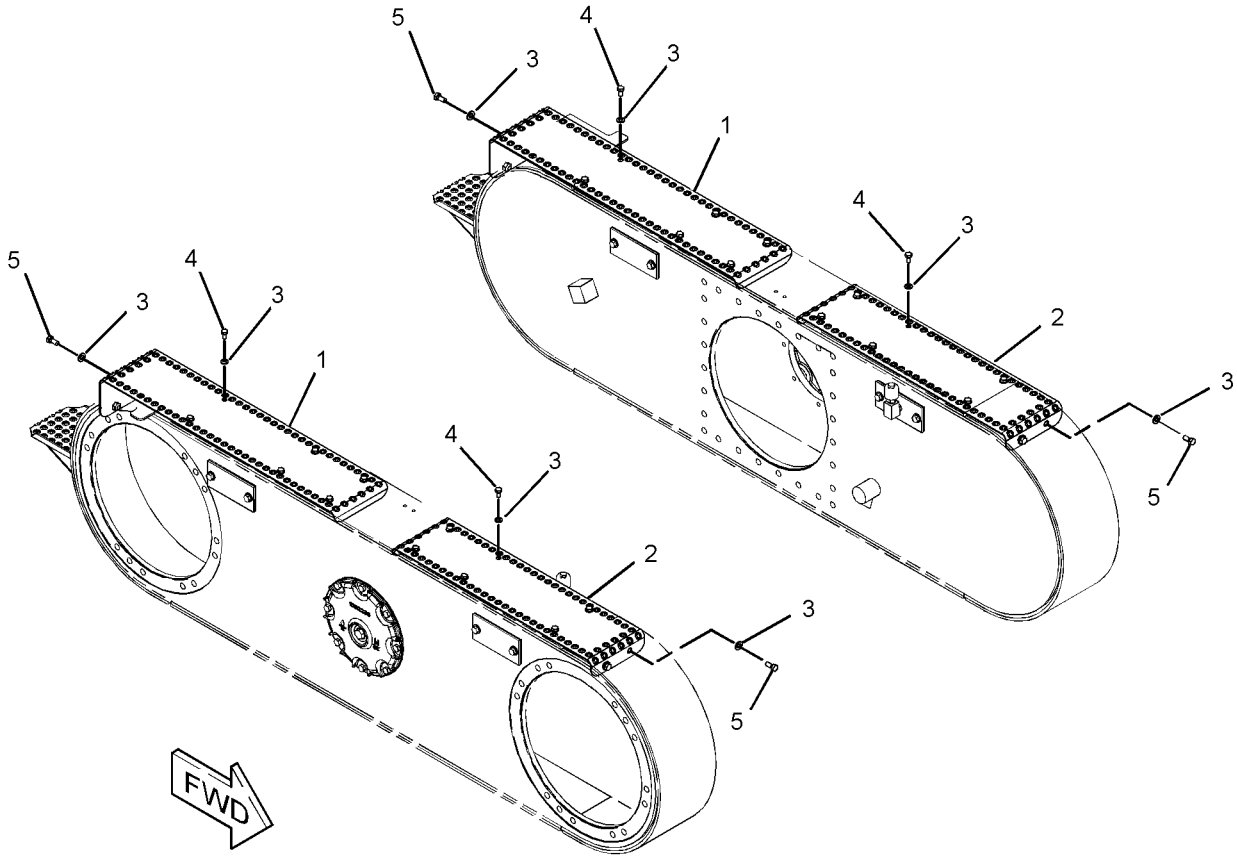

GRAPHIC #1 **<END>** g01386106

249-3860 ACCUMULATOR GP-BRAKE—CHARGED

S/N: R9J1-UP
PART OF 251-2243 LINES GP-ACCUMULATOR
FIELD REPLACEMENT ORDER 348-9257—PAGE 537
AN ATTACHMENT

SMCS-4263, 4264 **i04037845**

NOTE	REF NO	GRAPHIC REF	PART NUMBER	QTY	PART NAME 1 2 3 4 5 6 (PRODUCT LEVEL)	SEE PAGE
	1	1	**158-2336**	1	VALVE-GAS	
	2	1	**111-9110**	1	PROTECTOR-GAS VALVE	
J	3	1	**1J-9671**	1	SEAL-O-RING	
	4	1	**5M-3062**	2	BOLT (3/8-16X0.75-IN)	
					AVAILABLE REPAIR KIT(S):	
J			**203-1558**	1	KIT-SEAL	
					(INCLUDES SEAL)	
J-KIT MARKED J INCLUDES PART MARKED J						

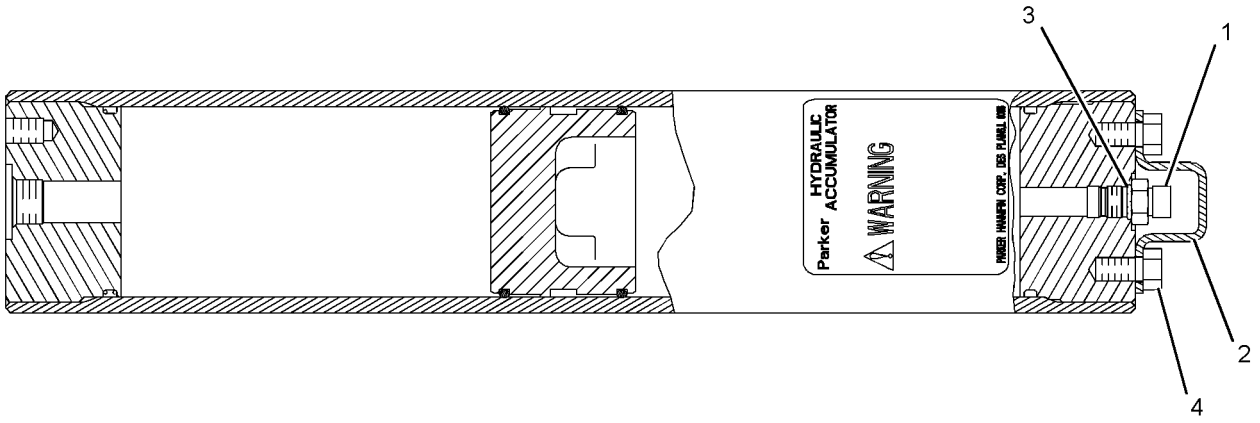

GRAPHIC #1 **<END>** g01110741

249-3862 ACCUMULATOR GP-BRAKE—CHARGED

S/N: R9J1-UP
PART OF 252-1811 LINES GP-ACCUMULATOR
FIELD REPLACEMENT ORDER 348-9257—PAGE 537
AN ATTACHMENT

SMCS-4263, 4264 **i03974437**

NOTE	REF NO	GRAPHIC REF	PART NUMBER	QTY	PART NAME 1 2 3 4 5 6 (PRODUCT LEVEL)	SEE PAGE
	1	1	**158-2336**	1	VALVE-GAS	
	2	1	**111-9110**	1	PROTECTOR-GAS VALVE	
	3	1	**1J-9671**	1	SEAL-O-RING	
	4	1	**5M-3062**	2	BOLT (3/8-16X0.75-IN)	
	5	1	**241-0037**	1	FILM-WARNING (HIGH PRESSURE, READ OMM)	
					AVAILABLE REPAIR KIT(S):	
			203-1558	1	KIT-SEAL	

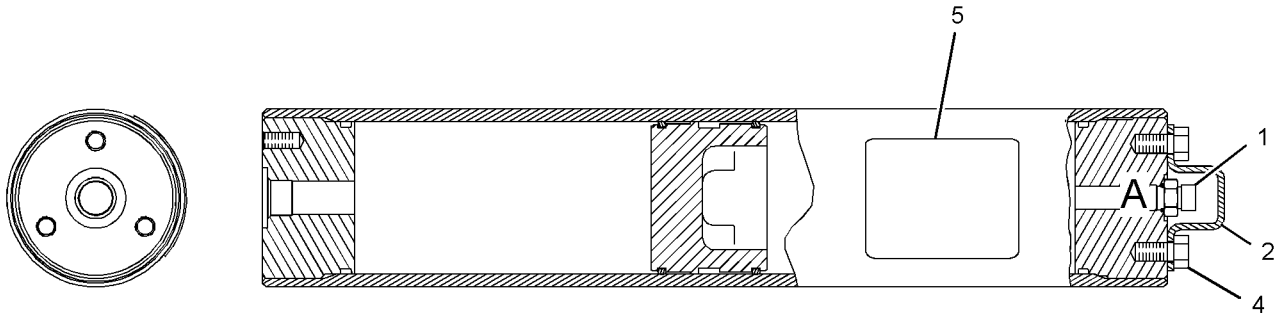

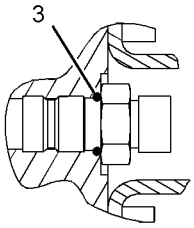

VIEW OF AREA A

GRAPHIC #1 **<END>** g02163451

348-9255 ACCUMULATOR GP-BRAKE–CHARGED

S/N: R9J1-UP
PART OF 356-4257 LINES GP-ACCUMULATOR
FIELD REPLACEMENT ORDER 348-9257–PAGE 537
AN ATTACHMENT

SMCS-4263, 4264 **i03950282**

NOTE	REF NO	GRAPHIC REF	PART NUMBER	QTY	PART NAME 1 2 3 4 5 6 (PRODUCT LEVEL)	SEE PAGE
	1	1	**158-2336**	1	VALVE-GAS	
	2	1	**111-9110**	1	PROTECTOR-GAS VALVE	
	3	1	**1J-9671**	1	SEAL-O-RING	
	4	1	**5M-3062**	2	BOLT (3/8-16X0.75-IN)	
	5	1	**241-0037**	1	FILM-WARNING (HIGH PRESSURE, READ OMM)	
					AVAILABLE REPAIR KIT(S):	
			203-1558	1	KIT-SEAL (BRAKE ACCUMULATOR)	

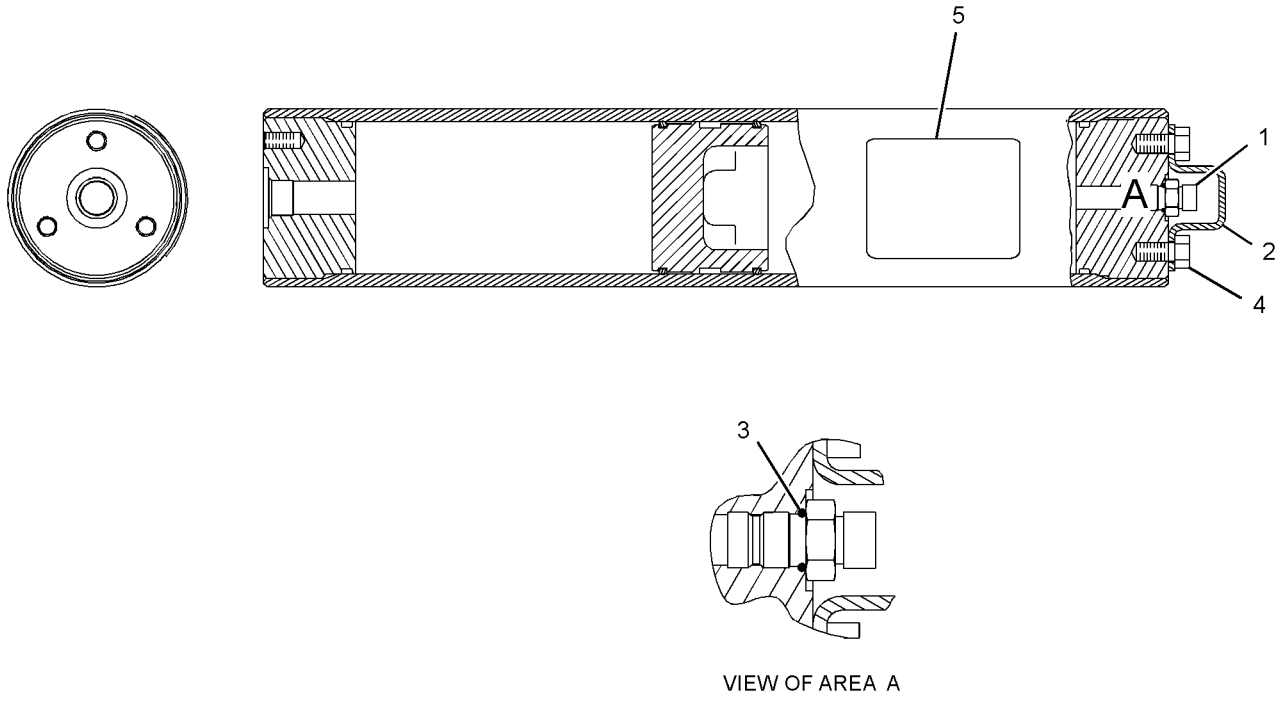

VIEW OF AREA A

GRAPHIC #1 **<END>** g02163451

348-9257 ACCUMULATOR GP-BRAKE—UNCHARGED

S/N: R9J1-UP

FIELD REPLACEMENT FOR 348-9255—PAGE 536, 249-3862—PAGE 535

SMCS-4263, 4264 **i03912174**

NOTE	REF NO	GRAPHIC REF	PART NUMBER	QTY	PART NAME 1 2 3 4 5 6 (PRODUCT LEVEL)	SEE PAGE
	1	1	**158-2336**	1	VALVE-GAS	
	2	1	**111-9110**	1	PROTECTOR-GAS VALVE	
	3	1	**1J-9671**	1	SEAL-O-RING	
	4	1	**5M-3062**	2	BOLT (3/8-16X0.75-IN)	
	5	1	**241-0037**	1	FILM-WARNING (HIGH PRESSURE, READ OMM)	
F			**5P-3779**	1	TAG-NOTICE (SHIPPING INSTRUCTIONS)	
					AVAILABLE REPAIR KIT(S):	
			203-1558	1	KIT-SEAL	

F-NOT SHOWN

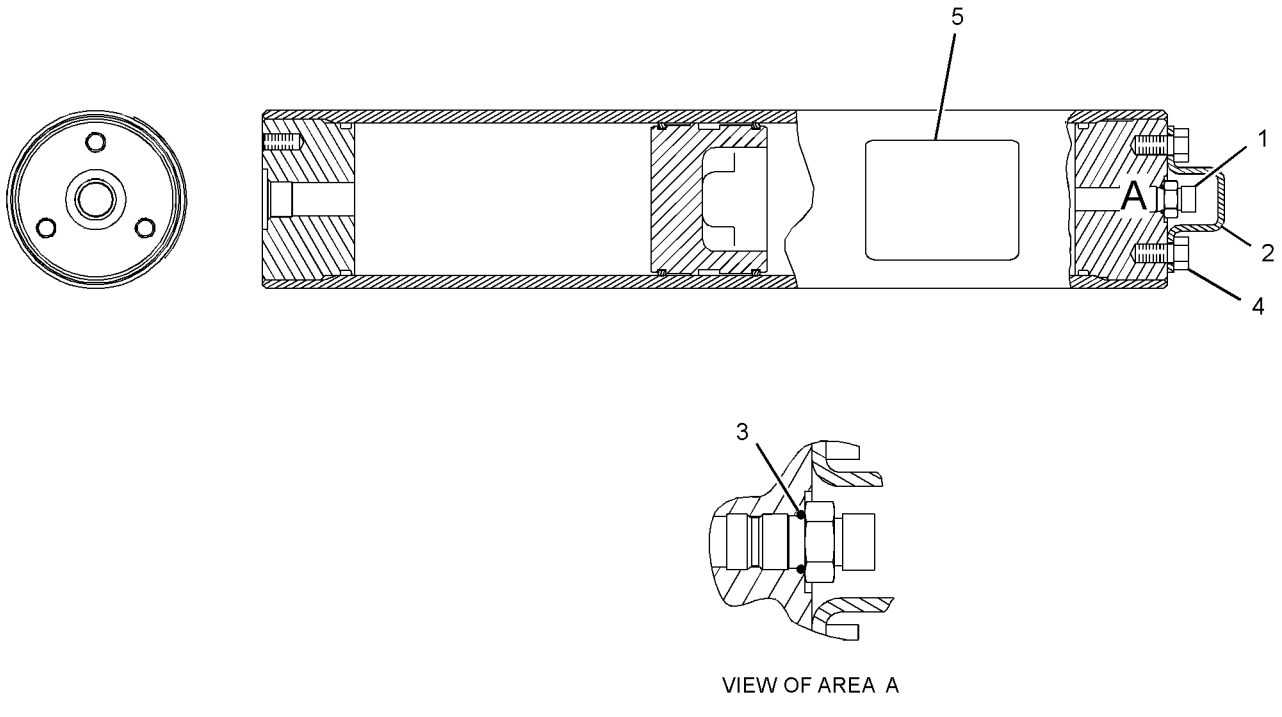

VIEW OF AREA A

GRAPHIC #1 **<END>** g02163451

BRAKING SYSTEM

253-8427 BRAKE GP-PARKING

S/N: DZM1544-UP

PART OF 253-8407 TRANSMISSION AR

SMCS-3077, 4267 **i03960429**

NOTE	REF NO	GRAPHIC REF	PART NUMBER	QTY	PART NAME 1 2 3 4 5 6 (PRODUCT LEVEL)	SEE PAGE
	1	1	**133-4292**	1	SEAL-LIP TYPE	
	2	1	**171-9375**	1	SEAL-O-RING	
	3	1	**187-3369**	4	SPRING	
C	4	1	**188-0633**	1	SEAL-BRAKE	
	5	1	**241-3722**	1	FILM-WARNING (RECOIL SPRING)	
	6	1	**246-8743**	1	YOKE AS	
		1	**2H-4145**	1	SEAL-O-RING	
		1	**172-6423**	1	CUP-DUST	
	7	1	**246-8776**	1	PISTON	
	8	1	**246-8777**	1	SEAL-BRAKE	
	9	1	**343-8739**	8	DISC-FRICTION	
	10	1	**246-8780**	9	PLATE-CLUTCH	
	11	1	**246-8781**	1	HUB	
	12	1	**297-2828**	1	HOUSING AS-BRAKE	
		1	**9W-6068**	1	PLUG	
		1	**124-1555**	3	PLUG	
	13	1	**297-2830**	1	PLATE AS	
		1	**5M-7937**	2	DOWEL	
	14	1	**095-0930**	1	RING-RETAINING (EXTERNAL)	
M	15	1	**129-3181**	3	BOLT-SOCKET HEAD (M10X1.5X55-MM)	
	16	1	**315-6094**	3	DOWEL	
	17	1	*162-0177*	1	PLUG AS	
		1	**3J-1907**	1	SEAL-O-RING	
		1	**9S-8004**	1	PLUG-O-RING	
	18	1	**4J-8996**	1	SEAL-O-RING	
	19	1	**6V-5759**	2	SEAL-O-RING	
	20	1	**7X-0605**	12	WASHER-HARD (13X28X1.6-MM THK)	
M	21	1	**8T-5092**	12	BOLT (M12X1.75X150-MM)	
	22	1	**1U-8846**	1	SEALANT-GASKET	

C-CHANGE FROM PREVIOUS TYPE
M-METRIC PART

253-8427 **BRAKE GP-PARKING** *(contd.)* **i03960429**

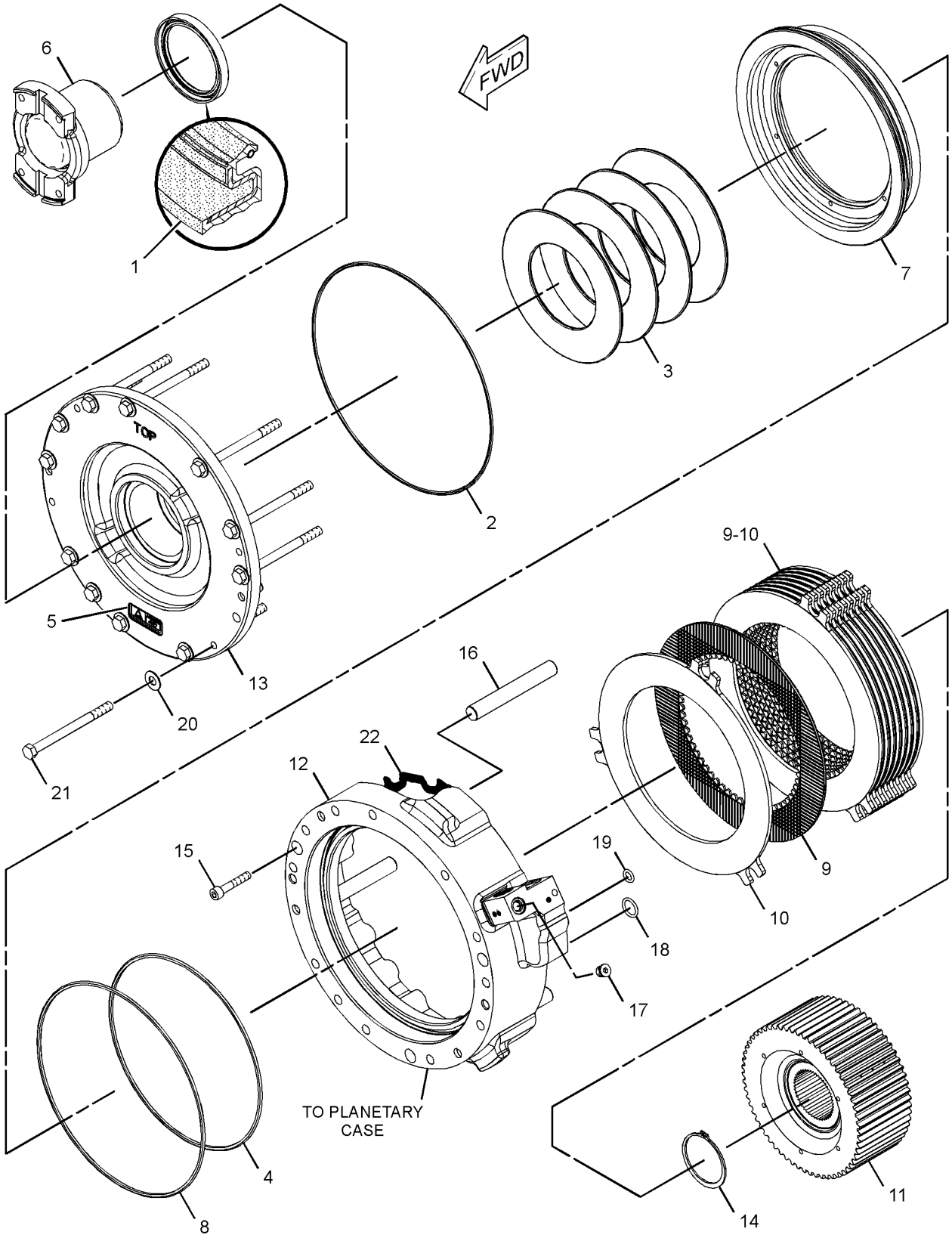

GRAPHIC #1 **<END>** g01293718

BRAKING SYSTEM

233-3142 CONTROL GP-SERVICE BRAKE

S/N: R9J1-UP

PART OF 353-5005, 358-7877, 361-1731, 361-4363, 363-0414 DISTRIBUTION AR AN ATTACHMENT

SMCS-4265, 4269 **i03537248**

NOTE	REF NO	GRAPHIC REF	PART NUMBER	QTY	PART NAME 1 2 3 4 5 6 (PRODUCT LEVEL)	SEE PAGE
Y	1	1	**249-4080**	1	CONTROL GP-SERVICE BRAKE	542
	2	1	**249-4091**	4	BLOCK	
Y	3	1	*251-2243*	1	LINES GP-ACCUMULATOR (BRAKE)	544
	4	1	**253-3476**	1	PLATE AS	
	5	1	**281-9356**	2	PLATE	
	6	1	**286-5672**	1	PLATE AS	
	7	1	**128-5924**	4	CLAMP	
	8	1	**5P-9299**	5	CLIP	
	9	1	**8R-3393**	4	STRAP	
	10	1	**8T-4121**	18	WASHER-HARD (11X21X2.5-MM THK)	
M	11	1	**8T-4137**	8	BOLT (M10X1.5X20-MM)	
M	12	1	**8T-4186**	4	BOLT (M10X1.5X40-MM)	
M	13	1	**8T-4191**	1	BOLT (M10X1.5X16-MM)	
M	14	1	**8T-4195**	4	BOLT (M10X1.5X30-MM)	
	15	1	**8T-4222**	3	WASHER-PLATED (11X32X2.5-MM THK)	
M	16	1	**8T-6466**	3	BOLT (M10X1.5X60-MM)	

M-METRIC PART
Y-SEPARATE ILLUSTRATION

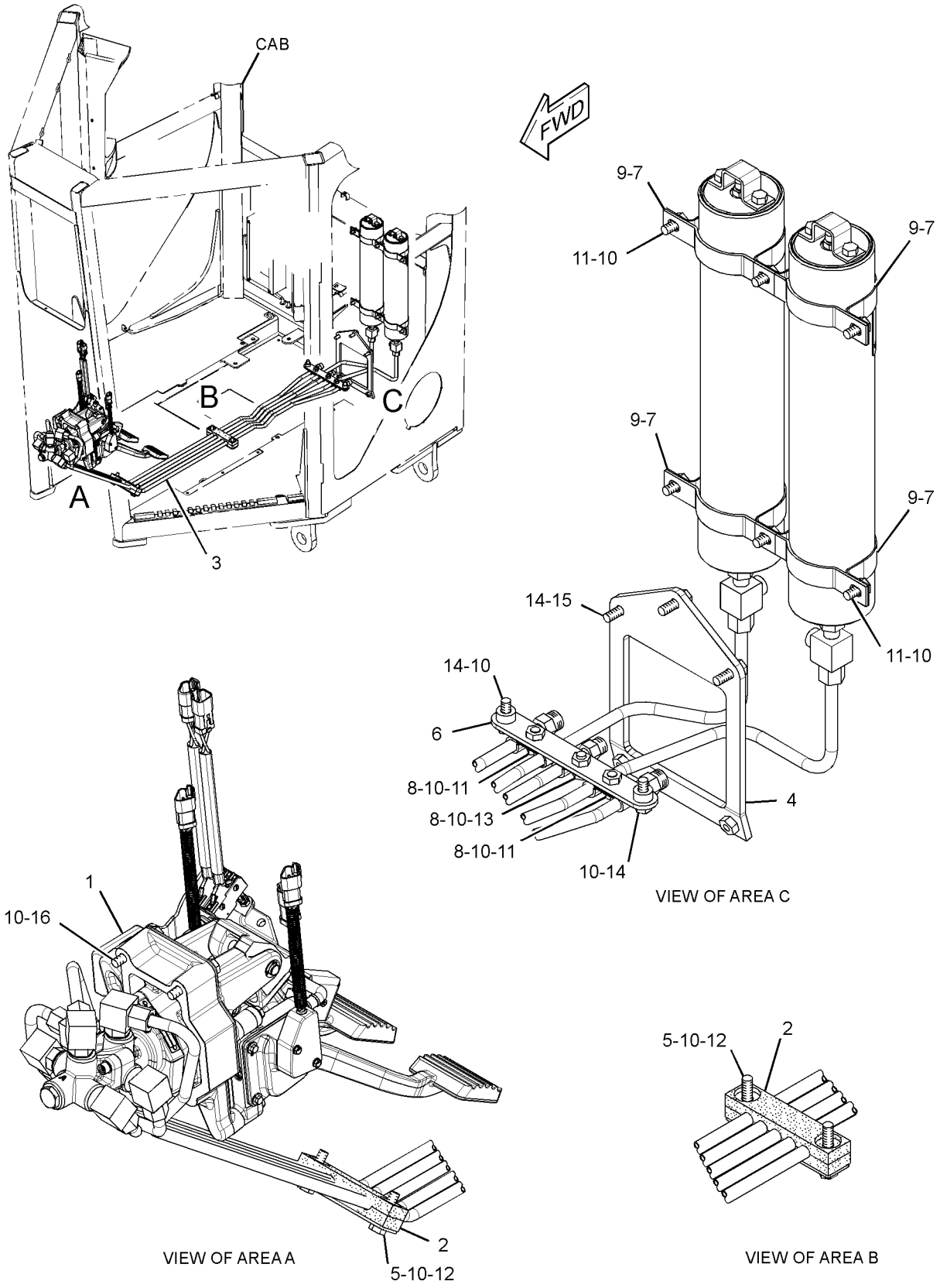

GRAPHIC #1 **<END>** g01865738

BRAKING SYSTEM

249-4080 CONTROL GP-SERVICE BRAKE

S/N: R9J1-UP

PART OF 233-3142, 252-1810 CONTROL GP-SERVICE BRAKE, 356-4256 LINES

GP-SERVICE BRAKE

AN ATTACHMENT

SMCS-4265, 4269 **i02956632**

NOTE	REF NO	GRAPHIC REF	PART NUMBER	QTY	PART NAME 1 2 3 4 5 6 (PRODUCT LEVEL)	SEE PAGE
Y	1	1	**265-8943**	1	PEDAL GP-BRAKE, TMSN & GOV	858
	2	1	**308-9523**	1	VALVE GP-BRAKE CONTROL	
		1	**117-7798**	1	BOOT	
		1	**117-7799**	1	KIT-SEAL (BRAKE VALVE) (INCLUDES BOOT, O-RINGS, QUAD RING & CUP)	

Y-SEPARATE ILLUSTRATION

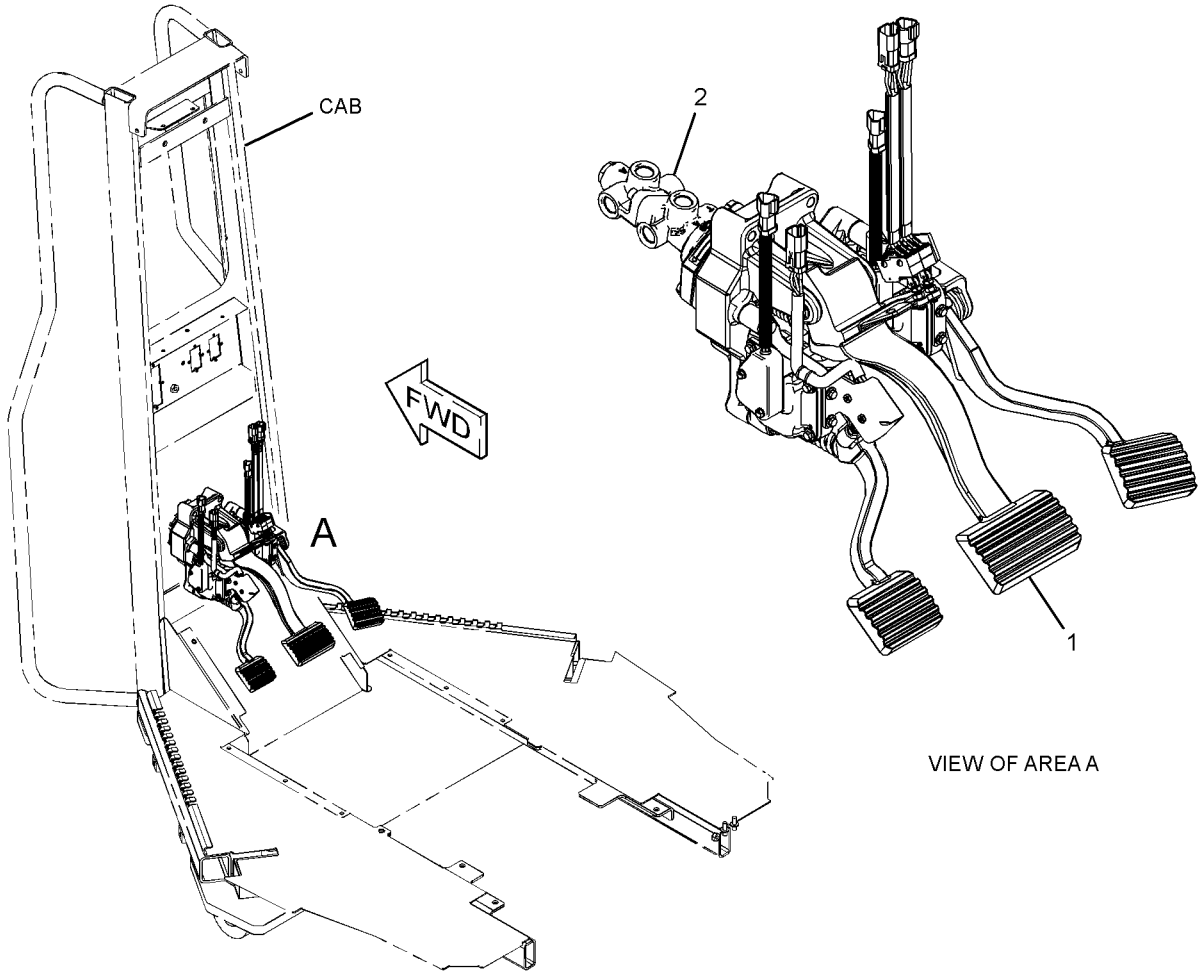

GRAPHIC #1 **<END>** g01331214

252-1810 CONTROL GP-SERVICE BRAKE

S/N: R9J1-UP
PART OF 350-5390, 364-3739 OPTION AR-REGIONAL
AN ATTACHMENT

SMCS-4265, 4269 **i03537353**

NOTE	REF NO	GRAPHIC REF	PART NUMBER	QTY	PART NAME 1 2 3 4 5 6 (PRODUCT LEVEL)	SEE PAGE
Y	1	1	**249-4080**	1	CONTROL GP-SERVICE BRAKE	542
	2	1	**249-4091**	4	BLOCK	
Y	3	1	*252-1811*	1	LINES GP-ACCUMULATOR (BRAKE)	546
	4	1	**253-3476**	1	PLATE AS	
	5	1	**281-9356**	2	PLATE	
	6	1	**286-5672**	1	PLATE AS	
	7	1	**128-5924**	4	CLAMP	
	8	1	**5P-9299**	5	CLIP	
	9	1	**8R-3393**	4	STRAP	
	10	1	**8T-4121**	18	WASHER-HARD (11X21X2.5-MM THK)	
M	11	1	**8T-4137**	8	BOLT (M10X1.5X20-MM)	
M	12	1	**8T-4186**	4	BOLT (M10X1.5X40-MM)	
M	13	1	**8T-4191**	1	BOLT (M10X1.5X16-MM)	
M	14	1	**8T-4195**	5	BOLT (M10X1.5X30-MM)	
	15	1	**8T-4222**	3	WASHER-PLATED (11X32X2.5-MM THK)	
M	16	1	**8T-6466**	3	BOLT (M10X1.5X60-MM)	

M-METRIC PART
Y-SEPARATE ILLUSTRATION

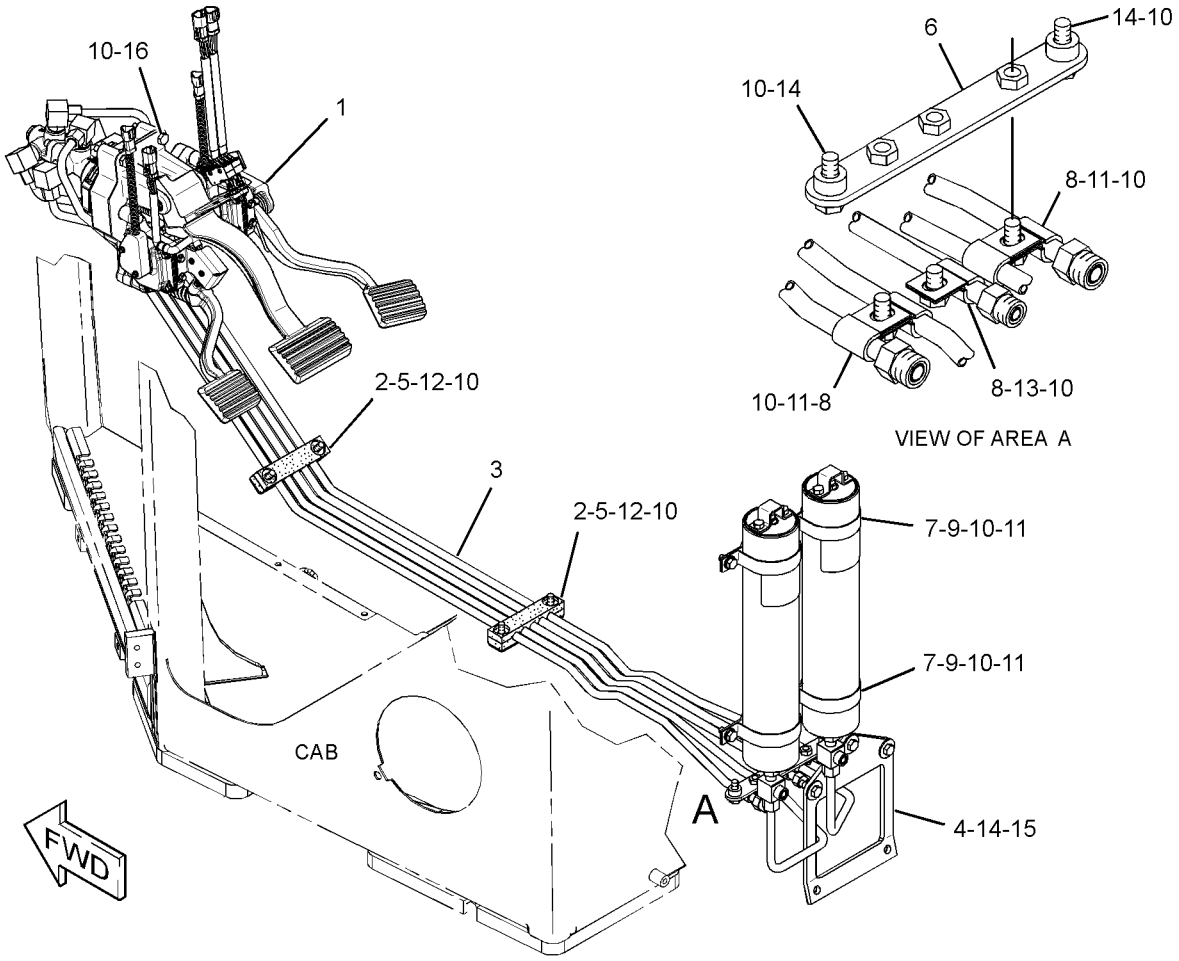

GRAPHIC #1 **<END>** g01868338

251-2243 LINES GP-ACCUMULATOR–BRAKE

S/N: R9J1-UP
PART OF 233-3142 CONTROL GP-SERVICE BRAKE
AN ATTACHMENT

SMCS-4257, 4263 **i03747102**

NOTE	REF NO	GRAPHIC REF	PART NUMBER	QTY	PART NAME 1 2 3 4 5 6 (PRODUCT LEVEL)	SEE PAGE
	1	1	**246-3303**	1	TUBE AS	
	2	1	**246-3305**	1	TUBE AS	
	3	1	**246-3307**	1	TUBE AS	
	4	1	**249-4088**	1	TUBE AS	
	5	1	**328-7073**	1	TUBE AS	
	6	1	**328-7074**	1	TUBE AS	
	7	1	*148-8340*	2	CONNECTOR AS	
					(EACH INCLUDES)	
		1	**6V-8639**	1	CONNECTOR	
		1	**3K-0360**	1	SEAL-O-RING	
		1	**6V-8398**	1	SEAL-O-RING	
	8	1	*148-8364*	5	ELBOW AS	
					(EACH INCLUDES)	
		1	**6V-8625**	1	ELBOW (90-DEG)	
		1	**3K-0360**	1	SEAL-O-RING	
		1	**6V-8398**	1	SEAL-O-RING	
	9	1	*148-8428*	1	TEE AS (ORFS)	
		1	**6V-8782**	1	TEE (FACE SEAL)	
		1	**3K-0360**	1	SEAL-O-RING	
		1	**6V-8398**	2	SEAL-O-RING	
	10	1	*148-8444*	2	TEE AS-SWIVEL	
					(EACH INCLUDES)	
		1	**6V-9837**	1	TEE-SWIVEL	
		1	**6V-8398**	2	SEAL-O-RING	
Y	11	1	*249-3860*	2	ACCUMULATOR GP-BRAKE (CHARGED)	534

Y-SEPARATE ILLUSTRATION

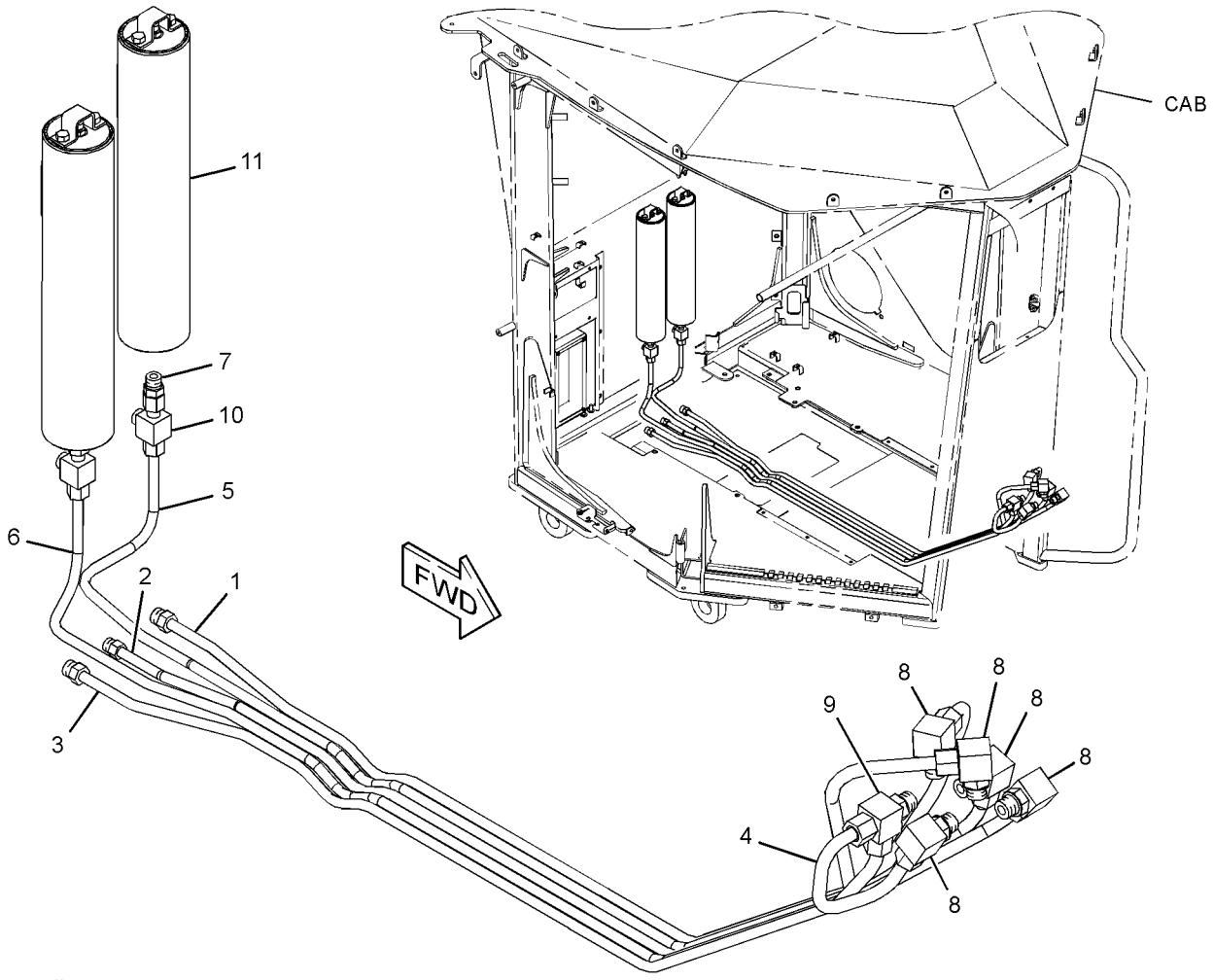

GRAPHIC #1 **<END>** g02023039

252-1811 LINES GP-ACCUMULATOR–BRAKE

S/N: R9J1-UP
PART OF 252-1810 CONTROL GP-SERVICE BRAKE
AN ATTACHMENT

SMCS-4257, 4263 **i03372242**

NOTE	REF NO	GRAPHIC REF	PART NUMBER	QTY	PART NAME 1 2 3 4 5 6 (PRODUCT LEVEL)	SEE PAGE
	1	1	**246-3303**	1	TUBE AS	
	2	1	**328-7073**	1	TUBE AS	
	3	1	**246-3305**	1	TUBE AS	
	4	1	**328-7074**	1	TUBE AS	
	5	1	**246-3307**	1	TUBE AS	
	6	1	**249-4088**	1	TUBE AS	
	8	1	*148-8340*	2	CONNECTOR AS	
					(EACH INCLUDES)	
		1	**6V-8639**	1	CONNECTOR	
		1	**3K-0360**	1	SEAL-O-RING	
		1	**6V-8398**	1	SEAL-O-RING	
	9	1	*148-8364*	5	ELBOW AS	
					(EACH INCLUDES)	
		1	**6V-8625**	1	ELBOW	
		1	**3K-0360**	1	SEAL-O-RING	
		1	**6V-8398**	1	SEAL-O-RING	
	11	1	*148-8444*	2	TEE AS-SWIVEL	
					(EACH INCLUDES)	
		1	**6V-9837**	1	TEE-SWIVEL	
		1	**6V-8398**	2	SEAL-O-RING	
	12	1	*148-8428*	1	TEE AS	
		1	**6V-8782**	1	TEE	
		1	**3K-0360**	1	SEAL-O-RING	
		1	**6V-8398**	2	SEAL-O-RING	
Y	13	1	*249-3862*	2	ACCUMULATOR GP-BRAKE (CHARGED)	535

Y-SEPARATE ILLUSTRATION

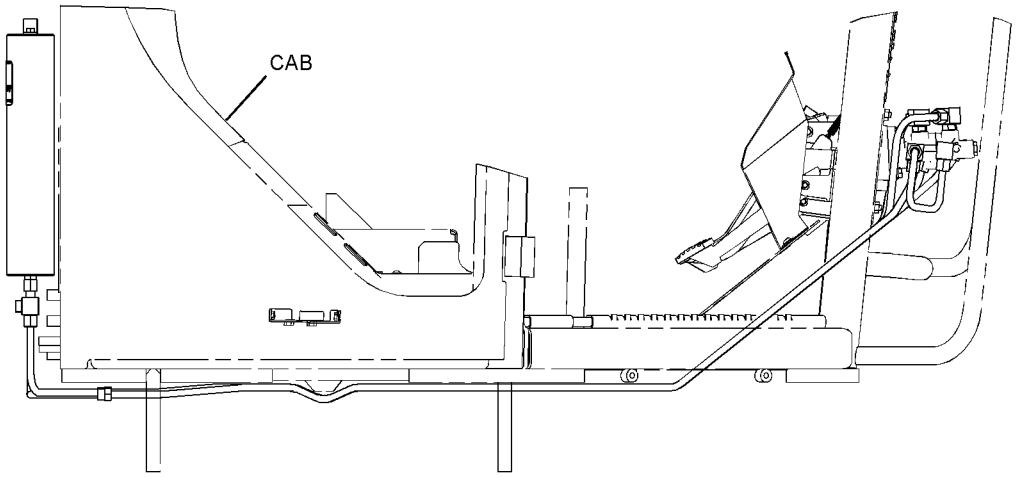

RIGHT SIDE VIEW

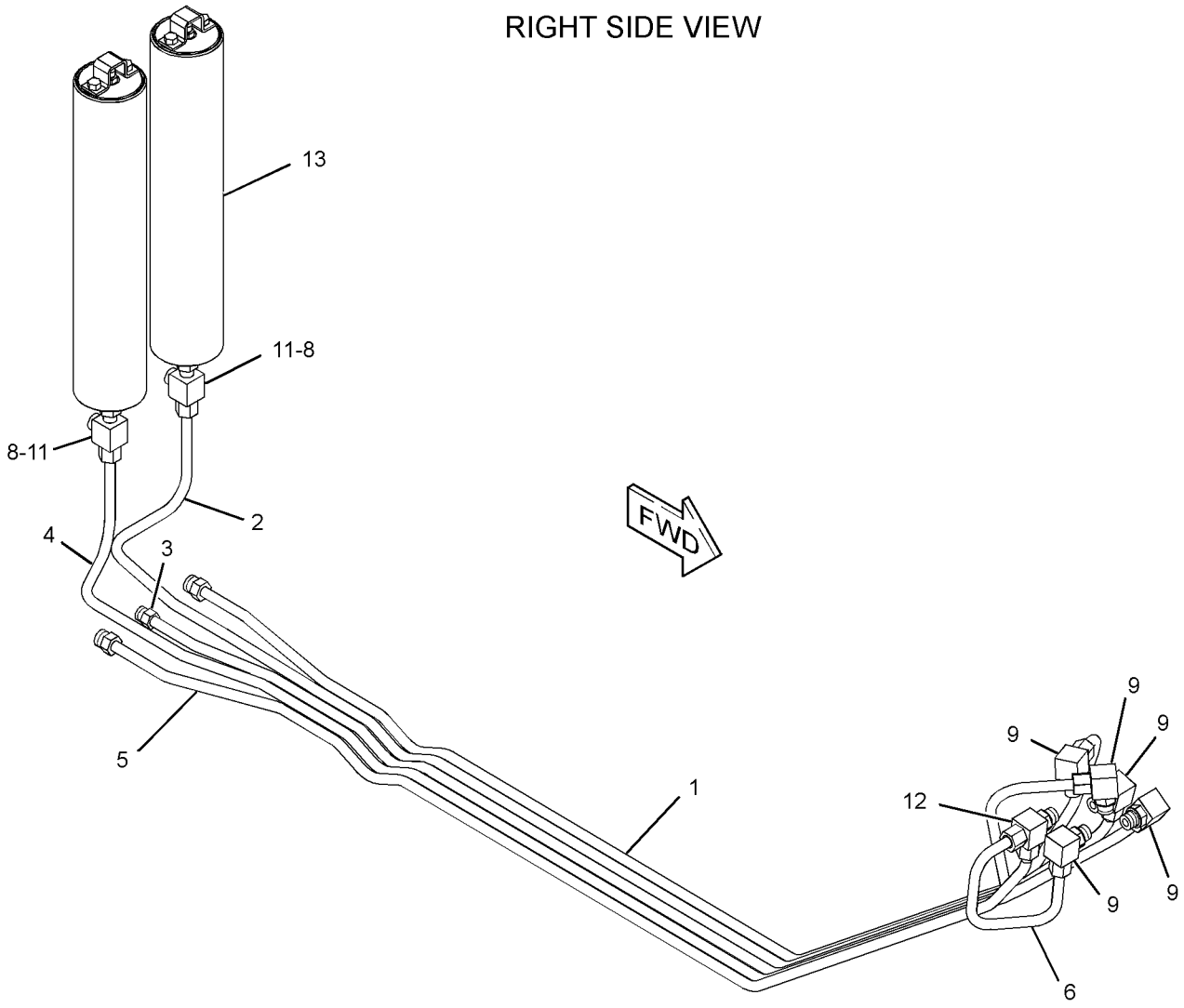

GRAPHIC #1 **<END>** g01299663

356-4257 LINES GP-ACCUMULATOR–BRAKE

S/N: R9J1-UP

PART OF 356-4256 LINES GP-SERVICE BRAKE

AN ATTACHMENT

SMCS-4257, 4263 **i03950294**

NOTE	REF NO	GRAPHIC REF	PART NUMBER	QTY	PART NAME 1 2 3 4 5 6 (PRODUCT LEVEL)	SEE PAGE
	1	1	**246-3303**	1	TUBE AS	
	2	1	**246-3305**	1	TUBE AS	
	3	1	**246-3307**	1	TUBE AS	
	4	1	**249-4088**	1	TUBE AS	
	5	1	**328-7073**	1	TUBE AS	
	6	1	**328-7074**	1	TUBE AS	
Y	7	1	*348-9255*	2	ACCUMULATOR GP-BRAKE (CHARGED)	536
	8	1	*148-8340*	2	CONNECTOR AS	
					(EACH INCLUDES)	
		1	**6V-8639**	1	CONNECTOR	
		1	**3K-0360**	1	SEAL-O-RING	
		1	**6V-8398**	1	SEAL-O-RING	
	9	1	*148-8364*	5	ELBOW AS	
					(EACH INCLUDES)	
		1	**6V-8625**	1	ELBOW	
		1	**3K-0360**	1	SEAL-O-RING	
		1	**6V-8398**	1	SEAL-O-RING	
	10	1	*148-8428*	1	TEE AS	
		1	**6V-8782**	1	TEE	
		1	**3K-0360**	1	SEAL-O-RING	
		1	**6V-8398**	2	SEAL-O-RING	
	11	1	*148-8444*	2	TEE AS-SWIVEL	
					(EACH INCLUDES)	
		1	**6V-9837**	1	TEE-SWIVEL	
		1	**6V-8398**	2	SEAL-O-RING	

Y-SEPARATE ILLUSTRATION

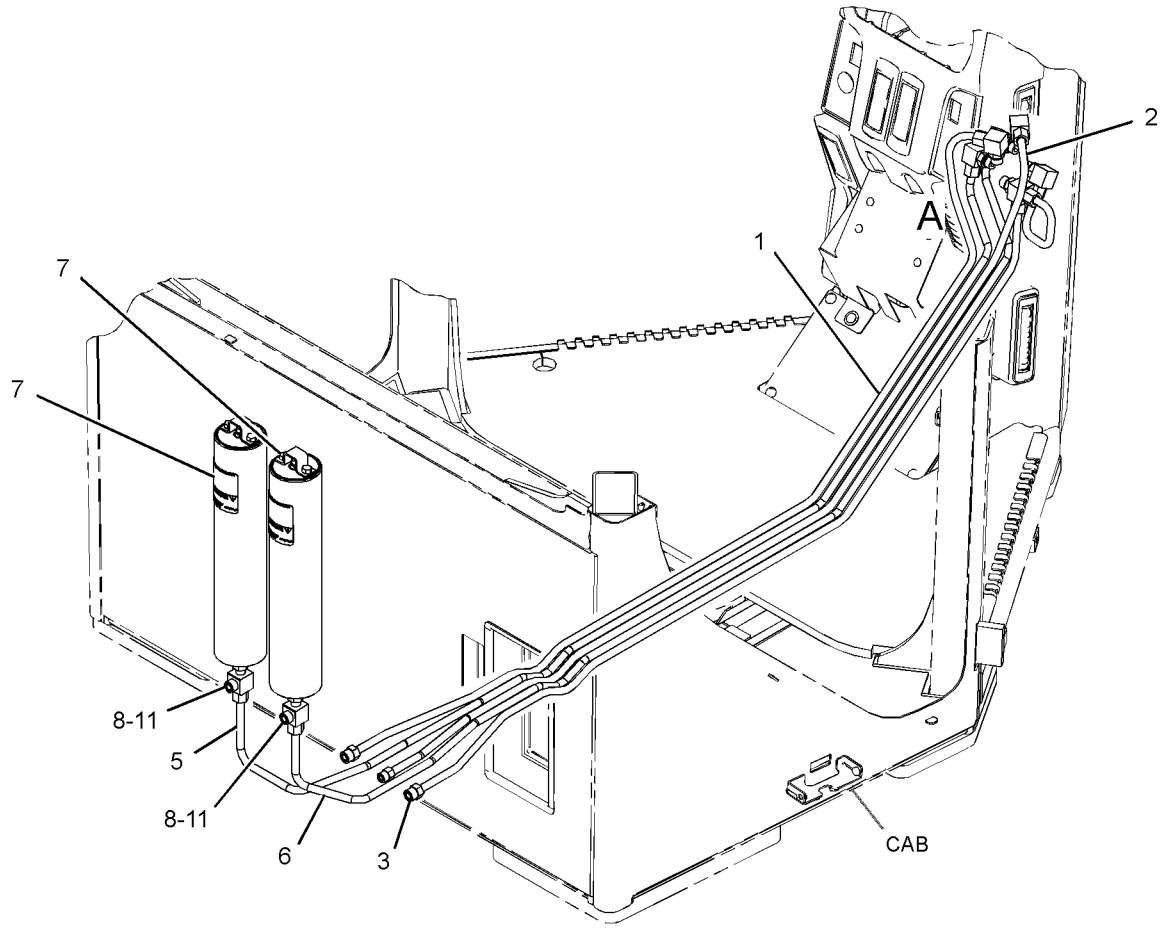

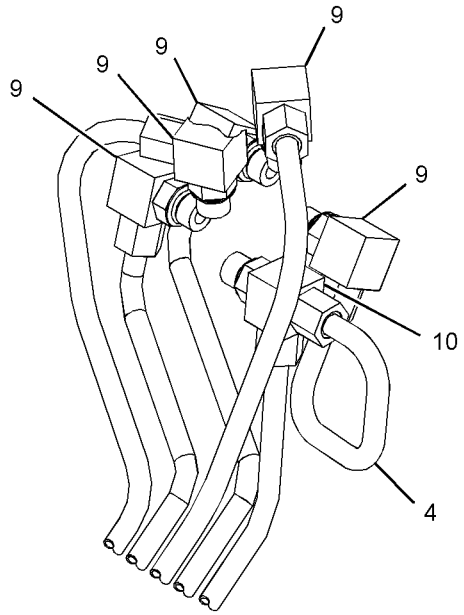

VIEW OF AREA A

GRAPHIC #1 **<END>** g02162898

BRAKING SYSTEM

248-5071 LINES GP-AIR TANK

S/N: R9J1-UP
PART OF 256-6983 AIR COMPRESSOR AR
AN ATTACHMENT

SMCS-4272 **i02838457**

NOTE	REF NO	GRAPHIC REF	PART NUMBER	QTY	PART NAME 1 2 3 4 5 6 (PRODUCT LEVEL)	SEE PAGE
	1	1	**2D-8910**	1	ELBOW	
	2	1	**6B-4312**	1	CLIP	
	3	1	**8M-3368**	1	VALVE-CHECK	
	4	1	**8J-3705**	1	CONNECTOR	
	5	1	**9R-5383**	1	BOSS (11X25X20-MM THK)	
	6	1	**258-4621**	1	HOSE AS	
	7	1	**289-6241**	1	HOSE AS	
	8	1	**2M-9780**	1	SEAL-O-RING	
	9	1	**3D-5279**	1	GROMMET	
	10	1	**4D-7733**	5	CLIP	
	11	1	**4D-7735**	1	CLIP	
	12	1	**4H-2558**	1	GROMMET	
	13	1	**4S-7606**	1	ELBOW	
	14	1	**5H-4778**	1	ELBOW	
	15	1	**5P-2369**	1	CLIP	
	16	1	**6V-3342**	1	ELBOW-PIPE	
	17	1	**8T-4121**	7	WASHER-HARD (11X21X2.5-MM THK)	
M	18	1	**8T-4133**	4	NUT (M10X1.5-THD)	
M	19	1	**8T-4137**	2	BOLT (M10X1.5X20-MM)	
M	20	1	**8T-4185**	1	BOLT (M10X1.5X50-MM)	
M	21	1	**8T-4195**	1	BOLT (M10X1.5X30-MM)	

M-METRIC PART

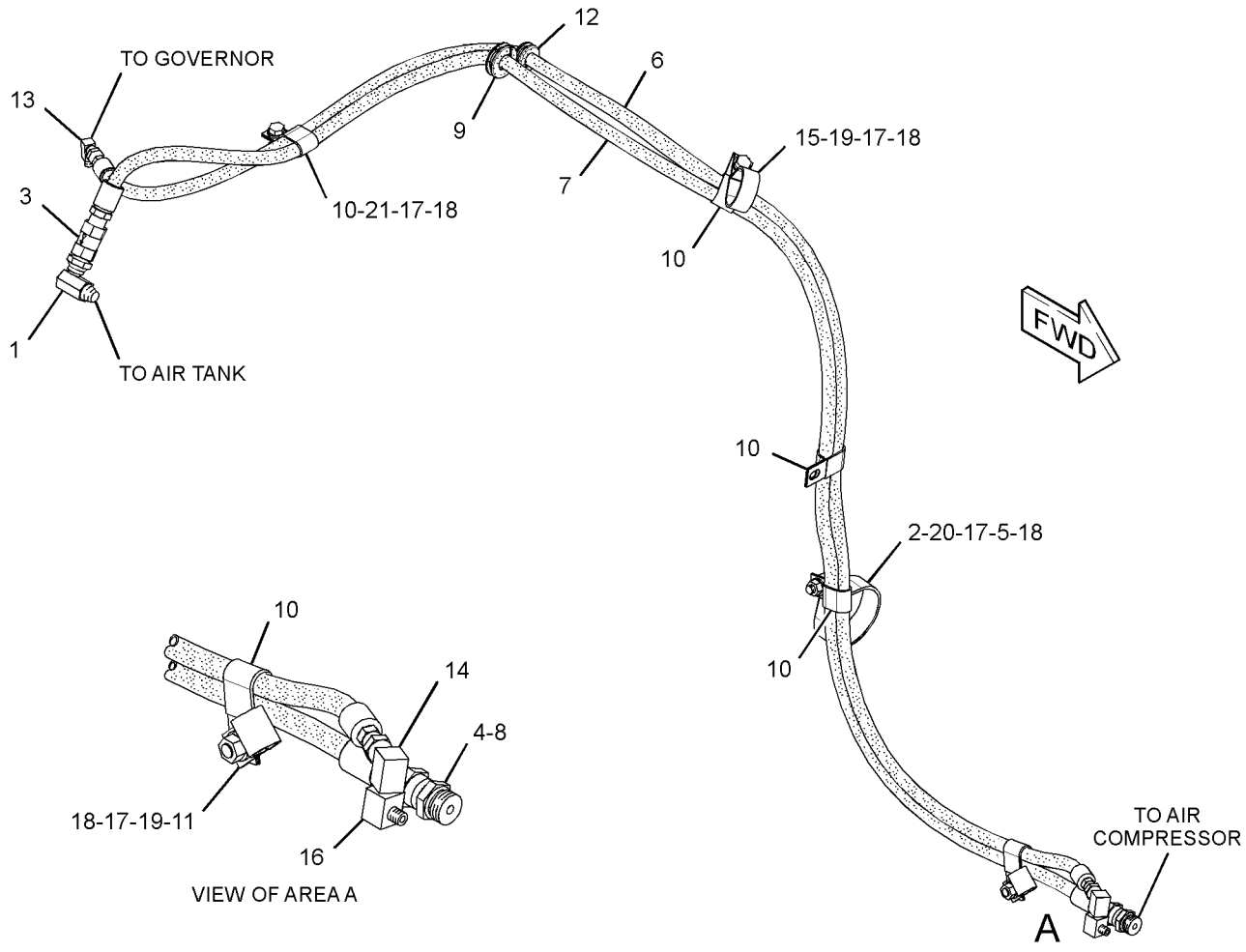

GRAPHIC #1

<END>

g01419966

BRAKING SYSTEM

356-2955 LINES GP-SERVICE BRAKE

S/N: R9J1-UP

PART OF 349-2555 COMMON AR

SMCS-4257 **i04017327**

NOTE	REF NO	GRAPHIC REF	PART NUMBER	QTY	PART NAME 1 2 3 4 5 6 (PRODUCT LEVEL)	SEE PAGE
	1	2	**7K-1181**	3	STRAP-CABLE	
	2	2	**260-3580**	1	PLATE AS	
M		2	**8T-3490**	1	NUT-WELD (M10X1.5-THD)	
M		2	**9R-2672**	1	BOSS-THREADED (M10X1.5-THD)	
M	3	2	**264-0168**	1	STUD-TAPERLOCK (M10X1.5X50-MM)	
I	4	2	**286-3108**	1	HOSE AS	
I	5	2	**286-3109**	1	HOSE AS	
	6	2	**286-5299**	1	PLATE AS	
M		2	**7X-2543**	2	BOLT (M10X1.5X120-MM)	
	7	2	**286-9783**	1	BLOCK	
	8	2	**286-9784**	1	BLOCK	
	9	2	**286-9785**	1	BLOCK	
I	10	2	**287-1712**	1	HOSE AS	
I	11	2	**287-4509**	1	HOSE AS	
	12	2	**361-2651**	1	HOSE	
	13	2	*148-8336*	1	CONNECTOR AS	
		2	**6V-8636**	1	CONNECTOR	
		2	**3J-1907**	1	SEAL-O-RING	
		2	**6V-8397**	1	SEAL-O-RING	
	14	2	*148-8370*	1	ELBOW AS	
		2	**6V-9851**	1	ELBOW	
		2	**6V-8398**	1	SEAL-O-RING	
	15	2	*148-8371*	1	ELBOW AS	
		2	**8C-8988**	1	ELBOW	
		2	**6V-8397**	1	SEAL-O-RING	
	16	2	*148-8377*	2	ELBOW AS	
					(EACH INCLUDES)	
		2	**6V-8980**	1	ELBOW	
		2	**6V-8397**	2	SEAL-O-RING	
	17	2	*148-8415*	1	REDUCER AS	
		2	**6V-8936**	1	REDUCER	
		2	**6V-8397**	1	SEAL-O-RING	
	18	2	*150-4043*	1	CONNECTOR AS	
		2	**6V-9873**	1	CONNECTOR	
		2	**3J-1907**	1	SEAL-O-RING	
		2	**6V-8398**	1	SEAL-O-RING	
	19	2	*153-6241*	2	ELBOW AS	
					(EACH INCLUDES)	
		2	**8C-8989**	1	ELBOW	
		2	**6V-8398**	1	SEAL-O-RING	
	20	2	*153-6252*	1	CONNECTOR AS	
		2	**9X-8408**	1	CONNECTOR	
		2	**6V-8398**	1	SEAL-O-RING	
		2	**7M-8485**	1	SEAL-O-RING	
I	21	2	**213-6495**	2	HOSE AS	
I	22	2	**287-1713**	1	HOSE AS	
	23	2	**1S-0994**	4	CLIP	
	24	2	**3P-9847**	1	CLIP	
	25	2	**5K-5338**	4	CLIP	
	26	2	**5P-8939**	2	GROMMET	
	27	2	**6V-9168**	2	NUT (11/16-16-THD)	
M	28	2	**8T-0389**	3	LOCKNUT (M10X1.5-THD)	
	29	2	**8T-1889**	2	CLIP (SLOT)	
	30	2	**8T-1890**	2	CLIP (TAB)	
	31	2	**8T-4121**	12	WASHER-HARD (11X21X2.5-MM THK)	
M	32	2	**8T-4133**	2	NUT (M10X1.5-THD)	

356-2955 **LINES GP-SERVICE BRAKE** *(contd.)* **i04017327**

NOTE	REF NO	GRAPHIC REF	PART NUMBER	QTY	PART NAME 1 2 3 4 5 6 (PRODUCT LEVEL)	SEE PAGE
M	33	2	**8T-4136**	2	BOLT (M10X1.5X25-MM)	
M	34	2	**8T-4137**	2	BOLT (M10X1.5X20-MM)	
M	35	2	**8T-4195**	1	BOLT (M10X1.5X30-MM)	
M	36	2	**8T-4196**	2	BOLT (M10X1.5X35-MM)	

I-REFER TO HYDRAULIC INFORMATION SYSTEM
M-METRIC PART

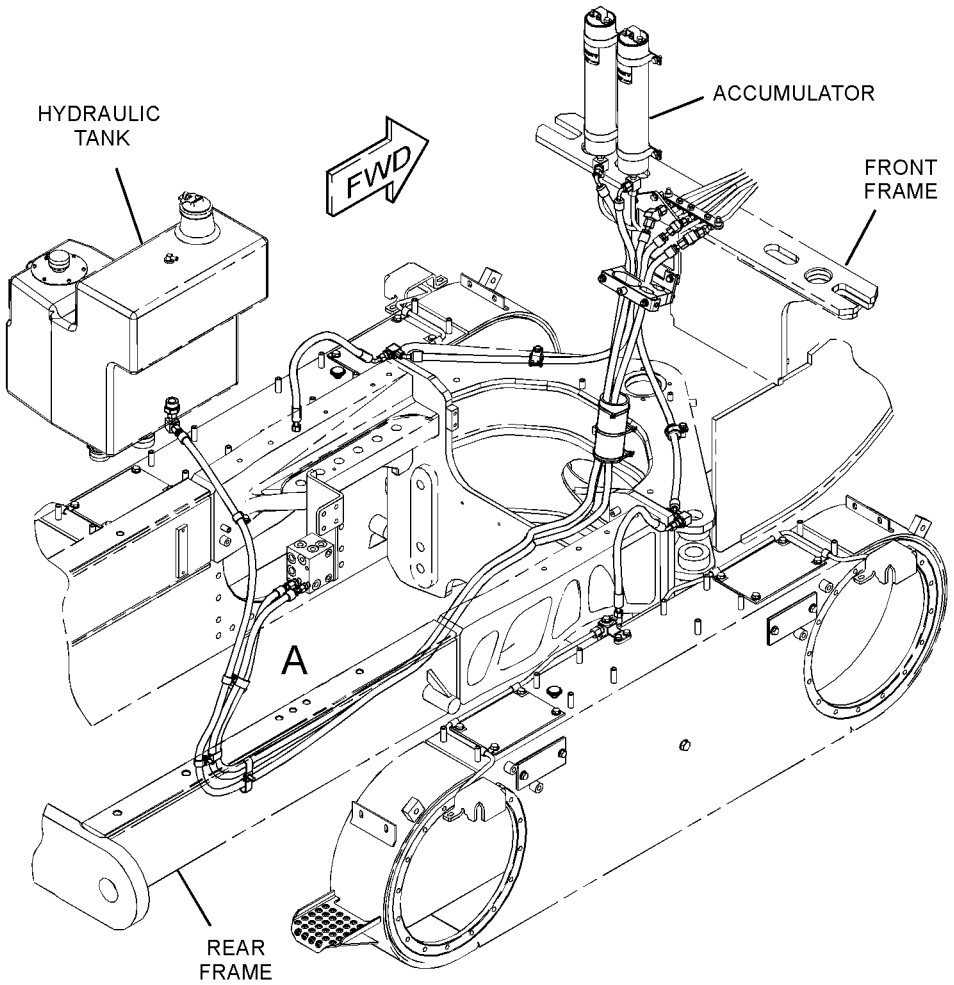

GRAPHIC #1 g02215496

356-2955 **LINES GP-SERVICE BRAKE** *(contd.)* **i04017327**

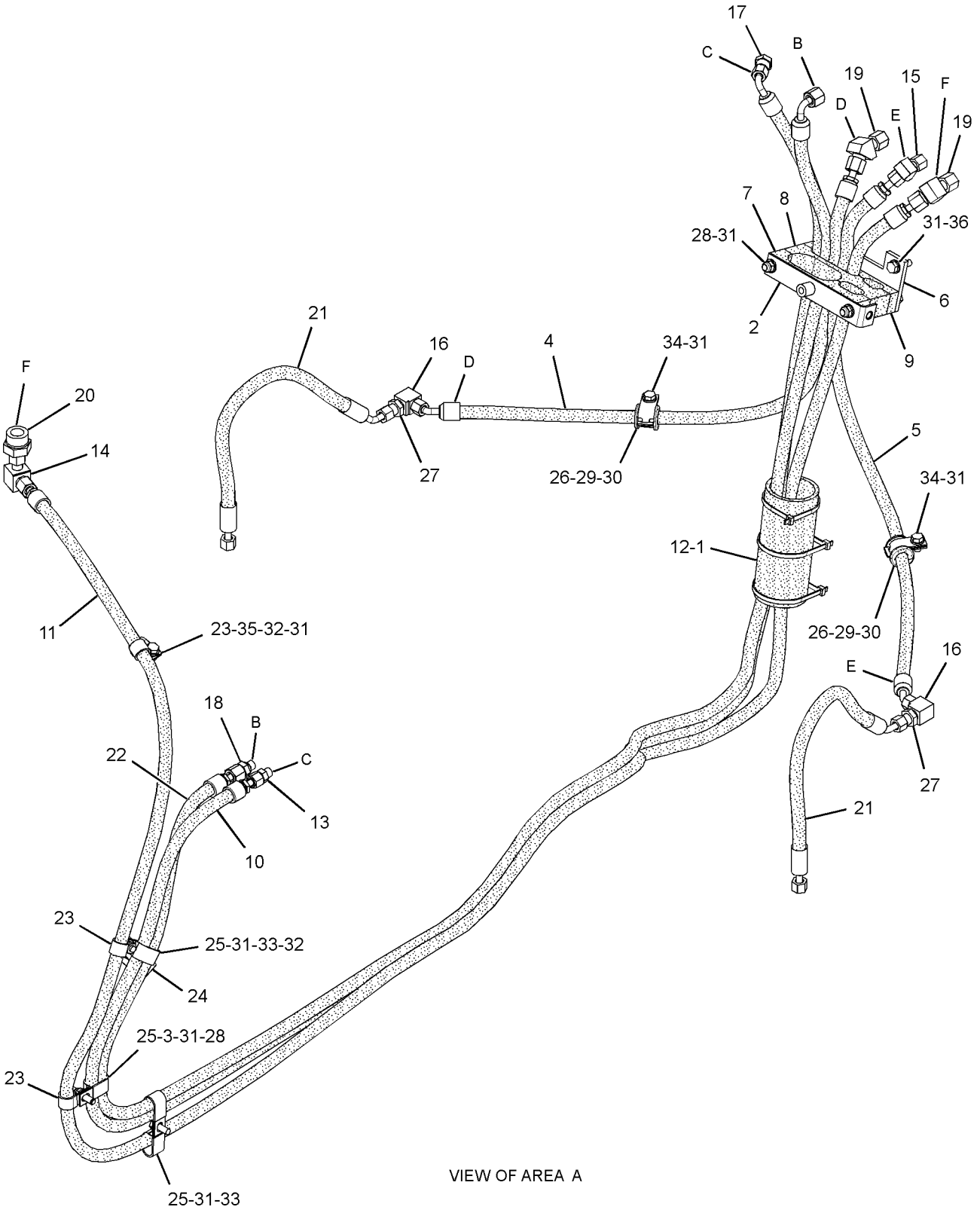

VIEW OF AREA A

GRAPHIC #2 **<END>** g02215497

356-2975 LINES GP-SERVICE BRAKE–TANDEM

S/N: R9J1-UP

PART OF 349-5187 POWER TRAIN AR

SMCS-4257 **i03984173**

NOTE	REF NO	GRAPHIC REF	PART NUMBER	QTY	PART NAME 1 2 3 4 5 6 (PRODUCT LEVEL)	SEE PAGE
	1	1	**246-3314**	2	BLOCK	
	2	1	**288-6652**	1	TUBE AS	
	3	1	**288-6653**	1	TUBE AS	
	4	1	**288-6654**	1	TUBE AS	
	5	1	**288-6655**	1	TUBE AS	
	6	1	**290-0112**	4	GUARD	
	7	1	*148-8365*	4	ELBOW AS	
					(EACH INCLUDES)	
		1	**8T-6876**	1	ELBOW	
		1	**3J-1907**	1	SEAL-O-RING	
		1	**6V-8398**	1	SEAL-O-RING	
	8	1	*148-8378*	2	ELBOW AS	
					(EACH INCLUDES)	
		1	**6V-8724**	1	ELBOW	
		1	**3J-1907**	1	SEAL-O-RING	
		1	**6V-8397**	1	SEAL-O-RING	
	9	1	*148-8407*	4	PLUG AS	
					(EACH INCLUDES)	
		1	**9S-4191**	1	PLUG-O-RING	
		1	**3J-1907**	1	SEAL-O-RING	
	10	1	*150-4043*	4	CONNECTOR AS	
					(EACH INCLUDES)	
		1	**6V-9873**	1	CONNECTOR	
		1	**3J-1907**	1	SEAL-O-RING	
		1	**6V-8398**	1	SEAL-O-RING	
	11	1	**164-4225**	4	CLIP	
	12	1	**5K-3294**	8	CLIP	
	13	1	**8T-4121**	12	WASHER-HARD (11X21X2.5-MM THK)	
M	14	1	**8T-4195**	12	BOLT (M10X1.5X30-MM)	

M-METRIC PART

356-2975 **LINES GP-SERVICE BRAKE** *(contd.)* **i03984173**

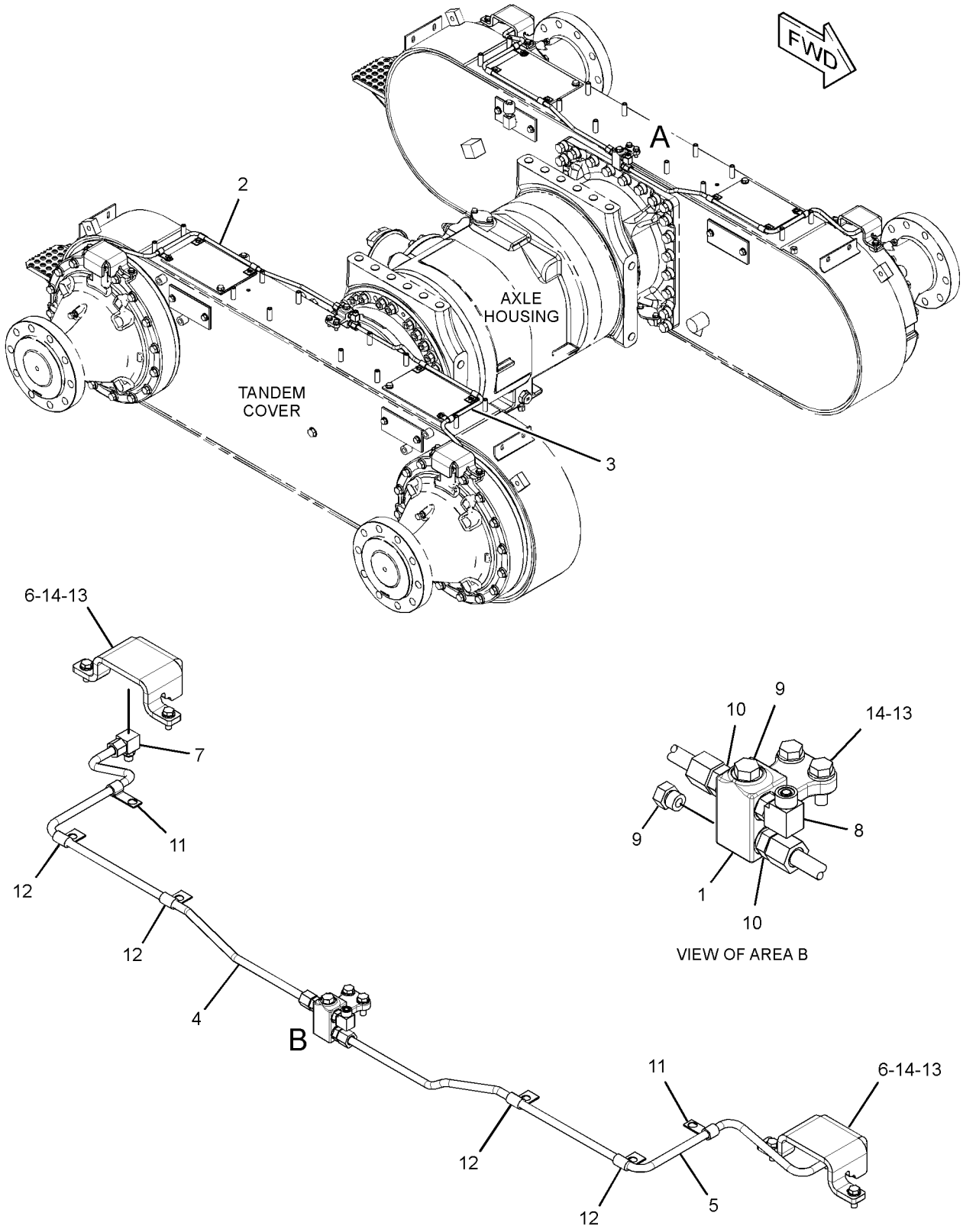

GRAPHIC #1 **<END>** g02214633

356-4256 LINES GP-SERVICE BRAKE

S/N: R9J1-UP
AN ATTACHMENT

SMCS-4257 **i03912178**

NOTE	REF NO	GRAPHIC REF	PART NUMBER	QTY	PART NAME 1 2 3 4 5 6 (PRODUCT LEVEL)	SEE PAGE
Y	1	1	**249-4080**	1	CONTROL GP-SERVICE BRAKE	542
	2	1	**249-4091**	4	BLOCK	
	3	1	**253-3476**	1	PLATE AS	
	4	1	**281-9356**	2	PLATE	
	5	1	**286-5672**	1	PLATE AS	
Y	6	1	*356-4257*	1	LINES GP-ACCUMULATOR (BRAKE)	548
	7	1	**128-5924**	4	CLAMP	
	8	1	**5P-9299**	5	CLIP	
	9	1	**8R-3393**	4	STRAP	
	10	1	**8T-4121**	18	WASHER-HARD (11X21X2.5-MM THK)	
M	11	1	**8T-4137**	8	BOLT (M10X1.5X20-MM)	
M	12	1	**8T-4186**	4	BOLT (M10X1.5X40-MM)	
M	13	1	**8T-4191**	1	BOLT (M10X1.5X16-MM)	
M	14	1	**8T-4195**	5	BOLT (M10X1.5X30-MM)	
	15	1	**8T-4222**	3	WASHER-PLATED (11X32X2.5-MM THK)	
M	16	1	**8T-6466**	3	BOLT (M10X1.5X60-MM)	

M-METRIC PART
Y-SEPARATE ILLUSTRATION

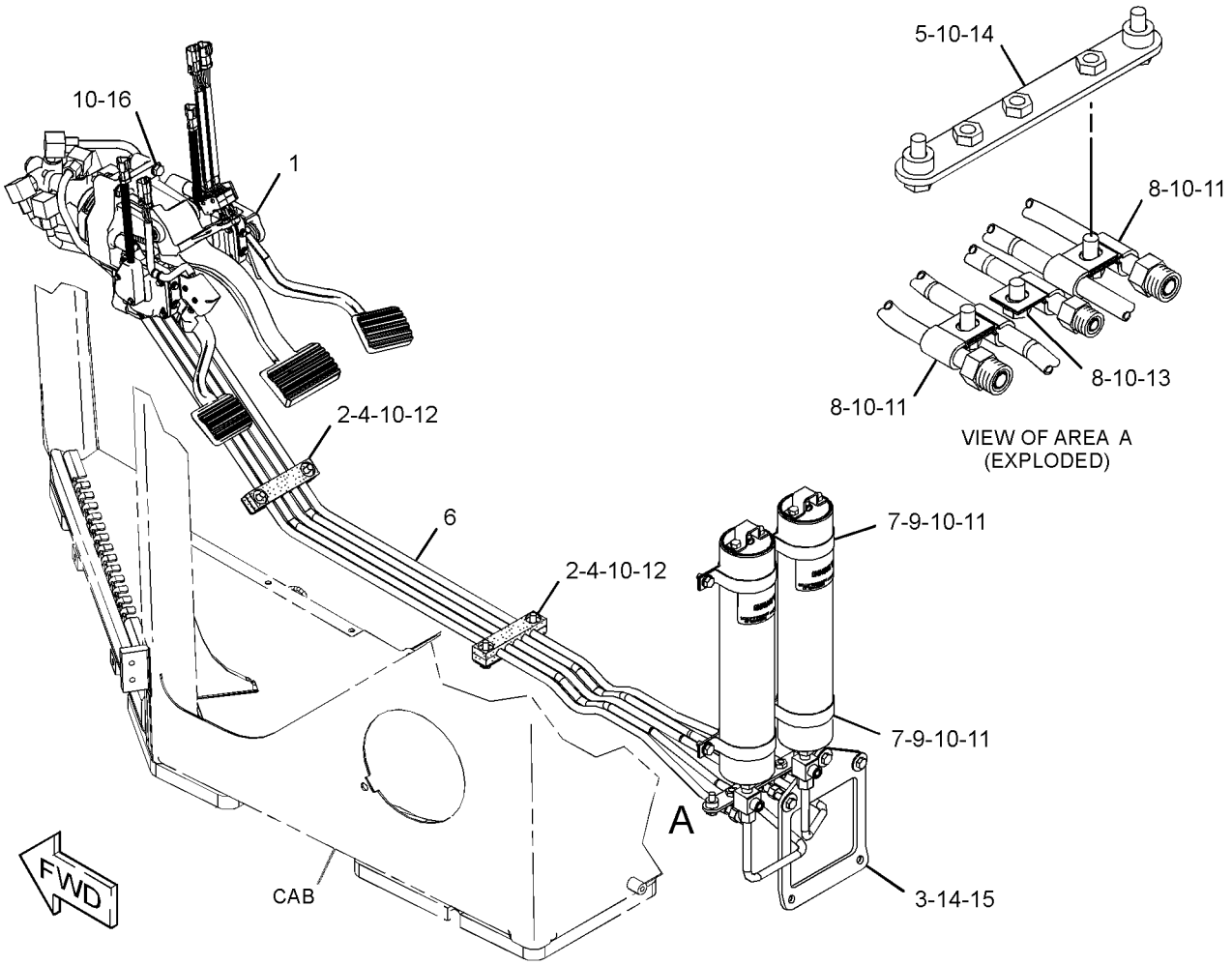

GRAPHIC #1 **<END>** g02163694

219-8035 ACCUMULATOR GP-BLADE CUSHION–CHARGED

S/N: R9J1-UP

PART OF 282-8869 LINES GP-ACCUMULATOR, 364-1282 LINES GP-HYDRAULIC

AN ATTACHMENT

SMCS-5077 **i02619821**

NOTE	REF NO	GRAPHIC REF	PART NUMBER	QTY	PART NAME 1 2 3 4 5 6 (PRODUCT LEVEL)	SEE PAGE
	1	1	**222-2367**	1	VALVE AS-GAS (HYDRAULIC ACCUMULATOR)	
		1	**190-3850**	1	CORE	
F			**241-0037**	1	FILM-WARNING (HIGH PRESSURE, READ OMM)	
					AVAILABLE REPAIR KIT(S):	
			170-0493	1	KIT-SEAL (HYDRAULIC ACCUMULATOR)	
					(KIT INCLUDES BACKUP WASHERS, PISTON SEALS, O-RINGS, & PISTON RING)	

F-NOT SHOWN

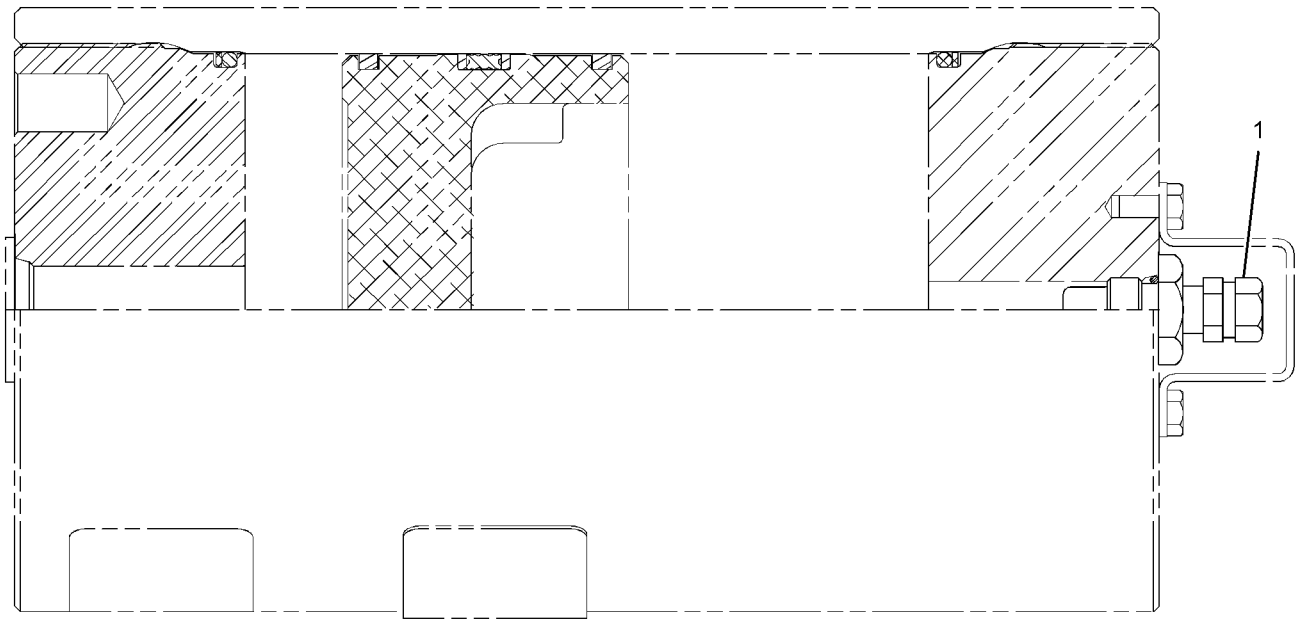

GRAPHIC #1 **<END>** g01313792

160-9413 ACCUMULATOR GP-HYDRAULIC

S/N: R9J1-UP
PART OF 351-8254, 366-3382 LINES GP-HYDRAULIC
FIELD REPLACEMENT ORDER 179-9399 ACCUMULATOR GP
AN ATTACHMENT

SMCS-5077 **i02817422**

NOTE	REF NO	GRAPHIC REF	PART NUMBER	QTY	PART NAME 1 2 3 4 5 6 (PRODUCT LEVEL)	SEE PAGE
	1	1	**222-2367**	1	VALVE AS-GAS	
		1	**190-3850**	1	CORE	
	2	1	**111-9110**	1	PROTECTOR-GAS VALVE	
	3	1	**1J-9671**	1	SEAL-O-RING	
	4	1	**5M-3062**	2	BOLT (3/8-16X0.75-IN)	
	5	1	**241-0037**	1	FILM-WARNING (HIGH PRESSURE, READ OMM)	
					AVAILABLE REPAIR KIT(S):	
			170-0493	1	KIT-SEAL (HYDRAULIC ACCUMULATOR)	
					(INCLUDES SEAL-O-RINGS, BACKUP WASHERS,PISTON RINGS & SEAL PISTON)	

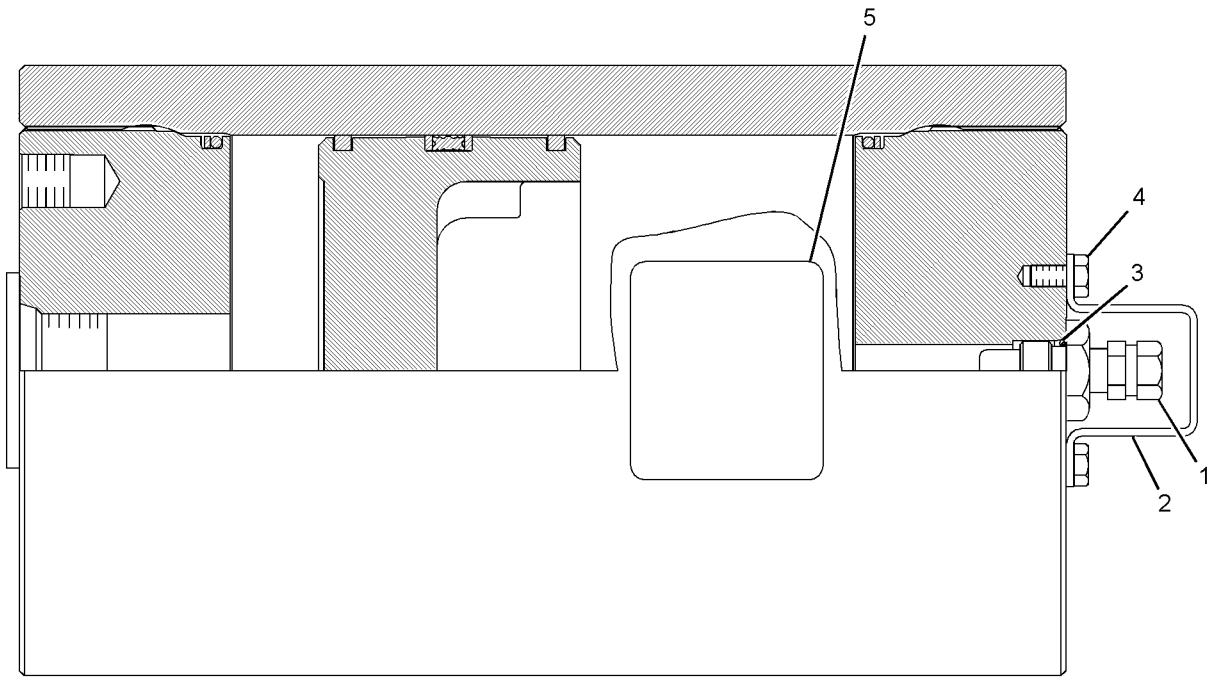

GRAPHIC #1 **<END>** g01421467

249-2308 BASE GP-OIL FILTER–STEERING

S/N: R9J1-UP

PART OF 249-2307 FILTER GP-OIL

SMCS-5068 **i03635785**

NOTE	REF NO	GRAPHIC REF	PART NUMBER	QTY	PART NAME 1 2 3 4 5 6 (PRODUCT LEVEL)	SEE PAGE
	1	1	**7G-4998**	1	SPOOL-BYPASS	
	2	1	**7M-1297**	1	SPRING	
	4	1	**5P-7815**	1	SEAL-O-RING	
	5	1	**5P-7701**	1	SEAL-O-RING	
	6	1	**9S-8010**	1	PLUG	
	7	1	**9S-9334**	1	PLUG-O-RING	

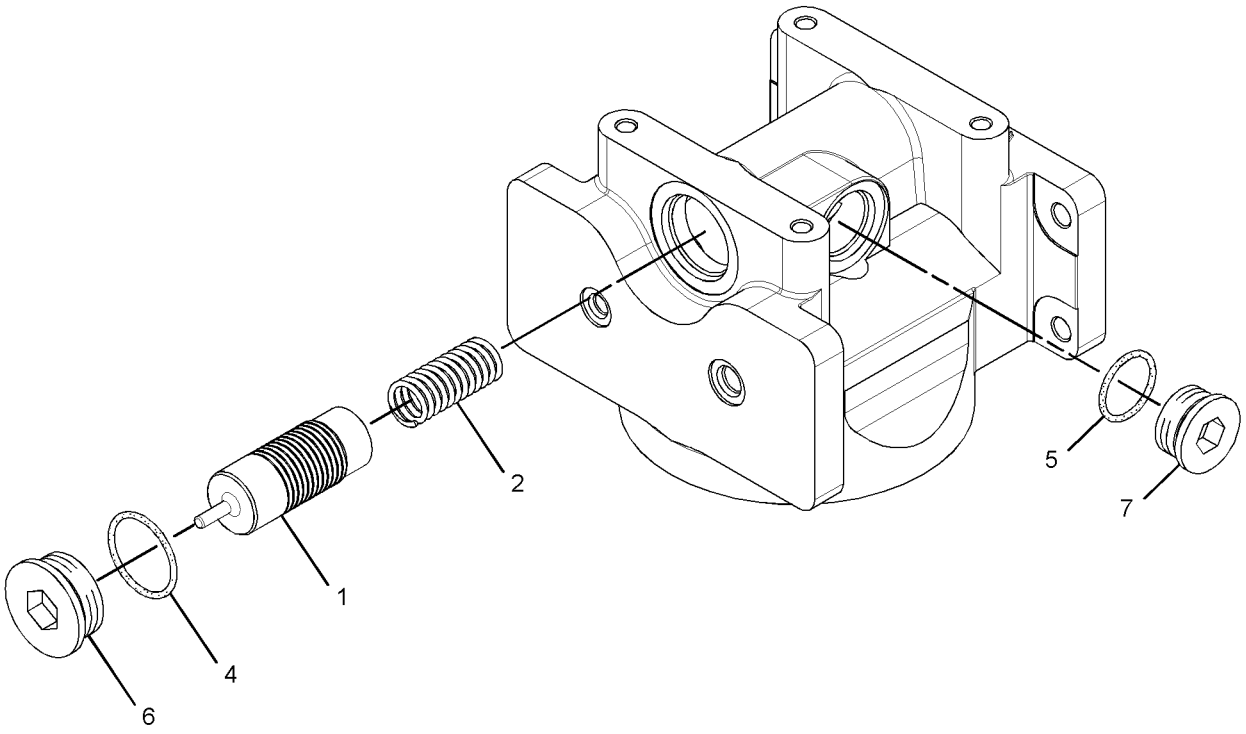

GRAPHIC #1 **<END>** g01442612

248-4151 CONTROL AR-HYDRAULIC

S/N: R9J1-UP
AN ATTACHMENT

SMCS-5050 **i04035034**

NOTE	PART NUMBER	QTY	PART NAME 1 2 3 4 5 6 (PRODUCT LEVEL)	SEE PAGE
Y	**259-6919**	1	VALVE GP-BANK 5	710
Y	**259-6923**	1	VALVE GP-BANK 3	708
M	**8T-4136**	8	BOLT (M10X1.5X25-MM)	
	8T-4121	8	WASHER-HARD (11X21X2.5-MM THK)	

M-METRIC PART
Y-SEPARATE ILLUSTRATION

<END>

252-4676 CONTROL AR-HYDRAULIC—RIPPER

S/N: R9J1-UP
PART OF 353-5005, 358-7877, 361-1731, 361-4363, 363-0414 DISTRIBUTION AR
AN ATTACHMENT

SMCS-5050 **i04035038**

NOTE	PART NUMBER	QTY	PART NAME 1 2 3 4 5 6 (PRODUCT LEVEL)	SEE PAGE
Y	*299-0874*	1	CONTROL GP-ELECTROHYDRAULIC	788
Y	*282-8874*	1	LINES GP-RIPPER	671
Y	**259-6924**	1	VALVE GP-BANK 4	709
Y	**259-6919**	1	VALVE GP-BANK 5	710
M	**8T-4136**	8	BOLT (M10X1.5X25-MM)	
	8T-4121	8	WASHER-HARD (11X21X2.5-MM THK)	

M-METRIC PART
Y-SEPARATE ILLUSTRATION

<END>

HYDRAULIC SYSTEM

351-2406 CONTROL AR-HYDRAULIC–
DOZER ANGLE, FRONT LIFT, RIPPER
S/N: R9J1-UP
AN ATTACHMENT

SMCS-5050 **i03837569**

NOTE	PART NUMBER	QTY	PART NAME 1 2 3 4 5 6 (PRODUCT LEVEL)	SEE PAGE
Y	*238-8756*	1	CONTROL GP-ELECTROHYDRAULIC (WITHOUT AUXILIARY LEVER)	785
Y	*299-0874*	1	CONTROL GP-ELECTROHYDRAULIC	788
Y	*250-9259*	1	ELECTRONICS GP-IMPLEMENT (IMPLEMENT 3)	220
Y	*231-1517*	1	LINES GP-HYDRAULIC (DOZER ANGLE, SNOW PLOW)	607
Y	*295-9160*	1	LINES GP-HYDRAULIC (FRONT LIFT)	616
Y	*282-8874*	1	LINES GP-RIPPER	671
Y	**259-6924**	1	VALVE GP-BANK 4	709
Y	**259-6921**	1	VALVE GP-BANK 7 (FRONT FRAME)	716
Y	*238-8828*	1	WIRING GP-ELECTRONIC CONTROL (HYDRAULIC IMPLEMENT)	341
M	**8T-4136**	8	BOLT (M10X1.5X25-MM)	
	8T-4121	8	WASHER-HARD (11X21X2.5-MM THK)	

M-METRIC PART
Y-SEPARATE ILLUSTRATION

<END>

351-2407 CONTROL AR-HYDRAULIC–
DOZER ANGLE, FRONT LIFT, RIPPER
S/N: R9J1-UP
AN ATTACHMENT

SMCS-5050 **i03837730**

NOTE	PART NUMBER	QTY	PART NAME 1 2 3 4 5 6 (PRODUCT LEVEL)	SEE PAGE
Y	*233-3147*	1	CONTROL GP-ELECTROHYDRAULIC (WITH AUXILIARY LEVER)	784
Y	*299-0874*	1	CONTROL GP-ELECTROHYDRAULIC	788
Y	*250-9259*	1	ELECTRONICS GP-IMPLEMENT (IMPLEMENT 3)	220
Y	*235-6414*	1	LINES GP-HYDRAULIC (DOZER ANGLE, SNOW PLOW)	608
Y	*295-9160*	1	LINES GP-HYDRAULIC (FRONT LIFT)	616
Y	*282-8874*	1	LINES GP-RIPPER	671
Y	**259-6924**	1	VALVE GP-BANK 4	709
Y	**259-6922**	1	VALVE GP-BANK 8 (FRONT FRAME)	718
Y	*238-8828*	1	WIRING GP-ELECTRONIC CONTROL (HYDRAULIC IMPLEMENT)	341
M	**8T-4136**	8	BOLT (M10X1.5X25-MM)	
	8T-4121	8	WASHER-HARD (11X21X2.5-MM THK)	

M-METRIC PART
Y-SEPARATE ILLUSTRATION

<END>

351-2408 CONTROL AR-HYDRAULIC–
FRONT LIFT, RIPPER, WING MAST, WING TILT
S/N: R9J1-UP
AN ATTACHMENT

SMCS-5050 **i03837677**

NOTE	PART NUMBER	QTY	PART NAME 1 2 3 4 5 6 (PRODUCT LEVEL)	SEE PAGE
Y	*233-3147*	1	CONTROL GP-ELECTROHYDRAULIC (WITH AUXILIARY LEVER)	784
Y	*299-0874*	1	CONTROL GP-ELECTROHYDRAULIC	788
Y	*250-9259*	1	ELECTRONICS GP-IMPLEMENT (IMPLEMENT 3)	220
Y	*295-9160*	1	LINES GP-HYDRAULIC (FRONT LIFT)	616
Y	*282-8874*	1	LINES GP-RIPPER	671
Y	**259-6920**	1	VALVE GP-BANK 6 (FRONT FRAME)	711
Y	**291-9518**	1	VALVE GP-BANK 6 (REAR FRAME)	715
Y	*238-8828*	1	WIRING GP-ELECTRONIC CONTROL (HYDRAULIC IMPLEMENT)	341
M	**8T-4136**	8	BOLT (M10X1.5X25-MM)	
	8T-4121	8	WASHER-HARD (11X21X2.5-MM THK)	

M-METRIC PART
Y-SEPARATE ILLUSTRATION

<END>

351-2409 CONTROL AR-HYDRAULIC–
FRONT LIFT, RIPPER, WING MAST, WING TILT
S/N: R9J1-UP
AN ATTACHMENT

SMCS-5050 **i03837631**

NOTE	PART NUMBER	QTY	PART NAME 1 2 3 4 5 6 (PRODUCT LEVEL)	SEE PAGE
Y	*233-3147*	1	CONTROL GP-ELECTROHYDRAULIC (WITH AUXILIARY LEVER)	784
Y	*299-0874*	1	CONTROL GP-ELECTROHYDRAULIC	788
Y	*250-9259*	1	ELECTRONICS GP-IMPLEMENT (IMPLEMENT 3)	220
Y	*295-9160*	1	LINES GP-HYDRAULIC (FRONT LIFT)	616
Y	*282-8874*	1	LINES GP-RIPPER	671
Y	**259-6925**	1	VALVE GP-BANK 6 (REAR FRAME)	713
Y	**259-6920**	1	VALVE GP-BANK 6 (FRONT FRAME)	711
Y	*238-8828*	1	WIRING GP-ELECTRONIC CONTROL (HYDRAULIC IMPLEMENT)	341
M	**8T-4136**	8	BOLT (M10X1.5X25-MM)	
	8T-4121	8	WASHER-HARD (11X21X2.5-MM THK)	

M-METRIC PART
Y-SEPARATE ILLUSTRATION

<END>

HYDRAULIC SYSTEM

351-2410 CONTROL AR-HYDRAULIC–
DOZER ANGLE, FRONT LIFT, RIPPER, WING MAST, WING TILT
S/N: R9J1-UP
AN ATTACHMENT

SMCS-5050 **i03837610**

NOTE	PART NUMBER	QTY	PART NAME 1 2 3 4 5 6 (PRODUCT LEVEL)	SEE PAGE
Y	*233-3147*	1	CONTROL GP-ELECTROHYDRAULIC (WITH AUXILIARY LEVER)	784
Y	*299-0874*	1	CONTROL GP-ELECTROHYDRAULIC	788
Y	*250-9259*	1	ELECTRONICS GP-IMPLEMENT (IMPLEMENT 3)	220
Y	*231-1517*	1	LINES GP-HYDRAULIC (DOZER ANGLE, SNOW PLOW)	607
Y	*295-9160*	1	LINES GP-HYDRAULIC (FRONT LIFT)	616
Y	*282-8874*	1	LINES GP-RIPPER	671
Y	**259-6925**	1	VALVE GP-BANK 6 (REAR FRAME)	713
Y	**259-6921**	1	VALVE GP-BANK 7 (FRONT FRAME)	716
Y	*238-8828*	1	WIRING GP-ELECTRONIC CONTROL (HYDRAULIC IMPLEMENT)	341
M	**8T-4136**	8	BOLT (M10X1.5X25-MM)	
	8T-4121	8	WASHER-HARD (11X21X2.5-MM THK)	

M-METRIC PART
Y-SEPARATE ILLUSTRATION

<END>

351-2411 CONTROL AR-HYDRAULIC–
DOZER ANGLE, FRONT LIFT, RIPPER, WING MAST, WING TILT
S/N: R9J1-UP
AN ATTACHMENT

SMCS-5050 **i03837589**

NOTE	PART NUMBER	QTY	PART NAME 1 2 3 4 5 6 (PRODUCT LEVEL)	SEE PAGE
Y	*233-3147*	1	CONTROL GP-ELECTROHYDRAULIC (WITH AUXILIARY LEVER)	784
Y	*299-0874*	1	CONTROL GP-ELECTROHYDRAULIC	788
Y	*250-9259*	1	ELECTRONICS GP-IMPLEMENT (IMPLEMENT 3)	220
Y	*231-1517*	1	LINES GP-HYDRAULIC (DOZER ANGLE, SNOW PLOW)	607
Y	*295-9160*	1	LINES GP-HYDRAULIC (FRONT LIFT)	616
Y	*282-8874*	1	LINES GP-RIPPER	671
Y	**291-9518**	1	VALVE GP-BANK 6 (REAR FRAME)	715
Y	**259-6921**	1	VALVE GP-BANK 7 (FRONT FRAME)	716
Y	*238-8828*	1	WIRING GP-ELECTRONIC CONTROL (HYDRAULIC IMPLEMENT)	341
M	**8T-4136**	8	BOLT (M10X1.5X25-MM)	
	8T-4121	8	WASHER-HARD (11X21X2.5-MM THK)	

M-METRIC PART
Y-SEPARATE ILLUSTRATION

<END>

351-2412 CONTROL AR-HYDRAULIC–
DOZER ANGLE, FRONT LIFT, RIPPER, WING MAST, WING TILT FLOAT
S/N: R9J1-UP
AN ATTACHMENT

SMCS-5050 **i03840510**

NOTE	PART NUMBER	QTY	PART NAME 1 2 3 4 5 6 (PRODUCT LEVEL)	SEE PAGE
Y	*233-3147*	1	CONTROL GP-ELECTROHYDRAULIC (WITH AUXILIARY LEVER)	784
Y	*299-0874*	1	CONTROL GP-ELECTROHYDRAULIC	788
Y	*250-9259*	1	ELECTRONICS GP-IMPLEMENT (IMPLEMENT 3)	220
Y	*235-6414*	1	LINES GP-HYDRAULIC (DOZER ANGLE, SNOW PLOW)	608
Y	*295-9160*	1	LINES GP-HYDRAULIC (FRONT LIFT)	616
Y	*282-8874*	1	LINES GP-RIPPER	671
Y	**291-9518**	1	VALVE GP-BANK 6 (REAR FRAME)	715
Y	**259-6922**	1	VALVE GP-BANK 8 (FRONT FRAME)	718
Y	*238-8828*	1	WIRING GP-ELECTRONIC CONTROL (HYDRAULIC IMPLEMENT)	341
M	**8T-4136**	8	BOLT (M10X1.5X25-MM)	
	8T-4121	8	WASHER-HARD (11X21X2.5-MM THK)	

M-METRIC PART
Y-SEPARATE ILLUSTRATION

<END>

354-8462 CONTROL AR-HYDRAULIC
S/N: R9J1-UP
PART OF 358-7877, 361-1731, 361-4363 DISTRIBUTION AR
AN ATTACHMENT

SMCS-5050 **i04035045**

NOTE	PART NUMBER	QTY	PART NAME 1 2 3 4 5 6 (PRODUCT LEVEL)	SEE PAGE
Y	*282-8869*	1	LINES GP-ACCUMULATOR	595
Y	*321-6987*	1	SWITCH GP-ROCKER (BLADE CUSHION)	322

Y-SEPARATE ILLUSTRATION

<END>

356-3723 CONTROL AR-HYDRAULIC
S/N: R9J1-UP
PART OF 363-0414 DISTRIBUTION AR
AN ATTACHMENT

SMCS-5050 **i03968810**

NOTE	PART NUMBER	QTY	PART NAME 1 2 3 4 5 6 (PRODUCT LEVEL)	SEE PAGE
Y	*351-8254*	1	LINES GP-HYDRAULIC	624
Y	*321-6987*	1	SWITCH GP-ROCKER (BLADE CUSHION)	322

Y-SEPARATE ILLUSTRATION

<END>

HYDRAULIC SYSTEM

364-2441 CONTROL AR-HYDRAULIC

S/N: R9J1-UP

AN ATTACHMENT

SMCS-5050 **i04025451**

NOTE	PART NUMBER	QTY	PART NAME 1 2 3 4 5 6 (PRODUCT LEVEL)	SEE PAGE
Y	*364-1282*	1	LINES GP-HYDRAULIC	632
Y	*321-6987*	1	SWITCH GP-ROCKER (BLADE CUSHION)	322

Y-SEPARATE ILLUSTRATION

<END>

366-3373 CONTROL AR-HYDRAULIC

S/N: R9J1-UP

AN ATTACHMENT

SMCS-5050 **i04025958**

NOTE	PART NUMBER	QTY	PART NAME 1 2 3 4 5 6 (PRODUCT LEVEL)	SEE PAGE
Y	*366-3382*	1	LINES GP-HYDRAULIC	640
Y	*321-6987*	1	SWITCH GP-ROCKER (BLADE CUSHION)	322

Y-SEPARATE ILLUSTRATION

<END>

282-8865 CYLINDER & MTG GP-ARTICULATION

S/N: R9J1-UP

PART OF 349-2555 COMMON AR

SMCS-5265 **i02903803**

NOTE	REF NO	GRAPHIC REF	PART NUMBER	QTY	PART NAME 1 2 3 4 5 6 (PRODUCT LEVEL)	SEE PAGE
C	1	1	**2K-4160**	16	WASHER (2.016X4X0.032-IN THK)	
	2	1	**287-4547**	2	PIN AS	
	3	1	**287-4548**	2	PIN AS	
	4	1	**170-3093**	4	BUSHING	
Y	5	1	**303-9598**	2	CYLINDER GP-ARTICULATION	574
	6	1	**3B-5316**	4	PIN-COTTER	
	7	1	**5P-1076**	4	WASHER-HARD (13.5X30X4-MM THK)	
M	8	1	**8T-4956**	4	BOLT (M12X1.75X35-MM)	

C-CHANGE FROM PREVIOUS TYPE
M-METRIC PART
Y-SEPARATE ILLUSTRATION

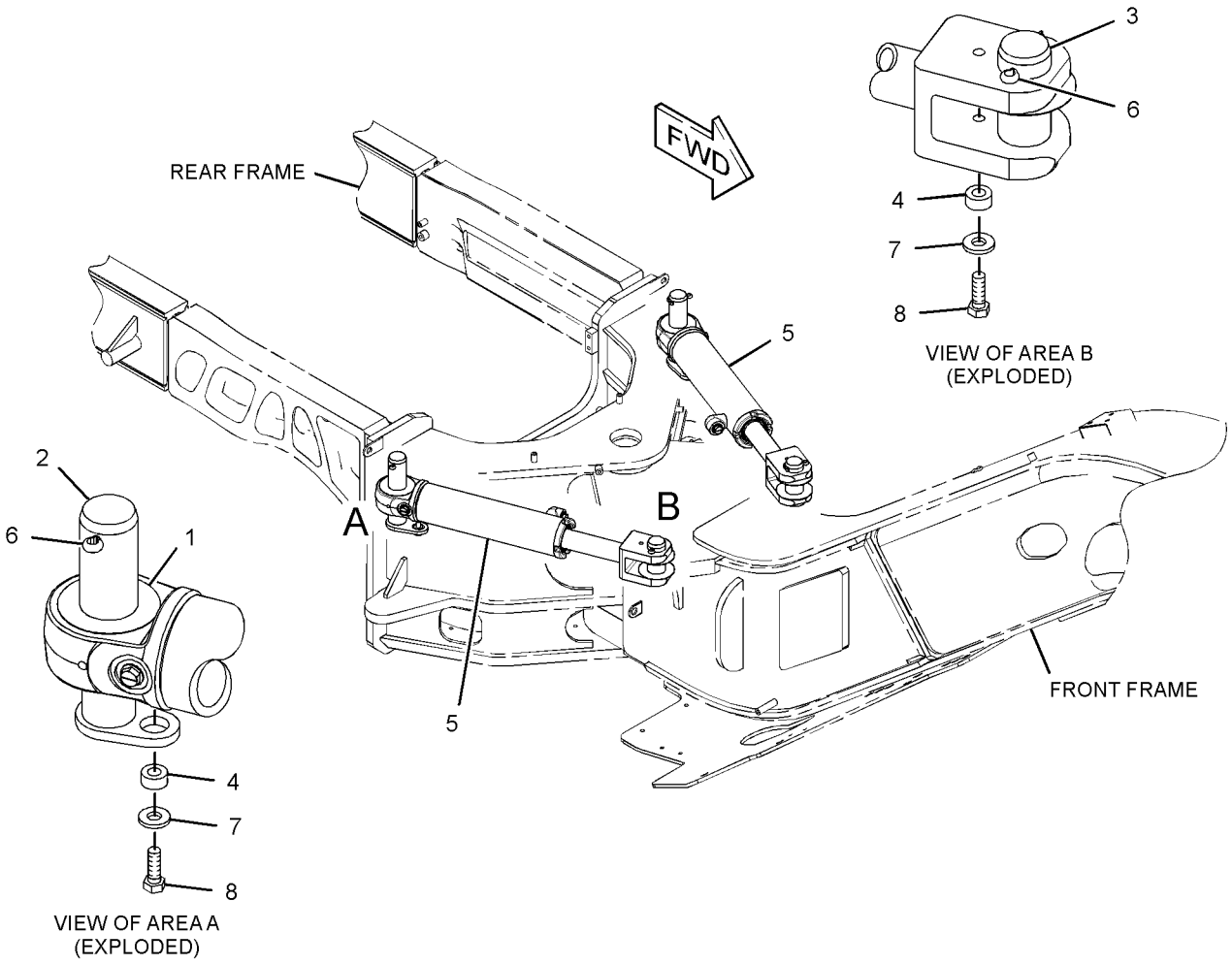

GRAPHIC #1 **<END>** g01445675

HYDRAULIC SYSTEM

271-6420 CYLINDER & MTG GP-BLADE LIFT

S/N: R9J1-UP

PART OF 349-2555 COMMON AR

SMCS-5102 **i02762732**

NOTE	REF NO	GRAPHIC REF	PART NUMBER	QTY	PART NAME 1 2 3 4 5 6 (PRODUCT LEVEL)	SEE PAGE
	1	1	**2G-9099**	2	CAP	
B	2	1	**308-0540**	8	SHIM	
	3	1	**3B-8485**	2	FITTING-GREASE	
	4	1	**8D-4114**	4	CAP AS	
					(EACH INCLUDES)	
		1	**3P-1461**	1	SEAL-LIP TYPE	
		1	**8D-4496**	1	BEARING	
	5	1	**308-0541**	4	INSERT	
Y	6	1	**270-7536**	2	CYLINDER GP-LIFT	578
	7	1	**267-3504**	4	BOLT (M24X3X100-MM)	
	8	1	**267-3506**	4	WASHER-HARD (26X44X4-MM THK)	
M	9	1	**8T-4174**	8	BOLT (M16X2X120-MM)	
	10	1	**7X-0515**	8	WASHER-HARD (17X35X5-MM THK)	

B-USE AS REQUIRED
M-METRIC PART
Y-SEPARATE ILLUSTRATION

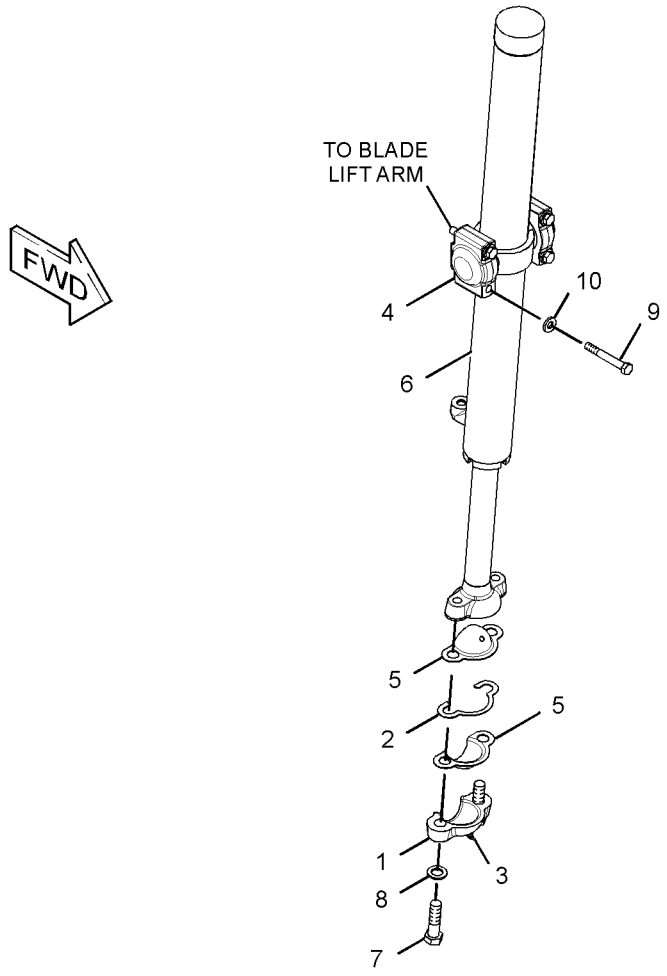

GRAPHIC #1 **<END>** g01407478

260-3646 CYLINDER & MTG GP-BLADE TIP

S/N: R9J1-UP

PART OF 349-2555 COMMON AR

SMCS-5106 **i02610184**

NOTE	REF NO	GRAPHIC REF	PART NUMBER	QTY	PART NAME 1 2 3 4 5 6 (PRODUCT LEVEL)	SEE PAGE
	1	1	**8W-8513**	2	PIN AS	
Y	2	1	**9T-8944**	1	CYLINDER GP-BLADE TIP	575
	3	1	**248-9337**	2	SPACER (39X75X20-MM THK)	
	4	1	**5P-1076**	2	WASHER-HARD (13.5X30X4-MM THK)	
M	5	1	**8T-4192**	2	BOLT (M12X1.75X25-MM)	

M-METRIC PART
Y-SEPARATE ILLUSTRATION

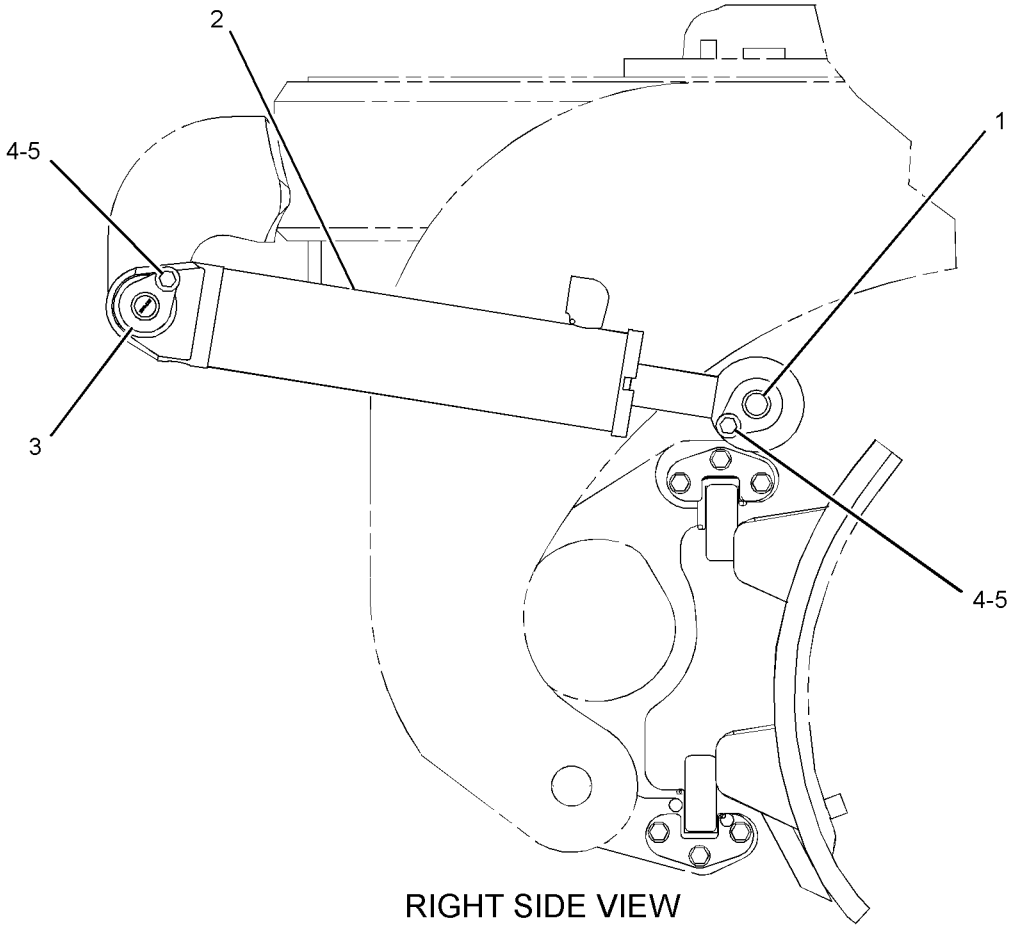

RIGHT SIDE VIEW

GRAPHIC #1 **<END>** g01308119

HYDRAULIC SYSTEM

274-2141 CYLINDER & MTG GP-CENTERSHIFT

S/N: R9J1-UP

PART OF 349-2555 COMMON AR

SMCS-5223 **i02562297**

NOTE	REF NO	GRAPHIC REF	PART NUMBER	QTY	PART NAME 1 2 3 4 5 6 (PRODUCT LEVEL)	SEE PAGE
	1	1	**2G-9099**	2	CAP	
B	2	1	**2G-9104**	8	SHIM (0.5-MM THK)	
	3	1	**3B-8485**	2	FITTING-GREASE	
	4	1	**9D-2252**	4	INSERT	
Y	5	1	**262-1906**	1	CYLINDER GP-CENTERSHIFT	577
	6	1	**267-3504**	4	BOLT (M24X3X100-MM)	
	7	1	**267-3506**	4	WASHER-HARD (26X44X4-MM THK)	

B-USE AS REQUIRED
Y-SEPARATE ILLUSTRATION

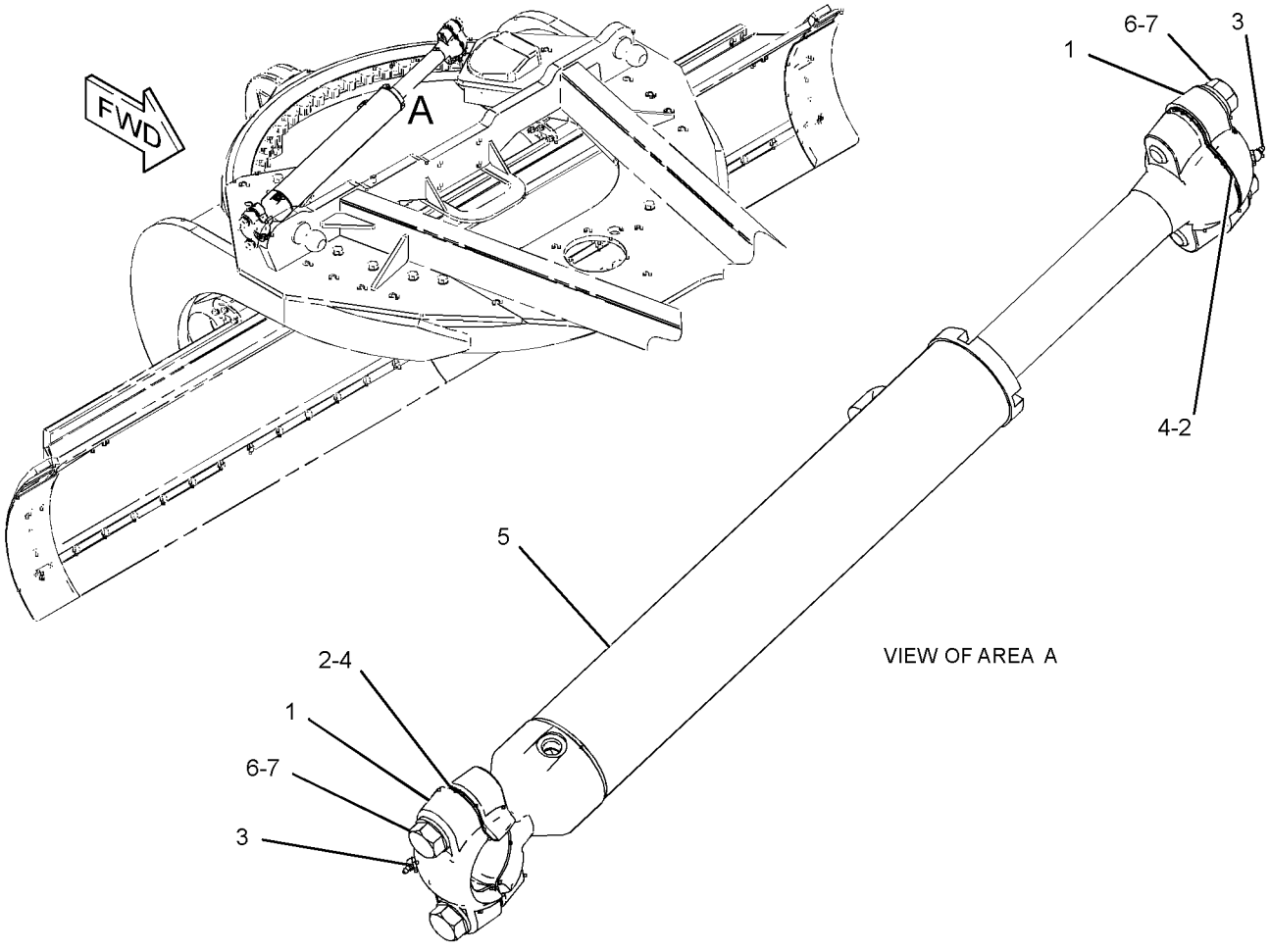

GRAPHIC #1 **<END>** g01283376

257-6804 CYLINDER & MTG GP-SIDESHIFT

S/N: R9J1-UP

PART OF 349-2555 COMMON AR

SMCS-5229 **i02564589**

NOTE	REF NO	GRAPHIC REF	PART NUMBER	QTY	PART NAME 1 2 3 4 5 6 (PRODUCT LEVEL)	SEE PAGE
	1	1	**253-4676**	1	BRACKET	
Y	2	1	**257-5083**	1	CYLINDER GP-SIDESHIFT	580
	3	1	**1H-4478**	1	PIN	
	4	1	**3B-4647**	2	PIN-COTTER	
	5	1	**5T-8417**	1	PIN	
M	6	1	**166-1880**	4	BOLT (M20X2.5X75-MM)	
	7	1	**283-1578**	4	WASHER-HARD	

M-METRIC PART
Y-SEPARATE ILLUSTRATION

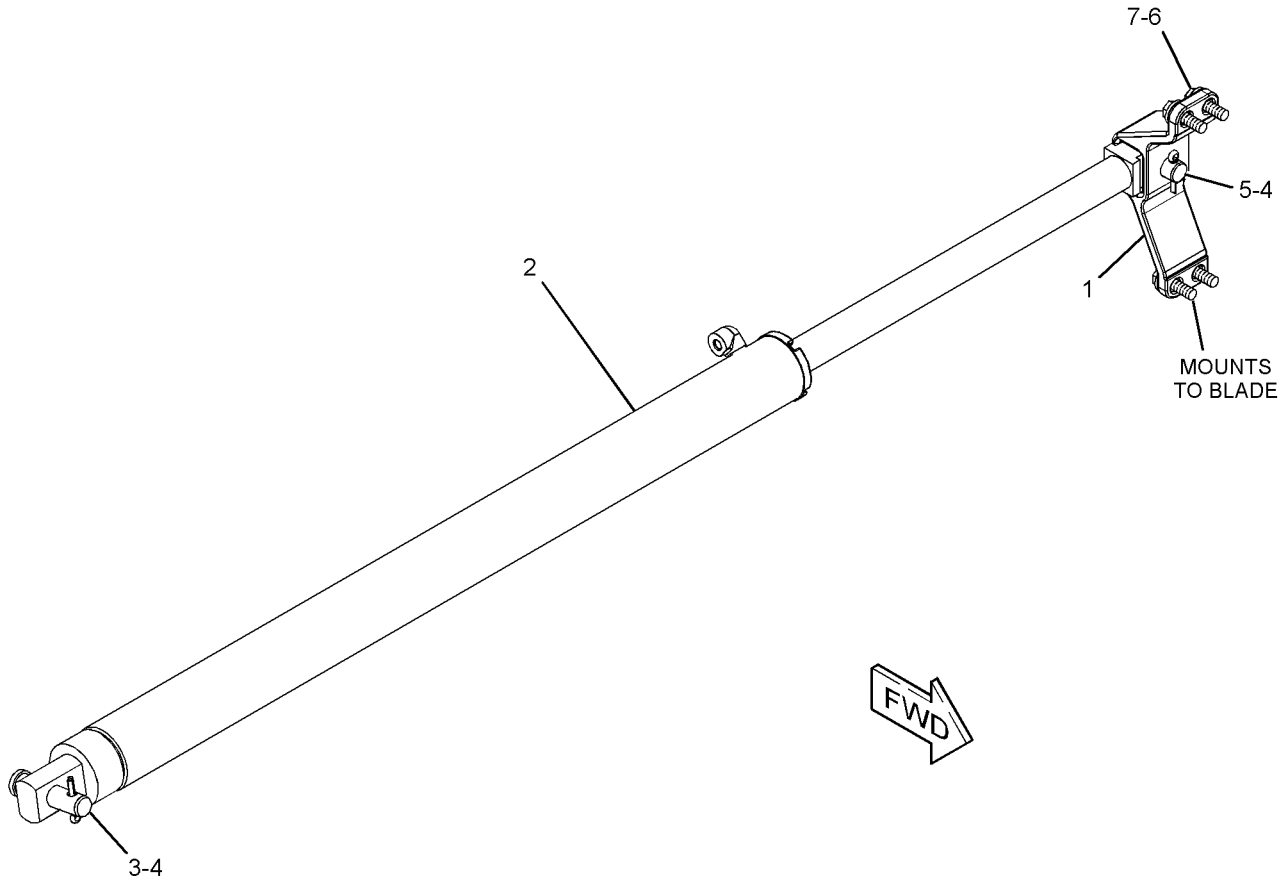

GRAPHIC #1 **<END>** g01156038

HYDRAULIC SYSTEM

277-0688 CYLINDER & MTG GP-STEERING

S/N: R9J1-UP

PART OF 256-3895 AXLE GP-FRONT

SMCS-4303 **i02630718**

NOTE	REF NO	GRAPHIC REF	PART NUMBER	QTY	PART NAME 1 2 3 4 5 6 (PRODUCT LEVEL)	SEE PAGE
	1	1	**249-3505**	2	RACE-BEARING	
	2	1	**257-2758**	2	PIN AS	
	3	1	**258-9981**	2	SPACER (32.16X38.1X8.65-MM THK)	
	4	1	**260-6117**	2	BALL STUD	
YR	5	1	**276-5681**	1	CYLINDER GP-STEERING (RH)	581
YR	6	1	**276-5682**	1	CYLINDER GP-STEERING (LH)	583
	7	1	**285-0612**	2	CAP AS-DUST	
	8	1	**294-9580**	2	SEAL-BOOT	
	9	1	**1D-0906**	2	NUT-SLOTTED	
	10	1	**3B-4629**	2	PIN-COTTER	
	11	1	**3B-8489**	2	FITTING-GREASE	
	12	1	**3J-8500**	2	RING-RETAINING	
	13	1	**4F-8824**	2	SEAL-O-RING	
	14	1	**8T-4121**	2	WASHER-HARD (11X21X2.5-MM THK)	
M	15	1	**8T-4137**	2	BOLT (M10X1.5X20-MM)	

M-METRIC PART
R-REMFG PART MAY BE AVAILABLE
Y-SEPARATE ILLUSTRATION

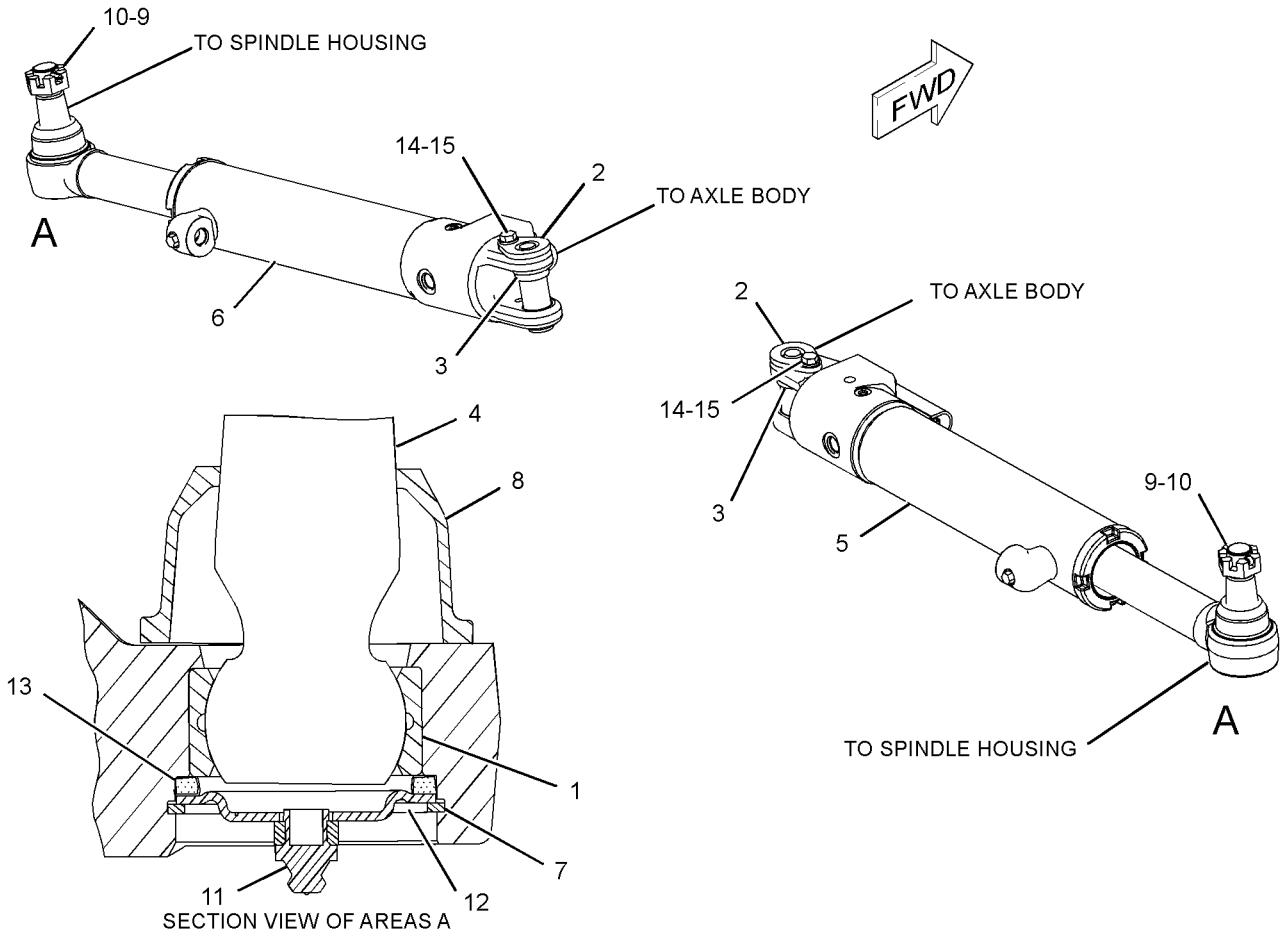

GRAPHIC #1 **<END>** g01285753

260-8713 CYLINDER & MTG GP-WHEEL LEAN

S/N: R9J1-UP

PART OF 256-3895 AXLE GP-FRONT

SMCS-5211 **i04033201**

NOTE	REF NO	GRAPHIC REF	PART NUMBER	QTY	PART NAME 1 2 3 4 5 6 (PRODUCT LEVEL)	SEE PAGE
	1	1	**264-9726**	1	PIN	
	2	1	**6G-7187**	1	LOCK	
	3	1	**7K-9202**	4	SEAL-LIP TYPE	
Y	4	1	**249-5299**	1	CYLINDER GP-WHEEL LEAN	585
	5	1	**3B-8489**	2	FITTING-GREASE	
	6	1	**5P-8245**	2	WASHER-HARD (13.5X25.5X3-MM THK)	
M	7	1	**6V-3668**	2	BOLT (M12X1.75X30-MM)	

M-METRIC PART
Y-SEPARATE ILLUSTRATION

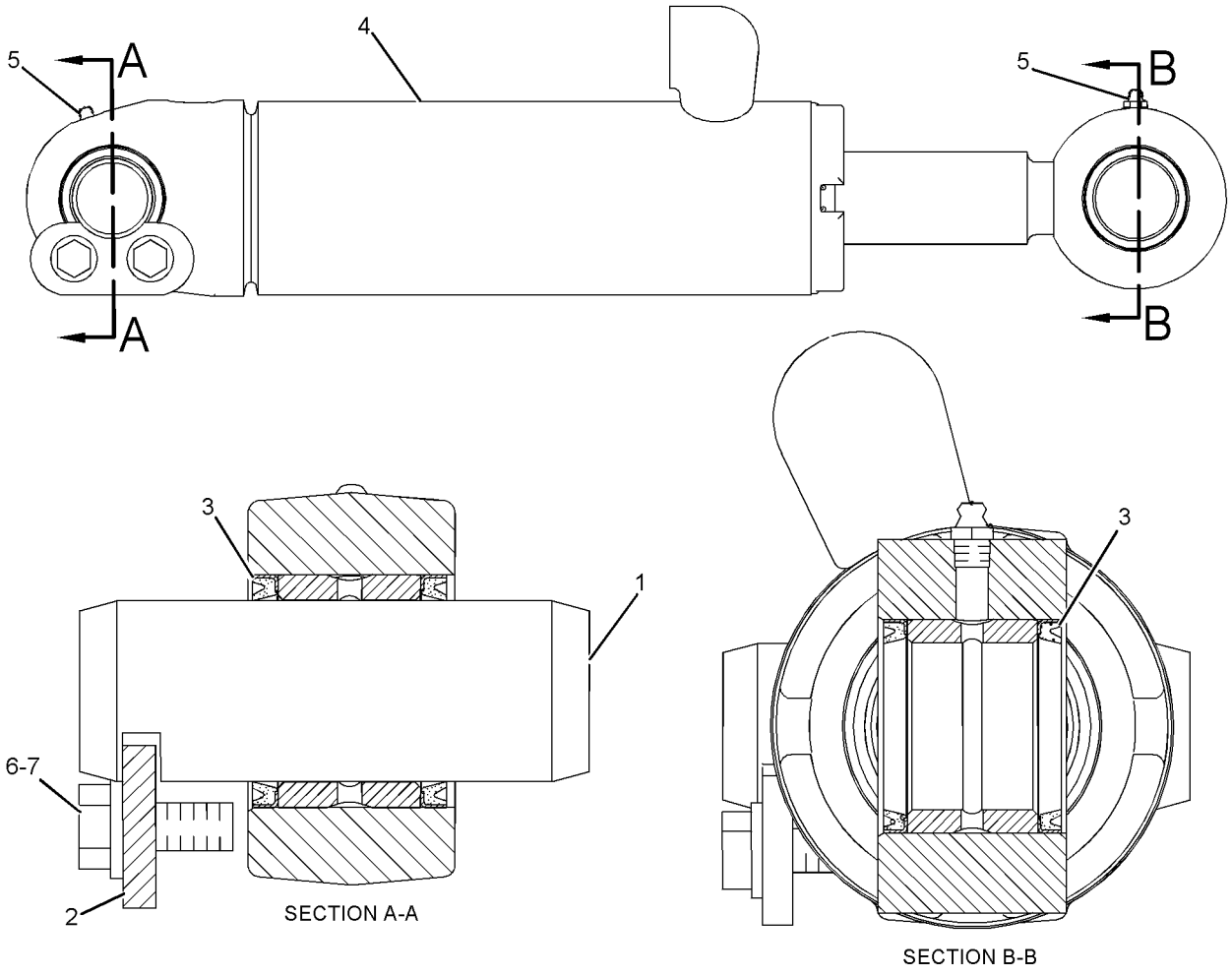

GRAPHIC #1 **<END>** g01112178

HYDRAULIC SYSTEM

303-9598 CYLINDER GP-ARTICULATION

S/N: R9J1-UP
95-MM (3.7-IN) BORE X 281.5-MM (11.1-IN) STROKE
PART OF 282-8865 CYLINDER & MTG GP-ARTICULATION

SMCS-5265 **i03339492**

NOTE	REF NO	GRAPHIC REF	PART NUMBER	QTY	PART NAME 1 2 3 4 5 6 (PRODUCT LEVEL)	SEE PAGE
	1	1	**233-0625**	1	SEAL-WIPER	
	2	1	**261-3637**	1	RING-WEAR	
	3	1	**266-7376**	1	HEAD	
	4	1	**303-9593**	1	ROD AS	
	5	1	**303-9596**	1	CYLINDER AS-HYDRAULIC	
	5A	1	**8X-5021**	1	BEARING	
	6	1	**304-0435**	1	PISTON	
	7	1	**140-0249**	1	RING-WEAR	
	8	1	**167-2199**	1	SEAL AS-BUFFER	
	9	1	**167-2306**	1	SEAL-U-CUP	
M	10	1	**173-9683**	1	BOLT (M30X3.5X90-MM)	
	11	1	**1S-0669**	1	RING (BACKUP)	
	12	1	**261-3644**	1	SEAL AS	
	13	1	**2H-4145**	1	SEAL-O-RING	
	14	1	**3E-6735**	1	SEAL-O-RING	
	15	1	**9X-8399**	1	WASHER (33X56X6-MM THK)	

M-METRIC PART

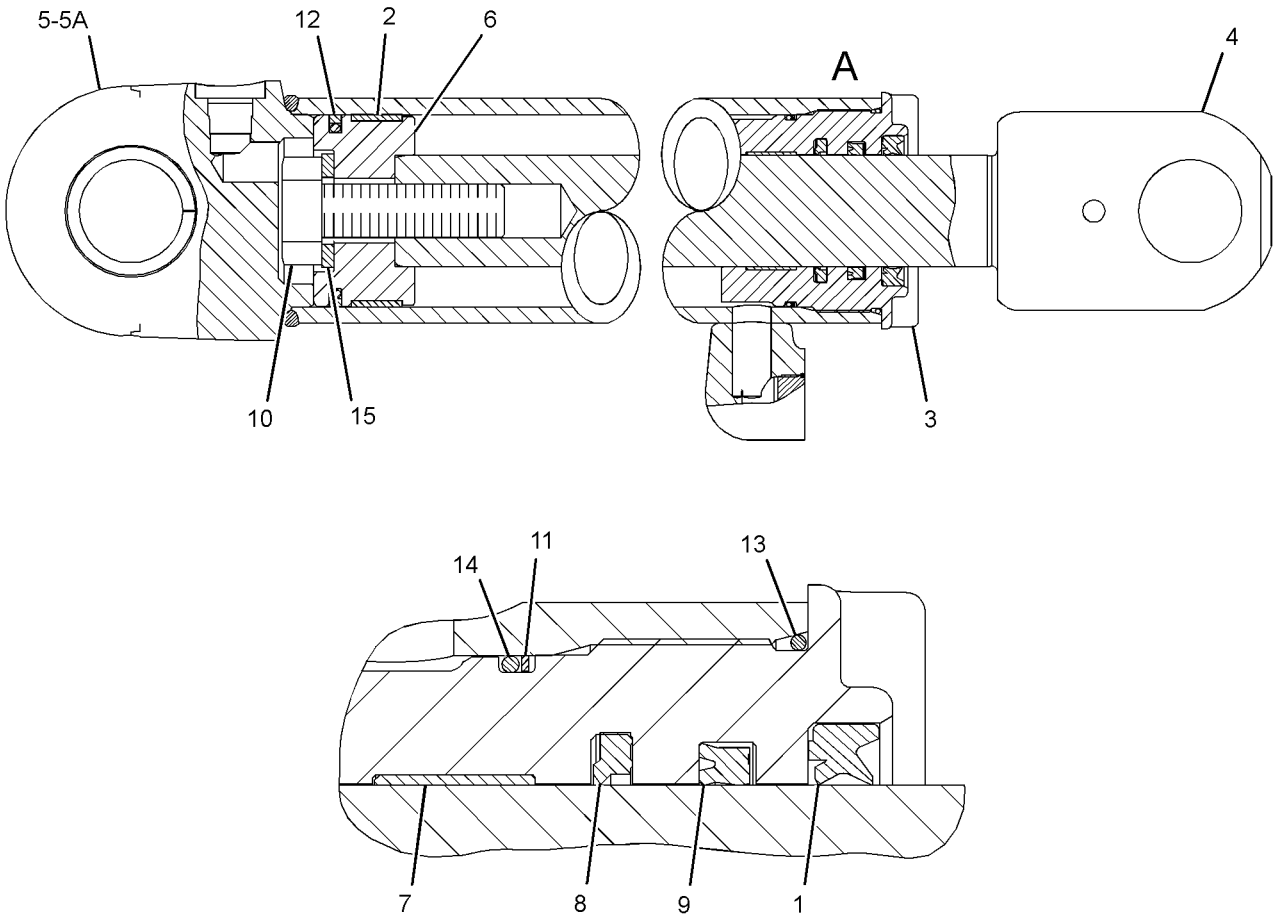

VIEW OF AREA A

GRAPHIC #1 **<END>** g01716433

9T-8944 CYLINDER GP-BLADE TIP

S/N: R9J1-UP
101.6-MM (4-IN) BORE X 355.5-MM (9.03-IN) STROKE
PART OF 260-3646 CYLINDER & MTG GP-BLADE TIP

SMCS-5106 **i03852559**

NOTE	REF NO	GRAPHIC REF	PART NUMBER	QTY	PART NAME 1 2 3 4 5 6 (PRODUCT LEVEL)	SEE PAGE
	1	1	**9T-8943**	1	CYLINDER AS	
		1	**4D-0298**	1	BEARING	
M	2	1	**173-9683**	1	BOLT (M30X3.5X90-MM)	
	3	1	**3S-7023**	1	WASHER (34X57X6-MM THK)	
	4	1	**9T-3133**	1	PISTON	
	5	1	**5J-5402**	1	SEAL AS	
	6	1	**6J-2797**	1	RING-WEAR	
R	7	1	**6E-1049**	1	ROD AS	
		1	**4D-0298**	1	BEARING	
	8	1	**4T-5613**	1	RING-WEAR	
	9	1	**289-2935**	1	SEAL AS	
	10	1	**289-2946**	1	SEAL-U-CUP	
	11	1	**308-1845**	1	SEAL-WIPER	
	12	1	**175-7900**	1	SEAL-O-RING	
	13	1	**2K-6830**	1	RING-BACKUP	
	14	1	**6E-0775**	1	HEAD	
		1	**229-9382**		SEAL-WIPER	

M-METRIC PART
R-REMFG PART MAY BE AVAILABLE

9T-8944 CYLINDER GP-BLADE TIP *(contd.)* i03852559

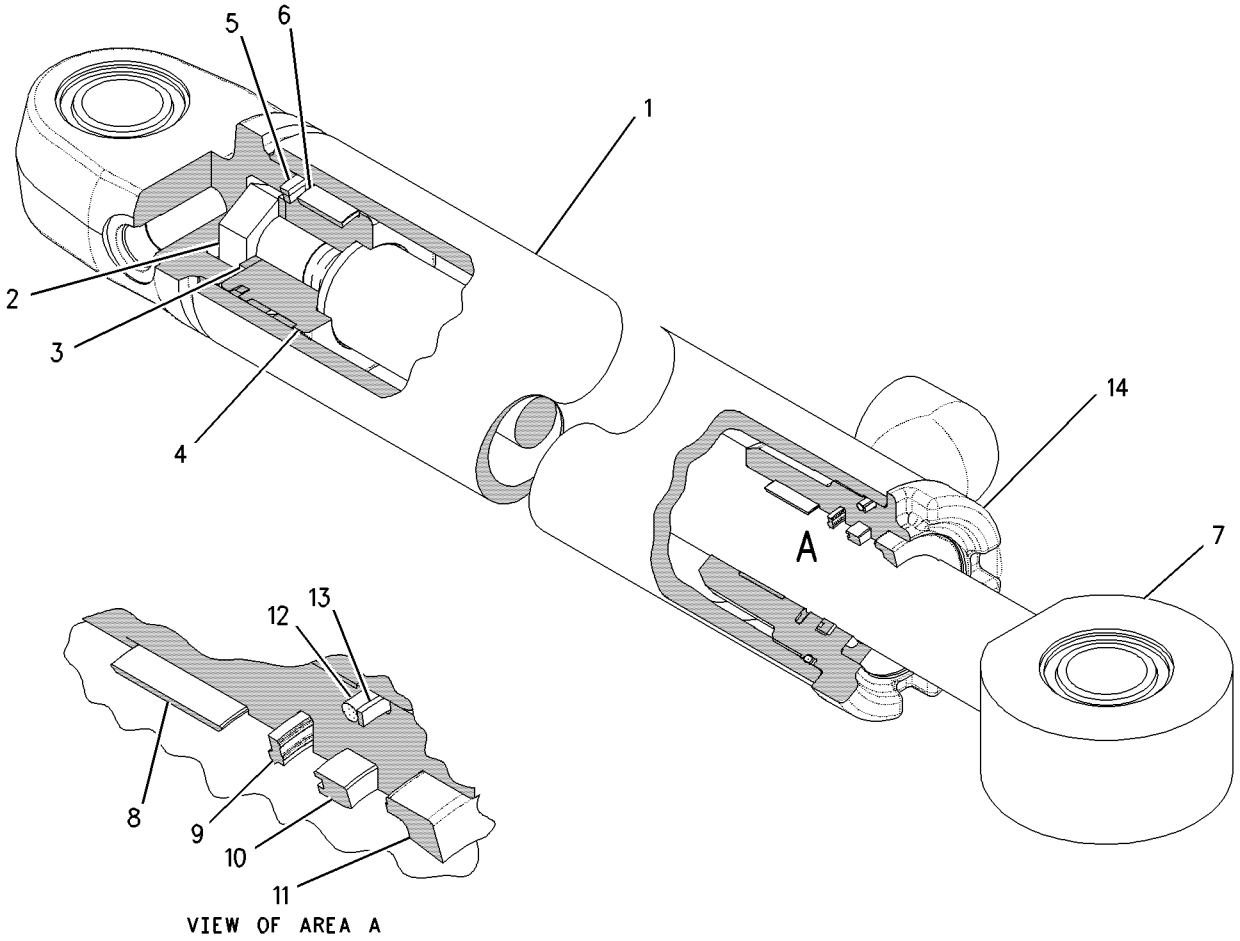

GRAPHIC #1 **<END>** g00785755

262-1906 CYLINDER GP-CENTERSHIFT

S/N: R9J1-UP
88.9-MM (3.5-IN) BORE X 471.5-MM (18.6-IN) STROKE
PART OF 274-2141 CYLINDER & MTG GP-CENTERSHIFT

SMCS-5223 **i02571351**

NOTE	REF NO	GRAPHIC REF	PART NUMBER	QTY	PART NAME 1 2 3 4 5 6 (PRODUCT LEVEL)	SEE PAGE
	1	1	**6E-4975**	1	HEAD	
	2	1	**9T-8043**	1	PISTON	
	3	1	**262-1922**	1	ROD AS	
	4	1	**262-1928**	1	CYLINDER AS	
	5	1	**167-2200**	1	SEAL AS	
	6	1	**167-2307**	1	SEAL-U-CUP	
M	7	1	**173-9683**	1	BOLT (M30X3.5X90-MM)	
	8	1	**175-7898**	1	SEAL-O-RING	
	9	1	**231-3538**	1	SEAL-WIPER	
	10	1	**4J-9224**	1	RING-BACKUP	
	11	1	**4T-8054**	1	SEAL AS	
	12	1	**7J-9885**	1	RING-WEAR	
	13	1	**8T-4958**	1	RING-WEAR	
	14	1	**9X-8399**	1	WASHER (33X56X6-MM THK)	

M-METRIC PART

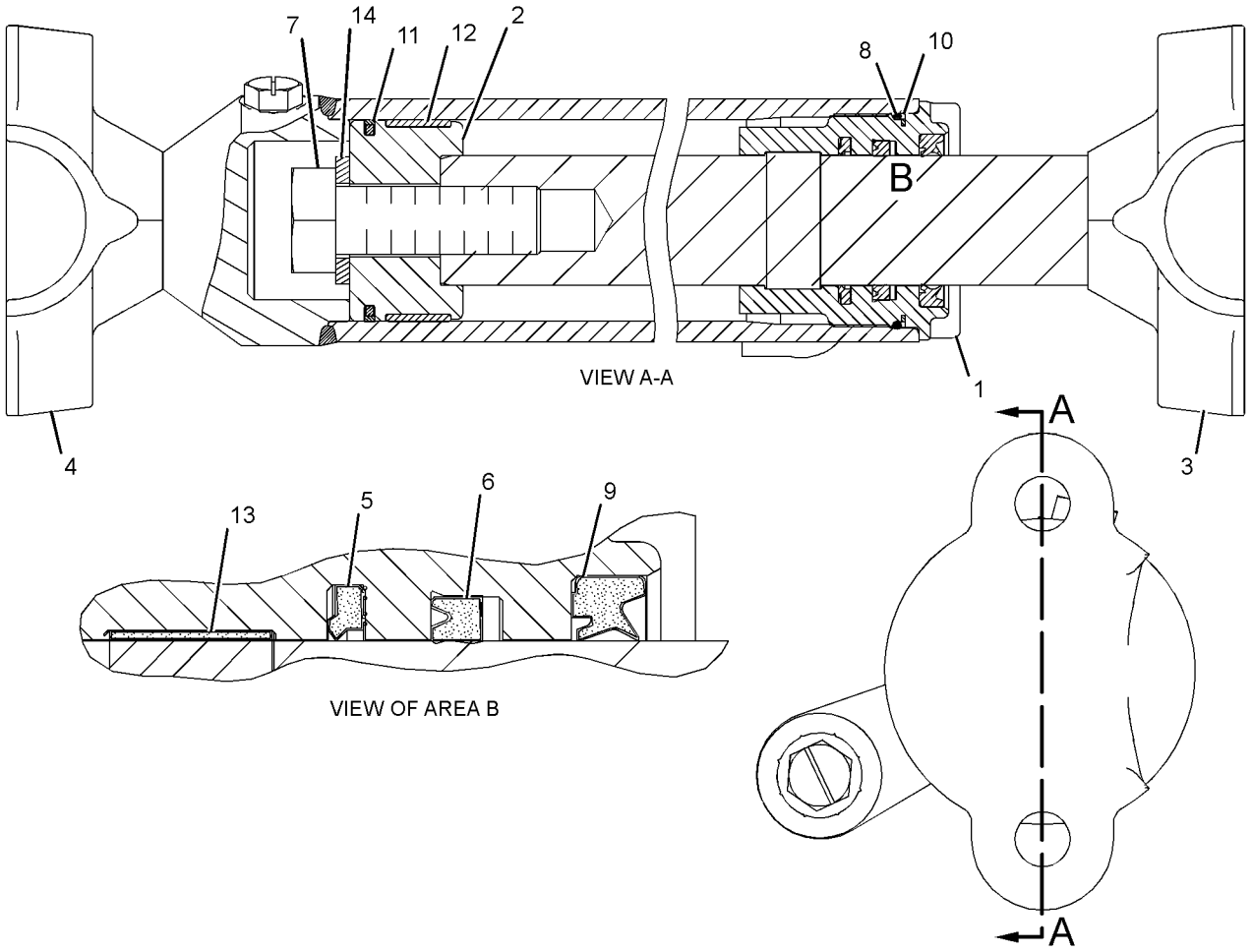

GRAPHIC #1 **<END>** g01294978

HYDRAULIC SYSTEM

270-7536 CYLINDER GP-LIFT

S/N: R9J1-UP
88.9-MM (3.5-IN) BORE X 471.5-MM (18.6-IN) STROKE
PART OF 271-6420 CYLINDER & MTG GP-BLADE LIFT

SMCS-5102 **i02566551**

NOTE	REF NO	GRAPHIC REF	PART NUMBER	QTY	PART NAME 1 2 3 4 5 6 (PRODUCT LEVEL)	SEE PAGE
	1	1	**6E-4975**	1	HEAD	
	2	1	**9T-8043**	1	PISTON	
	3	1	**175-2606**	1	CYLINDER AS	
		1	**8J-6018**	2	BEARING-SLEEVE	
	4	1	**262-1921**	1	ROD AS	
	5	1	**167-2200**	1	SEAL AS	
	6	1	**167-2307**	1	SEAL-U-CUP	
M	7	1	**173-9683**	1	BOLT (M30X3.5X90-MM)	
	8	1	**175-7898**	1	SEAL-O-RING	
	9	1	**231-3538**	1	SEAL-WIPER	
	10	1	**4J-9224**	1	RING-BACKUP	
	11	1	**4T-8054**	1	SEAL AS	
	12	1	**7J-9885**	1	RING-WEAR	
	13	1	**8T-4958**	1	RING-WEAR	
	14	1	**9X-8399**	1	WASHER (33X56X6-MM THK)	

M-METRIC PART

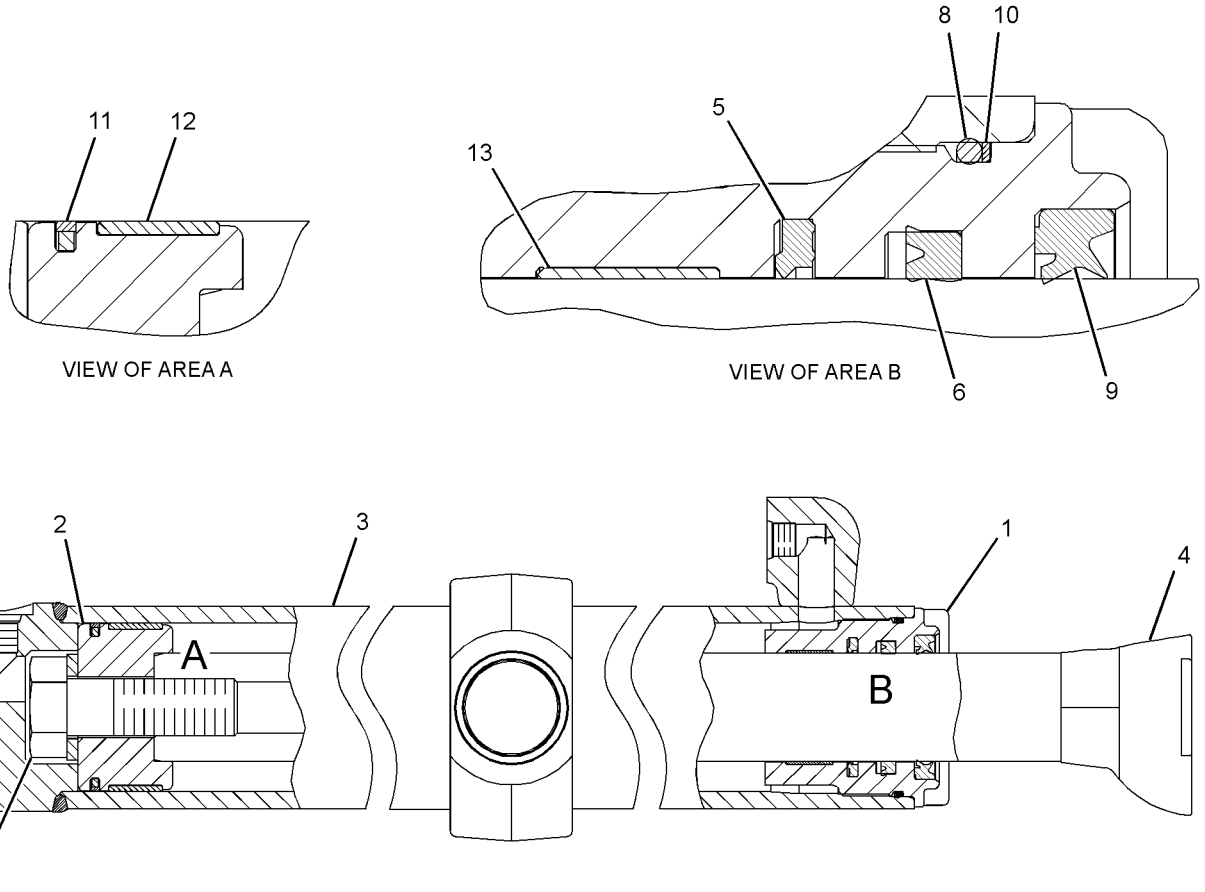

GRAPHIC #1 **<END>** g01283749

113-5264 CYLINDER GP-RIPPER

S/N: R9J1-UP
127-MM (3.23-IN) BORE X 495-MM (12.6-IN) STROKE
PART OF 257-3574, 291-4792 RIPPER AR
AN ATTACHMENT

SMCS-5352, 5356 **i04021042**

NOTE	REF NO	GRAPHIC REF	PART NUMBER	QTY	PART NAME 1 2 3 4 5 6 (PRODUCT LEVEL)	SEE PAGE
	1	1	**114-4776**	1	CYLINDER AS	
	2	1	**5J-5731**	1	LOCKNUT (1-3/4-12-THD)	
	3	1	**4J-4630**	1	RING-WEAR	
	4	1	**9X-7264**	1	SEAL AS	
	5	1	**6E-2314**	1	PISTON	
	6	1	**175-7904**	1	SEAL-O-RING	
	7	1	**2K-4096**	1	RING-BACKUP	
	8	1	**121-3395**	1	HEAD	
	9	1	**345-7209**	1	ROD AS	
	9A	1	**2K-4507**	1	BUSHING	
	10	1	**225-3281**	1	SEAL-WIPER	
	11	1	**167-2312**	1	SEAL-U-CUP	
	12	1	**167-2201**	1	SEAL AS-BUFFER	
	13	1	**8T-0785**	1	RING-WEAR	

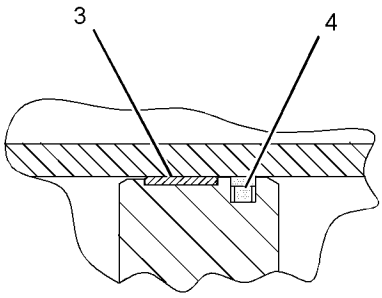

VIEW OF AREA B

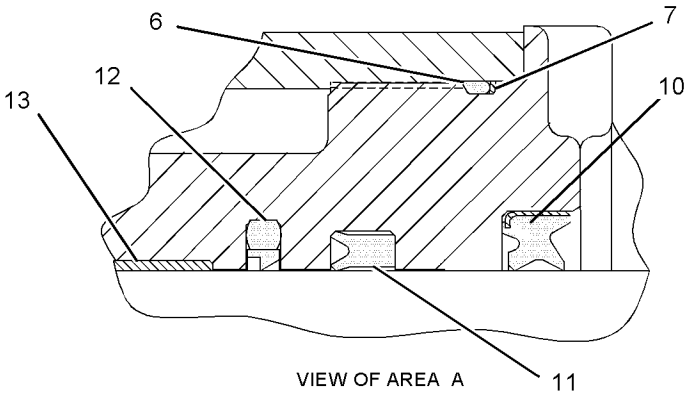

VIEW OF AREA A

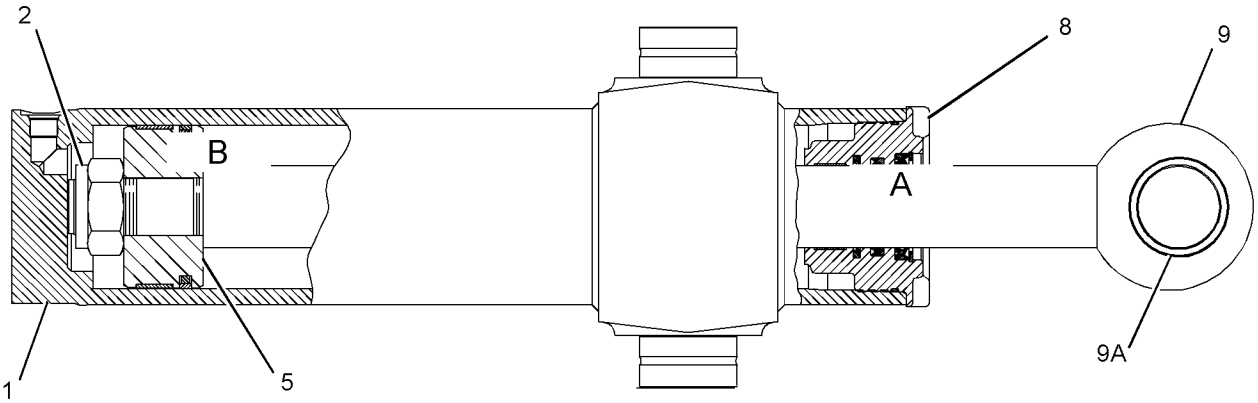

GRAPHIC #1

<END>

g01077049

HYDRAULIC SYSTEM

257-5083 CYLINDER GP-SIDESHIFT

S/N: R9J1-UP
101.6-MM (2.58-IN) BORE X 1531.9 (38.91-IN) STROKE
PART OF 257-6804 CYLINDER & MTG GP-SIDESHIFT

SMCS-5229 **i02183151**

NOTE	REF NO	GRAPHIC REF	PART NUMBER	QTY	PART NAME 1 2 3 4 5 6 (PRODUCT LEVEL)	SEE PAGE
	1	1	**9T-3051**	1	PISTON	
	2	1	**172-9981**	1	HEAD	
	3	1	**257-5085**	1	ROD AS	
	4	1	**167-2201**	1	SEAL AS-BUFFER	
	5	1	**167-2312**	1	SEAL-U-CUP	
M	6	1	**173-9683**	1	BOLT (M30X3.5X90-MM)	
	7	1	**175-7900**	1	SEAL-O-RING	
	8	1	**225-3281**	1	SEAL-WIPER	
	9	1	**257-5084**	1	CYLINDER AS	
	10	1	**2K-6830**	1	RING-BACKUP	
	11	1	**5J-5402**	1	SEAL AS	
	12	1	**6J-2797**	1	RING-WEAR	
	13	1	**8T-0785**	1	RING-WEAR	
	14	1	**9X-8399**	1	WASHER (33X56X6-MM THK)	

M-METRIC PART

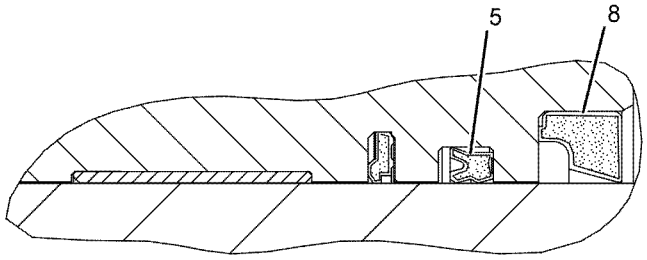

VIEW OF AREA A

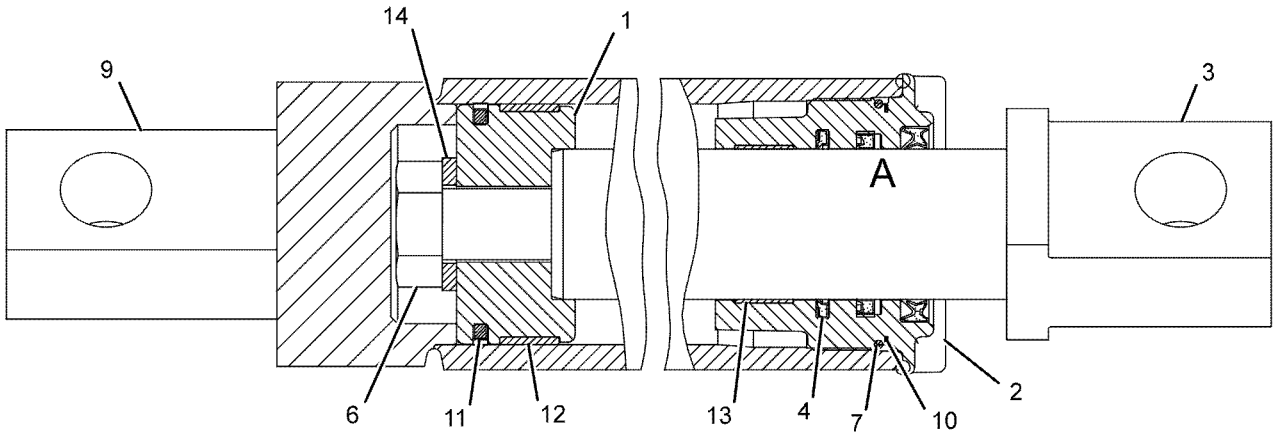

GRAPHIC #1 **<END>** g01105376

276-5681 CYLINDER GP-STEERING–RH*R

S/N: R9J1-UP
76.2-MM (3-IN) BORE X 287-MM (11.3-IN) STROKE
PART OF 277-0688 CYLINDER & MTG GP-STEERING

SMCS-4303 **i04016133**

NOTE	REF NO	GRAPHIC REF	PART NUMBER	QTY	PART NAME 1 2 3 4 5 6 (PRODUCT LEVEL)	SEE PAGE
	1	1	**8T-8737**	1	PLUG-SEAL	
	2	1	**102-2244**	1	GROMMET	
	3	1	**102-8804**	1	KIT-RECEPTACLE (4-PIN)	
					(INCLUDES RECEPTACLE AS & WEDGE)	
	4	1	**151-7038**	1	HEAD	
	5	1	**212-0907**	1	PLATE-CONNECTOR	
	6	1	**214-6480**	1	PISTON	
	7	1	**217-3311**	1	MAGNET	
	8	1	**242-9514**	1	CARRIER	
	9	1	**242-9515**	1	RING-RETAINING	
	10	1	**249-5193**	1	SENSOR GP-POSITION (STEERING CYLINDER)	
		1	**9X-3401**	3	PIN-CONNECTOR (16-GA TO 18-GA)	
	11	1	**262-5769**	1	ROD AS	
	12	1	**276-1816**	1	GUARD	
	13	1	**276-5683**	1	CYLINDER AS	
		1	**095-0879**	1	PIN-SPRING	
		1	**289-6002**	1	ELBOW AS	
		1	**1N-5999**	2	PLUG-O-RING	
		1	**7J-0204**	2	SEAL-O-RING	
	14	1	**289-2935**	1	SEAL AS	
	15	1	**188-2199**	1	SEAL-O-RING	
	16	1	**1H-7339**	1	SEAL-O-RING	
	17	1	**215-1942**	1	RING-BACKUP	
	18	1	**223-3353**	1	RING-WEAR	
	19	1	**289-2946**	1	SEAL-U-CUP	
	20	1	**308-1845**	1	SEAL-WIPER	
	21	1	**3V-2431**	2	WASHER (10.2X16X2-MM THK)	
	22	1	**4S-5565**	2	BOLT (3/8-16X0.875-IN)	
	23	1	**4T-5613**	1	RING-WEAR	
	24	1	**5J-4561**	1	LOCKNUT (1-14-THD)	
	25	1	**6J-1972**	1	SEAL AS	
	26	1	**6J-5731**	1	RING-BACKUP	
	27	1	**8T-5070**	1	SETSCREW-SOCKET (3/8-16X0.5-IN)	
E	28	1	**9X-1386**		SLEEVE (8-CM)	
	29	1	*241-6218*	1	PLUG AS	
		1	**3K-0360**	1	SEAL-O-RING	
		1	**241-6205**	1	PLUG	

E-ORDER BY THE CENTIMETER

276-5681 CYLINDER GP-STEERING *(contd.)* i04016133

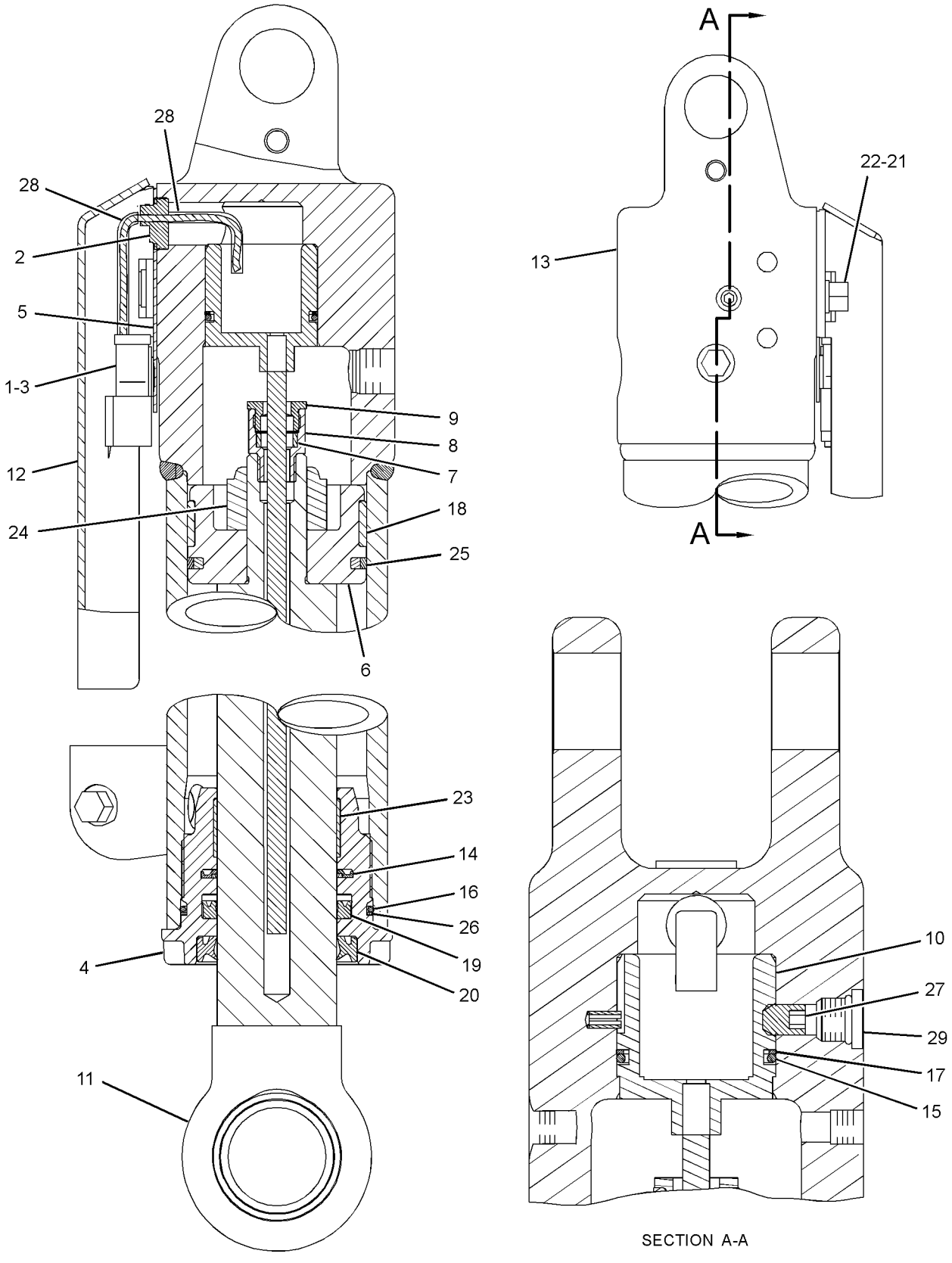

SECTION A-A

GRAPHIC #1 **<END>** g02213853

HYDRAULIC SYSTEM

276-5682 CYLINDER GP-STEERING—LH*R

S/N: R9J1-UP
76.2-MM (3-IN) BORE X 287-MM STROKE (11.3-IN)
PART OF 277-0688 CYLINDER & MTG GP-STEERING

SMCS-4303 **i03885453**

NOTE	REF NO	GRAPHIC REF	PART NUMBER	QTY	PART NAME 1 2 3 4 5 6 (PRODUCT LEVEL)	SEE PAGE
	1	1	**8T-8737**	1	PLUG-SEAL	
	2	1	**102-2244**	1	GROMMET	
	3	1	**102-8804**	1	KIT-RECEPTACLE (4-PIN)	
					(INCLUDES RECEPTACLE AS & WEDGE)	
	4	1	**151-7038**	1	HEAD	
	5	1	**212-0907**	1	PLATE-CONNECTOR	
	6	1	**214-6480**	1	PISTON	
	7	1	**217-3311**	1	MAGNET	
	8	1	**242-9514**	1	CARRIER	
	9	1	**242-9515**	1	RING-RETAINING	
	10	1	**249-5193**	1	SENSOR GP-POSITION (STEERING CYLINDER)	
		1	**9X-3401**	3	PIN-CONNECTOR (16-GA TO 18-GA)	
	11	1	**262-5769**	1	ROD AS	
	12	1	**276-1816**	1	GUARD	
	13	1	**276-5684**	1	CYLINDER AS	
		1	**095-0879**	1	PIN-SPRING	
		1	**289-6002**	1	ELBOW AS	
		1	**1N-5999**	2	PLUG-O-RING	
		1	**7J-0204**	2	SEAL-O-RING	
	14	1	**289-2935**	1	SEAL AS	
	15	1	**188-2199**	1	SEAL-O-RING	
	16	1	**1H-7339**	1	SEAL-O-RING	
	17	1	**215-1942**	1	RING-BACKUP	
	18	1	**223-3353**	1	RING-WEAR	
	19	1	**289-2946**	1	SEAL-U-CUP	
	20	1	**308-1845**	1	SEAL-WIPER	
	21	1	**3V-2431**	2	WASHER (10.2X16X2-MM THK)	
	22	1	**4S-5565**	2	BOLT (3/8-16X0.875-IN)	
	23	1	**4T-5613**	1	RING-WEAR	
	24	1	**5J-4561**	1	LOCKNUT (1-14-THD)	
	25	1	**6J-1972**	1	SEAL AS	
	26	1	**6J-5731**	1	RING-BACKUP	
	27	1	**8T-5070**	1	SETSCREW-SOCKET (3/8-16X0.5-IN)	
E	28	1	**9X-1386**		SLEEVE (8-CM)	

E-ORDER BY THE CENTIMETER

276-5682 CYLINDER GP-STEERING *(contd.)* i03885453

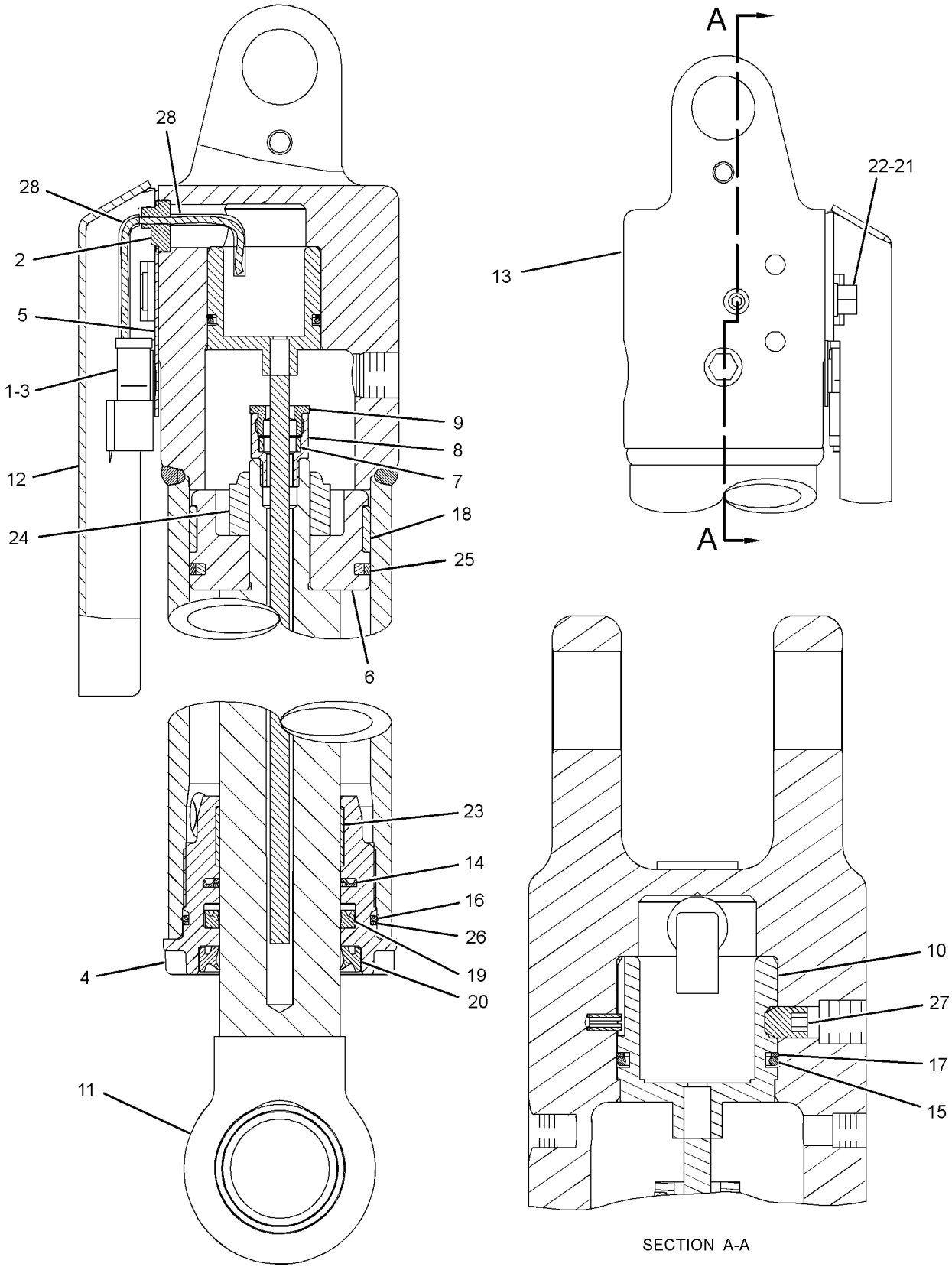

SECTION A-A

GRAPHIC #1 **<END>** g02139198

HYDRAULIC SYSTEM

249-5299 CYLINDER GP-WHEEL LEAN

S/N: R9J1-UP
88.9-MM (3.5-IN) BORE X 149-MM (5.87-IN) STROKE
PART OF 260-8713 CYLINDER & MTG GP-WHEEL LEAN

SMCS-5211 **i03963372**

NOTE	REF NO	GRAPHIC REF	PART NUMBER	QTY	PART NAME 1 2 3 4 5 6 (PRODUCT LEVEL)	SEE PAGE
	1	1	**251-1550**	1	CYLINDER AS	
	1A	1	**2G-8631**	1	BUSHING	
M	2	1	**173-9683**	1	BOLT (M30X3.5X90-MM)	
	3	1	**9X-8399**	1	WASHER (33X56X6-MM THK)	
	4	1	**4T-8054**	1	SEAL AS	
	5	1	**7J-9885**	1	RING-WEAR	
	6	1	**9T-9040**	1	PISTON	
	7	1	**175-7898**	1	SEAL-O-RING	
	8	1	**4J-9224**	1	RING-BACKUP	
	9	1	**6E-4974**	1	HEAD	
		1	**308-1845**	1	SEAL-WIPER	
R	10	1	**121-9245**	1	ROD AS	
	10A	1	**2G-8631**	1	BUSHING	
	11	1	**308-1845**	1	SEAL-WIPER	
	12	1	**356-8331**	1	SEAL-U-CUP	
	13	1	**289-2935**	1	SEAL AS	
	14	1	**4T-5613**	1	RING-WEAR	
					AVAILABLE REPAIR KIT(S):	
			228-1778	1	KIT-SEAL (HYDRAULIC CYLINDER)	
					(INCLUDES BACKUP RINGS, SEAL ASSEMBLIES, WEAR RINGS & SEALS)	

M-METRIC PART
R-REMFG PART MAY BE AVAILABLE

249-5299 CYLINDER GP-WHEEL LEAN *(contd.)* **i03963372**

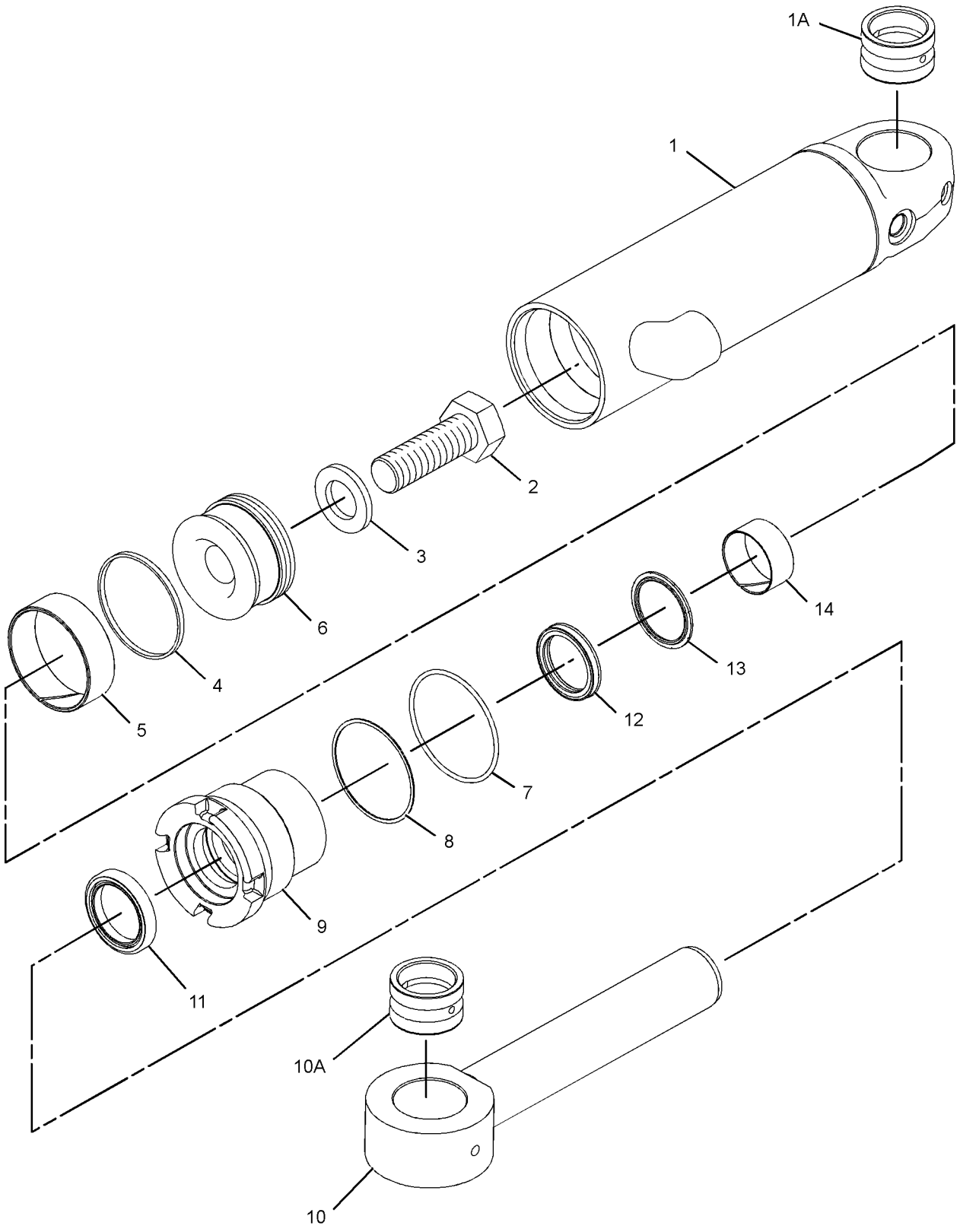

GRAPHIC #1 **<END>** g02121834

HYDRAULIC SYSTEM

259-5580 DRIVE GP-CIRCLE

S/N: R9J1-UP

PART OF 349-2555 COMMON AR

SMCS-5207 **i03794410**

NOTE	REF NO	GRAPHIC REF	PART NUMBER	QTY	PART NAME 1 2 3 4 5 6 (PRODUCT LEVEL)	SEE PAGE
	1	1	**1B-4038**	2	CUP-BEARING	
	2	1	**1B-4046**	2	CONE-BEARING	
	3	1	**1D-4719**	4	NUT-FULL (1/2-13-THD)	
	4	1	**2G-0339**	2	WASHER-SPECIAL (1.906X3.25X0.06-MM THK)	
	5	1	**2G-0478**	8	DISC-FRICTION	
	6	1	**2G-6695**	1	BRACKET	
R	7	1	**5K-5288**	1	SEAL GP-DUO-CONE	
		1	**5K-5129**	2	RING-SEALING	
	8	1	**6G-5538**	1	COVER	
	9	1	**6G-5542**	2	SPACER (119.2X178X9.3-MM THK)	
	10	1	**6G-6238**	1	COVER AS	
		1	**6G-5537**	1	BEARING	
	11	1	**6Y-7953**	9	DISC-FRICTION	
BC	12	1	**7D-8983**	10	SHIM (0.005-IN THK)	
BC	13	1	**7D-8984**	6	SHIM (0.007-IN THK)	
	14	1	**8T-0336**	1	FITTING-PRESSURE RELIEF	
	15	1	**312-0781**	1	WORM-CIRCLE DRIVE	
	16	1	**8X-5303**	1	GEAR-WORM (36-TEETH)	
	17	1	**9D-1491**	1	COUPLING	
	18	1	**8D-7424**	1	SPACER (48X81X6-MM THK)	
Y	19	1	**9T-5977**	1	MOTOR GP-GEROTOR	688
	20	1	**259-4481**	1	HOUSING AS	
		1	**2D-8154**	4	STUD-TAPERLOCK (1/2-13X2.36-IN)	
		1	**281-9452**	1	BEARING-SLEEVE	
		1	**286-2631**	4	STUD-TAPERLOCK	
	21	1	**261-8554**	1	PINION-CIRCLE DRIVE	
C	22	1	**281-9460**	1	SHAFT-PINION DRIVE	
BC	23	1	**307-1959**	6	SHIM (0.13-MM THK)	
BC	24	1	**307-1960**	1	SHIM (0.25-MM THK)	
C	25	1	**307-1961**	1	PLATE	
BC	26	1	**307-1962**	5	SHIM (0.5-MM THK)	
C	27	1	**0S-1585**	4	BOLT (1/2-13X1.5-IN)	
	28	1	**1A-1415**	1	NUT (1-7/8-12-THD)	
	29	1	**1B-5174**	1	PLUG-PIPE	
	30	1	**1H-7339**	1	SEAL-O-RING	
	31	1	**2B-7410**	1	PLUG-PIPE	
	32	1	**2D-6533**	1	SEAL-O-RING	
	33	1	**2H-9247**	1	SEAL-O-RING	
	34	1	**6B-7021**	1	SEAL-O-RING	
	35	1	**4H-6996**	1	PIN-SPRING	
	36	1	**5K-8454**	1	BOLT (1/2-13X1.12-IN)	
C	37	1	**5P-8245**	16	WASHER-HARD (13.5X25.5X3-MM THK)	
	38	1	**5S-7379**	4	BOLT (3/8-16X0.875-IN)	
	39	1	**6G-5539**	1	GASKET	
	40	1	**6G-5548**	1	SPACER (69.5X89X0.8-MM THK)	
	41	1	**6G-6122**	1	SPRING-DISC	
	42	1	**6H-1717**	7	BOLT (1/2-13X1.125-IN)	
CM	43	1	**6V-5686**	3	BOLT (M16X2X50-MM)	
C	44	1	**8D-5054**	3	WASHER-HARD (17X30X3-MM THK)	
	45	1	**8T-4896**	4	WASHER-HARD (10.2X18.5X2.5-MM THK)	
	46	1	**9D-5941**	2	WASHER-THRUST (3.06X4.25X0.120-MM THK)	

B-USE AS REQUIRED
C-CHANGE FROM PREVIOUS TYPE
M-METRIC PART
R-REMFG PART MAY BE AVAILABLE
Y-SEPARATE ILLUSTRATION

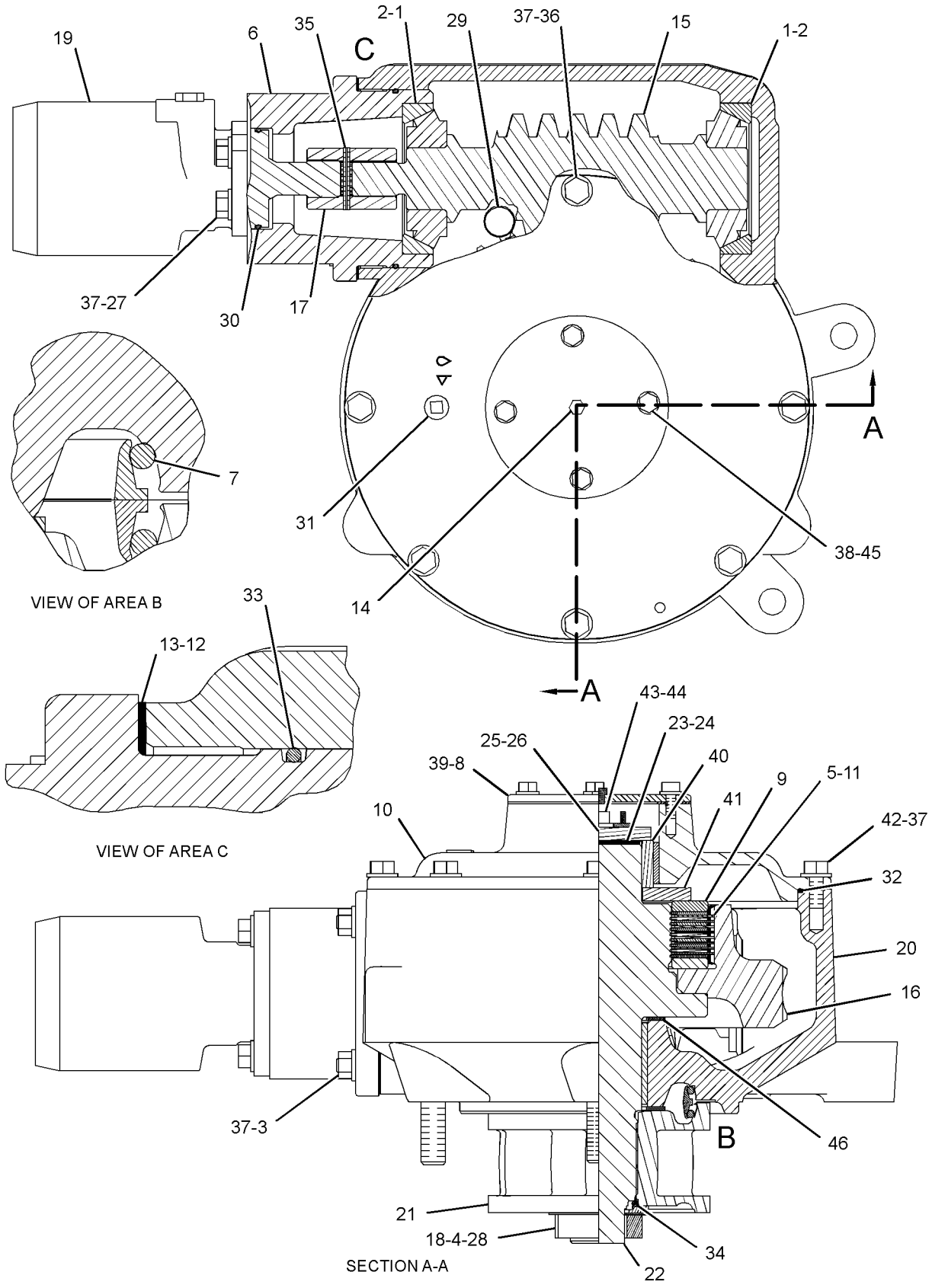

GRAPHIC #1 **<END>** g01442374

HYDRAULIC SYSTEM

250-3507 FILTER & MTG GP-HYDRAULIC

S/N: R9J1-UP

PART OF 289-2108 SERVICE CENTER AR

SMCS-5068 **i03745012**

NOTE	REF NO	GRAPHIC REF	PART NUMBER	QTY	PART NAME 1 2 3 4 5 6 (PRODUCT LEVEL)	SEE PAGE
	1	1	**6V-0852**	1	CAP-DUST	
	2	1	*164-5567*	1	COUPLER AS-QUICK DISCONNECT (MALE)	
		1	**6V-3965**	1	FITTING (QUICK DISCONNECT)	
		1	**3J-1907**	1	SEAL-O-RING	
	3	1	**242-0407**	1	VALVE-DRAIN (HYDRAULIC FILTER)	
	4	1	**245-7603**	1	TUBE AS	
	5	1	**245-8964**	1	BLOCK	
Y	6	1	**249-2307**	1	FILTER GP-OIL (HYDRAULIC TANK RETURN)	592
	7	1	**257-8897**	1	HOSE-MOLDED	
	8	1	*148-8408*	2	PLUG AS	
					(EACH INCLUDES)	
		1	**9S-4183**	1	PLUG-O-RING	
		1	**3D-2824**	1	SEAL-O-RING	
	9	1	*156-4283*	1	CONNECTOR AS	
		1	**8T-7926**	1	CONNECTOR	
		1	**6K-6307**	1	SEAL-O-RING	
		1	**8T-0315**	1	SEAL-O-RING	
	10	1	**294-9701**	1	TUBE AS	
	11	1	**294-9702**	1	TUBE AS	
	12	1	**4J-0524**	2	SEAL-O-RING	
M	13	1	**7X-2543**	2	BOLT (M10X1.5X120-MM)	
	14	1	**8T-4121**	8	WASHER-HARD (11X21X2.5-MM THK)	
M	15	1	**8T-4133**	2	NUT (M10X1.5-THD)	
M	16	1	**8T-4183**	8	BOLT (M12X1.75X40-MM)	
M	17	1	**8T-4195**	4	BOLT (M10X1.5X30-MM)	
	18	1	**8T-4223**	8	WASHER-HARD (13.5X25.5X3-MM THK)	
	19	1	**8T-6703**	4	CLAMP-HOSE	
	20	1	**8X-5489**	1	SLEEVE	
G	21	1	**122-6908**		HOSE-HYDRAULIC (6.3-IN)	
E	22	1	**9X-2023**		HOSE (31-CM)	
	23	1	*165-4931*	1	ELBOW AS	
		1	**6V-8077**	1	ELBOW	
		1	**3J-1907**	1	SEAL-O-RING	

E-ORDER BY THE CENTIMETER
G-ORDER BY THE INCH
M-METRIC PART
Y-SEPARATE ILLUSTRATION

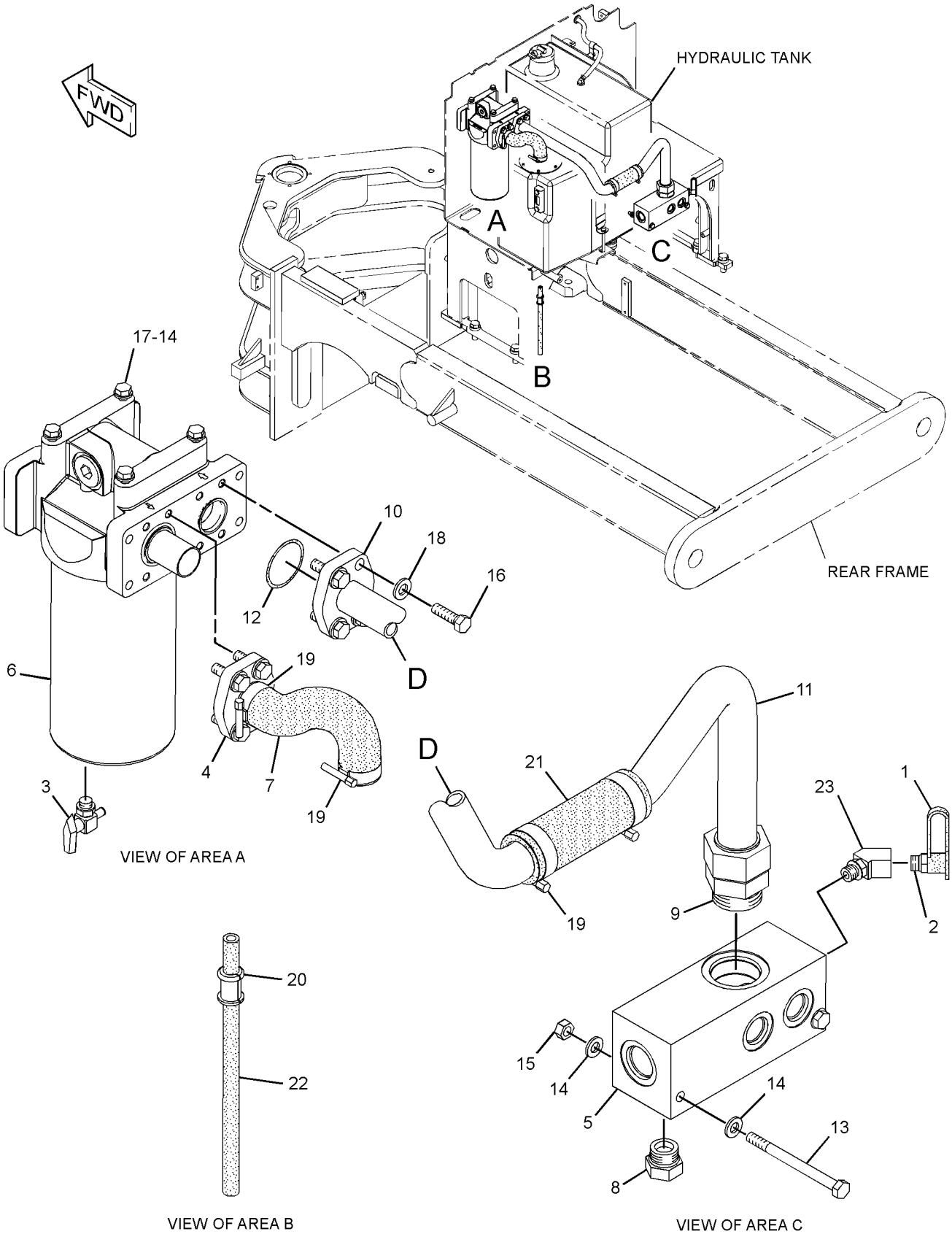

GRAPHIC #1 **<END>** g01420411

HYDRAULIC SYSTEM

191-9784 FILTER GP-OIL

S/N: R9J1-UP
PART OF 282-8870, 351-8251 LINES GP-PUMP
AN ATTACHMENT

SMCS-5068, 5093 **i03911357**

NOTE	REF NO	GRAPHIC REF	PART NUMBER	QTY	PART NAME 1 2 3 4 5 6 (PRODUCT LEVEL)	SEE PAGE
	1	1	**1G-8878**	1	FILTER-OIL (ADVANCED EFFICIENCY) (PRIMARY)	
	2	1	**7X-8549**	1	SWITCH AS-PRESSURE (FILTER BYPASS)	
		1	**3J-1907**	1	SEAL-O-RING	
	3	1	**8C-3451**	1	CAP-DUST	
	4	1	**183-7264**	1	VALVE AS-FLUID SAMPLING (FILTER OIL)	
	5	1	**3J-1907**	1	SEAL-O-RING	

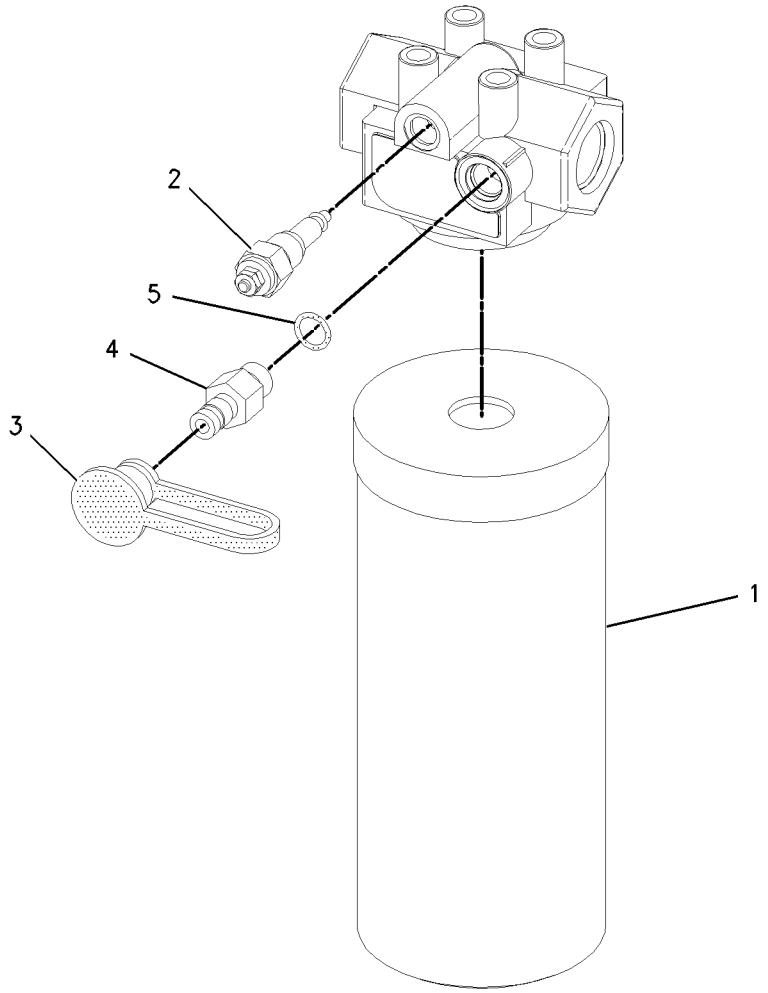

GRAPHIC #1 **<END>** g00977327

249-2307 FILTER GP-OIL–HYDRAULIC TANK RETURN

S/N: R9J1-UP

PART OF 250-3507 FILTER & MTG GP-HYDRAULIC

SMCS-5068, 5093 **i03797265**

NOTE	REF NO	GRAPHIC REF	PART NUMBER	QTY	PART NAME 1 2 3 4 5 6 (PRODUCT LEVEL)	SEE PAGE
	1	1	**338-3540**	1	FILTER ELEMENT-OIL (ULTRA HIGH EFFICIENCY) (HYDRAULIC TANK)	
C	2	1	**321-5967**	1	HOUSING GP-FILTER (OIL)	
		1	**9S-8004**	1	PLUG-O-RING	
		1	**214-7568**	1	SEAL-O-RING	
Y	3	1	*249-2308*	1	BASE GP-OIL FILTER (HYDRAULIC TANK RETURN)	560
	4	1	**214-7568**	1	SEAL-O-RING	
	5	1	**6V-5048**	1	SEAL-O-RING	
	6	1	**9S-4185**	1	PLUG-O-RING	
	7	1	**9S-4191**	1	PLUG-O-RING	
	8	1	**130-0229**	1	SEAL-O-RING	
F			**8L-2786**	1	SEAL-O-RING	

C-CHANGE FROM PREVIOUS TYPE
F-NOT SHOWN
Y-SEPARATE ILLUSTRATION

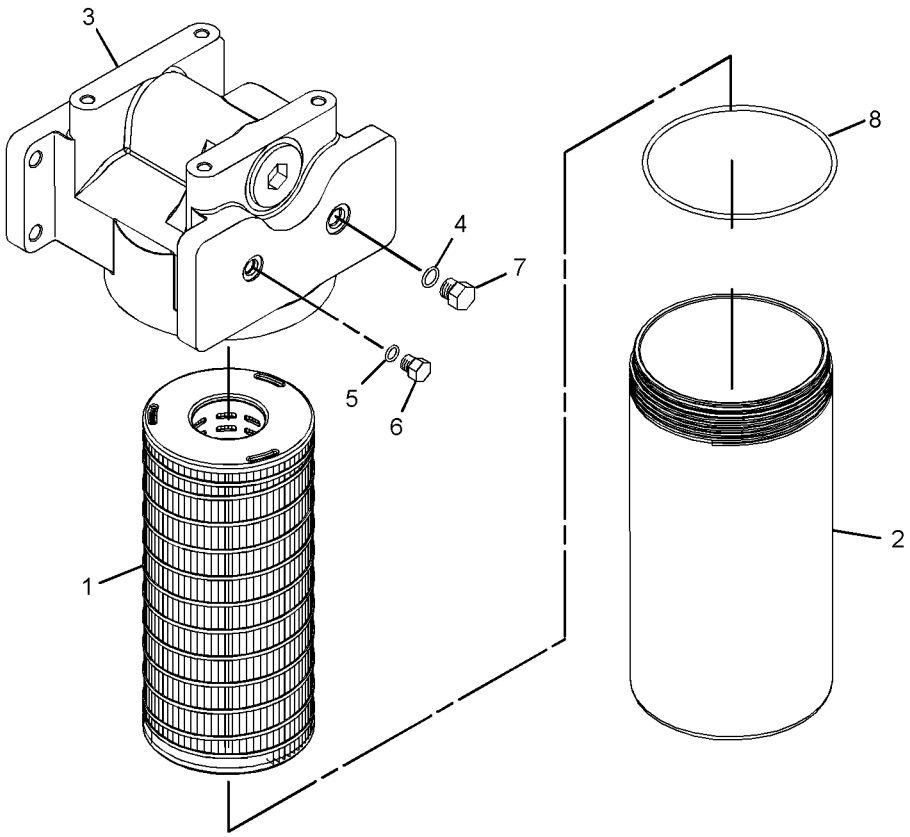

GRAPHIC #1 **<END>** g01447672

HYDRAULIC SYSTEM

260-3140 FILTER GP-OIL

S/N: R9J1-UP

PART OF 349-2555 COMMON AR

SMCS-5068, 5093 **i02762694**

NOTE	REF NO	GRAPHIC REF	PART NUMBER	QTY	PART NAME 1 2 3 4 5 6 (PRODUCT LEVEL)	SEE PAGE
	1	1	**8C-3445**	1	CAP-DUST	
	2	1	**102-5828**	1	COVER	
	3	1	**102-5829**	1	ADAPTER	
Y	4	1	**104-7995**	1	BASE GP-OIL FILTER	89
	5	1	*164-5596*	1	TEE AS	
		1	**8C-6515**	1	TEE	
		1	**5K-9090**	1	SEAL-O-RING	
		1	**7M-8485**	1	SEAL-O-RING	
	6	1	**186-3705**	1	ELBOW	
	7	1	*244-3712*	1	PLUG AS	
		1	**9S-4191**	1	PLUG-O-RING	
		1	**214-7568**	1	SEAL-O-RING	
	8	1	**260-3129**	1	TUBE AS	
	9	1	**260-3130**	1	TUBE AS	
	10	1	**260-3132**	1	BRACKET AS	
M		1	**8T-3490**	16	NUT-WELD (M10X1.5-THD)	
	11	1	**260-3133**	1	BRACKET AS	
M		1	**8T-3490**	5	NUT-WELD (M10X1.5-THD)	
	12	1	**260-3136**	1	BRACKET	
	13	1	**277-1875**	1	PLATE AS	
M		1	**8T-3490**	2	NUT-WELD (M10X1.5-THD)	
	14	1	**260-3161**	1	BRACKET AS	
	15	1	**133-6934**	1	SPACER (11X20X25-MM THK)	
	16	1	*148-8357*	2	ELBOW AS	
					(EACH INCLUDES)	
		1	**6V-9008**	1	ELBOW	
		1	**5K-9090**	1	SEAL-O-RING	
		1	**7M-8485**	1	SEAL-O-RING	
	17	1	**151-5145**	1	ELBOW	
	18	1	**3J-7354**	2	SEAL-O-RING	
	20	1	**5K-9090**	1	SEAL-O-RING	
	21	1	**5M-7087**	4	CLAMP-TUBE	
	22	1	**5P-1076**	2	WASHER-HARD (13.5X30X4-MM THK)	
	23	1	**6V-3908**	2	SEAL-O-RING	
	24	1	**7M-8485**	1	SEAL-O-RING	
	25	1	**198-4777**	16	WASHER-HARD (11X25X10-MM THK)	
	26	1	**8C-3446**	1	VALVE-FLUID SAMPLING	
	27	1	**8T-4121**	6	WASHER-HARD (11X21X2.5-MM THK)	
M	29	1	**8T-4186**	8	BOLT (M10X1.5X40-MM)	
M	30	1	**8T-4194**	2	BOLT (M12X1.75X50-MM)	
M	31	1	**8T-4196**	4	BOLT (M10X1.5X35-MM)	
	32	1	**8T-4223**	2	WASHER-HARD (13.5X25.5X3-MM THK)	
M	33	1	**8T-4244**	2	NUT (M12X1.75-THD)	
M	34	1	**8T-5005**	1	BOLT (M10X1.5X70-MM)	
M	35	1	**8T-4182**	6	BOLT (M10X1.5X45-MM)	
M	36	1	**8T-4185**	3	BOLT (M10X1.5X50-MM)	

M-METRIC PART
Y-SEPARATE ILLUSTRATION

260-3140 **FILTER GP-OIL** *(contd.)* **i02762694**

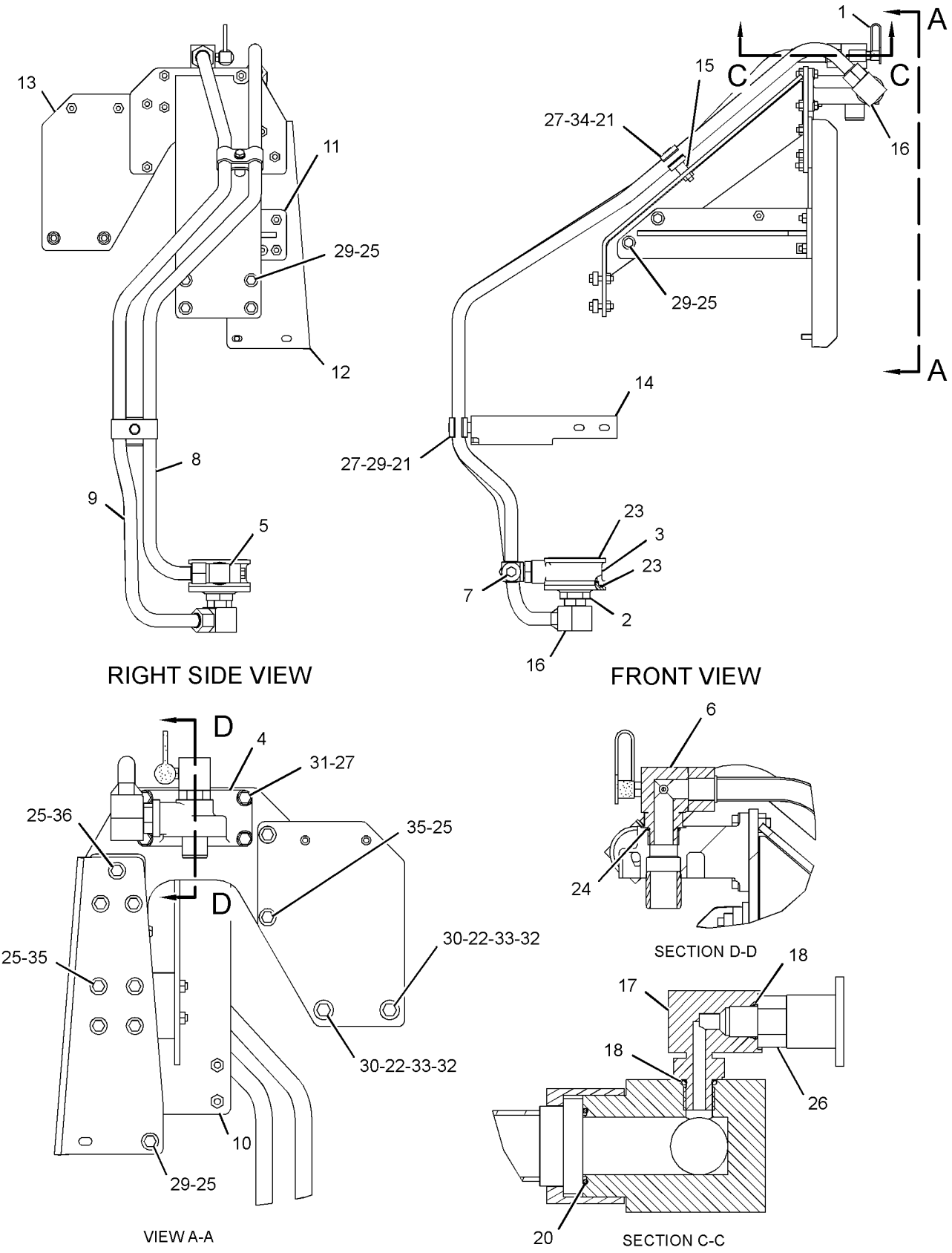

GRAPHIC #1 **<END>** g01395413

HYDRAULIC SYSTEM

282-8869 LINES GP-ACCUMULATOR

S/N: R9J1-UP

PART OF 354-8462 CONTROL AR-HYDRAULIC, 353-5005 DISTRIBUTION AR

AN ATTACHMENT

SMCS-5057, 5077 **i04026073**

NOTE	REF NO	GRAPHIC REF	PART NUMBER	QTY	PART NAME 1 2 3 4 5 6 (PRODUCT LEVEL)	SEE PAGE
	1	2	**4N-5091**	2	SPACER (0.53X1X3.375-IN THK)	
	2	3,4	**5P-0599**	3	CLAMP-BAND	
	3	2	**8T-1296**	2	WASHER (10.5X19X3.5-MM THK)	
	4	3,4	**8W-3989**	2	CLAMP	
	5	3,4	**8W-3990**	2	CLAMP	
	6	4	**8W-3991**	2	JUNCTION BLOCK	
	7	3	**9R-2053**	1	BLOCK	
	8	4	**9R-5008**	1	SPACER (11X20X6-MM THK)	
	9	3	**9R-8870**	1	BLOCK	
	10	2	**162-7449**	2	CLAMP	
	11	2	*171-6466*	2	UNION AS	
					(EACH INCLUDES)	
		2	**5P-9810**	1	UNION	
		2	**3D-2824**	2	SEAL-O-RING	
CY	12	2	*219-8035*	2	ACCUMULATOR GP-BLADE CUSHION (CHARGED)	558
	13	1	**246-6341**	3	CLAMP	
	14	1	**246-6342**	4	CLAMP	
I	15	2	**250-5612**	1	HOSE AS	
I	16	2	**252-0002**	1	HOSE AS	
I	17	4	**252-0003**	1	HOSE AS	
I	18	4	**252-0004**	1	HOSE AS	
	19	3	**252-5366**	1	GUIDE AS	
Y	20	2	**322-3798**	2	MANIFOLD GP-CONTROL (BLADE CUSHION)	681
	21	2	**256-9365**	1	PLATE AS	
	22	2	**257-7253**	2	CLAMP	
	23	1	**259-5418**	2	BLOCK	
	24	1	**259-5898**	2	BLOCK	
I	25	4	**265-0639**	2	HOSE AS	
I	26	4	**347-7290**	1	HOSE AS	
I	27	4	**265-0642**	1	HOSE AS	
	28	4	**265-0644**	4	TUBE AS	
	29	4	**265-0645**	4	TUBE AS	
	30	4	**272-4853**	1	TUBE AS	
	31	3	**272-4854**	1	TUBE AS	
	32	4	**272-5671**	2	BLOCK	
	33	4	**286-1760**	1	TUBE AS	
	34	4	**286-1763**	1	TUBE AS	
I	35	2	**302-9101**	1	HOSE AS	
I	36	2	**302-9118**	1	HOSE AS	
I	37	2	**302-9119**	1	HOSE AS	
I	38	1	**306-2031**	1	HOSE AS	
I	39	1	**306-2032**	1	HOSE AS	
I	40	4	**306-2034**	1	HOSE AS	
I	41	4	**351-2740**	1	HOSE AS	
I	42	4	**306-2036**	1	HOSE AS	
I	43	4	**306-2037**	1	HOSE AS	
I	44	3	**306-2038**	2	HOSE AS	
I	45	3	**306-2039**	1	HOSE AS	
I	46	3	**306-2040**	1	HOSE AS	
I	47	4	**309-4561**	1	HOSE AS	
I	48	4	**309-4562**	1	HOSE AS	
I	49	4	**312-5687**	1	HOSE AS	
I	50	4	**312-5688**	1	HOSE AS	
	51	1	**313-5510**	2	PLATE	
CM	52	1	**8T-0389**	4	LOCKNUT (M10X1.5-THD)	

282-8869 **LINES GP-ACCUMULATOR** *(contd.)* **i04026073**

NOTE	REF NO	GRAPHIC REF	PART NUMBER	QTY	PART NAME 1 2 3 4 5 6 (PRODUCT LEVEL)	SEE PAGE
	53	3	**100-4336**	3	CLIP	
	54	1,3,4	*148-8318*	6	CONNECTOR AS	
					(EACH INCLUDES)	
		1,3,4	**6V-8634**	1	CONNECTOR	
		1,3,4	**3K-0360**	1	SEAL-O-RING	
		1,3,4	**6V-8397**	1	SEAL-O-RING	
	55	2	*148-8328*	2	CONNECTOR AS	
					(EACH INCLUDES)	
		2	**6V-8633**	1	CONNECTOR	
		2	**3D-2824**	1	SEAL-O-RING	
		2	**6V-8398**	1	SEAL-O-RING	
	56	3,4	*148-8342*	13	CONNECTOR AS	
					(EACH INCLUDES)	
		3,4	**6V-8632**	1	CONNECTOR	
		3,4	**3K-0360**	1	SEAL-O-RING	
		3,4	**7J-9108**	1	SEAL-O-RING	
	57	3	*148-8358*	1	ELBOW AS	
		3	**6V-8624**	1	ELBOW	
		3	**2M-9780**	1	SEAL-O-RING	
		3	**6V-8398**	1	SEAL-O-RING	
	58	1,2,3	*148-8363*	5	ELBOW AS	
					(EACH INCLUDES)	
		1,2,3	**6V-9876**	1	ELBOW	
		1,2,3	**3K-0360**	1	SEAL-O-RING	
		1,2,3	**6V-8397**	1	SEAL-O-RING	
	59	3,4	*148-8364*	2	ELBOW AS	
					(EACH INCLUDES)	
		3,4	**6V-8625**	1	ELBOW	
		3,4	**3K-0360**	1	SEAL-O-RING	
		3,4	**6V-8398**	1	SEAL-O-RING	
	60	3	*148-8367*	2	ELBOW AS	
					(EACH INCLUDES)	
		3	**6V-8397**	1	SEAL-O-RING	
		3	**6V-9850**	1	ELBOW	
	61	2,3	*148-8370*	3	ELBOW AS	
					(EACH INCLUDES)	
		2,3	**6V-8398**	1	SEAL-O-RING	
		2,3	**6V-9851**	1	ELBOW	
	62	3	*148-8371*	1	ELBOW AS	
		3	**8C-8988**	1	ELBOW	
		3	**6V-8397**	1	SEAL-O-RING	
	63	3,4	*148-8372*	3	ELBOW AS	
					(EACH INCLUDES)	
		3,4	**6V-8721**	1	ELBOW	
		3,4	**2M-9780**	1	SEAL-O-RING	
		3,4	**6V-8398**	1	SEAL-O-RING	
	64	3	*148-8374*	7	ELBOW AS	
					(EACH INCLUDES)	
		3	**6V-8723**	1	ELBOW	
		3	**3K-0360**	1	SEAL-O-RING	
		3	**6V-8397**	1	SEAL-O-RING	
	65	2	*148-8381*	2	ELBOW AS	
					(EACH INCLUDES)	
		2	**8T-5429**	1	ELBOW	
		2	**3D-2824**	1	SEAL-O-RING	
		2	**6V-8398**	1	SEAL-O-RING	
	66	4	*148-8427*	2	TEE AS	
					(EACH INCLUDES)	
		4	**8T-6895**	1	TEE-UNION	

282-8869 **LINES GP-ACCUMULATOR** *(contd.)* **i04026073**

NOTE	REF NO	GRAPHIC REF	PART NUMBER	QTY	PART NAME 1 2 3 4 5 6 (PRODUCT LEVEL)	SEE PAGE
		4	**6V-8398**	3	SEAL-O-RING	
	67	2	*148-8444*	2	TEE AS-SWIVEL	
					(EACH INCLUDES)	
		2	**6V-9837**	1	TEE-SWIVEL	
		2	**6V-8398**	2	SEAL-O-RING	
	68	3	*150-4048*	1	ELBOW AS	
		3	**6V-8722**	1	ELBOW	
		3	**3K-0360**	1	SEAL-O-RING	
		3	**7J-9108**	1	SEAL-O-RING	
	69	2	*164-5573*	2	UNION AS	
					(EACH INCLUDES)	
		2	**6V-8738**	1	UNION	
		2	**6V-8398**	1	SEAL-O-RING	
		2	**7J-9108**	1	SEAL-O-RING	
	70	3,4	*164-5605*	3	CONNECTOR AS	
					(EACH INCLUDES)	
		3,4	**8T-0076**	1	CONNECTOR	
		3,4	**3K-0360**	1	SEAL-O-RING	
		3,4	**6V-8397**	1	SEAL-O-RING	
	71	3	*164-5608*	1	CONNECTOR AS	
		3	**3K-0360**	1	SEAL-O-RING	
		3	**6V-8398**	1	SEAL-O-RING	
		3	**8T-1687**	1	CONNECTOR	
	72	1,2,3	**1S-0994**	12	CLIP	
	73	3	*204-0317*	1	CONNECTOR AS	
		3	**3K-0360**	1	SEAL-O-RING	
		3	**6V-8397**	1	SEAL-O-RING	
		3	**092-3635**	1	CONNECTOR	
	74	1	**205-6716**	2	SPACER (10.5X20X19-MM THK)	
Y	75	3	**260-6502**	1	SWIVEL GP (CIRCLE DRIVE)	701
	76	2	**272-4851**	1	TUBE AS	
	77	2	**272-4852**	1	TUBE AS	
I	78	2	**302-8926**	1	HOSE AS	
	79	3	**3B-4628**	2	PIN-COTTER	
	80	2,4	**3E-4321**	6	CLIP	
	81	4	**5K-1094**	2	LOCKWASHER	
	82	3	**5P-3860**	1	CLAMP-HOSE	
	83	2,4	**6D-4244**	5	CLIP	
	84	2	**6D-4636**	1	CLIP	
	85	2	**6K-8178**	2	CLIP	
	86	4	**6V-8398**	10	SEAL-O-RING	
	87	4	**6V-9169**	2	NUT-BULKHEAD (13/16-16-THD)	
	88	4	**7K-1181**	2	STRAP-CABLE	
	89	2	**7W-5672**	2	PIPE	
	90	2	**7X-7729**	3	WASHER (11X25X3-MM THK)	
	91	3	**8D-9092**	1	PIN	
	92	2	**8D-9671**	2	CLIP	
	93	1,2,3, 4	**8T-4121**	45	WASHER-HARD (11X21X2.5-MM THK)	
M	94	2,3,4	**8T-4133**	9	NUT (M10X1.5-THD)	
M	95	1,2,3	**8T-4136**	7	BOLT (M10X1.5X25-MM)	
M	96	1,2,3, 4	**8T-4137**	10	BOLT (M10X1.5X20-MM)	
M	97	3,4	**8T-4172**	2	BOLT (M10X1.5X80-MM)	
M	98	1	**8T-4182**	2	BOLT (M10X1.5X45-MM)	
M	99	3,4	**8T-4185**	2	BOLT (M10X1.5X50-MM)	
M	100	1,2,4	**8T-4191**	3	BOLT (M10X1.5X16-MM)	
M	101	2,3,4	**8T-4195**	7	BOLT (M10X1.5X30-MM)	
M	102	2	**8T-4198**	2	BOLT (M10X1.5X100-MM)	
	103	2,3	**8T-4223**	6	WASHER-HARD (13.5X25.5X3-MM THK)	

282-8869 **LINES GP-ACCUMULATOR** *(contd.)* **i04026073**

NOTE	REF NO	GRAPHIC REF	PART NUMBER	QTY	PART NAME 1 2 3 4 5 6 (PRODUCT LEVEL)	SEE PAGE
M	104	3	**8T-4648**	4	BOLT (M12X1.75X70-MM)	
	105	3	**8T-4994**	2	WASHER-HARD (20X36.5X3.5-MM THK)	
M	106	2	**8T-5001**	2	BOLT (M12X1.75X130-MM)	
	107	2	**9X-8250**	3	CLIP	
	108	4	*148-8340*	1	CONNECTOR AS	
		4	**6V-8639**	1	CONNECTOR	
		4	**3K-0360**	1	SEAL-O-RING	
		4	**6V-8398**	1	SEAL-O-RING	

C-CHANGE FROM PREVIOUS TYPE
I-REFER TO HYDRAULIC INFORMATION SYSTEM
M-METRIC PART
Y-SEPARATE ILLUSTRATION

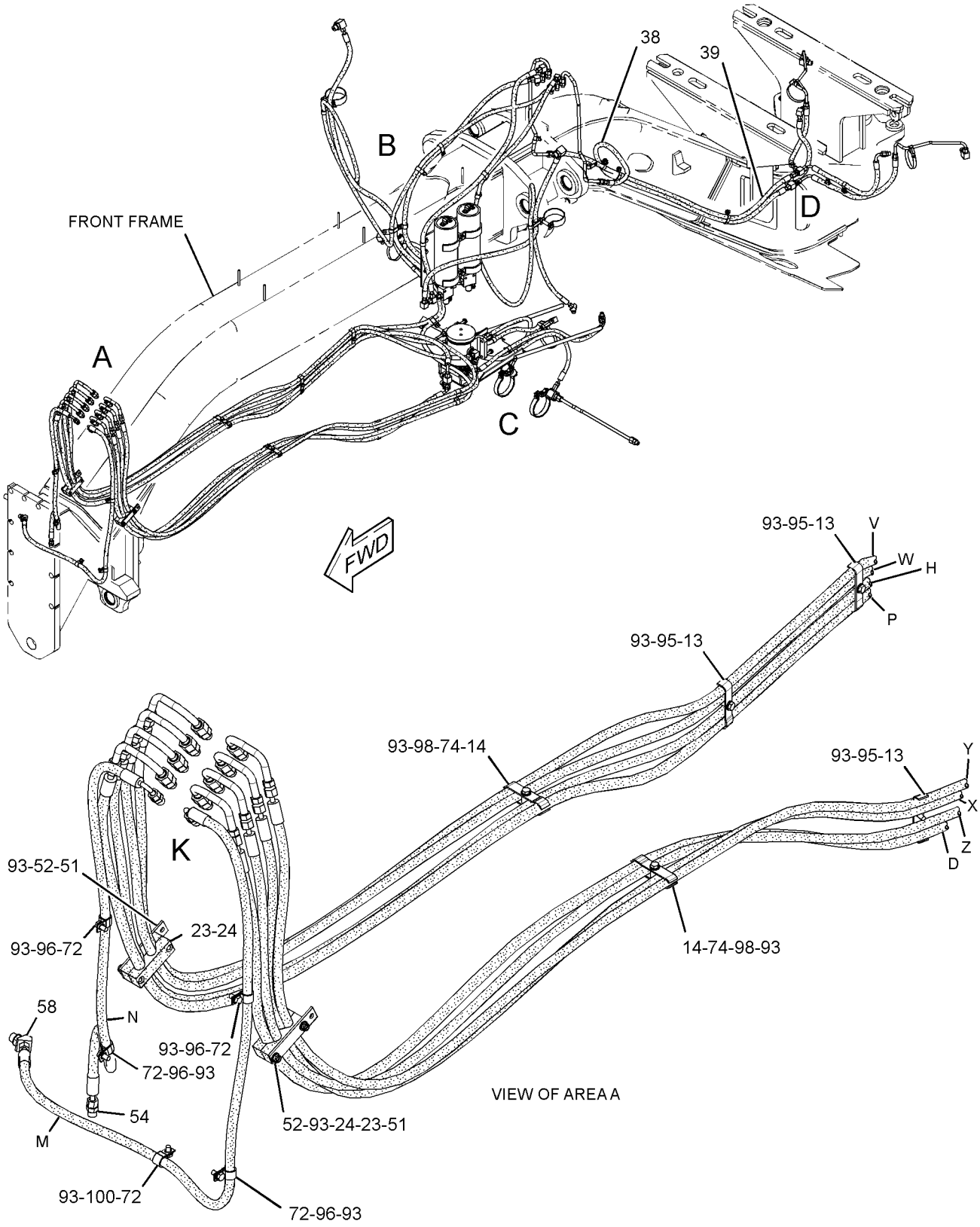

REFER TO ALL ILLUSTRATIONS OF THIS GROUP FOR AUXILIARY VIEWS

GRAPHIC #1

g02142453

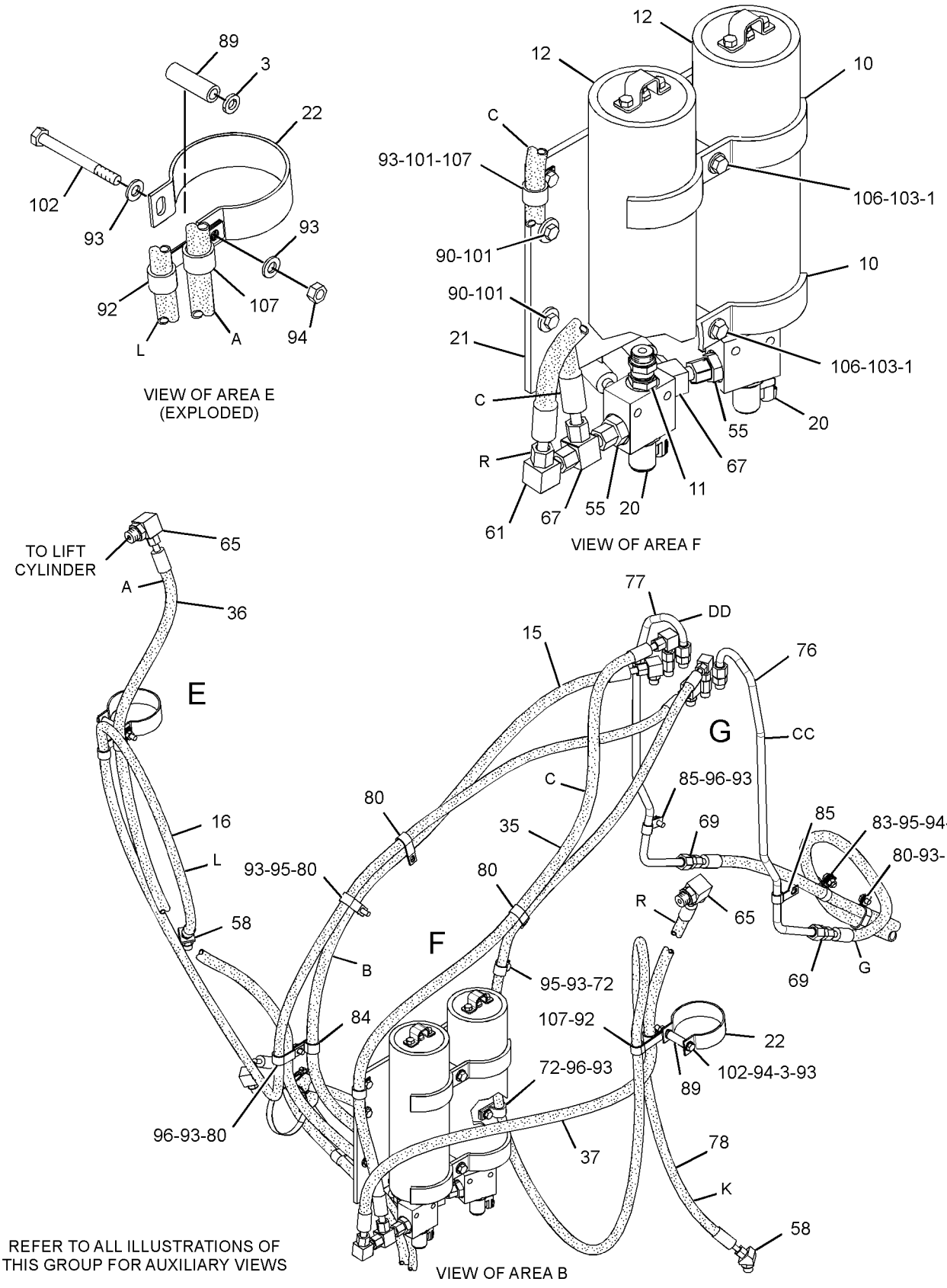

GRAPHIC #2

g02142457

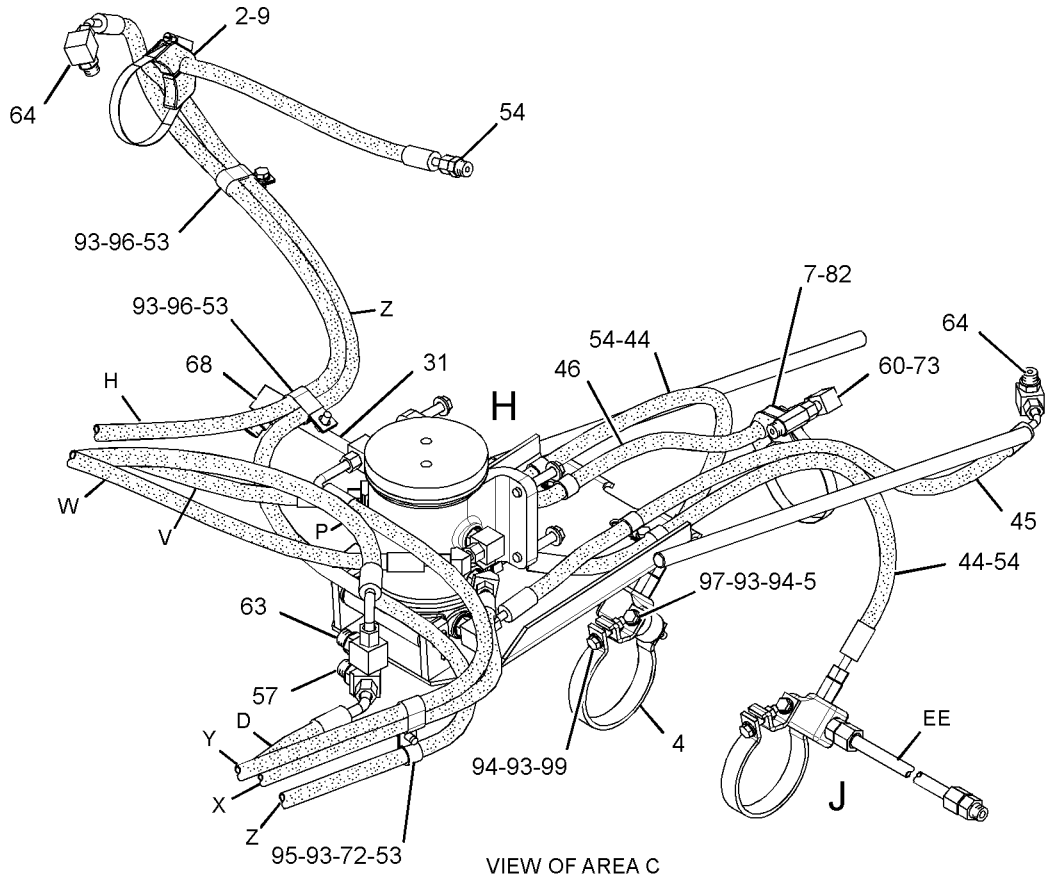

VIEW OF AREA C

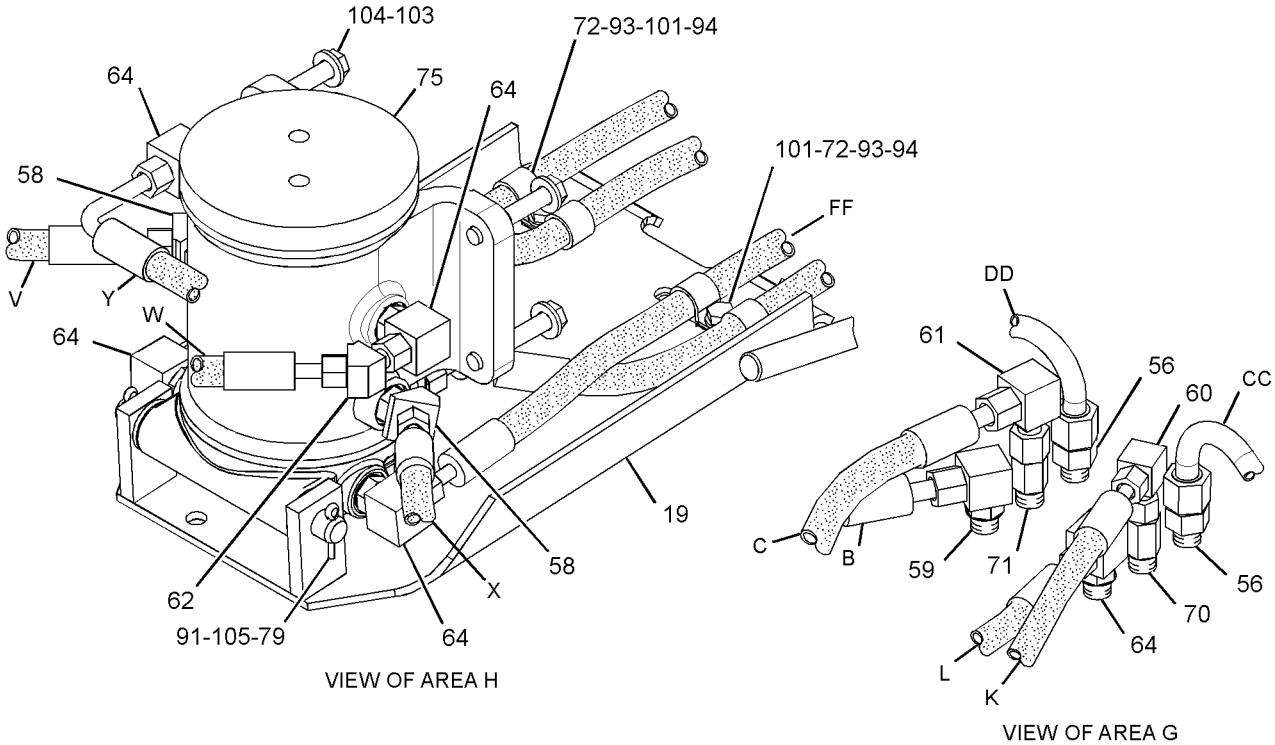

VIEW OF AREA H

VIEW OF AREA G

GRAPHIC #3

g02142458

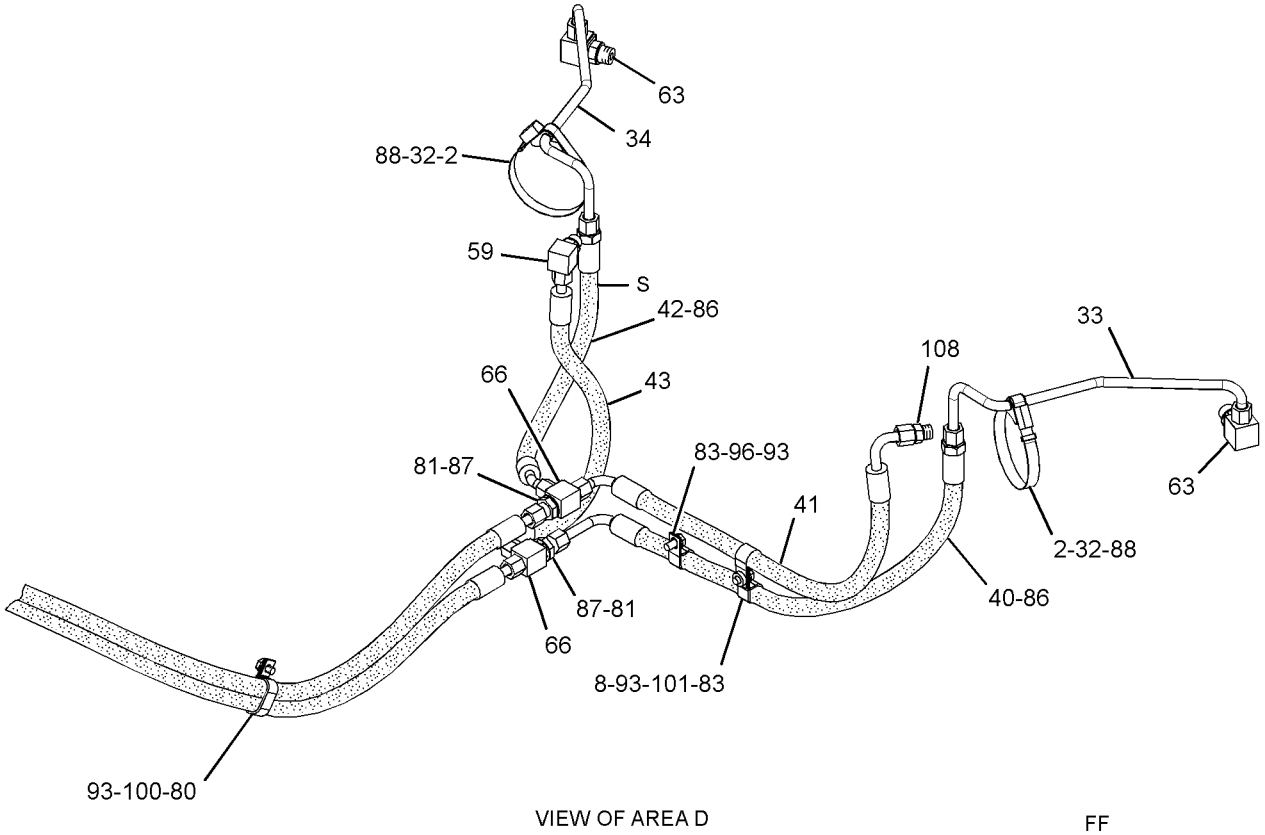

VIEW OF AREA D

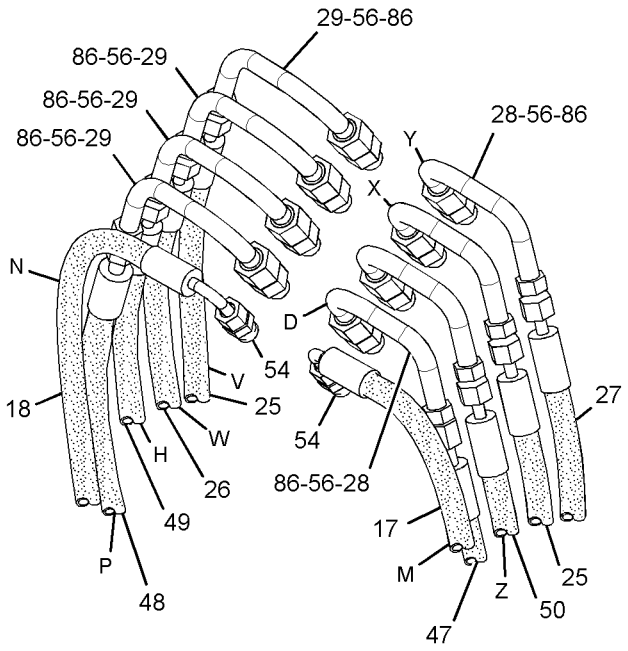

VIEW OF AREA K

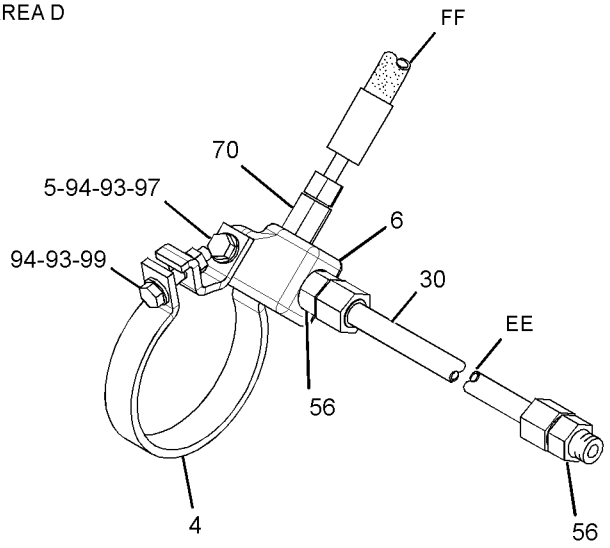

VIEW OF AREA J

GRAPHIC #4 **<END>** g02142394

HYDRAULIC SYSTEM

235-6405 LINES GP-CENTERSHIFT LOCK

S/N: R9J1-UP
PART OF 356-3071 OPTION AR-MACHINE
AN ATTACHMENT

SMCS-5057, 5221 **i03364060**

NOTE	REF NO	GRAPHIC REF	PART NUMBER	QTY	PART NAME 1 2 3 4 5 6 (PRODUCT LEVEL)	SEE PAGE
Y	1	1	**6E-4701**	1	VALVE GP-CHECK	720
	2	1	**9G-8140**	1	SPACER (10.5X25X15-MM THK)	
	3	1	**110-5266**	1	ORIFICE	
	4	1	**132-2453**	1	UNION	
I	5	1	**152-0269**	1	HOSE AS	
I	6	1	**164-9422**	1	HOSE AS	
	7	1	*148-8336*	2	CONNECTOR AS	
					(EACH INCLUDES)	
		1	**3J-1907**	1	SEAL-O-RING	
		1	**6V-8397**	1	SEAL-O-RING	
		1	**6V-8636**	1	CONNECTOR	
	8	1	*148-8367*	2	ELBOW AS	
					(EACH INCLUDES)	
		1	**6V-8397**	1	SEAL-O-RING	
		1	**6V-9850**	1	ELBOW	
	9	1	*148-8378*	1	ELBOW AS	
		1	**3J-1907**	1	SEAL-O-RING	
		1	**6V-8397**	1	SEAL-O-RING	
		1	**6V-8724**	1	ELBOW	
	10	1	**190-4885**	1	SPACER (11X22X50-MM THK)	
I	11	1	**252-5221**	1	HOSE AS	
	12	1	**3J-1907**	1	SEAL-O-RING	
	13	1	**6V-8397**	1	SEAL-O-RING	
	14	1	**8M-2773**	3	CLIP	
	15	1	**8T-4121**	3	WASHER-HARD (11X21X2.5-MM THK)	
M	16	1	**8T-4133**	1	NUT (M10X1.5-THD)	
M	17	1	**8T-4137**	1	BOLT (M10X1.5X20-MM)	
M	18	1	**8T-4196**	1	BOLT (M10X1.5X35-MM)	

I-REFER TO HYDRAULIC INFORMATION SYSTEM
M-METRIC PART
Y-SEPARATE ILLUSTRATION

235-6405 **LINES GP-CENTERSHIFT LOCK** *(contd.)* **i03364060**

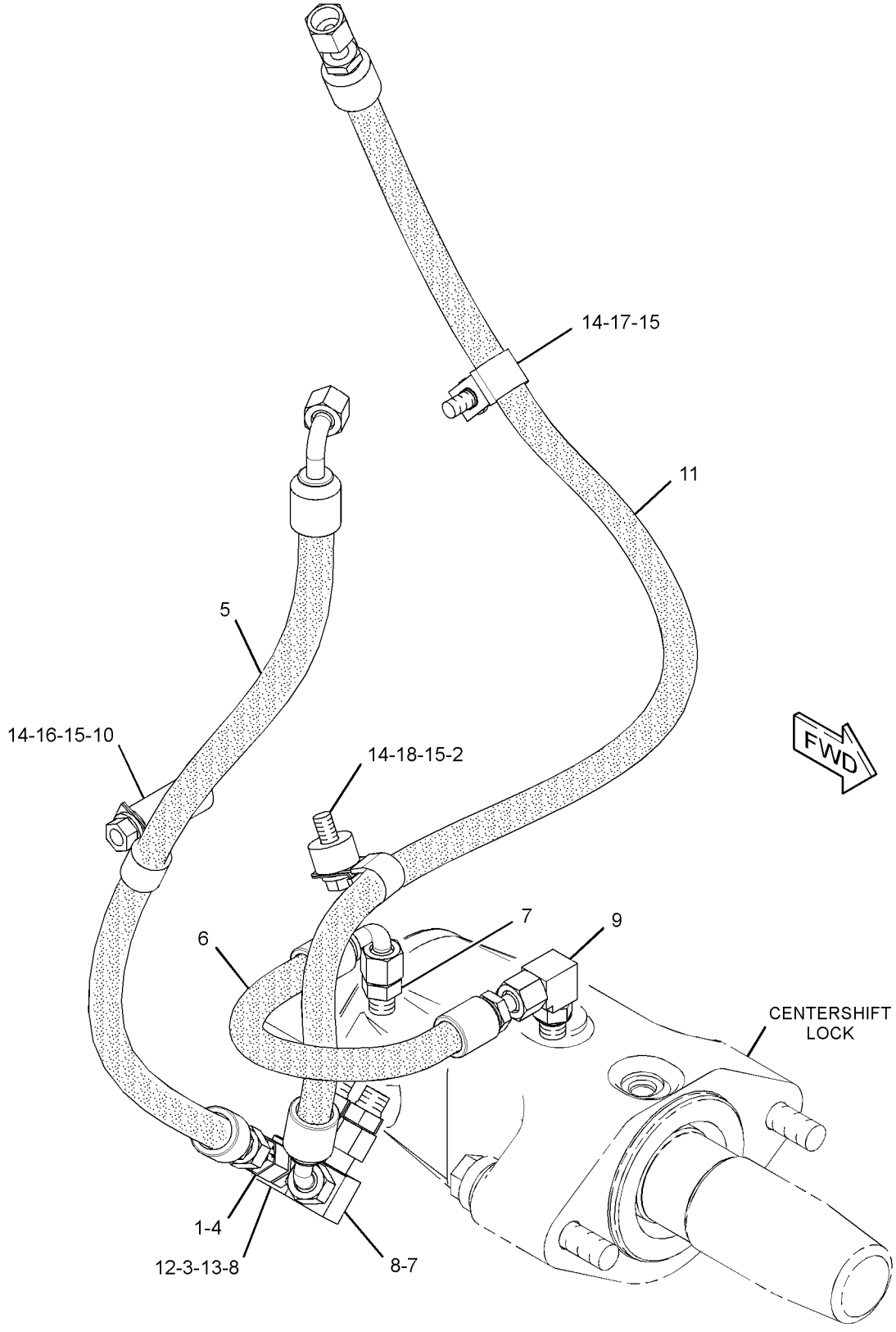

GRAPHIC #1 **<END>** g01923958

HYDRAULIC SYSTEM

351-8250 LINES GP-CENTERSHIFT LOCK

S/N: R9J1-UP
PART OF 356-3072 OPTION AR-MACHINE
AN ATTACHMENT

SMCS-5057, 5221 **i03972535**

NOTE	REF NO	GRAPHIC REF	PART NUMBER	QTY	PART NAME 1 2 3 4 5 6 (PRODUCT LEVEL)	SEE PAGE
Y	1	1	**6E-4701**	1	VALVE GP-CHECK	720
	2	1	**110-5266**	1	ORIFICE	
	3	1	**132-2453**	1	UNION	
I	4	1	**152-0269**	1	HOSE AS	
I	5	1	**8X-9255**	1	HOSE AS	
	6	1	*148-8336*	2	CONNECTOR AS	
					(EACH INCLUDES)	
		1	**6V-8636**	1	CONNECTOR	
		1	**3J-1907**	1	SEAL-O-RING	
		1	**6V-8397**	1	SEAL-O-RING	
	7	1	*148-8367*	2	ELBOW AS	
					(EACH INCLUDES)	
		1	**6V-9850**	1	ELBOW	
		1	**6V-8397**	1	SEAL-O-RING	
	8	1	*148-8378*	1	ELBOW AS	
		1	**6V-8724**	1	ELBOW	
		1	**3J-1907**	1	SEAL-O-RING	
		1	**6V-8397**	1	SEAL-O-RING	
I	9	1	**252-5221**	1	HOSE AS	
	10	1	**3J-1907**	1	SEAL-O-RING	
	11	1	**6V-8397**	1	SEAL-O-RING	
	12	1	**8M-2773**	3	CLIP	
	13	1	**8T-4121**	3	WASHER-HARD (11X21X2.5-MM THK)	
M	14	1	**8T-4136**	1	BOLT (M10X1.5X25-MM)	
M	15	1	**8T-4137**	2	BOLT (M10X1.5X20-MM)	

I-REFER TO HYDRAULIC INFORMATION SYSTEM
M-METRIC PART
Y-SEPARATE ILLUSTRATION

351-8250 **LINES GP-CENTERSHIFT LOCK** *(contd.)* **i03972535**

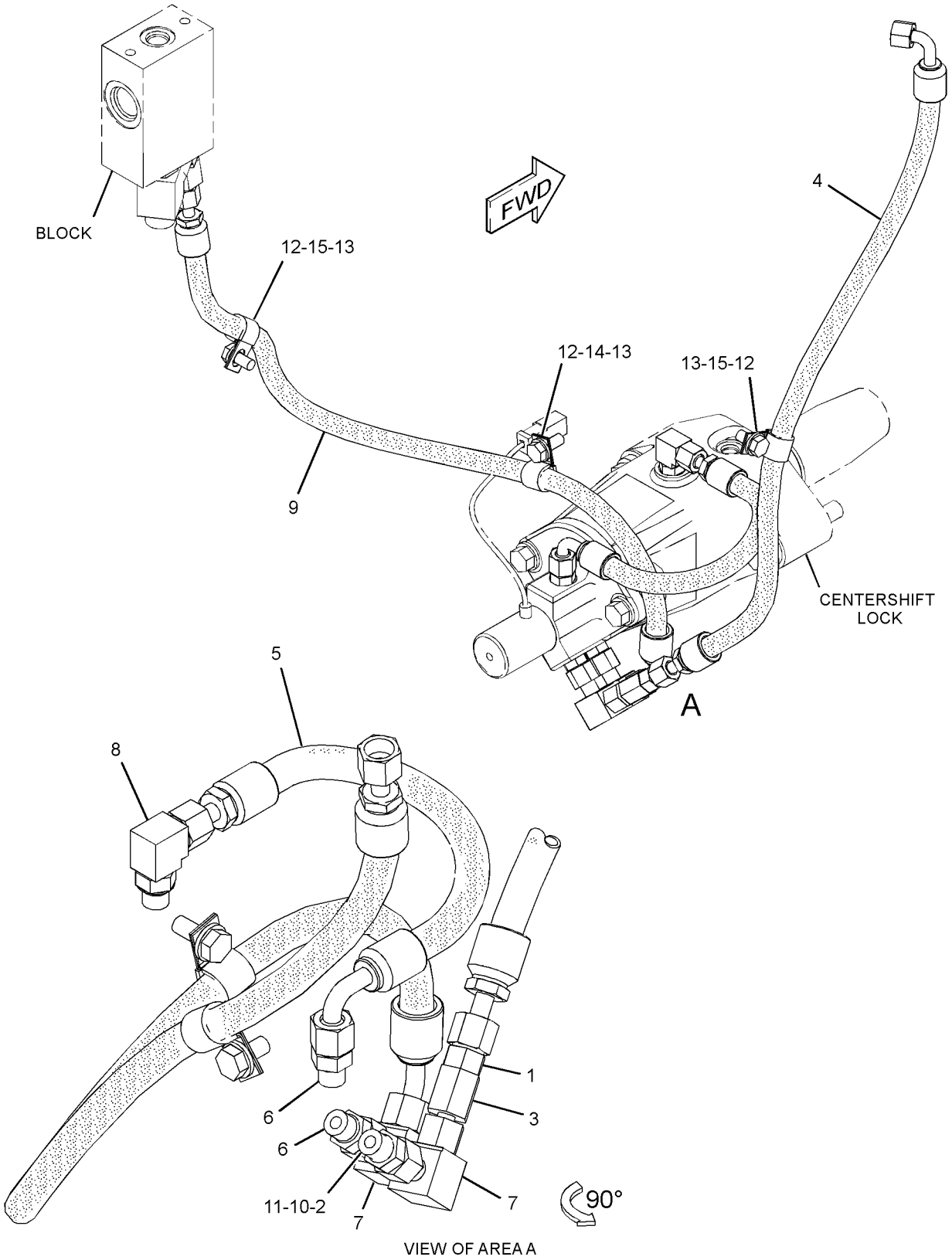

VIEW OF AREA A

GRAPHIC #1 **<END>** g02195114

231-1517 LINES GP-HYDRAULIC—DOZER ANGLE, SNOW PLOW

S/N: R9J1-UP
1-CIRCUIT
PART OF 351-2406, 351-2410, 351-2411 CONTROL AR-HYDRAULIC
AN ATTACHMENT

SMCS-5057 **i02302031**

NOTE	REF NO	GRAPHIC REF	PART NUMBER	QTY	PART NAME 1 2 3 4 5 6 (PRODUCT LEVEL)	SEE PAGE
I	1	1	**250-9856**	2	HOSE AS	
	2	1	*148-8340*	2	CONNECTOR AS	
					(EACH INCLUDES)	
		1	**6V-8639**	1	CONNECTOR	
		1	**3K-0360**	1	SEAL-O-RING	
		1	**6V-8398**	1	SEAL-O-RING	
	3	1	*150-3072*	2	PLUG AS	
					(EACH INCLUDES)	
		1	**6V-9509**	1	PLUG (13/16-16-THD)	
		1	**6V-8398**	1	SEAL-O-RING	
	4	1	**9X-8250**	4	CLIP	

I-REFER TO HYDRAULIC INFORMATION SYSTEM

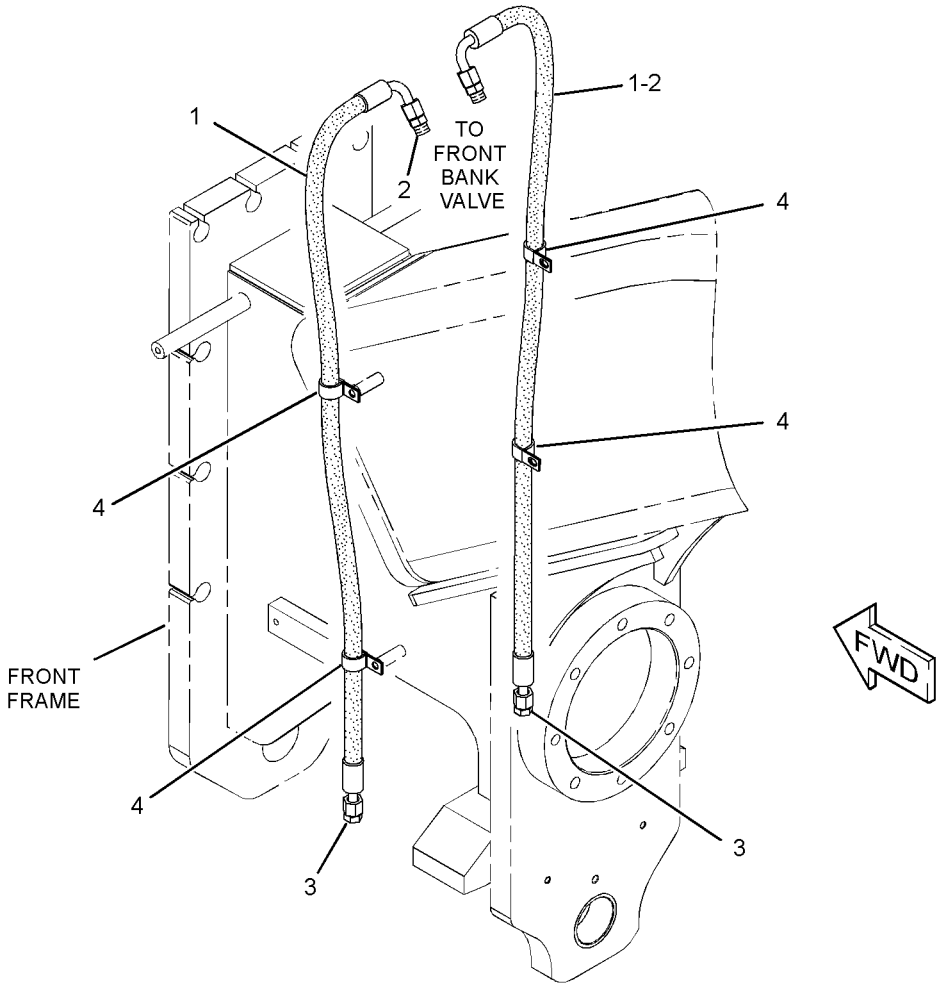

GRAPHIC #1 **<END>** g01170947

HYDRAULIC SYSTEM

235-6414 LINES GP-HYDRAULIC—DOZER ANGLE, SNOW PLOW

S/N: R9J1-UP
2-CIRCUITS
PART OF 351-2407, 351-2412 CONTROL AR-HYDRAULIC
AN ATTACHMENT

SMCS-5057 **i02556077**

NOTE	REF NO	GRAPHIC REF	PART NUMBER	QTY	PART NAME 1 2 3 4 5 6 (PRODUCT LEVEL)	SEE PAGE
I	1	1	**250-9856**	2	HOSE AS	
I	2	1	**250-9857**	2	HOSE AS	
	3	1	*148-8340*	4	CONNECTOR AS	
					(EACH INCLUDES)	
		1	**6V-8639**	1	CONNECTOR	
		1	**3K-0360**	1	SEAL-O-RING	
		1	**6V-8398**	1	SEAL-O-RING	
	4	1	*150-3072*	4	PLUG AS	
					(EACH INCLUDES)	
		1	**6V-9509**	1	PLUG (13/16-16-THD)	
		1	**6V-8398**	1	SEAL-O-RING	
	5	1	**5P-6994**	4	CLIP	
	6	1	**8T-4121**	1	WASHER-HARD (11X21X2.5-MM THK)	
M	7	1	**8T-4137**	1	BOLT (M10X1.5X20-MM)	

I-REFER TO HYDRAULIC INFORMATION SYSTEM
M-METRIC PART

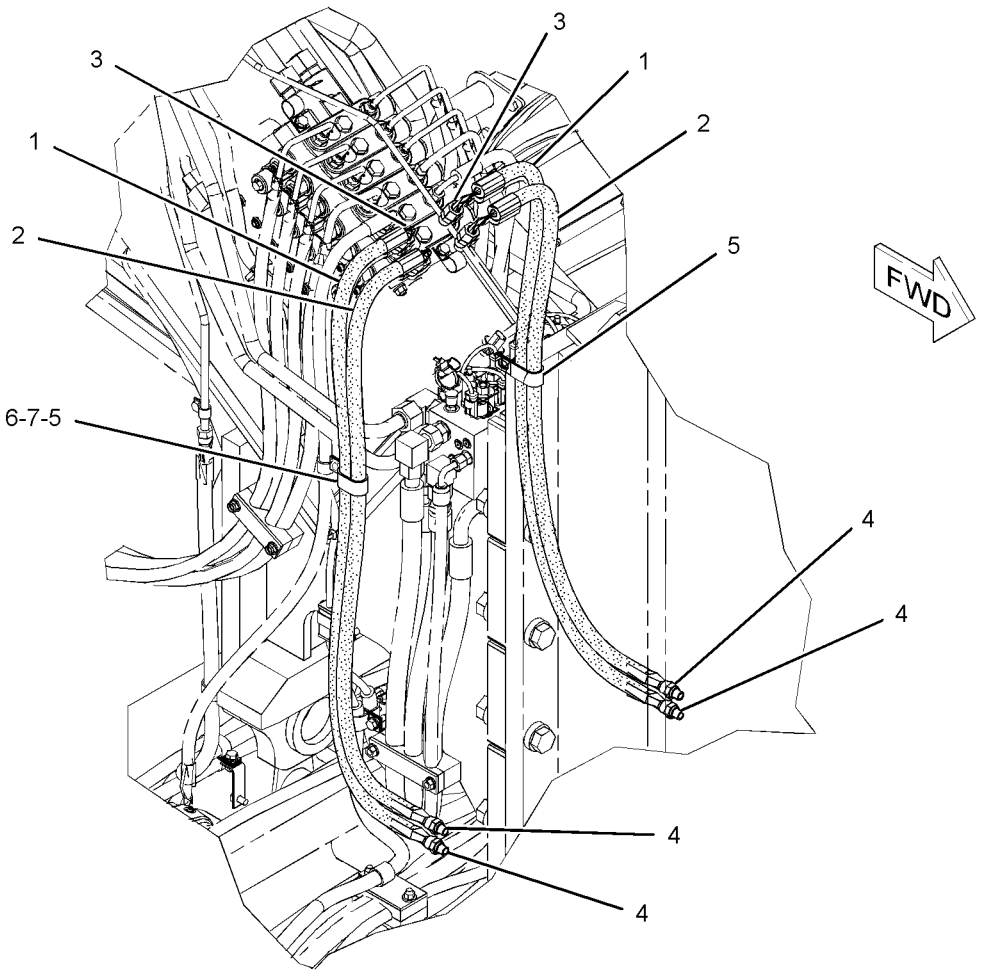

GRAPHIC #1 **<END>** g01279454

HYDRAULIC SYSTEM

282-8868 LINES GP-HYDRAULIC

S/N: R9J1-UP

AN ATTACHMENT

SMCS-5057 **i03901152**

NOTE	REF NO	GRAPHIC REF	PART NUMBER	QTY	PART NAME 1 2 3 4 5 6 (PRODUCT LEVEL)	SEE PAGE
	1	1,3	**5P-0599**	3	CLAMP-BAND	
	2	2	**8T-1296**	2	WASHER (10.5X19X3.5-MM THK)	
	3	3	**8W-3989**	2	CLAMP	
	4	3	**8W-3990**	2	CLAMP	
	5	3	**8W-3991**	2	JUNCTION BLOCK	
	6	3	**9R-2053**	1	BLOCK	
	7	1	**9R-5008**	1	SPACER (11X20X6-MM THK)	
	8	3	**9R-8870**	1	BLOCK	
	9	3,4	**246-6341**	3	CLAMP	
	10	4	**246-6342**	4	CLAMP	
I	11	2	**251-9999**	1	HOSE AS	
I	12	2	**252-0002**	1	HOSE AS	
I	13	4	**252-0003**	1	HOSE AS	
I	14	4	**252-0004**	1	HOSE AS	
	15	3	**252-5366**	1	GUIDE AS	
	16	2	**257-7253**	2	CLAMP	
	17	4	**259-5418**	2	BLOCK	
	18	4	**259-5898**	2	BLOCK	
I	19	4	**265-0639**	2	HOSE AS	
I	20	4	**347-7290**	1	HOSE AS	
I	21	4	**265-0642**	1	HOSE AS	
	22	4	**265-0644**	4	TUBE AS	
	23	4	**265-0645**	4	TUBE AS	
	24	3	**272-4853**	1	TUBE AS	
	25	3	**272-4854**	1	TUBE AS	
	26	1	**272-5671**	2	BLOCK	
	27	1	**286-1760**	1	TUBE AS	
	28	1	**286-1763**	1	TUBE AS	
I	29	2	**302-8925**	1	HOSE AS	
I	30	2	**302-8926**	1	HOSE AS	
I	31	1	**306-2031**	1	HOSE AS	
I	32	1	**306-2032**	1	HOSE AS	
I	33	1	**306-2034**	1	HOSE AS	
CI	34	1	**351-2740**	1	HOSE AS	
I	35	1	**306-2036**	1	HOSE AS	
I	36	1	**306-2037**	1	HOSE AS	
I	37	3	**306-2038**	2	HOSE AS	
I	38	3	**306-2039**	1	HOSE AS	
I	39	3	**306-2040**	1	HOSE AS	
I	40	4	**309-4561**	1	HOSE AS	
I	41	4	**309-4562**	1	HOSE AS	
I	42	4	**312-5687**	1	HOSE AS	
I	43	4	**312-5688**	1	HOSE AS	
	44	4	**313-5510**	2	PLATE	
M	45	4	**096-4883**	4	LOCKNUT (M10X1.5-THD)	
	46	3	**100-4336**	3	CLIP	
	47	3,4	*148-8318*	6	CONNECTOR AS	
					(EACH INCLUDES)	
		3,4	**6V-8634**	1	CONNECTOR	
		3,4	**3K-0360**	1	SEAL-O-RING	
		3,4	**6V-8397**	1	SEAL-O-RING	
	48	2,3,4	*148-8342*	13	CONNECTOR AS	
					(EACH INCLUDES)	
		2,3,4	**6V-8632**	1	CONNECTOR	
		2,3,4	**3K-0360**	1	SEAL-O-RING	
		2,3,4	**7J-9108**	1	SEAL-O-RING	

282-8868 **LINES GP-HYDRAULIC** *(contd.)* **i03901152**

NOTE	REF NO	GRAPHIC REF	PART NUMBER	QTY	PART NAME 1 2 3 4 5 6 (PRODUCT LEVEL)	SEE PAGE
	49	3	*148-8358*	1	ELBOW AS	
		3	**6V-8624**	1	ELBOW	
		3	**2M-9780**	1	SEAL-O-RING	
		3	**6V-8398**	1	SEAL-O-RING	
	50	2,3,4	*148-8363*	5	ELBOW AS	
					(EACH INCLUDES)	
		2,3,4	**6V-9876**	1	ELBOW	
		2,3,4	**3K-0360**	1	SEAL-O-RING	
		2,3,4	**6V-8397**	1	SEAL-O-RING	
C	51	1,2	*148-8364*	2	ELBOW AS	
					(EACH INCLUDES)	
		1,2	**3K-0360**	1	SEAL-O-RING	
		1,2	**6V-8398**	1	SEAL-O-RING	
		1,2	**6V-8625**	1	ELBOW	
	52	2,3	*148-8367*	2	ELBOW AS	
					(EACH INCLUDES)	
		2,3	**6V-8397**	1	SEAL-O-RING	
		2,3	**6V-9850**	1	ELBOW	
	53	2	*148-8370*	1	ELBOW AS	
		2	**6V-8398**	1	SEAL-O-RING	
		2	**6V-9851**	1	ELBOW	
	54	3	*148-8371*	1	ELBOW AS	
		3	**8C-8988**	1	ELBOW	
		3	**6V-8397**	1	SEAL-O-RING	
	55	1,3	*148-8372*	3	ELBOW AS	
					(EACH INCLUDES)	
		1,3	**6V-8721**	1	ELBOW	
		1,3	**2M-9780**	1	SEAL-O-RING	
		1,3	**6V-8398**	1	SEAL-O-RING	
	56	2,3	*148-8374*	7	ELBOW AS	
					(EACH INCLUDES)	
		2,3	**6V-8723**	1	ELBOW	
		2,3	**3K-0360**	1	SEAL-O-RING	
		2,3	**6V-8397**	1	SEAL-O-RING	
	57	2	*148-8381*	2	ELBOW AS	
					(EACH INCLUDES)	
		2	**8T-5429**	1	ELBOW	
		2	**3D-2824**	1	SEAL-O-RING	
		2	**6V-8398**	1	SEAL-O-RING	
	58	1	*148-8427*	2	TEE AS	
					(EACH INCLUDES)	
		1	**8T-6895**	1	TEE-UNION	
		1	**6V-8398**	3	SEAL-O-RING	
	59	3	*150-4048*	1	ELBOW AS	
		3	**6V-8722**	1	ELBOW	
		3	**3K-0360**	1	SEAL-O-RING	
		3	**7J-9108**	1	SEAL-O-RING	
	60	2	*164-5573*	2	UNION AS	
					(EACH INCLUDES)	
		2	**6V-8738**	1	UNION	
		2	**6V-8398**	1	SEAL-O-RING	
		2	**7J-9108**	1	SEAL-O-RING	
	61	2,3	*164-5605*	3	CONNECTOR AS	
					(EACH INCLUDES)	
		2,3	**8T-0076**	1	CONNECTOR	
		2,3	**3K-0360**	1	SEAL-O-RING	
		2,3	**6V-8397**	1	SEAL-O-RING	
	62	2	*164-5608*	1	CONNECTOR AS	
		2	**8T-1687**	1	CONNECTOR	

282-8868 **LINES GP-HYDRAULIC** *(contd.)* **i03901152**

NOTE	REF NO	GRAPHIC REF	PART NUMBER	QTY	PART NAME 1 2 3 4 5 6 (PRODUCT LEVEL)	SEE PAGE
		2	**3K-0360**	1	SEAL-O-RING	
		2	**6V-8398**	1	SEAL-O-RING	
	63	3,4	**1S-0994**	10	CLIP	
	64	3	*204-0317*	1	CONNECTOR AS	
		3	**092-3635**	1	CONNECTOR	
		3	**3K-0360**	1	SEAL-O-RING	
		3	**6V-8397**	1	SEAL-O-RING	
	65	4	**205-6716**	2	SPACER (10.5X20X19-MM THK)	
Y	66	3	**260-6502**	1	SWIVEL GP (CIRCLE DRIVE)	701
	67	2	**272-4851**	1	TUBE AS	
	68	2	**272-4852**	1	TUBE AS	
	69	3	**3B-4628**	2	PIN-COTTER	
	70	1,2	**3E-4321**	8	CLIP	
	71	1	**5K-1094**	2	LOCKWASHER	
	72	3	**5P-3860**	1	CLAMP-HOSE	
	73	1	**6D-4244**	5	CLIP	
	74	2	**6K-8178**	2	CLIP	
	75	1,4	**6V-8398**	10	SEAL-O-RING	
	76	1	**6V-9169**	2	NUT-BULKHEAD (13/16-16-THD)	
	77	1	**7K-1181**	2	STRAP-CABLE	
	78	2	**7W-5672**	2	PIPE	
	79	3	**8D-9092**	1	PIN	
	80	2	**8D-9671**	2	CLIP	
	81	1,2,3, 4	**8T-4121**	45	WASHER-HARD (11X21X2.5-MM THK)	
M	82	1,2,3	**8T-4133**	9	NUT (M10X1.5-THD)	
M	83	1,2,3, 4	**8T-4136**	7	BOLT (M10X1.5X25-MM)	
CM	84	1,2,3, 4	**8T-4137**	11	BOLT (M10X1.5X20-MM)	
M	85	3	**8T-4172**	2	BOLT (M10X1.5X80-MM)	
M	86	4	**8T-4182**	2	BOLT (M10X1.5X45-MM)	
M	87	3	**8T-4185**	2	BOLT (M10X1.5X50-MM)	
M	88	1,4	**8T-4191**	3	BOLT (M10X1.5X16-MM)	
CM	89	1,3	**8T-4195**	3	BOLT (M10X1.5X30-MM)	
M	90	2	**8T-4198**	2	BOLT (M10X1.5X100-MM)	
	91	3	**8T-4223**	4	WASHER-HARD (13.5X25.5X3-MM THK)	
M	92	3	**8T-4648**	4	BOLT (M12X1.75X70-MM)	
	93	3	**8T-4994**	2	WASHER-HARD (20X36.5X3.5-MM THK)	
	94	2	**9X-8250**	2	CLIP	
C	95	1	*148-8340*	1	CONNECTOR AS	
		1	**6V-8639**	1	CONNECTOR	
		1	**3K-0360**	1	SEAL-O-RING	
		1	**6V-8398**	1	SEAL-O-RING	

C-CHANGE FROM PREVIOUS TYPE
I-REFER TO HYDRAULIC INFORMATION SYSTEM
M-METRIC PART
Y-SEPARATE ILLUSTRATION

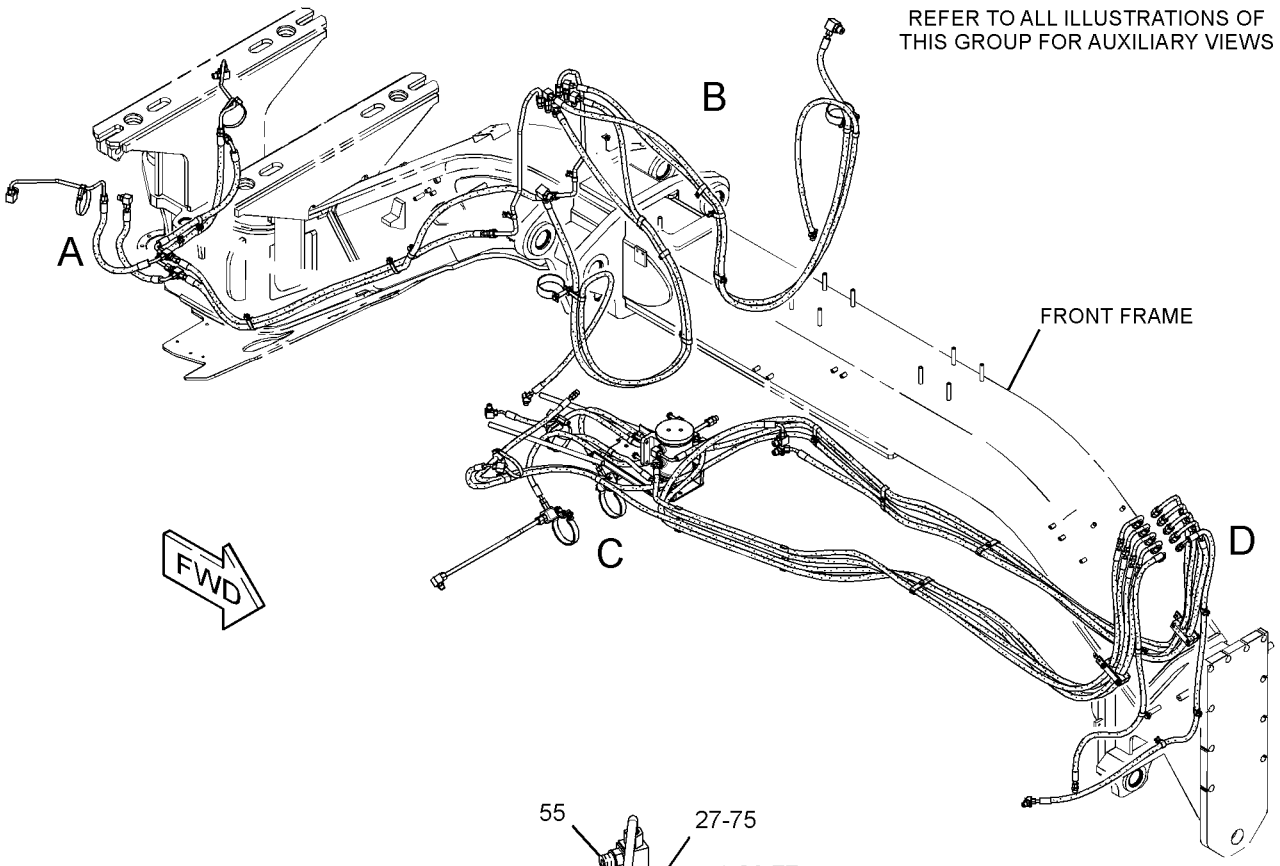

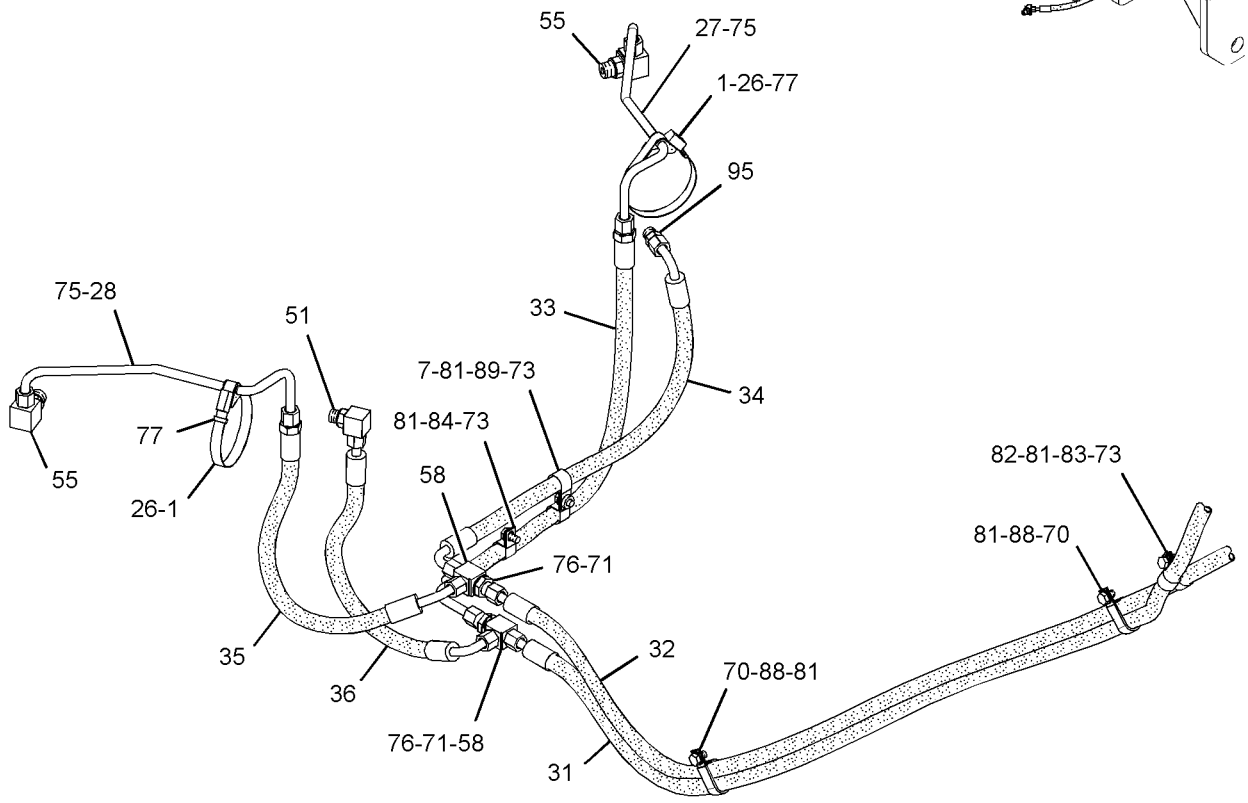

VIEW OF AREA A

GRAPHIC #1

g02126032

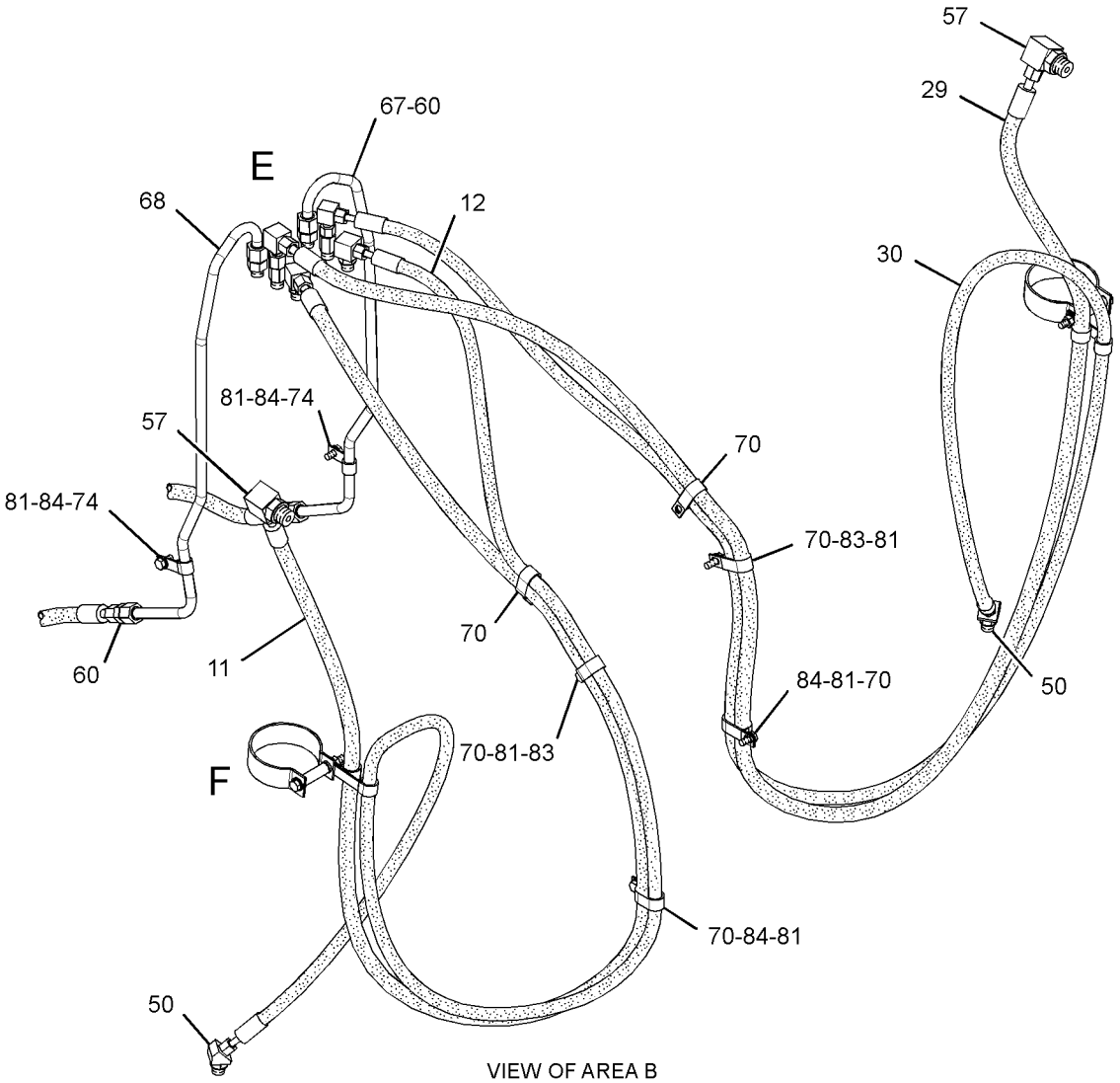

VIEW OF AREA B

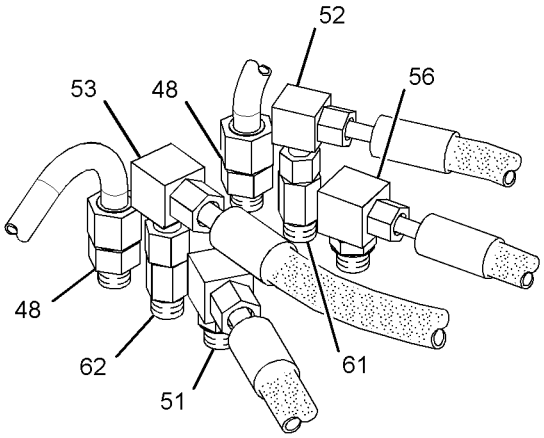

VIEW OF AREA E

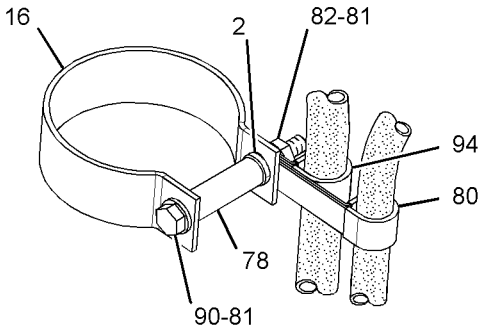

VIEW OF AREA F

GRAPHIC #2

g01672014

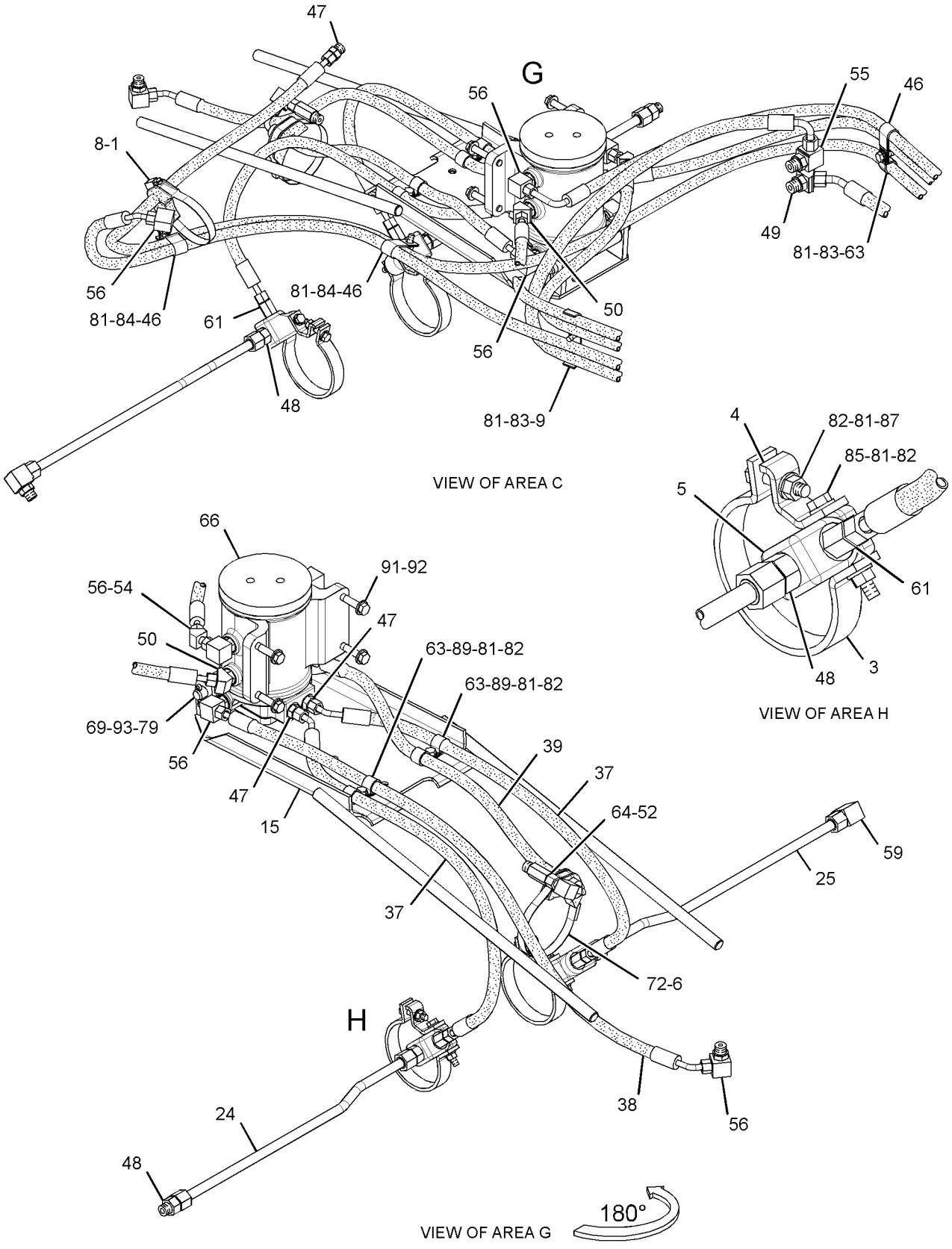

GRAPHIC #3

g01672015

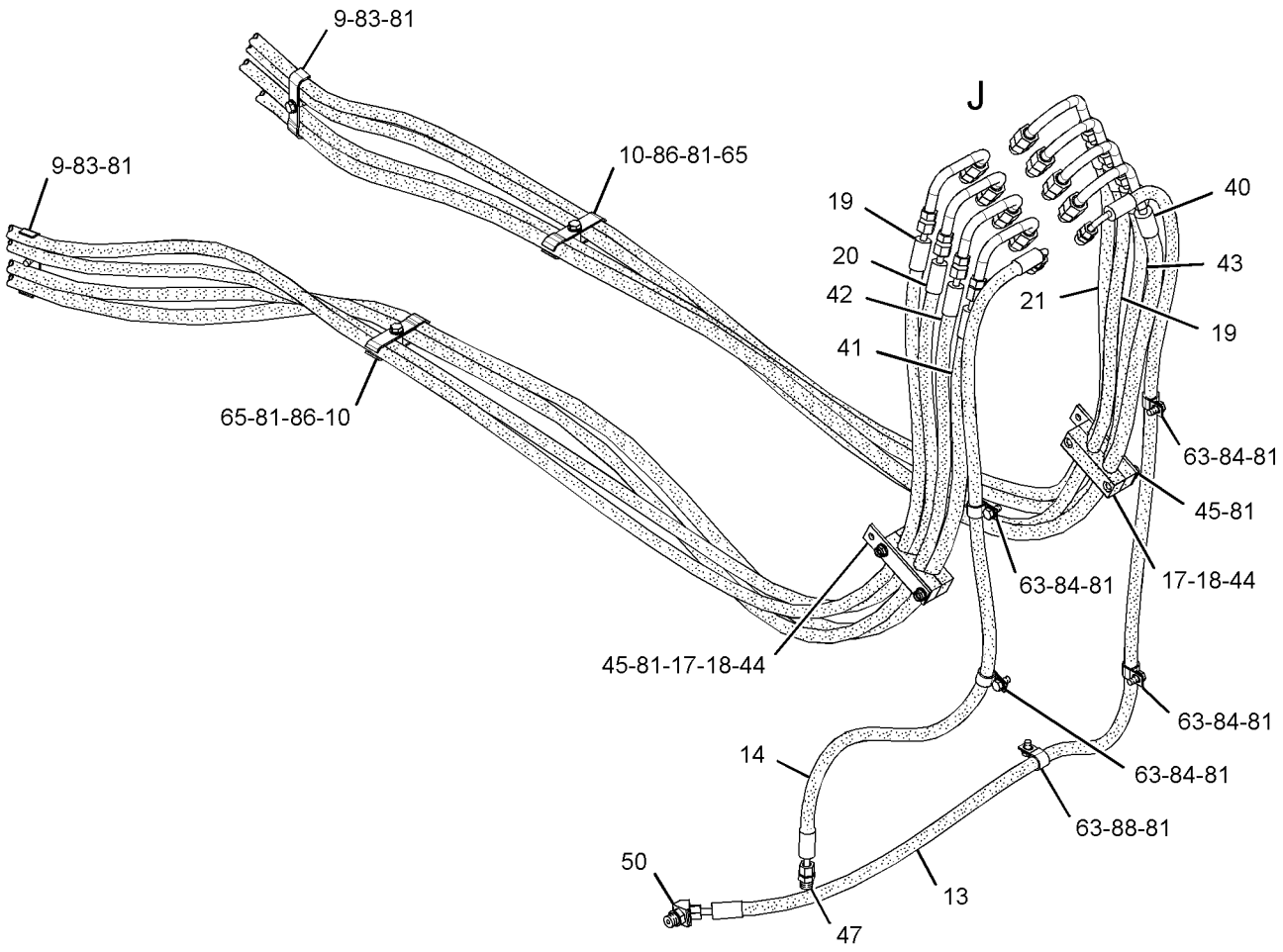

VIEW OF AREA D

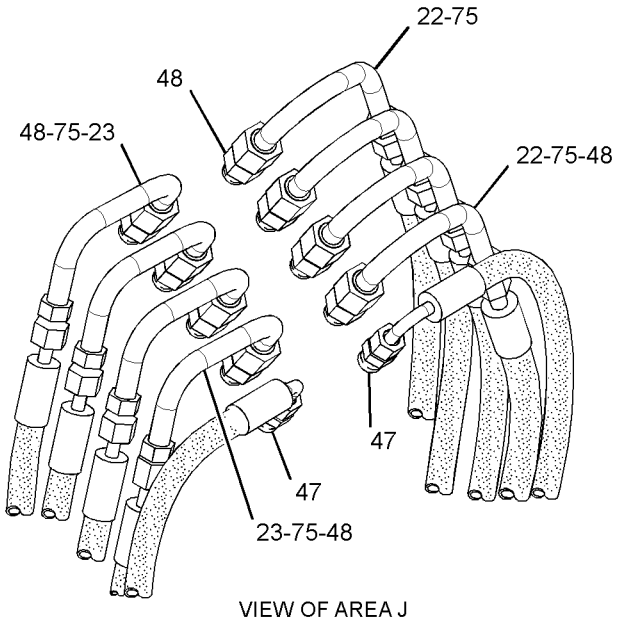

VIEW OF AREA J

GRAPHIC #4 **<END>** g01672016

295-9160 LINES GP-HYDRAULIC—FRONT LIFT

S/N: R9J1-UP
1-CIRCUIT
PART OF 351-2406, 351-2407, 351-2408, 351-2409, 351-2410, 351-2411, 351-2412
CONTROL AR-HYDRAULIC
FOR USE WITH 259-6920—PAGE 711, 259-6921—PAGE 716, 259-6922—PAGE 718
AN ATTACHMENT

SMCS-5057 **i02567558**

NOTE	REF NO	GRAPHIC REF	PART NUMBER	QTY	PART NAME 1 2 3 4 5 6 (PRODUCT LEVEL)	SEE PAGE
I	1	1	**250-9856**	2	HOSE AS	
	2	1	*148-8340*	2	CONNECTOR AS	
					(EACH INCLUDES)	
		1	**6V-8639**	1	CONNECTOR	
		1	**3K-0360**	1	SEAL-O-RING	
		1	**6V-8398**	1	SEAL-O-RING	
	3	1	*150-3072*	2	PLUG AS	
					(EACH INCLUDES)	
		1	**6V-9509**	1	PLUG (13/16-16-THD)	
		1	**6V-8398**	1	SEAL-O-RING	
	4	1	**9X-8250**	4	CLIP	

I-REFER TO HYDRAULIC INFORMATION SYSTEM

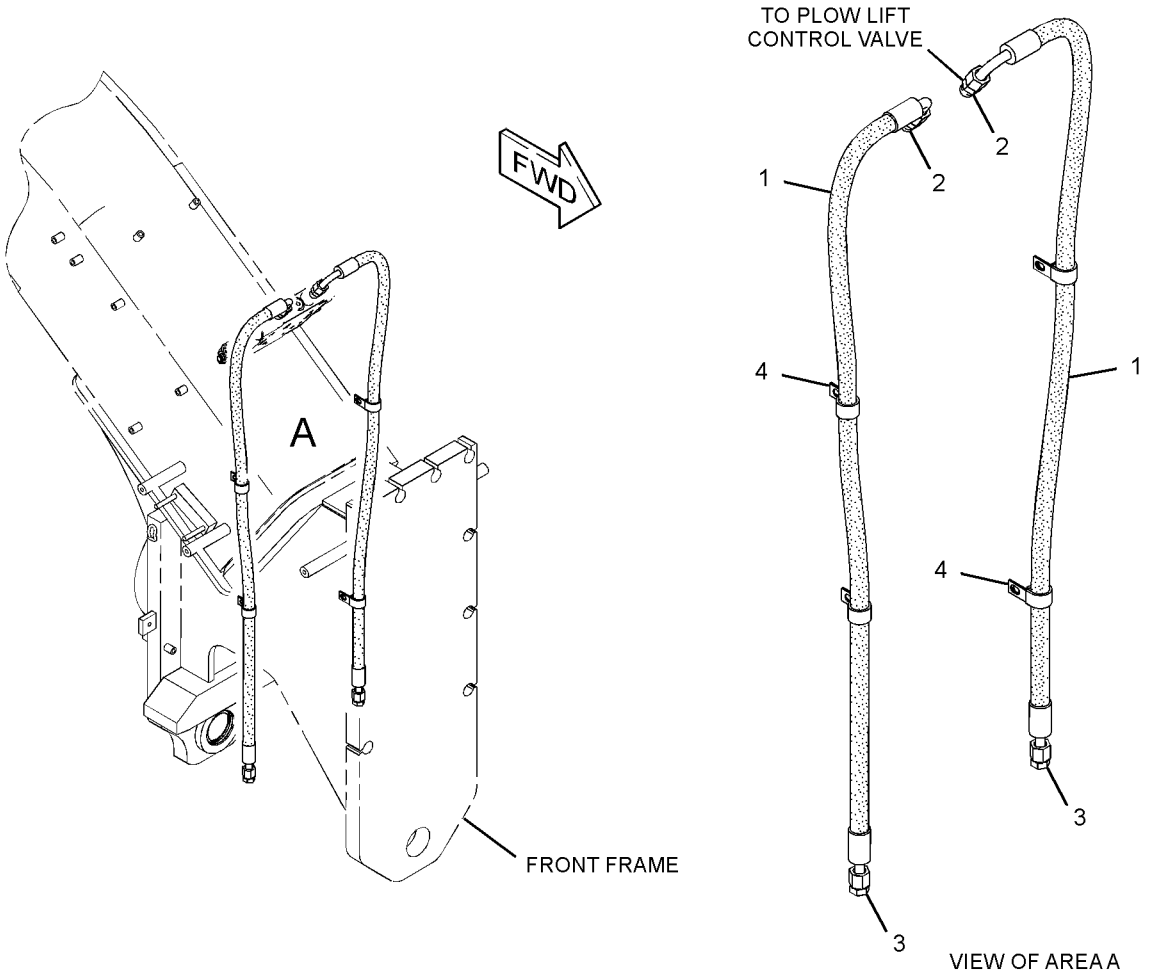

GRAPHIC #1 **<END>** g01303588

HYDRAULIC SYSTEM

351-8252 LINES GP-HYDRAULIC

S/N: R9J1-UP

AN ATTACHMENT

SMCS-5057 **i03968709**

NOTE	REF NO	GRAPHIC REF	PART NUMBER	QTY	PART NAME 1 2 3 4 5 6 (PRODUCT LEVEL)	SEE PAGE
	1	1,3	**5P-0599**	3	CLAMP-BAND	
	2	2	**8T-1296**	2	WASHER (10.5X19X3.5-MM THK)	
	3	3	**8W-3989**	2	CLAMP	
	4	3	**8W-3990**	2	CLAMP	
	5	3	**8W-3991**	2	JUNCTION BLOCK	
	6	3	**9R-2053**	1	BLOCK	
	7	1	**9R-5008**	1	SPACER (11X20X6-MM THK)	
	8	3	**9R-8870**	1	BLOCK	
	9	3,4	**246-6341**	3	CLAMP	
	10	4	**246-6342**	4	CLAMP	
I	11	2	**251-9999**	1	HOSE AS	
I	12	2	**252-0002**	1	HOSE AS	
I	13	4	**252-0003**	1	HOSE AS	
I	14	4	**252-0004**	1	HOSE AS	
	15	3	**252-5366**	1	GUIDE AS	
	16	2	**257-7253**	2	CLAMP	
	17	4	**259-5418**	2	BLOCK	
	18	4	**259-5898**	2	BLOCK	
I	19	4	**265-0639**	2	HOSE AS	
I	20	4	**265-0642**	1	HOSE AS	
	21	4	**265-0644**	4	TUBE AS	
	22	4	**265-0645**	4	TUBE AS	
	23	2	**272-4851**	1	TUBE AS	
	24	3	**272-4853**	1	TUBE AS	
	25	3	**272-4854**	1	TUBE AS	
	26	1	**272-5671**	2	BLOCK	
	27	1	**286-1760**	1	TUBE AS	
	28	1	**286-1763**	1	TUBE AS	
I	29	2	**302-8925**	1	HOSE AS	
I	30	2	**302-8926**	1	HOSE AS	
I	31	1	**306-2031**	1	HOSE AS	
I	32	1	**306-2032**	1	HOSE AS	
I	33	1	**306-2034**	1	HOSE AS	
I	34	1	**306-2036**	1	HOSE AS	
I	35	1	**306-2037**	1	HOSE AS	
I	36	3	**306-2038**	2	HOSE AS	
I	37	3	**306-2039**	1	HOSE AS	
I	38	3	**306-2040**	1	HOSE AS	
I	39	4	**309-4561**	1	HOSE AS	
I	40	4	**309-4562**	1	HOSE AS	
I	41	4	**312-5687**	1	HOSE AS	
I	42	4	**312-5688**	1	HOSE AS	
	43	4	**313-5510**	2	PLATE	
I	44	4	**347-7290**	1	HOSE AS	
I	45	1	**351-2740**	1	HOSE AS	
M	46	4	**096-4883**	4	LOCKNUT (M10X1.5-THD)	
	47	3	**100-4336**	3	CLIP	
	48	3,4	*148-8318*	6	CONNECTOR AS	
					(EACH INCLUDES)	
		3,4	**6V-8634**	1	CONNECTOR	
		3,4	**3K-0360**	1	SEAL-O-RING	
		3,4	**6V-8397**	1	SEAL-O-RING	
	49	1	*148-8340*	1	CONNECTOR AS	
		1	**6V-8639**	1	CONNECTOR	
		1	**3K-0360**	1	SEAL-O-RING	
		1	**6V-8398**	1	SEAL-O-RING	

351-8252 **LINES GP-HYDRAULIC** *(contd.)* **i03968709**

NOTE	REF NO	GRAPHIC REF	PART NUMBER	QTY	PART NAME 1 2 3 4 5 6 (PRODUCT LEVEL)	SEE PAGE
	50	2,3,4	*148-8342*	13	CONNECTOR AS	
					(EACH INCLUDES)	
		2,3,4	**6V-8632**	1	CONNECTOR	
		2,3,4	**3K-0360**	1	SEAL-O-RING	
		2,3,4	**7J-9108**	1	SEAL-O-RING	
	51	3	*148-8358*	1	ELBOW AS	
		3	**6V-8624**	1	ELBOW	
		3	**2M-9780**	1	SEAL-O-RING	
		3	**6V-8398**	1	SEAL-O-RING	
	52	2,3,4	*148-8363*	5	ELBOW AS	
					(EACH INCLUDES)	
		2,3,4	**6V-9876**	1	ELBOW	
		2,3,4	**3K-0360**	1	SEAL-O-RING	
		2,3,4	**6V-8397**	1	SEAL-O-RING	
	53	1,2	*148-8364*	2	ELBOW AS	
					(EACH INCLUDES)	
		1,2	**6V-8625**	1	ELBOW	
		1,2	**3K-0360**	1	SEAL-O-RING	
		1,2	**6V-8398**	1	SEAL-O-RING	
	54	2,3	*148-8367*	2	ELBOW AS	
					(EACH INCLUDES)	
		2,3	**6V-9850**	1	ELBOW	
		2,3	**6V-8397**	1	SEAL-O-RING	
	55	2	*148-8370*	1	ELBOW AS	
		2	**6V-9851**	1	ELBOW	
		2	**6V-8398**	1	SEAL-O-RING	
	56	3	*148-8371*	1	ELBOW AS	
		3	**8C-8988**	1	ELBOW	
		3	**6V-8397**	1	SEAL-O-RING	
	57	1,3	*148-8372*	3	ELBOW AS	
					(EACH INCLUDES)	
		1,3	**6V-8721**	1	ELBOW	
		1,3	**2M-9780**	1	SEAL-O-RING	
		1,3	**6V-8398**	1	SEAL-O-RING	
	58	2,3	*148-8374*	7	ELBOW AS	
					(EACH INCLUDES)	
		2,3	**6V-8723**	1	ELBOW	
		2,3	**3K-0360**	1	SEAL-O-RING	
		2,3	**6V-8397**	1	SEAL-O-RING	
	59	2	*148-8381*	2	ELBOW AS	
					(EACH INCLUDES)	
		2	**8T-5429**	1	ELBOW	
		2	**3D-2824**	1	SEAL-O-RING	
		2	**6V-8398**	1	SEAL-O-RING	
	60	1	*148-8427*	2	TEE AS	
					(EACH INCLUDES)	
		1	**8T-6895**	1	TEE-UNION	
		1	**6V-8398**	3	SEAL-O-RING	
	61	3	*150-4048*	1	ELBOW AS	
		3	**6V-8722**	1	ELBOW	
		3	**3K-0360**	1	SEAL-O-RING	
		3	**7J-9108**	1	SEAL-O-RING	
	62	2	*164-5573*	2	UNION AS	
					(EACH INCLUDES)	
		2	**6V-8738**	1	UNION	
		2	**6V-8398**	1	SEAL-O-RING	
		2	**7J-9108**	1	SEAL-O-RING	
	63	2,3	*164-5605*	3	CONNECTOR AS	
					(EACH INCLUDES)	

351-8252 **LINES GP-HYDRAULIC** *(contd.)* **i03968709**

NOTE	REF NO	GRAPHIC REF	PART NUMBER	QTY	PART NAME 1 2 3 4 5 6 (PRODUCT LEVEL)	SEE PAGE
		2,3	**8T-0076**	1	CONNECTOR	
		2,3	**3K-0360**	1	SEAL-O-RING	
		2,3	**6V-8397**	1	SEAL-O-RING	
	64	2	*164-5608*	1	CONNECTOR AS	
		2	**8T-1687**	1	CONNECTOR	
		2	**3K-0360**	1	SEAL-O-RING	
		2	**6V-8398**	1	SEAL-O-RING	
	65	3,4	**1S-0994**	10	CLIP	
	66	3	*204-0317*	1	CONNECTOR AS	
		3	**092-3635**	1	CONNECTOR	
		3	**3K-0360**	1	SEAL-O-RING	
		3	**6V-8397**	1	SEAL-O-RING	
	67	4	**205-6716**	2	SPACER (10.5X20X19-MM THK)	
Y	68	3	**260-6502**	1	SWIVEL GP (CIRCLE DRIVE)	701
	69	2	**272-4852**	1	TUBE AS	
	70	3	**3B-4628**	2	PIN-COTTER	
	71	1,2	**3E-4321**	8	CLIP	
	72	1	**5K-1094**	2	LOCKWASHER	
	73	3	**5P-3860**	1	CLAMP-HOSE	
	74	1	**6D-4244**	5	CLIP	
	75	2	**6K-8178**	2	CLIP	
	76	1,4	**6V-8398**	10	SEAL-O-RING	
	77	1	**6V-9169**	2	NUT-BULKHEAD (13/16-16-THD)	
	78	1,2	**7C-6921**	3	SPACER (11X20X22.8-MM THK)	
	79	1	**7K-1181**	2	STRAP-CABLE	
	80	2	**7W-5672**	2	PIPE	
	81	3	**8D-9092**	1	PIN	
	82	2	**8D-9671**	2	CLIP	
	83	1,2,3, 4	**8T-4121**	45	WASHER-HARD (11X21X2.5-MM THK)	
M	84	1,2,3	**8T-4133**	9	NUT (M10X1.5-THD)	
M	85	2,3,4	**8T-4136**	5	BOLT (M10X1.5X25-MM)	
M	86	1,2,3, 4	**8T-4137**	10	BOLT (M10X1.5X20-MM)	
M	87	3	**8T-4172**	2	BOLT (M10X1.5X80-MM)	
M	88	1,2,4	**8T-4182**	5	BOLT (M10X1.5X45-MM)	
M	89	3	**8T-4185**	2	BOLT (M10X1.5X50-MM)	
M	90	1,4	**8T-4191**	2	BOLT (M10X1.5X16-MM)	
M	91	1,3	**8T-4195**	4	BOLT (M10X1.5X30-MM)	
M	92	2	**8T-4198**	2	BOLT (M10X1.5X100-MM)	
	93	3	**8T-4223**	4	WASHER-HARD (13.5X25.5X3-MM THK)	
M	94	3	**8T-4648**	4	BOLT (M12X1.75X70-MM)	
	95	3	**8T-4994**	2	WASHER-HARD (20X36.5X3.5-MM THK)	
	96	2	**9X-8250**	2	CLIP	

I-REFER TO HYDRAULIC INFORMATION SYSTEM
M-METRIC PART
Y-SEPARATE ILLUSTRATION

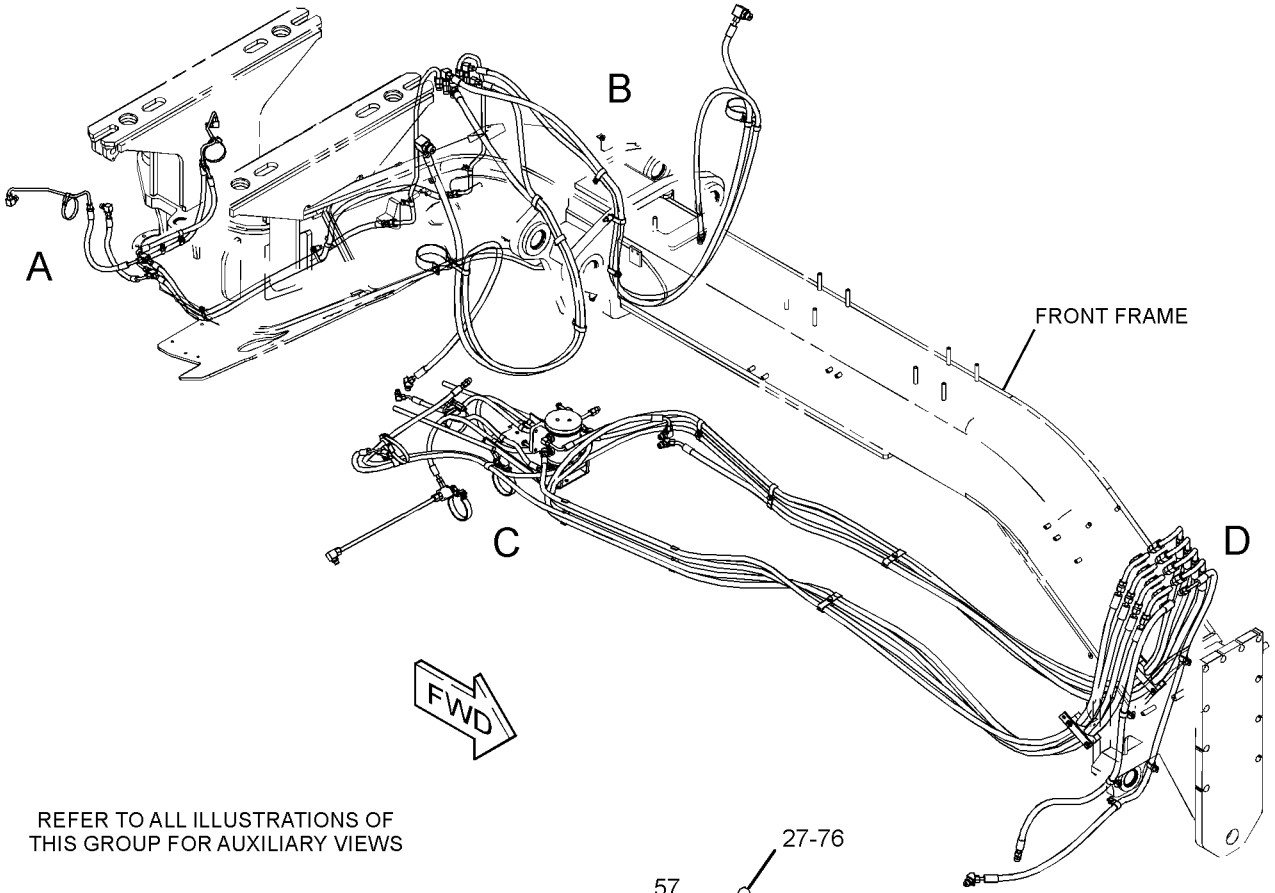

REFER TO ALL ILLUSTRATIONS OF
THIS GROUP FOR AUXILIARY VIEWS

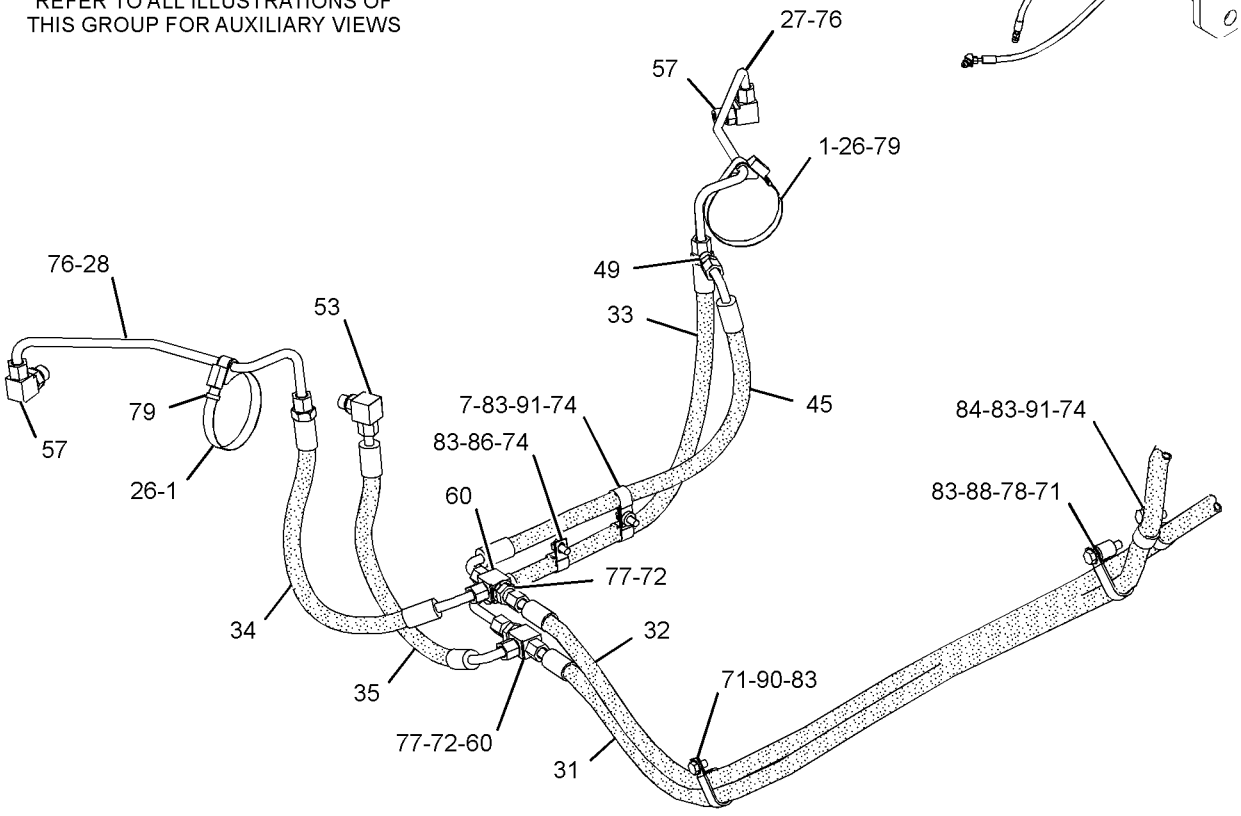

VIEW OF AREA A

GRAPHIC #1

g02215083

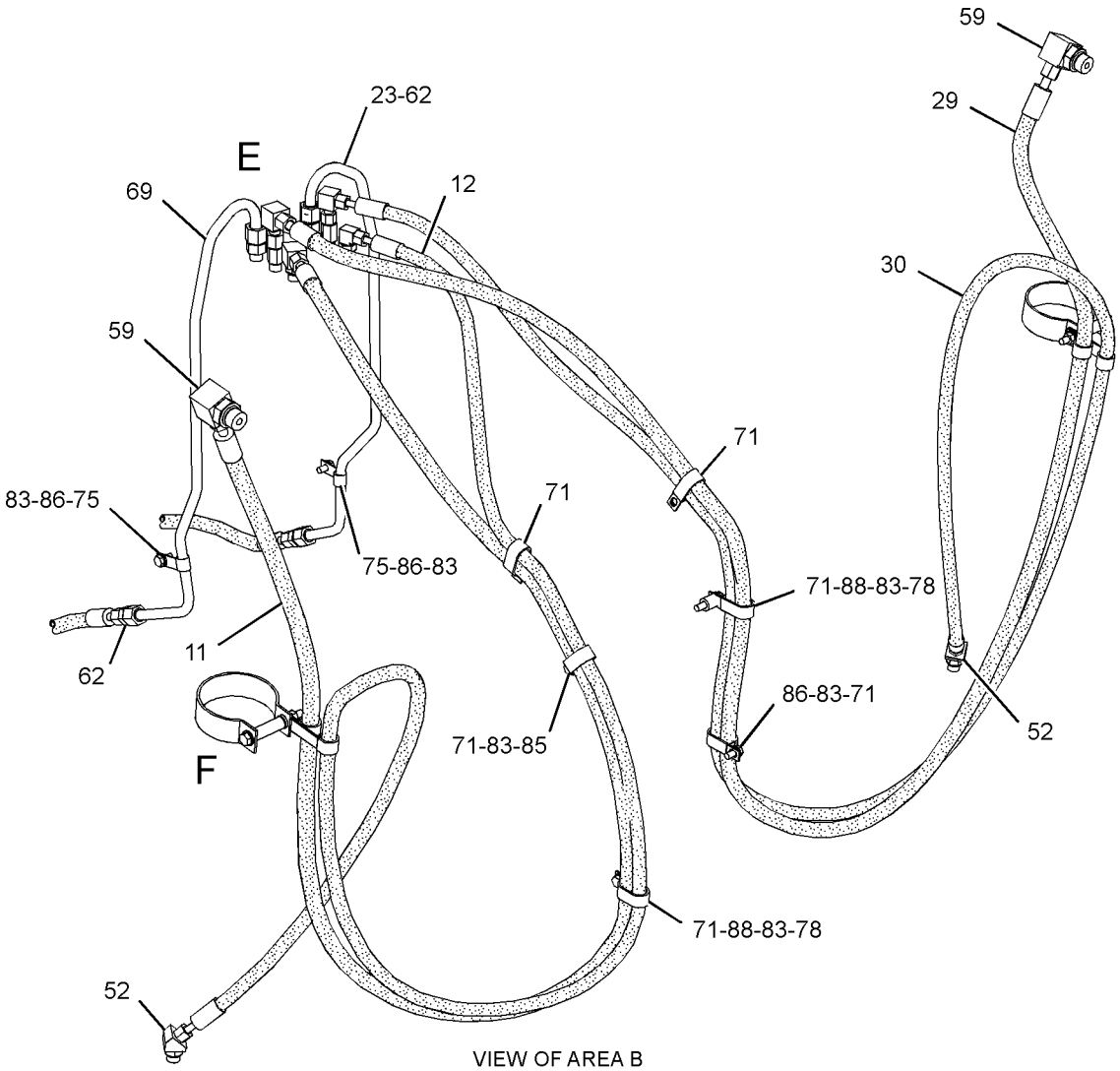

VIEW OF AREA B

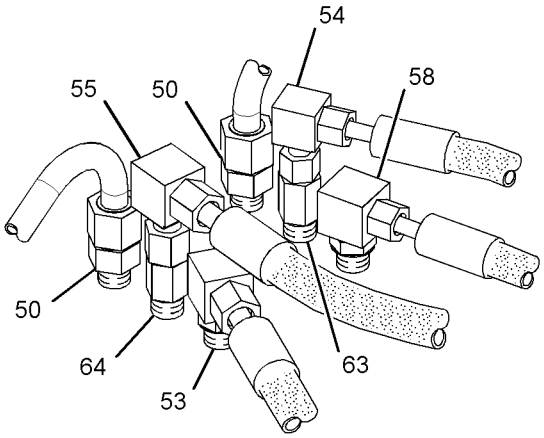

VIEW OF AREA E

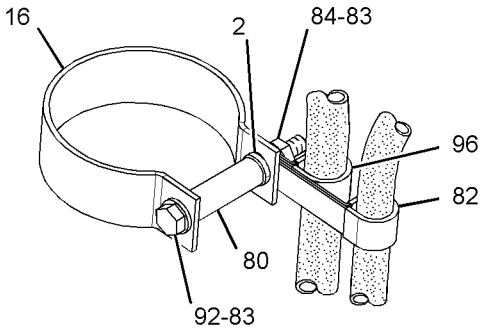

VIEW OF AREA F

GRAPHIC #2

g02215084

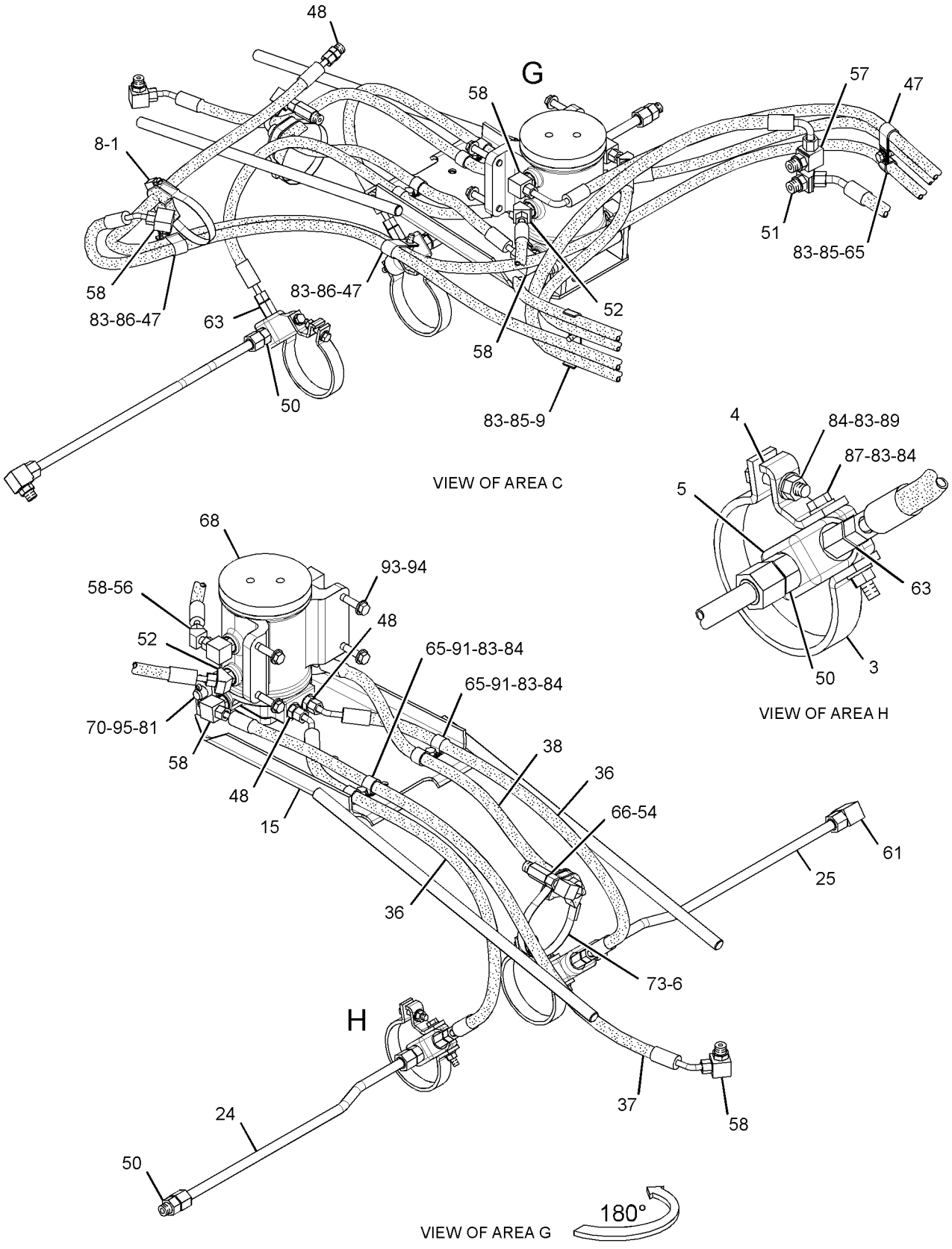

GRAPHIC #3

g02215087

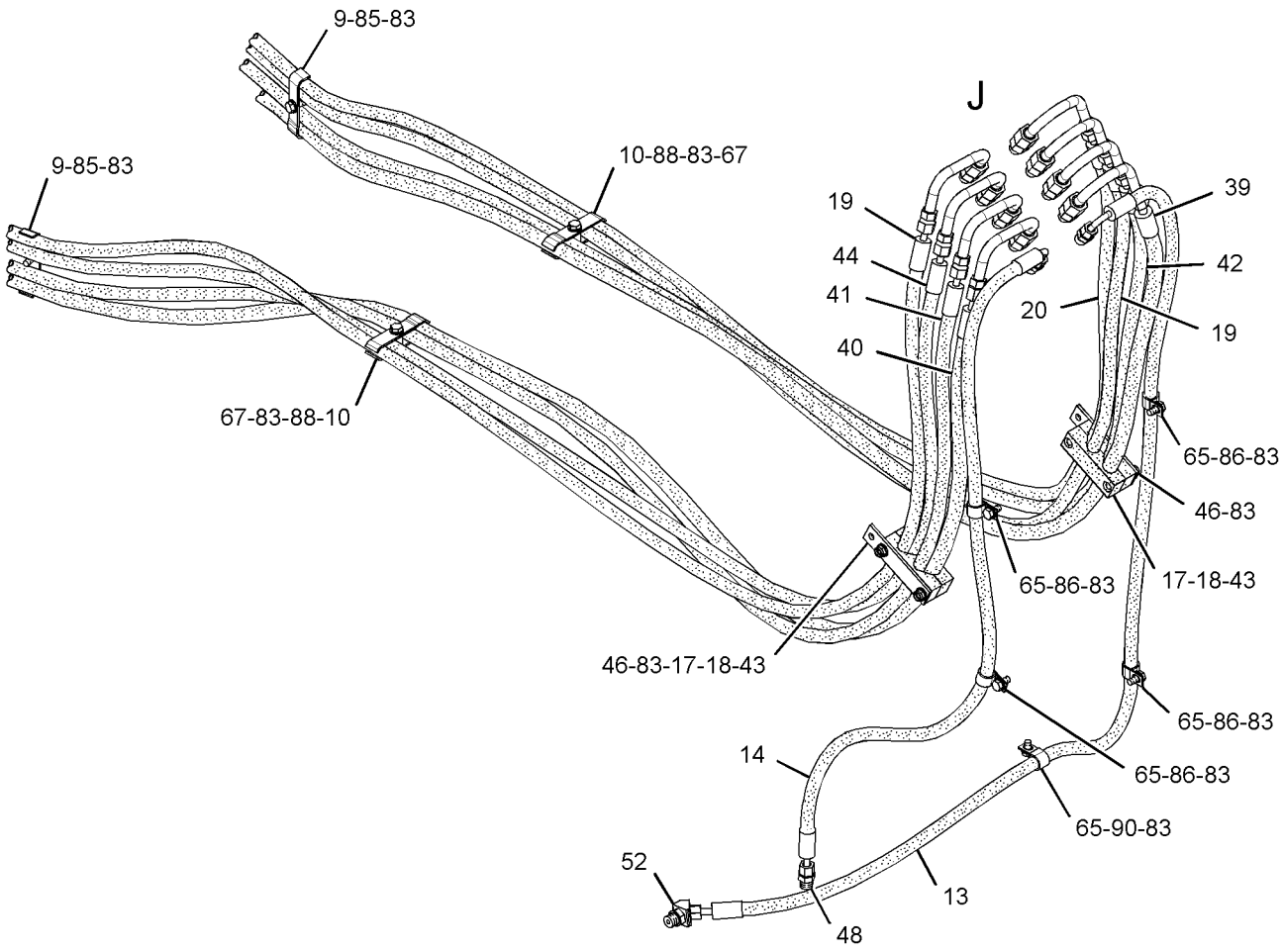

VIEW OF AREA D

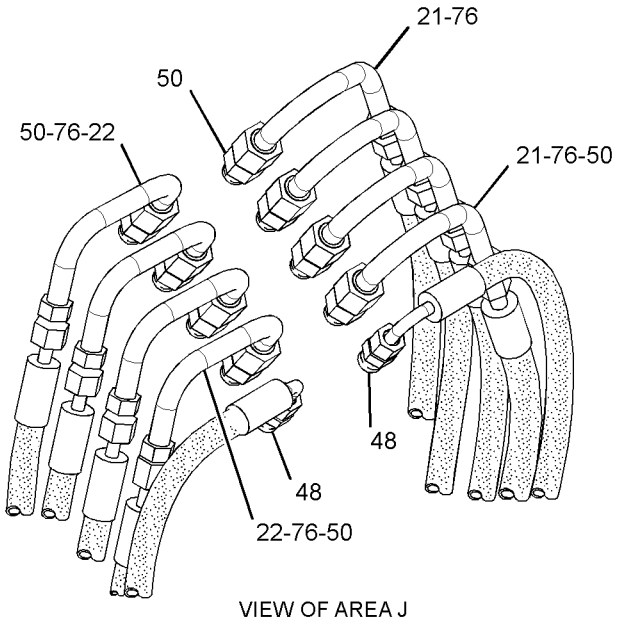

VIEW OF AREA J

GRAPHIC #4

<END>

g02215089

HYDRAULIC SYSTEM

351-8254 LINES GP-HYDRAULIC

S/N: R9J1-UP
PART OF 356-3723 CONTROL AR-HYDRAULIC
AN ATTACHMENT

SMCS-5057 **i04032526**

NOTE	REF NO	GRAPHIC REF	PART NUMBER	QTY	PART NAME 1 2 3 4 5 6 (PRODUCT LEVEL)	SEE PAGE
	1	2	**4N-5091**	2	SPACER (0.53X1X3.375-IN THK)	
	2	3,4	**5P-0599**	3	CLAMP-BAND	
	3	2	**8T-1296**	2	WASHER (10.5X19X3.5-MM THK)	
	4	3,4	**8W-3989**	2	CLAMP	
	5	3,4	**8W-3990**	2	CLAMP	
	6	4	**8W-3991**	2	JUNCTION BLOCK	
	7	3	**9R-2053**	1	BLOCK	
	8	4	**9R-5008**	1	SPACER (11X20X6-MM THK)	
	9	3	**9R-8870**	1	BLOCK	
	10	2	**162-7449**	2	CLAMP	
	11	2	*171-6466*	2	UNION AS	
					(EACH INCLUDES)	
		2	**5P-9810**	1	UNION	
		2	**3D-2824**	2	SEAL-O-RING	
Y	12	2	*160-9413*	2	ACCUMULATOR GP-HYDRAULIC (BLADE CUSHION)	559
	13	1	**246-6341**	3	CLAMP	
	14	1	**246-6342**	4	CLAMP	
I	15	2	**250-5612**	1	HOSE AS	
I	16	2	**252-0002**	1	HOSE AS	
I	17	4	**252-0003**	1	HOSE AS	
I	18	4	**252-0004**	1	HOSE AS	
	19	3	**252-5366**	1	GUIDE AS	
	20	2	**256-9365**	1	PLATE AS	
	21	2	**257-7253**	2	CLAMP	
	22	1	**259-5418**	2	BLOCK	
	23	1	**259-5898**	2	BLOCK	
I	24	4	**265-0639**	2	HOSE AS	
I	25	4	**265-0642**	1	HOSE AS	
	26	4	**265-0644**	4	TUBE AS	
	27	4	**265-0645**	4	TUBE AS	
	28	2	**272-4851**	1	TUBE AS	
	29	4	**272-4853**	1	TUBE AS	
	30	3	**272-4854**	1	TUBE AS	
	31	4	**272-5671**	2	BLOCK	
	32	4	**286-1760**	1	TUBE AS	
	33	4	**286-1763**	1	TUBE AS	
I	34	2	**302-9101**	1	HOSE AS	
I	35	2	**302-9118**	1	HOSE AS	
I	36	2	**302-9119**	1	HOSE AS	
I	37	1	**306-2031**	1	HOSE AS	
I	38	1	**306-2032**	1	HOSE AS	
I	39	4	**306-2034**	1	HOSE AS	
I	40	4	**306-2036**	1	HOSE AS	
I	41	4	**306-2037**	1	HOSE AS	
I	42	3	**306-2038**	2	HOSE AS	
I	43	3	**306-2039**	1	HOSE AS	
I	44	3	**306-2040**	1	HOSE AS	
I	45	4	**309-4561**	1	HOSE AS	
I	46	4	**309-4562**	1	HOSE AS	
I	47	4	**312-5687**	1	HOSE AS	
I	48	4	**312-5688**	1	HOSE AS	
	49	1	**313-5510**	2	PLATE	
Y	50	2	**322-3798**	2	MANIFOLD GP-CONTROL (BLADE CUSHION)	681
I	51	4	**347-7290**	1	HOSE AS	
I	52	4	**351-2740**	1	HOSE AS	

351-8254 **LINES GP-HYDRAULIC** ***(contd.)*** **i04032526**

NOTE	REF NO	GRAPHIC REF	PART NUMBER	QTY	PART NAME 1 2 3 4 5 6 (PRODUCT LEVEL)	SEE PAGE
	53	3	**100-4336**	3	CLIP	
	54	1,3,4	*148-8318*	6	CONNECTOR AS	
					(EACH INCLUDES)	
		1,3,4	**6V-8634**	1	CONNECTOR	
		1,3,4	**3K-0360**	1	SEAL-O-RING	
		1,3,4	**6V-8397**	1	SEAL-O-RING	
	55	2	*148-8328*	2	CONNECTOR AS	
					(EACH INCLUDES)	
		2	**6V-8633**	1	CONNECTOR	
		2	**3D-2824**	1	SEAL-O-RING	
		2	**6V-8398**	1	SEAL-O-RING	
	56	4	*148-8340*	1	CONNECTOR AS	
		4	**6V-8639**	1	CONNECTOR	
		4	**3K-0360**	1	SEAL-O-RING	
		4	**6V-8398**	1	SEAL-O-RING	
	57	3,4	*148-8342*	13	CONNECTOR AS	
					(EACH INCLUDES)	
		3,4	**6V-8632**	1	CONNECTOR	
		3,4	**3K-0360**	1	SEAL-O-RING	
		3,4	**7J-9108**	1	SEAL-O-RING	
	58	3	*148-8358*	1	ELBOW AS	
		3	**6V-8624**	1	ELBOW	
		3	**2M-9780**	1	SEAL-O-RING	
		3	**6V-8398**	1	SEAL-O-RING	
	59	1,2,3	*148-8363*	5	ELBOW AS	
					(EACH INCLUDES)	
		1,2,3	**6V-9876**	1	ELBOW	
		1,2,3	**3K-0360**	1	SEAL-O-RING	
		1,2,3	**6V-8397**	1	SEAL-O-RING	
	60	3,4	*148-8364*	2	ELBOW AS	
					(EACH INCLUDES)	
		3,4	**6V-8625**	1	ELBOW	
		3,4	**3K-0360**	1	SEAL-O-RING	
		3,4	**6V-8398**	1	SEAL-O-RING	
	61	3	*148-8367*	2	ELBOW AS	
					(EACH INCLUDES)	
		3	**6V-9850**	1	ELBOW	
		3	**6V-8397**	1	SEAL-O-RING	
	62	2,3	*148-8370*	3	ELBOW AS	
					(EACH INCLUDES)	
		2,3	**6V-9851**	1	ELBOW	
		2,3	**6V-8398**	1	SEAL-O-RING	
	63	3	*148-8371*	1	ELBOW AS	
		3	**8C-8988**	1	ELBOW	
		3	**6V-8397**	1	SEAL-O-RING	
	64	3,4	*148-8372*	3	ELBOW AS	
					(EACH INCLUDES)	
		3,4	**6V-8721**	1	ELBOW	
		3,4	**2M-9780**	1	SEAL-O-RING	
		3,4	**6V-8398**	1	SEAL-O-RING	
	65	3	*148-8374*	7	ELBOW AS	
					(EACH INCLUDES)	
		3	**6V-8723**	1	ELBOW	
		3	**3K-0360**	1	SEAL-O-RING	
		3	**6V-8397**	1	SEAL-O-RING	
	66	2	*148-8381*	2	ELBOW AS	
					(EACH INCLUDES)	
		2	**8T-5429**	1	ELBOW	
		2	**3D-2824**	1	SEAL-O-RING	

351-8254 **LINES GP-HYDRAULIC** *(contd.)* **i04032526**

NOTE	REF NO	GRAPHIC REF	PART NUMBER	QTY	PART NAME 1 2 3 4 5 6 (PRODUCT LEVEL)	SEE PAGE
		2	**6V-8398**	1	SEAL-O-RING	
	67	4	*148-8427*	2	TEE AS	
					(EACH INCLUDES)	
		4	**8T-6895**	1	TEE-UNION	
		4	**6V-8398**	3	SEAL-O-RING	
	68	2	*148-8444*	2	TEE AS-SWIVEL	
					(EACH INCLUDES)	
		2	**6V-9837**	1	TEE-SWIVEL	
		2	**6V-8398**	2	SEAL-O-RING	
	69	3	*150-4048*	1	ELBOW AS	
		3	**6V-8722**	1	ELBOW	
		3	**3K-0360**	1	SEAL-O-RING	
		3	**7J-9108**	1	SEAL-O-RING	
	70	2	*164-5573*	2	UNION AS	
					(EACH INCLUDES)	
		2	**6V-8738**	1	UNION	
		2	**6V-8398**	1	SEAL-O-RING	
		2	**7J-9108**	1	SEAL-O-RING	
	71	3,4	*164-5605*	3	CONNECTOR AS	
					(EACH INCLUDES)	
		3,4	**8T-0076**	1	CONNECTOR	
		3,4	**3K-0360**	1	SEAL-O-RING	
		3,4	**6V-8397**	1	SEAL-O-RING	
	72	3	*164-5608*	1	CONNECTOR AS	
		3	**8T-1687**	1	CONNECTOR	
		3	**3K-0360**	1	SEAL-O-RING	
		3	**6V-8398**	1	SEAL-O-RING	
	73	1,2,3	**1S-0994**	12	CLIP	
	74	3	*204-0317*	1	CONNECTOR AS	
		3	**092-3635**	1	CONNECTOR	
		3	**3K-0360**	1	SEAL-O-RING	
		3	**6V-8397**	1	SEAL-O-RING	
	75	1	**205-6716**	2	SPACER (10.5X20X19-MM THK)	
Y	76	3	**260-6502**	1	SWIVEL GP (CIRCLE DRIVE)	701
	77	2	**272-4852**	1	TUBE AS	
I	78	2	**302-8926**	1	HOSE AS	
	79	3	**3B-4628**	2	PIN-COTTER	
	80	2,4	**3E-4321**	6	CLIP	
	81	4	**5K-1094**	2	LOCKWASHER	
	82	3	**5P-3860**	1	CLAMP-HOSE	
	83	2,4	**6D-4244**	5	CLIP	
	84	2	**6D-4636**	1	CLIP	
	85	2	**6K-8178**	2	CLIP	
	86	4	**6V-8398**	10	SEAL-O-RING	
	87	4	**6V-9169**	2	NUT-BULKHEAD (13/16-16-THD)	
	88	2	**7C-6921**	3	SPACER (11X20X22.8-MM THK)	
	89	4	**7K-1181**	2	STRAP-CABLE	
	90	2	**7W-5672**	2	PIPE	
	91	2	**7X-7729**	3	WASHER (11X25X3-MM THK)	
	92	3	**8D-9092**	1	PIN	
	93	2	**8D-9671**	2	CLIP	
M	94	1	**8T-0389**	4	LOCKNUT (M10X1.5-THD)	
	95	1,2,3, 4	**8T-4121**	46	WASHER-HARD (11X21X2.5-MM THK)	
M	96	2,3,4	**8T-4133**	9	NUT (M10X1.5-THD)	
M	97	1,2,3	**8T-4136**	6	BOLT (M10X1.5X25-MM)	
M	98	1,2,3, 4	**8T-4137**	11	BOLT (M10X1.5X20-MM)	
M	99	3,4	**8T-4172**	2	BOLT (M10X1.5X80-MM)	
M	100	1,2	**8T-4182**	5	BOLT (M10X1.5X45-MM)	

351-8254 **LINES GP-HYDRAULIC** *(contd.)* **i04032526**

NOTE	REF NO	GRAPHIC REF	PART NUMBER	QTY	PART NAME 1 2 3 4 5 6 (PRODUCT LEVEL)	SEE PAGE
M	101	3,4	**8T-4185**	2	BOLT (M10X1.5X50-MM)	
M	102	1,4	**8T-4191**	2	BOLT (M10X1.5X16-MM)	
M	103	2,3	**8T-4195**	6	BOLT (M10X1.5X30-MM)	
M	104	2	**8T-4198**	2	BOLT (M10X1.5X100-MM)	
	105	2,3	**8T-4223**	6	WASHER-HARD (13.5X25.5X3-MM THK)	
M	106	3	**8T-4648**	4	BOLT (M12X1.75X70-MM)	
	107	3	**8T-4994**	2	WASHER-HARD (20X36.5X3.5-MM THK)	
M	108	2	**8T-5001**	2	BOLT (M12X1.75X130-MM)	
	109	2	**9X-8250**	3	CLIP	

I-REFER TO HYDRAULIC INFORMATION SYSTEM
M-METRIC PART
Y-SEPARATE ILLUSTRATION

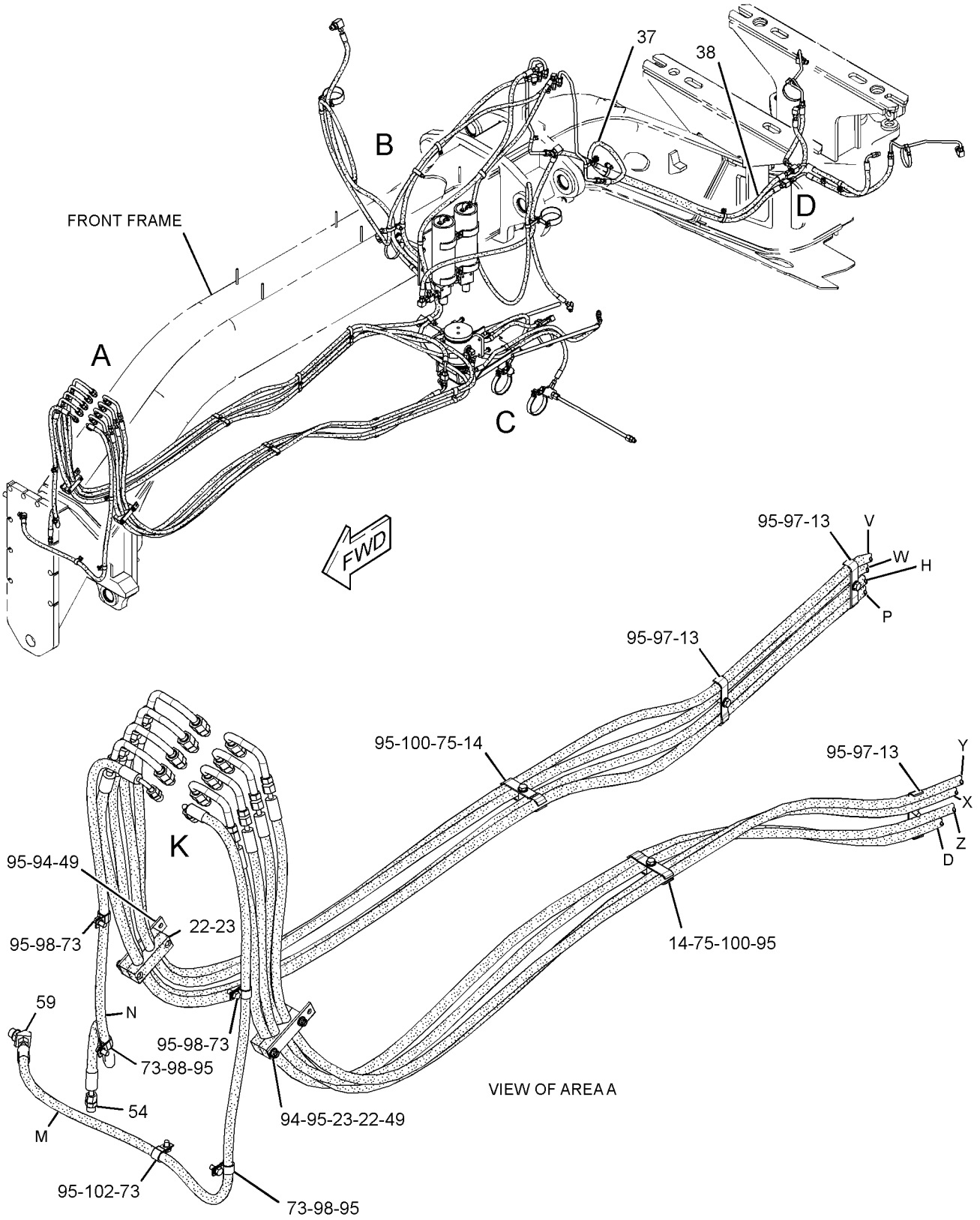

REFER TO ALL ILLUSTRATIONS OF THIS GROUP FOR AUXILIARY VIEWS

GRAPHIC #1

g02215479

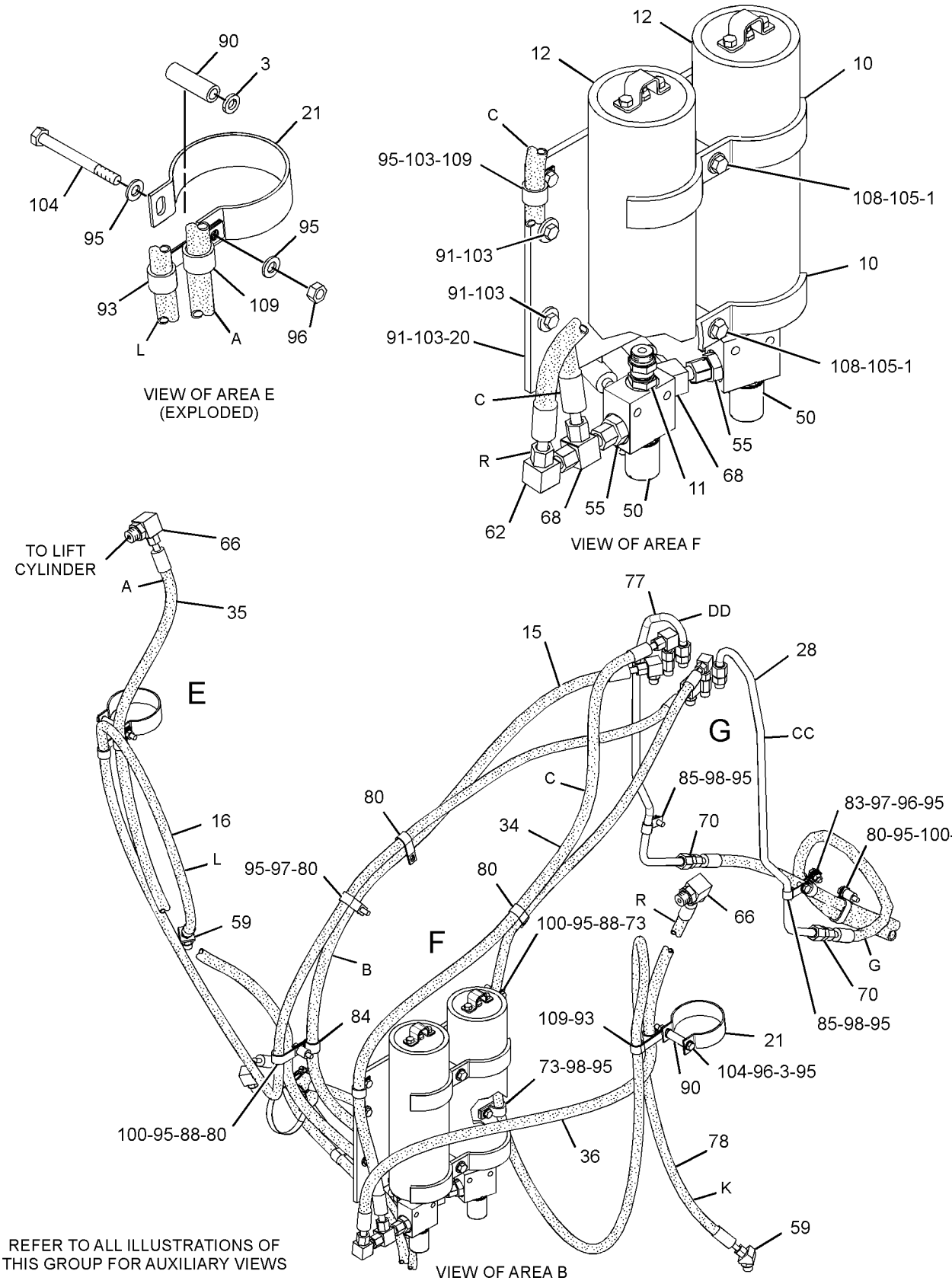

GRAPHIC #2

g02215480

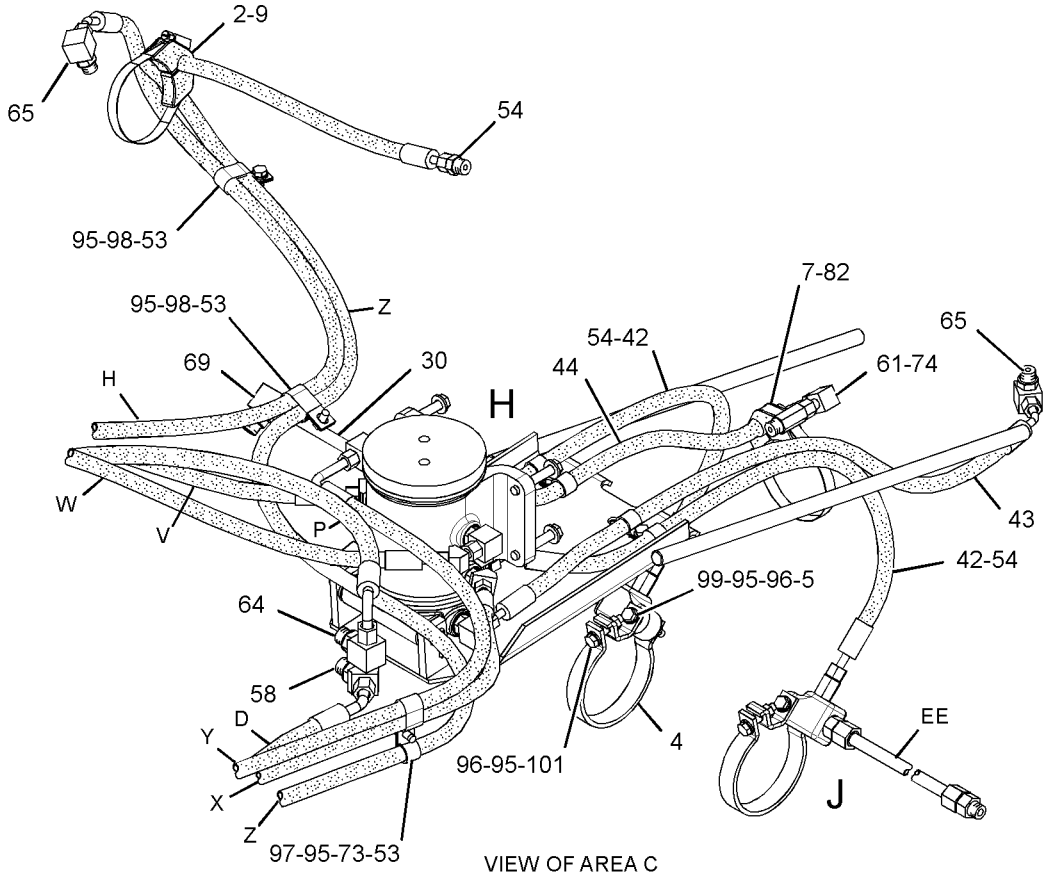

VIEW OF AREA C

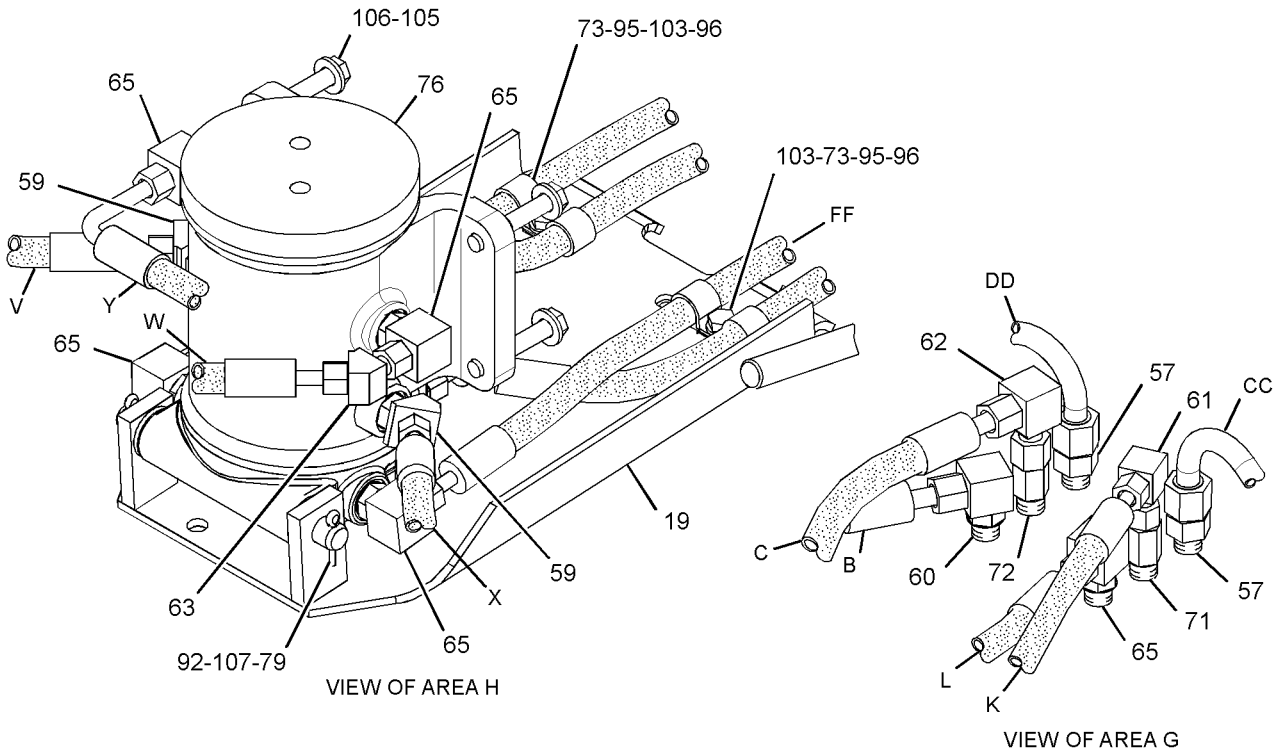

VIEW OF AREA H

VIEW OF AREA G

GRAPHIC #3

g02215481

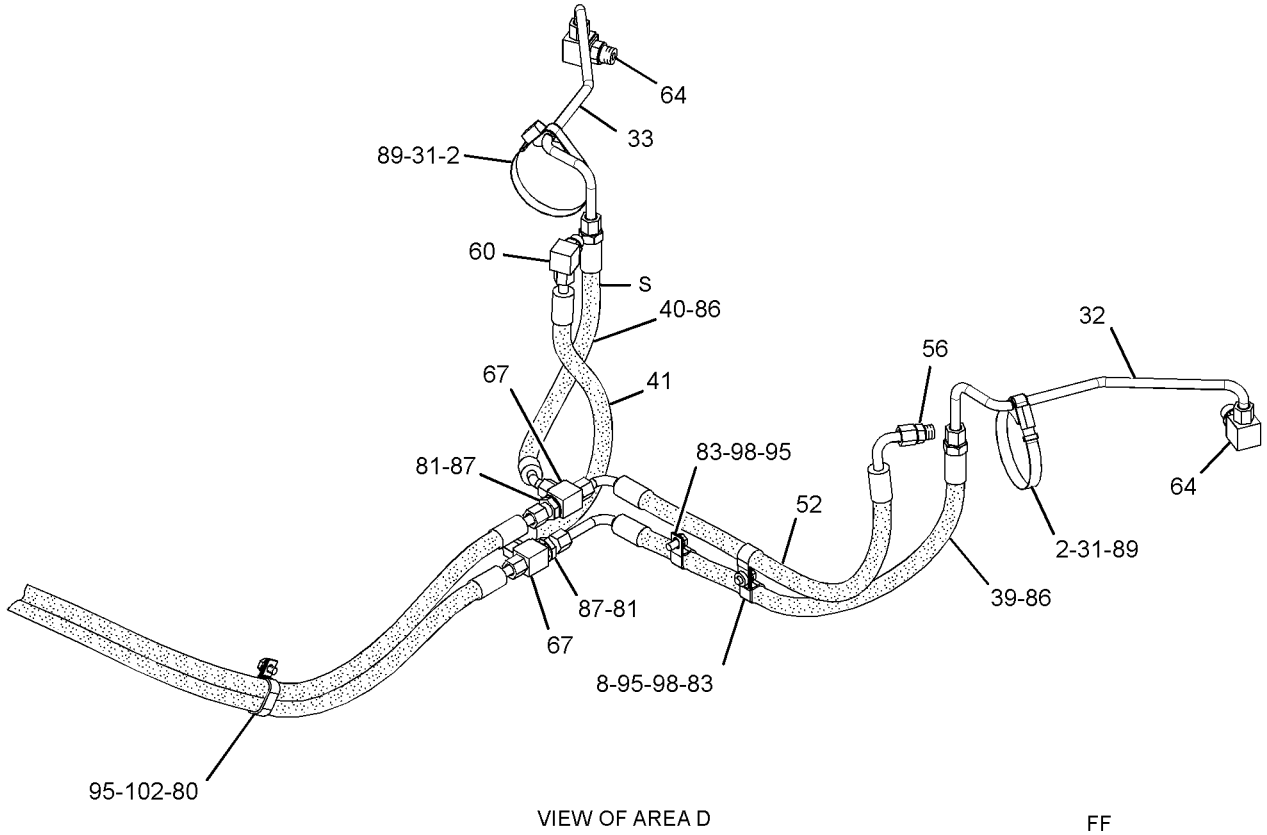

VIEW OF AREA D

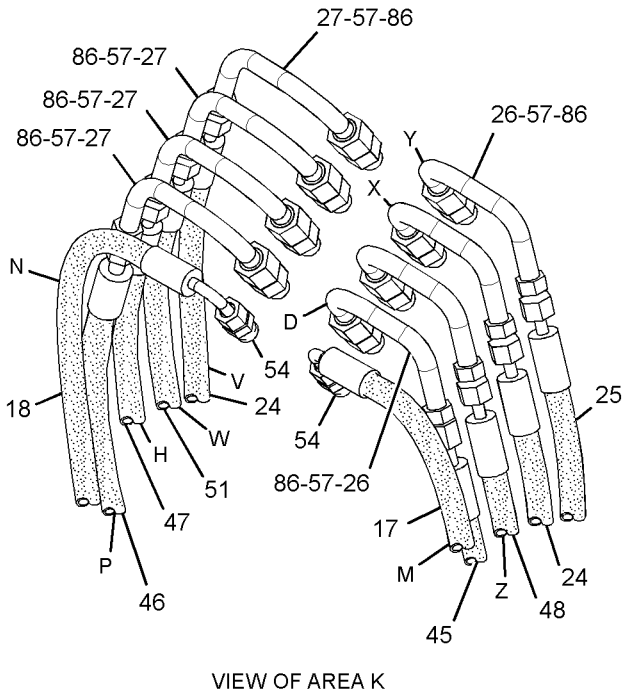

VIEW OF AREA K

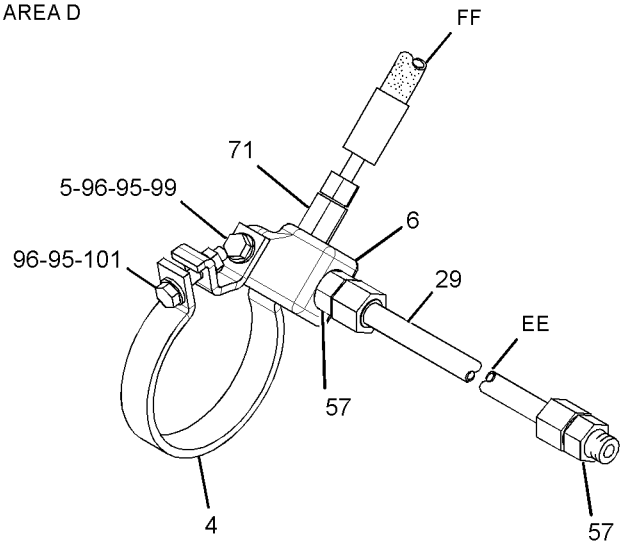

VIEW OF AREA J

GRAPHIC #4 **<END>** g02215482

HYDRAULIC SYSTEM

364-1282 LINES GP-HYDRAULIC

S/N: R9J1-UP

PART OF 364-2441 CONTROL AR-HYDRAULIC

AN ATTACHMENT

SMCS-5057 **i04025469**

NOTE	REF NO	GRAPHIC REF	PART NUMBER	QTY	PART NAME 1 2 3 4 5 6 (PRODUCT LEVEL)	SEE PAGE
	1	2	**4N-5091**	2	SPACER (0.53X1X3.375-IN THK)	
	2	3,4	**5P-0599**	3	CLAMP-BAND	
	3	2	**8T-1296**	2	WASHER (10.5X19X3.5-MM THK)	
	4	3,4	**8W-3989**	2	CLAMP	
	5	3,4	**8W-3990**	2	CLAMP	
	6	4	**8W-3991**	2	JUNCTION BLOCK	
	7	3	**9R-2053**	1	BLOCK	
	8	4	**9R-5008**	1	SPACER (11X20X6-MM THK)	
	9	3	**9R-8870**	1	BLOCK	
	10	2	**162-7449**	2	CLAMP	
	11	2	*171-6466*	2	UNION AS	
					(EACH INCLUDES)	
		2	**5P-9810**	1	UNION	
		2	**3D-2824**	2	SEAL-O-RING	
Y	12	2	*219-8035*	2	ACCUMULATOR GP-BLADE CUSHION (CHARGED)	558
	13	1	**246-6341**	3	CLAMP	
	14	1	**246-6342**	4	CLAMP	
I	15	2	**250-5612**	1	HOSE AS	
I	16	2	**252-0002**	1	HOSE AS	
I	17	4	**252-0003**	1	HOSE AS	
I	18	4	**252-0004**	1	HOSE AS	
	19	3	**252-5366**	1	GUIDE AS	
	20	2	**256-9365**	1	PLATE AS	
	21	2	**257-7253**	2	CLAMP	
	22	1	**259-5418**	2	BLOCK	
	23	1	**259-5898**	2	BLOCK	
I	24	4	**265-0639**	2	HOSE AS	
I	25	4	**265-0642**	1	HOSE AS	
	26	4	**265-0644**	4	TUBE AS	
	27	4	**265-0645**	4	TUBE AS	
	28	2	**272-4851**	1	TUBE AS	
	29	4	**272-4853**	1	TUBE AS	
	30	3	**272-4854**	1	TUBE AS	
	31	4	**272-5671**	2	BLOCK	
	32	4	**286-1760**	1	TUBE AS	
	33	4	**286-1763**	1	TUBE AS	
I	34	2	**302-9101**	1	HOSE AS	
I	35	2	**302-9118**	1	HOSE AS	
I	36	2	**302-9119**	1	HOSE AS	
I	37	1	**306-2031**	1	HOSE AS	
I	38	1	**306-2032**	1	HOSE AS	
I	39	4	**306-2034**	1	HOSE AS	
I	40	4	**306-2036**	1	HOSE AS	
I	41	4	**306-2037**	1	HOSE AS	
I	42	3	**306-2038**	2	HOSE AS	
I	43	3	**306-2039**	1	HOSE AS	
I	44	3	**306-2040**	1	HOSE AS	
I	45	4	**309-4561**	1	HOSE AS	
I	46	4	**309-4562**	1	HOSE AS	
I	47	4	**312-5687**	1	HOSE AS	
I	48	4	**312-5688**	1	HOSE AS	
	49	1	**313-5510**	2	PLATE	
Y	50	2	**322-3798**	2	MANIFOLD GP-CONTROL (BLADE CUSHION)	681
I	51	4	**347-7290**	1	HOSE AS	
I	52	4	**351-2740**	1	HOSE AS	

364-1282 **LINES GP-HYDRAULIC** *(contd.)* **i04025469**

NOTE	REF NO	GRAPHIC REF	PART NUMBER	QTY	PART NAME 1 2 3 4 5 6 (PRODUCT LEVEL)	SEE PAGE
	53	3	**100-4336**	3	CLIP	
	54	1,3,4	*148-8318*	6	CONNECTOR AS	
					(EACH INCLUDES)	
		1,3,4	**6V-8634**	1	CONNECTOR	
		1,3,4	**3K-0360**	1	SEAL-O-RING	
		1,3,4	**6V-8397**	1	SEAL-O-RING	
	55	2	*148-8328*	2	CONNECTOR AS	
					(EACH INCLUDES)	
		2	**6V-8633**	1	CONNECTOR	
		2	**3D-2824**	1	SEAL-O-RING	
		2	**6V-8398**	1	SEAL-O-RING	
	56	4	*148-8340*	1	CONNECTOR AS	
		4	**6V-8639**	1	CONNECTOR	
		4	**3K-0360**	1	SEAL-O-RING	
		4	**6V-8398**	1	SEAL-O-RING	
	57	3,4	*148-8342*	13	CONNECTOR AS	
					(EACH INCLUDES)	
		3,4	**6V-8632**	1	CONNECTOR	
		3,4	**3K-0360**	1	SEAL-O-RING	
		3,4	**7J-9108**	1	SEAL-O-RING	
	58	3	*148-8358*	1	ELBOW AS	
		3	**6V-8624**	1	ELBOW	
		3	**2M-9780**	1	SEAL-O-RING	
		3	**6V-8398**	1	SEAL-O-RING	
	59	1,2,3	*148-8363*	5	ELBOW AS	
					(EACH INCLUDES)	
		1,2,3	**6V-9876**	1	ELBOW	
		1,2,3	**3K-0360**	1	SEAL-O-RING	
		1,2,3	**6V-8397**	1	SEAL-O-RING	
	60	3,4	*148-8364*	2	ELBOW AS	
					(EACH INCLUDES)	
		3,4	**6V-8625**	1	ELBOW	
		3,4	**3K-0360**	1	SEAL-O-RING	
		3,4	**6V-8398**	1	SEAL-O-RING	
	61	3	*148-8367*	2	ELBOW AS	
					(EACH INCLUDES)	
		3	**6V-9850**	1	ELBOW	
		3	**6V-8397**	1	SEAL-O-RING	
	62	2,3	*148-8370*	3	ELBOW AS	
					(EACH INCLUDES)	
		2,3	**6V-9851**	1	ELBOW	
		2,3	**6V-8398**	1	SEAL-O-RING	
	63	3	*148-8371*	1	ELBOW AS	
		3	**8C-8988**	1	ELBOW	
		3	**6V-8397**	1	SEAL-O-RING	
	64	3,4	*148-8372*	3	ELBOW AS	
					(EACH INCLUDES)	
		3,4	**6V-8721**	1	ELBOW	
		3,4	**2M-9780**	1	SEAL-O-RING	
		3,4	**6V-8398**	1	SEAL-O-RING	
	65	3	*148-8374*	7	ELBOW AS	
					(EACH INCLUDES)	
		3	**6V-8723**	1	ELBOW	
		3	**3K-0360**	1	SEAL-O-RING	
		3	**6V-8397**	1	SEAL-O-RING	
	66	2	*148-8381*	2	ELBOW AS	
					(EACH INCLUDES)	
		2	**8T-5429**	1	ELBOW	
		2	**3D-2824**	1	SEAL-O-RING	

364-1282 **LINES GP-HYDRAULIC** *(contd.)* **i04025469**

NOTE	REF NO	GRAPHIC REF	PART NUMBER	QTY	PART NAME 1 2 3 4 5 6 (PRODUCT LEVEL)	SEE PAGE
		2	**6V-8398**	1	SEAL-O-RING	
	67	4	*148-8427*	2	TEE AS	
					(EACH INCLUDES)	
		4	**8T-6895**	1	TEE-UNION	
		4	**6V-8398**	3	SEAL-O-RING	
	68	2	*148-8444*	2	TEE AS-SWIVEL	
					(EACH INCLUDES)	
		2	**6V-9837**	1	TEE-SWIVEL	
		2	**6V-8398**	2	SEAL-O-RING	
	69	3	*150-4048*	1	ELBOW AS	
		3	**6V-8722**	1	ELBOW	
		3	**3K-0360**	1	SEAL-O-RING	
		3	**7J-9108**	1	SEAL-O-RING	
	70	2	*164-5573*	2	UNION AS	
					(EACH INCLUDES)	
		2	**6V-8738**	1	UNION	
		2	**6V-8398**	1	SEAL-O-RING	
		2	**7J-9108**	1	SEAL-O-RING	
	71	3,4	*164-5605*	3	CONNECTOR AS	
					(EACH INCLUDES)	
		3,4	**8T-0076**	1	CONNECTOR	
		3,4	**3K-0360**	1	SEAL-O-RING	
		3,4	**6V-8397**	1	SEAL-O-RING	
	72	3	*164-5608*	1	CONNECTOR AS	
		3	**8T-1687**	1	CONNECTOR	
		3	**3K-0360**	1	SEAL-O-RING	
		3	**6V-8398**	1	SEAL-O-RING	
	73	1,2,3	**1S-0994**	12	CLIP	
	74	3	*204-0317*	1	CONNECTOR AS	
		3	**092-3635**	1	CONNECTOR	
		3	**3K-0360**	1	SEAL-O-RING	
		3	**6V-8397**	1	SEAL-O-RING	
	75	1	**205-6716**	2	SPACER (10.5X20X19-MM THK)	
Y	76	3	**260-6502**	1	SWIVEL GP (CIRCLE DRIVE)	701
	77	2	**272-4852**	1	TUBE AS	
I	78	2	**302-8926**	1	HOSE AS	
	79	3	**3B-4628**	2	PIN-COTTER	
	80	2,4	**3E-4321**	6	CLIP	
	81	4	**5K-1094**	2	LOCKWASHER	
	82	3	**5P-3860**	1	CLAMP-HOSE	
	83	2,4	**6D-4244**	5	CLIP	
	84	2	**6D-4636**	1	CLIP	
	85	2	**6K-8178**	2	CLIP	
	86	4	**6V-8398**	10	SEAL-O-RING	
	87	4	**6V-9169**	2	NUT-BULKHEAD (13/16-16-THD)	
	88	2	**7C-6921**	3	SPACER (11X20X22.8-MM THK)	
	89	4	**7K-1181**	2	STRAP-CABLE	
	90	2	**7W-5672**	2	PIPE	
	91	2	**7X-7729**	3	WASHER (11X25X3-MM THK)	
	92	3	**8D-9092**	1	PIN	
	93	2	**8D-9671**	2	CLIP	
M	94	1	**8T-0389**	4	LOCKNUT (M10X1.5-THD)	
	95	1,2,3, 4	**8T-4121**	46	WASHER-HARD (11X21X2.5-MM THK)	
M	96	2,3,4	**8T-4133**	9	NUT (M10X1.5-THD)	
M	97	1,2,3	**8T-4136**	6	BOLT (M10X1.5X25-MM)	
M	98	1,2,3, 4	**8T-4137**	11	BOLT (M10X1.5X20-MM)	
M	99	3,4	**8T-4172**	2	BOLT (M10X1.5X80-MM)	
M	100	1,2	**8T-4182**	5	BOLT (M10X1.5X45-MM)	

364-1282 **LINES GP-HYDRAULIC** *(contd.)* **i04025469**

NOTE	REF NO	GRAPHIC REF	PART NUMBER	QTY	PART NAME 1 2 3 4 5 6 (PRODUCT LEVEL)	SEE PAGE
M	101	3,4	**8T-4185**	2	BOLT (M10X1.5X50-MM)	
M	102	1,4	**8T-4191**	2	BOLT (M10X1.5X16-MM)	
M	103	2,3	**8T-4195**	6	BOLT (M10X1.5X30-MM)	
M	104	2	**8T-4198**	2	BOLT (M10X1.5X100-MM)	
	105	2,3	**8T-4223**	6	WASHER-HARD (13.5X25.5X3-MM THK)	
M	106	3	**8T-4648**	4	BOLT (M12X1.75X70-MM)	
	107	3	**8T-4994**	2	WASHER-HARD (20X36.5X3.5-MM THK)	
M	108	2	**8T-5001**	2	BOLT (M12X1.75X130-MM)	
	109	2	**9X-8250**	3	CLIP	

I-REFER TO HYDRAULIC INFORMATION SYSTEM
M-METRIC PART
Y-SEPARATE ILLUSTRATION

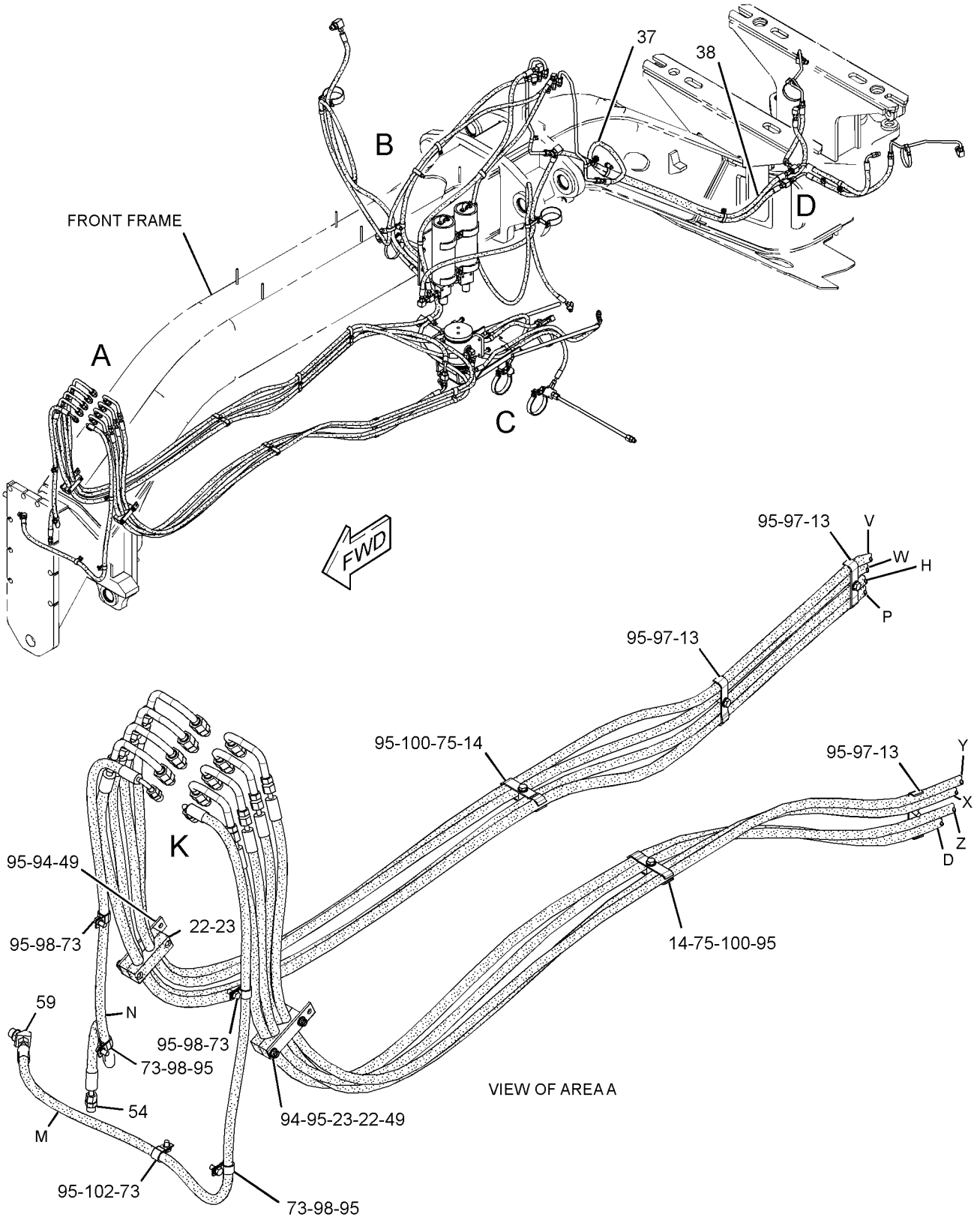

REFER TO ALL ILLUSTRATIONS OF THIS GROUP FOR AUXILIARY VIEWS

GRAPHIC #1

g02215479

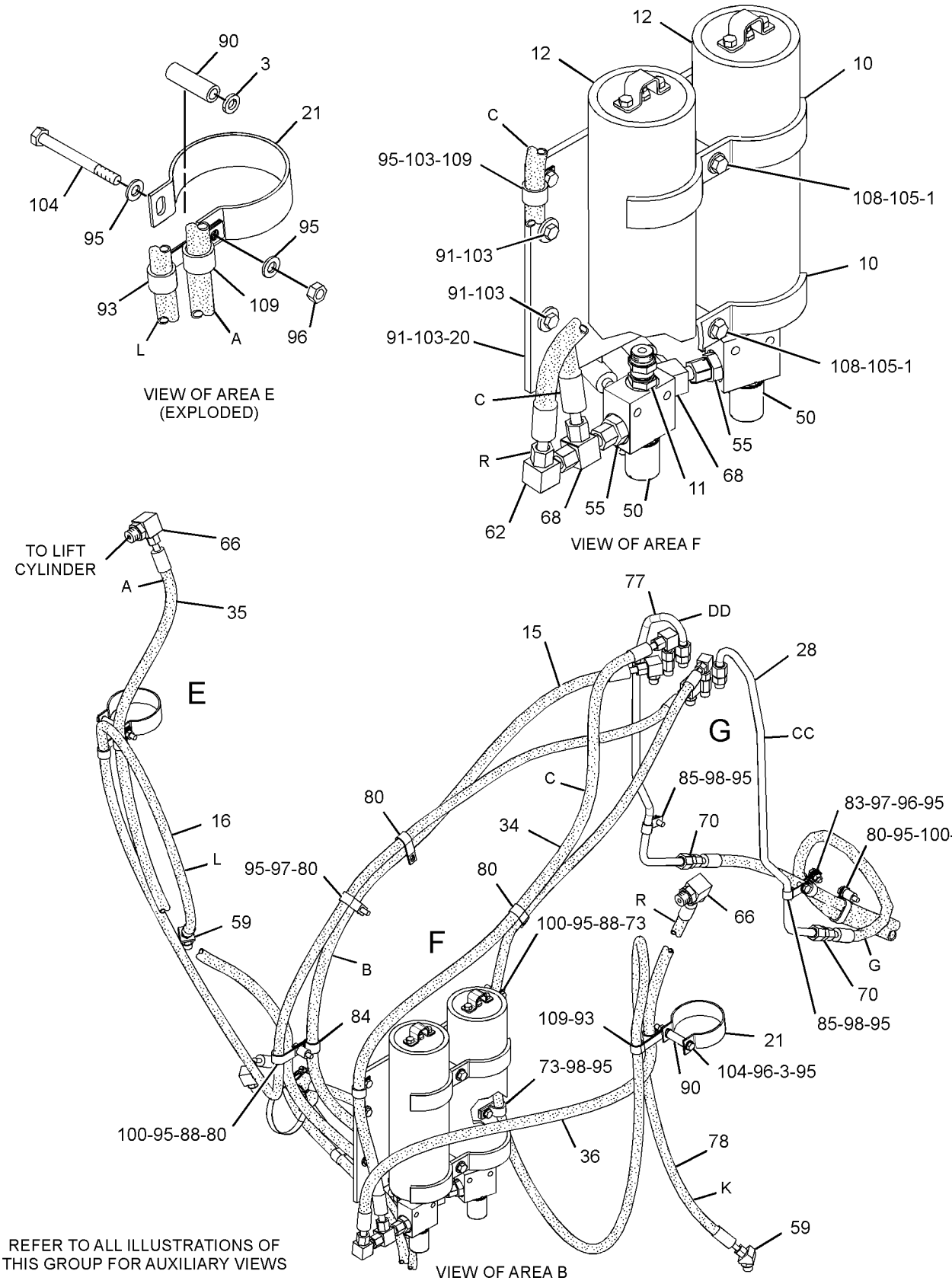

GRAPHIC #2

g02215480

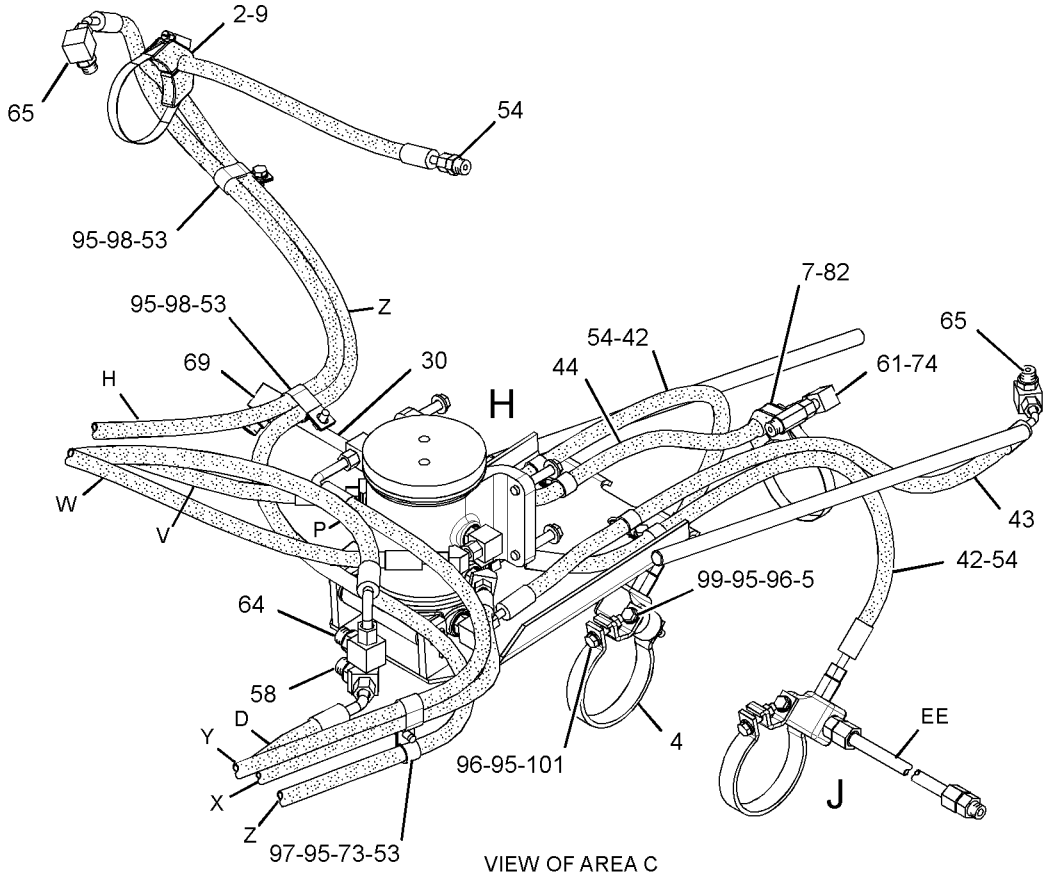

VIEW OF AREA C

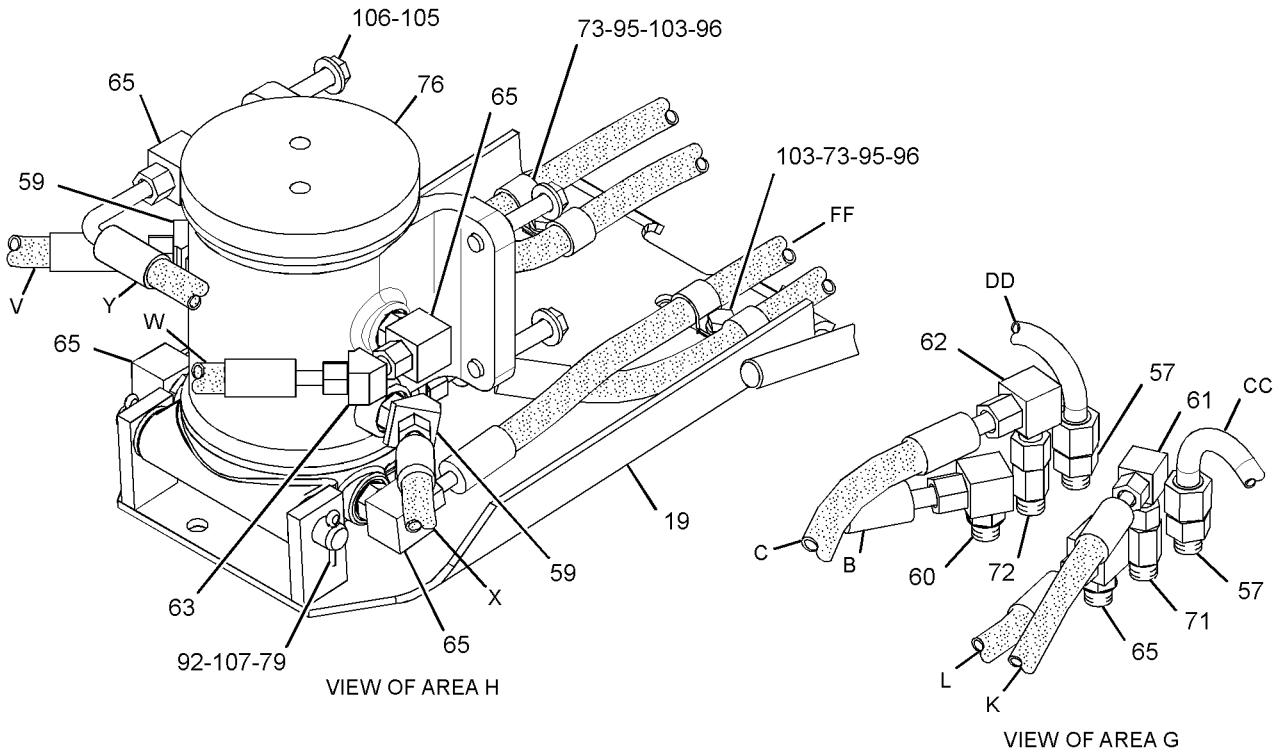

VIEW OF AREA H

VIEW OF AREA G

GRAPHIC #3

g02215481

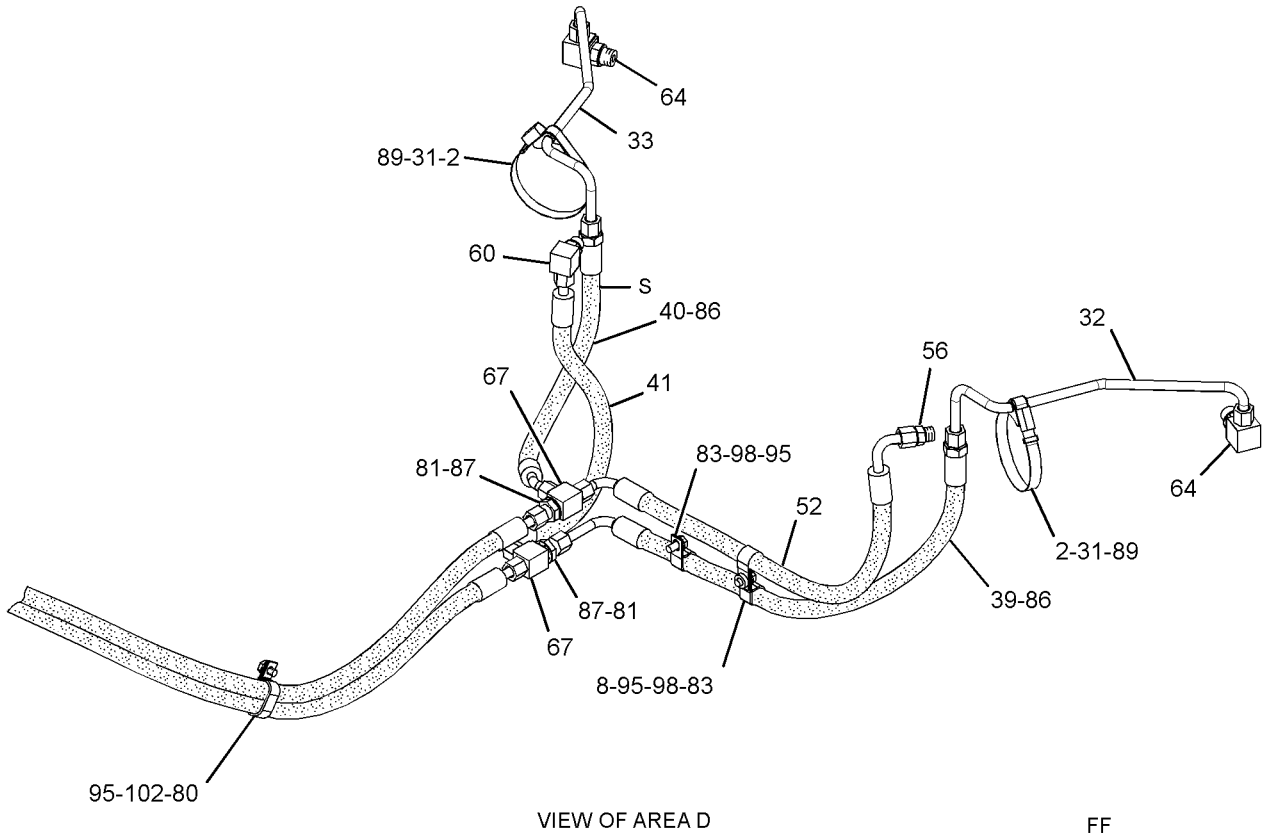

VIEW OF AREA D

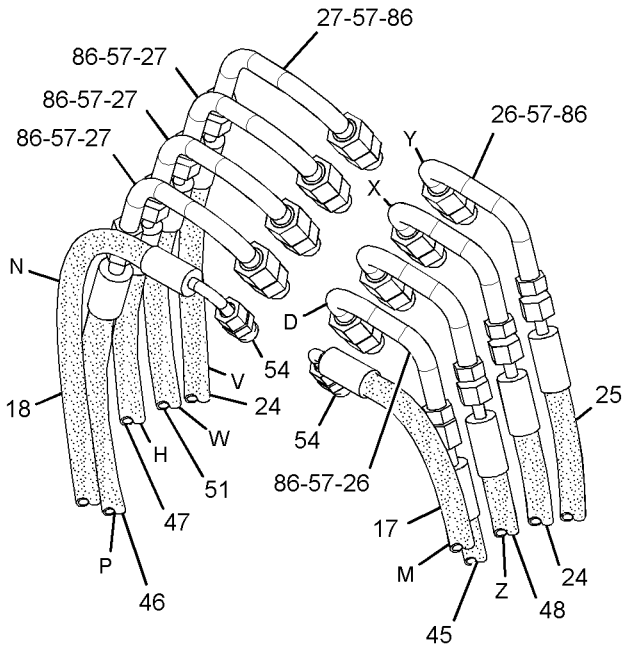

VIEW OF AREA K

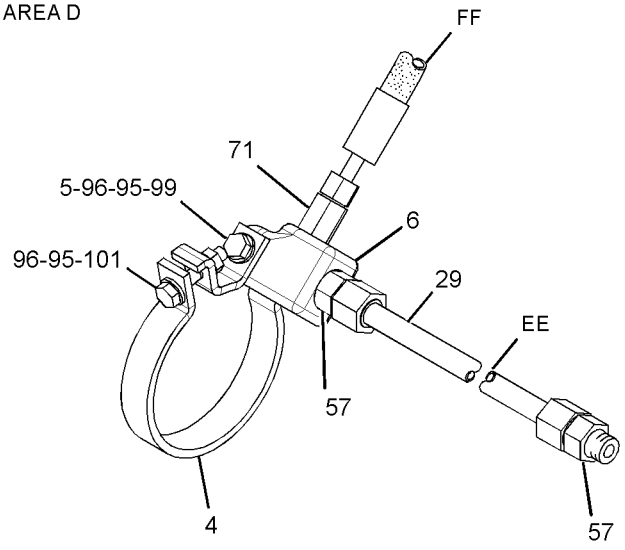

VIEW OF AREA J

GRAPHIC #4 **<END>** g02215482

HYDRAULIC SYSTEM

366-3382 LINES GP-HYDRAULIC

S/N: R9J1-UP

PART OF 366-3373 CONTROL AR-HYDRAULIC

AN ATTACHMENT

SMCS-5057 **i04025959**

NOTE	REF NO	GRAPHIC REF	PART NUMBER	QTY	PART NAME 1 2 3 4 5 6 (PRODUCT LEVEL)	SEE PAGE
	1	2	**4N-5091**	2	SPACER (0.53X1X3.375-IN THK)	
	2	3,4	**5P-0599**	3	CLAMP-BAND	
	3	2	**8T-1296**	2	WASHER (10.5X19X3.5-MM THK)	
	4	3,4	**8W-3989**	2	CLAMP	
	5	3,4	**8W-3990**	2	CLAMP	
	6	4	**8W-3991**	2	JUNCTION BLOCK	
	7	3	**9R-2053**	1	BLOCK	
	8	4	**9R-5008**	1	SPACER (11X20X6-MM THK)	
	9	3	**9R-8870**	1	BLOCK	
Y	10	2	*160-9413*	2	ACCUMULATOR GP-HYDRAULIC (BLADE CUSHION)	559
	11	2	**162-7449**	2	CLAMP	
	12	2	*171-6466*	2	UNION AS	
					(EACH INCLUDES)	
		2	**5P-9810**	1	UNION	
		2	**3D-2824**	2	SEAL-O-RING	
	13	1	**246-6341**	3	CLAMP	
	14	1	**246-6342**	4	CLAMP	
I	15	2	**250-5612**	1	HOSE AS	
I	16	2	**252-0002**	1	HOSE AS	
I	17	4	**252-0003**	1	HOSE AS	
I	18	4	**252-0004**	1	HOSE AS	
	19	3	**252-5366**	1	GUIDE AS	
	20	2	**256-9365**	1	PLATE AS	
	21	2	**257-7253**	2	CLAMP	
	22	1,2	**259-5418**	2	BLOCK	
	23	1	**259-5898**	2	BLOCK	
I	24	4	**265-0639**	2	HOSE AS	
I	25	4	**265-0642**	1	HOSE AS	
	26	4	**265-0644**	4	TUBE AS	
	27	4	**265-0645**	4	TUBE AS	
	28	4	**272-4853**	1	TUBE AS	
	29	3	**272-4854**	1	TUBE AS	
	30	4	**272-5671**	2	BLOCK	
	31	4	**286-1760**	1	TUBE AS	
	32	4	**286-1763**	1	TUBE AS	
I	33	2	**302-9101**	1	HOSE AS	
I	34	2	**302-9118**	1	HOSE AS	
I	35	2	**302-9119**	1	HOSE AS	
I	36	1	**306-2031**	1	HOSE AS	
I	37	1	**306-2032**	1	HOSE AS	
I	38	4	**306-2034**	1	HOSE AS	
I	39	4	**306-2036**	1	HOSE AS	
I	40	4	**306-2037**	1	HOSE AS	
I	41	3	**306-2038**	2	HOSE AS	
I	42	3	**306-2039**	1	HOSE AS	
I	43	3	**306-2040**	1	HOSE AS	
I	44	4	**309-4561**	1	HOSE AS	
I	45	4	**309-4562**	1	HOSE AS	
I	46	4	**312-5687**	1	HOSE AS	
I	47	4	**312-5688**	1	HOSE AS	
	48	1	**313-5510**	2	PLATE	
Y	49	2	**322-3798**	2	MANIFOLD GP-CONTROL (BLADE CUSHION)	681
I	50	4	**347-7290**	1	HOSE AS	
I	51	4	**351-2740**	1	HOSE AS	
	52	3	**100-4336**	3	CLIP	

366-3382 **LINES GP-HYDRAULIC** *(contd.)* **i04025959**

NOTE	REF NO	GRAPHIC REF	PART NUMBER	QTY	PART NAME 1 2 3 4 5 6 (PRODUCT LEVEL)	SEE PAGE
	53	1,3,4	*148-8318*	6	CONNECTOR AS	
					(EACH INCLUDES)	
		1,3,4	**6V-8634**	1	CONNECTOR	
		1,3,4	**3K-0360**	1	SEAL-O-RING	
		1,3,4	**6V-8397**	1	SEAL-O-RING	
	54	2	*148-8328*	2	CONNECTOR AS	
					(EACH INCLUDES)	
		2	**6V-8633**	1	CONNECTOR	
		2	**3D-2824**	1	SEAL-O-RING	
		2	**6V-8398**	1	SEAL-O-RING	
	55	4	*148-8340*	1	CONNECTOR AS	
		4	**6V-8639**	1	CONNECTOR	
		4	**3K-0360**	1	SEAL-O-RING	
		4	**6V-8398**	1	SEAL-O-RING	
	56	3,4	*148-8342*	13	CONNECTOR AS	
					(EACH INCLUDES)	
		3,4	**6V-8632**	1	CONNECTOR	
		3,4	**3K-0360**	1	SEAL-O-RING	
		3,4	**7J-9108**	1	SEAL-O-RING	
	57	3	*148-8358*	1	ELBOW AS	
		3	**6V-8624**	1	ELBOW	
		3	**2M-9780**	1	SEAL-O-RING	
		3	**6V-8398**	1	SEAL-O-RING	
	58	1,2,3	*148-8363*	5	ELBOW AS	
					(EACH INCLUDES)	
		1,2,3	**6V-9876**	1	ELBOW	
		1,2,3	**3K-0360**	1	SEAL-O-RING	
		1,2,3	**6V-8397**	1	SEAL-O-RING	
	59	3,4	*148-8364*	2	ELBOW AS	
					(EACH INCLUDES)	
		3,4	**6V-8625**	1	ELBOW	
		3,4	**3K-0360**	1	SEAL-O-RING	
		3,4	**6V-8398**	1	SEAL-O-RING	
	60	3	*148-8367*	2	ELBOW AS	
					(EACH INCLUDES)	
		3	**6V-9850**	1	ELBOW	
		3	**6V-8397**	1	SEAL-O-RING	
	61	2,3	*148-8370*	3	ELBOW AS	
					(EACH INCLUDES)	
		2,3	**6V-9851**	1	ELBOW	
		2,3	**6V-8398**	1	SEAL-O-RING	
	62	3	*148-8371*	1	ELBOW AS	
		3	**8C-8988**	1	ELBOW	
		3	**6V-8397**	1	SEAL-O-RING	
	63	3,4	*148-8372*	3	ELBOW AS	
					(EACH INCLUDES)	
		3,4	**6V-8721**	1	ELBOW	
		3,4	**2M-9780**	1	SEAL-O-RING	
		3,4	**6V-8398**	1	SEAL-O-RING	
	64	3	*148-8374*	7	ELBOW AS	
					(EACH INCLUDES)	
		3	**6V-8723**	1	ELBOW	
		3	**3K-0360**	1	SEAL-O-RING	
		3	**6V-8397**	1	SEAL-O-RING	
	65	2	*148-8381*	2	ELBOW AS	
					(EACH INCLUDES)	
		2	**8T-5429**	1	ELBOW	
		2	**3D-2824**	1	SEAL-O-RING	
		2	**6V-8398**	1	SEAL-O-RING	

366-3382 **LINES GP-HYDRAULIC** ***(contd.)*** **i04025959**

NOTE	REF NO	GRAPHIC REF	PART NUMBER	QTY	PART NAME 1 2 3 4 5 6 (PRODUCT LEVEL)	SEE PAGE
	66	4	*148-8427*	2	TEE AS	
					(EACH INCLUDES)	
		4	**8T-6895**	1	TEE-UNION	
		4	**6V-8398**	3	SEAL-O-RING	
	67	2	*148-8444*	2	TEE AS-SWIVEL	
					(EACH INCLUDES)	
		2	**6V-9837**	1	TEE-SWIVEL	
		2	**6V-8398**	2	SEAL-O-RING	
	68	3	*150-4048*	1	ELBOW AS	
		3	**6V-8722**	1	ELBOW	
		3	**3K-0360**	1	SEAL-O-RING	
		3	**7J-9108**	1	SEAL-O-RING	
	69	2	*164-5573*	2	UNION AS	
					(EACH INCLUDES)	
		2	**6V-8738**	1	UNION	
		2	**6V-8398**	1	SEAL-O-RING	
		2	**7J-9108**	1	SEAL-O-RING	
	70	3,4	*164-5605*	3	CONNECTOR AS	
					(EACH INCLUDES)	
		3,4	**8T-0076**	1	CONNECTOR	
		3,4	**3K-0360**	1	SEAL-O-RING	
		3,4	**6V-8397**	1	SEAL-O-RING	
	71	3	*164-5608*	1	CONNECTOR AS	
		3	**8T-1687**	1	CONNECTOR	
		3	**3K-0360**	1	SEAL-O-RING	
		3	**6V-8398**	1	SEAL-O-RING	
	72	1,2,3	**1S-0994**	12	CLIP	
	73	3	*204-0317*	1	CONNECTOR AS	
		3	**092-3635**	1	CONNECTOR	
		3	**3K-0360**	1	SEAL-O-RING	
		3	**6V-8397**	1	SEAL-O-RING	
	74	1	**205-6716**	2	SPACER (10.5X20X19-MM THK)	
Y	75	3	**260-6502**	1	SWIVEL GP (CIRCLE DRIVE)	701
	76	2	**272-4851**	1	TUBE AS	
	77	2	**272-4852**	1	TUBE AS	
I	78	2	**302-8926**	1	HOSE AS	
	79	3	**3B-4628**	2	PIN-COTTER	
	80	2,4	**3E-4321**	6	CLIP	
	81	4	**5K-1094**	2	LOCKWASHER	
	82	3	**5P-3860**	1	CLAMP-HOSE	
	83	2,4	**6D-4244**	5	CLIP	
	84	2	**6D-4636**	1	CLIP	
	85	2	**6K-8178**	2	CLIP	
	86	4	**6V-8398**	10	SEAL-O-RING	
	87	4	**6V-9169**	2	NUT-BULKHEAD (13/16-16-THD)	
	88	4	**7K-1181**	2	STRAP-CABLE	
	89	2	**7W-5672**	2	PIPE	
	90	2	**7X-7729**	3	WASHER (11X25X3-MM THK)	
	91	3	**8D-9092**	1	PIN	
	92	2	**8D-9671**	2	CLIP	
M	93	1	**8T-0389**	4	LOCKNUT (M10X1.5-THD)	
	94	1,2,3, 4	**8T-4121**	45	WASHER-HARD (11X21X2.5-MM THK)	
M	95	2,3,4	**8T-4133**	9	NUT (M10X1.5-THD)	
M	96	1,2,3	**8T-4136**	7	BOLT (M10X1.5X25-MM)	
M	97	1,2,3, 4	**8T-4137**	10	BOLT (M10X1.5X20-MM)	
M	98	3,4	**8T-4172**	2	BOLT (M10X1.5X80-MM)	
M	99	1	**8T-4182**	2	BOLT (M10X1.5X45-MM)	
M	100	3,4	**8T-4185**	2	BOLT (M10X1.5X50-MM)	

366-3382 **LINES GP-HYDRAULIC** *(contd.)* **i04025959**

NOTE	REF NO	GRAPHIC REF	PART NUMBER	QTY	PART NAME 1 2 3 4 5 6 (PRODUCT LEVEL)	SEE PAGE
M	101	1,2,4	**8T-4191**	3	BOLT (M10X1.5X16-MM)	
M	102	2,3,4	**8T-4195**	7	BOLT (M10X1.5X30-MM)	
M	103	2	**8T-4198**	2	BOLT (M10X1.5X100-MM)	
	104	2,3	**8T-4223**	6	WASHER-HARD (13.5X25.5X3-MM THK)	
M	105	3	**8T-4648**	4	BOLT (M12X1.75X70-MM)	
	106	3	**8T-4994**	2	WASHER-HARD (20X36.5X3.5-MM THK)	
M	107	2	**8T-5001**	2	BOLT (M12X1.75X130-MM)	
	108	2	**9X-8250**	3	CLIP	

I-REFER TO HYDRAULIC INFORMATION SYSTEM
M-METRIC PART
Y-SEPARATE ILLUSTRATION

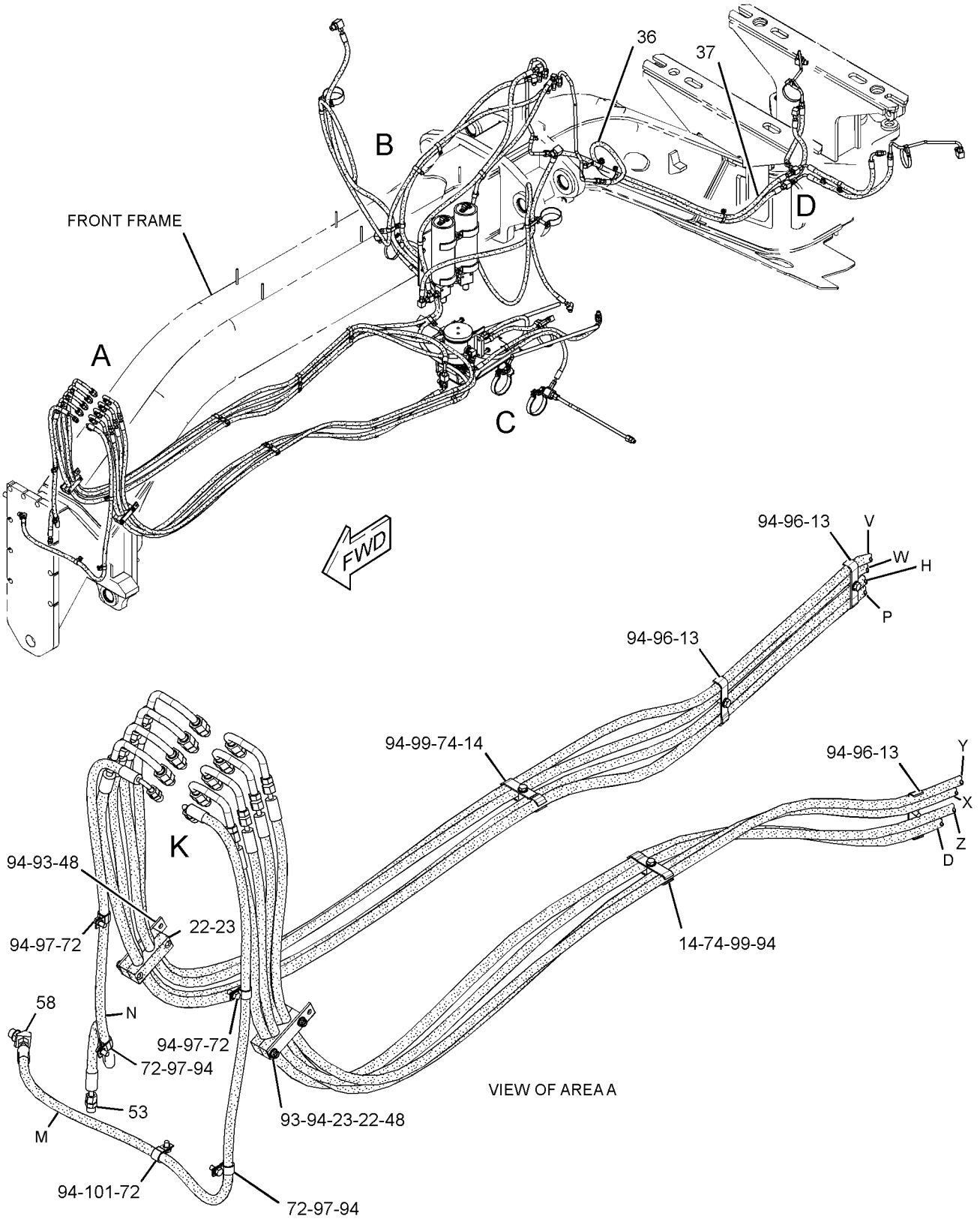

REFER TO ALL ILLUSTRATIONS OF THIS GROUP FOR AUXILIARY VIEWS

GRAPHIC #1

g02216715

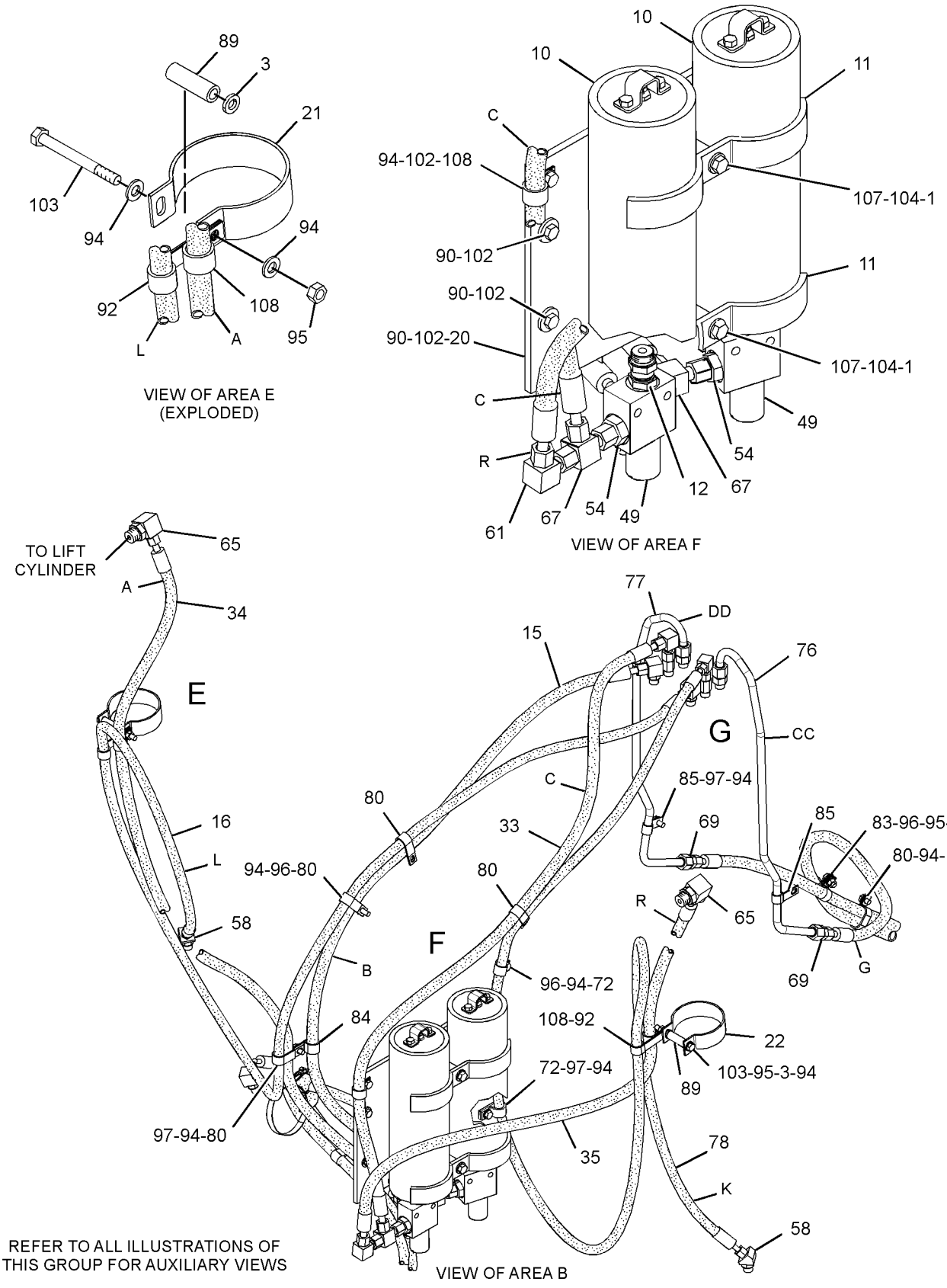

GRAPHIC #2

g02216716

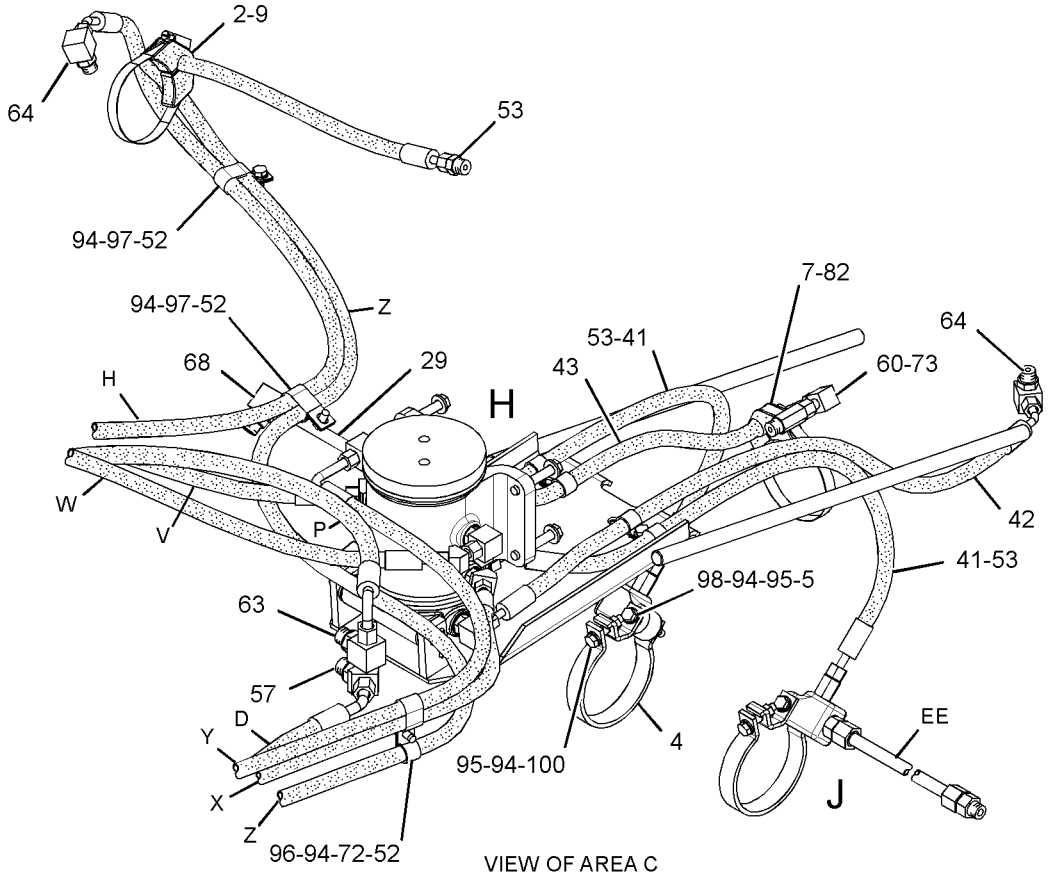

VIEW OF AREA C

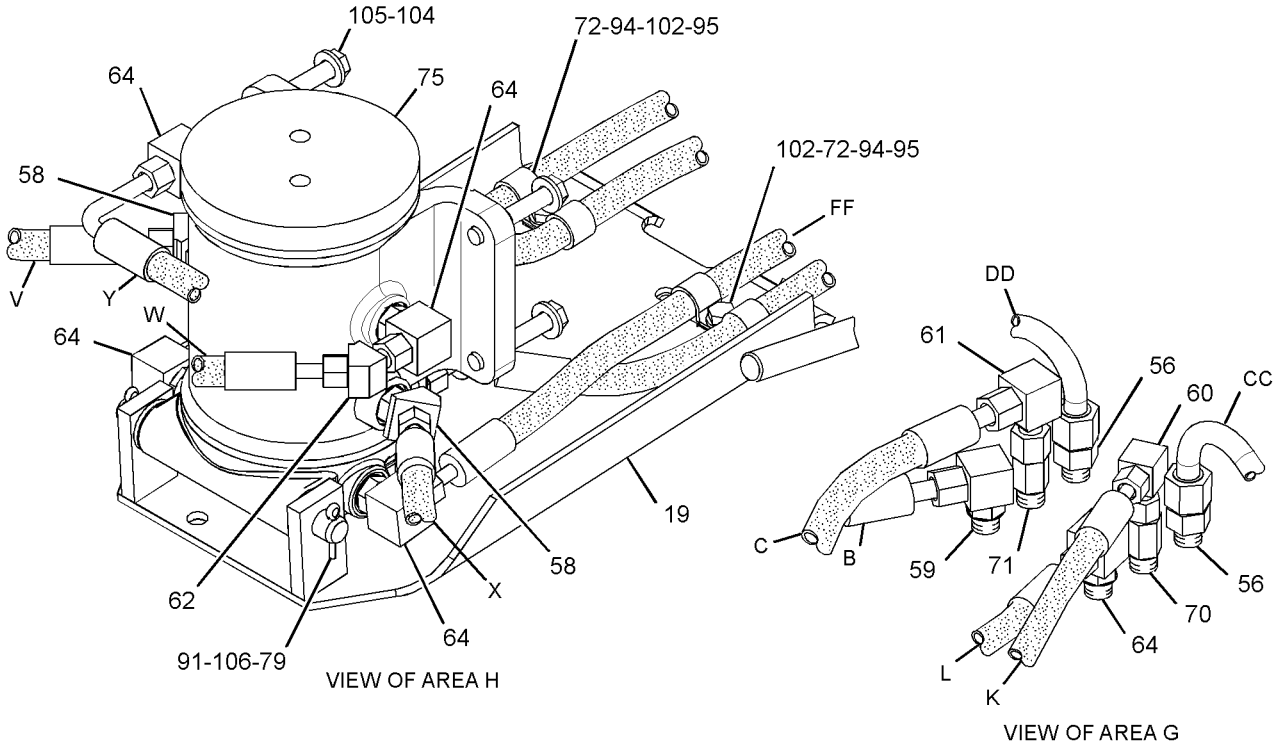

VIEW OF AREA H

VIEW OF AREA G

GRAPHIC #3

g02216717

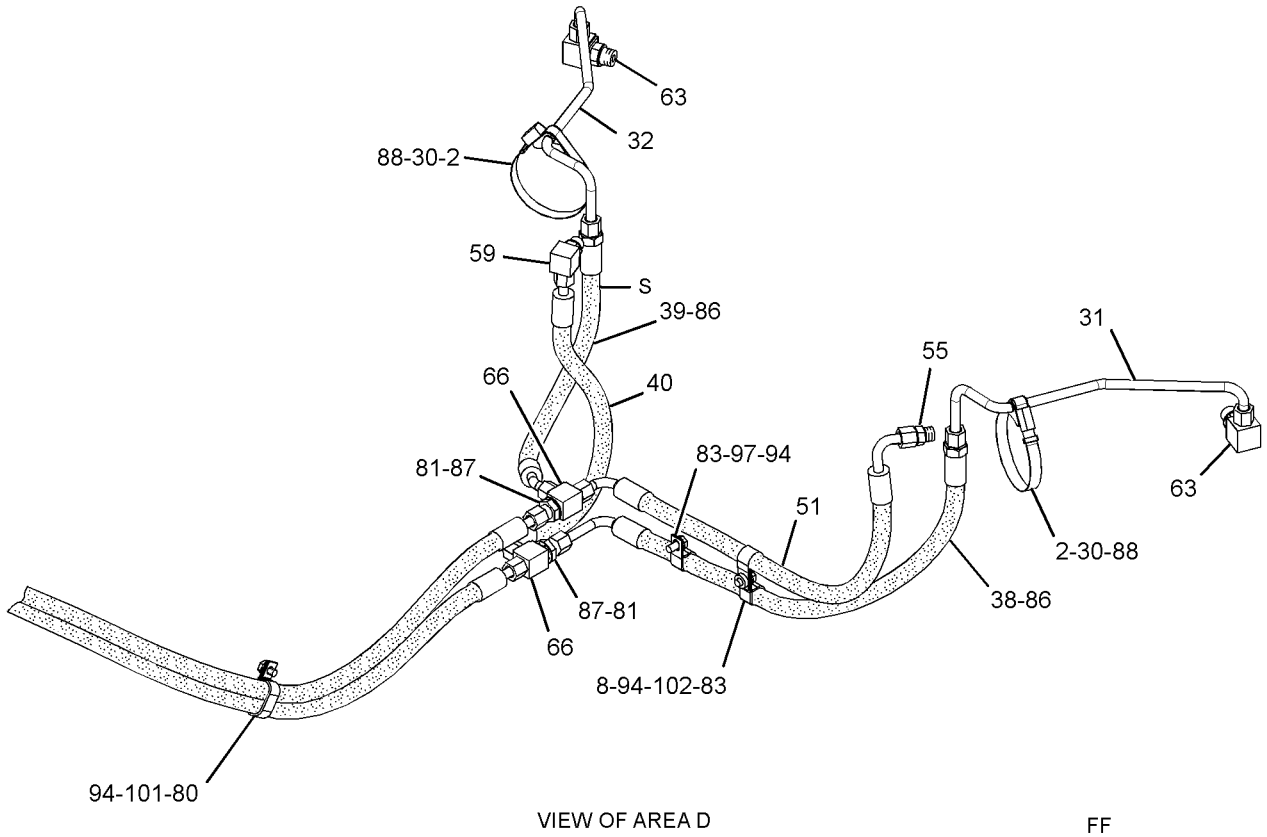

VIEW OF AREA D

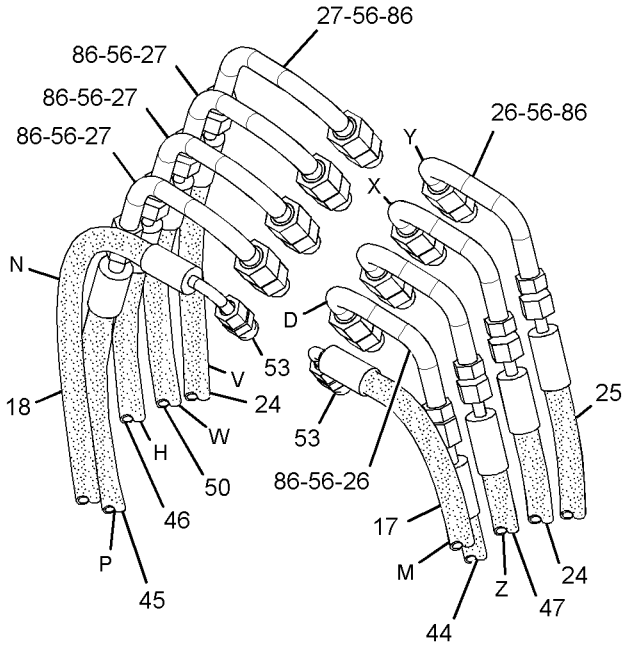

VIEW OF AREA K

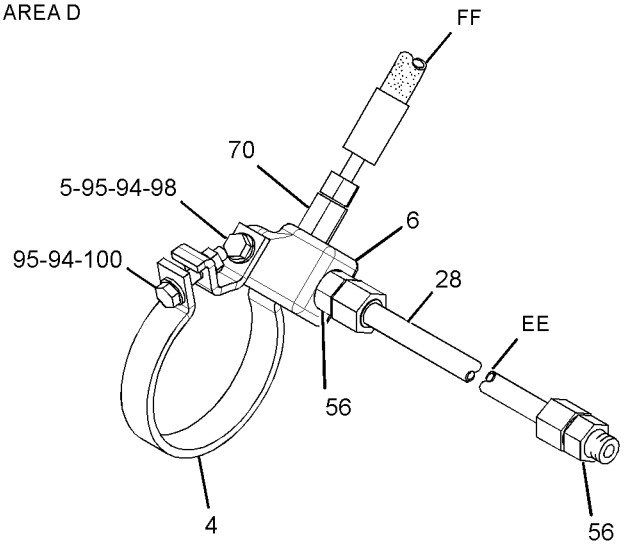

VIEW OF AREA J

GRAPHIC #4 **<END>** g02216718

HYDRAULIC SYSTEM

332-3946 LINES GP-HYDRAULIC FAN

S/N: R9J1-UP

PART OF 349-2555 COMMON AR

SMCS-1386, 1387, 5057 **i04012610**

NOTE	REF NO	GRAPHIC REF	PART NUMBER	QTY	PART NAME 1 2 3 4 5 6 (PRODUCT LEVEL)	SEE PAGE
	1	1	**6V-0852**	1	CAP-DUST	
	2	1	*180-9286*	1	TEE AS	
		1	**3D-2824**	1	SEAL-O-RING	
		1	**3E-2345**	1	TEE-O-RING	
		1	**6V-9746**	1	SEAL-O-RING	
CY	3	1	**353-2604**	1	MANIFOLD GP-CONTROL (BRAKE, HYDRAULIC FAN)	682
	4	1	**287-2141**	1	PLATE AS	
I	5	1	**287-5775**	1	HOSE AS	
I	6	1	**287-5776**	1	HOSE AS	
	7	1	**287-6431**	1	TUBE AS	
I	8	1	**287-6608**	1	HOSE AS	
I	9	1	**287-6609**	1	HOSE AS	
I	10	1	**332-6968**	1	HOSE AS	
	11	1	*148-8315*	1	CONNECTOR AS	
		1	**2M-9780**	1	SEAL-O-RING	
		1	**6V-8642**	1	CONNECTOR	
		1	**7J-9108**	1	SEAL-O-RING	
	12	1	*148-8322*	1	CONNECTOR AS	
		1	**2M-9780**	1	SEAL-O-RING	
		1	**6V-8640**	1	CONNECTOR	
		1	**6V-9746**	1	SEAL-O-RING	
	13	1	*148-8336*	1	CONNECTOR AS	
		1	**3J-1907**	1	SEAL-O-RING	
		1	**6V-8397**	1	SEAL-O-RING	
		1	**6V-8636**	1	CONNECTOR	
	14	1	*148-8360*	1	ELBOW AS	
		1	**6V-9182**	1	ELBOW	
		1	**6V-9746**	1	SEAL-O-RING	
		1	**7M-8485**	1	SEAL-O-RING	
	15	1	*148-8361*	2	ELBOW AS	
					(EACH INCLUDES)	
		1	**3J-7354**	1	SEAL-O-RING	
		1	**6V-8397**	1	SEAL-O-RING	
		1	**6V-9200**	1	ELBOW	
	16	1	*148-8365*	1	ELBOW AS	
		1	**3J-1907**	1	SEAL-O-RING	
		1	**6V-8398**	1	SEAL-O-RING	
		1	**8T-6876**	1	ELBOW	
	17	1	*148-8414*	1	REDUCER AS	
		1	**6V-8943**	1	REDUCER	
		1	**7J-9108**	1	SEAL-O-RING	
	18	1	*148-8446*	1	TEE AS-SWIVEL	
		1	**6V-9838**	1	TEE-SWIVEL	
		1	**7J-9108**	2	SEAL-O-RING	
	19	1	*164-5561*	1	ADAPTER AS	
		1	**2M-9780**	1	SEAL-O-RING	
		1	**5P-1042**	1	ADAPTER-O-RING	
	20	1	*164-5567*	1	COUPLER AS-QUICK DISCONNECT (MALE)	
		1	**6V-3965**	1	FITTING (QUICK DISCONNECT)	
		1	**214-7568**	1	SEAL-O-RING	
C	21	1	**9D-1829**	2	CLIP	
	22	1	**4J-5267**	1	SEAL-O-RING	
	23	1	**5K-5338**	3	CLIP	
	24	1	**6D-4244**	5	CLIP	
	25	1	**6V-1889**	2	CLIP	
	26	1	**6V-9746**	1	SEAL-O-RING	

332-3946 LINES GP-HYDRAULIC FAN *(contd.)* i04012610

NOTE	REF NO	GRAPHIC REF	PART NUMBER	QTY	PART NAME 1 2 3 4 5 6 (PRODUCT LEVEL)	SEE PAGE
	27	1	**7C-6921**	1	SPACER (11X20X22.8-MM THK)	
	28	1	**7X-7729**	2	WASHER (11X25X3-MM THK)	
	29	1	**8C-3205**	2	FLANGE-HALF	
	30	1	**8T-4121**	19	WASHER-HARD (11X21X2.5-MM THK)	
M	31	1	**8T-4133**	4	NUT (M10X1.5-THD)	
CM	32	1	**8T-4136**	1	BOLT (M10X1.5X25-MM)	
CM	33	1	**8T-4137**	3	BOLT (M10X1.5X20-MM)	
M	34	1	**8T-4195**	1	BOLT (M10X1.5X30-MM)	
M	35	1	**8T-4196**	8	BOLT (M10X1.5X35-MM)	
CM	36	1	**8T-5436**	1	BOLT (M10X1.5X130-MM)	
M	37	1	**8T-6466**	1	BOLT (M10X1.5X60-MM)	
CM	38	1	**7X-2544**	1	BOLT (M10X1.5X104-MM)	

C-CHANGE FROM PREVIOUS TYPE
I-REFER TO HYDRAULIC INFORMATION SYSTEM
M-METRIC PART
Y-SEPARATE ILLUSTRATION

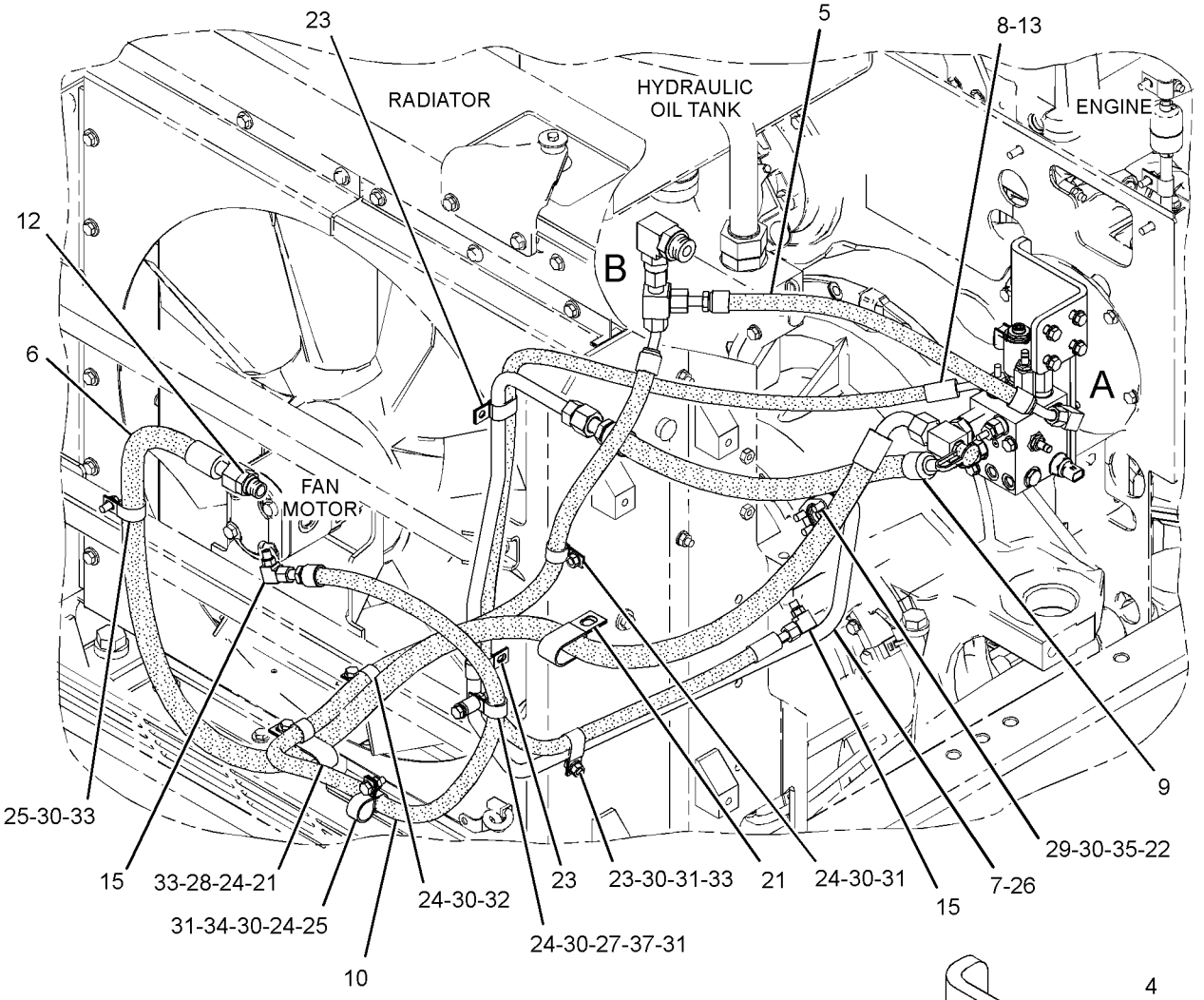

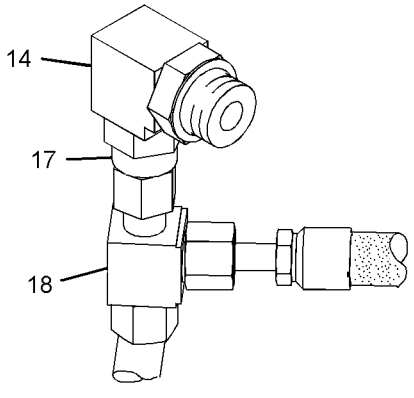

VIEW OF AREA B

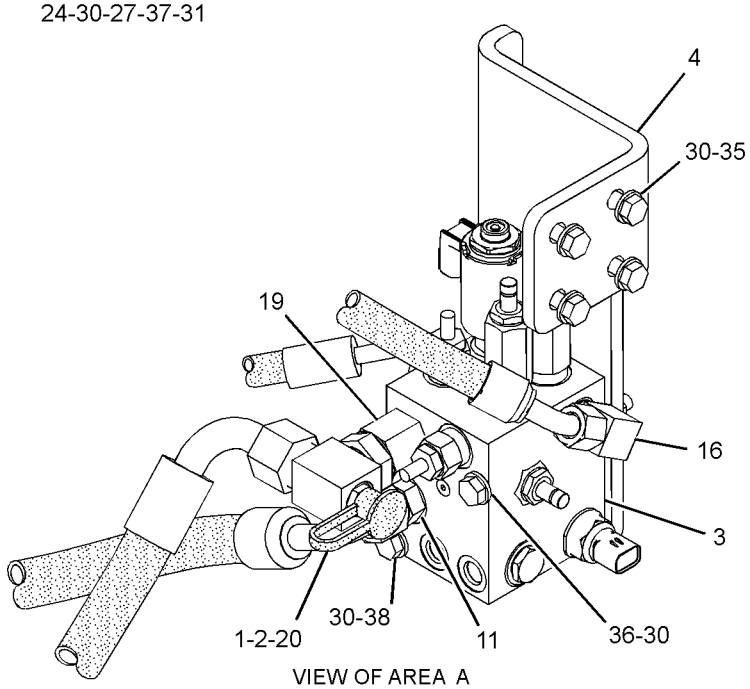

VIEW OF AREA A

GRAPHIC #1 **<END>** g02236719

HYDRAULIC SYSTEM

331-7005 LINES GP-HYDRAULIC OIL COOLER

S/N: R9J1-UP

PART OF 349-2555 COMMON AR

SMCS-1374, 5057 **i03317348**

NOTE	REF NO	GRAPHIC REF	PART NUMBER	QTY	PART NAME 1 2 3 4 5 6 (PRODUCT LEVEL)	SEE PAGE
I	1	1	**147-3069**	1	HOSE AS	
	2	1	**266-1595**	1	VALVE GP-CHECK	
		1	**5K-9090**	1	SEAL-O-RING	
		1	**7M-8485**	1	SEAL-O-RING	
	3	1	**291-1348**	1	BLOCK	
I	4	1	**294-0115**	1	HOSE AS	
I	5	1	**295-1965**	1	HOSE AS	
	6	1	**295-1969**	1	PLATE AS	
	7	1	**308-6308**	1	PLATE	
	8	1	**323-7293**	1	CORE AS-OIL COOLER (HYDRAULIC)	
	9	1	**331-7007**	1	TUBE AS	
	10	1	*148-8347*	2	ELBOW AS	
					(EACH INCLUDES)	
		1	**6V-9007**	1	ELBOW	
		1	**3D-2824**	1	SEAL-O-RING	
		1	**6V-9746**	1	SEAL-O-RING	
	11	1	*148-8362*	1	ELBOW AS	
		1	**8T-6684**	1	ELBOW	
		1	**3D-2824**	1	SEAL-O-RING	
		1	**5K-9090**	1	SEAL-O-RING	
	12	1	*148-8411*	1	PLUG AS	
		1	**9S-4185**	1	PLUG-O-RING	
		1	**3K-0360**	1	SEAL-O-RING	
	13	1	*148-8431*	1	TEE AS	
		1	**6V-8785**	1	TEE	
		1	**5K-9090**	2	SEAL-O-RING	
		1	**7M-8485**	1	SEAL-O-RING	
	14	1	*164-5649*	1	ELBOW AS	
		1	**141-1301**	1	ELBOW	
		1	**5K-9090**	1	SEAL-O-RING	
		1	**7M-8485**	1	SEAL-O-RING	
	15	1	**190-4885**	1	SPACER (11X22X50-MM THK)	
	16	1	**3D-2824**	1	SEAL-O-RING	
	17	1	**6V-5258**	1	ADAPTER	
	18	1	**7X-7729**	4	WASHER (11X25X3-MM THK)	
	19	1	**8T-4121**	9	WASHER-HARD (11X21X2.5-MM THK)	
M	20	1	**8T-4136**	4	BOLT (M10X1.5X25-MM)	
M	21	1	**8T-4178**	2	BOLT (M10X1.5X90-MM)	
M	22	1	**8T-4195**	6	BOLT (M10X1.5X30-MM)	
M	23	1	**8T-5005**	1	BOLT (M10X1.5X70-MM)	

I-REFER TO HYDRAULIC INFORMATION SYSTEM
M-METRIC PART

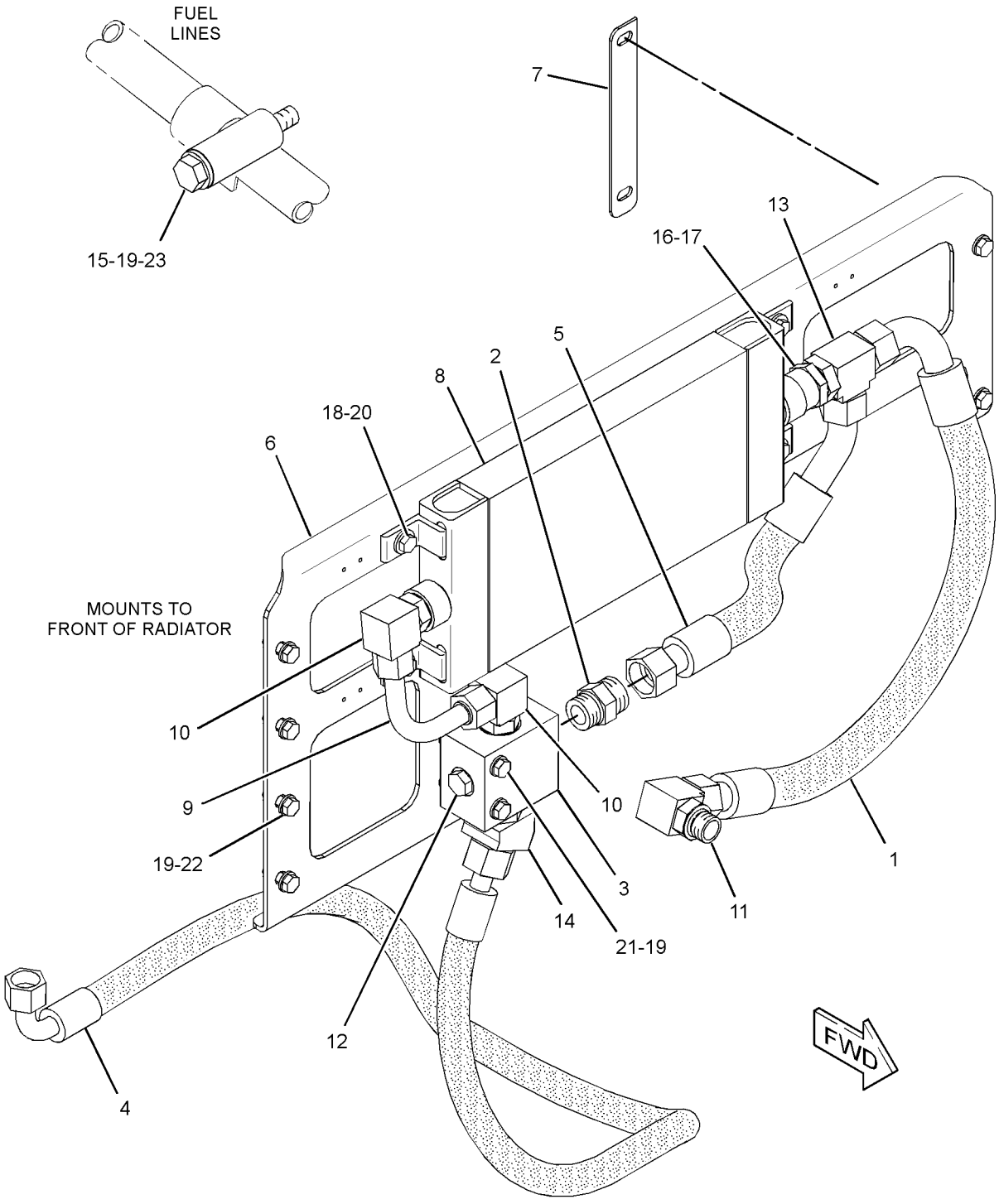

GRAPHIC #1 **<END>** g01925121

HYDRAULIC SYSTEM

282-8870 LINES GP-PUMP–STEERING

S/N: R9J1-UP
PART OF 356-3071 OPTION AR-MACHINE
AN ATTACHMENT

SMCS-5057 **i04033216**

NOTE	REF NO	GRAPHIC REF	PART NUMBER	QTY	PART NAME 1 2 3 4 5 6 (PRODUCT LEVEL)	SEE PAGE
	1	2	**5D-1026**	1	CLAMP-BAND	
	2	2	**5P-4868**	2	CLAMP-HOSE	
	3	3	**6N-6984**	2	MOUNT-RUBBER	
	4	1	**6R-7605**	1	VALVE-SHUTTLE	
	5	2	**6V-0852**	1	CAP-DUST	
	6	2	**7V-8532**	1	SPACER	
	7	3	**125-1836**	1	CONNECTOR	
	8	2	**148-8443**	1	TEE AS	
		2	**7X-2459**	1	TEE-O-RING	
		2	**3J-1907**	1	SEAL-O-RING	
		2	**6V-8397**	1	SEAL-O-RING	
	9	2	*165-2273*	1	VALVE GP-SHUTOFF	
		2	**6V-7238**	1	VALVE-SHUTOFF	
		2	**3K-0360**	1	SEAL-O-RING	
	10	1,2	*177-1061*	2	ELBOW AS	
					(EACH INCLUDES)	
		1,2	**142-0038**	1	ELBOW	
		1,2	**5K-9090**	1	SEAL-O-RING	
	11	3	*184-2420*	1	ADAPTER AS	
		3	**3E-7401**	1	ADAPTER	
		3	**6V-8397**	1	SEAL-O-RING	
Y	12	3	**191-9784**	1	FILTER GP-OIL (STEERING LINES)	591
	13	3	**193-9230**	1	VALVE GP-CHECK	
		3	**3D-2824**	1	SEAL-O-RING	
		3	**6V-9746**	1	SEAL-O-RING	
	14	2	**246-3352**	1	TUBE AS	
	15	1	*250-1420*	2	CONNECTOR AS	
					(EACH INCLUDES)	
		1	**250-1419**	1	CONNECTOR	
		1	**3K-0360**	1	SEAL-O-RING	
		1	**7J-9108**	1	SEAL-O-RING	
	16	1	**250-5615**	1	TUBE AS	
	17	1	**324-6331**	1	TUBE AS	
	18	1	**250-5617**	1	TUBE AS	
	19	1	**250-5623**	1	TUBE AS	
	20	3	**250-5624**	1	TUBE AS	
	21	1	**324-6330**	1	TUBE AS	
	22	2	**250-5629**	1	HOSE	
I	23	2	**250-5631**	1	HOSE AS	
I	24	2	**250-5634**	1	HOSE AS	
E	25	1	**215-8057**		SEAL (57-CM EACH)	
	26	2	**254-4476**	1	BRACKET AS	
	27	3	**254-4486**	1	BLOCK	
	28	3	**254-9934**	1	PLATE AS	
	29	3	**255-0683**	1	PLATE	
	30	3	**255-0685**	1	PLATE	
	31	3	**255-0686**	1	PLATE	
	32	2	**255-0688**	1	PLATE	
	33	3	**255-0689**	1	PLATE	
	34	3	**255-3631**	1	VALVE GP-CHECK	
		3	**2S-4078**	1	SEAL-O-RING	
		3	**6V-8400**	1	SEAL-O-RING	
	35	3	**255-5955**	1	PLATE	
	36	3	**255-5956**	1	PLATE	
	37	2	**255-5958**	1	PLATE	

282-8870 **LINES GP-PUMP** *(contd.)* **i04033216**

NOTE	REF NO	GRAPHIC REF	PART NUMBER	QTY	PART NAME 1 2 3 4 5 6 (PRODUCT LEVEL)	SEE PAGE
	38	3	**255-5962**	1	BLOCK	
	39	1	**259-7428**	1	TUBE AS	
CY	40	3	**353-2605**	1	MANIFOLD GP-CONTROL (IMPLEMENT, STEERING)	684
	41	3	**266-8804**	1	PLATE	
	42	1	**268-1647**	1	ELBOW	
	43	1	**270-6892**	1	BLOCK	
	44	1	**270-6893**	1	BLOCK	
	45	3	**270-6894**	1	BLOCK	
	46	2	**270-6906**	1	BLOCK	
	47	2	**270-7603**	1	PLATE AS	
	48	3	**271-3555**	1	TUBE AS	
	49	1	**271-3556**	1	TUBE AS	
	50	1	**271-3557**	1	TUBE AS	
	51	1	**345-2888**	1	TUBE AS	
I	52	2	**271-3560**	1	HOSE AS	
	53	2	**271-3565**	1	PLATE AS	
	54	2	**271-3570**	1	PLATE	
	55	2	**271-3571**	1	PLATE	
	56	2	**271-3608**	1	BRACKET AS	
	57	2	**271-3609**	1	BRACKET AS	
I	58	3	**109-9771**	1	HOSE AS	
	59	3	**271-4942**	1	BLOCK	
	60	3	**271-4943**	1	BLOCK	
	61	2	**271-7835**	1	BLOCK	
	62	3	**271-8632**	1	TUBE AS	
	63	3	**272-5366**	1	PLATE	
I	64	3	**272-5577**	1	HOSE AS	
	65	2	**283-0124**	1	PLATE AS	
	66	2	**283-0742**	1	TUBE AS	
I	67	2	**283-0743**	1	HOSE AS	
	68	3	**286-4455**	1	PLATE AS	
	69	3	**286-4526**	1	BRACKET AS	
	70	3	**286-4527**	1	BRACKET AS	
	71	2	**286-4605**	1	PLATE AS	
	72	2	**286-8175**	1	TUBE AS	
I	73	2	**286-8177**	1	HOSE AS	
	74	3	**286-9145**	1	BLOCK	
	75	3	**286-9146**	1	BLOCK	
	76	3	**286-9147**	1	BLOCK	
	77	3	**286-9148**	1	BLOCK	
	78	3	**286-9149**	1	BLOCK	
	79	2	**286-9786**	1	BLOCK	
	80	2	**286-9787**	1	BLOCK	
	81	2	**286-9788**	1	BLOCK	
	82	2	**286-9789**	1	BLOCK	
	83	3	**287-3079**	1	BLOCK	
	84	3	**287-3080**	1	BLOCK	
	85	3	**287-3081**	1	BLOCK	
	86	2	**287-3082**	1	BLOCK	
	87	2	**287-3083**	1	BLOCK	
	88	2	**287-3084**	1	BLOCK	
	89	3	**287-3204**	1	BLOCK	
	90	3	**287-3205**	1	BLOCK	
	91	3	**287-3206**	1	BLOCK	
	92	3	**287-3207**	1	BLOCK	
	93	3	**287-3208**	1	BLOCK	
	94	2	**287-7112**	1	TUBE AS	
I	95	3	**289-4018**	1	HOSE AS	
	96	3	**289-4234**	1	PLATE AS	

282-8870 **LINES GP-PUMP** *(contd.)* **i04033216**

NOTE	REF NO	GRAPHIC REF	PART NUMBER	QTY	PART NAME 1 2 3 4 5 6 (PRODUCT LEVEL)	SEE PAGE
	97	1	**289-6280**	2	BLOCK	
	98	1	**289-6297**	2	BLOCK	
	99	1	**296-5293**	3	PLATE AS	
	100	2	**315-7792**	1	TUBE AS	
M	101	1,2,3	**096-4883**	34	LOCKNUT (M10X1.5-THD)	
M	102	3	**096-9259**	4	BOLT (M14X2X60-MM)	
	103	3	*148-8315*	1	CONNECTOR AS	
		3	**6V-8642**	1	CONNECTOR	
		3	**2M-9780**	1	SEAL-O-RING	
		3	**7J-9108**	1	SEAL-O-RING	
	104	2	*148-8322*	1	CONNECTOR AS	
		2	**6V-8640**	1	CONNECTOR	
		2	**2M-9780**	1	SEAL-O-RING	
		2	**6V-9746**	1	SEAL-O-RING	
	105	3	*148-8323*	1	CONNECTOR AS	
		3	**6V-9875**	1	CONNECTOR	
		3	**2S-4078**	1	SEAL-O-RING	
		3	**5K-9090**	1	SEAL-O-RING	
	106	1	*148-8361*	1	ELBOW AS	
		1	**6V-9200**	1	ELBOW	
		1	**3J-7354**	1	SEAL-O-RING	
		1	**6V-8397**	1	SEAL-O-RING	
	107	2	*148-8327*	1	CONNECTOR AS	
		2	**6V-8637**	1	CONNECTOR	
		2	**3D-2824**	1	SEAL-O-RING	
		2	**6V-9746**	1	SEAL-O-RING	
	108	3	*148-8329*	1	CONNECTOR AS	
		3	**8T-6453**	1	CONNECTOR	
		3	**4K-1388**	1	SEAL-O-RING	
		3	**5K-9090**	1	SEAL-O-RING	
	109	2	*148-8333*	1	CONNECTOR AS	
		2	**8T-7927**	1	CONNECTOR	
		2	**6V-8400**	1	SEAL-O-RING	
		2	**7M-8485**	1	SEAL-O-RING	
	110	1	*148-8335*	6	CONNECTOR AS	
					(EACH INCLUDES)	
		1	**6V-8635**	1	CONNECTOR	
		1	**5K-9090**	1	SEAL-O-RING	
		1	**7M-8485**	1	SEAL-O-RING	
	111	1	*148-8336*	4	CONNECTOR AS	
					(EACH INCLUDES)	
		1	**6V-8636**	1	CONNECTOR	
		1	**3J-1907**	1	SEAL-O-RING	
		1	**6V-8397**	1	SEAL-O-RING	
	112	3	*148-8340*	2	CONNECTOR AS	
					(EACH INCLUDES)	
		3	**6V-8639**	1	CONNECTOR	
		3	**3K-0360**	1	SEAL-O-RING	
		3	**6V-8398**	1	SEAL-O-RING	
	113	3	*148-8342*	1	CONNECTOR AS	
		3	**6V-8632**	1	CONNECTOR	
		3	**3K-0360**	1	SEAL-O-RING	
		3	**7J-9108**	1	SEAL-O-RING	
	114	1	*148-8353*	1	ELBOW AS	
		1	**6V-9001**	1	ELBOW	
		1	**3J-1907**	1	SEAL-O-RING	
		1	**6V-8397**	1	SEAL-O-RING	
	115	3	*148-8382*	1	ELBOW AS	
		3	**8T-0404**	1	ELBOW	

282-8870 **LINES GP-PUMP** *(contd.)* **i04033216**

NOTE	REF NO	GRAPHIC REF	PART NUMBER	QTY	PART NAME 1 2 3 4 5 6 (PRODUCT LEVEL)	SEE PAGE
		3	**3D-2824**	1	SEAL-O-RING	
		3	**7J-9108**	1	SEAL-O-RING	
	116	2	*148-8387*	1	ELBOW AS	
		2	**6V-9855**	1	ELBOW	
		2	**6V-8400**	1	SEAL-O-RING	
	117	2	*148-8390*	1	ELBOW AS	
		2	**6V-8626**	1	ELBOW	
		2	**2M-9780**	1	SEAL-O-RING	
		2	**7J-9108**	1	SEAL-O-RING	
	118	1,3	*148-8393*	2	ELBOW AS	
					(EACH INCLUDES)	
		1,3	**6V-9852**	1	ELBOW	
		1,3	**7J-9108**	1	SEAL-O-RING	
	119	2,3	*148-8411*	2	PLUG AS	
					(EACH INCLUDES)	
		2,3	**9S-4185**	1	PLUG-O-RING	
		2,3	**3K-0360**	1	SEAL-O-RING	
	120	3	*148-8444*	1	TEE AS-SWIVEL	
		3	**6V-9837**	1	TEE-SWIVEL	
		3	**6V-8398**	2	SEAL-O-RING	
	121	1	*148-8446*	1	TEE AS-SWIVEL	
		1	**6V-9838**	1	TEE-SWIVEL	
		1	**7J-9108**	2	SEAL-O-RING	
	122	3	*148-8449*	1	TEE AS-SWIVEL	
		3	**6V-9839**	1	TEE-SWIVEL	
		3	**6V-9746**	2	SEAL-O-RING	
	123	1	*150-3033*	1	ELBOW AS	
		1	**8T-0164**	1	ELBOW	
		1	**3J-1907**	1	SEAL-O-RING	
		1	**4J-5477**	1	SEAL-O-RING	
	124	1	*150-4031*	2	TEE AS	
					(EACH INCLUDES)	
		1	**6V-9845**	1	TEE-SWIVEL	
		1	**7J-9108**	3	SEAL-O-RING	
	125	1	*150-4048*	1	ELBOW AS	
		1	**6V-8722**	1	ELBOW	
		1	**3K-0360**	1	SEAL-O-RING	
		1	**7J-9108**	1	SEAL-O-RING	
	126	2	*153-6232*	1	ELBOW AS	
		2	**8T-0120**	1	ELBOW	
		2	**3D-2824**	1	SEAL-O-RING	
		2	**7J-9108**	1	SEAL-O-RING	
	127	1	*153-6256*	1	ELBOW AS	
		1	**8C-7563**	1	ELBOW	
		1	**7J-9108**	1	SEAL-O-RING	
	128	2	**154-2302**	4	SPACER (11X20X15-MM THK)	
	129	1,3	*156-4282*	2	REDUCER AS	
					(EACH INCLUDES)	
		1,3	**6V-8938**	1	REDUCER-O-RING	
		1,3	**6V-8397**	1	SEAL-O-RING	
	130	2	**164-5567**	1	COUPLER AS-QUICK DISCONNECT (MALE)	
		2	**6V-3965**	2	FITTING (QUICK DISCONNECT)	
		2	**3J-1907**	1	SEAL-O-RING	
	131	1	*164-5570*	1	UNION AS	
		1	**6V-8730**	1	UNION (FACE SEAL)	
		1	**6V-8397**	2	SEAL-O-RING	
	132	3	*164-5615*	1	ELBOW AS	
		3	**8T-8986**	1	ELBOW	
		3	**4K-1388**	1	SEAL-O-RING	

282-8870 **LINES GP-PUMP** *(contd.)* **i04033216**

NOTE	REF NO	GRAPHIC REF	PART NUMBER	QTY	PART NAME 1 2 3 4 5 6 (PRODUCT LEVEL)	SEE PAGE
		3	**5K-9090**	1	SEAL-O-RING	
	133	3	*164-8908*	1	CONNECTOR AS	
		3	**8T-0077**	1	CONNECTOR	
		3	**3K-0360**	1	SEAL-O-RING	
		3	**6V-8398**	1	SEAL-O-RING	
	134	2	*171-6723*	1	ELBOW AS	
		2	**8T-8899**	1	ELBOW	
		2	**6V-9746**	1	SEAL-O-RING	
	135	3	*212-1336*	1	TEE AS	
		3	**6V-8783**	1	TEE-FACE SEAL	
		3	**2M-9780**	1	SEAL-O-RING	
		3	**7J-9108**	2	SEAL-O-RING	
I	136	2	**300-8591**	1	HOSE AS	
	137	1	**1P-3704**	1	SEAL-RECTANGULAR	
	138	3	**1P-3705**	1	SEAL-RECTANGULAR	
	139	2	**1P-4578**	2	FLANGE-HALF	
	140	2	**1S-0994**	2	CLIP	
	141	3	**2M-9780**	1	SEAL-O-RING	
	142	3	**3K-0360**	1	SEAL-O-RING	
	143	1	**4J-0520**	2	SEAL-O-RING	
	144	2	**4J-0522**	2	SEAL-O-RING	
	145	1,2	**4K-8864**	2	CLIP	
	146	3	**4S-1962**	1	CLIP	
	147	2	**4S-4455**	2	CLIP	
	148	2	**5H-8848**	1	SEAL-O-RING	
	149	1,2	**5K-9090**	2	SEAL-O-RING	
	150	1,2,3	**6D-4244**	3	CLIP	
	151	1	**6J-7035**	1	FLANGE	
	152	3	**6V-8765**	4	WASHER-HARD (15X26X3-MM THK)	
	153	3	**6V-9168**	1	NUT (11/16-16-THD)	
	154	2	**6V-9746**	1	SEAL-O-RING	
	155	2	**7D-7233**	2	CLIP	
	156	3	**8M-4069**	4	WASHER (10.3X38.1X5-MM THK)	
M	157	1	**8T-0341**	4	BOLT-SOCKET HEAD (M10X1.5X60-MM)	
	158	1,2,3	**8T-4121**	86	WASHER-HARD (11X21X2.5-MM THK)	
	159	2	**8T-4123**	2	WASHER (22X35X3.5-MM THK)	
M	160	2,3	**8T-4133**	3	NUT (M10X1.5-THD)	
M	161	1,2,3	**8T-4136**	13	BOLT (M10X1.5X25-MM)	
M	162	1,2,3	**8T-4137**	21	BOLT (M10X1.5X20-MM)	
M	163	3	**8T-4178**	2	BOLT (M10X1.5X90-MM)	
M	164	2,3	**8T-4186**	6	BOLT (M10X1.5X40-MM)	
M	165	3	**8T-4195**	1	BOLT (M10X1.5X30-MM)	
M	166	1	**8T-4196**	4	BOLT (M10X1.5X35-MM)	
	167	2	**8T-4223**	4	WASHER-HARD (13.5X25.5X3-MM THK)	
M	168	3	**8T-4779**	2	BOLT (M16X2X35-MM)	
M	169	2	**8T-4780**	2	BOLT (M20X2.5X30-MM)	
M	170	2	**8T-4956**	4	BOLT (M12X1.75X35-MM)	
M	171	2	**8T-5005**	4	BOLT (M10X1.5X70-MM)	
M	172	3	**8T-6408**	2	BOLT (M10X1.5X160-MM)	
	173	2,3	**8T-6703**	2	CLAMP-HOSE	
	174	1	**9S-1350**	1	CLIP	
	175	1,3	**9X-6581**	2	NUT-O-RING SEAL (1-14-THD)	
	176	3	**9X-8257**	3	WASHER (17.5X30X3.5-MM THK)	
G	177	2	**122-6871**		HOSE-HYDRAULIC (4.8-IN)	
G	178	3	**122-6908**		HOSE-HYDRAULIC (29-IN)	
	179	3	**7X-7729**	2	WASHER (11X25X3-MM THK)	
	180	3	**276-3596**	1	STUD	

C-CHANGE FROM PREVIOUS TYPE
E-ORDER BY THE CENTIMETER
G-ORDER BY THE INCH
I-REFER TO HYDRAULIC INFORMATION SYSTEM
M-METRIC PART
Y-SEPARATE ILLUSTRATION

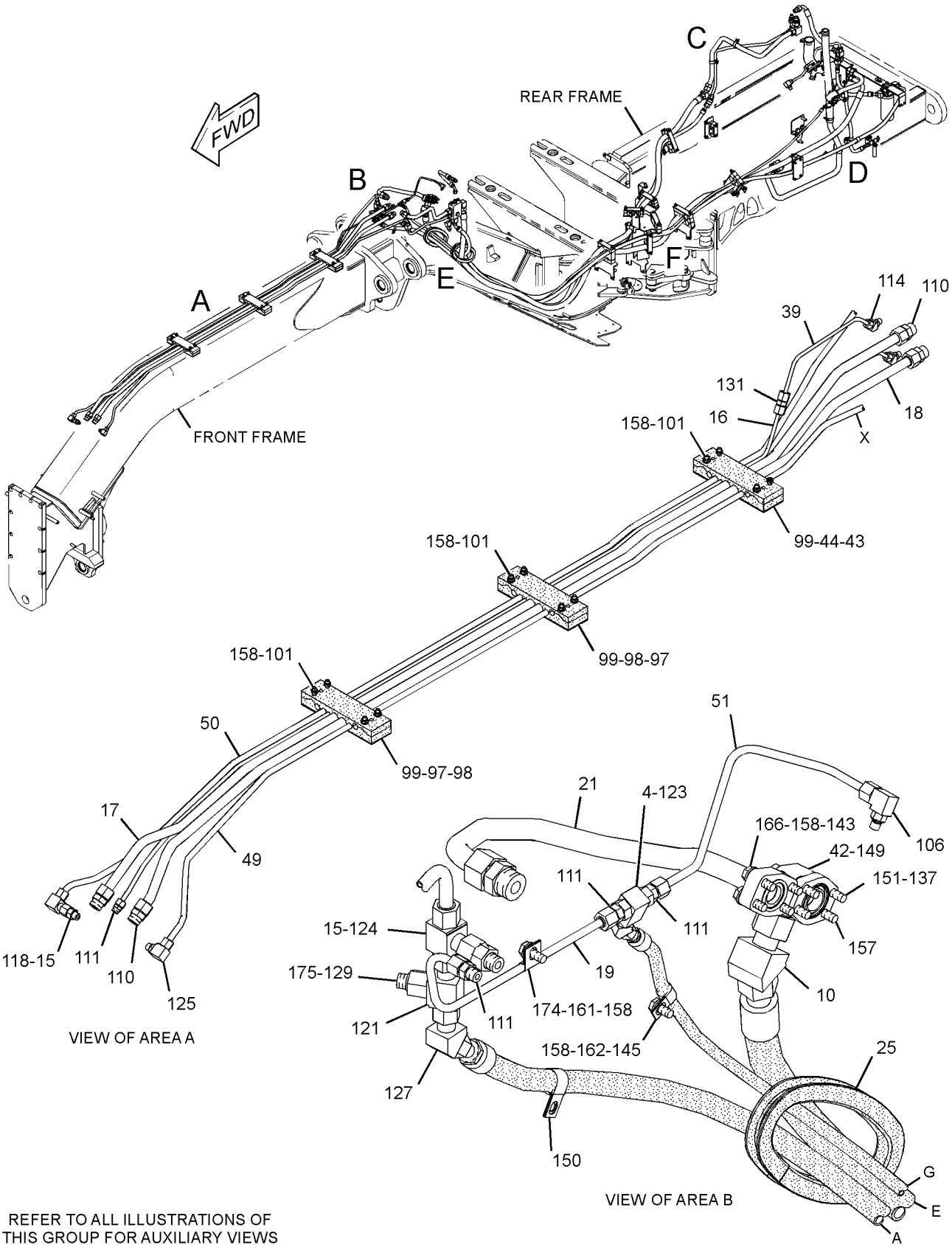

REFER TO ALL ILLUSTRATIONS OF
THIS GROUP FOR AUXILIARY VIEWS

GRAPHIC #1

g02157258

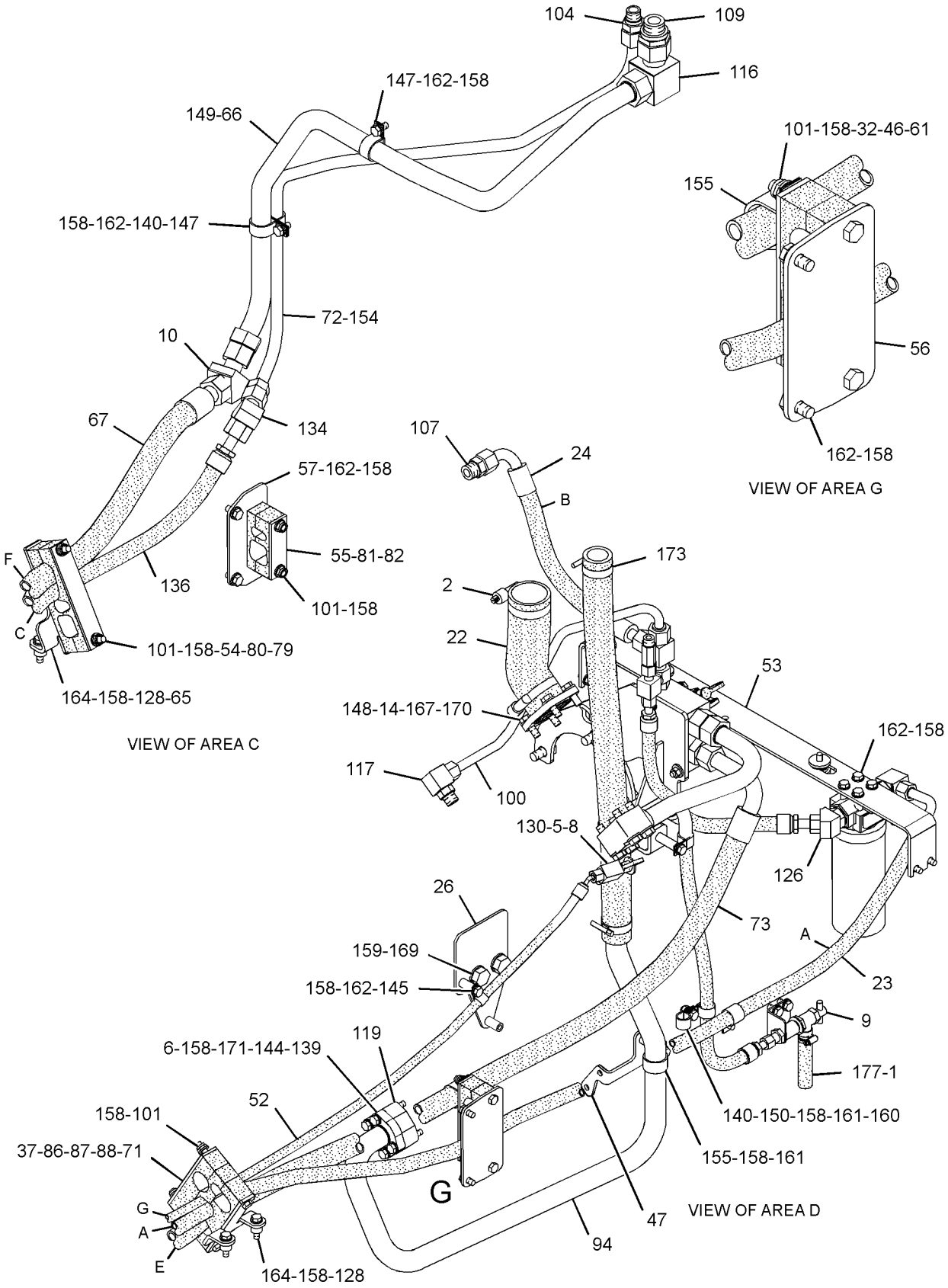

GRAPHIC #2

g01681436

282-8870 **LINES GP-PUMP** *(contd.)* **i04033216**

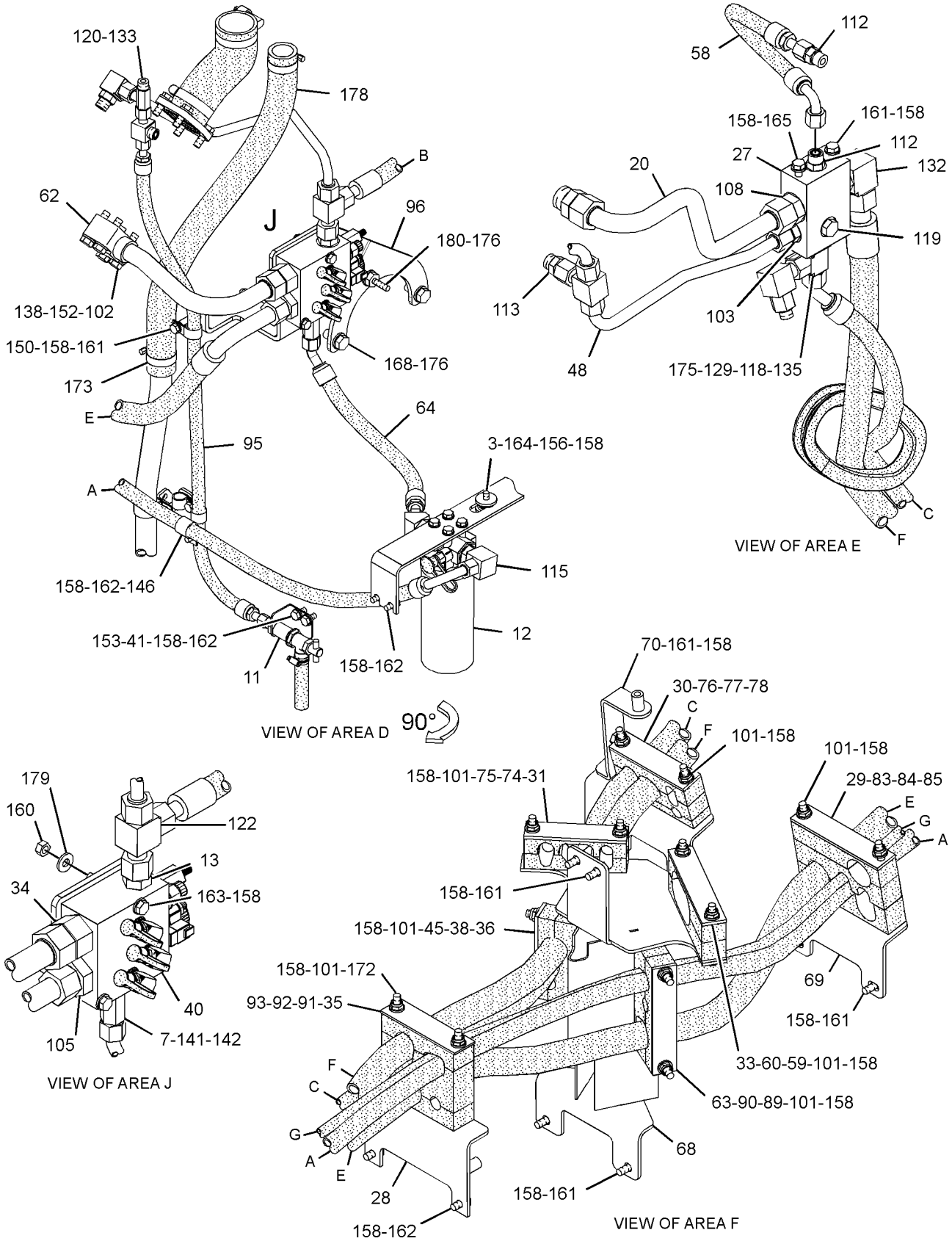

GRAPHIC #3 **<END>** g02157259

HYDRAULIC SYSTEM

351-8251 LINES GP-PUMP—STANDARD STEERING

S/N: R9J1-UP
PART OF 356-3072 OPTION AR-MACHINE
AN ATTACHMENT

SMCS-5057 **i03972501**

NOTE	REF NO	GRAPHIC REF	PART NUMBER	QTY	PART NAME 1 2 3 4 5 6 (PRODUCT LEVEL)	SEE PAGE
	1	1	**5D-1026**	1	CLAMP-BAND	
	2	1	**5P-4868**	2	CLAMP-HOSE	
	3	1	**6N-6984**	2	MOUNT-RUBBER	
	4	2	**6R-7605**	1	VALVE-SHUTTLE	
	5	1	**7V-8532**	1	SPACER	
I	6	2	**109-9771**	1	HOSE AS	
	7	1	**125-1836**	1	CONNECTOR	
	8	1	*148-8443*	1	TEE AS	
		1	**3J-1907**	1	SEAL-O-RING	
		1	**6V-8397**	1	SEAL-O-RING	
		1	**7X-2459**	1	TEE-O-RING	
	9	1	**165-2273**	1	VALVE GP-SHUTOFF	
		1	**3K-0360**	1	SEAL-O-RING	
		1	**6V-7238**	1	VALVE-SHUTOFF	
	10	1,2	*177-1061*	2	ELBOW AS	
					(EACH INCLUDES)	
		1,2	**5K-9090**	1	SEAL-O-RING	
		1,2	**142-0038**	1	ELBOW	
	11	1	*184-2420*	1	ADAPTER AS	
		1	**3E-7401**	1	ADAPTER	
		1	**6V-8397**	1	SEAL-O-RING	
Y	12	1	**191-9784**	1	FILTER GP-OIL	591
	13	1	**193-9230**	1	VALVE GP-CHECK	
	14	1	**246-3352**	1	TUBE AS	
	15	2	*250-1420*	2	CONNECTOR AS	
					(EACH INCLUDES)	
		2	**3K-0360**	1	SEAL-O-RING	
		2	**7J-9108**	1	SEAL-O-RING	
		2	**250-1419**	1	CONNECTOR	
	16	2	**250-5615**	1	TUBE AS	
	17	2	**250-5617**	1	TUBE AS	
	18	2	**250-5623**	1	TUBE AS	
	19	2	**250-5624**	1	TUBE AS	
	20	1	**250-5629**	1	HOSE	
I	21	1	**250-5631**	1	HOSE AS	
I	22	1	**250-5634**	1	HOSE AS	
	23	1	**254-4476**	1	BRACKET AS	
		1	**9R-6465**	2	BOSS	
	24	2	**254-4486**	1	BLOCK	
	25	2	**254-9934**	1	PLATE AS	
M		2	**9X-8487**	2	BOSS-WELD (M10X1.5X35-MM)	
	26	2	**255-0683**	1	PLATE	
	27	2	**255-0685**	1	PLATE	
	28	2	**255-0686**	1	PLATE	
	29	1	**255-0688**	1	PLATE	
	30	2	**255-0689**	1	PLATE	
	31	1	**255-3631**	1	VALVE GP-CHECK	
	32	2	**255-5955**	1	PLATE	
	33	2	**255-5956**	1	PLATE	
	34	2	**255-5958**	1	PLATE	
	35	2	**255-5962**	1	BLOCK	
	36	2	**259-7428**	1	TUBE AS	
	37	1	**266-8804**	1	PLATE	
	38	2	**268-1647**	1	ELBOW	
	39	2	**270-6892**	1	BLOCK	

351-8251 **LINES GP-PUMP** *(contd.)* **i03972501**

NOTE	REF NO	GRAPHIC REF	PART NUMBER	QTY	PART NAME 1 2 3 4 5 6 (PRODUCT LEVEL)	SEE PAGE
	40	2	**270-6893**	1	BLOCK	
	41	2	**270-6894**	1	BLOCK	
	42	1	**270-6906**	1	BLOCK	
	43	1	**270-7603**	1	PLATE AS	
M		1	**8C-8499**	1	BOSS-WELD (M10X1.5X50-MM)	
	44	2	**271-3555**	1	TUBE AS	
	45	2	**271-3556**	1	TUBE AS	
	46	2	**271-3557**	1	TUBE AS	
I	47	2	**271-3560**	1	HOSE AS	
	48	1	**271-3565**	1	PLATE AS	
M		1	**8T-3490**	1	NUT-WELD (M10X1.5-THD)	
	49	2	**271-3570**	1	PLATE	
	50	1	**271-3571**	1	PLATE	
	51	1	**271-3608**	1	BRACKET AS	
M		1	**8T-4178**	2	BOLT (M10X1.5X90-MM)	
	52	2	**271-4942**	1	BLOCK	
	53	2	**271-4943**	1	BLOCK	
	54	1	**271-7835**	1	BLOCK	
	55	1	**271-8632**	1	TUBE AS	
	56	2	**272-5366**	1	PLATE	
I	57	1	**272-5577**	1	HOSE AS	
	58	2	**283-0124**	1	PLATE AS	
M		2	**8T-4178**	2	BOLT (M10X1.5X90-MM)	
	59	1	**283-0742**	1	TUBE AS	
I	60	2	**283-0743**	1	HOSE AS	
	61	2	**286-4455**	1	PLATE AS	
M		2	**8T-4172**	2	BOLT (M10X1.5X80-MM)	
M		2	**8T-4178**	4	BOLT (M10X1.5X90-MM)	
M		2	**8T-4198**	2	BOLT (M10X1.5X100-MM)	
	62	2	**286-4526**	1	BRACKET AS	
M		2	**7X-2545**	1	BOLT (M10X1.5X150-MM)	
M		2	**8T-6408**	1	BOLT (M10X1.5X160-MM)	
	63	2	**286-4527**	1	BRACKET AS	
M		2	**8T-0355**	2	BOLT (M10X1.5X110-MM)	
M		2	**8T-3490**	1	NUT-WELD (M10X1.5-THD)	
M		2	**8T-3851**	1	BOSS-WELD (M10X1.5X17.5-MM)	
	64	2	**286-4605**	1	PLATE AS	
M		2	**7X-2544**	1	BOLT (M10X1.5X104-MM)	
M		2	**8T-5436**	1	BOLT (M10X1.5X130-MM)	
	65	1	**286-8175**	1	TUBE AS	
I	66	1	**286-8177**	1	HOSE AS	
	67	2	**286-9145**	1	BLOCK	
	68	2	**286-9146**	1	BLOCK	
	69	2	**286-9147**	1	BLOCK	
	70	2	**286-9148**	1	BLOCK	
	71	2	**286-9786**	1	BLOCK	
	72	2	**286-9787**	1	BLOCK	
	73	1	**286-9788**	1	BLOCK	
	74	1	**286-9789**	1	BLOCK	
	75	2	**287-3079**	1	BLOCK	
	76	2	**287-3080**	1	BLOCK	
	77	2	**287-3081**	1	BLOCK	
	78	2	**287-3082**	1	BLOCK	
	79	2	**287-3083**	1	BLOCK	
	80	2	**287-3084**	1	BLOCK	
	81	2	**287-3204**	1	BLOCK	
	82	2	**287-3205**	1	BLOCK	
	83	2	**287-3206**	1	BLOCK	
	84	2	**287-3207**	1	BLOCK	

351-8251 **LINES GP-PUMP** ***(contd.)*** **i03972501**

NOTE	REF NO	GRAPHIC REF	PART NUMBER	QTY	PART NAME 1 2 3 4 5 6 (PRODUCT LEVEL)	SEE PAGE
	85	2	**287-3208**	1	BLOCK	
	86	1	**287-7112**	1	TUBE AS	
I	87	1	**289-4018**	1	HOSE AS	
	88	1	**289-4234**		PLATE AS	
		1	**7T-1099**	1	LINK	
M		1	**8C-8499**	1	BOSS-WELD (M10X1.5X50-MM)	
M		1	**8T-6462**	1	BOSS-WELD (M10X1.5X25-MM OAL)	
	89	1	**289-6280**	2	BLOCK	
	90	1	**289-6297**	2	BLOCK	
	91	1,2	**296-5293**	3	PLATE AS	
		1,2	**9R-4764**	4	ROD	
	92	1	**315-7792**	1	TUBE AS	
	93	2	**324-6330**	1	TUBE AS	
	94	2	**324-6331**	1	TUBE AS	
	95	2	**345-2888**	1	TUBE AS	
Y	96	1	**353-2605**	1	MANIFOLD GP-CONTROL	684
	97	2	**230-7471**		SEAL (58-CM)	
	98	1	**361-4416**	1	BRACKET AS	
M		1	**8T-4172**	2	BOLT (M10X1.5X80-MM)	
M	99	1	**096-9259**	4	BOLT (M14X2X60-MM)	
	100	2	*148-8315*	1	CONNECTOR AS	
		2	**2M-9780**	1	SEAL-O-RING	
		2	**6V-8642**	1	CONNECTOR	
		2	**7J-9108**	1	SEAL-O-RING	
	101	1	*148-8322*	1	CONNECTOR AS	
		1	**2M-9780**	1	SEAL-O-RING	
		1	**6V-8640**	1	CONNECTOR	
		1	**6V-9746**	1	SEAL-O-RING	
	102	1	*148-8323*	1	CONNECTOR AS	
		1	**2S-4078**	1	SEAL-O-RING	
		1	**5K-9090**	1	SEAL-O-RING	
		1	**6V-9875**	1	CONNECTOR	
	103	1	*148-8327*	1	CONNECTOR AS	
		1	**3D-2824**	1	SEAL-O-RING	
		1	**6V-8637**	1	CONNECTOR	
		1	**6V-9746**	1	SEAL-O-RING	
	104	2	*148-8329*	1	CONNECTOR AS	
		2	**4K-1388**	1	SEAL-O-RING	
		2	**5K-9090**	1	SEAL-O-RING	
		2	**8T-6453**	1	CONNECTOR	
	105	1	*148-8333*	1	CONNECTOR AS	
		1	**6V-8400**	1	SEAL-O-RING	
		1	**7M-8485**	1	SEAL-O-RING	
		1	**8T-7927**	1	CONNECTOR	
	106	2	*148-8335*	6	CONNECTOR AS	
					(EACH INCLUDES)	
		2	**5K-9090**	1	SEAL-O-RING	
		2	**6V-8635**	1	CONNECTOR	
		2	**7M-8485**	1	SEAL-O-RING	
	107	2	*148-8336*	4	CONNECTOR AS	
					(EACH INCLUDES)	
		2	**3J-1907**	1	SEAL-O-RING	
		2	**6V-8397**	1	SEAL-O-RING	
		2	**6V-8636**	1	CONNECTOR	
	108	2	*148-8340*	2	CONNECTOR AS	
					(EACH INCLUDES)	
		2	**3K-0360**	1	SEAL-O-RING	
		2	**6V-8398**	1	SEAL-O-RING	
		2	**6V-8639**	1	CONNECTOR	

351-8251 **LINES GP-PUMP** *(contd.)* **i03972501**

NOTE	REF NO	GRAPHIC REF	PART NUMBER	QTY	PART NAME 1 2 3 4 5 6 (PRODUCT LEVEL)	SEE PAGE
	109	2	*148-8342*	1	CONNECTOR AS	
		2	**3K-0360**	1	SEAL-O-RING	
		2	**6V-8632**	1	CONNECTOR	
		2	**7J-9108**	1	SEAL-O-RING	
	110	2	*148-8353*	1	ELBOW AS	
		2	**3J-1907**	1	SEAL-O-RING	
		2	**6V-8397**	1	SEAL-O-RING	
		2	**6V-9001**	1	ELBOW	
	111	2	*148-8361*	1	ELBOW AS	
		2	**3J-7354**	1	SEAL-O-RING	
		2	**6V-8397**	1	SEAL-O-RING	
		2	**6V-9200**	1	ELBOW	
	112	1	*148-8382*	1	ELBOW AS	
		1	**3D-2824**	1	SEAL-O-RING	
		1	**7J-9108**	1	SEAL-O-RING	
		1	**8T-0404**	1	ELBOW	
	113	1	*148-8387*	1	ELBOW AS	
		1	**6V-8400**	1	SEAL-O-RING	
		1	**6V-9855**	1	ELBOW	
	114	1	*148-8390*	1	ELBOW AS	
		1	**2M-9780**	1	SEAL-O-RING	
		1	**6V-8626**	1	ELBOW	
		1	**7J-9108**	1	SEAL-O-RING	
	115	2	*148-8393*	2	ELBOW AS	
					(EACH INCLUDES)	
		2	**6V-9852**	1	ELBOW	
		2	**7J-9108**	1	SEAL-O-RING	
	116	1,2	*148-8411*	2	PLUG AS	
					(EACH INCLUDES)	
		1,2	**3K-0360**	1	SEAL-O-RING	
		1,2	**9S-4185**	1	PLUG-O-RING	
	117	1	*148-8444*	1	TEE AS-SWIVEL	
		1	**6V-8398**	2	SEAL-O-RING	
		1	**6V-9837**	1	TEE-SWIVEL	
	118	2	*148-8446*	1	TEE AS-SWIVEL	
		2	**6V-9838**	1	TEE-SWIVEL	
		2	**7J-9108**	2	SEAL-O-RING	
	119	1	*148-8449*	1	TEE AS-SWIVEL	
		1	**6V-9746**	2	SEAL-O-RING	
		1	**6V-9839**	1	TEE-SWIVEL	
	120	2	*150-3033*	1	ELBOW AS	
		2	**3J-1907**	1	SEAL-O-RING	
		2	**4J-5477**	1	SEAL-O-RING	
		2	**8T-0164**	1	ELBOW	
	121	2	*150-4031*	2	TEE AS	
					(EACH INCLUDES)	
		2	**6V-9845**	1	TEE-SWIVEL	
		2	**7J-9108**	2	SEAL-O-RING	
	122	2	*150-4048*	1	ELBOW AS	
		2	**3K-0360**	1	SEAL-O-RING	
		2	**6V-8722**	1	ELBOW	
		2	**7J-9108**	1	SEAL-O-RING	
	123	1	*153-6232*	1	ELBOW AS	
		1	**3D-2824**	1	SEAL-O-RING	
		1	**7J-9108**	1	SEAL-O-RING	
		1	**8T-0120**	1	ELBOW	
	124	2	*153-6256*	1	ELBOW AS	
		2	**7J-9108**	1	SEAL-O-RING	
		2	**8C-7563**	1	ELBOW	

351-8251 **LINES GP-PUMP** *(contd.)* **i03972501**

NOTE	REF NO	GRAPHIC REF	PART NUMBER	QTY	PART NAME 1 2 3 4 5 6 (PRODUCT LEVEL)	SEE PAGE
	125	2	**154-2302**	4	SPACER (11X20X15-MM THK)	
	126	2	*156-4282*	2	REDUCER AS	
					(EACH INCLUDES)	
		2	**6V-8397**	1	SEAL-O-RING	
		2	**6V-8938**	1	REDUCER-O-RING	
	127	1	*164-5567*	1	COUPLER AS-QUICK DISCONNECT (MALE)	
		1	**6V-3965**	1	FITTING (QUICK DISCONNECT)	
		1	**214-7568**	1	SEAL-O-RING	
	128	2	*164-5570*	1	UNION AS	
		2	**6V-8397**	2	SEAL-O-RING	
		2	**6V-8730**	1	UNION (FACE SEAL)	
	129	2	*164-5615*	1	ELBOW AS	
		2	**4K-1388**	1	SEAL-O-RING	
		2	**5K-9090**	1	SEAL-O-RING	
		2	**8T-8986**	1	ELBOW	
	130	1	*164-8908*	1	CONNECTOR AS	
		1	**3K-0360**	1	SEAL-O-RING	
		1	**6V-8398**	1	SEAL-O-RING	
		1	**8T-0077**	1	CONNECTOR	
	131	1	*171-6723*	1	ELBOW AS	
		1	**6V-9746**	1	SEAL-O-RING	
		1	**8T-8899**	1	ELBOW	
	132	2	*212-1336*	1	TEE AS	
		2	**2M-9780**	1	SEAL-O-RING	
		2	**6V-8783**	1	TEE-FACE SEAL	
		2	**7J-9108**	2	SEAL-O-RING	
	133	1	**276-3596**	1	STUD	
	134	2	**286-9149**	1	BLOCK	
I	135	2	**300-8591**	1	HOSE AS	
	136	2	**1P-3704**	1	SEAL-RECTANGULAR	
	137	1	**1P-3705**	1	SEAL-RECTANGULAR	
	138	1	**1P-4578**	2	FLANGE-HALF	
	139	1	**1S-0994**	2	CLIP	
	140	1	**2M-9780**	1	SEAL-O-RING	
	141	1	**3K-0360**	1	SEAL-O-RING	
	142	2	**4J-0520**	2	SEAL-O-RING	
	143	1	**4J-0522**	2	SEAL-O-RING	
	144	1,2	**4K-8864**	2	CLIP	
	145	1	**4S-1962**	1	CLIP	
	146	1	**4S-4455**	2	CLIP	
	147	1	**5H-8848**	1	SEAL-O-RING	
	148	1,2	**5K-9090**	2	SEAL-O-RING	
	149	1,2	**6D-4244**	3	CLIP	
	150	2	**6J-7035**	1	FLANGE	
	151	1	**6V-0852**	1	CAP-DUST	
	152	1	**6V-8765**	4	WASHER-HARD (15X26X3-MM THK)	
	153	1	**6V-9168**	1	NUT (11/16-16-THD)	
	154	1	**6V-9746**	1	SEAL-O-RING	
	155	1	**7D-7233**	2	CLIP	
	156	1	**7X-7729**	2	WASHER (11X25X3-MM THK)	
	157	1	**8M-4069**	4	WASHER (10.3X38.1X5-MM THK)	
M	158	2	**8T-0341**	4	BOLT-SOCKET HEAD (M10X1.5X60-MM)	
M	159	1,2	**8T-0389**	34	LOCKNUT (M10X1.5-THD)	
	160	1,2	**8T-4121**	86	WASHER-HARD (11X21X2.5-MM THK)	
	161	1	**8T-4123**	2	WASHER (22X35X3.5-MM THK)	
M	162	1	**8T-4133**	3	NUT (M10X1.5-THD)	
M	163	1,2	**8T-4136**	13	BOLT (M10X1.5X25-MM)	
M	164	1,2	**8T-4137**	21	BOLT (M10X1.5X20-MM)	
M	165	1	**8T-4178**	2	BOLT (M10X1.5X90-MM)	

351-8251 **LINES GP-PUMP** ***(contd.)*** **i03972501**

NOTE	REF NO	GRAPHIC REF	PART NUMBER	QTY	PART NAME 1 2 3 4 5 6 (PRODUCT LEVEL)	SEE PAGE
M	166	1,2	**8T-4186**	6	BOLT (M10X1.5X40-MM)	
M	167	2	**8T-4195**	1	BOLT (M10X1.5X30-MM)	
M	168	2	**8T-4196**	4	BOLT (M10X1.5X35-MM)	
	169	1	**8T-4223**	4	WASHER-HARD (13.5X25.5X3-MM THK)	
M	170	1	**8T-4779**	2	BOLT (M16X2X35-MM)	
M	171	1	**8T-4780**	2	BOLT (M20X2.5X30-MM)	
M	172	1	**8T-4956**	4	BOLT (M12X1.75X35-MM)	
M	173	1	**8T-5005**	4	BOLT (M10X1.5X70-MM)	
M	174	2	**8T-6408**	2	BOLT (M10X1.5X160-MM)	
	175	1	**8T-6703**	2	CLAMP-HOSE	
	176	2	**9S-1350**	1	CLIP	
	177	2	**9X-6581**	2	NUT-O-RING SEAL (1-14-THD)	
	178	1	**9X-8257**	3	WASHER (17.5X30X3.5-MM THK)	
G	179	1	**122-6871**		HOSE-HYDRAULIC (4.7-IN)	
G	180	1	**122-6908**		HOSE-HYDRAULIC (29-IN)	

G-ORDER BY THE INCH
I-REFER TO HYDRAULIC INFORMATION SYSTEM
M-METRIC PART
Y-SEPARATE ILLUSTRATION

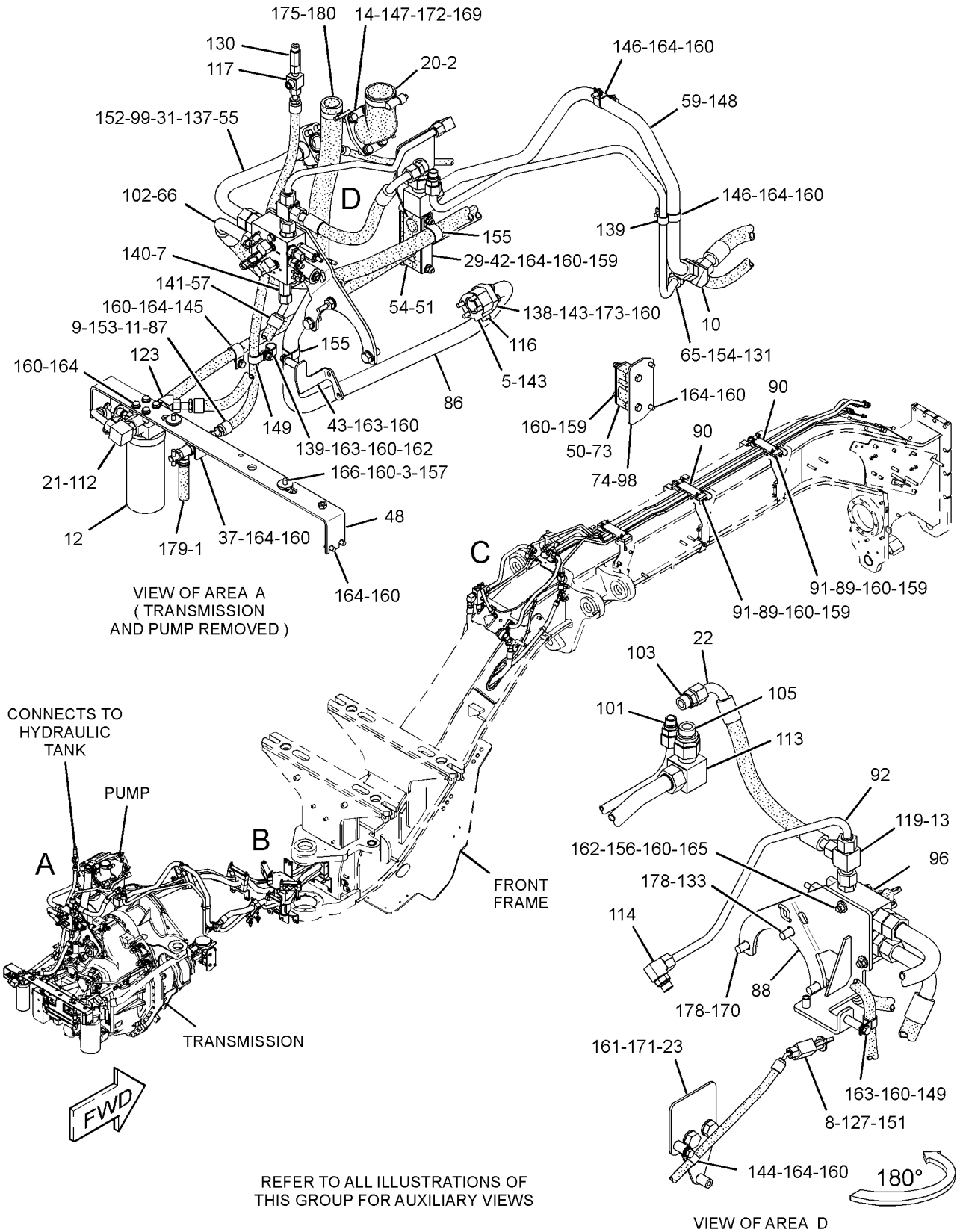

GRAPHIC #1

g02218593

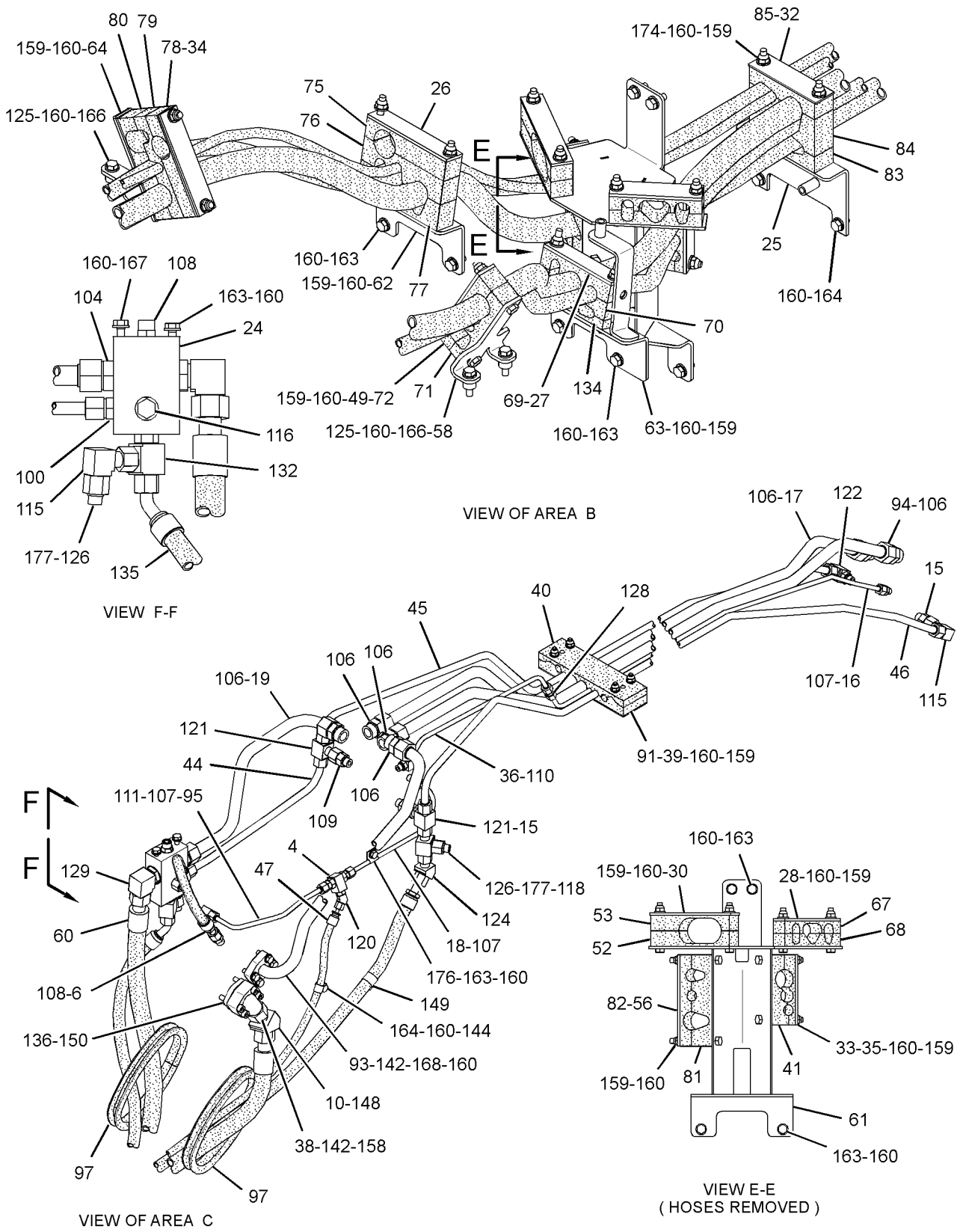

GRAPHIC #2 **<END>** g02218595

HYDRAULIC SYSTEM

259-6232 LINES GP-RIPPER

S/N: R9J1-UP
PART OF 257-3574, 291-4792 RIPPER AR
AN ATTACHMENT

SMCS-5057 **i02768603**

NOTE	REF NO	GRAPHIC REF	PART NUMBER	QTY	PART NAME 1 2 3 4 5 6 (PRODUCT LEVEL)	SEE PAGE
	1	1	*205-3692*	2	ELBOW AS	
					(EACH INCLUDES)	
		1	**2M-9780**	1	SEAL-O-RING	
		1	**6V-8397**	1	SEAL-O-RING	
		1	**9X-2134**	1	ELBOW (90-DEG)	
	2	1	**5P-7462**	1	CLIP (SLOT)	
	3	1	**5P-7463**	1	CLIP (TAB)	
	4	1	**6V-0683**	1	GROMMET	
I	6	1	**7I-4937**	1	HOSE AS	
I	7	1	**8W-2344**	1	HOSE AS	

I-REFER TO HYDRAULIC INFORMATION SYSTEM

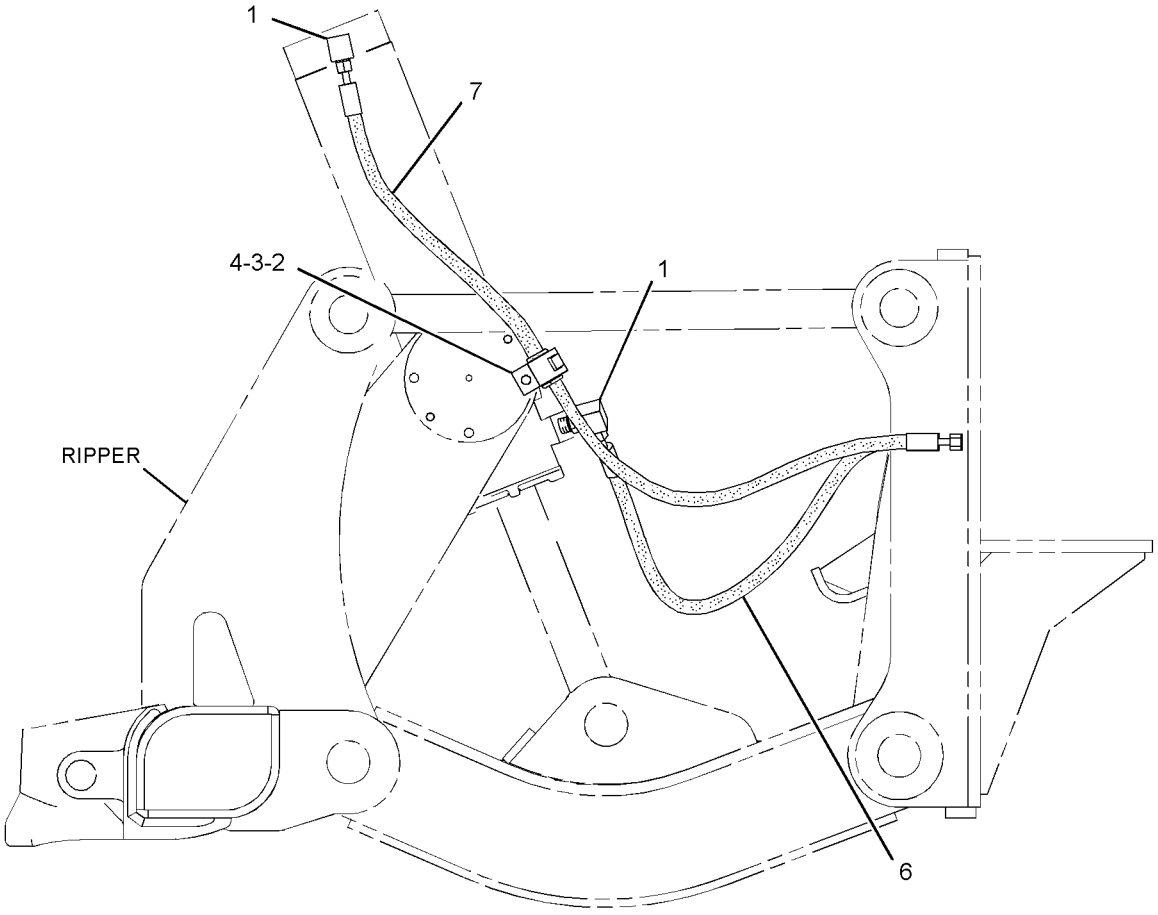

RIGHT SIDE VIEW

GRAPHIC #1 **<END>** g01395396

HYDRAULIC SYSTEM

282-8874 LINES GP-RIPPER

S/N: R9J1-UP

PART OF 252-4676, 351-2406, 351-2407, 351-2408, 351-2409, 351-2410, 351-2411, 351-2412 CONTROL AR-HYDRAULIC AN ATTACHMENT

SMCS-5057 **i02762696**

NOTE	REF NO	GRAPHIC REF	PART NUMBER	QTY	PART NAME 1 2 3 4 5 6 (PRODUCT LEVEL)	SEE PAGE
	1	1	*105-7167*	2	FITTING GP	
					(EACH INCLUDES)	
		1	**6V-8397**	2	SEAL-O-RING	
	2	1	**272-3134**	1	TUBE AS	
	3	1	**286-9437**	1	TUBE AS	
	4	1	*148-8342*	2	CONNECTOR AS	
					(EACH INCLUDES)	
		1	**3K-0360**	1	SEAL-O-RING	
		1	**6V-8632**	1	CONNECTOR	
		1	**7J-9108**	1	SEAL-O-RING	
I	5	1	**272-3133**	2	HOSE AS	
	6	1	**1S-0994**	2	CLIP	
	7	1	**6K-8178**	1	CLIP	
	8	1	**6V-8398**	2	SEAL-O-RING	
	9	1	**6V-9168**	2	NUT (11/16-16-THD)	
	10	1	**6V-9829**	2	CAP AS	
	11	1	**8T-4121**	3	WASHER-HARD (11X21X2.5-MM THK)	
	12	1	**111-9251**	2	WASHER-HARD (20X35X1.6-MM THK)	
M	13	1	**8T-4137**	3	BOLT (M10X1.5X20-MM)	
	14	1	**9M-8406**	1	CLIP	

I-REFER TO HYDRAULIC INFORMATION SYSTEM
M-METRIC PART

282-8874 **LINES GP-RIPPER** *(contd.)* **i02762696**

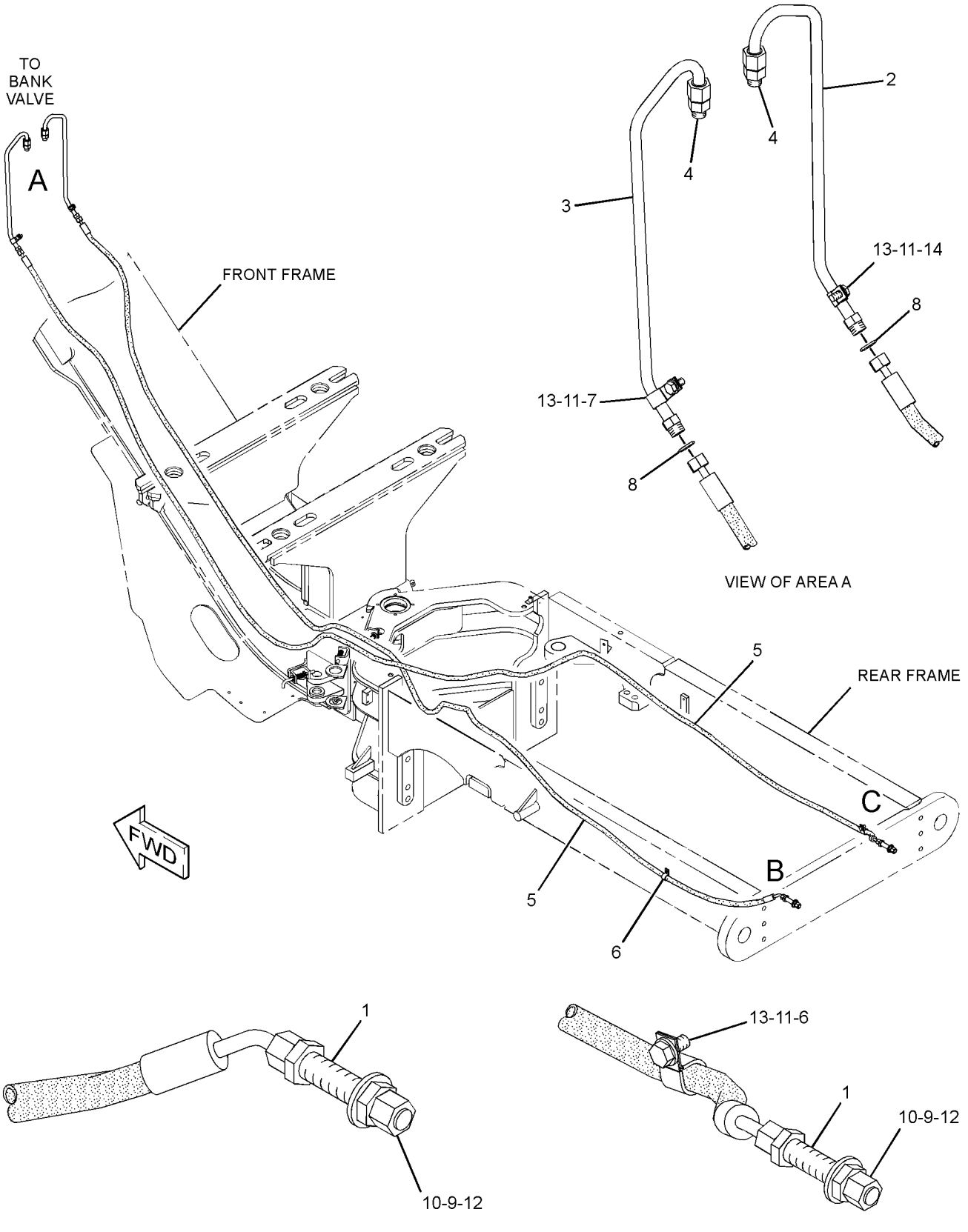

GRAPHIC #1 **<END>** g01302741

HYDRAULIC SYSTEM

282-8871 LINES GP-SECONDARY STEERING

S/N: R9J1-UP

PART OF 349-2555 COMMON AR

SMCS-4304 **i02848961**

NOTE	REF NO	GRAPHIC REF	PART NUMBER	QTY	PART NAME 1 2 3 4 5 6 (PRODUCT LEVEL)	SEE PAGE
	1	1	**9T-1013**	1	VALVE AS-CHECK	
		1	**3K-0360**	1	SEAL-O-RING	
		1	**6V-8398**	1	SEAL-O-RING	
	2	1	**9T-8071**	1	VALVE GP-RELIEF (SECONDARY STEERING)	
	3	1	*177-1061*	1	ELBOW AS	
		1	**142-0038**	1	ELBOW	
		1	**5K-9090**	1	SEAL-O-RING	
I	4	1	**287-7593**	1	HOSE AS	
I	5	1	**287-7594**	1	HOSE AS	
I	6	1	**287-7596**	1	HOSE AS	
	7	1	*148-8340*	1	CONNECTOR AS	
		1	**6V-8639**	1	CONNECTOR	
		1	**3K-0360**	1	SEAL-O-RING	
		1	**6V-8398**	1	SEAL-O-RING	
	8	1	*148-8354*	1	ELBOW AS	
		1	**6V-9002**	1	ELBOW	
		1	**3K-0360**	1	SEAL-O-RING	
		1	**6V-8398**	1	SEAL-O-RING	
	9	1	*148-8444*	1	TEE AS-SWIVEL	
		1	**6V-9837**	1	TEE-SWIVEL	
		1	**6V-8398**	2	SEAL-O-RING	
	10	1	*153-6230*	2	CONNECTOR AS	
					(EACH INCLUDES)	
		1	**8T-9386**	1	CONNECTOR	
		1	**2M-9780**	1	SEAL-O-RING	
		1	**5K-9090**	1	SEAL-O-RING	
	11	1	*153-6241*	1	ELBOW AS	
		1	**8C-8989**	1	ELBOW	
		1	**6V-8398**	1	SEAL-O-RING	
	12	1	*155-7321*	1	ADAPTER AS	
		1	**6V-1722**	1	ADAPTER-O-RING	
		1	**3D-2824**	1	SEAL-O-RING	
	13	1	*171-6728*	1	ELBOW AS	
		1	**8T-0249**	1	ELBOW	
		1	**3K-0360**	1	SEAL-O-RING	
	14	1	**3S-8665**	1	CLIP	
C	17	1	**7D-7233**	3	CLIP	
C	18	1	**8T-4121**	3	WASHER-HARD (11X21X2.5-MM THK)	
CM	19	1	**8T-4133**	1	NUT (M10X1.5-THD)	
M	20	1	**8T-4136**	1	BOLT (M10X1.5X25-MM)	
M	21	1	**8T-4137**	1	BOLT (M10X1.5X20-MM)	

C-CHANGE FROM PREVIOUS TYPE
I-REFER TO HYDRAULIC INFORMATION SYSTEM
M-METRIC PART

282-8871 **LINES GP-SECONDARY STEERING** *(contd.)* **i02848961**

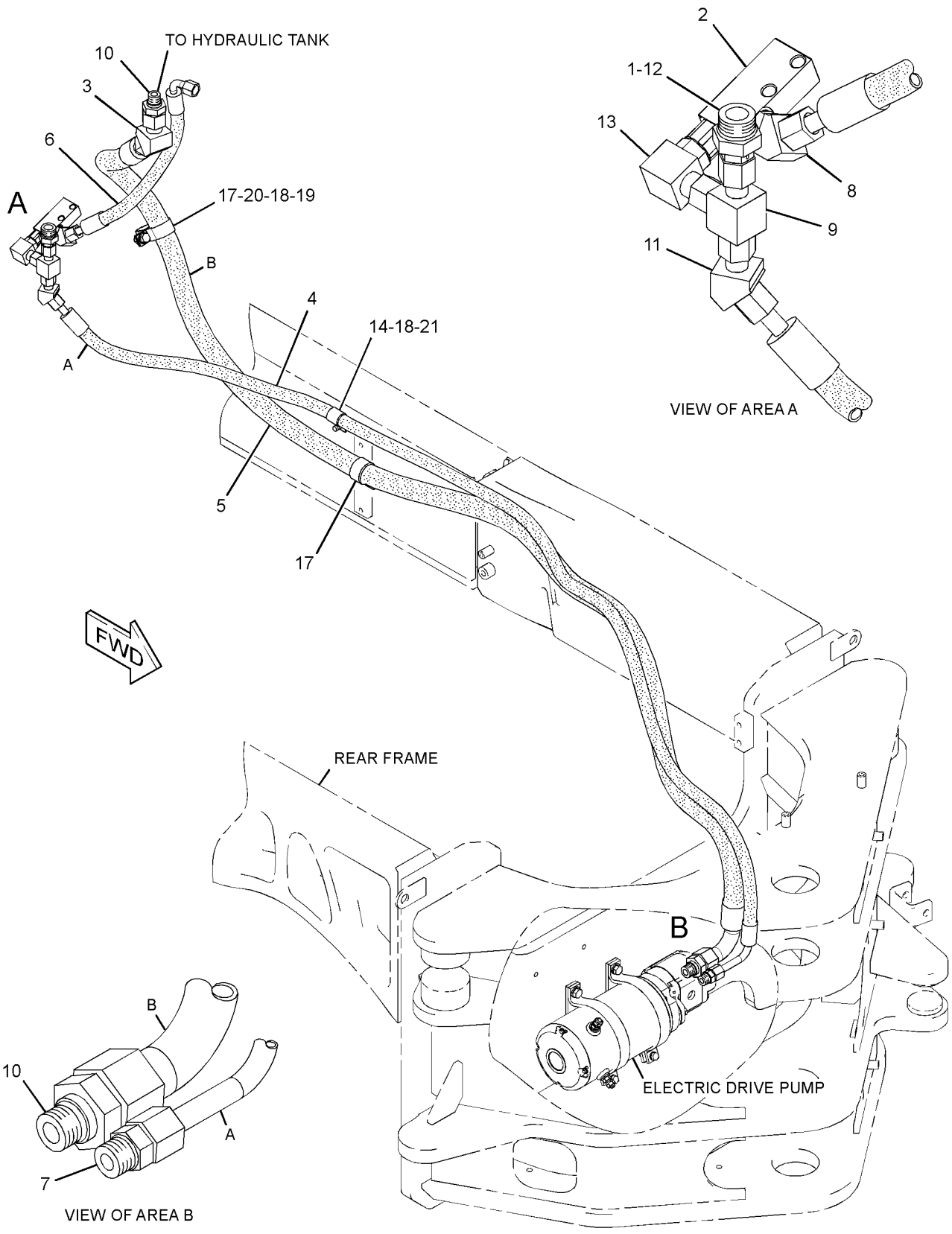

GRAPHIC #1 **<END>** g01434835

HYDRAULIC SYSTEM

344-7823 LINES GP-STEERING

S/N: R9J1-UP

PART OF 349-2555 COMMON AR

SMCS-4304 **i03850372**

NOTE	REF NO	GRAPHIC REF	PART NUMBER	QTY	PART NAME 1 2 3 4 5 6 (PRODUCT LEVEL)	SEE PAGE
	1	2	**5B-9627**	3	WASHER (10.3X19X5-MM THK)	
CI	2	2	**150-9044**	1	HOSE AS	
I	3	1	**165-8331**	1	HOSE AS	
	4	2	**249-7892**	1	TUBE AS	
	5	2	**249-7894**	1	TUBE AS	
Y	6	2	**254-3415**	1	MANIFOLD GP-CONTROL (STEERING)	680
CI	7	2	**262-5320**	1	HOSE AS	
	8	2	**267-0006**	1	PLATE	
	9	2	**272-5683**	1	TUBE AS	
	10	2	**272-5684**	1	TUBE AS	
	11	1	**289-5257**	1	TUBE AS	
	12	1	**289-5258**	1	TUBE AS	
	13	1	**289-5259**	1	TUBE AS	
	14	1	**289-5260**	1	TUBE AS	
I	15	1	**292-1370**	2	HOSE AS	
	16	2	*309-5127*	1	ELBOW AS	
		2	**152-3411**	1	ELBOW	
		2	**6V-8397**	1	SEAL-O-RING	
	17	2	*341-0118*	1	CONNECTOR AS	
		2	**341-0117**	1	CONNECTOR	
		2	**6V-8397**	1	SEAL-O-RING	
		2	**8T-7877**	1	SEAL-O-RING	
	18	2	**345-1871**	1	BRACKET AS	
M		2	**8T-3490**	2	NUT-WELD (M10X1.5-THD)	
	19	2	*345-3920*	1	CONNECTOR AS	
		2	**345-3919**	1	CONNECTOR	
		2	**3K-0360**	1	SEAL-O-RING	
		2	**6V-8398**	1	SEAL-O-RING	
Y	20	2	**345-4472**	1	VALVE GP-PRESSURE REDUCING	749
CI	21	2	**355-5200**	1	HOSE AS	
	22	2	*148-8318*	4	CONNECTOR AS	
					(EACH INCLUDES)	
		2	**6V-8634**	1	CONNECTOR	
		2	**3K-0360**	1	SEAL-O-RING	
		2	**6V-8397**	1	SEAL-O-RING	
	23	2	*148-8336*	3	CONNECTOR AS	
					(EACH INCLUDES)	
		2	**6V-8636**	1	CONNECTOR	
		2	**3J-1907**	1	SEAL-O-RING	
		2	**6V-8397**	1	SEAL-O-RING	
	24	1	*148-8340*	2	CONNECTOR AS	
					(EACH INCLUDES)	
		1	**6V-8639**	1	CONNECTOR	
		1	**3K-0360**	1	SEAL-O-RING	
		1	**6V-8398**	1	SEAL-O-RING	
	25	2	*148-8342*	1	CONNECTOR AS	
		2	**6V-8632**	1	CONNECTOR	
		2	**3K-0360**	1	SEAL-O-RING	
		2	**7J-9108**	1	SEAL-O-RING	
	26	1	*148-8346*	2	ELBOW AS	
					(EACH INCLUDES)	
		1	**8T-1686**	1	ELBOW	
		1	**3K-0360**	1	SEAL-O-RING	
		1	**6V-8398**	1	SEAL-O-RING	
	27	2	*148-8359*	1	ELBOW AS	
		2	**6V-9877**	1	ELBOW	

344-7823 **LINES GP-STEERING** *(contd.)* **i03850372**

NOTE	REF NO	GRAPHIC REF	PART NUMBER	QTY	PART NAME 1 2 3 4 5 6 (PRODUCT LEVEL)	SEE PAGE
		2	**3K-0360**	1	SEAL-O-RING	
		2	**6V-9746**	1	SEAL-O-RING	
C	28	2	*148-8367*	1	ELBOW AS	
		2	**6V-9850**	1	ELBOW	
		2	**6V-8397**	1	SEAL-O-RING	
C	29	2	*148-8370*	1	ELBOW AS	
		2	**6V-9851**	1	ELBOW	
		2	**6V-8398**	1	SEAL-O-RING	
	30	2	*148-8378*	1	ELBOW AS	
		2	**6V-8724**	1	ELBOW	
		2	**3J-1907**	1	SEAL-O-RING	
		2	**6V-8397**	1	SEAL-O-RING	
	31	2	*148-8428*	1	TEE AS	
		2	**6V-8782**	1	TEE	
		2	**3K-0360**	1	SEAL-O-RING	
		2	**6V-8398**	2	SEAL-O-RING	
	32	1	*148-8444*	2	TEE AS-SWIVEL	
					(EACH INCLUDES)	
		1	**6V-9837**	1	TEE-SWIVEL	
		1	**6V-8398**	2	SEAL-O-RING	
C	33	2	*150-3028*	1	ELBOW AS	
		2	**6V-9343**	1	ELBOW	
		2	**3D-2824**	1	SEAL-O-RING	
		2	**6V-8397**	1	SEAL-O-RING	
	34	2	*150-3035*	1	ELBOW AS	
		2	**8T-1718**	1	ELBOW	
		2	**6V-9746**	1	SEAL-O-RING	
	35	1	*164-5586*	1	TEE AS	
		1	**7X-0871**	1	TEE	
		1	**6V-8398**	1	SEAL-O-RING	
	36	1	*164-6861*	2	UNION AS	
					(EACH INCLUDES)	
		1	**6V-8733**	1	UNION	
		1	**6V-9746**	2	SEAL-O-RING	
	37	2	**185-4026**	1	VALVE GP-CHECK	
Y	38	2	**308-0935**	1	VALVE GP-BANK 1	706
	39	1	*341-0078*	1	CONNECTOR AS	
		1	**341-0077**	1	CONNECTOR	
		1	**3J-1907**	1	SEAL-O-RING	
	40	1	**5K-9660**	2	CLIP	
	41	1	**5P-7464**	2	CLIP (SLOT)	
	42	1	**5P-7465**	2	CLIP (TAB)	
	43	1	**6D-4244**	4	CLIP	
	44	1	**6D-4246**	4	CLIP	
	45	1	**6V-1249**	2	GROMMET	
	46	1	**6V-8398**	2	SEAL-O-RING	
	47	1,2	**8T-4121**	14	WASHER-HARD (11X21X2.5-MM THK)	
M	48	1	**8T-4133**	2	NUT (M10X1.5-THD)	
M	49	1,2	**8T-4136**	6	BOLT (M10X1.5X25-MM)	
M	50	1	**8T-4137**	4	BOLT (M10X1.5X20-MM)	
M	51	1	**8T-4195**	1	BOLT (M10X1.5X30-MM)	
	52	1	**8T-4896**	4	WASHER-HARD (10.2X18.5X2.5-MM THK)	
M	53	2	**8T-4908**	3	BOLT (M8X1.25X25-MM)	
M	54	2	**8T-5005**	2	BOLT (M10X1.5X70-MM)	
M	55	2	**8T-6466**	3	BOLT (M10X1.5X60-MM)	
I	56	1	**8W-4192**	1	HOSE AS	

C-CHANGE FROM PREVIOUS TYPE
I-REFER TO HYDRAULIC INFORMATION SYSTEM
M-METRIC PART
Y-SEPARATE ILLUSTRATION

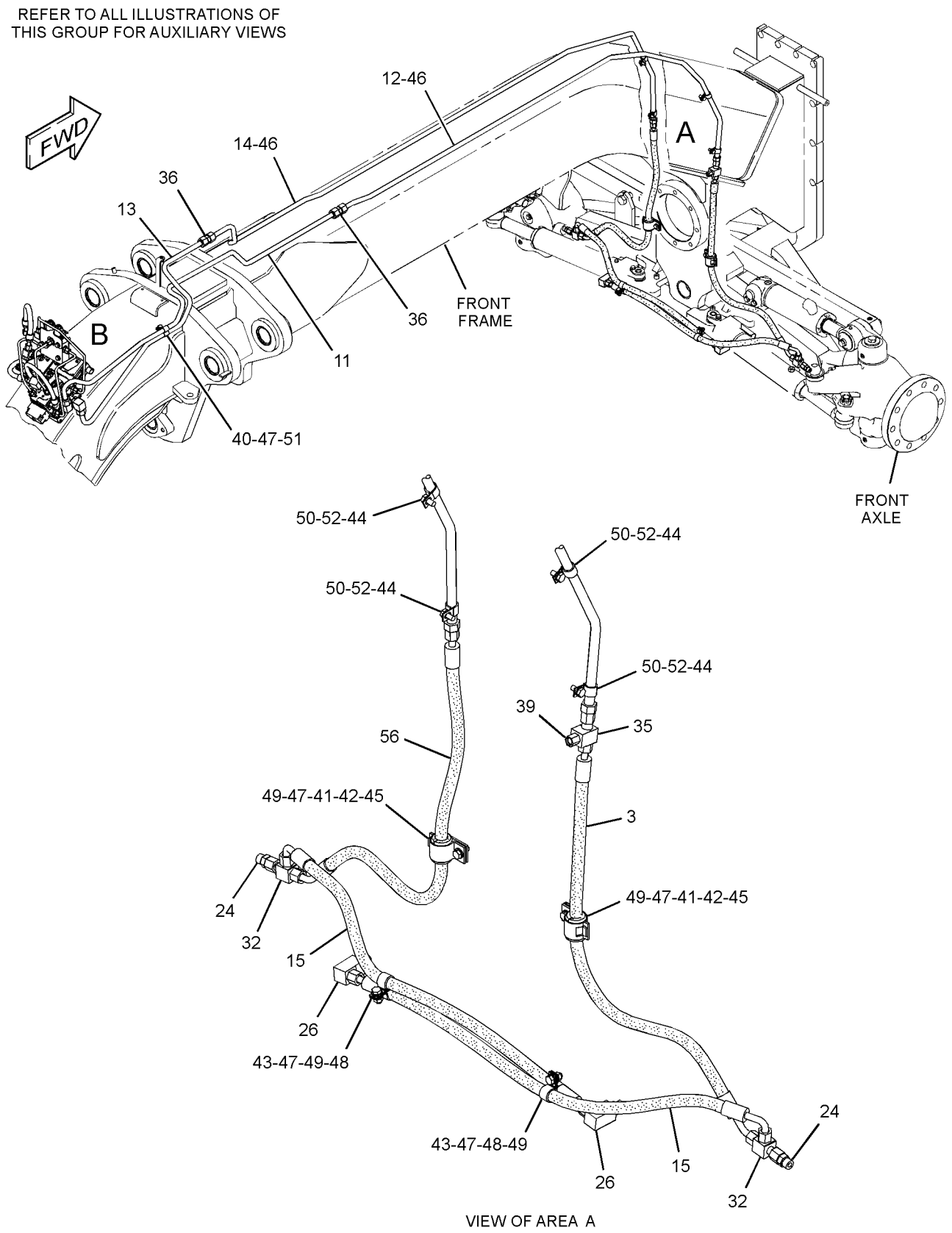

GRAPHIC #1 g02108715

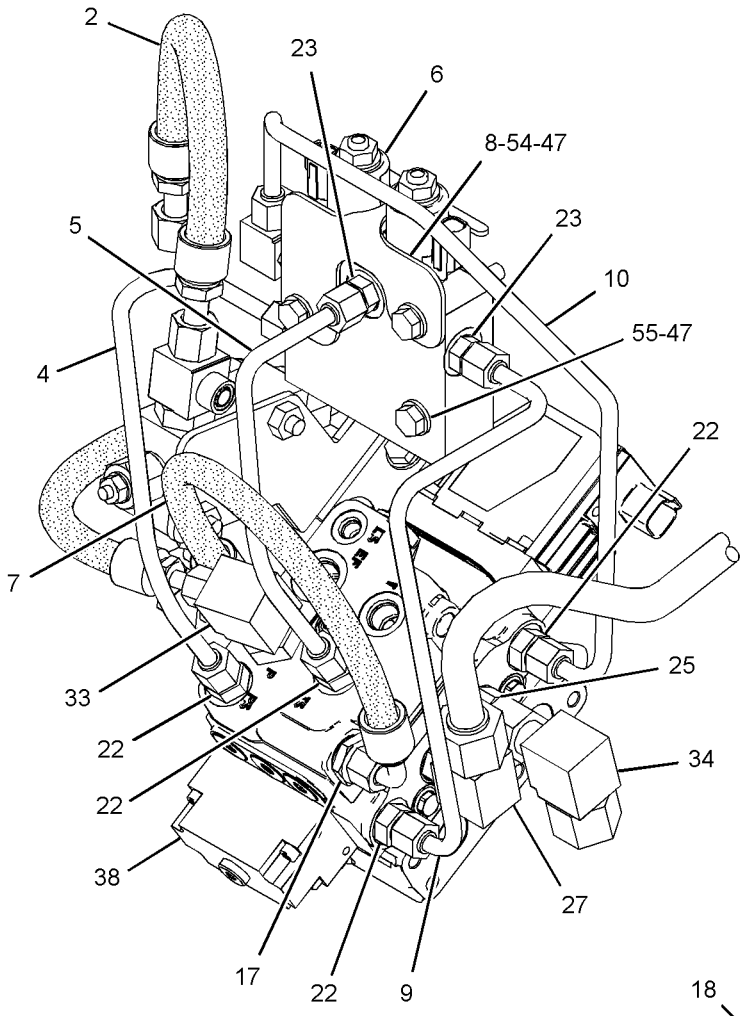

VIEW OF AREA B

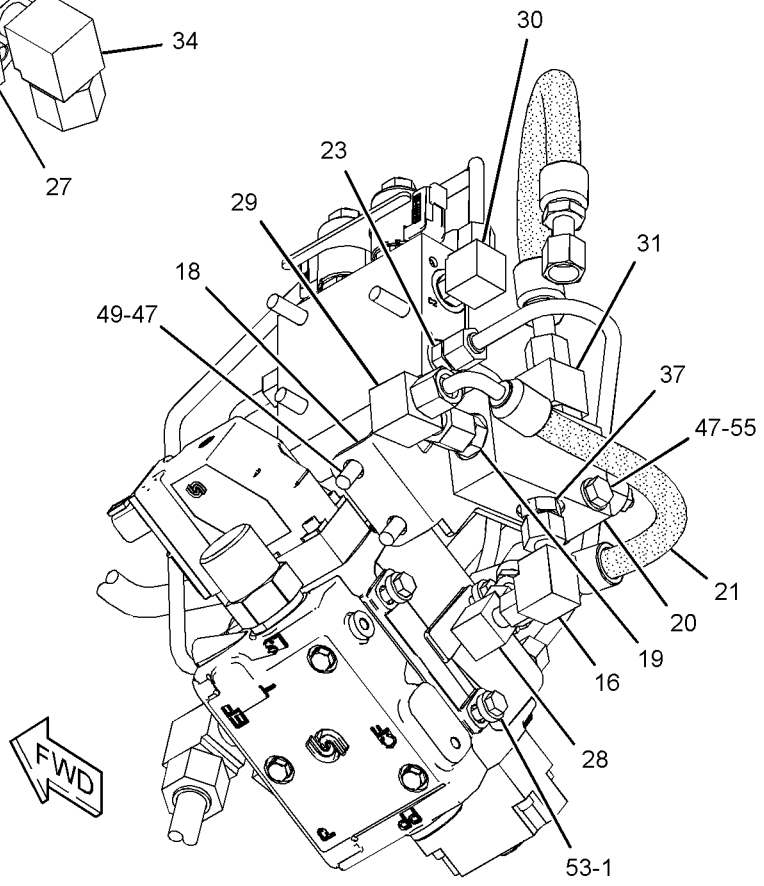

VIEW OF AREA B

GRAPHIC #2 **<END>** g02108716

HYDRAULIC SYSTEM

298-2600 LOCK GP-CENTERSHIFT

S/N: R9J1-UP

PART OF 349-2555 COMMON AR

SMCS-5221 **i02640338**

NOTE	REF NO	GRAPHIC REF	PART NUMBER	QTY	PART NAME 1 2 3 4 5 6 (PRODUCT LEVEL)	SEE PAGE
	1	1	**2H-3931**	1	SEAL-O-RING	
	2	1	**4T-8054**	1	SEAL AS	
	3	1	**8X-3749**	1	PISTON	
	4	1	**9D-6584**	1	SEAL-LIP TYPE	
	5	1	**115-0541**	1	PIN	
	6	1	**142-5787**	1	CAP	
Y	7	1	**152-8346**	1	VALVE GP-SOLENOID (24-VOLT) (CENTERSHIFT)	757
	8	1	**167-2307**	1	SEAL-U-CUP	
	9	1	**297-6979**	1	CYLINDER	
	10	1	**198-4780**	2	WASHER-HARD (17.5X32X8-MM THK)	
	11	1	**7X-0346**	1	BOLT (5/8-11X2-IN)	
	12	1	**8T-4122**	1	WASHER-HARD (17X32X3.5-MM THK)	
M	13	1	**8T-4175**	2	BOLT (M16X2X90-MM)	
	14	1	**8T-4223**	2	WASHER-HARD (13.5X25.5X3-MM THK)	
	15	1	**8T-8917**	2	BOLT (1/2-13X1.25-IN)	

M-METRIC PART
Y-SEPARATE ILLUSTRATION

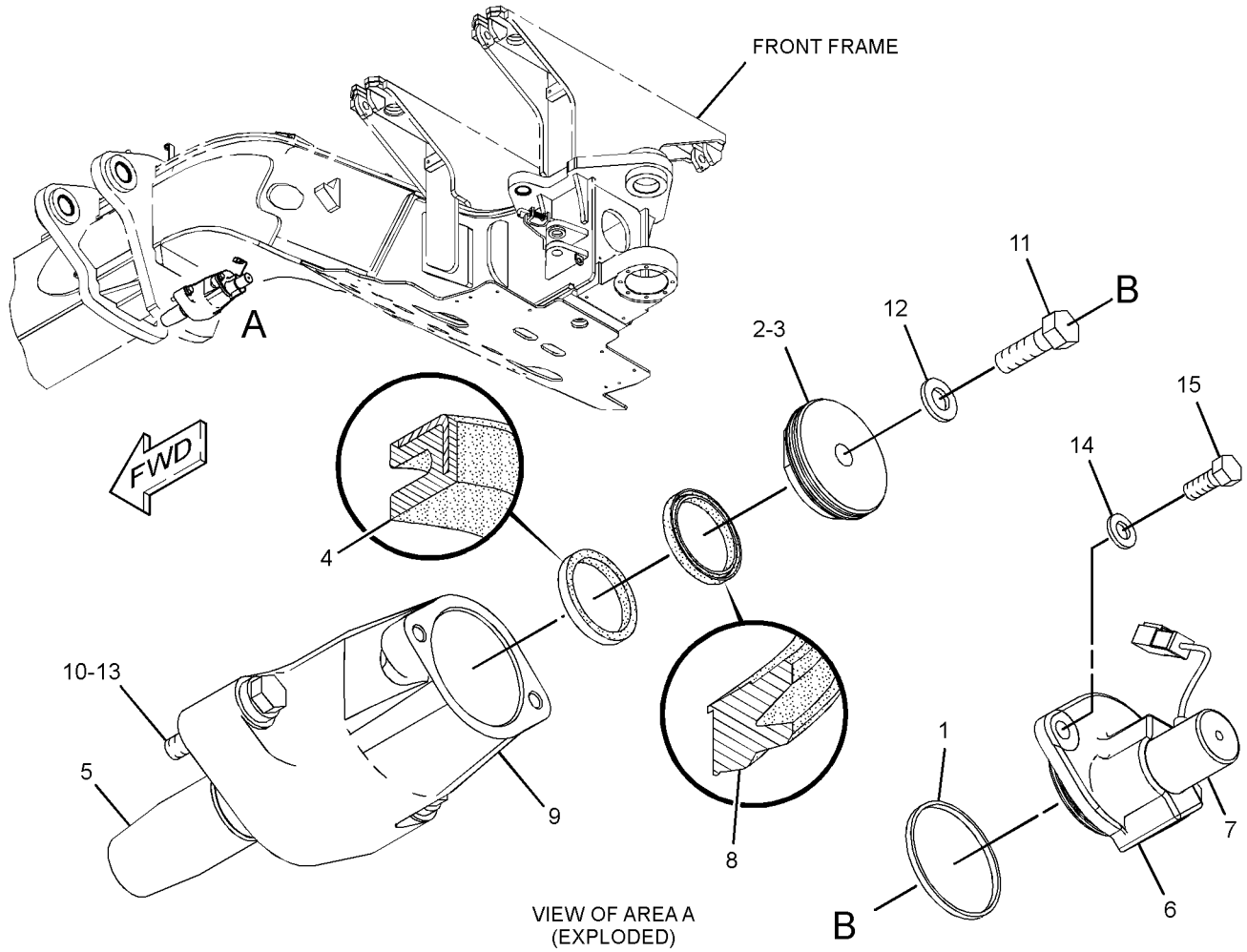

VIEW OF AREA A
(EXPLODED)

GRAPHIC #1

<END>

g01326788

HYDRAULIC SYSTEM

254-3415 MANIFOLD GP-CONTROL–STEERING

S/N: R9J1-UP

PART OF 344-7823 LINES GP-STEERING

SMCS-5051, 5069, 5264, 5467, 5479 **i03697017**

NOTE	REF NO	GRAPHIC REF	PART NUMBER	QTY	PART NAME 1 2 3 4 5 6 (PRODUCT LEVEL)	SEE PAGE
	2	1	**6E-5066**	1	SCREEN (CONTROL MANIFOLD)	
	3	1	**254-3413**	1	MANIFOLD AS	
		1	**124-1555**	1	PLUG	
J	4	1	**310-7060**	2	VALVE GP-SOLENOID (STEERING)	
					(EACH INCLUDES)	
		1	**164-2108**	1	WASHER (13.03X25.4X2.38-MM THK)	
		1	**218-2373**	1	NUT (1/2-28-THD)	
		1	**323-9533**	1	COIL AS	
					AVAILABLE REPAIR KIT(S):	
J			**108-2148**	1	KIT-SEAL (SOLENOID VALVE)	
					(INCLUDES SEALS)	

J-KIT MARKED J SERVICES PARTS MARKED J

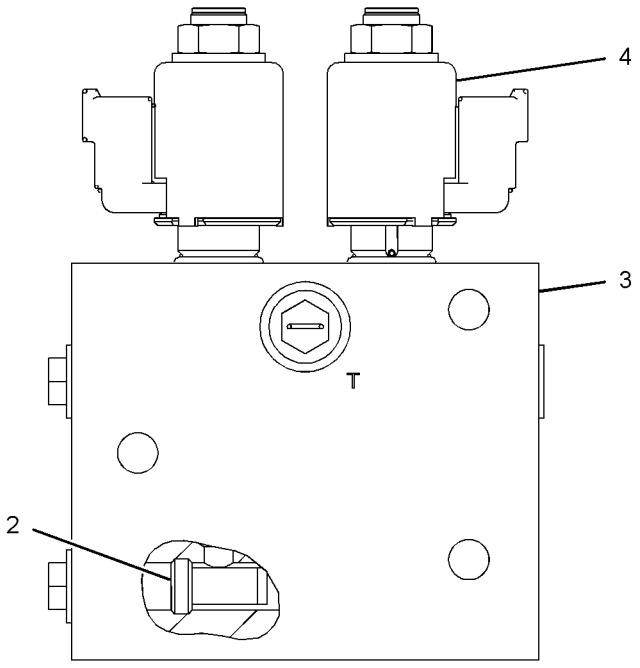

FRONT VIEW

GRAPHIC #1 **<END>** g01107180

322-3798 MANIFOLD GP-CONTROL–ACCUMULATOR

S/N: R9J1-UP

PART OF 282-8869 LINES GP-ACCUMULATOR, 351-8254, 364-1282, 366-3382 LINES GP-HYDRAULIC

AN ATTACHMENT

SMCS-5051, 5069, 5264, 5467, 5479 **i03902329**

NOTE	REF NO	GRAPHIC REF	PART NUMBER	QTY	PART NAME 1 2 3 4 5 6 (PRODUCT LEVEL)	SEE PAGE
	1	1	**253-1319**	1	MANIFOLD	
	2	1	**320-8117**	1	VALVE GP-SOLENOID (HYDRAULIC ACCUMULATOR)	
		1	**257-5022**	1	COIL AS	

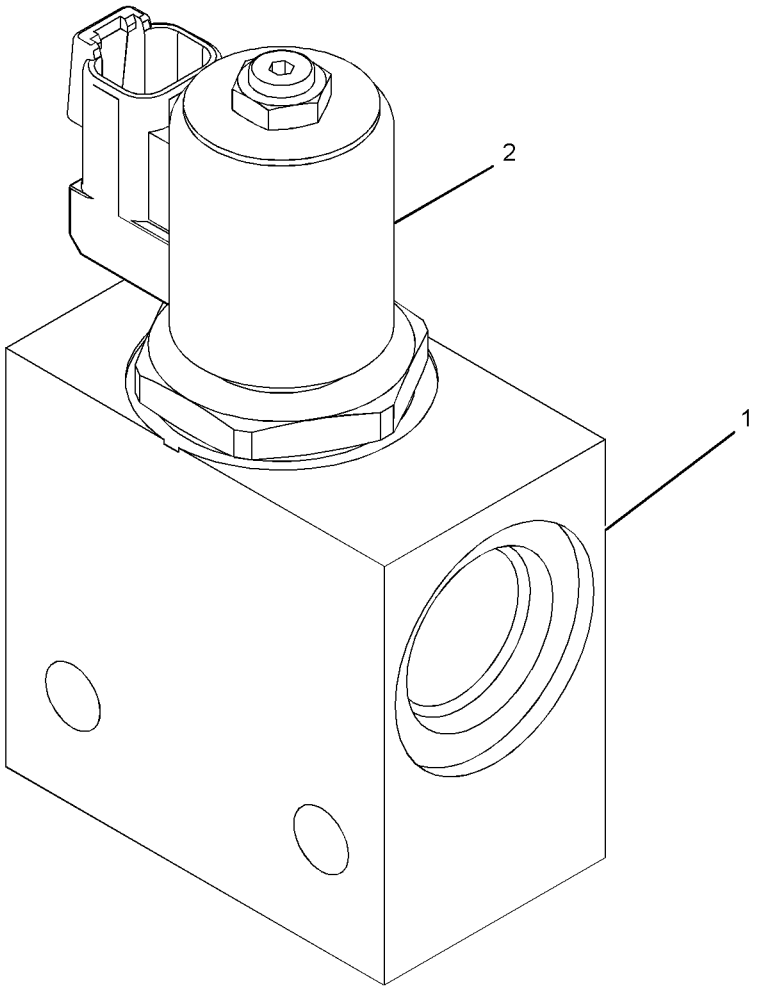

GRAPHIC #1 **<END>** g01227961

HYDRAULIC SYSTEM

353-2604 MANIFOLD GP-CONTROL

S/N: R9J1-UP

PART OF 332-3946 LINES GP-HYDRAULIC FAN

SMCS-5051, 5069, 5264, 5467, 5479 **i03995800**

NOTE	REF NO	GRAPHIC REF	PART NUMBER	QTY	PART NAME 1 2 3 4 5 6 (PRODUCT LEVEL)	SEE PAGE
P	1	1	**282-5396**	1	KIT-VALVE (BRAKE ACCUMULATOR)	
					(INCLUDES SEAL-O-RINGS & BACK-UP RINGS)	
Y	2	1	**251-8330**	1	VALVE GP-RELIEF (BRAKE ACCUMULATOR)	755
J	3	1	**239-0618**	1	VALVE GP-SHUTTLE (HYDRAULIC FAN)	
		1	**3H-0442**	1	SEAL-O-RING	
Y	4	1	**277-2132**	1	VALVE GP-DIVERTER (FAN DRIVE)	747
	5	1	**9S-8001**	3	PLUG-O-RING	
	6	1	**4J-7533**	3	SEAL-O-RING	
	7	1	**9S-8004**	1	PLUG-O-RING	
	8	1	**3J-1907**	1	SEAL-O-RING	
Y	9	1	**257-8414**	1	VALVE GP-SHUTTLE (BRAKE ACCUMULATOR)	756
	10	1	**296-5270**	1	SENSOR GP-PRESSURE	
N	11	1	**348-0421**	1	VALVE GP-CHECK (BRAKE, HYDRAULIC FAN)	
Y	12	1	**189-8627**	1	VALVE GP-SOLENOID (HYDRAULIC FAN)	758
	13	1	**6E-5066**	1	SCREEN (CONTROL MANIFOLD)	
	14	1	**280-0947**	1	PLUG-ORIFICE	
	15	1	**266-1602**	1	PLUG-ORIFICE	
	16	1	**1J-9671**	1	SEAL-O-RING	
					AVAILABLE REPAIR KIT(S):	
P			**200-6282**	1	KIT-SEAL (DIVERTER VALVE)	
					(INCLUDES SEAL-O-RINGS & BACK-UP RINGS)	
J			**239-5195**	1	KIT-SEAL (SHUTTLE VALVE)	
					(INCLUDES SEAL-O-RINGS & BACK-UP RING)	
N			**189-2102**	1	KIT-SEAL (SOLENOID VALVE)	
					(INCLUDES SEAL-O-RING & BACK-UP RINGS)	

J-KIT MARKED J SERVICES PART(S) MARKED J
N-KIT MARKED N SERVICES PART(S) MARKED N
P-KIT MARKED P SERVICES PART(S) MARKED P
Y-SEPARATE ILLUSTRATION

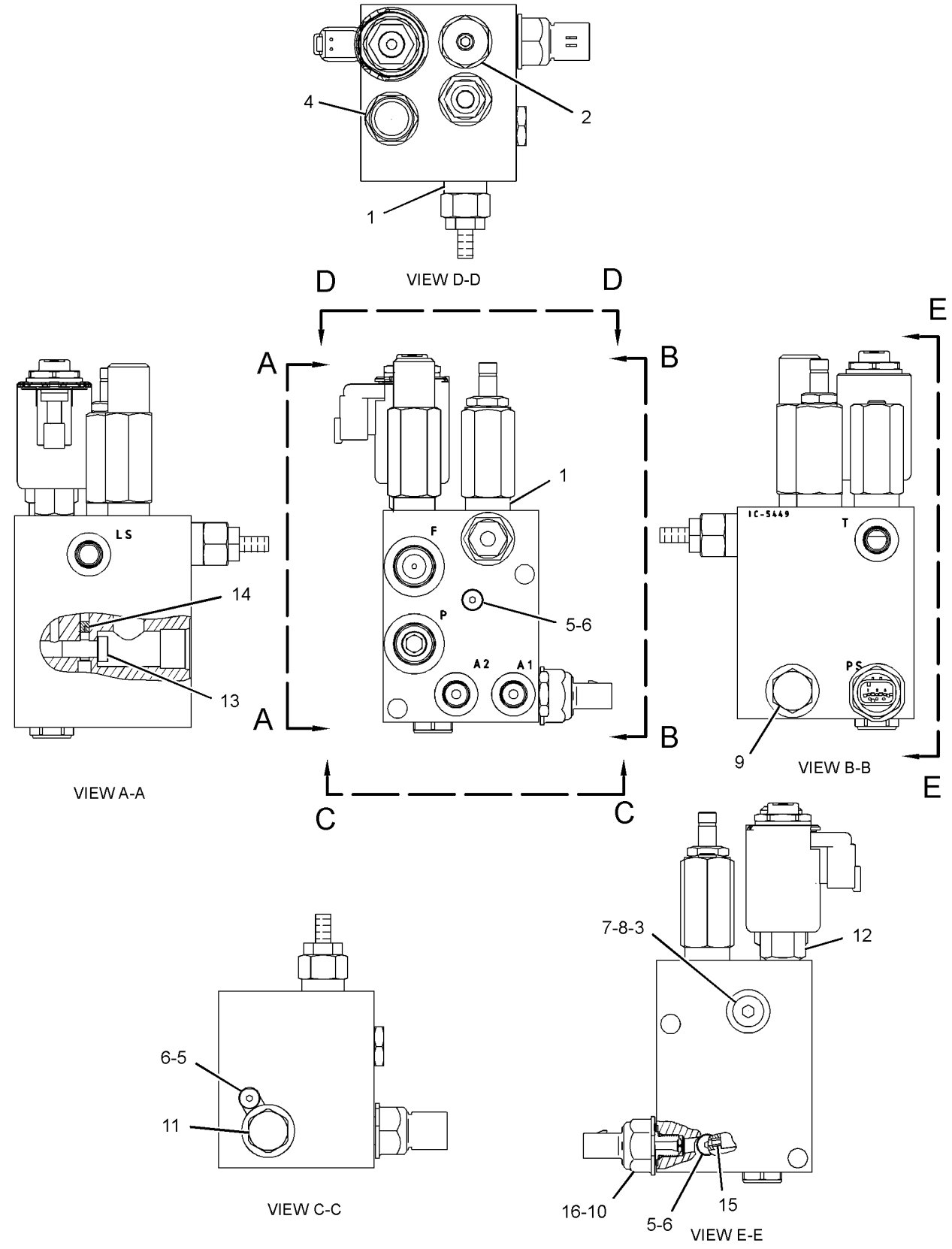

GRAPHIC #1 **<END>** g02177928

353-2605 MANIFOLD GP-CONTROL–IMPLEMENT, STEERING

S/N: R9J1-UP

PART OF 282-8870, 351-8251 LINES GP-PUMP

AN ATTACHMENT

SMCS-5051, 5069, 5264, 5467, 5479 **i03926336**

NOTE	REF NO	GRAPHIC REF	PART NUMBER	QTY	PART NAME 1 2 3 4 5 6 (PRODUCT LEVEL)	SEE PAGE
	1	1	**9S-8003**	1	PLUG	
Y	2	1	**133-5330**	1	VALVE GP-RELIEF (MAIN)	754
Y	3	1	**252-8038**	1	VALVE GP-PRESSURE REDUCING (PRIMARY STEERING)	748
	4	1	**252-0741**	1	VALVE GP-SOLENOID (IMPLEMENT PILOT OIL)	
		1	**156-5970**	1	NUT (1/2-20-THD)	
		1	**252-0745**	1	COIL AS	
	5	1	**296-5270**	1	SENSOR GP-PRESSURE (SECONDARY STEERING)	
	6	1	**6V-0852**	2	CAP-DUST	
	7	1	**6V-3965**	2	FITTING (QUICK DISCONNECT)	
	8	1	**3J-1907**	4	SEAL-O-RING	
	9	1	**6V-0484**	2	ADAPTER-O-RING	
	10	1	**8C-3446**	1	VALVE-FLUID SAMPLING	
	11	1	**126-8440**	2	SEAL-O-RING	
	12	1	**151-5145**	1	ELBOW	
	13	1	**1J-9671**	2	SEAL-O-RING	
	14	1	**8C-3451**	1	CAP-DUST	

Y-SEPARATE ILLUSTRATION

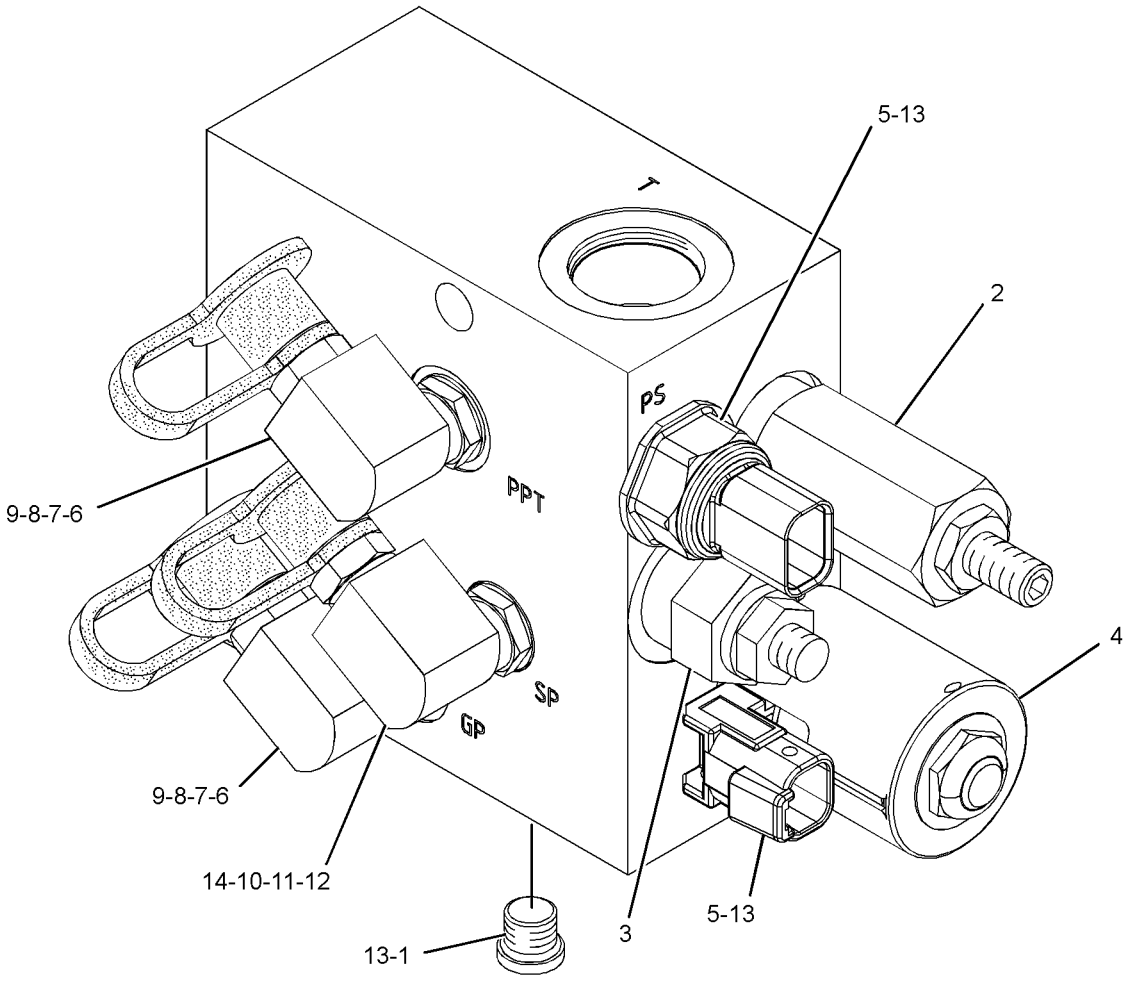

GRAPHIC #1 **<END>** g02158270

292-2033 MANIFOLD GP-VALVE–INLET

S/N: R9J1-UP

PART OF 259-6919 VALVE GP-BANK 5, 259-6920 VALVE GP-BANK 6, 259-6921 VALVE GP-BANK 7, 259-6922 VALVE GP-BANK 8 AN ATTACHMENT

SMCS-5264 **i03543607**

NOTE	REF NO	GRAPHIC REF	PART NUMBER	QTY	PART NAME 1 2 3 4 5 6 (PRODUCT LEVEL)	SEE PAGE
	1	1	**259-0309**	1	MANIFOLD-INLET	
	2	1	**301-4568**	1	ORIFICE	
	3	1	*148-8407*	2	PLUG AS	
					(EACH INCLUDES)	
		1	**9S-4191**	1	PLUG-O-RING	
		1	**3J-1907**	1	SEAL-O-RING	
	4	1	*148-8411*	4	PLUG AS	
					(EACH INCLUDES)	
		1	**9S-4185**	1	PLUG-O-RING	
		1	**3K-0360**	1	SEAL-O-RING	
	5	1	*173-3993*	5	PLUG AS	
					(EACH INCLUDES)	
		1	**9S-8001**	1	PLUG-O-RING	
		1	**4J-7533**	1	SEAL-O-RING	

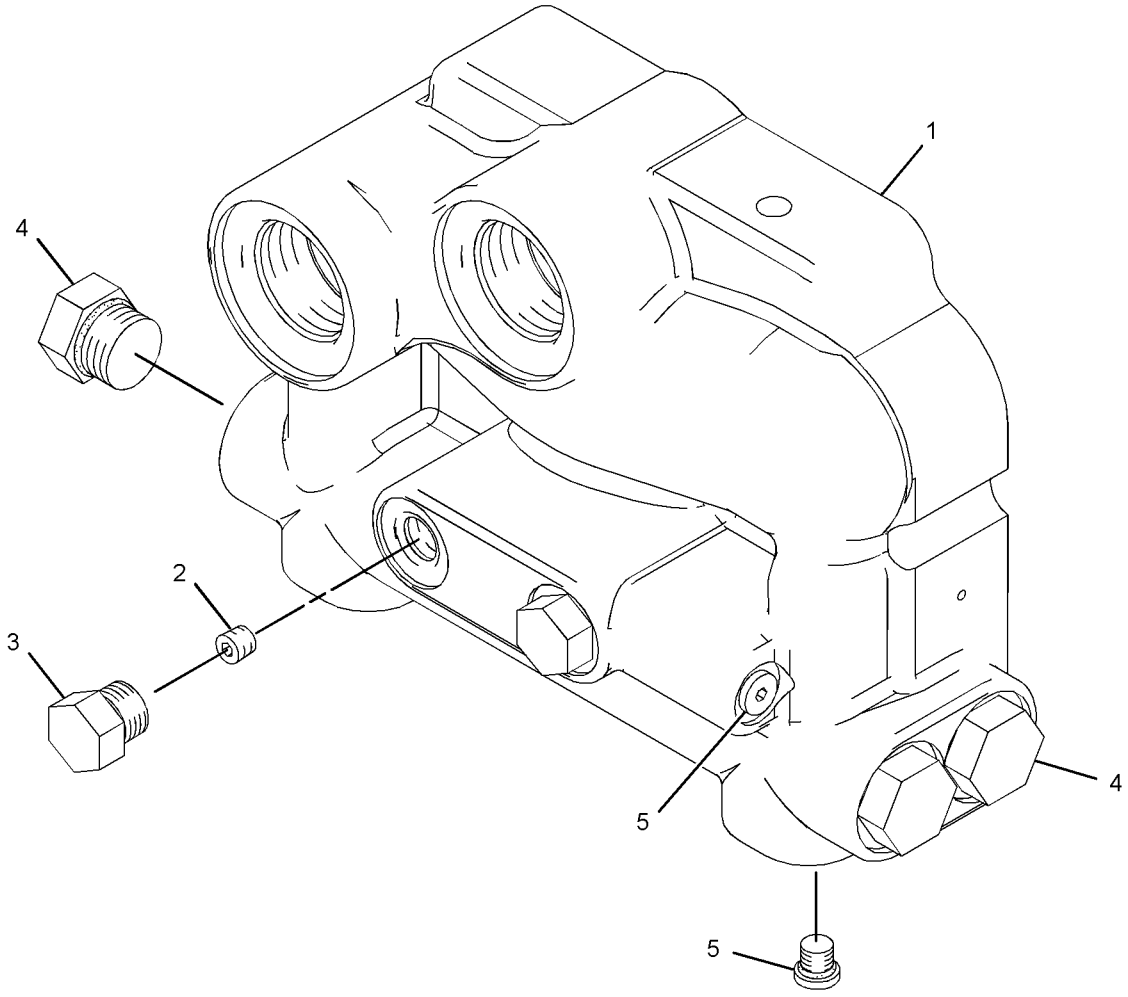

GRAPHIC #1 **<END>** g01860858

HYDRAULIC SYSTEM

292-2034 MANIFOLD GP-VALVE—INLET

S/N: R9J1-UP

PART OF 259-6923 VALVE GP-BANK 3, 259-6924 VALVE GP-BANK 4, 259-6925, 291-9518 VALVE GP-BANK 6

AN ATTACHMENT

SMCS-5264 **i04036915**

NOTE	REF NO	GRAPHIC REF	PART NUMBER	QTY	PART NAME 1 2 3 4 5 6 (PRODUCT LEVEL)	SEE PAGE
	1	1	**096-3831**	1	ORIFICE	
H	3	1	**361-3059**	1	VALVE GP-RELIEF (MAIN)	
	4	1	**259-0310**	1	MANIFOLD-INLET	
	6	1	*148-8407*	3	PLUG AS	
					(EACH INCLUDES)	
		1	**9S-4191**	1	PLUG-O-RING	
		1	**3J-1907**	1	SEAL-O-RING	
	7	1	*148-8411*	4	PLUG AS	
					(EACH INCLUDES)	
		1	**9S-4185**	1	PLUG-O-RING	
		1	**3K-0360**	1	SEAL-O-RING	
	8	1	*173-3993*	4	PLUG AS	
					(EACH INCLUDES)	
		1	**9S-8001**	1	PLUG-O-RING	
		1	**4J-7533**	1	SEAL-O-RING	
	9	1	*183-7263*	1	PLUG AS	
		1	**9S-8002**	1	PLUG-O-RING	
		1	**3J-7354**	1	SEAL-O-RING	
					AVAILABLE REPAIR KIT(S):	
H			**133-5545**	1	KIT-SEAL (RELIEF VALVE)	

H-KIT MARKED H SERVICES PART(S) MARKED H

292-2034 **MANIFOLD GP-VALVE** *(contd.)* **i04036915**

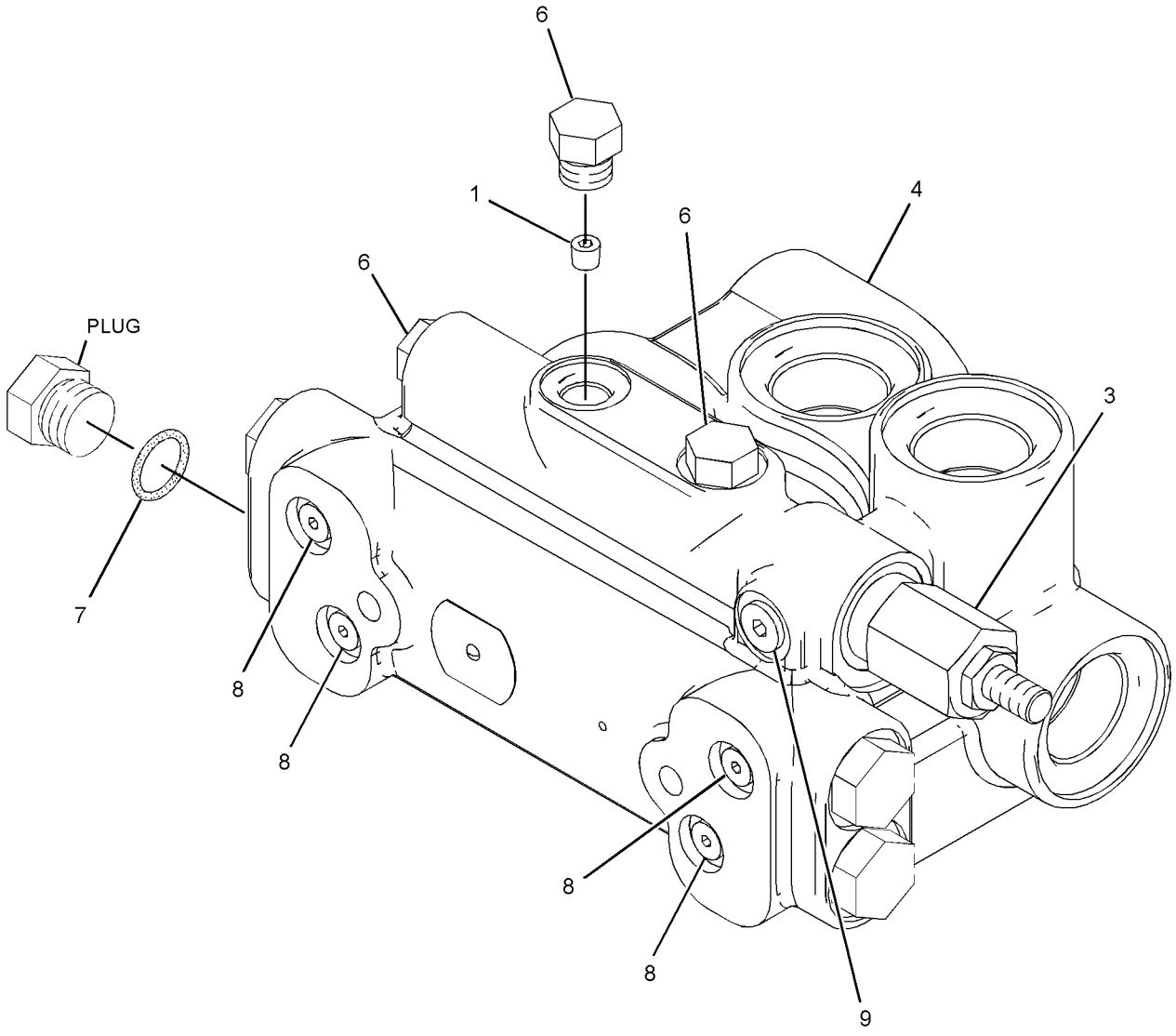

GRAPHIC #1 **<END>** g02239161

HYDRAULIC SYSTEM

9T-5977 MOTOR GP-GEROTOR

S/N: R9J1-UP

PART OF 259-5580 DRIVE GP-CIRCLE

SMCS-5082 **i02291910**

NOTE	REF NO	GRAPHIC REF	PART NUMBER	QTY	PART NAME 1 2 3 4 5 6 (PRODUCT LEVEL)	SEE PAGE
	1	1	**7X-4733**	1	SEAL-LIP TYPE	
	2	1	**9T-8070**	1	HOUSING AS	
	3	1	**6Y-2934**	1	BEARING-ROLLER	
	4	1	**6Y-2933**	2	RING-THRUST	
	5	1	**6Y-2932**	1	BEARING-THRUST	
	6	1	**8T-1698**	1	BEARING AS-NEEDLE	
	7	1	**9T-9071**	1	SHIM	
	8	1	**9T-8058**	1	BACKUP	
	9	1	**9T-8059**	1	SEAL	
	10	1	**9T-8057**	1	SHAFT	
	11	1	**6Y-2935**	1	BEARING	
	12	1	**9T-8053**	5	SEAL	
	13	1	**9T-8055**	1	LINK	
	14	1	**9T-8061**	1	PLATE	
	15	1	**9T-8062**	1	ROTOR SET	
	16	1	**9T-8065**	1	MANIFOLD	
	17	1	**9J-4963**	1	RING	
	18	1	**9T-8069**	1	PLATE AS	
	19	1	**9T-8067**	1	COVER	
	20	1	**9T-8052**	7	BOLT (3/8-24X4.375-IN)	
					AVAILABLE REPAIR KIT(S):	
			9T-9072	1	KIT-SEAL (MOTOR)	
					(INCLUDES SEALS, BACKUP RING, SHIM & GREASE PACK)	

9T-5977 MOTOR GP-GEROTOR *(contd.)* **i02291910**

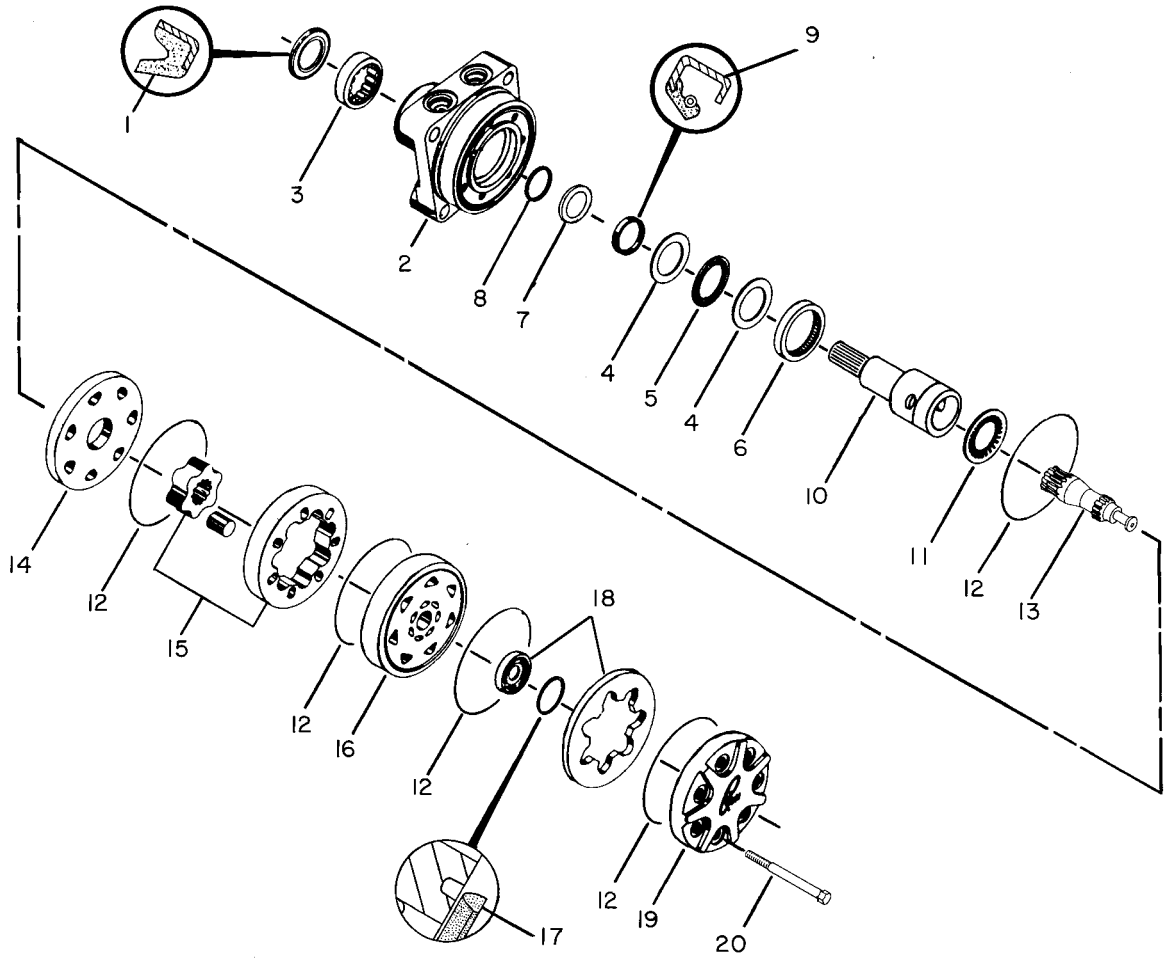

GRAPHIC #1 **<END>** g00082184

HYDRAULIC SYSTEM

235-8553 PUMP & MTG GP-HYDRAULIC FAN

S/N: R9J1-UP

PART OF 349-2555 COMMON AR

SMCS-1387 **i04033290**

NOTE	REF NO	GRAPHIC REF	PART NUMBER	QTY	PART NAME 1 2 3 4 5 6 (PRODUCT LEVEL)	SEE PAGE
YR	1	1	**250-8337**	1	PUMP GP-PISTON (BRAKE, HYDRAULIC FAN)	696
	2	1	**1H-6227**	1	SEAL-O-RING	
M	3	1	**8T-4139**	2	BOLT (M12X1.75X30-MM)	
	4	1	**8T-4223**	2	WASHER-HARD (13.5X25.5X3-MM THK)	

M-METRIC PART
R-REMFG PART MAY BE AVAILABLE
Y-SEPARATE ILLUSTRATION

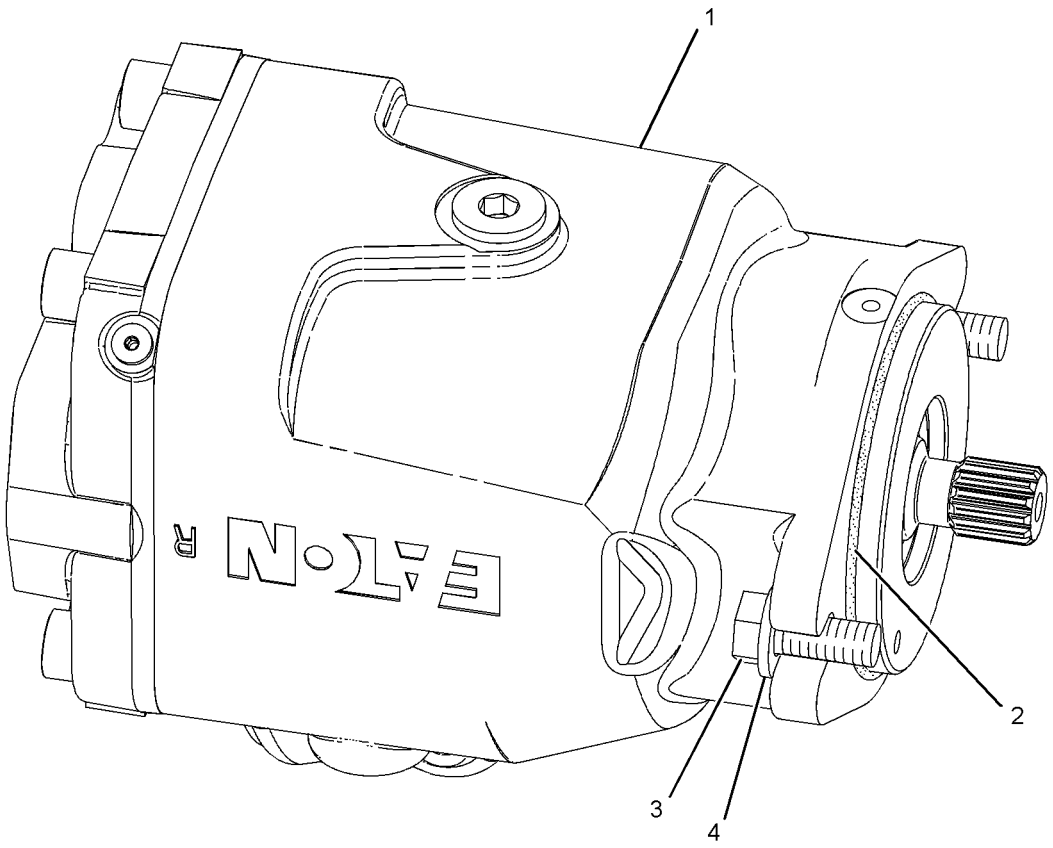

GRAPHIC #1 **<END>** g01110009

235-6409 PUMP & MTG GP-PISTON

S/N: R9J1-UP

PART OF 349-2555 COMMON AR

SMCS-5070 **i03754360**

NOTE	REF NO	GRAPHIC REF	PART NUMBER	QTY	PART NAME 1 2 3 4 5 6 (PRODUCT LEVEL)	SEE PAGE
Y	1	1	**246-4486**	1	PUMP GP-PISTON (IMPLEMENT, STEERING)	694
	2	1	**5P-1076**	4	WASHER-HARD (13.5X30X4-MM THK)	
	3	1	**8T-4223**	1	WASHER-HARD (13.5X25.5X3-MM THK)	
M	4	1	**8T-4956**	4	BOLT (M12X1.75X35-MM)	
	5	1	**8T-9383**	1	BOLT (1/2-13X0.75-IN)	
	6	1	**9X-7371**	1	SEAL-O-RING	

M-METRIC PART
Y-SEPARATE ILLUSTRATION

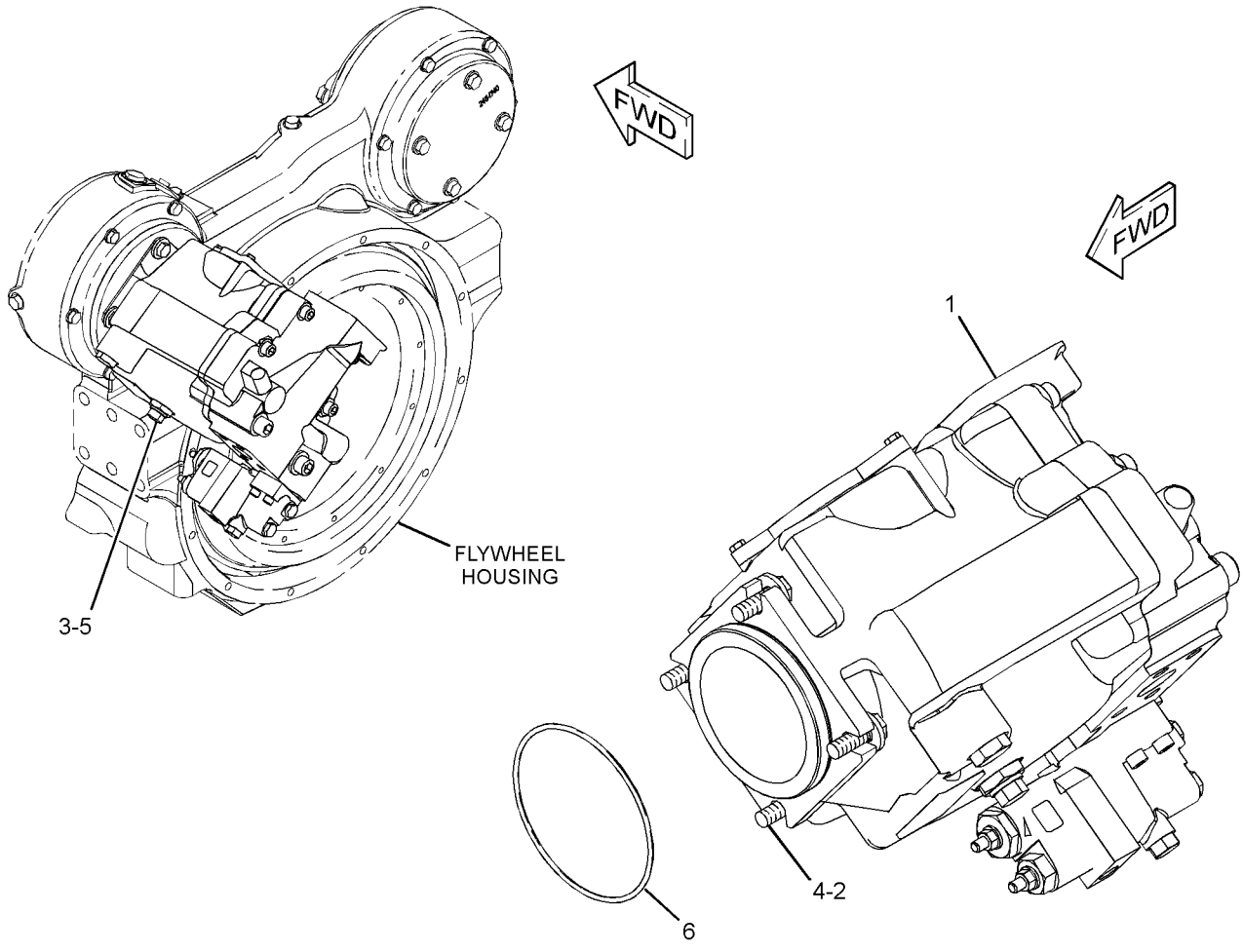

GRAPHIC #1 **<END>** g01157435

HYDRAULIC SYSTEM

282-8872 PUMP & MTG GP-SECONDARY STEER

S/N: R9J1-UP

PART OF 349-2555 COMMON AR

SMCS-4324 **i02562377**

NOTE	REF NO	GRAPHIC REF	PART NUMBER	QTY	PART NAME 1 2 3 4 5 6 (PRODUCT LEVEL)	SEE PAGE
	1	1	**283-9796**	2	CLAMP	
Y	2	1	**273-8714**	1	PUMP GP-GEAR (SECONDARY STEERING)	693
	3	1	**279-8929**	2	CLAMP	
M	4	1	**5C-7261**	2	NUT (M8X1.25-THD)	
M	5	1	**7X-2537**	2	BOLT (M8X1.25X35-MM)	
	6	1	**8T-4121**	4	WASHER-HARD (11X21X2.5-MM THK)	
M	7	1	**8T-4195**	4	BOLT (M10X1.5X30-MM)	
	8	1	**8T-4224**	4	WASHER-HARD (8.8X16X2-MM THK)	

M-METRIC PART
Y-SEPARATE ILLUSTRATION

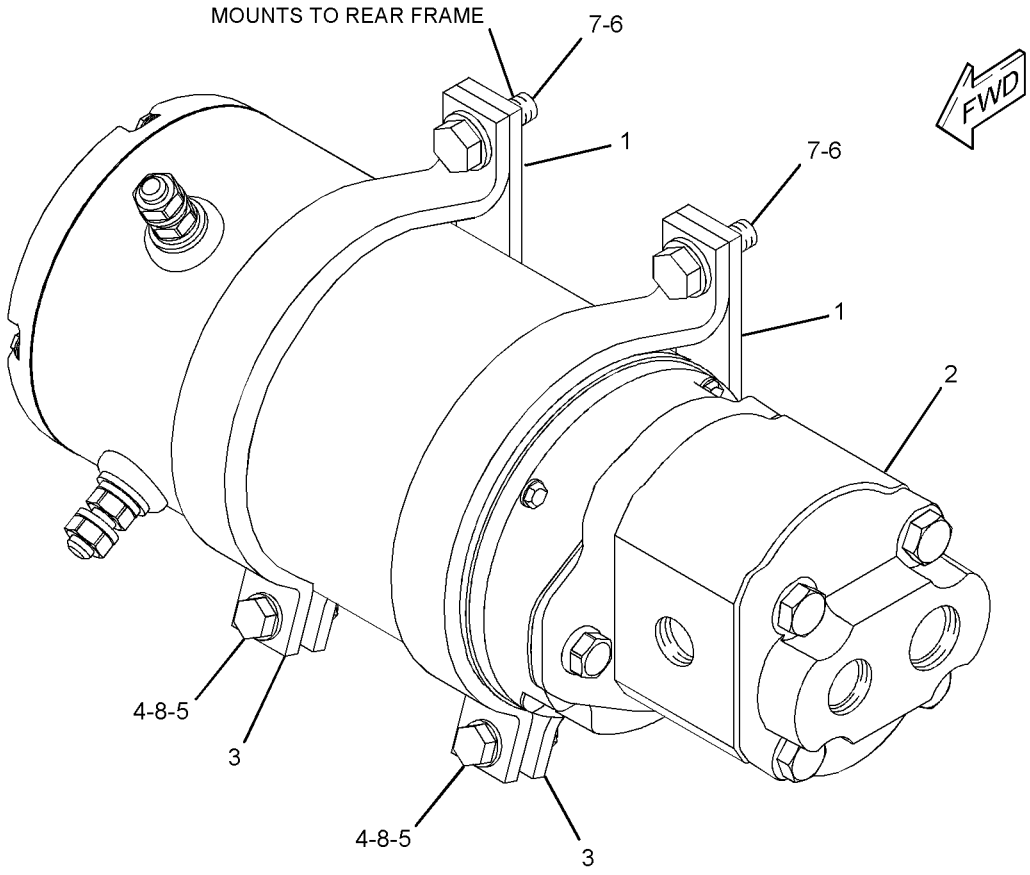

GRAPHIC #1 **<END>** g01284493

273-8714 PUMP GP-GEAR–SECONDARY STEERING

S/N: R9J1-UP

PART OF 282-8872 PUMP & MTG GP-SECONDARY STEER

SMCS-4306 **i02785844**

NOTE	REF NO	GRAPHIC REF	PART NUMBER	QTY	PART NAME 1 2 3 4 5 6 (PRODUCT LEVEL)	SEE PAGE
	1	1	**269-1009**	1	MOTOR-ELECTRIC	
	2	1	**117-5268**	1	GASKET	
	3	1	**123-8914**	1	PUMP	
					AVAILABLE REPAIR KIT(S):	
			269-1014	1	KIT-SEAL (SECONDARY STEERING PUMP)	
					(INCLUDES RETAINING RING, SHAFT SEAL, BACK-UP RINGS, E-SEALS, O-RINGS)	

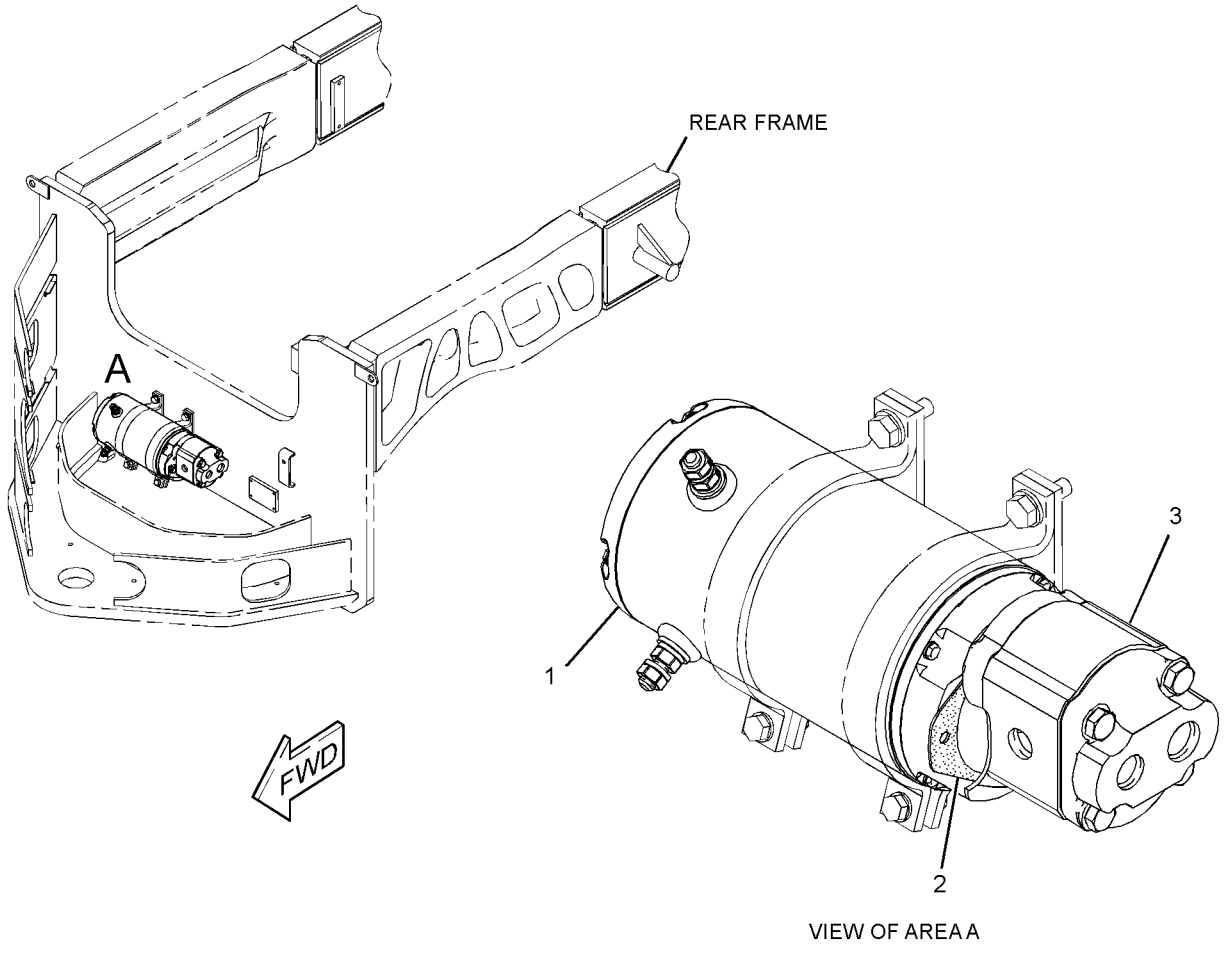

GRAPHIC #1 **<END>** g01303336

HYDRAULIC SYSTEM

246-4486 PUMP GP-PISTON–IMPLEMENT, STEERING*R

S/N: R9J1-UP

PART OF 235-6409 PUMP & MTG GP-PISTON

SMCS-5070 **i04040049**

NOTE	REF NO	GRAPHIC REF	PART NUMBER	QTY	PART NAME 1 2 3 4 5 6 (PRODUCT LEVEL)	SEE PAGE
	1	1	**6E-4232**	1	SHAFT	
	2	1	**6E-4237**	1	BEARING	
	3	1	**6E-4224**	1	PLUG-SWASHPLATE	
	4	1	**033-6036**	1	SEAL-O-RING	
	5	1	**9S-4190**	1	PLUG-O-RING	
	6	1	**9T-1699**	1	SPRING	
	7	1	**9T-1710**	1	POPPET	
	8	1	**9T-1636**	1	SEAT	
	9	1	**6E-4227**	1	COVER	
M	10	1	**6V-8837**	3	BOLT (M6X1X16-MM)	
	11	1	**4F-4097**	1	SEAL-O-RING	
	12	1	**6E-4236**	1	BEARING	
M	13	1	**3E-4302**	2	SCREW-FLAT HEAD (M4X0.7X10-MM)	
	14	1	**8T-5039**	3	SEAL-O-RING	
	15	1	**095-0888**	2	PIN-SPRING	
M	16	1	**8T-0343**	4	BOLT-SOCKET HEAD (M12X1.75X55-MM)	
M	17	1	**095-0705**	2	BOLT-SOCKET HEAD (M16X2X100-MM)	
Y	18	1	**271-6847**	1	VALVE GP-PUMP CONTROL (PRESSURE, FLOW COMPENSATOR)	753
	19	1	**7K-8877**	1	CONE-BEARING	
M	20	1	**6V-8337**	4	BOLT-SOCKET HEAD (M8X1.25X35-MM)	
	21	1	**033-6027**	1	SEAL-O-RING	
	22	1	**7K-8876**	1	CUP-BEARING	
	23	1	**6E-4213**	1	KIT-BIAS PISTON (HYDRAULIC PISTON PUMP) (INCLUDES SPRING, ROD, PISTON, & PACKING)	
	24	1	**6E-4214**	1	SPRING-BIAS	
Y	25	1	**6E-4216**	1	ROTATING GP-PUMP (IMPLEMENT, STEERING)	698
	26	1	**6E-4225**	1	GASKET	
	27	1	**7L-9061**	2	SEAL-O-RING	
	28	1	**3E-7417**	3	PLUG	
	29	1	**8T-7876**	3	SEAL-O-RING	
	30	1	**6E-4233**	1	PLATE-VALVE-RH	
	31	1	**005-0471**	1	CONE-BEARING	
	32	1	**005-0469**	1	CUP-BEARING	
B	33	1	**103-6282**	1	SHIM PACK (INCLUDES 17-SHIMS)	
	34	1	**9T-1652**	1	PIN	
	35	1	**6E-4215**	1	KIT-PISTON (HYDRAULIC PISTON PUMP) (INCLUDES PACKING, ROD, & PISTON)	
Y	36	1	**184-1527**	1	SWASHPLATE GP (IMPLEMENT, STEERING PUMP)	700
	37	1	**6L-8797**	2	RING-RETAINING	
	38	1	**9X-7547**	2	SEAL-LIP TYPE	

B-USE AS REQUIRED
M-METRIC PART
Y-SEPARATE ILLUSTRATION

246-4486 PUMP GP-PISTON *(contd.)* **i04040049**

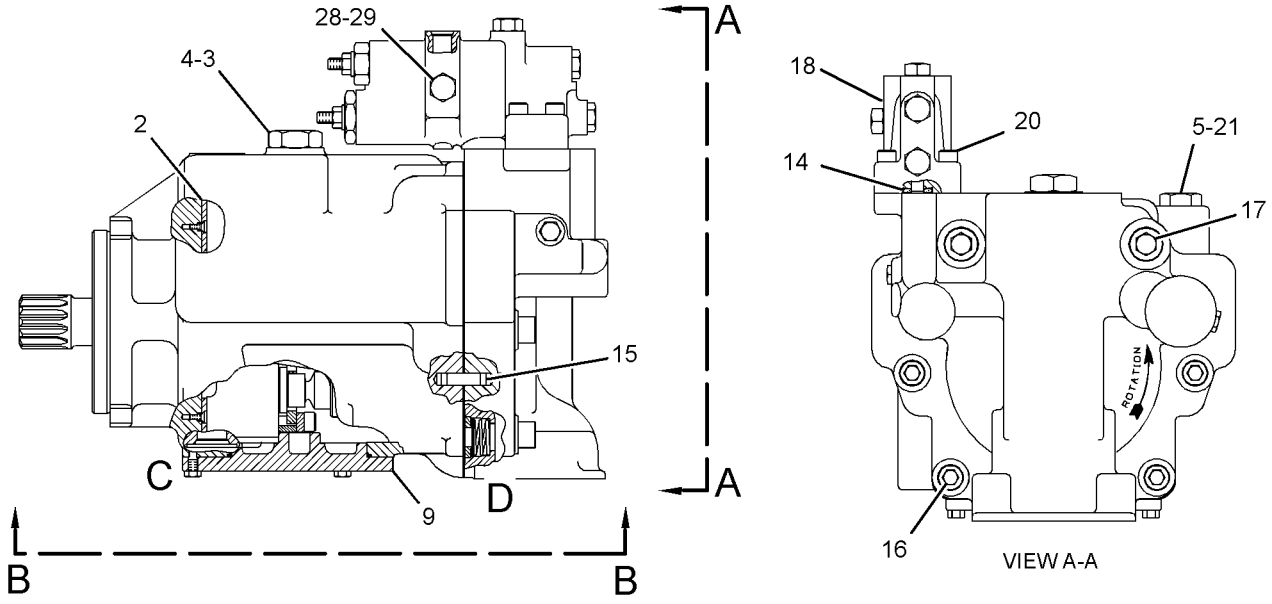

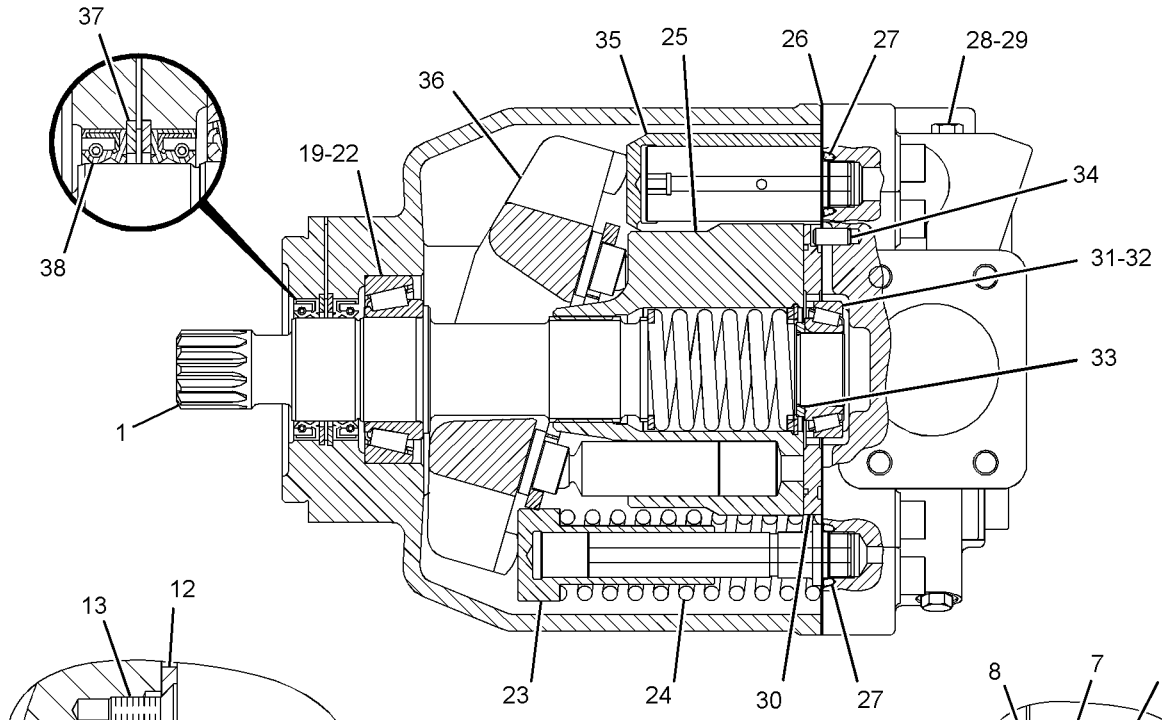

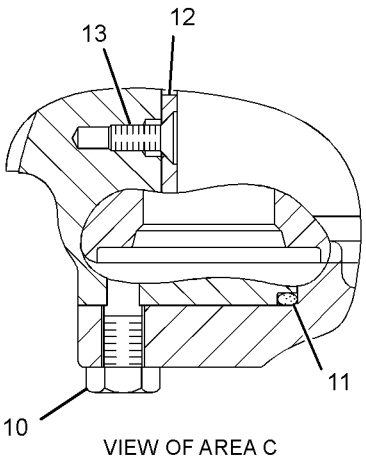

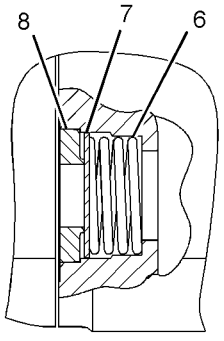

GRAPHIC #1 **<END>** g01339308

HYDRAULIC SYSTEM

250-8337 PUMP GP-PISTON–BRAKE, HYDRAULIC FAN

S/N: R9J1-UP

PART OF 235-8553 PUMP & MTG GP-HYDRAULIC FAN

SMCS-5070 **i03786829**

NOTE	REF NO	GRAPHIC REF	PART NUMBER	QTY	PART NAME 1 2 3 4 5 6 (PRODUCT LEVEL)	SEE PAGE
Y	1	1	**259-5504**	1	ROTATING GP-PUMP (BRAKE, HYDRAULIC FAN)	699
	2	1	**168-7861**	1	PISTON-ACTUATOR	
	3	1	**259-5507**	1	ROD-PISTON	
	4	1	**271-6418**	1	SWASHPLATE	
	5	1	**271-6919**	1	SHAFT-DRIVE	
	6	1	**198-5351**	1	PLUG	
	7	1	**194-9472**	1	SPRING	
	8	1	**191-7582**	1	SHIM (2.5-MM THK)	
	9	1	**194-9473**	2	RING	
	10	1	**155-9125**	1	BEARING AS-ROLLER	
	11	1	**191-7583**	1	BEARING AS-ROLLER	
	12	1	**194-9474**	2	BEARING-CRADLE	
	13	1	**155-9127**	1	SEAL	
	14	1	**133-6578**	1	SEAL-O-RING	
	15	1	**8T-7525**	1	SEAL-O-RING	
	16	1	**168-3504**	1	SEAL	
M	18	1	**8T-9515**	4	BOLT-SOCKET HEAD (M10X1.5X40-MM)	
	19	1	**9S-8005**	1	PLUG-O-RING	
	20	1	**120-4394**	1	PLUG-BREAK OFF	
	21	1	**099-3047**	1	DOWEL	
	22	1	**3K-0360**	1	SEAL-O-RING	
Y	23	1	**168-2210**	1	VALVE GP-PUMP CONTROL (PRESSURE, FLOW COMPENSATOR)	751
	24	1	**3J-7354**	1	SEAL-O-RING	
	25	1	**9S-8002**	1	PLUG-O-RING	

M-METRIC PART
Y-SEPARATE ILLUSTRATION

250-8337 PUMP GP-PISTON *(contd.)* **i03786829**

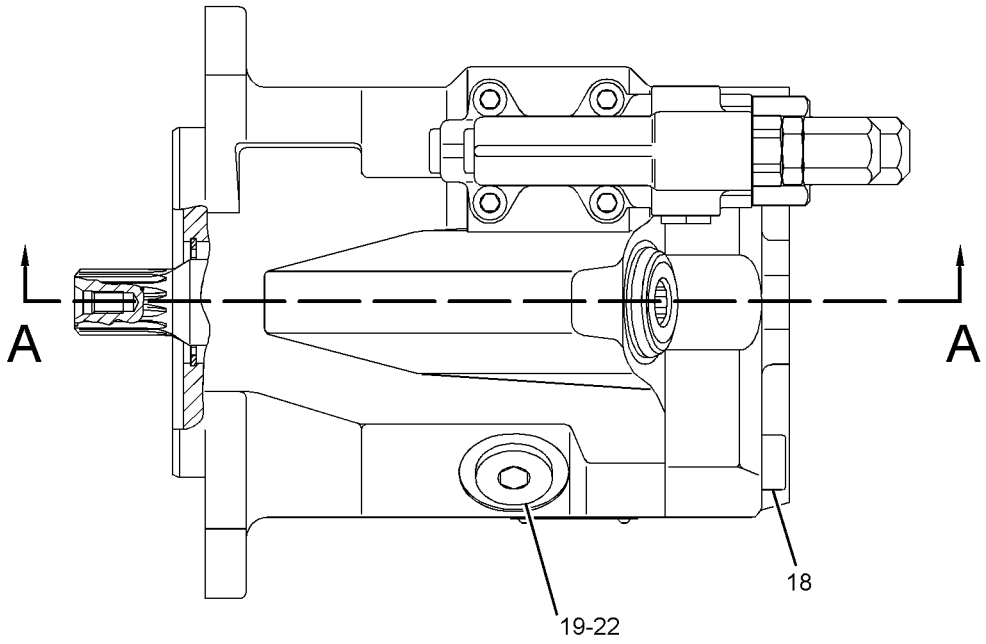

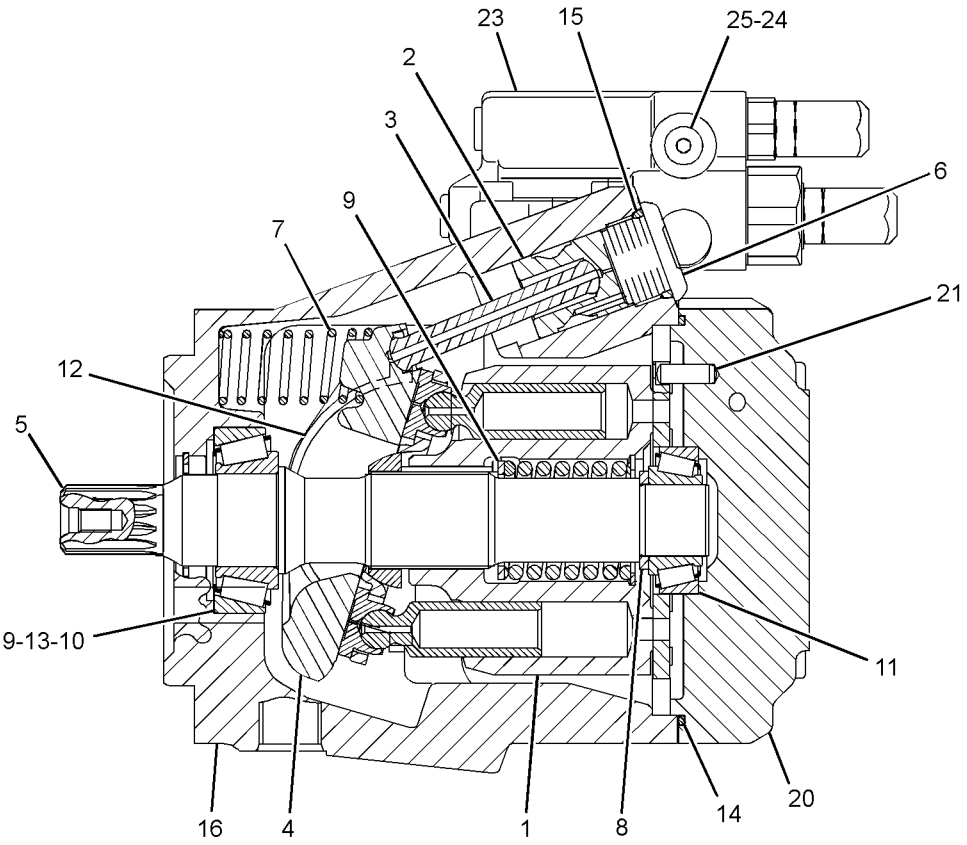

VIEW OF AREA A-A

GRAPHIC #1 **<END>** g01309678

6E-4216 ROTATING GP-PUMP—HYDRAULIC STEERING

S/N: R9J1-UP

PART OF 246-4486 PUMP GP-PISTON

SMCS-5070 **i02351999**

NOTE	REF NO	GRAPHIC REF	PART NUMBER	QTY	PART NAME 1 2 3 4 5 6 (PRODUCT LEVEL)	SEE PAGE
	1	1	**9T-4906**	1	RING-RETAINING	
	2	1	**6E-4219**	1	GUIDE	
M	3	1	**6V-5192**	4	BOLT-SOCKET HEAD (M8X1.25X30-MM)	
	4	1	**6E-4218**	2	PLATE-SPACER	
	5	1	**6E-4217**	2	PLATE-LIMITER	
	6	1	**9T-8452**	9	PISTON	
	7	1	**9T-8445**	1	GUIDE	
	8	1	**9T-8446**	1	SPRING	
	9	1	**9T-8448**	1	BARREL	
	10	1	**9T-8450**	1	PLATE-RETAINING	

M-METRIC PART

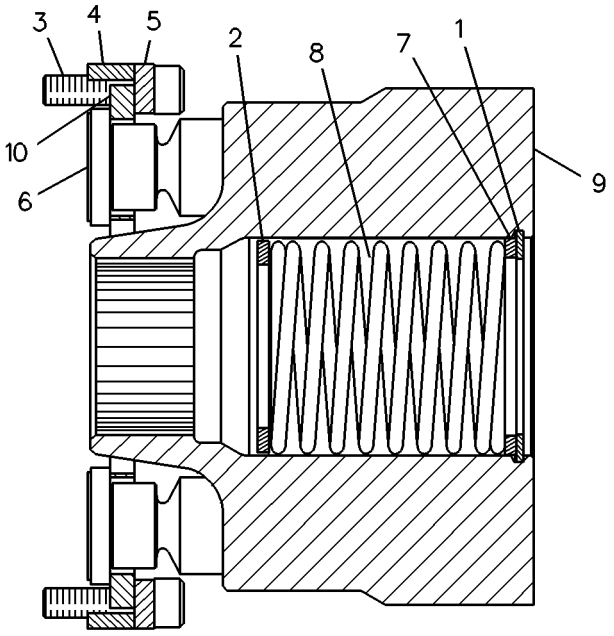

GRAPHIC #1 **<END>** g00083062

259-5504 ROTATING GP-PUMP–BRAKE, HYDRAULIC FAN

S/N: R9J1-UP

PART OF 250-8337 PUMP GP-PISTON

SMCS-5070 **i02473874**

NOTE	REF NO	GRAPHIC REF	PART NUMBER	QTY	PART NAME 1 2 3 4 5 6 (PRODUCT LEVEL)	SEE PAGE
	1	1	**259-5501**	9	PISTON AS (ROTATING)	
	2	1	**259-5502**	1	BARREL	
	3	1	**259-5503**	1	PLATE	
	4	1	**155-9116**	1	GUIDE-BALL	
	5	1	**155-9117**	1	SPRING	
	6	1	**194-9479**	3	PIN	
	7	1	**194-9480**	1	RING-RETAINING	
	8	1	**194-9481**	1	DISC-THRUST	
	9	1	**194-9478**	1	PLATE-PORT	

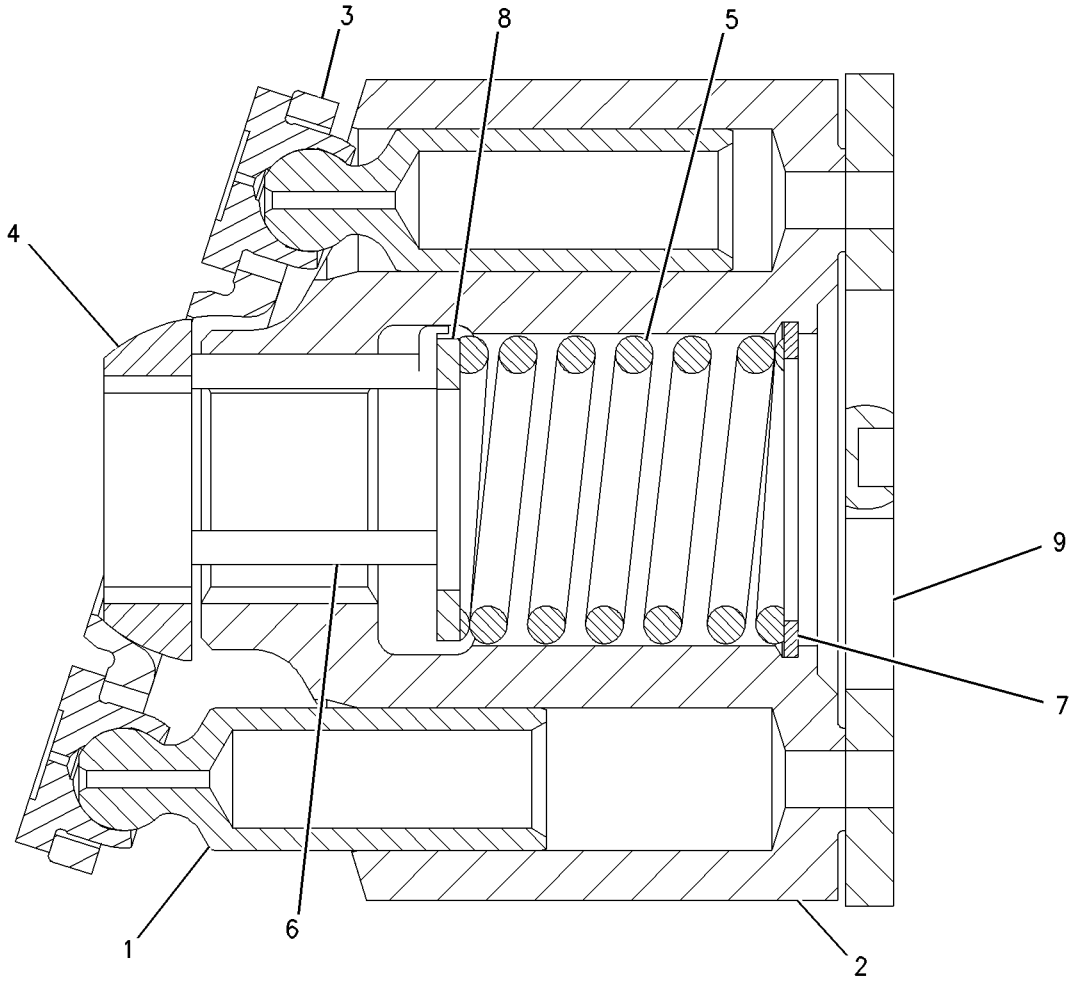

GRAPHIC #1 **<END>** g00768329

HYDRAULIC SYSTEM

184-1527 SWASHPLATE GP

S/N: R9J1-UP

PART OF 246-4486 PUMP GP-PISTON

SMCS-5070 **i01247539**

NOTE	PART NUMBER	QTY	PART NAME 1 2 3 4 5 6 (PRODUCT LEVEL)	SEE PAGE
	1H-3937	2	PIN	
	167-1801	2	STOP-SWASHPLATE	

<END>

260-6502 SWIVEL GP—CIRCLE DRIVE

S/N: R9J1-UP

PART OF 282-8869 LINES GP-ACCUMULATOR, 282-8868, 351-8252, 351-8254, 364-1282, 366-3382 LINES GP-HYDRAULIC

AN ATTACHMENT

SMCS-5060 **i02348806**

NOTE	REF NO	GRAPHIC REF	PART NUMBER	QTY	PART NAME 1 2 3 4 5 6 (PRODUCT LEVEL)	SEE PAGE
B	1	1	**5J-1246**	6	SHIM (0.13-MM THK)	
	2	1	**8J-2331**	7	SEAL	
	3	1	**173-1008**	1	ROTOR	
	4	1	**173-1009**	1	RETAINER	
	5	1	**223-0580**	1	COVER	
	7	1	**260-6501**	1	BODY	
	8	1	**173-1007**	2	SEAL	
	9	1	**1P-3700**	4	SEAL-RECTANGULAR	
	10	1	**2H-3928**	7	SEAL-O-RING	
	11	1	**4J-9964**	2	SEAL	
	12	1	**5P-2566**	6	BOLT (1/2-13X1.5-IN)	
	13	1	**8T-4223**	4	WASHER-HARD (13.5X25.5X3-MM THK)	

B-USE AS REQUIRED

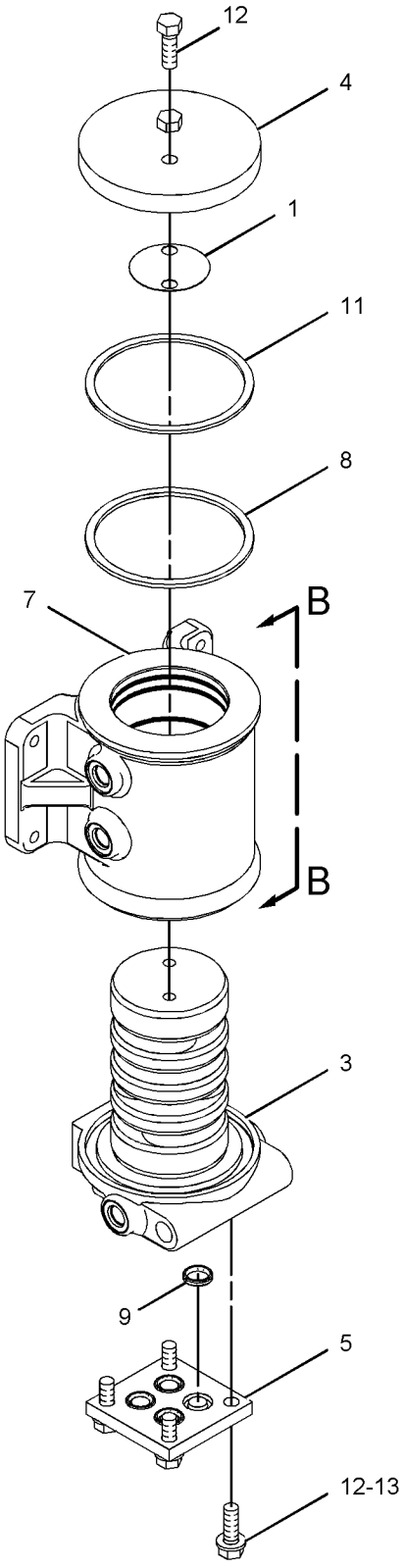

VIEW OF AREA A

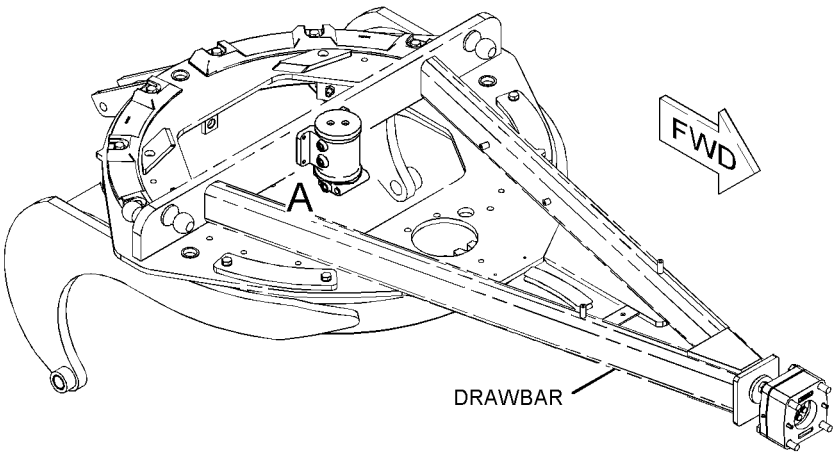

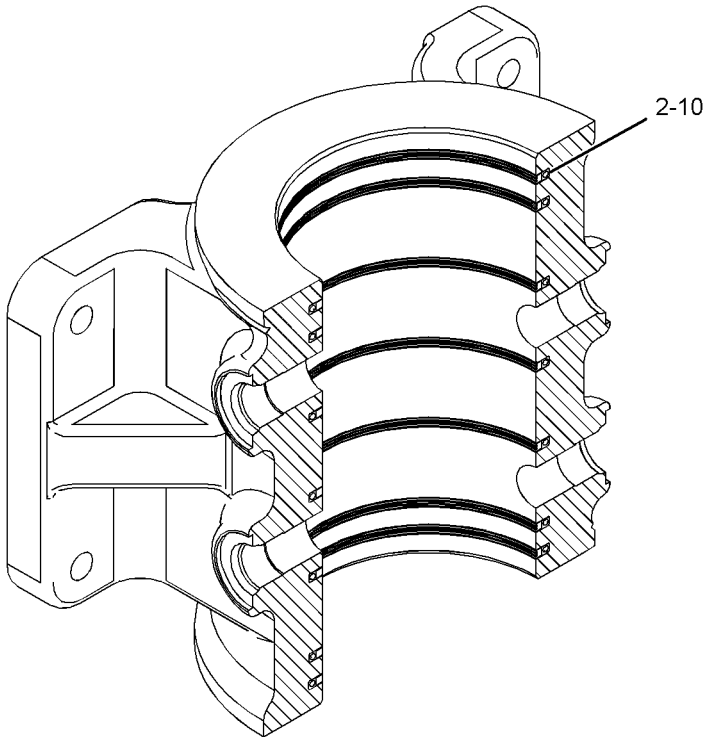

SECTION B-B

GRAPHIC #1 **<END>** g01142114

HYDRAULIC SYSTEM

233-4259 TANK & MTG GP-HYDRAULIC

S/N: R9J1-UP

PART OF 289-2108 SERVICE CENTER AR

SMCS-4332, 5056, 5068 **i02959357**

NOTE	REF NO	GRAPHIC REF	PART NUMBER	QTY	PART NAME 1 2 3 4 5 6 (PRODUCT LEVEL)	SEE PAGE
	1	1	**1P-4278**	3	CLAMP-HOSE	
	2	1	**9R-9925**	1	FILTER ELEMENT-BREATHER (HYDRAULIC TANK)	
Y	3	1	*241-3867*	1	TANK GP-HYDRAULIC	705
	4	1	**250-2784**	1	STRAP AS	
	5	1	**4H-2558**	1	GROMMET	
	6	1	**6D-3479**	4	CLIP	
	7	1	**287-7843**	1	PLATE AS	
M	8	1	**8T-0389**	1	LOCKNUT (M10X1.5-THD)	
	9	1	**8T-4121**	7	WASHER-HARD (11X21X2.5-MM THK)	
M	10	1	**8T-4136**	1	BOLT (M10X1.5X25-MM)	
M	11	1	**8T-4137**	5	BOLT (M10X1.5X20-MM)	
E	12	1	**5P-1442**		HOSE (102.4-CM)	
E	12A	1	**5P-1442**		HOSE (15.4-CM)	

E-ORDER BY THE CENTIMETER
M-METRIC PART
Y-SEPARATE ILLUSTRATION

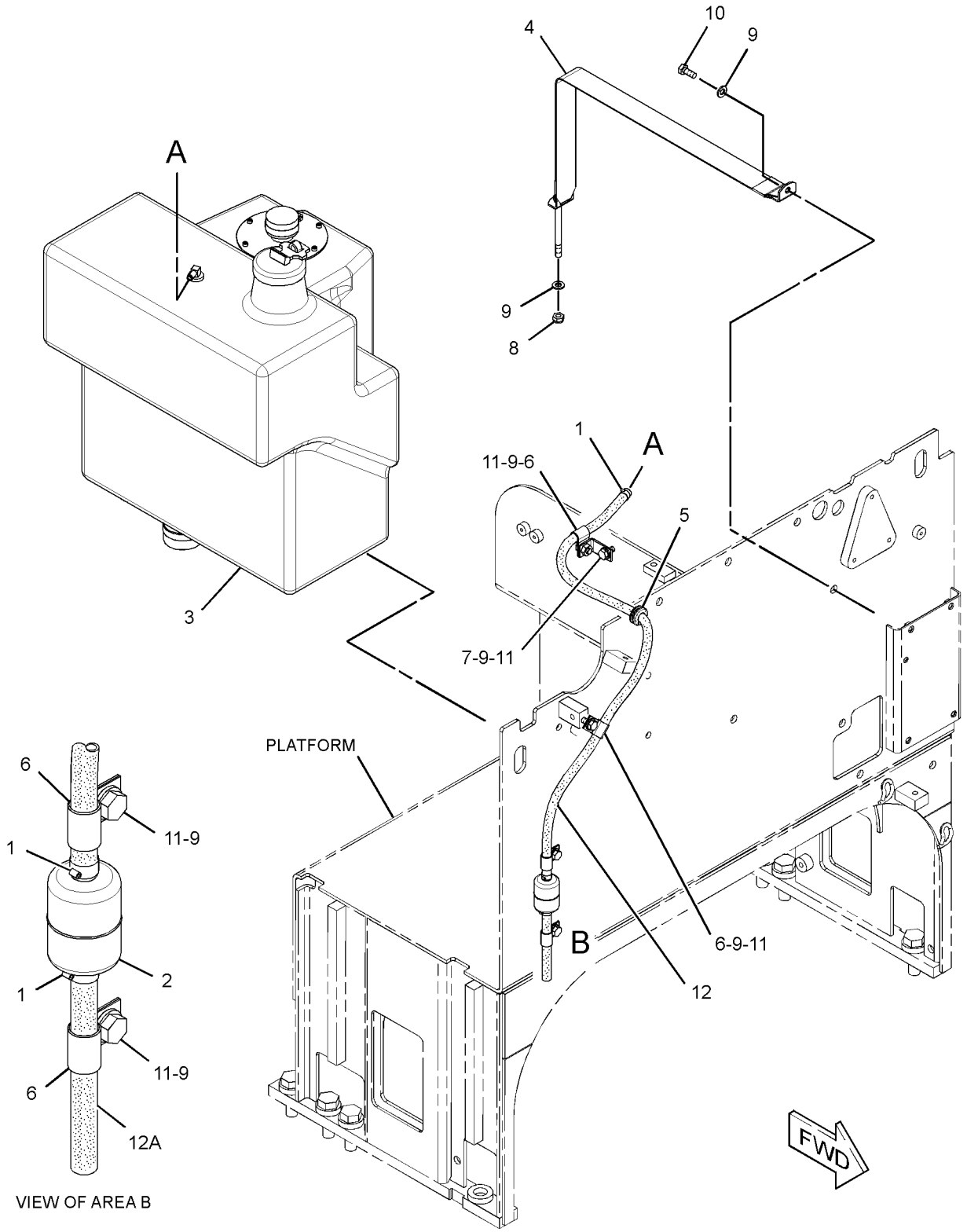

GRAPHIC #1 **<END>** g01502610

HYDRAULIC SYSTEM

241-3867 TANK GP-HYDRAULIC

S/N: R9J1-UP
90-LITER (23.8-US GAL)
PART OF 233-4259 TANK & MTG GP-HYDRAULIC

SMCS-4332, 5056, 5068 **i04033307**

NOTE	REF NO	GRAPHIC REF	PART NUMBER	QTY	PART NAME 1 2 3 4 5 6 (PRODUCT LEVEL)	SEE PAGE
	1	1	**6W-5698**	1	GROMMET	
	2	1	**142-8928**	1	ELBOW	
	3	1	**142-8937**	1	CAP AS-FILLER (HYDRAULIC TANK)	
	4	1	**241-3868**	1	TANK AS-HYDRAULIC	
	5	1	**250-3443**	1	TUBE AS	
	6	1	**265-5644**	1	GAUGE GP-SIGHT (HYDRAULIC TANK OIL)	
M	7	1	**125-3298**	6	BOLT-SOCKET HEAD (M5X0.8X12-MM)	
	8	1	**132-3056**	1	SEAL-O-RING	
	9	1	**206-8818**	1	STRAINER (HYDRAULIC TANK)	

M-METRIC PART

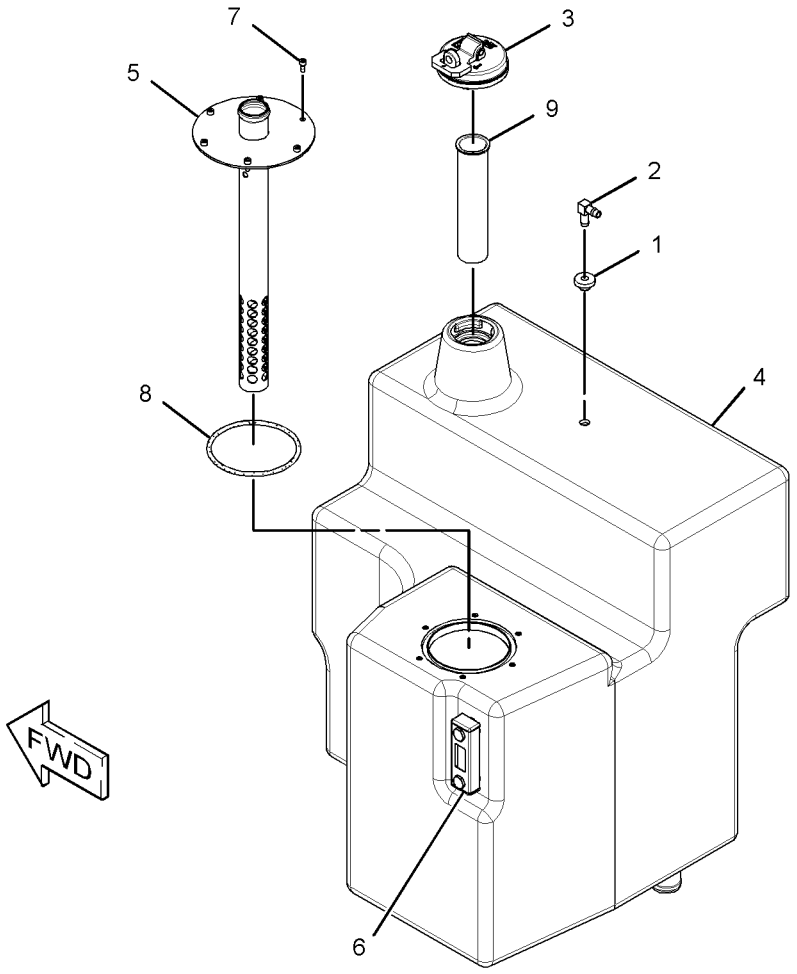

GRAPHIC #1 **<END>** g01502216

HYDRAULIC SYSTEM

308-0935 VALVE GP-BANK 1

S/N: R9J1-UP

PART OF 344-7823 LINES GP-STEERING

SMCS-5051 **i02779192**

NOTE	REF NO	GRAPHIC REF	PART NUMBER	QTY	PART NAME 1 2 3 4 5 6 (PRODUCT LEVEL)	SEE PAGE
	1	1	**192-7507**	1	SEAL-O-RING	
	2	1	**9T-4057**	5	SEAL-O-RING	
	3	1	**8T-7877**	8	SEAL-O-RING	
	4	1	**192-7510**	3	SEAL-O-RING	
	5	1	**5L-4758**	1	SEAL-O-RING	
	6	1	**192-7508**	2	SEAL-O-RING	
	7	1	**301-5166**	1	KIT-SEAL (BANK VALVE)	
					(INCLUDES O-RINGS)	
L	8	1	**308-0938**	1	VALVE GP-ACTUATOR	
M		1	**1R-5396**	4	BOLT (M6X1X35-MM)	
	9	1	**301-6821**	2	VALVE GP-RELIEF (STEERING PILOT PRESSURE)	
					PARTS SHOWN IN GRAPHIC(S) WITHOUT A REFERENCE NUMBER ARE NOT SERVICED SEPARATELY	
					AVAILABLE REPAIR KIT(S):	
			301-5165	1	KIT-SEAL (BANK VALVE)	
					(INCLUDES PARTS MARKED J IN GRAPHIC)	
L			**301-5167**	1	KIT-SEAL (BANK VALVE)	
					(INCLUDES PARTS MARKED K IN GRAPHIC)	

L-KIT MARKED L SERVICES PARTS MARKED L
M-METRIC PART

308-0935 VALVE GP-BANK 1 *(contd.)* **i02779192**

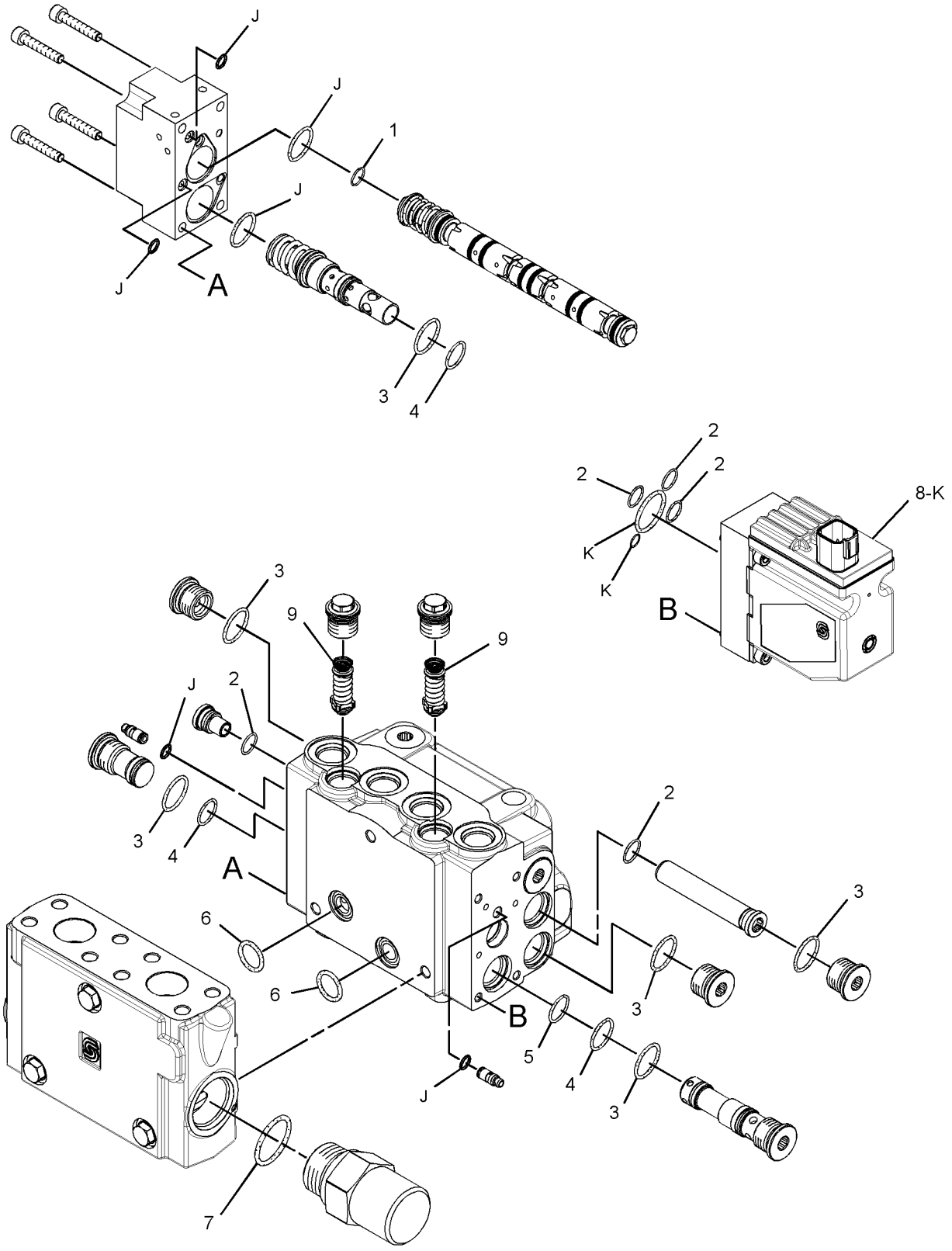

GRAPHIC #1 **<END>** g01460168

HYDRAULIC SYSTEM

259-6923 VALVE GP-BANK 3

S/N: R9J1-UP
PART OF 248-4151 CONTROL AR-HYDRAULIC
AN ATTACHMENT

SMCS-5051 **i04035023**

NOTE	REF NO	GRAPHIC REF	PART NUMBER	QTY	PART NAME 1 2 3 4 5 6 (PRODUCT LEVEL)	SEE PAGE
	2	1	**243-3662**	4	SEAL-INTEGRAL	
	3	1	**249-5636**	4	ROD	
Y	4	1	**259-6912**	1	VALVE GP-CONTROL (ARTICULATION)	735
Y	5	1	**261-3268**	1	VALVE GP-CONTROL (BLADE LIFT, LH)	743
Y	5A	1	**261-3268**	1	VALVE GP-CONTROL (BLADE LIFT, RH)	743
	7	1	**273-1871**	1	COVER	
Y	8	1	**292-2034**	1	MANIFOLD GP-VALVE (INLET)	686
	9	1	*292-9221*	1	PLUG AS	
		1	**292-9220**	1	PLUG	
		1	**294-8055**	1	SEAL-O-RING	
	10	1	*148-8411*	6	PLUG AS	
					(EACH INCLUDES)	
		1	**9S-4185**	1	PLUG-O-RING	
		1	**3K-0360**	1	SEAL-O-RING	
	11	1	**8T-4121**	4	WASHER-HARD (11X21X2.5-MM THK)	
M	12	1	**8T-4133**	4	NUT (M10X1.5-THD)	

M-METRIC PART
Y-SEPARATE ILLUSTRATION

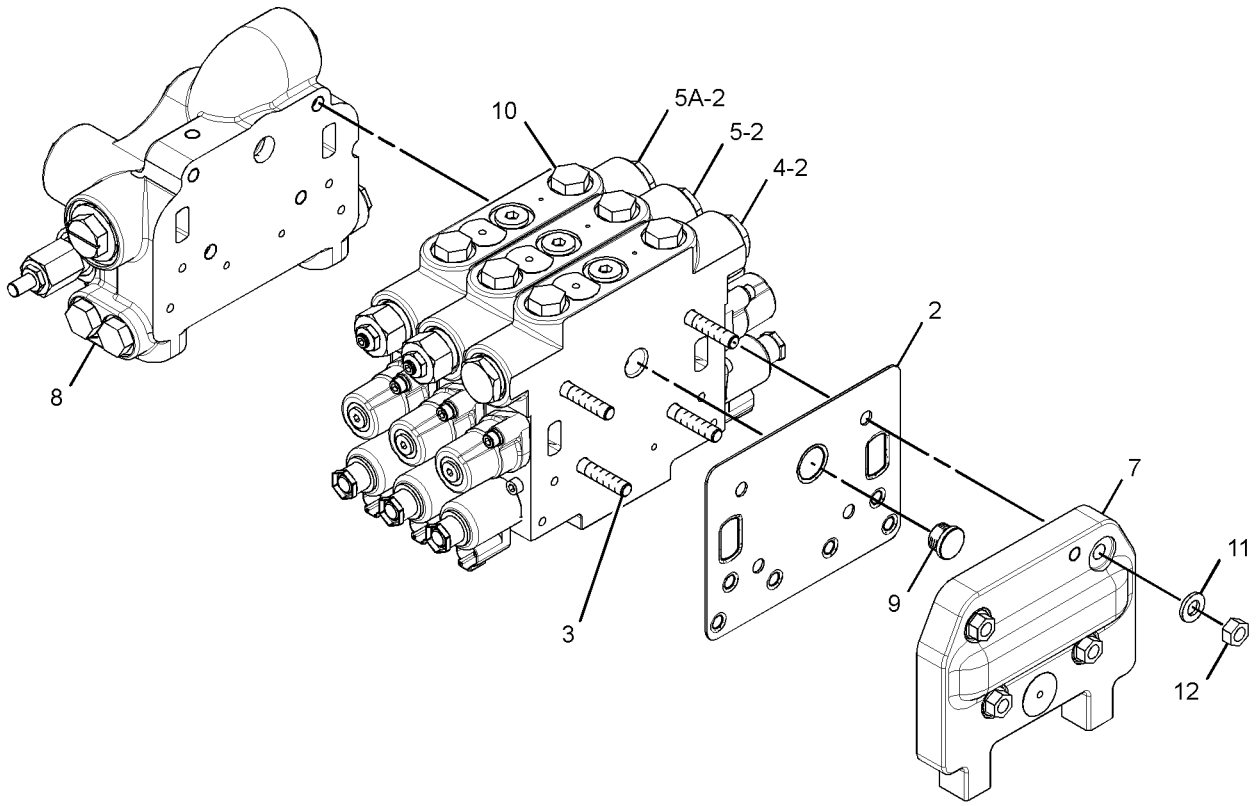

GRAPHIC #1 **<END>** g01344128

259-6924 VALVE GP-BANK 4—REAR FRAME

S/N: R9J1-UP

PART OF 252-4676, 351-2406, 351-2407 CONTROL AR-HYDRAULIC AN ATTACHMENT

SMCS-5051 **i02942058**

NOTE	REF NO	GRAPHIC REF	PART NUMBER	QTY	PART NAME 1 2 3 4 5 6 (PRODUCT LEVEL)	SEE PAGE
	2	1	**243-3662**	5	SEAL-INTEGRAL	
	3	1	**248-6175**	4	ROD	
Y	4	1	**259-6912**	1	VALVE GP-CONTROL (ARTICULATION)	735
Y	5	1	**259-6913**	1	VALVE GP-CONTROL (RIPPER)	737
Y	6	1	**261-3268**	1	VALVE GP-CONTROL (BLADE LIFT, LH)	743
Y	6A	1	**261-3268**	1	VALVE GP-CONTROL (BLADE LIFT, RH)	743
	8	1	**273-1871**	1	COVER	
Y	9	1	**292-2034**	1	MANIFOLD GP-VALVE	686
	10	1	*292-9221*	1	PLUG AS	
		1	**292-9220**	1	PLUG	
		1	**294-8055**	1	SEAL-O-RING	
	11	1	*148-8411*	8	PLUG AS	
					(EACH INCLUDES)	
		1	**9S-4185**	1	PLUG-O-RING	
		1	**3K-0360**	1	SEAL-O-RING	
	12	1	**8T-4121**	4	WASHER-HARD (11X21X2.5-MM THK)	
M	13	1	**8T-4133**	4	NUT (M10X1.5-THD)	

M-METRIC PART
Y-SEPARATE ILLUSTRATION

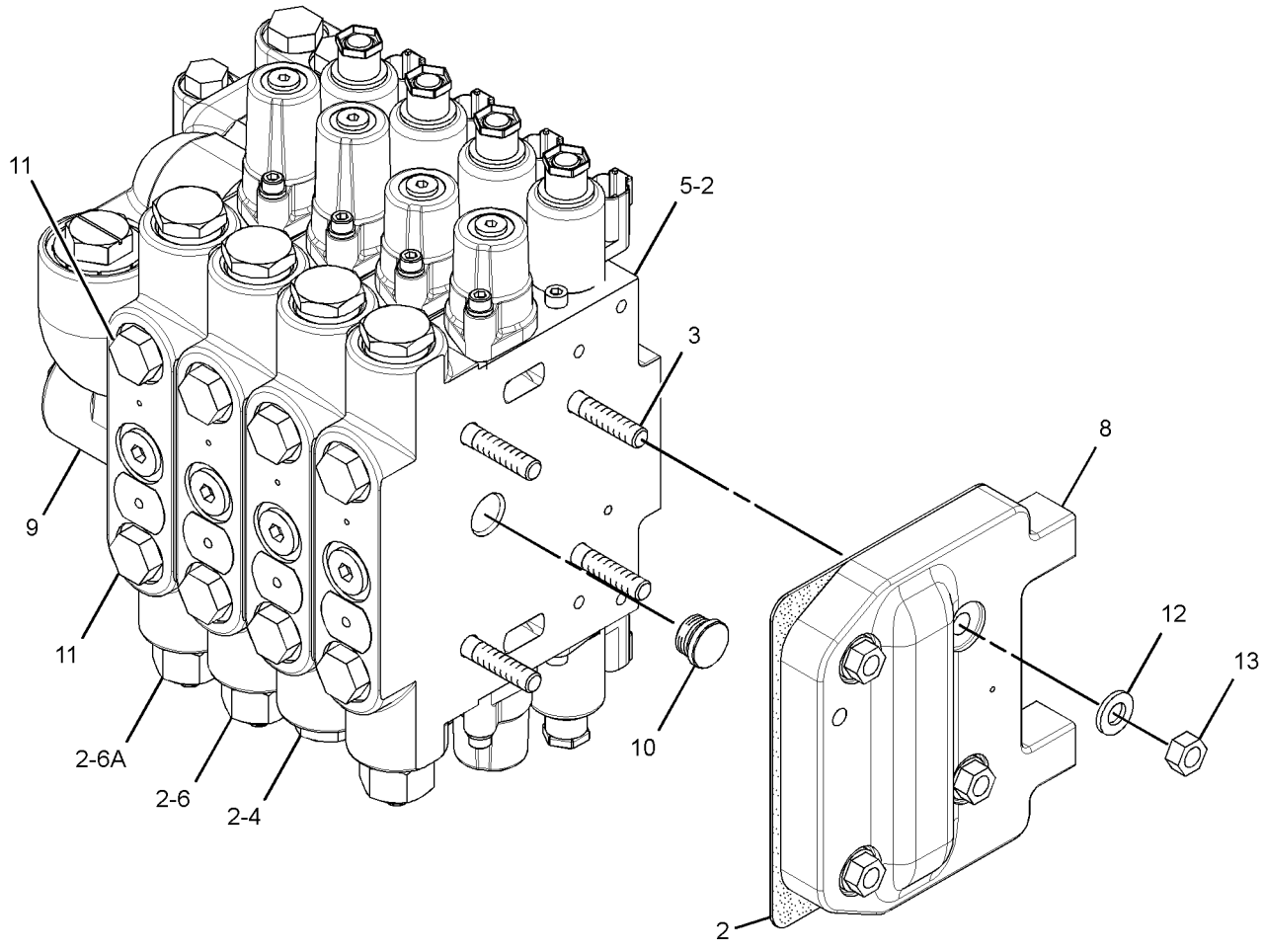

GRAPHIC #1 **<END>** g01345784

HYDRAULIC SYSTEM

259-6919 VALVE GP-BANK 5

S/N: R9J1-UP
PART OF 248-4151, 252-4676 CONTROL AR-HYDRAULIC
AN ATTACHMENT

SMCS-5051 **i04035026**

NOTE	REF NO	GRAPHIC REF	PART NUMBER	QTY	PART NAME 1 2 3 4 5 6 (PRODUCT LEVEL)	SEE PAGE
	2	1	**243-3662**	6	SEAL-INTEGRAL	
	3	1	**248-6174**	4	ROD	
Y	4	1	**259-6896**	1	VALVE GP-CONTROL (BLADE TIP)	721
Y	5	1	**259-6903**	1	VALVE GP-CONTROL (SIDESHIFT)	723
Y	6	1	**259-6906**	1	VALVE GP-CONTROL (CENTERSHIFT)	725
Y	7	1	**259-6907**	1	VALVE GP-CONTROL (CIRCLE DRIVE)	727
Y	8	1	**259-6908**	1	VALVE GP-CONTROL (WHEEL LEAN)	729
	10	1	**273-1871**	1	COVER	
Y	11	1	**292-2033**	1	MANIFOLD GP-VALVE (INLET)	685
	12	1	*292-9221*	1	PLUG AS	
		1	**292-9220**	1	PLUG	
		1	**294-8055**	1	SEAL-O-RING	
	13	1	*148-8411*	10	PLUG AS	
					(EACH INCLUDES)	
		1	**9S-4185**	1	PLUG-O-RING	
		1	**3K-0360**	1	SEAL-O-RING	
	14	1	**8T-4121**	4	WASHER-HARD (11X21X2.5-MM THK)	
M	15	1	**8T-4133**	4	NUT (M10X1.5-THD)	

M-METRIC PART
Y-SEPARATE ILLUSTRATION

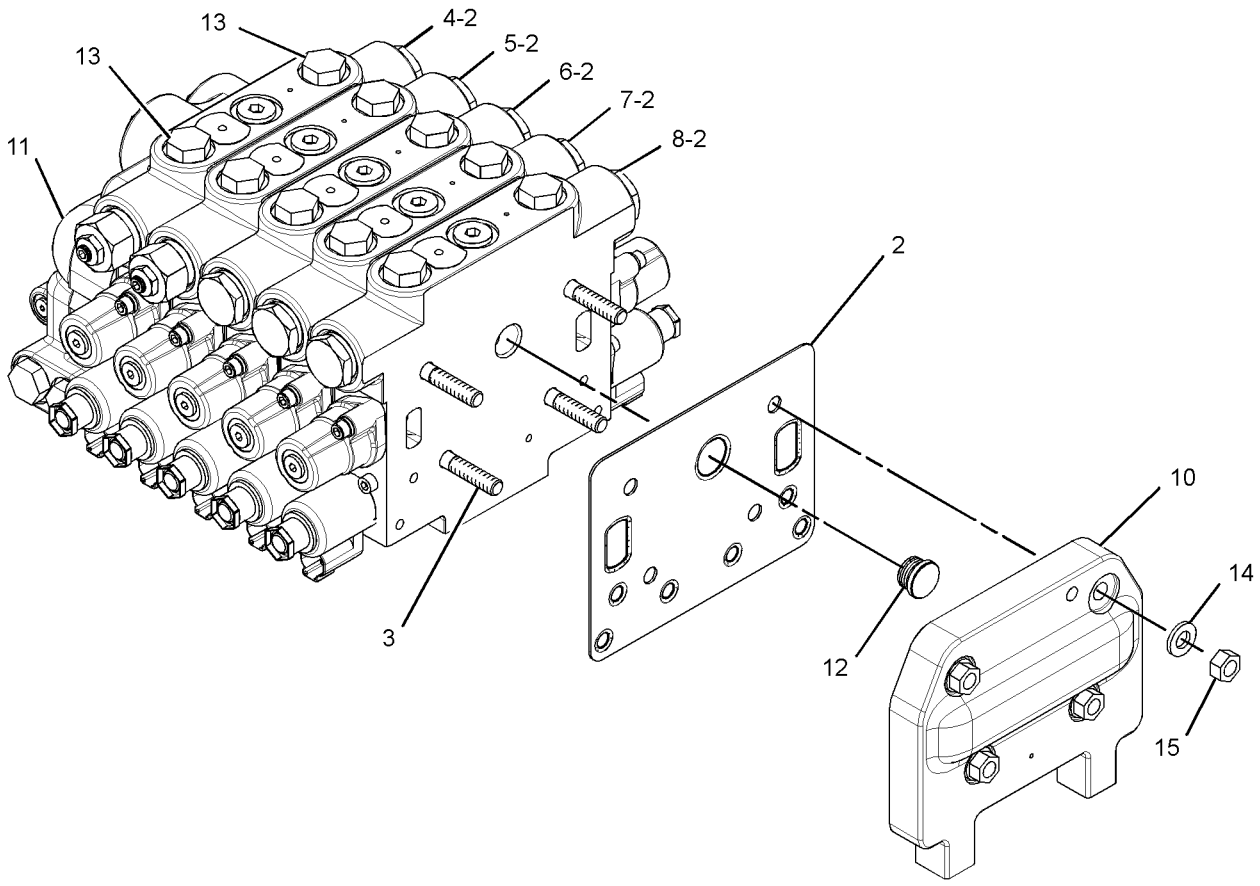

GRAPHIC #1 **<END>** g01344022

259-6920 VALVE GP-BANK 6

S/N: R9J1-UP
PART OF 351-2408, 351-2409 CONTROL AR-HYDRAULIC
AN ATTACHMENT

SMCS-5051 **i04035028**

NOTE	REF NO	GRAPHIC REF	PART NUMBER	QTY	PART NAME 1 2 3 4 5 6 (PRODUCT LEVEL)	SEE PAGE
	2	1	**243-3662**	7	SEAL-INTEGRAL	
	3	1	**249-5334**	4	ROD	
Y	4	1	**259-6896**	1	VALVE GP-CONTROL (BLADE TIP)	721
Y	5	1	**259-6903**	1	VALVE GP-CONTROL (SIDESHIFT)	723
Y	6	1	**259-6906**	1	VALVE GP-CONTROL (CENTERSHIFT)	725
Y	7	1	**259-6907**	1	VALVE GP-CONTROL (CIRCLE DRIVE)	727
Y	8	1	**259-6908**	1	VALVE GP-CONTROL (WHEEL LEAN)	729
Y	9	1	**259-6909**	1	VALVE GP-CONTROL (PLOW, BULLDOZER LIFT)	731
	11	1	**273-1871**	1	COVER	
Y	12	1	**292-2033**	1	MANIFOLD GP-VALVE (INLET)	685
	13	1	*292-9221*	1	PLUG AS	
		1	**292-9220**	1	PLUG	
		1	**294-8055**	1	SEAL-O-RING	
	14	1	*148-8411*	12	PLUG AS	
					(EACH INCLUDES)	
		1	**9S-4185**	1	PLUG-O-RING	
		1	**3K-0360**	1	SEAL-O-RING	
	15	1	**8T-4121**	4	WASHER-HARD (11X21X2.5-MM THK)	
M	16	1	**8T-4133**	4	NUT (M10X1.5-THD)	

M-METRIC PART
Y-SEPARATE ILLUSTRATION

259-6920 VALVE GP-BANK 6 *(contd.)* i04035028

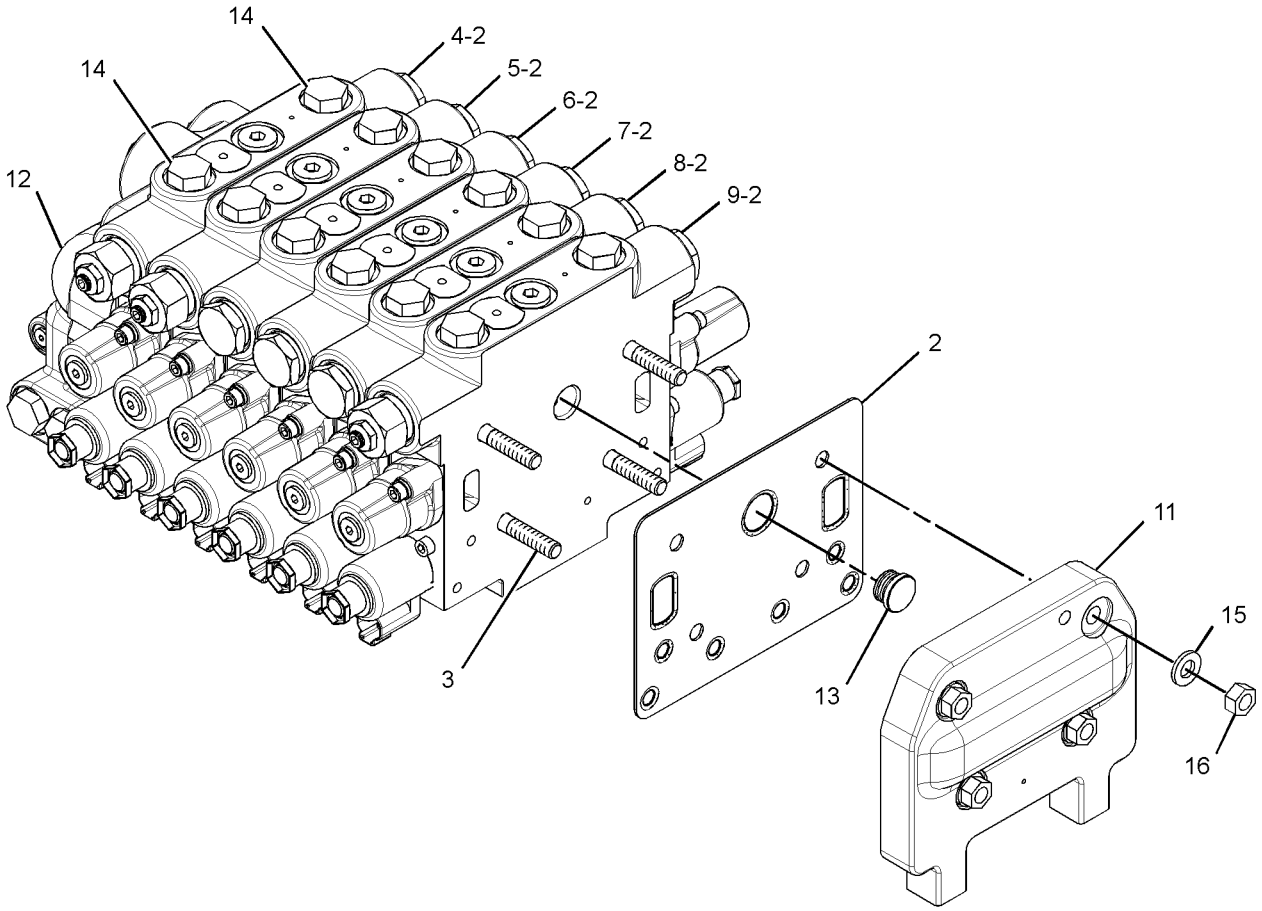

GRAPHIC #1 **<END>** g01344484

HYDRAULIC SYSTEM

259-6925 VALVE GP-BANK 6

S/N: R9J1-UP

PART OF 351-2409, 351-2410 CONTROL AR-HYDRAULIC

AN ATTACHMENT

SMCS-5051 **i04035030**

NOTE	REF NO	GRAPHIC REF	PART NUMBER	QTY	PART NAME 1 2 3 4 5 6 (PRODUCT LEVEL)	SEE PAGE
	2	1	**243-3662**	7	SEAL-INTEGRAL	
	3	1	**249-5334**	4	ROD	
Y	4	1	**259-6912**	1	VALVE GP-CONTROL (ARTICULATION)	735
Y	5	1	**259-6913**	1	VALVE GP-CONTROL (RIPPER)	737
Y	6	1	**259-6914**	1	VALVE GP-CONTROL (WING LIFT)	739
Y	7	1	**259-6915**	1	VALVE GP-CONTROL (WING TILT)	741
Y	9	1	**261-3268**	1	VALVE GP-CONTROL (BLADE LIFT, LH)	743
Y	9A	1	**261-3268**	1	VALVE GP-CONTROL (BLADE LIFT, RH)	743
	10	1	**273-1871**	1	COVER	
Y	11	1	**292-2034**	1	MANIFOLD GP-VALVE (INLET)	686
	12	1	*292-9221*	1	PLUG AS	
		1	**292-9220**	1	PLUG	
		1	**294-8055**	1	SEAL-O-RING	
	13	1	*148-8411*	12	PLUG AS	
					(EACH INCLUDES)	
		1	**9S-4185**	1	PLUG-O-RING	
		1	**3K-0360**	1	SEAL-O-RING	
	14	1	**8T-4121**	4	WASHER-HARD (11X21X2.5-MM THK)	
M	15	1	**8T-4133**	4	NUT (M10X1.5-THD)	

M-METRIC PART
Y-SEPARATE ILLUSTRATION

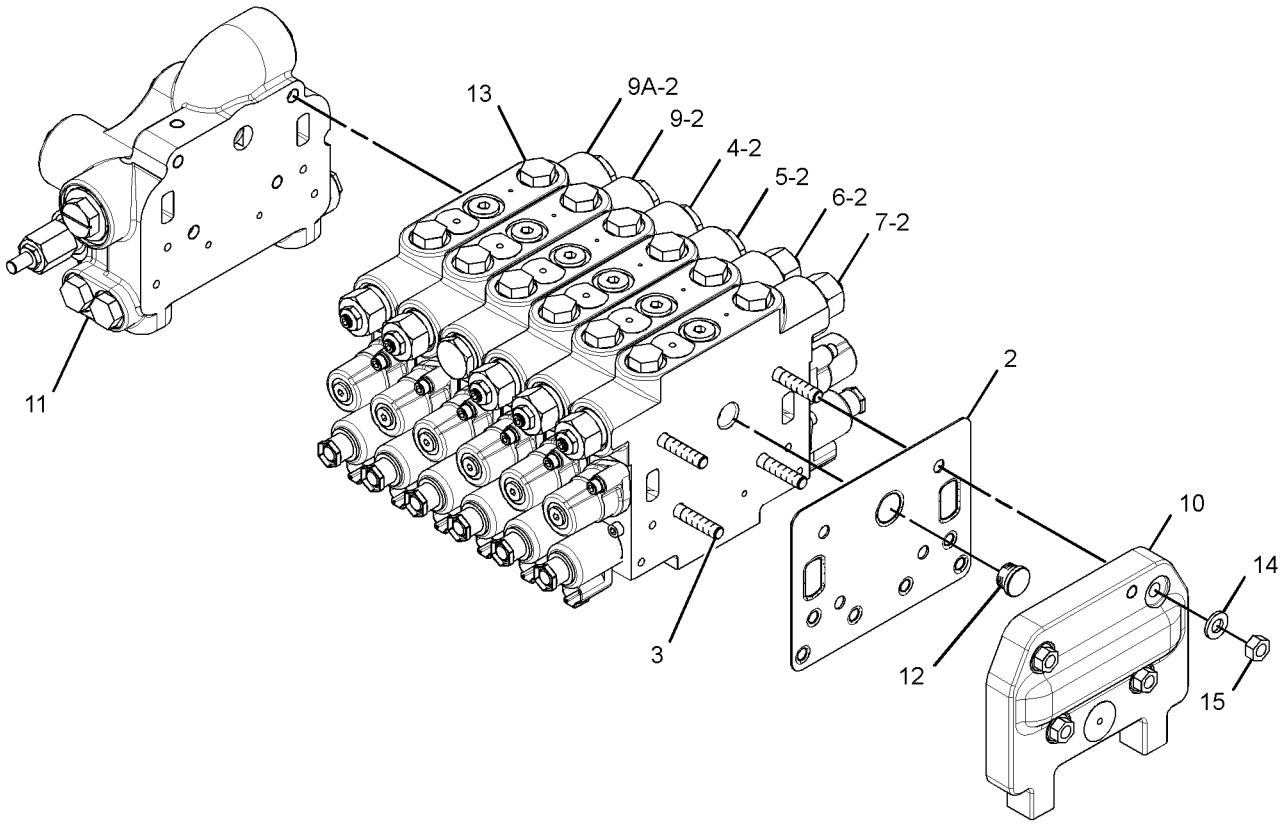

GRAPHIC #1 **<END>** g01344526

291-9518 VALVE GP-BANK 6

S/N: R9J1-UP

PART OF 351-2408, 351-2411, 351-2412 CONTROL AR-HYDRAULIC AN ATTACHMENT

SMCS-5051 **i04033310**

NOTE	REF NO	GRAPHIC REF	PART NUMBER	QTY	PART NAME 1 2 3 4 5 6 (PRODUCT LEVEL)	SEE PAGE
	2	1	**243-3662**	7	SEAL-INTEGRAL	
	3	1	**249-5334**	4	ROD	
Y	4	1	**261-3268**	2	VALVE GP-CONTROL (BLADE LIFT)	743
Y	5	1	**259-6912**	1	VALVE GP-CONTROL (ARTICULATION)	735
Y	6	1	**259-6913**	1	VALVE GP-CONTROL (RIPPER)	737
Y	7	1	**259-6914**	1	VALVE GP-CONTROL (WING LIFT)	739
	8	1	**273-1871**	1	COVER	
Y	9	1	**290-0594**	1	VALVE GP-CONTROL (WING TILT)	745
Y	10	1	**292-2034**	1	MANIFOLD GP-VALVE (INLET)	686
	11	1	*292-9221*	1	PLUG AS	
		1	**292-9220**	1	PLUG	
		1	**294-8055**	1	SEAL-O-RING	
	13	1	*148-8411*	12	PLUG AS	
					(EACH INCLUDES)	
		1	**9S-4185**	1	PLUG-O-RING	
		1	**3K-0360**	1	SEAL-O-RING	
	14	1	**8T-4121**	4	WASHER-HARD (11X21X2.5-MM THK)	
M	15	1	**8T-4133**	4	NUT (M10X1.5-THD)	

M-METRIC PART
Y-SEPARATE ILLUSTRATION

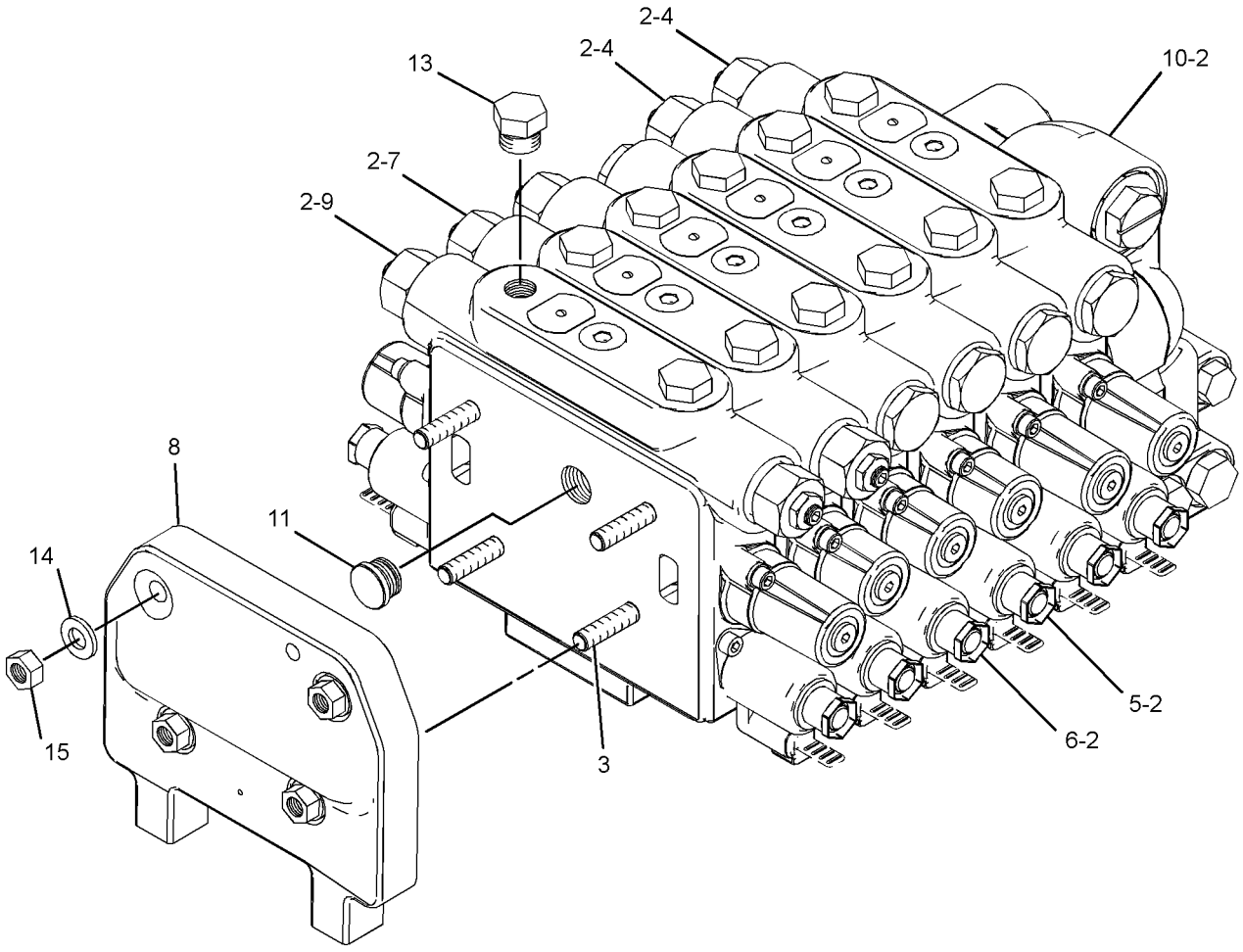

GRAPHIC #1 **<END>** g01306517

HYDRAULIC SYSTEM

259-6921 VALVE GP-BANK 7

S/N: R9J1-UP

PART OF 351-2406, 351-2410, 351-2411 CONTROL AR-HYDRAULIC

AN ATTACHMENT

SMCS-5051 **i04040316**

NOTE	REF NO	GRAPHIC REF	PART NUMBER	QTY	PART NAME 1 2 3 4 5 6 (PRODUCT LEVEL)	SEE PAGE
	2	1	**243-3662**	8	SEAL-INTEGRAL	
	3	1	**246-3193**	4	ROD	
Y	4	1	**259-6896**	1	VALVE GP-CONTROL (BLADE TIP)	721
Y	5	1	**259-6903**	1	VALVE GP-CONTROL (SIDESHIFT)	723
Y	6	1	**259-6906**	1	VALVE GP-CONTROL (CENTERSHIFT)	725
Y	7	1	**259-6907**	1	VALVE GP-CONTROL (CIRCLE DRIVE)	727
Y	8	1	**259-6908**	1	VALVE GP-CONTROL (WHEEL LEAN)	729
Y	9	1	**259-6909**	1	VALVE GP-CONTROL (PLOW, BULLDOZER LIFT)	731
Y	10	1	**259-6910**	1	VALVE GP-CONTROL (PLOW ANGLE)	733
	12	1	**273-1871**	1	COVER	
Y	13	1	**292-2033**	1	MANIFOLD GP-VALVE (INLET)	685
	14	1	*292-9221*	1	PLUG AS	
		1	**292-9220**	1	PLUG	
		1	**294-8055**	1	SEAL-O-RING	
	15	1	*148-8411*	14	PLUG AS	
					(EACH INCLUDES)	
		1	**9S-8005**	1	PLUG-O-RING	
		1	**3K-0360**	1	SEAL-O-RING	
	16	1	**8T-4121**	4	WASHER-HARD (11X21X2.5-MM THK)	
M	17	1	**8T-4133**	4	NUT (M10X1.5-THD)	

M-METRIC PART
Y-SEPARATE ILLUSTRATION

259-6921 VALVE GP-BANK 7 ***(contd.)*** **i04040316**

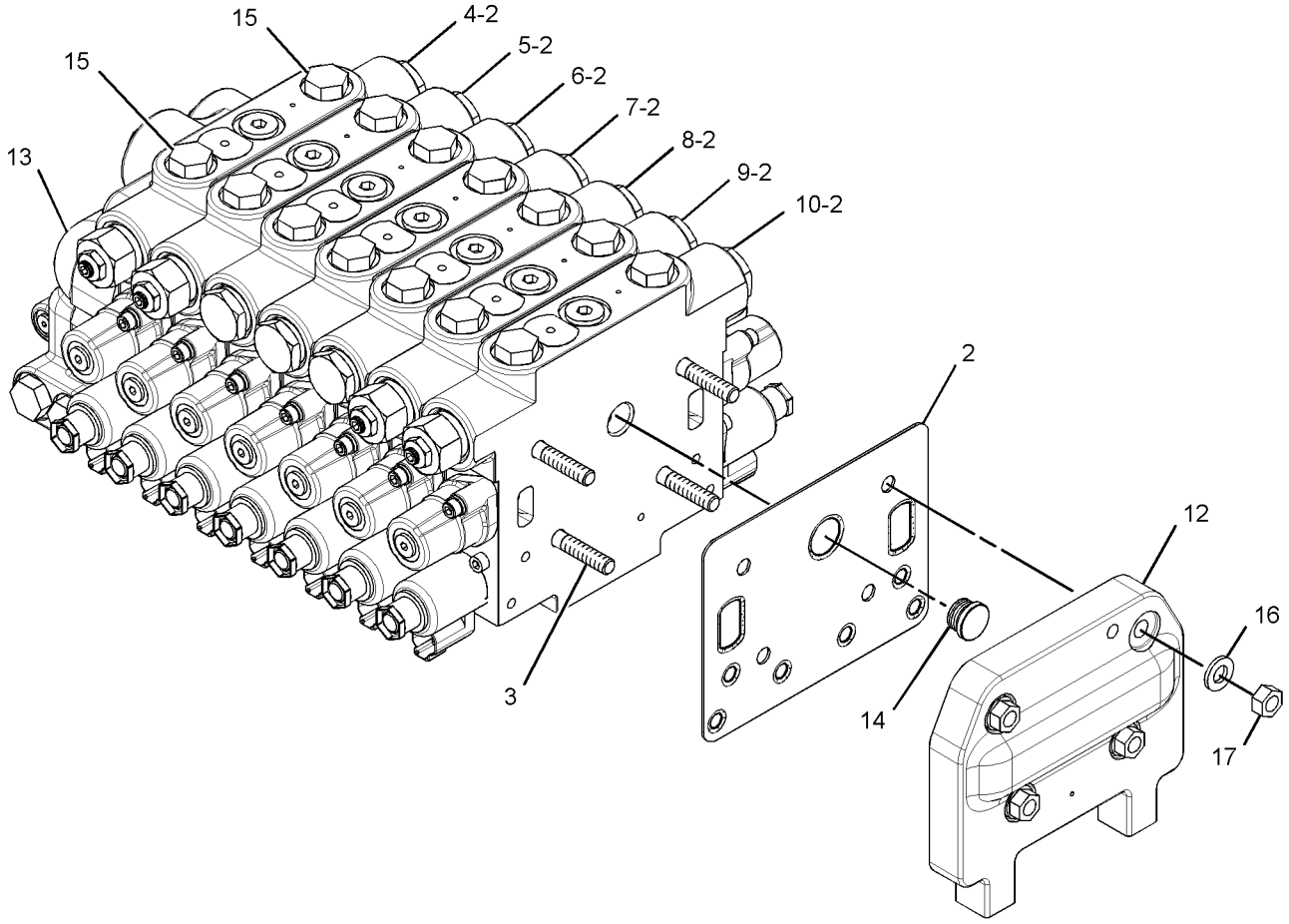

GRAPHIC #1 **<END>** g01344490

HYDRAULIC SYSTEM

259-6922 VALVE GP-BANK 8

S/N: R9J1-UP
PART OF 351-2407, 351-2412 CONTROL AR-HYDRAULIC
AN ATTACHMENT

SMCS-5051 **i04040098**

NOTE	REF NO	GRAPHIC REF	PART NUMBER	QTY	PART NAME 1 2 3 4 5 6 (PRODUCT LEVEL)	SEE PAGE
	2	1	**243-3662**	9	SEAL-INTEGRAL	
	3	1	**249-5637**	4	ROD	
Y	4	1	**259-6896**	1	VALVE GP-CONTROL (BLADE TIP)	721
Y	5	1	**259-6903**	1	VALVE GP-CONTROL (SIDESHIFT)	723
Y	6	1	**259-6906**	1	VALVE GP-CONTROL (CENTERSHIFT)	725
Y	7	1	**259-6907**	1	VALVE GP-CONTROL (CIRCLE DRIVE)	727
Y	8	1	**259-6908**	1	VALVE GP-CONTROL (WHEEL LEAN)	729
Y	9	1	**259-6909**	1	VALVE GP-CONTROL (PLOW, BULLDOZER LIFT)	731
Y	10	1	**259-6910**	2	VALVE GP-CONTROL (PLOW ANGLE)	733
	12	1	**273-1871**	1	COVER	
Y	13	1	**292-2033**	1	MANIFOLD GP-VALVE (INLET)	685
	14	1	*292-9221*	1	PLUG AS	
		1	**292-9220**	1	PLUG	
		1	**294-8055**	1	SEAL-O-RING	
	15	1	*148-8411*	16	PLUG AS	
					(EACH INCLUDES)	
		1	**9S-4185**	1	PLUG-O-RING	
		1	**3K-0360**	1	SEAL-O-RING	
	16	1	**8T-4121**	4	WASHER-HARD (11X21X2.5-MM THK)	
M	17	1	**8T-4133**	4	NUT (M10X1.5-THD)	

M-METRIC PART
Y-SEPARATE ILLUSTRATION

259-6922 VALVE GP-BANK 8 *(contd.)* **i04040098**

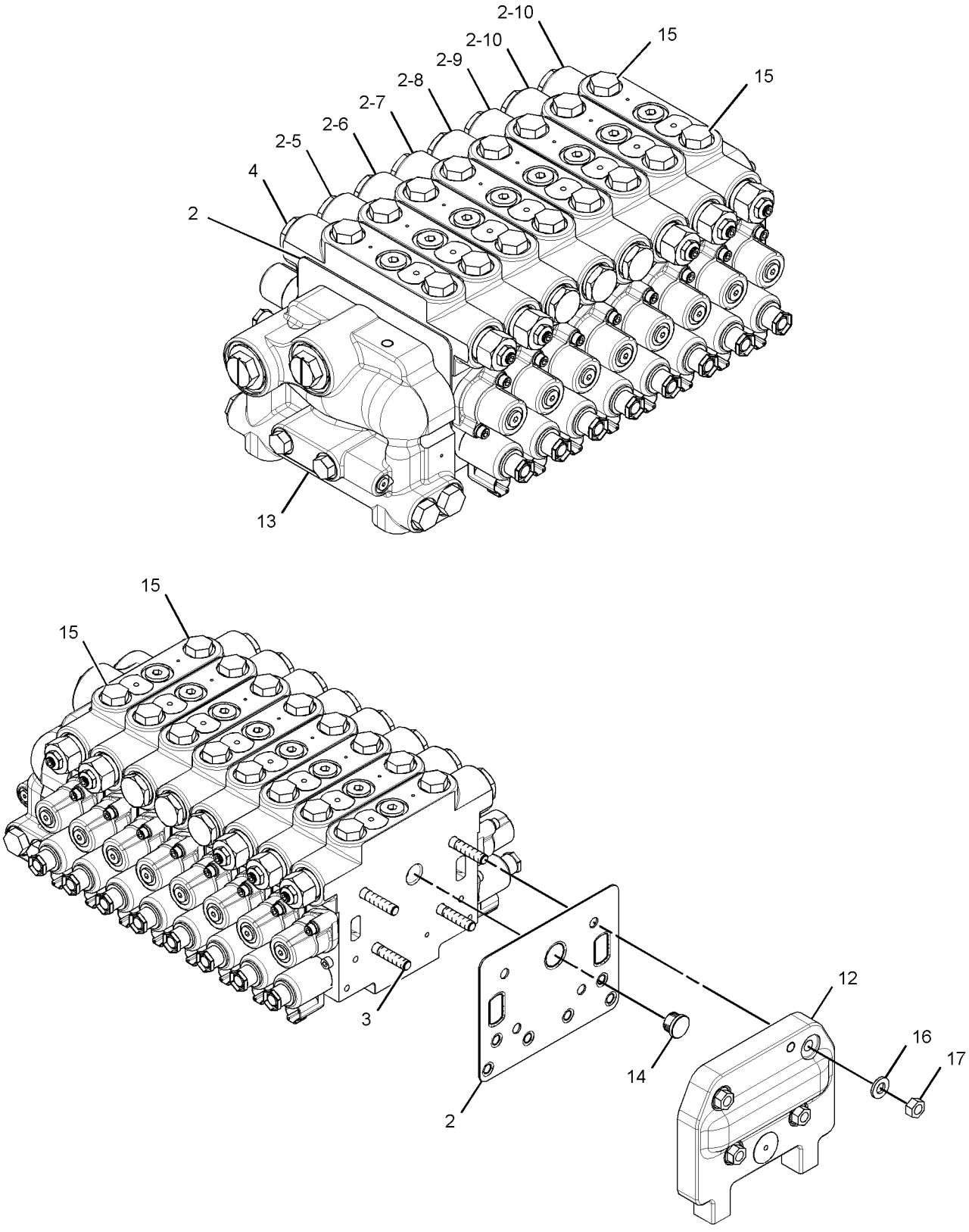

GRAPHIC #1 **<END>** g01344063

6E-4701 VALVE GP-CHECK

S/N: R9J1-UP
PART OF 235-6405, 351-8250 LINES GP-CENTERSHIFT LOCK
AN ATTACHMENT

SMCS-5067 **i03619401**

NOTE	REF NO	GRAPHIC REF	PART NUMBER	QTY	PART NAME 1 2 3 4 5 6 (PRODUCT LEVEL)	SEE PAGE
	1	1	**3J-1907**	1	SEAL-O-RING	
	2	1	**6V-8397**	1	SEAL-O-RING	

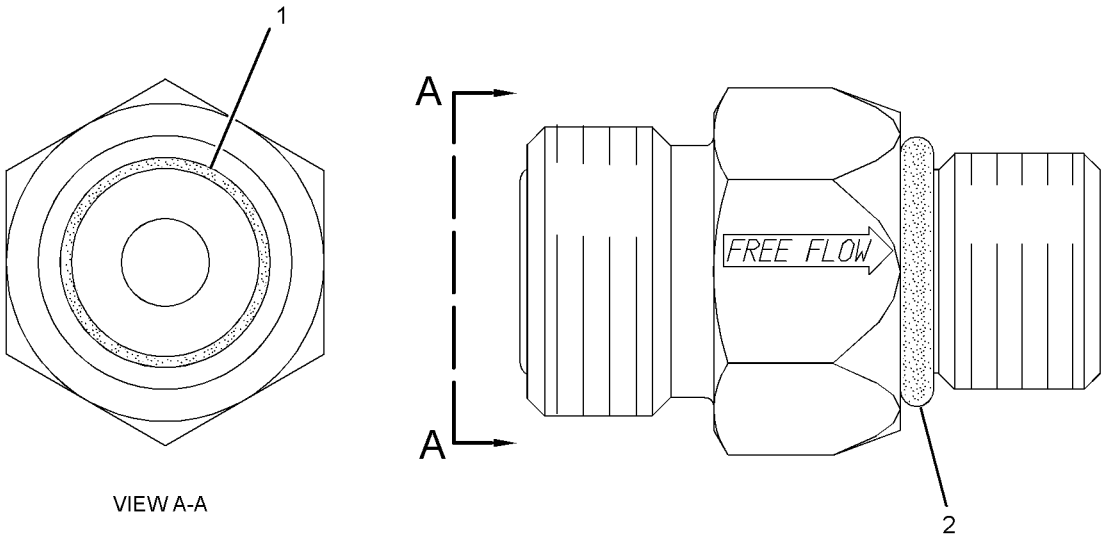

GRAPHIC #1 **<END>** g01944653

HYDRAULIC SYSTEM

259-6896 VALVE GP-CONTROL—BLADE TIP

S/N: R9J1-UP

PART OF 259-6919 VALVE GP-BANK 5, 259-6920 VALVE GP-BANK 6, 259-6921 VALVE GP-BANK 7, 259-6922 VALVE GP-BANK 8

AN ATTACHMENT

SMCS-5051 **i03887790**

NOTE	REF NO	GRAPHIC REF	PART NUMBER	QTY	PART NAME 1 2 3 4 5 6 (PRODUCT LEVEL)	SEE PAGE
M	1	1	**8T-0267**	2	BOLT-SOCKET HEAD (M6X1X12-MM)	
	2	1	**6E-3007**	1	SPRING	
	3	1	**148-2557**	6	PLUG	
	4	1	**106-3659**	1	PISTON	
	5	1	**212-4961**	1	SPRING	
	6	1	**242-9264**	1	PLUG-ORIFICE	
	7	1	**243-2965**	1	SPOOL	
	8	1	**244-2579**	1	PLUG	
	9	1	**254-3937**	1	STEM	
J	10	1	**318-3115**	1	VALVE GP-CHECK (BLADE TIP)	
		1	**3K-0360**	1	SEAL-O-RING	
		1	**6V-5326**	1	SEAL-O-RING	
		1	**6V-6580**	1	SEAL-O-RING	
J	11	1	**318-3040**	1	VALVE GP-CHECK & RELIEF (BLADE TIP)	
		1	**9X-7745**	1	SEAL-O-RING	
		1	**6V-5326**	1	SEAL-O-RING	
		1	**6V-6580**	1	SEAL-O-RING	
	12	1	**284-4601**	2	RETAINER	
	13	1	**284-4602**	2	RETAINER	
Y	14	1	**278-1799**	2	VALVE GP-SOLENOID (BLADE TIP)	759
	15	1	**251-1668**	2	COVER-SPRING	
	16	1	**284-3555**	2	SPRING	
M	19	1	**136-4192**	4	BOLT (M6X1X35-MM)	
	20	1	*148-8395*	1	PLUG AS	
		1	**9S-8005**	1	PLUG-O-RING	
		1	**3K-0360**	1	SEAL-O-RING	
	21	1	*183-7263*	3	PLUG AS	
					(EACH INCLUDES)	
		1	**9S-8002**	1	PLUG-O-RING	
		1	**3J-7354**	1	SEAL-O-RING	
	22	1	**3K-0360**	1	SEAL-O-RING	
	23	1	**3S-9233**	2	SEAL-O-RING	
	24	1	**4J-7533**	1	SEAL-O-RING	
	25	1	**5B-9318**	1	BALL	
					PARTS SHOWN IN GRAPHIC(S) WITHOUT A REFERENCE NUMBER ARE NOT SERVICED SEPARATELY	
					AVAILABLE REPAIR KIT(S):	
J			**325-2588**	1	KIT-SEAL (BLADE TIP)	
					(INCLUDES SEAL RINGS & BACKUP RINGS)	

J-KIT MARKED J SERVICES PARTS MARKED J
M-METRIC PART
Y-SEPARATE ILLUSTRATION

259-6896 VALVE GP-CONTROL *(contd.)* i03887790

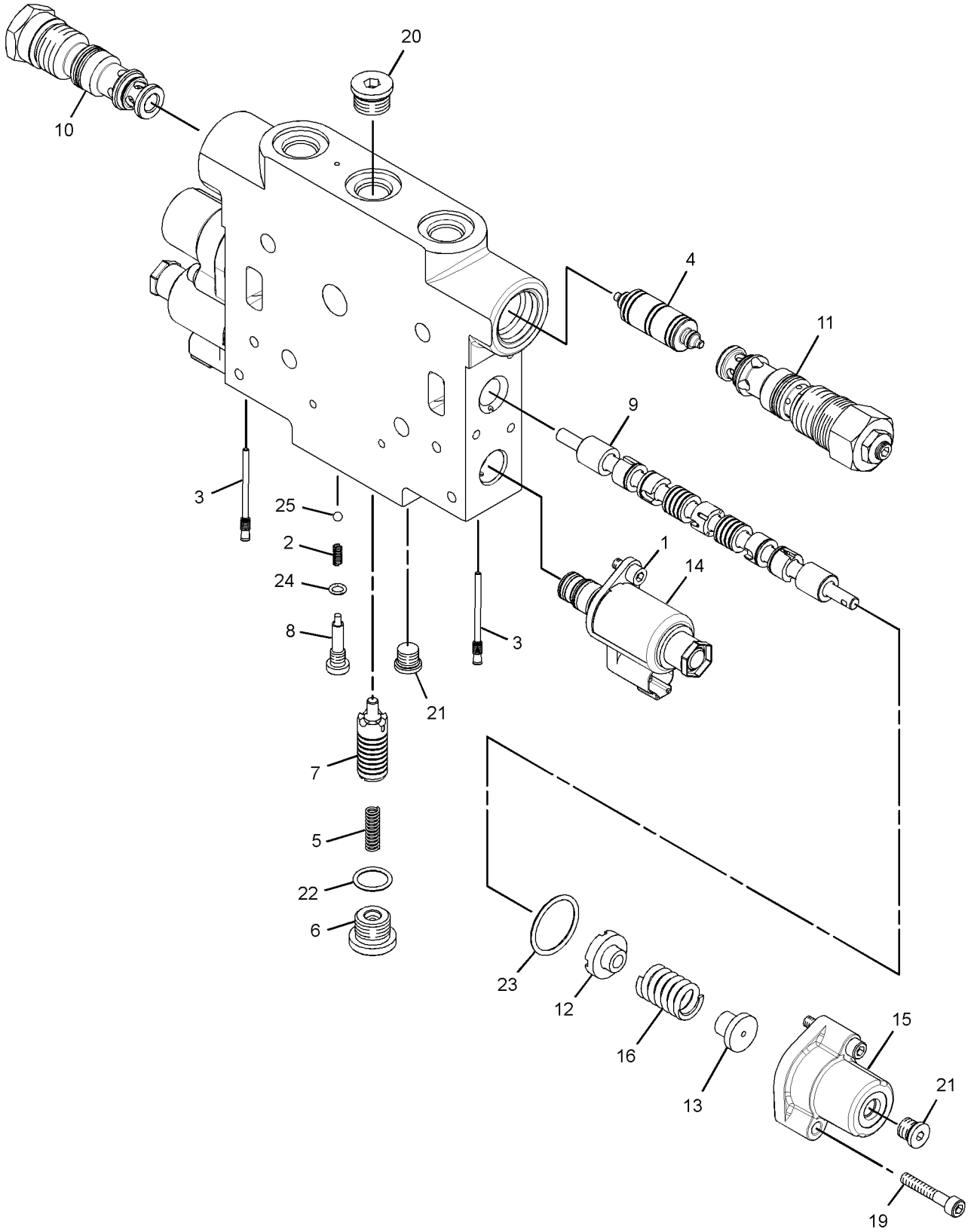

GRAPHIC #1 **<END>** g01635155

HYDRAULIC SYSTEM

259-6903 VALVE GP-CONTROL—SIDESHIFT

S/N: R9J1-UP

PART OF 259-6919 VALVE GP-BANK 5, 259-6920 VALVE GP-BANK 6, 259-6921 VALVE GP-BANK 7, 259-6922 VALVE GP-BANK 8

AN ATTACHMENT

SMCS-5051 **i03887811**

NOTE	REF NO	GRAPHIC REF	PART NUMBER	QTY	PART NAME 1 2 3 4 5 6 (PRODUCT LEVEL)	SEE PAGE
M	1	1	**8T-0267**	2	BOLT-SOCKET HEAD (M6X1X12-MM)	
	2	1	**6E-3007**	1	SPRING	
	3	1	**148-2557**	6	PLUG	
	4	1	**106-3659**	1	PISTON	
	5	1	**212-4961**	1	SPRING	
	6	1	**242-9264**	1	PLUG-ORIFICE	
	7	1	**243-2965**	1	SPOOL	
	8	1	**244-2579**	1	PLUG	
	9	1	**254-3939**	1	STEM	
J	10	1	**318-3115**	1	VALVE GP-CHECK (SIDESHIFT)	
		1	**9X-7745**	1	SEAL-O-RING	
		1	**6V-5326**	1	SEAL-O-RING	
		1	**6V-6580**	1	SEAL-O-RING	
J	11	1	**318-3040**	1	VALVE GP-CHECK & RELIEF (SIDESHIFT)	
		1	**9X-7745**	1	SEAL-O-RING	
		1	**6V-5326**	1	SEAL-O-RING	
		1	**6V-6580**	1	SEAL-O-RING	
	12	1	**284-4601**	2	RETAINER	
	13	1	**284-4602**	2	RETAINER	
Y	14	1	**278-1799**	2	VALVE GP-SOLENOID (SIDESHIFT)	759
	15	1	**251-1668**	2	COVER-SPRING	
	16	1	**284-3555**	2	SPRING	
M	19	1	**136-4192**	4	BOLT (M6X1X35-MM)	
	20	1	*148-8395*	1	PLUG AS	
		1	**9S-8005**	1	PLUG-O-RING	
		1	**3K-0360**	1	SEAL-O-RING	
	21	1	*183-7263*	3	PLUG AS	
					(EACH INCLUDES)	
		1	**9S-8002**	1	PLUG-O-RING	
		1	**3J-7354**	1	SEAL-O-RING	
	22	1	**3K-0360**	1	SEAL-O-RING	
	23	1	**3S-9233**	2	SEAL-O-RING	
	24	1	**4J-7533**	1	SEAL-O-RING	
	25	1	**5B-9318**	1	BALL	
					PARTS SHOWN IN GRAPHIC(S) WITHOUT A REFERENCE NUMBER ARE NOT SERVICED SEPARATELY	
					AVAILABLE REPAIR KIT(S):	
J			**325-2588**	1	KIT-SEAL (SIDESHIFT)	
					(INCLUDES SEAL RINGS & BACKUP RINGS)	

J-KIT MARKED J SERVICES PART(S) MARKED J
M-METRIC PART
Y-SEPARATE ILLUSTRATION

259-6903 VALVE GP-CONTROL *(contd.)* i03887811

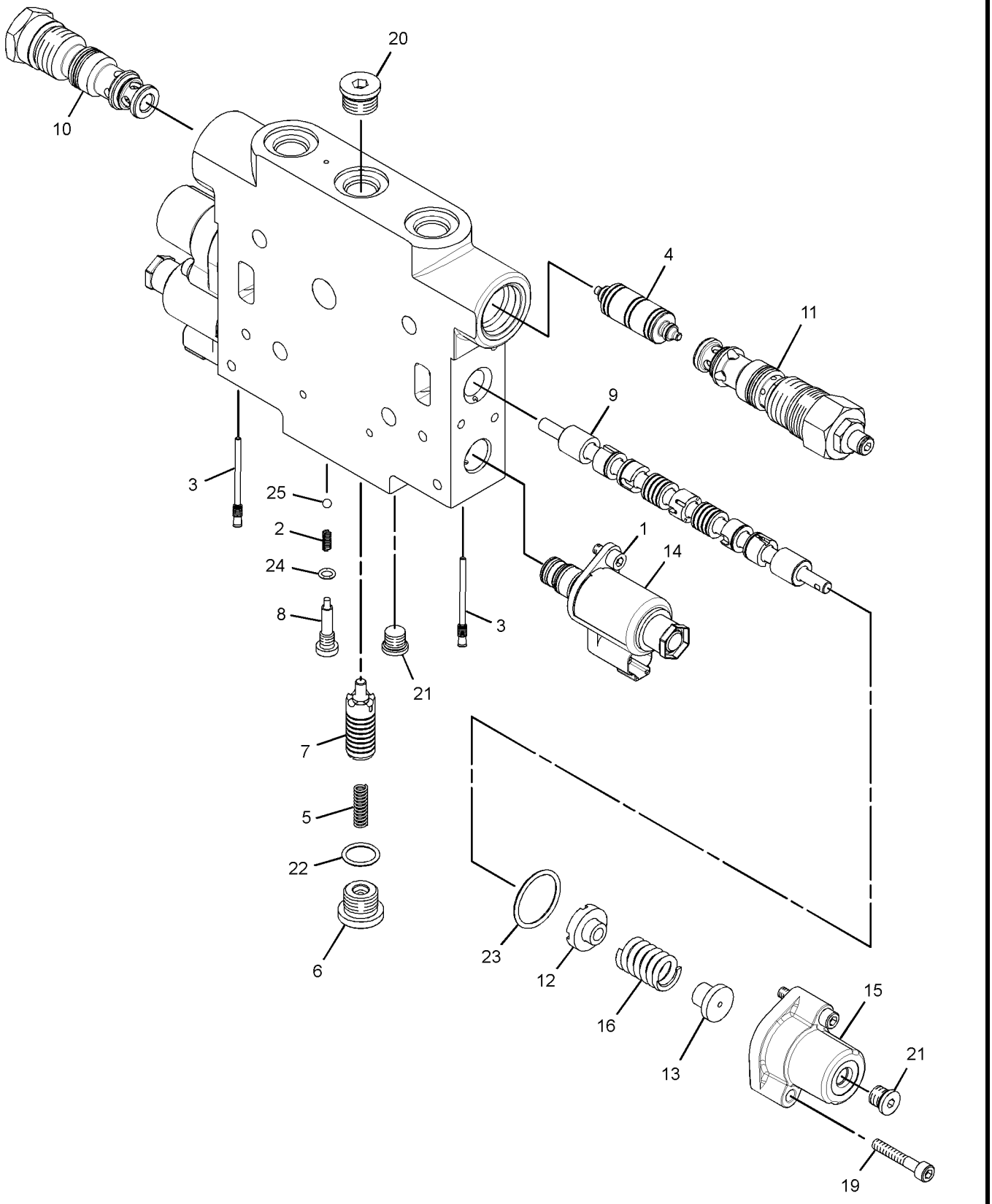

GRAPHIC #1 **<END>** g02148861

259-6906 VALVE GP-CONTROL—CENTERSHIFT

S/N: R9J1-UP

PART OF 259-6919 VALVE GP-BANK 5, 259-6920 VALVE GP-BANK 6, 259-6921 VALVE GP-BANK 7, 259-6922 VALVE GP-BANK 8

AN ATTACHMENT

SMCS-5051 **i03887810**

NOTE	REF NO	GRAPHIC REF	PART NUMBER	QTY	PART NAME 1 2 3 4 5 6 (PRODUCT LEVEL)	SEE PAGE
M	1	1	**8T-0267**	2	BOLT-SOCKET HEAD (M6X1X12-MM)	
	2	1	**6E-3007**	1	SPRING	
	3	1	**148-2557**	6	PLUG	
	4	1	**106-3659**	1	PISTON	
	5	1	**212-4961**	1	SPRING	
	6	1	**242-9264**	1	PLUG-ORIFICE	
	7	1	**243-2965**	1	SPOOL	
	8	1	**244-2579**	1	PLUG	
J	9	1	**318-3115**	2	VALVE GP-CHECK (CENTERSHIFT)	
					(EACH INCLUDES)	
		1	**3K-0360**	1	SEAL-O-RING	
		1	**6V-5326**	1	SEAL-O-RING	
		1	**6V-6580**	1	SEAL-O-RING	
	10	1	**284-4601**	2	RETAINER	
	11	1	**284-4602**	2	RETAINER	
Y	12	1	**278-1799**	2	VALVE GP-SOLENOID (CENTERSHIFT)	759
	13	1	**251-1668**	2	COVER-SPRING	
	14	1	**254-3945**	1	STEM	
	15	1	**284-3555**	2	SPRING	
M	18	1	**136-4192**	4	BOLT (M6X1X35-MM)	
	19	1	*148-8395*	1	PLUG AS	
		1	**9S-8005**	1	PLUG-O-RING	
		1	**3K-0360**	1	SEAL-O-RING	
	20	1	*183-7263*	3	PLUG AS	
					(EACH INCLUDES)	
		1	**9S-8002**	1	PLUG-O-RING	
		1	**3J-7354**	1	SEAL-O-RING	
	21	1	**3K-0360**	1	SEAL-O-RING	
	22	1	**3S-9233**	2	SEAL-O-RING	
	23	1	**4J-7533**	1	SEAL-O-RING	
	24	1	**5B-9318**	1	BALL	
					PARTS SHOWN IN GRAPHIC(S) WITHOUT A REFERENCE NUMBER ARE NOT SERVICED SEPARATELY	
					AVAILABLE REPAIR KIT(S):	
J			**325-2588**	1	KIT-SEAL (CENTERSHIFT)	
					(INCLUDES SEAL RINGS & BACKUP RINGS)	

J-KIT MARKED J SERVICES PARTS MARKED J
M-METRIC PART
Y-SEPARATE ILLUSTRATION

259-6906 VALVE GP-CONTROL *(contd.)* **i03887810**

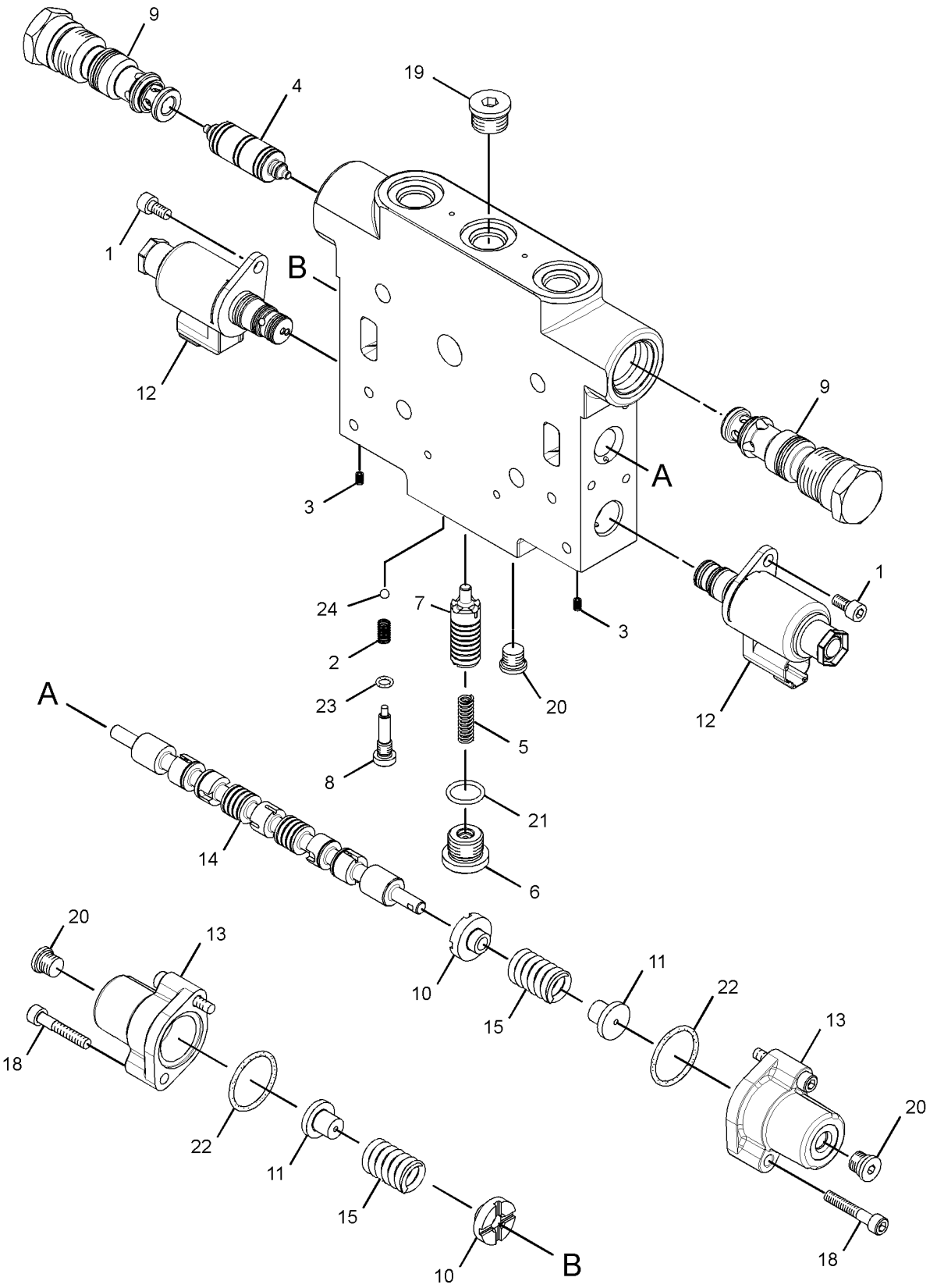

GRAPHIC #1 **<END>** g01647533

HYDRAULIC SYSTEM

259-6907 VALVE GP-CONTROL—CIRCLE DRIVE

S/N: R9J1-UP

PART OF 259-6919 VALVE GP-BANK 5, 259-6920 VALVE GP-BANK 6, 259-6921 VALVE GP-BANK 7, 259-6922 VALVE GP-BANK 8

AN ATTACHMENT

SMCS-5051 **i03887829**

NOTE	REF NO	GRAPHIC REF	PART NUMBER	QTY	PART NAME 1 2 3 4 5 6 (PRODUCT LEVEL)	SEE PAGE
	1	1	**6L-9716**	1	PLUG-PIPE	
	2	1	**6E-3007**	1	SPRING	
	3	1	**148-2557**	6	PLUG	
	4	1	**106-3659**	1	PISTON	
	5	1	**212-4961**	1	SPRING	
	6	1	**242-9264**	1	PLUG-ORIFICE	
	7	1	**243-2965**	1	SPOOL	
	8	1	**244-2579**	1	PLUG	
J	9	1	**318-3115**	2	VALVE GP-CHECK (CIRCLE DRIVE)	
					(EACH INCLUDES)	
		1	**3K-0360**	1	SEAL-O-RING	
		1	**6V-5326**	1	SEAL-O-RING	
		1	**6V-6580**	1	SEAL-O-RING	
	10	1	**284-4601**	2	RETAINER	
	11	1	**284-4602**	2	RETAINER	
Y	12	1	**278-1799**	2	VALVE GP-SOLENOID (CIRCLE DRIVE)	759
	13	1	**251-1668**	2	COVER-SPRING	
	15	1	**284-3555**	2	SPRING	
M	18	1	**136-4192**	4	BOLT (M6X1X35-MM)	
	19	1	*148-8395*	1	PLUG AS	
		1	**9S-8005**	1	PLUG-O-RING	
		1	**3K-0360**	1	SEAL-O-RING	
	20	1	*183-7263*	3	PLUG AS	
					(EACH INCLUDES)	
		1	**9S-8002**	1	PLUG-O-RING	
		1	**3J-7354**	1	SEAL-O-RING	
	21	1	**3K-0360**	1	SEAL-O-RING	
	22	1	**3S-9233**	2	SEAL-O-RING	
	23	1	**4J-7533**	1	SEAL-O-RING	
	24	1	**5B-9318**	1	BALL	
M	25	1	**8T-0267**	2	BOLT-SOCKET HEAD (M6X1X12-MM)	
					AVAILABLE REPAIR KIT(S):	
J			**325-2588**	1	KIT-SEAL (CIRCLE DRIVE)	
					(INCLUDES SEAL-O-RINGS & RING-BACKUPS)	

J-KIT MARKED J SERVICES PART(S) MARKED J
M-METRIC PART
Y-SEPARATE ILLUSTRATION

259-6907 VALVE GP-CONTROL *(contd.)* i03887829

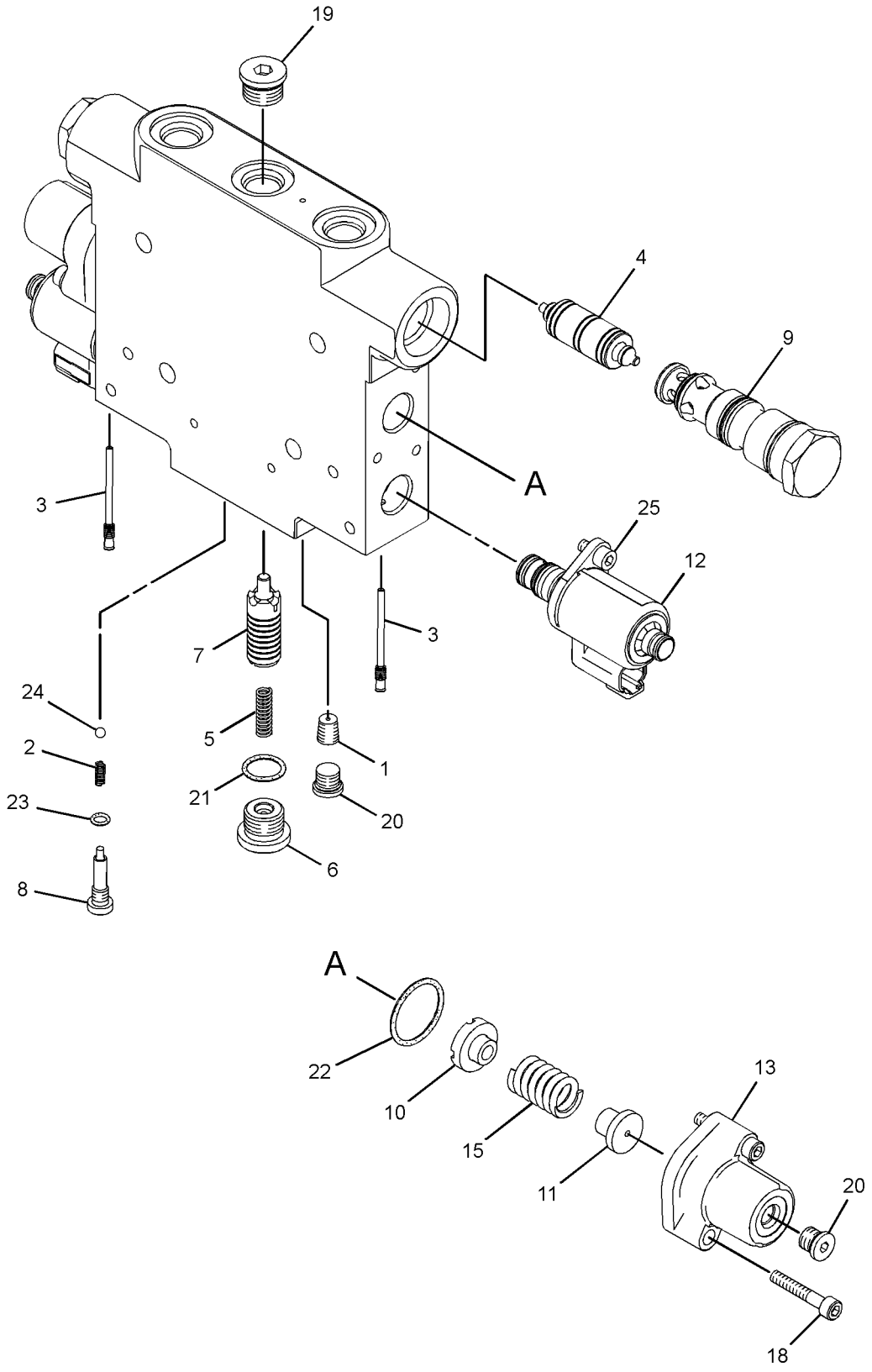

GRAPHIC #1 **<END>** g01635273

HYDRAULIC SYSTEM

259-6908 VALVE GP-CONTROL—WHEEL LEAN

S/N: R9J1-UP

PART OF 259-6919 VALVE GP-BANK 5, 259-6920 VALVE GP-BANK 6, 259-6921 VALVE GP-BANK 7, 259-6922 VALVE GP-BANK 8

AN ATTACHMENT

SMCS-5051 **i03887849**

NOTE	REF NO	GRAPHIC REF	PART NUMBER	QTY	PART NAME 1 2 3 4 5 6 (PRODUCT LEVEL)	SEE PAGE
M	1	1	**8T-0267**	2	BOLT-SOCKET HEAD (M6X1X12-MM)	
	2	1	**6E-3007**	1	SPRING	
	3	1	**148-2557**	6	PLUG	
	4	1	**106-3659**	1	PISTON	
	5	1	**212-4961**	1	SPRING	
	6	1	**242-9264**	1	PLUG-ORIFICE	
	7	1	**243-2965**	1	SPOOL	
	8	1	**244-2579**	1	PLUG	
	9	1	**245-9049**	1	STEM	
J	10	1	**318-3115**	2	VALVE GP-CHECK (WHEEL LEAN)	
					(EACH INCLUDES)	
		1	**3K-0360**	1	SEAL-O-RING	
		1	**6V-5326**	1	SEAL-O-RING	
		1	**6V-6580**	1	SEAL-O-RING	
	11	1	**284-4601**	2	RETAINER	
	12	1	**284-4602**	2	RETAINER	
Y	13	1	**278-1799**	2	VALVE GP-SOLENOID (WHEEL LEAN)	759
	14	1	**251-1668**	2	COVER-SPRING	
	15	1	**284-3555**	2	SPRING	
M	18	1	**136-4192**	4	BOLT (M6X1X35-MM)	
	19	1	*148-8395*	1	PLUG AS	
		1	**9S-8005**	1	PLUG-O-RING	
		1	**3K-0360**	1	SEAL-O-RING	
	20	1	*183-7263*	3	PLUG AS	
					(EACH INCLUDES)	
		1	**9S-8002**	1	PLUG-O-RING	
		1	**3J-7354**	1	SEAL-O-RING	
	21	1	**3K-0360**	1	SEAL-O-RING	
	22	1	**3S-9233**	2	SEAL-O-RING	
	23	1	**4J-7533**	1	SEAL-O-RING	
	24	1	**5B-9318**	1	BALL	
					AVAILABLE REPAIR KIT(S):	
J			**325-2588**	1	KIT-SEAL (WHEEL LEAN)	
					(INCLUDES SEAL RINGS & BACKUP RINGS)	

J-KIT MARKED J SERVICES PART MARKED J
M-METRIC PART
Y-SEPARATE ILLUSTRATION

259-6908 VALVE GP-CONTROL *(contd.)* i03887849

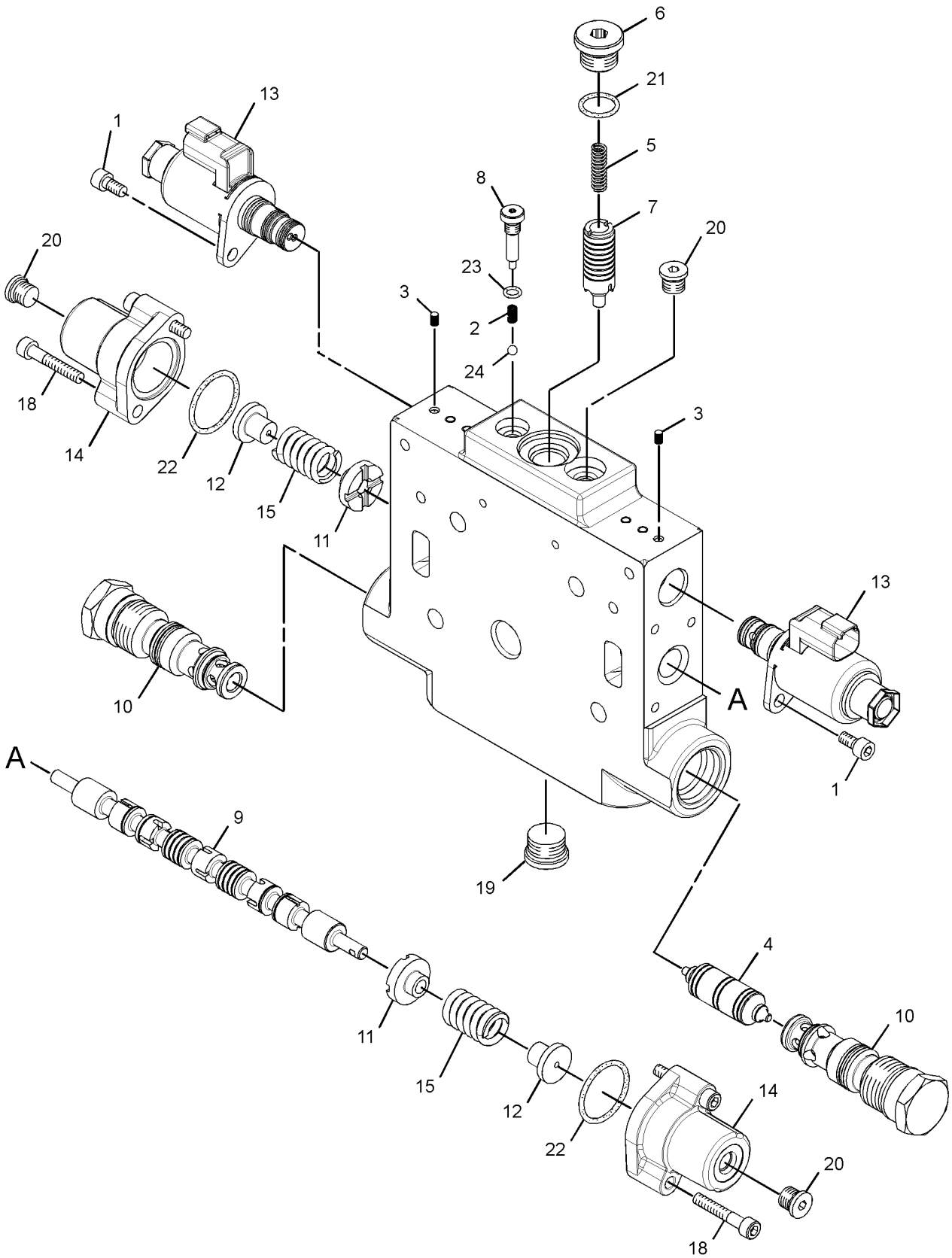

GRAPHIC #1 **<END>** g01647973

HYDRAULIC SYSTEM

259-6909 VALVE GP-CONTROL—BULLDOZER LIFT, PLOW

S/N: R9J1-UP

PART OF 259-6920 VALVE GP-BANK 6, 259-6921 VALVE GP-BANK 7, 259-6922 VALVE GP-BANK 8

AN ATTACHMENT

SMCS-5051 **i03887853**

NOTE	REF NO	GRAPHIC REF	PART NUMBER	QTY	PART NAME 1 2 3 4 5 6 (PRODUCT LEVEL)	SEE PAGE
M	1	1	**8T-0267**	2	BOLT-SOCKET HEAD (M6X1X12-MM)	
	2	1	**6E-3007**	1	SPRING	
	3	1	**148-2557**	6	PLUG	
	4	1	**106-3660**	2	PISTON	
	5	1	**212-4961**	1	SPRING	
	6	1	**242-9264**	1	PLUG-ORIFICE	
	7	1	**243-2965**	1	SPOOL	
	8	1	**244-2579**	1	PLUG	
	9	1	**245-9054**	1	STEM	
J	10	1	**318-3115**	1	VALVE GP-CHECK (BULLDOZER LIFT, PLOW)	
		1	**9X-7745**	1	SEAL-O-RING	
		1	**6V-5326**	1	SEAL-O-RING	
		1	**6V-6580**	1	SEAL-O-RING	
J	11	1	**318-3052**	1	VALVE GP-CHECK & RELIEF (BULLDOZER LIFT, PLOW)	
		1	**3K-0360**	1	SEAL-O-RING	
		1	**6V-5326**	1	SEAL-O-RING	
		1	**6V-6580**	1	SEAL-O-RING	
	12	1	**284-4601**	2	RETAINER	
	13	1	**284-4602**	2	RETAINER	
Y	14	1	**278-1799**	2	VALVE GP-SOLENOID (BULLDOZER LIFT, PLOW)	759
	15	1	**251-1668**	1	COVER-SPRING	
	16	1	**251-1669**	1	COVER-SPRING	
	17	1	**284-3555**	1	SPRING	
	18	1	**284-3556**	1	SPRING	
M	21	1	**136-4192**	4	BOLT (M6X1X35-MM)	
	22	1	*148-8395*	1	PLUG AS	
		1	**3K-0360**	1	SEAL-O-RING	
		1	**9S-8005**	1	PLUG-O-RING	
	23	1	*183-7263*	3	PLUG AS	
					(EACH INCLUDES)	
		1	**3J-7354**	1	SEAL-O-RING	
		1	**9S-8002**	1	PLUG-O-RING	
	24	1	**3K-0360**	1	SEAL-O-RING	
	25	1	**3S-9233**	2	SEAL-O-RING	
	26	1	**4J-7533**	1	SEAL-O-RING	
	27	1	**5B-9318**	1	BALL	
					AVAILABLE REPAIR KIT(S):	
J			**325-2588**	2	KIT-SEAL (BULLDOZER LIFT, PLOW)	
					(INCLUDES SEAL RINGS & BACKUP RINGS)	

J-KIT MARKED J SERVICES PARTS MARKED J
M-METRIC PART
Y-SEPARATE ILLUSTRATION

259-6909 VALVE GP-CONTROL *(contd.)* **i03887853**

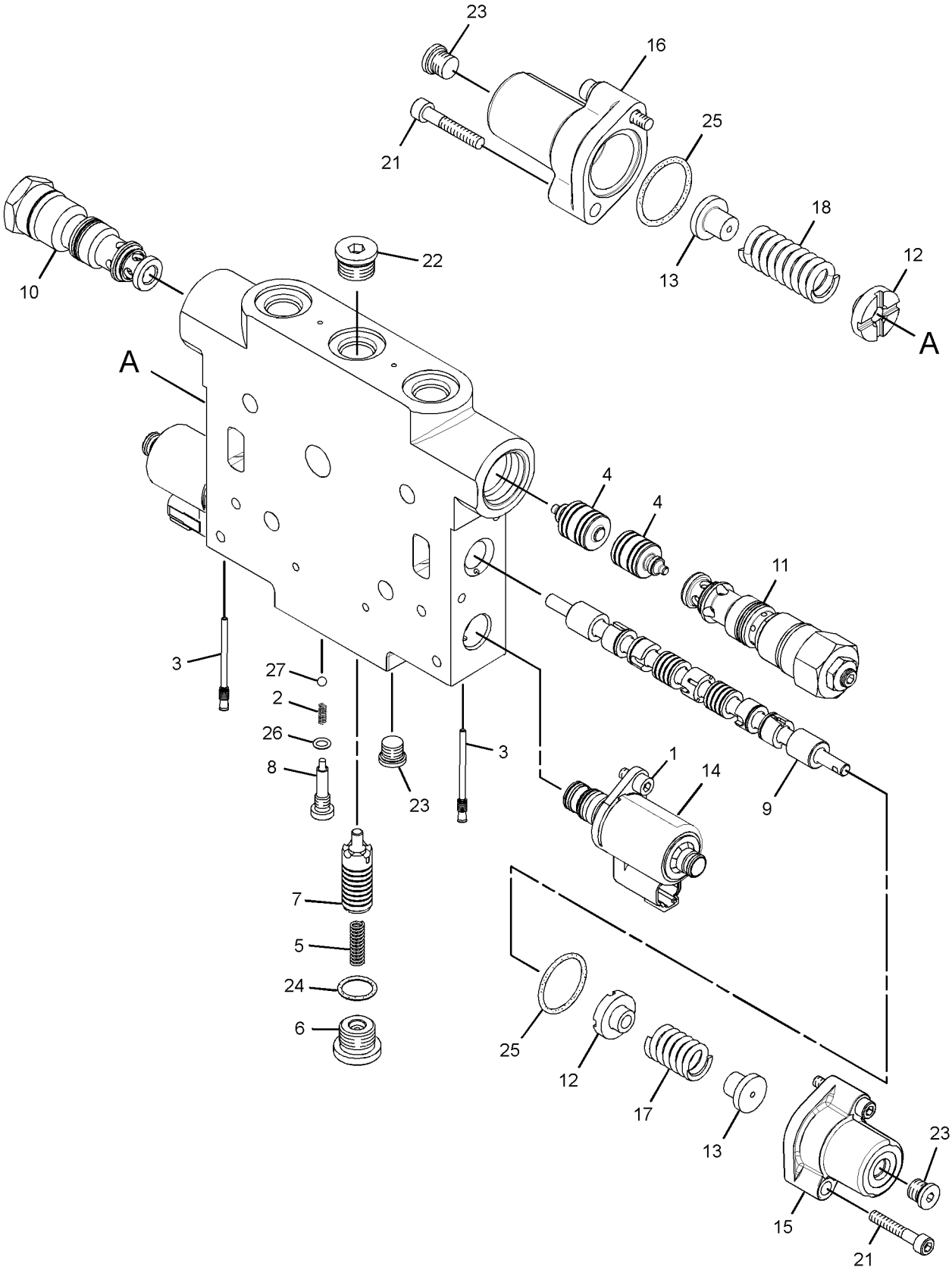

GRAPHIC #1 **<END>** g01635096

HYDRAULIC SYSTEM

259-6910 VALVE GP-CONTROL—PLOW, BULLDOZER LIFT

S/N: R9J1-UP

PART OF 259-6921 VALVE GP-BANK 7, 259-6922 VALVE GP-BANK 8

AN ATTACHMENT

SMCS-5051 **i03887869**

NOTE	REF NO	GRAPHIC REF	PART NUMBER	QTY	PART NAME 1 2 3 4 5 6 (PRODUCT LEVEL)	SEE PAGE
M	1	1	**8T-0267**	2	BOLT-SOCKET HEAD (M6X1X12-MM)	
	2	1	**6E-3007**	1	SPRING	
	3	1	**148-2557**	6	PLUG	
	4	1	**106-3659**	1	PISTON	
	5	1	**212-4961**	1	SPRING	
	6	1	**242-9264**	1	PLUG-ORIFICE	
	7	1	**243-2965**	1	SPOOL	
	8	1	**244-2579**	1	PLUG	
	9	1	**245-9055**	1	STEM	
J	10	1	**318-3115**	1	VALVE GP-CHECK (PLOW ANGLE)	
J		1	**9X-7745**	1	SEAL-O-RING	
J		1	**6V-5326**	1	SEAL-O-RING	
J		1	**6V-6580**	1	SEAL-O-RING	
J	11	1	**318-3040**	1	VALVE GP-CHECK & RELIEF (PLOW ANGLE)	
J		1	**9X-7745**	1	SEAL-O-RING	
J		1	**6V-5326**	1	SEAL-O-RING	
J		1	**6V-6580**	1	SEAL-O-RING	
	12	1	**284-4601**	2	RETAINER	
	13	1	**284-4602**	2	RETAINER	
Y	14	1	**278-1799**	2	VALVE GP-SOLENOID (PLOW ANGLE)	759
	15	1	**251-1668**	2	COVER-SPRING	
	16	1	**284-3555**	2	SPRING	
M	19	1	**136-4192**	4	BOLT (M6X1X35-MM)	
	20	1	*148-8395*	1	PLUG AS	
		1	**9S-8005**	1	PLUG-O-RING	
		1	**3K-0360**	1	SEAL-O-RING	
	21	1	*183-7263*	3	PLUG AS	
					(EACH INCLUDES)	
		1	**9S-8002**	1	PLUG-O-RING	
		1	**3J-7354**	1	SEAL-O-RING	
	22	1	**3K-0360**	1	SEAL-O-RING	
	23	1	**3S-9233**	2	SEAL-O-RING	
	24	1	**4J-7533**	1	SEAL-O-RING	
	25	1	**5B-9318**	1	BALL	
					PARTS SHOWN IN GRAPHIC(S) WITHOUT A REFERENCE NUMBER ARE NOT SERVICED SEPARATELY	
					AVAILABLE REPAIR KIT(S):	
J			**325-2588**	1	KIT-SEAL (PLOW ANGLE)	
					(INCLUDES SEAL-O-RINGS & BACKUP RINGS)	

J-KIT MARKED J SERVICES PART(S) MARKED J
M-METRIC PART
Y-SEPARATE ILLUSTRATION

259-6910 VALVE GP-CONTROL *(contd.)* i03887869

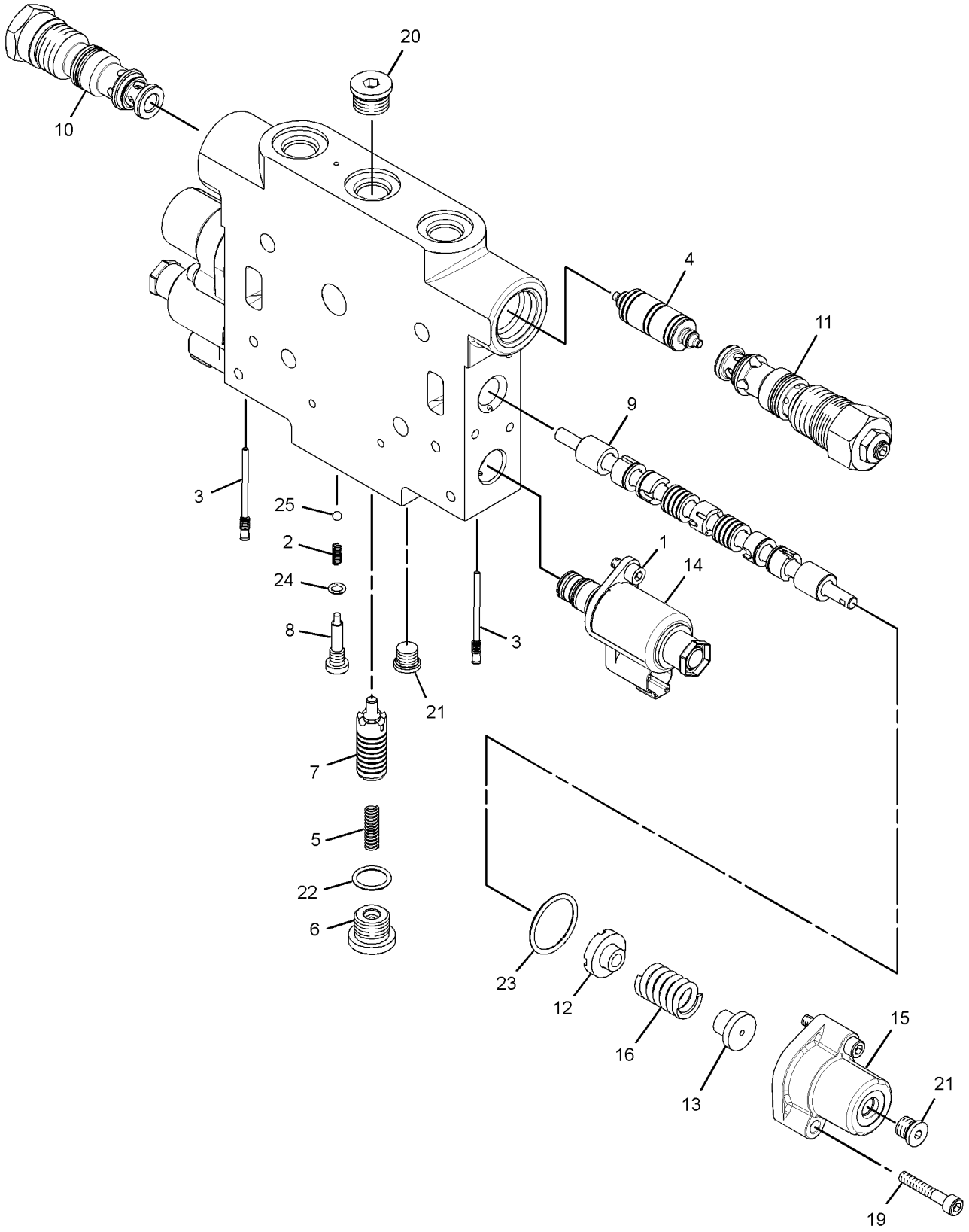

GRAPHIC #1 **<END>** g01635155

HYDRAULIC SYSTEM

259-6912 VALVE GP-CONTROL–ARTICULATION

S/N: R9J1-UP

PART OF 259-6923 VALVE GP-BANK 3, 259-6924 VALVE GP-BANK 4, 259-6925, 291-9518 VALVE GP-BANK 6

AN ATTACHMENT

SMCS-5051 **i03887990**

NOTE	REF NO	GRAPHIC REF	PART NUMBER	QTY	PART NAME 1 2 3 4 5 6 (PRODUCT LEVEL)	SEE PAGE
M	1	1	**8T-0267**	2	BOLT-SOCKET HEAD (M6X1X12-MM)	
	2	1	**6E-3007**	1	SPRING	
	3	1	**148-2557**	6	PLUG	
	4	1	**106-3659**	1	PISTON	
	5	1	**212-4961**	1	SPRING	
	6	1	**242-9264**	1	PLUG-ORIFICE	
	7	1	**243-2965**	1	SPOOL	
	8	1	**244-2579**	1	PLUG	
J	9	1	**321-6908**	2	VALVE GP-CHECK (ARTICULATION)	
					(EACH INCLUDES)	
		1	**9X-7745**	1	SEAL-O-RING	
		1	**6V-5326**	1	SEAL-O-RING	
		1	**6V-6580**	1	SEAL-O-RING	
	10	1	**284-4601**	2	RETAINER	
	11	1	**284-4602**	2	RETAINER	
Y	12	1	**278-1799**	2	VALVE GP-SOLENOID (ARTICULATION)	759
	13	1	**251-1668**	2	COVER-SPRING	
	14	1	**303-7503**	1	STEM	
	15	1	**284-3555**	2	SPRING	
M	18	1	**136-4192**	4	BOLT (M6X1X35-MM)	
	19	1	*148-8395*	1	PLUG AS	
		1	**9S-8005**	1	PLUG-O-RING	
		1	**3K-0360**	1	SEAL-O-RING	
	20	1	*183-7263*	3	PLUG AS	
					(EACH INCLUDES)	
		1	**9S-8002**	1	PLUG-O-RING	
		1	**3J-7354**	1	SEAL-O-RING	
	21	1	**3K-0360**	1	SEAL-O-RING	
	22	1	**3S-9233**	2	SEAL-O-RING	
	23	1	**4J-7533**	1	SEAL-O-RING	
	24	1	**5B-9318**	1	BALL	
					PARTS SHOWN IN GRAPHIC(S) WITHOUT A REFERENCE NUMBER ARE NOT SERVICED SEPARATELY	
					AVAILABLE REPAIR KIT(S):	
J			**325-2588**	1	KIT-SEAL	
					(INCLUDES SEAL-O-RINGS & BACKUP RINGS)	

J-KIT MARKED J SERVICES PART(S) MARKED J
M-METRIC PART
Y-SEPARATE ILLUSTRATION

259-6912 VALVE GP-CONTROL *(contd.)* i03887990

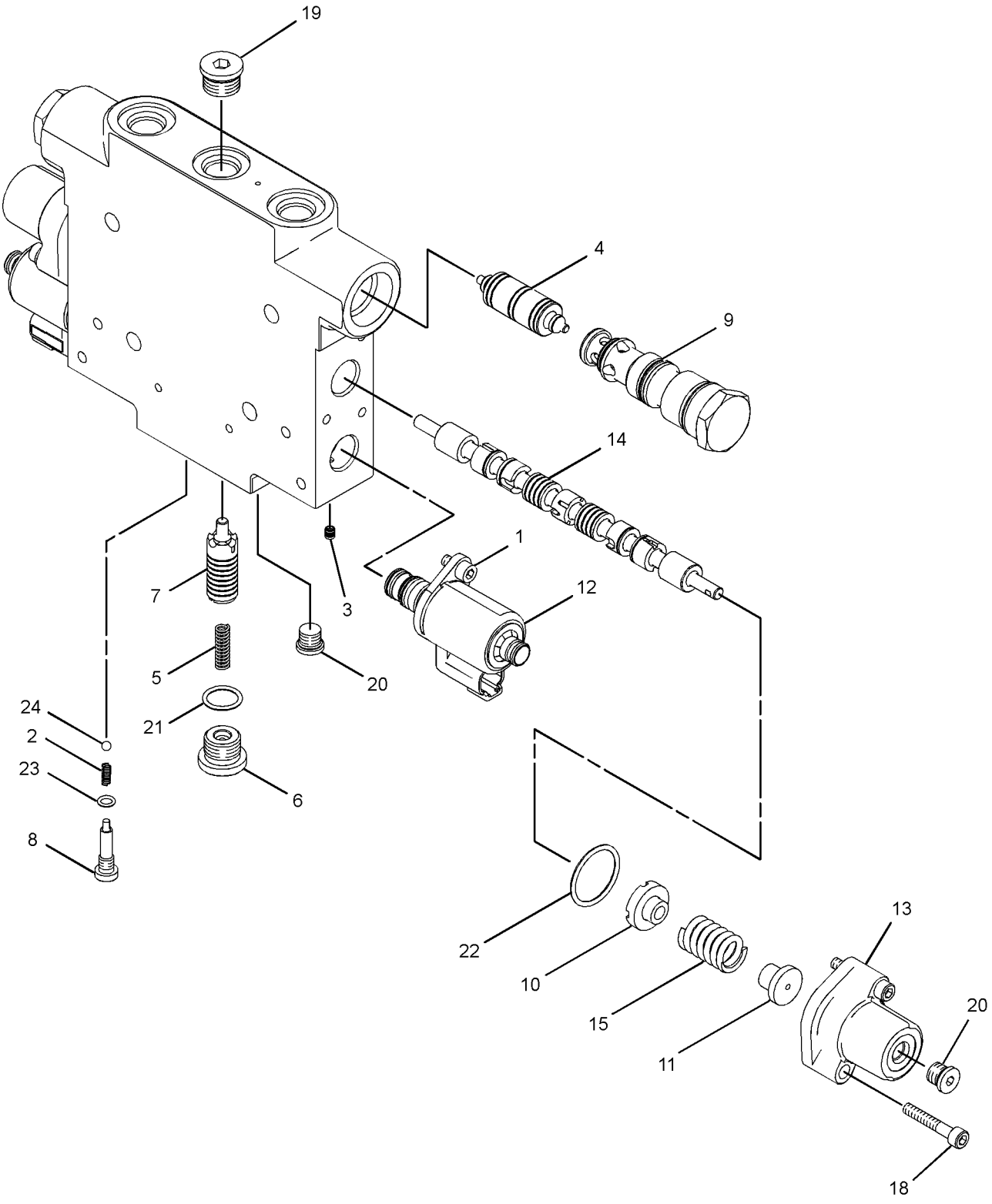

GRAPHIC #1 **<END>** g01633673

HYDRAULIC SYSTEM

259-6913 VALVE GP-CONTROL–RIPPER

S/N: R9J1-UP

PART OF 259-6924 VALVE GP-BANK 4, 259-6925, 291-9518 VALVE GP-BANK 6

AN ATTACHMENT

SMCS-5051 **i03887991**

NOTE	REF NO	GRAPHIC REF	PART NUMBER	QTY	PART NAME 1 2 3 4 5 6 (PRODUCT LEVEL)	SEE PAGE
M	1	1	**8T-0267**	2	BOLT-SOCKET HEAD (M6X1X12-MM)	
	2	1	**6E-3007**	1	SPRING	
	3	1	**148-2557**	6	PLUG	
	4	1	**106-3659**	1	PISTON	
	5	1	**212-4961**	1	SPRING	
	6	1	**242-9264**	1	PLUG-ORIFICE	
	7	1	**243-2965**	1	SPOOL	
	8	1	**244-2579**	1	PLUG	
J	9	1	**318-3115**	1	VALVE GP-CHECK (RIPPER)	
J		1	**9X-7745**	1	SEAL-O-RING	
J		1	**6V-5326**	1	SEAL-O-RING	
J		1	**6V-6580**	1	SEAL-O-RING	
J	10	1	**318-3040**	1	VALVE GP-CHECK & RELIEF (WING LIFT)	
J		1	**9X-7745**	1	SEAL-O-RING	
J		1	**6V-5326**	1	SEAL-O-RING	
J		1	**6V-6580**	1	SEAL-O-RING	
	11	1	**284-4601**	2	RETAINER	
	12	1	**284-4602**	2	RETAINER	
Y	13	1	**278-1799**	2	VALVE GP-SOLENOID (RIPPER)	759
	14	1	**251-1668**	2	COVER-SPRING	
	15	1	**254-3950**	1	STEM	
	16	1	**284-3555**	2	SPRING	
M	19	1	**136-4192**	4	BOLT (M6X1X35-MM)	
	20	1	*148-8395*	1	PLUG AS	
		1	**9S-8005**	1	PLUG-O-RING	
		1	**3K-0360**	1	SEAL-O-RING	
	21	1	*183-7263*	3	PLUG AS	
					(EACH INCLUDES)	
		1	**9S-8002**	1	PLUG-O-RING	
		1	**3J-7354**	1	SEAL-O-RING	
	22	1	**3K-0360**	1	SEAL-O-RING	
	23	1	**3S-9233**	2	SEAL-O-RING	
	24	1	**4J-7533**	1	SEAL-O-RING	
	25	1	**5B-9318**	1	BALL	
					AVAILABLE REPAIR KIT(S):	
J			**325-2588**	1	KIT-SEAL (RIPPER)	
					(INCLUDES SEAL-O-RINGS & BACKUP RINGS)	

J-KIT MARKED J SERVICES PARTS MARKED J
M-METRIC PART
Y-SEPARATE ILLUSTRATION

259-6913 VALVE GP-CONTROL *(contd.)* i03887991

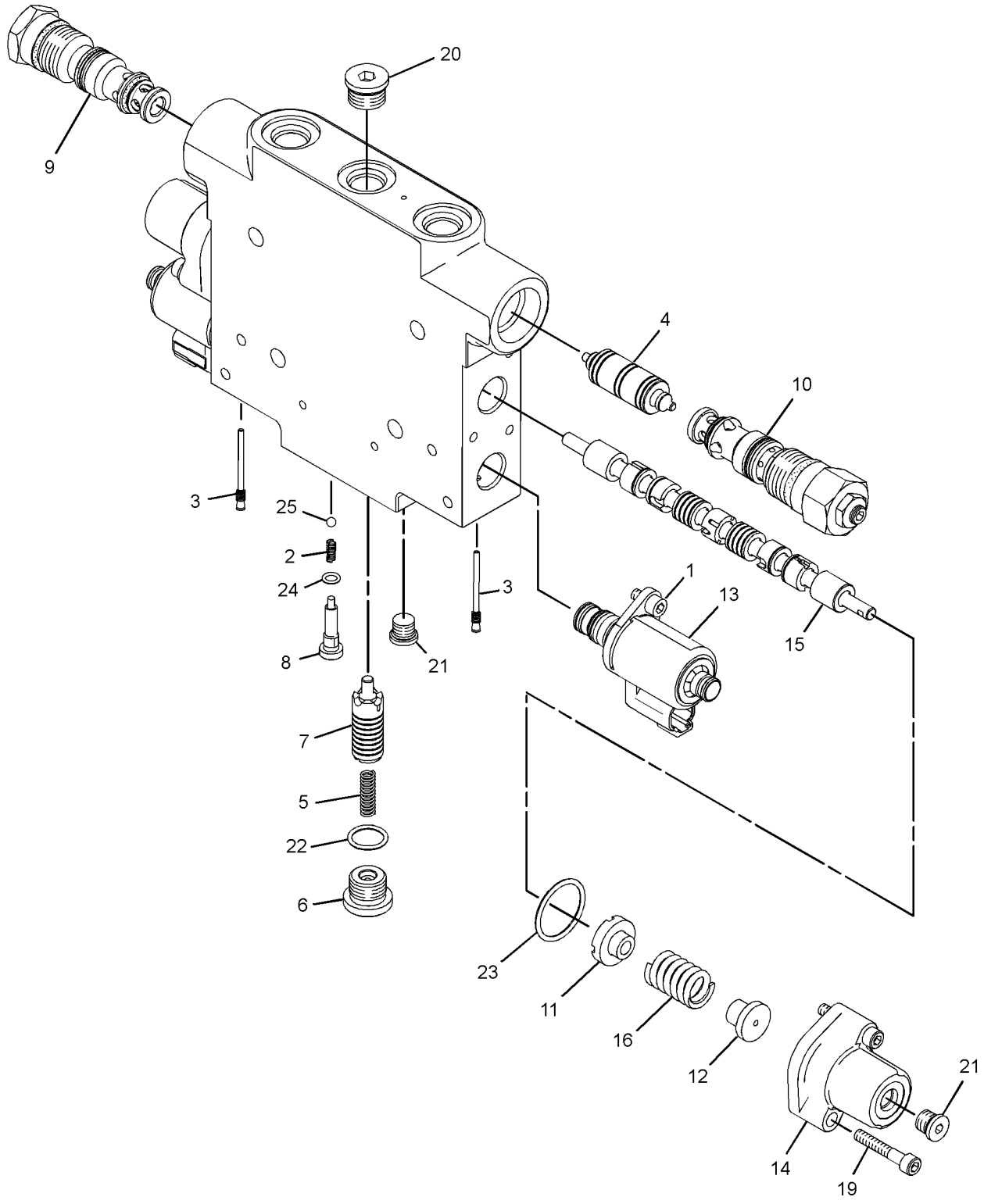

GRAPHIC #1 **<END>** g01632253

HYDRAULIC SYSTEM

259-6914 VALVE GP-CONTROL—WING LIFT

S/N: R9J1-UP

PART OF 259-6925, 291-9518 VALVE GP-BANK 6

AN ATTACHMENT

SMCS-5051 **i03888049**

NOTE	REF NO	GRAPHIC REF	PART NUMBER	QTY	PART NAME 1 2 3 4 5 6 (PRODUCT LEVEL)	SEE PAGE
M	1	1	**8T-0267**	2	BOLT-SOCKET HEAD (M6X1X12-MM)	
	2	1	**6E-3007**	1	SPRING	
	3	1	**148-2557**	6	PLUG	
	4	1	**106-3659**	1	PISTON	
	5	1	**212-4961**	1	SPRING	
	6	1	**242-9264**	1	PLUG-ORIFICE	
	7	1	**243-2965**	1	SPOOL	
	8	1	**244-2579**	1	PLUG	
	9	1	**245-9055**	1	STEM	
J	10	1	**318-3040**	2	VALVE GP-CHECK & RELIEF (WING LIFT)	
					(EACH INCLUDES)	
		1	**9X-7745**	1	SEAL-O-RING	
		1	**6V-5326**	1	SEAL-O-RING	
		1	**6V-6580**	1	SEAL-O-RING	
	11	1	**284-4601**	2	RETAINER	
	12	1	**284-4602**	2	RETAINER	
Y	13	1	**278-1799**	2	VALVE GP-SOLENOID (WING LIFT)	759
	14	1	**251-1668**	2	COVER-SPRING	
	15	1	**284-3555**	2	SPRING	
M	18	1	**136-4192**	4	BOLT (M6X1X35-MM)	
	19	1	*148-8395*	1	PLUG AS	
		1	**3K-0360**	1	SEAL-O-RING	
		1	**9S-8005**	1	PLUG-O-RING	
	20	1	*183-7263*	3	PLUG AS	
					(EACH INCLUDES)	
		1	**3J-7354**	1	SEAL-O-RING	
		1	**9S-8002**	1	PLUG-O-RING	
	21	1	**3K-0360**	1	SEAL-O-RING	
	22	1	**3S-9233**	2	SEAL-O-RING	
	23	1	**4J-7533**	1	SEAL-O-RING	
	24	1	**5B-9318**	1	BALL	
					PARTS SHOWN IN GRAPHIC(S) WITHOUT A REFERENCE NUMBER ARE NOT SERVICED SEPARATELY	
					AVAILABLE REPAIR KIT(S):	
J			**325-2588**	1	KIT-SEAL (WING LIFT)	
					(INCLUDES SEAL-O-RINGS & BACKUP RINGS)	

J-KIT MARKED J SERVICES PART MARKED J
M-METRIC PART
Y-SEPARATE ILLUSTRATION

259-6914 VALVE GP-CONTROL *(contd.)* i03888049

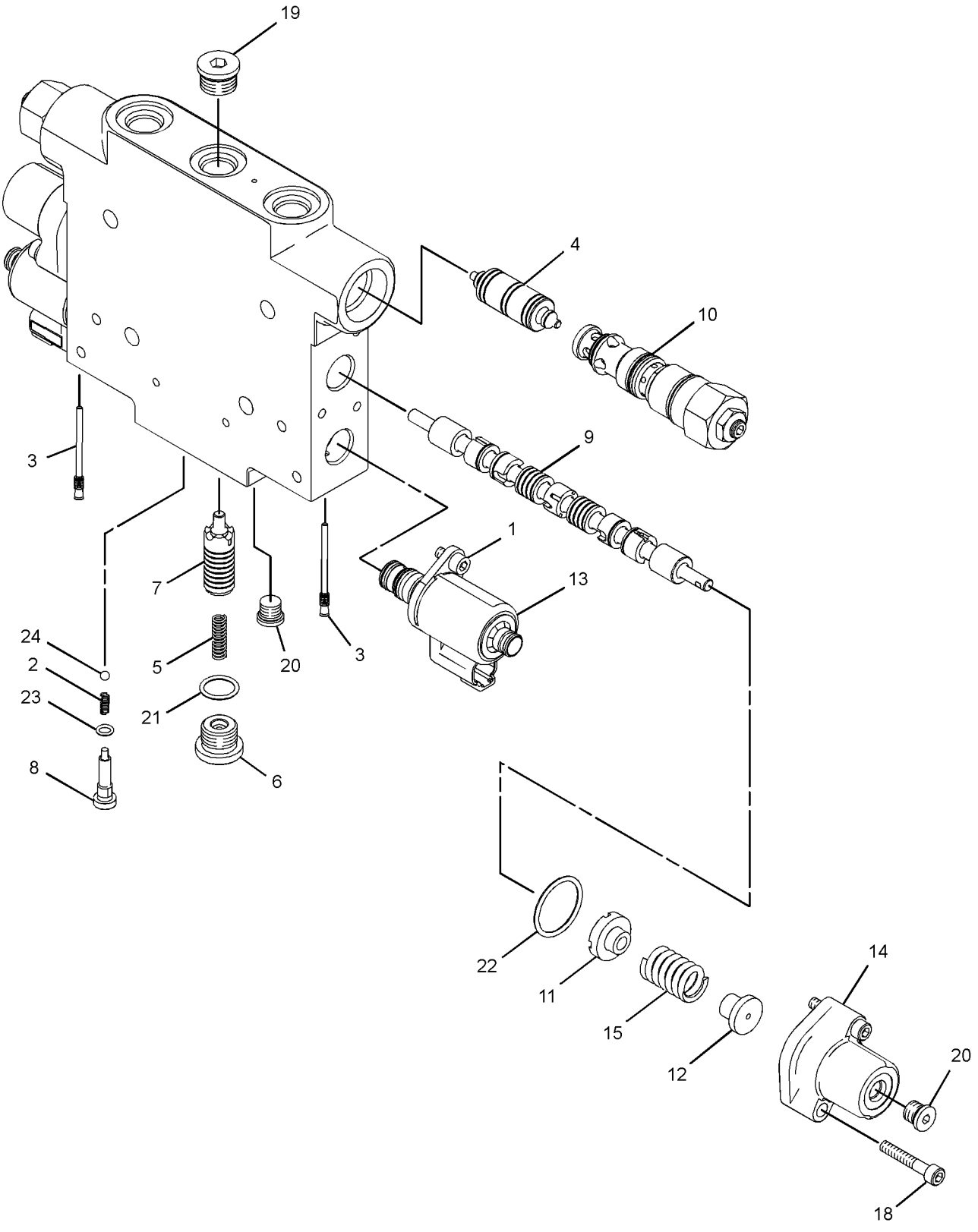

GRAPHIC #1 **<END>** g01632294

HYDRAULIC SYSTEM

259-6915 VALVE GP-CONTROL—WING TILT

S/N: R9J1-UP

PART OF 259-6925 VALVE GP-BANK 6

AN ATTACHMENT

SMCS-5051 **i03888112**

NOTE	REF NO	GRAPHIC REF	PART NUMBER	QTY	PART NAME 1 2 3 4 5 6 (PRODUCT LEVEL)	SEE PAGE
M	1	1	**8T-0267**	2	BOLT-SOCKET HEAD (M6X1X12-MM)	
	2	1	**6E-3007**	1	SPRING	
	3	1	**148-2557**	6	PLUG	
	4	1	**106-3659**	1	PISTON	
	5	1	**212-4961**	1	SPRING	
	6	1	**242-9264**	1	PLUG-ORIFICE	
	7	1	**243-2965**	1	SPOOL	
	8	1	**244-2579**	1	PLUG	
J	9	1	**318-3040**	2	VALVE GP-CHECK & RELIEF (WING TILT)	
					(EACH INCLUDES)	
		1	**9X-7745**	1	SEAL-O-RING	
		1	**6V-5326**	1	SEAL-O-RING	
		1	**6V-6580**	1	SEAL-O-RING	
	10	1	**284-4601**	2	RETAINER	
	11	1	**284-4602**	2	RETAINER	
Y	12	1	**278-1799**	2	VALVE GP-SOLENOID (WING TILT)	759
	13	1	**251-1668**	2	COVER-SPRING	
	14	1	**254-3951**	1	STEM	
	15	1	**284-3555**	2	SPRING	
M	18	1	**136-4192**	4	BOLT (M6X1X35-MM)	
	19	1	*148-8395*	1	PLUG AS	
		1	**3K-0360**	1	SEAL-O-RING	
		1	**9S-8005**	1	PLUG-O-RING	
	20	1	*183-7263*	3	PLUG AS	
					(EACH INCLUDES)	
		1	**3J-7354**	1	SEAL-O-RING	
		1	**9S-8002**	1	PLUG-O-RING	
	21	1	**3K-0360**	1	SEAL-O-RING	
	22	1	**3S-9233**	2	SEAL-O-RING	
	23	1	**4J-7533**	1	SEAL-O-RING	
	24	1	**5B-9318**	1	BALL	
					AVAILABLE REPAIR KIT(S):	
J			**325-2588**	1	KIT-SEAL (WING TILT)	
					(INCLUDES SEAL-O-RINGS & BACKUP RINGS)	

J-KIT MARKED J SERVICES PART MARKED J
M-METRIC PART
Y-SEPARATE ILLUSTRATION

259-6915 VALVE GP-CONTROL *(contd.)* i03888112

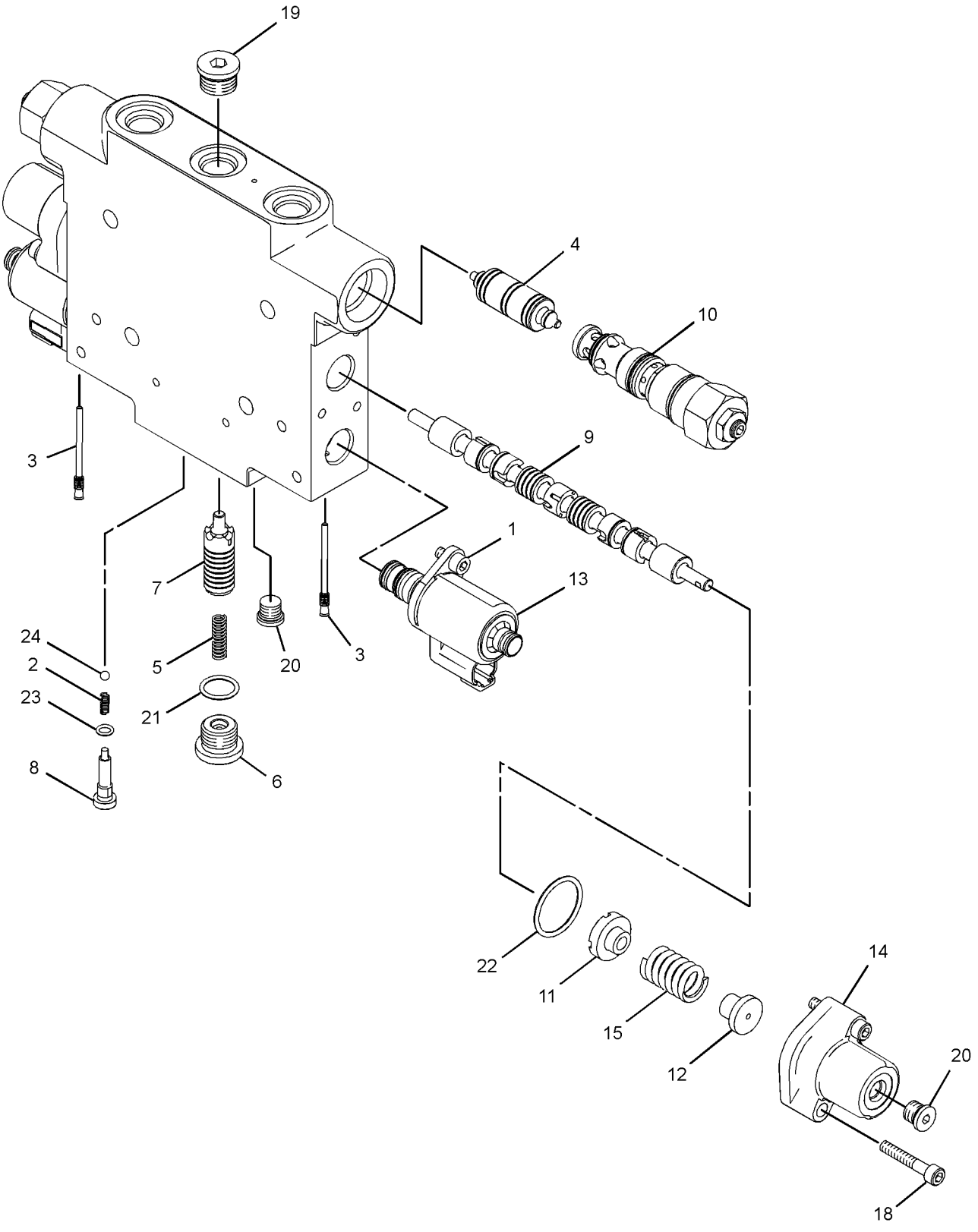

GRAPHIC #1 **<END>** g01632294

HYDRAULIC SYSTEM

261-3268 VALVE GP-CONTROL–BLADE LIFT

S/N: R9J1-UP

PART OF 259-6923 VALVE GP-BANK 3, 259-6924 VALVE GP-BANK 4, 259-6925, 291-9518 VALVE GP-BANK 6

AN ATTACHMENT

SMCS-5051 **i03888130**

NOTE	REF NO	GRAPHIC REF	PART NUMBER	QTY	PART NAME 1 2 3 4 5 6 (PRODUCT LEVEL)	SEE PAGE
M	1	1	**8T-0267**	2	BOLT-SOCKET HEAD (M6X1X12-MM)	
	2	1	**6E-3007**	1	SPRING	
	3	1	**148-2557**	6	PLUG	
	4	1	**106-3660**	2	PISTON	
M	5	1	**136-4192**	4	BOLT (M6X1X35-MM)	
	6	1	**212-4961**	1	SPRING	
	7	1	**242-9264**	1	PLUG-ORIFICE	
	8	1	**243-2965**	1	SPOOL	
	9	1	**244-2579**	1	PLUG	
J	10	1	**318-3115**	1	VALVE GP-CHECK (BLADE LIFT)	
		1	**6V-6580**	1	SEAL-O-RING	
		1	**9X-7745**	1	SEAL-O-RING	
		1	**6V-5326**	1	SEAL-O-RING	
J	11	1	**318-3052**	1	VALVE GP-CHECK & RELIEF (BLADE LIFT)	
		1	**6V-6580**	1	SEAL-O-RING	
		1	**9X-7745**	1	SEAL-O-RING	
		1	**6V-5326**	1	SEAL-O-RING	
	12	1	**251-1668**	1	COVER-SPRING	
	13	1	**251-1669**	1	COVER-SPRING	
Y	16	1	**278-1799**	2	VALVE GP-SOLENOID (BLADE LIFT)	759
	17	1	**284-3555**	1	SPRING	
	18	1	**284-3556**	1	SPRING	
	19	1	**284-4601**	2	RETAINER	
	20	1	**284-4602**	2	RETAINER	
	21	1	**297-4276**	1	STEM	
	22	1	*148-8395*	1	PLUG AS	
		1	**9S-8005**	1	PLUG-O-RING	
		1	**3K-0360**	1	SEAL-O-RING	
	23	1	*183-7263*	3	PLUG AS	
					(EACH INCLUDES)	
		1	**9S-8002**	1	PLUG-O-RING	
		1	**3J-7354**	1	SEAL-O-RING	
	24	1	**3K-0360**	1	SEAL-O-RING	
	25	1	**3S-9233**	2	SEAL-O-RING	
	26	1	**4J-7533**	1	SEAL-O-RING	
	27	1	**5B-9318**	1	BALL	
					AVAILABLE REPAIR KIT(S):	
J			**325-2588**	2	KIT-SEAL (BLADE LIFT)	
					(INCLUDES SEAL-O-RINGS & RING-BACKUPS)	

J-KIT MARKED J SERVICES PART(S) MARKED J
M-METRIC PART
Y-SEPARATE ILLUSTRATION

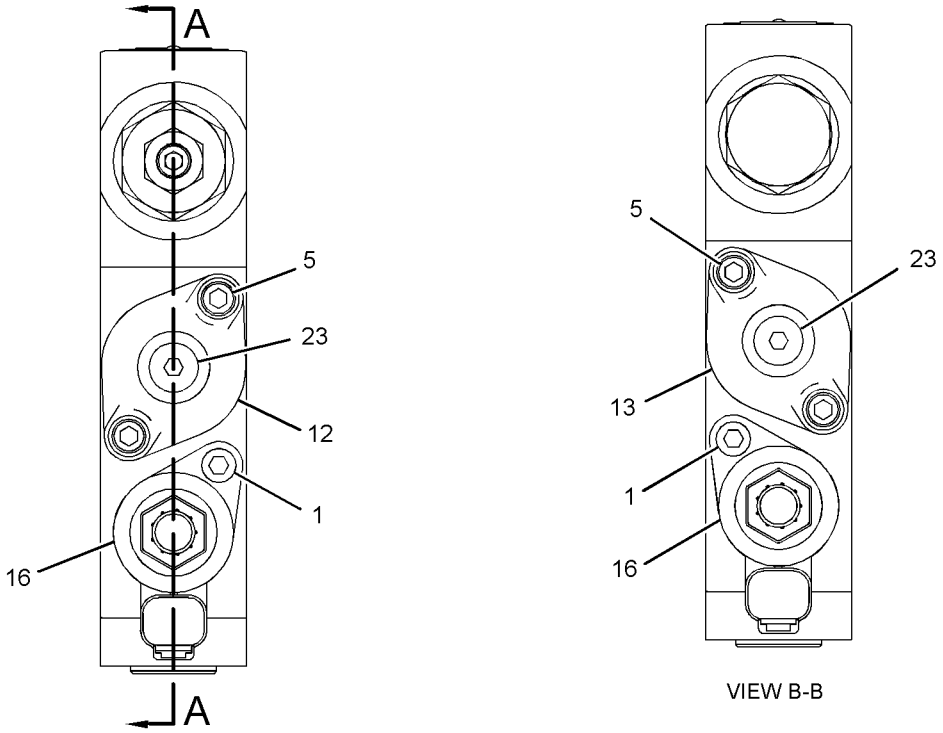

VIEW B-B

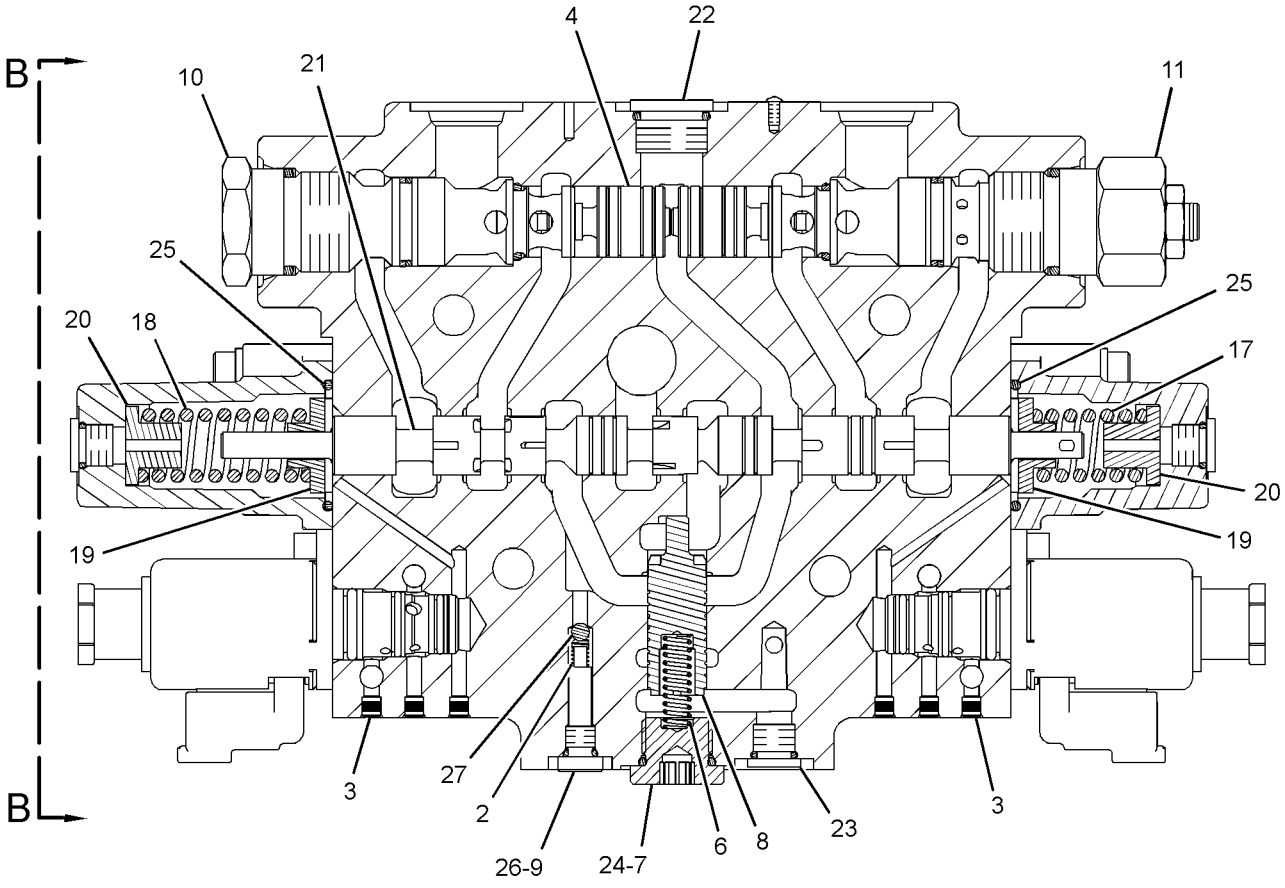

SECTION A-A

GRAPHIC #1 **<END>** g01625745

290-0594 VALVE GP-CONTROL—WING TILT

S/N: R9J1-UP
PART OF 291-9518 VALVE GP-BANK 6
AN ATTACHMENT

SMCS-5051 **i03889781**

NOTE	REF NO	GRAPHIC REF	PART NUMBER	QTY	PART NAME 1 2 3 4 5 6 (PRODUCT LEVEL)	SEE PAGE
M	1	1	**8T-0267**	2	BOLT-SOCKET HEAD (M6X1X12-MM)	
	2	1	**6E-3007**	1	SPRING	
	3	1	**148-2557**	6	PLUG	
	4	1	**106-3660**	2	PISTON	
	5	1	**212-4961**	1	SPRING	
	6	1	**242-9264**	1	PLUG-ORIFICE	
	7	1	**243-2965**	1	SPOOL	
	8	1	**244-2579**	1	PLUG	
J	9	1	**318-3040**	2	VALVE GP-CHECK & RELIEF (WING TILT)	
					(EACH INCLUDES)	
		1	**6V-6580**	1	SEAL-O-RING	
		1	**3K-0360**	1	SEAL-O-RING	
		1	**6V-5326**	1	SEAL-O-RING	
	10	1	**251-1668**	1	COVER-SPRING	
	11	1	**251-1669**	1	COVER-SPRING	
Y	13	1	**278-1799**	2	VALVE GP-SOLENOID (BLADE FLOAT, WING TILT)	759
	14	1	**284-3555**	1	SPRING	
	15	1	**284-3556**	1	SPRING	
	16	1	**284-4601**	2	RETAINER	
	17	1	**284-4602**	2	RETAINER	
M	20	1	**136-4192**	4	BOLT (M6X1X35-MM)	
	21	1	*148-8395*	1	PLUG AS	
		1	**9S-8005**	1	PLUG-O-RING	
		1	**3K-0360**	1	SEAL-O-RING	
	22	1	*183-7263*	3	PLUG AS	
					(EACH INCLUDES)	
		1	**9S-8002**	1	PLUG-O-RING	
		1	**3J-7354**	1	SEAL-O-RING	
	23	1	**3K-0360**	1	SEAL-O-RING	
	24	1	**3S-9233**	2	SEAL-O-RING	
	25	1	**4J-7533**	1	SEAL-O-RING	
	26	1	**5B-9318**	1	BALL	
					PARTS SHOWN IN GRAPHIC(S) WITHOUT A REFERENCE NUMBER ARE NOT SERVICED SEPARATELY	
					AVAILABLE REPAIR KIT(S):	
J			**325-2588**	1	KIT-SEAL (WING TILT)	
					(INCLUDES SEAL-O-RINGS & BACKUP RINGS)	

J-KIT MARKED J SERVICES PARTS MARKED J
M-METRIC PART
Y-SEPARATE ILLUSTRATION

290-0594 VALVE GP-CONTROL *(contd.)* i03889781

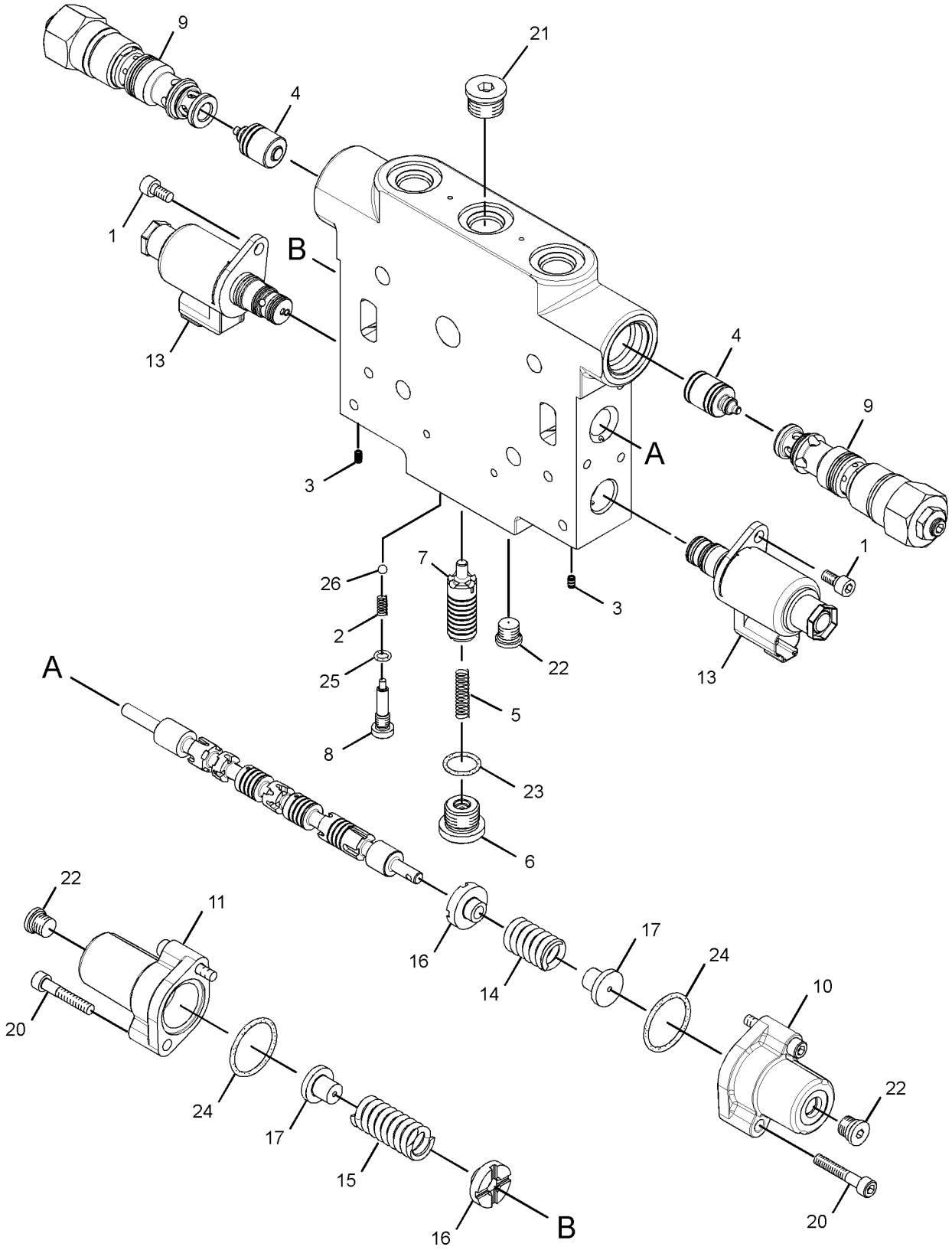

GRAPHIC #1 **<END>** g01896236

277-2132 VALVE GP-DIVERTER—FAN DRIVE

S/N: R9J1-UP

PART OF 353-2604 MANIFOLD GP-CONTROL

SMCS-5066 **i02855869**

NOTE	REF NO	GRAPHIC REF	PART NUMBER	QTY	PART NAME 1 2 3 4 5 6 (PRODUCT LEVEL)	SEE PAGE
J	1	1	**2M-9780**	1	SEAL-O-RING	
J	2	1	**6V-5142**	1	SEAL-O-RING	
J	3	1	**169-1617**	2	RING-BACKUP	
J	4	1	**095-1751**	1	SEAL-O-RING	
J	5	1	**169-1616**	2	RING-BACKUP	
					AVAILABLE REPAIR KIT(S):	
J			**200-6282**		KIT-SEAL (DIVERTER VALVE) (HYDRAULIC FAN FLUID FLOW)	

J-(KIT MARKED J INCLUDES PART(S) MARKED J)

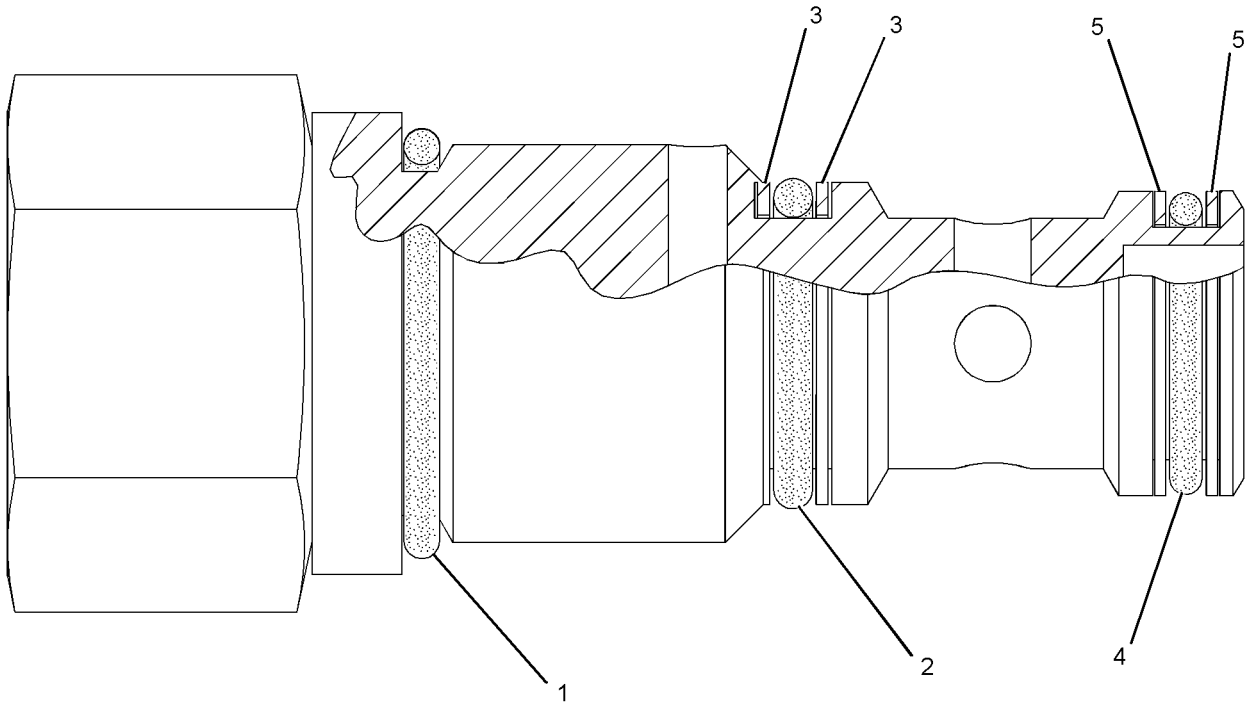

GRAPHIC #1 **<END>** g01109584

HYDRAULIC SYSTEM

252-8038 VALVE GP-PRESSURE REDUCING

S/N: R9J1-UP
PART OF 353-2605 MANIFOLD GP-CONTROL
AN ATTACHMENT

SMCS-5117 **i02148309**

NOTE	REF NO	GRAPHIC REF	PART NUMBER	QTY	PART NAME 1 2 3 4 5 6 (PRODUCT LEVEL)	SEE PAGE
	1	1	**2M-9780**	1	SEAL-O-RING	
	2	1	**6V-3505**	1	RING-BACKUP	
	3	1	**8C-3132**	1	SEAL-O-RING	
	4	1	**6E-0410**	1	SEAL-O-RING	
	5	1	**5P-2199**	1	RING-BACKUP	

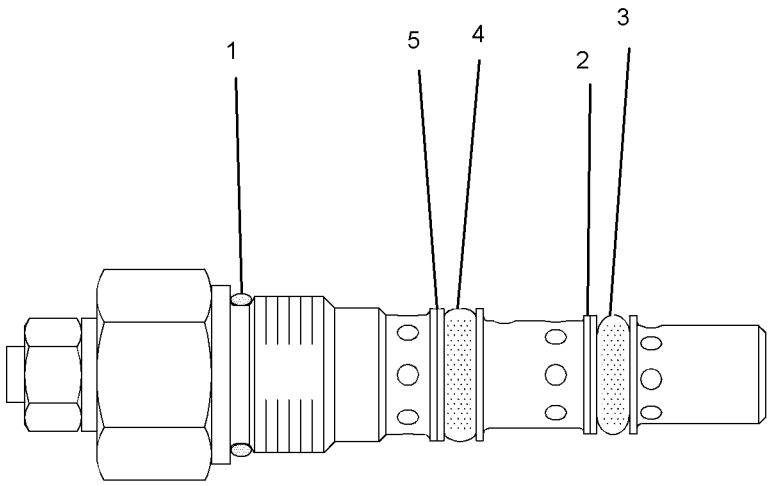

GRAPHIC #1 **<END>** g01089904

HYDRAULIC SYSTEM

345-4472 VALVE GP-PRESSURE REDUCING

S/N: R9J1-UP

PART OF 344-7823 LINES GP-STEERING

SMCS-5117 **i03631357**

NOTE	REF NO	GRAPHIC REF	PART NUMBER	QTY	PART NAME 1 2 3 4 5 6 (PRODUCT LEVEL)	SEE PAGE
Y	1	1	**345-6946**	1	VALVE GP-PRESSURE REDUCING (IMPLEMENT PILOT OIL)	750

Y-SEPARATE ILLUSTRATION

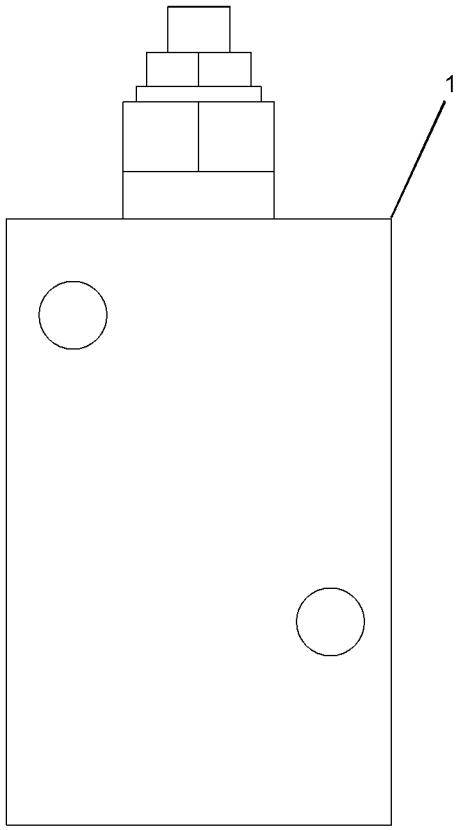

GRAPHIC #1 **<END>** g01950293

HYDRAULIC SYSTEM

345-6946 VALVE GP-PRESSURE REDUCING

S/N: R9J1-UP

PART OF 345-4472 VALVE GP-PRESSURE REDUCING

SMCS-5117 **i03634356**

NOTE	REF NO	GRAPHIC REF	PART NUMBER	QTY	PART NAME 1 2 3 4 5 6 (PRODUCT LEVEL)	SEE PAGE
	1	1	**2M-9780**	1	SEAL-O-RING	
	2	1	**6V-3505**	1	RING-BACKUP	
	3	1	**8C-3132**	1	SEAL-O-RING	
	4	1	**6E-0410**	1	SEAL-O-RING	
	5	1	**5P-2199**	1	RING-BACKUP	

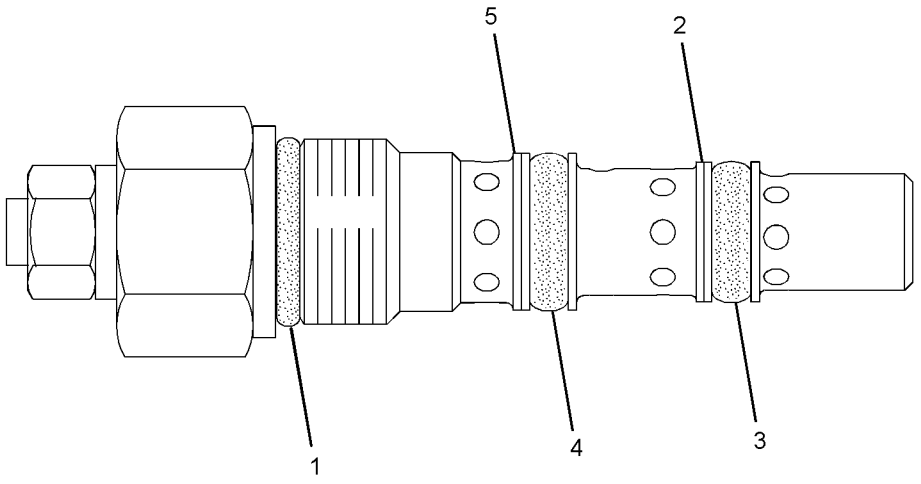

GRAPHIC #1 **<END>** g01950269

168-2210 VALVE GP-PUMP CONTROL–
PRESSURE, FLOW COMPENSATOR–BRAKE, HYDRAULIC FAN
S/N: R9J1-UP

PART OF 250-8337 PUMP GP-PISTON

SMCS-5455 **i01790993**

NOTE	REF NO	GRAPHIC REF	PART NUMBER	QTY	PART NAME 1 2 3 4 5 6 (PRODUCT LEVEL)	SEE PAGE
	1	1	**6E-6527**	2	PLUG	
	2	1	**6E-6528**	6	SEAL	
	3	1	**9S-8002**	1	PLUG-O-RING	
	4	1	**9X-7680**	3	SEAL-O-RING	
	5	1	**5P-9262**	1	SEAL-O-RING	
	6	1	**105-2145**	1	VALVE-ORIFICE	
	7	1	**6E-3268**	1	RETAINER-SPRING	
	8	1	**6E-3269**	1	RETAINER-SPRING	
M	9	1	**8T-8442**	4	BOLT-SOCKET HEAD (M6X1X30-MM)	
	10	1	**6E-3273**	1	SEAT	
	11	1	**6V-8352**	1	SEAL-O-RING	
	12	1	**6E-6536**	1	PLUG	
M	13	1	**6E-6537**	2	SCREW-ADJUSTMENT (M8X1X28-MM)	
M	14	1	**6E-6538**	2	NUT-ADJUSTMENT (M8X1-THD)	
M	15	1	**6E-6539**	2	NUT-CAP (M8X1-THD)	
	16	1	**6E-6540**	1	PLUG	
	17	1	**033-6043**	1	SEAL-O-RING	
	18	1	**6E-3272**	1	SEAT	
	19	1	**6E-3274**	1	SPRING	
	20	1	**6E-3275**	1	SPRING	
	21	1	**3J-7354**	1	SEAL-O-RING	
	22	1	**201-0780**	1	ORIFICE	
	23	1	**193-1036**	1	SPRING	
	24	1	**6E-3276**	1	SPRING	
Z	25	1		1	STEM	
Z	26	1		1	STEM	
Z	27	1		1	BODY	

M-METRIC PART
Z-NOT SERVICED SEPARATELY

168-2210 **VALVE GP-PUMP CONTROL** *(contd.)* **i01790993**

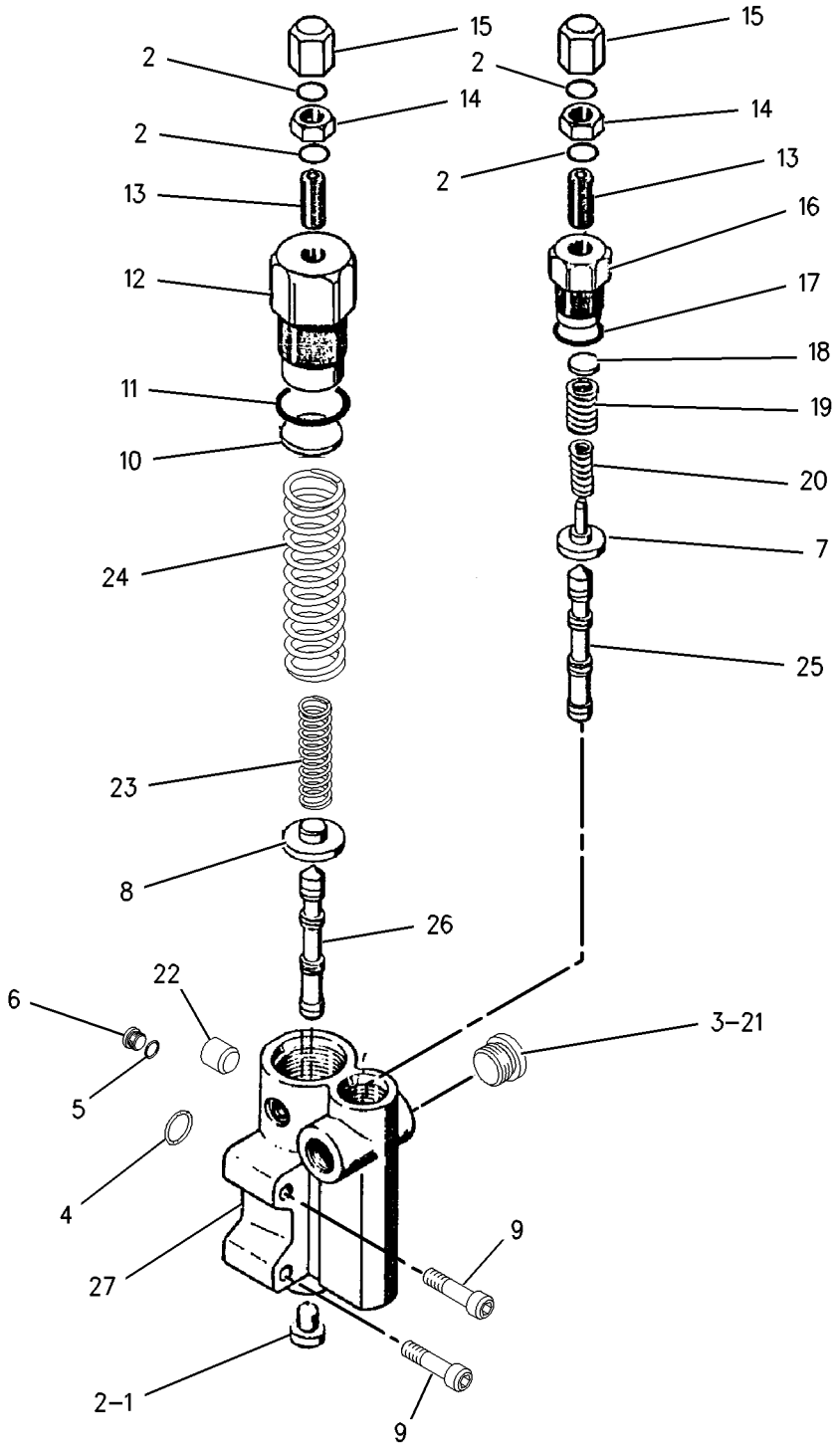

GRAPHIC #1 **<END>** g00918518

271-6847 VALVE GP-PUMP CONTROL–
PRESSURE, FLOW COMPENSATOR
S/N: R9J1-UP
PART OF 246-4486 PUMP GP-PISTON

SMCS-5455 **i02901450**

NOTE	REF NO	GRAPHIC REF	PART NUMBER	QTY	PART NAME 1 2 3 4 5 6 (PRODUCT LEVEL)	SEE PAGE
	1	1	**6E-4229**	1	BODY-COMPENSATOR	
	2	1	**9S-4191**	1	PLUG-O-RING	
	3	1	**3J-1907**	3	SEAL-O-RING	
	4	1	**6E-4241**	1	SPOOL-MARGIN	
	5	1	**9T-2186**	2	PLUG	
	6	1	**6E-4239**	1	SPOOL-CUTOFF	
	7	1	**6E-4230**	2	GUIDE-SPRING	
	8	1	**6E-4228**	1	SPRING (CUTOFF)	
	9	1	**6E-6140**	1	PLUG-COMPENSATOR	
	10	1	**033-6036**	1	SEAL-O-RING	
	11	1	**6E-6141**	2	LOCKNUT-SEALING (M8X1.25-THD)	
M	12	1	**9X-8914**	2	SETSCREW-SOCKET (M8X1.25X45-MM)	
	13	1	**6E-6142**	1	PLUG-MARGIN	
	14	1	**033-6027**	1	SEAL-O-RING	
	15	1	**6E-4246**	1	SPRING-MARGIN	
	16	1	**6E-4318**	1	PIN-SPRING STOP	
	17	1	**6E-4242**	2	GUIDE-SPRING	

M-METRIC PART

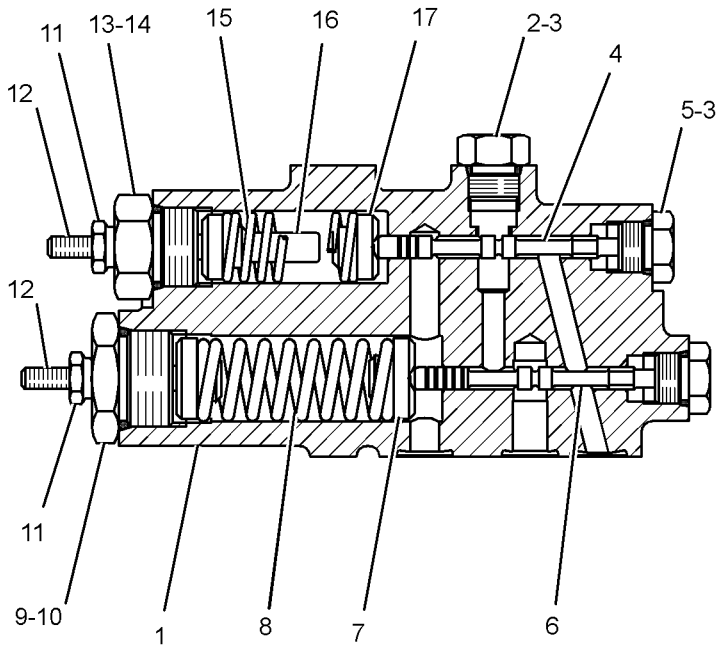

GRAPHIC #1 **<END>** g01287415

HYDRAULIC SYSTEM

133-5330 VALVE GP-RELIEF

S/N: R9J1-UP
PART OF 353-2605 MANIFOLD GP-CONTROL
AN ATTACHMENT

SMCS-4322, 5069, 5072, 5117 **i02783578**

NOTE	REF NO	GRAPHIC REF	PART NUMBER	QTY	PART NAME 1 2 3 4 5 6 (PRODUCT LEVEL)	SEE PAGE
J	1	1	**161-6149**	1	SEAL-O-RING	
J	2	1	**161-6161**	2	RING-BACKUP	
J	3	1	**2M-9780**	1	SEAL-O-RING	
					AVAILABLE REPAIR KIT(S):	
J			**133-5545**	1	KIT-SEAL (RELIEF VALVE)	
					(INCLUDES SEAL RINGS & BACK-UP RING)	

J-KIT MARKED J INCLUDES PART(S) MARKED J

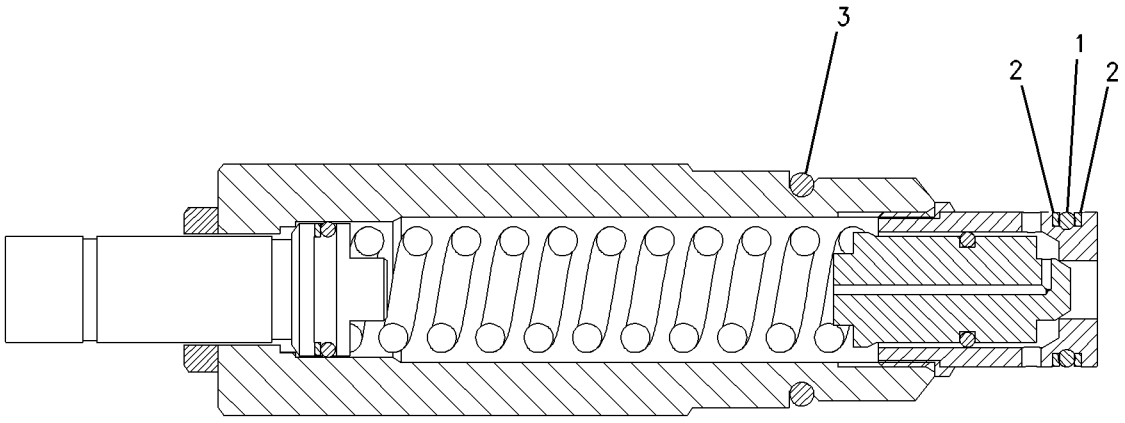

GRAPHIC #1 **<END>** g00705020

251-8330 VALVE GP-RELIEF

S/N: R9J1-UP

PART OF 353-2604 MANIFOLD GP-CONTROL

SMCS-4322, 5069, 5072, 5117 **i02786180**

NOTE	REF NO	GRAPHIC REF	PART NUMBER	QTY	PART NAME 1 2 3 4 5 6 (PRODUCT LEVEL)	SEE PAGE
J	1	1	**2M-9780**	1	SEAL-O-RING	
J	2	1	**161-6149**	1	SEAL-O-RING	
J	3	1	**161-6161**	2	RING-BACKUP	
					AVAILABLE REPAIR KIT(S):	
			133-5545	1	KIT-SEAL (RELIEF VALVE)	
					KIT INCLUDES SEAL-O-RINGS & BACK-UP RINGS	

J-KIT MARKED J INCLUDES PART(S) MARKED J

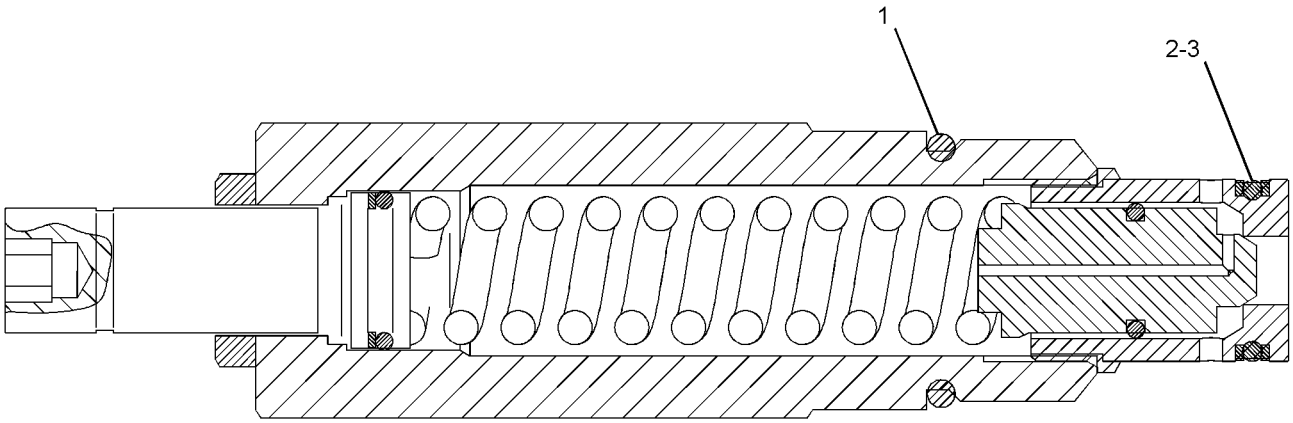

GRAPHIC #1 **<END>** g01113664

HYDRAULIC SYSTEM

257-8414 VALVE GP-SHUTTLE

S/N: R9J1-UP
PART OF 353-2604 MANIFOLD GP-CONTROL
FIELD REPLACEMENT FOR 213-4555 VALVE GP-SHUTTLE

SMCS-5079 **i02179242**

NOTE	REF NO	GRAPHIC REF	PART NUMBER	QTY	PART NAME 1 2 3 4 5 6 (PRODUCT LEVEL)	SEE PAGE
	1	1	**3K-0360**	1	SEAL-O-RING	
	2	1	**161-6149**	1	SEAL-O-RING	
	3	1	**095-1750**	1	SEAL-O-RING	
	4	1	**161-6161**	1	RING-BACKUP	
	5	1	**187-0541**	1	RING-BACKUP	

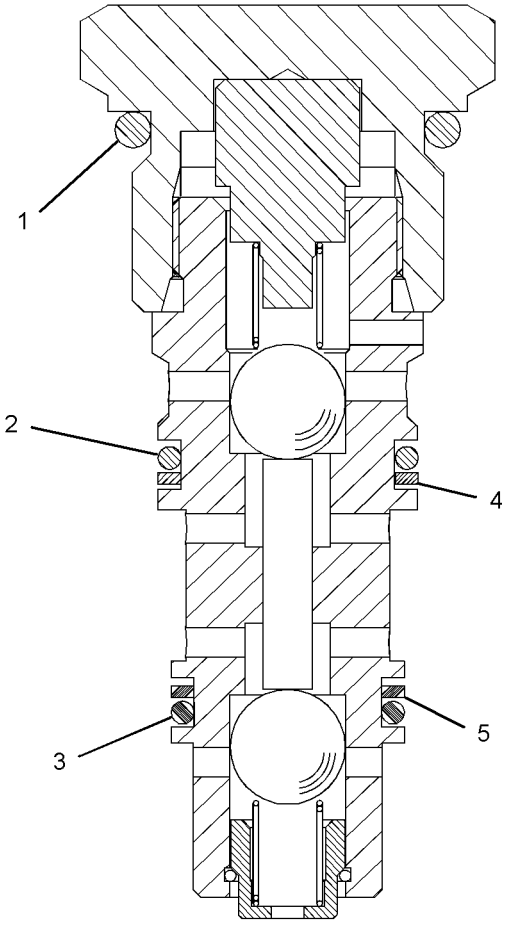

GRAPHIC #1 **<END>** g01104191

152-8346 VALVE GP-SOLENOID

S/N: R9J1-UP
24-VOLT
PART OF 298-2600 LOCK GP-CENTERSHIFT

SMCS-5479 **i03744046**

NOTE	REF NO	GRAPHIC REF	PART NUMBER	QTY	PART NAME 1 2 3 4 5 6 (PRODUCT LEVEL)	SEE PAGE
	1	1	**218-9894**	1	COIL AS (24-VOLT)	
	1A	1	**102-8802**	1	KIT-RECEPTACLE (2-PIN)	
					(INCLUDES RECEPTACLE AS AND WEDGE)	
	1B	1	**8T-8729**	2	PIN-CONNECTOR (16-GA TO 18-GA)	
	1C	1	**1S-9593**	2	STRAP-CABLE	
	2	1	**170-7485**	1	SPOOL AS-VALVE	
	2A	1	**111-0343**	1	LOCKNUT (5/16-18-THD)	
	2B	1	**8C-9987**	1	WASHER (8.3X28X2.5-MM THK)	
					AVAILABLE REPAIR KIT(S):	
			109-3036	1	KIT-SEAL	
					(INCLUDES SEALS & RINGS)	

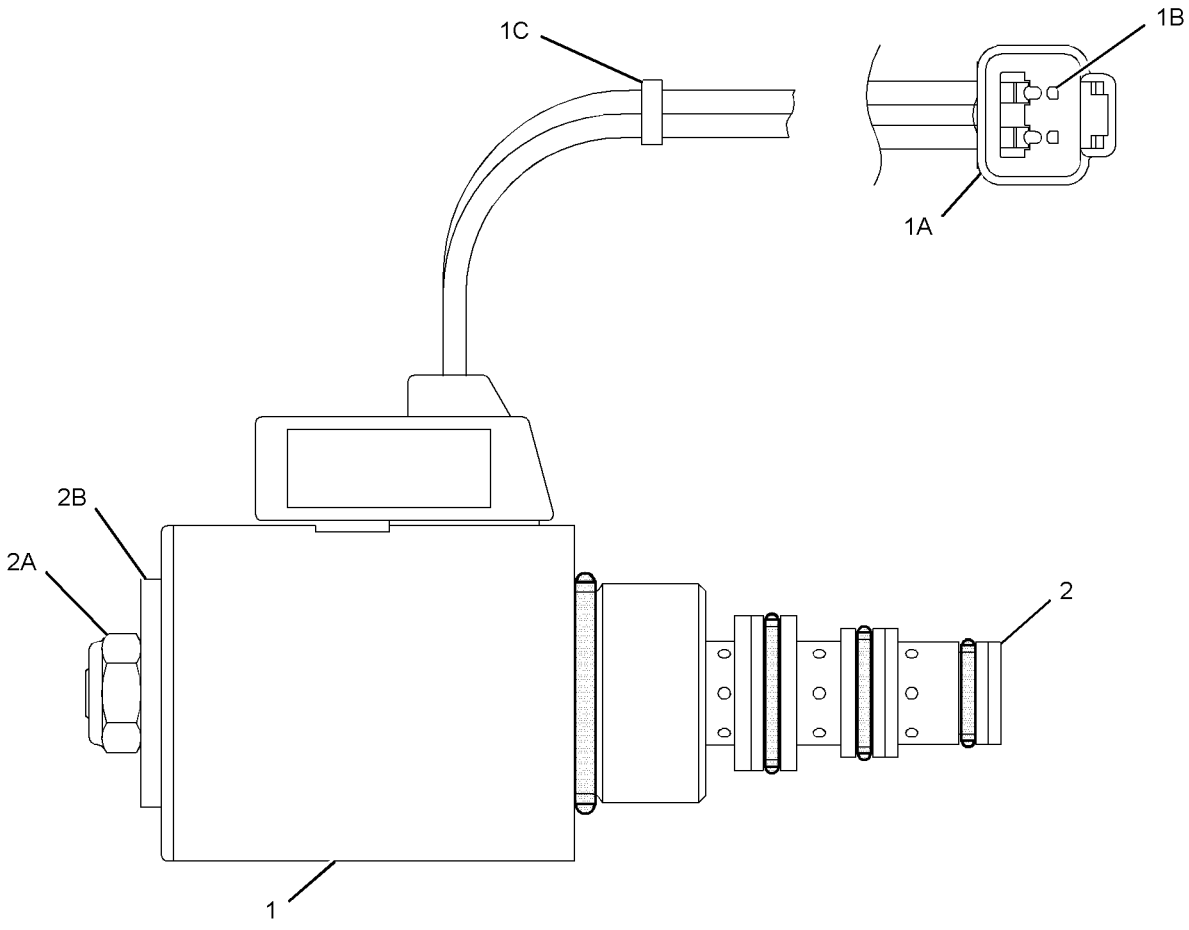

GRAPHIC #1 **<END>** g01965381

HYDRAULIC SYSTEM

189-8627 VALVE GP-SOLENOID

S/N: R9J1-UP
24-VOLT
PART OF 353-2604 MANIFOLD GP-CONTROL

SMCS-5479 **i03621222**

NOTE	REF NO	GRAPHIC REF	PART NUMBER	QTY	PART NAME 1 2 3 4 5 6 (PRODUCT LEVEL)	SEE PAGE
	1	1	**312-8629**	1	COIL AS	
	2	1	**191-9247**	1	WASHER (19.15X31.65X2.36-MM THK)	
	3	1	**198-2914**	1	NUT (3/4-32-THD)	
					PARTS SHOWN IN GRAPHIC(S) WITHOUT A REFERENCE NUMBER ARE NOT SERVICED SEPARATELY	

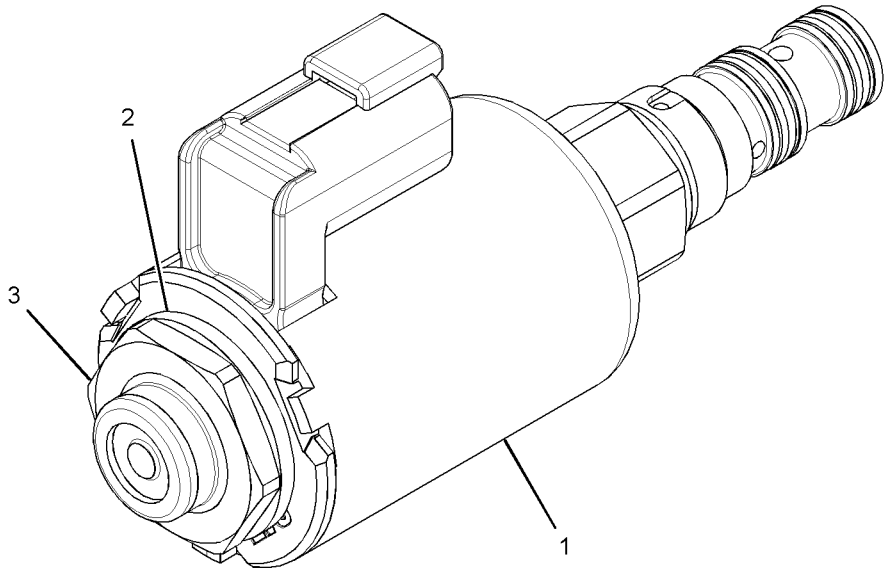

GRAPHIC #1 **<END>** g01947439

278-1799 VALVE GP-SOLENOID

S/N: R9J1-UP

PART OF 259-6896, 259-6903, 259-6906, 259-6907, 259-6908, 259-6909, 259-6910, 259-6912, 259-6913, 259-6914, 259-6915, 261-3268, 290-0594 VALVE GP-CONTROL

AN ATTACHMENT

SMCS-5479 **i02558898**

NOTE	REF NO	GRAPHIC REF	PART NUMBER	QTY	PART NAME 1 2 3 4 5 6 (PRODUCT LEVEL)	SEE PAGE
	1	1	**8C-6711**	1	NUT-RETAINER (1/2-20-THD)	
	2	1	**226-9622**	1	COIL AS-SOLENOID (24-VOLT)	
	3	1	**4K-2039**	1	SEAL-O-RING	
	4	1	**5L-4758**	1	SEAL-O-RING	
	5	1	**6F-4855**	1	SEAL-O-RING	

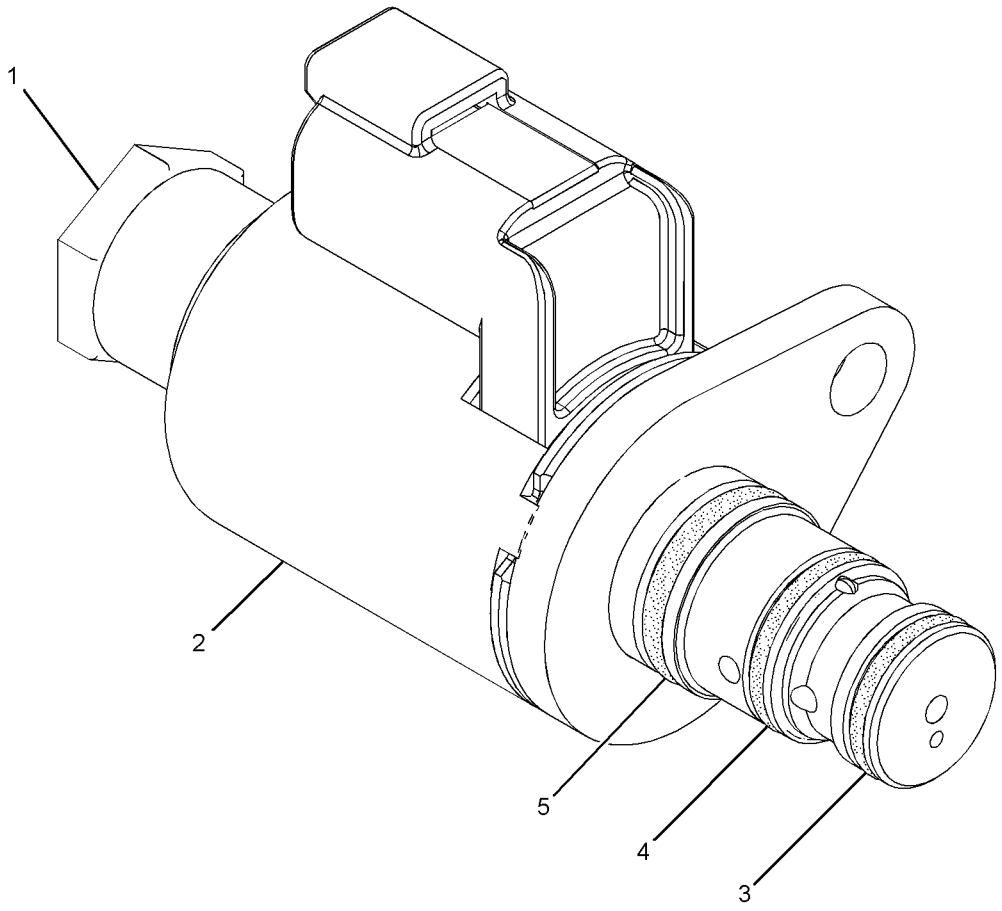

GRAPHIC #1 **<END>** g01281815

IMPLEMENTS

281-4298 CIRCLE & BEAM AS

S/N: R9J1-UP

PART OF 253-4650 CIRCLE GP

SMCS-6153, 6154 **i02712501**

NOTE	REF NO	GRAPHIC REF	PART NUMBER	QTY	PART NAME 1 2 3 4 5 6 (PRODUCT LEVEL)	SEE PAGE
	1	1	**6G-4911**	2	BOSS	
	2	1	**8X-5312**	1	BEAM-BLADE	
	3	1	**8X-5313**	1	BEAM-BLADE	
	4	1	**8X-5428**	2	BLOCK	
	5	1	**256-7143**	1	BRACKET AS	
M		1	**159-9539**	2	NUT-WELD (M6X1-THD)	
	6	1	**281-4295**	1	BRACKET AS	
	7	1	**281-9451**	2	PLATE	
M	8	1	**9R-2672**	1	BOSS-THREADED (M10X1.5-THD)	
	9	1	**9R-4595**	1	BOSS (M12X1.75X30-MM)	
M	10	1	**9R-9866**	1	BOSS-THREADED (M10X1.5-THD)	

M-METRIC PART

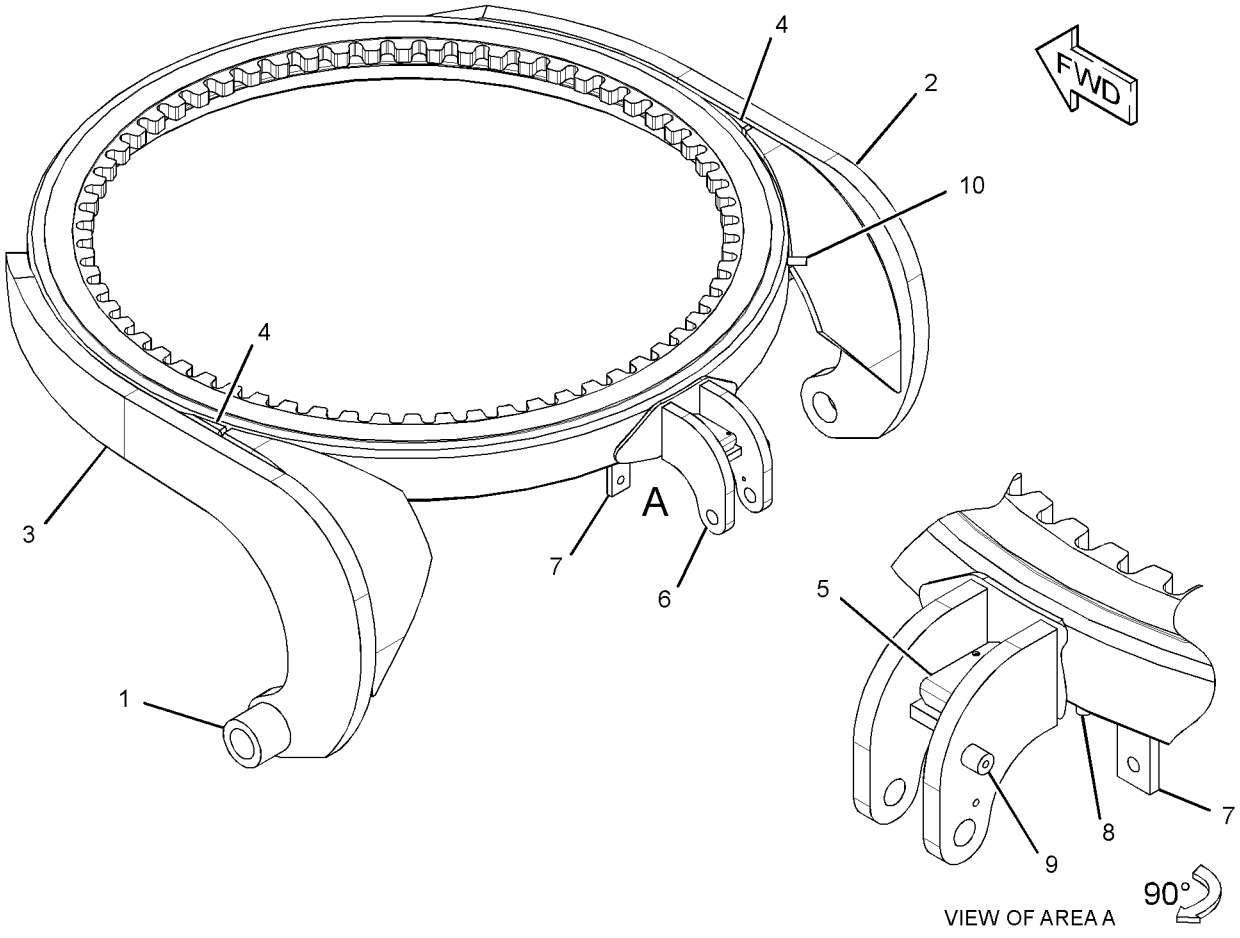

GRAPHIC #1 **<END>** g01486113

253-4650 CIRCLE GP

S/N: R9J1-UP

PART OF 349-2555 COMMON AR

SMCS-6152, 6154, 6155 **i02736180**

NOTE	REF NO	GRAPHIC REF	PART NUMBER	QTY	PART NAME 1 2 3 4 5 6 (PRODUCT LEVEL)	SEE PAGE
	1	1	**6G-4831**	2	SHAFT	
	3	1	**243-6700**	1	BRACKET AS	
	4	1	**252-7089**	2	STRIP-WEAR	
	5	1	**253-4627**	2	STRIP-WEAR	
	6	1	**253-4628**	2	STRIP-WEAR	
	7	1	**253-4629**	4	RETAINER	
	8	1	**253-4635**	2	PLATE AS	
B	9	1	**253-4643**	6	SHIM (2-MM THK)	
	10	1	**269-8248**	4	RETAINER	
Y	11	1	**281-4298**	1	CIRCLE & BEAM AS	760
	12	1	**285-6124**	16	WASHER-HARD (16X35X5-MM THK)	
	13	1	**285-6125**	16	BOLT (M14X2-MM-THD)	
M	14	1	**129-2220**	4	SETSCREW-SOCKET (M20X2.5X80-MM)	
	15	1	**4J-1888**	4	PIN-COTTER	
	16	1	**5F-3715**	4	NUT-SLOTTED HEX (2-12-THD)	
M	17	1	**6V-7688**	6	LOCKNUT (M20X2.5-THD)	
	18	1	**7Y-0725**	8	WASHER-HARD (52X92X8-MM THK)	
M	19	1	**8T-8555**	2	SETSCREW-SOCKET (M20X2.5-THD)	
	20	1	**8W-4167**	8	BEARING-SLEEVE	

B-USE AS REQUIRED
M-METRIC PART
Y-SEPARATE ILLUSTRATION

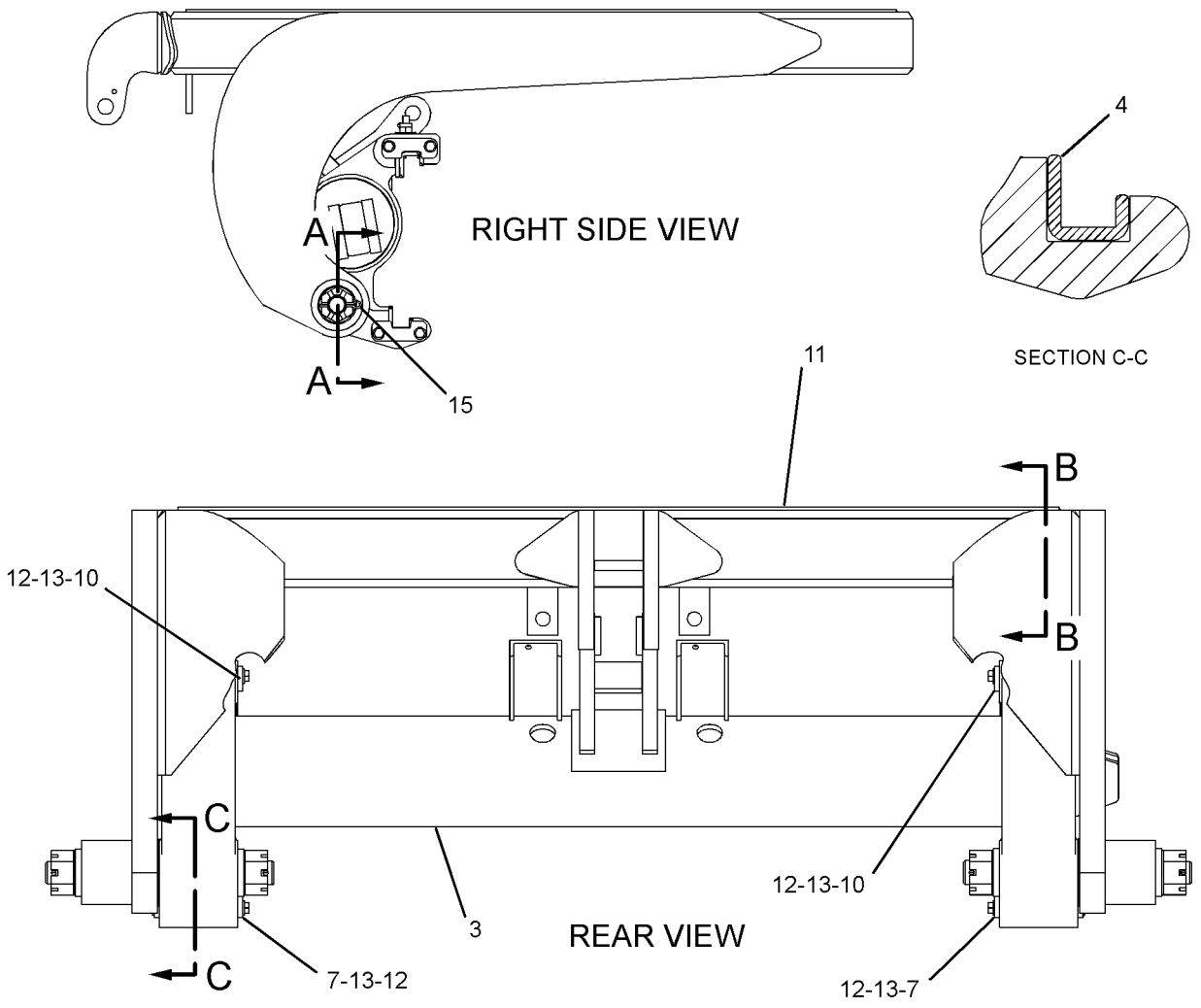

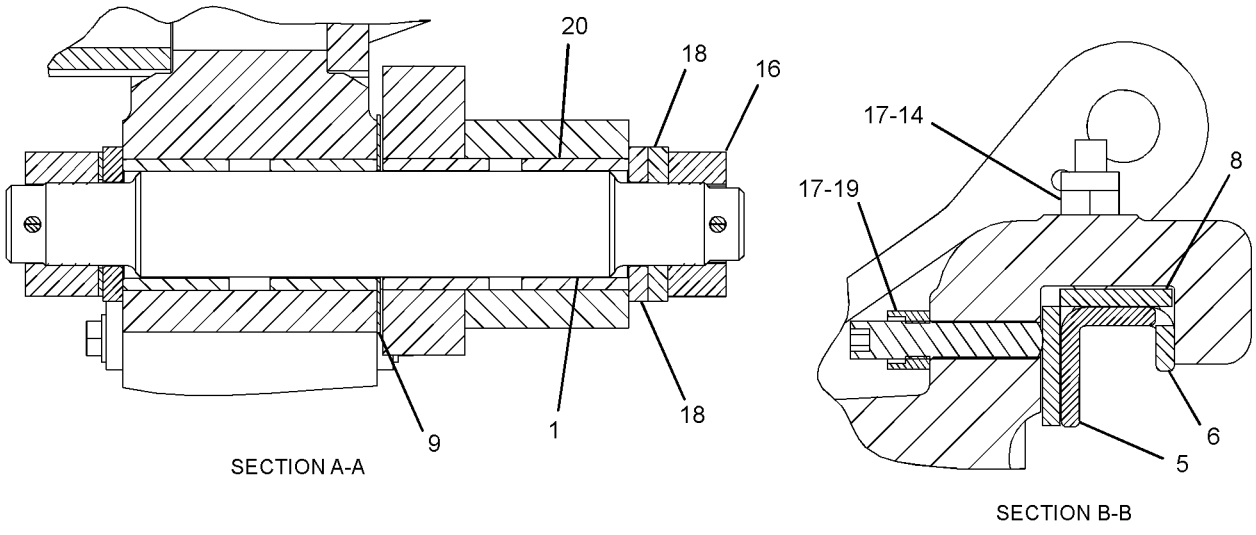

GRAPHIC #1 **<END>** g01373436

257-4929 DRAWBAR GP

S/N: R9J1-UP
PART OF 349-2555 COMMON AR
OPTIONAL FIELD REPLACEMENT ORDER 281-9445 STRIP-WEAR

SMCS-6153 **i03710700**

NOTE	REF NO	GRAPHIC REF	PART NUMBER	QTY	PART NAME 1 2 3 4 5 6 (PRODUCT LEVEL)	SEE PAGE
	1	1	**3B-8489**	1	FITTING-GREASE	
	2	1	**6G-4896**	1	BALL	
	3	1	**6K-6444**	2	SPACER (0.906X1.625X1.31-IN THK)	
	4	1	**308-6303**	6	STRIP-WEAR	
B	5	1	**185-7115**	42	SHIM (0.5-MM THK)	
	6	1	**251-8250**	1	DRAWBAR AS	
		1	**185-7120**	1	SHAFT AS	
M		1	**9R-2613**	6	BOSS-WELD (M10X1.5X25-MM)	
M		1	**9R-2672**	2	BOSS-THREADED (M10X1.5-THD)	
	7	1	**308-6304**	6	SHOE-CIRCLE GUIDE	
B	8	1	**257-4932**	12	SHIM (0.25-MM THK)	
	9	1	**259-4468**	1	CAP	
	10	1	**259-4469**	1	ADAPTER	
B	11	1	**259-4470**	1	SHIM (0.12-MM THK)	
B	12	1	**259-4471**	3	SHIM (0.25-MM THK)	
B	13	1	**259-4472**	3	SHIM (0.76-MM THK)	
B	14	1	**259-4473**	2	SHIM (1.52-MM THK)	
	15	1	**268-5743**	2	PLATE	
	16	1	**278-1415**	2	PLATE	
	17	1	**283-1578**	2	WASHER-HARD (22X45X10-MM THK)	
M	18	1	**287-5701**	22	BOLT (M20X2.5X50-MM)	
M	19	1	**288-3686**	18	BOLT (M24X3X125-MM)	
	20	1	**288-3717**	18	WASHER-HARD (26X52X6-MM THK)	
	21	1	**292-5889**	12	SETSCREW (1-8X3.25-IN)	
	22	1	**302-6331**	6	STRIP-WEAR	
	23	1	**302-6332**	6	PLATE	
	24	1	**302-6333**	6	PLATE	
M	25	1	**112-3926**	8	BOLT (M20X2.5X110-MM)	
M	26	1	**213-5007**	2	BOLT (M20X2.5X80-MM)	
	27	1	**267-3508**	12	WASHER-HARD (22X35X3.5-MM THK)	
M	28	1	**286-0742**	4	NUT (M20X2.5-THD)	
	29	1	**287-5718**	20	WASHER-HARD (22X60X6-MM THK)	
	30	1	**1D-6306**	12	NUT (1-8-THD)	
M	31	1	**8T-1160**	2	BOLT-SOCKET HEAD (M10X1.5X50-MM)	
	32	1	**9S-8892**	6	BOLT-12 POINT HEAD (3/4-16X3.5-IN)	
BJ	33	1	**257-4932**	24	SHIM (0.25-MM THK)	
BJ	34	1	**185-7115**	60	SHIM (0.5-MM THK)	

B-USE AS REQUIRED
J-(SHIMS MARKED J ARE TO BE LOCATED IN TOOLBOX)
M-METRIC PART

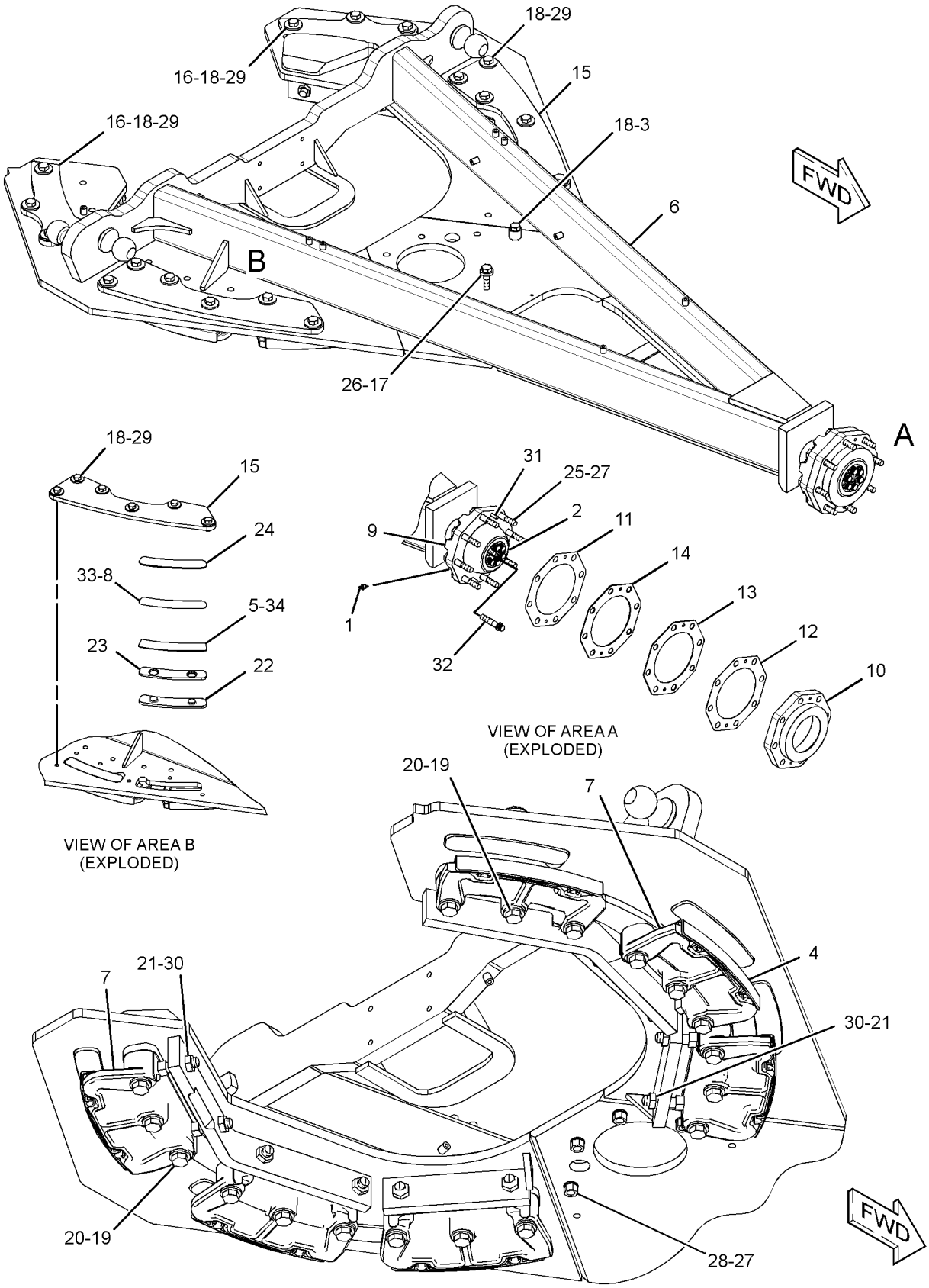

GRAPHIC #1 **<END>** g01426175

259-4479 PLATE GP-PUSH

S/N: R9J1-UP

PART OF 353-5005, 358-7877, 361-1731, 361-4363, 363-0414 DISTRIBUTION AR AN ATTACHMENT

SMCS-6077 **i02564890**

NOTE	REF NO	GRAPHIC REF	PART NUMBER	QTY	PART NAME 1 2 3 4 5 6 (PRODUCT LEVEL)	SEE PAGE
	1	1	**265-6737**	1	PLATE AS	
		1	**5J-7333**	2	HOOK	
M	2	1	**112-3928**	8	BOLT (M24X3X130-MM)	
	3	1	**267-3507**	16	WASHER-HARD (26X47X12-MM THK)	
M	4	1	**268-8262**	8	NUT (M24X3-THD)	

M-METRIC PART

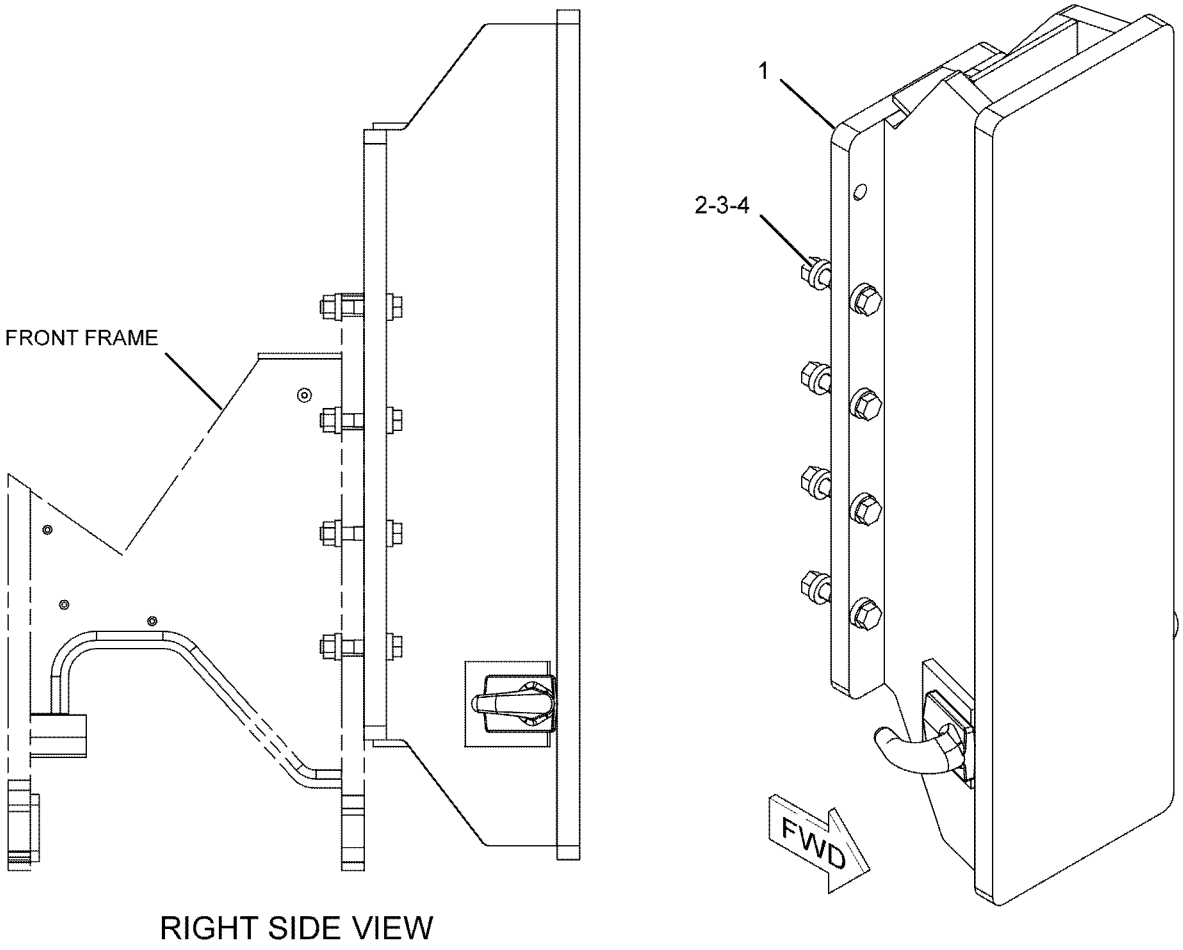

RIGHT SIDE VIEW

GRAPHIC #1 **<END>** g01109924

OPERATOR STATION

173-1028 ADJUSTER GP-SEAT

S/N: R9J1-UP
PART OF 244-5002 SEAT GP
AN ATTACHMENT

SMCS-7321 **i03396461**

NOTE	REF NO	GRAPHIC REF	PART NUMBER	QTY	PART NAME 1 2 3 4 5 6 (PRODUCT LEVEL)	SEE PAGE
	1	1	**4V-8256**	4	SPRING	
	2	1	**117-4492**	1	ROD	
	3	1	**136-1544**	1	LATCH AS (LH)	
	4	1	**156-5545**	1	LATCH AS (RH)	
	5	1	**164-4531**	1	ROD	
	6	1	**170-1112**	1	PLATE AS	
	7	1	**170-1114**	1	HANDLE (SLIDE ADJUSTMENT)	
	8	1	**170-1115**	1	HANDLE (TILT ADJUSTMENT)	
	9	1	**132-0338**	2	WASHER-PLASTIC (13X31.7X0.8-MM THK)	
	10	1	**2K-4973**	2	LOCKNUT (3/8-16-THD)	
	11	1	**7X-0608**	2	WASHER-HARD (10.2X16X2-MM THK)	

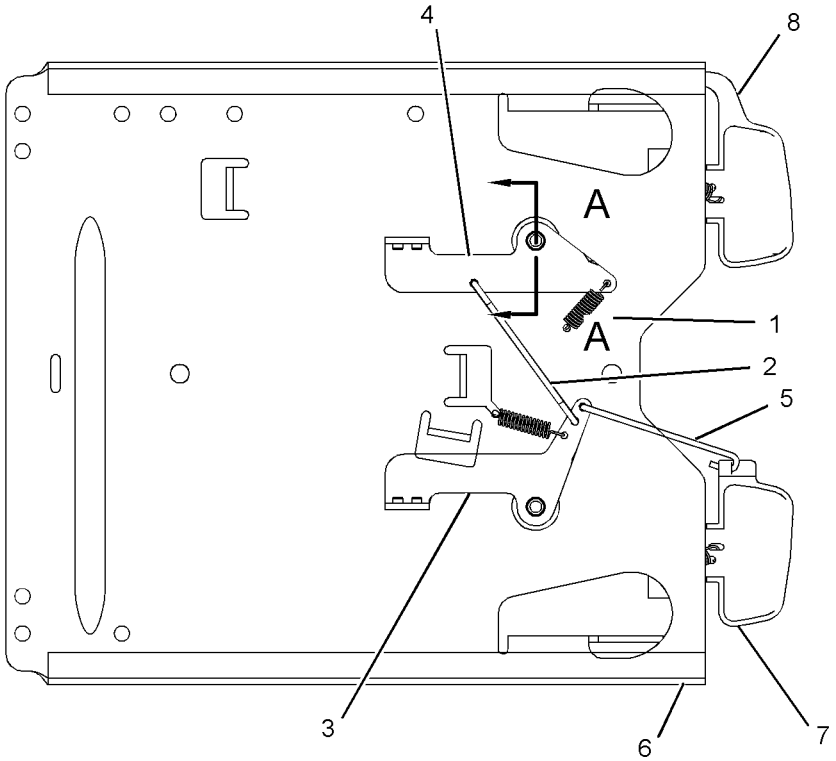

BOTTOM VIEW

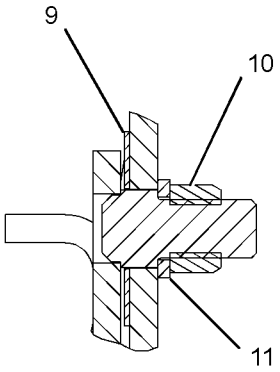

SECTION A-A

GRAPHIC #1 **<END>** g01191495

OPERATOR STATION

237-3970 AIR COMPRESSOR GP-SEAT

S/N: R9J1-UP
FOR OPTIONAL FIELD REPLACEMENT ORDER 211-5358 CONDUIT (100-CM) & 5P-6010 TUBE (1-M), PROVIDES HEAVY DUTY SEAT COMPRESSOR
PART OF 256-8768 SUSPENSION GP-SEAT
AN ATTACHMENT

SMCS-731S, 7324 **i02012095**

NOTE	REF NO	GRAPHIC REF	PART NUMBER	QTY	PART NAME 1 2 3 4 5 6 (PRODUCT LEVEL)	SEE PAGE
					(NO SERVICED PARTS)	

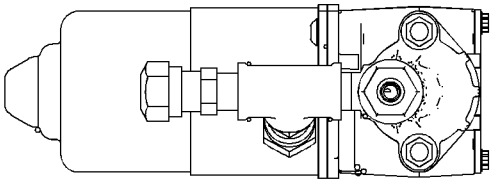

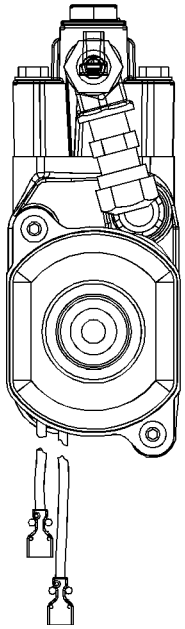

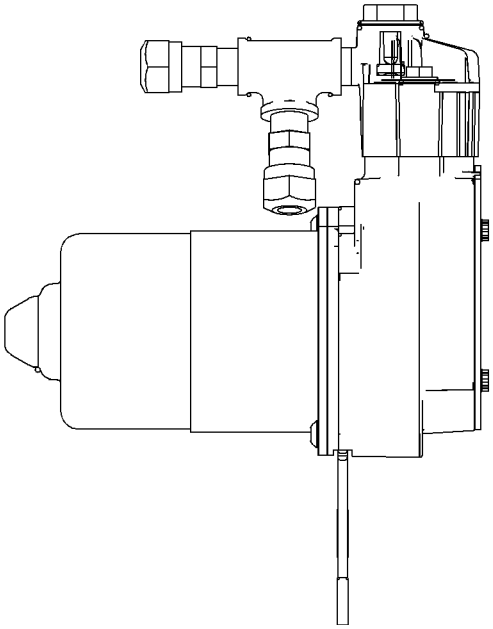

GRAPHIC #1

<END>

g01040576

OPERATOR STATION

244-2722 AIR CONDITIONER & MOUNTING GP

S/N: R9J1-UP

PART OF 233-3149 AIR CONDITIONER GP

SMCS-7320 **i02855169**

NOTE	REF NO	GRAPHIC REF	PART NUMBER	QTY	PART NAME 1 2 3 4 5 6 (PRODUCT LEVEL)	SEE PAGE
	1	1	**249-0410**	2	GASKET	
	2	1	**249-0411**	1	GASKET	
	3	1	**249-0937**	1	DUCT	
	4	1	**265-7454**	1	GASKET	
	5	1	**266-3753**	2	SPACER (11X25X39.8-MM)	
Y	6	1	**285-8055**	1	AIR CONDITIONER GP	771
	7	1	**118-5619**	2	SCREW-FLAT HEAD (6-20X1-IN)	
	8	1	**145-6669**	2	SCREW-SELF-TAPPING (10X0.75-IN)	
	9	1	**8T-4121**	4	WASHER-HARD (11X21X2.5-MM THK)	
M	10	1	**8T-4172**	2	BOLT (M10X1.5X80-MM)	
M	11	1	**8T-4196**	2	BOLT (M10X1.5X35-MM)	
D	12	1	**5P-5637**		SEAL (0.5-M)	
D	13	1	**5P-5927**		SEAL (0.4-M)	
D	13A	1	**5P-5927**		SEAL (0.3-M EACH)	
D	13B	1	**5P-5927**		SEAL (0.5-M)	
D	14	1	**5P-5643**		SEAL (0.5-M)	

D-ORDER BY THE METER
M-METRIC PART
Y-SEPARATE ILLUSTRATION

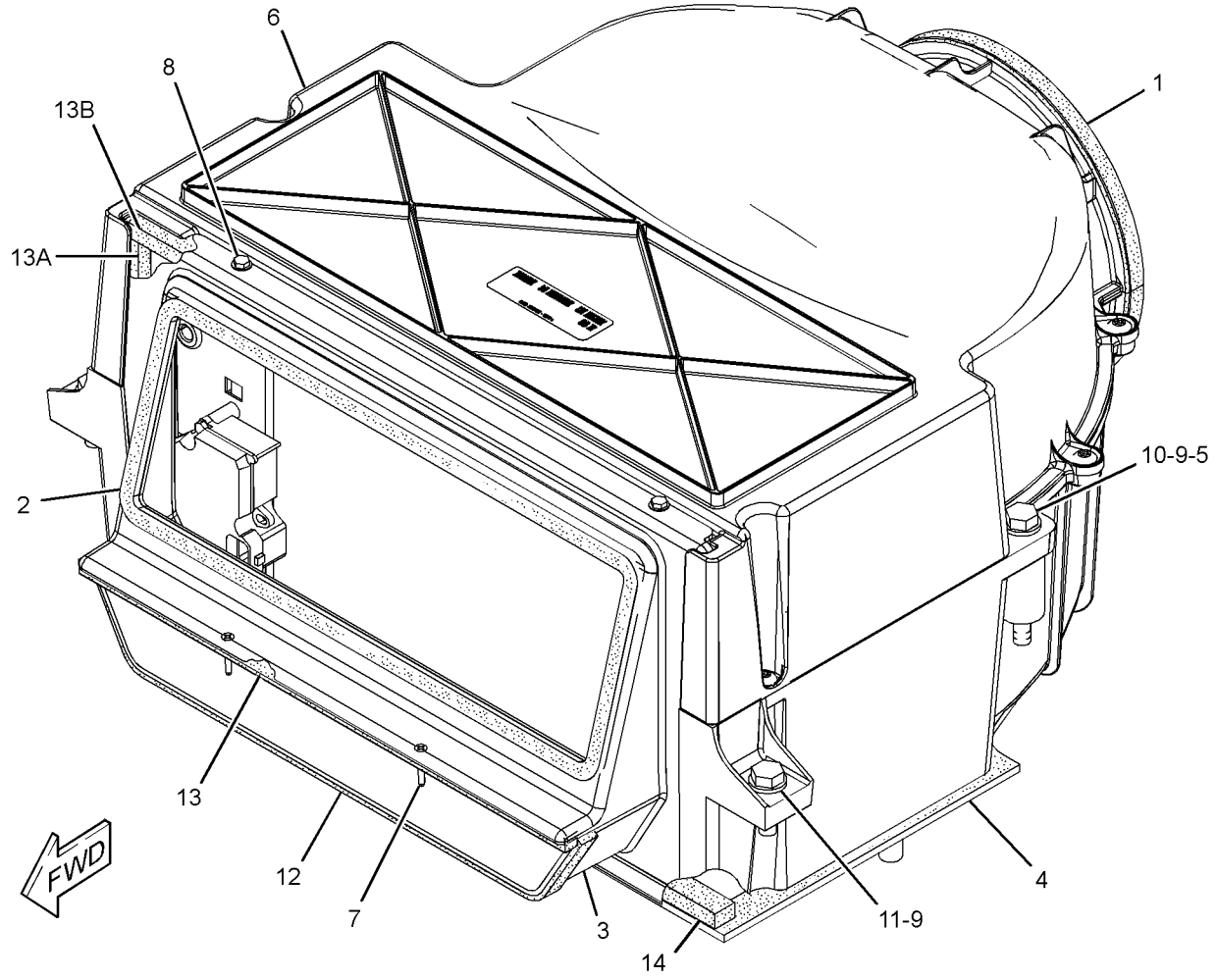

GRAPHIC #1 **<END>** g01431218

OPERATOR STATION

248-1254 AIR CONDITIONER AR

S/N: R9J1-UP

PART OF 349-2555 COMMON AR

SMCS-7320 **i03261617**

NOTE	PART NUMBER	QTY	PART NAME 1 2 3 4 5 6 (PRODUCT LEVEL)	SEE PAGE
Y	*233-3149*	1	AIR CONDITIONER GP (CAB)	770
Y	*231-2164*	1	COMPRESSOR GP-REFRIGERANT	779
Y	*232-4738*	1	CONDENSER & MTG GP-REFRIGERANT	780
Y	*282-8873*	1	LINES GP-AIR CONDITIONER	831
Y	*285-5290*	1	LINES GP-HEATER	834
	114-0061	1	PLATE-INSTRUCTION	

Y-SEPARATE ILLUSTRATION

<END>

OPERATOR STATION

233-3149 AIR CONDITIONER GP

S/N: R9J1-UP

PART OF 248-1254 AIR CONDITIONER AR

SMCS-7320 **i03816872**

NOTE	REF NO	GRAPHIC REF	PART NUMBER	QTY	PART NAME 1 2 3 4 5 6 (PRODUCT LEVEL)	SEE PAGE
C	1	1	*300-4231*	1	CONTROL GP-AIR & TEMPERATURE	
M		1	**9X-2045**	2	SCREW-TRUSS HEAD (M6X1X20-MM)	
		1	**248-4220**	1	PANEL AS (AIR CONDITIONER, HEATER CONT)	
		1	**271-7312**	1	KNOB (TEMPERATURE CONTROL)	
		1	**285-7415**	1	KNOB (BLOWER FAN SPEED)	
		1	**284-3662**	1	SWITCH AS-ROCKER (24-VOLT)	
Y	2	1	*244-2701*	1	DUCT & FILTER GP-CAB AIR	816
Y	3	1	*244-2702*	1	LINES GP-AIR CONDITIONER	829
Y	4	1	*244-2722*	1	AIR CONDITIONER & MOUNTING GP	768
Y	5	1	*250-2933*	1	LINES GP-HEATER (CAB)	833

C-CHANGE FROM PREVIOUS TYPE
M-METRIC PART
Y-SEPARATE ILLUSTRATION

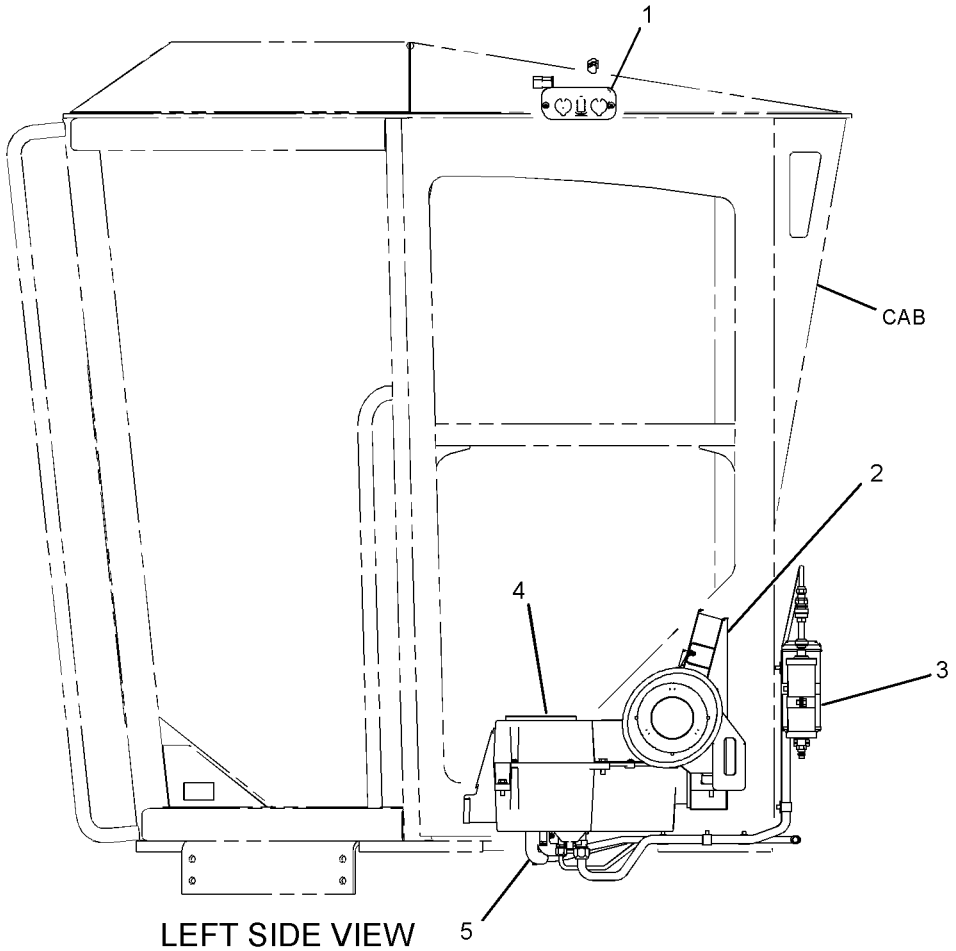

GRAPHIC #1 **<END>** g01286548

OPERATOR STATION

285-8055 AIR CONDITIONER GP

S/N: R9J1-UP

PART OF 244-2722 AIR CONDITIONER & MOUNTING GP

SMCS-7320 **i03817832**

NOTE	REF NO	GRAPHIC REF	PART NUMBER	QTY	PART NAME 1 2 3 4 5 6 (PRODUCT LEVEL)	SEE PAGE
	1	1	**3E-5464**	1	THERMOSTAT (HVAC) (AIR CONDITIONER, HEATER)	
	2	1	**3S-2093**	2	STRAP-CABLE	
	3	1	**6T-6708**	2	WASHER (7X28.6X4.1-MM THK)	
	4	1	**125-9740**	1	RESISTOR	
C	5	1	**133-9012**	2	FUSE (15-AMPERE) (AIR CONDITIONER, HEATER)	
	6	1	**249-0934**	1	CASE AS	
	7	1	**249-0938**	1	CASE	
	8	1	**263-9466**	1	PLATE	
	9	1	**265-7434**	1	SEAL	
	10	1	**265-7435**	1	GASKET	
	11	1	**273-0342**	1	FILM-IDENTIFICATION (SERIAL NUMBER)	
	12	1	**276-9015**	1	HARNESS AS-MOTOR (HVAC)	
		1	**7T-0093**	2	PIN-CONNECTOR (12-GA TO 14-GA)	
		1	**8T-8729**	4	PIN-CONNECTOR (16-GA TO 18-GA)	
		1	**8T-8737**	1	PLUG-SEAL	
		1	**9W-0852**	3	PIN-CONNECTOR (14-GA TO 16-GA)	
		1	**100-6674**	3	SEAL-CONNECTOR	
		1	**118-5125**	1	CLIP	
E		1	**119-3662**		TUBE-HEAT SHRINK (10.85-MM DIA) (7-CM)	
E		1	**125-7875**		TUBE-HEAT SHRINK (7.44-MM DIA) (5-CM)	
		1	**5P-5618**	3	TERMINAL-BLADE (10-GA TO 12-GA)	
		1	**5P-4571**	5	TERMINAL-BLADE (14-GA TO 16-GA)	
		1	**2L-8067**	2	TERMINAL-RING (10-GA TO 12-GA, 1/4-IN SCREW)	
		1	**102-8806**	1	KIT-RECEPTACLE (8-PIN)	
		1	**177-9645**	1	KIT-RECEPTACLE (2-PIN)	
					(EACH INCLUDES RECEPTACLE AS & WEDGE)	
Y	13	1	*278-1440*	1	COIL GP-EVAPORATOR & HEATER (AIR CONDITIONER)	777
	14	1	**278-3354**	1	FILM-INSTRUCTION (HVAC WATER, DRAINING, FILLING)	
	15	1	**279-1124**	1	GROMMET	
C	16	1	**322-6674**	1	PLATE	
C	17	1	**322-6675**	1	PLATE	
C	18	1	**324-6125**	1	FAN & MOTOR AS (24-VOLT, A/C, HEATER) (9-BLADE)	
		1	**1F-7958**	1	NUT-FULL (1/2-13-THD)	
C	19	1	**328-8755**	1	WIRE AS	
CM	20	1	**129-3178**	5	LOCKNUT (M6X1-THD)	
C	21	1	**132-5793**	2	SCREW-WASHER HD (4-40X0.25-IN)	
M	22	1	**141-9784**	1	BOLT (M6X1X190-MM)	
	23	1	**6V-1668**	2	WASHER (6.5X29.1X3-MM THK)	
	24	1	**6V-6717**	2	SCREW-WASHER HEAD (8-32X9.52-MM)	
C	25	1	**8T-4205**	10	WASHER-HARD (7.2X14.5X2-MM THK)	
	26	1	**9X-2038**	4	WASHER (7X19X2-MM THK)	
CM	27	1	**9X-2044**	14	SCREW-TRUSS HEAD (M6X1X16-MM)	

C-CHANGE FROM PREVIOUS TYPE
E-ORDER BY THE CENTIMETER
M-METRIC PART
Y-SEPARATE ILLUSTRATION

285-8055 AIR CONDITIONER GP *(contd.)* i03817832

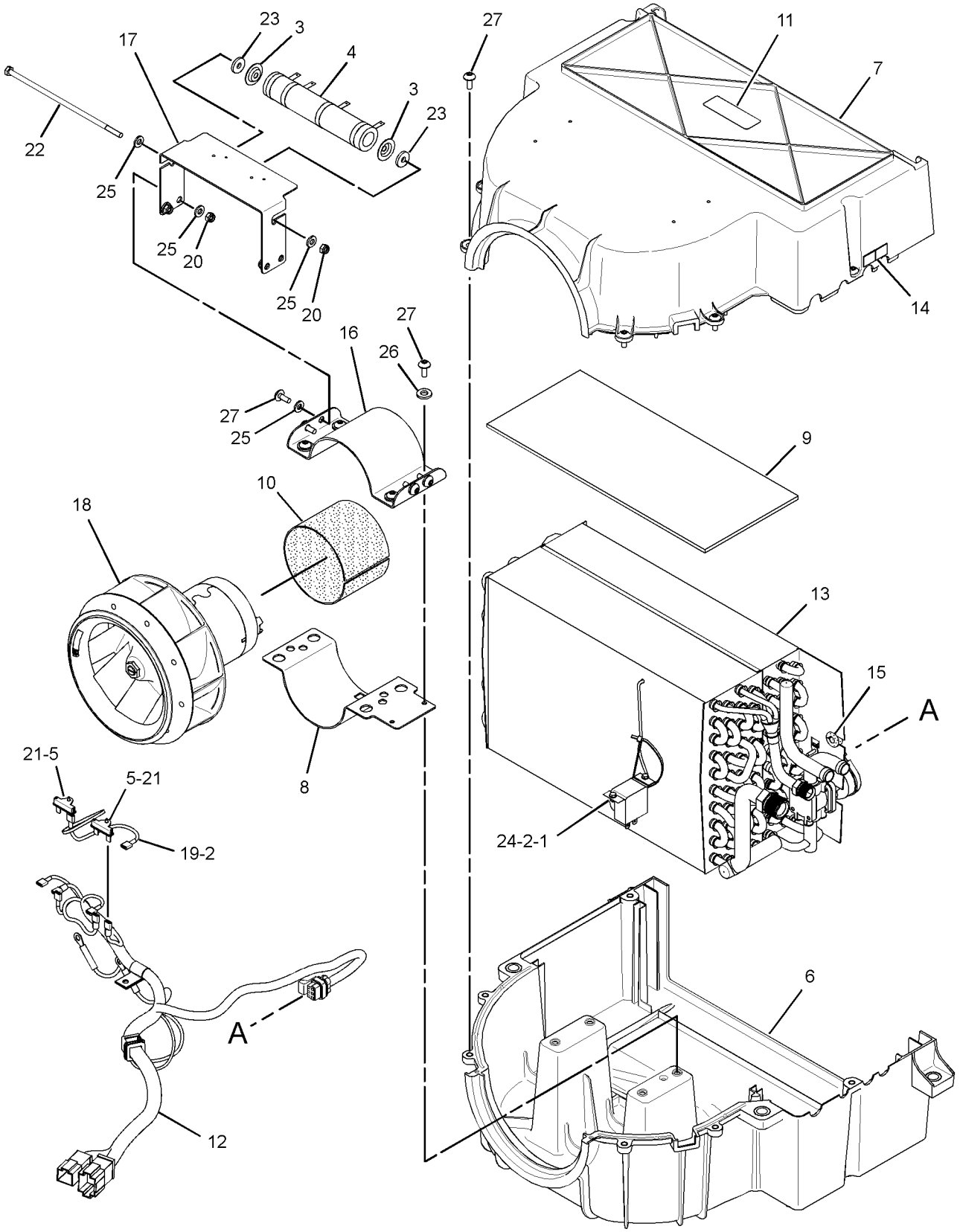

GRAPHIC #1 **<END>** g02033613

OPERATOR STATION

292-0609 ARMREST GP–RH

S/N: R9J1-UP

PART OF 309-5955 CONTROL & MTG GP-JOYSTICK, 342-8961 SUPPORT GP-CONTROL AN ATTACHMENT

SMCS-7307 **i03001760**

NOTE	REF NO	GRAPHIC REF	PART NUMBER	QTY	PART NAME 1 2 3 4 5 6 (PRODUCT LEVEL)	SEE PAGE
	1	1	**233-3278**	1	BRACKET AS (RH)	
M		1	**6V-9632**	2	NUT-WELD (M6X1-THD)	
	2	1	**253-8868**	1	PIN-SPRING	
	3	1	**283-7980**	1	CUSHION AS	
M	4	1	**3E-8020**	4	SCREW-TRUSS HEAD (M6X1X25-MM)	
	5	1	**122-7666**	1	SPRING	
	6	1	**8C-8430**	1	SETSCREW-SOCKET (NO 10X0.95-IN)	
	7	1	**292-0611**	2	BUSHING	
	8	1	**292-0612**	1	BUSHING	
	9	1	**292-0614**	1	ROD	
	10	1	**292-0618**	1	KNOB	

M-METRIC PART

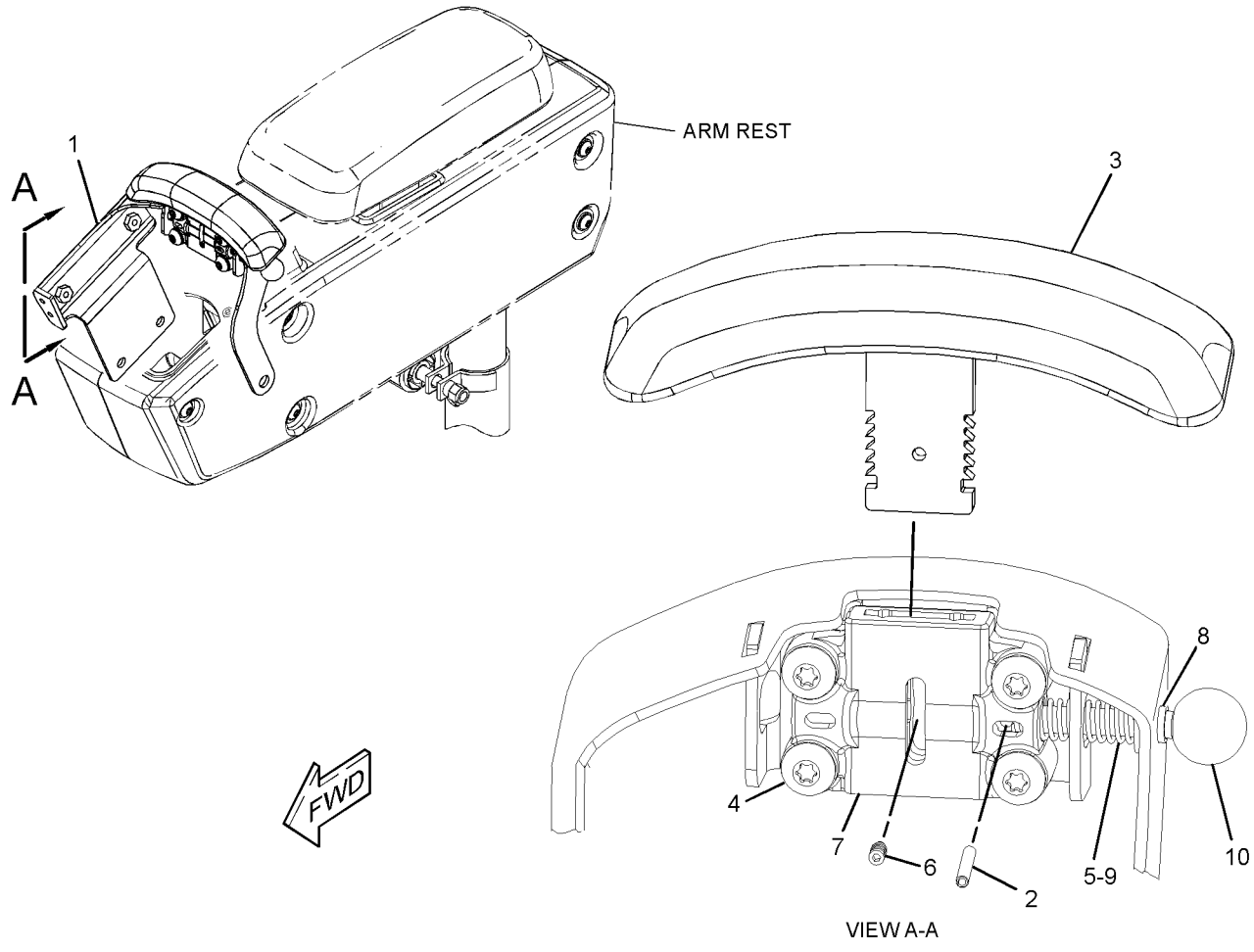

GRAPHIC #1 **<END>** g01391688

OPERATOR STATION

292-0617 ARMREST GP–LH

S/N: R9J1-UP

PART OF 309-5955 CONTROL & MTG GP-JOYSTICK, 342-8961 SUPPORT GP-CONTROL

AN ATTACHMENT

SMCS-7307 **i03001749**

NOTE	REF NO	GRAPHIC REF	PART NUMBER	QTY	PART NAME 1 2 3 4 5 6 (PRODUCT LEVEL)	SEE PAGE
	1	1	**233-3277**	1	BRACKET AS (LH)	
M		1	**6V-9632**	2	NUT-WELD (M6X1-THD)	
	2	1	**253-8868**	1	PIN-SPRING	
	3	1	**283-7980**	1	CUSHION AS	
M	4	1	**3E-8020**	4	SCREW-TRUSS HEAD (M6X1X25-MM)	
	5	1	**8C-8430**	1	SETSCREW-SOCKET (NO 10X0.95-IN)	
	6	1	**122-7666**	1	SPRING	
	7	1	**292-0611**	2	BUSHING	
	8	1	**292-0612**	1	BUSHING	
	9	1	**292-0614**	1	ROD	
	10	1	**292-0618**	1	KNOB	

M-METRIC PART

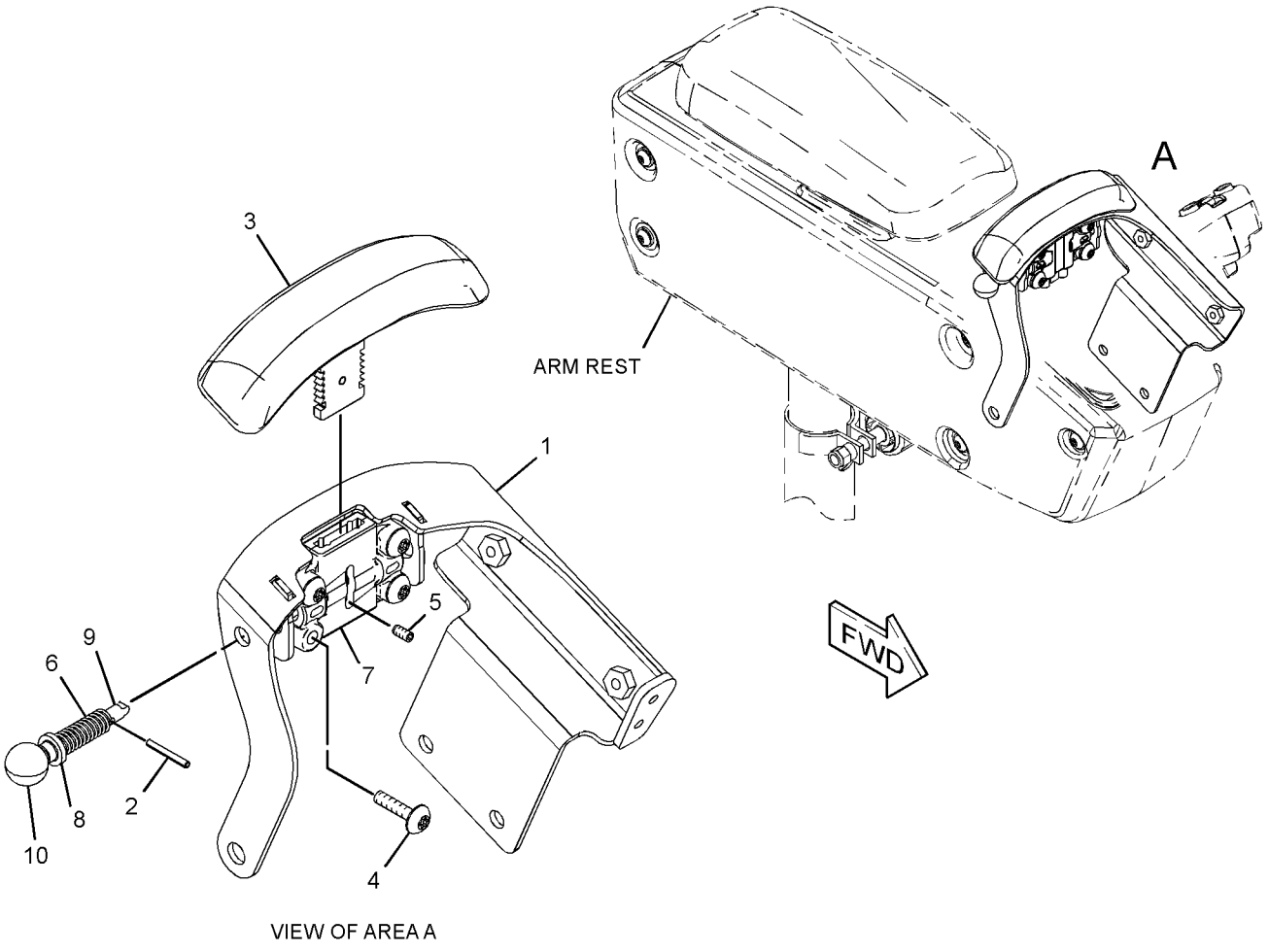

GRAPHIC #1 **<END>** g01523630

OPERATOR STATION

233-3110 CAB AR

S/N: R9J1-UP
PART OF 356-3071 OPTION AR-MACHINE
AN ATTACHMENT

SMCS-7301 **i04024905**

NOTE	PART NUMBER	QTY	PART NAME 1 2 3 4 5 6 (PRODUCT LEVEL)	SEE PAGE
Y	*233-3145*	1	CONTROL & MTG GP-IMPLEMENT	214
Y	*233-3135*	1	CONVERTER GP-ELECTRICAL	218
Y	*263-2590*	1	COVER GP-CAB (BULKHEAD)	795
Y	*294-1023*	1	DOOR GP-CAB	802
Y	*250-9257*	1	ELECTRONICS GP-IMPLEMENT (IMPLEMENT 1)	219
Y	*250-9258*	1	ELECTRONICS GP-IMPLEMENT (IMPLEMENT 2)	219
Y	*294-0995*	1	LINER GP-CAB	827
Y	*233-3208*	1	MIRROR GP-REAR VIEW (INTERIOR)	838
Y	*293-4200*	1	PANEL GP-CAB	848
Y	**233-3280**	1	PANEL GP-INSTRUMENT (FRONT CONSOLE)	854
Y	*233-3133*	1	ROOF GP-CAB	862
Y	*342-8961*	1	SUPPORT GP-CONTROL	873
Y	*294-0994*	1	WINDOW GP-CAB	880
Y	*233-3138*	1	WIPER & WASHER GP-WINDOW (FRONT)	884
Y	*351-7026*	1	WIRING GP-CAB	330
	311-3384	1	CAB AS-ROPS	
	233-3285	1	FILM-CERTIFICATION (OPS, READ OMM) (ROPS, FOPS)	
			(BEHIND THE RH SEAT POST)	
M	**096-3216**	2	SETSCREW-SOCKET (M12X1.75X12-MM)	
			(S/N: B9J 1 _ 1158)	

M-METRIC PART
Y-SEPARATE ILLUSTRATION

<END>

OPERATOR STATION

325-5227 CAB AR

S/N: R9J1-UP
PART OF 356-3072 OPTION AR-MACHINE
AN ATTACHMENT

SMCS-7301 **i04035047**

NOTE	PART NUMBER	QTY	PART NAME 1 2 3 4 5 6 (PRODUCT LEVEL)	SEE PAGE
Y	*233-3145*	1	CONTROL & MTG GP-IMPLEMENT	214
Y	*309-5955*	1	CONTROL & MTG GP-JOYSTICK (OPERATOR PLATFORM)	781
Y	*233-3135*	1	CONVERTER GP-ELECTRICAL	218
Y	*263-2590*	1	COVER GP-CAB (BULKHEAD)	795
Y	*294-1033*	1	DOOR GP-CAB (LH)	809
Y	*250-9257*	1	ELECTRONICS GP-IMPLEMENT (IMPLEMENT 1)	219
Y	*250-9258*	1	ELECTRONICS GP-IMPLEMENT (IMPLEMENT 2)	219
Y	*294-0987*	1	LINER GP-CAB	825
Y	*233-3208*	1	MIRROR GP-REAR VIEW (INTERIOR)	838
Y	*293-4200*	1	PANEL GP-CAB (HVAC)	848
Y	*294-0984*	1	PANEL GP-INSTRUMENT (FRONT CONSOLE)	856
Y	*233-3133*	1	ROOF GP-CAB	862
Y	*294-1011*	1	WINDOW GP-CAB (FRONT)	881
Y	*233-3138*	1	WIPER & WASHER GP-WINDOW (FRONT)	884
Y	*351-7026*	1	WIRING GP-CAB	330
Y	*233-3288*	1	WIRING GP-GRADE CONTROL (CAB)	358
Y	*291-2909*	1	WIRING GP-LIGHTING (FLOODLIGHTS, WARNING BEACON)	368
Y	*292-1874*	1	WIRING GP-LIGHTING (WORK LIGHTS)	369
	326-0516	1	CAB AS	
M	**096-3216**	2	SETSCREW-SOCKET (M12X1.75X12-MM)	

M-METRIC PART
Y-SEPARATE ILLUSTRATION

<END>

278-1440 COIL GP-EVAPORATOR & HEATER–AIR CONDITIONER

S/N: R9J1-UP

PART OF 285-8055 AIR CONDITIONER GP

SMCS-7309, 7343 **i02853639**

NOTE	REF NO	GRAPHIC REF	PART NUMBER	QTY	PART NAME 1 2 3 4 5 6 (PRODUCT LEVEL)	SEE PAGE
	1	1	**131-3093**	1	BUSHING	
	2	1	**238-8839**	1	CORE AS-HEATER (CAB)	
	3	1	**238-8840**	1	COIL AS-EVAPORATOR	
	4	1	**238-8841**	1	VALVE AS-CONTROL	
	5	1	**245-1596**	1	ACTUATOR	
	6	1	**248-2924**	2	SPACER (4.3X9.5X19.1-MM THK)	
	7	1	**248-6772**	11	SCREW-MACHINE (8-16X7.75-IN)	
	8	1	**262-4930**	1	TUBE	
	9	1	**281-2588**	4	SCREW	
M	10	1	**124-0608**	2	BOLT (M4X0.7X35-MM)	
	11	1	**4D-2297**	2	SEAL-O-RING	
	12	1	**168-9866**	2	NUT-SPEED	

M-METRIC PART

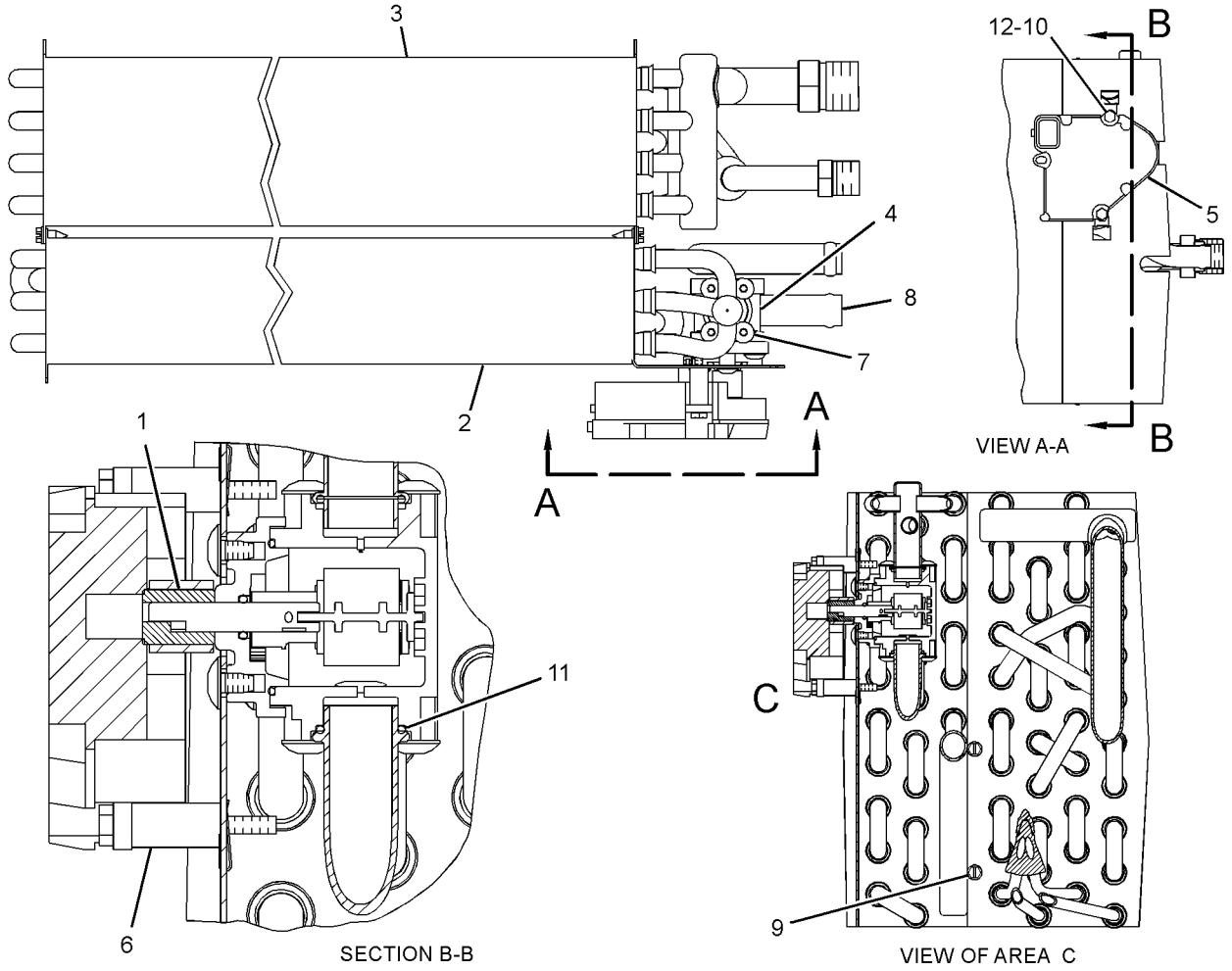

GRAPHIC #1 **<END>** g01444137

OPERATOR STATION

183-5106 COMPRESSOR GP-REFRIGERANT

S/N: R9J1-UP

PART OF 231-2164 COMPRESSOR GP-REFRIGERANT

SMCS-1802 **i03811331**

NOTE	REF NO	GRAPHIC REF	PART NUMBER	QTY	PART NAME 1 2 3 4 5 6 (PRODUCT LEVEL)	SEE PAGE
	1	1	**180-9339**	2	PIN-CONNECTOR (14-GA TO 18-GA)	
	2	1	**102-8802**	1	KIT-RECEPTACLE (2-PIN)	
					(INCLUDES RECEPTACLE AS & WEDGE)	
	3	1	**314-4018**	1	VALVE AS-PRESSURE RELIEF (REFRIGERANT COMPRESSOR)	
	4	1	**7T-4532**	1	PLUG AS	
	5	1	**9X-7385**	2	SEAL-O-RING	

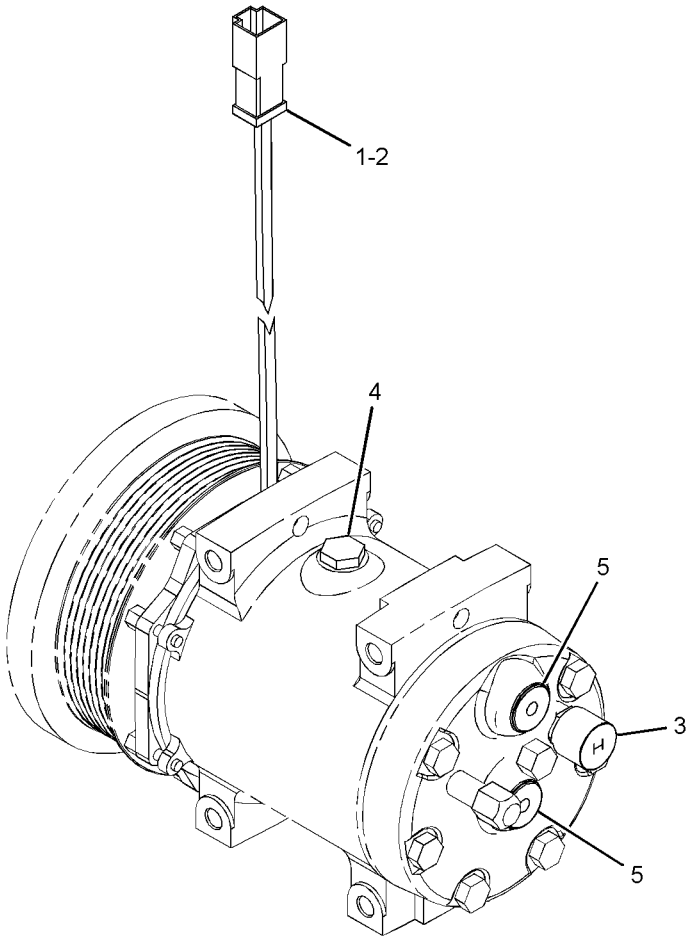

GRAPHIC #1 **<END>** g01419732

231-2164 COMPRESSOR GP-REFRIGERANT

S/N: R9J1-UP

PART OF 248-1254 AIR CONDITIONER AR

SMCS-1802 **i02673971**

NOTE	REF NO	GRAPHIC REF	PART NUMBER	QTY	PART NAME 1 2 3 4 5 6 (PRODUCT LEVEL)	SEE PAGE
Y	1	1	**183-5106**	1	COMPRESSOR GP-REFRIGERANT	778
M	2	1	**255-1281**	2	BOLT-FLANGE HEAD (M8X1.25X100-MM)	
	3	1	**293-5895**	1	BRACKET	
M	4	1	**7X-2538**	2	BOLT (M8X1.25X100-MM)	
	5	1	**7X-7729**	2	WASHER (11X25X3-MM THK)	
M	6	1	**8T-4133**	1	NUT (M10X1.5-THD)	
M	7	1	**8T-4182**	1	BOLT (M10X1.5X45-MM)	
	8	1	**8T-4224**	4	WASHER-HARD (8.8X16X2-MM THK)	

M-METRIC PART
Y-SEPARATE ILLUSTRATION

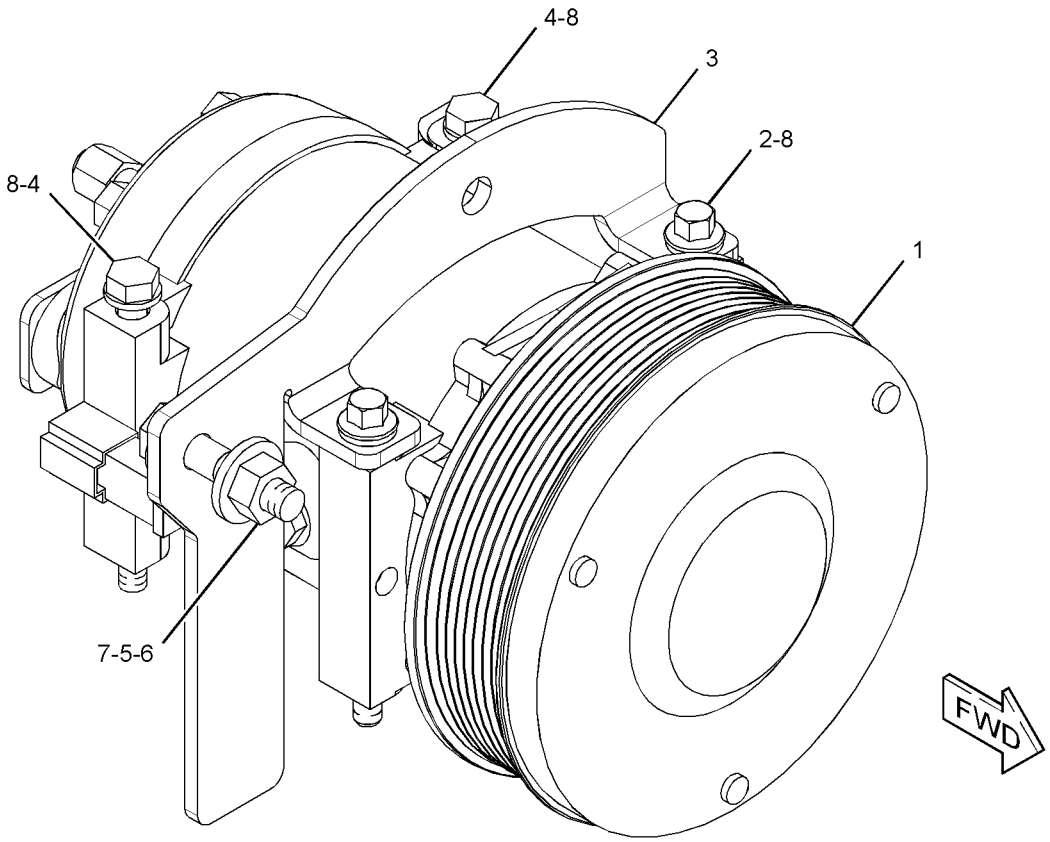

GRAPHIC #1 **<END>** g01344481

OPERATOR STATION

232-4738 CONDENSER & MTG GP-REFRIGERANT

S/N: R9J1-UP

PART OF 248-1254 AIR CONDITIONER AR

SMCS-1805 **i02970785**

NOTE	REF NO	GRAPHIC REF	PART NUMBER	QTY	PART NAME 1 2 3 4 5 6 (PRODUCT LEVEL)	SEE PAGE
C	1	1	**313-6008**	1	CORE AS-CONDENSER	
	2	1	**8T-4121**	4	WASHER-HARD (11X21X2.5-MM THK)	
M	3	1	**8T-4136**	4	BOLT (M10X1.5X25-MM)	

C-CHANGE FROM PREVIOUS TYPE
M-METRIC PART

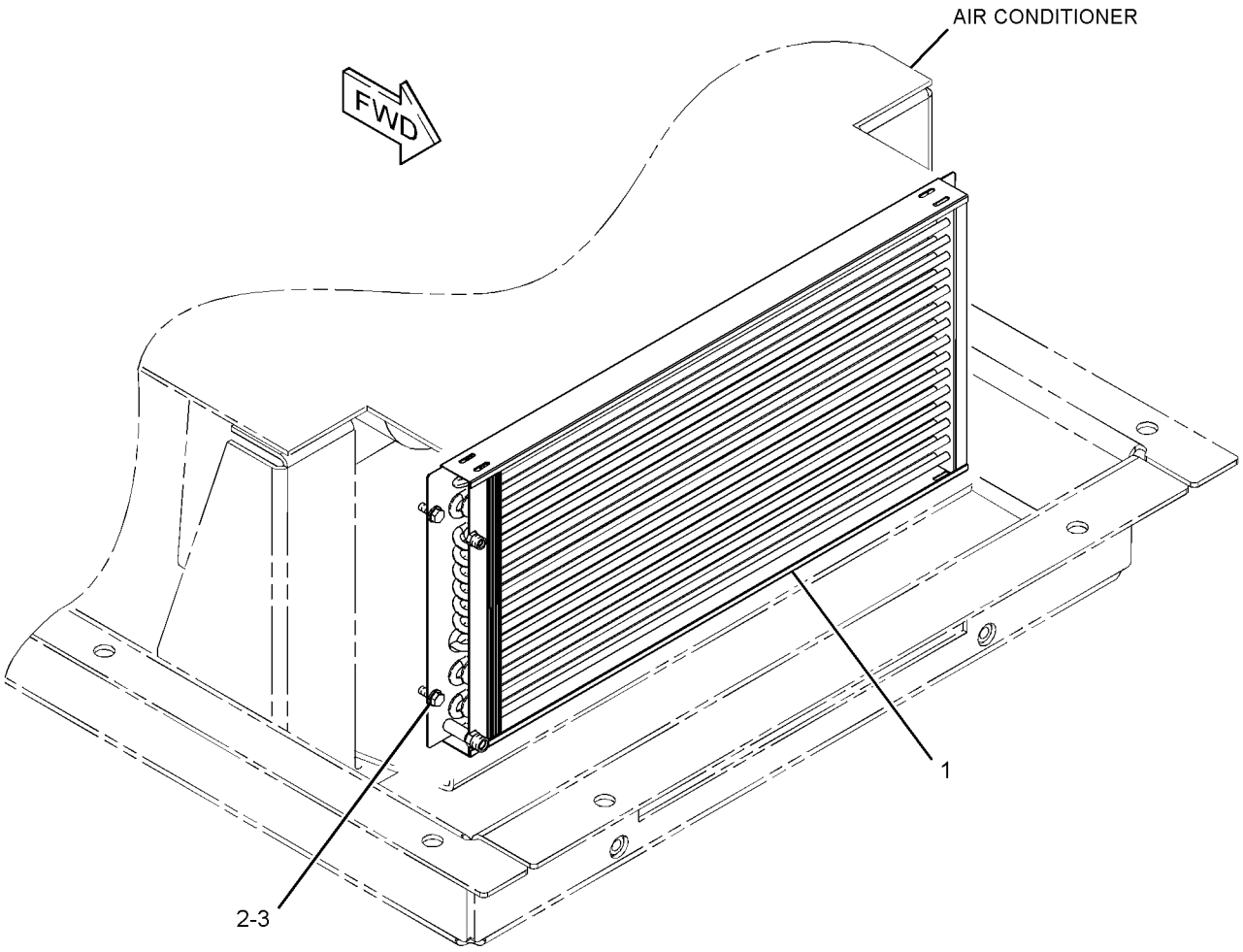

GRAPHIC #1 **<END>** g01369682

OPERATOR STATION

309-5955 CONTROL & MTG GP-JOYSTICK—OPERATOR PLATFORM

S/N: R9J1-UP
PART OF 325-5227 CAB AR
AN ATTACHMENT

SMCS-5063, 5705 **i03543604**

NOTE	REF NO	GRAPHIC REF	PART NUMBER	QTY	PART NAME 1 2 3 4 5 6 (PRODUCT LEVEL)	SEE PAGE
	1	1	**102-8802**	1	KIT-RECEPTACLE (2-PIN)	
					(INCLUDES RECEPTACLE AS & WEDGE)	
	2	1	**140-5945**	1	FILM-IDENTIFICATION (HORN)	
	3	1	**170-1821**	1	SWITCH AS-PUSH BUTTON (HORN)	
		1	**6F-0253**	1	LOCKWASHER	
		1	**186-3735**	2	PIN-CONNECTOR (16-GA TO 18-GA)	
		1	**172-3511**	1	NUT (5/8-24-THD)	
Y	4	1	*233-3224*	1	SUPPORT GP-CONTROL (JOYSTICK, LH)	869
Y	5	1	*233-3225*	1	SUPPORT GP-CONTROL (JOYSTICK, RH)	871
B	6	1	**228-6089**	1	PLUG (ROCKER SWITCH)	
	7	1	**251-2247**	2	GROMMET	
	8	1	**251-2272**	1	COVER	
	9	1	**251-2273**	1	COVER	
	10	1	**251-2274**	1	COVER	
	11	1	**251-2275**	1	COVER	
	12	1	**280-7477**	1	FILM-INSTRUCTION (OPERATOR CONSOLE, LH)	
	13	1	**280-7478**	1	FILM-INSTRUCTION (OPERATOR CONSOLE, RH)	
Y	14	1	*292-0609*	1	ARMREST GP (RH)	773
Y	15	1	*292-0617*	1	ARMREST GP (LH)	774
	16	1	**297-4147**	1	COVER (LH)	
	17	1	**297-4148**	1	COVER (RH)	
	18	1	**307-9737**	1	HARNESS AS-CONTROL (LH)	
		1	**102-8801**	2	KIT-RECEPTACLE (12-PIN)	
					(INCLUDES RECEPTACLE AS & WEDGE)	
		1	**186-3735**	21	PIN-CONNECTOR (16-GA TO 18-GA)	
		1	**186-3736**	21	SOCKET-CONNECTOR (16-GA TO 18-GA)	
		1	**8T-8737**	10	PLUG-SEAL	
		1	**155-2255**	1	KIT-CONNECTING PLUG (12-PIN)	
					(INCLUDES PLUG AS, WEDGE & INTERFACE SEAL)	
		1	**155-2256**	1	KIT-CONNECTING PLUG (12-PIN)	
					(INCLUDES PLUG AS, WEDGE & INTERFACE SEAL)	
		1	**155-2258**	2	WEDGE-PLUG LOCK (12-PIN)	
		1	**155-2271**	2	KIT-CONNECTING PLUG (4-PIN)	
					(INCLUDES PLUG AS, WEDGE & INTERFACE SEAL)	
		1	**190-7614**	1	KIT-RECEPTACLE (12-PIN)	
					(INCLUDES RECEPTACLE AS & WEDGE)	
	19	1	**307-9738**	1	HARNESS AS-CONTROL (RH)	
		1	**102-8801**	2	KIT-RECEPTACLE (12-PIN)	
					(INCLUDES RECEPTACLE AS & WEDGE)	
		1	**186-3735**	21	PIN-CONNECTOR (16-GA TO 18-GA)	
		1	**186-3736**	21	SOCKET-CONNECTOR (16-GA TO 18-GA)	
		1	**8T-8737**	10	PLUG-SEAL	
		1	**155-2255**	1	KIT-CONNECTING PLUG (12-PIN)	
					(INCLUDES PLUG AS, WEDGE & INTERFACE SEAL)	
		1	**155-2256**	1	KIT-CONNECTING PLUG (12-PIN)	
					(INCLUDES PLUG AS, WEDGE & INTERFACE SEAL)	
		1	**155-2258**	2	WEDGE-PLUG LOCK (12-PIN)	
		1	**155-2270**	1	KIT-CONNECTING PLUG (2-PIN)	
					(INCLUDES PLUG AS, WEDGE & INTERFACE SEAL)	
		1	**185-1860**	7	SEAL-WIRE	
		1	**190-7614**	1	KIT-RECEPTACLE (12-PIN)	
					(INCLUDES RECEPTACLE AS & WEDGE)	
		1	**235-4123**	7	TERMINAL (18-GA TO 20-GA)	

309-5955 **CONTROL & MTG GP-JOYSTICK** *(contd.)* **i03543604**

NOTE	REF NO	GRAPHIC REF	PART NUMBER	QTY	PART NAME 1 2 3 4 5 6 (PRODUCT LEVEL)	SEE PAGE
		1	**245-7434**	1	KIT-CONNECTING PLUG (10-PIN)	
					(INCLUDES PLUG AS, WEDGE & INTERFACE SEAL)	
Y	20	1	**308-5203**	1	CONTROL GP-JOYSTICK (RH)	789
Y	21	1	**308-5204**	1	CONTROL GP-JOYSTICK (LH)	790
	22	1	**6V-5839**	8	WASHER (11X21X2.5-MM THK)	
M	23	1	**9X-2546**	8	BOLT (M6X1X20-MM)	
	24	1	**114-6658**	20	WASHER (6.5X17X1-MM THK)	
M	25	1	**8T-4196**	8	BOLT (M10X1.5X35-MM)	
M	26	1	**8T-4200**	6	BOLT (M8X1.25X16-MM)	
	27	1	**8T-4224**	6	WASHER-HARD (8.8X16X2-MM THK)	
M	28	1	**9X-2044**	20	SCREW-TRUSS HEAD (M6X1X16-MM)	
E	29	1	**116-8376**		SEAL (17-CM EACH)	
E	29A	1	**116-8376**		SEAL (5.5-CM EACH)	
	30	1	**312-1714**	1	FILM-INSTRUCTION (ADJUSTMENT CONTROL)	
M	31	1	**9X-2045**	4	SCREW-TRUSS HEAD (M6X1X20-MM)	

B-USE AS REQUIRED
E-ORDER BY THE CENTIMETER
M-METRIC PART
Y-SEPARATE ILLUSTRATION

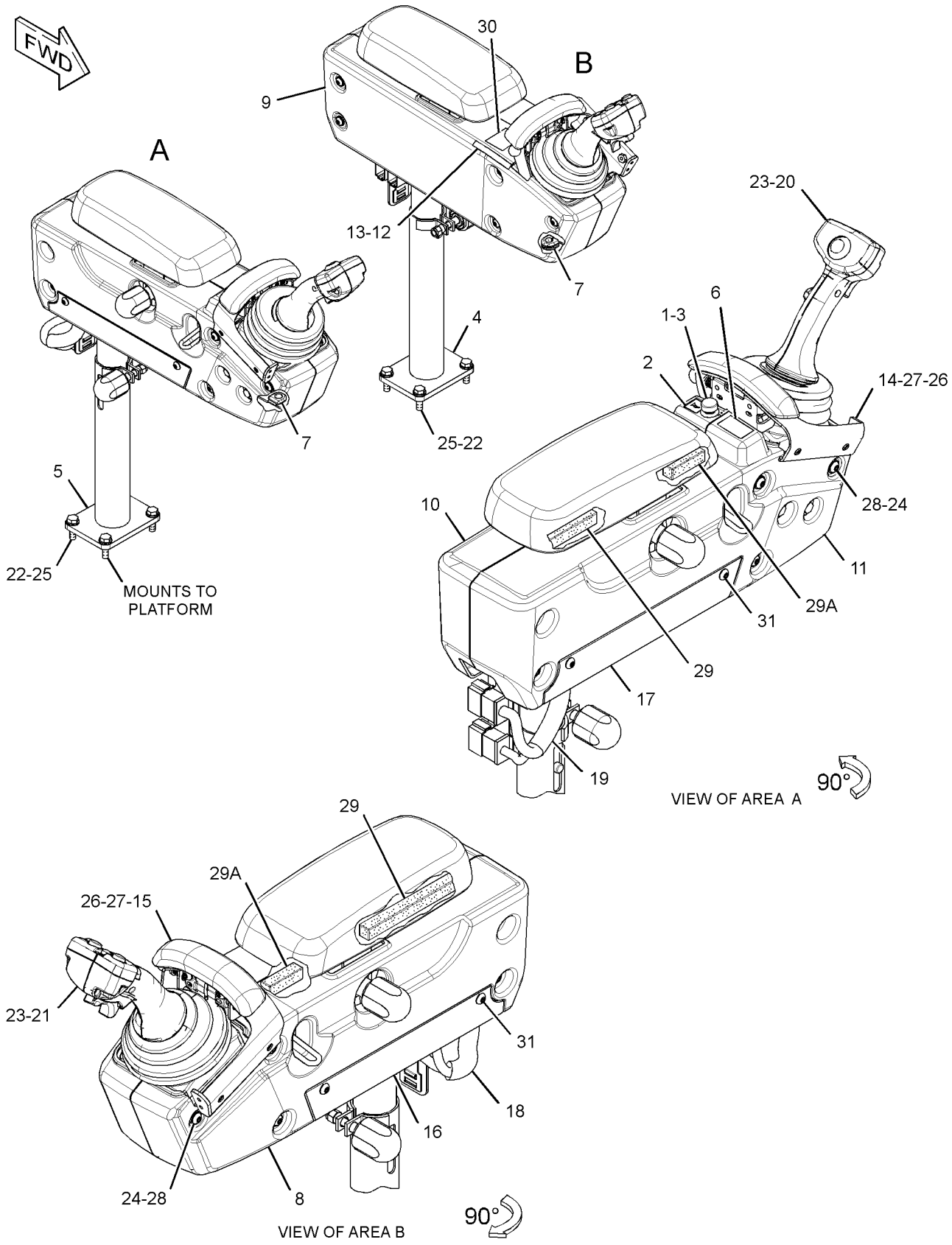

GRAPHIC #1 **<END>** g01918173

OPERATOR STATION

357-9151 CONTROL & MTG GP-JOYSTICK

S/N: R9J1-UP
PART OF 351-7026 WIRING GP-CAB
AN ATTACHMENT

SMCS-5063, 5705 **i04015812**

NOTE	PART NUMBER	QTY	PART NAME 1 2 3 4 5 6 (PRODUCT LEVEL)	SEE PAGE
Y	**360-2987**	1	CONTROL GP-JOYSTICK (LH)	794
Y	**348-6995**	1	CONTROL GP-JOYSTICK (RH)	791
M	**9X-2546**	8	BOLT (M6X1X20-MM)	

M-METRIC PART
Y-SEPARATE ILLUSTRATION

<END>

233-3147 CONTROL GP-ELECTROHYDRAULIC–

WITH AUXILIARY LEVER
S/N: R9J1-UP
PART OF 351-2407, 351-2408, 351-2409, 351-2410, 351-2411, 351-2412 CONTROL AR-HYDRAULIC
AN ATTACHMENT

SMCS-5702, 5705 **i03360341**

NOTE	PART NUMBER	QTY	PART NAME 1 2 3 4 5 6 (PRODUCT LEVEL)	SEE PAGE
Y	**272-8442**	1	CONTROL GP-ELECTROHYDRAULIC (WITH AUXILIARY LEVER)	787
	334-7786	1	HARNESS AS-SENSOR	
M	**5C-9553**	1	BOLT (M6X1X16-MM)	
	7X-0018	2	BOLT (1/4-20X3.25-IN)	
	9X-8256	1	WASHER (6.6X12X2-MM THK)	
	5P-4116	2	WASHER-HARD (8.8X20.5X2-MM THK)	

M-METRIC PART
Y-SEPARATE ILLUSTRATION

<END>

OPERATOR STATION

238-8756 CONTROL GP-ELECTROHYDRAULIC–
WITHOUT AUXILIARY LEVER
S/N: R9J1-UP
PART OF 351-2406 CONTROL AR-HYDRAULIC
AN ATTACHMENT

SMCS-5702, 5705 **i03339587**

NOTE	PART NUMBER	QTY	PART NAME 1 2 3 4 5 6 (PRODUCT LEVEL)	SEE PAGE
Y	**272-8441**	1	CONTROL GP-ELECTROHYDRAULIC (WITHOUT AUXILIARY LEVER)	786
	334-7786	1	HARNESS AS-SENSOR	
M	**5C-9553**	1	BOLT (M6X1X16-MM)	
M	**7X-0818**	2	BOLT (M8X1.25X45-MM)	
	9X-8256	1	WASHER (6.6X12X2-MM THK)	
	5P-4116	2	WASHER-HARD (8.8X20.5X2-MM THK)	

M-METRIC PART
Y-SEPARATE ILLUSTRATION

<END>

OPERATOR STATION

272-8441 CONTROL GP-ELECTROHYDRAULIC–

WITHOUT AUXILIARY LEVER

S/N: R9J1-UP

PART OF 238-8756 CONTROL GP-ELECTROHYDRAULIC

AN ATTACHMENT

SMCS-5702, 5705 **i03496428**

NOTE	REF NO	GRAPHIC REF	PART NUMBER	QTY	PART NAME 1 2 3 4 5 6 (PRODUCT LEVEL)	SEE PAGE
	1	1	**295-8260**	1	COVER	
	2	1	**292-8706**	1	CONTROL GP-ELECTROHYDRAULIC	
	2A	1	**8T-8737**	1	PLUG-SEAL	
	2B	1	**9X-3401**	11	PIN-CONNECTOR (16-GA TO 18-GA)	
	2C	1	**190-7615**	1	KIT-RECEPTACLE (12-PIN)	
					(INCLUDES RECEPTACLE AS & WEDGE)	
	2D	1	**281-4655**	1	FILM-INSTRUCTION (AUXILIARY)	
	3	1	**292-8703**	1	PALMREST	
	4	1	**292-8054**	1	BRACKET	

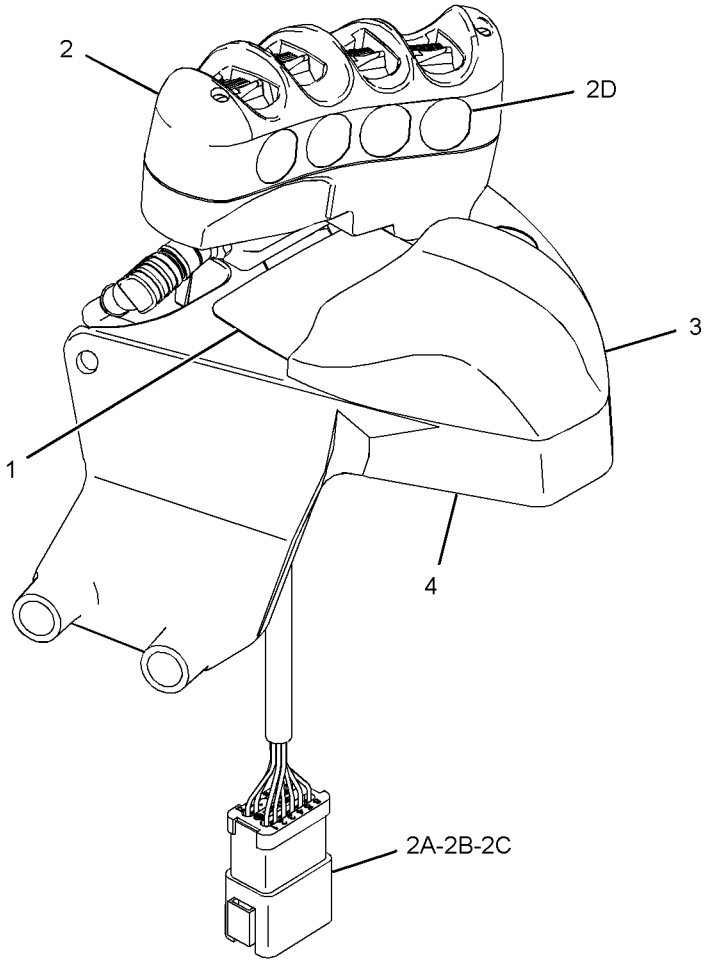

GRAPHIC #1 **<END>** g01349062

272-8442 CONTROL GP-ELECTROHYDRAULIC–

WITH AUXILIARY LEVER

S/N: R9J1-UP

PART OF 233-3147 CONTROL GP-ELECTROHYDRAULIC

AN ATTACHMENT

SMCS-5702, 5705 **i03496429**

NOTE	REF NO	GRAPHIC REF	PART NUMBER	QTY	PART NAME 1 2 3 4 5 6 (PRODUCT LEVEL)	SEE PAGE
	1	1	**247-0737**	1	CONTROL GP-JOYSTICK (ELECTRONIC CONTROL)	
	1A	1	**292-8705**	1	BOOT	
	2	1	**292-8706**	1	CONTROL GP-ELECTROHYDRAULIC	
	2A	1	**8T-8737**	1	PLUG-SEAL	
	2B	1	**9X-3401**	11	PIN-CONNECTOR (16-GA TO 18-GA)	
	2C	1	**190-7615**	1	KIT-RECEPTACLE (12-PIN)	
					(INCLUDES RECEPTACLE AS & WEDGE)	
	2D	1	**281-4655**	1	FILM-INSTRUCTION (AUXILIARY)	
	3	1	**292-8703**	1	PALMREST	
	4	1	**292-8054**	1	BRACKET	
	5	1	**102-8801**	1	KIT-RECEPTACLE (12-PIN)	
					(INCLUDES RECEPTACLE AS & WEDGE)	

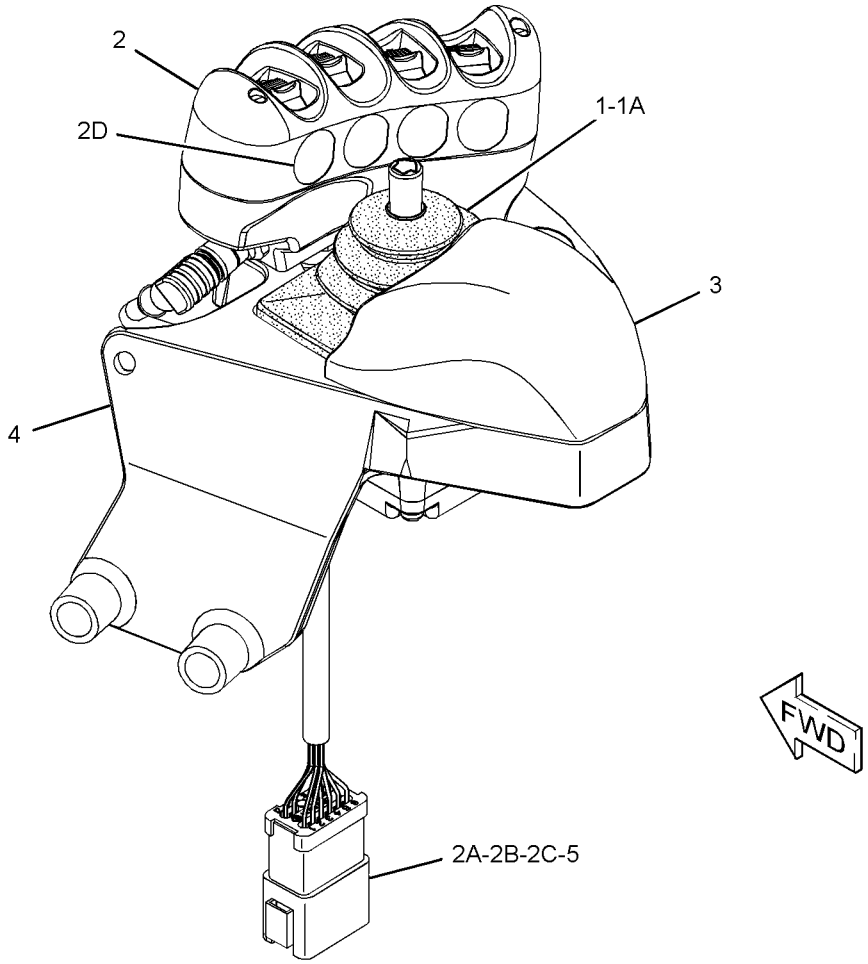

GRAPHIC #1 **<END>** g01373975

OPERATOR STATION

299-0874 CONTROL GP-ELECTROHYDRAULIC

S/N: R9J1-UP

PART OF 252-4676, 351-2406, 351-2407, 351-2408, 351-2409, 351-2410, 351-2411, 351-2412 CONTROL AR-HYDRAULIC

AN ATTACHMENT

SMCS-5702, 5705 **i04003094**

NOTE	REF NO	GRAPHIC REF	PART NUMBER	QTY	PART NAME 1 2 3 4 5 6 (PRODUCT LEVEL)	SEE PAGE
	1	1	**358-4931**	1	CONTROL AS-PROPORTIONAL	
		1	**8T-8737**	1	PLUG-SEAL	
		1	**9X-3401**	5	PIN-CONNECTOR (16-GA TO 18-GA)	
		1	**281-3136**	1	RECEPTACLE AS-CONNECTOR (6-PIN)	
	2	1	**281-0431**	1	PLATE AS	
	3	1	**286-0277**	1	FILM-INSTRUCTION (NO FLOAT)	
	4	1	**299-0877**	1	BRACKET	
Y	5	1	*299-0881*	1	MOUNTING GP-CONTROL (WITH ENCLOSURE)	844
M	6	1	**127-2170**	2	SCREW-TRUSS HEAD (M8X1.25X20-MM)	
M	7	1	**225-3109**	3	SCREW-TRUSS HEAD (M4X0.7X14-MM)	

M-METRIC PART
Y-SEPARATE ILLUSTRATION

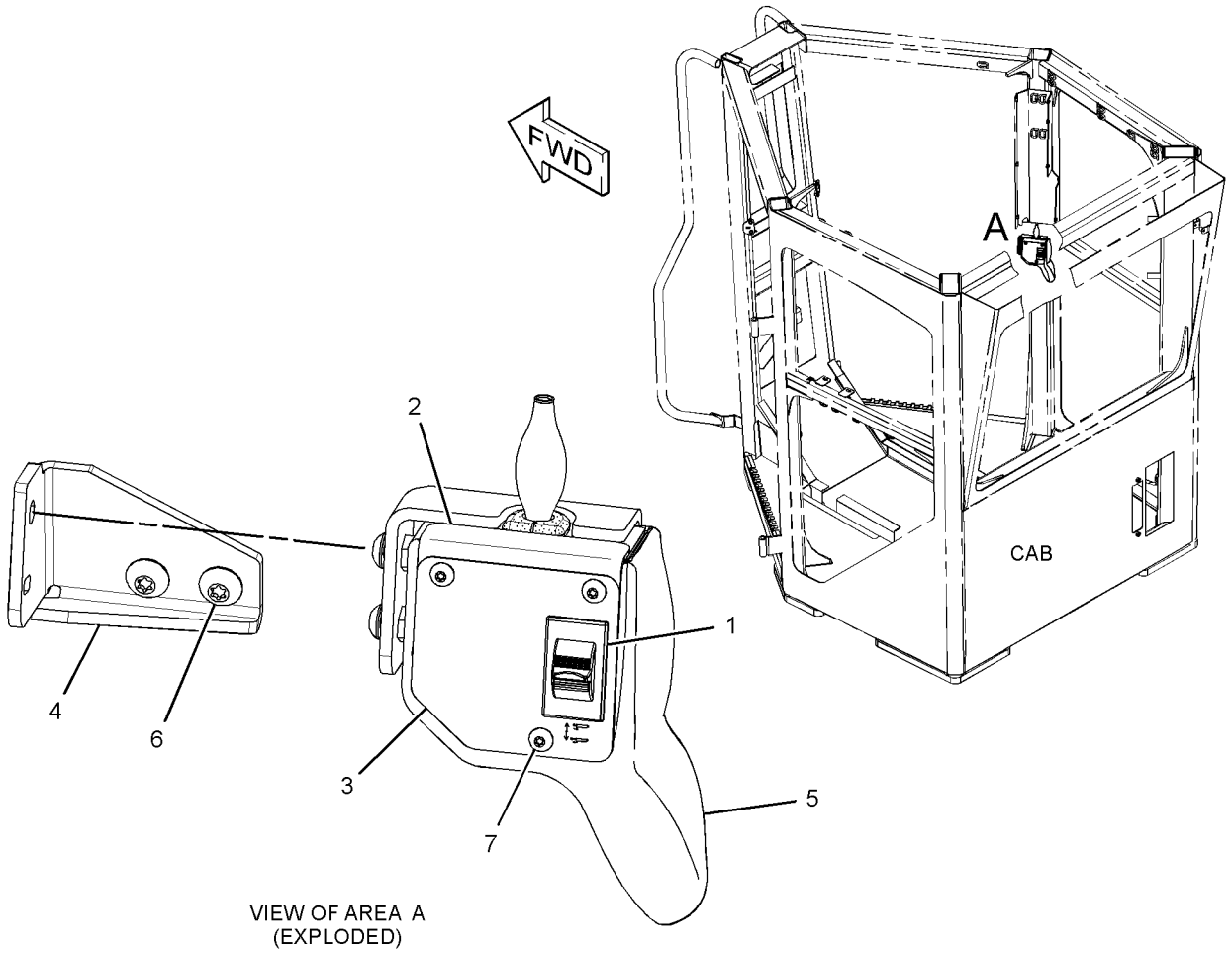

VIEW OF AREA A
(EXPLODED)

GRAPHIC #1 **<END>** g01522148

OPERATOR STATION

308-5203 CONTROL GP-JOYSTICK–RH

S/N: R9J1-UP
PART OF 309-5955 CONTROL & MTG GP-JOYSTICK
FIELD REPLACEMENT ORDER 356-3609–PAGE 793
AN ATTACHMENT

SMCS-3168, 4343, 5063, 5705 **i03829089**

NOTE	REF NO	GRAPHIC REF	PART NUMBER	QTY	PART NAME 1 2 3 4 5 6 (PRODUCT LEVEL)	SEE PAGE
	1	1	**169-0705**	9	SEAL	
	2	1	**174-3091**	1	KIT-RECEPTACLE (12-PIN)	
					(INCLUDES RECEPTACLE AS & WEDGE)	
	3	1	**247-0733**	1	BOOT	
	4	1	**9X-3401**	15	PIN-CONNECTOR (16-GA TO 18-GA)	
	5	1	**8T-8737**	9	PLUG-SEAL	
	6	1	**271-2811**	1	KIT-RECEPTACLE (12-PIN)	
					(INCLUDES RECEPTACLE AS & WEDGE)	

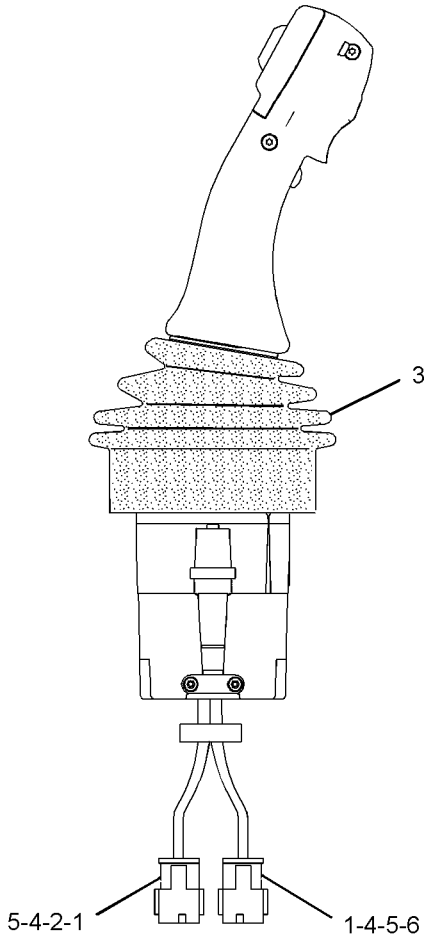

RIGHT SIDE VIEW

GRAPHIC #1 **<END>** g02071482

OPERATOR STATION

308-5204 CONTROL GP-JOYSTICK–LH

S/N: R9J1-UP
PART OF 309-5955 CONTROL & MTG GP-JOYSTICK
FIELD REPLACEMENT ORDER 356-3607–PAGE 792
AN ATTACHMENT

SMCS-3168, 4343, 5063, 5705 **i03767511**

NOTE	REF NO	GRAPHIC REF	PART NUMBER	QTY	PART NAME 1 2 3 4 5 6 (PRODUCT LEVEL)	SEE PAGE
	1	1	**169-0705**	5	SEAL	
	2	1	**174-3091**	1	KIT-RECEPTACLE (12-PIN)	
					(INCLUDES RECEPTACLE AS & WEDGE)	
	3	1	**247-0733**	1	BOOT	
	4	1	**9X-3401**	23	PIN-CONNECTOR (16-GA TO 18-GA)	
	5	1	**8T-8737**	5	PLUG-SEAL	
	6	1	**271-2811**	1	KIT-RECEPTACLE (12-PIN)	
	7	1	**151-9274**	1	KIT-RECEPTACLE (4-PIN)	
					(EACH KIT INCLUDES RECEPTACLE AS & WEDGE)	
	8	1	**342-9971**	1	SWITCH AS (FORWARD, NEUTRAL, REVERSE)	

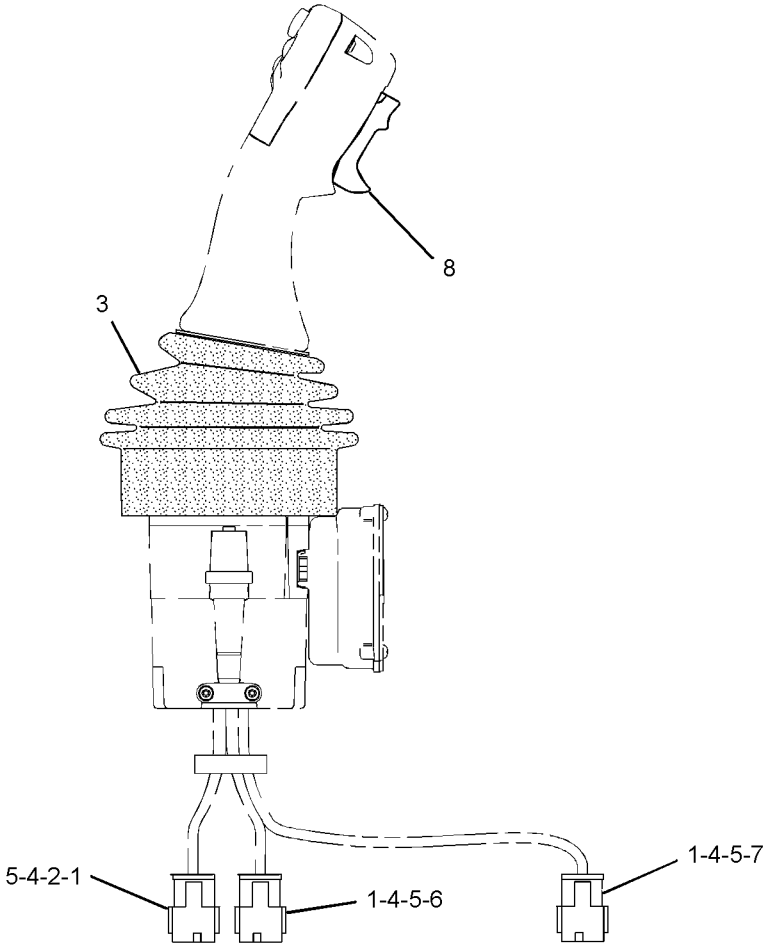

GRAPHIC #1 **<END>** g02031514

OPERATOR STATION

348-6995 CONTROL GP-JOYSTICK–RH

S/N: R9J1-UP
PART OF 357-9151 CONTROL & MTG GP-JOYSTICK
AN ATTACHMENT

SMCS-3168, 4343, 5063, 5705 **i03973593**

NOTE	REF NO	GRAPHIC REF	PART NUMBER	QTY	PART NAME 1 2 3 4 5 6 (PRODUCT LEVEL)	SEE PAGE
	1	1	**169-0705**	9	SEAL	
	2	1	**174-3091**	1	KIT-RECEPTACLE (12-PIN)	
					(INCLUDES RECEPTACLE AS & WEDGE)	
	3	1	**247-0733**	1	BOOT	
	4	1	**9X-3401**	15	PIN-CONNECTOR (16-GA TO 18-GA)	
	5	1	**8T-8737**	9	PLUG-SEAL	
	6	1	**271-2811**	1	KIT-RECEPTACLE (12-PIN)	
					(INCLUDES RECEPTACLE AS & WEDGE)	

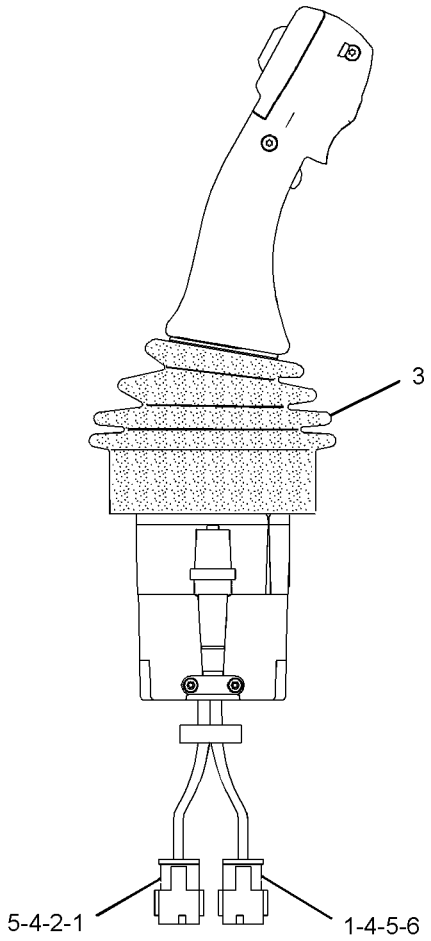

RIGHT SIDE VIEW

GRAPHIC #1

<END>

g02071482

OPERATOR STATION

356-3607 CONTROL GP-JOYSTICK–LH

S/N: R9J1-UP

AN ATTACHMENT

SMCS-3168, 4343, 5063, 5705 **i03814130**

NOTE	REF NO	GRAPHIC REF	PART NUMBER	QTY	PART NAME 1 2 3 4 5 6 (PRODUCT LEVEL)	SEE PAGE
	1	1	**169-0705**	5	SEAL	
	2	1	**174-3091**	1	KIT-RECEPTACLE (12-PIN)	
					(INCLUDES RECEPTACLE AS & WEDGE)	
	3	1	**247-0733**	1	BOOT	
	4	1	**9X-3401**	23	PIN-CONNECTOR (16-GA TO 18-GA)	
	5	1	**8T-8737**	5	PLUG-SEAL	
	6	1	**271-2811**	1	KIT-RECEPTACLE (12-PIN)	
	7	1	**151-9274**	1	KIT-RECEPTACLE (4-PIN)	
					(EACH KIT INCLUDES RECEPTACLE AS & WEDGE)	
	8	1	**342-9971**	1	SWITCH AS (FORWARD, NEUTRAL, REVERSE)	

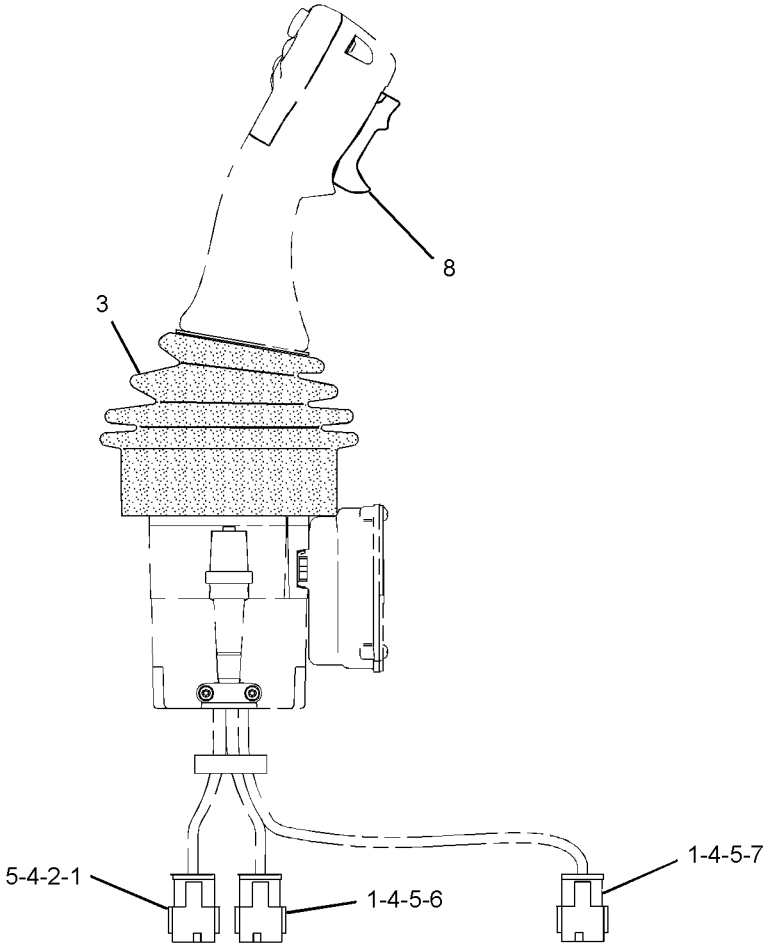

GRAPHIC #1 **<END>** g02031514

OPERATOR STATION

356-3609 CONTROL GP-JOYSTICK–RH

S/N: R9J1-UP

AN ATTACHMENT

SMCS-3168, 4343, 5063, 5705 **i03814180**

NOTE	REF NO	GRAPHIC REF	PART NUMBER	QTY	PART NAME 1 2 3 4 5 6 (PRODUCT LEVEL)	SEE PAGE
	1	1	**169-0705**	9	SEAL	
	2	1	**174-3091**	1	KIT-RECEPTACLE (12-PIN)	
					(INCLUDES RECEPTACLE AS & WEDGE)	
	3	1	**247-0733**	1	BOOT	
	4	1	**9X-3401**	15	PIN-CONNECTOR (16-GA TO 18-GA)	
	5	1	**8T-8737**	9	PLUG-SEAL	
	6	1	**271-2811**	1	KIT-RECEPTACLE (12-PIN)	
					(INCLUDES RECEPTACLE AS & WEDGE)	

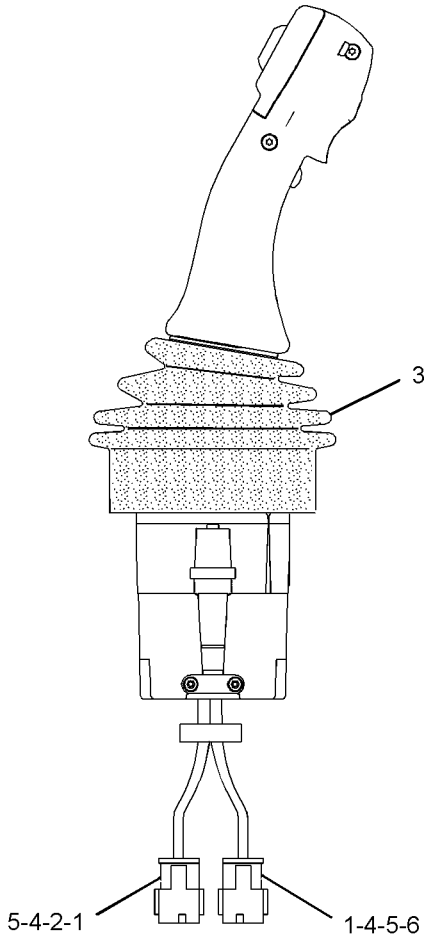

RIGHT SIDE VIEW

GRAPHIC #1

<END>

g02071482

OPERATOR STATION

360-2987 CONTROL GP-JOYSTICK

S/N: R9J1-UP
PART OF 357-9151 CONTROL & MTG GP-JOYSTICK
AN ATTACHMENT

SMCS-3168, 4343, 5063, 5705 **i04015815**

NOTE	REF NO	GRAPHIC REF	PART NUMBER	QTY	PART NAME 1 2 3 4 5 6 (PRODUCT LEVEL)	SEE PAGE
	1	1	**169-0705**	5	SEAL	
	2	1	**174-3091**	1	KIT-RECEPTACLE (12-PIN)	
					(INCLUDES RECEPTACLE AS & WEDGE)	
	3	1	**247-0733**	1	BOOT	
	4	1	**9X-3401**	23	PIN-CONNECTOR (16-GA TO 18-GA)	
	5	1	**8T-8737**	5	PLUG-SEAL	
	6	1	**271-2811**	1	KIT-RECEPTACLE (12-PIN)	
	7	1	**151-9274**	1	KIT-RECEPTACLE (4-PIN)	
					(EACH RECEPTACLE KIT INCLUDES RECEPTACLE AS & WEDGE)	
	8	1	**342-9971**	1	SWITCH AS (FORWARD, NEUTRAL, REVERSE)	

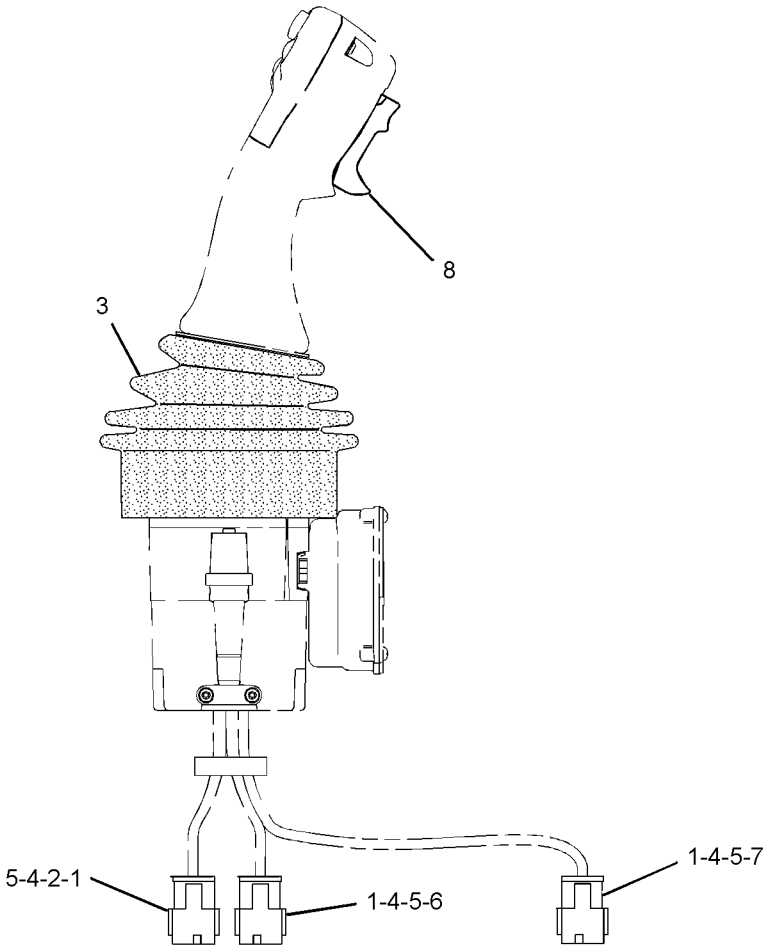

GRAPHIC #1 **<END>** g02031514

OPERATOR STATION

263-2590 COVER GP-CAB–BULKHEAD

S/N: R9J1-UP

PART OF 233-3110, 325-5227 CAB AR

AN ATTACHMENT

SMCS-7301 **i02276607**

NOTE	REF NO	GRAPHIC REF	PART NUMBER	QTY	PART NAME 1 2 3 4 5 6 (PRODUCT LEVEL)	SEE PAGE
	1	1	**263-2589**	1	COVER	
	2	1	**5P-4116**	3	WASHER-HARD (8.8X20.5X2-MM THK)	
M	3	1	**8T-4189**	3	BOLT (M8X1.25X20-MM)	
BD	4	1	**6V-5746**		TRIM	

B-USE AS REQUIRED
D-ORDER BY THE METER
M-METRIC PART

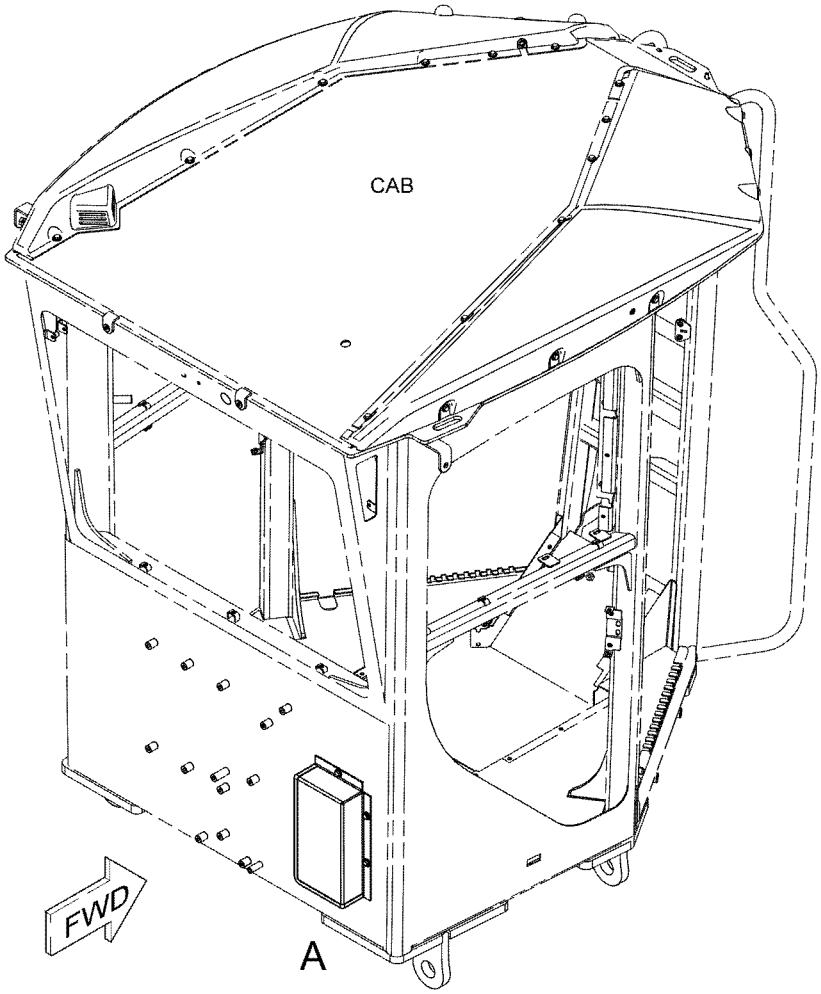

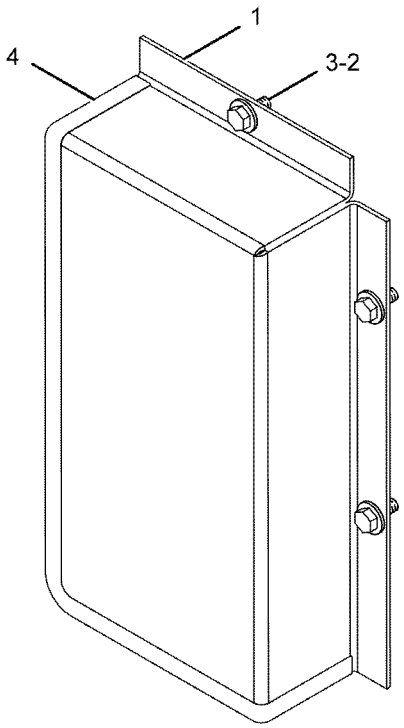

VIEW OF AREA A

GRAPHIC #1 **<END>** g01144301

OPERATOR STATION

252-1805 CUSHION GP-ARM

S/N: R9J1-UP
PART OF 233-3224, 233-3225 SUPPORT GP-CONTROL
AN ATTACHMENT

SMCS-7307 **i02748414**

NOTE	REF NO	GRAPHIC REF	PART NUMBER	QTY	PART NAME 1 2 3 4 5 6 (PRODUCT LEVEL)	SEE PAGE
	1	1	**233-3245**	1	PLATE	
	2	1	**233-3272**	1	CUSHION AS	
M	3	1	**5C-9553**	2	BOLT (M6X1X16-MM)	
	4	1	**9X-8256**	2	WASHER (6.6X12X2-MM THK)	

M-METRIC PART

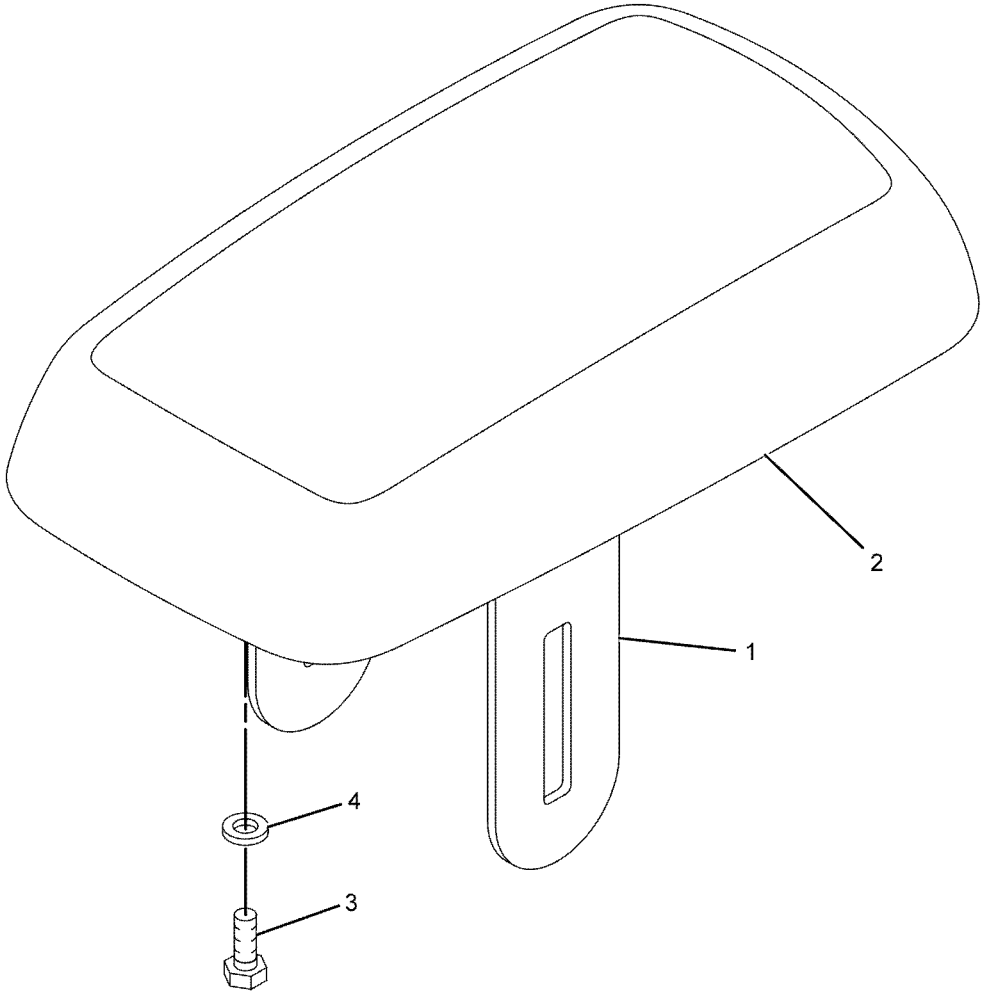

GRAPHIC #1 **<END>** g01109286

OPERATOR STATION

292-7975 DISPLAY AR-MONITOR—CD700

S/N: R9J1-UP
FOR USE WITH M SERIES MOTOR GRADER
FIELD INSTALLATION

SMCS-7490 **i04035054**

NOTE	PART NUMBER	QTY	PART NAME 1 2 3 4 5 6 (PRODUCT LEVEL)	SEE PAGE
Y	*286-0134*	1	DISPLAY GP-MONITOR (CD700)	799
Y	**286-9124**	3	DISPLAY GP-MONITOR (LIGHT BAR)	800
Y	*253-1964*	1	WIRING GP-MONITOR (CD700C)	371

Y-SEPARATE ILLUSTRATION

<END>

292-7980 DISPLAY AR-MONITOR—CD610

S/N: R9J1-UP
FOR USE WITH M SERIES MOTOR GRADER
FIELD INSTALLATION

SMCS-7490 **i03245379**

NOTE	PART NUMBER	QTY	PART NAME 1 2 3 4 5 6 (PRODUCT LEVEL)	SEE PAGE
Y	**292-0309**	1	DISPLAY GP-MONITOR (CD610)	801
Y	**253-1967**	1	WIRING GP-MONITOR (CD610)	373

Y-SEPARATE ILLUSTRATION

<END>

331-7530 DISPLAY AR-MONITOR

S/N: R9J1-UP
FIELD INSTALLATION

SMCS-7490 **i04040099**

NOTE	PART NUMBER	QTY	PART NAME 1 2 3 4 5 6 (PRODUCT LEVEL)	SEE PAGE
Y	**286-9124**	3	DISPLAY GP-MONITOR (LIGHT BAR)	800
Y	*253-1964*	1	WIRING GP-MONITOR (CD700)	371

Y-SEPARATE ILLUSTRATION

<END>

OPERATOR STATION

278-0668 DISPLAY GP-CAMERA—WORK AREA VISUAL SYSTEM

S/N: R9J1-UP
PART OF 278-1842 CAMERA AR
AN ATTACHMENT

SMCS-7347 **i04037168**

NOTE	REF NO	GRAPHIC REF	PART NUMBER	QTY	PART NAME 1 2 3 4 5 6 (PRODUCT LEVEL)	SEE PAGE
	1	1	**3S-2093**	10	STRAP-CABLE	
	2	1	**333-8153**	1	CONNECTOR GP-ELECTRONIC	
	3	1	**263-5033**	1	PLATE	
	4	1	**251-8248**	1	CABLE AS-COMMUNICATION (CAMERA)	
	5	1	**261-3224**	1	MODULE GP-DISPLAY (WORK AREA VISUAL SYSTEM)	
		1	**280-2691**	1	CABLE AS	
		1	**8T-8737**	1	PLUG-SEAL	
		1	**102-8805**	1	KIT-RECEPTACLE (6-PIN)	
					(INCLUDES RECEPTACLE AS, & WEDGE)	
		1	**8T-8729**	5	PIN-CONNECTOR (16-GA TO 18-GA)	
	6	1	**9X-8267**	4	WASHER (6.6X12X2-MM THK)	
M	7	1	**8T-2226**	4	SCREW-MACHINE (M5X0.8X10-MM)	
M	8	1	**3E-8020**	1	SCREW-TRUSS HEAD (M6X1X25-MM)	

M-METRIC PART

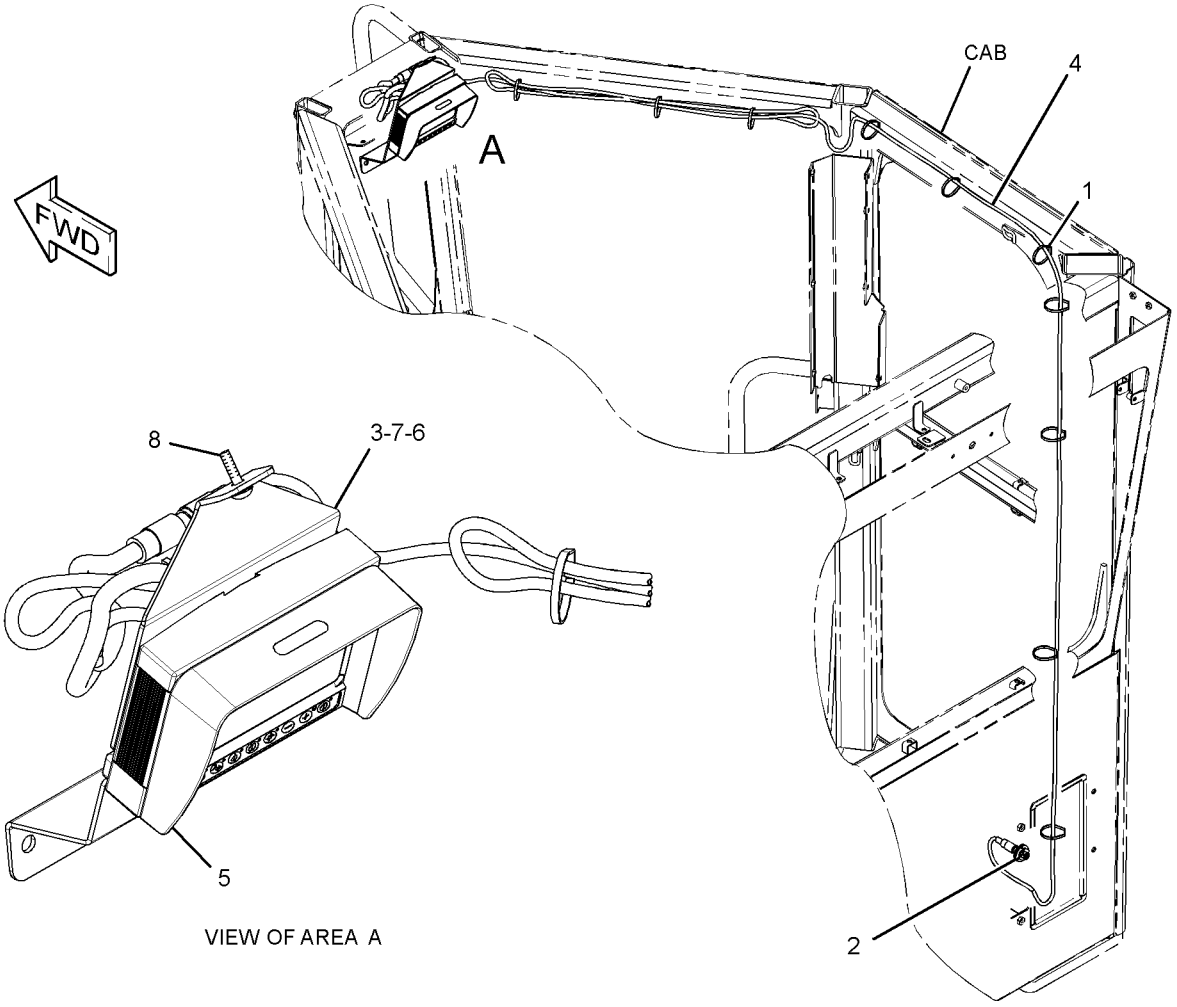

VIEW OF AREA A

GRAPHIC #1 **<END>** g01554198

OPERATOR STATION

286-0134 DISPLAY GP-MONITOR—CD700C

S/N: R9J1-UP

PART OF 292-7975 DISPLAY AR-MONITOR, 323-8139 SENSOR AR-GRADE

SMCS-7490 **i04036776**

NOTE	PART NUMBER	QTY	PART NAME 1 2 3 4 5 6 (PRODUCT LEVEL)	SEE PAGE
R	**244-1716**	1	DISPLAY GP-MONITOR (CD700C)	
	283-4426	1	CARD AS-MEMORY (FLASH)	
	194-8031	1	ADAPTER (COMPACT)	
M	**8T-4171**	6	BOLT (M6X1X12-MM)	
	292-0311	1	CASE-CARRYING	
M	**8T-0285**	6	SCREW-MACHINE (M4X0.7X12-MM)	
	9X-8256	6	WASHER (6.6X12X2-MM THK)	
	096-6166	6	WASHER-HARD (4.5X9X1-MM THK)	

M-METRIC PART
R-REMFG PART MAY BE AVAILABLE

<END>

OPERATOR STATION

286-9124 DISPLAY GP-MONITOR—LIGHT BAR

S/N: R9J1-UP

PART OF 292-7975, 331-7530 DISPLAY AR-MONITOR, 323-8139 SENSOR AR-GRADE

SMCS-7490 **i02618892**

NOTE	REF NO	GRAPHIC REF	PART NUMBER	QTY	PART NAME 1 2 3 4 5 6 (PRODUCT LEVEL)	SEE PAGE
	1	1	**230-5009**	1	RECEPTACLE AS-CONNECTOR (4-PIN)	
	2	1	**9X-3402**	3	SOCKET-CONNECTOR (16-GA TO 18-GA)	
	3	1	**8T-8737**	1	PLUG-SEAL	

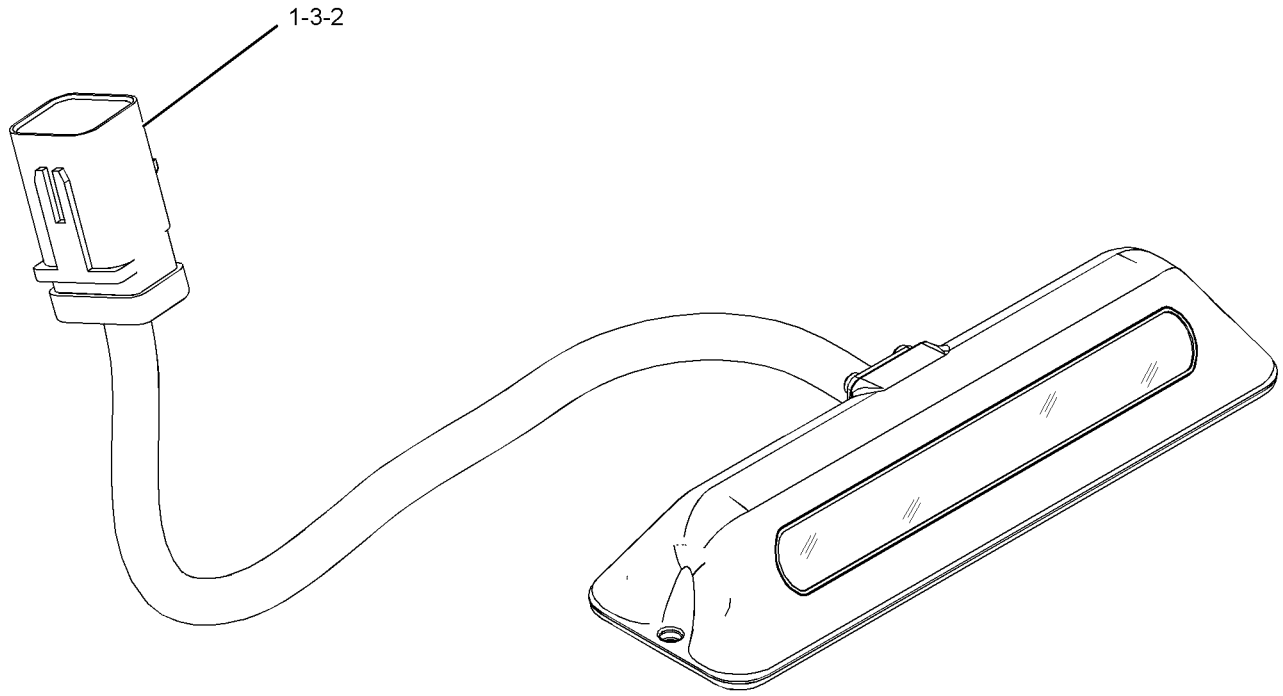

GRAPHIC #1 **<END>** g01313338

OPERATOR STATION

292-0309 DISPLAY GP-MONITOR—CD610

S/N: R9J1-UP

PART OF 292-7980 DISPLAY AR-MONITOR, 323-8140 GRADE CONTROL AR

SMCS-7490 **i04025329**

NOTE	PART NUMBER	QTY	PART NAME 1 2 3 4 5 6 (PRODUCT LEVEL)	SEE PAGE
	283-9530	1	DISPLAY GP-MONITOR (CD610)	
	346-4372	1	SOFTWARE	
M	**7X-2619**	6	BOLT (M6X1X10-MM)	
	292-0311	1	CASE-CARRYING	
	8T-4205	6	WASHER-HARD (7.2X14.5X2-MM THK)	

M-METRIC PART

<END>

OPERATOR STATION

294-1023 DOOR GP-CAB—LH

S/N: R9J1-UP
PART OF 233-3110 CAB AR
AN ATTACHMENT

SMCS-7308 **i03586480**

NOTE	REF NO	GRAPHIC REF	PART NUMBER	QTY	PART NAME 1 2 3 4 5 6 (PRODUCT LEVEL)	SEE PAGE
	1	2	**6V-7636**	2	PIN AS-SPRING	
C	3	2	**4E-8722**	5	NUT (RETAINER)	
M	4	2	**184-0983**	1	NUT-HEX FLANGE (M12X1.75-THD)	
J	5	2	**252-1862**	1	HANDLE AS (PULL)	
	6	2	**252-1863**	1	GASKET	
	9	1	**261-1731**	1	BOOT	
	10	1	**261-5524**	1	COVER AS	
	13	2	**269-2890**	1	CLEVIS	
	14	2	**269-2892**	1	PIN	
	15	2	**269-2893**	1	CLIP	
	16	2	**272-1623**	1	BELLCRANK AS	
	17	2	**285-3692**	1	SPACER	
	18	2	**294-1021**	1	DOOR AS (LH)	
Y	19	2	*295-1114*	1	WIPER GP-WINDOW (DOOR, LH)	891
	20	2	**295-1200**	2	HINGE (LH)	
	21	2	**295-1201**	1	GLASS (DOOR, LH)	
	22	2	**295-1202**	1	LINKAGE AS (LH)	
	23	2	**295-5648**	1	PLATE	
	24	2	**295-5665**	1	BRACKET AS	
	25	2	**295-6393**	1	COVER (LH)	
	26	2	**328-4984**	1	LATCH AS-DOOR (LH)	
	27	1	**295-6406**	1	LATCH AS (LH)	
	28	2	**296-2991**	1	BRACKET	
	29	2	**296-4040**	1	STRIKER AS	
	30	2	**296-4109**	1	COVER	
	31	2	**296-4924**	1	HARNESS AS-WINDOW WIPER	
		2	**102-8805**	1	KIT-RECEPTACLE (6-PIN)	
					(INCLUDES RECEPTACLE AS & WEDGE)	
		2	**186-3735**	1	PIN-CONNECTOR (16-GA TO 18-GA)	
		2	**186-3736**	1	SOCKET-CONNECTOR (16-GA TO 18-GA)	
		2	**8T-8737**	2	PLUG-SEAL	
		2	**9W-0844**	4	SOCKET-CONNECTOR (14-GA)	
		2	**9W-0852**	4	PIN-CONNECTOR (14-GA TO 16-GA)	
E		2	**144-0195**		HOSE (95-CM)	
		2	**155-2274**	1	KIT-CONNECTING PLUG (6-PIN)	
					(INCLUDES PLUG AS, WEDGE, & INTERFACE SEAL)	
		2	**297-4169**	2	GROMMET	
	32	2	**297-4169**	1	GROMMET	
C	33	1,2	**114-6658**	4	WASHER (6.5X17X1-MM THK)	
	34	1	**109-5008**	1	BUMPER-CONICAL	
M	35	2	**3E-8020**	4	SCREW-TRUSS HEAD (M6X1X25-MM)	
M	36	1	**5C-7261**	1	NUT (M8X1.25-THD)	
M	37	2	**9X-2125**	4	BOLT-LOCKING (M10X1.5X25-MM)	
	38	2	**8T-4121**	4	WASHER-HARD (11X21X2.5-MM THK)	
M	39	1	**8T-7547**	2	BOLT (M8X1.25X30-MM)	
CM	40	1,2	**9X-2043**	13	SCREW-TRUSS HEAD (M6X1X14-MM)	
CM	41	2	**9X-2044**	4	SCREW-TRUSS HEAD (M6X1X16-MM)	
BH	42	2	**328-5492**		SEAL (50-DM)	
C	43	1	**299-1021**	1	LEVER AS	
		1	**8T-7971**	2	WASHER-HARD (13.5X25.5X5-MM THK)	
M		1	**9X-2044**	2	SCREW-TRUSS HEAD (M6X1X16-MM)	
		1	**114-6658**	2	WASHER (6.5X17X1-MM THK)	
		1	**115-9345**	1	KNOB-CONTROL	
C	44	1	**299-1660**	1	CABLE AS	
		1	**7S-9930**	2	RING-RETAINING	

294-1023 **DOOR GP-CAB** *(contd.)* **i03586480**

NOTE	REF NO	GRAPHIC REF	PART NUMBER	QTY	PART NAME 1 2 3 4 5 6 (PRODUCT LEVEL)	SEE PAGE
		1	**159-0052**	2	PIN-CLEVIS	
	45	2	**110-7524**	8	BUTTON	
BE	46	2	**331-9731**		SEAL (4-CM)	
	47	2	**3S-2093**	3	STRAP-CABLE	
	48	2	**214-9186**	6	BUTTON	
	49	2	**7X-0605**	1	WASHER-HARD (13X28X1.6-MM THK)	

B-USE AS REQUIRED
C-CHANGE FROM PREVIOUS TYPE
E-ORDER BY THE CENTIMETER
H-ORDER BY THE DECIMETER
J-J-REQUIRES CORPORATE KEY
M-METRIC PART
Y-SEPARATE ILLUSTRATION

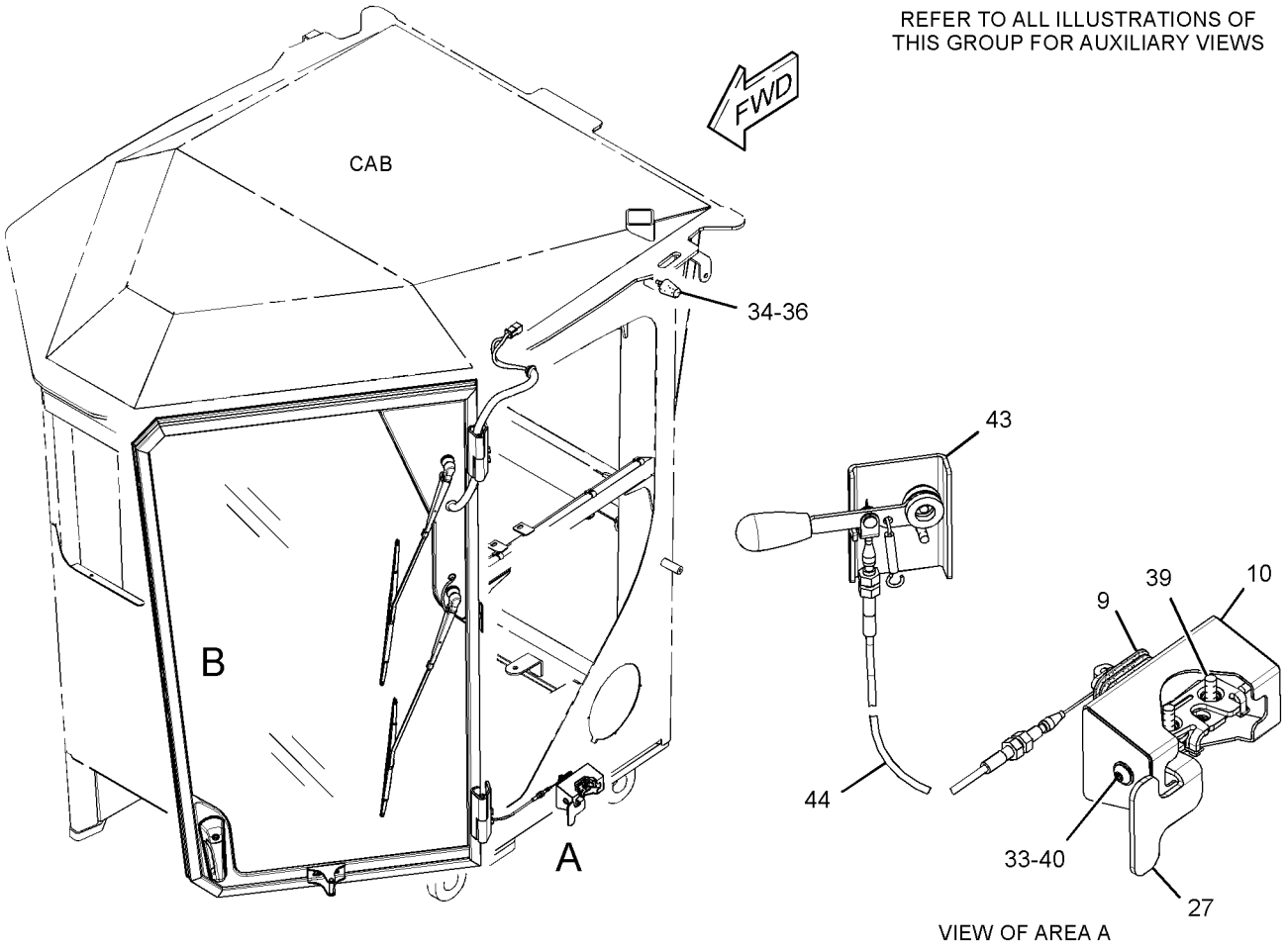

GRAPHIC #1 g01593833

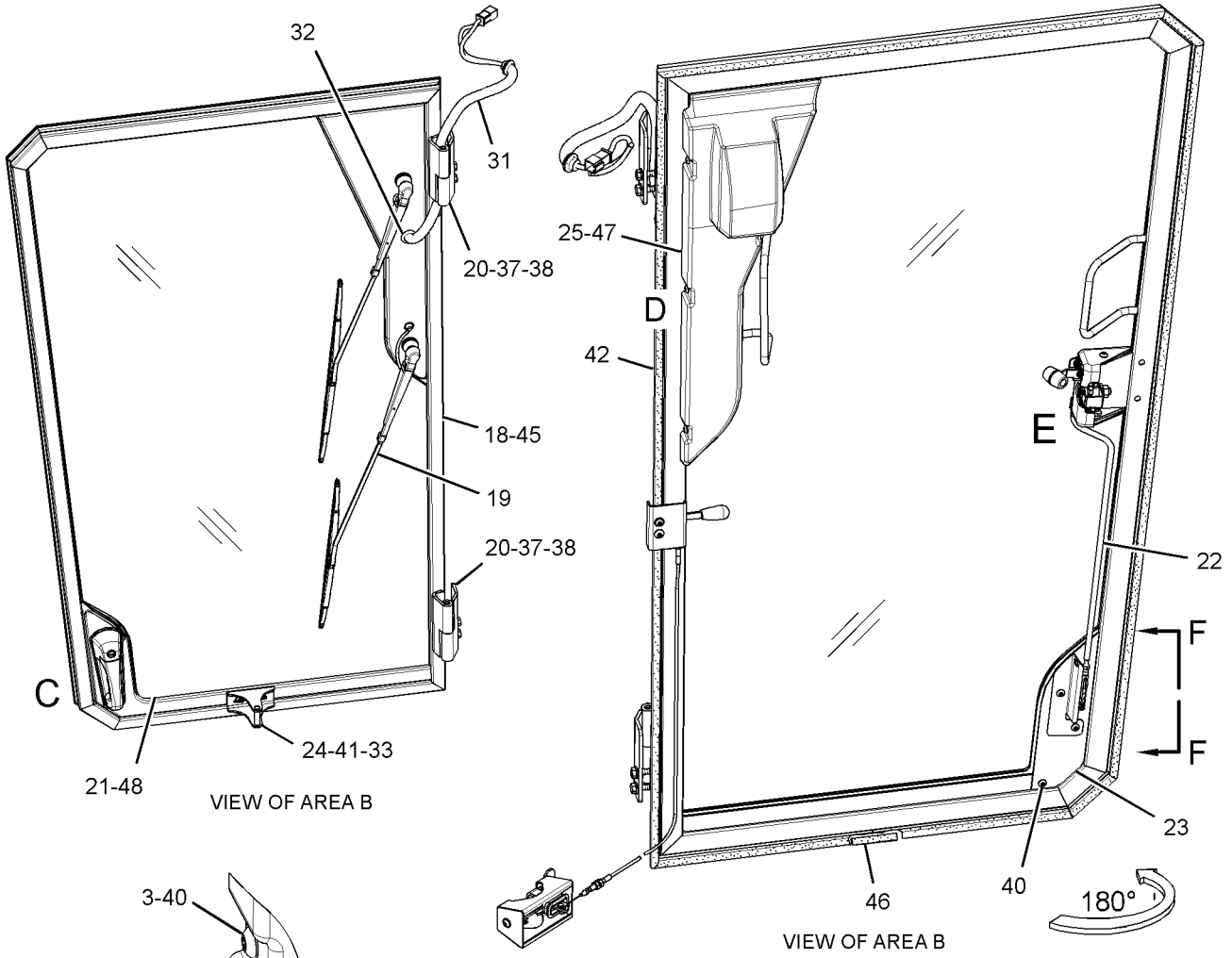

GRAPHIC #2

<END>

g01938934

OPERATOR STATION

294-1024 DOOR GP-CAB—RH

S/N: R9J1-UP
PART OF 356-3071 OPTION AR-MACHINE
AN ATTACHMENT

SMCS-7308 **i02847311**

NOTE	REF NO	GRAPHIC REF	PART NUMBER	QTY	PART NAME 1 2 3 4 5 6 (PRODUCT LEVEL)	SEE PAGE
	1	1	**114-6658**	6	WASHER (6.5X17X1-MM THK)	
	2	1	**115-9345**	1	KNOB-CONTROL	
	3	1,2	**139-6039**	7	NUT (U-TYPE RETAINER)	
M	4	2	**184-0983**	1	NUT-HEX FLANGE (M12X1.75-THD)	
J	5	1	**252-1862**	1	HANDLE AS (PULL)	
C	6	1	**252-1863**	1	GASKET	
	7	1	*260-8745*	1	RELEASE GP-LATCH (CAB DOOR, RH)	
		1	**121-9855**	1	LEVER AS	
		1	**260-8743**	1	CABLE AS	
	8	1	**260-9135**	1	COVER	
	9	1	**261-1731**	1	BOOT	
	10	1	**261-5524**	1	COVER AS	
	11	1	**262-4772**	3	CLIP	
C	12	2	**269-2890**	1	CLEVIS	
	13	1	**268-3529**	1	PLATE	
	14	2	**269-2892**	1	PIN	
	15	2	**269-2893**	1	CLIP	
	16	2	**272-1623**	1	BELLCRANK AS	
	17	1	**285-3692**	1	SPACER	
	18	1	**294-1022**	1	DOOR AS (RH)	
		1	**7T-1099**	5	LINK	
	19	1	**295-1043**	2	HINGE (RH)	
	20	2	**295-1049**	1	LINKAGE AS (RH)	
	21	1	**295-1050**	1	GLASS (DOOR, RH)	
Y	22	1	*295-1113*	1	WIPER GP-WINDOW (DOOR, RH)	889
	23	2	**295-5648**	1	PLATE	
	24	1	**295-5665**	1	BRACKET AS	
	25	2	**295-6390**	1	COVER	
	26	2	**295-6391**	1	COVER (RH)	
	27	2	**295-6397**	1	LATCH AS-DOOR	
	28	1	**295-6405**	1	LATCH AS (RH)	
	30	2	**296-4040**	1	STRIKER AS	
	32	2	**296-4924**	1	HARNESS AS-WINDOW WIPER	
		2	**130-8360**	3	GROMMET	
E		2	**144-0195**		HOSE (95-CM)	
		2	**102-8805**	1	KIT-RECEPTACLE (6-PIN)	
					(INCLUDES RECEPTACLE AS & WEDGE)	
		2	**155-2274**	1	KIT-CONNECTING PLUG (6-PIN)	
		2	**155-2274**	1	KIT-CONNECTING PLUG (6-PIN)	
					(EACH INCLUDES PLUG AS, WEDGE & INTERFACE SEAL)	
	33	1	**109-5008**	1	BUMPER-CONICAL	
M	34	2	**3E-8020**	4	SCREW-TRUSS HEAD (M6X1X25-MM)	
M	35	1	**5C-7261**	1	NUT (M8X1.25-THD)	
M	36	1	**6V-7732**	4	BOLT (M10X1.5X25-MM)	
	37	1	**8T-4121**	4	WASHER-HARD (11X21X2.5-MM THK)	
M	38	1	**8T-7547**	2	BOLT (M8X1.25X30-MM)	
M	39	1,2	**9X-2043**	17	SCREW-TRUSS HEAD (M6X1X14-MM)	
M	40	1,2	**9X-2044**	6	SCREW-TRUSS HEAD (M6X1X16-MM)	
CE	41	2	**240-2183**		SEAL (500-CM)	
C	42	1	**297-4169**	1	GROMMET	
C	43	2	**6V-7636**	2	PIN AS-SPRING	
C	44	2	**295-5649**	1	BRACKET	

C-CHANGE FROM PREVIOUS TYPE
E-ORDER BY THE CENTIMETER
J-(REQUIRES CORPORATE KEY)
M-METRIC PART
Y-SEPARATE ILLUSTRATION

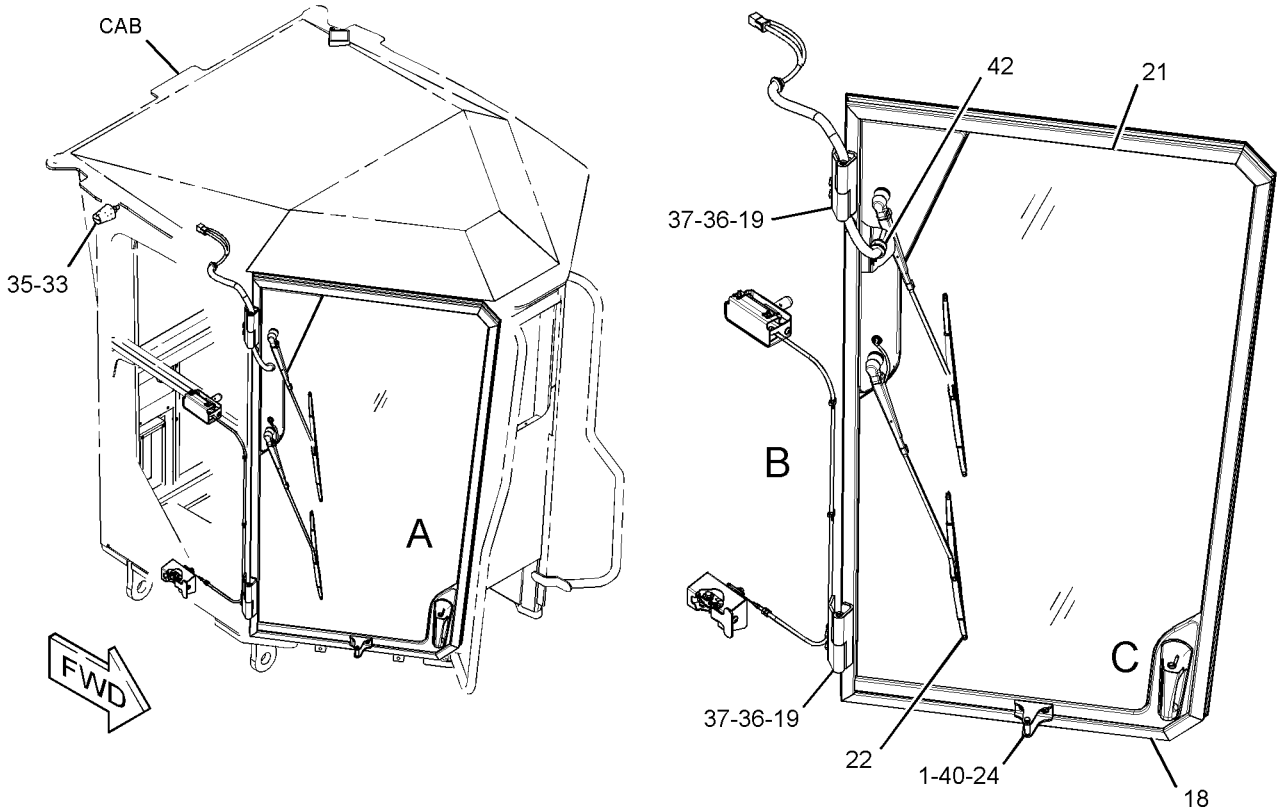

GRAPHIC #1 g01449118

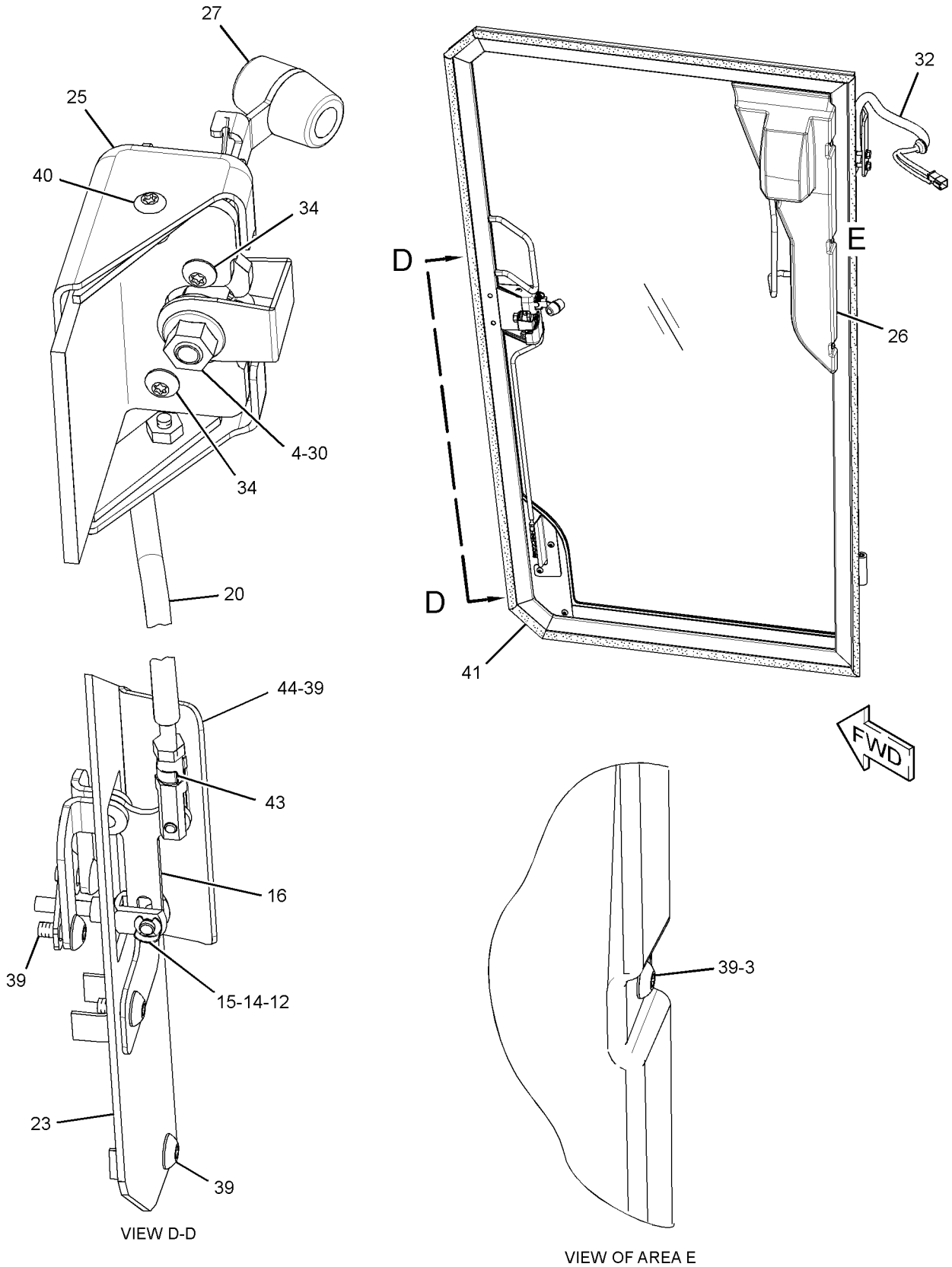

GRAPHIC #2 **<END>** g01449119

OPERATOR STATION

294-1033 DOOR GP-CAB–LH

S/N: R9J1-UP
PART OF 325-5227 CAB AR
AN ATTACHMENT

SMCS-7308 **i03829583**

NOTE	REF NO	GRAPHIC REF	PART NUMBER	QTY	PART NAME 1 2 3 4 5 6 (PRODUCT LEVEL)	SEE PAGE
	1	1	**6V-7636**	2	PIN AS-SPRING	
	2	2	**4E-8722**	5	NUT (RETAINER)	
M	3	1	**184-0983**	1	NUT-HEX FLANGE (M12X1.75-THD)	
J	4	1	**252-1862**	1	HANDLE AS (PULL) (PULL)	
	5	1	**252-1863**	1	GASKET	
	6	2	**261-1731**	1	BOOT	
	7	2	**261-5524**	1	COVER AS	
	8	1	**269-2890**	1	CLEVIS	
	9	1	**269-2892**	1	PIN	
	10	1	**269-2893**	1	CLIP	
	11	1	**272-1623**	1	BELLCRANK AS	
	12	1	**285-3692**	1	SPACER	
	13	2	**352-1643**	1	DOOR AS-CAB (LH)	
Y	14	2	*295-1114*	1	WIPER GP-WINDOW (DOOR, LH)	891
	15	2	**295-1200**	2	HINGE (LH)	
	16	1	**295-5648**	1	PLATE	
	17	2	**295-5665**	1	BRACKET AS	
	18	2	**295-6393**	1	COVER (LH)	
	19	1	**328-4984**	1	LATCH AS-DOOR (LH)	
	20	1	**295-6400**	1	LINKAGE AS (LH)	
	21	2	**295-6406**	1	LATCH AS (LH)	
	22	2	**295-6652**	1	GLASS (DOOR, LH)	
	23	1	**296-2991**	1	BRACKET	
	24	1	**296-4040**	1	STRIKER AS	
	25	1	**296-4109**	1	COVER	
	26	2	**296-4924**	1	HARNESS AS-WINDOW WIPER	
		2	**9W-0852**	4	PIN-CONNECTOR (14-GA TO 16-GA)	
		2	**102-8805**	1	KIT-RECEPTACLE (6-PIN)	
					(INCLUDES RECEPTACLE AS & WEDGE)	
		2	**8T-8729**	1	PIN-CONNECTOR (16-GA TO 18-GA)	
		2	**8T-8730**	1	SOCKET-CONNECTOR (16-GA TO 18-GA)	
		2	**8T-8737**	2	PLUG-SEAL	
		2	**9W-0844**	4	SOCKET-CONNECTOR (14-GA)	
		2	**9W-0852**	4	PIN-CONNECTOR (14-GA TO 16-GA)	
E		2	**144-0195**		HOSE (95-CM)	
		2	**155-2274**	1	KIT-CONNECTING PLUG (6-PIN)	
					(INCLUDES PLUG AS, WEDGE, & INTERFACE SEAL)	
		2	**297-4169**	2	GROMMET	
	27	2	**297-4169**	1	GROMMET	
	28	2	**299-1021**	1	LEVER AS	
		2	**8T-7971**	2	WASHER-HARD (13.5X25.5X5-MM THK)	
M		2	**9X-2044**	2	SCREW-TRUSS HEAD (M6X1X16-MM)	
		2	**114-6658**	2	WASHER (6.5X17X1-MM THK)	
		2	**115-9345**	1	KNOB-CONTROL (DOOR RELEASE)	
	29	2	**299-1660**	1	CABLE AS	
		2	**7S-9930**	2	RING-RETAINING	
		2	**159-0052**	2	PIN-CLEVIS	
	30	2	**114-6658**	4	WASHER (6.5X17X1-MM THK)	
	31	1	**109-5008**	1	BUMPER-CONICAL	
M	32	1	**3E-8020**	4	SCREW-TRUSS HEAD (M6X1X25-MM)	
M	33	1	**5C-7261**	1	NUT (M8X1.25-THD)	
M	34	2	**9X-2125**	4	BOLT-LOCKING (M10X1.5X25-MM)	
	35	2	**8T-4121**	4	WASHER-HARD (11X21X2.5-MM THK)	
M	36	2	**8T-7547**	2	BOLT (M8X1.25X30-MM)	
M	37	1,2	**9X-2043**	11	SCREW-TRUSS HEAD (M6X1X14-MM)	

OPERATOR STATION

294-1033 **DOOR GP-CAB** *(contd.)* **i03829583**

NOTE	REF NO	GRAPHIC REF	PART NUMBER	QTY	PART NAME 1 2 3 4 5 6 (PRODUCT LEVEL)	SEE PAGE
M	38	1,2	**9X-2044**	6	SCREW-TRUSS HEAD (M6X1X16-MM)	
L	39	2	**328-5492**		SEAL (50-DM)	
E	40	2	**331-9731**		SEAL (4-CM)	
	41	2	**110-7524**	8	BUTTON	
	42	2	**3S-2093**	3	STRAP-CABLE	
	43	1	**7X-0605**	1	WASHER-HARD (13X28X1.6-MM THK)	
	44	2	**214-9186**	6	BUTTON	

E-ORDER BY THE CENTIMETER
J-REQUIRES CORPORATE KEY
L-ORDER BY THE DECIMETER
M-METRIC PART
Y-SEPARATE ILLUSTRATION

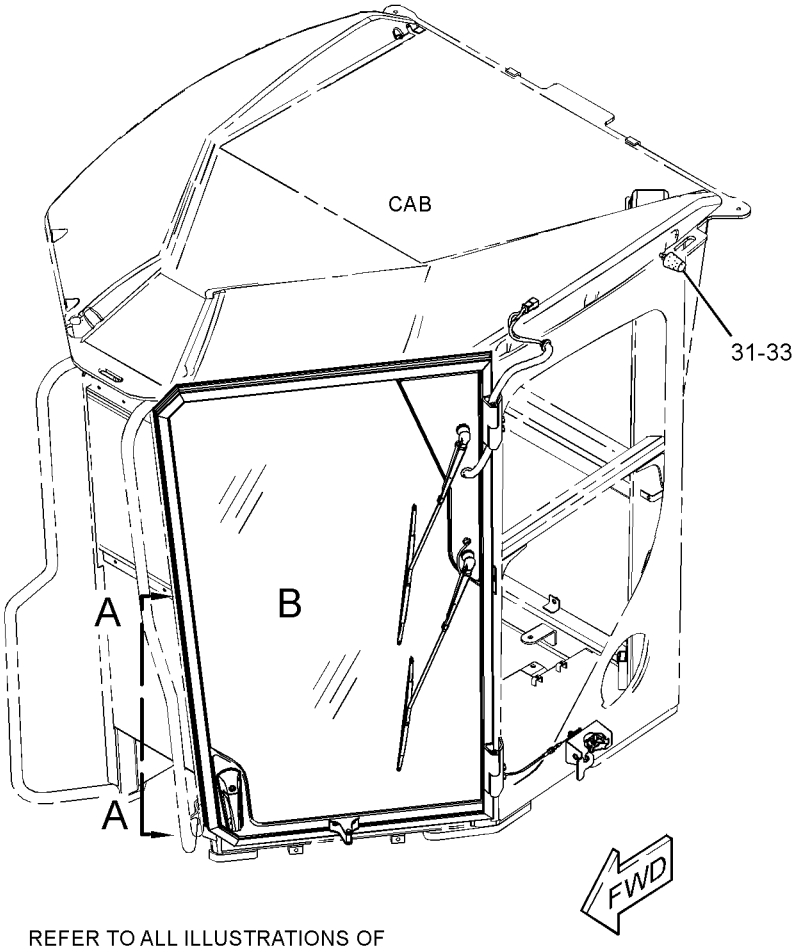

REFER TO ALL ILLUSTRATIONS OF THIS GROUP FOR AUXILIARY VIEWS

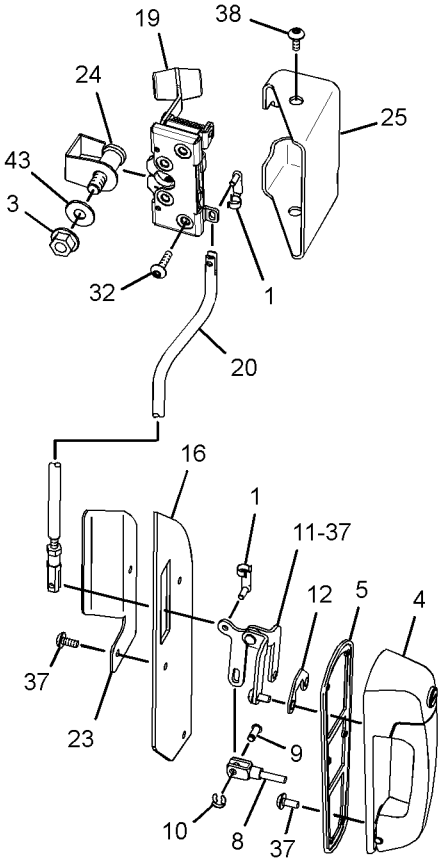

VIEW A-A (EXPLODED)

GRAPHIC #1

g01942350

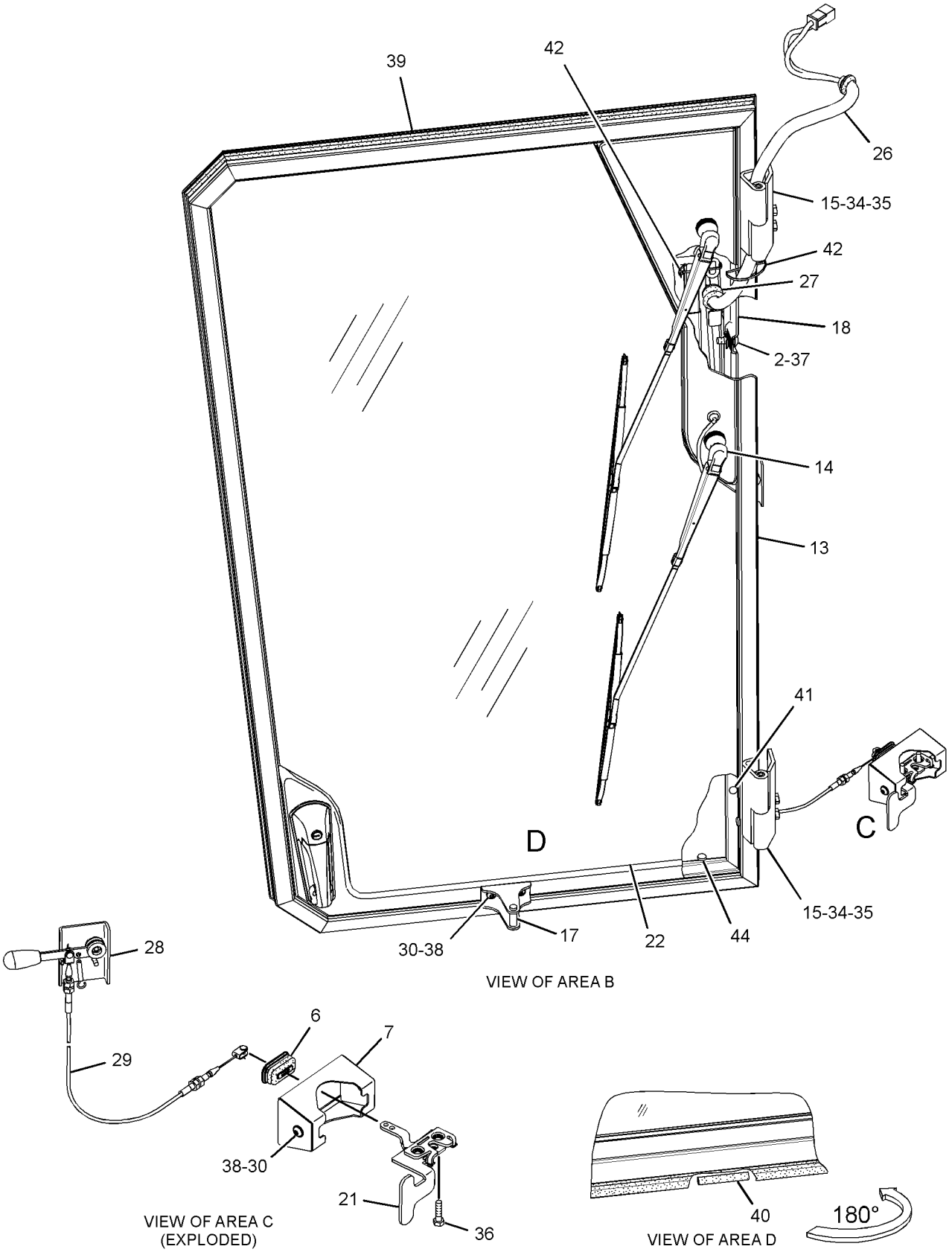

GRAPHIC #2 **<END>** g01942353

OPERATOR STATION

294-1034 DOOR GP-CAB—RH

S/N: R9J1-UP
PART OF 356-3072 OPTION AR-MACHINE
AN ATTACHMENT

SMCS-7308 **i03586501**

NOTE	REF NO	GRAPHIC REF	PART NUMBER	QTY	PART NAME 1 2 3 4 5 6 (PRODUCT LEVEL)	SEE PAGE
	1	2	**6V-7636**	2	PIN AS-SPRING	
	2	2	**4E-8722**	5	NUT (RETAINER)	
M	3	2	**184-0983**	1	NUT-HEX FLANGE (M12X1.75-THD)	
J	4	1	**252-1862**	1	HANDLE AS (PULL)	
	5	1	**252-1863**	1	GASKET	
	6	1	**261-1731**	1	BOOT	
	7	1	**261-5524**	1	COVER AS	
	8	2	**269-2890**	1	CLEVIS	
	9	2	**269-2892**	1	PIN	
	10	2	**269-2893**	1	CLIP	
	11	2	**272-1623**	1	BELLCRANK AS	
	12	2	**285-3692**	1	SPACER	
	13	1	**294-1032**	1	DOOR AS (RH)	
	14	1,2	**295-1043**	2	HINGE (RH)	
Y	15	1	*295-1113*	1	WIPER GP-WINDOW (DOOR, RH)	889
	16	2	**295-5648**	1	PLATE	
	17	2	**295-5649**	1	BRACKET	
	18	1	**295-5665**	1	BRACKET AS	
	19	1	**295-6374**	1	GLASS (DOOR, RH)	
	20	2	**295-6390**	1	COVER	
	21	2	**295-6391**	1	COVER (RH)	
	22	2	**328-4985**	1	LATCH AS-DOOR (RH)	
	23	2	**295-6399**	1	LINKAGE AS (RH)	
	24	1	**295-6405**	1	LATCH AS (RH)	
	25	2	**296-4040**	1	STRIKER AS	
	26	2	**296-4924**	1	HARNESS AS-WINDOW WIPER	
		2	**102-8805**	1	KIT-RECEPTACLE (6-PIN)	
					(INCLUDES RECEPTACLE AS & WEDGE)	
		2	**186-3735**	1	PIN-CONNECTOR (16-GA TO 18-GA)	
		2	**186-3736**	1	SOCKET-CONNECTOR (16-GA TO 18-GA)	
		2	**8T-8737**	2	PLUG-SEAL	
		2	**9W-0844**	4	SOCKET-CONNECTOR (14-GA)	
		2	**9W-0852**	4	PIN-CONNECTOR (14-GA TO 16-GA)	
E		2	**144-0195**		HOSE (95-CM)	
		2	**155-2274**	1	KIT-CONNECTING PLUG (6-PIN)	
					(INCLUDES PLUG AS, WEDGE, & INTERFACE SEAL)	
		2	**297-4169**	2	GROMMET	
	27	1	**297-4169**	1	GROMMET	
	28	2	**299-1020**	1	LEVER AS	
		2	**8T-7971**	2	WASHER-HARD (13.5X25.5X5-MM THK)	
M		2	**9X-2044**	2	SCREW-TRUSS HEAD (M6X1X16-MM)	
		2	**114-6658**	2	WASHER (6.5X17X1-MM THK)	
		2	**115-9345**	1	KNOB-CONTROL (DOOR RELEASE)	
	29	2	**299-1660**	1	CABLE AS	
		2	**2B-1560**	2	PIN	
		2	**3B-4605**	2	PIN-COTTER	
	30	1	**114-6658**	4	WASHER (6.5X17X1-MM THK)	
	31	1	**109-5008**	1	BUMPER-CONICAL	
M	32	2	**3E-8020**	4	SCREW-TRUSS HEAD (M6X1X25-MM)	
M	33	1	**5C-7261**	1	NUT (M8X1.25-THD)	
M	34	1,2	**9X-2125**	4	BOLT-LOCKING (M10X1.5X25-MM)	
	35	1,2	**8T-4121**	4	WASHER-HARD (11X21X2.5-MM THK)	
M	36	1	**8T-7547**	2	BOLT (M8X1.25X30-MM)	
M	37	1,2	**9X-2043**	11	SCREW-TRUSS HEAD (M6X1X14-MM)	
M	38	1,2	**9X-2044**	6	SCREW-TRUSS HEAD (M6X1X16-MM)	

294-1034 **DOOR GP-CAB** *(contd.)* **i03586501**

NOTE	REF NO	GRAPHIC REF	PART NUMBER	QTY	PART NAME 1 2 3 4 5 6 (PRODUCT LEVEL)	SEE PAGE
H	39	2	**328-5492**		SEAL (50-DM)	
	40	1	**110-7524**	8	BUTTON	
E	41	2	**331-9731**		SEAL (4-CM)	
	42	1,2	**3S-2093**	4	STRAP-CABLE	
	43	2	**7X-0605**	1	WASHER-HARD (13X28X1.6-MM THK)	
	44	1	**214-9186**	6	BUTTON	

E-ORDER BY THE CENTIMETER
H-ORDER BY THE DECIMETER
J-REQUIRES CORPORATE KEY
M-METRIC PART
Y-SEPARATE ILLUSTRATION

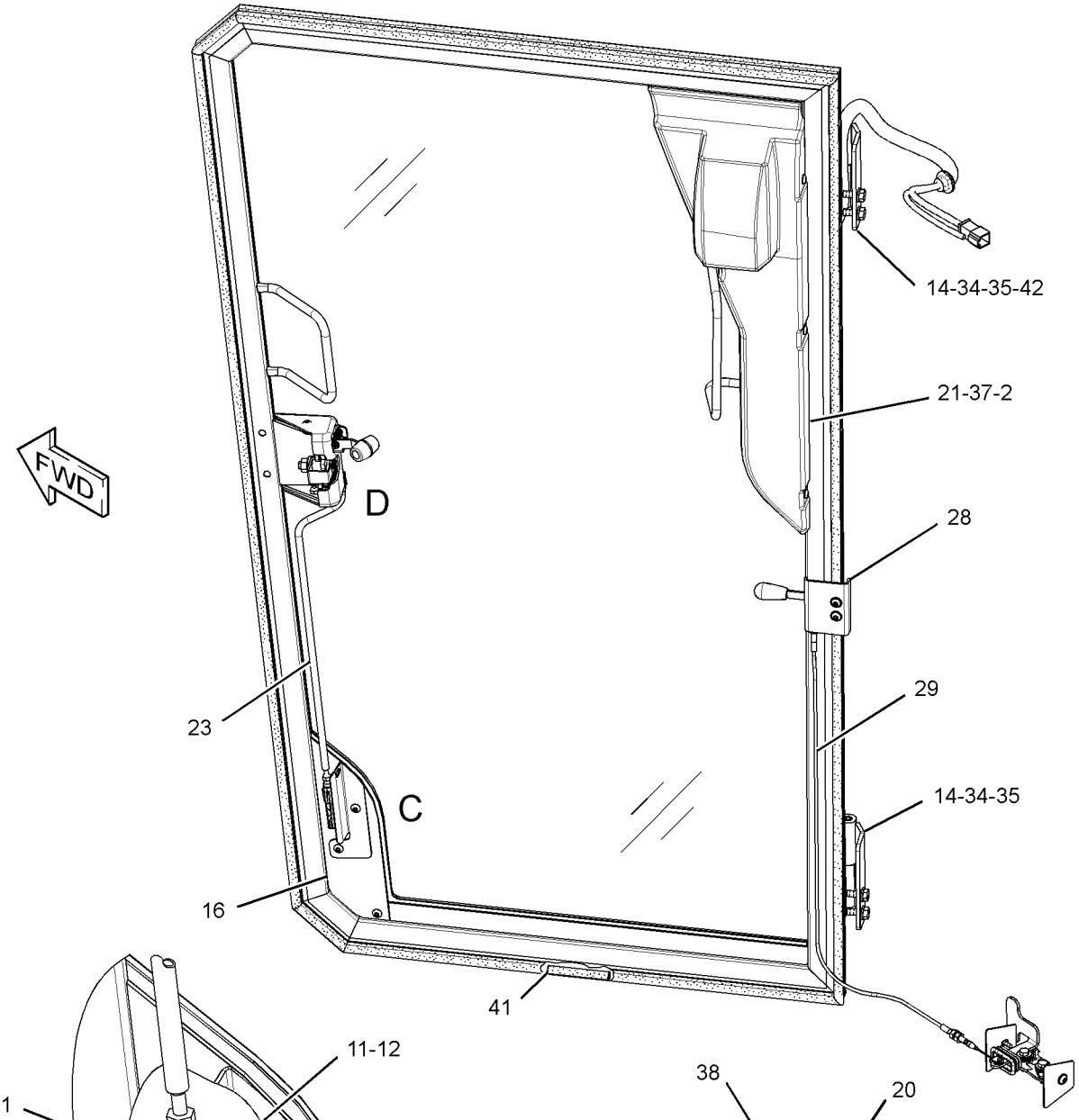

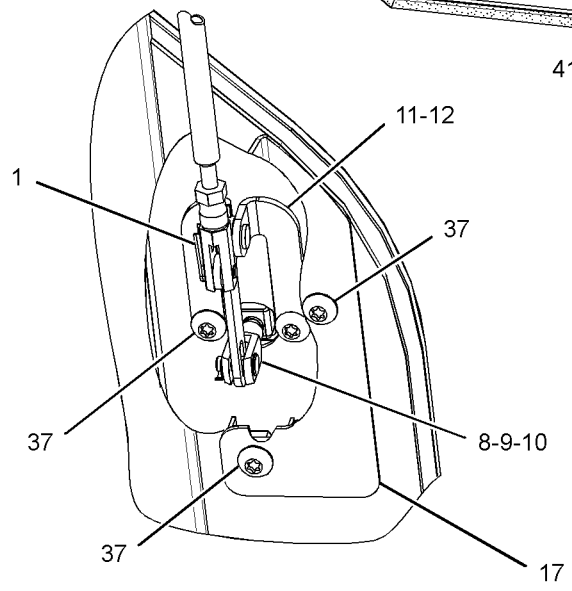

VIEW OF AREA C

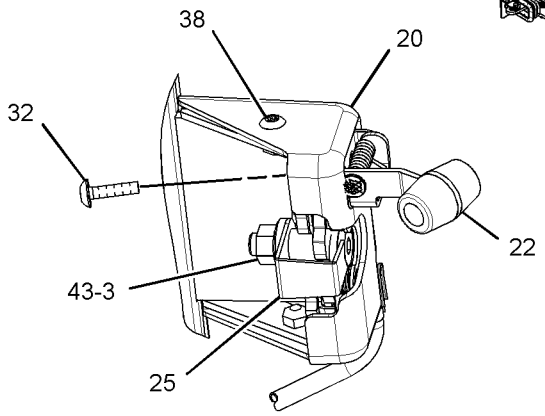

VIEW OF AREA D
(EXPLODED)

GRAPHIC #1

g01941475

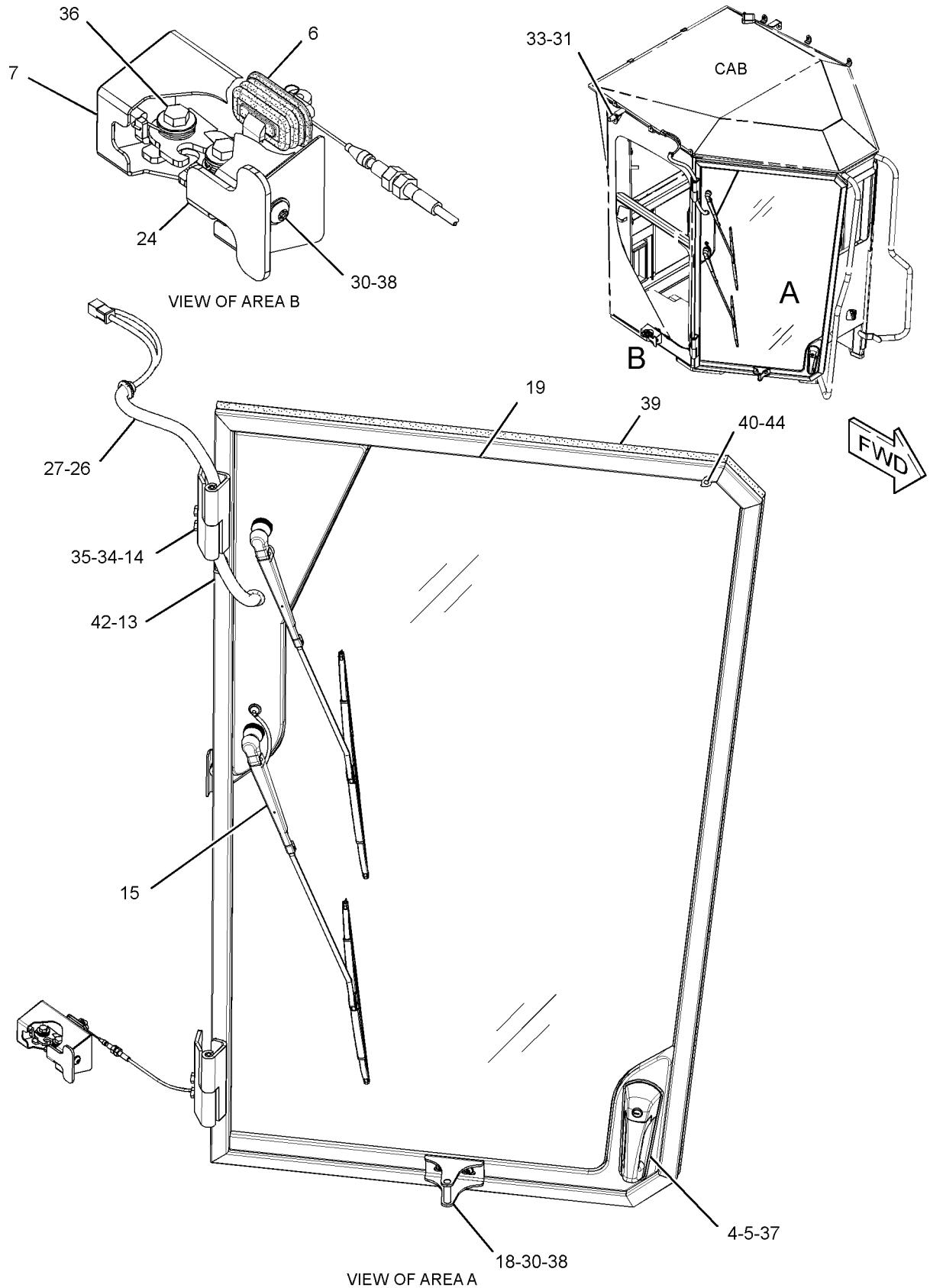

GRAPHIC #2

<END>

g01939057

OPERATOR STATION

244-2701 DUCT & FILTER GP-CAB AIR

S/N: R9J1-UP

PART OF 233-3149 AIR CONDITIONER GP

SMCS-7337, 7342, 734D **i02905893**

NOTE	REF NO	GRAPHIC REF	PART NUMBER	QTY	PART NAME 1 2 3 4 5 6 (PRODUCT LEVEL)	SEE PAGE
	1	1	**2R-2376**	2	WASHER (7X16X0.8-MM THK)	
	2	1	**149-1912**	1	FILTER ELEMENT-CAB AIR (CAB HEATER, AIR CONDITIONER)	
					—OR—	
		1	**220-8800**	1	FILTER ELEMENT-CAB AIR (ACTIVATED CHARCOAL)	
	3	1	**211-2660**	1	FILTER ELEMENT-AIR (CAB HEATER, AIR CONDITIONER)	
	4	1	**297-4139**	1	DUCT	
	5	1	**297-4140**	1	DUCT	
	6	1	**274-2384**	1	DUCT AS	
	7	1	**274-2385**	1	COVER	
	8	1	**274-2392**	2	THUMBSCREW	
	9	1	**5P-4115**	1	WASHER-HARD (7.2X19X2-MM THK)	
M	10	1	**6V-6317**	2	BOLT (M10X1.5X20-MM)	
M	11	1	**8T-0640**	1	BOLT (M6X1X30-MM)	
	12	1	**8T-4121**	2	WASHER-HARD (11X21X2.5-MM THK)	

M-METRIC PART

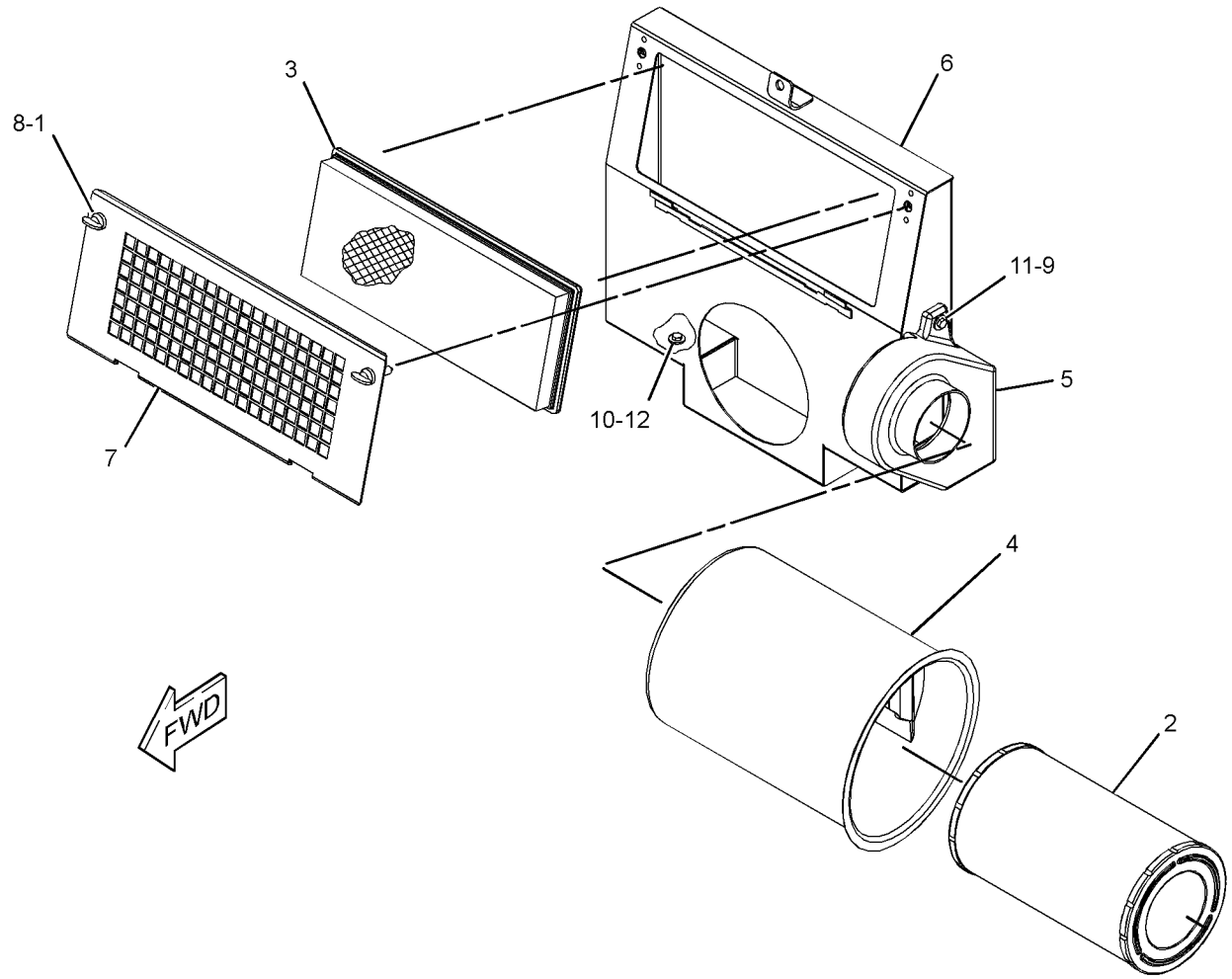

GRAPHIC #1 **<END>** g01332128

OPERATOR STATION

170-5334 FAN GP-CIRCULATING—DEFROST

S/N: R9J1-UP
24-VOLT
PART OF 233-3137 FAN GP-CIRCULATING
AN ATTACHMENT

SMCS-7316 **i03935812**

NOTE	REF NO	GRAPHIC REF	PART NUMBER	QTY	PART NAME 1 2 3 4 5 6 (PRODUCT LEVEL)	SEE PAGE
	1	1	**1B-2713**	1	BOLT (1/4-20X1.75-IN)	
	2	1	**3D-8747**	1	BRACKET	
	3	1	**3D-8748**	1	FAN AS (4-BLADE)	
	4	1	**3D-8749**	1	GUARD	
	5	1	**3T-6774**	1	GROMMET	
	6	1	**9X-9689**	1	BASE-FAN	
	7	1	**135-1979**	1	BRACKET	
Y	8	1	**170-5335**	1	MOTOR GP-ELECTRIC (24-VDC, CIRCULATING FAN)	252
	9	1	**031-4155**	1	LOCKNUT (5/16-18-THD)	
	10	1	**1M-1230**	2	NUT & LOCK AS (10-32-THD)	
	11	1	**2D-6235**	1	LOCKNUT (1/4-20-THD)	
	12	1	**3D-8752**	1	LOCKNUT (5/16-24-THD)	
	13	1	**4M-0061**	1	BOLT (5/16-18X0.75-IN)	
	14	1	**5P-0537**	4	WASHER-HARD (7.2X14.5X2-MM THK)	
	15	1	**6G-5987**	1	BRACKET	
	16	1	**7L-8316**	1	SETSCREW-SOCKET (10-32X2.54-IN)	
	17	1	**7T-0582**	1	BOLT	
	18	1	**9M-1974**	3	WASHER-HARD (8.8X16X2-MM THK)	
	19	1	**9T-5241**	2	WASHER (9.53X18X1-MM THK)	

Y-SEPARATE ILLUSTRATION

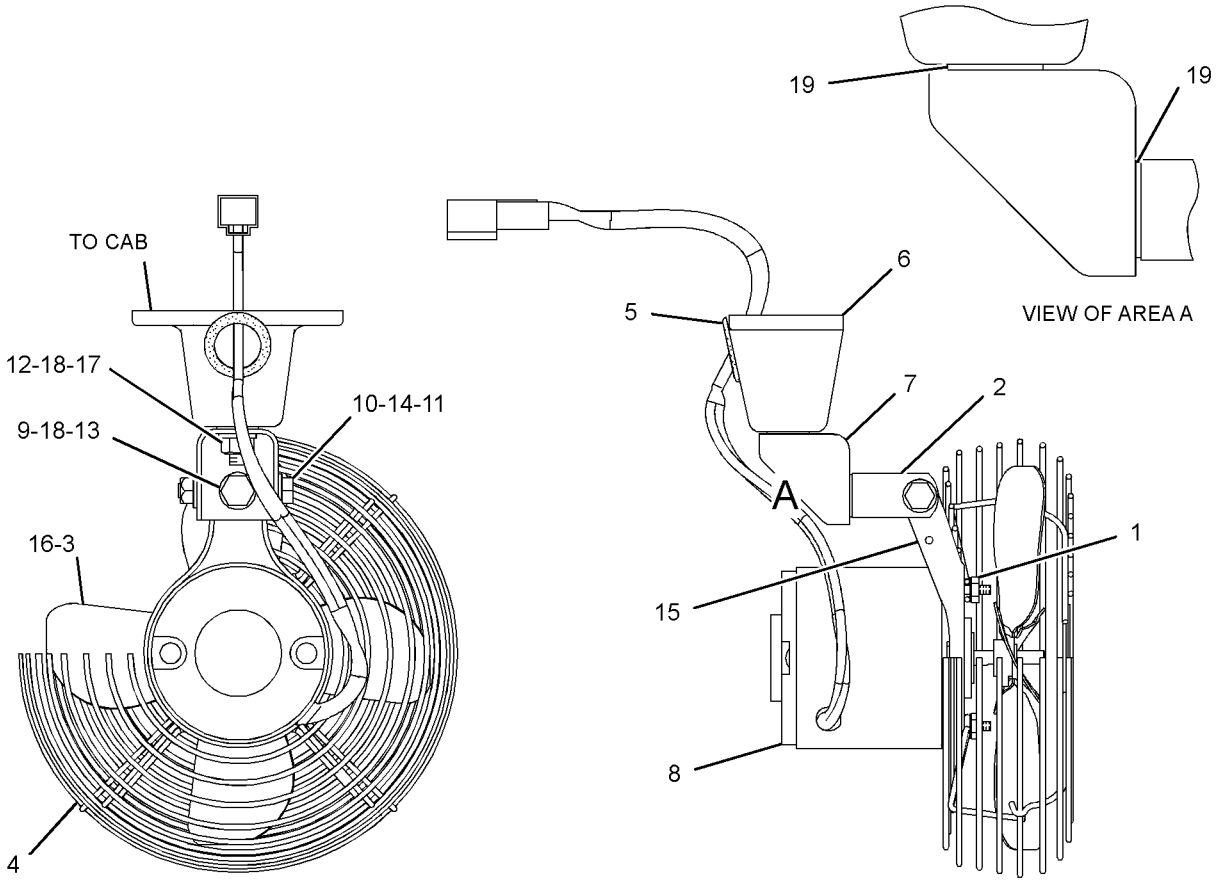

FRONT VIEW

LEFT SIDE VIEW

GRAPHIC #1 **<END>** g01240125

233-3137 FAN GP-CIRCULATING

S/N: R9J1-UP
WITH SWITCH
PART OF 349-3050 OPTION AR-CAB
AN ATTACHMENT

SMCS-7316 **i04033313**

NOTE	REF NO	GRAPHIC REF	PART NUMBER	QTY	PART NAME 1 2 3 4 5 6 (PRODUCT LEVEL)	SEE PAGE
	1	1	**7T-4003**	1	RESISTOR	
Y	2	1	**170-5334**	1	FAN GP-CIRCULATING (FRONT DEFROSTER)	817
	3	1	**236-4611**	1	SWITCH AS-ROCKER (FAN BLOWER SPEED)	
	4	1	**325-9400**	1	PLATE AS	
M	5	1	**7X-2536**	2	BOLT (M8X1.25X14-MM)	
	6	1	**8T-4224**	2	WASHER-HARD (8.8X16X2-MM THK)	
M	7	1	**9X-1046**	2	SCREW (M4X0.7X18-MM)	
M	8	1	**9X-2045**	4	SCREW-TRUSS HEAD (M6X1X20-MM)	

M-METRIC PART
Y-SEPARATE ILLUSTRATION

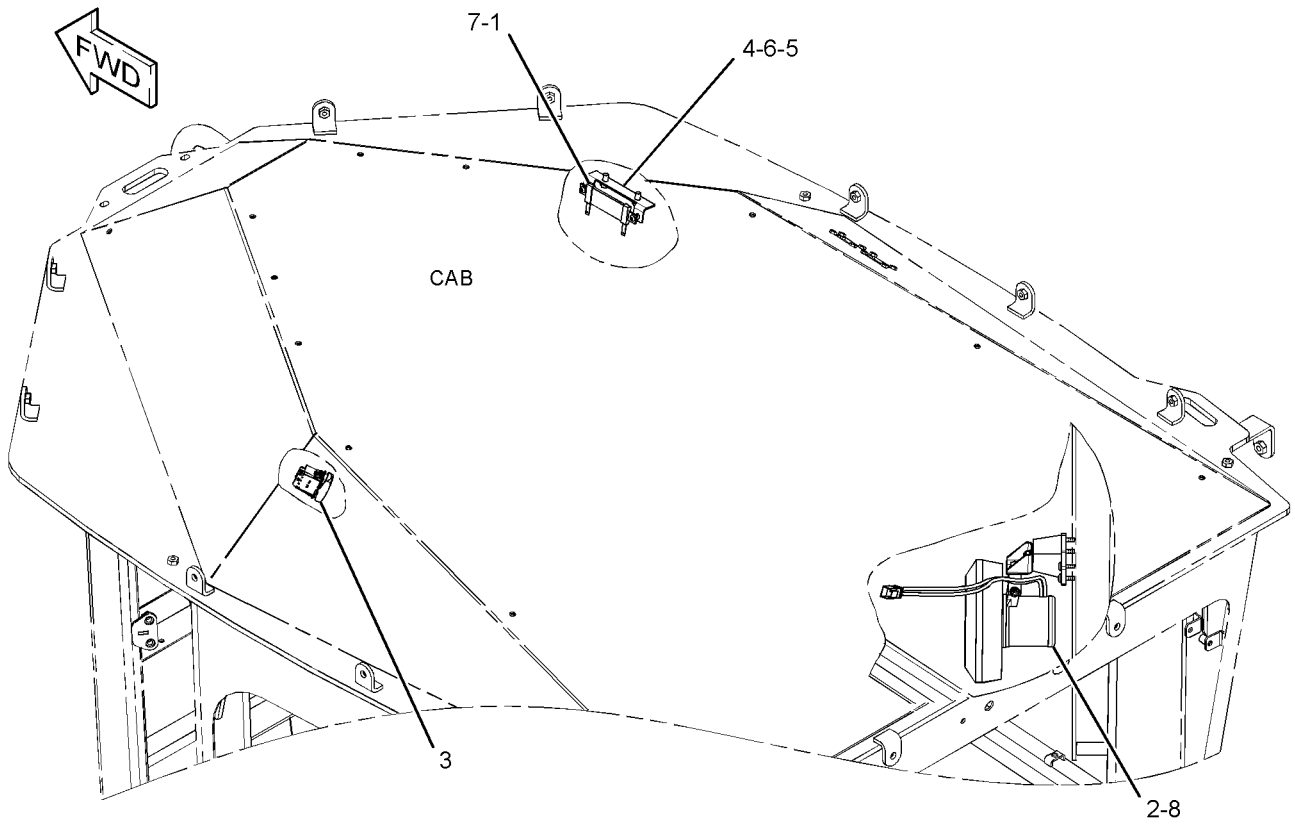

GRAPHIC #1 **<END>** g01862475

OPERATOR STATION

297-3245 HORN GP-AIR

S/N: R9J1-UP
CANNOT BE USED WITH 297-3244—PAGE 822
AN ATTACHMENT

SMCS-7402 **i02640355**

NOTE	REF NO	GRAPHIC REF	PART NUMBER	QTY	PART NAME 1 2 3 4 5 6 (PRODUCT LEVEL)	SEE PAGE
	1	1	**3S-2093**	5	STRAP-CABLE	
	2	1	**146-5804**	1	HORN AS	
		1	**186-3735**	2	PIN-CONNECTOR (16-GA TO 18-GA)	
		1	**102-8802**	1	KIT-RECEPTACLE (2-PIN)	
					(INCLUDES RECEPTACLE AS & WEDGE)	
	3	1	**297-3246**	1	BRACKET AS	
M		1	**8T-3597**	2	NUT-WELD (M12X1.75-THD)	
	4	1	**130-5301**	1	CLIP	
	5	1	**4P-7429**	1	CLIP	
	6	1	**4P-7581**	4	CLIP	
	7	1	**8T-4121**	2	WASHER-HARD (11X21X2.5-MM THK)	
M	8	1	**8T-4136**	2	BOLT (M10X1.5X25-MM)	
M	9	1	**8T-4139**	2	BOLT (M12X1.75X30-MM)	
	10	1	**8T-4223**	2	WASHER-HARD (13.5X25.5X3-MM THK)	

M-METRIC PART

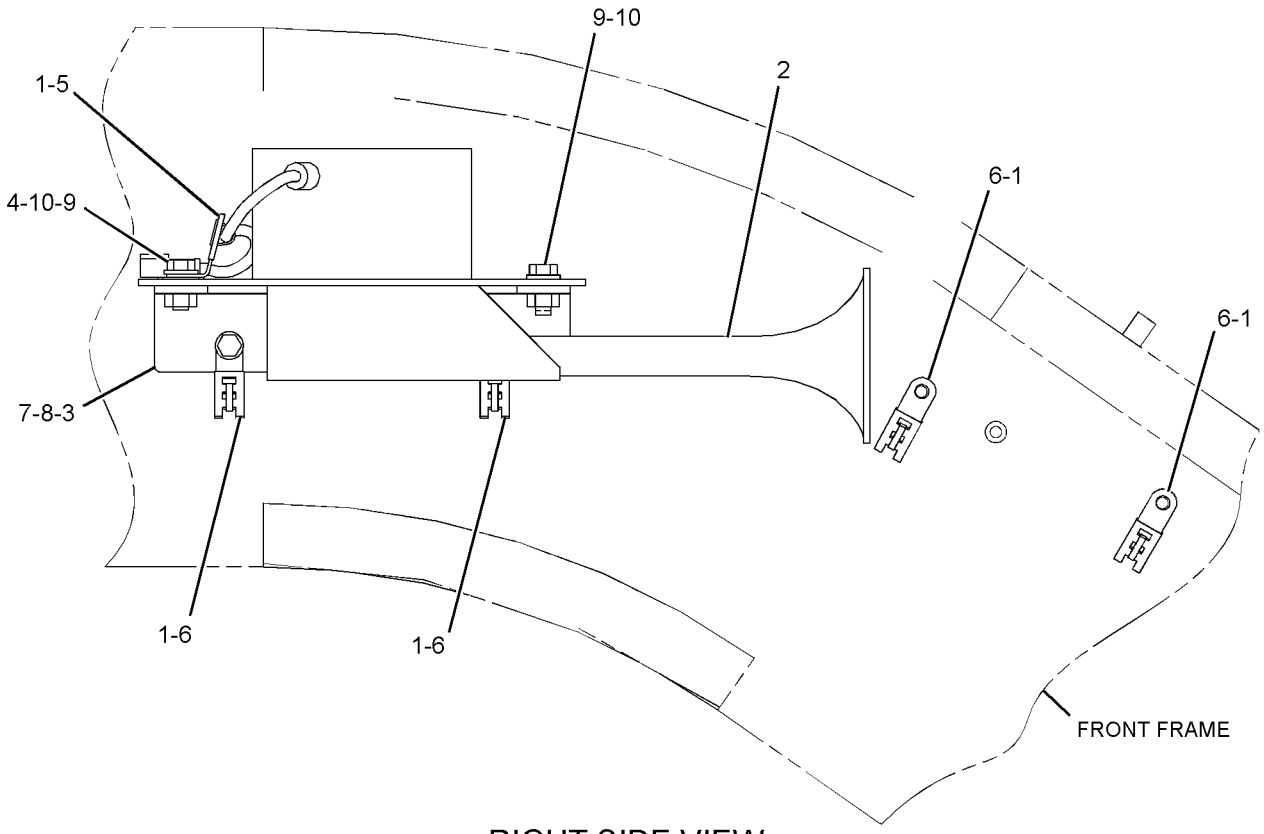

RIGHT SIDE VIEW

GRAPHIC #1 **<END>** g01326455

OPERATOR STATION

355-1048 HORN GP-AIR

S/N: R9J1-UP

AN ATTACHMENT

SMCS-7402 **i03995957**

NOTE	REF NO	GRAPHIC REF	PART NUMBER	QTY	PART NAME 1 2 3 4 5 6 (PRODUCT LEVEL)	SEE PAGE
	1	1	**3S-2093**	5	STRAP-CABLE	
	2	1	**146-5804**	1	HORN AS	
		1	**102-8802**	1	KIT-RECEPTACLE (2-PIN)	
					(INCLUDES RECEPTACLE AS & WEDGE)	
		1	**8T-8729**	2	PIN-CONNECTOR (16-GA TO 18-GA)	
	3	1	**297-3246**	1	BRACKET AS	
	4	1	**130-5301**	1	CLIP	
	5	1	**4P-7429**	1	CLIP	
	6	1	**4P-7581**	4	CLIP	
	7	1	**8T-4121**	2	WASHER-HARD (11X21X2.5-MM THK)	
M	8	1	**8T-4136**	2	BOLT (M10X1.5X25-MM)	
M	9	1	**8T-4139**	2	BOLT (M12X1.75X30-MM)	
	10	1	**8T-4223**	2	WASHER-HARD (13.5X25.5X3-MM THK)	

M-METRIC PART

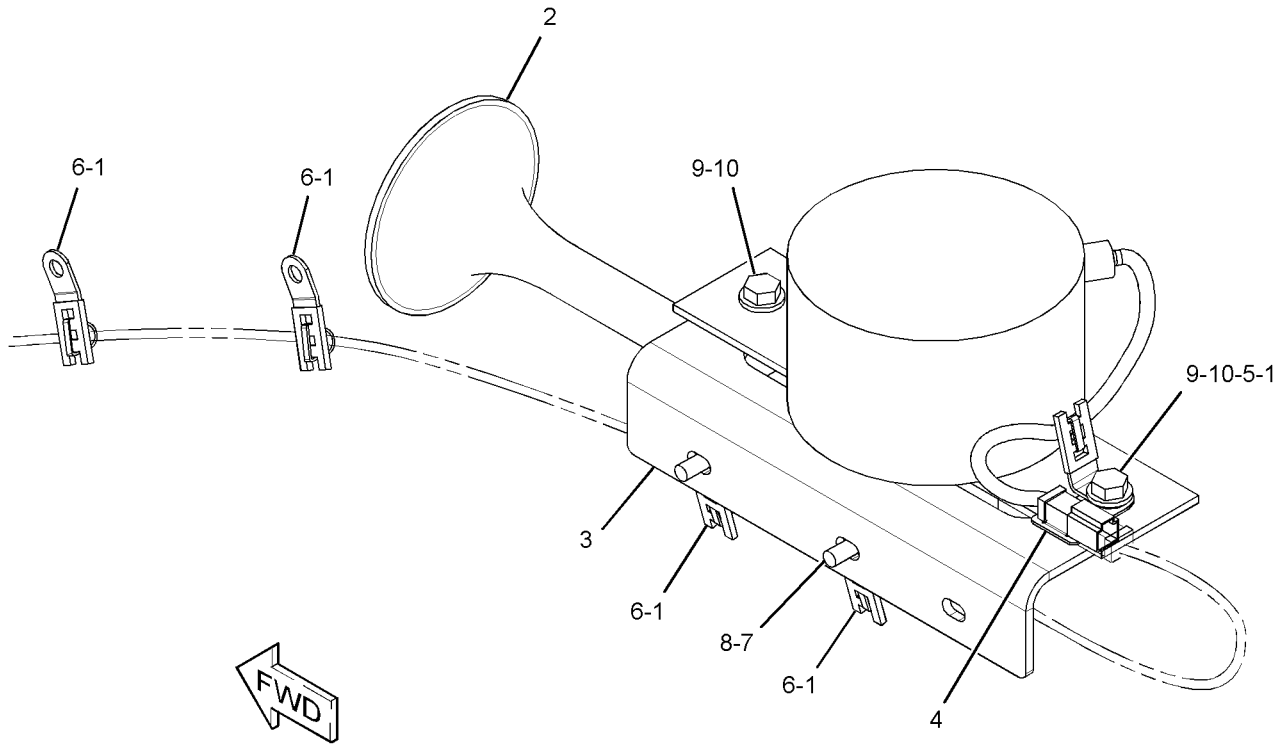

GRAPHIC #1 **<END>** g02194434

OPERATOR STATION

297-3244 HORN GP-ELECTRIC

S/N: R9J1-UP
PART OF 353-5005, 358-7877, 361-1731, 361-4363, 363-0414 DISTRIBUTION AR
CANNOT BE USED WITH 297-3245—PAGE 820
AN ATTACHMENT

SMCS-7402 **i02640357**

NOTE	REF NO	GRAPHIC REF	PART NUMBER	QTY	PART NAME 1 2 3 4 5 6 (PRODUCT LEVEL)	SEE PAGE
	1	1	**174-7875**	1	HORN AS (24-VOLT, HIGH TONE)	
	2	1	**8T-4121**	1	WASHER-HARD (11X21X2.5-MM THK)	
M	3	1	**8T-4136**	1	BOLT (M10X1.5X25-MM)	

M-METRIC PART

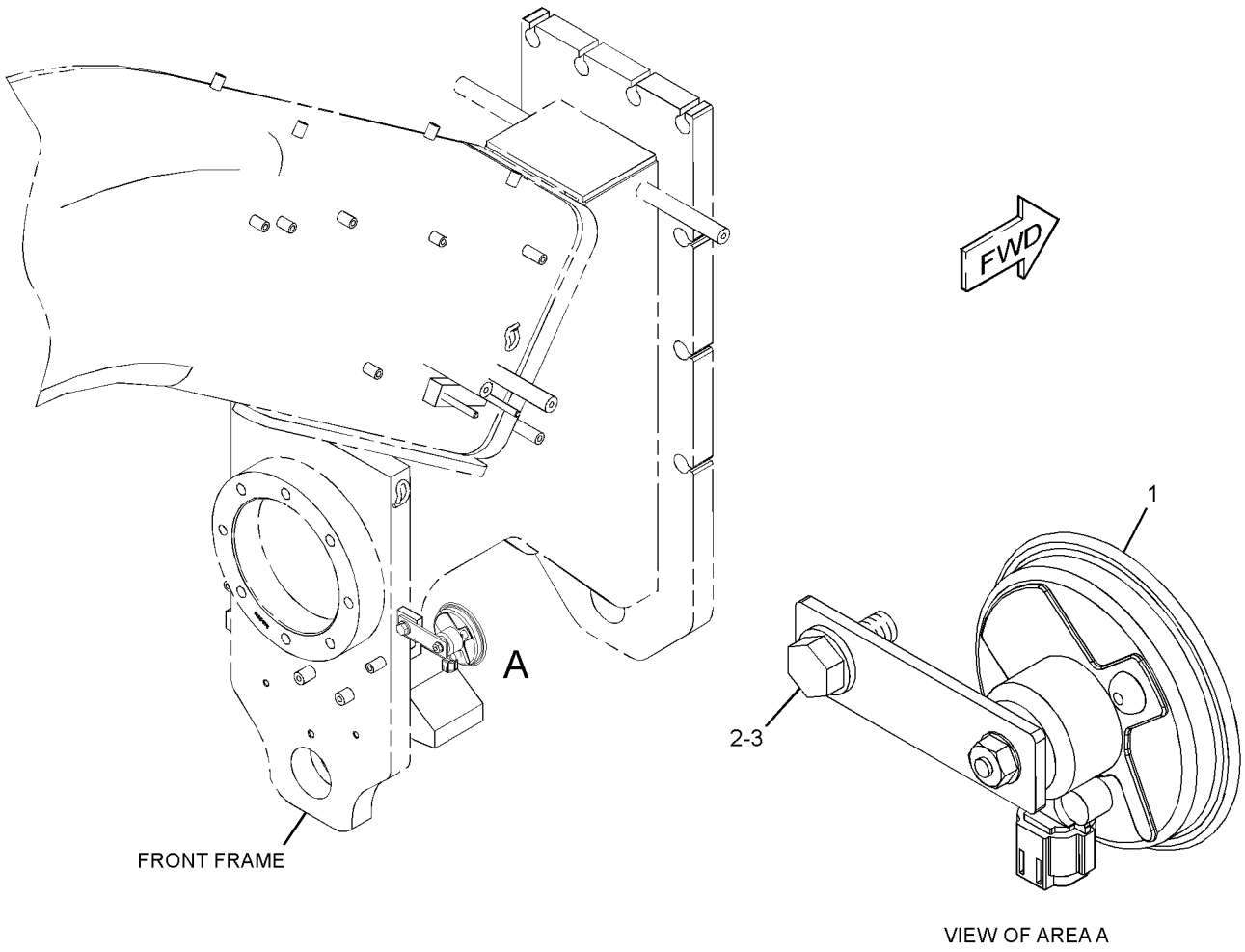

GRAPHIC #1 **<END>** g01326489

OPERATOR STATION

174-2231 HOUSING GP-SEAT SUSPENSION

S/N: R9J1-UP

PART OF 160-7165 SUSPENSION GP-SEAT

AN ATTACHMENT

SMCS-7321, 7324 **i03576323**

NOTE	REF NO	GRAPHIC REF	PART NUMBER	QTY	PART NAME 1 2 3 4 5 6 (PRODUCT LEVEL)	SEE PAGE
	1	1	**1Y-7927**	1	PIN	
	2	1	**2D-6235**	2	LOCKNUT (1/4-20-THD)	
	3	1	**2M-7819**	4	RING-RETAINING	
	4	1	**3D-2975**	2	RING-RETAINING	
	5	1	**4B-5059**	6	WASHER (15X29.5X2.5-MM THK)	
	6	1	**4N-2927**	2	RACE-THRUST BEARING	
	7	1	**5D-4822**	2	RING-RETAINING	
	8	1	**5P-8445**	4	RING-RETAINING	
	9	1	**5V-0770**	2	BOLT-CARRIAGE (1/4-20X0.74-IN)	
	10	1	**7M-7219**	1	BEARING-THRUST	
	11	1	**7V-5191**	2	SPACER (28X10X7.1-MM THK)	
	12	1	**8L-8413**	2	STRAP-CABLE	
	13	1	**8S-7803**	4	RING-RETAINING	
	14	1	**8Y-6041**	1	ARM AS	
	15	1	**8Y-6045**	1	CAM	
	16	1	**8Y-6046**	1	PIN	
	17	1	**8Y-6047**	2	PIN	
	18	1	**8Y-6060**	2	ROLLER	
	19	1	**8Y-6062**	1	LINK-ACTUATOR (RH)	
	20	1	**8Y-6063**	1	LINK-ACTUATOR (LH)	
	21	1	**8Y-6064**	2	ROLLER-SLIDER	
	22	1	**8Y-6066**	1	SPRING	
	23	1	**8Y-6067**	1	SPACER (10.54-MM THK)	
	24	1	**8Y-6068**	1	NUT (3/8X16-THD)	
	25	1	**8Y-6069**	1	ADJUSTER AS	
	26	1	**9X-8918**	3	SCREW-FLAT HEAD (8-32X0.5-IN)	
	27	1	**095-0878**	1	PIN-SPRING	
	28	1	**131-4242**	1	BOLT (3/8-16X5.18-IN)	
	29	1	**131-5167**	1	KNOB AS-ADJUSTMENT (WEIGHT)	
	30	1	**161-5967**	1	SHAFT	
	31	1	**174-2237**	1	FRAME AS-SUSPENSION	
					AVAILABLE REPAIR KIT(S):	
			8Y-5945	1	KIT-SUSPENSION KNOB (HEIGHT ADJUSTMENT)	
					(INCLUDES KNOBS)	
			8Y-6859	1	KIT-SPRING (SUSPENSION SEAT)	
					(INCLUDES SPRINGS, BUSHINGS & RINGS)	
			8Y-6860	1	KIT-SPRING (HEIGHT ADJUSTMENT) (SUSPENSION SEAT)	
					(INCLUDES SPRINGS, BUSHINGS, RODS & SPACERS)	
			100-3224	1	KIT-INDICATOR (WEIGHT ADJUSTMENT) (SUSPENSION SEAT)	
					(INCLUDES TAPE, GUIDE & STRAPS)	
			100-5179	1	KIT-BUMPER (WEIGHT ADJUSTMENT) (SUSPENSION SEAT)	
					(INCLUDES BUMPERS)	
			108-4086	1	KIT-FOLLOWER (SUSPENSION SEAT)	
					(INCLUDES FOLLOWER & PIN)	
			108-4087	1	KIT-FOLLOWER (SUSPENSION SEAT)	
					(INCLUDES FOLLOWER & PIN)	
			108-4103	1	KIT-BEARING (SUSPENSION SEAT)	
					(INCLUDES ROLLER ASSEMBLIES)	

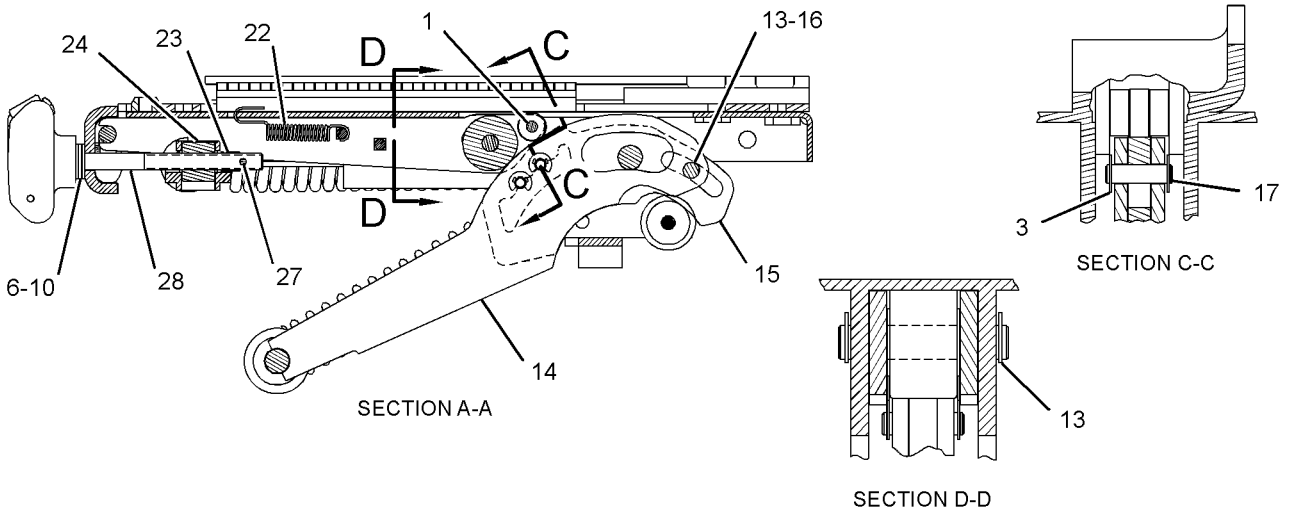

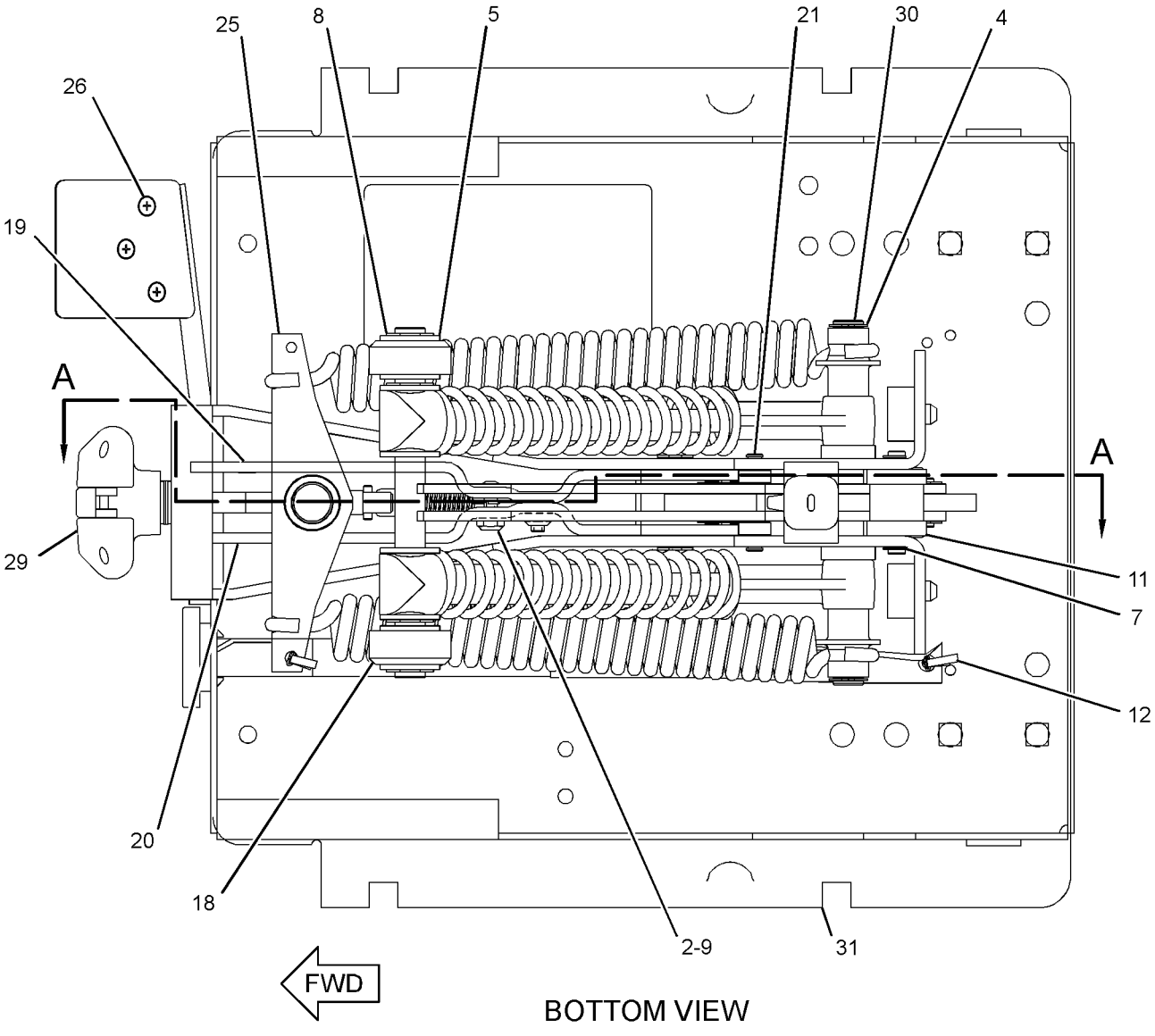

GRAPHIC #1 **<END>** g01923320

OPERATOR STATION

294-0987 LINER GP-CAB

S/N: R9J1-UP
PART OF 325-5227 CAB AR
AN ATTACHMENT

SMCS-7329 **i03823770**

NOTE	REF NO	GRAPHIC REF	PART NUMBER	QTY	PART NAME 1 2 3 4 5 6 (PRODUCT LEVEL)	SEE PAGE
Y	1	1	**3E-6389**	1	LAMP GP-DOME (24-VOLT) (WITH SWITCH)	234
	2	1	**5T-1625**	1	PLATE AS	
	3	1	**9F-8125**	3	LOCKWASHER (EXTERNAL TOOTH)	
	4	1	**101-0003**	2	FASTENER	
	5	1	**114-6658**	15	WASHER (6.5X17X1-MM THK)	
	6	1	**139-6039**	24	NUT (U-TYPE RETAINER)	
	7	1	**250-8335**	2	LAMP AS (24-VOLT)	
					(EACH INCLUDES)	
		1	**102-8802**	1	KIT-RECEPTACLE (2-PIN)	
					(INCLUDES RECEPTACLE AS & WEDGE)	
		1	**186-3735**	2	PIN-CONNECTOR (16-GA TO 18-GA)	
	8	1	**263-2573**	1	FILM-INSTRUCTION (WIPER)	
	9	1	**297-4151**	1	COVER	
	10	1	**272-8327**	1	PLATE	
	11	1	**274-2399**	1	COVER	
	12	1	**276-9622**	1	PLATE	
	13	1	**294-0986**	1	LINER AS-CAB	
		1	**174-5763**	18	CLIP	
	14	1	**294-0988**	1	COVER	
	15	1	**294-0992**	1	PLATE	
	16	1	**294-0993**	1	PLATE	
	17	1	**033-4814**	3	SCREW (10-32X1-IN)	
	18	1	**096-6166**	6	WASHER-HARD (4.5X9X1-MM THK)	
	19	1	**101-2867**	9	WASHER-HARD (7.2X25X2-MM THK)	
	20	1	**9K-5635**	10	SCREW-TAPPING (8-18X1-IN)	
M	21	1	**9X-2044**	4	SCREW-TRUSS HEAD (M6X1X16-MM)	
M	22	1	**9X-2045**	20	SCREW-TRUSS HEAD (M6X1X20-MM)	

M-METRIC PART
Y-SEPARATE ILLUSTRATION

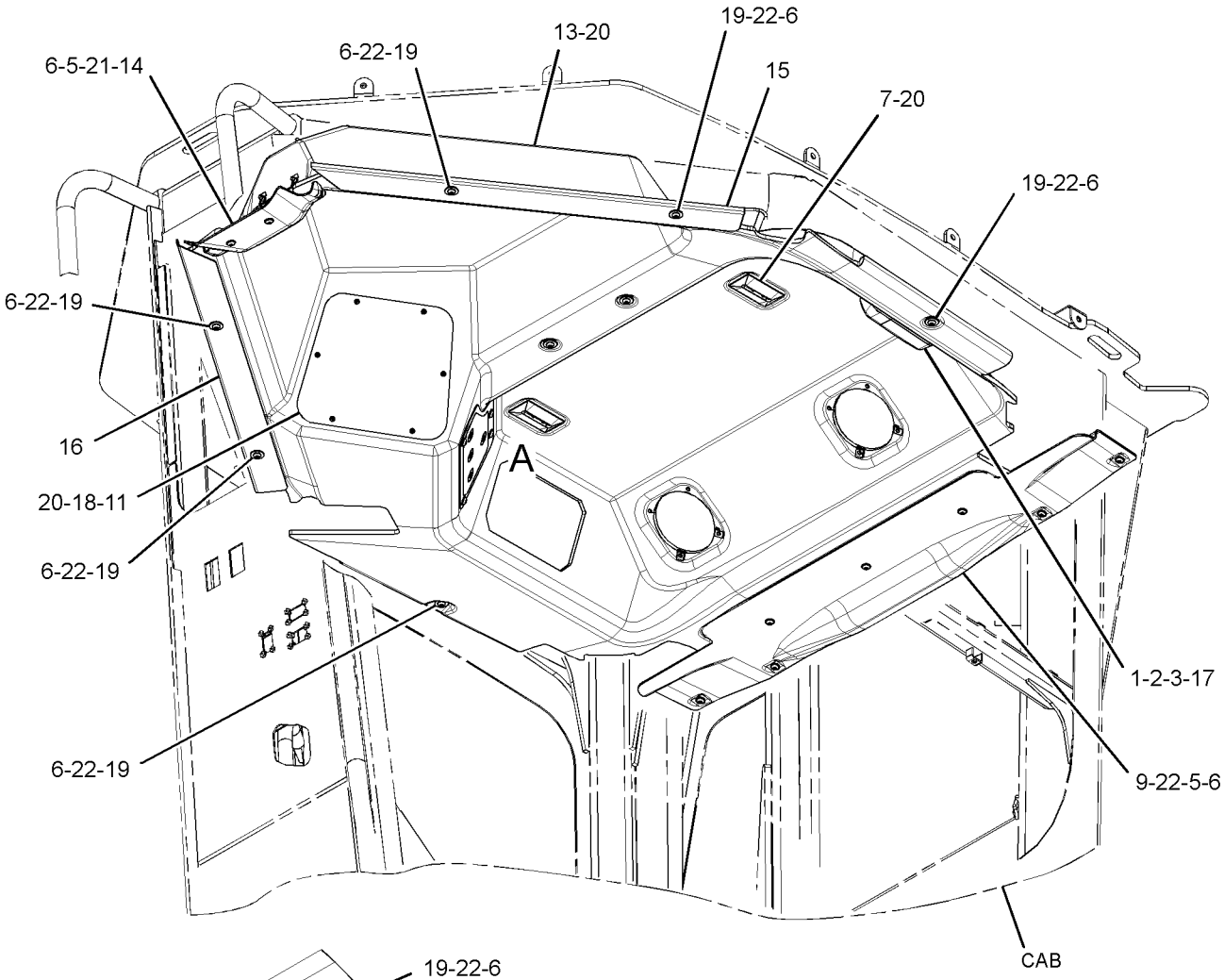

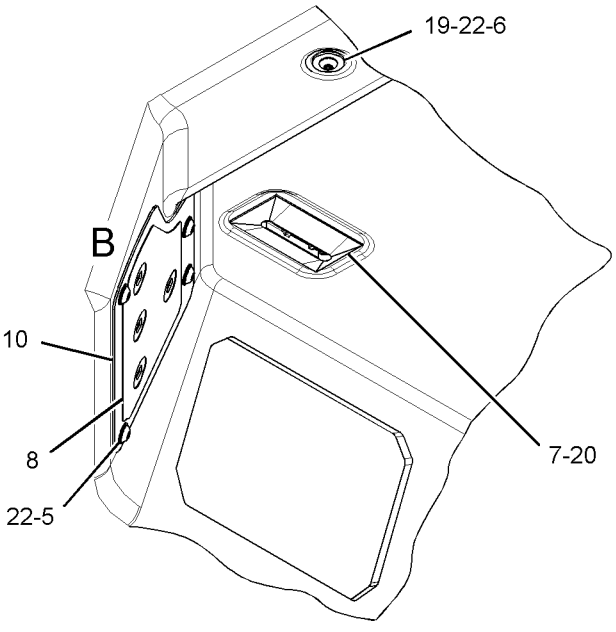

VIEW OF AREA A

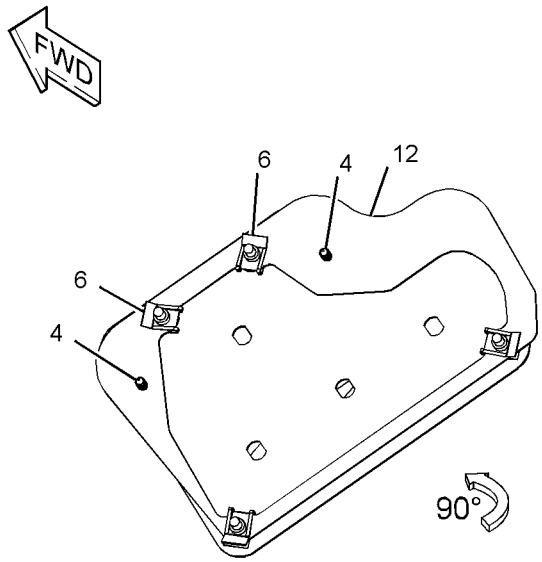

VIEW OF AREA B

GRAPHIC #1 **<END>** g01444135

OPERATOR STATION

294-0995 LINER GP-CAB

S/N: R9J1-UP
PART OF 233-3110 CAB AR
AN ATTACHMENT

SMCS-7329 **i03823771**

NOTE	REF NO	GRAPHIC REF	PART NUMBER	QTY	PART NAME 1 2 3 4 5 6 (PRODUCT LEVEL)	SEE PAGE
Y	1	1	**3E-6389**	1	LAMP GP-DOME (24-VOLT) (CAB, RH, LH)	234
	2	1	**5T-1625**	1	PLATE AS	
	3	1	**9F-8125**	3	LOCKWASHER (EXTERNAL TOOTH)	
	4	1	**101-0003**	2	FASTENER	
	5	1	**114-6658**	15	WASHER (6.5X17X1-MM THK)	
	6	1	**4E-8722**	24	NUT (RETAINER)	
	7	1	**250-8335**	2	LAMP AS (24-VOLT) (IMPLEMENT CONTROL)	
					(EACH INCLUDES)	
		1	**102-8802**	1	KIT-RECEPTACLE (2-PIN)	
					(INCLUDES RECEPTACLE AS & WEDGE)	
		1	**186-3735**	2	PIN-CONNECTOR (16-GA TO 18-GA)	
	8	1	**263-2573**	1	FILM-INSTRUCTION (WIPER)	
	9	1	**297-4151**	1	COVER	
	10	1	**272-8327**	1	PLATE	
	11	1	**274-2399**	1	COVER	
	12	1	**276-9622**	1	PLATE	
	13	1	**294-0986**	1	LINER AS-CAB	
		1	**174-5763**	18	CLIP	
	14	1	**294-0992**	1	PLATE	
	15	1	**294-0993**	1	PLATE	
	16	1	**297-4171**	1	COVER	
	17	1	**033-4814**	3	SCREW (10-32X1-IN)	
	18	1	**096-6166**	6	WASHER-HARD (4.5X9X1-MM THK)	
	19	1	**101-2867**	9	WASHER-HARD (7.2X25X2-MM THK)	
	20	1	**9K-5635**	10	SCREW-TAPPING (8-18X1-IN)	
M	21	1	**9X-2044**	4	SCREW-TRUSS HEAD (M6X1X16-MM)	
M	22	1	**9X-2045**	20	SCREW-TRUSS HEAD (M6X1X20-MM)	
	23	1	**131-5171**	1	CLIP	

M-METRIC PART
Y-SEPARATE ILLUSTRATION

294-0995 **LINER GP-CAB** *(contd.)* **i03823771**

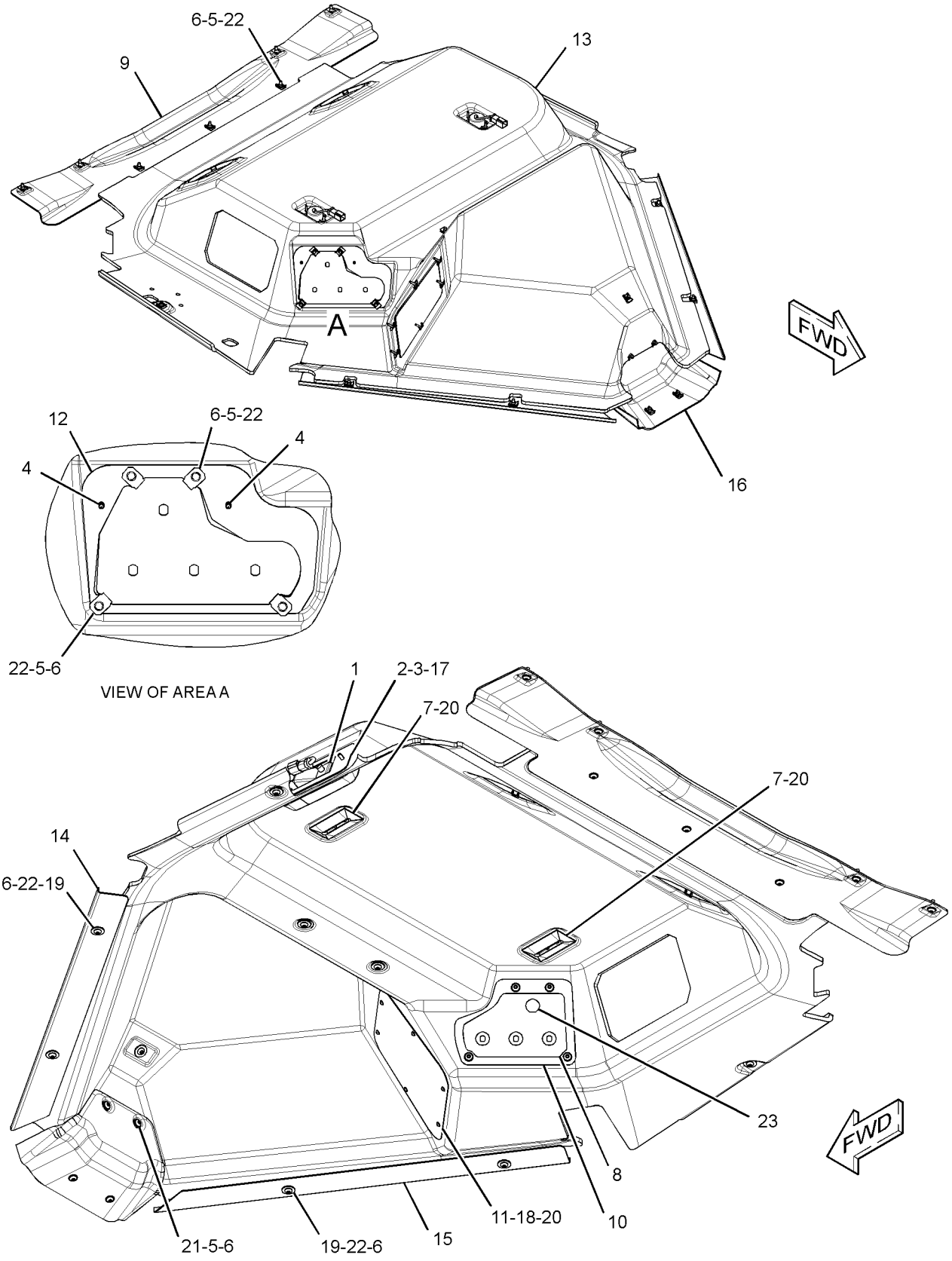

GRAPHIC #1 **<END>** g01886595

OPERATOR STATION

244-2702 LINES GP-AIR CONDITIONER

S/N: R9J1-UP

PART OF 233-3149 AIR CONDITIONER GP

SMCS-1808, 7320 **i03874128**

NOTE	REF NO	GRAPHIC REF	PART NUMBER	QTY	PART NAME 1 2 3 4 5 6 (PRODUCT LEVEL)	SEE PAGE
	1	1	**186-6189**	1	ACCUMULATOR-REFRIGERANT	
	2	1	**250-3528**	1	TUBE AS	
	3	1	**250-3529**	1	TUBE AS	
	4	1	**257-3226**	1	DRYER-REFRIGERANT (IN-LINE)	
		1	**189-1707**	1	ORIFICE AS-AIR CONDITIONER	
I	5	1	**260-5807**	1	HOSE AS	
I	6	1	**260-5808**	1	HOSE AS	
	7	1	**128-5924**	1	CLAMP	
	8	1	**5P-9297**	1	CLIP	
	9	1	**8R-3393**	1	STRAP	
	10	1	**8S-6109**	1	CLIP (SLOT)	
	11	1	**8S-6110**	1	CLIP (TAB)	
	12	1	**8T-4121**	5	WASHER-HARD (11X21X2.5-MM THK)	
M	14	1	**8T-4137**	5	BOLT (M10X1.5X20-MM)	
	16	1	**9M-8406**	1	CLIP	
	17	1	**9X-7381**	2	SEAL-O-RING	
	18	1	**9X-7382**	1	SEAL-O-RING	
	19	1	**9X-7383**	2	SEAL-O-RING	
	20	1	**1S-1015**	1	CLIP	
	21	1	**9X-7380**	1	SEAL-O-RING	

I-REFER TO HYDRAULIC INFORMATION SYSTEM
M-METRIC PART

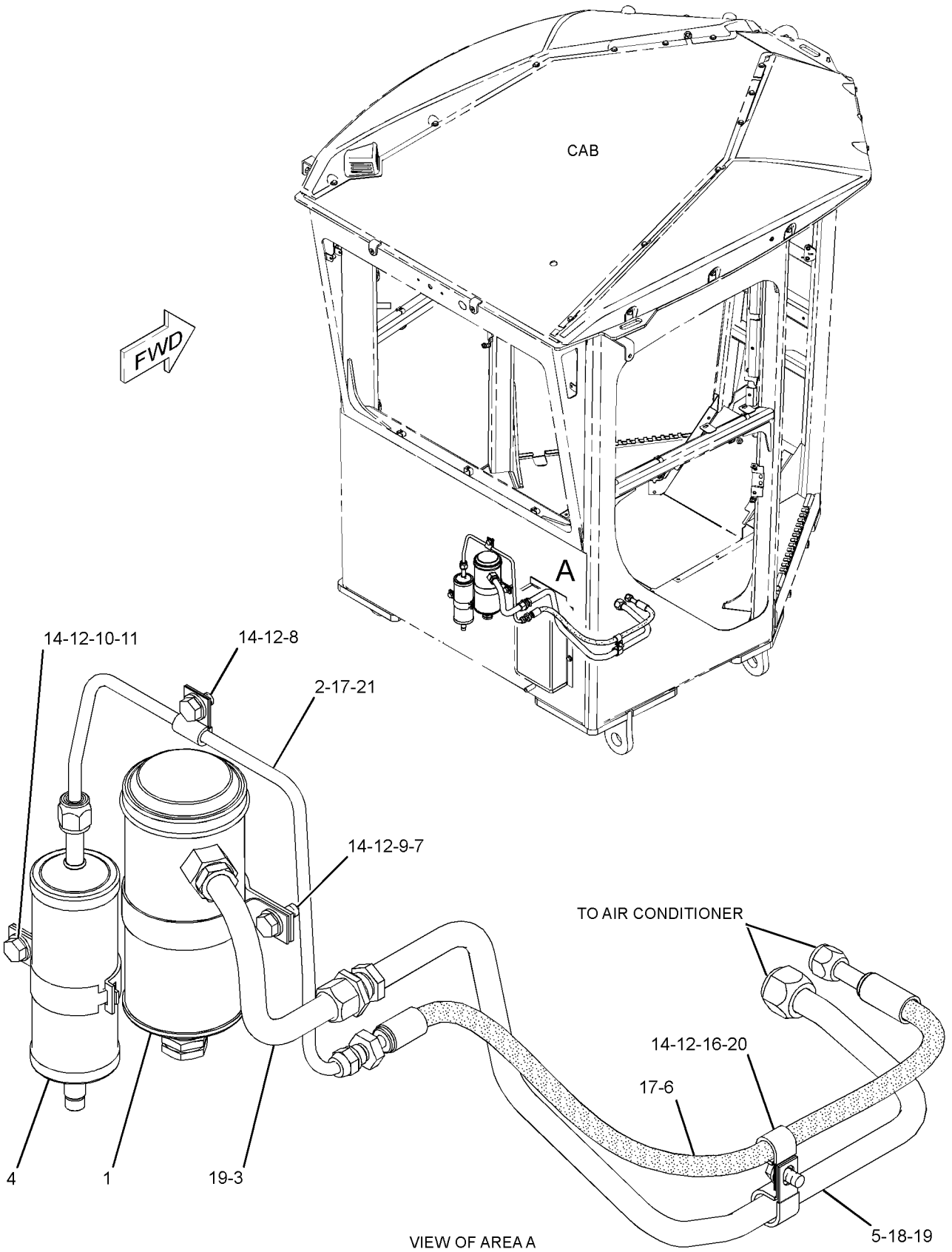

GRAPHIC #1

<END>

g02149093

OPERATOR STATION

282-8873 LINES GP-AIR CONDITIONER

S/N: R9J1-UP

PART OF 248-1254 AIR CONDITIONER AR

SMCS-1808, 7320 **i02769617**

NOTE	REF NO	GRAPHIC REF	PART NUMBER	QTY	PART NAME 1 2 3 4 5 6 (PRODUCT LEVEL)	SEE PAGE
	1	1	**1P-6356**	1	PLATE	
C	2	1	**114-5333**	1	SWITCH AS-PRESSURE (HIGH, LOW)	
E		1	**9X-1386**		SLEEVE (25-CM)	
		1	**186-3735**	2	PIN-CONNECTOR (16-GA TO 18-GA)	
		1	**102-8802**	1	KIT-RECEPTACLE (2-PIN)	
					(INCLUDES RECEPTACLE AS & WEDGE)	
C	3	1	**149-6371**	1	SWITCH AS-PRESSURE (REFRIGERANT COMPR, LOW SIDE)	
		1	**102-8802**	1	KIT-RECEPTACLE (2-PIN)	
					(INCLUDES RECEPTACLE AS & WEDGE)	
		1	**186-3735**	2	PIN-CONNECTOR (16-GA TO 18-GA)	
	4	1	**259-5420**	1	BRACKET AS	
M		1	**8T-3490**	1	NUT-WELD (M10X1.5-THD)	
M	5	1	**259-7140**	1	STUD-TAPERLOCK (M10X1.5X80-MM)	
	6	1	**270-0546**	1	FITTING AS-AIR CONDITIONER	
		1	**3E-4051**	1	CAP-SEAL (REFRIGERANT, LOW SIDE)	
		1	**3E-4057**	1	VALVE AS	
	7	1	**270-0548**	1	TUBE AS	
I	8	1	**286-9064**	1	HOSE AS	
I	9	1	**288-2789**	1	HOSE AS	
I	10	1	**288-2790**	1	HOSE AS	
M	11	1	**085-8091**	1	BOLT (M10X1.5X55-MM)	
M	12	1	**096-4883**	1	LOCKNUT (M10X1.5-THD)	
	13	1	**174-5907**	3	CLIP	
	14	1	**302-3908**	1	SPACER (11X20X30-MM THK) (11X20X30-MM THK)	
	15	1	**4D-7735**	2	CLIP	
	16	1	**4K-8302**	1	CLIP	
	17	1	**5K-8451**	1	CLIP	
	18	1	**5P-1075**	1	WASHER-HARD (10.2X22.5X3-MM THK)	
	19	1	**8T-4121**	4	WASHER-HARD (11X21X2.5-MM THK)	
M	20	1	**8T-4137**	2	BOLT (M10X1.5X20-MM)	
M	21	1	**8T-4195**	1	BOLT (M10X1.5X30-MM)	
	22	1	**9X-7378**	2	SEAL-O-RING	
	23	1	**9X-7380**	2	SEAL-O-RING	
	24	1	**9X-7381**	2	SEAL-O-RING	
	25	1	**9X-7382**	1	SEAL-O-RING	
	26	1	**9X-7383**	1	SEAL-O-RING	
	27	1	**9X-7385**	2	SEAL-O-RING	
	28	1	**9X-8250**	1	CLIP	

C-CHANGE FROM PREVIOUS TYPE
E-ORDER BY THE CENTIMETER
I-REFER TO HYDRAULIC INFORMATION SYSTEM
M-METRIC PART

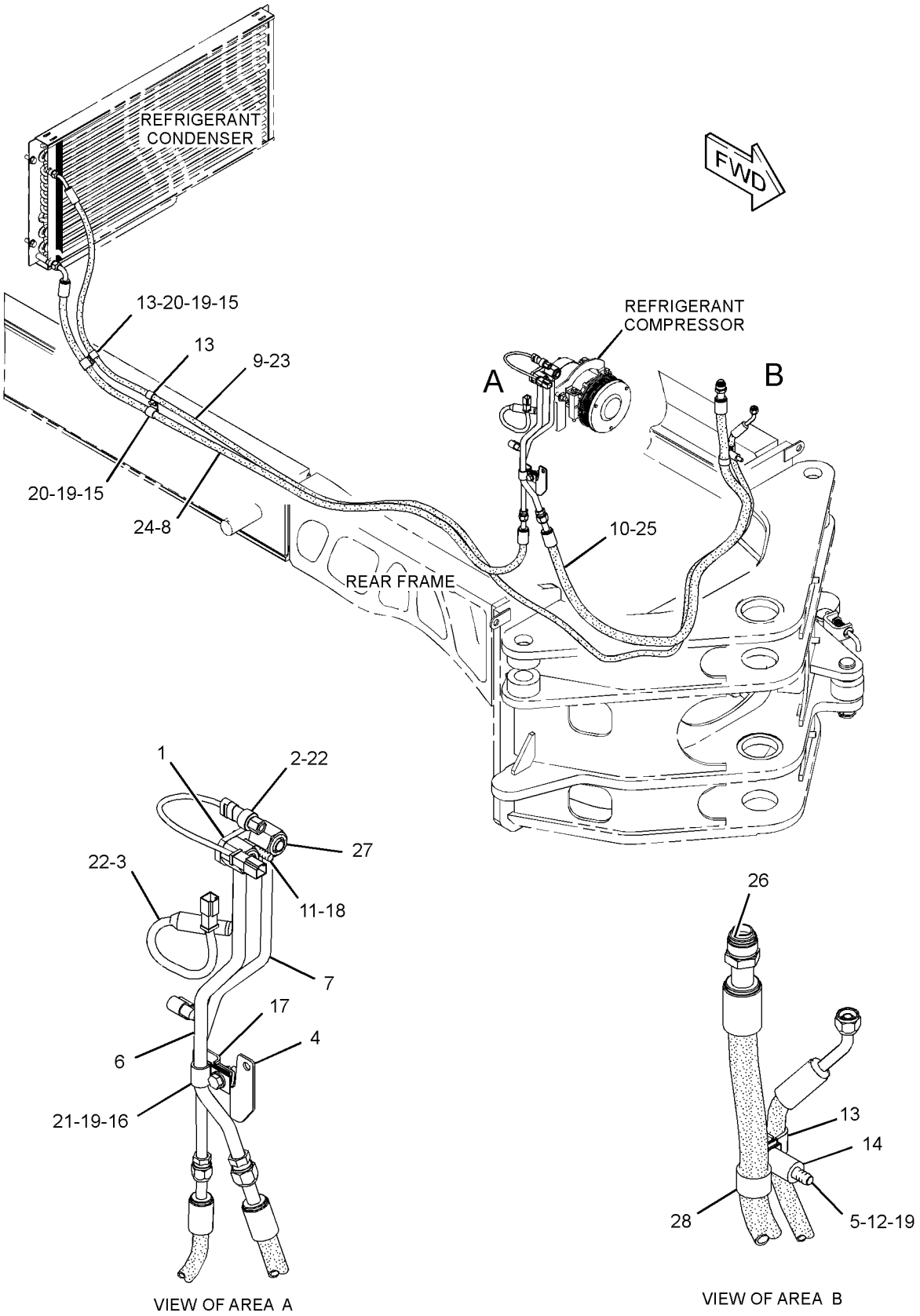

GRAPHIC #1 **<END>** g01421147

OPERATOR STATION

250-2933 LINES GP-HEATER–CAB

S/N: R9J1-UP

PART OF 233-3149 AIR CONDITIONER GP

SMCS-1812, 7304 **i02558799**

NOTE	REF NO	GRAPHIC REF	PART NUMBER	QTY	PART NAME 1 2 3 4 5 6 (PRODUCT LEVEL)	SEE PAGE
	1	1	**9X-2488**	4	CLAMP-HOSE	
	2	1	**260-5806**	1	PLATE AS	
	3	1	**278-3354**	1	FILM-INSTRUCTION (HVAC WATER, DRAINING, FILLING)	
	4	1	**5P-4116**	2	WASHER-HARD (8.8X20.5X2-MM THK)	
	5	1	**6D-1641**	1	CLIP	
	6	1	**8T-4121**	1	WASHER-HARD (11X21X2.5-MM THK)	
M	7	1	**8T-4137**	1	BOLT (M10X1.5X20-MM)	
M	8	1	**8T-4908**	2	BOLT (M8X1.25X25-MM)	
E	9	1	**136-1953**		HOSE (85-CM)	
E	9A	1	**136-1953**		HOSE (87-CM)	
D	10	1	**5P-5637**		SEAL (0.7-M)	

D-ORDER BY THE METER
E-ORDER BY THE CENTIMETER
M-METRIC PART

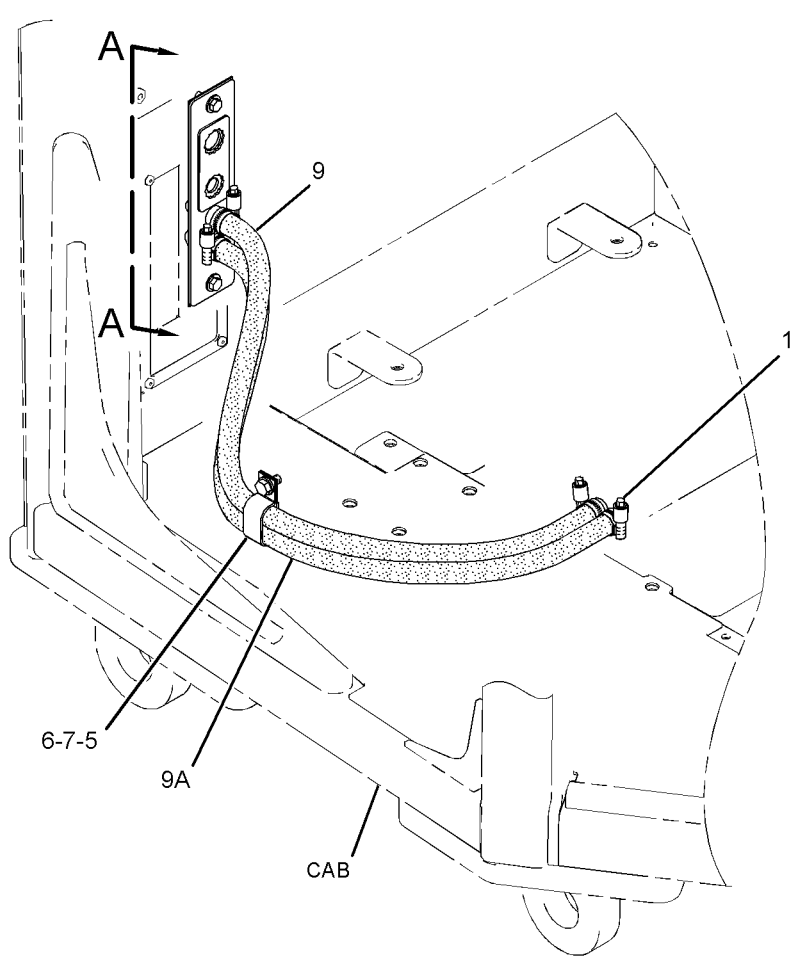

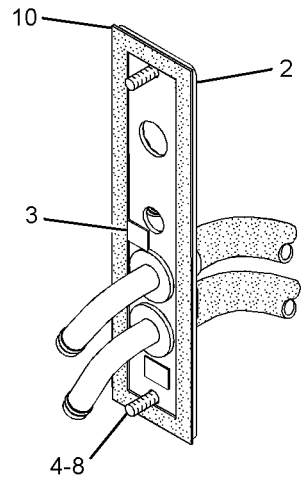

VIEW A-A



GRAPHIC #1 **<END>** g01280970

OPERATOR STATION

285-5290 LINES GP-HEATER

S/N: R9J1-UP

PART OF 248-1254 AIR CONDITIONER AR

SMCS-1812, 7304 **i04014051**

NOTE	REF NO	GRAPHIC REF	PART NUMBER	QTY	PART NAME 1 2 3 4 5 6 (PRODUCT LEVEL)	SEE PAGE
	1	1	**090-0744**	1	ELBOW	
C	2	1	**355-9288**	1	TUBE AS	
	3	1	**108-7251**	1	COUPLING AS	
C	4	1	**124-6257**	4	CLAMP-HOSE	
	5	1	*153-6231*	1	UNION AS	
		1	**6V-9809**	1	ELBOW	
		1	**7J-9108**	2	SEAL-O-RING	
	6	1	**3D-2824**	1	SEAL-O-RING	
	7	1	**3K-0360**	1	SEAL-O-RING	
	8	1	**6D-1641**	1	CLIP	
CE	9	1	**5P-0767**		HOSE (168-CM)	
CE	9A	1	**5P-0767**		HOSE (185-CM)	

C-CHANGE FROM PREVIOUS TYPE
E-ORDER BY THE CENTIMETER

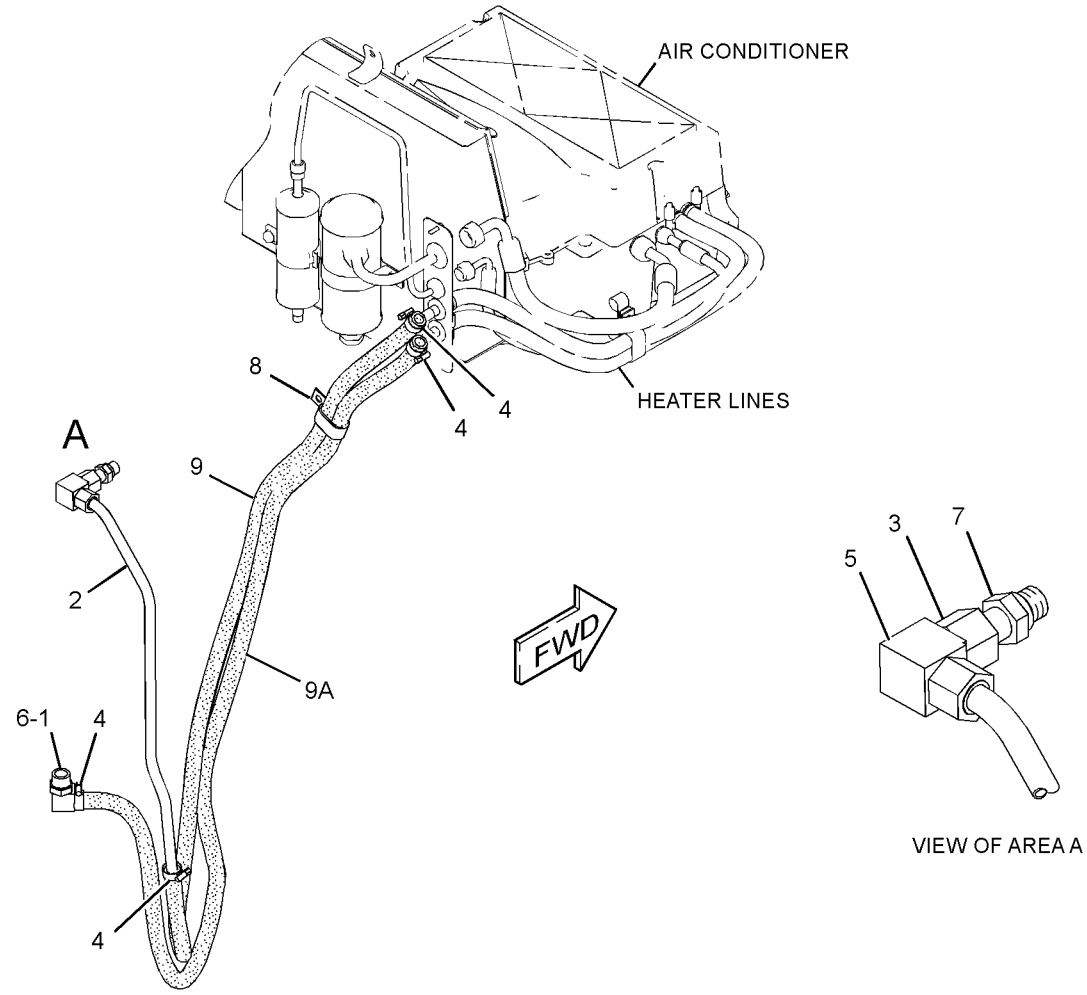

GRAPHIC #1 **<END>** g02218493

339-6165 MIRROR GP–INTERIOR, FRONT

S/N: R9J1-UP
PART OF 350-5390, 364-3739 OPTION AR-REGIONAL
AN ATTACHMENT

SMCS-7319 **i03581422**

NOTE	REF NO	GRAPHIC REF	PART NUMBER	QTY	PART NAME 1 2 3 4 5 6 (PRODUCT LEVEL)	SEE PAGE
	1	1	**275-5588**	1	MIRROR AS	
		1	**3K-6060**	1	LOCKNUT (3/8-16-THD)	
	2	1	**339-6166**	1	BRACKET	
M	3	1	**127-2170**	2	SCREW-TRUSS HEAD (M8X1.25X20-MM)	
	4	1	**5P-4116**	2	WASHER-HARD (8.8X20.5X2-MM THK)	

M-METRIC PART

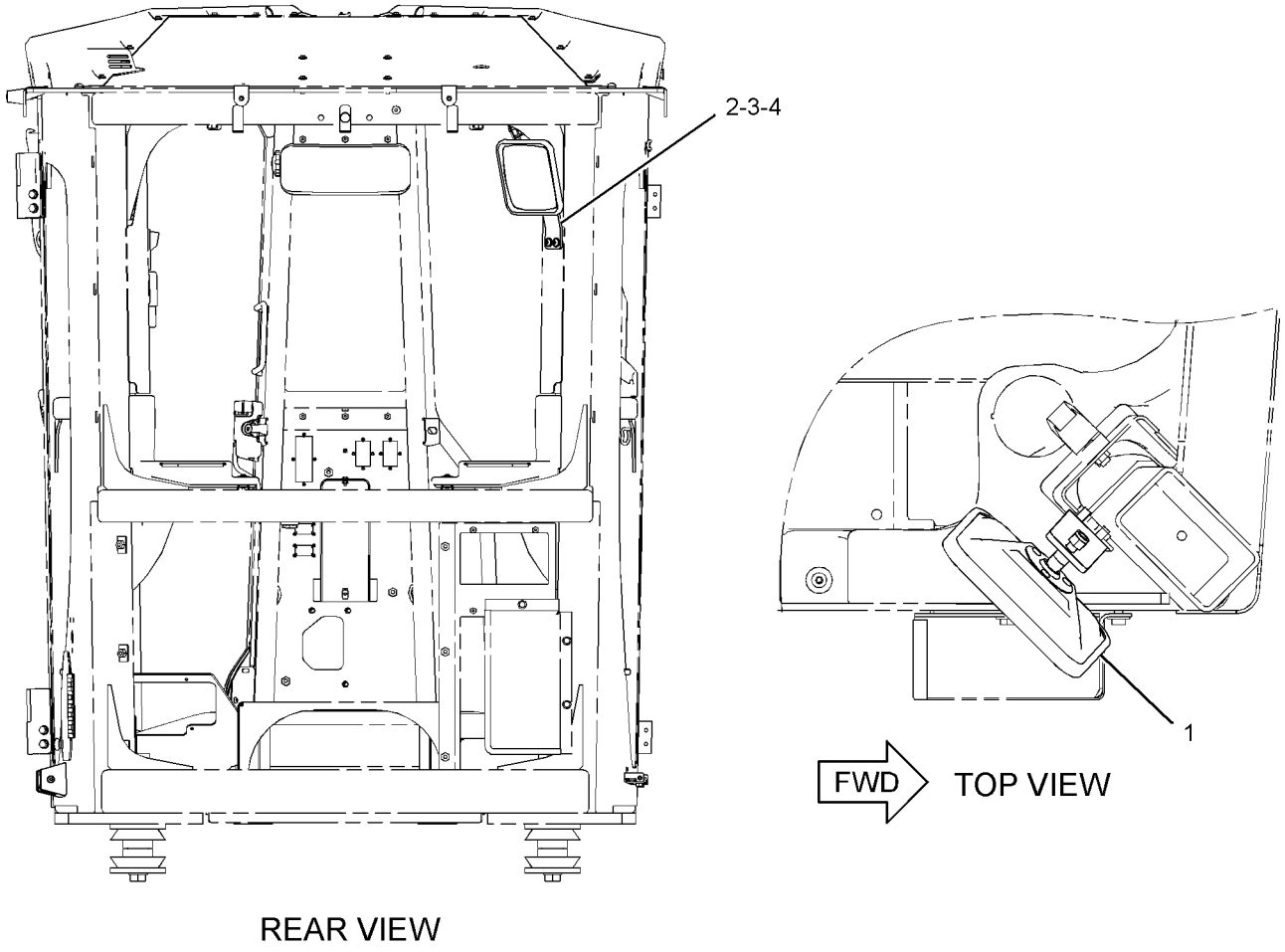

GRAPHIC #1 **<END>** g01933895

OPERATOR STATION

339-8788 MIRROR GP–EXTERIOR

S/N: R9J1-UP
PART OF 350-5390, 364-3739 OPTION AR-REGIONAL
AN ATTACHMENT

SMCS-7319 **i03581412**

NOTE	REF NO	GRAPHIC REF	PART NUMBER	QTY	PART NAME 1 2 3 4 5 6 (PRODUCT LEVEL)	SEE PAGE
	1	1	**339-6167**	4	BLOCK	
	2	1	**339-6168**	4	BLOCK	
	3	1	**339-6169**	2	CLIP	
	4	1	**339-6543**	2	MIRROR AS	
	5	1	**340-7076**	2	MIRROR AS	
	6	1	**341-3142**	2	TUBE	
	7	1	**2K-4973**	2	LOCKNUT (3/8-16-THD)	
	8	1	**8T-4121**	8	WASHER-HARD (11X21X2.5-MM THK)	
M	9	1	**8T-4185**	8	BOLT (M10X1.5X50-MM)	
	10	1	**9X-2027**	2	WASHER (11X18X2-MM THK)	

M-METRIC PART

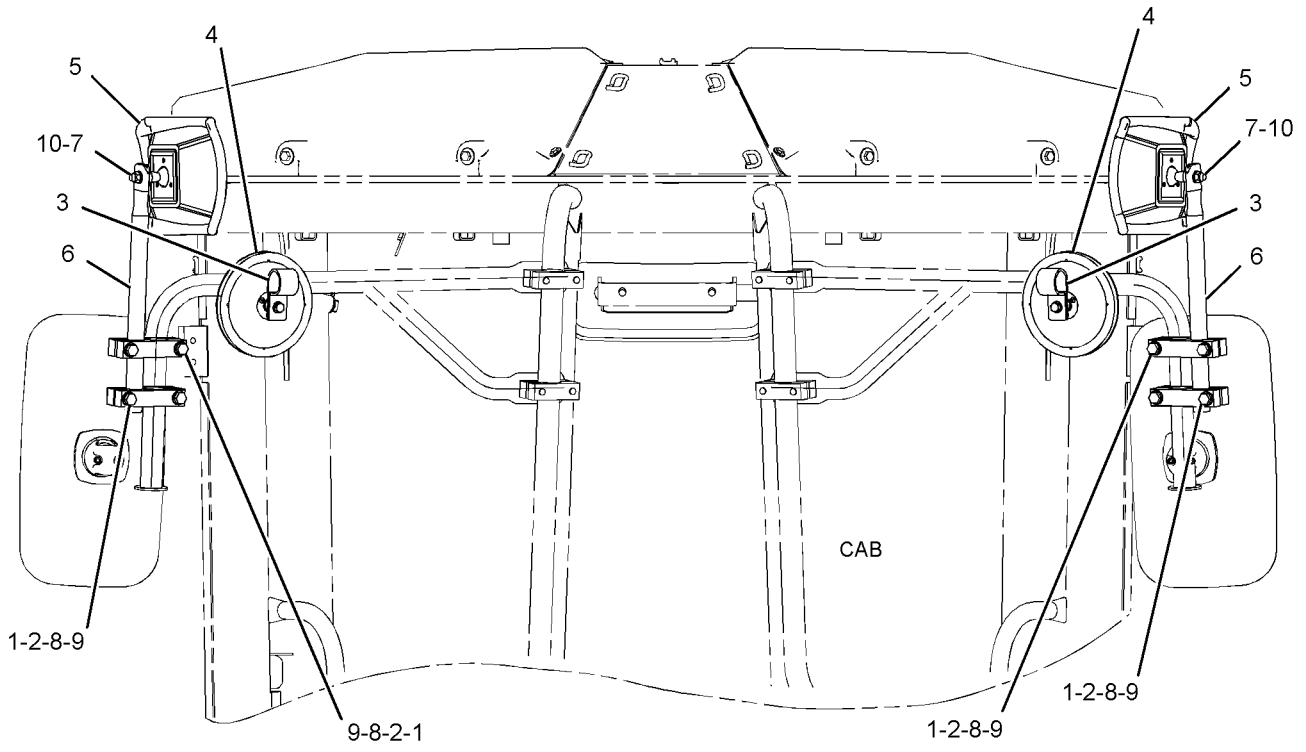

FRONT VIEW

GRAPHIC #1 **<END>** g01925433

105-9659 MIRROR GP-REAR VIEW–INTERIOR

S/N: R9J1-UP
PART OF 233-3208 MIRROR GP-REAR VIEW
AN ATTACHMENT

SMCS-7319 **i01901909**

NOTE	REF NO	GRAPHIC REF	PART NUMBER	QTY	PART NAME 1 2 3 4 5 6 (PRODUCT LEVEL)	SEE PAGE
	1	1	**9P-9388**	1	KNOB (MIRROR ADJUSTMENT)	
	2	1	**5P-6874**	1	MIRROR (REAR VIEW)	
	3	1	**5K-9179**	1	BOLT-ROUND HEAD (3/8-16X11-IN)	
	4	1	**6Y-5113**	1	BRACKET	
	5	1	**8T-4121**	2	WASHER-HARD (11X21X2.5-MM THK)	
M	6	1	**8T-4195**	2	BOLT (M10X1.5X30-MM)	

M-METRIC PART

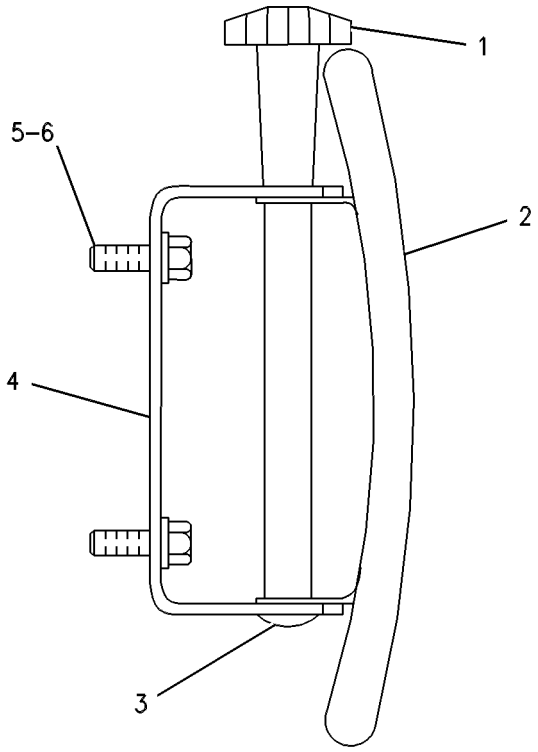

GRAPHIC #1 **<END>** g00254288

OPERATOR STATION

233-3208 MIRROR GP-REAR VIEW—INTERIOR

S/N: R9J1-UP

PART OF 233-3110, 325-5227 CAB AR

AN ATTACHMENT

SMCS-7319 **i03786952**

NOTE	PART NUMBER	QTY	PART NAME 1 2 3 4 5 6 (PRODUCT LEVEL)	SEE PAGE
Y	*105-9659*	1	MIRROR GP-REAR VIEW (INTERIOR)	837

Y-SEPARATE ILLUSTRATION

<END>

233-3295 MIRROR GP-REAR VIEW—EXTERIOR

S/N: R9J1-UP
PART OF 353-5005, 358-7877, 361-1731, 361-4363, 363-0414 DISTRIBUTION AR,
350-5390 OPTION AR-REGIONAL
CANNOT BE USED WITH 233-3296—PAGE 840
AN ATTACHMENT

SMCS-7319 **i03301620**

NOTE	REF NO	GRAPHIC REF	PART NUMBER	QTY	PART NAME 1 2 3 4 5 6 (PRODUCT LEVEL)	SEE PAGE
	1	1	**123-4586**	4	BLOCK	
	2	1	**291-9154**	4	BLOCK	
	3	1	**259-4758**	2	MIRROR AS	
	4	1	**265-8941**	2	TUBE AS	
	5	1	**8T-4121**	8	WASHER-HARD (11X21X2.5-MM THK)	
M	6	1	**189-5358**	8	BOLT (M10X1.5X60-MM)	

M-METRIC PART

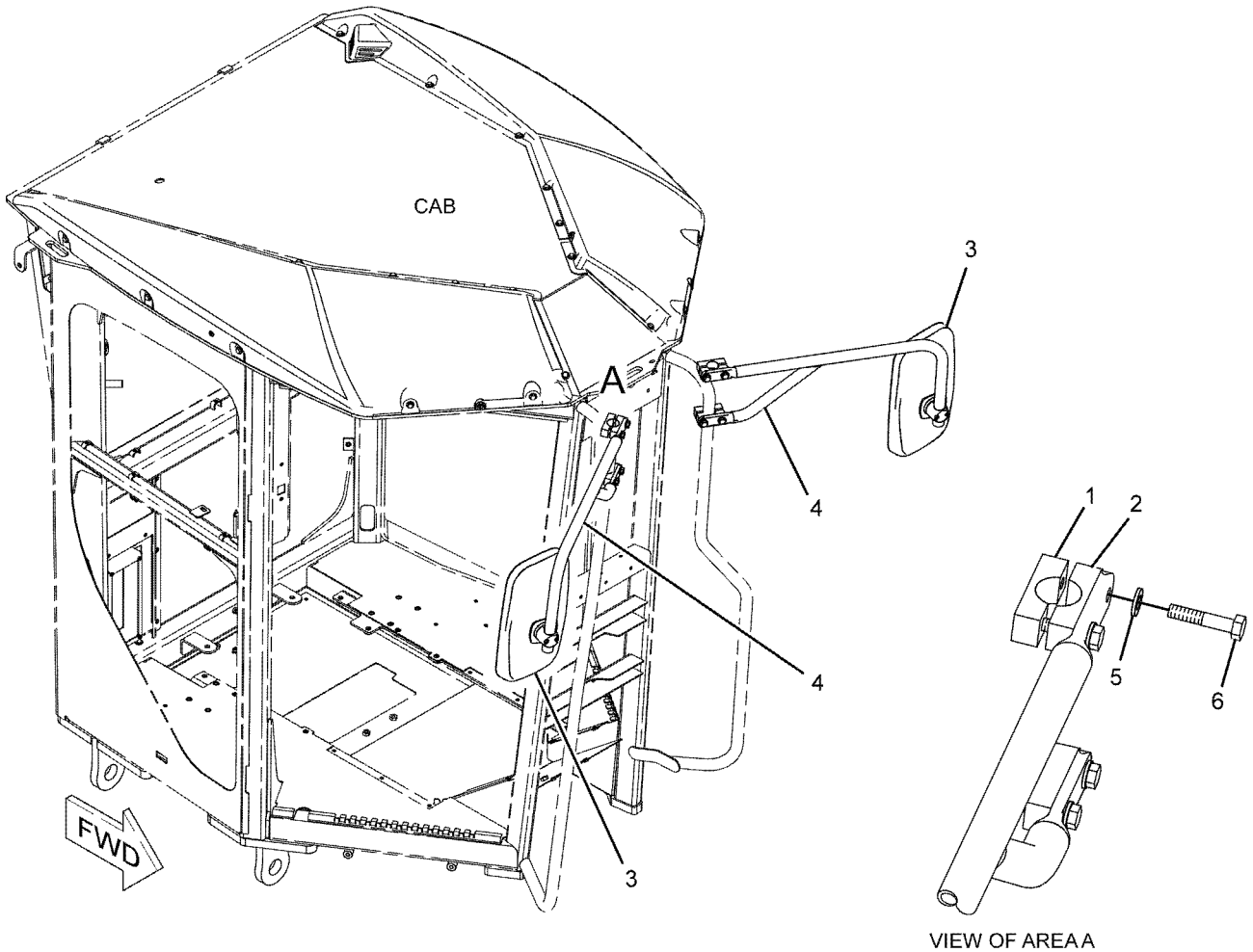

GRAPHIC #1 **<END>** g01142028

233-3296 MIRROR GP-REAR VIEW—EXTERIOR, HEATED

S/N: R9J1-UP

CANNOT BE USED WITH 233-3295—PAGE 839

AN ATTACHMENT

SMCS-7319 **i04021803**

NOTE	REF NO	GRAPHIC REF	PART NUMBER	QTY	PART NAME 1 2 3 4 5 6 (PRODUCT LEVEL)	SEE PAGE
	1	1	**123-4586**	4	BLOCK	
	2	1	**291-9154**	4	BLOCK	
CY	3	1	*343-1824*	1	SWITCH GP-ROCKER (HEATED MIRRORS)	323
	4	1	**259-4759**	2	MIRROR AS	
					(EACH INCLUDES)	
		1	**102-8802**	1	KIT-RECEPTACLE (2-PIN)	
					(INCLUDES RECEPTACLE AS & WEDGE)	
		1	**8T-8729**	2	PIN-CONNECTOR (16-GA TO 18-GA)	
	5	1	**265-8941**	2	TUBE AS	
	6	1	**8T-4121**	8	WASHER-HARD (11X21X2.5-MM THK)	
M	7	1	**189-5358**	8	BOLT (M10X1.5X60-MM)	

C-CHANGE FROM PREVIOUS TYPE
M-METRIC PART
Y-SEPARATE ILLUSTRATION

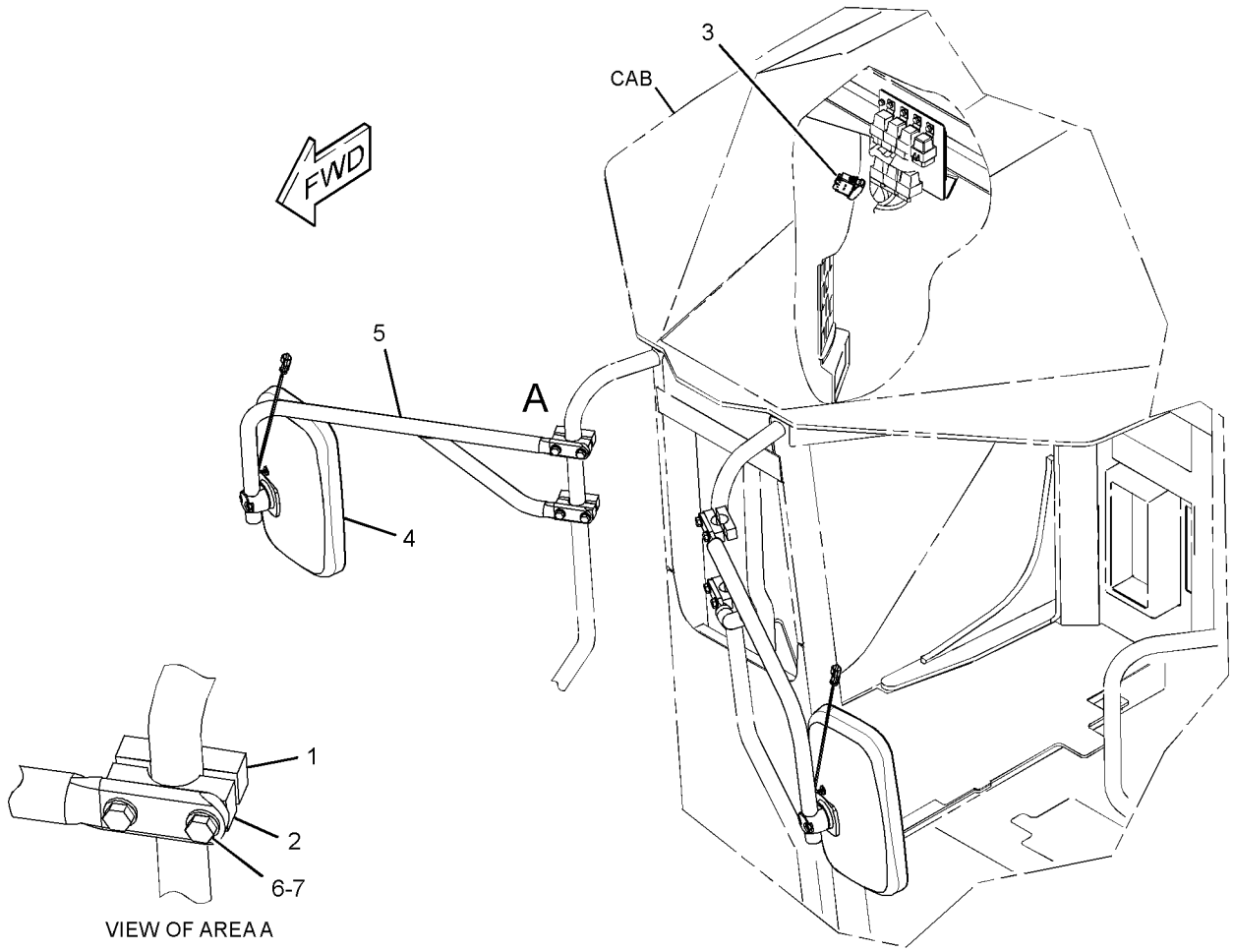

GRAPHIC #1 **<END>** g01874816

OPERATOR STATION

295-1120 MOTOR GP-WINDOW WIPER—FRONT

S/N: R9J1-UP
24-VOLT
PART OF 233-3138 WIPER & WASHER GP-WINDOW
AN ATTACHMENT

SMCS-7305 **i03115001**

NOTE	REF NO	GRAPHIC REF	PART NUMBER	QTY	PART NAME 1 2 3 4 5 6 (PRODUCT LEVEL)	SEE PAGE
	1	1	**135-0611**	1	MOTOR GP-WINDOW WIPER (24-VOLT, 2-SPEED) (FRONT)	
	2	1	**206-5823**	2	CAP (MOTOR)	
	3	1	**3F-9556**	2	LOCKWASHER	
M	4	1	**5C-7261**	2	NUT (M8X1.25-THD)	

M-METRIC PART

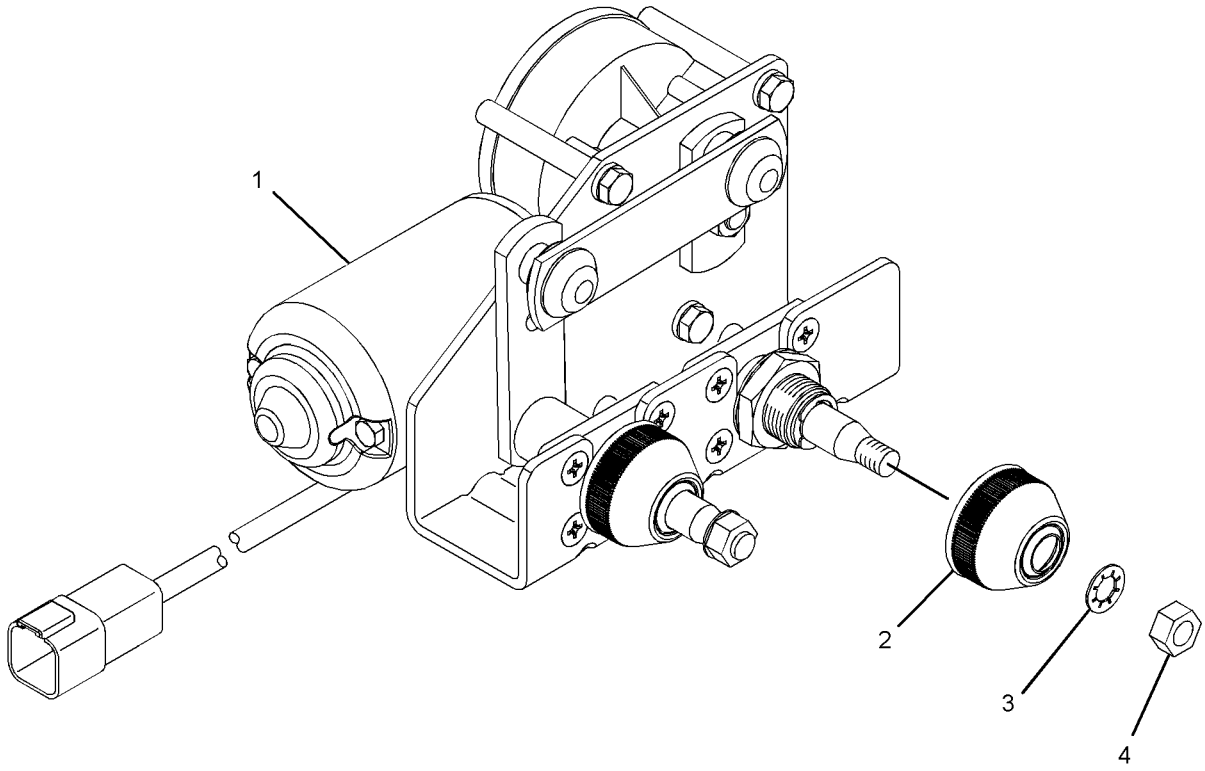

GRAPHIC #1 **<END>** g01315464

OPERATOR STATION

330-5016 MOTOR GP-WINDOW WIPER

S/N: R9J1-UP
24-VOLT
PART OF 233-3139 WIPER GP-WINDOW
AN ATTACHMENT

SMCS-7305 **i03658089**

NOTE	REF NO	GRAPHIC REF	PART NUMBER	QTY	PART NAME 1 2 3 4 5 6 (PRODUCT LEVEL)	SEE PAGE
	1	1	**102-8805**	1	KIT-RECEPTACLE (6-PIN)	
					(INCLUDES RECEPTACLE AS & WEDGE)	
	2	1	**3F-9556**	1	LOCKWASHER	
M	3	1	**5C-7261**	1	NUT (M8X1.25-THD)	
	4	1	**263-3823**	1	CAP-WIPER	
	5	1	**186-3735**	5	PIN-CONNECTOR (16-GA TO 18-GA)	
	6	1	**8T-8737**	1	PLUG-SEAL	

M-METRIC PART

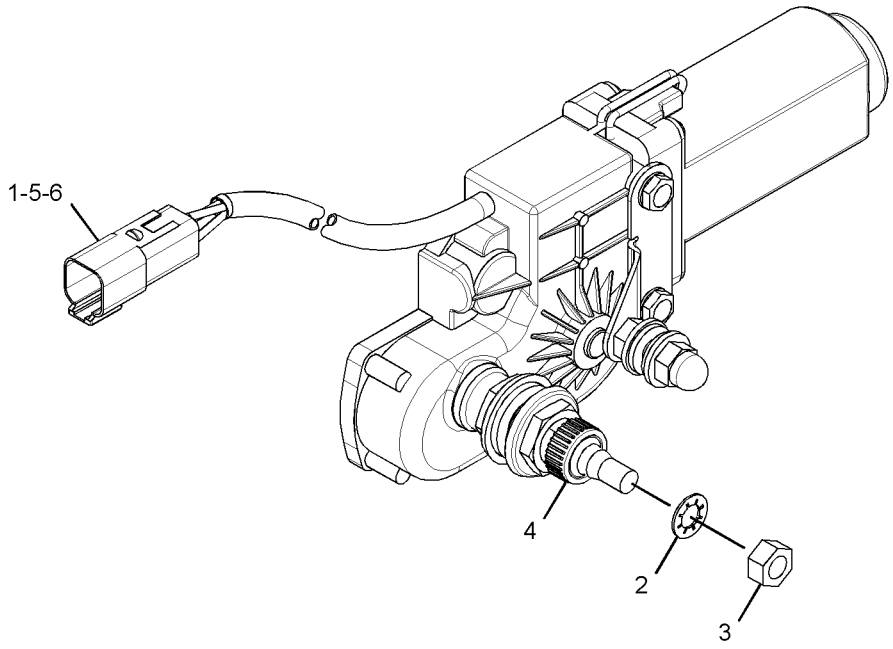

GRAPHIC #1 **<END>** g02034344

OPERATOR STATION

233-3122 MOUNTING GP-ANTENNA–RADIO

S/N: R9J1-UP

PART OF 349-2555 COMMON AR

SMCS-7338 **i02532706**

NOTE	REF NO	GRAPHIC REF	PART NUMBER	QTY	PART NAME 1 2 3 4 5 6 (PRODUCT LEVEL)	SEE PAGE
	1	1	**6T-7695**	2	SPEAKER AS-RADIO	
	2	1	**7K-1181**	1	STRAP-CABLE	
	3	1	**8E-1118**	1	ANTENNA AS	
	4	1	**101-3055**	2	COVER-SPEAKER	
	5	1	**109-8981**	1	CABLE AS-COAXIAL	
	6	1	**9K-5635**	8	SCREW-TAPPING (8-18X1-IN)	

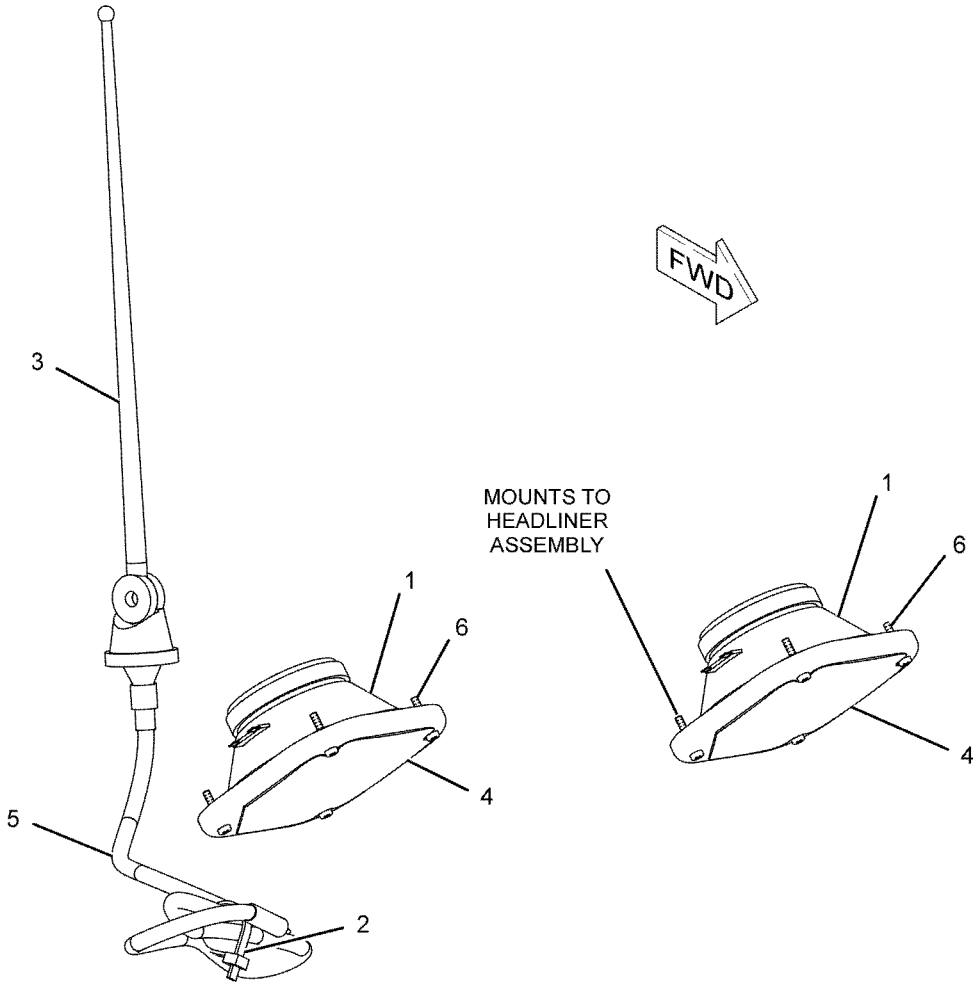

GRAPHIC #1 **<END>** g01114364

OPERATOR STATION

299-0881 MOUNTING GP-CONTROL—WITH ENCLOSURE

S/N: R9J1-UP

PART OF 299-0874 CONTROL GP-ELECTROHYDRAULIC

AN ATTACHMENT

SMCS-5063 **i02980293**

NOTE	REF NO	GRAPHIC REF	PART NUMBER	QTY	PART NAME 1 2 3 4 5 6 (PRODUCT LEVEL)	SEE PAGE
	1	1	**251-2247**	1	GROMMET	
	2	1	**281-0387**	1	PLATE	
	3	1	**281-0390**	1	GRIP	
	4	1	**299-1030**	1	ENCLOSURE AS	
M	5	1	**225-3109**	2	SCREW-TRUSS HEAD (M4X0.7X14-MM)	
M	6	1	**9X-2043**	2	SCREW-TRUSS HEAD (M6X1X14-MM)	
E	7	1	**282-0808**		SLEEVE (31-CM)	

E-ORDER BY THE CENTIMETER
M-METRIC PART

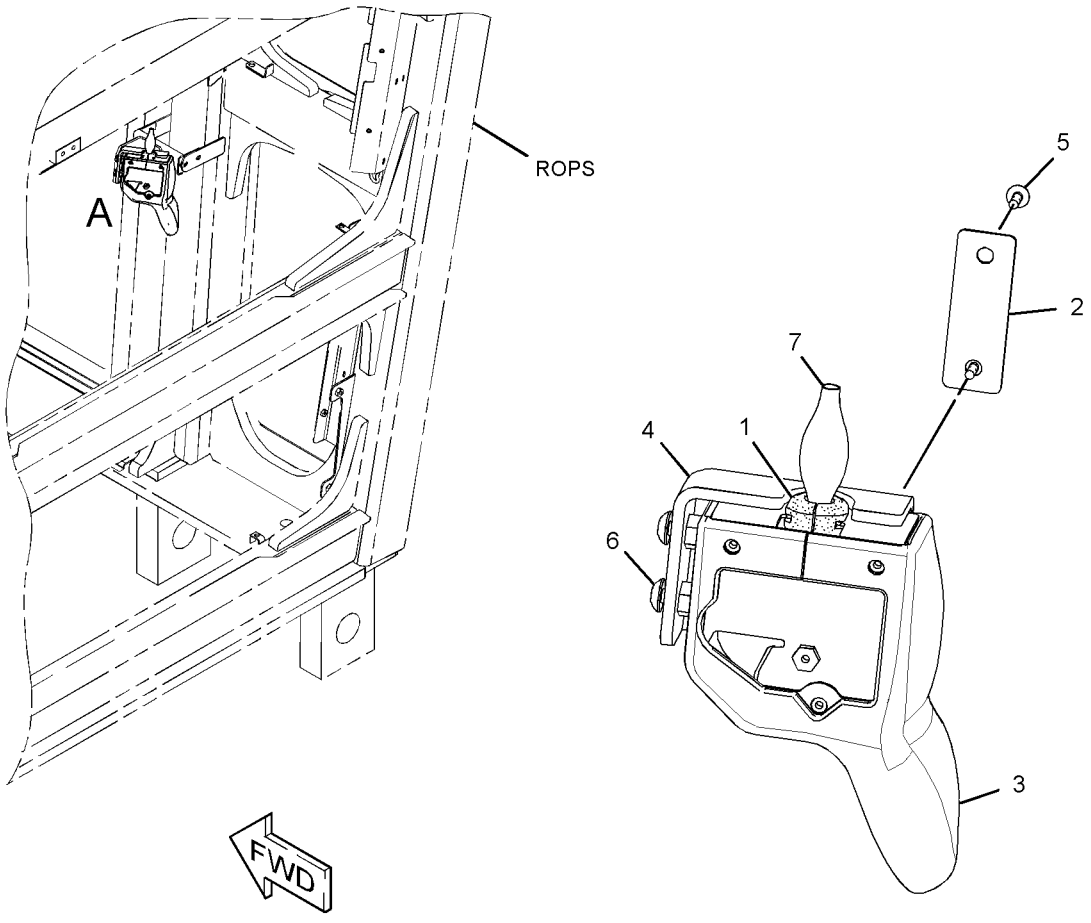

VIEW OF AREA A

GRAPHIC #1 **<END>** g01523875

OPERATOR STATION

292-6402 PAN GP-BACKREST—LUMBAR

S/N: R9J1-UP

PART OF 292-9237 PAN GP-BACKREST

AN ATTACHMENT

SMCS-7312 **i03095783**

NOTE	REF NO	GRAPHIC REF	PART NUMBER	QTY	PART NAME 1 2 3 4 5 6 (PRODUCT LEVEL)	SEE PAGE
	1	1	**5P-7957**	1	LANYARD	
	2	1	**136-1543**	1	PLATE AS-LUMBAR	
	3	1	**173-2052**	1	RETAINER	
	4	1	**178-7907**	1	HOLDER	
	5	1	**261-5694**	1	PAN AS-BACKREST	
	6	1	**322-3161**	1	SPRING	
	7	1	**4K-9429**	8	RIVET-POP	

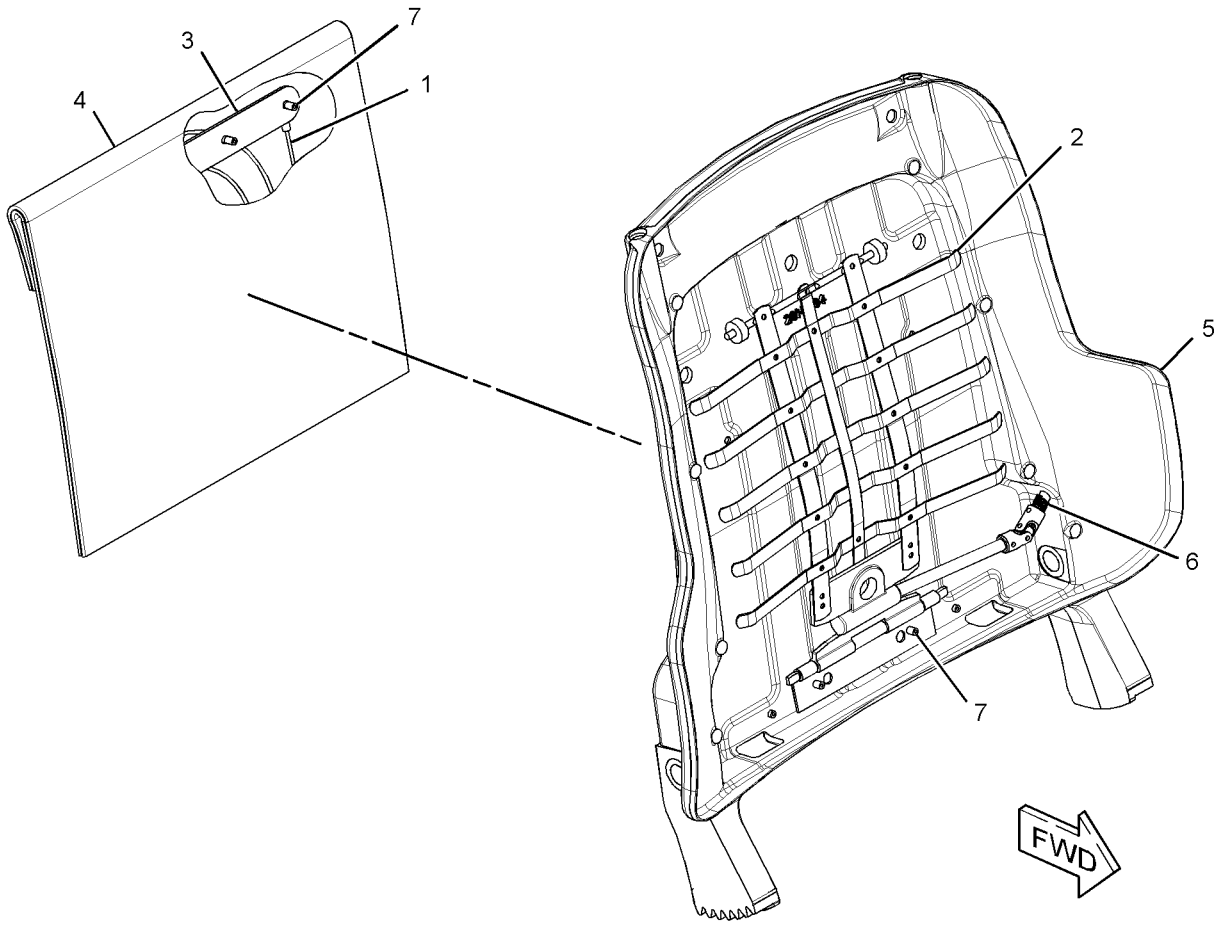

GRAPHIC #1 **<END>** g01577333

OPERATOR STATION

292-9237 PAN GP-BACKREST–LUMBAR

S/N: R9J1-UP
PART OF 244-5002 SEAT GP
AN ATTACHMENT

SMCS-7312 **i02649684**

NOTE	REF NO	GRAPHIC REF	PART NUMBER	QTY	PART NAME 1 2 3 4 5 6 (PRODUCT LEVEL)	SEE PAGE
	1	1	**164-4883**	1	KNOB-LUMBAR	
	2	1	**250-4628**	3	PLUG	
	3	1	**292-6097**	1	CUSHION AS-BACK	
Y	4	1	**292-6402**	1	PAN GP-BACKREST (LUMBAR)	845
	5	1	**5P-0537**	2	WASHER-HARD (7.2X14.5X2-MM THK)	
	6	1	**6V-8969**	2	SCREW-BUTTON HEAD (1/4-20X0.5-IN)	
	7	1	**8T-7566**	1	PIN-SPRING	

Y-SEPARATE ILLUSTRATION

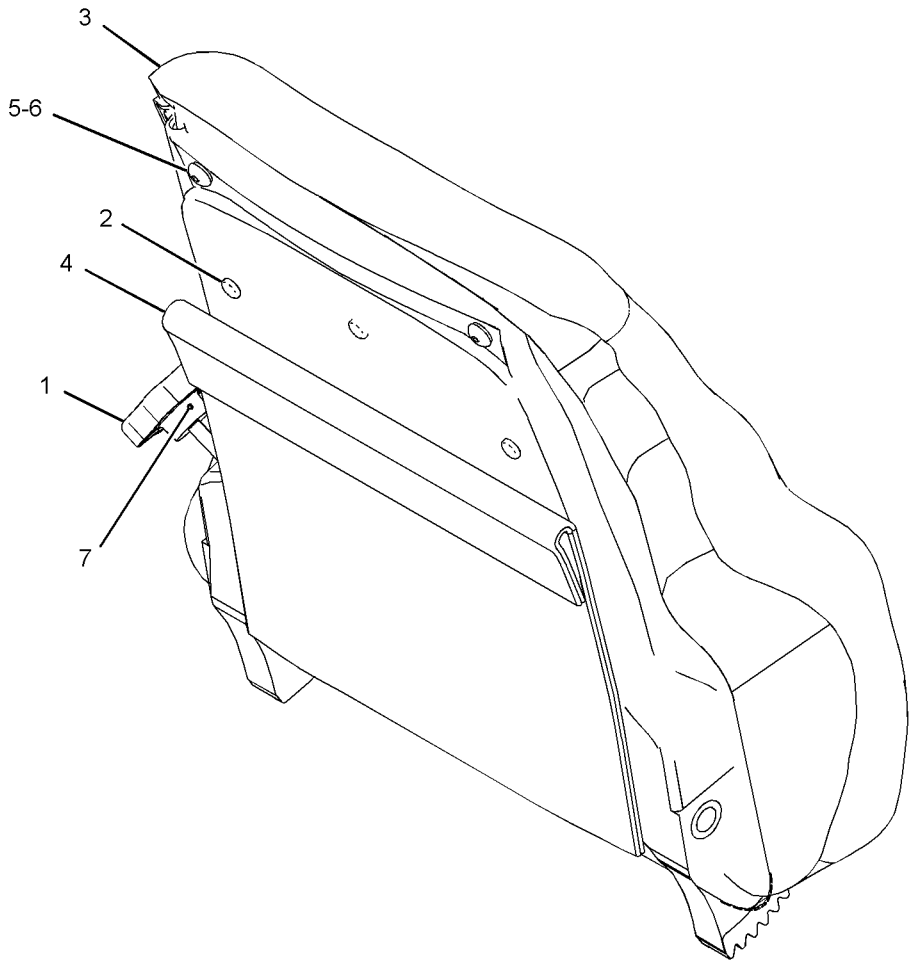

GRAPHIC #1 **<END>** g01336870

OPERATOR STATION

243-6737 PAN GP-SEAT–LUMBAR

S/N: R9J1-UP
PART OF 244-5002 SEAT GP
AN ATTACHMENT

SMCS-7312 **i02793187**

NOTE	REF NO	GRAPHIC REF	PART NUMBER	QTY	PART NAME 1 2 3 4 5 6 (PRODUCT LEVEL)	SEE PAGE
	1	1	**3S-2093**	2	STRAP-CABLE	
	2	1	**8T-9082**	5	RIVET-POP	
	3	1	**216-0814**	1	SWITCH AS-LIMIT (SEAT ADJUSTMENT)	
	4	1	**266-9281**	2	CLIP	
	5	1	**285-2372**	1	HARNESS AS-SWITCH	
		1	**102-8803**	1	KIT-RECEPTACLE (3-PIN)	
					(INCLUDES RECEPTACLE AS & WEDGE)	

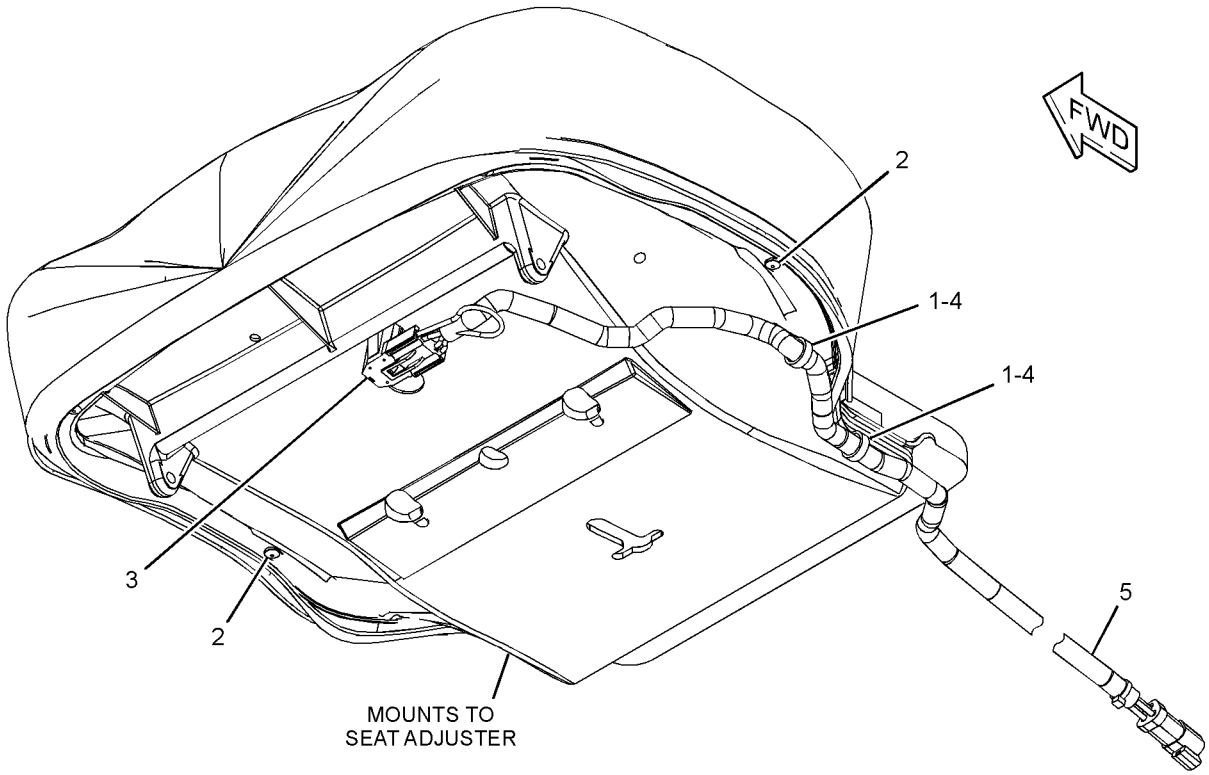

GRAPHIC #1 **<END>** g01338841

OPERATOR STATION

293-4200 PANEL GP-CAB–HVAC

S/N: R9J1-UP
PART OF 233-3110, 325-5227 CAB AR
AN ATTACHMENT

SMCS-7301 **i02812005**

NOTE	REF NO	GRAPHIC REF	PART NUMBER	QTY	PART NAME 1 2 3 4 5 6 (PRODUCT LEVEL)	SEE PAGE
	1	2	**2V-2015**	1	NUT-SPEED	
	2	1	**6V-8928**	1	HOOK-COAT	
	3	2	**9U-8263**	1	COVER	
	4	1,2	**114-6658**	25	WASHER (6.5X17X1-MM THK)	
	5	1	**139-6039**	8	NUT (U-TYPE RETAINER)	
	6	1	**171-4047**	4	LOUVER AS-VENT	
	7	1	**190-8505**	1	ASHTRAY	
	8	1	**223-0455**	6	LOUVER AS	
	9	2	**249-4097**	1	PLATE AS	
	10	2	**263-2576**	1	PLATE AS	
	11	1	**265-8935**	1	COVER	
	12	2	**274-2392**	1	THUMBSCREW	
	13	1	**274-2404**	2	COVER	
	14	1	**283-7978**	1	COVER AS (LH)	
	15	1	**294-1002**	1	PLENUM (LOWER, RH)	
	16	1	**294-1003**	1	PLENUM (UPPER, RH)	
	17	1	**294-1004**	1	PLENUM (LOWER, LH)	
	18	1	**294-1005**	1	PLENUM (UPPER, LH)	
	19	2	**297-4131**	1	SUPPORT AS	
M		2	**6V-9632**	3	NUT-WELD (M6X1-THD)	
M		2	**8T-3490**	4	NUT-WELD (M10X1.5-THD)	
	20	2	**297-4133**	1	COVER AS	
M		2	**6V-9632**	2	NUT-WELD (M6X1-THD)	
M		2	**8T-3490**	2	NUT-WELD (M10X1.5-THD)	
	21	1	**297-4144**	1	COVER AS (RH)	
M		1	**6V-9632**	1	NUT-WELD (M6X1-THD)	
	22	2	**297-4145**	1	COVER AS	
	23	2	**297-4149**	1	PLATE	
	24	1	**297-4153**	1	COVER	
	25	1	**297-4155**	2	PLENUM	
	26	1	**297-4160**	1	COVER AS-PANEL (SWITCH)	
		1	**297-4161**	1	FILM-IDENTIFICATION (LOWER)	
		1	**297-4162**	1	FILM-IDENTIFICATION (UPPER)	
	27	1	**297-4170**	1	INSULATION	
	28	1	**303-9456**	1	CUP HOLDER	
	29	1	**308-8620**	1	PANEL AS (LH)	
	30	1	**308-8621**	1	PANEL AS (RH)	
	31	1	**096-6166**	8	WASHER-HARD (4.5X9X1-MM THK)	
	32	1	**104-2091**	20	SCREW-FLAT HEAD (NO 6X0.5-IN)	
M	33	1	**111-4627**	6	SCREW-MACHINE (M6X1X30-MM)	
M	34	1	**3E-8020**	1	SCREW-TRUSS HEAD (M6X1X25-MM)	
	35	2	**5P-4115**	6	WASHER-HARD (7.2X19X2-MM THK)	
	36	1	**6V-5839**	4	WASHER (11X21X2.5-MM THK)	
M	37	1	**6V-8212**	4	BOLT (M10X1.5X16-MM)	
M	38	1	**6V-9672**	6	SCREW-MACHINE (M4X0.7X16-MM)	
	39	1	**7G-4824**	1	STRAP	
	40	1	**8E-7791**	1	STRAP	
	41	1	**8T-0328**	6	WASHER-HARD (5.5X10X1-MM THK)	
	42	2	**8T-4121**	6	WASHER-HARD (11X21X2.5-MM THK)	
M	43	2	**8T-4195**	6	BOLT (M10X1.5X30-MM)	
	44	1	**9K-5635**	8	SCREW-TAPPING (8-18X1-IN)	
M	45	1	**9X-2043**	7	SCREW-TRUSS HEAD (M6X1X14-MM)	
M	46	1,2	**9X-2044**	9	SCREW-TRUSS HEAD (M6X1X16-MM)	
M	47	1,2	**9X-2045**	11	SCREW-TRUSS HEAD (M6X1X20-MM)	
D	48	2	**8T-5372**		SEAL (0.8-M)	

D-ORDER BY THE METER
M-METRIC PART

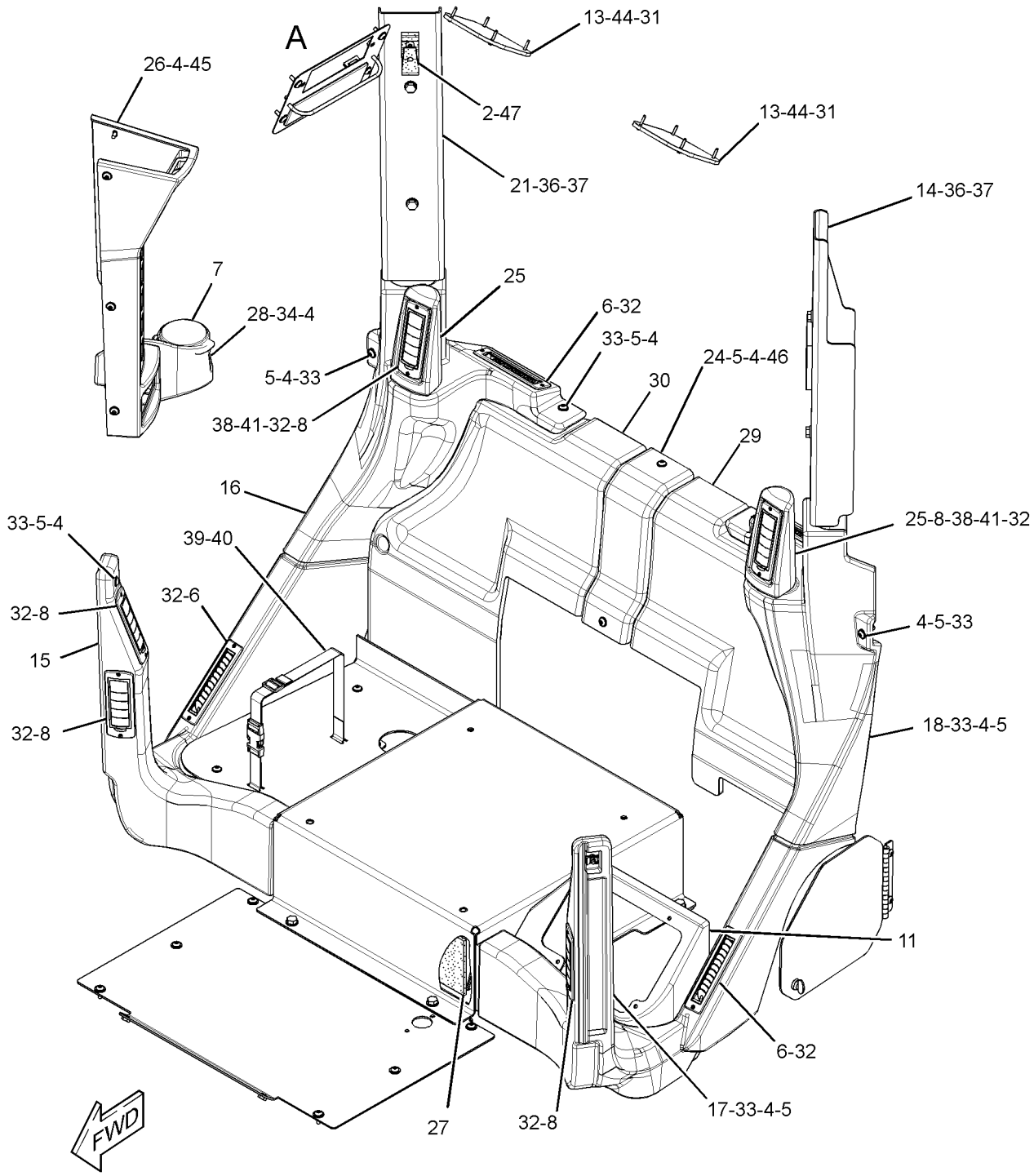

REFER TO ALL ILLUSTRATIONS OF
THIS GROUP FOR AUXILIARY VIEWS

GRAPHIC #1 g01419981

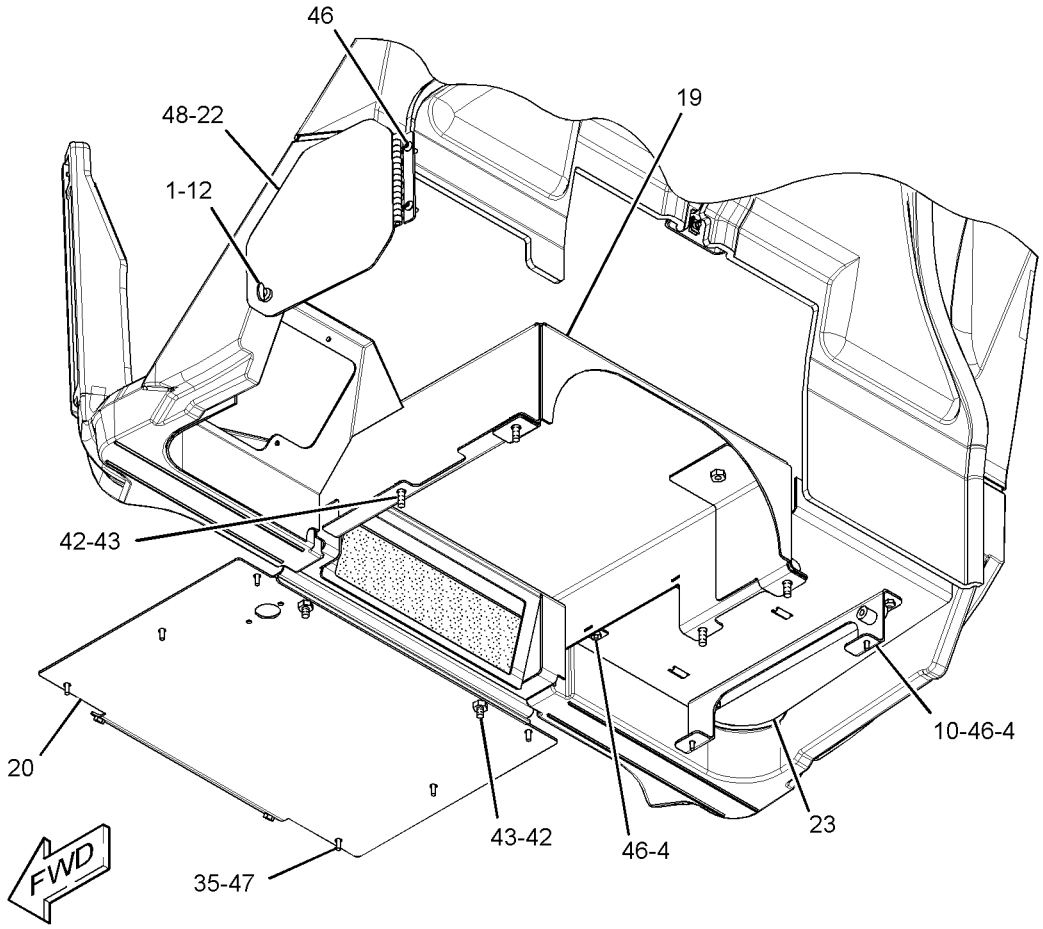

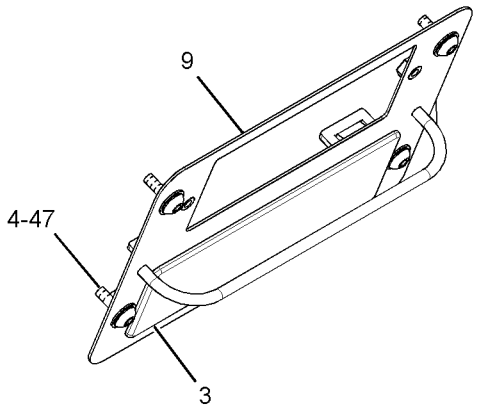

VIEW OF AREA A

GRAPHIC #2 **<END>** g01419982

OPERATOR STATION

314-3323 PANEL GP-CONTROL–ACCUGRADE, LH

S/N: R9J1-UP

PART OF 307-0155 GRADE CONTROL GP

AN ATTACHMENT

SMCS-7332, 7451 **i03002421**

NOTE	REF NO	GRAPHIC REF	PART NUMBER	QTY	PART NAME 1 2 3 4 5 6 (PRODUCT LEVEL)	SEE PAGE
	1	1	**249-5483**	1	SWITCH AS-ROCKER (24-VOLT) (BLADE OFFSET, LH)	
	1A	1	**249-5483**	1	SWITCH AS-ROCKER (24-VOLT) (BLADE OFFSET, RH)	
	2	1	**302-9089**	1	BRACKET AS (LH)	
		1	**7T-1099**	1	LINK	
M		1	**159-9539**	2	NUT-WELD (M6X1-THD)	
	3	1	**302-9090**	1	COVER	
	4	1	**307-0016**	1	FILM-IDENTIFICATION (PANEL SWITCHES)	
	5	1	**253-1789**	1	SWITCH AS-PUSH BUTTON (AUTO/MANUAL SIDESHIFT)	
		1	**3E-3371**	1	WEDGE-RECEPTACLE LOCK (3-PIN)	
		1	**6F-0253**	1	LOCKWASHER	
		1	**102-8803**	1	KIT-RECEPTACLE (3-PIN)	
					(INCLUDES RECEPTACLE AS & WEDGE)	
		1	**172-3511**	1	NUT (5/8-24-THD)	
		1	**186-3735**	1	PIN-CONNECTOR (16-GA TO 18-GA)	
M	6	1	**5C-9553**	2	BOLT (M6X1X16-MM)	
M	7	1	**9X-2044**	2	SCREW-TRUSS HEAD (M6X1X16-MM)	
	8	1	**9X-8256**	4	WASHER (6.6X12X2-MM THK)	

M-METRIC PART

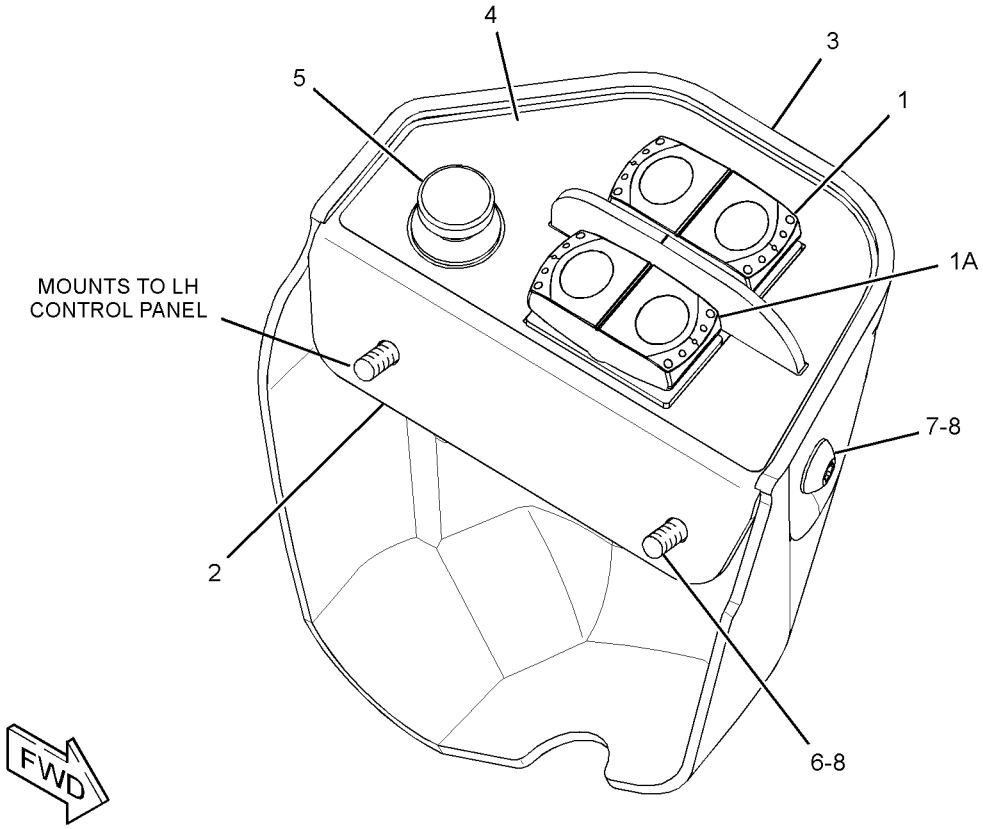

GRAPHIC #1 **<END>** g01525433

OPERATOR STATION

319-1617 PANEL GP-CONTROL–ACCUGRADE

S/N: R9J1-UP
PART OF 307-0155 GRADE CONTROL GP
AN ATTACHMENT

SMCS-7332, 7451 **i04040349**

NOTE	REF NO	GRAPHIC REF	PART NUMBER	QTY	PART NAME 1 2 3 4 5 6 (PRODUCT LEVEL)	SEE PAGE
	1	1	**251-2247**	2	GROMMET	
	2	1	**302-9088**	2	BRACKET AS	
	3	1	**306-9214**	1	FILM-INSTRUCTION (BLADE CONTROL, LH)	
	4	1	**306-9215**	1	FILM-INSTRUCTION (BLADE CONTROL, RH)	
	5	1	**307-0150**	2	BRACKET AS	
	6	1	**311-4911**	1	HARNESS AS-SWITCH (GRADE CONTROL)	
	7	1	**321-9712**	1	HARNESS AS-PANEL	
	8	1	**253-1789**	2	SWITCH AS-PUSH BUTTON (BLADE CONTROL)	
					(EACH INCLUDES)	
		1	**6F-0253**	1	LOCKWASHER	
		1	**102-8803**	1	KIT-RECEPTACLE (3-PIN)	
					(INCLUDES RECEPTACLE AS & WEDGE)	
		1	**172-3511**	1	NUT (5/8-24-THD)	
		1	**186-3735**	3	PIN-CONNECTOR (16-GA TO 18-GA)	
M	9	1	**8C-7581**	6	SCREW-MACHINE (M4X0.7X8-MM)	
M	10	1	**9X-2042**	4	SCREW-TRUSS HEAD (M6X1X12-MM)	

M-METRIC PART

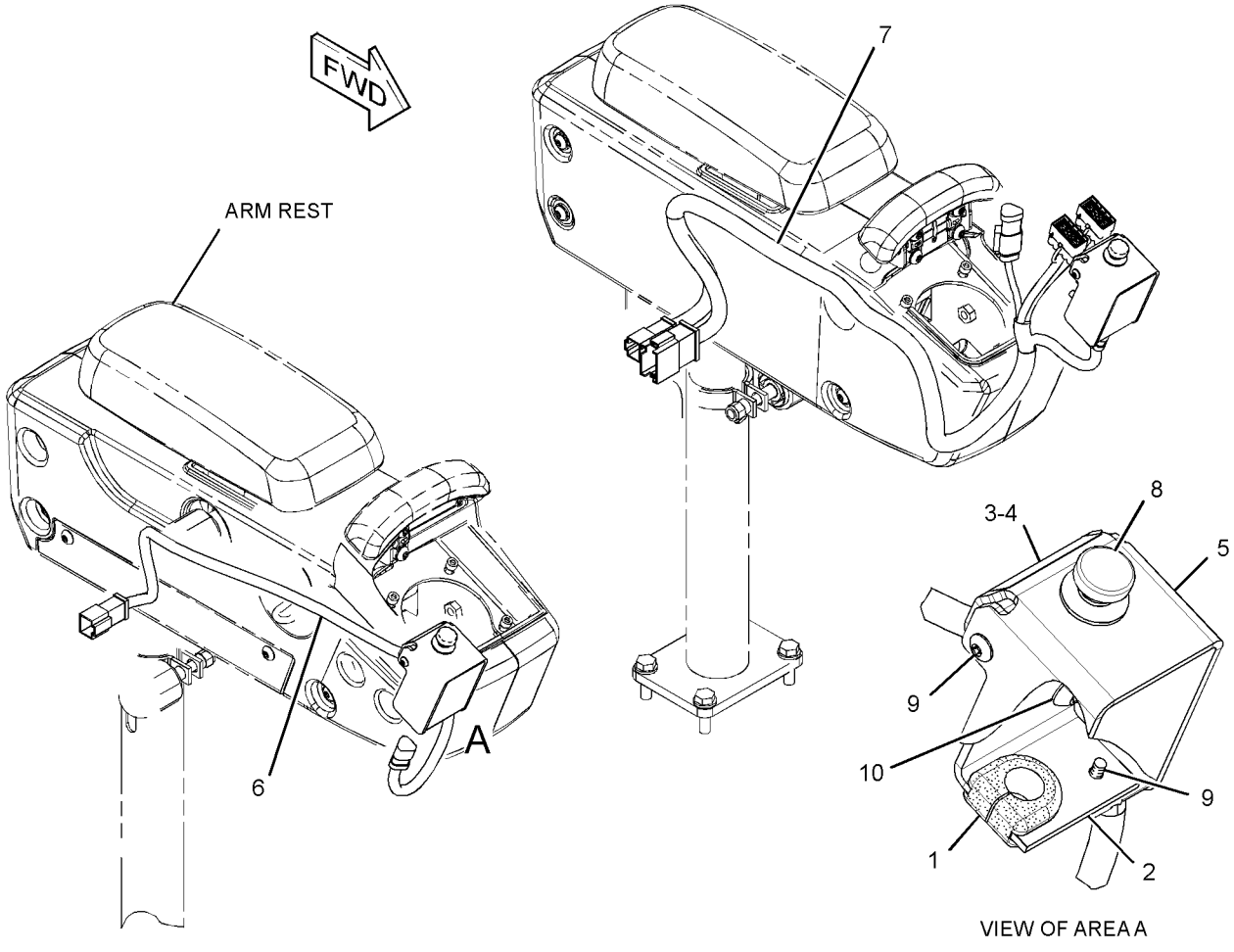

GRAPHIC #1 **<END>** g01523161

OPERATOR STATION

322-3834 PANEL GP-CONTROL

S/N: R9J1-UP

FIELD INSTALLATION

SMCS-7332, 7451 **i03116197**

NOTE	REF NO	GRAPHIC REF	PART NUMBER	QTY	PART NAME 1 2 3 4 5 6 (PRODUCT LEVEL)	SEE PAGE
	1	1	**3S-2093**	4	STRAP-CABLE	
	2	1	**251-2247**	2	GROMMET	
	3	1	**302-9088**	2	BRACKET AS	
	4	1	**306-9214**	1	FILM-INSTRUCTION (LH, BLADE CONTROL)	
	5	1	**306-9215**	1	FILM-INSTRUCTION (BLADE CONTROL, RH)	
	6	1	**307-0150**	2	BRACKET AS	
	7	1	**253-1789**	2	SWITCH AS-PUSH BUTTON (BLADE CONTROL)	
					(EACH INCLUDES)	
		1	**6F-0253**	1	LOCKWASHER	
		1	**102-8803**	1	KIT-RECEPTACLE (3-PIN)	
					(INCLUDES RECEPTACLE AS & WEDGE)	
		1	**172-3511**	1	NUT (5/8-24-THD)	
		1	**186-3735**	1	PIN-CONNECTOR (16-GA TO 18-GA)	
M	8	1	**8C-7581**	6	SCREW-MACHINE (M4X0.7X8-MM)	
	9	1	**4P-7581**	2	CLIP	
M	10	1	**9X-2042**	4	SCREW-TRUSS HEAD (M6X1X12-MM)	
	11	1	**321-6706**	1	HARNESS AS-PANEL (GRADE CONTROL)	

M-METRIC PART

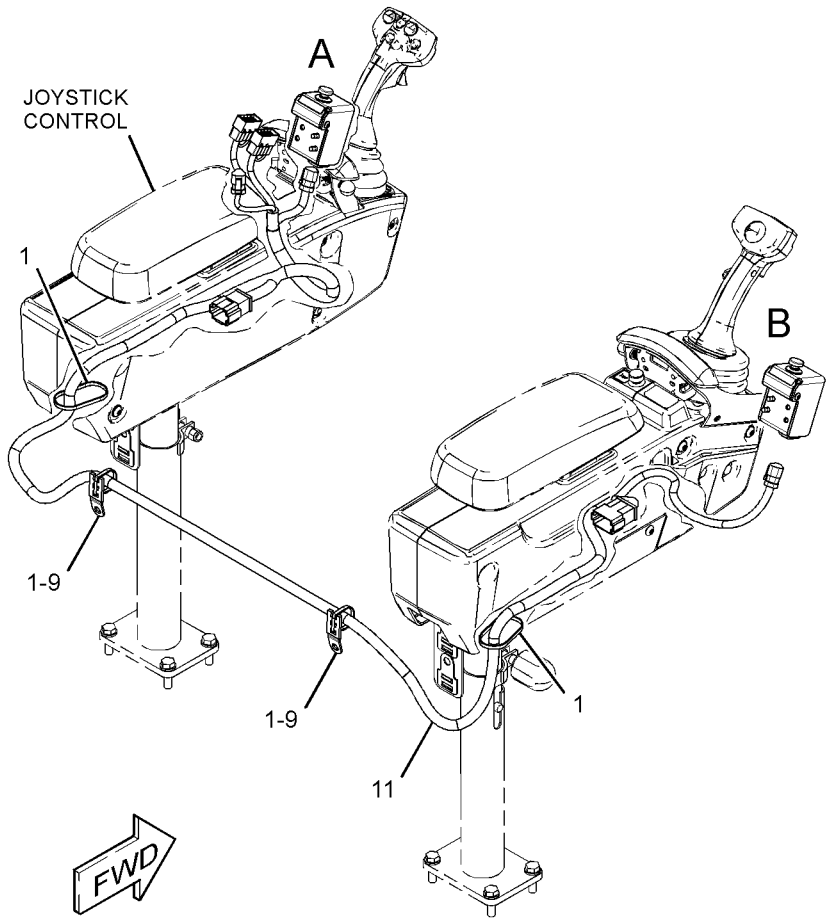

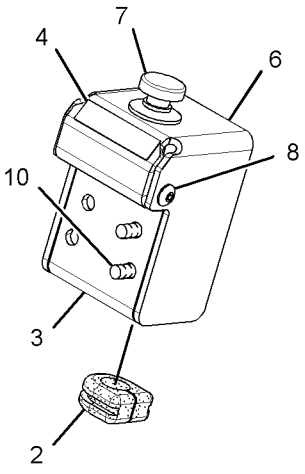

VIEW OF AREA A

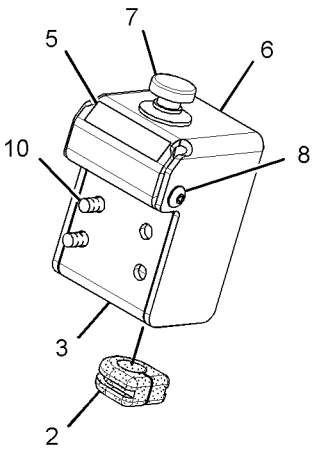

VIEW OF AREA B

GRAPHIC #1 **<END>** g01523916

OPERATOR STATION

233-3280 PANEL GP-INSTRUMENT

S/N: R9J1-UP
PART OF 233-3110 CAB AR
AN ATTACHMENT

SMCS-7450, 7451 **i04011749**

NOTE	REF NO	GRAPHIC REF	PART NUMBER	QTY	PART NAME 1 2 3 4 5 6 (PRODUCT LEVEL)	SEE PAGE
	1	1	**171-4047**	5	LOUVER AS-VENT	
	2	1	**8Y-6388**	2	LOUVER AS-VENT	
	3	1	**251-2252**	1	PANEL AS	
	4	1	**252-1825**	1	FILM-IDENTIFICATION (DASH, LH)	
	5	1	**252-1826**	1	FILM-IDENTIFICATION (DASH, RH)	
	6	1	**260-3041**	1	COVER	
	8	1	**297-4134**	1	PLENUM	
	9	1	**297-4143**	1	PLENUM AS	
	10	1	**297-4152**	1	COVER AS	
M		1	**6V-9632**	4	NUT-WELD (M6X1-THD)	
	11	1	**297-4154**	1	COVER	
	12	1	**312-4153**	1	BRACKET AS	
M		1	**6V-9632**	2	NUT-WELD (M6X1-THD)	
	13	1	**114-6658**	9	WASHER (6.5X17X1-MM THK)	
	14	1	**101-2867**	4	WASHER-HARD (7.2X25X2-MM THK)	
	15	1	**104-2091**	14	SCREW-FLAT HEAD (6-20X0.5-IN)	
	16	1	**197-5107**	2	SCREW-TRUSS HEAD (M6X1X60-MM)	
	17	1	**9X-2038**	2	WASHER (7X19X2-MM THK)	
M	18	1	**6V-8225**	2	NUT (M6X1-THD)	
M	19	1	**127-2170**	2	SCREW-TRUSS HEAD (M8X1.25X20-MM)	
	20	1	**9N-0869**	2	WASHER-HARD (8.8X25.5X2-MM THK)	
M	21	1	**9X-2043**	6	SCREW-TRUSS HEAD (M6X1X14-MM)	
M	22	1	**9X-2044**	5	SCREW-TRUSS HEAD (M6X1X16-MM)	
M	24	1	**9X-2046**	2	SCREW-TRUSS HEAD (M6X1X35-MM)	
M	25	1	**9X-2045**	2	SCREW-TRUSS HEAD (M6X1X20-MM)	

M-METRIC PART

233-3280 PANEL GP-INSTRUMENT *(contd.)* **i04011749**

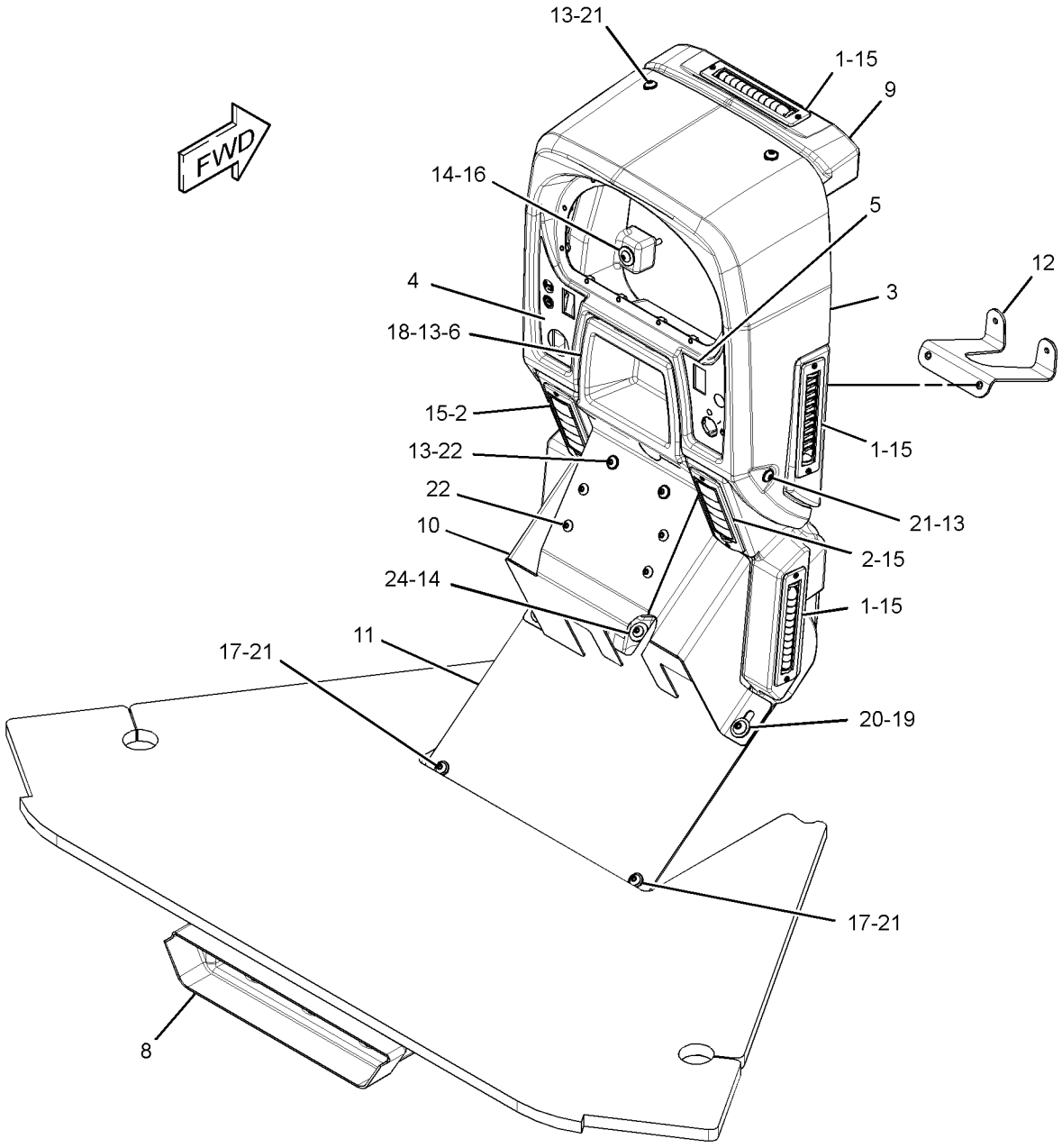

GRAPHIC #1 **<END>** g02189834

OPERATOR STATION

294-0984 PANEL GP-INSTRUMENT—FRONT CONSOLE

S/N: R9J1-UP
PART OF 325-5227 CAB AR
AN ATTACHMENT

SMCS-7450, 7451 **i04030023**

NOTE	REF NO	GRAPHIC REF	PART NUMBER	QTY	PART NAME 1 2 3 4 5 6 (PRODUCT LEVEL)	SEE PAGE
	1	1	**4E-8722**	2	NUT (RETAINER)	
	2	1	**8Y-6388**	4	LOUVER AS-VENT	
	3	1	**114-6658**	8	WASHER (6.5X17X1-MM THK)	
	4	1	**171-4047**	5	LOUVER AS-VENT	
	5	1	**294-0997**	1	PANEL-DASH	
	6	1	**294-0998**	1	PLENUM AS	
	7	1	**294-0999**	1	PLENUM	
	8	1	**294-1016**	1	FILM-INFORMATION (CONSOLE, LH)	
	9	1	**294-1019**	1	FILM-INFORMATION (CONSOLE, RH)	
	10	1	**297-4168**	1	PLATE AS	
M		1	**8T-3612**	2	NUT-WELD (M8X1.25-THD)	
	11	1	**300-0473**	1	COVER AS	
M		1	**6V-9632**	4	NUT-WELD (M6X1-THD)	
	12	1	**312-4153**	1	BRACKET AS	
M		1	**6V-9632**	2	NUT-WELD (M6X1-THD)	
	14	1	**101-2867**	4	WASHER-HARD (7.2X25X2-MM THK)	
	15	1	**104-2091**	18	SCREW-FLAT HEAD (6-20X0.5-IN)	
	16	1	**118-5619**	2	SCREW-FLAT HEAD (6-20X1-IN)	
M	17	1	**127-2170**	4	SCREW-TRUSS HEAD (M8X1.25X20-MM)	
	18	1	**197-5107**	2	SCREW-TRUSS HEAD (M6X1X60-MM)	
M	19	1	**5C-2890**	2	NUT (M6X1-THD)	
	20	1	**9N-0869**	4	WASHER-HARD (8.8X25.5X2-MM THK)	
	21	1	**9X-2038**	2	WASHER (7X19X2-MM THK)	
M	22	1	**9X-2043**	6	SCREW-TRUSS HEAD (M6X1X14-MM)	
M	23	1	**9X-2044**	4	SCREW-TRUSS HEAD (M6X1X16-MM)	
M	24	1	**9X-2045**	2	SCREW-TRUSS HEAD (M6X1X20-MM)	
M	25	1	**111-4627**	2	SCREW-MACHINE (M6X1X30-MM)	
E	26	1	**7X-2634**		SEAL (56-CM)	

E-ORDER BY THE CENTIMETER
M-METRIC PART

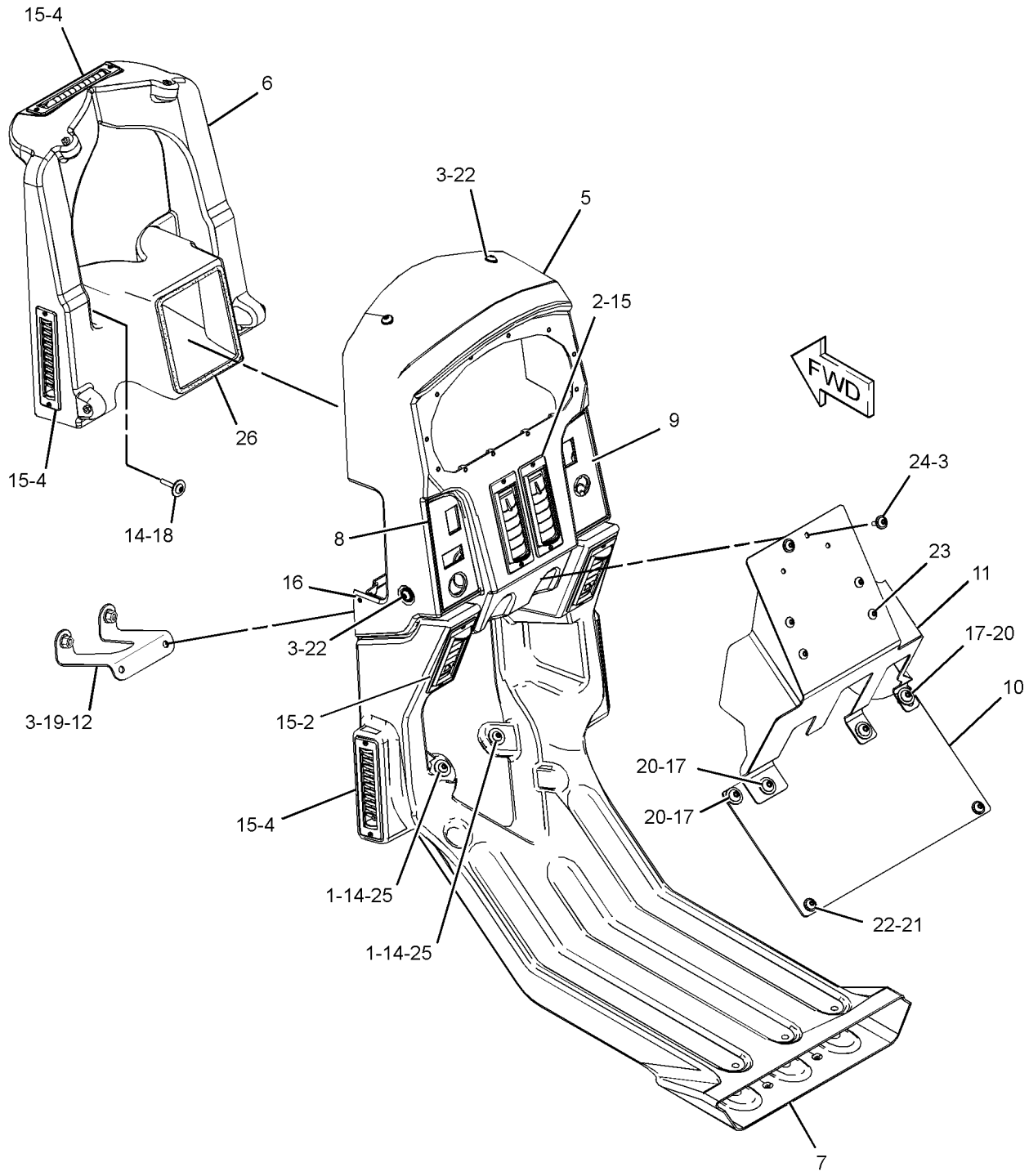

GRAPHIC #1 **<END>** g02228714

OPERATOR STATION

265-8943 PEDAL GP-BRAKE, XMSN & GOV

S/N: R9J1-UP
PART OF 249-4080 CONTROL GP-SERVICE BRAKE
AN ATTACHMENT

SMCS-1265, 3191, 4269 **i03787033**

NOTE	REF NO	GRAPHIC REF	PART NUMBER	QTY	PART NAME 1 2 3 4 5 6 (PRODUCT LEVEL)	SEE PAGE
CY	1	1	**266-1467**	1	SENSOR GP-POSITION (ROTARY)	276
CY	1A	1	**266-1467**	1	SENSOR GP-POSITION (ROTARY) (XMSN MODULATOR CONTROL)	276
Y	2	1	**171-3759**	1	SWITCH GP-LIMIT (BRAKE PEDAL)	314
Y	2A	1	**171-3759**	1	SWITCH GP-LIMIT (XMSN MODULATOR CONTROL)	314
	3	1	**189-0135**	1	SWITCH AS-LIMIT (BRAKE LIGHT)	
		1	**186-3735**	3	PIN-CONNECTOR (16-GA TO 18-GA)	
		1	**102-8803**	1	KIT-RECEPTACLE (3-PIN)	
					(INCLUDES RECEPTACLE AS & WEDGE)	

C-CHANGE FROM PREVIOUS TYPE
Y-SEPARATE ILLUSTRATION

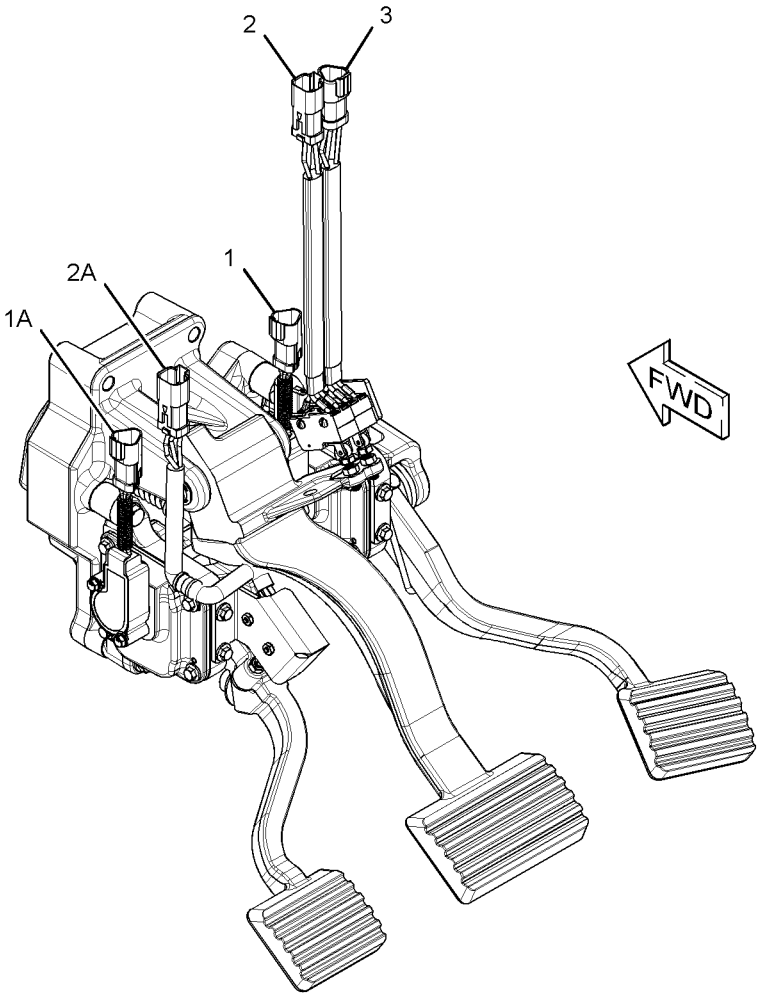

GRAPHIC #1 **<END>** g01429967

OPERATOR STATION

233-3123 RADIO GP–AM/FM/WB

S/N: R9J1-UP

PART OF 349-3067 OPTION AR-CAB

AN ATTACHMENT

SMCS-7338 **i03572366**

NOTE	REF NO	GRAPHIC REF	PART NUMBER	QTY	PART NAME 1 2 3 4 5 6 (PRODUCT LEVEL)	SEE PAGE
	1	1	**136-5490**	1	BUSHING (RADIO MOUNT)	
	2	1	**200-5728**	1	HARNESS AS-RADIO	
		1	**172-8037**	1	CONNECTOR (RADIO)	
		1	**186-3735**	7	PIN-CONNECTOR (16-GA TO 18-GA)	
		1	**8T-8737**	1	PLUG-SEAL	
		1	**160-3518**	1	KIT-RECEPTACLE (8-PIN)	
					(INCLUDES RECEPTACLE AS & WEDGE)	
Y	3	1	**331-5292**	1	RADIO GP (AM/FM/WB)	860

Y-SEPARATE ILLUSTRATION

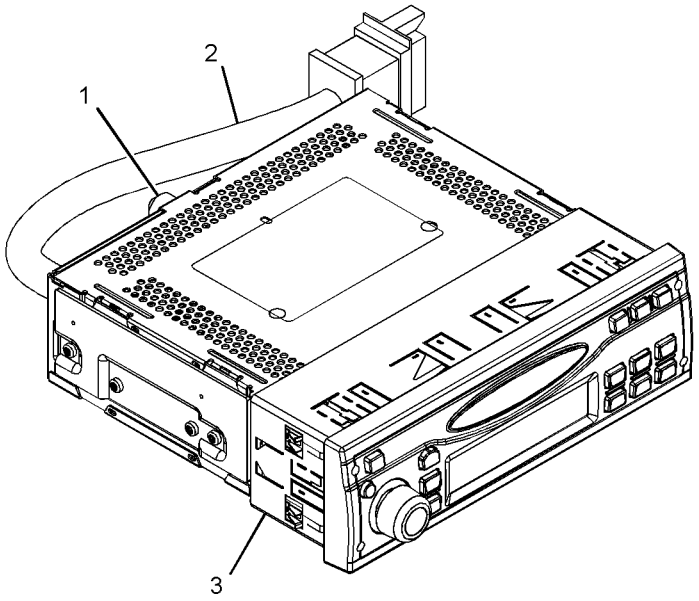

GRAPHIC #1 **<END>** g01813816

OPERATOR STATION

331-5292 RADIO GP–AM, FM

S/N: R9J1-UP
PART OF 233-3123 RADIO GP
FOR USE WITH INSTALLATION GP-RADIO
AN ATTACHMENT

SMCS-7338 **i03466464**

NOTE	REF NO	GRAPHIC REF	PART NUMBER	QTY	PART NAME 1 2 3 4 5 6 (PRODUCT LEVEL)	SEE PAGE
	1	1	**192-7054**	1	SLEEVE	

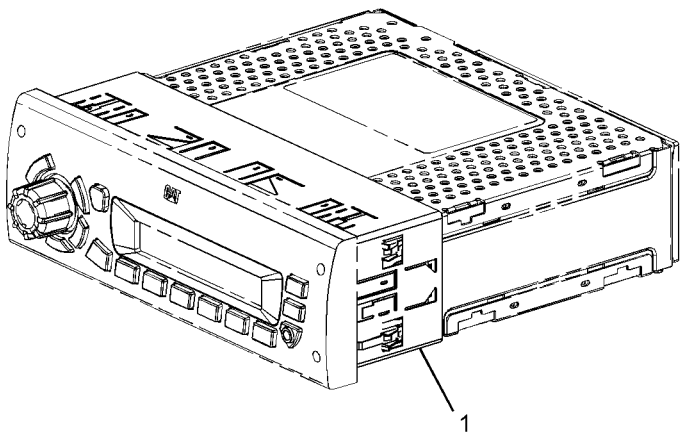

GRAPHIC #1 **<END>** g01813076

210-2270 RECLINER GP-SEAT

S/N: R9J1-UP
PART OF 244-5002 SEAT GP
AN ATTACHMENT

SMCS-7312 **i02709288**

NOTE	REF NO	GRAPHIC REF	PART NUMBER	QTY	PART NAME 1 2 3 4 5 6 (PRODUCT LEVEL)	SEE PAGE
	1	1	**177-1862**	1	BRACKET (SEAT BELT)	
	2	1	**210-2262**	1	BRACKET AS	
	3	1	**210-2263**	1	BRACKET AS	
	4	1	**210-2266**	1	GEAR-LOCK (14-TEETH)	
	5	1	**293-2911**	1	SHAFT AS	
		1	**2L-5893**	2	PIN-SPRING	
		1	**170-8590**	1	SPRING	
	6	1	**217-7933**	1	LATCH	
	7	1	**236-5197**	1	SPRING	
	8	1	**031-0214**	1	BOLT-LOCKING (1/4-20X0.5-IN)	
	9	1	**101-2867**	1	WASHER-HARD (7.2X25X2-MM THK)	
	10	1	**4M-6425**	1	BOLT (5/16-18X1-IN)	
	11	1	**5M-2894**	1	WASHER-HARD (10.2X18.5X2.5-MM THK)	
	12	1	**5S-7383**	1	BOLT (3/8-16X1.75-IN)	
	13	1	**8T-4224**	1	WASHER-HARD (8.8X16X2-MM THK)	

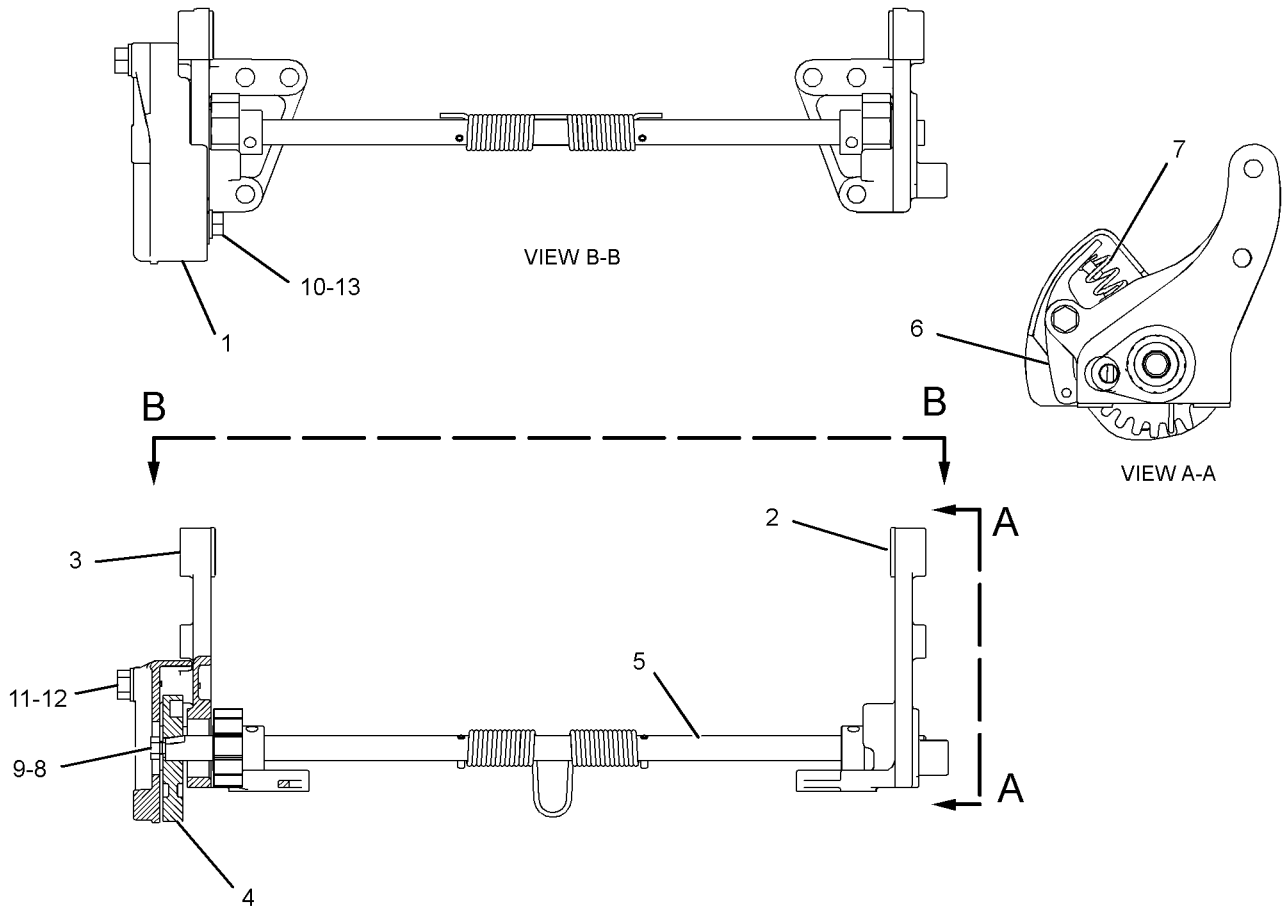

GRAPHIC #1 **<END>** g01296294

OPERATOR STATION

233-3133 ROOF GP-CAB

S/N: R9J1-UP
PART OF 233-3110, 325-5227 CAB AR
AN ATTACHMENT

SMCS-7301 **i02853664**

NOTE	REF NO	GRAPHIC REF	PART NUMBER	QTY	PART NAME 1 2 3 4 5 6 (PRODUCT LEVEL)	SEE PAGE
	1	1	**6V-3928**	4	PLUG-BUTTON	
	2	1	**8T-5401**	1	PLUG-BUTTON	
	3	1	**233-3209**	1	PANEL (LH)	
	4	1	**249-4073**	1	PANEL (RH)	
	5	1	**251-2247**	3	GROMMET	
	6	1	**285-6648**	18	INSERT	
	7	1	**5P-4115**	18	WASHER-HARD (7.2X19X2-MM THK)	
	8	1	**5P-4116**	10	WASHER-HARD (8.8X20.5X2-MM THK)	
M	9	1	**8T-4138**	18	BOLT (M6X1X20-MM)	
M	10	1	**8T-4189**	10	BOLT (M8X1.25X20-MM)	

M-METRIC PART

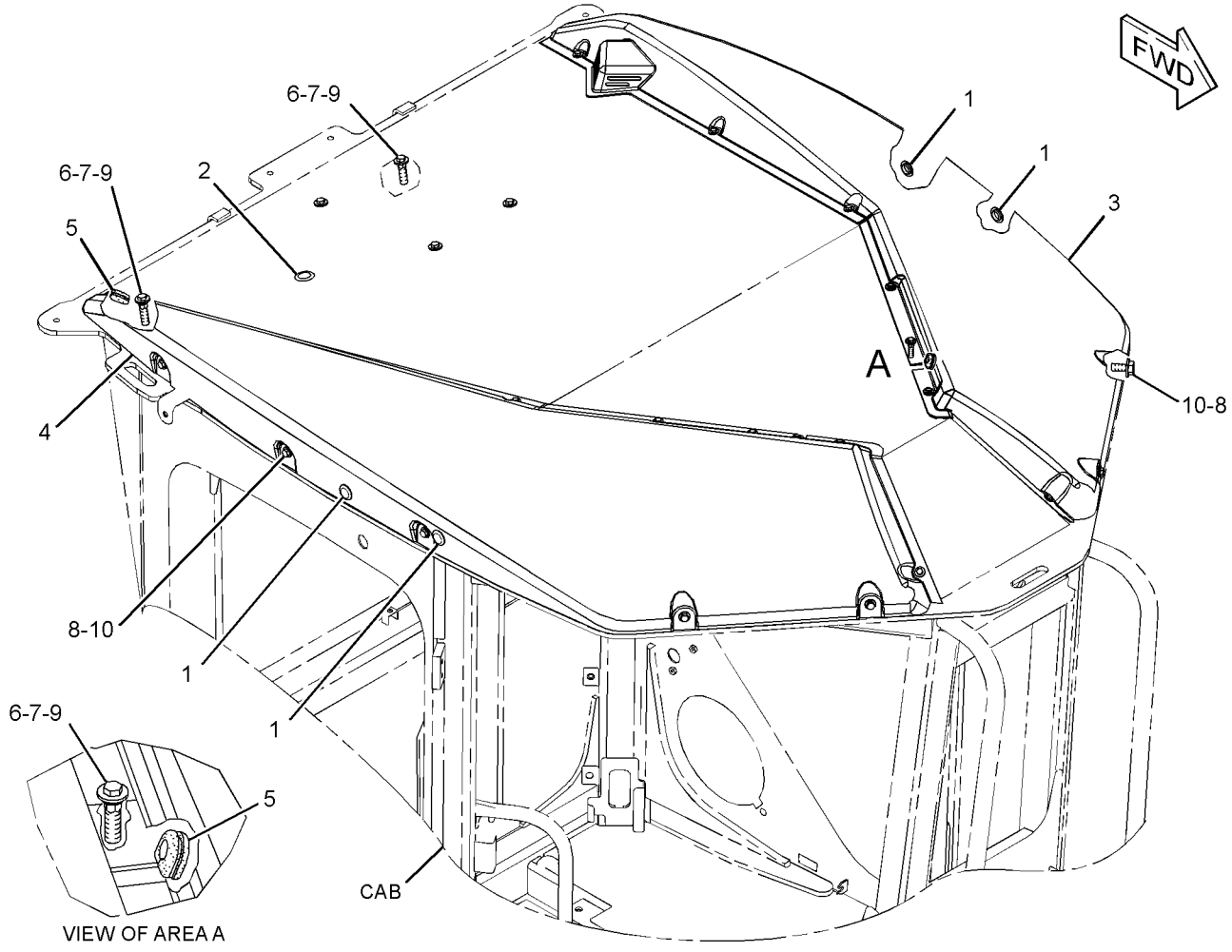

GRAPHIC #1 **<END>** g01433332

OPERATOR STATION

233-3116 SEAT & MOUNTING GP

S/N: R9J1-UP
PART OF 349-3049 OPTION AR-CAB
CANNOT BE USED WITH 233-3150 SEAT & MOUNTING GP
AN ATTACHMENT

SMCS-7312 **i02183331**

NOTE	PART NUMBER	QTY	PART NAME 1 2 3 4 5 6 (PRODUCT LEVEL)	SEE PAGE
Y	*243-6740*	1	SEAT GP-SUSPENSION	868
	8T-4121	4	WASHER-HARD (11X21X2.5-MM THK)	
M	**8T-4136**	4	BOLT (M10X1.5X25-MM)	

M-METRIC PART
Y-SEPARATE ILLUSTRATION

<END>

233-3150 SEAT & MOUNTING GP

S/N: R9J1-UP
PART OF 349-3050 OPTION AR-CAB
CANNOT BE USED WITH 233-3116—PAGE 863
AN ATTACHMENT

SMCS-7312 **i04036143**

NOTE	PART NUMBER	QTY	PART NAME 1 2 3 4 5 6 (PRODUCT LEVEL)	SEE PAGE
Y	*238-6683*	1	SEAT GP-SUSPENSION	867
M	**8T-4136**	4	BOLT (M10X1.5X25-MM)	
	8T-4121	4	WASHER-HARD (11X21X2.5-MM THK)	

M-METRIC PART
Y-SEPARATE ILLUSTRATION

<END>

OPERATOR STATION

244-5001 SEAT GP–CLOTH

S/N: R9J1-UP

PART OF 238-6683, 243-6740 SEAT GP-SUSPENSION

AN ATTACHMENT

SMCS-7312 **i02790340**

NOTE	REF NO	GRAPHIC REF	PART NUMBER	QTY	PART NAME 1 2 3 4 5 6 (PRODUCT LEVEL)	SEE PAGE
	1	1	**177-4937**	1	SPACER (11.7X19.8X20.3-MM THK)	
	2	1	**222-0345**	1	SEAT BELT GP (RETRACTABLE)	
	2A	1	**0T-0244**	1	BOLT (7/16-20X1.25-IN)	
	2B	1	**205-6388**	1	BOLT (7/16-20X1.75-IN)	
	3	1	**229-1494**	1	EXTENSION GP-BACKREST (CLOTH)	
Y	4	1	**244-5002**	1	SEAT GP (CLOTH)	865

Y-SEPARATE ILLUSTRATION

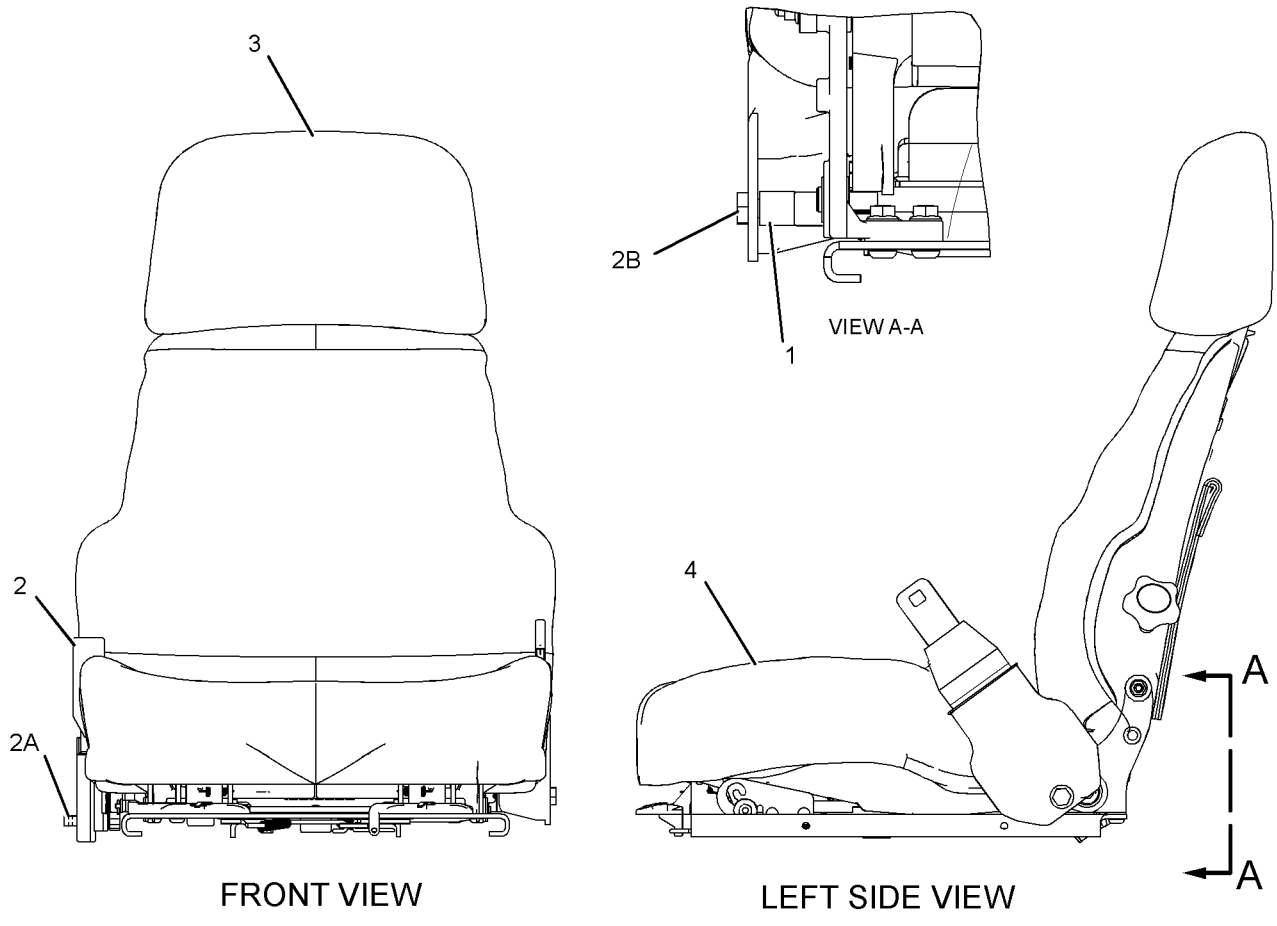

GRAPHIC #1 **<END>** g01393999

OPERATOR STATION

244-5002 SEAT GP–CLOTH

S/N: R9J1-UP
PART OF 244-5001 SEAT GP
AN ATTACHMENT

SMCS-7312 **i03818555**

NOTE	REF NO	GRAPHIC REF	PART NUMBER	QTY	PART NAME 1 2 3 4 5 6 (PRODUCT LEVEL)	SEE PAGE
	1	1	**294-5042**	2	SPACER (11.1X19.5X9.67-MM THK)	
	2	1	**143-1288**	8	LOCKNUT-FLANGE (3/8-16-THD)	
	3	1	**171-6682**	1	BAR	
	4	1	**172-2416**	2	PIN	
Y	5	1	*173-1028*	1	ADJUSTER GP-SEAT	766
	6	1	**177-1863**	2	BOLT-PIVOT (3/8-16X2.89-IN)	
Y	7	1	*292-9237*	1	PAN GP-BACKREST (CLOTH, LUMBAR)	846
	8	1	**184-2298**	1	ROD	
	9	1	**184-2299**	4	WASHER (7X25.4X2.54-MM THK)	
Y	10	1	*210-2270*	1	RECLINER GP-SEAT (CLOTH)	861
Y	11	1	**243-6737**	1	PAN GP-SEAT	847
	12	1	**095-0843**	2	PIN-COTTER	
	13	1	**171-1230**	6	SCREW-BUTTON HEAD (3/8-16X1-IN)	
	14	1	**5V-1496**	2	RETAINER	
	15	1	**6V-7646**	2	WASHER-HARD (7.2X25X2-MM THK)	
	16	1	**8T-0328**	1	WASHER-HARD (5.5X10X1-MM THK)	
	17	1	**8T-4205**	1	WASHER-HARD (7.2X14.5X2-MM THK)	

Y-SEPARATE ILLUSTRATION

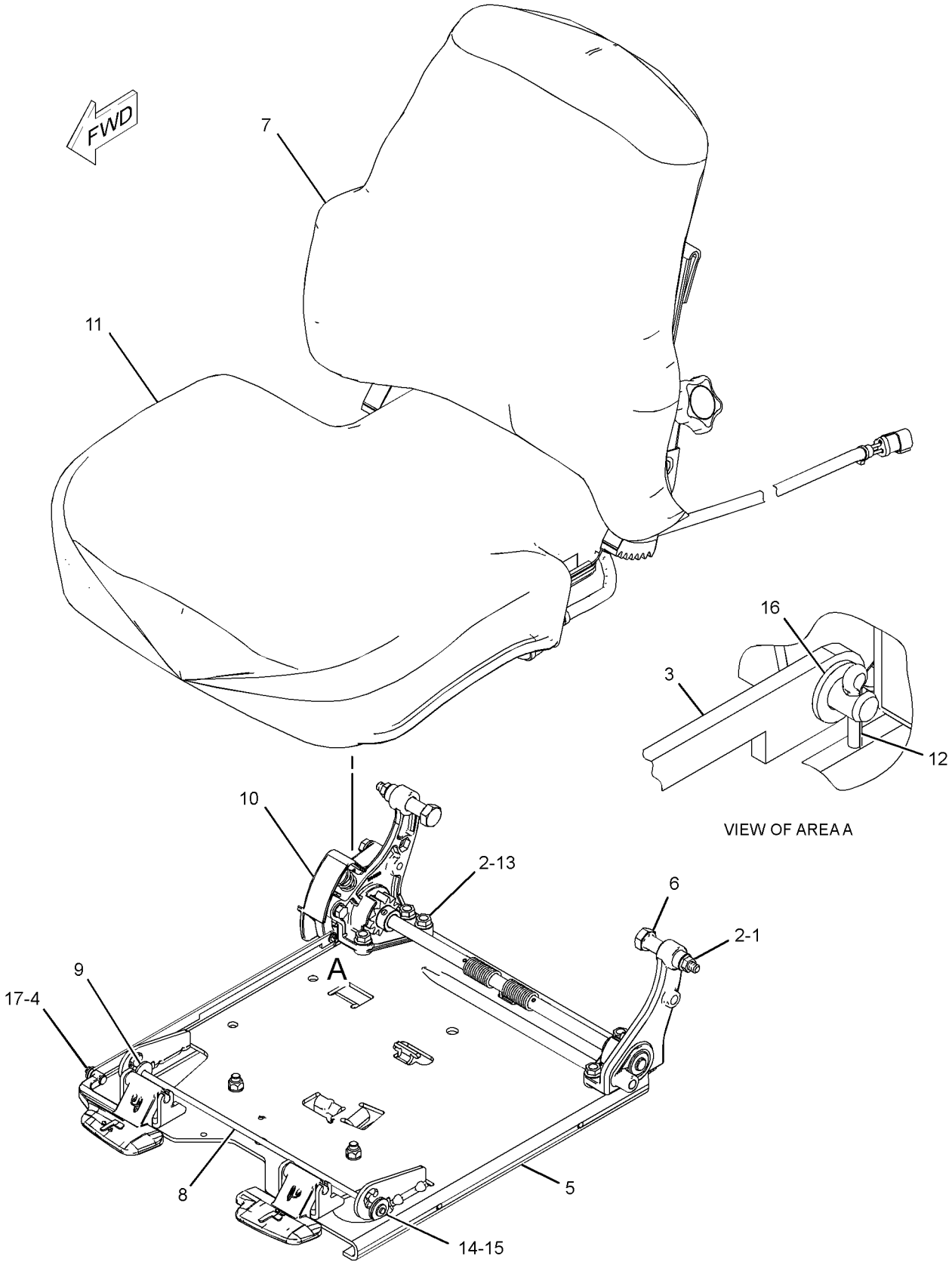

GRAPHIC #1 **<END>** g01336772

OPERATOR STATION

238-6683 SEAT GP-SUSPENSION

S/N: R9J1-UP

PART OF 233-3150 SEAT & MOUNTING GP

AN ATTACHMENT

SMCS-7312 **i02785026**

NOTE	REF NO	GRAPHIC REF	PART NUMBER	QTY	PART NAME 1 2 3 4 5 6 (PRODUCT LEVEL)	SEE PAGE
JZ	1	1		4	BLOCK-SLIDER	
J	2	1	**173-5787**	4	SETSCREW (1/4-20-THD)	
Y	3	1	**256-8768**	1	SUSPENSION GP-SEAT (AIR, HEATED)	877
J	4	1	**203-7703**	2	WASHER-HARD (10.2X22.22X2.38-MM THK)	
Y	5	1	*244-5001*	1	SEAT GP (CLOTH)	864
J	6	1	**4F-4879**	1	BOLT (3/8-16X0.5-IN)	
					AVAILABLE REPAIR KIT(S):	
J			**173-7035**	1	KIT-SLIDER BLOCK (SUSPENSION SEAT)	
					(INCLUDES WASHERS, BOLT, BLOCK SLIDERS & SETSCREWS)	

J-KIT MARKED J SERVICES PARTS MARKED J
Y-SEPARATE ILLUSTRATION
Z-NOT SERVICED SEPARATELY

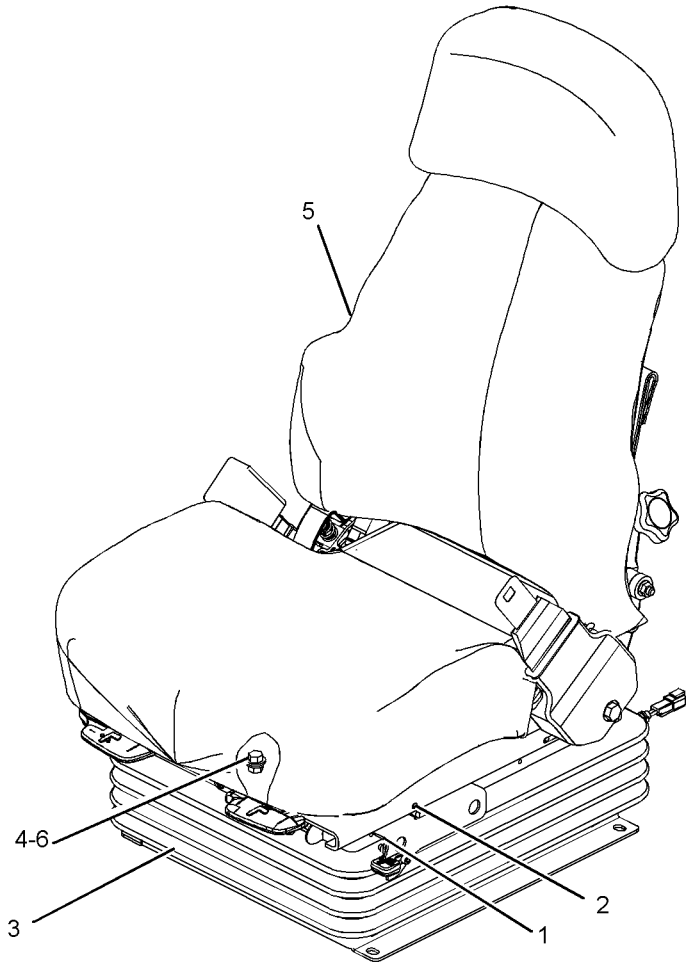

GRAPHIC #1 **<END>** g01110094

OPERATOR STATION

243-6740 SEAT GP-SUSPENSION

S/N: R9J1-UP
PART OF 233-3116 SEAT & MOUNTING GP
AN ATTACHMENT

SMCS-7312 **i02909349**

NOTE	REF NO	GRAPHIC REF	PART NUMBER	QTY	PART NAME 1 2 3 4 5 6 (PRODUCT LEVEL)	SEE PAGE
Y	1	1	**160-7165**	1	SUSPENSION GP-SEAT	875
JZ				4	BLOCK-SLIDER	
J	3	1	**173-5787**	4	SETSCREW (1/4-20-THD)	
J	4	1	**203-7703**	2	WASHER-HARD (10.2X22.22X2.38-MM THK)	
Y	5	1	**244-5001**	1	SEAT GP (CLOTH)	864
J	6	1	**4F-4879**	1	BOLT (3/8-16X0.5-IN)	
					AVAILABLE REPAIR KIT(S):	
J			**173-7035**	1	KIT-SLIDER BLOCK (SUSPENSION SEAT)	
					(INCLUDES WASHER, SCREW, BOLT & BLOCK-SLIDER)	

J-KIT MARKED J INCLUDES PARTS MARKED J
Y-SEPARATE ILLUSTRATION
Z-NOT SERVICED SEPARATELY

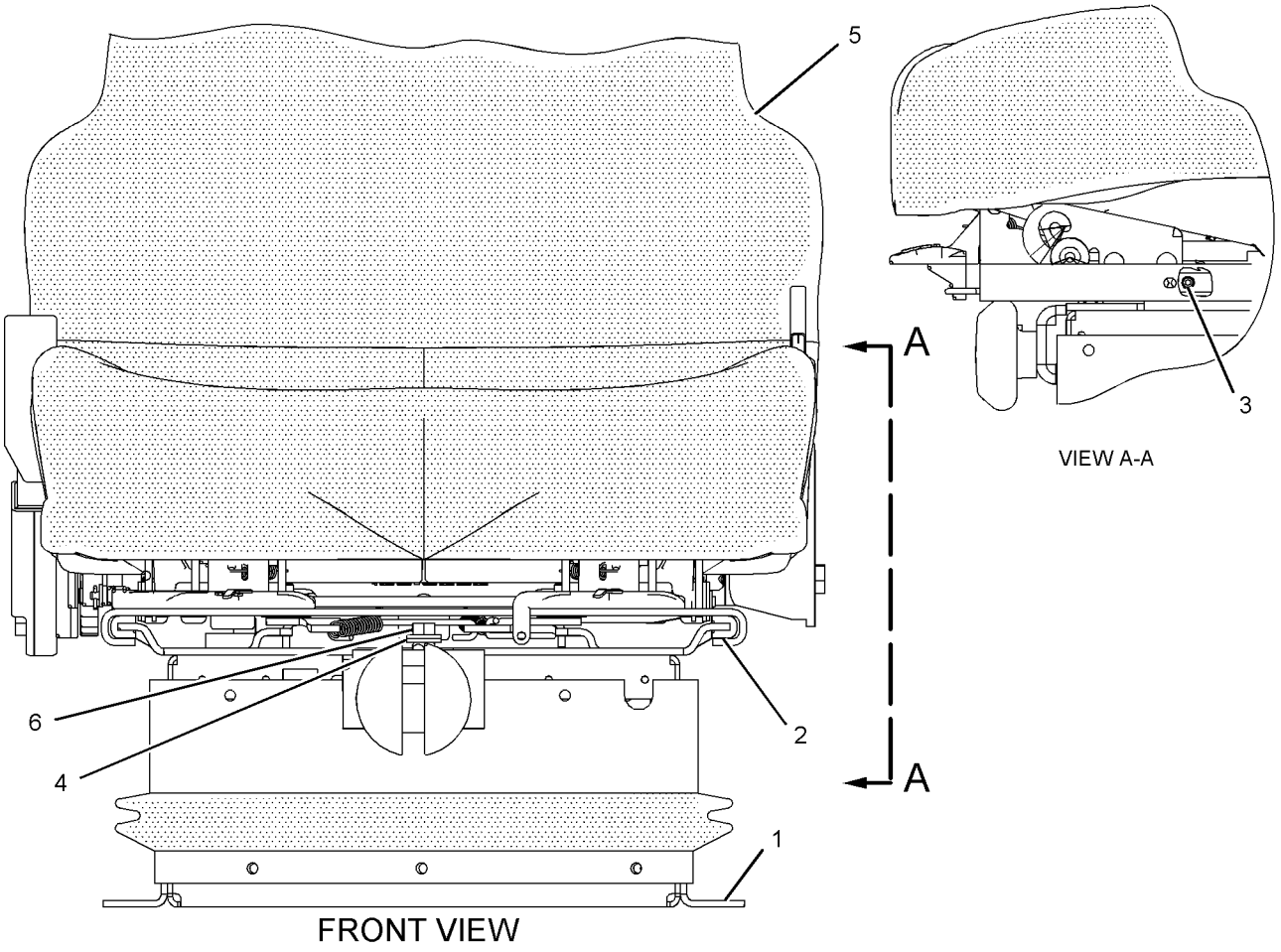

GRAPHIC #1 **<END>** g01109160

OPERATOR STATION

233-3224 SUPPORT GP-CONTROL—JOYSTICK, LH

S/N: R9J1-UP

PART OF 309-5955 CONTROL & MTG GP-JOYSTICK, 342-8961 SUPPORT GP-CONTROL AN ATTACHMENT

SMCS-4343, 6150 **i04003673**

NOTE	REF NO	GRAPHIC REF	PART NUMBER	QTY	PART NAME 1 2 3 4 5 6 (PRODUCT LEVEL)	SEE PAGE
	1	1	**8X-1386**	1	SPACER (12.2X23X22-MM THK)	
	2	1	**4E-8722**	10	NUT (RETAINER)	
	3	1	**233-3227**	1	SUPPORT AS (LH)	
	4	1	**233-3248**	2	BUSHING	
	5	1	**233-3252**	1	SHAFT AS	
	6	1	**360-6938**	1	SUPPORT AS (LH)	
		1	**3K-6060**	1	LOCKNUT (3/8-16-THD)	
		1	**4B-4280**	1	WASHER (13.5X27X2.5-MM THK)	
		1	**241-3720**	1	FILM-WARNING (RECOIL SPRING)	
		1	**295-2275**	1	KNOB AS (HEIGHT ADJUSTMENT)	
Y	7	1	**252-1805**	1	CUSHION GP-ARM	796
	8	1	**252-1807**	1	SUPPORT AS (LH)	
		1	**3G-0622**	2	RING-RETAINING	
M		1	**9X-2044**	2	SCREW-TRUSS HEAD (M6X1X16-MM)	
		1	**7X-0605**	2	WASHER-HARD (13X28X1.6-MM THK)	
		1	**114-6658**	2	WASHER (6.5X17X1-MM THK)	
		1	**294-1001**	1	PLATE AS	
M		1	**6V-9632**	2	NUT-WELD (M6X1-THD)	
	9	1	**253-3482**	1	KNOB AS (ARMREST ADJUSTMENT)	
	10	1	**253-3483**	1	PLATE AS	
	11	1	**253-3484**	2	WASHER (13X46X3.5-MM THK)	
	12	1	**272-8329**	1	BRACKET	
	13	1	**308-4358**	1	PLATE AS	
		1	**130-5300**	4	CLIP	
M	14	1	**5C-9553**	2	BOLT (M6X1X16-MM)	
	15	1	**7J-5925**	1	PIN-COTTER	
	16	1	**7X-0578**	2	WASHER-HARD (10.2X32X2.5-MM THK)	
	17	1	**8T-4224**	7	WASHER-HARD (8.8X16X2-MM THK)	
M	18	1	**8T-4908**	7	BOLT (M8X1.25X25-MM)	
M	19	1	**9X-2043**	2	SCREW-TRUSS HEAD (M6X1X14-MM)	
	20	1	**9X-8256**	2	WASHER (6.6X12X2-MM THK)	
D	21	1	**8T-6936**		SEAL (0.1-M EACH)	

D-ORDER BY THE METER
M-METRIC PART
Y-SEPARATE ILLUSTRATION

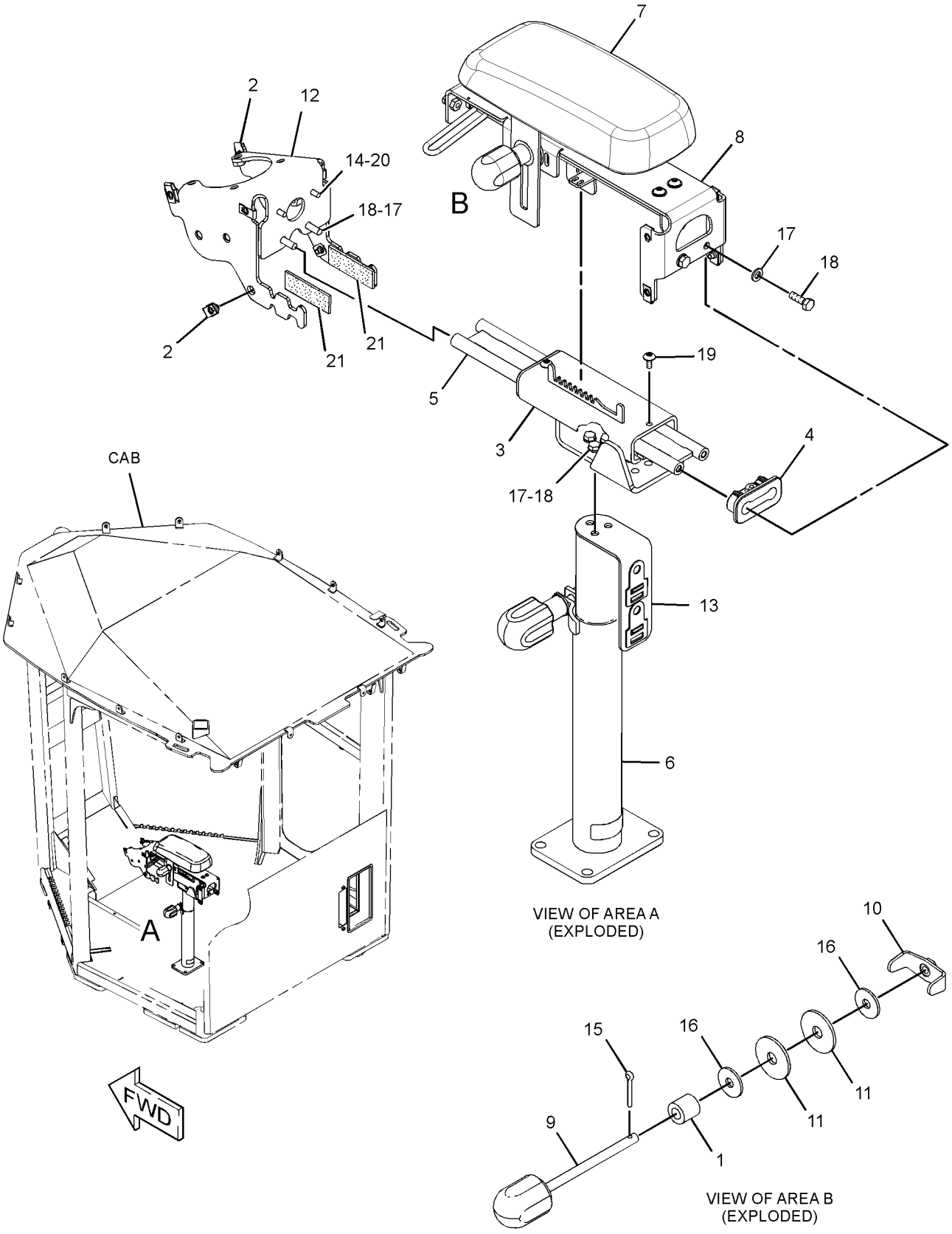

GRAPHIC #1 **<END>** g02219293

OPERATOR STATION

233-3225 SUPPORT GP-CONTROL—JOYSTICK, RH

S/N: R9J1-UP

PART OF 309-5955 CONTROL & MTG GP-JOYSTICK, 342-8961 SUPPORT GP-CONTROL AN ATTACHMENT

SMCS-4343, 6150 **i04004010**

NOTE	REF NO	GRAPHIC REF	PART NUMBER	QTY	PART NAME 1 2 3 4 5 6 (PRODUCT LEVEL)	SEE PAGE
	1	1	**8X-1386**	1	SPACER (12.2X23X22-MM THK)	
	2	1	**4E-8722**	10	NUT (RETAINER) (M6-THD)	
	3	1	**233-3226**	1	SUPPORT AS (RH)	
	4	1	**233-3248**	2	BUSHING	
	5	1	**233-3252**	1	SHAFT AS	
	6	1	**360-6937**	1	SUPPORT AS (RH)	
	6A	1	**3K-6060**	1	LOCKNUT (3/8-16-THD)	
	6B	1	**4B-4280**	1	WASHER (13.5X27X2.5-MM THK)	
	6C	1	**241-3720**	1	FILM-WARNING (RECOIL SPRING)	
	6D	1	**295-2275**	1	KNOB AS (HYDRAULIC CONTROL SUPPORT)	
	7	1	**233-3275**	1	BRACKET	
Y	8	1	**252-1805**	1	CUSHION GP-ARM	796
	9	1	**252-1808**	1	SUPPORT AS (RH)	
	9A	1	**3G-0622**	2	RING-RETAINING	
	9B	1	**7X-0605**	2	WASHER-HARD (13X28X1.6-MM THK)	
M	9C	1	**9X-2044**	2	SCREW-TRUSS HEAD (M6X1X16-MM)	
	9D	1	**114-6658**	2	WASHER (6.5X17X1-MM THK)	
	9E	1	**294-1001**	1	PLATE AS	
M		1	**6V-9632**	2	NUT-WELD (M6X1-THD)	
	10	1	**253-3482**	1	KNOB AS (ARMREST ADJUSTMENT)	
	11	1	**253-3483**	1	PLATE AS	
	12	1	**253-3484**	2	WASHER (13X46X3.5-MM THK)	
M	13	1	**5C-9553**	2	BOLT (M6X1X16-MM)	
	14	1	**7J-5925**	1	PIN-COTTER	
	15	1	**7X-0578**	2	WASHER-HARD (10.2X32X2.5-MM THK)	
	16	1	**8T-4224**	7	WASHER-HARD (8.8X16X2-MM THK)	
M	17	1	**8T-4908**	7	BOLT (M8X1.25X25-MM)	
M	18	1	**9X-2043**	2	SCREW-TRUSS HEAD (M6X1X14-MM)	
	19	1	**9X-8256**	2	WASHER (6.6X12X2-MM THK)	
	20	1	**308-4358**	1	PLATE AS	
		1	**130-5300**	4	CLIP	
D	21	1	**8T-6936**		SEAL (0.1-M EACH)	

D-ORDER BY THE METER
M-METRIC PART
Y-SEPARATE ILLUSTRATION

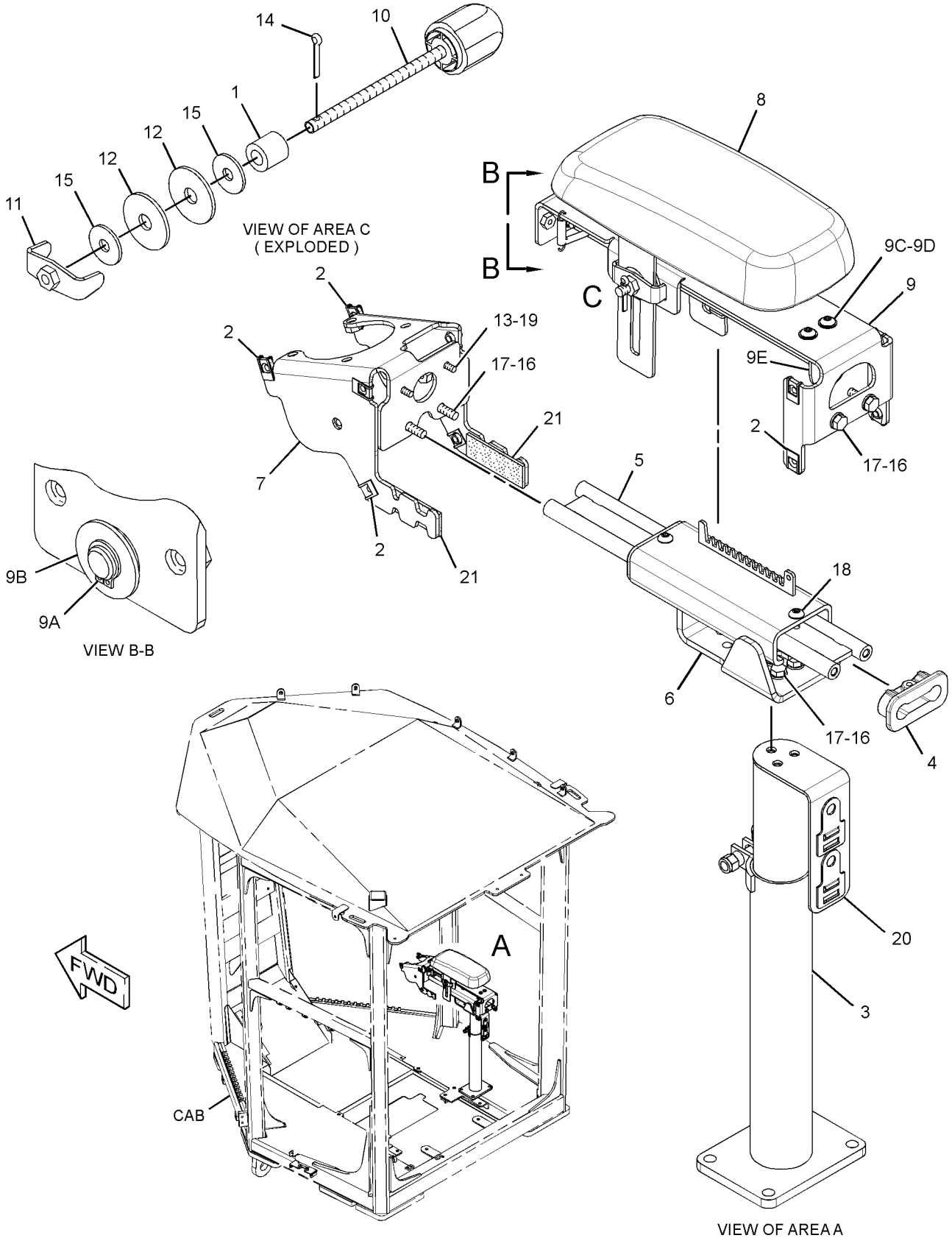

GRAPHIC #1 **<END>** g01426560

OPERATOR STATION

342-8961 SUPPORT GP-CONTROL—OPERATOR PLATFORM

S/N: R9J1-UP
PART OF 233-3110 CAB AR
AN ATTACHMENT

SMCS-4343, 6150 **i03655405**

NOTE	REF NO	GRAPHIC REF	PART NUMBER	QTY	PART NAME 1 2 3 4 5 6 (PRODUCT LEVEL)	SEE PAGE
	1	1	**140-5945**	1	FILM-IDENTIFICATION (HORN)	
Y	2	1	*233-3224*	1	SUPPORT GP-CONTROL (JOYSTICK, LH)	869
Y	3	1	*233-3225*	1	SUPPORT GP-CONTROL (JOYSTICK, RH)	871
	4	1	**251-2247**	2	GROMMET	
	5	1	**251-2272**	1	COVER	
	6	1	**251-2273**	1	COVER	
	7	1	**251-2274**	1	COVER	
	8	1	**251-2275**	1	COVER	
	9	1	**280-7477**	1	FILM-INSTRUCTION (OPERATOR CONSOLE, LH)	
	10	1	**280-7478**	1	FILM-INSTRUCTION (OPERATOR CONSOLE, RH)	
Y	11	1	*292-0609*	1	ARMREST GP (RH)	773
Y	12	1	*292-0617*	1	ARMREST GP (LH)	774
	13	1	**297-4147**	1	COVER (LH)	
	14	1	**297-4148**	1	COVER (RH)	
	15	1	**312-1714**	1	FILM-INSTRUCTION (ADJUSTMENT CONTROL)	
	16	1	**114-6658**	20	WASHER (6.5X17X1-MM THK)	
	17	1	**6V-5839**	8	WASHER (11X21X2.5-MM THK)	
M	18	1	**8T-4196**	8	BOLT (M10X1.5X35-MM)	
M	19	1	**8T-4200**	6	BOLT (M8X1.25X16-MM)	
	20	1	**8T-4224**	6	WASHER-HARD (8.8X16X2-MM THK)	
M	21	1	**9X-2044**	20	SCREW-TRUSS HEAD (M6X1X16-MM)	
M	22	1	**9X-2045**	4	SCREW-TRUSS HEAD (M6X1X20-MM)	
E	23	1	**116-8376**		SEAL (6-CM EACH)	
E	23A	1	**116-8376**		SEAL (17-CM EACH)	

E-ORDER BY THE CENTIMETER
M-METRIC PART
Y-SEPARATE ILLUSTRATION

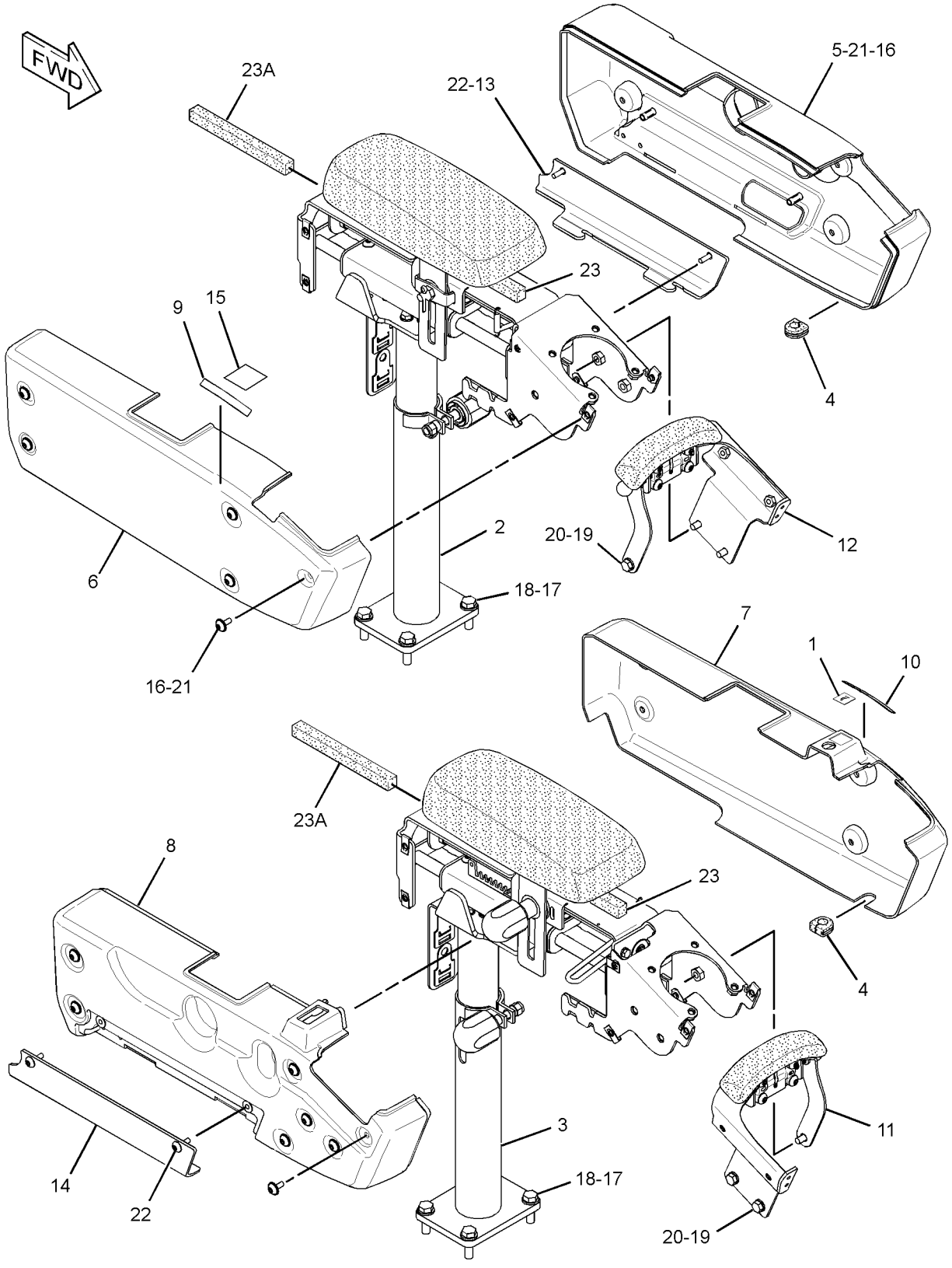

GRAPHIC #1 **<END>** g02028870

OPERATOR STATION

160-7165 SUSPENSION GP-SEAT

S/N: R9J1-UP
PART OF 243-6740 SEAT GP-SUSPENSION
AN ATTACHMENT

SMCS-7324 **i03338606**

NOTE	REF NO	GRAPHIC REF	PART NUMBER	QTY	PART NAME 1 2 3 4 5 6 (PRODUCT LEVEL)	SEE PAGE
	1	1	**2K-4973**	2	LOCKNUT (3/8-16-THD)	
	2	1	**4V-7884**	2	BEARING	
	3	1	**4V-8577**	4	BEARING	
	4	1	**5V-1497**	1	RETAINER	
	5	1	**8Y-5965**	1	ABSORBER AS-SHOCK	
	6	1	**8Y-6012**	1	ARM AS-SUSPENSION	
	7	1	**8Y-6014**	1	HOUSING AS (LOWER)	
	8	1	**8Y-6024**	2	SHAFT AS	
J	9	1	**101-0003**	20	FASTENER	
J	10	1	**166-6781**	6	FASTENER	
J	11	1	**163-1146**	3	FASTENER	
	12	1	**145-0326**	1	FILM-INSTRUCTION (SEAT ADJUSTMENT)	
	13	1	**169-7380**	1	BOLT-SOCKET HEAD (3/8-16X0.375-IN)	
Y	14	1	**174-2231**	1	HOUSING GP-SEAT SUSPENSION	823
J	15	1	**197-7689**	3	FASTENER	
					AVAILABLE REPAIR KIT(S):	
J			**8Y-5944**	1	KIT-SUSPENSION BOOT (SEAT)	
					(INCLUDES BOOT, RETAINER & FASTENERS)	
			101-4194	1	KIT-TETHER BELT (SUSPENSION SEAT)	
					(INCLUDES 2 BELTS)	
			101-4195	1	KIT-SUSPENSION ROLLER (SUSPENSION SEAT)	
					(INCLUDES 4 ROLLERS)	

J-KIT MARKED J INCLUDES PARTS MARKED J
Y-SEPARATE ILLUSTRATION

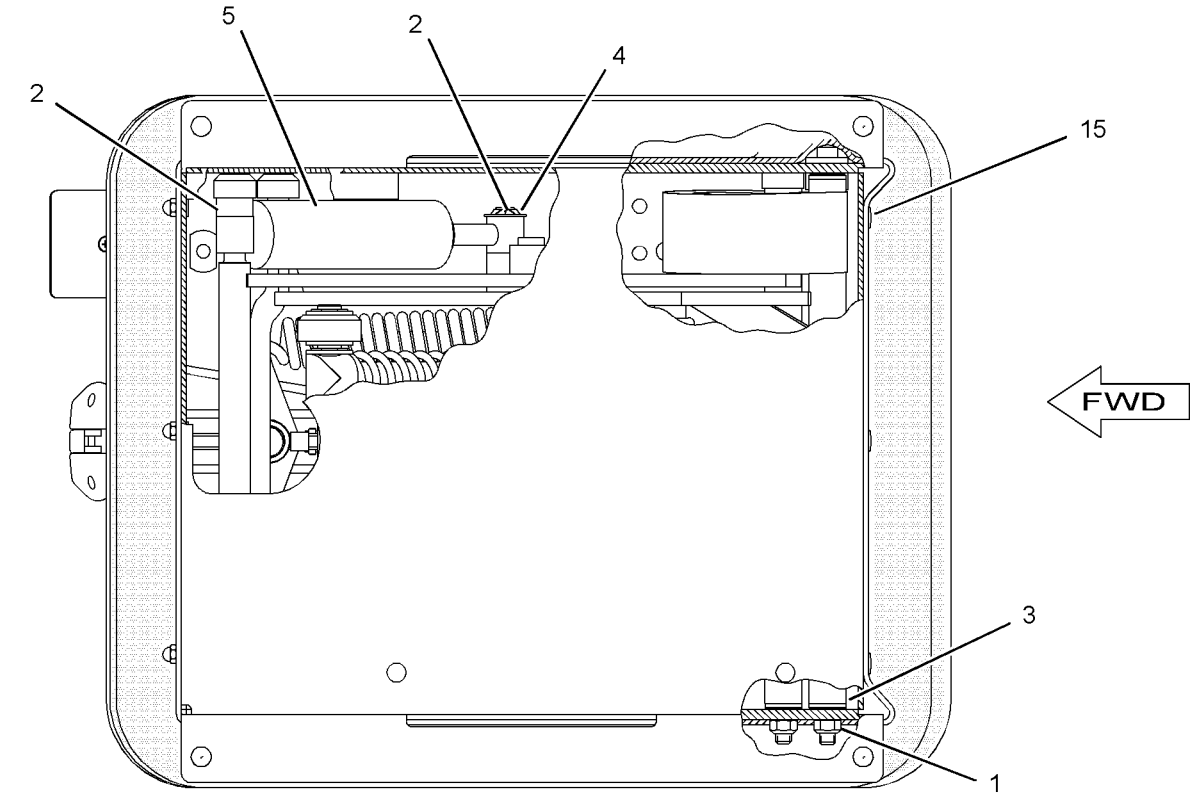

BOTTOM VIEW

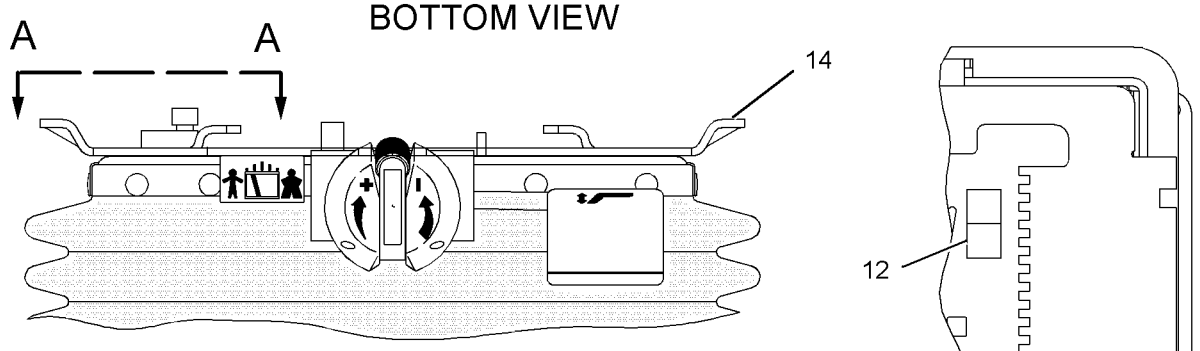

FRONT VIEW

VIEW A-A

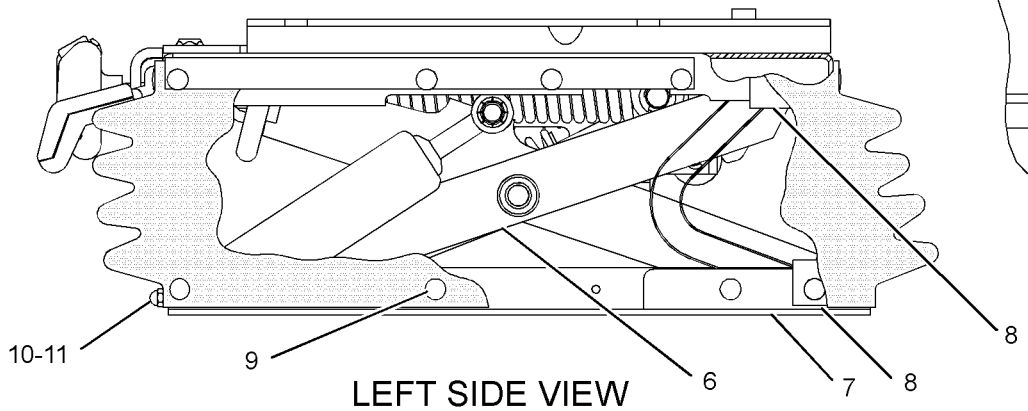

LEFT SIDE VIEW

GRAPHIC #1 **<END>** g01445578

OPERATOR STATION

256-8768 SUSPENSION GP-SEAT—AIR, HEATED

S/N: R9J1-UP
PART OF 238-6683 SEAT GP-SUSPENSION
AN ATTACHMENT

SMCS-7324 **i03185402**

NOTE	REF NO	GRAPHIC REF	PART NUMBER	QTY	PART NAME 1 2 3 4 5 6 (PRODUCT LEVEL)	SEE PAGE
	1	1	**3P-9900**	5	WASHER (10.5X30X3-MM THK)	
	2	1	**4B-4278**	2	WASHER (10.2X20.5X1.6-MM THK)	
	3	1	**4V-8577**	12	BEARING	
	4	1	**8L-8413**	1	STRAP-CABLE	
	5	1	**101-0003**	26	FASTENER	
	6	1	**145-0326**	1	FILM-INSTRUCTION (SEAT ADJUSTMENT)	
	7	1	**164-1234**	1	PLATE	
	8	1	**169-7380**	1	BOLT-SOCKET HEAD (3/8-16X0.375-IN)	
	9	1	**186-5107**	2	SCREW-DRIVE (NO 8-16X1.25-IN)	
	10	1	**192-7752**	4	SHAFT AS	
	11	1	**192-7755**	1	HOUSING AS (LOWER)	
	12	1	**192-7760**	1	SHAFT	
	13	1	**192-7767**	1	SCISSORS AS	
	14	1	**192-7783**	1	TOGGLE AS (WIDE)	
	15	1	**192-7787**	1	TOGGLE AS (NARROW)	
	16	1	**192-7790**	1	HOUSING AS (UPPER)	
	17	1	**192-7795**	1	BOOT	
	18	1	**192-7805**	1	HARNESS AS-VALVE (SEAT AIR COMPRESSOR)	
		1	**102-8802**	1	KIT-RECEPTACLE (2-PIN)	
		1	**102-8802**	1	KIT-RECEPTACLE (2-PIN)	
					(EACH KIT INCLUDES RECEPTACLE AS AND WEDGE)	
	19	1	**192-7810**	1	SPRING AS-AIR	
		1	**5P-4423**	1	ELBOW	
	20	1	**192-7812**	1	BOLT-SPECIAL	
	21	1	**192-7820**	3	BUMPER	
	22	1	**192-7822**	1	SHAFT	
	23	1	**237-3943**	1	BRACKET	
Y	24	1	**237-3970**	1	AIR COMPRESSOR GP-SEAT	767
	25	1	**108-4311**	1	SCREW-MACHINE (3/8-16X0.75-IN)	
	26	1	**2K-4973**	8	LOCKNUT (3/8-16-THD)	
	27	1	**3J-4818**	1	LOCKWASHER	
M	28	1	**5C-2890**	3	NUT (M6X1-THD)	
D	29	1	**5P-6010**		TUBE (0.257-M)	
D	29A	1	**5P-6010**		TUBE (0.356-M)	
	30	1	**8T-9371**	1	BOLT (3/8-16X0.5-IN)	
E	31	1	**211-5358**		CONDUIT-FLEXIBLE (26.7-CM)	
E	31A	1	**211-5358**		CONDUIT-FLEXIBLE (35.6-CM)	
					AVAILABLE REPAIR KIT(S):	
			192-7799	1	KIT-AIR VALVE (SEAT)	
					(INCLUDES KNOB ASSEMBLY)	
			212-7779	1	KIT-SHOCK ABSORBER (SUSPENSION SEAT) (SEAT)	
					(INCLUDES, LOCKNUTS, BALL, LOCKWASHER, STRAP, SPRING, CLAMP, ADJUSTERS, BOLTS, BEARINGS, WASHERS, SHOCK ABSORBER,	
					BRACKETS, KIT, CABLE ASSEMBLY & KNOB)	
			213-5170	1	KIT-INDICATOR (SEAT ADJUSTMENT) (SEAT)	
					(INCLUDES BOLTS, NUTS, ROD, ARM & HOUSING)	
			211-9294	1	KIT-TETHER (SEAT)	
					(INCLUDES TETHER)	

D-ORDER BY THE METER
E-ORDER BY THE CENTIMETER
M-METRIC PART
Y-SEPARATE ILLUSTRATION

256-8768 SUSPENSION GP-SEAT *(contd.)* i03185402

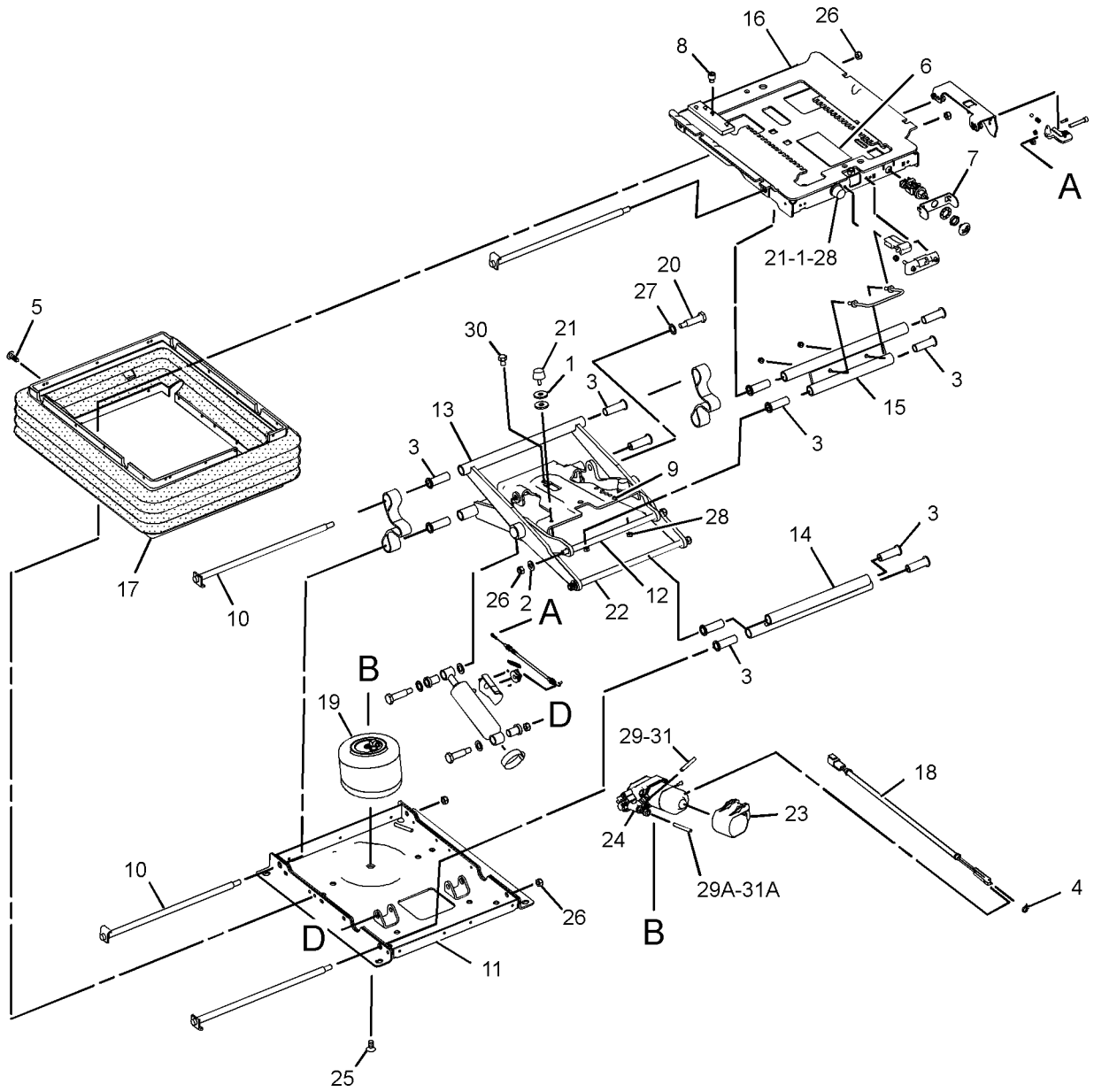

GRAPHIC #1 **<END>** g01636382

248-3164 TANK GP-WINDOW WASHER

S/N: R9J1-UP
3 PUMPS
PART OF 233-3138 WIPER & WASHER GP-WINDOW
AN ATTACHMENT

SMCS-7306 **i03744197**

NOTE	REF NO	GRAPHIC REF	PART NUMBER	QTY	PART NAME 1 2 3 4 5 6 (PRODUCT LEVEL)	SEE PAGE
	1	1	**6W-5698**	1	GROMMET	
	2	1	**7T-8890**	3	PUMP AS-WASHER	
	3	1	**254-0079**	1	TANK-WASHER	
	4	1	**261-3345**	1	CONNECTOR	
	5	1	**267-8715**	7	PLUG	
	6	1	**321-5236**	4	PLUG	
E	7	1	**144-0195**		HOSE (10-CM EACH)	

E-ORDER BY THE CENTIMETER

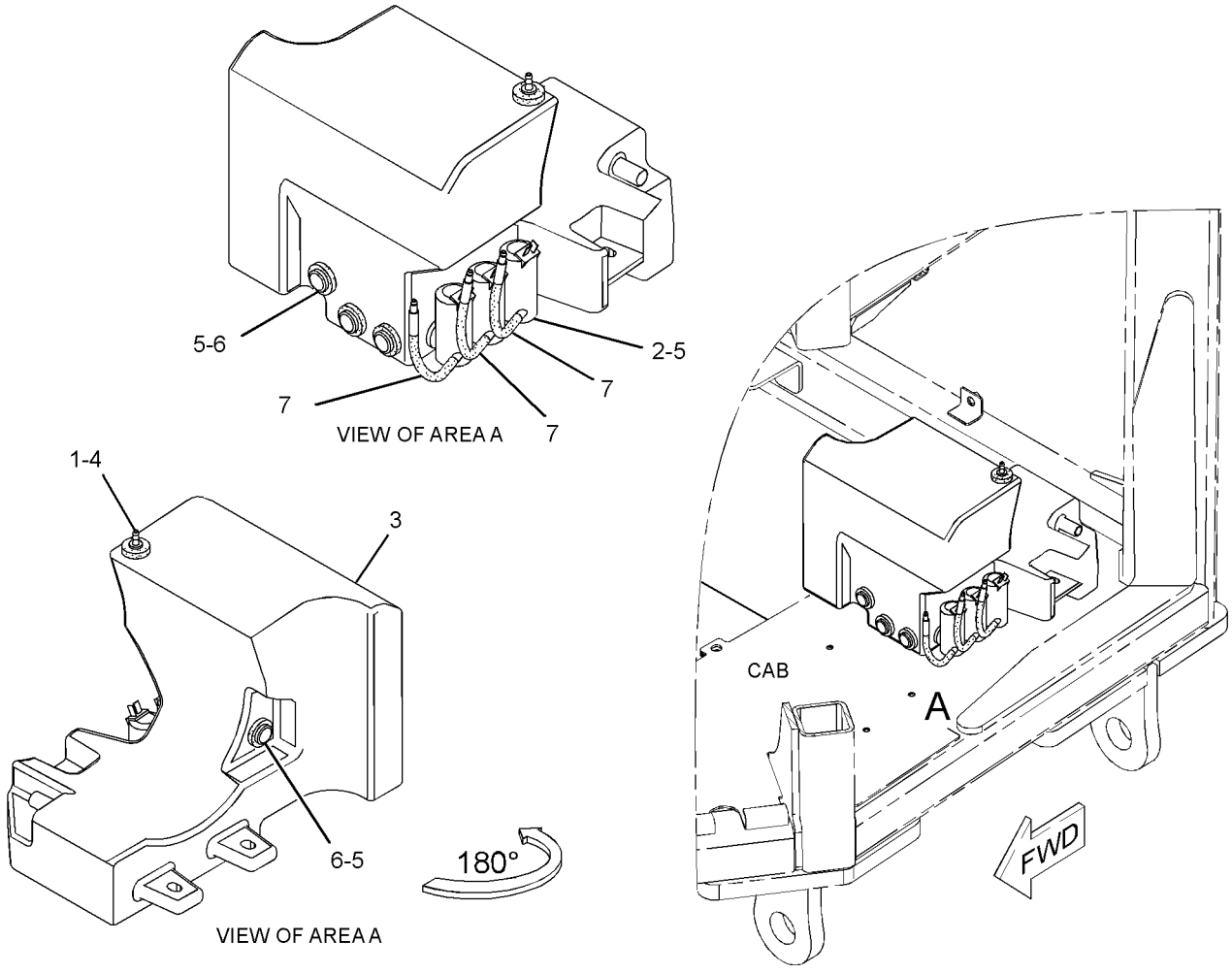

GRAPHIC #1 **<END>** g01523194

OPERATOR STATION

294-0994 WINDOW GP-CAB–FRONT

S/N: R9J1-UP
PART OF 233-3110 CAB AR
AN ATTACHMENT

SMCS-7310 **i04014349**

NOTE	REF NO	GRAPHIC REF	PART NUMBER	QTY	PART NAME 1 2 3 4 5 6 (PRODUCT LEVEL)	SEE PAGE
	1	1	**114-6658**	6	WASHER (6.5X17X1-MM THK)	
	2	1	**294-1012**	1	GLASS-FRONT	
	3	1	**294-1018**	2	BRACKET	
M	4	1	**9X-2045**	6	SCREW-TRUSS HEAD (M6X1X20-MM)	
E	5	1	**294-1015**		SEAL (25-CM EACH)	
CE	6	1	**294-1014**		SEAL-GLASS (185-CM)	

C-CHANGE FROM PREVIOUS TYPE
E-ORDER BY THE CENTIMETER
M-METRIC PART

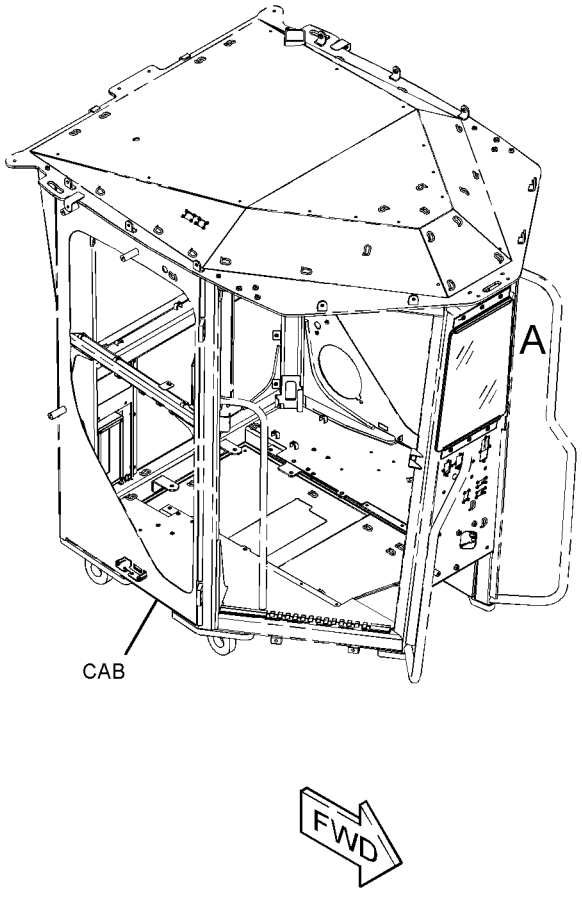

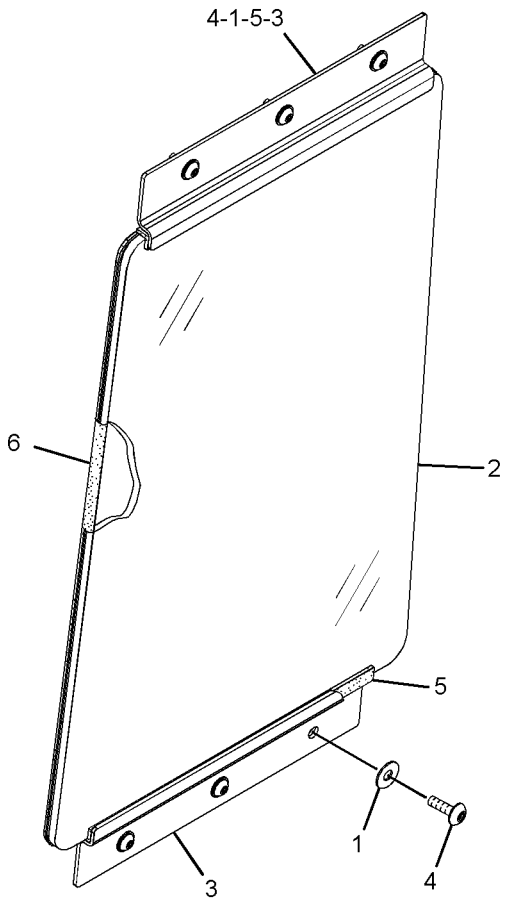

VIEW OF AREA A

GRAPHIC #1 **<END>** g02189636

OPERATOR STATION

294-1011 WINDOW GP-CAB—FRONT

S/N: R9J1-UP
PART OF 325-5227 CAB AR
AN ATTACHMENT

SMCS-7310 **i03302481**

NOTE	REF NO	GRAPHIC REF	PART NUMBER	QTY	PART NAME 1 2 3 4 5 6 (PRODUCT LEVEL)	SEE PAGE
	1	1	**114-6658**	6	WASHER (6.5X17X1-MM THK)	
	2	1	**294-1017**	1	GLASS	
	3	1	**294-1018**	2	BRACKET	
M	4	1	**9X-2045**	6	SCREW-TRUSS HEAD (M6X1X20-MM)	
E	5	1	**294-1015**		SEAL (25-CM EACH)	
E	6	1	**294-1014**		SEAL-GLASS (171-CM)	
	7	1	**224-3969**	1	INDICATOR-LEVEL	

E-ORDER BY THE CENTIMETER
M-METRIC PART

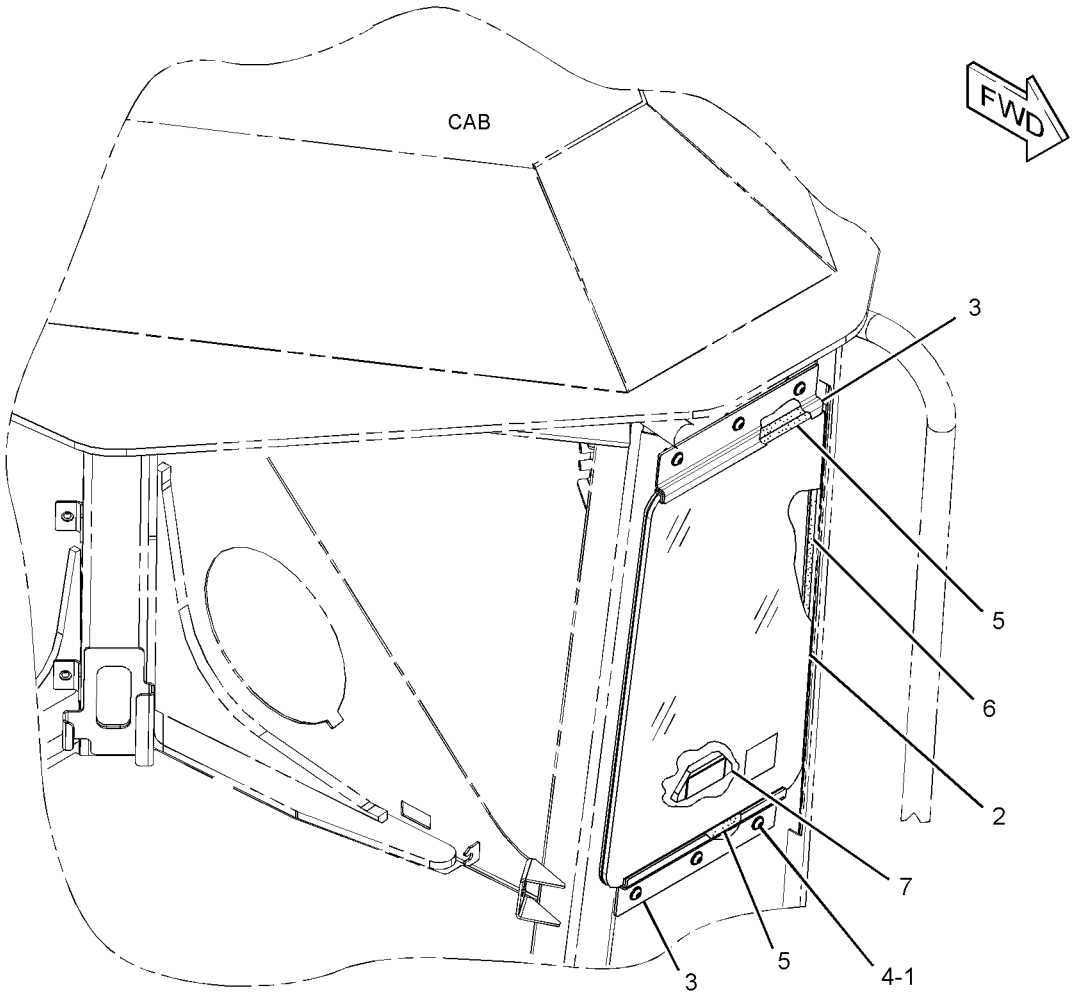

GRAPHIC #1 **<END>** g01425724

OPERATOR STATION

300-1870 WINDOW GP-CAB—SIDE, REAR, RH, LH

S/N: R9J1-UP
PART OF 349-3049 OPTION AR-CAB
CANNOT BE USED WITH 300-1873—PAGE 883
AN ATTACHMENT

SMCS-7310 **i02970603**

NOTE	REF NO	GRAPHIC REF	PART NUMBER	QTY	PART NAME 1 2 3 4 5 6 (PRODUCT LEVEL)	SEE PAGE
	1	1	**233-3235**	1	GLASS-REAR	
	2	1	**300-1871**	1	GLASS (RH)	
	3	1	**300-1872**	1	GLASS (LH)	
E	4	1	**3E-3000**		SEAL (387-CM)	
E	4A	1	**3E-3000**		SEAL (392-CM EACH)	

E-ORDER BY THE CENTIMETER

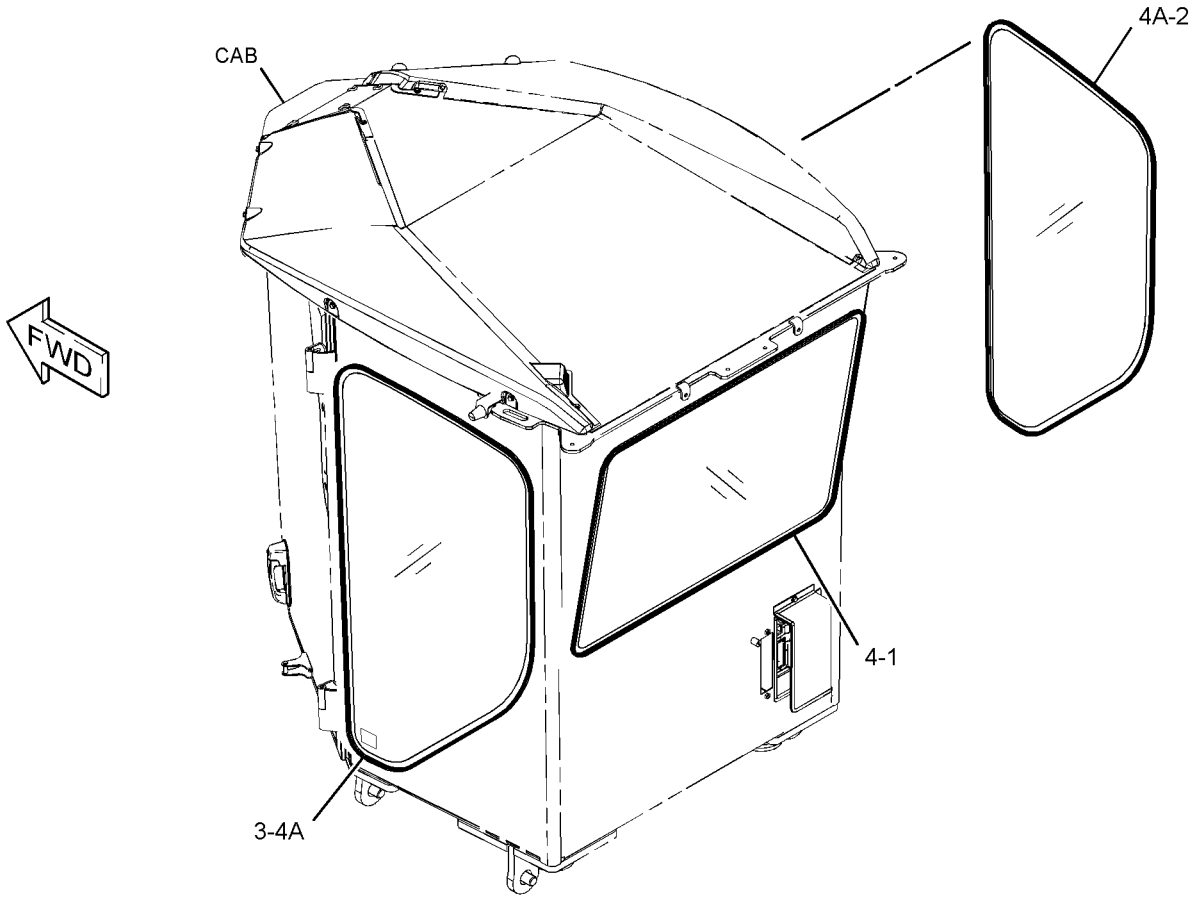

GRAPHIC #1 **<END>** g01523877

300-1873 WINDOW GP-CAB–REAR, LH, RH, SIDE WIPERS

S/N: R9J1-UP
PART OF 349-3050 OPTION AR-CAB
CANNOT BE USED WITH 300-1870–PAGE 882
AN ATTACHMENT

SMCS-7310 **i02793263**

NOTE	REF NO	GRAPHIC REF	PART NUMBER	QTY	PART NAME 1 2 3 4 5 6 (PRODUCT LEVEL)	SEE PAGE
Y	1	1	*233-3188*	1	WIPER GP-WINDOW (SIDE, RH, LH)	887
	2	1	**233-3235**	1	GLASS-REAR	
	3	1	**235-6175**	1	HARNESS AS-WINDOW WIPER	
		1	**155-2260**	2	KIT-CONNECTING PLUG (3-PIN)	
					(EACH INCLUDES PLUG AS, WEDGE, & INTERFACE SEAL)	
		1	**102-8804**	1	KIT-RECEPTACLE (4-PIN)	
					(INCLUDES RECEPTACLE AS & WEDGE)	
	4	1	**300-1874**	1	GLASS (RH)	
	5	1	**300-1875**	1	GLASS (LH)	
E	6	1	**3E-3000**		SEAL (387-CM)	
E	6A	1	**3E-3000**		SEAL (398-CM EACH)	

E-ORDER BY THE CENTIMETER
Y-SEPARATE ILLUSTRATION

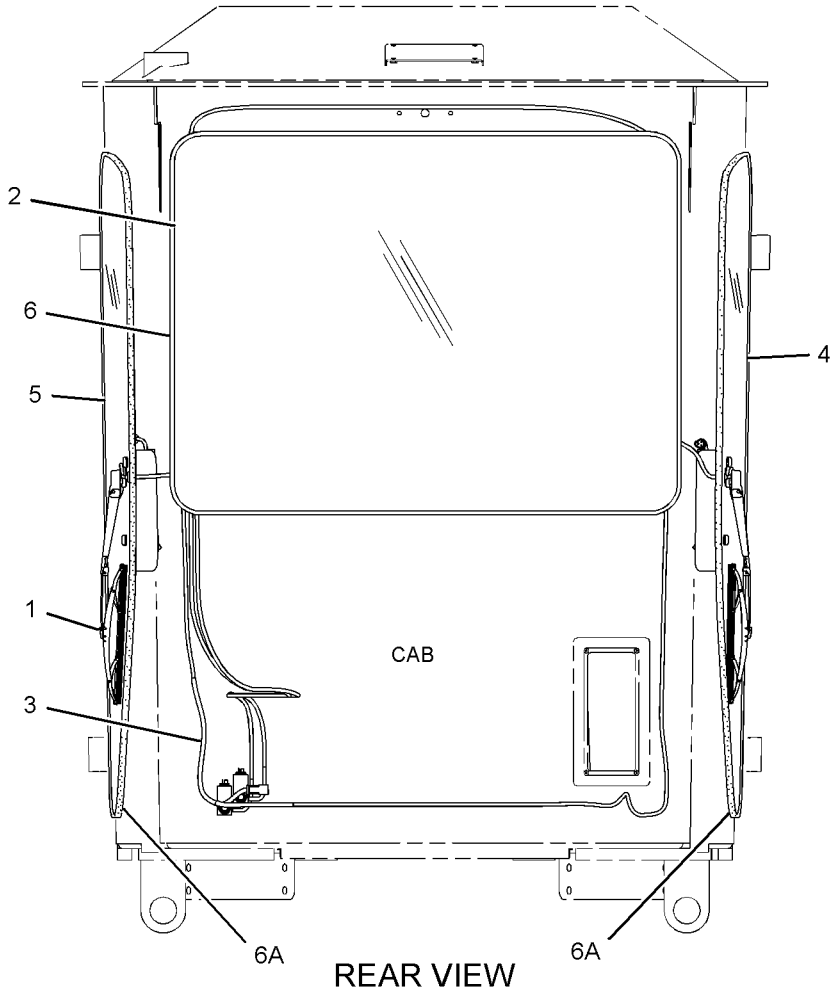

REAR VIEW

GRAPHIC #1 **<END>** g01392921

OPERATOR STATION

233-3138 WIPER & WASHER GP-WINDOW—FRONT

S/N: R9J1-UP
PART OF 233-3110, 325-5227 CAB AR
AN ATTACHMENT

SMCS-7305, 7306 **i02748814**

NOTE	REF NO	GRAPHIC REF	PART NUMBER	QTY	PART NAME 1 2 3 4 5 6 (PRODUCT LEVEL)	SEE PAGE
B	1	1	**3S-2093**	15	STRAP-CABLE (PLASTIC)	
	2	1	**3V-3263**	2	CONNECTOR (HOSE)	
	3	1	**5D-1026**	2	CLAMP-BAND	
	4	1	**6V-5853**	1	BLADE AS-WIPER (450-MM) (FRONT)	
	5	1	**8T-5400**	1	CONNECTOR AS	
	6	1	**8V-7162**	1	CABLE	
	7	1	**114-6658**	3	WASHER (6.5X17X1-MM THK)	
	8	1	**180-0149**	3	TUBE	
	9	1	**204-2581**	3	VALVE AS-CHECK	
	10	1	**248-2621**	1	ARM GP-WINDOW WIPER (WINDOW WASHER, WIPER)	
		1	**136-3188**	3	CLIP	
		1	**136-3191**	1	NOZZLE AS-WASHER	
E		1	**194-5171**		HOSE (55-CM)	
Y	11	1	**248-3164**	1	TANK GP-WINDOW WASHER	879
	12	1	**253-4115**	1	SPOUT	
	13	1	**276-3884**	1	CAP-VENTED (WASHER TANK)	
Y	14	1	**295-1120**	1	MOTOR GP-WINDOW WIPER (FRONT)	841
	15	1	**101-2867**	3	WASHER-HARD (7.2X25X2-MM THK)	
M	16	1	**9X-2044**	3	SCREW-TRUSS HEAD (M6X1X16-MM)	
M	17	1	**9X-2046**	3	SCREW-TRUSS HEAD (M6X1X35-MM)	
E	18	1	**153-2817**		HOSE (37-CM)	
E	19	1	**144-0195**		HOSE (240-CM)	
E	19A	1	**144-0195**		HOSE (370-CM)	
E	19B	1	**144-0195**		HOSE (93-CM)	
E	19C	1	**144-0195**		HOSE (348-CM)	

B-USE AS REQUIRED
E-ORDER BY THE CENTIMETER
M-METRIC PART
Y-SEPARATE ILLUSTRATION

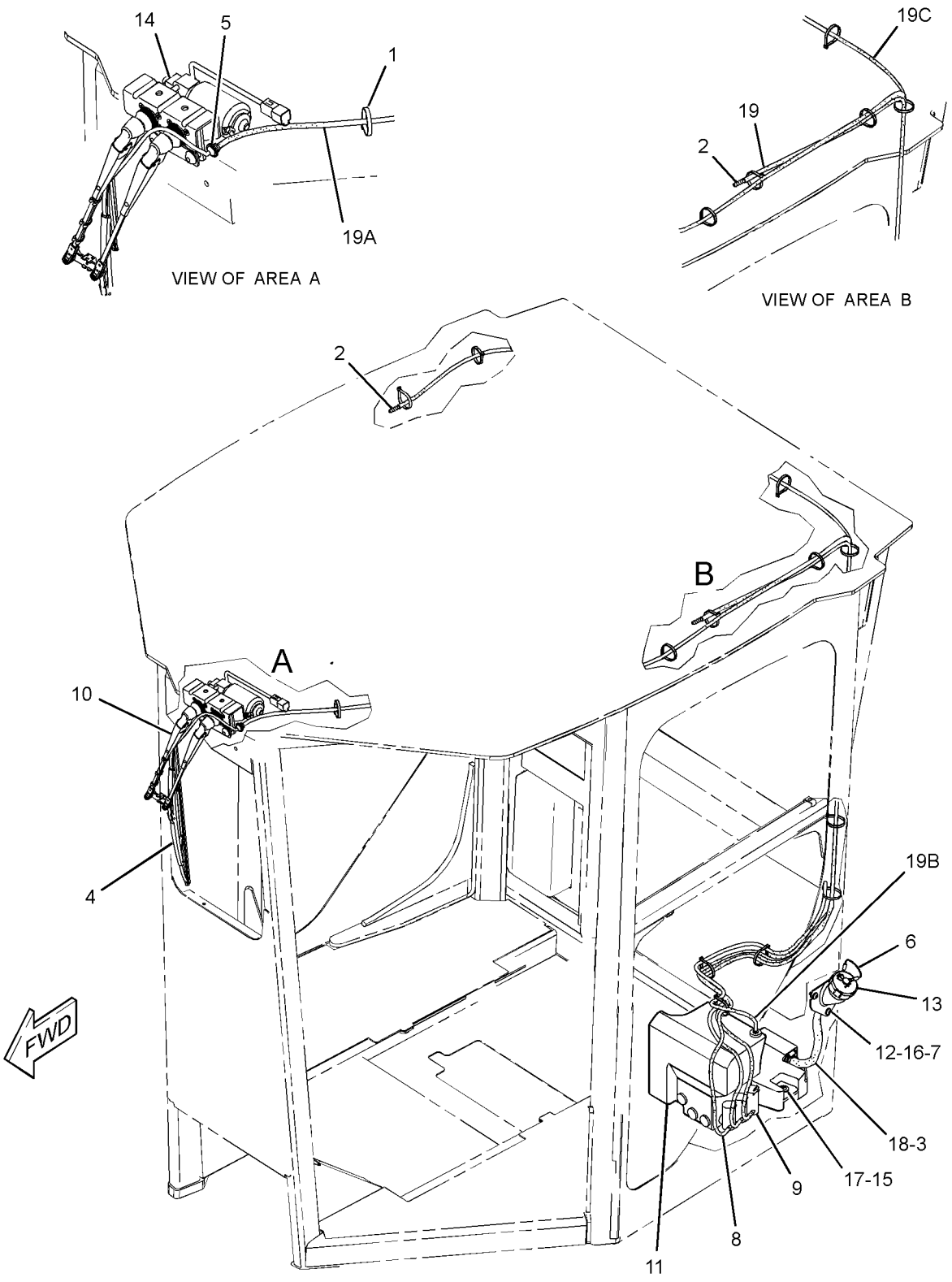

GRAPHIC #1 **<END>** g01316079

OPERATOR STATION

233-3139 WIPER GP-WINDOW—REAR

S/N: R9J1-UP
PART OF 349-3050 OPTION AR-CAB
AN ATTACHMENT

SMCS-7305 **i03657511**

NOTE	REF NO	GRAPHIC REF	PART NUMBER	QTY	PART NAME 1 2 3 4 5 6 (PRODUCT LEVEL)	SEE PAGE
	1	1	**7T-8890**	1	PUMP AS-WASHER	
	2	1	**8T-5400**	1	CONNECTOR AS	
	3	1	**112-5869**	1	ARM AS-WINDOW WIPER	
	4	1	**146-6433**	1	BLADE AS-WIPER (500-MM) (REAR)	
C	5	1	**7Y-3474**	1	VALVE AS-CHECK (WINDOW WASHER)	
CY	6	1	**330-5016**	1	MOTOR GP-WINDOW WIPER (REAR)	842
Y	7	1	**275-7764**	1	SWITCH GP-WIPER (24-VOLT, INTERMITTENT)	325
CE	8	1	**183-4678**		HOSE (289-CM)	
CE	8A	1	**183-4678**		HOSE (10-CM)	

C-CHANGE FROM PREVIOUS TYPE
E-ORDER BY THE CENTIMETER
Y-SEPARATE ILLUSTRATION

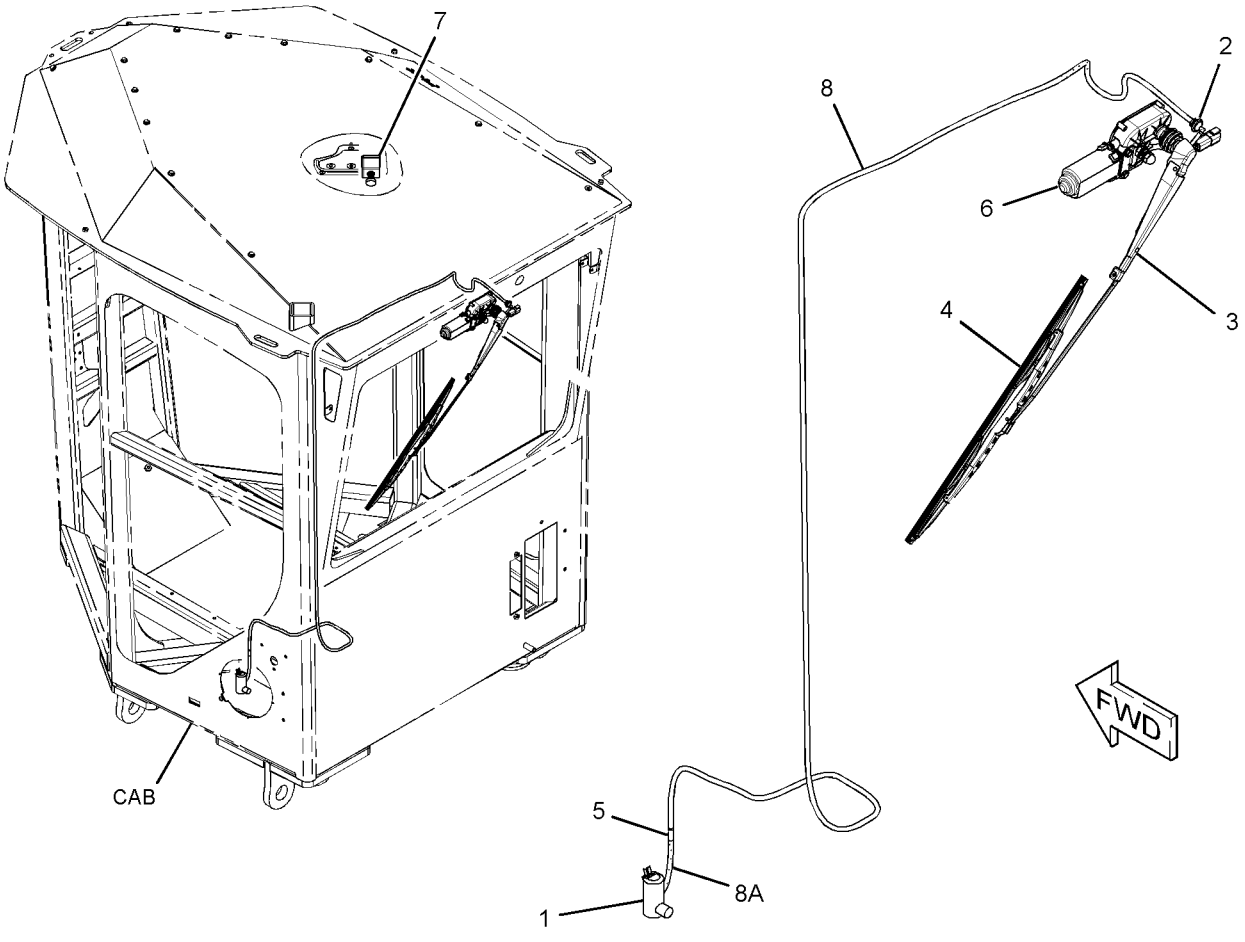

GRAPHIC #1 **<END>** g01614333

OPERATOR STATION

233-3188 WIPER GP-WINDOW—SIDE, RH, LH

S/N: R9J1-UP

PART OF 300-1873 WINDOW GP-CAB

AN ATTACHMENT

SMCS-7305 **i03140084**

NOTE	REF NO	GRAPHIC REF	PART NUMBER	QTY	PART NAME 1 2 3 4 5 6 (PRODUCT LEVEL)	SEE PAGE
	1	1	**3S-2093**	2	STRAP-CABLE	
	2	1	**6V-5851**	2	BLADE AS-WIPER (400-MM) (FRONT)	
	3	1	**7T-8890**	2	PUMP AS-WASHER	
	4	1	**8T-5400**	2	CONNECTOR AS	
	6	1	**204-2581**	2	VALVE AS-CHECK	
	7	1	**248-2628**	1	MOTOR GP-WINDOW WIPER (24-VOLT) (RH)	
		1	**3F-9556**	1	LOCKWASHER	
M		1	**5C-7261**	1	NUT (M8X1.25-THD)	
		1	**102-8803**	1	KIT-RECEPTACLE (3-PIN)	
					(INCLUDES RECEPTACLE AS & WEDGE)	
		1	**186-3735**	3	PIN-CONNECTOR (16-GA TO 18-GA)	
		1	**208-8759**	1	PLATE	
	8	1	**260-2577**	1	MOTOR GP-WINDOW WIPER (24-VOLT) (LH)	
		1	**3F-9556**	1	LOCKWASHER	
M		1	**5C-7261**	1	NUT (M8X1.25-THD)	
		1	**102-8803**	1	KIT-RECEPTACLE (3-PIN)	
					(INCLUDES RECEPTACLE AS & WEDGE)	
		1	**186-3735**	1	PIN-CONNECTOR (16-GA TO 18-GA)	
		1	**260-6438**	1	PLATE	
	9	1	**260-2579**	1	ARM AS-WIPER (LH)	
		1	**305-9194**	1	NOZZLE AS-WASHER	
E		1	**194-5171**		HOSE (33-CM)	
	10	1	**270-4884**	1	ARM AS-WIPER (RH)	
		1	**305-9195**	1	NOZZLE AS-WASHER	
E		1	**194-5171**		HOSE (33-CM)	
	11	1	**295-4243**	2	WASHER-RUBBER	
E	12	1	**144-0195**		HOSE (384-CM)	
E	12A	1	**144-0195**		HOSE (130-CM)	
E	12B	1	**144-0195**		HOSE (10-CM EACH)	

E-ORDER BY THE CENTIMETER
M-METRIC PART

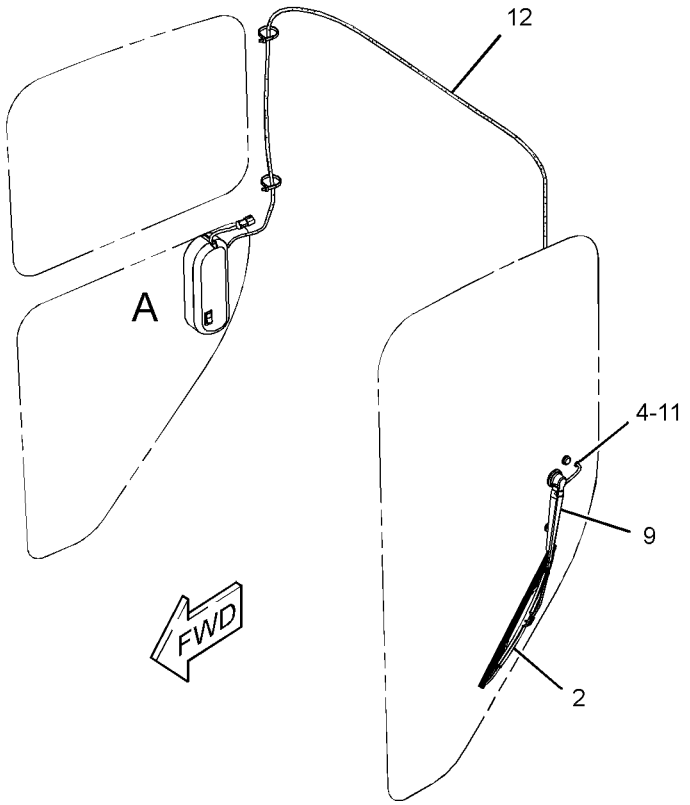

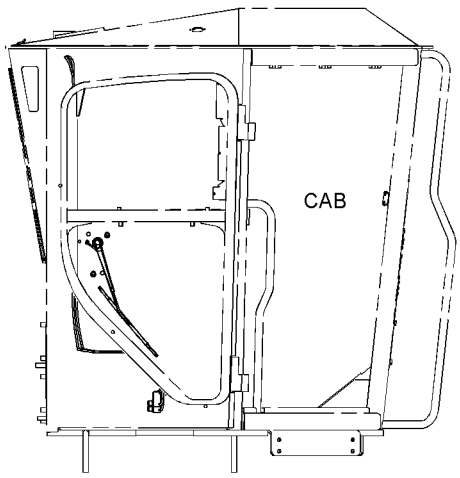

RIGHT SIDE VIEW

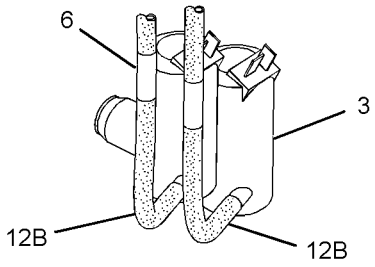

VIEW OF AREA C

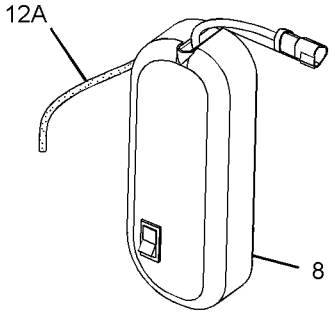

VIEW OF AREA B

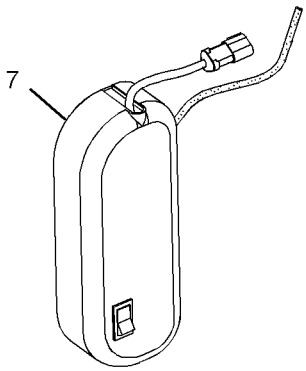

VIEW OF AREA A

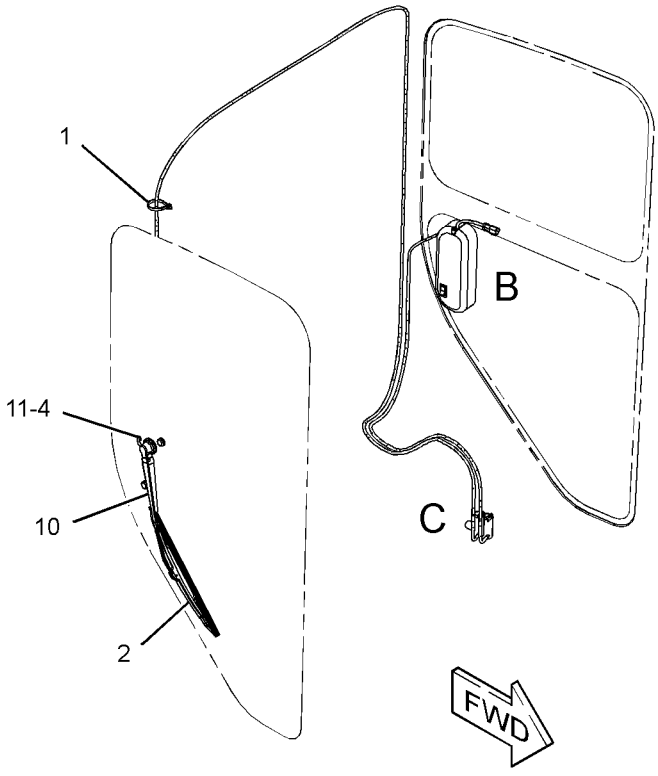

GRAPHIC #1 **<END>** g01631693

OPERATOR STATION

295-1113 WIPER GP-WINDOW—DOOR, RH

S/N: R9J1-UP

PART OF 294-1024, 294-1034 DOOR GP-CAB

AN ATTACHMENT

SMCS-7305 **i03869174**

NOTE	REF NO	GRAPHIC REF	PART NUMBER	QTY	PART NAME 1 2 3 4 5 6 (PRODUCT LEVEL)	SEE PAGE
	1	1	**3S-2093**	3	STRAP-CABLE	
	2	1	**5C-8811**	1	BLADE AS-WIPER (500-MM) (UPPER DOOR WINDOW, RH)	
	3	1	**6V-5851**	1	BLADE AS-WIPER (400-MM) (LOWER DOOR WINDOW, RH)	
	4	1	**8T-5400**	2	CONNECTOR AS	
	5	1	**135-0611**	1	MOTOR GP-WINDOW WIPER (24-VOLT, 2-SPEED) (DOOR, RH)	
	6	1	**256-9448**	1	ARM GP-WINDOW WIPER (UPPER DOOR WINDOW, RH)	
		1	**305-9195**	1	NOZZLE AS-WASHER	
E		1	**194-5171**		HOSE (24-CM)	
	7	1	**295-1115**	1	LINKAGE GP-WIPER (DOOR, RH)	
		1	**3F-9556**	2	LOCKWASHER	
M		1	**5C-7261**	2	NUT (M8X1.25-THD)	
		1	**206-5823**	2	CAP	
	8	1	**295-1117**	1	ARM GP-WINDOW WIPER (LOWER DOOR WINDOW, RH)	
		1	**305-9195**	1	NOZZLE AS-WASHER	
E		1	**194-5171**		HOSE (29-CM)	
	9	1	**306-9501**	2	SPACER (20.5X39X19-MM THK)	
	10	1	**3F-9556**	1	LOCKWASHER	
M	11	1	**5C-7261**	1	NUT (M8X1.25-THD)	
	12	1	**6K-9632**	1	TEE	
	13	1	**8T-0087**	3	LOCKWASHER	
M	14	1	**8T-4970**	3	BOLT (M6X1X14-MM)	
E	15	1	**144-0195**		HOSE (12.5-CM EACH)	
	16	1	**7Y-3474**	1	VALVE AS-CHECK (WINDOW WASHER)	

E-ORDER BY THE CENTIMETER
M-METRIC PART

295-1113 **WIPER GP-WINDOW** *(contd.)* **i03869174**

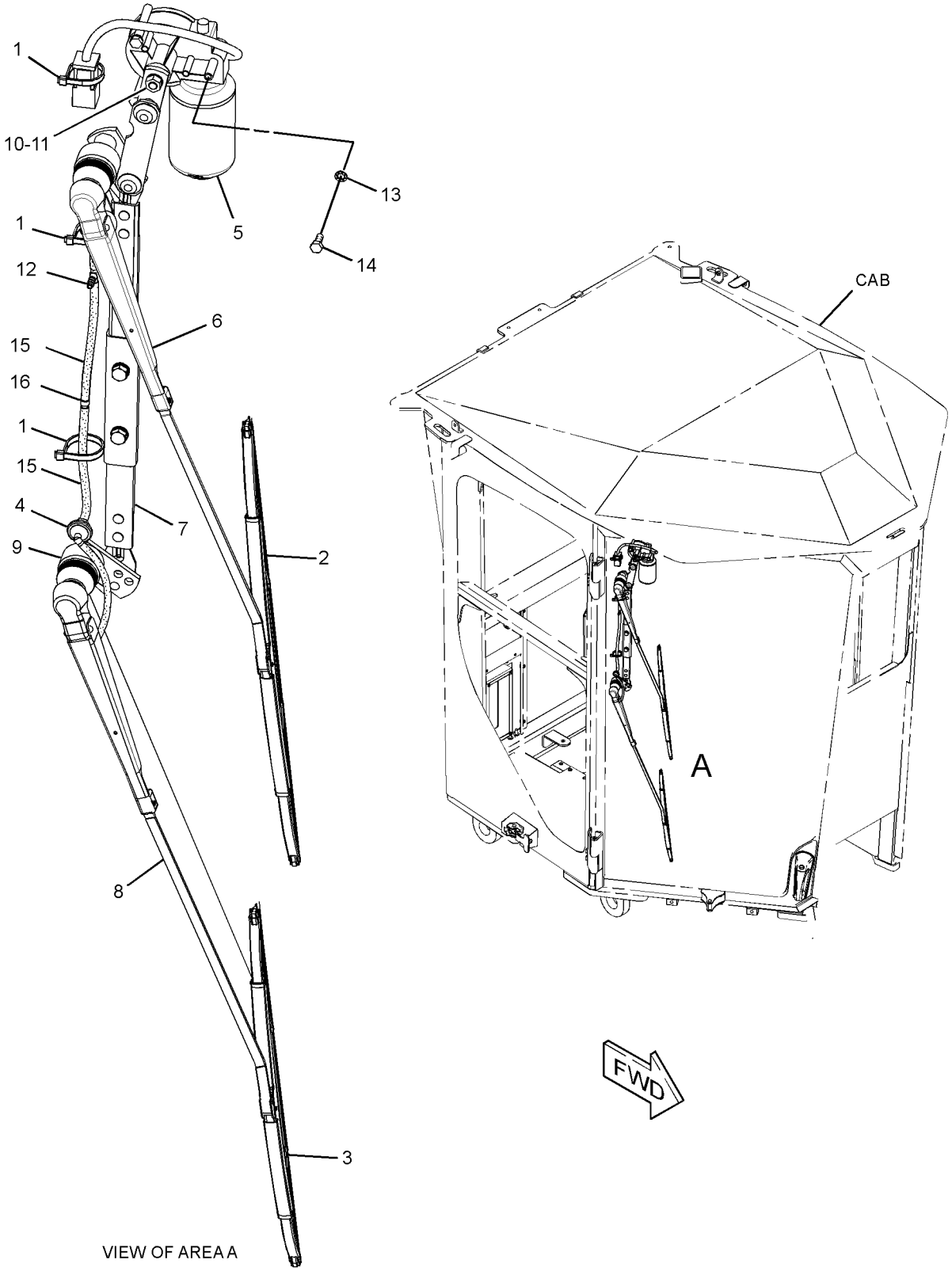

GRAPHIC #1 **<END>** g02115636

OPERATOR STATION

295-1114 WIPER GP-WINDOW—DOOR, LH

S/N: R9J1-UP
PART OF 294-1023, 294-1033 DOOR GP-CAB
AN ATTACHMENT

SMCS-7305 **i03894490**

NOTE	REF NO	GRAPHIC REF	PART NUMBER	QTY	PART NAME 1 2 3 4 5 6 (PRODUCT LEVEL)	SEE PAGE
	1	1	**3S-2093**	3	STRAP-CABLE	
	2	1	**5C-8811**	1	BLADE AS-WIPER (500-MM) (UPPER DOOR WINDOW, LH)	
	3	1	**6V-5851**	1	BLADE AS-WIPER (400-MM) (LOWER DOOR WINDOW, LH)	
	4	1	**8T-5400**	2	CONNECTOR AS	
	5	1	**222-5376**	1	MOTOR GP-WINDOW WIPER (24-VOLT, 2-SPEED) (LH)	
		1	**102-8805**	1	KIT-RECEPTACLE (6-PIN)	
					(INCLUDES RECEPTACLE AS & WEDGE)	
		1	**186-3735**	5	PIN-CONNECTOR (16-GA TO 18-GA)	
		1	**8T-8737**	1	PLUG-SEAL	
	6	1	**295-1116**	1	LINKAGE GP-WIPER (LH)	
		1	**3F-9556**	2	LOCKWASHER	
M		1	**5C-7261**	2	NUT (M8X1.25-THD)	
		1	**206-5823**	2	CAP	
	7	1	**295-1119**	1	ARM GP-WINDOW WIPER (LOWER DOOR WINDOW, LH)	
		1	**305-9194**	1	NOZZLE AS-WASHER	
E		1	**194-5171**		HOSE (29-CM)	
	8	1	**306-9501**	2	SPACER (20.5X39X19-MM THK)	
	9	1	**295-1118**	1	ARM GP-WINDOW WIPER (UPPER DOOR WINDOW, LH)	
		1	**305-9194**	1	NOZZLE AS-WASHER	
E		1	**194-5171**		HOSE (33-CM)	
	10	1	**3F-9556**	1	LOCKWASHER	
M	11	1	**5C-7261**	1	NUT (M8X1.25-THD)	
	12	1	**6K-9632**	1	TEE	
	13	1	**8T-0087**	3	LOCKWASHER	
M	14	1	**8T-4970**	3	BOLT (M6X1X14-MM)	
E	15	1	**144-0195**		HOSE (12.5-CM EACH)	
	16	1	**7Y-3474**	1	VALVE AS-CHECK (WINDOW WASHER)	

E-ORDER BY THE CENTIMETER
M-METRIC PART

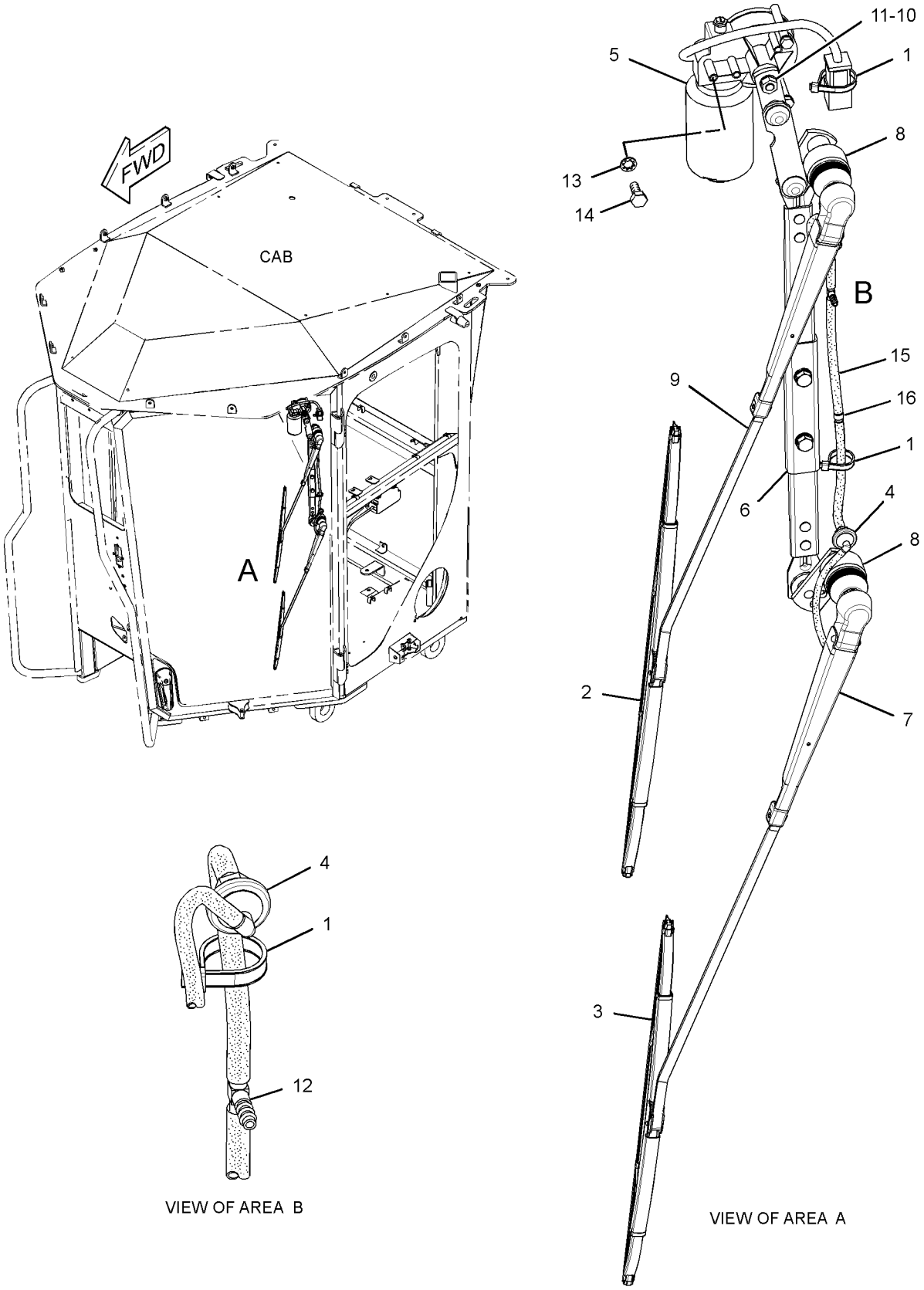

GRAPHIC #1 **<END>** g02116541

WORK TOOLS

233-7148 BIT GP-END

S/N: R9J1-UP
PART OF 351-2597, 351-2598 OPTION AR-WORK TOOL
CANNOT BE USED WITH 233-7143—PAGE 896
AN ATTACHMENT

SMCS-6804 **i02193657**

NOTE	PART NUMBER	QTY	PART NAME 1 2 3 4 5 6 (PRODUCT LEVEL)	SEE PAGE
	8E-5529	2	BIT-END	
	5J-4773	10	BOLT-PLOW (3/4-10X2.5-IN)	
	2J-3506	10	NUT-FULL (3/4-10-THD)	

<END>

WORK TOOLS

246-2610 BLADE GP

S/N: R9J1-UP
14-FT
PART OF 351-2597 OPTION AR-WORK TOOL
AN ATTACHMENT

SMCS-6151 **i02193630**

NOTE	REF NO	GRAPHIC REF	PART NUMBER	QTY	PART NAME 1 2 3 4 5 6 (PRODUCT LEVEL)	SEE PAGE
	1	1	**260-7784**	1	MOLDBOARD AS	

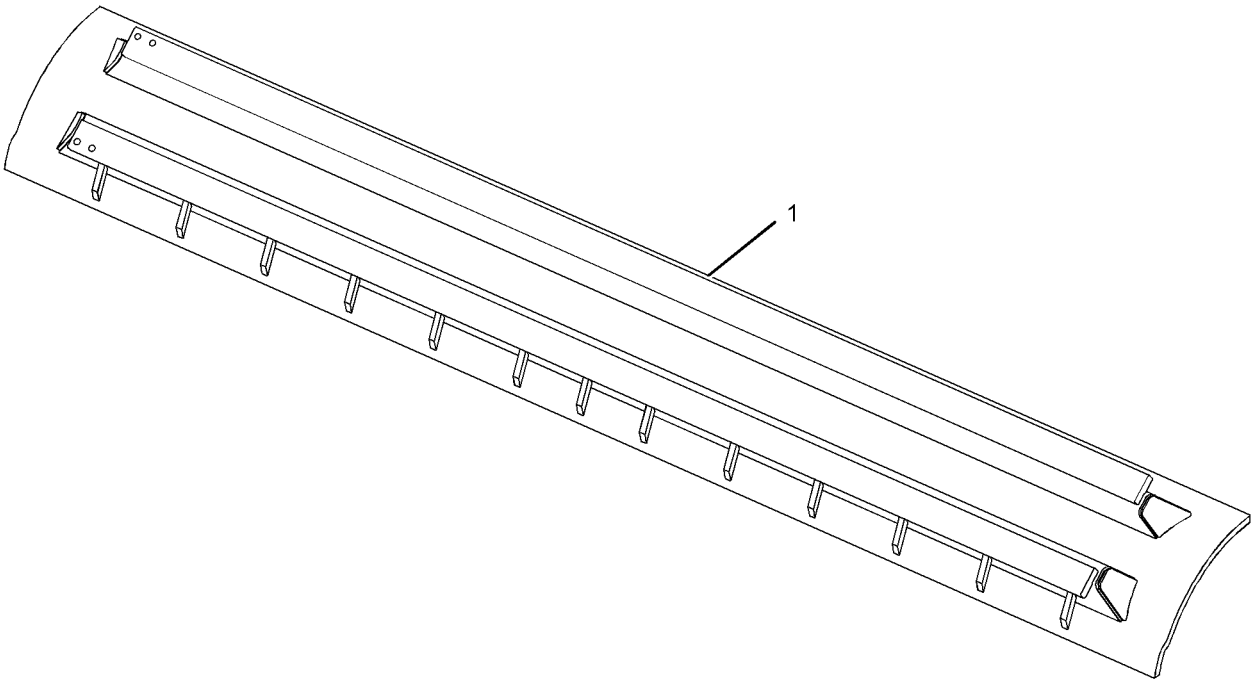

GRAPHIC #1 **<END>** g01111056

WORK TOOLS

252-7080 BLADE GP

S/N: R9J1-UP
16-FT
PART OF 351-2598 OPTION AR-WORK TOOL
AN ATTACHMENT

SMCS-6151 **i02186058**

NOTE	REF NO	GRAPHIC REF	PART NUMBER	QTY	PART NAME 1 2 3 4 5 6 (PRODUCT LEVEL)	SEE PAGE
	1	1	**260-7786**	1	MOLDBOARD AS	

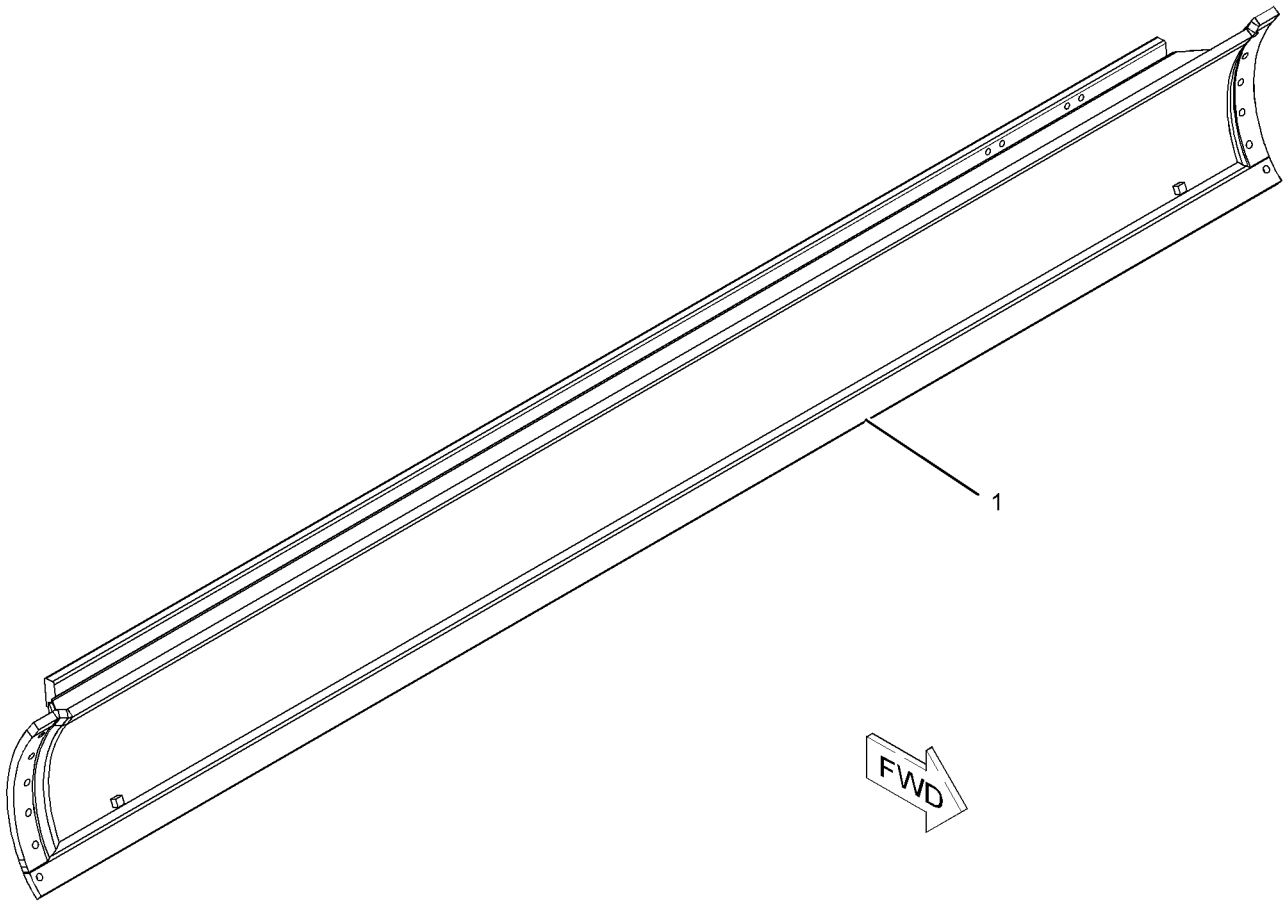

GRAPHIC #1 **<END>** g01110707

WORK TOOLS

233-7143 EDGE GP-CUTTING

S/N: R9J1-UP
PART OF 351-2597 OPTION AR-WORK TOOL
AN ATTACHMENT

SMCS-6801 **i02302047**

NOTE	PART NUMBER	QTY	PART NAME 1 2 3 4 5 6 (PRODUCT LEVEL)	SEE PAGE
	5J-4773	30	BOLT-PLOW (3/4-10X2.5-IN)	
	7D-1577	2	EDGE-CUTTING (7-FT EACH)	
	2J-3506	30	NUT-FULL (3/4-10-THD)	

<END>

233-7147 EDGE GP-CUTTING

S/N: R9J1-UP
PART OF 351-2598 OPTION AR-WORK TOOL
CANNOT BE USED WITH ANY OTHER EDGE GROUP
AN ATTACHMENT

SMCS-6801 **i02748330**

NOTE	PART NUMBER	QTY	PART NAME 1 2 3 4 5 6 (PRODUCT LEVEL)	SEE PAGE
	5J-4773	34	BOLT-PLOW (3/4-10X2.5-IN)	
	4T-2236	2	EDGE-CUTTING (8-FT EACH)	
	2J-3506	34	NUT-FULL (3/4-10-THD)	

<END>

WORK TOOLS

283-1068 EDGE-CUTTING—SERRATED

S/N: R9J1-UP
7-FT X 8-IN
AN ATTACHMENT

SMCS-6801 **i02665166**

NOTE	REF NO	GRAPHIC REF	PART NUMBER	QTY	PART NAME 1 2 3 4 5 6 (PRODUCT LEVEL)	SEE PAGE
					(NO SERVICED PARTS)	

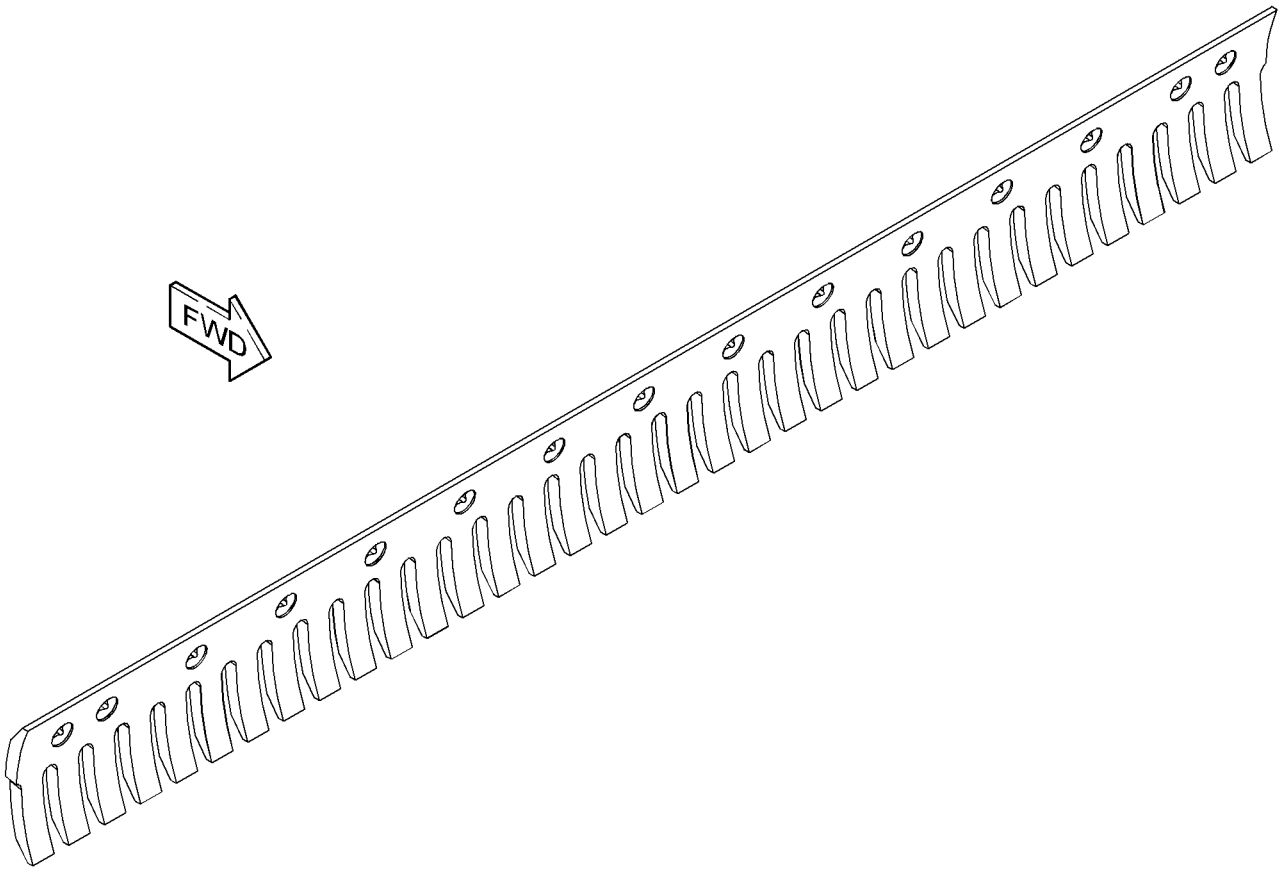

GRAPHIC #1 **<END>** g01340580

WORK TOOLS

286-2016 EDGE-CUTTING—SERRATED

S/N: R9J1-UP
7-FT X 8-IN
FIELD INSTALLATION

SMCS-6801 **i02566809**

NOTE	REF NO	GRAPHIC REF	PART NUMBER	QTY	PART NAME 1 2 3 4 5 6 (PRODUCT LEVEL)	SEE PAGE
					(NO SERVICED PARTS)	

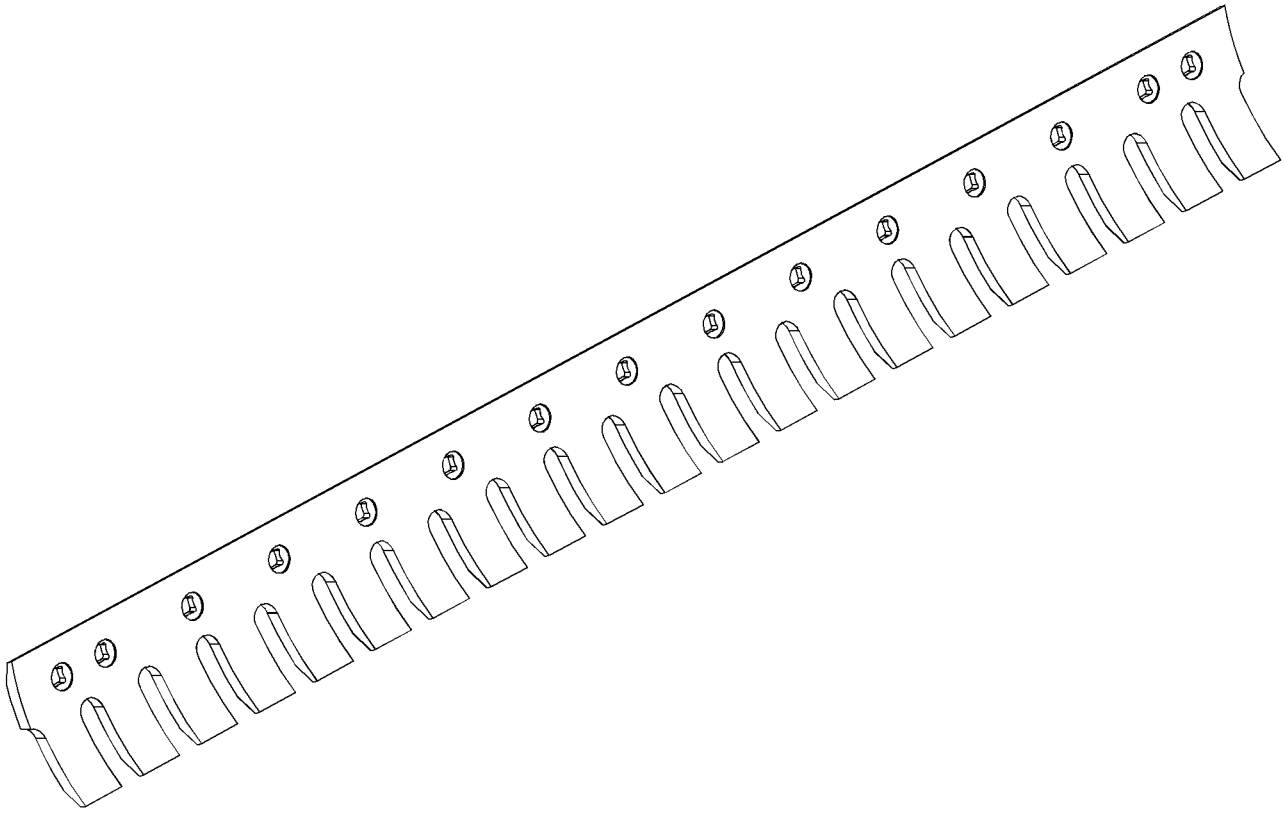

GRAPHIC #1 **<END>** g01302761

WORK TOOLS

253-4631 LIFT GP-BLADE

S/N: R9J1-UP

PART OF 349-2555 COMMON AR

SMCS-6151 **i02565087**

NOTE	REF NO	GRAPHIC REF	PART NUMBER	QTY	PART NAME 1 2 3 4 5 6 (PRODUCT LEVEL)	SEE PAGE
	1	1	**2G-3985**	1	PLATE	
	2	1	**8D-4203**	4	WASHER-THRUST (3.77X5.25X0.08-MM THK)	
	3	1	**8D-4208**	4	WASHER-THRUST (3.14X4.72X0.08-MM THK)	
	4	1	**8D-4235**	2	PIN	
	5	1	**8D-4317**	10	WASHER (60.73X133.35X1.22-MM THK)	
	6	1	**8D-4321**	10	WASHER (60.73X133.35X0.76-MM THK)	
	7	1	**8D-4336**	8	WASHER-THRUST (3.02X5.75X0.08-MM THK)	
	8	1	**259-4483**	2	PIN	
	9	1	**259-4486**	1	ARM AS (RH)	
		1	**8D-4137**	1	BEARING-SLEEVE	
		1	**8D-4138**	1	BEARING-SLEEVE	
	10	1	**259-4488**	1	ARM AS (LH)	
		1	**8D-4137**	1	BEARING-SLEEVE	
		1	**8D-4138**	1	BEARING-SLEEVE	
	11	1	**259-4491**	2	YOKE AS	
					(EACH INCLUDES)	
		1	**2G-5584**	1	RING	
	12	1	**259-4492**	2	LOCK	
	13	1	**259-4493**	2	LOCK	
B	14	1	**259-4494**	8	SHIM (0.12-MM THK)	
B	15	1	**259-4495**	6	SHIM (0.25-MM THK)	
B	16	1	**259-4496**	2	SHIM (0.5-MM THK)	
	17	1	**259-4497**	2	RETAINER	
M	18	1	**288-0735**	1	BOLT (M12X1.75X60-MM)	
	19	1	**288-8997**	1	BAR AS	
		1	**8D-9652**	4	BEARING	
		1	**124-5836**	5	BUSHING	
	20	1	**279-6632**	1	WASHER (13.5X25.5X3-MM THK)	
	21	1	**1J-2859**	2	SEAL-O-RING	
	22	1	**3P-1461**	8	SEAL-LIP TYPE	
	23	1	**5H-5672**	2	SEAL-O-RING	
	24	1	**5P-8247**	12	WASHER-HARD (17X32X3.5-MM THK)	
M	25	1	**6V-5686**	4	BOLT (M16X2X50-MM)	
M	26	1	**6V-7742**	6	NUT-FULL (M20X2.5-THD)	
	27	1	**8D-3308**	2	SEAL	
	28	1	**8D-4204**	2	WASHER-THRUST (96.82X131.78X2.39-MM THK)	
	29	1	**8D-4207**	2	WASHER-THRUST (80.98X119.08X2.39-MM THK)	
	30	1	**8D-4217**	2	SEAL	
	31	1	**8D-4316**	4	WASHER-THRUST (61.93X133.35X2.39-MM THK)	
	32	1	**8D-4337**	4	WASHER-THRUST (77.77X146.05X2.39-MM THK)	
M	33	1	**8T-0359**	4	BOLT (M16X2X130-MM)	
M	34	1	**8T-0655**	6	BOLT (M20X2.5X130-MM)	
M	35	1	**8T-1757**	4	NUT (M16X2-THD)	
	36	1	**8T-3282**	12	WASHER-HARD (22X35X3.5-MM THK)	

B-USE AS REQUIRED
M-METRIC PART

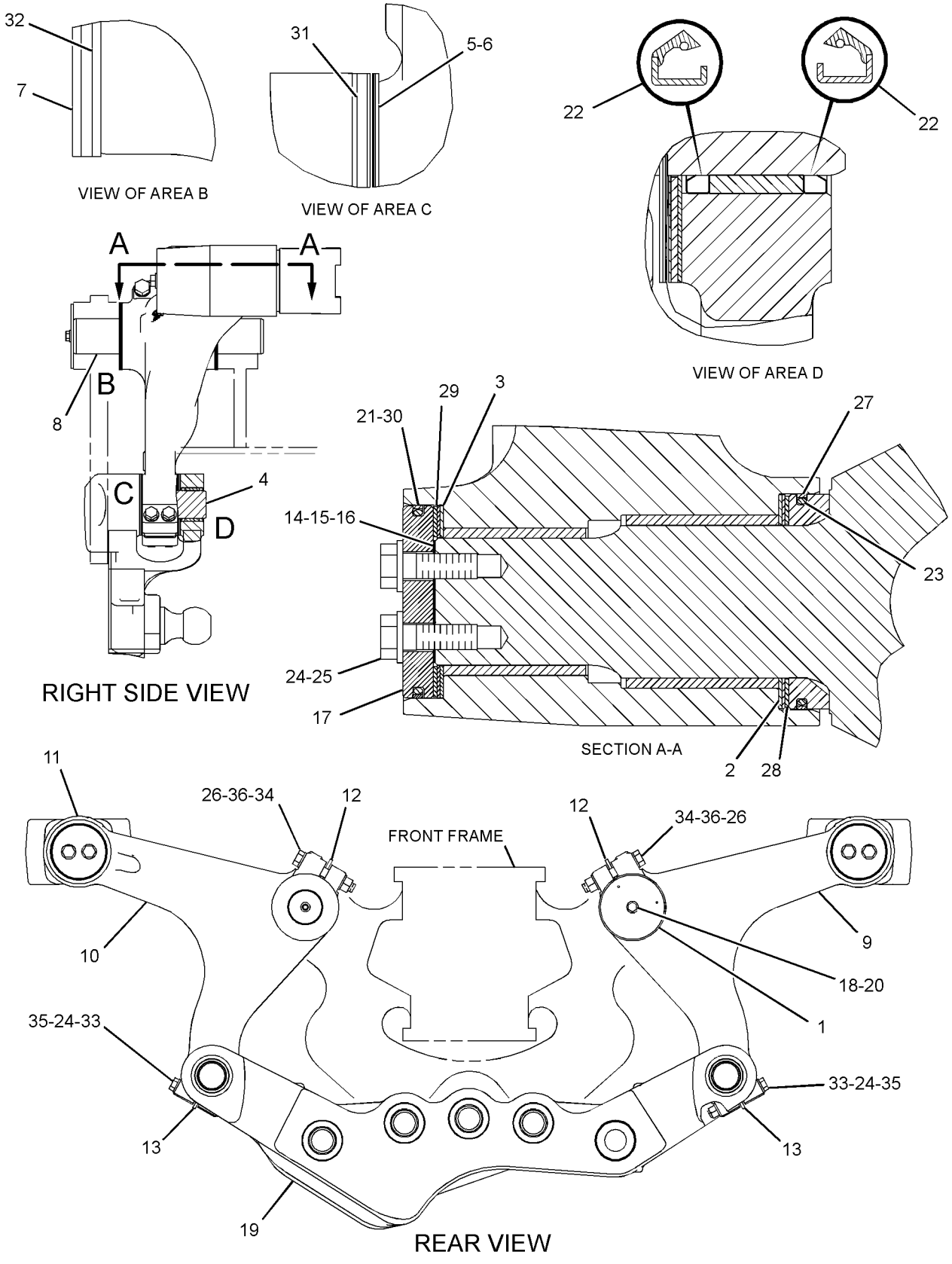

GRAPHIC #1

<END>

g01285959

WORK TOOLS

257-3573 MOUNTING GP-RIPPER

S/N: R9J1-UP

PART OF 257-3574, 291-4792 RIPPER AR

AN ATTACHMENT

SMCS-6324 **i02738840**

NOTE	REF NO	GRAPHIC REF	PART NUMBER	QTY	PART NAME 1 2 3 4 5 6 (PRODUCT LEVEL)	SEE PAGE
	1	1	**301-4497**	2	BOSS	
	2	1	**8J-9092**	2	PIN	
	3	1	**8J-9608**	2	PIN	
	4	1	**133-7130**	2	CAM AS	
	5	1	**257-3572**	1	PLATE AS	
	6	1	**289-3509**	2	LINK AS	
M	7	1	**129-3180**	2	LOCKNUT (M12X1.75-THD)	
	8	1	**267-3506**	12	WASHER-HARD (26X44X4-MM THK)	
	9	1	**6K-0715**	2	PIN	
M	10	1	**7X-2557**	2	BOLT (M16X2X140-MM)	
M	11	1	**7X-2558**	2	BOLT (M16X2X150-MM)	
M	12	1	**8T-4778**	4	LOCKNUT (M16X2-THD)	
M	13	1	**8T-5092**	2	BOLT (M12X1.75X150-MM)	
M	14	1	**9X-2615**	12	BOLT (M24X3X60-MM)	
M	15	1	**8T-4183**	4	BOLT (M12X1.75X40-MM)	
	16	1	**8T-4223**	4	WASHER-HARD (13.5X25.5X3-MM THK)	
	17	1	**301-4496**	2	PLATE	

M-METRIC PART

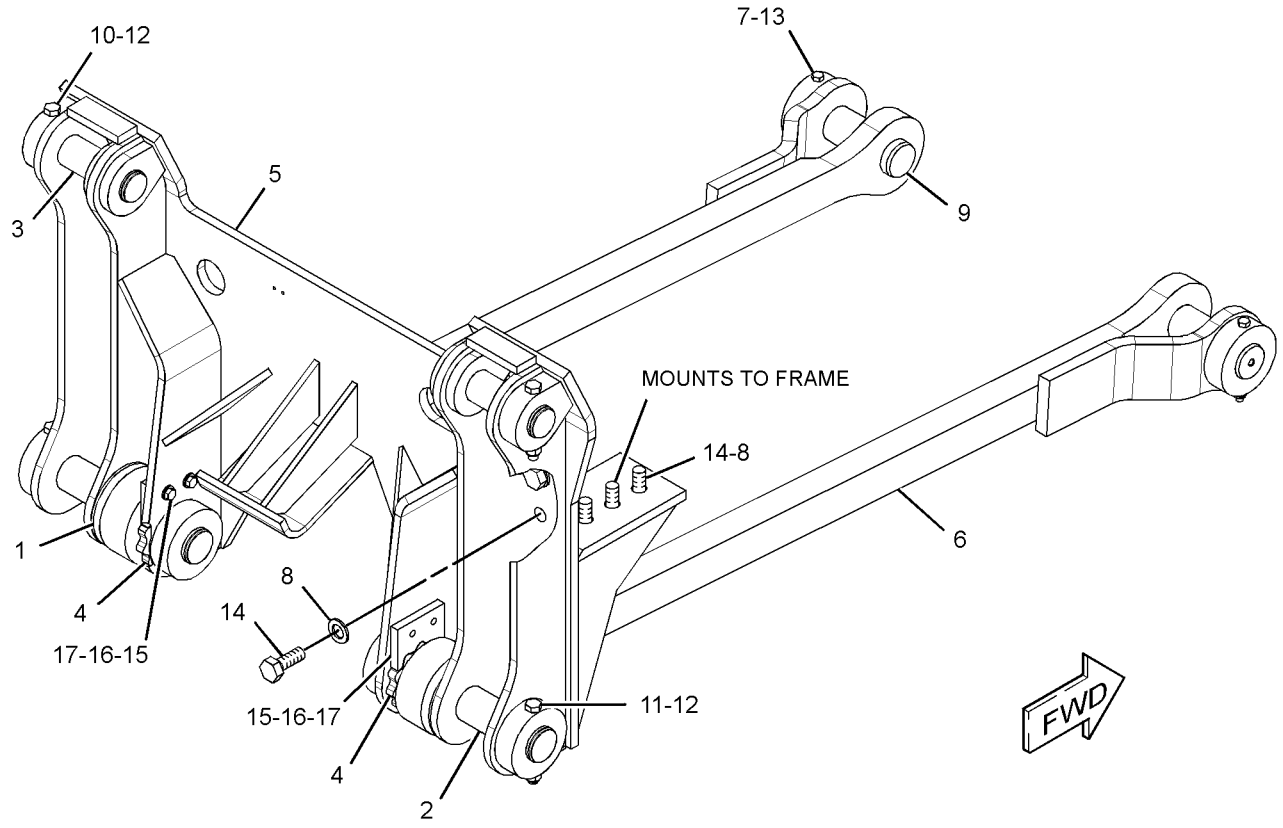

GRAPHIC #1 **<END>** g01374605

WORK TOOLS

252-0976 MOUNTING GP-SNOW WING

S/N: R9J1-UP
PART OF 351-2599 OPTION AR-LIGHTING
AN ATTACHMENT

SMCS-6158 **i03828269**

NOTE	REF NO	GRAPHIC REF	PART NUMBER	QTY	PART NAME 1 2 3 4 5 6 (PRODUCT LEVEL)	SEE PAGE
	1	1	**258-7508**	1	PLATE AS	
	2	1	**354-5018**	1	PLATE	
	3	1	**284-8931**	1	PLATE-MOUNTING	
	4	1	**284-8932**	2	PLATE	
	5	1	**287-1640**	1	PLATE (RH) (RH)	
	6	1	**287-1641**	1	PLATE (LH) (LH)	

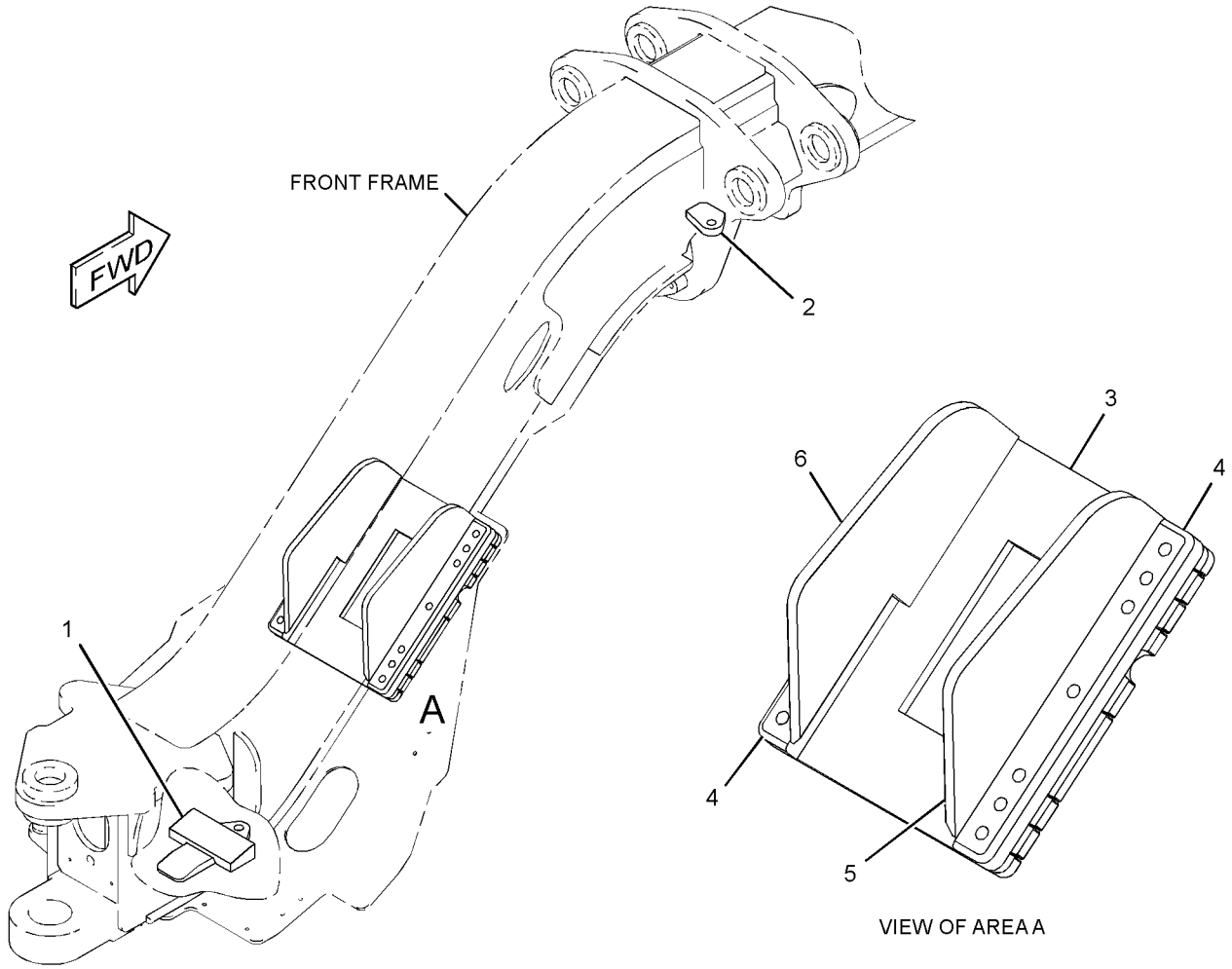

GRAPHIC #1 **<END>** g01284883

WORK TOOLS

352-4780 MOUNTING GP-SNOW WING

S/N: R9J1-UP
PART OF 357-3001 OPTION AR-LIGHTING
AN ATTACHMENT

SMCS-6158 **i04018870**

NOTE	REF NO	GRAPHIC REF	PART NUMBER	QTY	PART NAME 1 2 3 4 5 6 (PRODUCT LEVEL)	SEE PAGE
	1	1	**284-8931**	1	PLATE-MOUNTING	
	2	1	**352-4781**	1	PLATE AS	
	3	1	**352-4783**	1	PLATE	
	4	1	**352-4784**	1	PLATE	
	5	1	**352-4785**	1	PLATE	
	6	1	**352-4786**	1	PLATE	
	7	1	**352-4787**	1	PLATE	

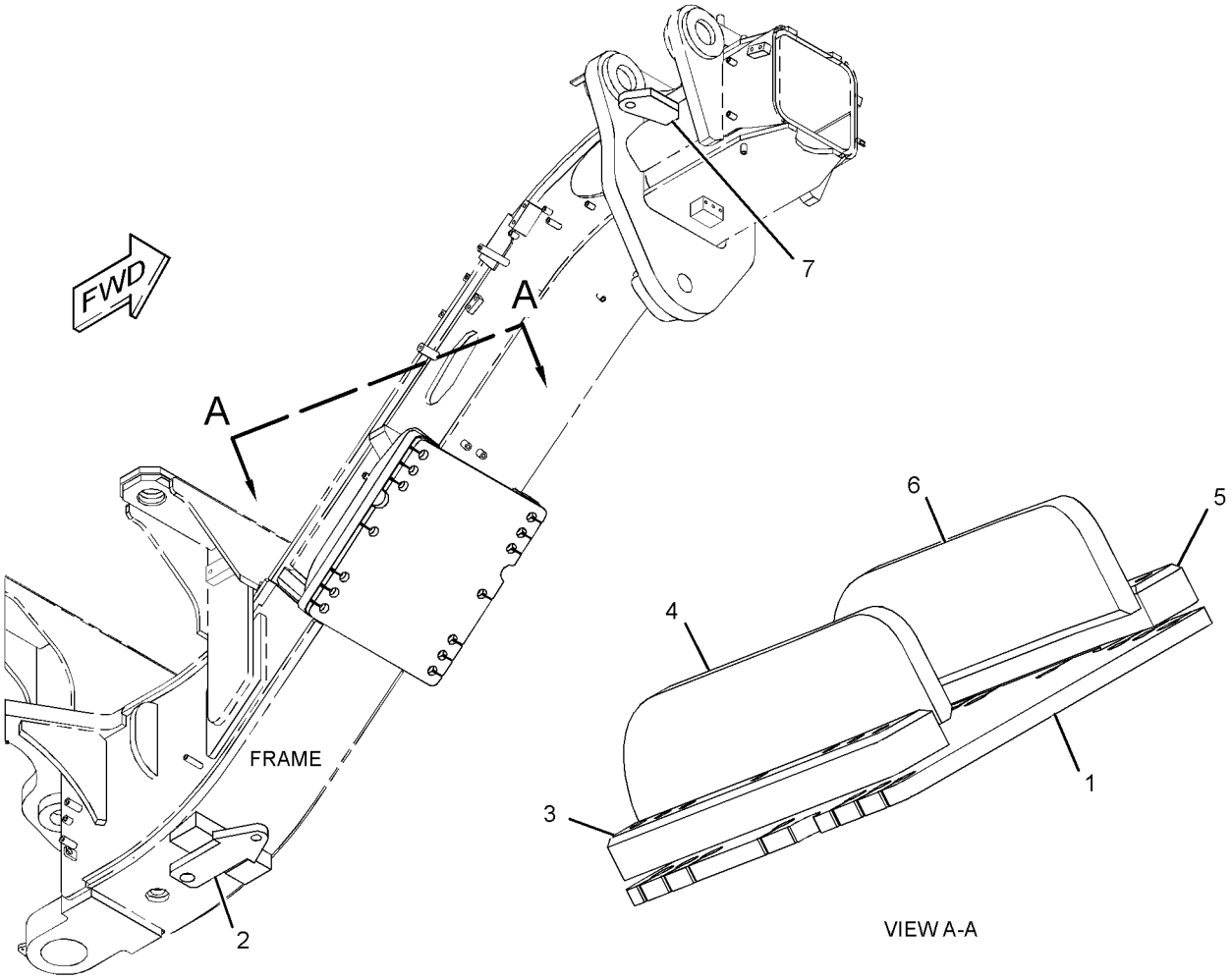

GRAPHIC #1 **<END>** g02218777

WORK TOOLS

257-3574 RIPPER AR

S/N: R9J1-UP

PART OF 353-5005, 358-7877, 361-1731, 361-4363, 363-0414 DISTRIBUTION AR

AN ATTACHMENT

SMCS-6325 **i02627900**

NOTE	REF NO	GRAPHIC REF	PART NUMBER	QTY	PART NAME 1 2 3 4 5 6 (PRODUCT LEVEL)	SEE PAGE
Y	1	1	**113-5264**	1	CYLINDER GP-RIPPER	579
Y	2	1	*257-3573*	1	MOUNTING GP-RIPPER	901
Y	3	1	*259-6231*	1	RIPPER GP	906
Y	4	1	*259-6232*	1	LINES GP-RIPPER	670

Y-SEPARATE ILLUSTRATION

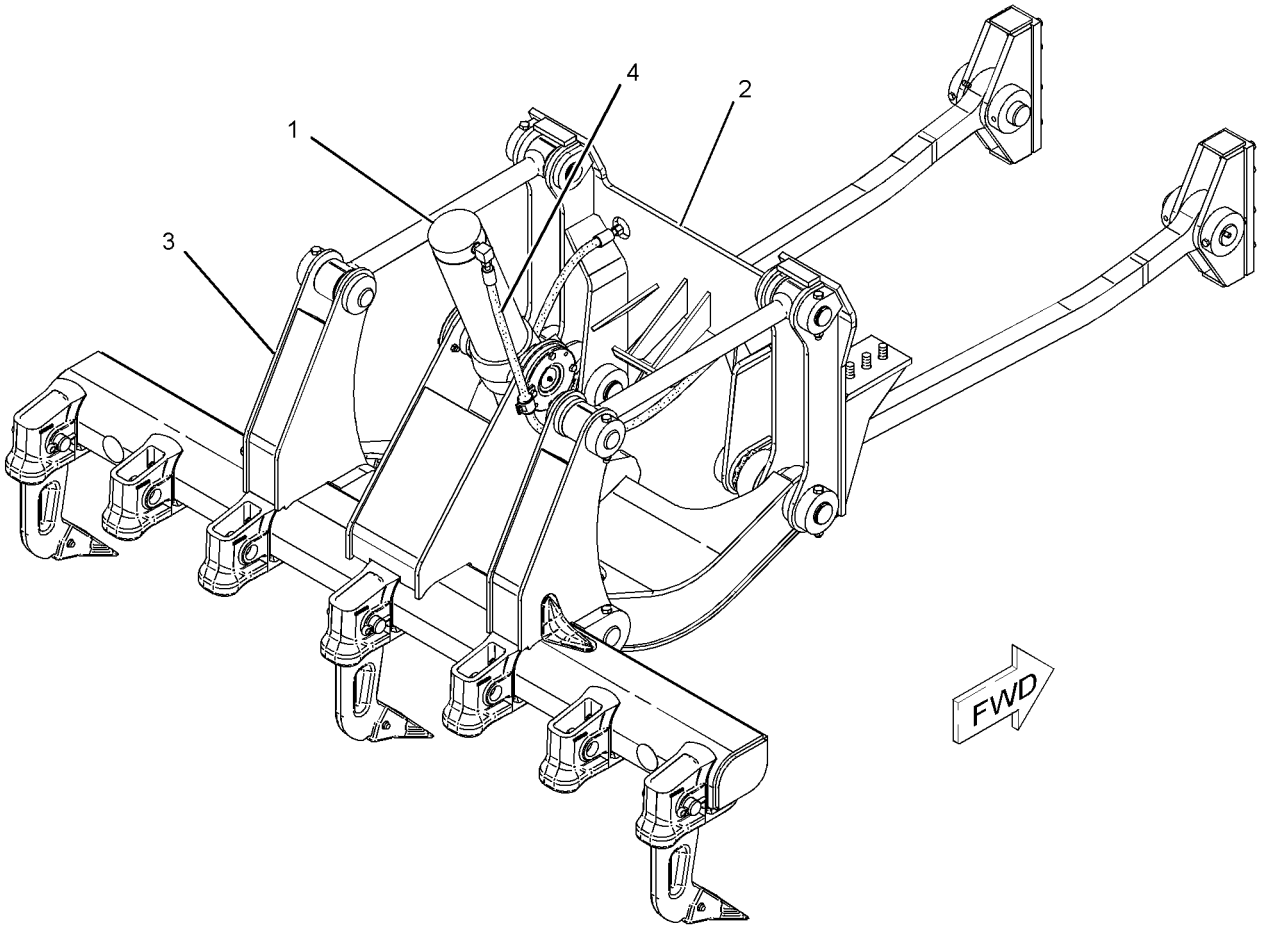

GRAPHIC #1 **<END>** g01109943

WORK TOOLS

291-4792 RIPPER AR

S/N: R9J1-UP

AN ATTACHMENT

SMCS-6325 **i02838263**

NOTE	PART NUMBER	QTY	PART NAME 1 2 3 4 5 6 (PRODUCT LEVEL)	SEE PAGE
Y	**113-5264**	1	CYLINDER GP-RIPPER	579
Y	*257-7150*	1	HITCH GP-TOWING	492
Y	*259-6232*	1	LINES GP-RIPPER	670
Y	*257-3573*	1	MOUNTING GP-RIPPER	901
Y	*259-6231*	1	RIPPER GP	906

Y-SEPARATE ILLUSTRATION

<END>

WORK TOOLS

259-6231 RIPPER GP

S/N: R9J1-UP
PART OF 257-3574, 291-4792 RIPPER AR
AN ATTACHMENT

SMCS-6325 **i04040389**

NOTE	REF NO	GRAPHIC REF	PART NUMBER	QTY	PART NAME 1 2 3 4 5 6 (PRODUCT LEVEL)	SEE PAGE
	1	1	**2K-0703**	1	BAR	
	2	1	**3B-8489**	3	FITTING-GREASE (HYDRAULIC)	
	3	1	**3K-8510**	1	PIN	
	4	1	**4K-3004**	2	BEARING-TRUNNION SUPPLEMENTARY	
Y	5	1	*8J-1434*	3	TOOTH GP-RIPPER	908
	6	1	**8J-6572**	1	CARRIAGE AS	
		1	**2K-4309**	1	REINFORCEMENT (RH)	
		1	**2K-4310**	1	REINFORCEMENT (LH)	
		1	**2K-4315**	4	BOSS	
		1	**5K-8330**	7	HOLDER-BIT	
M		1	**9R-2613**	5	BOSS-WELD (M10X1.5X25-MM)	
C	7	1	**297-6399**	1	LINK AS-LOWER	
	7A	1	**3G-2580**	4	BEARING	
	8	1	**9J-0269**	2	LINK AS (UPPER)	
	8A	1	**3G-2582**	2	BEARING	
	9	1	**190-5386**	2	FILM-STRIPE (ROUND RED REFLECTIVE)	
CM	10	1	**6V-7687**	8	LOCKNUT (M12X1.75-THD)	
CM	11	1	**8T-4139**	2	BOLT (M12X1.75X30-MM)	
M	12	1	**7X-2557**	2	BOLT (M16X2X140-MM)	
	13	1	**8J-9607**	2	PIN	
	14	1	**8J-9608**	2	PIN	
M	15	1	**8T-4778**	4	LOCKNUT (M16X2-THD)	
M	16	1	**8T-4910**	7	BOLT (M12X1.75X60-MM)	
M	17	1	**8T-6385**	2	BOLT (M16X2X180-MM)	
	18	1	**9D-6584**	8	SEAL-LIP TYPE	
	19	1	**9D-6585**	8	SEAL-LIP TYPE	
M	20	1	**8T-4648**	1	BOLT (M12X1.75X70-MM)	

C-CHANGE FROM PREVIOUS TYPE
M-METRIC PART
Y-SEPARATE ILLUSTRATION

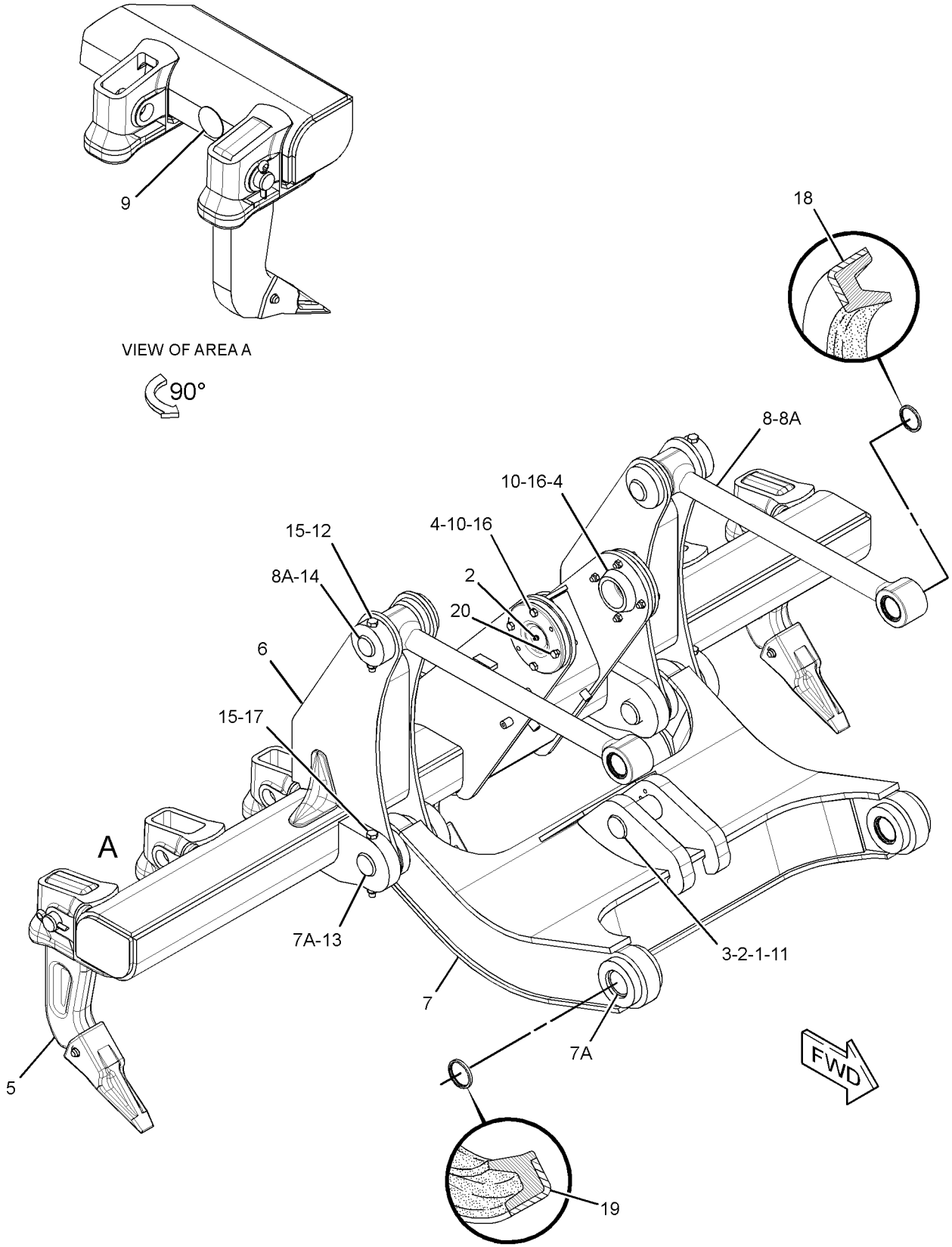

GRAPHIC #1

<END>

g01398130

WORK TOOLS

8J-1434 TOOTH GP-RIPPER—RIPPER

S/N: R9J1-UP
PART OF 259-6231 RIPPER GP
AN ATTACHMENT

SMCS-6808 **i02809484**

NOTE	REF NO	GRAPHIC REF	PART NUMBER	QTY	PART NAME 1 2 3 4 5 6 (PRODUCT LEVEL)	SEE PAGE
	1	1	**3B-5325**	2	PIN-COTTER	
C	2	1	**2K-6413**	1	PIN	
C	3	1	**9J-6586**	1	SHANK	
	4	1	**136-8308**	1	PIN	
	5	1	**6Y-0309**	1	TIP-RIPPER (PENETRATION)	
	6	1	**114-0359**	1	RETAINER AS	

C-CHANGE FROM PREVIOUS TYPE

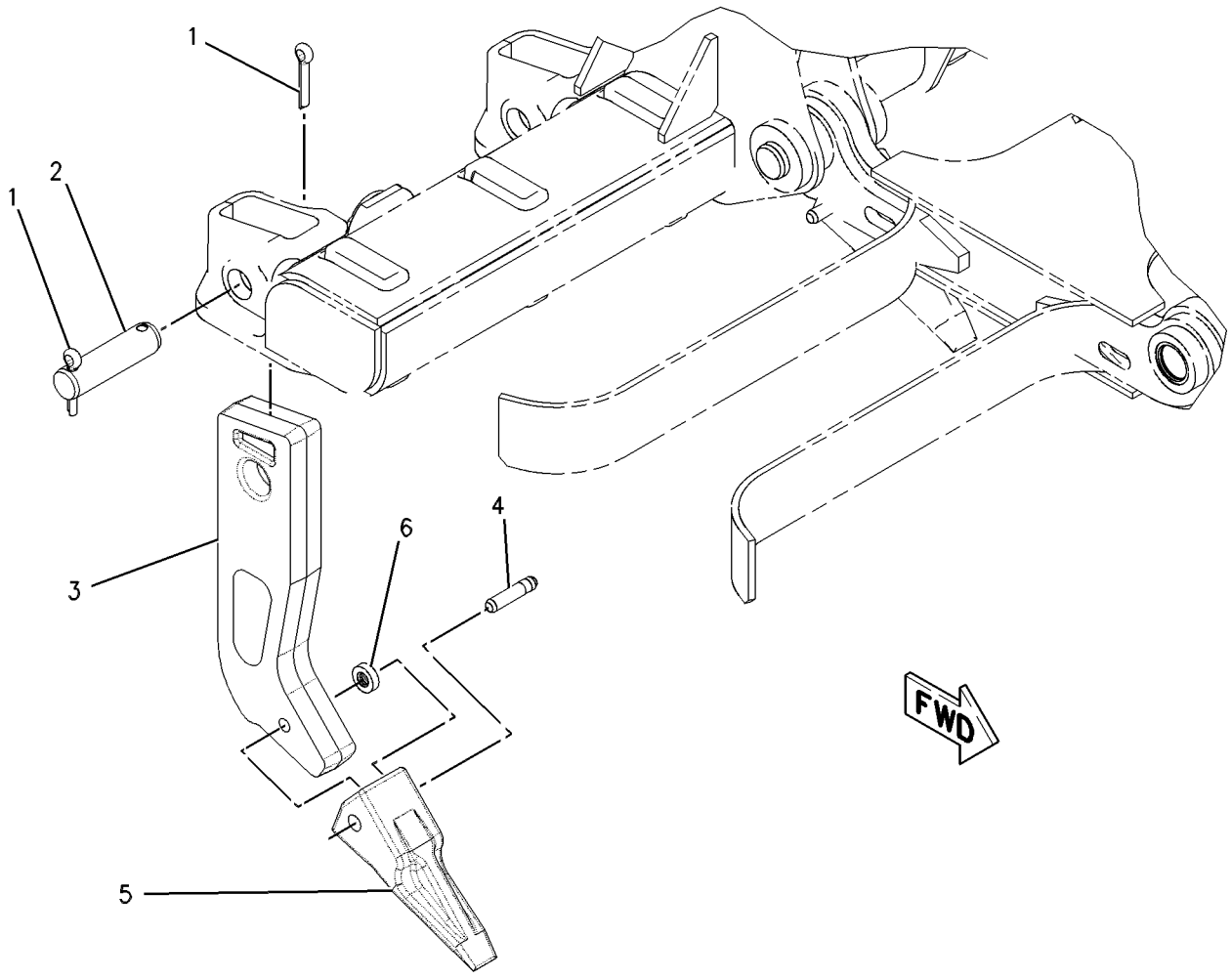

GRAPHIC #1 **<END>** g00632727

SERVICE EQUIPMENT AND SUPPLIES

247-8622 BOX GP-TOOL

S/N: R9J1-UP

PART OF 349-2555 COMMON AR

SMCS-7259 **i03001587**

NOTE	REF NO	GRAPHIC REF	PART NUMBER	QTY	PART NAME 1 2 3 4 5 6 (PRODUCT LEVEL)	SEE PAGE
	1	1	**246-2641**	1	PADLOCK GP	
		1	**5P-8500**	1	KEY	
	2	1	**8W-0791**	1	BOX AS-TOOL	
C	3	1	**8T-4226**	2	WASHER-PLATED (10.5X45X3-MM THK)	
C	4	1	**7X-7729**	6	WASHER (11X25X3-MM THK)	
M	5	1	**8T-4133**	2	NUT (M10X1.5-THD)	
M	6	1	**8T-4136**	4	BOLT (M10X1.5X25-MM)	

C-CHANGE FROM PREVIOUS TYPE
M-METRIC PART

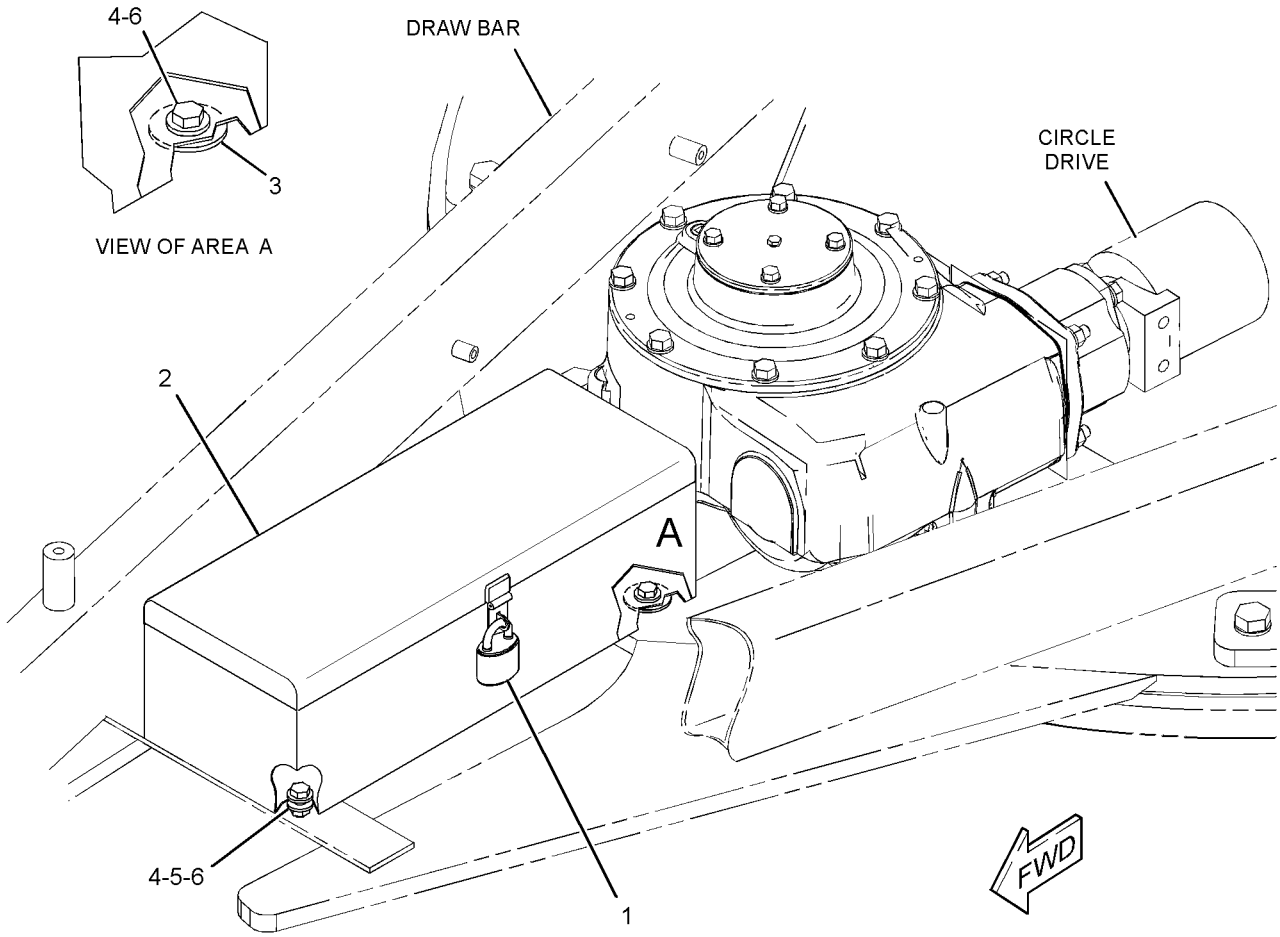

GRAPHIC #1 **<END>** g01523165

SERVICE EQUIPMENT AND SUPPLIES

235-4186 FILM GP—VARIABLE HORSEPOWER PLUS

S/N: R9J1-UP

PART OF 351-2601, 357-3000 SNOW AR-MOTOR GRADER

AN ATTACHMENT

SMCS-0375, 7000, 7405, 7557 **i02696922**

NOTE	PART NUMBER	QTY	PART NAME 1 2 3 4 5 6 (PRODUCT LEVEL)	SEE PAGE
	280-1034	1	FILM-IDENTIFICATION (VARIABLE HORSEPOWER PLUS)	
			ON BOTH SIDES OF THE PLATFORM ON THE OUTSIDE SURFACE	
	115-5852	1	PLATE & FILM GP (ENGINE INFORMATION)	
			ON LEFT SIDE OF CYLINDER BLOCK TOWARDS REAR ON VERTICAL SURFACE ABOVE ECM	
	249-6751	1	CONFIGURATION-PREMIUM	

<END>

260-0212 FILM GP

S/N: R9J1-UP

PART OF 252-4890, 297-6428 PLATE & FILM GP

AN ATTACHMENT

SMCS-0375, 7000, 7405, 7557 **i03771791**

NOTE	REF NO	GRAPHIC REF	PART NUMBER	QTY	PART NAME 1 2 3 4 5 6 (PRODUCT LEVEL)	SEE PAGE
	1	1	**253-0861**	2	FILM-INFORMATION (CAT POWER, ACERT TECHNOLOGY)	
	2	1	**280-1480**	1	FILM-IDENTIFICATION (CATERPILLAR)	
	3	1	**281-1999**	1	FILM-STRIPE (CAT HOOD, LH)	
	4	1	**281-2000**	1	FILM-STRIPE (CAT HOOD, RH)	
	5	1	**281-2001**	2	FILM-STRIPE (14M)	
	6	1	**280-1033**	2	FILM-IDENTIFICATION (VARIABLE HORSEPOWER)	

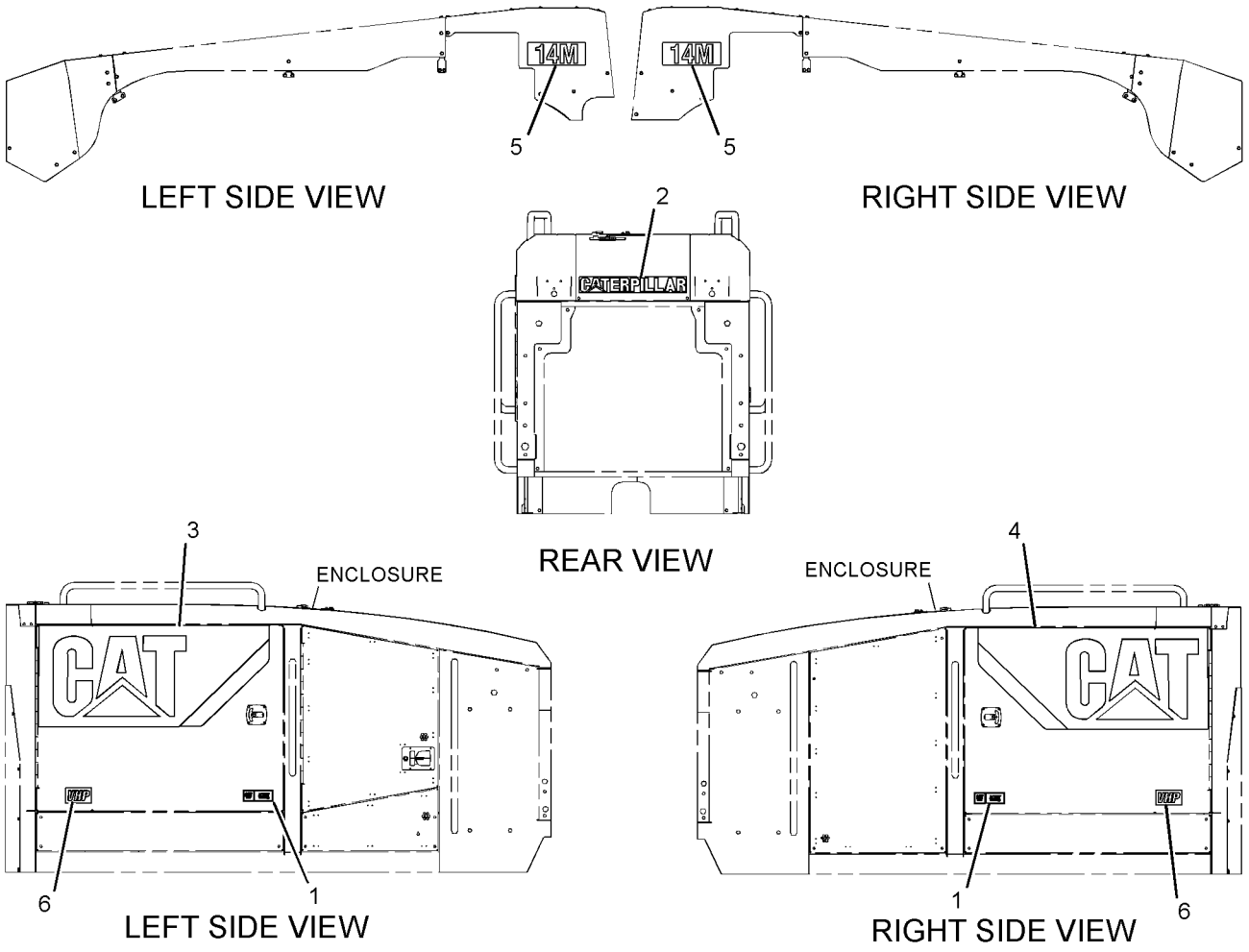

GRAPHIC #1 **<END>** g02093354

SERVICE EQUIPMENT AND SUPPLIES

267-3184 FILM GP-INTERNATIONAL

S/N: R9J1-UP

PART OF 302-1293, 302-1294, 302-1295, 302-1296, 302-1297, 302-1298, 302-1299, 302-1300, 302-1301, 302-1302, 302-1303, 302-1304, 302-1305, 302-1306, 302-1307, 302-1308, 302-1309, 302-1310, 302-5135 PLATE & FILM GP AN ATTACHMENT

SMCS-7557 **i03157454**

NOTE	REF NO	GRAPHIC REF	PART NUMBER	QTY	PART NAME 1 2 3 4 5 6 (PRODUCT LEVEL)	SEE PAGE
	1	1	**100-5612**	1	FILM-INSTRUCTION (ALTERNATE EXIT, REMOVE WINDOW)	
	2	1	**219-0302**	1	FILM-WARNING (NO WELD, NO DRILL, READ OMM)	
	3	1	**224-0554**	1	FILM-WARNING (UNIVERSAL, READ OMM, INTL)	
	4	1	**227-7391**	1	FILM-WARNING (SEAT BELT, INTERNATIONAL)	
	5	1	**249-6688**	1	FILM-WARNING (CRUSH HAZARD, READ MANUAL)	
	6	1	**307-0047**	1	FILM-INFORMATION (PRODUCT LINK, READ OMM)	
	7	1	**260-7653**	1	FILM-WARNING (PRODUCT LINK, READ OMM)	

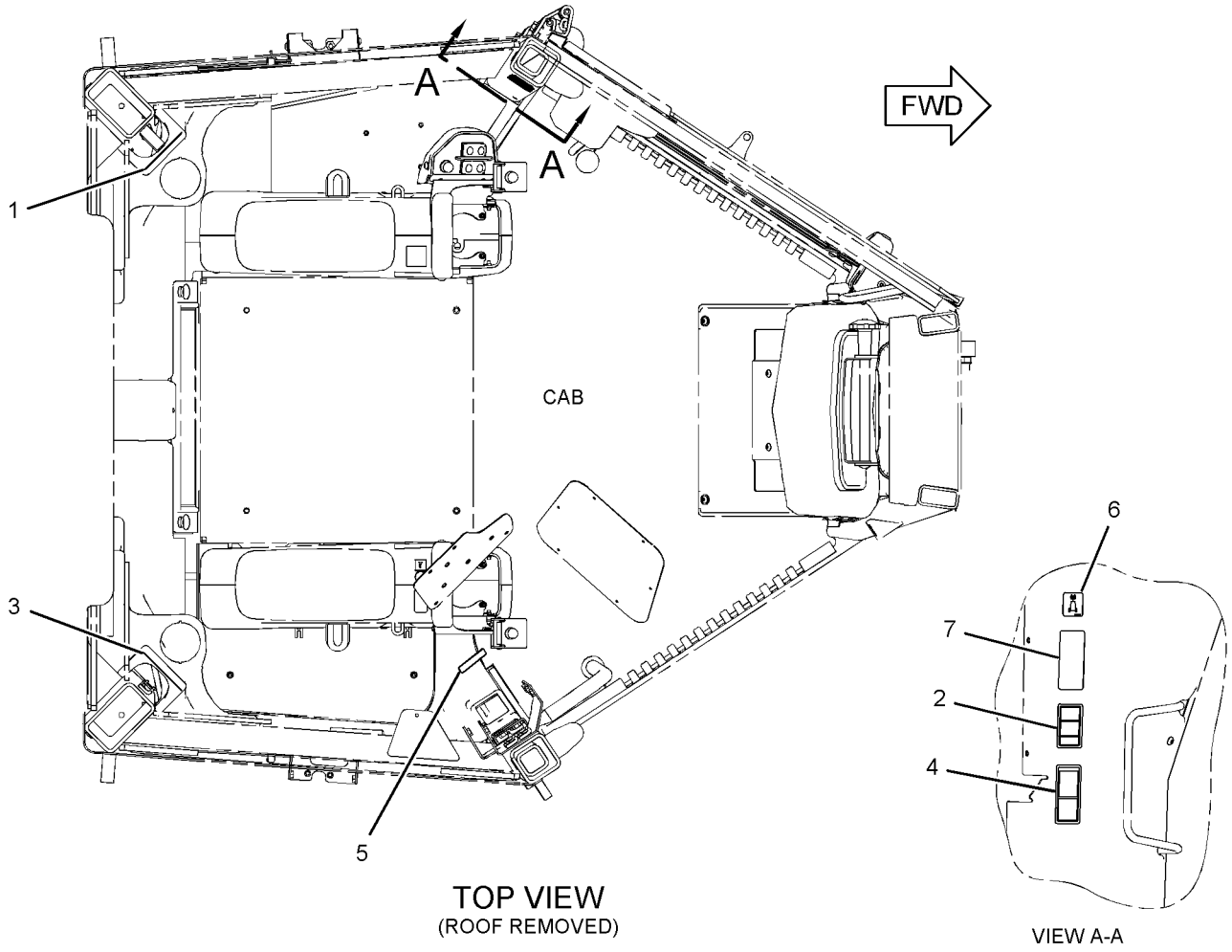

TOP VIEW
(ROOF REMOVED)

VIEW A-A

GRAPHIC #1 **<END>** g01636402

SERVICE EQUIPMENT AND SUPPLIES

267-3183 FILM GP-U.S.

S/N: R9J1-UP
PART OF 302-1292 PLATE & FILM GP
AN ATTACHMENT

SMCS-7557 **i03151500**

NOTE	REF NO	GRAPHIC REF	PART NUMBER	QTY	PART NAME 1 2 3 4 5 6 (PRODUCT LEVEL)	SEE PAGE
	1	1	**100-5612**	1	FILM-INSTRUCTION (ALTERNATE EXIT, REMOVE WINDOW)	
	2	1	**219-0302**	1	FILM-WARNING (NO WELD, NO DRILL, READ OMM)	
	3	1	**225-3305**	1	FILM-WARNING (UNIVERSAL, READ OMM, U.S.)	
	4	1	**227-7390**	1	FILM-WARNING (SEAT BELT)	
	5	1	**249-6687**	1	FILM-WARNING (CRUSH HAZARD)	
	6	1	**260-7652**	1	FILM-WARNING (PRODUCT LINK 300, U.S.)	
	7	1	**307-0047**	1	FILM-INFORMATION (PRODUCT LINK, READ OMM)	

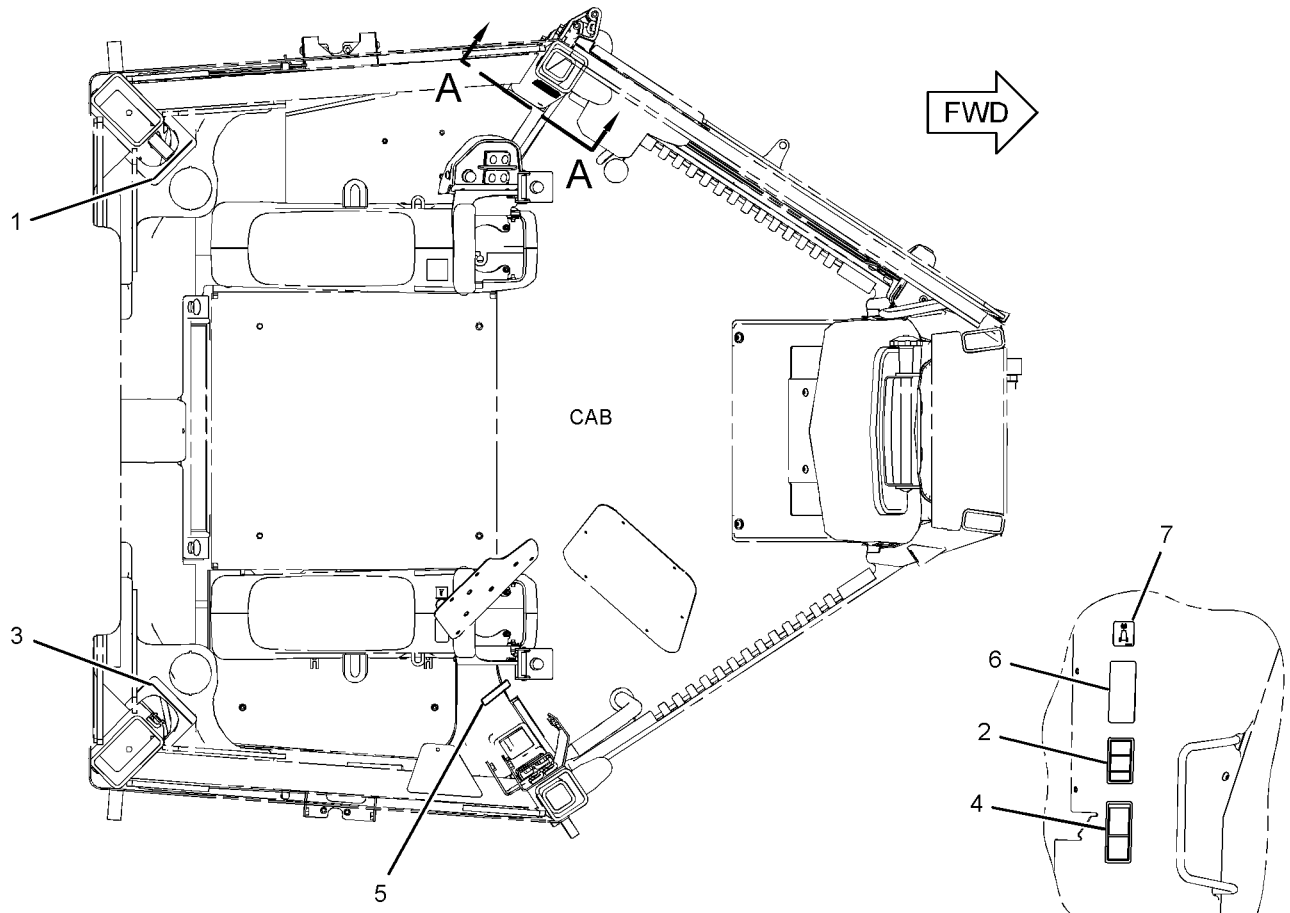

TOP VIEW
(ROOF REMOVED)

VIEW A-A

GRAPHIC #1 **<END>** g01631994

SERVICE EQUIPMENT AND SUPPLIES

235-4180 PLATE & FILM GP—VARIABLE HORSEPOWER

S/N: R9J1-UP

PART OF 353-5005, 358-7877, 361-1731, 361-4363, 363-0414 DISTRIBUTION AR AN ATTACHMENT

SMCS-7405, 7557 **i02696921**

NOTE	PART NUMBER	QTY	PART NAME 1 2 3 4 5 6 (PRODUCT LEVEL)	SEE PAGE
	115-5852	1	PLATE & FILM GP (ENGINE INFORMATION)	
			ON LEFT SIDE OF CYLINDER BLOCK TOWARDS REAR ON VERTICAL SURFACE ABOVE ECM	
	280-1033	1	FILM-IDENTIFICATION (VARIABLE HORSEPOWER)	
			ON BOTH SIDES OF THE PLATFORM ON THE OUTSIDE SURFACE	

<END>

SERVICE EQUIPMENT AND SUPPLIES

252-4890 PLATE & FILM GP

S/N: R9J1-UP

PART OF 302-1292 PLATE & FILM GP

AN ATTACHMENT

SMCS-7405, 7557 **i03180550**

NOTE	REF NO	GRAPHIC REF	PART NUMBER	QTY	PART NAME 1 2 3 4 5 6 (PRODUCT LEVEL)	SEE PAGE
	1	2	**5P-1174**	1	FILM-IDENTIFICATION (TRANSMISSION OIL FILL CAP)	
	2	2	**5P-1175**	1	FILM-IDENTIFICATION (ENGINE OIL FILL)	
	3	3	**109-0361**	1	FILM-INSTRUCTION (ENGINE SHUTDOWN)	
	4	3	**129-7680**	1	FILM-INSTRUCTION (HYDRAULIC TANK OIL DRAIN)	
	5	1	**134-7258**	1	FILM-INFORMATION (EXTENDED LIFE COOLANT,READ OMM)	
	6	2	**146-6747**	1	FILM-INFORMATION (24-VOLT)	
	7	4	**190-5386**	2	FILM-STRIPE (ROUND RED REFLECTIVE)	
	8	2	**225-4150**	1	PLATE-SERVICE INFORMATION (MACHINE)	
	9	4	**226-1242**	2	FILM-WARNING (CRUSH HAZARD, STAY BACK, U.S.)	
	10	4	**226-1275**	1	FILM-WARNING (CRUSH HAZARD, READ OMM, U.S.)	
	14	1	**239-4990**	2	FILM-WARNING (HIGH PRESSURE CYLINDER)	
	15	2	**239-6989**	1	PLATE-SERIAL NUMBER (MACHINE)	
	16	1,3	**248-5245**	2	FILM-INFORMATION (LIFT EYE, TIE-DOWN LOCATION)	
	18	2	**249-8575**	1	FILM-WARNING (NO DRILL, WELD, READ OMM)	
	20	2	**252-2157**	2	FILM-INFORMATION (TIE-DOWN)	
	21	1	**260-0189**	1	FILM-IDENTIFICATION (BLADE ANGLE)	
Y	22	1	*260-0212*	1	FILM GP	911
	25	1	**263-6901**	1	FILM-WARNING (HOT FLUID)	
	26	3	**275-3292**	1	FILM-IDENTIFICATION (GREASE POINT)	
	27	3	**293-3823**	1	FILM-IDENTIFICATION (ARTICULATION LOCK)	
E	30	1	**117-9978**		FILM-STRIPE (RED) (10.2-CM EACH)	
	31	2,3	**329-5706**	2	FILM-WARNING (COLD START, READ OMM)	
	32	3	**329-5707**	1	FILM-IDENTIFICATION (OIL GRADE, READ OMM)	
	33	1,2	**243-5289**	2	FILM-IDENTIFICATION (LIFT POINT)	
	34	2	**286-1089**	1	FILM-INFORMATION (FLUID LEVEL)	
F			**246-2641**	3	PADLOCK GP	
					(EACH INCLUDES)	
			5P-8500	1	KEY	

E-ORDER BY THE CENTIMETER
F-NOT SHOWN
Y-SEPARATE ILLUSTRATION

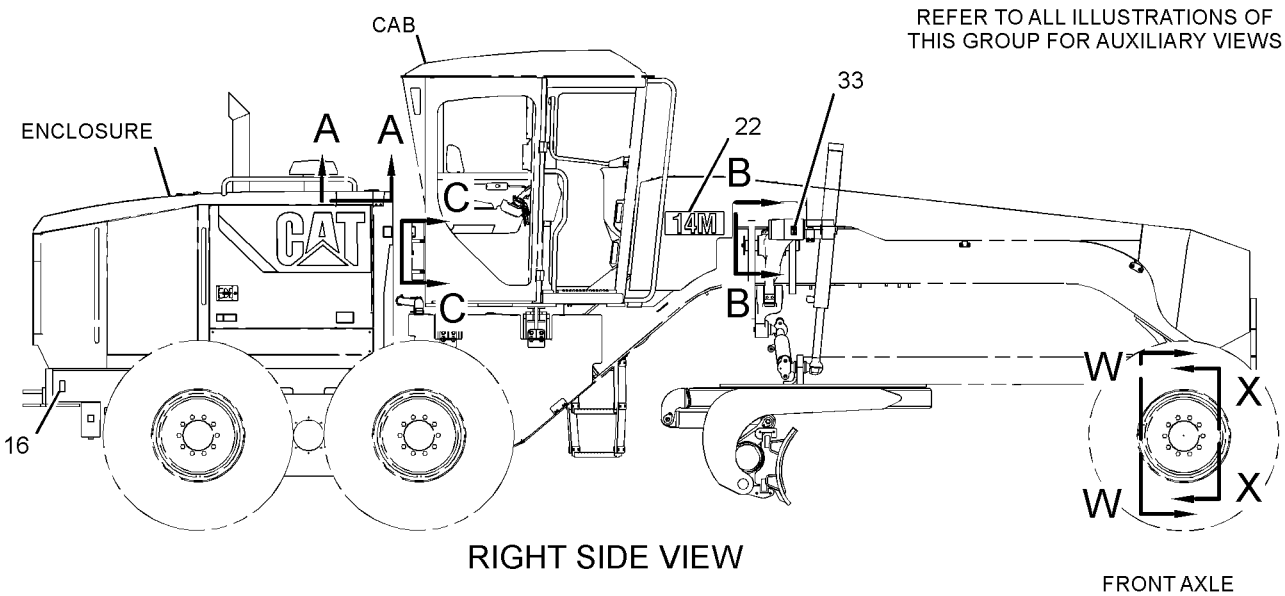

RIGHT SIDE VIEW

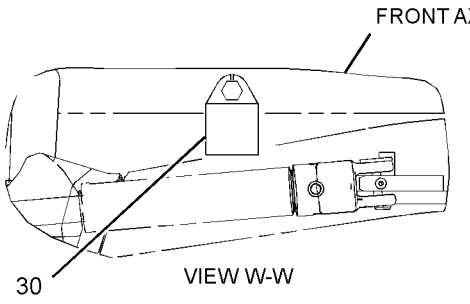

VIEW W-W

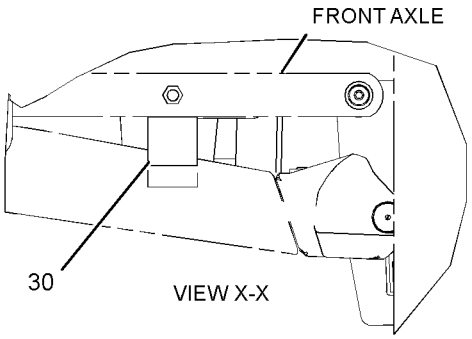

VIEW X-X

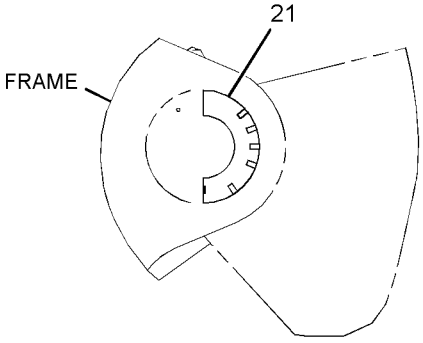

VIEW B-B

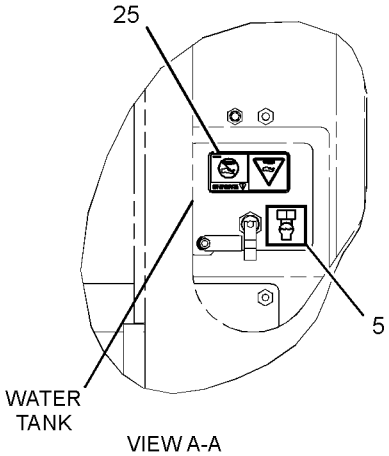

VIEW A-A

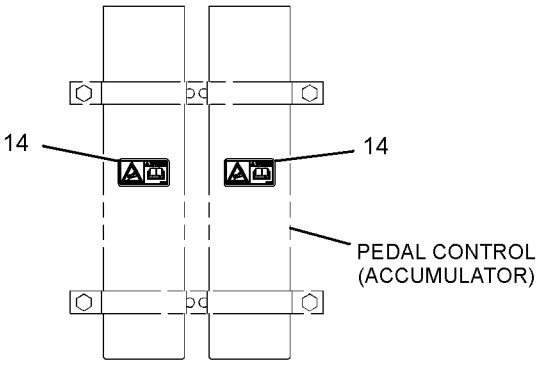

VIEW C-C

GRAPHIC #1

g01842333

REFER TO ALL ILLUSTRATIONS OF
THIS GROUP FOR AUXILIARY VIEWS

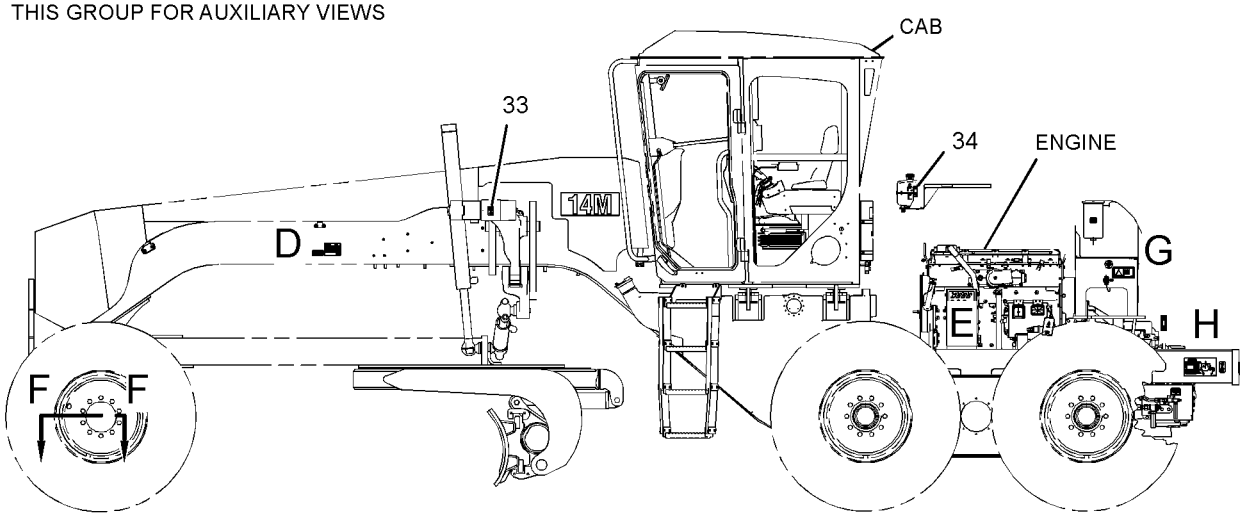

LEFT SIDE VIEW

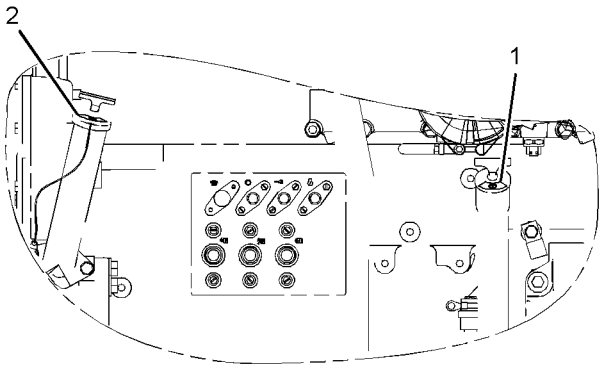

VIEW OF AREA E

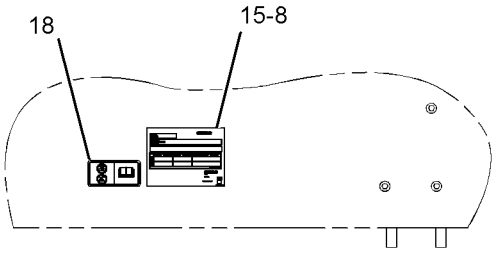

VIEW OF AREA D

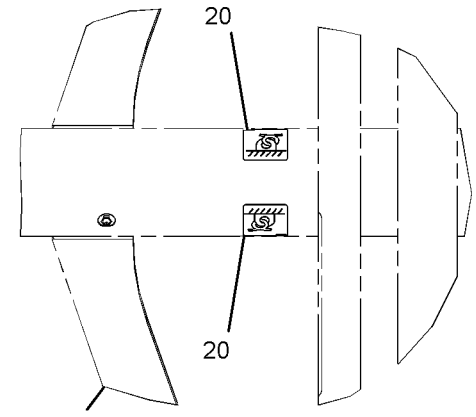

SECTION F-F

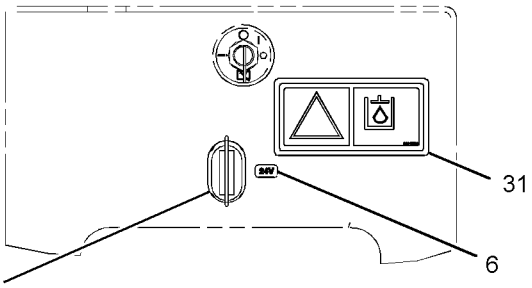

VIEW OF AREA G

GRAPHIC #2

g01842334

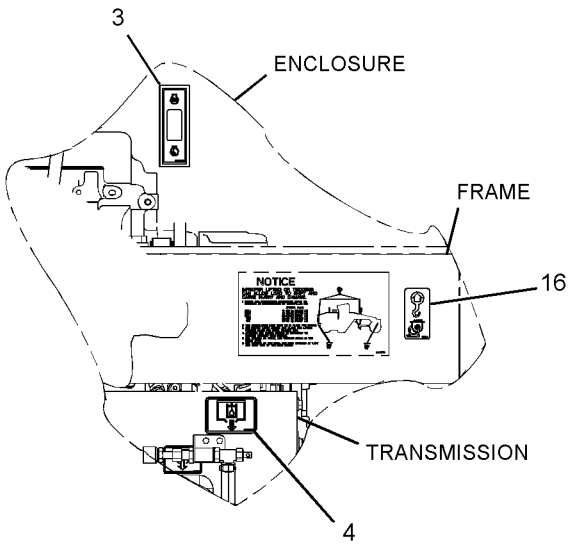

VIEW OF AREA H

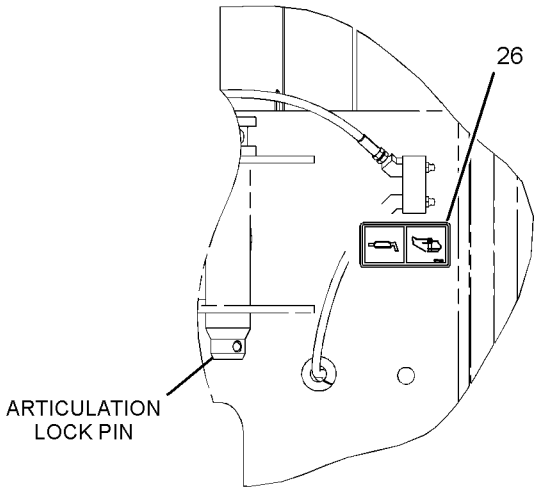

VIEW J-J

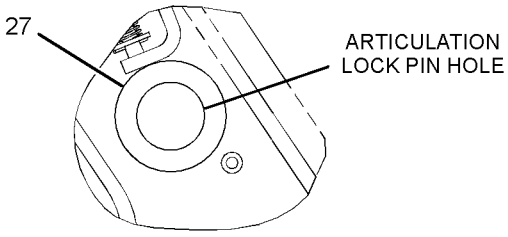

VIEW OF AREA M

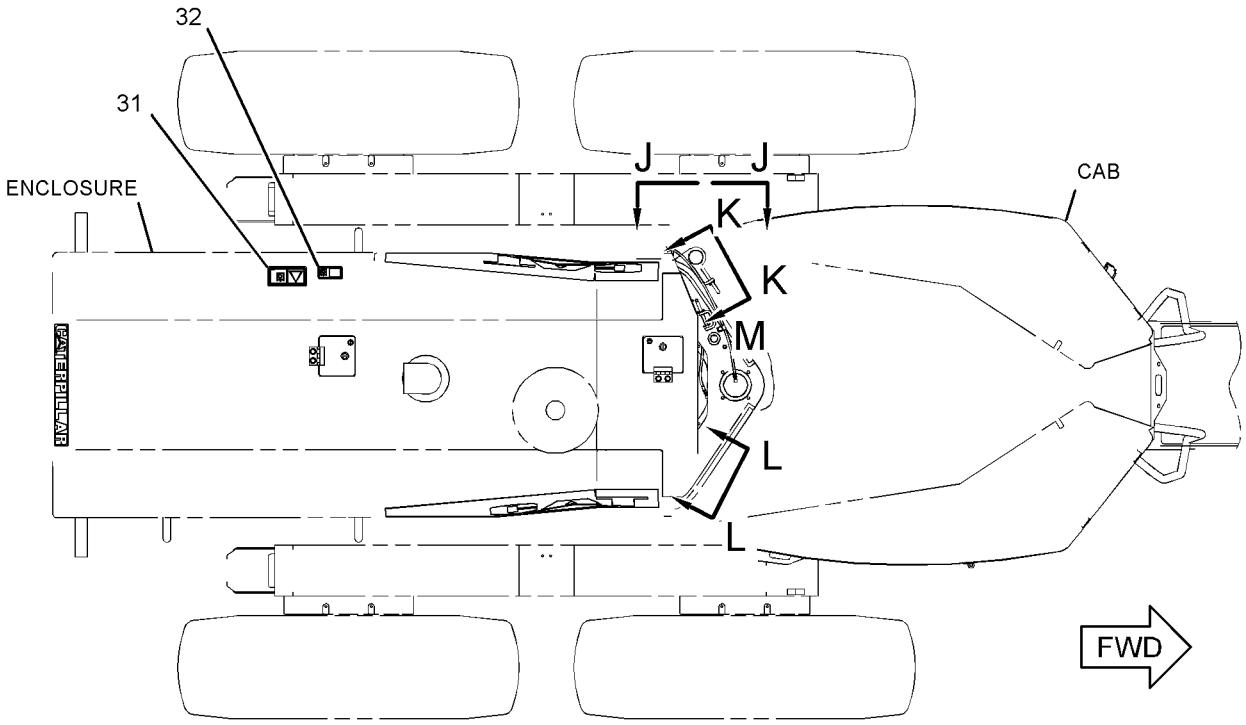

REFER TO ALL ILLUSTRATIONS OF THIS GROUP FOR AUXILIARY VIEWS

TOP VIEW

GRAPHIC #3

g01842335

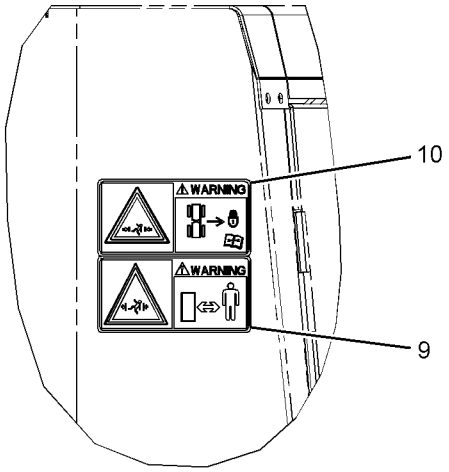

VIEW K-K

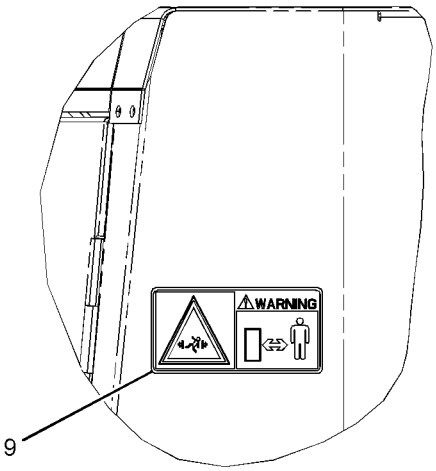

VIEW L-L

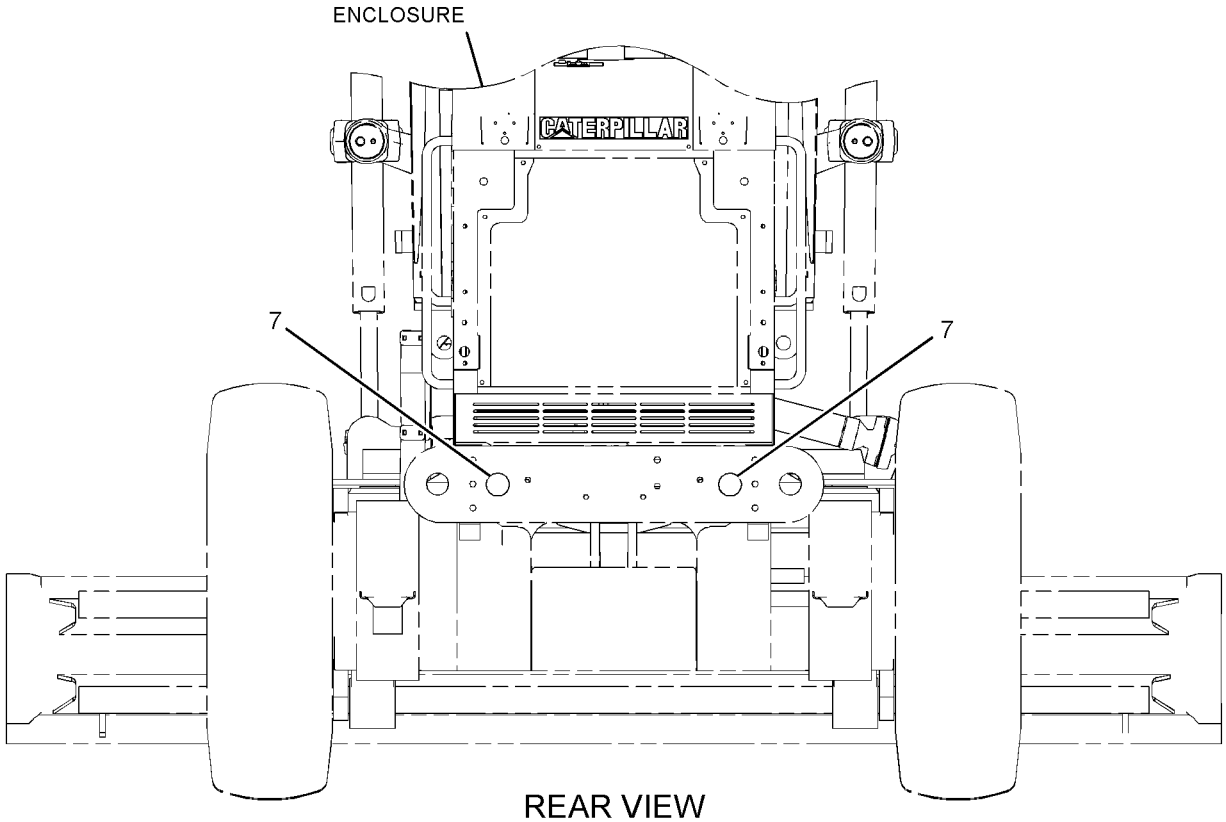

REAR VIEW

GRAPHIC #4 **<END>** g01305281

SERVICE EQUIPMENT AND SUPPLIES

297-6428 PLATE & FILM GP

S/N: R9J1-UP

PART OF 302-1293, 302-1294, 302-1295, 302-1296, 302-1297, 302-1298, 302-1299, 302-1300, 302-1301, 302-1302, 302-1303, 302-1304, 302-1305, 302-1306, 302-1307, 302-1308, 302-1309, 302-1310, 302-5135 PLATE & FILM GP AN ATTACHMENT

SMCS-7405, 7557 **i03195178**

NOTE	REF NO	GRAPHIC REF	PART NUMBER	QTY	PART NAME 1 2 3 4 5 6 (PRODUCT LEVEL)	SEE PAGE
	1	2	**5P-1174**	1	FILM-IDENTIFICATION (TRANSMISSION OIL FILL CAP)	
	2	2	**5P-1175**	1	FILM-IDENTIFICATION (ENGINE OIL FILL)	
	3	4	**109-0361**	1	FILM-INSTRUCTION (ENGINE SHUTDOWN)	
	4	4	**129-7680**	1	FILM-INSTRUCTION (HYDRAULIC TANK OIL DRAIN)	
	5	1	**134-7258**	1	FILM-INFORMATION (EXTENDED LIFE COOLANT,READ OMM)	
	6	4	**146-6747**	1	FILM-INFORMATION (24-VOLT)	
	7	4	**190-5386**	2	FILM-STRIPE (ROUND RED REFLECTIVE)	
	8	2	**225-4150**	1	PLATE-SERVICE INFORMATION (MACHINE)	
	9	3	**226-1240**	2	FILM-WARNING (CRUSH HAZARD, STAY BACK, INTL)	
	10	3	**226-1274**	1	FILM-WARNING (CRUSH HAZARD, READ OMM, INTL)	
	11	1	**239-4991**	2	FILM-WARNING (HIGH PRESSURE CYLINDER)	
	12	2	**239-6989**	1	PLATE-SERIAL NUMBER (MACHINE)	
	13	1,4	**248-5245**	2	FILM-INFORMATION (LIFT EYE, TIE-DOWN LOCATION)	
	14	2	**249-8575**	1	FILM-WARNING (NO DRILL, WELD, READ OMM)	
	16	2	**252-2157**	2	FILM-INFORMATION (TIE-DOWN)	
	17	1	**260-0189**	1	FILM-IDENTIFICATION (BLADE ANGLE)	
Y	18	2	*260-0212*	1	FILM GP	911
	19	1	**263-6902**	1	FILM-WARNING (HOT FLUID)	
	20	3	**275-3292**	1	FILM-IDENTIFICATION (GREASE POINT)	
	21	3	**293-3823**	1	FILM-IDENTIFICATION (ARTICULATION LOCK)	
E	22	1,3	**117-9978**		FILM-STRIPE (RED) (10.2-CM EACH)	
	25	2	**286-1089**	1	FILM-INFORMATION (FLUID LEVEL)	
	26	1,2	**243-5289**	2	FILM-IDENTIFICATION (LIFT POINT)	
	27	3,4	**329-5706**	2	FILM-WARNING (COLD START, READ OMM)	
	28	3	**329-5707**	1	FILM-IDENTIFICATION (OIL GRADE, READ OMM)	
F			**246-2641**	3	PADLOCK GP	
					(EACH INCLUDES)	
			5P-8500	1	KEY	
					(ONE PADLOCK FOR EACH OF THE FOLLOWING COMPONENTS)	
					1.HYDRAULIC TANK	
					2.FUEL TANK	
					3.BATTERY	
F			**222-7944**	2	FILM-WARNING (DO NOT OPERATE, READ OMM, INTL)	
					(ON ENGINE VALVE COVER ON BOTH RH & LH SIDE)	

E-ORDER BY THE CENTIMETER
F-NOT SHOWN
Y-SEPARATE ILLUSTRATION

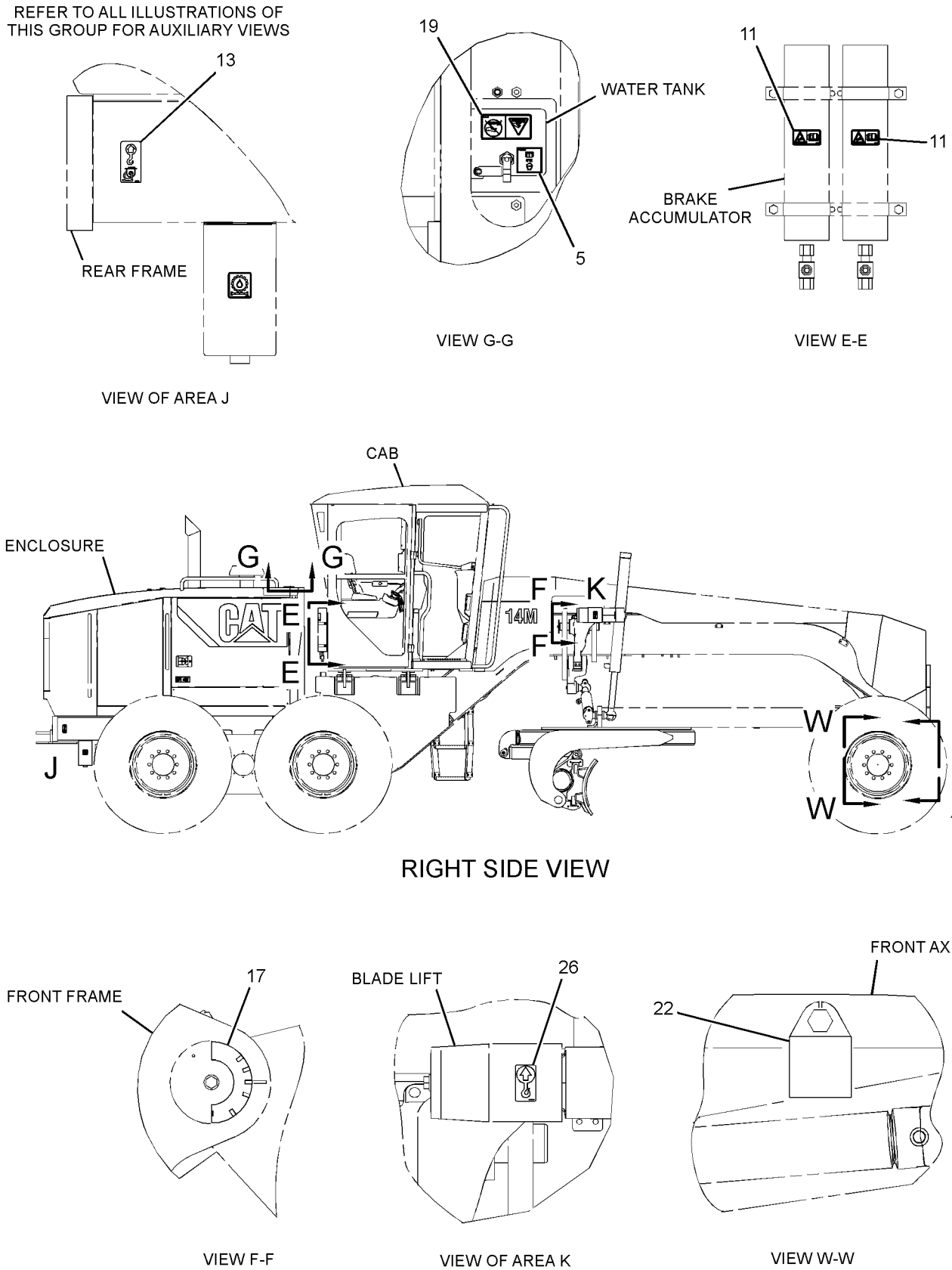

GRAPHIC #1

g01839379

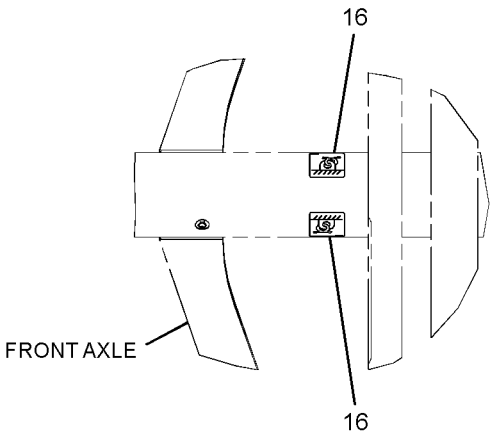

VIEW R-R

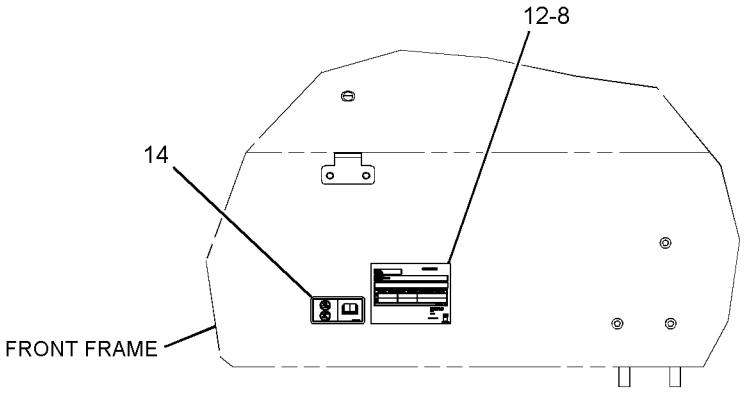

VIEW OF AREA L

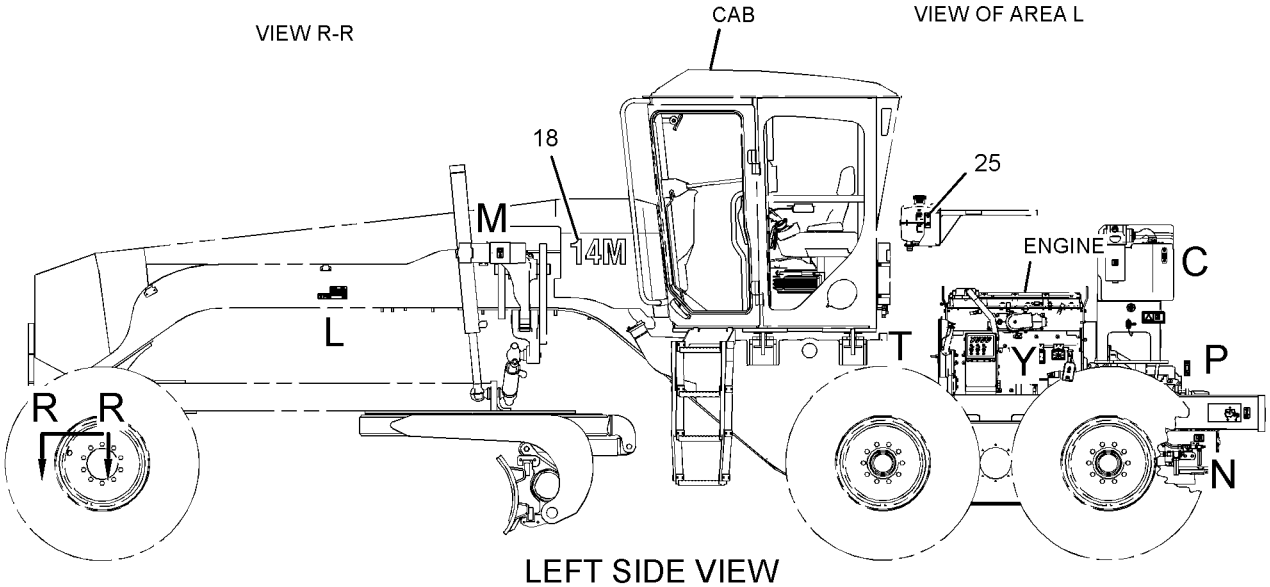

LEFT SIDE VIEW

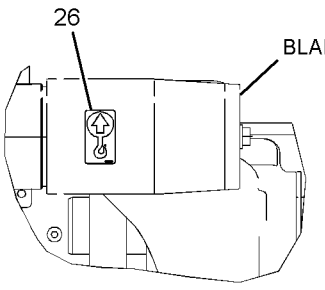

VIEW OF AREA M

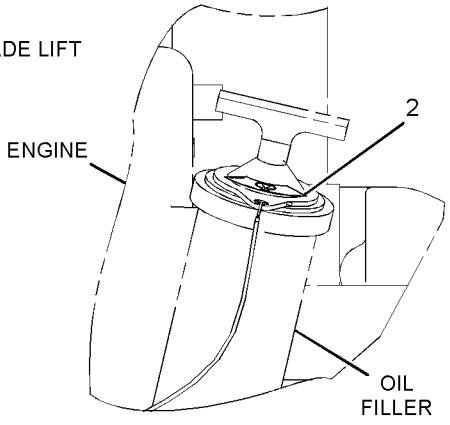

VIEW OF AREA T

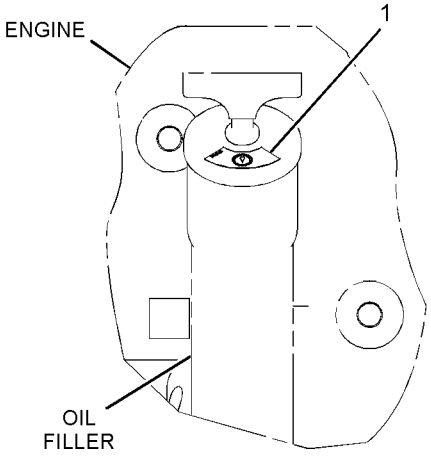

VIEW OF AREA Y

REFER TO ALL ILLUSTRATIONS OF
THIS GROUP FOR AUXILIARY VIEWS

GRAPHIC #2

g01839380

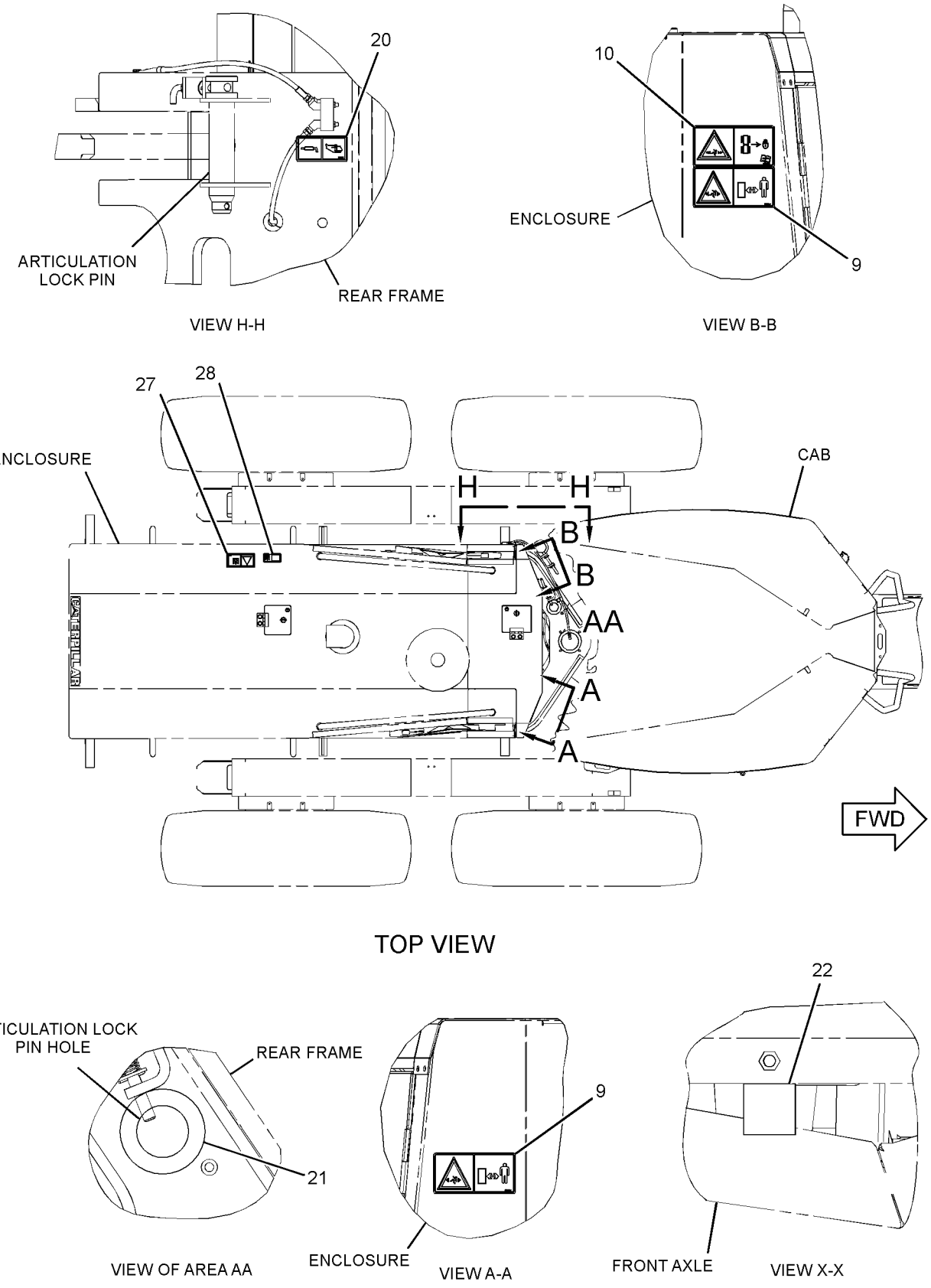

GRAPHIC #3

g01839382

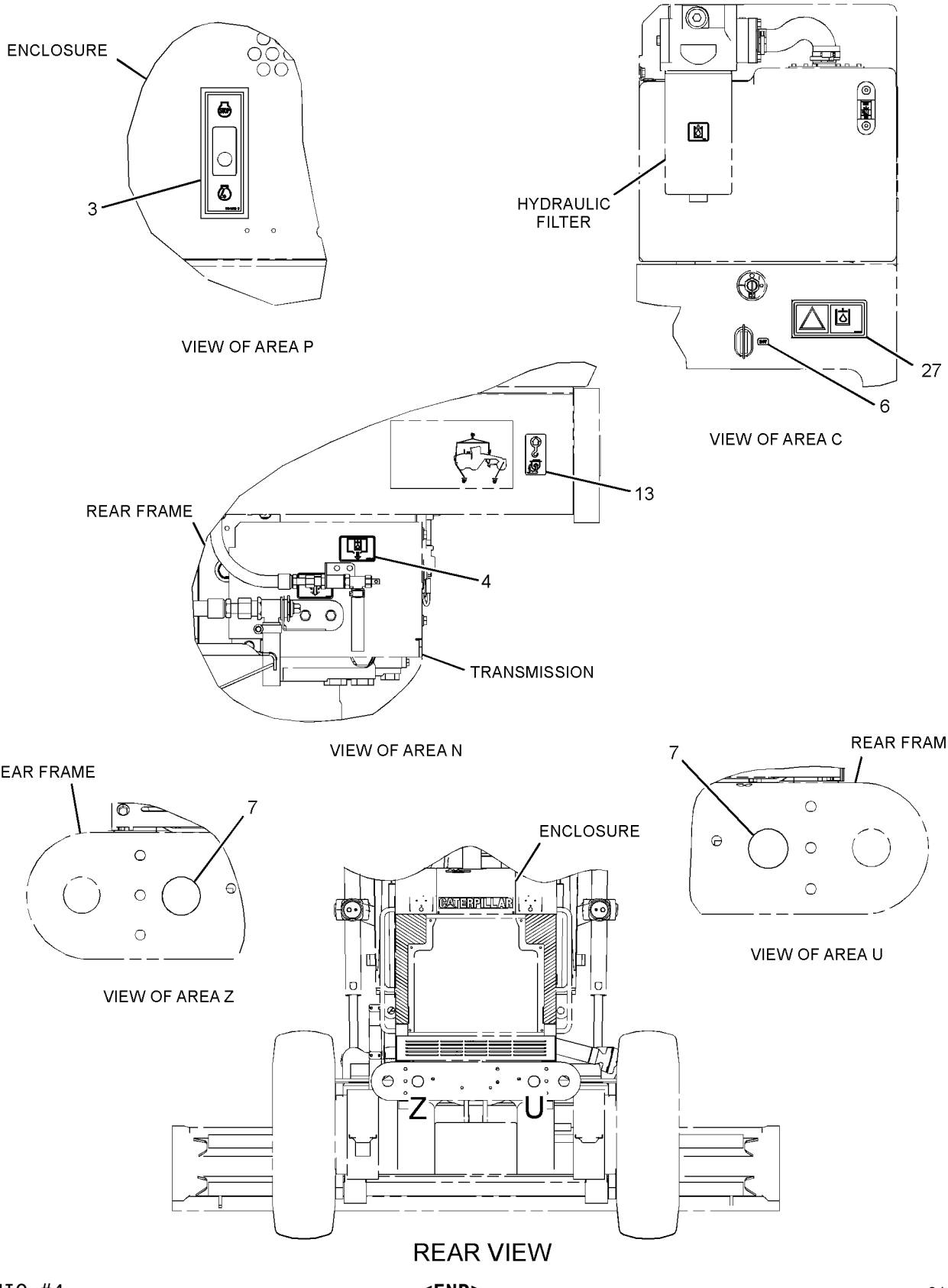

GRAPHIC #4 **<END>** g01839383

302-1292 PLATE & FILM GP—ENGLISH, WITH MONITOR SOFTWARE

S/N: R9J1-UP
AN ATTACHMENT

SMCS-7405, 7557 **i02770712**

NOTE	PART NUMBER	QTY	PART NAME 1 2 3 4 5 6 (PRODUCT LEVEL)	SEE PAGE
Y	*250-9254*	1	ELECTRONICS GP-MONITOR	220
Y	*267-3183*	1	FILM GP-U.S.	913
Y	*252-4890*	1	PLATE & FILM GP	915
Y-SEPARATE ILLUSTRATION				

<END>

302-1293 PLATE & FILM GP— PORTUGUESE, WITH MONITOR SOFTWARE

S/N: R9J1-UP
AN ATTACHMENT

SMCS-7405, 7557 **i02672718**

NOTE	PART NUMBER	QTY	PART NAME 1 2 3 4 5 6 (PRODUCT LEVEL)	SEE PAGE
Y	*250-9254*	1	ELECTRONICS GP-MONITOR	220
Y	*267-3184*	1	FILM GP-INTERNATIONAL	912
Y	*297-6428*	1	PLATE & FILM GP	920
Y-SEPARATE ILLUSTRATION				

<END>

302-1294 PLATE & FILM GP—SPANISH, WITH MONITOR SOFTWARE

S/N: R9J1-UP
AN ATTACHMENT

SMCS-7405, 7557 **i02672726**

NOTE	PART NUMBER	QTY	PART NAME 1 2 3 4 5 6 (PRODUCT LEVEL)	SEE PAGE
Y	*250-9254*	1	ELECTRONICS GP-MONITOR	220
Y	*267-3184*	1	FILM GP-INTERNATIONAL	912
Y	*297-6428*	1	PLATE & FILM GP	920
Y-SEPARATE ILLUSTRATION				

<END>

302-1295 PLATE & FILM GP—FRENCH, WITH MONITOR SOFTWARE

S/N: R9J1-UP
AN ATTACHMENT

SMCS-7405, 7557 **i02672728**

NOTE	PART NUMBER	QTY	PART NAME 1 2 3 4 5 6 (PRODUCT LEVEL)	SEE PAGE
Y	*250-9254*	1	ELECTRONICS GP-MONITOR	220
Y	*267-3184*	1	FILM GP-INTERNATIONAL	912
Y	*297-6428*	1	PLATE & FILM GP	920
Y-SEPARATE ILLUSTRATION				

<END>

302-1296 PLATE & FILM GP—GERMAN, WITH MONITOR SOFTWARE

S/N: R9J1-UP

AN ATTACHMENT

SMCS-7405, 7557 **i02672729**

NOTE	PART NUMBER	QTY	PART NAME 1 2 3 4 5 6 (PRODUCT LEVEL)	SEE PAGE
Y	*250-9254*	1	ELECTRONICS GP-MONITOR	220
Y	*267-3184*	1	FILM GP-INTERNATIONAL	912
Y	*297-6428*	1	PLATE & FILM GP	920

Y-SEPARATE ILLUSTRATION

<END>

302-1297 PLATE & FILM GP—DUTCH, WITH MONITOR SOFTWARE

S/N: R9J1-UP

AN ATTACHMENT

SMCS-7405, 7557 **i02672746**

NOTE	PART NUMBER	QTY	PART NAME 1 2 3 4 5 6 (PRODUCT LEVEL)	SEE PAGE
Y	*250-9254*	1	ELECTRONICS GP-MONITOR	220
Y	*267-3184*	1	FILM GP-INTERNATIONAL	912
Y	*297-6428*	1	PLATE & FILM GP	920

Y-SEPARATE ILLUSTRATION

<END>

302-1298 PLATE & FILM GP—DANISH, WITH MONITOR SOFTWARE

S/N: R9J1-UP

AN ATTACHMENT

SMCS-7405, 7557 **i02733428**

NOTE	PART NUMBER	QTY	PART NAME 1 2 3 4 5 6 (PRODUCT LEVEL)	SEE PAGE
Y	*302-0359*	1	ELECTRONICS GP-MONITOR	221
Y	*267-3184*	1	FILM GP-INTERNATIONAL	912
Y	*297-6428*	1	PLATE & FILM GP	920

Y-SEPARATE ILLUSTRATION

<END>

302-1299 PLATE & FILM GP—FINNISH, WITH MONITOR SOFTWARE

S/N: R9J1-UP

AN ATTACHMENT

SMCS-7405, 7557 **i02733429**

NOTE	PART NUMBER	QTY	PART NAME 1 2 3 4 5 6 (PRODUCT LEVEL)	SEE PAGE
Y	*302-0359*	1	ELECTRONICS GP-MONITOR	221
Y	*267-3184*	1	FILM GP-INTERNATIONAL	912
Y	*297-6428*	1	PLATE & FILM GP	920

Y-SEPARATE ILLUSTRATION

<END>

302-1300 PLATE & FILM GP—SWEDISH, WITH MONITOR SOFTWARE

S/N: R9J1-UP
AN ATTACHMENT

SMCS-7405, 7557 **i02733430**

NOTE	PART NUMBER	QTY	PART NAME 1 2 3 4 5 6 (PRODUCT LEVEL)	SEE PAGE
Y	*302-0359*	1	ELECTRONICS GP-MONITOR	221
Y	*267-3184*	1	FILM GP-INTERNATIONAL	912
Y	*297-6428*	1	PLATE & FILM GP	920

Y-SEPARATE ILLUSTRATION

<END>

302-1301 PLATE & FILM GP—NORWEGIAN, WITH MONITOR SOFTWARE

S/N: R9J1-UP
AN ATTACHMENT

SMCS-7405, 7557 **i02733431**

NOTE	PART NUMBER	QTY	PART NAME 1 2 3 4 5 6 (PRODUCT LEVEL)	SEE PAGE
Y	*302-0359*	1	ELECTRONICS GP-MONITOR	221
Y	*267-3184*	1	FILM GP-INTERNATIONAL	912
Y	*297-6428*	1	PLATE & FILM GP	920

Y-SEPARATE ILLUSTRATION

<END>

302-1302 PLATE & FILM GP—ITALIAN, WITH MONITOR SOFTWARE

S/N: R9J1-UP
AN ATTACHMENT

SMCS-7405, 7557 **i02733432**

NOTE	PART NUMBER	QTY	PART NAME 1 2 3 4 5 6 (PRODUCT LEVEL)	SEE PAGE
Y	*302-0360*	1	ELECTRONICS GP-MONITOR	221
Y	*267-3184*	1	FILM GP-INTERNATIONAL	912
Y	*297-6428*	1	PLATE & FILM GP	920

Y-SEPARATE ILLUSTRATION

<END>

302-1303 PLATE & FILM GP—GREEK, WITH MONITOR SOFTWARE

S/N: R9J1-UP
AN ATTACHMENT

SMCS-7405, 7557 **i02733433**

NOTE	PART NUMBER	QTY	PART NAME 1 2 3 4 5 6 (PRODUCT LEVEL)	SEE PAGE
Y	*302-0360*	1	ELECTRONICS GP-MONITOR	221
Y	*267-3184*	1	FILM GP-INTERNATIONAL	912
Y	*297-6428*	1	PLATE & FILM GP	920

Y-SEPARATE ILLUSTRATION

<END>

302-1304 PLATE & FILM GP—HEBREW, WITH MONITOR SOFTWARE

S/N: R9J1-UP

AN ATTACHMENT

SMCS-7405, 7557 **i02733435**

NOTE	PART NUMBER	QTY	PART NAME 1 2 3 4 5 6 (PRODUCT LEVEL)	SEE PAGE
Y	*302-0360*	1	ELECTRONICS GP-MONITOR	221
Y	*267-3184*	1	FILM GP-INTERNATIONAL	912
Y	*297-6428*	1	PLATE & FILM GP	920

Y-SEPARATE ILLUSTRATION

<END>

302-1305 PLATE & FILM GP—TURKISH, WITH MONITOR SOFTWARE

S/N: R9J1-UP

AN ATTACHMENT

SMCS-7405, 7557 **i02733437**

NOTE	PART NUMBER	QTY	PART NAME 1 2 3 4 5 6 (PRODUCT LEVEL)	SEE PAGE
Y	*302-0360*	1	ELECTRONICS GP-MONITOR	221
Y	*267-3184*	1	FILM GP-INTERNATIONAL	912
Y	*297-6428*	1	PLATE & FILM GP	920

Y-SEPARATE ILLUSTRATION

<END>

302-1306 PLATE & FILM GP—RUSSIAN, WITH MONITOR SOFTWARE

S/N: R9J1-UP

AN ATTACHMENT

SMCS-7405, 7557 **i02733438**

NOTE	PART NUMBER	QTY	PART NAME 1 2 3 4 5 6 (PRODUCT LEVEL)	SEE PAGE
Y	*302-0361*	1	ELECTRONICS GP-MONITOR	221
Y	*267-3184*	1	FILM GP-INTERNATIONAL	912
Y	*297-6428*	1	PLATE & FILM GP	920

Y-SEPARATE ILLUSTRATION

<END>

302-1307 PLATE & FILM GP—ARABIC, WITH MONITOR SOFTWARE

S/N: R9J1-UP

AN ATTACHMENT

SMCS-7405, 7557 **i02733440**

NOTE	PART NUMBER	QTY	PART NAME 1 2 3 4 5 6 (PRODUCT LEVEL)	SEE PAGE
Y	*302-0361*	1	ELECTRONICS GP-MONITOR	221
Y	*267-3184*	1	FILM GP-INTERNATIONAL	912
Y	*297-6428*	1	PLATE & FILM GP	920

Y-SEPARATE ILLUSTRATION

<END>

302-1308 PLATE & FILM GP—CHINESE, WITH MONITOR SOFTWARE

S/N: R9J1-UP

AN ATTACHMENT

SMCS-7405, 7557 **i02733441**

NOTE	PART NUMBER	QTY	PART NAME 1 2 3 4 5 6 (PRODUCT LEVEL)	SEE PAGE
Y	*302-0361*	1	ELECTRONICS GP-MONITOR	221
Y	*267-3184*	1	FILM GP-INTERNATIONAL	912
Y	*297-6428*	1	PLATE & FILM GP	920
Y-SEPARATE ILLUSTRATION				

<END>

302-1309 PLATE & FILM GP—ROMANIAN, WITH MONITOR SOFTWARE

S/N: R9J1-UP

AN ATTACHMENT

SMCS-7405, 7557 **i02733442**

NOTE	PART NUMBER	QTY	PART NAME 1 2 3 4 5 6 (PRODUCT LEVEL)	SEE PAGE
Y	*302-0362*	1	ELECTRONICS GP-MONITOR	222
Y	*267-3184*	1	FILM GP-INTERNATIONAL	912
Y	*297-6428*	1	PLATE & FILM GP	920
Y-SEPARATE ILLUSTRATION				

<END>

302-1310 PLATE & FILM GP—SLOVENIAN, WITH MONITOR SOFTWARE

S/N: R9J1-UP

AN ATTACHMENT

SMCS-7405, 7557 **i02733443**

NOTE	PART NUMBER	QTY	PART NAME 1 2 3 4 5 6 (PRODUCT LEVEL)	SEE PAGE
Y	*302-0362*	1	ELECTRONICS GP-MONITOR	222
Y	*267-3184*	1	FILM GP-INTERNATIONAL	912
Y	*297-6428*	1	PLATE & FILM GP	920
Y-SEPARATE ILLUSTRATION				

<END>

302-5135 PLATE & FILM GP—BRITISH, WITH MONITOR SOFTWARE

S/N: R9J1-UP

AN ATTACHMENT

SMCS-7405, 7557 **i02672747**

NOTE	PART NUMBER	QTY	PART NAME 1 2 3 4 5 6 (PRODUCT LEVEL)	SEE PAGE
Y	*250-9254*	1	ELECTRONICS GP-MONITOR	220
Y	*267-3184*	1	FILM GP-INTERNATIONAL	912
Y	*297-6428*	1	PLATE & FILM GP	920
Y-SEPARATE ILLUSTRATION				

<END>

SERVICE EQUIPMENT AND SUPPLIES

246-6129 TANK GP-AIR

S/N: R9J1-UP
PART OF 256-6983 AIR COMPRESSOR AR
AN ATTACHMENT

SMCS-5505 **i02917985**

NOTE	REF NO	GRAPHIC REF	PART NUMBER	QTY	PART NAME 1 2 3 4 5 6 (PRODUCT LEVEL)	SEE PAGE
	1	1	**1P-4278**	1	CLAMP-HOSE	
	2	1	**1P-9328**	1	FITTING	
	3	1	**2G-1034**	1	VALVE-AIR RELIEF (AIR TANK)	
	4	1	**5F-5434**	1	VALVE AS-VENT (GOVERNOR, AIR COMPRESSOR)	
	5	1	**6V-0852**	1	CAP-DUST	
	7	1	**172-9284**	1	VALVE-BALL	
J	8	1	**205-7187**	1	GOVERNOR AS (AIR COMPRESSOR)	
	9	1	**246-6651**	1	TANK-AIR	
	10	1	**252-1575**	1	HOSE AS	
I	11	1	**269-8916**	1	HOSE AS	
	12	1	**174-5907**	1	CLIP	
	14	1	**4H-2558**	1	GROMMET	
	15	1	**4S-7606**	1	ELBOW	
	16	1	**5P-4116**	4	WASHER-HARD (8.8X20.5X2-MM THK)	
C	17	1	**6V-3966**	1	FITTING AS	
	18	1	**6V-7535**	1	ELBOW-PIPE	
	19	1	**7J-8611**	1	ELBOW-PIPE	
M	20	1	**8T-3844**	2	BOLT (M6X1X70-MM)	
M	21	1	**8T-4189**	4	BOLT (M8X1.25X20-MM)	
	22	1	**8T-6757**	4	PLUG-PIPE	
	23	1	**9X-8256**	2	WASHER (6.6X12X2-MM THK)	
E	24	1	**5P-0720**		HOSE (106-CM)	
	25	1	**1P-7009**	2	CLIP	
					AVAILABLE REPAIR KIT(S):	
J			**9M-0402**	1	KIT-GOVERNOR OVERHAUL (AIR COMPRESSOR)	
					(INCLUDES GROMMETS, FILTER, SPRING, VALVE, COVER, RING, & GASKET)	

C-CHANGE FROM PREVIOUS TYPE
E-ORDER BY THE CENTIMETER
I-REFER TO HYDRAULIC INFORMATION SYSTEM
J-KIT MARKED J SERVICES PART MARKED J
M-METRIC PART

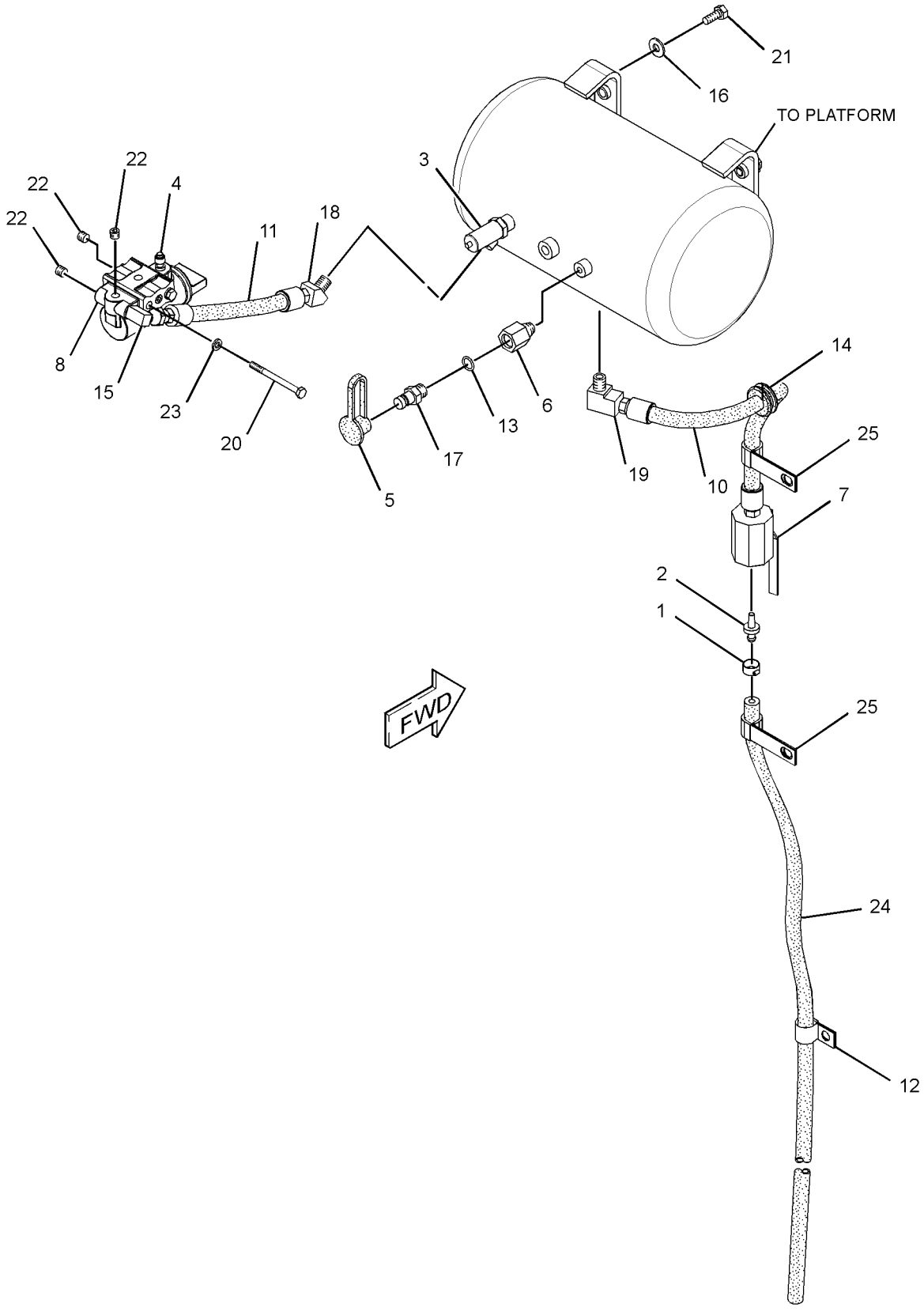

GRAPHIC #1 **<END>** g01365339

MEMORANDA

PART NUMBER INDEX

Part	Page
0	
0L-1026	61
0S-1585	587
0S-1597	302
	304
0T-0244	864
1	
1A-1415	587
1A-2029	424
1A-2170	90
1B-2578	204
	316
1B-2709	521
	522
1B-2713	817
1B-3867	118
	123
1B-4038	587
1B-4046	587
1B-5170	403
1B-5174	587
1B-8705	25
	445
1D-0906	497
	572
1D-4689	521
	522
1D-4691	521
	522
1D-4692	521
	522
1D-4719	587
1D-6306	763
1F-7958	771
1G-8878	591
1H-1023	304
1H-2629	304
1H-3244	196
	333
1H-3338	315
1H-3937	700
1H-4393	333
1H-4478	571
1H-6227	690
1H-7339	30
	581
	583
	587
1J-2859	899
1J-6762	361
	365
1J-9671	141
	178
	180
	534
	535
	536
	537
	559
	682
	684
1K-6870	361
	365
1K-6872	521
	522
1L-3613	498
	508
1M-1230	817
1M-3909	445
1M-6119	199
	201
1M-6120	199
	201
1M-9968	305
1M-9971	304
1N-5999	581
	583
1P-0604	406
	408
1P-0810	331
	418
1P-3700	701
1P-3704	657
	666
1P-3705	657
	666
1P-3934	394
1P-3935	394
1P-4278	703
	930
1P-4578	438
	439
	657
	666
1P-4579	438
	440
1P-4582	170
1P-4693	394
1P-4694	394
1P-6356	831
1P-7009	930
1P-9328	930
1R-0762	144
	146
	148
	150
	152
1R-1808	96
1R-5396	706
1S-0669	574
1S-0994	163
	552
	597
	611
	619
	626
	634
	642
	657
	666
	671
1S-1015	829
1S-3725	425
1S-3730	425
1S-5008	398
1S-6420	163
1S-7251	207
	208
	307
	308
	381
1S-7252	199
	201
	307
	308
	387
1S-7446	304
1S-9593	757
1S-9799	440
1T-0043	402
1T-0205	402
1T-0808	304
1U-8846	57
	403
	538
1V-6688	383
	385
1V-7801	160
	171
1V-8284	475
1W-4738	55
	56
1W-4741	55
	56
1W-4746	55
	56
1Y-7927	823
2	
2A-1162	57
2A-3034	131
	163
2A-4429	45
	47
2B-1560	812
2B-7410	587
2D-1683	498
	503
	505
	508
	527
	528
	529
	531
2D-2443	459
2D-2507	459
	464
2D-2508	459
	464
2D-2509	459
	464
2D-2565	464
2D-2654	465
2D-6235	817
	823
2D-6392	304
2D-6533	587
2D-6642	78
	79
2D-7325	529
	531
2D-8154	587
2D-8652	394
2D-8910	550
2D-9454	427
2D-9455	427
2F-6678	305
2F-7888	270
2G-0339	587
2G-0478	587
2G-0617	254
	256
2G-0988	254
	256
2G-1034	930
2G-3867	395
2G-3985	899
2G-5584	899
2G-5667	394
2G-5668	514
2G-5669	514
2G-6595	459
	464
2G-6695	587
2G-7387	394
2G-7388	394
2G-8607	484
	485
2G-8615	394
2G-8626	394
2G-8631	394
	585
2G-8741	394
2G-8777	394
2G-8793	394
2G-9099	568
	570
2G-9104	570
2G-9793	450
2H-1142	419
2H-3429	304
2H-3920	324
2H-3922	312
2H-3928	701
2H-3931	679
2H-4145	538
	574
2H-6489	402
2H-6490	449
2H-9247	587
2J-3506	361
	365
	893
	896
2J-8163	304
2K-0703	906
2K-4096	579
2K-4160	567
2K-4309	906
2K-4310	906
2K-4315	906
2K-4507	579
2K-4821	196

► **PRIMARY REFERENCE**

PART NUMBER INDEX

Part	Page
2K-4973	766
	836
	875
	877
2K-5232	346
	352
2K-6413	908
2K-6830	575
	580
2K-8199	419
2L-5893	861
2L-6679	304
2L-8065	332
2L-8067	332
	771
2L-8069	332
	376
2L-8079	332
	346
	351
	376
2M-7819	823
2M-9780	17
	20
	163
	394
	402
	450
	550
	596
	610
	618
	625
	633
	641
	648
	655
	656
	657
	664
	665
	666
	670
	673
	747
	748
	750
	754
	755
2N-5243	422
2P-1692	418
2P-4304	89
	90
2P-8421	402
2R-2376	816
2S-0795	422
2S-3029	402
2S-4078	403
	439
	653
	655
	664
2S-4663	455
2S-5658	51
2S-5835	455
2T-1925	173
2T-3013	452
2V-2015	848
2V-3216	389
2V-4332	490
2Y-5829	75
	76
	81
	82
	339
	343

3

Part	Page
3B-0623	38
	40
	42
	43
	70
	90
3B-4507	481
3B-4508	259
3B-4512	223
	258
	259
	266
3B-4605	812
3B-4610	371
3B-4615	475
	484
	485
	487
3B-4619	270
3B-4623	383
3B-4628	597
	611
	619
	626
	634
	642
3B-4629	394
	572
3B-4647	571
3B-5316	567
3B-5325	908
3B-7722	529
	531
3B-7733	496
3B-7896	503
	505
3B-8485	568
	570
3B-8486	395
3B-8488	496
3B-8489	394
	572
	573
	763
	906
3D-2824	73
	109
	126
	311
	402
	425
	439
	589
	595
	596
	610
	618
	624
	625
	632
	633
	640
	641
	648
	651
	653
	655
	656
	664
	665
	673
	676
	834
3D-2975	823
3D-5279	550
3D-8317	455
3D-8747	817
3D-8748	817
3D-8749	817
3D-8752	817
3E-2345	648
3E-3000	882
	883
3E-3371	851
3E-3377	314
	360
3E-3636	345
	351
3E-4051	831
3E-4057	831
3E-4096	113
	160
3E-4302	694
3E-4321	505
	597
	611
	619
	626
	634
	642
3E-4352	68
	69
3E-4353	401
	422
3E-4367	331
	332
	345
	351
	361
	365
	376
3E-4369	160
	171
3E-4887	63
3E-4888	63
3E-5169	377
3E-5226	331
3E-5239	330
	358
	377
3E-5464	771
3E-5519	331
3E-6328	▶194
	330
3E-6389	▶234
	825
	827
3E-6735	574
3E-6785	447
3E-6788	103
3E-7401	113
	653
	662
3E-7417	694
3E-7771	305
3E-7775	302
3E-8016	59
	67
3E-8020	773
	774
	798
	802
	805
	809
	812
	848
3E-8557	345
	351
	376
3E-8558	331
	332
	361
	365
	376
3E-9854	240
3E-9861	267
	271
3F-1396	430
	432
3F-5792	57
3F-9556	196
	841
	842
	887
	889
	891
3G-0622	869
	871
3G-2580	906
3G-2582	906
3H-0442	682
3J-1907	144
	146
	148
	150
	154
	156
	173
	188
	346

▶ **PRIMARY REFERENCE**

PART NUMBER INDEX

Part	Page	Part	Page	Part	Page	Part	Page
	352		144		737		418
	377		146		739		498
	402		148		741		508
	416		150		743		771
	419		156		745		798
	425		416		756		803
	437		418		834		810
	439		450	3K-0715	403		813
	440		455	3K-6060	835		820
	455		529		869		821
	538		531		871		847
	552		544	3K-8510	906		853
	555		546	3K-9520	254		884
	589		548		256		887
	591		581	3L-3313	430		889
	603		596		432		891
	605		597	3L-3380	304	3S-6049	381
	648		598	3N-2945	434	3S-6050	199
	653		607		443		201
	655		608	3N-3763	305	3S-6605	77
	656		609	3P-0647	98		80
	662		610	3P-1461	568	3S-7023	575
	664		611		899	3S-8665	673
	665		616	3P-1896	90	3S-9233	398
	675		617	3P-1932	436		721
	676		618	3P-9847	552		723
	682		619	3P-9900	877		725
	684		625	3R-8797	302		727
	685		626		304		729
	686		633	3R-8801	305		731
	720		634	3R-9965	331		733
	753		641		358		735
3J-4818	877		642	3S-0004	445		737
3J-5390	124		651	3S-2093	144		739
3J-5696	160		653		146		741
	171		655		148		743
3J-7354	17		656		150		745
	20		657		152	3S-9643	115
	105		662		163	3T-2662	262
	285		664		199	3T-3418	304
	398		665		201	3T-3422	302
	593		666		207		304
	648		671		208	3T-3423	304
	655		673		227		305
	665		675		230	3T-3424	304
	686		676		248		305
	696		685		261	3T-3434	302
	721		686		329		304
	723		696		331	3T-3663	445
	725		708		333	3T-4377	449
	727		709		339	3T-4709	304
	729		710		341	3T-4710	304
	731		711		343	3T-6774	817
	733		713		345	3T-9494	304
	735		715		351		305
	737		716		358	3T-9524	305
	739		718		368	3T-9525	304
	741		721		369	3T-9549	400
	743		723		375	3V-2431	581
	745		725		376		583
	751		727		381	3V-3263	884
3J-8500	572		729		383		
3K-0360	17		731		385		
	109		733		387		
	113		735		389		

► **PRIMARY REFERENCE**

PART NUMBER INDEX

Part	Page
4	
4B-2049	305
4B-4274	262
	270
4B-4278	877
4B-4280	869
	871
4B-4863	141
	143
	174
	176
	178
	180
	182
	184
4B-5059	823
4B-7270	466
	468
4B-9880	455
4D-0298	575
4D-1326	316
4D-2297	777
4D-7388	437
	440
4D-7733	163
	550
4D-7735	550
	831
4D-7794	346
	377
4D-7889	406
	413
4D-8123	498
	503
	505
	508
4D-9517	346
	352
	377
4E-5685	430
	432
4E-8722	802
	809
	812
	827
	856
	869
	871
4F-2294	317
4F-4097	694
4F-4879	867
	868
4F-5695	37
4F-6024	55
	56
4F-7952	444
4F-8824	572
4H-2558	550
	703
	930
4H-6112	450
4H-6996	587
4H-7869	307
	308
4I-0472	498
	508
4I-0755	466
	468
4I-3884	487
4I-7889	163
4J-0520	657
	666
4J-0522	438
	440
	657
	666
4J-0524	438
	440
	589
4J-0527	170
4J-1888	761
4J-4630	579
4J-5267	648
4J-5351	398
4J-5477	144
	146
	148
	150
	398
	416
	440
	656
	665
4J-7533	682
	685
	686
	721
	723
	725
	727
	729
	731
	733
	735
	737
	739
	741
	743
	745
4J-8996	403
	538
4J-9224	577
	578
	585
4J-9964	701
4K-1388	398
	655
	656
	664
	666
4K-2039	759
4K-3004	906
4K-4879	464
4K-4881	465
4K-6761	490
4K-6781	490
4K-6804	398
4K-7461	490
4K-7462	490
4K-7463	490
4K-7464	490
4K-7465	490
4K-7467	490
4K-8302	207
	208
	498
	508
	831
4K-8603	402
4K-8734	490
4K-8864	17
	381
	419
	657
	666
4K-9429	845
4L-2729	305
4L-6499	316
4L-7125	371
	373
4M-0061	817
4M-0189	57
	425
4M-1827	304
4M-1828	304
4M-1831	302
	304
4M-1853	304
4M-1854	304
4M-1896	305
4M-2381	455
4M-5281	270
4M-5317	498
	508
4M-5905	455
4M-6425	259
	861
4M-6480	26
4M-8973	499
	503
	505
	509
4N-1114	27
	28
4N-1230	55
	56
4N-2927	823
4N-5091	595
	624
	632
	640
4N-8150	90
4P-0916	113
4P-1650	30
4P-4369	136
4P-5918	339
	343
4P-7428	164
	361
	365
	419
4P-7429	361
	365
	419
	820
	821
4P-7581	146
	148
	150
	152
	248
	339
	343
	346
	349
	352
	356
	361
	365
	377
	419
	499
	509
	529
	531
	820
	821
	853
4P-7582	419
4P-8134	352
	377
4P-8525	389
4S-1962	346
	352
	499
	509
	657
	666
4S-4455	377
	657
	666
4S-5565	581
	583
4S-6679	439
4S-7606	550
	930
4T-2236	896
4T-5613	575
	581
	583
	585
4T-8054	577
	578
	585
	679
4V-0015	490
4V-7884	875
4V-8256	766
4V-8577	875
	877
4V-9804	521
	522
5	
5A-3604	427
5B-9318	721
	723

PART NUMBER INDEX

Part	Page	Part	Page	Part	Page	Part	Page
	725	5F-5434	930	5L-4759	398	5P-2304	402
	727	5F-9144	154	5L-4763	61	5P-2369	440
	729		429	5M-2894	167		550
	731	5G-2373	487		168	5P-2566	701
	733	5H-3701	466		169	5P-2618	141
	735		468		861		178
	737	5H-4778	550	5M-3034	304		180
	739	5H-5672	899	5M-3062	534	5P-3114	406
	741	5H-8848	657		535		408
	743		666		536		411
	745	5H-8985	406		537		413
5B-9627	675		408		559	5P-3422	498
5C-2890	223		411	5M-6214	499		503
	262		413		509		505
	269	5J-1246	701	5M-7087	593		508
	271	5J-4561	581	5M-7937	402		527
	315		583		538		528
	338	5J-4715	424	5P-0537	389	5P-3490	466
	383	5J-4773	893		817		468
	385		896		846	5P-3779	537
	475	5J-5314	304	5P-0597	425	5P-3860	597
	856	5J-5402	575	5P-0599	595		611
	877		580		609		619
5C-7261	208	5J-5731	579		617		626
	210	5J-7333	765		624		634
	371	5K-1075	394		632		642
	475	5K-1078	394		640	5P-3863	403
	692	5K-1094	597	5P-0720	930	5P-4115	326
	802		611	5P-0747	307		333
	805		619		308		383
	809		626		387		385
	812		634	5P-0767	113		816
	841		642		834		848
	842	5K-3294	254	5P-1042	648		862
	887		256	5P-1075	204	5P-4116	129
	889		555		831		160
	891	5K-5129	466	5P-1076	109		163
5C-8811	889		468		160		171
	891		587		171		214
5C-9553	205	5K-5288	466		383		253
	323		468		480		310
	333		587		494		329
	358	5K-5338	503		514		341
	377		552		521		371
	784		648		522		381
	785	5K-8330	906		567		475
	796	5K-8451	831		569		482
	851	5K-8454	587		593		493
	869	5K-9090	100		691		494
	871		439	5P-1174	915		529
5D-0269	496		440		920		531
5D-1026	113		593	5P-1175	915		784
	126		651		920		785
	653		653	5P-1255	376		795
	662		655	5P-1262	113		833
	884		657	5P-1265	377		835
5D-3887	484		662	5P-1424	360		862
	485		664		364		930
	487		666	5P-1442	703	5P-4135	361
5D-4822	823		673	5P-1838	529		365
5D-9629	109	5K-9179	837		531	5P-4295	141
	383	5K-9660	676	5P-2199	748	5P-4423	877
5F-0304	57	5L-4504	163		750	5P-4483	402
5F-3092	403	5L-4758	706	5P-2230	138	5P-4484	403
5F-3715	761		759	5P-2249	487	5P-4571	331

► **PRIMARY REFERENCE**

PART NUMBER INDEX

Part	Page
	332
	771
5P-4868	653
	662
5P-4889	167
	168
	169
5P-4892	447
5P-4961	113
5P-5528	300
5P-5598	45
	47
5P-5618	332
	771
5P-5630	300
5P-5637	768
	833
5P-5643	768
5P-5677	314
5P-5678	22
5P-5927	768
5P-6010	877
5P-6298	304
5P-6419	371
5P-6727	59
5P-6874	837
5P-6944	144
	146
	148
	150
	152
5P-6994	608
5P-7462	670
5P-7463	670
5P-7464	676
5P-7465	676
5P-7470	160
	171
	440
5P-7471	160
	171
	440
5P-7657	371
	373
5P-7701	400
	560
5P-7703	160
	171
5P-7815	400
	560
5P-7957	845
5P-7958	2
5P-8068	103
5P-8182	440
5P-8211	67
5P-8245	31
	50
	57
	62
	65
	67
	84
	109
	398
	422
	425
	430
	432
	490
	573
	587
5P-8246	57
5P-8247	53
	196
	899
5P-8248	269
5P-8309	124
5P-8347	24
	419
5P-8439	476
5P-8445	823
5P-8500	2
	909
	915
	920
5P-8525	338
5P-8843	394
	484
	485
5P-8847	394
	484
	485
5P-8890	394
5P-8939	552
5P-9085	249
	339
	496
	499
	503
	505
	509
5P-9135	254
	256
5P-9262	751
5P-9297	377
	829
5P-9299	540
	543
	557
5P-9768	126
	479
5P-9810	595
	624
	632
	640
5S-7349	196
	302
	371
5S-7379	587
5S-7383	861
5S-7385	480
5S-9134	94
5T-0907	394
5T-1625	825
	827
5T-5119	464
5T-5120	464
5T-8417	571
5V-0770	823
5V-1496	865
5V-1497	875
5W-1437	259

6

Part	Page
6A-5591	57
	67
	422
6B-3223	466
	468
6B-4312	550
6B-5072	450
6B-5154	413
6B-5310	269
6B-6684	109
6B-7021	587
6B-8193	371
6C-3060	176
	178
	182
6C-3247	460
6D-1641	833
	834
6D-3033	360
	364
6D-3479	440
	703
6D-4244	126
	361
	365
	377
	499
	505
	509
	597
	611
	619
	626
	634
	642
	648
	657
	666
	676
6D-4246	503
	676
6D-4636	17
	597
	626
	634
	642
6D-5257	331
	358
6D-7146	102
6D-7889	418
6E-0410	748
	750
6E-0775	575
6E-1049	575
6E-2314	579
6E-3007	721
	723
	725
	727
	729
	731
	733
	735
	737
	739
	741
	743
	745
6E-3268	751
6E-3269	751
6E-3272	751
6E-3273	751
6E-3274	751
6E-3275	751
6E-3276	751
6E-4213	694
6E-4214	694
6E-4215	694
6E-4216	694
	▶698
6E-4217	698
6E-4218	698
6E-4219	698
6E-4224	694
6E-4225	694
6E-4227	694
6E-4228	753
6E-4229	753
6E-4230	753
6E-4232	694
6E-4233	694
6E-4236	694
6E-4237	694
6E-4239	753
6E-4241	753
6E-4242	753
6E-4246	753
6E-4318	753
6E-4701	603
	605
	▶720
6E-4974	585
6E-4975	577
	578
6E-5066	680
	682
6E-6140	753
6E-6141	753
6E-6142	753
6E-6527	751
6E-6528	751
6E-6536	751
6E-6537	751
6E-6538	751
6E-6539	751
6E-6540	751
6F-0253	330
	781
	851
	852
	853
6F-0612	375
6F-3930	459
	464

▶ **PRIMARY REFERENCE**

PART NUMBER INDEX

Part	Page	Part	Page	Part	Page	Part	Page
6F-4855	759		662	6V-2686	300		146
6F-6672	419	6N-8863	67	6V-3250	106		148
6F-7045	312	6P-6256	476		422		150
6F-7062	422	6R-7605	653	6V-3251	73		272
6F-8499	484		662		106		273
	485	6T-0363	304		119		300
	487	6T-0371	304		122		436
6G-1667	405	6T-0372	304	6V-3342	550		592
6G-1670	405	6T-1999	330	6V-3505	748	6V-5049	40
6G-2168	439	6T-3631	375		750		105
6G-3207	430	6T-3632	375	6V-3532	398		144
	432	6T-3633	375	6V-3535	59		146
6G-4831	761	6T-3644	333	6V-3536	33		148
6G-4896	763	6T-6708	771	6V-3538	38		272
6G-4911	760	6T-7695	843	6V-3668	62		273
6G-5537	587	6V-0484	436		422	6V-5050	17
6G-5538	587		684		573	6V-5063	40
6G-5539	587	6V-0683	670	6V-3669	430		42
6G-5542	587	6V-0852	193		432		43
6G-5548	587		402	6V-3822	137		45
6G-5987	817		416	6V-3823	422		47
6G-6122	587		418		425		115
6G-6238	587		436		452		117
6G-7187	573		455		490	6V-5064	422
6H-1717	587		589	6V-3834	103	6V-5134	103
6I-1418	211		648	6V-3908	593	6V-5142	747
	213		653	6V-3918	22	6V-5192	59
	214		666		23		698
	341		684		339	6V-5215	273
6I-8911	406		930		343		274
	413	6V-0894	270	6V-3928	862		419
6I-8912	408	6V-1249	676	6V-3940	95	6V-5217	25
	411	6V-1322	304		117		95
	413	6V-1581	113		403	6V-5218	101
6J-1972	581	6V-1582	113		455		455
	583	6V-1586	408	6V-3964	210	6V-5219	59
6J-2680	440		411	6V-3965	193		105
6J-2797	575		413		402		106
	580	6V-1614	314		416		422
6J-5731	581	6V-1668	771		436		447
	583	6V-1720	402		454	6V-5221	20
6J-7035	657	6V-1722	673		455		23
	666	6V-1819	406		589		103
6K-0715	901		408		648		105
6K-3273	474		411		656		106
6K-4718	402		413		666	6V-5222	419
6K-6307	589	6V-1820	30		684	6V-5230	444
6K-6444	763		55	6V-3966	930	6V-5258	651
6K-8178	381		56	6V-4245	529	6V-5326	721
	387		403		531		723
	597		422	6V-4248	26		725
	611	6V-1889	100		144		727
	619		377		146		729
	626		648		148		731
	634	6V-1903	17		150		733
	642	6V-1970	2		152		735
	671	6V-2317	50	6V-4249	67		737
6K-9632	889		59	6V-4429	27		739
	891		102		28		741
6L-8797	694		103	6V-4589	105		743
6L-9716	727		105		189		745
6N-3279	304		106		318	6V-5684	57
6N-3826	302	6V-2383	503		319		490
	304		505	6V-4604	109	6V-5686	587
6N-6984	653	6V-2394	427	6V-5048	144		899

► **PRIMARY REFERENCE**

PART NUMBER INDEX

Part	Page	Part	Page	Part	Page	Part	Page
6V-5696	84		115	6V-8337	694		610
	394		295	6V-8352	751		611
6V-5746	476		296	6V-8359	90		616
	795		299	6V-8369	324		617
6V-5759	538	6V-6717	771	6V-8376	262		618
6V-5839	26	6V-6923	191	6V-8378	261		619
	29		192		302		625
	30	6V-7238	653		316		626
	50		662	6V-8397	113		633
	55	6V-7350	120		156		634
	56		121		160		641
	92	6V-7535	930		163		642
	98	6V-7555	360		173		648
	99		364		174		655
	120	6V-7636	802		176		656
	121		805		178		657
	136		809		182		664
	137		812		398		665
	144	6V-7646	865		416		666
	146	6V-7673	55		437		671
	148		56		439		673
	150		422		552		675
	152	6V-7687	383		555		676
	156		906		596	6V-8400	440
	158	6V-7688	761		597		653
	339	6V-7727	57		603		655
	343	6V-7728	389		605		656
	419	6V-7732	401		609		664
	782		805		610		665
	848	6V-7742	398		611	6V-8523	113
	873		899		617	6V-8624	596
6V-5842	29	6V-7744	262		618		610
	50		476		619		618
	123	6V-7981	156		625		625
	144	6V-8004	422		626		633
	146		490		633		641
	148	6V-8077	419		634	6V-8625	17
	150		455		641		544
	152		589		642		546
	156	6V-8149	50		648		548
6V-5843	61		425		653		596
6V-5844	57	6V-8185	326		655		610
	394		333		656		618
6V-5851	887	6V-8187	261		662		625
	889	6V-8188	259		664		633
	891		302		665		641
6V-5853	884		305		666	6V-8626	656
6V-6317	50		480		670		665
	56	6V-8189	196		671	6V-8627	416
	816	6V-8197	31		675	6V-8628	398
6V-6353	137		490		676	6V-8632	596
6V-6580	721	6V-8202	381		720		609
	723	6V-8212	146	6V-8398	17		618
	725		148		163		625
	727		150		439		633
	729		152		544		641
	731		339		546		655
	733		343		548		665
	735		403		552		671
	737		419		555		675
	739		848		596	6V-8633	596
	741	6V-8214	389		597		625
	743	6V-8225	59		598		633
	745		854		607		641
6V-6609	73	6V-8237	394		608	6V-8634	156

PART NUMBER INDEX

Part	Page	Part	Page	Part	Page	Part	Page
	158		656		619		665
	596		665		626	6V-9845	656
	609	6V-8723	416		634		665
	617		596		642	6V-9850	113
	625		610	6V-9182	109		437
	633		618		648		596
	641		625	6V-9189	235		603
	675		633		239		605
6V-8635	439		641		240		610
	655	6V-8724	416	6V-9200	648		618
	664		555		655		625
6V-8636	437		603		665		633
	439		605	6V-9313	126		641
	552		676	6V-9343	676		676
	603	6V-8730	656	6V-9509	607	6V-9851	552
	605		666		608		596
	648	6V-8733	676		616		610
	655	6V-8738	597	6V-9632	261		618
	664		610		338		625
	675		618		371		633
6V-8637	655		626		493		641
	664		634		773		676
6V-8638	17		642		774	6V-9852	656
	163	6V-8765	657		848		665
6V-8639	17		666		854	6V-9855	656
	544	6V-8782	544		856		665
	546		546		869	6V-9873	552
	548		548		871		555
	598		676	6V-9666	123	6V-9875	655
	607	6V-8783	657	6V-9672	848		664
	608		666	6V-9746	109	6V-9876	596
	611	6V-8785	651		439		610
	616	6V-8836	339		648		618
	617		343		651		625
	625		389		653		633
	633	6V-8837	694		655		641
	641	6V-8928	848		656	6V-9877	675
	655	6V-8936	160		657	6W-5698	705
	664		552		664		879
	673	6V-8938	656		665	6W-6672	100
	675		666		666		360
6V-8640	648	6V-8939	439		676		364
	655	6V-8943	648	6V-9809	834	6Y-0309	908
	664	6V-8969	846	6V-9828	144	6Y-1119	406
6V-8641	144	6V-8980	552		146		408
	146	6V-9001	655		148		411
	148		665		150		413
	150	6V-9002	673		152	6Y-1352	158
	152	6V-9004	109	6V-9829	671	6Y-1895	408
6V-8642	648		439	6V-9837	544	6Y-2419	411
	655	6V-9007	651		546	6Y-2932	688
	664	6V-9008	593		548	6Y-2933	688
6V-8716	109	6V-9027	106		597	6Y-2934	688
6V-8721	596		115		626	6Y-2935	688
	610	6V-9028	419		634	6Y-3083	402
	618	6V-9168	113		642	6Y-5010	445
	625		398		656	6Y-5113	837
	633		503		665	6Y-7953	587
	641		505		673	6Y-9960	63
6V-8722	597		552		676		
	610		657	6V-9838	439		
	618		666		648	7	
	626		671		656		
	634	6V-9169	597		665	7C-1445	95
	642		611	6V-9839	656	7C-1821	103

► **PRIMARY REFERENCE**

PART NUMBER INDEX

Part	Page
7C-1822	103
7C-3081	90
7C-3082	90
7C-3083	90
7C-3954	90
7C-4354	377
7C-6921	509
	619
	626
	634
	649
7C-7851	54
7C-7852	54
7C-8246	156
7C-9542	94
7D-1577	896
7D-5081	487
7D-5252	459
	464
7D-7233	100
	126
	377
	657
	666
	673
7D-7469	463
7D-7496	488
7D-8983	587
7D-8984	587
7E-4761	113
7E-6508	389
7E-7977	45
	47
7E-7978	45
	47
7E-8629	131
7F-3488	305
7F-3525	304
7G-4822	406
	408
	411
	413
7G-4824	848
7G-4998	400
	560
7G-7917	331
	376
7G-7918	376
7G-7919	331
	376
7H-3171	450
7H-7055	156
	158
7I-1024	499
	509
7I-4937	670
7I-7439	499
	509
7J-0204	581
	583
7J-5925	869
	871
7J-8611	113
	434
	930
7J-9108	439
	596
	597
	609
	610
	618
	625
	626
	633
	634
	641
	642
	648
	653
	655
	656
	657
	662
	664
	665
	666
	671
	675
	834
7J-9885	577
	578
	585
7K-1181	164
	176
	178
	180
	182
	184
	262
	333
	338
	345
	349
	350
	351
	356
	361
	365
	371
	377
	498
	508
	552
	597
	611
	619
	626
	634
	843
7K-4129	141
	156
	158
	180
7K-8876	694
7K-8877	694
7K-9202	394
	573
7L-2894	302
	304
7L-3203	97
7L-6580	115
7L-8316	817
7L-9061	694
7M-0324	304
7M-0325	305
7M-0326	304
7M-0327	304
7M-1297	560
7M-4672	326
7M-7219	823
7M-8485	109
	173
	188
	225
	226
	398
	402
	403
	425
	439
	552
	593
	648
	651
	655
	664
7M-8651	305
7N-0296	300
7N-0718	199
	201
	▶312
7N-2059	300
7N-5274	199
	201
7N-5683	38
7N-9017	376
7N-9801	328
7N-9943	234
7R-2751	331
7R-3029	361
	365
7S-2942	398
7S-4001	427
7S-9930	802
	809
7T-0020	234
7T-0093	771
7T-0094	331
7T-0582	817
7T-1099	109
	345
	351
	371
	493
	664
	805
	851
7T-3267	302
7T-3268	302
7T-3276	302
7T-3277	302
7T-3278	302
7T-3279	302
7T-3451	302
7T-3454	302
7T-3974	302
	304
7T-4003	819
7T-4532	778
7T-4897	406
	408
	411
7T-6496	402
7T-6799	330
7T-8890	879
	886
	887
7T-9123	305
7T-9302	325
7U-4891	330
7U-4892	333
7V-0638	525
7V-5191	823
7V-6571	158
7V-8532	653
	662
7W-5672	597
	611
	619
	626
	634
	642
7W-6390	90
7W-7381	436
7W-9094	17
7X-0018	784
7X-0265	269
7X-0343	206
	223
	258
	266
7X-0345	326
7X-0346	269
	679
7X-0347	267
	271
7X-0349	269
7X-0366	206
	223
	258
	266
7X-0448	269
7X-0474	445
7X-0515	568
7X-0562	302
	305
7X-0568	63
7X-0578	470
	472
	869
	871
7X-0579	163
	470
	472
7X-0591	479
7X-0605	538
	803
	810
	813

▶ **PRIMARY REFERENCE**

PART NUMBER INDEX

Part	Page	Part	Page	Part	Page	Part	Page
	869		195		593	8D-4204	899
	871		198		684	8D-4207	899
7X-0608	766		199	8C-3447	436	8D-4208	899
7X-0620	316		201	8C-3451	591	8D-4217	899
7X-0818	214		346		684	8D-4235	899
	785		352	8C-3655	302	8D-4316	899
7X-0851	394		377	8C-3681	126	8D-4317	899
7X-0870	103		383	8C-5053	173	8D-4321	899
7X-0871	676		394		188	8D-4336	899
7X-1387	475		440	8C-5607	227	8D-4337	899
7X-1548	466		470		230	8D-4496	568
	468		472		326	8D-5054	587
7X-2393	383		476		371	8D-7424	587
7X-2459	416		479	8C-5608	227	8D-7685	484
	653		482		230		485
	662		488		326	8D-9092	597
7X-2475	160		494		371		611
	171		519	8C-5748	240		619
7X-2534	528		520		419		626
7X-2536	126		523	8C-5918	199		634
	819		525		201		642
7X-2537	371		597	8C-6354	332	8D-9159	484
	509		626	8C-6515	593		485
	692		634	8C-6711	759	8D-9652	899
7X-2538	779		642	8C-6857	361	8D-9671	163
7X-2539	163		649		365		597
7X-2543	163		651	8C-6868	174		611
	552		657		176		619
	589		666		178		626
7X-2544	649		779		182		634
	663		909	8C-6959	163		642
7X-2545	663	7X-7958	100	8C-7563	656	8E-0401	408
7X-2546	124	7X-8549	591		665		411
	445	7Y-0589	361	8C-7581	852		413
7X-2549	160		365		853	8E-1118	843
	171	7Y-0725	761	8C-8430	773	8E-1143	455
7X-2554	482	7Y-3474	886		774	8E-1263	406
7X-2557	901		889	8C-8451	17		408
	906		891		503	8E-5157	402
7X-2558	901	7Y-5074	503		505	8E-5529	893
7X-2561	394		505		527	8E-6558	406
7X-2563	518	7Y-5288	489	8C-8499	487		408
7X-2564	63				663	8E-7365	425
7X-2576	108				664	8E-7366	422
7X-2619	801	**8**		8C-8580	262		425
7X-2634	856			8C-8585	533	8E-7791	848
7X-3373	302	8B-6343	430	8C-8988	439	8E-8319	406
	304		432		552		408
7X-4733	688	8C-0620	131		596		411
7X-6222	332		160		610		413
	376		171		618	8E-8439	61
7X-6312	226	8C-2926	444		625	8E-9571	105
7X-6315	219	8C-3089	131		633		106
7X-7700	174		304		641		422
	176	8C-3100	118	8C-8989	552	8F-1434	261
	178		123		673		302
	182	8C-3132	748	8C-9660	304		305
7X-7729	109		750	8C-9987	757		316
	112	8C-3205	649	8D-3308	899	8F-1974	346
	124	8C-3210	403	8D-3615	394		352
	126	8C-3398	475	8D-3791	487	8F-3469	406
	128	8C-3445	90	8D-4114	568		408
	131		593	8D-4137	899		411
	160	8C-3446	90	8D-4138	899		413
	171		436	8D-4203	899	8F-4452	427

► **PRIMARY REFERENCE**

PART NUMBER INDEX

Part	Page
8F-7219	154
8F-9516	394
8F-9538	466
	468
8H-1141	302
8H-5303	312
8H-5306	312
8H-9789	59
8I-1362	440
8J-1434	906
	▶908
8J-2331	701
8J-3705	550
8J-4351	103
8J-6018	578
8J-6572	906
8J-9092	901
8J-9607	906
8J-9608	901
	906
8K-0530	488
8K-1433	229
8L-2777	78
	79
8L-2786	294
	436
	592
8L-5008	499
	503
	505
	509
8L-8413	823
	877
8M-2770	346
	352
	377
8M-2773	163
	349
	356
	361
	365
	377
	437
	603
	605
8M-3368	550
8M-4069	657
	666
8M-4992	403
8M-5253	455
8M-6521	402
8M-8489	445
8M-9307	422
8M-9315	57
8N-0869	207
	381
	387
8N-1517	261
	332
8N-1518	376
8N-1521	376
8N-1522	332
8N-1523	261
8N-1540	332
8N-1541	376
8N-1545	376
8N-1548	332
8N-1549	376
8N-1725	381
8N-2353	333
8R-1803	268
	326
8R-3393	540
	543
	557
	829
8R-8088	195
	198
8R-8525	63
8S-0948	346
8S-2634	381
8S-3020	387
8S-4304	422
8S-6109	829
8S-6110	829
8S-7048	375
8S-7803	823
8S-9075	430
	432
8S-9076	430
	432
8T-0076	597
	610
	619
	626
	634
	642
8T-0077	657
	666
8T-0087	889
	891
8T-0088	398
8T-0100	68
	69
	419
8T-0119	150
	152
8T-0120	656
	665
8T-0154	17
8T-0164	440
	656
	665
8T-0226	57
8T-0249	673
8T-0267	721
	723
	725
	727
	729
	731
	733
	735
	737
	739
	741
	743
	745
8T-0275	93
8T-0276	211
8T-0281	52
	54
	497
8T-0285	341
	358
	799
8T-0292	115
8T-0293	425
8T-0309	141
	178
8T-0315	589
8T-0328	217
	218
	261
	262
	302
	305
	334
	341
	358
	848
	865
8T-0336	587
8T-0338	25
8T-0341	657
	666
8T-0343	694
8T-0355	663
8T-0359	899
8T-0360	54
8T-0372	430
	432
8T-0375	490
8T-0389	199
	201
	237
	238
	241
	242
	243
	552
	595
	626
	634
	642
	666
	703
8T-0404	439
	655
	665
8T-0640	816
8T-0642	272
	339
	343
8T-0643	120
	121
	158
8T-0644	162
8T-0646	50
8T-0655	899
8T-0667	395
8T-0707	402
8T-0722	470
	472
8T-0785	579
	580
8T-1117	126
8T-1158	419
	453
8T-1159	466
	468
8T-1160	763
8T-1296	595
	609
	617
	624
	632
	640
8T-1686	675
8T-1687	597
	610
	619
	626
	634
	642
8T-1698	688
8T-1718	676
8T-1757	899
8T-1889	158
	552
8T-1890	158
	552
8T-2226	798
8T-2947	227
8T-3282	398
	430
	432
	899
8T-3490	109
	112
	150
	208
	261
	345
	351
	352
	365
	371
	373
	381
	470
	472
	475
	482
	493
	494
	519
	552
	593
	663
	675
	831
	848
8T-3597	109
	160
	171
	470
	820
8T-3612	163
	364

▶ **PRIMARY REFERENCE**

PART NUMBER INDEX

Part	Page
	482
	494
	531
	856
8T-3647	163
8T-3734	487
8T-3844	269
	930
8T-3851	487
	663
8T-3957	398
8T-4121	17
	50
	97
	100
	109
	113
	126
	138
	139
	163
	195
	198
	199
	201
	207
	208
	236
	237
	238
	248
	249
	254
	256
	262
	334
	346
	349
	350
	352
	356
	361
	365
	373
	377
	381
	385
	387
	403
	416
	434
	435
	437
	438
	440
	476
	488
	496
	499
	503
	505
	509
	515
	523
	533
	540
	543
	550
	552
	555
	557
	561
	562
	563
	564
	565
	572
	589
	593
	597
	603
	605
	608
	611
	619
	626
	634
	642
	649
	651
	657
	666
	671
	673
	676
	692
	703
	708
	709
	710
	711
	713
	715
	716
	718
	768
	780
	802
	805
	809
	812
	816
	820
	821
	822
	829
	831
	833
	836
	837
	839
	840
	848
	863
8T-4122	206
	223
	258
	266
	267
	269
	271
	679
8T-4123	63
	113
	361
	365
	657
	666
8T-4133	97
	100
	124
	126
	138
	163
	195
	198
	249
	254
	256
	334
	346
	352
	361
	365
	377
	381
	437
	440
	476
	499
	509
	523
	525
	550
	552
	589
	597
	603
	611
	619
	626
	634
	642
	649
	657
	666
	673
	676
	708
	709
	710
	711
	713
	715
	716
	718
	779
	909
8T-4136	17
	100
	109
	112
	126
	138
	160
	163
	171
	199
	201
	207
	248
	249
	262
	346
	352
	377
	381
	383
	387
	437
	440
	470
	472
	476
	479
	488
	494
	499
	509
	515
	519
	523
	553
	561
	562
	563
	564
	565
	597
	605
	611
	619
	626
	634
	642
	649
	651
	657
	666
	673
	676
	703
	780
	820
	821
	822
	863
	909
8T-4137	109
	113
	126
	139
	163
	199
	201
	208
	236
	262
	346
	349

► **PRIMARY REFERENCE**

PART NUMBER INDEX

Part	Page
	352
	356
	361
	365
	377
	381
	387
	394
	403
	425
	437
	440
	499
	503
	505
	509
	515
	523
	540
	543
	550
	553
	557
	572
	597
	603
	605
	608
	611
	619
	626
	634
	642
	649
	657
	666
	671
	673
	676
	703
	829
	831
	833
8T-4138	126
	227
	262
	338
	377
	479
	862
8T-4139	109
	160
	171
	381
	425
	488
	494
	514
	690
	820
	821
	906
8T-4140	361
	365
	479
8T-4171	373
	387
	799
8T-4172	109
	195
	198
	385
	440
	597
	611
	619
	626
	634
	642
	663
	664
	768
8T-4174	568
8T-4175	488
	679
8T-4176	383
8T-4178	17
	50
	163
	403
	651
	657
	663
	666
8T-4179	201
	262
	381
8T-4182	124
	195
	198
	440
	593
	597
	611
	619
	626
	634
	642
	779
8T-4183	55
	63
	440
	589
	901
8T-4184	435
	438
	440
	476
8T-4185	17
	128
	160
	171
	199
	201
	365
	488
	550
	593
	597
	611
	619
	627
	635
	642
	836
8T-4186	124
	131
	482
	509
	540
	543
	557
	593
	657
	667
8T-4189	141
	143
	160
	163
	171
	180
	184
	265
	300
	329
	334
	381
	403
	470
	472
	476
	482
	494
	795
	862
	930
8T-4191	346
	350
	352
	381
	496
	499
	509
	540
	543
	557
	597
	611
	619
	627
	635
	643
8T-4192	160
	171
	361
	365
	499
	509
	569
8T-4194	17
	63
	207
	208
	593
8T-4195	109
	113
	126
	128
	138
	160
	163
	171
	249
	254
	256
	346
	352
	361
	365
	435
	440
	470
	472
	476
	485
	494
	499
	509
	520
	523
	540
	543
	550
	553
	555
	557
	589
	597
	611
	619
	627
	635
	643
	649
	651
	657
	667
	676
	692
	831
	837
	848
8T-4196	126
	128
	138
	434
	438
	476
	509
	553
	593
	603
	649
	657
	667
	768
	782
	873
8T-4198	195
	198

► **PRIMARY REFERENCE**

PART NUMBER INDEX

Part	Page	Part	Page	Part	Page	Part	Page
	476		701		310		886
	597		820		371		887
	611		821		403		889
	619		901		476		891
	627	8T-4224	32		482	8T-5401	862
	635		126		493	8T-5412	254
	643		143		494		256
	663		163		676	8T-5413	351
8T-4200	782		178		833	8T-5429	596
	873		180		869		610
8T-4205	196		182		871		618
	261		184	8T-4910	160		625
	262		196		171		633
	269		208		906		641
	270		210	8T-4956	109	8T-5436	649
	302		214		440		663
	304		235		479	8T-6381	63
	333		239		521	8T-6385	906
	371		240		522	8T-6408	447
	373		265		567		657
	377		300		657		663
	771		310		667		667
	801		334		691	8T-6453	655
	865		361	8T-4958	577		664
8T-4222	50		371		578	8T-6462	487
	476		381	8T-4970	338		664
	540		476		889	8T-6466	100
	543		498		891		361
	557		509	8T-4984	105		365
8T-4223	17		692	8T-4987	129		540
	55		779	8T-4994	206		543
	164		782		223		557
	170		819		258		649
	201		861		266		676
	254		869		361	8T-6684	651
	256		871		365	8T-6685	195
	258		873		598		198
	262	8T-4226	124		611	8T-6703	589
	361		128		619		657
	365		909		627		667
	381	8T-4244	258		635	8T-6757	930
	383		365		643	8T-6868	17
	422		593	8T-5001	598		164
	435	8T-4648	258		627	8T-6869	529
	438		598		635		531
	440		611		643	8T-6876	101
	450		619	8T-5002	429		555
	488		627	8T-5005	113		648
	499		635		346	8T-6895	596
	509		643		352		610
	521		906		416		618
	522	8T-4778	497		593		626
	589		901		651		634
	593		906		657		642
	597	8T-4779	482		667	8T-6912	32
	611		657		676		124
	619		667	8T-5039	694		235
	627	8T-4780	113	8T-5070	581		239
	635		657		583		253
	643		667	8T-5092	538		341
	657	8T-4896	587		901	8T-6936	869
	667		676	8T-5346	360		871
	679	8T-4908	141		364	8T-7525	696
	690		178	8T-5372	848	8T-7547	126
	691		182	8T-5400	884		498

► **PRIMARY REFERENCE**

PART NUMBER INDEX

Part	Page
	802
	805
	809
	812
8T-7566	846
8T-7852	371
8T-7876	694
8T-7877	675
	706
8T-7926	589
8T-7927	655
	664
8T-7971	802
	809
	812
8T-8442	751
8T-8555	761
8T-8566	302
8T-8569	302
8T-8729	230
	241
	242
	243
	328
	330
	331
	345
	351
	364
	375
	376
	757
	771
	798
	809
	821
	840
8T-8730	230
	331
	345
	351
	356
	361
	364
	365
	375
	376
	383
	385
	809
8T-8737	144
	146
	152
	163
	230
	241
	242
	243
	324
	331
	332
	333
	339
	343
	345
	351
	356
	360
	361
	364
	365
	375
	376
	377
	383
	385
	418
	425
	581
	583
	771
	781
	786
	787
	788
	789
	790
	791
	792
	793
	794
	798
	800
	802
	809
	812
	842
	859
	891
8T-8827	381
8T-8874	262
8T-8899	657
	666
8T-8917	480
	481
	679
8T-8919	170
8T-8986	656
	666
8T-9082	847
8T-9368	326
8T-9371	877
8T-9383	259
	691
8T-9386	673
8T-9388	268
8T-9389	480
8T-9405	141
	180
	184
8T-9515	118
	696
8T-9598	118
	123
8T-9655	163
	211
	213
	214
	341
	419
8T-9756	199
	201
8T-9884	302
8V-7162	884
8W-0791	909
8W-2344	670
8W-3989	595
	609
	617
	624
	632
	640
8W-3990	595
	609
	617
	624
	632
	640
8W-3991	595
	609
	617
	624
	632
	640
8W-4167	761
8W-4192	676
8W-6626	488
8W-8513	569
8W-8528	381
8W-9566	465
8X-1106	529
	531
8X-1386	869
	871
8X-1904	479
8X-3749	679
8X-5021	574
8X-5303	587
8X-5312	760
8X-5313	760
8X-5428	760
8X-5489	589
8X-6166	422
8X-8452	459
8X-9255	605
8Y-1816	17
	207
	208
8Y-5944	875
8Y-5945	823
8Y-5965	875
8Y-6012	875
8Y-6014	875
8Y-6024	875
8Y-6041	823
8Y-6045	823
8Y-6046	823
8Y-6047	823
8Y-6060	823
8Y-6062	823
8Y-6063	823
8Y-6064	823
8Y-6066	823
8Y-6067	823
8Y-6068	823
8Y-6069	823
8Y-6388	854
	856
8Y-6859	823
8Y-6860	823
8Y-9603	307
	308

9

Part	Page
9B-0453	259
9B-7233	262
9D-0630	141
	178
9D-1491	587
9D-1586	466
	468
9D-1829	648
9D-2252	570
9D-3311	484
	485
9D-5941	587
9D-6584	484
	485
	679
	906
9D-6585	906
9D-6589	484
	485
9F-2247	430
	432
9F-5599	304
9F-5644	312
9F-8125	825
	827
9F-8477	406
	408
9G-0002	199
	201
9G-0005	199
	201
9G-2758	199
	201
9G-3695	314
9G-4101	304
	305
9G-4343	332
9G-5127	434
9G-5211	514
9G-7101	131
9G-8140	603
9G-8909	199
	201
	387
9H-0846	425
9H-3757	304
9J-0269	906
9J-4963	688
9J-6586	908
9K-1242	17
9K-5635	825
	827
	843
	848

PART NUMBER INDEX

Part	Page	Part	Page	Part	Page	Part	Page
9K-7951	459		671		188		106
	464		829	9S-4183	109		137
9L-1566	138	9N-0869	211		425		154
9L-1775	360		213		589		422
	364		419	9S-4185	144		436
9L-3334	375		854		146		455
9L-5650	430		856		148		538
	432	9N-1941	138		150		592
9L-6770	196	9N-4155	445		592		682
9L-8493	73	9P-9388	837		651	9S-8005	72
9M-0402	930	9R-2053	595		656		73
9M-0853	90		609		665		115
9M-1974	20		617		685		152
	22		624		686		455
	23		632		708		696
	24		640		709		716
	25	9R-2613	487		710		721
	50		763		711		723
	59		906		713		725
	67	9R-2620	479		715		727
	95	9R-2672	261		718		729
	101		364	9S-4190	119		731
	102		470		450		733
	103		487		694		735
	105		552	9S-4191	105		737
	106		760		173		739
	115		763		425		741
	117	9R-2821	261		555		743
	141	9R-2860	158		592		745
	272	9R-4595	760		593	9S-8006	73
	273	9R-4764	664		685		105
	274	9R-5008	131		686		106
	339		163		753		122
	343		595	9S-6524	164		163
	403		609	9S-8001	682		394
	419		617		685		402
	422		624		686	9S-8008	40
	455		632	9S-8002	38		42
	817		640		71		43
9M-2092	394	9R-5383	550		105		45
9M-2110	455	9R-6414	199		106		47
9M-2904	97		201		115		73
9M-4370	445	9R-6465	662		135		115
9M-4995	499	9R-8870	595		686		117
	509		609		696		402
9M-7609	304		617		721	9S-8010	403
9M-7958	173		624		723		560
	174		632		725	9S-8752	424
	176		640		727	9S-8892	763
	178	9R-9806	332		729	9S-9334	67
	180	9R-9866	760		731		90
	182	9R-9925	703		733		400
	184	9S-1316	383		735		402
	188	9S-1350	657		737		422
	439		667		739		425
9M-8406	207	9S-1362	223		741		560
	208		258		743	9T-1013	673
	346		266		745	9T-1636	694
	349	9S-2544	304		751	9T-1652	694
	350	9S-4167	144	9S-8003	684	9T-1699	694
	352		146	9S-8004	40	9T-1710	694
	356		148		42	9T-2186	753
	361		150		43	9T-3051	580
	365		152		72	9T-3133	575
	381	9S-4181	173		90	9T-4057	706

► **PRIMARY REFERENCE**

PART NUMBER INDEX

Part	Page
9T-4906	698
9T-5241	817
9T-5977	587
	▶688
9T-6635	529
	531
9T-8043	577
	578
9T-8052	688
9T-8053	688
9T-8055	688
9T-8057	688
9T-8058	688
9T-8059	688
9T-8061	688
9T-8062	688
9T-8065	688
9T-8067	688
9T-8069	688
9T-8070	688
9T-8071	673
9T-8445	698
9T-8446	698
9T-8448	698
9T-8450	698
9T-8452	698
9T-8943	575
9T-8944	569
	▶575
9T-9040	585
9T-9071	688
9T-9072	688
9U-8263	848
9U-8669	455
9W-0844	331
	345
	351
	356
	360
	361
	364
	365
	375
	376
	383
	385
	802
	809
	812
9W-0852	252
	331
	345
	351
	361
	365
	375
	376
	771
	802
	809
	812
9W-1441	330
9W-1442	330
9W-1446	330
9W-1454	402
9W-1951	332
9W-2029	406
	408
9W-2032	332
9W-2033	332
9W-3273	445
9W-5477	160
	171
9W-6068	538
9W-6465	402
9W-6467	413
9W-6582	63
9W-6584	63
9W-7038	402
9W-9930	63
9X-0145	332
9X-0196	331
9X-0261	144
	146
	148
9X-0262	272
	273
9X-0352	261
9X-1046	334
	371
	819
9X-1054	331
	332
	358
	375
	376
9X-1055	332
9X-1056	331
	332
	375
	376
9X-1386	314
	581
	583
	831
9X-1813	277
	278
	281
	311
	315
	318
	319
	329
	418
9X-2023	589
9X-2026	338
9X-2027	49
	523
	836
9X-2032	371
9X-2038	771
	854
	856
9X-2042	852
	853
9X-2043	253
	802
	805
	809
	812
9X-2044	205
	771
	782
	802
	805
	809
	810
	812
	825
	827
	848
	851
	854
	856
	869
	871
	873
	884
9X-2045	371
	770
	782
	819
	825
	827
	848
	854
	856
	873
	880
	881
9X-2046	854
	884
9X-2053	53
9X-2097	210
	339
	343
9X-2098	211
	213
9X-2125	394
	470
	472
	802
	809
	812
9X-2133	126
9X-2134	163
	670
9X-2205	174
	176
	178
	182
9X-2383	360
9X-2388	364
9X-2488	833
9X-2537	223
	271
9X-2546	782
	784
9X-2615	492
	844
	848
	854
	856
	869
	871
	873
	884
	771
	782
	802
	805
	809
	810
	812
	825
	827
	848
	851
	854
	856
	869
	871
	873
	884
	770
	782
	819
	825
	827
	848
	854
	856
	873
	880
	881
	854
	884
	53
	210
	339
	343
	211
	213
	394
	470
	472
	802
	809
	812
	126
	163
	670
	174
	176
	178
	182
	360
	364
	833
	223
	271
	782
	784
	492
9X-3265	331
	332
	361
	365
	376
9X-3401	152
	164
	276
	331
	345
	351
	360
	361
	364
	365
	375
	418
	581
	583
	786
	787
	788
	789
	790
	791
	792
	793
	794
9X-3402	152
	331
	332
	333
	345
	351
	360
	361
	364
	365
	375
	376
	377
	418
	800
9X-3463	235
	237
	238
	239
	240
9X-3465	241
	242
	243
9X-4244	235
	237
	238
	239
9X-4385	360
	361
	364
	365
9X-4391	345
	351
	376
9X-4493	233
9X-4609	419

▶ **PRIMARY REFERENCE**

PART NUMBER INDEX

Part	Page
9X-4824	302
9X-5615	345
	351
	376
9X-6016	262
9X-6165	227
	230
	326
	371
9X-6451	67
9X-6581	440
	657
	667
9X-6620	136
	140
9X-6772	227
	373
	376
9X-6856	332
9X-6857	376
9X-7145	331
	358
9X-7146	331
	361
	365
9X-7264	579
9X-7317	155
9X-7345	236
9X-7371	691
9X-7378	38
	831
9X-7380	115
	829
	831
9X-7381	829
	831
9X-7382	829
	831
9X-7383	829
	831
9X-7385	778
	831
9X-7430	40
	42
	43
9X-7547	694
9X-7680	751
9X-7737	318
	319
9X-7745	721
	723
	731
	733
	735
	737
	739
	741
	743
9X-8243	376
9X-8250	598
	607
	611
	616
	619
	627
	635
	643
	831
9X-8256	17
	59
	126
	205
	223
	227
	262
	269
	271
	323
	334
	338
	358
	377
	383
	385
	387
	403
	479
	503
	505
	527
	528
	784
	785
	796
	799
	851
	869
	871
	930
9X-8257	360
	364
	482
	488
	490
	657
	667
9X-8258	63
9X-8267	57
	93
	339
	343
	798
9X-8268	27
	28
	57
	398
	427
	429
9X-8281	136
9X-8399	574
	577
	578
	580
	585
9X-8408	552
9X-8487	487
	662
9X-8582	499
	509
9X-8600	174
	176
	178
	182
9X-8914	753
9X-8918	823
9X-9120	208
	387
9X-9365	236
9X-9689	817
9X-9825	208
	381
9Y-0810	33
9Y-0821	33
9Y-1758	93
9Y-4357	93
9Y-6089	27
	28
9Y-8075	102
9Y-8076	102
0	
002-0639	503
	505
002-6453	450
003-7764	113
004-6683	529
	531
005-0469	694
005-0471	694
012-0380	315
014-0816	325
030-1707	381
030-1709	381
030-7942	156
	158
030-7946	17
	20
030-7947	144
	146
	148
	150
	152
	156
	158
030-7950	17
030-8188	144
	146
	148
	150
	152
031-0214	861
031-4155	817
032-8487	17
033-4814	825
	827
033-6027	694
	753
033-6033	191
	192
033-6036	694
	753
033-6043	751
033-6783	17
033-8248	126
036-7232	375
036-9821	304
045-4065	305
054-3788	484
	485
	487
061-6665	223
	271
061-9455	95
061-9458	67
	100
067-2551	156
	163
	498
	508
069-4269	126
	439
070-0107	139
085-8091	831
090-0744	834
091-0081	346
	352
092-3635	597
	611
	619
	626
	634
	642
092-4924	330
095-0705	694
095-0817	373
095-0843	865
095-0878	823
095-0879	581
	583
095-0888	694
095-0930	538
095-1750	756
095-1751	747
096-3216	775
	776
096-3831	686
096-4836	204
096-4883	361
	365
	609
	617
	655
	831
096-6166	333
	371
	799
	825
	827
	848
096-9259	655
	664
097-7234	332
099-2374	20
099-3047	696
099-3649	129
	482

► **PRIMARY REFERENCE**

PART NUMBER INDEX

Part	Page
1	
100-3224	823
100-3253	241
	242
	243
100-3254	241
	242
	243
100-3255	241
	242
	243
100-4336	596
	609
	617
	625
	633
	640
100-5041	332
	376
100-5179	823
100-5421	83
100-5612	912
	913
100-6674	771
101-0003	825
	827
	875
	877
101-2867	825
	827
	854
	856
	861
	884
101-3055	843
101-3129	99
101-3934	57
101-4194	875
101-4195	875
102-2244	581
	583
102-5828	593
102-5829	593
102-8801	227
	331
	333
	358
	368
	371
	373
	376
	418
	781
	787
102-8802	178
	182
	194
	230
	233
	244
	246
	252
	254
	256
	261
	311
	315
	318
	321
	328
	329
	330
	331
	333
	339
	343
	345
	351
	356
	368
	375
	383
	385
	757
	778
	781
	820
	821
	825
	827
	831
	840
	877
102-8803	144
	146
	148
	150
	230
	234
	245
	276
	281
	331
	339
	345
	351
	375
	383
	385
	418
	847
	851
	852
	853
	858
	887
102-8804	314
	330
	331
	341
	345
	351
	358
	360
	361
	364
	365
	371
	581
	583
	883
102-8805	230
	241
	242
	243
	254
	256
	331
	356
	375
	418
	798
	802
	805
	809
	812
	842
	891
102-8806	144
	146
	148
	150
	152
	164
	324
	331
	356
	358
	771
103-0213	332
103-2006	174
	176
	178
	182
103-2543	523
103-6169	430
	432
	466
	468
103-6282	694
103-8133	389
104-2091	848
	854
	856
104-3560	37
104-7995	▶89
	593
105-1797	339
	343
105-2145	751
105-7167	671
105-9659	▶837
	838
106-3659	721
	723
	725
	727
	729
	733
	735
	737
	739
	741
106-3660	731
	743
	745
106-4175	492
107-3953	63
107-5769	29
107-6280	83
108-2148	680
108-3612	156
108-4086	823
108-4087	823
108-4103	823
108-4311	877
108-7251	834
109-0361	915
	920
109-3036	757
109-5008	802
	805
	809
	812
109-6495	430
	432
109-8981	843
109-9771	654
	662
110-5266	603
	605
110-7149	466
	468
110-7524	803
	810
	813
110-7887	330
111-0343	757
111-4627	848
	856
111-9110	534
	535
	536
	537
	559
111-9251	503
	505
	671
112-1574	444
	445
112-3926	763
112-3928	765
112-3931	513
112-4550	375
112-5869	886
112-9736	109
	523
113-0693	268
	326
113-5264	▶579
	904
	905
113-5304	92
113-8373	261
113-8987	12
	▶29
114-0061	769
114-0359	908
114-4776	579

PART NUMBER INDEX

Part	Page	Part	Page	Part	Page	Part	Page
114-5333	831	117-8801	31	125-6536	305		829
114-6658	205		59	125-6537	305	129-2220	761
	253	117-8929	371	125-7874	314	129-2893	61
	371	117-9409	383		332	129-2905	29
	782	117-9978	915		333	129-3178	771
	802		920		339	129-3180	901
	805	118-5125	771		345	129-3181	538
	809	118-5619	768		351	129-6400	131
	812		856		375	129-7679	100
	825	118-6050	528		376	129-7680	915
	827	119-3662	254		418		920
	848		331	125-7875	331	130-0229	436
	854		332		332		592
	856		361		333	130-3515	241
	869		365		339		242
	871		376		343		243
	873		383		345	130-5300	254
	880		385		351		256
	881		418		356		261
	884		771		360		333
114-8843	254	120-4394	696		361		346
	360	121-3307	124		364		352
	364		128		365		358
	418	121-3395	579		375		361
114-8844	148	121-5908	137		376		365
	150	121-9245	585		383		371
	163	121-9855	805		385		373
	360	122-6871	657		771		377
	364		667	125-9740	771		419
	418	122-6908	589	126-1766	343		498
115-0541	679		657	126-1767	152		508
115-2972	68		667		164		529
	69	122-7666	773		276		531
115-2973	68		774	126-1768	152		869
	69	122-8905	188		376		871
115-4550	455	123-0764	65	126-1773	425	130-5301	254
115-5852	910	123-0783	146	126-1774	227		256
	914		148		332		820
115-9345	802		150		341		821
	805		152		373	130-8360	805
	809		▶193		376	130-9811	294
	812	123-4586	839	126-7574	219		295
116-0118	383		840	126-8440	684	131-1475	332
	385	123-8914	693	127-0929	131	131-1487	376
116-1089	68	124-0608	777	127-2170	788	131-1490	376
116-3715	136	124-1479	498		835	131-3093	777
116-5763	470		508		854	131-3718	25
	472	124-1555	538		856	131-4242	823
116-8376	782		680	127-8609	225	131-5167	823
	873	124-2528	126	128-0317	118	131-5171	827
117-0165	12	124-5043	422		123	131-6645	106
	▶70	124-5836	899	128-0382	33	132-0338	383
117-1385	419	124-6257	834	128-0383	33		766
117-2311	218	124-6262	439	128-0384	33	132-1805	351
117-2766	12	124-7792	195	128-0385	33	132-2453	603
	▶49		198	128-0395	68		605
117-2771	12	124-8909	436	128-0396	68	132-3056	705
	▶52	125-1302	261	128-0400	33	132-5789	22
117-2786	12		▶315	128-0401	33		23
	▶94	125-1836	653	128-0402	33		137
117-2927	425		662	128-0403	33		339
117-4492	766	125-3298	705	128-5016	332		343
117-5268	693	125-4369	156	128-5924	540		346
117-7798	542		158		543		352
117-7799	542	125-6535	305		557		361

▶ **PRIMARY REFERENCE**

PART NUMBER INDEX

Part	Page
	365
	377
	419
132-5793	771
132-6598	427
132-7551	529
	531
132-8487	360
	364
133-0260	288
133-3260	498
	508
133-4292	538
133-5330	684
	▶754
133-5545	686
	754
	755
133-6517	225
	226
133-6578	696
133-6934	160
	171
	593
133-7130	901
133-9012	771
134-2540	332
	358
	361
	365
	377
134-3344	199
	201
	345
134-3355	375
134-3987	377
134-4126	219
134-5245	92
134-7258	915
	920
135-0611	841
	889
135-1979	817
135-6261	134
136-1543	845
136-1544	766
136-1953	833
136-1955	17
136-3188	884
136-3191	884
136-4183	49
	167
	168
	169
136-4192	721
	723
	725
	727
	729
	731
	733
	735
	737
	739
	741
	743
	745
136-4307	12
	▶30
136-5490	859
136-8308	908
137-6645	288
	294
	295
	298
	299
	418
137-9410	254
	256
138-2515	195
	198
138-7828	460
139-1398	138
139-6039	805
	825
	848
140-0249	574
140-0860	381
140-5945	781
	873
140-7480	371
140-8010	406
	408
	411
	413
141-1301	651
141-1480	138
141-4043	521
	522
141-9203	523
141-9784	771
142-0038	653
	662
	673
142-5787	679
142-6433	457
	▶459
142-8928	705
142-8937	705
143-1288	865
143-6020	269
144-0195	802
	805
	809
	812
	879
	884
	887
	889
	891
144-1636	314
	319
	332
	418
145-0326	875
	877
145-2901	195
	198
145-6669	768
145-8039	402
146-5804	820
	821
146-6433	886
146-6747	915
	920
146-7453	100
	174
	176
	178
	180
	182
	184
147-1444	373
147-1445	332
	341
	376
147-1446	332
	341
	376
147-1685	134
147-3069	651
148-1925	418
148-2557	721
	723
	725
	727
	729
	731
	733
	735
	737
	739
	741
	743
	745
148-7841	429
148-8309	402
148-8313	146
	148
	150
148-8315	648
	655
	664
148-8318	156
	596
	609
	617
	625
	633
	641
	675
148-8322	648
	655
	664
148-8323	655
	664
148-8327	655
	664
148-8328	596
	625
	633
	641
148-8329	655
	664
148-8333	655
	664
148-8335	439
	655
	664
148-8336	437
	439
	552
	603
	605
	648
	655
	664
	675
148-8339	109
148-8340	17
	544
	546
	548
	598
	607
	608
	611
	616
	617
	625
	633
	641
	655
	664
	673
	675
148-8342	596
	609
	618
	625
	633
	641
	655
	665
	671
	675
148-8345	17
	163
148-8346	675
148-8347	651
148-8353	655
	665
148-8354	673
148-8357	593
148-8358	596
	610
	618
	625
	633
	641
148-8359	675
148-8360	109
	648
148-8361	648
	655
	665
148-8362	651
148-8363	596
	610
	618

▶ **PRIMARY REFERENCE**

PART NUMBER INDEX

Part	Page	Part	Page	Part	Page	Part	Page
	625		618		653	153-5710	199
	633		625		662	153-6230	673
	641		633	148-8444	544	153-6231	834
148-8364	17		641		546	153-6232	656
	544	148-8382	439		548		665
	546		655		597	153-6237	109
	548		665		626		439
	596	148-8387	656		634	153-6241	552
	610		665		642		673
	618	148-8390	656		656	153-6252	552
	625		665		665	153-6256	656
	633	148-8393	656		673		665
	641		665		676	153-7645	459
148-8365	555	148-8395	721	148-8446	439	154-2302	656
	648		723		648		666
148-8367	113		725		656	154-3358	55
	437		727		665		56
	596		729	148-8449	656	154-9025	113
	603		731		665	155-2255	227
	605		733	149-1912	816		331
	610		735	149-6371	831		332
	618		737	149-7738	440		333
	625		739	149-9129	178		339
	633		741	150-1112	163		343
	641		743	150-3028	676		346
	676		745	150-3033	440		351
148-8368	416	148-8406	402		656		358
148-8369	398		425		665		368
148-8370	552	148-8407	425	150-3035	676		369
	596		555	150-3072	607		371
	610		685		608		373
	618		686		616		375
	625	148-8408	109	150-4031	656		376
	633		425		665		383
	641		589	150-4043	552		385
	676	148-8409	402		555		425
148-8371	439	148-8411	150	150-4048	597		781
	552		651		610	155-2256	331
	596		656		618		332
	610		665		626		356
	618		685		634		358
	625		686		642		781
	633		708		656	155-2257	332
	641		709		665	155-2258	425
148-8372	596		710	150-4086	199		781
	610		711		201	155-2260	277
	618		713	150-9044	675		278
	625		715	151-1398	333		332
	633		716	151-5145	593		339
	641		718		684		383
148-8374	416	148-8414	648	151-7038	581		385
	596	148-8415	552		583		418
	610	148-8416	439	151-8190	126		883
	618	148-8427	596	151-9274	790	155-2262	360
	625		610		792	155-2263	425
	633		618		794	155-2265	164
	641		626	152-0269	603		230
148-8377	552		634		605		332
148-8378	416		642	152-3411	675		333
	555	148-8428	544	152-3988	▶457		339
	603		546	152-8346	679		343
	605		548		▶757		356
	676		676	153-2817	884		358
148-8381	596	148-8431	651	153-5043	293		368
	610	148-8443	416	153-5700	201	155-2270	144

▶ **PRIMARY REFERENCE**

PART NUMBER INDEX

Part	Page
	146
	230
	261
	293
	317
	332
	333
	339
	343
	345
	346
	351
	356
	368
	373
	375
	376
	377
	383
	385
	418
	781
155-2271	331
	332
	346
	352
	358
	360
	364
	781
155-2272	341
155-2274	254
	256
	332
	346
	352
	356
	369
	377
	425
	802
	805
	809
	812
155-4098	333
155-5114	418
155-7321	673
155-9116	699
155-9117	699
155-9125	696
155-9127	696
156-4282	656
	666
156-4283	589
156-5545	766
156-5970	684
156-6175	333
	339
	343
	383
	385
157-0670	113
157-2014	498
	503
	505
	508
	527
	528
157-2016	498
	503
	505
	508
	527
	528
158-2336	534
	535
	536
	537
159-0052	803
	809
159-3046	427
159-8047	381
159-8049	199
	201
	207
	208
	381
	387
159-8050	199
	201
	381
159-9322	332
	376
159-9539	760
	851
159-9541	138
160-0018	381
160-2169	338
160-2246	174
	176
	178
	180
	182
	184
160-3518	859
160-6506	17
160-7165	868
	▶875
160-7689	376
160-7690	227
160-8184	55
	56
160-8192	68
160-8492	402
160-8499	475
160-8510	430
	432
160-8749	398
160-9413	▶559
	624
	640
160-9449	156
	158
161-5967	823
161-6149	754
	755
	756
161-6161	754
	755
	756
161-7338	333
161-8068	445
161-8313	406
	408
	411
	413
162-0177	455
	538
162-2165	143
	174
	176
	178
	180
	182
	184
	333
162-7449	595
	624
	632
	640
163-1146	875
163-2478	45
	47
163-2919	113
164-1234	877
164-2108	454
	680
164-3493	440
164-4225	555
164-4227	17
164-4531	766
164-4883	846
164-5555	439
164-5561	648
164-5567	402
	416
	455
	589
164-5570	656
	666
164-5573	597
	610
	618
	626
	634
	642
164-5586	676
164-5596	593
164-5597	174
	176
	178
	182
164-5605	597
	610
	618
	626
	634
	642
164-5608	597
	610
	619
	626
	634
	642
164-5615	656
	666
164-5619	163
	394
	402
164-5649	651
164-6861	676
164-7556	235
	237
	238
	239
164-7577	▶311
	400
164-8908	657
	666
164-9422	603
164-9609	272
	273
	274
165-0367	408
	411
	413
165-0488	406
	408
	411
	413
165-2273	653
	662
165-3929	424
165-4854	439
165-4929	403
165-4931	419
	455
	589
165-8331	675
166-0690	270
166-1880	571
166-2904	40
	42
	43
166-5229	331
	341
166-6781	875
167-1801	700
167-2199	574
167-2200	577
	578
167-2201	579
	580
167-2306	574
167-2307	577
	578
	679
167-2312	579
	580
167-8125	49
167-8610	371
167-8712	373
167-8713	373
167-8714	373
167-8987	371
168-2210	696
	▶751

▶ **PRIMARY REFERENCE**

PART NUMBER INDEX

Part	Page	Part	Page	Part	Page	Part	Page
168-3504	696	172-9284	930		585	184-1527	694
168-7861	696	172-9981	580	175-7900	575		▶700
168-9866	777	173-1007	701		580	184-2298	865
169-0705	789	173-1008	701	175-7904	579	184-2299	865
	790	173-1009	701	175-9079	158	184-2420	113
	791	173-1028	▶766	176-6994	118		653
	792		865	176-9237	137		662
	793	173-1437	439	177-1061	653	184-2509	113
	794	173-2052	845		662	184-3579	217
169-1616	747	173-3993	685		673	184-5465	460
169-1617	747		686	177-1862	861	185-1860	333
169-2876	218	173-5787	867	177-1863	865		781
169-4166	59		868	177-4687	527	185-1861	333
169-5864	439	173-7035	867		528	185-2638	196
169-7380	875		868	177-4937	864	185-2639	196
	877	173-9683	574	177-9645	771	185-2643	196
170-0493	558		575	177-9648	332	185-2644	196
	559		577	177-9656	333	185-2647	196
170-1112	766		578	178-2991	430	185-2648	196
170-1114	766		580		432	185-2650	196
170-1115	766		585	178-7907	845	185-2654	196
170-1821	330	174-0503	331	179-0006	▶316	185-2655	196
	781		358		387	185-2658	196
170-3093	567		360	179-0092	49	185-4026	676
170-3794	381		361	179-5774	465	185-7115	763
170-5334	▶817		364	180-0149	884	185-7120	763
	819		365	180-1538	22	186-0359	223
170-5335	▶252		376	180-9286	648		271
	817	174-2231	▶823	180-9339	281	186-3705	593
170-7485	757		875		339	186-3735	178
170-8590	861	174-2237	823		778		182
171-1230	865	174-3091	789	180-9340	163		194
171-2210	261		790		277		233
171-2215	261		791		278		234
171-3759	▶314		792		293		244
	858		793		339		245
171-4047	848		794	180-9900	330		246
	854	174-4181	124	183-3407	72		311
	856	174-5763	825		90		315
171-6466	595		827		137		318
	624	174-5907	163	183-4365	75		324
	632		199		76		330
	640		201	183-4678	886		360
171-6682	865		361	183-5106	▶778		781
171-6723	657		365		779		802
	666		377	183-7262	403		812
171-6728	673		381	183-7263	686		820
171-8867	527		387		721		825
	528		831		723		827
171-8869	527		930		725		831
171-8870	527	174-7449	455		727		842
	528	174-7875	822		729		851
171-9375	538	174-8131	217		731		852
172-2416	865		218		733		853
172-3511	330	174-9527	63		735		858
	781	174-9570	▶154		737		859
	851		166		739		887
	852	175-2606	578		741		891
	853	175-3721	57		743	186-3736	317
172-4863	261		425		745		360
172-6063	389	175-4291	235	183-7264	591		781
172-6423	538	175-4292	235	184-0983	802		802
172-7966	455		239		805		812
172-7968	455	175-7898	577		809	186-5107	877
172-8037	859		578		812	186-6189	829

▶ **PRIMARY REFERENCE**

PART NUMBER INDEX

Part	Page
186-6438	156
	158
187-0541	756
187-3369	538
187-8194	55
187-8969	36
187-8972	33
188-0633	538
188-2162	402
188-2199	581
	583
188-3959	199
	201
188-9644	361
	365
189-0135	858
189-1707	829
189-2102	682
189-2512	330
189-3158	261
	333
	375
189-4523	126
189-5358	839
	840
189-8627	682
	▶758
190-3848	387
190-3849	387
190-3850	558
	559
190-4885	603
	651
190-5386	482
	906
	915
	920
190-7613	341
190-7614	331
	356
	358
	371
	781
190-7615	331
	786
	787
190-8505	848
190-8970	166
190-8977	163
	▶166
191-1782	163
191-1783	163
191-2857	57
191-6587	▶293
	345
	351
191-7582	696
191-7583	696
191-7805	152
	158
191-8303	▶288
	418
191-8304	418
191-9247	758
191-9784	▶591
	653
	662
192-7054	860
192-7507	706
192-7508	706
192-7510	706
192-7752	877
192-7755	877
192-7760	877
192-7767	877
192-7783	877
192-7787	877
192-7790	877
192-7795	877
192-7799	877
192-7805	877
192-7810	877
192-7812	877
192-7820	877
192-7822	877
193-1036	751
193-9230	653
	662
194-4254	331
194-5171	884
	887
	889
	891
194-6523	174
	176
194-6722	▶277
	279
194-6725	▶278
	280
194-8031	799
194-9472	696
194-9473	696
194-9474	696
194-9478	699
194-9479	699
194-9480	699
194-9481	699
195-7493	398
195-7495	401
195-7988	330
197-4977	402
197-5107	854
	856
197-7689	875
197-8391	144
	146
	272
	▶294
197-8392	272
	▶295
197-8418	101
197-8419	101
197-9257	68
	69
197-9326	68
	69
197-9327	68
	69
197-9330	37
197-9642	50
198-2914	758
198-4768	394
	466
	468
198-4769	398
198-4777	128
	138
	163
	470
	472
	475
	485
	593
198-4778	124
	164
	479
198-4780	679
198-4781	63
	518
198-4782	108
198-4963	44
	48
	▶51
198-5351	696
198-5389	230
199-4318	474
	489
199-7819	497
199-7891	196
199-8436	196
199-9907	174
	176
	178
	182
199-9923	17
199-9985	143
	184
	2
200-5728	859
200-6282	682
	747
200-8788	333
201-0780	751
201-5464	▶244
	383
201-6615	289
201-6616	290
201-9109	475
201-9331	413
202-5397	333
202-6611	235
	238
202-6614	237
	239
202-7475	61
203-0351	135
203-1558	534
	535
	536
	537
203-3768	158
203-3831	123
203-6066	475
203-7703	867
	868
203-9807	174
	176
204-0317	597
	611
	619
	626
	634
	642
204-0813	230
	371
204-2581	884
	887
205-0826	230
205-3235	8
205-3692	163
	670
205-4120	398
205-4121	429
205-4122	429
205-4641	429
205-6388	864
205-6716	597
	611
	619
	626
	634
	642
205-7047	371
205-7187	930
205-7299	508
205-8125	439
205-8257	230
206-2423	339
206-4669	100
206-5162	230
206-5208	230
206-5823	841
	889
	891
206-8818	705
207-1556	▶302
	307
207-6031	461
207-8103	12
	▶74
207-8107	74
207-8572	35
208-0800	174
	176
208-6054	113
208-7448	131
208-8759	887
208-9281	119
	122
209-0381	218
209-4575	113
209-4578	131
209-7309	98
	99
210-1743	67
210-1746	67
210-2262	861

▶ **PRIMARY REFERENCE**

PART NUMBER INDEX

Part	Page
210-2263	861
210-2266	861
210-2270	▶861
	865
210-4458	439
210-4460	51
211-0587	33
211-0588	33
211-2660	816
211-5358	877
211-6807	339
	343
211-7895	50
211-9294	877
212-0431	98
	144
	146
	148
212-0907	581
	583
212-1336	657
	666
212-4174	100
212-4621	141
	180
212-4669	141
	180
212-4670	141
	180
212-4961	721
	723
	725
	727
	729
	731
	733
	735
	737
	739
	741
	743
	745
212-7728	32
212-7779	877
213-1585	52
213-5007	763
213-5170	877
213-6495	552
213-9100	329
214-0586	45
214-2470	391
214-6480	581
	583
214-7566	38
	71
	90
	135
	274
	280
	282
	283
	285
214-7568	42
	43
	72
	90
	101
	137
	150
	152
	158
	193
	274
	279
	284
	416
	436
	454
	592
	593
	648
	666
214-9186	803
	810
	813
215-1942	581
	583
215-8057	653
215-8200	427
215-8201	427
215-8202	398
215-9664	427
215-9665	398
215-9666	398
216-0814	847
216-2211	160
	171
216-5540	▶26
	57
217-3311	581
	583
217-3673	67
217-3674	67
217-4537	429
217-5232	20
217-5900	26
217-6885	160
	171
217-7933	861
218-0404	230
218-2373	454
	680
218-7270	54
218-7272	12
	14
	▶59
218-9894	757
219-0302	912
	913
219-4458	68
219-4683	427
219-6036	475
219-6314	230
219-6488	▶235
	250
219-7440	12
	▶65
219-7461	339
219-7462	13
	▶339
219-8035	▶558
	595
	632
220-0771	307
	308
220-3373	59
220-4126	139
220-4335	466
	468
220-4336	466
	468
220-6390	12
	▶27
220-8678	154
220-8800	816
221-0318	143
	184
221-0319	141
	180
221-9357	59
221-9392	44
	48
222-0345	864
222-1206	163
222-2367	558
	559
222-2889	17
222-2899	50
222-3088	14
	15
	▶54
222-3092	12
	▶137
222-3902	54
222-3904	118
222-3905	54
222-3907	25
222-5376	891
222-7890	330
222-7944	920
222-9151	371
223-0455	848
223-0580	701
223-3353	581
	583
223-3505	17
223-3875	12
	14
	▶71
223-6546	35
223-7463	14
	15
	▶25
223-7468	25
223-7471	25
223-7485	133
223-7852	59
223-9133	69
223-9143	118
	123
223-9144	118
223-9145	118
	123
223-9147	▶118
	119
224-0554	912
224-0880	12
	▶62
224-1270	40
	42
	43
224-2675	105
	106
224-3028	45
224-3030	45
	47
224-3117	85
224-3125	45
	47
224-3405	90
224-3882	14
	15
	▶33
224-3969	881
224-4140	62
224-4418	77
	80
224-4441	45
	47
224-4991	162
224-5539	97
224-5757	105
224-6360	105
224-6361	115
224-8170	12
	▶101
224-8171	101
224-8172	101
225-0312	518
225-0313	518
225-3109	788
	844
225-3281	579
	580
225-3305	913
225-4150	915
	920
225-5222	20
225-6948	101
225-7003	119
	122
226-1240	920
226-1242	915
226-1274	920
226-1275	915
226-1885	459
	▶463
226-1886	463
226-2333	223
	251
	266
226-4192	361
	365
226-4755	59
226-6478	68
226-7473	211
	213
	▶215
226-9169	265
226-9622	759

▶ **PRIMARY REFERENCE**

PART NUMBER INDEX

Part	Page
226-9770	1
	▶12
227-0838	57
	▶83
227-2574	12
	▶31
227-3101	475
227-3103	475
227-3812	144
	146
227-4892	92
227-5075	115
227-5723	13
	14
	▶167
	▶168
	▶169
227-7390	913
227-7391	912
227-9545	12
	▶72
228-0902	463
228-1778	585
228-3323	361
	365
228-4947	99
	289
	290
	291
	292
228-5810	119
	122
228-5811	▶119
	120
228-5812	14
	15
	▶120
	▶121
228-6053	241
	242
228-6054	241
	242
	243
228-6056	241
	242
	243
228-6089	330
	781
228-7088	152
228-7089	158
228-7090	101
	188
228-9655	196
228-9656	196
228-9657	196
229-1494	864
229-2580	330
229-2615	12
	▶32
229-5039	461
229-5279	78
229-5431	100
229-5684	25
229-5711	32
229-8084	12
	14
	▶66
229-8810	119
	122
229-9382	575
230-0917	300
230-0960	389
230-0961	14
	15
	▶389
230-2603	115
230-3518	137
230-3728	155
230-3775	155
230-4011	148
	150
	152
	319
	333
	343
	418
230-4012	148
	150
	152
	333
230-4013	343
230-4518	105
	106
230-4519	105
230-5008	371
230-5009	800
230-5010	333
230-5011	333
230-7149	272
	273
	▶289
230-7471	664
230-9174	261
231-0049	223
	258
	266
231-0152	12
	▶105
	▶106
231-0307	11
231-1517	562
	564
	▶607
231-1975	13
	▶272
	▶273
231-2115	1
	▶129
231-2137	1
	▶131
231-2145	1
	▶100
231-2149	1
	▶163
231-2153	1
	▶113
231-2157	1
	▶63
231-2160	1
	▶138
231-2161	1
	▶300
231-2164	769
	▶779
231-2311	108
	▶128
231-2313	1
	▶109
231-2315	108
	▶124
231-2316	108
	▶523
231-3178	422
231-3492	12
	▶96
231-3538	577
	578
231-5056	8
	▶525
231-6565	445
231-9030	136
232-1693	211
	213
232-1767	170
232-4738	769
	▶780
233-0625	574
233-0891	211
	213
233-3110	7
	▶775
233-3116	5
	▶863
233-3122	1
	▶843
233-3123	5
	▶859
233-3124	247
	251
	▶320
233-3126	7
	▶229
233-3133	775
	776
	▶862
233-3134	5
	▶217
233-3135	▶218
	775
	776
233-3137	5
	▶819
233-3138	775
	776
	▶884
233-3139	5
	▶886
233-3142	2
	3
	4
	▶540
233-3145	▶214
	775
	776
233-3147	562
	563
	564
	565
	▶784
233-3149	769
	▶770
233-3150	5
	▶863
233-3188	883
	▶887
233-3208	775
	776
	▶838
233-3209	862
233-3224	781
	▶869
	873
233-3225	781
	▶871
	873
233-3226	871
233-3227	869
233-3235	882
	883
233-3245	796
233-3248	869
	871
233-3252	869
	871
233-3272	796
233-3275	871
233-3277	774
233-3278	773
233-3280	775
	▶854
233-3285	775
233-3288	▶358
	776
233-3295	2
	3
	4
	8
	▶839
233-3296	▶840
233-4259	518
	▶703
233-4611	6
	▶199
233-4615	6
	▶248
233-4620	6
	▶236
233-4623	247
	251
	▶383
233-5220	▶102
	103
233-5221	14
	15
	▶103
233-6191	12
	▶211
	▶213
233-6742	144
	146

▶ **PRIMARY REFERENCE**

PART NUMBER INDEX

Part	Page
	148
	150
	152
	▶189
	▶190
233-7143	9
	▶896
233-7147	9
	▶896
233-7148	9
	▶893
233-8134	402
234-4325	236
	▶237
	248
	249
234-4326	229
	▶238
234-4355	272
	273
	274
234-5012	274
	▶296
234-5013	148
	150
	152
	274
	▶297
234-7730	237
	238
234-7731	237
	238
234-9970	223
	251
	▶259
	266
235-1448	103
235-1451	103
235-3595	150
	152
235-4123	781
235-4180	2
	3
	4
	▶914
235-4186	9
	10
	▶910
235-4189	2
	3
	4
	▶195
235-4587	266
235-5869	398
235-5871	398
235-5955	251
	▶254
235-6175	883
235-6183	341
235-6188	▶227
235-6405	7
	▶603
235-6409	1
	▶691
235-6412	1
235-6414	562
	565
	▶608
235-7133	195
	▶196
235-8119	1
	▶490
235-8553	1
	▶690
236-1924	6
	▶201
236-1928	385
236-2335	254
	256
236-2340	199
	201
236-2341	381
236-2356	360
	364
236-4545	300
236-4611	819
236-4615	330
236-4616	320
236-4630	323
236-5197	861
236-8745	105
	106
236-8826	360
	364
237-0226	133
237-0227	152
	285
	343
	376
	377
237-1962	▶304
	308
237-3943	877
237-3970	▶767
	877
237-4132	259
237-4133	259
237-4134	259
237-4135	259
237-4376	▶61
	85
	87
237-6445	12
	▶95
237-6469	85
237-7252	259
237-7253	85
	87
237-7552	258
237-8197	▶405
	443
237-8199	1
	▶448
237-9310	144
	146
	148
	150
	152
237-9736	232
237-9960	389
238-0112	418
238-0251	533
238-0296	189
	▶191
238-2717	68
	69
238-2721	14
	15
	▶68
	▶69
238-5080	72
	152
	158
	297
	298
238-5081	190
238-5084	67
	90
238-6683	863
	▶867
238-6721	115
238-6728	115
238-6730	115
238-8756	562
	▶785
238-8763	6
	▶313
238-8813	230
238-8824	▶321
	391
238-8825	1
	▶310
238-8827	▶230
238-8828	▶341
	562
	563
	564
	565
238-8839	777
238-8840	777
238-8841	777
238-8962	12
	▶73
239-0618	682
239-1134	300
	▶328
239-2395	272
	273
	▶279
239-2396	144
	146
	148
	150
	272
	273
	▶280
239-2397	272
	273
	▶290
239-3478	▶281
	282
239-4990	915
239-4991	920
239-5195	682
239-5674	272
	273
	▶282
239-6379	385
239-6989	915
	920
239-7342	226
239-7352	333
239-7353	333
239-8135	115
240-2183	805
240-2636	61
240-3277	67
240-3279	12
	▶67
240-5403	12
	▶422
240-5881	17
240-7193	345
	351
	375
240-7271	14
	15
	▶38
240-7272	14
	15
	▶85
	▶87
240-7679	14
	▶44
240-8460	75
240-8461	▶75
	77
240-8462	76
240-8463	▶76
	77
241-0037	535
	536
	537
	558
	559
241-0835	▶77
	85
241-0844	78
241-0845	77
	▶78
241-0847	66
	77
	80
241-3720	869
	871
241-3722	538
241-3867	703
	▶705
241-3868	705
241-4330	17
241-6205	581
241-6218	455
	581
241-6388	17
241-7601	12
	▶210
241-8368	261
	▶317
241-8534	109

▶ **PRIMARY REFERENCE**

PART NUMBER INDEX

Part	Page
241-9265	138
241-9584	▶141
	176
241-9585	▶143
	174
242-0407	589
242-1401	77
	80
242-1811	51
242-3282	230
242-7418	77
	80
242-9264	721
	723
	725
	727
	729
	731
	733
	735
	737
	739
	741
	743
	745
242-9514	581
	583
242-9515	581
	583
243-1352	248
243-1557	50
243-1667	12
	▶115
243-2289	124
243-2965	721
	723
	725
	727
	729
	731
	733
	735
	737
	739
	741
	743
	745
243-3250	360
	364
243-3662	708
	709
	710
	711
	713
	715
	716
	718
243-5063	128
243-5289	915
	920
243-5362	360
	364
243-6700	761
243-6717	33
243-6737	▶847
	865
243-6740	863
	▶868
243-7239	7
	▶470
244-1420	156
	158
244-1714	269
244-1716	799
244-1719	327
244-1987	422
244-2579	721
	723
	725
	727
	729
	731
	733
	735
	737
	739
	741
	743
	745
244-2701	770
	▶816
244-2702	770
	▶829
244-2713	310
244-2714	310
244-2722	▶768
	770
244-2729	521
	522
244-3114	418
	▶454
244-3712	593
244-5001	▶864
	867
	868
244-5002	864
	▶865
244-6849	424
244-6850	424
244-6851	424
245-1181	418
	453
245-1596	777
245-1811	453
245-1912	453
245-2806	475
245-2810	383
245-2811	383
245-2812	383
245-2813	383
245-2814	383
245-2827	475
245-2860	493
245-2861	493
245-3555	453
245-3816	129
245-3818	130
245-3819	130
245-4747	251
245-6095	78
	79
245-7434	333
	782
245-7603	589
245-8334	371
245-8842	199
	201
245-8964	589
245-9049	729
245-9054	731
245-9055	733
	739
246-1127	95
246-1670	199
	201
246-2610	9
	▶894
246-2641	909
	915
	920
246-3144	33
246-3193	716
246-3303	544
	546
	548
246-3305	544
	546
	548
246-3307	544
	546
	548
246-3314	555
246-3352	653
	662
246-4311	330
246-4486	691
	▶694
246-4617	130
246-6111	1
	▶437
246-6129	16
	▶930
246-6341	595
	609
	617
	624
	632
	640
246-6342	595
	609
	617
	624
	632
	640
246-6466	448
	▶452
246-6651	930
246-8065	▶444
	451
246-8066	444
	▶445
246-8068	445
246-8071	445
246-8073	445
246-8075	445
246-8078	445
246-8728	▶406
	451
246-8731	▶408
	451
246-8734	▶411
	451
246-8737	▶413
	451
246-8738	413
246-8743	538
246-8746	449
246-8747	408
	411
	413
246-8748	408
	411
246-8749	406
246-8752	449
246-8757	408
246-8761	413
246-8764	411
246-8772	406
246-8773	449
246-8774	413
246-8776	538
246-8777	538
246-8780	538
246-8781	538
246-8793	406
	408
	411
	413
246-8794	406
	408
	411
	413
246-8795	413
246-8796	413
246-8797	413
246-8800	406
	408
	411
	413
246-8801	408
	411
246-8804	408
246-9371	333
247-0733	789
	790
	791
	792
	793
	794
247-0737	787
247-2833	12
	▶136
247-2834	136
247-2956	140
247-4993	418
247-5838	523
247-6430	▶385
247-8602	131
247-8622	1
	▶909

▶ **PRIMARY REFERENCE**

PART NUMBER INDEX

Part	Page
247-9664	▶90
	92
247-9665	12
	▶92
247-9730	130
247-9764	523
247-9765	523
247-9766	523
247-9769	523
247-9851	9
	10
	▶198
248-0322	470
248-0409	109
248-0671	109
	▶112
248-0676	128
248-0677	124
248-0678	109
248-0679	523
248-0716	13
	▶307
	309
248-0833	398
248-1254	1
	▶769
248-1484	▶480
	481
248-1487	286
248-1488	▶204
	286
248-1496	223
	258
	266
248-1497	286
	287
248-1502	267
	271
248-1503	206
	223
	258
	266
248-2222	406
	413
248-2226	406
	413
248-2284	373
248-2621	884
248-2628	887
248-2924	777
248-3164	▶879
	884
248-4151	▶561
248-4220	770
248-4765	▶173
	174
	176
248-4840	135
248-4841	135
248-5071	16
	▶550
248-5245	915
	920
248-5358	371
248-5513	115
248-6174	710
248-6175	709
248-6364	131
248-6661	22
248-6772	777
248-6925	9
	10
	▶391
248-8735	450
248-9337	569
249-0096	274
	▶283
249-0410	768
249-0411	768
249-0712	▶155
	162
249-0934	771
249-0937	768
249-0938	771
249-2307	589
	▶592
249-2308	▶560
	592
249-3505	572
249-3860	▶534
	544
249-3862	▶535
	546
249-4073	862
249-4080	540
	▶542
	543
	557
249-4088	544
	546
	548
249-4091	540
	543
	557
249-4097	848
249-5193	581
	583
249-5299	573
	▶585
249-5334	711
	713
	715
249-5478	321
249-5479	320
249-5480	250
249-5482	320
249-5483	851
249-5486	320
	330
249-5487	322
249-5488	313
249-5493	330
249-5508	225
249-5511	▶225
249-5516	▶226
249-5636	708
249-5637	718
249-6687	913
249-6688	912
249-6692	6
	▶489
249-6751	910
249-7345	▶139
249-7386	124
249-7742	176
	178
249-7789	223
	▶269
	271
249-7892	675
249-7894	675
249-8540	100
249-8575	915
	920
250-0154	1
	▶424
250-0358	2
	3
	4
	▶133
250-0359	16
	▶134
250-0366	129
	▶130
250-0684	523
250-0778	16
	▶17
250-0832	138
250-0951	402
250-0952	411
250-0953	402
250-1172	1
	▶126
250-1419	653
	662
250-1420	653
	662
250-2138	453
250-2139	416
	▶453
250-2151	131
250-2152	131
250-2153	113
250-2172	269
250-2299	321
250-2313	422
250-2784	703
250-2933	770
	▶833
250-3443	705
250-3507	518
	▶589
250-3528	829
250-3529	829
250-3865	170
250-4357	489
250-4358	489
250-4359	489
250-4360	489
250-4628	846
250-5612	595
	624
	632
	640
250-5615	653
250-5617	653
	662
250-5623	653
	662
250-5624	653
	662
250-5629	653
	662
250-5631	653
	662
250-5634	653
	662
250-5757	195
	198
250-6591	17
250-7012	84
250-7017	13
	▶84
250-8213	1
	▶443
250-8279	302
250-8335	825
	827
250-8337	690
	▶696
250-8467	100
250-9200	141
	▶170
	178
250-9254	▶220
	925
	926
	929
250-9257	▶219
	775
	776
250-9258	▶219
	775
	776
250-9259	▶220
	562
	563
	564
	565
250-9304	143
	182
250-9305	173
	188
250-9819	333
250-9830	333
250-9856	607
	608
	616
250-9857	608
251-0077	373
251-1005	61
251-1133	360
	364
251-1217	141
	178
	180
251-1545	449
251-1550	585
251-1668	721

▶ **PRIMARY REFERENCE**

PART NUMBER INDEX

Part	Page	Part	Page	Part	Page	Part	Page
	723		617		▶338		451
	725		624	252-8038	684	253-8330	286
	727		632		▶748		287
	729		640	252-8402	17	253-8407	2
	731	252-0741	684	252-8678	466		▶451
	733	252-0745	684		468	253-8427	451
	735	252-0976	7	252-8744	206		▶538
	737		▶902		258	253-8428	▶418
	739	252-0980	490		327		451
	741	252-0989	490	252-9513	109	253-8429	▶402
	743	252-0990	490	252-9628	268		451
	745	252-1575	930		326	253-8868	773
251-1669	731	252-1607	300	253-0861	911		774
	743	252-1805	▶796	253-1319	681	253-8967	259
	745		869	253-1459	14	253-8969	259
251-2192	129		871		15	253-8981	259
251-2243	540	252-1807	869		▶162	253-9736	398
	▶544	252-1808	871	253-1789	851	253-9738	452
251-2247	781	252-1810	8		852	254-0079	879
	844		▶543		853	254-0312	413
	852	252-1811	543	253-1963	371	254-1618	526
	853		▶546	253-1964	271	254-1619	526
	862	252-1824	490		▶371	254-3286	434
	873	252-1825	854		797	254-3292	526
251-2252	854	252-1826	854	253-1967	223	254-3303	430
251-2272	781	252-1862	802		▶373		432
	873		805		797	254-3364	20
251-2273	781		809	253-2111	261	254-3413	680
	873		812		262	254-3415	675
251-2274	781	252-1863	802	253-3476	540		▶680
	873		805		543	254-3937	721
251-2275	781		809		557	254-3939	723
	873		812	253-3482	869	254-3944	40
251-3204	95	252-2157	915		871		42
251-3227	126		920	253-3483	869		43
251-4162	338	252-2177	63		871	254-3945	725
251-4174	126	252-4676	2	253-3484	869	254-3950	737
251-4314	59		3		871	254-3951	741
251-6668	90		4	253-3485	330	254-3955	525
251-6673	402		▶561	253-3489	330	254-4476	653
	447	252-4890	▶915	253-4115	884		662
251-6674	402		925	253-4627	761	254-4486	653
	447	252-5188	53	253-4628	761		662
251-8248	338	252-5190	371	253-4629	761	254-4998	12
	798	252-5221	603	253-4631	1		▶144
251-8250	763		605		▶899		▶146
251-8330	682	252-5224	330	253-4635	761		▶148
	▶755	252-5366	595	253-4643	761		▶150
251-9571	373		609	253-4650	1	254-5036	375
251-9999	609		617		▶761	254-5471	139
	617		624	253-4676	571	254-9136	206
252-0002	595		632	253-5303	402	254-9934	653
	609		640	253-5306	418		662
	617	252-5738	144	253-5307	▶449	254-9951	269
	624		146		451	255-0683	653
	632		148	253-5322	402		662
	640		150	253-5323	418	255-0685	653
252-0003	595		152	253-7135	17		662
	609	252-6185	12	253-7136	17	255-0686	653
	617		▶53	253-7154	475		662
	624	252-7080	9	253-7461	371	255-0688	653
	632		▶895	253-7576	163		662
	640	252-7089	761	253-7931	▶438	255-0689	653
252-0004	595	252-7802	47		451		662
	609	252-8000	209	253-7939	▶435	255-0696	20

▶ **PRIMARY REFERENCE**

PART NUMBER INDEX

Part	Page	Part	Page	Part	Page	Part	Page
255-0939	268		▶394	257-7111	360	259-4481	587
255-0941	269	256-3904	394		364	259-4483	899
255-1281	779	256-4579	251	257-7150	▶492	259-4486	899
255-2395	117	256-4580	251		905	259-4488	899
255-2396	12	256-4581	251	257-7192	492	259-4491	899
	▶117	256-4582	251	257-7224	2	259-4492	899
255-3482	360	256-5308	124		▶329	259-4493	899
	364	256-5719	251	257-7226	254	259-4494	899
255-3631	653	256-5720	251	257-7253	595	259-4495	899
	662	256-5721	251		609	259-4496	899
255-4160	17	256-5722	251		617	259-4497	899
	▶20	256-5732	251		624	259-4758	839
255-4161	20	256-6068	482		632	259-4759	840
255-4966	459	256-6072	482		640	259-5418	595
	461	256-6073	482	257-8414	682		609
	▶464	256-6074	482		▶756		617
255-4972	460	256-6075	482	257-8897	589		624
	461	256-6076	482	257-9799	394		632
	▶464	256-6453	296	257-9850	435		640
255-4973	▶461		297	257-9950	17	259-5420	831
255-4983	457	256-6631	381	257-9989	207	259-5501	699
	▶459	256-6944	286	257-9990	381	259-5502	699
255-4984	▶457		287	258-0883	144	259-5503	699
255-4985	457	256-6983	▶16		146	259-5504	696
	▶459	256-7143	760		▶318		▶699
255-4986	▶457	256-8768	867	258-4484	12	259-5507	696
255-4995	457		▶877		▶97	259-5580	1
	▶460	256-9347	439	258-4621	550		▶587
255-4996	▶457	256-9365	595	258-7508	902	259-5898	595
255-5001	457		624	258-7561	406		609
	▶460		632	258-7562	406		617
255-5002	▶457		640	258-7563	408		624
255-5003	458	256-9448	889	258-7564	408		632
	▶460	256-9651	53	258-7565	411		640
255-5004	▶458	257-1702	466	258-7566	411	259-6231	904
255-5090	▶482		468	258-7593	286		905
255-5321	▶222	257-1985	430		287		▶906
255-5322	222		432	258-7598	286	259-6232	▶670
	▶360	257-2015	59		287		904
255-5415	113	257-2291	514	258-8699	160		905
255-5955	653	257-2758	572		171	259-6896	710
	662	257-3226	829	258-8716	394		711
255-5956	653	257-3572	901	258-8719	394		716
	662	257-3573	▶901	258-8721	78		718
255-5958	653		904		79		▶721
	662		905	258-8739	394	259-6903	710
255-5962	654	257-3574	2	258-9981	572		711
	662		3	259-0309	685		716
255-9331	430		4	259-0310	686		718
	432		▶904	259-1843	394		▶723
256-2907	▶326	257-4095	44	259-2569	488	259-6906	710
	327		▶45	259-2620	443		711
256-3351	174	257-4183	▶390	259-2622	394		716
	176	257-4929	1	259-4462	430		718
	180		▶763		432		▶725
	184	257-4932	763	259-4468	763	259-6907	710
256-3352	174	257-5022	681	259-4469	763		711
	176	257-5026	418	259-4470	763		716
	178		▶455	259-4471	763		718
	182	257-5083	571	259-4472	763		▶727
256-3355	482		▶580	259-4473	763	259-6908	710
256-3356	482	257-5084	580	259-4479	2		711
256-3894	1	257-5085	580		3		716
	▶392	257-6804	1		4		718
256-3895	392		▶571		▶765		▶729

▶ **PRIMARY REFERENCE**

PART NUMBER INDEX

Part	Page
259-6909	711
	716
	718
	▶731
259-6910	716
	718
	▶733
259-6912	708
	709
	713
	715
	▶735
259-6913	709
	713
	715
	▶737
259-6914	713
	715
	▶739
259-6915	713
	▶741
259-6919	561
	▶710
259-6920	563
	▶711
259-6921	562
	564
	▶716
259-6922	562
	565
	▶718
259-6923	561
	▶708
259-6924	561
	562
	▶709
259-6925	563
	564
	▶713
259-6939	398
259-7138	398
259-7140	831
259-7428	654
	662
259-8455	174
	176
	178
	182
259-9282	490
259-9283	490
259-9287	▶241
	254
	256
259-9288	▶242
	254
	256
260-0189	915
	920
260-0212	▶911
	915
	920
260-0251	▶79
	80
260-0252	▶80
	87
260-0723	195
	198
260-0915	79
260-1406	12
	▶50
260-1909	247
	▶256
260-2577	887
260-2579	887
260-2989	430
	432
260-3041	854
260-3129	593
260-3130	593
260-3132	593
260-3133	593
260-3136	593
260-3140	1
	▶593
260-3161	593
260-3404	387
260-3580	552
260-3646	1
	▶569
260-4855	40
	42
	43
260-5806	833
260-5807	829
260-5808	829
260-6117	572
260-6438	887
260-6478	251
260-6480	251
260-6501	701
260-6502	597
	611
	619
	626
	634
	642
	▶701
260-6821	20
260-6878	523
260-7524	81
	82
260-7595	418
260-7596	413
260-7652	913
260-7653	912
260-7717	138
260-7784	894
260-7786	895
260-8713	394
	▶573
260-8743	805
260-8745	805
260-9135	805
260-9479	▶425
	451
261-0154	171
261-1502	▶233
	383
	385
261-1731	802
	805
	809
	812
261-1957	466
	468
261-2290	80
	▶81
261-2291	81
261-2293	82
261-2294	80
	▶82
261-3223	338
261-3224	798
261-3246	55
	56
261-3268	708
	709
	713
	715
	▶743
261-3345	879
261-3637	574
261-3644	574
261-5524	802
	805
	809
	812
261-5694	845
261-8554	587
261-9391	227
262-0569	130
262-0595	98
	99
262-0596	12
	▶98
	▶99
262-1408	341
262-1421	▶219
	227
262-1906	570
	▶577
262-1921	578
262-1922	577
262-1928	577
262-2017	▶271
262-2827	262
262-2878	215
262-4772	805
262-4930	777
262-4961	330
262-5320	675
262-5769	581
	583
263-1649	406
	408
	411
	413
263-1650	408
	411
263-2573	825
	827
263-2576	848
263-2589	795
263-2590	775
	776
	▶795
263-3823	842
263-4902	401
263-4903	401
263-4904	401
263-4920	40
	43
263-5033	798
263-6681	12
	▶14
263-6891	199
	201
263-6901	915
263-6902	920
263-7429	403
263-9466	771
264-0168	552
264-0575	427
264-3171	326
264-4297	109
	298
	299
264-5346	233
264-5732	339
	343
264-7021	195
	198
264-7029	152
	319
	333
	343
	418
264-7030	152
	343
	376
	377
264-7032	333
264-9726	573
265-0639	595
	609
	617
	624
	632
	640
265-0642	595
	609
	617
	624
	632
265-0644	595
	609
	617
	624
	632
	640
265-0645	595
	609
	617
	624
	632
	640
265-1111	68
265-1113	68
	69

▶ **PRIMARY REFERENCE**

PART NUMBER INDEX

Part	Page	Part	Page	Part	Page	Part	Page
265-3700	437	267-2103	381	269-6650	113	271-3565	654
265-3701	437	267-3183	▶913	269-8248	761		663
265-5644	705		925	269-8916	930	271-3567	131
265-6631	381	267-3184	▶912	270-0546	831	271-3570	654
265-6737	765		925	270-0548	831		663
265-7434	771		926	270-0550	416	271-3571	654
265-7435	771		927	270-3528	381		663
265-7454	768		928	270-3650	160	271-3608	654
265-8932	205		929		171		663
265-8933	205	267-3504	568	270-3651	160	271-3609	654
265-8934	205		570		171	271-4942	654
265-8935	848	267-3506	492	270-3839	519		663
265-8936	205		568	270-3840	520	271-4943	654
265-8937	▶205		570	270-4884	887		663
	330		901	270-5411	515	271-6373	267
265-8941	839	267-3507	513	270-6892	654		271
	840		765		662	271-6418	696
265-8943	542	267-3508	492	270-6893	654	271-6420	1
	▶858		763		663		▶568
265-8970	174	267-8715	879	270-6894	654	271-6847	694
	176	268-1543	173		663		▶753
	178	268-1647	654	270-6906	654	271-6919	696
	180		662		663	271-7312	770
265-8971	174	268-2953	40	270-6941	430	271-7835	654
	176		42		432		663
	178		43		466	271-8528	427
	180	268-3299	98		468	271-8529	427
266-0482	55		99	270-6942	430	271-8632	654
266-0483	55	268-3529	805		432		663
266-1467	270	268-5743	763		466	271-8680	427
	▶276	268-6570	1		468	271-9038	439
	858		▶108	270-6943	430	272-0353	429
266-1595	651	268-6686	12		432	272-0389	23
266-1602	682		▶135		466	272-1623	802
266-2422	2	268-8080	338		468		805
	▶533	268-8082	338	270-6944	430		809
266-2522	167	268-8262	765		432		812
266-3753	768	268-8794	424		466	272-1889	198
266-4296	5	268-9602	174		468	272-2286	▶206
266-6049	466		176	270-7536	568		267
	468		178		▶578		271
266-7315	394	269-1009	693	270-7603	654	272-3133	671
266-7376	574	269-1014	693		663	272-3134	671
266-7711	109	269-2259	519	270-8407	520	272-4851	597
266-7712	109	269-2860	61	270-9037	▶398		611
266-7713	109	269-2862	61		443		617
266-8568	109	269-2864	61	270-9382	2		624
266-8804	113	269-2890	802		3		632
	654		805		4		642
	662		809		▶519	272-4852	597
266-9281	847		812	271-2178	375		611
266-9363	163	269-2892	802	271-2811	789		619
266-9715	394		805		790		626
266-9716	394		809		791		634
266-9727	450		812		792		642
266-9728	450	269-2893	802		793	272-4853	595
266-9729	450		805		794		609
267-0006	675		809	271-3555	654		617
267-0007	12		812		663		624
	▶93	269-3277	269	271-3556	654		632
267-0010	14	269-3303	269		663		640
	15	269-3304	269	271-3557	654	272-4854	595
	▶22	269-4759	17		663		609
	▶23	269-5353	529	271-3560	654		617
267-2102	381		531		663		624

▶ **PRIMARY REFERENCE**

PART NUMBER INDEX

Part	Page
	632
	640
272-5366	654
	663
272-5577	654
	663
272-5612	398
	▶427
272-5671	595
	609
	617
	624
	632
	640
272-5683	675
272-5684	675
272-7118	427
272-7121	427
272-7239	199
	201
272-8010	▶401
	430
	432
272-8325	227
272-8326	227
272-8327	825
	827
272-8329	869
272-8441	785
	▶786
272-8442	784
	▶787
272-9850	241
	242
	243
273-0342	771
273-1719	371
273-1871	708
	709
	710
	711
	713
	715
	716
	718
273-2827	413
273-5924	371
273-8714	692
	▶693
274-2141	1
	▶570
274-2384	816
274-2385	816
274-2392	816
	848
274-2399	825
	827
274-2404	848
274-3774	352
274-4490	79
274-5551	465
274-6717	284
	375
274-6718	283
274-6719	285
274-6809	497
274-6810	497
274-6811	497
274-6817	394
	▶497
274-6851	140
274-7395	273
	▶298
274-7396	273
	▶299
275-0961	527
	528
275-1253	148
	150
	152
	▶319
275-1286	13
	▶140
275-2146	464
	▶465
275-2147	464
	▶465
275-3292	915
	920
275-3376	327
275-3378	326
275-3393	124
275-4012	326
275-5588	835
275-7741	▶324
	325
275-7764	▶325
	333
	886
275-7864	4
	8
	▶494
275-7870	494
275-8969	214
	▶216
275-8970	214
	▶216
275-9650	▶220
	330
276-0764	267
	327
276-1297	141
	180
276-1816	581
	583
276-3091	148
	150
276-3276	143
	178
	182
276-3596	657
	666
276-3884	884
276-5681	572
	▶581
276-5682	572
	▶583
276-5683	581
276-5684	583
276-6146	269
276-7222	69
276-7247	498
	503
	505
	508
276-8193	497
276-8548	274
	▶284
276-8826	498
	508
276-9015	771
276-9067	152
	274
	▶285
276-9496	425
276-9622	825
	827
277-0688	394
	▶572
277-1875	593
277-2132	682
	▶747
277-4434	57
277-4435	12
	▶57
277-4837	126
277-4844	141
	143
	180
	184
277-4845	141
	143
	184
277-5425	12
	▶55
	▶56
277-8283	56
278-0018	12
	▶156
	▶158
278-0668	209
	▶798
278-1415	763
278-1440	771
	▶777
278-1799	721
	723
	725
	727
	729
	731
	733
	735
	737
	739
	741
	743
	745
	▶759
278-1842	▶209
278-3354	771
	833
278-7093	59
279-1124	771
279-2569	430
	432
279-5308	330
279-6632	899
279-8929	692
279-9828	291
279-9829	292
279-9991	163
280-0947	682
280-1033	911
	914
280-1034	910
280-1480	911
280-1766	439
280-2228	470
280-2691	798
280-2822	394
280-3616	443
280-4244	330
280-4436	398
280-4438	398
280-6895	408
280-6896	411
280-6897	411
280-6898	413
280-6899	413
280-6900	438
280-7477	781
	873
280-7478	781
	873
280-8969	▶261
	381
280-8973	261
280-8974	261
280-8976	261
280-9455	261
281-0228	249
281-0387	844
281-0390	844
281-0431	788
281-1999	911
281-2000	911
281-2001	911
281-2588	777
281-2725	190
	▶192
281-2925	137
281-3136	788
281-3432	160
	171
281-3433	160
	171
281-4295	760
281-4298	▶760
	761
281-4655	786
	787
281-5825	261
281-9356	540
	543
	557
281-9451	760
281-9452	587
281-9460	587
282-0808	844

▶ **PRIMARY REFERENCE**

PART NUMBER INDEX

Part	Page	Part	Page	Part	Page	Part	Page
282-0882	443		733		468		797
282-5396	682		735	284-8960	466		▶799
282-7842	408		737		468	286-0174	493
282-8865	1		739	284-9556	466	286-0175	475
	▶567		741		468		▶493
282-8866	1		743	284-9557	466	286-0277	788
	▶496		745		468	286-0323	331
282-8868	▶609	284-3556	731	285-0256	398		341
282-8869	2		743		▶430	286-0742	763
	565		745	285-0258	398	286-1089	915
	▶595	284-3619	229		▶432		920
282-8870	7	284-3623	331	285-0600	443	286-1172	475
	▶653	284-3662	770		▶450	286-1605	475
282-8871	1	284-3757	▶246	285-0601	450	286-1760	595
	▶673	284-4601	721	285-0602	450		609
282-8872	1		723	285-0612	572		617
	▶692		725	285-0613	466		624
282-8873	769		727		468		632
	▶831		729	285-0823	31		640
282-8874	561		731	285-2258	4	286-1763	595
	562		733		8		609
	563		735		▶488		617
	564		737	285-2263	2		624
	565		739		3		632
	▶671		741		4		640
282-9083	1		743		▶174	286-2016	▶898
	▶439		745	285-2264	▶176	286-2439	387
283-0124	654	284-4602	721	285-2265	7	286-2501	387
	663		723		▶171	286-2631	587
283-0742	654		725	285-2372	847	286-3017	268
	663		727	285-3173	2	286-3108	552
283-0743	654		729		▶375	286-3109	552
	663		731	285-3174	2	286-4455	654
283-0820	498		733		▶381		663
	508		735	285-3175	7	286-4526	654
283-0827	503		737		▶345		663
283-1068	▶897		739	285-3176	2	286-4527	654
283-1107	302		741		▶387		663
283-1578	571		743	285-3178	7	286-4605	654
	763		745		▶349		663
283-2238	136	284-5040	443	285-3692	802	286-5299	552
283-4426	799		▶462		805	286-5672	540
283-5830	345	284-5041	462		809		543
	351		▶466		812		557
283-6385	345	284-5042	462	285-5290	769	286-7126	439
	351		▶468		▶834	286-7909	6
283-7960	224	284-5043	466	285-5589	461		▶249
	▶265		468	285-6124	761	286-8172	418
283-7978	848	284-5044	466	285-6125	761	286-8175	654
283-7980	773		468	285-6648	862		663
	774	284-5045	466	285-7415	770	286-8177	654
283-9503	174		468	285-7586	7		663
	176	284-5046	1		▶484	286-8292	475
283-9530	801		▶513	285-7588	484	286-9064	831
283-9796	692	284-5170	269	285-7600	487	286-9124	271
284-0565	475	284-6086	1	285-7608	487		797
284-2277	475		▶487	285-8055	768		▶800
284-2288	475	284-6087	487		▶771	286-9145	654
284-2421	402	284-8379	254	285-9020	1		663
284-3555	721		256		▶475	286-9146	654
	723	284-8533	227	285-9034	475		663
	725	284-8931	902	285-9036	475	286-9147	654
	727		903	286-0132	▶286		663
	729	284-8932	902	286-0133	▶286	286-9148	654
	731	284-8959	466	286-0134	271		663

▶ **PRIMARY REFERENCE**

PART NUMBER INDEX

Part	Page
286-9149	654
	666
286-9155	427
	466
	468
286-9437	671
286-9718	383
	385
286-9783	552
286-9784	552
286-9785	552
286-9786	654
	663
286-9787	654
	663
286-9788	654
	663
286-9789	654
	663
287-1640	902
287-1641	902
287-1686	261
287-1687	261
287-1688	261
287-1712	552
287-1713	552
287-2141	648
287-3049	67
287-3079	654
	663
287-3080	654
	663
287-3081	654
	663
287-3082	654
	663
287-3083	654
	663
287-3084	654
	663
287-3204	654
	663
287-3205	654
	663
287-3206	654
	663
287-3207	654
	663
287-3208	654
	664
287-3754	141
	178
287-4509	552
287-4547	567
287-4548	567
287-5701	763
287-5718	763
287-5775	648
287-5776	648
287-5777	439
287-5778	439
287-5794	301
	▶308
287-5839	439
287-5840	439
287-5841	439
287-6155	270
287-6431	648
287-6608	648
287-6609	648
287-6642	345
	351
287-6688	360
	364
287-6933	398
287-7112	654
	664
287-7593	673
287-7594	673
287-7596	673
287-7843	439
	703
287-8228	429
287-8233	427
	▶429
287-8357	56
287-8828	381
288-0693	360
	364
288-0735	899
288-1402	331
288-1544	527
288-2789	831
288-2790	831
288-3686	763
288-3687	261
288-3717	763
288-3882	466
	468
288-5507	419
288-5508	360
	364
288-5509	360
	364
288-5515	360
	364
288-5516	360
	365
288-5517	360
	365
288-5529	345
288-5531	345
288-5532	345
	351
288-5533	345
	351
288-6306	392
	▶514
288-6652	555
288-6653	555
288-6654	555
288-6655	555
288-6735	163
288-6736	163
288-7312	174
	176
	178
	180
	182
	184
288-7324	339
	343
288-8997	899
288-9439	270
288-9441	375
288-9442	375
288-9443	▶270
	375
289-0487	204
289-0488	204
289-0723	381
289-2108	1
	▶518
289-2527	261
289-2528	261
289-2786	160
	171
289-2935	575
	581
	583
	585
289-2946	575
	581
	583
289-3464	470
289-3509	901
289-3874	533
289-3875	533
289-4018	654
	664
289-4086	526
289-4087	526
289-4088	526
289-4090	525
	▶526
289-4113	439
289-4234	654
	664
289-5150	152
289-5231	488
289-5234	488
289-5257	675
289-5258	675
289-5259	675
289-5260	675
289-6002	581
	583
289-6241	550
289-6280	655
	664
289-6297	655
	664
289-7646	482
289-8449	268
	326
289-9519	375
290-0112	555
290-0594	715
	▶745
290-2014	310
290-2015	253
290-2016	229
	▶253
290-2018	253
290-2543	430
	432
290-2544	398
290-2758	458
	▶461
290-2759	▶458
290-3263	402
290-4050	398
290-4134	419
290-5749	▶240
	250
290-7296	427
290-7514	448
290-8166	465
291-0996	408
291-1348	109
	651
291-1915	326
291-2609	416
291-2610	416
291-2908	368
291-2909	▶368
	776
291-3878	439
291-4038	1
	▶250
291-4792	▶905
291-6872	430
	432
291-6905	123
291-8574	529
291-9154	839
	840
291-9518	563
	564
	565
	▶715
291-9976	164
292-0281	▶251
	266
292-0285	266
	▶267
292-0291	267
	▶268
	271
292-0292	267
	▶268
292-0301	▶266
292-0302	251
	▶258
	266
292-0309	223
	797
	▶801
292-0310	▶266
292-0311	799
	801
292-0484	69
292-0609	▶773
	781
	873
292-0611	773
	774
292-0612	773
	774
292-0614	773

▶ **PRIMARY REFERENCE**

PART NUMBER INDEX

Part	Page	Part	Page	Part	Page	Part	Page
	774		716	294-1021	802	295-4857	63
292-0617	▶774		718	294-1022	805	295-5509	345
	781	292-9237	▶846	294-1023	775		▶350
	873		865		▶802		351
292-0618	773	292-9252	121	294-1024	7	295-5648	802
	774		▶122		▶805		805
292-0908	▶258	292-9277	513	294-1032	812		809
	266	292-9390	383	294-1033	776		812
292-1005	138	292-9391	383		▶809	295-5649	805
292-1128	▶498	293-0214	427	294-1034	8		812
292-1148	498	293-0773	286		▶812	295-5665	802
	▶529	293-0818	122	294-5042	865		805
292-1200	123		▶123	294-8055	708		809
292-1370	675	293-2911	861		709		812
292-1868	369	293-3823	915		710	295-6374	812
292-1874	▶369		920		711	295-6390	805
	776	293-4200	775		713		812
292-2033	▶685		776		715	295-6391	805
	710		▶848		716		812
	711	293-5369	429		718	295-6393	802
	716	293-5895	779	294-9322	513		809
	718	293-5896	195	294-9580	572	295-6397	805
292-2034	▶686		198	294-9701	589	295-6399	812
	708	293-8697	518	294-9702	589	295-6400	809
	709		▶520	294-9835	513	295-6405	805
	713	293-9397	35	295-1043	805		812
	715	294-0115	651		812	295-6406	802
292-3091	475	294-0675	498	295-1049	805		809
292-4305	199		508	295-1050	805	295-6652	809
	201	294-0984	776	295-1113	805	295-8260	786
292-4311	498		▶856		812	295-8369	371
	508	294-0986	825		▶889	295-8370	371
292-4313	529		827	295-1114	802	295-8381	371
	531	294-0987	776		809	295-8930	251
292-4314	529		▶825		▶891	295-8963	373
	531	294-0988	825	295-1115	889	295-9160	562
292-5889	763	294-0992	825	295-1116	891		563
292-6097	846		827	295-1117	889		564
292-6402	▶845	294-0993	825	295-1118	891		565
	846		827	295-1119	891		▶616
292-7971	▶267	294-0994	775	295-1120	▶841	295-9260	168
292-7972	▶267		▶880		884	295-9879	▶269
292-7975	▶797	294-0995	775	295-1200	802	295-9880	223
292-7980	▶797		▶827		809		▶327
292-8054	786	294-0997	856	295-1201	802	296-0011	8
	787	294-0998	856	295-1202	802		▶516
292-8703	786	294-0999	856	295-1544	470	296-0012	8
	787	294-1001	869	295-1545	470		▶517
292-8705	787		871	295-1578	475	296-0089	494
292-8706	786	294-1002	848	295-1783	▶503	296-0091	494
	787	294-1003	848	295-1965	651	296-0101	494
292-9220	708	294-1004	848	295-1969	651	296-0102	494
	709	294-1005	848	295-2037	350	296-0103	494
	710	294-1011	776	295-2038	350	296-0104	494
	711		▶881	295-2039	349	296-0105	494
	713	294-1012	880		356	296-0106	494
	715	294-1014	880	295-2275	869	296-0107	494
	716		881		871	296-0108	494
	718	294-1015	880	295-2349	109	296-0109	494
292-9221	708		881	295-3839	475	296-0110	494
	709	294-1016	856	295-4243	887	296-0111	494
	710	294-1017	881	295-4322	360	296-0653	503
	711	294-1018	880		365		505
	713		881	295-4661	518	296-0702	494
	715	294-1019	856	295-4856	63	296-0727	488

▶ **PRIMARY REFERENCE**

PART NUMBER INDEX

Part	Page
296-1067	371
296-2991	802
	809
296-3491	109
296-4040	802
	805
	809
	812
296-4109	802
	809
296-4922	373
296-4924	802
	805
	809
	812
296-4925	331
	358
296-5270	682
	684
296-5293	655
	664
296-7739	526
296-8274	466
	468
296-9931	262
297-0760	323
297-1711	138
297-2538	394
297-2828	538
297-2830	538
297-3244	2
	3
	4
	▶822
297-3245	▶820
297-3246	820
	821
297-4131	848
297-4133	848
297-4134	854
297-4139	816
297-4140	816
297-4143	854
297-4144	848
297-4145	848
297-4147	781
	873
297-4148	781
	873
297-4149	848
297-4151	825
	827
297-4152	854
297-4153	848
297-4154	854
297-4155	848
297-4160	848
297-4161	848
297-4162	848
297-4168	856
297-4169	802
	805
	809
	812
297-4170	848
297-4171	827
297-4244	138
297-4276	743
297-4392	138
297-5434	138
297-6399	906
297-6428	▶920
	925
	926
	927
	928
	929
297-6979	679
297-8049	345
	350
	351
298-2600	1
	▶679
298-3699	6
	▶309
298-6182	498
298-6183	498
298-6184	498
	508
298-6185	498
	508
298-6186	498
	508
298-6187	498
	508
298-6188	498
	508
298-6189	498
	508
298-6190	498
	508
298-6191	498
	508
298-6192	498
	508
298-6193	498
	508
298-6194	498
	508
298-6195	498
	508
298-6196	498
	508
298-6197	498
	508
298-6198	498
	508
298-6199	498
	508
298-6200	498
	508
298-8482	498
	508
298-8483	498
	508
298-8484	498
	508
298-8485	498
298-8486	498
	▶527
298-8487	498
	508
298-8488	498
	508
298-8489	498
	508
298-8490	498
	508
299-0874	561
	562
	563
	564
	565
	▶788
299-0877	788
299-0881	788
	▶844
299-1020	812
299-1021	802
	809
299-1030	844
299-1660	802
	809
	812
299-3880	2
	3
	4
	▶251
299-3881	9
	10
	▶247
299-4833	498
	508
299-4834	498
	508
299-4835	498
	508
299-4836	527
	528
299-4837	527
	528
299-4838	527
	528
299-4839	498
	508
299-8905	402
300-0473	856
300-1870	5
	▶882
300-1871	882
300-1872	882
300-1873	5
	▶883
300-1874	883
300-1875	883
300-4231	770
300-5004	519
300-5583	208
300-6864	113
300-7909	371
300-8591	657
	666
300-8639	519
300-9805	274
	▶291
300-9806	274
	▶292
301-0589	227
301-4496	901
301-4497	901
301-4568	685
301-5165	706
301-5166	706
301-5167	706
301-6343	156
301-6821	706
302-0359	▶221
	926
	927
302-0360	▶221
	927
	928
302-0361	▶221
	928
	929
302-0362	▶222
	929
302-1292	▶925
302-1293	▶925
302-1294	▶925
302-1295	▶925
302-1296	▶926
302-1297	▶926
302-1298	▶926
302-1299	▶926
302-1300	▶927
302-1301	▶927
302-1302	▶927
302-1303	▶927
302-1304	▶928
302-1305	▶928
302-1306	▶928
302-1307	▶928
302-1308	▶929
302-1309	▶929
302-1310	▶929
302-3908	831
302-3917	208
302-5135	▶929
302-6331	763
302-6332	763
302-6333	763
302-7410	126
302-8255	498
	508
302-8925	609
	617
302-8926	597
	609
	617
	626
	634
	642
302-9088	852
	853
302-9089	851

3

▶ PRIMARY REFERENCE

PART NUMBER INDEX

Part	Page
302-9090	851
302-9101	595
	624
	632
	640
302-9118	595
	624
	632
	640
302-9119	595
	624
	632
	640
303-1382	▶35
	36
303-1383	▶36
	37
303-1384	▶37
	38
303-5952	339
303-7503	735
303-9456	848
303-9593	574
303-9596	574
303-9598	567
	▶574
304-0435	574
304-2671	503
	505
304-5687	216
	418
304-6808	▶207
	309
304-6809	▶208
	301
304-8008	106
	115
304-8032	450
304-8429	401
304-9131	503
	505
304-9667	503
	505
304-9668	503
	505
304-9669	503
	505
305-0617	▶47
	48
305-0618	14
	15
	▶48
305-2230	449
305-3343	429
305-3344	429
305-9194	887
	891
305-9195	887
	889
306-2031	595
	609
	617
	624
	632
	640
306-2032	595
	609
	617
	624
	632
	640
306-2034	595
	609
	617
	624
	632
	640
306-2036	595
	609
	617
	624
	632
	640
306-2037	595
	609
	617
	624
	632
	640
306-2038	595
	609
	617
	624
	632
	640
306-2039	595
	609
	617
	624
	632
	640
306-2040	595
	609
	617
	624
	632
	640
306-3998	304
306-4148	402
306-5623	429
306-5630	429
306-5631	429
306-5636	429
306-8127	178
	182
306-9214	852
	853
306-9215	852
	853
306-9501	889
	891
306-9997	261
306-9998	261
307-0016	851
307-0047	912
	913
307-0150	852
	853
307-0155	222
	223
	▶224
307-0718	496
307-0719	496
307-1959	587
307-1960	587
307-1961	587
307-1962	587
307-2671	38
	71
	135
307-2673	72
	152
307-3245	529
	531
307-4611	406
307-6492	401
307-9737	781
307-9738	781
308-0540	568
308-0541	568
308-0888	398
308-0935	676
	▶706
308-0938	706
308-1845	575
	581
	583
	585
308-2129	240
308-2897	6
	▶301
308-3071	523
308-3072	523
308-3073	523
308-3869	220
308-4358	869
	871
308-5203	782
	▶789
308-5204	782
	▶790
308-6303	763
308-6304	763
308-6308	651
308-6358	▶40
	45
308-7777	475
308-8620	848
308-8621	848
308-9523	542
309-1833	112
309-1834	112
309-1835	112
309-1836	112
309-4559	439
309-4561	595
	609
	617
	624
	632
	640
309-4562	595
	609
	617
	624
	632
	640
309-5127	675
309-5955	776
	▶781
309-8764	427
309-8817	133
	134
310-1516	470
310-1891	434
310-2078	9
	10
	▶232
310-2088	232
310-3221	▶222
	451
310-4972	109
310-7060	680
310-7316	458
	▶461
310-7334	▶458
310-7636	256
310-7637	254
	256
310-9412	482
310-9413	482
310-9414	482
310-9417	482
310-9420	482
310-9421	482
310-9422	482
310-9423	482
311-1956	521
	522
311-3384	775
311-4911	852
311-6567	458
	▶461
311-6568	▶458
311-7500	521
	522
311-8290	450
312-0781	587
312-1714	782
	873
312-4153	854
	856
312-5687	595
	609
	617
	624
	632
	640
312-5688	595
	609
	617
	624
	632
	640
312-6371	1
	▶521
312-8430	470
312-8629	758
313-2152	331
313-3996	33

▶ **PRIMARY REFERENCE**

PART NUMBER INDEX

Part	Page
313-5270	516
	517
313-5271	516
313-5510	595
	609
	617
	624
	632
	640
313-6008	780
314-3323	224
	▶851
314-4018	778
314-4860	1
	▶522
314-5694	503
	505
315-1251	▶239
	250
315-6094	538
315-7792	655
	664
316-5382	447
316-5384	447
316-5385	▶447
	451
316-6864	169
316-9769	430
316-9771	432
317-1009	398
317-2403	430
	432
317-6526	▶223
317-7684	239
317-9191	178
	182
318-2082	305
318-3040	721
	723
	733
	737
	739
	741
	745
318-3052	731
	743
318-3115	721
	723
	725
	727
	729
	731
	733
	737
	739
	741
	743
318-6433	475
319-0270	87
319-0271	87
319-1617	224
	▶852
319-6213	158
319-6234	67
	90
319-7078	1
	▶479
320-1515	243
320-8117	681
320-9861	331
	358
321-1455	286
321-1456	286
	▶287
321-1458	286
	▶481
321-3884	475
321-5236	879
321-5639	24
321-5967	436
	592
321-6706	853
321-6908	735
321-6987	▶322
	565
	566
321-7238	475
321-7241	475
321-7242	475
321-7260	475
321-7265	475
321-7266	475
321-8649	90
321-8671	152
321-8675	152
321-9712	852
322-1172	475
322-3161	845
322-3798	595
	624
	632
	640
	▶681
322-3834	▶853
322-6674	771
322-6675	771
323-1682	12
	▶28
323-1776	475
323-2184	475
323-2186	475
323-2187	475
323-2550	475
323-2551	475
323-3933	411
323-3935	411
323-7293	651
323-8139	▶271
323-8140	▶223
323-9531	454
323-9533	680
324-2694	223
	271
324-6125	771
324-6330	653
	664
324-6331	653
	664
324-8176	214
325-2588	721
	723
	725
	727
	729
	731
	733
	735
	737
	739
	741
	743
	745
325-4505	23
	▶24
325-5227	8
	▶776
325-9400	819
326-0516	776
326-0610	475
326-0612	475
326-1644	154
327-3871	360
	364
327-3872	360
	364
328-3655	436
	439
328-4984	802
	809
328-4985	812
328-5492	802
	810
	813
328-7073	544
	546
	548
328-7074	544
	546
	548
328-8755	771
328-9668	430
	432
329-0223	20
329-3061	59
329-5706	915
	920
329-5707	915
	920
330-3566	178
	180
	182
	184
330-3568	178
	182
330-5016	▶842
	886
330-7851	430
	432
330-9732	152
331-1080	160
	171
331-1081	160
	171
331-5007	40
	42
	43
331-5008	40
	42
	43
331-5009	40
	42
	43
331-5010	40
	42
	43
331-5011	40
	42
	43
331-5292	859
	▶860
331-7005	1
	▶651
331-7007	651
331-7530	▶797
331-9731	803
	810
	813
332-2152	47
332-3707	24
332-3946	1
	▶648
332-6968	648
333-6432	435
	▶436
333-8153	798
333-9310	▶400
	436
334-2679	400
334-2680	400
334-5370	6
	▶474
334-7786	784
	785
334-8049	▶245
	383
	385
335-3976	152
335-6328	20
335-9214	106
336-3545	227
	▶266
336-3566	266
336-4806	▶269
336-4808	269
336-8899	470
337-0072	331
337-4161	472
337-4162	472
337-4166	472
337-8764	331
338-3540	592
339-3845	472
339-6165	8
	▶835
339-6166	835
339-6167	836
339-6168	836
339-6169	836
339-6543	836
339-8176	69
339-8788	8
	▶836

▶ **PRIMARY REFERENCE**

PART NUMBER INDEX

Part	Page	Part	Page	Part	Page	Part	Page
340-0625	472	348-3547	485		▶9		▶528
340-0627	472	348-3549	485	351-2598	▶9	354-0196	508
340-7076	836	348-3551	485	351-2599	▶7	354-1627	459
341-0077	676	348-3553	485		9	354-4776	351
341-0078	676	348-3555	508	351-2601	▶9	354-4778	8
341-0117	675	348-3560	8	351-2740	595		▶351
341-0118	675		▶485		609	354-4811	352
341-1429	106	348-3563	485		617	354-5018	902
341-2719	109	348-6995	784		624	354-8028	229
341-3142	836		▶791		632	354-8415	352
342-4397	▶42	348-7240	241		640	354-8462	3
342-7222	475		242	351-3302	485		4
342-7223	475		243	351-3303	485		▶565
342-7923	32	348-7889	195	351-3549	485	355-1048	▶821
342-8961	775		198	351-5962	331	355-1050	223
	▶873	348-9255	▶536	351-5963	333		▶364
342-9559	267		548	351-7026	▶330	355-1051	8
342-9971	790	348-9257	▶537		775		▶356
	792	349-2555	▶1		776	355-2945	8
	794	349-3049	2	351-8250	8		▶472
343-1211	109		3		▶605	355-2952	8
343-1824	▶323		4	351-8251	8		▶160
	840		▶5		▶662	355-2955	472
343-5527	154	349-3050	▶5	351-8252	▶617	355-2959	160
343-6734	485		9	351-8254	565	355-3081	472
343-8140	474		10		▶624	355-3083	472
343-8739	538	349-3067	▶5	351-8255	▶505	355-3347	4
344-3460	▶243	349-3068	▶6	351-8256	▶508		▶186
344-7771	515	349-3069	▶6	352-1643	809	355-3348	▶187
344-7823	1		9	352-4780	7	355-5105	219
	▶675		10		▶903	355-5200	675
345-1871	675	349-3309	422	352-4781	903	355-9288	834
345-1999	402	349-3313	106	352-4783	903	355-9764	219
345-2888	654	349-5187	1	352-4784	903	356-0841	418
	664		▶443	352-4785	903	356-0955	59
345-3752	▶43	349-5332	475	352-4786	903	356-1379	508
	47	349-5335	526	352-4787	903	356-1381	508
345-3919	675	349-6141	443	352-5517	418	356-1521	505
345-3920	675	349-6142	1	353-2604	648	356-2955	1
345-4472	675		▶434		▶682		▶552
	▶749	349-6273	475	353-2605	654	356-2975	443
345-6946	749	349-6967	219		664		▶555
	▶750		220		▶684	356-2979	1
345-7209	579	349-6988	219	353-2794	268		▶416
346-4372	801		220	353-3817	376		443
346-4897	103	350-5390	▶8	353-4515	375	356-3071	3
347-1354	345	351-0925	466	353-5005	▶2		4
347-1545	▶178		468	353-5103	158		▶7
	187	351-2406	▶562	353-5124	106	356-3072	4
347-1546	▶180	351-2407	▶562		422		▶8
	187	351-2408	▶563	353-5125	106	356-3073	▶223
347-1547	▶182	351-2409	▶563		122	356-3607	▶792
	186	351-2410	▶564	353-5126	115	356-3609	▶793
347-1548	▶184	351-2411	▶564	353-5140	47	356-3723	4
	186	351-2412	▶565		115		▶565
347-1668	338	351-2594	2		117	356-4256	▶557
347-7290	595		3	353-5144	422	356-4257	▶548
	609		4	353-9855	531		557
	617		▶6	353-9856	528	356-8331	585
	624	351-2596	▶6	354-0045	13	356-8382	12
	632		9		▶343		▶152
	640		10	354-0048	343	357-0523	13
347-8616	402	351-2597	2	354-0133	508		15
348-0421	682		3		▶531		▶274
348-0424	475		4	354-0134	508	357-0673	152

▶ **PRIMARY REFERENCE**

PART NUMBER INDEX

Part	Page	Part	Page	Part	Page	Part	Page
357-3000	▶10						
357-3001	▶7						
	10						
357-5030	186						
	187						
	▶188						
357-5031	188						
357-6276	375						
357-6586	11						
	▶15						
357-6587	▶11						
	12						
357-9151	331						
	▶784						
358-3850	375						
358-4889	328						
358-4931	788						
358-6192	222						
358-6193	222						
358-7810	219						
358-7811	219						
358-7877	▶3						
360-2987	784						
	▶794						
360-6937	871						
360-6938	869						
360-7545	220						
360-7546	220						
360-7547	221						
360-7548	221						
360-7549	221						
360-7550	221						
360-7551	221						
360-7552	221						
360-7553	222						
360-7554	222						
361-1731	▶3						
361-2115	188						
361-2651	552						
361-3059	686						
361-4363	▶4						
361-4416	664						
362-6081	470						
362-6082	470						
362-6534	470						
363-0414	▶4						
364-1282	566						
	▶632						
364-2441	▶566						
364-3739	▶8						
366-3373	▶566						
366-3382	566						
	▶640						



© 2010 CATERPILLAR
ALL RIGHTS
RESERVED

CAT, CATERPILLAR, THEIR RESPECTIVE LOGOS, “CATERPILLAR YELLOW” AND THE POWER EDGE TRADE DRESS, AS WELL AS CORPORATE AND PRODUCT IDENTITY USED HEREIN, ARE TRADEMARKS OF CATERPILLAR AND MAY NOT BE USED WITHOUT PERMISSION.

PRINTED IN
U.S.A.