M0106591-00 (en-us)
July 2019

RUTHZIL TRATOR COMERCIAL DE PEÇAS LTDA 11 97083-6812 ROLANDO

Parts Manual

150 Motor Grader

B551-UP (Machine)
TX71-UP (Engine)
JP21-UP (Transmission)
TSZ1-UP (Transmission)

Powered By C7 Engine

Product and Dealer Information

Note: For product identification plate locations, see the section “Product Identification Information” in the Operation and Maintenance Manual.

Delivery Date: _____

Product Information

Model: _____

Product Identification Number: _____

Engine Serial Number: _____

Transmission Serial Number: _____

Generator Serial Number: _____

Attachment Serial Numbers: _____

Attachment Information: _____

Customer Equipment Number: _____

Dealer Equipment Number: _____

Dealer Information

Name: _____ Branch: _____

Address: _____

_____

_____

	Dealer Contact	Phone Number	Hours
Sales:	_____	_____	_____
Parts:	_____	_____	_____
Service:	_____	_____	_____

MEMORANDA

TABLE OF CONTENTS

NAME	PAGE
GENERAL INFORMATION	A6
REPAIR ALTERNATIVES	A9
SUPPLEMENTAL COOLANT ADDITIVES	A10
MAINTENANCE PARTS	A11
INDEX	A15
MACHINE ARRANGEMENT	1
COLD WEATHER AR	1
COMMON AR	2
CONVERSION AR-CERTIFICATION	3
OPTION AR-CAB	4
OPTION AR-COLD WEATHER	5
OPTION AR-ELECTRICAL	5
OPTION AR-GRADE CONTROL	5
OPTION AR-LIGHTING	6
OPTION AR-MACHINE	7
OPTION AR-REGIONAL	8
OPTION AR-SCARIFIER	9
OPTION AR-WORK TOOL	9
ROADING AR	10
SNOW AR-MOTOR GRADER	10
ENGINE ARRANGEMENT	11
ENGINE AR-COMPLETE	11
ENGINE AR-CORE	12
BASIC ENGINE	13
AIR COMPRESSOR AR	13
AIR COMPRESSOR GP	14
CAMSHAFT GP	17
COVER GP-CYLINDER BLOCK	18
COVER GP-FRONT HOUSING	19
COVER GP-VALVE MECHANISM	21
CRANKSHAFT GP	24
CYLINDER BLOCK GP	25
CYLINDER HEAD AS	29
CYLINDER HEAD GP	30
DAMPER & PULLEY GP	34
FASTENER GP-CYLINDER HEAD	35
FLYWHEEL GP	36
GEAR GP-FRONT	37
GEAR GP-REAR	38
HOUSING GP-FLYWHEEL	39
HOUSING GP-FRONT	41
LIFTER GP-VALVE	42
LIFTING GP-ENGINE	43
MOUNTING GP-ALTERNATOR	44
MOUNTING GP-ENGINE & XMSN	45
MOUNTING GP-FAN DRIVE	47
PAN GP-OIL	48
PISTON & ROD GP	49
PLUG GP-CYLINDER BLOCK	50
PLUG GP-ENGINE	51
ROCKER ARM GP	52
SEAL GP-CRANKSHAFT	54
SUPPORT GP-ENGINE	55
VALVE MECHANISM GP	56
LUBRICATION SYSTEM	58
ADAPTER GP-OIL LINE	58
BREATHER GP	59
FILTER GP-ENGINE OIL	60
FUMES DISPOSAL GP	62
GAUGE GP-OIL LEVEL (DIPSTICK)	63
LINES GP-ENGINE OIL	64
LINES GP-ENGINE OIL DRAIN	65
LINES GP-TURBOCHARGER OIL	66
MANIFOLD GP-ENGINE OIL	68
OIL CHANGE GP-HIGH SPEED	69
PUMP GP-ENGINE OIL	71
COOLING SYSTEM	73
COOLER GP-ENGINE OIL	73
COOLING AR	74
FAN & MOTOR GP	75
GUARD GP-FAN	78
LINES GP-WATER	79
PUMP AS-WATER	83
PUMP GP-WATER	84
RADIATOR GP	87
TANK GP-COOLANT	89
AIR INLET AND EXHAUST SYSTEM	91
ADAPTER GP-TURBOCHARGER	91
AFTERCOOLER GP-AIR	92
AIR CLEANER GP	93
COVER GP-AIR INLET	95
ELBOW GP-AIR INLET	97
LINES GP-AFTERCOOLER AIR	98
LINES GP-AIR	100
MANIFOLD GP-EXHAUST	102
MUFFLER GP	103
PRECLEANER GP	105
TURBOCHARGER GP	106
FUEL SYSTEM	108
BASE GP-FUEL FILTER	108
FILTER GP-FUEL	109
FILTER GP-WATER SEP & FUEL	111
INJECTOR GP-FUEL	112
KIT-FUEL PUMP	113
LINES GP-FUEL	114
LINES GP-FUEL FILTER	116
LINES GP-INJECTOR HYD PUMP	119
MOUNTING GP-FUEL TANK	120
PUMP & MTG GP-UNIT INJ HYD	122

TABLE OF CONTENTS

NAME PAGE

PUMP GP-FILTER & FUEL TRANSFER 123
PUMP GP-FUEL INJECTION 125
PUMP GP-FUEL TRANSFER 126
PUMP GP-UNIT INJECTOR HYD 127
REGULATOR GP-FUEL PRESSURE 129
TANK GP-FUEL 130

ELECTRICAL AND STARTING SYSTEM 140
ALARM GP 140
ALTERNATOR GP-CHARGING 141
APPLICATION GP-MONITOR 147
BATTERY & WIRING GP 148
CAMERA AR 152
CONTROL & MTG GP-ENGINE ELEK 153
CONTROL AR-ELECTRIC 154
CONTROL GP-COMMUNICATION 156
CONTROL GP-ELECTRONIC 164
CONTROL GP-ENGINE ELECTRONIC 165
CONTROL GP-UNPROGRAMMED 166
CONVERTER GP-ELECTRICAL 168
ELECTRONICS GP-IMPLEMENT 171
ELECTRONICS GP-MONITOR 171
ELECTRONICS GP-POWER TRAIN 174
GRADE CONTROL AR 174
GRADE CONTROL GP 176
GROUND GP-ELECTRICAL 177
HARNESS AS-CAB 178
HARNESS AS-CHASSIS 182
HARNESS AS-ENGINE 182
HARNESS AS-FRONT 184
HARNESS AS-LIGHTING 185
HARNESS AS-RADIO 186
HARNESS AS-REAR 187
HARNESS AS-SENSOR 189
HARNESS AS-SOLENOID 190
HARNESS AS-SWITCH 191
HARNESS AS-VALVE 192
HARNESS AS-WIRING 192
HEATER GP-JACKET WATER 194
INSTALLATION GP-SECURITY 196
INSTALLATION GP-WARNING BEACON 198
KIT-SENSOR & MOUNTING 199
LAMP GP 200
LAMP GP-DOME 201
LAMP GP-FLOOD 202
LAMP GP-HEAD 210
LAMP GP-HEAD & SIGNAL 211
LAMP GP-MARKER 215
LAMP GP-REGISTRATION PLATE 216
LAMP GP-SIGNAL 218
LAMP GP-WARNING BEACON 220
LIGHTING AR-ROADING 221
LIGHTING GP-FLOOD 226
LIGHTING GP-ROADING 232
LIGHTING GP-WARNING BEACON 237
MOTOR GP-ELECTRIC 239
MOUNTING GP-GRADE CONTROL 240
MOUNTING GP-LIGHTING 241
PANEL GP-CIRCUIT BREAKER 245
POWER SUPPLY GP 250
SENSOR & MOUNTING GP 251
SENSOR GP-ENGINE 252
SENSOR GP-POSITION 254
SENSOR GP-PRESSURE 255
SENSOR GP-SPEED 257
SENSOR GP-TEMPERATURE 260
STARTING AID GP-ETHER 263
STARTING MOTOR GP-ELECTRIC 265
SWITCH GP-DISCONNECT 267
SWITCH GP-LIGHT 268
SWITCH GP-LIMIT 269
SWITCH GP-MAGNETIC 270
SWITCH GP-PRESSURE 275
SWITCH GP-ROCKER 277
SWITCH GP-WIPER 281
VALVE GP-ETHER STARTING 283
WARNING GP-BACKUP 284
WIRING GP-AUXILIARY 285
WIRING GP-CAB 286
WIRING GP-CAMERA 293
WIRING GP-ELECTRONIC CONTROL 295
WIRING GP-FAN 299
WIRING GP-FRONT 300
WIRING GP-GRADE CONTROL 305
WIRING GP-HEATER 308
WIRING GP-MONITOR 309
WIRING GP-POWER RECEPTACLE 311
WIRING GP-REAR 313
WIRING GP-REAR LIGHTING 326
WIRING GP-SECONDARY STEERING 330
WIRING GP-SENSOR 331

POWER TRAIN 337
AUTOSHIFT AR 337
AXLE AR-FRONT 337
AXLE GP-FRONT 338
AXLE GP-REAR 344
CARRIER GP-FINAL DRIVE 346
CASE & PARTS GP-PLANETARY 347
CHAIN GP-DRIVE 351
CLUTCH GP-TRANSMISSION 352
CONTROL GP-DIFFERENTIAL LOCK 360
CONTROL GP-TRANSMISSION HYD 362
COOLER GP-TRANSMISSION OIL 366
COUPLING GP-TORSIONAL 367

TABLE OF CONTENTS

NAME	PAGE
COVER GP-SHIPPING	368
DIFFERENTIAL & BEVEL GEAR GP	370
DIFFERENTIAL GP	372
DRIVE GP-FINAL	374
FILLER GP-POWER TRAIN OIL	378
FILTER & MTG GP-TRANSMISSION	380
FILTER GP-OIL	382
LINES GP-LUBRICATION	384
LINES GP-TRANSMISSION OIL	386
MOUNTING GP-WHEEL	392
MOUNTING GP-XMSN OIL COOLER	393
POWER TRAIN AR	394
PUMP & MTG GP-GEAR	395
PUMP GP-GEAR	396
RIM GP-DEMOUNTABLE	398
SCREEN GP-MAGNETIC	400
SHAFT GP-DRIVE	401
SHAFT GP-INPUT	402
TANDEM & COVER GP	403
TRANSMISSION AR	405
TUBE GP-SHIPPING	406
UNIVERSAL JOINT GP	407
VALVE & MTG GP-SOLENOID	411
VALVE GP-MODULATING	412
VALVE GP-RELIEF	417
VALVE GP-SOLENOID	419
WHEEL & TIRE AR	422
WHEEL & TIRE GP	423
WHEEL AR	427
WHEEL GP	428
FRAME AND BODY	435
CONVERSION GP-TOWING HITCH	435
COVER GP-PROTECTION	436
ENCLOSURE GP-ENGINE	438
FASTENER GP-ENCLOSURE	441
FENDER & SUPPORT GP	442
FRAME GP-FRONT	446
FRAME GP-REAR	449
GUARD GP-BOTTOM	450
GUARD GP-CYLINDER	452
GUARD GP-DEBRIS	453
GUARD GP-FUEL TANK	454
GUARD GP-LINES	455
GUARD GP-SENSOR	457
HANDRAIL GP	458
HITCH GP-ARTICULATING	459
HITCH GP-TOWING	461
HOOD GP	463
LINES GP-LUBRICATION	464
LINK GP-STEERING	465
MOUNTING GP-AXLE	466
PLATE AS-TIE DOWN	468
PLATE GP-MOUNTING	469
PLATE GP-PUSH	470
REFLECTOR GP	471
SERVICE CENTER AR	474
SHIELD GP-ENGINE COMPARTMENT	475
STEP GP	477
SUPPORT GP-RADIATOR	478
SUPPRESSION GP-SOUND	480
WALKWAY GP	483
BRAKING SYSTEM	484
ACCUMULATOR GP-BRAKE	484
BRAKE GP-PARKING	490
BRAKE GP-SERVICE	492
CONTROL GP-SERVICE BRAKE	496
LINES GP-ACCUMULATOR	500
LINES GP-AIR TANK	506
LINES GP-SERVICE BRAKE	508
HYDRAULIC SYSTEM	515
ACCUMULATOR GP-BLADE CUSHION	515
BASE GP-OIL FILTER	518
CONTROL AR-HYDRAULIC	519
CYLINDER & MTG GP-ARTICULATION	526
CYLINDER & MTG GP-BLADE LIFT	528
CYLINDER & MTG GP-BLADE TIP	529
CYLINDER & MTG GP-CENTERSHIFT	530
CYLINDER & MTG GP-SCARIFIER	531
CYLINDER & MTG GP-SIDESHIFT	532
CYLINDER & MTG GP-STEERING	533
CYLINDER & MTG GP-WHEEL LEAN	534
CYLINDER GP-ARTICULATION	535
CYLINDER GP-BLADE TIP	537
CYLINDER GP-CENTERSHIFT	539
CYLINDER GP-LIFT	541
CYLINDER GP-RIPPER	542
CYLINDER GP-SCARIFIER	543
CYLINDER GP-SIDESHIFT	545
CYLINDER GP-STEERING	547
CYLINDER GP-WHEEL LEAN	549
DRIVE GP-CIRCLE	551
FILTER & MTG GP-HYDRAULIC	555
FILTER GP-OIL	557
LINES GP-HYDRAULIC	559
LINES GP-HYDRAULIC FAN	588
LINES GP-HYDRAULIC OIL COOLER	593
LINES GP-PUMP	595
LINES GP-RIPPER	607
LINES GP-SECONDARY STEERING	610
LINES GP-STEERING	612
LOCK GP-CENTERSHIFT	617

TABLE OF CONTENTS

NAME PAGE

MANIFOLD GP-CONTROL 618
MOTOR GP-GEROTOR 621
MOUNTING GP-VALVE 623
PUMP & MTG GP-PISTON 624
PUMP & MTG GP-SECONDARY STEER 626
PUMP GP-GEAR 627
PUMP GP-PISTON 628
ROTATING GP-PUMP 632
SWIVEL GP 634
TANK & MTG GP-HYDRAULIC 639
TANK GP-HYDRAULIC 641
VALVE GP-BANK 3 642
VALVE GP-BANK 4 645
VALVE GP-BANK 5 650
VALVE GP-BANK 6 658
VALVE GP-BANK 7 676
VALVE GP-BANK 8 687
VALVE GP-CHECK 692
VALVE GP-CONTROL 693
VALVE GP-DIVERTER 731
VALVE GP-PRESSURE REDUCING 732
VALVE GP-PUMP CONTROL 733
VALVE GP-RELIEF 736
VALVE GP-SHUTOFF 738
VALVE GP-SHUTTLE 739
VALVE GP-SOLENOID 740
VALVE GP-STEERING 743

IMPLEMENTS 744
CIRCLE GP 744
DRAWBAR GP 746

OPERATOR STATION 749
AIR CONDITIONER & MOUNTING GP 749
AIR CONDITIONER AR 750
AIR CONDITIONER GP 751
ARMREST GP 755
CAB AR 757
COMPRESSOR & MTG GP-REFRIG 761
COMPRESSOR GP-REFRIGERANT 762
CONDENSER & MTG GP-REFRIGERANT 763
CONTROL & MTG GP-JOYSTICK 764
CONTROL GP-AIR & TEMPERATURE 766
CONTROL GP-ELECTROHYDRAULIC 767
CONTROL GP-JOYSTICK 776
COVER GP-CAB 783
CUSHION GP-ARM 784
DISPLAY GP-CAMERA 785
DOOR GP-CAB 786
DUCT & FILTER GP-CAB AIR 794
FAN GP-CIRCULATING 796
HOUSING GP-SEAT SUSPENSION 799

NAME PAGE

LEVER GP-CAB DOOR 802
LINER GP-CAB 803
LINES GP-AIR CONDITIONER 805
LINES GP-HEATER 809
LITERATURE GP 812
MIRROR GP 813
MIRROR GP-REAR VIEW 816
MOTOR GP-WINDOW WIPER 821
MOUNTING GP-ANTENNA 823
MOUNTING GP-CAB 824
MOUNTING GP-CONTROL 826
PANEL GP-INSTRUMENT 827
PEDAL GP-BRAKE, XMSN & GOV 829
RADIO GP 831
ROPS GP 833
SEAT & MOUNTING GP 834
SEAT BELT GP 835
SEAT GP 836
SEAT GP-SUSPENSION 838
SUPPORT GP-CONTROL 840
SUSPENSION GP-SEAT 844
TANK GP-WINDOW WASHER 849
TRIM GP-CAB 850
WINDOW GP-CAB 855
WINDOW GP-VENT 858
WIPER & WASHER GP-WINDOW 859
WIPER GP-WINDOW 861

WORK TOOLS 868
BIT GP-END 868
BLADE GP 870
BLADE GP-BULLDOZER 873
BRACE GP 875
BRACKET GP-SCARIFIER 876
CYLINDER GP-HYDRAULIC 877
EDGE GP-CUTTING 880
EXTENSION GP-BLADE 880
LIFT GP-BLADE 883
LIFT GP-WORK TOOL 887
MOUNTING GP-RIPPER 890
MOUNTING GP-SNOW WING 894
RIPPER AR 896
RIPPER GP 898
SCARIFIER AR 900
SCARIFIER GP 901
TOOTH GP-RIPPER 904
TOOTH GP-SCARIFIER 905

SERVICE EQUIPMENT AND SUPPLIES 906
BOX GP-TOOL 906
FILM GP 907
FILM GP-INTERNATIONAL 910
FILM GP-U.S. 911
PLATE & FILM GP 912
PLATE-SERIAL NUMBER 925

TABLE OF CONTENTS

NAME	PAGE	NAME	PAGE
TANK GP-AIR	926		
PART NUMBER INDEX	B1		

1. MACHINE IDENTIFICATION

Cat machines are identified by Product Identification Numbers (PIN). Some components included in a machine may be identified by Serial Numbers (S/N). Typical components that will be serialized include engines, transmissions, bulldozers, and rippers. The machine and engine are further identified by arrangement numbers and in some cases modification numbers. These numbers are shown on the product identification plate(s) and on the master plate in the operator's compartment.

Cat dealers need all of these numbers to determine accurate parts identification.

Effective First Quarter 2001 the Cat Product Identification Number (PIN) changed from 8 to 17 characters. In an effort to provide uniform equipment identification, Caterpillar and other construction equipment manufacturers are moving to comply with the latest version of the product identification numbering standard. Non-road machine PINs are defined by ISO 10261. The new PIN format will apply to all Cat machines and generator sets. The PIN plates and frame marking will display the 17 character PIN. The new format will look like the following:

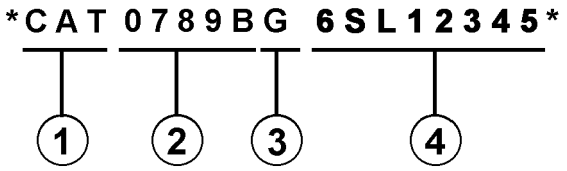

Where:

1. Caterpillar's World Manufacturing Code (characters 1-3)

2. Machine Descriptor (characters 4-8)

3. Check Character (character 9)

4. Machine Indicator Section (MIS) or Product Sequence Number (characters 10-17). These were previously referred to as the Serial Number.

Machines and generator sets produced before First Quarter 2001 will maintain their 8 character PIN format.

Components such as engines, transmissions, axles, etc. and work tools will continue to use an 8 character Serial Number (S/N).

2. ORDERING PARTS

⚠ WARNING

When replacement parts are required for this product Caterpillar recommends using Caterpillar replacement parts or parts with equivalent specifications including, but not limited to, physical dimensions, type, strength and material.

Failure to heed this warning can lead to premature failures, product damage, personal injury or death.

Quality Cat replacement parts are available from Cat dealers throughout the world. Their parts inventories are up to date and include all parts normally required to protect your investment in Cat machines. Dealers may offer repair kits or remanufactured parts to allow selection of the most effective repair alternative for a particular situation. When ordering parts, your order should specify the quantity, part number, part name, and the serial number/product identification number of the machine for which the parts are needed.

3. PARTS MANUAL ORGANIZATION

Product information in this manual is presented as "information elements" that represent all of the components for the specific model. Engine Arrangement and Seat Group are examples of information elements. The information elements are organized alphabetically by part name and secondarily by part number within each major section of the manual.

4. TABLE OF CONTENTS

A table of contents (TOC) is found at the beginning of the manual. The TOC lists each section of the manual with a complete list of all information elements organized as they appear in the manual. Page numbers are provided for quick reference to detailed parts identification illustrations and serviceable consist lists.

5. MAINTENANCE PARTS INDEX

The Maintenance Parts Index, located near the beginning of the manual, references most frequently used maintenance part numbers, providing description, quantity, usage and page number. This information is organized alphabetically by part description.

6. INDEX

The index located near the front of the manual is an alphabetical listing of all information elements included in the manual. Page numbers are provided for quick reference to detailed parts identification illustrations and serviceable consist lists.

7. PART NUMBER INDEX

A numerical index listing all part numbers and the corresponding page number(s) appears at the back of the manual.

8. CAPTIONS

Captions located at the beginning of each information element identify the part number and part name along with additional descriptive information. PIN and S/N information found in each caption should be used to select correct information for a specific machine. Field replacement options, identification of optional attachment components, and where used ("part of") information is also provided.

The first line of a caption is shown in larger type font to indicate the beginning of an information element. Captions for additional pages that may be required to illustrate an information element will be shown in standard type font and will include the term (contd.).

9. NON-SERVICED PARTS

In some instances it is necessary to display non-serviced parts that are a link to a lower level serviceable consist lists. These non-serviced part numbers are shown in italic type indicating that they are not available.

10. PARTS LIST REFERENCE NUMBERS

Numbers shown in the Ref No column correspond to numbers used in the associated graphic(s). An alphabetic suffix may be added to a reference number to identify lower level consist items. Numbers shown in the Graphic Ref column refer to the graphic number identifier displayed in the lower left corner of each illustration. The Graphic Ref number may be used in combination with the item Ref No to determine the correct part number. There may be intentional omission of a Ref No in a consist list as information is updated to reflect the latest serviceable part numbers.

11. INDENTED PART NAMES

When a part name is indented in a parts list, it is part of (included in) the group or assembly under which it is indented.

12. ILLUSTRATION REFERENCE LETTERS

When necessary, illustrations contain reference letters (A, B, C etc.) that are intended to track lines and harnesses from one point to another. They are also used to show where to reconnect illustrations that have been separated.

13. ABBREVIATIONS AND SYMBOLS

O.D. – Outside Diameter
I.D. – Inside Diameter
A – Not Part Of This Group
B – Use As Required
C – Change From Previous Type
D – Order By The Meter
E – Order By The Centimeter
F – Not Shown
G – Order By The Inch
I – Refer To Hydraulic Information System
M – Metric Part
R – Remfg Part May Be Available
Y – Separate Illustration
Z – Not Serviced Separately

14. DESCRIPTION OF TYPE CHANGES

Type - A type is defined as any configuration change that requires an additional Information Element for an Arrangement, Group, or Assembly. If serial number breaks for types are not available, a type # (Type 1, Type 2, etc.) will be displayed in the caption. These "type" changes are identified with a "C" note (change from previous type) in the Parts List. Only the "types" that apply to this Parts Manual will be included. Additional types may exist causing "C" notes to appear on an Information Element when no other types are shown.

15.<END>

This symbol indicates the end of an information element.

NOTE:

Continuing improvement and advancement of product design may cause changes to your machine which may not be included in this publication. Whenever a question arises regarding your Cat product or this publication, please consult your Cat dealer for the latest available information.

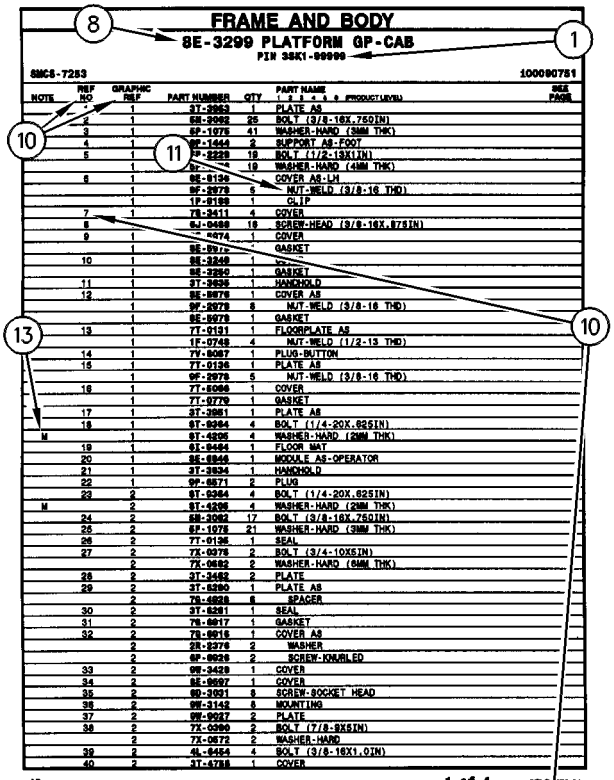

FRAME AND BODY

8E-3299 PLATFORM GP-CAB

PIN 38K1-00999

SMCS-7283 100090751

NOTE	REF NO	GRAPHIC REF	PART NUMBER	QTY	PART NAME 1 2 3 4 5 6 (PRODUCT LEVEL)	SEE PAGE
	1	1	3T-3963	1	PLATE AS	
	2	1	6M-3062	25	BOLT (3/8-16X.75DIN)	
	3	1	5P-1078	41	WASHER-HARD (3MM THK)	
	4	1	8E-1444	2	SUPPORT AS-FOOT	
	5	1	7P-2228	18	BOLT (1/2-13X1IN)	
		1	5P-[illegible]	18	WASHER-HARD (4MM THK)	
	6	1	8E-8136	1	COVER AS-LH	
		1	9F-2979	6	NUT-WELD (3/8-16 THD)	
		1	1F-8188	1	CLIP	
	7	1	7S-3411	4	COVER	
	8		5J-0488	18	SCREW-HEAD (3/8-16X.875IN)	
	9	1	[illegible]-0474	1	COVER	
		1	8E-8[illegible]	1	GASKET	
	10	1	8E-3249	1	[illegible]	
		1	8E-3250	1	GASKET	
	11	1	3T-3935	1	HANDHOLD	
	12	1	8E-8078	1	COVER AS	
		1	9F-2979	6	NUT-WELD (3/8-16 THD)	
		1	8E-8079	1	GASKET	
	13	1	7T-0131	1	FLOORPLATE AS	
		1	1F-0748	4	NUT-WELD (1/2-13 THD)	
	14	1	7V-8067	1	PLUG-BUTTON	
	15	1	7T-0136	1	PLATE AS	
		1	9F-2979	5	NUT-WELD (3/8-16 THD)	
	16	1	7T-8066	1	COVER	
		1	7T-0779	1	GASKET	
	17	1	3T-3961	1	PLATE AS	
	18	1	6T-9364	4	BOLT (1/4-20X.625IN)	
M		1	6T-4236	4	WASHER-HARD (2MM THK)	
	19	1	6T-8464	1	FLOOR MAT	
	20	1	8E-8946	1	MODULE AS-OPERATOR	
	21	1	3T-3934	1	HANDHOLD	
	22	1	9F-8571	2	PLUG	
	23	2	6T-9364	4	BOLT (1/4-20X.625IN)	
M		2	6T-4236	4	WASHER-HARD (2MM THK)	
	24	2	6M-3062	17	BOLT (3/8-16X.75DIN)	
	25	2	5P-1078	21	WASHER-HARD (3MM THK)	
	26	2	7T-0136	1	SEAL	
	27	2	7X-0378	2	BOLT (3/4-10X5IN)	
		2	7X-0682	2	WASHER-HARD (6MM THK)	
	28	2	3T-3462	2	PLATE	
	29	2	3T-8280	1	PLATE AS	
		2	7S-4828	6	SPACER	
	30	2	3T-8281	1	SEAL	
	31	2	7S-8817	1	GASKET	
	32	2	7S-8816	1	COVER AS	
		2	2S-2376	2	WASHER	
		2	6P-8626	2	SCREW-KNURLED	
	33	2	9W-3429	1	COVER	
	34	2	8E-8697	1	COVER	
	35	2	9D-3931	8	SCREW-SOCKET HEAD	
	36	2	9W-3142	8	MOUNTING	
	37	2	9W-8927	2	PLATE	
	38	2	7X-0290	2	BOLT (7/8-9X5IN)	
		2	7X-0572	2	WASHER-HARD	
	39	2	4L-6454	4	BOLT (3/8-16X1.0IN)	
	40	2	3T-4788	1	COVER	

12 FRAME AND BODY 1 of 4 SELP[illegible]70-01

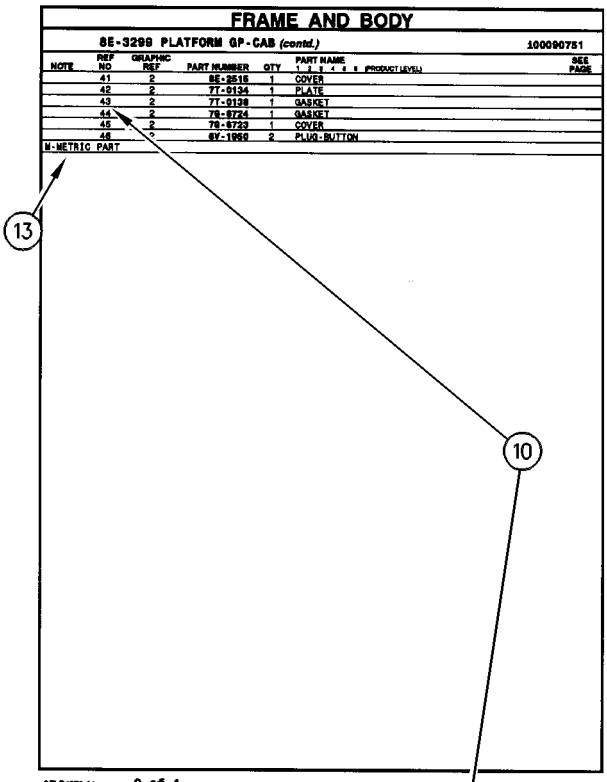

FRAME AND BODY

8E-3299 PLATFORM GP-CAB (contd.) 100090751

NOTE	REF NO	GRAPHIC REF	PART NUMBER	QTY	PART NAME 1 2 3 4 5 6 (PRODUCT LEVEL)	SEE PAGE
	41	2	8E-2516	1	COVER	
	42	2	7T-0134	1	PLATE	
	43	2	7T-0138	1	GASKET	
	44	2	7S-8724	1	GASKET	
	45	2	7S-8723	1	COVER	
	46	2	6V-1960	2	PLUG-BUTTON	

M-METRIC PART

SELP4570-01 2 of 4 FRAME AND BODY 13

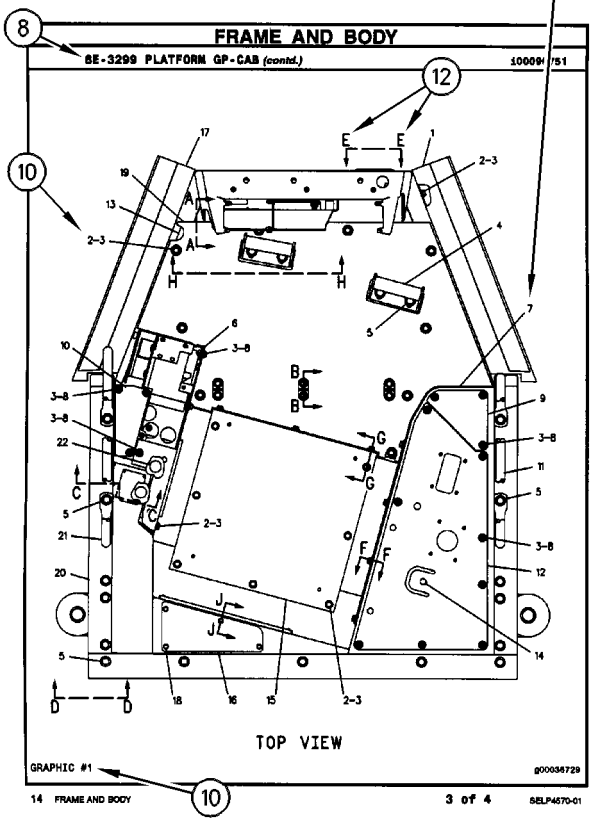

FRAME AND BODY

8E-3299 PLATFORM GP-CAB (contd.) 100090751

TOP VIEW

GRAPHIC #1 g00036729

14 FRAME AND BODY 3 of 4 SELP4570-01

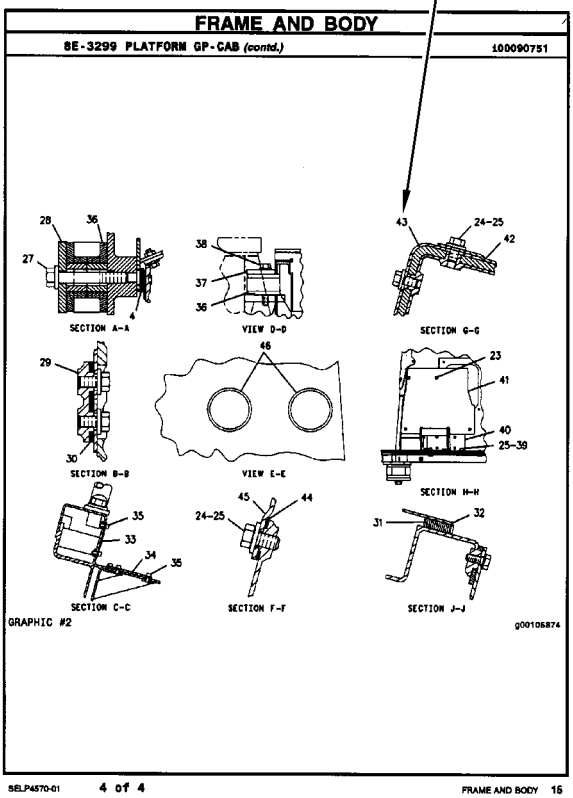

FRAME AND BODY

8E-3299 PLATFORM GP-CAB (contd.) 100090751

SECTION A-A

VIEW D-D

SECTION G-G

SECTION B-B

VIEW E-E

SECTION H-H

SECTION C-C

SECTION F-F

SECTION J-J

GRAPHIC #2 g00105874

SELP4570-01 4 of 4 FRAME AND BODY 15

REMANUFACTURED COMPONENTS

As an option when making repairs consider Cat Remanufactured Components. Components that are available through the Cat Remanufactured Program are identified three ways in the parts book:

- with the letter R in the note field of the parts list
- with an R* at the beginning of the first line of the caption
- with an *R at the end of the first line of the caption

Typical components included in the Remanufacturing Program include:

ALTERNATORS
CONNECTING RODS
CRANKSHAFTS - UNDERSIZE
CRANKSHAFTS - UPGRADE TO NEW
CYLINDER HEADS
ELECTRONIC CONTROL MODULES (ECM)
ELECTRONIC SENSORS
FUEL INJECTORS
FUEL NOZZLES
FUEL PUMPS
GOVERNORS
OIL PUMPS
PISTONS
SHORT BLOCKS
STARTERS
TURBOCHARGERS - COMPLETE
TURBOCHARGER CARTRIDGES
WATER PUMPS

Cat Remanufactured engines for many engine arrangements are also available.

SUPPLEMENTAL COOLANT ADDITIVES

CUSTOMER BENEFITS:

Protects against cavitation, foam, erosion, corrosion, and scale buildup in cooling systems.

- Provides measured coolant conditioner.

DESCRIPTION:

Additives deplete from the coolant with normal operation. For this reason, Supplemental Coolant Additives (SCA) must be added to all heavy duty coolants at regular intervals. In addition, when not using a fully formulated, pre-charged antifreeze, like Cat DEAC, an initial charge of SCA must be added to the cooling system. The amount of SCA added to the system is dependent on the capacity of the system.

The SCA for initial fill is provided as a liquid. SCA's for maintenance intervals are available in liquid form and as a spin-on element. (No Spin-on available for 3600 Family of Engines)

NOTE:

The amount of SCA added at initial fill is not the same as the amount added at maintenance intervals.

The coolant additive elements can be used with any ethylene or propylene glycol type antifreeze which meets ASTM D4985 or ASTM D5345 Specifications.

NOTE:

For use with standard heavy duty coolant only, not for use with Extended Life Coolant.

PARTS NEEDED:

Cooling System Capacity		Liquid SCA at Initial Fill	Liquid SCA at Maintenance*	Spin-on SCA Maintenance Element*
Liters	Gallons			
22-30	(6-8)	3P-2044 (1)	6V-3542 (1)	111-2370 (1)
30-38	(8-10)	3P-2044 (1) 6V-3542 (1)	111-2372 (1)	111-2369 (1)
38-49	(10-13)	3P-2044 (1) 8T-1589 (1)	111-2372 (1)	111-2369 (1)
49-64	(13-17)	3P-2044 (2)	8T-1589 (1)	9N-3368 (1)
64-83	(17-22)	3P-2044 (2) 8T-1589 (1)	111-2372 (1) 6V-3542 (1)	111-2371 (1)
83-114	(22-30)	3P-2044 (3) 8T-1589 (1)	3P-2044 (1)	9N-3718 (1)
114-163	(30-43)	3P-2044 (5)	3P-2044 (1) 6V-3542 (1)	111-2371 (2)
163-242	(43-64)	3P-2044 (8)	3P-2044 (2)	9N-3718 (2)

* Normal maintenance period is 250 hrs. See your Operation and Maintenance Manual for complete coolant maintenance instructions.

( ) Indicates quantity required.

MAINTENANCE PARTS

DESCRIPTION	PART NUMBER	QTY	WHERE USED	PAGE
AIR INLET AND EXHAUST SYSTEM				
FILTER ELEMENT AS-AIR (SECONDARY)	245-6376	1	AIR CLEANER GP	94
FILTER ELEMENT-AIR (PRIMARY)	245-6375	1	AIR CLEANER GP	94
BASIC ENGINE				
CAP AS-ENGINE OIL FILLER	241-5645	1	COVER GP-FRONT HOUSING	20
SEAL-VALVE COVER	272-0388	1	COVER GP-VALVE MECHANISM	23
COOLING SYSTEM				
CAP AS-COOLANT TANK	345-1237	1	TANK GP-COOLANT	89
REGULATOR-WATER TEMPERATURE (97-DEG C) (COOLANT)	115-4223	2	LINES GP-WATER	79
ELECTRICAL AND STARTING SYSTEM				
BATTERY AS (12-VOLT, 1125-CCA) (WET)	153-5700	2	BATTERY & WIRING GP	150
BELT-SERPENTINE	348-7886	1	ALTERNATOR GP-CHARGING	143
		1	ALTERNATOR GP-CHARGING	145
CAP AS-FILLER (7/8-9-THD) (NEGATIVE)	123-1373	6	BATTERY & WIRING GP	148
CAP AS-FILLER (POSITIVE)	461-5232	6	BATTERY & WIRING GP	148
CIRCUIT BREAKER AS (15-AMPERE, AUTOMATIC RESET) (FLOODLIGHTS, LH)	3T-2662	1	PANEL GP-CIRCUIT BREAKER	246
CIRCUIT BREAKER AS (15-AMPERE, AUTOMATIC RESET) (FLOODLIGHTS, RH)	3T-2662	1	PANEL GP-CIRCUIT BREAKER	246
CIRCUIT BREAKER AS (15-AMPERE, MANUAL RESET) (WORK LIGHTS, FRONT)	280-2709	1	WIRING GP-CAB	286
CIRCUIT BREAKER AS (15-AMPERE) (KEY SWITCH)	230-9174	1	PANEL GP-CIRCUIT BREAKER	246
CIRCUIT BREAKER AS (15-AMPERE) (TRANSMISSION CONTROL)	230-9174	1	PANEL GP-CIRCUIT BREAKER	246
CIRCUIT BREAKER AS (150-AMPERE) (ALTERNATOR)	171-2215	1	PANEL GP-CIRCUIT BREAKER	245
CIRCUIT BREAKER AS (20-AMPERE, MANUAL RESET) (BLOWER)	280-2710	1	WIRING GP-CAB	286
CIRCUIT BREAKER AS (20-AMPERE, MANUAL RESET) (HVAC)	280-2710	1	WIRING GP-CAB	286
CIRCUIT BREAKER AS (20-AMPERE) (ACCUGRADE)	288-3687	1	PANEL GP-CIRCUIT BREAKER	246
CIRCUIT BREAKER AS (20-AMPERE) (ENGINE CONTROL)	288-3687	1	PANEL GP-CIRCUIT BREAKER	246
CIRCUIT BREAKER AS (80-AMPERE) (LOAD)	171-2210	1	PANEL GP-CIRCUIT BREAKER	245
CIRCUIT BREAKER AS (80-AMPERE) (MAIN)	171-2210	1	PANEL GP-CIRCUIT BREAKER	245
FILTER (ETHER START)	358-4889	1	VALVE GP-ETHER STARTING	283
FLASHER AS (12/24-VOLT) (TURN SIGNAL)	431-8735	1	WIRING GP-CAB	287

MAINTENANCE PARTS

DESCRIPTION	PART NUMBER	QTY	WHERE USED	PAGE
FUSE (10-AMPERE)	113-8490	17	WIRING GP-CAB	286
FUSE (15-AMPERE)	113-8491	19	WIRING GP-CAB	286
FUSE (20-AMPERE)	113-8492	2	WIRING GP-CAB	286
FUSE (7.5-AMPERE)	141-2760	4	WIRING GP-CAB	286
KEY (BATTERY DISCONNECT)	8H-5306	1	SWITCH GP-DISCONNECT	267
KEY AS-ELECTRONIC (SECURITY)	206-5162	2	INSTALLATION GP-SECURITY	196
LAMP (24-VOLT, 21-WATT)	8U-2622	1	LAMP GP	200
LAMP (24-VOLT, 5-WATT)	130-3515	1	LAMP GP-HEAD & SIGNAL	211
		1	LAMP GP-HEAD & SIGNAL	212
	5C-9583	1	LAMP GP-REGISTRATION PLATE	216
LAMP (24-VOLT, 5-WATT) (REGISTRATION PLATE)	5C-9583	1	LAMP GP-REGISTRATION PLATE	217
LAMP (24-VOLT, 75/70-WATT)	9X-3465	1	LAMP GP-HEAD & SIGNAL	211
		1	LAMP GP-HEAD & SIGNAL	212
LAMP (24-VOLT)	9X-4494	1	LAMP GP-MARKER	215
LAMP AS-LED (24-VOLT, GREEN)	250-2299	1	SWITCH GP-ROCKER	277
	279-5308	1	WIRING GP-CAB	286
LAMP AS-LED (24-VOLT, RED)	242-3282	1	INSTALLATION GP-SECURITY	196
LAMP GP-FLOOD (9-32-VOLT, 1200 LM, LED)	550-2445	2	LAMP GP-FLOOD	209
		2	LIGHTING GP-FLOOD	229
		2	LIGHTING GP-FLOOD	230
		4	LIGHTING GP-ROADING	236
LAMP GP-FLOOD (9-32-VOLT, 1200 LM, LED) (CAB ROOF)	550-2445	2	LIGHTING GP-FLOOD	231
LAMP GP-FLOOD (9-32-VOLT, 1200 LM, LED) (NARROW BEAM)	550-2446	2	LIGHTING GP-ROADING	236
LAMP-HALOGEN (24-VOLT, 70-WATT)	351-9918	1	LAMP GP-FLOOD	202
		1	LAMP GP-FLOOD	204
		1	LAMP GP-FLOOD	205
		1	LAMP GP-FLOOD	206
		1	LAMP GP-HEAD	210
FUEL SYSTEM				
CAP AS-FUEL (LOCKABLE, VENTED)	349-7059	1	TANK GP-FUEL	134
		1	TANK GP-FUEL	137
FILTER (STRAINER)	357-5031	1	TANK GP-FUEL	139
FILTER (STRAINER) (FUEL)	357-5031	1	TANK GP-FUEL	131
FILTER AS-WATER SEP & FUEL (PRIMARY)	326-1644	1	FILTER GP-WATER SEP & FUEL	111
FILTER-FUEL (ADVANCED EFFICIENCY)	1R-0749	1	FILTER GP-FUEL	109
	1R-0762	1	BASE GP-FUEL FILTER	108
PLUG-DRAIN	361-2115	1	TANK GP-FUEL	131
		1	TANK GP-FUEL	139
HYDRAULIC SYSTEM				
CAP AS	8W-2842	4	CYLINDER & MTG GP-BLADE LIFT	528
CAP AS-FILLER (LOCKABLE)	142-8937	1	TANK GP-HYDRAULIC	641

DESCRIPTION	PART NUMBER	QTY	WHERE USED	PAGE
FILTER ELEMENT-OIL (ULTRA HIGH EFFICIENCY) (HYDRAULIC TANK)	338-3540	1	FILTER GP-OIL	558
FILTER-OIL (ADVANCED EFFICIENCY)	1G-8878	1	FILTER GP-OIL	557
SCREEN (HYDRAULIC) (CONTROL MANIFOLD)	6E-5066	1	MANIFOLD GP-CONTROL	618
SEAL-INTEGRAL	372-0918	3	VALVE GP-BANK 3	643
		3	VALVE GP-BANK 4	646
		4	VALVE GP-BANK 4	646
		4	VALVE GP-BANK 5	651
		6	VALVE GP-BANK 5	651
		4	VALVE GP-BANK 5	654
		5	VALVE GP-BANK 5	654
		4	VALVE GP-BANK 6	659
		7	VALVE GP-BANK 6	659
		4	VALVE GP-BANK 6	663
		7	VALVE GP-BANK 6	663
		4	VALVE GP-BANK 6	668
		6	VALVE GP-BANK 6	668
		4	VALVE GP-BANK 6	672
		6	VALVE GP-BANK 6	672
		5	VALVE GP-BANK 7	677
		8	VALVE GP-BANK 7	677
		5	VALVE GP-BANK 7	682
		8	VALVE GP-BANK 7	682
		5	VALVE GP-BANK 8	688
		9	VALVE GP-BANK 8	688
		5	VALVE GP-CONTROL	724
		9	VALVE GP-CONTROL	724
STRAINER (HYDRAULIC TANK)	206-8818	1	TANK GP-HYDRAULIC	641
LUBRICATION SYSTEM				
BREATHER (CRANKCASE)	164-0210	1	BREATHER GP	59
FILTER AS-ENGINE OIL (ADVANCED EFFICIENCY)	1R-1807	1	FILTER GP-ENGINE OIL	60
OPERATOR STATION				
BLADE AS-WIPER (400-MM) (DOOR, RH, LH)	6V-5851	2	WIPER GP-WINDOW	866
BLADE AS-WIPER (400-MM) (LOWER)	6V-5851	1	WIPER GP-WINDOW	862
		1	WIPER GP-WINDOW	864
BLADE AS-WIPER (450-MM) (FRONT, UPPER)	6V-5853	1	WIPER & WASHER GP-WINDOW	859
BLADE AS-WIPER (500-MM)	146-6433	1	WIPER GP-WINDOW	861
BLADE AS-WIPER (500-MM) (UPPER)	5C-8811	1	WIPER GP-WINDOW	862
		1	WIPER GP-WINDOW	864
CAP-VENTED (WASHER TANK)	276-3884	1	WIPER & WASHER GP-WINDOW	859
DRYER AS-AIR (IN-LINE)	283-4236	1	LINES GP-AIR CONDITIONER	807
FILTER ELEMENT-AIR (CAB HEATER, AIR CONDITIONER)	211-2660	1	DUCT & FILTER GP-CAB AIR	794

MAINTENANCE PARTS

DESCRIPTION	PART NUMBER	QTY	WHERE USED	PAGE
FILTER ELEMENT-CAB AIR (ACTIVATED CHARCOAL)	220-8800	1	DUCT & FILTER GP-CAB AIR	794
FILTER ELEMENT-CAB AIR (CAB HEATER, AIR CONDITIONER)	149-1912	1	DUCT & FILTER GP-CAB AIR	794
FUSE (15-AMPERE) (AIR CONDITIONER, HEATER)	133-9012	2	AIR CONDITIONER GP	751
KEY	5P-8500	2	LITERATURE GP	812
LAMP AS (24-VOLT) (IMPLEMENT CONTROL)	250-8335	2	LINER GP-CAB	803
LAMP AS-LED (24-VOLT, GREEN)	279-5308	1	CONTROL GP-ELECTROHYDRAULIC	771
		1	CONTROL GP-ELECTROHYDRAULIC	773
SEAT BELT GP (RETRACTABLE, 3-IN)	222-0345	1	SEAT GP-SUSPENSION	838
		1	SEAT GP-SUSPENSION	839
POWER TRAIN				
BREATHER (ATMOSPHERIC) (POWER TRAIN OIL)	9G-5127	1	FILLER GP-POWER TRAIN OIL	379
BREATHER (TANDEM HOUSING)	4H-6112	1	TANDEM & COVER GP	403
FILTER ELEMENT AS-OIL (TRANSMISSION)	337-5270	1	LINES GP-TRANSMISSION OIL	386
FILTER ELEMENT AS-OIL (TRANSMISSION) (POWER TRAIN)	337-5270	1	FILTER GP-OIL	383
FILTER-MAGNETIC (PLANETARY)	251-6673	1	CASE & PARTS GP-PLANETARY	347
FILTER-MAGNETIC (TRANSMISSION)	8S-9129	1	SCREEN GP-MAGNETIC	400
PLUG AS-DRAIN (DIFFERENTIAL CASE)	248-0833	1	AXLE GP-REAR	344
PLUG AS-MAGNETIC	165-4929	2	CASE & PARTS GP-PLANETARY	347
PLUG-MAGNETIC	5P-4484	1	CASE & PARTS GP-PLANETARY	347
PLUG-MAGNETIC (TANDEM DRIVE OIL DRAIN)	304-8032	2	TANDEM & COVER GP	403
SCREEN-SUCTION	251-6674	1	CASE & PARTS GP-PLANETARY	347
SCREEN-SUCTION (TRANSMISSION)	8S-9130	1	SCREEN GP-MAGNETIC	400
SERVICE EQUIPMENT AND SUPPLIES				
KEY	5P-8500	1	BOX GP-TOOL	906
		1	PLATE & FILM GP	917
		2	PLATE & FILM GP	921

INDEX

NAME PAGE

A

ACCUMULATOR GP-BLADE CUSHION–CHARGED 515
516
ACCUMULATOR GP-BLADE CUSHION–UNCHARGED 517
ACCUMULATOR GP-BRAKE–CHARGED 484
486
487
ACCUMULATOR GP-BRAKE–UNCHARGED 485
488
489
ACCUMULATOR-REFRIGERANT 807
ADAPTER GP-OIL LINE–FUEL INJECTION PUMP 58
ADAPTER GP-TURBOCHARGER 91
AFTERCOOLER GP-AIR 92
AIR CLEANER GP 93
94
AIR COMPRESSOR AR. 13
AIR COMPRESSOR GP 14
15
AIR CONDITIONER & MOUNTING GP. 749
AIR CONDITIONER AR–HVAC 750
AIR CONDITIONER GP 751
754
ALARM GP 140
ALARM GP (24-VOLT) (ACTION) 286
ALTERNATOR GP-CHARGING 141
ALTERNATOR GP-CHARGING–WITH AIR CONDITIONER 143
145
APPLICATION GP-MONITOR–NETWORK MANAGER 147
APPLICATION GP-MONITOR–PL641I CELLULAR 147
APPLICATION GP-MONITOR–PRODUCT LINK 631 SATELLITE. 147
ARM GP-WINDOW WIPER (FRONT, UPPER). 859
ARM GP-WINDOW WIPER (LOWER) 862
864
ARM GP-WINDOW WIPER (UPPER). 862
864
ARMREST GP–LH 756
ARMREST GP–RH. 755
AUTOSHIFT AR–TRANSMISSION 337
AXLE AR-FRONT 337
AXLE GP-FRONT 338
340
AXLE GP-REAR 344

B

BASE GP-FUEL FILTER 108
BASE GP-OIL FILTER 518
BASE GP-VALVE COVER. 21
BATTERY & WIRING GP–EXTREME SERVICE 148
BATTERY & WIRING GP–HEAVY-DUTY 150
BATTERY AS (12-VOLT, 1125-CCA) (WET) 150
BATTERY GP (12-VOLT, MAINTENANCE FREE, WET) 148
BEARING GP 887
BELT-SERPENTINE. 143
145
BIT GP-END 868
869
BLADE AS-WIPER (400-MM) (DOOR, RH, LH) 866
BLADE AS-WIPER (400-MM) (LOWER) 862
864
BLADE AS-WIPER (450-MM) (FRONT, UPPER). 859
BLADE AS-WIPER (500-MM) 861
BLADE AS-WIPER (500-MM) (UPPER). 862
864
BLADE GP. 870
871
872
BLADE GP-BULLDOZER–FRONT 873
BOX GP-TOOL 906
BRACE GP–WORK TOOL LIFT. 875
BRACKET GP-SCARIFIER 876
BRAKE GP-PARKING 490
BRAKE GP-SERVICE–FRONT TANDEM. 492
BRAKE GP-SERVICE–REAR TANDEM 494
BREATHER (ATMOSPHERIC) (POWER TRAIN OIL) 379
BREATHER (CRANKCASE) 59
BREATHER (TANDEM HOUSING) 403
BREATHER GP 59
BREATHER GP (TANDEM). 403

C

CAB AR 757
759
760
CAB AR–AUSTRALIA 758
CAB AR–COMFORT 757
CAMERA AR. 152
CAMSHAFT GP 17
CAP AS 528
CAP AS-COOLANT TANK. 89
CAP AS-ENGINE OIL FILLER 20
CAP AS-FILLER (7/8-9-THD) (NEGATIVE). 148
CAP AS-FILLER (LOCKABLE) 641
CAP AS-FILLER (POSITIVE) 148
CAP AS-FUEL (LOCKABLE, VENTED) 134
137
CAP GP-PROTECTION 617
CAP-VENTED (WASHER TANK). 859
CARRIER GP-FINAL DRIVE. 346
CARTRIDGE GP-TURBOCHARGER. 107
CASE & PARTS GP-PLANETARY 347
CHAIN GP-DRIVE–TANDEM. 351
CIRCLE GP 744

INDEX

NAME PAGE

CIRCUIT BREAKER AS (15-AMPERE, AUTOMATIC RESET) (FLOODLIGHTS, LH) 246
CIRCUIT BREAKER AS (15-AMPERE, AUTOMATIC RESET) (FLOODLIGHTS, RH) 246
CIRCUIT BREAKER AS (15-AMPERE, MANUAL RESET) (WORK LIGHTS, FRONT). 286
CIRCUIT BREAKER AS (15-AMPERE) (KEY SWITCH). 246
CIRCUIT BREAKER AS (15-AMPERE) (TRANSMISSION CONTROL). 246
CIRCUIT BREAKER AS (150-AMPERE) (ALTERNATOR) 245
CIRCUIT BREAKER AS (20-AMPERE, MANUAL RESET) (BLOWER). 286
CIRCUIT BREAKER AS (20-AMPERE, MANUAL RESET) (HVAC) 286
CIRCUIT BREAKER AS (20-AMPERE) (ACCUGRADE) 246
CIRCUIT BREAKER AS (20-AMPERE) (ENGINE CONTROL). 246
CIRCUIT BREAKER AS (80-AMPERE) (LOAD) 245
CIRCUIT BREAKER AS (80-AMPERE) (MAIN). 245
CLUTCH GP-TRANSMISSION–FIRST, THIRD . . . 356
CLUTCH GP-TRANSMISSION–FORWARD 352
CLUTCH GP-TRANSMISSION–HIGH, LOW 358
CLUTCH GP-TRANSMISSION–REVERSE, SECOND. 354
COLD WEATHER AR 1
COMMON AR 2
COMPRESSOR & MTG GP-REFRIG 761
COMPRESSOR GP-REFRIGERANT 762
CONDENSER & MTG GP-REFRIGERANT–AIR CONDITIONER 763
CONFIGURATION-PREMIUM 907
CONTROL & MTG GP-ENGINE ELEK 153
CONTROL & MTG GP-JOYSTICK 765
CONTROL & MTG GP-JOYSTICK–OPERATOR PLATFORM 764
CONTROL AR-ELECTRIC 154
CONTROL AR-ELECTRIC–AUTO ARTICULATION 154 155
CONTROL AR-HYDRAULIC 524
CONTROL AR-HYDRAULIC–ACCUMULATOR . . . 519
CONTROL AR-HYDRAULIC–DOZER ANGLE, FRONT LIFT, RIPPER 519
CONTROL AR-HYDRAULIC–DOZER ANGLE, FRONT LIFT, RIPPER, WING MAST, WING TILT 521
CONTROL AR-HYDRAULIC–DOZER ANGLE, FRONT LIFT, RIPPER, WING MAST, WING TILT FLOAT. 522 523
CONTROL AR-HYDRAULIC–DOZER ANGLE, FRONT LIFT, SCARIFIER, WING MAST, WING TILT 525
CONTROL AR-HYDRAULIC–FRONT LIFT 524
CONTROL AR-HYDRAULIC–FRONT LIFT, RIPPER. 523
CONTROL AR-HYDRAULIC–FRONT LIFT, RIPPER, SCARIFIER 520
CONTROL AR-HYDRAULIC–FRONT LIFT, RIPPER, WING MAST, WING TILT 521
CONTROL AR-HYDRAULIC–FRONT LIFT, RIPPER, WING MAST, WING TILT FLOAT. 520
CONTROL AR-HYDRAULIC–FRONT LIFT, WING MAST, WING TILT 525
CONTROL AR-HYDRAULIC–RIPPER 522
CONTROL AR-HYDRAULIC–SCARIFIER. 524
CONTROL GP-AIR & TEMPERATURE 766
CONTROL GP-COMMUNICATION 163
CONTROL GP-COMMUNICATION–CELLULAR. 158
CONTROL GP-COMMUNICATION–DUAL 160
CONTROL GP-COMMUNICATION–SATELLITE. 156
CONTROL GP-DIFFERENTIAL LOCK 360
CONTROL GP-ELECTROHYDRAULIC 767 768 769 771 773
CONTROL GP-ELECTROHYDRAULIC–AUXILIARY CONTROL 775
CONTROL GP-ELECTROHYDRAULIC–WITH AUXILIARY LEVER 768
CONTROL GP-ELECTROHYDRAULIC–WITHOUT AUXILIARY LEVER 767
CONTROL GP-ELECTRONIC–PL641I CELLULAR. 164
CONTROL GP-ELECTRONIC–PRODUCT LINK ELITE. 164
CONTROL GP-ELECTRONIC–PRODUCT LINK ELITE CELLULAR 164
CONTROL GP-ELECTRONIC–PRODUCT LINK ELITE SATELLITE 164
CONTROL GP-ENGINE ELECTRONIC 165
CONTROL GP-JOYSTICK 782
CONTROL GP-JOYSTICK (ELECTRONIC CONTROL). 768
CONTROL GP-JOYSTICK–LH 777 778 780
CONTROL GP-JOYSTICK–RH 776 779 781
CONTROL GP-SERVICE BRAKE 496 498
CONTROL GP-TRANSMISSION HYD 362
CONTROL GP-UNPROGRAMMED (IMPLEMENT 1) 166
CONTROL GP-UNPROGRAMMED (IMPLEMENT 2) 166
CONTROL GP-UNPROGRAMMED (IMPLEMENT 3) 295
CONTROL GP-UNPROGRAMMED (TRANSMISSION). 362
CONTROL GP-UNPROGRAMMED–IMPLEMENT 1 166

INDEX

NAME PAGE

CONTROL GP-UNPROGRAMMED–IMPLEMENT 2 166
CONTROL GP-UNPROGRAMMED–PRODUCT LINK ELITE 631 SATELLITE 167
CONVERSION AR-CERTIFICATION 3
CONVERSION AR-CERTIFICATION–AUSTRALIA 3
CONVERSION AR-CERTIFICATION–CAMERA, REAR 3
4
CONVERSION GP-TOWING HITCH 435
CONVERTER GP-ELECTRICAL 168
CONVERTER GP-ELECTRICAL–RADIO 169
COOLER GP-ENGINE OIL 73
COOLER GP-TRANSMISSION OIL 366
COOLING AR 74
CORE AS-CONDENSER (AIR CONDITIONER) 763
CORE AS-ENGINE OIL COOLER 73
CORE AS-OIL COOLER (HYDRAULIC) 593
CORE AS-RADIATOR 87
CORE AS-TRANSMISSION COOLER 366
COUPLING GP-TORSIONAL 367
COVER GP-AIR INLET–STARTING AID HEATER 95
96
COVER GP-CAB 783
COVER GP-CYLINDER BLOCK 18
COVER GP-FRONT HOUSING 19
20
COVER GP-PROTECTION 436
437
COVER GP-SHIPPING–TRANSMISSION 368
COVER GP-VALVE MECHANISM 21
23
CRANKSHAFT GP 24
CUSHION GP-ARM 784
CYLINDER & MTG GP-ARTICULATION 526
CYLINDER & MTG GP-BLADE LIFT 528
CYLINDER & MTG GP-BLADE TIP 529
CYLINDER & MTG GP-CENTERSHIFT 530
CYLINDER & MTG GP-SCARIFIER 531
CYLINDER & MTG GP-SIDESHIFT 532
CYLINDER & MTG GP-STEERING 533
CYLINDER & MTG GP-WHEEL LEAN 534
CYLINDER BLOCK GP 25
26
27
CYLINDER GP-ARTICULATION 535
CYLINDER GP-BLADE TIP 537
CYLINDER GP-CENTERSHIFT 539
CYLINDER GP-HYDRAULIC 878
CYLINDER GP-HYDRAULIC–WORK TOOL LIFT 877
CYLINDER GP-LIFT–BLADE 541
CYLINDER GP-RIPPER 542
CYLINDER GP-SCARIFIER 543
CYLINDER GP-SIDESHIFT 545
CYLINDER GP-STEERING 547
CYLINDER GP-WHEEL LEAN 549
CYLINDER HEAD AS 29

NAME PAGE

CYLINDER HEAD GP 30
32
33

D

DAMPER & PULLEY GP 34
DIFFERENTIAL & BEVEL GEAR GP 370
DIFFERENTIAL GP 372
DISPLAY GP-CAMERA 785
DOOR GP-CAB–LH 790
DOOR GP-CAB–RH 786
DRAWBAR GP 746
DRIVE GP-CIRCLE 551
DRIVE GP-FINAL–LH 376
DRIVE GP-FINAL–RH 374
DRYER AS-AIR (IN-LINE) 807
DUCT & FILTER GP-CAB AIR 794

E

EDGE GP-CUTTING 880
ELBOW GP-AIR INLET 97
ELECTRONICS GP-IMPLEMENT–IMPLEMENT 2 171
ELECTRONICS GP-IMPLEMENT–IMPLEMENT 3 171
ELECTRONICS GP-IMPLEMENT–MASTER 171
ELECTRONICS GP-MONITOR–ENGLISH, FINNISH, SWEDISH, DANISH, PORTUGUESE 172
ELECTRONICS GP-MONITOR–ENGLISH, FRENCH, GERMAN, PORTUGUESE, SPANISH 172
ELECTRONICS GP-MONITOR–ENGLISH, GREEK, HEBREW, ITALIAN, PORTUGUESE 172
ELECTRONICS GP-MONITOR–ENGLISH, PORTUGUESE, DUTCH, NORWEGIAN, SLOVENIAN 173
ELECTRONICS GP-MONITOR–ENGLISH, PORTUGUESE, ROMANIAN, INDONESIAN, UKRANIAN 172
ELECTRONICS GP-MONITOR–ENGLISH, PORTUGUESE, RUSSIAN, ARABIC 172
ELECTRONICS GP-MONITOR–ENGLISH, PORTUGUESE, TURKISH, CHINESE 173
ELECTRONICS GP-MONITOR–MESSENGER . . . 171
ELECTRONICS GP-MONITOR–NETWORK MANAGER 173
ELECTRONICS GP-MONITOR–PRODUCT LINK 631 173
ELECTRONICS GP-MONITOR–PRODUCT LINK 641 173
ELECTRONICS GP-POWER TRAIN 174
ENCLOSURE GP-ENGINE 438
ENGINE AR-COMPLETE 11
ENGINE AR-CORE 12
EXTENSION GP-BACKREST (CLOTH) 836
EXTENSION GP-BLADE 880
881
882

NAME PAGE

F

FAN & MOTOR GP–RADIATOR COOLING 75
FAN GP-CIRCULATING–DEFROSTER. 798
FAN GP-CIRCULATING–FRONT DEFROSTER. 796
FASTENER GP-CYLINDER HEAD 32 35
FASTENER GP-ENCLOSURE 441
FENDER & SUPPORT GP–FRONT 444
FENDER & SUPPORT GP–REAR 442
FILLER GP-POWER TRAIN OIL 378 379
FILM GP. 2 758 759 760 907 908 909 917 921
FILM GP-INTERNATIONAL 910
FILM GP-U.S. 911
FILM GP–VARIABLE HORSEPOWER PLUS 907
FILM-FUSE/RELAY 289
FILM-IDENTIFICATION (150) 909
FILM-IDENTIFICATION (ARTICULATION LOCK) 917 921
FILM-IDENTIFICATION (AUTO ARTICULATION). 155
FILM-IDENTIFICATION (BLADE CENTERSHIFT) 917 921
FILM-IDENTIFICATION (CANADIAN STANDARDS ASSOCIATION). 908
FILM-IDENTIFICATION (CAT) (REAR). 909
FILM-IDENTIFICATION (CAT) (SIDE). 909
FILM-IDENTIFICATION (ENGINE OIL FILL). 917 921
FILM-IDENTIFICATION (FUSE PANEL). 247
FILM-IDENTIFICATION (GRADE CONTROL). . . . 782
FILM-IDENTIFICATION (GREASE POINT) 917 921
FILM-IDENTIFICATION (HORN). 764
FILM-IDENTIFICATION (HYDRAULIC OIL). 917
FILM-IDENTIFICATION (IGNITION SWITCH). . . . 196
FILM-IDENTIFICATION (INSTRUCTION). 782
FILM-IDENTIFICATION (LIFT POINT) 917 921
FILM-IDENTIFICATION (OIL GRADE, READ OMM). 917 921
FILM-IDENTIFICATION (OPERATOR CONTROLS, LH) 842
FILM-IDENTIFICATION (OPERATOR CONTROLS, RH). 840
FILM-IDENTIFICATION (ROUND RED REFLECTIVE) 898 917 921
FILM-IDENTIFICATION (SERIAL NUMBER). 751
FILM-IDENTIFICATION (SWITCH PANEL, LOWER) 850
FILM-IDENTIFICATION (SWITCH PANEL, UPPER). 850
FILM-IDENTIFICATION (TIE-DOWN). 8
FILM-IDENTIFICATION (TRANSMISSION OIL FILL CAP) 917 921
FILM-IDENTIFICATION (VARIABLE HORSEPOWER PLUS) 907
FILM-IDENTIFICATION (WRITE DATA). 850
FILM-INFORMATION (24-VOLT) 917 921
FILM-INFORMATION (CONSOLE, LH). 827
FILM-INFORMATION (CONSOLE, RH) 827
FILM-INFORMATION (EXTENDED LIFE COOLANT). 917 921
FILM-INFORMATION (FLUID LEVEL). 917 921
FILM-INFORMATION (HYDRAULIC ACCUMULATOR) 485 486 487 488 489 515 516 517
FILM-INFORMATION (LIFT EYE, TIE-DOWN LOCATION) 917 921
FILM-INFORMATION (PRODUCT LINK, READ OMM). 910 911
FILM-INFORMATION (TIE-DOWN LOCATION) 917 921
FILM-INSTRUCTION (ALTERNATE EXIT, REMOVE WINDOW). 910 911
FILM-INSTRUCTION (AUXILIARY) 767 768
FILM-INSTRUCTION (BELT ROUTING). 143 145
FILM-INSTRUCTION (ENGINE OIL DRAIN). 69
FILM-INSTRUCTION (ENGINE SHUTDOWN) . . . 917 921
FILM-INSTRUCTION (FLOAT) 771
FILM-INSTRUCTION (FLOAT/NO FLOAT) 773
FILM-INSTRUCTION (FUEL, READ OMM). 917 921
FILM-INSTRUCTION (HVAC WATER, DRAINING, FILLING) 751 809

INDEX

NAME PAGE

FILM-INSTRUCTION (HYDRAULIC TANK OIL DRAIN) . . . 917, 921
FILM-INSTRUCTION (MACHINE SECURITY, CONSOLE) . . . 196
FILM-INSTRUCTION (NO FLOAT) . . . 769
FILM-INSTRUCTION (SEAT ADJUSTMENT) . . . 844, 846
FILM-INSTRUCTION (TRANSMISSION FILTER) . . . 917, 921
FILM-INSTRUCTION (WIPER) . . . 803
FILM-NOTICE (SHIPPING) . . . 917, 921
FILM-ROPS . . . 759, 760
FILM-STRIPE (RED) . . . 921
FILM-STRIPE (RED) (11-CM EACH) . . . 917
FILM-WARNING (COLD START, READ OMM) . . . 921
FILM-WARNING (CRUSH HAZARD, READ MANUAL) . . . 910
FILM-WARNING (CRUSH HAZARD, READ OMM, INTL) . . . 921
FILM-WARNING (CRUSH HAZARD, READ OMM, U.S.) . . . 917
FILM-WARNING (CRUSH HAZARD, STAY BACK, INTL) . . . 921
FILM-WARNING (CRUSH HAZARD, STAY BACK, U.S.) . . . 917
FILM-WARNING (CRUSH HAZARD) . . . 887, 911
FILM-WARNING (DO NOT OPERATE, READ OMM, INTL) . . . 921
FILM-WARNING (EXPLOSION HAZARD, PRODUCT LINK) . . . 910
FILM-WARNING (EXPLOSION HAZARD, READ OMM) . . . 163
FILM-WARNING (HAND CRUSH HAZARD, STAY BACK) . . . 917, 921
FILM-WARNING (HIGH PRESSURE CYLINDER) . . . 917, 921
FILM-WARNING (HOT FLUID) . . . 917, 921
FILM-WARNING (HYDRAULIC STEERING) . . . 917
FILM-WARNING (JUMP START, READ OMM, INTL) . . . 921
FILM-WARNING (JUMP START, READ OMM, U.S.) . . . 917
FILM-WARNING (NO DRILL, WELD, READ OMM) . . . 917, 921
FILM-WARNING (NO WELD, NO DRILL, READ OMM) . . . 910, 911
FILM-WARNING (PRODUCT LINK 300, U.S.) . . . 911
FILM-WARNING (RECOIL SPRING) . . . 490, 921
FILM-WARNING (ROPS, FOPS, READ OMM) . . . 758
FILM-WARNING (SEAT BELT, INTERNATIONAL) . . . 910
FILM-WARNING (SEAT BELT) . . . 911
FILM-WARNING (SHOCK, ELECTROCUTION HAZARD) . . . 195
FILM-WARNING (UNIVERSAL, READ OMM) . . . 910
FILM-WARNING (UNIVERSAL, U.S.) . . . 911
FILTER (ETHER START) . . . 283
FILTER (STRAINER) . . . 139
FILTER (STRAINER) (FUEL) . . . 131
FILTER & MTG GP-HYDRAULIC . . . 555
FILTER & MTG GP-TRANSMISSION . . . 380
FILTER AS-ENGINE OIL (ADVANCED EFFICIENCY) . . . 60
FILTER AS-WATER SEP & FUEL (PRIMARY) . . . 111
FILTER ELEMENT AS-AIR (SECONDARY) . . . 94
FILTER ELEMENT AS-OIL (TRANSMISSION) . . . 386
FILTER ELEMENT AS-OIL (TRANSMISSION) (POWER TRAIN) . . . 383
FILTER ELEMENT-AIR (CAB HEATER, AIR CONDITIONER) . . . 794
FILTER ELEMENT-AIR (PRIMARY) . . . 94
FILTER ELEMENT-CAB AIR (ACTIVATED CHARCOAL) . . . 794
FILTER ELEMENT-CAB AIR (CAB HEATER, AIR CONDITIONER) . . . 794
FILTER ELEMENT-OIL (ULTRA HIGH EFFICIENCY) (HYDRAULIC TANK) . . . 558
FILTER GP-ENGINE OIL . . . 60
FILTER GP-FUEL . . . 109, 110
FILTER GP-OIL . . . 382, 383, 557, 558
FILTER GP-WATER SEP & FUEL . . . 111
FILTER-FUEL (ADVANCED EFFICIENCY) . . . 108, 109
FILTER-MAGNETIC (PLANETARY) . . . 347
FILTER-MAGNETIC (TRANSMISSION) . . . 400
FILTER-OIL (ADVANCED EFFICIENCY) . . . 557
FLASHER AS (12/24-VOLT) (TURN SIGNAL) . . . 287
FLOOR MAT AS . . . 851
FLYWHEEL GP . . . 36
FRAME GP-FRONT . . . 446
FRAME GP-REAR–ENGINE END . . . 449
FUMES DISPOSAL GP . . . 62
FUSE (10-AMPERE) . . . 286
FUSE (15-AMPERE) . . . 286
FUSE (15-AMPERE) (AIR CONDITIONER, HEATER) . . . 751
FUSE (20-AMPERE) . . . 286
FUSE (7.5-AMPERE) . . . 286

INDEX

NAME PAGE

G

GAUGE AS-OIL LEVEL (DIPSTICK) (POWER TRAIN OIL) 379
GAUGE GP-OIL LEVEL (DIPSTICK)–ENGINE 63
GAUGE GP-SIGHT (HYDRAULIC TANK OIL) . . . 641
GAUGE-OIL LEVEL (DIPSTICK) (ENGINE) 63
GEAR GP-FRONT 37
GEAR GP-REAR 38
GRADE CONTROL AR 174 175
GRADE CONTROL GP 176
GROUND GP-ELECTRICAL 177
GUARD GP-BOTTOM 450
GUARD GP-CYLINDER–ALL WHEEL DRIVE . . . 452
GUARD GP-DEBRIS–SCREEN 453
GUARD GP-FAN–RADIATOR 78
GUARD GP-FUEL TANK 454
GUARD GP-LIGHTING (ROTATING BEACON) 237
GUARD GP-LINES 455
GUARD GP-SENSOR–ARTICULATION 457

H

HANDHOLD GP (GRAB) 438
HANDRAIL GP 458
HARNESS AS-BOX 245
HARNESS AS-CAB 179
HARNESS AS-CAB–HVAC 178
HARNESS AS-CHASSIS 156 158 160 182
HARNESS AS-CHASSIS (GRADE CONTROL) 305
HARNESS AS-CHASSIS (MACHINE SECURITY SYSTEM) 196
HARNESS AS-CONTROL 295
HARNESS AS-CONTROL (GRADE CONTROL) 287
HARNESS AS-ENGINE 182 183
HARNESS AS-FRONT 184
HARNESS AS-HEATER 297
HARNESS AS-HEATER & AIR COND 314
HARNESS AS-LIGHTING 185 237
HARNESS AS-LIGHTING–BAR 185
HARNESS AS-MONITOR 309
HARNESS AS-MOTOR 323
HARNESS AS-MOTOR (HVAC) 751
HARNESS AS-MOTOR (START) 319
HARNESS AS-PANEL 288
HARNESS AS-PUMP (FUEL) 313
HARNESS AS-RADIO 186
HARNESS AS-RADIO (AUXILIARY) 831
HARNESS AS-RADIO (BLUETOOTH) 831
HARNESS AS-REAR 187
HARNESS AS-REAR LIGHTING 326 328
HARNESS AS-REAR LIGHTING (REGISTRATION PLATE) 216 232
HARNESS AS-SENSOR 189 251 334 335
HARNESS AS-SENSOR (FAN BYPASS WARNING) 299
HARNESS AS-SENSOR (PUMP PRESSURE) . . . 313
HARNESS AS-SENSOR (TRANSMISSION SPEED) 362
HARNESS AS-SENSOR–INCLINATION 189
HARNESS AS-SENSOR–ROTATION SENSOR 190
HARNESS AS-SOLENOID 191
HARNESS AS-SOLENOID (STEERING VALVE) 192
HARNESS AS-SOLENOID–TRANSMISSION PUMP BYPASS 190
HARNESS AS-SWITCH 191
HARNESS AS-TRANSMISSION 246 362
HARNESS AS-VALVE 285
HARNESS AS-VALVE–STEERING 192
HARNESS AS-WINDOW WIPER 286 866
HARNESS AS-WINDOW WIPER (LH) 786 790
HARNESS AS-WIRING 193 335
HARNESS AS-WIRING (POWER MODULE, LH) 176
HARNESS AS-WIRING (POWER MODULE, RH) 176
HARNESS AS-WIRING (RADIO) 169
HARNESS AS-WIRING–TRANSMISSION PUMP PRESSURE 192
HEATER GP-JACKET WATER–EUROPEAN MARKET 195
HEATER GP-JACKET WATER–NORTH AMERICA 194
HITCH GP-ARTICULATING 459
HITCH GP-TOWING 461 462
HOOD GP–ENGINE 463
HOUSING GP-FILTER (OIL) 558
HOUSING GP-FLYWHEEL 39
HOUSING GP-FRONT 41
HOUSING GP-SEAT SUSPENSION 799

I

INDICATOR-LEVEL (MACHINE) 825
INJECTOR GP-FUEL 112
INSTALLATION GP-SECURITY–MACHINE SECURITY SYSTEM 196

NAME PAGE

INSTALLATION GP-WARNING BEACON–PRODUCT LINK. 198

K

KEY 812
906
917
921
KEY (BATTERY DISCONNECT) 267
KEY AS-ELECTRONIC (SECURITY) 196
KIT-FUEL PUMP–FUEL TRANSFER PUMP. 113
KIT-SENSOR & MOUNTING. 199

L

LAMP (24-VOLT, 21-WATT) 200
LAMP (24-VOLT, 5-WATT) 211
212
216
LAMP (24-VOLT, 5-WATT) (REGISTRATION PLATE) 217
LAMP (24-VOLT, 75/70-WATT) 211
212
LAMP (24-VOLT) 215
LAMP AS (24-VOLT) (IMPLEMENT CONTROL). 803
LAMP AS-LED (24-VOLT, GREEN) 277
286
771
773
LAMP AS-LED (24-VOLT, RED) 196
LAMP GP. 200
LAMP GP-DOME–LED 201
LAMP GP-FLOOD 202
204
205
206
LAMP GP-FLOOD (9-32-VOLT, 1200 LM, LED). 209
229
230
236
LAMP GP-FLOOD (9-32-VOLT, 1200 LM, LED) (CAB ROOF) 231
LAMP GP-FLOOD (9-32-VOLT, 1200 LM, LED) (NARROW BEAM) 236
LAMP GP-FLOOD–LED 207
208
LAMP GP-FLOOD–RIPPER. 203
209
LAMP GP-HEAD & SIGNAL. 213
214
LAMP GP-HEAD & SIGNAL–LH 211
LAMP GP-HEAD & SIGNAL–RH 212
LAMP GP-HEAD–FRONT. 210
LAMP GP-MARKER. 215
LAMP GP-REGISTRATION PLATE–EAME 216
LAMP GP-REGISTRATION PLATE–LICENSE . . . 217

NAME PAGE

LAMP GP-SIGNAL (24-VOLT, STOP, TAIL). 326
328
LAMP GP-SIGNAL–STOP, TAIL. 219
LAMP GP-SIGNAL–TURN 218
LAMP GP-WARNING BEACON 220
LAMP-HALOGEN (24-VOLT, 70-WATT). 202
204
205
206
210
LEVER GP-CAB DOOR. 802
LIFT GP-BLADE 883
LIFT GP-WORK TOOL. 887
889
LIFTER GP-VALVE 42
LIFTING GP-ENGINE 43
LIGHTING AR-ROADING–HIGH BAR. 223
LIGHTING AR-ROADING–LOW BAR 221
LIGHTING AR-ROADING–REAR 225
LIGHTING GP-FLOOD 228
231
LIGHTING GP-FLOOD–HEEL 227
230
LIGHTING GP-FLOOD–TOE 226
229
LIGHTING GP-ROADING. 233
235
LIGHTING GP-ROADING–AUSTRALIA, LH. 232
LIGHTING GP-ROADING–LED 236
LIGHTING GP-ROADING–MARKER LIGHTS 234
LIGHTING GP-WARNING BEACON–DUAL. 237
LINER GP-CAB. 803
LINES GP-ACCUMULATOR–BRAKE. 500
502
504
LINES GP-AFTERCOOLER AIR 98
LINES GP-AIR 100
101
LINES GP-AIR CONDITIONER 805
807
LINES GP-AIR TANK 506
LINES GP-ENGINE OIL. 64
LINES GP-ENGINE OIL DRAIN. 65
LINES GP-FUEL. 114
LINES GP-FUEL FILTER. 116
LINES GP-HEATER. 810
LINES GP-HEATER–CAB. 809
LINES GP-HYDRAULIC 586
LINES GP-HYDRAULIC FAN 588
LINES GP-HYDRAULIC FAN–COLD WEATHER 591
LINES GP-HYDRAULIC OIL COOLER. 593
LINES GP-HYDRAULIC–ARTICULATION. 581
LINES GP-HYDRAULIC–BLADE LIFT. 563
573
577
LINES GP-HYDRAULIC–CENTERSHIFT LOCK. 584
LINES GP-HYDRAULIC–CIRCLE, DRAWBAR, MOLDBOARD 560

INDEX

NAME PAGE

LINES GP-HYDRAULIC–DOZER ANGLE, SNOW PLOW 569
LINES GP-HYDRAULIC–DOZER, SNOW PLOW 567
LINES GP-HYDRAULIC–FRONT BLADE 559
LINES GP-HYDRAULIC–FRONT LIFT 565
LINES GP-HYDRAULIC–SCARIFIER. 571
LINES GP-INJECTOR HYD PUMP 119
LINES GP-LUBRICATION 384
LINES GP-LUBRICATION–ARTICULATION HITCH BEARING 464
LINES GP-PUMP–FRONT 595
LINES GP-PUMP–REAR 599
LINES GP-RIPPER 607 608
LINES GP-SECONDARY STEERING 610
LINES GP-SERVICE BRAKE 508 513
LINES GP-SERVICE BRAKE–TANDEM 511
LINES GP-STEERING. 615
LINES GP-STEERING–STEERING CYLINDER 612
LINES GP-TRANSMISSION OIL 386 389
LINES GP-TRANSMISSION OIL–COLD WEATHER 390
LINES GP-TURBOCHARGER OIL. 66
LINES GP-WATER. 79 81
LINK GP-STEERING 465
LITERATURE GP 812
LOCK GP-CENTERSHIFT 617

M

MANIFOLD GP-CONTROL–BRAKE, HYDRAULIC FAN 618
MANIFOLD GP-CONTROL–STEERING 620
MANIFOLD GP-ENGINE OIL 68
MANIFOLD GP-EXHAUST 102
MIRROR GP-REAR VIEW–EXTERIOR. 818
MIRROR GP-REAR VIEW–EXTERIOR, HEATED 819
MIRROR GP-REAR VIEW–INTERIOR 816 817 820
MIRROR GP–EXTERIOR 814
MIRROR GP–INTERIOR, REAR 813
MODULE GP-DISPLAY (INSTRUMENT CLUSTER) 286
MODULE GP-INTERFACE (KEY) (MACHINE SECURITY SYSTEM) 196
MOTOR GP-ELECTRIC–CIRCULATING FAN. . . . 239
MOTOR GP-GEAR (RADIATOR FAN DRIVE). . . . 75
MOTOR GP-GEROTOR–CIRCLE DRIVE. 621
MOTOR GP-WINDOW WIPER. 821
MOTOR GP-WINDOW WIPER (24-VOLT, 2-SPEED). 862 864
MOTOR GP-WINDOW WIPER (24-VOLT, 2-SPEED) (FRONT) 821
MOTOR GP-WINDOW WIPER (LH) 866
MOTOR GP-WINDOW WIPER (RH). 866
MOTOR GP-WINDOW WIPER–REAR 822
MOUNTING GP-ALTERNATOR 44
MOUNTING GP-ANTENNA–RADIO 823
MOUNTING GP-AXLE–FRONT. 467
MOUNTING GP-AXLE–REAR 466
MOUNTING GP-BLADE 744
MOUNTING GP-CAB. 824 825
MOUNTING GP-CONTROL–IMPLEMENT 826
MOUNTING GP-ENGINE & XMSN 45
MOUNTING GP-FAN DRIVE. 47
MOUNTING GP-FUEL TANK 120
MOUNTING GP-GRADE CONTROL. 240
MOUNTING GP-LIGHTING–ROADING 243
MOUNTING GP-LIGHTING–ROADING LIGHTS 241
MOUNTING GP-RIPPER 890 892
MOUNTING GP-SNOW WING 895
MOUNTING GP-SNOW WING–FRONT LIFT 894
MOUNTING GP-VALVE 623
MOUNTING GP-WHEEL. 392
MOUNTING GP-XMSN OIL COOLER 393
MUFFLER GP 103

O

OIL CHANGE GP-HIGH SPEED 69
OPTION AR-CAB 4
OPTION AR-CAB–COMFORT 4
OPTION AR-COLD WEATHER–NON ALL WHEEL DRIVE 5
OPTION AR-ELECTRICAL. 5
OPTION AR-GRADE CONTROL 5
OPTION AR-LIGHTING–WORK LIGHTS 6
OPTION AR-MACHINE–NON ALL WHEEL DRIVE 7
OPTION AR-MACHINE–SNOW WING 7
OPTION AR-REGIONAL. 8
OPTION AR-REGIONAL–CANADIAN CONFIGURATION 8
OPTION AR-SCARIFIER–SCARIFIER. 9
OPTION AR-WORK TOOL–BLADE. 9
OPTION AR-WORK TOOL–BULLDOZER 10

P

PADLOCK GP. 906 917 921
PAN GP-OIL 48
PANEL GP-CIRCUIT BREAKER 245
PANEL GP-INSTRUMENT–FRONT CONSOLE 827

NAME PAGE

PEDAL GP-BRAKE, XMSN & GOV 829 830
PISTON & ROD GP 49
PLATE & FILM GP 917 921
PLATE & FILM GP–ARABIC, WITH MONITOR SOFTWARE 916
PLATE & FILM GP–BRITISH, WITH MONITOR SOFTWARE 912
PLATE & FILM GP–CHINESE, WITH MONITOR SOFTWARE 916
PLATE & FILM GP–DANISH, WITH MONITOR SOFTWARE 913
PLATE & FILM GP–DUTCH, WITH MONITOR SOFTWARE 913
PLATE & FILM GP–ENGLISH, WITH MONITOR SOFTWARE 912
PLATE & FILM GP–FINNISH, WITH MONITOR SOFTWARE 914
PLATE & FILM GP–FRENCH, WITH MONITOR SOFTWARE 913
PLATE & FILM GP–GERMAN, WITH MONITOR SOFTWARE 913
PLATE & FILM GP–GREEK, WITH MONITOR SOFTWARE 915
PLATE & FILM GP–HEBREW, WITH MONITOR SOFTWARE 915
PLATE & FILM GP–ITALIAN, WITH MONITOR SOFTWARE 914
PLATE & FILM GP–NORWEGIAN, WITH MONITOR SOFTWARE 914
PLATE & FILM GP–PORTUGUESE, WITH MONITOR SOFTWARE 912
PLATE & FILM GP–ROMANIAN, WITH MONITOR SOFTWARE 916
PLATE & FILM GP–RUSSIAN, WITH MONITOR SOFTWARE 915
PLATE & FILM GP–SLOVENIAN, WITH MONITOR SOFTWARE 916
PLATE & FILM GP–SPANISH, WITH MONITOR SOFTWARE 912
PLATE & FILM GP–SWEDISH, WITH MONITOR SOFTWARE 914
PLATE & FILM GP–TURKISH, WITH MONITOR SOFTWARE 915
PLATE AS-TIE DOWN 468
PLATE GP-MOUNTING–FRONT LICENSE PLATE 469
PLATE GP-PUSH 470
PLATE-SERIAL NUMBER 925
PLUG AS-DRAIN (DIFFERENTIAL CASE) 344
PLUG AS-MAGNETIC 347
PLUG GP-CYLINDER BLOCK 50
PLUG GP-ENGINE 51
PLUG-DRAIN 131 139
PLUG-MAGNETIC 347
PLUG-MAGNETIC (TANDEM DRIVE OIL DRAIN) 403
POWER SUPPLY GP–GRADE CONTROL 250
POWER TRAIN AR 394
PRECLEANER GP 105
PUMP & MTG GP-GEAR–POWER TRAIN 395
PUMP & MTG GP-PISTON 625
PUMP & MTG GP-PISTON–BRAKE, HYDRAULIC FAN 624
PUMP & MTG GP-SECONDARY STEER–ELECTRIC DRIVE 626
PUMP & MTG GP-UNIT INJ HYD 122
PUMP AS-WATER 83
PUMP GP-ENGINE OIL 71 72
PUMP GP-FILTER & FUEL TRANSFER 123
PUMP GP-FILTER & FUEL TRANSFER–PRIMARY 124
PUMP GP-FUEL INJECTION 125
PUMP GP-FUEL TRANSFER 124 126
PUMP GP-GEAR 627
PUMP GP-GEAR–SECONDARY STEERING 627
PUMP GP-GEAR–TRANSMISSION 396
PUMP GP-PISTON 630
PUMP GP-PISTON–BRAKE, HYDRAULIC FAN 628
PUMP GP-UNIT INJECTOR HYD 127
PUMP GP-WATER 84 86

R

RADIATOR GP 87
RADIO GP (AM/FM/BLUETOOTH) 831
RADIO GP–AM/FM/WB 832
RADIO GP–AM/FM/WB/CD/XM/USB/BLUETOOTH 831
REFLECTOR GP 471 472
REGULATOR AS-VOLTAGE (24-VOLT) 141
REGULATOR GP-FUEL PRESSURE 129
REGULATOR-PRESSURE (FUEL TRANSFER PUMP) 126
REGULATOR-WATER TEMPERATURE (97-DEG C) (COOLANT) 79
RELAY AS (24-VDC, 20-AMPERE) (HEATED MIRROR TIMER) 279
RELAY AS (24-VOLT) 233
RELAY AS (24-VOLT) (AIR CONDITIONER) 313
RELAY AS (24-VOLT) (BACKLIGHT) 289
RELAY AS (24-VOLT) (BACKUP ALARM) 313
RELAY AS (24-VOLT) (CAB BLOWER) 289
RELAY AS (24-VOLT) (CAB FLOODLIGHTS, FRONT) 289
RELAY AS (24-VOLT) (CAB FLOODLIGHTS, REAR) 289
RELAY AS (24-VOLT) (DIFFERENTIAL LOCK) 289
RELAY AS (24-VOLT) (FLOODLIGHTS) 268
RELAY AS (24-VOLT) (FUEL PUMP RELAY) . . . 313
RELAY AS (24-VOLT) (GRADE CONTROL) 289
RELAY AS (24-VOLT) (HORN) 289
RELAY AS (24-VOLT) (HVAC) 178

NAME PAGE

RELAY AS (24-VOLT) (POSITION LAMP, LH) 289
RELAY AS (24-VOLT) (POSITION LAMP, RH) 289
RELAY AS (24-VOLT) (SECONDARY STEERING) 313
RIM GP-DEMOUNTABLE 398 399
RIPPER AR 896 897
RIPPER GP 898
ROADING AR 10
ROCKER ARM GP–EXHAUST 52
ROCKER ARM GP–INLET 53
ROPS GP 833
ROTATING GP-PUMP 632 633

S

SCARIFIER AR–VEE TYPE 900
SCARIFIER GP–VEE TYPE 901
SCREEN (HYDRAULIC) (CONTROL MANIFOLD) 618
SCREEN GP-MAGNETIC–TRANSMISSION 400
SCREEN-SUCTION 347
SCREEN-SUCTION (TRANSMISSION) 400
SEAL GP-CRANKSHAFT 54
SEAL GP-DUO-CONE 340 492 494 551
SEAL-CRANKSHAFT (FRONT) 54
SEAL-INTEGRAL 643 646 651 654 659 663 668 672 677 682 688 724
SEAL-VALVE COVER 23
SEAT & MOUNTING GP 834
SEAT BELT GP (RETRACTABLE, 3-IN) 838 839
SEAT BELT GP–RETRACTABLE 835
SEAT GP-SUSPENSION–CLOTH 839
SEAT GP-SUSPENSION–CLOTH, AIR 838
SEAT GP–CLOTH, AIR 836
SENDER AS-FUEL LEVEL (WITH GAUGE) 134
SENDER AS-LEVEL 137
SENSOR & MOUNTING GP 251
SENSOR AS (SPOOL) 199 695
SENSOR AS-ANGLE (AS400TC) (BLADE SLOPE) 333
SENSOR AS-ANGLE (AS400TC) (MAINFALL) . . 333
SENSOR AS-INERTIAL (ACCELERATION, ANGLE) 251
SENSOR AS-PRESSURE (PARKING BRAKE OIL) 362
SENSOR AS-ROTARY POSITION 333
SENSOR AS-TEMPERATURE (2-PIN) (HYDRAULIC FAN OIL) 75
SENSOR GP-ENGINE 252
SENSOR GP-POSITION (LINEAR) (STEERING CYLINDER) 547
SENSOR GP-POSITION (ROTARY) 314 829
SENSOR GP-POSITION (ROTARY) (XMSN MODULATOR CONTROL) 829
SENSOR GP-POSITION–ROTARY 254
SENSOR GP-PRESSURE 255 256 618
SENSOR GP-PRESSURE (ATMOSPHERIC) 252
SENSOR GP-PRESSURE (BOOST) 252
SENSOR GP-PRESSURE (ENGINE OIL BLOCK INLET) 334
SENSOR GP-PRESSURE (ENGINE) 252
SENSOR GP-PRESSURE (RAIL) 252
SENSOR GP-PRESSURE (SECONDARY STEERING) 600
SENSOR GP-PRESSURE (TRANSMISSION PUMP) 331
SENSOR GP-SPEED 252 257 258 259
SENSOR GP-SPEED (LOW OUTPUT) 257
SENSOR GP-SPEED (TORQUE CONVERTER OUTPUT) 362
SENSOR GP-SPEED (TRANSMISSION OUTPUT 2) 258
SENSOR GP-SPEED (TRANSMISSION OUTPUT) 362
SENSOR GP-TEMPERATURE 252 260 261 262
SENSOR GP-TEMPERATURE (2-PIN) (HYDRAULIC, STEERING) 300
SENSOR GP-TEMPERATURE (2-PIN) (TRANSMISSION OIL) 363
SENSOR GP-TEMPERATURE (CHARGE AIR) 334
SENSOR GP-TEMPERATURE (INLET AIR) 252
SENSOR-PRESSURE (TURBOCHARGER INLET) 313
SENSOR-TEMPERATURE (2-PIN) 261 262
SERVICE CENTER AR 474
SHAFT GP-DRIVE 401
SHAFT GP-INPUT–TRANSMISSION 402
SHIELD GP-ENGINE COMPARTMENT–DEBRIS 475
SNOW AR-MOTOR GRADER 10

INDEX

NAME PAGE

SOFTWARE GP-IMPLEMENT. 171
SOFTWARE GP-MONITOR. 172
173
SOFTWARE GP-MONITOR (CELLULAR) 164
173
SOFTWARE GP-MONITOR (NETWORK MANAGER) 173
SOFTWARE GP-MONITOR (SATELLITE RADIO) 167
173
SOFTWARE GP-MONITOR (TELEMATICS) 173
SOFTWARE GP-POWER TRAIN. 174
STARTING AID GP-ETHER 263
STARTING MOTOR GP-ELECTRIC 265
266
STEP GP 477
STRAINER (HYDRAULIC TANK). 641
SUPPORT GP-CONTROL–JOYSTICK, LH 842
SUPPORT GP-CONTROL–JOYSTICK, RH 840
SUPPORT GP-ENGINE 55
SUPPORT GP-RADIATOR. 478
SUPPRESSION GP-SOUND 481
SUPPRESSION GP-SOUND–ENGINE ENCLOSURE. 480
SUSPENSION GP-SEAT 844
SUSPENSION GP-SEAT–AIR. 846
SWITCH AS (FORWARD, NEUTRAL, REVERSE) 777
SWITCH AS-BALL 300
SWITCH AS-LIMIT (BRAKE LIGHT). 829
SWITCH AS-PRESSURE (A/C COMPRESSOR CLUTCH) (COMPRESSOR, LOW SIDE). 805
SWITCH AS-PRESSURE (FILTER BYPASS). . . . 557
SWITCH AS-PRESSURE (HIGH, LOW) (COMPRESSOR, HIGH SIDE) 805
SWITCH AS-PUSH BUTTON (HORN). 286
SWITCH AS-ROCKER (24-VOLT). 233
SWITCH AS-ROCKER (24-VOLT) (AIR CONDITIONER ON, OFF). 766
SWITCH AS-ROCKER (24-VOLT) (AUTO DIFFERENTIAL LOCK). 289
SWITCH AS-ROCKER (24-VOLT) (BLADE CUSHION) 278
SWITCH AS-ROCKER (24-VOLT) (CENTERSHIFT PIN) 286
SWITCH AS-ROCKER (24-VOLT) (FAN BLOWER SPEED). 798
SWITCH AS-ROCKER (24-VOLT) (FLOODLIGHTS). 268
SWITCH AS-ROCKER (24-VOLT) (FOG LIGHT, REAR) 228
SWITCH AS-ROCKER (24-VOLT) (FOG LIGHT). 231
SWITCH AS-ROCKER (24-VOLT) (HEADLIGHTS, TAIL LIGHTS) 288
SWITCH AS-ROCKER (24-VOLT) (HYDRAULIC LOCKOUT). 286
SWITCH AS-ROCKER (24-VOLT) (JOYSTICK CONTROL RAISE, LOWER). 287

NAME PAGE

SWITCH AS-ROCKER (24-VOLT) (PARKING BRAKE). 286
SWITCH AS-ROCKER (24-VOLT) (THROTTLE LOCK SET) 286
SWITCH AS-ROCKER (24-VOLT) (THROTTLE LOCK) 287
SWITCH AS-ROCKER (24-VOLT) (TURN SIGNAL) 233
SWITCH AS-ROCKER (24-VOLT) (WORK LIGHTS) 280
SWITCH AS-ROCKER (AUTO ARTICULATION). 154
155
SWITCH AS-ROCKER (AUTOSHIFT). 277
SWITCH AS-ROCKER (HEADLIGHT). 233
SWITCH AS-ROCKER (HEATED MIRRORS) . . . 279
SWITCH AS-ROCKER (SECONDARY STEERING) 286
SWITCH AS-ROCKER (WARNING BEACON). . . 198
237
SWITCH AS-START (KEY) 286
SWITCH GP-DISCONNECT–BATTERY 267
SWITCH GP-LIGHT–WORK LIGHT. 268
SWITCH GP-LIMIT. 269
SWITCH GP-MAGNETIC 271
273
274
SWITCH GP-MAGNETIC (24-VOLT). 308
SWITCH GP-MAGNETIC (24-VOLT) (MAIN POWER RELAY). 245
SWITCH GP-MAGNETIC–GLOW PLUG RELAY. 272
SWITCH GP-MAGNETIC–START RELAY 270
SWITCH GP-PRESSURE. 275
276
SWITCH GP-ROCKER 279
SWITCH GP-ROCKER (WARNING BEACON). . . 198
SWITCH GP-ROCKER–AUTO. 277
SWITCH GP-ROCKER–BLADE CUSHION 278
SWITCH GP-ROCKER–ROADING LIGHTS. 280
SWITCH GP-TOGGLE (GROUND LEVEL SHUTDOWN). 314
SWITCH GP-WIPER 282
SWITCH GP-WIPER (24-VOLT). 282
SWITCH GP-WIPER–CAB 281
SWITCH-TEMPERATURE (AIR CONDITIONER) 751
SWIVEL GP. 638
SWIVEL GP–CIRCLE DRIVE 634
636
637

T

TANDEM & COVER GP 403
TANK & MTG GP-HYDRAULIC. 639
TANK GP-AIR. 926
TANK GP-COOLANT. 89
TANK GP-FUEL 132
133

INDEX

NAME PAGE

TANK GP-FUEL–CROSSOVER 131
139
TANK GP-FUEL–LH. 134
137
TANK GP-FUEL–RH 130
136
TANK GP-HYDRAULIC. 641
TANK GP-WINDOW WASHER. 849
TOOTH GP-RIPPER–STRAIGHT 904
TOOTH GP-SCARIFIER 905
TRANSMISSION AR 405
TRIM GP-CAB–HVAC 850
TUBE GP-SHIPPING. 406
TURBOCHARGER GP 106
107

U

UNIVERSAL JOINT GP 407
408
409
410

V

VALVE & MTG GP-SOLENOID 411
VALVE & MTG GP-SOLENOID (DIFFERENTIAL LOCK) 360
VALVE AS-PRESSURE RELIEF 762
VALVE AS-RELIEF (SECONDARY STEERING) 610
VALVE GP-ACCUMULATOR CHARGING 517
VALVE GP-ACCUMULATOR CHARGING (BRAKE) 486
487
488
489
VALVE GP-ACCUMULATOR CHARGING (HYDRAULIC) 515
516
VALVE GP-BANK 3–REAR 642
VALVE GP-BANK 4–REAR 645
VALVE GP-BANK 5–FRONT. 650
VALVE GP-BANK 5–REAR 653
VALVE GP-BANK 6–FRONT. 658
662
VALVE GP-BANK 6–REAR 667
671
VALVE GP-BANK 7–FRONT. 676
681
VALVE GP-BANK 8–FRONT. 687
VALVE GP-BRAKE CONTROL. 830
VALVE GP-CHECK 593
599
692
703
711

NAME PAGE

VALVE GP-CHECK (ARTICULATION) 642
645
653
667
671
697
VALVE GP-CHECK (BLADE CENTERSHIFT) . . . 701
VALVE GP-CHECK (BLADE LIFT, LH) 642
645
653
667
671
VALVE GP-CHECK (BLADE LIFT, RH). 642
645
653
667
671
VALVE GP-CHECK (BLADE TIP) 650
658
662
676
681
687
699
715
723
VALVE GP-CHECK (BULLDOZER LIFT, PLOW). 709
VALVE GP-CHECK (CENTERSHIFT). 650
658
662
676
681
687
723
VALVE GP-CHECK (LIFT). 729
VALVE GP-CHECK (PLOW ANGLE) 681
687
723
VALVE GP-CHECK (PLOW LIFT). 658
676
681
687
723
VALVE GP-CHECK (RIPPER) 645
667
671
VALVE GP-CHECK (SCARIFIER) 662
676
687
713
VALVE GP-CHECK (SIDESHIFT) 650
658
662
676
681
687
723

INDEX

NAME PAGE

VALVE GP-CHECK (WHEEL LEAN) 650 658 662 676 681 687 717 723
VALVE GP-CHECK & RELIEF (BLADE LIFT, LH) 642 645 653 667 671
VALVE GP-CHECK & RELIEF (BLADE LIFT, RH) 642 645 653 667 671
VALVE GP-CHECK & RELIEF (BLADE TIP) 650 658 662 676 681 687 699 715 723
VALVE GP-CHECK & RELIEF (BULLDOZER LIFT, PLOW) 709
VALVE GP-CHECK & RELIEF (LINE, LIFT) 703 707 729
VALVE GP-CHECK & RELIEF (LINE, TILT) 705
VALVE GP-CHECK & RELIEF (PLOW ANGLE) 681 687 723
VALVE GP-CHECK & RELIEF (PLOW LIFT) . . . 658 676 681 687 723
VALVE GP-CHECK & RELIEF (RIPPER) 645 667 671 711
VALVE GP-CHECK & RELIEF (SCARIFIER) 662 676 687 713
VALVE GP-CHECK & RELIEF (SIDESHIFT) 650 662 676 681 687 723
VALVE GP-CHECK & RELIEF (WING LIFT) 653 667 671
VALVE GP-CHECK & RELIEF (WING TILT) 653 667 671 721
VALVE GP-CONTROL–ARTICULATION 697
VALVE GP-CONTROL–BLADE LIFT 729
VALVE GP-CONTROL–BLADE TIP 699 715
VALVE GP-CONTROL–CENTER SHIFT 701
VALVE GP-CONTROL–CIRCLE 719
VALVE GP-CONTROL–FRONT 723
VALVE GP-CONTROL–PLOW LIFT 709
VALVE GP-CONTROL–RIPPER 703 711
VALVE GP-CONTROL–SCARIFIER 713
VALVE GP-CONTROL–STEERING 693 695
VALVE GP-CONTROL–WHEEL LEAN 717
VALVE GP-CONTROL–WING LIFT 707
VALVE GP-CONTROL–WING TILT 705 721
VALVE GP-DIVERTER–FAN DRIVE 731
VALVE GP-ETHER STARTING 283
VALVE GP-MODULATING 412 413 414 415 416
VALVE GP-PRESSURE REDUCING 732
VALVE GP-PUMP CONTROL–FLOW COMPENSATOR 735
VALVE GP-PUMP CONTROL–PRESSURE, FLOW COMPENSATOR 733
VALVE GP-RELIEF 417 693 736 737
VALVE GP-RELIEF (LOAD SENSING) 645 653 667 671
VALVE GP-RELIEF (OIL PRESSURE) 695
VALVE GP-RELIEF (PILOT OPERATED) 642
VALVE GP-SHUTOFF–LOAD SENSING 738
VALVE GP-SHUTTLE 738 739
VALVE GP-SHUTTLE (HYDRAULIC FAN) 618
VALVE GP-SHUTTLE (STEERING) 695
VALVE GP-SOLENOID 420 421 667 738 740 741 742
VALVE GP-SOLENOID (24-VDC) (DIFFERENTIAL LOCK) 411
VALVE GP-SOLENOID (24-VDC) (TRANSMISSION CONTROL) 362

INDEX

NAME PAGE

VALVE GP-SOLENOID (24-VOLT) (COLD START) . . . 390
VALVE GP-SOLENOID (24-VOLT) (HYDRAULIC FAN) . . . 591
VALVE GP-SOLENOID (ARTICULATION) . . . 642, 645, 654, 671, 697
VALVE GP-SOLENOID (BLADE CENTERSHIFT) . . . 701
VALVE GP-SOLENOID (BLADE LIFT, LH) . . . 642, 645, 654, 671
VALVE GP-SOLENOID (BLADE LIFT, RH) . . . 642, 645, 654, 671
VALVE GP-SOLENOID (BLADE LIFT) . . . 729
VALVE GP-SOLENOID (BLADE TIP) . . . 650, 658, 662, 677, 681, 687, 699, 715, 723
VALVE GP-SOLENOID (BULLDOZER LIFT, PLOW) . . . 709
VALVE GP-SOLENOID (CENTERSHIFT LOCK) . . . 617
VALVE GP-SOLENOID (CENTERSHIFT) . . . 650, 658, 662, 677, 681, 687, 723
VALVE GP-SOLENOID (CIRCLE DRIVE) . . . 650, 658, 662, 677, 681, 687, 719, 723
VALVE GP-SOLENOID (HYDRAULIC ACCUMULATOR) . . . 515, 516
VALVE GP-SOLENOID (HYDRAULIC FAN) . . . 618
VALVE GP-SOLENOID (PILOT) . . . 695
VALVE GP-SOLENOID (PLOW ANGLE) . . . 681, 687, 723
VALVE GP-SOLENOID (PLOW LIFT) . . . 658, 677, 681, 687, 723
VALVE GP-SOLENOID (RIPPER) . . . 645, 671, 703, 711
VALVE GP-SOLENOID (SCARIFIER) . . . 662, 677, 687, 713
VALVE GP-SOLENOID (SIDESHIFT) . . . 650, 658, 662, 677, 681, 687, 723
VALVE GP-SOLENOID (STEERING) . . . 695
VALVE GP-SOLENOID (WHEEL LEAN) . . . 650, 658, 662, 677, 681, 687, 717, 723
VALVE GP-SOLENOID (WING LIFT) . . . 654, 671
VALVE GP-SOLENOID (WING TILT) . . . 654, 671, 693, 705, 707, 721
VALVE GP-SOLENOID–RIDE CONT, LIFT CYL HEAD END . . . 419
VALVE GP-STEERING . . . 743
VALVE GP-TIRE . . . 423, 430
VALVE GP-TIRE (TIRE INFLATION) . . . 423
VALVE MECHANISM GP . . . 56, 57
VALVE-AIR RELIEF . . . 926
VALVE-RELIEF . . . 490

W

WALKWAY GP–TANDEM . . . 483
WARNING GP-BACKUP . . . 284
WHEEL & TIRE AR . . . 422, 423
WHEEL & TIRE GP . . . 423, 424, 425, 426
WHEEL AR–TANDEM . . . 427

INDEX

NAME	PAGE	NAME	PAGE
WHEEL GP	428		
	429		
	430		
	431		
	432		
	433		
	434		
WINDOW GP-CAB	857		
WINDOW GP-CAB–FRONT	856		
WINDOW GP-CAB–REAR, SIDE	855		
WINDOW GP-VENT	858		
WIPER & WASHER GP-WINDOW–FRONT	859		
WIPER GP-WINDOW	866		
WIPER GP-WINDOW–DOOR, LH	864		
WIPER GP-WINDOW–DOOR, RH	862		
WIPER GP-WINDOW–REAR	861		
WIRING GP-AUXILIARY–FRONT	285		
WIRING GP-CAB	286		
WIRING GP-CAMERA–WORK AREA VISUAL SYSTEM	293		
WIRING GP-ELECTRONIC CONTROL	297		
WIRING GP-ELECTRONIC CONTROL–HYDRAULIC IMPLEMENT	295		
WIRING GP-FAN–COLD WEATHER	299		
WIRING GP-FRONT	300		
WIRING GP-GRADE CONTROL–ACCUGRADE	305		
WIRING GP-HEATER	308		
WIRING GP-MONITOR–CD610 DISPLAY	309		
WIRING GP-POWER RECEPTACLE	311		
WIRING GP-REAR	319		
	322		
WIRING GP-REAR LIGHTING–STOP, TAIL, TURN, BACKUP	326		
WIRING GP-REAR LIGHTING–TAIL	328		
WIRING GP-REAR–MAIN	313		
WIRING GP-SECONDARY STEERING	330		
WIRING GP-SENSOR	333		
	334		
	335		
WIRING GP-SENSOR–COLD WEATHER OPERATION	331		

MEMORANDA

MACHINE ARRANGEMENT

333-6001 COLD WEATHER AR

S/N: B551-UP

PART OF 349-3053 OPTION AR-COLD WEATHER

SMCS-7000 **i03460107**

NOTE	PART NUMBER	QTY	PART NAME 1 2 3 4 5 6 (PRODUCT LEVEL)	SEE PAGE
Y	*333-1285*	1	LINES GP-HYDRAULIC FAN	591
Y	*324-9254*	1	LINES GP-TRANSMISSION OIL (COLD WEATHER)	390
Y	*335-9433*	1	WIRING GP-FAN (COLD WEATHER)	299
Y	*323-5169*	1	WIRING GP-SENSOR (COLD WEATHER OPERATION)	331

Y - SEPARATE ILLUSTRATION

<END>

MACHINE ARRANGEMENT

577-1377 COMMON AR

S/N: B551-UP

SMCS-7000 **i07766956**

NOTE	PART NUMBER	QTY	PART NAME 1 2 3 4 5 6 (PRODUCT LEVEL)	SEE PAGE
Y	*231-2114*	1	AIR CLEANER GP	93
Y	*261-0775*	1	AIR CONDITIONER AR	750
Y	*433-6116*	1	AXLE AR-FRONT	337
Y	*247-8622*	1	BOX GP-TOOL	906
Y	*243-6660*	1	CIRCLE GP	744
Y	*268-6570*	1	COOLING AR	74
Y	*8E-3366*	1	COUPLING GP-TORSIONAL	367
Y	*233-7721*	1	CYLINDER & MTG GP-ARTICULATION	526
Y	*233-7723*	1	CYLINDER & MTG GP-BLADE TIP	529
Y	*263-2788*	1	CYLINDER & MTG GP-CENTERSHIFT	530
Y	*246-6115*	1	CYLINDER & MTG GP-SIDESHIFT	532
Y	*253-4630*	1	DRAWBAR GP	746
Y	**423-9923**	1	DRIVE GP-CIRCLE	551
Y	*310-3221*	1	ELECTRONICS GP-POWER TRAIN	174
Y	*288-8988*	1	ENCLOSURE GP-ENGINE	438
YR	**506-2265**	1	ENGINE AR-COMPLETE	11
Y	*231-2313*	1	FAN & MOTOR GP (RADIATOR COOLING)	75
Y	*319-7077*	1	FASTENER GP-ENCLOSURE	441
Y	*357-6336*	1	FILLER GP-POWER TRAIN OIL	379
Y	*246-6711*	1	FILM GP	907
Y	*250-8312*	1	FLYWHEEL GP	36
Y	*430-9004*	1	FRAME GP-REAR	449
Y	*232-2678*	1	HITCH GP-ARTICULATING	459
Y	*296-3008*	1	LIFT GP-BLADE	883
Y	*246-6704*	1	LINES GP-AFTERCOOLER AIR	98
Y	*246-6706*	1	LINES GP-FUEL FILTER	116
Y	*332-3941*	1	LINES GP-HYDRAULIC FAN	588
Y	*289-2081*	1	LINES GP-HYDRAULIC OIL COOLER	593
Y	*236-8921*	1	LINES GP-LUBRICATION (ARTICULATION HITCH BEARING)	464
Y	*255-1244*	1	LINES GP-LUBRICATION	384
Y	*231-1531*	1	LINES GP-SECONDARY STEERING	610
Y	*356-2956*	1	LINES GP-SERVICE BRAKE	508
Y	*255-1243*	1	LINES GP-TRANSMISSION OIL	386
Y	*246-6707*	1	LINES GP-WATER	81
Y	*6V-1970*	1	LITERATURE GP (STANDARD CAB)	812
Y	*284-5025*	1	MOUNTING GP-AXLE (REAR)	466
Y	*354-8029*	1	MOUNTING GP-CAB	825
Y	*231-2156*	1	MOUNTING GP-ENGINE & XMSN	45
Y	*255-1566*	1	MOUNTING GP-WHEEL	392
Y	*262-8360*	1	MOUNTING GP-XMSN OIL COOLER	393
Y	*371-8160*	1	MUFFLER GP	103
Y	*349-6146*	1	POWER TRAIN AR	394
Y	*235-8552*	1	PUMP & MTG GP-PISTON (BRAKE, HYDRAULIC FAN)	624
Y	*382-6923*	1	PUMP & MTG GP-PISTON (IMPLEMENT, STEERING)	625
Y	*250-1170*	1	PUMP & MTG GP-SECONDARY STEER (ELECTRIC DRIVE)	626
Y	*231-5061*	1	SERVICE CENTER AR	474
Y	*364-0526*	1	SHAFT GP-DRIVE	401
Y	*416-9123*	1	STARTING MOTOR GP-ELECTRIC	265

577-1377 **COMMON AR (**contd.**)** **i07766956**

NOTE	PART NUMBER	QTY	PART NAME 1 2 3 4 5 6 (PRODUCT LEVEL)	SEE PAGE
Y	*335-8336*	2	STEP GP	477
Y	*254-6997*	1	TANK GP-COOLANT	89
YR	**396-3303**	1	TRANSMISSION AR	405
Y	*266-2423*	1	WALKWAY GP (TANDEM)	483
Y	*257-7224*	1	WARNING GP-BACKUP	284
Y	*396-9719*	1	WIRING GP-POWER RECEPTACLE	311
Y	*264-7522*	1	WIRING GP-REAR	313
Y	*269-4150*	1	WIRING GP-SECONDARY STEERING	330

R - REMANUFACTURED PART MAY BE AVAILABLE
Y - SEPARATE ILLUSTRATION

<END>

367-7795 CONVERSION AR-CERTIFICATION

S/N: B551-UP

SMCS-7000 **i06611180**

NOTE	PART NUMBER	QTY	PART NAME 1 2 3 4 5 6 (PRODUCT LEVEL)	SEE PAGE
Y	*233-3142*	1	CONTROL GP-SERVICE BRAKE	496
Y	*396-9714*	1	WIRING GP-REAR	319

Y - SEPARATE ILLUSTRATION

<END>

426-1256 CONVERSION AR-CERTIFICATION—AUSTRALIA

S/N: B551-UP

SMCS-7000 **i06611672**

NOTE	PART NUMBER	QTY	PART NAME 1 2 3 4 5 6 (PRODUCT LEVEL)	SEE PAGE
Y	*252-1810*	1	CONTROL GP-SERVICE BRAKE	498
Y	*396-9714*	1	WIRING GP-REAR	319

Y - SEPARATE ILLUSTRATION

<END>

492-0728 CONVERSION AR-CERTIFICATION—CAMERA, REAR

S/N: B551-UP
TURKISH MARKET

SMCS-7000 **i07278867**

NOTE	PART NUMBER	QTY	PART NAME 1 2 3 4 5 6 (PRODUCT LEVEL)	SEE PAGE
Y	*391-4396*	1	CAMERA AR (WORK AREA VISUAL SYSTEM)	152
Y	*252-1810*	1	CONTROL GP-SERVICE BRAKE	498
Y	*366-2459*	1	GUARD GP-BOTTOM	450
Y	*376-4477*	1	GUARD GP-FUEL TANK	454
Y	*339-8788*	1	MIRROR GP (EXTERIOR)	814
Y	*440-9820*	1	REFLECTOR GP (MACHINE)	471
Y	*231-5055*	1	SUPPRESSION GP-SOUND (ENGINE ENCLOSURE)	480
Y	*377-1602*	1	SUPPRESSION GP-SOUND (ENGINE ENCLOSURE)	481
Y	*396-9714*	1	WIRING GP-REAR	319

Y - SEPARATE ILLUSTRATION

<END>

492-0729 CONVERSION AR-CERTIFICATION—CAMERA, REAR

S/N: B551-UP
TURKISH MARKET

SMCS-7000 **i07755627**

NOTE	PART NUMBER	QTY	PART NAME 1 2 3 4 5 6 (PRODUCT LEVEL)	SEE PAGE
Y	*391-4396*	1	CAMERA AR (WORK AREA VISUAL SYSTEM)	152
Y	*252-1810*	1	CONTROL GP-SERVICE BRAKE	498
Y	*262-0413*	1	FENDER & SUPPORT GP (REAR)	442
Y	*366-2459*	1	GUARD GP-BOTTOM	450
Y	*376-4477*	1	GUARD GP-FUEL TANK	454
Y	*233-4631*	1	LAMP GP-REGISTRATION PLATE	216
Y	*368-9766*	1	LIGHTING GP-ROADING (MARKER LIGHTS)	234
Y	*339-6165*	1	MIRROR GP (INTERIOR, REAR)	813
Y	*339-8788*	1	MIRROR GP (EXTERIOR)	814
Y	*440-9820*	1	REFLECTOR GP (MACHINE)	471
Y	*231-5055*	1	SUPPRESSION GP-SOUND (ENGINE ENCLOSURE)	480
Y	*377-1602*	1	SUPPRESSION GP-SOUND (ENGINE ENCLOSURE)	481
Y	*431-4287*	1	WIRING GP-REAR (SHIELDED CABLE)	322

Y - SEPARATE ILLUSTRATION

<END>

389-1907 OPTION AR-CAB

S/N: B551-UP
PLUS
CANNOT BE USED WITH 389-1906—PAGE: 757

SMCS-7301 **i07764537**

NOTE	PART NUMBER	QTY	PART NAME 1 2 3 4 5 6 (PRODUCT LEVEL)	SEE PAGE
Y	**575-9875**	1	CAB AR (PLUS)	760
Y	*233-3137*	1	FAN GP-CIRCULATING (DEFROSTER)	798
Y	*233-3150*	1	SEAT & MOUNTING GP (AIR)	834

Y - SEPARATE ILLUSTRATION

<END>

397-5305 OPTION AR-CAB—COMFORT

S/N: B551-UP
CANNOT BE USED WITH 391-8968—PAGE: 757
PART OF 565-4306 OPTION AR-REGIONAL

SMCS-7301 **i06553847**

NOTE	PART NUMBER	QTY	PART NAME 1 2 3 4 5 6 (PRODUCT LEVEL)	SEE PAGE
Y	*361-3136*	1	CONVERTER GP-ELECTRICAL (RADIO)	169
Y	*477-1250*	1	RADIO GP (AM/FM/WB/CD/XM/USB/BLUETOOTH)	831
	360-0116	1	SHADE AS-SUN	

Y - SEPARATE ILLUSTRATION

<END>

349-3052 OPTION AR-COLD WEATHER—NON ALL WHEEL DRIVE

S/N: B551-UP

SMCS-7000 **i03842889**

NOTE	PART NUMBER	QTY	PART NAME 1 2 3 4 5 6 (PRODUCT LEVEL)	SEE PAGE
Y	*233-4611*	1	BATTERY & WIRING GP (EXTREME SERVICE)	148
Y	*238-9561*	1	STARTING AID GP-ETHER	263

Y - SEPARATE ILLUSTRATION

<END>

349-3053 OPTION AR-COLD WEATHER—NON ALL WHEEL DRIVE

S/N: B551-UP

PART OF 565-1026 SNOW AR-MOTOR GRADER

SMCS-7000 **i03839909**

NOTE	PART NUMBER	QTY	PART NAME 1 2 3 4 5 6 (PRODUCT LEVEL)	SEE PAGE
Y	*333-6001*	1	COLD WEATHER AR	1
Y	*233-4611*	1	BATTERY & WIRING GP (EXTREME SERVICE)	148
Y	**312-5972**	1	COVER GP-PROTECTION (HYDRAULIC OIL COOLER, SNOW)	436
Y	*249-6692*	1	GUARD GP-DEBRIS	453
Y	*238-9561*	1	STARTING AID GP-ETHER	263

Y - SEPARATE ILLUSTRATION

<END>

349-3051 OPTION AR-ELECTRICAL

S/N: B551-UP

SMCS-7000 **i03839272**

NOTE	PART NUMBER	QTY	PART NAME 1 2 3 4 5 6 (PRODUCT LEVEL)	SEE PAGE
Y	*236-1924*	1	BATTERY & WIRING GP (HEAVY-DUTY)	150

Y - SEPARATE ILLUSTRATION

<END>

492-0730 OPTION AR-GRADE CONTROL

S/N: B551-UP

CANNOT BE USED WITH 357-9151—PAGE: 765, 458-8701—PAGE: 782, 458-2072—PAGE: 154, 362-5222—PAGE: 636, 462-6392—PAGE: 174, 462-6393—PAGE: 175

SMCS-7000 **i06888799**

NOTE	PART NUMBER	QTY	PART NAME 1 2 3 4 5 6 (PRODUCT LEVEL)	SEE PAGE
Y	*435-2072*	1	CONTROL AR-ELECTRIC (AUTO ARTICULATION)	154
Y	*458-2072*	1	CONTROL AR-ELECTRIC (ANTI - BOUNCE)	154
Y	*458-8701*	1	CONTROL GP-JOYSTICK (GRADE CONTROL)	782
Y	*462-6393*	1	GRADE CONTROL AR	175

Y - SEPARATE ILLUSTRATION

<END>

353-3319 OPTION AR-LIGHTING—WORK LIGHTS

S/N: B551-UP

CANNOT BE USED WITH 374-4558—PAGE: 6

SMCS-7000 **i03928711**

NOTE	PART NUMBER	QTY	PART NAME 1 2 3 4 5 6 (PRODUCT LEVEL)	SEE PAGE
Y	*308-9380*	1	LIGHTING GP-FLOOD (TOE)	226
Y	*308-9382*	1	LIGHTING GP-FLOOD (HEEL)	227
Y	*344-0985*	1	SWITCH GP-LIGHT (WORK LIGHT)	268

Y - SEPARATE ILLUSTRATION

<END>

374-4558 OPTION AR-LIGHTING—WORK LIGHTS

S/N: B551-UP

PLUS

CANNOT BE USED WITH 353-3319—PAGE: 6

SMCS-7000 **i05893411**

NOTE	PART NUMBER	QTY	PART NAME 1 2 3 4 5 6 (PRODUCT LEVEL)	SEE PAGE
Y	*233-4620*	1	LAMP GP-FLOOD (RIPPER)	203
Y	*308-9380*	1	LIGHTING GP-FLOOD (TOE)	226
Y	*308-9382*	1	LIGHTING GP-FLOOD (HEEL)	227
Y	*344-0985*	1	SWITCH GP-LIGHT (WORK LIGHT)	268

Y - SEPARATE ILLUSTRATION

<END>

551-6544 OPTION AR-LIGHTING—WORK LIGHTS

S/N: B551-UP

CANNOT BE USED WITH 353-3319—PAGE: 6

SMCS-7000 **i07651034**

NOTE	PART NUMBER	QTY	PART NAME 1 2 3 4 5 6 (PRODUCT LEVEL)	SEE PAGE
Y	*550-4905*	1	LAMP GP-FLOOD (RIPPER)	209
Y	*550-4901*	1	LIGHTING GP-FLOOD (TOE)	229
Y	*550-4904*	1	LIGHTING GP-FLOOD (HEEL)	230
Y	*344-0985*	1	SWITCH GP-LIGHT (WORK LIGHT)	268

Y - SEPARATE ILLUSTRATION

<END>

364-1989 OPTION AR-MACHINE–NON ALL WHEEL DRIVE

S/N: B551-UP

FOR USE WITH BOX FRAME

SMCS-7000 **i07676120**

NOTE	PART NUMBER	QTY	PART NAME 1 2 3 4 5 6 (PRODUCT LEVEL)	SEE PAGE
Y	*305-2897*	1	CYLINDER & MTG GP-BLADE LIFT	528
Y	*351-9811*	1	FRAME GP-FRONT	446
Y	*394-1511*	1	GUARD GP-LINES	455
Y	*305-2926*	1	LINES GP-HYDRAULIC (DRAWBAR)	560
Y	*380-8323*	1	LINES GP-HYDRAULIC (ARTICULATION)	581
Y	*473-0556*	1	LINES GP-PUMP (REAR)	599
Y	*393-6074*	1	LINES GP-PUMP (FRONT)	595
Y	*393-6071*	1	LINES GP-STEERING (CONTROL MANIFOLD)	615
Y	*305-2925*	1	LINES GP-STEERING (STEERING CYLINDER)	612
Y	*305-2901*	1	LOCK GP-CENTERSHIFT	617
Y	*355-2954*	1	MOUNTING GP-FUEL TANK	120
Y	*393-6073*	1	MOUNTING GP-VALVE	623
Y	*362-5222*	1	SWIVEL GP (CIRCLE DRIVE)	636
Y	*471-9240*	1	WIRING GP-FRONT	300
Y	*443-0882*	1	WIRING GP-SENSOR (STEERING CYLINDER POSITION)	335

Y - SEPARATE ILLUSTRATION

<END>

390-9182 OPTION AR-MACHINE–SNOW WING

S/N: B551-UP

SMCS-7000 **i05893413**

NOTE	PART NUMBER	QTY	PART NAME 1 2 3 4 5 6 (PRODUCT LEVEL)	SEE PAGE
Y	*357-2262*	1	LIGHTING GP-FLOOD	228
Y	*360-5080*	1	MOUNTING GP-SNOW WING	895

Y - SEPARATE ILLUSTRATION

<END>

551-6546 OPTION AR-MACHINE–SNOW WING

S/N: B551-UP

LED

CANNOT BE USED WITH 390-9182–PAGE: 7

SMCS-7000 **i07651038**

NOTE	PART NUMBER	QTY	PART NAME 1 2 3 4 5 6 (PRODUCT LEVEL)	SEE PAGE
Y	*550-6609*	1	LIGHTING GP-FLOOD (SNOW WING)	231
Y	*360-5080*	1	MOUNTING GP-SNOW WING	895

Y - SEPARATE ILLUSTRATION

<END>

367-7798 OPTION AR-REGIONAL—CANADIAN CONFIGURATION

S/N: B551-UP

CANNOT BE USED WITH 367-7795—PAGE: 3

SMCS-7000 **i07231234**

NOTE	PART NUMBER	QTY	PART NAME 1 2 3 4 5 6 (PRODUCT LEVEL)	SEE PAGE
Y	*511-5471*	1	FILM GP	908
Y	*356-4256*	1	LINES GP-SERVICE BRAKE	513
Y	*396-9714*	1	WIRING GP-REAR	319

Y - SEPARATE ILLUSTRATION

<END>

536-5229 OPTION AR-REGIONAL

S/N: B551-UP

FOR USE WITH 233-3295—PAGE: 818

CANNOT BE USED WITH 492-0728—PAGE: 3, 492-0729—PAGE: 4, 391-4396—PAGE: 152

SMCS-7000 **i07162418**

NOTE	PART NUMBER	QTY	PART NAME 1 2 3 4 5 6 (PRODUCT LEVEL)	SEE PAGE
Y	*391-4396*	1	CAMERA AR (WORK AREA VISUAL SYSTEM)	152
Y	*339-8788*	1	MIRROR GP (EXTERIOR)	814

Y - SEPARATE ILLUSTRATION

<END>

565-4306 OPTION AR-REGIONAL

S/N: B551-UP

SMCS-7000 **i07726166**

NOTE	PART NUMBER	QTY	PART NAME 1 2 3 4 5 6 (PRODUCT LEVEL)	SEE PAGE
Y	*420-1977*	1	CAB AR	758
Y	*463-5584*	1	CONTROL GP-ELECTRONIC (PRODUCT LINK ELITE SATELLITE)	164
Y	*560-8856*	1	LIGHTING AR-ROADING (REAR)	225
Y	*277-9409*	1	LIGHTING GP-ROADING (LH)	232
Y	*368-9766*	1	LIGHTING GP-ROADING (MARKER LIGHTS)	234
Y	*286-4435*	1	LIGHTING GP-WARNING BEACON	237
Y	*233-3295*	1	MIRROR GP-REAR VIEW (EXTERIOR)	818
Y	*397-5305*	1	OPTION AR-CAB (COMFORT CAB)	4
Y	*311-3865*	1	PLATE AS-TIE DOWN	468
Y	*278-0951*	1	PLATE GP-MOUNTING (FRONT LICENSE PLATE)	469
	7X-7644	1	FILM-IDENTIFICATION (TIE-DOWN)	

Y - SEPARATE ILLUSTRATION

<END>

364-2034 OPTION AR-SCARIFIER—SCARIFIER

S/N: B551-UP
MID MOUNT
FOR USE WITH 365-3355—PAGE: 520

SMCS-7000 **i04790235**

NOTE	PART NUMBER	QTY	PART NAME 1 2 3 4 5 6 (PRODUCT LEVEL)	SEE PAGE
Y	*360-5074*	1	BRACKET GP-SCARIFIER	876
Y	*310-9425*	1	SCARIFIER AR (VEE TYPE)	900

Y - SEPARATE ILLUSTRATION

<END>

349-3046 OPTION AR-WORK TOOL—BLADE

S/N: B551-UP
12-FT
CANNOT BE USED WITH 349-3047—PAGE: 9, 349-3048—PAGE: 9

SMCS-6700, 7000 **i05893062**

NOTE	PART NUMBER	QTY	PART NAME 1 2 3 4 5 6 (PRODUCT LEVEL)	SEE PAGE
Y	*233-7148*	1	BIT GP-END	868
Y	*243-6702*	1	BLADE GP (12-FT)	870
Y	*233-7139*	1	EDGE GP-CUTTING	880

Y - SEPARATE ILLUSTRATION

<END>

349-3047 OPTION AR-WORK TOOL—BLADE

S/N: B551-UP
14-FT X 24-IN
CANNOT BE USED WITH 349-3046—PAGE: 9, 349-3048—PAGE: 9

SMCS-6700, 7000 **i05893063**

NOTE	PART NUMBER	QTY	PART NAME 1 2 3 4 5 6 (PRODUCT LEVEL)	SEE PAGE
Y	*233-7148*	1	BIT GP-END	868
Y	*243-6703*	1	BLADE GP (14-FT X 24-IN)	871
Y	*233-7143*	1	EDGE GP-CUTTING	880

Y - SEPARATE ILLUSTRATION

<END>

349-3048 OPTION AR-WORK TOOL—BLADE

S/N: B551-UP
14-FT X 27-IN, PLUS
CANNOT BE USED WITH 349-3046—PAGE: 9, 349-3047—PAGE: 9

SMCS-6700, 7000 **i05893064**

NOTE	PART NUMBER	QTY	PART NAME 1 2 3 4 5 6 (PRODUCT LEVEL)	SEE PAGE
Y	*233-7160*	1	BIT GP-END	869
Y	*243-6704*	1	BLADE GP (14-FT X 27-IN)	872
Y	*233-7143*	1	EDGE GP-CUTTING	880

Y - SEPARATE ILLUSTRATION

<END>

351-5178 OPTION AR-WORK TOOL—BULLDOZER

S/N: B551-UP

FOR USE WITH 312-2204—PAGE: 889

CANNOT BE USED WITH 312-2204—PAGE: 889, 365-5539—PAGE: 522, 438-5423—PAGE: 524

SMCS-6700, 7000 **i06751196**

NOTE	PART NUMBER	QTY	PART NAME 1 2 3 4 5 6 (PRODUCT LEVEL)	SEE PAGE
Y	*309-6809*	1	BLADE GP-BULLDOZER (STRAIGHT BLADE)	873
Y	*279-8137*	1	LINES GP-HYDRAULIC (FRONT)	559

Y - SEPARATE ILLUSTRATION

<END>

565-9420 ROADING AR

S/N: B551-UP

BRAZILIAN MARKET

SMCS-7000 **i07638627**

NOTE	PART NUMBER	QTY	PART NAME 1 2 3 4 5 6 (PRODUCT LEVEL)	SEE PAGE
Y	*560-8856*	1	LIGHTING AR-ROADING (REAR)	225
Y	*277-9409*	1	LIGHTING GP-ROADING (LH)	232
Y	*233-3295*	1	MIRROR GP-REAR VIEW (EXTERIOR)	818
Y	*515-5427*	1	REFLECTOR GP	472

Y - SEPARATE ILLUSTRATION

<END>

565-1026 SNOW AR-MOTOR GRADER

S/N: B551-UP

SMCS-7000 **i07631052**

NOTE	PART NUMBER	QTY	PART NAME 1 2 3 4 5 6 (PRODUCT LEVEL)	SEE PAGE
Y	*253-2724*	1	ALTERNATOR GP-CHARGING (150-AMPERE)	145
Y	*248-6925*	1	AUTOSHIFT AR (TRANSMISSION)	337
Y	*361-3137*	1	INSTALLATION GP-WARNING BEACON	198
Y	*560-8856*	1	LIGHTING AR-ROADING (REAR)	225
Y	*349-3053*	1	OPTION AR-COLD WEATHER	5

Y - SEPARATE ILLUSTRATION

<END>

506-2265 ENGINE AR-COMPLETE*R

S/N: TX71-UP

PART OF 577-1377 COMMON AR

SMCS-1000 **i06991481**

NOTE	PART NUMBER	QTY	PART NAME 1 2 3 4 5 6 (PRODUCT LEVEL)	SEE PAGE
Y	*250-8318*	1	ADAPTER GP-TURBOCHARGER	91
Y	*222-5946*	1	BREATHER GP (CRANKCASE)	59
Y	**334-3855**	1	CONTROL & MTG GP-ENGINE ELEK	153
Y	*117-3643*	1	COOLER GP-ENGINE OIL	73
Y	*189-8780*	1	COVER GP-AIR INLET	95
Y	*229-8841*	1	COVER GP-CYLINDER BLOCK	18
Y	*118-1727*	1	COVER GP-FRONT HOUSING (ACCESSORY DRIVE)	19
Y	*275-0595*	1	COVER GP-FRONT HOUSING	20
Y	*307-1735*	1	COVER GP-VALVE MECHANISM	21
Y	*250-8309*	1	DAMPER & PULLEY GP	34
Y	*275-1307*	1	ELBOW GP-AIR INLET	97
Y	*461-5203*	1	ENGINE AR-CORE	12
Y	*258-8723*	1	FASTENER GP-CYLINDER HEAD	35
Y	*189-5433*	1	FILTER GP-ENGINE OIL	60
Y	*420-3318*	1	FILTER GP-FUEL	110
Y	*220-1194*	1	FUMES DISPOSAL GP	62
Y	*276-3681*	1	GAUGE GP-OIL LEVEL (DIPSTICK)	63
Y	*434-1092*	1	GEAR GP-REAR	38
Y	*297-6867*	1	GROUND GP-ELECTRICAL	177
Y	*279-5644*	1	HOUSING GP-FLYWHEEL	39
Y	*165-4446*	1	HOUSING GP-FRONT	41
Y	*339-7815*	1	LIFTING GP-ENGINE	43
Y	*129-1133*	1	LINES GP-ENGINE OIL	64
Y	*418-8566*	1	LINES GP-FUEL	114
Y	*250-8315*	1	LINES GP-TURBOCHARGER OIL	66
Y	*206-4228*	1	LINES GP-WATER (ENGINE)	79
Y	*237-8063*	1	MANIFOLD GP-ENGINE OIL	68
Y	*257-8467*	1	MANIFOLD GP-EXHAUST	102
Y	*293-4622*	1	MOUNTING GP-FAN DRIVE	47
Y	*250-8320*	1	PAN GP-OIL	48
Y	*159-0303*	1	PLUG GP-CYLINDER BLOCK (COOLANT CONDITIONER)	50
Y	*162-8068*	1	PLUG GP-ENGINE	51
Y	*7E-7590*	1	SEAL GP-CRANKSHAFT	54
Y	*247-0270*	1	SUPPORT GP-ENGINE	55
Y	*254-3813*	1	TURBOCHARGER GP	106
Y	*424-7735*	1	WIRING GP-ELECTRONIC CONTROL	297
Y	*275-0596*	1	WIRING GP-HEATER	308
Y	*419-6912*	1	WIRING GP-SENSOR	334
	416-5382	1	PLATE & FILM GP	

Y - SEPARATE ILLUSTRATION

<END>

387-8499 ENGINE AR-CORE

S/N: TX71-UP

PART OF 461-5203 ENGINE AR-CORE

SMCS-1000 **i06224786**

NOTE	PART NUMBER	QTY	PART NAME 1 2 3 4 5 6 (PRODUCT LEVEL)	SEE PAGE
Y	*212-4289*	1	CAMSHAFT GP	17
Y	*210-5590*	1	CRANKSHAFT GP	24
Y	*221-4482*	1	CYLINDER BLOCK GP	25
Y	*219-5849*	1	CYLINDER HEAD GP	32
Y	*205-1321*	1	GEAR GP-FRONT	37
Y	*396-8415*	1	LINES GP-INJECTOR HYD PUMP	119
YR	*212-3652*	6	PISTON & ROD GP	49
Y	*389-1183*	1	PUMP & MTG GP-UNIT INJ HYD	122
Y	*192-2981*	1	PUMP GP-ENGINE OIL	71
Y	*268-1839*	6	PUMP GP-FUEL INJECTION	125
Y	*264-1434*	1	PUMP GP-WATER	84
Y	*330-6038*	1	SENSOR GP-ENGINE	252
Y	*232-3717*	1	VALVE MECHANISM GP	56

R - REMANUFACTURED PART MAY BE AVAILABLE
Y - SEPARATE ILLUSTRATION

<END>

461-5203 ENGINE AR-CORE

S/N: TX71-UP

PART OF 506-2265 ENGINE AR-COMPLETE

SMCS-1000 **i06641532**

NOTE	PART NUMBER	QTY	PART NAME 1 2 3 4 5 6 (PRODUCT LEVEL)	SEE PAGE
Y	*387-8499*	1	ENGINE AR-CORE	12
	463-8352	1	ELECTRONICS GP-ENGINE	

Y - SEPARATE ILLUSTRATION

<END>

261-0610 AIR COMPRESSOR AR

S/N: B551-UP

CANNOT BE USED WITH 255-1284—PAGE: 101

SMCS-1803, 1804, 5502

i02786527

NOTE	PART NUMBER	QTY	PART NAME 1 2 3 4 5 6 (PRODUCT LEVEL)	SEE PAGE
Y	*246-6719*	1	AIR COMPRESSOR GP	15
Y	*255-1283*	1	LINES GP-AIR	100
Y	*255-1250*	1	LINES GP-AIR TANK	506
Y	*236-8922*	1	TANK GP-AIR	926

Y - SEPARATE ILLUSTRATION

<END>

224-0003 AIR COMPRESSOR GP

S/N: B551-UP
10.9 CFM AT 1250 RPM
PART OF 246-6719 AIR COMPRESSOR GP

SMCS-1803 **i05394351**

NOTE	REF NO	GRAPHIC REF	PART NUMBER	QTY	PART NAME 1 2 3 4 5 6 (PRODUCT LEVEL)	SEE PAGE
	1	1	**9X-8267**	2	WASHER (6.6X12X2-MM THK)	
	2	1	**033-6031**	1	SEAL-O-RING	
	3	1	**179-7383**	1	SEAL-O-RING	
	4	1	**3K-0360**	1	SEAL-O-RING	
	5	1	**9S-8005**	1	PLUG (3/4-16-THD)	
M	6	1	**6V-6317**	2	BOLT (M10X1.5X20-MM)	
M	7	1	**6V-5221**	4	BOLT (M8X1.25X80-MM)	
	8	1	**6V-5839**	2	WASHER (11X21X2.5-MM THK)	
M	9	1	**8T-2396**	2	BOLT (M6X1X60-MM)	
	10	1	**9M-1974**	4	WASHER-HARD (8.8X16X2-MM THK)	

M - METRIC PART

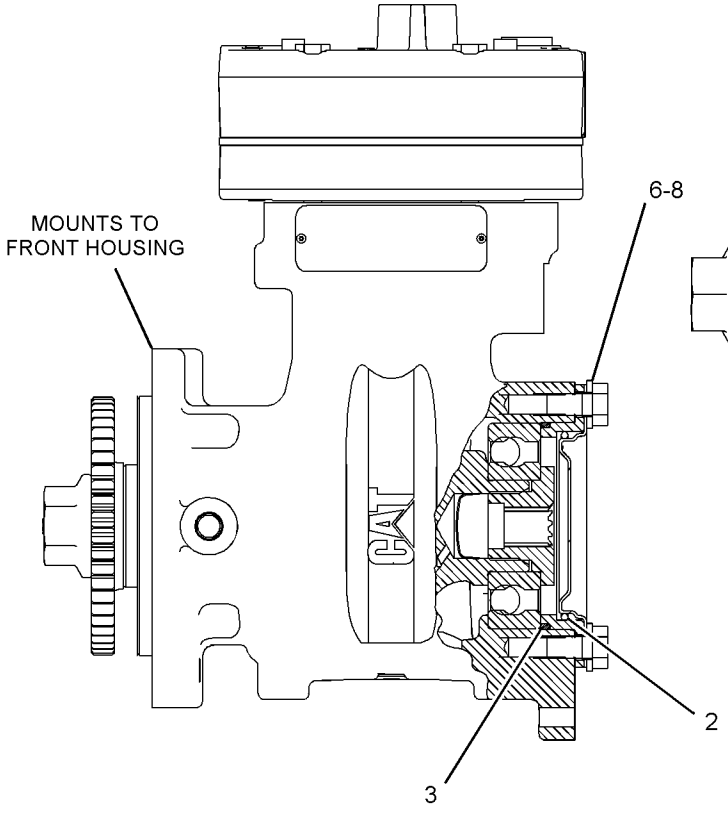

LEFT SIDE VIEW OF ENGINE

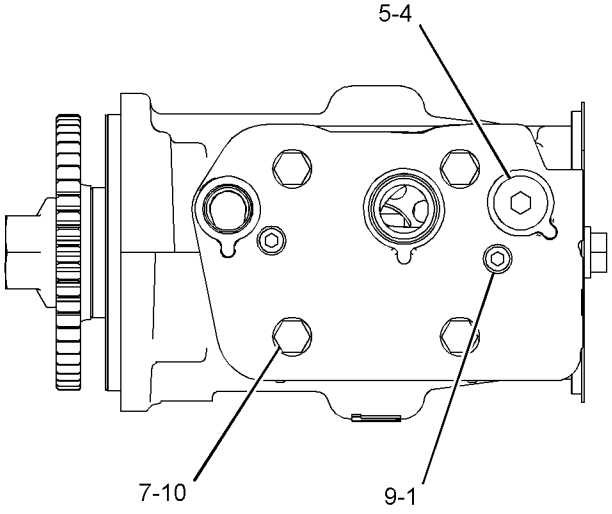

TOP VIEW OF ENGINE

GRAPHIC #1 <END> g02728403

246-6719 AIR COMPRESSOR GP

S/N: B551-UP

PART OF 261-0610 AIR COMPRESSOR AR

SMCS-1803 **i07495932**

NOTE	REF NO	GRAPHIC REF	PART NUMBER	QTY	PART NAME 1 2 3 4 5 6 (PRODUCT LEVEL)	SEE PAGE
	1	1	**2P-2216**	2	SPACER (0.641X1.125X0.750-IN THK)	
	2	1	**135-9819**	1	SEAL-INTEGRAL	
	3	1	*439-1960*	1	ADAPTER AS	
		1	**168-8806**	1	CONNECTOR	
		1	**238-5080**	1	SEAL-O-RING	
Y	4	1	**224-0003**	1	AIR COMPRESSOR GP	14
I	5	1	**235-2448**	1	HOSE AS	
	6	1	**239-5921**	1	TUBE AS	
	7	1	**257-8751**	1	VALVE AS	
M		1	**6V-7728**	4	BOLT (M6X1X45-MM)	
		1	**178-5544**	4	SPACER (6.6X13X18-MM THK)	
		1	**245-4393**	1	GASKET	
I	8	1	**265-4043**	1	HOSE AS	
	9	1	**313-6409**	1	TUBE AS	
	10	1	**313-6411**	1	BRACKET	
	11	1	**436-3344**	1	TUBE AS	
	12	1	**122-5855**	1	SPACER (11.5X20X26-MM THK)	
	13	1	*451-0386*	1	ELBOW AS	
		1	**008-8381**	1	ELBOW	
		1	**238-5082**	1	SEAL-O-RING	
	14	1	*384-9225*	1	CONNECTOR AS	
		1	**030-8190**	1	CONNECTOR	
		1	**238-5082**		SEAL-O-RING	
	15	1	**124-6257**	2	CLAMP-HOSE	
	17	1	*365-0581*	1	CONNECTOR AS	
		1	**6V-6609**	1	SEAL-O-RING	
		1	**6V-8639**	1	CONNECTOR	
		1	**180-8424**	1	SEAL-O-RING	
	18	1	*371-7174*	1	ELBOW AS	
		1	**6V-6609**	1	SEAL-O-RING	
		1	**6V-8625**	1	ELBOW	
		1	**180-8424**	1	SEAL-O-RING	
	19	1	*335-3982*	1	ELBOW AS	
		1	**6V-8627**	1	ELBOW	
		1	**214-7568**	1	SEAL-O-RING	
		1	**228-7088**	1	SEAL-O-RING	
	20	1	*385-5772*	1	ELBOW AS	
		1	**6V-8628**	1	ELBOW	
		1	**214-7566**	1	SEAL-O-RING	
		1	**228-7088**	1	SEAL-O-RING	
M	21	1	**8T-4182**	1	BOLT (M10X1.5X45-MM)	
	22	1	*448-9013*	1	ADAPTER AS	
		1	**6V-6609**	1	SEAL-O-RING	
		1	**123-1904**	1	CONNECTOR	
		1	**180-8424**	1	SEAL-O-RING	
	23	1	**3E-4353**	1	WASHER-HARD (11X25X3-MM THK)	
	24	1	*398-5610*	1	CONNECTOR AS	

246-6719 **AIR COMPRESSOR GP (**contd.**)** **i07495932**

NOTE	REF NO	GRAPHIC REF	PART NUMBER	QTY	PART NAME 1 2 3 4 5 6 (PRODUCT LEVEL)	SEE PAGE
		1	**3R-6790**	1	CONNECTOR-PORT	
		1	**238-5082**	1	SEAL-O-RING	
	25	1	**4B-0418**	1	CLIP (LOOP)	
	26	1	**4D-7735**	1	CLIP	
M	27	1	**6V-3940**	2	BOLT (M8X1.25X25-MM)	
	29	1	**6V-8765**	2	WASHER-HARD (15X26X3-MM THK)	
	30	1	**7X-0632**	1	WASHER-HARD (11X36X6-MM THK)	
M	31	1	**8T-0226**	2	BOLT (M14X2X45-MM)	
	32	1	**8T-4121**	1	WASHER-HARD (11X21X2.5-MM THK)	
M	33	1	**8T-4136**	1	BOLT (M10X1.5X25-MM)	
	35	1	**8T-4223**	2	WASHER-HARD (13.5X25.5X3-MM THK)	
M	36	1	**8T-6868**	2	BOLT (M12X1.75X80-MM)	
	37	1	**9M-1974**	4	WASHER-HARD (8.8X16X2-MM THK)	
CG	38	1	**423-1984**		HOSE (18.1-IN)	

C - CHANGE FROM PREVIOUS TYPE
G - ORDER BY THE INCH
I - REFER TO HYDRAULIC INFORMATION SYSTEM
M - METRIC PART
Y - SEPARATE ILLUSTRATION

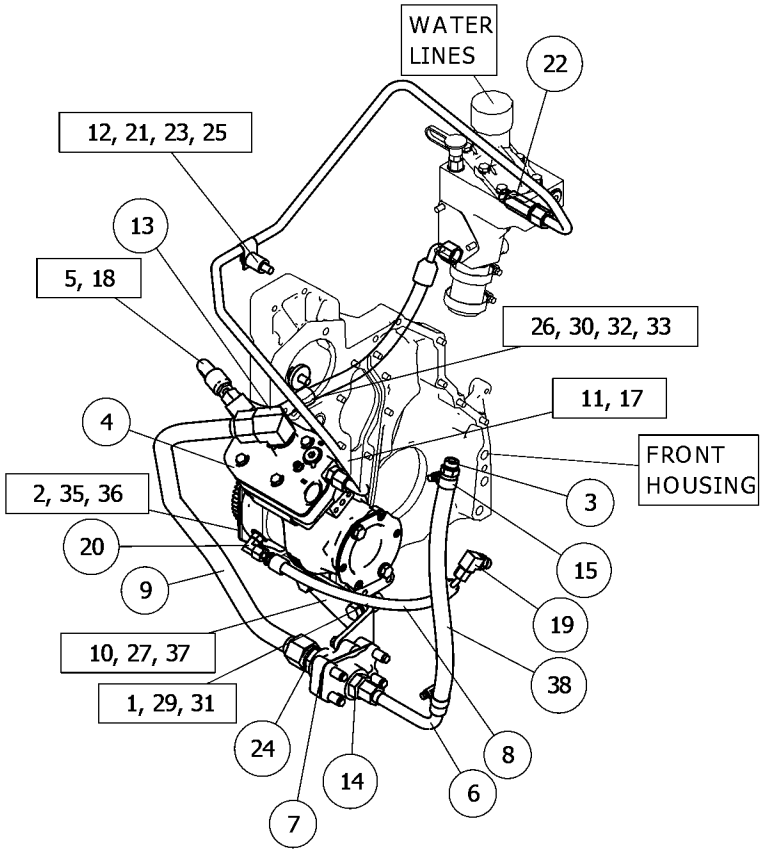

GRAPHIC #1 <END> g06316536

212-4289 CAMSHAFT GP

S/N: TX71-UP

PART OF 387-8499 ENGINE AR-CORE

SMCS-1210 **i02215726**

NOTE	REF NO	GRAPHIC REF	PART NUMBER	QTY	PART NAME 1 2 3 4 5 6 (PRODUCT LEVEL)	SEE PAGE
	1	1	**107-7694**	1	PLATE-THRUST	
R	2	1	**212-4288**	1	CAMSHAFT AS	
	2A	1	**1B-8705**	1	KEY-WOODRUFF	
	2B	1	**224-3247**	1	GEAR (100-TEETH)	
M	3	1	**6V-3940**	2	BOLT (M8X1.25X25-MM)	

M - METRIC PART
R - REMANUFACTURED PART MAY BE AVAILABLE

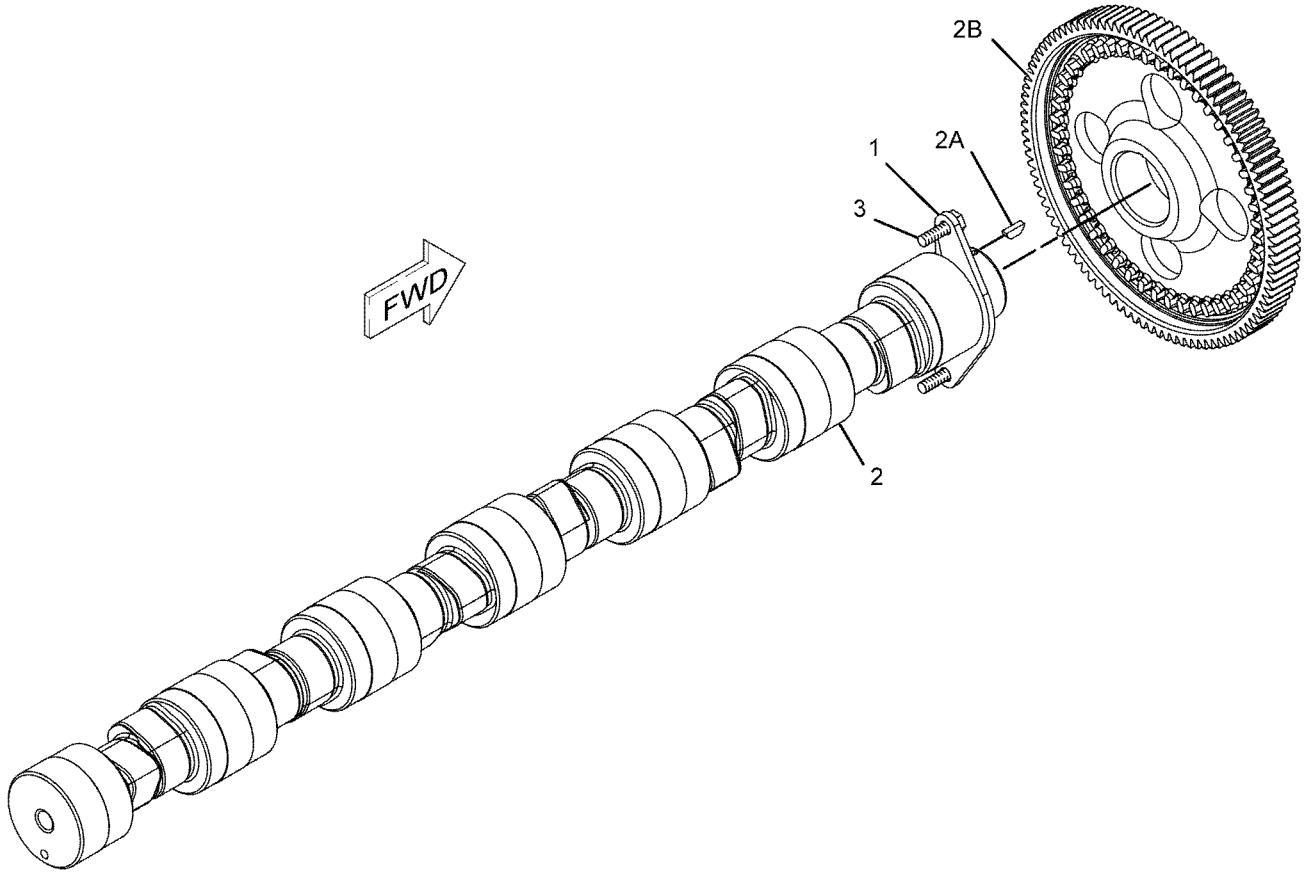

GRAPHIC #1 <END> g01099239

229-8841 COVER GP-CYLINDER BLOCK

S/N: TX71-UP

PART OF 506-2265 ENGINE AR-COMPLETE

SMCS-1201 **i07161589**

NOTE	REF NO	GRAPHIC REF	PART NUMBER	QTY	PART NAME 1 2 3 4 5 6 (PRODUCT LEVEL)	SEE PAGE
	1	1	**2W-6544**	1	COVER	
	2	1	**4P-5918**	3	CLIP	
	3	1	**4Y-9652**	3	GASKET	
	4	1	**342-4977**	2	COVER-SIDE	
	5	1	**7W-3872**	6	SLEEVE	
	6	1	**110-7618**	4	BOLT AS	
	8	1	**222-5893**	1	COVER AS	
M	8A	1	**6V-5698**	2	SCREW-BUTTON HEAD (M4X0.7X10-MM)	
M	9	1	**210-3321**	1	STUD (M8X1.25-THD)	
M	10	1	**5C-7261**	1	NUT (M8X1.25-THD)	
M	11	1	**6V-2317**	23	BOLT (M8X1.25X30-MM)	
	12	1	**9M-1974**	14	WASHER-HARD (8.8X16X2-MM THK)	
	13	1	**517-0553**	1	GASKET	

M - METRIC PART

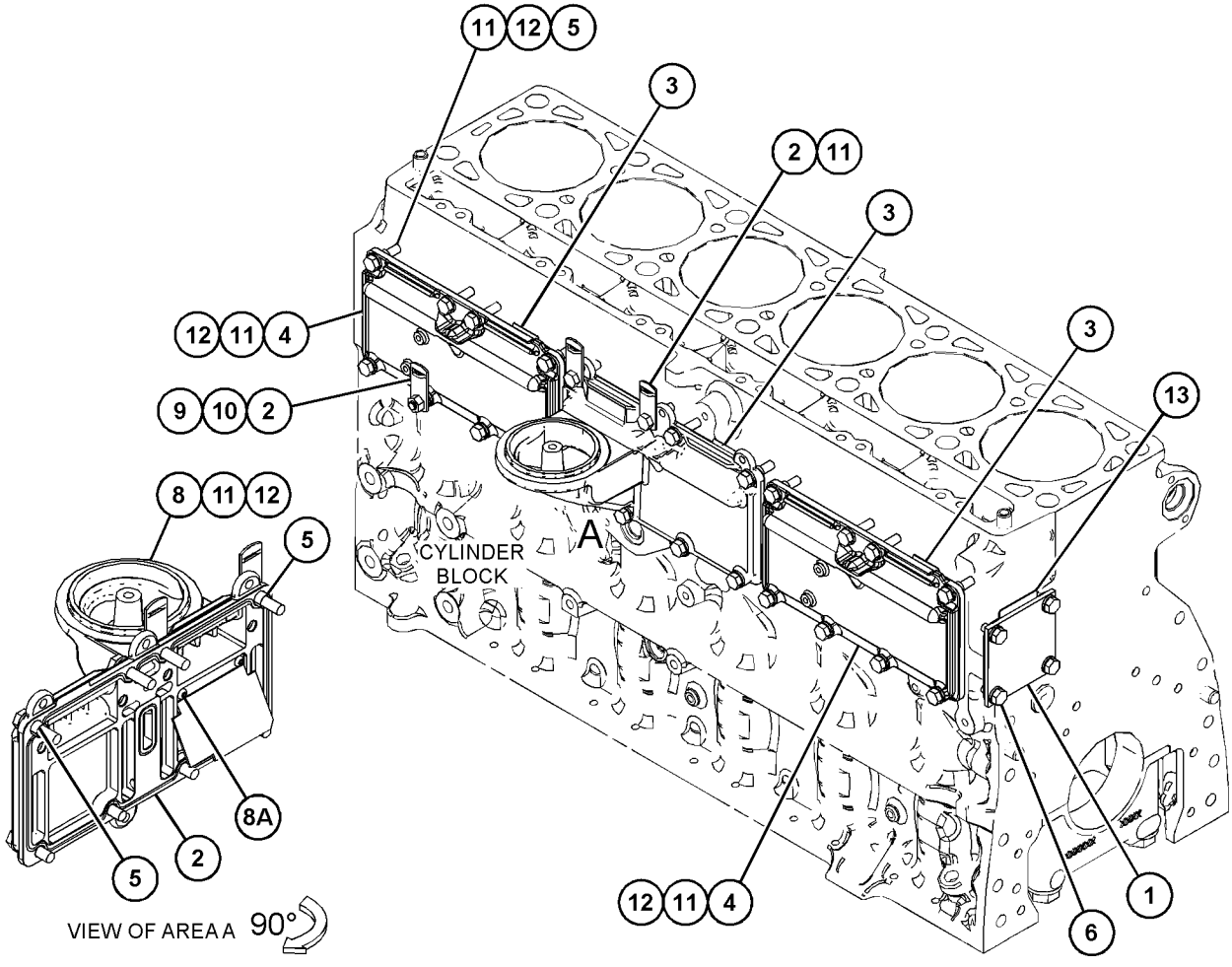

GRAPHIC #1 <END> g06231268

118-1727 COVER GP-FRONT HOUSING

S/N: TX71-UP

PART OF 506-2265 ENGINE AR-COMPLETE

SMCS-1151, 1166 **i05854262**

NOTE	REF NO	GRAPHIC REF	PART NUMBER	QTY	PART NAME 1 2 3 4 5 6 (PRODUCT LEVEL)	SEE PAGE
	1	1	**5P-8245**	4	WASHER-HARD (13.5X25.5X3-MM THK)	
M	2	1	**6V-5696**	2	BOLT (M12X1.75X80-MM)	
	3	1	**4W-2026**	1	COVER	
	4	1	**135-9819**	1	SEAL-INTEGRAL	
M	5	1	**6V-8149**	2	NUT (M12X1.75-THD)	

M - METRIC PART

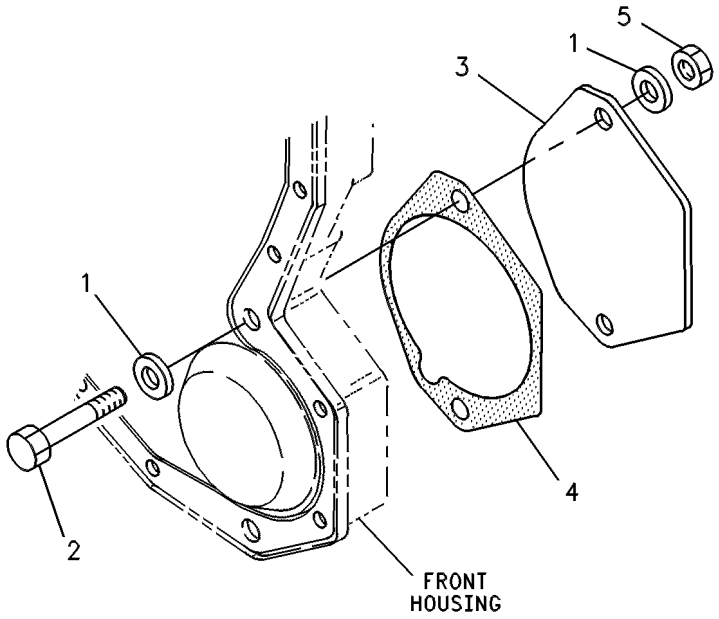

GRAPHIC #1 <END> g00245495

275-0595 COVER GP-FRONT HOUSING

S/N: TX71-UP

PART OF 506-2265 ENGINE AR-COMPLETE

SMCS-1151, 1166 **i05944458**

NOTE	REF NO	GRAPHIC REF	PART NUMBER	QTY	PART NAME 1 2 3 4 5 6 (PRODUCT LEVEL)	SEE PAGE
M	1	1	**9X-2099**	1	STUD (M8X1.25X52.75-MM)	
	2	1	**301-7789**	1	CLIP (SLOT)	
	3	1	**108-3612**	1	SPACER (11.13X19.05X53-MM THK)	
	4	1	**362-9558**	1	TUBE AS-OIL FILLER	
	5	1	**166-1776**	1	COVER AS-FRONT	
		1	**126-1757**	2	WASHER (10.85X19.3X1.27-MM THK)	
		1	**136-0822**	2	STUD	
	6	1	**166-1781**	1	GASKET	
	7	1	**241-5645**	1	CAP AS-ENGINE OIL FILLER	
	8	1	**061-9455**	1	SEAL-O-RING	
M	9	1	**344-5674**	2	NUT (M8X1.25-THD)	
M	10	1	**6V-2317**	11	BOLT (M8X1.25X30-MM)	
	11	1	**6V-5839**	1	WASHER (11X21X2.5-MM THK)	
M	12	1	**8T-0100**	2	BOLT (M8X1.25X60-MM)	
M	13	1	**8T-0643**	1	BOLT (M10X1.5X80-MM)	
	14	1	**8T-4224**	2	WASHER-HARD (8.8X16X2-MM THK)	
	15	1	**301-7790**	1	CLIP (TAB)	

M - METRIC PART

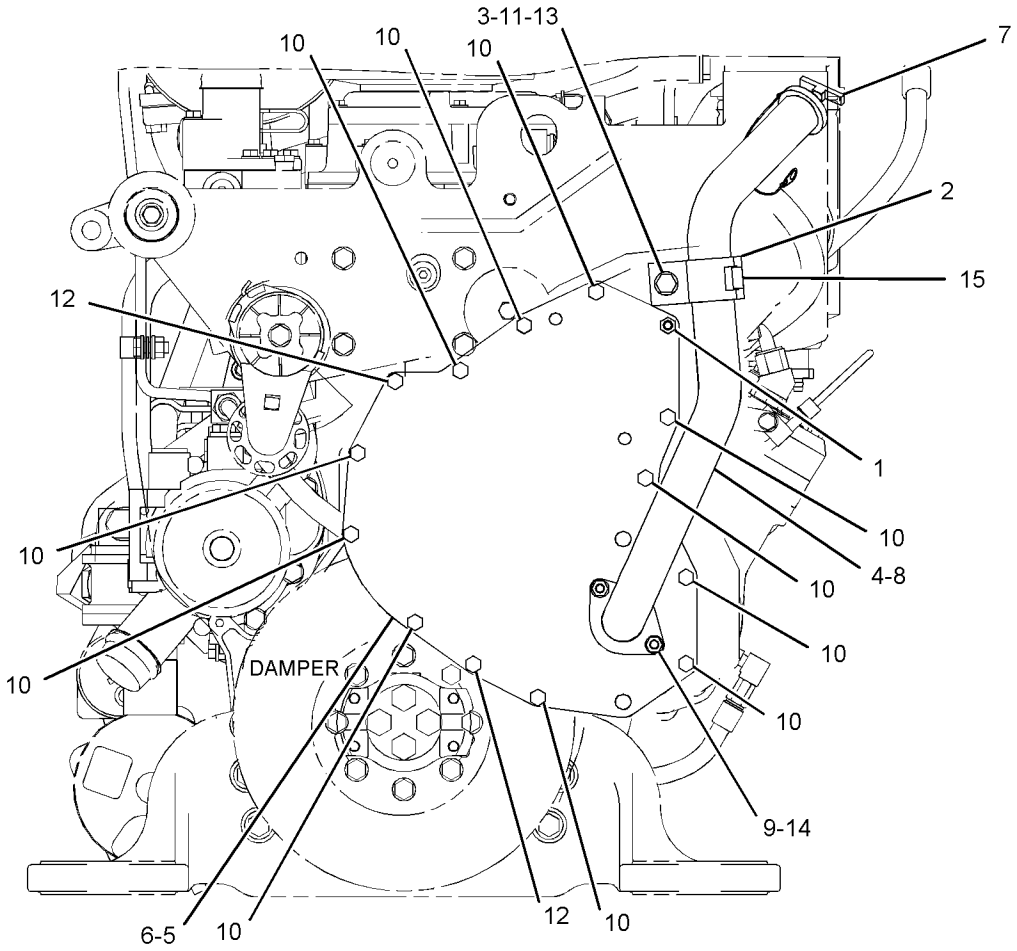

FRONT VIEW OF ENGINE

GRAPHIC #1 <END> g02360338

307-1735 COVER GP-VALVE MECHANISM

S/N: TX71-UP

PART OF 506-2265 ENGINE AR-COMPLETE

SMCS-1107, 1120

i04641089

NOTE	REF NO	GRAPHIC REF	PART NUMBER	QTY	PART NAME 1 2 3 4 5 6 (PRODUCT LEVEL)	SEE PAGE
	1	1	**310-9247**	1	BASE GP-VALVE COVER	
	1A	1	**304-4924**	1	SEAL AS	
CY	2	1	**356-5748**	1	COVER GP-VALVE MECHANISM	23
M	3	1	**099-3649**	13	BOLT (M8X1.25X40-MM)	
	4	1	**8T-4224**	13	WASHER-HARD (8.8X16X2-MM THK)	

C - CHANGE FROM PREVIOUS TYPE
M - METRIC PART
Y - SEPARATE ILLUSTRATION

307-1735 **COVER GP-VALVE MECHANISM (**contd.**)** **i04641089**

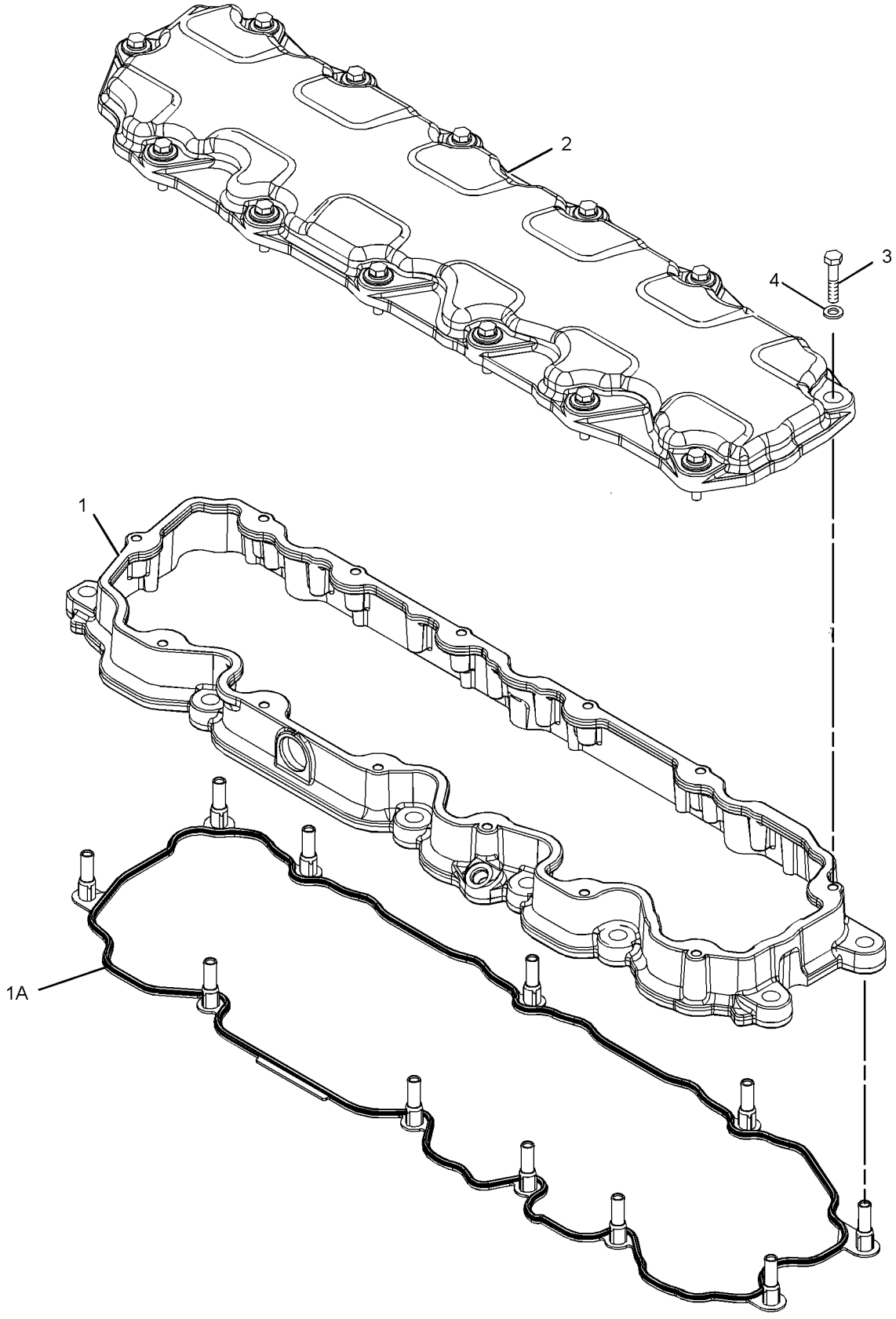

GRAPHIC #1 <END> g02797686

356-5748 COVER GP-VALVE MECHANISM

S/N: TX71-UP
NO OIL FILL
PART OF 307-1735 COVER GP-VALVE MECHANISM

SMCS-1107, 1120

i04641250

NOTE	REF NO	GRAPHIC REF	PART NUMBER	QTY	PART NAME 1 2 3 4 5 6 (PRODUCT LEVEL)	SEE PAGE
	1	1	**272-0388**	1	SEAL - VALVE COVER	

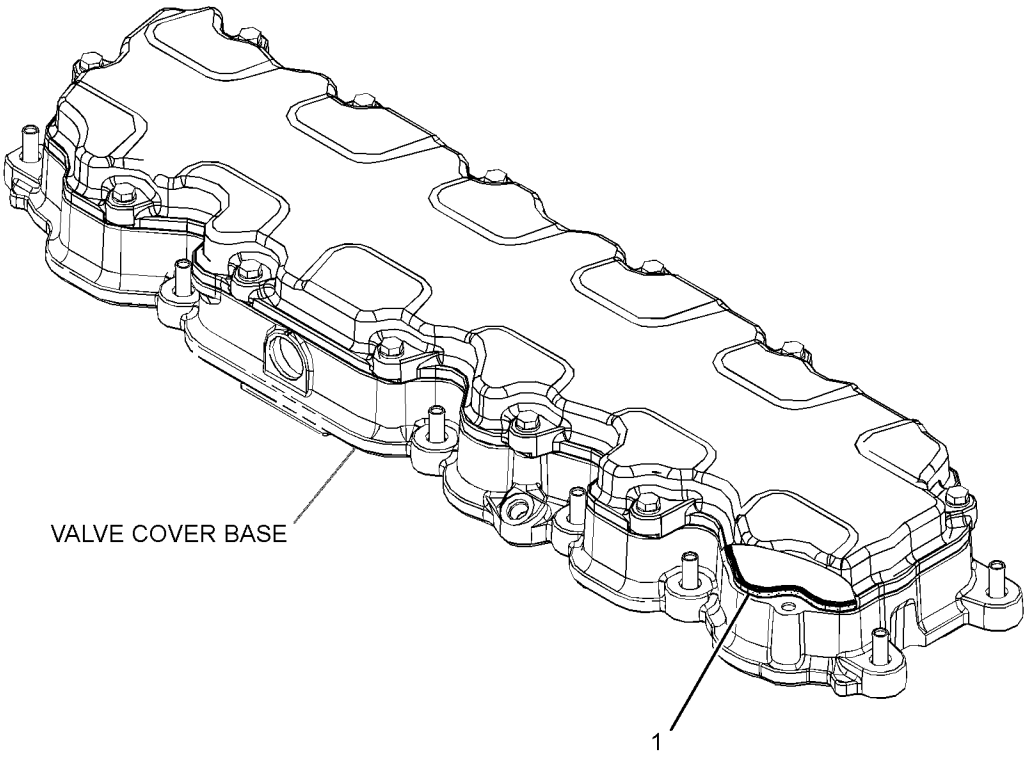

GRAPHIC #1

<END>

g02925357

210-5590 CRANKSHAFT GP

S/N: TX71-UP

PART OF 387-8499 ENGINE AR-CORE

SMCS-1202, 1203, 1204, 1232 **i07186650**

NOTE	REF NO	GRAPHIC REF	PART NUMBER	QTY	PART NAME 1 2 3 4 5 6 (PRODUCT LEVEL)	SEE PAGE
CR	1	1	**489-2731**	1	CRANKSHAFT AS	
	1A	1	**1B-8705**	1	KEY-WOODRUFF	
	1B	1	**2W-8147**	1	GEAR (50-TEETH)	
	2	1	**212-4893**	1	BEARING-THRUST (STANDARD)	
AB		1	**229-5153**		BEARING-THRUST (0.25-MM US)	
AB		1	**229-5154**		BEARING-THRUST (0.5-MM US)	
AB		1	**229-5155**		BEARING-THRUST (0.5-MM OS)	
AB		1	**229-5156**		BEARING-THRUST (0.5-MM OS, 0.5-MM US)	
	3	1	**107-7708**	6	BEARING-MAIN (STANDARD)	
AB		1	**145-0168**		BEARING-MAIN (0.5-MM OS)	
AB		1	**145-0170**		BEARING-MAIN (0.5-MM OS, 0.5-MM US)	
AB		1	**145-0162**		BEARING-MAIN (0.25-MM US)	
AB		1	**145-0164**		BEARING-MAIN (0.5-MM US)	

A - NOT PART OF THIS GROUP
B - USE AS REQUIRED
C - CHANGE FROM PREVIOUS TYPE
R - REMANUFACTURED PART MAY BE AVAILABLE

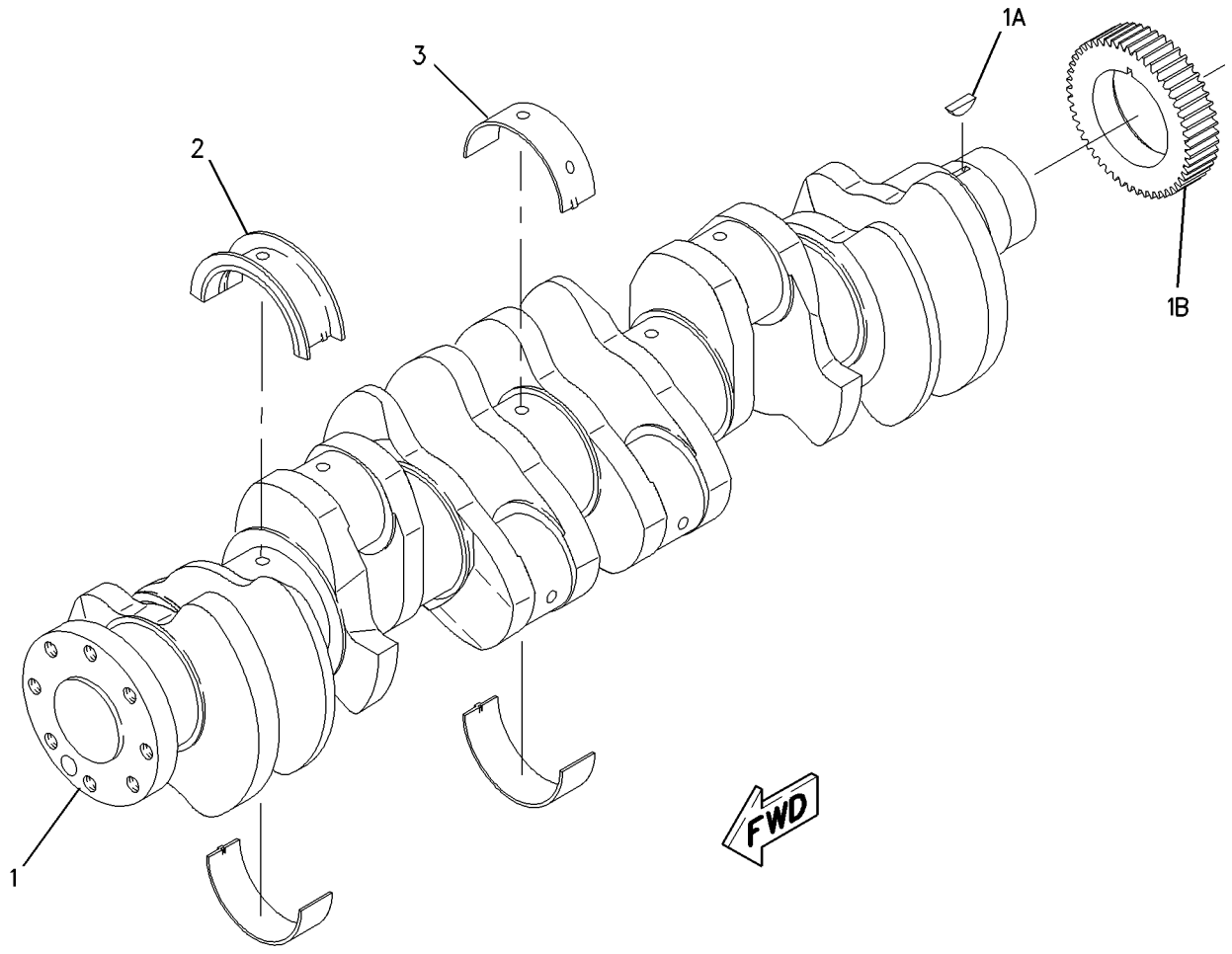

GRAPHIC #1 <END> g00977492

221-4482 CYLINDER BLOCK GP

S/N: TX71-UP

PART OF 387-8499 ENGINE AR-CORE

SMCS-1201 **i05329754**

NOTE	REF NO	GRAPHIC REF	PART NUMBER	QTY	PART NAME 1 2 3 4 5 6 (PRODUCT LEVEL)	SEE PAGE
CYR	1	1	**305-8141**	1	CYLINDER BLOCK GP	27
	2	1	**7N-5683**	2	DOWEL	
	3	1	**1W-8407**	2	SLEEVE	
	4	1	**6V-3538**	2	DOWEL	

C - CHANGE FROM PREVIOUS TYPE
R - REMANUFACTURED PART MAY BE AVAILABLE
Y - SEPARATE ILLUSTRATION

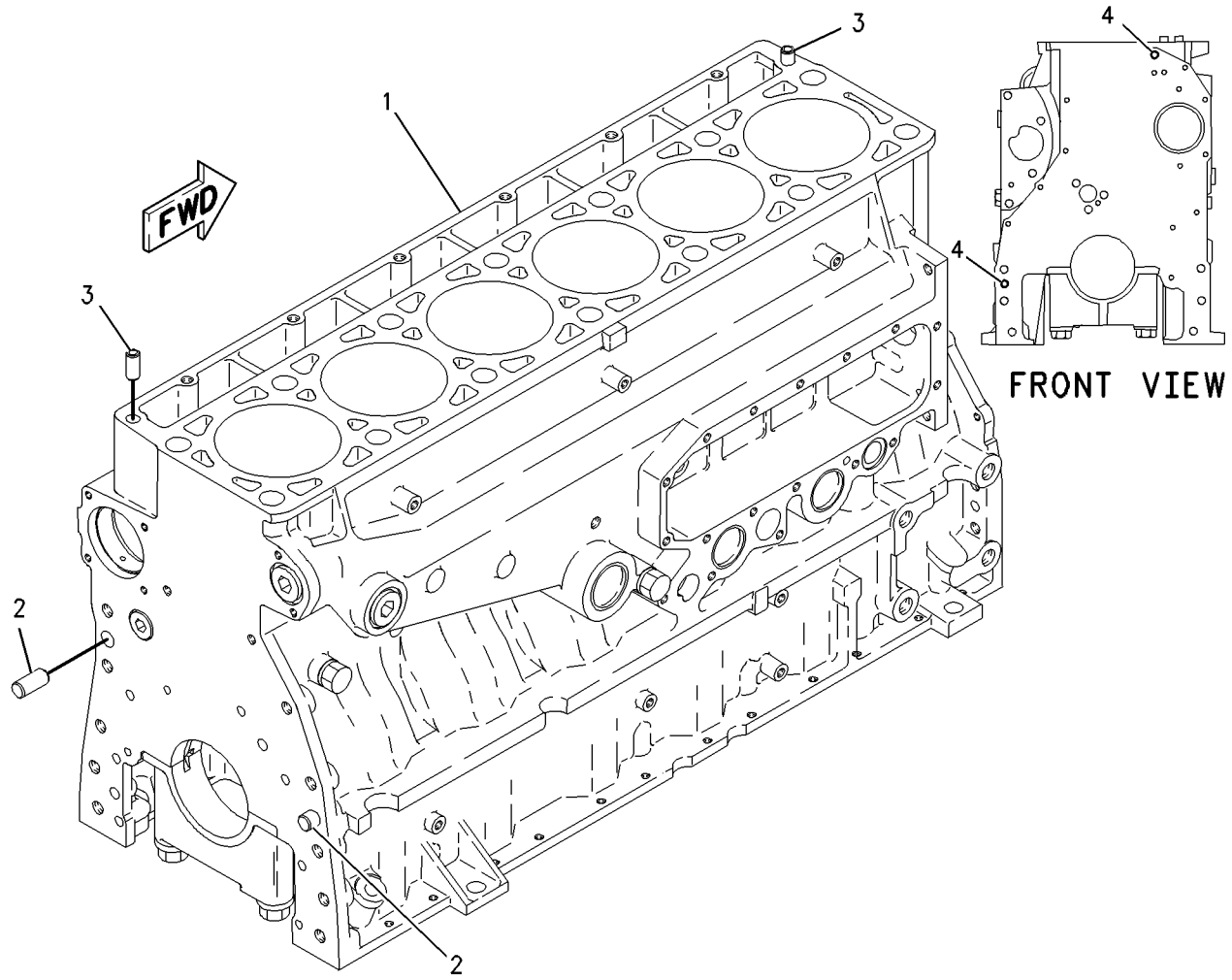

GRAPHIC #1 <END> g00800849

263-3774 CYLINDER BLOCK GP

S/N: TX71-UP

PART OF 305-8141 CYLINDER BLOCK GP

SMCS-1201 **i02696326**

NOTE	REF NO	GRAPHIC REF	PART NUMBER	QTY	PART NAME 1 2 3 4 5 6 (PRODUCT LEVEL)	SEE PAGE
	1	1	**7E-2968**	7	CAP-CRANKSHAFT BEARING	
M	2	1	**9X-8916**	14	BOLT (M16X2X140-MM)	
	3	1	**5P-8247**	14	WASHER-HARD (17X32X3.5-MM THK)	

M - METRIC PART

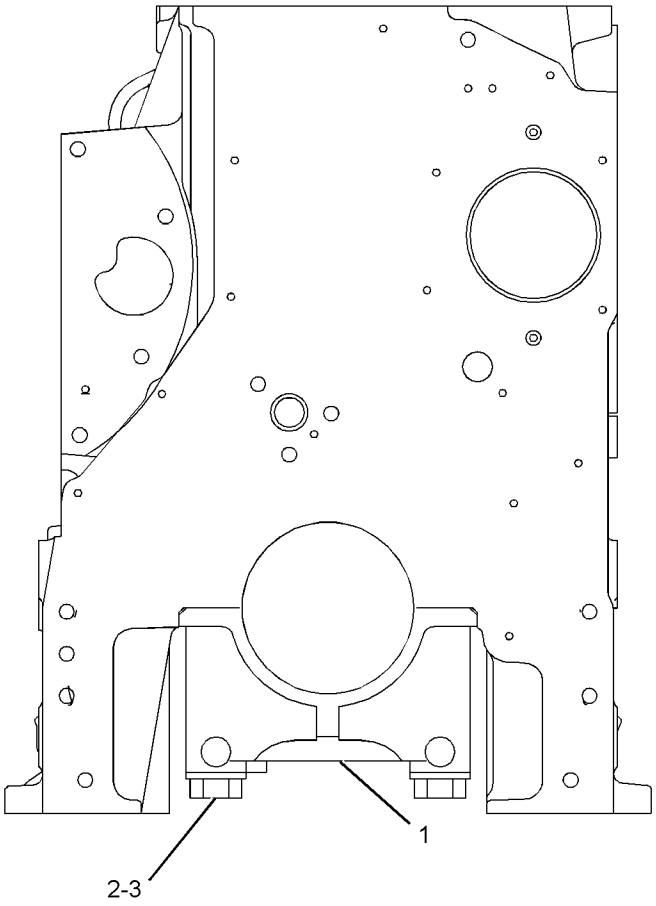

FRONT VIEW

GRAPHIC #1 <END> g01352581

305-8141 CYLINDER BLOCK GP*R

S/N: TX71-UP

PART OF 221-4482 CYLINDER BLOCK GP

SMCS-1201 **i06184565**

NOTE	REF NO	GRAPHIC REF	PART NUMBER	QTY	PART NAME 1 2 3 4 5 6 (PRODUCT LEVEL)	SEE PAGE
Y	1	1	*263-3774*	1	CYLINDER BLOCK GP	26
	2	1	**2M-6471**	2	PLUG-CUP	
	3	1	**3H-5552**	1	PLUG-CUP	
	4	1	*309-5131*	1	PLUG AS	
		1	**9S-8006**	1	PLUG (7/8-14-THD)	
		1	**238-5081**	1	SEAL-O-RING	
	5	1	**2W-7213**	6	BUSHING (CAMSHAFT)	
	6	1	**216-5586**	1	BUSHING (CAMSHAFT)	
ABF			**107-7604**		SLEEVE-CYLINDER	
					(FOR SALVAGE OF CYLINDER BORE IN BLOCK.	

A - NOT PART OF THIS GROUP
B - USE AS REQUIRED
F - NOT SHOWN
Y - SEPARATE ILLUSTRATION

305-8141 **CYLINDER BLOCK GP (**contd.**)** **i06184565**

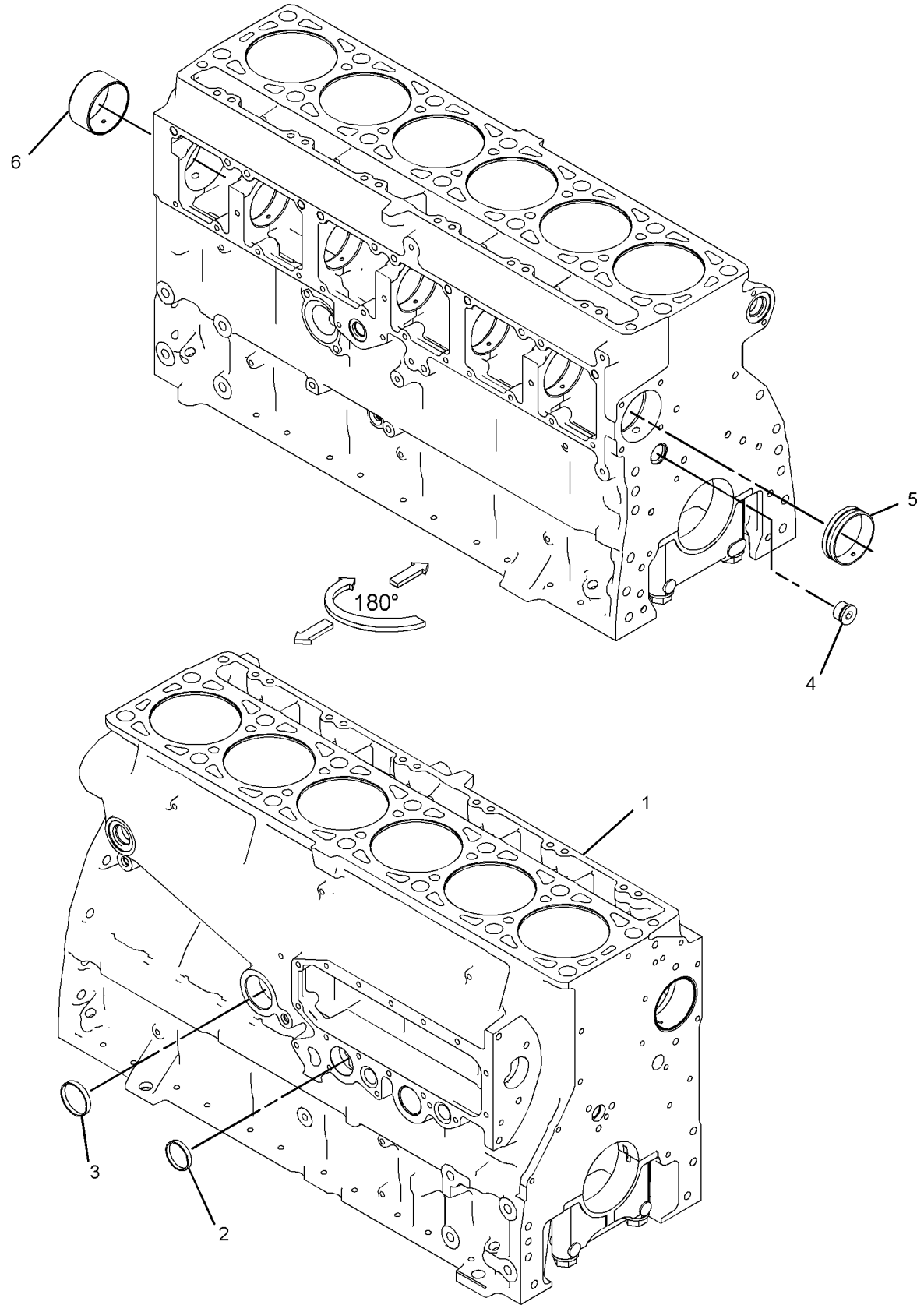

GRAPHIC #1 <END> g03408535

487-2810 CYLINDER HEAD AS

S/N: TX71-UP

PART OF 487-2807 CYLINDER HEAD GP

SMCS-1100 **i06512087**

NOTE	REF NO	GRAPHIC REF	PART NUMBER	QTY	PART NAME 1 2 3 4 5 6 (PRODUCT LEVEL)	SEE PAGE
	1	1	**310-7257**	6	SEAL-O-RING	
	2	1	**8M-5860**	12	PLUG-CUP	
	3	1	**4F-5695**	2	PLUG-CUP	
	4	1	**227-1200**	6	SLEEVE-INJECTOR	
	5	1	**147-8218**	6	INSERT-VALVE SEAT	
	6	1	**264-6157**	12	INSERT-VALVE SEAT (STANDARD)	
	7	1	**310-7255**	6	SEAL-O-RING	

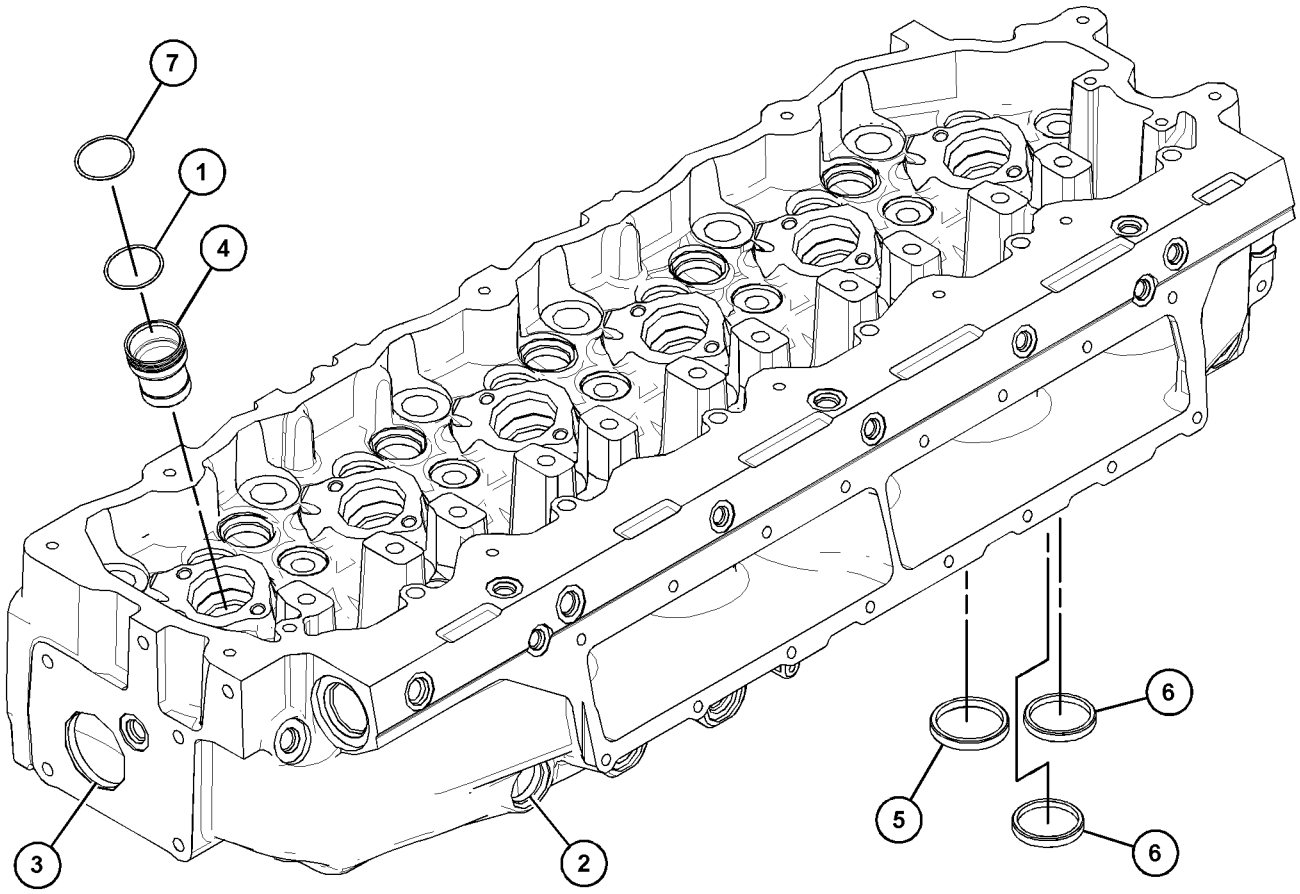

GRAPHIC #1 <END> g06005506

219-5847 CYLINDER HEAD GP*R

S/N: TX71-UP

PART OF 219-5849 CYLINDER HEAD GP

SMCS-1100 **i06510664**

NOTE	REF NO	GRAPHIC REF	PART NUMBER	QTY	PART NAME 1 2 3 4 5 6 (PRODUCT LEVEL)	SEE PAGE
CY	1	1	**487-2807**	1	CYLINDER HEAD GP	33
	2	1	*353-5125*	1	PLUG AS	
		1	**6V-3251**	1	SEAL-O-RING	
		1	**9S-8006**	1	PLUG (7/8-14-THD)	
	3	1	*353-5124*	1	PLUG AS	
		1	**6V-3250**	1	SEAL-O-RING	
		1	**9S-8004**	1	PLUG (9/16-18-THD)	
	4	1	*319-6234*	2	PLUG AS	
					(EACH INCLUDES)	
		1	**9S-9334**	1	PLUG (1-5/16-12-THD)	
		1	**238-5084**	1	SEAL-O-RING	
	5	1	*315-9843*	2	PLUG AS	
					(EACH INCLUDES)	
		1	**1N-5999**	1	PLUG-O-RING	
		1	**238-5079**	1	SEAL-O-RING	
	6	1	*307-2671*	6	PLUG AS	
					(EACH INCLUDES)	
		1	**9S-8002**	1	PLUG (7/16-20-THD)	
		1	**214-7566**	1	SEAL-O-RING	
	7	1	*183-3407*	1	PLUG AS	
		1	**9S-8004**	1	PLUG (9/16-18-THD)	
		1	**214-7568**	1	SEAL-O-RING	

C - CHANGE FROM PREVIOUS TYPE
Y - SEPARATE ILLUSTRATION

219-5847 **CYLINDER HEAD GP (**contd.**)** **i06510664**

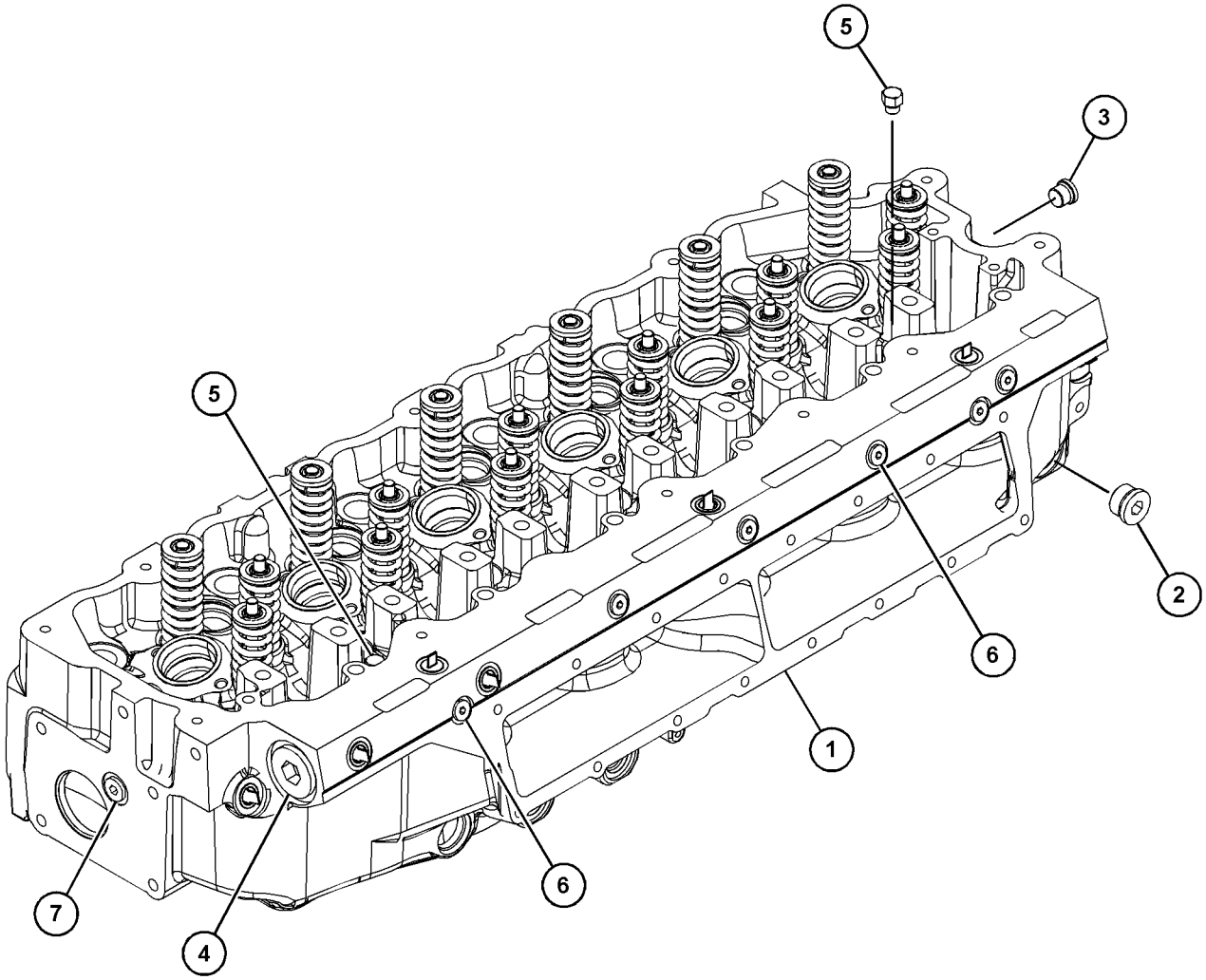

GRAPHIC #1 <END> g06003090

219-5849 CYLINDER HEAD GP

S/N: TX71-UP

PART OF 387-8499 ENGINE AR-CORE

SMCS-1100 **i05329698**

NOTE	REF NO	GRAPHIC REF	PART NUMBER	QTY	PART NAME 1 2 3 4 5 6 (PRODUCT LEVEL)	SEE PAGE
YR	1	1	*219-5847*	1	CYLINDER HEAD GP	30
	2	1	**133-4995**	1	GASKET AS-CYLINDER HEAD	
	3	1	*142-7289*	14	FASTENER GP-CYLINDER HEAD	
					(EACH INCLUDES)	
		1	**138-3252**	1	BOLT-12 POINT HEAD	
		1	**8T-3282**	1	WASHER-HARD (22X35X3.5-MM THK)	
M	4	1	**8T-7950**	6	BOLT (M10X1.5X180-MM)	
	5	1	**6V-5839**	6	WASHER (11X21X2.5-MM THK)	

M - METRIC PART
R - REMANUFACTURED PART MAY BE AVAILABLE
Y - SEPARATE ILLUSTRATION

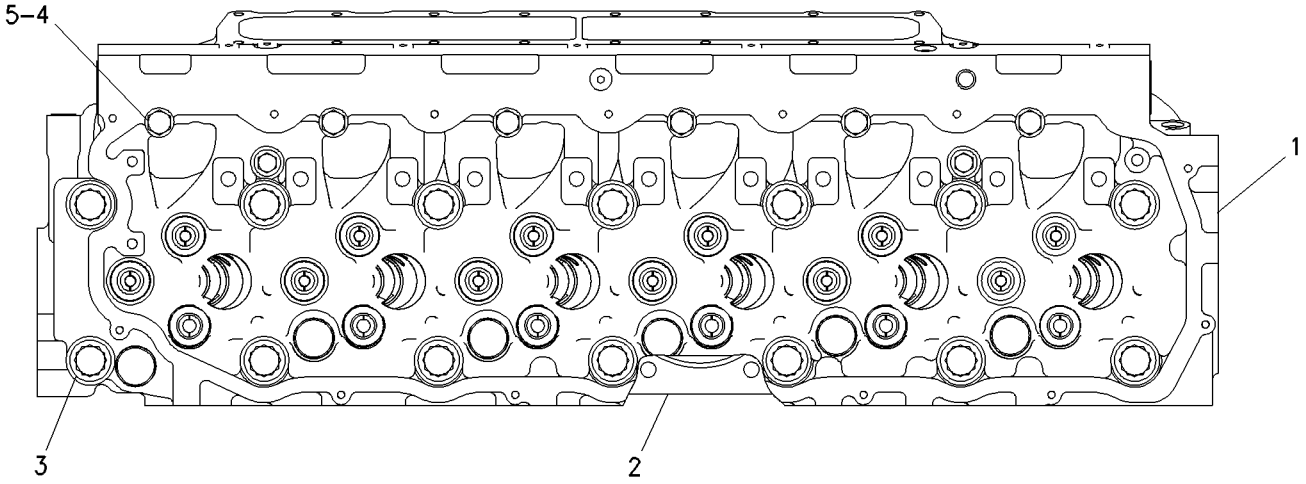

TOP VIEW

GRAPHIC #1 <END> g00760746

487-2807 CYLINDER HEAD GP

S/N: TX71-UP

PART OF 219-5847 CYLINDER HEAD GP

SMCS-1100 **i06508253**

NOTE	REF NO	GRAPHIC REF	PART NUMBER	QTY	PART NAME 1 2 3 4 5 6 (PRODUCT LEVEL)	SEE PAGE
	1	1	**1W-2715**	24	LOCK-RETAINER	
	2	1	**2A-4429**	12	LOCK-RETAINER	
	3	1	**7E-7779**	12	RETAINER-SPRING	
	4	1	**134-4483**	6	RETAINER-SPRING	
	5	1	**137-6715**	6	SEAT-VALVE SPRING	
	6	1	**137-6718**	6	SPRING-VALVE	
	7	1	**140-6188**	12	SPRING-VALVE	
	8	1	**147-8214**	12	SEAL-VALVE STEM	
	9	1	**147-8220**	6	GUIDE-VALVE	
	10	1	**157-7130**	6	VALVE-EXHAUST	
	11	1	**163-2478**	6	SEAL-VALVE STEM	
	12	1	**252-7801**	12	VALVE-INLET	
Y	13	1	*487-2810*	1	CYLINDER HEAD AS	29
	14	1	**140-9670**	12	GUIDE-VALVE	

Y - SEPARATE ILLUSTRATION

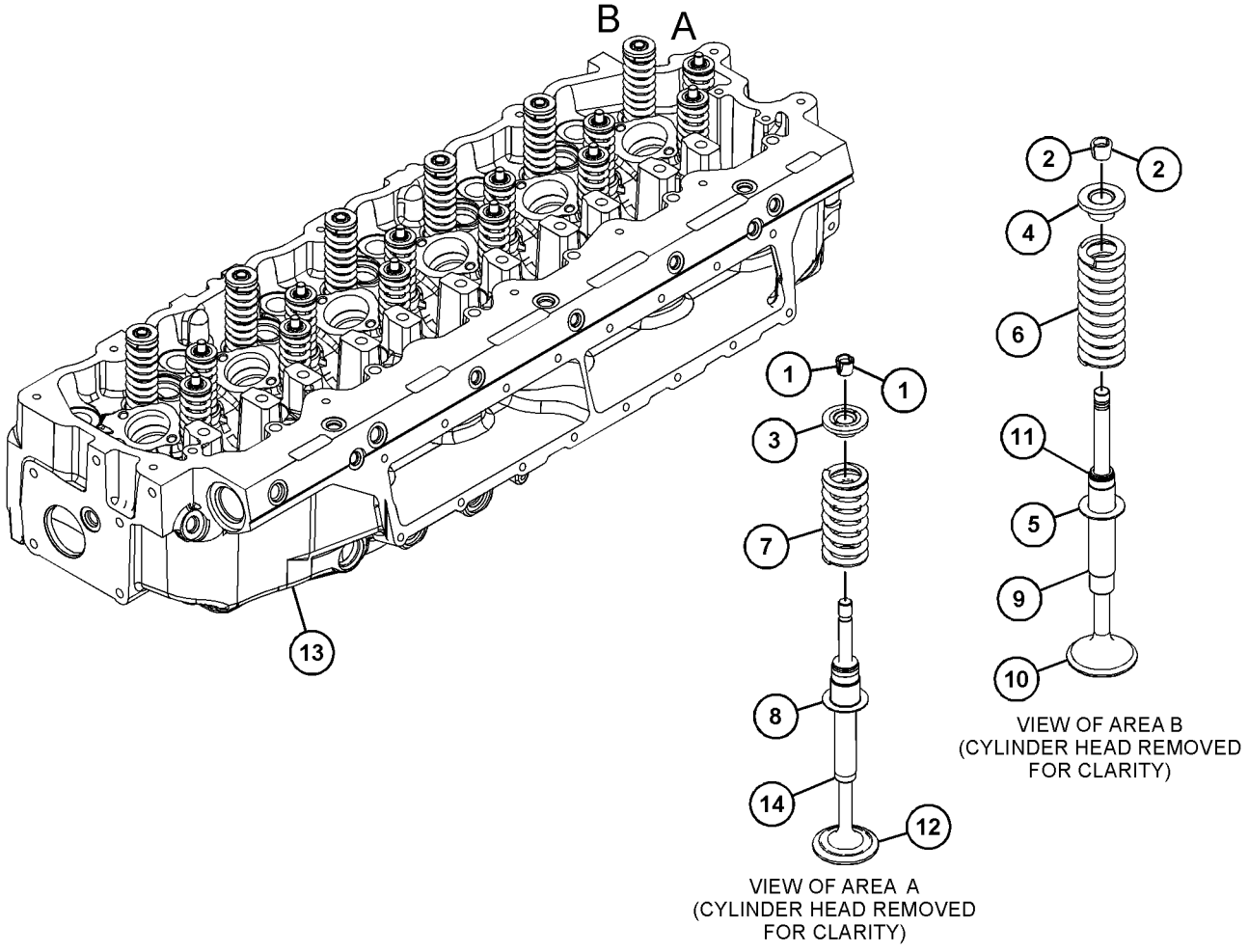

GRAPHIC #1 <END> g06003087

250-8309 DAMPER & PULLEY GP

S/N: TX71-UP

PART OF 506-2265 ENGINE AR-COMPLETE

SMCS-1205 **i02789612**

NOTE	REF NO	GRAPHIC REF	PART NUMBER	QTY	PART NAME 1 2 3 4 5 6 (PRODUCT LEVEL)	SEE PAGE
	1	1	**2W-7381**	1	PLATE-CLAMP	
	2	1	**167-8121**	1	DAMPER AS	
	3	1	**172-9367**	1	PULLEY-CRANKSHAFT	
	4	1	**228-3621**	1	SPACER (101.5X167X8-MM THK)	
M	5	1	**6V-4249**	8	BOLT (M10X1.5X50-MM)	
M	6	1	**8T-3666**	4	BOLT (M14X2X60-MM)	

M - METRIC PART

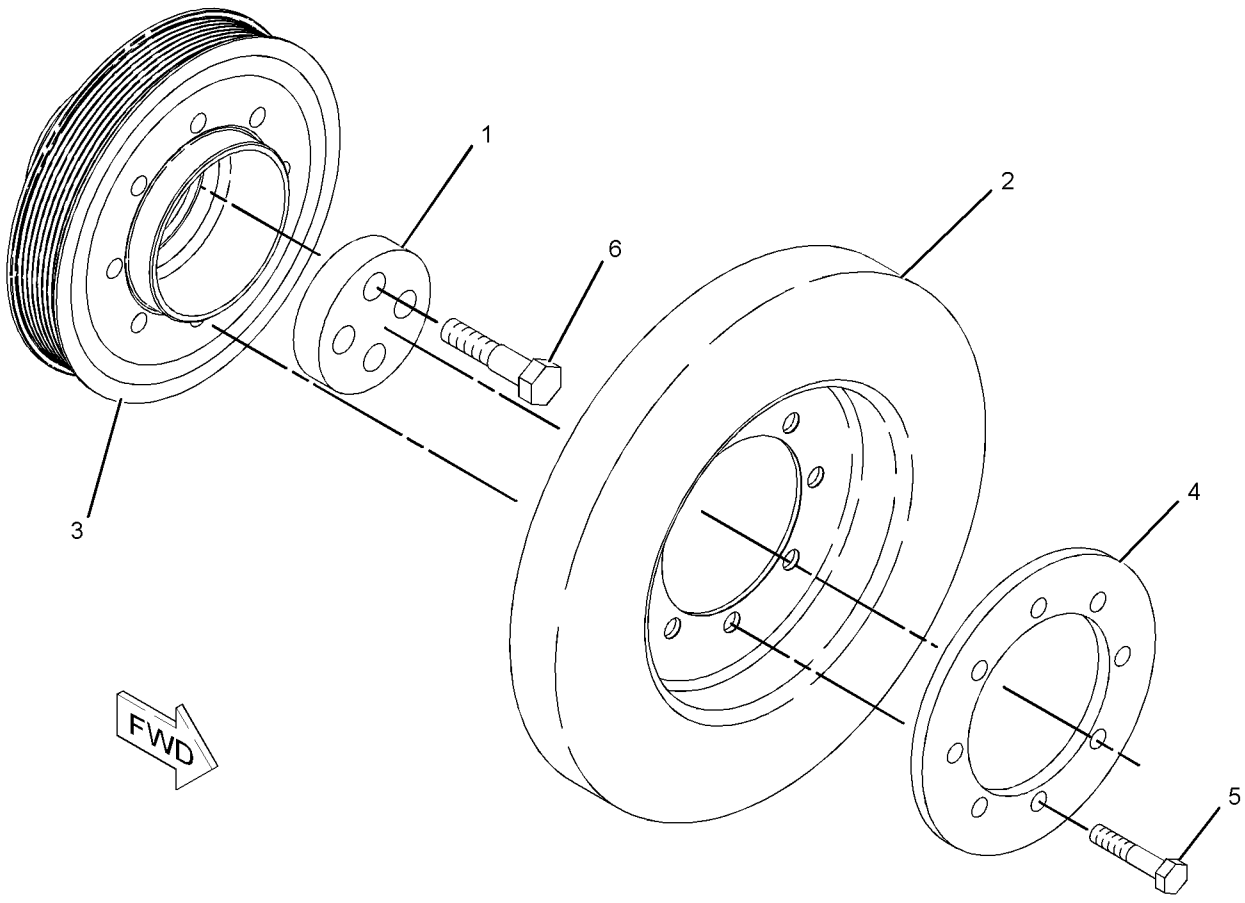

GRAPHIC #1 <END> g01148400

258-8723 FASTENER GP-CYLINDER HEAD

S/N: TX71-UP

PART OF 506-2265 ENGINE AR-COMPLETE

SMCS-1100 **i02310961**

NOTE	REF NO	GRAPHIC REF	PART NUMBER	QTY	PART NAME 1 2 3 4 5 6 (PRODUCT LEVEL)	SEE PAGE
	1	1	**229-8844**	3	CLIP	
	2	1	**244-4500**	11	SPRING	
M	3	1	**8T-0100**	11	BOLT (M8X1.25X60-MM)	
	4	1	**9N-0869**	11	WASHER-HARD (8.8X25.5X2-MM THK)	

M - METRIC PART

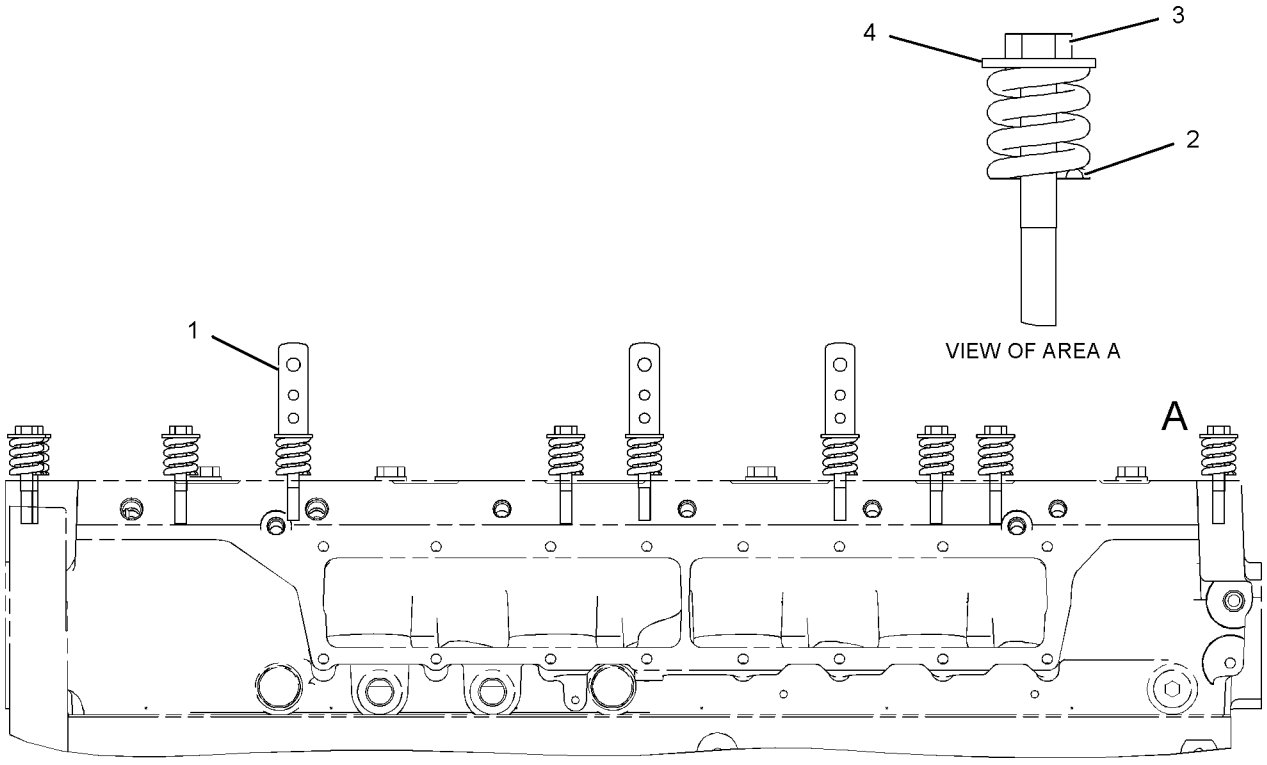

RIGHT SIDE VIEW

GRAPHIC #1 <END> g01125046

250-8312 FLYWHEEL GP

S/N: B551-UP

PART OF 577-1377 COMMON AR

SMCS-1156, 1158 **i02791660**

NOTE	REF NO	GRAPHIC REF	PART NUMBER	QTY	PART NAME 1 2 3 4 5 6 (PRODUCT LEVEL)	SEE PAGE
	1	1	**250-8305**	1	FLYWHEEL AS	
		1	**256-9651**	1	GEAR-FLYWHEEL (113-TEETH)	
	2	1	**256-6070**	8	BOLT (M12X1.75X150-MM)	
	3	1	**5P-8245**	8	WASHER-HARD (13.5X25.5X3-MM THK)	

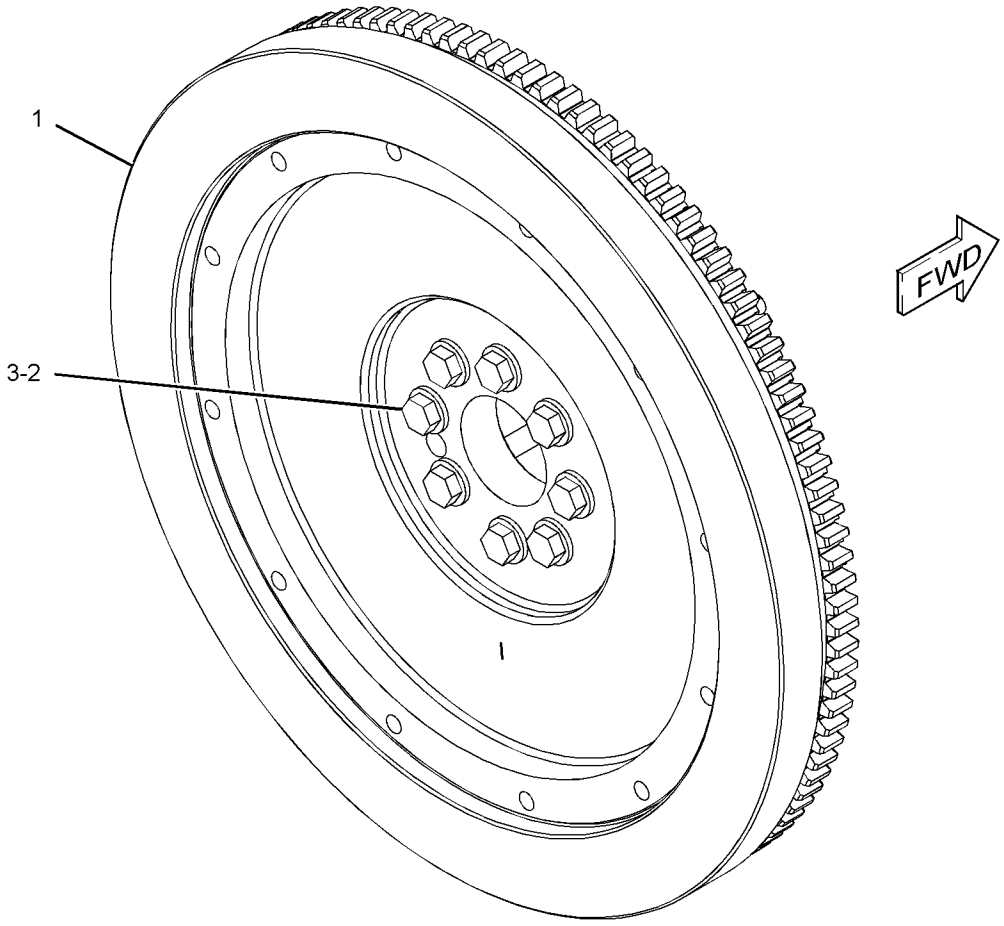

GRAPHIC #1 <END> g01152658

205-1321 GEAR GP-FRONT

S/N: TX71-UP

PART OF 387-8499 ENGINE AR-CORE

SMCS-1151, 1162, 1206 **i01696307**

NOTE	REF NO	GRAPHIC REF	PART NUMBER	QTY	PART NAME 1 2 3 4 5 6 (PRODUCT LEVEL)	SEE PAGE
	1	1	**113-6069**	1	PLATE-THRUST	
	2	1	**115-4219**	1	PLATE-RETAINING	
	3	1	**200-4495**	1	SHAFT-IDLER	
	4	1	**205-1320**	1	GEAR AS-IDLER (50-TEETH)	
	4A	1	**115-4072**	1	BEARING	
M	5	1	**136-4183**	1	BOLT-12 POINT HEAD (M10X1.5X30-MM)	
M	6	1	**6V-5843**	2	BOLT (M10X1.5X45-MM)	

M - METRIC PART

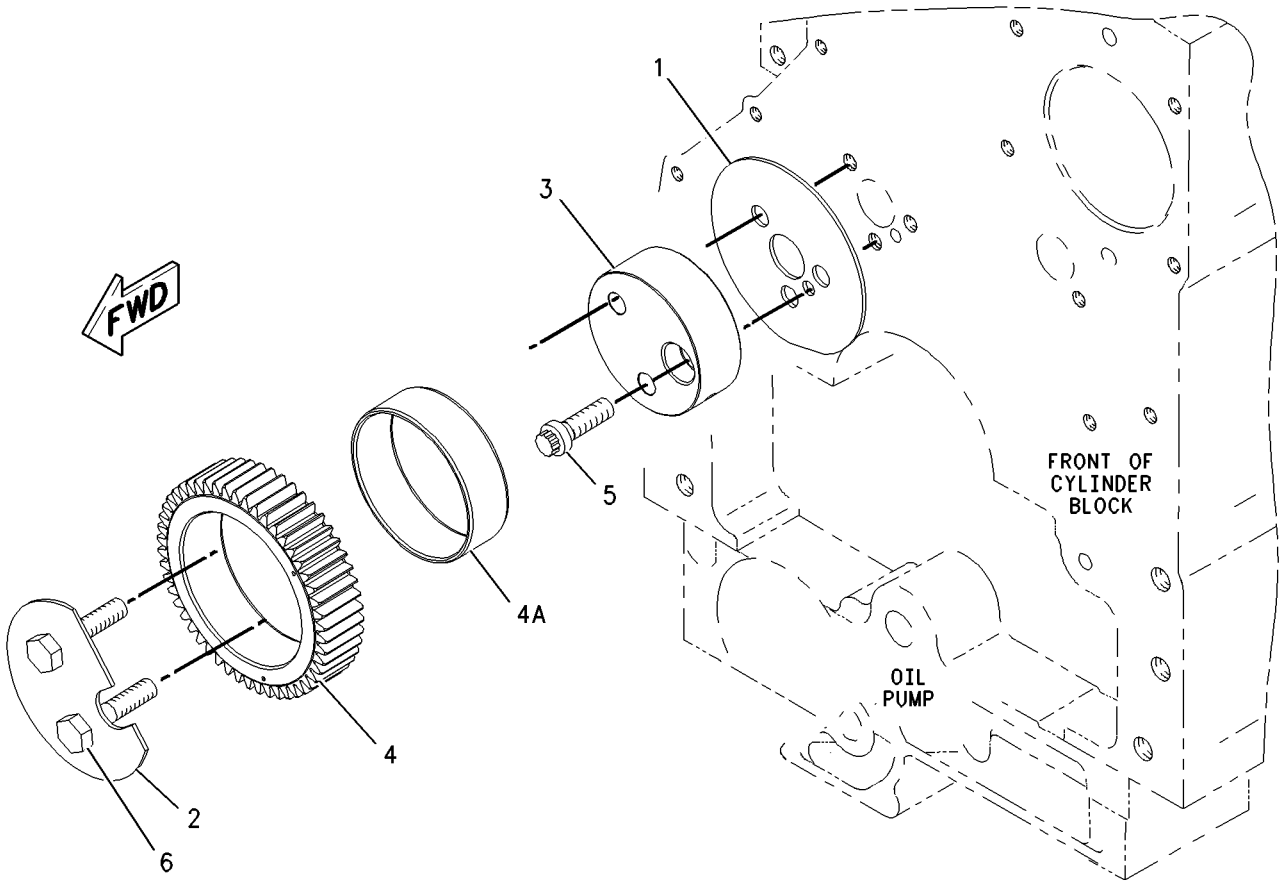

GRAPHIC #1 <END> g00873940

434-1092 GEAR GP-REAR

S/N: TX71-UP

PART OF 506-2265 ENGINE AR-COMPLETE

SMCS-1204, 1206 **i05331479**

NOTE	REF NO	GRAPHIC REF	PART NUMBER	QTY	PART NAME 1 2 3 4 5 6 (PRODUCT LEVEL)	SEE PAGE
	1	1	**1W-4741**	1	GEAR AS-IDLER (70-TEETH)	
		1	**1W-4738**	1	BUSHING	
	2	1	**1W-4746**	1	RETAINER-GEAR	
	3	1	**187-8194**	1	GEAR AS-DRIVE (64-TEETH)	
		1	**4F-6024**	1	PIN	
	4	1	**187-8222**	1	ADAPTER AS-PUMP	
		1	**160-8184**	1	BUSHING	
M	5	1	**6V-7673**	3	BOLT (M12X1.75X50-MM)	
M	6	1	**6V-6317**	6	BOLT (M10X1.5X20-MM)	
	7	1	**251-2305**	1	GEAR	
	8	1	**277-8283**	1	COVER	
	9	1	**4N-1230**	2	SEAL-O-RING	
M	10	1	**6V-1820**	6	BOLT (M10X1.5X30-MM)	
	11	1	**6V-5839**	12	WASHER (11X21X2.5-MM THK)	

M - METRIC PART

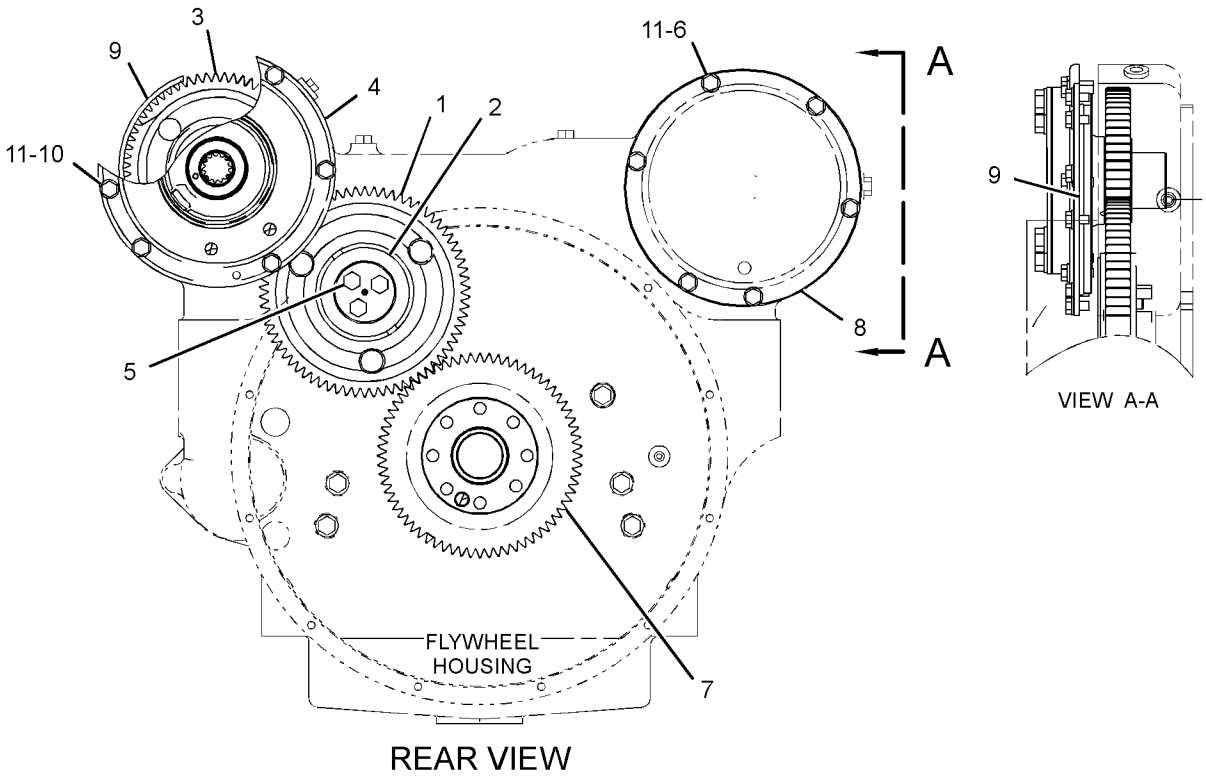

REAR VIEW

GRAPHIC #1 <END> g03528538

279-5644 HOUSING GP-FLYWHEEL

S/N: TX71-UP

PART OF 506-2265 ENGINE AR-COMPLETE

SMCS-1157 **i02792197**

NOTE	REF NO	GRAPHIC REF	PART NUMBER	QTY	PART NAME 1 2 3 4 5 6 (PRODUCT LEVEL)	SEE PAGE
	1	1	**175-3721**	1	COVER	
	2	1	**101-3934**	1	COVER	
	3	1	*279-5643*	1	HOUSING AS-FLYWHEEL	
		1	**2A-1162**	1	GASKET	
		1	**5F-0304**	1	PLUG	
		1	**8M-9315**	1	BUSHING	
		1	*148-8395*	1	PLUG AS	
		1	**3K-0360**	1	SEAL-O-RING	
		1	**9S-8005**	1	PLUG (3/4-16-THD)	
		1	*148-8405*	1	PLUG AS	
		1	**1J-9671**	1	SEAL-O-RING	
		1	**3K-8460**	1	PLUG (1/2-20-THD)	
		1	*148-8407*	2	PLUG AS	
					(EACH INCLUDES)	
		1	**3J-1907**	1	SEAL-O-RING	
		1	**9S-4191**	1	PLUG (9/16-18-THD)	
		1	*155-3624*	1	PLUG AS	
		1	**3J-7354**	1	SEAL-O-RING	
		1	**9S-4182**	1	PLUG (7/16-20-THD)	
		1	**279-5648**	1	HOUSING-FLYWHEEL	
	4	1	**4M-0189**	1	SEAL-O-RING	
	5	1	**3F-5792**	1	SEAL-O-RING	
	6	1	**5P-8245**	2	WASHER-HARD (13.5X25.5X3-MM THK)	
	7	1	**5P-8246**	10	WASHER-HARD (15.5X29X3-MM THK)	
M	8	1	**6A-5591**	2	BOLT (M12X1.75X25-MM)	
M	9	1	**6V-5192**	1	BOLT-SOCKET HEAD (M8X1.25X30-MM)	
	10	1	**6V-5839**	2	WASHER (11X21X2.5-MM THK)	
M	11	1	**6V-5844**	2	BOLT (M16X2X35-MM)	
M	12	1	**8C-0537**	10	BOLT (M14X2X90-MM)	
M	13	1	**8T-0643**	2	BOLT (M10X1.5X80-MM)	
	14	1	**9X-8268**	2	WASHER (17.5X30X3.5-MM THK)	
B	15	1	**1U-8846**		SEALANT-GASKET	

B - USE AS REQUIRED
M - METRIC PART

279-5644 **HOUSING GP-FLYWHEEL (**contd.**)** **i02792197**

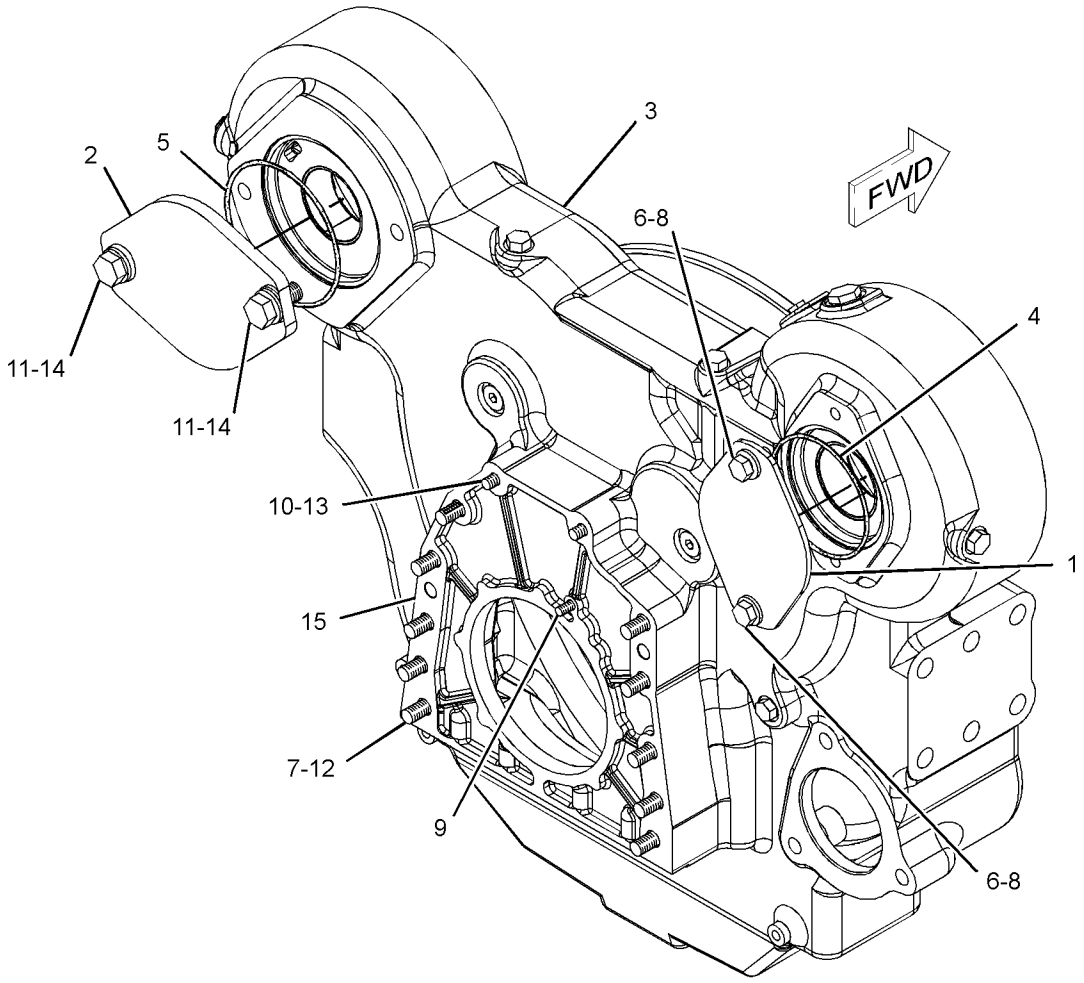

GRAPHIC #1 <END> g01299026

165-4446 HOUSING GP-FRONT

S/N: TX71-UP

PART OF 506-2265 ENGINE AR-COMPLETE

SMCS-1151, 1162, 1206

i03529802

NOTE	REF NO	GRAPHIC REF	PART NUMBER	QTY	PART NAME 1 2 3 4 5 6 (PRODUCT LEVEL)	SEE PAGE
C	1	1	**245-3259**	1	HOUSING-FRONT	
M	2	1	**6V-3918**	4	BOLT (M8X1.25X50-MM)	
M	3	1	**6V-5217**	8	BOLT (M8X1.25X20-MM)	
	4	1	**9M-1974**	12	WASHER-HARD (8.8X16X2-MM THK)	
B	5	1	**1U-8846**		SEALANT-GASKET	

B - USE AS REQUIRED
C - CHANGE FROM PREVIOUS TYPE
M - METRIC PART

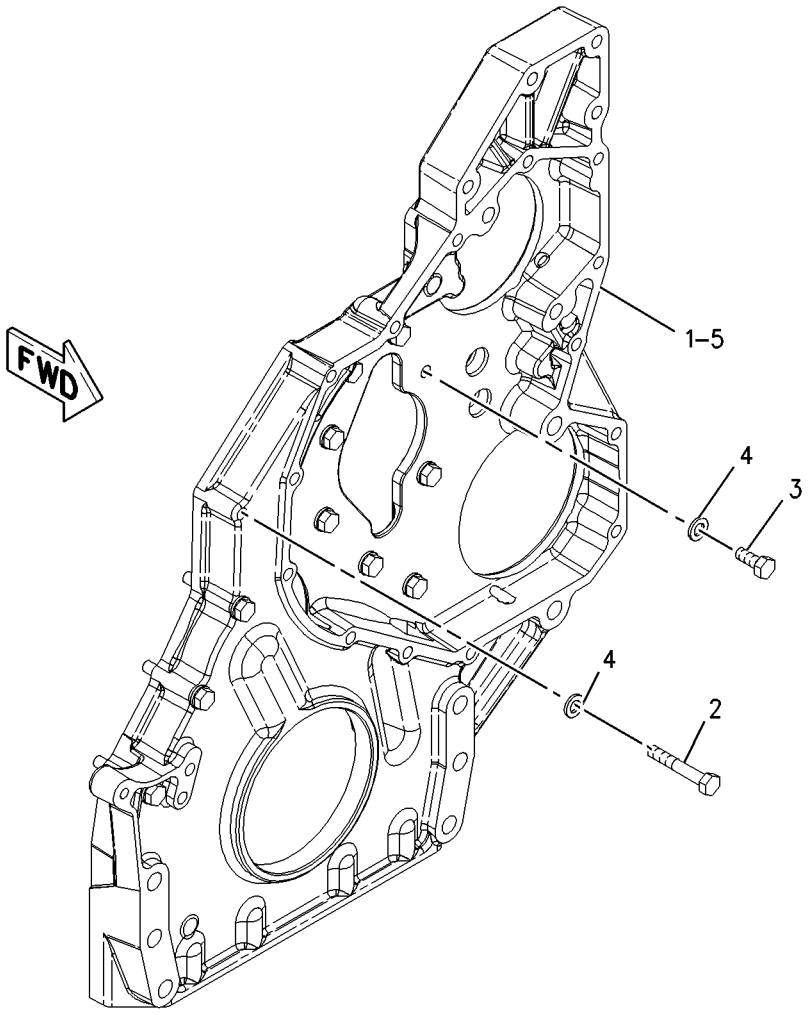

GRAPHIC #1 <END> g01005394

139-4081 LIFTER GP-VALVE

S/N: TX71-UP

PART OF 232-3717 VALVE MECHANISM GP

SMCS-1209 **i06891046**

NOTE	REF NO	GRAPHIC REF	PART NUMBER	QTY	PART NAME 1 2 3 4 5 6 (PRODUCT LEVEL)	SEE PAGE
	1	1	**492-1813**	1	SHAFT AS-LIFTER	
		1	**2D-6642**	2	BALL	
	2	1	**7E-6794**	4	ARM AS-LIFTER	
	3	1	**139-4084**	2	SPACER (15.9X24X6-MM THK)	

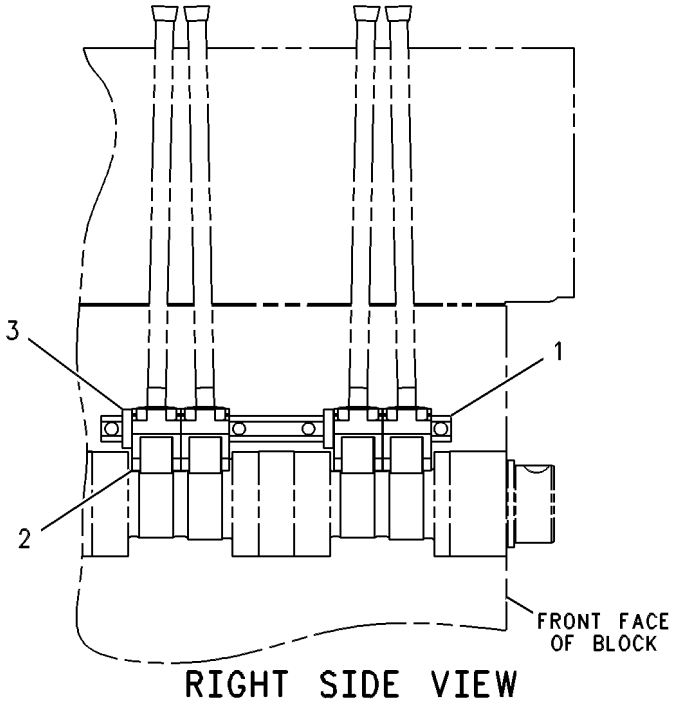

RIGHT SIDE VIEW

GRAPHIC #1 <END> g00288708

339-7815 LIFTING GP-ENGINE

S/N: TX71-UP

PART OF 506-2265 ENGINE AR-COMPLETE

SMCS-1122 **i05351214**

NOTE	REF NO	GRAPHIC REF	PART NUMBER	QTY	PART NAME 1 2 3 4 5 6 (PRODUCT LEVEL)	SEE PAGE
	1	1	**339-7814**	1	PLATE-LIFTING	
	2	1	**6V-5839**	4	WASHER (11X21X2.5-MM THK)	
M	3	1	**8T-4136**	4	BOLT (M10X1.5X25-MM)	

M - METRIC PART

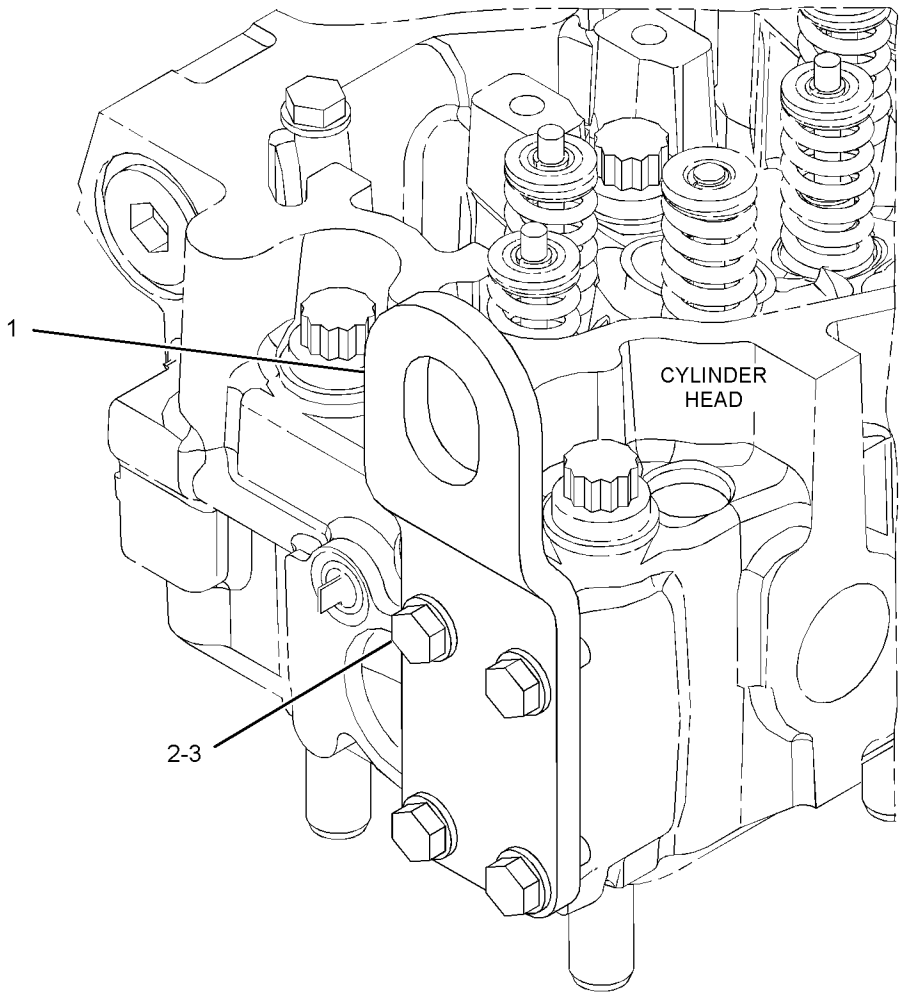

GRAPHIC #1 <END> g01886760

169-3130 MOUNTING GP-ALTERNATOR

S/N: B551-UP

PART OF 253-2723, 253-2724 ALTERNATOR GP-CHARGING

SMCS-1154, 1405 **i02785145**

NOTE	REF NO	GRAPHIC REF	PART NUMBER	QTY	PART NAME 1 2 3 4 5 6 (PRODUCT LEVEL)	SEE PAGE
	1	1	**131-2182**	1	SUPPORT-ALTERNATOR	
	2	1	**126-8240**	1	SUPPORT-ALTERNATOR	
	3	1	**8T-4121**	6	WASHER-HARD (11X21X2.5-MM THK)	
M	4	1	**8T-4186**	2	BOLT (M10X1.5X40-MM)	
M	5	1	**8T-4195**	4	BOLT (M10X1.5X30-MM)	

M - METRIC PART

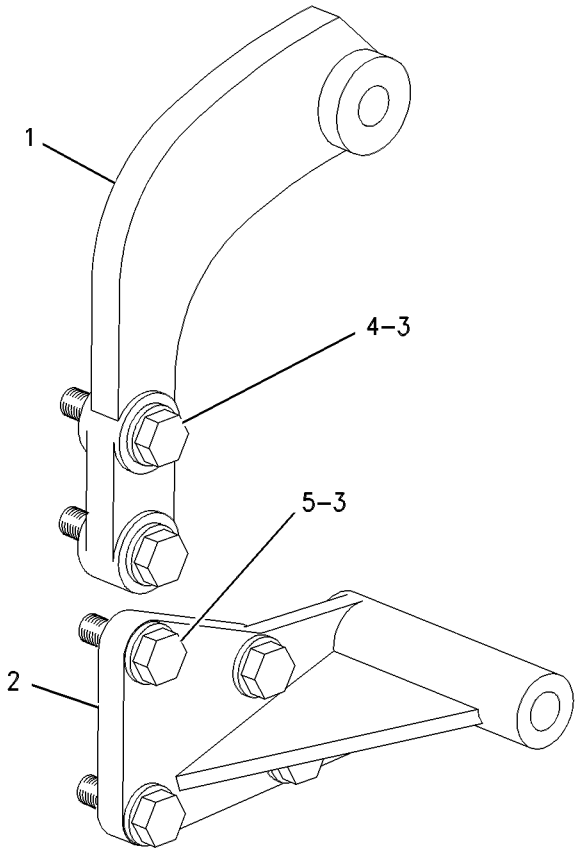

GRAPHIC #1 <END> g00642006

231-2156 MOUNTING GP-ENGINE & XMSN

S/N: B551-UP

PART OF 577-1377 COMMON AR

SMCS-1152, 1153, 1154, 3082 **i06658972**

NOTE	REF NO	GRAPHIC REF	PART NUMBER	QTY	PART NAME 1 2 3 4 5 6 (PRODUCT LEVEL)	SEE PAGE
	1	1	**9W-9920**	2	MOUNTING AS-VIBRATION ISOLATOR	
	1A	1	**9W-6582**	2	SLEEVE	
	1B	1	**9W-6584**	2	WASHER (20.5X114X10-MM THK)	
	2	1	**252-2177**	2	MOUNT AS	
					(EACH INCLUDES)	
	2A	1	**3E-4887**	2	SLEEVE	
	2B	1	**3E-4888**	4	WASHER (32X144X12-MM THK)	
	2C	1	**6Y-9960**	2	MOUNT AS	
					(EACH INCLUDES)	
		1	**9W-8095**	1	PAD-REBOUND	
	3	1	**293-9619**	2	SUPPORT	
	4	1	**198-4781**	8	WASHER-HARD (22X40X10-MM THK)	
M	5	1	**7X-2565**	8	BOLT (M20X2.5X100-MM)	
M	6	1	**7X-2585**	2	BOLT (M30X3.5X160-MM)	
	7	1	**8T-4123**	2	WASHER (22X35X3.5-MM THK)	
M	8	1	**8T-4183**	10	BOLT (M12X1.75X40-MM)	
M	9	1	**8T-4194**	2	BOLT (M12X1.75X50-MM)	
M	10	1	**8T-6381**	2	BOLT (M20X2.5X120-MM)	
	11	1	**8T-7971**	12	WASHER-HARD (13.5X25.5X5-MM THK)	
	12	1	**9X-8258**	2	WASHER (33X56X6-MM THK)	

M - METRIC PART

231-2156 **MOUNTING GP-ENGINE & XMSN (**contd.**)** **i06658972**

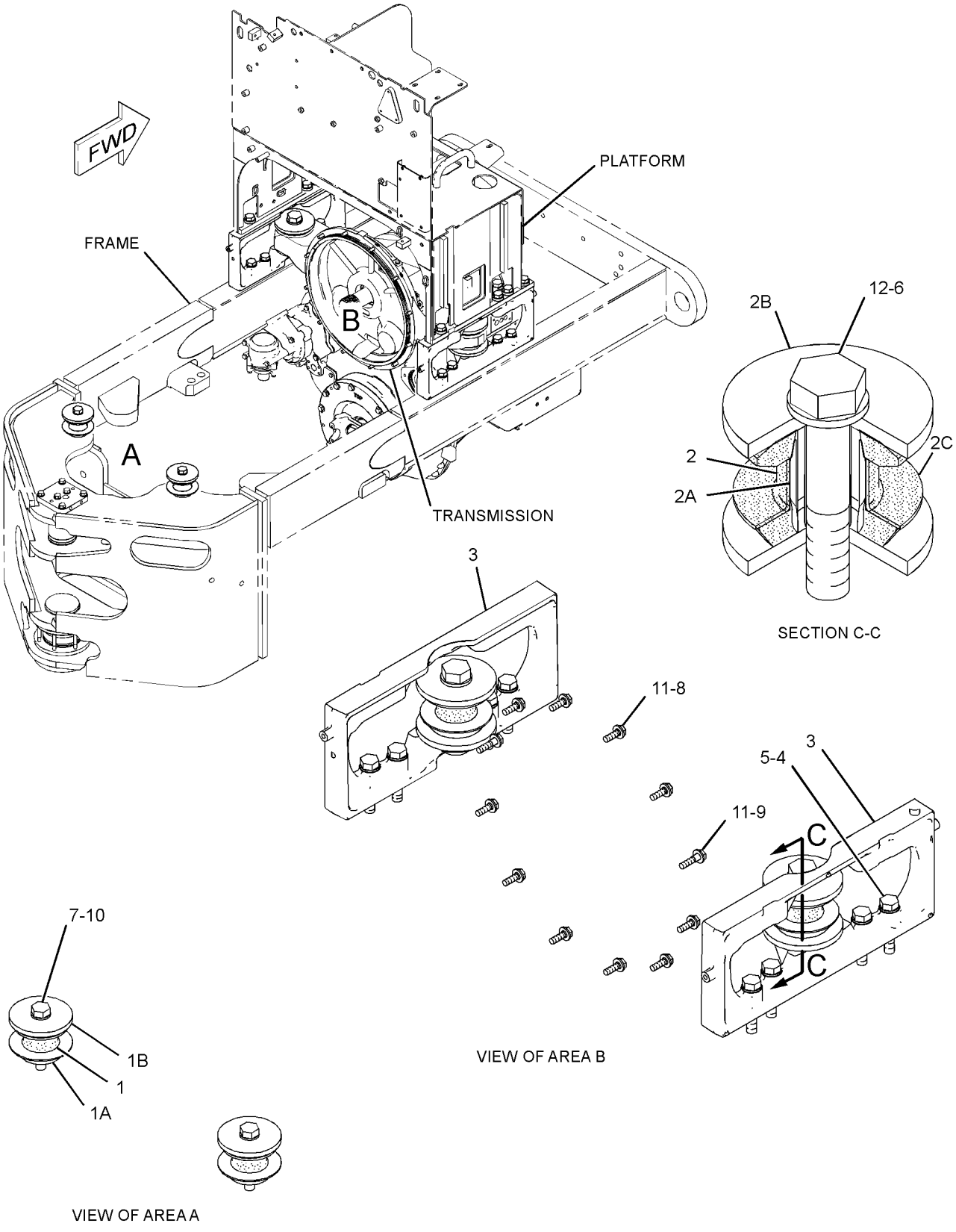

GRAPHIC #1 <END> g06062720

293-4622 MOUNTING GP-FAN DRIVE

S/N: TX71-UP

PART OF 506-2265 ENGINE AR-COMPLETE

SMCS-1359 **i03633190**

NOTE	REF NO	GRAPHIC REF	PART NUMBER	QTY	PART NAME 1 2 3 4 5 6 (PRODUCT LEVEL)	SEE PAGE
	1	1	**7E-1313**	1	BRACKET	
	2	1	**337-3544**	1	SUPPORT AS-FAN	
	3	1	**8T-4121**	8	WASHER-HARD (11X21X2.5-MM THK)	
M	4	1	**8T-4195**	2	BOLT (M10X1.5X30-MM)	
M	5	1	**8T-4196**	5	BOLT (M10X1.5X35-MM)	
M	6	1	**8T-4172**	1	BOLT (M10X1.5X80-MM)	
	7	1	**190-0649**	1	BELT TENSIONER	

M - METRIC PART

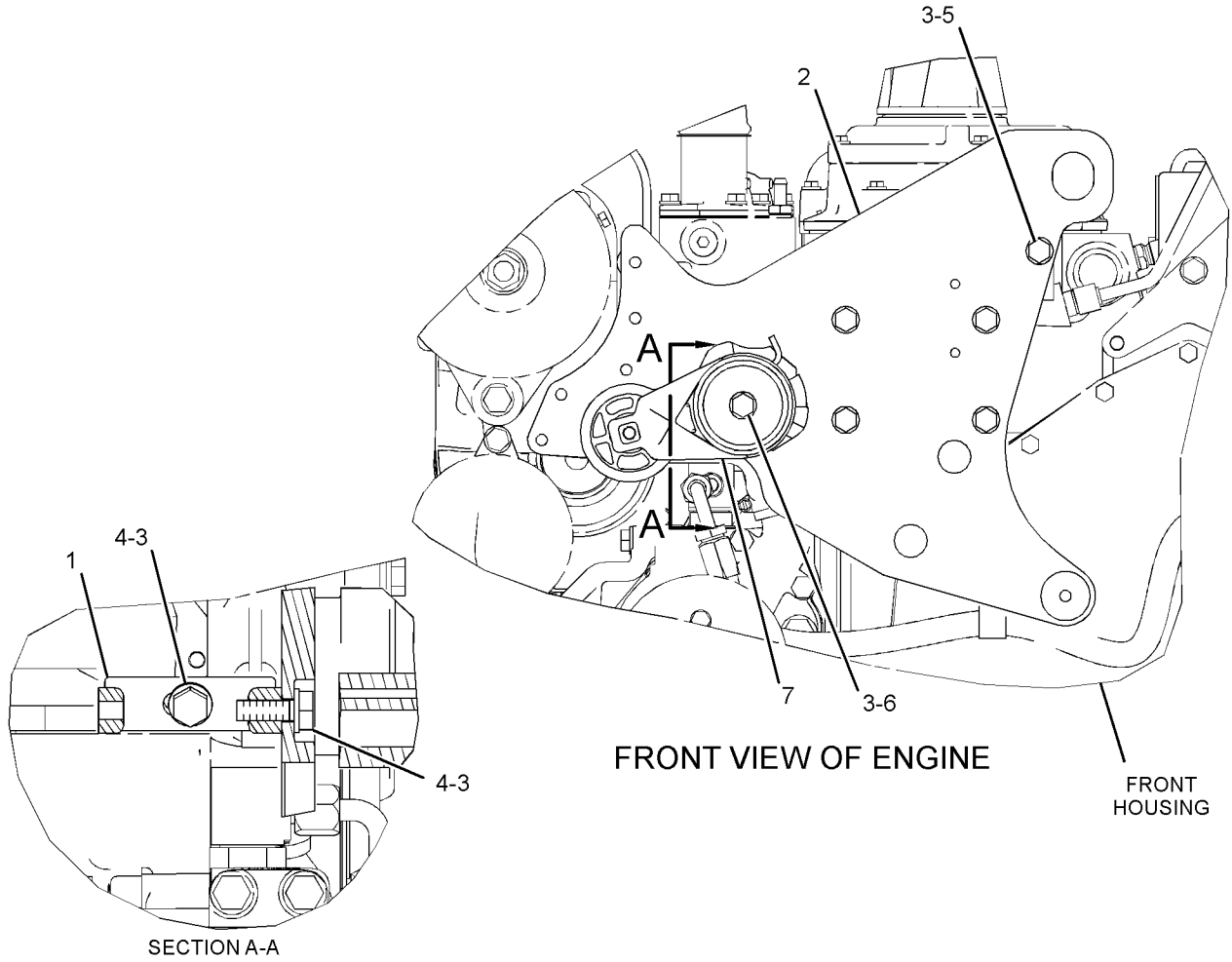

GRAPHIC #1 <END> g01525624

250-8320 PAN GP-OIL

S/N: TX71-UP

PART OF 506-2265 ENGINE AR-COMPLETE

SMCS-1302 **i02789726**

NOTE	REF NO	GRAPHIC REF	PART NUMBER	QTY	PART NAME 1 2 3 4 5 6 (PRODUCT LEVEL)	SEE PAGE
	1	1	**166-2905**	1	SEAL-INTEGRAL	
	2	1	*256-0193*	1	PAN GP-OIL (ENGINE)	
	2A	1	**3D-2824**	2	SEAL-O-RING	
	2B	1	**9S-8008**	2	PLUG (1-1/16-12-THD)	
M	3	1	**175-3676**	36	BOLT (M8X1.25X19.5-MM)	
B	4	1	**4C-9612**		SEALANT-SILICONE	

B - USE AS REQUIRED
M - METRIC PART

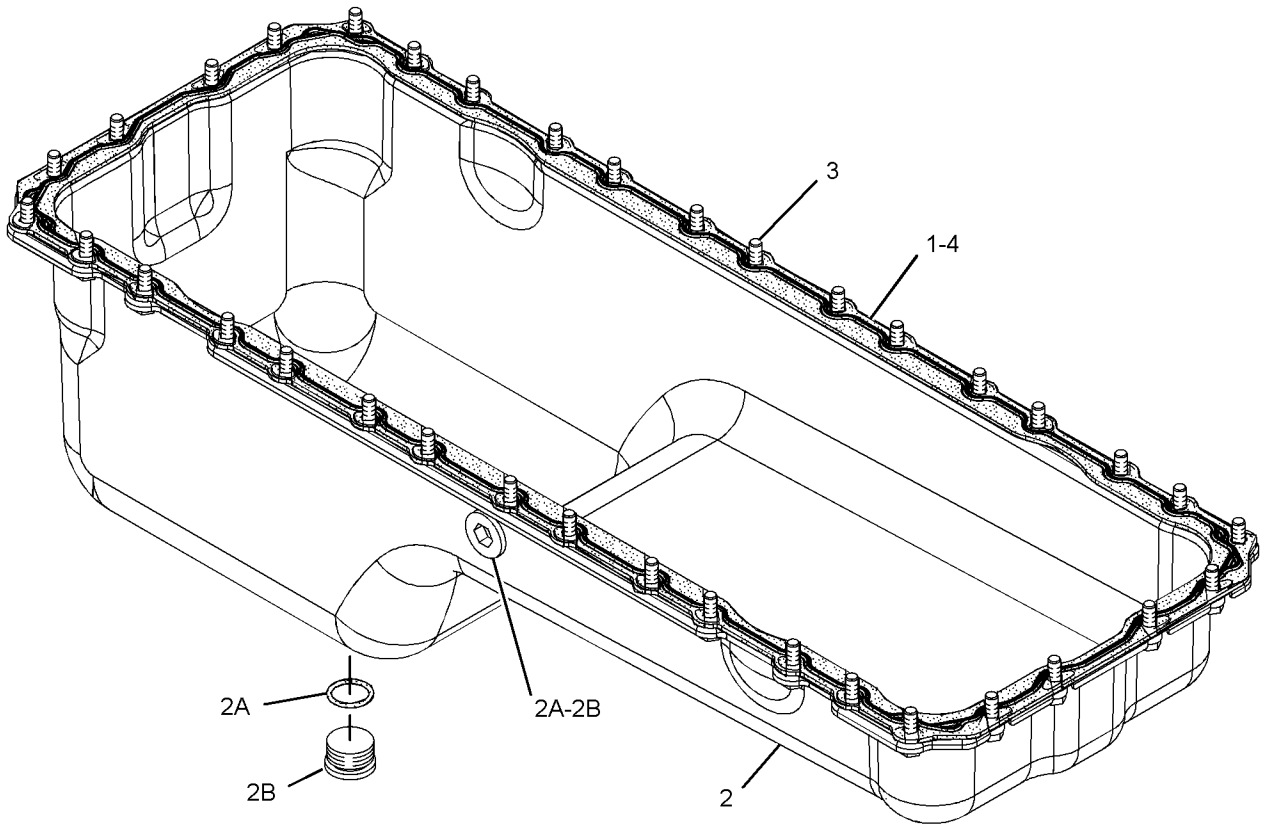

GRAPHIC #1 <END> g01283115

212-3652 PISTON & ROD GP*R

S/N: TX71-UP
16.5:1 COMPRESSION RATIO
PART OF 387-8499 ENGINE AR-CORE

SMCS-1225 **i07419584**

NOTE	REF NO	GRAPHIC REF	PART NUMBER	QTY	PART NAME 1 2 3 4 5 6 (PRODUCT LEVEL)	SEE PAGE
	1	1	**197-9353**	1	RING-PISTON (INTERMEDIATE)	
	2	1	**524-6492**	1	PIN-PISTON	
	3	1	**197-9372**	2	RETAINER-PIN	
	4	1	**197-9386**	1	RING-PISTON (TOP)	
R	5	1	**213-3193**	1	ROD AS-CONNECTING (NON-DRILLED)	
	5A	1	**2W-0027**	1	BEARING (EYE END)	
M	5B	1	**229-6266**	2	BOLT (M11X1.25X65-MM)	
	6	1	**224-6638**	1	BEARING-CONNECTING ROD (STANDARD)	
	7	1	**238-2706**	1	RING-PISTON (OIL)	
R	8	1	**238-2720**	1	BODY AS-PISTON	
	9	1	**280-2748**	1	TUBE AS-OIL JET	
M	10	1	**6V-3940**	1	BOLT (M8X1.25X25-MM)	

M - METRIC PART
R - REMANUFACTURED PART MAY BE AVAILABLE

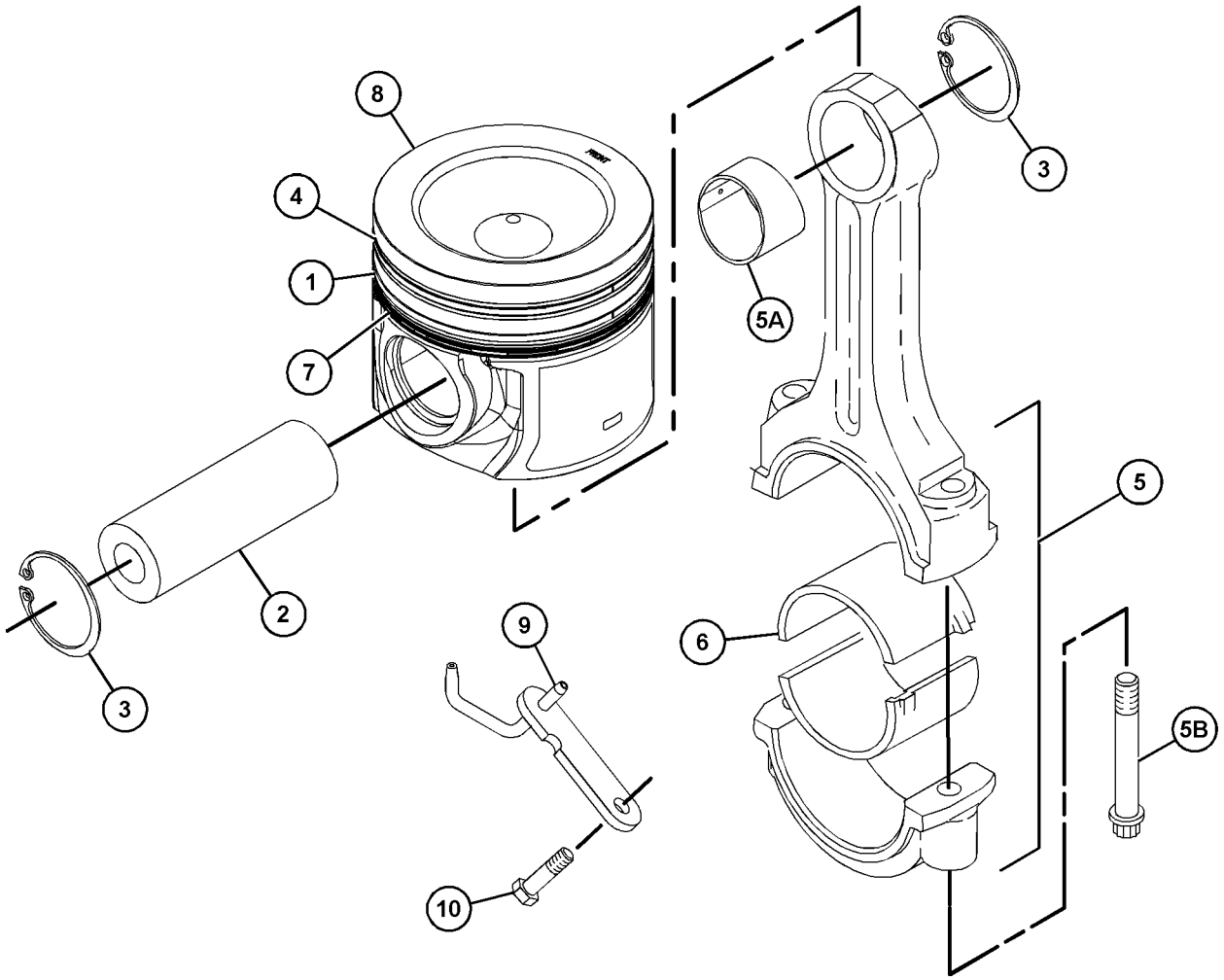

GRAPHIC #1 <END> g06328952

159-0303 PLUG GP-CYLINDER BLOCK

S/N: TX71-UP

PART OF 506-2265 ENGINE AR-COMPLETE

SMCS-1201 **i05287891**

NOTE	REF NO	GRAPHIC REF	PART NUMBER	QTY	PART NAME 1 2 3 4 5 6 (PRODUCT LEVEL)	SEE PAGE
M	1	1	**8T-0293**	1	BOLT (M12X1.75X20-MM)	
	2	1	**6F-7062**	1	WASHER (12.7X19.05X1.83-MM THK)	
	3	1	*398-5612*	2	PLUG AS	
					(EACH INCLUDES)	
		1	**6V-5063**	1	SEAL-O-RING	
		1	**9S-8008**	1	PLUG (1-1/16-12-THD)	

M - METRIC PART

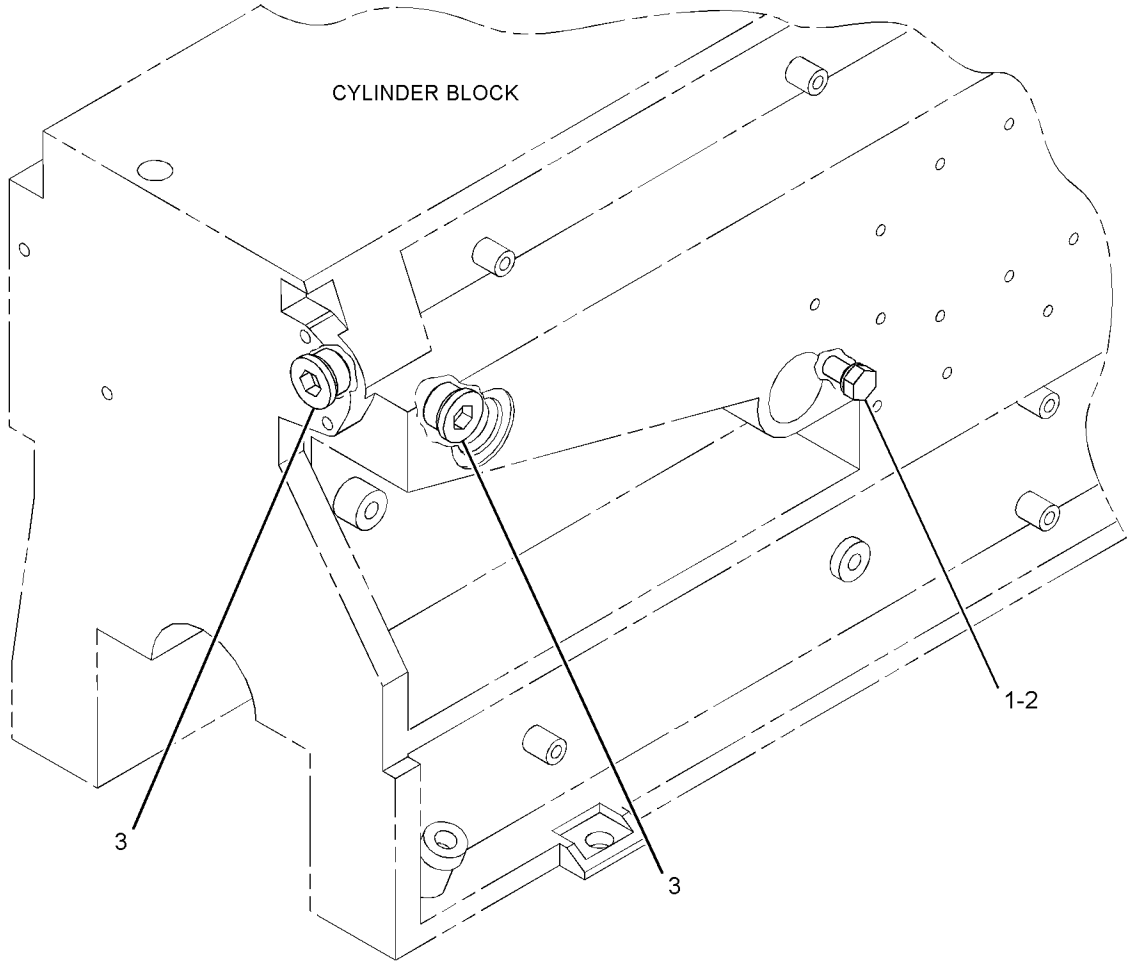

GRAPHIC #1 <END> g02925198

162-8068 PLUG GP-ENGINE

S/N: TX71-UP

PART OF 506-2265 ENGINE AR-COMPLETE

SMCS-1000, 1201 **i05287928**

NOTE	REF NO	GRAPHIC REF	PART NUMBER	QTY	PART NAME 1 2 3 4 5 6 (PRODUCT LEVEL)	SEE PAGE
	1	1	*396-0405*	1	PLUG AS	
		1	**6V-6609**	1	SEAL-O-RING	
		1	**360-3680**	1	PLUG	

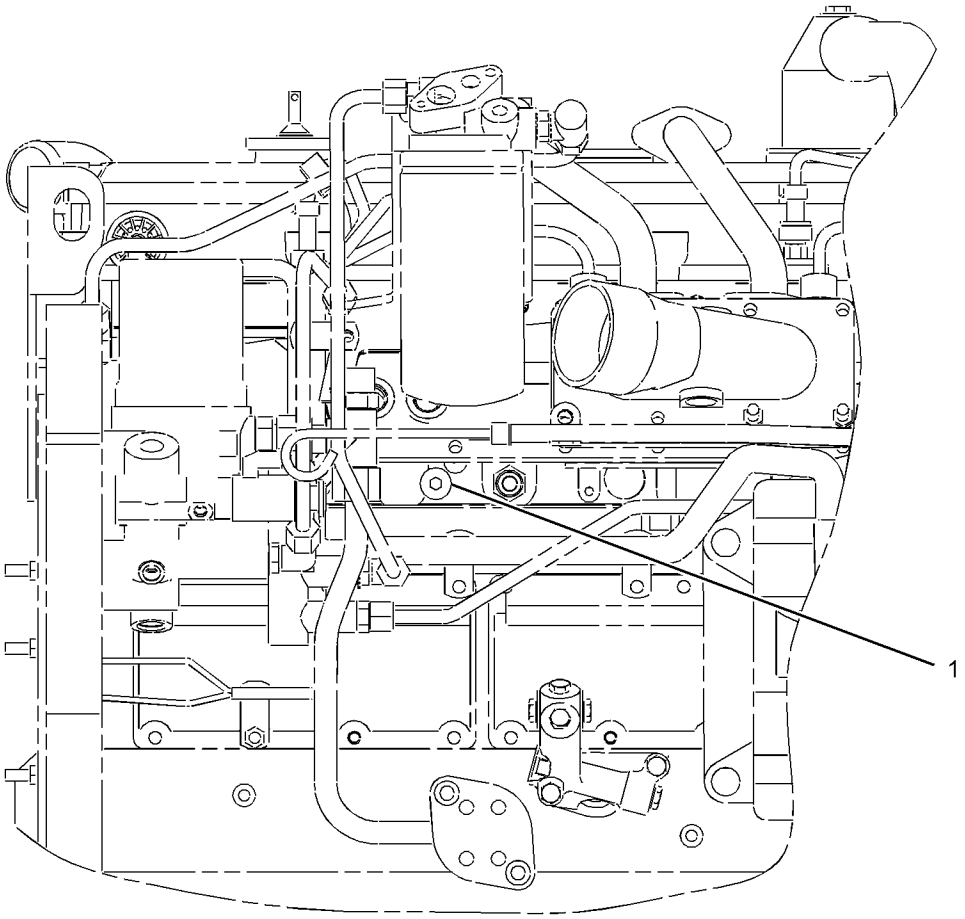

LEFT SIDE VIEW

GRAPHIC #1 <END> g01457732

256-3831 ROCKER ARM GP–EXHAUST

S/N: TX71-UP

PART OF 256-3830 VALVE MECHANISM GP

SMCS-1102, 1123

i02598465

NOTE	REF NO	GRAPHIC REF	PART NUMBER	QTY	PART NAME 1 2 3 4 5 6 (PRODUCT LEVEL)	SEE PAGE
R	1	1	**256-3832**	1	ROCKER ARM AS (EXHAUST)	
M	2	1	**260-7524**	1	SCREW-VALVE ADJUSTMENT (M10X1.5-THD)	
M	3	1	**2Y-5829**	1	NUT (M10X1.5-THD)	

M - METRIC PART
R - REMANUFACTURED PART MAY BE AVAILABLE

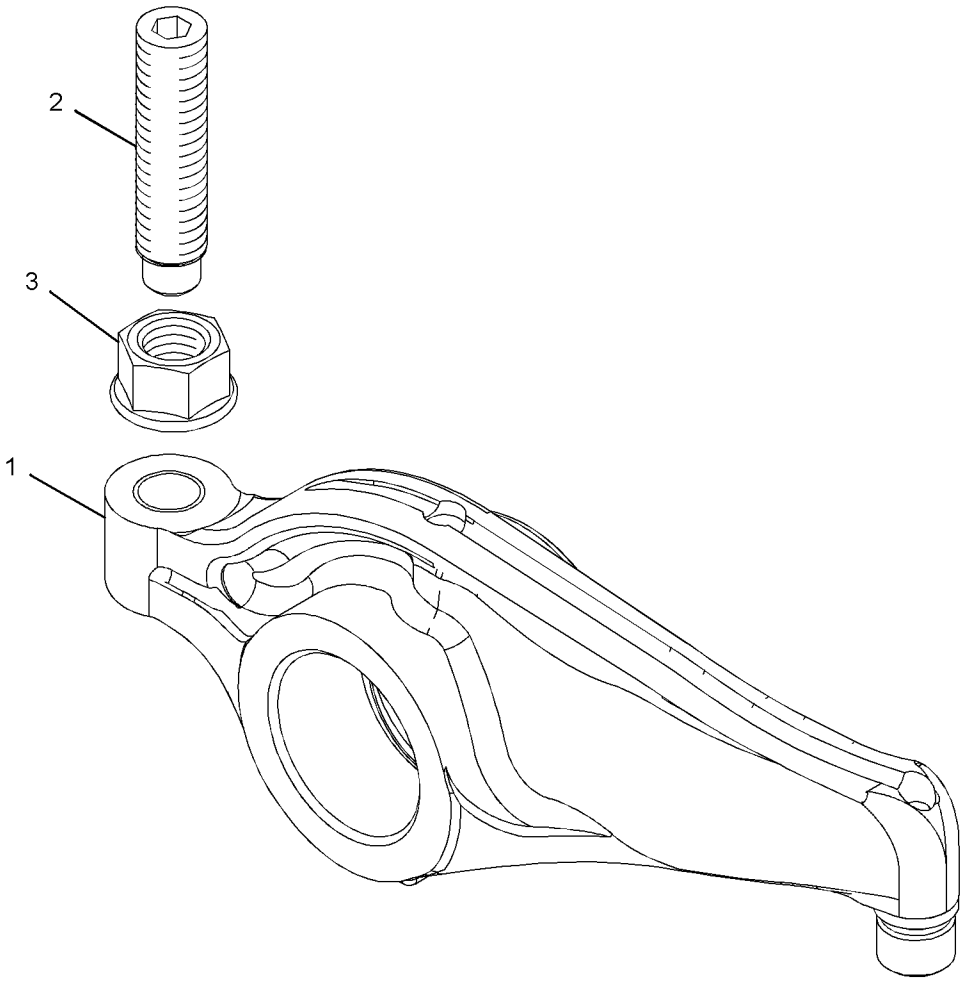

GRAPHIC #1 <END> g01293346

256-3834 ROCKER ARM GP–INLET

S/N: TX71-UP

PART OF 256-3830 VALVE MECHANISM GP

SMCS-1102, 1123

i02598550

NOTE	REF NO	GRAPHIC REF	PART NUMBER	QTY	PART NAME 1 2 3 4 5 6 (PRODUCT LEVEL)	SEE PAGE
M	1	1	**260-7524**	1	SCREW-VALVE ADJUSTMENT (M10X1.5-THD)	
R	2	1	**256-3835**	1	ROCKER ARM AS (INLET)	
M	3	1	**2Y-5829**	1	NUT (M10X1.5-THD)	

M - METRIC PART
R - REMANUFACTURED PART MAY BE AVAILABLE

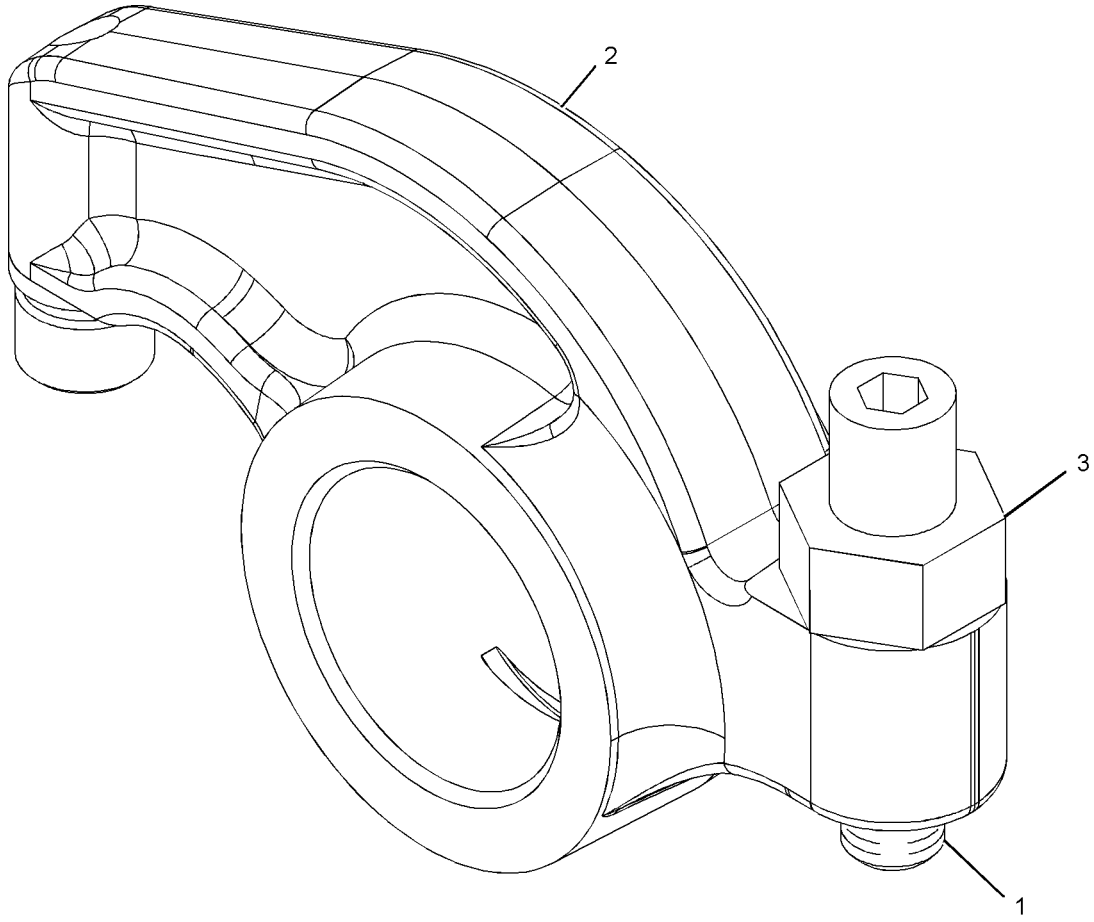

GRAPHIC #1 <END> g01056688

7E-7590 SEAL GP-CRANKSHAFT

S/N: TX71-UP

PART OF 506-2265 ENGINE AR-COMPLETE

SMCS-1160, 1161

i06947241

NOTE	REF NO	GRAPHIC REF	PART NUMBER	QTY	PART NAME 1 2 3 4 5 6 (PRODUCT LEVEL)	SEE PAGE
	1	1	**7E-7589**	1	SEAL GP-CRANKSHAFT (REAR)	
	2	1	**245-7339**	1	SEAL-CRANKSHAFT (FRONT)	

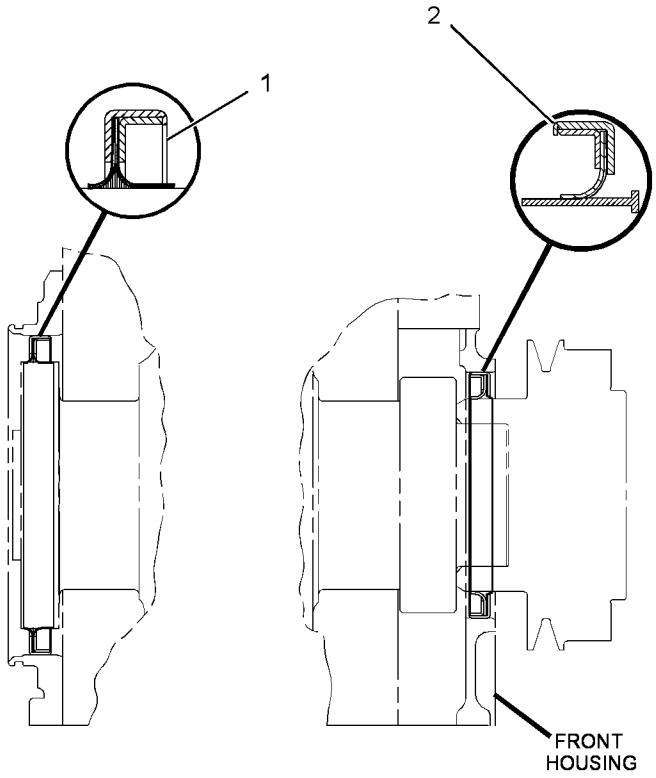

RIGHT SIDE VIEW

GRAPHIC #1

<END>

g01438665

247-0270 SUPPORT GP-ENGINE

S/N: TX71-UP

PART OF 506-2265 ENGINE AR-COMPLETE

SMCS-1152, 1153, 1154

i05856512

NOTE	REF NO	GRAPHIC REF	PART NUMBER	QTY	PART NAME 1 2 3 4 5 6 (PRODUCT LEVEL)	SEE PAGE
	1	1	**247-0271**	1	SUPPORT-FRONT	
	2	1	**5P-8245**	1	WASHER-HARD (13.5X25.5X3-MM THK)	
M	3	1	**6V-5696**	1	BOLT (M12X1.75X80-MM)	
	4	1	**7D-1649**	5	WASHER-HARD (13.5X32X5-MM THK)	
M	5	1	**8T-0106**	5	BOLT (M12X1.75X100-MM)	

M - METRIC PART

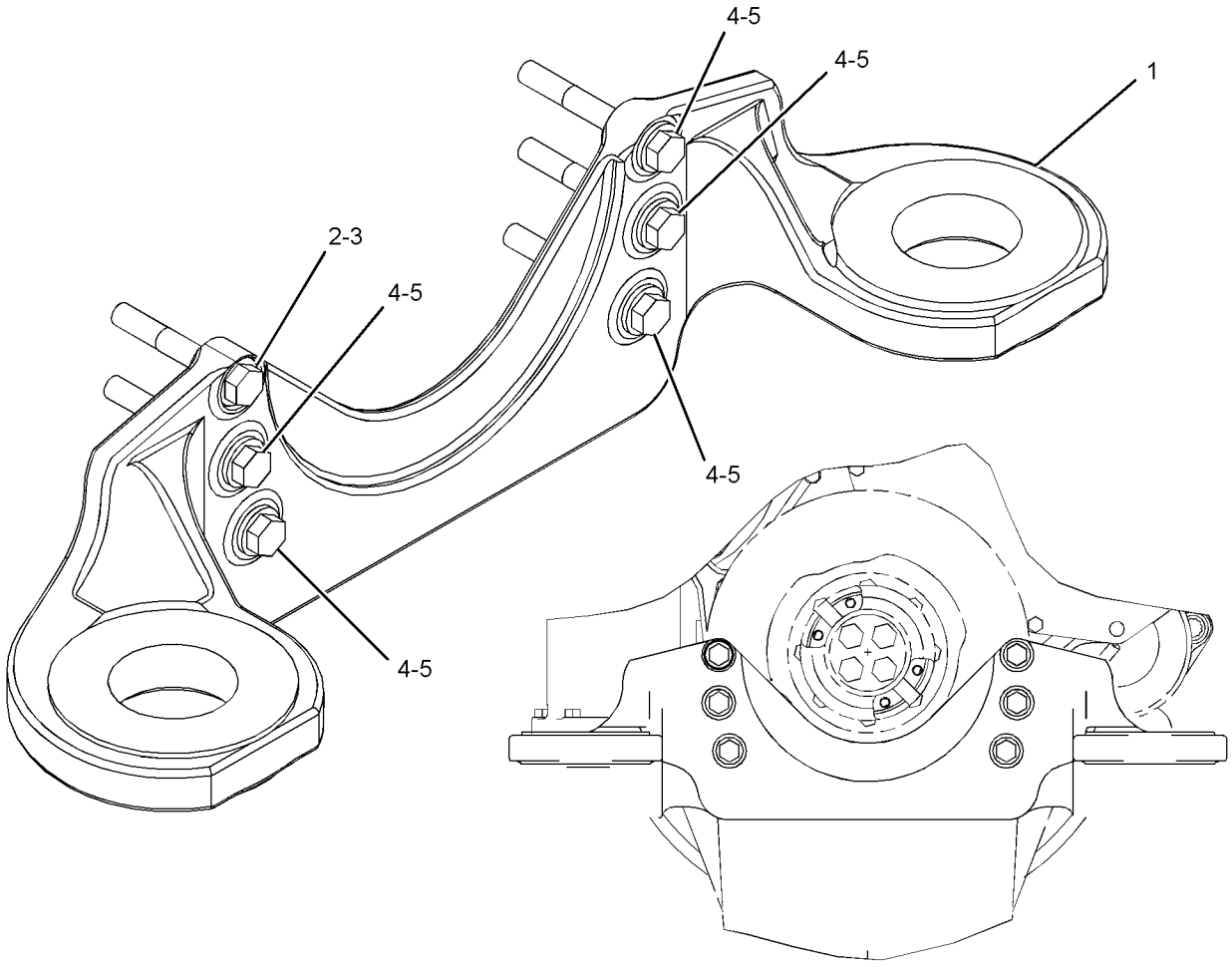

GRAPHIC #1 <END> g01394036

232-3717 VALVE MECHANISM GP

S/N: TX71-UP

PART OF 387-8499 ENGINE AR-CORE

SMCS-1102 **i05351176**

NOTE	REF NO	GRAPHIC REF	PART NUMBER	QTY	PART NAME 1 2 3 4 5 6 (PRODUCT LEVEL)	SEE PAGE
C	1	1	**264-6156**	12	ROD-VALVE PUSH	
	2	1	**219-3309**	6	BRIDGE-VALVE	
Y	3	1	*139-4081*	3	LIFTER GP-VALVE	42
M	4	1	**8T-8442**	12	BOLT-SOCKET HEAD (M6X1X30-MM)	
	5	1	**3E-9412**	6	DOWEL	
CY	6	1	**256-3830**	1	VALVE MECHANISM GP	57
M	7	1	**6V-5696**	11	BOLT (M12X1.75X80-MM)	
	8	1	**9M-1974**	2	WASHER-HARD (8.8X16X2-MM THK)	
	9	1	**3H-7654**	9	WASHER-HARD (13.5X22.5X3-MM THK)	
M	10	1	**8T-0100**	2	BOLT (M8X1.25X60-MM)	
	11	1	**232-1754**	1	CLIP	

C - CHANGE FROM PREVIOUS TYPE
M - METRIC PART
Y - SEPARATE ILLUSTRATION

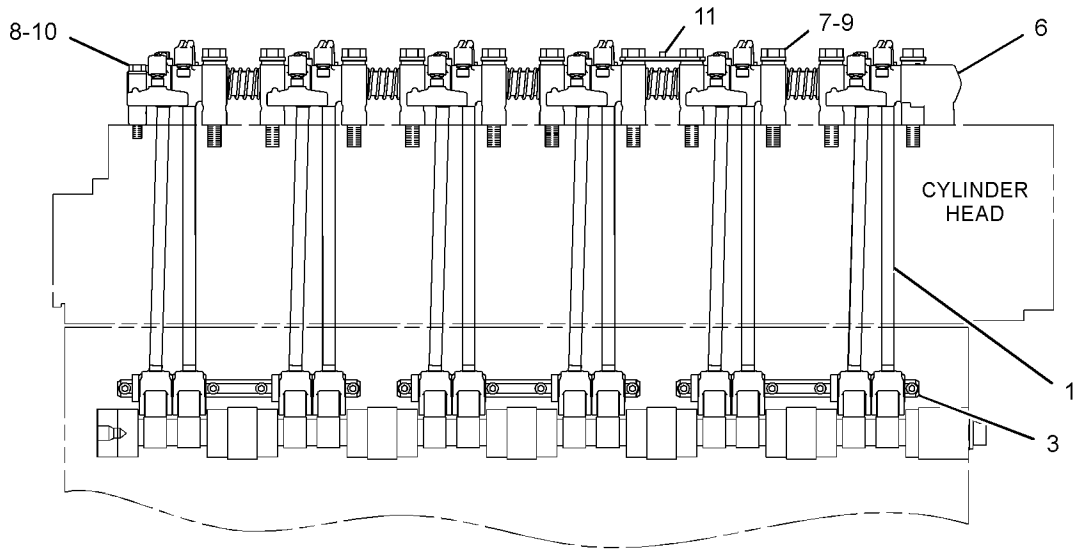

RIGHT SIDE VIEW

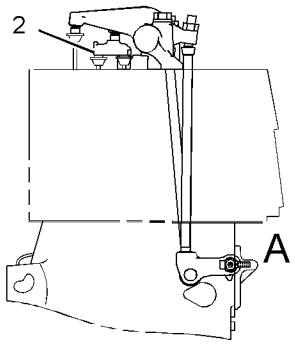

FRONT VIEW

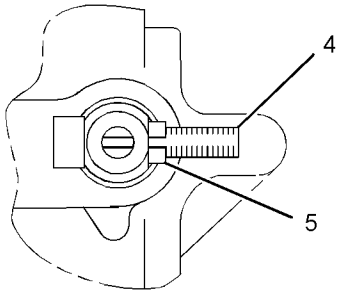

VIEW OF AREA A

GRAPHIC #1 <END> g01279672

256-3830 VALVE MECHANISM GP

S/N: TX71-UP

PART OF 232-3717 VALVE MECHANISM GP

SMCS-1102 **i02597721**

NOTE	REF NO	GRAPHIC REF	PART NUMBER	QTY	PART NAME 1 2 3 4 5 6 (PRODUCT LEVEL)	SEE PAGE
	1	1	**137-6717**	5	SPRING	
Y	2	1	*256-3834*	6	ROCKER ARM GP (INLET)	53
	3	1	**138-8403**	1	STAND	
Y	4	1	*256-3831*	6	ROCKER ARM GP (EXHAUST)	52
	5	1	**235-5527**	10	STAND	
	6	1	**138-8402**	1	STAND	
	7	1	**138-9868**	1	RING-RETAINING	
	8	1	**8H-5244**	1	DOWEL	
	9	1	**138-7198**	1	SHAFT AS	
	9A	1	**5B-1866**	1	PLUG-CUP	

Y - SEPARATE ILLUSTRATION

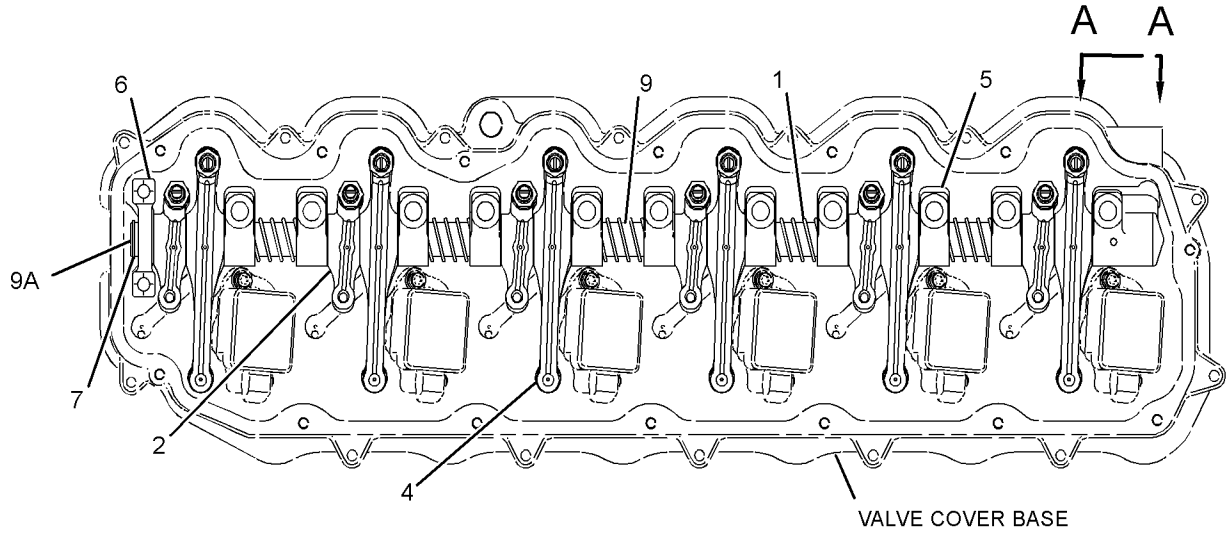

TOP VIEW OF ENGINE

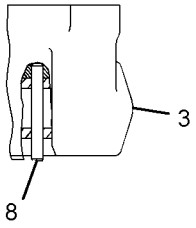

VIEW A-A

GRAPHIC #1 <END> g01300505

191-0523 ADAPTER GP-OIL LINE–FUEL INJECTION PUMP

S/N: TX71-UP

PART OF 396-8415 LINES GP-INJECTOR HYD PUMP

SMCS-1307 **i03363386**

NOTE	REF NO	GRAPHIC REF	PART NUMBER	QTY	PART NAME 1 2 3 4 5 6 (PRODUCT LEVEL)	SEE PAGE
	1	1	**191-0522**	1	ADAPTER	
	2	1	**033-6027**	1	SEAL-O-RING	

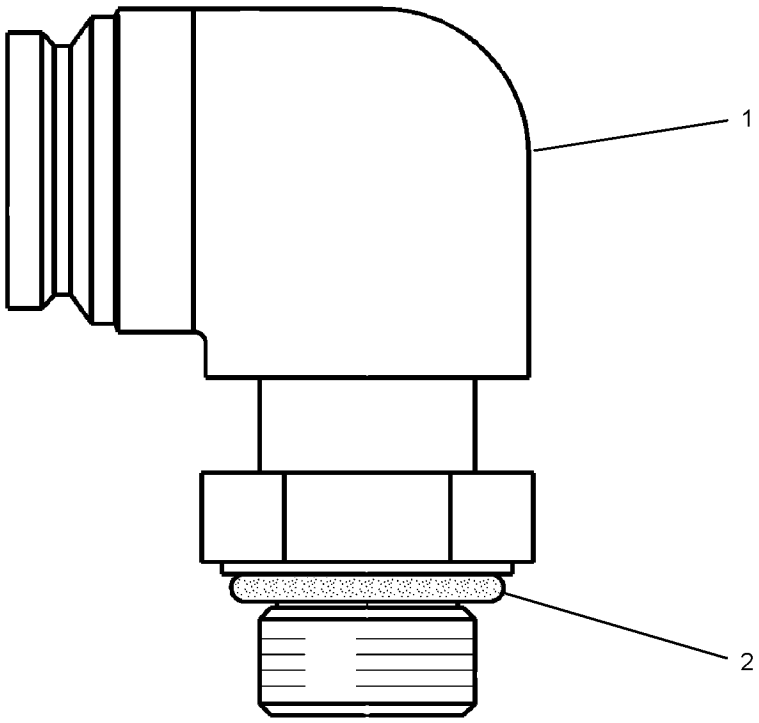

GRAPHIC #1 <END> g01735676

222-5946 BREATHER GP

S/N: TX71-UP

PART OF 506-2265 ENGINE AR-COMPLETE

SMCS-1317 **i03737769**

NOTE	REF NO	GRAPHIC REF	PART NUMBER	QTY	PART NAME 1 2 3 4 5 6 (PRODUCT LEVEL)	SEE PAGE
	1	1	**164-0210**	1	BREATHER (CRANKCASE)	
M	2	1	**143-4654**	1	BOLT (M8X1.25X105-MM)	
	3	1	**8H-2046**	1	SEAL-O-RING (CRANKCASE BREATHER)	
	4	1	**5N-4185**	1	WASHER-SPECIAL	

M - METRIC PART

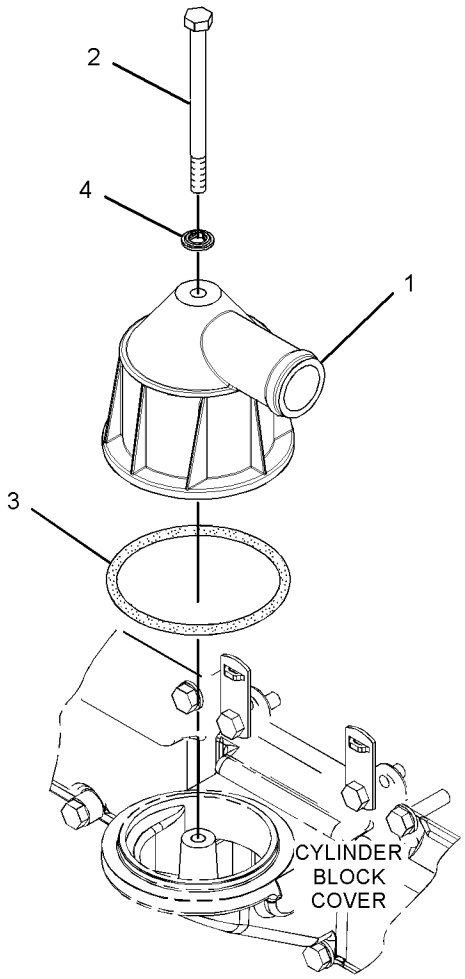

GRAPHIC #1 <END> g01426131

189-5433 FILTER GP-ENGINE OIL

S/N: TX71-UP

PART OF 506-2265 ENGINE AR-COMPLETE

SMCS-1306, 1308

i03288044

NOTE	REF NO	GRAPHIC REF	PART NUMBER	QTY	PART NAME 1 2 3 4 5 6 (PRODUCT LEVEL)	SEE PAGE
	1	1	**7C-1493**	2	VALVE AS-BYPASS (ENGINE OIL FILTER)	
	2	1	**8C-3445**	1	CAP-DUST	
	3	1	**206-6875**	2	CAP-TUBE	
	4	1	**260-7759**	1	BASE AS-OIL FILTER	
	4A	1	**2P-2537**	1	STUD-HOLLOW	
	5	1	**1R-1807**	1	FILTER AS-ENGINE OIL (ADVANCED EFFICIENCY)	
	6	1	**2M-9780**	2	SEAL-O-RING	
	7	1	**214-7566**	1	SEAL-O-RING	
	8	1	**5P-9617**	1	ADAPTER	
M	9	1	**5P-8196**	2	PLUG	
M	10	1	**6V-2317**	10	BOLT (M8X1.25X30-MM)	
	11	1	**300-7933**	1	GASKET	
	12	1	**8C-3446**	1	VALVE-SAMPLING (ENGINE OIL)	
	13	1	**214-7568**	1	SEAL-O-RING	
M	14	1	**8T-0276**	3	BOLT (M8X1.25X45-MM)	
	15	1	**242-3864**	2	SPRING	
	16	1	**9M-1974**	15	WASHER-HARD (8.8X16X2-MM THK)	
M	17	1	**9X-2098**	2	STUD-TAPERLOCK (M8X1.25X45-MM)	

M - METRIC PART

189-5433 **FILTER GP-ENGINE OIL (**contd.**)** **i03288044**

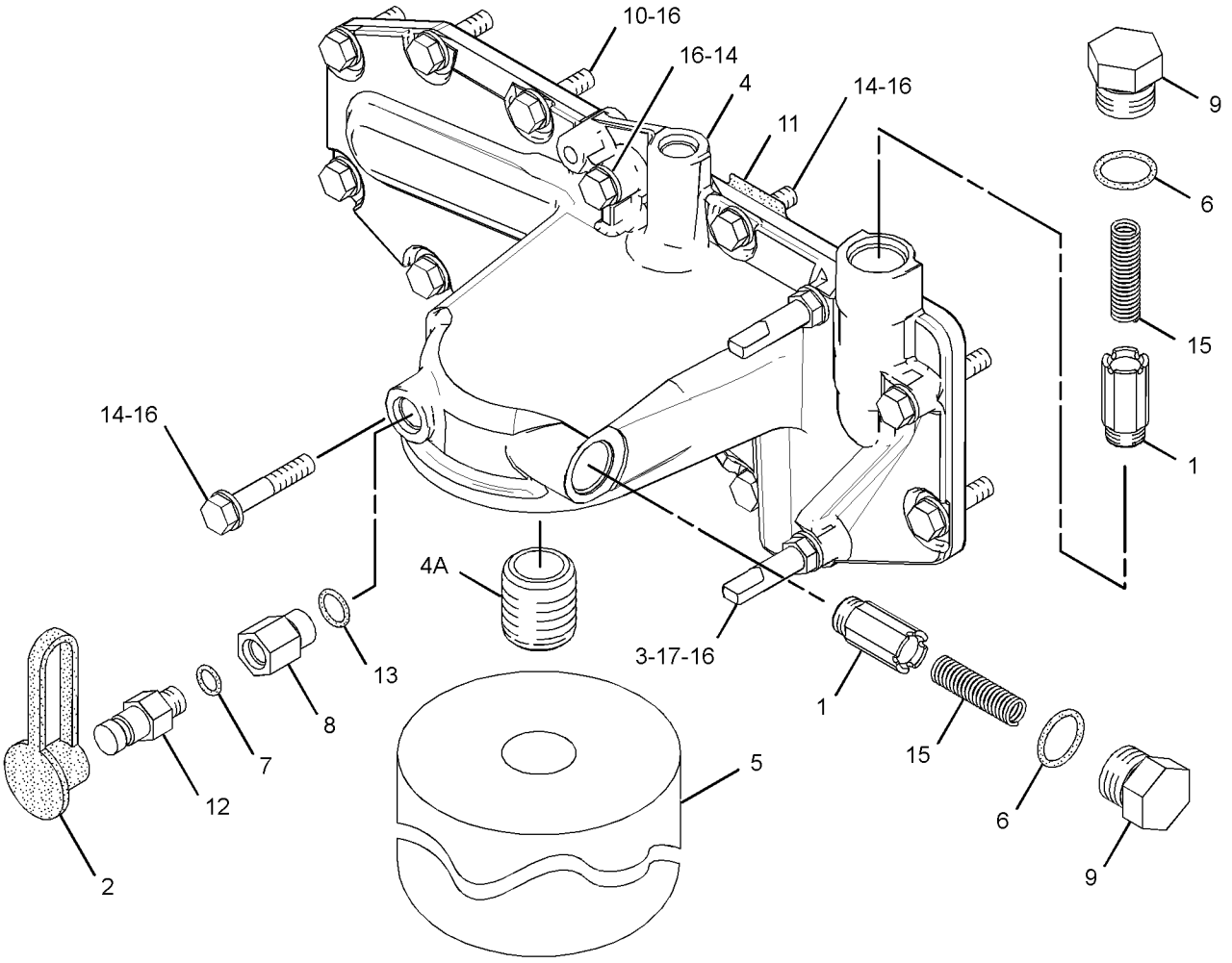

GRAPHIC #1 <END> g01626939

220-1194 FUMES DISPOSAL GP

S/N: TX71-UP

PART OF 506-2265 ENGINE AR-COMPLETE

SMCS-1317 **i06227007**

NOTE	REF NO	GRAPHIC REF	PART NUMBER	QTY	PART NAME 1 2 3 4 5 6 (PRODUCT LEVEL)	SEE PAGE
	1	1	**7C-6921**	1	SPACER (11X20X22.8-MM THK)	
	2	1	**9M-2904**	1	CLAMP-HOSE	
	3	1	**228-8510**	1	HOSE-DISPOSAL (FUMES)	
	4	1	**2S-2053**	1	CLIP (LOOP)	
	5	1	**3E-4352**	1	WASHER-HARD (8.8X20.5X2.5-MM THK)	
M	6	1	**162-3148**	1	STUD (M8X1.25X62.75-MM)	

M - METRIC PART

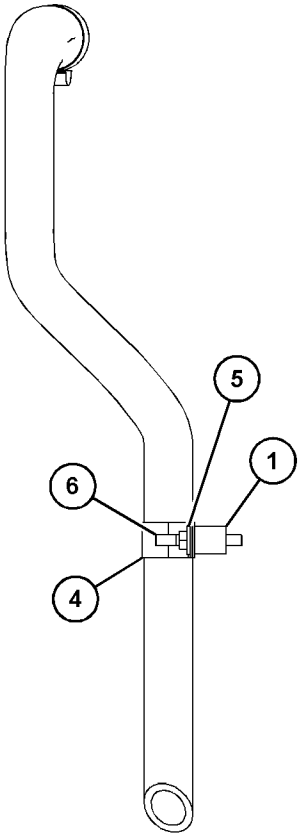

REAR VIEW OF ENGINE

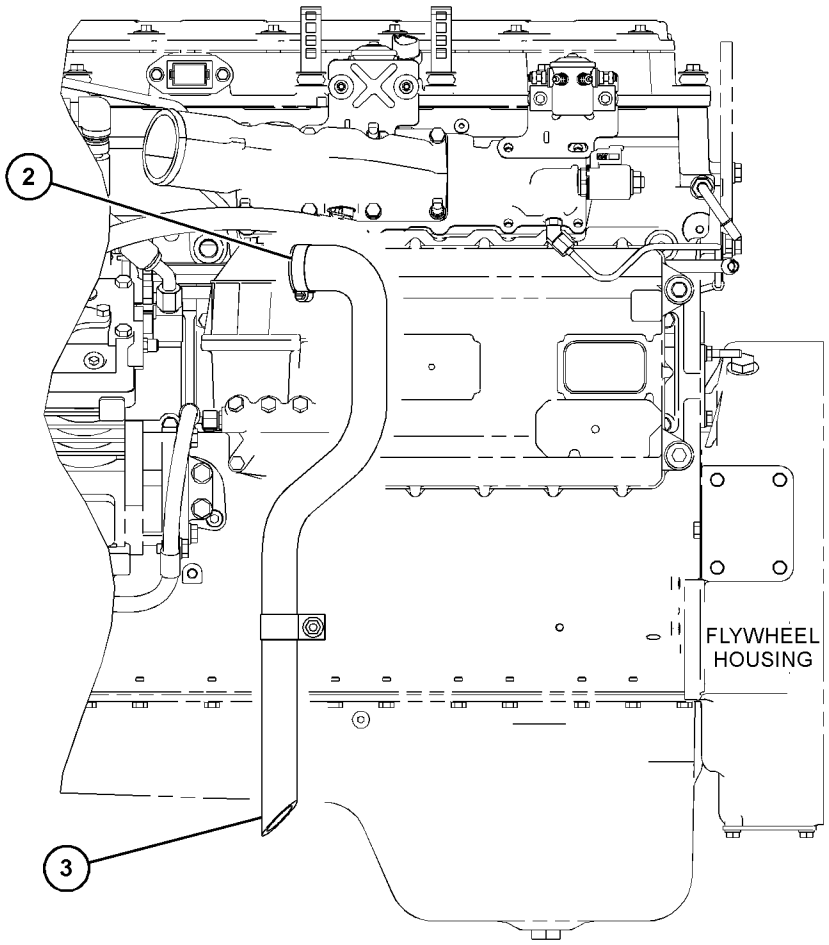

LEFT SIDE VIEW OF ENGINE

GRAPHIC #1

<END>

g03863728

276-3681 GAUGE GP-OIL LEVEL (DIPSTICK)—ENGINE

S/N: TX71-UP

PART OF 506-2265 ENGINE AR-COMPLETE

SMCS-1326 **i05114413**

NOTE	REF NO	GRAPHIC REF	PART NUMBER	QTY	PART NAME 1 2 3 4 5 6 (PRODUCT LEVEL)	SEE PAGE
	1	1	**1S-2563**	3	PLUG	
	2	1	**154-6626**	1	BRACKET AS	
M		1	**8T-3490**	1	NUT-WELD (M10X1.5-THD)	
	3	1	**276-3674**	1	TUBE AS	
	4	1	**345-3661**	1	GAUGE-OIL LEVEL (DIPSTICK) (ENGINE)	
	5	1	**3E-4352**	1	WASHER-HARD (8.8X20.5X2.5-MM THK)	
M	6	1	**5P-7970**	1	NUT (M8X1.25-THD)	
	7	1	**5P-9297**	1	CLIP (LOOP)	
	8	1	**6V-5839**	1	WASHER (11X21X2.5-MM THK)	
M	9	1	**6V-6317**	1	BOLT (M10X1.5X20-MM)	

M - METRIC PART

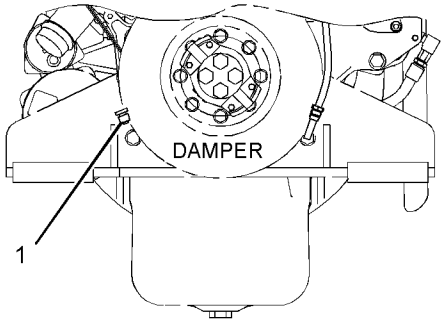

FRONT VIEW OF ENGINE

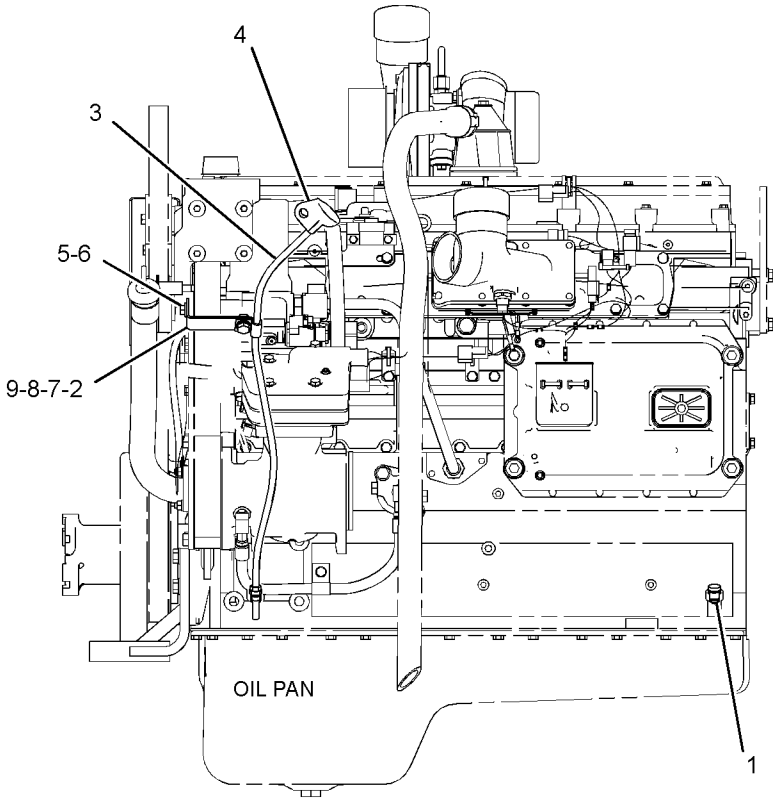

LEFT SIDE VIEW OF ENGINE

GRAPHIC #1 <END> g03323238

129-1133 LINES GP-ENGINE OIL

S/N: TX71-UP
FOR USE WITH 31 LITER REAR SUMP OIL PAN
PART OF 506-2265 ENGINE AR-COMPLETE

SMCS-1307 **i05460657**

NOTE	REF NO	GRAPHIC REF	PART NUMBER	QTY	PART NAME 1 2 3 4 5 6 (PRODUCT LEVEL)	SEE PAGE
	1	1	**129-1132**	1	TUBE AS-OIL	
M	2	1	**6V-4248**	2	BOLT (M10X1.5X25-MM)	
	3	1	**7W-5340**	1	GASKET	
M	4	1	**6V-3940**	4	BOLT (M8X1.25X25-MM)	
	5	1	**9M-1974**	4	WASHER-HARD (8.8X16X2-MM THK)	
	6	1	**438-8638**	1	ELBOW-OUTLET	
	7	1	**3P-1156**	2	SEAL-O-RING	
	8	1	**3E-4353**	2	WASHER-HARD (11X25X3-MM THK)	

M - METRIC PART

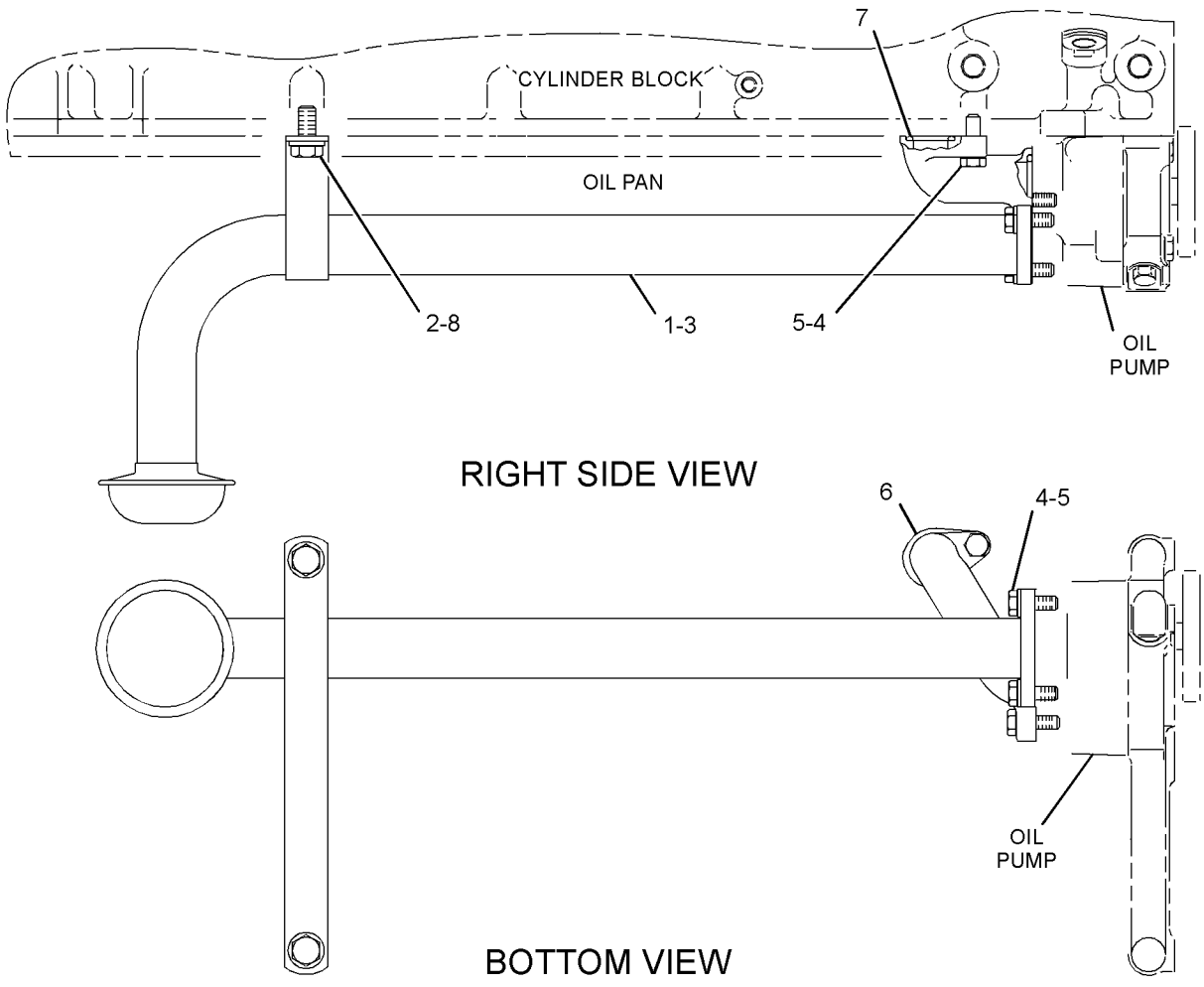

GRAPHIC #1 <END> g03464436

246-6705 LINES GP-ENGINE OIL DRAIN

S/N: B551-UP

SMCS-1307 **i07775786**

NOTE	REF NO	GRAPHIC REF	PART NUMBER	QTY	PART NAME 1 2 3 4 5 6 (PRODUCT LEVEL)	SEE PAGE
	1	1	**7X-7958**	1	CLAMP-HOSE	
	2	1	**206-4669**	1	VALVE-DRAIN (ENGINE OIL)	
	3	1	**249-8540**	1	PLATE (ENGINE OIL DRAIN)	
M	4	1	**344-5675**	1	NUT (M10X1.5-THD)	
	5	1	*148-8347*	1	ELBOW AS	
		1	**6V-9007**	1	ELBOW	
		1	**3D-2824**	1	SEAL-O-RING	
		1	**6V-9746**	1	SEAL-O-RING	
	6	1	**212-4174**	1	LOCKWASHER	
I	7	1	**4I-8897**	1	HOSE AS	
	8	1	**556-9087**	1	PLATE-FRONT (ENGINE OIL)	
	9	1	**6V-1889**	1	CLIP (LOOP)	
	10	1	**7D-7233**	1	CLIP (LOOP)	
	11	1	**8T-4121**	4	WASHER-HARD (11X21X2.5-MM THK)	
M	12	1	**8T-4136**	2	BOLT (M10X1.5X25-MM)	
M	13	1	**8T-4195**	1	BOLT (M10X1.5X30-MM)	
E	14	1	**146-7453**		HOSE (13-CM)	

E - ORDER BY THE CENTIMETER
I - REFER TO HYDRAULIC INFORMATION SYSTEM
M - METRIC PART

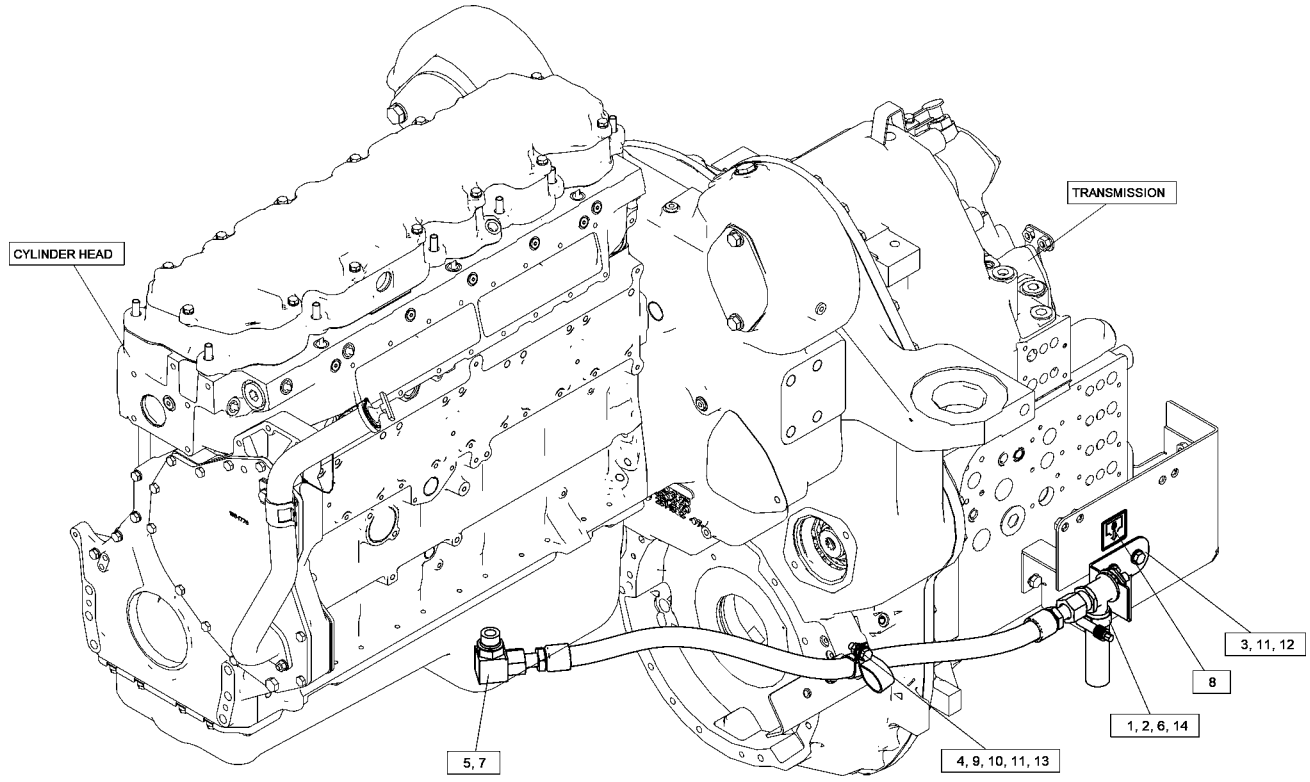

GRAPHIC #1 <END> g06424720

250-8315 LINES GP-TURBOCHARGER OIL

S/N: TX71-UP

PART OF 506-2265 ENGINE AR-COMPLETE

SMCS-1052, 1307

i04538510

NOTE	REF NO	GRAPHIC REF	PART NUMBER	QTY	PART NAME 1 2 3 4 5 6 (PRODUCT LEVEL)	SEE PAGE
	1	1	**119-2942**	1	ADAPTER	
	2	1	*183-3399*	2	CONNECTOR AS	
					(EACH INCLUDES)	
		1	**214-7568**	1	SEAL-O-RING	
		1	**221-3494**	1	SEAL-O-RING	
	3	1	**197-8419**	1	GASKET (TURBOCHARGER)	
	4	1	**349-3582**	1	TUBE AS	
C	5	1	**323-9474**	1	TUBE AS	
	6	1	**114-2687**	1	SEAL-O-RING	
	7	1	**8S-8820**	1	CLIP	
M	8	1	**2Y-5829**	1	NUT (M10X1.5-THD)	
	9	1	**1S-0724**	1	CLIP	
	10	1	**5P-8066**	1	SEAL-O-RING	
M	11	1	**6V-4248**	1	BOLT (M10X1.5X25-MM)	
M	12	1	**6V-5218**	4	BOLT (M8X1.25X35-MM)	
	13	1	**6V-5839**	2	WASHER (11X21X2.5-MM THK)	
	14	1	**9M-1974**	2	WASHER-HARD (8.8X16X2-MM THK)	

C - CHANGE FROM PREVIOUS TYPE
M - METRIC PART

250-8315 **LINES GP-TURBOCHARGER OIL (**contd.**)** **i04538510**

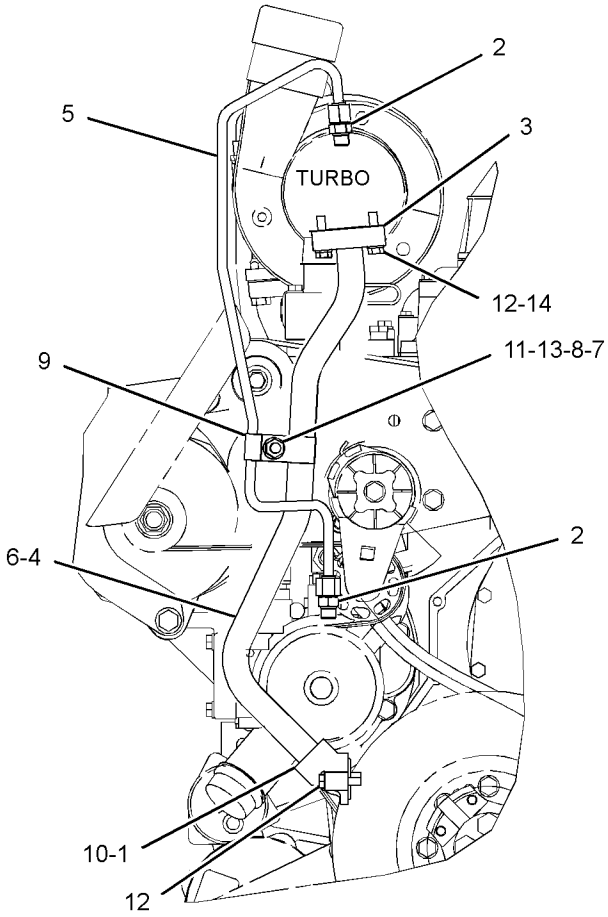

FRONT VIEW OF ENGINE

GRAPHIC #1 <END> g02741582

237-8063 MANIFOLD GP-ENGINE OIL

S/N: TX71-UP

PART OF 506-2265 ENGINE AR-COMPLETE

SMCS-1307 **i05351153**

NOTE	REF NO	GRAPHIC REF	PART NUMBER	QTY	PART NAME 1 2 3 4 5 6 (PRODUCT LEVEL)	SEE PAGE
	1	1	**226-8696**	1	MANIFOLD-OIL (ENGINE)	
	2	1	*389-3708*	4	PLUG AS	
					(EACH INCLUDES)	
		1	**214-7568**	1	SEAL-O-RING	
		1	**360-3679**	1	PLUG-CONNECTOR (9/16-18-THD)	
	3	1	**4F-9029**	1	SEAL	
M	4	1	**6V-5219**	2	BOLT (M8X1.25X40-MM)	

M - METRIC PART

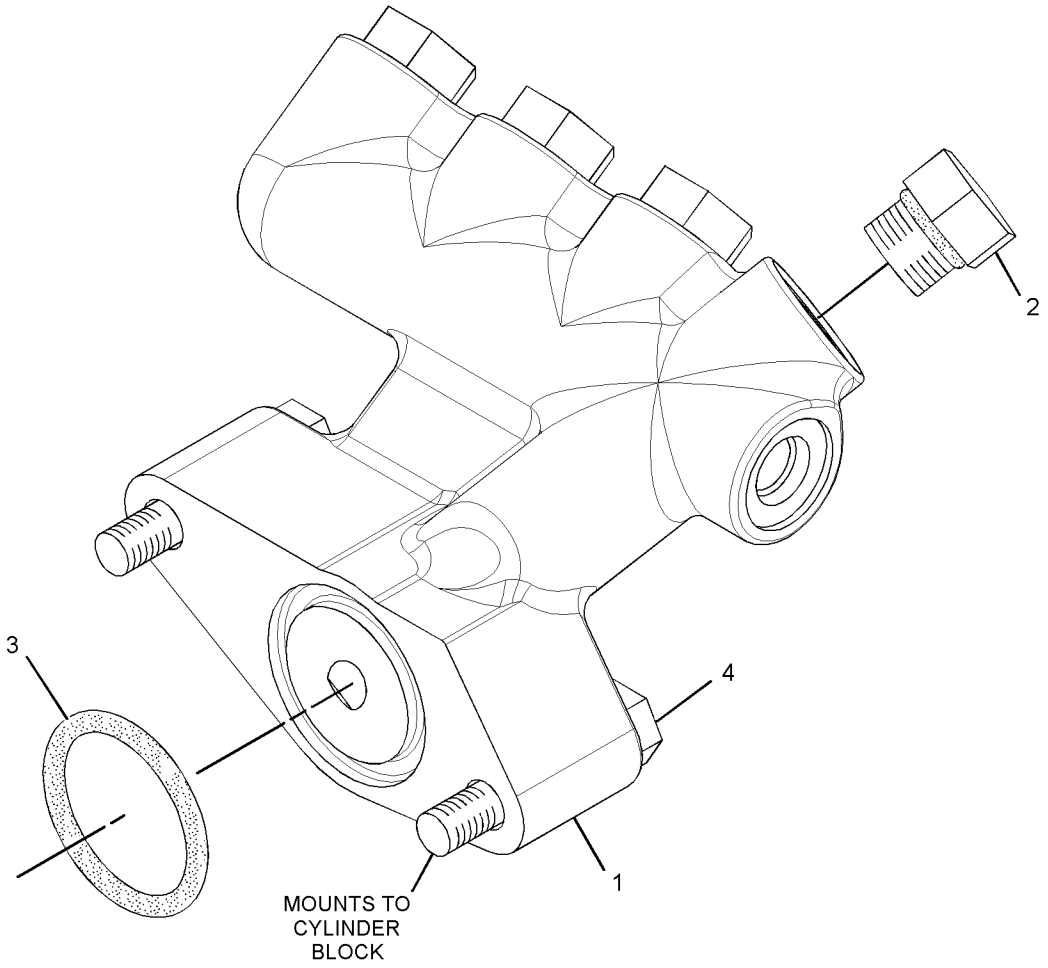

GRAPHIC #1 <END> g01439662

501-1173 OIL CHANGE GP-HIGH SPEED

S/N: B551-UP

CANNOT BE USED WITH 246-6705—PAGE: 65

SMCS-1325 **i07722219**

NOTE	REF NO	GRAPHIC REF	PART NUMBER	QTY	PART NAME 1 2 3 4 5 6 (PRODUCT LEVEL)	SEE PAGE
	1	1	**129-7679**	1	FILM-INSTRUCTION (ENGINE OIL DRAIN)	
	2	1	*164-5569*	1	COUPLING AS	
		1	**4I-6140**	1	COUPLING	
		1	**7M-8485**	1	SEAL-O-RING	
	3	1	**206-4669**	1	VALVE-DRAIN	
	4	1	**249-8540**	1	PLATE	
I	5	1	**501-1174**	1	HOSE AS	
	6	1	**110-8827**	1	FITTING (QUICK DISCONNECT, MALE)	
	7	1	*148-8347*	1	ELBOW AS	
		1	**3D-2824**	1	SEAL-O-RING	
		1	**6V-9007**	1	ELBOW	
		1	**6V-9746**	1	SEAL-O-RING	
	8	1	*148-8449*	1	TEE AS-SWIVEL	
		1	**6V-9746**	2	SEAL-O-RING	
		1	**6V-9839**	1	TEE-SWIVEL	
	9	1	**212-4174**	1	LOCKWASHER	
	10	1	**7X-7958**	1	CLAMP-HOSE	
	11	1	**7X-7729**	2	WASHER (11X25X3-MM THK)	
M	12	1	**8T-4136**	2	BOLT (M10X1.5X25-MM)	
G	13	1	**423-1986**		HOSE (5-IN)	

G - ORDER BY THE INCH
I - REFER TO HYDRAULIC INFORMATION SYSTEM
M - METRIC PART

501-1173 **OIL CHANGE GP-HIGH SPEED (**contd.**)** **i07722219**

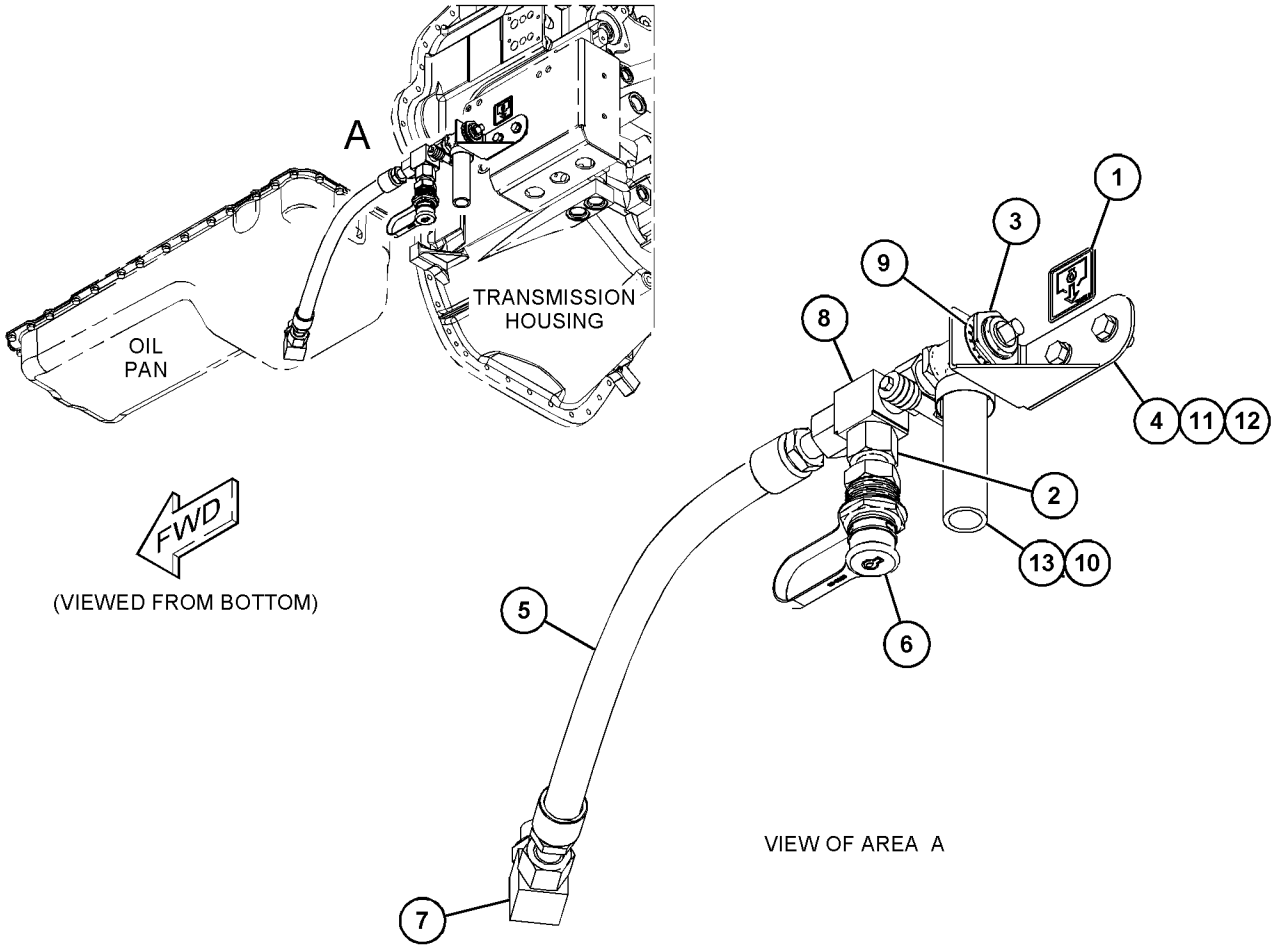

GRAPHIC #1 <END> g06174341

192-2981 PUMP GP-ENGINE OIL

S/N: TX71-UP

PART OF 387-8499 ENGINE AR-CORE

SMCS-1304, 1315 **i05976509**

NOTE	REF NO	GRAPHIC REF	PART NUMBER	QTY	PART NAME 1 2 3 4 5 6 (PRODUCT LEVEL)	SEE PAGE
Y	1	1	*200-4497*	1	PUMP GP-ENGINE OIL	72
M	2	1	**6V-5815**	2	BOLT (M10X1.5X75-MM)	
	3	1	**6V-5839**	2	WASHER (11X21X2.5-MM THK)	

M - METRIC PART
Y - SEPARATE ILLUSTRATION

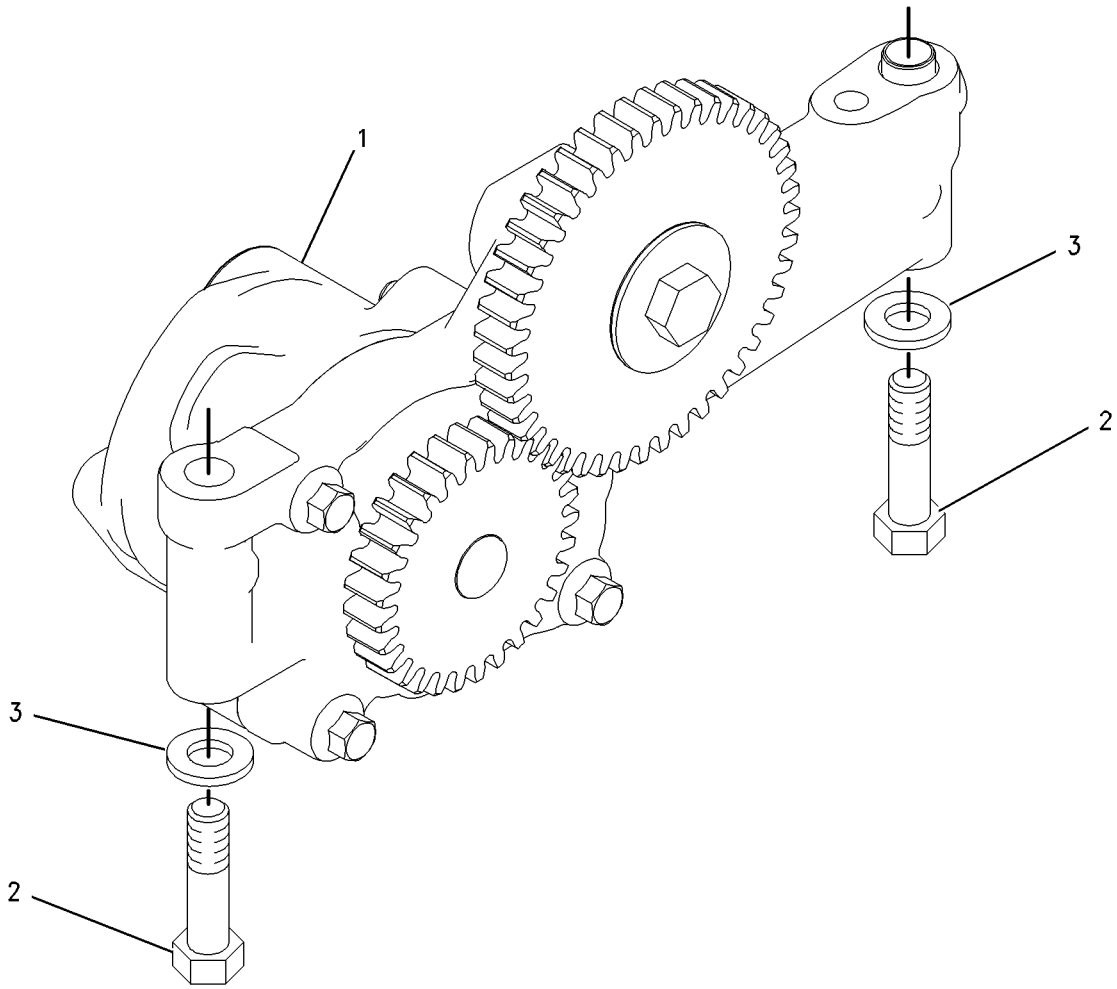

GRAPHIC #1 <END> g00775811

200-4497 PUMP GP-ENGINE OIL

S/N: TX71-UP

PART OF 192-2981 PUMP GP-ENGINE OIL

SMCS-1304, 1315 **i02120062**

NOTE	REF NO	GRAPHIC REF	PART NUMBER	QTY	PART NAME 1 2 3 4 5 6 (PRODUCT LEVEL)	SEE PAGE
	1	1	**7W-9737**	1	SHAFT	
	2	1	**7W-9738**	1	WASHER (10.5X38X1.6-MM THK)	
	3	1	**7W-9740**	1	GEAR AS-IDLER (43-TEETH)	
	3A	1	**7W-9930**	1	BUSHING	
M	4	1	**9X-2305**	1	BOLT-LOCKING (M10X1.5X50-MM)	
R	5	1	**189-8777**	1	PUMP GP-ENGINE OIL	

M - METRIC PART
R - REMANUFACTURED PART MAY BE AVAILABLE

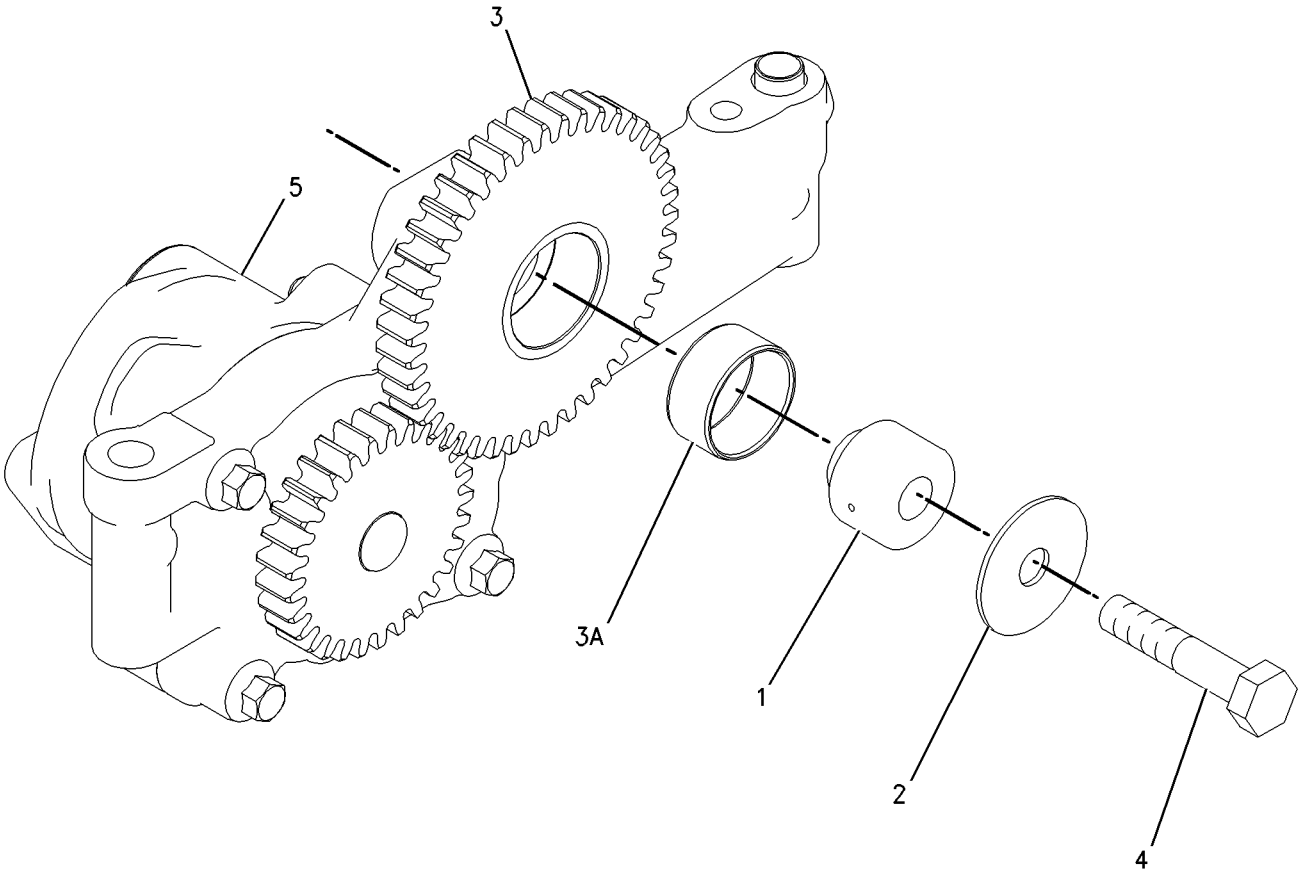

GRAPHIC #1 <END> g00775788

117-3643 COOLER GP-ENGINE OIL

S/N: TX71-UP

PART OF 506-2265 ENGINE AR-COMPLETE

SMCS-1378 **i07427356**

NOTE	REF NO	GRAPHIC REF	PART NUMBER	QTY	PART NAME 1 2 3 4 5 6 (PRODUCT LEVEL)	SEE PAGE
R	1	1	**267-4743**	1	CORE AS-ENGINE OIL COOLER	
	2	1	**240-2767**	1	GASKET	
	3	1	**3P-1156**	2	SEAL-O-RING	

R - REMANUFACTURED PART MAY BE AVAILABLE

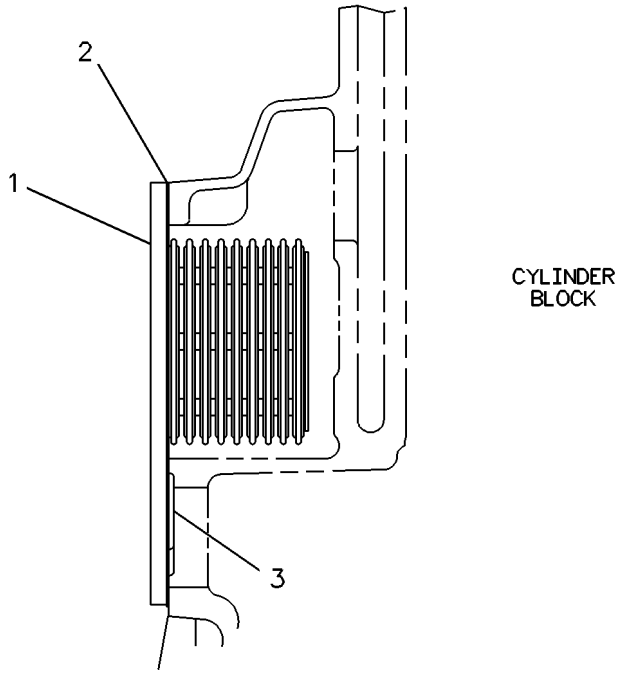

GRAPHIC #1 <END> g00117316

268-6570 COOLING AR

S/N: B551-UP

PART OF 577-1377 COMMON AR

SMCS-1350 **i04840765**

NOTE	REF NO	GRAPHIC REF	PART NUMBER	QTY	PART NAME 1 2 3 4 5 6 (PRODUCT LEVEL)	SEE PAGE
CY	1	1	*371-7905*	1	AFTERCOOLER GP-AIR	92
Y	2	1	*231-2315*	1	RADIATOR GP	87
Y	3	1	*231-2316*	1	SUPPORT GP-RADIATOR	478
	4	1	**198-4782**	4	WASHER-HARD (26X47X12-MM THK)	
M	5	1	**7X-2576**	4	BOLT (M24X3X70-MM)	

C - CHANGE FROM PREVIOUS TYPE
M - METRIC PART
Y - SEPARATE ILLUSTRATION

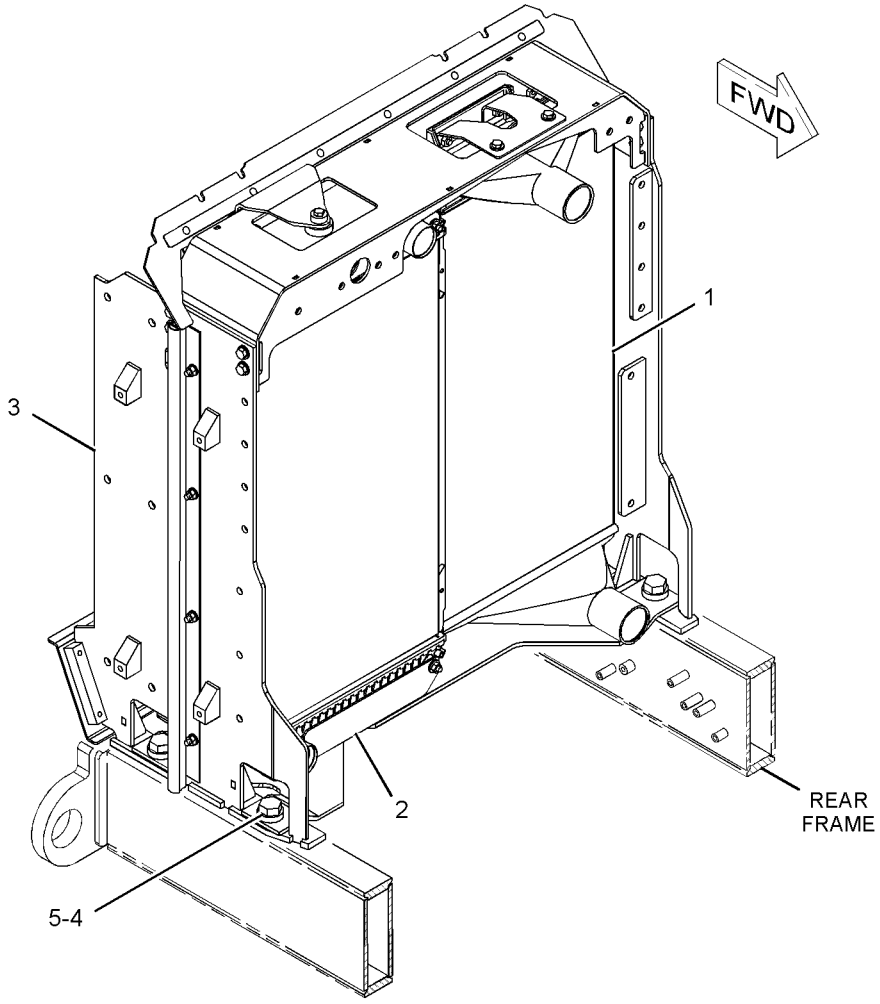

GRAPHIC #1 <END> g01150518

231-2313 FAN & MOTOR GP–RADIATOR COOLING

S/N: B551-UP
HYDRAULIC
PART OF 577-1377 COMMON AR

SMCS-1356, 1386 **i06661576**

NOTE	REF NO	GRAPHIC REF	PART NUMBER	QTY	PART NAME 1 2 3 4 5 6 (PRODUCT LEVEL)	SEE PAGE
	1	1	**241-8534**	1	SPIDER AS (8-BLADE)	
	2	1	**248-0409**	1	ADAPTER-FAN	
Y	3	1	*248-0671*	1	GUARD GP-FAN (RADIATOR)	78
J	4	1	**341-2719**	1	MOTOR GP-GEAR (RADIATOR FAN DRIVE)	
	5	1	**310-4972**	2	BRACKET AS	
	6	1	**252-9513**	1	SUPPORT AS	
	7	1	**264-4297**	1	SENSOR AS-TEMPERATURE (2-PIN) (HYDRAULIC FAN OIL)	
		1	**137-6645**	1	PAD-CONNECTOR	
	8	1	**266-7711**	1	BAFFLE	
	9	1	**266-7712**	1	BAFFLE	
	10	1	**266-7713**	2	STRIP	
	11	1	**291-1348**	1	BLOCK	
	12	1	**295-2349**	1	PLATE AS	
I	13	1	**375-0851**	1	HOSE AS	
	14	1	*150-4049*	1	ELBOW AS	
		1	**8T-4149**	1	ELBOW	
		1	**6V-9746**	1	SEAL-O-RING	
		1	**7M-8485**	1	SEAL-O-RING	
	15	1	*148-8360*	1	ELBOW AS	
		1	**6V-9182**	1	ELBOW	
		1	**6V-9746**	1	SEAL-O-RING	
		1	**7M-8485**	1	SEAL-O-RING	
	16	1	*148-8408*	1	PLUG AS	
		1	**9S-4183**	1	PLUG (1-1/16-12-THD)	
		1	**3D-2824**	1	SEAL-O-RING	
	17	1	*153-6237*	1	ELBOW AS	
		1	**6V-9004**	1	ELBOW	
		1	**3D-2824**	1	SEAL-O-RING	
		1	**6V-9746**	1	SEAL-O-RING	
	18	1	**3K-0360**	1	SEAL-O-RING	
	19	1	**5P-1076**	16	WASHER-HARD (13.5X30X4-MM THK)	
	20	1	**5P-8245**	1	WASHER-HARD (13.5X25.5X3-MM THK)	
	21	1	**6B-6684**	1	NUT-FULL (1/2-20-THD)	
	22	1	**6V-4604**	8	RIVET-POP	
	23	1	**7X-7729**	2	WASHER (11X25X3-MM THK)	
	24	1	**8T-4121**	10	WASHER-HARD (11X21X2.5-MM THK)	
M	25	1	**8T-4136**	2	BOLT (M10X1.5X25-MM)	
M	26	1	**8T-4137**	6	BOLT (M10X1.5X20-MM)	
M	27	1	**8T-4139**	4	BOLT (M12X1.75X30-MM)	
M	28	1	**8T-4172**	2	BOLT (M10X1.5X80-MM)	
M	29	1	**8T-4195**	2	BOLT (M10X1.5X30-MM)	
M	30	1	**8T-4956**	12	BOLT (M12X1.75X35-MM)	
E	31	1	**112-9736**		SEAL (5-CM EACH)	
					AVAILABLE REPAIR KIT(S):	

231-2313 **FAN & MOTOR GP (**contd.**)** **i06661576**

NOTE	REF NO	GRAPHIC REF	PART NUMBER	QTY	PART NAME 1 2 3 4 5 6 (PRODUCT LEVEL)	SEE PAGE
J			**343-1211**	1	KIT-SEAL (MOTOR)	
					(INCLUDES RETAINIG RINGS, DUST SEAL, SHAFT SEAL, BI ROTATIONAL SEALS & O-RINGS)	

E - ORDER BY THE CENTIMETER
I - REFER TO HYDRAULIC INFORMATION SYSTEM
J - KIT MARKED J SERVICES PART(S) MARKED J
M - METRIC PART
Y - SEPARATE ILLUSTRATION

231-2313 **FAN & MOTOR GP** (contd.) **i06661576**

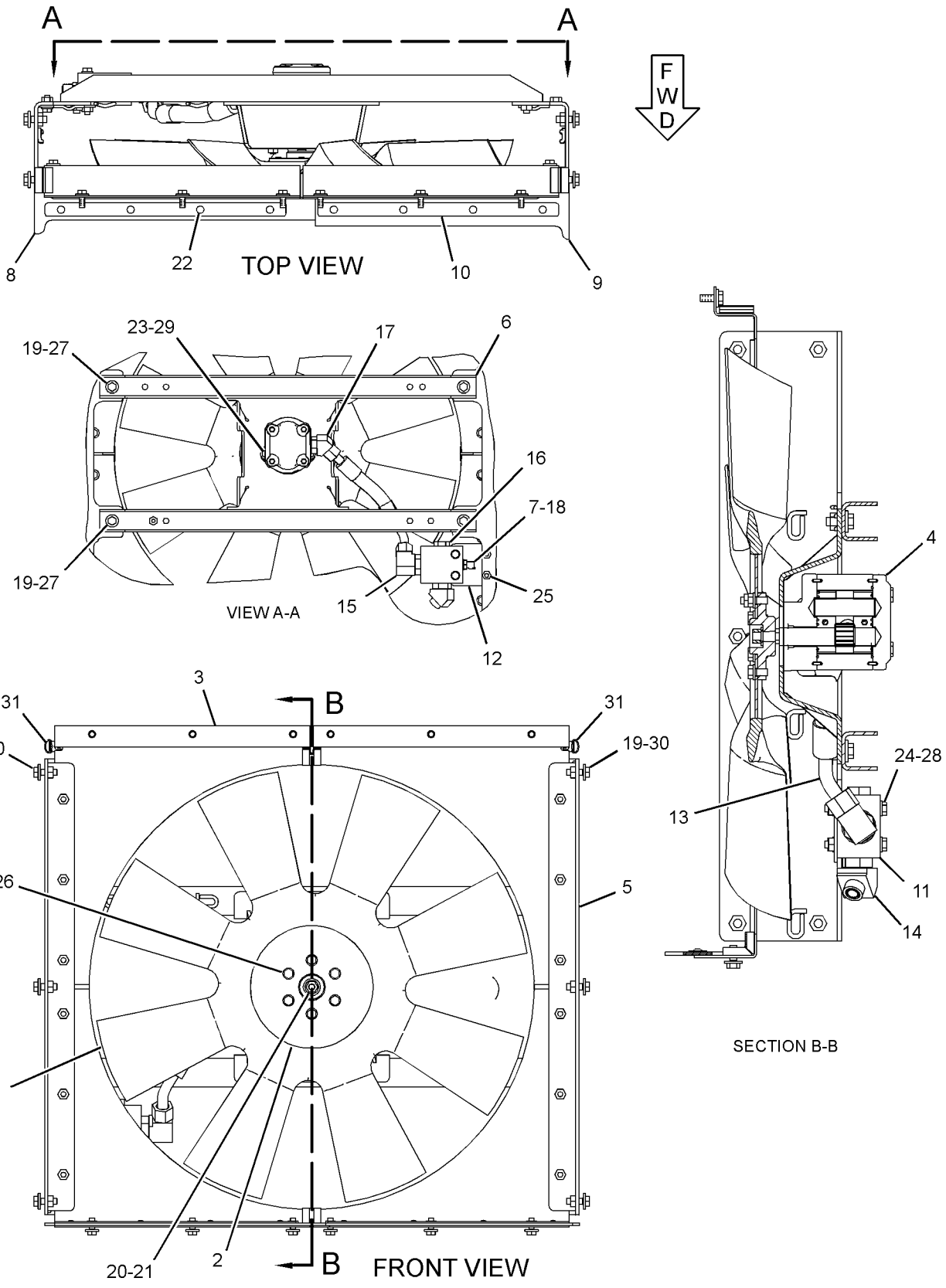

GRAPHIC #1 <END> g03529719

248-0671 GUARD GP-FAN–RADIATOR

S/N: B551-UP

PART OF 231-2313 FAN & MOTOR GP

SMCS-1360 **i02787117**

NOTE	REF NO	GRAPHIC REF	PART NUMBER	QTY	PART NAME 1 2 3 4 5 6 (PRODUCT LEVEL)	SEE PAGE
	1	1	**309-1833**	1	SHIELD-FAN	
	2	1	**309-1834**	1	SHIELD-FAN	
	3	1	**309-1835**	1	SHIELD AS	
	4	1	**309-1836**	1	SHIELD AS	
					(EACH SHIELD AS INCLUDES)	
M		1	**8T-3490**	3	NUT-WELD (M10X1.5-THD)	
	5	1	**7X-7729**	24	WASHER (11X25X3-MM THK)	
M	6	1	**8T-4136**	24	BOLT (M10X1.5X25-MM)	

M - METRIC PART

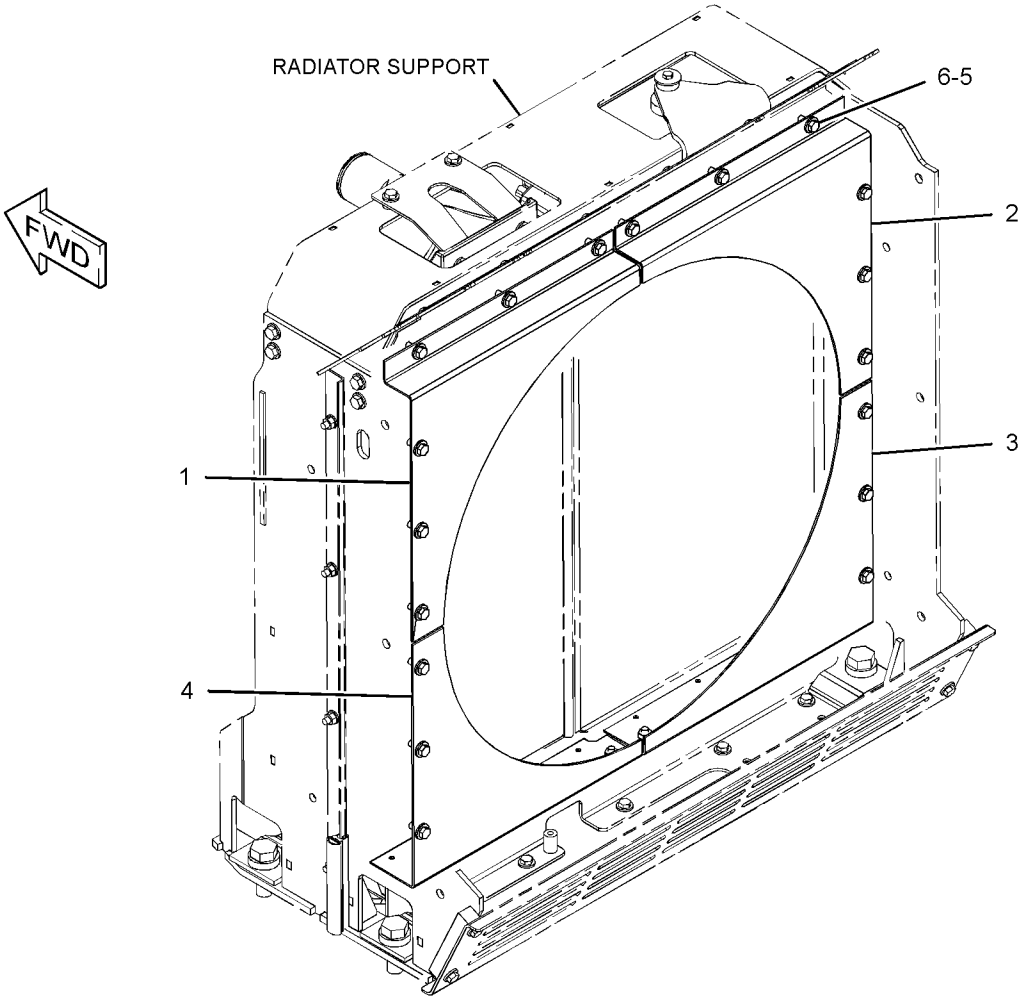

GRAPHIC #1 <END> g01369630

206-4228 LINES GP-WATER

S/N: TX71-UP

PART OF 506-2265 ENGINE AR-COMPLETE

SMCS-1380 **i05327530**

NOTE	REF NO	GRAPHIC REF	PART NUMBER	QTY	PART NAME 1 2 3 4 5 6 (PRODUCT LEVEL)	SEE PAGE
	1	1	**227-5942**	1	HOUSING-WATER REGULATOR	
	2	1	**126-5466**	1	GASKET	
	3	1	**115-4223**	2	REGULATOR-WATER TEMPERATURE (97-DEG C) (COOLANT)	
	4	1	**222-5915**	1	GASKET (TEMPERATURE REGULATOR HOUSING)	
	5	1	**160-5131**	1	PIPE (OUTLET)	
	6	1	**7E-0759**	1	HOSE	
	7	1	*351-0274*	1	ADAPTER AS	
		1	**6V-3250**	1	SEAL-O-RING	
		1	**5P-9617**	1	ADAPTER	
	8	1	*377-9603*	1	VALVE AS-FLUID SAMPLING (ENGINE COOLANT)	
		1	**6V-9027**	1	SEAL-O-RING	
		1	**154-9023**	1	VALVE-SAMPLING	
	9	1	**9M-1974**	6	WASHER-HARD (8.8X16X2-MM THK)	
M	10	1	**6V-3940**	6	BOLT (M8X1.25X25-MM)	
M	11	1	**5P-8347**	2	BOLT (M8X1.25X70-MM)	
M	12	1	**6V-5223**	1	BOLT (M8X1.25X100-MM)	
	13	1	*396-0405*	4	PLUG AS	
					(EACH INCLUDES)	
		1	**6V-6609**	1	SEAL-O-RING	
		1	**360-3680**	1	PLUG	
	14	1	**157-0670**	1	CAP-DUST	
	15	1	*398-5598*	1	PLUG AS	
		1	**6V-9027**	1	SEAL-O-RING	
		1	**360-3677**	1	PLUG (7/16-20-THD)	
	16	1	**347-3148**	2	CLAMP-BAND	

M - METRIC PART

206-4228 **LINES GP-WATER (**contd.**)** **i05327530**

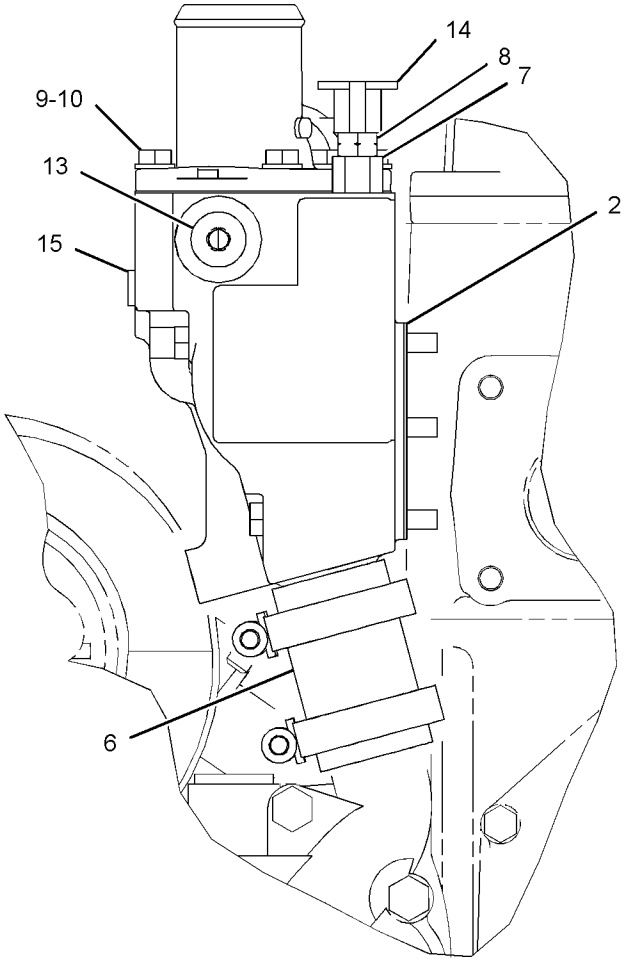

FRONT VIEW OF ENGINE

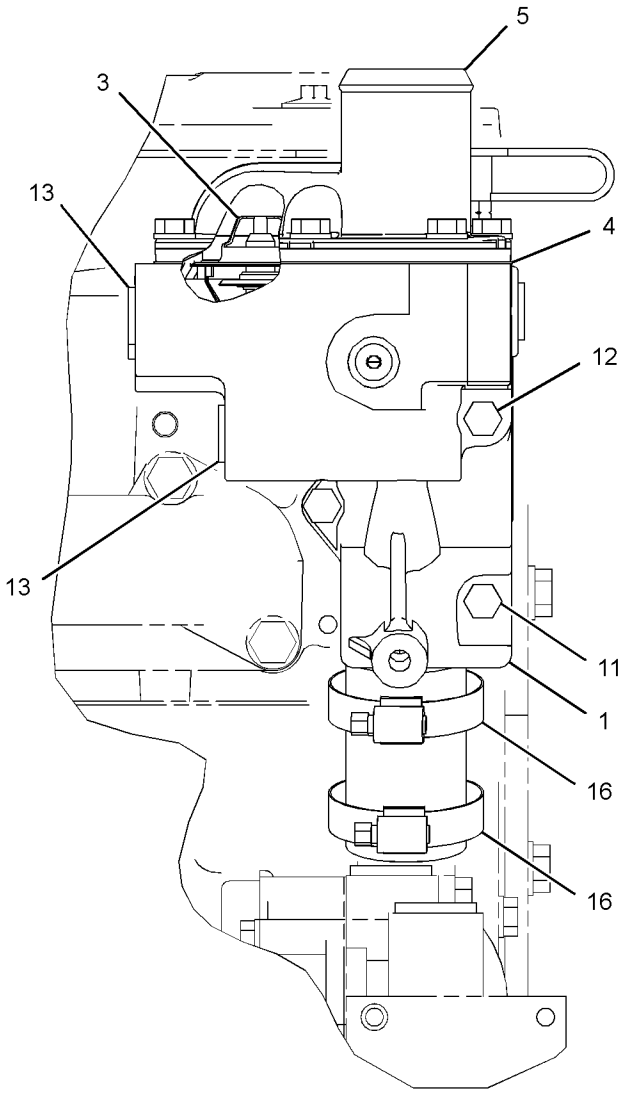

RIGHT SIDE VIEW OF ENGINE

GRAPHIC #1 <END> g03377849

246-6707 LINES GP-WATER

S/N: B551-UP

PART OF 577-1377 COMMON AR

SMCS-1380 **i04829936**

NOTE	REF NO	GRAPHIC REF	PART NUMBER	QTY	PART NAME 1 2 3 4 5 6 (PRODUCT LEVEL)	SEE PAGE
	1	1	**5P-4961**	4	CLAMP-HOSE	
E	2	1	**5P-1262**		HOSE (16-CM)	
	3	1	**9X-3982**	1	ELBOW	
	4	1	**149-8142**	1	CONNECTOR	
	6	1	*184-2420*	2	ADAPTER AS	
					(EACH INCLUDES)	
		1	**3E-7401**	1	ADAPTER	
		1	**6V-8397**	1	SEAL-O-RING	
	7	1	*184-2509*	2	VALVE GP-DRAIN (COOLANT)	
					(EACH INCLUDES)	
		1	**7E-4761**	1	VALVE-DRAIN	
		1	**3K-0360**	1	SEAL-O-RING	
C	8	1	**352-0401**	1	TUBE AS	
	9	1	**262-7688**	1	TUBE AS	
	10	1	**262-7689**	1	TUBE AS	
	11	1	**262-7692**	1	BRACKET AS	
	12	1	**265-9385**	1	HOSE	
	13	1	**266-7650**	1	ELBOW	
	14	1	**266-7651**	1	HOSE	
	15	1	**269-6650**	2	ADAPTER	
	16	1	**292-4417**	1	PLATE AS	
	17	1	**295-7612**	1	BRACKET AS	
	18	1	*148-8367*	1	ELBOW AS	
		1	**6V-9850**	1	ELBOW	
		1	**6V-8397**	1	SEAL-O-RING	
C	20	1	**8T-4984**	8	CLAMP-HOSE	
C	21	1	**8T-6703**	4	CLAMP-HOSE	
	22	1	**3K-0360**	2	SEAL-O-RING	
	24	1	**5P-4116**	2	WASHER-HARD (8.8X20.5X2-MM THK)	
	25	1	**5P-7468**	1	CLIP (SLOT)	
	26	1	**5P-7469**	1	CLIP (TAB)	
	27	1	**6V-1581**	1	CLIP (SLOT)	
	28	1	**6V-1582**	1	CLIP (TAB)	
	29	1	**6V-9168**	2	NUT (11/16-16-THD)	
	30	1	**7X-7729**	4	WASHER (11X25X3-MM THK)	
	32	1	**8T-4121**	2	WASHER-HARD (11X21X2.5-MM THK)	
M	34	1	**8T-4136**	1	BOLT (M10X1.5X25-MM)	
M	35	1	**8T-4137**	2	BOLT (M10X1.5X20-MM)	
M	36	1	**8T-4189**	2	BOLT (M8X1.25X20-MM)	
M	37	1	**8T-4195**	1	BOLT (M10X1.5X30-MM)	
M	38	1	**8T-4196**	2	BOLT (M10X1.5X35-MM)	
	39	1	**9D-6196**	1	CLIP (SLOT)	
	40	1	**9D-6197**	1	CLIP (TAB)	
E	41	1	**6V-8523**		HOSE (20-CM)	
E	41A	1	**6V-8523**		HOSE (60-CM)	
E	42	1	**5P-1259**		HOSE (13-CM EACH)	

C - CHANGE FROM PREVIOUS TYPE
E - ORDER BY THE CENTIMETER
M - METRIC PART

246-6707 **LINES GP-WATER (**contd.**)** **i04829936**

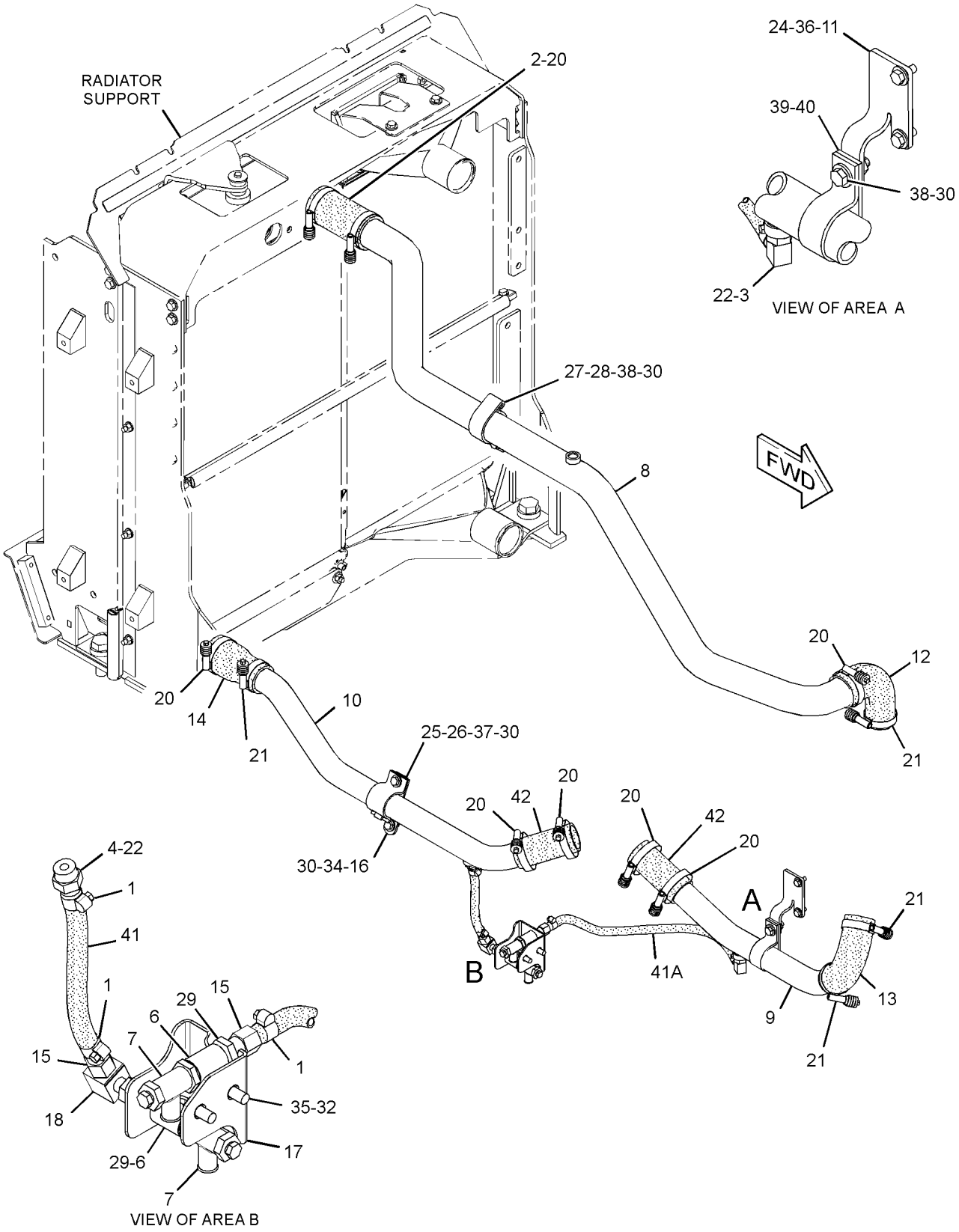

GRAPHIC #1 <END> g02970360

352-2138 PUMP AS-WATER*R

S/N: TX71-UP

PART OF 352-2139 PUMP GP-WATER

SMCS-1361 **i04967071**

NOTE	REF NO	GRAPHIC REF	PART NUMBER	QTY	PART NAME 1 2 3 4 5 6 (PRODUCT LEVEL)	SEE PAGE
	1	1	**119-3025**	1	PLUG-FELT (WATER)	

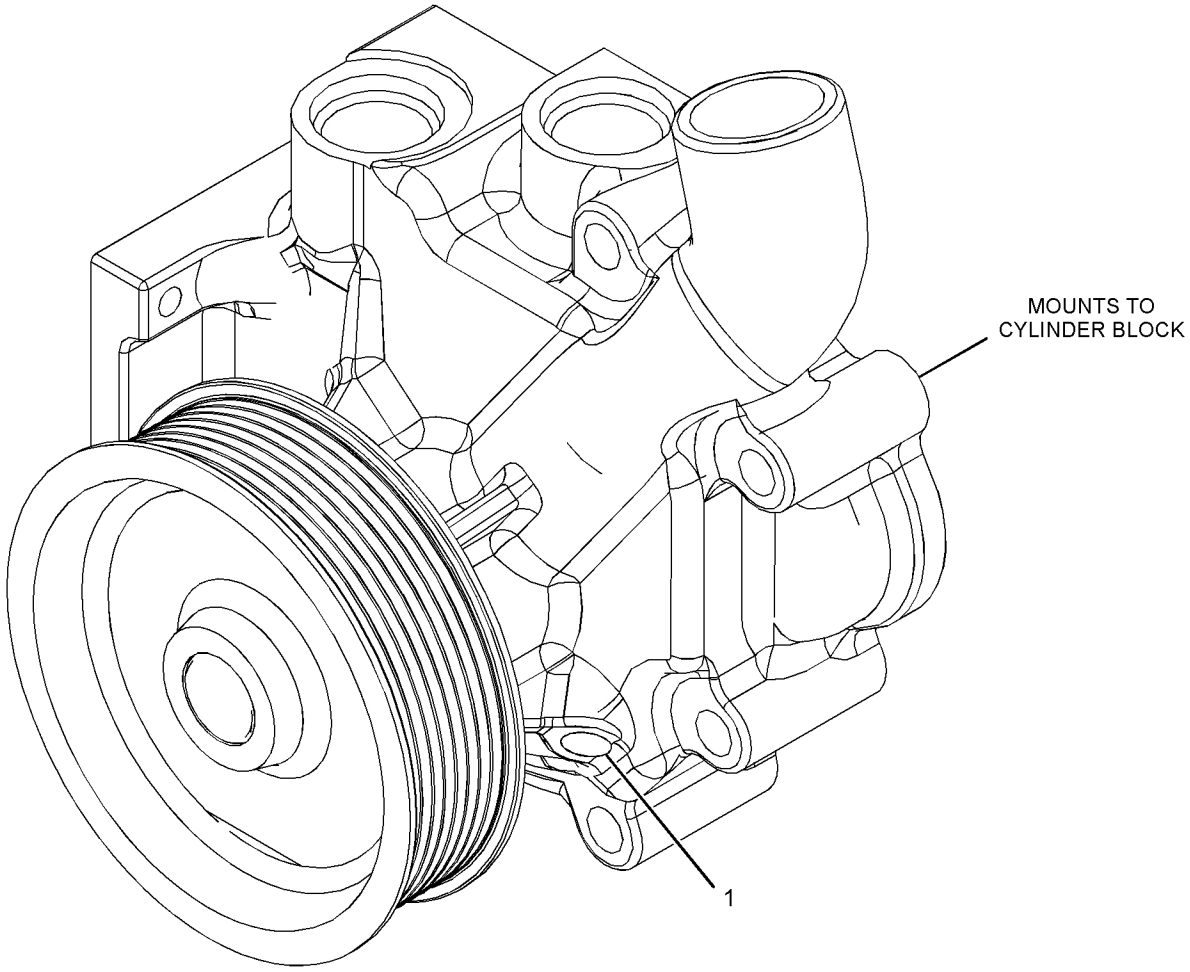

GRAPHIC #1 <END> g02720683

264-1434 PUMP GP-WATER

S/N: TX71-UP

PART OF 387-8499 ENGINE AR-CORE

SMCS-1361 **i05927295**

NOTE	REF NO	GRAPHIC REF	PART NUMBER	QTY	PART NAME 1 2 3 4 5 6 (PRODUCT LEVEL)	SEE PAGE
M	1	1	**8T-0644**	4	BOLT (M10X1.5X90-MM)	
	2	1	**147-0182**	1	SEAL-O-RING	
YR	3	1	**352-2139**	1	PUMP GP-WATER	86
C	4	1	*398-5612*	1	PLUG AS	
		1	**6V-5063**	1	SEAL-O-RING	
		1	**360-3682**	1	PLUG-O-RING	
C	5	1	*439-1817*	1	ELBOW AS	
		1	**6V-5063**	1	SEAL-O-RING	
		1	**8T-3491**	1	ELBOW	
C	6	1	*366-4675*	1	ELBOW AS	
		1	**6V-5063**	1	SEAL-O-RING	
		1	**8T-5429**	1	ELBOW	
		1	**180-8424**	1	SEAL-O-RING	
C	7	1	*396-0405*	2	PLUG AS	
					(EACH INCLUDES)	
		1	**6V-6609**	1	SEAL-O-RING	
		1	**360-3680**	1	PLUG	
C	8	1	*396-0404*	1	PLUG AS	
		1	**6V-3251**	1	SEAL-O-RING	
		1	**360-3681**	1	PLUG (7/8-14-THD)	
C	9	1	*426-4162*	1	PLUG AS	
		1	**291-8144**	1	SEAL-O-RING	
		1	**360-3678**	1	PLUG-O-RING	
	10	1	**4J-0524**	1	SEAL-O-RING	

C - CHANGE FROM PREVIOUS TYPE
M - METRIC PART
R - REMANUFACTURED PART MAY BE AVAILABLE
Y - SEPARATE ILLUSTRATION

264-1434 **PUMP GP-WATER (**contd.**)** **i05927295**

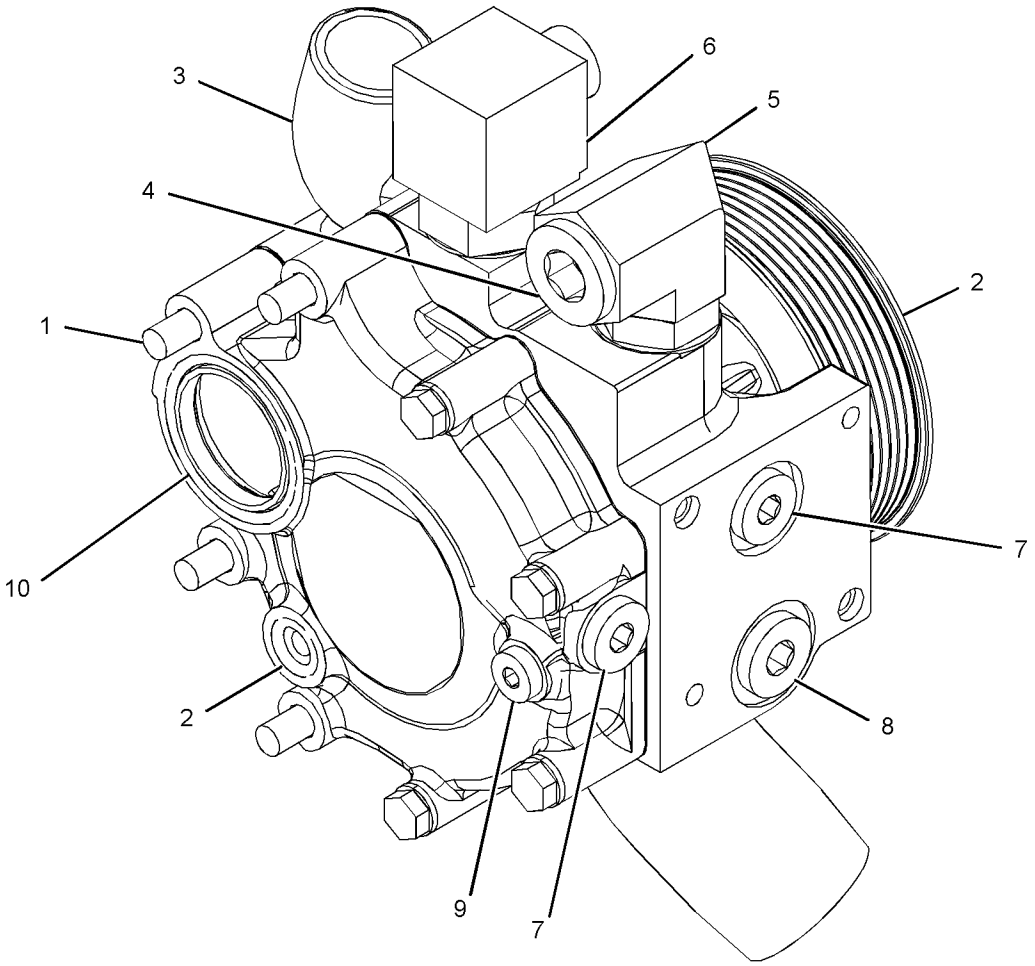

GRAPHIC #1 <END> g03731185

352-2139 PUMP GP-WATER*R

S/N: TX71-UP

PART OF 264-1434 PUMP GP-WATER

SMCS-1361 **i04965756**

NOTE	REF NO	GRAPHIC REF	PART NUMBER	QTY	PART NAME 1 2 3 4 5 6 (PRODUCT LEVEL)	SEE PAGE
	1	1	**4W-0253**	1	COVER	
	2	1	**4W-7592**	1	GASKET	
YR	3	1	**352-2138**	1	PUMP AS-WATER	83
M	4	1	**6V-3918**	4	BOLT (M8X1.25X50-MM)	
	5	1	**9M-1974**	4	WASHER-HARD (8.8X16X2-MM THK)	

M - METRIC PART
R - REMANUFACTURED PART MAY BE AVAILABLE
Y - SEPARATE ILLUSTRATION

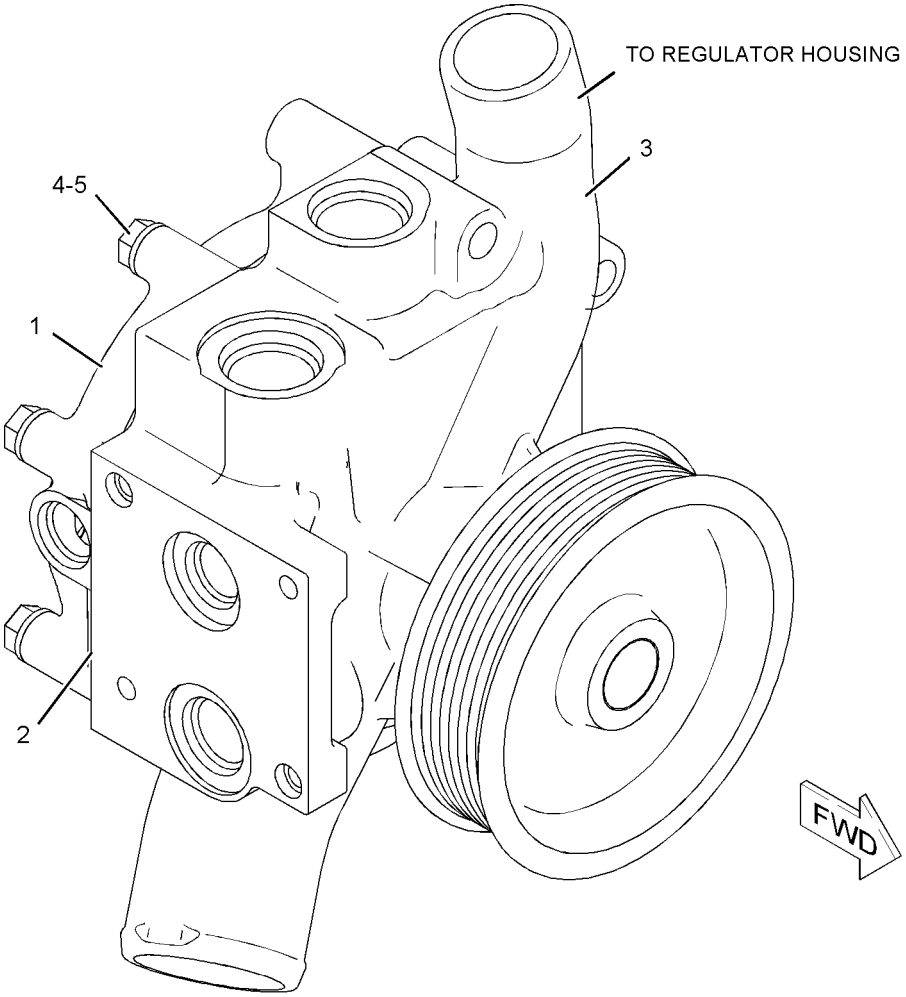

GRAPHIC #1 <END> g01040531

231-2315 RADIATOR GP

S/N: B551-UP

PART OF 268-6570 COOLING AR

SMCS-1353 **i06661620**

NOTE	REF NO	GRAPHIC REF	PART NUMBER	QTY	PART NAME 1 2 3 4 5 6 (PRODUCT LEVEL)	SEE PAGE
	1	1	**243-2289**	2	MOUNT AS	
	2	1	**248-0677**	1	BRACKET AS	
	3	1	**249-7386**	1	BRACKET AS	
	4	1	**275-3393**	1	BRACKET	
	5	1	**256-5308**	1	CORE AS-RADIATOR	
	6	1	**198-4778**	2	WASHER-HARD (13.5X30X12-MM THK)	
	7	1	**3J-5390**	1	PLUG (3/8-18-THD)	
M	8	1	**7X-2546**	4	BOLT (M10X1.5X180-MM)	
	9	1	**7X-7729**	10	WASHER (11X25X3-MM THK)	
M	10	1	**8T-4133**	4	NUT (M10X1.5-THD)	
M	11	1	**8T-4186**	2	BOLT (M10X1.5X40-MM)	
M	12	1	**8T-4182**	2	BOLT (M10X1.5X45-MM)	
	13	1	**8T-4226**	2	WASHER-PLATED (10.5X45X3-MM THK)	
CE	14	1	**112-9736**		SEAL (88-CM EACH)	
M	15	1	**8T-6912**	1	BOLT (M8X1.25X50-MM)	
	16	1	**174-4181**	1	WASHER-HARD (8.5X40X3-MM THK)	
	17	1	**121-3307**	1	MOUNT AS-RESILIENT	

C - CHANGE FROM PREVIOUS TYPE
E - ORDER BY THE CENTIMETER
M - METRIC PART

231-2315 **RADIATOR GP** (contd.) **i06661620**

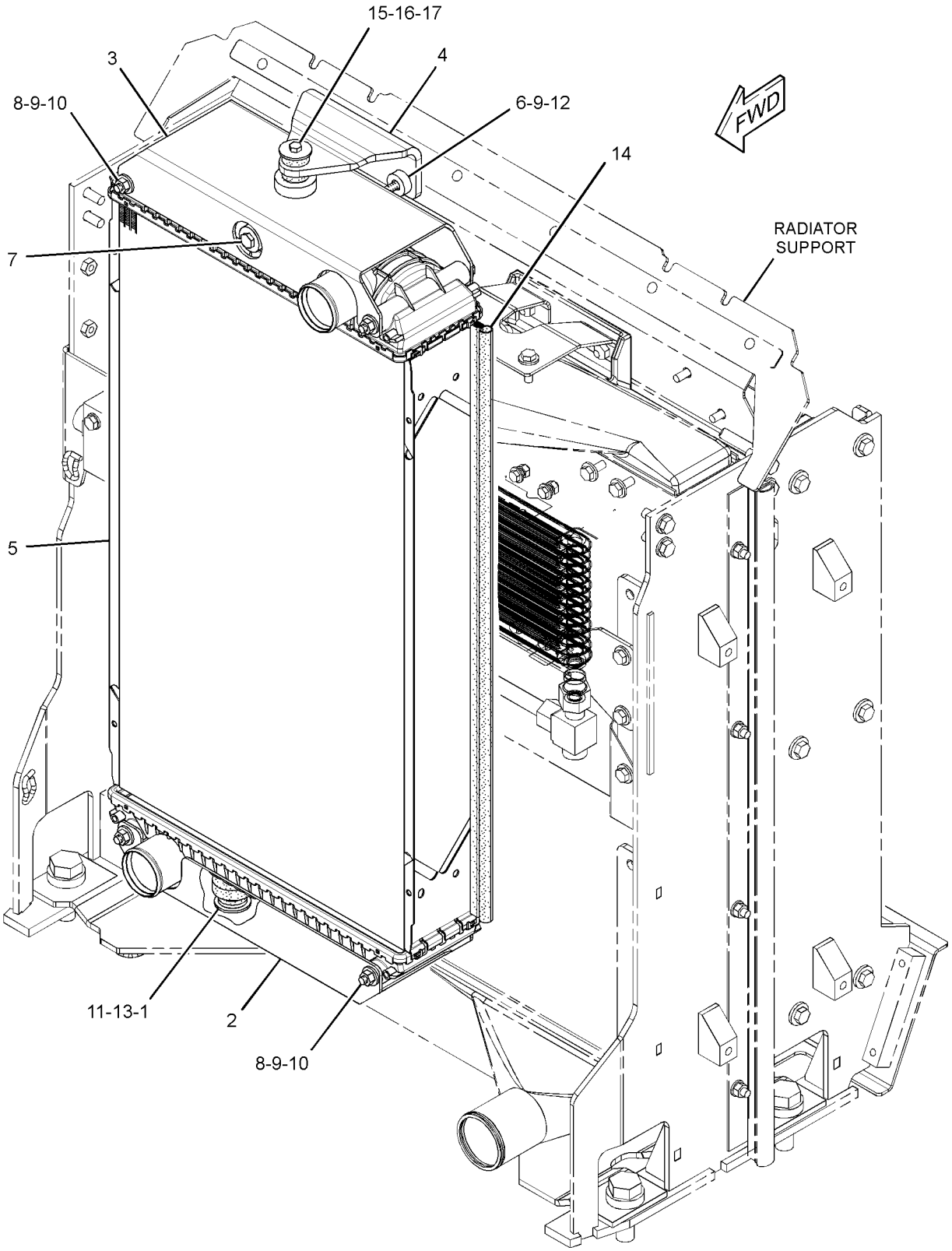

GRAPHIC #1 <END> g01346681

254-6997 TANK GP-COOLANT

S/N: B551-UP

PART OF 577-1377 COMMON AR

SMCS-1354, 1377 **i04527113**

NOTE	REF NO	GRAPHIC REF	PART NUMBER	QTY	PART NAME 1 2 3 4 5 6 (PRODUCT LEVEL)	SEE PAGE
	1	1	**5P-1230**	1	CONNECTOR	
	2	1	*150-3026*	1	ELBOW AS	
		1	**6V-4292**	1	ELBOW	
		1	**3K-0360**	1	SEAL-O-RING	
	3	1	**277-4837**	1	TANK GP-COOLANT	
		1	**345-1237**	1	CAP AS-COOLANT TANK	
	4	1	**266-7589**	1	PLATE	
	5	1	**144-8344**	1	SPACER (11X19X20-MM THK)	
	6	1	**1S-0994**	1	CLIP (LOOP)	
	7	1	**3D-2824**	1	SEAL-O-RING	
	8	1	**5D-1026**	2	CLAMP-BAND	
	9	1	**7D-7233**	1	CLIP (LOOP)	
M	10	1	**7X-2536**	4	BOLT (M8X1.25X14-MM)	
	11	1	**033-8248**	1	CLIP (LOOP)	
	12	1	**8T-1117**	2	CLAMP-HOSE	
	13	1	**8T-4121**	7	WASHER-HARD (11X21X2.5-MM THK)	
M	14	1	**8T-4133**	1	NUT (M10X1.5-THD)	
M	15	1	**8T-4136**	2	BOLT (M10X1.5X25-MM)	
M	16	1	**8T-4137**	3	BOLT (M10X1.5X20-MM)	
M	17	1	**8T-4186**	1	BOLT (M10X1.5X40-MM)	
	18	1	**8T-4224**	4	WASHER-HARD (8.8X16X2-MM THK)	
E	19	1	**9X-2133**		HOSE (40-CM)	
E	20	1	**5P-1251**		HOSE (73-CM)	
E	21	1	**8C-3681**		HOSE (186-CM)	
	22	1	**5K-3294**	1	CLIP	
	23	1	**147-0385**	1	CLIP	

E - ORDER BY THE CENTIMETER
M - METRIC PART

254-6997 **TANK GP-COOLANT (**contd.**)** **i04527113**

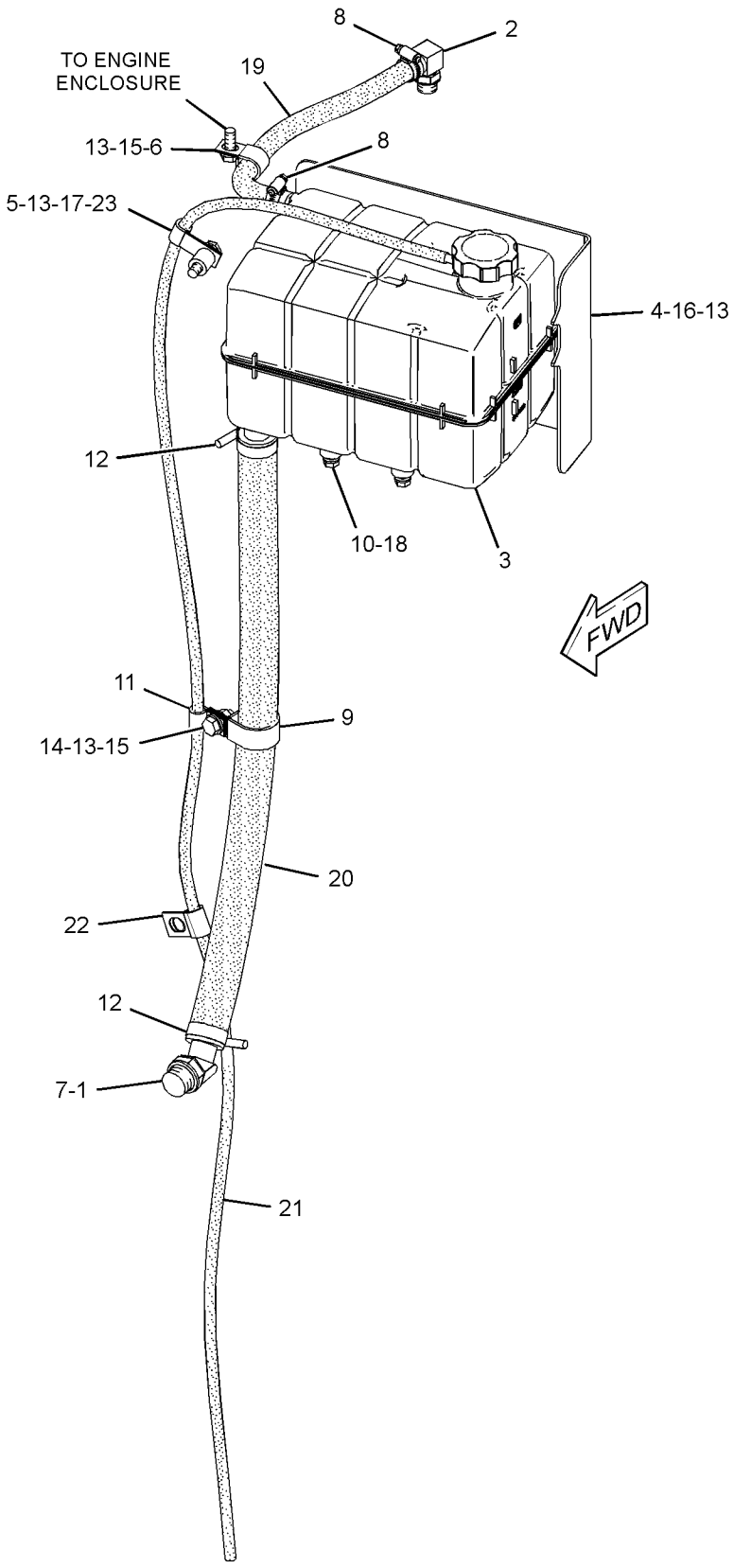

GRAPHIC #1 <END> g01478081

250-8318 ADAPTER GP-TURBOCHARGER

S/N: TX71-UP

PART OF 506-2265 ENGINE AR-COMPLETE

SMCS-1052 **i07685165**

NOTE	REF NO	GRAPHIC REF	PART NUMBER	QTY	PART NAME 1 2 3 4 5 6 (PRODUCT LEVEL)	SEE PAGE
	1	1	**257-5703**	1	ELBOW	
	2	1	**7C-7431**	1	GASKET	
M	3	1	**9X-6620**	4	LOCKNUT (M10X1.5-THD)	

M - METRIC PART

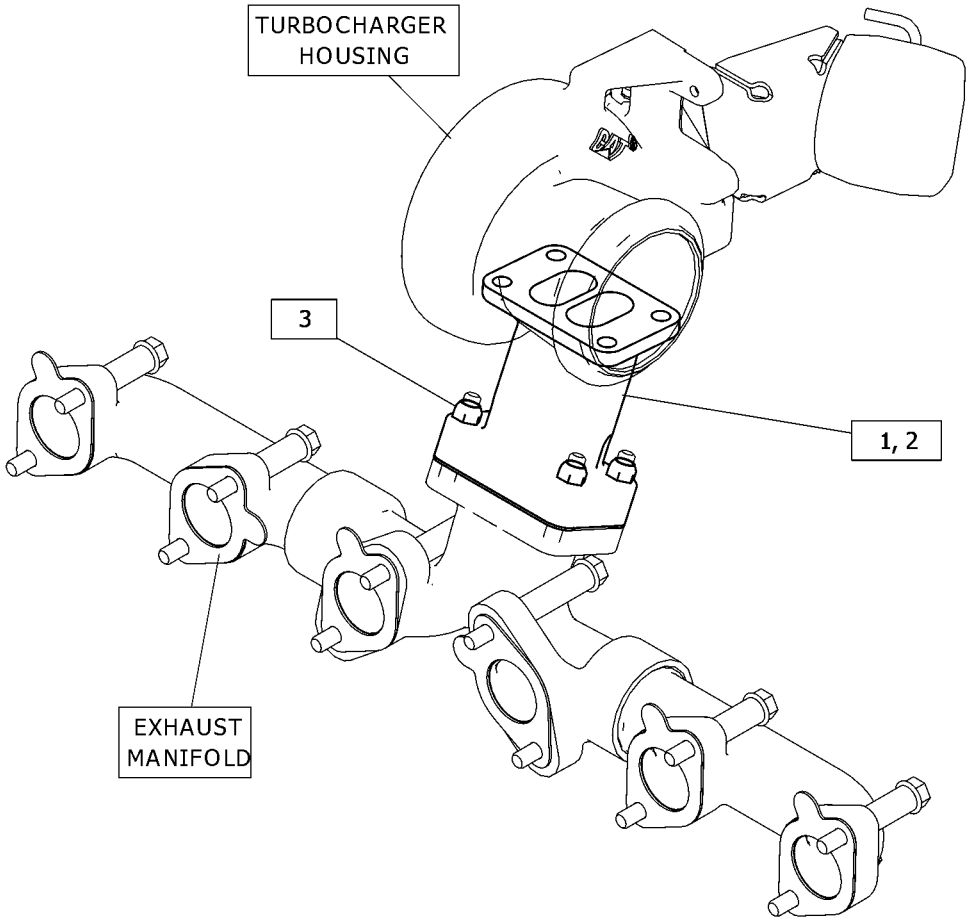

GRAPHIC #1 <END> g06393622

371-7905 AFTERCOOLER GP-AIR

S/N: B551-UP

PART OF 268-6570 COOLING AR

SMCS-1063, 1064, 1079 **i04841109**

NOTE	REF NO	GRAPHIC REF	PART NUMBER	QTY	PART NAME 1 2 3 4 5 6 (PRODUCT LEVEL)	SEE PAGE
	1	1	**121-3307**	2	MOUNT AS-RESILIENT	
	2	1	**376-6732**	1	AFTERCOOLER AS-AIR	
	3	1	**385-0044**	1	BRACKET AS	
M		1	**8T-3490**	2	NUT-WELD (M10X1.5-THD)	
	4	1	**198-4777**	2	WASHER-HARD (11X25X10-MM THK)	
	5	1	**7X-7729**	4	WASHER (11X25X3-MM THK)	
M	6	1	**8T-4185**	2	BOLT (M10X1.5X50-MM)	
M	7	1	**8T-4195**	2	BOLT (M10X1.5X30-MM)	
M	8	1	**8T-4196**	2	BOLT (M10X1.5X35-MM)	
	9	1	**8T-4226**	2	WASHER-PLATED (10.5X45X3-MM THK)	

M - METRIC PART

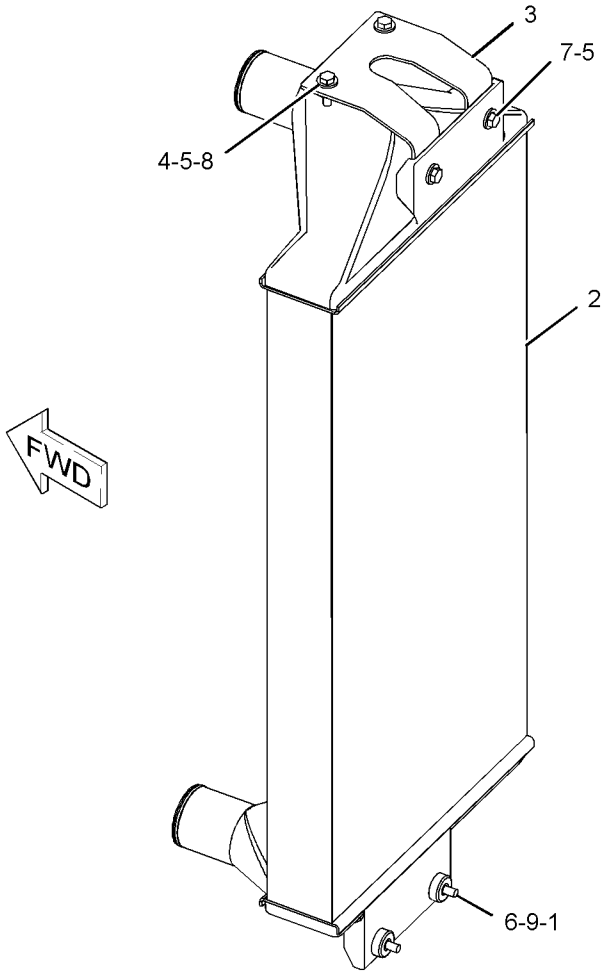

GRAPHIC #1 <END> g01109137

231-2114 AIR CLEANER GP

S/N: B551-UP

PART OF 577-1377 COMMON AR

SMCS-1051, 1054

i02940598

NOTE	REF NO	GRAPHIC REF	PART NUMBER	QTY	PART NAME 1 2 3 4 5 6 (PRODUCT LEVEL)	SEE PAGE
	1	1	**246-4611**	1	CAP AS-AIR CLEANER	
Y	2	1	**247-9729**	1	AIR CLEANER GP	94
	3	1	**250-2984**	1	PIPE-EXTENSION	
M	4	1	**099-3649**	4	BOLT (M8X1.25X40-MM)	
	5	1	**219-0314**	1	CLAMP	
	6	1	**5P-4116**	4	WASHER-HARD (8.8X20.5X2-MM THK)	

M - METRIC PART
Y - SEPARATE ILLUSTRATION

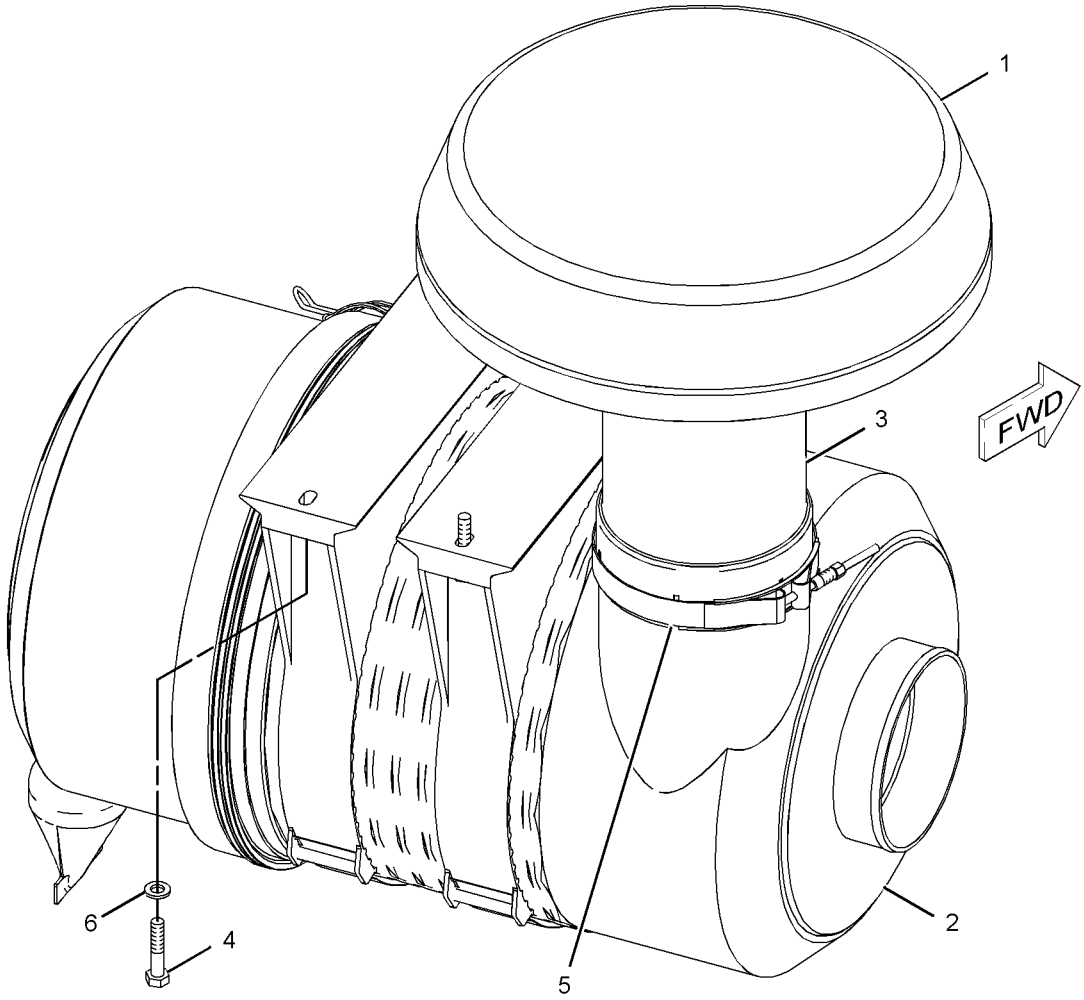

GRAPHIC #1 <END> g01131034

247-9729 AIR CLEANER GP

S/N: B551-UP

PART OF 231-2114 AIR CLEANER GP

SMCS-1051, 1054

i02771749

NOTE	REF NO	GRAPHIC REF	PART NUMBER	QTY	PART NAME 1 2 3 4 5 6 (PRODUCT LEVEL)	SEE PAGE
	1	1	**245-6375**	1	FILTER ELEMENT-AIR (PRIMARY)	
	2	1	**245-6376**	1	FILTER ELEMENT AS-AIR (SECONDARY)	
	3	1	**247-9730**	1	VALVE AS-CHECK (AIR CLEANER)	
	4	1	**246-4615**	2	BRACKET AS	
	5	1	**262-0568**	1	COVER AS	

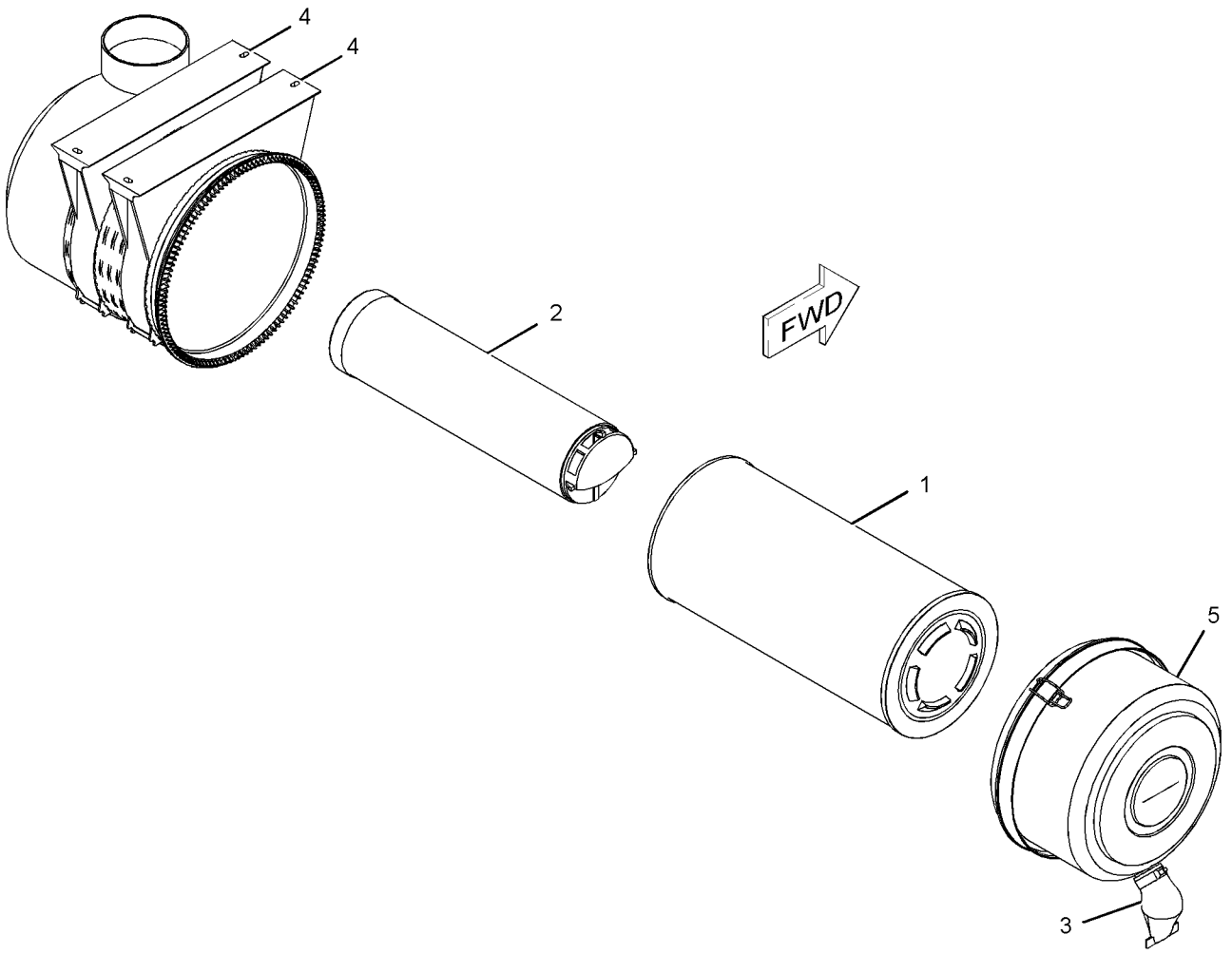

GRAPHIC #1 <END> g01132754

189-8780 COVER GP-AIR INLET—STARTING AID HEATER

S/N: TX71-UP

PART OF 506-2265 ENGINE AR-COMPLETE

SMCS-1087 **i02674840**

NOTE	REF NO	GRAPHIC REF	PART NUMBER	QTY	PART NAME 1 2 3 4 5 6 (PRODUCT LEVEL)	SEE PAGE
CY	1	1	**294-7675**	1	COVER GP-AIR INLET (STARTING AID HEATER)	96
B	2	1	**1U-8846**		SEALANT-GASKET	

B - USE AS REQUIRED
C - CHANGE FROM PREVIOUS TYPE
Y - SEPARATE ILLUSTRATION

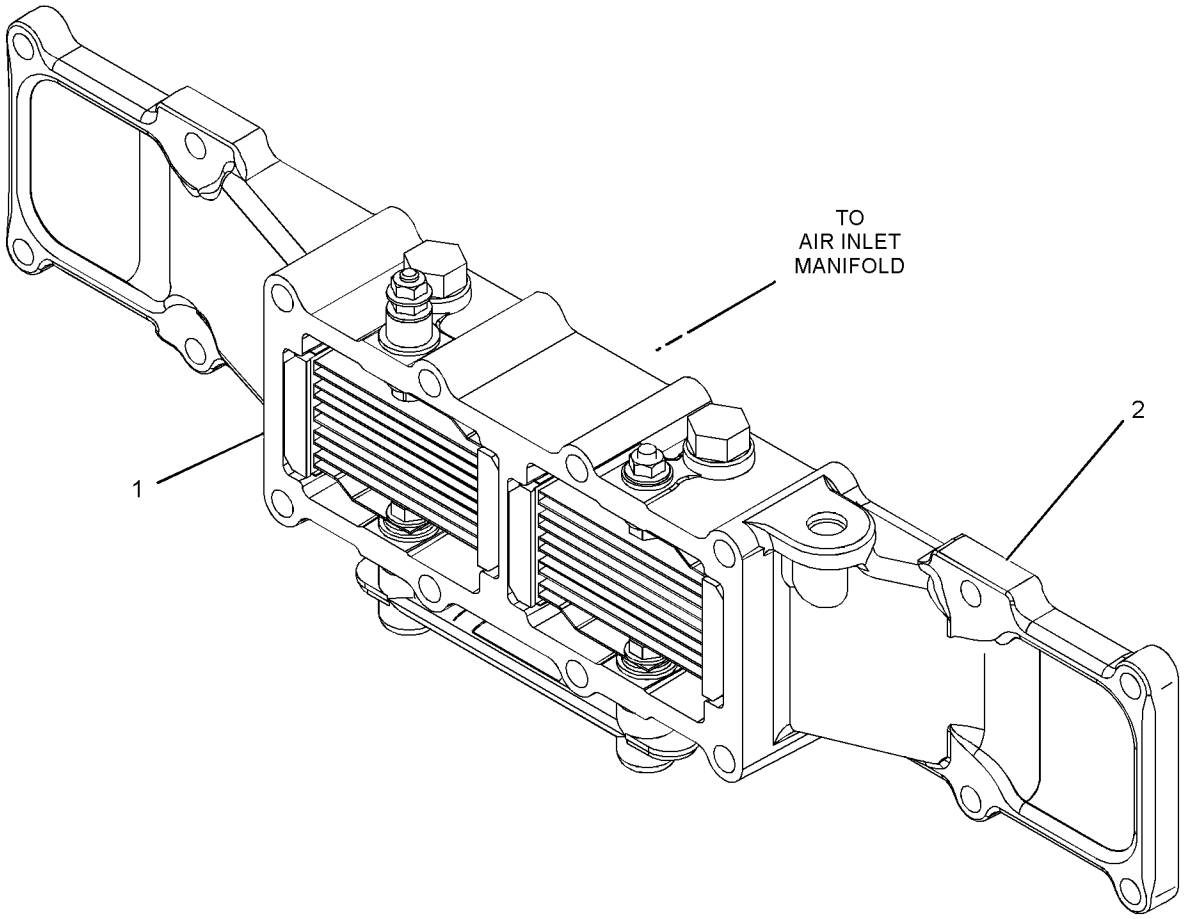

GRAPHIC #1 <END> g01350757

294-7675 COVER GP-AIR INLET—STARTING AID HEATER

S/N: TX71-UP

PART OF 189-8780 COVER GP-AIR INLET

SMCS-1087 **i05325064**

NOTE	REF NO	GRAPHIC REF	PART NUMBER	QTY	PART NAME 1 2 3 4 5 6 (PRODUCT LEVEL)	SEE PAGE
	1	1	*389-3708*	2	PLUG AS	
					(EACH INCLUDES)	
		1	**214-7568**	1	SEAL-O-RING	
		1	**360-3679**	1	PLUG-CONNECTOR (9/16-18-THD)	
	2	1	**245-6795**	1	INSULATOR	

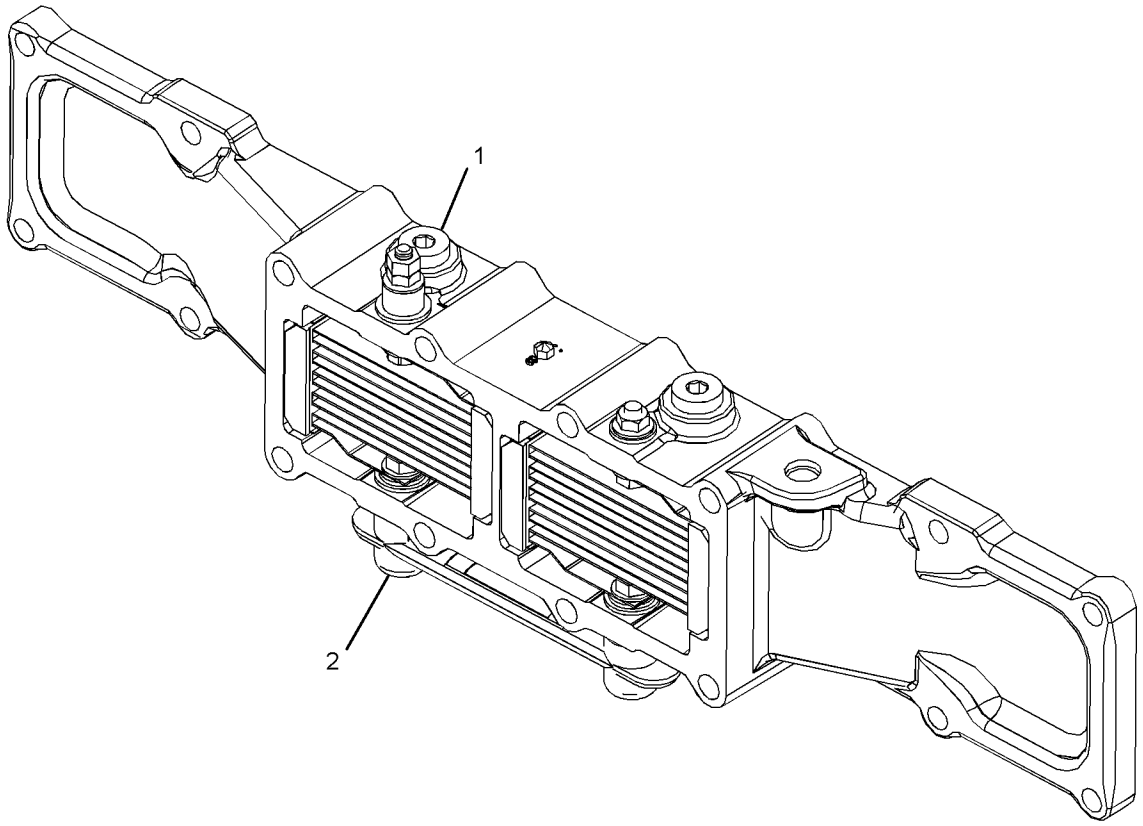

GRAPHIC #1 <END> g03375228

275-1307 ELBOW GP-AIR INLET

S/N: TX71-UP

PART OF 506-2265 ENGINE AR-COMPLETE

SMCS-1087 **i05300105**

NOTE	REF NO	GRAPHIC REF	PART NUMBER	QTY	PART NAME 1 2 3 4 5 6 (PRODUCT LEVEL)	SEE PAGE
M	1	1	**192-4594**	4	STUD (M8X1.25X80-MM)	
B	2	1	**1U-8846**		SEALANT-GASKET	
	3	1	**257-8299**	1	ELBOW-AIR INLET	
	4	1	*398-5601*	1	PLUG AS	
		1	**238-5081**	1	SEAL-O-RING	
		1	**360-3681**	1	PLUG (7/8-14-THD)	
	5	1	*398-5596*	1	PLUG AS	
		1	**238-5080**	1	SEAL-O-RING	
		1	**360-3680**	1	PLUG	
M	6	1	**6V-5221**	4	BOLT (M8X1.25X80-MM)	
	7	1	**9M-1974**	8	WASHER-HARD (8.8X16X2-MM THK)	
	8	1	**068-9526**	4	CAP-TUBE	

B - USE AS REQUIRED
M - METRIC PART

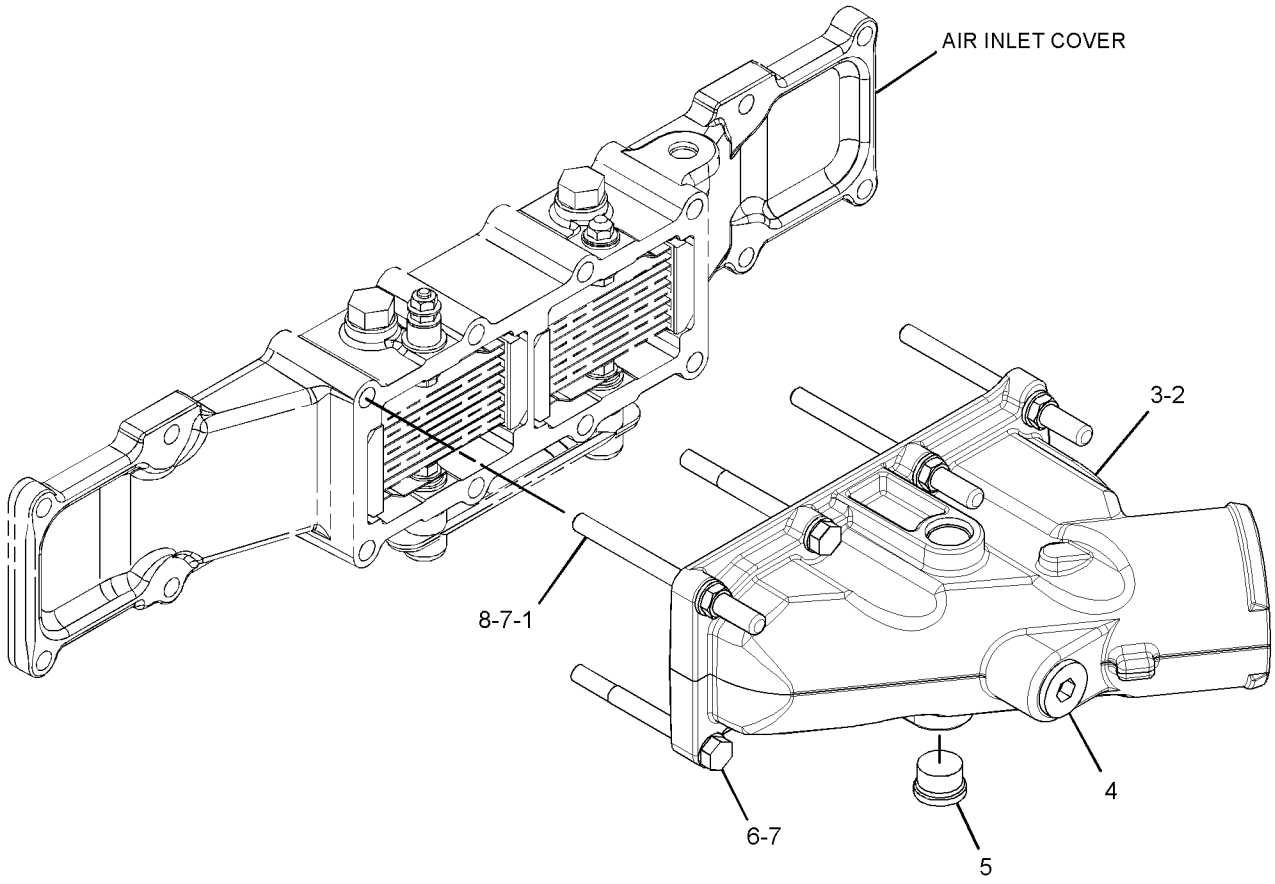

GRAPHIC #1 <END> g03387519

246-6704 LINES GP-AFTERCOOLER AIR

S/N: B551-UP

PART OF 577-1377 COMMON AR

SMCS-1063, 1071 **i05623015**

NOTE	REF NO	GRAPHIC REF	PART NUMBER	QTY	PART NAME 1 2 3 4 5 6 (PRODUCT LEVEL)	SEE PAGE
	1	1	**9R-5008**	3	SPACER (11X20X6-MM THK)	
CM	2	1	**8T-4196**	1	BOLT (M10X1.5X35-MM)	
	3	1	**177-0581**	1	HOSE	
	4	1	**209-4578**	7	CLAMP-T BOLT	
	5	1	**247-8602**	1	HOSE-ELBOW	
	6	1	**248-6364**	1	HOSE-ELBOW	
	8	1	**254-6802**	1	HOSE-ELBOW	
	9	1	**262-8057**	1	TUBE	
	10	1	**262-8058**	1	TUBE	
	11	1	**267-9386**	1	BRACKET AS	
	12	1	**2A-3034**	2	CLAMP-AIR CLEANER	
	13	1	**8T-4121**	2	WASHER-HARD (11X21X2.5-MM THK)	
	14	1	**8T-4123**	2	WASHER (22X35X3.5-MM THK)	
CM	15	1	**8T-4182**	1	BOLT (M10X1.5X45-MM)	
M	16	1	**8T-4780**	2	BOLT (M20X2.5X30-MM)	
	17	1	**144-0367**	1	CLAMP-HOSE	

C - CHANGE FROM PREVIOUS TYPE
M - METRIC PART

246-6704 **LINES GP-AFTERCOOLER AIR (**contd.**)** **i05623015**

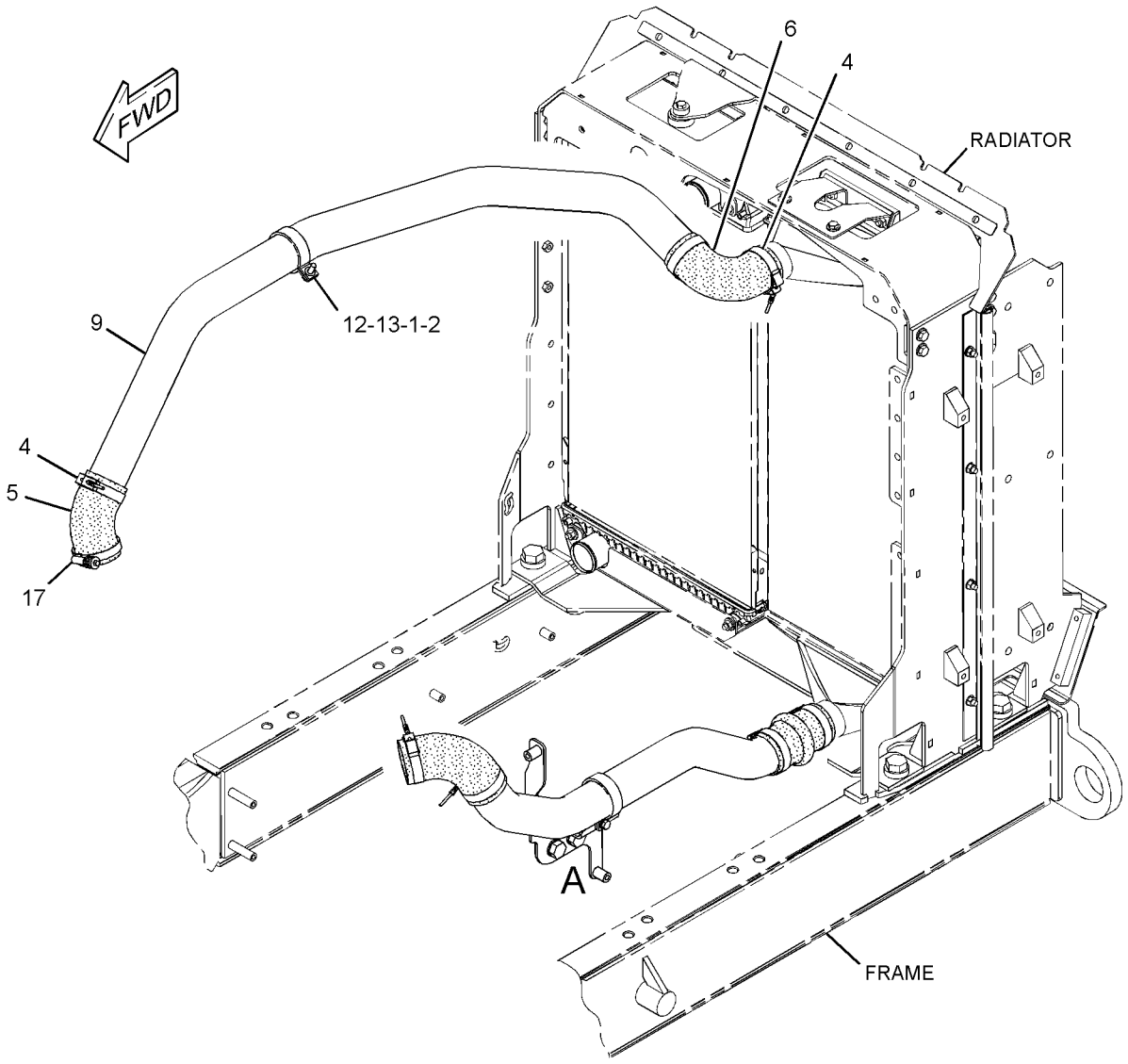

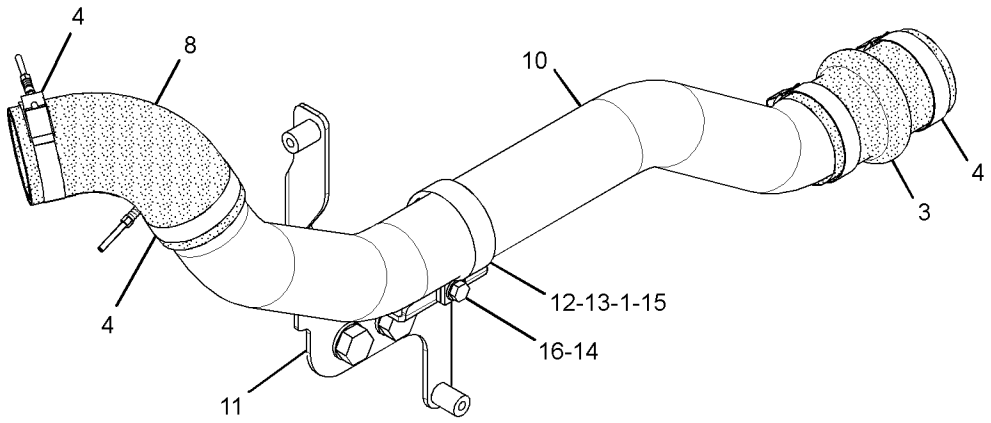

VIEW OF AREA A

GRAPHIC #1 <END> g02796103

255-1283 LINES GP-AIR

S/N: B551-UP

PART OF 261-0610 AIR COMPRESSOR AR

SMCS-1071 **i02853534**

NOTE	REF NO	GRAPHIC REF	PART NUMBER	QTY	PART NAME 1 2 3 4 5 6 (PRODUCT LEVEL)	SEE PAGE
	1	1	**8C-0620**	4	PROTECTOR-THREAD	
	2	1	**220-4125**	1	CLAMP	
	3	1	**252-1462**	1	TUBE AS	
	4	1	**263-3350**	1	ELBOW	
	5	1	**263-3351**	1	ELBOW	
	6	1	**230-3671**	3	CLAMP-T BOLT	

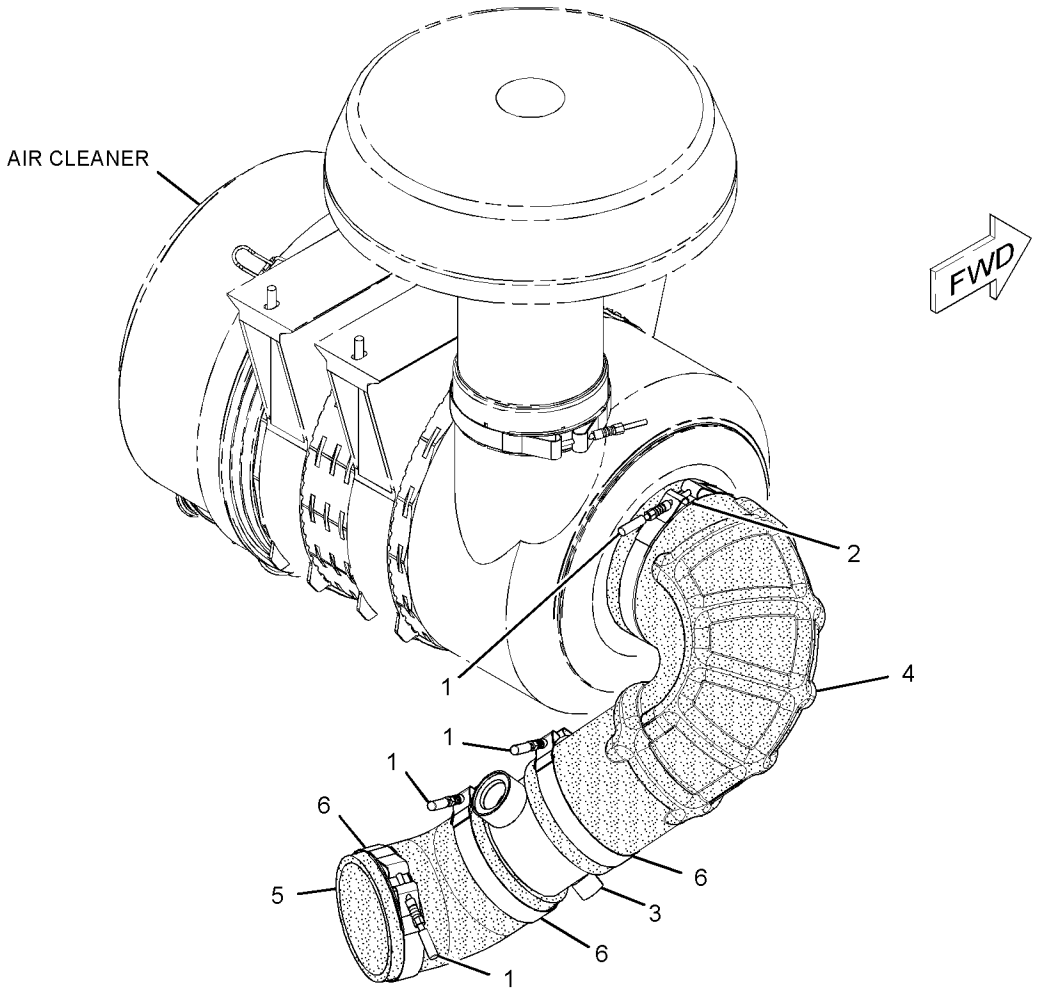

GRAPHIC #1 <END> g01421848

255-1284 LINES GP-AIR

S/N: B551-UP
WITHOUT COMPRESSOR
CANNOT BE USED WITH 261-0610—PAGE: 13

SMCS-1071 **i06661647**

NOTE	REF NO	GRAPHIC REF	PART NUMBER	QTY	PART NAME 1 2 3 4 5 6 (PRODUCT LEVEL)	SEE PAGE
	1	1	**8C-0620**	4	PROTECTOR-THREAD	
	2	1	**220-4125**	1	CLAMP	
	3	1	**252-1462**	1	TUBE AS	
	4	1	**263-3350**	1	ELBOW	
	5	1	**263-3351**	1	ELBOW	
	6	1	**230-3671**	3	CLAMP-T BOLT	

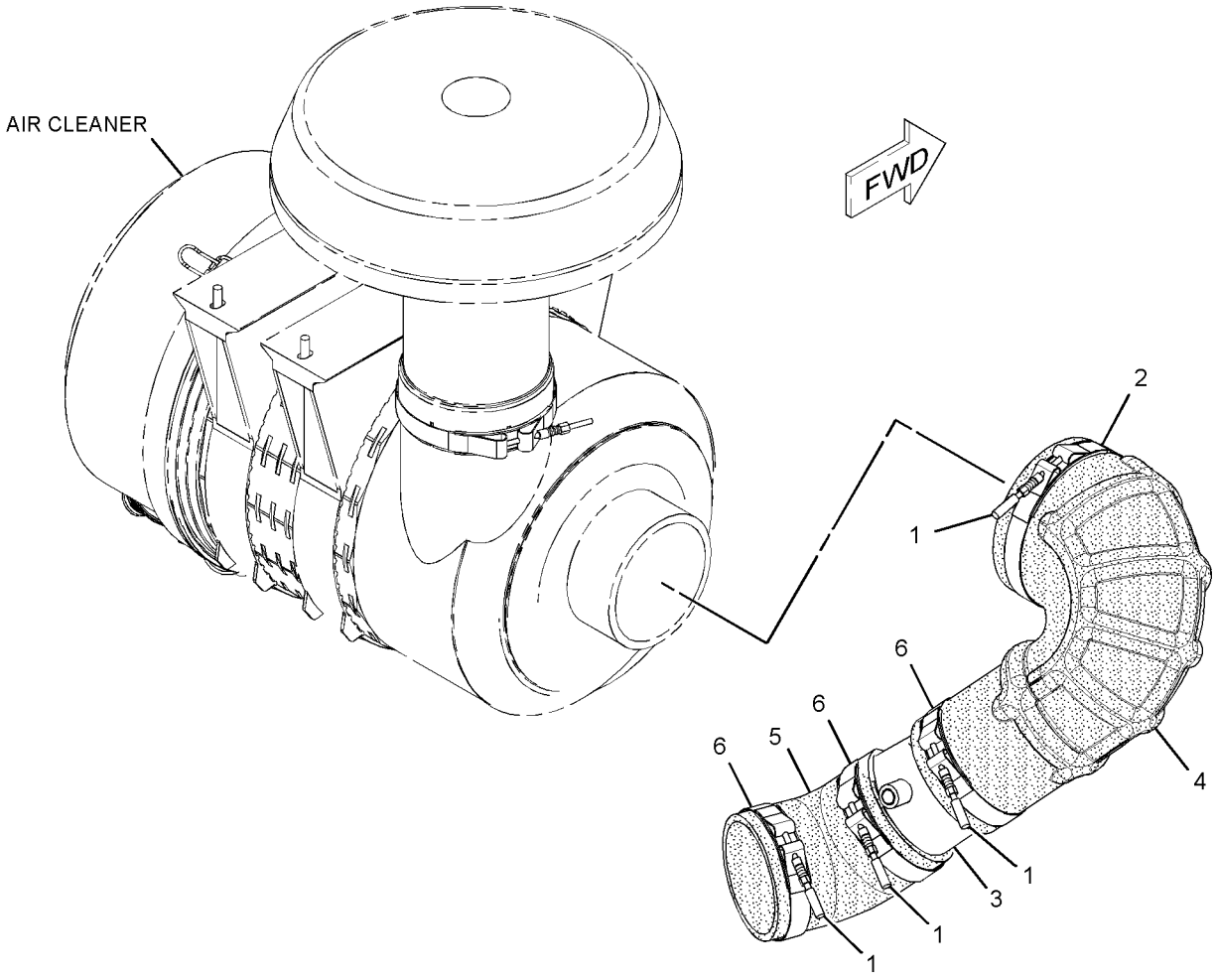

GRAPHIC #1 <END> g01878061

257-8467 MANIFOLD GP-EXHAUST

S/N: TX71-UP

PART OF 506-2265 ENGINE AR-COMPLETE

SMCS-1059 **i02789769**

NOTE	REF NO	GRAPHIC REF	PART NUMBER	QTY	PART NAME 1 2 3 4 5 6 (PRODUCT LEVEL)	SEE PAGE
M	2	1	**172-6298**	10	BOLT-FLANGE HEAD (M10X1.5-THD)	
	3	1	**183-6854**	1	MANIFOLD-EXHAUST (CENTER)	
	4	1	**183-6856**	2	MANIFOLD-EXHAUST (END)	
	5	1	**189-8772**	10	SPACER (11X16X35-MM THK)	
	6	1	**203-3768**	2	SPACER (11X16X60-MM THK)	
	7	1	**210-7722**	2	BOLT-FLANGE HEAD (M10X1.5-THD)	
M	8	1	**180-3998**	4	STUD (M10X1.5X55-MM)	
	9	1	**272-1956**	6	GASKET (EXHAUST MANIFOLD)	

M - METRIC PART

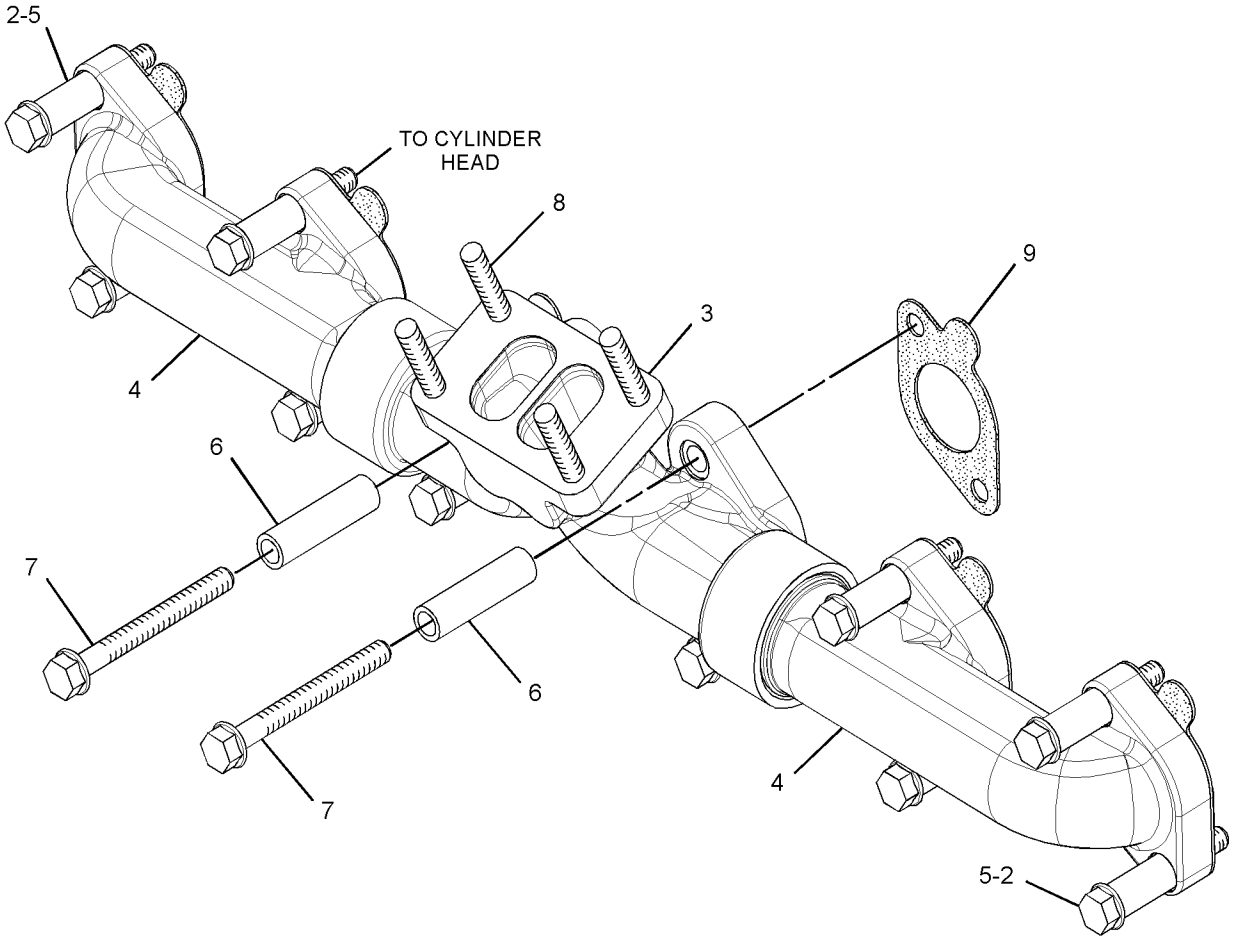

GRAPHIC #1 <END> g01332593

371-8160 MUFFLER GP

S/N: B551-UP

PART OF 577-1377 COMMON AR

SMCS-1062 **i05956995**

NOTE	REF NO	GRAPHIC REF	PART NUMBER	QTY	PART NAME 1 2 3 4 5 6 (PRODUCT LEVEL)	SEE PAGE
	1	1	**1W-2431**	1	CLAMP-BAND	
	2	1	**5P-2230**	2	CLAMP-HOSE	
	3	1	**388-7016**	1	CLAMP-BENT BOLT	
	4	1	**372-1596**	1	BRACKET AS	
	5	1	**264-3152**	1	BRACKET AS	
	6	1	**366-8275**	1	HOSE	
	7	1	**352-1486**	1	MUFFLER AS	
	8	1	**348-7748**	1	EJECTOR AS	
	9	1	**198-4777**	8	WASHER-HARD (11X25X10-MM THK)	
	10	1	**198-4778**	2	WASHER-HARD (13.5X30X12-MM THK)	
	11	1	**5P-2369**	1	CLIP (LOOP)	
M	12	1	**6V-8212**	1	BOLT (M10X1.5X16-MM)	
	13	1	**8T-4121**	1	WASHER-HARD (11X21X2.5-MM THK)	
M	14	1	**8T-4183**	2	BOLT (M12X1.75X40-MM)	
M	15	1	**8T-4195**	2	BOLT (M10X1.5X30-MM)	
M	16	1	**8T-4196**	6	BOLT (M10X1.5X35-MM)	
	17	1	**308-6409**	1	SHIELD-HEAT	
	18	1	**376-7136**	1	BRACKET AS	
M		1	**8T-3490**	2	NUT-WELD (M10X1.5-THD)	

M - METRIC PART

371-8160 **MUFFLER GP (**contd.**)** **i05956995**

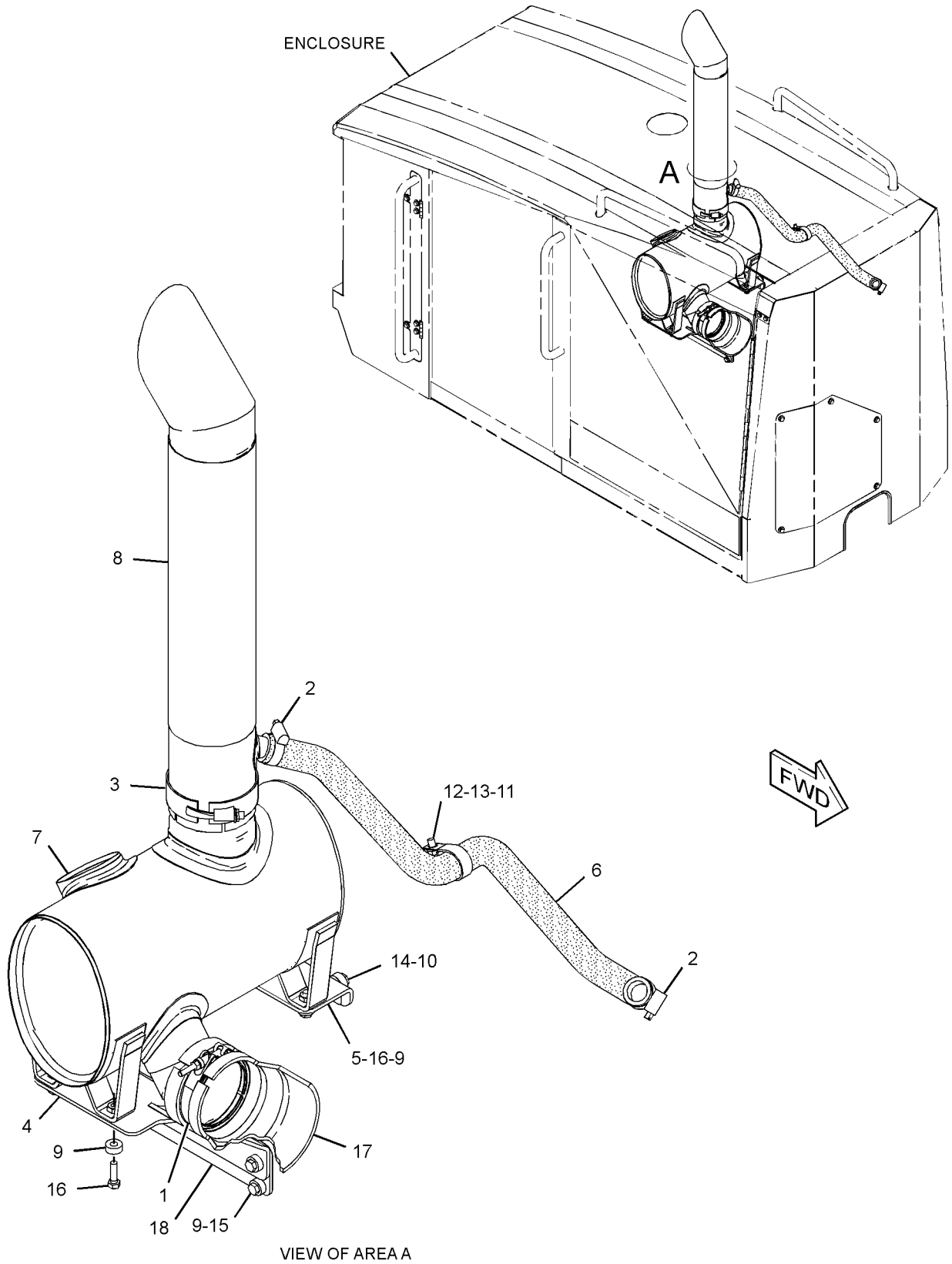

VIEW OF AREA A

GRAPHIC #1 <END> g02689276

233-3387 PRECLEANER GP

S/N: B551-UP

SMCS-1055 **i06757623**

NOTE	REF NO	GRAPHIC REF	PART NUMBER	QTY	PART NAME 1 2 3 4 5 6 (PRODUCT LEVEL)	SEE PAGE
	1	1	**070-0107**	1	PRECLEANER AS (TURBINE)	
		1	**174-5415**	1	CLAMP	
	2	1	**251-5743**	1	DAMPER	

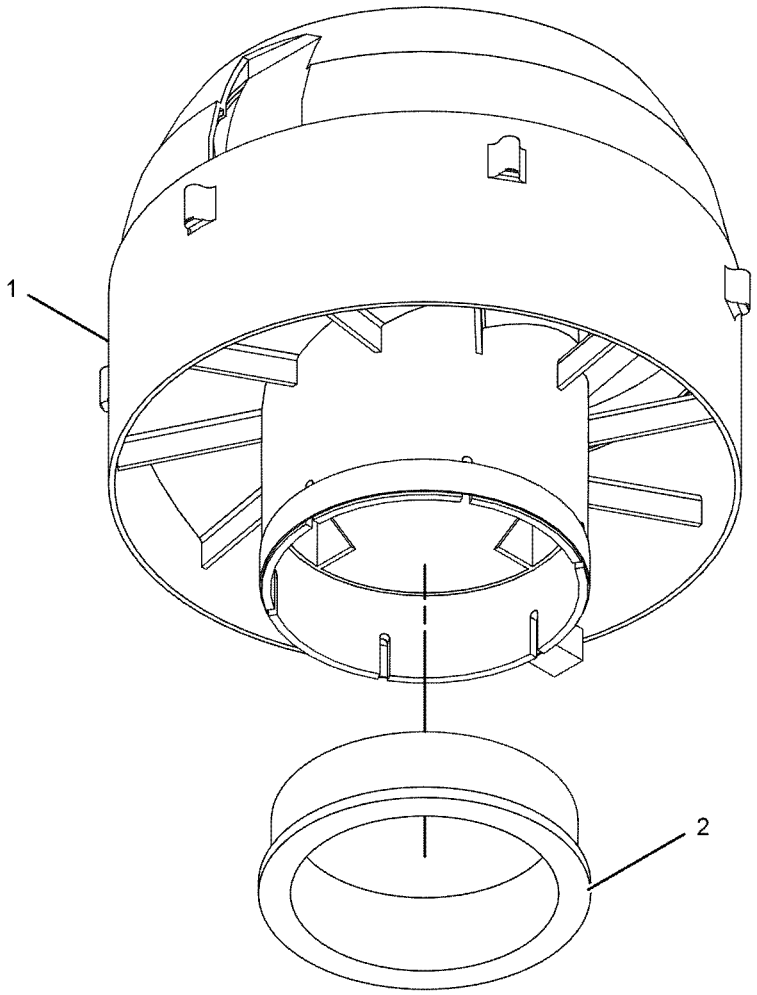

GRAPHIC #1 <END> g01132481

254-3813 TURBOCHARGER GP

S/N: TX71-UP

PART OF 506-2265 ENGINE AR-COMPLETE

SMCS-1052, 1053

i07385896

NOTE	REF NO	GRAPHIC REF	PART NUMBER	QTY	PART NAME 1 2 3 4 5 6 (PRODUCT LEVEL)	SEE PAGE
	1	1	**7C-7431**	1	GASKET	
	2	1	**8T-4121**	8	WASHER-HARD (11X21X2.5-MM THK)	
M	3	1	**225-0947**	4	BOLT (M10X1.5X40-MM)	
YR	4	1	**350-9729**	1	TURBOCHARGER GP	107
M	5	1	**9X-6620**	4	LOCKNUT (M10X1.5-THD)	

M - METRIC PART
R - REMANUFACTURED PART MAY BE AVAILABLE
Y - SEPARATE ILLUSTRATION

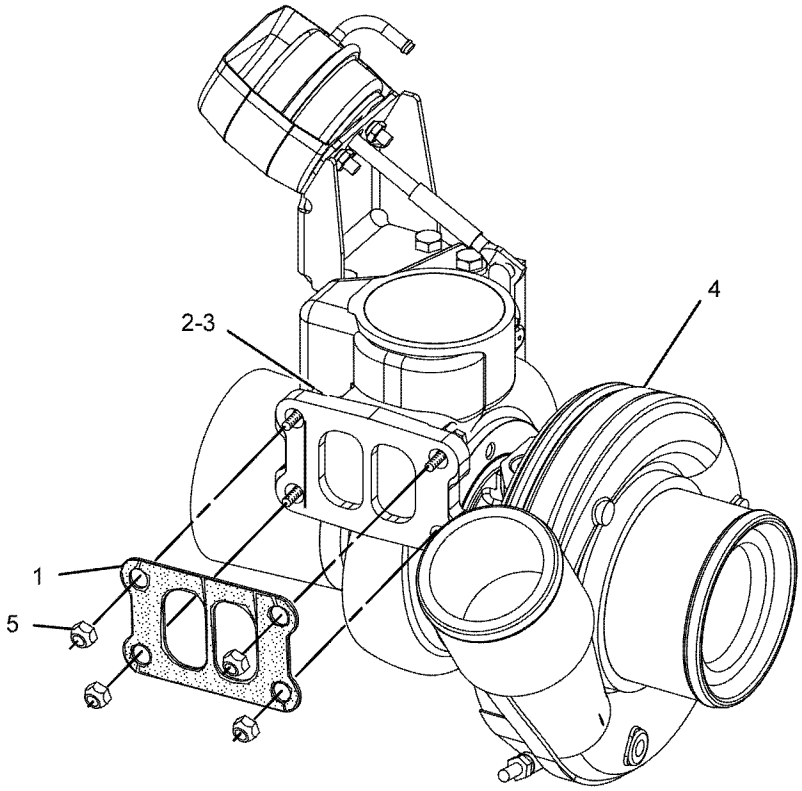

GRAPHIC #1 <END> g01149784

350-9729 TURBOCHARGER GP*R

S/N: TX71-UP
CONTAINS 6 PAD THRUST BEARING
PART OF 254-3813 TURBOCHARGER GP

SMCS-1052, 1053

i03912235

NOTE	REF NO	GRAPHIC REF	PART NUMBER	QTY	PART NAME 1 2 3 4 5 6 (PRODUCT LEVEL)	SEE PAGE
	1	1	**2Y-9402**	1	FITTING	
E	2	1	**242-3360**		HOSE (44-CM)	
R	3	1	**350-9781**	1	CARTRIDGE GP-TURBOCHARGER	
	4	1	**137-1602**	1	CLAMP AS (TURBINE)	
	5	1	**158-6072**	1	CLAMP AS (COMPRESSOR)	
	6	1	**161-6963**	2	CLAMP	

E - ORDER BY THE CENTIMETER
R - REMANUFACTURED PART MAY BE AVAILABLE

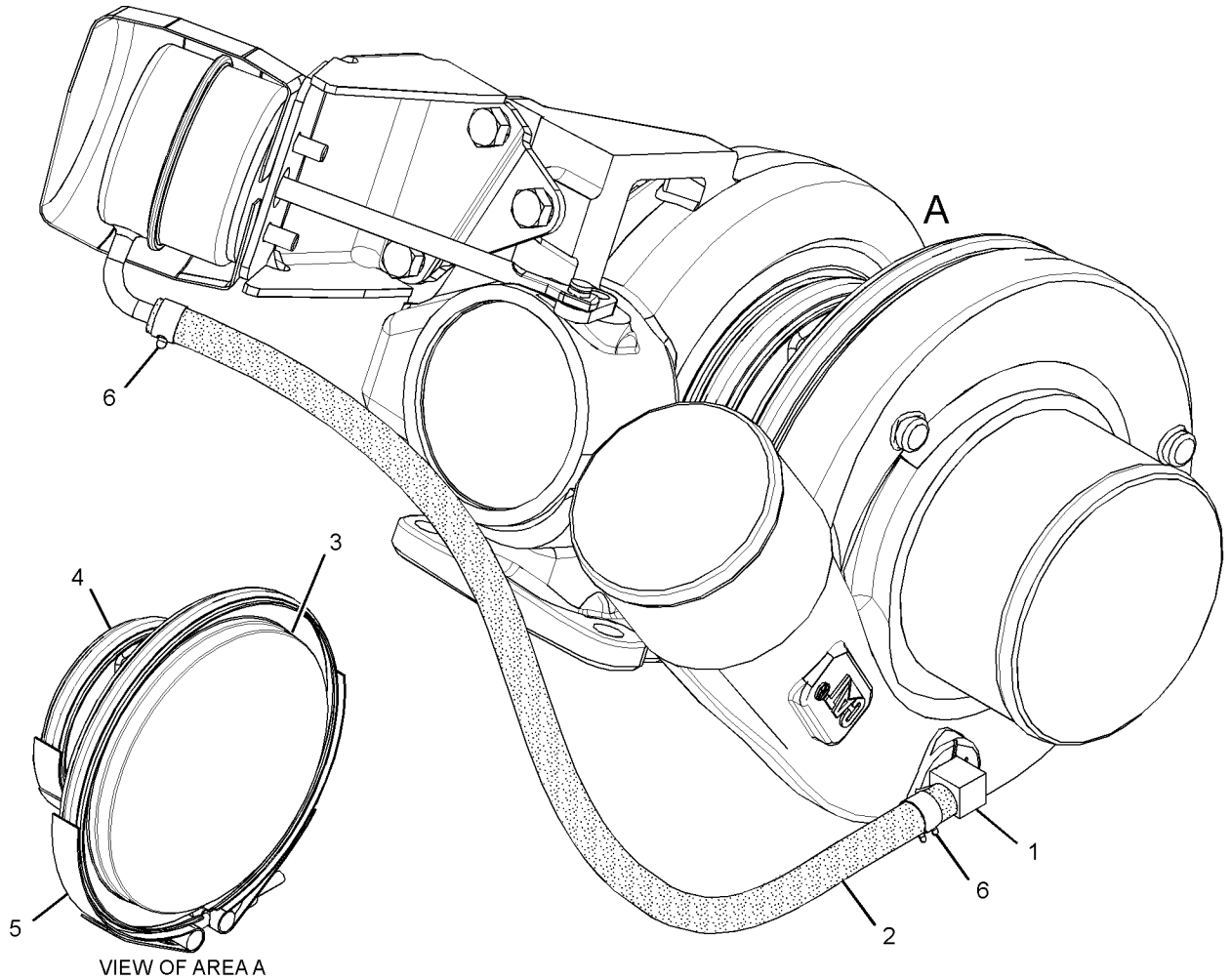

VIEW OF AREA A

GRAPHIC #1 <END> g02150644

420-2068 BASE GP-FUEL FILTER

S/N: TX71-UP

PART OF 420-3318 FILTER GP-FUEL

SMCS-1262 **i05170500**

NOTE	REF NO	GRAPHIC REF	PART NUMBER	QTY	PART NAME 1 2 3 4 5 6 (PRODUCT LEVEL)	SEE PAGE
	1	1	**213-0064**	1	BASE AS (FUEL)	
		1	**9S-4167**	1	STUD-HOLLOW (1-14X1.47-IN)	
	2	1	**1R-0762**	1	FILTER-FUEL (ADVANCED EFFICIENCY)	

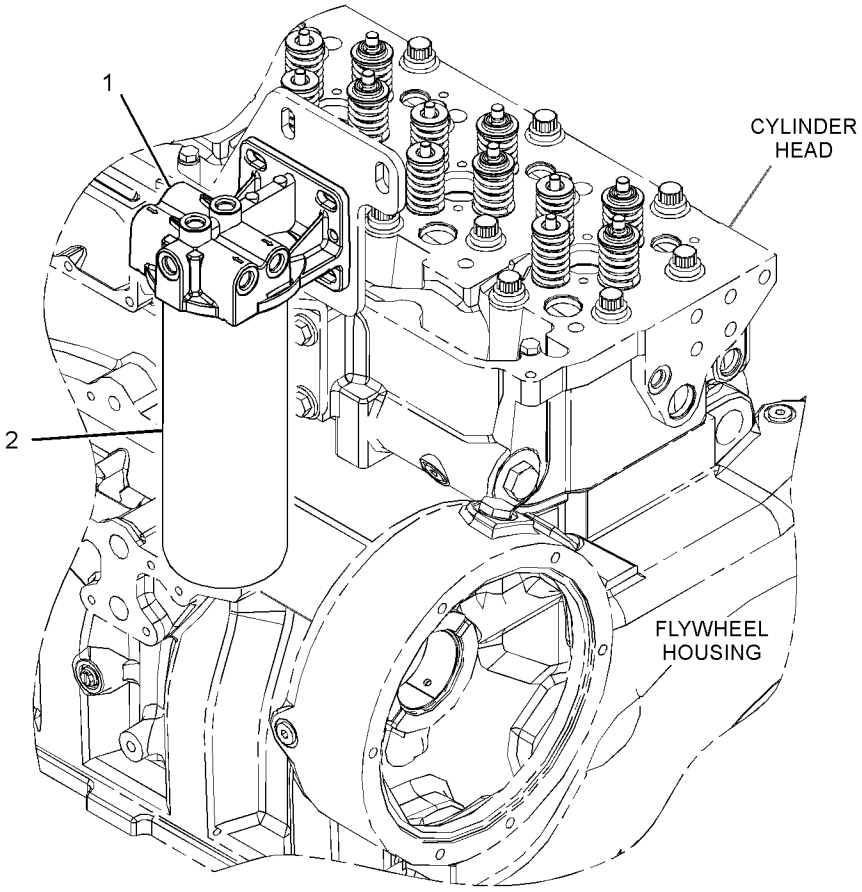

GRAPHIC #1 <END> g03196536

419-4129 FILTER GP-FUEL

S/N: B551-UP

PART OF 246-6706 LINES GP-FUEL FILTER

SMCS-1261 **i05200765**

NOTE	REF NO	GRAPHIC REF	PART NUMBER	QTY	PART NAME 1 2 3 4 5 6 (PRODUCT LEVEL)	SEE PAGE
	1	1	**1R-0749**	1	FILTER-FUEL (ADVANCED EFFICIENCY)	
	2	1	**195-1068**	1	BASE AS-FUEL FILTER	
		1	**9S-4167**	1	STUD-HOLLOW (1-14X1.47-IN)	
	3	1	*389-3708*	2	PLUG AS	
					(EACH INCLUDES)	
		1	**214-7568**	1	SEAL-O-RING	
		1	**360-3679**	1	PLUG-CONNECTOR (9/16-18-THD)	
	4	1	*398-5596*	2	PLUG AS	
					(EACH INCLUDES)	
		1	**238-5080**	1	SEAL-O-RING	
		1	**360-3680**	1	PLUG	
	5	1	**7X-7729**	2	WASHER (11X25X3-MM THK)	
M	6	1	**8T-4196**	2	BOLT (M10X1.5X35-MM)	

M - METRIC PART

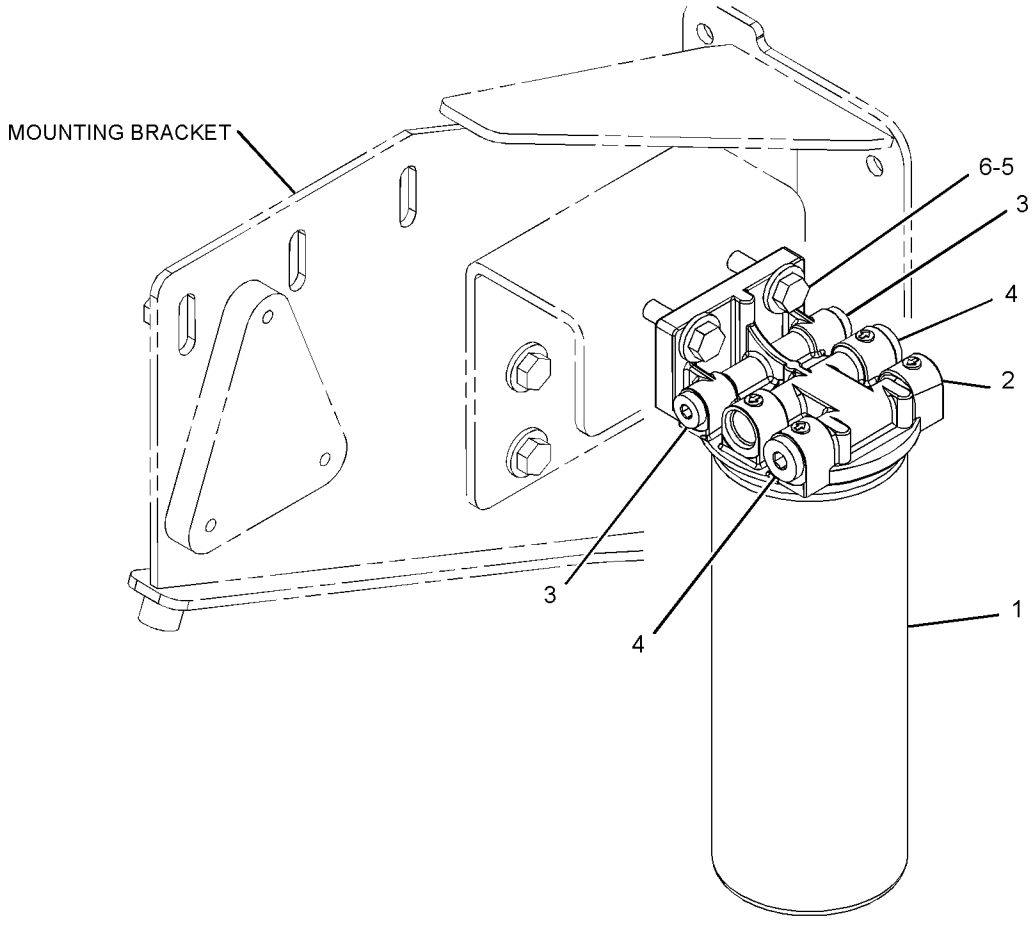

GRAPHIC #1 <END> g03360358

420-3318 FILTER GP-FUEL

S/N: TX71-UP

PROVIDES TERTIARY FILTER FOR C7 140-MG TIER 3 ENGINES

PART OF 506-2265 ENGINE AR-COMPLETE

SMCS-1261 **i05195499**

NOTE	REF NO	GRAPHIC REF	PART NUMBER	QTY	PART NAME 1 2 3 4 5 6 (PRODUCT LEVEL)	SEE PAGE
	1	1	**250-8307**	1	BRACKET AS	
Y	2	1	*420-2068*	1	BASE GP-FUEL FILTER	108
	3	1	**0S-1588**	4	BOLT (3/8-16X1.25-IN)	
	4	1	**126-5211**	1	SPACER (3X15X17-MM THK)	
M	5	1	**241-0542**	3	STUD (M8X1.25X30-MM)	
	6	1	**308-0860**	1	STUD (M8X1.25X80-MM)	
	7	1	**4P-8134**	1	CLIP (LADDER)	
M	8	1	**5P-7970**	2	NUT (M8X1.25-THD)	
	9	1	**9M-1974**	7	WASHER-HARD (8.8X16X2-MM THK)	
	10	1	**9X-6458**	4	WASHER-HARD (10.2X22.5X3-MM THK)	

M - METRIC PART
Y - SEPARATE ILLUSTRATION

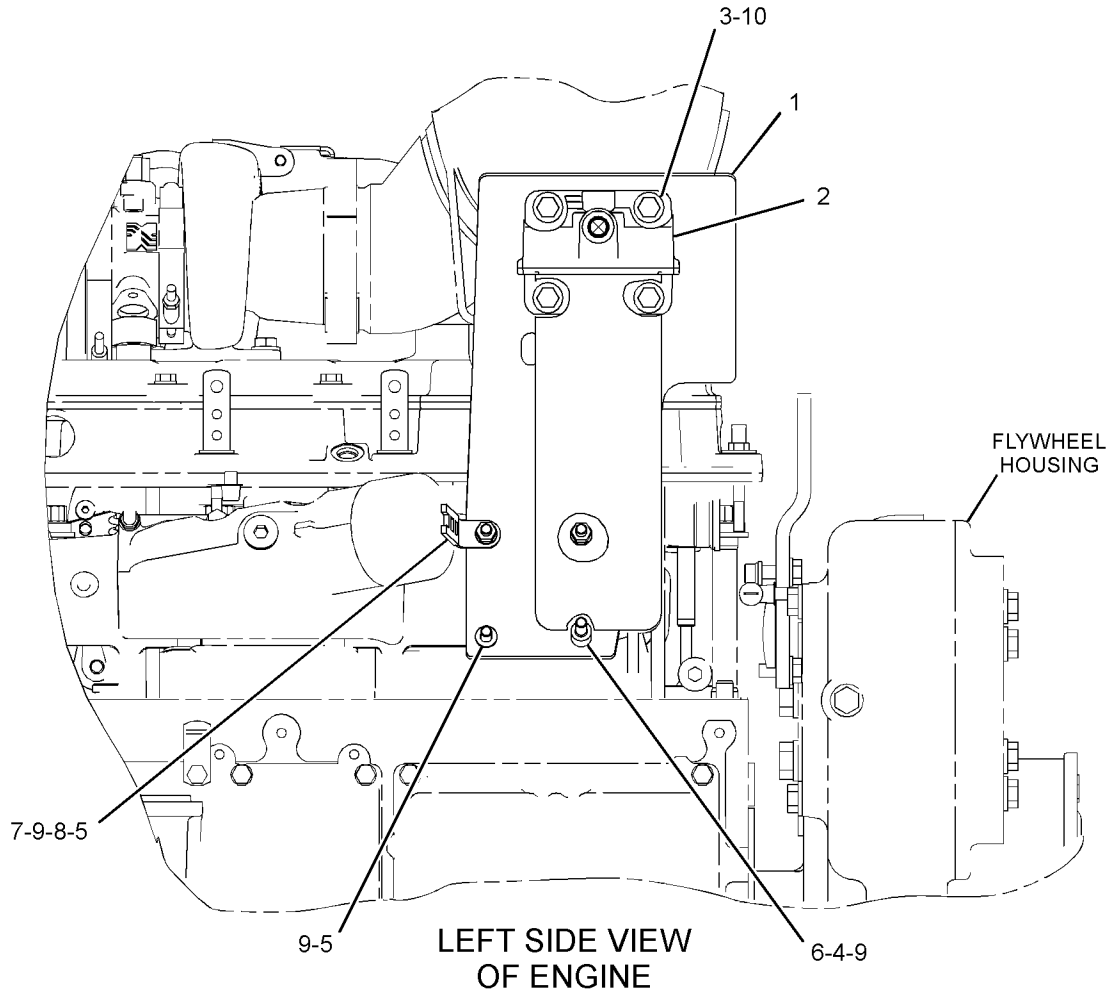

GRAPHIC #1 <END> g03358346

174-9570 FILTER GP-WATER SEP & FUEL

S/N: B551-UP

PART OF 235-8725 PUMP GP-FILTER & FUEL TRANSFER

SMCS-1261, 1263

i06692126

NOTE	REF NO	GRAPHIC REF	PART NUMBER	QTY	PART NAME 1 2 3 4 5 6 (PRODUCT LEVEL)	SEE PAGE
	1	1	**326-1644**	1	FILTER AS-WATER SEP & FUEL (PRIMARY)	
	1A	1	**220-8678**	1	SEAL-RING (FUEL, WATER SEPARATOR)	
	2	1	**343-5527**	1	BOWL AS	
	2A	1	**5F-9144**	1	SEAL-O-RING	
	2B	1	**8F-7219**	1	SEAL-O-RING	

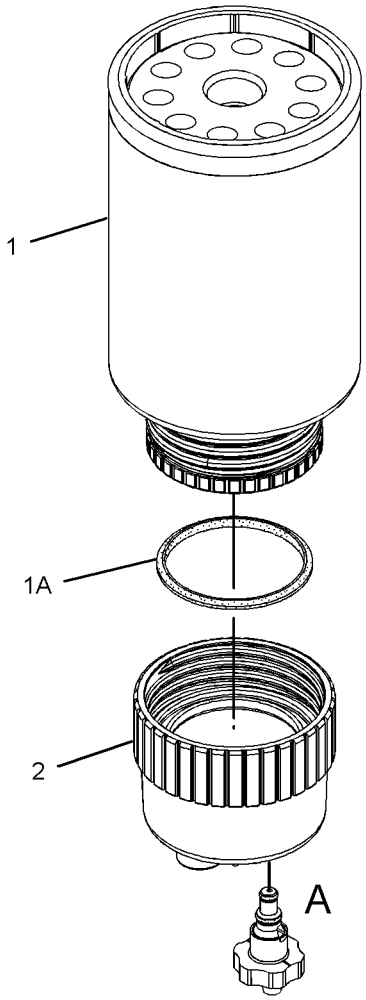

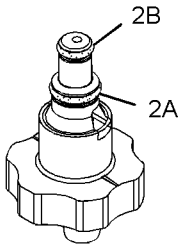

VIEW OF AREA A

GRAPHIC #1

<END>

g06078297

557-7627 INJECTOR GP-FUEL

S/N: TX71-UP

PART OF 268-1839 PUMP GP-FUEL INJECTION

SMCS-1251, 1254, 1290, 1713 **i07396492**

NOTE	REF NO	GRAPHIC REF	PART NUMBER	QTY	PART NAME 1 2 3 4 5 6 (PRODUCT LEVEL)	SEE PAGE
	1	1	**149-5240**	1	RING-BACKUP	
	2	1	**220-0684**	4	SCREW-MACHINE (M3X0.5X40.3-MM)	
	3	1	**293-0730**	1	RING-BACKUP	
	4	1	**109-3207**	1	SEAL-O-RING	
	5	1	**148-2903**	2	SEAL-O-RING	
	6	1	**3E-4354**	2	BALL	

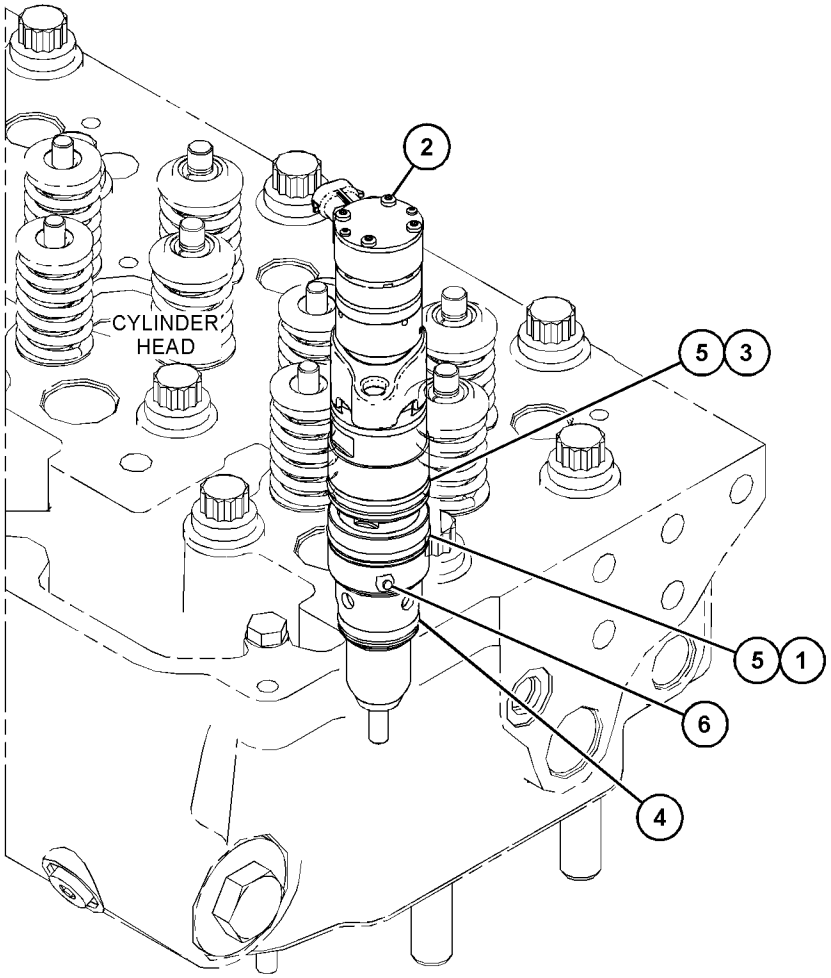

GRAPHIC #1 <END> g06305623

396-3298 KIT-FUEL PUMP–FUEL TRANSFER PUMP

S/N: TX71-UP

FOR USE WITH REHS3830

PART OF 476-8768 PUMP GP-UNIT INJECTOR HYD

SMCS-1251 **i05659690**

NOTE	PART NUMBER	QTY	PART NAME 1 2 3 4 5 6 (PRODUCT LEVEL)	SEE PAGE
M	**3E-8006**	1	BOLT (M8X1.25X130-MM)	
	390-8589	1	COVER AS-PUMP	
	7S-5005	1	DOWEL	
M	**313-4620**	4	SCREW-PAN HEAD (M5X0.8X25-MM)	
	239-2402	3	SEAL-O-RING	
B	**227-5904**	1	SEAL-O-RING	
			–OR–	
BJ	**185-3241**	1	SEAL-O-RING	

B - USE AS REQUIRED
J - USE ONLY ON UNIT INJECTOR HYDRAULIC PUMPS WITH A RADIAL SEAL ON THE MOUNTING FLANGE
M - METRIC PART

<END>

418-8566 LINES GP-FUEL

S/N: TX71-UP

PART OF 506-2265 ENGINE AR-COMPLETE

SMCS-1274 **i06226683**

NOTE	REF NO	GRAPHIC REF	PART NUMBER	QTY	PART NAME 1 2 3 4 5 6 (PRODUCT LEVEL)	SEE PAGE
	1	1	**231-3047**	1	TUBE AS	
Y	2	1	*232-0343*	1	REGULATOR GP-FUEL PRESSURE	129
	3	1	*389-3708*	3	PLUG AS	
					(EACH INCLUDES)	
		1	**214-7568**	1	SEAL-O-RING	
		1	**360-3679**	1	PLUG-CONNECTOR (9/16-18-THD)	
	4	1	**391-6329**	1	BRACKET AS	
	5	1	*398-5632*	1	ELBOW AS	
		1	**030-8276**	1	ELBOW-FLARED	
		1	**214-7568**	1	SEAL-O-RING	
	6	1	**420-9730**	1	HOSE AS	
	7	1	**061-6737**	1	UNION-FLARED	
	8	1	*313-9614*	2	ADAPTER AS	
					(EACH INCLUDES)	
		1	**2R-6806**	1	CONNECTOR	
		1	**214-7568**	1	SEAL-O-RING	
	9	1	*319-6240*	1	CONNECTOR AS	
		1	**6V-9873**	1	CONNECTOR	
		1	**214-7568**	1	SEAL-O-RING	
		1	**228-7090**	1	SEAL-O-RING	
	10	1	**353-7953**	2	GROMMET (19-MM ID)	
M	11	1	**5P-7970**	2	NUT (M8X1.25-THD)	
	12	1	**6V-3265**	1	CLIP	
M	13	1	**6V-4248**	1	BOLT (M10X1.5X25-MM)	
	14	1	**6V-5839**	1	WASHER (11X21X2.5-MM THK)	
	15	1	**8T-1889**	2	CLIP (SLOT)	
	16	1	**8T-1890**	2	CLIP (TAB)	
	17	1	**9M-1974**	1	WASHER-HARD (8.8X16X2-MM THK)	
	18	1	**3E-4352**	2	WASHER-HARD (8.8X20.5X2.5-MM THK)	

M - METRIC PART
Y - SEPARATE ILLUSTRATION

418-8566 **LINES GP-FUEL (**contd.**)** **i06226683**

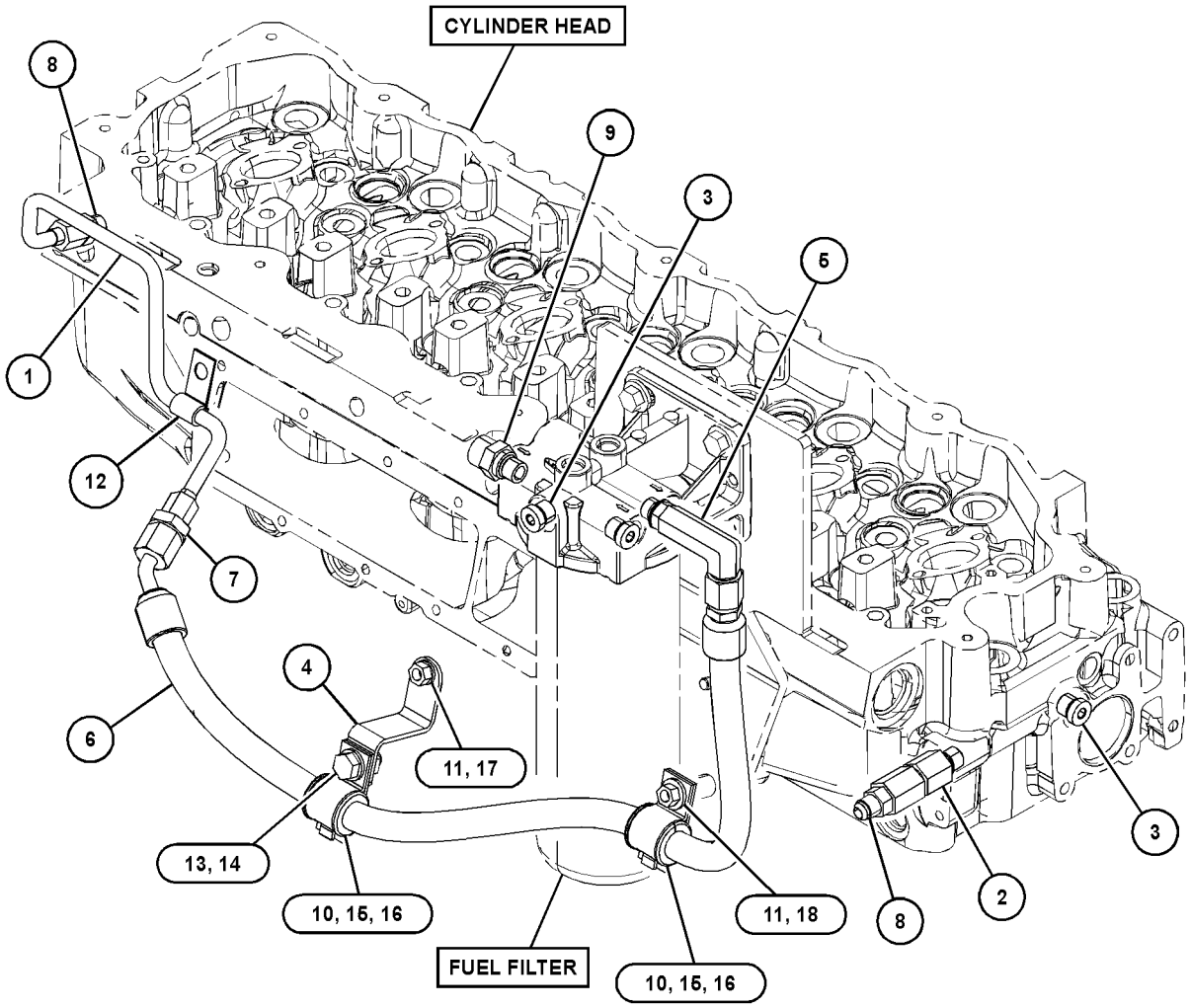

GRAPHIC #1 <END> g03863504

246-6706 LINES GP-FUEL FILTER

S/N: B551-UP

PART OF 577-1377 COMMON AR

SMCS-1261, 1274 **i05436511**

NOTE	REF NO	GRAPHIC REF	PART NUMBER	QTY	PART NAME 1 2 3 4 5 6 (PRODUCT LEVEL)	SEE PAGE
	1	1	**3S-2093**	1	STRAP-CABLE	
	2	1	**184-5394**	1	CLIP (LOOP)	
Y	3	1	*190-1105*	1	PUMP GP-FILTER & FUEL TRANSFER	123
C	5	1	**420-4900**	1	BRACKET AS	
M		1	**4Y-8939**	1	BOSS (M10X1.5X40-MM)	
M		1	**9R-2821**	1	BOSS (M10X1.5X15-MM)	
M		1	**8T-3490**	4	NUT-WELD (M10X1.5-THD)	
CI	6	1	**420-2896**	1	HOSE AS	
I	7	1	**277-5431**	1	HOSE AS	
	8	1	**289-0213**	1	BRACKET	
	9	1	**353-7954**	2	GROMMET (16-MM ID)	
	10	1	**030-7962**	1	ELBOW	
	12	1	*148-8372*	1	ELBOW AS	
		1	**6V-8721**	1	ELBOW	
		1	**6V-8398**	1	SEAL-O-RING	
		1	**2M-9780**	1	SEAL-O-RING	
	13	1	*330-9757*	1	ELBOW AS	
		1	**8T-1905**	1	ELBOW	
		1	**214-7568**	1	SEAL-O-RING	
		1	**228-7089**	1	SEAL-O-RING	
	14	1	*164-5557*	1	CONNECTOR AS	
		1	**5I-4370**	1	CONNECTOR	
		1	**2M-9780**	1	SEAL-O-RING	
		1	**6V-8398**	1	SEAL-O-RING	
C	15	1	*148-8364*	1	ELBOW AS	
		1	**3K-0360**	1	SEAL-O-RING	
		1	**6V-8625**	1	ELBOW	
		1	**6V-8398**	1	SEAL-O-RING	
	16	1	**8T-1890**	2	CLIP (TAB)	
I	17	1	**436-3331**	1	HOSE AS	
	18	1	**1S-0994**	2	CLIP (LOOP)	
	19	1	**4D-7735**	1	CLIP	
M	20	1	**5C-7261**	1	NUT (M8X1.25-THD)	
	21	1	**5P-4116**	2	WASHER-HARD (8.8X20.5X2-MM THK)	
	22	1	**5P-9299**	1	CLIP (LOOP)	
	23	1	**7X-7729**	13	WASHER (11X25X3-MM THK)	
	24	1	**8M-2773**	1	CLIP (LOOP)	
	25	1	**8T-4121**	10	WASHER-HARD (11X21X2.5-MM THK)	
M	26	1	**8T-4133**	4	NUT (M10X1.5-THD)	
M	27	1	**8T-4136**	7	BOLT (M10X1.5X25-MM)	
	28	1	**8T-1889**	2	CLIP (SLOT)	
M	29	1	**8T-4195**	3	BOLT (M10X1.5X30-MM)	
M	30	1	**8T-4196**	5	BOLT (M10X1.5X35-MM)	
CE	31	1	**8C-6959**		HOSE (108-CM)	
C	32	1	**4P-7581**	1	CLIP (LADDER)	
C	33	1	**7K-1181**	1	STRAP-CABLE	
M	36	1	**096-4883**	2	LOCKNUT (M10X1.5-THD)	
CI	37	1	**420-1867**	1	HOSE AS	

246-6706 **LINES GP-FUEL FILTER (**contd.**)** **i05436511**

NOTE	REF NO	GRAPHIC REF	PART NUMBER	QTY	PART NAME 1 2 3 4 5 6 (PRODUCT LEVEL)	SEE PAGE
CY	38	1	*419-4129*	1	FILTER GP-FUEL	109
C	39	1	**431-7841**	1	BRACKET AS	
M		1	**8T-3490**	2	NUT-WELD (M10X1.5-THD)	
C	40	1	*148-8354*	1	ELBOW AS	
		1	**3K-0360**	1	SEAL-O-RING	
		1	**6V-8398**	1	SEAL-O-RING	
		1	**6V-9002**	1	ELBOW	

C - CHANGE FROM PREVIOUS TYPE
E - ORDER BY THE CENTIMETER
I - REFER TO HYDRAULIC INFORMATION SYSTEM
M - METRIC PART
Y - SEPARATE ILLUSTRATION

246-6706 **LINES GP-FUEL FILTER (**contd.**)** **i05436511**

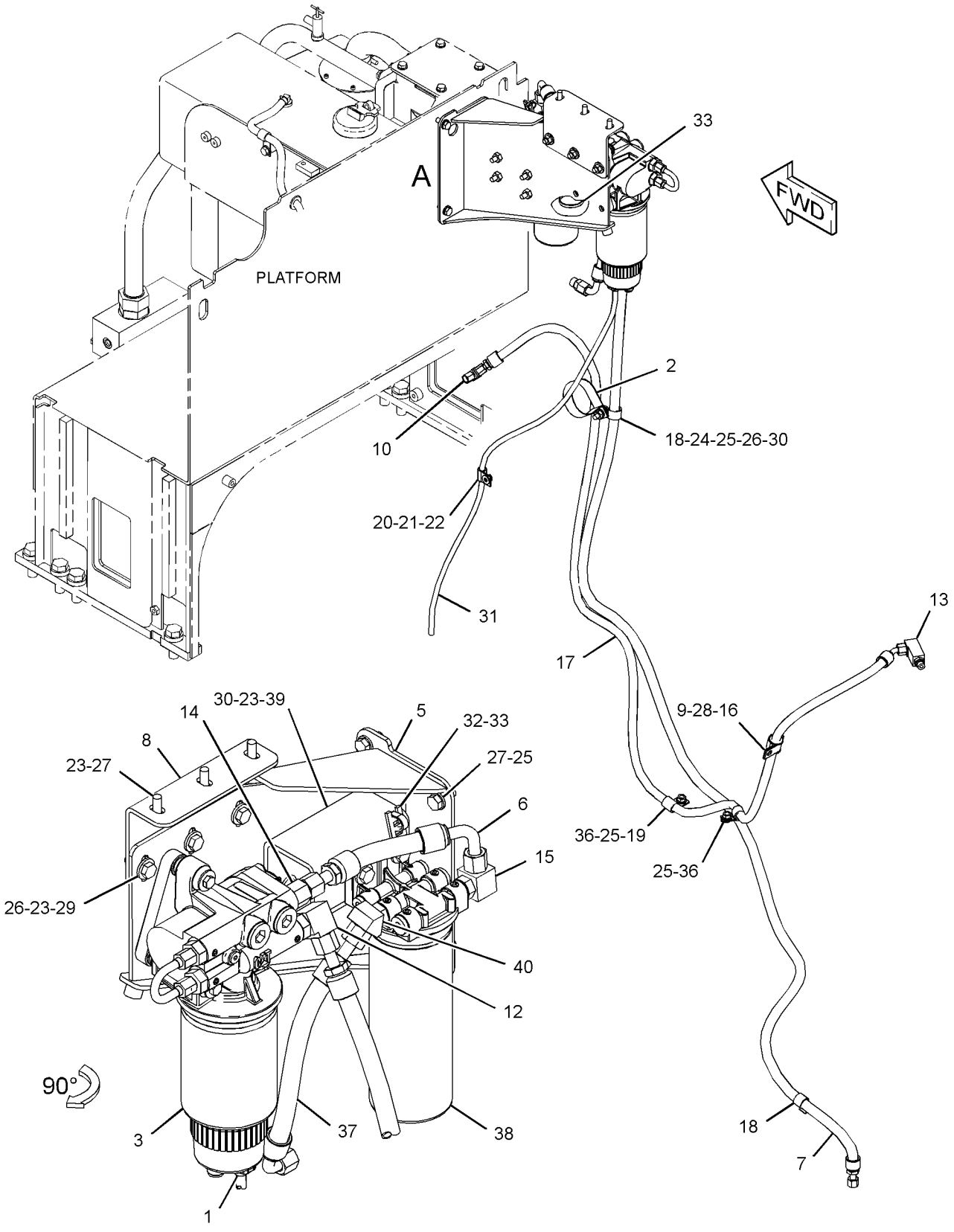

VIEW OF AREA A

GRAPHIC #1 <END> g03554756

396-8415 LINES GP-INJECTOR HYD PUMP

S/N: TX71-UP

PART OF 387-8499 ENGINE AR-CORE

SMCS-1714 **i06759811**

NOTE	REF NO	GRAPHIC REF	PART NUMBER	QTY	PART NAME 1 2 3 4 5 6 (PRODUCT LEVEL)	SEE PAGE
Y	1	1	*191-0523*	1	ADAPTER GP-OIL LINE	58
	2	1	**205-1280**	1	HOSE AS	
	3	1	**505-5361**	1	TUBE AS-OIL	
	4	1	*183-3399*	2	CONNECTOR AS	
					(EACH INCLUDES)	
		1	**6V-8636**	1	CONNECTOR	
		1	**214-7568**	1	SEAL-O-RING	
		1	**228-7089**	1	SEAL-O-RING	
	5	1	**3V-2431**	2	WASHER (10.2X16X2-MM THK)	
	6	1	**4F-9653**	1	SEAL-O-RING	
M	7	1	**8T-1159**	2	BOLT-SOCKET HEAD (M10X1.5X25-MM)	

M - METRIC PART
Y - SEPARATE ILLUSTRATION

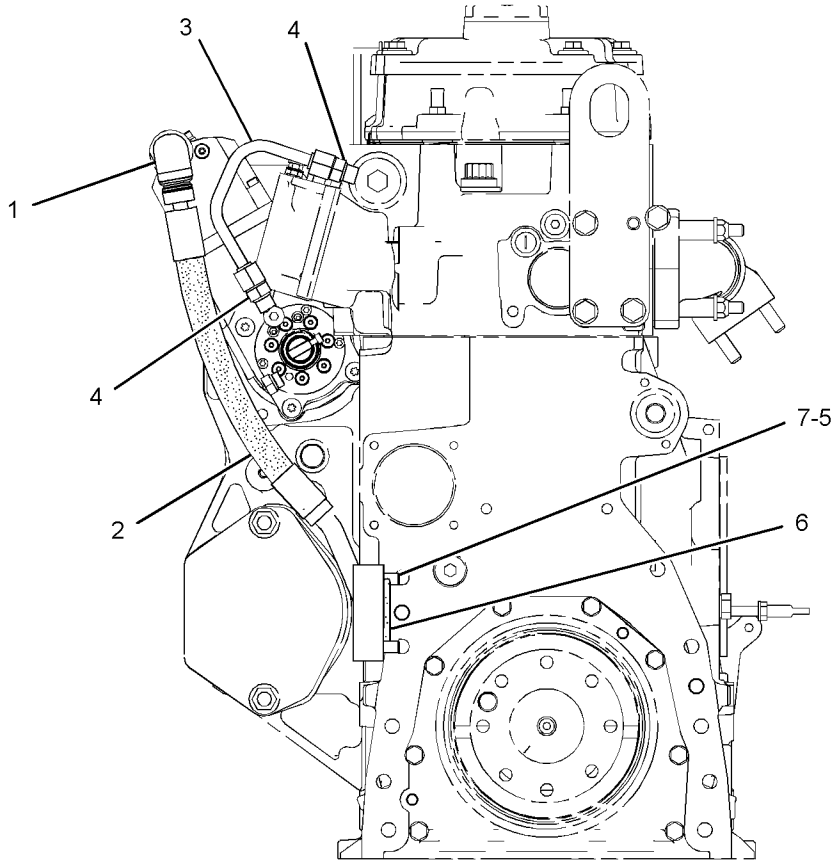

REAR VIEW OF ENGINE

GRAPHIC #1 <END> g03076817

355-2954 MOUNTING GP-FUEL TANK

S/N: B551-UP

PART OF 364-1989 OPTION AR-MACHINE

SMCS-1273 **i07577190**

NOTE	REF NO	GRAPHIC REF	PART NUMBER	QTY	PART NAME 1 2 3 4 5 6 (PRODUCT LEVEL)	SEE PAGE
	1	1	**6G-7187**	1	LOCK	
	3	1	**7J-6356**	2	TUBE	
	4	1	**216-2211**	4	CLAMP	
	5	1	**335-9214**	4	CLAMP-BAND	
	6	1	**509-6660**	2	HOSE-FUEL	
	7	1	**270-3651**	2	PLATE AS	
					(EACH INCLUDES)	
M		1	**8T-3597**	4	NUT-WELD (M12X1.75-THD)	
	8	1	**270-9583**	6	PLATE	
	9	1	**281-3431**	1	BRACKET AS	
M		1	**8Y-4489**	1	BOSS (M10X1.5-THD)	
	10	1	**281-3432**	1	TUBE	
	11	1	**281-3433**	2	HOSE	
	15	1	**549-4994**	1	GUARD	
	16	1	*148-8415*	1	REDUCER AS	
		1	**6V-8936**	1	REDUCER	
		1	**6V-8397**	1	SEAL-O-RING	
	17	1	**1V-7801**	2	SPACER (0.546X0.840X2.38-IN THK)	
	18	1	**287-5718**	2	WASHER-HARD (22X60X6-MM THK)	
	19	1	**5P-1076**	10	WASHER-HARD (13.5X30X4-MM THK)	
	20	1	**5P-7470**	1	CLIP (SLOT)	
	21	1	**5P-7471**	1	CLIP (TAB)	
	22	1	**5P-7703**	1	GROMMET (52-MM ID)	
M	23	1	**7X-2549**	2	BOLT (M12X1.75X100-MM)	
M	24	1	**7X-2557**	2	BOLT (M16X2X140-MM)	
	25	1	**7X-7729**	4	WASHER (11X25X3-MM THK)	
M	26	1	**8T-0389**	1	LOCKNUT (M10X1.5-THD)	
M	28	1	**8T-4136**	1	BOLT (M10X1.5X25-MM)	
M	29	1	**8T-4139**	4	BOLT (M12X1.75X30-MM)	
M	30	1	**8T-4179**	8	BOLT (M12X1.75X20-MM)	
M	32	1	**8T-4192**	4	BOLT (M12X1.75X25-MM)	
M	33	1	**8T-4196**	2	BOLT (M10X1.5X35-MM)	
	34	1	**8T-4223**	12	WASHER-HARD (13.5X25.5X3-MM THK)	
M	36	1	**8T-4956**	4	BOLT (M12X1.75X35-MM)	
	37	1	**8C-0620**	4	PROTECTOR-THREAD	

M - METRIC PART

355-2954 **MOUNTING GP-FUEL TANK (**contd.**)** **i07577190**

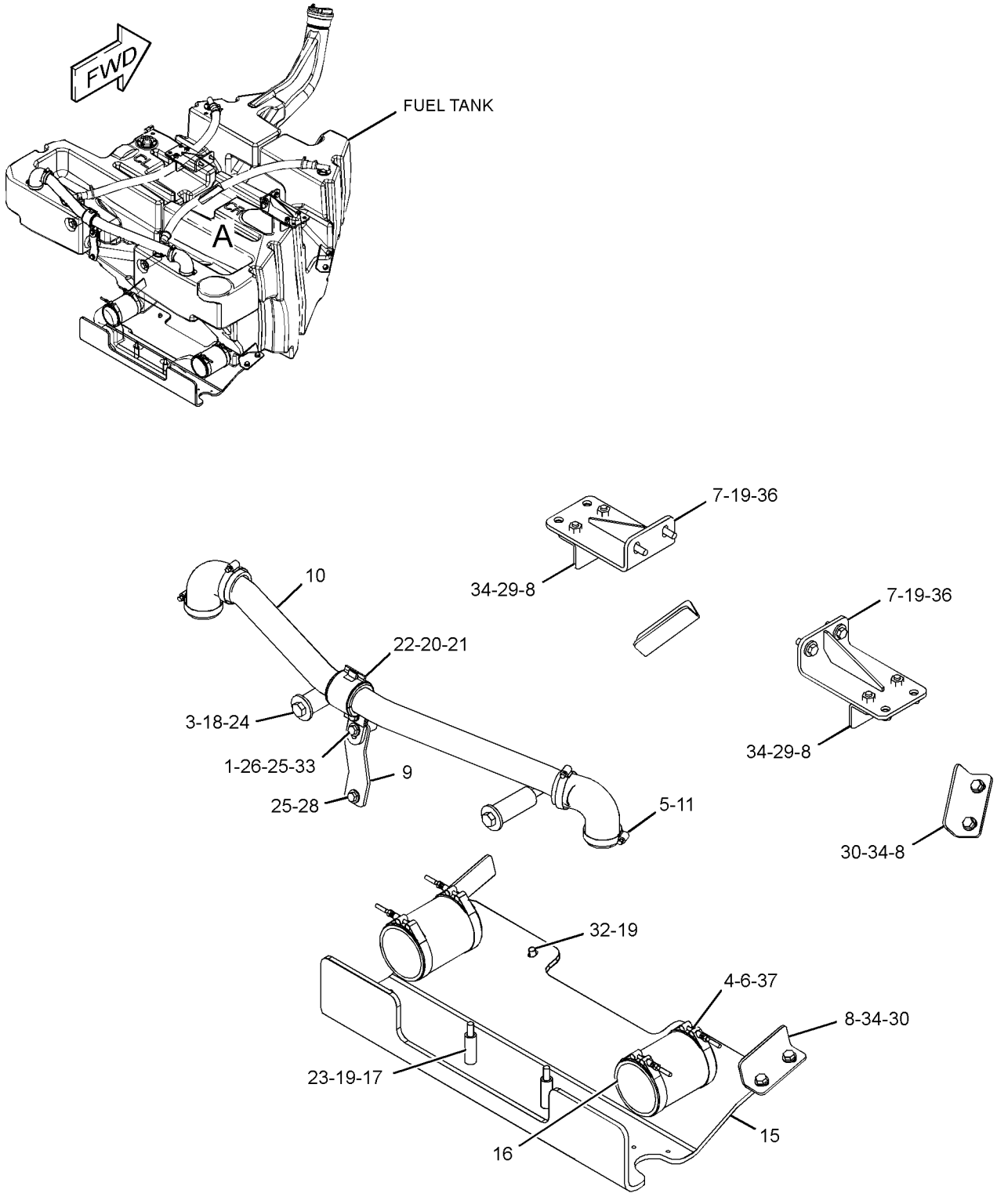

VIEW OF AREA A

GRAPHIC #1 <END> g06358979

389-1183 PUMP & MTG GP-UNIT INJ HYD

S/N: TX71-UP

PART OF 387-8499 ENGINE AR-CORE

SMCS-1714 **i06888869**

NOTE	REF NO	GRAPHIC REF	PART NUMBER	QTY	PART NAME 1 2 3 4 5 6 (PRODUCT LEVEL)	SEE PAGE
	1	1	*321-8638*	2	PLUG AS	
					(EACH INCLUDES)	
		1	**214-7568**	1	SEAL-O-RING	
		1	**321-8635**	1	PLUG	
CYR	2	1	**476-8768**	1	PUMP GP-UNIT INJECTOR HYD	127
	3	1	**227-5904**	1	SEAL-O-RING	
	4	1	**6V-5839**	2	WASHER (11X21X2.5-MM THK)	
M	5	1	**6V-7981**	2	BOLT (M10X1.5X70-MM)	

C - CHANGE FROM PREVIOUS TYPE
M - METRIC PART
R - REMANUFACTURED PART MAY BE AVAILABLE
Y - SEPARATE ILLUSTRATION

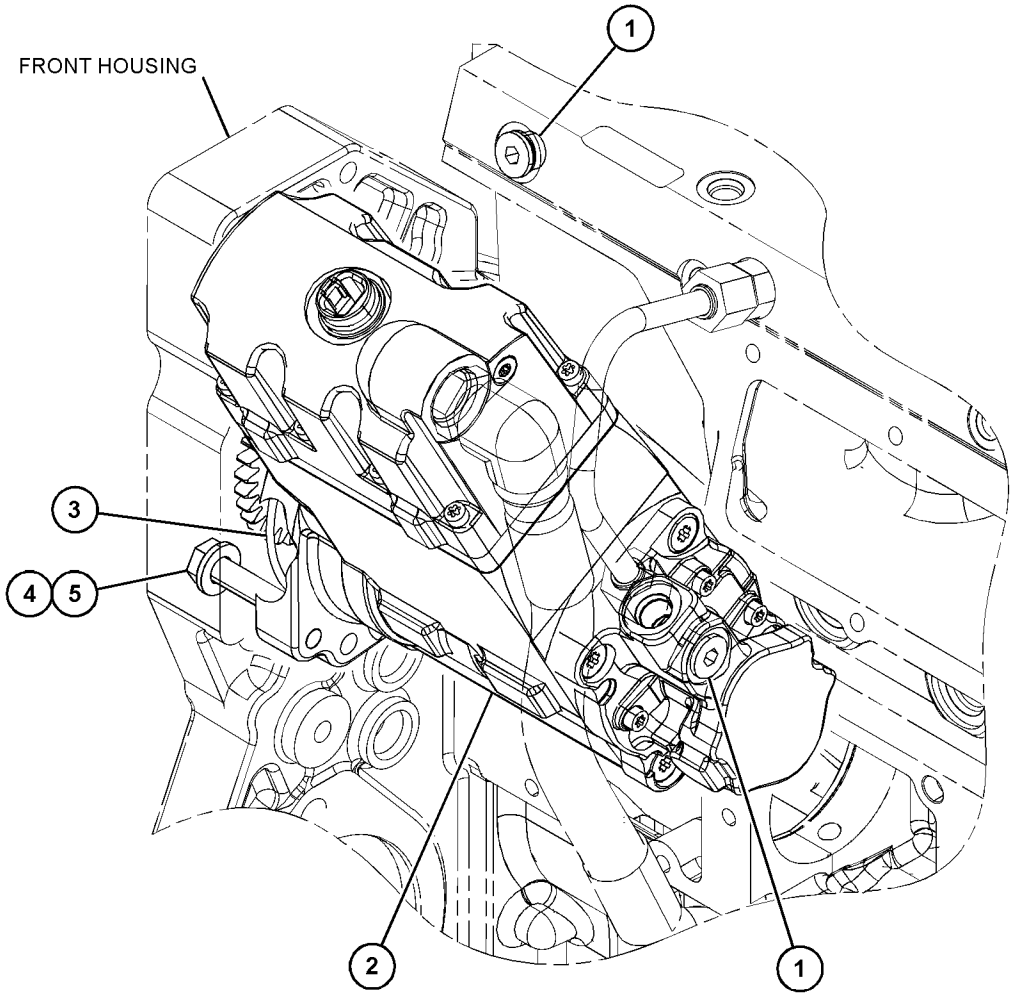

GRAPHIC #1 <END> g06086565

190-1105 PUMP GP-FILTER & FUEL TRANSFER

S/N: B551-UP

PART OF 246-6706 LINES GP-FUEL FILTER

SMCS-1256, 1260, 1261 **i03008671**

NOTE	REF NO	GRAPHIC REF	PART NUMBER	QTY	PART NAME 1 2 3 4 5 6 (PRODUCT LEVEL)	SEE PAGE
	1	1	**8T-9655**	6	MOUNT-ISOLATION	
CY	2	1	**256-6915**	1	PUMP GP-FUEL TRANSFER	126
	3	1	**191-1782**	1	SPACER (8.5X12.7X38.2-MM THK)	
	4	1	**191-1783**	2	SPACER (8.5X12.7X87.3-MM THK)	
M	5	1	**7X-2539**	2	BOLT (M8X1.25X110-MM)	
M	6	1	**8T-6869**	1	BOLT (M8X1.25X60-MM)	
	7	1	**9N-0869**	6	WASHER-HARD (8.8X25.5X2-MM THK)	

C - CHANGE FROM PREVIOUS TYPE
M - METRIC PART
Y - SEPARATE ILLUSTRATION

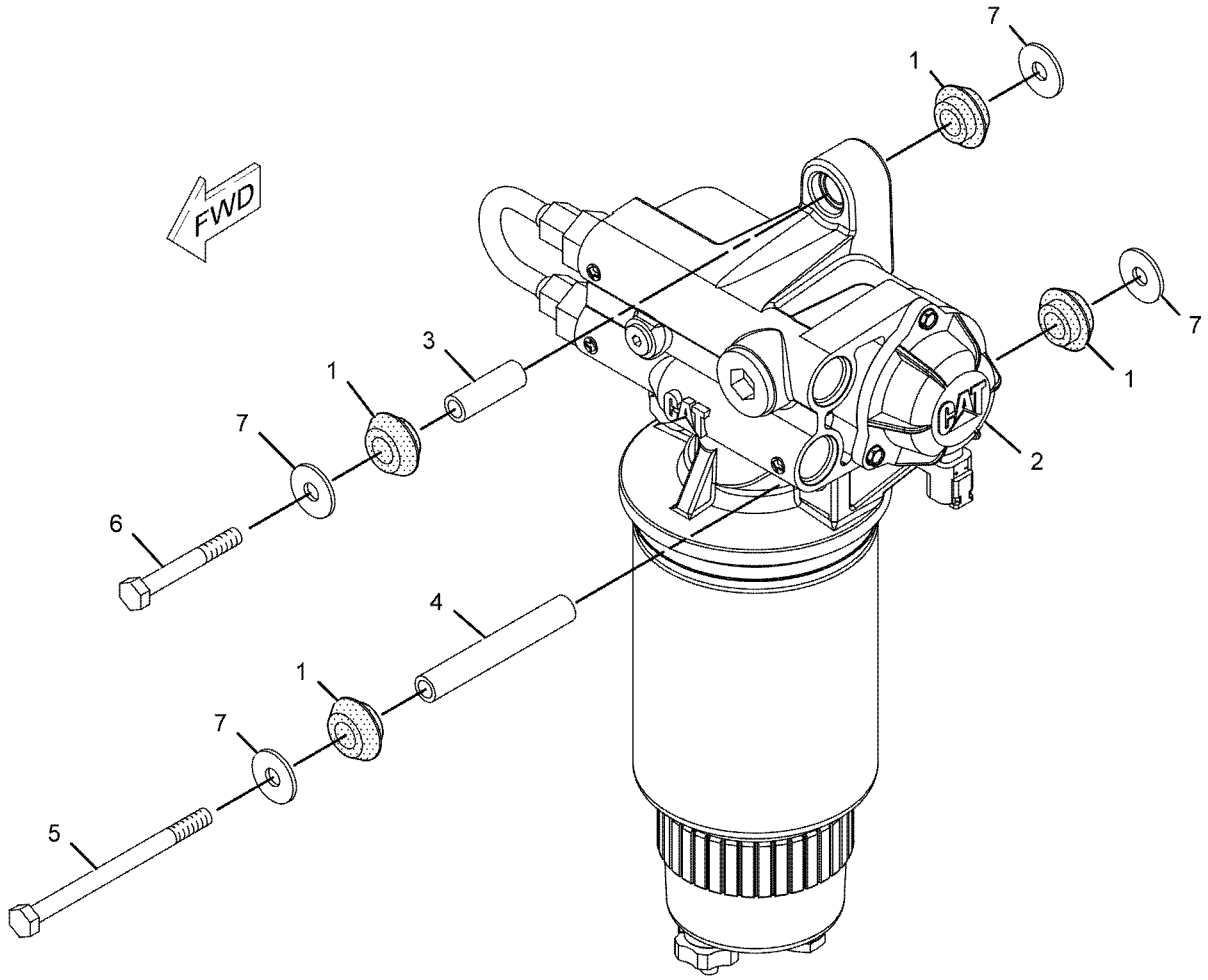

GRAPHIC #1 <END> g01107461

235-8725 PUMP GP-FILTER & FUEL TRANSFER—PRIMARY

S/N: B551-UP

PART OF 256-6915 PUMP GP-FUEL TRANSFER

SMCS-1256, 1260, 1261

i03804118

NOTE	REF NO	GRAPHIC REF	PART NUMBER	QTY	PART NAME 1 2 3 4 5 6 (PRODUCT LEVEL)	SEE PAGE
Y	1	1	*174-9570*	1	FILTER GP-WATER SEP & FUEL (PRIMARY)	111
	2	1	**235-8724**	1	PUMP GP-FUEL TRANSFER	

Y - SEPARATE ILLUSTRATION

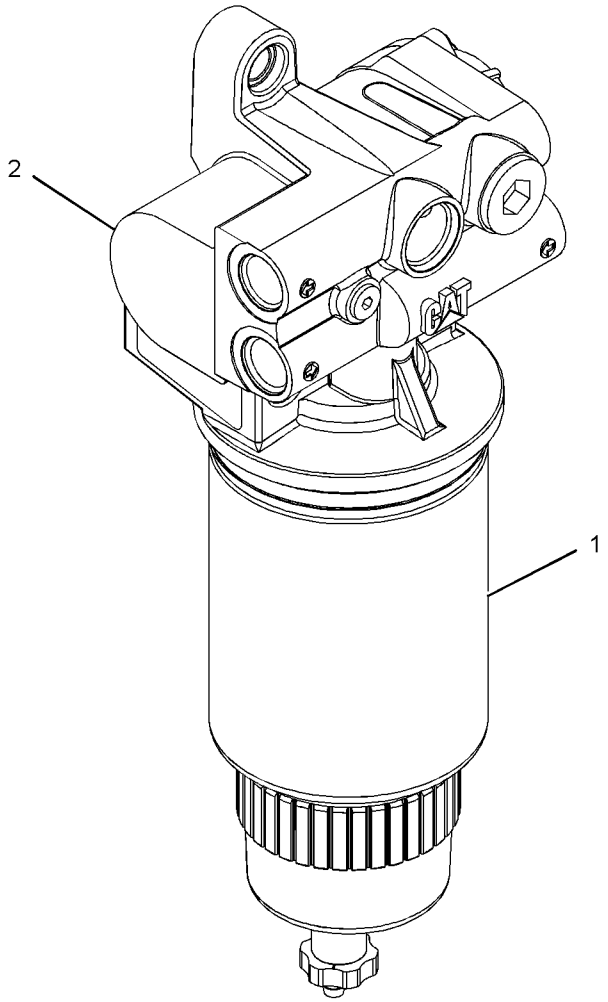

GRAPHIC #1 <END> g01107471

268-1839 PUMP GP-FUEL INJECTION

S/N: TX71-UP

PART OF 387-8499 ENGINE AR-CORE

SMCS-1251, 1290 **i07396487**

NOTE	REF NO	GRAPHIC REF	PART NUMBER	QTY	PART NAME 1 2 3 4 5 6 (PRODUCT LEVEL)	SEE PAGE
M	1	1	**235-9651**	2	BOLT-SOCKET HEAD (M8X1.25X65-MM)	
CY	2	1	**557-7627**	1	INJECTOR GP-FUEL	112

C - CHANGE FROM PREVIOUS TYPE
M - METRIC PART
Y - SEPARATE ILLUSTRATION

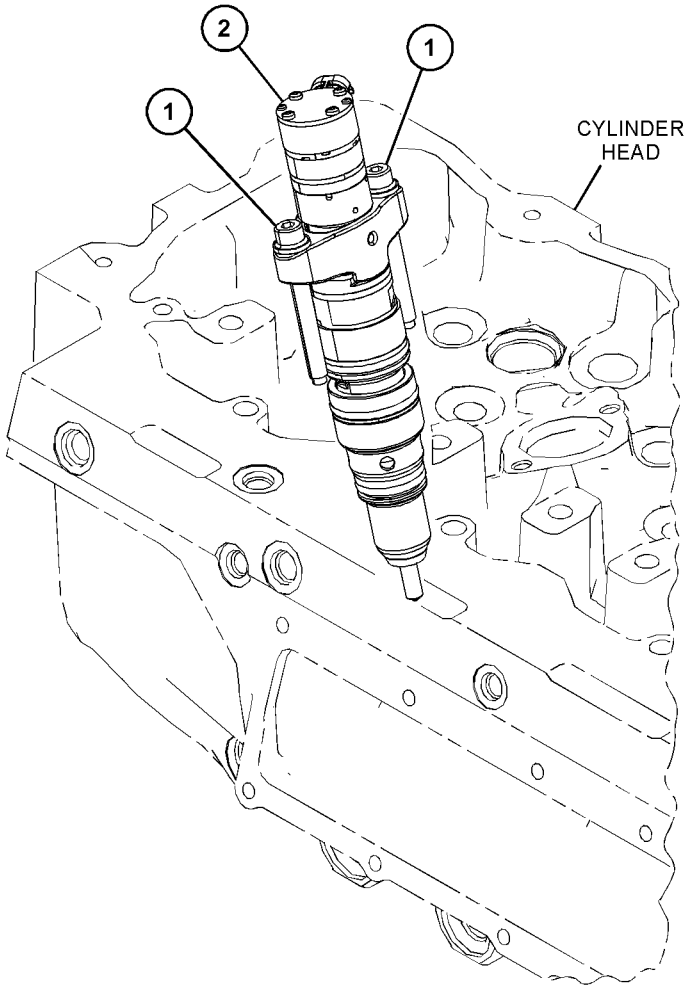

GRAPHIC #1 <END> g06304480

256-6915 PUMP GP-FUEL TRANSFER

S/N: B551-UP

PART OF 190-1105 PUMP GP-FILTER & FUEL TRANSFER

SMCS-1256 **i03008693**

NOTE	REF NO	GRAPHIC REF	PART NUMBER	QTY	PART NAME 1 2 3 4 5 6 (PRODUCT LEVEL)	SEE PAGE
	1	1	**209-9234**	1	REGULATOR-PRESSURE (FUEL TRANSFER PUMP)	
Y	2	1	**235-8725**	1	PUMP GP-FILTER & FUEL TRANSFER (PRIMARY)	124
	3	1	**211-7730**	1	TUBE AS	
	4	1	**030-8194**	1	CONNECTOR	
	5	1	**136-7227**	2	SEAL-O-RING	

Y - SEPARATE ILLUSTRATION

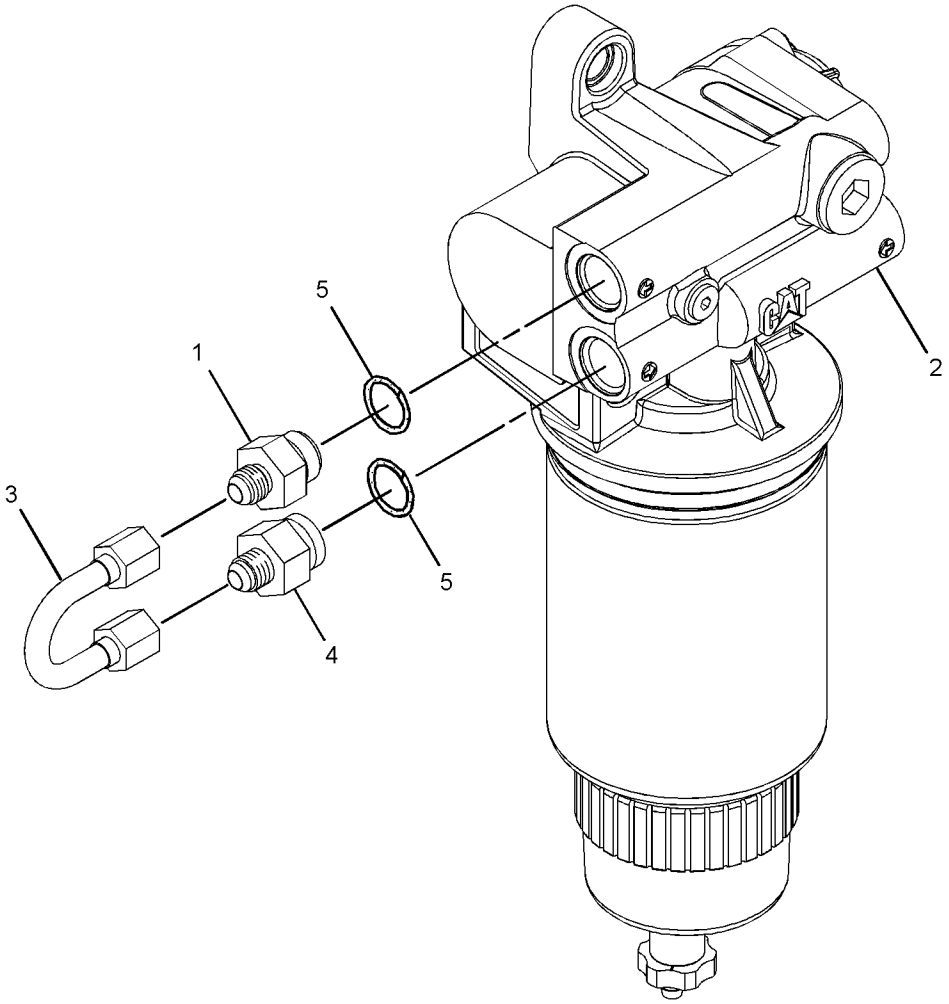

GRAPHIC #1 <END> g01526141

476-8768 PUMP GP-UNIT INJECTOR HYD*R

S/N: TX71-UP

PART OF 389-1183 PUMP & MTG GP-UNIT INJ HYD

SMCS-1714 **i06688899**

NOTE	REF NO	GRAPHIC REF	PART NUMBER	QTY	PART NAME 1 2 3 4 5 6 (PRODUCT LEVEL)	SEE PAGE
	1	1	**1N-8062**	1	BEARING AS-NEEDLE	
M	2	1	**5C-2890**	1	NUT (M6X1-THD)	
	3	1	**6V-5048**	3	SEAL-O-RING	
	4	1	**8C-6711**	1	NUT-RETAINER (1/2-20-THD)	
	5	1	**9X-8267**	1	WASHER (6.6X12X2-MM THK)	
	6	1	**153-7036**	1	SPOOL	
	7	1	**179-8128**	1	SEAL-O-RING	
	8	1	**193-1736**	1	SEAL-O-RING	
M	9	1	**218-8655**	8	BOLT-SOCKET HEAD (M5X0.8X42-MM)	
M	10	1	**228-5897**	4	BOLT-TORX (M8X1.25X136.7-MM)	
	11	1	**239-2402**	4	SEAL-O-RING	
	12	1	**260-5716**	1	SPOOL	
	13	1	**262-0284**	1	RING-RETAINING	
M	14	1	**313-4620**	3	SCREW-PAN HEAD (M5X0.8X25-MM)	
	15	1	**390-8589**	1	COVER AS-PUMP	
		1	**7S-5005**	1	DOWEL	
AF		1	**227-5904**	1	SEAL-O-RING	
					AVAILABLE REPAIR KIT(S):	
AY			**396-3298**	1	KIT-FUEL PUMP (FUEL TRANSFER PUMP COVER)	113
					(INCLUDES BOLT, SEAL O-RINGS, SEALS, SCREWS & COVER AS)	

A - NOT PART OF THIS GROUP
F - NOT SHOWN
M - METRIC PART
Y - SEPARATE ILLUSTRATION

476-8768 **PUMP GP-UNIT INJECTOR HYD (**contd.**)** **i06688899**

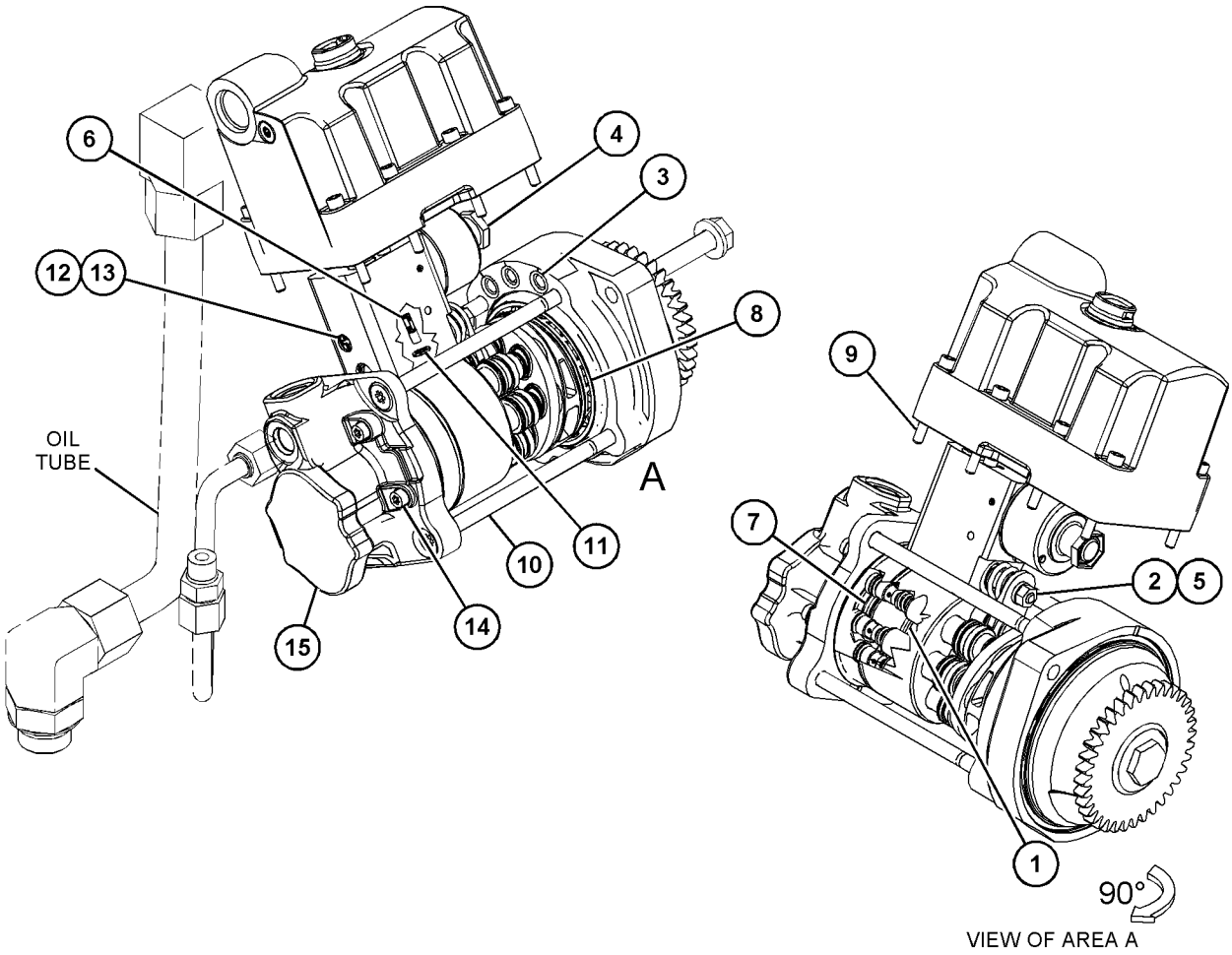

GRAPHIC #1 <END> g06106930

232-0343 REGULATOR GP-FUEL PRESSURE

S/N: TX71-UP

PART OF 418-8566 LINES GP-FUEL

SMCS-1715 **i04482870**

NOTE	REF NO	GRAPHIC REF	PART NUMBER	QTY	PART NAME 1 2 3 4 5 6 (PRODUCT LEVEL)	SEE PAGE
	1	1	**214-7568**	1	SEAL-O-RING	
	2	1	**369-6662**	1	REGULATOR AS (FUEL PRESSURE)	

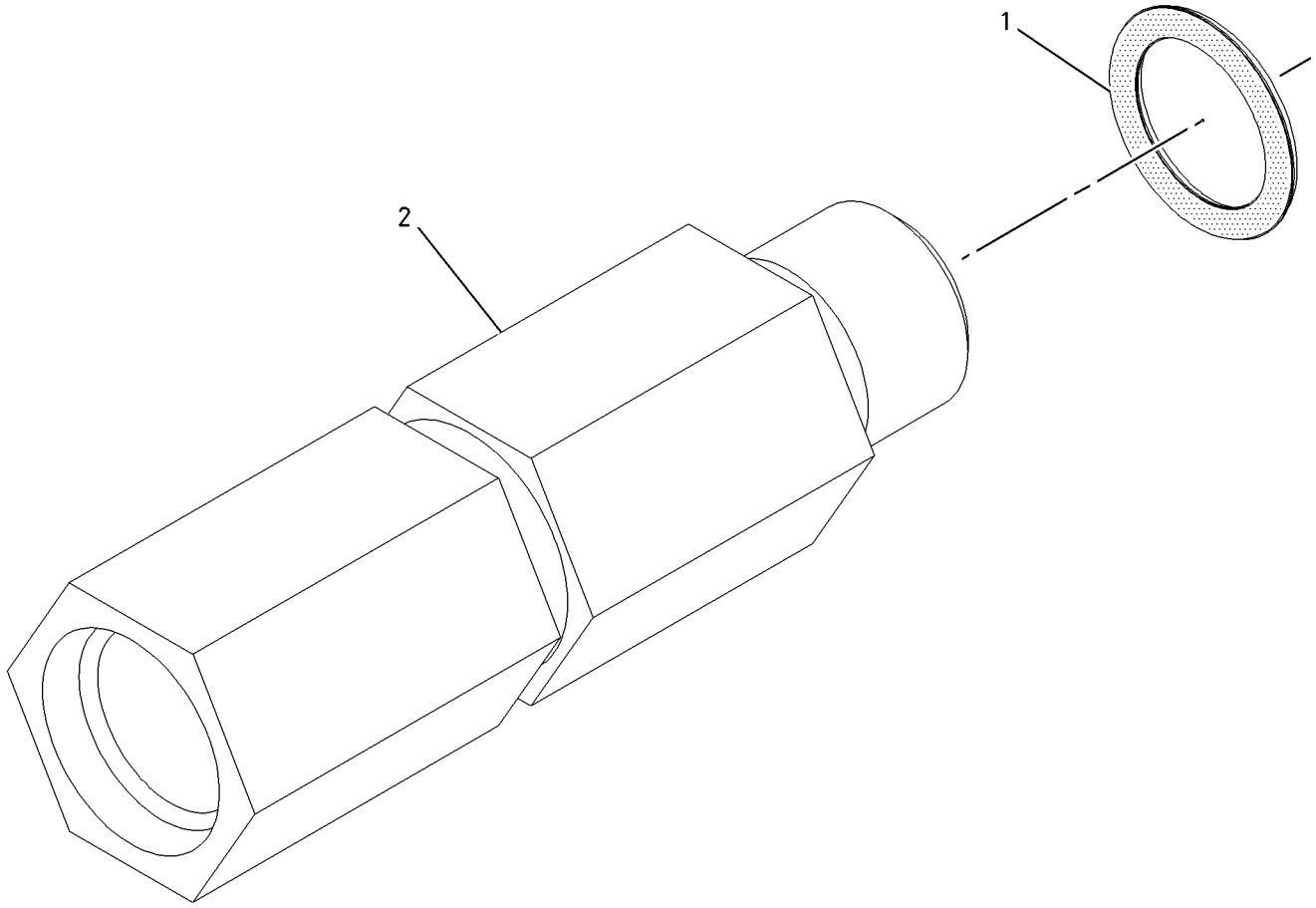

GRAPHIC #1 <END> g01004480

330-3563 TANK GP-FUEL–RH

S/N: B551-UP

PART OF 382-6931 TANK GP-FUEL

SMCS-1273 **i06610749**

NOTE	REF NO	GRAPHIC REF	PART NUMBER	QTY	PART NAME 1 2 3 4 5 6 (PRODUCT LEVEL)	SEE PAGE
	1	1	**7K-1181**	2	STRAP-CABLE	
	2	1	**460-3760**	2	GASKET	
C	3	1	**377-6222**	2	TUBE	
C	4	1	**362-1308**	1	TANK AS-FUEL (RH)	
		1	**265-8971**	8	INSERT	
CM	5	1	**221-3700**	8	BOLT-SOCKET HEAD (M4X0.7X16-MM)	
C	6	1	**478-7893**	8	WASHER-HARD (4.7X11X1.2-MM THK)	
	7	1	**9M-7958**	2	CLAMP-HOSE	
G	8	1	**423-1986**		HOSE (44.1-IN)	
G	9	1	**160-2246**		SLEEVE-ABRASION (40.2-IN)	

C - CHANGE FROM PREVIOUS TYPE
G - ORDER BY THE INCH
M - METRIC PART

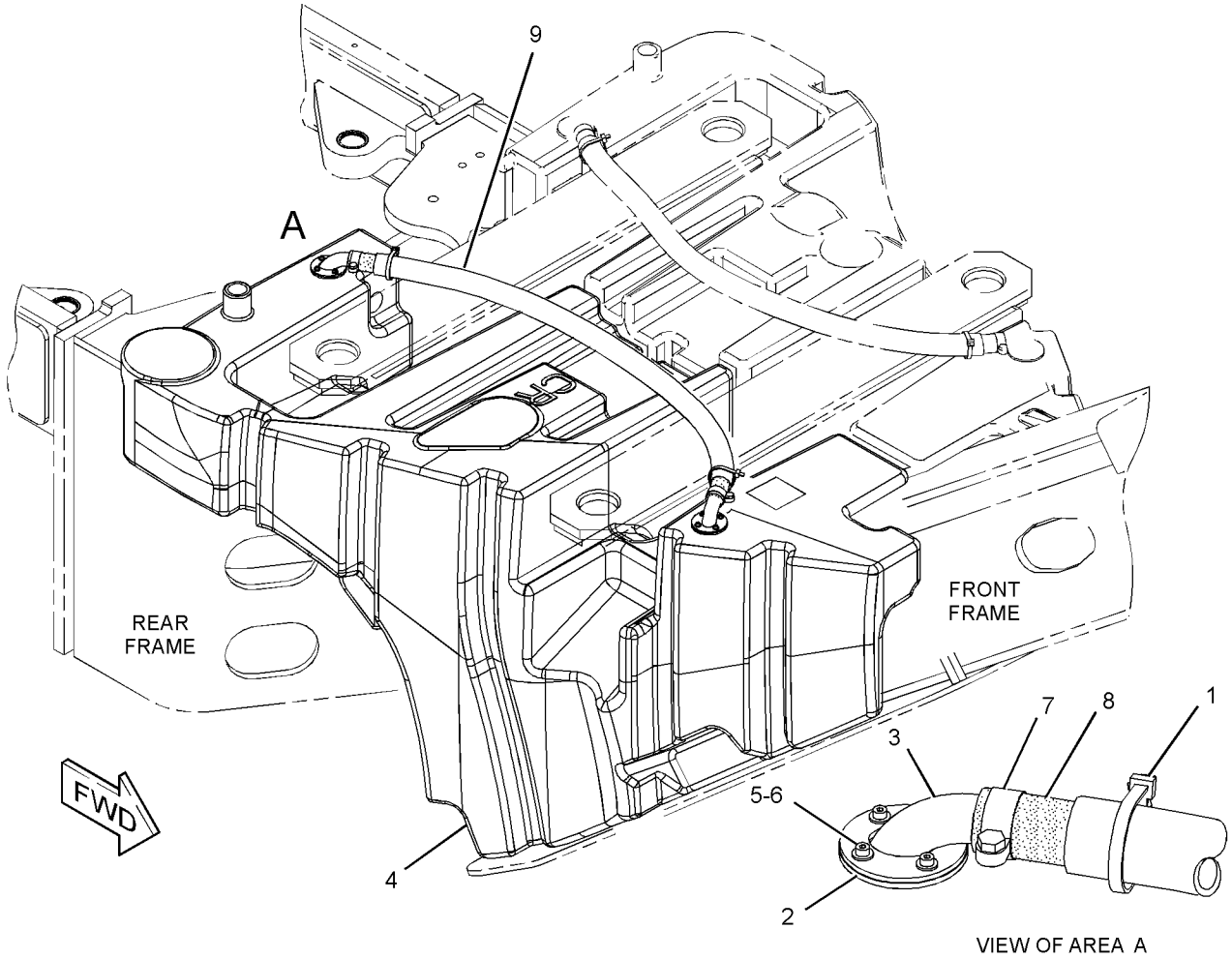

GRAPHIC #1 <END> g02463342

357-5030 TANK GP-FUEL–CROSSOVER

S/N: B551-UP

PART OF 439-2801 TANK GP-FUEL

SMCS-1273 **i05835851**

NOTE	REF NO	GRAPHIC REF	PART NUMBER	QTY	PART NAME 1 2 3 4 5 6 (PRODUCT LEVEL)	SEE PAGE
	1	1	**361-2115**	1	PLUG-DRAIN	
	2	1	**8C-5053**	1	ADAPTER	
	3	1	**250-9305**	1	BUSHING	
	4	1	**122-8905**	1	ELBOW (90-DEG)	
	5	1	**228-7090**	1	SEAL-O-RING	
	6	1	**214-7568**	1	SEAL-O-RING	
	7	1	**238-5084**	1	SEAL-O-RING	
	8	1	**9M-7958**	3	CLAMP-HOSE	
	9	1	**9S-4181**	1	PLUG (1-5/16-12-THD)	
	10	1	**357-5031**	1	FILTER (STRAINER) (FUEL)	
	11	1	**457-6044**	1	TANK-FUEL	

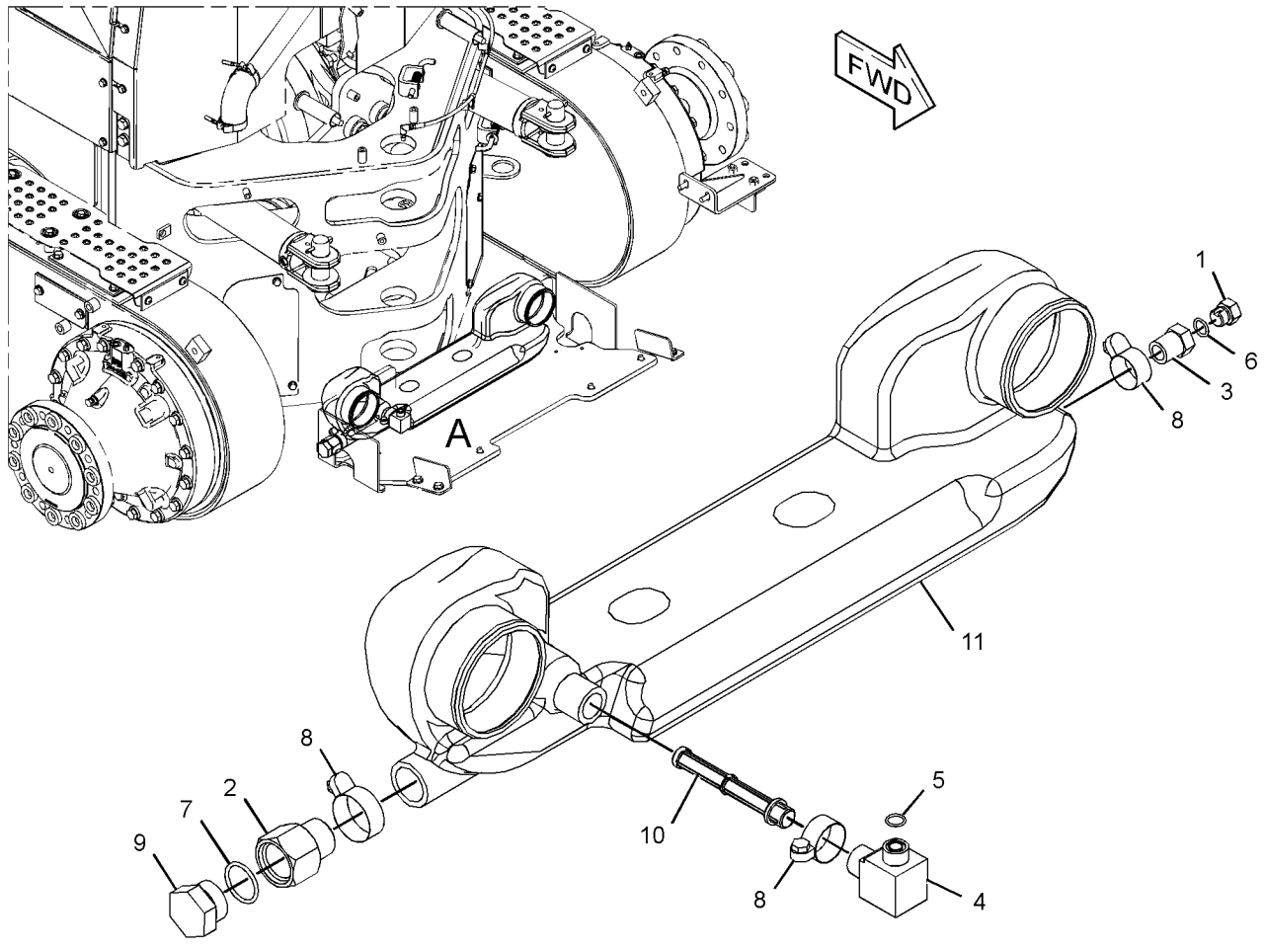

VIEW OF AREA A

GRAPHIC #1 <END> g03692772

382-6931 TANK GP-FUEL

S/N: B551-UP

SMCS-1273 **i07764486**

NOTE	REF NO	GRAPHIC REF	PART NUMBER	QTY	PART NAME 1 2 3 4 5 6 (PRODUCT LEVEL)	SEE PAGE
Y	1	1	**458-7281**	1	TANK GP-FUEL (LH)	137
Y	2	1	**330-3563**	1	TANK GP-FUEL (RH)	130
CY	3	1	**492-5710**	1	TANK GP-FUEL (CROSSOVER)	139

C - CHANGE FROM PREVIOUS TYPE
Y - SEPARATE ILLUSTRATION

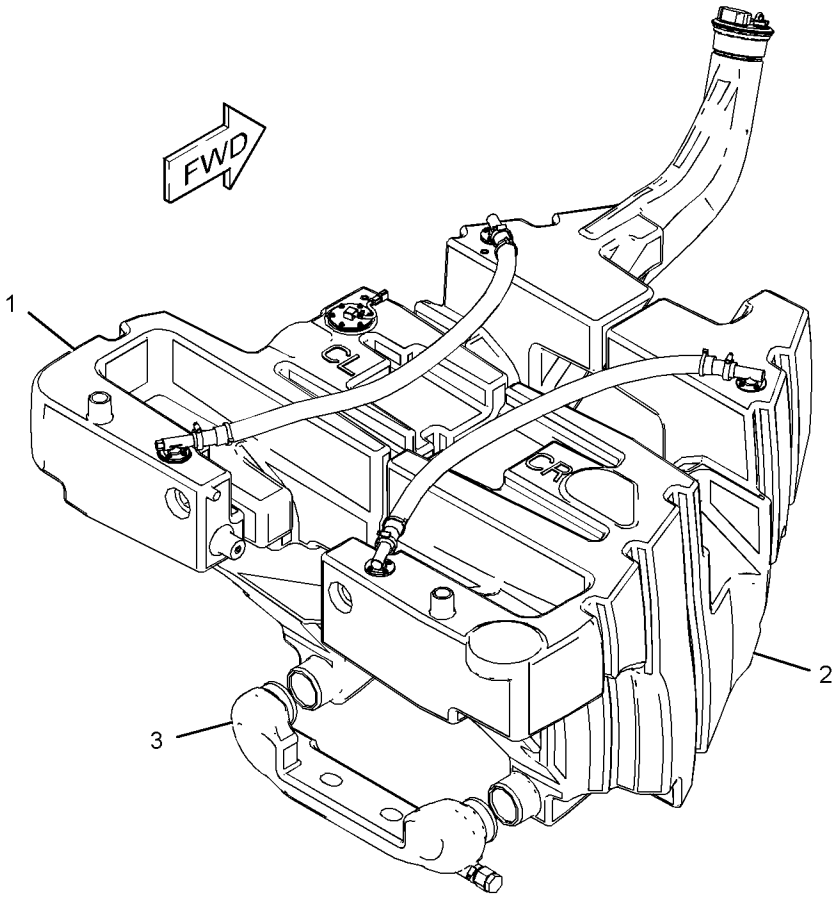

GRAPHIC #1 <END> g06056818

439-2801 TANK GP-FUEL

S/N: B551-UP

CANNOT BE USED WITH 382-6931—PAGE: 132

SMCS-1273 **i06522588**

NOTE	REF NO	GRAPHIC REF	PART NUMBER	QTY	PART NAME 1 2 3 4 5 6 (PRODUCT LEVEL)	SEE PAGE
Y	1	1	**442-1609**	1	TANK GP-FUEL (LH)	134
Y	2	1	**442-1610**	1	TANK GP-FUEL (RH)	136
Y	3	1	**357-5030**	1	TANK GP-FUEL	131

Y - SEPARATE ILLUSTRATION

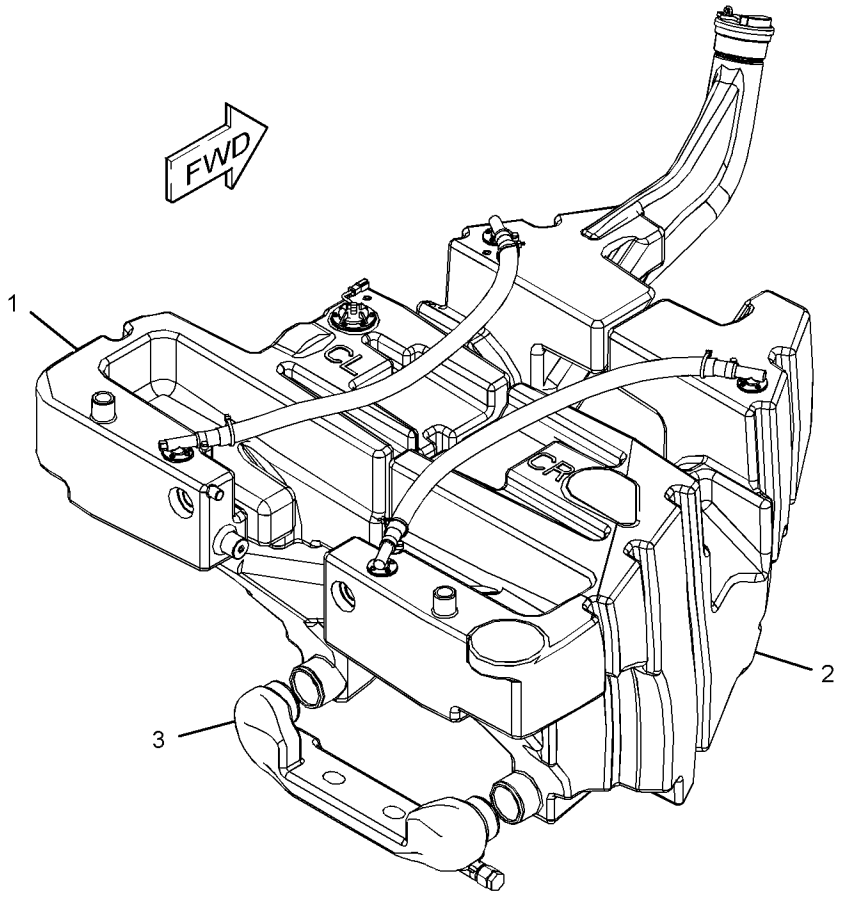

GRAPHIC #1 <END> g02317175

442-1609 TANK GP-FUEL—LH

S/N: B551-UP

PART OF 439-2801 TANK GP-FUEL

SMCS-1273 **i06273688**

NOTE	REF NO	GRAPHIC REF	PART NUMBER	QTY	PART NAME 1 2 3 4 5 6 (PRODUCT LEVEL)	SEE PAGE
	1	1	**269-1021**	1	SENDER AS-FUEL LEVEL (WITH GAUGE)	
		1	**6C-3060**	1	GASKET	
BT		1	**363-4122**	1	GASKET	
		1	**376-1555**	1	KIT-DIAL SENSOR	
					(INCLUDES SENSOR AS & SCREWS)	
	2	1	**250-9304**	1	PLATE	
	3	1	**276-3276**	1	GASKET	
	4	1	**330-3566**	2	GASKET	
	5	1	**330-3568**	1	GASKET	
	6	1	**330-3570**	1	TANK AS-FUEL	
		1	**265-8970**	12	INSERT	
		1	**265-8971**	14	INSERT	
	7	1	**349-7059**	1	CAP AS-FUEL (LOCKABLE, VENTED)	
		1	**7D-7111**	1	SEAL-O-RING	
		1	**350-7735**	1	KIT-CAP FILTER (FUEL TANK)	
	8	1	**377-6222**	1	TUBE	
	9	1	**380-0680**	1	VENT AS	
M	10	1	**162-2165**	14	BOLT-SOCKET HEAD (M4X0.7X16-MM)	
	11	1	**306-8127**	1	ADAPTER	
	12	1	**329-3707**	1	SCREW-PAN HEAD (6X0.375-IN)	
	13	1	**4B-4863**	14	WASHER (4.7X11X1.2-MM THK)	
	14	1	**7K-1181**	2	STRAP-CABLE	
M	15	1	**8T-4189**	12	BOLT (M8X1.25X20-MM)	
	16	1	**8T-4224**	12	WASHER-HARD (8.8X16X2-MM THK)	
	17	1	**9M-7958**	2	CLAMP-HOSE	
E	18	1	**146-7453**		HOSE (113-CM)	
G	19	1	**160-2246**		SLEEVE-ABRASION (41-IN)	

B - USE AS REQUIRED
E - ORDER BY THE CENTIMETER
G - ORDER BY THE INCH
M - METRIC PART
T - FOR BIO-DIESEL APPLICATION

442-1609 **TANK GP-FUEL (**contd.**)** **i06273688**

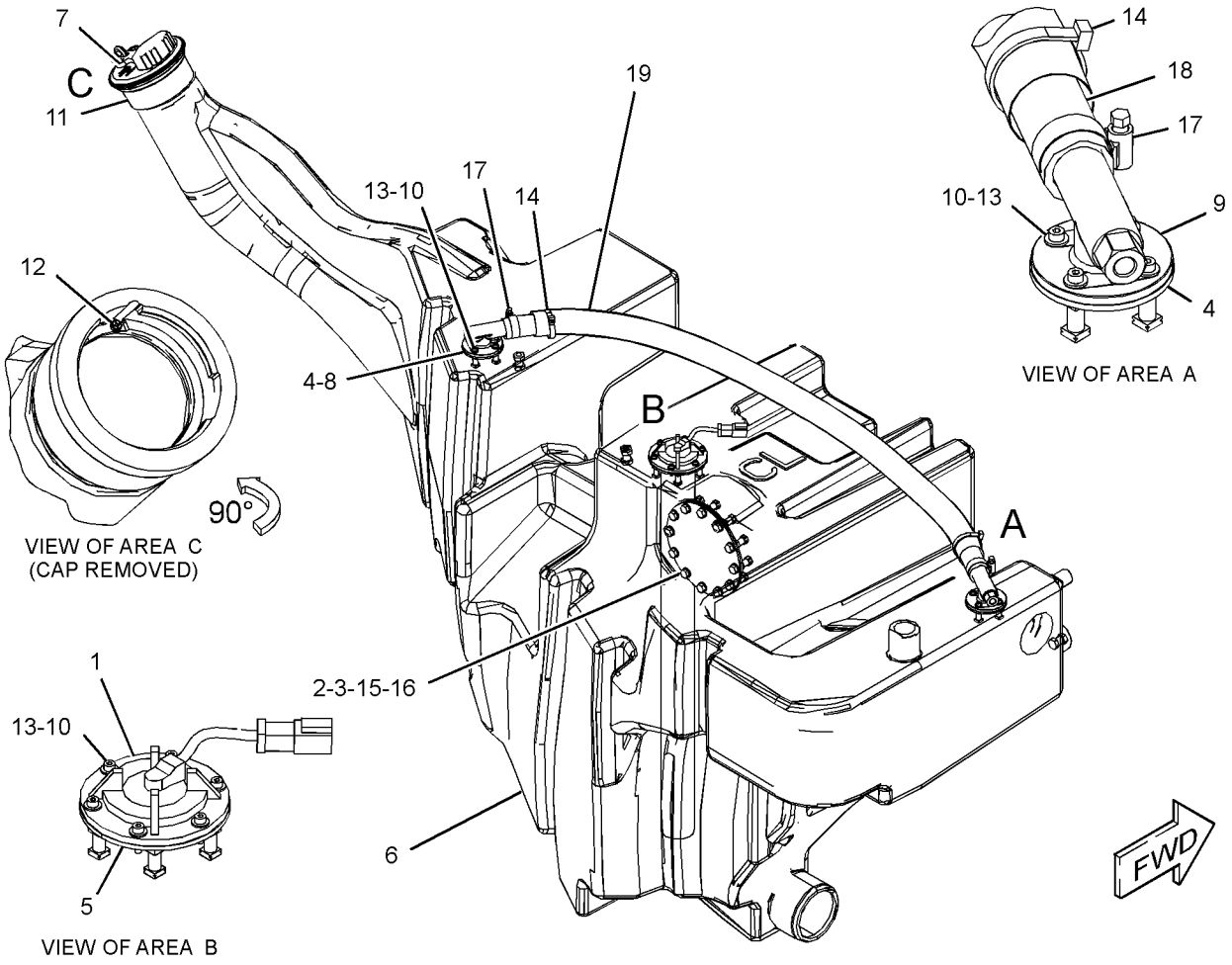

GRAPHIC #1 <END> g03536896

442-1610 TANK GP-FUEL–RH

S/N: B551-UP

PART OF 439-2801 TANK GP-FUEL

SMCS-1273 **i06749154**

NOTE	REF NO	GRAPHIC REF	PART NUMBER	QTY	PART NAME 1 2 3 4 5 6 (PRODUCT LEVEL)	SEE PAGE
	1	1	**199-9985**	1	PLATE	
	2	1	**221-0318**	1	PLATE	
	3	1	**258-8676**	1	TANK AS-FUEL (RH)	
	4	1	**460-3761**	1	GASKET	
	5	1	**460-3794**	1	GASKET	
	6	1	**460-3760**	2	GASKET	
	7	1	**377-6222**	2	TUBE	
M	8	1	**123-0707**	14	SCREW-HEX SOCKET (M4X0.7X20-MM)	
	9	1	**4B-4863**	14	WASHER (4.7X11X1.2-MM THK)	
	10	1	**7K-1181**	2	STRAP-CABLE	
M	11	1	**8T-4189**	6	BOLT (M8X1.25X20-MM)	
	12	1	**8T-4224**	6	WASHER-HARD (8.8X16X2-MM THK)	
	13	1	**9M-7958**	2	CLAMP-HOSE	
G	14	1	**160-2246**		SLEEVE-ABRASION (41-IN)	
G	15	1	**423-1986**		HOSE (45-IN)	

G - ORDER BY THE INCH
M - METRIC PART

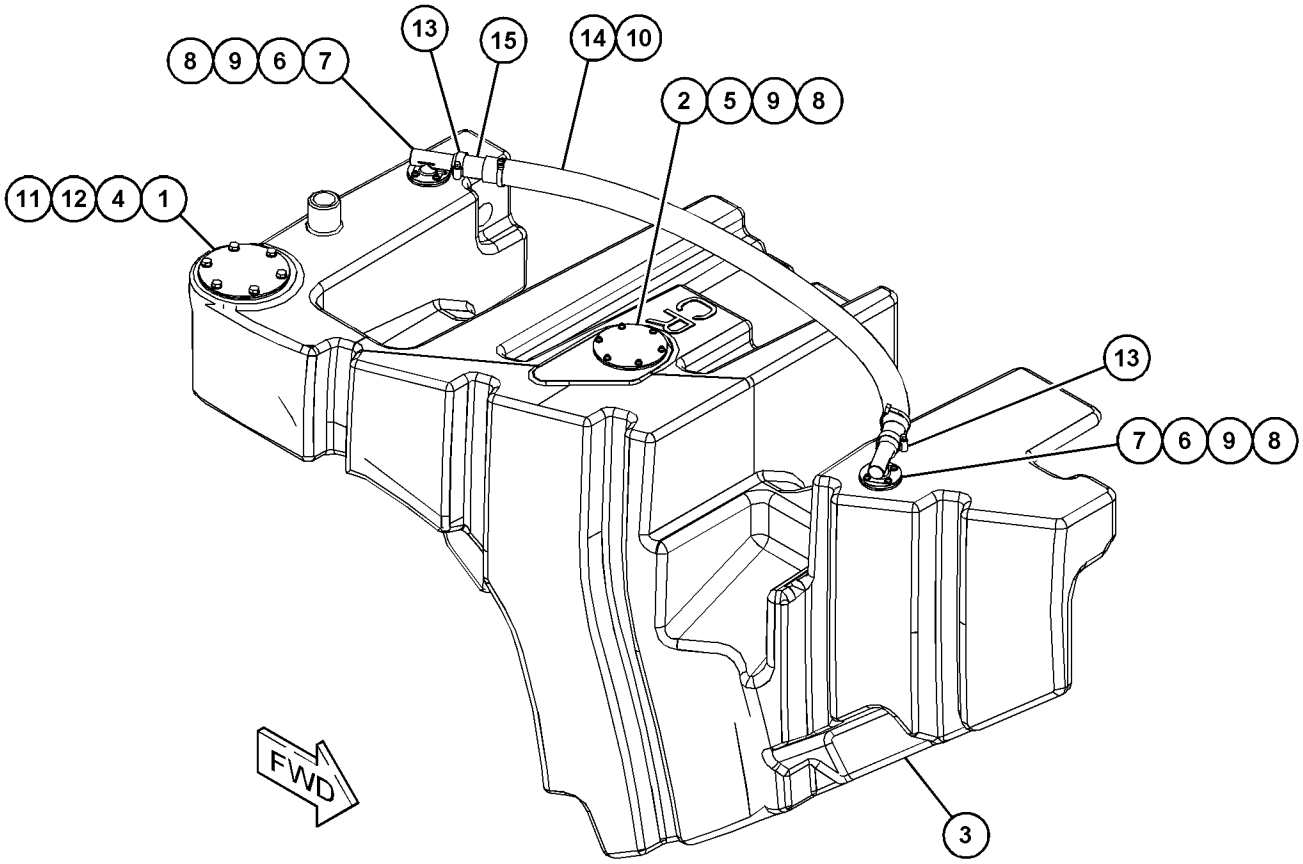

GRAPHIC #1 <END> g03481201

458-7281 TANK GP-FUEL—LH

S/N: B551-UP

PART OF 382-6931 TANK GP-FUEL

SMCS-1273 **i06632206**

NOTE	REF NO	GRAPHIC REF	PART NUMBER	QTY	PART NAME 1 2 3 4 5 6 (PRODUCT LEVEL)	SEE PAGE
	1	1	**7K-1181**	2	STRAP-CABLE	
J	2	1	**349-7059**	1	CAP AS-FUEL (LOCKABLE, VENTED)	
	3	1	**362-1307**	1	TANK AS-FUEL (LH)	
		1	**265-8971**	14	INSERT	
		1	**268-9602**	3	INSERT	
	4	1	**377-6222**	1	TUBE	
	5	1	**380-0680**	1	VENT AS	
	6	1	**394-0438**	1	SENDER AS-LEVEL	
		1	**9X-3401**	2	PIN-CONNECTOR (16-GA TO 18-GA)	
		1	**102-8802**	1	KIT-RECEPTACLE (2-PIN)	
					(INCLUDES RECEPTACLE AS & WEDGE)	
	7	1	**460-3760**	2	GASKET	
	8	1	**460-3764**	1	GASKET	
M	9	1	**221-3700**	14	BOLT-SOCKET HEAD (M4X0.7X16-MM)	
	10	1	**306-8127**	1	ADAPTER	
	11	1	**329-3707**	1	SCREW-PAN HEAD (6X0.375-IN)	
	12	1	**478-7893**	14	WASHER-HARD (4.7X11X1.2-MM THK)	
	13	1	**9M-7958**	2	CLAMP-HOSE	
G	14	1	**423-1986**		HOSE (44-IN)	
G	15	1	**160-2246**		SLEEVE-ABRASION (40-IN)	
					AVAILABLE REPAIR KIT(S):	
J			**350-7735**	1	KIT-CAP FILTER (FUEL TANK)	
					(INCLUDES BODY, GASKET, SCREWS & WASHERS)	

G - ORDER BY THE INCH
J - KIT MARKED J SERVICES PART(S) MARKED J
M - METRIC PART

458-7281 **TANK GP-FUEL (**contd.**)** **i06632206**

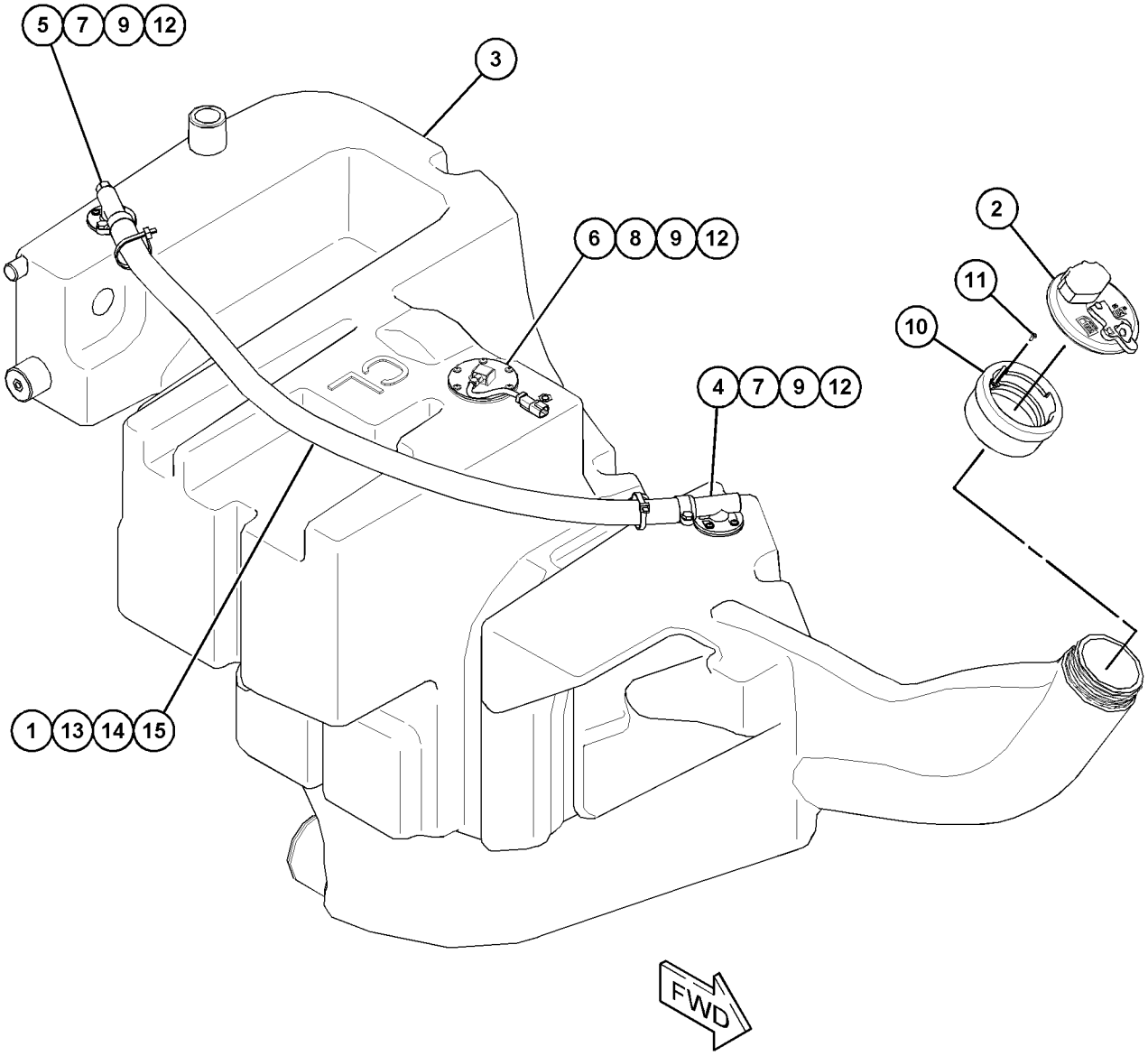

GRAPHIC #1 <END> g06044928

492-5710 TANK GP-FUEL–CROSSOVER

S/N: B551-UP

PART OF 382-6931 TANK GP-FUEL

SMCS-1273 **i07155888**

NOTE	REF NO	GRAPHIC REF	PART NUMBER	QTY	PART NAME 1 2 3 4 5 6 (PRODUCT LEVEL)	SEE PAGE
	1	1	**8C-5053**	1	ADAPTER	
	2	1	**250-9305**	1	BUSHING	
	3	1	**357-5031**	1	FILTER (STRAINER)	
	4	1	**361-2115**	1	PLUG-DRAIN	
	5	1	**9S-4181**	1	PLUG (1-5/16-12-THD)	
	6	1	**122-8905**	1	ELBOW (90-DEG)	
	7	1	**214-7568**	1	SEAL-O-RING	
	8	1	**228-7090**	1	SEAL-O-RING	
	9	1	**238-5084**	1	SEAL-O-RING	
	10	1	**9M-7958**	3	CLAMP-HOSE	

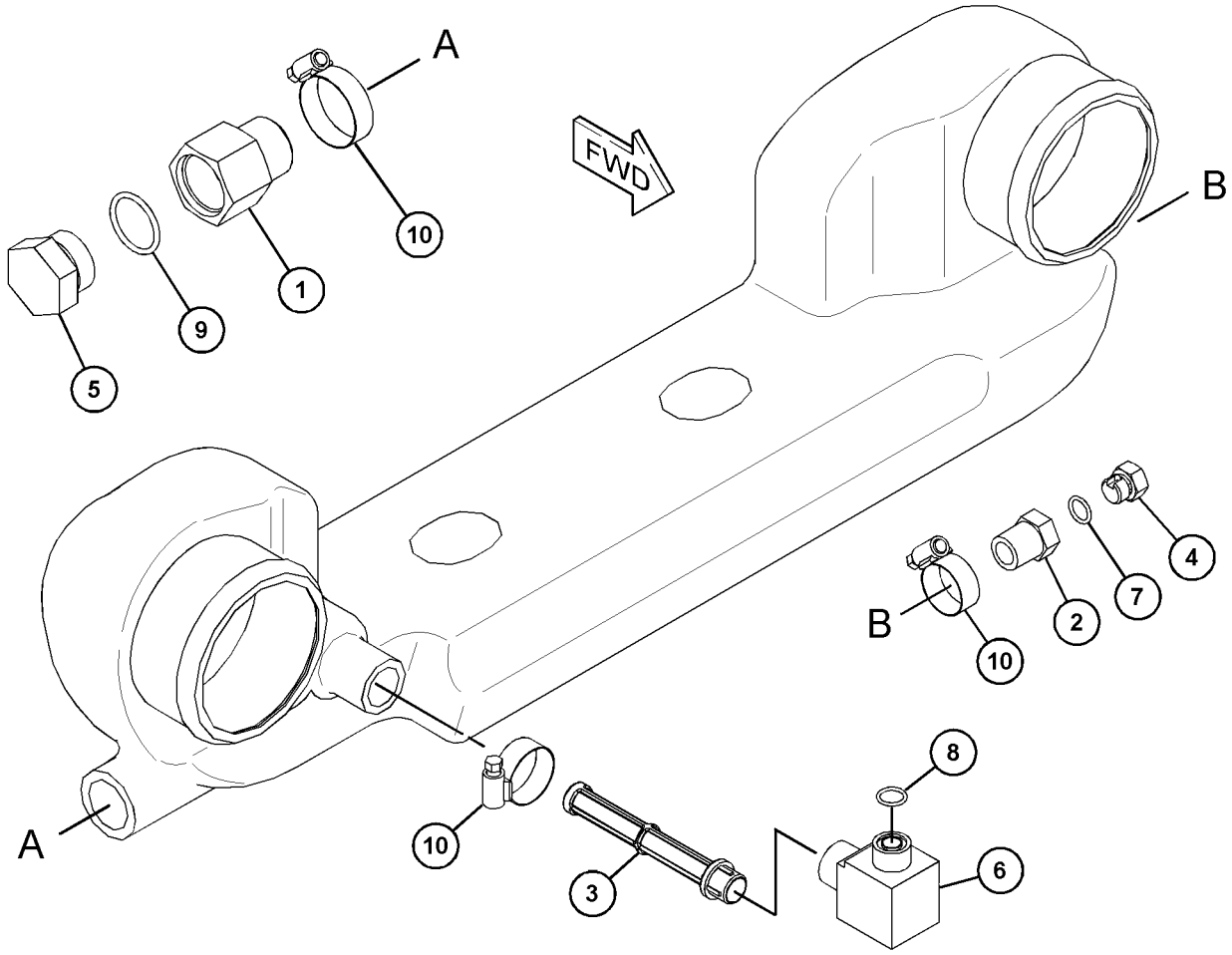

GRAPHIC #1 <END> g06189702

3E-6328 ALARM GP

S/N: B551-UP
24-VOLT
PART OF 372-6063 WIRING GP-CAB

SMCS-7400, 7402, 7407

i07284368

NOTE	REF NO	GRAPHIC REF	PART NUMBER	QTY	PART NAME 1 2 3 4 5 6 (PRODUCT LEVEL)	SEE PAGE
	1	1	**102-8802**	1	KIT-RECEPTACLE (2-PIN)	
					(INCLUDES RECEPTACLE AS & WEDGE)	
	2	1	**8T-8729**	2	PIN-CONNECTOR (16-GA TO 20-GA)	

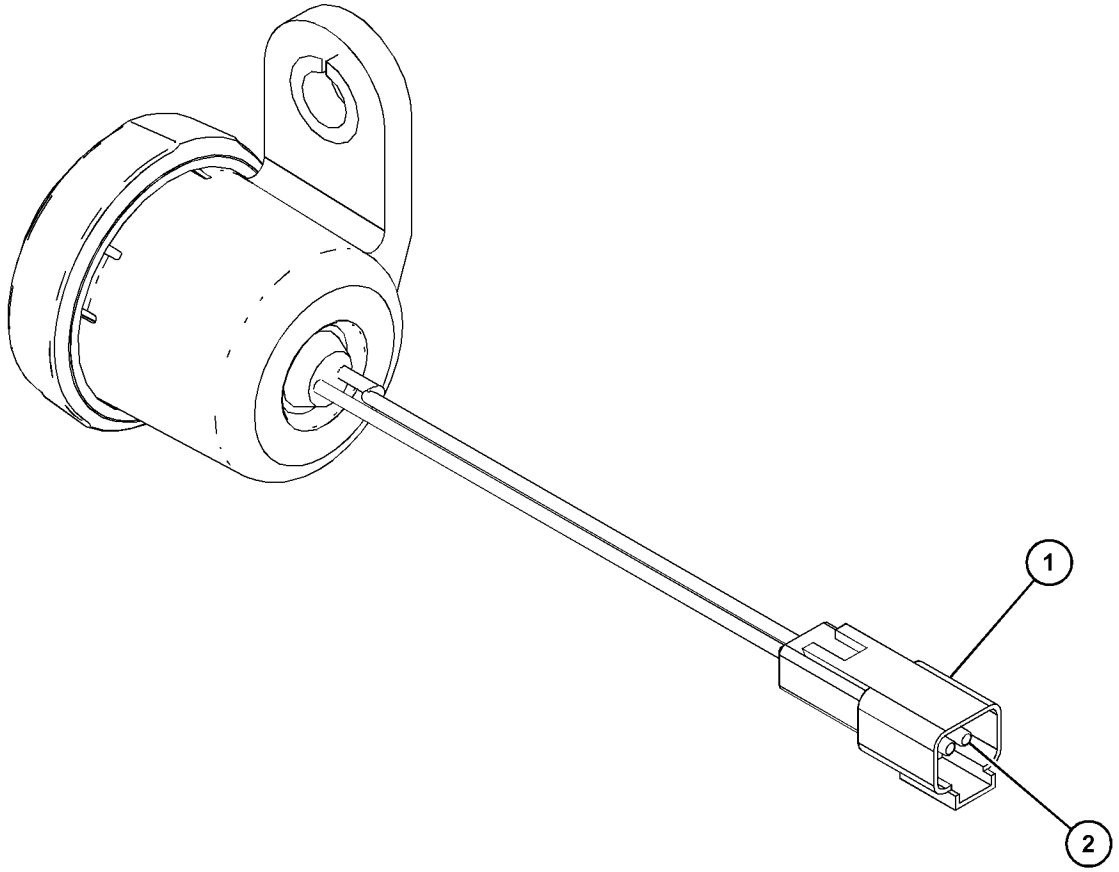

GRAPHIC #1 <END> g03798741

177-9953 ALTERNATOR GP-CHARGING*R

S/N: B551-UP
24-VOLT, 80-AMP
PART OF 253-2723 ALTERNATOR GP-CHARGING

SMCS-1405 **i07797554**

NOTE	REF NO	GRAPHIC REF	PART NUMBER	QTY	PART NAME 1 2 3 4 5 6 (PRODUCT LEVEL)	SEE PAGE
	1	1	**185-2653**	1	FRAME	
	2	1	**5S-7349**	1	BOLT (1/4-20X0.5-IN)	
	3	1	**185-2639**	1	FAN AS	
	4	1	**1H-3244**	1	LOCKWASHER	
	5	1	**185-2645**	1	FRAME	
	6	1	**2K-4821**	1	LOCKNUT (5/8-18-THD)	
	7	1	**5P-8247**	1	WASHER-HARD (17X32X3.5-MM THK)	
	8	1	**228-9657**	1	COVER AS	
	9	1	**8T-4205**	1	WASHER-HARD (7.2X14.5X2-MM THK)	
	10	1	**185-2647**	1	GROMMET	
	11	1	**9L-6770**	1	CAP-DUST	
	12	1	**423-2775**	1	STATOR AS (24-VOLT, 95-AMPERE)	
	13	1	**185-2638**	2	COLLAR	
	14	1	**185-2654**	1	PLATE	
	15	1	**185-2650**	1	ROTOR AS	
	16	1	**185-2644**	1	COIL AS	
	17	1	**185-2648**	1	REGULATOR AS-VOLTAGE (24-VOLT)	
	18	1	**6V-8189**	1	NUT (5/16-18-THD)	
	19	1	**8T-4224**	1	WASHER-HARD (8.8X16X2-MM THK)	
	20	1	**3F-9556**	1	LOCKWASHER	
					AVAILABLE REPAIR KIT(S):	
			199-7891		KIT-TERMINAL (ALTERNATOR AIR)	
					(INCLUDES INSULATORS, WASHERS, NUT & STEP NUT)	
			185-2655		KIT-BEARING (ALTERNATOR)	
					(INCLUDES BEARINGS)	
			199-8436		KIT-TERMINAL (ALTERNATOR AIR)	
					(INCLUDES HOLDER AS, PLATE, INSULATOR, PIN, BOLTS, GROMMET & NUT)	
			185-2658		KIT-HARDWARE (ALTERNATOR AIR)	
					(INCLUDES BOLTS)	

177-9953 **ALTERNATOR GP-CHARGING (**contd.**)** **i07797554**

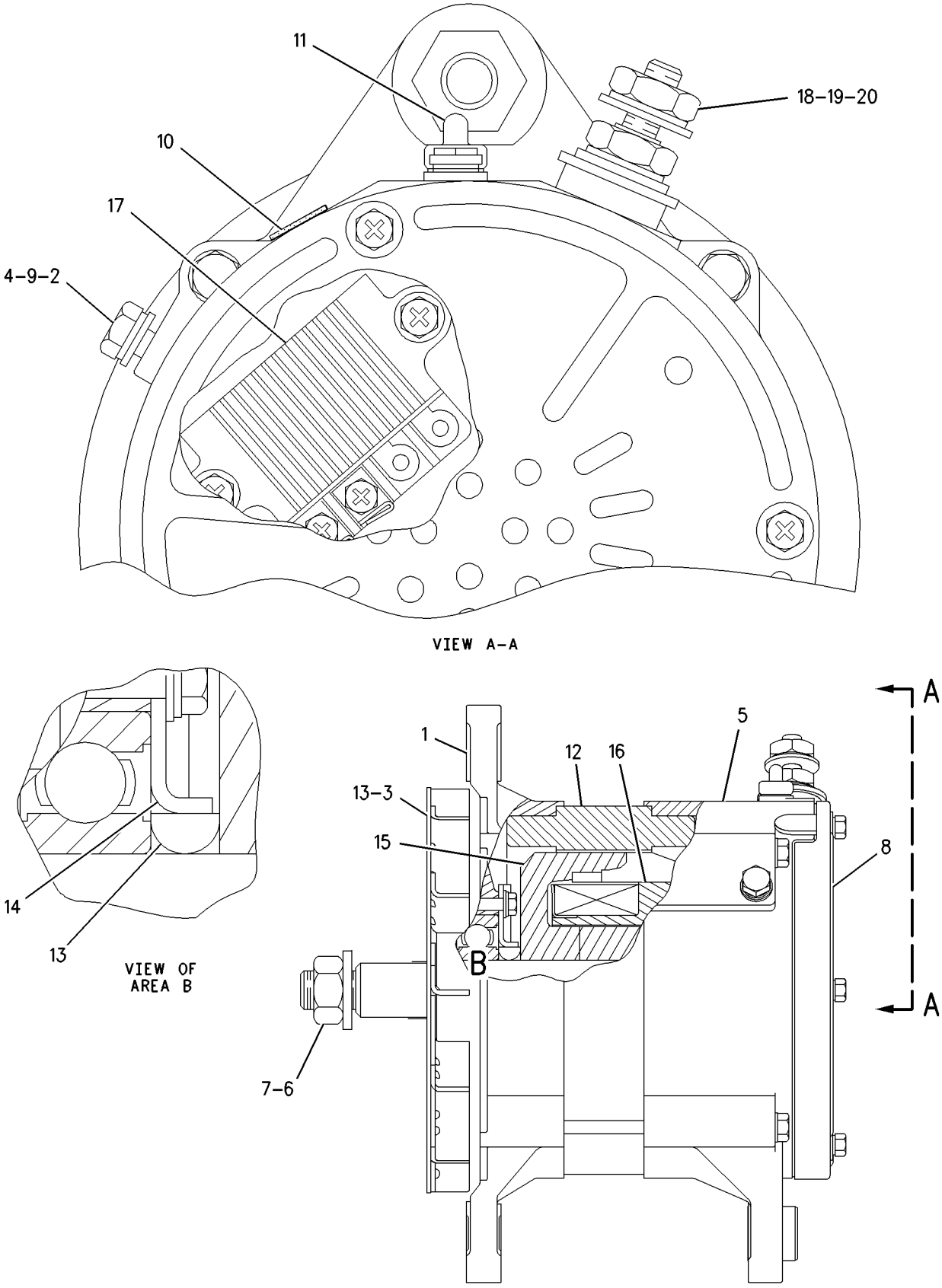

GRAPHIC #1 <END> g00795850

253-2723 ALTERNATOR GP-CHARGING—WITH AIR CONDITIONER

S/N: B551-UP
80-AMPERE
CANNOT BE USED WITH 253-2724—PAGE: 145

SMCS-1405 **i04846512**

NOTE	REF NO	GRAPHIC REF	PART NUMBER	QTY	PART NAME 1 2 3 4 5 6 (PRODUCT LEVEL)	SEE PAGE
	1	1	**129-5096**	1	PULLEY-ALTERNATOR (8-GROOVE)	
	2	1	**354-0672**	1	PULLEY AS-IDLER	
Y	3	1	*169-3130*	1	MOUNTING GP-ALTERNATOR	44
YR	4	1	**177-9953**	1	ALTERNATOR GP-CHARGING (24-VOLT, 80-AMPERE)	141
	5	1	**263-1786**	1	SPACER	
	6	1	**348-7886**	1	BELT-SERPENTINE	
	7	1	**264-7021**	1	GUARD AS-BELT	
		1	**8R-8088**	2	SPACER (11.66X15.88X18-MM THK)	
	8	1	**266-6025**	1	BRACKET AS	
	9	1	**268-5817**	1	FILM-INSTRUCTION (BELT ROUTING)	
	10	1	**6V-8188**	1	NUT (1/2-13-THD)	
	11	1	**7X-0481**	1	BOLT (1/2-13X8-IN)	
	12	1	**8T-4121**	2	WASHER-HARD (11X21X2.5-MM THK)	
M	13	1	**8T-4186**	2	BOLT (M10X1.5X40-MM)	
	14	1	**8T-4223**	3	WASHER-HARD (13.5X25.5X3-MM THK)	
	15	1	**8T-4835**	1	BOLT (1/2-13X2-IN)	
M	16	1	**285-9066**	1	BOLT (M8X1.25X65-MM)	
	17	1	**5P-4116**	1	WASHER-HARD (8.8X20.5X2-MM THK)	
	18	1	**145-2901**	1	COVER-DUST	

M - METRIC PART
R - REMANUFACTURED PART MAY BE AVAILABLE
Y - SEPARATE ILLUSTRATION

253-2723 **ALTERNATOR GP-CHARGING (**contd.**)** **i04846512**

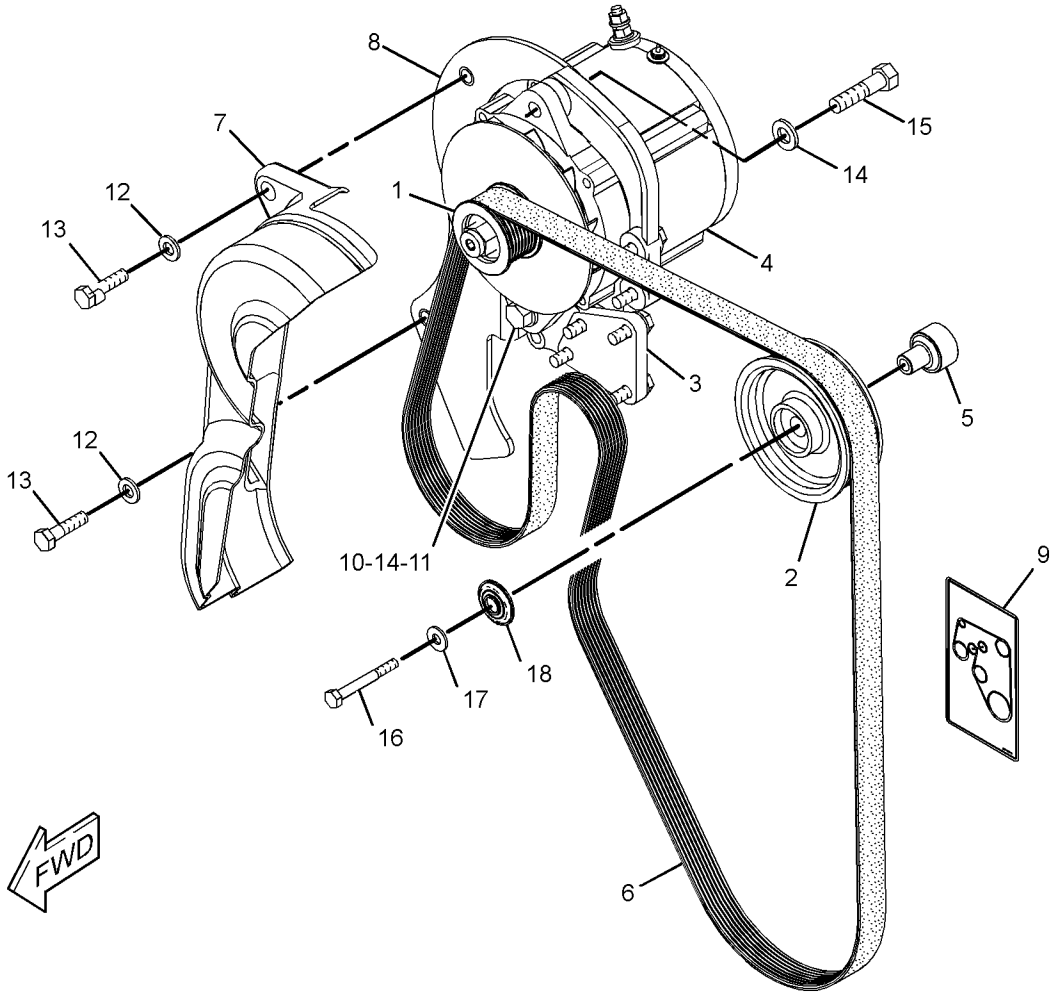

GRAPHIC #1 <END> g01360508

253-2724 ALTERNATOR GP-CHARGING—WITH AIR CONDITIONER

S/N: B551-UP
150-AMPERE
CANNOT BE USED WITH 253-2723—PAGE: 143
PART OF 565-1026 SNOW AR-MOTOR GRADER

SMCS-1405 **i04777968**

NOTE	REF NO	GRAPHIC REF	PART NUMBER	QTY	PART NAME 1 2 3 4 5 6 (PRODUCT LEVEL)	SEE PAGE
	1	1	**129-5096**	1	PULLEY-ALTERNATOR (8-GROOVE)	
	2	1	**354-0672**	1	PULLEY AS-IDLER	
Y	3	1	*169-3130*	1	MOUNTING GP-ALTERNATOR	44
R	4	1	**249-0313**	1	ALTERNATOR GP-CHARGING (24-VOLT, 150-AMPERE)	
	5	1	**263-1786**	1	SPACER	
	6	1	**348-7886**	1	BELT-SERPENTINE	
	7	1	**264-7021**	1	GUARD AS-BELT	
		1	**8R-8088**	2	SPACER (11.66X15.88X18-MM THK)	
	8	1	**266-6025**	1	BRACKET AS	
	9	1	**268-5817**	1	FILM-INSTRUCTION (BELT ROUTING)	
	10	1	**6V-8188**	1	NUT (1/2-13-THD)	
	11	1	**7X-0481**	1	BOLT (1/2-13X8-IN)	
	12	1	**8T-4121**	2	WASHER-HARD (11X21X2.5-MM THK)	
M	13	1	**8T-4186**	2	BOLT (M10X1.5X40-MM)	
	14	1	**8T-4223**	3	WASHER-HARD (13.5X25.5X3-MM THK)	
	15	1	**8T-4835**	1	BOLT (1/2-13X2-IN)	
M	16	1	**285-9066**	1	BOLT (M8X1.25X65-MM)	
	17	1	**5P-4116**	1	WASHER-HARD (8.8X20.5X2-MM THK)	
	18	1	**145-2901**	1	COVER-DUST	

M - METRIC PART
R - REMANUFACTURED PART MAY BE AVAILABLE
Y - SEPARATE ILLUSTRATION

253-2724 **ALTERNATOR GP-CHARGING (**contd.**)** **i04777968**

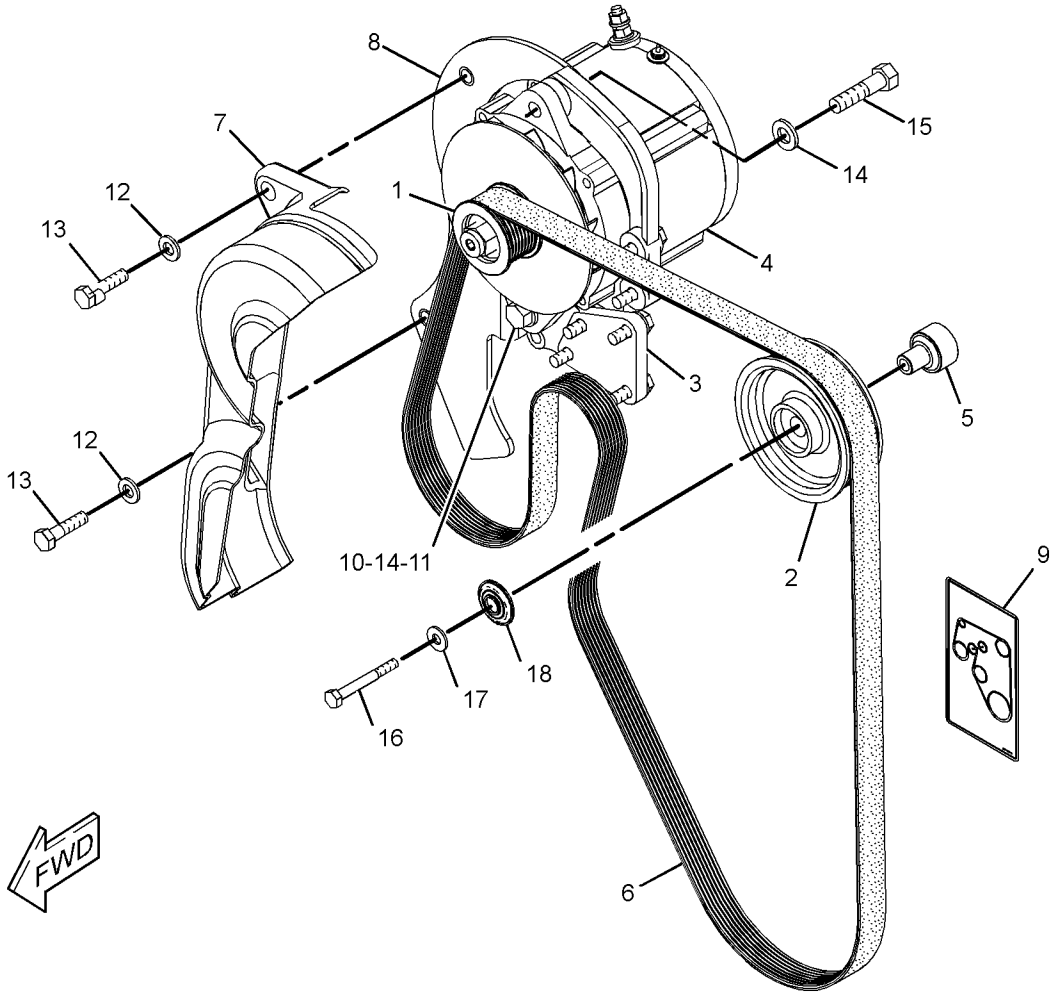

GRAPHIC #1 <END> g01360617

463-9613 APPLICATION GP-MONITOR—NETWORK MANAGER

S/N: B551-UP

PART OF 456-3346, 456-3347, 456-3348 CONTROL GP-COMMUNICATION

SMCS-7610 **i06636616**

NOTE	PART NUMBER	QTY	PART NAME 1 2 3 4 5 6 (PRODUCT LEVEL)	SEE PAGE
YR	**459-0786**	1	CONTROL GP-COMMUNICATION (NETWORK MANAGER)	163

R - REMANUFACTURED PART MAY BE AVAILABLE
Y - SEPARATE ILLUSTRATION

<END>

463-9614 APPLICATION GP-MONITOR—PL641I CELLULAR

S/N: B551-UP

PART OF 456-3347, 456-3348 CONTROL GP-COMMUNICATION

SMCS-7610 **i06139662**

NOTE	PART NUMBER	QTY	PART NAME 1 2 3 4 5 6 (PRODUCT LEVEL)	SEE PAGE
YR	**440-2104**	1	CONTROL GP-ELECTRONIC (PL641I CELLULAR)	164

R - REMANUFACTURED PART MAY BE AVAILABLE
Y - SEPARATE ILLUSTRATION

<END>

463-9615 APPLICATION GP-MONITOR—PRODUCT LINK 631 SATELLITE

S/N: B551-UP

PART OF 456-3346, 456-3348 CONTROL GP-COMMUNICATION

SMCS-7610 **i06139650**

NOTE	PART NUMBER	QTY	PART NAME 1 2 3 4 5 6 (PRODUCT LEVEL)	SEE PAGE
YR	**442-7199**	1	CONTROL GP-UNPROGRAMMED (PRODUCT LINK ELITE 631 SATELLITE)	167

R - REMANUFACTURED PART MAY BE AVAILABLE
Y - SEPARATE ILLUSTRATION

<END>

233-4611 BATTERY & WIRING GP—EXTREME SERVICE

S/N: B551-UP

CANNOT BE USED WITH 236-1924—PAGE: 150

PART OF 349-3052, 349-3053 OPTION AR-COLD WEATHER

SMCS-1401, 1402, 1408 **i06661808**

NOTE	REF NO	GRAPHIC REF	PART NUMBER	QTY	PART NAME 1 2 3 4 5 6 (PRODUCT LEVEL)	SEE PAGE
	1	1	**3S-2093**	4	STRAP-CABLE	
Y	2	1	**7N-0718**	1	SWITCH GP-DISCONNECT (BATTERY)	267
J	3	1	**9G-2758**	1	LOCKOUT-SWITCH (BATTERY DISCONNECT)	
	4	1	**9R-6414**	2	ROD	
	5	1	**153-5710**	2	BATTERY GP (12-VOLT, MAINTENANCE FREE, WET)	
					(EACH INCLUDES)	
		1	**123-1373**	6	CAP AS-FILLER (7/8-9-THD) (NEGATIVE)	
		1	**461-5232**	6	CAP AS-FILLER (POSITIVE)	
	6	1	**188-3959**	1	BRACKET	
	7	1	**236-2340**	1	CABLE AS-BATTERY (JUMPER)	
		1	**8T-9756**	1	TERMINAL AS-BATTERY (POSITIVE)	
		1	**8C-5918**	1	TERMINAL AS-BATTERY (NEGATIVE)	
					(EACH TERMINAL AS INCLUDES)	
		1	**1M-6119**	1	BOLT (5/16-18X1.375-IN)	
		1	**1M-6120**	1	NUT (5/16-18-THD)	
		1	**9G-0002**	1	COVER AS-TERMINAL (RED)	
		1	**9G-0005**	1	COVER AS-TERMINAL (BLACK)	
E		1	**159-8049**		CABLE (00-GA, RED) (17-CM)	
	8	1	**246-1670**	1	BAR	
	9	1	**263-6891**	1	HOLD-DOWN AS	
	10	1	**272-7239**	1	BLOCK AS	
	11	1	**388-7676**	1	CABLE AS	
		1	**4D-1248**	1	TERMINAL (00-GA, 3/8-IN SCREW)	
		1	**3S-6050**	1	TERMINAL AS-BATTERY (NEGATIVE)	
		1	**1M-6119**	1	BOLT (5/16-18X1.375-IN)	
		1	**1M-6120**	1	NUT (5/16-18-THD)	
		1	**7N-5274**	1	COVER AS-TERMINAL (BLACK)	
		1	**8L-8413**	1	STRAP-CABLE (WHITE)	
		1	**9G-0003**	1	COVER AS-TERMINAL (BLACK)	
E		1	**159-8050**		CABLE (00-GA, BLACK) (154-CM)	
	12	1	**132-1805**	1	STRAP AS-GROUND	
M	13	1	**150-4086**	4	SCREW (M4X0.7X16-MM)	
	14	1	**174-5907**	4	CLIP (LOOP)	
	15	1	**245-8842**	2	CLIP (LOOP)	
	16	1	**7X-7729**	2	WASHER (11X25X3-MM THK)	
M	17	1	**8T-0389**	2	LOCKNUT (M10X1.5-THD)	
	18	1	**8T-4121**	10	WASHER-HARD (11X21X2.5-MM THK)	
M	19	1	**8T-4136**	7	BOLT (M10X1.5X25-MM)	
M	20	1	**8T-4137**	1	BOLT (M10X1.5X20-MM)	
M	21	1	**8T-4185**	2	BOLT (M10X1.5X50-MM)	

E - ORDER BY THE CENTIMETER
J - REQUIRES CORPORATE KEY
M - METRIC PART
Y - SEPARATE ILLUSTRATION

233-4611 **BATTERY & WIRING GP (**contd.**)** **i06661808**

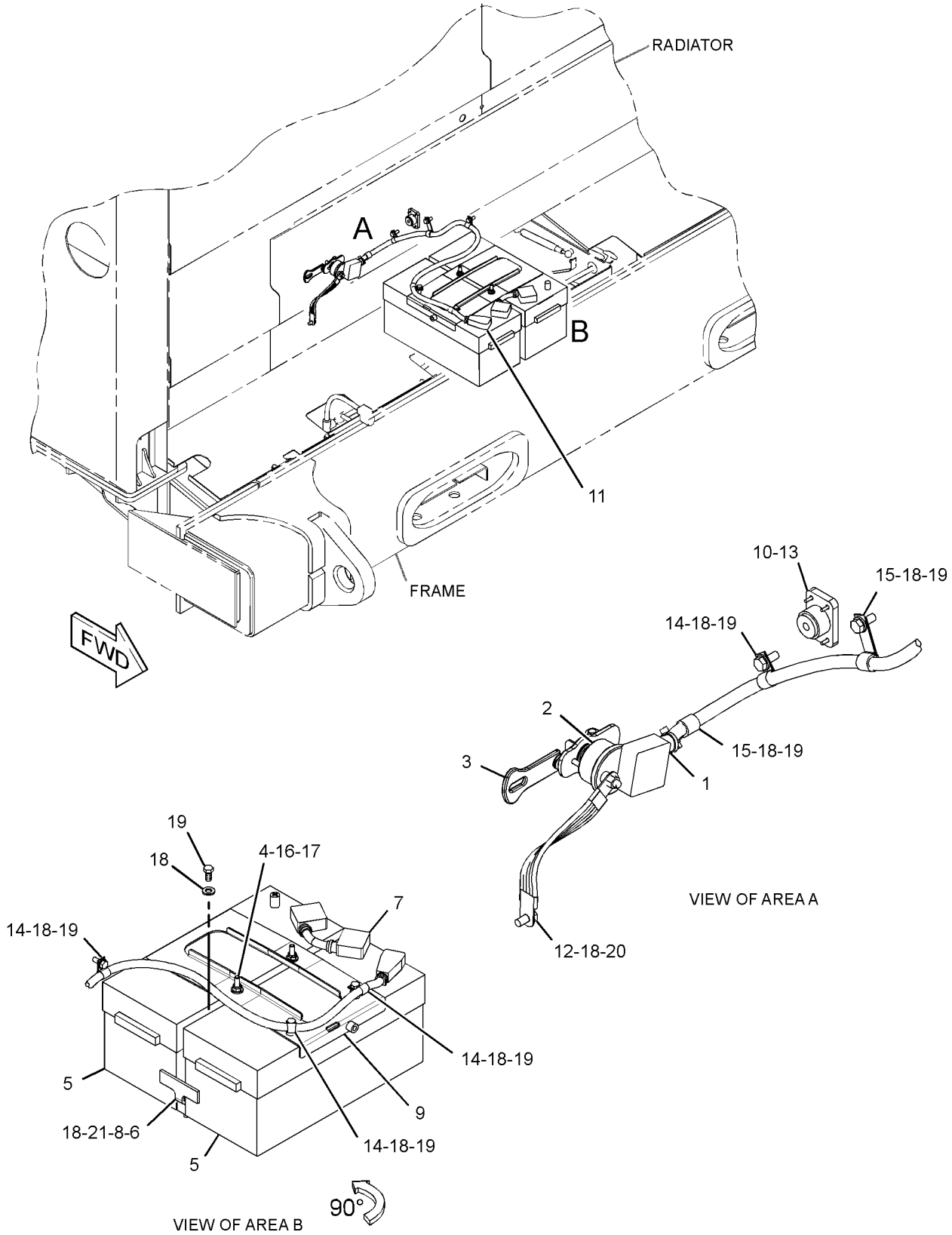

GRAPHIC #1 <END> g03393496

236-1924 BATTERY & WIRING GP—HEAVY-DUTY

S/N: B551-UP

CANNOT BE USED WITH 233-4611—PAGE: 148

PART OF 349-3051 OPTION AR-ELECTRICAL

SMCS-1401, 1402, 1408 **i05353936**

NOTE	REF NO	GRAPHIC REF	PART NUMBER	QTY	PART NAME 1 2 3 4 5 6 (PRODUCT LEVEL)	SEE PAGE
	1	1	**3S-2093**	4	STRAP-CABLE	
Y	2	1	**7N-0718**	1	SWITCH GP-DISCONNECT (BATTERY)	267
J	3	1	**9G-2758**	1	LOCKOUT-SWITCH (BATTERY DISCONNECT)	
	4	1	**153-5700**	2	BATTERY AS (12-VOLT, 1125-CCA) (WET)	
	5	1	**188-3959**	1	BRACKET	
	6	1	**236-2340**	1	CABLE AS-BATTERY (JUMPER)	
		1	**8C-5918**	1	TERMINAL AS-BATTERY (NEGATIVE)	
		1	**8T-9756**	1	TERMINAL AS-BATTERY (POSITIVE)	
					(EACH TERMINAL AS INCLUDES)	
		1	**1M-6119**	1	BOLT (5/16-18X1.375-IN)	
		1	**1M-6120**	1	NUT (5/16-18-THD)	
		1	**9G-0002**	1	COVER AS-TERMINAL (RED)	
		1	**9G-0005**	1	COVER AS-TERMINAL (BLACK)	
E		1	**159-8049**		CABLE (00-GA, RED) (17-CM)	
	8	1	**246-1670**	1	BAR	
	9	1	**263-6891**	1	HOLD-DOWN AS	
	11	1	**272-7239**	1	BLOCK AS	
	12	1	**388-7676**	1	CABLE AS	
		1	**4D-1248**	1	TERMINAL (00-GA, 3/8-IN SCREW)	
		1	**3S-6050**	1	TERMINAL AS-BATTERY (NEGATIVE)	
		1	**1M-6119**	1	BOLT (5/16-18X1.375-IN)	
		1	**1M-6120**	1	NUT (5/16-18-THD)	
		1	**7N-5274**	1	COVER AS-TERMINAL (BLACK)	
		1	**8L-8413**	1	STRAP-CABLE (WHITE)	
		1	**9G-0003**	1	COVER AS-TERMINAL (BLACK)	
E		1	**159-8050**		CABLE (00-GA, BLACK) (154-CM)	
	14	1	**132-1805**	1	STRAP AS-GROUND	
	15	1	**174-5907**	4	CLIP (LOOP)	
	16	1	**245-8842**	2	CLIP (LOOP)	
	19	1	**7X-7729**	2	WASHER (11X25X3-MM THK)	
M	21	1	**8T-0389**	2	LOCKNUT (M10X1.5-THD)	
	22	1	**8T-4121**	10	WASHER-HARD (11X21X2.5-MM THK)	
M	23	1	**8T-4136**	7	BOLT (M10X1.5X25-MM)	
M	24	1	**8T-4137**	1	BOLT (M10X1.5X20-MM)	
M	26	1	**8T-4185**	2	BOLT (M10X1.5X50-MM)	
M	28	1	**150-4086**	4	SCREW (M4X0.7X16-MM)	
	29	1	**9R-6414**	2	ROD	

E - ORDER BY THE CENTIMETER
J - REQUIRES CORPORATE KEY
M - METRIC PART
Y - SEPARATE ILLUSTRATION

236-1924 **BATTERY & WIRING GP (**contd.**)** **i05353936**

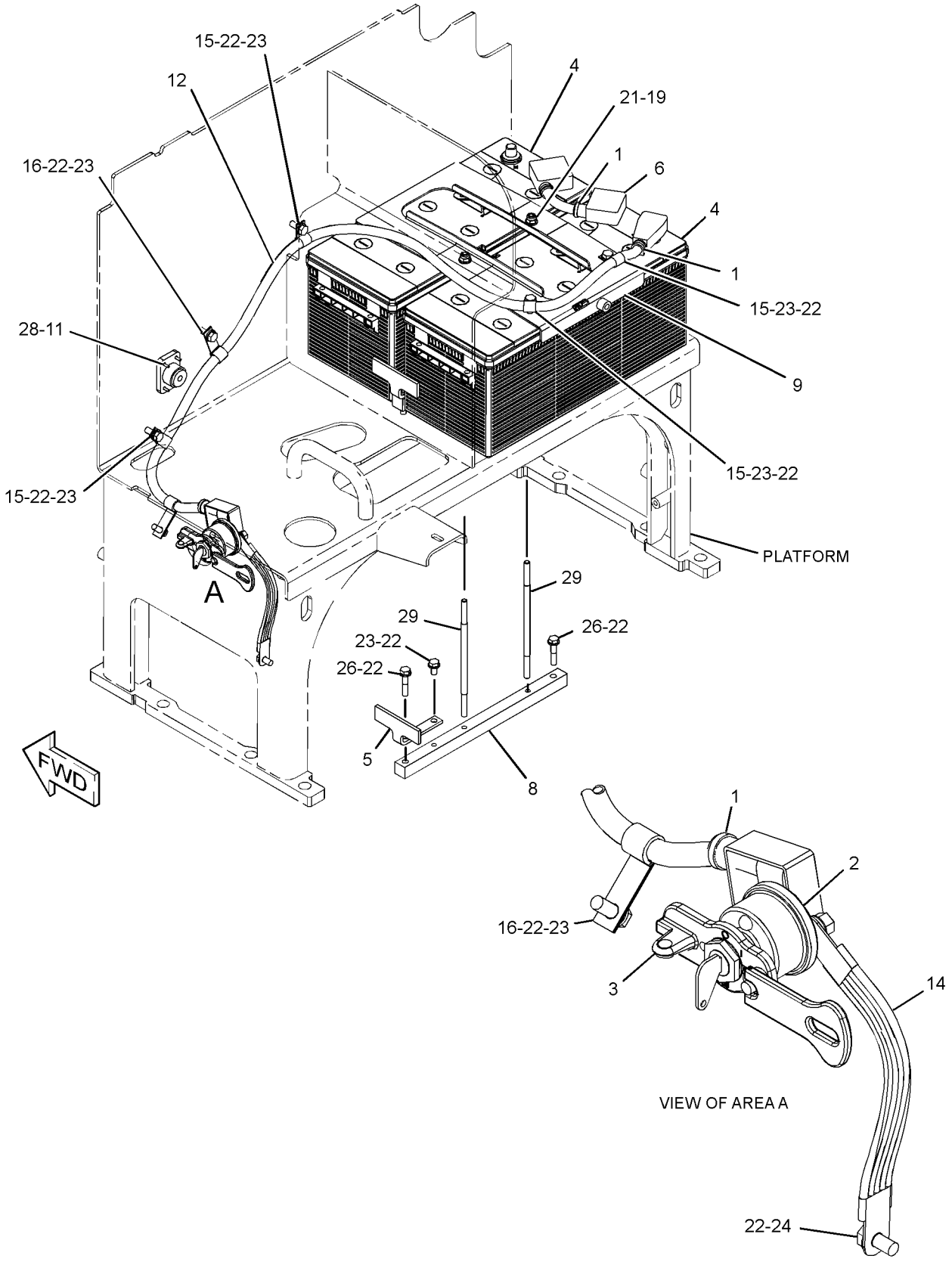

GRAPHIC #1 <END> g03393724

391-4396 CAMERA AR

S/N: B551-UP

PART OF 492-0728, 492-0729 CONVERSION AR-CERTIFICATION, 536-5229 OPTION AR-REGIONAL

SMCS-7348 **i06207501**

NOTE	PART NUMBER	QTY	PART NAME 1 2 3 4 5 6 (PRODUCT LEVEL)	SEE PAGE
Y	*447-2229*	1	DISPLAY GP-CAMERA	785
Y	*252-8000*	1	WIRING GP-CAMERA (WORK AREA VISUAL SYSTEM)	293

Y - SEPARATE ILLUSTRATION

<END>

334-3855 CONTROL & MTG GP-ENGINE ELEK

S/N: TX71-UP

PART OF 506-2265 ENGINE AR-COMPLETE

SMCS-1901 **i03523352**

NOTE	REF NO	GRAPHIC REF	PART NUMBER	QTY	PART NAME 1 2 3 4 5 6 (PRODUCT LEVEL)	SEE PAGE
	1	1	**8T-9655**	8	MOUNT-ISOLATION (POWER TRAIN)	
	2	1	**101-3128**	4	SPACER-SPECIAL	
Y	3	1	*226-7473*	1	CONTROL GP-ENGINE ELECTRONIC	165
	4	1	**244-3168**	1	BRACKET AS (HARNESS)	
M		1	**232-1693**	1	BOLT-FLANGE HEAD (M6X1X35-MM)	
	5	1	**9N-0869**	4	WASHER-HARD (8.8X25.5X2-MM THK)	
M	6	1	**143-9392**	4	STUD (M8X1.25-THD)	
	7	1	**9M-1974**	4	WASHER-HARD (8.8X16X2-MM THK)	

M - METRIC PART
Y - SEPARATE ILLUSTRATION

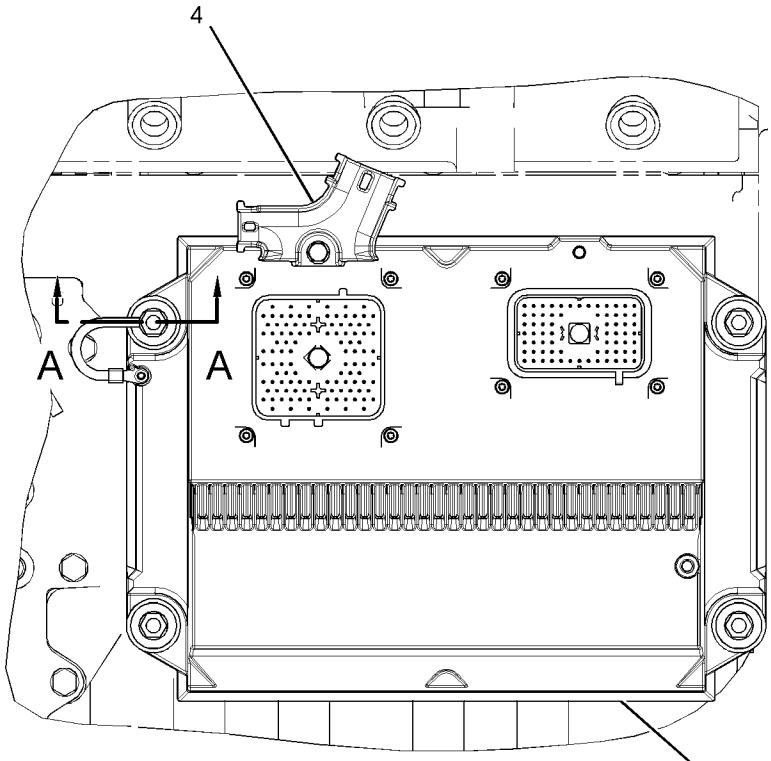

LEFT SIDE VIEW OF ENGINE

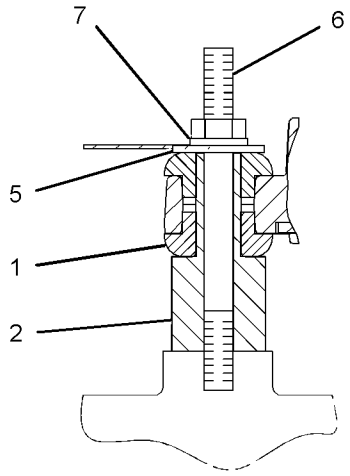

SECTION A-A

GRAPHIC #1 <END> g01861835

435-2072 CONTROL AR-ELECTRIC—AUTO ARTICULATION

S/N: B551-UP

PART OF 492-0730 OPTION AR-GRADE CONTROL

SMCS-5004 **i06888807**

NOTE	PART NUMBER	QTY	PART NAME 1 2 3 4 5 6 (PRODUCT LEVEL)	SEE PAGE
	435-8660	1	CONFIGURATION-PREMIUM	
			(DLR INSTALL CONFIG: SEE IRM: EES03-01)	
	419-0845	1	SWITCH AS-ROCKER (AUTO ARTICULATION)	

<END>

458-2072 CONTROL AR-ELECTRIC

S/N: B551-UP

ANTI BOUNCE

PART OF 492-0730 OPTION AR-GRADE CONTROL

SMCS-5004 **i06280819**

NOTE	PART NUMBER	QTY	PART NAME 1 2 3 4 5 6 (PRODUCT LEVEL)	SEE PAGE
Y	*457-5046*	1	SENSOR & MOUNTING GP	251
J	*461-9801*	1	CONFIGURATION-PREMIUM	

J - DLR INSTALL CONFIG: SEE IRM: EES03-01
Y - SEPARATE ILLUSTRATION

<END>

483-2354 CONTROL AR-ELECTRIC—AUTO ARTICULATION

S/N: B551-UP

CANNOT BE USED WITH 435-2072—PAGE: 154

SMCS-5004 **i06925296**

NOTE	REF NO	GRAPHIC REF	PART NUMBER	QTY	PART NAME 1 2 3 4 5 6 (PRODUCT LEVEL)	SEE PAGE
	1	1	**419-0845**	1	SWITCH AS-ROCKER (AUTO ARTICULATION)	
	2	1	**481-7206**	1	FILM-IDENTIFICATION (AUTO ARTICULATION)	
FJ		1	*435-8660*	1	CONFIGURATION-PREMIUM	

F - NOT SHOWN
J - DLR INSTALL CONFIG: SEE IRM: EES03-01

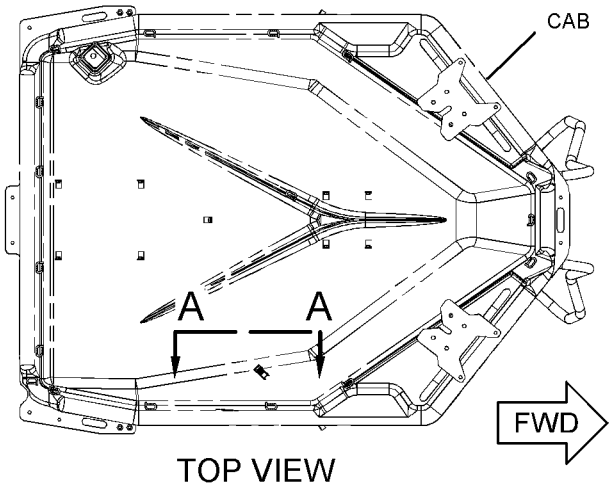

TOP VIEW

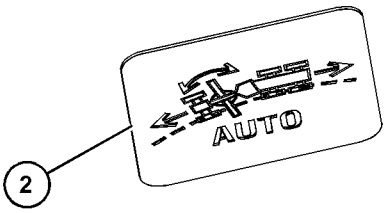

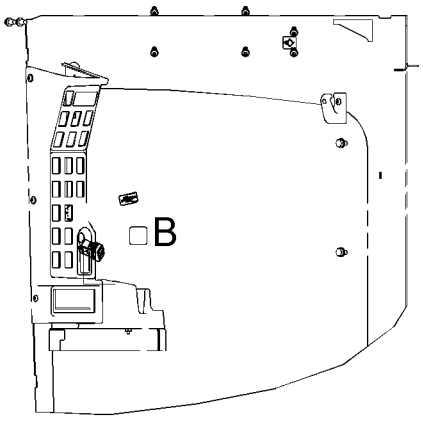

VIEW A-A

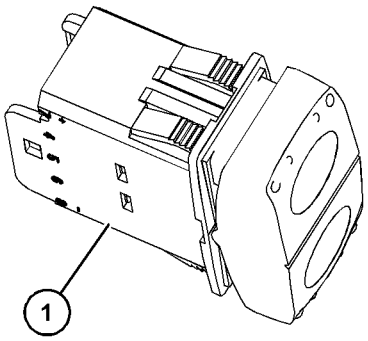

VIEW OF AREA B

GRAPHIC #1 <END> g06056833

456-3346 CONTROL GP-COMMUNICATION—SATELLITE

S/N: B551-UP

PART OF 463-5584 CONTROL GP-ELECTRONIC

SMCS-7602, 7606, 7610, 7620 **i07726157**

NOTE	REF NO	GRAPHIC REF	PART NUMBER	QTY	PART NAME 1 2 3 4 5 6 (PRODUCT LEVEL)	SEE PAGE
	1	1	**3S-2093**	11	STRAP-CABLE	
	2	1	**8C-5607**	8	MOUNT-ISOLATION	
	3	1	**385-5989**	1	HARNESS AS-CHASSIS	
		1	**155-2255**	1	KIT-CONNECTING PLUG (12-PIN)	
		1	**155-2256**	2	KIT-CONNECTING PLUG (12-PIN)	
					(EACH PLUG KIT INCLUDES PLUG AS, WEDGE, & INTERFACE SEAL)	
		1	**155-2260**	2	KIT-CONNECTING PLUG (3-PIN)	
					(EACH PLUG KIT INCLUDES PLUG AS, WEDGES & INTERFACE SEAL)	
		1	**102-8801**	1	KIT-RECEPTACLE (12-PIN)	
					(INCLUDES RECEPTACLE AS & WEDGE)	
		1	**237-0336**	1	COVER (CONNECTOR)	
		1	**359-5179**	1	PLUG AS-CONNECTOR (14-PIN)	
		1	**374-7468**	2	CAP-SEAL	
		1	**8T-8737**	57	PLUG-SEAL	
E		1	**125-7874**		TUBE-HEAT SHRINK (5.72-MM DIA) (35-CM)	
E		1	**125-7875**		TUBE-HEAT SHRINK (7.44-MM DIA) (5-CM)	
		1	**9X-3402**	70	SOCKET-CONNECTOR (16-GA TO 18-GA)	
					—OR—	
		1	**126-1768**	70	SOCKET-CONNECTOR (14-GA TO 16-GA)	
		1	**2L-8079**	1	TERMINAL-RING (14-GA TO 16-GA, 3/8-IN SCREW)	
		1	**134-2540**	2	RECEPTACLE AS-CONNECTOR (3-PIN)	
		1	**9X-3401**	11	PIN-CONNECTOR (16-GA TO 18-GA)	
					—OR—	
		1	**126-1767**	11	PIN-CONNECTOR (14-GA TO 16-GA)	
		1	**147-1445**	1	PLUG AS-CONNECTOR (70-PIN)	
		1	**159-9322**	1	SEAL-O-RING	
	4	1	**558-6550**	1	ANTENNA AS (CELLULAR)	
		1	**361-1045**	1	NUT-SPECIAL (5/8-18-THD)	
		1	**460-4049**	1	CAP AS (CONNECTOR) (CONNECTOR)	
	5	1	**448-2602**	1	COVER	
	6	1	**373-8970**	1	CABLE AS-COMMUNICATION	
Y	7	1	*463-9613*	1	APPLICATION GP-MONITOR (PLE601 NETWORK MANAGER)	147
Y	8	1	*463-9615*	1	APPLICATION GP-MONITOR (PRODUCT LINK 631 SATELLITE)	147
	9	1	**156-6175**	1	CLIP (LADDER)	
M	10	1	**344-5673**	8	NUT (M6X1-THD)	
	11	1	**4P-7428**	1	CLIP (LADDER)	
	12	1	**5P-4115**	5	WASHER-HARD (7.2X19X2-MM THK)	
M	13	1	**7X-2535**	7	BOLT (M6X1X60-MM)	
	14	1	**8C-5608**	4	SPACER (6.5X9.5X25.4-MM THK)	
M	15	1	**8T-3844**	1	BOLT (M6X1X70-MM)	
M	16	1	**8T-4138**	5	BOLT (M6X1X20-MM)	
	17	1	**9X-2038**	1	WASHER (7X19X2-MM THK)	
	18	1	**9X-6165**	8	WASHER (6.5X22X2.5-MM THK)	
	19	1	**9X-8256**	3	WASHER (6.6X12X2-MM THK)	

E - ORDER BY THE CENTIMETER
M - METRIC PART
Y - SEPARATE ILLUSTRATION

456-3346 **CONTROL GP-COMMUNICATION (**contd.**)** **i07726157**

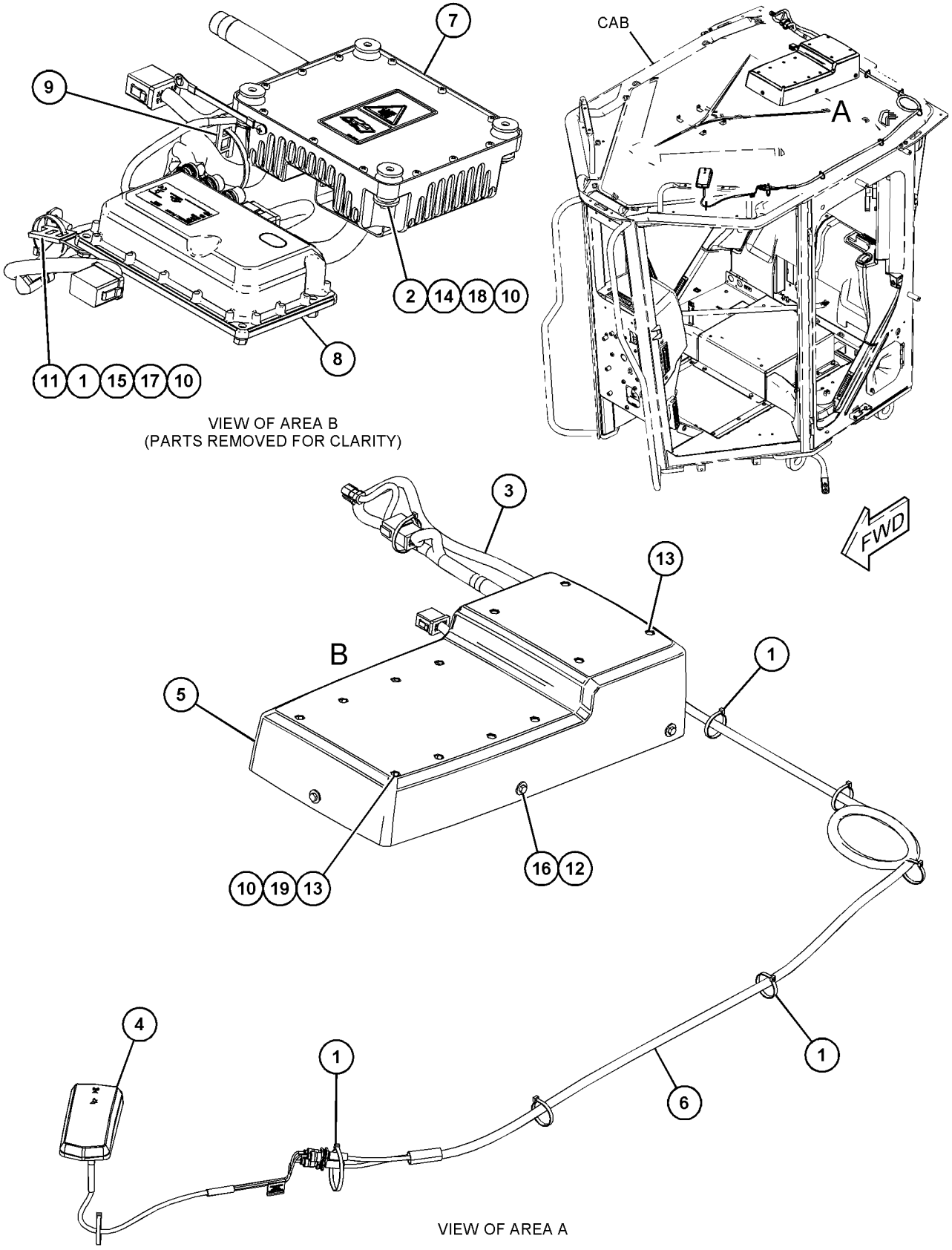

GRAPHIC #1 <END> g06066740

456-3347 CONTROL GP-COMMUNICATION–CELLULAR

S/N: B551-UP

PART OF 463-5585 CONTROL GP-ELECTRONIC

SMCS-7602, 7606, 7610, 7620 **i06139633**

NOTE	REF NO	GRAPHIC REF	PART NUMBER	QTY	PART NAME 1 2 3 4 5 6 (PRODUCT LEVEL)	SEE PAGE
	1	1	**8C-5607**	8	MOUNT-ISOLATION	
	2	1	**385-5989**	1	HARNESS AS-CHASSIS	
		1	**155-2255**	1	KIT-CONNECTING PLUG (12-PIN)	
		1	**155-2256**	2	KIT-CONNECTING PLUG (12-PIN)	
		1	**155-2260**	2	KIT-CONNECTING PLUG (3-PIN)	
					(EACH PLUG KIT INCLUDES PLUG AS, WEDGE(S) & INTERFACE SEAL)	
		1	**102-8801**	1	KIT-RECEPTACLE (12-PIN)	
					(INCLUDES RECEPTACLE AS & WEDGE)	
		1	**237-0336**	1	COVER (CONNECTOR)	
		1	**359-5179**	1	PLUG AS-CONNECTOR (14-PIN)	
		1	**374-7468**	2	CAP-SEAL	
		1	**8T-8737**	57	PLUG-SEAL	
E		1	**125-7874**		TUBE-HEAT SHRINK (5.72-MM DIA) (35-CM)	
E		1	**125-7875**		TUBE-HEAT SHRINK (7.44-MM DIA) (5-CM)	
		1	**9X-3402**	70	SOCKET-CONNECTOR (16-GA TO 18-GA)	
					–OR–	
		1	**126-1768**	70	SOCKET-CONNECTOR (14-GA TO 16-GA)	
		1	**2L-8079**	1	TERMINAL-RING (14-GA TO 16-GA, 3/8-IN SCREW)	
		1	**134-2540**	2	RECEPTACLE AS-CONNECTOR (3-PIN)	
		1	**9X-3401**	11	PIN-CONNECTOR (16-GA TO 18-GA)	
					–OR–	
		1	**126-1767**	11	PIN-CONNECTOR (14-GA TO 16-GA)	
		1	**147-1445**	1	PLUG AS-CONNECTOR (70-PIN)	
		1	**159-9322**	1	SEAL-O-RING	
	3	1	**448-2602**	1	COVER	
Y	4	1	*463-9613*	1	APPLICATION GP-MONITOR (PLE601 NETWORK MANAGER)	147
Y	5	1	*463-9614*	1	APPLICATION GP-MONITOR (PL641I CELLULAR)	147
	6	1	**156-6175**	1	CLIP (LADDER)	
M	7	1	**344-5673**	8	NUT (M6X1-THD)	
	8	1	**3S-2093**	4	STRAP-CABLE	
	9	1	**4P-7428**	1	CLIP (LADDER)	
	10	1	**5P-4115**	5	WASHER-HARD (7.2X19X2-MM THK)	
M	11	1	**7X-2535**	7	BOLT (M6X1X60-MM)	
	12	1	**8C-5608**	4	SPACER (6.5X9.5X25.4-MM THK)	
M	13	1	**8T-3844**	1	BOLT (M6X1X70-MM)	
M	14	1	**8T-4138**	5	BOLT (M6X1X20-MM)	
	15	1	**9X-2038**	1	WASHER (7X19X2-MM THK)	
	16	1	**9X-6165**	8	WASHER (6.5X22X2.5-MM THK)	
	17	1	**9X-8256**	3	WASHER (6.6X12X2-MM THK)	

E - ORDER BY THE CENTIMETER
M - METRIC PART
Y - SEPARATE ILLUSTRATION

456-3347 **CONTROL GP-COMMUNICATION (**contd.**)** **i06139633**

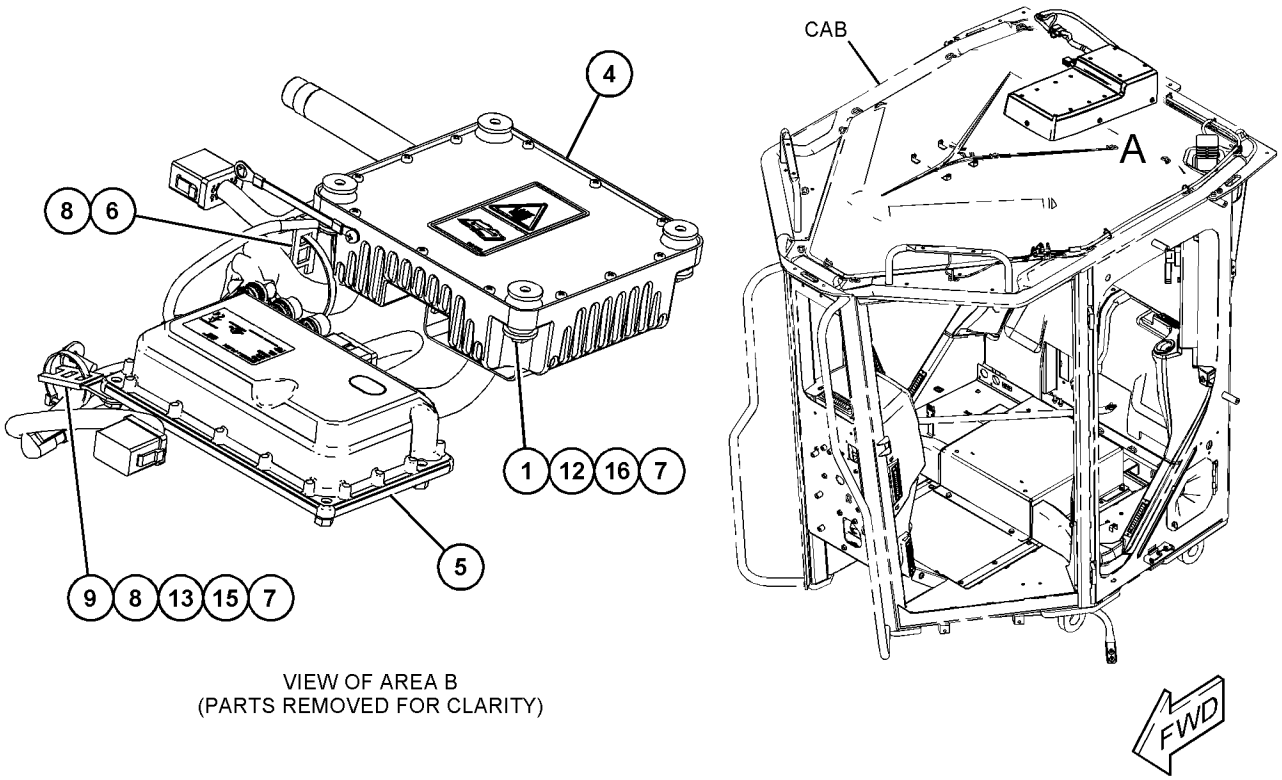

VIEW OF AREA B
(PARTS REMOVED FOR CLARITY)

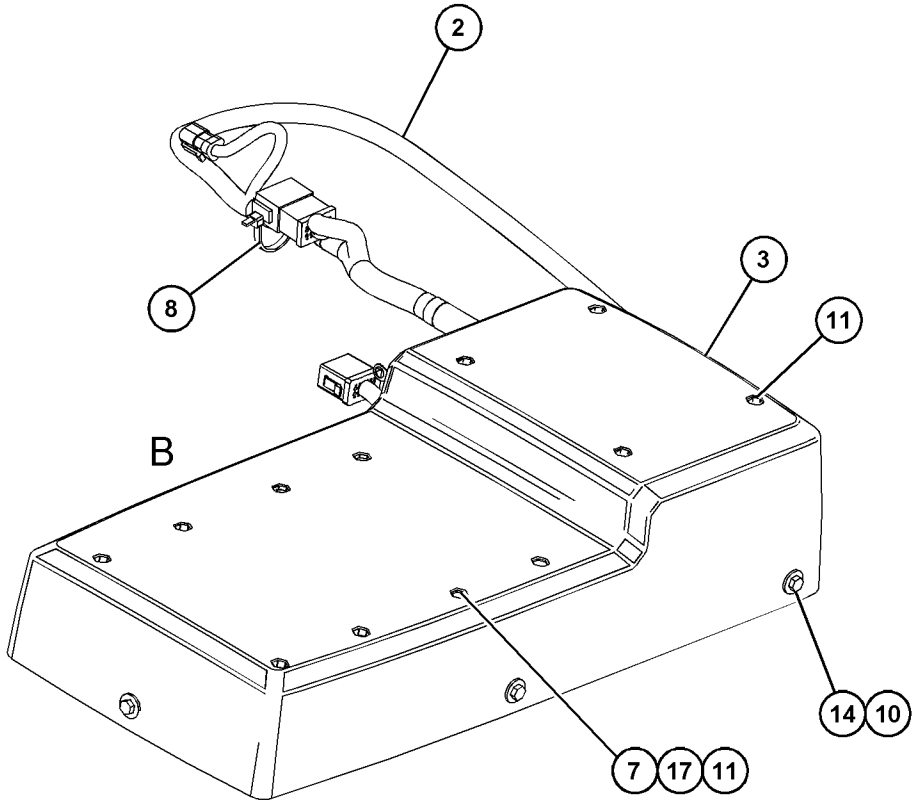

VIEW OF AREA A

GRAPHIC #1 <END> g03825984

456-3348 CONTROL GP-COMMUNICATION—DUAL

S/N: B551-UP

PART OF 463-5586 CONTROL GP-ELECTRONIC

SMCS-7602, 7606, 7610, 7620 **i07793933**

NOTE	REF NO	GRAPHIC REF	PART NUMBER	QTY	PART NAME 1 2 3 4 5 6 (PRODUCT LEVEL)	SEE PAGE
	1	1	**3S-2093**	11	STRAP-CABLE	
	2	1	**8C-5607**	8	MOUNT-ISOLATION	
	3	1	**385-5989**	1	HARNESS AS-CHASSIS	
		1	**7K-1181**	1	STRAP-CABLE	
		1	**155-2255**	1	KIT-CONNECTING PLUG (12-PIN)	
		1	**155-2256**	2	KIT-CONNECTING PLUG (12-PIN)	
		1	**155-2260**	2	KIT-CONNECTING PLUG (3-PIN)	
					(EACH PLUG KIT INCLUDES PLUG AS, WEDGE(S) & INTERFACE SEAL)	
		1	**102-8801**	1	KIT-RECEPTACLE (12-PIN)	
					(INCLUDES RECEPTACLE AS & WEDGE)	
		1	**237-0336**	1	COVER (CONNECTOR)	
		1	**359-5179**	1	PLUG AS-CONNECTOR (14-PIN)	
		1	**374-7468**	2	CAP-SEAL	
		1	**8T-8737**	57	PLUG-SEAL	
E		1	**125-7874**		TUBE-HEAT SHRINK (5.72-MM DIA) (35-CM)	
E		1	**125-7875**		TUBE-HEAT SHRINK (7.44-MM DIA) (5-CM)	
		1	**9X-3402**	70	SOCKET-CONNECTOR (16-GA TO 18-GA)	
					—OR—	
		1	**126-1768**	70	SOCKET-CONNECTOR (14-GA TO 16-GA)	
		1	**2L-8079**	1	TERMINAL-RING (14-GA TO 16-GA, 3/8-IN SCREW)	
		1	**134-2540**	2	RECEPTACLE AS-CONNECTOR (3-PIN)	
		1	**9X-3401**	11	PIN-CONNECTOR (16-GA TO 18-GA)	
					—OR—	
		1	**126-1767**	11	PIN-CONNECTOR (14-GA TO 16-GA)	
		1	**147-1445**	1	PLUG AS-CONNECTOR (70-PIN)	
		1	**159-9322**	1	SEAL-O-RING	
	4	1	**558-6550**	1	ANTENNA AS (CELLULAR)	
		1	**361-1045**	1	NUT-SPECIAL (5/8-18-THD)	
		1	**460-4049**	1	CAP AS (CONNECTOR)	
	5	1	**448-2602**	1	COVER	
	6	1	**373-8970**	2	CABLE AS-COMMUNICATION	
Y	7	1	*463-9613*	1	APPLICATION GP-MONITOR (PLE601 NETWORK MANAGER)	147
Y	8	1	*463-9614*	1	APPLICATION GP-MONITOR (PL641I CELLULAR)	147
Y	9	1	*463-9615*	1	APPLICATION GP-MONITOR (PRODUCT LINK 631 SATELLITE)	147
	10	1	**156-6175**	1	CLIP (LADDER)	
M	11	1	**344-5673**	12	NUT (M6X1-THD)	
	12	1	**4P-7428**	1	CLIP (LADDER)	
	13	1	**5P-4115**	5	WASHER-HARD (7.2X19X2-MM THK)	
M	14	1	**7X-2535**	11	BOLT (M6X1X60-MM)	
	15	1	**8C-5608**	4	SPACER (6.5X9.5X25.4-MM THK)	
M	16	1	**8T-3844**	1	BOLT (M6X1X70-MM)	
M	17	1	**8T-4138**	5	BOLT (M6X1X20-MM)	
	18	1	**9X-2038**	1	WASHER (7X19X2-MM THK)	
	19	1	**9X-6165**	8	WASHER (6.5X22X2.5-MM THK)	
	20	1	**9X-8256**	7	WASHER (6.6X12X2-MM THK)	

456-3348 **CONTROL GP-COMMUNICATION (**contd.**)** **i07793933**

NOTE	REF NO	GRAPHIC REF	PART NUMBER	QTY	PART NAME 1 2 3 4 5 6 (PRODUCT LEVEL)	SEE PAGE

E - ORDER BY THE CENTIMETER
M - METRIC PART
Y - SEPARATE ILLUSTRATION

456-3348 **CONTROL GP-COMMUNICATION (**contd.**)** **i07793933**

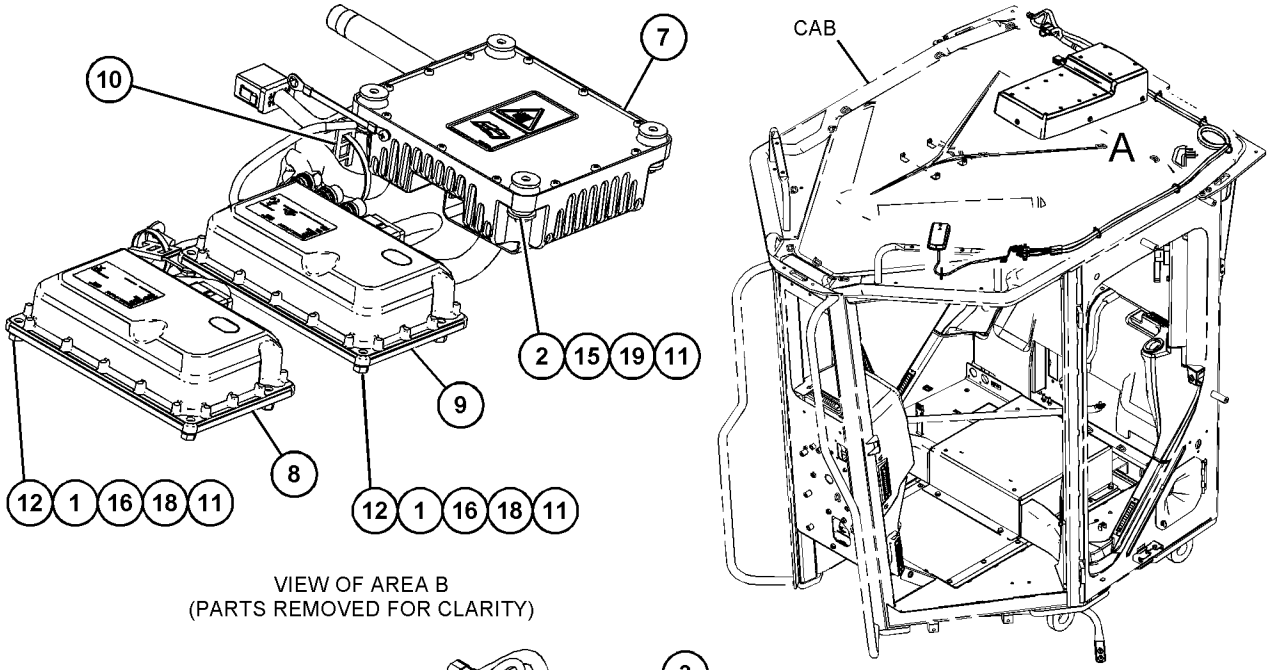

VIEW OF AREA B
(PARTS REMOVED FOR CLARITY)

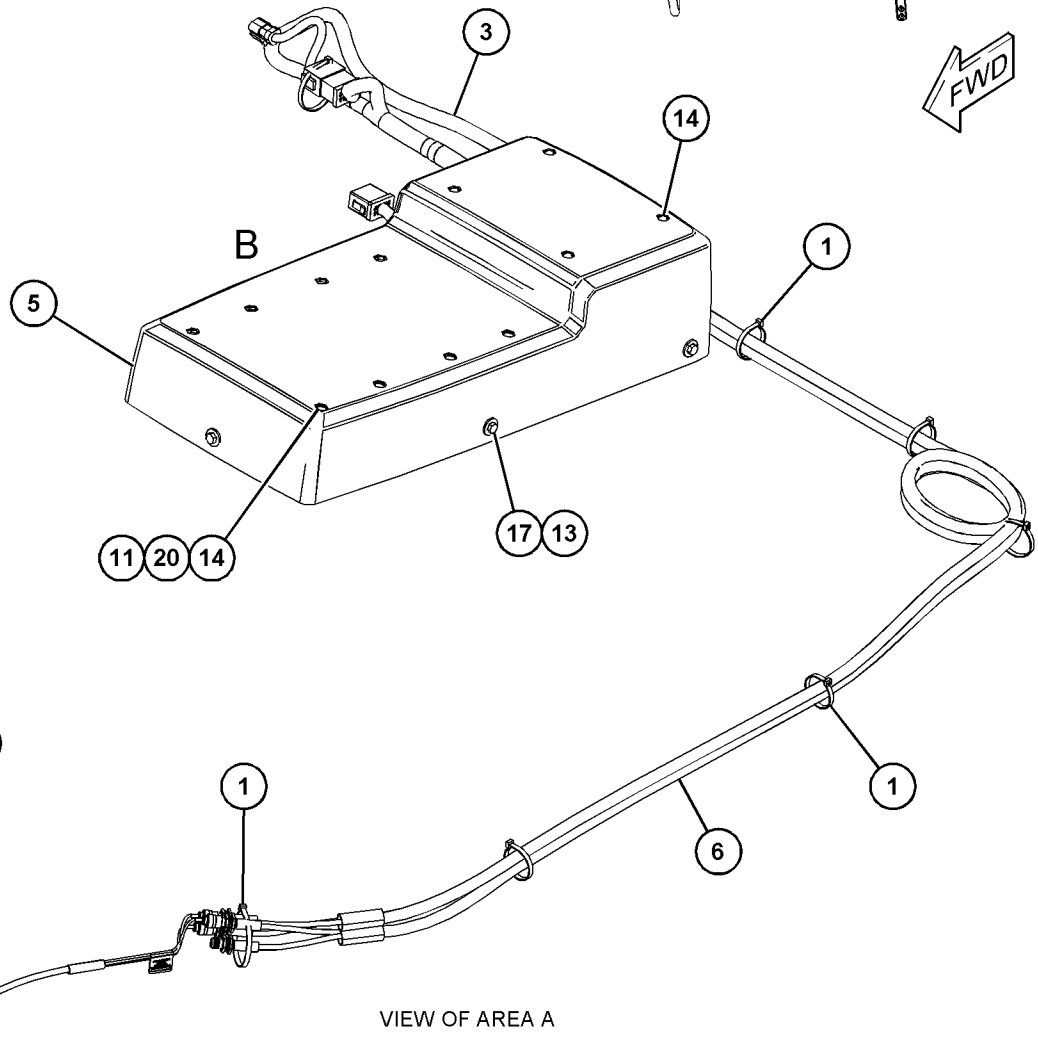

VIEW OF AREA A

GRAPHIC #1 <END> g06069243

459-0786 CONTROL GP-COMMUNICATION*R

S/N: B551-UP

PART OF 463-9613 APPLICATION GP-MONITOR

SMCS-7602, 7606, 7610, 7620

i07073381

NOTE	REF NO	GRAPHIC REF	PART NUMBER	QTY	PART NAME 1 2 3 4 5 6 (PRODUCT LEVEL)	SEE PAGE
	1	1	**175-4168**	12	SCREW-PAN HEAD (6-32X0.37-IN)	
	2	1	**272-2379**	1	FILM-WARNING (EXPLOSION HAZARD, READ OMM)	
	3	1	**7X-6315**	1	STRAP AS-GROUND	
D		1	**5P-6006**		TUBE-HEAT SHRINK (9.52-MM DIA) (0.1-M)	
		1	**2L-8078**	1	TERMINAL-RING (14-GA TO 16-GA, 5/16-IN SCREW)	
		1	**2L-8075**	1	TERMINAL-RING (14-GA TO 16-GA, NO. 8 SCREW)	
	4	1	**8C-8514**	1	SCREW-MACHINE (8-32X0.375-IN)	
	5	1	**134-4126**	1	WASHER (4.52X8.28X0.76-MM THK)	

D - ORDER BY THE METER

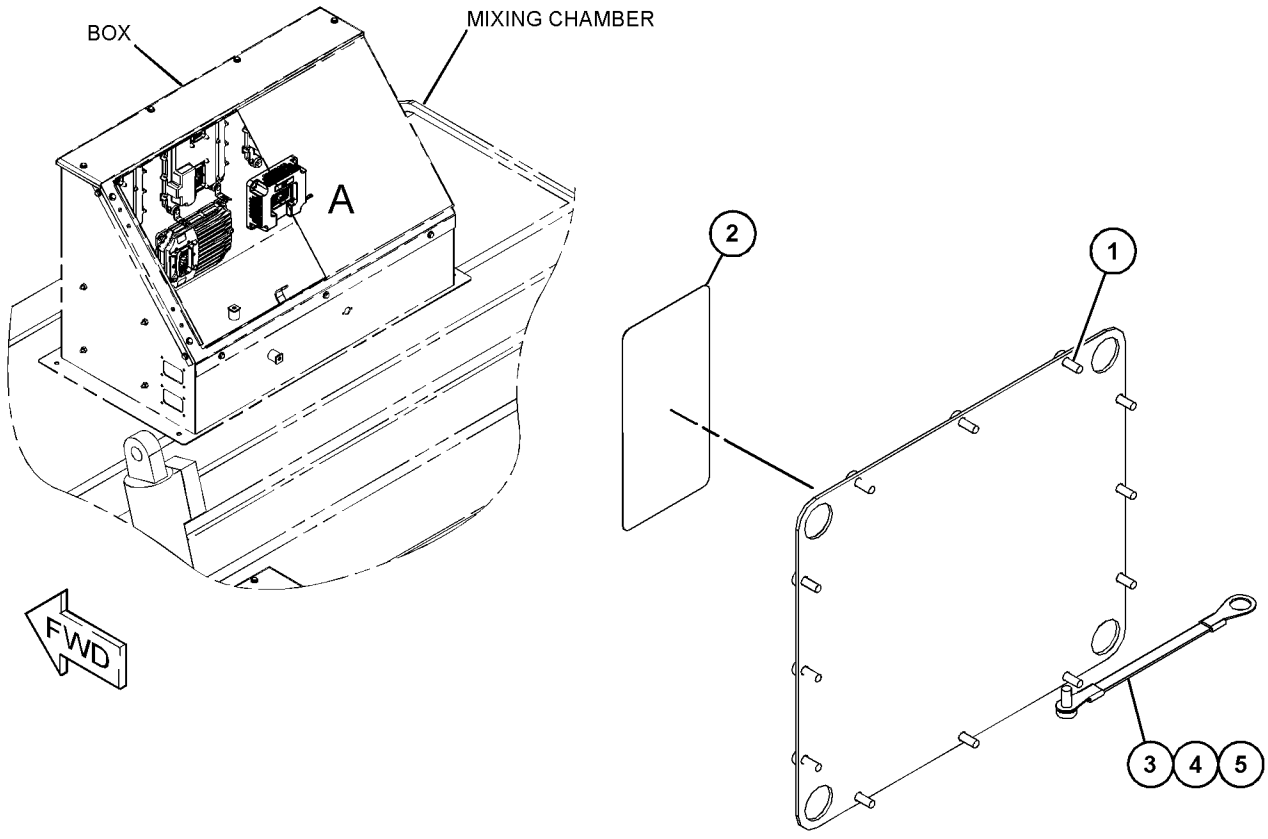

VIEW OF AREA A
(PARTS REMOVED FOR CLARITY)

GRAPHIC #1 <END> g03892850

440-2104 CONTROL GP-ELECTRONIC—PL641I CELLULAR*R

S/N: B551-UP

PART OF 463-9614 APPLICATION GP-MONITOR

SMCS-1917, 1924 **i07715121**

NOTE	PART NUMBER	QTY	PART NAME 1 2 3 4 5 6 (PRODUCT LEVEL)	SEE PAGE
	568-5111	1	SOFTWARE GP-MONITOR (CELLULAR)	

<END>

463-5584 CONTROL GP-ELECTRONIC—PRODUCT LINK ELITE SATELLITE

S/N: B551-UP

CANNOT BE USED WITH ANY OTHER PRODUCT LINK OPTION

PART OF 565-4306 OPTION AR-REGIONAL

SMCS-1917, 1924 **i06279602**

NOTE	PART NUMBER	QTY	PART NAME 1 2 3 4 5 6 (PRODUCT LEVEL)	SEE PAGE
Y	*456-3346*	1	CONTROL GP-COMMUNICATION (PLE631 SATELLITE)	156
Y	*463-9608*	1	ELECTRONICS GP-MONITOR (NETWORK MANAGER)	173
Y	*463-9611*	1	ELECTRONICS GP-MONITOR (SATELLITE)	173

Y - SEPARATE ILLUSTRATION

<END>

463-5585 CONTROL GP-ELECTRONIC—PRODUCT LINK ELITE CELLULAR

S/N: B551-UP

CANNOT BE USED WITH ANY OTHER PRODUCT LINK OPTION

SMCS-1917, 1924 **i06279634**

NOTE	PART NUMBER	QTY	PART NAME 1 2 3 4 5 6 (PRODUCT LEVEL)	SEE PAGE
Y	*456-3347*	1	CONTROL GP-COMMUNICATION (PLE641 CELLULAR)	158
Y	*463-9605*	1	ELECTRONICS GP-MONITOR (CELLULAR)	173
Y	*463-9608*	1	ELECTRONICS GP-MONITOR (NETWORK MANAGER)	173

Y - SEPARATE ILLUSTRATION

<END>

463-5586 CONTROL GP-ELECTRONIC—PRODUCT LINK ELITE

S/N: B551-UP

CANNOT BE USED WITH ANY OTHER PRODUCT LINK OPTION

SMCS-1917, 1924 **i06813050**

NOTE	PART NUMBER	QTY	PART NAME 1 2 3 4 5 6 (PRODUCT LEVEL)	SEE PAGE
Y	*456-3348*	1	CONTROL GP-COMMUNICATION (PLE641, PL631)	160
Y	*463-9605*	1	ELECTRONICS GP-MONITOR (CELLULAR)	173
Y	*463-9608*	1	ELECTRONICS GP-MONITOR (NETWORK MANAGER)	173
Y	*463-9611*	1	ELECTRONICS GP-MONITOR (SATELLITE)	173

Y - SEPARATE ILLUSTRATION

<END>

226-7473 CONTROL GP-ENGINE ELECTRONIC

S/N: TX71-UP

PART OF 334-3855 CONTROL & MTG GP-ENGINE ELEK

SMCS-1901 **i06752523**

NOTE	REF NO	GRAPHIC REF	PART NUMBER	QTY	PART NAME 1 2 3 4 5 6 (PRODUCT LEVEL)	SEE PAGE
R	1	1	**478-7932**	1	CONTROL GP-ELECTRONIC (ENGINE)	

R - REMANUFACTURED PART MAY BE AVAILABLE

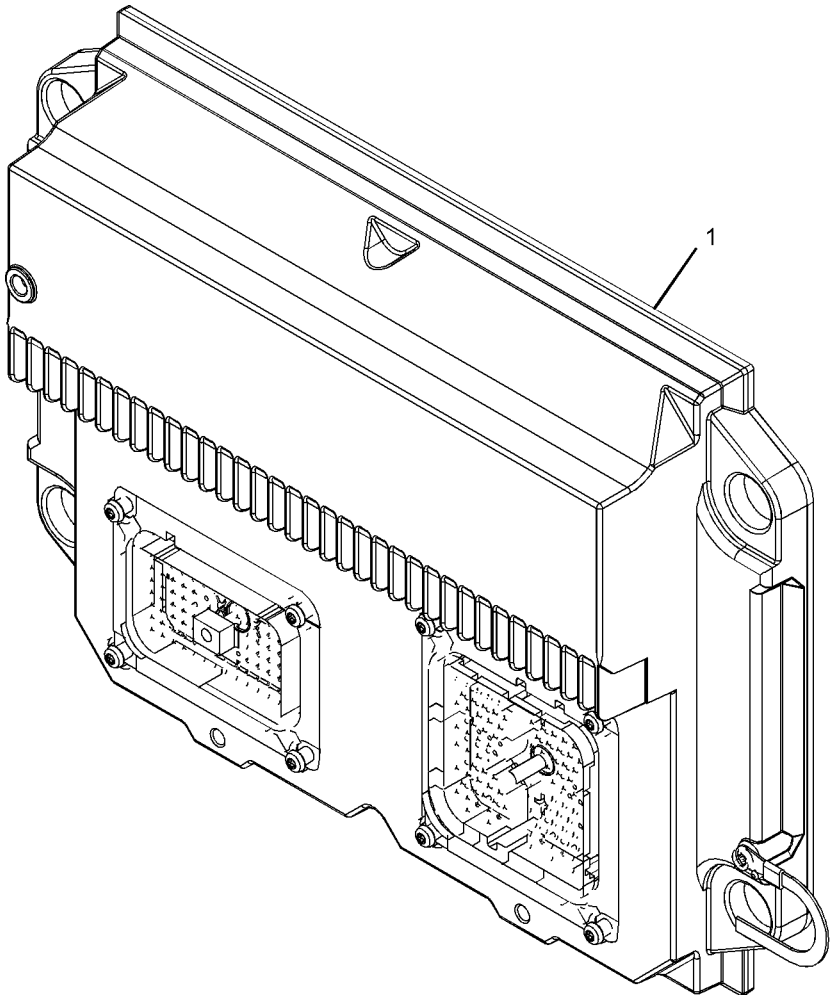

GRAPHIC #1 <END> g01101798

275-8969 CONTROL GP-UNPROGRAMMED–IMPLEMENT 2

S/N: B551-UP

PART OF 367-2375 MOUNTING GP-CONTROL

SMCS-7610 **i03027281**

NOTE	PART NUMBER	QTY	PART NAME 1 2 3 4 5 6 (PRODUCT LEVEL)	SEE PAGE
R	**304-5687**	1	CONTROL GP-UNPROGRAMMED (IMPLEMENT 2)	

R - REMANUFACTURED PART MAY BE AVAILABLE

<END>

275-8970 CONTROL GP-UNPROGRAMMED–IMPLEMENT 1

S/N: B551-UP

PART OF 367-2375 MOUNTING GP-CONTROL

SMCS-7610 **i06661830**

NOTE	PART NUMBER	QTY	PART NAME 1 2 3 4 5 6 (PRODUCT LEVEL)	SEE PAGE
R	**304-5687**	1	CONTROL GP-UNPROGRAMMED (IMPLEMENT 1)	

R - REMANUFACTURED PART MAY BE AVAILABLE

<END>

442-7199 CONTROL GP-UNPROGRAMMED–PRODUCT LINK ELITE 631

SATELLITE*R

S/N: B551-UP

PART OF 463-9615 APPLICATION GP-MONITOR

SMCS-7610 **i07416692**

NOTE	REF NO	GRAPHIC REF	PART NUMBER	QTY	PART NAME 1 2 3 4 5 6 (PRODUCT LEVEL)	SEE PAGE
F			**559-9492**	1	SOFTWARE GP-MONITOR (SATELLITE RADIO)	

F - NOT SHOWN

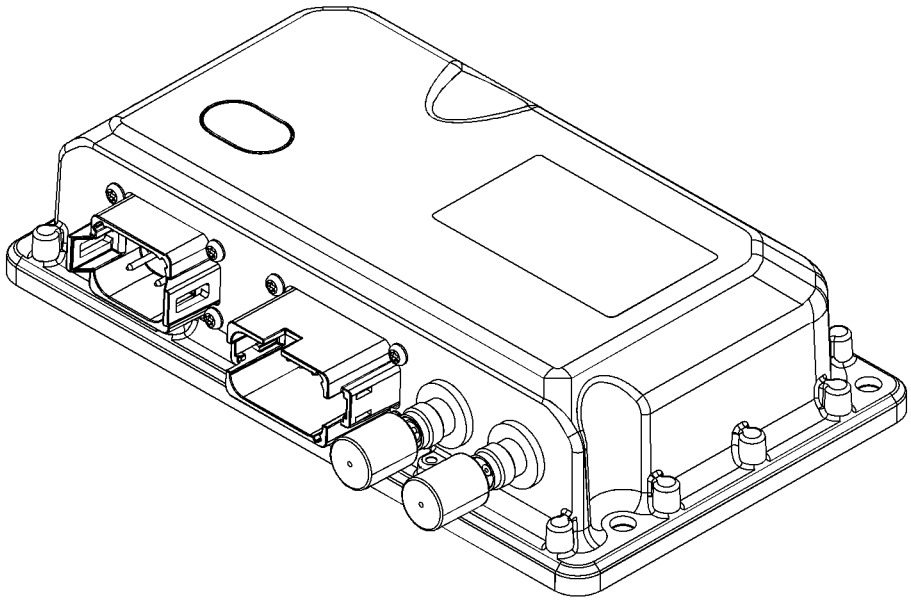

GRAPHIC #1 <END> g06131298

233-3135 CONVERTER GP-ELECTRICAL

S/N: B551-UP
10-AMPERE, 12-VOLT
PART OF 420-1977, 575-9874, 575-9875 CAB AR

SMCS-1421 **i05111369**

NOTE	REF NO	GRAPHIC REF	PART NUMBER	QTY	PART NAME 1 2 3 4 5 6 (PRODUCT LEVEL)	SEE PAGE
	1	1	**117-2311**	1	SOCKET-AUXILIARY POWER (12-VOLT) (AUXILIARY)	
	2	1	**340-7161**	1	CONVERTER-POWER (24-VOLT TO 12-VOLT)	
	3	1	**8T-0328**	2	WASHER-HARD (5.5X10X1-MM THK)	
M	4	1	**9X-1046**	2	SCREW (M4X0.7X18-MM)	

M - METRIC PART

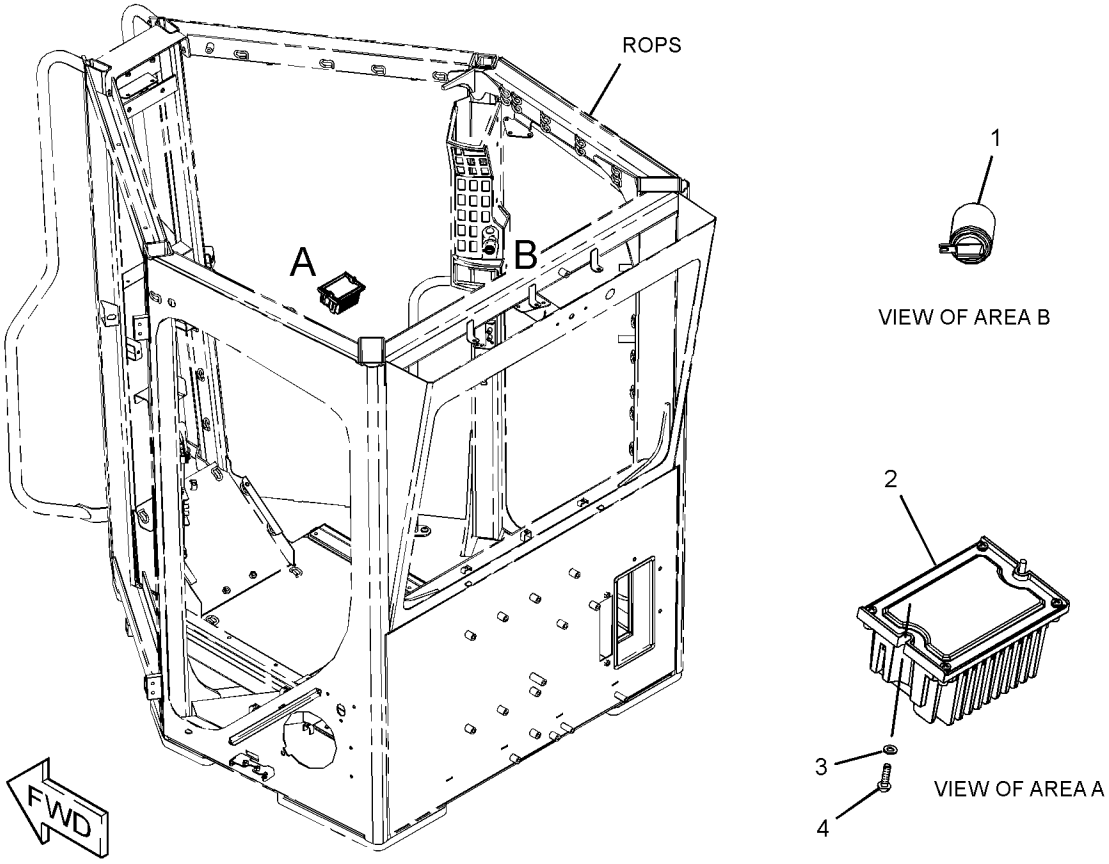

GRAPHIC #1 <END> g02530983

361-3136 CONVERTER GP-ELECTRICAL—RADIO

S/N: B551-UP

PART OF 391-8968 CAB AR, 397-5305 OPTION AR-CAB

SMCS-1421 **i05792173**

NOTE	REF NO	GRAPHIC REF	PART NUMBER	QTY	PART NAME 1 2 3 4 5 6 (PRODUCT LEVEL)	SEE PAGE
	1	1	**348-7842**	1	CONVERTER-POWER (24-VOLT TO 12-VOLT)	
	2	1	**445-1528**	1	HARNESS AS-WIRING (RADIO)	
		1	**9X-3401**	1	PIN-CONNECTOR (16-GA TO 18-GA)	
					—OR—	
		1	**126-1767**	1	PIN-CONNECTOR (14-GA TO 16-GA)	
		1	**155-2274**	2	KIT-CONNECTING PLUG (6-PIN)	
					(EACH INCLUDES PLUG AS, WEDGE & INTERFACE SEAL)	
		1	**102-8805**	1	KIT-RECEPTACLE (6-PIN)	
		1	**177-9653**	1	KIT-RECEPTACLE (4-PIN)	
					(EACH RECEPTACLE KIT INCLUDES RECEPTACLE AS & WEDGE)	
		1	**9X-3402**	5	SOCKET-CONNECTOR (16-GA TO 18-GA)	
					—OR—	
		1	**126-1768**	5	SOCKET-CONNECTOR (14-GA TO 16-GA)	
		1	**115-3519**	3	PIN-CONNECTOR (12-GA TO 14-GA)	
		1	**8T-8737**	7	PLUG-SEAL	
E		1	**125-7874**		TUBE-HEAT SHRINK (5.72-MM DIA) (5-CM)	
		1	**3E-3383**	1	WEDGE-RECEPTACLE LOCK (6-PIN)	
	3	1	**449-2127**	1	PLATE	
	4	1	**096-6166**	4	WASHER-HARD (4.5X9X1-MM THK)	
M	5	1	**162-2165**	4	BOLT-SOCKET HEAD (M4X0.7X16-MM)	
M	6	1	**9X-2043**	4	SCREW-TRUSS HEAD (M6X1X14-MM)	

E - ORDER BY THE CENTIMETER
M - METRIC PART

361-3136 **CONVERTER GP-ELECTRICAL (**contd.**)** **i05792173**

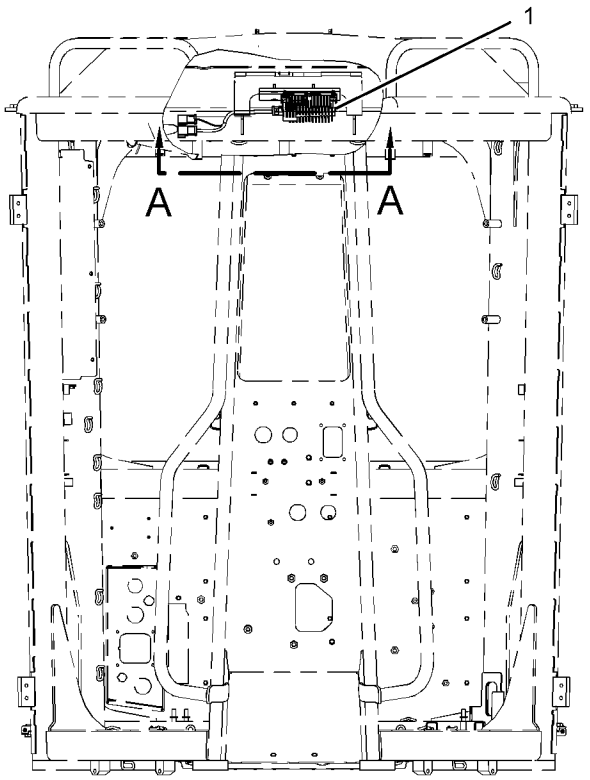

FRONT VIEW

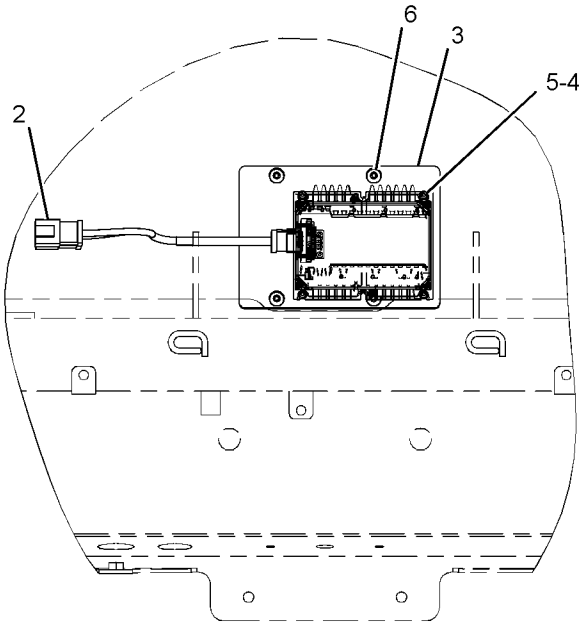

VIEW A-A

GRAPHIC #1 <END> g03510005

250-9257 ELECTRONICS GP-IMPLEMENT—MASTER

S/N: B551-UP

PART OF 420-1977, 575-9874, 575-9875 CAB AR

SMCS-5701, 7610, 7620 **i06857113**

NOTE	PART NUMBER	QTY	PART NAME 1 2 3 4 5 6 (PRODUCT LEVEL)	SEE PAGE
	520-2844	1	SOFTWARE GP-IMPLEMENT	
			<END>	

250-9258 ELECTRONICS GP-IMPLEMENT—IMPLEMENT 3

S/N: B551-UP

PART OF 420-1977, 575-9874, 575-9875 CAB AR

SMCS-5701, 7610, 7620 **i04648416**

NOTE	PART NUMBER	QTY	PART NAME 1 2 3 4 5 6 (PRODUCT LEVEL)	SEE PAGE
	385-5563	1	SOFTWARE GP-IMPLEMENT	
			—OR—	
	385-5564	1	SERVICE GP-IMPLEMENT	
			(OPTIONAL SERVICE REPLACEMENT)(INCLUDES CONTROL GP & SOFTWARE)	
			<END>	

311-8592 ELECTRONICS GP-IMPLEMENT—IMPLEMENT 2

S/N: B551-UP

PART OF 365-3354, 365-3355, 365-3368, 365-3369, 365-3370, 365-3371, 365-5541, 438-5425, 438-5426 CONTROL AR-HYDRAULIC

SMCS-5701, 7610, 7620 **i04647910**

NOTE	PART NUMBER	QTY	PART NAME 1 2 3 4 5 6 (PRODUCT LEVEL)	SEE PAGE
	385-5563	1	SOFTWARE GP-IMPLEMENT	
			—OR—	
	385-5564	1	SERVICE GP-IMPLEMENT	
			(OPTIONAL SERVICE REPLACEMENT)(INCLUDES CONTROL GP & SOFTWARE)	
			<END>	

275-9650 ELECTRONICS GP-MONITOR—MESSENGER

S/N: B551-UP

PART OF 372-6063 WIRING GP-CAB

SMCS-7490, 7610, 7620 **i03812877**

NOTE	PART NUMBER	QTY	PART NAME 1 2 3 4 5 6 (PRODUCT LEVEL)	SEE PAGE
R	**308-3869**	1	CONTROL GP-UNPRGMED MONITOR (MESSENGER)	
R - REMANUFACTURED PART MAY BE AVAILABLE				
			<END>	

446-4842 ELECTRONICS GP-MONITOR—ENGLISH, FRENCH, GERMAN, PORTUGUESE, SPANISH

S/N: B551-UP

PART OF 302-5133, 302-8669, 302-8670, 302-8671, 302-8672, 302-8673 PLATE & FILM GP

SMCS-7490, 7610, 7620 **i06854229**

NOTE	PART NUMBER	QTY	PART NAME 1 2 3 4 5 6 (PRODUCT LEVEL)	SEE PAGE
	520-7338	1	SOFTWARE GP-MONITOR	

<END>

446-4843 ELECTRONICS GP-MONITOR—ENGLISH, FINNISH, SWEDISH, DANISH, PORTUGUESE

S/N: B551-UP

PART OF 302-8675, 302-8676, 302-8677 PLATE & FILM GP

SMCS-7490, 7610, 7620 **i06857125**

NOTE	PART NUMBER	QTY	PART NAME 1 2 3 4 5 6 (PRODUCT LEVEL)	SEE PAGE
	520-7339	1	SOFTWARE GP-MONITOR	

<END>

446-4845 ELECTRONICS GP-MONITOR—ENGLISH, GREEK, HEBREW, ITALIAN, PORTUGUESE

S/N: B551-UP

PART OF 302-8679, 302-8680, 302-8681 PLATE & FILM GP

SMCS-7490, 7610, 7620 **i06857280**

NOTE	PART NUMBER	QTY	PART NAME 1 2 3 4 5 6 (PRODUCT LEVEL)	SEE PAGE
	520-7340	1	SOFTWARE GP-MONITOR	

<END>

446-4846 ELECTRONICS GP-MONITOR—ENGLISH, PORTUGUESE, RUSSIAN, ARABIC

S/N: B551-UP

PART OF 302-8683, 302-8684 PLATE & FILM GP

SMCS-7490, 7610, 7620 **i06857127**

NOTE	PART NUMBER	QTY	PART NAME 1 2 3 4 5 6 (PRODUCT LEVEL)	SEE PAGE
	520-7341	1	SOFTWARE GP-MONITOR	

<END>

446-4847 ELECTRONICS GP-MONITOR—ENGLISH, PORTUGUESE, ROMANIAN, INDONESIAN, UKRANIAN

S/N: B551-UP

PART OF 302-8686 PLATE & FILM GP

SMCS-7490, 7610, 7620 **i06857284**

NOTE	PART NUMBER	QTY	PART NAME 1 2 3 4 5 6 (PRODUCT LEVEL)	SEE PAGE
	520-7342	1	SOFTWARE GP-MONITOR	

<END>

446-4848 ELECTRONICS GP-MONITOR—ENGLISH, PORTUGUESE, DUTCH, NORWEGIAN, SLOVENIAN

S/N: B551-UP

PART OF 302-8674, 302-8678, 302-8687 PLATE & FILM GP

SMCS-7490, 7610, 7620 **i06857184**

NOTE	PART NUMBER	QTY	PART NAME 1 2 3 4 5 6 (PRODUCT LEVEL)	SEE PAGE
	520-7343	1	SOFTWARE GP-MONITOR	

<END>

446-4849 ELECTRONICS GP-MONITOR—ENGLISH, PORTUGUESE, TURKISH, CHINESE

S/N: B551-UP

PART OF 302-8682, 302-8685 PLATE & FILM GP

SMCS-7490, 7610, 7620 **i06857110**

NOTE	PART NUMBER	QTY	PART NAME 1 2 3 4 5 6 (PRODUCT LEVEL)	SEE PAGE
	520-7344	1	SOFTWARE GP-MONITOR	

<END>

463-9605 ELECTRONICS GP-MONITOR—PRODUCT LINK 641

S/N: B551-UP

PART OF 463-5585, 463-5586 CONTROL GP-ELECTRONIC

SMCS-7490, 7610, 7620 **i07641603**

NOTE	PART NUMBER	QTY	PART NAME 1 2 3 4 5 6 (PRODUCT LEVEL)	SEE PAGE
	560-0261	1	SOFTWARE GP-MONITOR (CELLULAR)	

<END>

463-9608 ELECTRONICS GP-MONITOR—NETWORK MANAGER

S/N: B551-UP

PART OF 463-5584, 463-5585, 463-5586 CONTROL GP-ELECTRONIC

SMCS-7490, 7610, 7620 **i07394976**

NOTE	PART NUMBER	QTY	PART NAME 1 2 3 4 5 6 (PRODUCT LEVEL)	SEE PAGE
	552-6072	1	SOFTWARE GP-MONITOR (NETWORK MANAGER)	
	520-2944	1	SOFTWARE GP-MONITOR (TELEMATICS)	

<END>

463-9611 ELECTRONICS GP-MONITOR—PRODUCT LINK 631

S/N: B551-UP

PART OF 463-5584, 463-5586 CONTROL GP-ELECTRONIC

SMCS-7490, 7610, 7620 **i07713199**

NOTE	PART NUMBER	QTY	PART NAME 1 2 3 4 5 6 (PRODUCT LEVEL)	SEE PAGE
	559-9492	1	SOFTWARE GP-MONITOR (SATELLITE RADIO)	

<END>

310-3221 ELECTRONICS GP-POWER TRAIN

S/N: B551-UP

PART OF 577-1377 COMMON AR

SMCS-4800, 4808, 7610, 7620 **i07427819**

NOTE	PART NUMBER	QTY	PART NAME 1 2 3 4 5 6 (PRODUCT LEVEL)	SEE PAGE
	560-6324	1	SOFTWARE GP-POWER TRAIN	

<END>

462-6392 GRADE CONTROL AR

S/N: B551-UP

SMCS-7220 **i05965208**

NOTE	PART NUMBER	QTY	PART NAME 1 2 3 4 5 6 (PRODUCT LEVEL)	SEE PAGE
Y	*459-3196*	1	GRADE CONTROL GP	176
Y	**298-3643**	1	MOUNTING GP-GRADE CONTROL	240
Y	*362-5222*	1	SWIVEL GP (CIRCLE DRIVE)	636
Y	*356-3647*	1	WIRING GP-GRADE CONTROL (ACCUGRADE)	305

Y - SEPARATE ILLUSTRATION

<END>

462-6393 GRADE CONTROL AR

S/N: B551-UP
FOR USE WITH 458-8701—PAGE: 782
CANNOT BE USED WITH 362-5222—PAGE: 636
PART OF 492-0730 OPTION AR-GRADE CONTROL

SMCS-7220 **i07797561**

NOTE	REF NO	GRAPHIC REF	PART NUMBER	QTY	PART NAME 1 2 3 4 5 6 (PRODUCT LEVEL)	SEE PAGE
Y	1	1	**298-3643**	1	MOUNTING GP-GRADE CONTROL	240
Y	2	1	*356-3647*	1	WIRING GP-GRADE CONTROL (ACCUGRADE)	305
Y	3	1	*362-5223*	1	SWIVEL GP (CIRCLE DRIVE)	637
Y	4	1	*363-4325*	1	WIRING GP-SENSOR	333
FJ			*363-7275*	1	CONFIGURATION-PREMIUM	

F - NOT SHOWN
J - DLR INSTALL CONFIG:SEE IRM:EESC3-01
Y - SEPARATE ILLUSTRATION

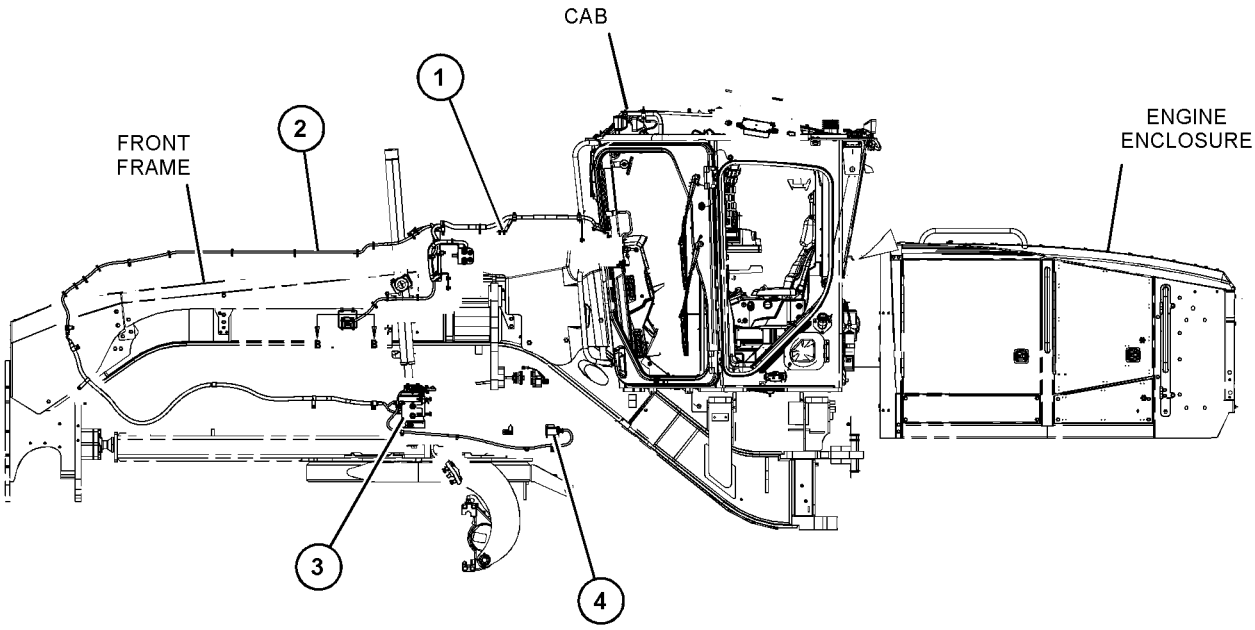

LEFT SIDE VIEW

GRAPHIC #1 <END> g06432024

459-3196 GRADE CONTROL GP

S/N: B551-UP
POWER MODULE 400
PART OF 462-6392 GRADE CONTROL AR

SMCS-7220 **i05841283**

NOTE	REF NO	GRAPHIC REF	PART NUMBER	QTY	PART NAME 1 2 3 4 5 6 (PRODUCT LEVEL)	SEE PAGE
Y	1	1	*283-7960*	1	POWER SUPPLY GP (GRADE CONTROL)	250
	2	1	**360-2968**	1	HARNESS AS-WIRING (POWER MODULE, RH)	
		1	**3R-9965**	1	PLUG AS-CONNECTOR (8-PIN)	
		1	**8T-8737**	6	PLUG-SEAL	
		1	**126-1767**	6	PIN-CONNECTOR (14-GA TO 16-GA)	
		1	**230-4010**	1	RECEPTACLE AS-CONNECTOR (12-PIN)	
	3	1	**360-2969**	1	HARNESS AS-WIRING (POWER MODULE, LH)	
		1	**6D-5257**	1	PLUG AS-CONNECTOR (8-PIN)	
		1	**8T-8737**	4	PLUG-SEAL	
		1	**126-1768**	8	SOCKET-CONNECTOR (14-GA TO 16-GA)	
		1	**230-4009**	1	PLUG AS-CONNECTOR (12-PIN)	
		1	**455-0709**	1	SEAL-CONNECTOR	
	4	1	**3S-2093**	2	STRAP-CABLE	
	5	1	**4P-8134**	2	CLIP (LADDER)	

Y - SEPARATE ILLUSTRATION

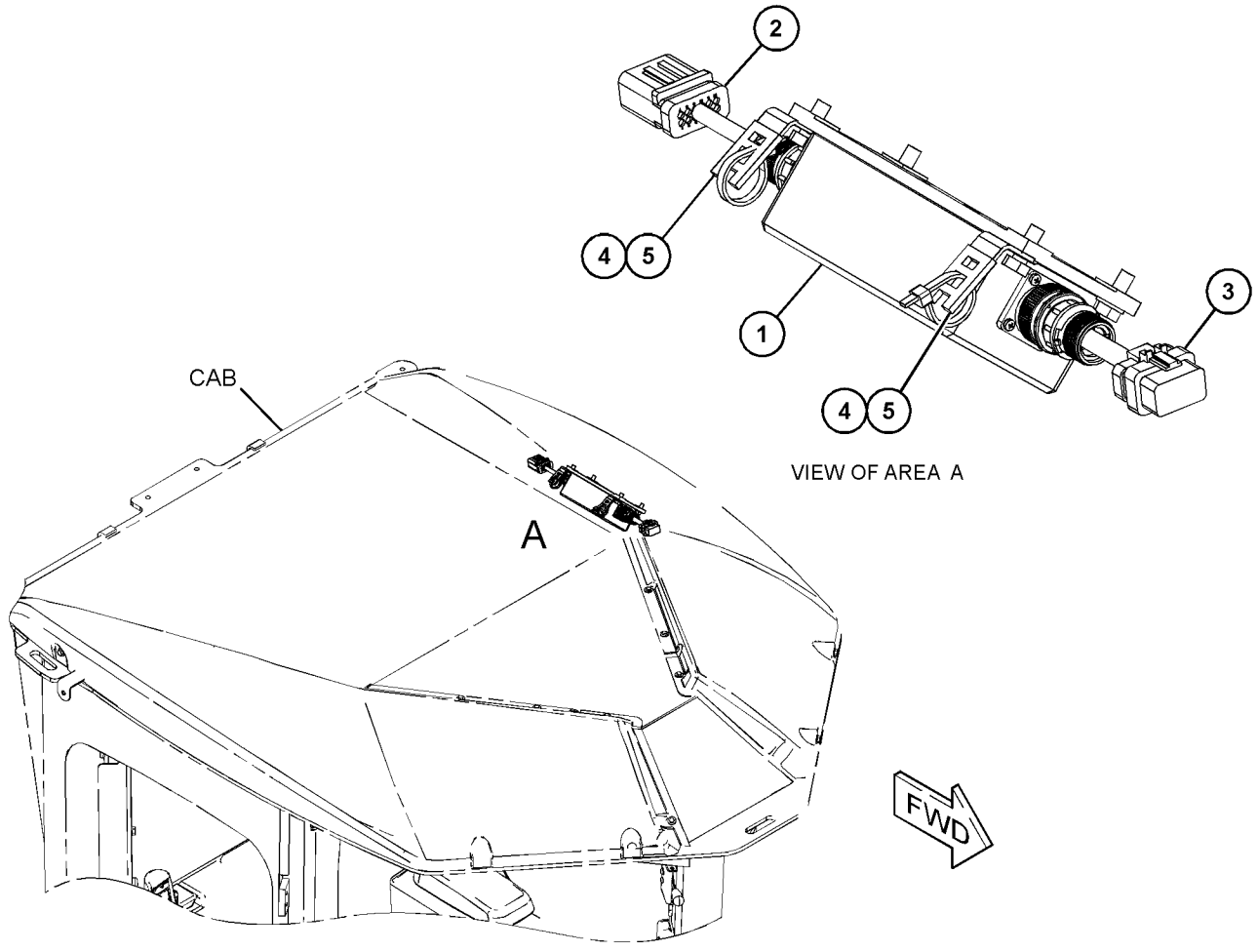

GRAPHIC #1 <END> g03695781

297-6867 GROUND GP-ELECTRICAL

S/N: TX71-UP

PART OF 506-2265 ENGINE AR-COMPLETE

SMCS-1405, 1453

i02789819

NOTE	REF NO	GRAPHIC REF	PART NUMBER	QTY	PART NAME 1 2 3 4 5 6 (PRODUCT LEVEL)	SEE PAGE
M	1	1	**5C-7261**	1	NUT (M8X1.25-THD)	
	2	1	**8T-4224**	2	WASHER-HARD (8.8X16X2-MM THK)	

M - METRIC PART

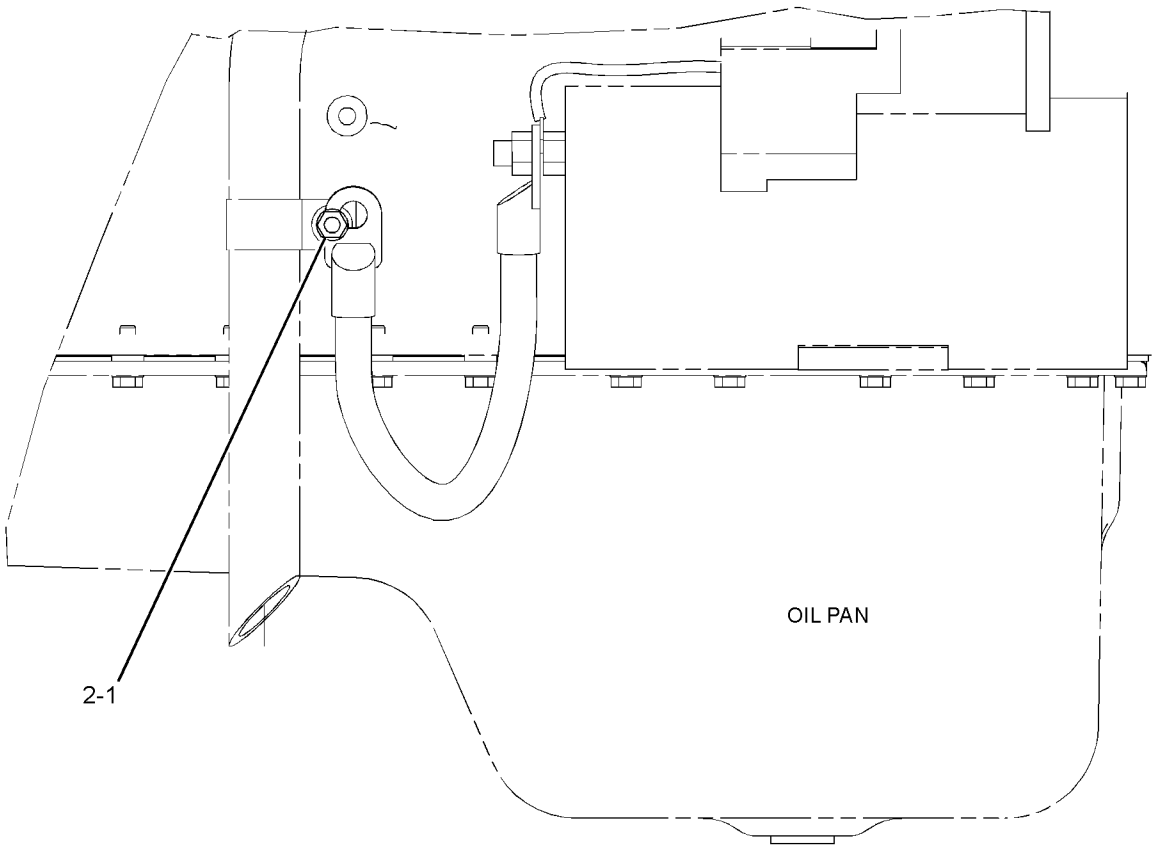

LEFT SIDE VIEW OF ENGINE

GRAPHIC #1 <END> g01352470

524-2229 HARNESS AS-CAB–HVAC

S/N: B551-UP

JUMPER

PART OF 372-6063 WIRING GP-CAB

SMCS-1408 **i07189823**

NOTE	PART NUMBER	QTY	PART NAME 1 2 3 4 5 6 (PRODUCT LEVEL)	SEE PAGE
	102-8801	1	KIT-RECEPTACLE (12-PIN)	
			(INCLUDES RECEPTACLE AS & WEDGE)	
	9X-3401	12	PIN-CONNECTOR (16-GA TO 18-GA)	
			–OR–	
	126-1767	12	PIN-CONNECTOR (14-GA TO 16-GA)	
	119-5094	1	PLUG AS	
	231-3930	1	RELAY AS (24-VOLT) (HVAC)	
	9X-3402	12	SOCKET-CONNECTOR (16-GA TO 18-GA)	
			–OR–	
	126-1768	12	SOCKET-CONNECTOR (14-GA TO 16-GA)	
	9X-1056	4	TERMINAL-RECEPTACLE (14-GA TO 16-GA)	
E	**119-3662**		TUBE-HEAT SHRINK (10.85-MM DIA) (13-CM)	
	155-2258	1	WEDGE-PLUG LOCK (12-PIN)	

E - ORDER BY THE CENTIMETER

<END>

559-8198 HARNESS AS-CAB

S/N: B551-UP

PART OF 372-6063 WIRING GP-CAB

SMCS-1408 **i07583008**

NOTE	PART NUMBER	QTY	PART NAME 1 2 3 4 5 6 (PRODUCT LEVEL)	SEE PAGE
	309-9886	2	BLOCK AS-FUSE	
	455-7867	2	CAP AS	
			(EACH INCLUDES)	
	8C-6354	1	CAP-RECEPTACLE (ET CONNECTOR)	
	374-7463	2	CAP-SEAL	
	374-7465	2	CAP-SEAL	
	374-7466	4	CAP-SEAL	
	374-7467	5	CAP-SEAL	
	374-7468	1	CAP-SEAL	
	126-1774	4	COVER-CONNECTOR	
	424-4322	1	COVER-CONNECTOR	
	155-2255	6	KIT-CONNECTING PLUG (12-PIN)	
	155-2265	10	KIT-CONNECTING PLUG (8-PIN)	
	155-2270	8	KIT-CONNECTING PLUG (2-PIN)	
	155-2271	6	KIT-CONNECTING PLUG (4-PIN)	
	176-2947	6	KIT-CONNECTING PLUG (4-PIN)	
	155-2274	9	KIT-CONNECTING PLUG (6-PIN)	
			(EACH PLUG KIT INCLUDES PLUG AS, WEDGE, & INTERFACE SEAL)	
	155-2260	3	KIT-CONNECTING PLUG (3-PIN)	
	155-2260	5	KIT-CONNECTING PLUG (3-PIN)	
			(EACH INCLUDES PLUG AS, WEDGES, & INTERFACE SEAL)	
	177-9648	2	KIT-CONNECTING PLUG (2-PIN)	
			(EACH INCLUDES PLUG AS & WEDGE)	
	245-7434	6	KIT-CONNECTING PLUG (10-PIN)	
	331-4222	2	KIT-CONNECTING PLUG (12-PIN)	
			(EACH INCLUDES PLUG-CONNECTOR, WIRE AS, & PLUG)	
	331-4223	1	KIT-CONNECTING PLUG (12-PIN)	
	331-4224	10	KIT-CONNECTING PLUG (6-PIN)	
	331-4226	8	KIT-CONNECTING PLUG (2-PIN)	
			(EACH PLUG KIT INCLUDES WEDGE-PLUG LOCK, PLUG AS, & INTERFACE SEAL)	
	102-8803	1	KIT-RECEPTACLE (3-PIN)	
	102-8804	1	KIT-RECEPTACLE (4-PIN)	
	102-8805	1	KIT-RECEPTACLE (6-PIN)	
	102-8801	2	KIT-RECEPTACLE (12-PIN)	
	151-9274	1	KIT-RECEPTACLE (4-PIN)	
	174-3091	2	KIT-RECEPTACLE (12-PIN)	
	177-9645	1	KIT-RECEPTACLE (2-PIN)	
			(EACH RECEPTACLE KIT INCLUDES RECEPTACLE AS & WEDGE)	
	8N-1523	1	LOCKWASHER	
	128-4249	1	LOCKWASHER	
	270-2679	3	LOCKWASHER	
	310-0674	1	LOCKWASHER	
	203-9007	3	NUT (1-1/2-18-THD)	
	211-0052	2	NUT (1-11/16-18-THD)	
	7T-0093	2	PIN-CONNECTOR (12-GA TO 14-GA)	

559-8198 **HARNESS AS-CAB (**contd.**)** **i07583008**

NOTE	PART NUMBER	QTY	PART NAME 1 2 3 4 5 6 (PRODUCT LEVEL)	SEE PAGE
	8N-1540	2	PIN-CONNECTOR (12-GA TO 14-GA)	
	8N-1548	2	PIN-CONNECTOR (4-GA)	
	9X-6856	12	PIN-CONNECTOR (16-GA TO 18-GA)	
	9X-3401	276	PIN-CONNECTOR (16-GA TO 18-GA)	
			—OR—	
	126-1767	276	PIN-CONNECTOR (14-GA TO 16-GA)	
	202-5397	16	PLUG	
	245-8021	1	PLUG AS (24-PIN)	
	245-8025	9	PLUG AS-CONNECTOR (6-PIN)	
	261-0524	1	PLUG AS-CONNECTOR (4-PIN)	
	455-0706	1	SEAL-CONNECTOR	
	271-5590	2	PLUG AS-CONNECTOR (2-PIN)	
	281-3395	1	PLUG AS-CONNECTOR (12-PIN)	
	455-0709	1	SEAL-CONNECTOR	
	309-6831	2	PLUG AS-CONNECTOR (70-PIN)	
	338-8860	2	PLUG AS-CONNECTOR (70-PIN)	
			(EACH PLUG AS INCLUDES)	
	159-9322	1	SEAL-O-RING	
	7R-2751	164	PLUG-CONNECTOR (1-PIN)	
	7G-7917	4	PLUG-SEAL	
	7G-7918	2	PLUG-SEAL	
	7G-7919	3	PLUG-SEAL	
	8T-8737	270	PLUG-SEAL	
	175-3366	2	RECEPTACLE AS	
	359-5180	1	RECEPTACLE AS-CONNECTOR (14-PIN)	
	8N-1517	1	RECEPTACLE AS-CONNECTOR (25-PIN)	
	8N-1522	1	NUT (2-1/4-16-THD)	
	134-2540	3	RECEPTACLE AS-CONNECTOR (3-PIN)	
	171-0596	1	RECEPTACLE AS-CONNECTOR (3-PIN)	
	197-7259	1	RECEPTACLE AS-CONNECTOR (19-PIN)	
	331-3575	1	RECEPTACLE AS-CONNECTOR (70-PIN)	
	331-3600	1	RECEPTACLE AS-CONNECTOR (24-PIN)	
	317-3176	1	RECEPTACLE-CONNECTOR (9-PIN)	
	325-9568	1	RECEPTACLE-CONNECTOR (9-PIN)	
	128-4123	3	SEAL-CABLE	
	128-5016	99	SEAL-CABLE	
	185-1860	44	SEAL-WIRE	
	3E-5226	4	SOCKET-CONNECTOR (12-GA TO 14-GA)	
	9X-3402	387	SOCKET-CONNECTOR (16-GA TO 18-GA)	
			—OR—	
	126-1768	387	SOCKET-CONNECTOR (14-GA TO 16-GA)	
	283-8106	4	SOCKET-CONNECTOR (20-GA)	
			—OR—	
	374-8372	4	SOCKET-CONNECTOR (16-GA TO 18-GA)	
	3S-2093	12	STRAP-CABLE	
	189-3158	1	SUPPRESSOR-ARC	
B	**1P-0810**		TAPE-ELECTRICAL	
B	**329-3734**		TAPE-ELECTRICAL	
	196-2412	51	TERMINAL AS (16-GA)	
			(EACH INCLUDES)	
	7R-2750	1	SEAL-CONNECTOR	
	196-2413	47	TERMINAL AS (12-GA)	

559-8198 **HARNESS AS-CAB (**contd.**)** **i07583008**

NOTE	PART NUMBER	QTY	PART NAME 1 2 3 4 5 6 (PRODUCT LEVEL)	SEE PAGE
	202-0313	2	TERMINAL AS (18-GA)	
	202-0314	2	TERMINAL AS (14-GA)	
	204-1297	41	TERMINAL AS-BLADE (18-GA TO 20-GA)	
			(EACH INCLUDES)	
	235-4123	1	TERMINAL (18-GA TO 20-GA)	
	5P-5618	1	TERMINAL-BLADE (10-GA TO 12-GA)	
	5P-4571	3	TERMINAL-BLADE (14-GA TO 16-GA)	
	5P-2957	2	TERMINAL-BLADE (14-GA TO 16-GA)	
			—OR—	
	5P-5602	2	TERMINAL-BLADE (18-GA TO 22-GA)	
	223-4779	3	TERMINAL-BLADE (14-GA TO 16-GA)	
	2L-8069	3	TERMINAL-RING (2-GA TO 10-GA, 3/8-IN SCREW)	
	2L-8052	2	TERMINAL-RING (6-GA, 3/8-IN SCREW)	
			—OR—	
	2L-8060	2	TERMINAL-RING (8-GA, 3/8-IN SCREW)	
	2L-8069	3	TERMINAL-RING (2-GA TO 10-GA, 3/8-IN SCREW)	
	2L-8079	9	TERMINAL-RING (14-GA TO 16-GA, 3/8-IN SCREW)	
	283-6447	2	TERMINAL-RING	
E	**125-7874**		TUBE-HEAT SHRINK (5.72-MM DIA) (625-CM)	
E	**125-7875**		TUBE-HEAT SHRINK (7.44-MM DIA) (35-CM)	
	271-5599	2	WEDGE-PLUG LOCK	

B - USE AS REQUIRED
E - ORDER BY THE CENTIMETER

<END>

356-3649 HARNESS AS-CHASSIS

S/N: B551-UP

PART OF 356-3647 WIRING GP-GRADE CONTROL

SMCS-1408 **i07022127**

NOTE	PART NUMBER	QTY	PART NAME 1 2 3 4 5 6 (PRODUCT LEVEL)	SEE PAGE
	7R-3029	4	CAP-DUST	
	243-5362	1	CAP-DUST	
	228-3323	4	CLIP-SPRING	
	155-2255	1	KIT-CONNECTING PLUG (12-PIN)	
			(INCLUDES PLUG AS, WEDGE, & INTERFACE SEAL)	
	174-0503	1	KIT-CONNECTING PLUG (3-PIN)	
			(INCLUDES PLUG AS, WEDGES & INTERFACE SEAL)	
	102-8804	1	KIT-RECEPTACLE (4-PIN)	
			(INCLUDES RECEPTACLE AS & WEDGE)	
	9W-0852	2	PIN-CONNECTOR (14-GA TO 16-GA)	
	9X-3401	2	PIN-CONNECTOR (16-GA TO 18-GA)	
	230-2566	4	RECEPTACLE-CONNECTOR	
	9X-4385	1	PLUG AS-CONNECTOR (6-PIN)	
	8T-8737	3	PLUG-SEAL	
	134-2540	1	RECEPTACLE AS-CONNECTOR (3-PIN)	
	9W-0844	4	SOCKET-CONNECTOR (14-GA TO 16-GA)	
	9X-3402	8	SOCKET-CONNECTOR (16-GA TO 18-GA)	
E	**119-3662**		TUBE-HEAT SHRINK (10.85-MM DIA) (39-CM)	
E	**125-7875**		TUBE-HEAT SHRINK (7.44-MM DIA) (115-CM)	
	155-2258	1	WEDGE-PLUG LOCK (12-PIN)	
	3E-3377	1	WEDGE-RECEPTACLE LOCK (4-PIN)	

E - ORDER BY THE CENTIMETER

<END>

222-5917 HARNESS AS-ENGINE

S/N: TX71-UP

PART OF 424-7735 WIRING GP-ELECTRONIC CONTROL

SMCS-1408 **i05952456**

NOTE	PART NUMBER	QTY	PART NAME 1 2 3 4 5 6 (PRODUCT LEVEL)	SEE PAGE
	135-5975	1	GROMMET-WIRING	
	316-8226	1	BOLT-SPECIAL	
	155-2255	1	KIT-CONNECTING PLUG (12-PIN)	
			(INCLUDES PLUG AS & WEDGE)	
	6N-7523	1	WASHER (6.48X11.9X1.57-MM THK)	
	155-2258	1	WEDGE-PLUG LOCK (12-PIN)	
	194-5226	12	WIRE AS (16-GA)	
			–OR–	
	194-5227	12	WIRE AS (14-GA)	

<END>

322-2733 HARNESS AS-ENGINE

S/N: TX71-UP

PART OF 424-7735 WIRING GP-ELECTRONIC CONTROL

SMCS-1408 **i05385098**

NOTE	PART NUMBER	QTY	PART NAME 1 2 3 4 5 6 (PRODUCT LEVEL)	SEE PAGE
	211-6807	1	COVER-CONNECTOR	
	9X-3401	12	PIN-CONNECTOR (16-GA TO 18-GA)	
			—OR—	
	126-1767	12	PIN-CONNECTOR (14-GA TO 16-GA)	
	100-3320	1	PLUG AS-CONNECTOR (2-PIN)	
	111-2416	1	PLUG AS-CONNECTOR (2-PIN)	
			(EACH PLUG AS INCLUDES)	
	126-5011	1	SEAL-CONNECTOR	
	155-2265	1	KIT-CONNECTING PLUG (8-PIN)	
	155-2270	3	KIT-CONNECTING PLUG (2-PIN)	
			(EACH PLUG KIT INCLUDES PLUG AS, WEDGE & INTERFACE SEAL)	
	230-4011	2	PLUG AS-CONNECTOR (2-PIN)	
			(EACH INCLUDES)	
	264-7029	1	SEAL-CONNECTOR	
	230-4013	1	PLUG AS-CONNECTOR (3-PIN)	
	237-0227	3	PLUG AS-CONNECTOR (3-PIN)	
			(EACH PLUG AS INCLUDES)	
	264-7030	1	SEAL-CONNECTOR	
	264-5732	1	PLUG AS-CONNECTOR (120-PIN)	
	288-7324	1	SEAL-CONNECTOR	
	8T-8737	89	PLUG-SEAL	
	102-8802	1	KIT-RECEPTACLE (2-PIN)	
	102-8801	1	KIT-RECEPTACLE (12-PIN)	
			(EACH RECEPTACLE KIT INCLUDES RECEPTACLE AS & WEDGE)	
	194-5226	63	WIRE AS (16-GA)	
			—OR—	
	194-5227	63	WIRE AS (14-GA)	
	305-5362	4	TERMINAL AS (18-GA)	
	1S-9593	2	STRAP-CABLE	
E	**119-3662**		TUBE-HEAT SHRINK (10.85-MM DIA) (33-CM)	
E	**125-7874**		TUBE-HEAT SHRINK (5.72-MM DIA) (5-CM)	
E	**125-7875**		TUBE-HEAT SHRINK (7.44-MM DIA) (10-CM)	

E - ORDER BY THE CENTIMETER

<END>

555-8914 HARNESS AS-FRONT

S/N: B551-UP

PART OF 471-9240 WIRING GP-FRONT

SMCS-1408 **i07582977**

NOTE	PART NUMBER	QTY	PART NAME 1 2 3 4 5 6 (PRODUCT LEVEL)	SEE PAGE
	274-3774	9	CAP-CONNECTOR	
	274-3777	1	CAP-CONNECTOR	
	213-0142	1	CONNECTOR	
	155-2270	28	KIT-CONNECTING PLUG (2-PIN)	
	155-2271	3	KIT-CONNECTING PLUG (4-PIN)	
	155-2274	2	KIT-CONNECTING PLUG (6-PIN)	
			(EACH PLUG KIT INCLUDES PLUG AS, WEDGE, & INTERFACE SEAL)	
	102-8802	1	KIT-RECEPTACLE (2-PIN)	
	102-8803	1	KIT-RECEPTACLE (3-PIN)	
	102-8804	1	KIT-RECEPTACLE (4-PIN)	
			(EACH RECEPTACLE KIT INCLUDES RECEPTACLE AS & WEDGE)	
	8T-8729	1	PIN-CONNECTOR (16-GA TO 20-GA)	
	9X-3401	7	PIN-CONNECTOR (16-GA TO 18-GA)	
	9X-4391	1	PLUG AS-CONNECTOR (70-PIN)	
	3E-4367	1	RING-RETAINING	
M	**3E-8557**	1	BOLT (M5X0.8X39.37-MM)	
	9X-5615	2	SEAL (INTERFACE, 70-PIN)	
	230-4013	1	PLUG AS-CONNECTOR (3-PIN)	
	455-0705	1	SEAL-CONNECTOR	
	8T-8737	32	PLUG-SEAL	
	7T-0094	2	SOCKET-CONNECTOR (12-GA TO 14-GA)	
	8T-8730	102	SOCKET-CONNECTOR (16-GA TO 18-GA)	
	9W-0844	4	SOCKET-CONNECTOR (14-GA TO 16-GA)	
	9X-3402	33	SOCKET-CONNECTOR (16-GA TO 18-GA)	
	2L-8079	2	TERMINAL-RING (14-GA TO 16-GA, 3/8-IN SCREW)	
E	**119-3662**		TUBE-HEAT SHRINK (10.85-MM DIA) (7-CM)	
E	**125-7874**		TUBE-HEAT SHRINK (5.72-MM DIA) (25-CM)	
E	**125-7875**		TUBE-HEAT SHRINK (7.44-MM DIA) (30-CM)	

E - ORDER BY THE CENTIMETER
M - METRIC PART

<END>

308-9323 HARNESS AS-LIGHTING

S/N: B551-UP

PART OF 471-9240 WIRING GP-FRONT

SMCS-1408 **i06629004**

NOTE	PART NUMBER	QTY	PART NAME 1 2 3 4 5 6 (PRODUCT LEVEL)	SEE PAGE
	102-8804	1	KIT-RECEPTACLE (4-PIN)	
			(INCLUDES RECEPTACLE AS & WEDGE)	
	8T-8729	2	PIN-CONNECTOR (16-GA TO 20-GA)	
	8T-8730	4	SOCKET-CONNECTOR (16-GA TO 18-GA)	
	9X-3401	2	PIN-CONNECTOR (16-GA TO 18-GA)	
	9X-3402	2	SOCKET-CONNECTOR (16-GA TO 18-GA)	
E	**125-7875**		TUBE-HEAT SHRINK (7.44-MM DIA) (10-CM)	
	155-2270	3	KIT-CONNECTING PLUG (2-PIN)	
			(EACH INCLUDES PLUG AS, WEDGE, & INTERFACE SEAL)	
	274-3774	2	CAP-CONNECTOR	

E - ORDER BY THE CENTIMETER

<END>

553-2611 HARNESS AS-LIGHTING—BAR

S/N: B551-UP

PART OF 553-2588, 553-2589 LIGHTING AR-ROADING, 308-9370, 308-9371 MOUNTING GP-LIGHTING

SMCS-1408 **i07637819**

NOTE	PART NUMBER	QTY	PART NAME 1 2 3 4 5 6 (PRODUCT LEVEL)	SEE PAGE
E	**196-8876**		BRAID (BLACK, ONE GOLD STRAND) (346-CM)	
	155-2274	2	KIT-CONNECTING PLUG (6-PIN)	
			(EACH INCLUDES PLUG AS, WEDGE, & INTERFACE SEAL)	
	102-8802	1	KIT-RECEPTACLE (2-PIN)	
	102-8805	1	KIT-RECEPTACLE (6-PIN)	
			(EACH RECEPTACLE KIT INCLUDES RECEPTACLE AS & WEDGE)	
	8T-8729	6	PIN-CONNECTOR (16-GA TO 20-GA)	
	9W-0852	1	PIN-CONNECTOR (14-GA TO 16-GA)	
	8T-8737	3	PLUG-SEAL	
	8T-8730	10	SOCKET-CONNECTOR (16-GA TO 18-GA)	
E	**125-7874**		TUBE-HEAT SHRINK (5.72-MM DIA) (15-CM)	
	3E-3383	1	WEDGE-RECEPTACLE LOCK (6-PIN)	

E - ORDER BY THE CENTIMETER

<END>

200-5728 HARNESS AS-RADIO

S/N: B551-UP
4 FLANGE
PART OF 477-1250, 477-1257 RADIO GP

SMCS-1408 **i05716252**

NOTE	PART NUMBER	QTY	PART NAME 1 2 3 4 5 6 (PRODUCT LEVEL)	SEE PAGE
	172-8037	1	CONNECTOR (RADIO)	
	160-3518	1	KIT-RECEPTACLE (8-PIN)	
			(INCLUDES RECEPTACLE AS & WEDGE)	
	8T-8729	7	PIN-CONNECTOR (16-GA TO 20-GA)	
	8T-8737	1	PLUG-SEAL	
	172-8039	11	TERMINAL (RADIO)	

<END>

564-9571 HARNESS AS-REAR

S/N: B551-UP

PART OF 264-7522 WIRING GP-REAR

SMCS-1408 **i07635851**

NOTE	PART NUMBER	QTY	PART NAME 1 2 3 4 5 6 (PRODUCT LEVEL)	SEE PAGE
	8N-1521	2	BELL AS-END	
	274-3781	1	CAP-SEAL	
	374-7463	3	CAP-SEAL	
	374-7466	1	CAP-SEAL	
	126-1774	3	COVER-CONNECTOR	
E	**371-8115**		HOSE (96-CM)	
	155-2255	3	KIT-CONNECTING PLUG (12-PIN)	
	155-2270	11	KIT-CONNECTING PLUG (2-PIN)	
	155-2274	5	KIT-CONNECTING PLUG (6-PIN)	
			(EACH PLUG KIT INCLUDES PLUG AS, WEDGE, & INTERFACE SEAL)	
	155-2260	3	KIT-CONNECTING PLUG (3-PIN)	
	174-0503	3	KIT-CONNECTING PLUG (3-PIN)	
			(EACH PLUG KIT INCLUDES PLUG AS, WEDGES & INTERFACE SEAL)	
	102-8802	1	KIT-RECEPTACLE (2-PIN)	
	102-8803	1	KIT-RECEPTACLE (3-PIN)	
	102-8801	3	KIT-RECEPTACLE (12-PIN)	
			(EACH RECEPTACLE KIT INCLUDES RECEPTACLE AS & WEDGE)	
	8T-8729	22	PIN-CONNECTOR (16-GA TO 20-GA)	
	9W-0852	5	PIN-CONNECTOR (14-GA TO 16-GA)	
	9X-3401	4	PIN-CONNECTOR (16-GA TO 18-GA)	
	119-5094	2	PLUG AS	
	7X-6222	1	PLUG AS-CONNECTOR (24-PIN)	
	3E-4367	1	RING-RETAINING	
M	**3E-8558**	1	BOLT (M5X0.8X39.37-MM)	
	9X-3265	2	SEAL-CONNECTOR (24-PIN)	
	8N-1518	2	PLUG AS-CONNECTOR (25-PIN)	
	9X-1054	1	PLUG AS-CONNECTOR (4-PIN)	
	9X-4391	1	PLUG AS-CONNECTOR (70-PIN)	
	3E-4367	1	RING-RETAINING	
M	**3E-8557**	1	BOLT (M5X0.8X39.37-MM)	
	9X-5615	2	SEAL (INTERFACE, 70-PIN)	
	147-1445	1	PLUG AS-CONNECTOR (70-PIN)	
	160-7689	1	PLUG AS-CONNECTOR (70-PIN)	
	147-1446	1	PLUG AS-CONNECTOR (70-PIN)	
			(EACH PLUG AS INCLUDES)	
	159-9322	1	SEAL-O-RING	
	230-4013	1	PLUG AS-CONNECTOR (3-PIN)	
	237-0227	1	PLUG AS-CONNECTOR (3-PIN)	
			(EACH PLUG AS INCLUDES)	
	455-0705	1	SEAL-CONNECTOR	
	7G-7917	15	PLUG-SEAL	
	7G-7918	3	PLUG-SEAL	
	7G-7919	5	PLUG-SEAL	
	8T-8737	118	PLUG-SEAL	
	134-2540	3	RECEPTACLE AS-CONNECTOR (3-PIN)	
	9X-6857	17	SOCKET-CONNECTOR (16-GA TO 18-GA)	
	8N-1541	5	SOCKET-CONNECTOR (12-GA TO 14-GA)	

564-9571 **HARNESS AS-REAR (**contd.**)** **i07635851**

NOTE	PART NUMBER	QTY	PART NAME 1 2 3 4 5 6 (PRODUCT LEVEL)	SEE PAGE
	8N-1545	1	SOCKET-CONNECTOR (8-GA)	
	8N-1549	4	SOCKET-CONNECTOR (4-GA)	
	8T-8730	157	SOCKET-CONNECTOR (16-GA TO 18-GA)	
	9W-0844	37	SOCKET-CONNECTOR (14-GA TO 16-GA)	
	9X-3402	111	SOCKET-CONNECTOR (16-GA TO 18-GA)	
	3S-2093	4	STRAP-CABLE	
	9X-6772	4	STRAP-CABLE	
	9X-1056	5	TERMINAL-RECEPTACLE (14-GA TO 16-GA)	
	100-5041	7	TERMINAL-RECEPTACLE (18-GA TO 20-GA)	
	2L-8049	1	TERMINAL-RING (6-GA, NO. 10 SCREW)	
			—OR—	
	2L-8057	1	TERMINAL-RING (8-GA, NO. 10 SCREW)	
	2L-8052	1	TERMINAL-RING (6-GA, 3/8-IN SCREW)	
			—OR—	
	2L-8060	1	TERMINAL-RING (8-GA, 3/8-IN SCREW)	
	2L-8069	4	TERMINAL-RING (2-GA TO 10-GA, 3/8-IN SCREW)	
	2L-8079	1	TERMINAL-RING (14-GA TO 16-GA, 3/8-IN SCREW)	
	7N-9017	3	TERMINAL-RING (18-GA TO 22-GA, NO. 10 SCREW)	
E	**9X-2506**		TUBE-HEAT SHRINK (19.1-MM DIA) (6-CM)	
E	**119-3662**		TUBE-HEAT SHRINK (10.85-MM DIA) (85-CM)	
E	**125-7874**		TUBE-HEAT SHRINK (5.72-MM DIA) (75-CM)	
E	**125-7875**		TUBE-HEAT SHRINK (7.44-MM DIA) (55-CM)	
E	**135-5010**		TUBE-HEAT SHRINK (52-MM DIA) (40-CM)	

E - ORDER BY THE CENTIMETER
M - METRIC PART

<END>

356-3380 HARNESS AS-SENSOR

S/N: TX71-UP

PART OF 419-6912 WIRING GP-SENSOR

SMCS-1408 **i05205991**

NOTE	PART NUMBER	QTY	PART NAME 1 2 3 4 5 6 (PRODUCT LEVEL)	SEE PAGE
	9X-3401	9	PIN-CONNECTOR (16-GA TO 18-GA)	
			—OR—	
	126-1767	9	PIN-CONNECTOR (14-GA TO 16-GA)	
	230-4011	1	PLUG AS-CONNECTOR (2-PIN)	
	264-7029	1	SEAL-CONNECTOR	
	237-0227	1	PLUG AS-CONNECTOR (3-PIN)	
	264-7030	1	SEAL-CONNECTOR	
	8T-8737	1	PLUG-SEAL	
	102-8806	1	KIT-RECEPTACLE (8-PIN)	
			(INCLUDES RECEPTACLE AS & WEDGE)	
	230-4012	1	RECEPTACLE AS-CONNECTOR (2-PIN)	
E	**289-5150**		SLEEVE (11-CM)	
	9X-3402	5	SOCKET-CONNECTOR (16-GA TO 18-GA)	
			—OR—	
	126-1768	5	SOCKET-CONNECTOR (14-GA TO 16-GA)	

E - ORDER BY THE CENTIMETER

<END>

448-1938 HARNESS AS-SENSOR—INCLINATION

S/N: B551-UP

PART OF 356-3647 WIRING GP-GRADE CONTROL

SMCS-1408 **i06535752**

NOTE	PART NUMBER	QTY	PART NAME 1 2 3 4 5 6 (PRODUCT LEVEL)	SEE PAGE
	102-8804	1	KIT-RECEPTACLE (4-PIN)	
			(INCLUDES RECEPTACLE AS & WEDGE)	
	8T-8729	2	PIN-CONNECTOR (16-GA TO 20-GA)	
	9X-3401	2	PIN-CONNECTOR (16-GA TO 18-GA)	
	9X-4385	1	PLUG AS-CONNECTOR (6-PIN)	
E	**125-7875**		TUBE-HEAT SHRINK (7.44-MM DIA) (5-CM)	
	243-5362	1	CAP-DUST	
E	**232-0895**		CONDUIT-FLEXIBLE (9.6-MM ID) (216-CM)	

E - ORDER BY THE CENTIMETER

<END>

474-5410 HARNESS AS-SENSOR—ROTATION SENSOR

S/N: B551-UP
ACCUGRADE READY OPTION
PART OF 356-3647 WIRING GP-GRADE CONTROL

SMCS-1408 **i06535668**

NOTE	PART NUMBER	QTY	PART NAME 1 2 3 4 5 6 (PRODUCT LEVEL)	SEE PAGE
	243-5362	1	CAP-DUST (PLUG)	
	155-2271	1	KIT-CONNECTING PLUG (4-PIN)	
			(INCLUDES PLUG AS, WEDGE & INTERFACE SEAL)	
	9X-4385	1	PLUG AS-CONNECTOR (6-PIN)	
	8T-8730	2	SOCKET-CONNECTOR (16-GA TO 18-GA)	
	9X-3402	2	SOCKET-CONNECTOR (16-GA TO 18-GA)	
E	**125-7875**		TUBE-HEAT SHRINK (7.44-MM DIA) (5-CM)	

E - ORDER BY THE CENTIMETER

<END>

324-3356 HARNESS AS-SOLENOID—TRANSMISSION PUMP BYPASS

S/N: B551-UP
PART OF 323-5169 WIRING GP-SENSOR

SMCS-1408, 1467 **i06064209**

NOTE	PART NUMBER	QTY	PART NAME 1 2 3 4 5 6 (PRODUCT LEVEL)	SEE PAGE
	155-2270	1	KIT-CONNECTING PLUG (2-PIN)	
			(INCLUDES PLUG AS, WEDGE & INTERFACE SEAL)	
	102-8802	1	KIT-RECEPTACLE (2-PIN)	
			(INCLUDES RECEPTACLE AS & WEDGE)	
	8T-8729	2	PIN-CONNECTOR (16-GA TO 20-GA)	
	8T-8730	2	SOCKET-CONNECTOR (16-GA TO 18-GA)	

<END>

391-4444 HARNESS AS-SOLENOID

S/N: B551-UP
STEERING VALVE
PART OF 391-4440 HARNESS AS-VALVE

SMCS-1408, 1467 **i06629051**

NOTE	PART NUMBER	QTY	PART NAME 1 2 3 4 5 6 (PRODUCT LEVEL)	SEE PAGE
	311-8743	4	ADAPTER-CONNECTOR	
	318-2589	1	HOUSING-RECEPTACLE	
	155-2270	4	KIT-CONNECTING PLUG (2-PIN)	
			(EACH INCLUDES PLUG AS, WEDGE & INTERFACE SEAL)	
	102-8804	1	KIT-RECEPTACLE (4-PIN)	
	102-8805	1	KIT-RECEPTACLE (6-PIN)	
			(EACH RECEPTACLE KIT INCLUDES RECEPTACLE AS & WEDGE)	
	9X-3401	10	PIN-CONNECTOR (16-GA TO 18-GA)	
	230-4011	1	PLUG AS-CONNECTOR (2-PIN)	
	455-0704	1	SEAL-CONNECTOR	
	9X-3402	10	SOCKET-CONNECTOR (16-GA TO 18-GA)	
E	**125-7876**		TUBE-HEAT SHRINK (17.78-MM DIA) (21-CM)	
	3E-3377	1	WEDGE-RECEPTACLE LOCK (4-PIN)	
	3E-3383	1	WEDGE-RECEPTACLE LOCK (6-PIN)	

E - ORDER BY THE CENTIMETER

<END>

308-9367 HARNESS AS-SWITCH

S/N: B551-UP
PART OF 356-3647 WIRING GP-GRADE CONTROL

SMCS-1408 **i07022089**

NOTE	PART NUMBER	QTY	PART NAME 1 2 3 4 5 6 (PRODUCT LEVEL)	SEE PAGE
G	**165-0017**		HOSE (100.4-IN)	
	155-2271	2	KIT-CONNECTING PLUG (4-PIN)	
			(EACH INCLUDES PLUG AS, WEDGE, & INTERFACE SEAL)	
	174-0503	1	KIT-CONNECTING PLUG (3-PIN)	
			(INCLUDES PLUG AS, WEDGES & INTERFACE SEAL)	
	102-8804	1	KIT-RECEPTACLE (4-PIN)	
			(INCLUDES RECEPTACLE AS & WEDGE)	
	8T-8729	2	PIN-CONNECTOR (16-GA TO 20-GA)	
	9X-3401	2	PIN-CONNECTOR (16-GA TO 18-GA)	
	8T-8737	1	PLUG-SEAL	
	134-2540	1	RECEPTACLE AS-CONNECTOR (3-PIN)	
	8T-8730	2	SOCKET-CONNECTOR (16-GA TO 18-GA)	
	9W-0844	2	SOCKET-CONNECTOR (14-GA TO 16-GA)	
	9X-3402	6	SOCKET-CONNECTOR (16-GA TO 18-GA)	
B	**368-2369**		TAPE	
B	**368-2370**		TAPE	
E	**125-7875**		TUBE-HEAT SHRINK (7.44-MM DIA) (30-CM)	
E	**9X-8243**		TUBE-HEAT SHRINK (39.9-MM DIA) (16-CM)	
	3E-3377	1	WEDGE-RECEPTACLE LOCK (4-PIN)	

B - USE AS REQUIRED
E - ORDER BY THE CENTIMETER
G - ORDER BY THE INCH

<END>

391-4440 HARNESS AS-VALVE—STEERING

S/N: B551-UP

PART OF 471-9240 WIRING GP-FRONT

SMCS-1408 **i06629033**

NOTE	PART NUMBER	QTY	PART NAME 1 2 3 4 5 6 (PRODUCT LEVEL)	SEE PAGE
Y	*391-4444*	1	HARNESS AS-SOLENOID (STEERING VALVE)	191
	391-4443	1	PLATE	

Y - SEPARATE ILLUSTRATION

<END>

324-3355 HARNESS AS-WIRING—TRANSMISSION PUMP PRESSURE

S/N: B551-UP

PART OF 323-5169 WIRING GP-SENSOR

SMCS-1408 **i06064205**

NOTE	PART NUMBER	QTY	PART NAME 1 2 3 4 5 6 (PRODUCT LEVEL)	SEE PAGE
	155-2260	1	KIT-CONNECTING PLUG (3-PIN)	
			(INCLUDES PLUG AS, WEDGE & INTERFACE SEAL)	
	102-8803	1	KIT-RECEPTACLE (3-PIN)	
			(INCLUDES RECEPTACLE AS & WEDGE)	
	8T-8729	3	PIN-CONNECTOR (16-GA TO 20-GA)	
BE	**114-8843**		SLEEVE-PLASTIC (20-CM)	
	8T-8730	3	SOCKET-CONNECTOR (16-GA TO 18-GA)	
	3E-3371	1	WEDGE-RECEPTACLE LOCK (3-PIN)	

B - USE AS REQUIRED
E - ORDER BY THE CENTIMETER

<END>

438-3108 HARNESS AS-WIRING

S/N: B551-UP
ACCUGRADE READY OPTION RIGHT, LEFT
PART OF 458-8701 CONTROL GP-JOYSTICK

SMCS-1408 **i06092711**

NOTE	PART NUMBER	QTY	PART NAME 1 2 3 4 5 6 (PRODUCT LEVEL)	SEE PAGE
	102-8804	1	KIT-RECEPTACLE (4-PIN)	
	102-8806	3	KIT-RECEPTACLE (8-PIN)	
			(EACH RECEPTACLE KIT INCLUDES RECEPTACLE AS & WEDGE)	
	3E-3377	1	WEDGE-RECEPTACLE LOCK (4-PIN)	
	3E-3389	3	WEDGE-RECEPTACLE LOCK (8-PIN)	
	8T-8737	14	PLUG-SEAL	
E	**125-7874**		TUBE-HEAT SHRINK (5.72-MM DIA) (10-CM)	
E	**125-7875**		TUBE-HEAT SHRINK (7.44-MM DIA) (5-CM)	
	9X-3402	19	SOCKET-CONNECTOR (16-GA TO 18-GA)	
			—OR—	
	126-1768	19	SOCKET-CONNECTOR (14-GA TO 16-GA)	
	9X-3401	19	PIN-CONNECTOR (16-GA TO 18-GA)	
			—OR—	
	126-1767	19	PIN-CONNECTOR (14-GA TO 16-GA)	
	155-2255	2	KIT-CONNECTING PLUG (12-PIN)	
			(EACH PLUG KIT INCLUDES PLUG AS, WEDGE & INTERFACE SEAL)	
	155-2258	2	WEDGE-PLUG LOCK (12-PIN)	
B	**329-3734**		TAPE-ELECTRICAL	

B - USE AS REQUIRED
E - ORDER BY THE CENTIMETER

<END>

332-1543 HEATER GP-JACKET WATER—NORTH AMERICA

S/N: B551-UP

120-VOLT, 1000 WATT

SMCS-1383 **i06662140**

NOTE	REF NO	GRAPHIC REF	PART NUMBER	QTY	PART NAME 1 2 3 4 5 6 (PRODUCT LEVEL)	SEE PAGE
	1	1	**9N-5253**	1	CORD AS-HEATER ELEMENT (120-VOLT, 15-AMPERE)	
	2	1	**321-8710**	1	ELEMENT AS-JACKET WATER HEATER (120-VOLT, 1000-WATT)	
		1	**4F-7952**	1	SEAL-O-RING	
	3	1	**7X-0599**	1	WASHER-HARD (13X20X2-MM THK)	
M	4	1	**8T-4192**	1	BOLT (M12X1.75X25-MM)	

M - METRIC PART

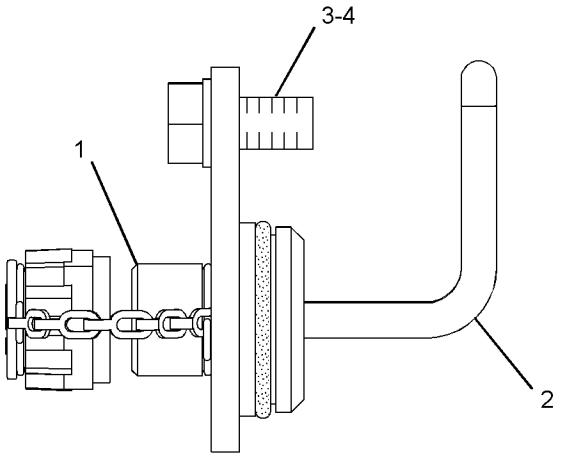

GRAPHIC #1 <END> g01879653

332-1544 HEATER GP-JACKET WATER–EUROPEAN MARKET

S/N: B551-UP

240-VOLT, 1000-WATT

SMCS-1383 **i06662162**

NOTE	REF NO	GRAPHIC REF	PART NUMBER	QTY	PART NAME 1 2 3 4 5 6 (PRODUCT LEVEL)	SEE PAGE
	1	1	**4N-8227**	1	CORD AS-HEATER ELEMENT (240-VOLT, 15-AMPERE)	
	2	1	**321-8711**	1	ELEMENT AS-JACKET WATER HEATER (240-VOLT, 1000-WATT)	
		1	**4F-7952**	1	SEAL-O-RING	
	3	1	**7X-0599**	1	WASHER-HARD (13X20X2-MM THK)	
M	4	1	**8T-4192**	1	BOLT (M12X1.75X25-MM)	
	5	1	**488-2140**	1	FILM-WARNING (SHOCK, ELECTROCUTION HAZARD)	

M - METRIC PART

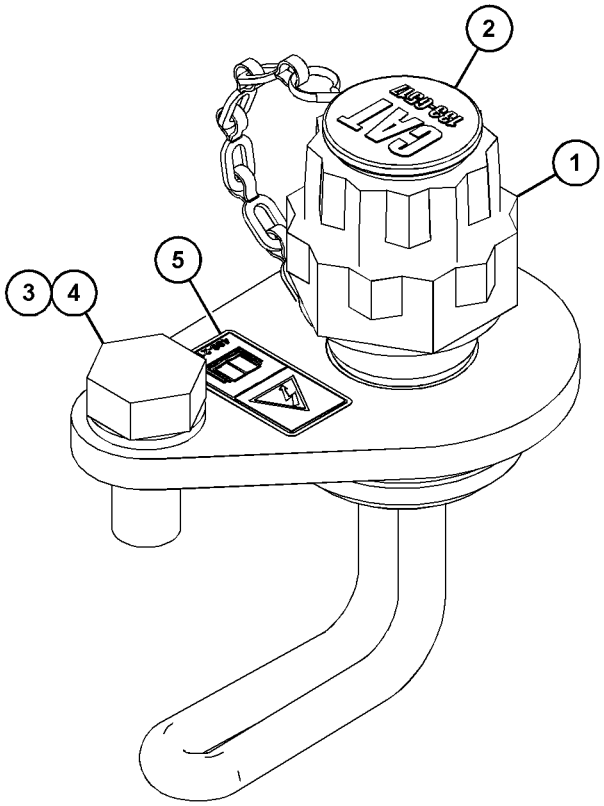

GRAPHIC #1 <END> g06014706

238-8827 INSTALLATION GP-SECURITY—MACHINE SECURITY SYSTEM

S/N: B551-UP

SMCS-7631 **i05893023**

NOTE	REF NO	GRAPHIC REF	PART NUMBER	QTY	PART NAME 1 2 3 4 5 6 (PRODUCT LEVEL)	SEE PAGE
	1	1	**102-8803**	1	KIT-RECEPTACLE (3-PIN)	
					(INCLUDES RECEPTACLE AS & WEDGE)	
	2	1	**3S-2093**	2	STRAP-CABLE	
	3	1	**198-5389**	1	FILM-IDENTIFICATION (IGNITION SWITCH)	
	4	1	**205-0826**	1	FILM-INSTRUCTION (MACHINE SECURITY, CONSOLE)	
J	5	1	**206-5162**	2	KEY AS-ELECTRONIC (SECURITY)	
	6	1	**206-5208**	1	COIL AS (EXCITER)	
		1	**102-8802**	2	KIT-RECEPTACLE (2-PIN)	
					(EACH INCLUDES RECEPTACLE AS & WEDGE)	
		1	**205-8257**	1	COIL AS (EXCITER)	
	7	1	**218-0404**	1	MODULE GP-INTERFACE (KEY) (MACHINE SECURITY SYSTEM)	
	8	1	**219-6314**	2	KEY RING (IDENTIFICATION)	
	11	1	**238-8813**	1	HARNESS AS-CHASSIS (MACHINE SECURITY SYSTEM)	
		1	**8T-8729**	6	PIN-CONNECTOR (16-GA TO 20-GA)	
		1	**8T-8730**	10	SOCKET-CONNECTOR (16-GA TO 18-GA)	
		1	**8T-8737**	2	PLUG-SEAL	
		1	**102-8805**	1	KIT-RECEPTACLE (6-PIN)	
					(INCLUDES RECEPTACLE AS & WEDGE)	
		1	**155-2265**	1	KIT-CONNECTING PLUG (8-PIN)	
		1	**155-2270**	2	KIT-CONNECTING PLUG (2-PIN)	
					(EACH PLUG KIT INCLUDES PLUG AS,WEDGE,& INTERFACE SEAL)	
	12	1	**242-3282**	1	LAMP AS-LED (24-VOLT, RED)	
	14	1	**204-0813**	2	BOLT (M6X1X40-MM)	
	15	1	**102-8802**	1	KIT-RECEPTACLE (2-PIN)	
					(INCLUDES RECEPTACLE AS & WEDGE)	
	16	1	**8C-5607**	4	MOUNT-ISOLATION	
	17	1	**8C-5608**	2	SPACER (6.5X9.5X25.4-MM THK)	
	18	1	**9X-6165**	4	WASHER (6.5X22X2.5-MM THK)	

J - REQUIRES CORPORATE KEY

238-8827 **INSTALLATION GP-SECURITY (**contd.**)** **i05893023**

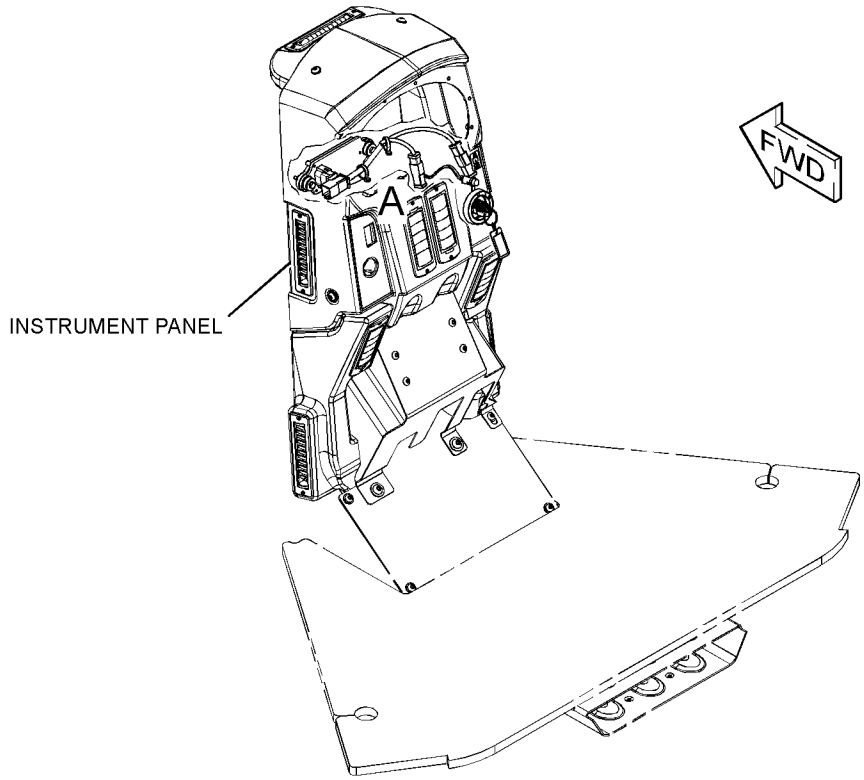

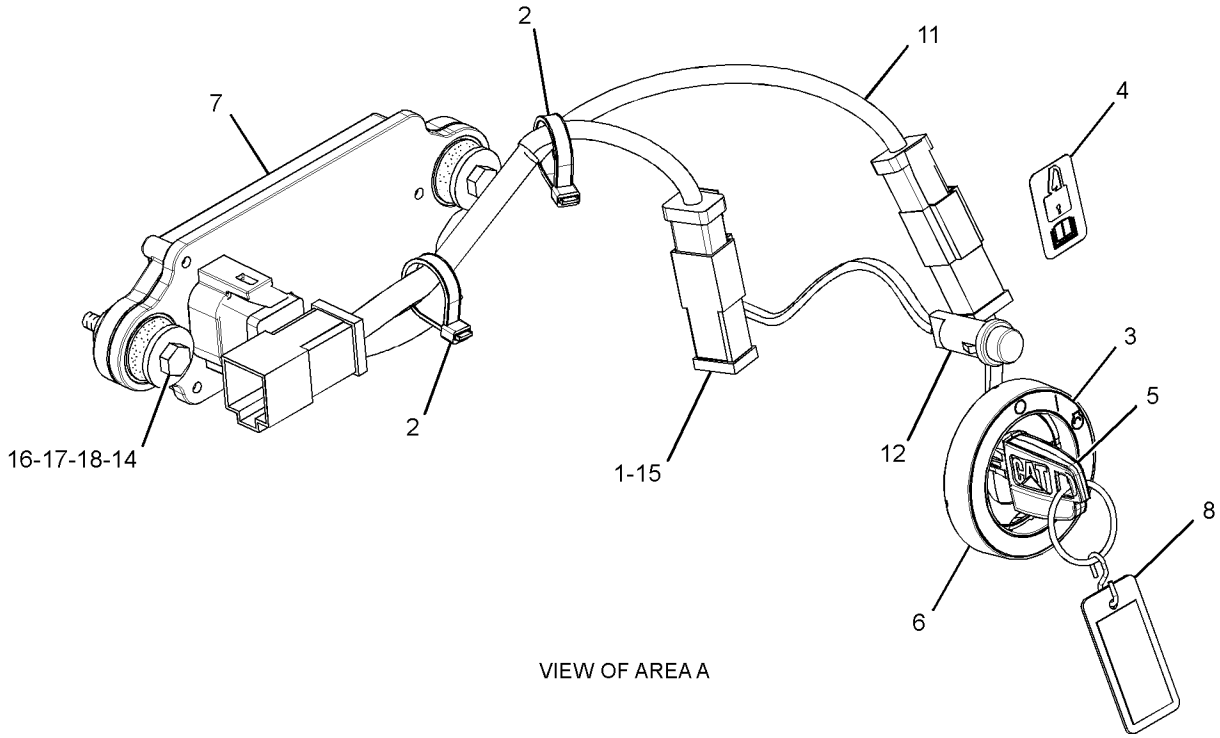

VIEW OF AREA A

GRAPHIC #1 <END> g01444538

361-3137 INSTALLATION GP-WARNING BEACON—PRODUCT LINK

S/N: B551-UP
STROBE LAMP BRACKET
FOR USE WITH 338-1132—PAGE: 220
PART OF 565-1026 SNOW AR-MOTOR GRADER

SMCS-1408, 1429, 1431, 7553 **i05893125**

NOTE	REF NO	GRAPHIC REF	PART NUMBER	QTY	PART NAME 1 2 3 4 5 6 (PRODUCT LEVEL)	SEE PAGE
	1	1	*354-8027*	1	SWITCH GP-ROCKER (WARNING BEACON)	
		1	**237-9736**		SWITCH AS-ROCKER (WARNING BEACON)	
	2	1	**356-5178**	1	PLATE AS	
		1	**130-5300**	1	CLIP	
	3	1	**5P-4115**	4	WASHER-HARD (7.2X19X2-MM THK)	
M	4	1	**8T-4138**	4	BOLT (M6X1X20-MM)	

M - METRIC PART

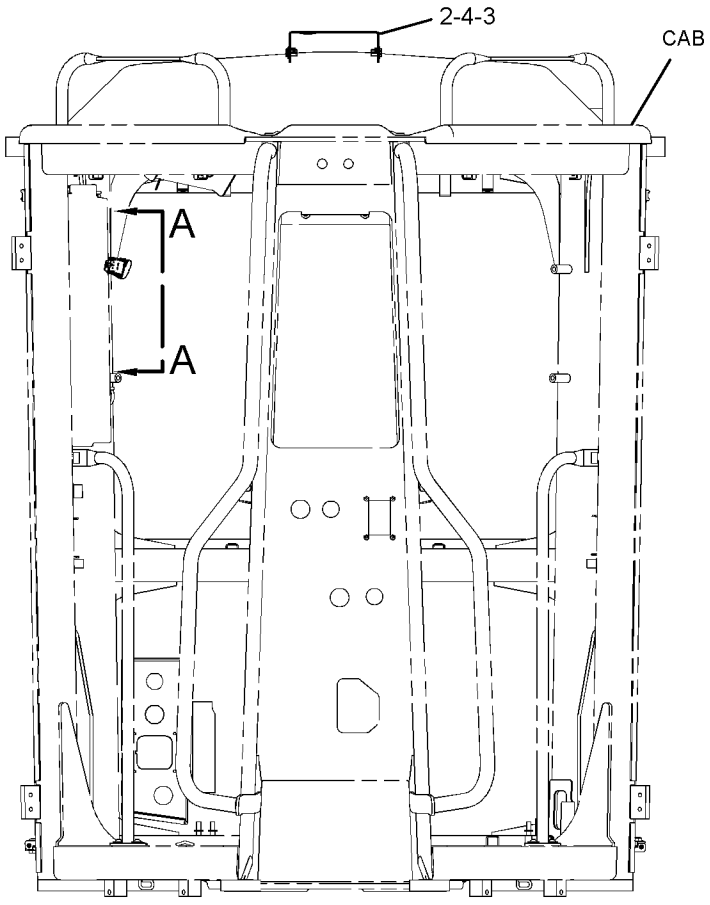

FRONT VIEW

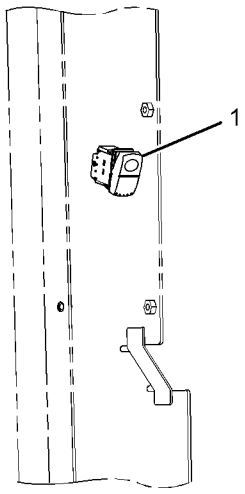

VIEW A-A

GRAPHIC #1 <END> g03007547

505-1454 KIT-SENSOR & MOUNTING

S/N: B551-UP

PART OF 366-6692 VALVE GP-CONTROL

SMCS-1439, 7400, 7856

i07139109

NOTE	PART NUMBER	QTY	PART NAME 1 2 3 4 5 6 (PRODUCT LEVEL)	SEE PAGE
M	**6V-8653**	2	BOLT-SOCKET HEAD (M6X1X40-MM)	
	461-2544	1	SENSOR AS (SPOOL)	

M - METRIC PART

<END>

261-1502 LAMP GP

S/N: B551-UP
24-VOLT, COMPARTMENT
PART OF 233-4623, 247-6430 WIRING GP-REAR LIGHTING

SMCS-1429 **i07711352**

NOTE	REF NO	GRAPHIC REF	PART NUMBER	QTY	PART NAME 1 2 3 4 5 6 (PRODUCT LEVEL)	SEE PAGE
	1	1	**264-5346**	1	LENS	
	2	1	**8U-2622**	1	LAMP (24-VOLT, 21-WATT)	
	3	1	**8T-8729**	2	PIN-CONNECTOR (16-GA TO 20-GA)	
	4	1	**102-8802**	1	KIT-RECEPTACLE (2-PIN)	
					(INCLUDES RECEPTACLE AS & WEDGE)	
FM			**5C-2890**	3	NUT (M6X1-THD)	
F			**8T-4205**	3	WASHER-HARD (7.2X14.5X2-MM THK)	

F - NOT SHOWN
M - METRIC PART

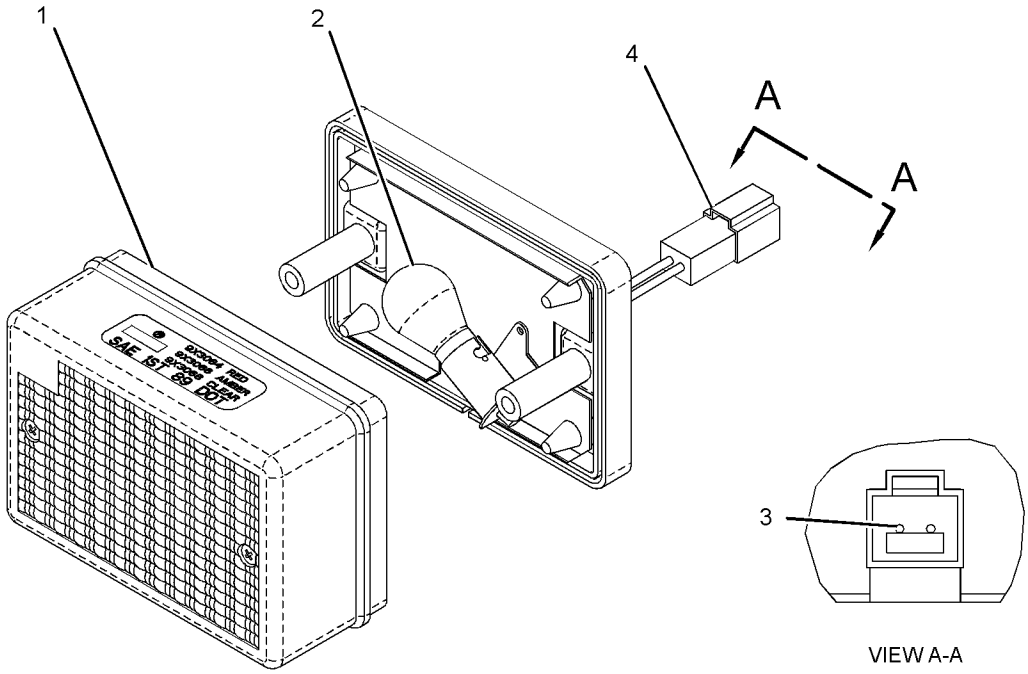

VIEW A-A

GRAPHIC #1 <END> g01279825

375-1478 LAMP GP-DOME–LED

S/N: B551-UP
24-VOLT. WITH SWITCH
PART OF 447-2230 LINER GP-CAB

SMCS-1433 **i07458999**

NOTE	REF NO	GRAPHIC REF	PART NUMBER	QTY	PART NAME 1 2 3 4 5 6 (PRODUCT LEVEL)	SEE PAGE
	1	1	**102-8803**	1	KIT-RECEPTACLE (3-PIN)	
					(INCLUDES RECEPTACLE AS & WEDGE)	
	2	1	**8T-8729**	3	PIN-CONNECTOR (16-GA TO 20-GA)	
	3	1	**7T-0020**	1	LENS-DOME LAMP	

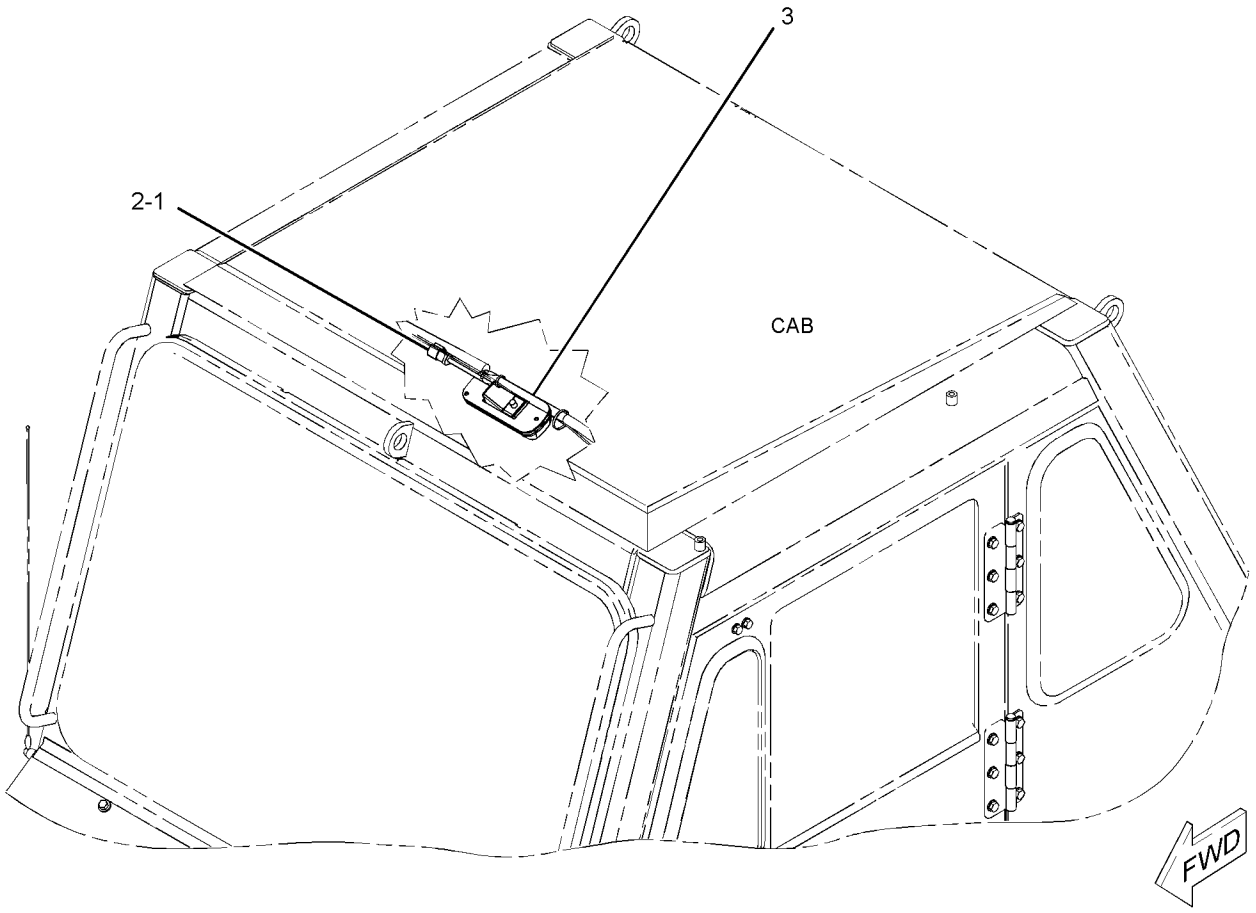

GRAPHIC #1 <END> g03253998

219-6488 LAMP GP-FLOOD

S/N: B551-UP
24-VOLT, WITH SWITCH
PART OF 421-7810 LIGHTING GP-ROADING

SMCS-1434 **i04321906**

NOTE	REF NO	GRAPHIC REF	PART NUMBER	QTY	PART NAME 1 2 3 4 5 6 (PRODUCT LEVEL)	SEE PAGE
	1	1	**351-9918**	1	LAMP-HALOGEN (24-VOLT, 70-WATT)	
M	2	1	**8T-6912**	1	BOLT (M8X1.25X50-MM)	
M	3	1	**6V-9189**	1	LOCKNUT (M8X1.25-THD)	
	4	1	**8T-4224**	2	WASHER-HARD (8.8X16X2-MM THK)	
M	5	1	**9X-4244**	2	SCREW-SPECIAL (M4X1.79X25-MM)	
	6	1	**202-6611**	1	LENS AS (FLOODLIGHT)	
	7	1	**175-4292**	1	BODY AS	
	8	1	**164-7556**	1	BRACKET (LAMP RETAINING)	
	9	1	**175-4291**	1	BRACKET AS	

M - METRIC PART

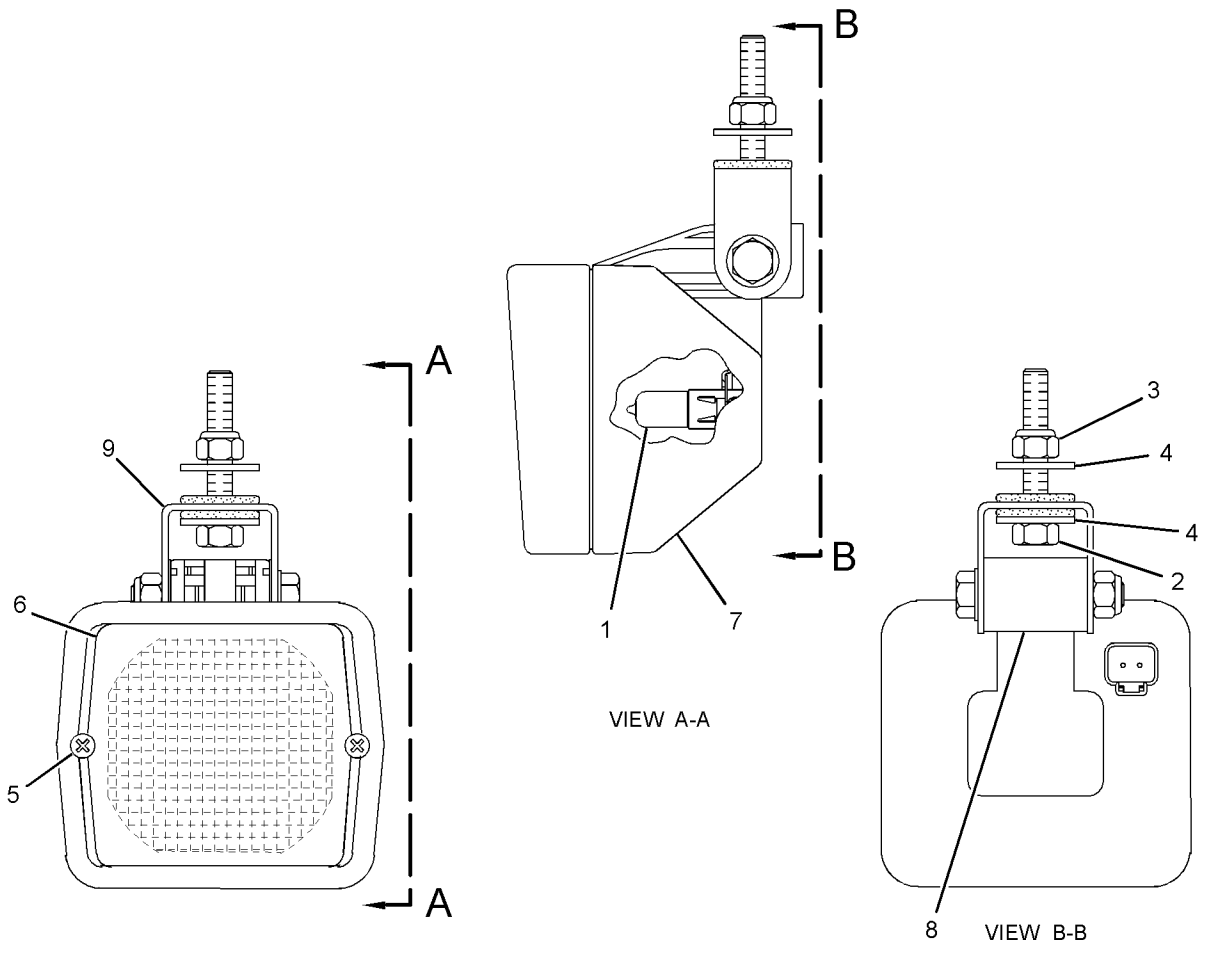

GRAPHIC #1 <END> g01454045

233-4620 LAMP GP-FLOOD–RIPPER

S/N: B551-UP
24-VOLT
PART OF 374-4558 OPTION AR-LIGHTING

SMCS-1434 **i06851896**

NOTE	REF NO	GRAPHIC REF	PART NUMBER	QTY	PART NAME 1 2 3 4 5 6 (PRODUCT LEVEL)	SEE PAGE
	1	1	**9X-9365**	2	BRACKET (LAMP)	
Y	2	1	**234-4325**	2	LAMP GP-FLOOD (24-VOLT)	204
	3	1	**9X-7345**	2	GROMMET	

Y - SEPARATE ILLUSTRATION

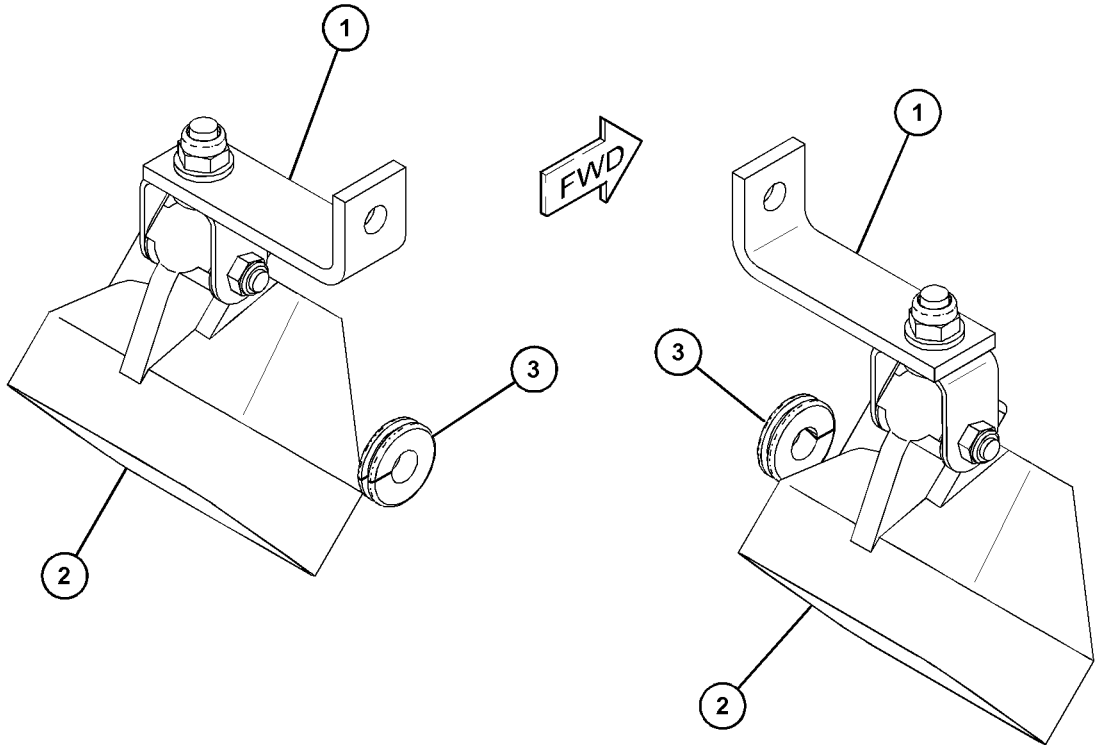

GRAPHIC #1 <END> g06155575

234-4325 LAMP GP-FLOOD

S/N: B551-UP
24-VOLT
PART OF 233-4620 LAMP GP-FLOOD

SMCS-1434 **i04506829**

NOTE	REF NO	GRAPHIC REF	PART NUMBER	QTY	PART NAME 1 2 3 4 5 6 (PRODUCT LEVEL)	SEE PAGE
	1	1	**351-9918**	1	LAMP-HALOGEN (24-VOLT, 70-WATT)	
M	2	1	**8T-0389**	1	LOCKNUT (M10X1.5-THD)	
M	3	1	**9X-4244**	2	SCREW-SPECIAL (M4X1.79X25-MM)	
	4	1	**202-6614**	1	LENS AS (FLOODLIGHT)	
	5	1	**234-7730**	1	BODY AS	
	6	1	**164-7556**	1	BRACKET (LAMP RETAINING)	
	7	1	**234-7731**	1	BRACKET AS	
	8	1	**8T-4121**	1	WASHER-HARD (11X21X2.5-MM THK)	

M - METRIC PART

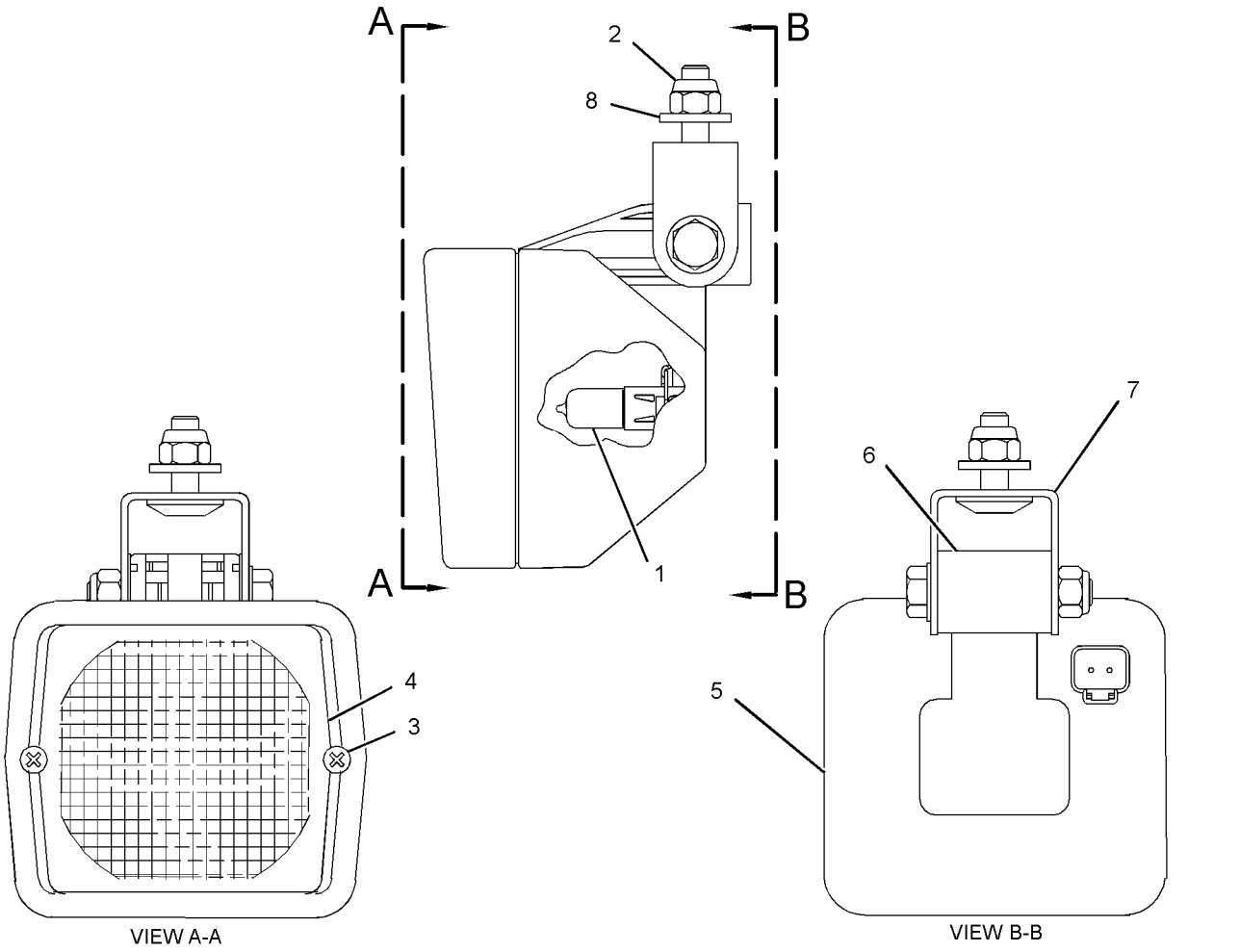

GRAPHIC #1 <END> g01246703

254-8155 LAMP GP-FLOOD

S/N: B551-UP
24-VOLT, 70-WATT
PART OF 308-9380, 308-9382 LIGHTING GP-FLOOD

SMCS-1434 **i04197471**

NOTE	REF NO	GRAPHIC REF	PART NUMBER	QTY	PART NAME 1 2 3 4 5 6 (PRODUCT LEVEL)	SEE PAGE
	1	1	**351-9918**	1	LAMP-HALOGEN (24-VOLT, 70-WATT)	
M	2	1	**8T-4154**	1	BOLT (M8X1.25X35-MM)	
M	3	1	**5C-7261**	1	NUT (M8X1.25-THD)	
	4	1	**8T-4224**	2	WASHER-HARD (8.8X16X2-MM THK)	
M	5	1	**9X-4244**	2	SCREW-SPECIAL (M4X1.79X25-MM)	
	6	1	**202-6614**	1	LENS AS	
	7	1	**175-4292**	1	BODY AS	
	8	1	**164-7556**	1	BRACKET (LAMP RETAINING)	
	9	1	**175-4291**	1	BRACKET AS	

M - METRIC PART

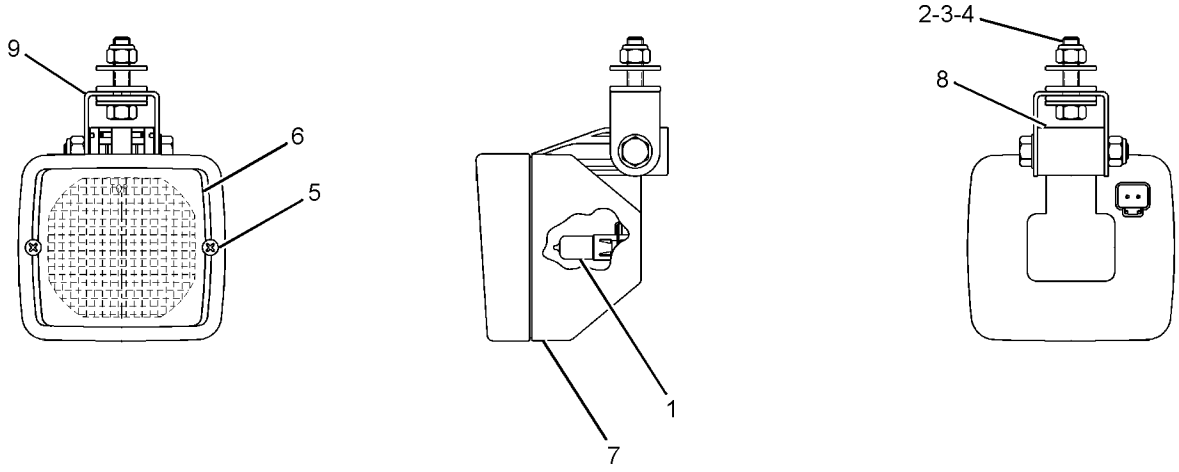

GRAPHIC #1 <END> g01205426

315-1251 LAMP GP-FLOOD

S/N: B551-UP
24-VOLT
PART OF 357-2262 LIGHTING GP-FLOOD, 421-7810 LIGHTING GP-ROADING

SMCS-1434 **i04465893**

NOTE	REF NO	GRAPHIC REF	PART NUMBER	QTY	PART NAME 1 2 3 4 5 6 (PRODUCT LEVEL)	SEE PAGE
	1	1	**351-9918**	1	LAMP-HALOGEN (24-VOLT, 70-WATT)	
M	2	1	**9X-4244**	2	SCREW-SPECIAL (M4X1.79X25-MM)	
	3	1	**202-6614**	1	LENS AS	
	4	1	**175-4292**	1	BODY AS	
	5	1	**164-7556**	1	BRACKET (LAMP RETAINING)	
M	6	1	**8T-6912**	1	BOLT (M8X1.25X50-MM)	
M	7	1	**6V-9189**	1	LOCKNUT (M8X1.25-THD)	
	8	1	**8T-4224**	2	WASHER-HARD (8.8X16X2-MM THK)	

M - METRIC PART

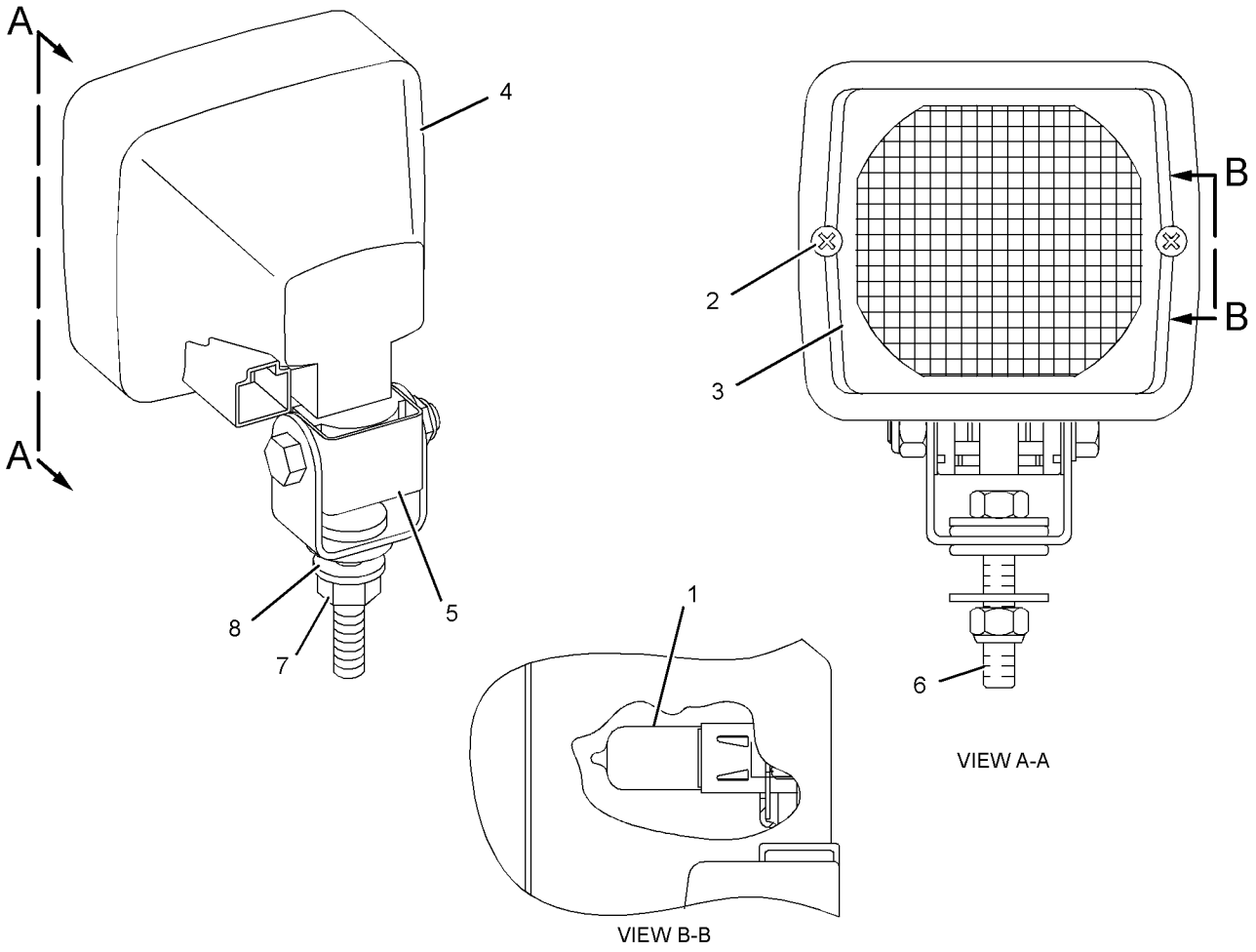

VIEW A-A

VIEW B-B

GRAPHIC #1 <END> g02679481

550-2445 LAMP GP-FLOOD–LED

S/N: B551-UP
9-32-VOLT, 1200 LM
PART OF 550-4905 LAMP GP-FLOOD, 550-4901, 550-4904 LIGHTING GP-FLOOD, 550-6608 LIGHTING GP-ROADING

SMCS-1434 **i07442941**

NOTE	REF NO	GRAPHIC REF	PART NUMBER	QTY	PART NAME 1 2 3 4 5 6 (PRODUCT LEVEL)	SEE PAGE
M	1	1	**3T-0852**	2	LOCKNUT (M8X1.25-THD)	
	2	1	**5P-4116**	1	WASHER-HARD (8.8X20.5X2-MM THK)	
M	3	1	**8T-6912**	1	BOLT (M8X1.25X50-MM)	

M - METRIC PART

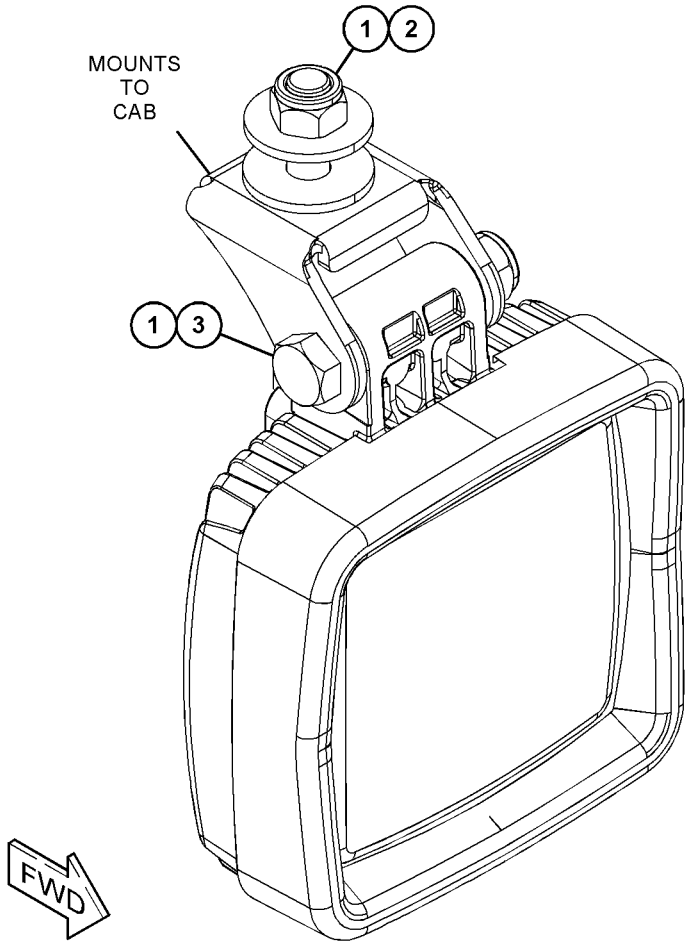

GRAPHIC #1 <END> g06325210

550-2446 LAMP GP-FLOOD–LED

S/N: B551-UP
9-32-VOLT, 1200 LM. NARROW BEAM
PART OF 550-6608 LIGHTING GP-ROADING

SMCS-1434 **i07693238**

NOTE	REF NO	GRAPHIC REF	PART NUMBER	QTY	PART NAME 1 2 3 4 5 6 (PRODUCT LEVEL)	SEE PAGE
M	1	1	**3T-0852**	2	LOCKNUT (M8X1.25-THD)	
	2	1	**5P-4116**	1	WASHER-HARD (8.8X20.5X2-MM THK)	
M	3	1	**8T-6912**	1	BOLT (M8X1.25X50-MM)	

M - METRIC PART

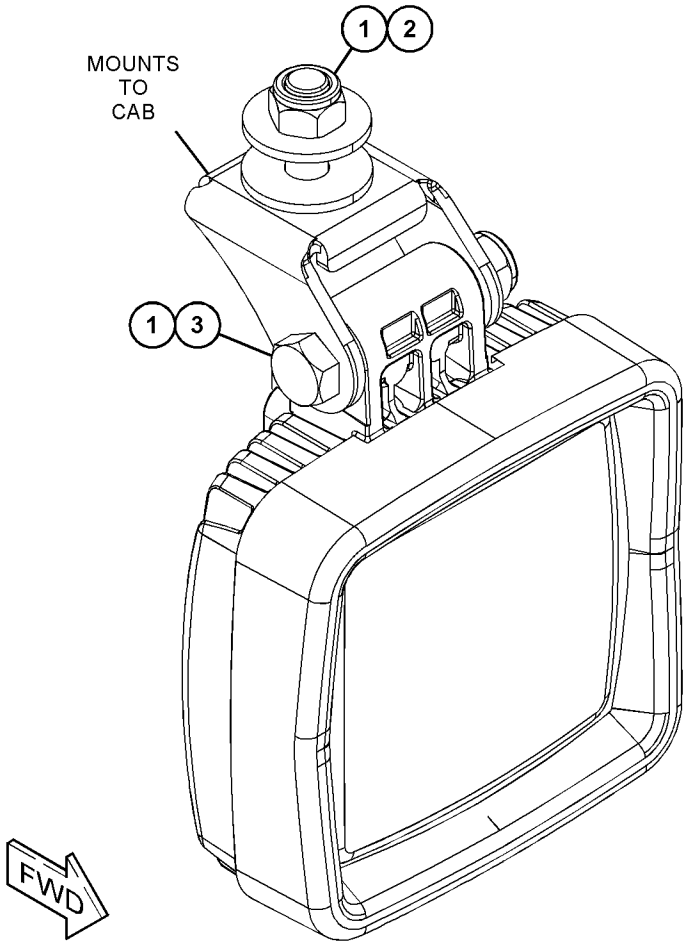

GRAPHIC #1 <END> g06325215

550-4905 LAMP GP-FLOOD–RIPPER

S/N: B551-UP

PART OF 551-6544 OPTION AR-LIGHTING

SMCS-1434 **i07542461**

NOTE	REF NO	GRAPHIC REF	PART NUMBER	QTY	PART NAME 1 2 3 4 5 6 (PRODUCT LEVEL)	SEE PAGE
	1	1	**9X-9365**	2	BRACKET (LAMP)	
Y	2	1	**550-2445**	2	LAMP GP-FLOOD (9-32-VOLT, 1200 LM, LED)	207
	3	1	**9X-7345**	2	GROMMET	

Y - SEPARATE ILLUSTRATION

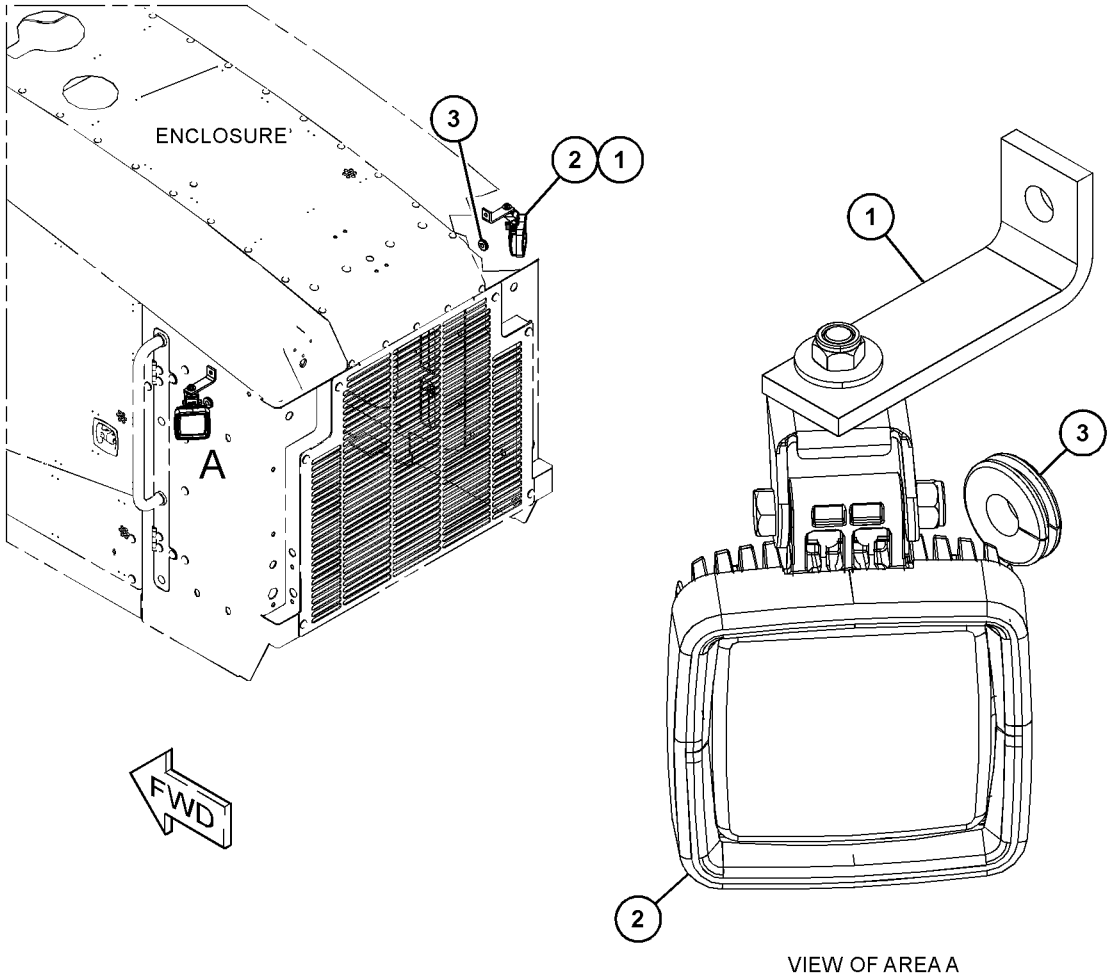

VIEW OF AREA A

GRAPHIC #1 <END> g06328594

290-5749 LAMP GP-HEAD–FRONT

S/N: B551-UP
24-VOLT, HIGH BEAM
PART OF 421-7810 LIGHTING GP-ROADING

SMCS-1429 **i05806111**

NOTE	REF NO	GRAPHIC REF	PART NUMBER	QTY	PART NAME 1 2 3 4 5 6 (PRODUCT LEVEL)	SEE PAGE
	1	1	**351-9918**	1	LAMP-HALOGEN (24-VOLT, 70-WATT)	
M	2	1	**3E-9854**	1	BOLT (M8X1.25X20-MM)	
M	3	1	**6V-9189**	2	LOCKNUT (M8X1.25-THD)	
M	4	1	**8C-5748**	1	BOLT (M8X1.25X55-MM)	
	5	1	**8T-4224**	1	WASHER-HARD (8.8X16X2-MM THK)	

M - METRIC PART

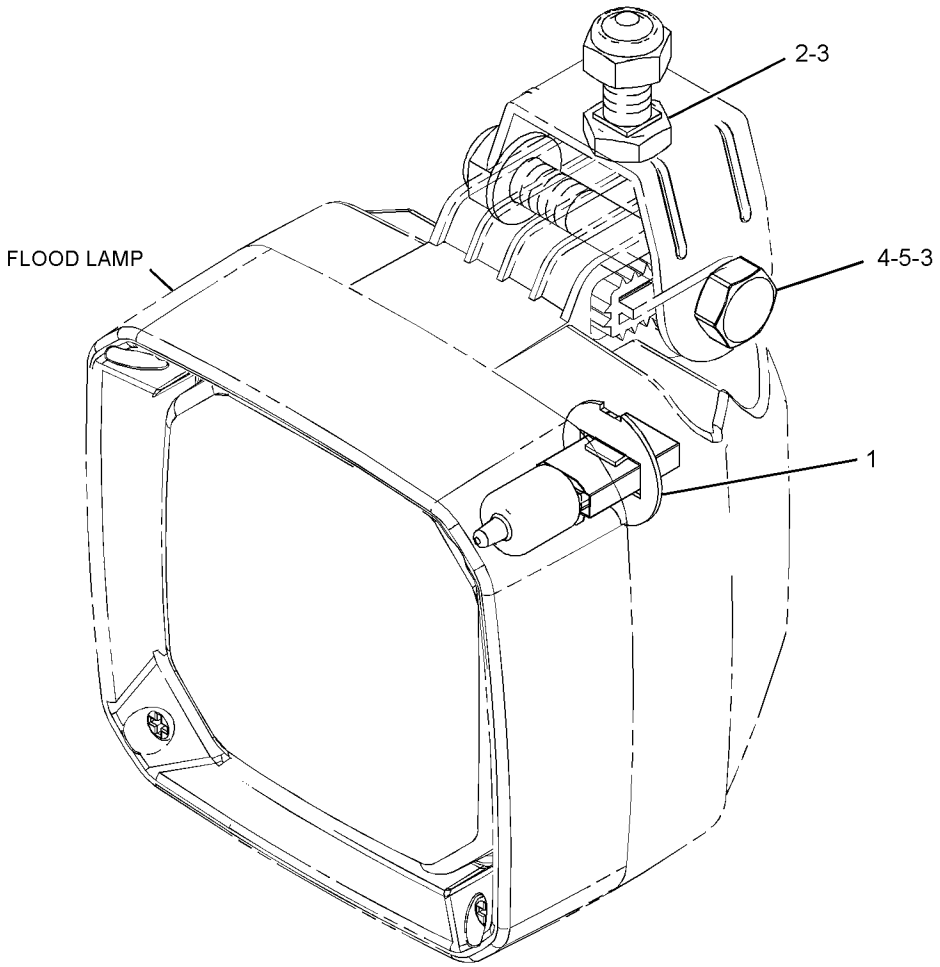

GRAPHIC #1 <END> g03316591

259-9287 LAMP GP-HEAD & SIGNAL–LH

S/N: B551-UP
24-VOLT
PART OF 308-9370, 308-9371 MOUNTING GP-LIGHTING

SMCS-1429, 1430 **i06873734**

NOTE	REF NO	GRAPHIC REF	PART NUMBER	QTY	PART NAME 1 2 3 4 5 6 (PRODUCT LEVEL)	SEE PAGE
	1	1	**8T-8737**	1	PLUG-SEAL	
	2	1	**228-6054**	1	BEZEL	
	3	1	**444-6523**	1	LENS AS (HEADLIGHT)	
	4	1	**377-5227**	1	LENS AS (TURN SIGNAL)	
	5	1	**228-6056**	6	SCREW (4-32X1.26-IN)	
	6	1	**9X-3465**	1	LAMP (24-VOLT, 75/70-WATT)	
	7	1	**130-3515**	1	LAMP (24-VOLT, 5-WATT)	
M	8	1	**8T-0389**	1	LOCKNUT (M10X1.5-THD)	
	9	1	**473-8155**	2	SPACER (SPHERICAL)	
	10	1	**473-8156**	2	WASHER (SPHERICAL)	
	11	1	**102-8805**	1	KIT-RECEPTACLE (6-PIN)	
					(INCLUDES RECEPTACLE AS & WEDGE)	
	12	1	**8T-8729**	5	PIN-CONNECTOR (16-GA TO 20-GA)	

M - METRIC PART

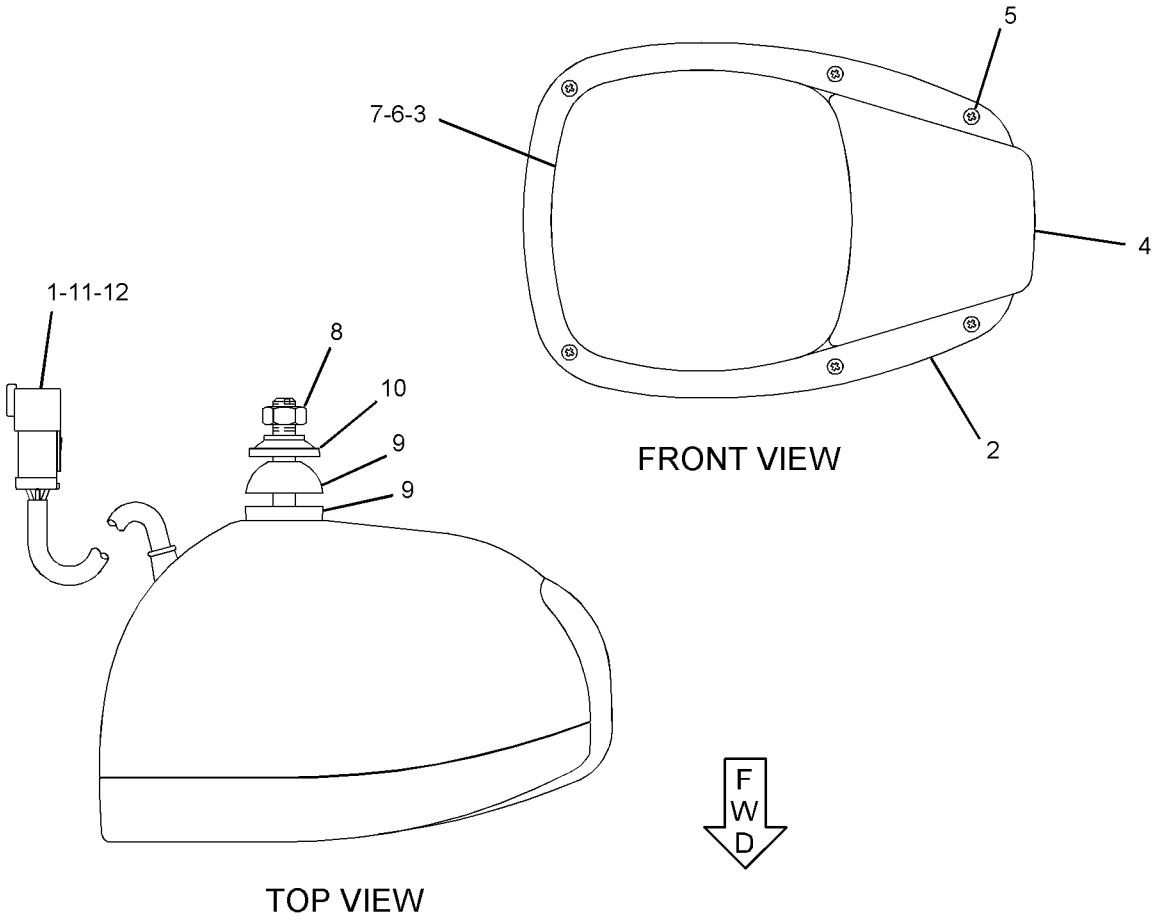

GRAPHIC #1 <END> g02701777

259-9288 LAMP GP-HEAD & SIGNAL–RH

S/N: B551-UP
24-VOLT
PART OF 308-9370, 308-9371 MOUNTING GP-LIGHTING

SMCS-1429, 1430 **i06945096**

NOTE	REF NO	GRAPHIC REF	PART NUMBER	QTY	PART NAME 1 2 3 4 5 6 (PRODUCT LEVEL)	SEE PAGE
	1	1	**8T-8737**	1	PLUG-SEAL	
	2	1	**228-6054**	1	BEZEL	
	3	1	**444-6523**	1	LENS AS (HEADLIGHT)	
	4	1	**377-5227**	1	LENS AS (TURN SIGNAL)	
	5	1	**228-6056**	6	SCREW (4-32X1.26-IN)	
	6	1	**9X-3465**	1	LAMP (24-VOLT, 75/70-WATT)	
	7	1	**130-3515**	1	LAMP (24-VOLT, 5-WATT)	
M	8	1	**8T-0389**	1	LOCKNUT (M10X1.5-THD)	
	9	1	**473-8155**	2	SPACER (SPHERICAL)	
	10	1	**473-8156**	2	WASHER (SPHERICAL)	
	11	1	**102-8805**	1	KIT-RECEPTACLE (6-PIN)	
					(INCLUDES RECEPTACLE AS & WEDGE)	
	12	1	**8T-8729**	5	PIN-CONNECTOR (16-GA TO 20-GA)	

M - METRIC PART

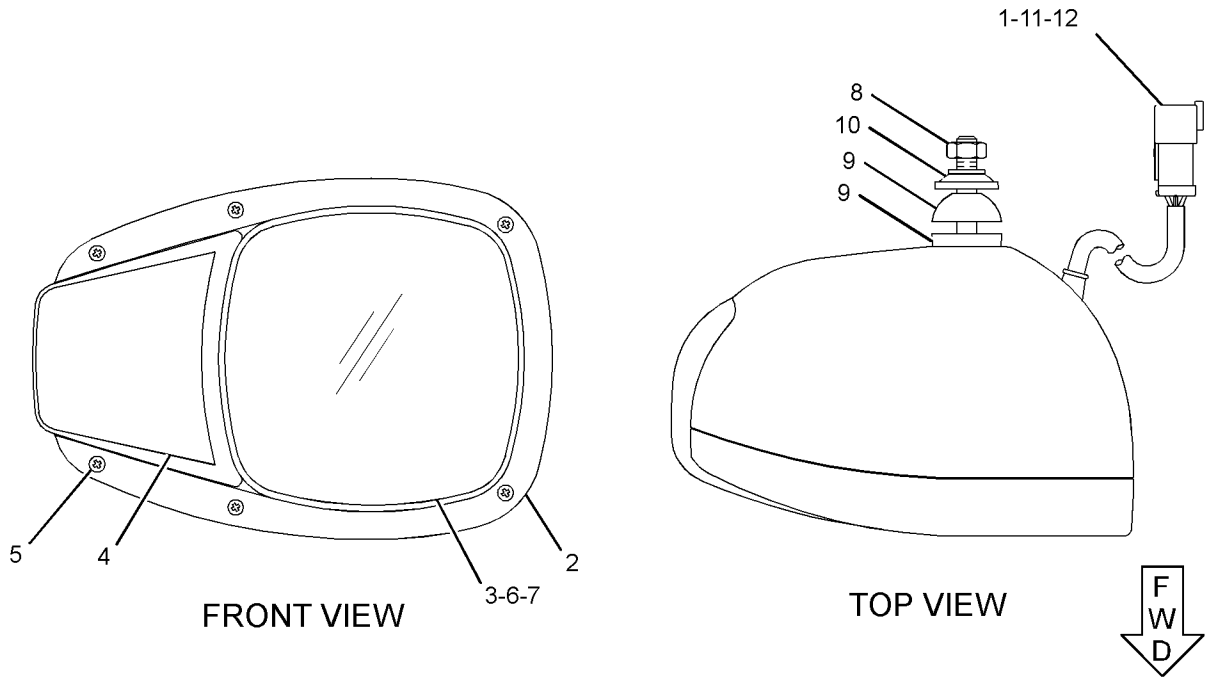

GRAPHIC #1 <END> g02701796

525-5297 LAMP GP-HEAD & SIGNAL

S/N: B551-UP
9-VOLT TO 32-VOLT, LED. RH
PART OF 553-2588, 553-2589 LIGHTING AR-ROADING

SMCS-1429, 1430 **i07190589**

NOTE	REF NO	GRAPHIC REF	PART NUMBER	QTY	PART NAME 1 2 3 4 5 6 (PRODUCT LEVEL)	SEE PAGE
	1	1	**487-7761**	1	LENS AS (HEADLIGHT)	
	2	1	**487-7762**	1	LENS AS (SIGNAL)	
M	3	1	**8T-0389**	1	LOCKNUT (M10X1.5-THD)	
	4	1	**100-3253**	1	SPACER (SPHERICAL)	
	5	1	**100-3254**	1	SPACER (SPHERICAL)	
	6	1	**100-3255**	1	WASHER (SPHERICAL)	

M - METRIC PART

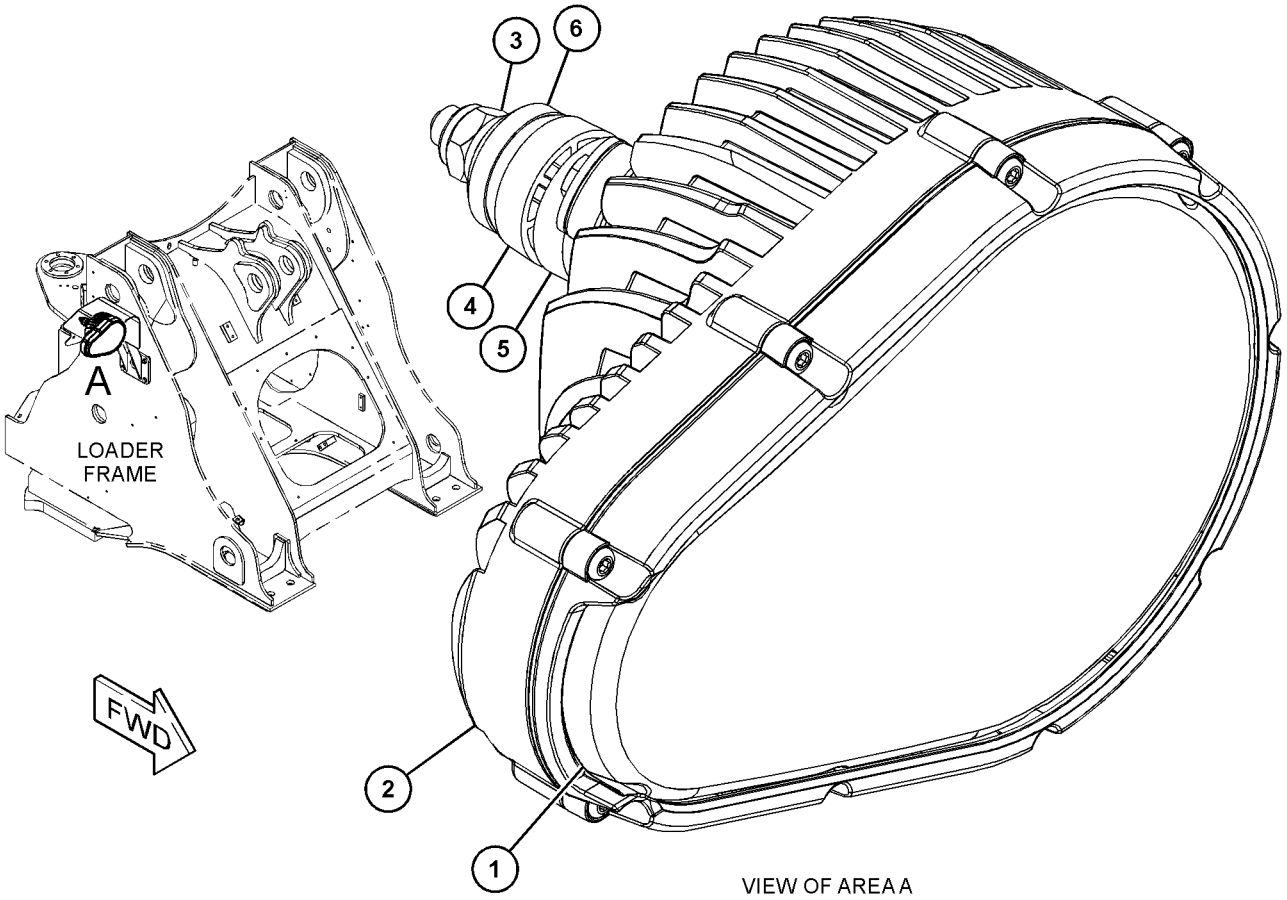

VIEW OF AREA A

GRAPHIC #1 <END> g06249245

525-5298 LAMP GP-HEAD & SIGNAL

S/N: B551-UP
9-VOLT TO 32-VOLT, LED. LH
PART OF 553-2588, 553-2589 LIGHTING AR-ROADING

SMCS-1429, 1430 **i07190595**

NOTE	REF NO	GRAPHIC REF	PART NUMBER	QTY	PART NAME 1 2 3 4 5 6 (PRODUCT LEVEL)	SEE PAGE
	1	1	**487-7761**	1	LENS AS (HEADLIGHT)	
	2	1	**487-7762**	1	LENS AS (SIGNAL)	
M	3	1	**8T-0389**	1	LOCKNUT (M10X1.5-THD)	
	4	1	**100-3253**	1	SPACER (SPHERICAL)	
	5	1	**100-3254**	1	SPACER (SPHERICAL)	
	6	1	**100-3255**	1	WASHER (SPHERICAL)	

M - METRIC PART

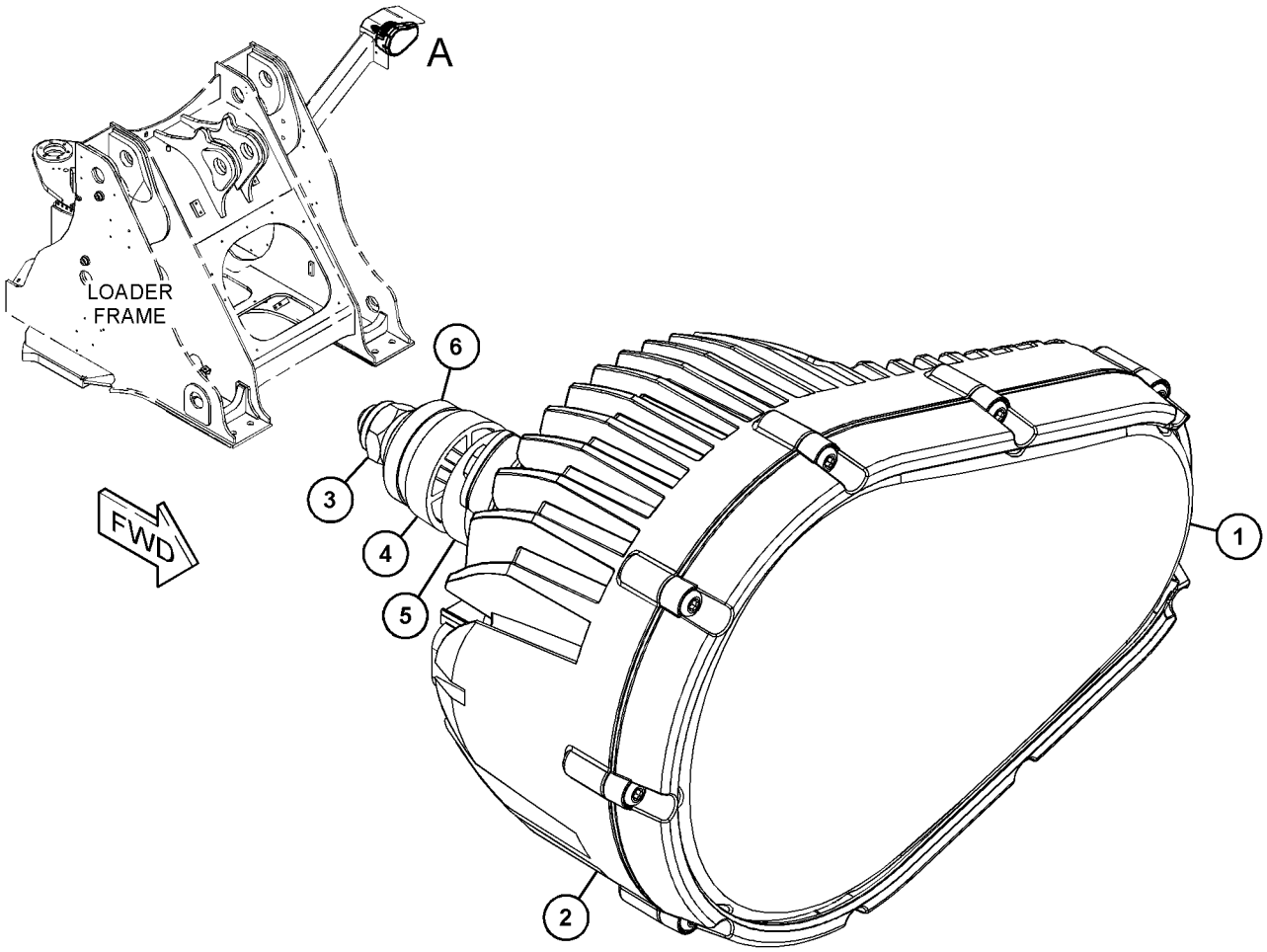

VIEW OF AREA A

GRAPHIC #1 <END> g06249273

212-3924 LAMP GP-MARKER

S/N: B551-UP
24-VOLT
PART OF 368-9766 LIGHTING GP-ROADING

SMCS-1429 **i07404100**

NOTE	REF NO	GRAPHIC REF	PART NUMBER	QTY	PART NAME 1 2 3 4 5 6 (PRODUCT LEVEL)	SEE PAGE
	1	1	**102-8802**	1	KIT-RECEPTACLE (2-PIN)	
					(INCLUDES RECEPTACLE AS & WEDGE)	
	2	1	**8T-8729**	2	PIN-CONNECTOR (16-GA TO 20-GA)	
	3	1	**9X-4494**	1	LAMP (24-VOLT)	
M	4	1	**104-3601**	2	SCREW-MACHINE (M5X0.8X25-MM)	
M	5	1	**3T-0851**	2	LOCKNUT (M5X0.8-THD)	

M - METRIC PART

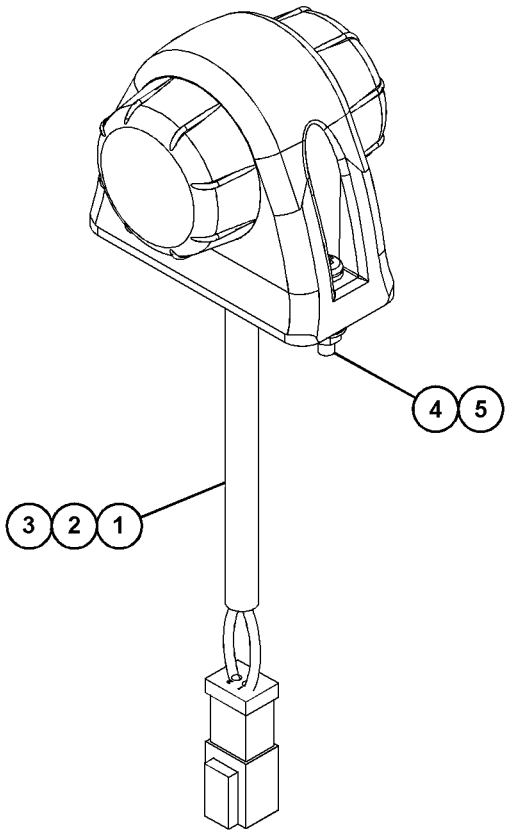

GRAPHIC #1 <END> g06313997

233-4631 LAMP GP-REGISTRATION PLATE–EAME

S/N: B551-UP

PART OF 492-0729 CONVERSION AR-CERTIFICATION

SMCS-1429 **i02783262**

NOTE	REF NO	GRAPHIC REF	PART NUMBER	QTY	PART NAME 1 2 3 4 5 6 (PRODUCT LEVEL)	SEE PAGE
	1	1	**3S-2093**	6	STRAP-CABLE	
	2	1	**213-3733**	1	PLATE	
	3	1	**224-2821**	4	PLATE AS	
	4	1	**246-1685**	1	HARNESS AS-REAR LIGHTING (REGISTRATION PLATE)	
		1	**102-8802**	1	KIT-RECEPTACLE (2-PIN)	
					(INCLUDES RECEPTACLE AS & WEDGE)	
		1	**155-2270**	1	KIT-CONNECTING PLUG (2-PIN)	
					(INCLUDES PLUG AS, WEDGE, & INTERFACE SEAL)	
	5	1	**259-0134**	1	LAMP GP-REGISTRATION PLATE (24-VOLT)	
		1	**5C-9583**	1	LAMP (24-VOLT, 5-WATT)	
		1	**102-8802**	1	KIT-RECEPTACLE (2-PIN)	
					(INCLUDES RECEPTACLE AS & WEDGE)	
		1	**186-3735**	2	PIN-CONNECTOR (16-GA TO 18-GA)	
	6	1	**5P-4116**	4	WASHER-HARD (8.8X20.5X2-MM THK)	
M	7	1	**8T-4908**	4	BOLT (M8X1.25X25-MM)	

M - METRIC PART

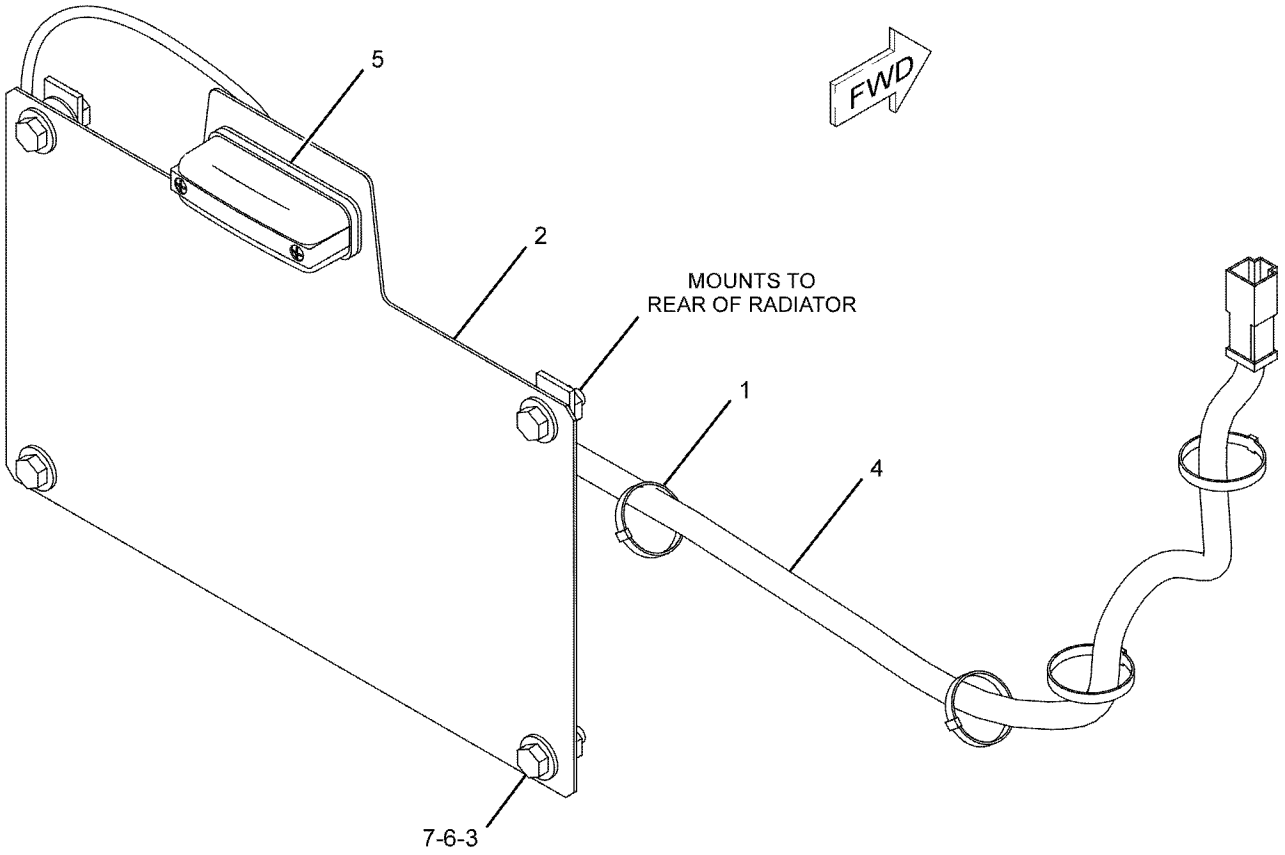

GRAPHIC #1 <END> g01110134

259-0134 LAMP GP-REGISTRATION PLATE–LICENSE

S/N: B551-UP
24-VOLT, ECE
PART OF 277-9409 LIGHTING GP-ROADING

SMCS-1429 **i05514710**

NOTE	REF NO	GRAPHIC REF	PART NUMBER	QTY	PART NAME 1 2 3 4 5 6 (PRODUCT LEVEL)	SEE PAGE
	1	1	**5C-9583**	1	LAMP (24-VOLT, 5-WATT) (REGISTRATION PLATE)	
	2	1	**102-8802**	1	KIT-RECEPTACLE (2-PIN)	
					(INCLUDES RECEPTACLE AS & WEDGE)	
	3	1	**8T-8729**	2	PIN-CONNECTOR (16-GA TO 20-GA)	

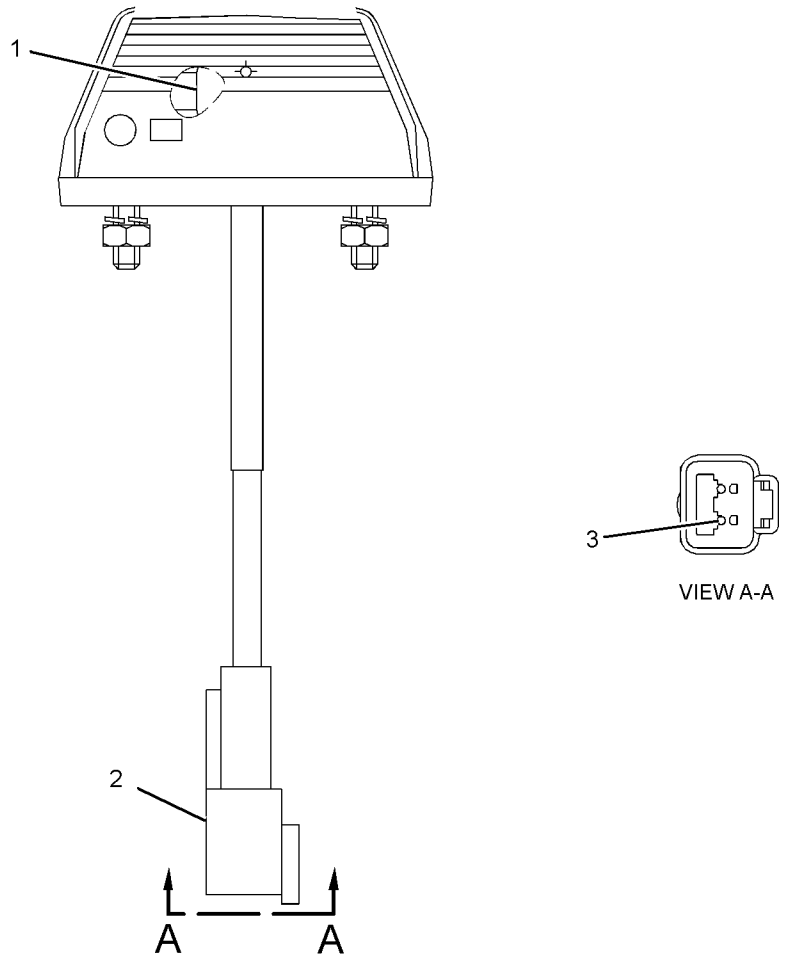

GRAPHIC #1 <END> g01201568

201-5464 LAMP GP-SIGNAL–TURN

S/N: B551-UP
12-VOLT, 24-VOLT, LED
PART OF 233-4623 WIRING GP-REAR LIGHTING

SMCS-1430, 1432 **i07818834**

NOTE	REF NO	GRAPHIC REF	PART NUMBER	QTY	PART NAME 1 2 3 4 5 6 (PRODUCT LEVEL)	SEE PAGE
	1	1	**102-8802**	1	KIT-RECEPTACLE (2-PIN)	
					(INCLUDES RECEPTACLE AS & WEDGE)	
	2	1	**8T-8729**	2	PIN-CONNECTOR (16-GA TO 20-GA)	

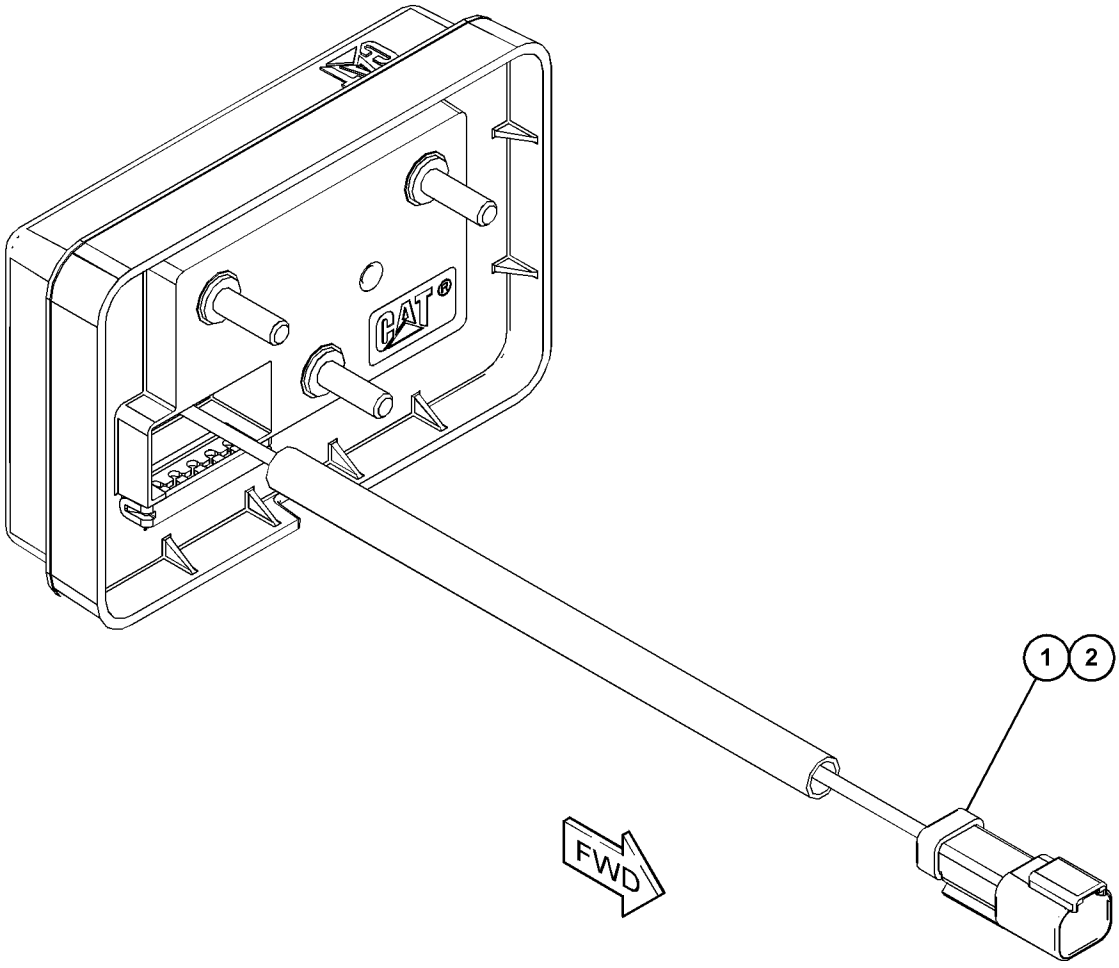

GRAPHIC #1 <END> g06389291

334-8049 LAMP GP-SIGNAL–STOP, TAIL

S/N: B551-UP
12-VOLT TO 24-VOLT
PART OF 233-4623, 247-6430 WIRING GP-REAR LIGHTING

SMCS-1430, 1432 **i07679705**

NOTE	REF NO	GRAPHIC REF	PART NUMBER	QTY	PART NAME 1 2 3 4 5 6 (PRODUCT LEVEL)	SEE PAGE
	1	1	**102-8803**	1	KIT-RECEPTACLE (3-PIN)	
					(INCLUDES RECEPTACLE AS & WEDGE)	
	2	1	**8T-8729**	3	PIN-CONNECTOR (16-GA TO 20-GA)	

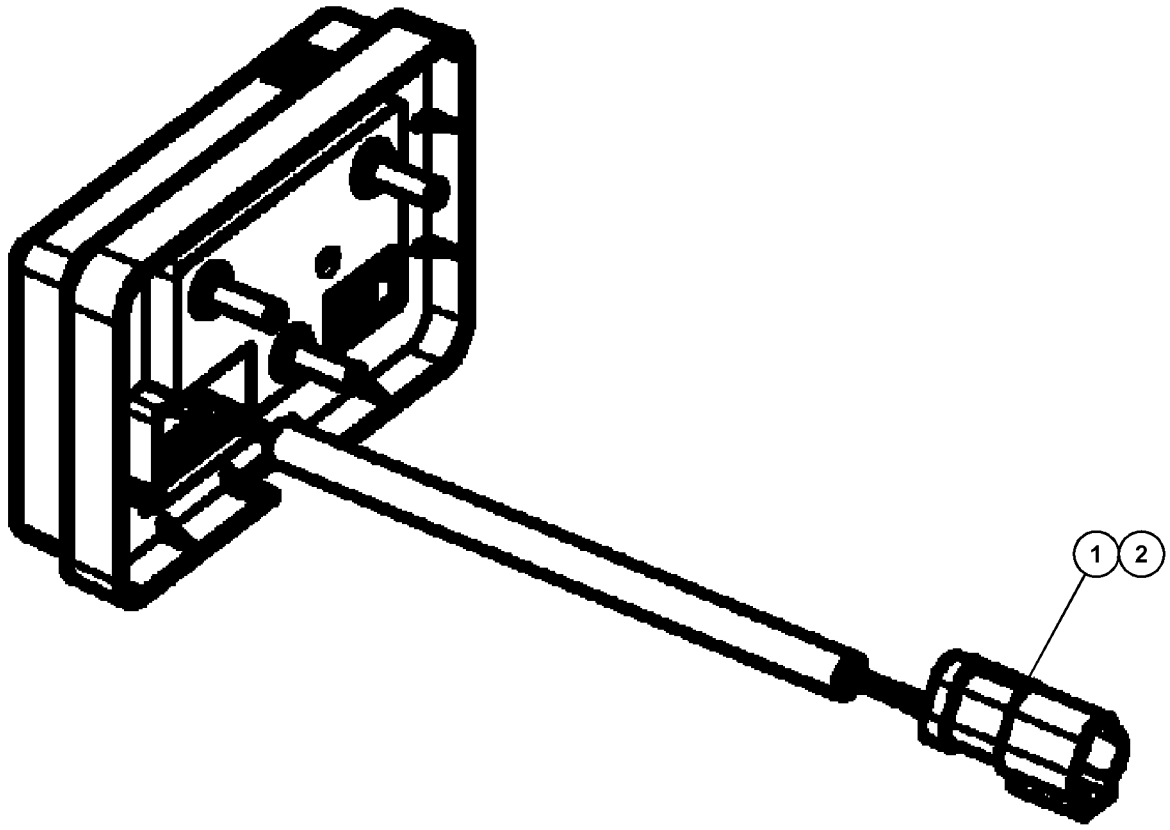

GRAPHIC #1 <END> g06331290

338-1132 LAMP GP-WARNING BEACON

S/N: B551-UP
12/24-VOLT. AMBER, STROBE, LED
FOR USE WITH 361-3137—PAGE: 198

SMCS-1431 **i07787989**

NOTE	REF NO	GRAPHIC REF	PART NUMBER	QTY	PART NAME 1 2 3 4 5 6 (PRODUCT LEVEL)	SEE PAGE
	1	1	**102-8802**	1	KIT-RECEPTACLE (2-PIN)	
					(INCLUDES RECEPTACLE AS & WEDGE)	
	2	1	**8T-8729**	2	PIN-CONNECTOR (16-GA TO 20-GA)	
	3	1	**356-7515**	1	LENS (AMBER)	
					—OR—	
		1	**421-5583**	1	LENS (RED)	
					—OR—	
		1	**421-5584**	1	LENS (CLEAR)	
					—OR—	
		1	**421-5585**	1	LENS (GREEN)	
	4	1	**7U-4891**	3	SCREW (10-32X1-IN)	
	5	1	**4B-4274**	3	WASHER (5.5X13X1.2-MM THK)	
	6	1	**4L-1250**	3	LOCKNUT (10-32-THD)	

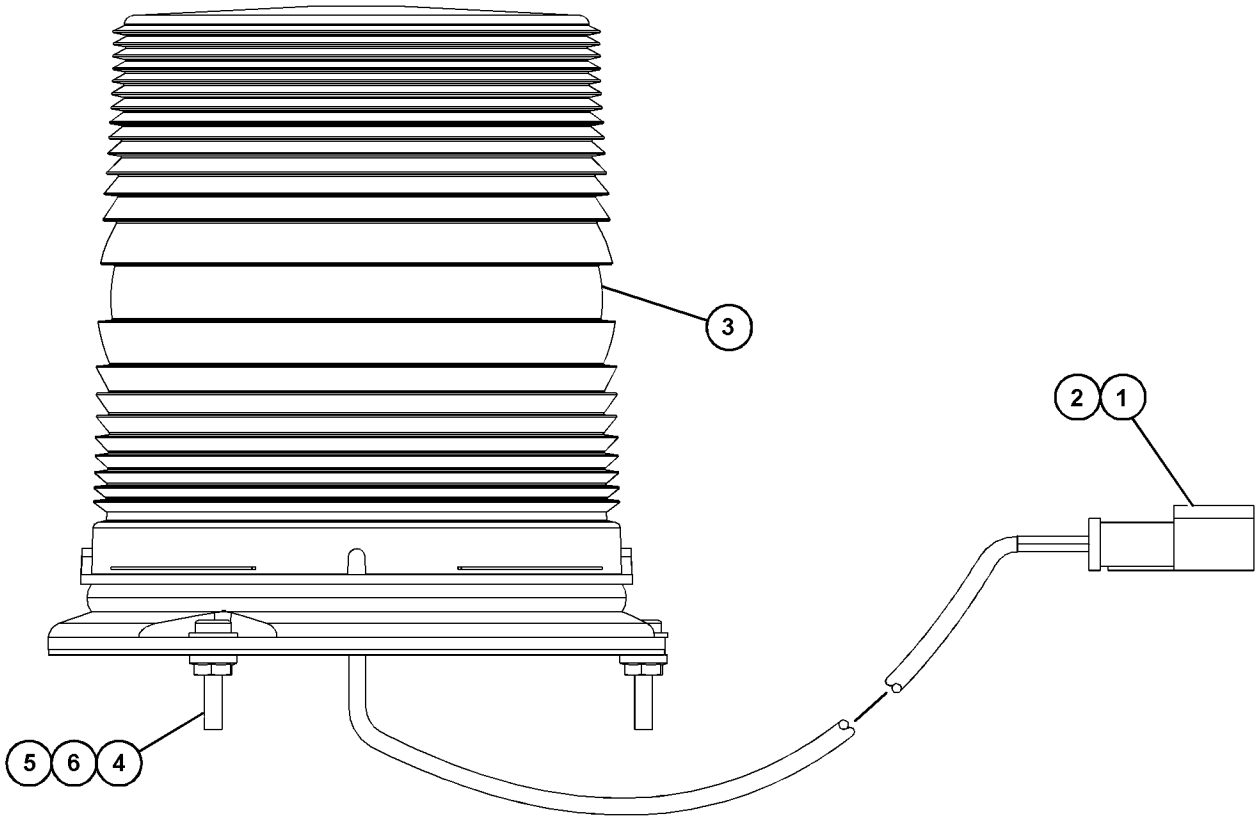

GRAPHIC #1 <END> g06438568

553-2588 LIGHTING AR-ROADING—LOW BAR

S/N: B551-UP

CANNOT BE USED WITH OTHER LIGHTING GP, 308-9370—PAGE: 241

SMCS-1408, 1429 **i07788662**

NOTE	REF NO	GRAPHIC REF	PART NUMBER	QTY	PART NAME 1 2 3 4 5 6 (PRODUCT LEVEL)	SEE PAGE
	1	1	**2G-0617**	2	CLAMP	
	2	1	**2G-0988**	2	CAP	
	3	1	**4P-7428**	1	CLIP (LADDER)	
	4	1	**4P-7581**	2	CLIP (LADDER)	
	5	1	**7K-1181**	3	STRAP-CABLE	
M	6	1	**8T-4195**	2	BOLT (M10X1.5X30-MM)	
	7	1	**137-9410**	2	CLAMP	
	8	1	**250-4330**	1	TUBE	
	9	1	**331-3710**	2	BRACKET AS	
	10	1	**130-5301**	2	CLIP	
M	11	1	**344-5675**	2	NUT (M10X1.5-THD)	
	12	1	**3K-9520**	3	GROMMET	
Y	13	1	**525-5297**	1	LAMP GP-HEAD & SIGNAL (LED) (RH)	213
Y	14	1	**525-5298**	1	LAMP GP-HEAD & SIGNAL (LED) (LH)	214
Y	15	1	**553-2611**	1	HARNESS AS-LIGHTING (BAR)	185
	16	1	**5P-9135**	1	GROMMET	
	17	1	**8T-4121**	4	WASHER-HARD (11X21X2.5-MM THK)	
	18	1	**8T-4223**	4	WASHER-HARD (13.5X25.5X3-MM THK)	
M	19	1	**8T-5001**	4	BOLT (M12X1.75X130-MM)	

M - METRIC PART
Y - SEPARATE ILLUSTRATION

553-2588 **LIGHTING AR-ROADING (**contd.**)** **i07788662**

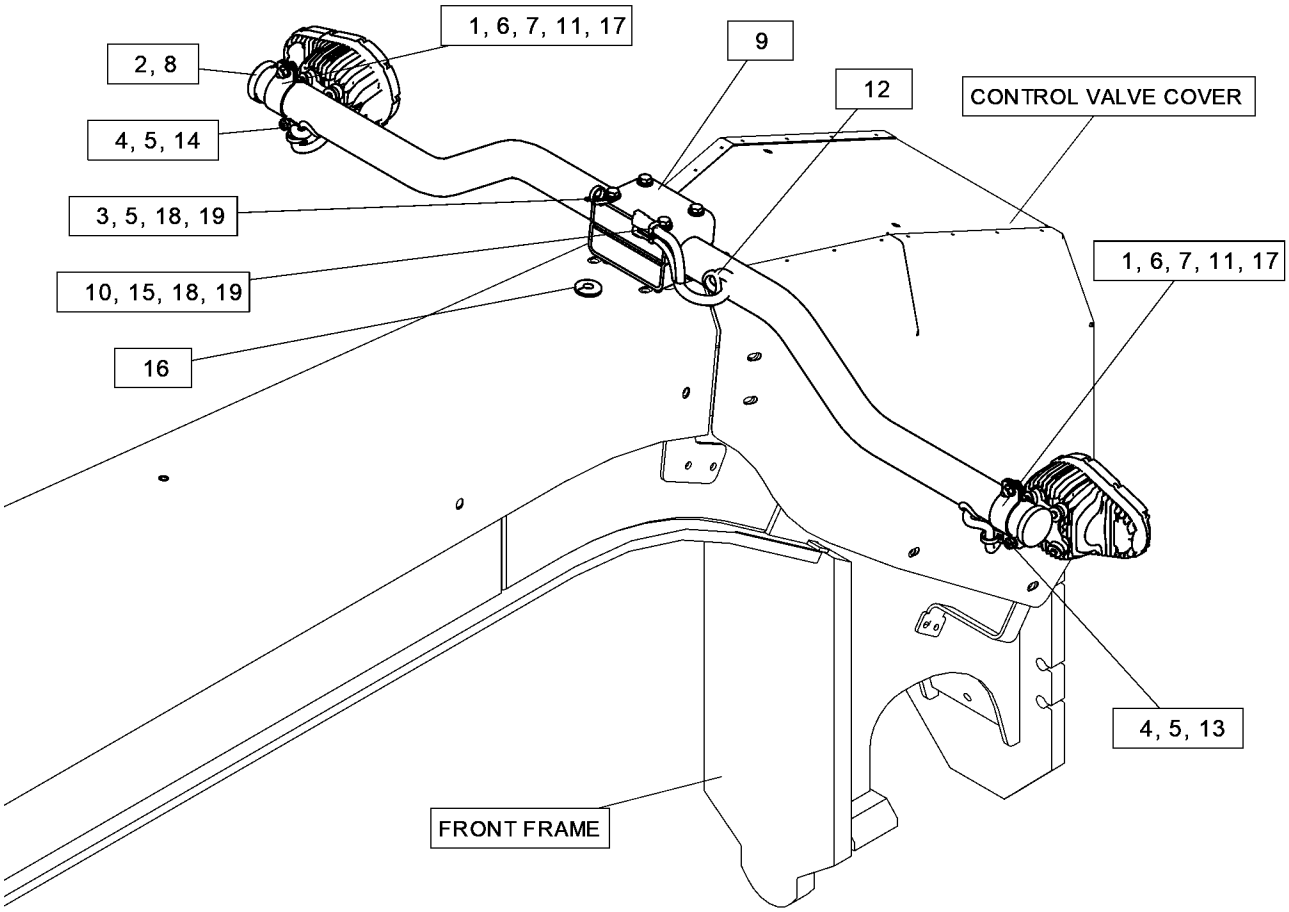

GRAPHIC #1 <END> g06399508

553-2589 LIGHTING AR-ROADING—HIGH BAR

S/N: B551-UP

CANNOT BE USED WITH OTHER LIGHTING GP, 308-9371—PAGE: 243

SMCS-1408, 1429 **i07788651**

NOTE	REF NO	GRAPHIC REF	PART NUMBER	QTY	PART NAME 1 2 3 4 5 6 (PRODUCT LEVEL)	SEE PAGE
	1	1	**2G-0617**	2	CLAMP	
	2	1	**2G-0988**	2	CAP	
	3	1	**3K-9520**	3	GROMMET	
	4	1	**4P-7428**	1	CLIP (LADDER)	
	5	1	**4P-7581**	2	CLIP (LADDER)	
	6	1	**7K-1181**	3	STRAP-CABLE	
M	7	1	**8T-4195**	2	BOLT (M10X1.5X30-MM)	
M	8	1	**8T-5001**	4	BOLT (M12X1.75X130-MM)	
	9	1	**137-9410**	2	CLAMP	
	10	1	**246-1672**	1	TUBE	
	11	1	**331-3710**	2	BRACKET AS	
	12	1	**130-5301**	2	CLIP	
M	13	1	**344-5675**	2	NUT (M10X1.5-THD)	
Y	14	1	**525-5297**	1	LAMP GP-HEAD & SIGNAL (LED) (RH)	213
Y	15	1	**525-5298**	1	LAMP GP-HEAD & SIGNAL (LED) (LH)	214
Y	16	1	**553-2611**	1	HARNESS AS-LIGHTING (BAR)	185
	17	1	**5P-9135**	1	GROMMET	
	18	1	**8T-4121**	4	WASHER-HARD (11X21X2.5-MM THK)	
	19	1	**8T-4223**	4	WASHER-HARD (13.5X25.5X3-MM THK)	

M - METRIC PART
Y - SEPARATE ILLUSTRATION

553-2589 **LIGHTING AR-ROADING (**contd.**)** **i07788651**

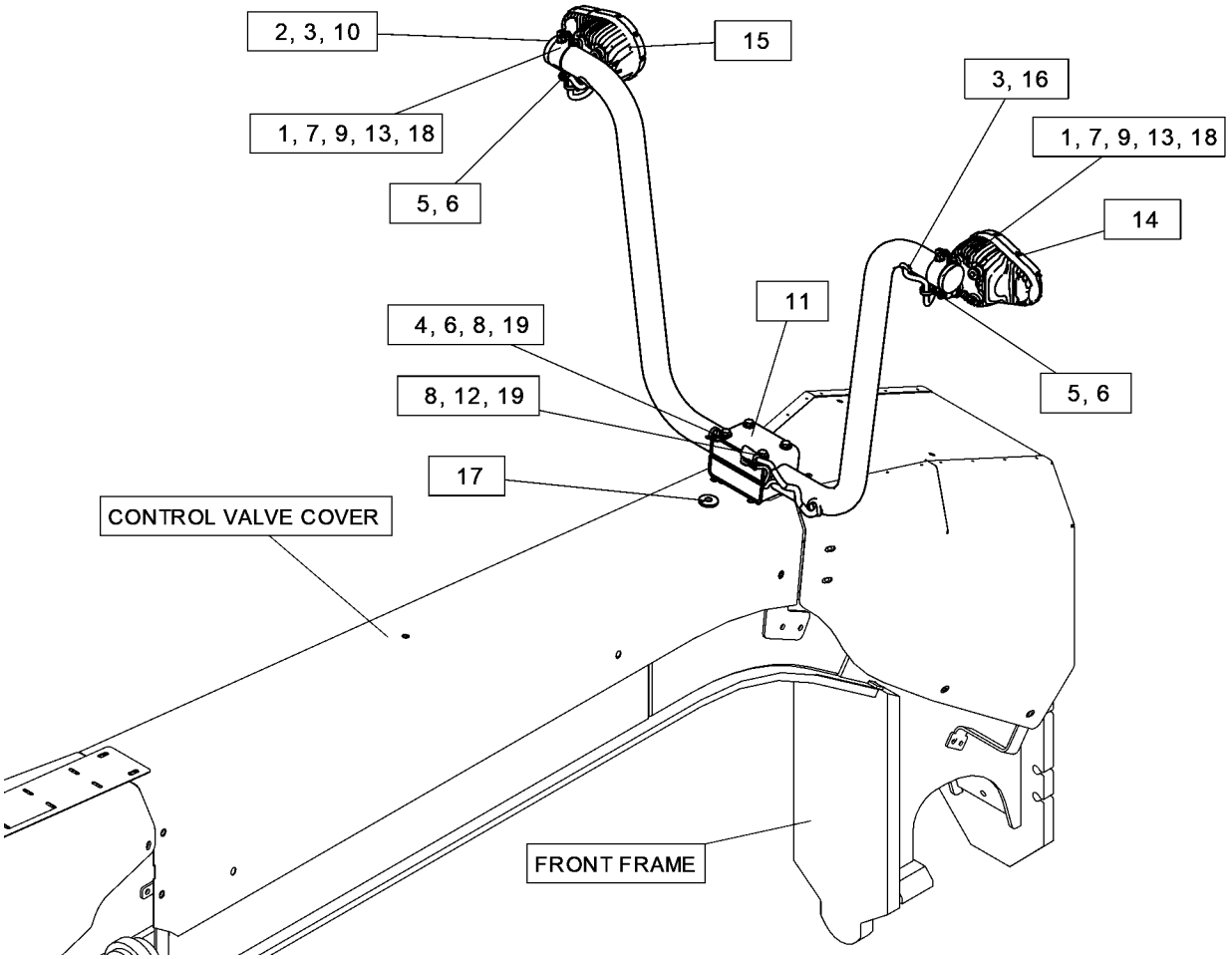

GRAPHIC #1 <END> g06399560

560-8856 LIGHTING AR-ROADING—REAR

S/N: B551-UP

PART OF 565-4306 OPTION AR-REGIONAL, 565-9420 ROADING AR, 565-1026 SNOW AR-MOTOR GRADER

SMCS-1408, 1429

i07651074

NOTE	PART NUMBER	QTY	PART NAME 1 2 3 4 5 6 (PRODUCT LEVEL)	SEE PAGE
Y	*344-0983*	1	LIGHTING GP-ROADING	233
Y	*233-4623*	1	WIRING GP-REAR LIGHTING (STOP, TAIL, TURN, BACKUP)	326

Y - SEPARATE ILLUSTRATION

<END>

308-9380 LIGHTING GP-FLOOD–TOE

S/N: B551-UP

PART OF 353-3319, 374-4558 OPTION AR-LIGHTING

SMCS-1434 **i06666876**

NOTE	REF NO	GRAPHIC REF	PART NUMBER	QTY	PART NAME 1 2 3 4 5 6 (PRODUCT LEVEL)	SEE PAGE
	1	1	**3S-2093**	2	STRAP-CABLE	
	2	1	**243-1352**	2	BRACKET AS	
Y	3	1	**254-8155**	2	LAMP GP-FLOOD (24-VOLT)	205
	4	1	**4P-7581**	2	CLIP (LADDER)	
	5	1	**8T-4121**	4	WASHER-HARD (11X21X2.5-MM THK)	
M	6	1	**8T-4136**	4	BOLT (M10X1.5X25-MM)	
					QUANTITIES SHOWN ARE THOSE REQUIRED FOR BOTH LH & RH SIDES	

M - METRIC PART
Y - SEPARATE ILLUSTRATION

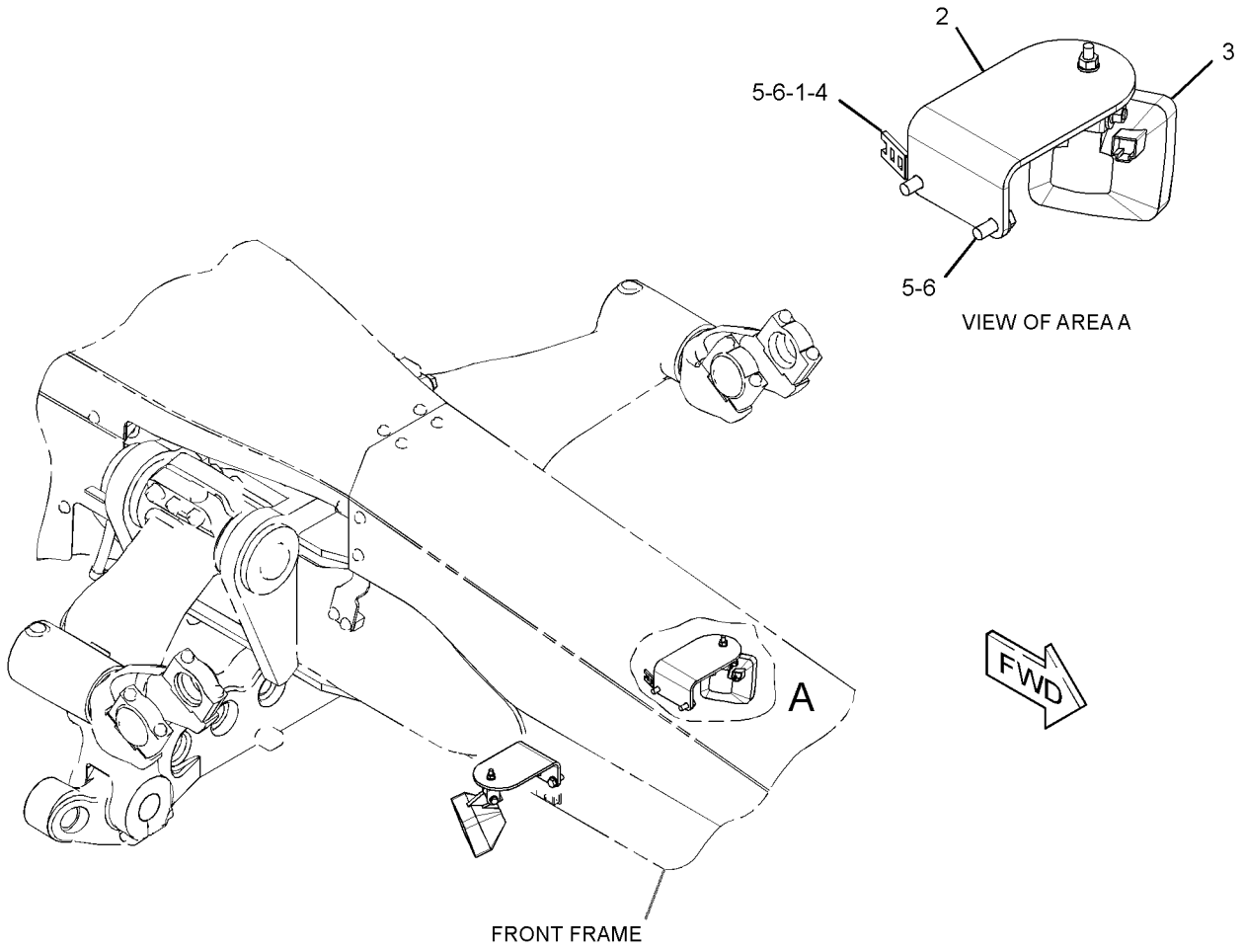

GRAPHIC #1 <END> g02155890

308-9382 LIGHTING GP-FLOOD–HEEL

S/N: B551-UP

PART OF 353-3319, 374-4558 OPTION AR-LIGHTING

SMCS-1434 **i06666890**

NOTE	REF NO	GRAPHIC REF	PART NUMBER	QTY	PART NAME 1 2 3 4 5 6 (PRODUCT LEVEL)	SEE PAGE
	1	1	**3S-2093**	2	STRAP-CABLE	
Y	2	1	**254-8155**	2	LAMP GP-FLOOD (24-VOLT)	205
	3	1	**281-0228**	2	PLATE	
	4	1	**132-5789**	2	CLIP (LADDER)	
	5	1	**8T-4121**	6	WASHER-HARD (11X21X2.5-MM THK)	
M	6	1	**8T-4133**	2	NUT (M10X1.5-THD)	
M	7	1	**8T-4136**	2	BOLT (M10X1.5X25-MM)	
M	8	1	**8T-4195**	2	BOLT (M10X1.5X30-MM)	
					QUANTITIES SHOWN ARE THOSE REQUIRED FOR BOTH LH & RH SIDES	

M - METRIC PART
Y - SEPARATE ILLUSTRATION

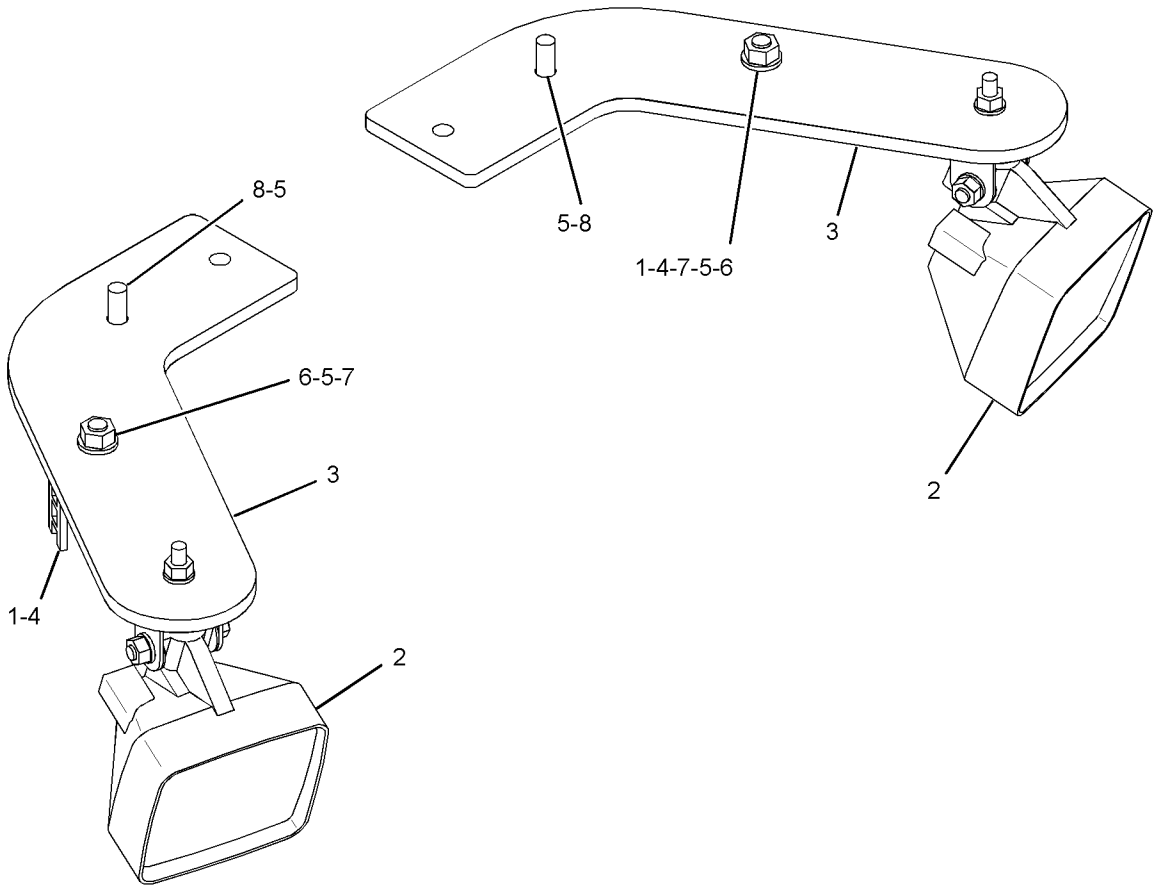

GRAPHIC #1 <END> g02155572

357-2262 LIGHTING GP-FLOOD

S/N: B551-UP

PART OF 390-9182 OPTION AR-MACHINE

SMCS-1434 **i06536397**

NOTE	REF NO	GRAPHIC REF	PART NUMBER	QTY	PART NAME 1 2 3 4 5 6 (PRODUCT LEVEL)	SEE PAGE
	1	1	**284-3619**	1	SWITCH AS-ROCKER (24-VOLT) (FOG LIGHT, REAR)	
Y	2	1	**315-1251**	2	LAMP GP-FLOOD (24-VOLT) (CAB ROOF, REAR)	206
	3	1	**8T-1890**	1	CLIP (TAB)	
	4	1	**8T-1895**	1	CLIP (SLOT)	

Y - SEPARATE ILLUSTRATION

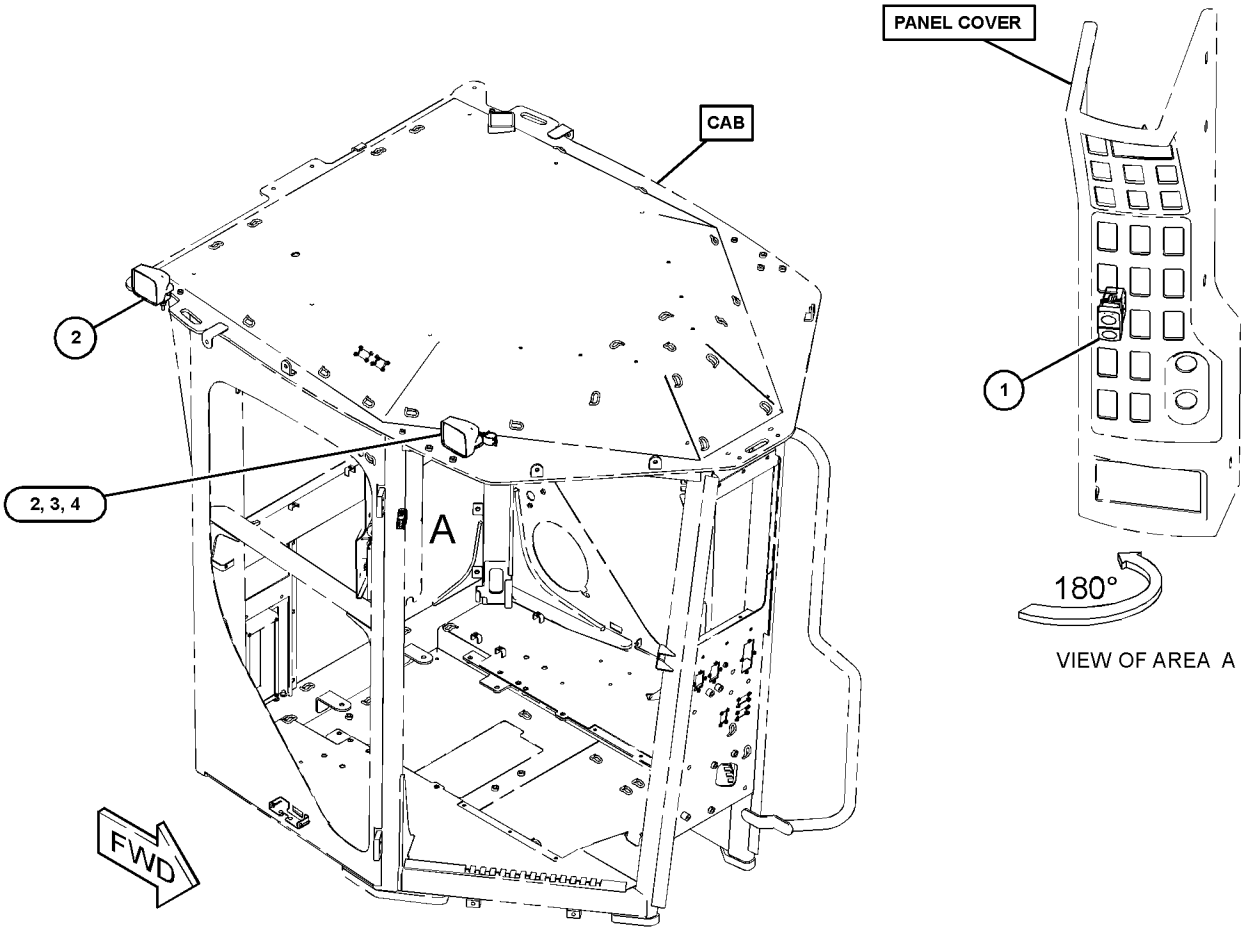

VIEW OF AREA A

GRAPHIC #1 <END> g03686326

550-4901 LIGHTING GP-FLOOD–TOE

S/N: B551-UP
LED
PART OF 551-6544 OPTION AR-LIGHTING

SMCS-1434 **i07435103**

NOTE	REF NO	GRAPHIC REF	PART NUMBER	QTY	PART NAME 1 2 3 4 5 6 (PRODUCT LEVEL)	SEE PAGE
	1	1	**3S-2093**	2	STRAP-CABLE	
	2	1	**4P-7581**	2	CLIP (LADDER)	
	3	1	**8T-4121**	4	WASHER-HARD (11X21X2.5-MM THK)	
M	4	1	**8T-4136**	4	BOLT (M10X1.5X25-MM)	
	5	1	**243-1352**	2	BRACKET AS	
Y	6	1	**550-2445**	2	LAMP GP-FLOOD (9-32-VOLT, 1200 LM, LED)	207
					(EACH INCLUDES)	
M		1	**3T-0852**	2	LOCKNUT (M8X1.25-THD)	
		1	**5P-4116**	1	WASHER-HARD (8.8X20.5X2-MM THK)	
M		1	**8T-6912**	1	BOLT (M8X1.25X50-MM)	

M - METRIC PART
Y - SEPARATE ILLUSTRATION

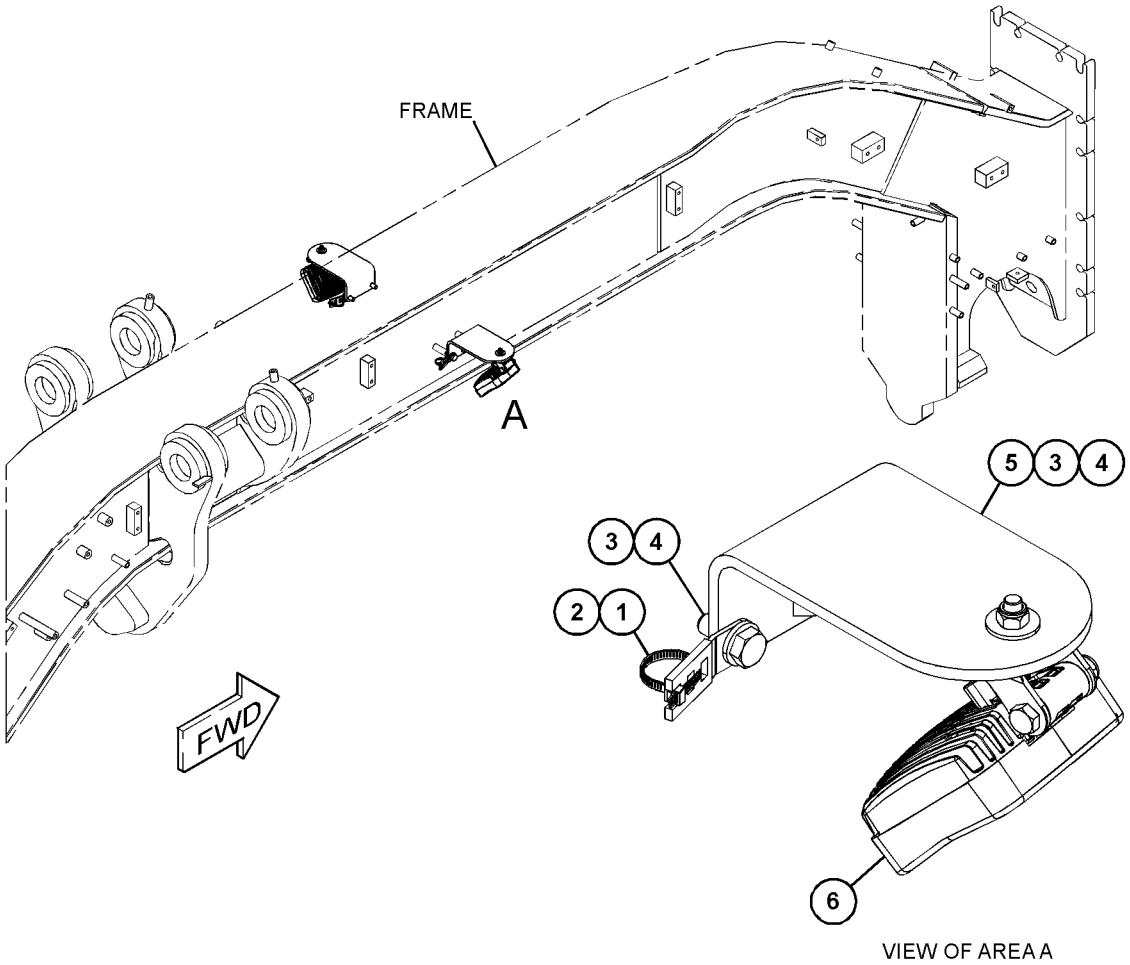

VIEW OF AREA A

GRAPHIC #1 <END> g06279429

550-4904 LIGHTING GP-FLOOD—HEEL

S/N: B551-UP
LED
PART OF 551-6544 OPTION AR-LIGHTING

SMCS-1434 **i07500622**

NOTE	REF NO	GRAPHIC REF	PART NUMBER	QTY	PART NAME 1 2 3 4 5 6 (PRODUCT LEVEL)	SEE PAGE
	1	1	**3S-2093**	2	STRAP-CABLE	
	2	1	**8T-4121**	6	WASHER-HARD (11X21X2.5-MM THK)	
M	3	1	**8T-4136**	2	BOLT (M10X1.5X25-MM)	
M	4	1	**8T-4195**	2	BOLT (M10X1.5X30-MM)	
	5	1	**132-5789**	2	CLIP (LADDER)	
	6	1	**281-0228**	2	PLATE	
M	7	1	**344-5675**	2	NUT (M10X1.5-THD)	
Y	8	1	**550-2445**	2	LAMP GP-FLOOD (9-32-VOLT, 1200 LM, LED)	207
					(EACH INCLUDES)	
M		1	**3T-0852**	2	LOCKNUT (M8X1.25-THD)	
		1	**5P-4116**	1	WASHER-HARD (8.8X20.5X2-MM THK)	
M		1	**8T-6912**	1	BOLT (M8X1.25X50-MM)	

M - METRIC PART
Y - SEPARATE ILLUSTRATION

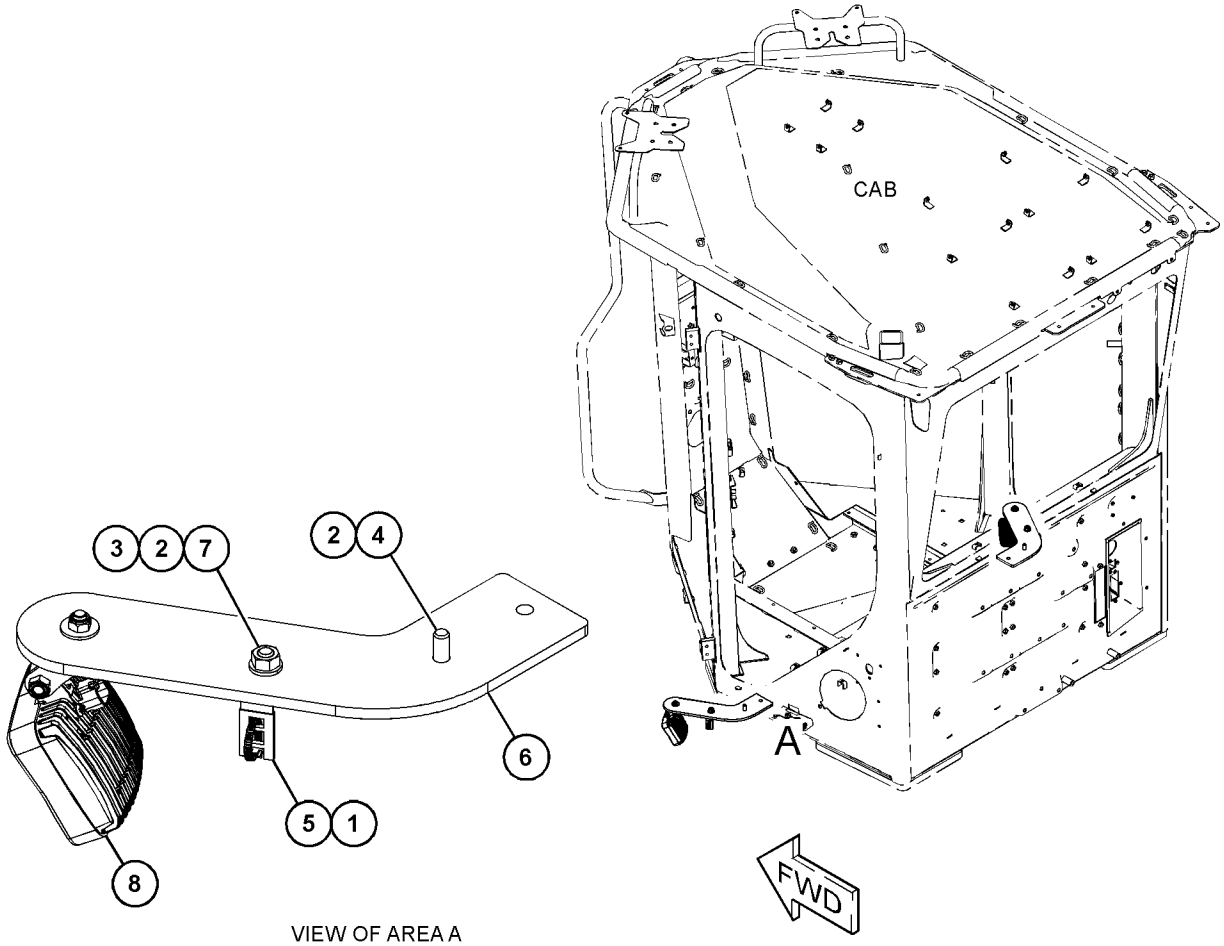

VIEW OF AREA A

GRAPHIC #1 <END> g06287759

550-6609 LIGHTING GP-FLOOD

S/N: B551-UP

PART OF 551-6546 OPTION AR-MACHINE

SMCS-1434 **i07430769**

NOTE	REF NO	GRAPHIC REF	PART NUMBER	QTY	PART NAME 1 2 3 4 5 6 (PRODUCT LEVEL)	SEE PAGE
	1	1	**284-3619**	1	SWITCH AS-ROCKER (24-VOLT) (FOG LIGHT)	
	2	1	**550-2445**	2	LAMP GP-FLOOD (9-32-VOLT, 1200 LM, LED) (CAB ROOF)	
					(EACH INCLUDES)	
M		1	**3T-0852**	2	LOCKNUT (M8X1.25-THD)	
		1	**5P-4116**	1	WASHER-HARD (8.8X20.5X2-MM THK)	
M		1	**8T-6912**	1	BOLT (M8X1.25X50-MM)	
	3	1	**8T-1890**	1	CLIP (TAB)	
	4	1	**8T-1895**	1	CLIP (SLOT)	

M - METRIC PART

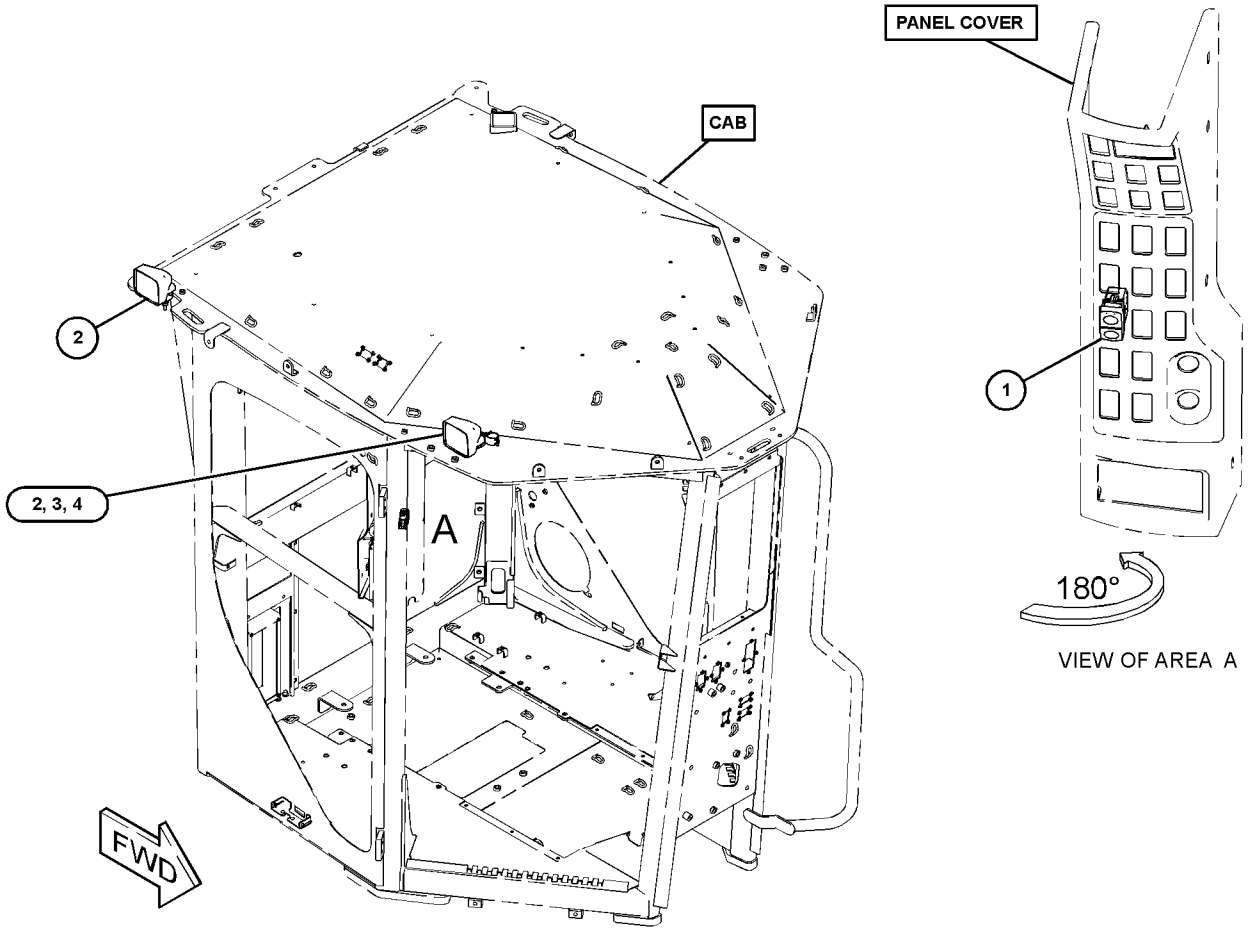

VIEW OF AREA A

GRAPHIC #1 <END> g03686326

277-9409 LIGHTING GP-ROADING—AUSTRALIA, LH

S/N: B551-UP

PART OF 565-4306 OPTION AR-REGIONAL, 565-9420 ROADING AR

SMCS-1429 **i04898702**

NOTE	REF NO	GRAPHIC REF	PART NUMBER	QTY	PART NAME 1 2 3 4 5 6 (PRODUCT LEVEL)	SEE PAGE
	1	1	**3S-2093**	6	STRAP-CABLE	
	2	1	**224-2821**	4	PLATE AS	
	3	1	**246-1685**	1	HARNESS AS-REAR LIGHTING (REGISTRATION PLATE)	
		1	**102-8802**	1	KIT-RECEPTACLE (2-PIN)	
					(INCLUDES RECEPTACLE AS & WEDGE)	
		1	**155-2270**	2	KIT-CONNECTING PLUG (2-PIN)	
					(EACH INCLUDES PLUG AS, WEDGE & INTERFACE SEAL)	
		1	**9W-0844**	2	SOCKET-CONNECTOR (14-GA TO 16-GA)	
		1	**9W-0852**	2	PIN-CONNECTOR (14-GA TO 16-GA)	
	4	1	**277-9410**	1	PLATE	
Y	5	1	**259-0134**	1	LAMP GP-REGISTRATION PLATE (24-VOLT) (LICENSE)	217
	6	1	**5P-4116**	4	WASHER-HARD (8.8X20.5X2-MM THK)	
M	7	1	**8T-4908**	4	BOLT (M8X1.25X25-MM)	

M - METRIC PART
Y - SEPARATE ILLUSTRATION

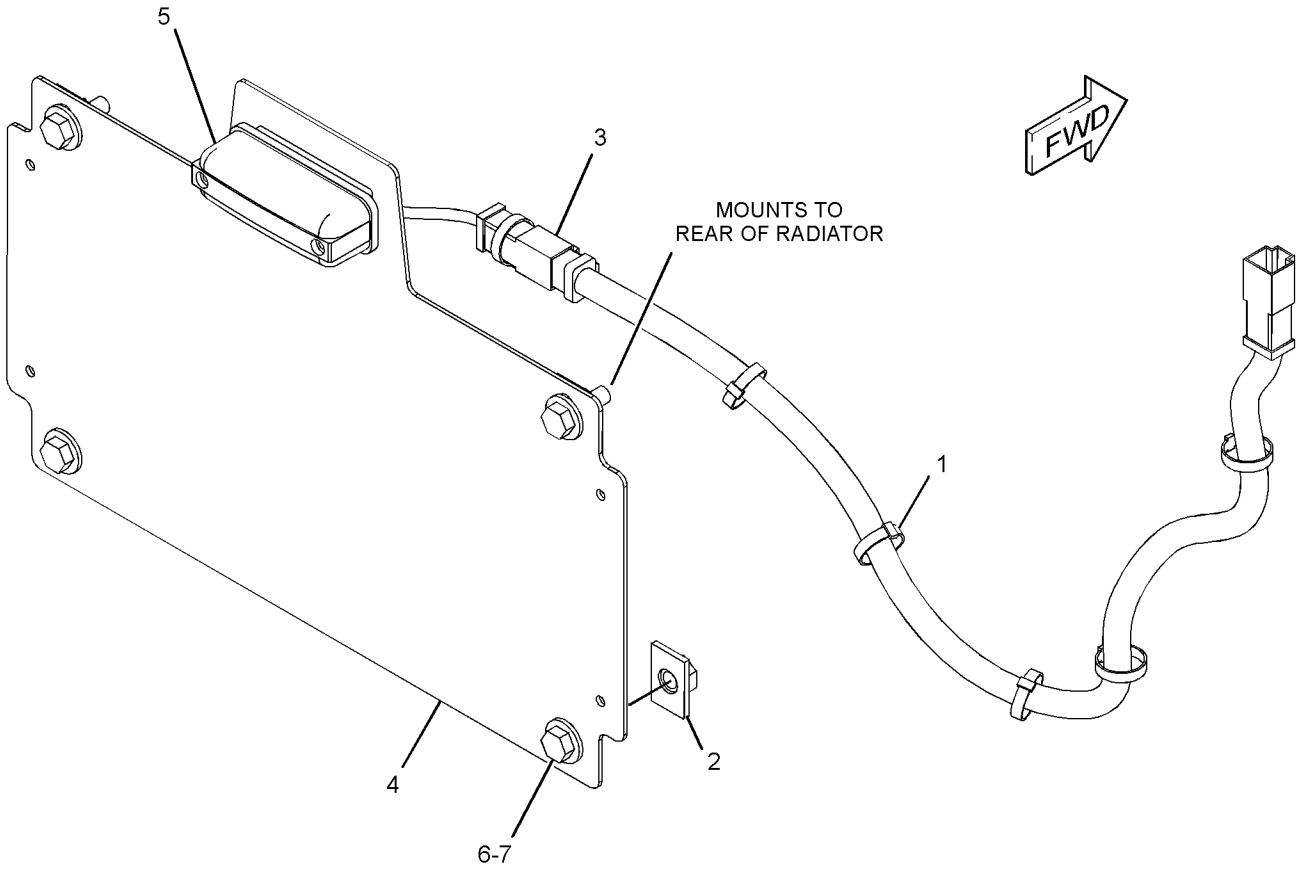

GRAPHIC #1 <END> g02044941

344-0983 LIGHTING GP-ROADING

S/N: B551-UP

PART OF 560-8856 LIGHTING AR-ROADING

SMCS-1429 **i07168809**

NOTE	REF NO	GRAPHIC REF	PART NUMBER	QTY	PART NAME 1 2 3 4 5 6 (PRODUCT LEVEL)	SEE PAGE
	1	1	**236-4616**	1	SWITCH AS-ROCKER (24-VOLT)	
	2	1	**367-5212**	1	SWITCH AS-ROCKER (24-VOLT) (TURN SIGNAL)	
	3	1	**369-4096**	1	SWITCH AS-ROCKER (HEADLIGHT)	
	4	1	**248-2841**	2	RELAY AS (24-VOLT)	

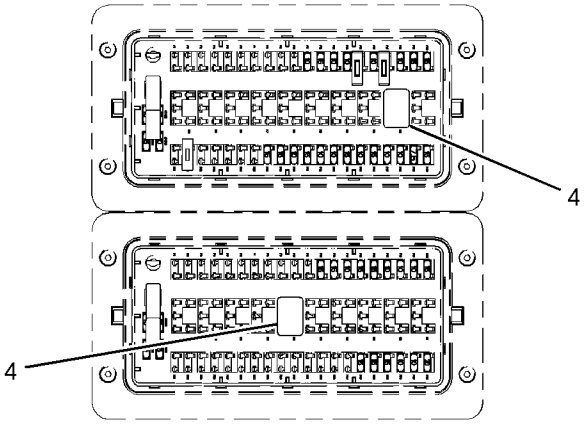

FRONT VIEW
(FUSE BLOCK)

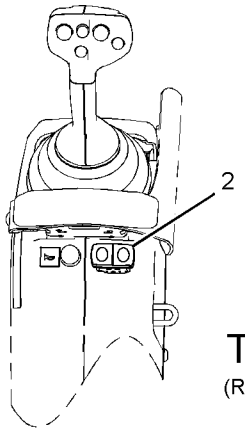

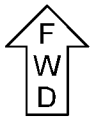

TOP VIEW
(RH CONTROL POD)

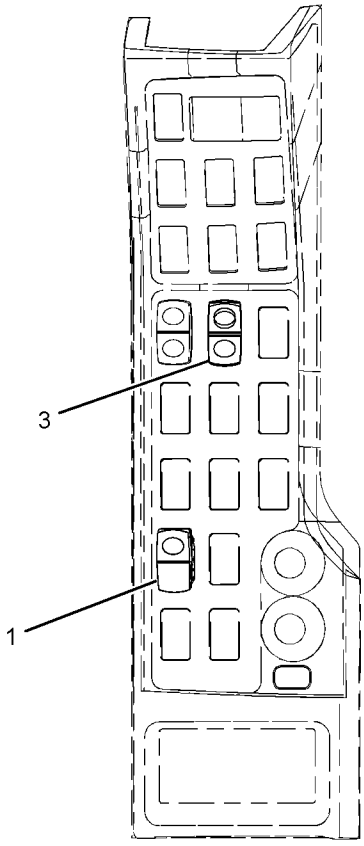

FRONT VIEW
(SWITCH PANEL)

GRAPHIC #1 <END> g02158441

368-9766 LIGHTING GP-ROADING—MARKER LIGHTS

S/N: B551-UP

PART OF 492-0729 CONVERSION AR-CERTIFICATION, 565-4306 OPTION AR-REGIONAL

SMCS-1429 **i07609290**

NOTE	REF NO	GRAPHIC REF	PART NUMBER	QTY	PART NAME 1 2 3 4 5 6 (PRODUCT LEVEL)	SEE PAGE
Y	1	1	**212-3924**	2	LAMP GP-MARKER (24-VOLT) (ROADING)	215
	2	1	**357-2263**	2	PLATE AS	
					(EACH INCLUDES)	
M		1	**8T-8874**	2	NUT-WELD (M5X0.8-THD)	
	3	1	**5P-4116**	2	WASHER-HARD (8.8X20.5X2-MM THK)	
M	4	1	**8T-4908**	2	BOLT (M8X1.25X25-MM)	
	5	1	**5P-1076**	2	WASHER-HARD (13.5X30X4-MM THK)	

M - METRIC PART
Y - SEPARATE ILLUSTRATION

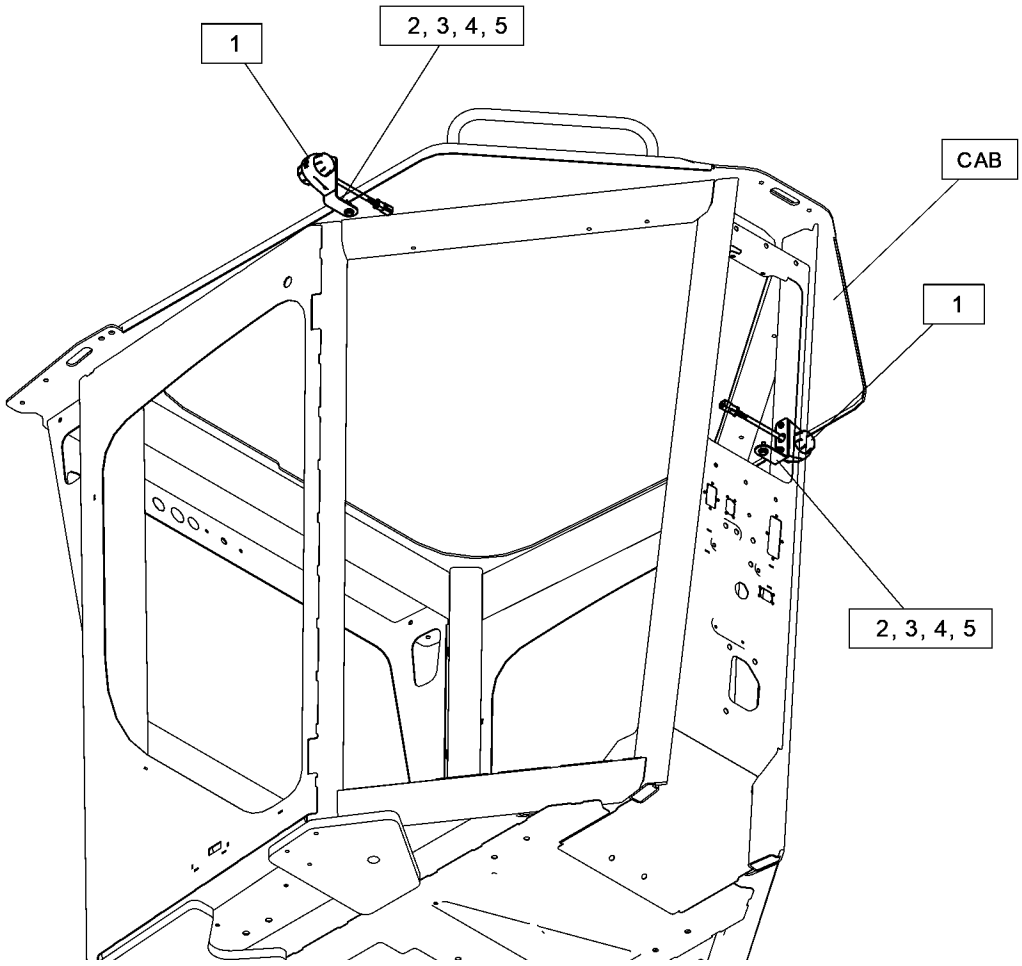

GRAPHIC #1 <END> g06411701

421-7810 LIGHTING GP-ROADING

S/N: B551-UP

SMCS-1429 **i07666609**

NOTE	REF NO	GRAPHIC REF	PART NUMBER	QTY	PART NAME 1 2 3 4 5 6 (PRODUCT LEVEL)	SEE PAGE
Y	1	1	**219-6488**	2	LAMP GP-FLOOD (24-VOLT) (CAB, FRONT)	202
Y	2	1	**290-5749**	2	LAMP GP-HEAD (24-VOLT) (FRONT)	210
Y	3	1	*315-1251*	2	LAMP GP-FLOOD (24-VOLT) (CAB ROOF, REAR)	206

Y - SEPARATE ILLUSTRATION

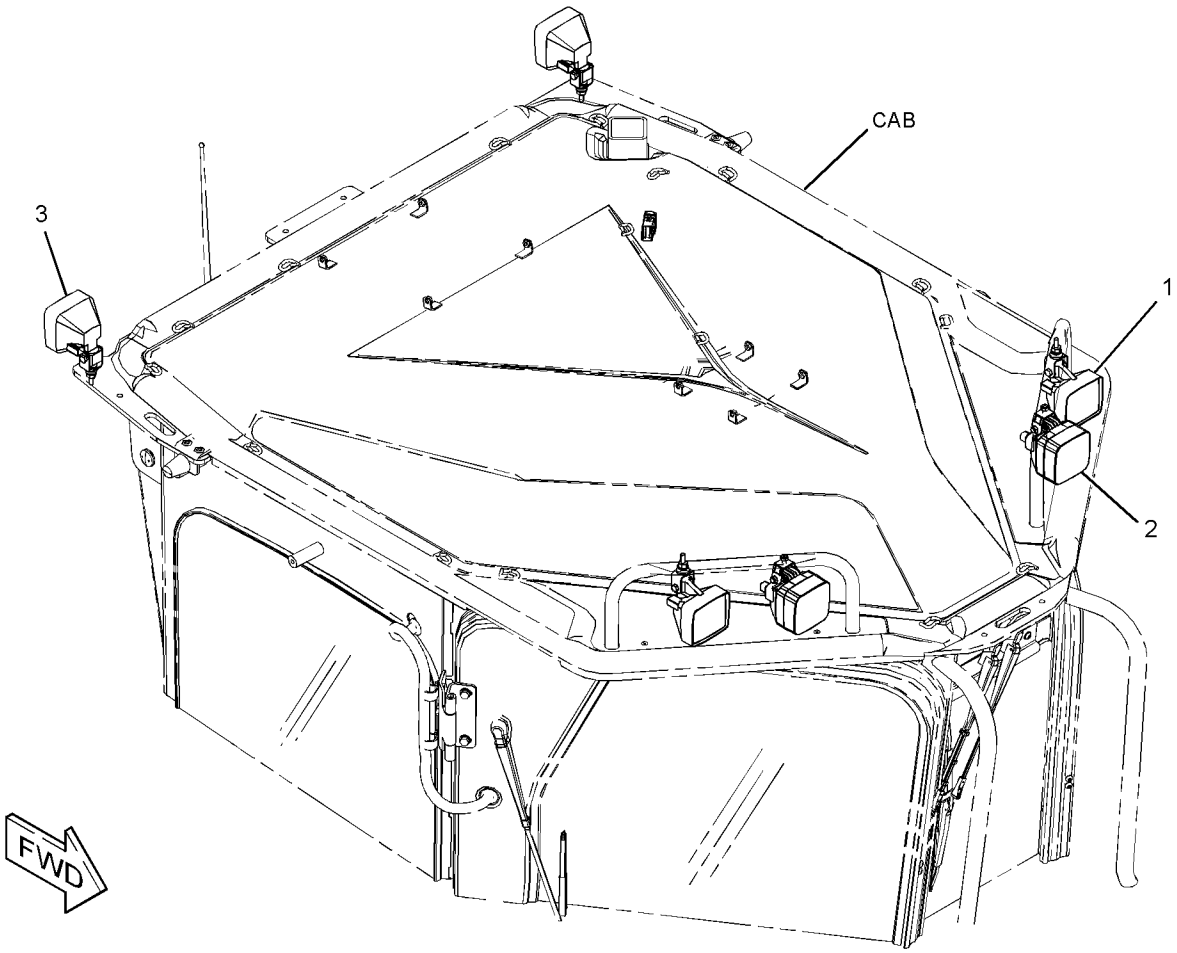

GRAPHIC #1 <END> g03838990

550-6608 LIGHTING GP-ROADING–LED

S/N: B551-UP

SMCS-1429 **i07435076**

NOTE	REF NO	GRAPHIC REF	PART NUMBER	QTY	PART NAME 1 2 3 4 5 6 (PRODUCT LEVEL)	SEE PAGE
Y	1	1	**550-2445**	4	LAMP GP-FLOOD (9-32-VOLT, 1200 LM, LED)	207
					(EACH INCLUDES)	
M		1	**3T-0852**	2	LOCKNUT (M8X1.25-THD)	
		1	**5P-4116**	1	WASHER-HARD (8.8X20.5X2-MM THK)	
M		1	**8T-6912**	1	BOLT (M8X1.25X50-MM)	
Y	2	1	**550-2446**	2	LAMP GP-FLOOD (9-32-VOLT, 1200 LM, LED) (NARROW BEAM)	208
					(EACH INCLUDES)	
M		1	**3T-0852**	2	LOCKNUT (M8X1.25-THD)	
		1	**5P-4116**	1	WASHER-HARD (8.8X20.5X2-MM THK)	
M		1	**8T-6912**	1	BOLT (M8X1.25X50-MM)	

M - METRIC PART
Y - SEPARATE ILLUSTRATION

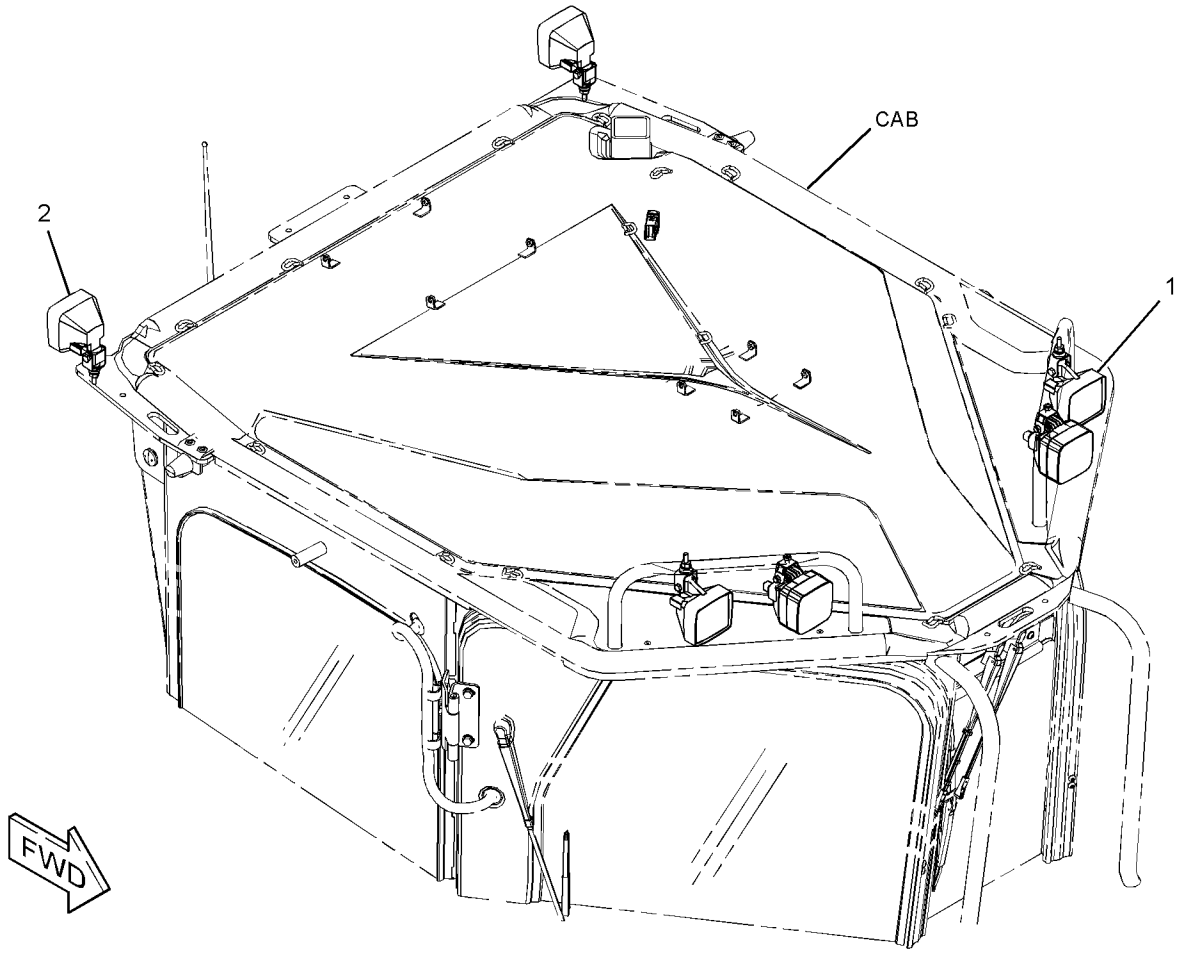

GRAPHIC #1 <END> g06277721

286-4435 LIGHTING GP-WARNING BEACON—DUAL

S/N: B551-UP

PART OF 565-4306 OPTION AR-REGIONAL

SMCS-1431 **i07334338**

NOTE	REF NO	GRAPHIC REF	PART NUMBER	QTY	PART NAME 1 2 3 4 5 6 (PRODUCT LEVEL)	SEE PAGE
	1	1	**3S-2093**	8	STRAP-CABLE	
	2	1	**150-9870**	2	GUARD GP-LIGHTING (ROTATING BEACON)	
					(EACH INCLUDES)	
	2A	1	**9B-2923**	2	HINGE	
	3	1	**237-9736**	1	SWITCH AS-ROCKER (WARNING BEACON)	
	4	1	**277-9411**	2	PLATE	
	5	1	**286-5163**	1	HARNESS AS-LIGHTING	
		1	**102-8802**	1	KIT-RECEPTACLE (2-PIN)	
					(INCLUDES RECEPTACLE AS & WEDGE)	
		1	**9W-0844**	4	SOCKET-CONNECTOR (14-GA TO 16-GA)	
		1	**9W-0852**	2	PIN-CONNECTOR (14-GA TO 16-GA)	
		1	**155-2270**	2	KIT-CONNECTING PLUG (2-PIN)	
					(EACH INCLUDES PLUG AS, WEDGE, & INTERFACE SEAL)	
		1	**274-3774**	2	CAP-CONNECTOR	
	6	1	**130-5300**	2	CLIP	
	7	1	**5A-4878**	2	GROMMET	
M	8	1	**5C-2890**	2	NUT (M6X1-THD)	
M	9	1	**6V-7357**	2	BOLT (M6X1X25-MM)	
M	10	1	**8T-0389**	8	LOCKNUT (M10X1.5-THD)	
	11	1	**8T-4121**	24	WASHER-HARD (11X21X2.5-MM THK)	
M	12	1	**8T-4133**	4	NUT (M10X1.5-THD)	
M	13	1	**8T-4195**	6	BOLT (M10X1.5X30-MM)	
M	14	1	**8T-4196**	2	BOLT (M10X1.5X35-MM)	
	15	1	**9X-8256**	4	WASHER (6.6X12X2-MM THK)	
M	16	1	**8T-4186**	4	BOLT (M10X1.5X40-MM)	

M - METRIC PART

286-4435 **LIGHTING GP-WARNING BEACON (**contd.**)** **i07334338**

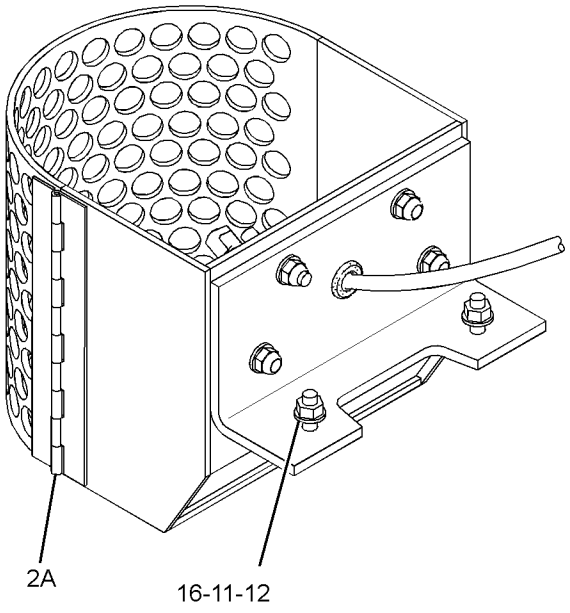

VIEW OF AREA A

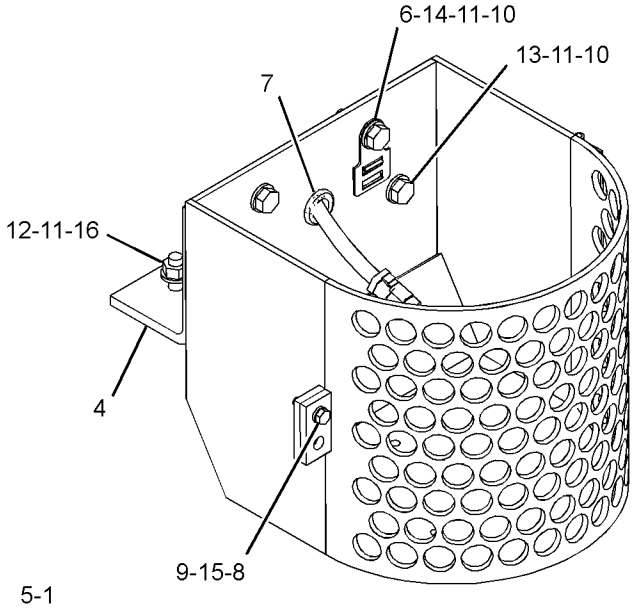

VIEW OF AREA B

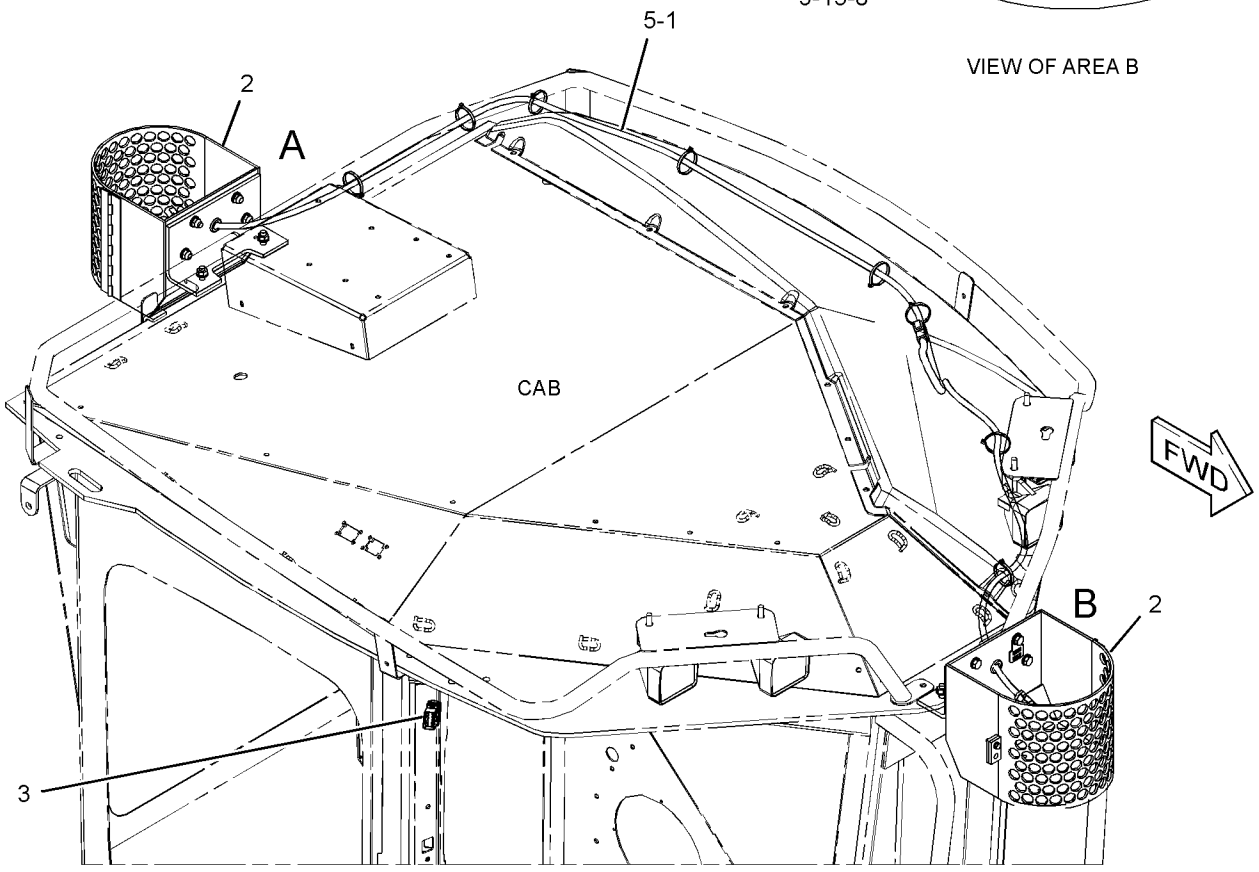

GRAPHIC #1 <END> g06272091

436-9180 MOTOR GP-ELECTRIC—CIRCULATING FAN

S/N: B551-UP
27-VOLT, COUNTER CLOCKWISE LEAD END
PART OF 170-5334 FAN GP-CIRCULATING

SMCS-5927 **i05673770**

NOTE	REF NO	GRAPHIC REF	PART NUMBER	QTY	PART NAME 1 2 3 4 5 6 (PRODUCT LEVEL)	SEE PAGE
	1	1	**102-8802**	1	KIT-RECEPTACLE (2-PIN)	
					(INCLUDES RECEPTACLE AS & WEDGE)	
	2	1	**9W-0852**	2	PIN-CONNECTOR (14-GA TO 16-GA)	

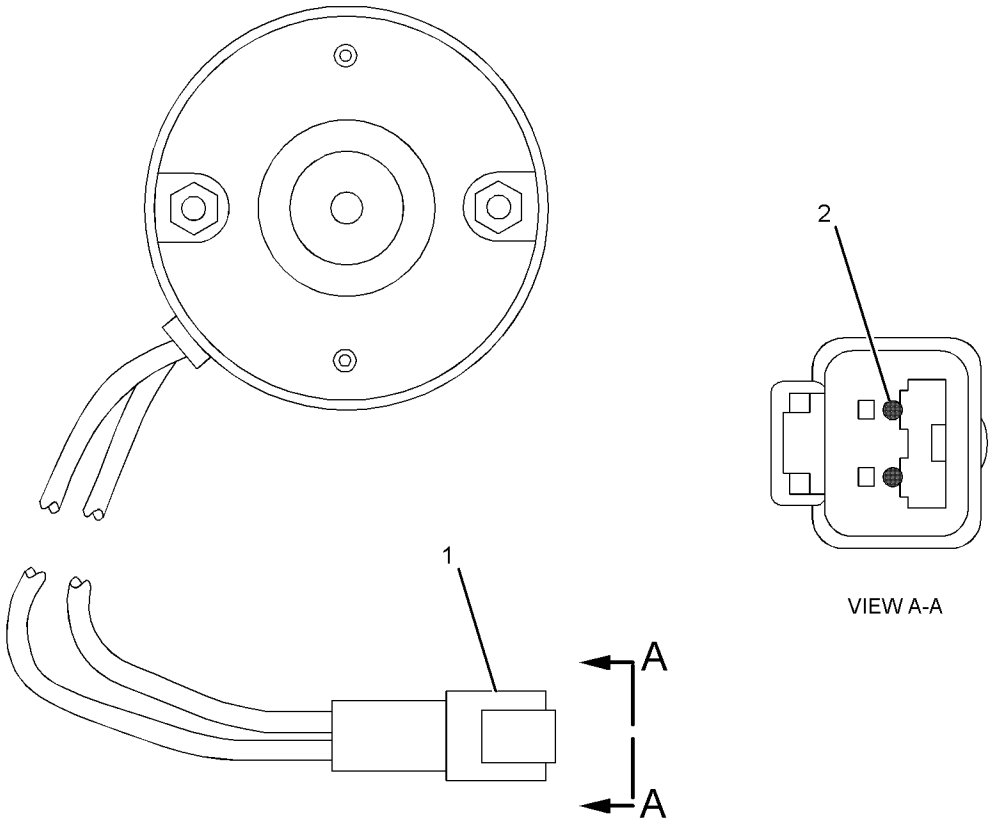

GRAPHIC #1 <END> g01224350

298-3643 MOUNTING GP-GRADE CONTROL

S/N: B551-UP

PART OF 462-6392, 462-6393 GRADE CONTROL AR

SMCS-7220 **i02787075**

NOTE	REF NO	GRAPHIC REF	PART NUMBER	QTY	PART NAME 1 2 3 4 5 6 (PRODUCT LEVEL)	SEE PAGE
	1	1	**287-6688**	2	PLATE	
	2	1	**288-0693**	4	BLOCK	
	3	1	**288-5515**	1	PLATE AS	
M		1	**8T-4185**	2	BOLT (M10X1.5X50-MM)	
	4	1	**288-5516**	1	PLATE AS	
M		1	**8T-4185**	2	BOLT (M10X1.5X50-MM)	
	5	1	**298-3644**	1	BRACKET AS	
M		1	**8T-3490**	1	NUT-WELD (M10X1.5-THD)	
M	6	1	**096-4883**	4	LOCKNUT (M10X1.5-THD)	
	7	1	**8T-4121**	11	WASHER-HARD (11X21X2.5-MM THK)	
M	8	1	**8T-4137**	6	BOLT (M10X1.5X20-MM)	
M	9	1	**8T-4186**	1	BOLT (M10X1.5X40-MM)	
	10	1	**9C-5344**	1	SPACER (10.5X20X18-MM THK)	

M - METRIC PART

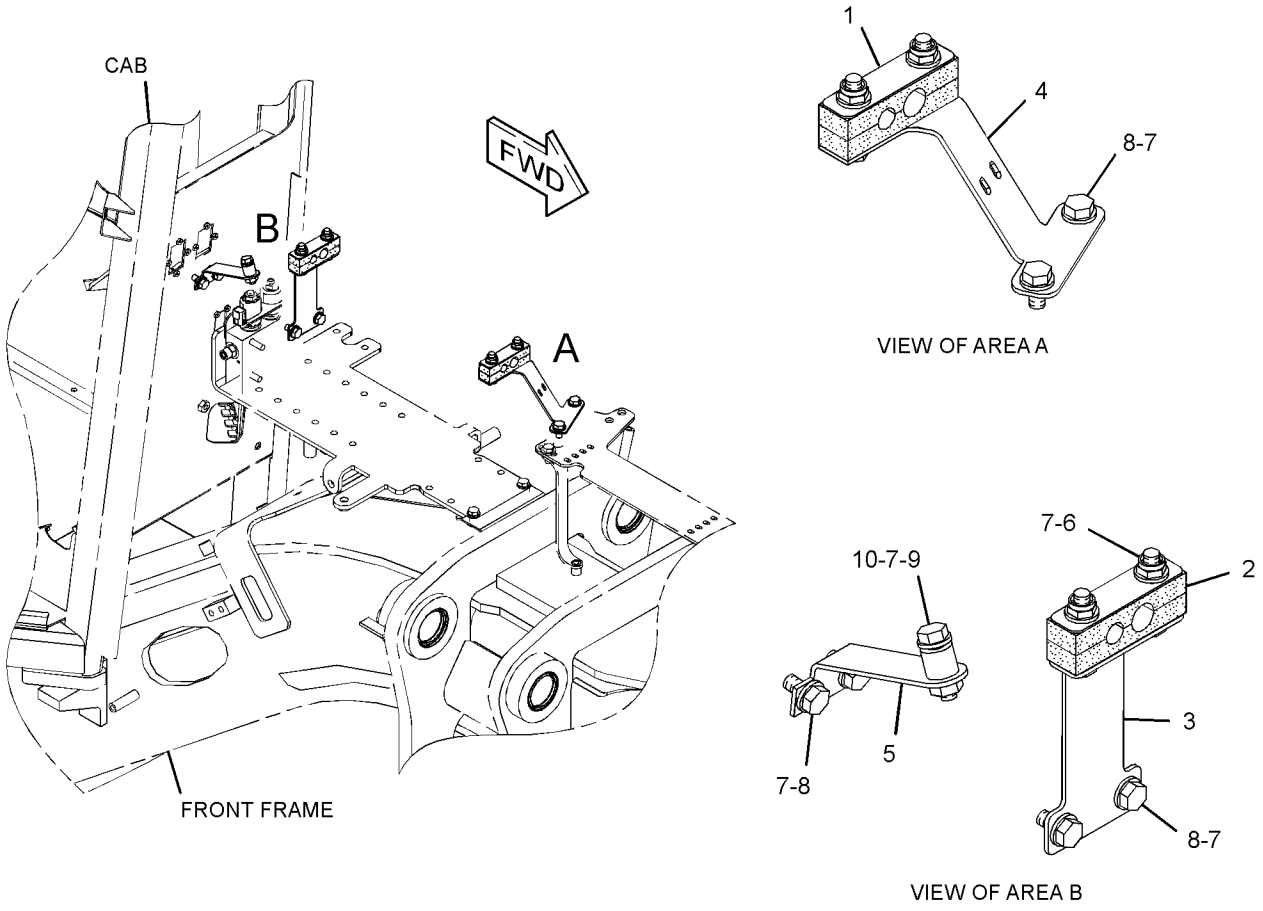

GRAPHIC #1 <END> g01329368

308-9370 MOUNTING GP-LIGHTING—ROADING LIGHTS

S/N: B551-UP

LOW BAR

CANNOT BE USED WITH 308-9371—PAGE: 243

SMCS-1429 **i07637815**

NOTE	REF NO	GRAPHIC REF	PART NUMBER	QTY	PART NAME 1 2 3 4 5 6 (PRODUCT LEVEL)	SEE PAGE
	1	1	**2G-0617**	2	CLAMP	
	2	1	**2G-0988**	2	CAP	
	3	1	**3K-9520**	3	GROMMET	
	4	1	**137-9410**	2	CLAMP	
CY	5	1	**553-2611**	1	HARNESS AS-LIGHTING (BAR)	185
	6	1	**250-4330**	1	TUBE	
	7	1	**331-3710**	2	BRACKET AS	
Y	8	1	**259-9288**	1	LAMP GP-HEAD & SIGNAL (24-VOLT, RH)	212
Y	9	1	**259-9287**	1	LAMP GP-HEAD & SIGNAL (24-VOLT, LH)	211
	10	1	**130-5300**	2	CLIP	
	11	1	**130-5301**	2	CLIP	
	12	1	**4P-7428**	1	CLIP (LADDER)	
	13	1	**5P-9135**	1	GROMMET	
	14	1	**8T-4223**	4	WASHER-HARD (13.5X25.5X3-MM THK)	
	15	1	**8T-4121**	4	WASHER-HARD (11X21X2.5-MM THK)	
CM	16	1	**344-5675**	2	NUT (M10X1.5-THD)	
M	17	1	**8T-4195**	2	BOLT (M10X1.5X30-MM)	
M	18	1	**8T-5001**	4	BOLT (M12X1.75X130-MM)	
	19	1	**7K-1181**	1	STRAP-CABLE	

C - CHANGE FROM PREVIOUS TYPE
M - METRIC PART
Y - SEPARATE ILLUSTRATION

308-9370 **MOUNTING GP-LIGHTING (**contd.**)** **i07637815**

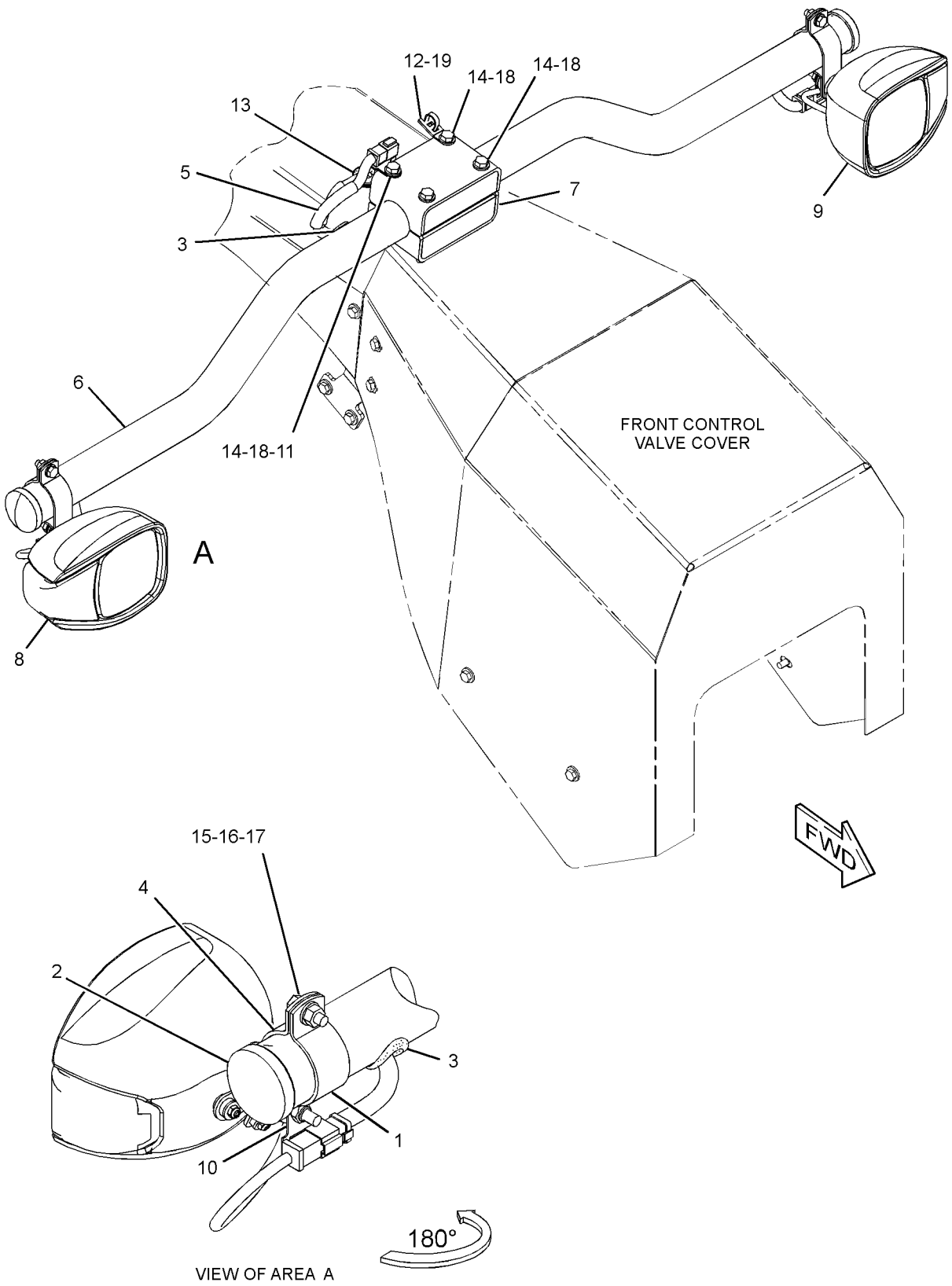

VIEW OF AREA A

GRAPHIC #1 <END> g03077656

308-9371 MOUNTING GP-LIGHTING—ROADING

S/N: B551-UP

HIGH BAR

SMCS-1429 **i07763081**

NOTE	REF NO	GRAPHIC REF	PART NUMBER	QTY	PART NAME 1 2 3 4 5 6 (PRODUCT LEVEL)	SEE PAGE
	1	1	**2G-0617**	2	CLAMP	
	2	1	**2G-0988**	2	CAP	
	3	1	**3K-9520**	3	GROMMET	
	4	1	**137-9410**	2	CLAMP	
CY	5	1	**553-2611**	1	HARNESS AS-LIGHTING (BAR)	185
	6	1	**246-1672**	1	TUBE	
	7	1	**331-3710**	2	BRACKET AS	
Y	8	1	**259-9288**	1	LAMP GP-HEAD & SIGNAL (24-VOLT, RH)	212
Y	9	1	**259-9287**	1	LAMP GP-HEAD & SIGNAL (24-VOLT, LH)	211
	10	1	**130-5300**	2	CLIP	
	11	1	**130-5301**	2	CLIP	
	12	1	**4P-7428**	1	CLIP (LADDER)	
	13	1	**5P-9135**	1	GROMMET	
	14	1	**8T-4223**	4	WASHER-HARD (13.5X25.5X3-MM THK)	
	15	1	**8T-4121**	4	WASHER-HARD (11X21X2.5-MM THK)	
CM	16	1	**344-5675**	2	NUT (M10X1.5-THD)	
M	17	1	**8T-4195**	2	BOLT (M10X1.5X30-MM)	
M	18	1	**8T-5001**	4	BOLT (M12X1.75X130-MM)	
	19	1	**7K-1181**	1	STRAP-CABLE	

C - CHANGE FROM PREVIOUS TYPE
M - METRIC PART
Y - SEPARATE ILLUSTRATION

308-9371 **MOUNTING GP-LIGHTING (**contd.**)** **i07763081**

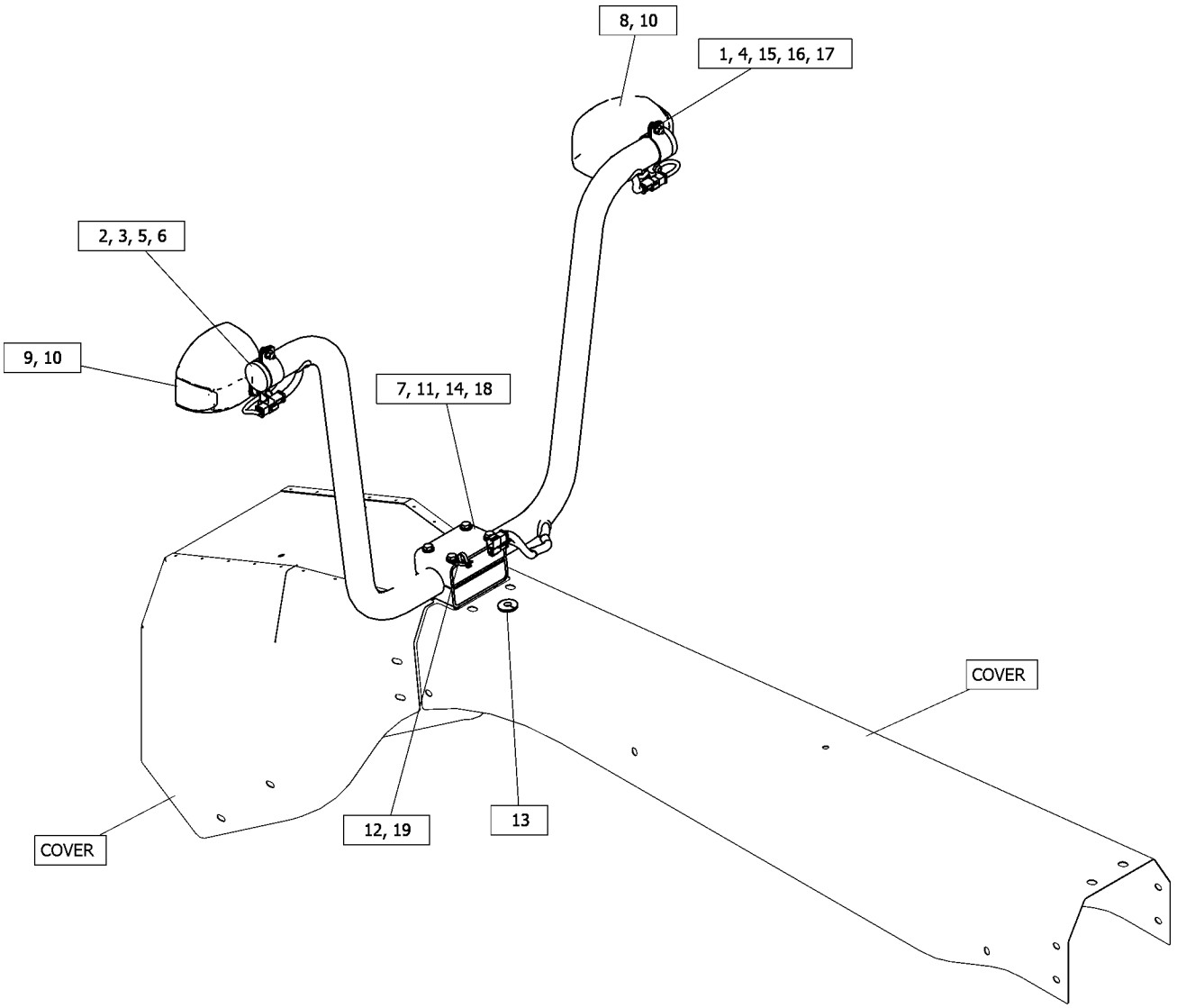

GRAPHIC #1 <END> g06427001

280-8969 PANEL GP-CIRCUIT BREAKER

S/N: B551-UP

PART OF 396-9719 WIRING GP-POWER RECEPTACLE

SMCS-1417, 1420, 1422 **i07200125**

NOTE	REF NO	GRAPHIC REF	PART NUMBER	QTY	PART NAME 1 2 3 4 5 6 (PRODUCT LEVEL)	SEE PAGE
	1	2	**3S-2093**	2	STRAP-CABLE	
	2	2	**9X-0352**	1	RECEPTACLE AS-CONNECTOR (2-PIN)	
Y	3	2	**125-1302**	1	SWITCH GP-MAGNETIC (24-VOLT) (START RELAY)	270
	4	1	**171-2210**	1	CIRCUIT BREAKER AS (80-AMPERE) (MAIN)	
	4A	1	**171-2210**	1	CIRCUIT BREAKER AS (80-AMPERE) (LOAD)	
	5	1	**171-2215**	1	CIRCUIT BREAKER AS (150-AMPERE) (ALTERNATOR)	
					(EACH INCLUDES)	
		1	**1H-3244**	2	LOCKWASHER	
		1	**8T-0122**	2	NUT-FULL (1/4-28-THD)	
		1	**4E-5724**	2	WASHER (7X12X1-MM THK)	
	6	2	**172-4863**	1	JUNCTION BLOCK	
Y	7	2	**241-8368**	1	SWITCH GP-MAGNETIC (24-VOLT) (MAIN POWER RELAY)	272
	8	2	**280-8973**	1	BRACKET AS	
M		2	**8T-3490**	6	NUT-WELD (M10X1.5-THD)	
	9	1	**280-8974**	1	BOX AS	
M		1	**6V-9632**	1	NUT-WELD (M6X1-THD)	
M		1	**8T-3490**	7	NUT-WELD (M10X1.5-THD)	
M		1	**9R-2672**	1	BOSS-THREADED (M10X1.5X120-MM)	
M		1	**9R-2821**	2	BOSS (M10X1.5X15-MM)	
	10	1	**280-8976**	1	HARNESS AS-BOX	
		1	**8N-1523**	1	LOCKWASHER	
		1	**189-3158**	1	SUPPRESSOR-ARC	
		1	**8N-1517**	1	RECEPTACLE AS-CONNECTOR (25-PIN)	
		1	**8N-1522**	1	NUT (2-1/4-16-THD)	
		1	**102-8802**	1	KIT-RECEPTACLE (2-PIN)	
					(INCLUDES RECEPTACLE AS & WEDGE)	
		1	**155-2270**	2	KIT-CONNECTING PLUG (2-PIN)	
					(EACH INCLUDES PLUG AS, WEDGE, & INTERFACE SEAL)	
		1	**7G-7917**	10	PLUG-SEAL	
		1	**7G-7918**	1	PLUG-SEAL	
		1	**7G-7919**	2	PLUG-SEAL	
		1	**9X-6856**	6	PIN-CONNECTOR (16-GA TO 18-GA)	
		1	**8N-1540**	3	PIN-CONNECTOR (12-GA TO 14-GA)	
		1	**8N-1544**	1	PIN-CONNECTOR (8-GA)	
		1	**8N-1548**	2	PIN-CONNECTOR (4-GA)	
		1	**8T-8729**	2	PIN-CONNECTOR (16-GA TO 20-GA)	
		1	**8T-8730**	4	SOCKET-CONNECTOR (16-GA TO 18-GA)	
		1	**9G-4343**	1	TERMINAL-RING (4-GA, 1/4-IN SCREW)	
		1	**5P-3454**	1	TERMINAL-RING (4-GA, 5/16-IN SCREW)	
		1	**2L-8075**	2	TERMINAL-RING (14-GA TO 16-GA, NO. 8 SCREW)	
		1	*276-7498*	1	TERMINAL AS-RING	
E		1	**119-3662**		TUBE-HEAT SHRINK (10.85-MM DIA) (4-CM)	
		1	*285-5600*	3	TERMINAL AS-RING	
					(EACH INCLUDES)	
E		1	**125-7874**		TUBE-HEAT SHRINK (5.72-MM DIA) (4-CM)	
E		1	**125-7875**		TUBE-HEAT SHRINK (7.44-MM DIA) (10-CM)	
	11	2	**306-9997**	1	PLATE	

280-8969 **PANEL GP-CIRCUIT BREAKER (**contd.**)** **i07200125**

NOTE	REF NO	GRAPHIC REF	PART NUMBER	QTY	PART NAME 1 2 3 4 5 6 (PRODUCT LEVEL)	SEE PAGE
	12	2	**280-9455**	1	PLATE	
	13	1	**281-5825**	1	COVER	
	14	2	**306-9998**	1	PLATE	
	15	2	**287-1686**	1	WIRE AS	
	16	2	**287-1687**	1	WIRE AS	
	17	1	**287-1688**	1	HARNESS AS-TRANSMISSION	
		1	**155-2270**	1	KIT-CONNECTING PLUG (2-PIN)	
					(INCLUDES PLUG AS, WEDGE, & INTERFACE SEAL)	
E		1	**125-7874**		TUBE-HEAT SHRINK (5.72-MM DIA) (4-CM)	
		1	**8T-8737**	1	PLUG-SEAL	
		1	**8T-8730**	1	SOCKET-CONNECTOR (16-GA TO 18-GA)	
	18	2	**289-2527**	1	WIRE AS	
	19	2	**289-2528**	1	WIRE AS	
	20	1	**113-8373**	6	SCREW-BUTTON HEAD (10-32X0.75-IN)	
	21	2	**130-5300**	2	CLIP	
	22	1	**230-9174**	1	CIRCUIT BREAKER AS (15-AMPERE) (TRANSMISSION CONTROL)	
	22A	1	**230-9174**	1	CIRCUIT BREAKER AS (15-AMPERE) (KEY SWITCH)	
					(EACH CIRCUIT BREAKER AS INCLUDES)	
		1	**8F-1434**	2	LOCKWASHER	
		1	**6V-8378**	2	NUT (10-32-THD)	
		1	**8T-0328**	2	WASHER-HARD (5.5X10X1-MM THK)	
	23	1	**288-3687**	1	CIRCUIT BREAKER AS (20-AMPERE) (ACCUGRADE)	
	23A	1	**288-3687**	1	CIRCUIT BREAKER AS (20-AMPERE) (ENGINE CONTROL)	
					(EACH CIRCUIT BREAKER INCLUDES)	
		1	**8F-1434**	2	LOCKWASHER	
		1	**6V-8378**	2	NUT (10-32-THD)	
		1	**8T-0328**	2	WASHER-HARD (5.5X10X1-MM THK)	
	24	1	**3T-2662**	1	CIRCUIT BREAKER AS (15-AMPERE, AUTOMATIC RESET) (FLOODLIGHTS, LH)	
	24A	1	**3T-2662**	1	CIRCUIT BREAKER AS (15-AMPERE, AUTOMATIC RESET) (FLOODLIGHTS, RH)	
					(EACH CIRCUIT BREAKER AS INCLUDES)	
		1	**9B-7233**	2	LOCKWASHER	
		1	**6V-8376**	2	SCREW-MACHINE (8-32X0.25-IN)	
	25	1	**4B-4274**	6	WASHER (5.5X13X1.2-MM THK)	
M	26	2	**5C-2890**	4	NUT (M6X1-THD)	
M	27	2	**6V-7744**	1	LOCKNUT (M10X1.5-THD)	
	28	1,2	**7K-1181**	3	STRAP-CABLE	
	29	1	**9X-6016**	12	SCREW-HEX SOCKET (8-32X0.875-IN)	
M	30	2	**8T-4179**	1	BOLT (M12X1.75X20-MM)	
M	31	2	**8C-8580**	3	BOLT-SOCKET HEAD (M5X0.8X16-MM)	
	32	2	**8T-0328**	3	WASHER-HARD (5.5X10X1-MM THK)	
	33	2	**8T-4121**	6	WASHER-HARD (11X21X2.5-MM THK)	
M	34	1,2	**8T-4137**	10	BOLT (M10X1.5X20-MM)	
M	35	2	**8T-4138**	1	BOLT (M6X1X20-MM)	
	36	1	**7X-7729**	6	WASHER (11X25X3-MM THK)	
	37	2	**8T-4205**	1	WASHER-HARD (7.2X14.5X2-MM THK)	
	38	2	**8T-4223**	1	WASHER-HARD (13.5X25.5X3-MM THK)	
	39	1	**9B-7233**	12	LOCKWASHER	
	40	1,2	**9X-8256**	8	WASHER (6.6X12X2-MM THK)	

280-8969 **PANEL GP-CIRCUIT BREAKER (**contd.**)** **i07200125**

NOTE	REF NO	GRAPHIC REF	PART NUMBER	QTY	PART NAME 1 2 3 4 5 6 (PRODUCT LEVEL)	SEE PAGE
	41	2	**296-9931**	1	PLATE AS	
M		2	**8T-8874**	3	NUT-WELD (M5X0.8-THD)	
	42	1	**262-2827**	1	FILM-IDENTIFICATION (FUSE PANEL)	
	43	2	**1H-3244**	1	LOCKWASHER	
M	44	2	**8T-4136**	1	BOLT (M10X1.5X25-MM)	
	45	2	**4B-4277**	2	WASHER (8.8X17.5X1.6-MM THK)	

E - ORDER BY THE CENTIMETER
M - METRIC PART
Y - SEPARATE ILLUSTRATION

280-8969 **PANEL GP-CIRCUIT BREAKER (**contd.**)** **i07200125**

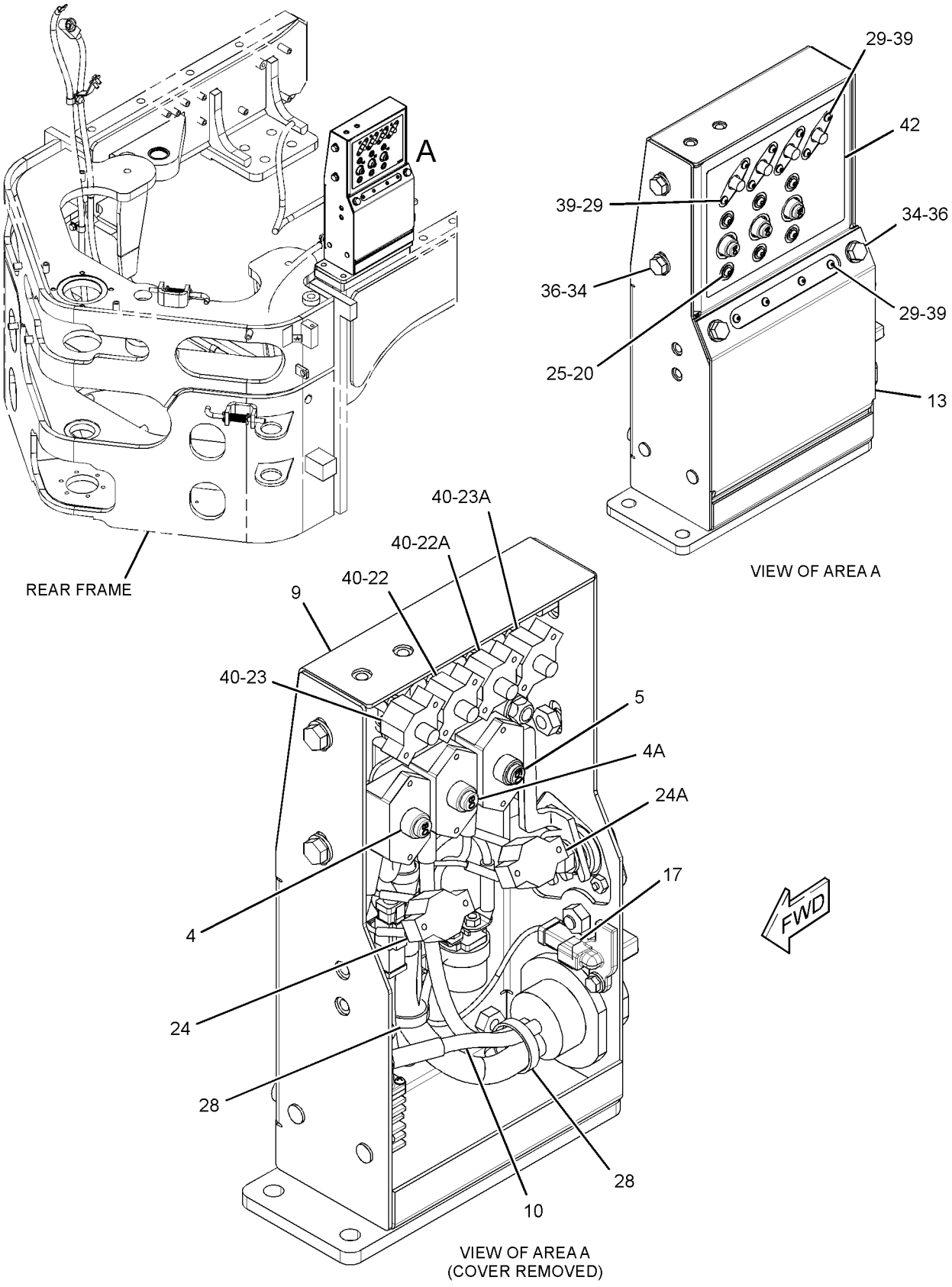

GRAPHIC #1 g06056438

280-8969 **PANEL GP-CIRCUIT BREAKER (**contd.**)** **i07200125**

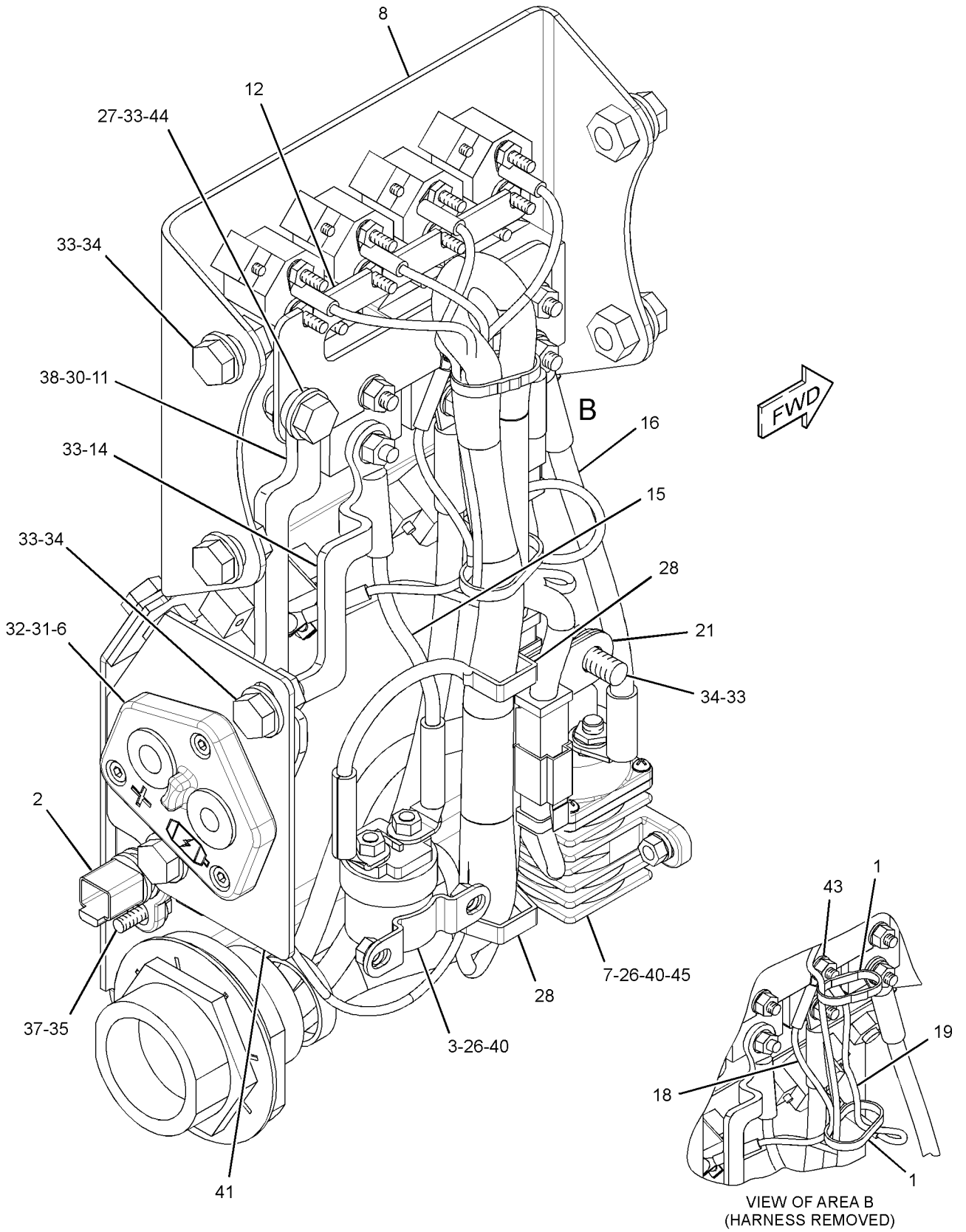

GRAPHIC #2 <END> g06162218

283-7960 POWER SUPPLY GP—GRADE CONTROL

S/N: B551-UP

PART OF 459-3196 GRADE CONTROL GP

SMCS-5201, 7220

i06269045

NOTE	REF NO	GRAPHIC REF	PART NUMBER	QTY	PART NAME 1 2 3 4 5 6 (PRODUCT LEVEL)	SEE PAGE
	1	1	**455-6348**	1	MODULE AS-POWER SUPPLY	
	2	1	**8T-4224**	4	WASHER-HARD (8.8X16X2-MM THK)	
M	3	1	**8T-4189**	4	BOLT (M8X1.25X20-MM)	

M - METRIC PART

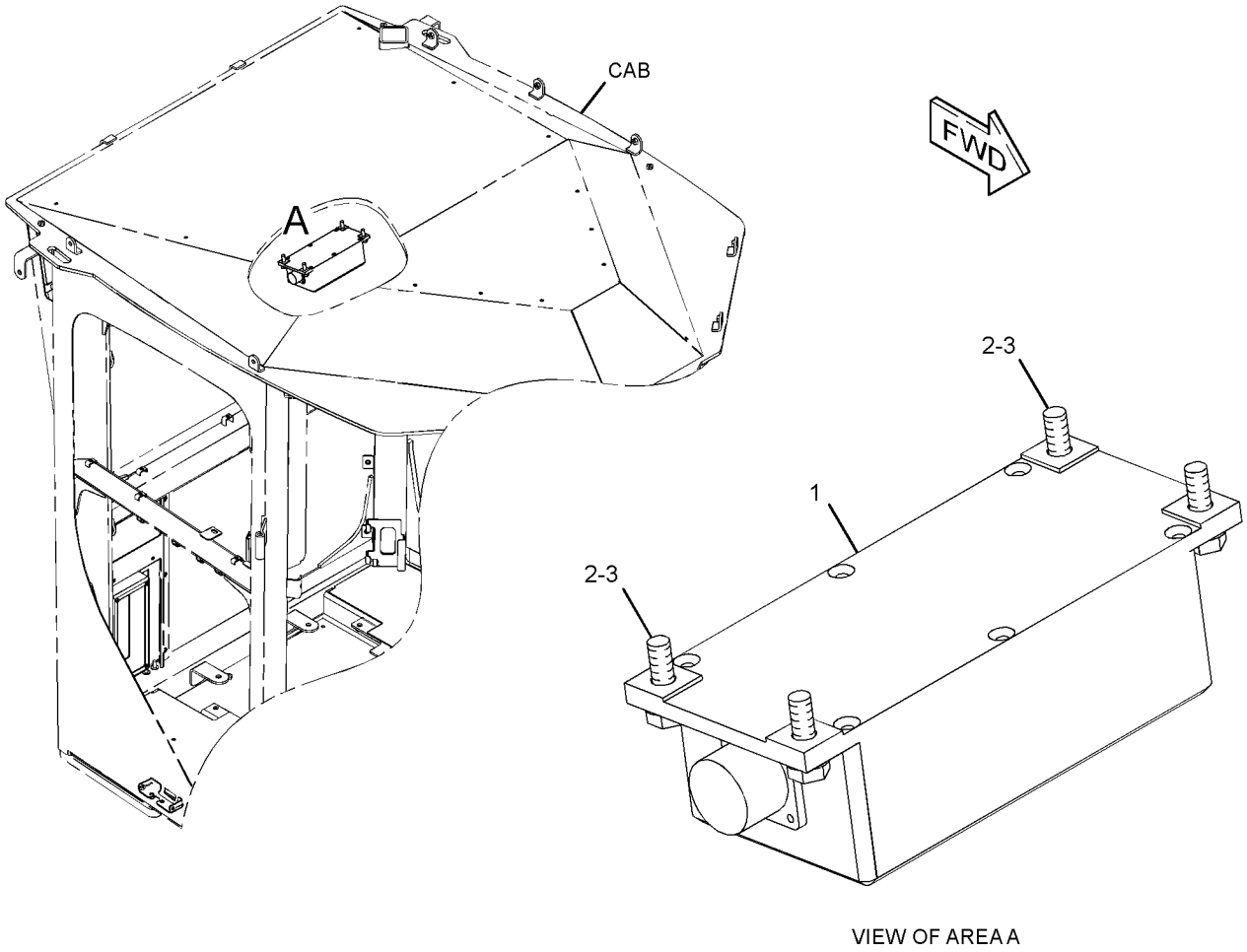

VIEW OF AREA A

GRAPHIC #1 <END> g01288314

457-5046 SENSOR & MOUNTING GP

S/N: B551-UP
ANTI BOUNCE
PART OF 458-2072 CONTROL AR-ELECTRIC

SMCS-1408, 1439, 1906, 1907, 1912, 1917, 1923, 1924, 7400

i06859658

NOTE	REF NO	GRAPHIC REF	PART NUMBER	QTY	PART NAME 1 2 3 4 5 6 (PRODUCT LEVEL)	SEE PAGE
	1	1	**333-8538**	1	SENSOR AS-INERTIAL (ACCELERATION, ANGLE)	
		1	*386-0444*	1	HARNESS AS-SENSOR	
		1	**3E-3383**	1	WEDGE-RECEPTACLE LOCK (6-PIN)	
E		1	**112-4550**		SLEEVE (20-CM)	
		1	**151-9275**	1	KIT-RECEPTACLE (6-PIN)	
					(INCLUDES RECEPTACLE AS & WEDGE)	
		1	**9X-3401**	6	PIN-CONNECTOR (16-GA TO 18-GA)	
	2	1	**457-2082**	1	BRACKET AS	
	3	1	**130-5300**	1	CLIP	
M	4	1	**8T-4138**	2	BOLT (M6X1X20-MM)	
	5	1	**8T-4121**	2	WASHER-HARD (11X21X2.5-MM THK)	
M	6	1	**8T-4136**	2	BOLT (M10X1.5X25-MM)	
	7	1	**9X-8256**	2	WASHER (6.6X12X2-MM THK)	

E - ORDER BY THE CENTIMETER
M - METRIC PART

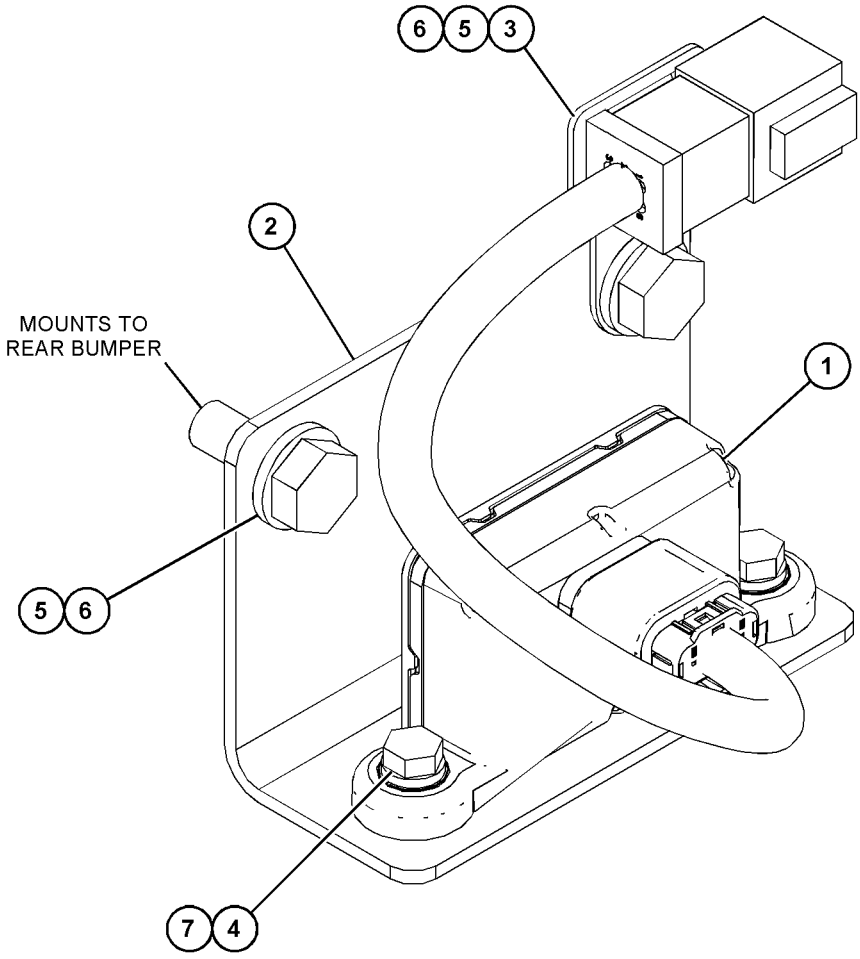

GRAPHIC #1

<END>

g06015822

330-6038 SENSOR GP-ENGINE

S/N: TX71-UP

PART OF 387-8499 ENGINE AR-CORE

SMCS-1439, 1906, 1917, 1923, 1924, 1925 **i06951503**

NOTE	REF NO	GRAPHIC REF	PART NUMBER	QTY	PART NAME 1 2 3 4 5 6 (PRODUCT LEVEL)	SEE PAGE
	1	1	*392-0773*	1	ELBOW AS	
		1	**9X-8403**	1	ELBOW	
		1	**214-7566**	1	SEAL-O-RING	
		1	**214-7568**	1	SEAL-O-RING	
Y	2	1	*234-5012*	1	SENSOR GP-TEMPERATURE	261
Y	3	1	*234-5013*	1	SENSOR GP-TEMPERATURE (INLET AIR)	262
Y	4	1	*236-6221*	1	SENSOR GP-SPEED	259
	5	1	**276-6793**	1	SENSOR GP-PRESSURE (BOOST)	
Y	6	1	**267-1402**	1	SENSOR GP-PRESSURE (RAIL)	255
	7	1	*274-6719*	1	SENSOR GP-PRESSURE (ENGINE)	
Y	8	1	*303-3357*	1	SENSOR GP-PRESSURE (ATMOSPHERIC)	256
	9	1	*371-7186*	1	PLUG AS	
		1	**214-7567**	1	SEAL-O-RING	
		1	**360-3678**	1	PLUG-O-RING	
	10	1	*389-3708*	1	PLUG AS	
		1	**214-7568**	1	SEAL-O-RING	
		1	**360-3679**	1	PLUG-CONNECTOR (9/16-18-THD)	
	11	1	*396-0393*	1	PLUG AS	
		1	**214-7566**	1	SEAL-O-RING	
		1	**360-3677**	1	PLUG (7/16-20-THD)	
	13	1	**3E-4352**	1	WASHER-HARD (8.8X20.5X2.5-MM THK)	
M	14	1	**6V-3940**	1	BOLT (M8X1.25X25-MM)	
	16	1	*329-5518*	1	ADAPTER AS	
		1	**8T-2353**	1	ADAPTER	
		1	**214-7566**	1	SEAL-O-RING	
	17	1	*353-5112*	1	ADAPTER AS	
		1	**9X-0262**	1	ADAPTER	
		1	**214-7566**	2	SEAL-O-RING	

M - METRIC PART
Y - SEPARATE ILLUSTRATION

330-6038 **SENSOR GP-ENGINE (**contd.**)** **i06951503**

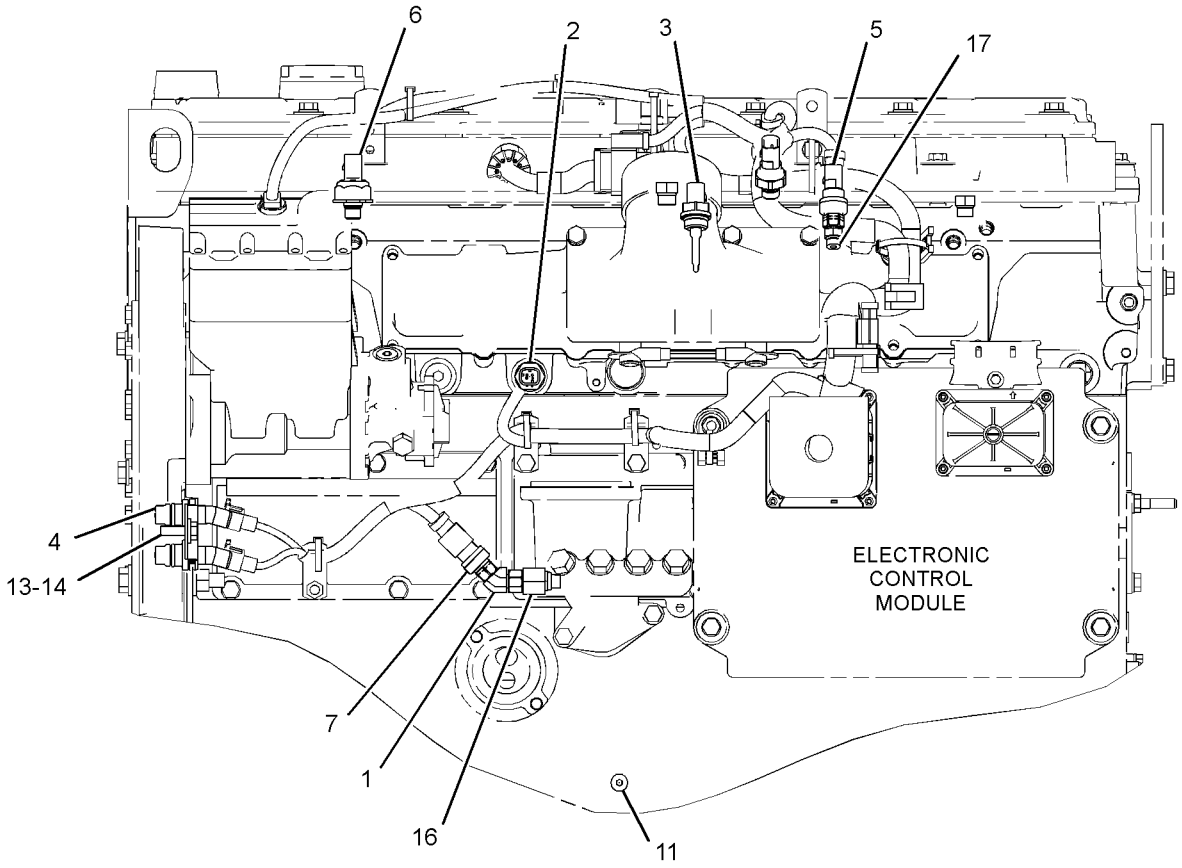

LEFT SIDE VIEW OF ENGINE

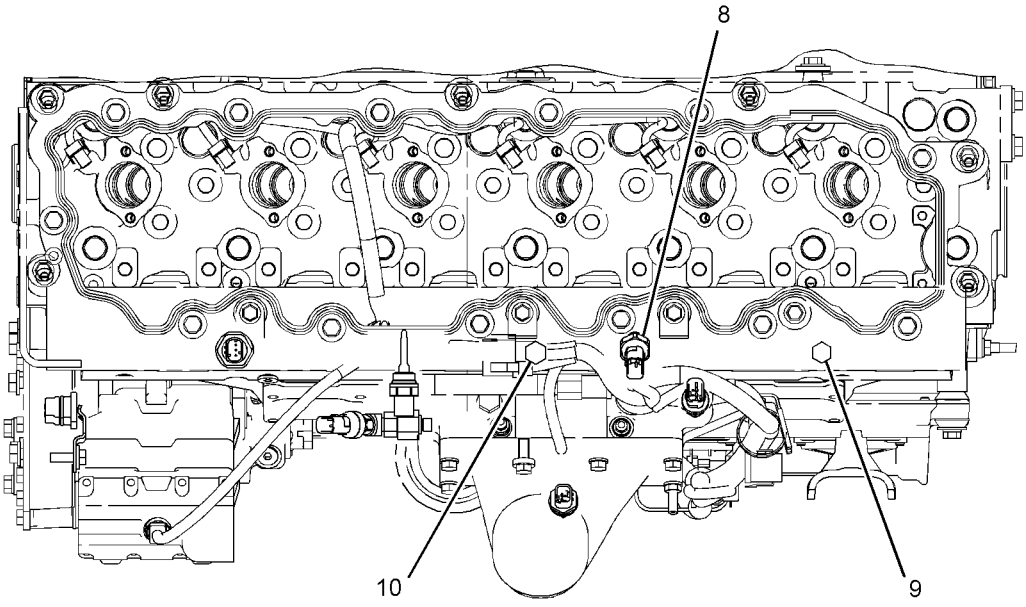

TOP VIEW OF ENGINE

GRAPHIC #1 <END> g06029380

266-1467 SENSOR GP-POSITION–ROTARY

S/N: B551-UP

PART OF 265-8943 PEDAL GP-BRAKE, XMSN & GOV

SMCS-1408, 3168, 3175, 4269, 430S, 4809

i07284646

NOTE	REF NO	GRAPHIC REF	PART NUMBER	QTY	PART NAME 1 2 3 4 5 6 (PRODUCT LEVEL)	SEE PAGE
	1	1	**9X-3401**	3	PIN-CONNECTOR (16-GA TO 18-GA)	
					–OR–	
		1	**126-1767**	3	PIN-CONNECTOR (14-GA TO 16-GA)	
	2	1	**102-8803**	1	KIT-RECEPTACLE (3-PIN)	
					(INCLUDES RECEPTACLE AS & WEDGE)	
E	3	1	**3E-9375**		CONDUIT (14-CM)	

E - ORDER BY THE CENTIMETER

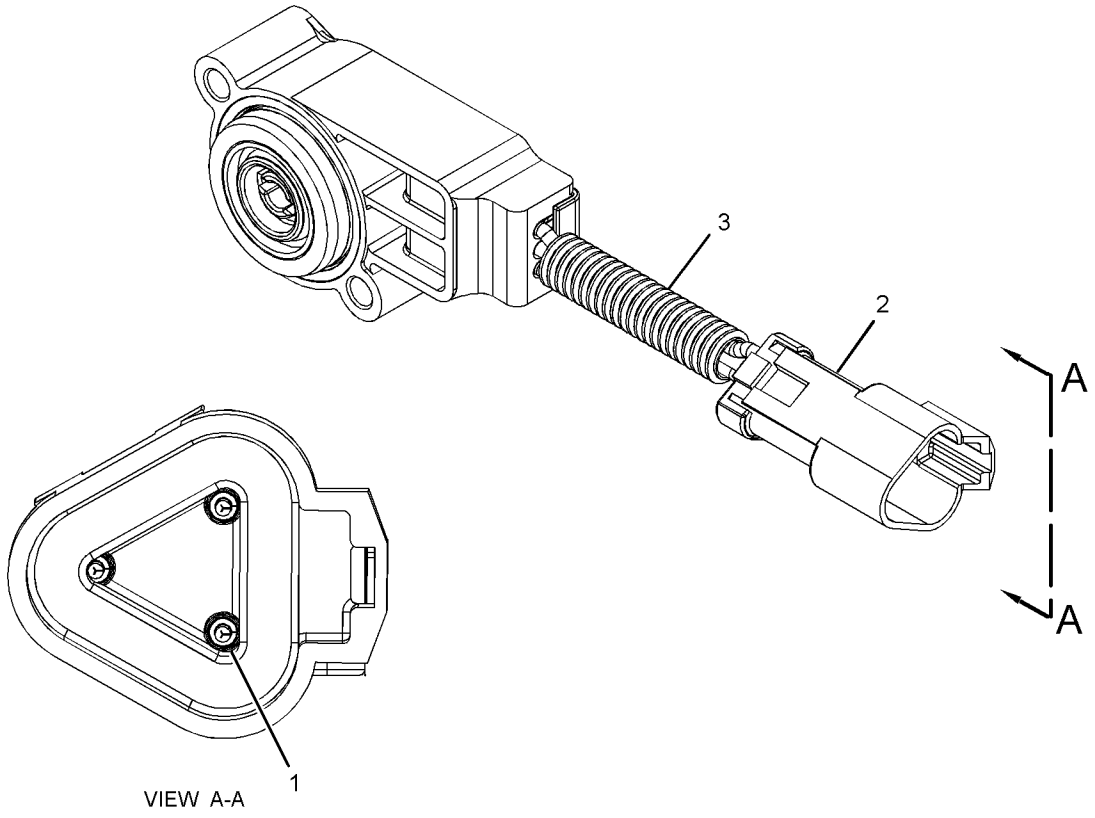

VIEW A-A

GRAPHIC #1 <END> g03547699

267-1402 SENSOR GP-PRESSURE

S/N: TX71-UP
AMPSEAL CONNECTOR
PART OF 330-6038 SENSOR GP-ENGINE

SMCS-1052, 1058, 1408, 1718, 1907, 1912, 1916, 1917, 1923, 1924, 1925, 3175, 4351, 4352, 7400, 7494

i03565217

NOTE	REF NO	GRAPHIC REF	PART NUMBER	QTY	PART NAME 1 2 3 4 5 6 (PRODUCT LEVEL)	SEE PAGE
	1	1	**214-7567**	1	SEAL-O-RING	
	2	1	**248-2169**	1	SENSOR GP-PRESSURE	

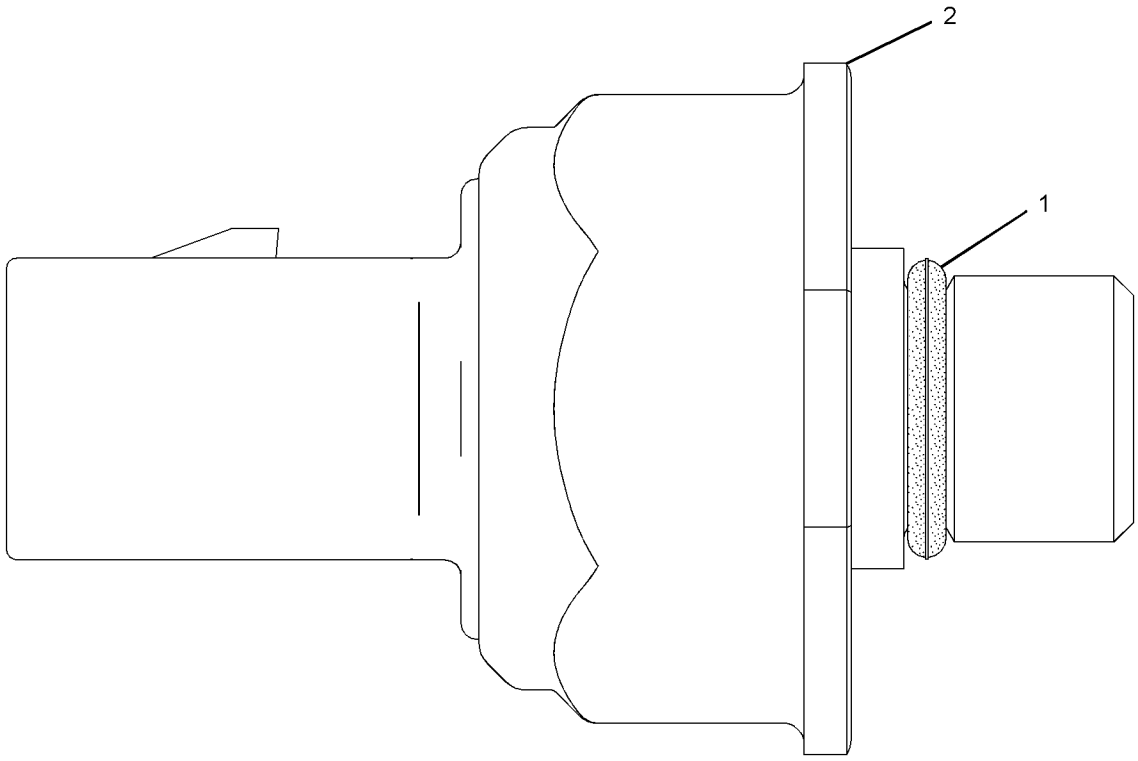

GRAPHIC #1 <END> g01164283

303-3357 SENSOR GP-PRESSURE

S/N: TX71-UP

PART OF 330-6038 SENSOR GP-ENGINE

SMCS-1052, 1058, 1408, 1718, 1907, 1912, 1916, 1917, 1923, 1924, 1925, 3175, 4351, 4352, 7400, 7494

i05020732

NOTE	REF NO	GRAPHIC REF	PART NUMBER	QTY	PART NAME 1 2 3 4 5 6 (PRODUCT LEVEL)	SEE PAGE
	1	1	**296-8060**	1	SENSOR GP-PRESSURE	
	2	1	**214-7568**	1	SEAL-O-RING	

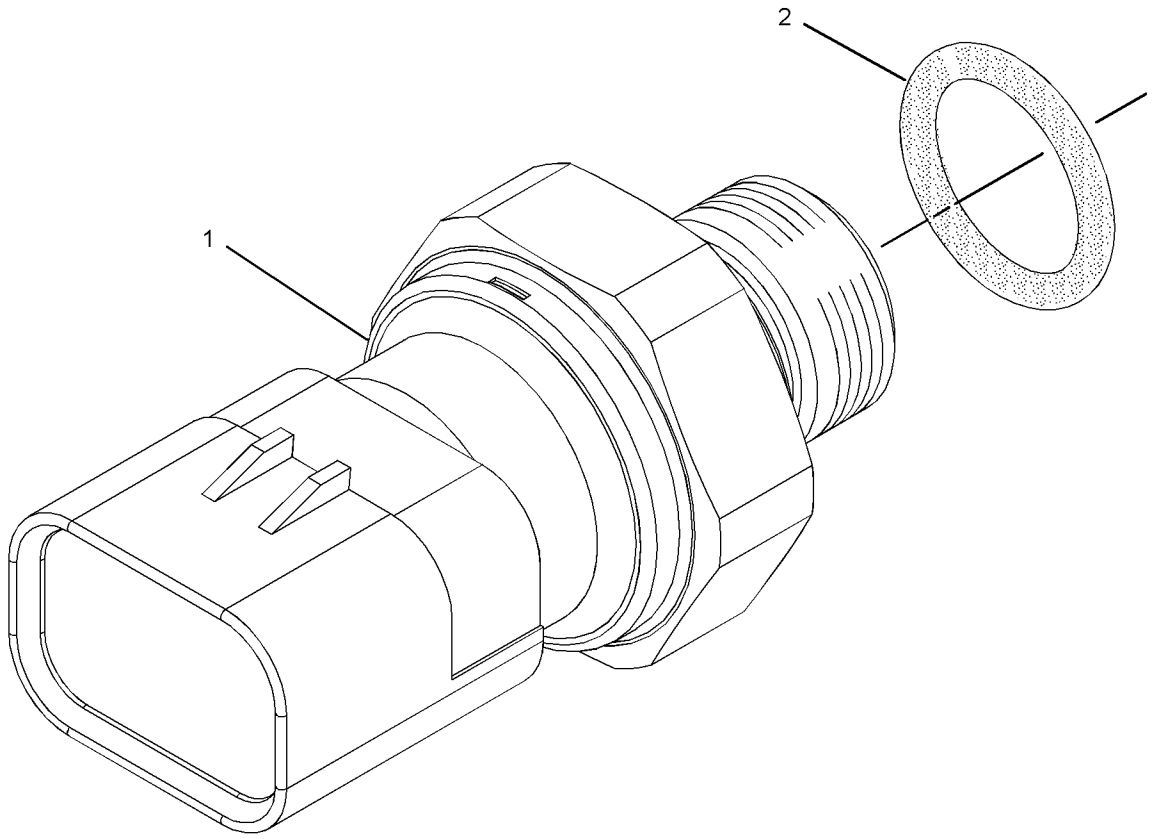

GRAPHIC #1 <END> g01331369

214-2484 SENSOR GP-SPEED

S/N: JP21-UP; TSZ1-UP

PART OF 423-4654 CONTROL GP-TRANSMISSION HYD

SMCS-1907, 1912, 3141, 3175, 4803, 7493 **i04400335**

NOTE	REF NO	GRAPHIC REF	PART NUMBER	QTY	PART NAME 1 2 3 4 5 6 (PRODUCT LEVEL)	SEE PAGE
	1	1	**228-4947**	1	SEAL-O-RING	
	2	1	**191-8303**	1	SENSOR GP-SPEED (LOW OUTPUT)	
		1	**137-6645**	1	PAD-CONNECTOR	

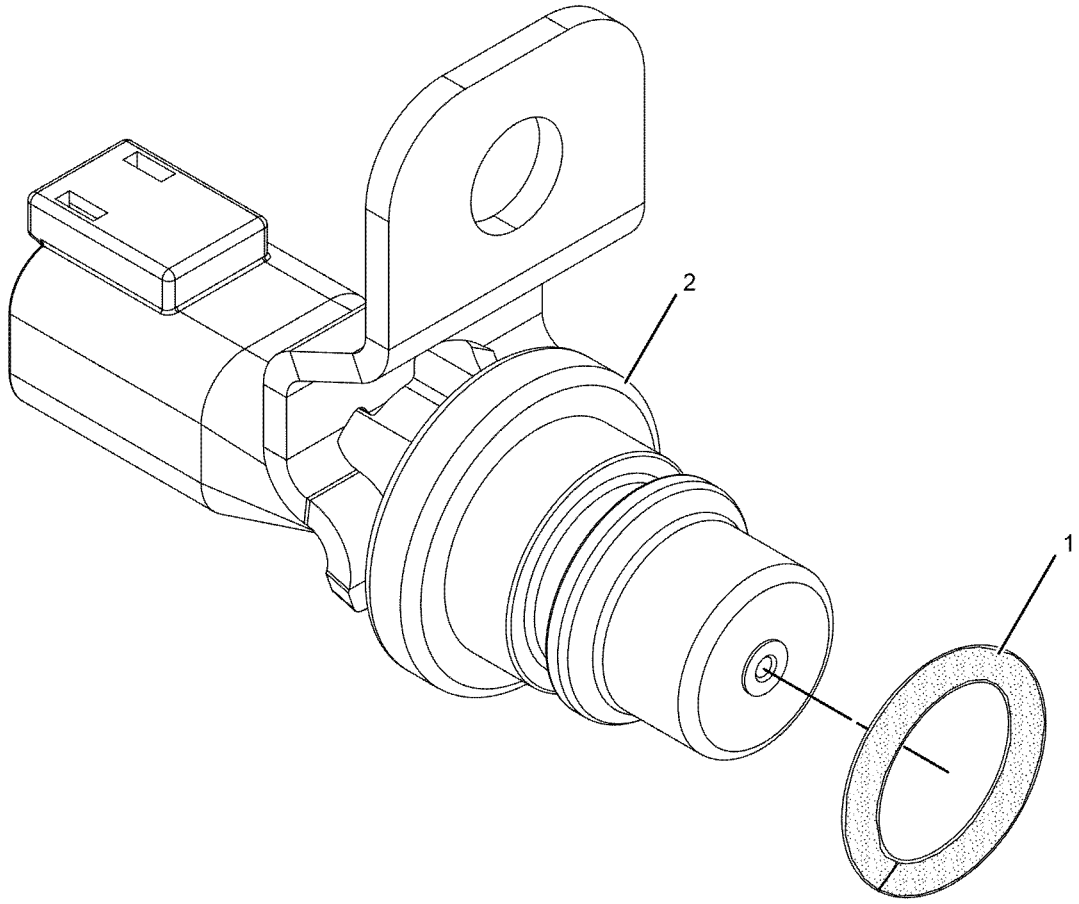

GRAPHIC #1 <END> g01021497

214-2485 SENSOR GP-SPEED

S/N: JP21-UP; TSZ1-UP

PART OF 423-4654 CONTROL GP-TRANSMISSION HYD

SMCS-1907, 1912, 3141, 3175, 4803, 7493 **i05271291**

NOTE	REF NO	GRAPHIC REF	PART NUMBER	QTY	PART NAME 1 2 3 4 5 6 (PRODUCT LEVEL)	SEE PAGE
	1	1	**228-4947**	1	SEAL-O-RING	
	2	1	**191-8304**	1	SENSOR GP-SPEED (TRANSMISSION OUTPUT 2)	

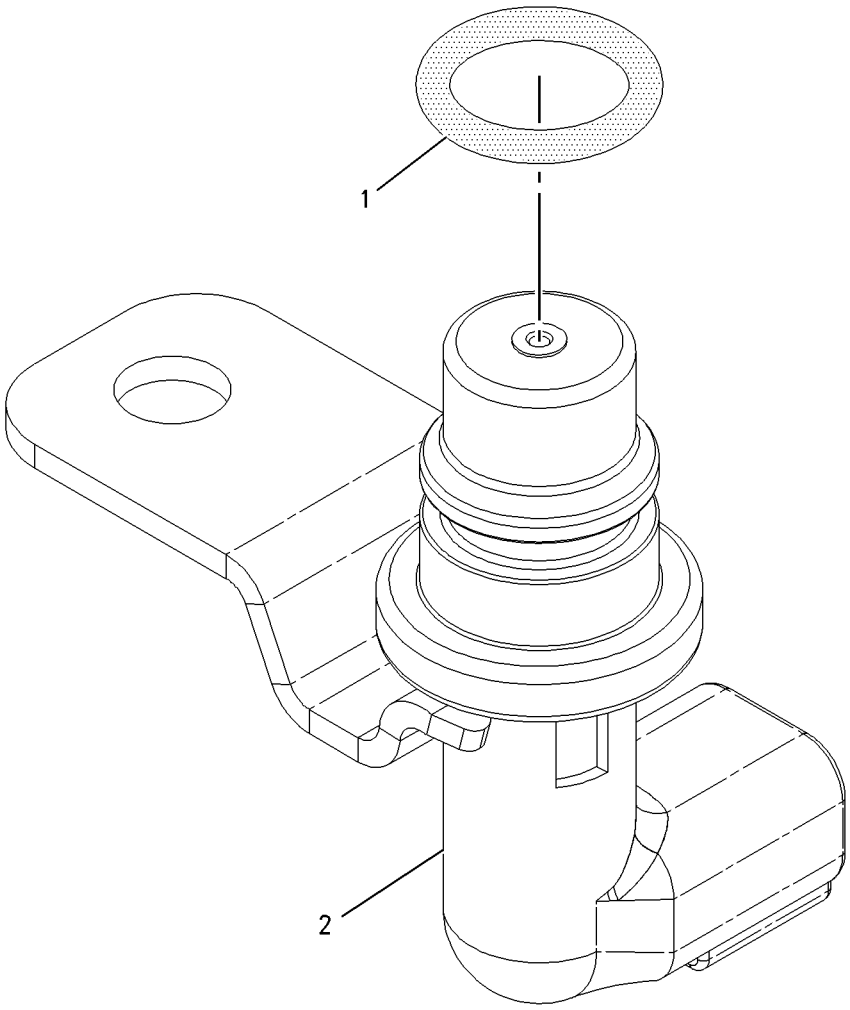

GRAPHIC #1 <END> g00998408

236-6221 SENSOR GP-SPEED

S/N: TX71-UP

PART OF 330-6038 SENSOR GP-ENGINE

SMCS-1907, 1912, 3141, 3175, 4803, 7493

i04565632

NOTE	REF NO	GRAPHIC REF	PART NUMBER	QTY	PART NAME 1 2 3 4 5 6 (PRODUCT LEVEL)	SEE PAGE
	1	1	**228-4947**	2	SEAL-O-RING	
	2	1	**245-4630**	1	SENSOR GP-SPEED	

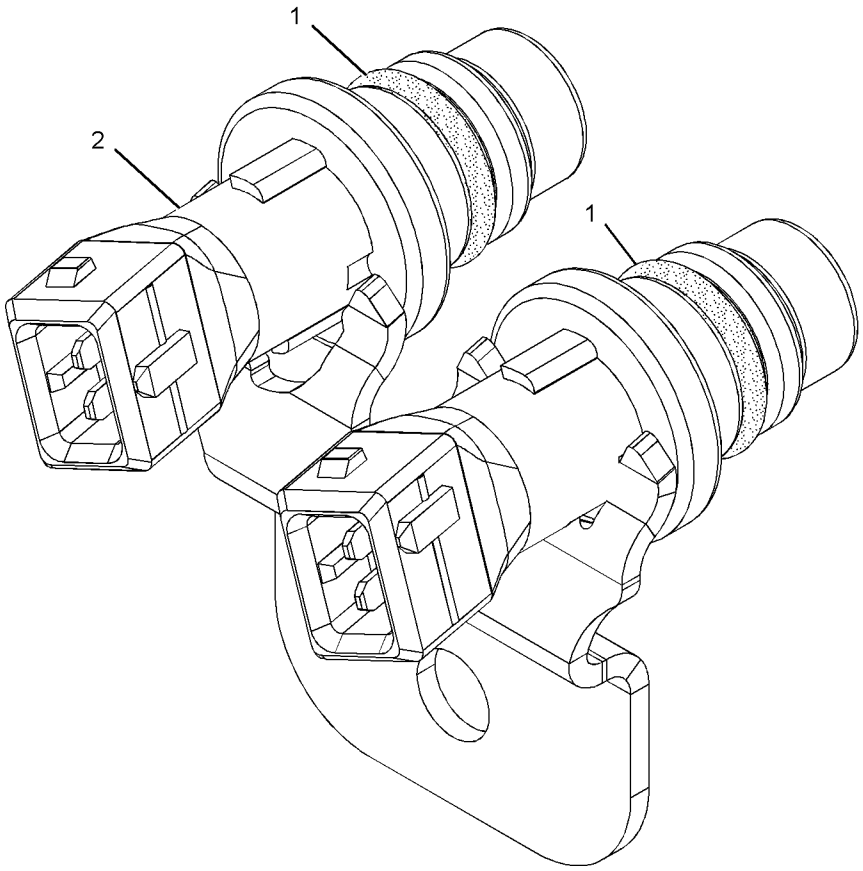

GRAPHIC #1

<END>

g01013894

191-6587 SENSOR GP-TEMPERATURE

S/N: B551-UP
2 PIN PASSIVE
PART OF 471-9240 WIRING GP-FRONT

SMCS-1439, 1906, 1919, 1921, 1922, 1928, 1929, 192T, 1932, 301T, 3194, 3290, 429T, 509T, 7344

i07584543

NOTE	REF NO	GRAPHIC REF	PART NUMBER	QTY	PART NAME 1 2 3 4 5 6 (PRODUCT LEVEL)	SEE PAGE
	1	1	**155-2270**	1	KIT-CONNECTING PLUG (2-PIN)	
					(INCLUDES PLUG AS, WEDGE & INTERFACE SEAL)	

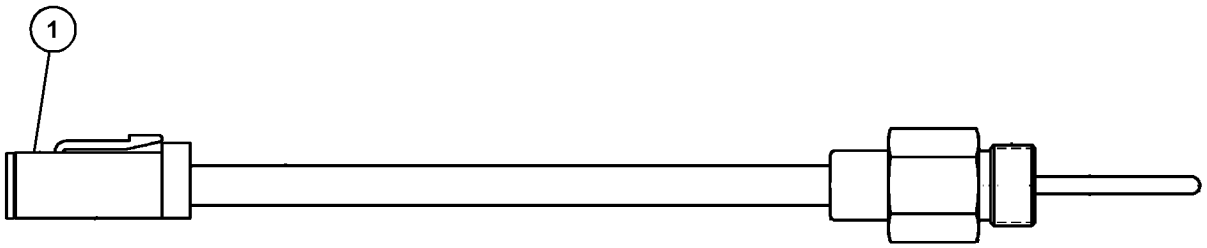

GRAPHIC #1 <END> g06356348

234-5012 SENSOR GP-TEMPERATURE

S/N: TX71-UP
AMPSEAL CONNECTOR
PART OF 330-6038 SENSOR GP-ENGINE

SMCS-1439, 1906, 1919, 1921, 1922, 1928, 1929, 192T, 1932, 301T, 3194, 3290, 429T, 509T, 7344

i03565212

NOTE	REF NO	GRAPHIC REF	PART NUMBER	QTY	PART NAME 1 2 3 4 5 6 (PRODUCT LEVEL)	SEE PAGE
	1	1	**256-6453**	1	SENSOR-TEMPERATURE (2-PIN)	
	2	1	**6V-6609**	1	SEAL-O-RING	

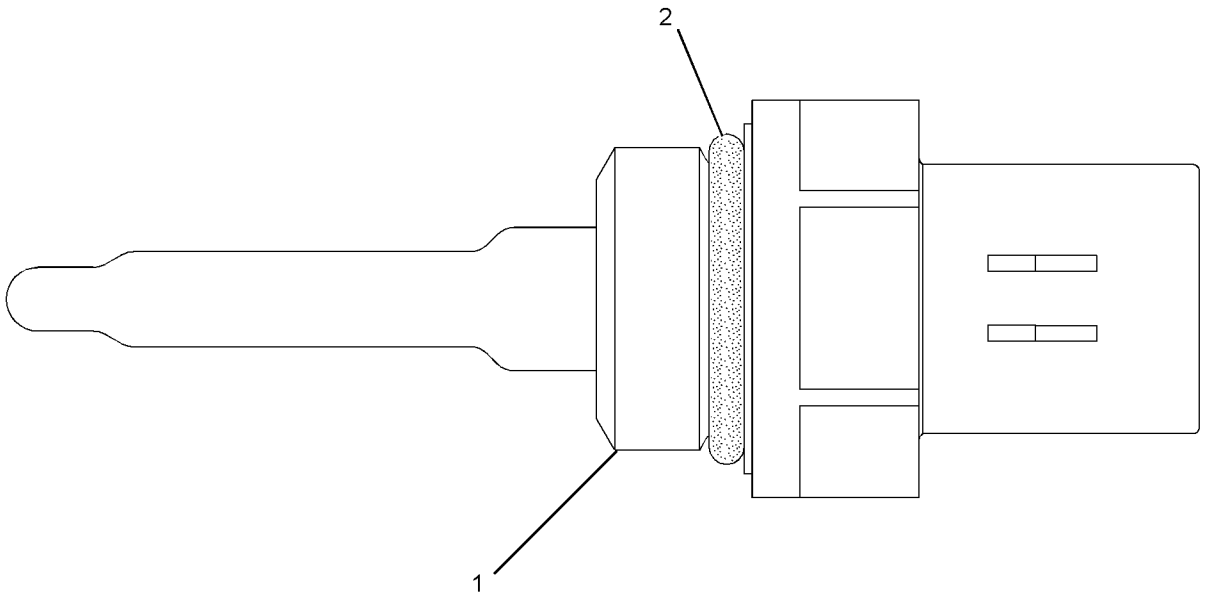

GRAPHIC #1

<END>

g01164284

234-5013 SENSOR GP-TEMPERATURE

S/N: TX71-UP

AMPSEAL CONNECTOR

PART OF 330-6038 SENSOR GP-ENGINE, 419-6912 WIRING GP-SENSOR

SMCS-1439, 1906, 1919, 1921, 1922, 1928, 1929, 192T, 1932, 301T, 3194, 3290, 429T, 509T, 7344

i03645027

NOTE	REF NO	GRAPHIC REF	PART NUMBER	QTY	PART NAME 1 2 3 4 5 6 (PRODUCT LEVEL)	SEE PAGE
	1	1	**256-6453**	1	SENSOR-TEMPERATURE (2-PIN)	
	2	1	**238-5080**	1	SEAL-O-RING	

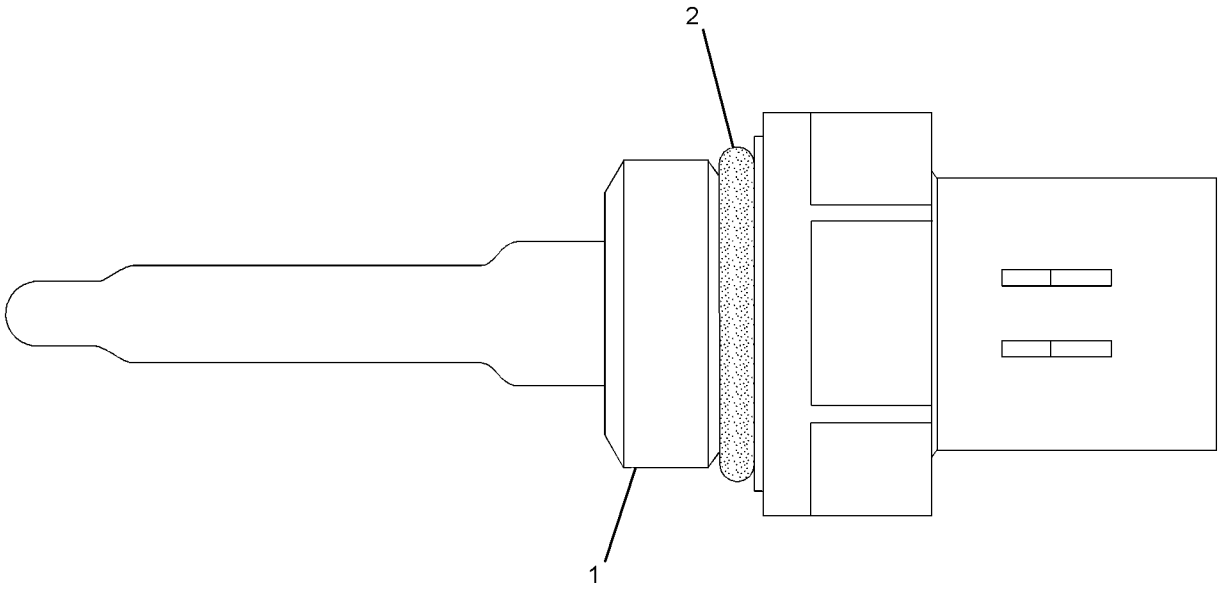

GRAPHIC #1

<END>

g01164268

238-9561 STARTING AID GP-ETHER

S/N: B551-UP

PART OF 349-3052, 349-3053 OPTION AR-COLD WEATHER

SMCS-1456 **i07832616**

NOTE	REF NO	GRAPHIC REF	PART NUMBER	QTY	PART NAME 1 2 3 4 5 6 (PRODUCT LEVEL)	SEE PAGE
	1	1	**3P-0764**	1	PLUG	
	2	1	**7N-2059**	1	CLAMP AS (CYLINDER)	
Y	3	1	**239-1134**	1	VALVE GP-ETHER STARTING (24-VOLT)	283
	4	1	**241-4194**	1	FITTING AS (CONTROL)	
		1	**236-4545**	1	NUT-SLEEVE (5/16-24-THD)	
	5	1	**250-2177**	1	ATOMIZER AS	
C	6	1	**3S-2093**	1	STRAP-CABLE	
	7	1	**136-7227**	1	SEAL-O-RING	
M	8	1	**8T-4189**	2	BOLT (M8X1.25X20-MM)	
	9	1	**8T-4224**	2	WASHER-HARD (8.8X16X2-MM THK)	
CD	10	1	**5P-5630**		TUBE (0.8-M)	
AF			**7N-0296**	1	CYLINDER AS-ETHER	
					(MUST BE PROCURED LOCALLY FROM YOUR CATERPILLAR DEALER)	

A - NOT PART OF THIS GROUP
C - CHANGE FROM PREVIOUS TYPE
D - ORDER BY THE METER
F - NOT SHOWN
M - METRIC PART
Y - SEPARATE ILLUSTRATION

238-9561 **STARTING AID GP-ETHER (**contd.**)** **i07832616**

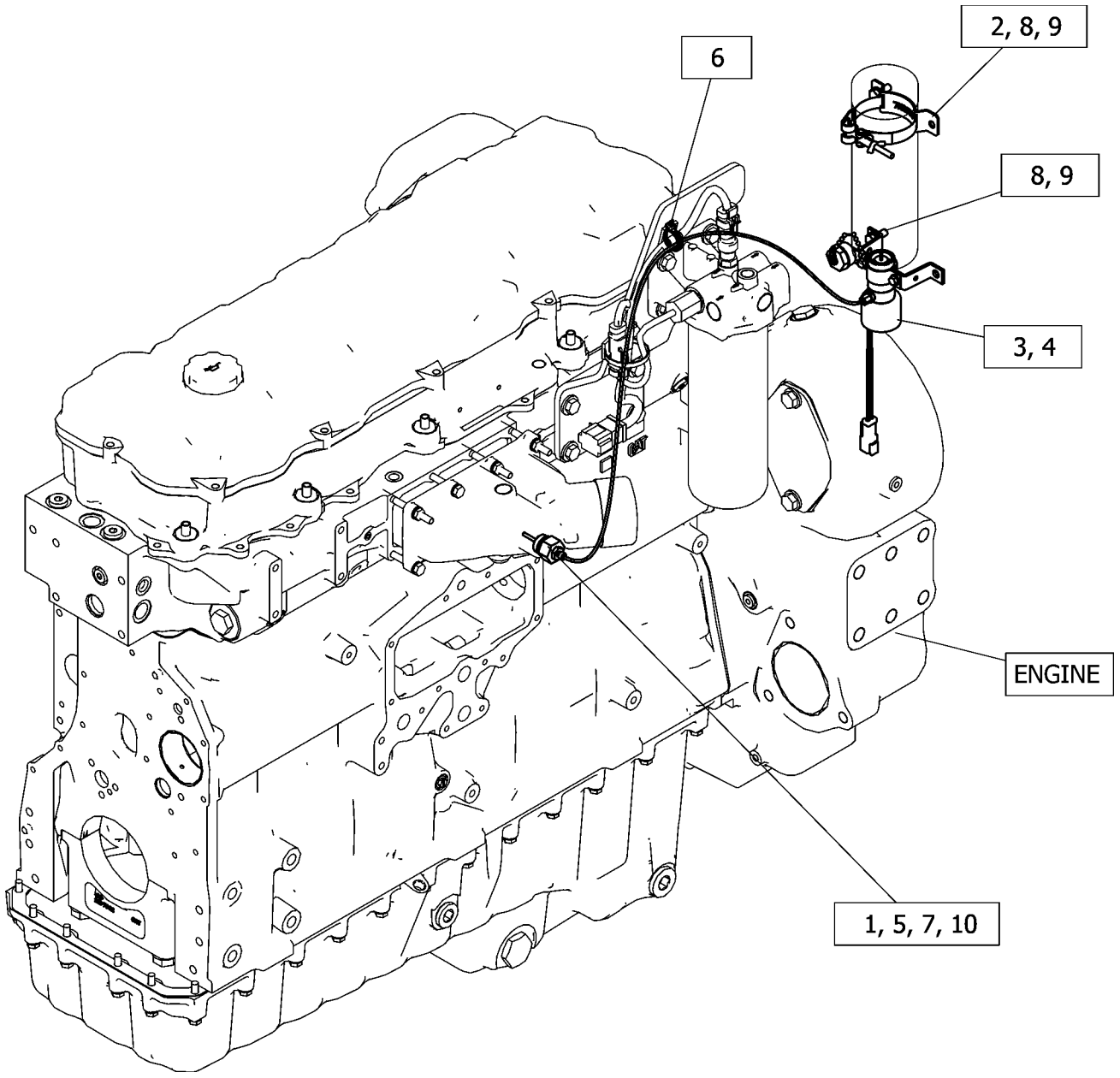

GRAPHIC #1 <END> g06448791

416-9123 STARTING MOTOR GP-ELECTRIC

S/N: B551-UP

PART OF 577-1377 COMMON AR

SMCS-1453 **i07244730**

NOTE	REF NO	GRAPHIC REF	PART NUMBER	QTY	PART NAME 1 2 3 4 5 6 (PRODUCT LEVEL)	SEE PAGE
	1	1	**8Y-9603**	1	CABLE AS-STARTING MOTOR	
		1	**1S-7251**	1	TERMINAL-CABLE (00-GA, 1/2-IN SCREW)	
		1	**1S-7252**	1	TERMINAL-CABLE (00-GA, 3/8-IN SCREW)	
E		1	**159-8050**		CABLE (00-GA, BLACK) (28-CM)	
C	2	1	**214-4677**	3	WASHER-HARD (17X27X5-MM THK)	
CM	3	1	**296-3446**	3	BOLT-12 POINT HEAD (M16X2X50-MM)	
CY	4	1	**436-9102**	1	STARTING MOTOR GP-ELECTRIC (24-VOLT)	266

C - CHANGE FROM PREVIOUS TYPE
E - ORDER BY THE CENTIMETER
M - METRIC PART
Y - SEPARATE ILLUSTRATION

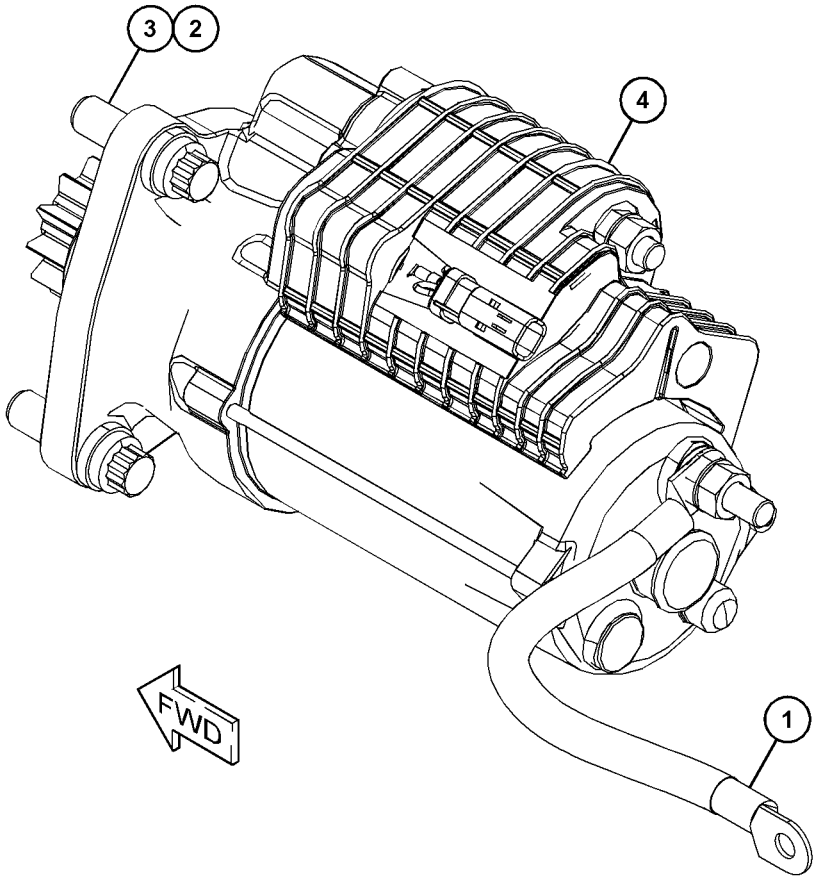

GRAPHIC #1 <END> g06264773

436-9102 STARTING MOTOR GP-ELECTRIC

S/N: B551-UP

24-VOLT

PART OF 416-9123 STARTING MOTOR GP-ELECTRIC

SMCS-1453 **i07350943**

NOTE	REF NO	GRAPHIC REF	PART NUMBER	QTY	PART NAME 1 2 3 4 5 6 (PRODUCT LEVEL)	SEE PAGE
	1	1	**490-2370**	1	SEAL-O-RING	
	2	1	**230-4012**	1	RECEPTACLE AS-CONNECTOR (2-PIN)	

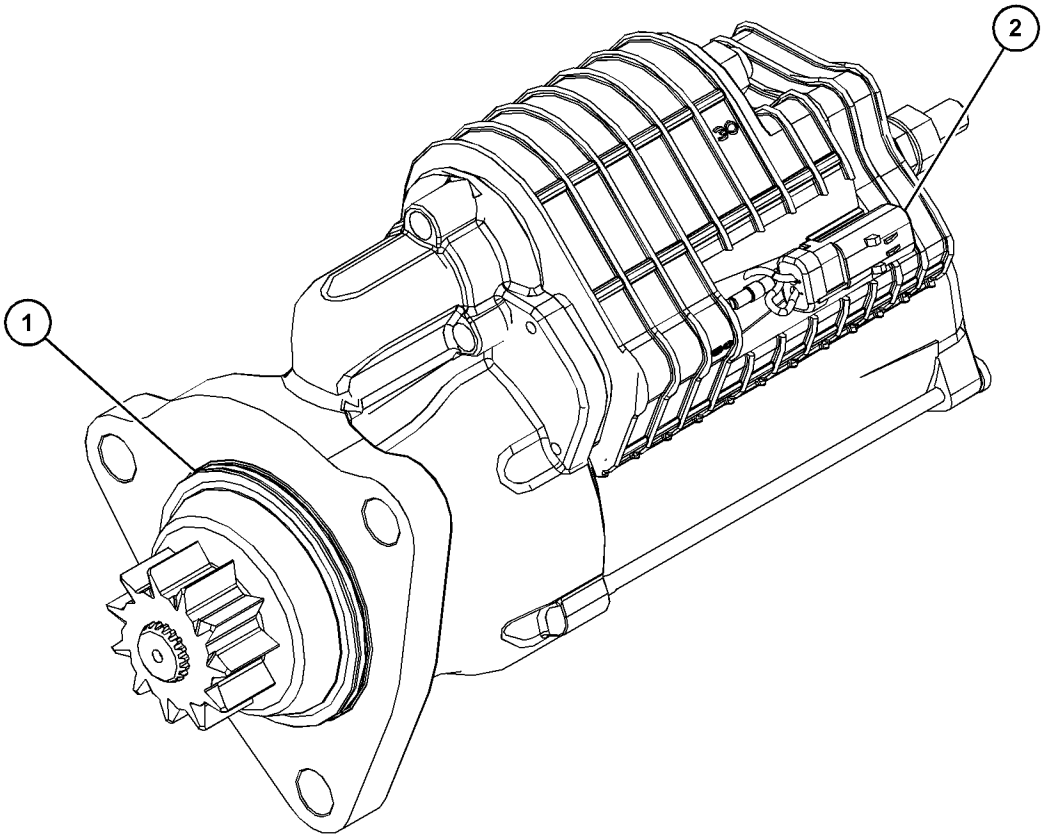

GRAPHIC #1 <END> g06264218

7N-0718 SWITCH GP-DISCONNECT–BATTERY

S/N: B551-UP
12-VOLT
PART OF 233-4611, 236-1924 BATTERY & WIRING GP

SMCS-1411 **i07398962**

NOTE	REF NO	GRAPHIC REF	PART NUMBER	QTY	PART NAME 1 2 3 4 5 6 (PRODUCT LEVEL)	SEE PAGE
	1	1	**8H-5306**	1	KEY (BATTERY DISCONNECT)	
	2	1	**8H-5303**	1	NUT (3/4-16-THD)	
	3	1	**2H-3922**	2	LOCKWASHER	
	4	1	**264-3617**	2	LOCKWASHER	
	5	1	**6F-7045**	2	NUT-FULL (3/8-24-THD)	

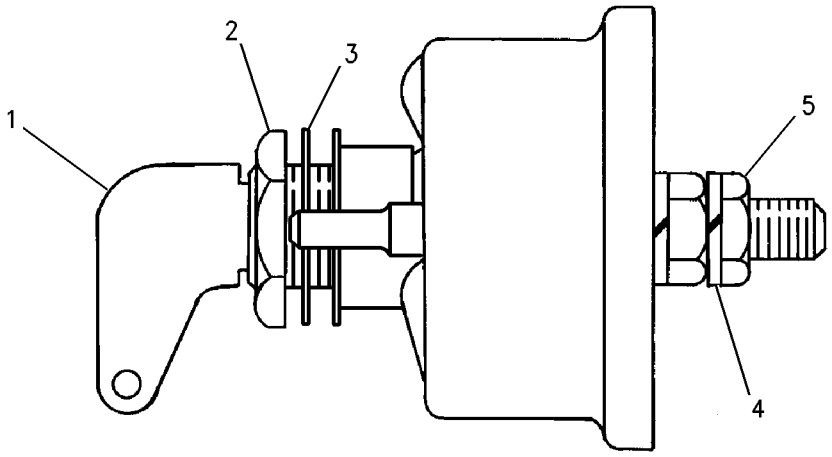

GRAPHIC #1 <END> g00715584

344-0985 SWITCH GP-LIGHT–WORK LIGHT

S/N: B551-UP

PART OF 353-3319, 374-4558, 551-6544 OPTION AR-LIGHTING

SMCS-1429, 1430, 7332

i04947364

NOTE	REF NO	GRAPHIC REF	PART NUMBER	QTY	PART NAME 1 2 3 4 5 6 (PRODUCT LEVEL)	SEE PAGE
	1	1	**248-2841**	2	RELAY AS (24-VOLT) (FLOODLIGHTS)	
	2	1	**261-4907**	1	SWITCH AS-ROCKER (24-VOLT) (FLOODLIGHTS)	

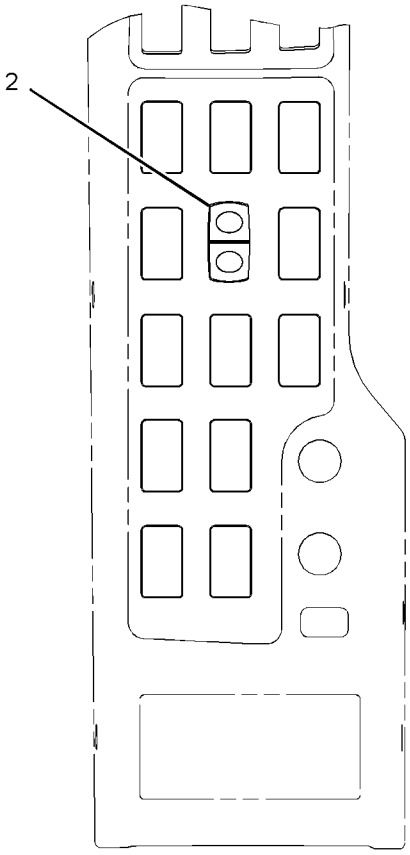

FRONT VIEW
(SWITCH PANEL)

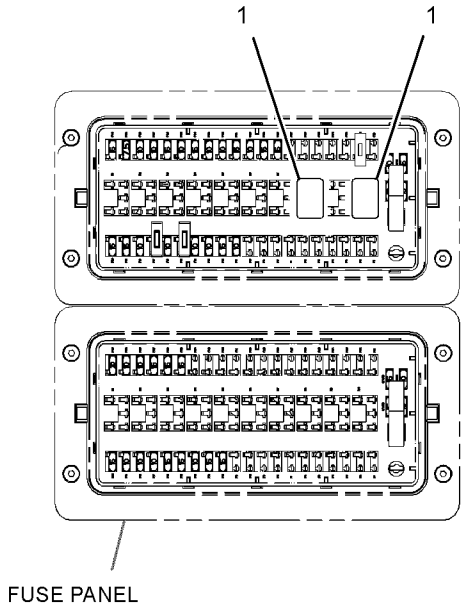

FRONT VIEW

GRAPHIC #1

<END>

g03136960

171-3759 SWITCH GP-LIMIT

S/N: B551-UP

PART OF 265-8943 PEDAL GP-BRAKE, XMSN & GOV

SMCS-1435, 7332 **i07829050**

NOTE	REF NO	GRAPHIC REF	PART NUMBER	QTY	PART NAME 1 2 3 4 5 6 (PRODUCT LEVEL)	SEE PAGE
	1	1	**9G-3695**	1	PLUG-SEAL	
	2	1	**9X-3401**	3	PIN-CONNECTOR (16-GA TO 18-GA)	
	3	1	**3E-3377**	1	WEDGE-RECEPTACLE LOCK (4-PIN)	
	4	1	**102-8804**	1	KIT-RECEPTACLE (4-PIN)	
					(INCLUDES RECEPTACLE AS & WEDGE)	
BE	5	1	**9X-1386**		SLEEVE (17-CM)	
BE	6	1	**125-7874**		TUBE-HEAT SHRINK (5.72-MM DIA) (8-CM)	
BD	7	1	**6V-1614**		TUBE-HEAT SHRINK (9.52-MM DIA) (0.1-M)	
BD	8	1	**5P-5677**		WIRE (18-GA, BLACK) (0.8-M)	

B - USE AS REQUIRED
D - ORDER BY THE METER
E - ORDER BY THE CENTIMETER

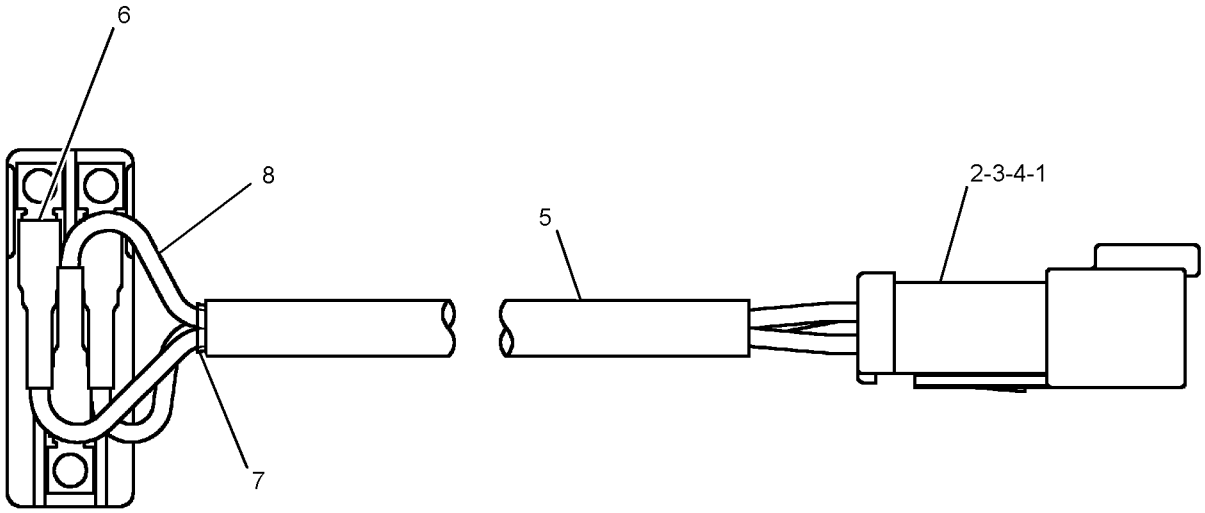

GRAPHIC #1 <END> g06449359

125-1302 SWITCH GP-MAGNETIC–START RELAY

S/N: B551-UP
24-VOLT
PART OF 280-8969 PANEL GP-CIRCUIT BREAKER

SMCS-7499 **i07495612**

NOTE	REF NO	GRAPHIC REF	PART NUMBER	QTY	PART NAME 1 2 3 4 5 6 (PRODUCT LEVEL)	SEE PAGE
	1	1	**102-8802**	1	KIT-RECEPTACLE (2-PIN)	
					(INCLUDES RECEPTACLE AS & WEDGE)	
	2	1	**8T-8729**	2	PIN-CONNECTOR (16-GA TO 20-GA)	
	3	1	**1H-3338**	2	LOCKWASHER	
	4	1	**3B-4504**	2	LOCKWASHER (SPLIT)	
M	5	1	**5C-2890**	2	NUT (M6X1-THD)	
E	6	1	**9X-1813**		SLEEVE (16-CM)	

E - ORDER BY THE CENTIMETER
M - METRIC PART

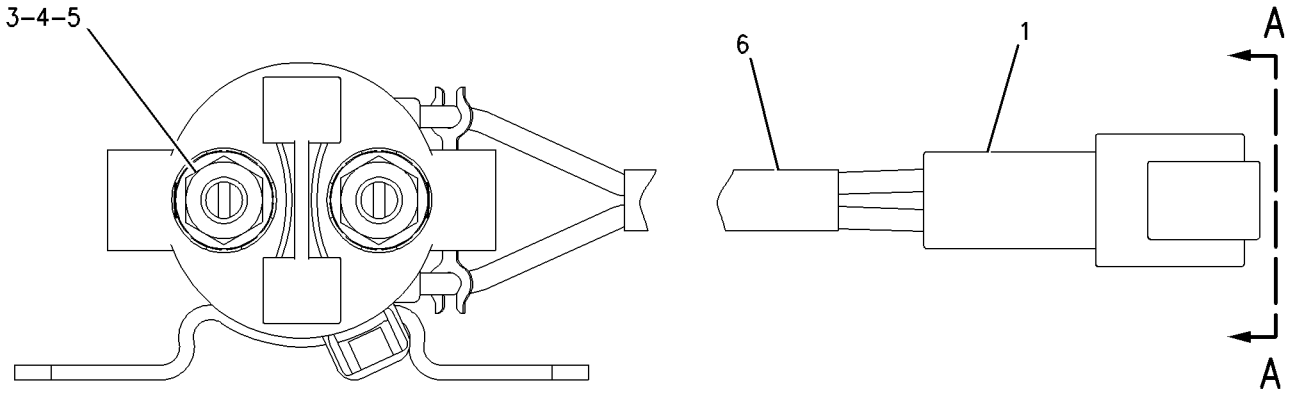

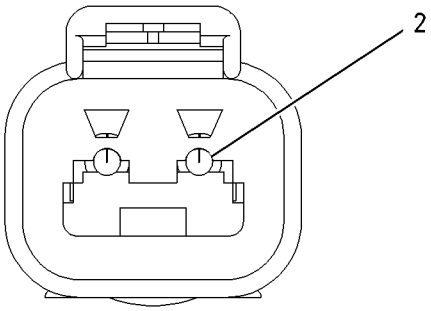

VIEW A–A

GRAPHIC #1 <END> g00987986

179-0006 SWITCH GP-MAGNETIC

S/N: B551-UP
24-VOLT TO 32-VOLT
FIELD REPLACEMENT ORDER 337-9078—PAGE: 273
PART OF 269-4150 WIRING GP-SECONDARY STEERING

SMCS-7499 **i04841449**

NOTE	REF NO	GRAPHIC REF	PART NUMBER	QTY	PART NAME 1 2 3 4 5 6 (PRODUCT LEVEL)	SEE PAGE
	1	1	**7X-0620**	2	WASHER-HARD (5.5X13X1.6-MM THK)	
	2	1	**8F-1434**	2	LOCKWASHER	
	3	1	**6V-8378**	2	NUT (10-32-THD)	
	4	1	**4L-6499**	2	WASHER (0.38X0.88X0.06-IN THK)	
	5	1	**124-7346**	2	LOCKWASHER	
	6	1	**1B-2578**	2	NUT (3/8-16-THD)	

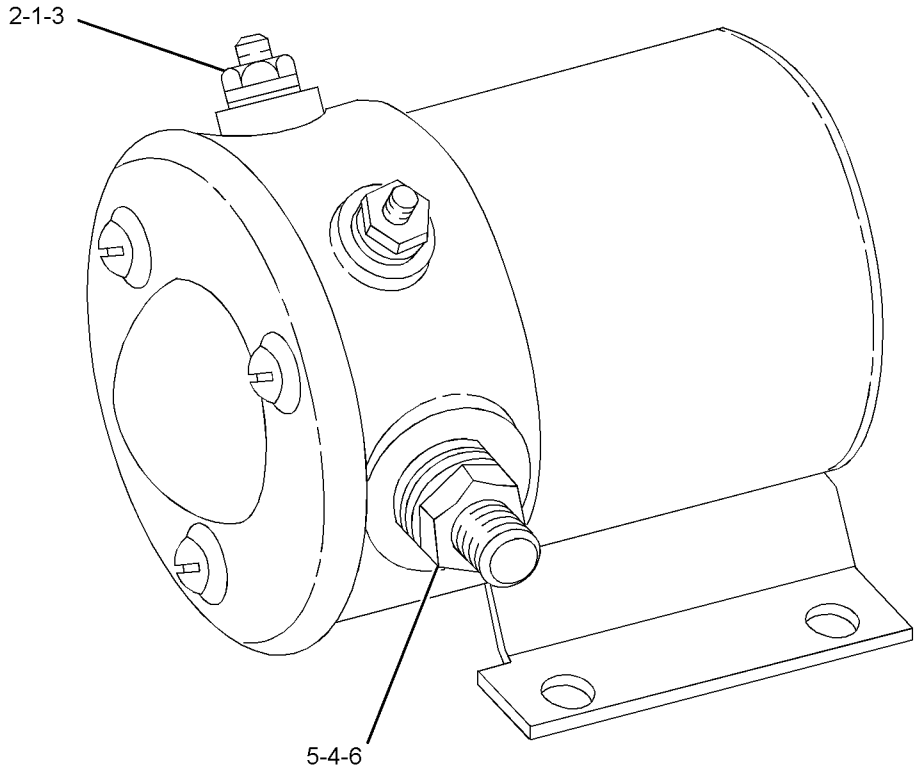

GRAPHIC #1 <END> g01132022

241-8368 SWITCH GP-MAGNETIC—GLOW PLUG RELAY

S/N: B551-UP

24-VOLT

PART OF 280-8969 PANEL GP-CIRCUIT BREAKER

SMCS-7499 **i07246406**

NOTE	REF NO	GRAPHIC REF	PART NUMBER	QTY	PART NAME 1 2 3 4 5 6 (PRODUCT LEVEL)	SEE PAGE
	1	1	**155-2270**	1	KIT-CONNECTING PLUG (2-PIN)	
					(INCLUDES PLUG AS, WEDGE & INTERFACE SEAL)	
	2	1	**4F-2294**	2	NUT-JAM (5/16-24-THD)	
	3	1	**8T-8730**	2	SOCKET-CONNECTOR (16-GA TO 18-GA)	

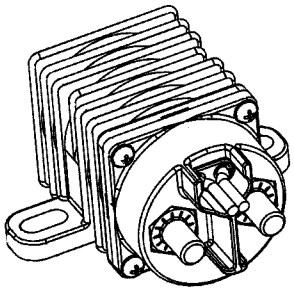

ISOMETRIC VIEW

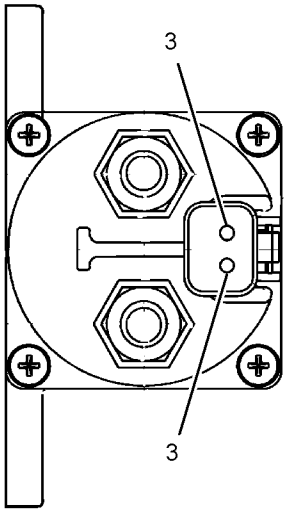

VIEW A-A

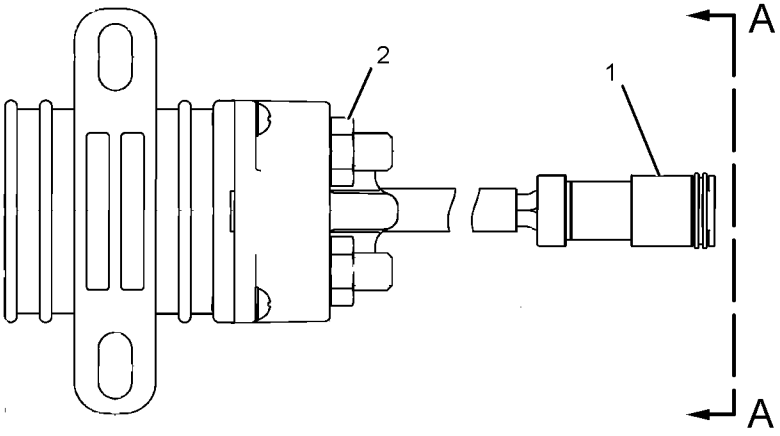

GRAPHIC #1 <END> g01077362

337-9078 SWITCH GP-MAGNETIC

S/N: B551-UP

FIELD REPLACEMENT FOR 179-0006—PAGE: 271

SMCS-7499 **i06041908**

NOTE	REF NO	GRAPHIC REF	PART NUMBER	QTY	PART NAME 1 2 3 4 5 6 (PRODUCT LEVEL)	SEE PAGE
	1	1	**7X-0620**	2	WASHER-HARD (5.5X13X1.6-MM THK)	
	2	1	**8F-1434**	2	LOCKWASHER	
	3	1	**6V-8378**	2	NUT (10-32-THD)	
	4	1	**4L-6499**	2	WASHER (0.38X0.88X0.06-IN THK)	
	5	1	**4D-1326**	2	LOCKWASHER	
	6	1	**1B-2578**	2	NUT (3/8-16-THD)	

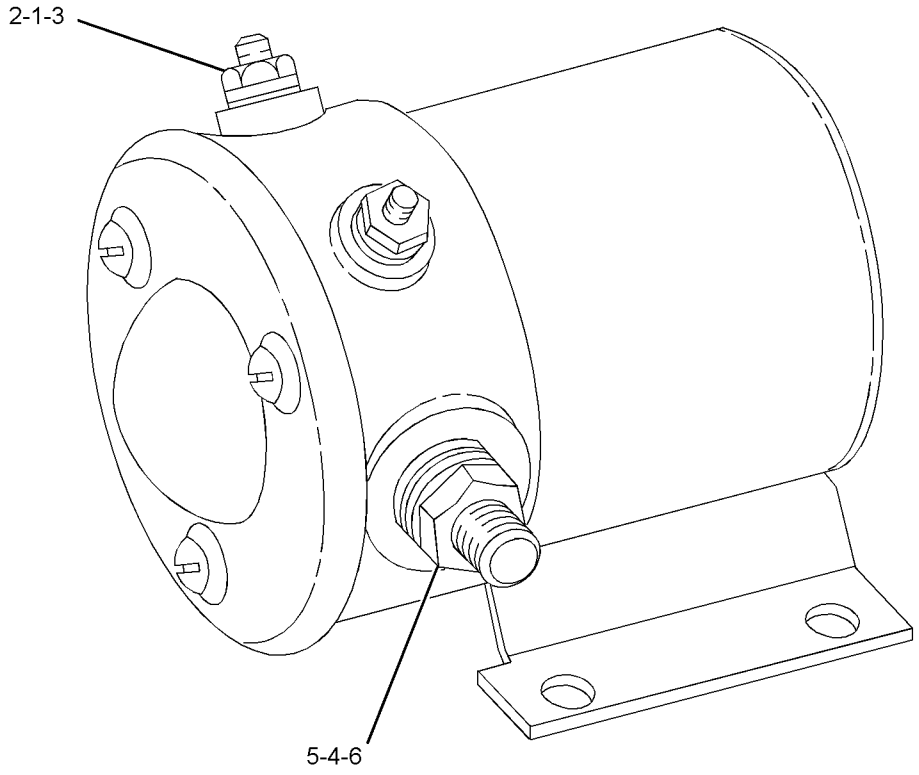

GRAPHIC #1 <END> g01132022

398-0940 SWITCH GP-MAGNETIC

S/N: TX71-UP
24-VOLT
PART OF 275-0596 WIRING GP-HEATER

SMCS-7499 **i06836573**

NOTE	REF NO	GRAPHIC REF	PART NUMBER	QTY	PART NAME 1 2 3 4 5 6 (PRODUCT LEVEL)	SEE PAGE
	1	1	**102-8802**	1	KIT-RECEPTACLE (2-PIN)	
					(INCLUDES RECEPTACLE AS & WEDGE)	
	2	1	**8T-8729**	2	PIN-CONNECTOR (16-GA TO 20-GA)	
	3	1	**3F-9556**	2	LOCKWASHER	
	4	1	**6V-8186**	2	NUT-FULL (5/16-24-THD)	
	5	1	**6V-8378**	2	NUT (10-32-THD)	
	6	1	**8F-1434**	2	LOCKWASHER	

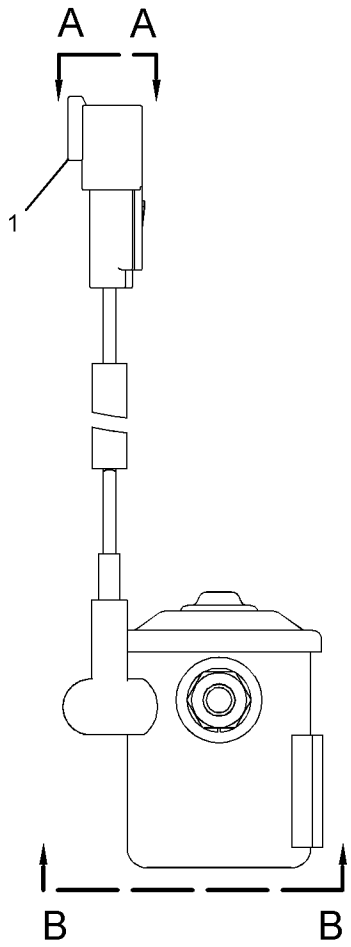

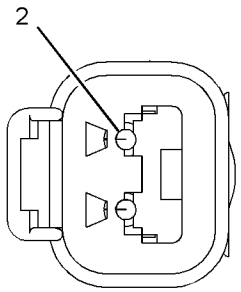

VIEW A-A

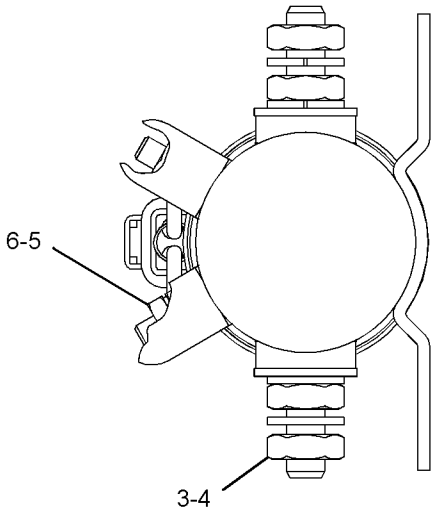

VIEW B-B

GRAPHIC #1 <END> g03351877

275-1253 SWITCH GP-PRESSURE

S/N: TX71-UP

PART OF 419-6912 WIRING GP-SENSOR

SMCS-1435 **i06616045**

NOTE	REF NO	GRAPHIC REF	PART NUMBER	QTY	PART NAME 1 2 3 4 5 6 (PRODUCT LEVEL)	SEE PAGE
	1	1	**230-4011**	1	PLUG AS-CONNECTOR (2-PIN)	
		1	**264-7029**	1	SEAL-CONNECTOR	
E	2	1	**9X-1813**		SLEEVE (14-CM)	
	3	1	**6V-4589**	1	SEAL-O-RING	
	4	1	**9X-7737**	1	SEAL-O-RING	
	5	1	**9X-3401**	2	PIN-CONNECTOR (16-GA TO 18-GA)	

E - ORDER BY THE CENTIMETER

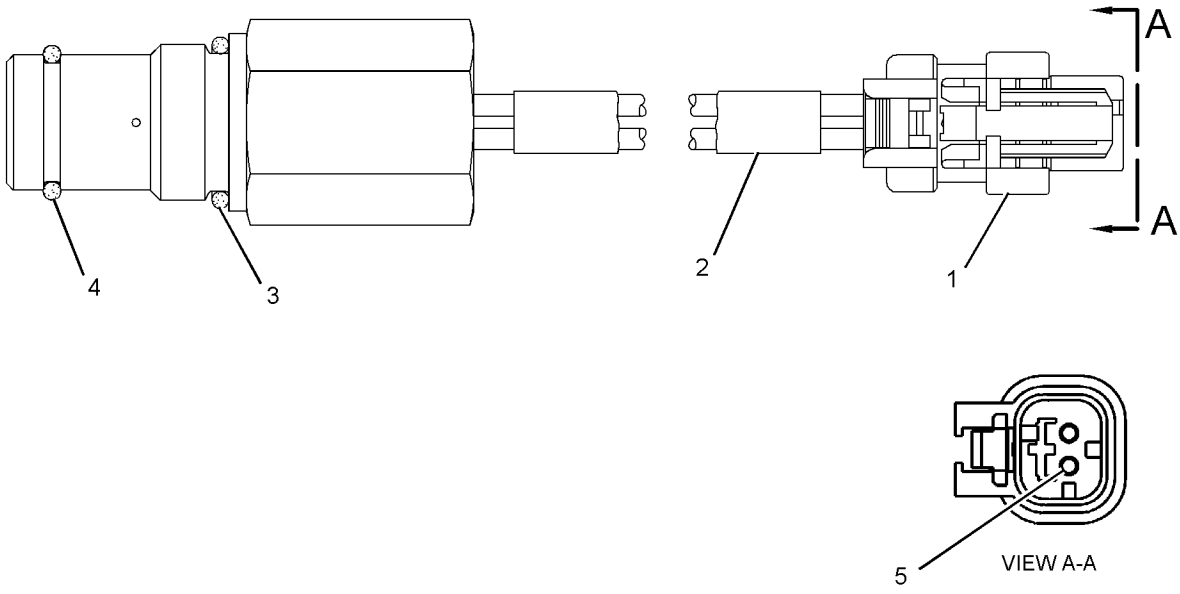

GRAPHIC #1 <END> g01238534

440-0257 SWITCH GP-PRESSURE

S/N: JP21-UP; TSZ1-UP

PART OF 332-8833 FILTER GP-OIL

SMCS-1435 **i05979712**

NOTE	REF NO	GRAPHIC REF	PART NUMBER	QTY	PART NAME 1 2 3 4 5 6 (PRODUCT LEVEL)	SEE PAGE
	1	1	**102-8802**	1	KIT-RECEPTACLE (2-PIN)	
					(INCLUDES RECEPTACLE AS & WEDGE)	
	2	1	**033-6033**	1	SEAL-O-RING	
	3	1	**8T-8729**	2	PIN-CONNECTOR (16-GA TO 20-GA)	
E	4	1	**9X-1813**		SLEEVE (28-CM)	
	5	1	**206-9295**	1	SEAL-O-RING	

E - ORDER BY THE CENTIMETER

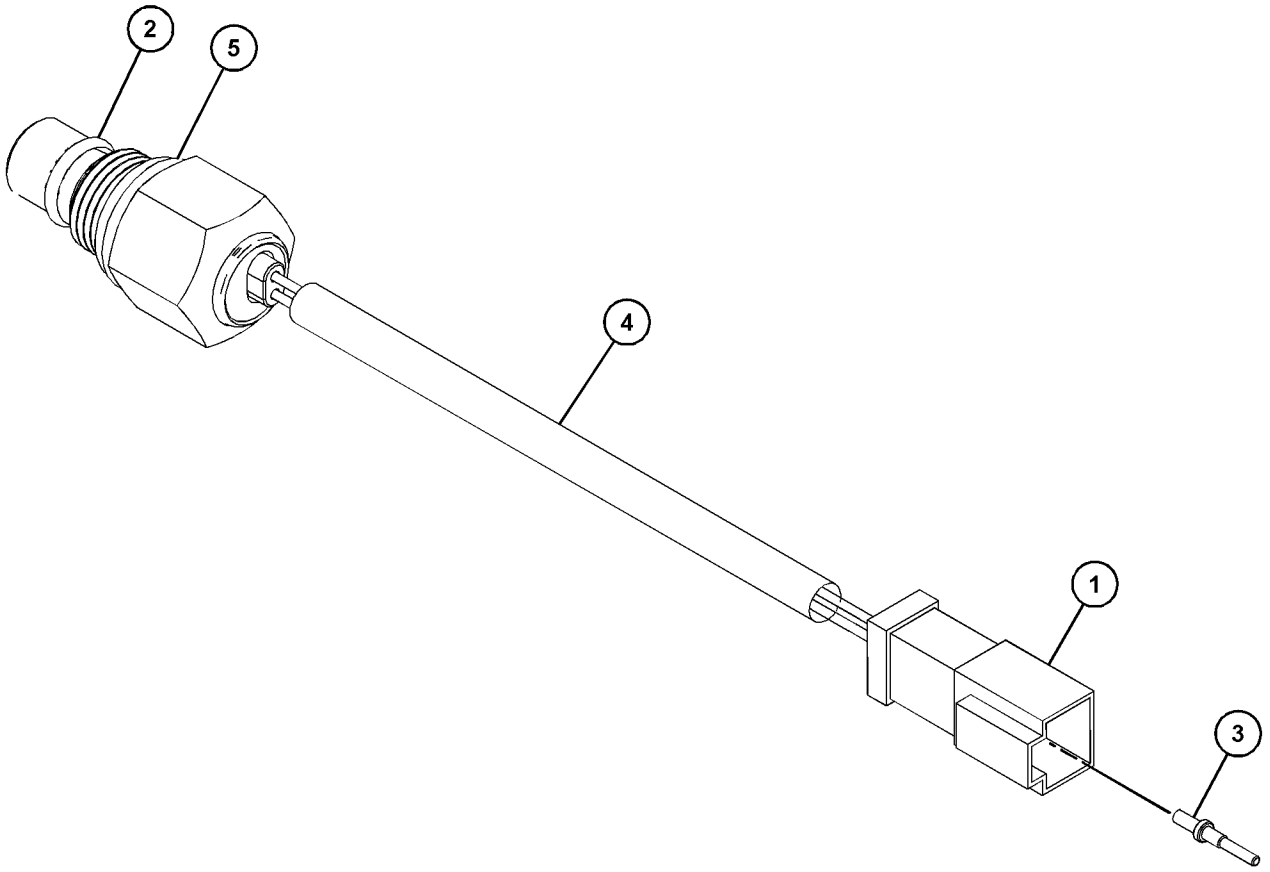

GRAPHIC #1 <END> g03688962

238-8824 SWITCH GP-ROCKER–AUTO

S/N: B551-UP

PART OF 248-6925 AUTOSHIFT AR

SMCS-7332 **i02783100**

NOTE	REF NO	GRAPHIC REF	PART NUMBER	QTY	PART NAME 1 2 3 4 5 6 (PRODUCT LEVEL)	SEE PAGE
	1	1	**102-8802**	1	KIT-RECEPTACLE (2-PIN)	
					(INCLUDES RECEPTACLE AS & WEDGE)	
	2	1	**249-5478**	1	SWITCH AS-ROCKER (AUTOSHIFT)	
	3	1	**250-2299**	1	LAMP AS-LED (24-VOLT, GREEN)	

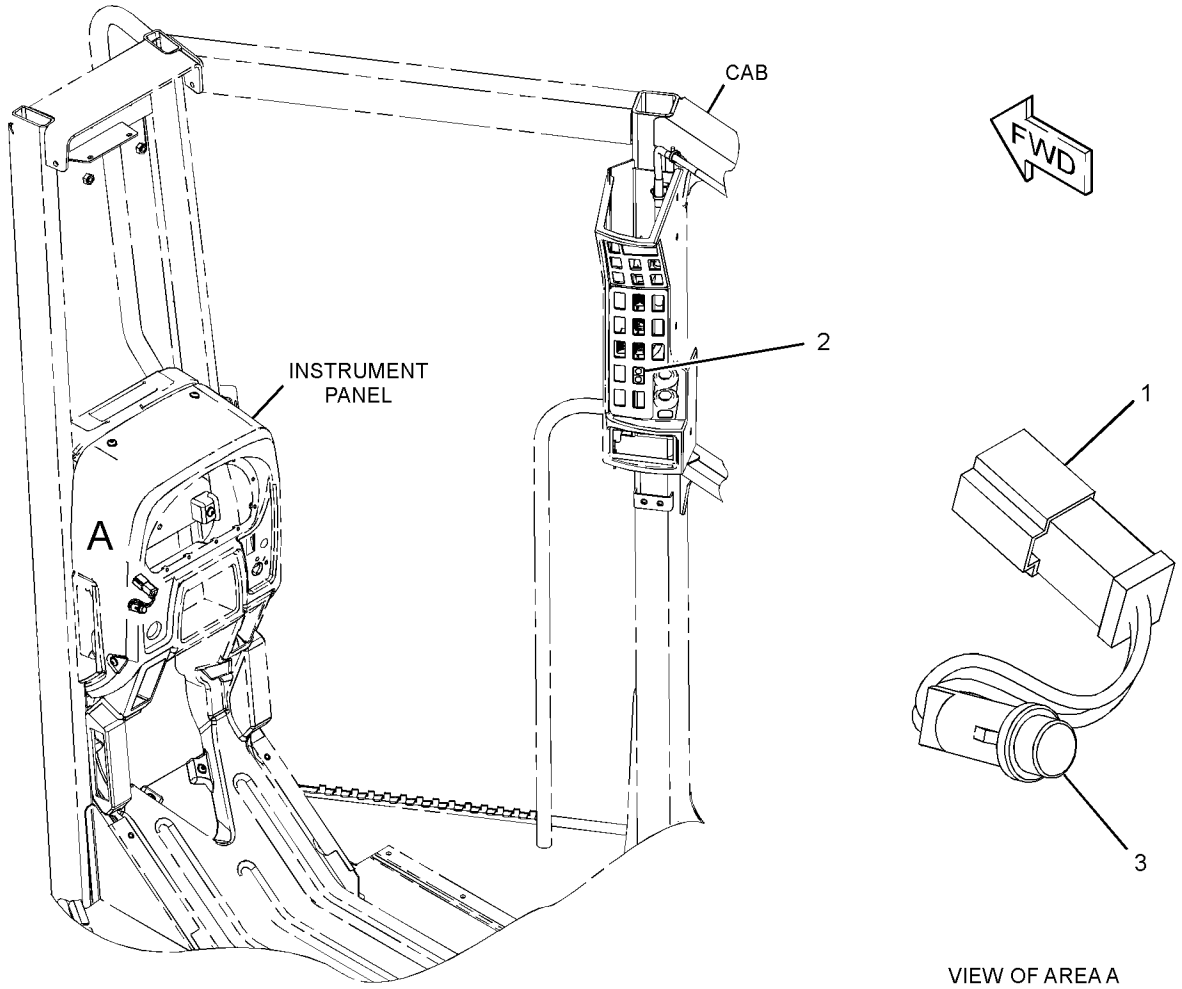

GRAPHIC #1 <END> g01313358

321-6987 SWITCH GP-ROCKER—BLADE CUSHION

S/N: B551-UP

PART OF 364-2035, 364-2037 CONTROL AR-HYDRAULIC

SMCS-7332 **i03542821**

NOTE	REF NO	GRAPHIC REF	PART NUMBER	QTY	PART NAME 1 2 3 4 5 6 (PRODUCT LEVEL)	SEE PAGE
	1	1	**249-5487**	1	SWITCH AS-ROCKER (24-VOLT) (BLADE CUSHION)	

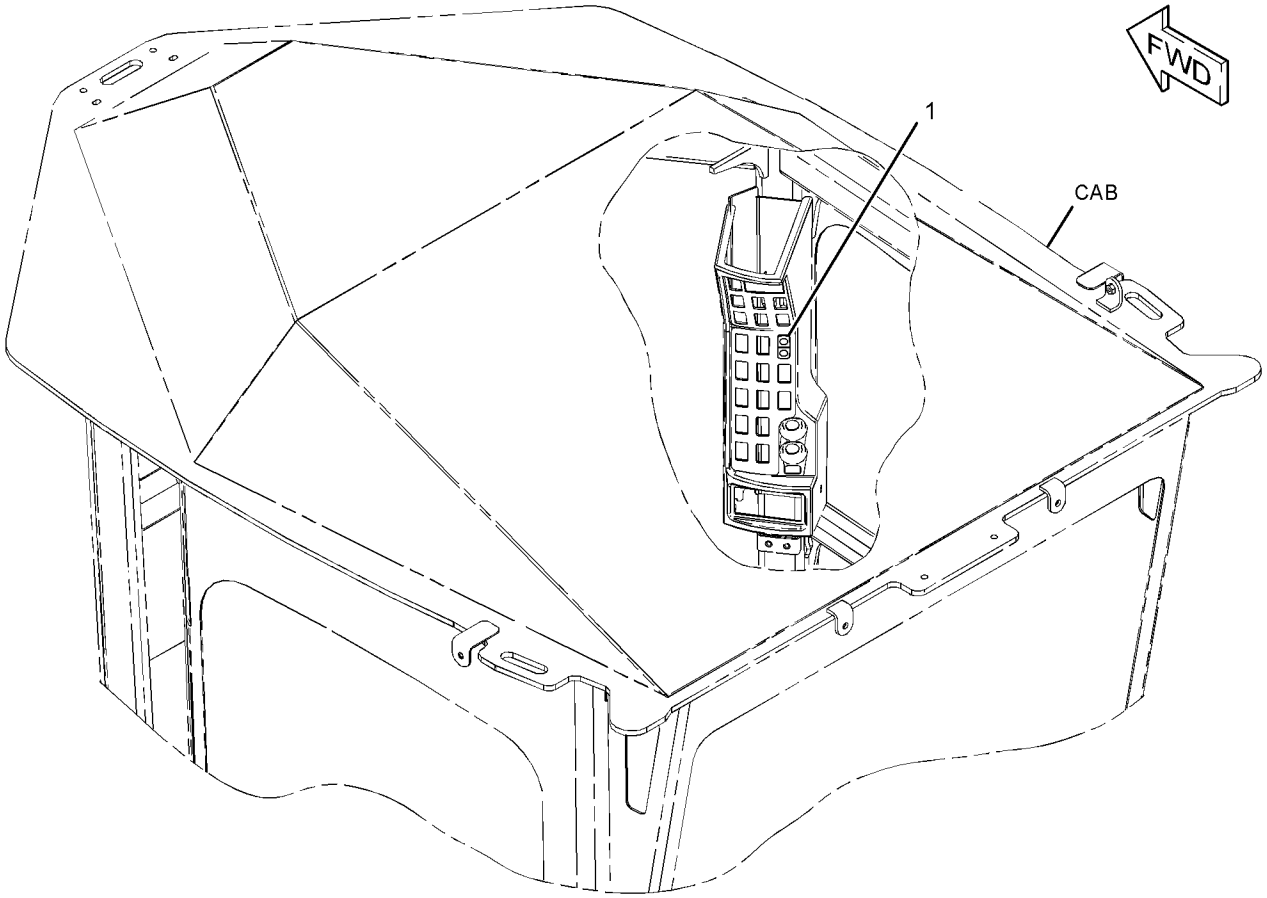

GRAPHIC #1 <END> g01878280

343-1824 SWITCH GP-ROCKER

S/N: B551-UP

PART OF 233-3296 MIRROR GP-REAR VIEW

SMCS-7332 **i04906568**

NOTE	REF NO	GRAPHIC REF	PART NUMBER	QTY	PART NAME 1 2 3 4 5 6 (PRODUCT LEVEL)	SEE PAGE
	1	1	**236-4630**	1	SWITCH AS-ROCKER (HEATED MIRRORS)	
	2	1	**297-0760**	1	RELAY AS (24-VDC, 20-AMPERE) (HEATED MIRROR TIMER)	
M	3	1	**5C-9553**	1	BOLT (M6X1X16-MM)	
	4	1	**9X-8256**	1	WASHER (6.6X12X2-MM THK)	

M - METRIC PART

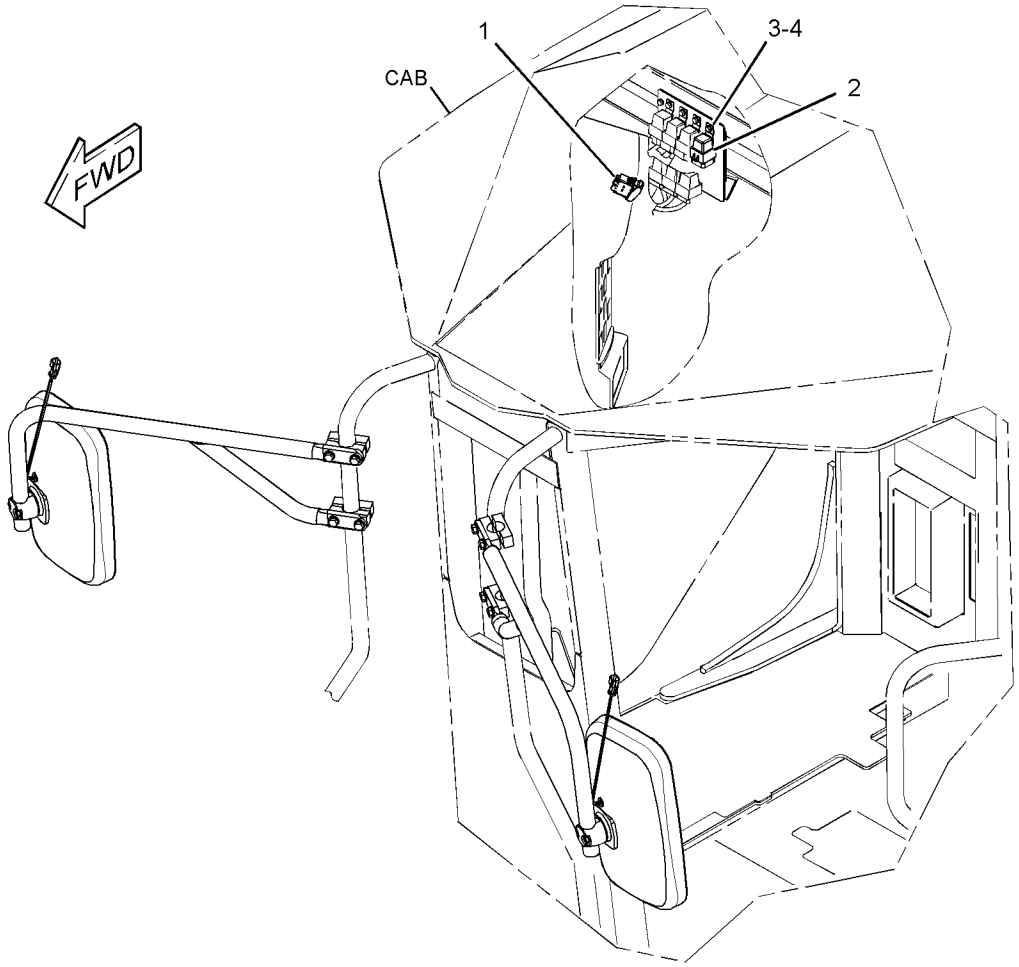

GRAPHIC #1 <END> g01923033

550-6606 SWITCH GP-ROCKER—ROADING LIGHTS

S/N: B551-UP

PART OF 420-1977, 575-9874, 575-9875 CAB AR

SMCS-7332 **i07358559**

NOTE	REF NO	GRAPHIC REF	PART NUMBER	QTY	PART NAME 1 2 3 4 5 6 (PRODUCT LEVEL)	SEE PAGE
	1	1	**261-4907**	1	SWITCH AS-ROCKER (24-VOLT) (WORK LIGHTS)	

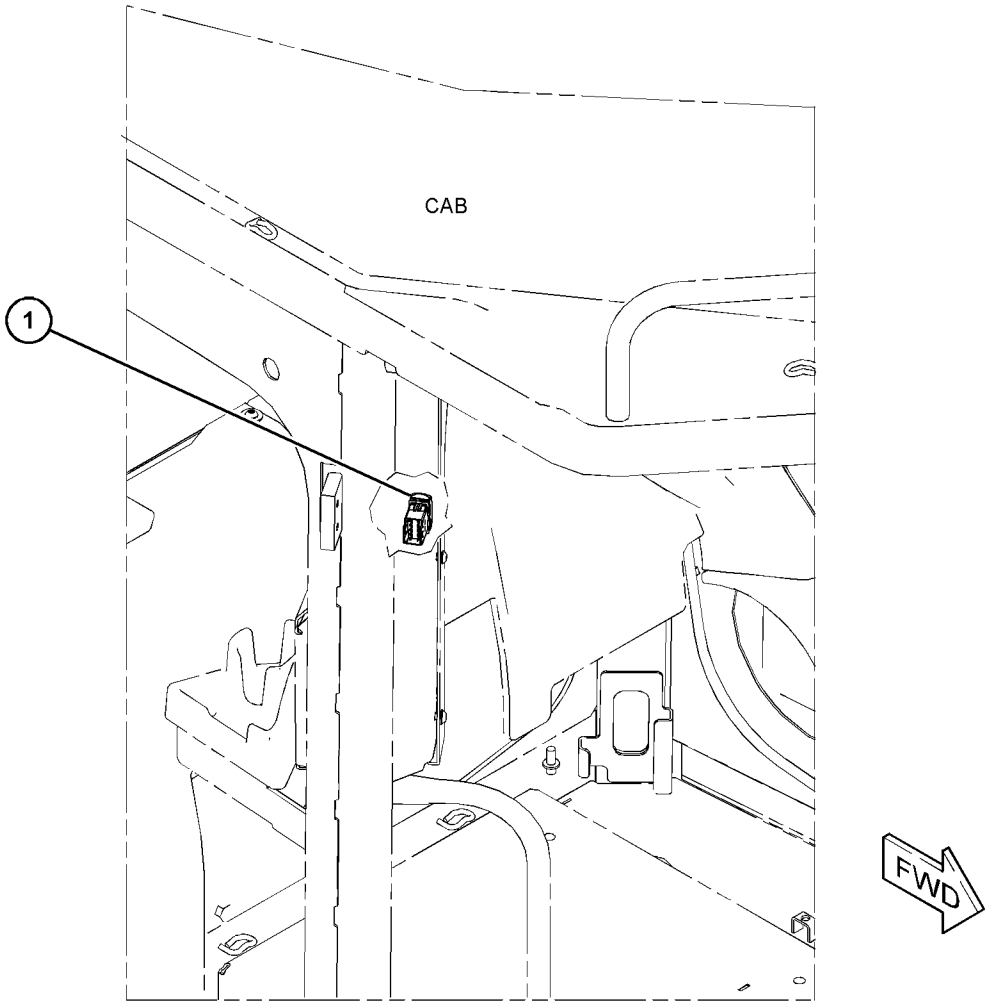

GRAPHIC #1 <END> g06294236

275-7741 SWITCH GP-WIPER—CAB

S/N: B551-UP
24-VOLT, INTERMITTENT
PART OF 275-7764 SWITCH GP-WIPER

SMCS-7305, 7332

i07523601

NOTE	REF NO	GRAPHIC REF	PART NUMBER	QTY	PART NAME 1 2 3 4 5 6 (PRODUCT LEVEL)	SEE PAGE
	1	1	**6V-8369**	1	NUT (7/16-28-THD)	
	2	1	**2H-3920**	1	LOCKWASHER	
	3	1	**8T-8737**	2	PLUG-SEAL	
	4	1	**186-3735**	6	PIN-CONNECTOR (16-GA TO 18-GA)	
	5	1	**102-8806**	1	KIT-RECEPTACLE (8-PIN)	
					(INCLUDES RECEPTACLE AS & WEDGE)	

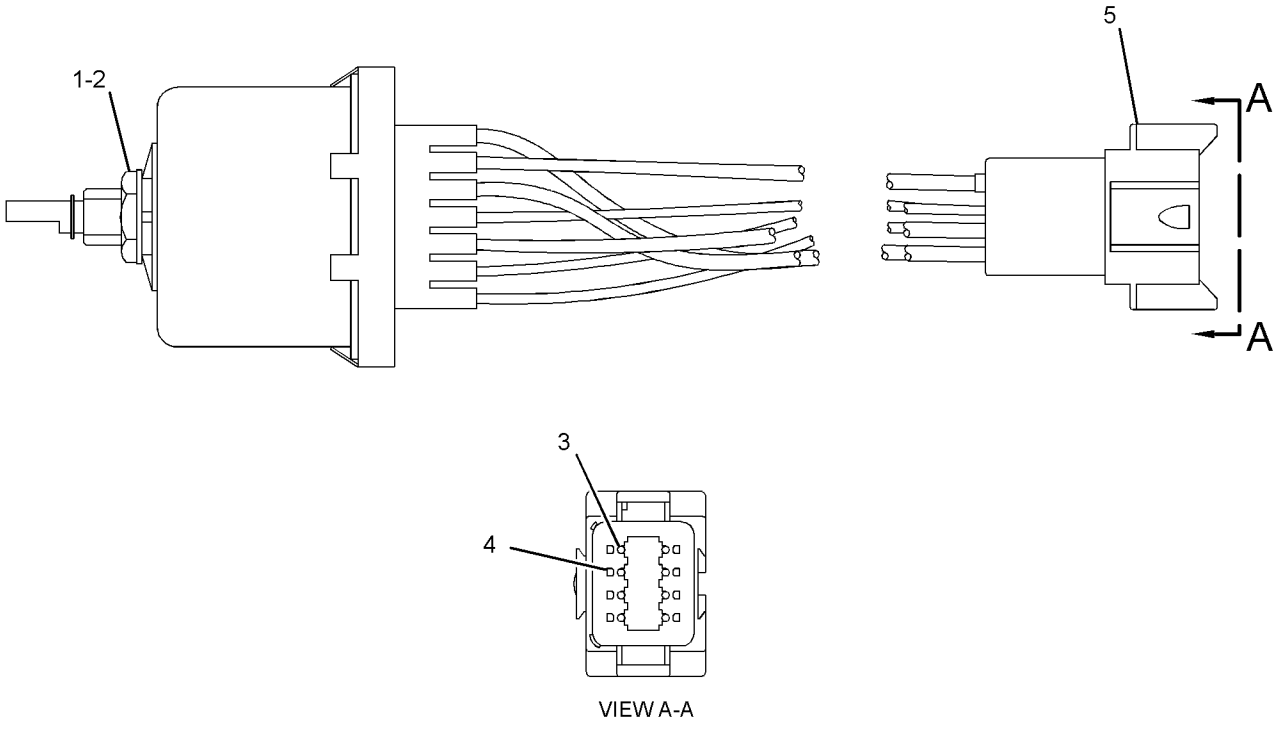

VIEW A-A

GRAPHIC #1

<END>

g01445891

275-7764 SWITCH GP-WIPER

S/N: B551-UP

24-VOLT, INTERMITTENT

PART OF 330-3868 WIPER GP-WINDOW, 372-6063 WIRING GP-CAB

SMCS-7305, 7332

i02978860

NOTE	REF NO	GRAPHIC REF	PART NUMBER	QTY	PART NAME 1 2 3 4 5 6 (PRODUCT LEVEL)	SEE PAGE
Y	1	1	**275-7741**	1	SWITCH GP-WIPER (24-VOLT)	281
	2	1	**7T-9302**	1	KNOB AS-WIPER SWITCH (WASHER)	
		1	**014-0816**	1	SETSCREW (8-32X0.5-IN)	

Y - SEPARATE ILLUSTRATION

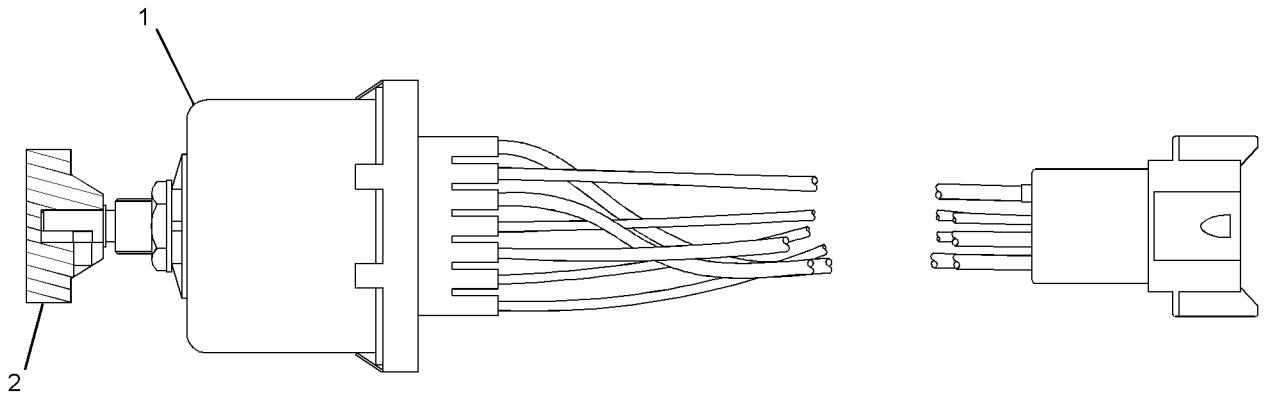

GRAPHIC #1 <END> g01516002

239-1134 VALVE GP-ETHER STARTING

S/N: B551-UP
24-VOLT
PART OF 238-9561 STARTING AID GP-ETHER

SMCS-1456 **i06885450**

NOTE	REF NO	GRAPHIC REF	PART NUMBER	QTY	PART NAME 1 2 3 4 5 6 (PRODUCT LEVEL)	SEE PAGE
	1	1	**7N-9801**	1	GASKET	
	2	1	**102-8802**	1	KIT-RECEPTACLE (2-PIN)	
					(INCLUDES RECEPTACLE AS & WEDGE)	
	3	1	**8T-8729**	2	PIN-CONNECTOR (16-GA TO 20-GA)	
	4	1	**358-4889**	1	FILTER (ETHER START)	

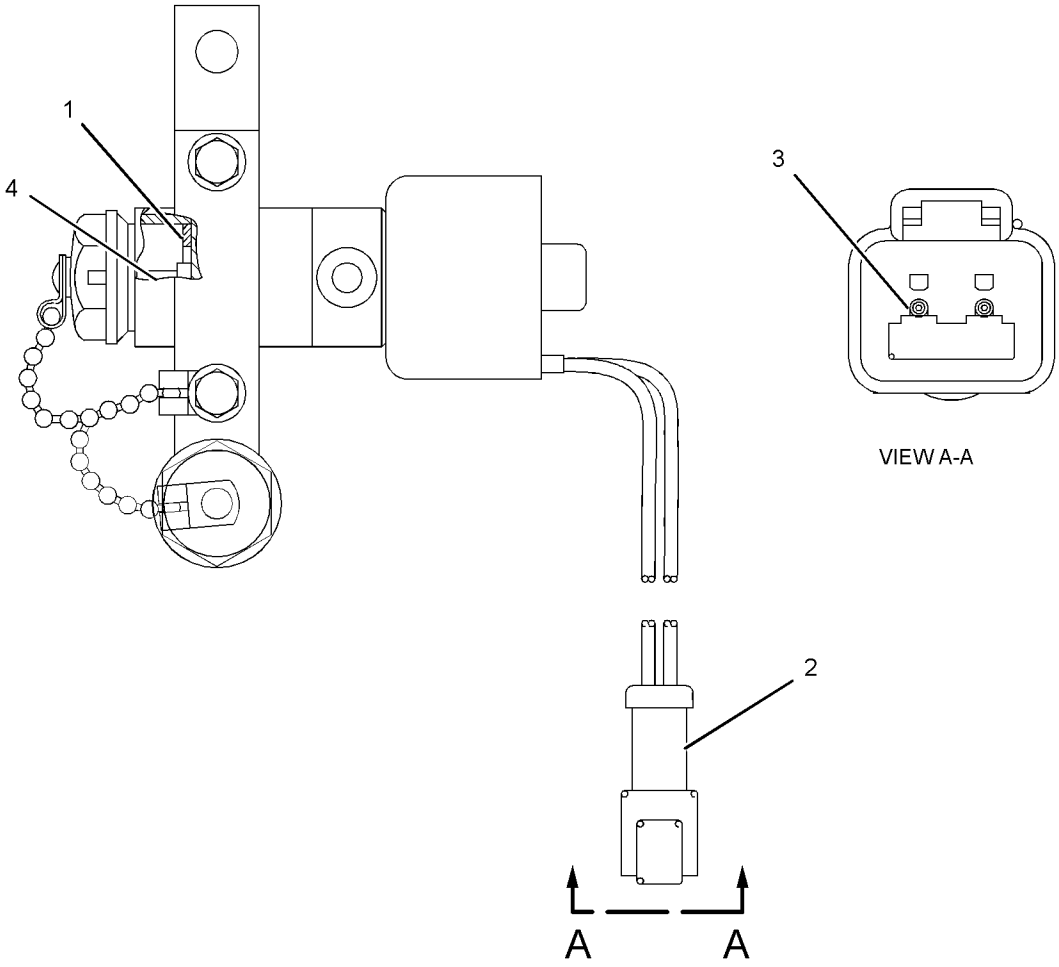

GRAPHIC #1 <END> g02138138

257-7224 WARNING GP-BACKUP

S/N: B551-UP

PART OF 577-1377 COMMON AR

SMCS-7406 **i07041857**

NOTE	REF NO	GRAPHIC REF	PART NUMBER	QTY	PART NAME 1 2 3 4 5 6 (PRODUCT LEVEL)	SEE PAGE
	1	1	**3S-2093**	1	STRAP-CABLE	
	2	1	**213-9100**	1	ALARM AS (BACKUP)	
		1	**186-3735**	2	PIN-CONNECTOR (16-GA TO 18-GA)	
E		1	**9X-1813**		SLEEVE	
		1	**102-8802**	1	KIT-RECEPTACLE (2-PIN)	
					(INCLUDES RECEPTACLE AS & WEDGE)	
	3	1	**5P-4116**	4	WASHER-HARD (8.8X20.5X2-MM THK)	
M	4	1	**8T-4189**	4	BOLT (M8X1.25X20-MM)	

E - ORDER BY THE CENTIMETER
M - METRIC PART

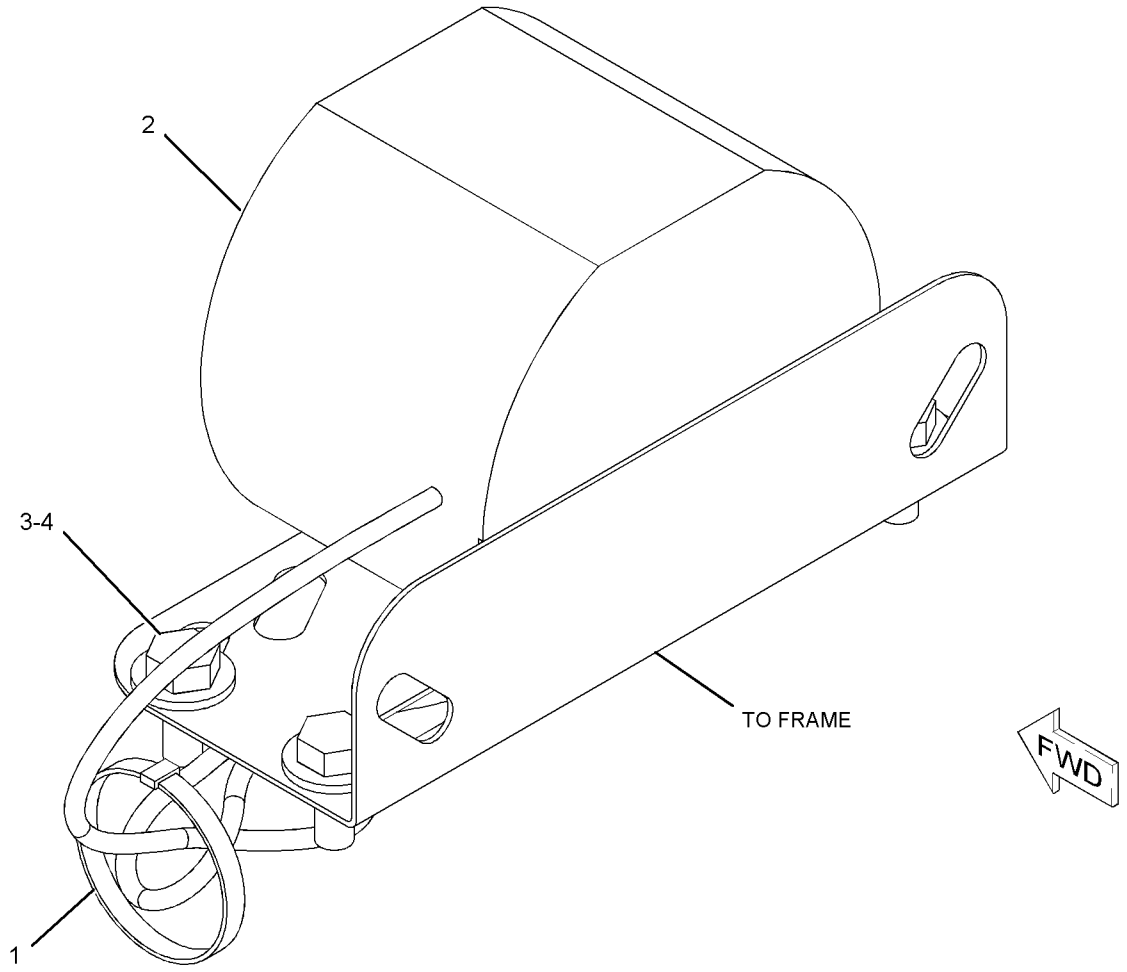

GRAPHIC #1 <END> g01109906

319-5180 WIRING GP-AUXILIARY–FRONT

S/N: B551-UP

PART OF 365-3354, 365-3355, 365-3368, 365-3369, 365-3370, 365-3371, 365-5541, 438-5425, 438-5426 CONTROL AR-HYDRAULIC

SMCS-1408 **i03915793**

NOTE	REF NO	GRAPHIC REF	PART NUMBER	QTY	PART NAME 1 2 3 4 5 6 (PRODUCT LEVEL)	SEE PAGE
	1	1	**7K-1181**	25	STRAP-CABLE	
	2	1	**319-5181**	1	HARNESS AS-VALVE	
		1	**8T-8730**	26	SOCKET-CONNECTOR (16-GA TO 18-GA)	
		1	**8T-8737**	2	PLUG-SEAL	
E		1	**125-7875**		TUBE-HEAT SHRINK (7.44-MM DIA) (10-CM)	
		1	**155-2256**	1	KIT-CONNECTING PLUG (12-PIN)	
		1	**155-2270**	8	KIT-CONNECTING PLUG (2-PIN)	
					(EACH KIT INCLUDES PLUG AS, WEDGE & INTERFACE SEAL)	
		1	**274-3774**	8	CAP-CONNECTOR	
	3	1	**5P-9297**	1	CLIP (LOOP)	
	4	1	**5P-9299**	2	CLIP (LOOP)	

E - ORDER BY THE CENTIMETER

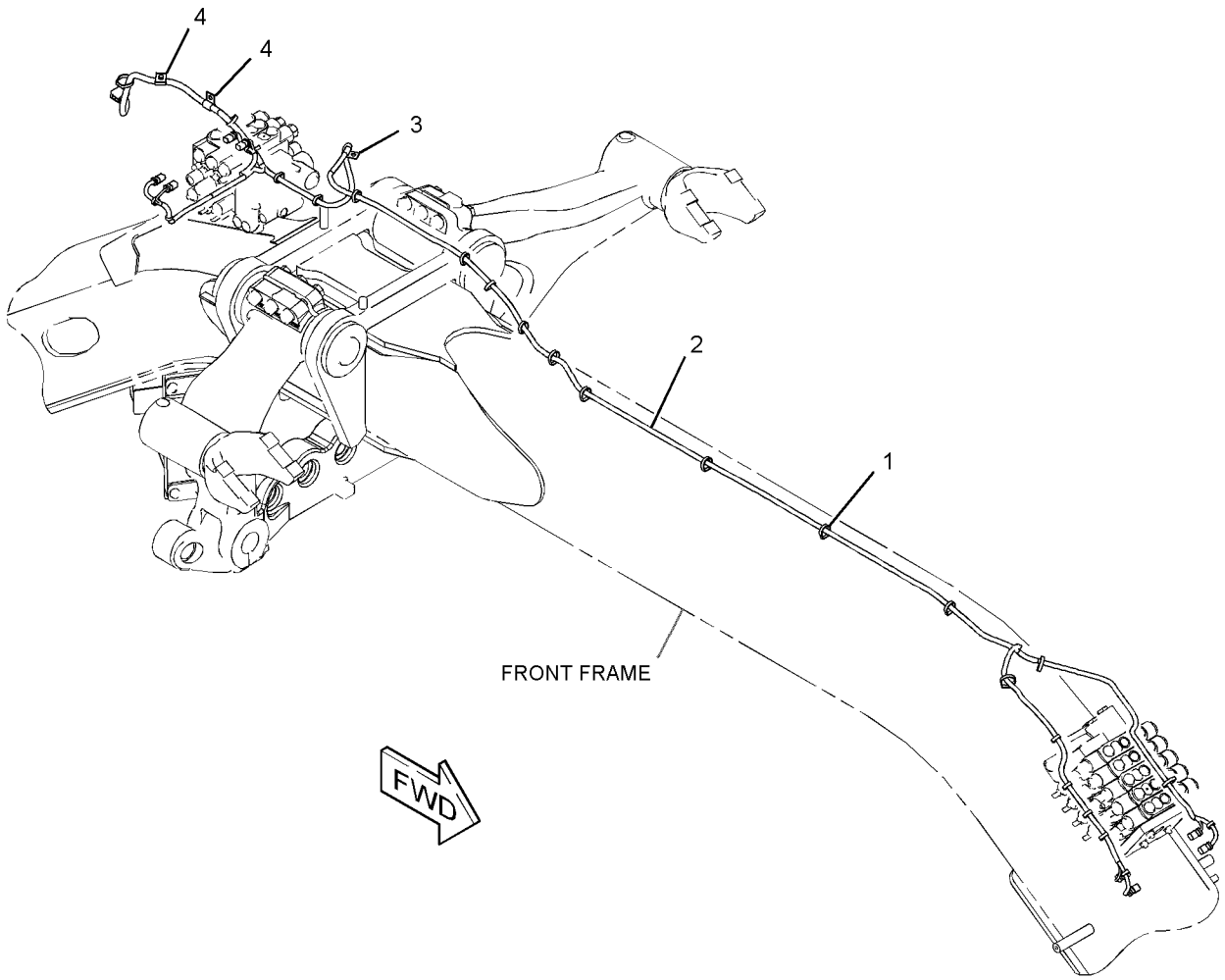

GRAPHIC #1 <END> g02155514

372-6063 WIRING GP-CAB

S/N: B551-UP

PART OF 420-1977, 575-9874, 575-9875 CAB AR

SMCS-1408 **i07580012**

NOTE	REF NO	GRAPHIC REF	PART NUMBER	QTY	PART NAME 1 2 3 4 5 6 (PRODUCT LEVEL)	SEE PAGE
	1	2	**9X-8256**	4	WASHER (6.6X12X2-MM THK)	
Y	2	1	**3E-6328**	1	ALARM GP (24-VOLT) (ACTION)	140
	3	1	**092-4924**	1	PLUG-BUTTON	
C	4	1	**467-8535**	1	SWITCH AS-START (KEY)	
		1	**7T-6799**	1	NUT-MOUNTING (1-32-THD)	
		1	**8T-8729**	4	PIN-CONNECTOR (16-GA TO 20-GA)	
		1	**102-8804**	1	KIT-RECEPTACLE (4-PIN)	
					(INCLUDES RECEPTACLE AS & WEDGE)	
	5	2	**113-8490**	17	FUSE (10-AMPERE)	
	6	2	**113-8491**	19	FUSE (15-AMPERE)	
	7	2	**113-8492**	2	FUSE (20-AMPERE)	
	8	2	**141-2760**	4	FUSE (7.5-AMPERE)	
	10	1	**195-7988**	1	GASKET	
	11	1,2	**228-6089**	16	PLUG (ROCKER SWITCH)	
	12	2	**229-2580**	1	SWITCH AS-ROCKER (24-VOLT) (THROTTLE LOCK SET)	
	13	1	**236-4615**	1	SWITCH AS-ROCKER (SECONDARY STEERING)	
	14	2	**242-1555**	2	PULLER-FUSE	
	15	1	**253-3485**	1	PLATE	
	16	1	**253-3489**	2	PLATE	
Y	17	2	**275-9650**	1	ELECTRONICS GP-MONITOR (MESSENGER)	171
	18	1	**279-5308**	1	LAMP AS-LED (24-VOLT, GREEN)	
		1	**8T-8729**	2	PIN-CONNECTOR (16-GA TO 20-GA)	
	19	2	**280-2709**	1	CIRCUIT BREAKER AS (15-AMPERE, MANUAL RESET) (WORK LIGHTS, FRONT)	
	20	2	**280-2710**	1	CIRCUIT BREAKER AS (20-AMPERE, MANUAL RESET) (HVAC)	
	20A	2	**280-2710**	1	CIRCUIT BREAKER AS (20-AMPERE, MANUAL RESET) (BLOWER)	
	21	2	**280-4244**	1	SWITCH AS-ROCKER (24-VOLT) (CENTERSHIFT PIN)	
	22	1	**283-6947**	1	SWITCH AS-PUSH BUTTON (HORN)	
		1	**6F-0253**	1	LOCKWASHER	
		1	**9X-3402**	3	SOCKET-CONNECTOR (16-GA TO 18-GA)	
					—OR—	
		1	**126-1768**	3	SOCKET-CONNECTOR (14-GA TO 16-GA)	
		1	**155-2260**	1	KIT-CONNECTING PLUG (3-PIN)	
					(INCLUDES PLUG AS, WEDGES & INTERFACE SEAL)	
		1	**172-3511**	1	NUT (5/8-24-THD)	
	23	2	**284-3623**	1	SWITCH AS-ROCKER (24-VOLT) (HYDRAULIC LOCKOUT)	
	24	1	**286-0323**	2	GASKET	
	25	1	**288-1402**	1	GASKET	
	26	2	**311-2813**	2	SEAL	
R	27	1	**476-3381**	1	MODULE GP-DISPLAY (INSTRUMENT CLUSTER)	
	28	1	**320-9861**	1	GASKET	
C	29	1	**367-5213**	1	SWITCH AS-ROCKER (24-VOLT) (PARKING BRAKE)	
	30	2	**330-3356**	2	BAR-BUS	
	31	1	**331-6861**	1	HARNESS AS-WINDOW WIPER	
		1	**9X-0196**	6	TERMINAL AS (16-GA)	
		1	**9X-3402**	12	SOCKET-CONNECTOR (16-GA TO 18-GA)	
					—OR—	

372-6063 **WIRING GP-CAB (**contd.**)** **i07580012**

NOTE	REF NO	GRAPHIC REF	PART NUMBER	QTY	PART NAME 1 2 3 4 5 6 (PRODUCT LEVEL)	SEE PAGE
		1	**126-1768**	12	SOCKET-CONNECTOR (14-GA TO 16-GA)	
		1	**155-2255**	1	KIT-CONNECTING PLUG (12-PIN)	
					(INCLUDES PLUG AS, WEDGE, & INTERFACE SEAL)	
		1	**155-2258**	1	WEDGE-PLUG LOCK (12-PIN)	
B		1	**329-3734**		TAPE-ELECTRICAL	
	32	1	**347-0799**	2	SWITCH AS-ROCKER (24-VOLT) (JOYSTICK CONTROL RAISE, LOWER)	
	33	1	**431-8735**	1	FLASHER AS (12/24-VOLT) (TURN SIGNAL)	
	35	2	**360-1767**	1	SWITCH AS-ROCKER (24-VOLT) (THROTTLE LOCK)	
	36	1	**360-2974**	1	HARNESS AS-CONTROL (GRADE CONTROL)	
		1	**102-8804**	1	KIT-RECEPTACLE (4-PIN)	
		1	**102-8801**	2	KIT-RECEPTACLE (12-PIN)	
		1	**160-3518**	1	KIT-RECEPTACLE (8-PIN)	
		1	**174-3091**	1	KIT-RECEPTACLE (12-PIN)	
		1	**190-7614**	1	KIT-RECEPTACLE (12-PIN)	
		1	**331-4227**	1	KIT-RECEPTACLE (12-PIN)	
					(EACH RECEPTACLE KIT INCLUDES RECEPTACLE AS & WEDGE)	
		1	**8T-8737**	61	PLUG-SEAL	
		1	**9X-3401**	19	PIN-CONNECTOR (16-GA TO 18-GA)	
		1	**9X-3402**	21	SOCKET-CONNECTOR (16-GA TO 18-GA)	
E		1	**125-7874**		TUBE-HEAT SHRINK (5.72-MM DIA) (90-CM)	
		1	**126-1767**	14	PIN-CONNECTOR (14-GA TO 16-GA)	
		1	**126-1768**	12	SOCKET-CONNECTOR (14-GA TO 16-GA)	
		1	**134-2540**	1	RECEPTACLE AS-CONNECTOR (3-PIN)	
		1	**155-2255**	1	KIT-CONNECTING PLUG (12-PIN)	
		1	**331-4222**	1	KIT-CONNECTING PLUG (12-PIN)	
		1	**176-2947**	1	KIT-CONNECTING PLUG (4-PIN)	
		1	**155-2271**	1	KIT-CONNECTING PLUG (4-PIN)	
					(EACH PLUG KIT INCLUDES PLUG AS, WEDGE, & INTERFACE SEAL)	
		1	**155-2260**	1	KIT-CONNECTING PLUG (3-PIN)	
		1	**174-0503**	1	KIT-CONNECTING PLUG (3-PIN)	
					(EACH PLUG KIT INCLUDES PLUG AS, WEDGES & INTERFACE SEAL)	
		1	**260-6728**	1	RECEPTACLE AS-CONNECTOR (12-PIN)	
		1	**281-3395**	1	PLUG AS-CONNECTOR (12-PIN)	
		1	**455-0709**	1	SEAL-CONNECTOR	
B		1	**329-3734**		TAPE-ELECTRICAL	
		1	**3E-3389**	1	WEDGE-RECEPTACLE LOCK (8-PIN)	
		1	**155-2258**	3	WEDGE-PLUG LOCK (12-PIN)	
	37	1	**366-9416**	1	HARNESS AS-LIGHTING (ROOF)	
		1	**7K-1181**	1	STRAP-CABLE	
B		1	**329-3734**		TAPE-ELECTRICAL	
E		1	**337-7978**		SLEEVE (14-CM)	
		1	**7G-7917**	2	PLUG-SEAL	
		1	**8T-8737**	3	PLUG-SEAL	
E		1	**119-3662**		TUBE-HEAT SHRINK (10.85-MM DIA) (13-CM)	
E		1	**125-7874**		TUBE-HEAT SHRINK (5.72-MM DIA) (30-CM)	
E		1	**125-7875**		TUBE-HEAT SHRINK (7.44-MM DIA) (15-CM)	
		1	**9X-3402**	60	SOCKET-CONNECTOR (16-GA TO 18-GA)	
					—OR—	

372-6063 **WIRING GP-CAB (**contd.**)** **i07580012**

NOTE	REF NO	GRAPHIC REF	PART NUMBER	QTY	PART NAME 1 2 3 4 5 6 (PRODUCT LEVEL)	SEE PAGE
		1	**126-1768**	60	SOCKET-CONNECTOR (14-GA TO 16-GA)	
		1	**155-2255**	1	KIT-CONNECTING PLUG (12-PIN)	
		1	**155-2270**	15	KIT-CONNECTING PLUG (2-PIN)	
					(EACH PLUG KIT INCLUDES PLUG AS, WEDGE, & INTERFACE SEAL)	
		1	**274-3774**	15	CAP-CONNECTOR	
		1	**374-7468**	1	CAP-SEAL	
		1	**311-2812**	1	PLUG-CONNECTOR	
		1	**155-2258**	1	WEDGE-PLUG LOCK (12-PIN)	
	38	2	**367-5209**	1	SWITCH AS-ROCKER (24-VOLT) (HEADLIGHTS, TAIL LIGHTS)	
CY	39	1	**559-8198**	1	HARNESS AS-CAB (FRONT, MAIN)	179
	40	2	**448-4273**	1	HARNESS AS-PANEL	
		2	**123-7615**	1	CONNECTOR (1-PIN)	
		2	**3S-2093**	1	STRAP-CABLE	
		2	**6V-0491**	2	TERMINAL-BLADE (14-GA TO 18-GA)	
		2	**8T-8737**	24	PLUG-SEAL	
E		2	**125-7874**		TUBE-HEAT SHRINK (5.72-MM DIA) (100-CM)	
E		2	**125-7875**		TUBE-HEAT SHRINK (7.44-MM DIA) (45-CM)	
		2	**9X-3402**	87	SOCKET-CONNECTOR (16-GA TO 18-GA)	
					—OR—	
		2	**126-1768**	87	SOCKET-CONNECTOR (14-GA TO 16-GA)	
		2	**134-2540**	1	RECEPTACLE AS-CONNECTOR (3-PIN)	
		2	**160-7689**	1	PLUG AS-CONNECTOR (70-PIN)	
		2	**159-9322**	1	SEAL-O-RING	
		2	**185-1861**	151	SEAL-WIRE	
		2	**189-3158**	1	SUPPRESSOR-ARC	
		2	**202-5397**	59	PLUG	
		2	**204-1297**	140	TERMINAL AS-BLADE (18-GA TO 20-GA)	
					(EACH INCLUDES)	
		2	**235-4123**	1	TERMINAL (18-GA TO 20-GA)	
		2	**245-7434**	21	KIT-CONNECTING PLUG (10-PIN)	
					(EACH INCLUDES)	
		2	**202-5397**	8	PLUG	
		2	**288-7146**	10	WIRE AS (16-GA)	
		2	**230-4011**	1	PLUG AS-CONNECTOR (2-PIN)	
		2	**455-0704**	1	SEAL-CONNECTOR	
		2	**230-4012**	1	RECEPTACLE AS-CONNECTOR (2-PIN)	
		2	**239-7352**	1	PLUG AS-CONNECTOR (6-PIN)	
		2	**230-5010**	1	PLUG AS-CONNECTOR (6-PIN)	
					(EACH PLUG AS INCLUDES)	
		2	**455-0707**	1	SEAL-CONNECTOR	
		2	**230-5011**	1	RECEPTACLE AS-CONNECTOR (6-PIN)	
		2	**237-0336**	1	COVER (CONNECTOR)	
		2	**239-7353**	1	RECEPTACLE AS-CONNECTOR (6-PIN)	
B		2	**329-3734**		TAPE-ELECTRICAL	
		2	**331-4224**	1	KIT-CONNECTING PLUG (6-PIN)	
		2	**331-4226**	1	KIT-CONNECTING PLUG (2-PIN)	
					(EACH PLUG KIT INCLUDES PLUG AS, WEDGE, & INTERFACE SEAL)	
		2	**155-2259**	1	WEDGE-PLUG LOCK (8-PIN)	
		2	**174-0503**	1	KIT-CONNECTING PLUG (3-PIN)	
					(INCLUDES PLUG AS, WEDGES & INTERFACE SEAL)	

372-6063 **WIRING GP-CAB (**contd.**)** **i07580012**

NOTE	REF NO	GRAPHIC REF	PART NUMBER	QTY	PART NAME 1 2 3 4 5 6 (PRODUCT LEVEL)	SEE PAGE
	41	2	**380-0830**	1	FILM-FUSE/RELAY	
	42	1	**096-6166**	31	WASHER-HARD (4.5X9X1-MM THK)	
	43	1,2	**130-5300**	5	CLIP	
M	44	1	**162-2165**	31	BOLT-SOCKET HEAD (M4X0.7X16-MM)	
	45	1	**204-8000**	5	MOUNTING-CABLE TIE	
	46	2	**248-2841**	1	RELAY AS (24-VOLT) (GRADE CONTROL)	
	46A	2	**248-2841**	1	RELAY AS (24-VOLT) (POSITION LAMP, LH)	
	46B	2	**248-2841**	1	RELAY AS (24-VOLT) (CAB BLOWER)	
	46C	2	**248-2841**	1	RELAY AS (24-VOLT) (CAB FLOODLIGHTS, REAR)	
	46D	2	**248-2841**	1	RELAY AS (24-VOLT) (HORN)	
	46E	2	**248-2841**	2	RELAY AS (24-VOLT) (CAB FLOODLIGHTS, FRONT)	
	46F	2	**248-2841**	1	RELAY AS (24-VOLT) (DIFFERENTIAL LOCK)	
	46G	2	**248-2841**	1	RELAY AS (24-VOLT) (POSITION LAMP, RH)	
	46H	2	**248-2841**	1	RELAY AS (24-VOLT) (BACKLIGHT)	
Y	47	2	*275-7764*	1	SWITCH GP-WIPER (24-VOLT, INTERMITTENT) (FRONT WIPER)	282
Y	47A	2	*275-7764*	1	SWITCH GP-WIPER (24-VOLT, INTERMITTENT) (WIPER, RH DOOR)	282
Y	47B	2	*275-7764*	1	SWITCH GP-WIPER (24-VOLT, INTERMITTENT) (WIPER, LH DOOR)	282
	48	1	**102-8802**	1	KIT-RECEPTACLE (2-PIN)	
					(INCLUDES RECEPTACLE AS & WEDGE)	
	49	1	**3S-2093**	49	STRAP-CABLE	
M	50	2	**5C-7261**	4	NUT (M8X1.25-THD)	
CM	51	2	**5C-9553**	4	BOLT (M6X1X16-MM)	
	52	1	**5P-4115**	1	WASHER-HARD (7.2X19X2-MM THK)	
	53	1,2	**7K-1181**	63	STRAP-CABLE	
	54	2	**7X-0608**	4	WASHER-HARD (10.2X16X2-MM THK)	
	55	1	**7X-7729**	5	WASHER (11X25X3-MM THK)	
M	56	2	**7Y-7388**	8	SCREW-BUTTON HEAD (M5X0.8X12-MM)	
	57	2	**8T-0328**	8	WASHER-HARD (5.5X10X1-MM THK)	
	58	1,2	**8T-4121**	7	WASHER-HARD (11X21X2.5-MM THK)	
M	59	1,2	**8T-4133**	12	NUT (M10X1.5-THD)	
M	60	1	**8T-4137**	5	BOLT (M10X1.5X20-MM)	
M	61	2	**8T-4189**	2	BOLT (M8X1.25X20-MM)	
	62	2	**8T-4224**	2	WASHER-HARD (8.8X16X2-MM THK)	
	63	2	**264-3617**	4	LOCKWASHER	
	64	2	**9R-2620**	1	PLUG	
M	65	1	**9X-1046**	12	SCREW (M4X0.7X18-MM)	
	66	2	**293-9136**	1	SWITCH AS-ROCKER (24-VOLT) (AUTO DIFFERENTIAL LOCK)	
	67	1	**416-7158**	1	COVER-CONNECTOR	
	68	2	**339-2958**	1	GASKET	
	69	2	**180-9900**	2	CAP AS (SERVICE PORT)	
					(EACH INCLUDES)	
		2	**5P-7958**	1	SLEEVE-CABLE SPLICE	
		2	**8C-6354**	1	CAP-RECEPTACLE (ET CONNECTOR)	
		2	**179-9392**	1	LANYARD	
Y	70	2	**524-2229**	1	HARNESS AS-CAB (HVAC)	178
	71	1	**6V-1827**	1	CAP-PROTECTION	
CM	72	1	**8T-4138**	1	BOLT (M6X1X20-MM)	

372-6063 **WIRING GP-CAB (**contd.**)** **i07580012**

NOTE	REF NO	GRAPHIC REF	PART NUMBER	QTY	PART NAME 1 2 3 4 5 6 (PRODUCT LEVEL)	SEE PAGE

B - USE AS REQUIRED
C - CHANGE FROM PREVIOUS TYPE
E - ORDER BY THE CENTIMETER
M - METRIC PART
R - REMANUFACTURED PART MAY BE AVAILABLE
Y - SEPARATE ILLUSTRATION

372-6063 **WIRING GP-CAB (**contd.**)** **i07580012**

REFER TO ALL ILLUSTRATIONS OF
THIS GROUP FOR AUXILIARY VIEWS

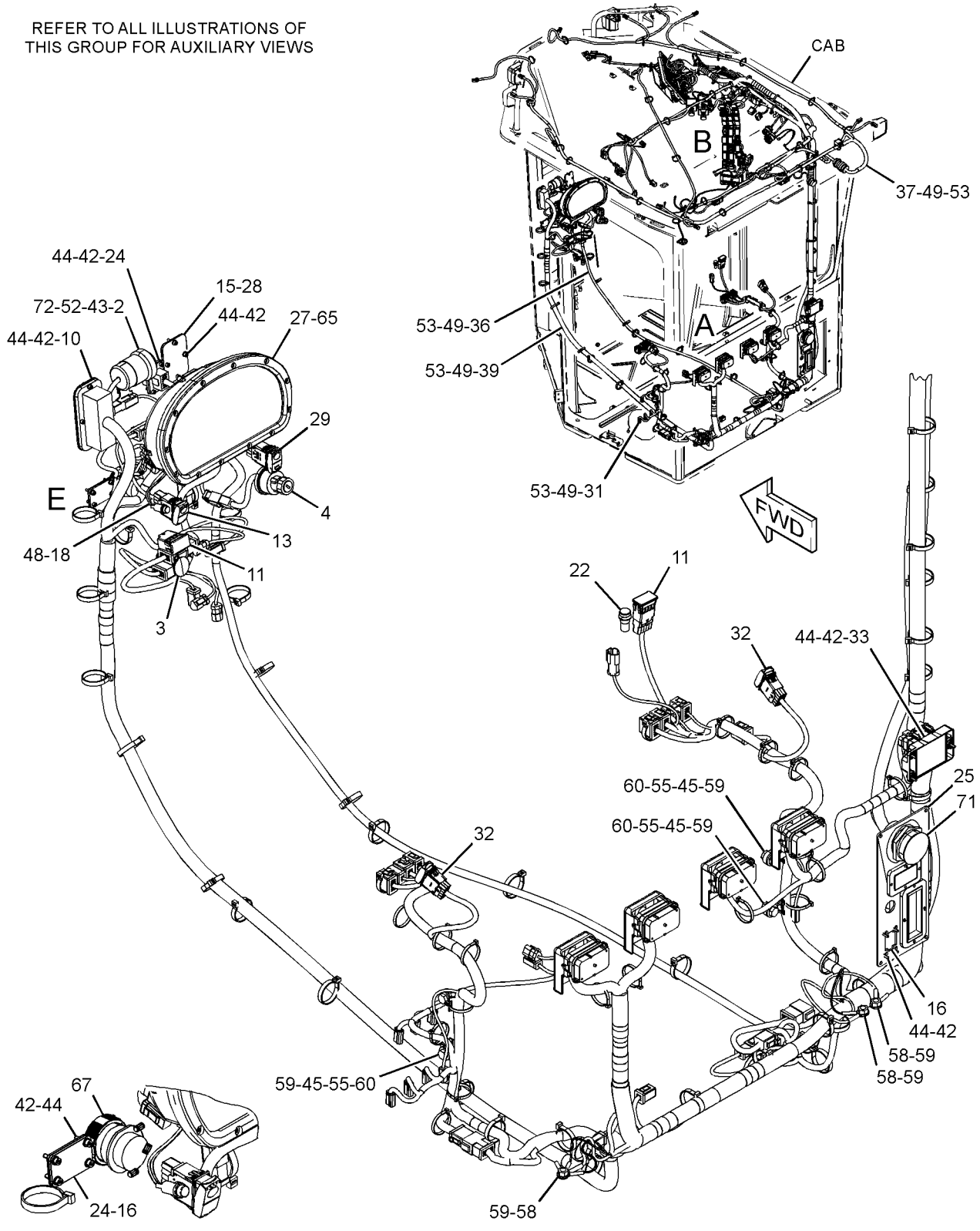

VIEW OF AREA E
(PARTS REMOVED FOR CLARITY)

VIEW OF AREA A

GRAPHIC #1

g06368173

372-6063 **WIRING GP-CAB (**contd.**)** **i07580012**

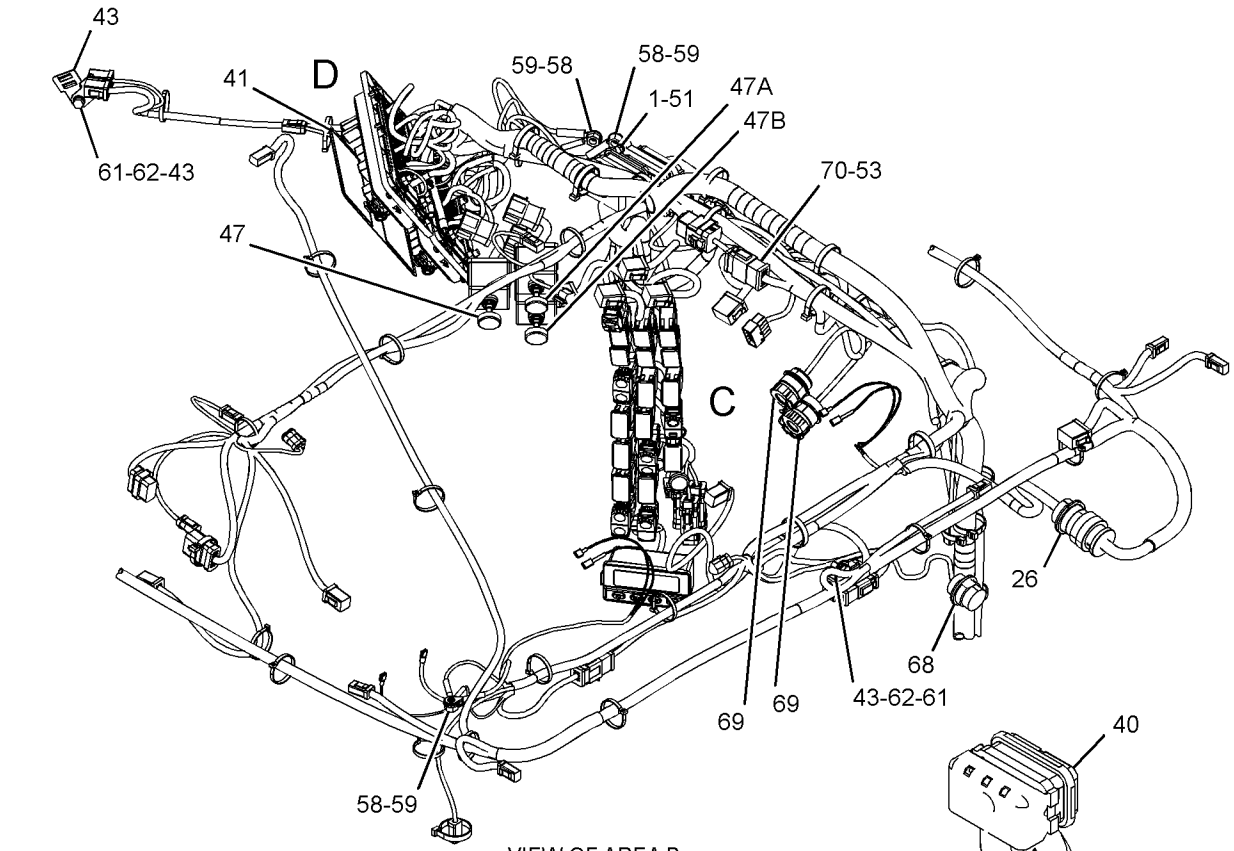

VIEW OF AREA B

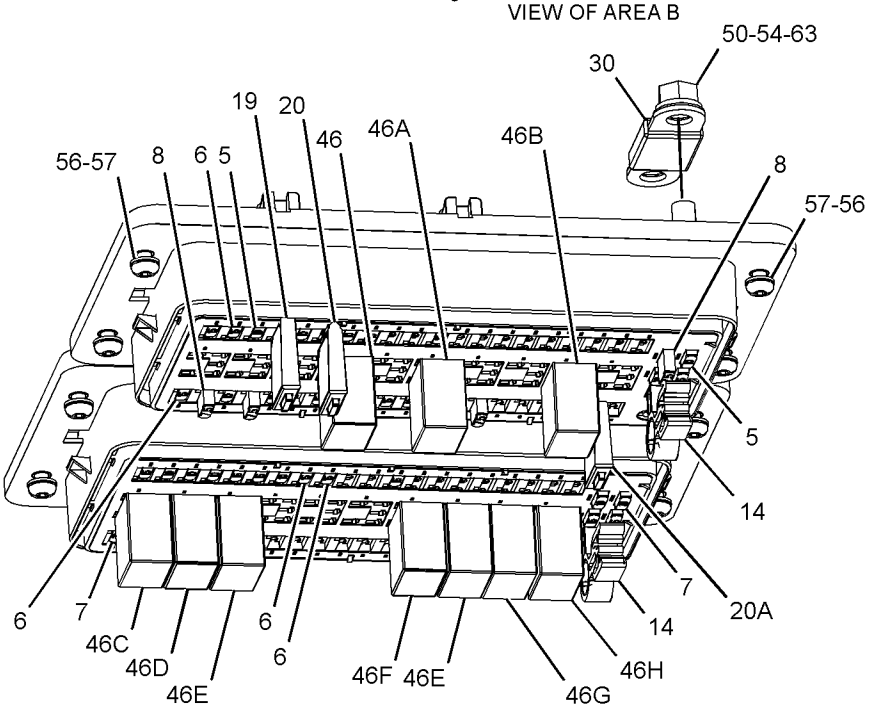

VIEW OF AREA D
(PARTS REMOVED FOR CLARITY)

90°

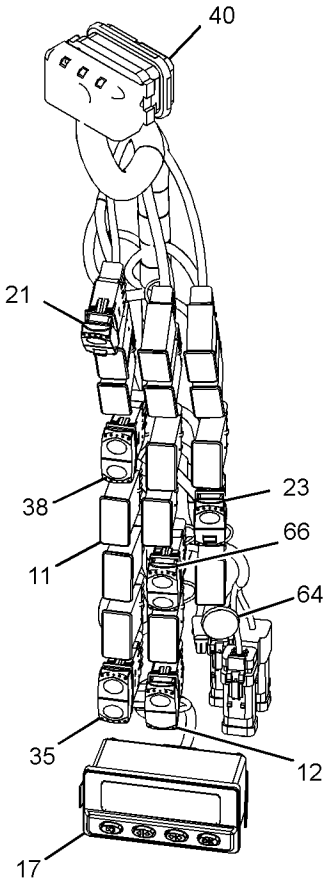

VIEW OF AREA C
(PARTS REMOVED FOR CLARITY)

GRAPHIC #2 <END> g06246801

252-8000 WIRING GP-CAMERA—WORK AREA VISUAL SYSTEM

S/N: B551-UP

PART OF 391-4396 CAMERA AR

SMCS-1408, 7348 **i04002850**

NOTE	REF NO	GRAPHIC REF	PART NUMBER	QTY	PART NAME 1 2 3 4 5 6 (PRODUCT LEVEL)	SEE PAGE
	1	1	**268-8080**	1	MOUNTING AS	
M		1	**6V-9632**	4	NUT-WELD (M6X1-THD)	
		1	**160-2169**	4	SPACER (7X11X8.4-MM THK)	
	2	1	**268-8082**	1	COVER	
J	3	1	**347-1668**	1	CAMERA AS (115-DEG, COLOR) (REAR VIEW)	
	4	1	**251-8248**	1	CABLE AS-COMMUNICATION	
	5	1	**261-3223**	1	CABLE AS-COMMUNICATION	
M	6	1	**5C-2890**	2	NUT (M6X1-THD)	
	7	1	**5P-8525**	2	GROMMET	
	8	1	**7K-1181**	18	STRAP-CABLE	
M	9	1	**8T-4138**	8	BOLT (M6X1X20-MM)	
M	10	1	**8T-4970**	2	BOLT (M6X1X14-MM)	
	11	1	**9X-2026**	2	WASHER (6.5X17X1-MM THK)	
	12	1	**9X-8256**	8	WASHER (6.6X12X2-MM THK)	
					AVAILABLE REPAIR KIT(S):	
J			**251-4162**	1	KIT-BRACKET (CAMERA)	
					(INCLUDES BRACKET, BOLTS, LOCKNUTS, BOLT-SOCKETS, GASKET, & ALLENKEY)	

J - KIT MARKED J SERVICE(S) PART MARKED J
M - METRIC PART

252-8000 **WIRING GP-CAMERA (**contd.**)** **i04002850**

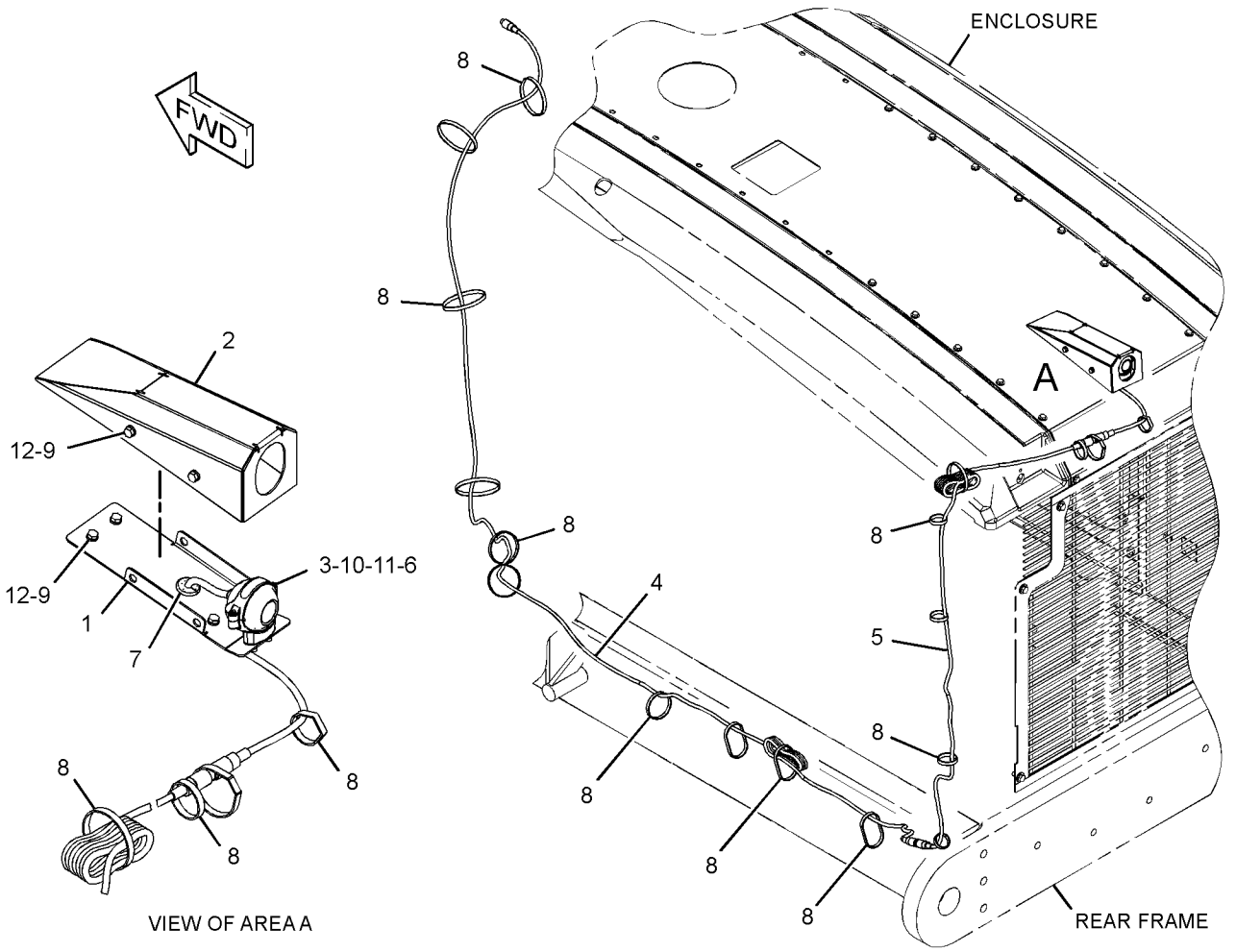

GRAPHIC #1 <END> g01306652

329-6117 WIRING GP-ELECTRONIC CONTROL–HYDRAULIC IMPLEMENT

S/N: B551-UP

PART OF 365-3354, 365-3355, 365-3368, 365-3369, 365-3370, 365-3371, 365-5541, 438-5425, 438-5426 CONTROL AR-HYDRAULIC

SMCS-1408, 1900

i03915794

NOTE	REF NO	GRAPHIC REF	PART NUMBER	QTY	PART NAME 1 2 3 4 5 6 (PRODUCT LEVEL)	SEE PAGE
	1	1	**6I-1418**	4	SPACER (8.2X12.7X28.7-MM THK)	
	2	1	**8T-9655**	8	MOUNT-ISOLATION	
R	3	1	**304-5687**	1	CONTROL GP-UNPROGRAMMED (IMPLEMENT 3)	
	4	1	**326-4208**	1	HARNESS AS-CONTROL	
		1	**102-8805**	1	KIT-RECEPTACLE (6-PIN)	
					(INCLUDES RECEPTACLE AS & WEDGE)	
		1	**3S-2093**	4	STRAP-CABLE	
		1	**8T-8729**	9	PIN-CONNECTOR (16-GA TO 20-GA)	
		1	**8T-8737**	114	PLUG-SEAL	
		1	**9X-3401**	1	PIN-CONNECTOR (16-GA TO 18-GA)	
E		1	**119-3662**		TUBE-HEAT SHRINK (10.85-MM DIA) (13-CM)	
E		1	**125-7874**		TUBE-HEAT SHRINK (5.72-MM DIA) (5-CM)	
E		1	**125-7875**		TUBE-HEAT SHRINK (7.44-MM DIA) (10-CM)	
		1	**9X-3402**	28	SOCKET-CONNECTOR (16-GA TO 18-GA)	
					–OR–	
		1	**126-1768**	28	SOCKET-CONNECTOR (14-GA TO 16-GA)	
		1	**126-1774**	2	COVER-CONNECTOR	
		1	**2L-8079**	1	TERMINAL-RING (14-GA TO 16-GA, 3/8-IN SCREW)	
		1	**9X-3401**	6	PIN-CONNECTOR (16-GA TO 18-GA)	
					–OR–	
		1	**126-1767**	6	PIN-CONNECTOR (14-GA TO 16-GA)	
		1	**147-1445**	1	PLUG AS-CONNECTOR (70-PIN)	
		1	**159-9322**	1	SEAL-O-RING	
		1	**147-1446**	1	PLUG AS-CONNECTOR (70-PIN)	
		1	**159-9322**	1	SEAL-O-RING	
		1	**184-7036**	1	RECEPTACLE AS-CONNECTOR (12-PIN)	
	5	1	**5P-4116**	4	WASHER-HARD (8.8X20.5X2-MM THK)	
M	6	1	**7X-0818**	4	BOLT (M8X1.25X45-MM)	
	7	1	**8T-4224**	1	WASHER-HARD (8.8X16X2-MM THK)	

E - ORDER BY THE CENTIMETER
M - METRIC PART
R - REMANUFACTURED PART MAY BE AVAILABLE

329-6117 **WIRING GP-ELECTRONIC CONTROL (**contd.**)** **i03915794**

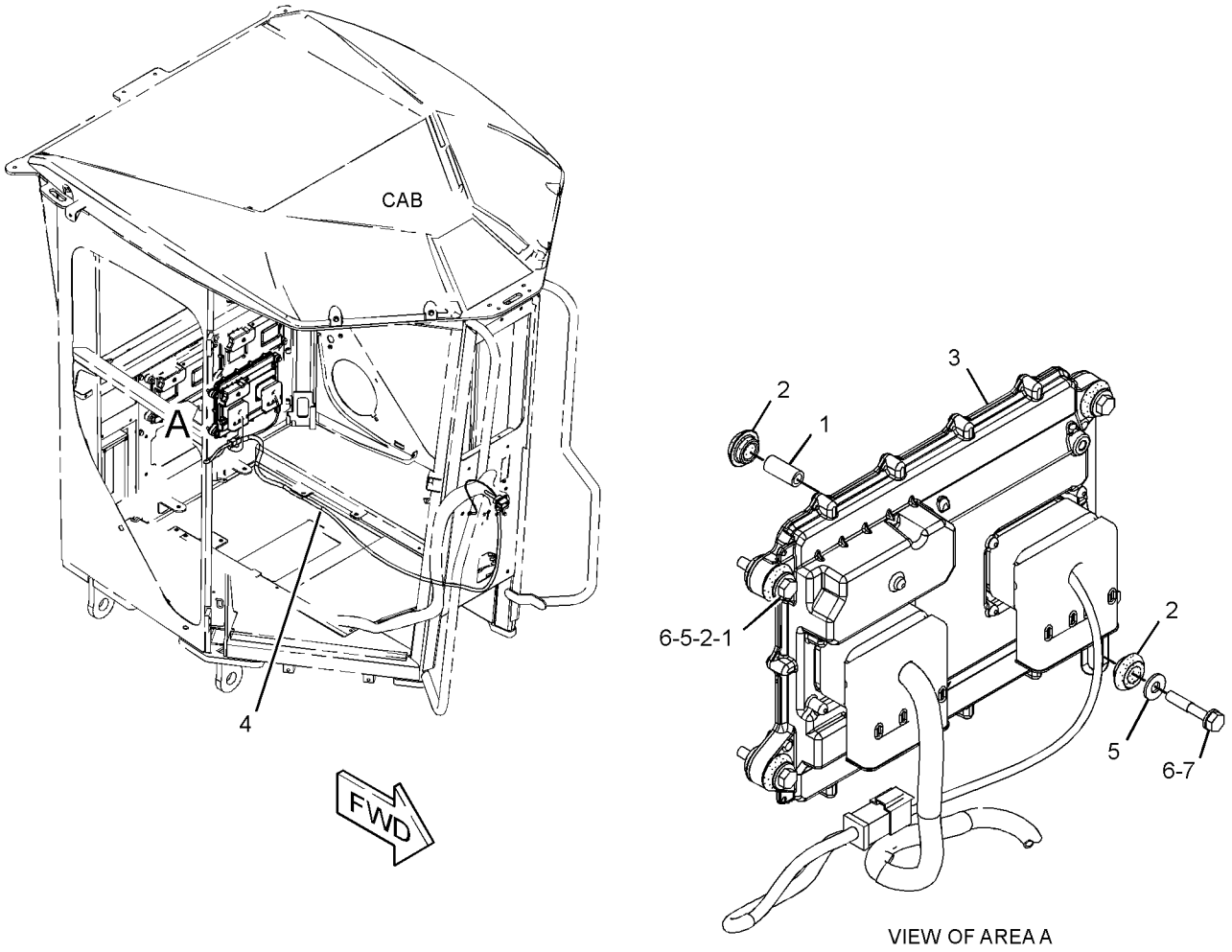

GRAPHIC #1 <END> g02155554

424-7735 WIRING GP-ELECTRONIC CONTROL

S/N: TX71-UP

PART OF 506-2265 ENGINE AR-COMPLETE

SMCS-1408, 1900 **i05195516**

NOTE	REF NO	GRAPHIC REF	PART NUMBER	QTY	PART NAME 1 2 3 4 5 6 (PRODUCT LEVEL)	SEE PAGE
	1	1	**3S-2093**	13	STRAP-CABLE	
	2	1	**4P-5918**	1	CLIP	
	3	1	**206-1345**	9	STRAP-CABLE	
	4	1	**215-2315**	1	HARNESS AS-HEATER	
		1	**135-2543**	1	BOOT (RED)	
		1	**5P-3454**	1	TERMINAL-RING (4-GA, 5/16-IN SCREW)	
		1	**9G-4344**	1	TERMINAL-RING (4-GA, 1/2-IN SCREW)	
Y	5	1	**222-5917**	1	HARNESS AS-ENGINE (FUEL INJECTION)	182
Y	6	1	**322-2733**	1	HARNESS AS-ENGINE (SENSORS)	183
	7	1	**134-3987**	3	CLIP (LOOP)	
	8	1	**303-5952**	1	STRAP-CABLE	
M	9	1	**5C-7261**	3	NUT (M8X1.25-THD)	
	10	1	**8T-4224**	2	WASHER-HARD (8.8X16X2-MM THK)	

M - METRIC PART
Y - SEPARATE ILLUSTRATION

424-7735 **WIRING GP-ELECTRONIC CONTROL (**contd.**)** **i05195516**

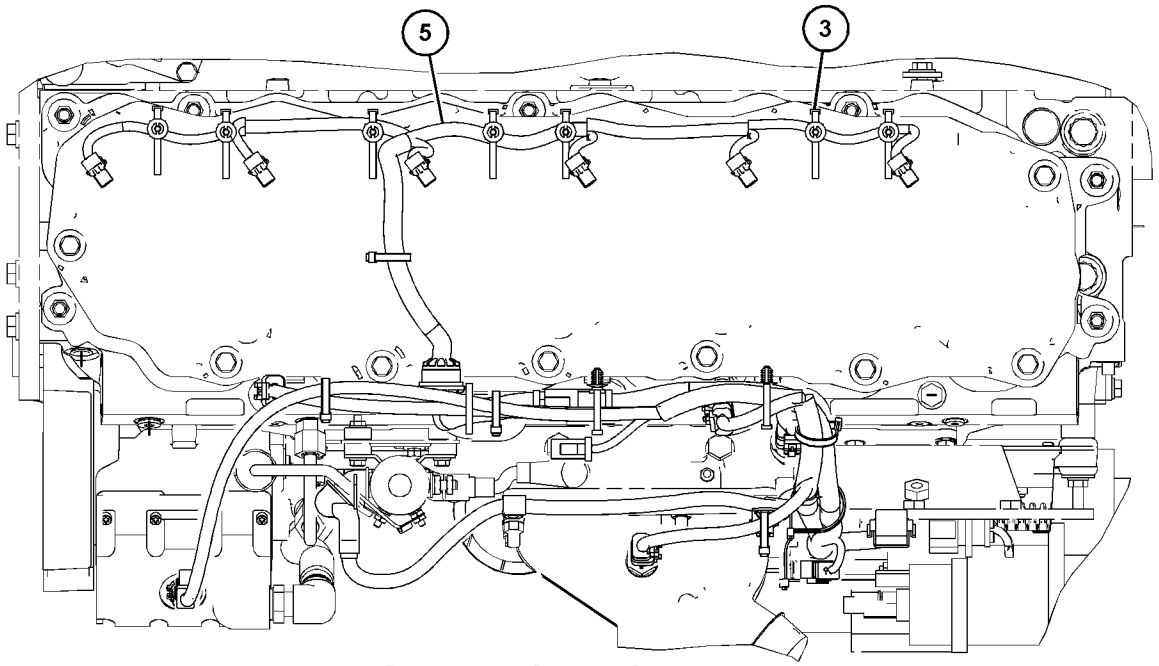

TOP VIEW OF ENGINE

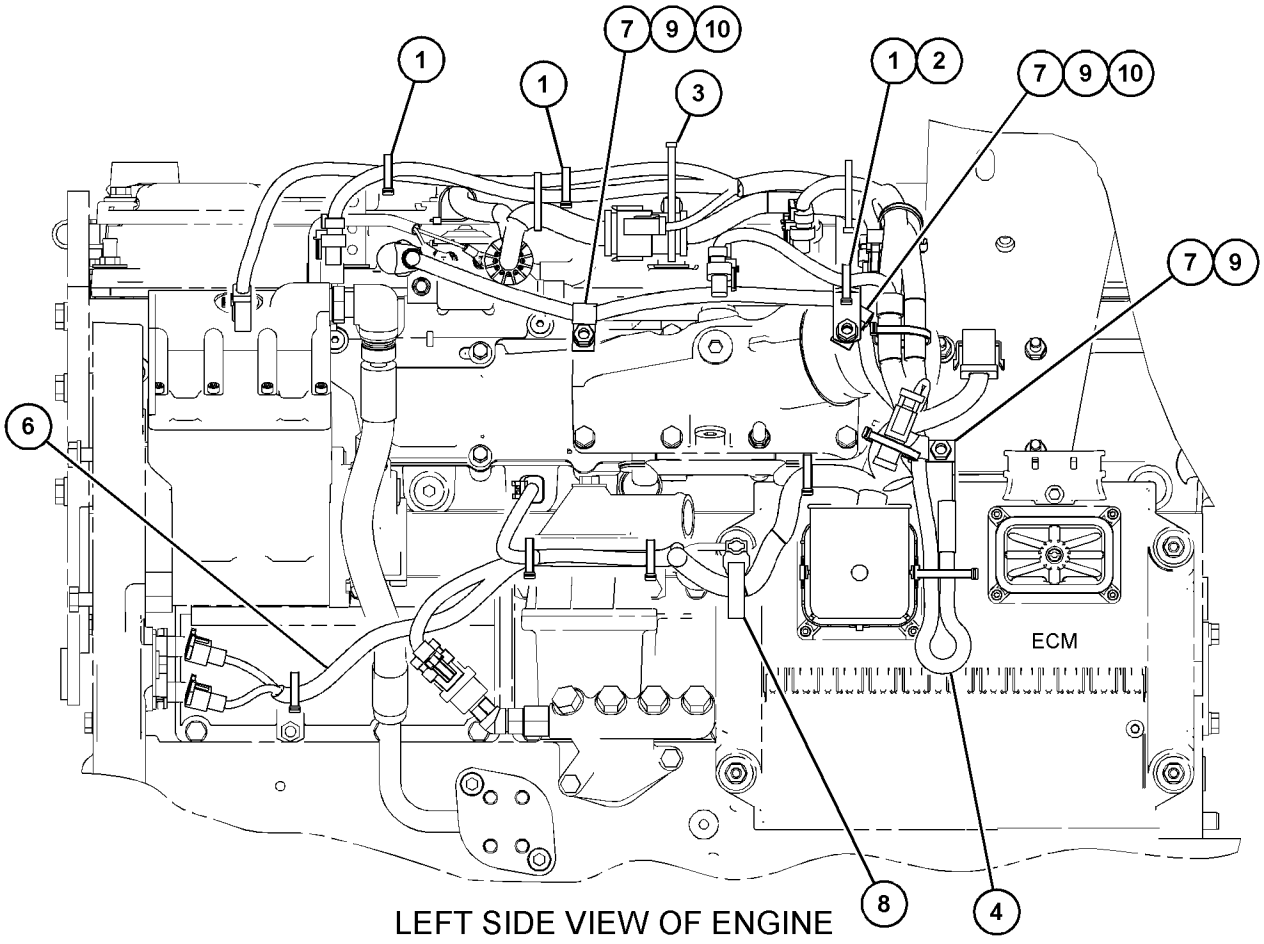

LEFT SIDE VIEW OF ENGINE

GRAPHIC #1 <END> g03464196

335-9433 WIRING GP-FAN–COLD WEATHER

S/N: B551-UP
BYPASS
PART OF 333-6001 COLD WEATHER AR

SMCS-1408 **i07829084**

NOTE	REF NO	GRAPHIC REF	PART NUMBER	QTY	PART NAME 1 2 3 4 5 6 (PRODUCT LEVEL)	SEE PAGE
	1	1	**333-2758**	1	HARNESS AS-SENSOR (FAN BYPASS WARNING)	
		1	**155-2270**	1	KIT-CONNECTING PLUG (2-PIN)	
					(INCLUDES PLUG AS, WEDGE & INTERFACE SEAL)	
		1	**102-8802**	1	KIT-RECEPTACLE (2-PIN)	
					(INCLUDES RECEPTACLE AS & WEDGE)	
		1	**8T-8729**	2	PIN-CONNECTOR (16-GA TO 20-GA)	
		1	**8T-8730**	2	SOCKET-CONNECTOR (16-GA TO 18-GA)	
	2	1	**130-5300**	1	CLIP (TAB)	
	3	1	**4D-7794**	1	CLIP	
	4	1	**4P-7581**	1	CLIP (LADDER)	
	5	1	**4P-8134**	1	CLIP (LADDER)	
	6	1	**7K-1181**	17	STRAP-CABLE	
	7	1	**8T-4121**	2	WASHER-HARD (11X21X2.5-MM THK)	
M	8	1	**8T-4137**	2	BOLT (M10X1.5X20-MM)	
	9	1	**132-5789**	1	CLIP (LADDER)	

M - METRIC PART

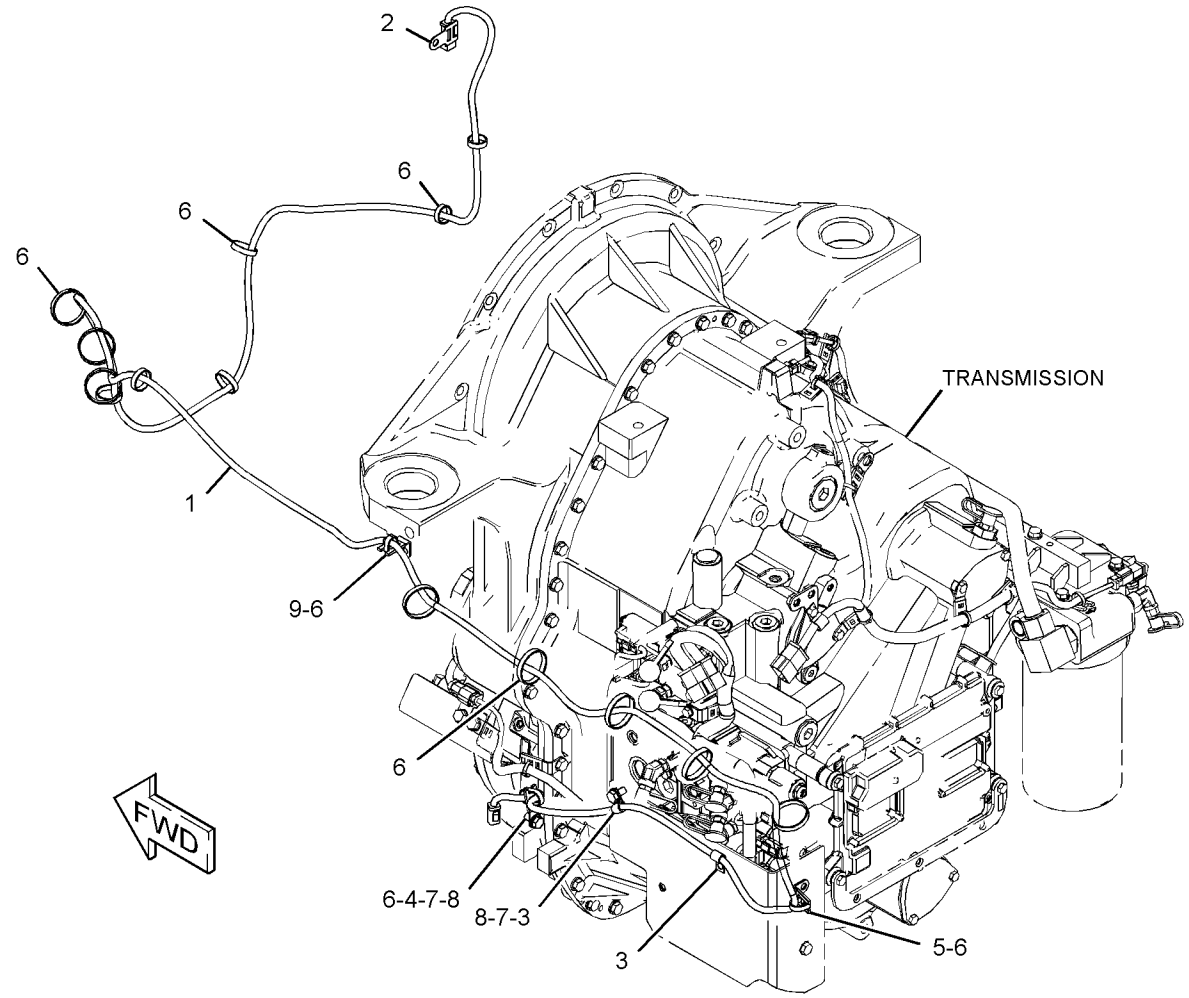

GRAPHIC #1 <END> g02946316

471-9240 WIRING GP-FRONT

S/N: B551-UP

PART OF 364-1989 OPTION AR-MACHINE

SMCS-1408 **i07579943**

NOTE	REF NO	GRAPHIC REF	PART NUMBER	QTY	PART NAME 1 2 3 4 5 6 (PRODUCT LEVEL)	SEE PAGE
	1	2	**1F-7854**	1	SPACER (11.01X19.05X49.21-MM THK)	
	2	2	**3E-3636**	1	SWITCH AS-BALL	
		2	**8T-8729**	4	PIN-CONNECTOR (16-GA TO 20-GA)	
		2	**102-8804**	1	KIT-RECEPTACLE (4-PIN)	
					(INCLUDES RECEPTACLE AS & WEDGE)	
	3	2	**3S-2093**	2	STRAP-CABLE	
	4	1,2,3	**7K-1181**	56	STRAP-CABLE	
	5	3	**9C-5344**	1	SPACER (10.5X20X18-MM THK)	
	6	3	**132-1805**	1	STRAP AS-GROUND	
	7	2	**172-4211**	1	SPACER (10.5X22X50.8-MM THK)	
	8	1	**174-7875**	1	HORN AS (24-VOLT, HIGH TONE)	
Y	9	1	**191-6587**	1	SENSOR GP-TEMPERATURE (2-PIN) (HYDRAULIC, STEERING)	260
	10	1	**193-5576**	1	BRACKET AS	
	11	3	**283-5830**	1	BRACKET AS	
		3	**7T-1099**	1	LINK	
M		3	**8T-3490**	1	NUT-WELD (M10X1.5-THD)	
	12	1	**291-4826**	1	CHANNEL	
	13	1	**291-4827**	1	CHANNEL	
Y	14	2	**308-9323**	1	HARNESS AS-LIGHTING	185
	15	1	**319-5096**	1	BRACKET	
	16	2	**354-8415**	1	BRACKET AS	
	17	1	**356-3650**	1	CHANNEL AS	
M		1	**7X-0750**	1	BOSS-WELD (M10X1.5X55-MM)	
M		1	**8T-3490**	5	NUT-WELD (M10X1.5-THD)	
M		1	**8T-3851**	1	BOSS-WELD (M10X1.5X17.5-MM)	
	18	2	**380-3033**	1	BRACKET AS	
M		2	**8T-5413**	1	STUD-WELD (M10X1.5X25-MM)	
Y	19	2	**391-4440**	1	HARNESS AS-VALVE (STEERING)	192
CY	20	1	**555-8914**	1	HARNESS AS-FRONT (STEERING)	184
	21	1,2,3	**130-5300**	9	CLIP	
	22	1,2,3	**132-5789**	8	CLIP (LADDER)	
	23	1	**204-2281**	1	STRAP-CABLE	
	24	1	**204-8000**	1	MOUNTING-CABLE TIE	
	25	3	**352-3964**	1	CLIP (LADDER)	
	26	1,2	**3J-1907**	2	SEAL-O-RING	
	27	3	**4D-2886**	1	CLIP	
	28	1,2,3	**4P-7581**	11	CLIP (LADDER)	
	29	2	**4P-8134**	3	CLIP (LADDER)	
	30	3	**7D-7233**	1	CLIP (LOOP)	
B	31	2	**8F-1974**	10	SHIM (0.13-MM THK)	
	32	3	**8T-2920**	2	GROMMET (27-MM ID)	
	33	1,2,3	**8T-4121**	41	WASHER-HARD (11X21X2.5-MM THK)	
M	34	3	**8T-4133**	1	NUT (M10X1.5-THD)	
M	35	1,2,3	**8T-4136**	5	BOLT (M10X1.5X25-MM)	
M	36	1,2,3	**8T-4137**	30	BOLT (M10X1.5X20-MM)	
M	37	3	**8T-4186**	1	BOLT (M10X1.5X40-MM)	
M	38	2,3	**8T-4195**	2	BOLT (M10X1.5X30-MM)	

471-9240 **WIRING GP-FRONT (**contd.**)** **i07579943**

NOTE	REF NO	GRAPHIC REF	PART NUMBER	QTY	PART NAME 1 2 3 4 5 6 (PRODUCT LEVEL)	SEE PAGE
M	39	2	**8T-5005**	2	BOLT (M10X1.5X70-MM)	
	40	2	**9X-8250**	1	CLIP (LOOP)	

B - USE AS REQUIRED
C - CHANGE FROM PREVIOUS TYPE
M - METRIC PART
Y - SEPARATE ILLUSTRATION

471-9240 **WIRING GP-FRONT (**contd.**)** **i07579943**

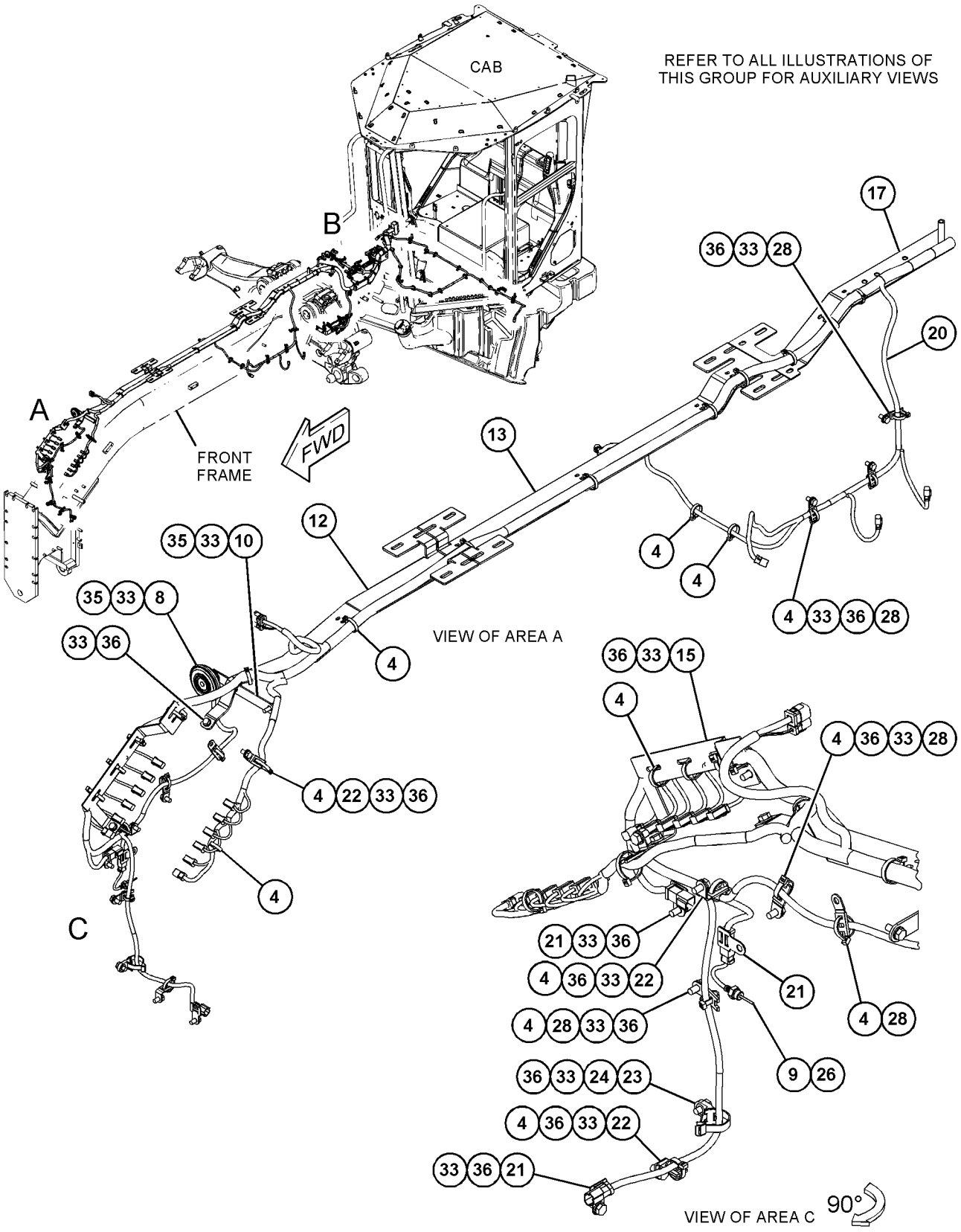

GRAPHIC #1 g06197482

471-9240 **WIRING GP-FRONT (**contd.**)** **i07579943**

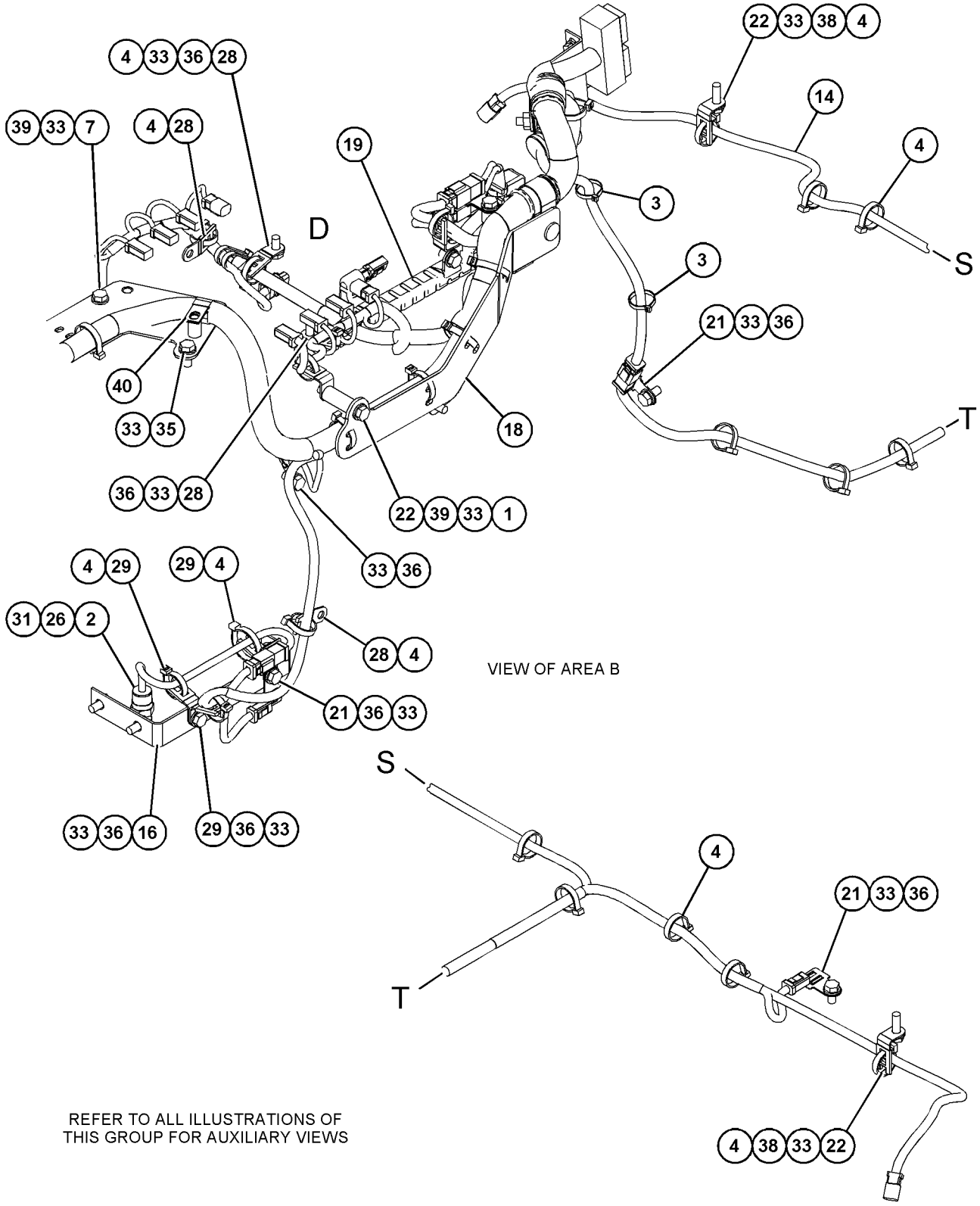

REFER TO ALL ILLUSTRATIONS OF
THIS GROUP FOR AUXILIARY VIEWS

GRAPHIC #2 g06056066

471-9240 **WIRING GP-FRONT (**contd.**)** **i07579943**

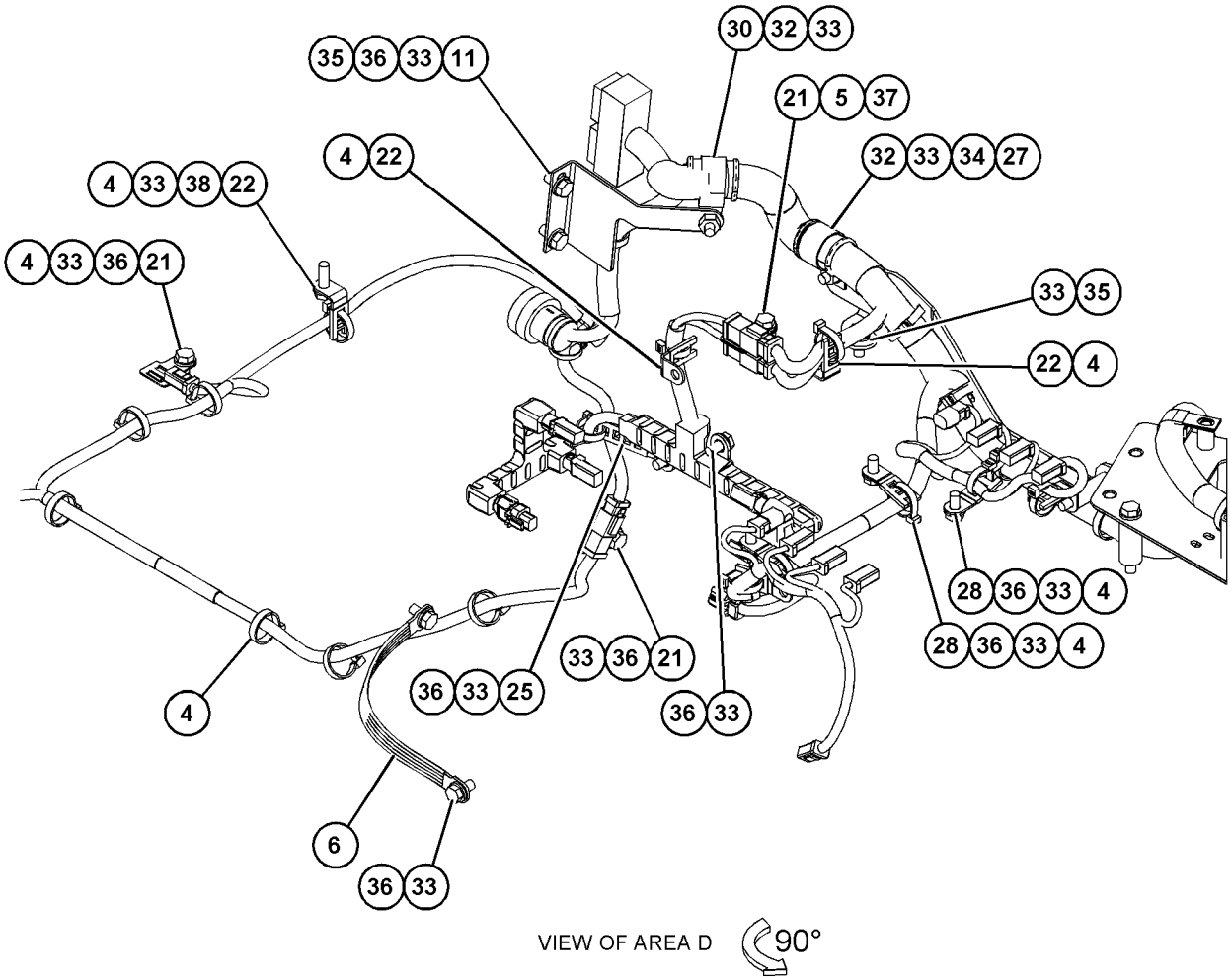

GRAPHIC #3 <END> g06056067

356-3647 WIRING GP-GRADE CONTROL–ACCUGRADE

S/N: B551-UP

PART OF 462-6392, 462-6393 GRADE CONTROL AR

SMCS-1408 **i07829077**

NOTE	REF NO	GRAPHIC REF	PART NUMBER	QTY	PART NAME 1 2 3 4 5 6 (PRODUCT LEVEL)	SEE PAGE
	1	2	**107-1716**	16	SCREW (4-1/2-40X0.63-IN)	
C	2	1,2	**7K-1181**	28	STRAP-CABLE	
	3	2	**9C-5344**	2	SPACER (10.5X20X18-MM THK)	
	4	2	**9G-7101**	1	SPACER (11X20X30-MM THK)	
C	5	2	**127-9323**	1	BRACKET AS	
M		2	**8T-3490**	1	NUT-WELD (M10X1.5-THD)	
	6	2	**132-8487**	4	NUT-RING	
	7	2	**169-5414**	1	CLIP	
	8	2	**236-8826**	4	BOSS (1-1/8-18X0.708-IN)	
	9	2	**251-1133**	1	TUBE	
	10	1	**255-3482**	1	BRACKET	
Y	11	1	**308-9367**	1	HARNESS AS-SWITCH (ROTATION, INCLINATION)	191
	12	2	**308-9396**	2	BRACKET AS	
	13	2	**511-2430**	1	BRACKET AS (LH)	
		2	**7T-1099**	1	LINK	
M		2	**8T-3612**	2	NUT-WELD (M8X1.25-THD)	
	14	2	**511-2431**	1	BRACKET AS (RH)	
	15	1	**327-0560**	1	BRACKET (RH)	
	16	1	**327-0561**	1	BRACKET (LH)	
Y	17	1	**356-3649**	1	HARNESS AS-CHASSIS (GRADE CONTROL)	182
	18	2	**436-3254**	1	BRACKET	
C	19	2	**448-1893**	1	BRACKET AS	
CY	20	1	**448-1938**	1	HARNESS AS-SENSOR (INCLINATION)	189
CY	21	2	**474-5410**	1	HARNESS AS-SENSOR (ROTATION SENSOR)	190
C	22	2	**111-9251**	4	WASHER-HARD (20X35X1.6-MM THK)	
	23	1,2	**130-5300**	2	CLIP	
M	24	2	**131-3539**	4	SCREW-FLAT HEAD (M8X1.25X30-MM)	
	25	1	**174-9692**	4	SPACER (20.5X35X16-MM THK)	
	26	1	**1J-6762**	4	BOLT-PLOW (3/4-10X3-IN)	
	27	2	**1K-6870**	1	LOCKNUT (3/4-10-THD)	
	28	1	**223-3490**	1	CLIP	
	29	1	**2J-3506**	4	NUT-FULL (3/4-10-THD)	
CM	30	2	**344-5675**	1	NUT (M10X1.5-THD)	
C	31	2	**4P-7581**	4	CLIP (LADDER)	
C	32	1,2	**4S-1962**	3	CLIP (LOOP)	
C	33	2	**5K-3294**	1	CLIP	
	34	2	**5P-4135**	1	BOLT (3/4-10X8-IN)	
	35	2	**6D-4246**	2	CLIP (LOOP)	
	36	1	**6V-1228**	1	CLIP	
	37	2	**7D-1649**	8	WASHER-HARD (13.5X32X5-MM THK)	
	38	1	**8C-6857**	4	BOLT (3/4-10X2.75-IN)	
C	39	2	**8M-2770**	5	CLIP (LOOP)	
	40	2	**8M-2773**	5	CLIP (LOOP)	
C	41	1,2	**8T-4121**	20	WASHER-HARD (11X21X2.5-MM THK)	
	42	1	**8T-4123**	4	WASHER (22X35X3.5-MM THK)	
CM	43	2	**8T-4136**	4	BOLT (M10X1.5X25-MM)	
CM	44	1,2	**8T-4137**	18	BOLT (M10X1.5X20-MM)	
M	45	2	**8T-4192**	1	BOLT (M12X1.75X25-MM)	

356-3647 **WIRING GP-GRADE CONTROL (**contd.**)** **i07829077**

NOTE	REF NO	GRAPHIC REF	PART NUMBER	QTY	PART NAME 1 2 3 4 5 6 (PRODUCT LEVEL)	SEE PAGE
M	46	2	**8T-0558**	4	BOLT-SELF-LOCKING (M12X1.75X50-MM)	
M	47	2	**8T-4196**	2	BOLT (M10X1.5X35-MM)	
C	48	2	**8T-4223**	2	WASHER-HARD (13.5X25.5X3-MM THK)	
CM	49	2	**8T-4244**	1	NUT (M12X1.75-THD)	
M	50	2	**8T-6466**	1	BOLT (M10X1.5X60-MM)	
	51	2	**7X-7729**	7	WASHER (11X25X3-MM THK)	

C - CHANGE FROM PREVIOUS TYPE
M - METRIC PART
Y - SEPARATE ILLUSTRATION

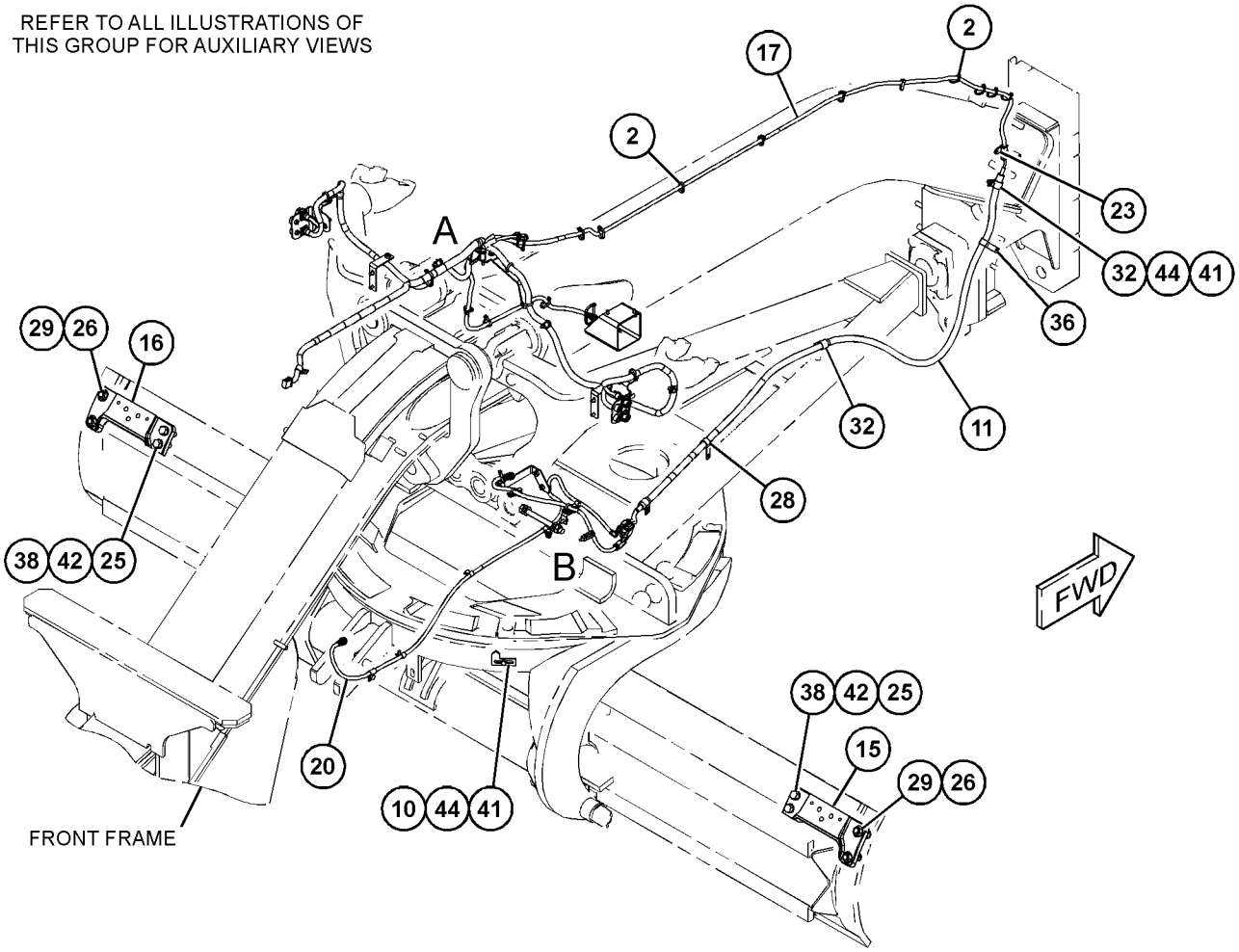

GRAPHIC #1 g06099082

356-3647 **WIRING GP-GRADE CONTROL (**contd.**)** **i07829077**

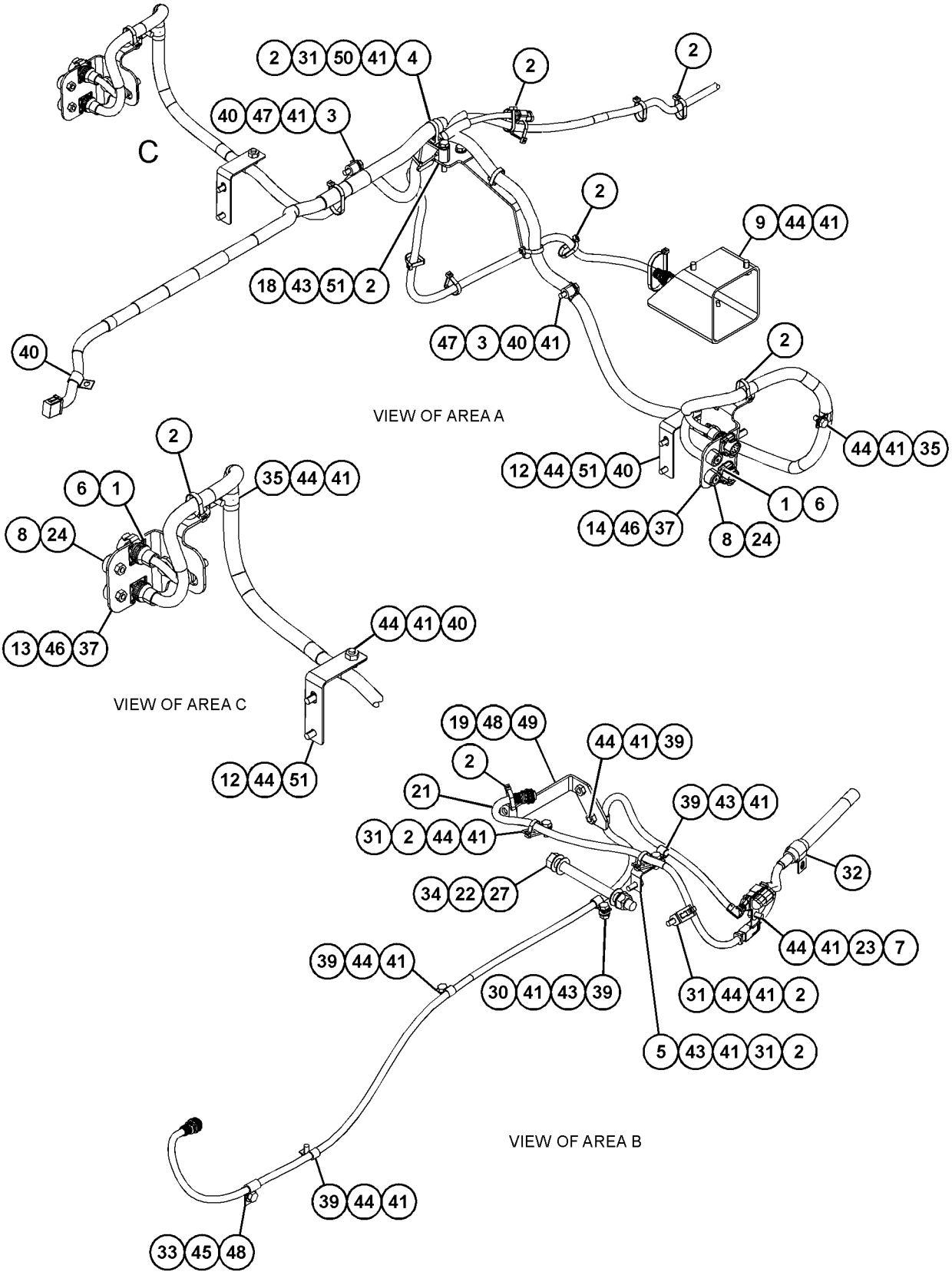

GRAPHIC #2 <END> g06212364

275-0596 WIRING GP-HEATER

S/N: TX71-UP

PART OF 506-2265 ENGINE AR-COMPLETE

SMCS-1090, 1408 **i05882578**

NOTE	REF NO	GRAPHIC REF	PART NUMBER	QTY	PART NAME 1 2 3 4 5 6 (PRODUCT LEVEL)	SEE PAGE
	1	1	**3S-2093**	1	STRAP-CABLE (PLASTIC)	
	2	1	**229-8851**	1	CABLE AS	
E		1	**6V-9023**		TUBE-HEAT SHRINK (12.7-MM DIA) (3-CM)	
		1	**030-1712**	1	TERMINAL-RING (2-GA, 1/4-IN SCREW)	
		1	**135-2543**	1	BOOT (RED)	
	3	1	**283-1224**	1	BRACKET AS	
M	4	1	**208-9277**	2	BOLT-FLANGE HEAD (M6X1X20-MM)	
M	5	1	**208-9282**	1	BOLT (M8X1.25X25-MM)	
M	6	1	**208-9283**	2	BOLT-FLANGE HEAD (M8X1.25X30-MM)	
Y	7	1	**398-0940**	1	SWITCH GP-MAGNETIC (24-VOLT)	274
M	8	1	**6V-5192**	1	BOLT-SOCKET HEAD (M8X1.25X30-MM)	
	9	1	**9M-1974**	1	WASHER-HARD (8.8X16X2-MM THK)	

E - ORDER BY THE CENTIMETER
M - METRIC PART
Y - SEPARATE ILLUSTRATION

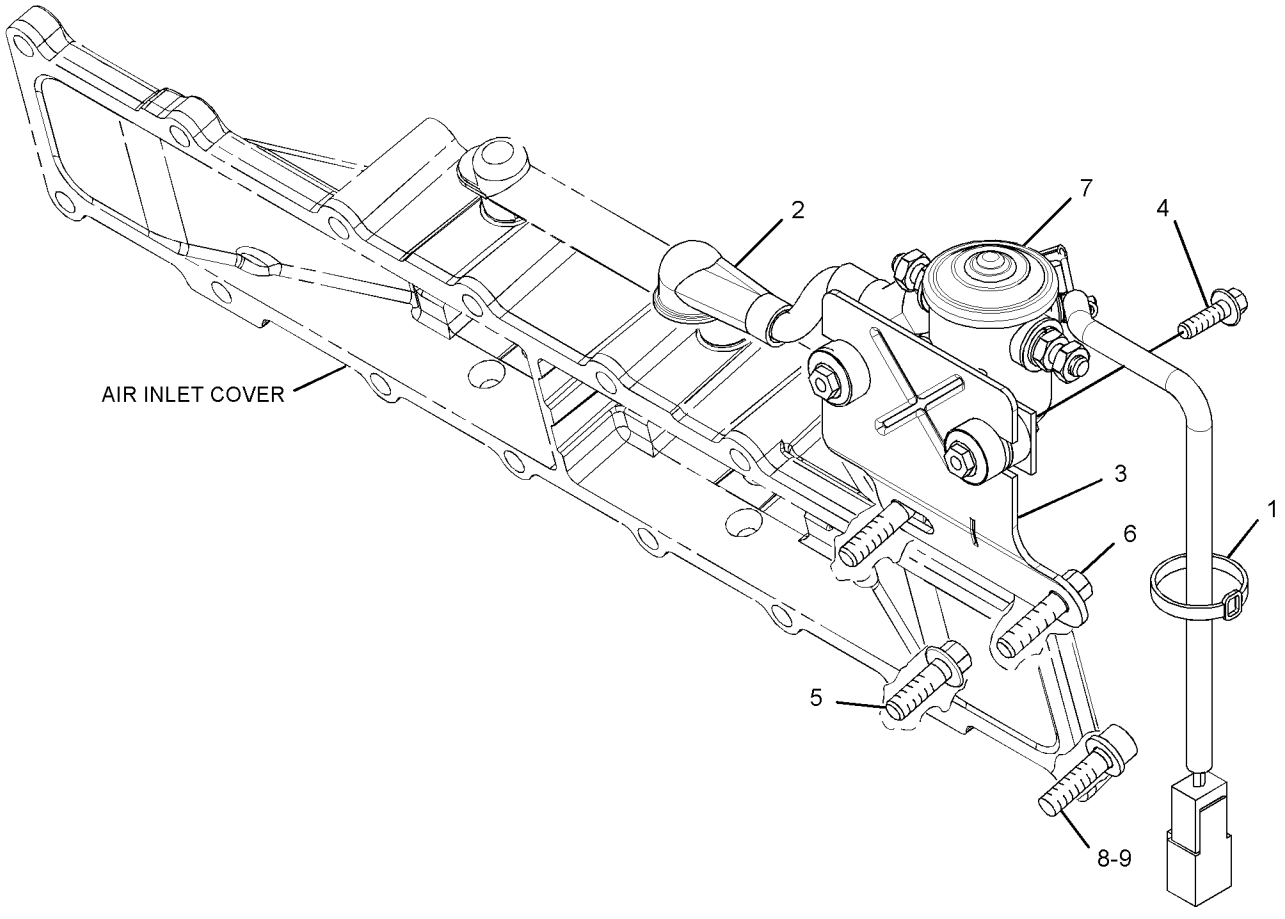

GRAPHIC #1 <END> g01525200

253-1967 WIRING GP-MONITOR—CD610 DISPLAY

S/N: B551-UP

SMCS-1408 **i02788460**

NOTE	REF NO	GRAPHIC REF	PART NUMBER	QTY	PART NAME 1 2 3 4 5 6 (PRODUCT LEVEL)	SEE PAGE
	1	1	**095-0817**	2	LOCKWASHER	
	2	1	**167-8712**	1	ALARM (CAES)	
	3	1	**167-8713**	1	BAFFLE AS	
	4	1	**167-8714**	1	WIRE AS	
	5	1	**248-2284**	2	KNOB-CONTROL	
	6	1	**251-0077**	1	BRACKET AS	
	7	1	**251-9571**	1	BRACKET AS	
					(EACH BRACKET AS INCLUDES)	
M		1	**8T-3490**	1	NUT-WELD (M10X1.5-THD)	
	8	1	**295-8963**	1	PLATE	
	9	1	**296-4922**	1	HARNESS AS-MONITOR	
		1	**102-8801**	1	KIT-RECEPTACLE (12-PIN)	
					(INCLUDES RECEPTACLE AS & WEDGE)	
		1	**9X-6772**	2	STRAP-CABLE	
		1	**126-1774**	1	COVER-CONNECTOR	
		1	**147-1444**	1	PLUG AS-CONNECTOR (70-PIN)	
		1	**155-2255**	1	KIT-CONNECTING PLUG (12-PIN)	
		1	**155-2270**	1	KIT-CONNECTING PLUG (2-PIN)	
					(EACH INCLUDES PLUG AS, WEDGE, & INTERFACE SEAL)	
	10	1	**130-5300**	3	CLIP	
	11	1	**4L-7125**	4	LOCKWASHER	
	12	1	**8T-4121**	2	WASHER-HARD (11X21X2.5-MM THK)	
M	13	1	**8T-4171**	4	BOLT (M6X1X12-MM)	
	14	1	**8T-4205**	4	WASHER-HARD (7.2X14.5X2-MM THK)	
D	15	1	**5P-7657**		SEAL (0.2-M)	

D - ORDER BY THE METER
M - METRIC PART

253-1967 **WIRING GP-MONITOR (**contd.**)** **i02788460**

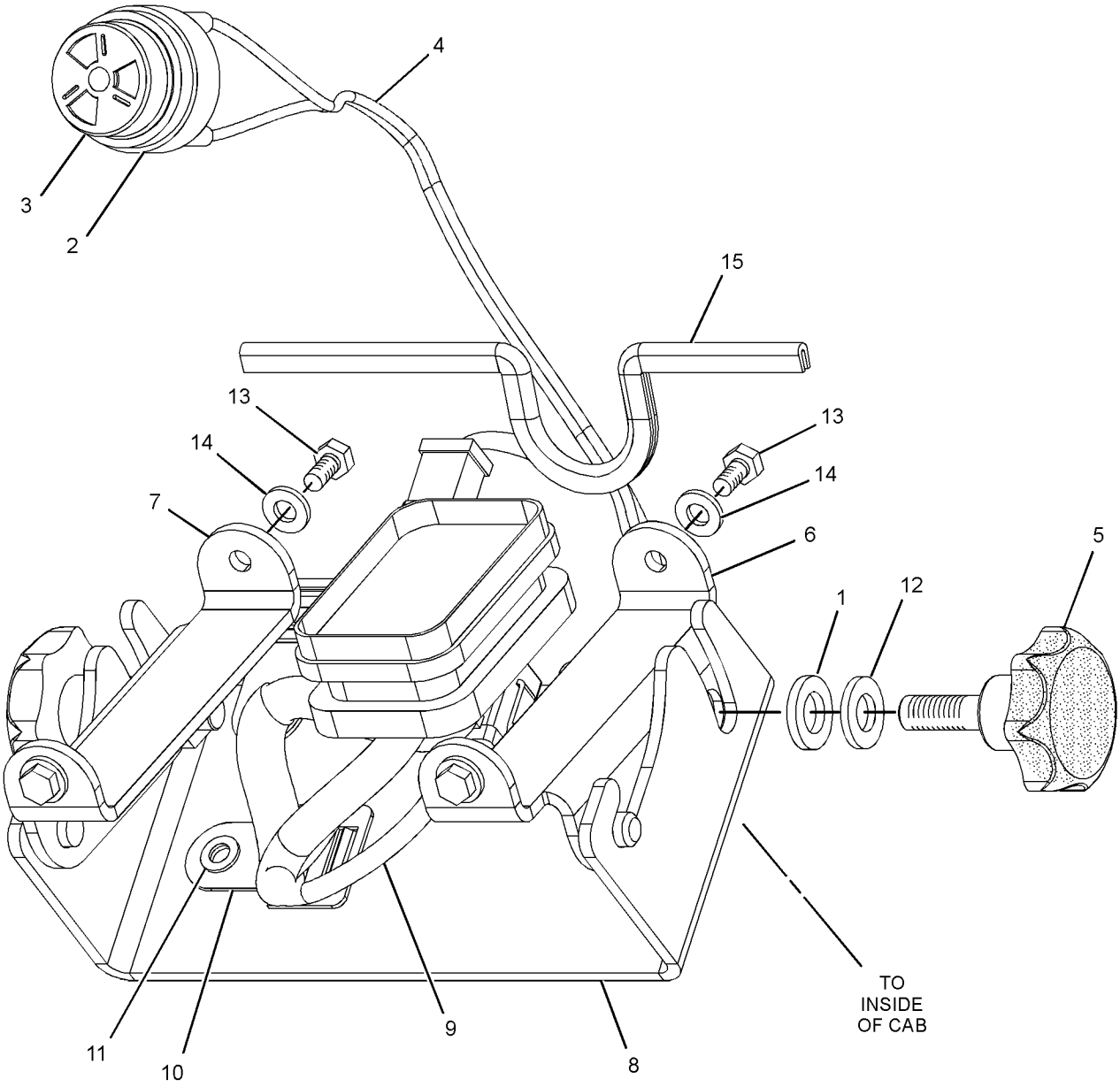

GRAPHIC #1 <END> g01332375

396-9719 WIRING GP-POWER RECEPTACLE

S/N: B551-UP

PART OF 577-1377 COMMON AR

SMCS-1408, 1420, 1463 **i07278918**

NOTE	REF NO	GRAPHIC REF	PART NUMBER	QTY	PART NAME 1 2 3 4 5 6 (PRODUCT LEVEL)	SEE PAGE
	1	1	**7K-1181**	2	STRAP-CABLE	
	2	1	**8V-9708**	1	SPACER (14.3X25.4X35-MM THK)	
	3	1	**144-8344**	2	SPACER (11X19X20-MM THK)	
	4	1	**160-0564**	2	BRACKET AS	
	5	1	**170-9328**	1	STRAP AS-GROUND	
Y	6	1	*280-8969*	1	PANEL GP-CIRCUIT BREAKER	245
	7	1	**287-6436**	1	BRACKET	
	8	1	**287-8828**	1	PLATE	
	9	1	**291-1884**	1	CABLE AS	
		1	**1S-7252**	1	TERMINAL-CABLE (00-GA, 3/8-IN SCREW)	
E		1	**159-8050**		CABLE (00-GA, BLACK) (98-CM)	
	10	1	**341-6021**	1	CABLE AS	
		1	**8T-8827**	1	BOOT (RED)	
E		1	**159-8047**		CABLE-ELECTRICAL (0-GA, RED) (244-CM)	
		1	**317-3356**	2	TERMINAL-RING	
		1	**328-8425**	1	COVER-TERMINAL (RED)	
	11	1	**140-0860**	1	STRAP AS-GROUND	
M	12	1	**160-0018**	2	SCREW-FLAT HEAD (M12X1.75X45-MM)	
	13	1	**174-5907**	6	CLIP (LOOP)	
	14	1	**2V-1771**	4	GROMMET	
	15	1	**3S-8664**	1	CLIP (LOOP)	
	16	1	**4D-1432**	1	SPACER (12.52X17.14X45.72-MM THK)	
	17	1	**8D-9671**	1	CLIP	
	18	1	**8S-0948**	2	CLIP	
	19	1	**8T-4121**	13	WASHER-HARD (11X21X2.5-MM THK)	
M	20	1	**8T-4136**	4	BOLT (M10X1.5X25-MM)	
M	21	1	**8T-4137**	8	BOLT (M10X1.5X20-MM)	
M	22	1	**8T-4139**	2	BOLT (M12X1.75X30-MM)	
M	23	1	**8T-4179**	1	BOLT (M12X1.75X20-MM)	
M	24	1	**8T-4182**	1	BOLT (M10X1.5X45-MM)	
M	25	1	**8T-4191**	1	BOLT (M10X1.5X16-MM)	
M	26	1	**8T-4196**	1	BOLT (M10X1.5X35-MM)	
	27	1	**8T-4223**	4	WASHER-HARD (13.5X25.5X3-MM THK)	
M	28	1	**8T-4956**	1	BOLT (M12X1.75X35-MM)	
M	29	1	**8T-5005**	1	BOLT (M10X1.5X70-MM)	
	30	1	**292-8741**	1	BRACKET AS	
	31	1	**133-6934**	1	SPACER (11X20X25-MM THK)	
M	32	1	**8T-4186**	1	BOLT (M10X1.5X40-MM)	
	33	1	**7X-7729**	4	WASHER (11X25X3-MM THK)	

E - ORDER BY THE CENTIMETER
M - METRIC PART
Y - SEPARATE ILLUSTRATION

396-9719 **WIRING GP-POWER RECEPTACLE (**contd.**)** **i07278918**

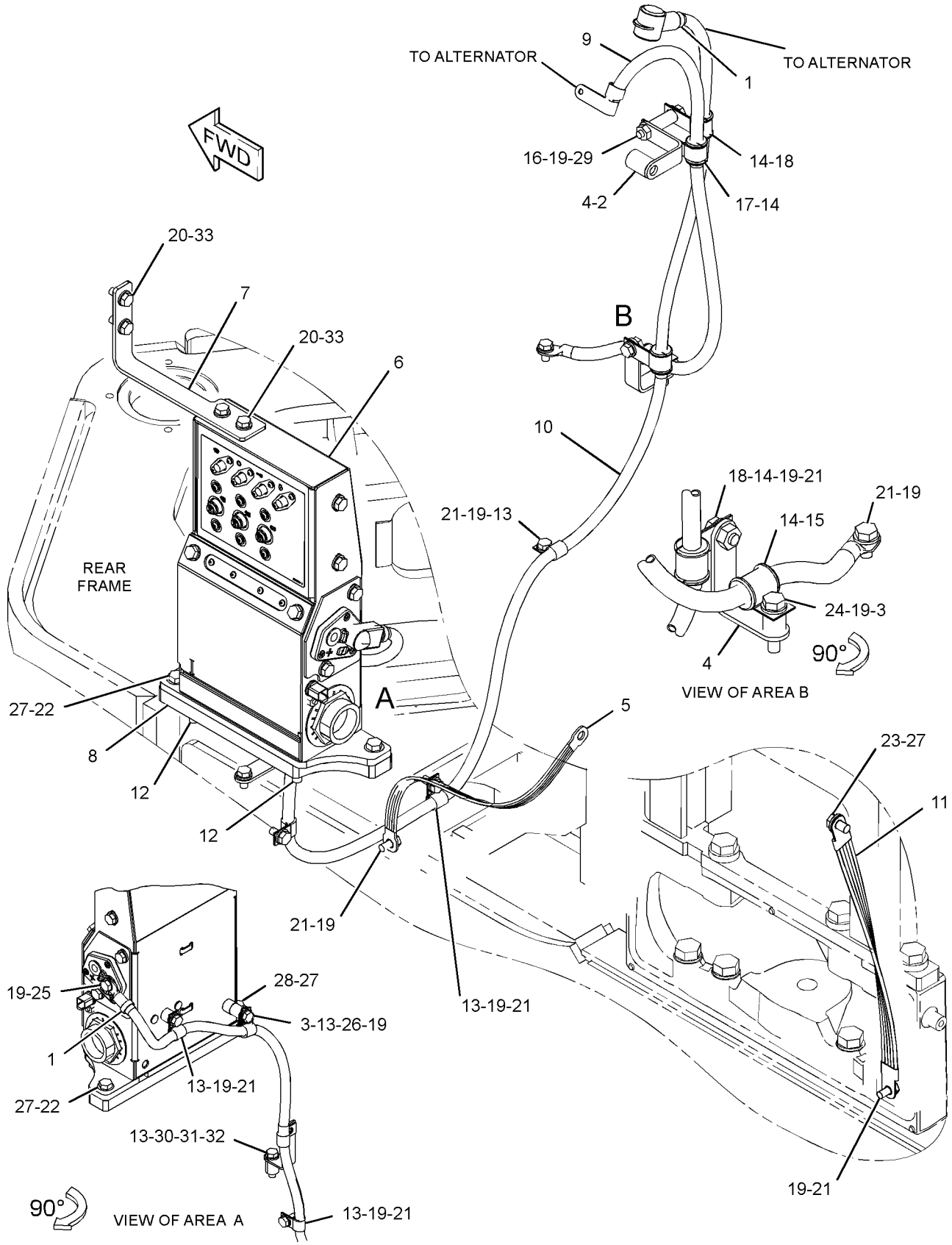

GRAPHIC #1 <END> g06276267

264-7522 WIRING GP-REAR—MAIN

S/N: B551-UP

PART OF 577-1377 COMMON AR

SMCS-1408 **i07635845**

NOTE	REF NO	GRAPHIC REF	PART NUMBER	QTY	PART NAME 1 2 3 4 5 6 (PRODUCT LEVEL)	SEE PAGE
	1	2	**3E-5169**	1	GUARD-SWITCH	
	2	2	**3E-5239**	1	RELAY AS (24-VOLT) (FUEL PUMP RELAY)	
	2A	2	**3E-5239**	1	RELAY AS (24-VOLT) (AIR CONDITIONER)	
	2B	2	**3E-5239**	1	RELAY AS (24-VOLT) (BACKUP ALARM)	
	2C	3	**3E-5239**	1	RELAY AS (24-VOLT) (SECONDARY STEERING)	
	3	2,3	**3S-2093**	3	STRAP-CABLE	
C	4	1,2,3	**7K-1181**	40	STRAP-CABLE	
C	5	2,3	**116-0118**	2	CLIP	
	6	2,3	**189-3158**	2	SUPPRESSOR-ARC	
	7	2	**204-2281**	8	STRAP-CABLE	
	8	3	**240-7193**	1	RESISTOR AS (500-OHM, 2-WATT)	
		3	**102-8802**	1	KIT-RECEPTACLE (2-PIN)	
					(INCLUDES RECEPTACLE AS & WEDGE)	
		3	**9X-3401**	2	PIN-CONNECTOR (16-GA TO 18-GA)	
	9	3	**251-3265**	1	LINK AS	
		3	**6V-8187**	1	NUT (1/4-28-THD)	
		3	**8S-7048**	1	ROD END	
		3	**9L-3334**	1	NUT-PLATED (1/4-28-THD, LH)	
		3	**036-7232**	1	ROD END	
	10	3	**256-8730**	1	PLATE AS	
	11	3	**258-8949**	2	SPACER (7.5X12X56-MM THK)	
	12	2	**269-4156**	1	BRACKET	
	13	3	**274-6717**	1	SENSOR-PRESSURE (TURBOCHARGER INLET)	
	14	3	**279-9658**	1	LEVER	
	15	2	**288-5507**	1	PLATE AS	
	16	2	**289-9520**	1	BRACKET AS	
	17	2	**291-2162**	1	BRACKET AS	
	18	2	**292-0970**	1	HARNESS AS-PUMP (FUEL)	
		2	**3E-3383**	1	WEDGE-RECEPTACLE LOCK (6-PIN)	
		2	**102-8802**	1	KIT-RECEPTACLE (2-PIN)	
		2	**102-8805**	1	KIT-RECEPTACLE (6-PIN)	
					(EACH RECEPTACLE KIT INCLUDES RECEPTACLE AS & WEDGE)	
		2	**8T-8729**	3	PIN-CONNECTOR (16-GA TO 20-GA)	
		2	**8T-8730**	2	SOCKET-CONNECTOR (16-GA TO 18-GA)	
		2	**8T-8737**	3	PLUG-SEAL	
		2	**9W-0844**	2	SOCKET-CONNECTOR (14-GA TO 16-GA)	
		2	**9W-0852**	2	PIN-CONNECTOR (14-GA TO 16-GA)	
		2	**9X-1054**	1	PLUG AS-CONNECTOR (4-PIN)	
		2	**9X-1056**	4	TERMINAL-RECEPTACLE (14-GA TO 16-GA)	
E		2	**125-7875**		TUBE-HEAT SHRINK (7.44-MM DIA) (5-CM)	
		2	**155-2270**	2	KIT-CONNECTING PLUG (2-PIN)	
					(EACH INCLUDES PLUG AS, WEDGE, & INTERFACE SEAL)	
	19	2	**353-3810**	1	HARNESS AS-SENSOR (PUMP PRESSURE)	
		2	**374-7463**	1	CAP-SEAL	
		2	**3E-3383**	1	WEDGE-RECEPTACLE LOCK (6-PIN)	
		2	**102-8805**	1	KIT-RECEPTACLE (6-PIN)	
					(INCLUDES RECEPTACLE AS & WEDGE)	

264-7522 **WIRING GP-REAR (**contd.**)** **i07635845**

NOTE	REF NO	GRAPHIC REF	PART NUMBER	QTY	PART NAME 1 2 3 4 5 6 (PRODUCT LEVEL)	SEE PAGE
		2	**8T-8729**	4	PIN-CONNECTOR (16-GA TO 20-GA)	
		2	**8T-8730**	4	SOCKET-CONNECTOR (16-GA TO 18-GA)	
		2	**8T-8737**	1	PLUG-SEAL	
		2	**9X-3401**	1	PIN-CONNECTOR (16-GA TO 18-GA)	
		2	**9X-3402**	1	SOCKET-CONNECTOR (16-GA TO 18-GA)	
		2	**155-2270**	1	KIT-CONNECTING PLUG (2-PIN)	
					(INCLUDES PLUG AS, WEDGE, & INTERFACE SEAL)	
		2	**237-0227**	1	PLUG AS-CONNECTOR (3-PIN)	
		2	**455-0705**	1	SEAL-CONNECTOR	
	20	2	**353-4515**	1	SWITCH GP-TOGGLE (GROUND LEVEL SHUTDOWN)	
		2	**3E-3371**	1	WEDGE-RECEPTACLE LOCK (3-PIN)	
		2	**3E-3390**	3	PIN-CONNECTOR (16-GA TO 18-GA)	
		2	**102-8803**	1	KIT-RECEPTACLE (3-PIN)	
					(INCLUDES RECEPTACLE AS & WEDGE)	
	21	3	**358-3848**	1	HARNESS AS-HEATER & AIR COND	
		3	**155-2258**	1	WEDGE-PLUG LOCK (12-PIN)	
		3	**8T-8730**	20	SOCKET-CONNECTOR (16-GA TO 18-GA)	
		3	**8T-8737**	3	PLUG-SEAL	
		3	**9X-3402**	2	SOCKET-CONNECTOR (16-GA TO 18-GA)	
		3	**110-8769**	1	WIRE AS (16-GA)	
E		3	**125-7874**		TUBE-HEAT SHRINK (5.72-MM DIA) (5-CM)	
E		3	**125-7875**		TUBE-HEAT SHRINK (7.44-MM DIA) (5-CM)	
		3	**155-2255**	1	KIT-CONNECTING PLUG (12-PIN)	
		3	**155-2270**	5	KIT-CONNECTING PLUG (2-PIN)	
					(EACH PLUG KIT INCLUDES PLUG AS, WEDGE, & INTERFACE SEAL)	
		3	**230-4013**	1	PLUG AS-CONNECTOR (3-PIN)	
		3	**455-0705**	1	SEAL-CONNECTOR	
	22	3	**373-4328**	1	SENSOR GP-POSITION (ROTARY)	
CY	23	1	**564-9571**	1	HARNESS AS-REAR (AIR CONDITIONER)	187
	24	2	**436-9181**	1	BRACKET AS	
M		2	**6V-9632**	2	NUT-WELD (M6X1-THD)	
	25	2,3	**033-8248**	5	CLIP (LOOP)	
	26	2,3	**130-5300**	7	CLIP	
	27	2,3	**132-5789**	12	CLIP (LADDER)	
	28	2	**133-6934**	2	SPACER (11X20X25-MM THK)	
	29	2	**134-2540**	1	RECEPTACLE AS-CONNECTOR (3-PIN)	
	30	3	**134-3355**	1	STRAP AS	
	31	2	**134-3987**	2	CLIP (LOOP)	
	32	3	**144-8344**	1	SPACER (11X19X20-MM THK)	
	33	3	**166-0690**	1	BLOCK AS-MOUNTING	
M	34	3	**242-1583**	1	STUD (M10X1.5X75-MM)	
	35	3	**204-1611**	1	STRAP-CABLE (DUAL)	
	36	2	**204-8000**	8	MOUNTING-CABLE TIE	
	37	3	**2F-7888**	2	SCREW-MACHINE (10-32X1.25-IN)	
M	38	2,3	**344-5675**	2	NUT (M10X1.5-THD)	
	39	3	**3B-4619**	1	PIN-COTTER	
	40	3	**3J-1907**	1	SEAL-O-RING	
	41	3	**4B-4274**	2	WASHER (5.5X13X1.2-MM THK)	
	42	2	**4D-7794**	1	CLIP	
	43	3	**4P-7429**	1	CLIP (LADDER)	

264-7522 **WIRING GP-REAR (**contd.**)** **i07635845**

NOTE	REF NO	GRAPHIC REF	PART NUMBER	QTY	PART NAME 1 2 3 4 5 6 (PRODUCT LEVEL)	SEE PAGE
C	44	2,3	**4P-7581**	7	CLIP (LADDER)	
	45	2	**4P-7582**	1	CLIP (LADDER)	
	46	2	**4S-1962**	1	CLIP (LOOP)	
M	47	2	**5C-7261**	1	NUT (M8X1.25-THD)	
M	48	2,3	**5C-9553**	4	BOLT (M6X1X16-MM)	
	49	2,3	**5P-4116**	1	WASHER-HARD (8.8X20.5X2-MM THK)	
	50	2,3	**5P-9297**	3	CLIP (LOOP)	
	51	3	**6D-3479**	1	CLIP (LOOP)	
	52	3	**6D-4244**	2	CLIP (LOOP)	
	53	3	**6D-4246**	1	CLIP (LOOP)	
	54	2	**6V-3265**	1	CLIP	
M	55	3	**6V-7357**	1	BOLT (M6X1X25-MM)	
	56	3	**8C-3793**	2	BOLT (1/4-20X3.75-IN)	
C	57	2,3	**8T-4121**	40	WASHER-HARD (11X21X2.5-MM THK)	
M	58	2,3	**8T-4136**	10	BOLT (M10X1.5X25-MM)	
CM	59	2,3	**8T-4137**	22	BOLT (M10X1.5X20-MM)	
M	60	2,3	**8T-4182**	3	BOLT (M10X1.5X45-MM)	
M	61	2	**8T-4189**	3	BOLT (M8X1.25X20-MM)	
M	62	2	**8T-4195**	3	BOLT (M10X1.5X30-MM)	
	63	3	**8T-4205**	4	WASHER-HARD (7.2X14.5X2-MM THK)	
	64	2	**8T-4224**	3	WASHER-HARD (8.8X16X2-MM THK)	
	65	3	**4S-4455**	4	CLIP	
	66	3	**9M-8406**	1	CLIP (LOOP)	
	67	2,3	**9X-8256**	4	WASHER (6.6X12X2-MM THK)	
	68	3	**6V-0894**	1	SEAL-O-RING	

C - CHANGE FROM PREVIOUS TYPE
E - ORDER BY THE CENTIMETER
M - METRIC PART
Y - SEPARATE ILLUSTRATION

264-7522 **WIRING GP-REAR (**contd.**)** **i07635845**

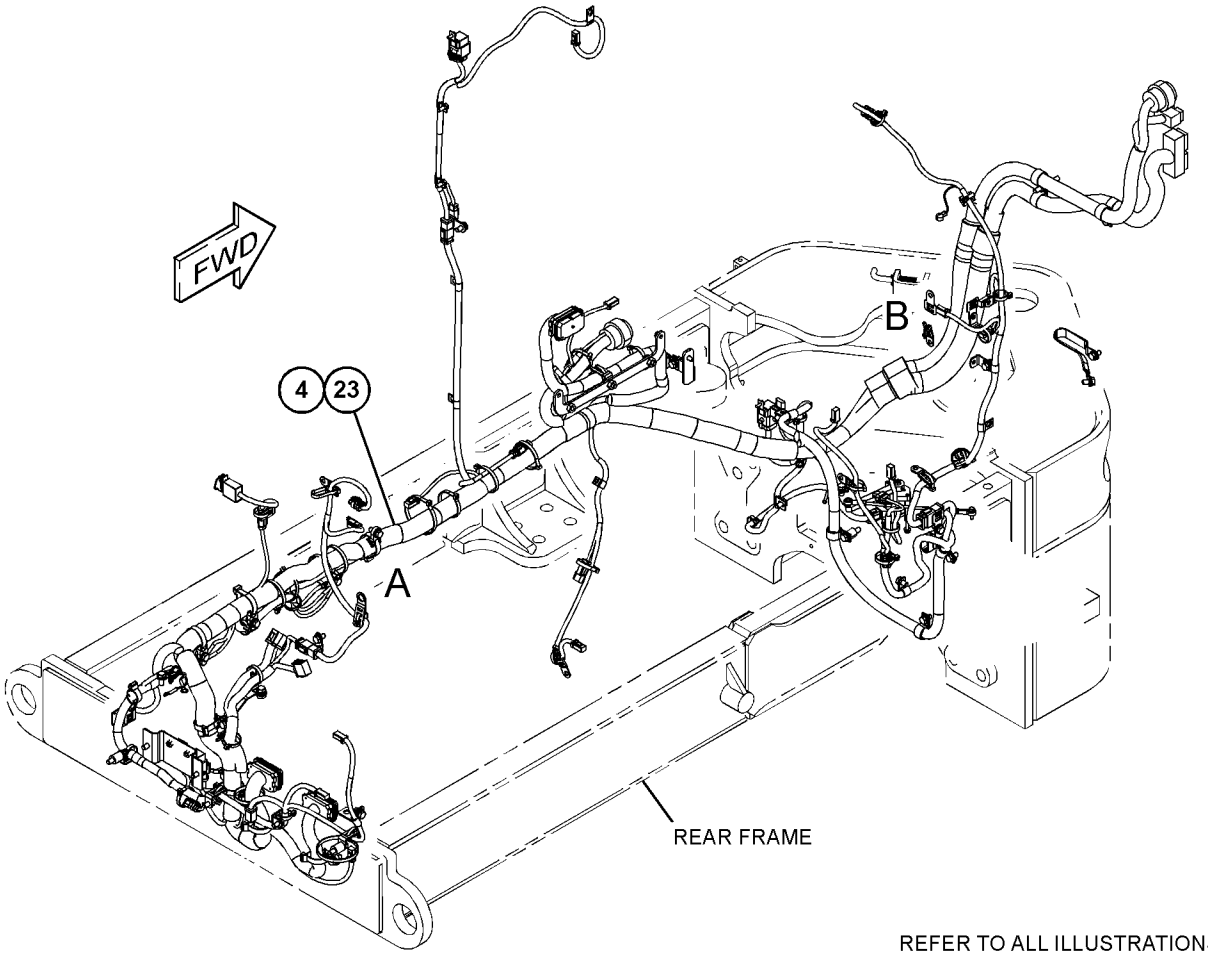

REFER TO ALL ILLUSTRATIONS OF
THIS GROUP FOR AUXILIARY VIEWS

GRAPHIC #1 g06383201

264-7522 **WIRING GP-REAR (**contd.**)** **i07635845**

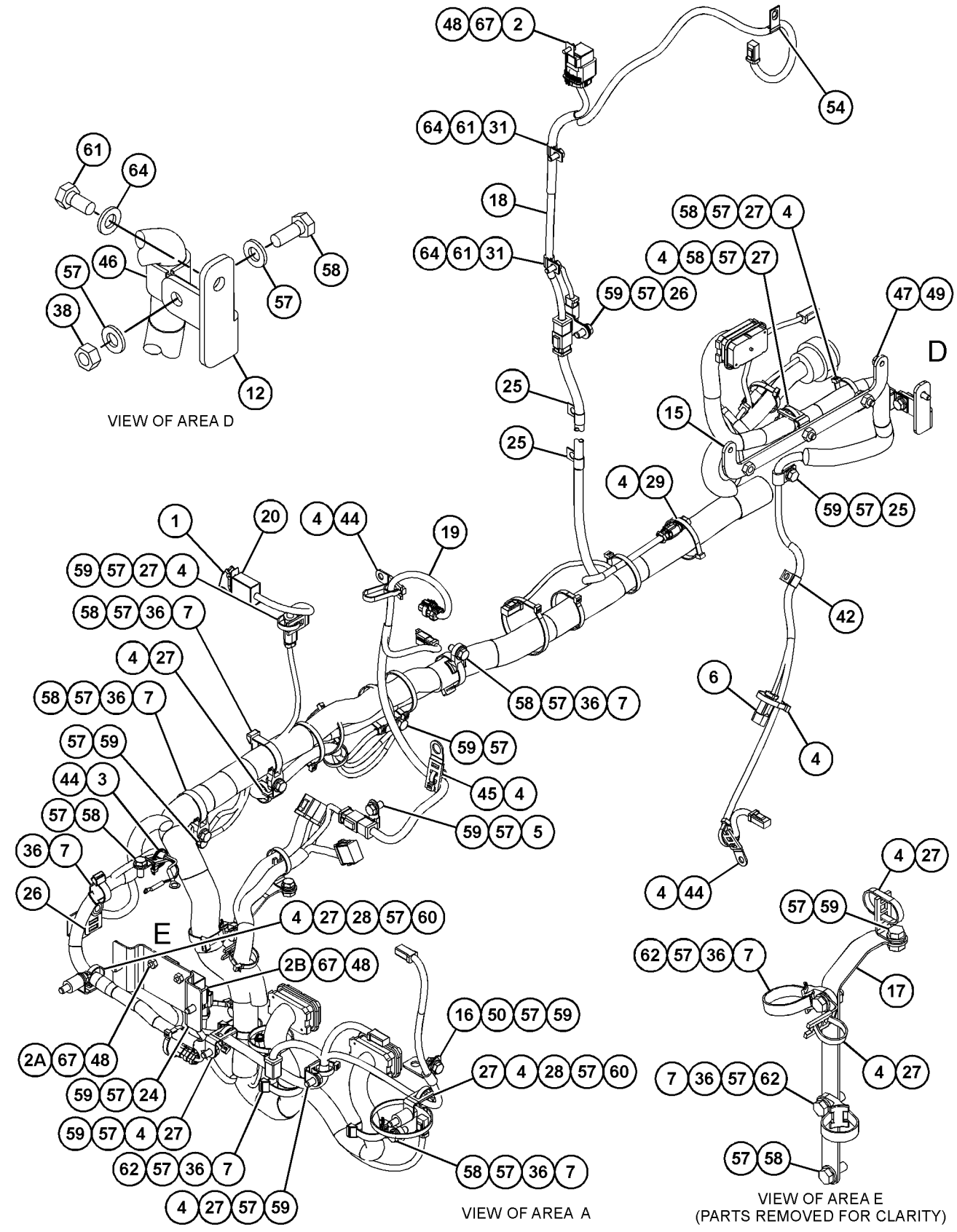

GRAPHIC #2

g06383204

264-7522 **WIRING GP-REAR (**contd.**)** **i07635845**

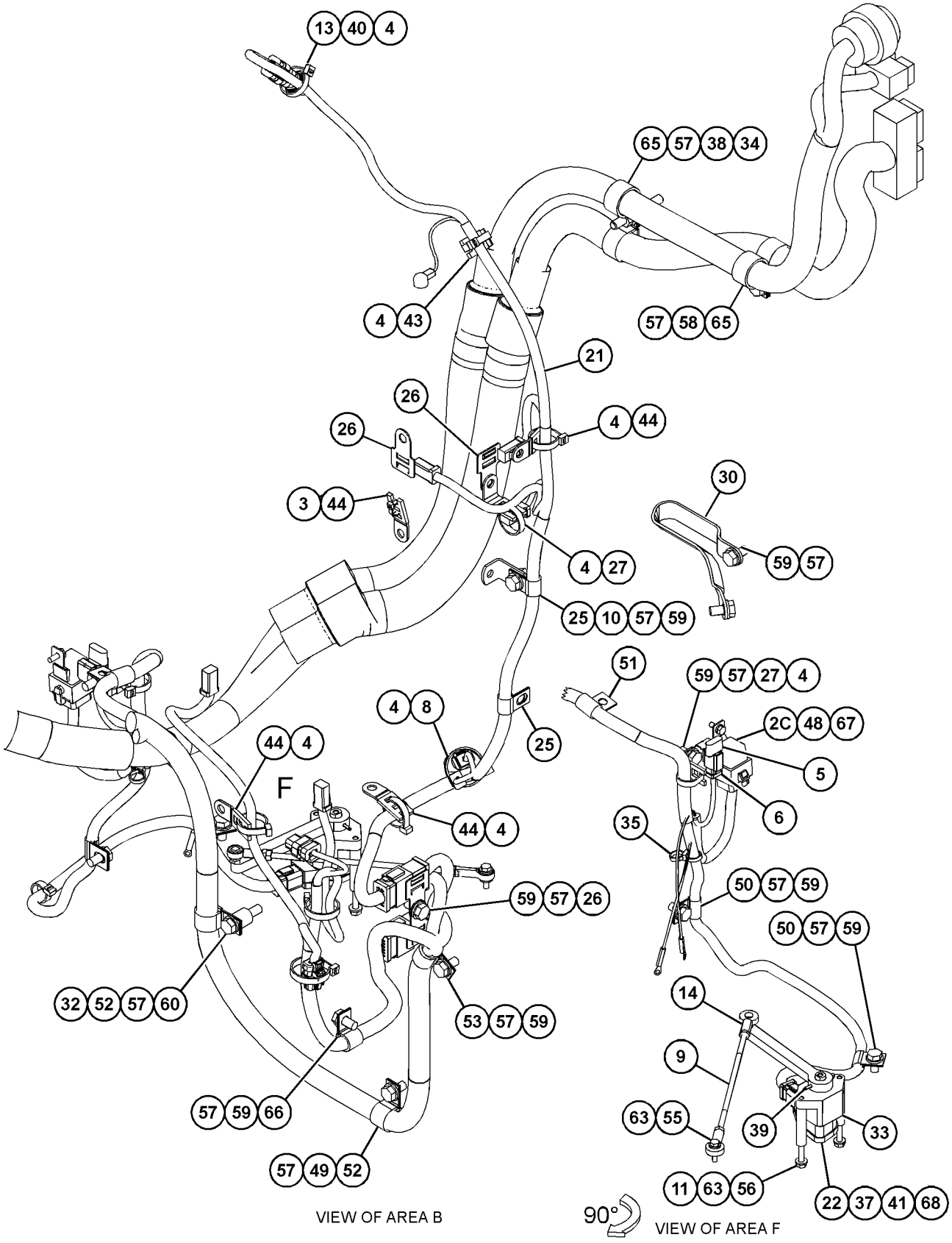

GRAPHIC #3 <END> g06270061

396-9714 WIRING GP-REAR

S/N: B551-UP
STANDARD CABLE
PART OF 367-7795, 426-1256, 492-0728 CONVERSION AR-CERTIFICATION, 367-7798 OPTION AR-REGIONAL

SMCS-1408 **i07814154**

NOTE	REF NO	GRAPHIC REF	PART NUMBER	QTY	PART NAME 1 2 3 4 5 6 (PRODUCT LEVEL)	SEE PAGE
	1	1	**3S-2093**	8	STRAP-CABLE	
	2	1	**7K-1181**	8	STRAP-CABLE	
	3	1	**8S-2634**	1	COVER AS	
	4	1	**8W-8528**	1	SLEEVE	
	5	1	**236-2341**	1	CABLE AS	
		1	**1S-7251**	1	TERMINAL-CABLE (00-GA, 1/2-IN SCREW)	
		1	**8N-1725**	1	COVER AS-TERMINAL (RED)	
		1	**8L-8413**	1	STRAP-CABLE (WHITE)	
		1	**3S-6049**	1	TERMINAL AS-BATTERY (POSITIVE)	
		1	**1M-6119**	1	BOLT (5/16-18X1.375-IN)	
		1	**1M-6120**	1	NUT (5/16-18-THD)	
E		1	**159-8049**		CABLE (00-GA, RED) (85-CM)	
	6	1	**286-2439**	1	CABLE AS	
		1	**1S-7252**	1	TERMINAL-CABLE (00-GA, 3/8-IN SCREW)	
E		1	**159-8049**		CABLE (00-GA, RED) (62-CM)	
		1	**276-1786**	1	COVER-TERMINAL (RED)	
		1	**315-0180**	1	TERMINAL-RING (00-GA, 3/8-IN SCREW)	
		1	**328-8425**	1	COVER-TERMINAL (RED)	
	7	1	**291-1889**	1	CABLE AS	
		1	**1S-7251**	1	TERMINAL-CABLE (00-GA, 1/2-IN SCREW)	
		1	**9X-9825**	1	TERMINAL-CABLE (00-GA, 1/2-IN SCREW)	
E		1	**159-8049**		CABLE (00-GA, RED) (142-CM)	
		1	**328-8425**	1	COVER-TERMINAL (RED)	
	8	1	**291-1891**	1	CABLE AS	
		1	**1S-7251**	1	TERMINAL-CABLE (00-GA, 1/2-IN SCREW)	
E		1	**159-8049**		CABLE (00-GA, RED) (76-CM)	
		1	**194-4046**	1	COVER AS-TERMINAL (00-GA, POSITIVE, RED)	
		1	**8L-8413**	1	STRAP-CABLE (WHITE)	
	9	1	**291-3817**	1	CABLE AS	
		1	**1S-7252**	1	TERMINAL-CABLE (00-GA, 3/8-IN SCREW)	
E		1	**159-8049**		CABLE (00-GA, RED) (103-CM)	
		1	**190-3848**	1	TERMINAL-RING (00-GA, 1/2-IN SCREW)	
		1	**190-3849**	1	COVER-TERMINAL (RED)	
		1	**328-8425**	1	COVER-TERMINAL (RED)	
	10	1	**388-7675**	1	RECEPTACLE AS	
		1	**1S-7251**	1	TERMINAL-CABLE (00-GA, 1/2-IN SCREW)	
E		1	**159-8049**		CABLE (00-GA, RED) (50-CM)	
E		1	**159-8050**		CABLE (00-GA, BLACK) (16-CM)	
		1	**190-3848**	1	TERMINAL-RING (00-GA, 1/2-IN SCREW)	
		1	**328-8426**	1	COVER-TERMINAL	
	11	1	**396-9715**	1	HARNESS AS-MOTOR (START)	
		1	**102-8802**	1	KIT-RECEPTACLE (2-PIN)	
					(INCLUDES RECEPTACLE AS & WEDGE)	
		1	**8T-8729**	2	PIN-CONNECTOR (16-GA TO 20-GA)	
		1	**8T-8730**	2	SOCKET-CONNECTOR (16-GA TO 18-GA)	
		1	**8T-8737**	2	PLUG-SEAL	

396-9714 **WIRING GP-REAR (**contd.**)** **i07814154**

NOTE	REF NO	GRAPHIC REF	PART NUMBER	QTY	PART NAME 1 2 3 4 5 6 (PRODUCT LEVEL)	SEE PAGE
		1	**155-2270**	1	KIT-CONNECTING PLUG (2-PIN)	
					(INCLUDES PLUG AS, WEDGE, & INTERFACE SEAL)	
		1	**230-4011**	1	PLUG AS-CONNECTOR (2-PIN)	
		1	**264-7029**	1	SEAL-CONNECTOR	
M	12	1	**105-3482**	4	BOLT-SOCKET HEAD (M8X1.25X16-MM)	
	13	1	**144-8344**	1	SPACER (11X19X20-MM THK)	
	14	1	**174-5907**	2	CLIP (LOOP)	
	15	1	**1S-1476**	2	CLIP	
	16	1	**4S-1962**	11	CLIP (LOOP)	
	17	1	**5P-4116**	4	WASHER-HARD (8.8X20.5X2-MM THK)	
	18	1	**7V-6571**	13	GROMMET	
	19	1	**8T-4121**	6	WASHER-HARD (11X21X2.5-MM THK)	
M	20	1	**8T-4136**	2	BOLT (M10X1.5X25-MM)	
M	21	1	**8T-4137**	3	BOLT (M10X1.5X20-MM)	
M	22	1	**8T-4179**	3	BOLT (M12X1.75X20-MM)	
M	23	1	**8T-4186**	1	BOLT (M10X1.5X40-MM)	
M	24	1	**8T-4183**	2	BOLT (M12X1.75X40-MM)	
	25	1	**8T-4223**	5	WASHER-HARD (13.5X25.5X3-MM THK)	
	26	1	**198-4778**	2	WASHER-HARD (13.5X30X12-MM THK)	

E - ORDER BY THE CENTIMETER
M - METRIC PART

396-9714 **WIRING GP-REAR (**contd.**)** **i07814154**

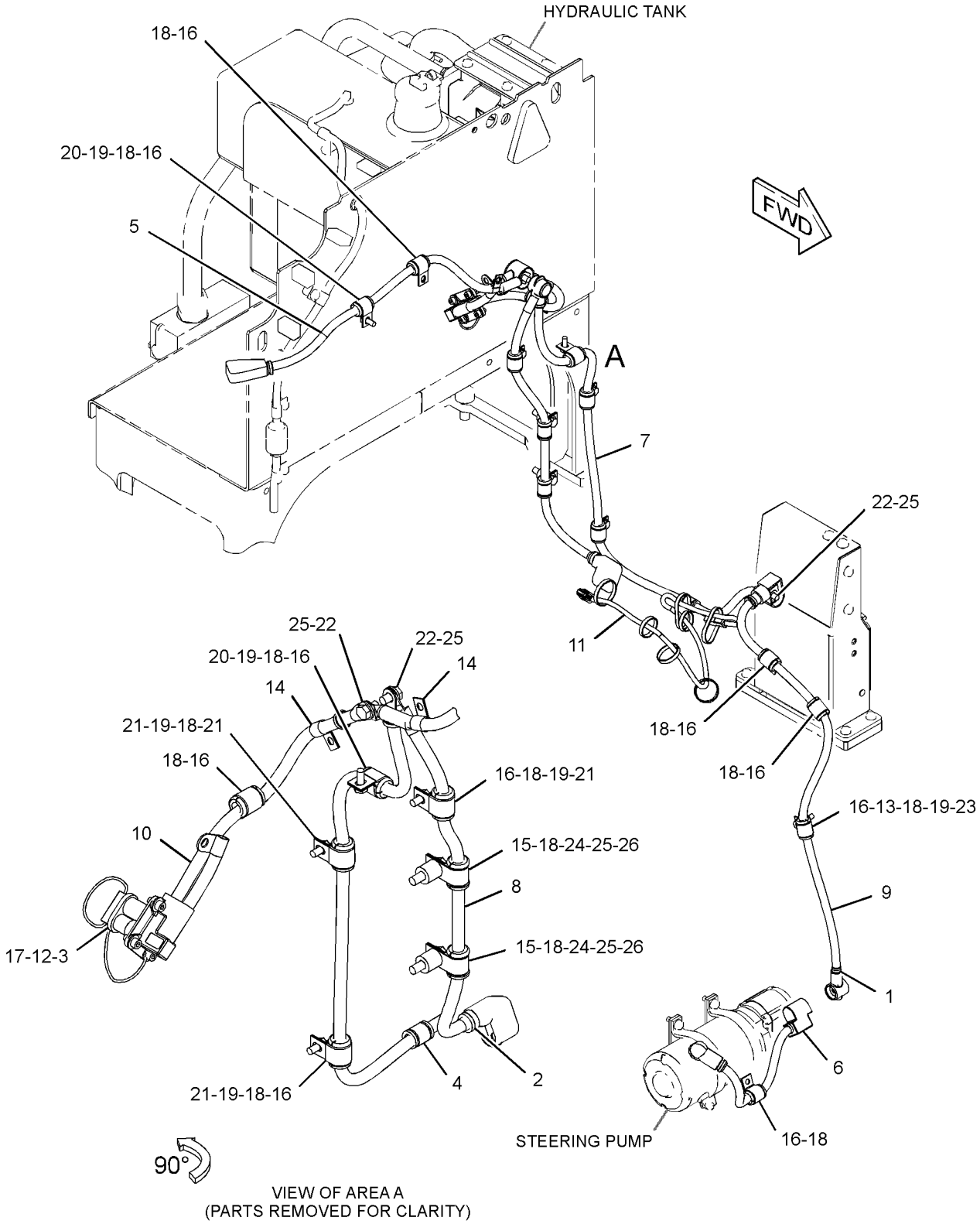

VIEW OF AREA A
(PARTS REMOVED FOR CLARITY)

GRAPHIC #1 <END> g03353404

431-4287 WIRING GP-REAR

S/N: B551-UP

PART OF 492-0729 CONVERSION AR-CERTIFICATION

SMCS-1408 **i05263377**

NOTE	REF NO	GRAPHIC REF	PART NUMBER	QTY	PART NAME 1 2 3 4 5 6 (PRODUCT LEVEL)	SEE PAGE
	1	1	**3S-2093**	10	STRAP-CABLE	
	2	1	**7K-1181**	21	STRAP-CABLE	
	3	1	**8S-2634**	1	COVER AS	
	4	1	**8W-8528**	1	SLEEVE	
	5	1	**240-7192**	4	RESISTOR AS (1500-OHM, 1-WATT)	
					(EACH INCLUDES)	
		1	**8T-8729**	2	PIN-CONNECTOR (16-GA TO 20-GA)	
		1	**102-8802**	1	KIT-RECEPTACLE (2-PIN)	
					(INCLUDES RECEPTACLE AS & WEDGE)	
	6	1	**253-9557**	1	BLOCK AS-JUNCTION	
	7	1	**313-7162**	1	CABLE AS	
		1	**155-2270**	1	KIT-CONNECTING PLUG (2-PIN)	
					(INCLUDES PLUG AS, WEDGE & INTERFACE SEAL)	
		1	**2L-8077**	1	TERMINAL-RING (14-GA TO 16-GA, 1/4-IN SCREW)	
		1	**2L-8079**	1	TERMINAL-RING (14-GA TO 16-GA, 3/8-IN SCREW)	
		1	**3S-6049**	1	TERMINAL AS-BATTERY (POSITIVE)	
		1	**1M-6119**	1	BOLT (5/16-18X1.375-IN)	
		1	**1M-6120**	1	NUT (5/16-18-THD)	
		1	**7T-9987**	1	COVER AS-TERMINAL (RED)	
		1	**8L-8413**	1	STRAP-CABLE (WHITE)	
E		1	**109-0887**		SLEEVE (60-CM)	
		1	**8T-8730**	2	SOCKET-CONNECTOR (16-GA TO 18-GA)	
		1	**3S-2093**	1	STRAP-CABLE	
B		1	**368-2369**		TAPE	
		1	**1S-7251**	1	TERMINAL-CABLE (00-GA, 1/2-IN SCREW)	
E		1	**135-5009**		TUBE-HEAT SHRINK (32-MM DIA) (19-CM)	
	8	1	**313-7164**	1	CABLE AS	
		1	**102-8802**	1	KIT-RECEPTACLE (2-PIN)	
					(INCLUDES RECEPTACLE AS & WEDGE)	
		1	**2L-8077**	1	TERMINAL-RING (14-GA TO 16-GA, 1/4-IN SCREW)	
		1	**9X-4519**	1	BOOT (RED)	
		1	**8T-8729**	1	PIN-CONNECTOR (16-GA TO 20-GA)	
		1	**8T-8737**	11	PLUG-SEAL	
E		1	**109-0887**		SLEEVE (69-CM)	
B		1	**368-2369**		TAPE	
		1	**9X-9825**	1	TERMINAL-CABLE (00-GA, 1/2-IN SCREW)	
		1	**1S-7251**	1	TERMINAL-CABLE (00-GA, 1/2-IN SCREW)	
E		1	**135-5009**		TUBE-HEAT SHRINK (32-MM DIA) (21-CM)	
	9	1	**313-7165**	1	CABLE AS	
		1	**155-2270**	1	KIT-CONNECTING PLUG (2-PIN)	
					(INCLUDES PLUG AS, WEDGE & INTERFACE SEAL)	
		1	**2L-8077**	1	TERMINAL-RING (14-GA TO 16-GA, 1/4-IN SCREW)	
		1	**2L-8079**	1	TERMINAL-RING (14-GA TO 16-GA, 3/8-IN SCREW)	
		1	**194-4047**	1	TERMINAL-RING (00-GA, 1/2-IN SCREW)	
		1	**194-4046**	1	COVER AS-TERMINAL (00-GA, POSITIVE, RED)	
E		1	**109-0887**		SLEEVE (72-CM)	
		1	**8T-8730**	2	SOCKET-CONNECTOR (16-GA TO 18-GA)	
		1	**3S-2093**	1	STRAP-CABLE	

431-4287 **WIRING GP-REAR (**contd.**)** **i05263377**

NOTE	REF NO	GRAPHIC REF	PART NUMBER	QTY	PART NAME 1 2 3 4 5 6 (PRODUCT LEVEL)	SEE PAGE
B		1	**368-2369**		TAPE	
		1	**1S-7251**	1	TERMINAL-CABLE (00-GA, 1/2-IN SCREW)	
E		1	**135-5009**		TUBE-HEAT SHRINK (32-MM DIA) (20-CM)	
	10	1	**313-7167**	1	CABLE AS	
		1	**155-2270**	2	KIT-CONNECTING PLUG (2-PIN)	
					(EACH KIT INCLUDES PLUG AS, WEDGE & INTERFACE SEAL)	
		1	**1S-7252**	1	TERMINAL-CABLE (00-GA, 3/8-IN SCREW)	
		1	**3S-2093**	1	STRAP-CABLE	
		1	**8T-8730**	2	SOCKET-CONNECTOR (16-GA TO 18-GA)	
		1	**8T-8737**	2	PLUG-SEAL	
		1	**9X-4519**	1	BOOT (RED)	
E		1	**109-0887**		SLEEVE (26-CM)	
E		1	**135-5009**		TUBE-HEAT SHRINK (32-MM DIA) (19-CM)	
		1	**190-3848**	1	TERMINAL-RING (00-GA, 1/2-IN SCREW)	
		1	**190-3849**	1	COVER-TERMINAL (RED)	
B		1	**368-2369**		TAPE	
	11	1	**313-7229**	1	CABLE AS	
		1	**9X-4519**	1	BOOT (RED)	
		1	**348-7341**	1	COVER-TERMINAL	
		1	**8T-8729**	1	PIN-CONNECTOR (16-GA TO 20-GA)	
		1	**8T-8737**	1	PLUG-SEAL	
E		1	**109-0887**		SLEEVE (47-CM)	
		1	**8T-8730**	2	SOCKET-CONNECTOR (16-GA TO 18-GA)	
B		1	**368-2369**		TAPE	
		1	**1S-7252**	1	TERMINAL-CABLE (00-GA, 3/8-IN SCREW)	
		1	**315-0180**	1	TERMINAL-RING (00-GA, 3/8-IN SCREW)	
E		1	**135-5009**		TUBE-HEAT SHRINK (32-MM DIA) (21-CM)	
	12	1	**355-5071**	1	WIRE AS	
	13	1	**389-9478**	1	RECEPTACLE AS	
		1	**155-2270**	1	KIT-CONNECTING PLUG (2-PIN)	
					(INCLUDES PLUG AS, WEDGE & INTERFACE SEAL)	
		1	**2L-8077**	1	TERMINAL-RING (14-GA TO 16-GA, 1/4-IN SCREW)	
		1	**2L-8079**	1	TERMINAL-RING (14-GA TO 16-GA, 3/8-IN SCREW)	
E		1	**159-8050**		CABLE (00-GA, BLACK) (16-CM)	
		1	**328-8426**	1	COVER-TERMINAL	
E		1	**109-0887**		SLEEVE (74-CM)	
		1	**8T-8730**	2	SOCKET-CONNECTOR (16-GA TO 18-GA)	
		1	**3S-2093**	1	STRAP-CABLE	
B		1	**368-2369**		TAPE	
		1	**1S-7251**	1	TERMINAL-CABLE (00-GA, 1/2-IN SCREW)	
		1	**190-3848**	1	TERMINAL-RING (00-GA, 1/2-IN SCREW)	
E		1	**135-5009**		TUBE-HEAT SHRINK (32-MM DIA) (19-CM)	
	14	1	**396-9715**	1	HARNESS AS-MOTOR	
		1	**155-2270**	1	KIT-CONNECTING PLUG (2-PIN)	
					(INCLUDES PLUG AS, WEDGE & INTERFACE SEAL)	
		1	**102-8802**	1	KIT-RECEPTACLE (2-PIN)	
					(INCLUDES RECEPTACLE AS & WEDGE)	
		1	**8T-8729**	2	PIN-CONNECTOR (16-GA TO 20-GA)	
		1	**230-4011**	1	PLUG AS-CONNECTOR (2-PIN)	
		1	**264-7029**	1	SEAL-CONNECTOR	
		1	**8T-8737**	2	PLUG-SEAL	

431-4287 **WIRING GP-REAR (**contd.**)** **i05263377**

NOTE	REF NO	GRAPHIC REF	PART NUMBER	QTY	PART NAME 1 2 3 4 5 6 (PRODUCT LEVEL)	SEE PAGE
		1	**8T-8730**	2	SOCKET-CONNECTOR (16-GA TO 18-GA)	
M	15	1	**105-3482**	4	BOLT-SOCKET HEAD (M8X1.25X16-MM)	
	16	1	**130-5300**	2	CLIP	
	17	1	**132-5789**	1	CLIP (LADDER)	
	18	1	**144-8344**	1	SPACER (11X19X20-MM THK)	
M	19	1	**150-4086**	2	SCREW (M4X0.7X16-MM)	
	20	1	**1S-6420**	2	CLIP	
	21	1	**4P-7581**	1	CLIP (LADDER)	
M	22	1	**5C-2890**	2	NUT (M6X1-THD)	
	23	1	**5P-4116**	4	WASHER-HARD (8.8X20.5X2-MM THK)	
	24	1	**6D-4246**	1	CLIP (LOOP)	
	25	1	**8T-4121**	8	WASHER-HARD (11X21X2.5-MM THK)	
M	26	1	**8T-4136**	2	BOLT (M10X1.5X25-MM)	
M	27	1	**8T-4137**	5	BOLT (M10X1.5X20-MM)	
M	28	1	**8T-4179**	3	BOLT (M12X1.75X20-MM)	
M	29	1	**8T-4186**	1	BOLT (M10X1.5X40-MM)	
M	30	1	**8T-4194**	2	BOLT (M12X1.75X50-MM)	
	31	1	**8T-4223**	5	WASHER-HARD (13.5X25.5X3-MM THK)	
	32	1	**8Y-1816**	2	SPACER (12.5X25X25-MM THK)	
	33	1	**9M-8406**	11	CLIP (LOOP)	
	34	1	**9X-8256**	2	WASHER (6.6X12X2-MM THK)	

B - USE AS REQUIRED
E - ORDER BY THE CENTIMETER
M - METRIC PART

431-4287 **WIRING GP-REAR (**contd.**)** **i05263377**

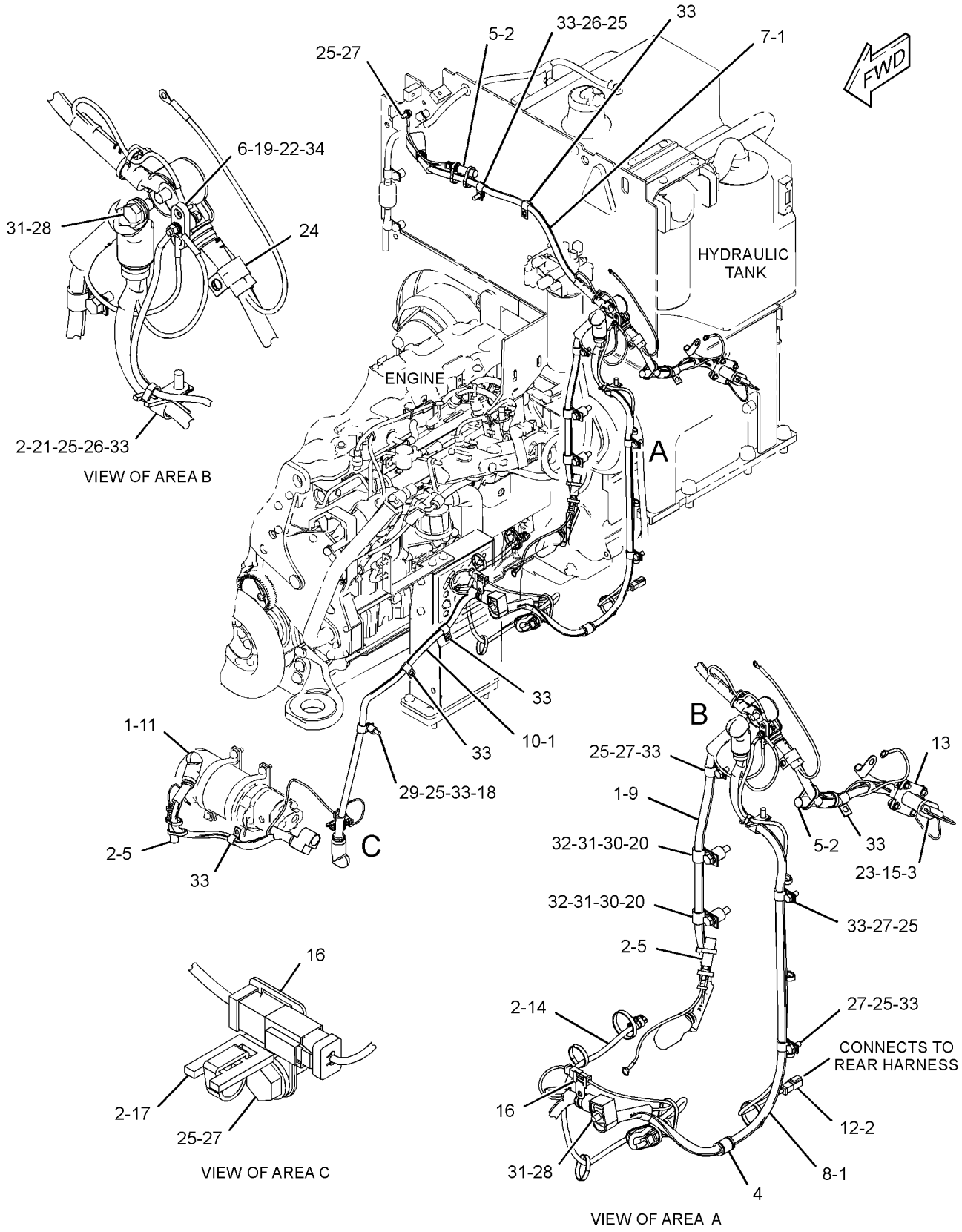

GRAPHIC #1 <END> g03356578

233-4623 WIRING GP-REAR LIGHTING—STOP, TAIL, TURN, BACKUP

S/N: B551-UP

PART OF 560-8856 LIGHTING AR-ROADING

SMCS-1408, 1429 **i05819579**

NOTE	REF NO	GRAPHIC REF	PART NUMBER	QTY	PART NAME 1 2 3 4 5 6 (PRODUCT LEVEL)	SEE PAGE
	1	1	**3S-2093**	22	STRAP-CABLE	
	2	1	**7X-2393**	4	BUMPER-CONICAL	
	3	1	**9S-1316**	2	SPRING	
	4	1	**116-0118**	2	CLIP	
CY	5	1	**334-8049**	2	LAMP GP-SIGNAL (24-VOLT, STOP, TAIL)	219
Y	6	1	**201-5464**	2	LAMP GP-SIGNAL (12-VOLT, 24-VOLT, TURN)	218
	7	1	**245-2810**	1	BRACKET AS (RH)	
	8	1	**245-2811**	1	BRACKET AS (LH)	
	9	1	**245-2812**	1	ARM AS (RH)	
		1	**5D-9629**	2	ROD	
	10	1	**245-2813**	1	ARM AS (LH)	
		1	**5D-9629**	3	ROD	
	11	1	**245-2814**	2	ROD	
Y	12	1	**261-1502**	2	LAMP GP (24-VOLT)	200
	13	1	**286-9718**	1	HARNESS AS-REAR LIGHTING	
		1	**102-8802**	5	KIT-RECEPTACLE (2-PIN)	
		1	**102-8803**	4	KIT-RECEPTACLE (3-PIN)	
					(EACH KIT INCLUDES RECEPTACLE AS & WEDGE)	
		1	**8T-8730**	11	SOCKET-CONNECTOR (16-GA TO 18-GA)	
		1	**8T-8737**	26	PLUG-SEAL	
		1	**9W-0844**	23	SOCKET-CONNECTOR (14-GA TO 16-GA)	
E		1	**119-3662**		TUBE-HEAT SHRINK (10.85-MM DIA) (13-CM)	
E		1	**125-7875**		TUBE-HEAT SHRINK (7.44-MM DIA) (25-CM)	
		1	**155-2255**	1	KIT-CONNECTING PLUG (12-PIN)	
		1	**155-2260**	4	KIT-CONNECTING PLUG (3-PIN)	
		1	**155-2270**	7	KIT-CONNECTING PLUG (2-PIN)	
					(EACH PLUG KIT INCLUDES PLUG AS, WEDGE & INTERFACE SEAL)	
	16	1	**117-9409**	2	GROMMET	
	17	1	**156-6175**	2	CLIP (LADDER)	
	18	1	**1V-6688**	1	GROMMET	
	19	1	**3B-4623**	2	PIN-COTTER	
M	20	1	**5C-2890**	18	NUT (M6X1-THD)	
	21	1	**5P-1076**	4	WASHER-HARD (13.5X30X4-MM THK)	
	22	1	**5P-4115**	6	WASHER-HARD (7.2X19X2-MM THK)	
M	23	1	**129-3180**	2	LOCKNUT (M12X1.75-THD)	
	24	1	**7X-7729**	4	WASHER (11X25X3-MM THK)	
B	25	1	**132-0338**	8	WASHER-PLASTIC (13X31.7X0.8-MM THK)	
M	26	1	**8T-4136**	4	BOLT (M10X1.5X25-MM)	
M	27	1	**8T-4176**	2	BOLT (M12X1.75X90-MM)	
	28	1	**8T-4223**	2	WASHER-HARD (13.5X25.5X3-MM THK)	
	29	1	**9X-8256**	12	WASHER (6.6X12X2-MM THK)	

B - USE AS REQUIRED
C - CHANGE FROM PREVIOUS TYPE
E - ORDER BY THE CENTIMETER
M - METRIC PART
Y - SEPARATE ILLUSTRATION

233-4623 **WIRING GP-REAR LIGHTING** (contd.) **i05819579**

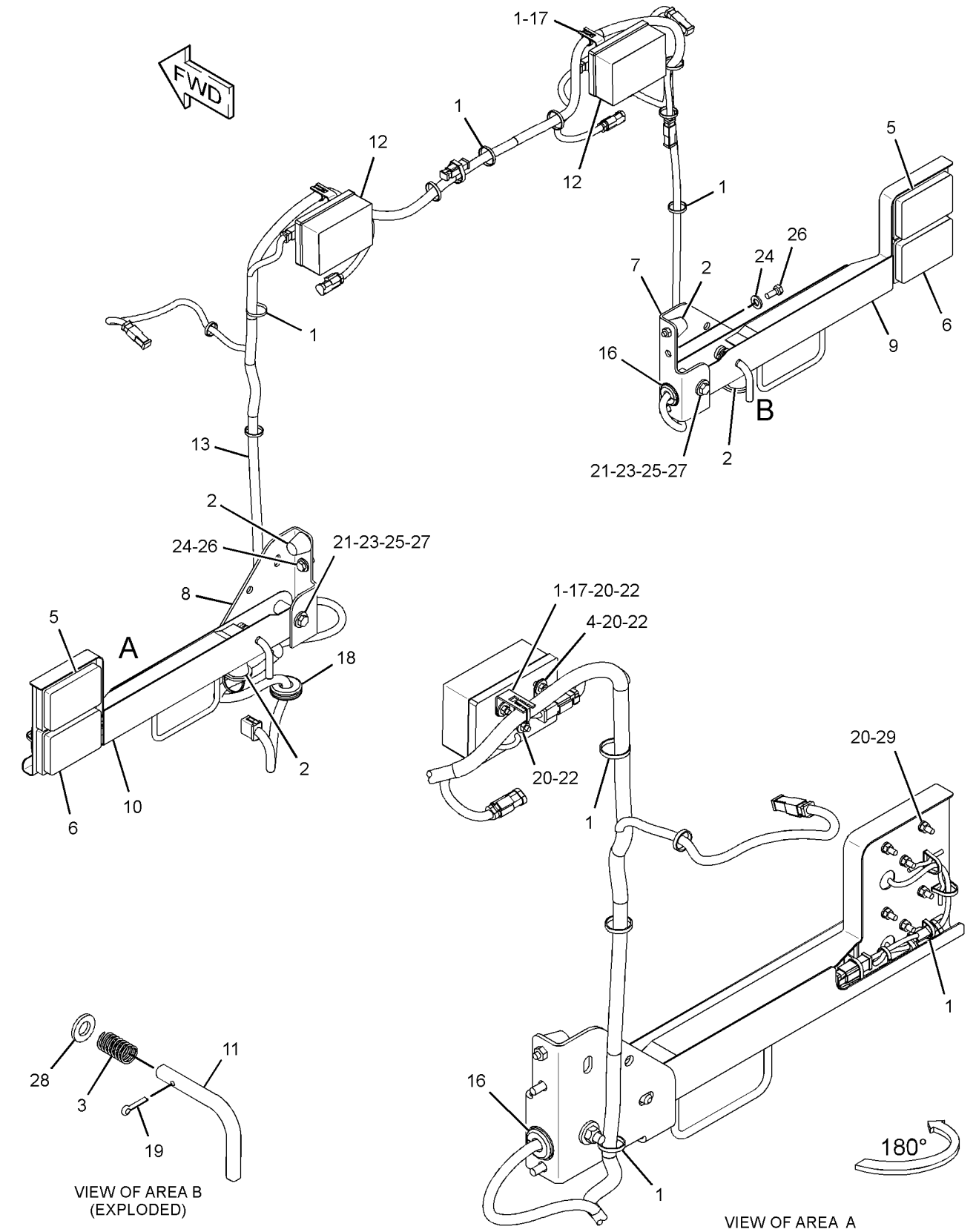

GRAPHIC #1

<END>

g03686276

247-6430 WIRING GP-REAR LIGHTING–TAIL

S/N: B551-UP

SMCS-1408, 1429 **i05893024**

NOTE	REF NO	GRAPHIC REF	PART NUMBER	QTY	PART NAME 1 2 3 4 5 6 (PRODUCT LEVEL)	SEE PAGE
	1	1	**3S-2093**	25	STRAP-CABLE	
	2	1	**116-0118**	2	CLIP	
Y	3	1	**334-8049**	2	LAMP GP-SIGNAL (24-VOLT, STOP, TAIL)	219
	4	1	**236-1928**	1	BRACKET AS	
	5	1	**239-6379**	1	BRACKET AS	
Y	6	1	**261-1502**	2	LAMP GP (24-VOLT)	200
	7	1	**286-9718**	1	HARNESS AS-REAR LIGHTING	
		1	**102-8802**	5	KIT-RECEPTACLE (2-PIN)	
		1	**102-8803**	4	KIT-RECEPTACLE (3-PIN)	
					(EACH RECEPTACLE KIT INCLUDES RECEPTACLE AS & WEDGE)	
		1	**155-2255**	1	KIT-CONNECTING PLUG (12-PIN)	
		1	**155-2260**	4	KIT-CONNECTING PLUG (3-PIN)	
		1	**155-2270**	7	KIT-CONNECTING PLUG (2-PIN)	
					(EACH PLUG KIT INCLUDES PLUG AS, WEDGE & INTERFACE SEAL)	
	8	1	**156-6175**	2	CLIP (LADDER)	
	9	1	**1V-6688**	1	GROMMET	
M	10	1	**5C-2890**	12	NUT (M6X1-THD)	
	11	1	**5P-4115**	6	WASHER-HARD (7.2X19X2-MM THK)	
	13	1	**8T-4121**	6	WASHER-HARD (11X21X2.5-MM THK)	
M	14	1	**8T-4172**	6	BOLT (M10X1.5X80-MM)	
	15	1	**9X-8256**	6	WASHER (6.6X12X2-MM THK)	

M - METRIC PART
Y - SEPARATE ILLUSTRATION

247-6430 **WIRING GP-REAR LIGHTING (**contd.**)** **i05893024**

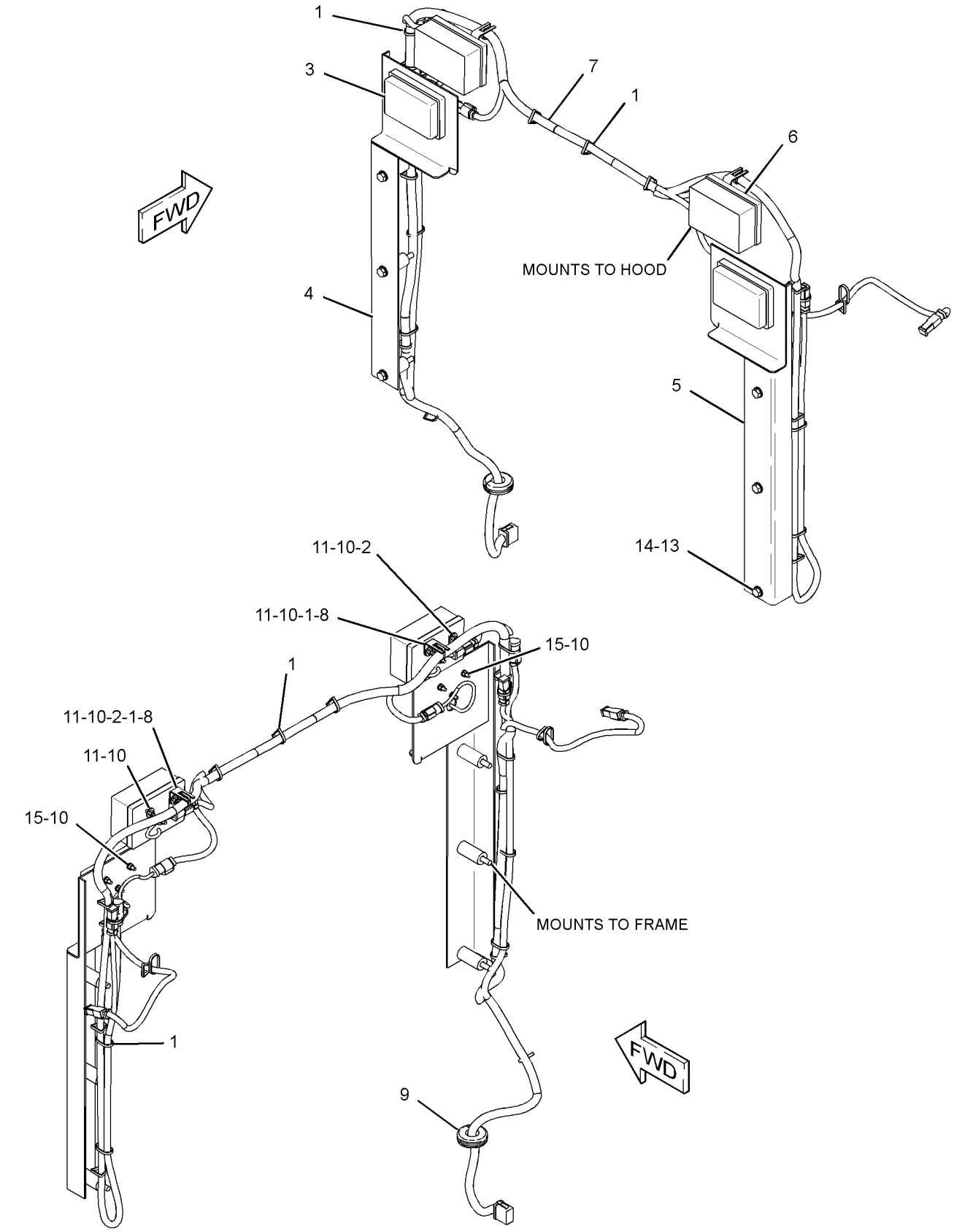

GRAPHIC #1 <END> g01522891

269-4150 WIRING GP-SECONDARY STEERING

S/N: B551-UP

PART OF 577-1377 COMMON AR

SMCS-1408, 4334 **i03865849**

NOTE	REF NO	GRAPHIC REF	PART NUMBER	QTY	PART NAME 1 2 3 4 5 6 (PRODUCT LEVEL)	SEE PAGE
Y	1	1	**179-0006**	1	SWITCH GP-MAGNETIC (24-VOLT TO 32-VOLT) (SECONDARY STEERING RELAY)	271
	2	1	**134-3355**	1	STRAP AS	
	3	1	**8T-4121**	1	WASHER-HARD (11X21X2.5-MM THK)	
M	4	1	**8T-4137**	1	BOLT (M10X1.5X20-MM)	
M	5	1	**8T-4171**	4	BOLT (M6X1X12-MM)	
	6	1	**9X-8256**	4	WASHER (6.6X12X2-MM THK)	

M - METRIC PART
Y - SEPARATE ILLUSTRATION

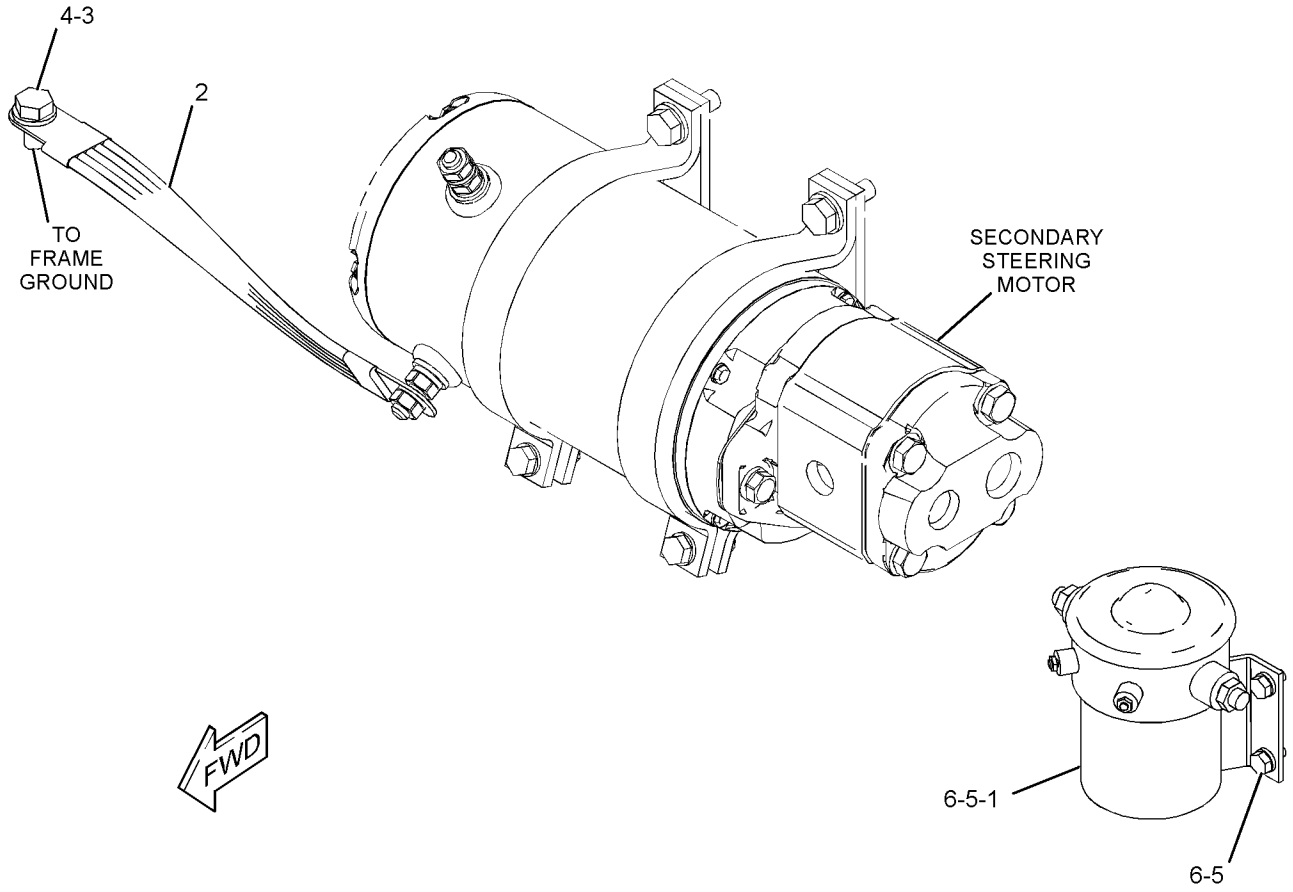

GRAPHIC #1 <END> g02350860

323-5169 WIRING GP-SENSOR—COLD WEATHER OPERATION

S/N: B551-UP

PART OF 333-6001 COLD WEATHER AR

SMCS-1408 **i06013139**

NOTE	REF NO	GRAPHIC REF	PART NUMBER	QTY	PART NAME 1 2 3 4 5 6 (PRODUCT LEVEL)	SEE PAGE
	1	1	**463-8243**	1	SENSOR GP-PRESSURE (TRANSMISSION PUMP)	
			155-2260	1	KIT-CONNECTING PLUG (3-PIN)	
					(INCLUDES RECEPTACLE AS & WEDGE)	
			194-5226	3	WIRE AS (16-GA)	
					—OR—	
			194-5227	3	WIRE AS (14-GA)	
Y	2	1	**324-3355**	1	HARNESS AS-WIRING (XSMSN PUMP PRESSURE SENSOR)	192
Y	3	1	**324-3356**	1	HARNESS AS-SOLENOID (XMSN PUMP BYPASS)	190
	4	1	**130-5300**	1	CLIP	
	5	1	**132-5789**	1	CLIP (LADDER)	
	6	1	*148-8309*	1	ADAPTER AS	
		1	**2P-8421**	1	ADAPTER-O-RING	
		1	**3D-2824**	1	SEAL-O-RING	
	7	1	**3J-1907**	1	SEAL-O-RING	
	8	1	**4P-7581**	3	CLIP (LADDER)	
	9	1	**4P-8134**	1	CLIP (LADDER)	
	10	1	**7K-1181**	9	STRAP-CABLE	
	11	1	**8T-4121**	1	WASHER-HARD (11X21X2.5-MM THK)	
M	12	1	**8T-4137**	1	BOLT (M10X1.5X20-MM)	

M - METRIC PART
Y - SEPARATE ILLUSTRATION

323-5169 **WIRING GP-SENSOR (**contd.**)** **i06013139**

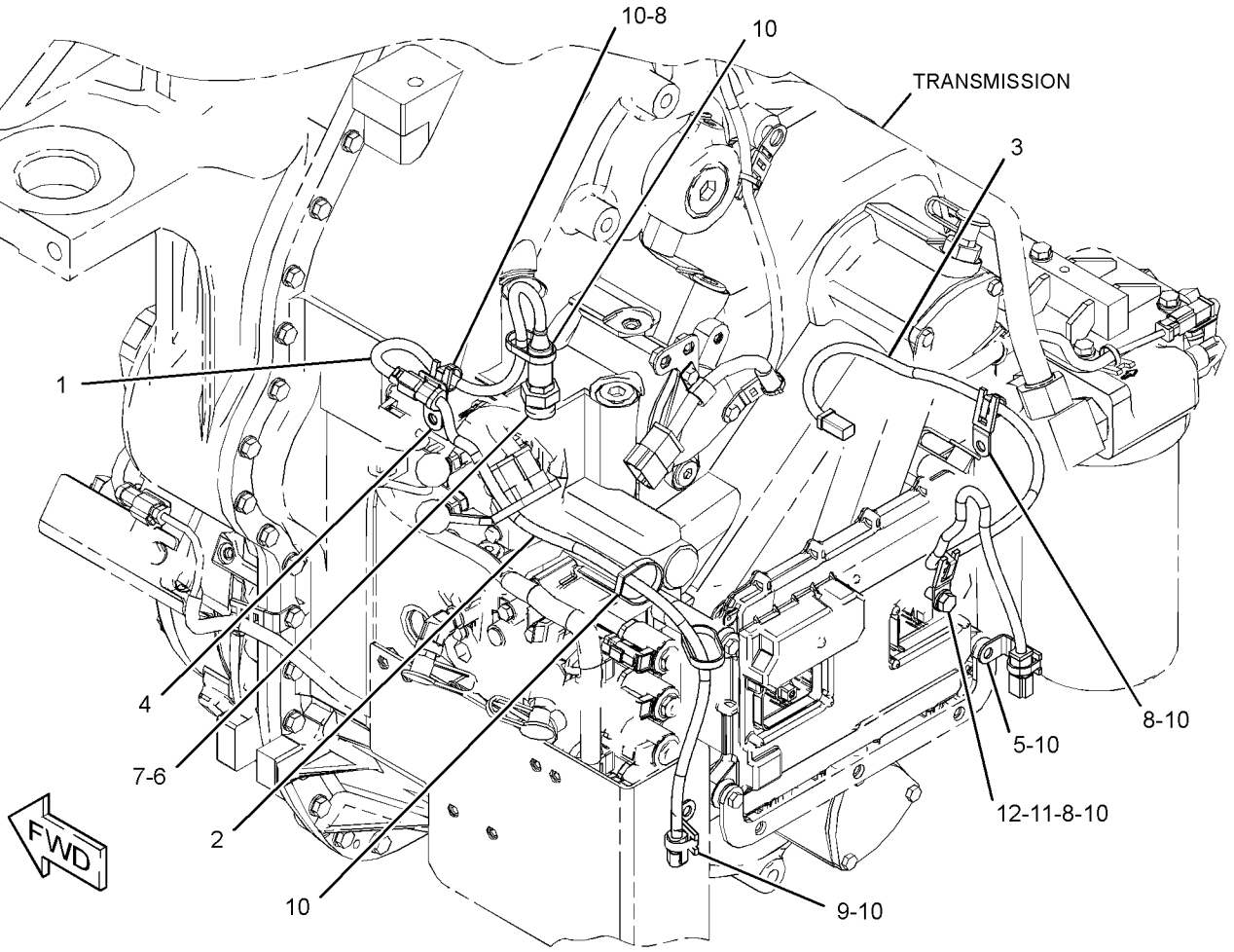

GRAPHIC #1 <END> g01774174

363-4325 WIRING GP-SENSOR

S/N: B551-UP

PART OF 462-6393 GRADE CONTROL AR

SMCS-1408 **i07186729**

NOTE	REF NO	GRAPHIC REF	PART NUMBER	QTY	PART NAME 1 2 3 4 5 6 (PRODUCT LEVEL)	SEE PAGE
C	1	1	**491-1256**	1	BRACKET AS	
	2	1	**276-6146**	1	SENSOR AS-ANGLE (AS400TC) (MAINFALL)	
	2A	1	**276-6146**	1	SENSOR AS-ANGLE (AS400TC) (BLADE SLOPE)	
	3	1	**363-0347**	1	SENSOR AS-ROTARY POSITION	
		1	**269-3277**	1	RING	
	4	1	**8T-4205**	6	WASHER-HARD (7.2X14.5X2-MM THK)	
C	5	1	**491-1257**	1	BRACKET	
	6	1	**3S-2093**	3	STRAP-CABLE	
C	7	1	**498-8523**	2	COLLAR	
	8	1	**4M-6425**	2	BOLT (5/16-18X1-IN)	
M	9	1	**5C-2890**	2	NUT (M6X1-THD)	
CM	10	1	**9X-2043**	4	SCREW-TRUSS HEAD (M6X1X14-MM)	
M	11	1	**8T-3844**	4	BOLT (M6X1X70-MM)	
C	12	1	**8T-4223**	2	WASHER-HARD (13.5X25.5X3-MM THK)	
	13	1	**8T-4224**	2	WASHER-HARD (8.8X16X2-MM THK)	
CM	14	1	**329-3356**	2	NUT (M12X1.75-THD)	

C - CHANGE FROM PREVIOUS TYPE
M - METRIC PART

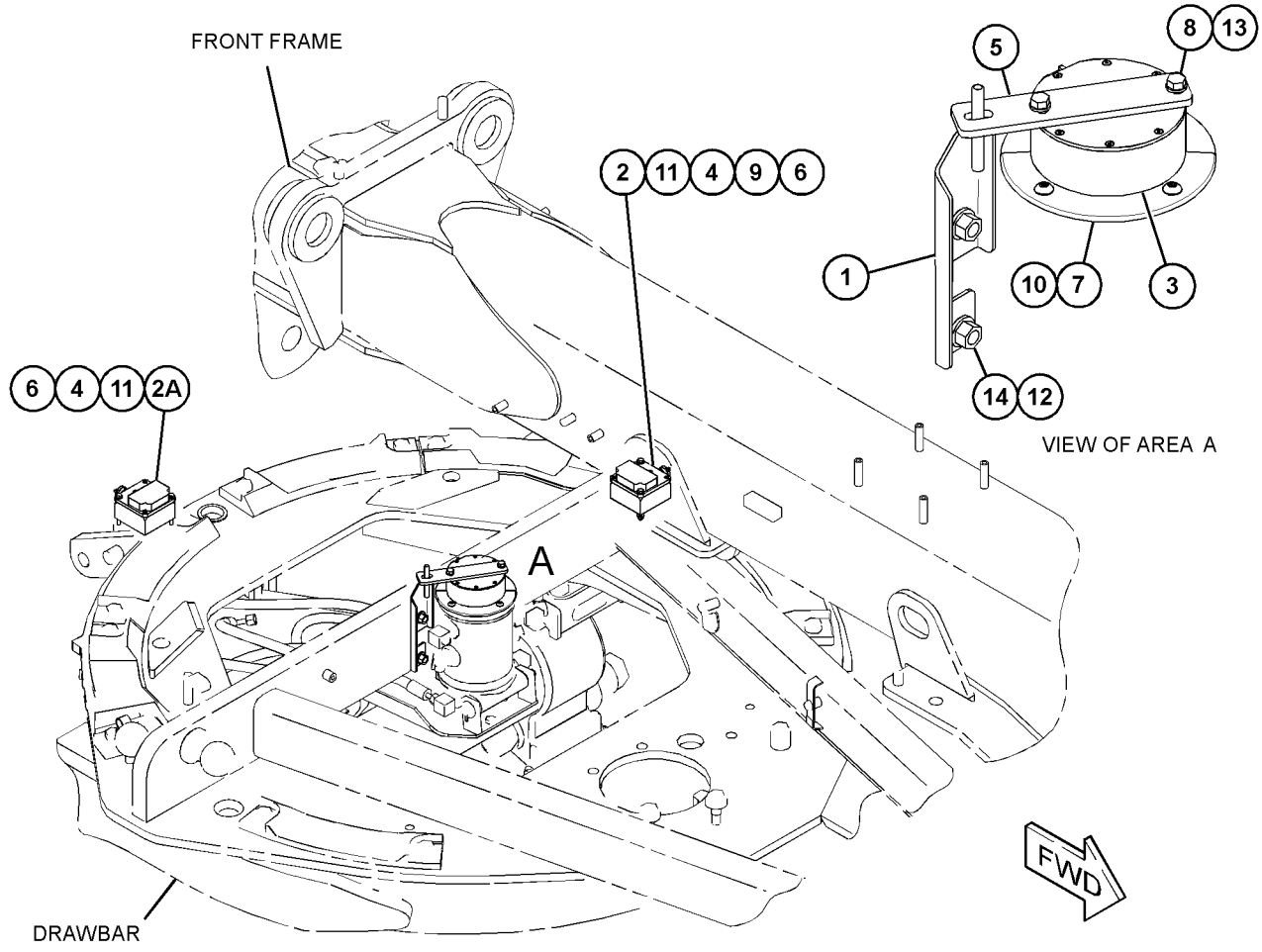

GRAPHIC #1 <END> g06105043

419-6912 WIRING GP-SENSOR

S/N: TX71-UP
FILTER
PART OF 506-2265 ENGINE AR-COMPLETE

SMCS-1408 **i05767928**

NOTE	REF NO	GRAPHIC REF	PART NUMBER	QTY	PART NAME 1 2 3 4 5 6 (PRODUCT LEVEL)	SEE PAGE
	1	1	**3S-2093**	3	STRAP-CABLE	
Y	2	1	*234-5013*	1	SENSOR GP-TEMPERATURE (CHARGE AIR)	262
	3	1	**274-6719**	1	SENSOR GP-PRESSURE (ENGINE OIL BLOCK INLET)	
Y	4	1	**275-1253**	1	SWITCH GP-PRESSURE (DIFFERENTIAL)	275
Y	5	1	**356-3380**	1	HARNESS AS-SENSOR	189
	6	1	*319-6209*	1	ADAPTER AS	
		1	**5P-8874**	1	ADAPTER	
		1	**214-7568**	1	SEAL-O-RING	
	7	1	*329-5451*	1	ADAPTER AS	
		1	**9X-0261**	1	ADAPTER	
		1	**214-7566**	1	SEAL-O-RING	
		1	**214-7568**	1	SEAL-O-RING	
	8	1	**4P-7581**	2	CLIP (LADDER)	

Y - SEPARATE ILLUSTRATION

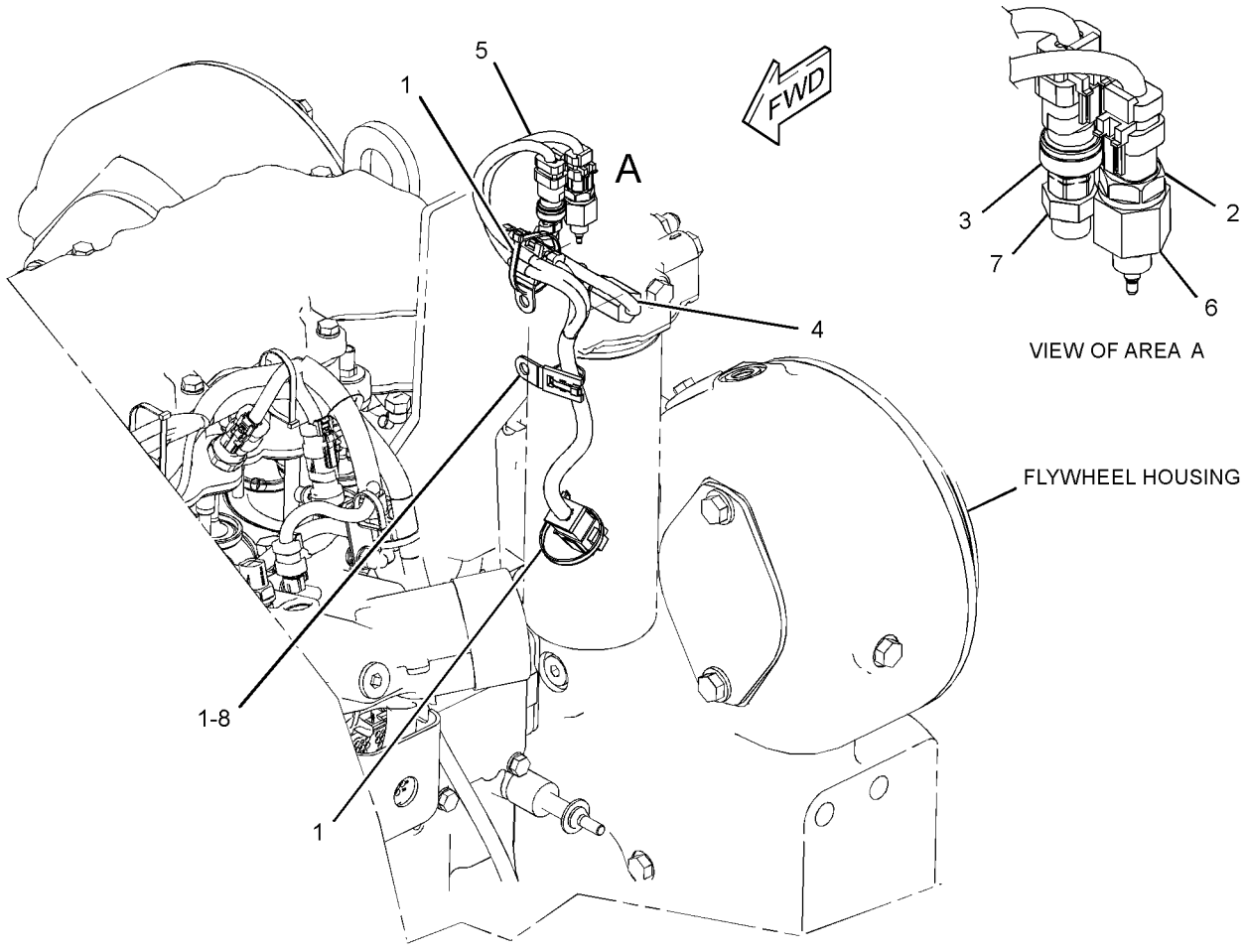

GRAPHIC #1 <END> g03659392

443-0882 WIRING GP-SENSOR

S/N: B551-UP
NON ALL WHEEL DRIVE, FRONT AXLE
PART OF 364-1989 OPTION AR-MACHINE

SMCS-1408 **i06231632**

NOTE	REF NO	GRAPHIC REF	PART NUMBER	QTY	PART NAME 1 2 3 4 5 6 (PRODUCT LEVEL)	SEE PAGE
	1	1	**360-2086**	2	PLATE AS	
					(EACH INCLUDES)	
M		1	**8T-3490**	2	NUT-WELD (M10X1.5-THD)	
	2	1	**360-2087**	2	COVER	
	3	1	**443-0884**	1	HARNESS AS-SENSOR	
		1	**8T-8737**	1	PLUG-SEAL	
		1	**9X-3402**	3	SOCKET-CONNECTOR (16-GA TO 18-GA)	
		1	**155-2271**	1	KIT-CONNECTING PLUG (4-PIN)	
					(INCLUDES PLUG AS, WEDGE, & INTERFACE SEAL)	
E		1	**232-0895**		CONDUIT-FLEXIBLE (9.6-MM ID) (119-CM)	
M		1	**263-6540**	1	NUT (M16X1.5-THD)	
		1	**369-9842**	1	FITTING-ELBOW	
	4	1	**448-8651**	1	HARNESS AS-WIRING	
		1	**9X-3402**	3	SOCKET-CONNECTOR (16-GA TO 18-GA)	
		1	**155-2260**	1	KIT-CONNECTING PLUG (3-PIN)	
					(INCLUDES PLUG AS, WEDGE, & INTERFACE SEAL)	
E		1	**232-0895**		CONDUIT-FLEXIBLE (9.6-MM ID) (79-CM)	
M		1	**263-6540**	1	NUT (M16X1.5-THD)	
		1	**369-9842**	1	FITTING-ELBOW	
	5	1	**3E-6909**	2	CLIP (LOOP)	
	6	1	**3V-2431**	4	WASHER (10.2X16X2-MM THK)	
	7	1	**4S-5565**	4	BOLT (3/8-16X0.875-IN)	
	8	1	**8M-2770**	5	CLIP (LOOP)	
	9	1	**8T-4121**	11	WASHER-HARD (11X21X2.5-MM THK)	
M	10	1	**8T-4137**	9	BOLT (M10X1.5X20-MM)	

E - ORDER BY THE CENTIMETER
M - METRIC PART

443-0882 **WIRING GP-SENSOR (**contd.**)** **i06231632**

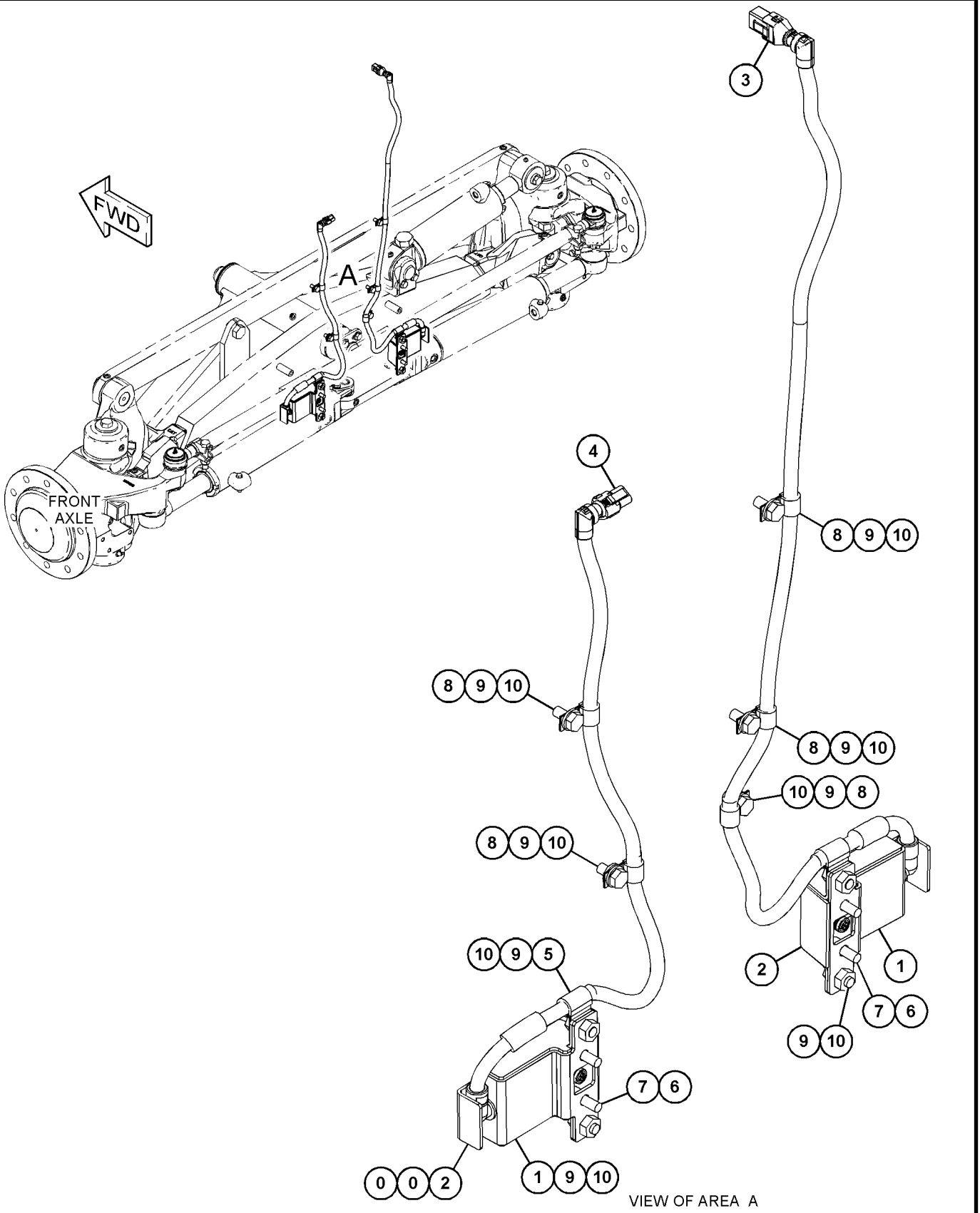

VIEW OF AREA A

GRAPHIC #1 <END> g03648222

248-6925 AUTOSHIFT AR–TRANSMISSION

S/N: B551-UP

PART OF 565-1026 SNOW AR-MOTOR GRADER

SMCS-3168 **i02783102**

NOTE	PART NUMBER	QTY	PART NAME 1 2 3 4 5 6 (PRODUCT LEVEL)	SEE PAGE
Y	*238-8824*	1	SWITCH GP-ROCKER (AUTOSHIFT)	277
	214-2470	1	CONFIGURATION-PREMIUM	
			(DLR INSTALL CONFIG: SEE IRM: EES03-01)	

Y - SEPARATE ILLUSTRATION

<END>

433-6116 AXLE AR-FRONT

S/N: B551-UP

NON ALL WHEEL DRIVE

PART OF 577-1377 COMMON AR

SMCS-3020, 3278, 4303, 4305, 5225 **i06616238**

NOTE	PART NUMBER	QTY	PART NAME 1 2 3 4 5 6 (PRODUCT LEVEL)	SEE PAGE
Y	*433-6117*	1	AXLE GP-FRONT	340
Y	*290-3921*	1	MOUNTING GP-AXLE (FRONT)	467

Y - SEPARATE ILLUSTRATION

<END>

381-4306 AXLE GP-FRONT

S/N: B551-UP

PART OF 433-6117 AXLE GP-FRONT

SMCS-3020, 3282, 4303, 4305, 5225 **i05957005**

NOTE	REF NO	GRAPHIC REF	PART NUMBER	QTY	PART NAME 1 2 3 4 5 6 (PRODUCT LEVEL)	SEE PAGE
	1	1	**2D-8652**	2	BEARING	
	2	1	**2G-8631**	4	BUSHING	
	3	1	**433-7105**	4	SEAL-PIN	
	4	1	**131-4428**	2	BUSHING	
	5	1	*377-2508*	1	AXLE AS	
		1	**8W-6469**	2	BRACKET	
		1	**117-8721**	4	LUG (M10X1.5-THD)	
	6	1	**5P-8843**	2	SEAL-LIP TYPE	

381-4306 **AXLE GP-FRONT (**contd.**)** **i05957005**

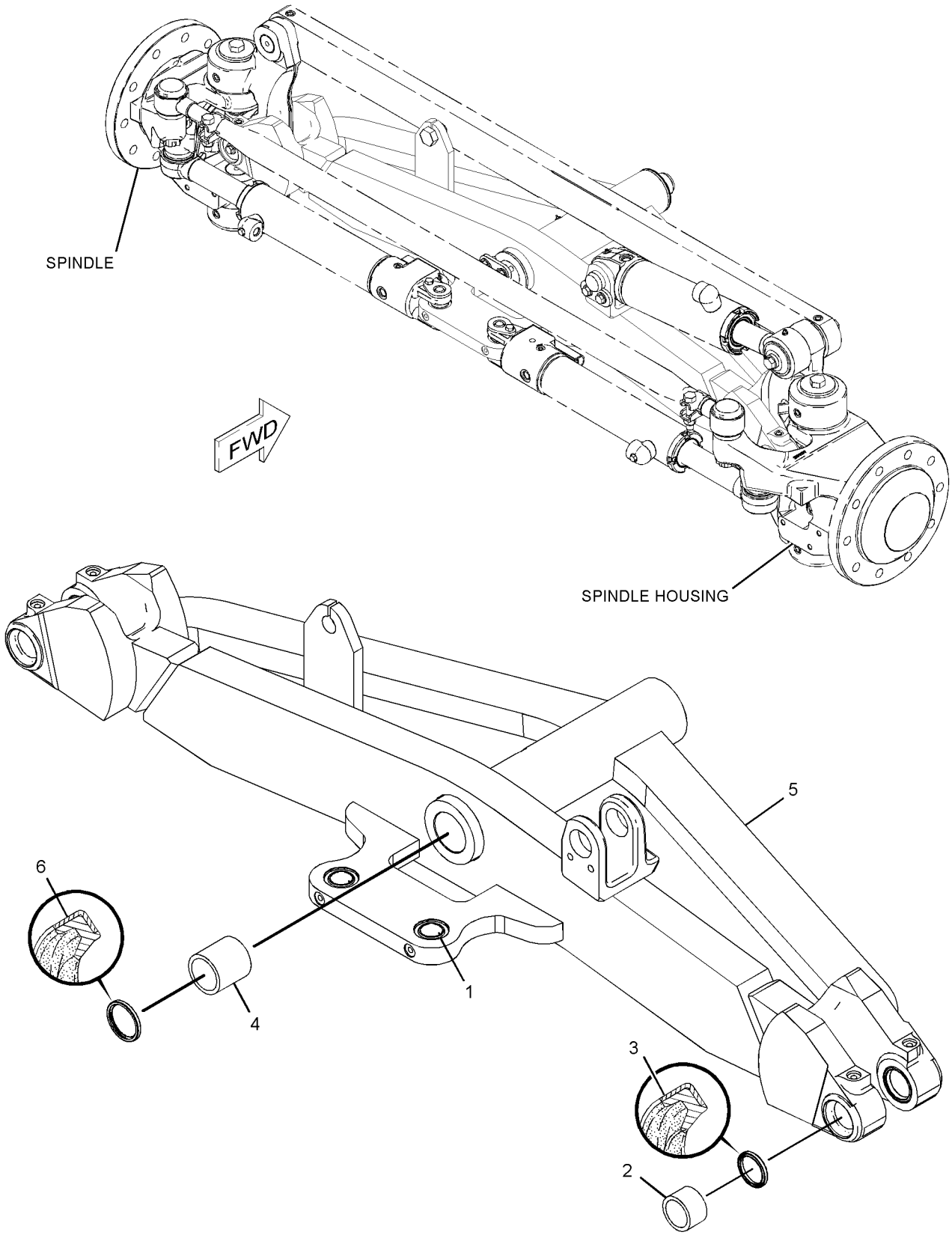

GRAPHIC #1 <END> g01394389

433-6117 AXLE GP-FRONT

S/N: B551-UP
NON ALL WHEEL DRIVE
PART OF 433-6116 AXLE AR-FRONT

SMCS-3020, 3282, 4303, 4305, 5225 **i07766795**

NOTE	REF NO	GRAPHIC REF	PART NUMBER	QTY	PART NAME 1 2 3 4 5 6 (PRODUCT LEVEL)	SEE PAGE
	1	2	**2G-8615**	4	WASHER-THRUST (2.015X3.625X0.11-IN THK)	
	2	2	**2G-8626**	2	WASHER-THRUST (2.02X3.63X0.16-IN THK)	
	3	2	**2G-8741**	4	RING-METAL SEAL	
	4	2	**2G-8777**	4	SEAL	
	5	2	**3B-8486**	2	FITTING-GREASE (1/8-27 PTF)	
	6	1,2	**3B-8489**	10	FITTING-GREASE (1/8-27 PTF)	
R	7	2	**5K-5288**	2	SEAL GP-DUO-CONE	
					(EACH INCLUDES)	
		2	**5K-5129**	2	RING-SEALING	
	8	2	**5T-0906**	2	COVER	
	9	2	**7D-8636**	2	CONE-BEARING	
	10	2	**7D-8637**	2	CUP-BEARING	
	11	2	**7D-8643**	2	RETAINER	
	12	2	**030-0060**	2	CUP-BEARING	
	13	2	**030-0061**	2	CONE-BEARING	
	14	1	**155-1142**	3	WASHER (17X71X5-MM THK)	
	15	2	**248-6225**	2	SPINDLE	
	16	2	**257-9799**	4	PIN	
	17	1	**260-7486**	2	PIN	
	18	1	**260-8602**	4	WASHER (11X53.8X3-MM THK)	
Y	19	1	*260-8713*	1	CYLINDER & MTG GP-WHEEL LEAN	534
Y	20	1	**274-6816**	1	LINK GP-STEERING	465
	21	1	**279-4357**	1	BAR AS	
	21A	1	**2G-8624**	2	BUSHING	
	22	1	**297-2537**	2	LOCK	
	23	1	**365-9252**	1	HOUSING-SPINDLE (LH)	
	24	2	**365-9253**	1	HOUSING-SPINDLE (RH)	
Y	25	1	**381-4306**	1	AXLE GP-FRONT	338
	26	1	**381-4308**	1	ARM AS (LH)	
	26A	1	**146-1842**	1	BUSHING	
	26B	1	**146-1843**	1	BUSHING	
		1	**279-4355**	1	PIN	
	27	2	**381-4309**	1	ARM AS (RH)	
	27A	2	**146-1842**	1	BUSHING	
	27B	2	**146-1843**	1	BUSHING	
		2	**279-4356**	1	PIN	
Y	28	1	*390-0593*	1	CYLINDER & MTG GP-STEERING	533
	29	1	**433-7105**	4	SEAL-PIN	
	30	2	*148-8395*	2	PLUG AS	
		2	**3K-0360**	1	SEAL-O-RING	
		2	**9S-8005**	1	PLUG (3/4-16-THD)	
	31	1	**198-4768**	3	WASHER-HARD (17.5X32X8-MM THK)	
	32	2	**266-7315**	2	WASHER-HARD (22X65X6-MM THK)	
	33	2	**2J-8163**	2	SEAL-O-RING	
	34	1	**3B-4618**	2	PIN-COTTER	
	35	1	**5M-6214**	4	PLUG (1/8-27 PTF)	

433-6117 **AXLE GP-FRONT (**contd.**)** **i07766795**

NOTE	REF NO	GRAPHIC REF	PART NUMBER	QTY	PART NAME 1 2 3 4 5 6 (PRODUCT LEVEL)	SEE PAGE
	36	2	**5P-8890**	2	SEAL-LIP TYPE	
M	37	2	**6V-5696**	6	BOLT (M12X1.75X80-MM)	
M	38	1	**6V-5844**	3	BOLT (M16X2X35-MM)	
M	39	2	**6V-8133**	2	BOLT (M24X3X80-MM)	
M	40	2	**7X-0851**	2	NUT (M24X3-THD)	
M	41	2	**7X-2561**	4	BOLT (M20X2.5X35-MM)	
	42	1	**7X-7729**	4	WASHER (11X25X3-MM THK)	
M	43	1	**8T-4137**	4	BOLT (M10X1.5X20-MM)	
	44	2	**9M-2092**	4	SEAL-O-RING	
M	45	2	**9X-2125**	4	BOLT-LOCKING (M10X1.5X25-MM)	
B	46	2	**2G-3865**	6	SHIM (0.127-MM THK)	
	47	1	**3B-8488**	2	FITTING-GREASE (1/8-27 PTF)	

B - USE AS REQUIRED
M - METRIC PART
R - REMANUFACTURED PART MAY BE AVAILABLE
Y - SEPARATE ILLUSTRATION

433-6117 **AXLE GP-FRONT (**contd.**)** **i07766795**

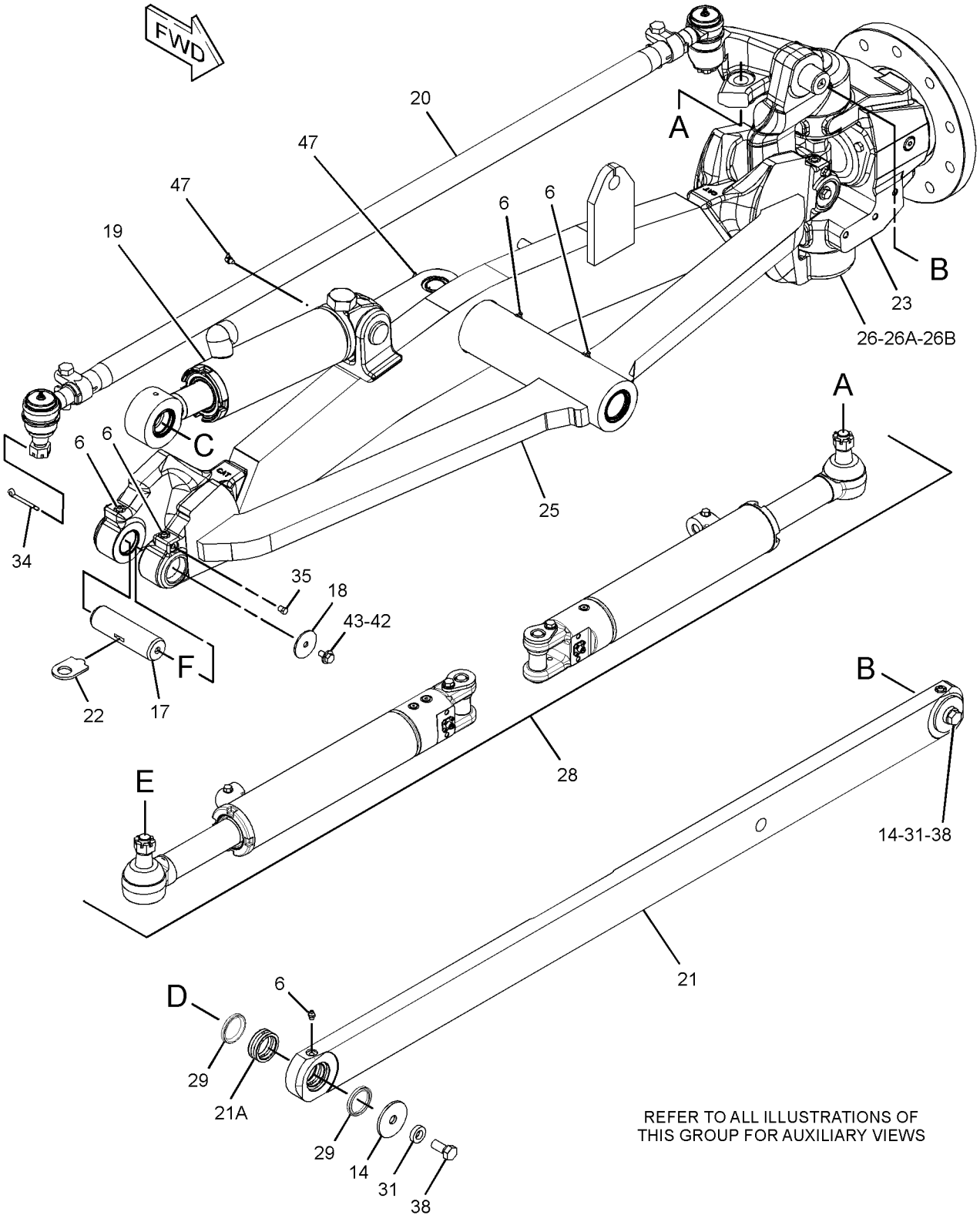

GRAPHIC #1 g06209307

433-6117 **AXLE GP-FRONT (**contd.**)** **i07766795**

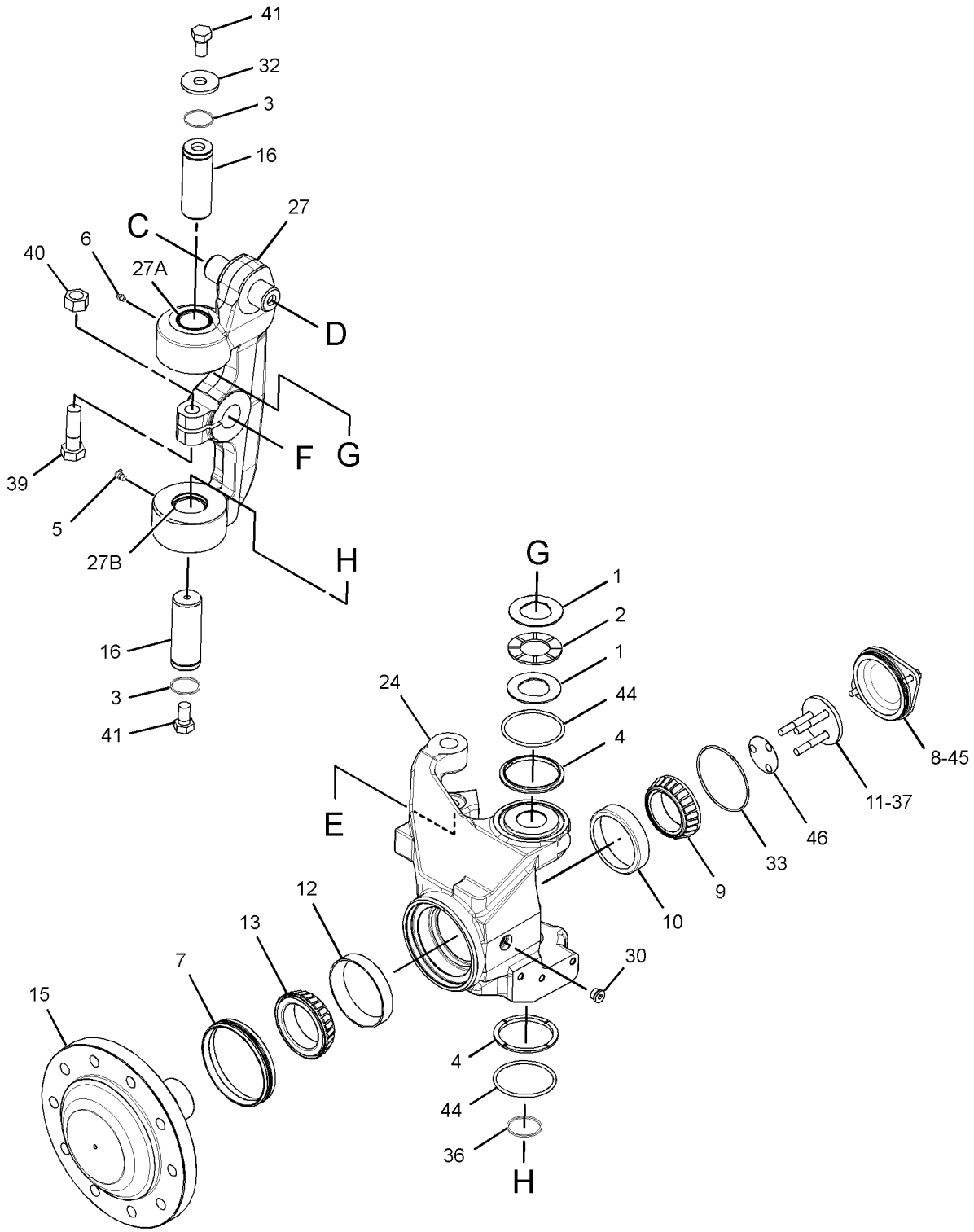

GRAPHIC #2 <END> g03421415

365-2125 AXLE GP-REAR

S/N: B551-UP

PART OF 349-6146 POWER TRAIN AR

SMCS-3278, 3282, 4068 **i07573035**

NOTE	REF NO	GRAPHIC REF	PART NUMBER	QTY	PART NAME 1 2 3 4 5 6 (PRODUCT LEVEL)	SEE PAGE
	1	1	**8L-5189**	1	SEAL-O-RING	
B	2	1	**194-8742**	1	SHIM (2.65-MM THK)	
	3	1	**201-8478**	1	PISTON	
	4	1	**209-0229**	1	SEAL	
	5	1	**209-0230**	1	SEAL	
B	6	1	**209-4527**	1	SHIM (4.3-MM THK)	
	7	1	**244-5682**	1	BEARING-SPECIAL	
	8	1	**248-0833**	1	PLUG AS-DRAIN (DIFFERENTIAL CASE)	
		1	**259-7138**	1	PLUG	
		1	**3S-9233**	1	SEAL-O-RING	
		1	**5L-4759**	1	SEAL-O-RING	
	9	1	**311-1502**	48	STUD (M20X2.5X225-MM)	
Y	10	1	*365-2124*	1	DIFFERENTIAL & BEVEL GEAR GP	370
	12	1	**279-4346**	1	BEARING AS-NEEDLE	
		1	**6I-9248**	1	BEARING-THRUST	
		1	**6I-9249**	2	RACE-THRUST BEARING	
	13	1	**280-4432**	1	TUBE AS	
	14	1	**317-1009**	1	WASHER (18X35X8-MM THK)	
	15	1	**280-4438**	1	PLUG	
Y	16	1	*288-6508*	1	DRIVE GP-FINAL (RH)	374
Y	17	1	*288-6509*	1	DRIVE GP-FINAL (LH)	376
	18	1	**288-9251**	1	HOUSING AS	
		1	**6V-5839**	4	WASHER (11X21X2.5-MM THK)	
M		1	**6V-5842**	4	BOLT (M10X1.5X40-MM)	
M		1	**8T-8441**	4	BOLT-SOCKET HEAD (M12X1.75X25-MM)	
	19	1	**367-7422**	2	SHAFT-SUN GEAR (35-TEETH)	
	20	1	*148-8369*	1	ELBOW AS	
		1	**6V-8628**	1	ELBOW	
		1	**3J-7354**	1	SEAL-O-RING	
		1	**4J-5477**	1	SEAL-O-RING	
	21	1	**198-4769**	48	WASHER (22X40X10-MM THK)	
	24	1	**4B-3365**	4	DOWEL	
	25	1	**4J-5351**	1	SEAL-O-RING	
	26	1	**4K-1388**	1	SEAL-O-RING	
M	27	1	**6V-5686**	8	BOLT (M16X2X50-MM)	
M	28	1	**6V-7742**	48	NUT-FULL (M20X2.5-THD)	
	29	1	**6V-8397**	1	SEAL-O-RING	
	30	1	**6V-9168**	1	NUT (11/16-16-THD)	
	31	1	**7M-8485**	1	SEAL-O-RING	
M	32	1	**8T-0088**	6	BOLT (M16X2X65-MM)	
	33	1	**9X-8268**	14	WASHER (17.5X30X3.5-MM THK)	

B - USE AS REQUIRED
M - METRIC PART
Y - SEPARATE ILLUSTRATION

365-2125 **AXLE GP-REAR (**contd.**)** **i07573035**

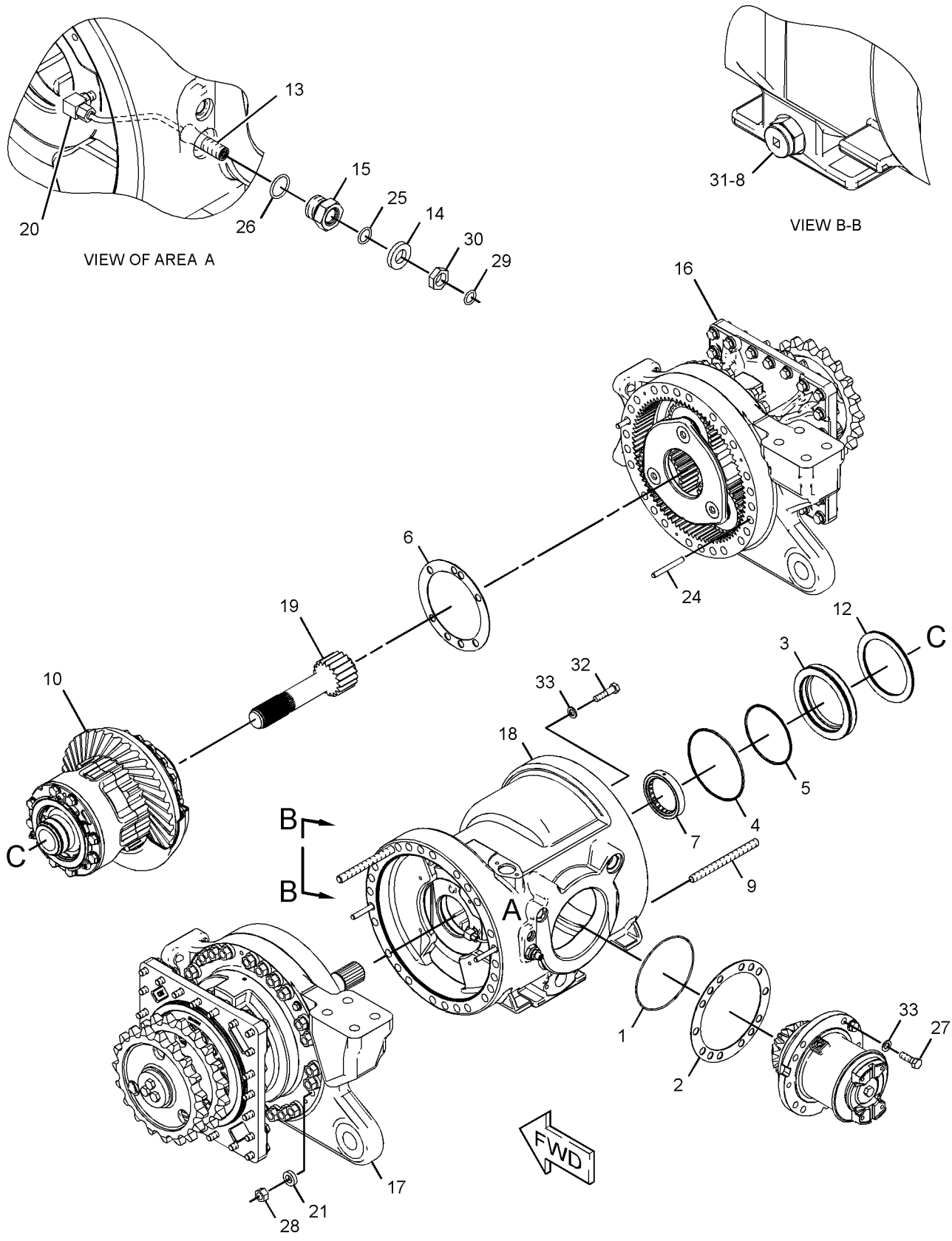

GRAPHIC #1 <END> g06364529

272-8009 CARRIER GP-FINAL DRIVE

S/N: B551-UP

PART OF 288-6508, 288-6509 DRIVE GP-FINAL

SMCS-4050 **i04404436**

NOTE	REF NO	GRAPHIC REF	PART NUMBER	QTY	PART NAME 1 2 3 4 5 6 (PRODUCT LEVEL)	SEE PAGE
	1	1	**1S-9110**	6	ROLLER AS	
	2	1	**265-9125**	3	RETAINER	
	3	1	**272-5444**	1	CARRIER-PLANETARY	
	4	1	**272-5446**	3	SHAFT	
	5	1	**272-5449**	3	SPACER (51.5X65.86X5.3-MM THK)	
	6	1	**365-5731**	3	GEAR-PLANETARY (32-TEETH)	
	7	1	**3E-4353**	6	WASHER-HARD (11X25X3-MM THK)	
M	8	1	**6V-7732**	6	BOLT (M10X1.5X25-MM)	
	9	1	**8X-8377**	6	WASHER (47.57X82.55X2.92-MM THK)	

M - METRIC PART

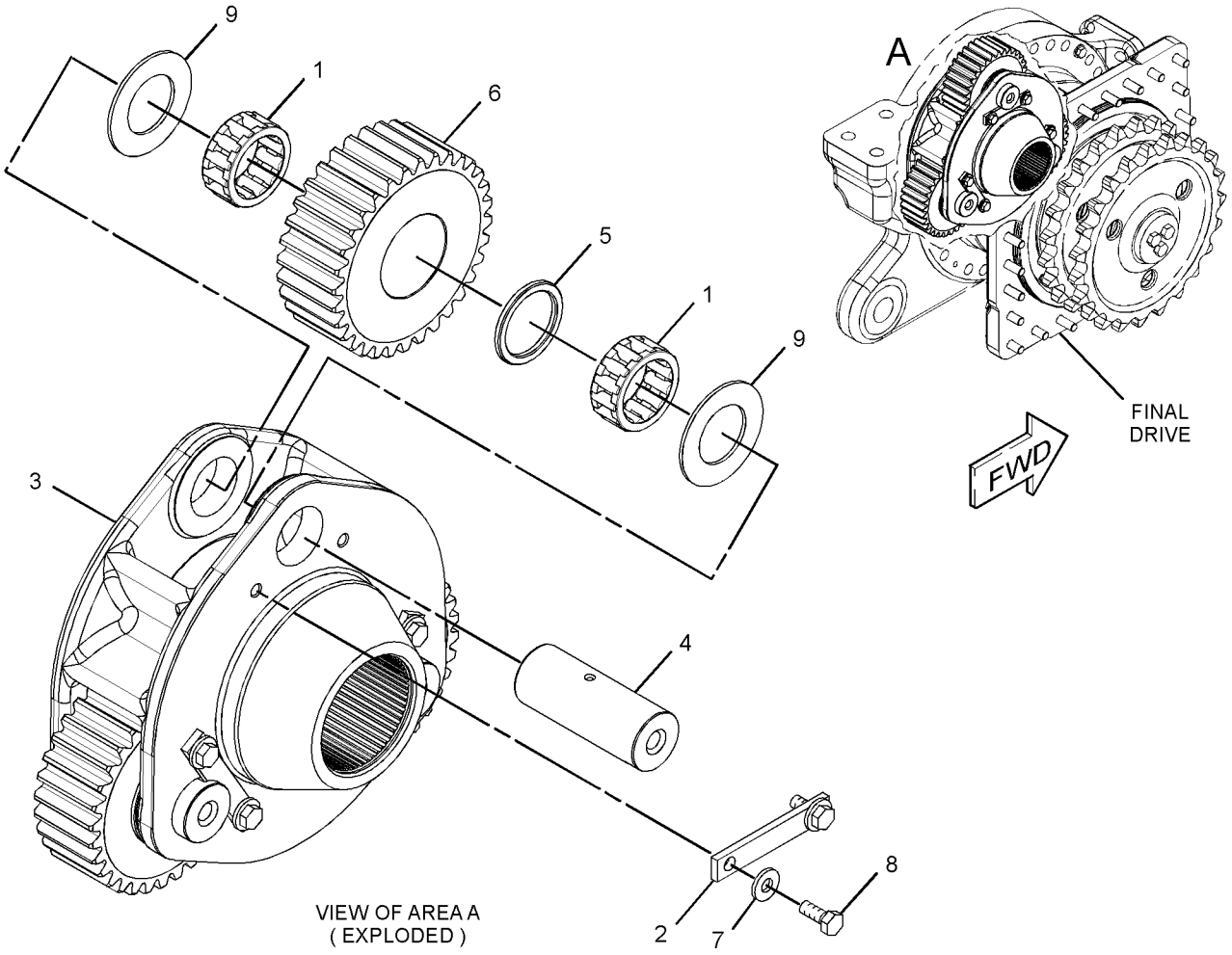

GRAPHIC #1 <END> g01330173

422-6861 CASE & PARTS GP-PLANETARY

S/N: JP21-UP; TSZ1-UP

PART OF 396-3303 TRANSMISSION AR

SMCS-3030, 3064, 3160 **i05649371**

NOTE	REF NO	GRAPHIC REF	PART NUMBER	QTY	PART NAME 1 2 3 4 5 6 (PRODUCT LEVEL)	SEE PAGE
	1	2	**3K-0715**	1	SEAL-O-RING	
	2	2	**5F-3092**	1	SEAL-O-RING	
	3	1	**5P-3863**	4	SEAL-O-RING	
	4	1	**6V-1720**	1	PLATE-SERIAL NUMBER (TRANSMISSION)	
	5	2	**8M-4992**	1	SEAL-O-RING	
	6	1	**9W-1454**	4	COVER	
	7	2	**9W-6465**	1	RETAINER-BEARING	
	8	2	**145-8039**	3	LOCK	
	9	1	*165-4929*	2	PLUG AS-MAGNETIC	
					(EACH INCLUDES)	
		1	**5P-4484**	1	PLUG-MAGNETIC	
		1	**7M-8485**	1	SEAL-O-RING	
	10	2	**188-2162**	1	COVER	
	11	2	*197-4977*	1	PLUG AS	
		2	**5P-4483**	1	PLUG	
		2	**7M-8485**	1	SEAL-O-RING	
	12	2	**233-8134**	1	GEAR AS (44-TEETH)	
		2	**4K-8603**	1	PLUG-CUP	
	13	2	**251-6673**	1	FILTER-MAGNETIC (PLANETARY)	
	14	2	**251-6674**	1	SCREEN-SUCTION	
	15	1	**253-5303**	1	GUARD	
	16	1	**253-5322**	1	GUARD	
	17	2	**263-7429**	1	TUBE AS	
	18	2	**284-2425**	1	COVER AS	
		2	**5M-7937**	2	DOWEL	
		2	**7T-6496**	1	PLUG	
	19	2	**290-3263**	1	PLATE	
	20	1	**295-8062**	1	BRACKET AS	
M		1	**8T-3490**	2	NUT-WELD (M10X1.5-THD)	
	21	1	**299-8905**	1	PLATE AS	
M		1	**8T-3490**	6	NUT-WELD (M10X1.5-THD)	
	22	2	**306-4148**	1	GEAR (38-TEETH)	
	25	1	**345-1999**	1	PLATE AS	
	26	1	**396-6551**	1	CASE AS-TRANSMISSION	
		1	**6Y-3083**	6	PLUG	
		1	**7T-6496**	2	PLUG	
		1	**8M-6521**	2	DOWEL	
	28	1	*148-8309*	1	ADAPTER AS	
		1	**2P-8421**	1	ADAPTER-O-RING	
		1	**3D-2824**	1	SEAL-O-RING	
	29	1	*148-8406*	5	PLUG AS	
					(EACH INCLUDES)	
		1	**7M-8485**	1	SEAL-O-RING	
		1	**9S-9334**	1	PLUG (1-5/16-12-THD)	
	30	1	*148-8409*	6	PLUG AS	
					(EACH INCLUDES)	
		1	**3D-2824**	1	SEAL-O-RING	
		1	**9S-8008**	1	PLUG (1-1/16-12-THD)	

422-6861 **CASE & PARTS GP-PLANETARY (**contd.**)** **i05649371**

NOTE	REF NO	GRAPHIC REF	PART NUMBER	QTY	PART NAME 1 2 3 4 5 6 (PRODUCT LEVEL)	SEE PAGE
M	31	2	**160-8492**	1	BOLT (M10X1.5X85-MM)	
	32	1	*164-4180*	1	PLUG AS	
		1	**7M-8485**	1	SEAL-O-RING	
		1	**9S-4181**	1	PLUG (1-5/16-12-THD)	
	33	1	*164-5567*	1	COUPLER AS-QUICK DISCONNECT (MALE)	
		1	**6V-3965**	1	FITTING (QUICK DISCONNECT)	
		1	**214-7568**	1	SEAL-O-RING	
	34	1	*164-5619*	5	PLUG AS	
					(EACH INCLUDES)	
		1	**2M-9780**	1	SEAL-O-RING	
		1	**9S-8006**	1	PLUG (7/8-14-THD)	
	35	1	*183-7262*	2	PLUG AS	
					(EACH INCLUDES)	
		1	**2S-4078**	1	SEAL-O-RING	
		1	**9S-8010**	1	PLUG	
	36	2	**1B-5170**	1	PLUG-PIPE	
	37	2	**1T-0043**	1	BALL BEARING	
	38	2	**1T-0205**	1	RING-SNAP	
	39	2	**2H-6489**	1	RACE-BEARING OUTER	
	40	2	**2S-3029**	1	BALL BEARING	
	41	2	**4J-8996**	2	SEAL-O-RING	
	42	2	**4M-6108**	2	RACE-BEARING OUTER	
	43	1	**6I-8642**	4	RACE-BEARING OUTER	
	44	2	**5P-3924**	2	RACE-BEARING OUTER	
	45	1	**6V-0852**	1	CAP-DUST	
M	46	2	**6V-1820**	1	BOLT (M10X1.5X30-MM)	
M	47	2	**6V-3940**	4	BOLT (M8X1.25X25-MM)	
	48	2	**6V-5839**	2	WASHER (11X21X2.5-MM THK)	
M	49	2	**6V-6317**	2	BOLT (M10X1.5X20-MM)	
M	50	2	**6V-8212**	1	BOLT (M10X1.5X16-MM)	
M	51	2	**8C-3210**	2	BOLT (M6X1X16-MM)	
	52	2	**8T-0707**	1	RING-RETAINING (INTERNAL)	
	53	1	**8T-4121**	50	WASHER-HARD (11X21X2.5-MM THK)	
M	54	1	**8T-4137**	7	BOLT (M10X1.5X20-MM)	
M	55	1,2	**8T-4189**	4	BOLT (M8X1.25X20-MM)	
M	56	1	**8T-4196**	43	BOLT (M10X1.5X35-MM)	
M	57	1	**8T-4908**	12	BOLT (M8X1.25X25-MM)	
	58	1	**9M-1974**	1	WASHER-HARD (8.8X16X2-MM THK)	
	59	1	**9M-2042**	1	RACE-BEARING OUTER	
	60	2	**9W-7038**	1	RING-SNAP	
	61	2	**9X-8256**	2	WASHER (6.6X12X2-MM THK)	
	62	1	**345-1998**	1	PLATE AS	
	63	1	**6V-5759**	2	SEAL-O-RING	

M - METRIC PART

422-6861 **CASE & PARTS GP-PLANETARY (**contd.**)** **i05649371**

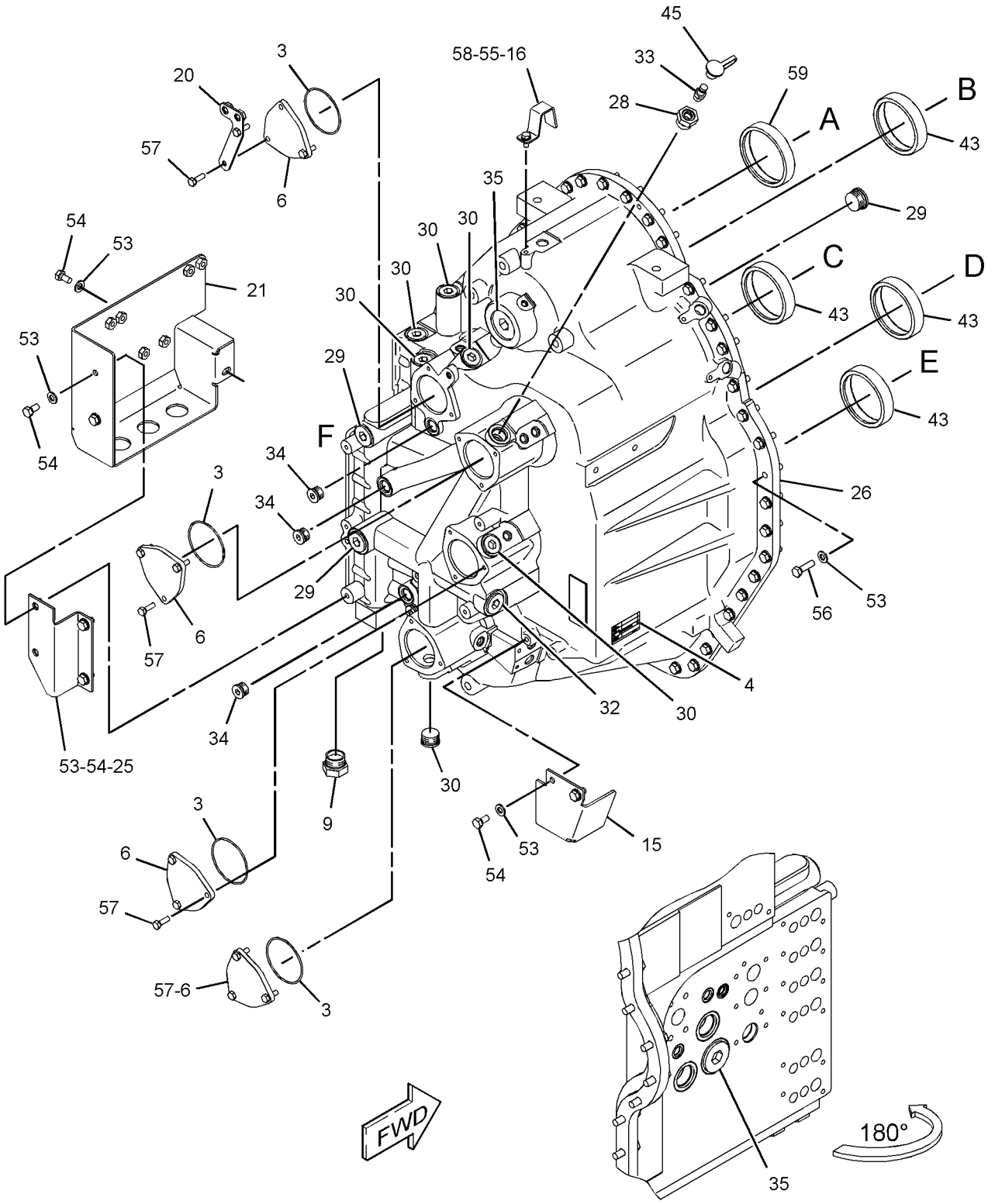

REFER TO ALL ILLUSTRATIONS OF THIS GROUP FOR AUXILIARY VIEWS

VIEW OF AREA F
COVER PLATE REMOVED
(299-8905)

GRAPHIC #1

g03583982

422-6861 **CASE & PARTS GP-PLANETARY (**contd.**)** **i05649371**

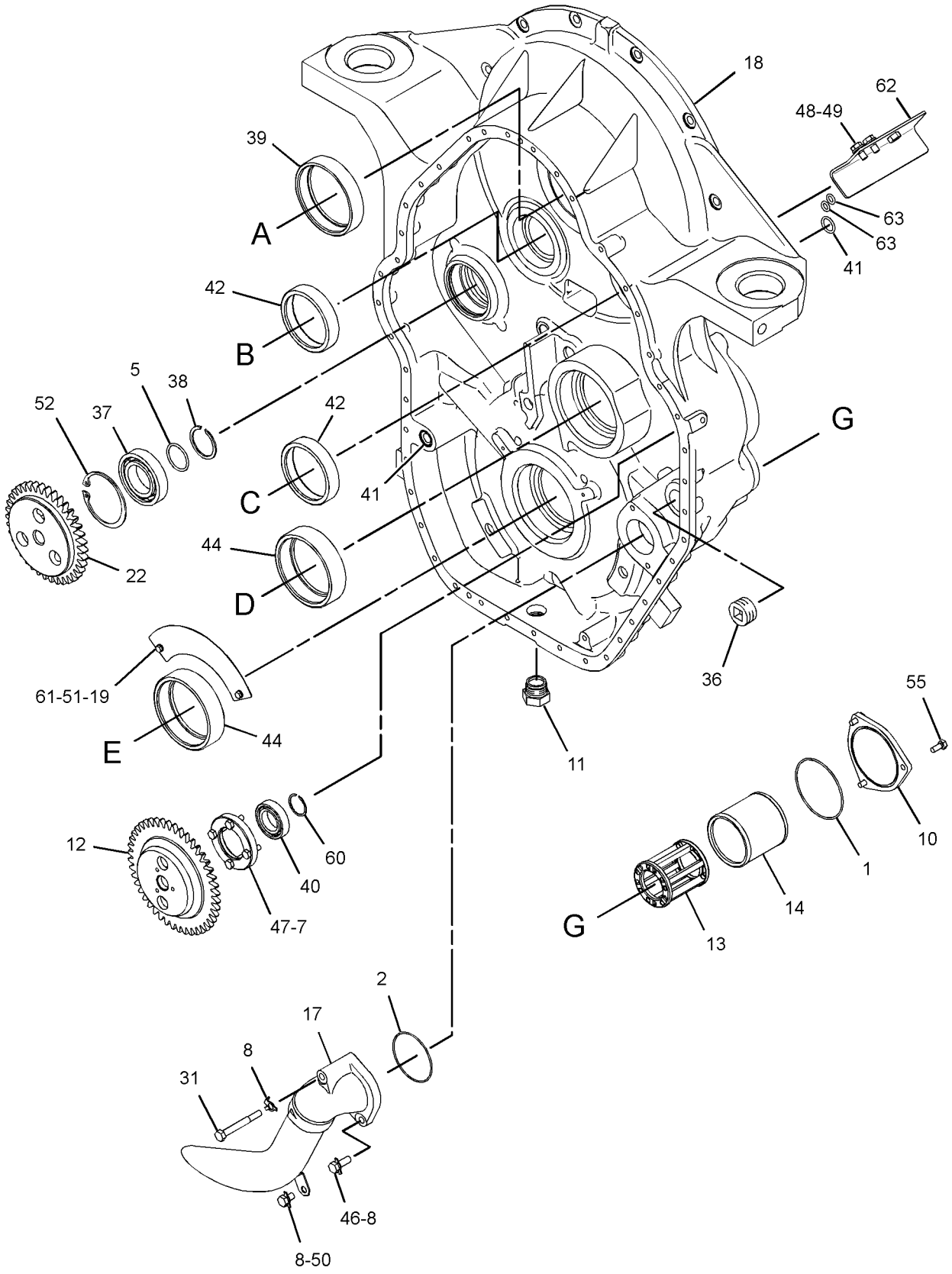

GRAPHIC #2 <END> g03583988

297-8776 CHAIN GP-DRIVE–TANDEM

S/N: B551-UP

PART OF 349-6146 POWER TRAIN AR

SMCS-3261, 4063

i02796713

NOTE	REF NO	GRAPHIC REF	PART NUMBER	QTY	PART NAME 1 2 3 4 5 6 (PRODUCT LEVEL)	SEE PAGE
	1	1	**297-8777**	4	CHAIN	
					(EACH INCLUDES)	
		1	**297-8778**	1	LINK-CONNECTING	

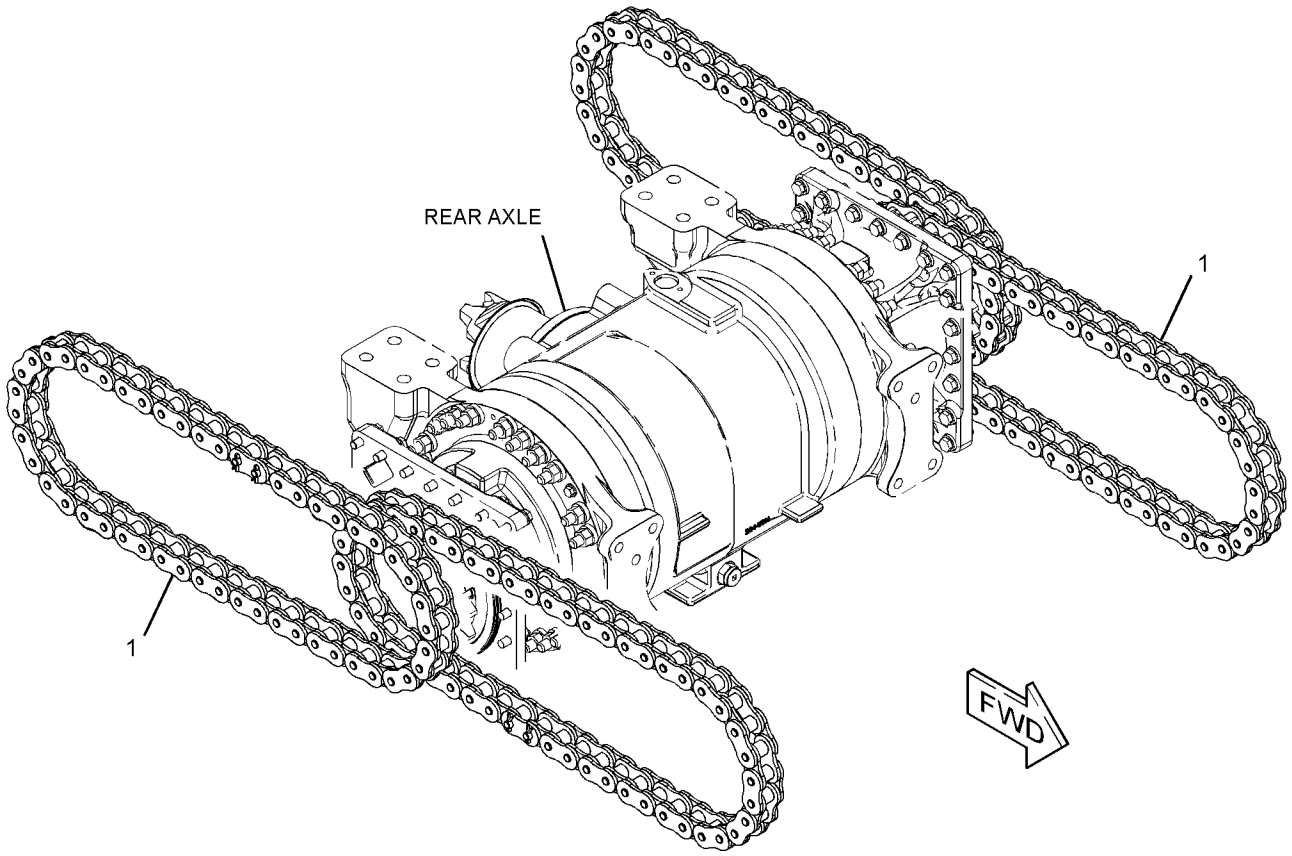

GRAPHIC #1 <END> g01374263

235-2412 CLUTCH GP-TRANSMISSION—FORWARD

S/N: JP21-UP; TSZ1-UP

PART OF 396-3303 TRANSMISSION AR

SMCS-3063, 3155, 3170 **i07318399**

NOTE	REF NO	GRAPHIC REF	PART NUMBER	QTY	PART NAME 1 2 3 4 5 6 (PRODUCT LEVEL)	SEE PAGE
	1	1	**6I-8911**	5	DISC-FRICTION	
	2	1	**6I-8912**	6	DISC-FRICTION	
	3	1	**6I-9502**	6	PLATE-CLUTCH	
	4	1	**6Y-1115**	4	RING-HALF	
	5	1	**6Y-1116**	1	GEAR AS (43-TEETH)	
	6	1	**6Y-1119**	1	CARRIER-SEAL	
	7	1	**7G-4822**	3	RING-SEAL	
	8	1	**7T-4897**	2	DISC-THRUST	
	9	1	**8E-5742**	2	RING-SEAL (INTERNAL)	
	10	1	**8E-8319**	4	DISC-THRUST	
	11	1	**8F-3469**	4	SEAL-O-RING	
	12	1	**9U-8815**	2	SPRING	
	13	1	**9U-9995**	6	PLATE-CLUTCH	
	14	1	**9W-2029**	1	RACE-THRUST BEARING	
	15	1	**9W-9371**	2	RING-SEAL	
	16	1	**9W-9905**	4	RING-LOCK	
	17	1	**108-5751**	2	DISC-FRICTION	
	18	1	**132-9625**	1	GEAR AS (50-TEETH)	
	19	1	**509-4136**	2	PISTON	
	20	1	**159-0927**	1	DISC-FRICTION	
	21	1	**161-6713**	2	PLATE-LOCK	
	22	1	**171-7091**	1	SHAFT AS	
	23	1	**247-8629**	2	VALVE AS	
	24	1	**247-9711**	2	HUB AS	
	25	1	**2K-1738**	1	BEARING-INNER	
	26	1	**4M-6107**	1	BEARING-INNER	
M	27	1	**5C-7423**	4	SCREW (M6X1X16-MM)	
	28	1	**5H-8985**	1	PIN-SPRING	
M	29	1	**6V-1819**	2	BOLT (M10X1.5X100-MM)	
	30	1	**8E-1263**	2	BEARING-ROLLER	

M - METRIC PART

235-2412 **CLUTCH GP-TRANSMISSION (**contd.**)** **i07318399**

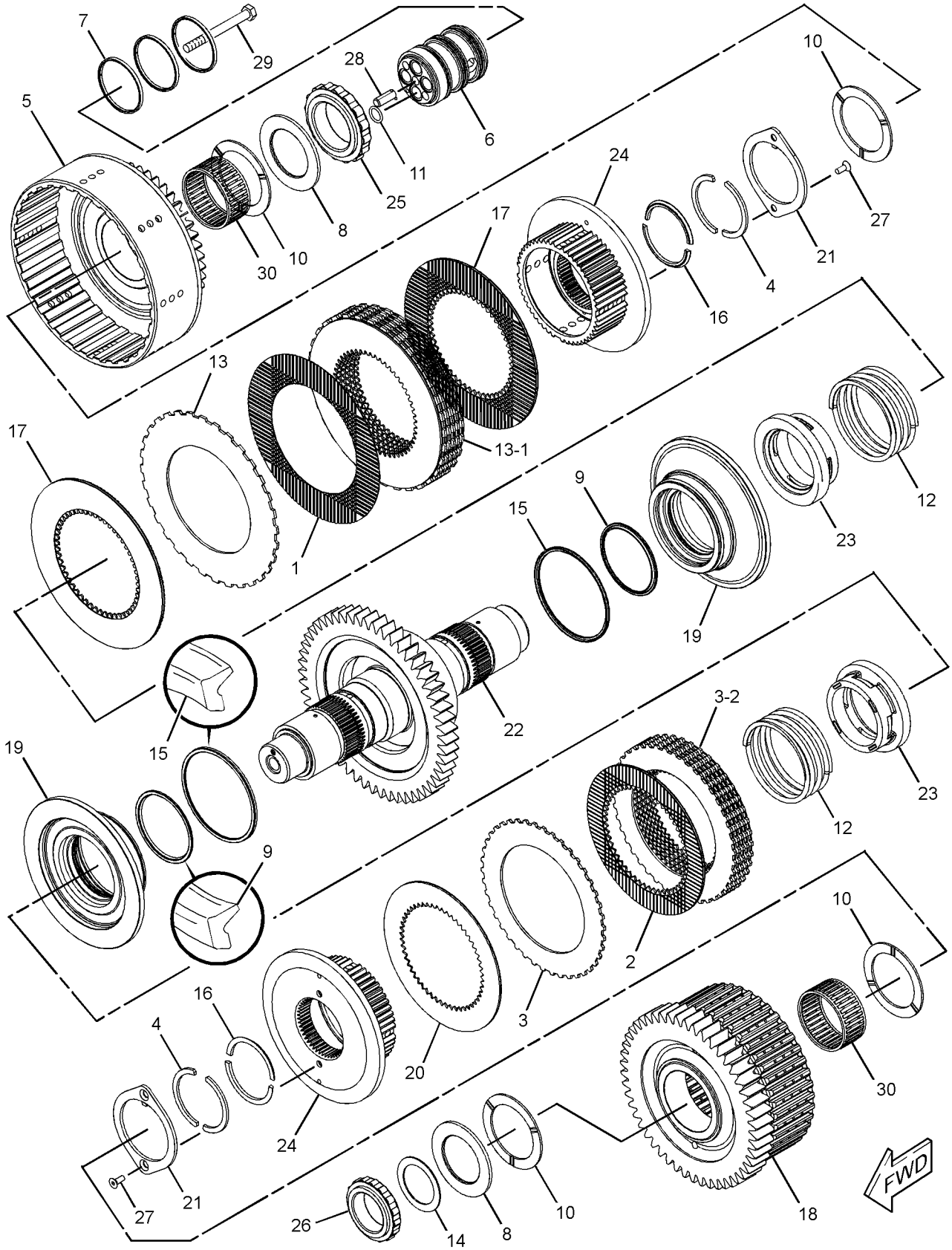

GRAPHIC #1 <END> g06282023

235-2413 CLUTCH GP-TRANSMISSION—REVERSE, SECOND

S/N: JP21-UP; TSZ1-UP

PART OF 396-3303 TRANSMISSION AR

SMCS-3063, 3155, 3170 **i06860505**

NOTE	REF NO	GRAPHIC REF	PART NUMBER	QTY	PART NAME 1 2 3 4 5 6 (PRODUCT LEVEL)	SEE PAGE
	1	1	**131-3919**	1	BEARING-ROLLER	
	2	1	**4M-6107**	1	BEARING-INNER	
	3	1	**8E-1263**	1	BEARING-ROLLER	
	4	1	**6I-8912**	10	DISC-FRICTION	
	5	1	**6I-9502**	9	PLATE-CLUTCH	
	6	1	**6Y-0976**	1	GEAR (29-TEETH)	
	7	1	**6Y-1114**	1	LOCKWASHER	
	8	1	**6Y-1115**	4	RING-HALF	
	9	1	**6Y-1119**	1	CARRIER-SEAL	
	10	1	**509-4135**	1	PISTON	
	11	1	**6Y-1888**	1	SPACER	
	12	1	**6Y-1891**	1	HUB AS	
	13	1	**6Y-2307**	1	SPACER (61X82.55X43.88-MM THK)	
	14	1	**7G-4822**	3	RING-SEAL	
	15	1	**7T-4897**	1	DISC-THRUST	
	16	1	**8E-5734**	1	RING-SEAL EXTENSION	
	17	1	**8E-5742**	2	RING-SEAL (INTERNAL)	
	18	1	**8E-8319**	4	DISC-THRUST	
	19	1	**8F-3469**	4	SEAL-O-RING	
	20	1	**9U-8815**	1	SPRING	
	21	1	**9W-2029**	1	RACE-THRUST BEARING	
	22	1	**9W-9371**	1	RING-SEAL	
	23	1	**9W-9905**	4	RING-LOCK	
	24	1	**102-5881**	1	SPRING-WAVE	
	25	1	**132-9628**	1	GEAR AS (44-TEETH)	
		1	**6Y-1895**	1	BUSHING	
	26	1	**509-4136**	1	PISTON	
	27	1	**159-0927**	1	DISC-FRICTION	
	28	1	**161-6713**	1	PLATE-LOCK	
	29	1	**171-7095**	1	SHAFT AS	
	30	1	**247-8629**	1	VALVE AS	
	31	1	**247-9711**	1	HUB AS	
	32	1	**248-2886**	1	GEAR AS (46-TEETH)	
M	33	1	**5C-7423**	2	SCREW (M6X1X16-MM)	
	34	1	**5H-8985**	1	PIN-SPRING	
M	35	1	**6V-1819**	2	BOLT (M10X1.5X100-MM)	

M - METRIC PART

235-2413 **CLUTCH GP-TRANSMISSION (**contd.**)** **i06860505**

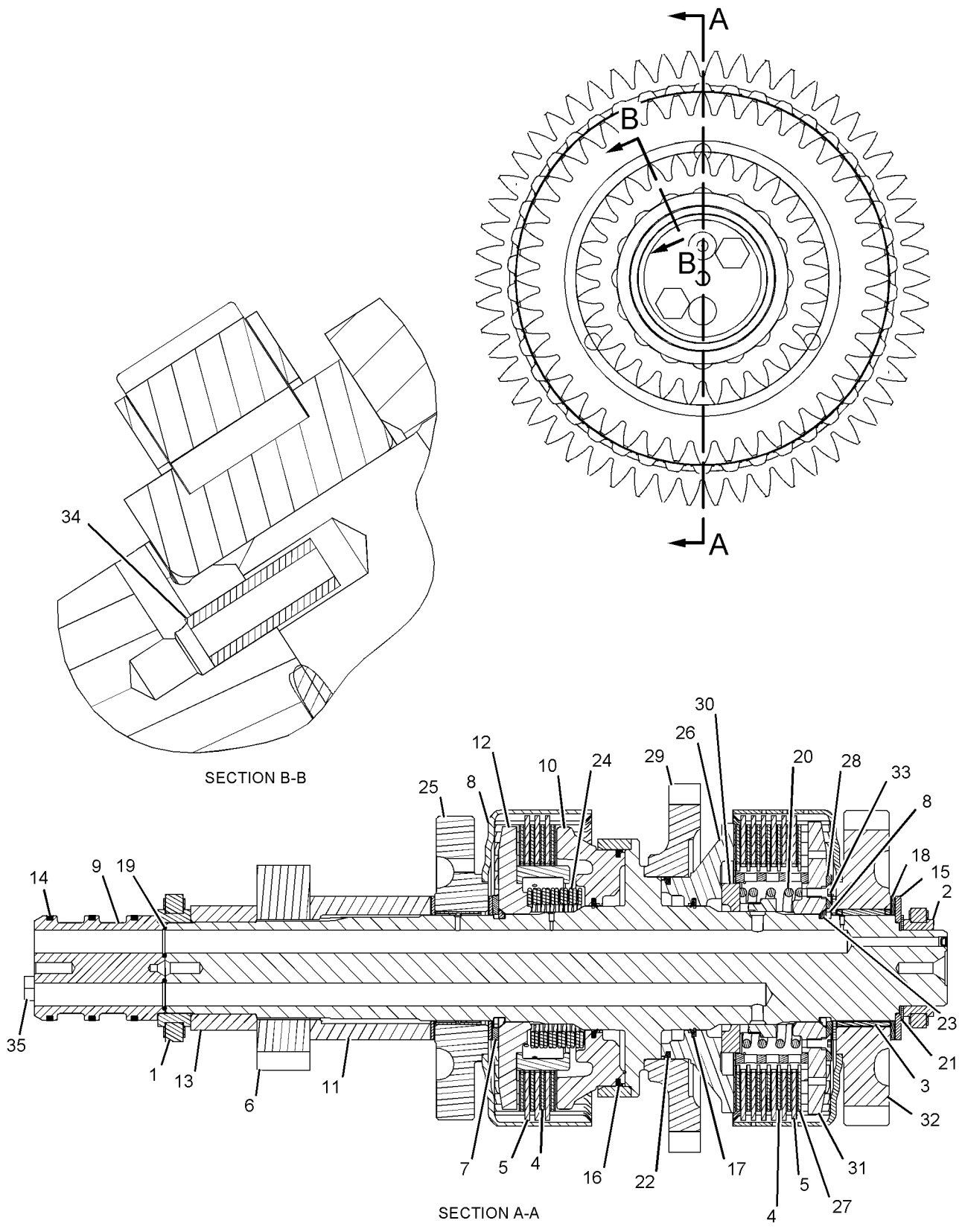

GRAPHIC #1 <END> g01132487

235-2414 CLUTCH GP-TRANSMISSION—FIRST, THIRD

S/N: JP21-UP; TSZ1-UP

PART OF 396-3303 TRANSMISSION AR

SMCS-3063, 3155, 3170 **i06860509**

NOTE	REF NO	GRAPHIC REF	PART NUMBER	QTY	PART NAME 1 2 3 4 5 6 (PRODUCT LEVEL)	SEE PAGE
	1	1	**131-3919**	1	BEARING-ROLLER	
	2	1	**3B-8921**	1	BEARING-INNER	
	3	1	**6I-8912**	10	DISC-FRICTION	
	4	1	**6I-9502**	8	PLATE-CLUTCH	
	5	1	**6Y-0983**	1	GEAR (32-TEETH)	
	6	1	**6Y-1001**	1	GEAR (71-TEETH)	
	7	1	**6Y-1114**	2	LOCKWASHER	
	8	1	**6Y-1115**	4	RING-HALF	
	9	1	**509-4135**	2	PISTON	
	10	1	**6Y-1891**	1	HUB AS	
	11	1	**6Y-2312**	1	HUB AS	
	12	1	**6Y-2425**	1	CARRIER-SEAL	
	13	1	**7G-4822**	3	RING-SEAL	
	14	1	**7T-4897**	2	DISC-THRUST	
	15	1	**8E-5734**	2	RING-SEAL EXTENSION	
	16	1	**8E-5742**	2	RING-SEAL (INTERNAL)	
	17	1	**8E-8319**	4	DISC-THRUST	
	18	1	**8F-3469**	3	SEAL-O-RING	
	19	1	**9W-9905**	4	RING-LOCK	
	20	1	**102-5881**	2	SPRING-WAVE	
	21	1	**132-9630**	1	GEAR AS (54-TEETH)	
		1	**6Y-1895**	1	BUSHING	
	22	1	**132-9633**	1	GEAR AS (79-TEETH)	
		1	**6Y-2419**	1	BUSHING	
	23	1	**249-6718**	1	SHAFT AS	
	24	1	**5H-8985**	1	PIN-SPRING	
M	25	1	**6V-1819**	2	BOLT (M10X1.5X100-MM)	

M - METRIC PART

235-2414 **CLUTCH GP-TRANSMISSION (**contd.**)** **i06860509**

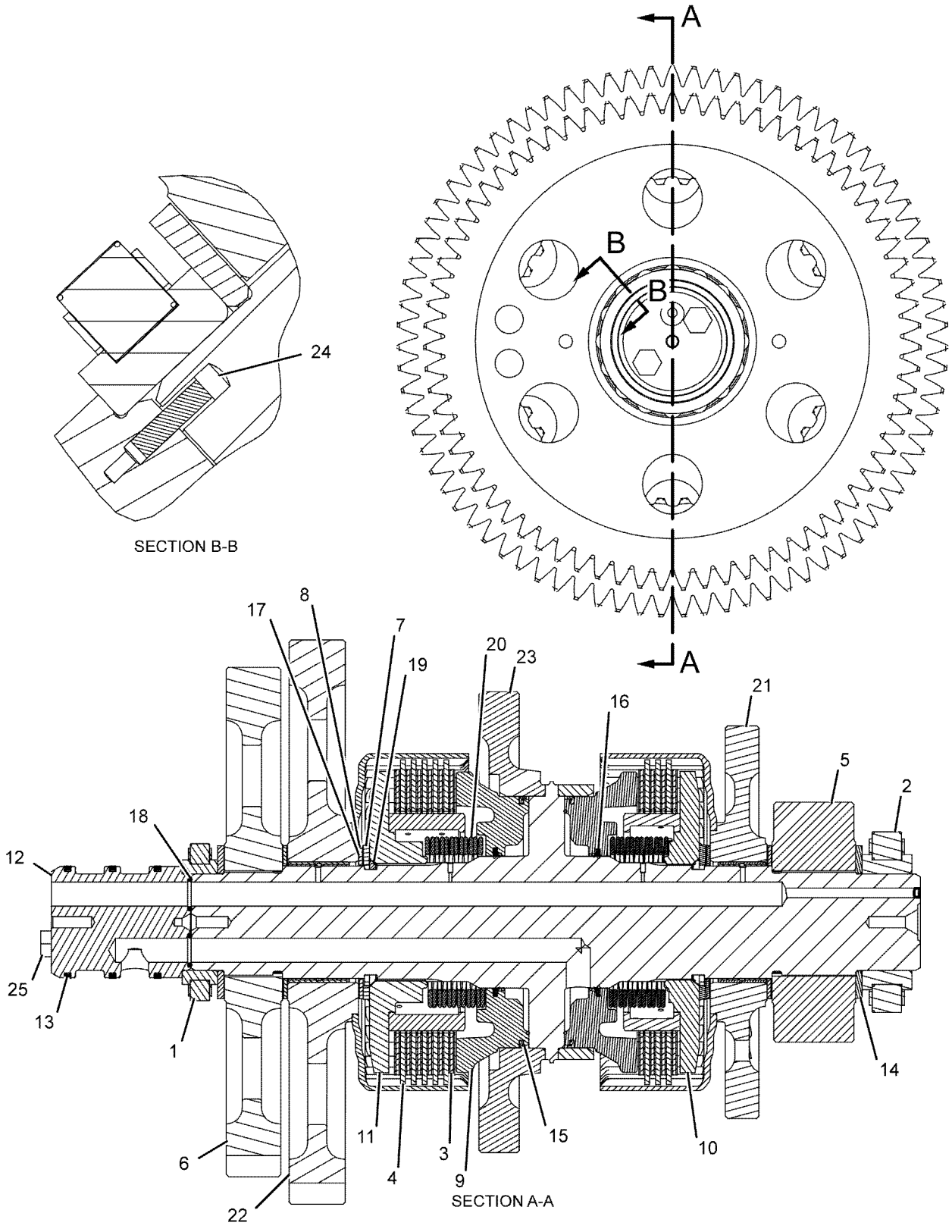

GRAPHIC #1 <END> g01132548

247-8303 CLUTCH GP-TRANSMISSION—HIGH, LOW

S/N: JP21-UP; TSZ1-UP

PART OF 396-3303 TRANSMISSION AR

SMCS-3063, 3155, 3170 **i06860400**

NOTE	REF NO	GRAPHIC REF	PART NUMBER	QTY	PART NAME 1 2 3 4 5 6 (PRODUCT LEVEL)	SEE PAGE
	1	1	**131-3919**	1	BEARING-ROLLER	
	2	1	**3B-8921**	1	BEARING-INNER	
	3	1	**3P-0337**	8	PLATE-CLUTCH	
	4	1	**6I-8912**	6	DISC-FRICTION	
	5	1	**6I-9502**	5	PLATE-CLUTCH	
	6	1	**6Y-1114**	2	LOCKWASHER	
	7	1	**6Y-1115**	4	RING-HALF	
	8	1	**509-4135**	1	PISTON	
	9	1	**6Y-1890**	1	RING-RETAINING	
	10	1	**6Y-2312**	1	HUB AS	
	11	1	**6Y-2425**	1	CARRIER-SEAL	
	12	1	**509-4138**	1	PISTON	
	13	1	**509-4139**	1	PISTON-BALANCE	
	14	1	**6Y-7981**	7	DISC-FRICTION	
	15	1	**7G-4822**	3	RING-SEAL	
	16	1	**7T-4897**	1	DISC-THRUST	
	17	1	**260-7596**	1	ROTOR	
	18	1	**8E-1911**	1	GEAR AS (82-TEETH)	
		1	**9W-6467**	2	BUSHING	
	19	1	**8E-5734**	1	RING-SEAL EXTENSION	
	20	1	**8E-5736**	2	RING-SEAL EXTENSION	
	21	1	**8E-5742**	2	RING-SEAL (INTERNAL)	
	22	1	**8E-8319**	4	DISC-THRUST	
	23	1	**8F-3469**	3	SEAL-O-RING	
	24	1	**8M-4295**	15	SPRING	
	25	1	**9W-9905**	4	RING-LOCK	
	26	1	**102-5881**	1	SPRING-WAVE	
	27	1	**132-9637**	1	GEAR AS (43-TEETH)	
		1	**9W-6467**	2	BUSHING	
	28	1	**218-3339**	1	HUB AS	
	29	1	**247-9930**	1	SHAFT AS	
		1	**1P-0604**	1	PLUG-CUP	
	30	1	**5H-8985**	1	PIN-SPRING	
M	31	1	**6V-1819**	2	BOLT (M10X1.5X100-MM)	

M - METRIC PART

247-8303 **CLUTCH GP-TRANSMISSION (**contd.**)** **i06860400**

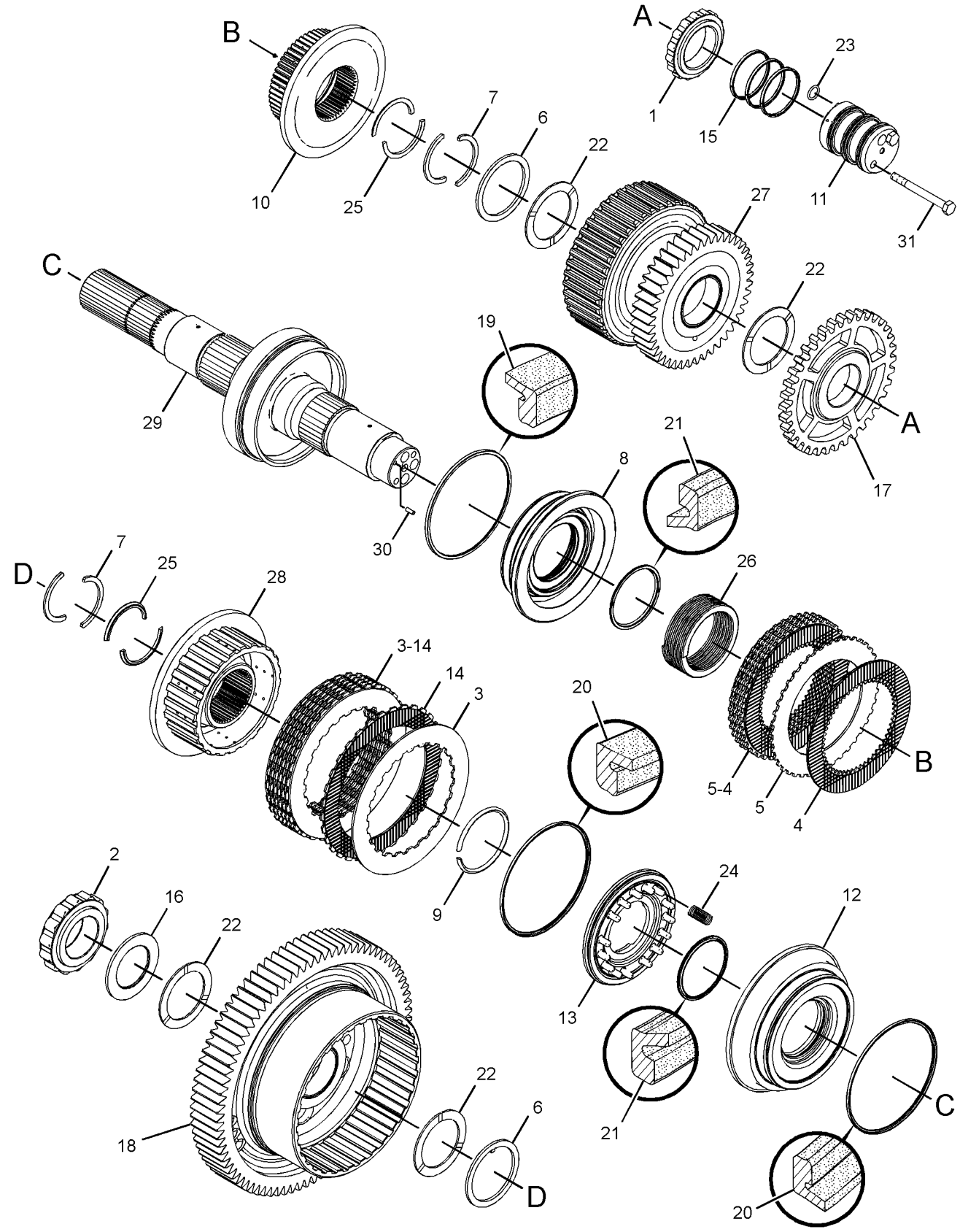

GRAPHIC #1 <END> g01701375

356-2977 CONTROL GP-DIFFERENTIAL LOCK

S/N: B551-UP

PART OF 349-6146 POWER TRAIN AR

SMCS-3264 **i04322872**

NOTE	REF NO	GRAPHIC REF	PART NUMBER	QTY	PART NAME 1 2 3 4 5 6 (PRODUCT LEVEL)	SEE PAGE
	1	1	*148-8443*	1	TEE AS	
		1	**7X-2459**	1	ADAPTER-TEE	
		1	**3J-1907**	1	SEAL-O-RING	
		1	**6V-8397**	1	SEAL-O-RING	
	2	1	*164-5567*	1	COUPLER AS-QUICK DISCONNECT (MALE)	
		1	**6V-3965**	1	FITTING (QUICK DISCONNECT)	
		1	**214-7568**	1	SEAL-O-RING	
	3	1	**276-9459**	1	TUBE AS	
	4	1	**280-7066**	1	TUBE AS	
	5	1	**313-6460**	1	PLATE AS	
	6	1	*148-8318*	1	CONNECTOR AS	
		1	**6V-8634**	1	CONNECTOR	
		1	**3K-0360**	1	SEAL-O-RING	
		1	**6V-8397**	1	SEAL-O-RING	
	7	1	*148-8368*	1	ELBOW AS	
		1	**6V-8627**	1	ELBOW	
		1	**3J-1907**	1	SEAL-O-RING	
		1	**4J-5477**	1	SEAL-O-RING	
	8	1	*148-8378*	1	ELBOW AS	
		1	**6V-8724**	1	ELBOW	
		1	**3J-1907**	1	SEAL-O-RING	
		1	**6V-8397**	1	SEAL-O-RING	
Y	9	1	**250-2139**	1	VALVE & MTG GP-SOLENOID (DIFFERENTIAL LOCK)	411
	10	1	**6V-0852**	1	CAP-DUST	
	11	1	**8T-4121**	2	WASHER-HARD (11X21X2.5-MM THK)	
M	12	1	**8T-5005**	2	BOLT (M10X1.5X70-MM)	

M - METRIC PART
Y - SEPARATE ILLUSTRATION

356-2977 **CONTROL GP-DIFFERENTIAL LOCK (**contd.**)** **i04322872**

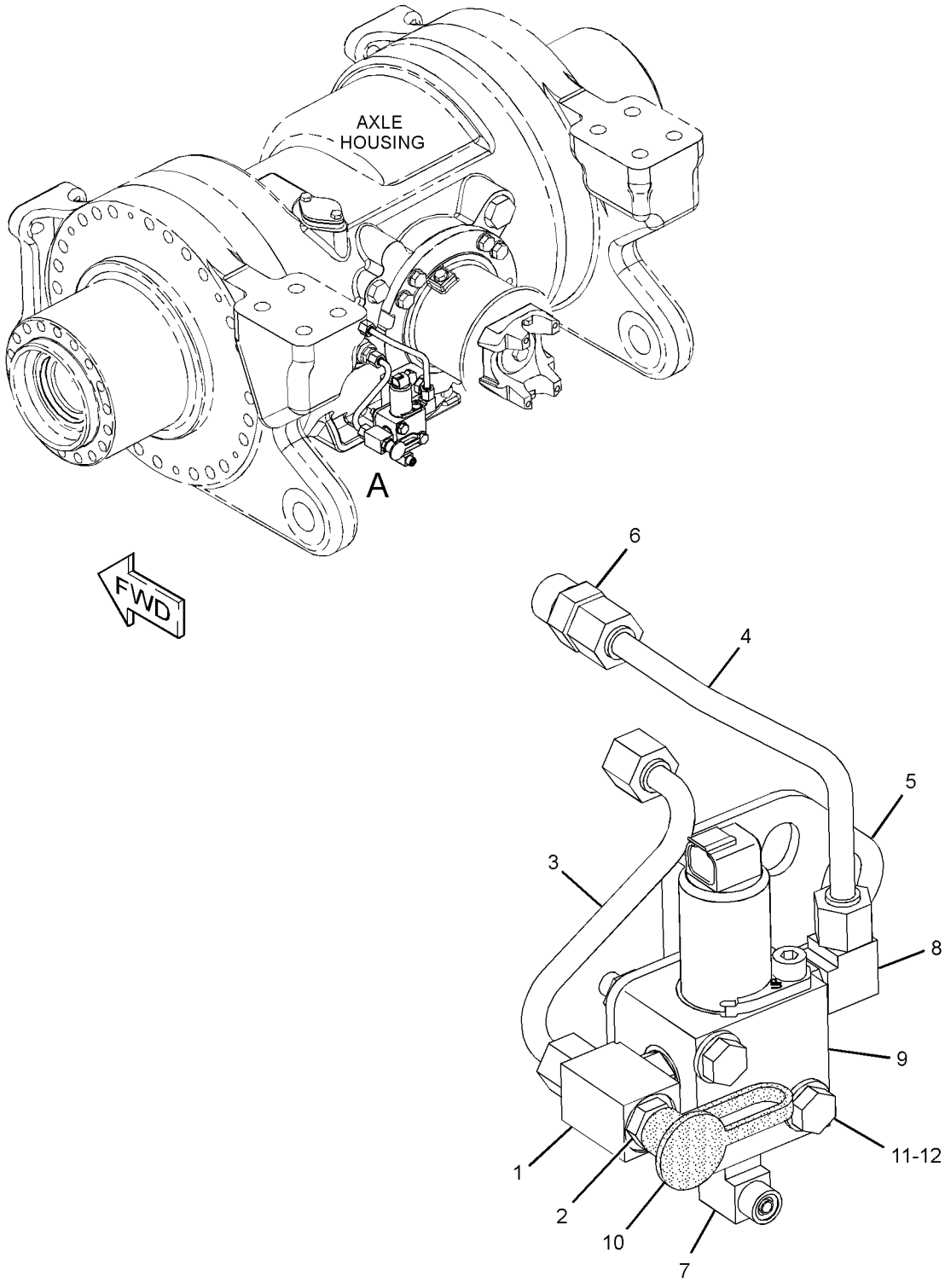

VIEW OF AREA A

GRAPHIC #1 <END> g02167865

423-4654 CONTROL GP-TRANSMISSION HYD

S/N: JP21-UP; TSZ1-UP

PART OF 396-3303 TRANSMISSION AR

SMCS-3073, 3167 **i07772241**

NOTE	REF NO	GRAPHIC REF	PART NUMBER	QTY	PART NAME 1 2 3 4 5 6 (PRODUCT LEVEL)	SEE PAGE
	1	2	**2P-1692**	1	SEAL-O-RING	
	2	1,2	**6D-7889**	8	SEAL-O-RING	
	3	2	**148-1925**	2	VALVE-RELIEF	
	4	1	**155-5114**	3	SPACER-SPECIAL	
Y	5	2	*214-2484*	2	SENSOR GP-SPEED (TRANSMISSION OUTPUT)	257
Y	6	1,2	*214-2485*	3	SENSOR GP-SPEED (TORQUE CONVERTER OUTPUT)	258
Y	7	2	**235-3530**	1	VALVE GP-RELIEF (TRANSMISSION)	417
Y	8	1,2	**244-3114**	8	VALVE GP-MODULATING (24-VOLT) (TRANSMISSION CLUTCH)	412
	9	1	**247-4993**	1	SPACER	
	10	1	**253-5306**	1	HARNESS AS-SENSOR (TRANSMISSION SPEED)	
		1	**102-8801**	1	KIT-RECEPTACLE (12-PIN)	
					(INCLUDES RECEPTACLE AS & WEDGE)	
		1	**9X-3402**	12	SOCKET-CONNECTOR (16-GA TO 18-GA)	
					—OR—	
		1	**126-1768**	12	SOCKET-CONNECTOR (14-GA TO 16-GA)	
		1	**9X-3401**	12	PIN-CONNECTOR (16-GA TO 18-GA)	
					—OR—	
		1	**126-1767**	12	PIN-CONNECTOR (14-GA TO 16-GA)	
		1	**155-2270**	6	KIT-CONNECTING PLUG (2-PIN)	
					(EACH INCLUDES PLUG AS, WEDGE, & INTERFACE SEAL)	
B		1	**1P-0810**		TAPE-ELECTRICAL	
R	11	1	**304-5687**	1	CONTROL GP-UNPROGRAMMED (TRANSMISSION)	
	12	1	**288-5507**	1	PLATE AS	
M		1	**8T-3490**	3	NUT-WELD (M10X1.5-THD)	
	13	1	**344-7389**	1	SENSOR AS-PRESSURE (PARKING BRAKE OIL)	
Y	14	1	**252-2237**	1	VALVE GP-SOLENOID (24-VDC) (TRANSMISSION CONTROL)	420
	15	1	**436-2452**	1	HARNESS AS-TRANSMISSION	
		1	**102-8805**	1	KIT-RECEPTACLE (6-PIN)	
		1	**102-8801**	1	KIT-RECEPTACLE (12-PIN)	
					(EACH RECEPTACLE KIT INCLUDES RECEPTACLE AS & WEDGE)	
		1	**8T-8729**	17	PIN-CONNECTOR (16-GA TO 20-GA)	
		1	**8T-8730**	18	SOCKET-CONNECTOR (16-GA TO 18-GA)	
		1	**8T-8737**	1	PLUG-SEAL	
E		1	**114-8843**		SLEEVE-PLASTIC (240-CM)	
E		1	**119-3662**		TUBE-HEAT SHRINK (10.85-MM DIA) (13-CM)	
		1	**9X-3402**	5	SOCKET-CONNECTOR (16-GA TO 18-GA)	
					—OR—	
		1	**126-1768**	5	SOCKET-CONNECTOR (14-GA TO 16-GA)	
		1	**155-2270**	9	KIT-CONNECTING PLUG (2-PIN)	
					(EACH INCLUDES PLUG AS, WEDGE, & INTERFACE SEAL)	
B		1	**1P-0810**		TAPE-ELECTRICAL	
		1	**230-4011**	1	PLUG AS-CONNECTOR (2-PIN)	
		1	**264-7029**	1	SEAL-CONNECTOR	
		1	**237-0227**	1	PLUG AS-CONNECTOR (3-PIN)	
		1	**264-7030**	1	SEAL-CONNECTOR	

423-4654 **CONTROL GP-TRANSMISSION HYD (**contd.**)** **i07772241**

NOTE	REF NO	GRAPHIC REF	PART NUMBER	QTY	PART NAME 1 2 3 4 5 6 (PRODUCT LEVEL)	SEE PAGE
	16	2	**130-5300**	3	CLIP	
	17	1,2	**132-5789**	8	CLIP (LADDER)	
	18	2	*165-4931*	4	ELBOW AS	
					(EACH INCLUDES)	
		2	**6V-8077**	1	ELBOW	
		2	**3J-1907**	1	SEAL-O-RING	
	19	1	**214-7568**	1	SEAL-O-RING	
	20	2	**238-0112**	1	SENSOR GP-TEMPERATURE (2-PIN) (TRANSMISSION OIL)	
	21	1,2	**3S-2093**	24	STRAP-CABLE	
	22	2	**4K-8864**	1	CLIP (LOOP)	
	23	1,2	**4P-7581**	12	CLIP (LADDER)	
	24	2	**4P-7582**	1	CLIP (LADDER)	
	25	2	**4P-8134**	1	CLIP (LADDER)	
M	26	2	**5P-8347**	2	BOLT (M8X1.25X70-MM)	
	27	1,2	**6V-0852**	8	CAP-DUST	
M	28	1,2	**6V-5215**	5	BOLT (M8X1.25X16-MM)	
M	29	1,2	**6V-5222**	3	BOLT (M8X1.25X85-MM)	
	30	1	**6V-5839**	2	WASHER (11X21X2.5-MM THK)	
M	31	1	**6V-6317**	2	BOLT (M10X1.5X20-MM)	
	32	2	**6V-9028**	1	SEAL-O-RING	
	33	2	**199-7560**	1	RING-RETAINING	
M	35	2	**8T-0100**	21	BOLT (M8X1.25X60-MM)	
M	36	1	**8T-1158**	1	BOLT-SOCKET HEAD (M8X1.25X20-MM)	
	38	1	**8T-9655**	8	MOUNT-ISOLATION	
	39	1,2	**9M-1974**	30	WASHER-HARD (8.8X16X2-MM THK)	
	40	1	**9N-0869**	4	WASHER-HARD (8.8X25.5X2-MM THK)	
	41	2	**9X-4609**	2	SEAL-O-RING	

B - USE AS REQUIRED
E - ORDER BY THE CENTIMETER
M - METRIC PART
R - REMANUFACTURED PART MAY BE AVAILABLE
Y - SEPARATE ILLUSTRATION

423-4654 **CONTROL GP-TRANSMISSION HYD (**contd.**)** **i07772241**

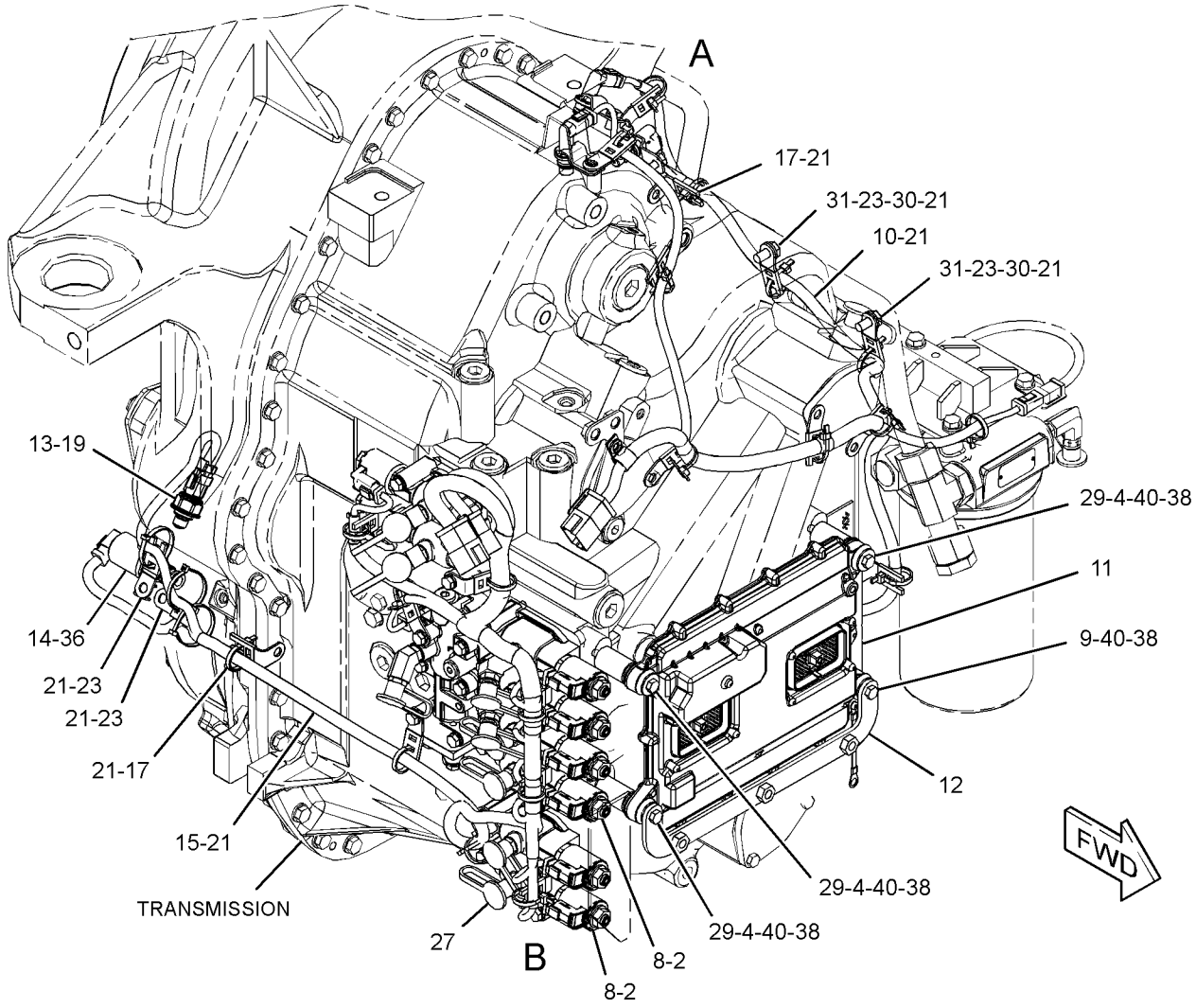

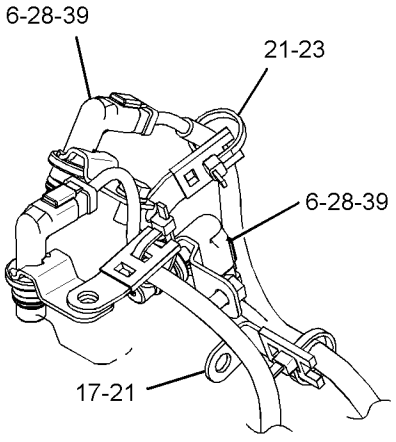

VIEW OF AREA A

REFER TO ALL ILLUSTRATIONS OF THIS GROUP FOR AUXILIARY VIEWS

GRAPHIC #1

g06418878

423-4654 **CONTROL GP-TRANSMISSION HYD (**contd.**)** **i07772241**

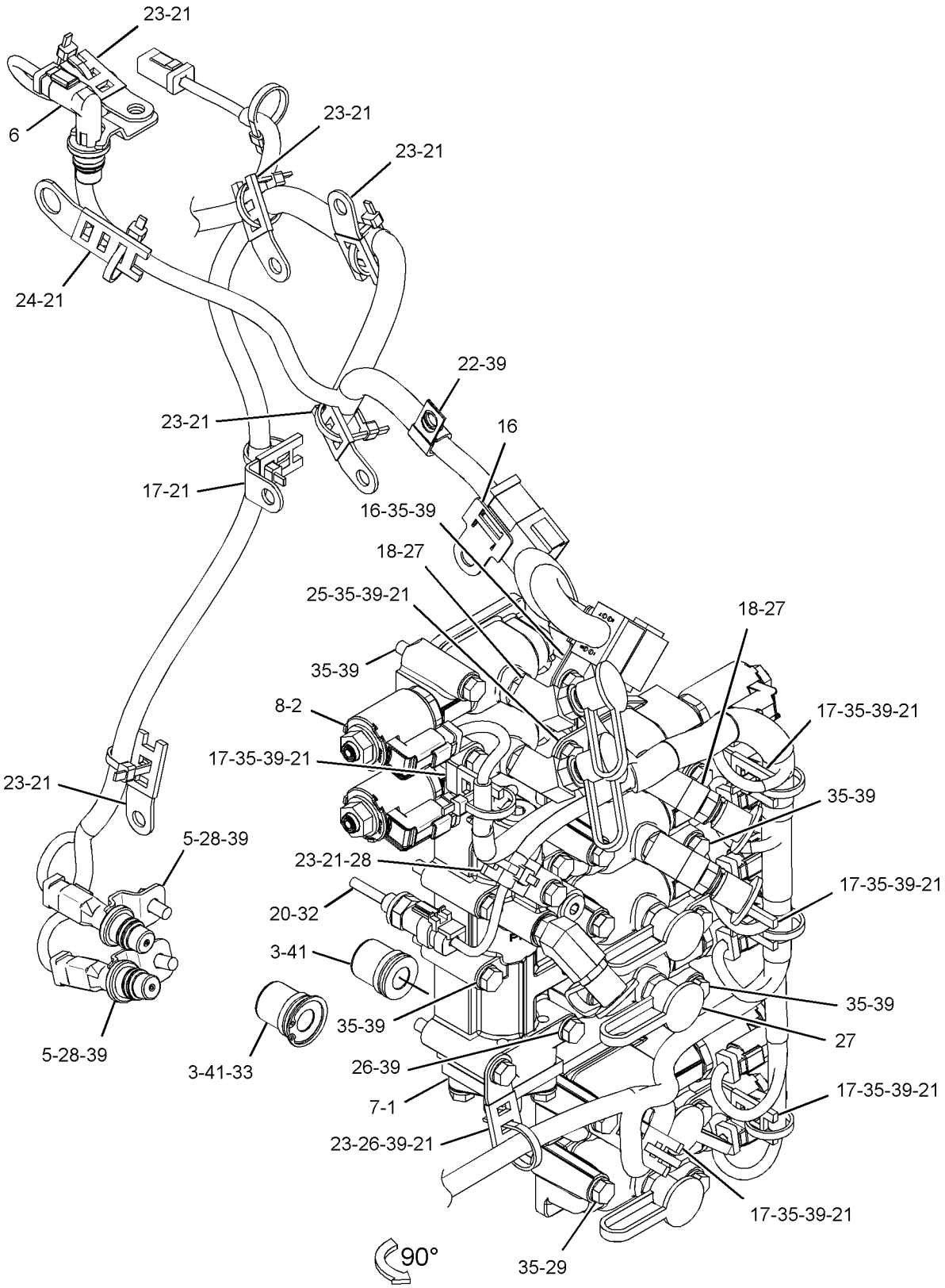

VIEW OF AREA B

GRAPHIC #2 <END> g06418877

272-1045 COOLER GP-TRANSMISSION OIL

S/N: B551-UP

PART OF 262-8360 MOUNTING GP-XMSN OIL COOLER

SMCS-1375 **i02796715**

NOTE	REF NO	GRAPHIC REF	PART NUMBER	QTY	PART NAME 1 2 3 4 5 6 (PRODUCT LEVEL)	SEE PAGE
	1	1	**7E-8570**	1	BONNET	
R	2	1	**175-7453**	1	CORE AS-TRANSMISSION COOLER	
	3	1	**262-7721**	1	BONNET	
	4	1	**262-7857**	1	BRACKET AS	
	5	1	**129-2861**	2	GASKET	
M	8	1	**5C-7261**	2	NUT (M8X1.25-THD)	
	9	1	**5P-4116**	2	WASHER-HARD (8.8X20.5X2-MM THK)	
	10	1	**6V-9027**	1	SEAL-O-RING	
	11	1	**7X-7729**	2	WASHER (11X25X3-MM THK)	
M	12	1	**8T-4136**	2	BOLT (M10X1.5X25-MM)	
M	13	1	**8T-6870**	2	BOLT (M8X1.25X70-MM)	
M	14	1	**8T-7547**	6	BOLT (M8X1.25X30-MM)	
	16	1	**9S-4182**	1	PLUG (7/16-20-THD)	

M - METRIC PART
R - REMANUFACTURED PART MAY BE AVAILABLE

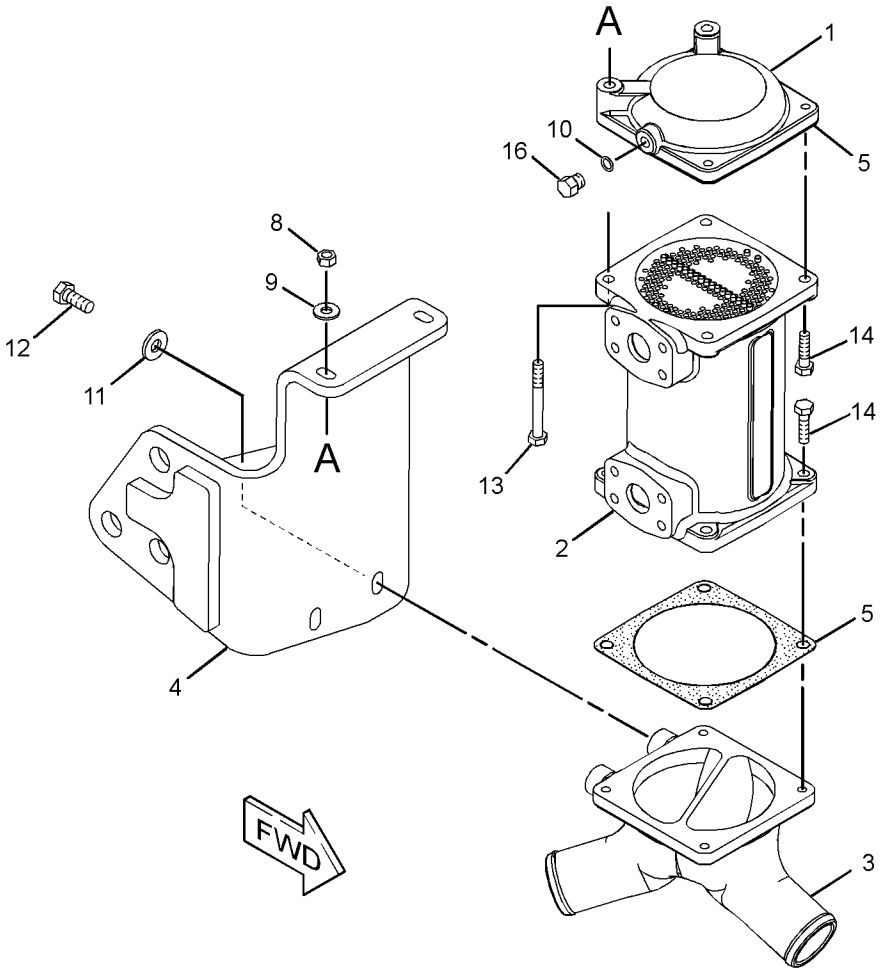

GRAPHIC #1 <END> g01157248

8E-3366 COUPLING GP-TORSIONAL

S/N: B551-UP
DRIVE
PART OF 577-1377 COMMON AR

SMCS-3252, 3279

i05781852

NOTE	REF NO	GRAPHIC REF	PART NUMBER	QTY	PART NAME 1 2 3 4 5 6 (PRODUCT LEVEL)	SEE PAGE
	1	1	**422-2480**	1	COUPLING AS	
	2	1	**165-3928**	12	BOLT (3/8-16-THD)	
	3	1	**5M-2894**	12	WASHER-HARD (10.2X18.5X2.5-MM THK)	

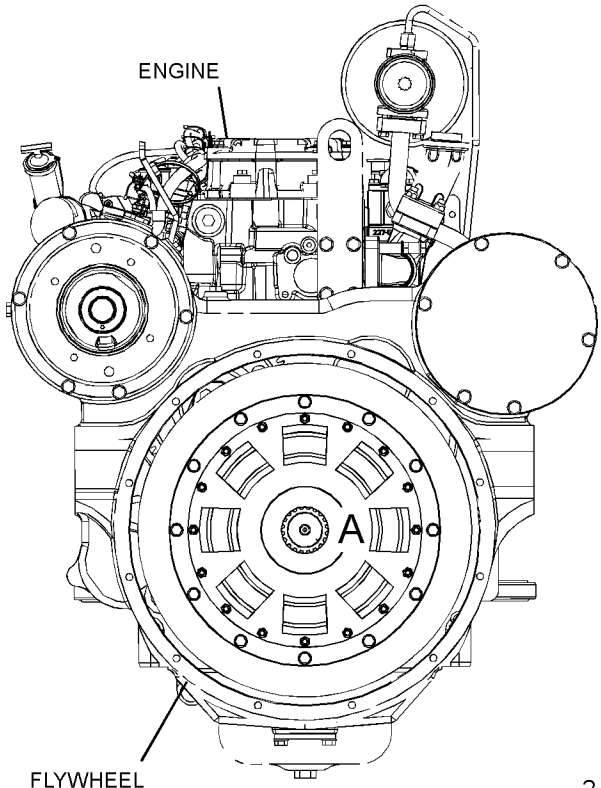

REAR VIEW

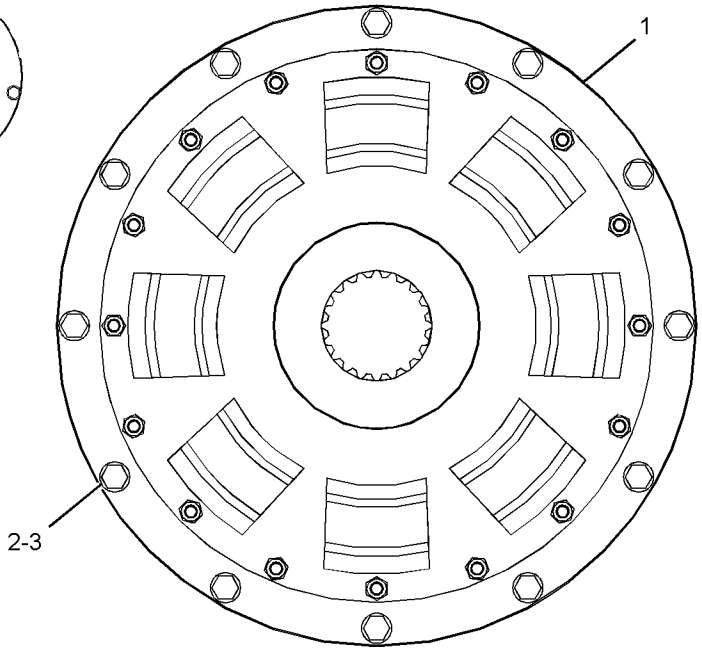

VIEW OF AREA A

GRAPHIC #1

<END>

g03193158

263-7434 COVER GP-SHIPPING—TRANSMISSION

S/N: JP21-UP; TSZ1-UP

PART OF 396-3303 TRANSMISSION AR

SMCS-3030, 3064 **i07695086**

NOTE	REF NO	GRAPHIC REF	PART NUMBER	QTY	PART NAME 1 2 3 4 5 6 (PRODUCT LEVEL)	SEE PAGE
M	1	1	**8T-4137**	6	BOLT (M10X1.5X20-MM)	
	2	1	**7J-3554**	1	COVER	
	3	1	**8T-8737**	30	PLUG-SEAL	
	4	1	**9H-0846**	1	SEAL-O-RING	
	5	1	**117-2927**	1	COVER-SHIPPING	
	6	1	**126-1773**	2	CAP-CONNECTOR	
	7	1	**5N-4454**	1	BOOT	
	9	1	**175-3721**	1	COVER	
	10	1	**179-1539**	1	GASKET	
	13	1	*148-8406*	2	PLUG AS	
					(EACH INCLUDES)	
		1	**9S-9334**	1	PLUG (1-5/16-12-THD)	
		1	**7M-8485**	1	SEAL-O-RING	
	14	1	*148-8407*	2	PLUG AS	
					(EACH INCLUDES)	
		1	**9S-4191**	1	PLUG (9/16-18-THD)	
		1	**3J-1907**	1	SEAL-O-RING	
	15	1	*148-8408*	1	PLUG AS	
		1	**9S-4183**	1	PLUG (1-1/16-12-THD)	
		1	**3D-2824**	1	SEAL-O-RING	
	16	1	**155-2255**	2	KIT-CONNECTING PLUG (12-PIN)	
	17	1	**155-2274**	1	KIT-CONNECTING PLUG (6-PIN)	
					(EACH PLUG KIT INCLUDES PLUG AS, WEDGE, & INTERFACE SEAL)	
	18	1	**179-1538**	1	COVER	
	19	1	**2D-0094**	1	GASKET	
	20	1	**4M-0189**	1	SEAL-O-RING	
	21	1	**5P-8245**	12	WASHER-HARD (13.5X25.5X3-MM THK)	
M	22	1	**6V-3823**	10	BOLT (M12X1.75X60-MM)	
M	23	1	**6V-8149**	10	NUT (M12X1.75-THD)	
	24	1	**6V-9833**	1	CAP	
M	25	1	**8T-0293**	4	BOLT (M12X1.75X20-MM)	
	26	1	**371-7951**	1	CAP-PLUG	
	27	1	**8E-5287**	1	STRAP	
	28	1	**9M-2904**	1	CLAMP-HOSE	

M - METRIC PART

263-7434 **COVER GP-SHIPPING (**contd.**)** **i07695086**

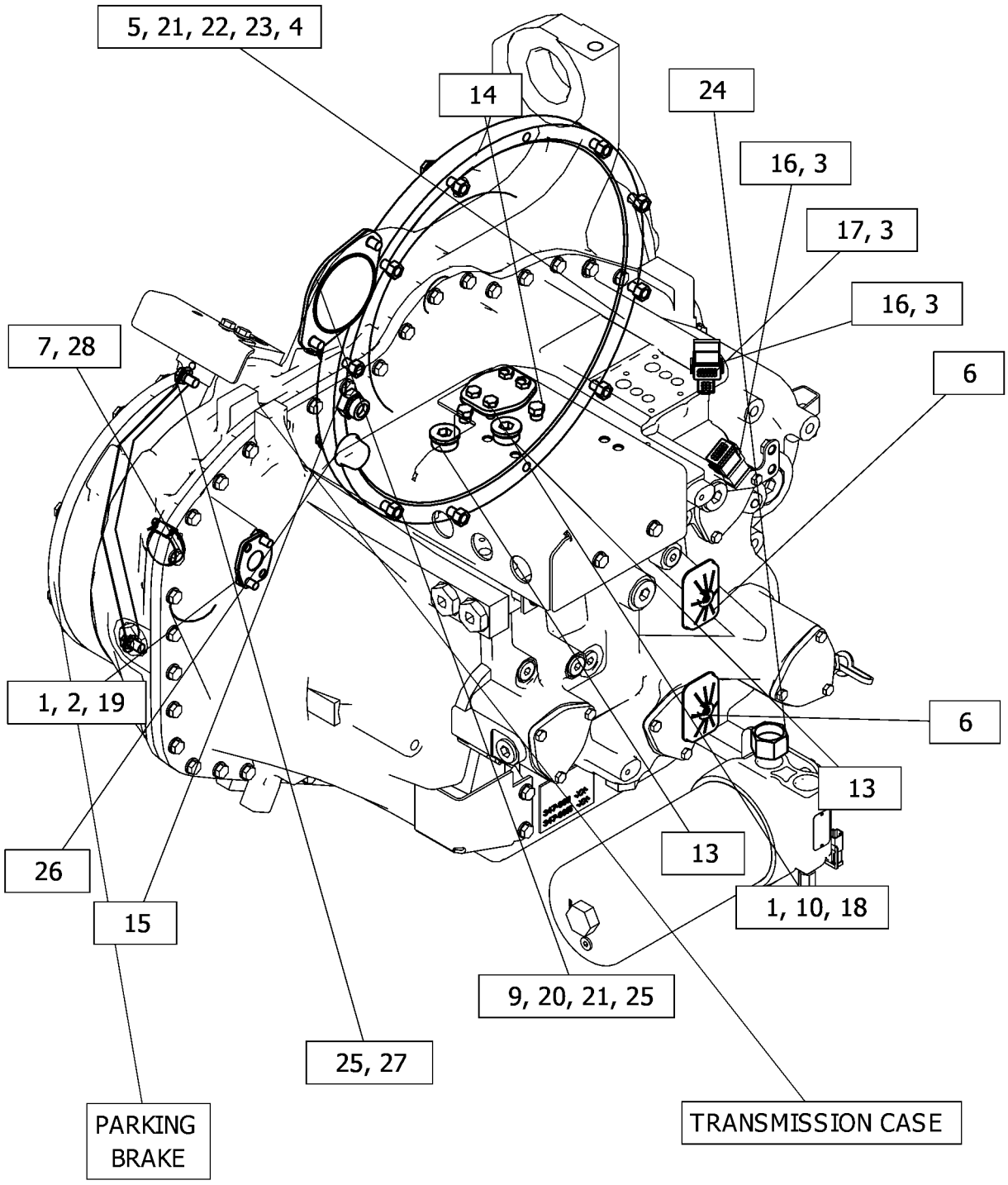

GRAPHIC #1 <END> g06421278

365-2124 DIFFERENTIAL & BEVEL GEAR GP

S/N: B551-UP

PART OF 365-2125 AXLE GP-REAR

SMCS-3256, 3258 **i05406731**

NOTE	REF NO	GRAPHIC REF	PART NUMBER	QTY	PART NAME 1 2 3 4 5 6 (PRODUCT LEVEL)	SEE PAGE
	1	1	**7D-1677**	1	RACE-BEARING INNER	
	2	1	**1J-2860**	1	CUP-BEARING	
	3	1	**2D-9455**	1	CONE-BEARING	
	4	1	**7S-4001**	1	SEAL-O-RING	
	5	1	**201-7713**	1	BEARING AS	
	6	1	**201-8481**	1	LOCKNUT AS	
		1	**314-3260**	4	BOLT-LOCKING (M8X1.25X18-MM)	
	7	1	**222-7843**	1	SHROUD	
	8	1	**264-0575**	1	SEAL-LIP TYPE	
	9	1	**272-7121**	1	YOKE AS	
		1	**271-8680**	1	GUARD	
B	10	1	**271-8528**	1	SHIM PACK (INCLUDES 18-SHIMS)	
	11	1	**271-8529**	1	RETAINER	
	12	1	**272-7116**	1	HOUSING-PINION	
Y	13	1	**287-8223**	1	DIFFERENTIAL GP	372
	14	1	**293-0213**	1	SHAFT-BEVEL PINION	
M	15	1	**290-7296**	20	BOLT (M16X2X40-MM)	
	16	1	**309-8763**	1	GEAR-BEVEL (44-TEETH)	
M	17	1	**5A-3604**	3	BOLT-SOCKET HEAD (M8X1.25X25-MM)	
	18	1	**1J-4757**	1	CONE-BEARING	
	19	1	**2D-9454**	1	CUP-BEARING	
	20	1	**8C-0622**	1	RING-RETAINING	
M	21	1	**286-9155**	1	BOLT-SELF-LOCKING (M16X2X120-MM)	
	22	1	**9X-8268**	20	WASHER (17.5X30X3.5-MM THK)	

B - USE AS REQUIRED
M - METRIC PART
Y - SEPARATE ILLUSTRATION

365-2124 **DIFFERENTIAL & BEVEL GEAR GP (**contd.**)** **i05406731**

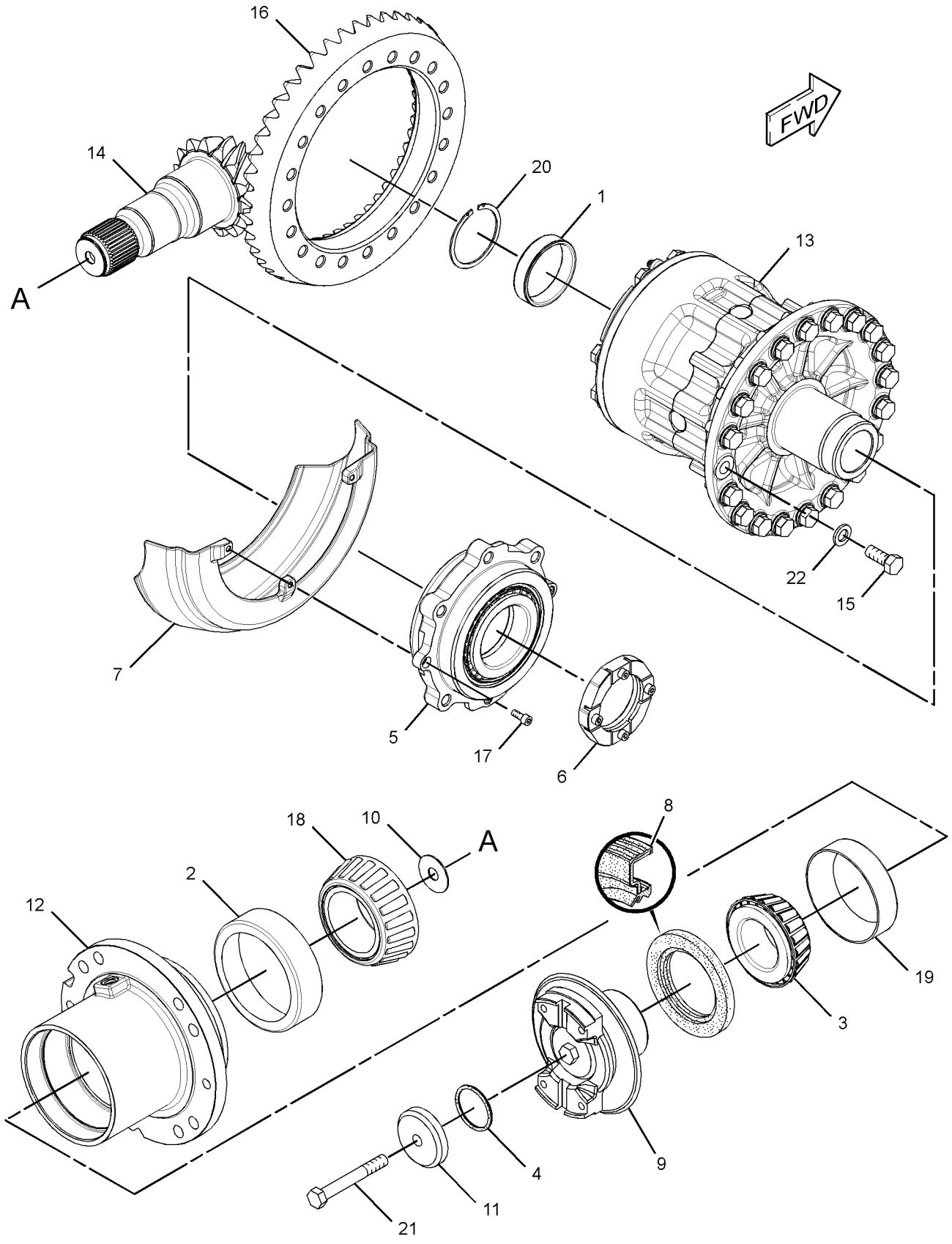

GRAPHIC #1 <END> g02303738

287-8223 DIFFERENTIAL GP

S/N: B551-UP

PART OF 365-2124 DIFFERENTIAL & BEVEL GEAR GP

SMCS-3258 **i07195318**

NOTE	REF NO	GRAPHIC REF	PART NUMBER	QTY	PART NAME 1 2 3 4 5 6 (PRODUCT LEVEL)	SEE PAGE
	1	1	**5F-9144**	3	SEAL-O-RING	
	2	1	**148-7841**	3	SPRING	
	3	1	**201-8476**	9	PLATE-SEPARATOR	
	4	1	**201-8477**	9	DISC-FRICTION	
	5	1	**201-8480**	1	PLATE-THRUST	
	6	1	**221-8040**	3	DOWEL	
	7	1	**239-3105**	1	RING-THRUST	
	8	1	**287-8222**	1	CASE AS-DIFFERENTIAL	
M	8A	1	**8T-5002**	8	BOLT (M16X2X180-MM)	
	8B	1	**2S-0736**	8	WASHER-HARD (17X27X3.5-MM THK)	
	9	1	**293-5368**	4	BUSHING	
	10	1	**305-3353**	2	WASHER-THRUST	
	11	1	**305-3352**	4	WASHER-THRUST	
	12	1	**306-5622**	1	SPIDER	
	13	1	**306-5628**	1	GEAR-DIFFERENTIAL BEVEL (44-TEETH)	
	14	1	**306-5629**	1	GEAR-DIFFERENTIAL BEVEL (16-TEETH)	
	15	1	**306-5635**	4	PINION-DIFFERENTIAL	
					PARTS SHOWN IN GRAPHIC(S) WITHOUT A REFERENCE NUMBER ARE NOT SERVICED SEPARATELY	

M - METRIC PART

287-8223 **DIFFERENTIAL GP (**contd.**)** **i07195318**

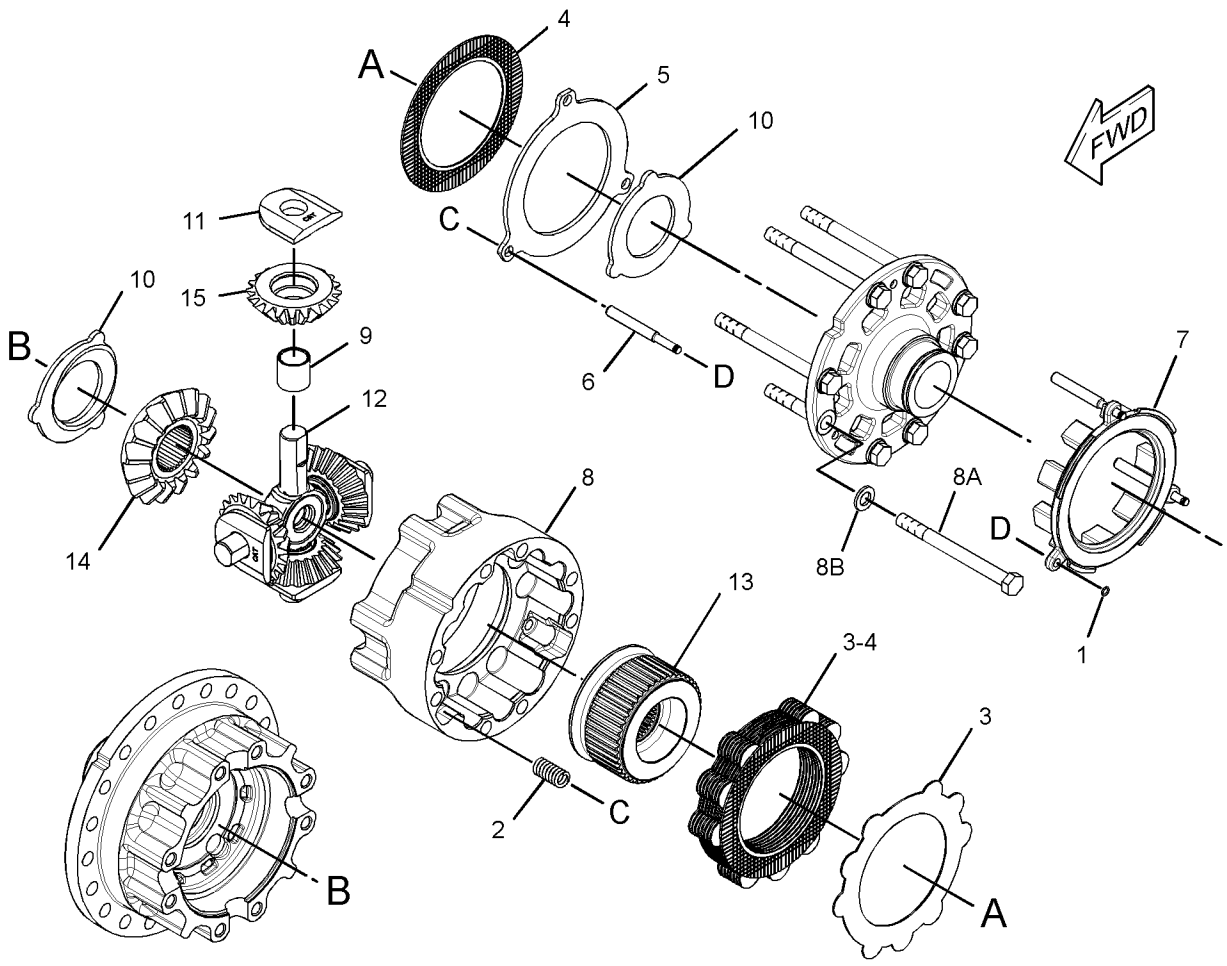

GRAPHIC #1 <END> g01332550

288-6508 DRIVE GP-FINAL—RH

S/N: B551-UP

PART OF 365-2125 AXLE GP-REAR

SMCS-4050 **i07639073**

NOTE	REF NO	GRAPHIC REF	PART NUMBER	QTY	PART NAME 1 2 3 4 5 6 (PRODUCT LEVEL)	SEE PAGE
	1	1	**4B-8394**	2	CUP-BEARING	
	2	1	**547-6515**	1	WASHER-THRUST (261.8X309X7-MM THK)	
B	3	1	**7D-8439**	5	SHIM (0.007-IN THK)	
B	4	1	**7D-8441**	5	SHIM (0.005-IN THK)	
	5	1	**8D-3902**	1	SEAL-LIP TYPE	
	6	1	**9D-3075**	1	RETAINER	
B	7	1	**9D-7047**	2	SHIM (0.020-IN THK)	
M	8	1	**202-6473**	30	BOLT (M16X2X60-MM)	
	9	1	**255-8575**	1	SHAFT-DRIVE	
	10	1	**264-0194**	1	RETAINER	
B	11	1	**264-0196**	1	SHIM PACK (INCLUDES 10-SHIMS)	
	12	1	**266-0199**	2	RING-WEAR	
Y	14	1	**272-8009**	1	CARRIER GP-FINAL DRIVE	346
	15	1	**278-3320**	2	SPROCKET	
	16	1	**279-2568**	1	GEAR-RING (84-TEETH)	
	17	1	**329-0411**	1	SEAL-LIP TYPE	
	18	1	**284-5016**	1	HOUSING	
	19	1	**291-6874**	1	HOUSING-FINAL DRIVE	
M	20	1	**6V-3303**	3	BOLT (M16X2X60-MM)	
	21	1	**198-4768**	24	WASHER-HARD (17.5X32X8-MM THK)	
	22	1	**2B-9174**	1	BEARING AS-TAPERED ROLLER	
	23	1	**4D-3704**	18	WASHER-HARD (17X30X5-MM THK)	
	24	1	**4D-6695**	1	SEAL-O-RING	
	25	1	**5P-8245**	3	WASHER-HARD (13.5X25.5X3-MM THK)	
	26	1	**6V-2449**	1	CONE-BEARING	
M	27	1	**8T-0372**	3	BOLT (M12X1.75X90-MM)	
	28	1	**8T-3727**	1	RING-RETAINING	
	29	1	**9F-2247**	1	PLUG-PIPE (1/8-27-THD)	
M	30	1	**178-3707**	12	BOLT (M16X2X50-MM)	
	31	1	**328-9669**	1	WASHER-THRUST (261.8X303X7-MM THK)	

B - USE AS REQUIRED
M - METRIC PART
Y - SEPARATE ILLUSTRATION

288-6508 **DRIVE GP-FINAL (**contd.**)** **i07639073**

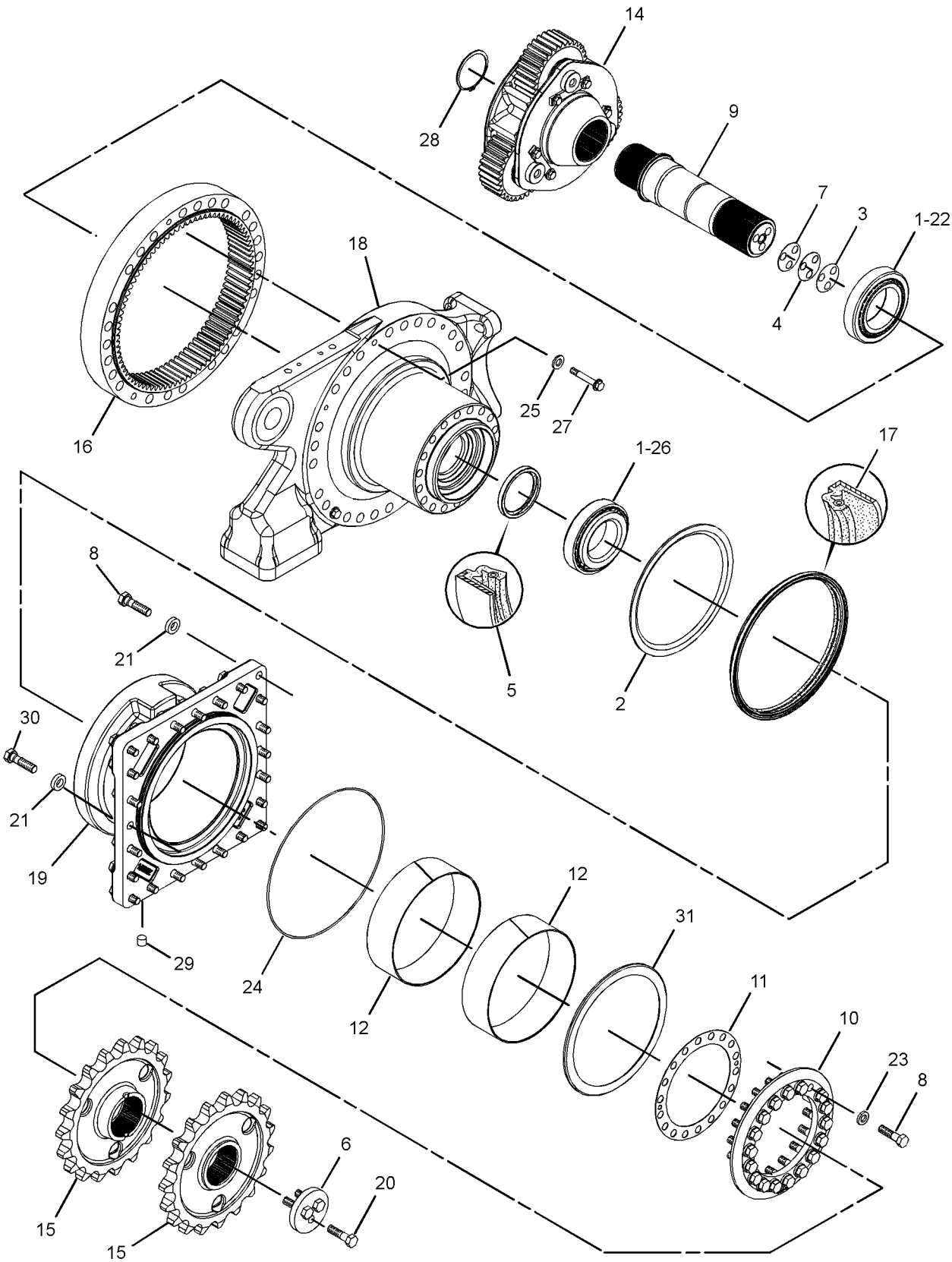

GRAPHIC #1 <END> g06384056

288-6509 DRIVE GP-FINAL–LH

S/N: B551-UP

PART OF 365-2125 AXLE GP-REAR

SMCS-4050 **i07639074**

NOTE	REF NO	GRAPHIC REF	PART NUMBER	QTY	PART NAME 1 2 3 4 5 6 (PRODUCT LEVEL)	SEE PAGE
	1	1	**4B-8394**	2	CUP-BEARING	
	2	1	**547-6515**	1	WASHER-THRUST (261.8X309X7-MM THK)	
B	3	1	**7D-8439**	5	SHIM (0.007-IN THK)	
BF			**7D-8441**	5	SHIM (0.005-IN THK)	
	5	1	**8D-3902**	1	SEAL-LIP TYPE	
	6	1	**9D-3075**	1	RETAINER	
B	7	1	**9D-7047**	2	SHIM (0.020-IN THK)	
M	8	1	**202-6473**	30	BOLT (M16X2X60-MM)	
	9	1	**255-8575**	1	SHAFT-DRIVE	
	10	1	**264-0194**	1	RETAINER	
B	11	1	**264-0196**	1	SHIM PACK (INCLUDES 10-SHIMS)	
	12	1	**266-0199**	2	RING-WEAR	
Y	14	1	*272-8009*	1	CARRIER GP-FINAL DRIVE	346
	15	1	**278-3320**	2	SPROCKET	
	16	1	**279-2568**	1	GEAR-RING (84-TEETH)	
	17	1	**329-0411**	1	SEAL-LIP TYPE	
	18	1	**284-5018**	1	HOUSING	
	19	1	**291-6874**	1	HOUSING-FINAL DRIVE	
M	20	1	**6V-3303**	3	BOLT (M16X2X60-MM)	
	21	1	**198-4768**	24	WASHER-HARD (17.5X32X8-MM THK)	
	22	1	**2B-9174**	1	BEARING AS-TAPERED ROLLER	
	23	1	**4D-3704**	18	WASHER-HARD (17X30X5-MM THK)	
	24	1	**4D-6695**	1	SEAL-O-RING	
	25	1	**5P-8245**	3	WASHER-HARD (13.5X25.5X3-MM THK)	
	26	1	**6V-2449**	1	CONE-BEARING	
M	27	1	**8T-0372**	3	BOLT (M12X1.75X90-MM)	
	28	1	**8T-3727**	1	RING-RETAINING	
	29	1	**9F-2247**	1	PLUG-PIPE (1/8-27-THD)	
M	30	1	**178-3707**	12	BOLT (M16X2X50-MM)	
	31	1	**328-9669**	1	WASHER-THRUST (261.8X303X7-MM THK)	

B - USE AS REQUIRED
F - NOT SHOWN
M - METRIC PART
Y - SEPARATE ILLUSTRATION

288-6509 **DRIVE GP-FINAL (**contd.**)** **i07639074**

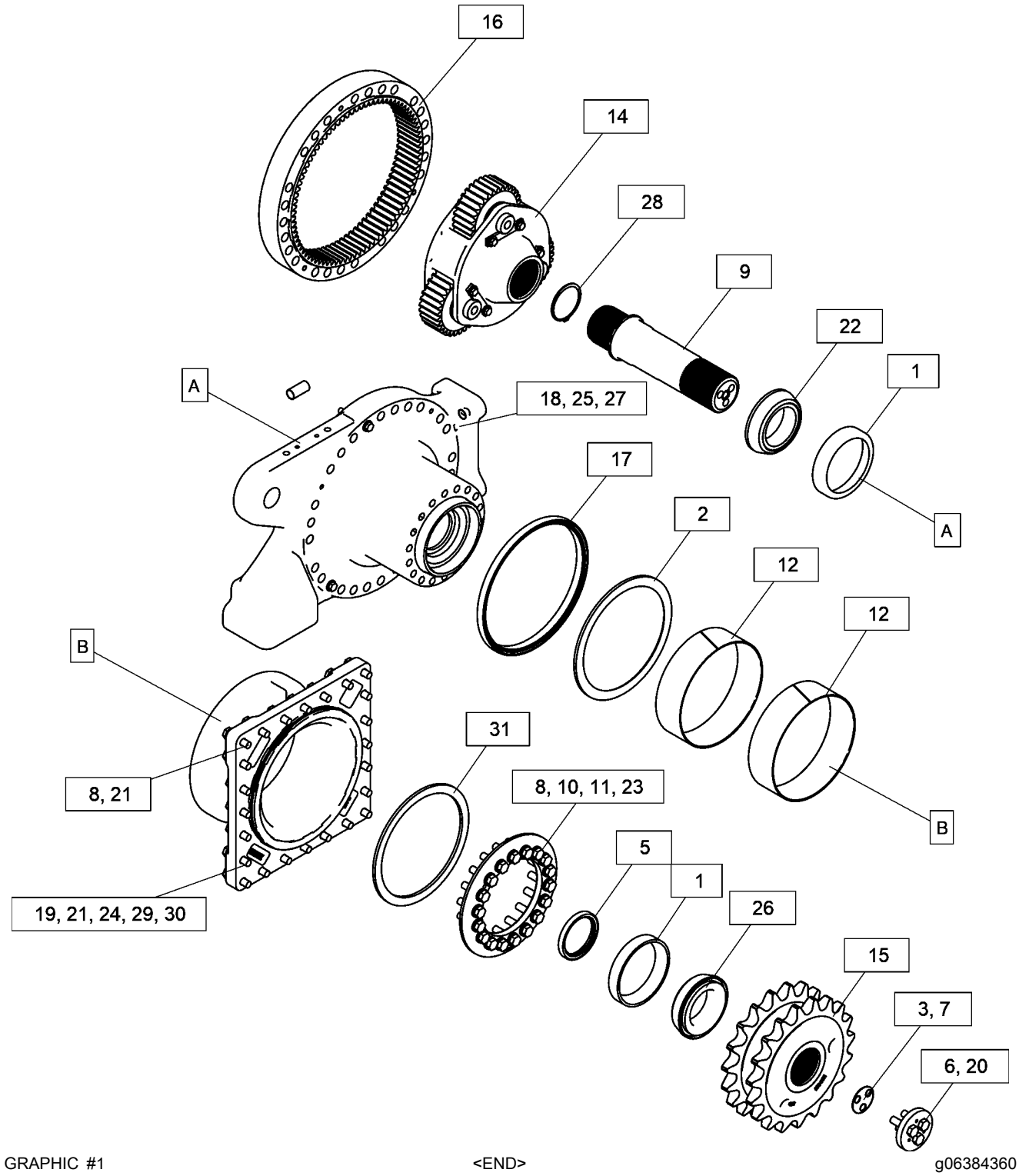

GRAPHIC #1 <END> g06384360

349-6137 FILLER GP-POWER TRAIN OIL

S/N: B551-UP

PART OF 349-6146 POWER TRAIN AR

SMCS-3005, 3081, 7513 **i04912140**

NOTE	REF NO	GRAPHIC REF	PART NUMBER	QTY	PART NAME 1 2 3 4 5 6 (PRODUCT LEVEL)	SEE PAGE
	1	1	**397-1180**	1	TUBE AS	
	2	1	**8B-1615**	1	GASKET	

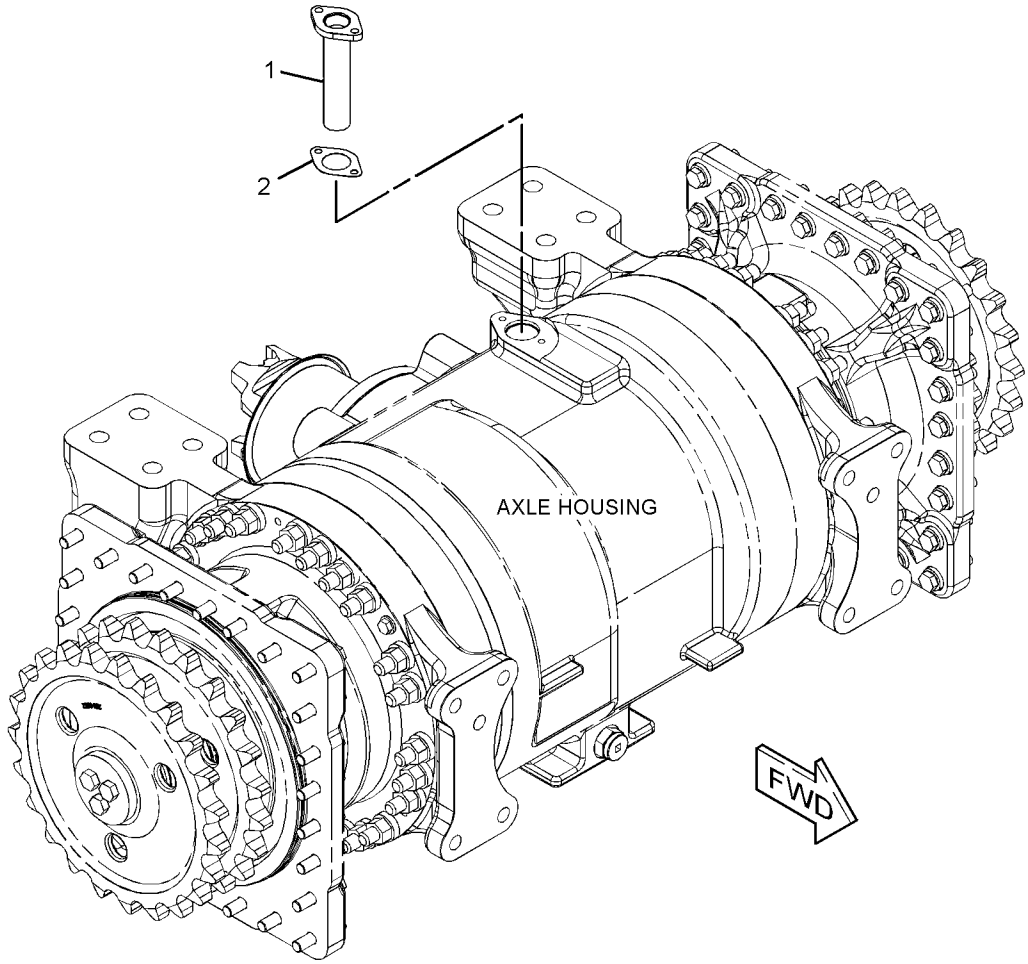

GRAPHIC #1 <END> g02174674

357-6336 FILLER GP-POWER TRAIN OIL

S/N: B551-UP

PART OF 577-1377 COMMON AR

SMCS-3005, 3081, 7513 **i04350172**

NOTE	REF NO	GRAPHIC REF	PART NUMBER	QTY	PART NAME 1 2 3 4 5 6 (PRODUCT LEVEL)	SEE PAGE
	1	1	**9G-5127**	1	BREATHER (ATMOSPHERIC) (POWER TRAIN OIL)	
	2	1	**254-3286**	1	GAUGE AS-OIL LEVEL (DIPSTICK) (POWER TRAIN OIL)	
	3	1	**265-9383**	1	TUBE AS	
	4	1	**6V-5839**	2	WASHER (11X21X2.5-MM THK)	
	5	1	**7J-8611**	1	ELBOW-PIPE	
	6	1	**8B-1615**	1	GASKET	
M	7	1	**8T-4196**	2	BOLT (M10X1.5X35-MM)	

M - METRIC PART

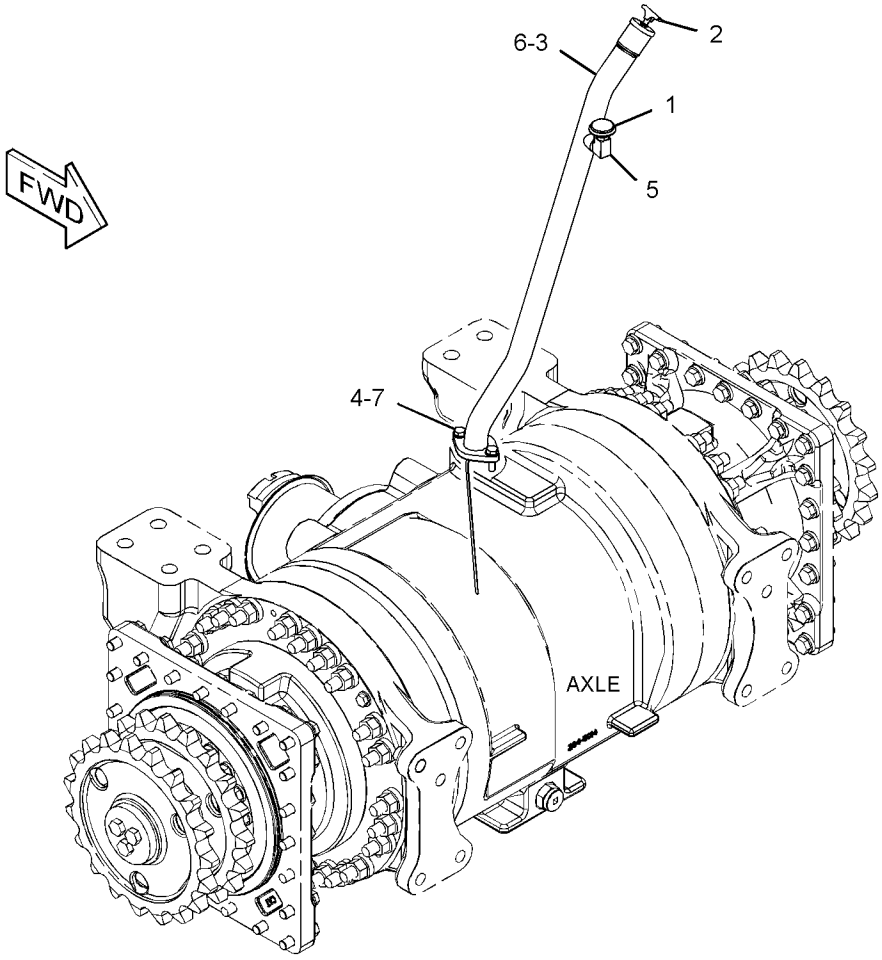

GRAPHIC #1 <END> g02957279

520-5008 FILTER & MTG GP-TRANSMISSION

S/N: JP21-UP; TSZ1-UP

PART OF 396-3303 TRANSMISSION AR

SMCS-3067 **i07358280**

NOTE	REF NO	GRAPHIC REF	PART NUMBER	QTY	PART NAME 1 2 3 4 5 6 (PRODUCT LEVEL)	SEE PAGE
	1	1	**3P-1932**	1	ADAPTER	
	2	1	**6V-0852**	1	CAP-DUST	
	3	1	*150-3065*	1	ELBOW AS	
		1	**3J-1907**	1	SEAL-O-RING	
		1	**6V-0484**	1	ELBOW	
	4	1	**8C-3446**	1	VALVE-SAMPLING	
	5	1	**8C-3447**	1	CAP-DUST	
	6	1	**8L-2786**	1	SEAL-O-RING	
	7	1	**8T-0151**	1	ADAPTER	
	8	1	**253-5327**	1	ELBOW	
Y	9	1	**332-8833**	1	FILTER GP-OIL (MEDIUM PRESSURE)	382
	10	1	**520-5007**	1	BRACKET AS	
	11	1	**130-5300**	1	CLIP	
	12	1	*162-0177*	1	PLUG AS	
		1	**3J-1907**	1	SEAL-O-RING	
		1	**9S-8004**	1	PLUG (9/16-18-THD)	
	13	1	**214-7568**	1	SEAL-O-RING	
	14	1	*307-2673*	1	PLUG AS	
		1	**9S-8005**	1	PLUG (3/4-16-THD)	
		1	**238-5080**	1	SEAL-O-RING	
	15	1	**4P-7581**	1	CLIP (LADDER)	
	16	1	*164-5567*	1	COUPLER AS-QUICK DISCONNECT (MALE)	
		1	**6V-3965**	1	FITTING (QUICK DISCONNECT)	
		1	**214-7568**	1	SEAL-O-RING	
	17	1	**6V-5048**	2	SEAL-O-RING	
	18	1	**8T-4121**	4	WASHER-HARD (11X21X2.5-MM THK)	
M	19	1	**8T-4184**	2	BOLT (M12X1.75X45-MM)	
M	20	1	**8T-4195**	4	BOLT (M10X1.5X30-MM)	
	21	1	**8T-4223**	2	WASHER-HARD (13.5X25.5X3-MM THK)	
	22	1	*148-8406*	2	PLUG AS	
					(EACH INCLUDES)	
		1	**7M-8485**	1	SEAL-O-RING	
		1	**9S-9334**	1	PLUG (1-5/16-12-THD)	
	23	1	**3S-2093**	1	STRAP-CABLE	
	24	1	**132-5789**	1	CLIP (LADDER)	

M - METRIC PART
Y - SEPARATE ILLUSTRATION

520-5008 **FILTER & MTG GP-TRANSMISSION (**contd.**)** **i07358280**

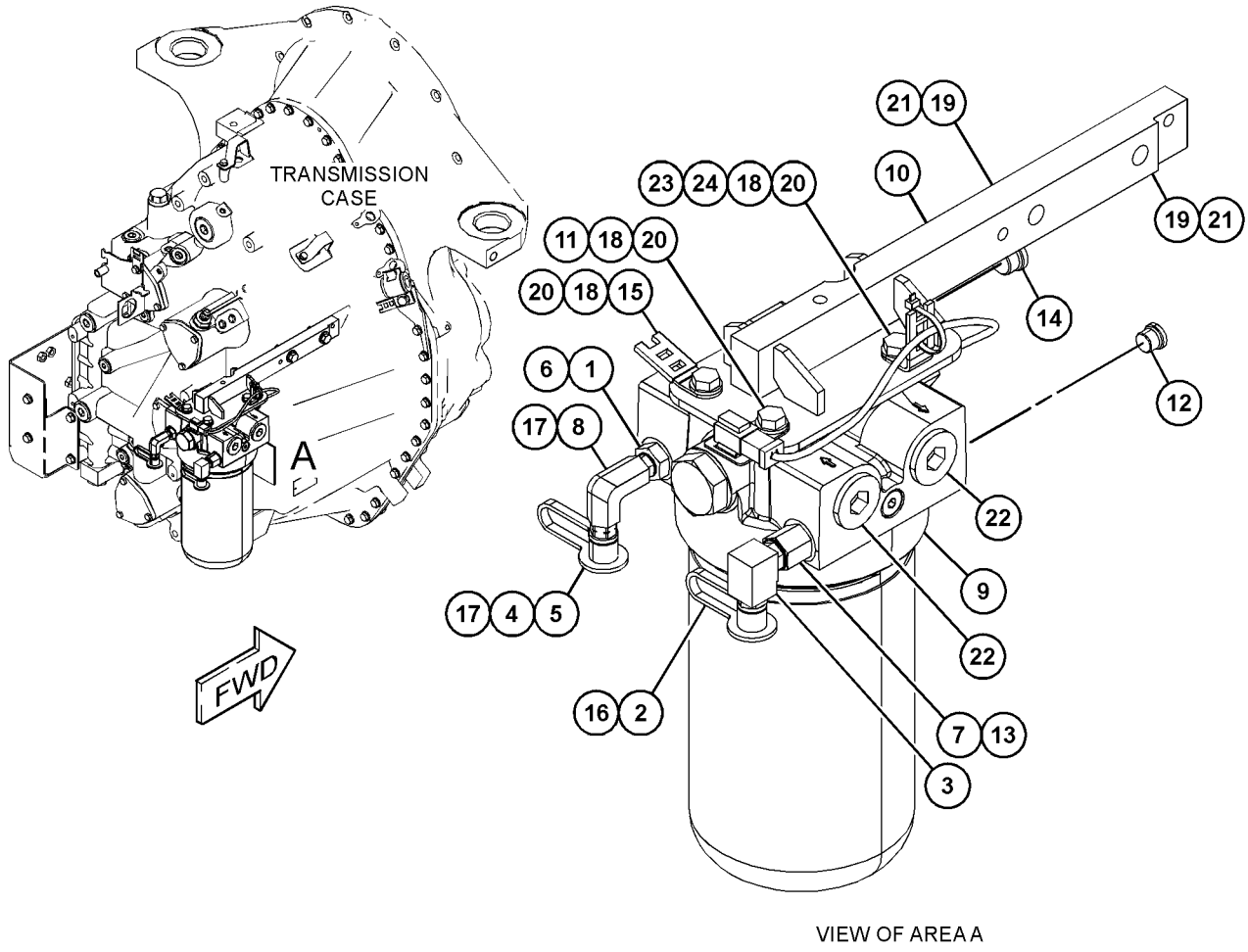

VIEW OF AREA A

GRAPHIC #1 <END> g06260128

332-8833 FILTER GP-OIL

S/N: JP21-UP; TSZ1-UP

PART OF 520-5008 FILTER & MTG GP-TRANSMISSION

SMCS-3004, 3067 **i05822872**

NOTE	REF NO	GRAPHIC REF	PART NUMBER	QTY	PART NAME 1 2 3 4 5 6 (PRODUCT LEVEL)	SEE PAGE
	1	1	**332-8832**	1	BASE AS-OIL FILTER	
		1	**5P-7701**	1	SEAL-O-RING	
		1	**9S-4181**	1	PLUG (1-5/16-12-THD)	
		1	**114-0561**	1	PLUG	
		1	**206-9292**	1	SEAL-O-RING	
Y	2	1	**440-0257**	1	SWITCH GP-PRESSURE (POWER TRAIN OIL)	276
Y	3	1	**353-4688**	1	FILTER GP-OIL (POWER TRAIN)	383

Y - SEPARATE ILLUSTRATION

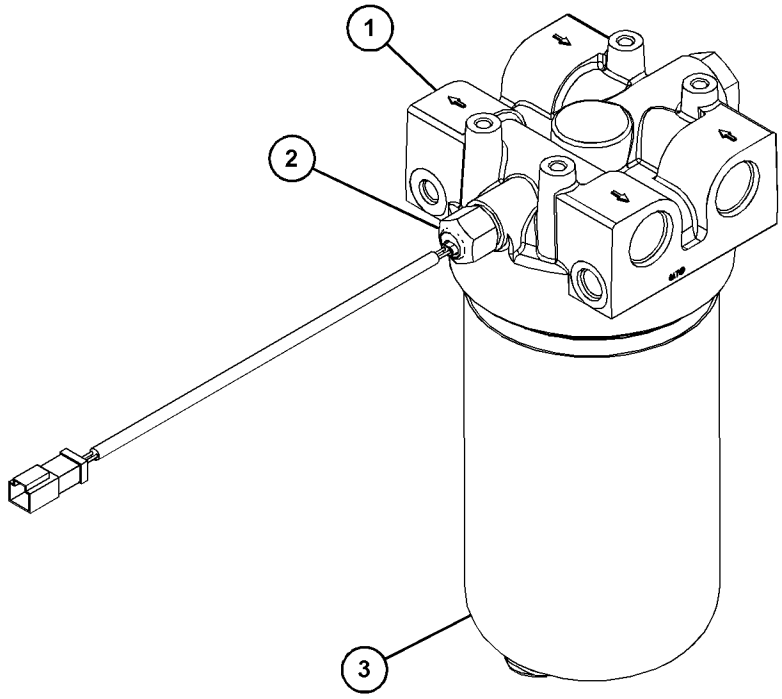

GRAPHIC #1 <END> g03687729

353-4688 FILTER GP-OIL

S/N: JP21-UP; TSZ1-UP

PART OF 332-8833 FILTER GP-OIL

SMCS-3004, 3067

i05412736

NOTE	REF NO	GRAPHIC REF	PART NUMBER	QTY	PART NAME 1 2 3 4 5 6 (PRODUCT LEVEL)	SEE PAGE
	1	1	**9S-8005**	1	PLUG (3/4-16-THD)	
	2	1	**337-5270**	1	FILTER ELEMENT AS-OIL (TRANSMISSION) (POWER TRAIN)	
	2A	1	**095-1678**	1	SEAL-O-RING	
	3	1	**347-7407**	1	TUBE-CENTER	
	4	1	**8L-2786**	1	SEAL-O-RING	
					PARTS SHOWN IN GRAPHIC(S) WITHOUT A REFERENCE NUMBER ARE NOT SERVICED SEPARATELY	

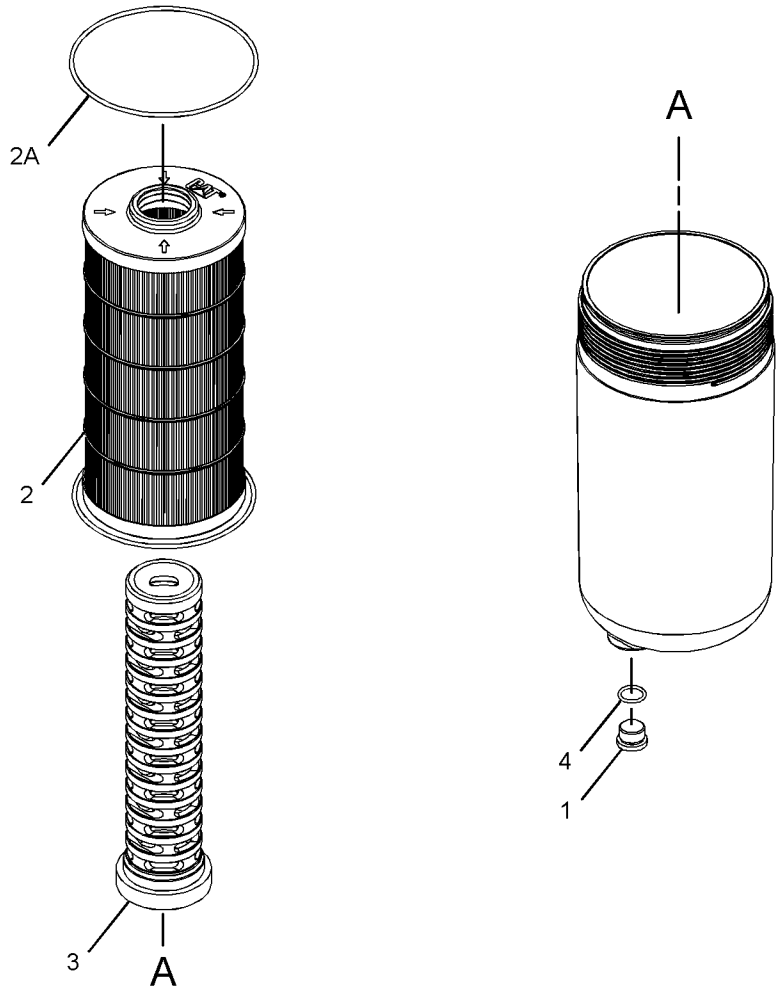

GRAPHIC #1

<END>

g02308153

255-1244 LINES GP-LUBRICATION

S/N: B551-UP
POWER TAKE-OFF
PART OF 577-1377 COMMON AR

SMCS-5057, 7517

i02780361

NOTE	REF NO	GRAPHIC REF	PART NUMBER	QTY	PART NAME 1 2 3 4 5 6 (PRODUCT LEVEL)	SEE PAGE
I	1	1	**145-4496**	1	HOSE AS	
	2	1	*148-8336*	1	CONNECTOR AS	
		1	**6V-8636**	1	CONNECTOR	
		1	**3J-1907**	1	SEAL-O-RING	
		1	**6V-8397**	1	SEAL-O-RING	
	3	1	**160-1744**	1	BRACKET	
	4	1	*148-8378*	1	ELBOW AS	
		1	**6V-8724**	1	ELBOW	
		1	**3J-1907**	1	SEAL-O-RING	
		1	**6V-8397**	1	SEAL-O-RING	
	5	1	*148-8367*	1	ELBOW AS	
		1	**6V-9850**	1	ELBOW	
		1	**6V-8397**	1	SEAL-O-RING	
M	6	1	**8T-4136**	1	BOLT (M10X1.5X25-MM)	
M	7	1	**8T-4133**	1	NUT (M10X1.5-THD)	
	8	1	**8T-4121**	2	WASHER-HARD (11X21X2.5-MM THK)	
	9	1	**8M-2773**	1	CLIP (LOOP)	

I - REFER TO HYDRAULIC INFORMATION SYSTEM
M - METRIC PART

255-1244 **LINES GP-LUBRICATION (**contd.**)** **i02780361**

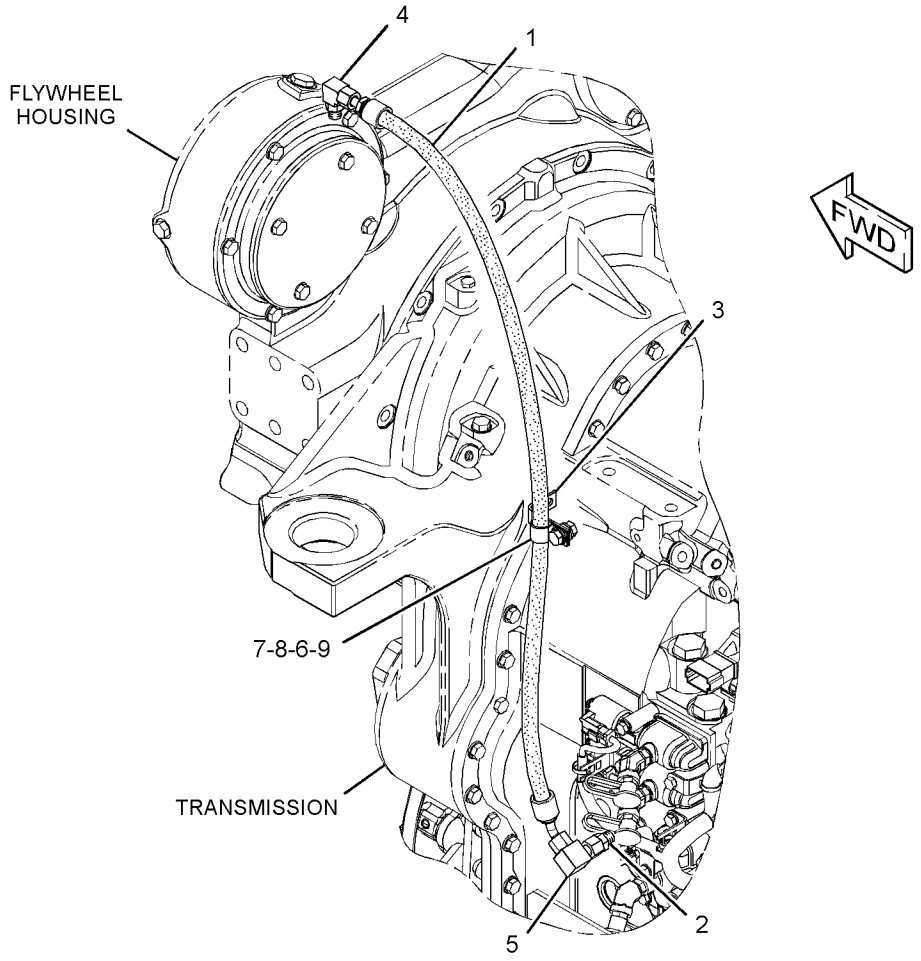

GRAPHIC #1 <END> g01345747

255-1243 LINES GP-TRANSMISSION OIL

S/N: B551-UP

PART OF 577-1377 COMMON AR

SMCS-3154 **i07496571**

NOTE	REF NO	GRAPHIC REF	PART NUMBER	QTY	PART NAME 1 2 3 4 5 6 (PRODUCT LEVEL)	SEE PAGE
C	1	1	**337-5270**	1	FILTER ELEMENT AS-OIL (TRANSMISSION)	
		1	**095-1678**	1	SEAL-O-RING	
	2	1	**3E-7445**	2	CLAMP-HOSE	
	3	1	**8T-6703**	2	CLAMP-HOSE	
	4	1	**9J-3866**	1	ADAPTER	
I	6	1	**145-3757**	1	HOSE AS	
	7	1	**210-4458**	1	ELBOW	
G	8	1	**122-6908**		HOSE-HYDRAULIC (19.3-IN)	
	9	1	**269-6974**	1	TUBE AS	
	10	1	**280-1766**	1	SLEEVE	
I	11	1	**291-1965**	1	HOSE AS	
	12	1	**297-8332**	1	TUBE AS	
	13	1	**357-6002**	1	TUBE AS	
	14	1	**297-8334**	1	TUBE AS	
	15	1	**297-8335**	1	TUBE AS	
	16	1	**297-8336**	1	PLATE AS	
M		1	**8T-3490**	1	NUT-WELD (M10X1.5-THD)	
I	17	1	**308-0398**	1	HOSE AS	
	19	1	**130-9984**	2	CLIP (LOOP)	
	20	1	*148-8323*	1	CONNECTOR AS	
		1	**6V-9875**	1	CONNECTOR	
		1	**2S-4078**	1	SEAL-O-RING	
		1	**5K-9090**	1	SEAL-O-RING	
	21	1	*148-8335*	2	CONNECTOR AS	
					(EACH INCLUDES)	
		1	**6V-8635**	1	CONNECTOR	
		1	**5K-9090**	1	SEAL-O-RING	
		1	**7M-8485**	1	SEAL-O-RING	
	22	1	*148-8336*	1	CONNECTOR AS	
		1	**6V-8636**	1	CONNECTOR	
		1	**3J-1907**	1	SEAL-O-RING	
		1	**6V-8397**	1	SEAL-O-RING	
	23	1	*148-8352*	2	ELBOW AS	
					(EACH INCLUDES)	
		1	**6V-9854**	1	ELBOW (SWIVEL)	
		1	**5K-9090**	1	SEAL-O-RING	
	24	1	*148-8378*	1	ELBOW AS	
		1	**6V-8724**	1	ELBOW	
		1	**3J-1907**	1	SEAL-O-RING	
		1	**6V-8397**	1	SEAL-O-RING	
	25	1	*155-2026*	2	UNION AS	
					(EACH INCLUDES)	
		1	**6V-8998**	1	UNION	
		1	**5K-9090**	2	SEAL-O-RING	
	26	1	**165-4854**	2	SEAL-O-RING	
	27	1	**1P-4577**	4	FLANGE-HALF	
	28	1	**1P-4578**	2	FLANGE-HALF	
	29	1	**1S-9799**	1	SEAL-O-RING	

255-1243 **LINES GP-TRANSMISSION OIL (**contd.**)** **i07496571**

NOTE	REF NO	GRAPHIC REF	PART NUMBER	QTY	PART NAME 1 2 3 4 5 6 (PRODUCT LEVEL)	SEE PAGE
	31	1	**4J-0520**	4	SEAL-O-RING	
	32	1	**4J-0522**	1	SEAL-O-RING	
	34	1	**5S-7382**	8	BOLT (3/8-16X1.375-IN)	
	35	1	**6V-8400**	1	SEAL-O-RING	
	36	1	**6V-9172**	2	NUT (1-7/16-12-THD)	
	37	1	**8C-3206**	2	FLANGE-HALF	
	38	1	**8T-4121**	14	WASHER-HARD (11X21X2.5-MM THK)	
CM	39	1	**344-5675**	2	NUT (M10X1.5-THD)	
M	40	1	**8T-4136**	4	BOLT (M10X1.5X25-MM)	
M	41	1	**8T-4196**	4	BOLT (M10X1.5X35-MM)	
M	43	1	**8T-4779**	1	BOLT (M16X2X35-MM)	
	44	1	**8T-4896**	8	WASHER-HARD (10.2X18.5X2.5-MM THK)	
M	46	1	**8T-5005**	4	BOLT (M10X1.5X70-MM)	
	47	1	**9X-8257**	1	WASHER (17.5X30X3.5-MM THK)	
CE	48	1	**5P-0765**		HOSE (53-CM)	
	49	1	**6D-3479**	1	CLIP (LOOP)	
	50	1	**7D-7233**	1	CLIP (LOOP)	
	51	1	*148-8325*	1	CONNECTOR AS	
		1	**6V-8641**	1	CONNECTOR	
		1	**3J-1907**	1	SEAL-O-RING	
		1	**4J-5477**	1	SEAL-O-RING	
I	52	1	**215-2693**	1	HOSE AS	
	53	1	**033-6783**	2	FITTING	
	54	1	**3D-2824**	2	SEAL-O-RING	

C - CHANGE FROM PREVIOUS TYPE
E - ORDER BY THE CENTIMETER
G - ORDER BY THE INCH
I - REFER TO HYDRAULIC INFORMATION SYSTEM
M - METRIC PART

255-1243 **LINES GP-TRANSMISSION OIL (**contd.**)** **i07496571**

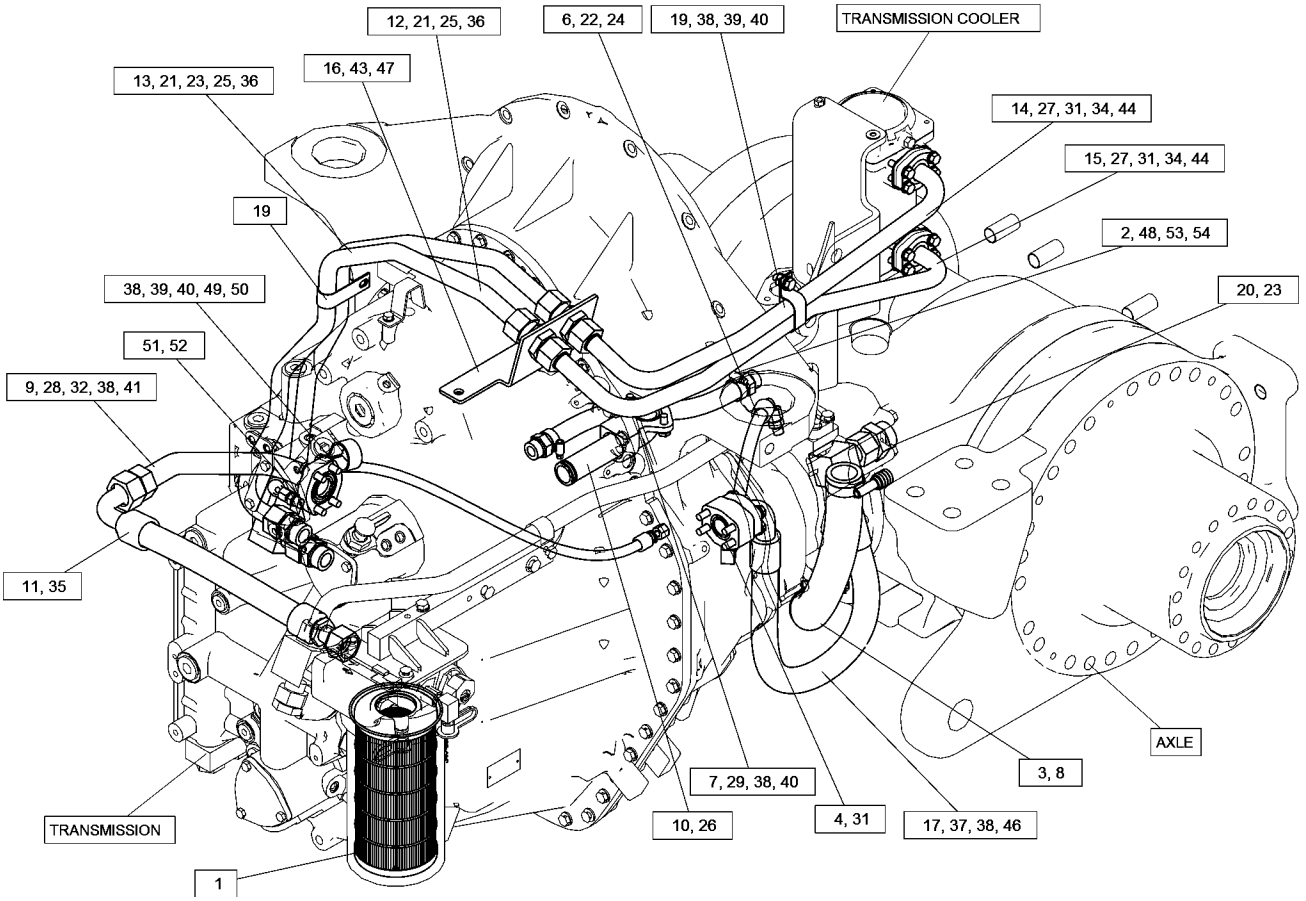

GRAPHIC #1 <END> g06296181

262-6674 LINES GP-TRANSMISSION OIL

S/N: JP21-UP; TSZ1-UP

PART OF 396-3303 TRANSMISSION AR

SMCS-3154 **i07155882**

NOTE	REF NO	GRAPHIC REF	PART NUMBER	QTY	PART NAME 1 2 3 4 5 6 (PRODUCT LEVEL)	SEE PAGE
	1	1	**8C-6798**	1	TEE-SWIVEL	
	2	1	**286-3197**	1	TUBE AS	
	3	1	*148-8335*	1	CONNECTOR AS	
		1	**5K-9090**	1	SEAL-O-RING	
		1	**6V-8635**	1	CONNECTOR	
		1	**7M-8485**	1	SEAL-O-RING	
	4	1	*150-3073*	1	PLUG AS	
		1	**5K-9090**	1	SEAL-O-RING	
		1	**6V-9512**	1	PLUG (1-7/16-12-THD)	
	5	1	**4J-0520**	1	SEAL-O-RING	
	6	1	**4S-1962**	1	CLIP (LOOP)	
	7	1	**5K-9090**	1	SEAL-O-RING	
	8	1	**7M-8485**	1	SEAL-O-RING	
	9	1	**8C-3206**	2	FLANGE-HALF	
	10	1	**8T-4121**	4	WASHER-HARD (11X21X2.5-MM THK)	
M	11	1	**8T-4196**	4	BOLT (M10X1.5X35-MM)	

M - METRIC PART

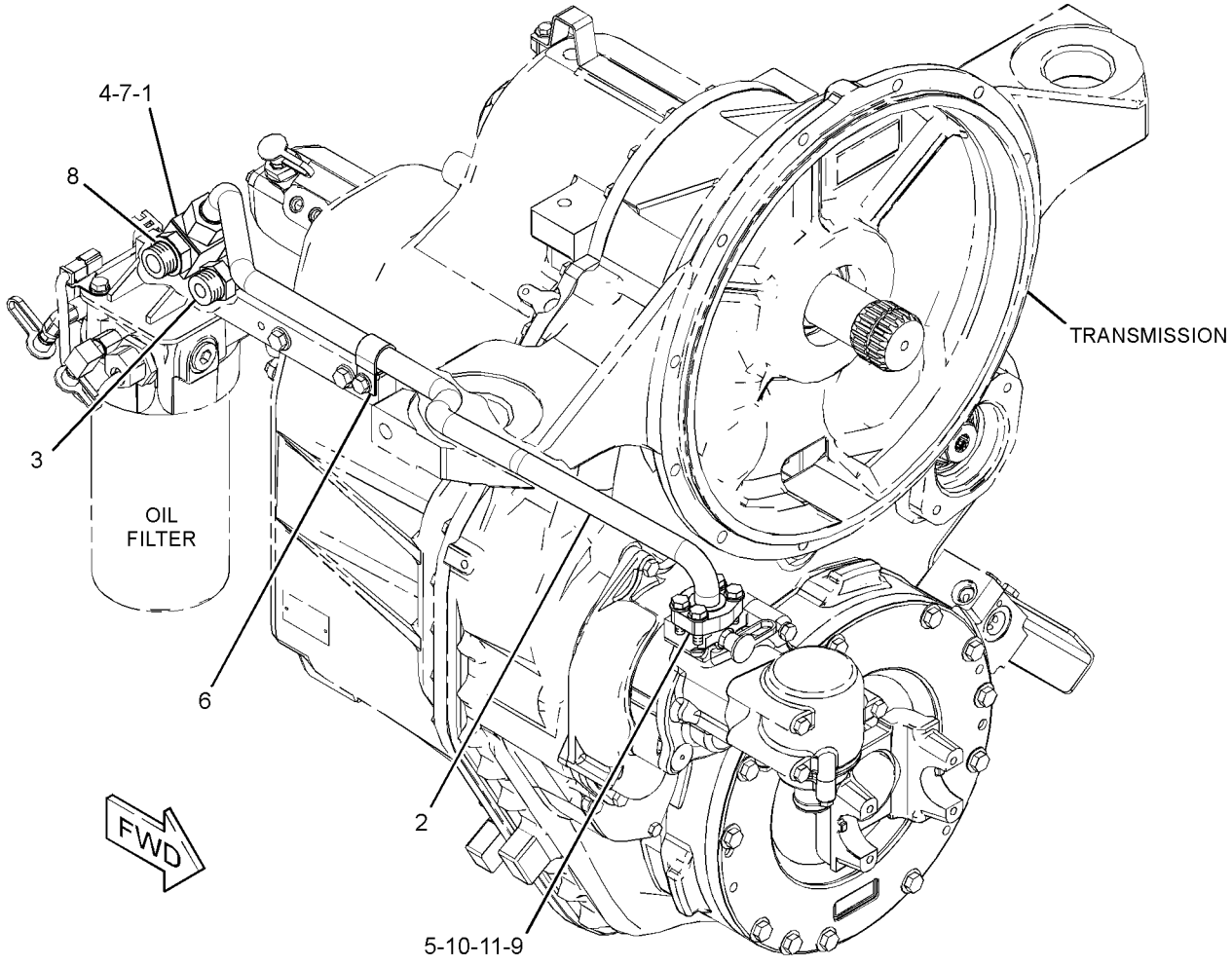

GRAPHIC #1 <END> g06241012

324-9254 LINES GP-TRANSMISSION OIL—COLD WEATHER

S/N: B551-UP

PART OF 333-6001 COLD WEATHER AR

SMCS-3154 **i07377483**

NOTE	REF NO	GRAPHIC REF	PART NUMBER	QTY	PART NAME 1 2 3 4 5 6 (PRODUCT LEVEL)	SEE PAGE
	1	1	**541-4602**	1	TUBE AS	
	2	1	**323-6835**	1	PLATE AS	
	3	1	**323-9149**	1	TUBE AS	
Y	4	1	**361-5941**	1	VALVE GP-SOLENOID (24-VOLT) (COLD START)	421
	5	1	*148-8355*	1	ELBOW AS	
		1	**5K-9090**	1	SEAL-O-RING	
		1	**6V-9005**	1	ELBOW	
		1	**7M-8485**	1	SEAL-O-RING	
	6	1	*148-8357*	2	ELBOW AS	
					(EACH INCLUDES)	
		1	**5K-9090**	1	SEAL-O-RING	
		1	**6V-9008**	1	ELBOW	
		1	**7M-8485**	1	SEAL-O-RING	
	7	1	**5K-9090**	1	SEAL-O-RING	
	8	1	**9X-8250**	2	CLIP (LOOP)	
M	9	1	**8T-4186**	2	BOLT (M10X1.5X40-MM)	
	10	1	**8T-4121**	9	WASHER-HARD (11X21X2.5-MM THK)	
M	11	1	**344-5675**	3	NUT (M10X1.5-THD)	
M	12	1	**8T-4136**	4	BOLT (M10X1.5X25-MM)	
M	13	1	**8T-4178**	2	BOLT (M10X1.5X90-MM)	

M - METRIC PART
Y - SEPARATE ILLUSTRATION

324-9254 **LINES GP-TRANSMISSION OIL (**contd.**)** **i07377483**

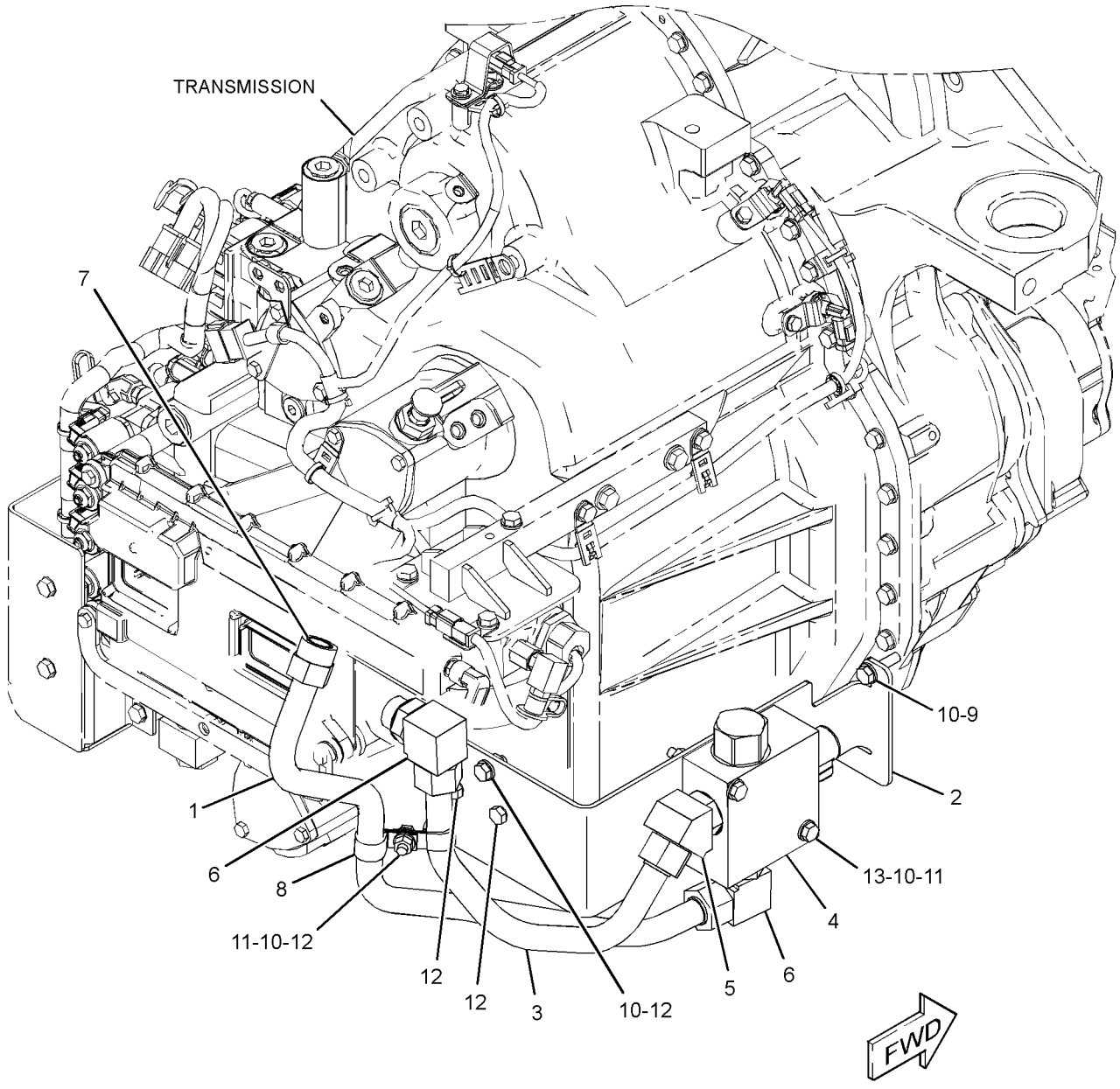

GRAPHIC #1 <END> g06287758

255-1566 MOUNTING GP-WHEEL

S/N: B551-UP
NON ALL WHEEL DRIVE
PART OF 577-1377 COMMON AR

SMCS-4201 **i05334665**

NOTE	REF NO	GRAPHIC REF	PART NUMBER	QTY	PART NAME 1 2 3 4 5 6 (PRODUCT LEVEL)	SEE PAGE
	1	1	**267-3507**	60	WASHER-HARD (26X47X12-MM THK)	
M	2	1	**7X-2575**	60	BOLT (M24X3X60-MM)	

M - METRIC PART

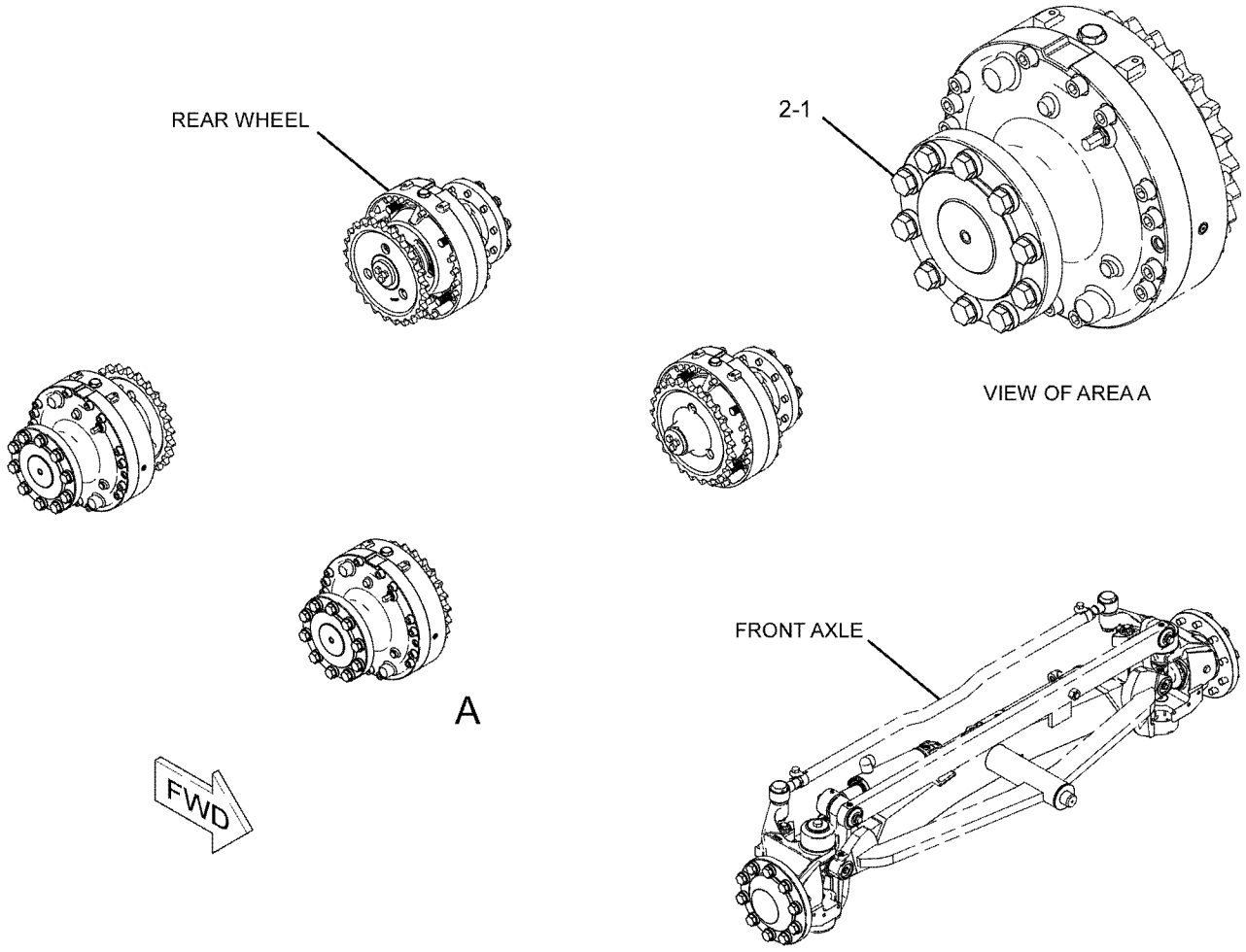

GRAPHIC #1 <END> g01133872

262-8360 MOUNTING GP-XMSN OIL COOLER

S/N: B551-UP

PART OF 577-1377 COMMON AR

SMCS-1375 **i04096610**

NOTE	REF NO	GRAPHIC REF	PART NUMBER	QTY	PART NAME 1 2 3 4 5 6 (PRODUCT LEVEL)	SEE PAGE
	1	1	**157-0670**	1	CAP-DUST	
	2	1	*217-9060*	1	VALVE AS-FLUID SAMPLING (COOLANT)	
		1	**3J-7354**	1	SEAL-O-RING	
		1	**154-9023**	1	VALVE-SAMPLING	
Y	3	1	**272-1045**	1	COOLER GP-TRANSMISSION OIL	366
M	4	1	**7X-2562**	3	BOLT (M20X2.5X45-MM)	
	5	1	**8T-4123**	3	WASHER (22X35X3.5-MM THK)	

M - METRIC PART
Y - SEPARATE ILLUSTRATION

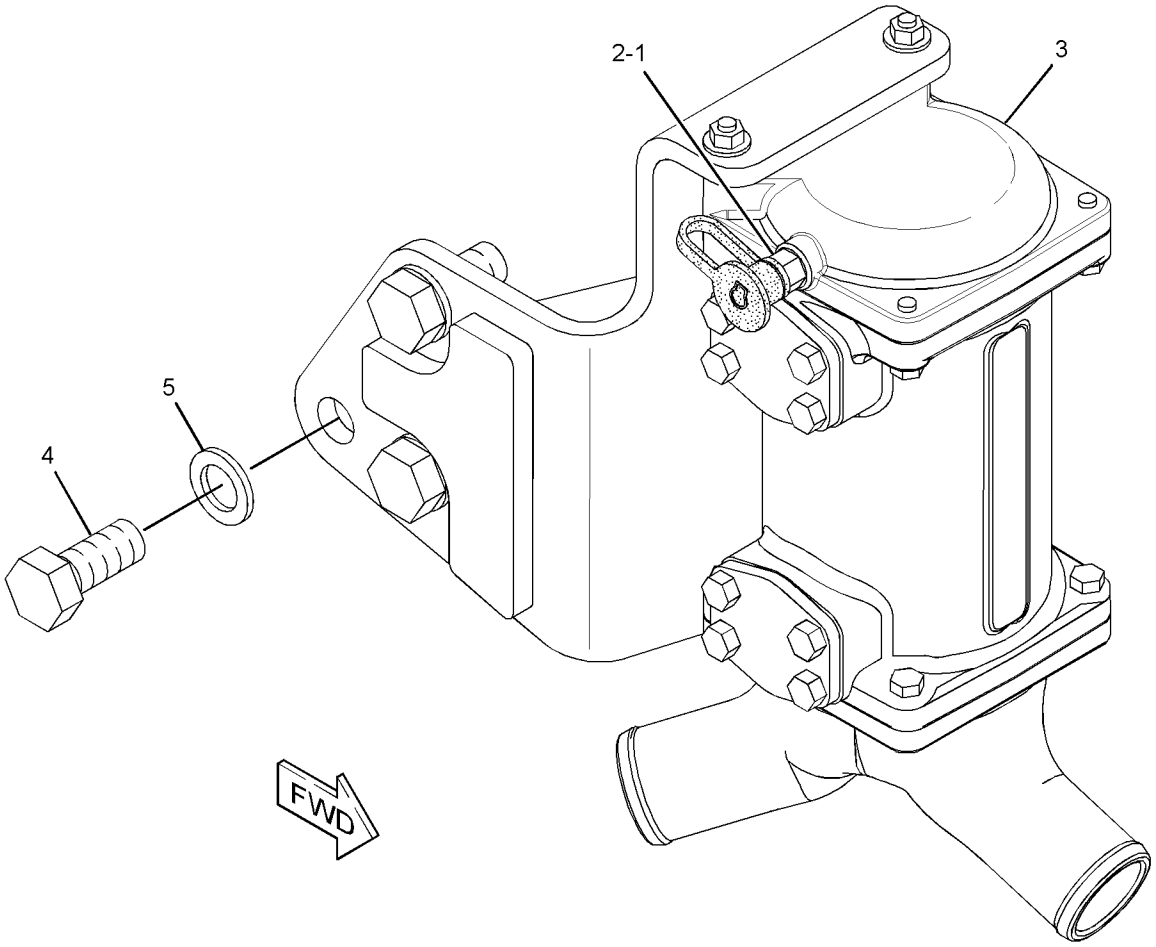

GRAPHIC #1 <END> g02578536

349-6146 POWER TRAIN AR

S/N: B551-UP

PART OF 577-1377 COMMON AR

SMCS-3000, 4000 **i05341173**

NOTE	REF NO	GRAPHIC REF	PART NUMBER	QTY	PART NAME 1 2 3 4 5 6 (PRODUCT LEVEL)	SEE PAGE
Y	1	1	*284-5019*	1	WHEEL AR (TANDEM)	427
Y	2	1	*285-0592*	1	TANDEM & COVER GP	403
Y	3	1	*297-8776*	1	CHAIN GP-DRIVE (TANDEM)	351
Y	4	1	*349-6137*	1	FILLER GP-POWER TRAIN OIL	378
Y	5	1	*356-2972*	1	LINES GP-SERVICE BRAKE	511
Y	6	1	*356-2977*	1	CONTROL GP-DIFFERENTIAL LOCK	360
Y	7	1	*365-2125*	1	AXLE GP-REAR	344
Y	8	1	*432-2644*	1	TUBE GP-SHIPPING	406

Y - SEPARATE ILLUSTRATION

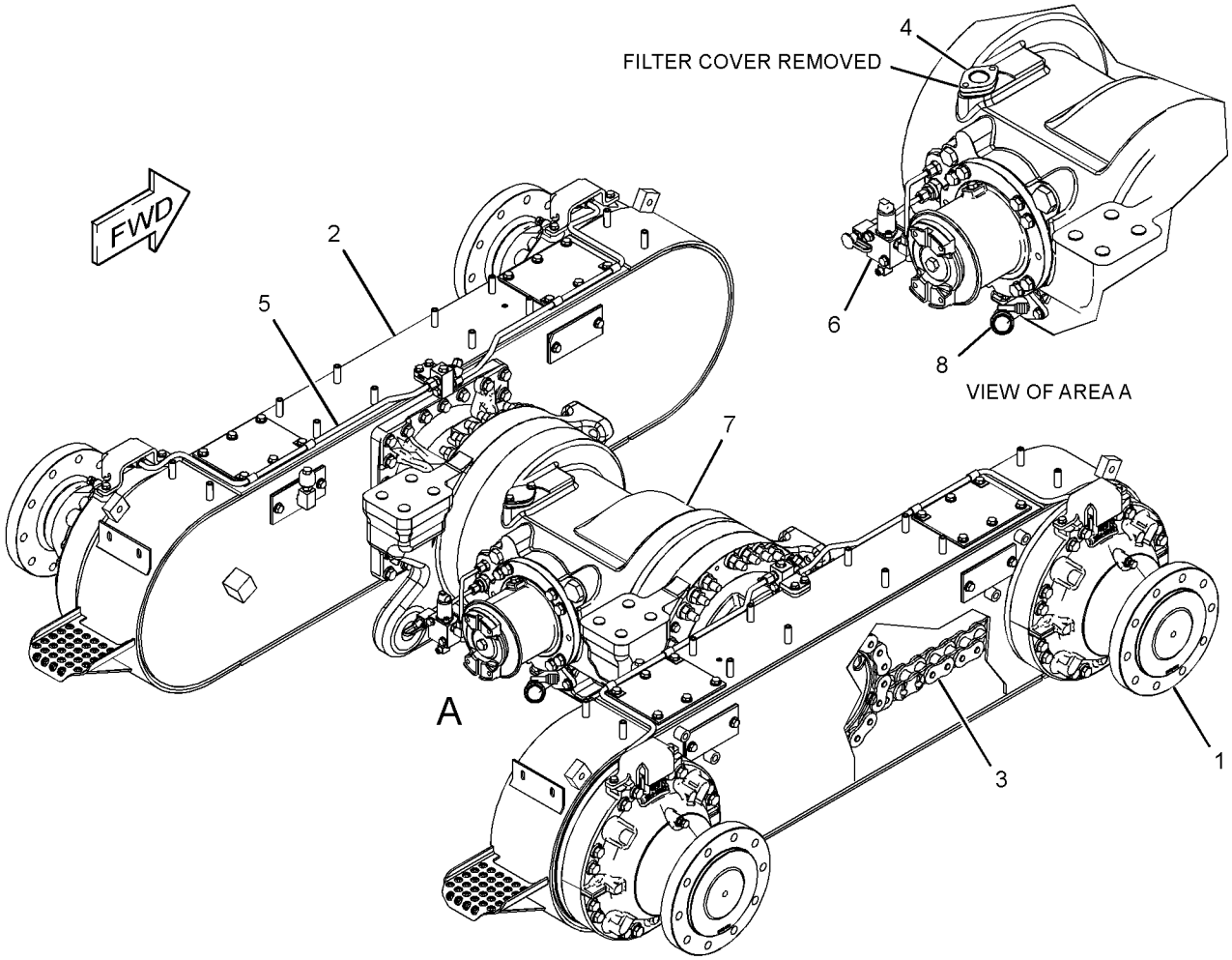

GRAPHIC #1 <END> g03405776

262-6672 PUMP & MTG GP-GEAR—POWER TRAIN

S/N: JP21-UP; TSZ1-UP

PART OF 396-3303 TRANSMISSION AR

SMCS-3066, 3115 **i06622500**

NOTE	REF NO	GRAPHIC REF	PART NUMBER	QTY	PART NAME 1 2 3 4 5 6 (PRODUCT LEVEL)	SEE PAGE
CYR	1	1	**326-1237**	1	PUMP GP-GEAR (TRANSMISSION)	396
	2	1	**112-1574**	1	SEAL-O-RING	
	3	1	**4F-7952**	1	SEAL-O-RING	
M	4	1	**6V-5842**	2	BOLT (M10X1.5X40-MM)	
M	5	1	**8T-0644**	1	BOLT (M10X1.5X90-MM)	

C - CHANGE FROM PREVIOUS TYPE
M - METRIC PART
R - REMANUFACTURED PART MAY BE AVAILABLE
Y - SEPARATE ILLUSTRATION

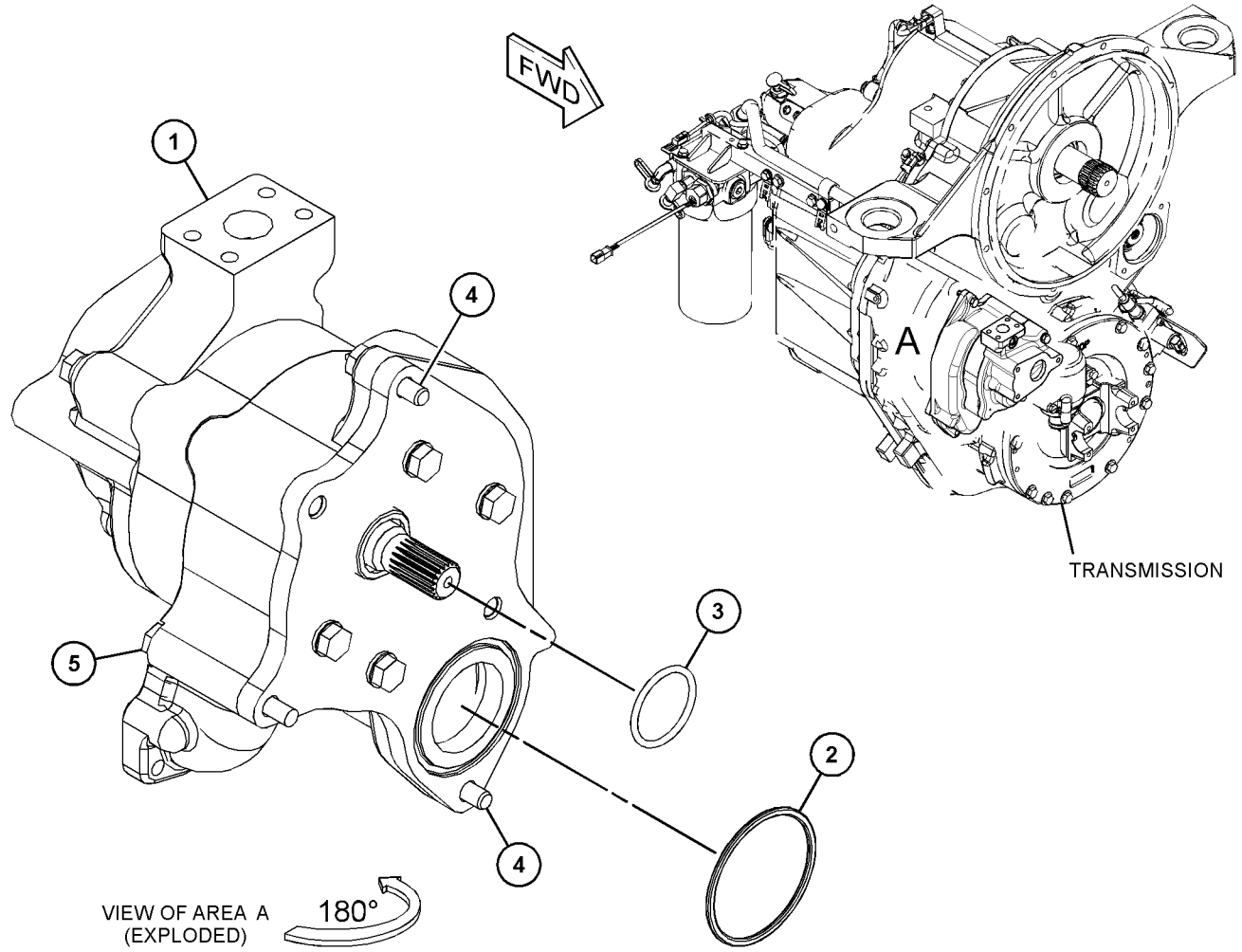

GRAPHIC #1 <END> g06045240

326-1237 PUMP GP-GEAR—TRANSMISSION*R

S/N: JP21-UP; TSZ1-UP
2-SECTION
PART OF 262-6672 PUMP & MTG GP-GEAR

SMCS-3066, 3115, 3203, 5073 **i03783232**

NOTE	REF NO	GRAPHIC REF	PART NUMBER	QTY	PART NAME 1 2 3 4 5 6 (PRODUCT LEVEL)	SEE PAGE
	1	1	**3S-0004**	5	WASHER (0.406X0.728X0.09-IN THK)	
	2	1	**6Y-5010**	8	WASHER (10.16X19X0.84-MM THK)	
	4	1	**116-4627**	2	GEAR (8-TEETH)	
	5	1	**234-0819**	1	BODY AS-OIL PUMP	
		1	**5M-3320**	2	BUSHING	
	6	1	**234-0821**	1	MANIFOLD AS-OIL PUMP	
		1	**8M-8489**	2	DOWEL	
		1	**9N-4155**	1	ADAPTER	
	7	1	**234-0823**	1	GEAR AS-OIL PUMP (12-TEETH)	
	8	1	**234-0826**	1	GEAR AS-OIL PUMP (12-TEETH)	
	9	1	**263-7428**	1	COVER AS-OIL PUMP	
		1	**5M-3320**	2	BUSHING	
	11	1	**326-1253**	1	BODY AS-OIL PUMP	
		1	**8M-8489**	4	DOWEL	
	12	1	**112-1574**	1	SEAL-O-RING	
	13	1	**2B-9373**	1	KEY-WOODRUFF	
	14	1	**161-8068**	3	SEAL-O-RING	
M	15	1	**8C-2926**	4	BOLT (M10X1.5X140-MM)	
M	16	1	**8T-0355**	1	BOLT (M10X1.5X110-MM)	

M - METRIC PART

326-1237 **PUMP GP-GEAR (**contd.**)** **i03783232**

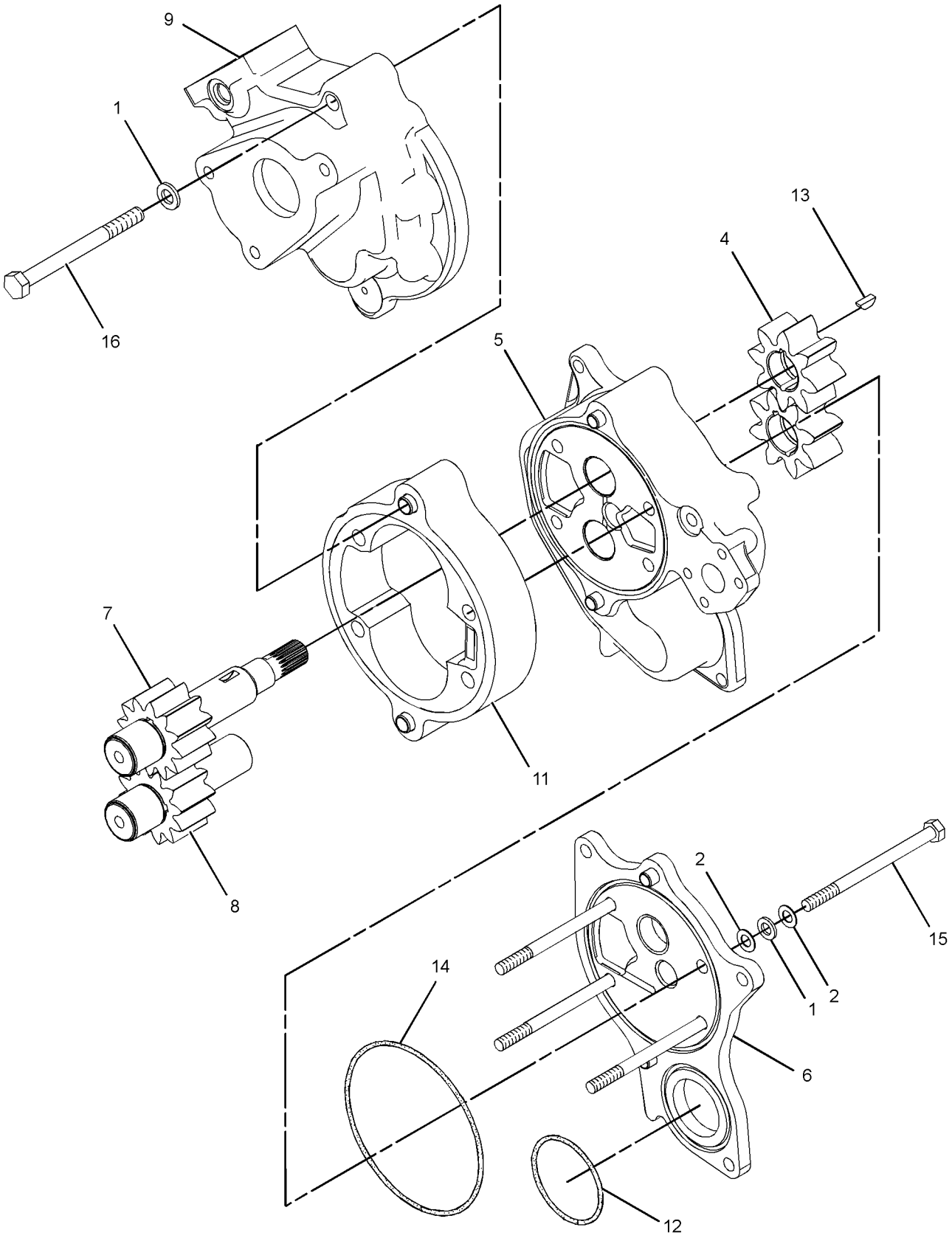

GRAPHIC #1 <END> g01342978

540-6848 RIM GP-DEMOUNTABLE

S/N: B551-UP

(10X24)

PART OF 540-3755 WHEEL GP

SMCS-4209 **i07383683**

NOTE	REF NO	GRAPHIC REF	PART NUMBER	QTY	PART NAME 1 2 3 4 5 6 (PRODUCT LEVEL)	SEE PAGE
	1	1	**540-6849**	1	RING-LOCK	
	2	1	**540-6850**	1	FLANGE AS	
	3	1	**540-6851**	1	RIM AS	

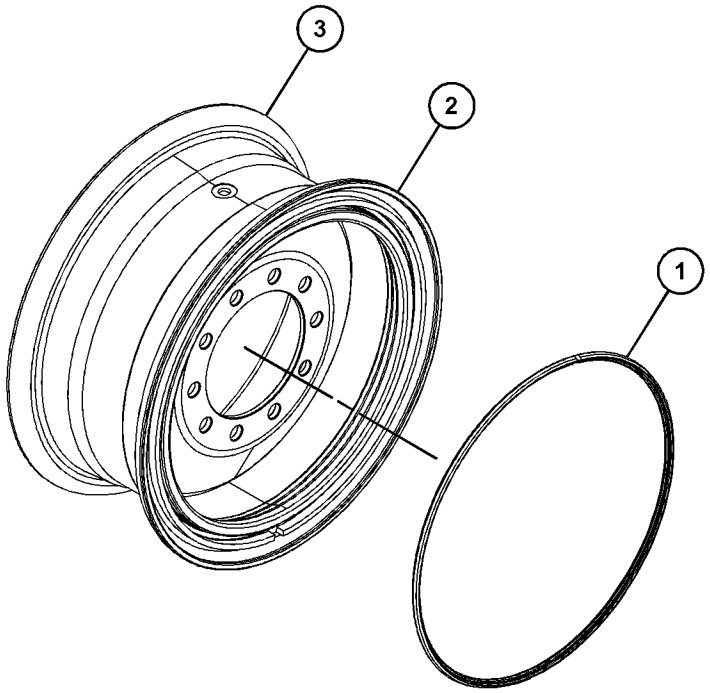

GRAPHIC #1 <END> g06308929

540-6852 RIM GP-DEMOUNTABLE

S/N: B551-UP

(14X25)

PART OF 540-3236 WHEEL GP

SMCS-4209 **i07339465**

NOTE	REF NO	GRAPHIC REF	PART NUMBER	QTY	PART NAME 1 2 3 4 5 6 (PRODUCT LEVEL)	SEE PAGE
	1	1	**540-6853**	1	RING-LOCK	
	2	1	**540-6854**	1	FLANGE AS	
	3	1	**540-6855**	1	RIM AS	

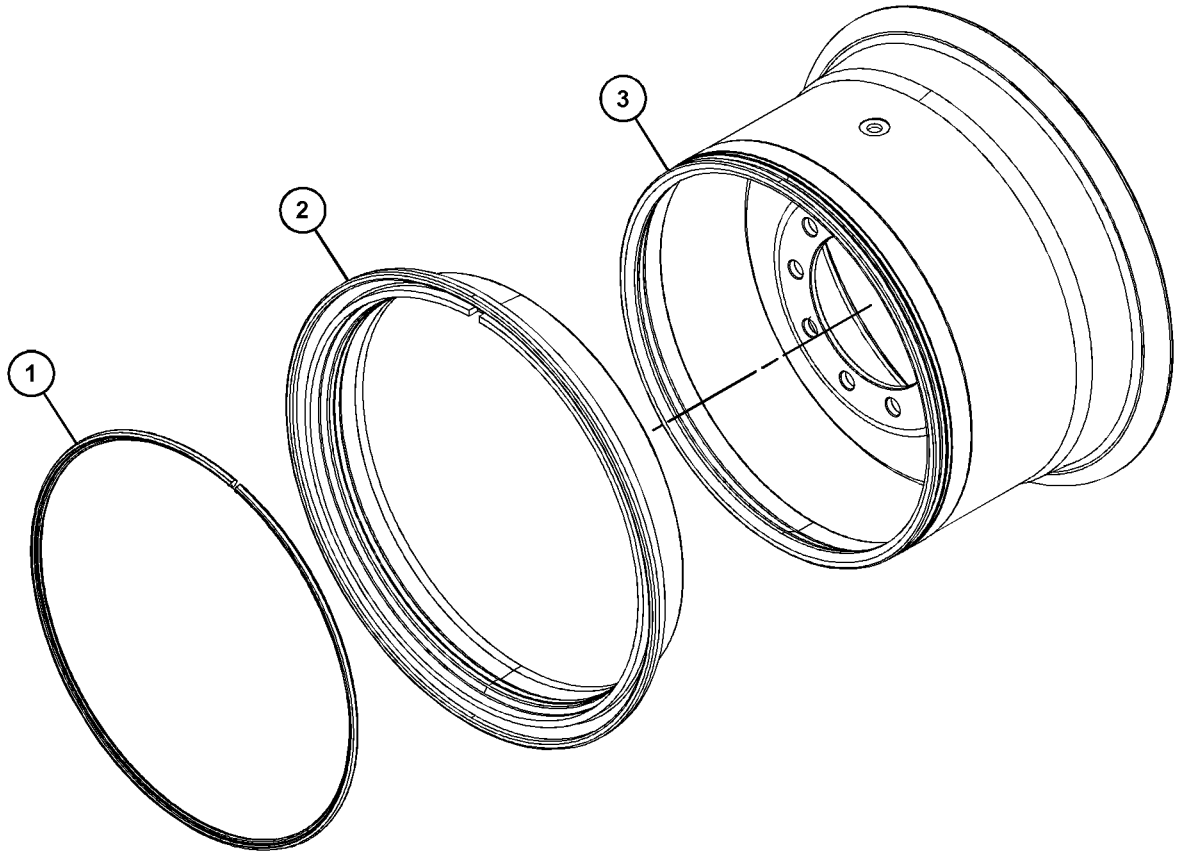

GRAPHIC #1 <END> g06291217

9W-5134 SCREEN GP-MAGNETIC—TRANSMISSION

S/N: JP21-UP; TSZ1-UP

PART OF 396-3303 TRANSMISSION AR

SMCS-3067 **i05883501**

NOTE	REF NO	GRAPHIC REF	PART NUMBER	QTY	PART NAME 1 2 3 4 5 6 (PRODUCT LEVEL)	SEE PAGE
	1	1	**6Y-3860**	1	HOUSING-FILTER	
	2	1	**8S-9129**	1	FILTER-MAGNETIC (TRANSMISSION)	
	3	1	**8S-9130**	1	SCREEN-SUCTION (TRANSMISSION)	
C	4	1	**325-9697**	1	COVER AS	
C	5	1	**5P-8211**	1	SEAL-O-RING	
CM	6	1	**6V-2317**	3	BOLT (M8X1.25X30-MM)	
C	7	1	**8C-3089**	1	SEAL-O-RING	
M	8	1	**8T-0355**	3	BOLT (M10X1.5X110-MM)	

C - CHANGE FROM PREVIOUS TYPE
M - METRIC PART

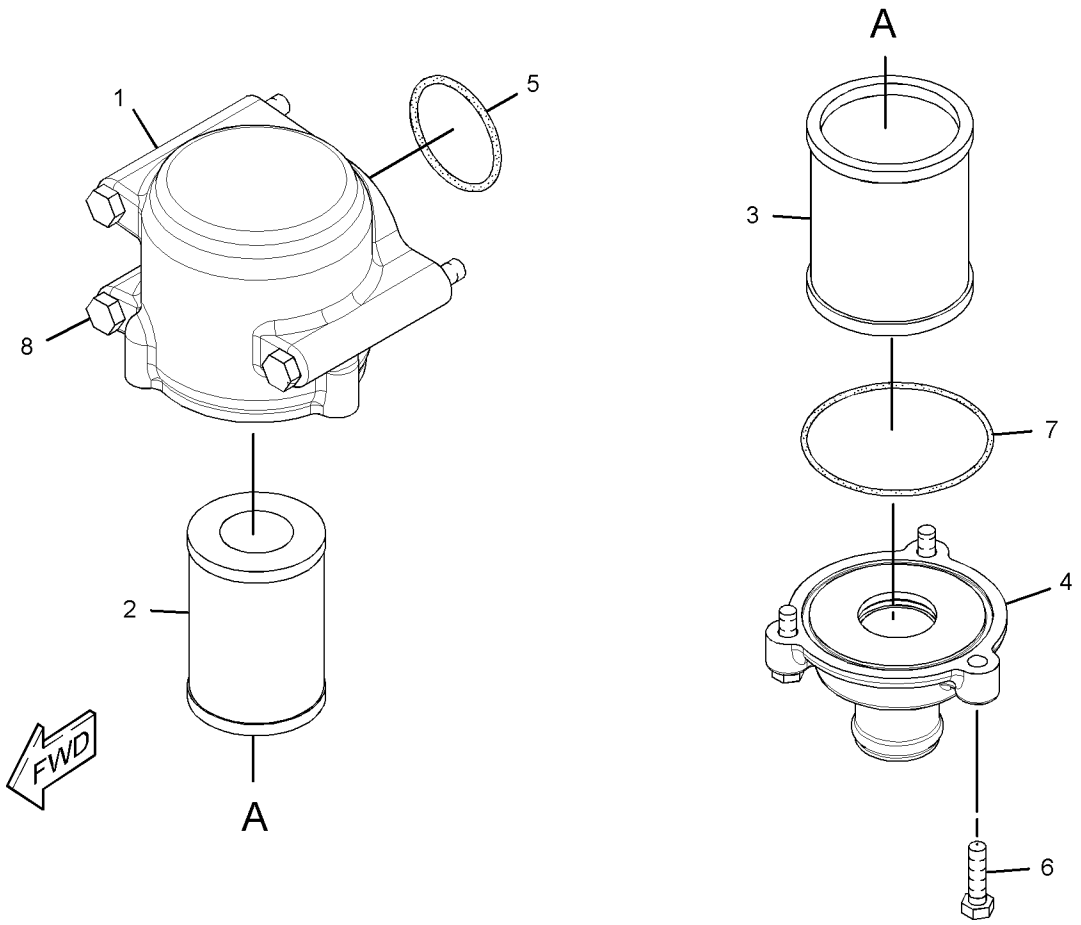

GRAPHIC #1 <END> g01870273

364-0526 SHAFT GP-DRIVE

S/N: B551-UP

PART OF 577-1377 COMMON AR

SMCS-3253 **i04080811**

NOTE	REF NO	GRAPHIC REF	PART NUMBER	QTY	PART NAME 1 2 3 4 5 6 (PRODUCT LEVEL)	SEE PAGE
Y	1	1	**364-0569**	1	UNIVERSAL JOINT GP	407
M	2	1	**290-7514**	8	BOLT (M12X1.75X60-MM)	

M - METRIC PART
Y - SEPARATE ILLUSTRATION

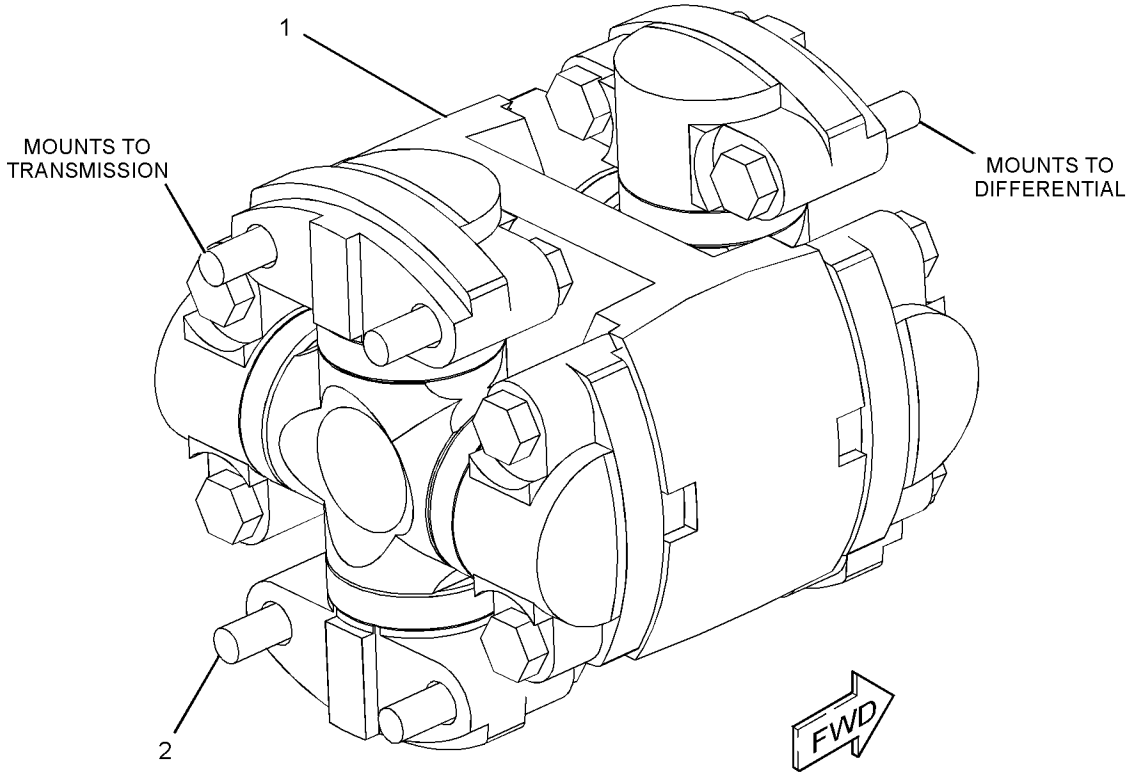

GRAPHIC #1 <END> g02318834

305-2148 SHAFT GP-INPUT—TRANSMISSION

S/N: JP21-UP; TSZ1-UP

PART OF 396-3303 TRANSMISSION AR

SMCS-3063 **i02775356**

NOTE	REF NO	GRAPHIC REF	PART NUMBER	QTY	PART NAME 1 2 3 4 5 6 (PRODUCT LEVEL)	SEE PAGE
	1	1	**1M-4095**	1	BEARING-INNER	
	2	1	**3T-4377**	1	SEAL-RING	
	3	1	**246-8746**	1	GEAR (38-TEETH)	
	4	1	**246-8752**	1	GEAR (45-TEETH)	
	5	1	**304-9224**	1	SHAFT	
	6	1	**2H-6490**	1	BEARING-INNER	

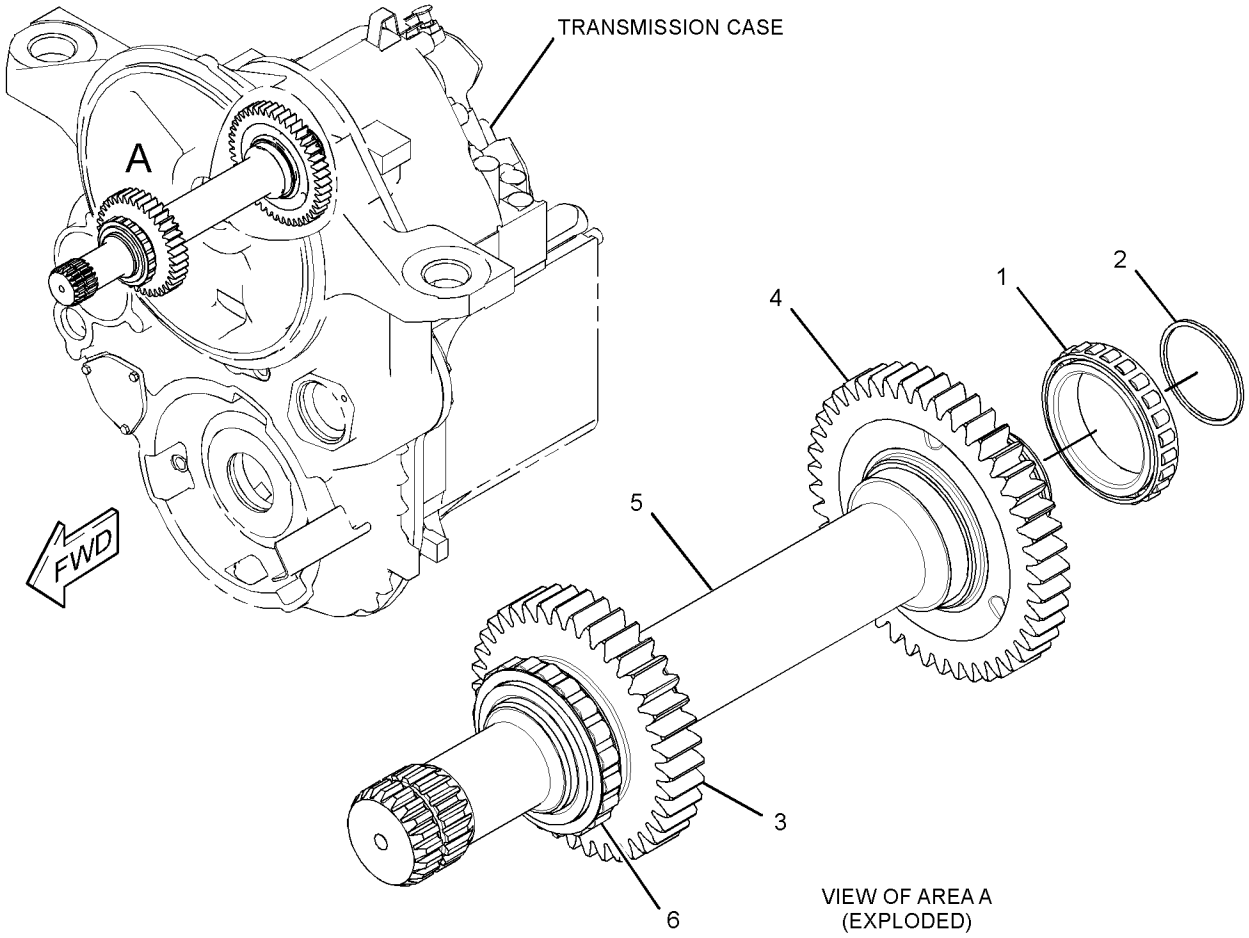

GRAPHIC #1 <END> g01393166

285-0592 TANDEM & COVER GP

S/N: B551-UP

PART OF 349-6146 POWER TRAIN AR

SMCS-4062, 4064 **i04225291**

NOTE	REF NO	GRAPHIC REF	PART NUMBER	QTY	PART NAME 1 2 3 4 5 6 (PRODUCT LEVEL)	SEE PAGE
	1	1	**3D-2981**	4	GASKET	
	2	1	**248-2378**	6	COVER	
	3	1	**363-8054**	4	COVER	
	4	1	**250-4091**	8	GASKET	
	5	1	**250-4095**	2	BREATHER GP (TANDEM)	
					(EACH INCLUDES)	
		1	**4H-6112**	1	BREATHER (TANDEM HOUSING)	
		1	**6B-5072**	1	ADAPTER	
		1	**002-6453**	1	ELBOW	
	6	1	**285-0593**	1	HOUSING AS-TANDEM DRIVE (RH)	
	7	1	**285-0594**	1	HOUSING AS-TANDEM DRIVE (LH)	
M	8	1	**311-8290**	40	BOLT (M12X1.75X25-MM)	
	9	1	**304-8032**	2	PLUG-MAGNETIC (TANDEM DRIVE OIL DRAIN)	
	10	1	**2M-9780**	2	SEAL-O-RING	
	11	1	**3K-0360**	2	SEAL-O-RING	
	12	1	**7H-3171**	2	PLUG-PIPE	
	13	1	**8T-4223**	40	WASHER-HARD (13.5X25.5X3-MM THK)	
	14	1	**9S-4190**	2	PLUG-O-RING (7/8-14-THD)	

M - METRIC PART

285-0592 **TANDEM & COVER GP** (contd.) **i04225291**

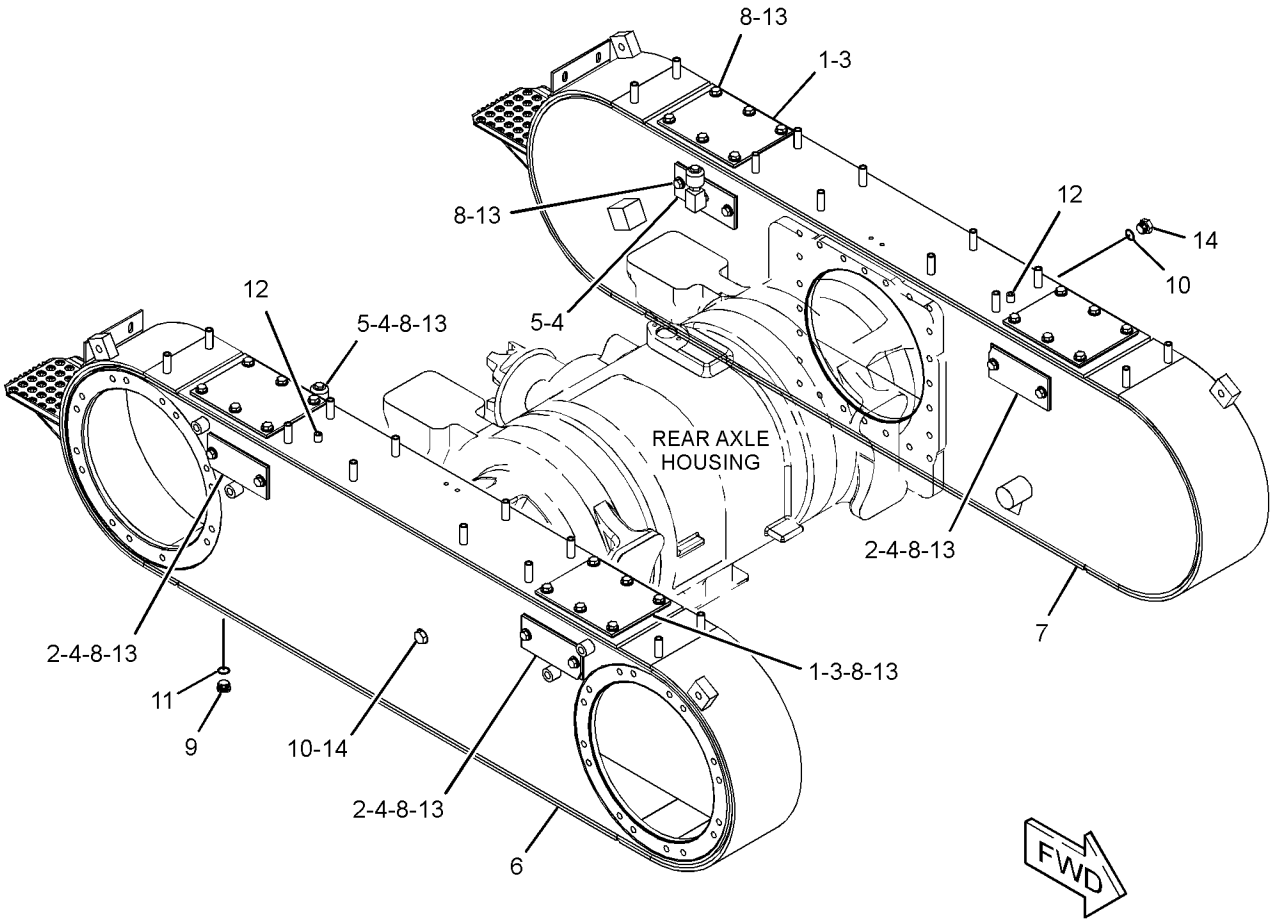

GRAPHIC #1 <END> g02468202

396-3303 TRANSMISSION AR*R

S/N: JP21-UP; TSZ1-UP

PART OF 577-1377 COMMON AR

SMCS-3030 **i07609605**

NOTE	PART NUMBER	QTY	PART NAME 1 2 3 4 5 6 (PRODUCT LEVEL)	SEE PAGE
Y	*436-2627*	1	BRAKE GP-PARKING	490
Y	*422-6861*	1	CASE & PARTS GP-PLANETARY	347
Y	*235-2412*	1	CLUTCH GP-TRANSMISSION (FORWARD)	352
Y	*235-2413*	1	CLUTCH GP-TRANSMISSION (REVERSE, 2ND)	354
Y	*235-2414*	1	CLUTCH GP-TRANSMISSION (FIRST, THIRD)	356
Y	*247-8303*	1	CLUTCH GP-TRANSMISSION (HIGH, LOW)	358
Y	*423-4654*	1	CONTROL GP-TRANSMISSION HYD	362
Y	*263-7434*	1	COVER GP-SHIPPING (TRANSMISSION)	368
Y	*310-3221*	1	ELECTRONICS GP-POWER TRAIN	174
Y	*520-5008*	1	FILTER & MTG GP-TRANSMISSION	380
			S/N: TSZ2868-UP	
Y	*262-6674*	1	LINES GP-TRANSMISSION OIL	389
Y	*262-6672*	1	PUMP & MTG GP-GEAR (POWER TRAIN)	395
Y	*9W-5134*	1	SCREEN GP-MAGNETIC (TRANSMISSION)	400
Y	*305-2148*	1	SHAFT GP-INPUT (TRANSMISSION)	402

Y - SEPARATE ILLUSTRATION

<END>

432-2644 TUBE GP-SHIPPING

S/N: B551-UP

PART OF 349-6146 POWER TRAIN AR

SMCS-7505 **i05320033**

NOTE	REF NO	GRAPHIC REF	PART NUMBER	QTY	PART NAME 1 2 3 4 5 6 (PRODUCT LEVEL)	SEE PAGE
	1	1	**369-1253**	1	TUBE AS	
	2	1	**6V-4368**	1	SEAL-O-RING	
	3	1	**8T-4223**	2	WASHER-HARD (13.5X25.5X3-MM THK)	
M	4	1	**8T-4956**	2	BOLT (M12X1.75X35-MM)	
	5	1	**8T-4983**	1	CLAMP-HOSE	

M - METRIC PART

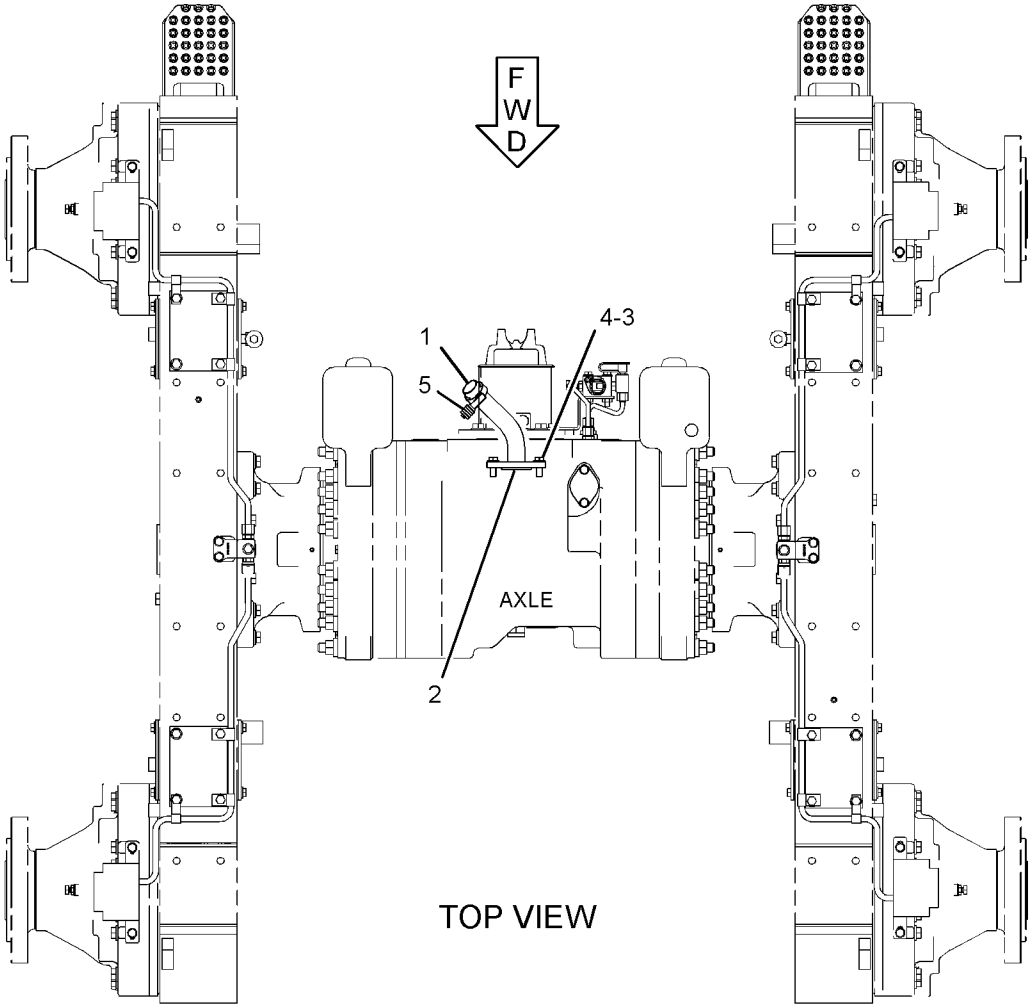

GRAPHIC #1 <END> g03371899

364-0569 UNIVERSAL JOINT GP

S/N: B551-UP

PART OF 364-0526 SHAFT GP-DRIVE

SMCS-3251, 3253

i05481091

NOTE	PART NUMBER	QTY	PART NAME 1 2 3 4 5 6 (PRODUCT LEVEL)	SEE PAGE
Y	*364-0570*	1	UNIVERSAL JOINT GP	408
			—OR—	
Y	*364-0571*	1	UNIVERSAL JOINT GP	409
			—OR—	
Y	*397-8066*	1	UNIVERSAL JOINT GP	410

Y - SEPARATE ILLUSTRATION

<END>

364-0570 UNIVERSAL JOINT GP

S/N: B551-UP

PART OF 364-0569 UNIVERSAL JOINT GP

SMCS-3251, 3253 **i04080832**

NOTE	REF NO	GRAPHIC REF	PART NUMBER	QTY	PART NAME 1 2 3 4 5 6 (PRODUCT LEVEL)	SEE PAGE
	1	1	**2T-3013**	2	UNIVERSAL JOINT	
M	2	1	**160-8750**	8	BOLT (M12X1.75X65-MM)	

M - METRIC PART

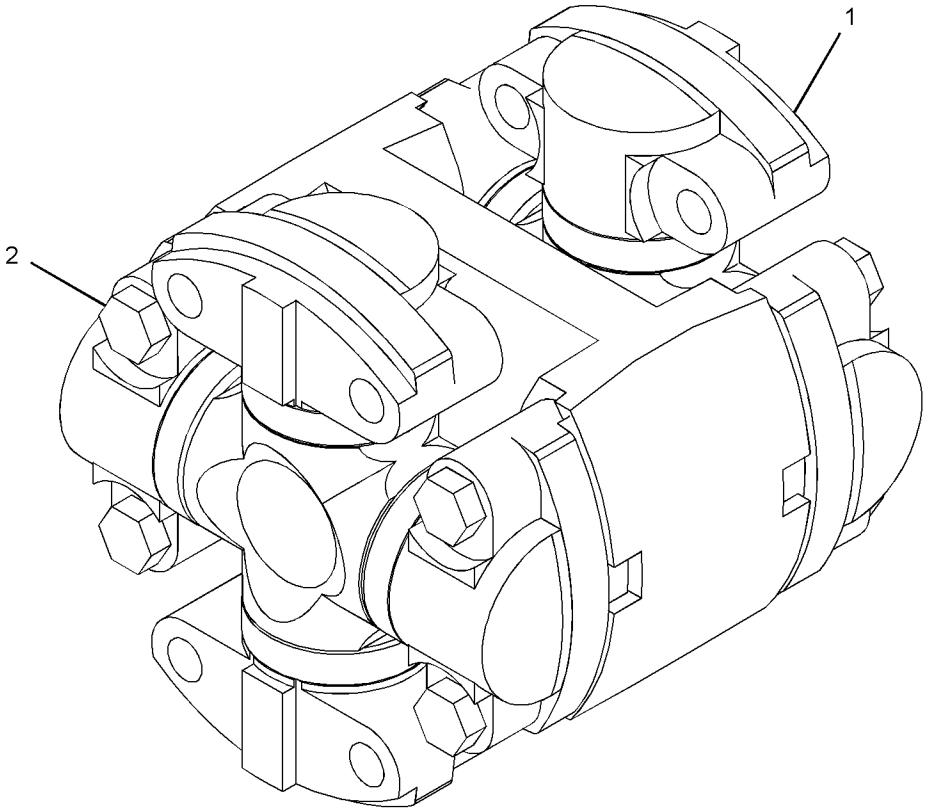

GRAPHIC #1 <END> g02318974

364-0571 UNIVERSAL JOINT GP

S/N: B551-UP

PART OF 364-0569 UNIVERSAL JOINT GP

SMCS-3251, 3253

i04080833

NOTE	REF NO	GRAPHIC REF	PART NUMBER	QTY	PART NAME 1 2 3 4 5 6 (PRODUCT LEVEL)	SEE PAGE
	1	1	**2T-3013**	2	UNIVERSAL JOINT	
M	2	1	**160-8748**	8	BOLT (M12X1.75X55-MM)	

M - METRIC PART

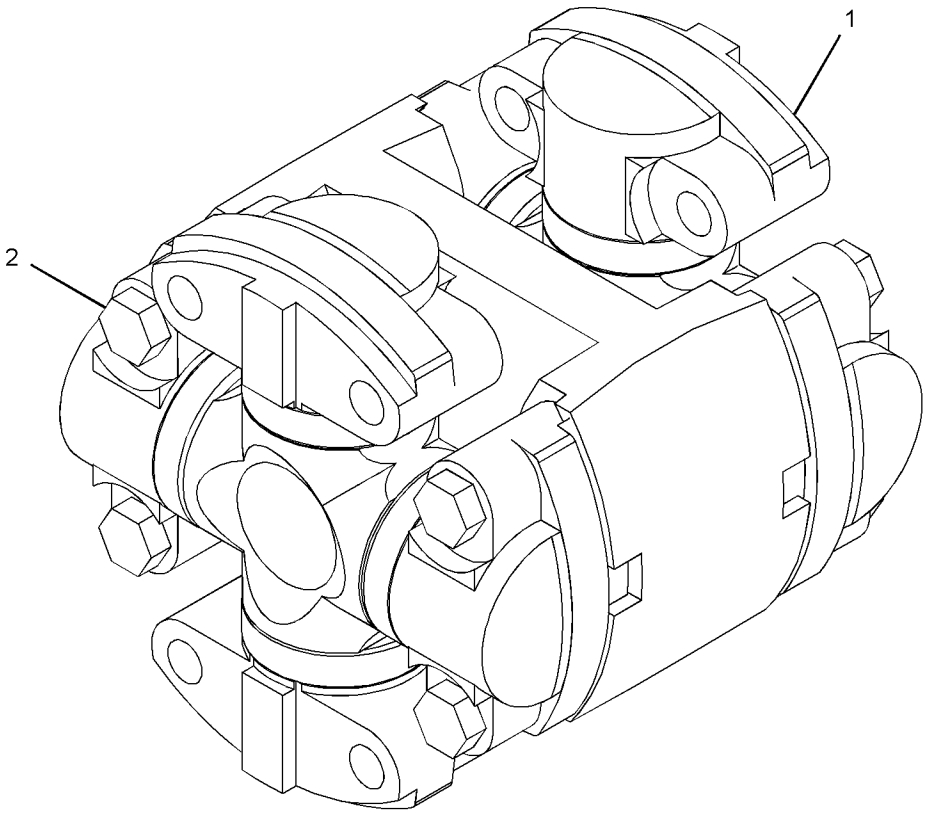

GRAPHIC #1 <END> g02321733

397-8066 UNIVERSAL JOINT GP

S/N: B551-UP

PART OF 364-0569 UNIVERSAL JOINT GP

SMCS-3251, 3253 **i05481093**

NOTE	REF NO	GRAPHIC REF	PART NUMBER	QTY	PART NAME 1 2 3 4 5 6 (PRODUCT LEVEL)	SEE PAGE
	1	1	**2T-3013**	2	UNIVERSAL JOINT	
M	2	1	**290-7514**	8	BOLT (M12X1.75X60-MM)	

M - METRIC PART

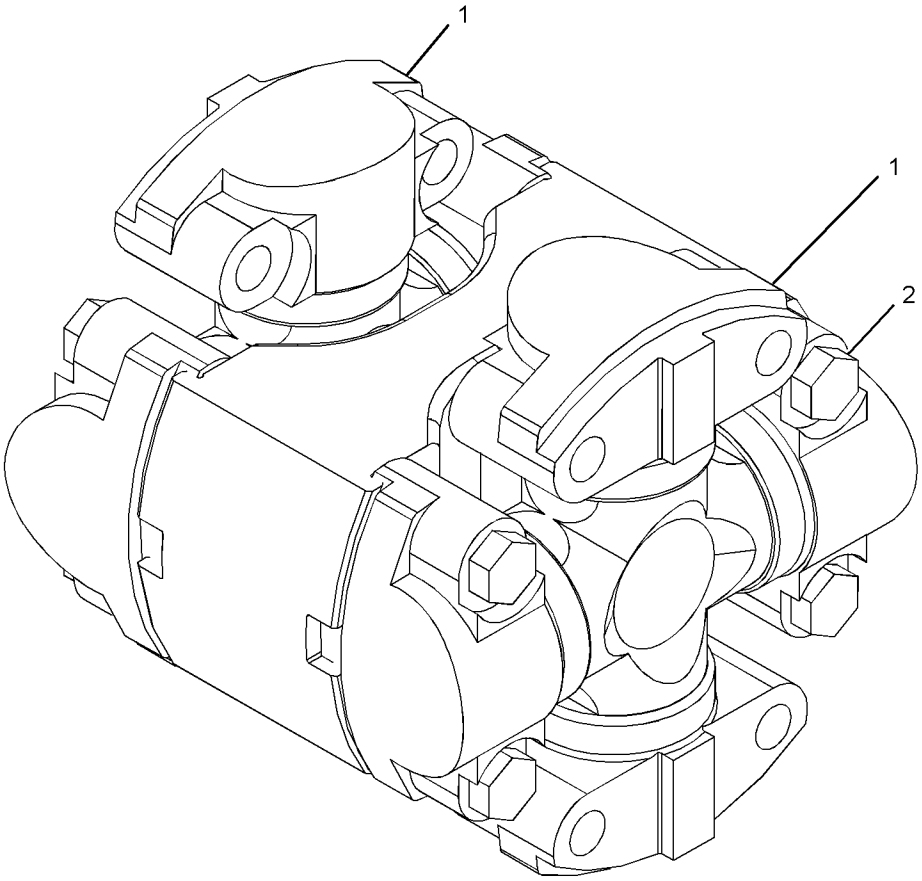

GRAPHIC #1 <END> g03472363

250-2139 VALVE & MTG GP-SOLENOID

S/N: B551-UP

PART OF 356-2977 CONTROL GP-DIFFERENTIAL LOCK

SMCS-5479 **i07621076**

NOTE	REF NO	GRAPHIC REF	PART NUMBER	QTY	PART NAME 1 2 3 4 5 6 (PRODUCT LEVEL)	SEE PAGE
M	1	1	**8T-1158**	1	BOLT-SOCKET HEAD (M8X1.25X20-MM)	
	2	1	**245-1181**	1	FLANGE	
	3	1	**245-3555**	1	VALVE GP-SOLENOID (24-VDC) (DIFFERENTIAL LOCK)	
		1	**245-1811**	1	COVER-BASE	
		1	**245-1912**	1	KIT-SEAL (SOLENOID VALVE)	
					(INCLUDES SEAL-O-RINGS)	
	4	1	**250-2138**	1	MANIFOLD	

M - METRIC PART

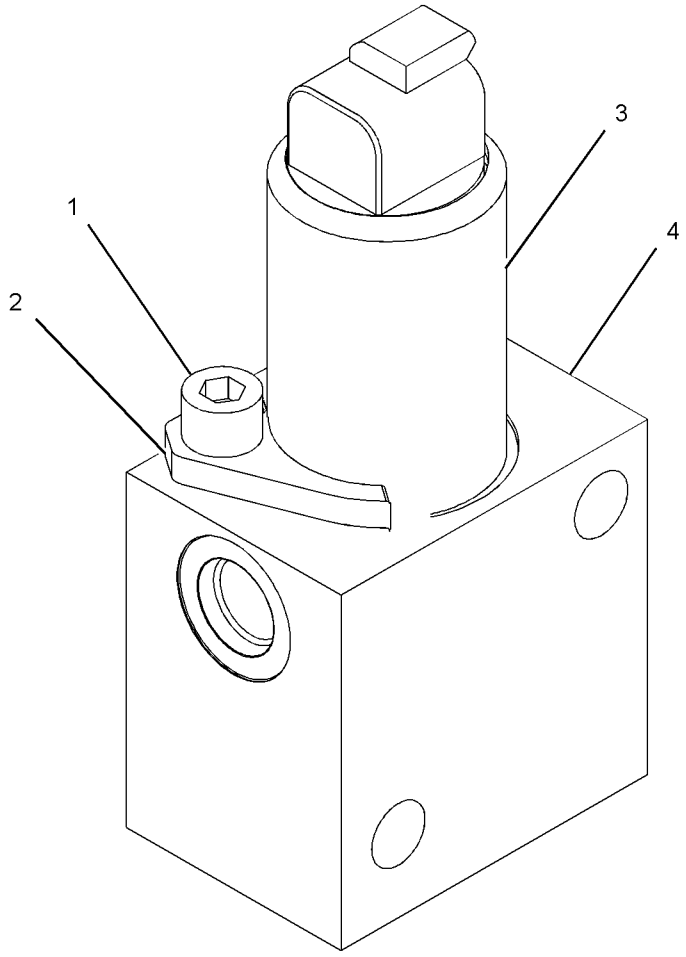

GRAPHIC #1 <END> g01109363

244-3114 VALVE GP-MODULATING

S/N: JP21-UP; TSZ1-UP
24-VOLT
PART OF 423-4654 CONTROL GP-TRANSMISSION HYD

SMCS-3139 **i07668237**

NOTE	PART NUMBER	QTY	PART NAME 1 2 3 4 5 6 (PRODUCT LEVEL)	SEE PAGE
Y	*385-4432*	1	VALVE GP-MODULATING (24-VOLT)	414
			—OR—	
Y	*425-6734*	1	VALVE GP-MODULATING (24-VOLT)	416
			—OR—	
Y	*350-3913*	1	VALVE GP-MODULATING (24-VOLT)	413
			—OR—	
Y	*425-4565*	1	VALVE GP-MODULATING (24-VOLT)	415

Y - SEPARATE ILLUSTRATION

<END>

350-3913 VALVE GP-MODULATING

S/N: JP21-UP; TSZ1-UP
24-VOLT
FIELD REPLACEMENT FOR 244-3114—PAGE: 412
PART OF 244-3114 VALVE GP-MODULATING

SMCS-3139 **i06050166**

NOTE	REF NO	GRAPHIC REF	PART NUMBER	QTY	PART NAME 1 2 3 4 5 6 (PRODUCT LEVEL)	SEE PAGE
	1	1	**6V-3965**	1	FITTING (QUICK DISCONNECT)	
	2	1	**218-2373**	1	NUT (1/2-28-THD)	
	3	1	**323-9531**	1	COIL AS (24-VOLT)	
	4	1	**214-7568**	1	SEAL-O-RING	
	5	1	**164-2108**	1	WASHER (13.03X25.4X2.38-MM THK)	

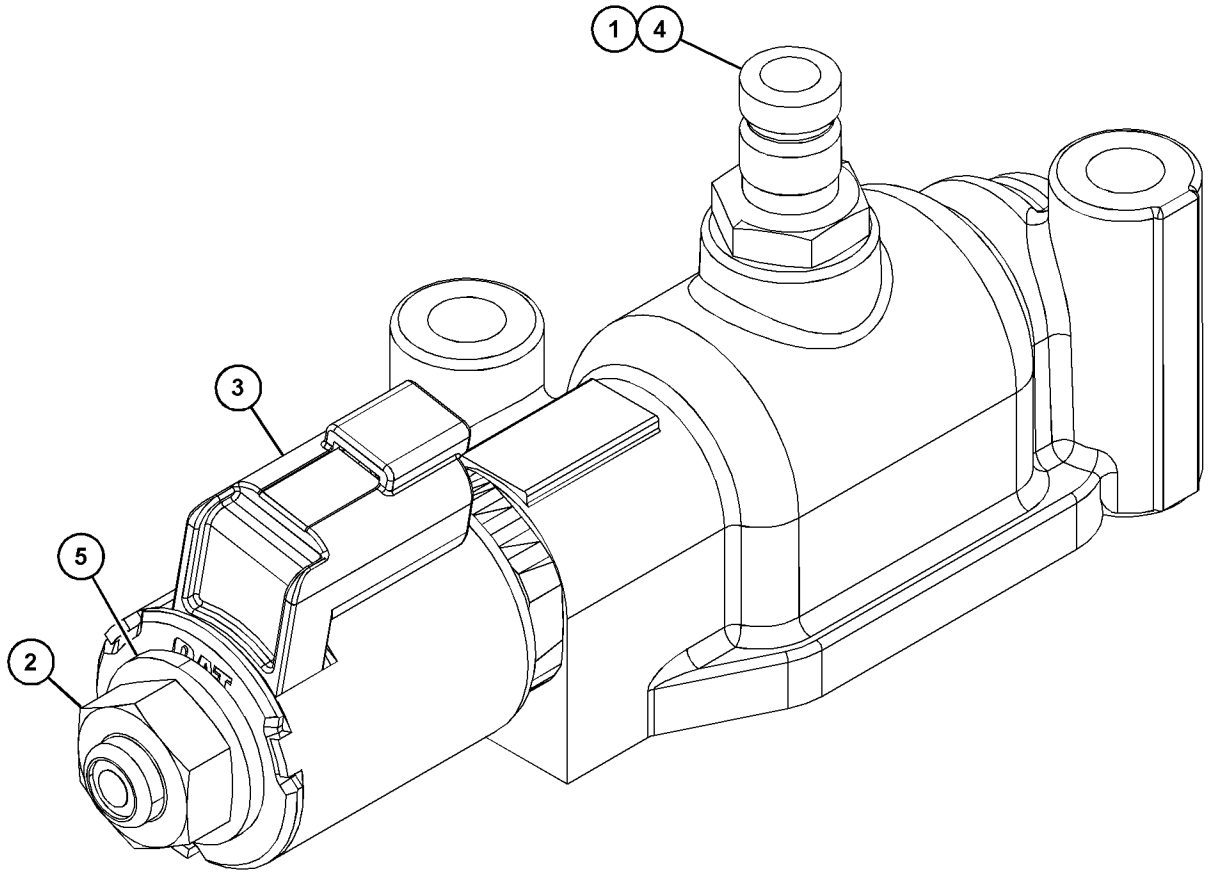

GRAPHIC #1 <END> g03736461

385-4432 VALVE GP-MODULATING

S/N: JP21-UP; TSZ1-UP
24-VOLT
PART OF 244-3114 VALVE GP-MODULATING

SMCS-3139 **i07714904**

NOTE	REF NO	GRAPHIC REF	PART NUMBER	QTY	PART NAME 1 2 3 4 5 6 (PRODUCT LEVEL)	SEE PAGE
	1	1	**6V-3965**	1	FITTING (QUICK DISCONNECT)	
	2	1	**444-7826**	1	COIL AS (24-VOLT)	
	3	1	**214-7568**	1	SEAL-O-RING	
	4	1	**164-2108**	1	WASHER (13.03X25.4X2.38-MM THK)	
	5	1	**218-2373**	1	NUT (1/2-28-THD)	
					PARTS SHOWN IN GRAPHIC(S) WITHOUT A REFERENCE NUMBER ARE NOT SERVICED SEPARATELY	

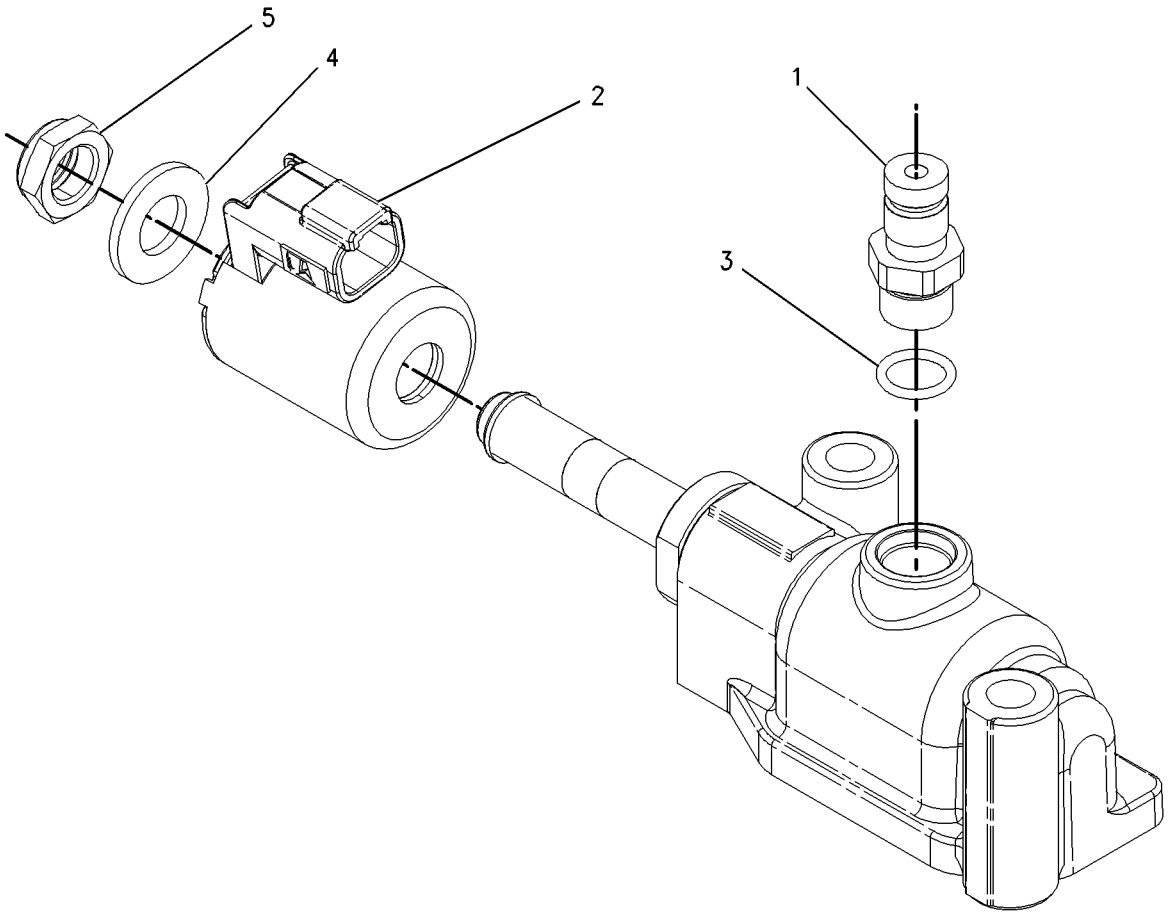

GRAPHIC #1 <END> g00919065

425-4565 VALVE GP-MODULATING

S/N: JP21-UP; TSZ1-UP
24-VOLT
FIELD REPLACEMENT FOR 244-3114—PAGE: 412
PART OF 244-3114 VALVE GP-MODULATING

SMCS-3139 **i06050283**

NOTE	REF NO	GRAPHIC REF	PART NUMBER	QTY	PART NAME 1 2 3 4 5 6 (PRODUCT LEVEL)	SEE PAGE
	1	1	**6V-3965**	1	FITTING (QUICK DISCONNECT)	
	2	1	**164-2108**	1	WASHER (13.03X25.4X2.38-MM THK)	
	3	1	**218-2373**	1	NUT (1/2-28-THD)	
	4	1	**214-7568**	1	SEAL-O-RING	
	5	1	**323-9531**	1	COIL AS (24-VOLT)	

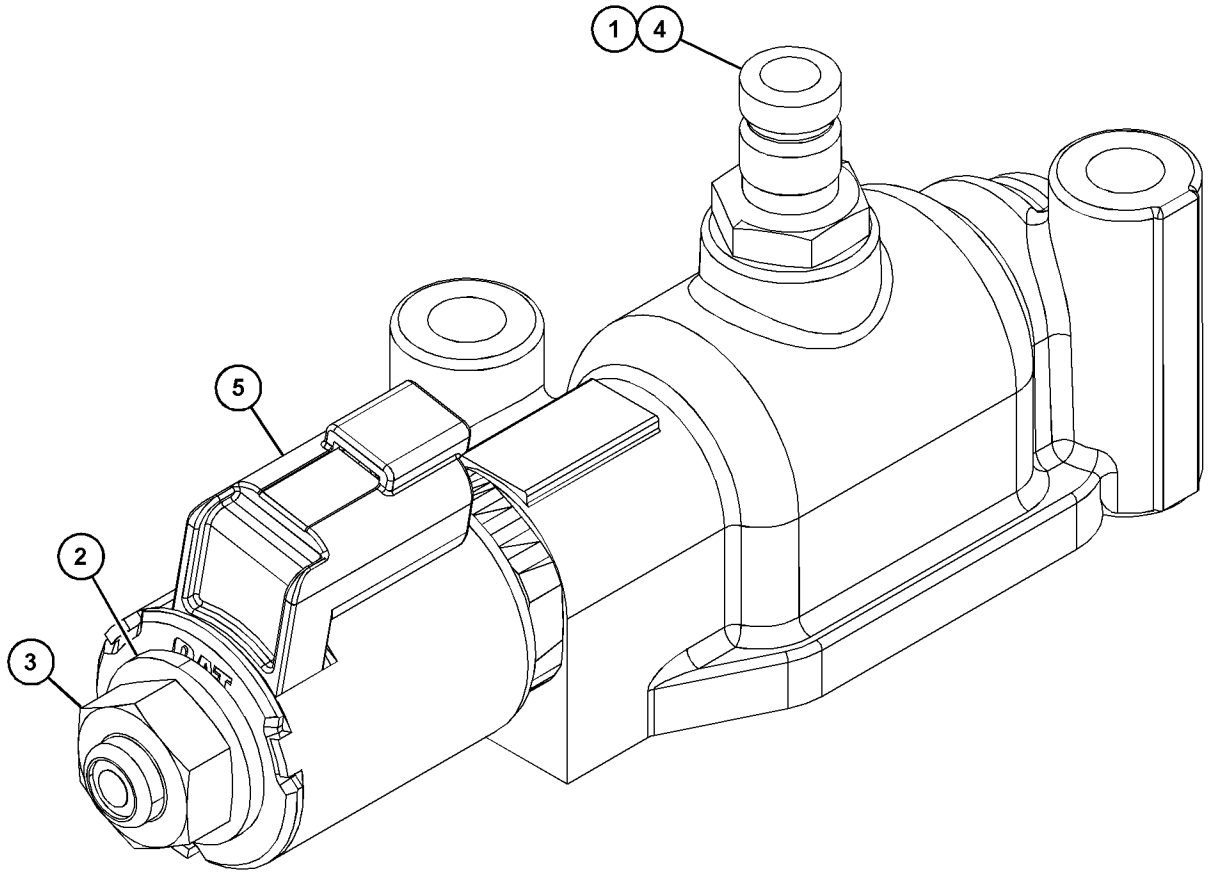

GRAPHIC #1 <END> g03736453

425-6734 VALVE GP-MODULATING

S/N: JP21-UP; TSZ1-UP
24-VOLT
PART OF 244-3114 VALVE GP-MODULATING

SMCS-3139 **i05980386**

NOTE	REF NO	GRAPHIC REF	PART NUMBER	QTY	PART NAME 1 2 3 4 5 6 (PRODUCT LEVEL)	SEE PAGE
	1	1	**6V-3965**	1	FITTING (QUICK DISCONNECT)	
	2	1	**323-9531**	1	COIL AS (24-VOLT)	
	3	1	**214-7568**	1	SEAL-O-RING	
	4	1	**164-2108**	1	WASHER (13.03X25.4X2.38-MM THK)	
	5	1	**218-2373**	1	NUT (1/2-28-THD)	
					PARTS SHOWN IN GRAPHIC(S) WITHOUT A REFERENCE NUMBER ARE NOT SERVICED SEPARATELY	

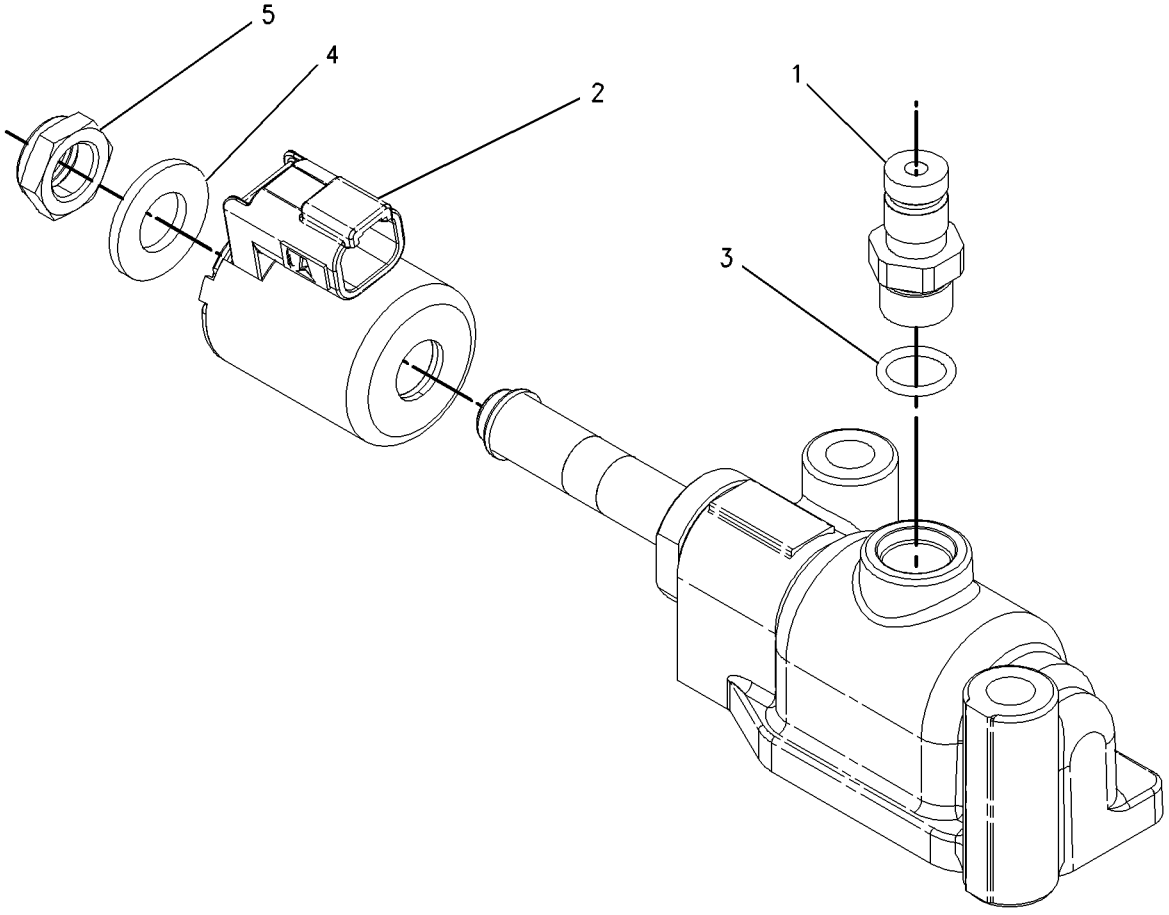

GRAPHIC #1 <END> g00919065

235-3530 VALVE GP-RELIEF

S/N: JP21-UP; TSZ1-UP

PART OF 423-4654 CONTROL GP-TRANSMISSION HYD

SMCS-3133 **i02775119**

NOTE	REF NO	GRAPHIC REF	PART NUMBER	QTY	PART NAME 1 2 3 4 5 6 (PRODUCT LEVEL)	SEE PAGE
	1	1	**2S-4663**	1	SEAL-O-RING	
	2	1	**2S-5835**	1	PISTON-LOAD	
	3	1	**4M-5905**	1	SCREW-ADJUSTMENT (5/16-18X1-IN)	
	4	1	**6V-0852**	1	CAP-DUST	
	6	1	**8E-1143**	1	SLUG	
	7	1	**8M-5253**	1	SEAL-O-RING	
	8	1	**9M-2110**	1	COVER-ADJUSTMENT	
	9	1	**115-4550**	1	COVER	
	10	1	**172-7966**	1	BODY	
	11	1	**172-7968**	1	SPOOL AS	
		1	**3D-8317**	1	RING-RETAINING	
		1	**4B-9880**	1	BALL	
		1	**4M-2381**	1	SPRING	
		1	**9U-8669**	1	RETAINER	
	12	1	**174-7449**	1	SPRING	
	13	1	*241-6218*	1	PLUG AS	
		1	**241-6205**	1	PLUG	
		1	**3K-0360**	1	SEAL-O-RING	
	15	1	*162-0177*	1	PLUG AS	
		1	**9S-8004**	1	PLUG (9/16-18-THD)	
		1	**3J-1907**	1	SEAL-O-RING	
	16	1	*164-5567*	1	COUPLER AS-QUICK DISCONNECT (MALE)	
		1	**3J-1907**	1	SEAL-O-RING	
		1	**6V-3965**	1	FITTING (QUICK DISCONNECT)	
	17	1	*165-4931*	1	ELBOW AS	
		1	**6V-8077**	1	ELBOW	
		1	**3J-1907**	1	SEAL-O-RING	
M	18	1	**6V-3940**	2	BOLT (M8X1.25X25-MM)	
M	19	1	**6V-5218**	2	BOLT (M8X1.25X35-MM)	
	20	1	**9M-1974**	2	WASHER-HARD (8.8X16X2-MM THK)	

M - METRIC PART

235-3530 **VALVE GP-RELIEF (**contd.**)** **i02775119**

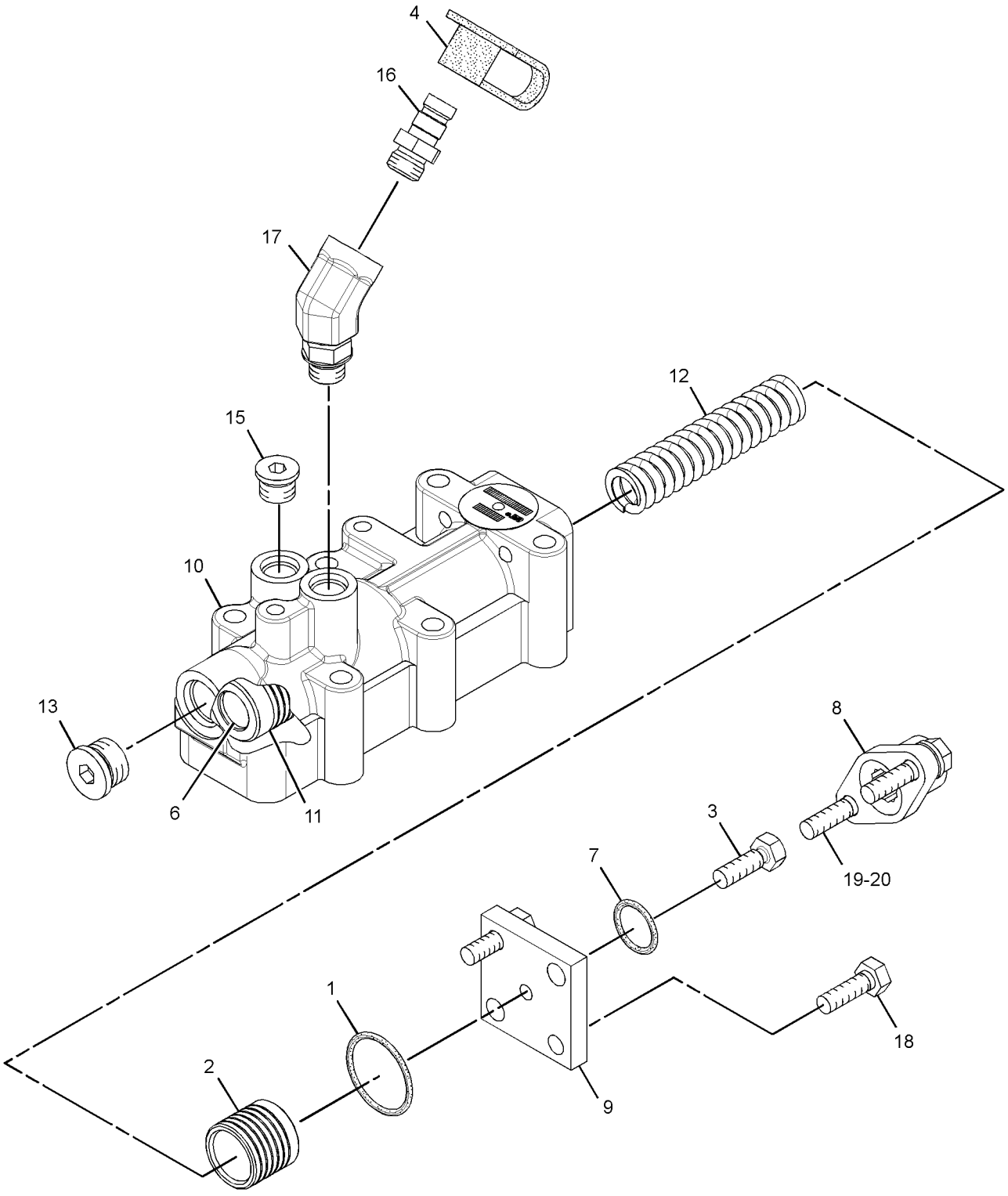

GRAPHIC #1 <END> g01347076

251-3268 VALVE GP-SOLENOID—RIDE CONT, LIFT CYL HEAD END

S/N: B551-UP
24-VOLT
OPTIONAL FIELD REPLACEMENT ORDER 1-397-9397 VALVE GP-SOLENOID
PART OF 361-5941 VALVE GP-SOLENOID

SMCS-5479 **i05423596**

NOTE	REF NO	GRAPHIC REF	PART NUMBER	QTY	PART NAME 1 2 3 4 5 6 (PRODUCT LEVEL)	SEE PAGE
	1	1	**384-8750**	1	COIL AS (24-VOLT)	
					AVAILABLE REPAIR KIT(S):	
			332-5669	1	KIT-SEAL (SOLENOID VALVE)	
					(INCLUDES O-RING SEALS & BACKUP RINGS)`	

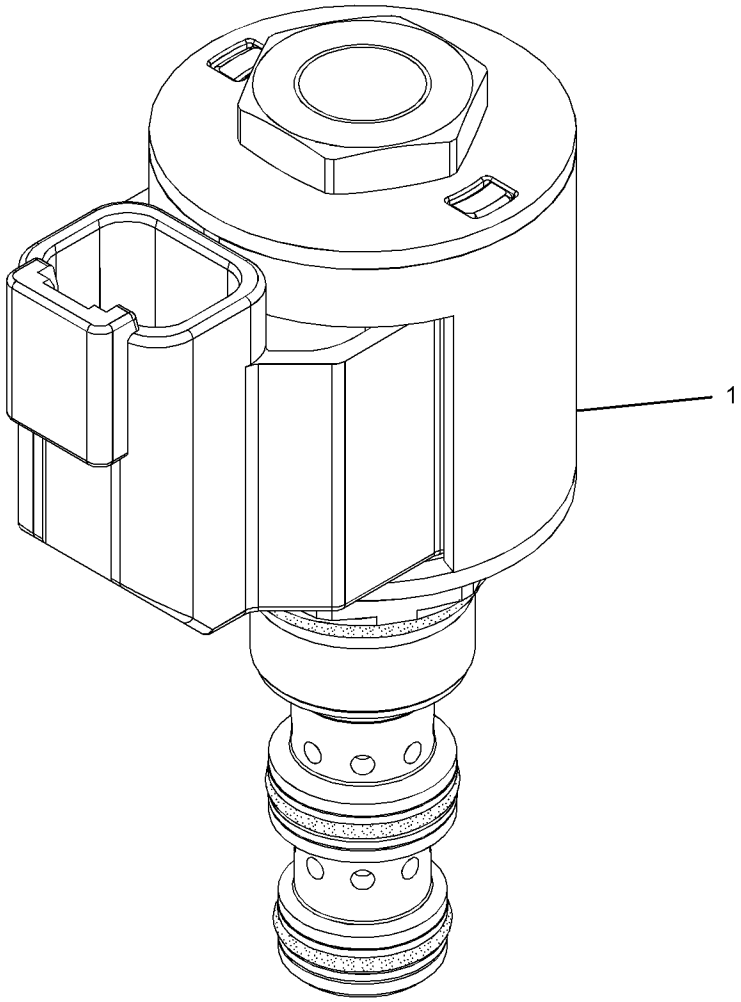

GRAPHIC #1 <END> g02173984

252-2237 VALVE GP-SOLENOID

S/N: JP21-UP; TSZ1-UP

24-VOLT

PART OF 423-4654 CONTROL GP-TRANSMISSION HYD

SMCS-5479 **i07589154**

NOTE	REF NO	GRAPHIC REF	PART NUMBER	QTY	PART NAME 1 2 3 4 5 6 (PRODUCT LEVEL)	SEE PAGE
	1	1	**245-1181**	1	FLANGE	
					AVAILABLE REPAIR KIT(S):	
			245-1912	1	KIT-SEAL (SOLENOID VALVE)	
					(INCLUDES SEALS)	

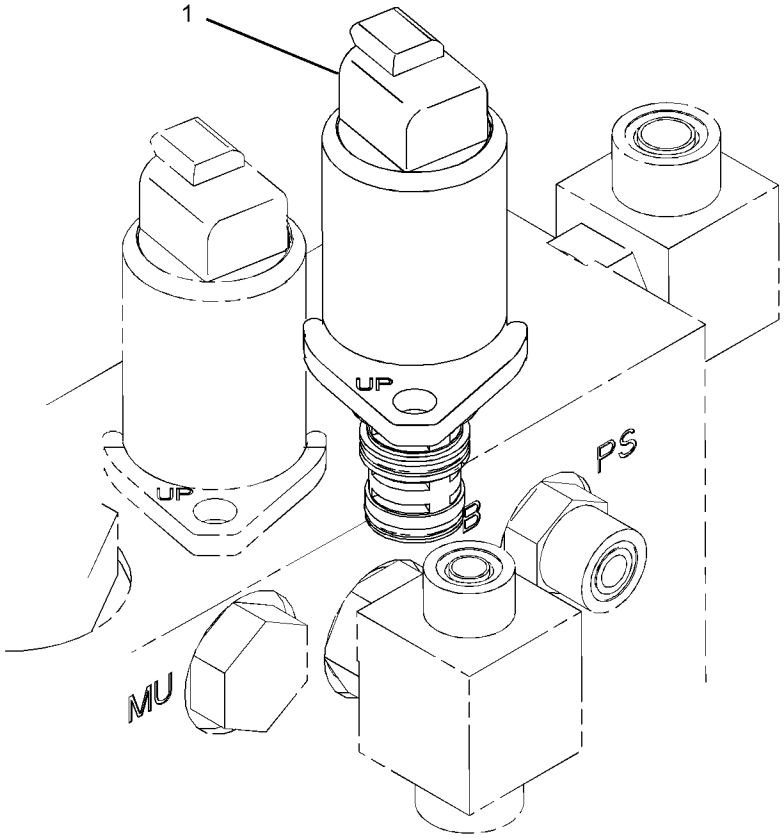

GRAPHIC #1 <END> g01199604

361-5941 VALVE GP-SOLENOID

S/N: B551-UP
24-VOLT
PART OF 324-9254 LINES GP-TRANSMISSION OIL

SMCS-5479 **i06284373**

NOTE	REF NO	GRAPHIC REF	PART NUMBER	QTY	PART NAME 1 2 3 4 5 6 (PRODUCT LEVEL)	SEE PAGE
Y	1	1	**251-3268**	1	VALVE GP-SOLENOID (24-VOLT) (COLD START APPL, HYDRAULIC FAN)	419
J	2	1	**271-2510**	1	VALVE AS-CONTROL	
					AVAILABLE REPAIR KIT(S):	
J			**274-6217**	1	KIT-SEAL (CONTROL VALVE)	
					(INCLUDES SEAL-O-RINGS & BACK-UP RINGS)	

J - KIT MARKED J SERVICES PART(S) MARKED J
Y - SEPARATE ILLUSTRATION

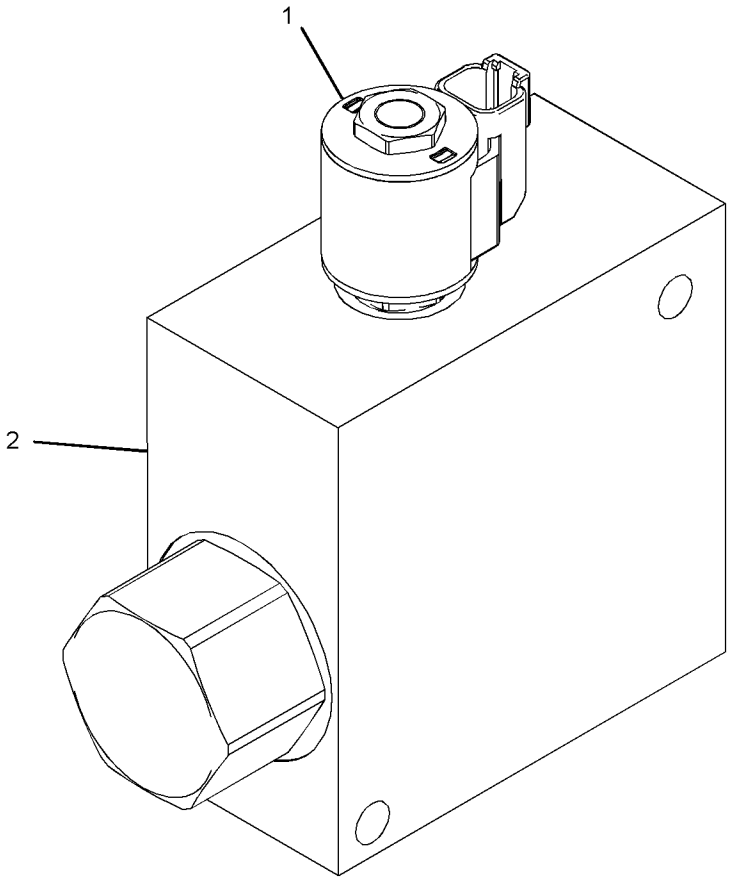

GRAPHIC #1 <END> g02380242

254-7904 WHEEL & TIRE AR

S/N: B551-UP

SMCS-4200 **i05736203**

NOTE	PART NUMBER	QTY	PART NAME 1 2 3 4 5 6 (PRODUCT LEVEL)	SEE PAGE
Y	*254-7890*	6	WHEEL & TIRE GP	423

Y - SEPARATE ILLUSTRATION

<END>

254-7971 WHEEL & TIRE AR

S/N: B551-UP

SMCS-4200 **i06668498**

NOTE	PART NUMBER	QTY	PART NAME 1 2 3 4 5 6 (PRODUCT LEVEL)	SEE PAGE
Y	*254-7955*	6	WHEEL & TIRE GP	424

Y - SEPARATE ILLUSTRATION

<END>

310-7325 WHEEL & TIRE AR

S/N: B551-UP

SMCS-4200 **i07641285**

NOTE	PART NUMBER	QTY	PART NAME 1 2 3 4 5 6 (PRODUCT LEVEL)	SEE PAGE
Y	*310-7307*	6	WHEEL & TIRE GP	424

Y - SEPARATE ILLUSTRATION

<END>

310-7326 WHEEL & TIRE AR

S/N: B551-UP

SMCS-4200 **i07641282**

NOTE	PART NUMBER	QTY	PART NAME 1 2 3 4 5 6 (PRODUCT LEVEL)	SEE PAGE
Y	*310-7308*	6	WHEEL & TIRE GP	424

Y - SEPARATE ILLUSTRATION

<END>

310-7331 WHEEL & TIRE AR

S/N: B551-UP

SMCS-4200 **i02788105**

NOTE	PART NUMBER	QTY	PART NAME 1 2 3 4 5 6 (PRODUCT LEVEL)	SEE PAGE
Y	*310-7313*	6	WHEEL & TIRE GP	424

Y - SEPARATE ILLUSTRATION

<END>

440-3433 WHEEL & TIRE AR

S/N: B551-UP
SHIPPING

SMCS-4200 **i06668612**

NOTE	PART NUMBER	QTY	PART NAME 1 2 3 4 5 6 (PRODUCT LEVEL)	SEE PAGE
Y	*440-3431*	6	WHEEL & TIRE GP	425
	4K-4879	6	SEAL-O-RING	
	2G-6595	6	VALVE GP-TIRE	
	6F-3930	1	CORE-VALVE	
	7D-5252	1	SPUD AS	
	2D-2507	1	SPUD	
	2D-2508	1	GROMMET	
	2D-2509	1	LOCKNUT (11/16-16-THD)	
	9K-7951	1	CAP-VALVE	

Y - SEPARATE ILLUSTRATION

<END>

448-5577 WHEEL & TIRE AR

S/N: B551-UP
SHIPPING

SMCS-4200 **i06668608**

NOTE	PART NUMBER	QTY	PART NAME 1 2 3 4 5 6 (PRODUCT LEVEL)	SEE PAGE
Y	*448-0412*	6	WHEEL & TIRE GP	426
	2D-2565	6	SEAL-O-RING	
	110-4213	6	VALVE GP-TIRE (TIRE INFLATION)	
			(EACH INCLUDES)	
	110-4214	1	STEM AS	
	6F-3930	1	CORE-VALVE	
	9K-7951	1	CAP-VALVE	
	7D-5252	1	SPUD AS	
	2D-2507	1	SPUD	
	2D-2508	1	GROMMET	
	2D-2509	1	LOCKNUT (11/16-16-THD)	

Y - SEPARATE ILLUSTRATION

<END>

254-7890 WHEEL & TIRE GP

S/N: B551-UP
PART OF 254-7904 WHEEL & TIRE AR

SMCS-4200 **i07084648**

NOTE	PART NUMBER	QTY	PART NAME 1 2 3 4 5 6 (PRODUCT LEVEL)	SEE PAGE
Y	*252-0106*	1	WHEEL GP	430
	112-9813	1	TIRE (14-R24)	

Y - SEPARATE ILLUSTRATION

<END>

254-7955 WHEEL & TIRE GP

S/N: B551-UP

PART OF 254-7971 WHEEL & TIRE AR

SMCS-4200 **i07084652**

NOTE	PART NUMBER	QTY	PART NAME 1 2 3 4 5 6 (PRODUCT LEVEL)	SEE PAGE
Y	*252-0111*	1	WHEEL GP	430
	106-4835	1	TIRE (17.5-R25)	

Y - SEPARATE ILLUSTRATION

<END>

310-7307 WHEEL & TIRE GP

S/N: B551-UP

PART OF 310-7325 WHEEL & TIRE AR

SMCS-4200 **i07377008**

NOTE	PART NUMBER	QTY	PART NAME 1 2 3 4 5 6 (PRODUCT LEVEL)	SEE PAGE
Y	*252-0111*	1	WHEEL GP	430
	180-9852	1	TIRE (17.5-R25)	

Y - SEPARATE ILLUSTRATION

<END>

310-7308 WHEEL & TIRE GP

S/N: B551-UP

PART OF 310-7326 WHEEL & TIRE AR

SMCS-4200 **i02866145**

NOTE	PART NUMBER	QTY	PART NAME 1 2 3 4 5 6 (PRODUCT LEVEL)	SEE PAGE
Y	*252-0112*	1	WHEEL GP	430
	180-9852	1	TIRE (17.5-R25)	

Y - SEPARATE ILLUSTRATION

<END>

310-7313 WHEEL & TIRE GP

S/N: B551-UP

PART OF 310-7331 WHEEL & TIRE AR

SMCS-4200 **i02867759**

NOTE	PART NUMBER	QTY	PART NAME 1 2 3 4 5 6 (PRODUCT LEVEL)	SEE PAGE
Y	*252-0112*	1	WHEEL GP	430
	170-0432	1	TIRE (17.5-R25)	

Y - SEPARATE ILLUSTRATION

<END>

440-3431 WHEEL & TIRE GP

S/N: B551-UP

PART OF 440-3433 WHEEL & TIRE AR

SMCS-4200 **i07393391**

NOTE	REF NO	GRAPHIC REF	PART NUMBER	QTY	PART NAME 1 2 3 4 5 6 (PRODUCT LEVEL)	SEE PAGE
Y	1	1	**540-3236**	1	WHEEL GP	431
	2	1	**396-9056**	1	TIRE (795X150X595)	

Y - SEPARATE ILLUSTRATION

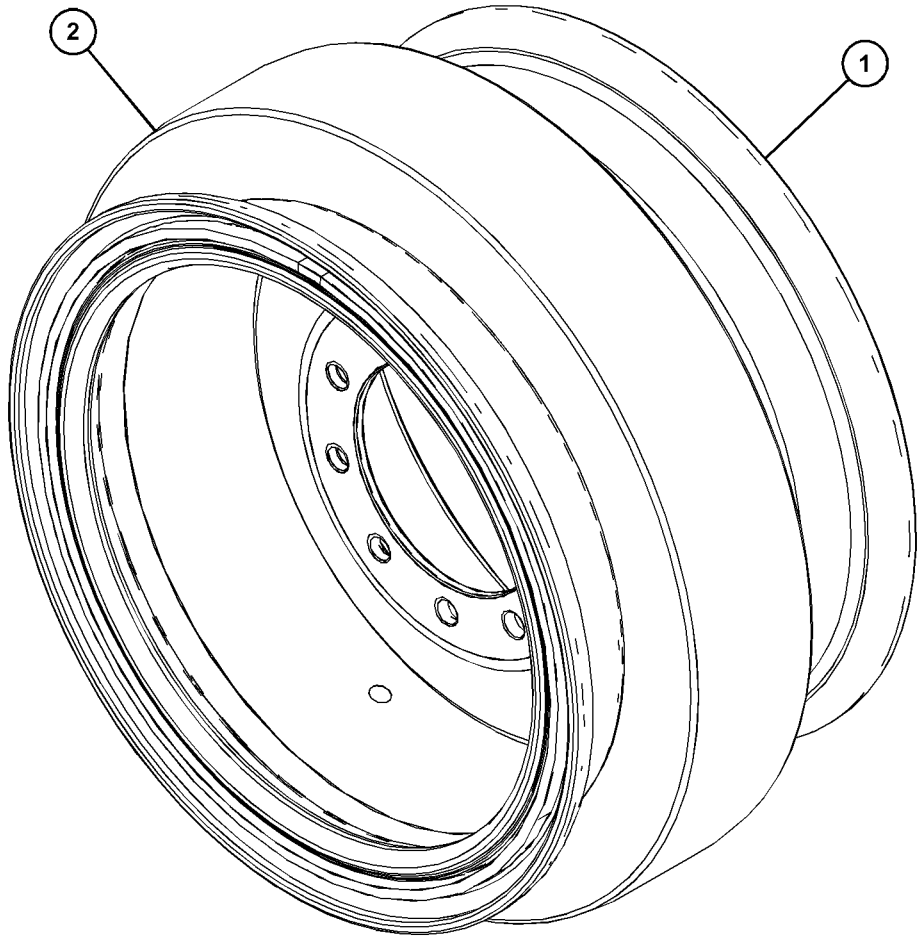

GRAPHIC #1 <END> g06310625

448-0412 WHEEL & TIRE GP

S/N: B551-UP
SHIPPING
PART OF 448-5577 WHEEL & TIRE AR

SMCS-4200 **i07623298**

NOTE	PART NUMBER	QTY	PART NAME 1 2 3 4 5 6 (PRODUCT LEVEL)	SEE PAGE
Y	*252-0102*	1	WHEEL GP	428
			—OR—	
Y	*540-3755*	1	WHEEL GP	433
	447-3143	1	TIRE (14-R24)	

Y - SEPARATE ILLUSTRATION

<END>

284-5019 WHEEL AR–TANDEM

S/N: B551-UP

PART OF 349-6146 POWER TRAIN AR

SMCS-4208 **i02781124**

NOTE	REF NO	GRAPHIC REF	PART NUMBER	QTY	PART NAME 1 2 3 4 5 6 (PRODUCT LEVEL)	SEE PAGE
Y	1	1	*284-5020*	2	BRAKE GP-SERVICE (FRONT TANDEM)	492
Y	2	1	*284-5021*	2	BRAKE GP-SERVICE (REAR TANDEM)	494

Y - SEPARATE ILLUSTRATION

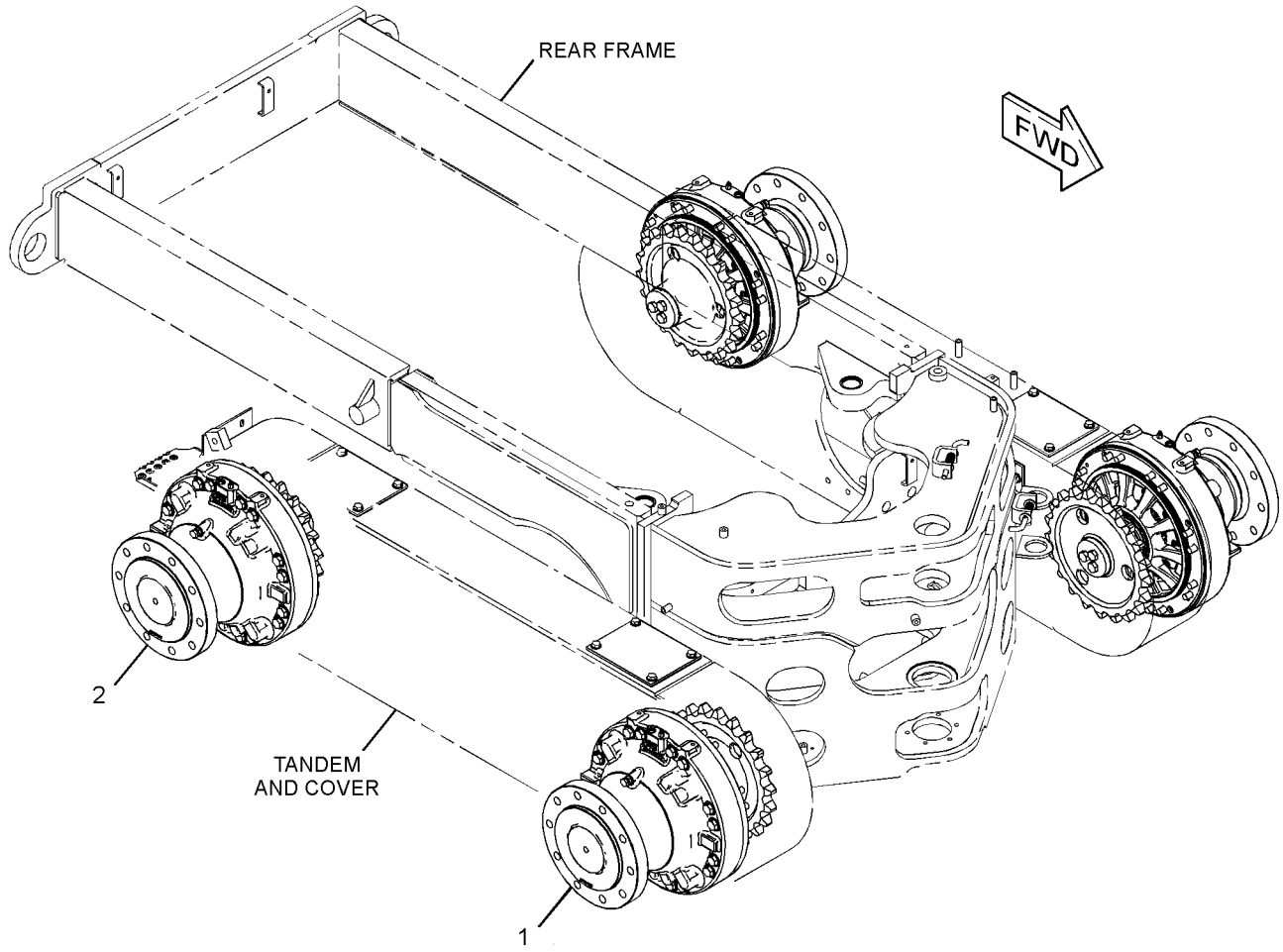

GRAPHIC #1 <END> g01374941

252-0102 WHEEL GP

S/N: B551-UP
(10X24)
PART OF 540-3755 WHEEL GP

SMCS-4006, 4201, 4208

i07777859

NOTE	REF NO	GRAPHIC REF	PART NUMBER	QTY	PART NAME 1 2 3 4 5 6 (PRODUCT LEVEL)	SEE PAGE
	1	1	**2D-2654**	1	RING-LOCK	
	2	1	**8W-9566**	1	FLANGE AS	
	3	1	**290-1505**	1	RIM AS	

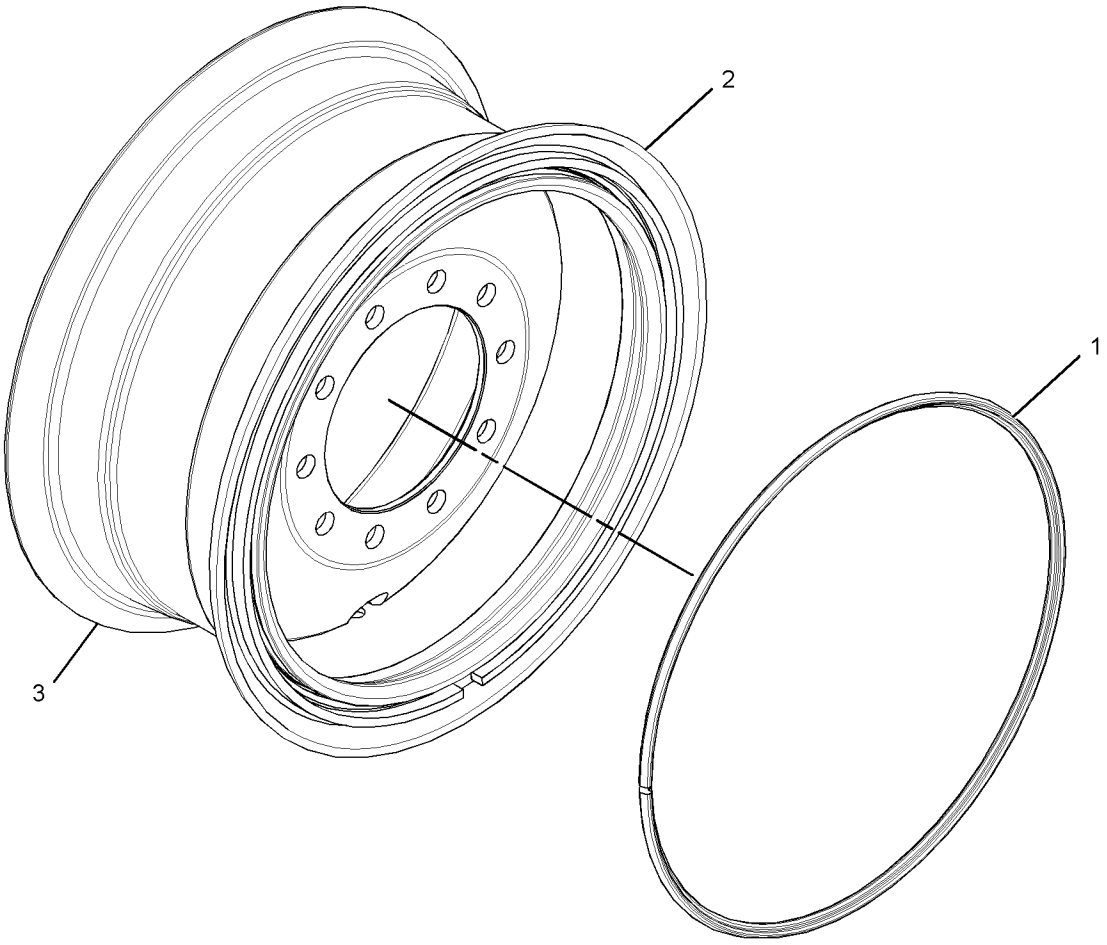

GRAPHIC #1 <END> g01393131

252-0104 WHEEL GP

S/N: B551-UP

(14X25)

PART OF 540-3236 WHEEL GP

SMCS-4006, 4201, 4208

i07777861

NOTE	REF NO	GRAPHIC REF	PART NUMBER	QTY	PART NAME 1 2 3 4 5 6 (PRODUCT LEVEL)	SEE PAGE
	1	1	**4K-4881**	1	RING-LOCK	
	2	1	**8W-9594**	1	FLANGE AS	
	3	1	**289-9726**	1	RIM AS	

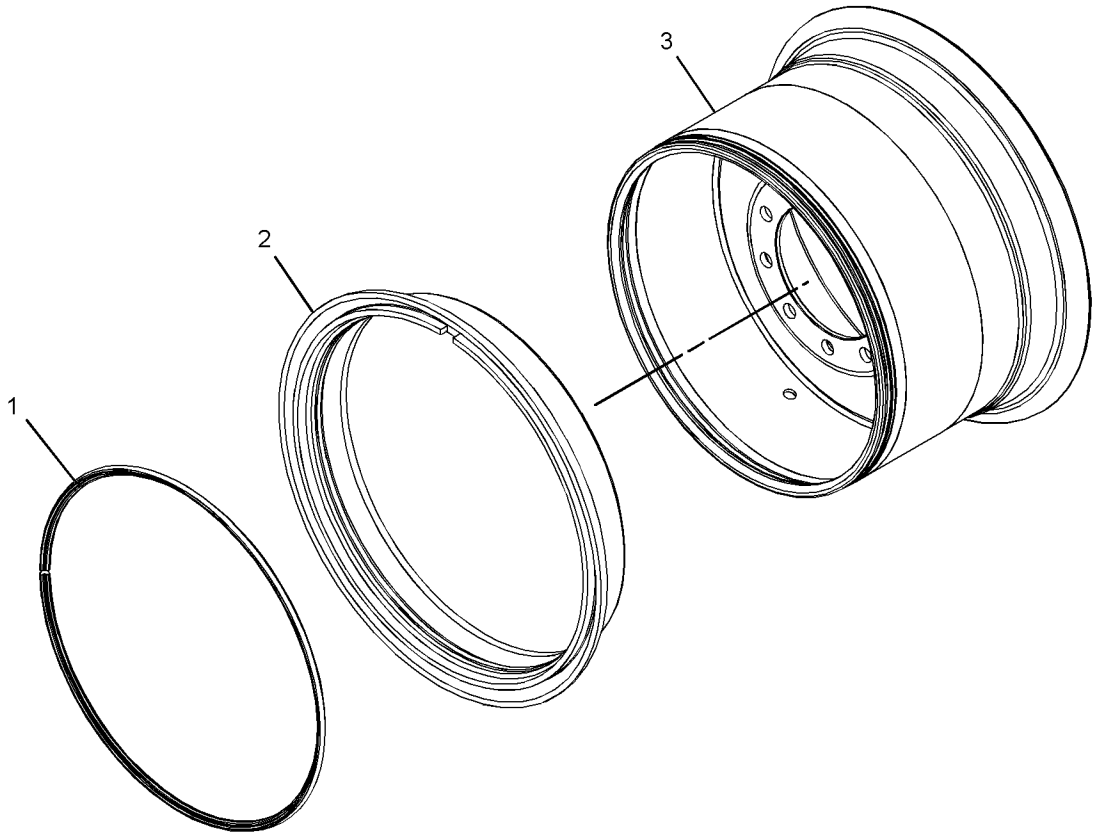

GRAPHIC #1 <END> g01392485

252-0106 WHEEL GP

S/N: B551-UP
(9X24)
PART OF 254-7890 WHEEL & TIRE GP

SMCS-4006, 4201, 4208 **i07179288**

NOTE	PART NUMBER	QTY	PART NAME 1 2 3 4 5 6 (PRODUCT LEVEL)	SEE PAGE
	252-0098	1	RIM AS	
	2D-2511	1	VALVE GP-TIRE (BASIC)	
	3D-2239	1	VALVE AS-TIRE (TIRE INFLATION)	
	6F-3930	1	CORE-VALVE	
	9K-7951	1	CAP-VALVE	
	7D-5252	1	SPUD AS	
	2D-2507	1	SPUD	
	2D-2508	1	GROMMET	
	2D-2509	1	LOCKNUT (11/16-16-THD)	

<END>

252-0111 WHEEL GP

S/N: B551-UP
(13X25)
PART OF 254-7955, 310-7307 WHEEL & TIRE GP

SMCS-4006, 4201, 4208 **i07151579**

NOTE	PART NUMBER	QTY	PART NAME 1 2 3 4 5 6 (PRODUCT LEVEL)	SEE PAGE
	252-0100	1	RIM AS	
	2G-6595	1	VALVE GP-TIRE	
	6F-3930	1	CORE-VALVE	
	9K-7951	1	CAP-VALVE	
	7D-5252	1	SPUD AS	
	2D-2507	1	SPUD	
	2D-2508	1	GROMMET	
	2D-2509	1	LOCKNUT (11/16-16-THD)	

<END>

252-0112 WHEEL GP

S/N: B551-UP
PART OF 310-7308, 310-7313 WHEEL & TIRE GP

SMCS-4006, 4201, 4208 **i07339464**

NOTE	PART NUMBER	QTY	PART NAME 1 2 3 4 5 6 (PRODUCT LEVEL)	SEE PAGE
Y	**540-3236**	1	WHEEL GP	431
	4K-4879	1	SEAL-O-RING	
	2G-6595	1	VALVE GP-TIRE	
	6F-3930	1	CORE-VALVE	
	9K-7951	1	CAP-VALVE	
	7D-5252	1	SPUD AS	
	2D-2507	1	SPUD	
	2D-2508	1	GROMMET	
	2D-2509	1	LOCKNUT (11/16-16-THD)	

Y - SEPARATE ILLUSTRATION

<END>

540-3236 WHEEL GP

S/N: B551-UP

PART OF 440-3431 WHEEL & TIRE GP, 252-0112 WHEEL GP

SMCS-4006, 4201, 4208 **i07701274**

NOTE	PART NUMBER	QTY	PART NAME 1 2 3 4 5 6 (PRODUCT LEVEL)	SEE PAGE
Y	*252-0104*	1	WHEEL GP	429
			—OR—	
Y	*540-3237*	1	WHEEL GP	432
			—OR—	
Y	*540-6852*	1	RIM GP-DEMOUNTABLE	399

Y - SEPARATE ILLUSTRATION

<END>

540-3237 WHEEL GP

S/N: B551-UP

(14X25)

PART OF 540-3236 WHEEL GP

SMCS-4006, 4201, 4208

i07339528

NOTE	REF NO	GRAPHIC REF	PART NUMBER	QTY	PART NAME 1 2 3 4 5 6 (PRODUCT LEVEL)	SEE PAGE
	1	1	**540-3238**	1	RING-LOCK	
	2	1	**540-3243**	1	FLANGE AS	
	3	1	**540-3254**	1	RIM AS	

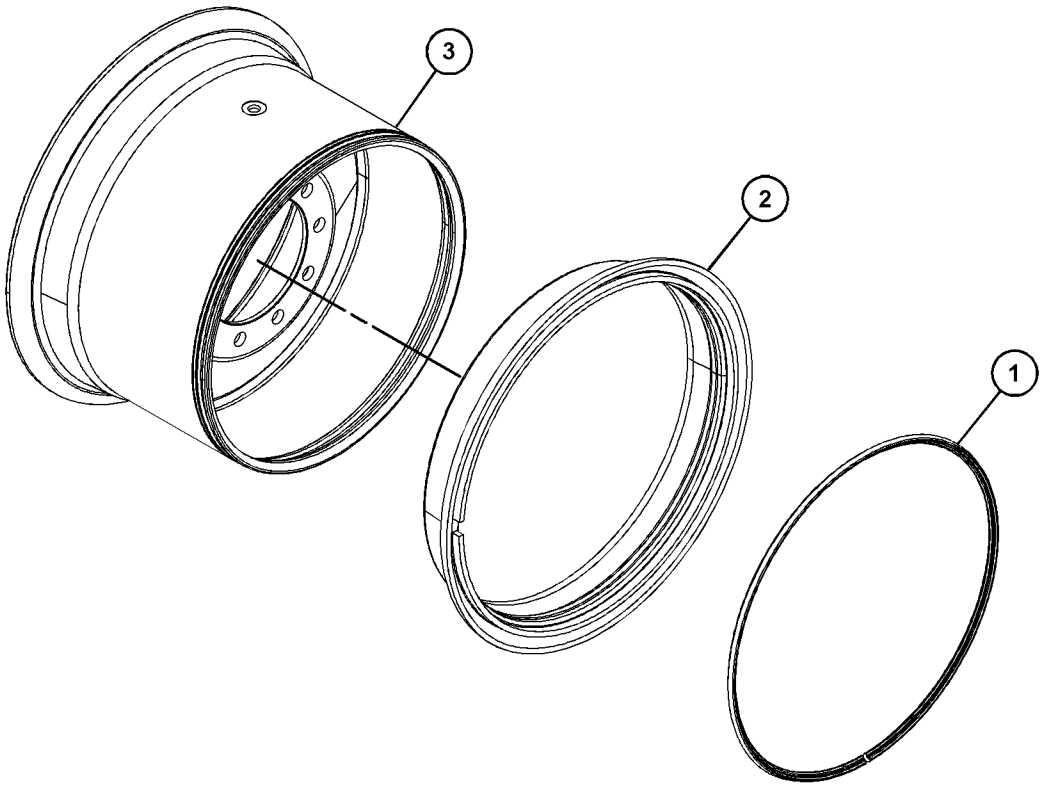

GRAPHIC #1 <END> g06291203

540-3755 WHEEL GP

S/N: B551-UP

(10X24)

PART OF 448-0412 WHEEL & TIRE GP

SMCS-4006, 4201, 4208

i07701267

NOTE	PART NUMBER	QTY	PART NAME 1 2 3 4 5 6 (PRODUCT LEVEL)	SEE PAGE
Y	*252-0102*	1	WHEEL GP	428
			—OR—	
Y	*540-3756*	1	WHEEL GP	434
			—OR—	
Y	*540-6848*	1	RIM GP-DEMOUNTABLE	398

Y - SEPARATE ILLUSTRATION

<END>

540-3756 WHEEL GP

S/N: B551-UP

(10X24)

PART OF 540-3755 WHEEL GP

SMCS-4006, 4201, 4208

i07383682

NOTE	REF NO	GRAPHIC REF	PART NUMBER	QTY	PART NAME 1 2 3 4 5 6 (PRODUCT LEVEL)	SEE PAGE
	1	1	**540-3757**	1	RING-LOCK	
	2	1	**540-3758**	1	FLANGE AS	
	3	1	**540-3759**	1	RIM AS	

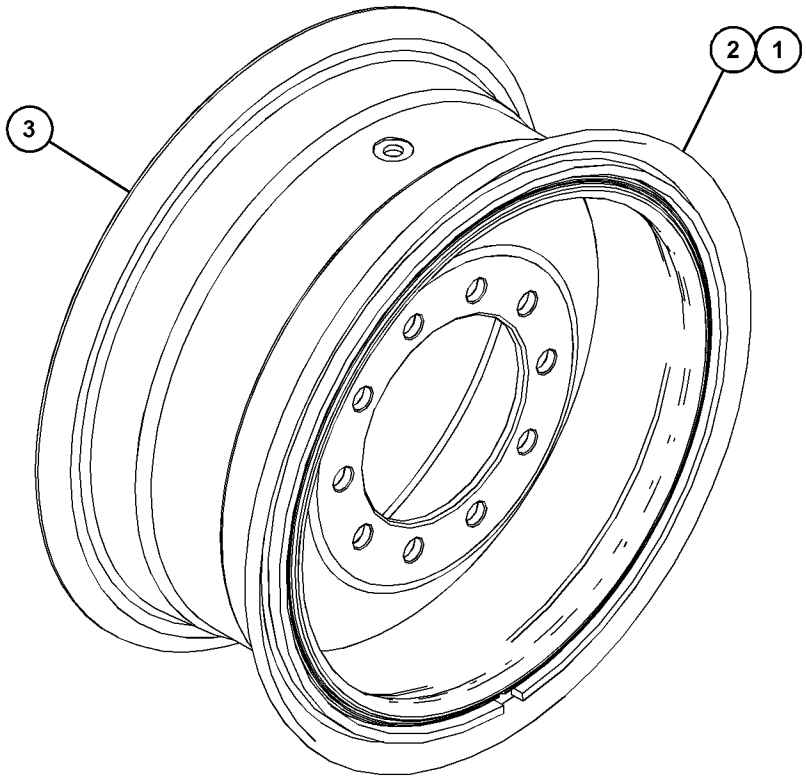

GRAPHIC #1 <END> g06307171

308-6276 CONVERSION GP-TOWING HITCH

S/N: B551-UP

SMCS-7116 **i06732681**

NOTE	REF NO	GRAPHIC REF	PART NUMBER	QTY	PART NAME 1 2 3 4 5 6 (PRODUCT LEVEL)	SEE PAGE
	1	1	**8T-9530**	4	TACK (METAL)	
	2	1	**167-0206**	1	PLATE	
	3	1	**308-6274**	1	HITCH AS-TOWING	
		1	**2C-8746**	1	PIN	
		1	**3B-5325**	1	PIN-COTTER	
		1	**7T-1099**	1	LINK	
		1	**103-5796**	1	PIN-KEEPER	

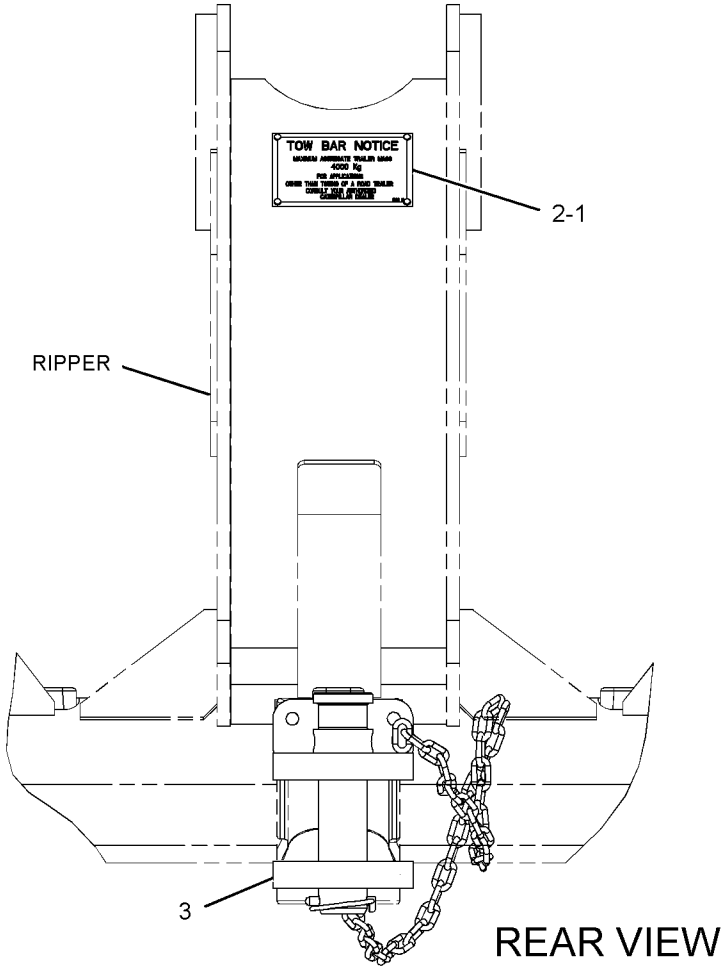

GRAPHIC #1 <END> g02351266

312-5972 COVER GP-PROTECTION

S/N: B551-UP

PART OF 349-3053 OPTION AR-COLD WEATHER

SMCS-7315, 795C

i04852310

NOTE	REF NO	GRAPHIC REF	PART NUMBER	QTY	PART NAME 1 2 3 4 5 6 (PRODUCT LEVEL)	SEE PAGE
	1	1	**199-4318**	4	TURNBUCKLE	
	2	1	**350-8820**	1	COVER AS	
	3	1	**6K-3273**	8	RIVET-POP	

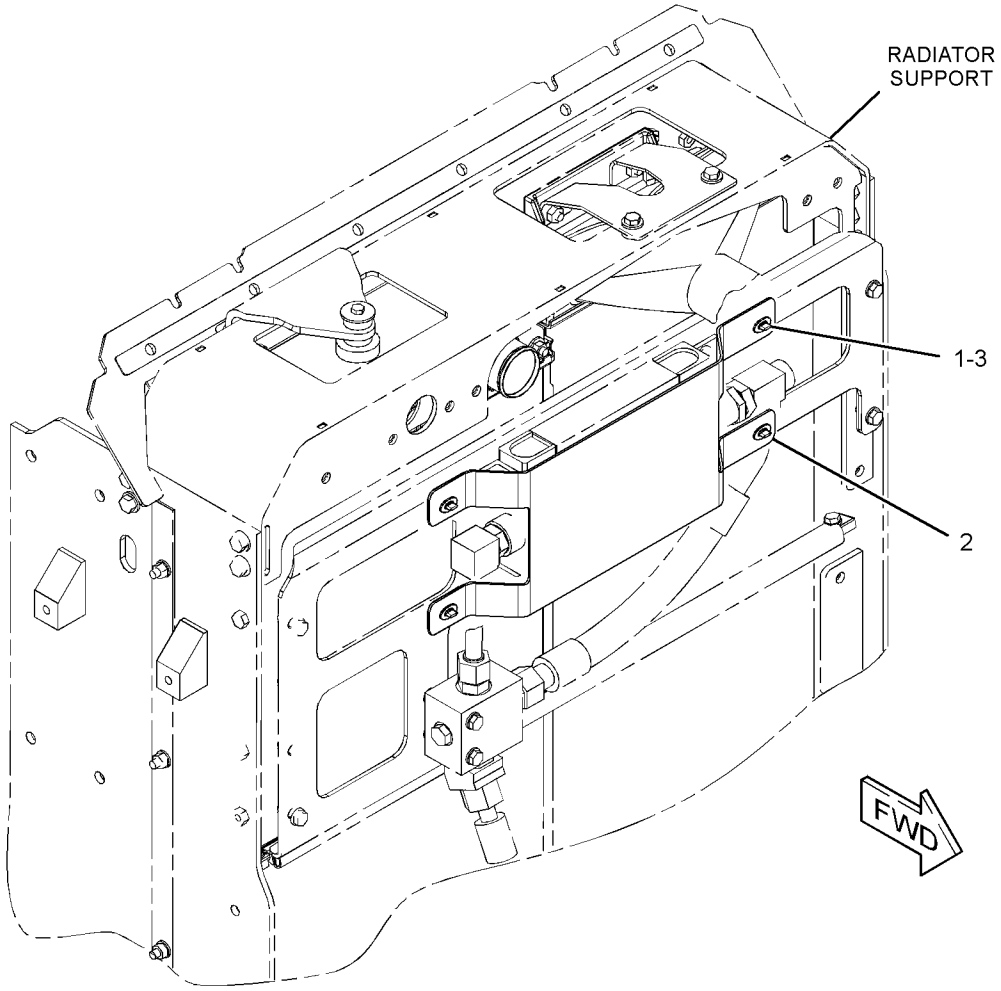

GRAPHIC #1 <END> g01459103

323-6970 COVER GP-PROTECTION

S/N: B551-UP

HITCH, STEERING

CANNOT BE USED WITH 368-6239—PAGE: 457

SMCS-7315, 795C

i06732705

NOTE	REF NO	GRAPHIC REF	PART NUMBER	QTY	PART NAME 1 2 3 4 5 6 (PRODUCT LEVEL)	SEE PAGE
	1	1	**303-2253**	1	PLATE AS	
	2	1	**327-3797**	2	PLATE	
	3	1	**7X-7729**	12	WASHER (11X25X3-MM THK)	
M	4	1	**8T-4196**	6	BOLT (M10X1.5X35-MM)	
M	5	1	**8T-4136**	6	BOLT (M10X1.5X25-MM)	

M - METRIC PART

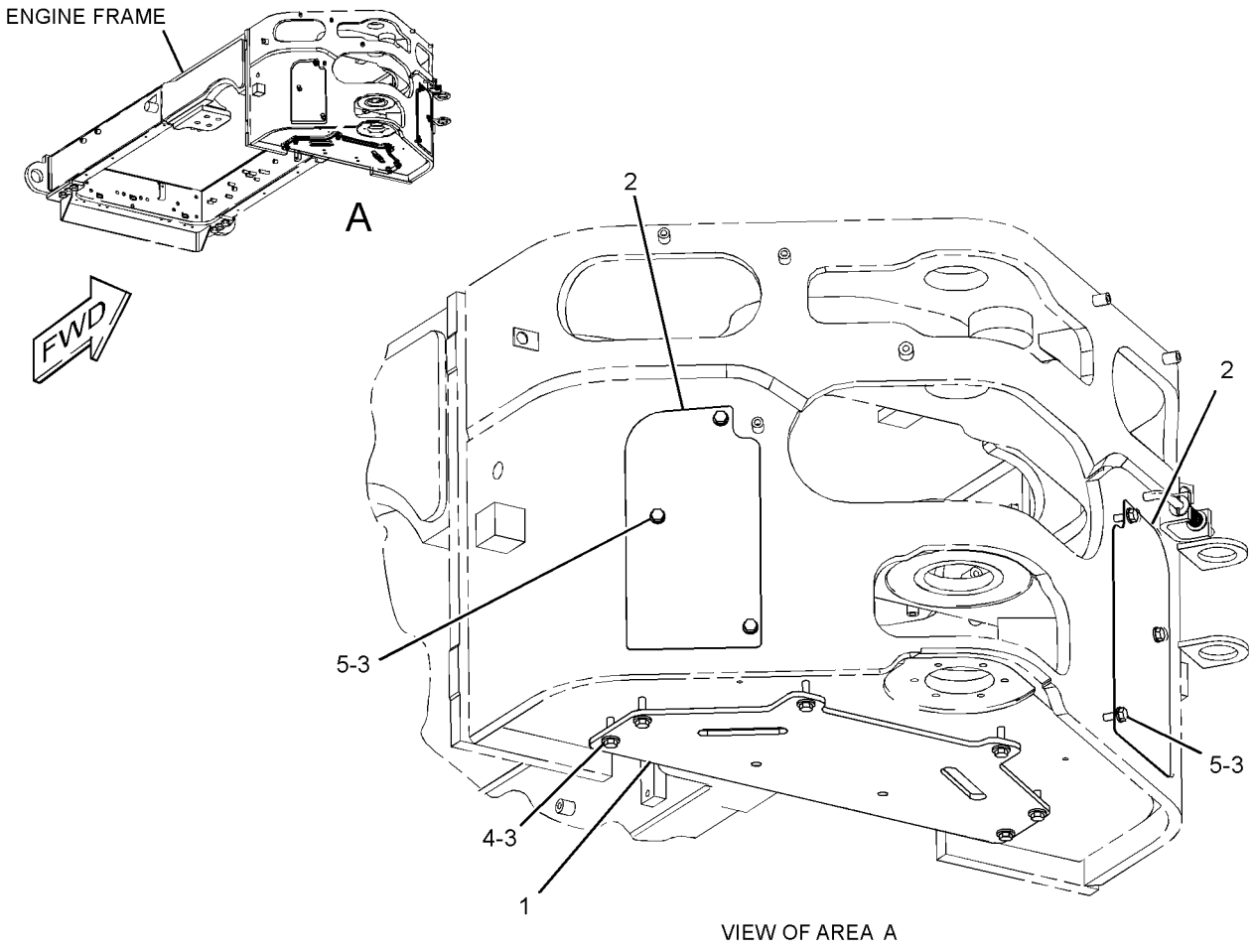

VIEW OF AREA A

GRAPHIC #1 <END> g06096110

288-8988 ENCLOSURE GP-ENGINE

S/N: B551-UP

PART OF 577-1377 COMMON AR

SMCS-7263 **i06616090**

NOTE	REF NO	GRAPHIC REF	PART NUMBER	QTY	PART NAME 1 2 3 4 5 6 (PRODUCT LEVEL)	SEE PAGE
	1	1	**227-3101**	2	STRIKER AS	
	3	1	**227-3103**	2	PLATE	
	5	1	**354-8358**	4	HANDHOLD GP (GRAB)	
					(EACH INCLUDES)	
		1	**361-5860**	2	PLATE AS	
					(EACH INCLUDES)	
M		1	**8T-3490**	1	NUT-WELD (M10X1.5-THD)	
	6	1	**354-8357**	2	HANDHOLD	
	7	1	**371-3230**	1	GRILL AS	
M		1	**8T-3612**	3	NUT-WELD (M8X1.25-THD)	
	8	1	**444-9628**	2	ROD	
	9	1	**449-2861**	1	ROD	
	10	1	**286-1605**	3	PLATE	
	11	1	**442-2343**	1	DOOR AS	
	12	1	**442-2341**	1	DOOR AS	
Y	13	1	*288-9588*	1	HOOD GP (ENGINE)	463
	14	1	**292-3091**	2	BAR	
	15	1	**292-3092**	1	COVER AS	
M		1	**8T-3490**	3	NUT-WELD (M10X1.5-THD)	
	16	1	**295-1578**	2	BRACKET AS	
	17	1	**295-3839**	3	PAWL	
	18	1	**308-7777**	2	PLATE	
	19	1	**316-0557**	1	BRACKET AS	
M		1	**8T-3490**	13	NUT-WELD (M10X1.5-THD)	
	20	1	**442-2351**	1	PANEL	
	22	1	**442-2344**	2	PANEL	
	23	1	**321-1446**	1	BRACKET AS	
	24	1	**321-3884**	2	HINGE AS	
	25	1	**321-7238**	1	PANEL	
	26	1	**367-7457**	1	PLATE AS	
M		1	**8T-3490**	8	NUT-WELD (M10X1.5-THD)	
	27	1	**446-1445**	1	BRACKET AS	
M		1	**8T-3490**	4	NUT-WELD (M10X1.5-THD)	
	28	1	**323-1779**	1	FRAME AS (LH)	
	29	1	**323-1780**	1	FRAME AS (RH)	
	30	1	**323-2550**	1	FRAME AS	
	31	1	**323-2551**	1	PLATE AS	
J	32	1	**326-0610**	3	LATCH AS	
					(EACH INCLUDES)	
M		1	**344-5673**	4	NUT (M6X1-THD)	
		1	**1H-3244**	4	LOCKWASHER	
M		1	**095-1207**	2	NUT (M12X1.75-THD)	
		1	**326-0612**	2	WASHER-TAB	
	33	1	**442-2350**	1	DOOR AS	
	34	1	**349-5332**	1	DASH AS	
	35	1	**349-6273**	1	PLATE AS	
	36	1	**198-4777**	10	WASHER-HARD (11X25X10-MM THK)	
	37	1	**198-4778**	4	WASHER-HARD (13.5X30X12-MM THK)	

288-8988 **ENCLOSURE GP-ENGINE (**contd.**)** **i06616090**

NOTE	REF NO	GRAPHIC REF	PART NUMBER	QTY	PART NAME 1 2 3 4 5 6 (PRODUCT LEVEL)	SEE PAGE
M	39	1	**344-5674**	2	NUT (M8X1.25-THD)	
C	40	1	**5P-4116**	25	WASHER-HARD (8.8X20.5X2-MM THK)	
C	41	1	**5P-8439**	4	GROMMET	
	42	1	**6P-6256**	2	RETAINER-SPRING	
M	43	1	**6V-7744**	3	LOCKNUT (M10X1.5-THD)	
	44	1	**7X-7729**	121	WASHER (11X25X3-MM THK)	
M	45	1	**344-5675**	18	NUT (M10X1.5-THD)	
CM	46	1	**8T-4136**	76	BOLT (M10X1.5X25-MM)	
M	47	1	**8T-4184**	4	BOLT (M12X1.75X45-MM)	
CM	48	1	**8T-4189**	47	BOLT (M8X1.25X20-MM)	
CM	49	1	**8T-4195**	36	BOLT (M10X1.5X30-MM)	
CM	50	1	**8T-4196**	3	BOLT (M10X1.5X35-MM)	
C	51	1	**8T-4224**	33	WASHER-HARD (8.8X16X2-MM THK)	
CM	52	1	**8T-4908**	9	BOLT (M8X1.25X25-MM)	
D	53	1	**6V-5746**		TRIM (0.6-M)	
	54	1	**8T-4222**	2	WASHER-PLATED (11X32X2.5-MM THK)	
	55	1	**2V-3726**	4	BUMPER	
	56	1	**332-3604**	12	BUMPER	
C	57	1	**8K-1433**	2	GROMMET	

C - CHANGE FROM PREVIOUS TYPE
D - ORDER BY THE METER
J - REQUIRES CORPORATE KEY
M - METRIC PART
Y - SEPARATE ILLUSTRATION

288-8988 **ENCLOSURE GP-ENGINE (**contd.**)** **i06616090**

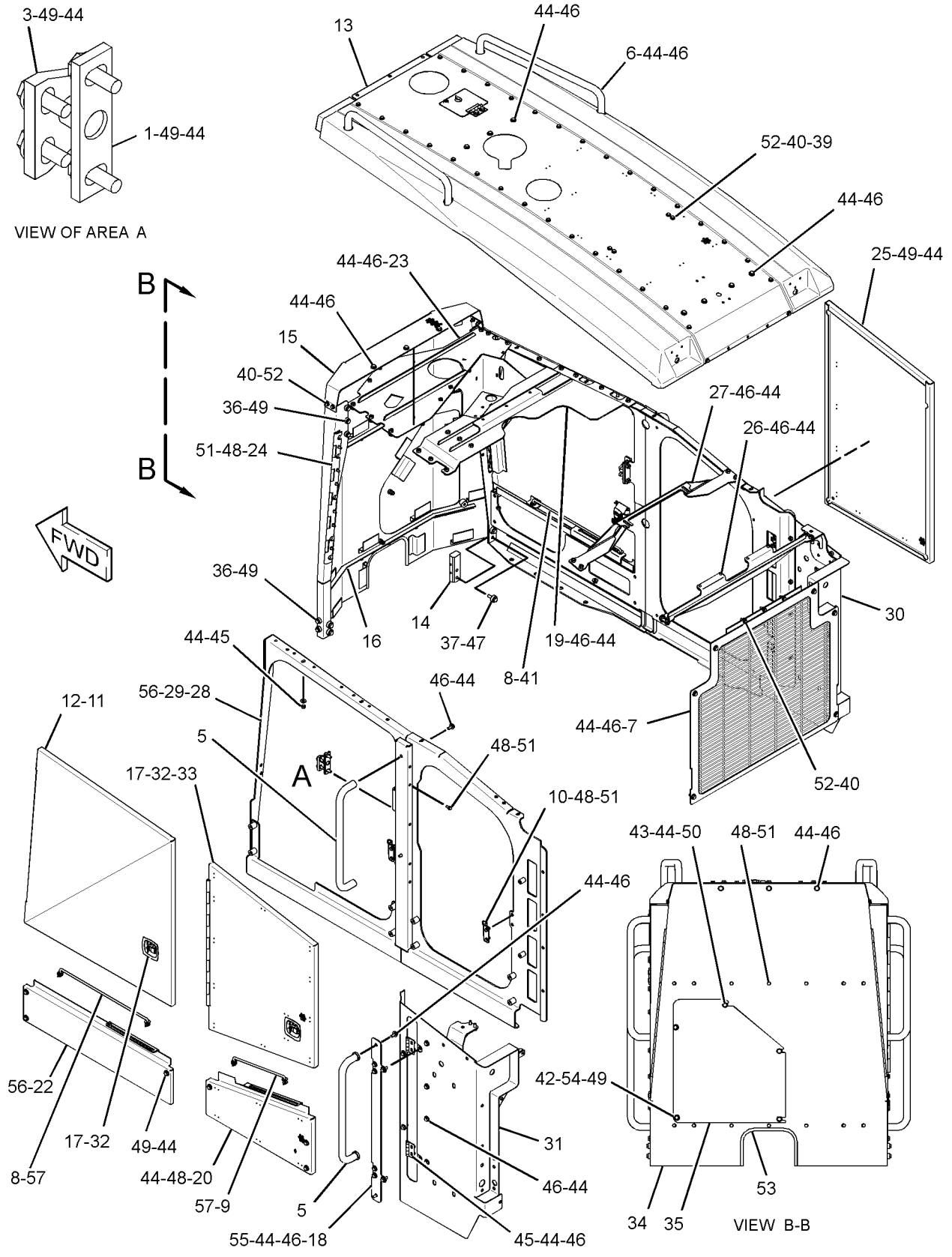

GRAPHIC #1 <END> g06057358

319-7077 FASTENER GP-ENCLOSURE

S/N: B551-UP

PART OF 577-1377 COMMON AR

SMCS-7263, 7553 **i05414747**

NOTE	REF NO	GRAPHIC REF	PART NUMBER	QTY	PART NAME 1 2 3 4 5 6 (PRODUCT LEVEL)	SEE PAGE
	1	1	**198-4778**	8	WASHER-HARD (13.5X30X12-MM THK)	
	2	1	**198-4780**	7	WASHER-HARD (17.5X32X8-MM THK)	
	3	1	**267-8821**	1	WASHER (17X36X12-MM THK)	
	4	1	**7X-7729**	4	WASHER (11X25X3-MM THK)	
M	5	1	**8T-4140**	8	BOLT (M16X2X60-MM)	
M	6	1	**8T-4171**	4	BOLT (M6X1X12-MM)	
M	7	1	**8T-4191**	4	BOLT (M10X1.5X16-MM)	
M	8	1	**8T-4956**	8	BOLT (M12X1.75X35-MM)	
	9	1	**9D-3767**	2	PLUG-BUTTON	
	10	1	**9R-2620**	1	PLUG	
	11	1	**9X-8256**	4	WASHER (6.6X12X2-MM THK)	

M - METRIC PART

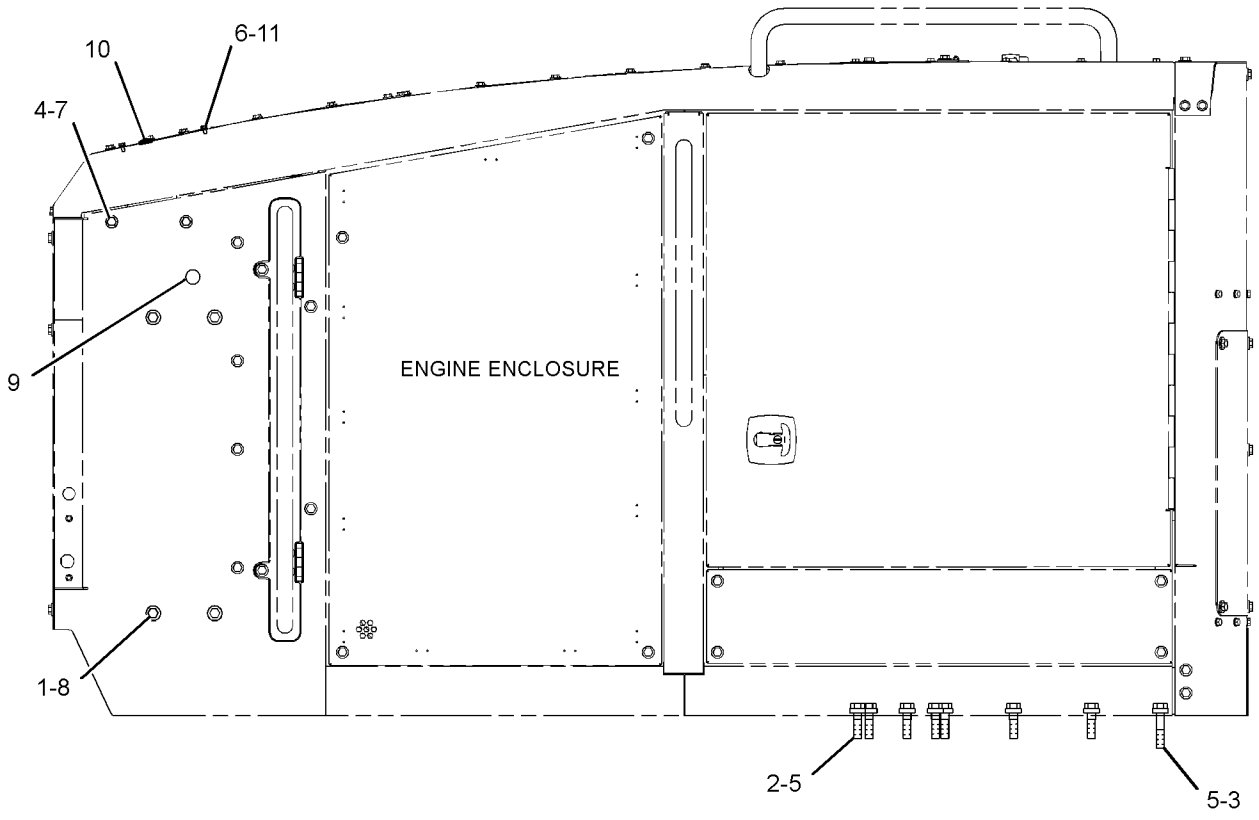

RIGHT SIDE VIEW

GRAPHIC #1 <END> g03421877

262-0413 FENDER & SUPPORT GP–REAR

S/N: B551-UP

PART OF 492-0729 CONVERSION AR-CERTIFICATION

SMCS-7252 **i07763076**

NOTE	REF NO	GRAPHIC REF	PART NUMBER	QTY	PART NAME 1 2 3 4 5 6 (PRODUCT LEVEL)	SEE PAGE
	1	1	**178-6450**	4	SPACER (17X35X30-MM THK)	
	2	1	**502-9305**	1	SUPPORT AS	
	3	1	**502-9306**	1	SUPPORT AS	
					(EACH SUPPORT AS INCLUDES)	
M		1	**8T-3490**	4	NUT-WELD (M10X1.5-THD)	
M		1	**8T-3612**	3	NUT-WELD (M8X1.25-THD)	
	4	1	**502-9307**	1	SUPPORT AS	
	5	1	**502-9308**	1	SUPPORT AS	
					(EACH SUPPORT AS INCLUDES)	
M		1	**8T-3490**	6	NUT-WELD (M10X1.5-THD)	
M		1	**8T-3612**	5	NUT-WELD (M8X1.25-THD)	
	6	1	**530-1616**	2	FENDER	
	8	1	**333-0486**	1	COVER	
	9	1	**284-8450**	10	SUPPORT AS	
	10	1	**333-0492**	1	BRACKET AS	
	11	1	**251-1153**	2	PLATE AS	
					(EACH INCLUDES)	
M		1	**8T-3612**	4	NUT-WELD (M8X1.25-THD)	
	12	1	**333-0490**	1	BRACKET AS	
	13	1	**251-2449**	2	PLATE AS	
					(EACH INCLUDES)	
M		1	**8T-3612**	5	NUT-WELD (M8X1.25-THD)	
	14	1	**530-1617**	2	FENDER	
	15	1	**333-0493**	2	BRACKET AS	
	17	1	**333-0489**	1	COVER	
M	18	1	**7X-0818**	10	BOLT (M8X1.25X45-MM)	
	19	1	**5P-4116**	44	WASHER-HARD (8.8X20.5X2-MM THK)	
M	20	1	**7X-2554**	4	BOLT (M16X2X70-MM)	
M	21	1	**8T-4189**	20	BOLT (M8X1.25X20-MM)	
M	22	1	**8T-4779**	8	BOLT (M16X2X35-MM)	
M	23	1	**8T-4908**	24	BOLT (M8X1.25X25-MM)	
	24	1	**9X-8257**	12	WASHER (17.5X30X3.5-MM THK)	
	25	1	**7X-7729**	20	WASHER (11X25X3-MM THK)	
M	26	1	**8T-4182**	20	BOLT (M10X1.5X45-MM)	
C	27	1	**198-4776**	10	WASHER-HARD (8.8X20X8-MM THK)	
	29	1	**313-5271**	2	REFLECTOR-RED	
	30	1	**333-0487**	1	COVER	
	31	1	**333-0488**	1	COVER	

C - CHANGE FROM PREVIOUS TYPE
M - METRIC PART

262-0413 **FENDER & SUPPORT GP** (contd.) **i07763076**

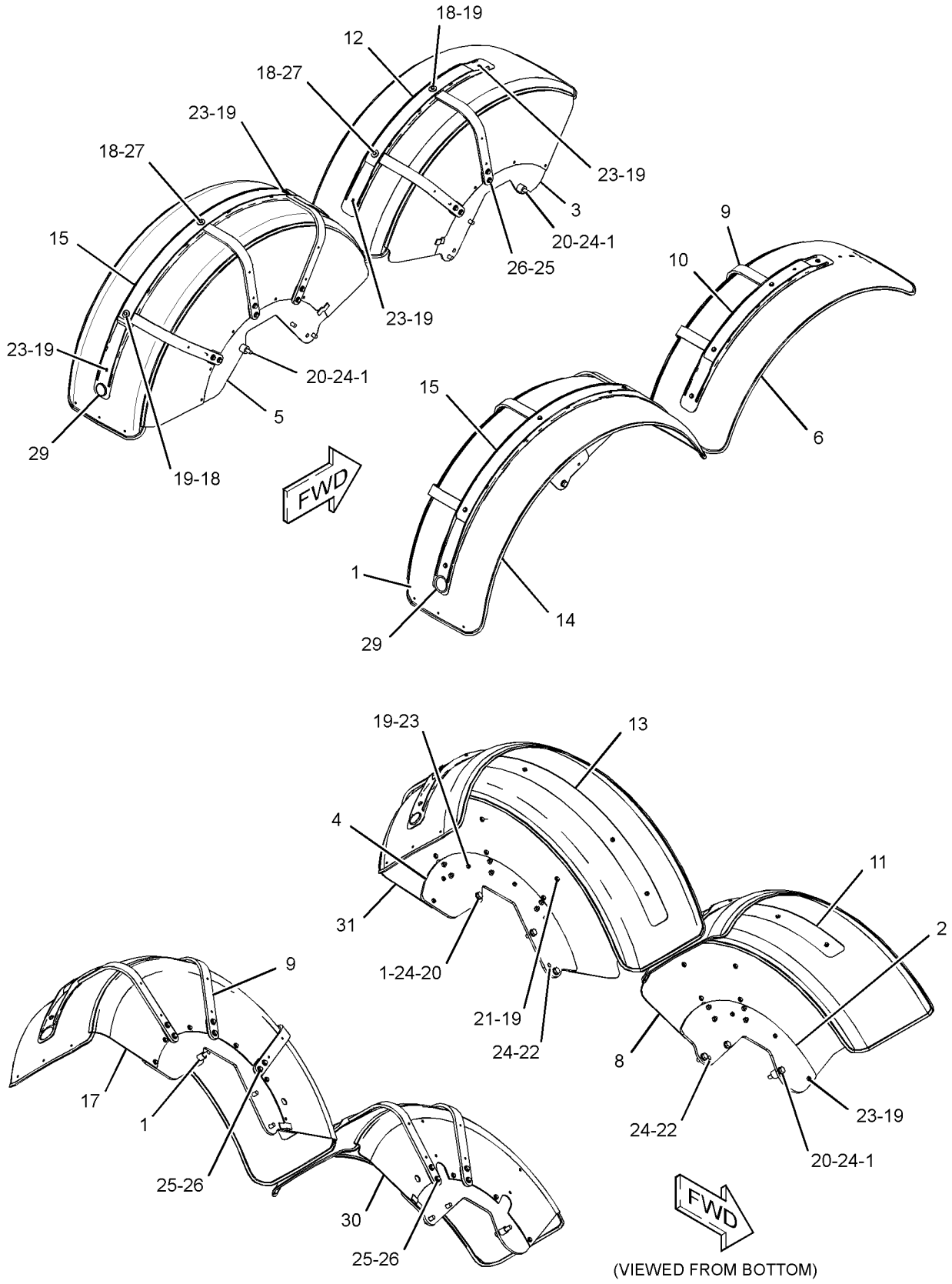

GRAPHIC #1 <END> g06186189

308-7368 FENDER & SUPPORT GP–FRONT

S/N: B551-UP

SMCS-7252 **i07144913**

NOTE	REF NO	GRAPHIC REF	PART NUMBER	QTY	PART NAME 1 2 3 4 5 6 (PRODUCT LEVEL)	SEE PAGE
	1	1	**134-0165**	4	WASHER (13.8X45X3-MM THK)	
	2	1	**246-3483**	8	PLATE	
	3	1	**530-1615**	2	FENDER	
	4	1	**262-3963**	2	SUPPORT AS	
M	5	1	**8T-4178**	16	BOLT (M10X1.5X90-MM)	
	6	1	**296-6047**	1	PLATE AS	
M		1	**8T-3597**	1	NUT-WELD (M12X1.75-THD)	
	7	1	**296-6051**	1	PLATE AS	
M		1	**8T-3597**	1	NUT-WELD (M12X1.75-THD)	
	8	1	**296-6052**	1	PLATE AS	
M		1	**8T-3597**	1	NUT-WELD (M12X1.75-THD)	
	9	1	**481-8300**	4	BAR	
	10	1	**308-7354**	1	TUBE AS	
	11	1	**308-7358**	1	TUBE AS	
	12	1	**308-7360**	1	TUBE AS	
	13	1	**308-7363**	1	TUBE AS	
	14	1	**308-7380**	4	PLATE	
	15	1	**310-2174**	1	PLATE AS	
M		1	**8T-3597**	1	NUT-WELD (M12X1.75-THD)	
	16	1	*343-4501*	2	BLOCK AS-MOUNTING	
					(EACH INCLUDES)	
		1	**308-7649**	1	BUSHING-MOUNTING	
		1	**308-7373**	1	BLOCK	
	17	1	*343-4502*	2	BLOCK AS-MOUNTING	
					(EACH INCLUDES)	
		1	**308-7649**	1	BUSHING-MOUNTING	
		1	**308-7372**	1	BLOCK	
M	18	1	**6V-7744**	16	LOCKNUT (M10X1.5-THD)	
M	19	1	**6V-9189**	16	LOCKNUT (M8X1.25-THD)	
	20	1	**8T-7971**	16	WASHER-HARD (13.5X25.5X5-MM THK)	
M	21	1	**7X-2549**	10	BOLT (M12X1.75X100-MM)	
	22	1	**8T-4121**	8	WASHER-HARD (11X21X2.5-MM THK)	
M	23	1	**8T-4139**	4	BOLT (M12X1.75X30-MM)	
M	24	1	**8T-4191**	8	BOLT (M10X1.5X16-MM)	
M	26	1	**8T-4956**	6	BOLT (M12X1.75X35-MM)	
M	27	1	**8T-6870**	16	BOLT (M8X1.25X70-MM)	
	28	1	**313-5270**	2	REFLECTOR (AMBER)	
	29	1	**5P-4116**	32	WASHER-HARD (8.8X20.5X2-MM THK)	
	30	1	**7X-7729**	32	WASHER (11X25X3-MM THK)	

M - METRIC PART

308-7368 **FENDER & SUPPORT GP** (contd.) **i07144913**

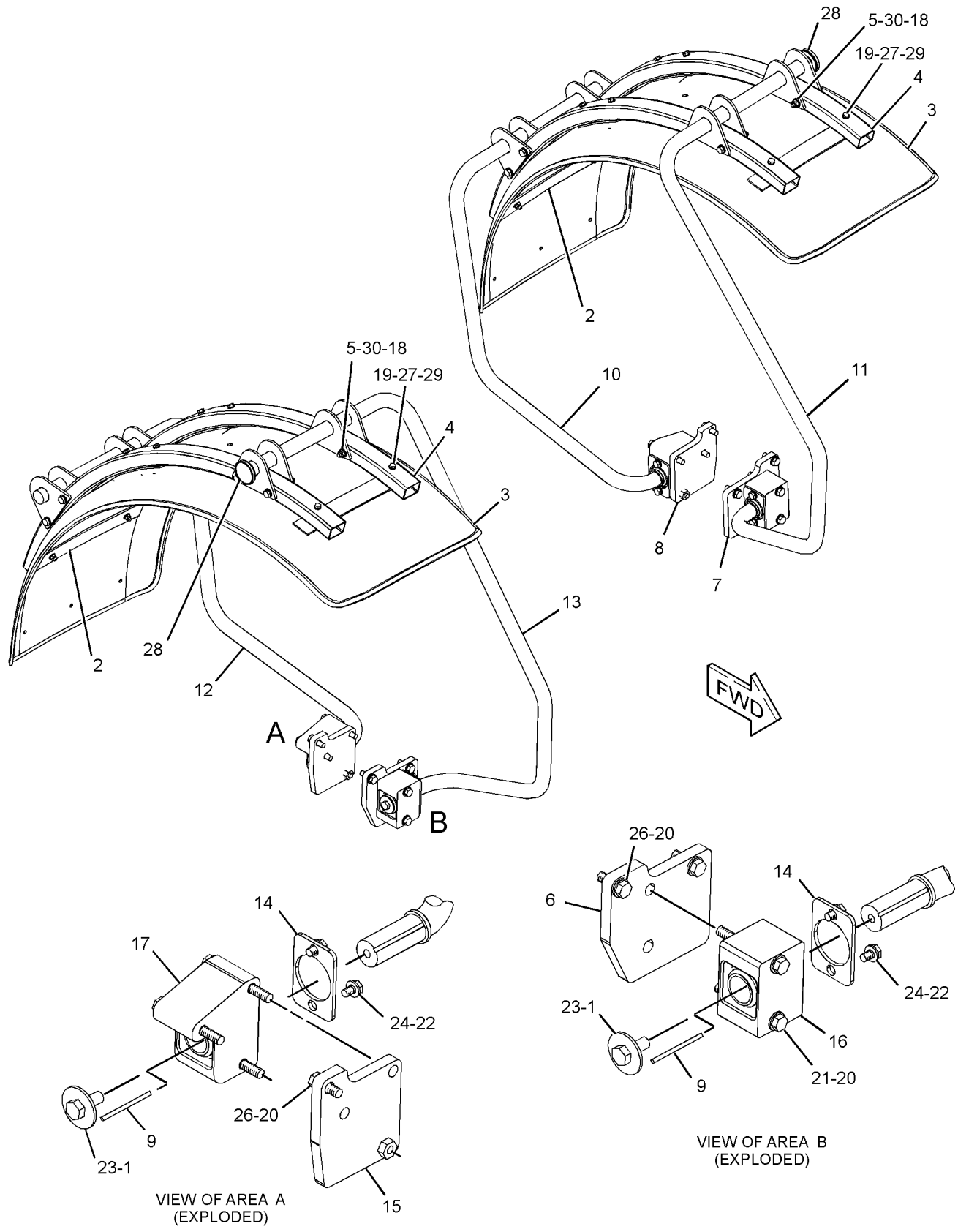

GRAPHIC #1 <END> g06096086

351-9811 FRAME GP-FRONT

S/N: B551-UP

PART OF 364-1989 OPTION AR-MACHINE

SMCS-7050, 7051 **i07021762**

NOTE	REF NO	GRAPHIC REF	PART NUMBER	QTY	PART NAME 1 2 3 4 5 6 (PRODUCT LEVEL)	SEE PAGE
	1	2	**7K-9204**	1	SEAL-LIP TYPE	
	2	2	**9D-6589**	8	SEAL-LIP TYPE	
	3	2	**368-7627**	1	PIN AS	
	4	1	**396-3192**	1	PLATE AS	
M		1	**7Y-6338**	2	BOSS (M10X1.5X70-MM)	
M		1	**8Y-3795**	1	BOSS (M10X1.5X39-MM)	
M		1	**9R-2672**	3	BOSS-THREADED (M10X1.5X120-MM)	
M		1	**9R-9866**	3	BOSS-THREADED (M10X1.5-THD)	
	5	1	**441-7014**	1	PLATE AS	
M		1	**8Y-3795**	2	BOSS (M10X1.5X39-MM)	
M		1	**9R-2672**	3	BOSS-THREADED (M10X1.5X120-MM)	
M		1	**9R-9866**	5	BOSS-THREADED (M10X1.5-THD)	
	6	2	**351-9810**	1	FRAME GP-FRONT	
	7	2	**356-2396**	1	PLATE AS	
M		2	**8T-3490**	3	NUT-WELD (M10X1.5-THD)	
	8	1	**506-0163**	1	PLATE AS	
	9	1	**356-2412**	2	PLATE AS	
					(EACH INCLUDES)	
M		1	**8T-3490**	6	NUT-WELD (M10X1.5-THD)	
M		1	**8Y-4489**	3	BOSS (M10X1.5-THD)	
M		1	**356-2419**	4	STUD (M10X1.5X110-MM)	
	10	2	**393-6368**	1	PLATE AS	
M		2	**8T-3490**	11	NUT-WELD (M10X1.5-THD)	
M		2	**8Y-4489**	1	BOSS (M10X1.5-THD)	
M		2	**9R-2672**	4	BOSS-THREADED (M10X1.5X120-MM)	
M		2	**183-7602**	4	BOSS-THREADED (M10X1.5-THD)	
	11	1,2	**198-4777**	25	WASHER-HARD (11X25X10-MM THK)	
	12	1	**6K-4076**	1	BUSHING	
	13	2	**7K-9202**	4	SEAL-LIP TYPE	
	14	2	**7X-7729**	4	WASHER (11X25X3-MM THK)	
	15	2	**8D-7086**	2	BEARING	
	16	2	**8D-9159**	4	BUSHING	
M	17	1,2	**8T-4195**	29	BOLT (M10X1.5X30-MM)	
	18	2	**9D-3311**	1	BUSHING	
	19	2	**162-7120**	1	PIN	

M - METRIC PART

351-9811 **FRAME GP-FRONT (**contd.**)** **i07021762**

REFER TO ALL ILLUSTRATIONS OF
THIS GROUP FOR AUXILIARY VIEWS

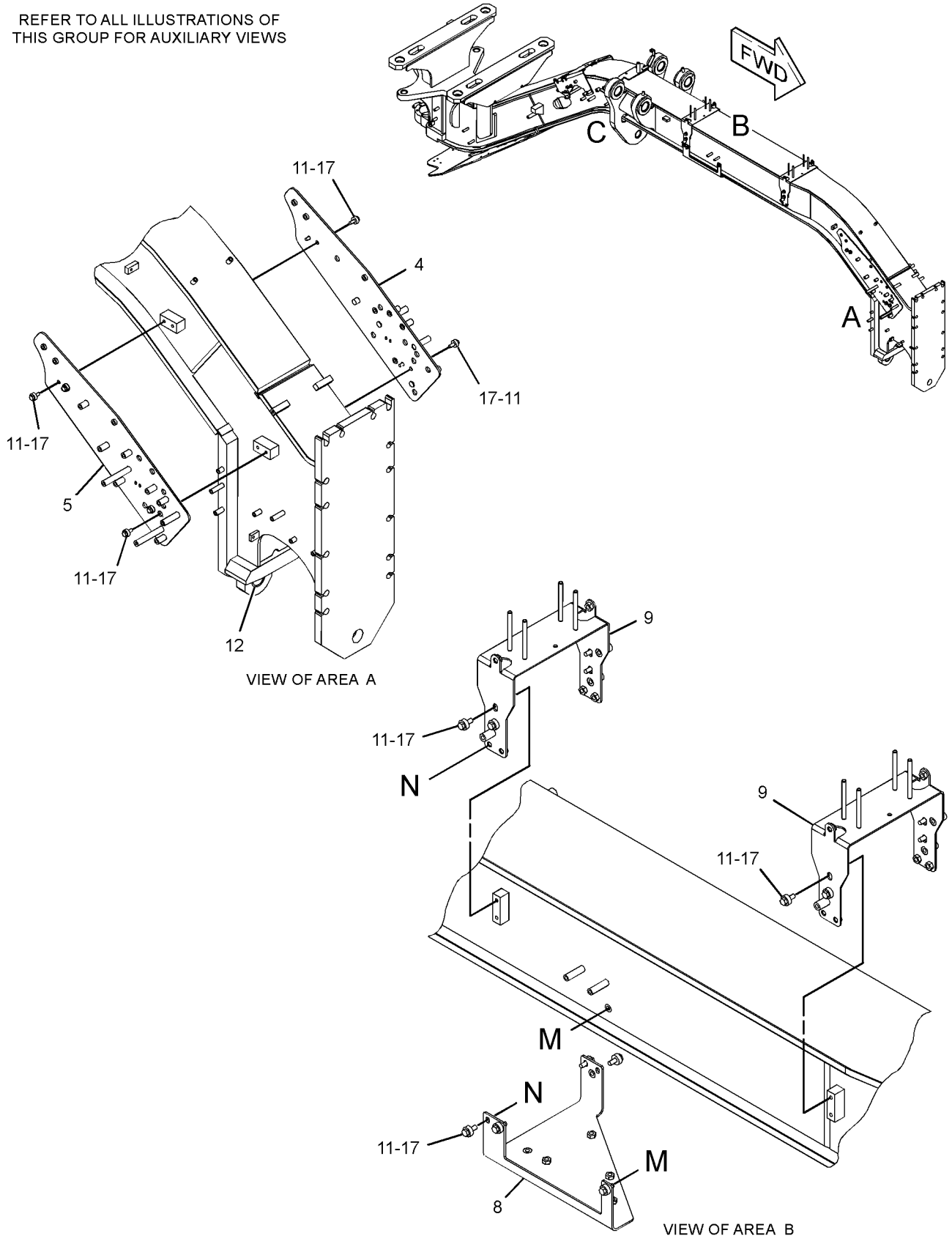

GRAPHIC #1

g06002871

351-9811 **FRAME GP-FRONT (**contd.**)** **i07021762**

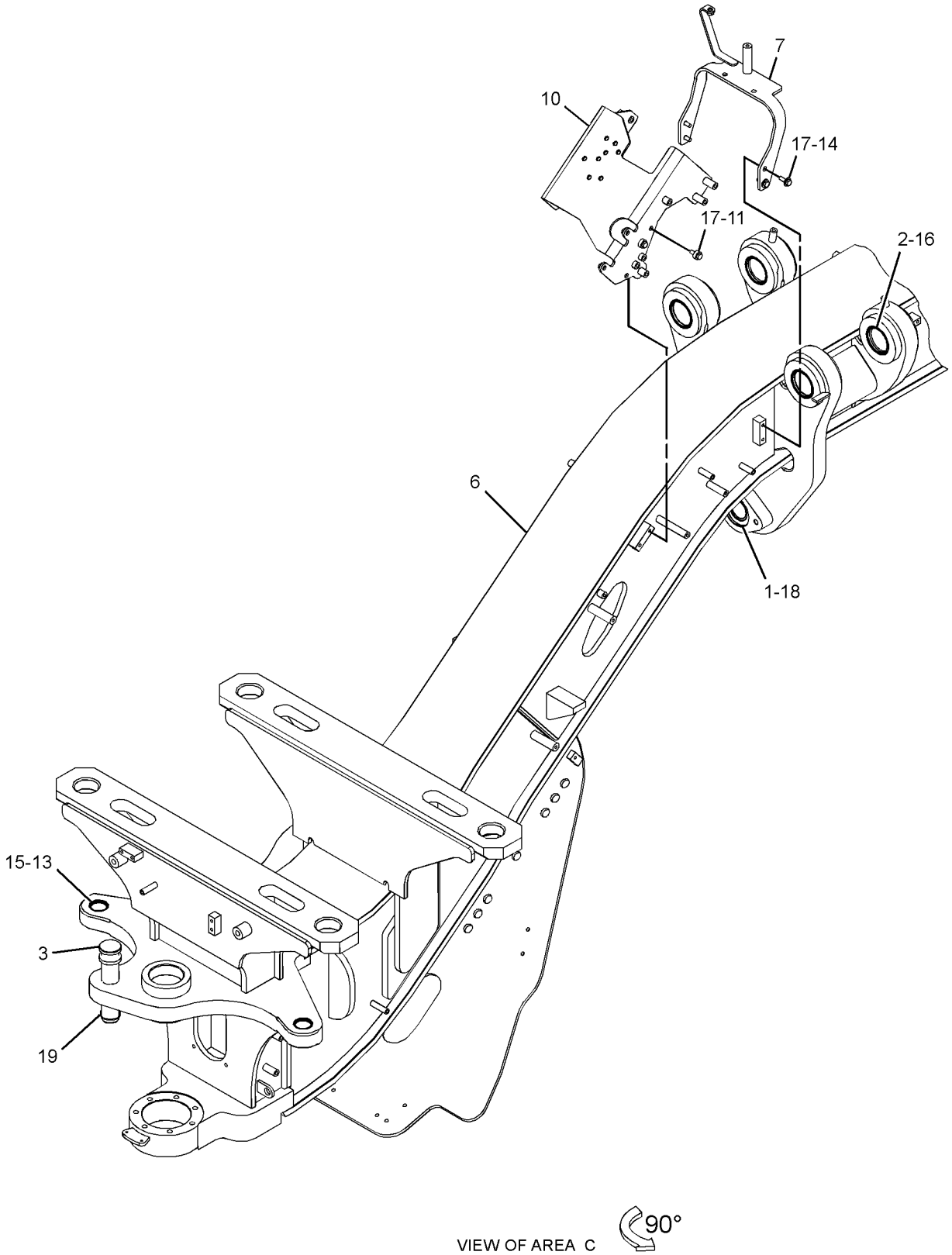

GRAPHIC #2 <END> g06002872

430-9004 FRAME GP-REAR—ENGINE END

S/N: B551-UP

PART OF 577-1377 COMMON AR

SMCS-7050, 7051 **i05645690**

NOTE	REF NO	GRAPHIC REF	PART NUMBER	QTY	PART NAME 1 2 3 4 5 6 (PRODUCT LEVEL)	SEE PAGE
	1	1	**430-8985**	1	FRAME AS	
	2	1	**7K-9202**	4	SEAL-LIP TYPE	
	3	1	**8D-7086**	2	BEARING	

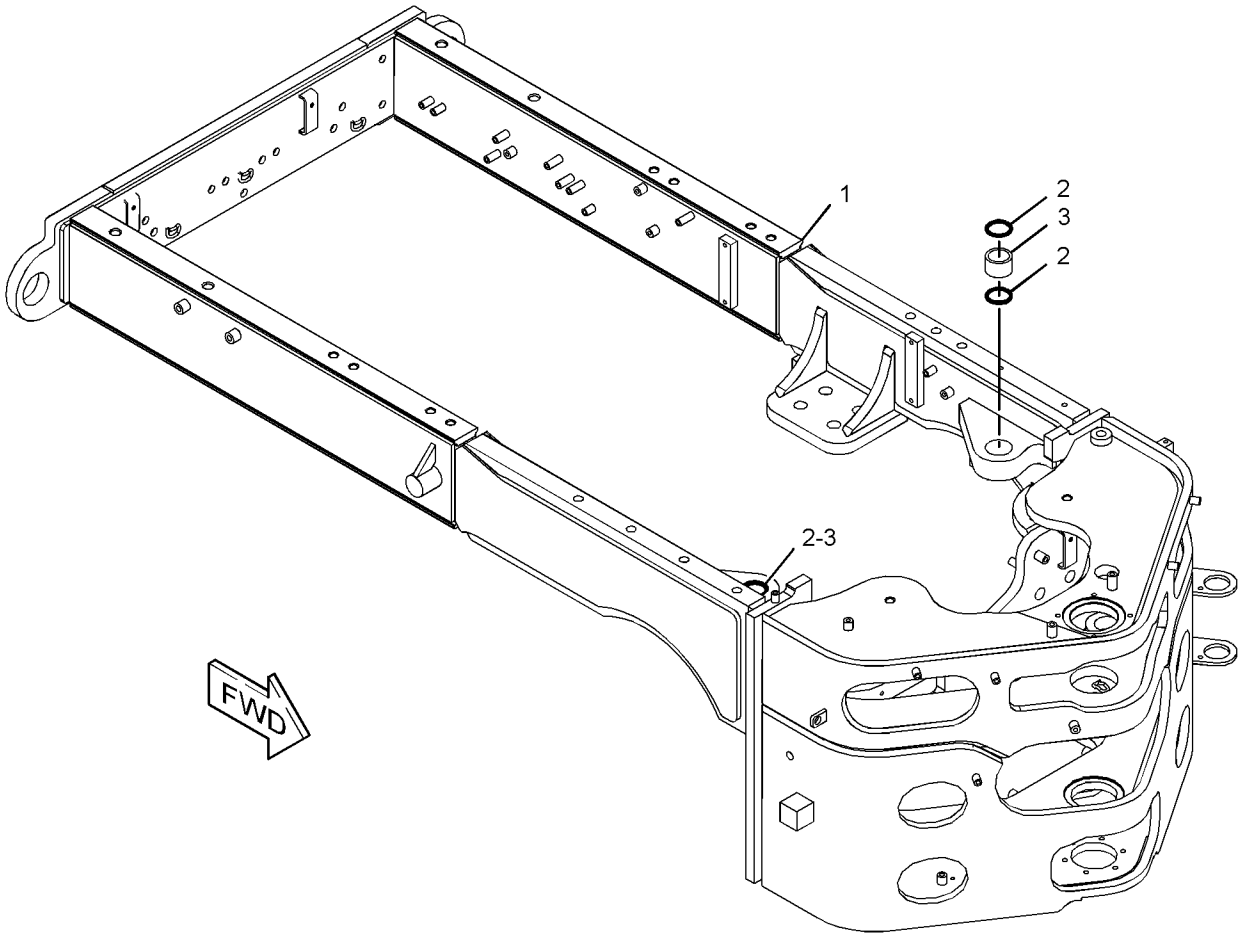

GRAPHIC #1 <END> g03013436

366-2459 GUARD GP-BOTTOM

S/N: B551-UP

FOR USE WITH 377-1602—PAGE: 481

PART OF 492-0728, 492-0729 CONVERSION AR-CERTIFICATION

SMCS-7153 **i07376819**

NOTE	REF NO	GRAPHIC REF	PART NUMBER	QTY	PART NAME 1 2 3 4 5 6 (PRODUCT LEVEL)	SEE PAGE
	1	1	**7D-7496**	2	PIN AS	
	2	1	**8W-6626**	2	CAP	
	3	1	**296-0727**	1	PLATE	
	4	1	**365-6668**	1	SUPPORT AS	
M		1	**8T-3490**	3	NUT-WELD (M10X1.5-THD)	
	5	1	**500-8530**	1	GUARD AS	
	6	1	**366-2458**	1	PLATE AS	
M		1	**8Y-4489**	4	BOSS (M10X1.5-THD)	
	7	1	**7X-7729**	3	WASHER (11X25X3-MM THK)	
	8	1	**8K-0530**	2	PIN-CABLE SOCKET	
	9	1	**8T-4121**	4	WASHER-HARD (11X21X2.5-MM THK)	
M	10	1	**8T-4956**	8	BOLT (M12X1.75X35-MM)	
M	11	1	**8T-4175**	4	BOLT (M16X2X90-MM)	
M	12	1	**8T-4185**	4	BOLT (M10X1.5X50-MM)	
M	13	1	**8T-4195**	3	BOLT (M10X1.5X30-MM)	
	14	1	**8T-4223**	8	WASHER-HARD (13.5X25.5X3-MM THK)	
	15	1	**9X-8257**	4	WASHER (17.5X30X3.5-MM THK)	

M - METRIC PART

366-2459 **GUARD GP-BOTTOM (**contd.**)** **i07376819**

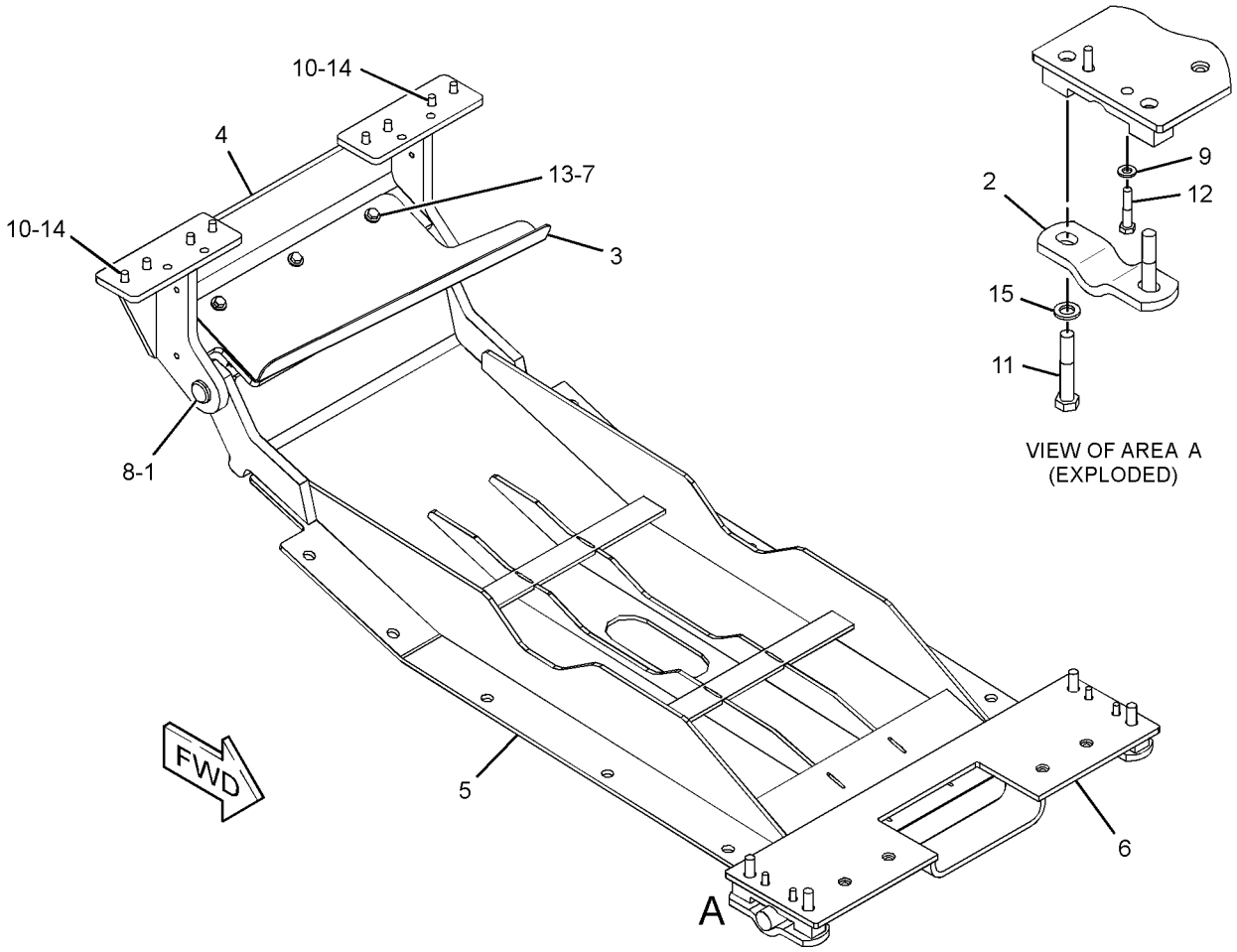

GRAPHIC #1 <END> g06161172

367-6905 GUARD GP-CYLINDER–ALL WHEEL DRIVE

S/N: B551-UP

STEERING CYLINDER

SMCS-7164 **i07765332**

NOTE	REF NO	GRAPHIC REF	PART NUMBER	QTY	PART NAME 1 2 3 4 5 6 (PRODUCT LEVEL)	SEE PAGE
C	1	1	**515-4664**	1	GUARD (RH)	
C	2	1	**515-4666**	1	GUARD (LH)	
C	3	1	**515-4669**	4	CLAMP AS	
CM	4	1	**177-0035**	4	U-BOLT (M10X1.5-THD)	
C	5	1	**7X-7729**	18	WASHER (11X25X3-MM THK)	
CM	6	1	**8T-0389**	8	LOCKNUT (M10X1.5-THD)	
M	7	1	**8T-4185**	2	BOLT (M10X1.5X50-MM)	
CM	8	1	**8T-4195**	8	BOLT (M10X1.5X30-MM)	
	9	1	**9C-5344**	2	SPACER (10.5X20X18-MM THK)	
CE	10	1	**7X-7877**		STRIP-EDGE (13.3-CM EACH)	

C - CHANGE FROM PREVIOUS TYPE
E - ORDER BY THE CENTIMETER
M - METRIC PART

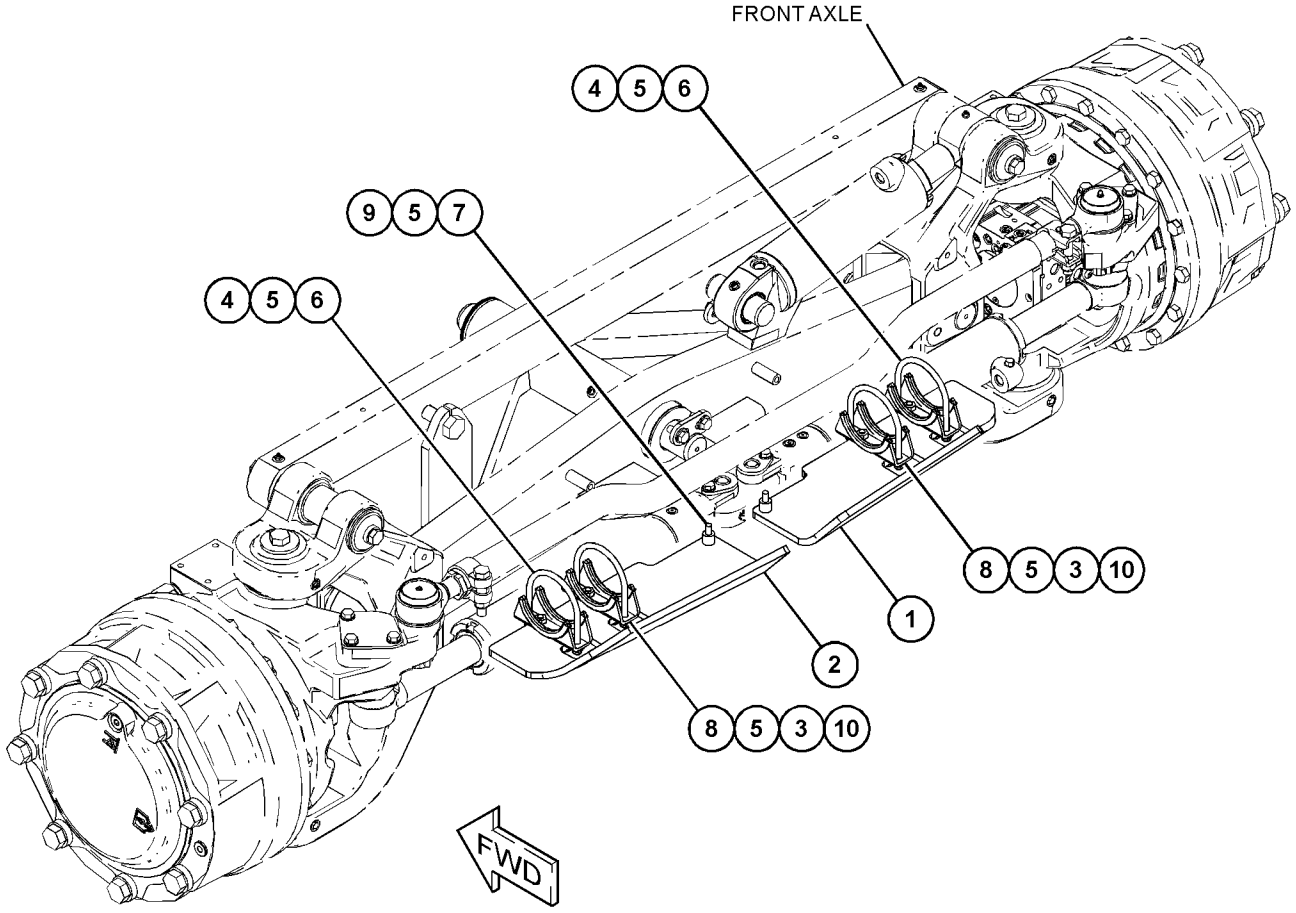

GRAPHIC #1 <END> g06201856

249-6692 GUARD GP-DEBRIS–SCREEN

S/N: B551-UP

PART OF 349-3053 OPTION AR-COLD WEATHER

SMCS-7158 **i04852290**

NOTE	REF NO	GRAPHIC REF	PART NUMBER	QTY	PART NAME 1 2 3 4 5 6 (PRODUCT LEVEL)	SEE PAGE
	1	1	**199-4318**	42	TURNBUCKLE	
	2	1	**250-4357**	1	COVER (TOP)	
	3	1	**250-4358**	1	COVER (DOOR, RH)	
	4	1	**250-4359**	1	GUARD AS-SCREEN (DOOR, LH)	
	5	1	**250-4360**	1	COVER (LOWER, LH)	
M	6	1	**131-3987**	84	SCREW (M4X0.7X12-MM)	

M - METRIC PART

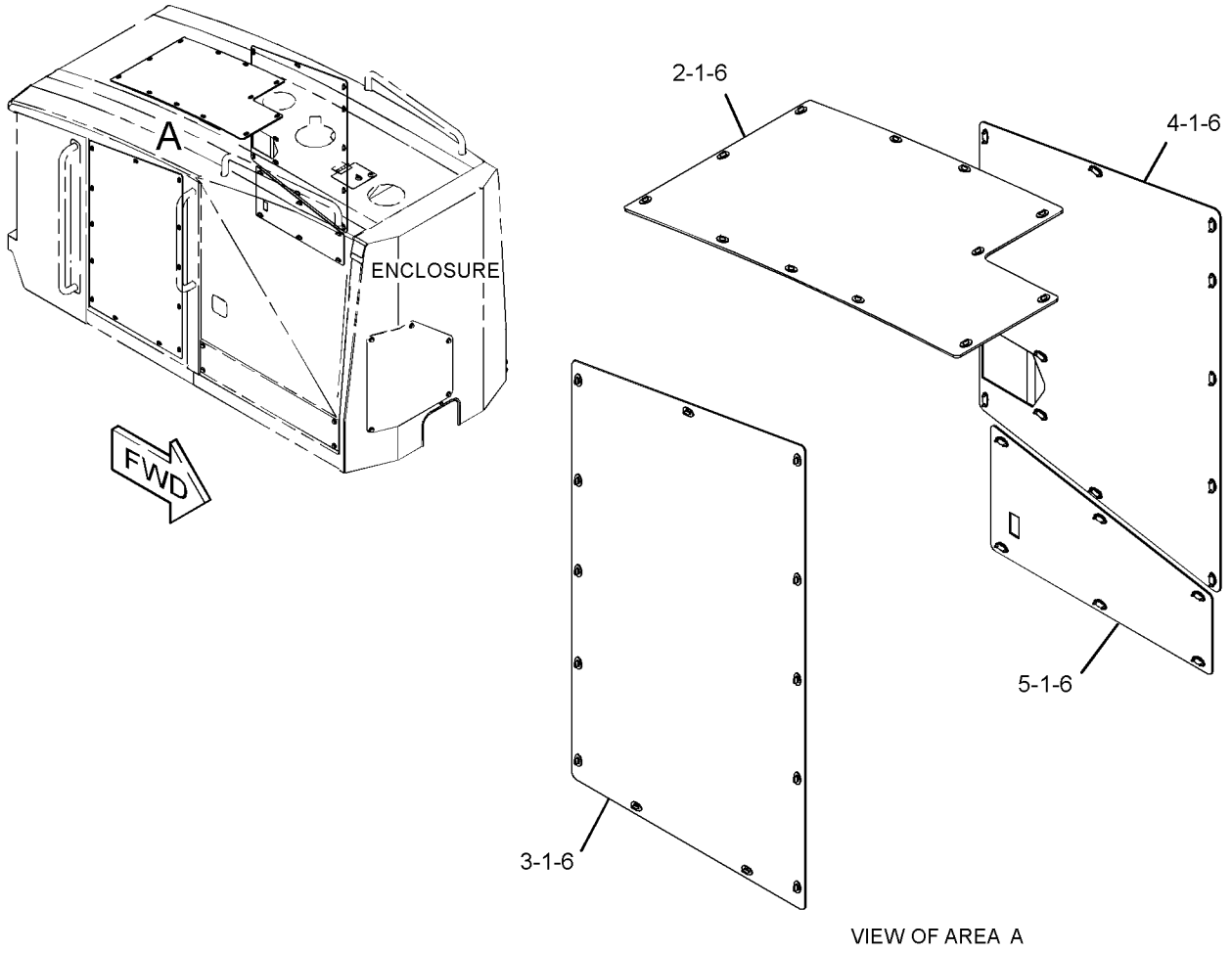

VIEW OF AREA A

GRAPHIC #1 <END> g03007597

376-4477 GUARD GP-FUEL TANK

S/N: B551-UP

PART OF 492-0728, 492-0729 CONVERSION AR-CERTIFICATION

SMCS-1273, 7150

i04537031

NOTE	REF NO	GRAPHIC REF	PART NUMBER	QTY	PART NAME 1 2 3 4 5 6 (PRODUCT LEVEL)	SEE PAGE
	1	1	**331-1080**	1	GUARD	
	2	1	**331-1081**	1	GUARD	
	3	1	**5P-4116**	6	WASHER-HARD (8.8X20.5X2-MM THK)	
M	4	1	**8T-4189**	6	BOLT (M8X1.25X20-MM)	

M - METRIC PART

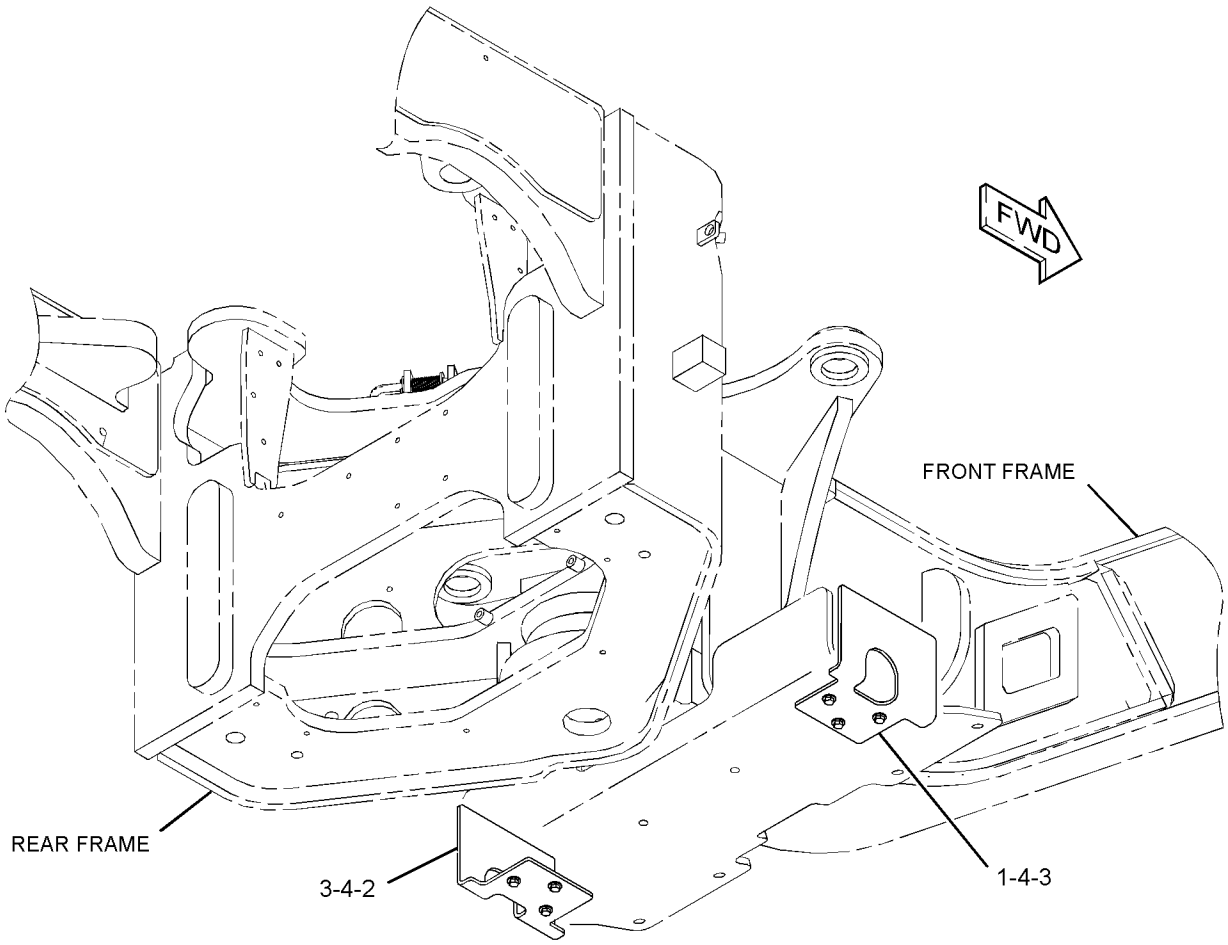

GRAPHIC #1 <END> g02720423

394-1511 GUARD GP-LINES

S/N: B551-UP

PART OF 364-1989 OPTION AR-MACHINE

SMCS-7167 **i07766643**

NOTE	REF NO	GRAPHIC REF	PART NUMBER	QTY	PART NAME 1 2 3 4 5 6 (PRODUCT LEVEL)	SEE PAGE
	1	1	**116-5763**	14	CLIP-SPRING	
	2	1	**297-7129**	1	BRACKET AS	
C	3	1	**536-3668**	1	BRACKET AS	
	4	1	**394-1751**	1	BRACKET AS	
M		1	**8T-3490**	1	NUT-WELD (M10X1.5-THD)	
	5	1	**435-4845**	1	COVER AS	
		1	**447-0763**	30	RIVET-ALUMINUM	
M		1	**322-0819**	2	INSERT-THREADED (M10X1.5-THD)	
C	6	1	**570-9279**	1	COVER (LH)	
C	7	1	**570-9278**	1	COVER (RH)	
C	8	1	**536-3666**	1	BRACKET AS	
C	9	1	**519-8440**	1	PLATE AS	
	10	1	**357-2191**	1	BRACKET AS	
	11	1	**463-1734**	1	BRACKET AS	
	12	1	**481-8298**	1	COVER AS	
M	14	1	**8T-4189**	14	BOLT (M8X1.25X20-MM)	
M	15	1	**8T-4137**	11	BOLT (M10X1.5X20-MM)	
M	16	1	**8T-4195**	28	BOLT (M10X1.5X30-MM)	
	17	1	**7X-7729**	11	WASHER (11X25X3-MM THK)	
	18	1	**7X-0579**	14	WASHER-HARD (8.8X25.5X2-MM THK)	
C	19	1	**8T-4222**	10	WASHER-PLATED (11X32X2.5-MM THK)	
	20	1	**198-4777**	30	WASHER-HARD (11X25X10-MM THK)	
CM	23	1	**9X-2125**	8	BOLT-LOCKING (M10X1.5X25-MM)	
M	24	1	**8T-4136**	4	BOLT (M10X1.5X25-MM)	
C	25	1	**472-1143**	6	SPACER AS	
					(EACH INCLUDES)	
		1	**5F-7054**	1	SEAL-O-RING	
		1	**472-1128**	1	SPACER	

C - CHANGE FROM PREVIOUS TYPE
M - METRIC PART

394-1511 **GUARD GP-LINES (**contd.**)** **i07766643**

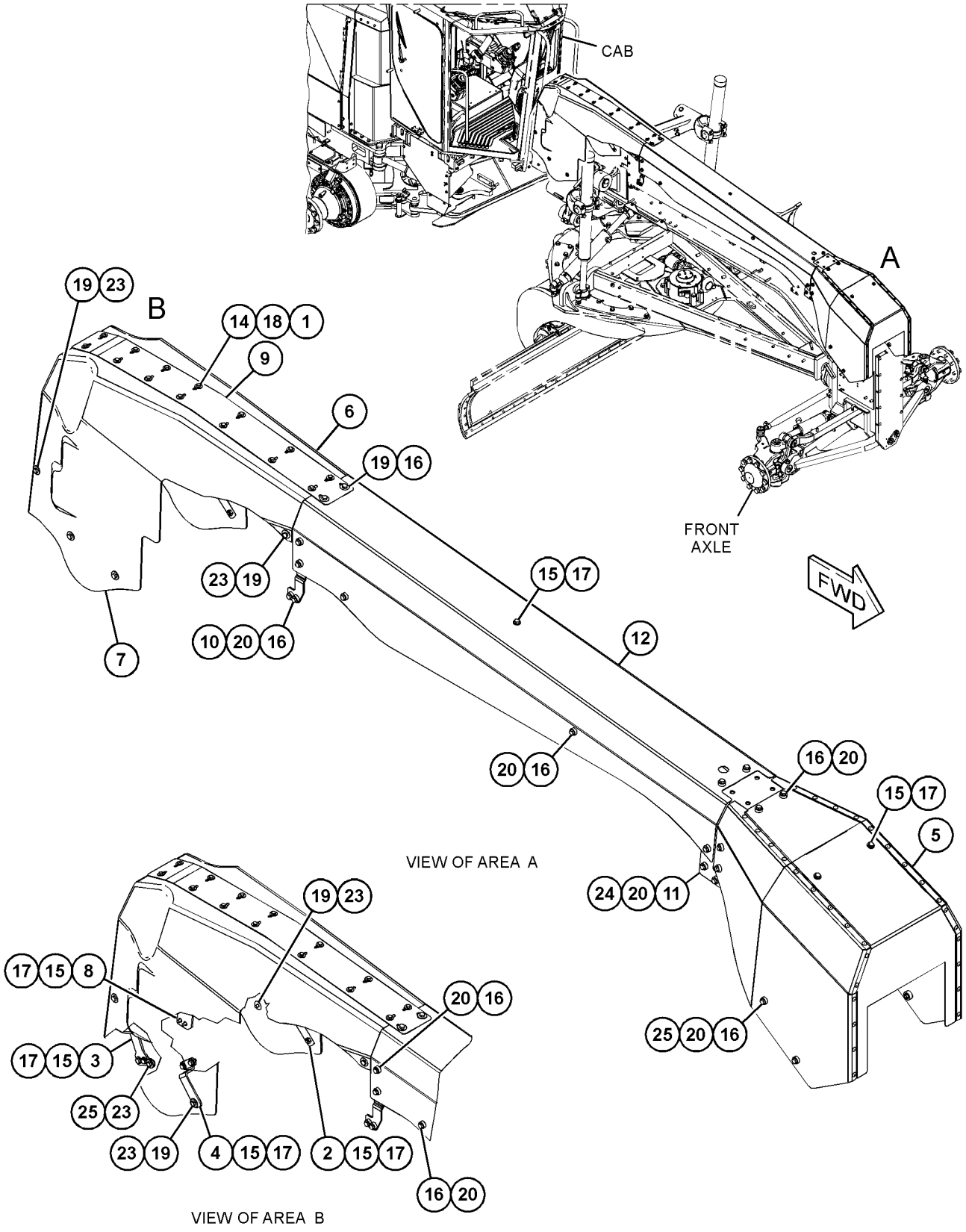

GRAPHIC #1 <END> g06272113

368-6239 GUARD GP-SENSOR—ARTICULATION

S/N: B551-UP

FOR USE WITH 377-1602—PAGE: 481

CANNOT BE USED WITH 323-6970—PAGE: 437

SMCS-4806, 7150 **i05893410**

NOTE	REF NO	GRAPHIC REF	PART NUMBER	QTY	PART NAME 1 2 3 4 5 6 (PRODUCT LEVEL)	SEE PAGE
	1	1	**327-3797**	2	PLATE	
	2	1	**366-6783**	2	FLAP	
	3	1	**368-6237**	1	GUARD AS-HITCH	
		1	**033-9412**	8	RIVET	
		1	**089-7960**	8	WASHER (5.3X25X1.6-MM THK)	
	4	1	**382-7980**	1	BRACKET	
	5	1	**382-9784**	1	GUARD AS (LH)	
M		1	**8T-3490**	5	NUT-WELD (M10X1.5-THD)	
	6	1	**382-9785**	1	GUARD AS (RH)	
M		1	**8T-3490**	5	NUT-WELD (M10X1.5-THD)	
	7	1	**7X-7729**	20	WASHER (11X25X3-MM THK)	
M	8	1	**8T-4136**	2	BOLT (M10X1.5X25-MM)	
M	9	1	**8T-4195**	10	BOLT (M10X1.5X30-MM)	
M	10	1	**9X-2125**	8	BOLT-LOCKING (M10X1.5X25-MM)	

M - METRIC PART

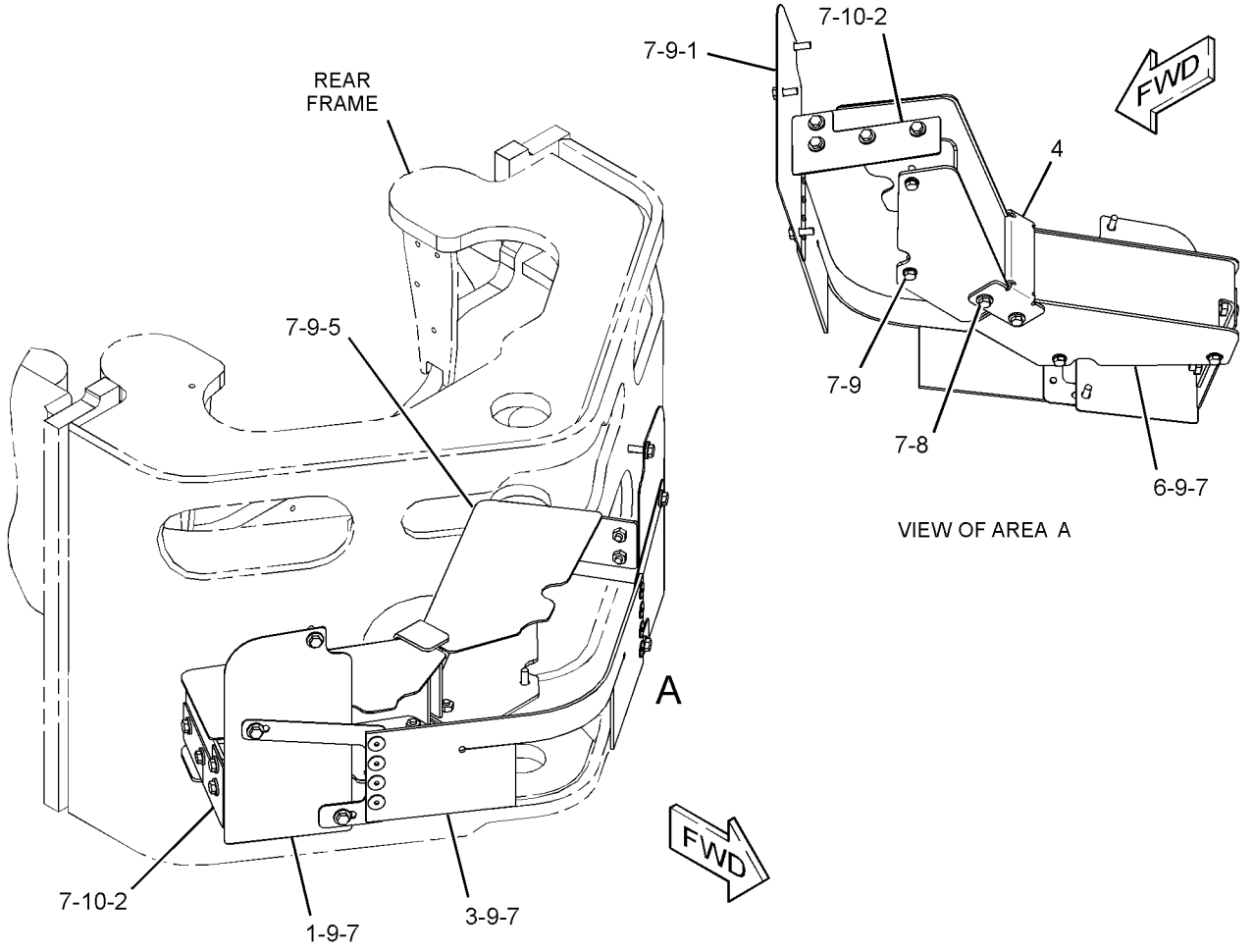

VIEW OF AREA A

GRAPHIC #1 <END> g02887697

356-5163 HANDRAIL GP

S/N: B551-UP

PART OF 381-7048, 381-7049 ROPS GP

SMCS-7256 **i06675970**

NOTE	REF NO	GRAPHIC REF	PART NUMBER	QTY	PART NAME 1 2 3 4 5 6 (PRODUCT LEVEL)	SEE PAGE
	1	1	**356-5165**	2	HANDRAIL AS	
					(EACH INCLUDES)	
E		1	**141-5519**		PIPE-BULK (94-CM)	
M	2	1	**127-2170**	8	SCREW-TRUSS HEAD (M8X1.25X20-MM)	
	3	1	**5P-4116**	8	WASHER-HARD (8.8X20.5X2-MM THK)	

E - ORDER BY THE CENTIMETER
M - METRIC PART

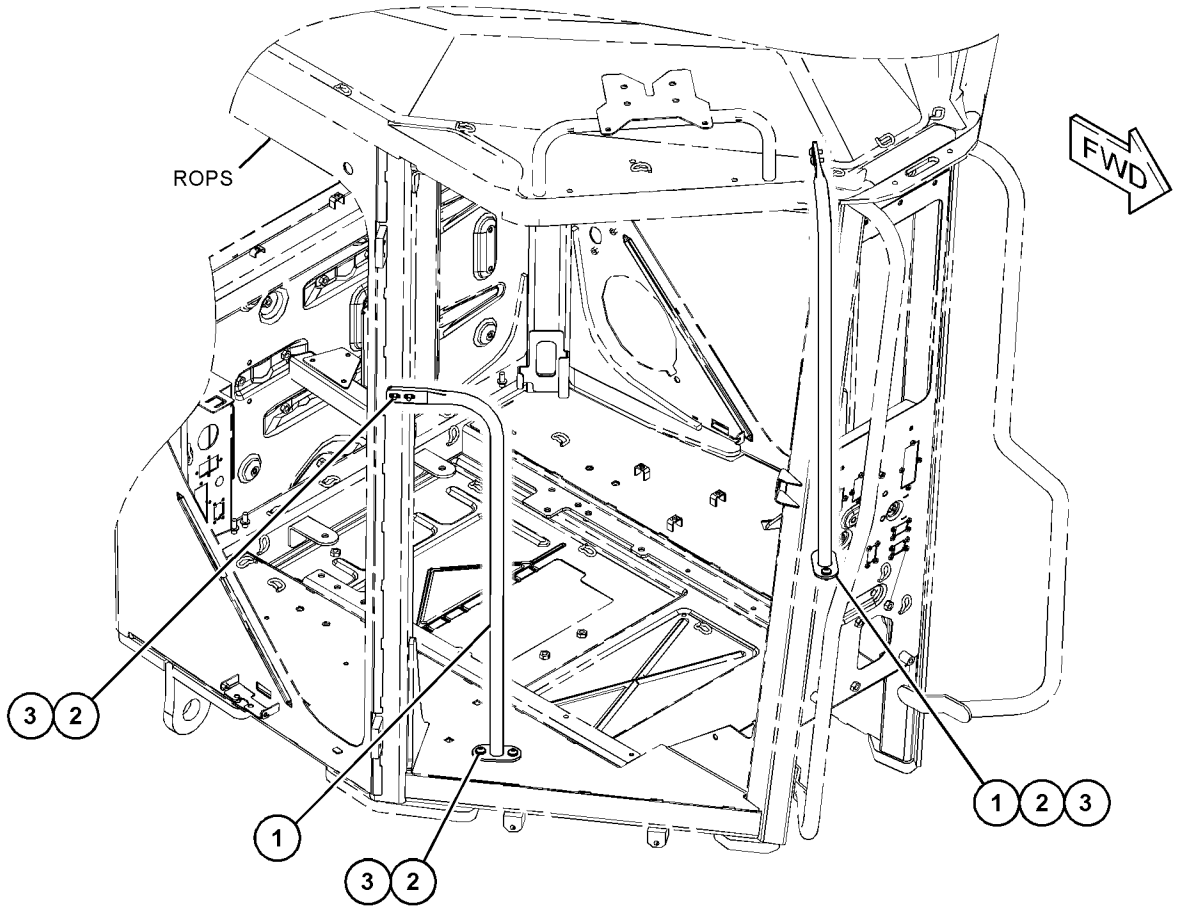

GRAPHIC #1 <END> g03590940

232-2678 HITCH GP-ARTICULATING

S/N: B551-UP

PART OF 577-1377 COMMON AR

SMCS-7057, 7100 **i07607476**

NOTE	REF NO	GRAPHIC REF	PART NUMBER	QTY	PART NAME 1 2 3 4 5 6 (PRODUCT LEVEL)	SEE PAGE
	1	1	**2V-4332**	1	COLLAR	
	2	1	**4K-6781**	1	SPACER	
B	3	1	**4K-7464**	1	SHIM PACK (INCLUDES 19-SHIMS)	
	4	1	**4V-0015**	1	PLATE-LOCK	
	5	1	**276-3622**	1	PIN-LOWER	
	6	1	**143-7356**	1	BEARING-TAPERED ROLLER	
	7	1	**5K-0987**	1	SPACER	
B	8	1	**5K-0988**	1	SHIM PACK (INCLUDES 35-SHIMS)	
	9	1	**5K-0989**	1	CAP-UPPER	
	10	1	**276-3620**	1	CAP-LOWER	
	11	1	**252-0990**	1	BUSHING	
	12	1	**252-1824**	1	PIN	
	13	1	**259-9283**	1	COVER	
	14	1	**4K-7463**	2	SEAL-LIP TYPE	
	15	1	**4K-8734**	1	BEARING (SLEEVE)	
	16	1	**5K-0983**	2	SEAL-LIP TYPE	
	17	1	**8T-4223**	19	WASHER-HARD (13.5X25.5X3-MM THK)	
M	18	1	**288-0735**	4	BOLT (M12X1.75X60-MM)	
M	19	1	**319-6699**	2	BOLT (M12X1.75X45-MM)	
M	20	1	**259-2627**	6	BOLT (M12X1.75X40-MM)	
M	21	1	**8T-7338**	4	BOLT (M16X2X45-MM)	
M	22	1	**319-6698**	7	BOLT (M12X1.75X110-MM)	
	23	1	**9X-8257**	4	WASHER (17.5X30X3.5-MM THK)	

B - USE AS REQUIRED
M - METRIC PART

232-2678 **HITCH GP-ARTICULATING (**contd.**)** **i07607476**

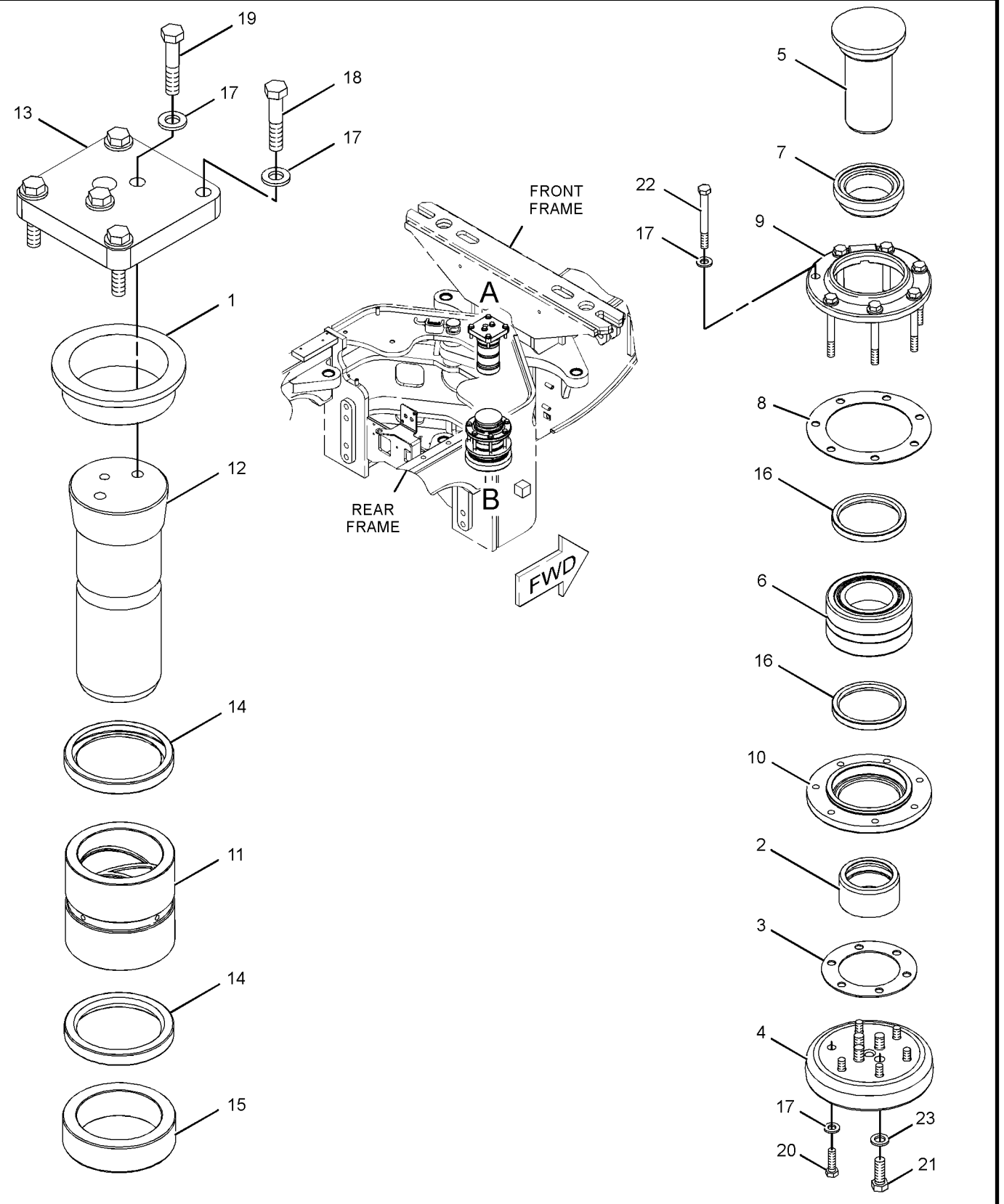

VIEW OF AREA A

VIEW OF AREA B

GRAPHIC #1

<END>

g06379356

337-7510 HITCH GP-TOWING

S/N: B551-UP
WITHOUT RIPPER
CANNOT BE USED WITH 324-0889—PAGE: 896

SMCS-7100 **i03924731**

NOTE	REF NO	GRAPHIC REF	PART NUMBER	QTY	PART NAME 1 2 3 4 5 6 (PRODUCT LEVEL)	SEE PAGE
M	1	1	**166-1880**	8	BOLT (M20X2.5X75-MM)	
	2	1	**337-7511**	1	HITCH AS	
	3	1	**267-3506**	6	WASHER-HARD (26X44X4-MM THK)	
	4	1	**267-3508**	8	WASHER-HARD (22X35X3.5-MM THK)	
M	5	1	**9X-2615**	6	BOLT (M24X3X60-MM)	

M - METRIC PART

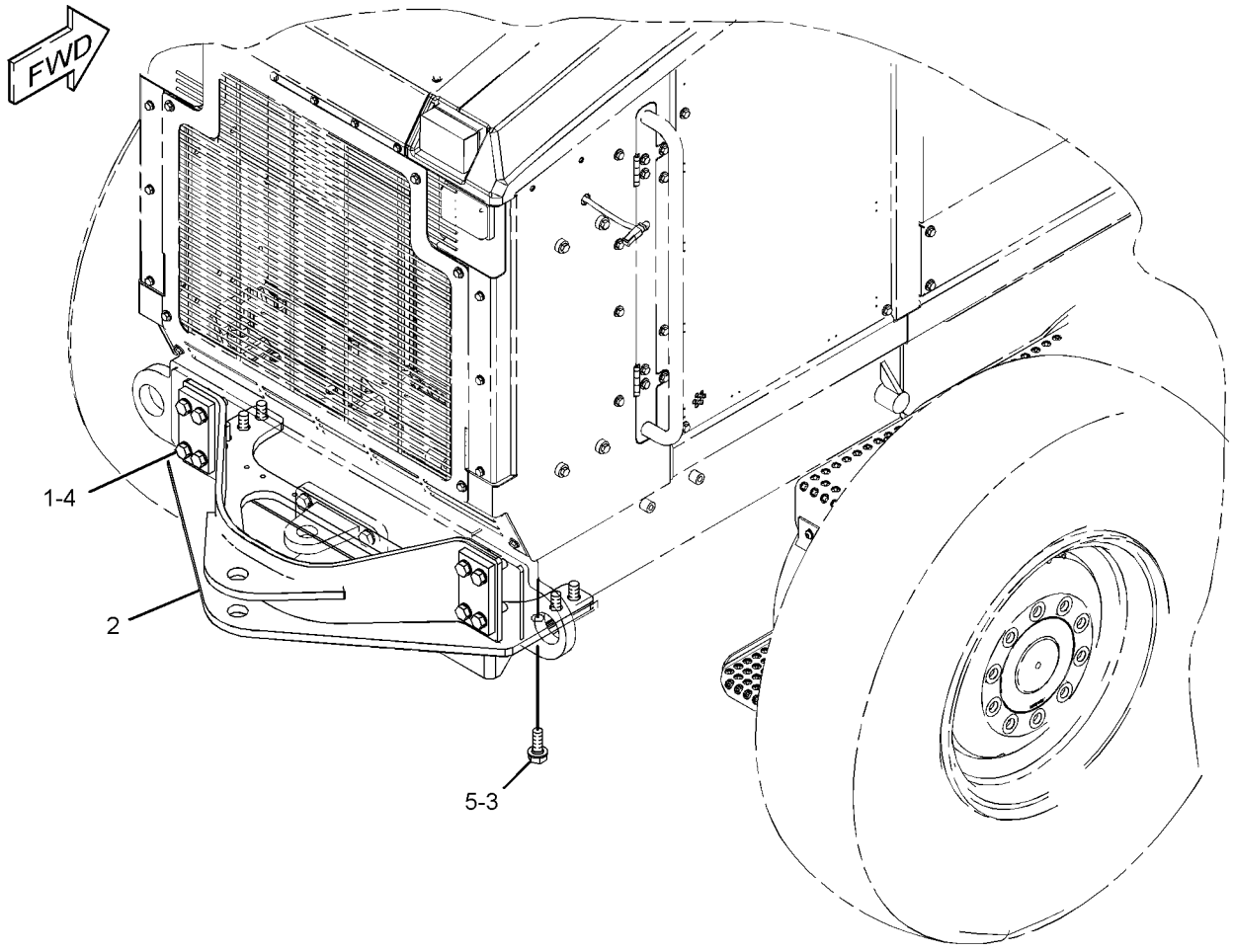

GRAPHIC #1 <END> g02155944

393-4882 HITCH GP-TOWING

S/N: B551-UP

NO LINK

CANNOT BE USED WITH 324-0889—PAGE: 896

SMCS-7100 **i06280007**

NOTE	REF NO	GRAPHIC REF	PART NUMBER	QTY	PART NAME 1 2 3 4 5 6 (PRODUCT LEVEL)	SEE PAGE
	1	1	**393-4879**	1	PLATE	
	2	1	**393-4880**	2	PLATE	
	3	1	**393-4881**	1	PLATE	
	4	1	**8T-4167**	6	WASHER-HARD (26X44X4-MM THK)	
	5	1	**8T-5439**	4	WASHER-HARD (21.5X45X6-MM THK)	
M	6	1	**8T-4139**	8	BOLT (M12X1.75X30-MM)	
	7	1	**8T-4223**	8	WASHER-HARD (13.5X25.5X3-MM THK)	
M	8	1	**8T-6430**	4	BOLT (M20X2.5X50-MM)	
M	9	1	**7X-2575**	6	BOLT (M24X3X60-MM)	

M - METRIC PART

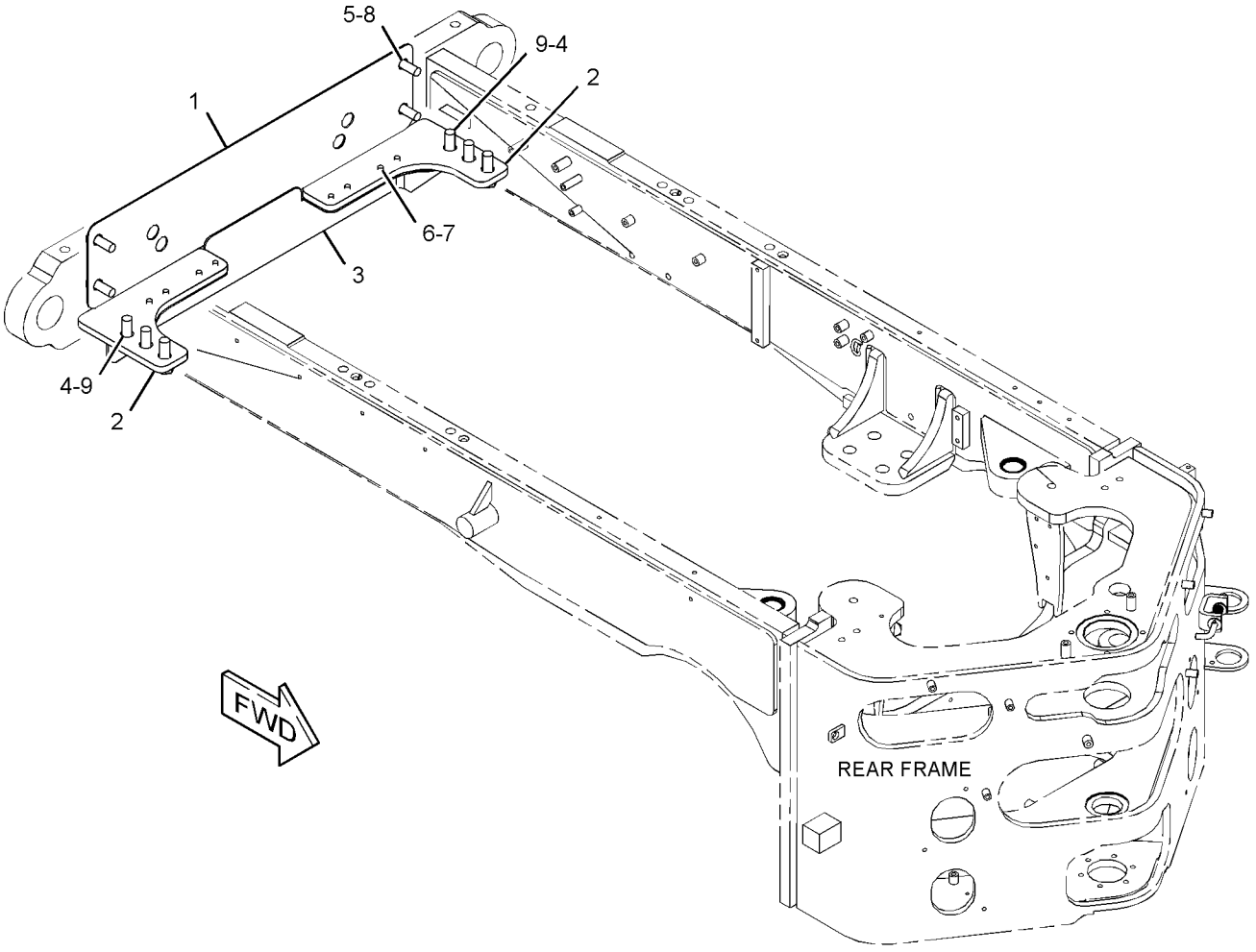

GRAPHIC #1 <END> g03323426

288-9588 HOOD GP–ENGINE

S/N: B551-UP

PART OF 288-8988 ENCLOSURE GP-ENGINE

SMCS-7251 **i06576744**

NOTE	REF NO	GRAPHIC REF	PART NUMBER	QTY	PART NAME 1 2 3 4 5 6 (PRODUCT LEVEL)	SEE PAGE
	1	1	**245-2797**	1	CORNER AS (RH)	
	2	1	**245-2798**	1	CORNER AS (LH)	
CJ	3	1	**275-0572**	1	LATCH AS	
	4	1	**316-0560**	1	SHEET AS	
M		1	**6V-9632**	4	NUT-WELD (M6X1-THD)	
		1	**7T-1099**	3	LINK	
M		1	**8T-3490**	5	NUT-WELD (M10X1.5-THD)	
C	5	1	**319-2305**	1	CAM-LATCH	
M	6	1	**8T-4908**	32	BOLT (M8X1.25X25-MM)	
	7	1	**5P-4116**	32	WASHER-HARD (8.8X20.5X2-MM THK)	

C - CHANGE FROM PREVIOUS TYPE
J - REQUIRES CORPORATE KEY
M - METRIC PART

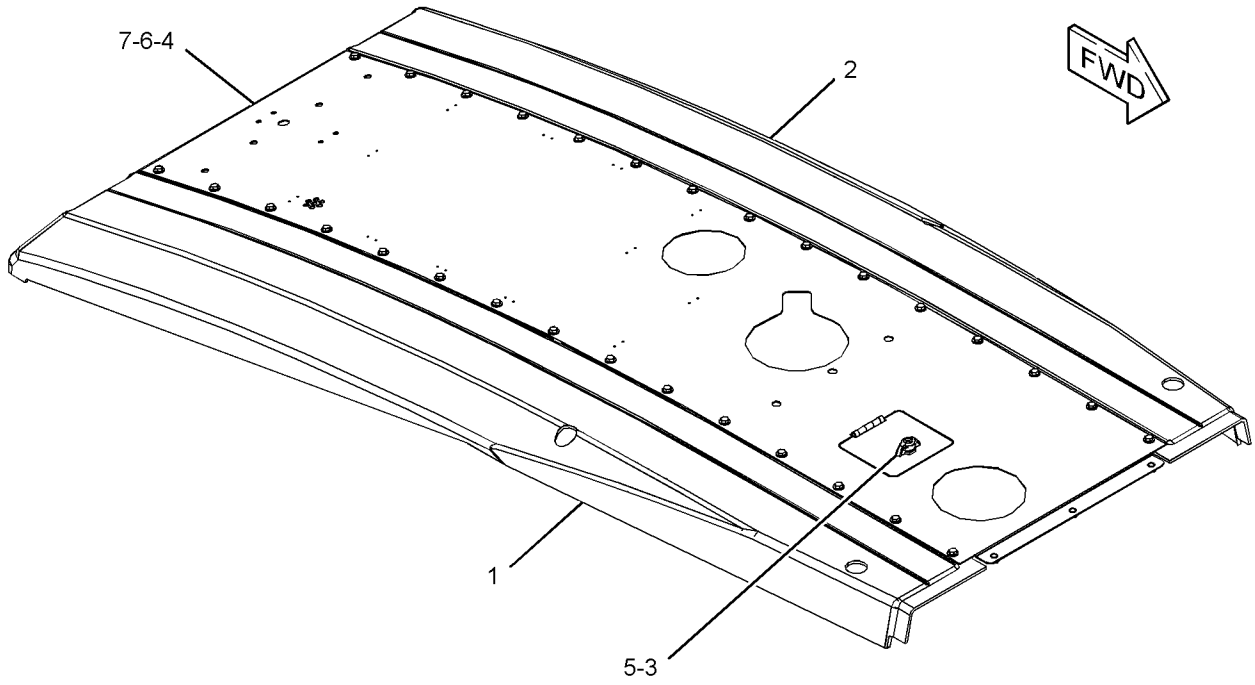

GRAPHIC #1 <END> g03014696

236-8921 LINES GP-LUBRICATION—ARTICULATION HITCH BEARING

S/N: B551-UP

PART OF 577-1377 COMMON AR

SMCS-7510 **i04775127**

NOTE	REF NO	GRAPHIC REF	PART NUMBER	QTY	PART NAME 1 2 3 4 5 6 (PRODUCT LEVEL)	SEE PAGE
	1	1	**3B-8489**	2	FITTING-GREASE (1/8-27 PTF)	
	2	1	**5K-5068**	1	FITTING-PIPE (1/8-27 PTF)	
C	3	1	**361-4699**	1	HOSE AS	
C	4	1	**368-8606**	1	HOSE AS	
C	5	1	**3B-6552**	2	ELBOW-PIPE	
C	6	1	**3B-6769**	1	ELBOW	
	7	1	**3B-7896**	2	ELBOW-STREET	
C	8	1	**4D-8123**	2	CLIP (LOOP)	
	9	1	**5P-6629**	1	GROMMET	
C	10	1	**5P-9085**	3	CLIP (LOOP)	
C	11	1	**8T-4121**	3	WASHER-HARD (11X21X2.5-MM THK)	
CM	12	1	**8T-4137**	3	BOLT (M10X1.5X20-MM)	

C - CHANGE FROM PREVIOUS TYPE
M - METRIC PART

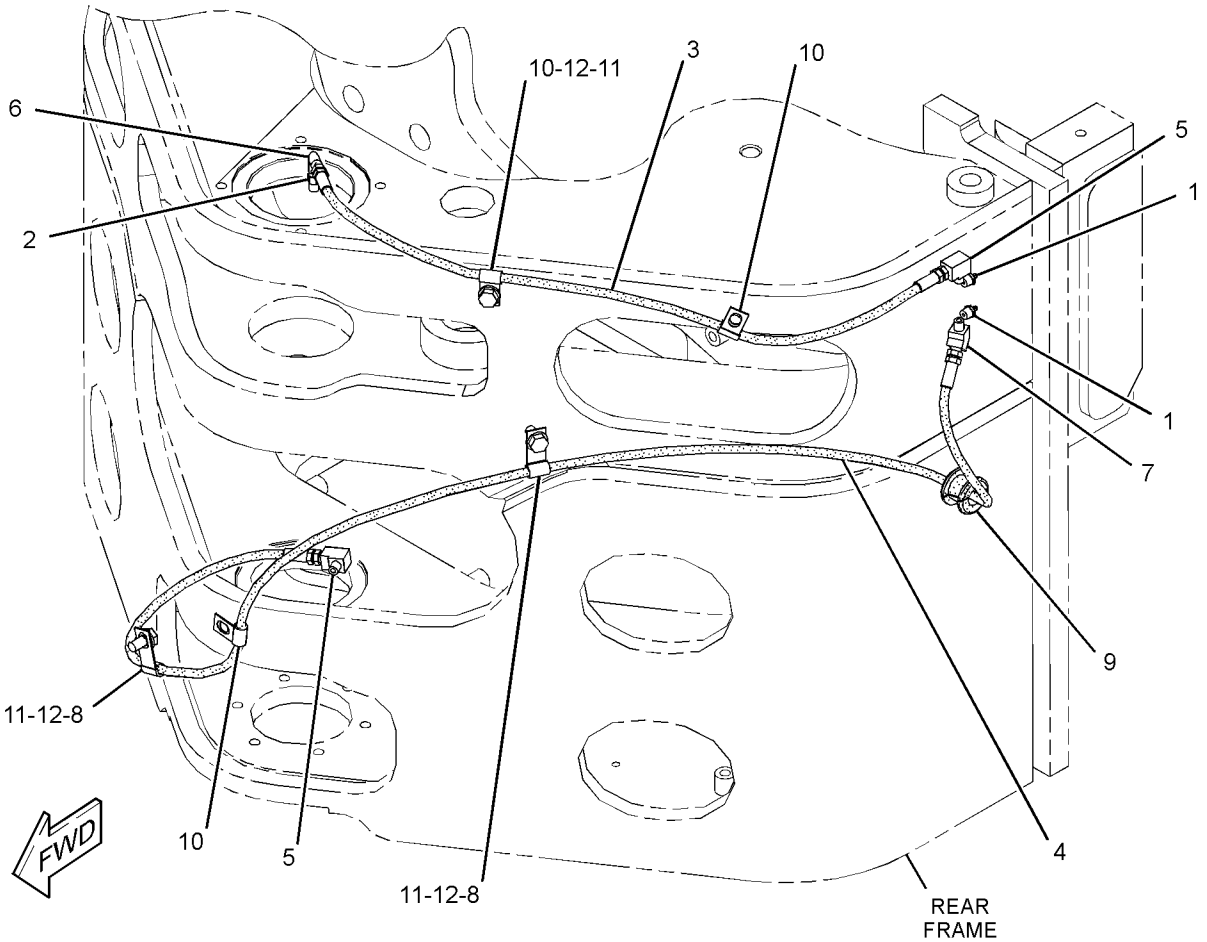

GRAPHIC #1 <END> g02970579

274-6816 LINK GP-STEERING

S/N: B551-UP

PART OF 433-6117 AXLE GP-FRONT

SMCS-4305 **i02787962**

NOTE	REF NO	GRAPHIC REF	PART NUMBER	QTY	PART NAME 1 2 3 4 5 6 (PRODUCT LEVEL)	SEE PAGE
	1	1	**141-6141**	2	CLAMP	
	2	1	**276-8722**	1	ROD	
	3	1	**276-8723**	1	SOCKET GP-TIE ROD (LH)	
		1	**2F-8057**	1	NUT-SLOTTED	
		1	**277-0648**	1	SEAL-BOOT	
	4	1	**276-8724**	1	SOCKET GP-TIE ROD (RH)	
		1	**2F-8057**	1	NUT-SLOTTED	
		1	**277-0648**	1	SEAL-BOOT	
M	5	1	**8T-0281**	2	BOLT (M16X2X80-MM)	
M	6	1	**8T-4778**	2	LOCKNUT (M16X2-THD)	

M - METRIC PART

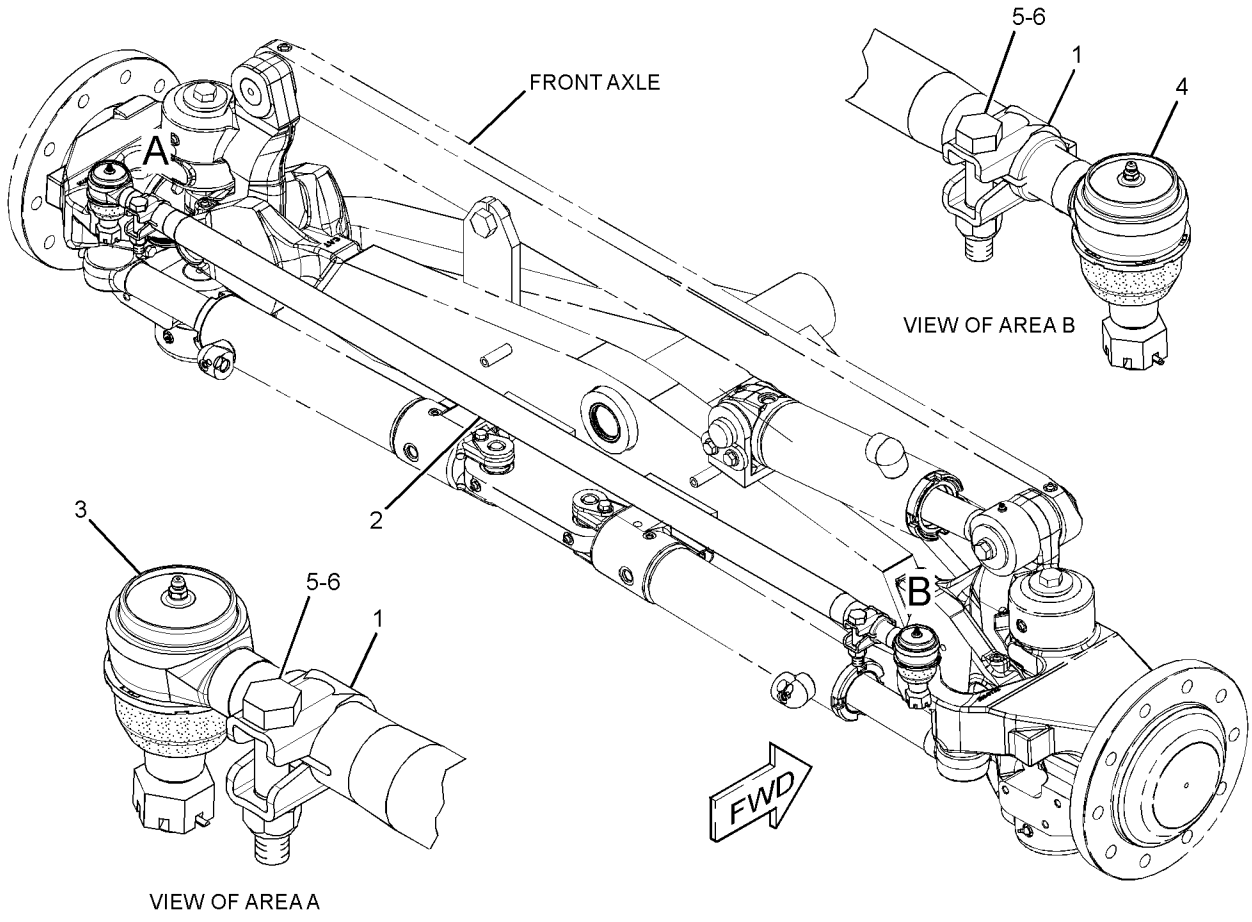

GRAPHIC #1 <END> g01346716

284-5025 MOUNTING GP-AXLE–REAR

S/N: B551-UP

PART OF 577-1377 COMMON AR

SMCS-3268, 3278 **i02781144**

NOTE	REF NO	GRAPHIC REF	PART NUMBER	QTY	PART NAME 1 2 3 4 5 6 (PRODUCT LEVEL)	SEE PAGE
	1	1	**293-8335**	10	SPACER (26X60X23-MM THK)	
M	2	1	**112-3931**	18	BOLT (M24X3X120-MM)	
	3	1	**267-3507**	18	WASHER-HARD (26X47X12-MM THK)	

M - METRIC PART

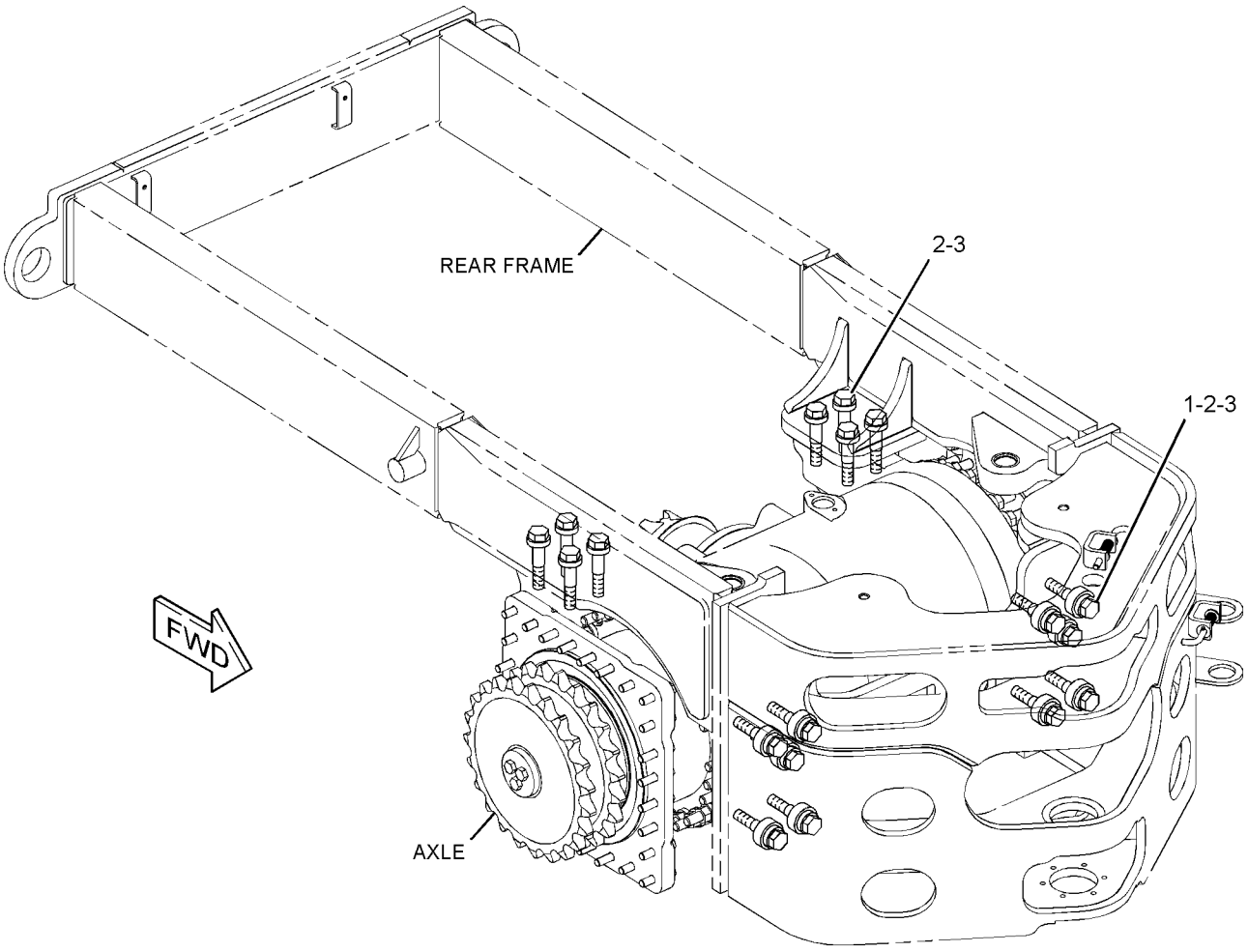

GRAPHIC #1 <END> g01328364

290-3921 MOUNTING GP-AXLE–FRONT

S/N: B551-UP

PART OF 433-6116 AXLE AR-FRONT

SMCS-3268, 3278 **i06612808**

NOTE	REF NO	GRAPHIC REF	PART NUMBER	QTY	PART NAME 1 2 3 4 5 6 (PRODUCT LEVEL)	SEE PAGE
B	1	1	**2G-5673**	5	WASHER (2.031X4X0.06-IN THK)	
	2	1	**6G-7187**	1	LOCK	
	3	1	**9D-3523**	1	WASHER (2.062X4X0.188-IN)	
	4	1	**264-1180**	1	PIN	
M	5	1	**8T-4139**	2	BOLT (M12X1.75X30-MM)	
	6	1	**8T-4223**	2	WASHER-HARD (13.5X25.5X3-MM THK)	

B - USE AS REQUIRED
M - METRIC PART

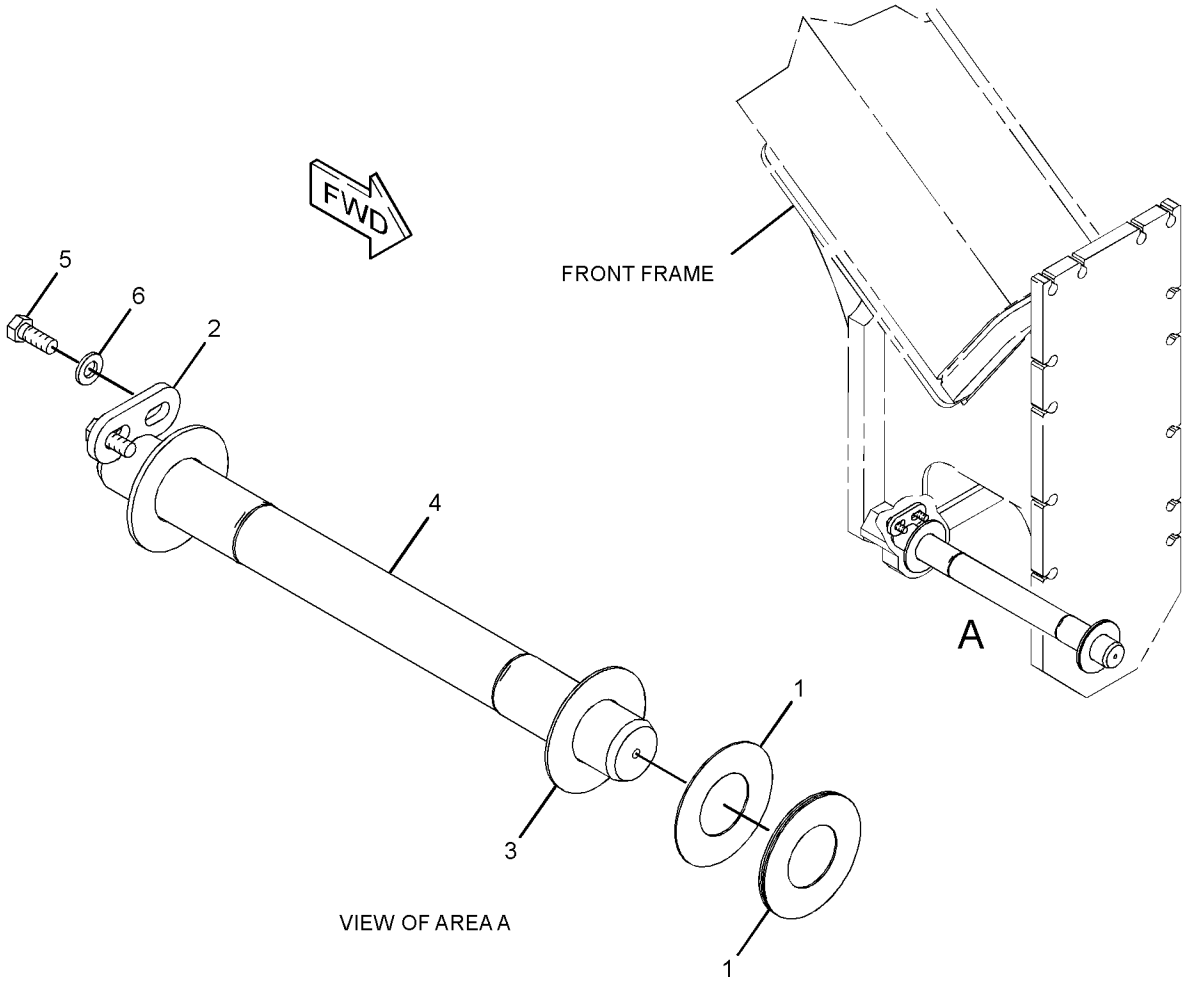

GRAPHIC #1 <END> g01439853

311-3865 PLATE AS-TIE DOWN

S/N: B551-UP

PART OF 565-4306 OPTION AR-REGIONAL

SMCS-7103 **i03774072**

NOTE	REF NO	GRAPHIC REF	PART NUMBER	QTY	PART NAME 1 2 3 4 5 6 (PRODUCT LEVEL)	SEE PAGE
	1	1	**311-3866**	2	PLATE	

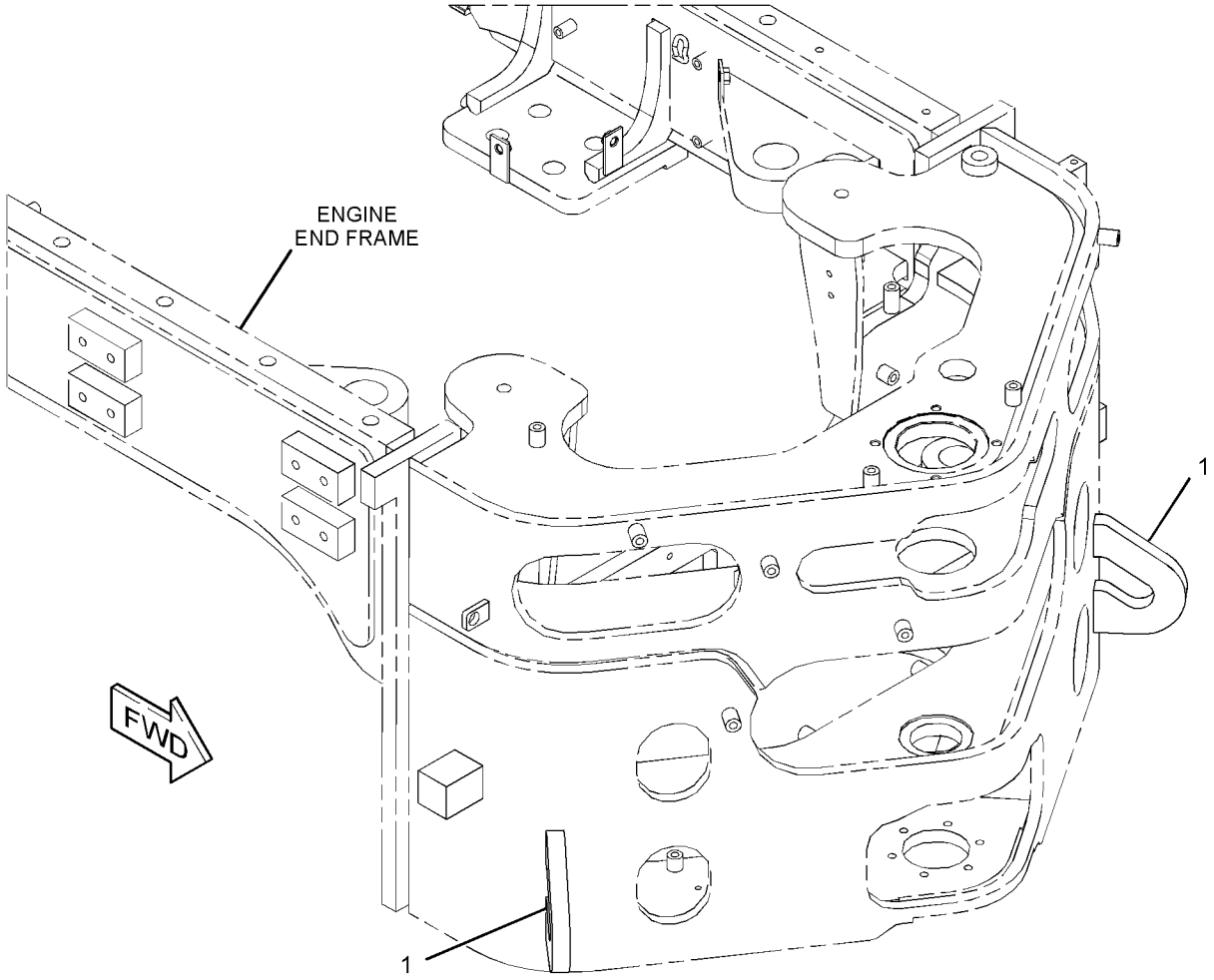

GRAPHIC #1 <END> g02044295

278-0951 PLATE GP-MOUNTING–FRONT LICENSE PLATE

S/N: B551-UP

PART OF 565-4306 OPTION AR-REGIONAL

SMCS-7050 **i03778060**

NOTE	REF NO	GRAPHIC REF	PART NUMBER	QTY	PART NAME 1 2 3 4 5 6 (PRODUCT LEVEL)	SEE PAGE
	1	1	**278-0098**	1	PLATE	

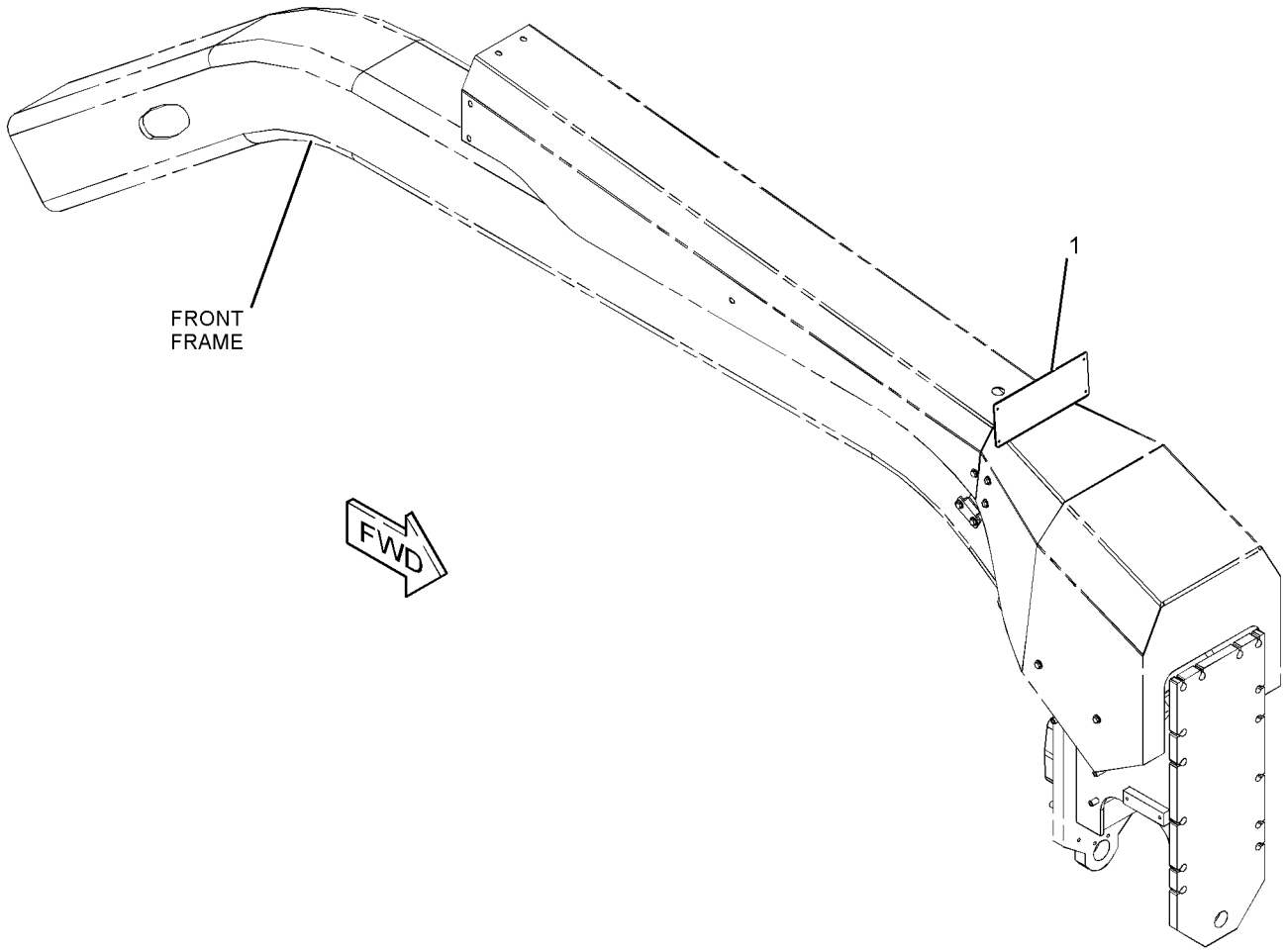

GRAPHIC #1 <END> g02044254

250-3071 PLATE GP-PUSH

S/N: B551-UP
COUNTERWEIGHT
CANNOT BE USED WITH 312-2204—PAGE: 889, 309-6809—PAGE: 873

SMCS-6077 **i06052644**

NOTE	REF NO	GRAPHIC REF	PART NUMBER	QTY	PART NAME 1 2 3 4 5 6 (PRODUCT LEVEL)	SEE PAGE
M	1	1	**166-1880**	8	BOLT (M20X2.5X75-MM)	
	2	1	**388-7390**	1	PLATE AS-PUSH	
	2A	1	**5J-7333**	2	HOOK	
	3	1	**198-4781**	8	WASHER-HARD (22X40X10-MM THK)	

M - METRIC PART

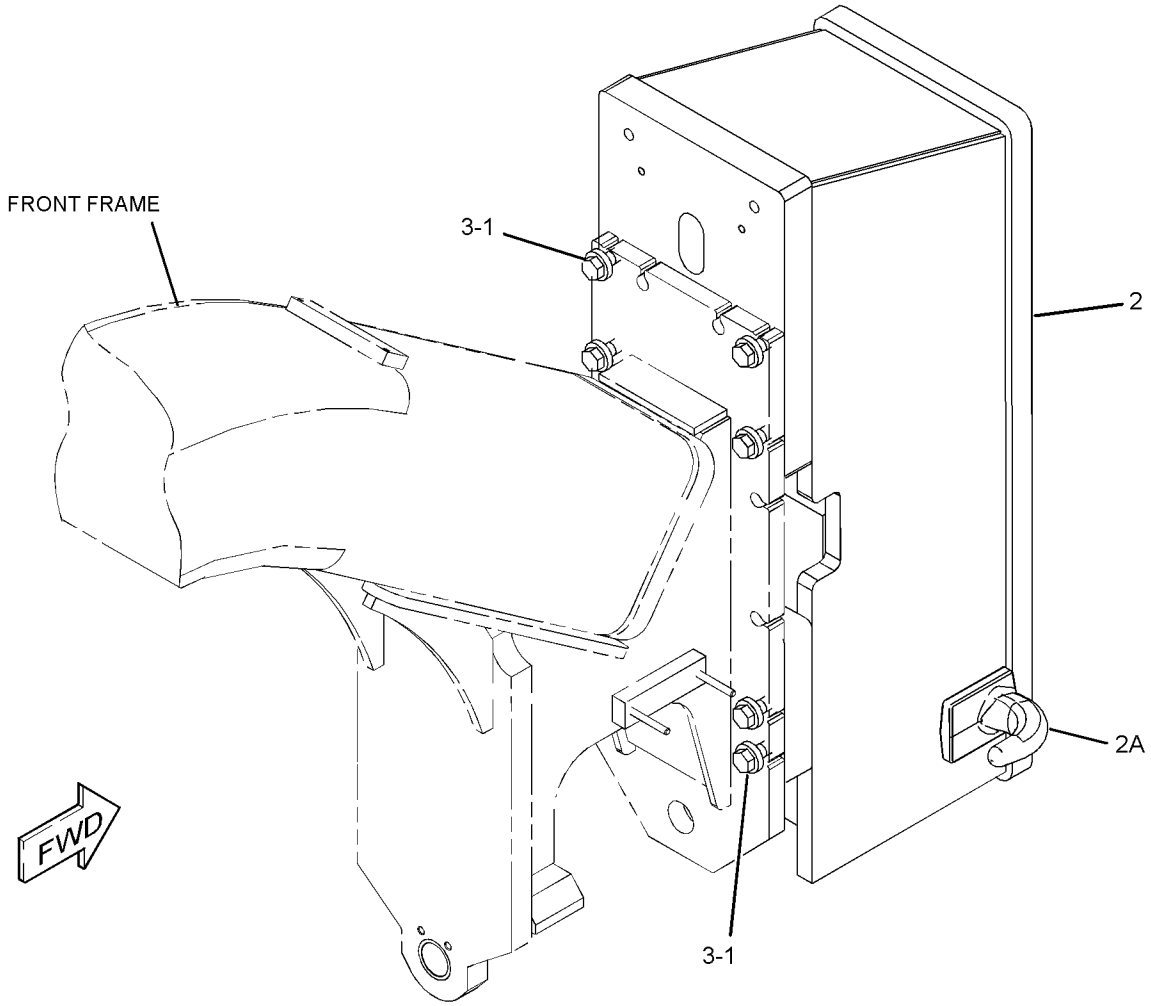

GRAPHIC #1 <END> g03317042

440-9820 REFLECTOR GP

S/N: B551-UP

PART OF 492-0728, 492-0729 CONVERSION AR-CERTIFICATION

SMCS-7430 **i05599860**

NOTE	REF NO	GRAPHIC REF	PART NUMBER	QTY	PART NAME 1 2 3 4 5 6 (PRODUCT LEVEL)	SEE PAGE
	1	1	**313-5270**	10	REFLECTOR (AMBER)	
	2	1	**313-5271**	6	REFLECTOR-RED	

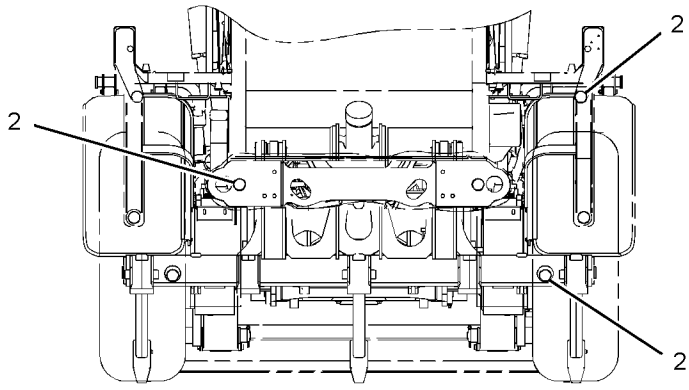

REAR VIEW

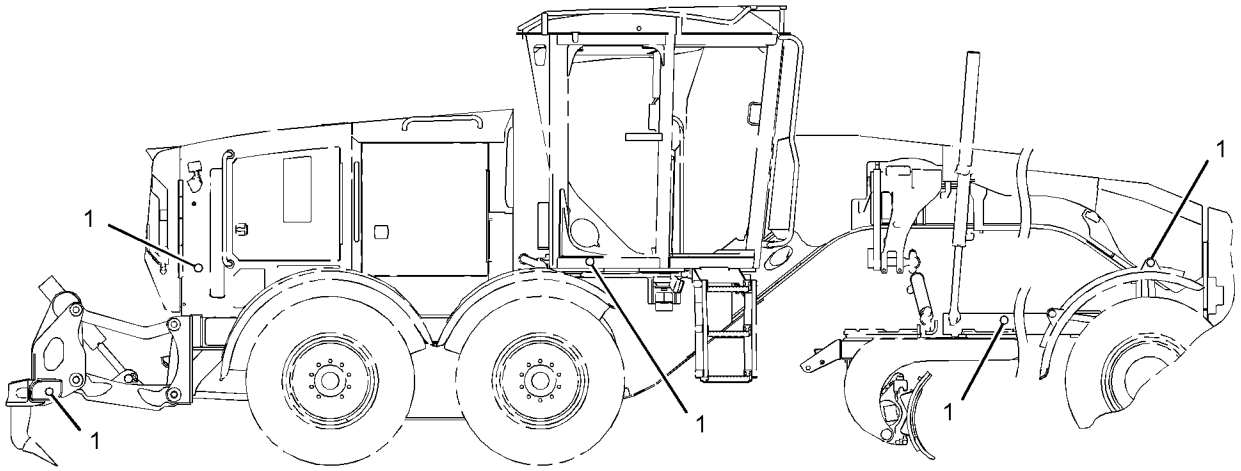

RIGHT SIDE VIEW

GRAPHIC #1 <END> g03412789

515-5427 REFLECTOR GP

S/N: B551-UP

PART OF 565-9420 ROADING AR

SMCS-7430 **i07102495**

NOTE	REF NO	GRAPHIC REF	PART NUMBER	QTY	PART NAME 1 2 3 4 5 6 (PRODUCT LEVEL)	SEE PAGE
J	1	1	**448-9278**	5	TAPE-REFLECTIVE	
L	2	1	**448-9317**	5	TAPE-REFLECTIVE	
HJ	3	1	**448-9278**	1	TAPE-REFLECTIVE	
HL	4	1	**448-9317**	1	TAPE-REFLECTIVE	

H - REQUIRED ONLY IF MACHINE IS EQUIPPED WITH RIPPER
J - USE ON LEFT SIDE OF MACHINE, WHITE HALF FACING FORWARD, UPWARD OR INWARD
L - USE ON RIGHT SIDE OF MACHINE, WHITE HALF FACING FORWARD, UPWARD OR INWARD

515-5427 **REFLECTOR GP (**contd.**)** **i07102495**

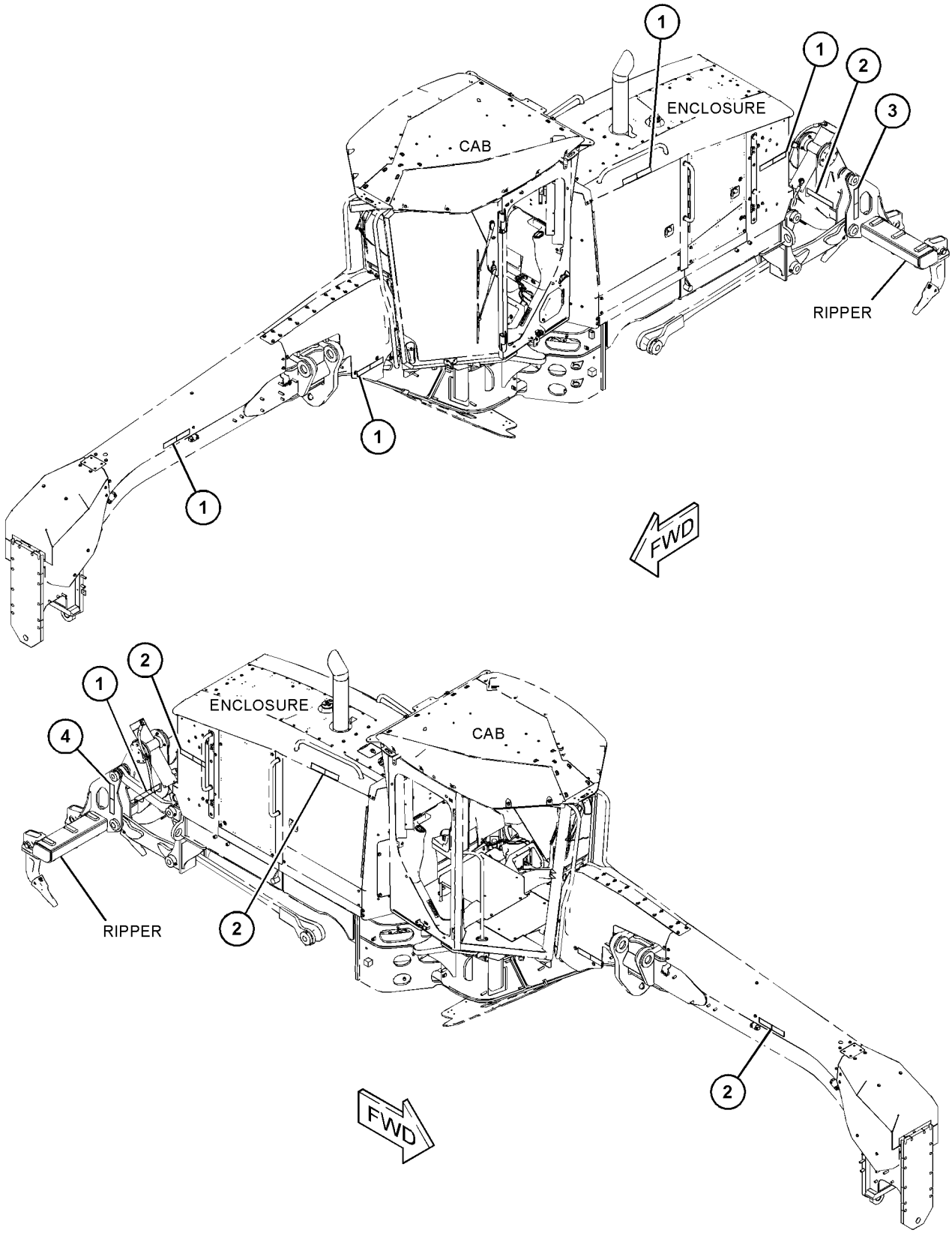

GRAPHIC #1 <END> g06224877

231-5061 SERVICE CENTER AR

S/N: B551-UP

PART OF 577-1377 COMMON AR

SMCS-7513 **i05366120**

NOTE	REF NO	GRAPHIC REF	PART NUMBER	QTY	PART NAME 1 2 3 4 5 6 (PRODUCT LEVEL)	SEE PAGE
Y	1	1	*233-4259*	1	TANK & MTG GP-HYDRAULIC	639
Y	2	1	*250-3507*	1	FILTER & MTG GP-HYDRAULIC	555
	3	1	**389-2061**	1	PLATFORM AS	
	4	1	**198-4781**	6	WASHER-HARD (22X40X10-MM THK)	
M	5	1	**7X-2563**	6	BOLT (M20X2.5X60-MM)	

M - METRIC PART
Y - SEPARATE ILLUSTRATION

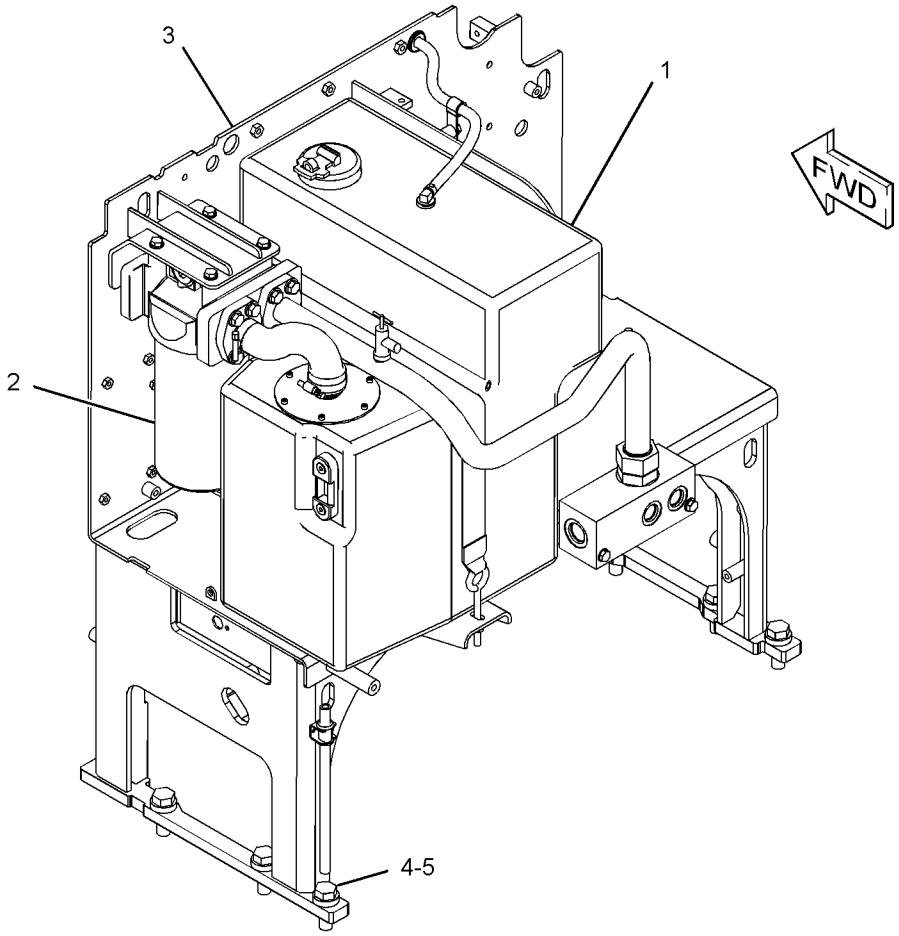

GRAPHIC #1 <END> g03397756

270-6989 SHIELD GP-ENGINE COMPARTMENT—DEBRIS

S/N: B551-UP

CANNOT BE USED WITH 377-1602—PAGE: 481

SMCS-7263 **i07635848**

NOTE	REF NO	GRAPHIC REF	PART NUMBER	QTY	PART NAME 1 2 3 4 5 6 (PRODUCT LEVEL)	SEE PAGE
	1	1	**183-4000**	10	SHIM (1.5-MM THK)	
	2	1	**270-8407**	1	PLATE	
	3	1	**286-1278**	1	BRUSH AS	
	4	1	**286-9714**	1	BLOCK-FOAM	
	5	1	**557-1719**	1	COVER	
	6	1	**286-9725**	1	BRUSH AS	
	7	1	**297-5874**	1	GUARD	
	8	1	**568-0700**	1	GUARD	
	9	1	**557-1714**	1	GUARD	
	10	1	**297-5877**	1	PLATE	
	11	1	**297-5878**	1	GUARD	
	12	1	**297-5879**	1	GUARD	
	13	1	**557-1716**	1	GUARD	
	14	1	**297-8035**	1	PLATE AS	
M		1	**8T-3490**	4	NUT-WELD (M10X1.5-THD)	
	15	1	**6K-3273**	5	RIVET-POP	
	16	1	**7X-7729**	18	WASHER (11X25X3-MM THK)	
M	17	1	**8T-4133**	2	NUT (M10X1.5-THD)	
M	18	1	**8T-4136**	5	BOLT (M10X1.5X25-MM)	
M	19	1	**8T-4186**	6	BOLT (M10X1.5X40-MM)	
M	20	1	**8T-4195**	4	BOLT (M10X1.5X30-MM)	
M	21	1	**8T-4196**	1	BOLT (M10X1.5X35-MM)	
	22	1	**9X-2038**	8	WASHER (7X19X2-MM THK)	
	23	1	**162-2480**	8	RIVET	

M - METRIC PART

270-6989 **SHIELD GP-ENGINE COMPARTMENT (**contd.**)** **i07635848**

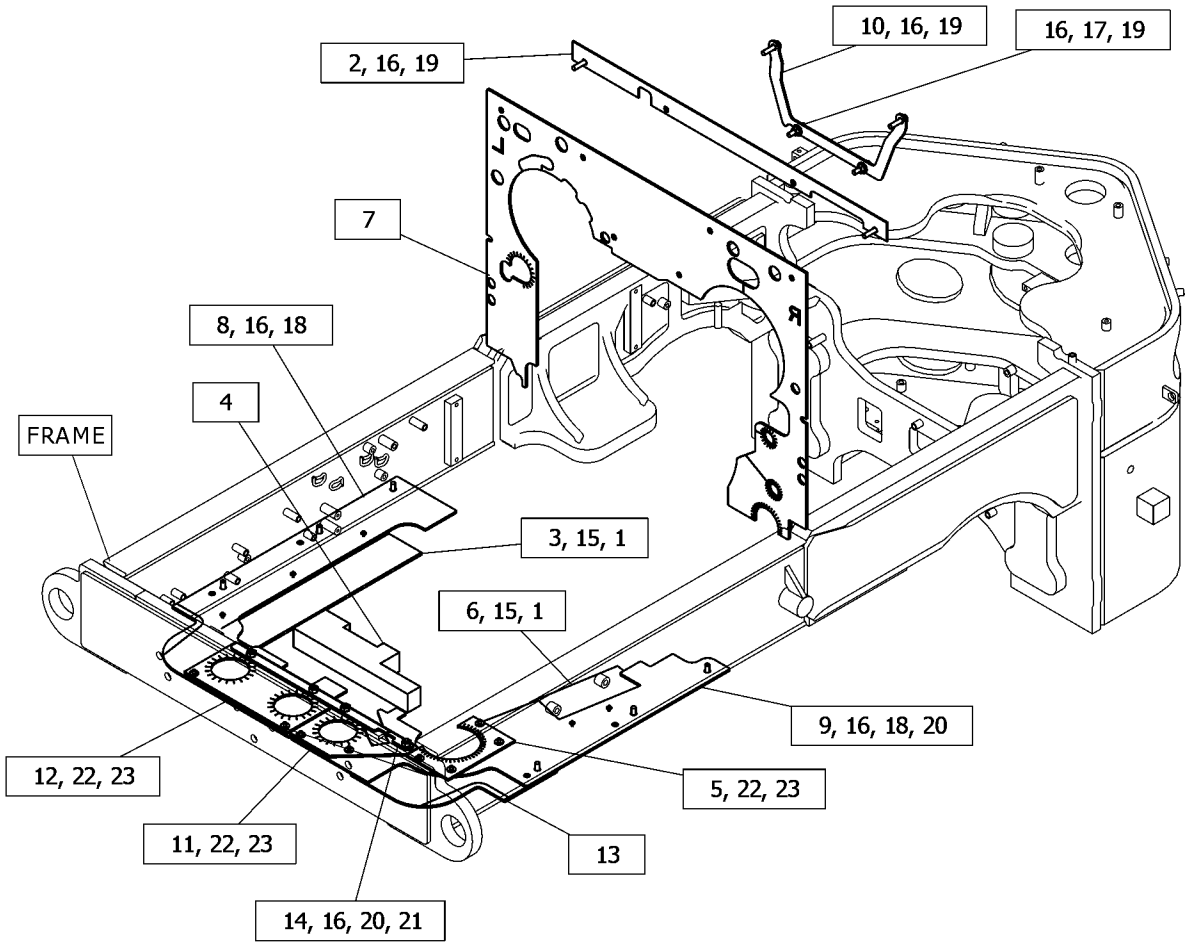

GRAPHIC #1 <END> g06384031

335-8336 STEP GP

S/N: B551-UP

PART OF 577-1377 COMMON AR

SMCS-7254 **i06795222**

NOTE	REF NO	GRAPHIC REF	PART NUMBER	QTY	PART NAME 1 2 3 4 5 6 (PRODUCT LEVEL)	SEE PAGE
	1	1	**454-7807**	3	STEP AS	
	2	1	**466-1384**	2	BELT-STEP	
	3	1	**486-5117**	6	PLATE	
	4	1	**492-7328**	1	PLATE	
M	5	1	**6V-7744**	12	LOCKNUT (M10X1.5-THD)	
	6	1	**5P-1076**	3	WASHER-HARD (13.5X30X4-MM THK)	
	7	1	**8T-4121**	24	WASHER-HARD (11X21X2.5-MM THK)	
M	8	1	**280-8912**	4	BOLT (M10X1.5X75-MM)	
M	9	1	**8T-4956**	3	BOLT (M12X1.75X35-MM)	
M	10	1	**8T-5005**	8	BOLT (M10X1.5X70-MM)	

M - METRIC PART

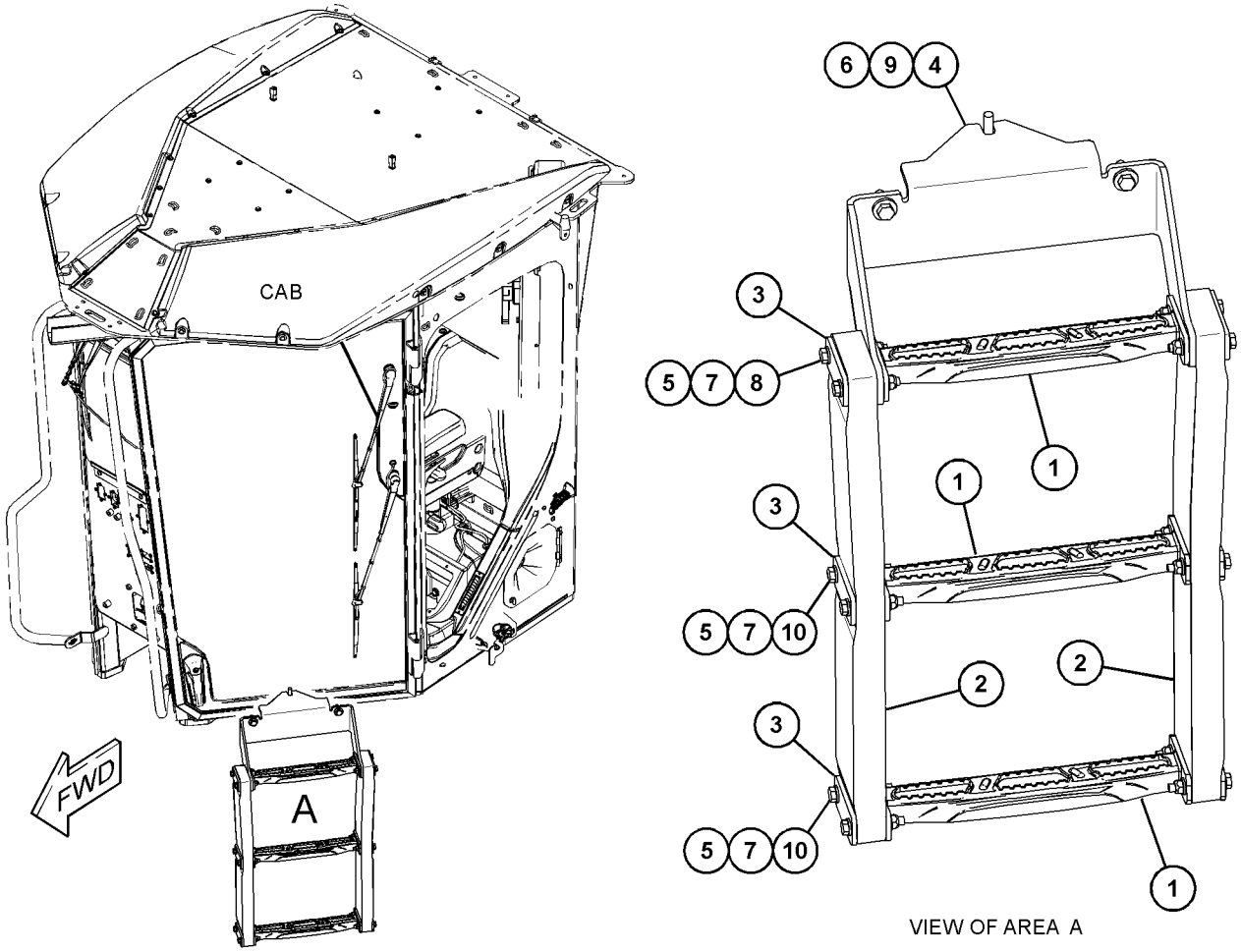

VIEW OF AREA A

GRAPHIC #1 <END> g06118180

231-2316 SUPPORT GP-RADIATOR

S/N: B551-UP

PART OF 268-6570 COOLING AR

SMCS-1353 **i06830973**

NOTE	REF NO	GRAPHIC REF	PART NUMBER	QTY	PART NAME 1 2 3 4 5 6 (PRODUCT LEVEL)	SEE PAGE
	1	1	**382-3562**	1	SUPPORT AS (LH)	
	2	1	**382-3560**	1	SUPPORT AS (RH)	
	3	1	**247-9766**	1	BRACKET AS	
	4	1	**247-9769**	1	BRACKET AS	
	5	1	**248-0679**	1	BRACKET AS	
	6	1	**250-0684**	1	BAFFLE AS	
	7	1	**260-6878**	1	PLATE AS	
C	8	1	**308-3071**	2	PLATE	
C	9	1	**308-3072**	2	PLATE	
C	10	1	**308-3073**	2	PLATE	
CM	11	1	**141-9203**	12	SCREW-BUTTON HEAD (M10X1.5X30-MM)	
	12	1	**7X-7729**	11	WASHER (11X25X3-MM THK)	
C	13	1	**8T-4121**	8	WASHER-HARD (11X21X2.5-MM THK)	
M	14	1	**8T-4133**	8	NUT (M10X1.5-THD)	
M	15	1	**8T-4136**	6	BOLT (M10X1.5X25-MM)	
CM	16	1	**8T-4137**	4	BOLT (M10X1.5X20-MM)	
M	17	1	**8T-4195**	5	BOLT (M10X1.5X30-MM)	
C	18	1	**9X-2027**	12	WASHER (11X18X2-MM THK)	
E	19	1	**122-8340**		SEAL (8-CM)	
D	20	1	**6V-6604**		SEAL (1-M)	
CE	21	1	**112-9736**		SEAL (16.5-CM EACH)	
CE	21A	1	**112-9736**		SEAL (5O-CM EACH)	
CE	21B	1	**112-9736**		SEAL (44-CM)	
CE	21C	1	**112-9736**		SEAL (51-CM)	
CE	21D	1	**112-9736**		SEAL (15-CM EACH)	
	22	1	**8T-7934**	4	WASHER-HARD (11X21X5-MM THK)	

C - CHANGE FROM PREVIOUS TYPE
D - ORDER BY THE METER
E - ORDER BY THE CENTIMETER
M - METRIC PART

231-2316 **SUPPORT GP-RADIATOR (**contd.**)** **i06830973**

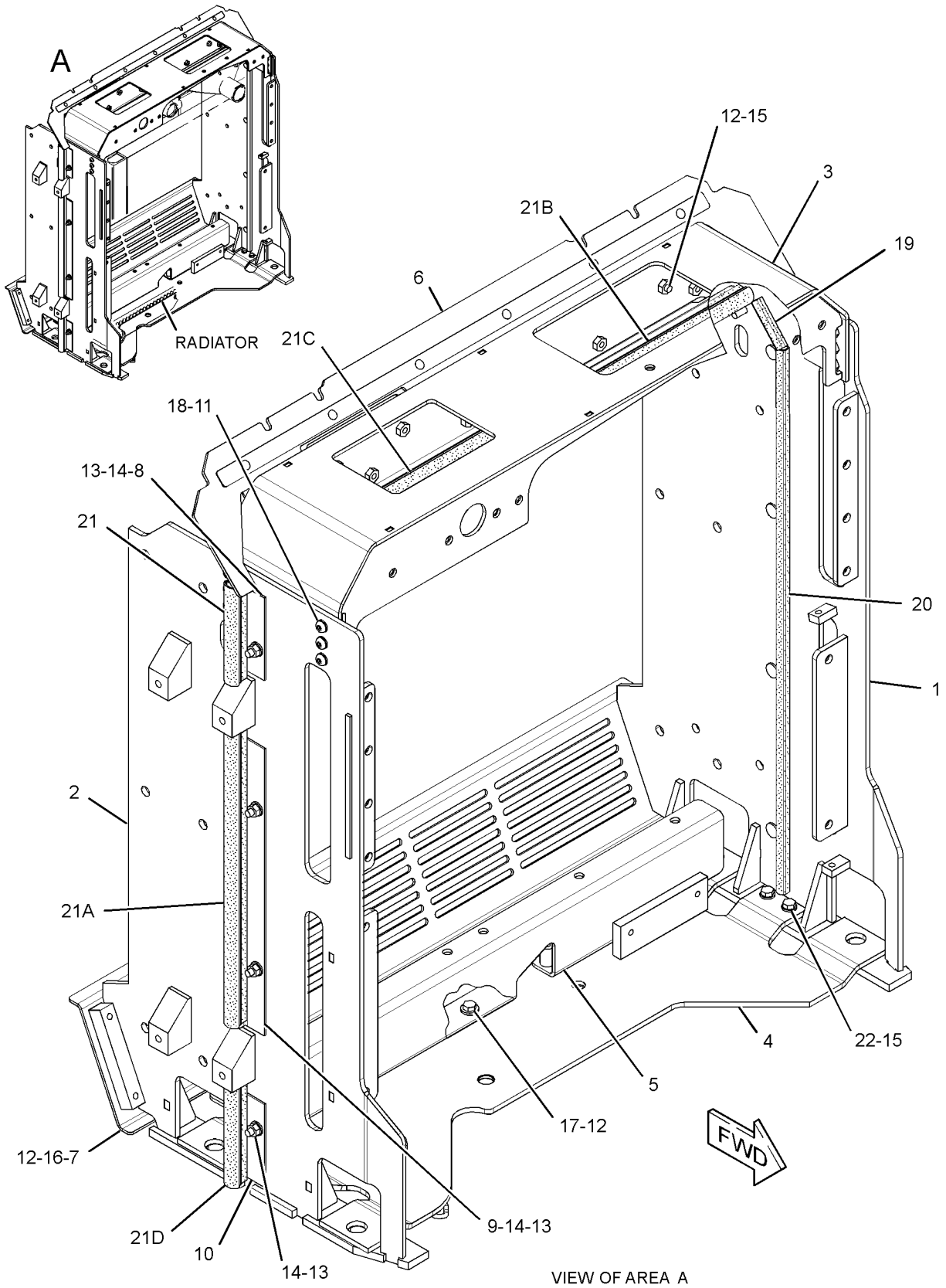

GRAPHIC #1 <END> g02979377

231-5055 SUPPRESSION GP-SOUND–ENGINE ENCLOSURE

S/N: B551-UP

PART OF 492-0728, 492-0729 CONVERSION AR-CERTIFICATION

SMCS-1801, 7076

i06266456

NOTE	REF NO	GRAPHIC REF	PART NUMBER	QTY	PART NAME 1 2 3 4 5 6 (PRODUCT LEVEL)	SEE PAGE
	1	1	**245-2815**	2	INSULATION	
	2	1	**289-4086**	1	INSULATION	
	3	1	**289-4087**	1	INSULATION	
	4	1	**289-4088**	1	INSULATION	
	5	1	**349-5335**	1	INSULATION	
	6	1	**450-6228**	1	INSULATION	
	7	1	**450-6230**	1	INSULATION	
	8	1	**296-7739**	2	INSULATION	

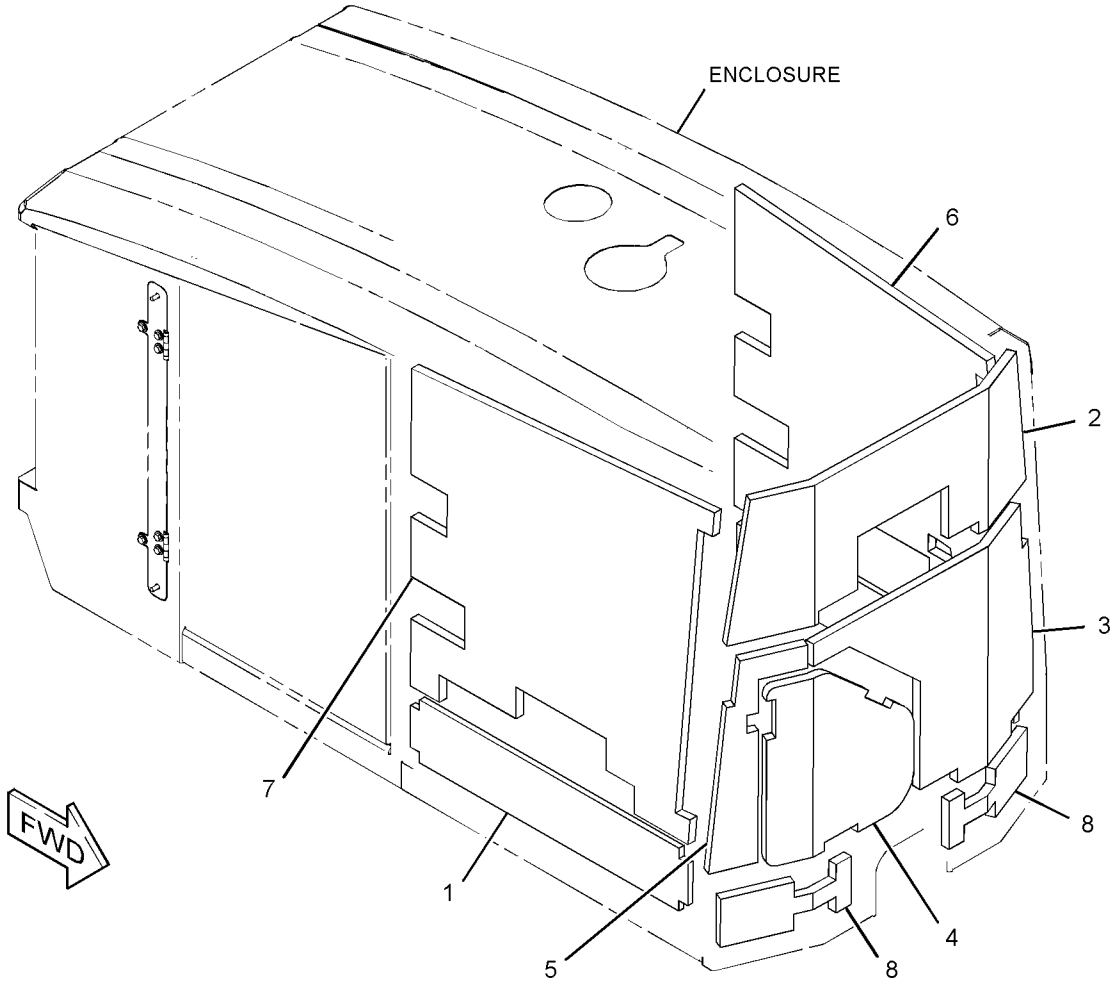

GRAPHIC #1 <END> g06050592

377-1602 SUPPRESSION GP-SOUND

S/N: B551-UP

FOR USE WITH 366-2459—PAGE: 450, 368-6239—PAGE: 457

CANNOT BE USED WITH 270-6989—PAGE: 475

PART OF 492-0728, 492-0729 CONVERSION AR-CERTIFICATION

SMCS-1801, 7076 **i06515242**

NOTE	REF NO	GRAPHIC REF	PART NUMBER	QTY	PART NAME 1 2 3 4 5 6 (PRODUCT LEVEL)	SEE PAGE
	1	1	**295-8387**	1	INSULATION	
	2	1	**295-8389**	1	INSULATION	
	3	1	**295-8390**	1	PLATE AS (LH)	
M		1	**8T-3490**	5	NUT-WELD (M10X1.5-THD)	
M		1	**8T-3612**	5	NUT-WELD (M8X1.25-THD)	
	4	1	**295-8391**	1	PLATE AS (RH)	
M		1	**8T-3490**	5	NUT-WELD (M10X1.5-THD)	
M		1	**8T-3612**	5	NUT-WELD (M8X1.25-THD)	
	5	1	**296-4355**	2	INSULATION	
	6	1	**315-1349**	1	INSULATION	
	7	1	**319-0697**	1	INSULATION	
	8	1	**319-0699**	1	INSULATION	
	9	1	**319-0700**	1	INSULATION	
	10	1	**319-0704**	1	PLATE AS (RH)	
	11	1	**319-0705**	1	PLATE AS (RH)	
	12	1	**319-0706**	1	PLATE AS (LH)	
	13	1	**319-0709**	1	PLATE AS (LH)	
	14	1	**319-0712**	1	PLATE AS (LH)	
	15	1	**319-0713**	1	PLATE AS (RH)	
	16	1	**319-0725**	2	PLATE	
	17	1	**366-6182**	1	PLATE	
	18	1	**377-3052**	1	PLATE AS	
M		1	**8T-3490**	2	NUT-WELD (M10X1.5-THD)	
	19	1	**377-3053**	1	PLATE AS	
M		1	**8T-3490**	2	NUT-WELD (M10X1.5-THD)	
	20	1	**7X-0579**	20	WASHER-HARD (8.8X25.5X2-MM THK)	
	21	1	**7X-7729**	24	WASHER (11X25X3-MM THK)	
M	22	1	**8T-4136**	22	BOLT (M10X1.5X25-MM)	
M	23	1	**8T-4189**	10	BOLT (M8X1.25X20-MM)	
M	25	1	**8T-4196**	12	BOLT (M10X1.5X35-MM)	
M	26	1	**8T-4908**	10	BOLT (M8X1.25X25-MM)	
	27	1	**7X-0632**	10	WASHER-HARD (11X36X6-MM THK)	

M - METRIC PART

377-1602 **SUPPRESSION GP-SOUND (**contd.**)** **i06515242**

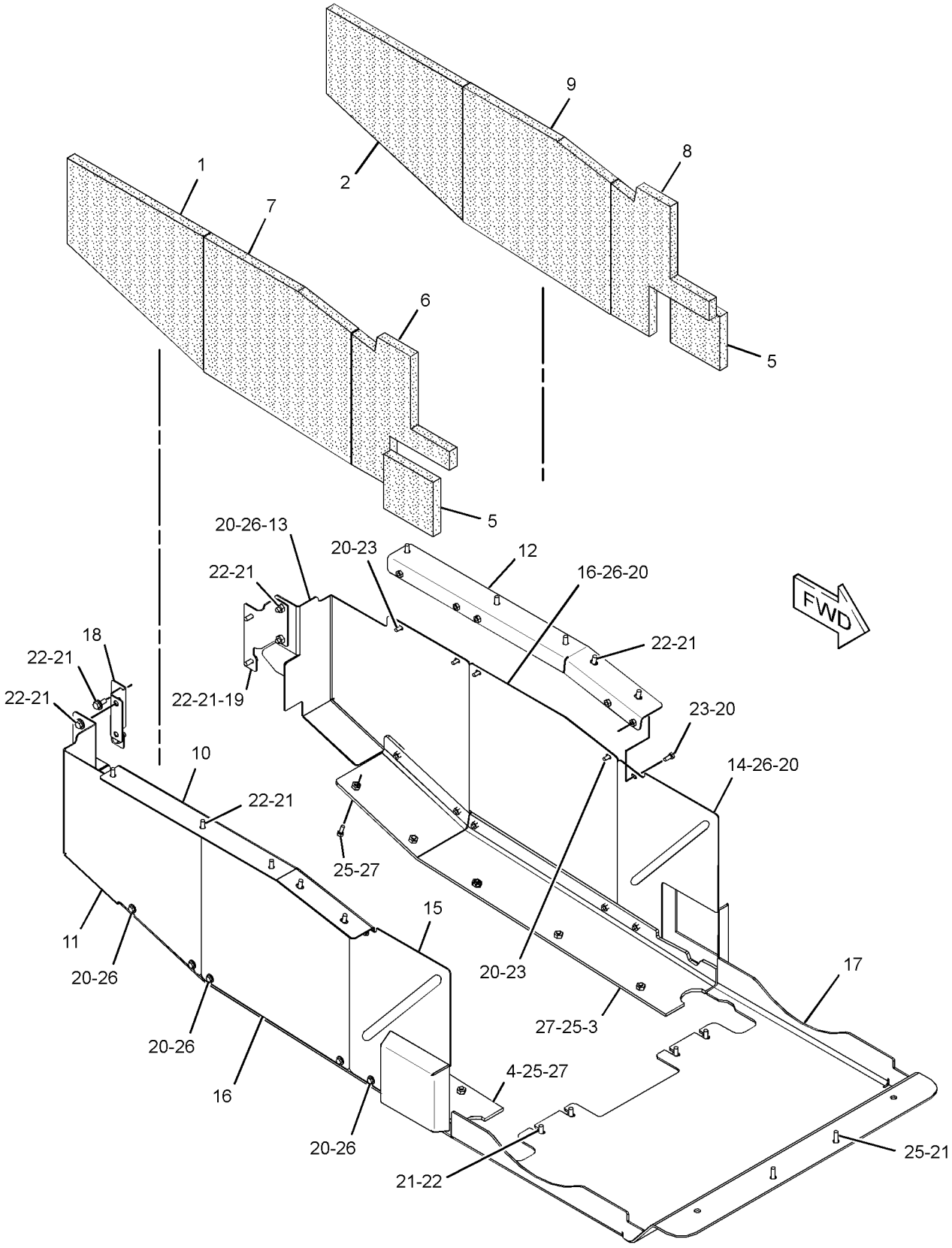

GRAPHIC #1 <END> g06005722

266-2423 WALKWAY GP–TANDEM

S/N: B551-UP

PART OF 577-1377 COMMON AR

SMCS-7255 **i07682178**

NOTE	REF NO	GRAPHIC REF	PART NUMBER	QTY	PART NAME 1 2 3 4 5 6 (PRODUCT LEVEL)	SEE PAGE
	1	1	**570-2575**	2	WALKWAY AS	
	2	1	**7X-7729**	28	WASHER (11X25X3-MM THK)	
M	3	1	**8T-4136**	4	BOLT (M10X1.5X25-MM)	
M	4	1	**8T-4137**	24	BOLT (M10X1.5X20-MM)	

M - METRIC PART

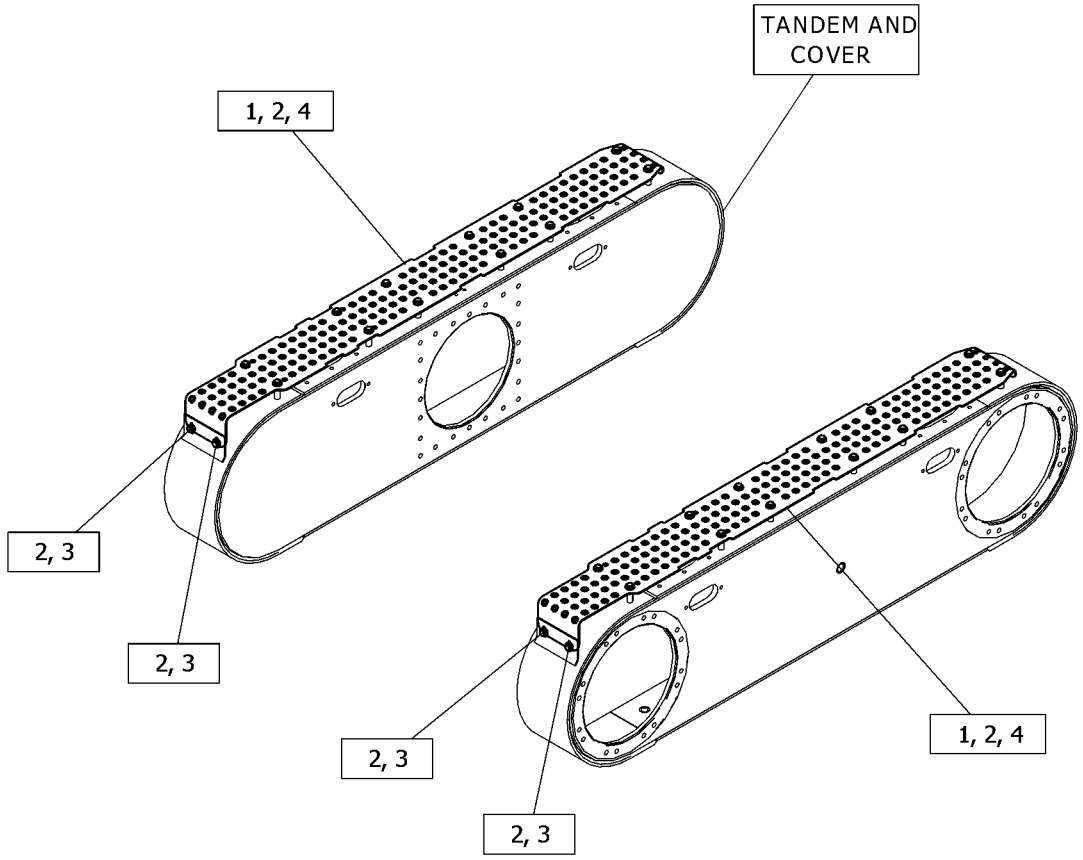

GRAPHIC #1 <END> g06393775

249-3860 ACCUMULATOR GP-BRAKE–CHARGED

S/N: B551-UP

FIELD REPLACEMENT ORDER 348-9257–PAGE: 485

PART OF 251-2243 LINES GP-ACCUMULATOR

SMCS-4263, 4264

i07775715

NOTE	REF NO	GRAPHIC REF	PART NUMBER	QTY	PART NAME 1 2 3 4 5 6 (PRODUCT LEVEL)	SEE PAGE
	1	1	**158-2336**	1	VALVE-GAS	
	2	1	**111-9110**	1	PROTECTOR-GAS VALVE	
J	3	1	**1J-9671**	1	SEAL-O-RING	
	4	1	**5M-3062**	2	BOLT (3/8-16X0.75-IN)	
					AVAILABLE REPAIR KIT(S):	
J			**203-1558**	1	KIT-SEAL (HYDRAULIC ACCUMULATOR)	
					(INCLUDES SEAL)	

J - KIT MARKED J INCLUDES PART(S) MARKED J

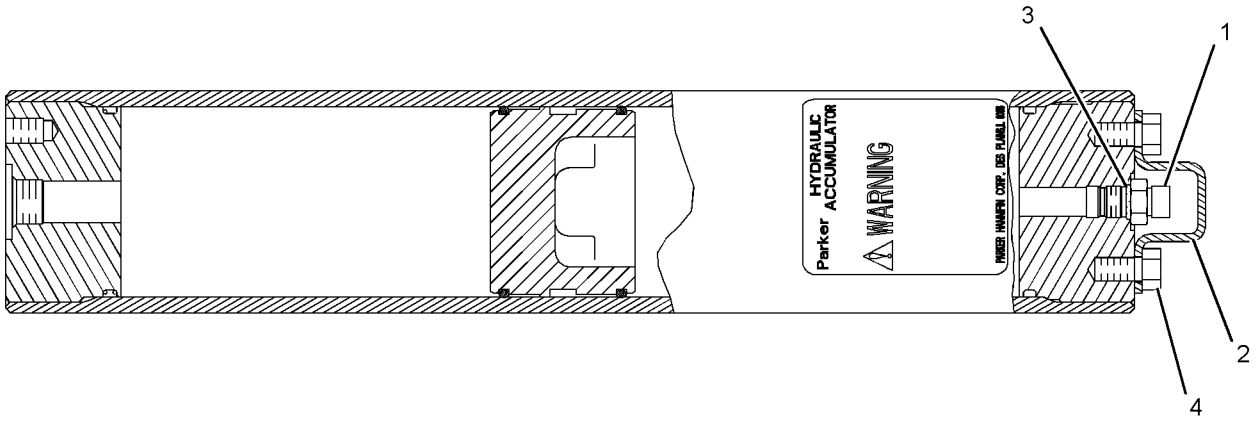

GRAPHIC #1 <END> g01110741

348-9257 ACCUMULATOR GP-BRAKE—UNCHARGED

S/N: B551-UP

FIELD REPLACEMENT FOR 249-3860—PAGE: 484

SMCS-4263, 4264

i05543790

NOTE	REF NO	GRAPHIC REF	PART NUMBER	QTY	PART NAME 1 2 3 4 5 6 (PRODUCT LEVEL)	SEE PAGE
	1	1	**158-2336**	1	VALVE-GAS	
	2	1	**111-9110**	1	PROTECTOR-GAS VALVE	
	3	1	**1J-9671**	1	SEAL-O-RING	
	4	1	**5M-3062**	2	BOLT (3/8-16X0.75-IN)	
	5	1	**241-0037**	1	FILM-INFORMATION (HYDRAULIC ACCUMULATOR)	
F			**5P-3779**	1	TAG-NOTICE (SHIPPING INSTRUCTIONS)	
					AVAILABLE REPAIR KIT(S):	
			203-1558	1	KIT-SEAL (HYDRAULIC ACCUMULATOR)	

F - NOT SHOWN

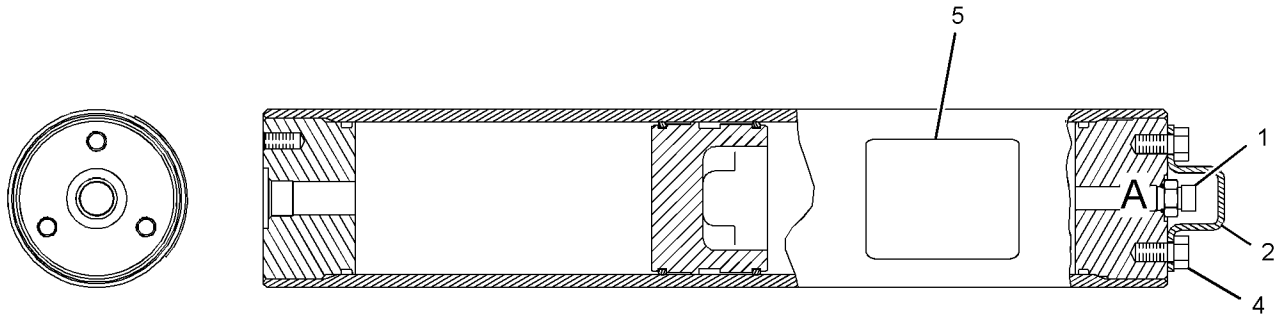

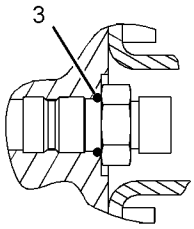

VIEW OF AREA A

GRAPHIC #1 <END> g02163451

361-8119 ACCUMULATOR GP-BRAKE—CHARGED

S/N: B551-UP

FIELD REPLACEMENT ORDER 361-8122—PAGE: 489

PART OF 252-1811 LINES GP-ACCUMULATOR

SMCS-4263, 4264

i07833149

NOTE	REF NO	GRAPHIC REF	PART NUMBER	QTY	PART NAME 1 2 3 4 5 6 (PRODUCT LEVEL)	SEE PAGE
	1	1	**222-2367**	1	VALVE GP-ACCUMULATOR CHARGING (BRAKE)	
		1	**190-3850**	1	CORE	
	2	1	**111-9110**	1	PROTECTOR-GAS VALVE	
	3	1	**1J-9671**	1	SEAL-O-RING	
	4	1	**5M-3062**	2	BOLT (3/8-16X0.75-IN)	
	5	1	**241-0037**	1	FILM-INFORMATION (HYDRAULIC ACCUMULATOR)	
					AVAILABLE REPAIR KIT(S):	
			361-9763		KIT-SEAL (BRAKE ACCUMULATOR)	
					(INCLUDES PISTON SEALS, END SEALS, O-RINGS & EXPANDER)	

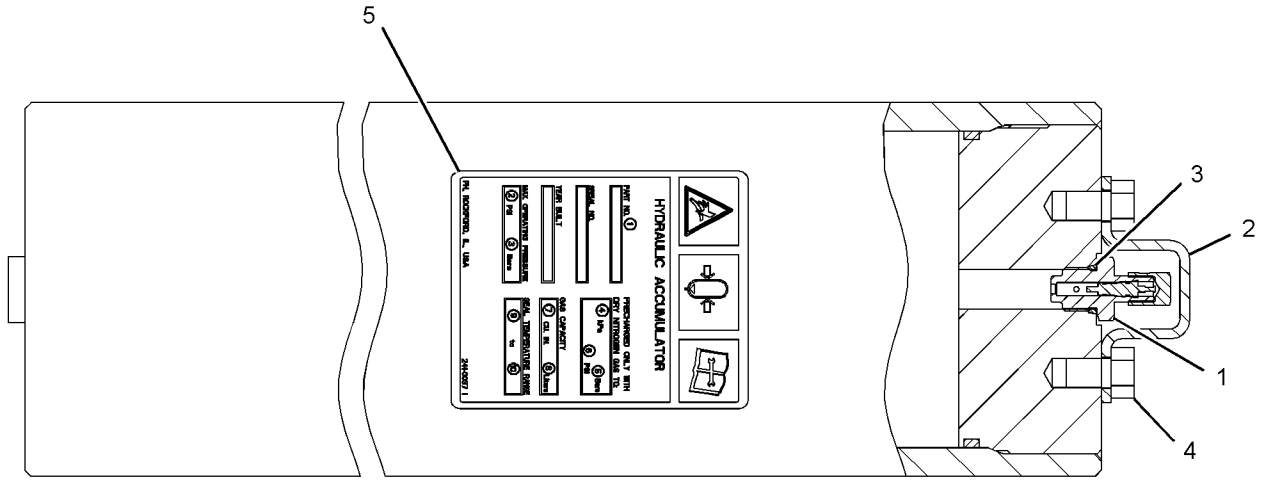

GRAPHIC #1 <END> g02323575

361-8120 ACCUMULATOR GP-BRAKE–CHARGED

S/N: B551-UP

FIELD REPLACEMENT ORDER 361-8121–PAGE: 488

PART OF 356-4257 LINES GP-ACCUMULATOR

SMCS-4263, 4264 **i05571281**

NOTE	REF NO	GRAPHIC REF	PART NUMBER	QTY	PART NAME 1 2 3 4 5 6 (PRODUCT LEVEL)	SEE PAGE
	1	1	**222-2367**	1	VALVE GP-ACCUMULATOR CHARGING (BRAKE)	
		1	**190-3850**	1	CORE	
	2	1	**111-9110**	1	PROTECTOR-GAS VALVE	
	3	1	**1J-9671**	1	SEAL-O-RING	
	4	1	**5M-3062**	2	BOLT (3/8-16X0.75-IN)	
	5	1	**241-0037**	1	FILM-INFORMATION (HYDRAULIC ACCUMULATOR)	
					AVAILABLE REPAIR KIT(S):	
			361-9763	1	KIT-SEAL	
					(INCLUDES PISTON SEALS, END SEALS, O-RINGS & EXPANDER)	

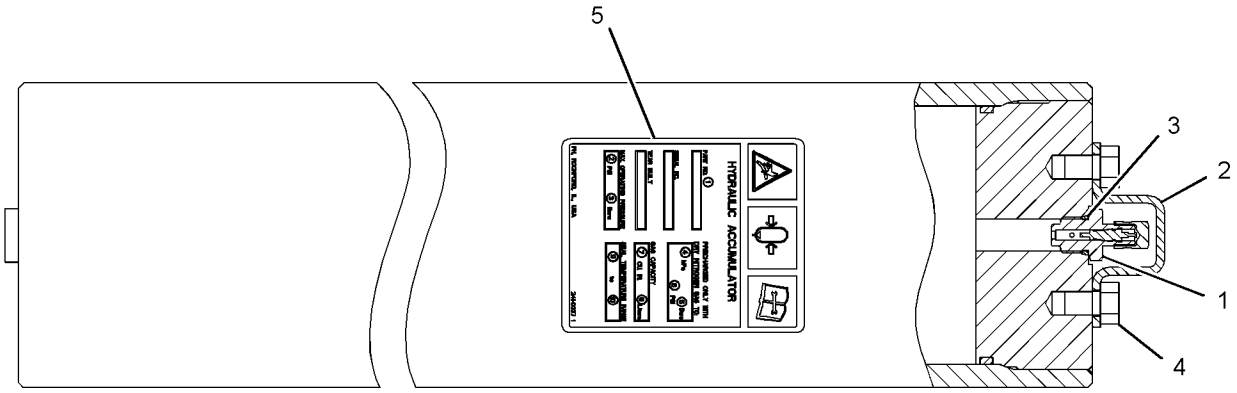

GRAPHIC #1 <END> g02318573

361-8121 ACCUMULATOR GP-BRAKE–UNCHARGED

S/N: B551-UP

FIELD REPLACEMENT FOR 361-8120–PAGE: 487

SMCS-4263, 4264 **i05956388**

NOTE	REF NO	GRAPHIC REF	PART NUMBER	QTY	PART NAME 1 2 3 4 5 6 (PRODUCT LEVEL)	SEE PAGE
	1	1	**222-2367**	1	VALVE GP-ACCUMULATOR CHARGING (BRAKE)	
		1	**190-3850**	1	CORE	
	2	1	**111-9110**	1	PROTECTOR-GAS VALVE	
	3	1	**1J-9671**	1	SEAL-O-RING	
	4	1	**5M-3062**	2	BOLT (3/8-16X0.75-IN)	
	5	1	**241-0037**	1	FILM-INFORMATION (HYDRAULIC ACCUMULATOR)	
					AVAILABLE REPAIR KIT(S):	
			361-9763	1	KIT-SEAL	
					(INCLUDES SEALS, RINGS, & EXPANDERS)	

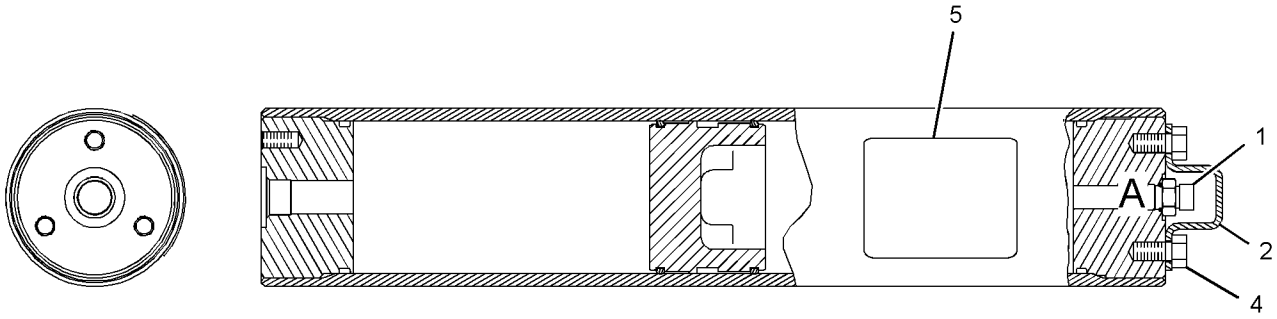

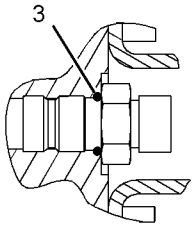

VIEW OF AREA A

GRAPHIC #1 <END> g02163451

361-8122 ACCUMULATOR GP-BRAKE—UNCHARGED

S/N: B551-UP

FIELD REPLACEMENT FOR 361-8119—PAGE: 486

SMCS-4263, 4264 **i05545231**

NOTE	REF NO	GRAPHIC REF	PART NUMBER	QTY	PART NAME 1 2 3 4 5 6 (PRODUCT LEVEL)	SEE PAGE
	1	1	**241-0037**	1	FILM-INFORMATION (HYDRAULIC ACCUMULATOR)	
	2	1	**222-2367**	1	VALVE GP-ACCUMULATOR CHARGING (BRAKE)	
		1	**190-3850**	1	CORE	
	3	1	**111-9110**	1	PROTECTOR-GAS VALVE	
	4	1	**1J-9671**	1	SEAL-O-RING	
	5	1	**5M-3062**	2	BOLT (3/8-16X0.75-IN)	
					AVAILABLE REPAIR KIT(S):	
			361-9763	1	KIT-SEAL	
					(INCLUDES PISTON SEALS, END SEALS, O-RINGS & EXPANDER)	

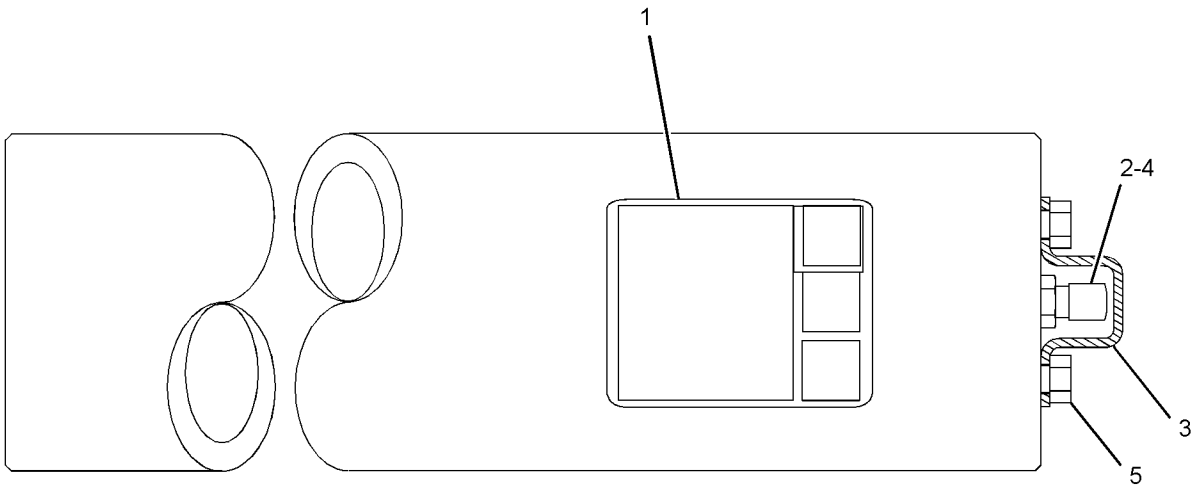

GRAPHIC #1 <END> g02330333

436-2627 BRAKE GP-PARKING

S/N: JP21-UP; TSZ1-UP

PART OF 396-3303 TRANSMISSION AR

SMCS-3077, 4267 **i05377837**

NOTE	REF NO	GRAPHIC REF	PART NUMBER	QTY	PART NAME 1 2 3 4 5 6 (PRODUCT LEVEL)	SEE PAGE
	1	1	**6Y-3849**	1	HUB-CLUTCH	
	2	1	**171-9375**	1	SEAL-O-RING	
	3	1	**187-3369**	2	SPRING	
	4	1	**188-0633**	1	SEAL-BRAKE	
	5	1	**193-2200**	1	SEAL-LIP TYPE	
	6	1	**241-3722**	1	FILM-WARNING (RECOIL SPRING)	
	7	1	**246-8777**	1	SEAL-BRAKE	
	8	1	**246-8780**	4	PLATE-CLUTCH	
	9	1	**290-4134**	1	VALVE-RELIEF	
	10	1	**297-2825**	1	PLATE AS	
		1	**5M-7937**	2	DOWEL	
	11	1	**343-8739**	3	DISC-FRICTION	
	12	1	**364-3731**	1	YOKE AS	
	13	1	**436-2623**	1	HOUSING AS	
		1	**217-5763**	2	PLUG	
		1	**306-7053**	3	PLUG	
	14	1	**436-2626**	1	PISTON	
	15	1	**064-3843**	1	RING-SNAP	
M	16	1	**129-3181**	3	BOLT-SOCKET HEAD (M10X1.5X55-MM)	
	17	1	*162-0177*	1	PLUG AS	
		1	**3J-1907**	1	SEAL-O-RING	
		1	**9S-8004**	1	PLUG (9/16-18-THD)	
	18	1	**2L-6726**	1	RING-RETAINING	
	19	1	**315-6093**	3	DOWEL	
	20	1	**5P-5297**	1	RING-RETAINING (EXTERNAL)	
	21	1	**6F-6672**	1	SEAL-O-RING	
	22	1	**7X-0605**	12	WASHER-HARD (13X28X1.6-MM THK)	
M	23	1	**7X-2549**	12	BOLT (M12X1.75X100-MM)	

M - METRIC PART

436-2627 **BRAKE GP-PARKING (**contd.**)** **i05377837**

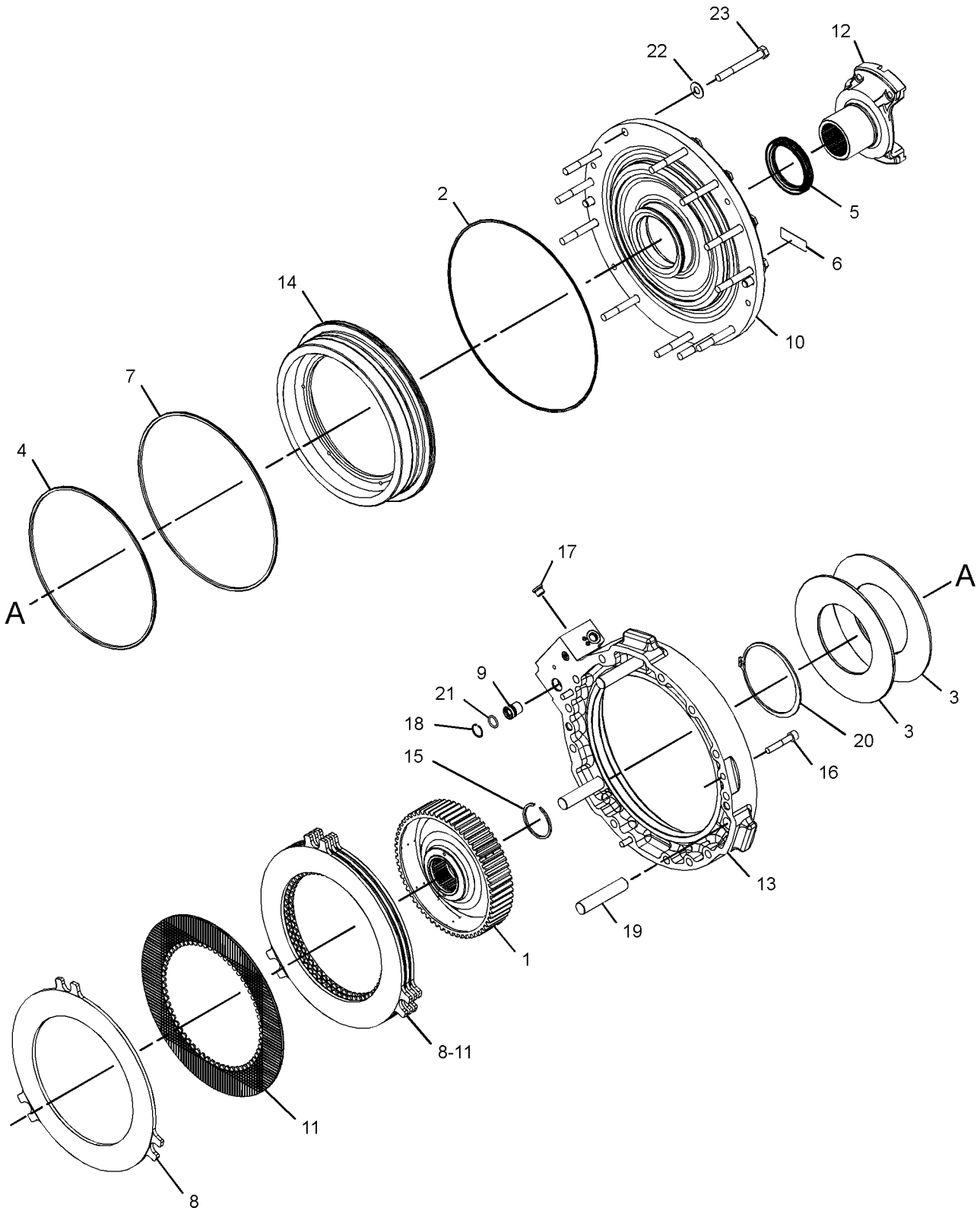

GRAPHIC #1 <END> g03405439

284-5020 BRAKE GP-SERVICE—FRONT TANDEM

S/N: B551-UP

PART OF 284-5019 WHEEL AR

SMCS-4251 **i07640739**

NOTE	REF NO	GRAPHIC REF	PART NUMBER	QTY	PART NAME 1 2 3 4 5 6 (PRODUCT LEVEL)	SEE PAGE
	1	1	**5H-3701**	1	SCREW-PURGE	
R	2	1	**5K-5288**	1	SEAL GP-DUO-CONE	
	2A	1	**5K-5129**	2	RING-SEALING	
	3	1	**6B-3223**	2	CUP-BEARING	
B	4	1	**7D-8439**	4	SHIM (0.007-IN THK)	
B		1	**7D-8441**	1	SHIM (0.005-IN THK)	
B		1	**9D-7047**	4	SHIM (0.020-IN THK)	
	7	1	**9D-3075**	1	RETAINER	
	8	1	**110-7149**	1	RING-RETAINING	
	9	1	**220-4335**	1	SEAL-BRAKE	
	10	1	**220-4336**	1	SEAL-BRAKE	
	11	1	**257-1702**	1	PISTON	
	12	1	**351-0925**	6	DISC-FRICTION	
	13	1	**262-5610**	1	HUB-BRAKE	
	14	1	**278-3319**	1	SPROCKET	
	15	1	**284-5022**	1	HOUSING	
	16	1	**284-5023**	1	SPINDLE	
B	17	1	**284-8959**	1	SHIM (2-MM THK)	
B	18	1	**284-8960**	5	SHIM (0.5-MM THK)	
	19	1	**284-9552**	1	COMPENSATOR (SERVICE BRAKE)	
	20	1	**284-9553**	4	SPRING	
	21	1	**284-9554**	4	DOWEL	
	22	1	**284-9555**	4	DOWEL	
	23	1	**284-9556**	4	SPACER-SPECIAL	
	24	1	**284-9557**	7	PLATE	
	25	1	**364-2075**	1	COVER	
M	26	1	**235-9631**	16	BOLT (M16X2X120-MM)	
M	27	1	**6V-3303**	3	BOLT (M16X2X60-MM)	
	28	1	**198-4768**	16	WASHER-HARD (17.5X32X8-MM THK)	
	29	1	**4B-7270**	1	CONE-BEARING	
M	30	1	**4I-0755**	1	NUT (M12X1.25-THD)	
	31	1	**4S-5879**	1	SEAL-O-RING	
	32	1	**7D-8437**	1	CONE-BEARING	
	33	1	**8F-9538**	1	SEAL-O-RING	
M	34	1	**8T-1159**	4	BOLT-SOCKET HEAD (M10X1.5X25-MM)	

B - USE AS REQUIRED
M - METRIC PART
R - REMANUFACTURED PART MAY BE AVAILABLE

284-5020 **BRAKE GP-SERVICE (**contd.**)** **i07640739**

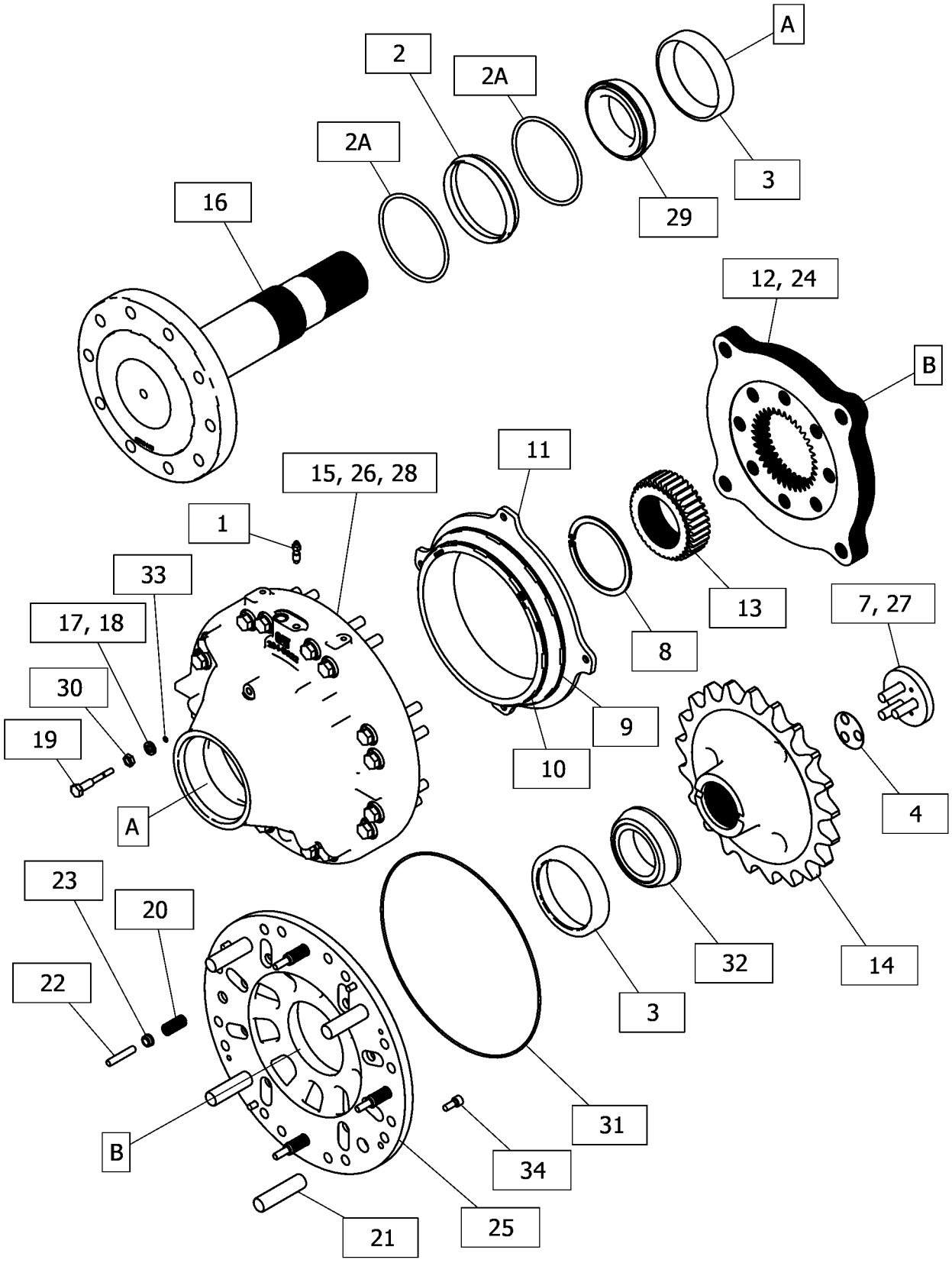

GRAPHIC #1 <END> g06420601

284-5021 BRAKE GP-SERVICE—REAR TANDEM

S/N: B551-UP

PART OF 284-5019 WHEEL AR

SMCS-4251 **i07640740**

NOTE	REF NO	GRAPHIC REF	PART NUMBER	QTY	PART NAME 1 2 3 4 5 6 (PRODUCT LEVEL)	SEE PAGE
	1	1	**5H-3701**	1	SCREW-PURGE	
R	2	1	**5K-5288**	1	SEAL GP-DUO-CONE	
	2A	1	**5K-5129**	2	RING-SEALING	
	3	1	**6B-3223**	2	CUP-BEARING	
B	4	1	**7D-8439**	4	SHIM (0.007-IN THK)	
B	5	1	**7D-8441**	1	SHIM (0.005-IN THK)	
	6	1	**9D-3075**	1	RETAINER	
B	7	1	**9D-7047**	4	SHIM (0.020-IN THK)	
	8	1	**110-7149**	1	RING-RETAINING	
	9	1	**220-4335**	1	SEAL-BRAKE	
	10	1	**220-4336**	1	SEAL-BRAKE	
	11	1	**257-1702**	1	PISTON	
	12	1	**351-0925**	6	DISC-FRICTION	
	13	1	**262-5610**	1	HUB-BRAKE	
	14	1	**278-3319**	1	SPROCKET	
	15	1	**284-5022**	1	HOUSING	
	16	1	**284-5023**	1	SPINDLE	
B	17	1	**284-8959**	1	SHIM (2-MM THK)	
B	18	1	**284-8960**	5	SHIM (0.5-MM THK)	
	19	1	**284-9552**	1	COMPENSATOR (SERVICE BRAKE)	
	20	1	**284-9553**	4	SPRING	
	21	1	**284-9554**	4	DOWEL	
	22	1	**284-9555**	4	DOWEL	
	23	1	**284-9556**	4	SPACER-SPECIAL	
	24	1	**284-9557**	7	PLATE	
	25	1	**364-2075**	1	COVER	
M	26	1	**235-9631**	16	BOLT (M16X2X120-MM)	
M	27	1	**6V-3303**	3	BOLT (M16X2X60-MM)	
	28	1	**198-4768**	16	WASHER-HARD (17.5X32X8-MM THK)	
	29	1	**4B-7270**	1	CONE-BEARING	
M	30	1	**4I-0755**	1	NUT (M12X1.25-THD)	
	31	1	**4S-5879**	1	SEAL-O-RING	
	32	1	**7D-8437**	1	CONE-BEARING	
	33	1	**8F-9538**	1	SEAL-O-RING	
M	34	1	**8T-1159**	4	BOLT-SOCKET HEAD (M10X1.5X25-MM)	

B - USE AS REQUIRED
M - METRIC PART
R - REMANUFACTURED PART MAY BE AVAILABLE

284-5021 **BRAKE GP-SERVICE (**contd.**)** **i07640740**

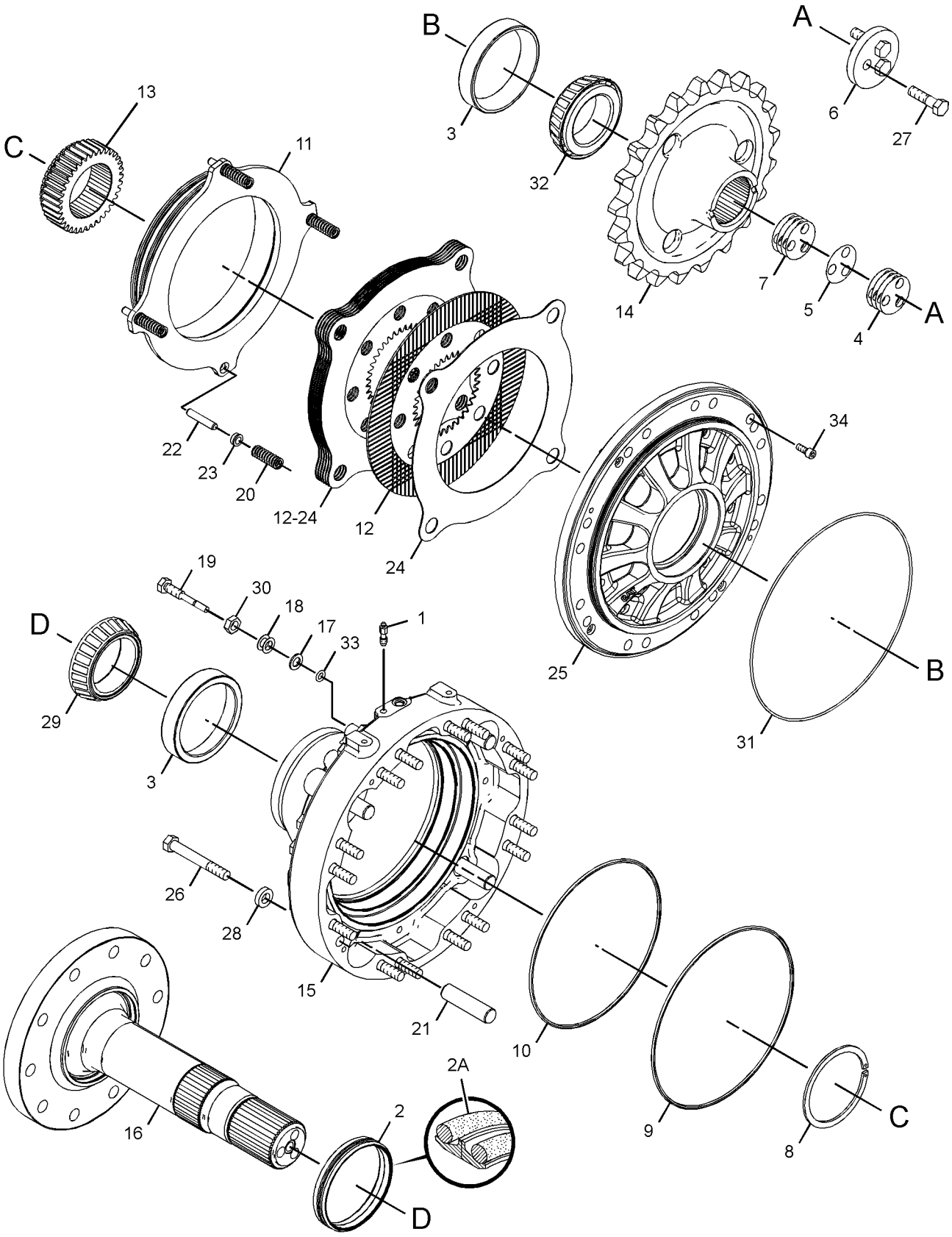

GRAPHIC #1 <END> g02321601

233-3142 CONTROL GP-SERVICE BRAKE

S/N: B551-UP

PART OF 367-7795 CONVERSION AR-CERTIFICATION

SMCS-4251, 4265, 4269 **i06177843**

NOTE	REF NO	GRAPHIC REF	PART NUMBER	QTY	PART NAME 1 2 3 4 5 6 (PRODUCT LEVEL)	SEE PAGE
CY	1	1	**346-6901**	1	PEDAL GP-BRAKE, XMSN & GOV	830
	2	1	**249-4091**	4	BLOCK	
Y	3	1	*251-2243*	1	LINES GP-ACCUMULATOR (BRAKE)	500
	4	1	**253-3476**	1	PLATE AS	
	5	1	**281-9356**	3	PLATE	
	6	1	**286-5672**	1	PLATE AS	
	7	1	**361-3138**	4	CLAMP	
	8	1	**5P-9299**	5	CLIP (LOOP)	
M	9	1	**8T-6466**	3	BOLT (M10X1.5X60-MM)	
	10	1	**8T-4121**	18	WASHER-HARD (11X21X2.5-MM THK)	
M	11	1	**8T-4137**	8	BOLT (M10X1.5X20-MM)	
M	12	1	**8T-4186**	2	BOLT (M10X1.5X40-MM)	
M	13	1	**8T-4191**	1	BOLT (M10X1.5X16-MM)	
M	14	1	**8T-4195**	5	BOLT (M10X1.5X30-MM)	
	15	1	**8T-4222**	3	WASHER-PLATED (11X32X2.5-MM THK)	
M	16	1	**8T-4182**	2	BOLT (M10X1.5X45-MM)	

C - CHANGE FROM PREVIOUS TYPE
M - METRIC PART
Y - SEPARATE ILLUSTRATION

233-3142 **CONTROL GP-SERVICE BRAKE (**contd.**)** **i06177843**

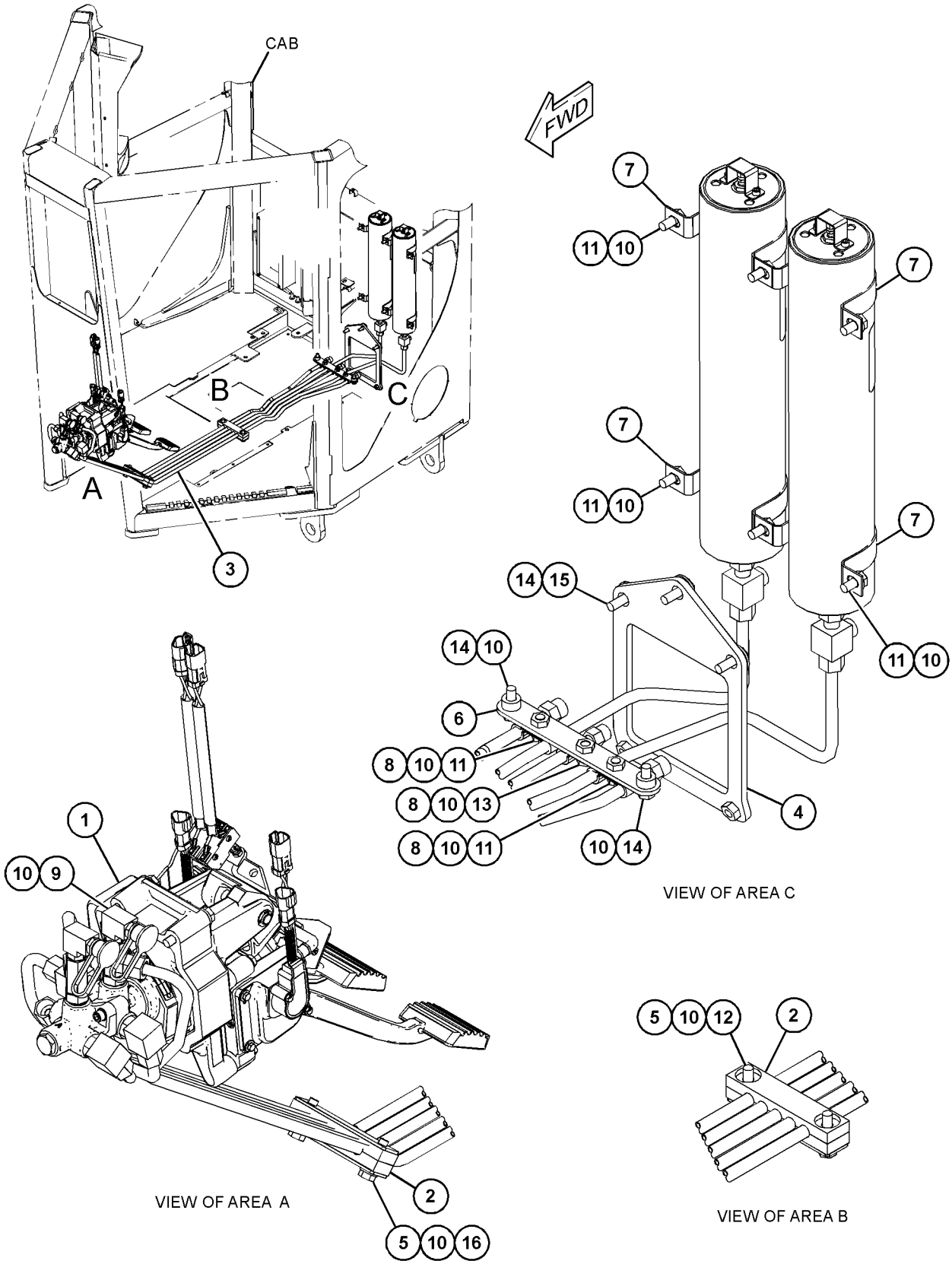

GRAPHIC #1 <END> g03857331

252-1810 CONTROL GP-SERVICE BRAKE

S/N: B551-UP

PART OF 426-1256, 492-0728, 492-0729 CONVERSION AR-CERTIFICATION

SMCS-4251, 4265, 4269

i06190832

NOTE	REF NO	GRAPHIC REF	PART NUMBER	QTY	PART NAME 1 2 3 4 5 6 (PRODUCT LEVEL)	SEE PAGE
CY	1	1	**346-6901**	1	PEDAL GP-BRAKE, XMSN & GOV	830
	2	1	**249-4091**	4	BLOCK	
Y	3	1	*252-1811*	1	LINES GP-ACCUMULATOR (BRAKE)	502
	4	1	**253-3476**	1	PLATE AS	
M		1	**8T-3490**	2	NUT-WELD (M10X1.5-THD)	
	5	1	**281-9356**	3	PLATE	
	6	1	**286-5672**	1	PLATE AS	
M		1	**6V-8224**	3	NUT-WELD (M10X1.5-THD)	
		1	**124-2528**	2	SPACER (11X20X10-MM THK)	
M	7	1	**8T-6466**	3	BOLT (M10X1.5X60-MM)	
	8	1	**5P-9299**	5	CLIP (LOOP)	
	9	1	**361-3138**	4	CLAMP	
	10	1	**8T-4121**	18	WASHER-HARD (11X21X2.5-MM THK)	
M	11	1	**8T-4137**	8	BOLT (M10X1.5X20-MM)	
M	12	1	**8T-4186**	2	BOLT (M10X1.5X40-MM)	
M	13	1	**8T-4191**	1	BOLT (M10X1.5X16-MM)	
M	14	1	**8T-4195**	5	BOLT (M10X1.5X30-MM)	
	15	1	**8T-4222**	3	WASHER-PLATED (11X32X2.5-MM THK)	
M	16	1	**8T-4182**	2	BOLT (M10X1.5X45-MM)	

C - CHANGE FROM PREVIOUS TYPE
M - METRIC PART
Y - SEPARATE ILLUSTRATION

252-1810 **CONTROL GP-SERVICE BRAKE (**contd.**)** **i06190832**

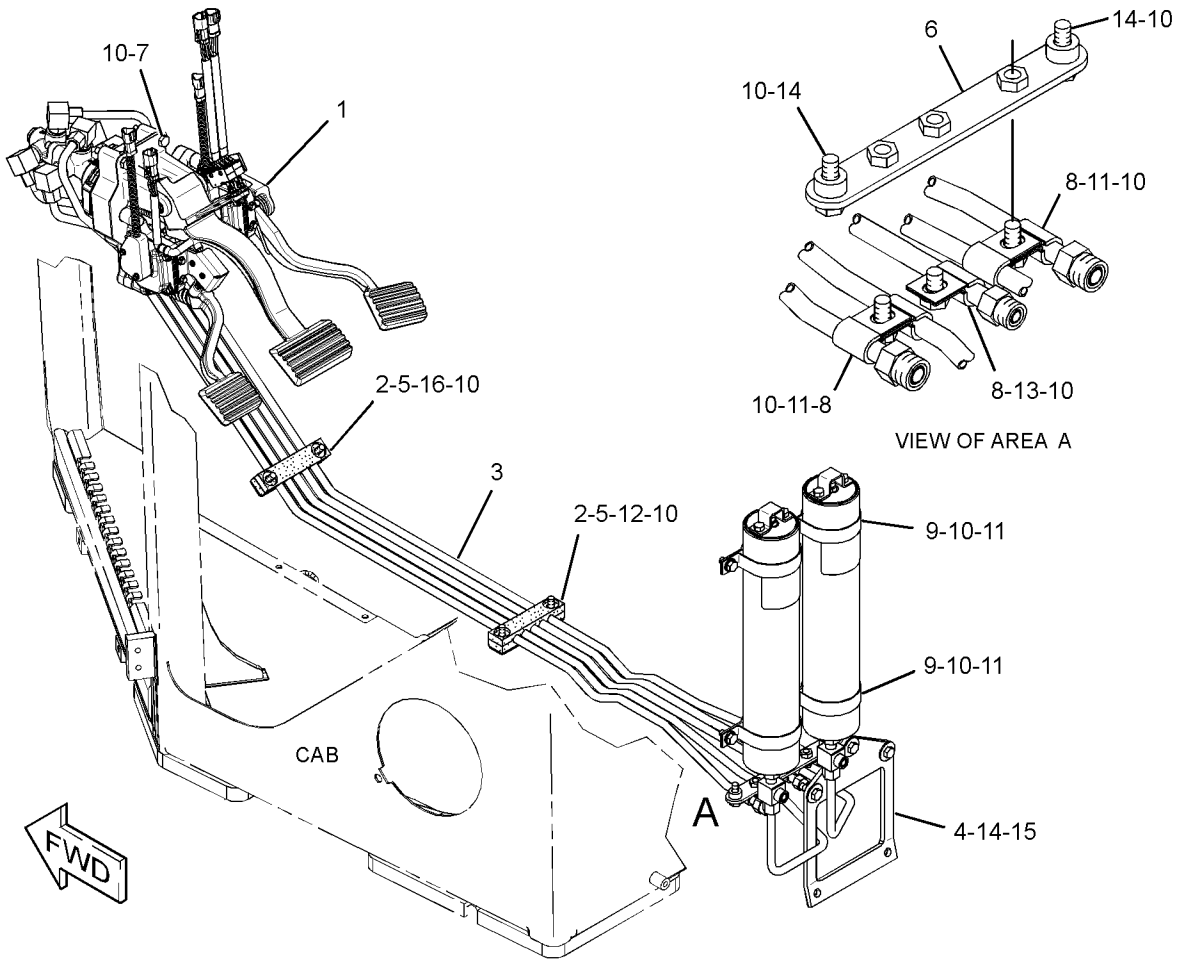

GRAPHIC #1 <END> g03857025

251-2243 LINES GP-ACCUMULATOR—BRAKE

S/N: B551-UP

PART OF 233-3142 CONTROL GP-SERVICE BRAKE

SMCS-4257, 4263 **i05939111**

NOTE	REF NO	GRAPHIC REF	PART NUMBER	QTY	PART NAME 1 2 3 4 5 6 (PRODUCT LEVEL)	SEE PAGE
	1	1	**246-3303**	1	TUBE AS	
	2	1	**246-3305**	1	TUBE AS	
	3	1	**246-3307**	1	TUBE AS	
	4	1	**249-4088**	1	TUBE AS	
	5	1	**328-7073**	1	TUBE AS	
	6	1	**328-7074**	1	TUBE AS	
	7	1	*148-8340*	2	CONNECTOR AS	
					(EACH INCLUDES)	
		1	**6V-8639**	1	CONNECTOR	
		1	**3K-0360**	1	SEAL-O-RING	
		1	**6V-8398**	1	SEAL-O-RING	
	8	1	*148-8364*	3	ELBOW AS	
					(EACH INCLUDES)	
		1	**6V-8625**	1	ELBOW (90-DEG)	
		1	**3K-0360**	1	SEAL-O-RING	
		1	**6V-8398**	1	SEAL-O-RING	
	9	1	*148-8428*	1	TEE AS (ORFS)	
		1	**6V-8782**	1	TEE (FACE SEAL)	
		1	**3K-0360**	1	SEAL-O-RING	
		1	**6V-8398**	2	SEAL-O-RING	
	10	1	*148-8444*	2	TEE AS-SWIVEL	
					(EACH INCLUDES)	
		1	**6V-9837**	1	TEE-SWIVEL	
		1	**6V-8398**	2	SEAL-O-RING	
Y	11	1	*249-3860*	2	ACCUMULATOR GP-BRAKE (CHARGED)	484
	12	1	**6V-0852**	2	CAP-DUST	
	13	1	*164-5567*	2	COUPLER AS-QUICK DISCONNECT (MALE)	
					(EACH INCLUDES)	
		1	**6V-3965**	1	FITTING (QUICK DISCONNECT)	
		1	**214-7568**	1	SEAL-O-RING	
	14	1	*196-2036*	2	TEE AS	
					(EACH INCLUDES)	
		1	**3K-0360**	1	SEAL-O-RING	
		1	**6V-8398**	1	SEAL-O-RING	
		1	**9X-2492**	1	TEE-O-RING	
	15	1	*241-6215*	2	ELBOW AS	
					(EACH INCLUDES)	
		1	**3J-1907**	1	SEAL-O-RING	
		1	**6V-8076**	1	ELBOW	

Y - SEPARATE ILLUSTRATION

251-2243 **LINES GP-ACCUMULATOR (**contd.**)** **i05939111**

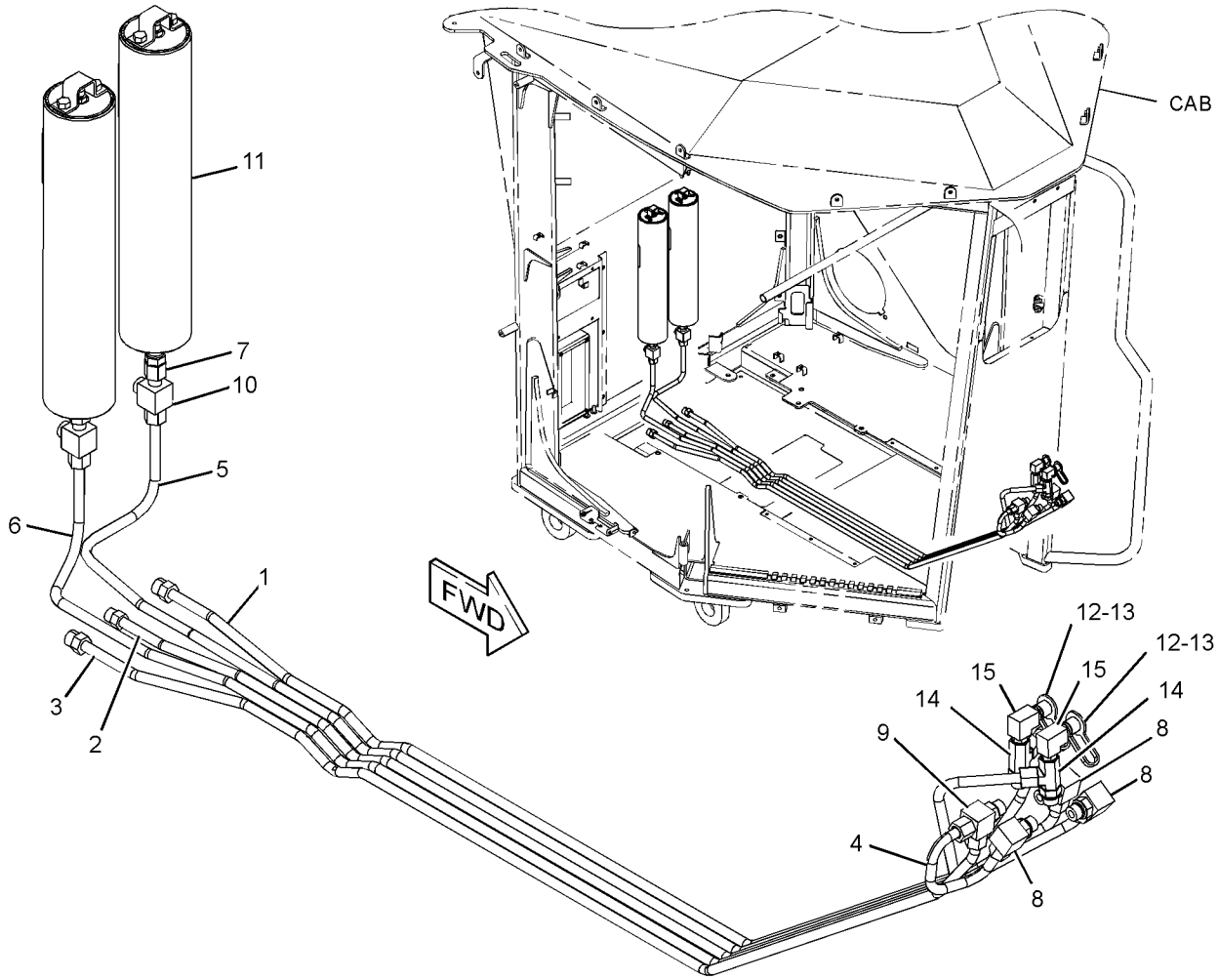

GRAPHIC #1 <END> g03756957

252-1811 LINES GP-ACCUMULATOR—BRAKE

S/N: B551-UP

PART OF 252-1810 CONTROL GP-SERVICE BRAKE

SMCS-4257, 4263 **i05939113**

NOTE	REF NO	GRAPHIC REF	PART NUMBER	QTY	PART NAME 1 2 3 4 5 6 (PRODUCT LEVEL)	SEE PAGE
	1	1	**246-3303**	1	TUBE AS	
	2	1	**246-3305**	1	TUBE AS	
	3	1	**246-3307**	1	TUBE AS	
	4	1	**249-4088**	1	TUBE AS	
	5	1	**328-7073**	1	TUBE AS	
	6	1	**328-7074**	1	TUBE AS	
	7	1	*148-8340*	2	CONNECTOR AS	
					(EACH INCLUDES)	
		1	**6V-8639**	1	CONNECTOR	
		1	**3K-0360**	1	SEAL-O-RING	
		1	**6V-8398**	1	SEAL-O-RING	
	8	1	*148-8364*	3	ELBOW AS	
					(EACH INCLUDES)	
		1	**6V-8625**	1	ELBOW	
		1	**3K-0360**	1	SEAL-O-RING	
		1	**6V-8398**	1	SEAL-O-RING	
	9	1	*148-8428*	1	TEE AS	
		1	**6V-8782**	1	TEE	
		1	**3K-0360**	1	SEAL-O-RING	
		1	**6V-8398**	2	SEAL-O-RING	
	10	1	*148-8444*	2	TEE AS-SWIVEL	
					(EACH INCLUDES)	
		1	**6V-9837**	1	TEE-SWIVEL	
		1	**6V-8398**	2	SEAL-O-RING	
CY	11	1	*361-8119*	2	ACCUMULATOR GP-BRAKE (CHARGED)	486
	12	1	**6V-0852**	2	CAP-DUST	
	13	1	*164-5567*	2	COUPLER AS-QUICK DISCONNECT (MALE)	
					(EACH INCLUDES)	
		1	**6V-3965**	1	FITTING (QUICK DISCONNECT)	
		1	**214-7568**	1	SEAL-O-RING	
	14	1	*196-2036*	2	TEE AS	
					(EACH INCLUDES)	
		1	**3K-0360**	1	SEAL-O-RING	
		1	**6V-8398**	1	SEAL-O-RING	
		1	**9X-2492**	1	TEE-O-RING	
	15	1	*241-6215*	2	ELBOW AS	
					(EACH INCLUDES)	
		1	**3J-1907**	1	SEAL-O-RING	
		1	**6V-8076**	1	ELBOW	

C - CHANGE FROM PREVIOUS TYPE
Y - SEPARATE ILLUSTRATION

252-1811 **LINES GP-ACCUMULATOR (**contd.**)** **i05939113**

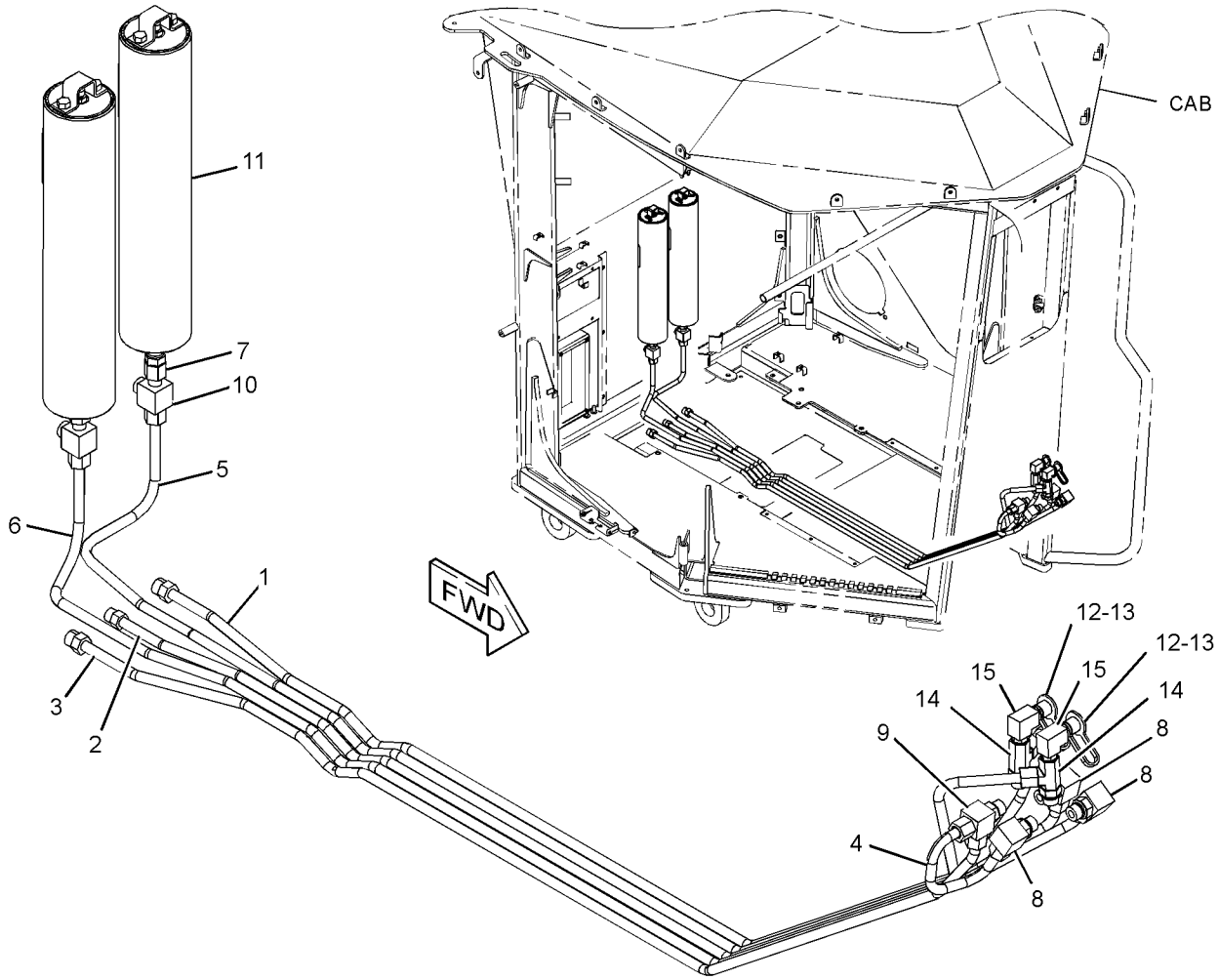

GRAPHIC #1 <END> g03756957

356-4257 LINES GP-ACCUMULATOR—BRAKE

S/N: B551-UP

PART OF 356-4256 LINES GP-SERVICE BRAKE

SMCS-4257, 4263

i05956987

NOTE	REF NO	GRAPHIC REF	PART NUMBER	QTY	PART NAME 1 2 3 4 5 6 (PRODUCT LEVEL)	SEE PAGE
	1	1	**246-3303**	1	TUBE AS	
	2	1	**246-3305**	1	TUBE AS	
	3	1	**246-3307**	1	TUBE AS	
	4	1	**249-4088**	1	TUBE AS	
	5	1	**328-7073**	1	TUBE AS	
	6	1	**328-7074**	1	TUBE AS	
	7	1	*148-8340*	2	CONNECTOR AS	
					(EACH INCLUDES)	
		1	**6V-8639**	1	CONNECTOR	
		1	**3K-0360**	1	SEAL-O-RING	
		1	**6V-8398**	1	SEAL-O-RING	
	8	1	*148-8364*	3	ELBOW AS	
					(EACH INCLUDES)	
		1	**6V-8625**	1	ELBOW	
		1	**3K-0360**	1	SEAL-O-RING	
		1	**6V-8398**	1	SEAL-O-RING	
	9	1	*148-8428*	1	TEE AS	
		1	**6V-8782**	1	TEE	
		1	**3K-0360**	1	SEAL-O-RING	
		1	**6V-8398**	2	SEAL-O-RING	
	10	1	*148-8444*	2	TEE AS-SWIVEL	
					(EACH INCLUDES)	
		1	**6V-9837**	1	TEE-SWIVEL	
		1	**6V-8398**	2	SEAL-O-RING	
CY	11	1	*361-8120*	2	ACCUMULATOR GP-BRAKE (CHARGED)	487
	12	1	**6V-0852**	2	CAP-DUST	
	13	1	*164-5567*	2	COUPLER AS-QUICK DISCONNECT (MALE)	
					(EACH INCLUDES)	
		1	**6V-3965**	1	FITTING (QUICK DISCONNECT)	
		1	**214-7568**	1	SEAL-O-RING	
	14	1	*196-2036*	2	TEE AS	
					(EACH INCLUDES)	
		1	**3K-0360**	1	SEAL-O-RING	
		1	**6V-8398**	1	SEAL-O-RING	
		1	**9X-2492**	1	TEE-O-RING	
	15	1	*241-6215*	2	ELBOW AS	
					(EACH INCLUDES)	
		1	**3J-1907**	1	SEAL-O-RING	
		1	**6V-8076**	1	ELBOW	

C - CHANGE FROM PREVIOUS TYPE
Y - SEPARATE ILLUSTRATION

356-4257 **LINES GP-ACCUMULATOR (**contd.**)** **i05956987**

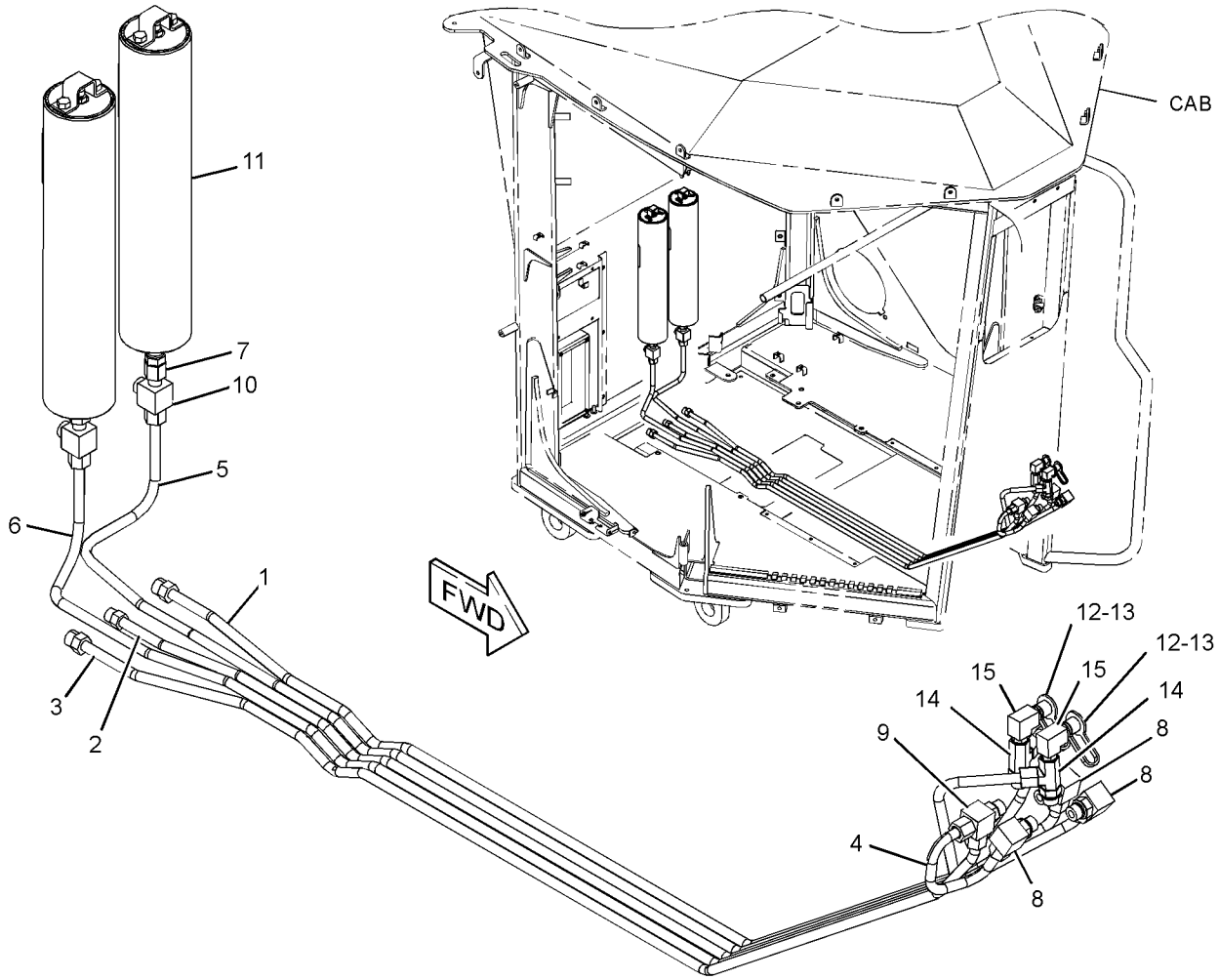

GRAPHIC #1 <END> g03756957

255-1250 LINES GP-AIR TANK

S/N: B551-UP

PART OF 261-0610 AIR COMPRESSOR AR

SMCS-4272 **i05262341**

NOTE	REF NO	GRAPHIC REF	PART NUMBER	QTY	PART NAME 1 2 3 4 5 6 (PRODUCT LEVEL)	SEE PAGE
	1	1	**2D-8910**	1	ELBOW	
CI	2	1	**422-4683**	1	HOSE AS	
CI	3	1	**422-4682**	1	HOSE AS	
	4	1	**1S-0994**	1	CLIP (LOOP)	
	5	1	**3D-2824**	1	SEAL-O-RING	
	6	1	**3D-5279**	1	GROMMET	
	7	1	**4D-2560**	1	CONNECTOR-PIPE	
	8	1	**4D-7388**	1	CLIP (LOOP)	
	9	1	**4D-7733**	3	CLIP (LOOP)	
	10	1	**4H-2558**	1	GROMMET	
	11	1	**4S-7606**	1	ELBOW	
	12	1	**6D-4492**	1	CONNECTOR	
	13	1	**8T-4121**	5	WASHER-HARD (11X21X2.5-MM THK)	
M	14	1	**8T-4133**	2	NUT (M10X1.5-THD)	
CM	15	1	**8T-4137**	2	BOLT (M10X1.5X20-MM)	
	16	1	**8M-3368**	1	VALVE-CHECK (SERVICE BRAKE, RETARDER)	
CM	17	1	**8T-6466**	1	BOLT (M10X1.5X60-MM)	
C	18	1	**6W-7636**	1	SPACER (11.13X19.05X30-MM THK)	

C - CHANGE FROM PREVIOUS TYPE
I - REFER TO HYDRAULIC INFORMATION SYSTEM
M - METRIC PART

255-1250 **LINES GP-AIR TANK (**contd.**)** **i05262341**

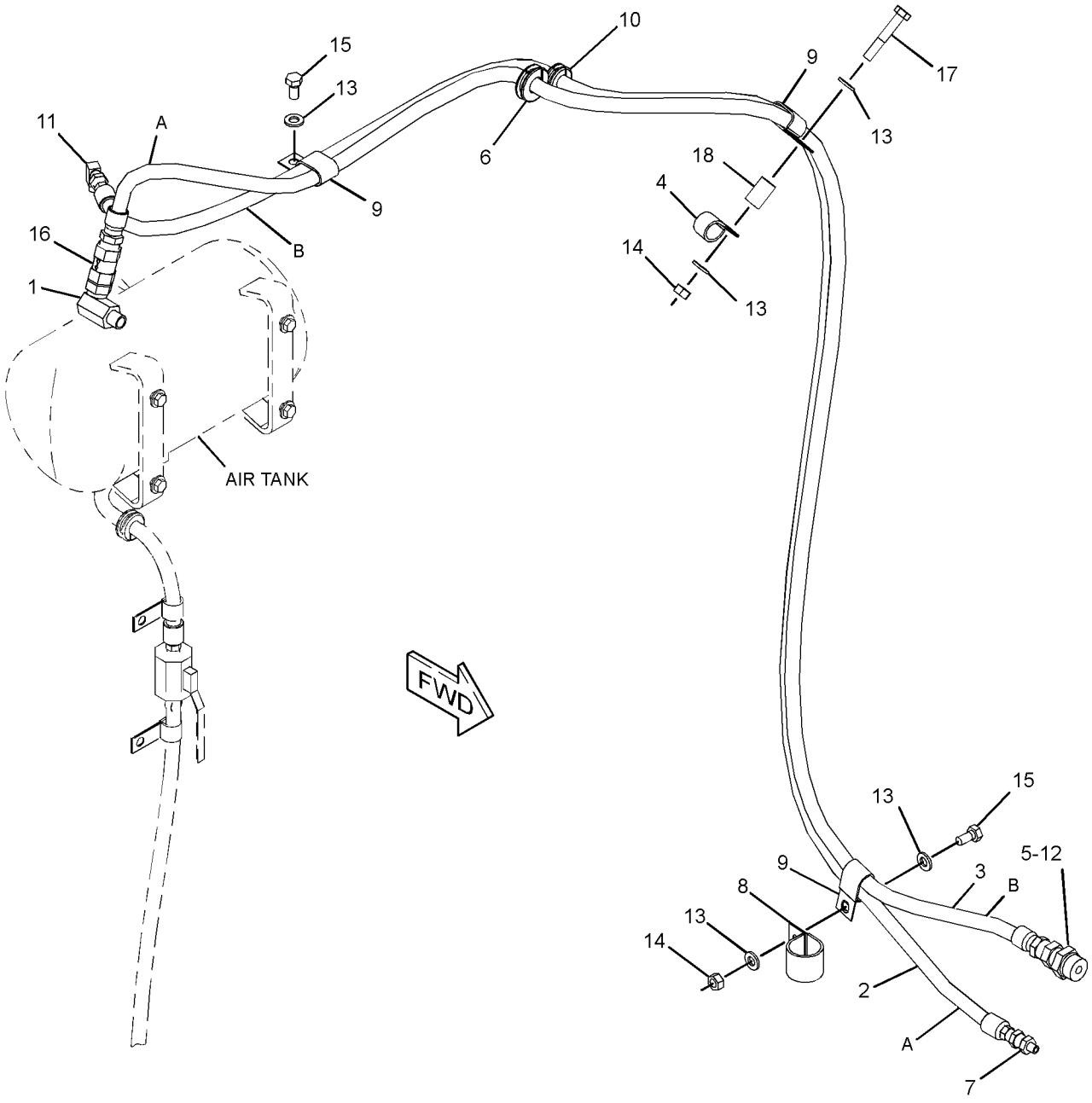

GRAPHIC #1 <END> g03353893

356-2956 LINES GP-SERVICE BRAKE

S/N: B551-UP

PART OF 577-1377 COMMON AR

SMCS-4257 **i05353887**

NOTE	REF NO	GRAPHIC REF	PART NUMBER	QTY	PART NAME 1 2 3 4 5 6 (PRODUCT LEVEL)	SEE PAGE
	1	1	**371-8952**	2	HOSE	
	2	1	**7K-1181**	5	STRAP-CABLE	
	3	1	**127-9323**	1	BRACKET AS	
M		1	**8T-3490**	1	NUT-WELD (M10X1.5-THD)	
I	4	1	**246-3298**	1	HOSE AS	
	5	1	**247-4247**	1	PLATE AS	
M		1	**9R-2672**	1	BOSS-THREADED (M10X1.5X120-MM)	
	6	1	**280-7911**	1	BLOCK	
	7	1	**280-7912**	1	BLOCK	
	8	1	**280-7913**	1	BLOCK	
	9	1	**286-5299**	1	PLATE AS	
M		1	**7X-2543**	2	BOLT (M10X1.5X120-MM)	
I	10	1	**383-1286**	1	HOSE AS	
I	11	1	**288-9473**	1	HOSE AS	
I	12	1	**297-1225**	2	HOSE AS	
	13	1	**301-0960**	2	PLATE	
	14	1	*148-8336*	2	CONNECTOR AS	
					(EACH INCLUDES)	
		1	**6V-8636**	1	CONNECTOR	
		1	**3J-1907**	1	SEAL-O-RING	
		1	**6V-8397**	1	SEAL-O-RING	
	15	1	*148-8366*	2	ELBOW AS	
					(EACH INCLUDES)	
		1	**6V-8987**	1	ELBOW	
		1	**6V-8397**	2	SEAL-O-RING	
	16	1	*148-8370*	2	ELBOW AS	
					(EACH INCLUDES)	
		1	**6V-9851**	1	ELBOW	
		1	**6V-8398**	1	SEAL-O-RING	
	17	1	*153-6241*	1	ELBOW AS	
		1	**8C-8989**	1	ELBOW	
		1	**6V-8398**	1	SEAL-O-RING	
I	18	1	**166-9130**	1	HOSE AS	
I	19	1	**178-2176**	1	HOSE AS	
	20	1	**3G-8054**	1	CLIP (TAB)	
	21	1	**3G-8057**	1	CLIP (SLOT)	
	22	1	**4D-7735**	1	CLIP	
	23	1	**5K-5338**	1	CLIP (LOOP)	
	24	1	**5P-7462**	1	CLIP (SLOT)	
	25	1	**5P-7463**	1	CLIP (TAB)	
	26	1	**6D-4246**	8	CLIP (LOOP)	
	27	1	**6V-0683**	1	GROMMET	
	28	1	**6V-0974**	1	GROMMET	
	29	1	**6V-9168**	2	NUT (11/16-16-THD)	
	30	1	**7D-7233**	2	CLIP (LOOP)	
	31	1	**7X-7729**	3	WASHER (11X25X3-MM THK)	
M	32	1	**8T-0389**	2	LOCKNUT (M10X1.5-THD)	
	33	1	**8T-1887**	3	CLIP (SLOT)	

356-2956 **LINES GP-SERVICE BRAKE** (contd.) **i05353887**

NOTE	REF NO	GRAPHIC REF	PART NUMBER	QTY	PART NAME 1 2 3 4 5 6 (PRODUCT LEVEL)	SEE PAGE
	34	1	**8T-1888**	3	CLIP (TAB)	
	35	1	**8T-4121**	25	WASHER-HARD (11X21X2.5-MM THK)	
M	36	1	**8T-4133**	4	NUT (M10X1.5-THD)	
M	37	1	**8T-4136**	8	BOLT (M10X1.5X25-MM)	
M	38	1	**8T-4137**	7	BOLT (M10X1.5X20-MM)	
M	39	1	**8T-4195**	4	BOLT (M10X1.5X30-MM)	
M	40	1	**8T-4196**	2	BOLT (M10X1.5X35-MM)	
	41	1	**372-6294**	1	PLATE AS	
M		1	**8T-3490**	3	NUT-WELD (M10X1.5-THD)	
	42	1	**204-9734**	1	SPACER (11X18X25-MM THK)	
M	43	1	**8T-4185**	1	BOLT (M10X1.5X50-MM)	

I - REFER TO HYDRAULIC INFORMATION SYSTEM
M - METRIC PART

356-2956 **LINES GP-SERVICE BRAKE (**contd.**)** **i05353887**

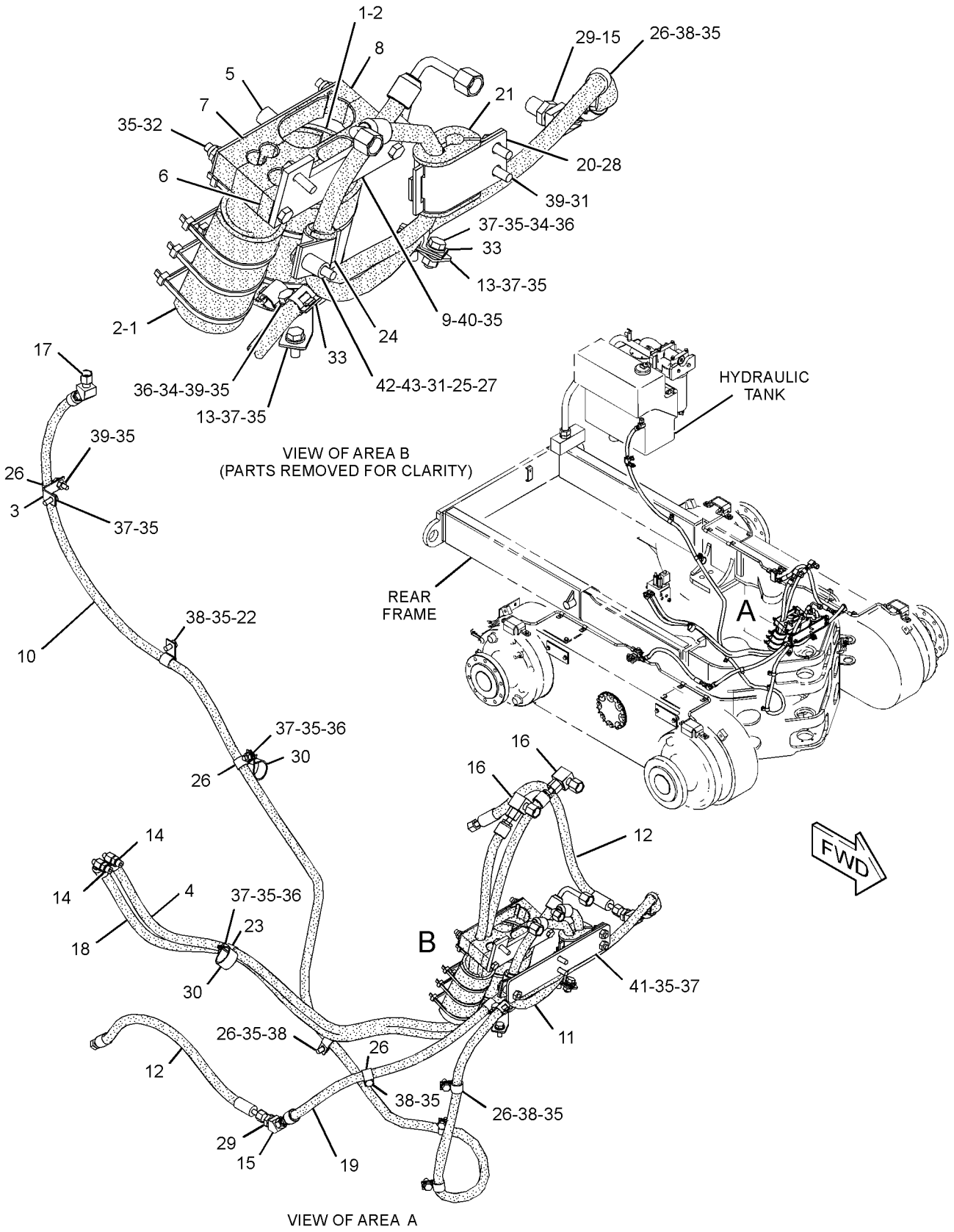

GRAPHIC #1 <END> g03391965

356-2972 LINES GP-SERVICE BRAKE–TANDEM

S/N: B551-UP

PART OF 349-6146 POWER TRAIN AR

SMCS-4257 **i04783075**

NOTE	REF NO	GRAPHIC REF	PART NUMBER	QTY	PART NAME 1 2 3 4 5 6 (PRODUCT LEVEL)	SEE PAGE
	1	1	**372-2526**	2	BLOCK	
	2	1	**309-6887**	4	GUARD	
	3	1	**310-6179**	2	PLATE	
	4	1	**318-9105**	1	TUBE AS	
	5	1	**318-9127**	1	TUBE AS	
	6	1	**318-9128**	1	TUBE AS	
	7	1	**318-9129**	1	TUBE AS	
	8	1	*148-8353*	2	ELBOW AS	
					(EACH INCLUDES)	
		1	**6V-9001**	1	ELBOW	
		1	**3J-1907**	1	SEAL-O-RING	
		1	**6V-8397**	1	SEAL-O-RING	
	9	1	*148-8365*	4	ELBOW AS	
					(EACH INCLUDES)	
		1	**8T-6876**	1	ELBOW	
		1	**3J-1907**	1	SEAL-O-RING	
		1	**6V-8398**	1	SEAL-O-RING	
	10	1	*148-8407*	4	PLUG AS	
					(EACH INCLUDES)	
		1	**9S-4191**	1	PLUG (9/16-18-THD)	
		1	**3J-1907**	1	SEAL-O-RING	
	11	1	*150-4043*	4	CONNECTOR AS	
					(EACH INCLUDES)	
		1	**6V-9873**	1	CONNECTOR	
		1	**3J-1907**	1	SEAL-O-RING	
		1	**6V-8398**	1	SEAL-O-RING	
	12	1	**5K-3294**	8	CLIP	
	13	1	**8T-4121**	12	WASHER-HARD (11X21X2.5-MM THK)	
M	14	1	**8T-4195**	8	BOLT (M10X1.5X30-MM)	
M	15	1	**8T-4186**	4	BOLT (M10X1.5X40-MM)	

M - METRIC PART

356-2972 **LINES GP-SERVICE BRAKE (**contd.**)** **i04783075**

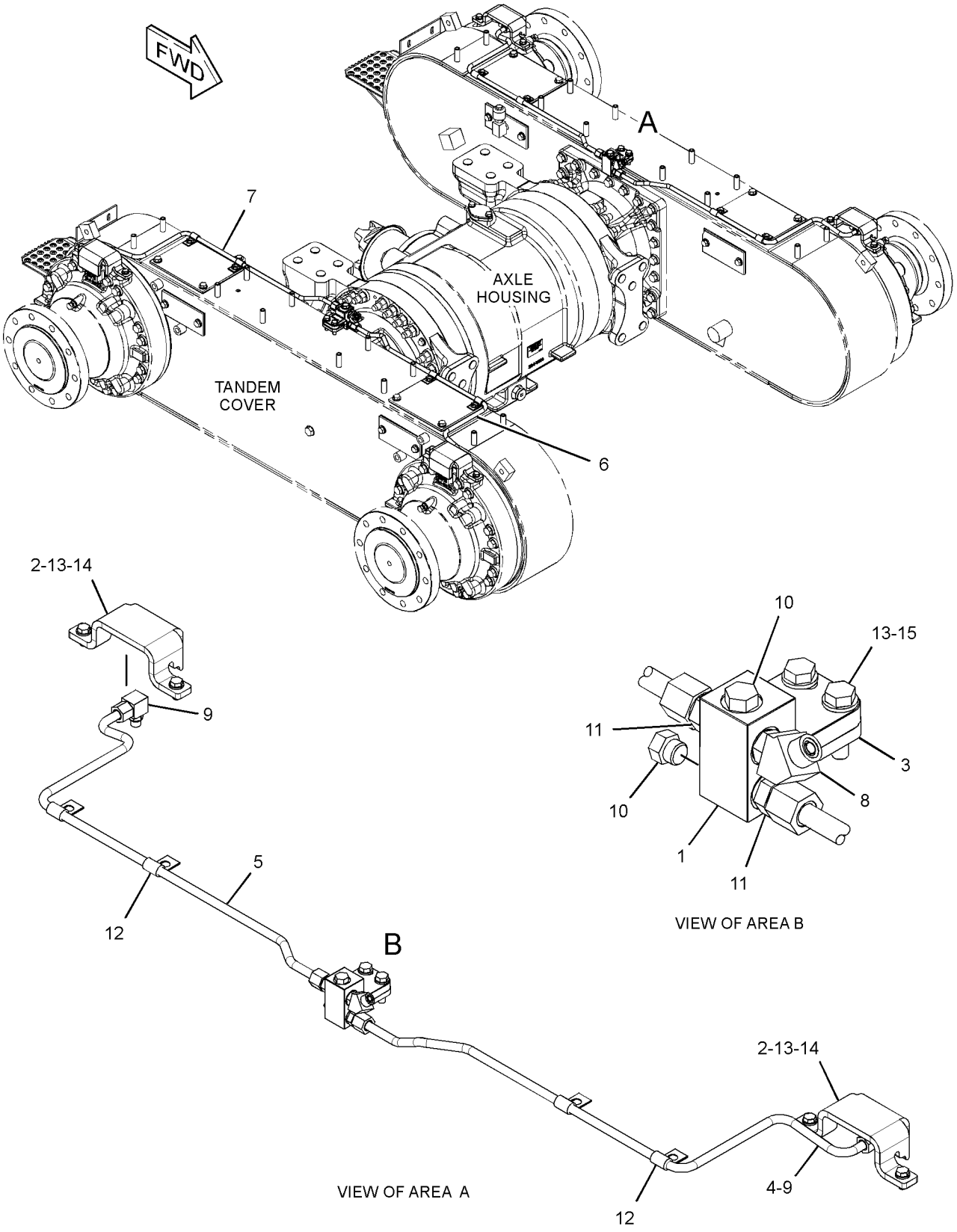

GRAPHIC #1 <END> g02985316

356-4256 LINES GP-SERVICE BRAKE

S/N: B551-UP

PART OF 367-7798 OPTION AR-REGIONAL

SMCS-4257 **i06144791**

NOTE	REF NO	GRAPHIC REF	PART NUMBER	QTY	PART NAME 1 2 3 4 5 6 (PRODUCT LEVEL)	SEE PAGE
Y	1	1	**346-6901**	1	PEDAL GP-BRAKE, XMSN & GOV	830
	2	1	**249-4091**	4	BLOCK	
	3	1	**253-3476**	1	PLATE AS	
	4	1	**281-9356**	3	PLATE	
	5	1	**286-5672**	1	PLATE AS	
M		1	**6V-8224**	3	NUT-WELD (M10X1.5-THD)	
		1	**124-2528**	2	SPACER (11X20X10-MM THK)	
Y	6	1	*356-4257*	1	LINES GP-ACCUMULATOR (BRAKE)	504
M	7	1	**8T-6466**	3	BOLT (M10X1.5X60-MM)	
	8	1	**5P-9299**	5	CLIP (LOOP)	
	9	1	**361-3138**	4	CLAMP	
	10	1	**8T-4121**	18	WASHER-HARD (11X21X2.5-MM THK)	
M	11	1	**8T-4137**	8	BOLT (M10X1.5X20-MM)	
M	12	1	**8T-4186**	2	BOLT (M10X1.5X40-MM)	
M	13	1	**8T-4191**	1	BOLT (M10X1.5X16-MM)	
M	14	1	**8T-4195**	5	BOLT (M10X1.5X30-MM)	
	15	1	**8T-4222**	3	WASHER-PLATED (11X32X2.5-MM THK)	
M	16	1	**8T-4182**	2	BOLT (M10X1.5X45-MM)	

M - METRIC PART
Y - SEPARATE ILLUSTRATION

356-4256 **LINES GP-SERVICE BRAKE (**contd.**)** **i06144791**

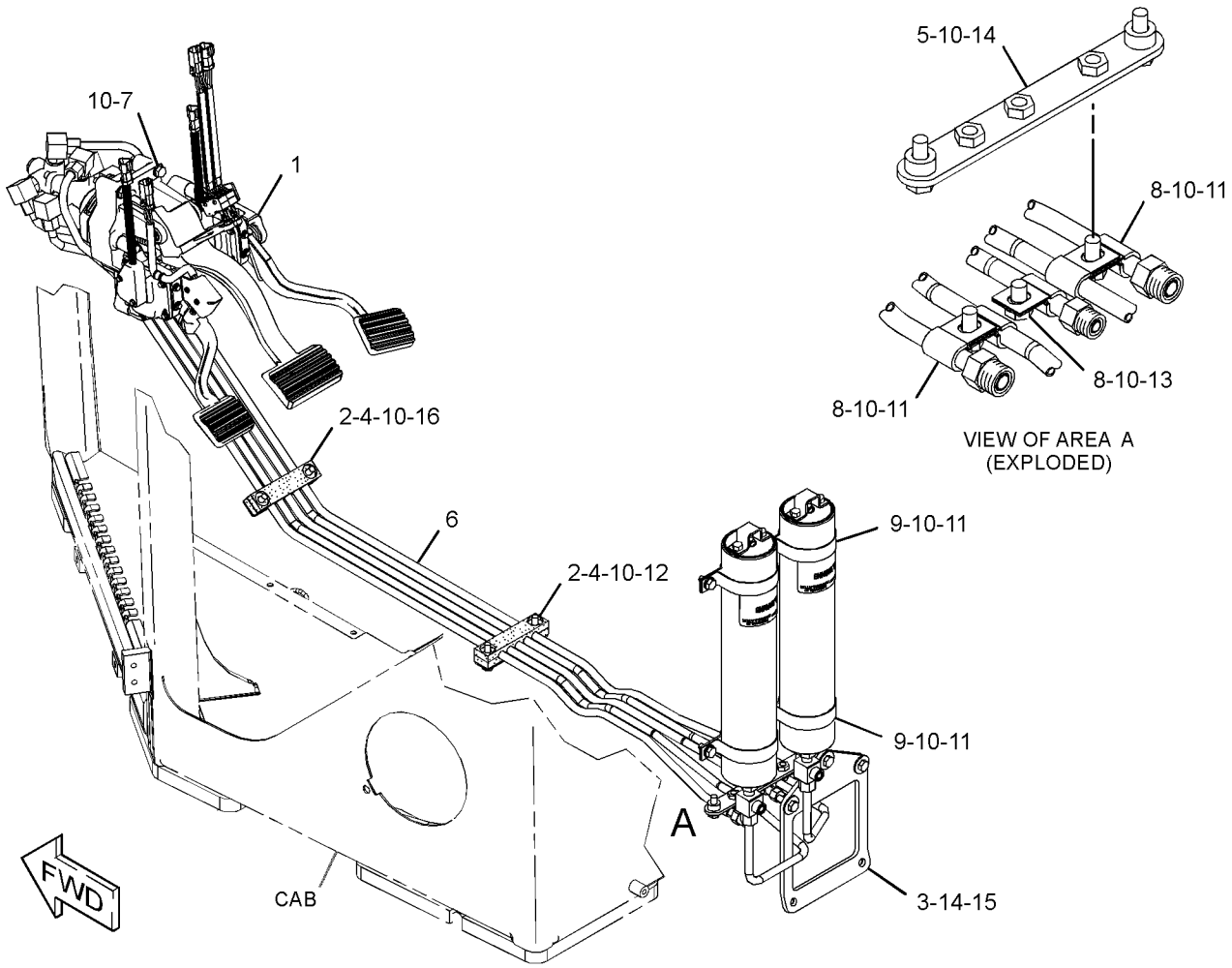

GRAPHIC #1 <END> g03839041

327-8568 ACCUMULATOR GP-BLADE CUSHION–CHARGED

S/N: B551-UP

FIELD REPLACEMENT ORDER 348-9258–PAGE: 517

PART OF 360-9698 LINES GP-HYDRAULIC

SMCS-5077 **i06669087**

NOTE	REF NO	GRAPHIC REF	PART NUMBER	QTY	PART NAME 1 2 3 4 5 6 (PRODUCT LEVEL)	SEE PAGE
	1	1	**222-2367**	1	VALVE GP-ACCUMULATOR CHARGING (HYDRAULIC)	
		1	**190-3850**	1	CORE	
	2	1	**320-8117**	1	VALVE GP-SOLENOID (HYDRAULIC ACCUMULATOR)	
		1	**257-5022**	1	COIL AS	
	3	1	**241-0037**	1	FILM-INFORMATION (HYDRAULIC ACCUMULATOR)	
	4	1	**111-9110**	1	PROTECTOR-GAS VALVE	
	5	1	**5M-3062**	2	BOLT (3/8-16X0.75-IN)	
					AVAILABLE REPAIR KIT(S):	
			170-0493	1	KIT-SEAL (HYDRAULIC ACCUMULATOR)	
					(INCLUDES SEAL-O-RINGS, BACKUP WASHERS, PISTON SEAL & PISTON RING)	

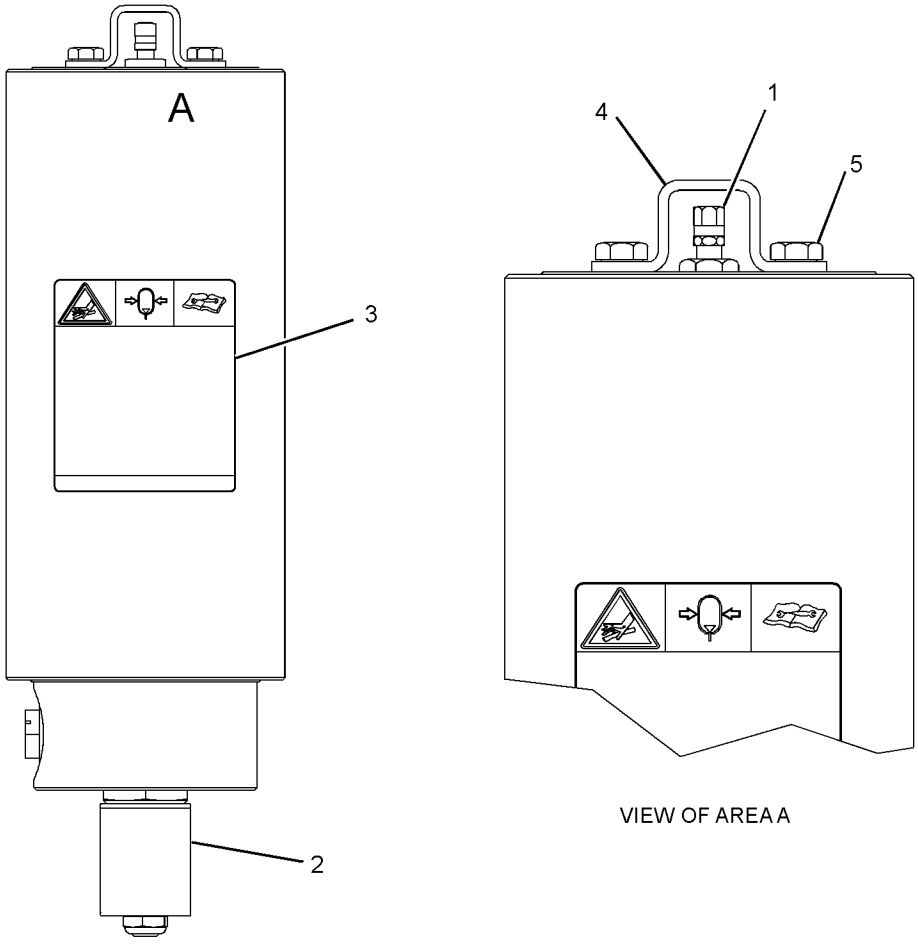

VIEW OF AREA A

GRAPHIC #1 <END> g02046995

348-9256 ACCUMULATOR GP-BLADE CUSHION–CHARGED

S/N: B551-UP

FIELD REPLACEMENT ORDER 348-9258–PAGE: 517

PART OF 358-5267 LINES GP-HYDRAULIC

SMCS-5077 **i06669090**

NOTE	REF NO	GRAPHIC REF	PART NUMBER	QTY	PART NAME 1 2 3 4 5 6 (PRODUCT LEVEL)	SEE PAGE
	1	1	**222-2367**	1	VALVE GP-ACCUMULATOR CHARGING (HYDRAULIC)	
		1	**190-3850**	1	CORE	
	2	1	**320-8117**	1	VALVE GP-SOLENOID (HYDRAULIC ACCUMULATOR)	
		1	**257-5022**	1	COIL AS	
	3	1	**241-0037**	1	FILM-INFORMATION (HYDRAULIC ACCUMULATOR)	
	4	1	**111-9110**	1	PROTECTOR-GAS VALVE	
	5	1	**5M-3062**	2	BOLT (3/8-16X0.75-IN)	
					AVAILABLE REPAIR KIT(S):	
			170-0493	1	KIT-SEAL (HYDRAULIC ACCUMULATOR)	
					(INCLUDES O-RINGS, WASHERS, RINGS & SEAL)	

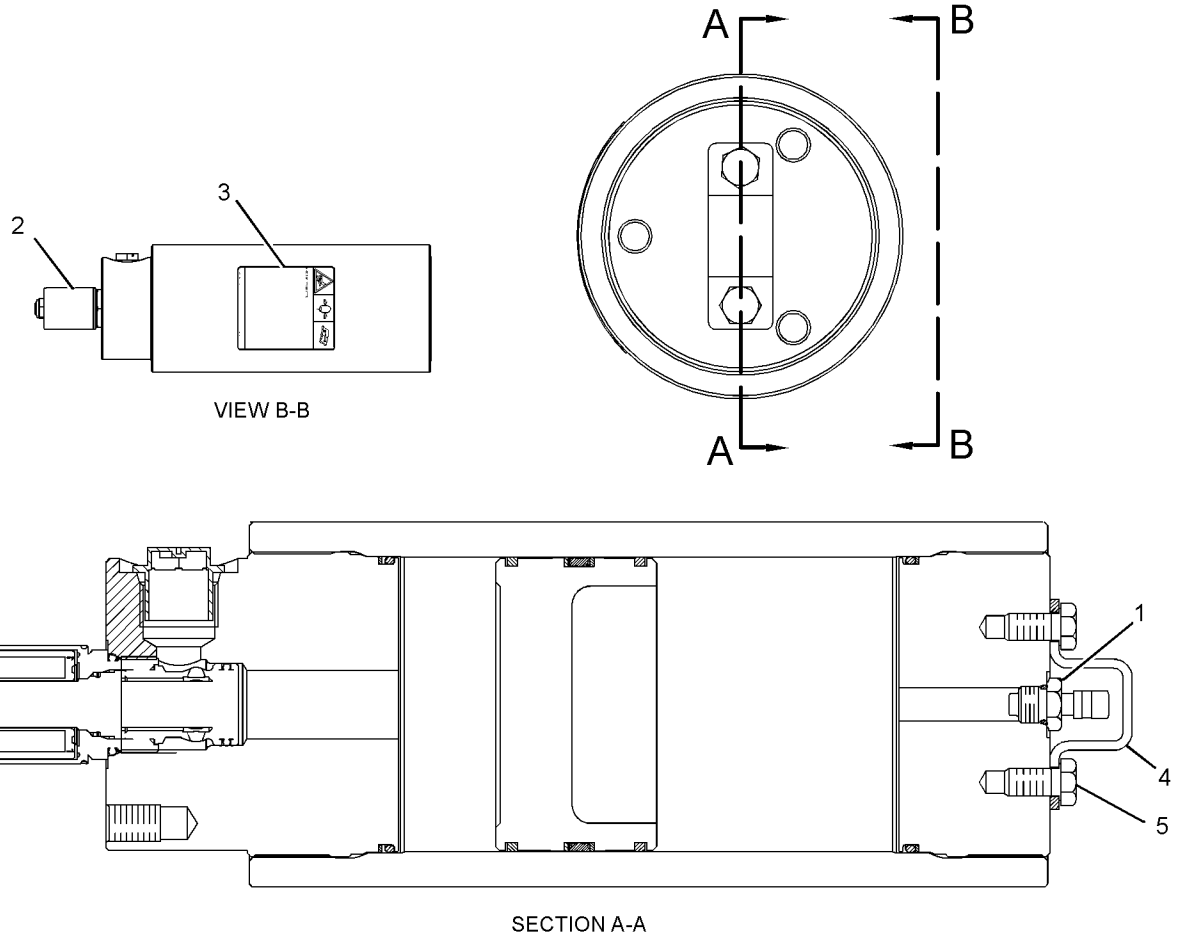

GRAPHIC #1 <END> g01926573

348-9258 ACCUMULATOR GP-BLADE CUSHION—UNCHARGED

S/N: B551-UP

FIELD REPLACEMENT FOR 348-9256—PAGE: 516: FOR 327-8568—PAGE: 515

SMCS-5077 **i05545249**

NOTE	REF NO	GRAPHIC REF	PART NUMBER	QTY	PART NAME 1 2 3 4 5 6 (PRODUCT LEVEL)	SEE PAGE
	1	1	**5M-3062**	2	BOLT (3/8-16X0.75-IN)	
	2	1	**222-2367**	1	VALVE GP-ACCUMULATOR CHARGING	
	3	1	**111-9110**	1	PROTECTOR-GAS VALVE	
	4	1	**241-0037**	1	FILM-INFORMATION (HYDRAULIC ACCUMULATOR)	
					AVAILABLE REPAIR KIT(S):	
			170-0493	1	KIT-SEAL (HYDRAULIC ACCUMULATOR)	
					(INCLUDES SEAL-O-RINGS, BACKUP WASHERS, PISTON RINGS & PISTON SEAL)	

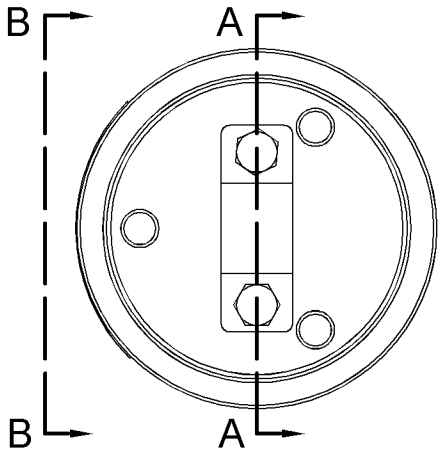

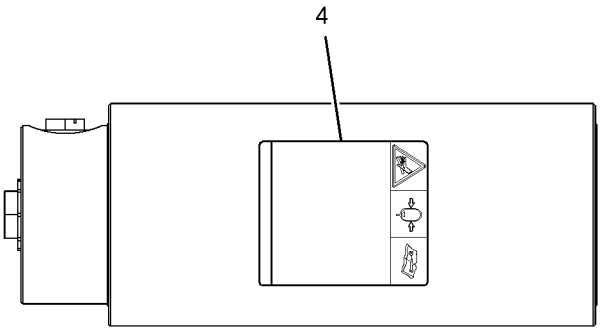

VIEW B-B

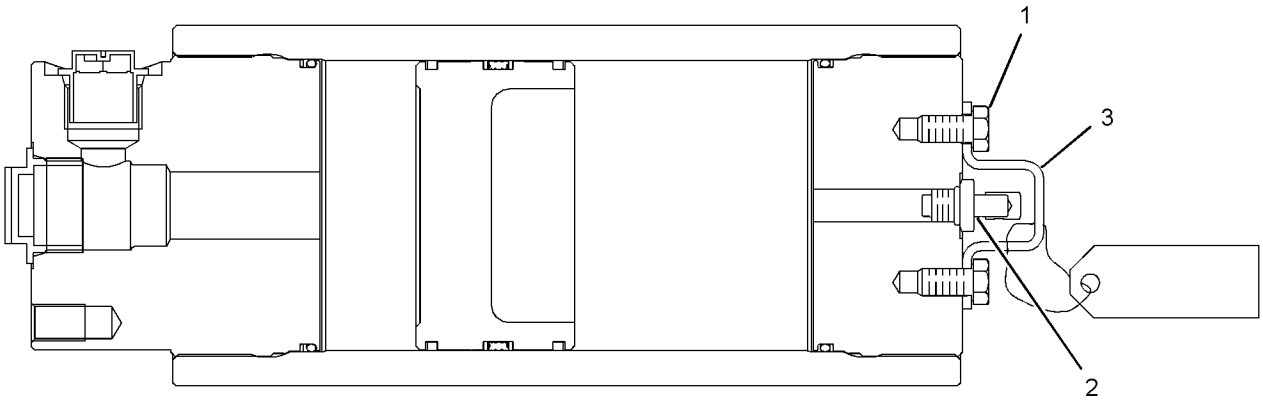

SECTION A-A

GRAPHIC #1 <END> g02029658

249-2308 BASE GP-OIL FILTER

S/N: B551-UP
INTERNAL BYPASS
PART OF 249-2307 FILTER GP-OIL

SMCS-5068 **i03635786**

NOTE	REF NO	GRAPHIC REF	PART NUMBER	QTY	PART NAME 1 2 3 4 5 6 (PRODUCT LEVEL)	SEE PAGE
	1	1	**7G-4998**	1	SPOOL-BYPASS	
	2	1	**7M-1297**	1	SPRING	
	4	1	**5P-7815**	1	SEAL-O-RING	
	5	1	**5P-7701**	1	SEAL-O-RING	
	6	1	**9S-8010**	1	PLUG	
	7	1	**9S-9334**	1	PLUG (1-5/16-12-THD)	

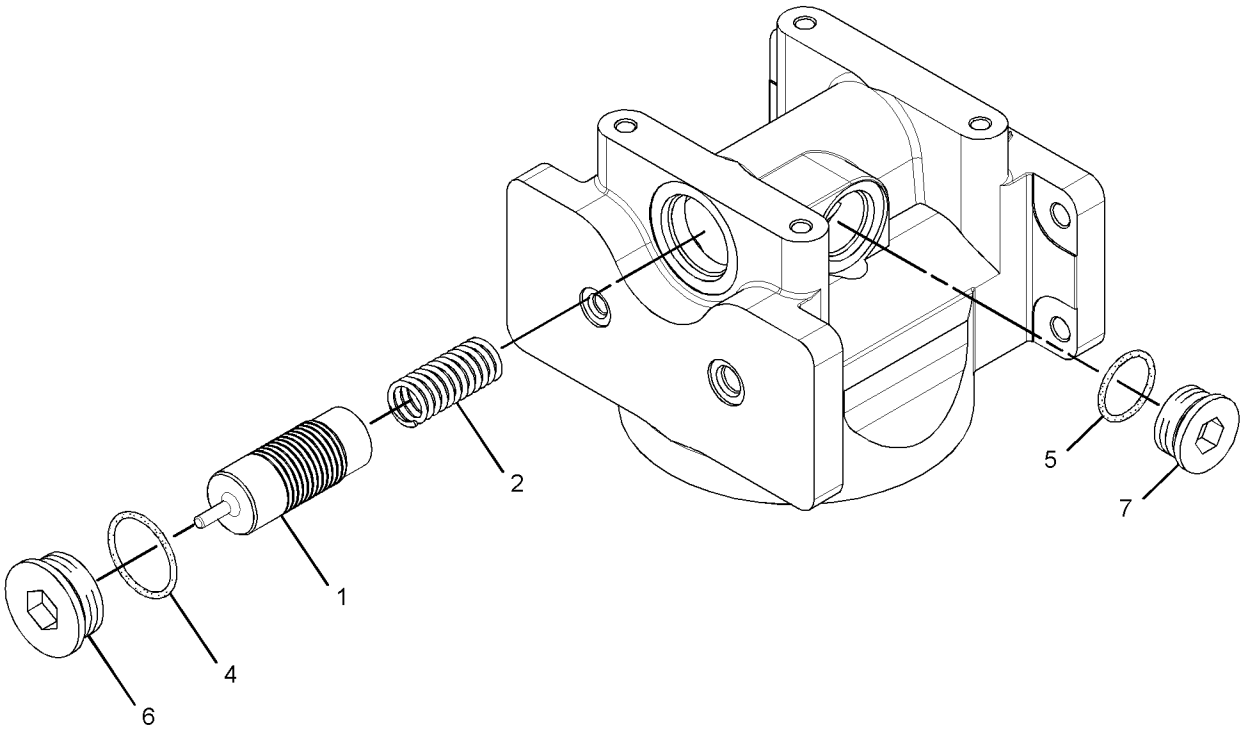

GRAPHIC #1 <END> g01442612

364-2035 CONTROL AR-HYDRAULIC—ACCUMULATOR

S/N: B551-UP

SMCS-5050 **i05924510**

NOTE	PART NUMBER	QTY	PART NAME 1 2 3 4 5 6 (PRODUCT LEVEL)	SEE PAGE
Y	*360-9698*	1	LINES GP-HYDRAULIC (BLADE LIFT)	577
Y	*321-6987*	1	SWITCH GP-ROCKER (BLADE CUSHION)	278

Y - SEPARATE ILLUSTRATION

<END>

364-2037 CONTROL AR-HYDRAULIC—ACCUMULATOR

S/N: B551-UP

CANNOT BE USED WITH 305-2927—PAGE: 563

SMCS-5050 **i06732640**

NOTE	PART NUMBER	QTY	PART NAME 1 2 3 4 5 6 (PRODUCT LEVEL)	SEE PAGE
Y	*358-5267*	1	LINES GP-HYDRAULIC (BLADE LIFT)	573
Y	*321-6987*	1	SWITCH GP-ROCKER (BLADE CUSHION)	278

Y - SEPARATE ILLUSTRATION

<END>

365-3354 CONTROL AR-HYDRAULIC—DOZER ANGLE, FRONT LIFT, RIPPER

S/N: B551-UP

FOR USE WITH 312-2204—PAGE: 889, 351-5178—PAGE: 10

SMCS-5050 **i07640557**

NOTE	PART NUMBER	QTY	PART NAME 1 2 3 4 5 6 (PRODUCT LEVEL)	SEE PAGE
Y	*360-7616*	1	CONTROL GP-ELECTROHYDRAULIC (AUXILIARY CONTROL)	775
Y	*344-2764*	1	CONTROL GP-ELECTROHYDRAULIC (RIPPER)	769
Y	*311-8592*	1	ELECTRONICS GP-IMPLEMENT (IMPLEMENT 2)	171
Y	*305-2946*	1	LINES GP-HYDRAULIC (FRONT LIFT)	565
Y	*305-2947*	1	LINES GP-HYDRAULIC (DOZER, SNOW PLOW)	567
Y	*473-0557*	1	LINES GP-RIPPER	608
Y	**487-3028**	1	VALVE GP-BANK 4 (FRONT FRAME, REAR)	645
Y	**487-3017**	1	VALVE GP-BANK 7	681
Y	*319-5180*	1	WIRING GP-AUXILIARY (FRONT)	285
Y	*329-6117*	1	WIRING GP-ELECTRONIC CONTROL (HYDRAULIC IMPLEMENT)	295
M	**8T-4136**	8	BOLT (M10X1.5X25-MM)	
	8T-4121	8	WASHER-HARD (11X21X2.5-MM THK)	

M - METRIC PART
Y - SEPARATE ILLUSTRATION

<END>

365-3355 CONTROL AR-HYDRAULIC—FRONT LIFT, RIPPER, SCARIFIER

S/N: B551-UP

FOR USE WITH 312-2204—PAGE: 889, 351-5178—PAGE: 10, 364-2034—PAGE: 9, 324-0889—PAGE: 896

SMCS-5050 **i07710202**

NOTE	PART NUMBER	QTY	PART NAME 1 2 3 4 5 6 (PRODUCT LEVEL)	SEE PAGE
Y	*360-7616*	1	CONTROL GP-ELECTROHYDRAULIC (AUXILIARY CONTROL)	775
Y	*344-2764*	1	CONTROL GP-ELECTROHYDRAULIC (RIPPER)	769
Y	*311-8592*	1	ELECTRONICS GP-IMPLEMENT (IMPLEMENT 2)	171
Y	*305-2946*	1	LINES GP-HYDRAULIC (FRONT LIFT)	565
Y	*305-2953*	1	LINES GP-HYDRAULIC (SCARIFIER)	571
Y	*473-0557*	1	LINES GP-RIPPER	608
Y	**487-3028**	1	VALVE GP-BANK 4 (FRONT FRAME, REAR)	645
Y	**487-3016**	1	VALVE GP-BANK 7 (FRONT FRAME)	676
Y	*319-5180*	1	WIRING GP-AUXILIARY (FRONT)	285
Y	*329-6117*	1	WIRING GP-ELECTRONIC CONTROL (HYDRAULIC IMPLEMENT)	295
M	**8T-4136**	8	BOLT (M10X1.5X25-MM)	
	8T-4121	8	WASHER-HARD (11X21X2.5-MM THK)	

M - METRIC PART
Y - SEPARATE ILLUSTRATION

<END>

365-3368 CONTROL AR-HYDRAULIC—FRONT LIFT, RIPPER, WING MAST, WING TILT FLOAT

S/N: B551-UP

FOR USE WITH 312-2204—PAGE: 889, 351-5178—PAGE: 10

CANNOT BE USED WITH ANY OTHER CONTROL AR-HYDRAULIC

SMCS-5050 **i07622738**

NOTE	PART NUMBER	QTY	PART NAME 1 2 3 4 5 6 (PRODUCT LEVEL)	SEE PAGE
Y	*360-7615*	1	CONTROL GP-ELECTROHYDRAULIC (AUXILIARY)	775
Y	*344-2764*	1	CONTROL GP-ELECTROHYDRAULIC (RIPPER)	769
Y	*311-8592*	1	ELECTRONICS GP-IMPLEMENT (IMPLEMENT 2)	171
Y	*305-2946*	1	LINES GP-HYDRAULIC (FRONT LIFT)	565
Y	*473-0557*	1	LINES GP-RIPPER	608
Y	**487-3014**	1	VALVE GP-BANK 6 (FRONT FRAME)	658
Y	**487-3031**	1	VALVE GP-BANK 6 (FRONT FRAME, REAR)	671
Y	*319-5180*	1	WIRING GP-AUXILIARY (FRONT)	285
Y	*329-6117*	1	WIRING GP-ELECTRONIC CONTROL (HYDRAULIC IMPLEMENT)	295
M	**8T-4136**	4	BOLT (M10X1.5X25-MM)	
M	**8T-4195**	3	BOLT (M10X1.5X30-MM)	
	4H-1225	3	WASHER (11X22X6-MM THK)	
	8T-4121	4	WASHER-HARD (11X21X2.5-MM THK)	

M - METRIC PART
Y - SEPARATE ILLUSTRATION

<END>

365-3369 CONTROL AR-HYDRAULIC—FRONT LIFT, RIPPER, WING MAST, WING TILT

S/N: B551-UP

FOR USE WITH 312-2204—PAGE: 889, 351-5178—PAGE: 10

CANNOT BE USED WITH ANY OTHER CONTROL AR-HYDRAULIC

SMCS-5050 **i07710230**

NOTE	PART NUMBER	QTY	PART NAME 1 2 3 4 5 6 (PRODUCT LEVEL)	SEE PAGE
Y	*360-7615*	1	CONTROL GP-ELECTROHYDRAULIC (AUXILIARY)	775
Y	*344-2764*	1	CONTROL GP-ELECTROHYDRAULIC (RIPPER)	769
Y	*311-8592*	1	ELECTRONICS GP-IMPLEMENT (IMPLEMENT 2)	171
Y	*305-2946*	1	LINES GP-HYDRAULIC (FRONT LIFT)	565
Y	*473-0557*	1	LINES GP-RIPPER	608
Y	**487-3030**	1	VALVE GP-BANK 6 (FRONT FRAME, REAR)	667
Y	**487-3014**	1	VALVE GP-BANK 6 (FRONT FRAME)	658
Y	*319-5180*	1	WIRING GP-AUXILIARY (FRONT)	285
Y	*329-6117*	1	WIRING GP-ELECTRONIC CONTROL (HYDRAULIC IMPLEMENT)	295
M	**8T-4136**	4	BOLT (M10X1.5X25-MM)	
M	**8T-4195**	3	BOLT (M10X1.5X30-MM)	
	4H-1225	3	WASHER (11X22X6-MM THK)	
	8T-4121	4	WASHER-HARD (11X21X2.5-MM THK)	

M - METRIC PART
Y - SEPARATE ILLUSTRATION

<END>

365-3370 CONTROL AR-HYDRAULIC—DOZER ANGLE, FRONT LIFT, RIPPER, WING MAST, WING TILT

S/N: B551-UP

NO FLOAT

FOR USE WITH 312-2204—PAGE: 889, 351-5178—PAGE: 10

CANNOT BE USED WITH ANY OTHER CONTROL AR-HYDRAULIC

SMCS-5050 **i07705189**

NOTE	PART NUMBER	QTY	PART NAME 1 2 3 4 5 6 (PRODUCT LEVEL)	SEE PAGE
Y	*360-7615*	1	CONTROL GP-ELECTROHYDRAULIC (AUXILIARY)	775
Y	*344-2764*	1	CONTROL GP-ELECTROHYDRAULIC (RIPPER)	769
Y	*311-8592*	1	ELECTRONICS GP-IMPLEMENT (IMPLEMENT 2)	171
Y	*305-2946*	1	LINES GP-HYDRAULIC (FRONT LIFT)	565
Y	*305-2947*	1	LINES GP-HYDRAULIC (DOZER, SNOW PLOW)	567
Y	*473-0557*	1	LINES GP-RIPPER	608
Y	**487-3030**	1	VALVE GP-BANK 6 (FRONT FRAME, REAR)	667
Y	**487-3017**	1	VALVE GP-BANK 7 (FRONT FRAME)	681
Y	*319-5180*	1	WIRING GP-AUXILIARY (FRONT)	285
Y	*329-6117*	1	WIRING GP-ELECTRONIC CONTROL (HYDRAULIC IMPLEMENT)	295
M	**8T-4136**	4	BOLT (M10X1.5X25-MM)	
M	**8T-4195**	3	BOLT (M10X1.5X30-MM)	
	4H-1225	3	WASHER (11X22X6-MM THK)	
	8T-4121	4	WASHER-HARD (11X21X2.5-MM THK)	

M - METRIC PART
Y - SEPARATE ILLUSTRATION

<END>

365-3371 CONTROL AR-HYDRAULIC—DOZER ANGLE, FRONT LIFT, RIPPER, WING MAST, WING TILT FLOAT

S/N: B551-UP

FOR USE WITH 312-2204—PAGE: 889, 351-5178—PAGE: 10

CANNOT BE USED WITH ANY OTHER CONTROL AR-HYDRAULIC

SMCS-5050 **i07703965**

NOTE	PART NUMBER	QTY	PART NAME 1 2 3 4 5 6 (PRODUCT LEVEL)	SEE PAGE
Y	*360-7615*	1	CONTROL GP-ELECTROHYDRAULIC (AUXILIARY)	775
Y	*344-2764*	1	CONTROL GP-ELECTROHYDRAULIC (RIPPER)	769
Y	*311-8592*	1	ELECTRONICS GP-IMPLEMENT (IMPLEMENT 2)	171
Y	*305-2946*	1	LINES GP-HYDRAULIC (FRONT LIFT)	565
Y	*305-2948*	1	LINES GP-HYDRAULIC (DOZER ANGLE, SNOW PLOW)	569
Y	*473-0557*	1	LINES GP-RIPPER	608
Y	**487-3030**	1	VALVE GP-BANK 6 (FRONT FRAME, REAR)	667
Y	**487-3019**	1	VALVE GP-CONTROL (FRONT FRAME)	723
Y	*319-5180*	1	WIRING GP-AUXILIARY (FRONT)	285
Y	*329-6117*	1	WIRING GP-ELECTRONIC CONTROL (HYDRAULIC IMPLEMENT)	295
M	**8T-4136**	4	BOLT (M10X1.5X25-MM)	
M	**8T-4195**	3	BOLT (M10X1.5X30-MM)	
	4H-1225	3	WASHER (11X22X6-MM THK)	
	8T-4121	4	WASHER-HARD (11X21X2.5-MM THK)	

M - METRIC PART
Y - SEPARATE ILLUSTRATION

<END>

365-5539 CONTROL AR-HYDRAULIC—RIPPER

S/N: B551-UP

FOR USE WITH 324-0889—PAGE: 896

CANNOT BE USED WITH 351-5178—PAGE: 10

SMCS-5050 **i07703618**

NOTE	PART NUMBER	QTY	PART NAME 1 2 3 4 5 6 (PRODUCT LEVEL)	SEE PAGE
Y	*344-2764*	1	CONTROL GP-ELECTROHYDRAULIC (RIPPER)	769
Y	*473-0557*	1	LINES GP-RIPPER	608
Y	**487-3028**	1	VALVE GP-BANK 4 (FRONT FRAME, REAR)	645
Y	**487-3013**	1	VALVE GP-BANK 5 (FRONT FRAME)	650
M	**8T-4136**	8	BOLT (M10X1.5X25-MM)	
	8T-4121	8	WASHER-HARD (11X21X2.5-MM THK)	

M - METRIC PART
Y - SEPARATE ILLUSTRATION

<END>

365-5540 CONTROL AR-HYDRAULIC—FRONT LIFT, RIPPER

S/N: B551-UP

FOR USE WITH 312-2204—PAGE: 889, 351-5178—PAGE: 10

CANNOT BE USED WITH ANY OTHER CONTROL AR-HYDRAULIC

SMCS-5050 **i07763096**

NOTE	PART NUMBER	QTY	PART NAME 1 2 3 4 5 6 (PRODUCT LEVEL)	SEE PAGE
Y	*344-2766*	1	CONTROL GP-ELECTROHYDRAULIC	773
Y	*305-2946*	1	LINES GP-HYDRAULIC (FRONT LIFT)	565
Y	*473-0557*	1	LINES GP-RIPPER	608
Y	**487-3028**	1	VALVE GP-BANK 4 (FRONT FRAME, REAR)	645
Y	**487-3014**	1	VALVE GP-BANK 6 (FRONT FRAME)	658
M	**8T-4136**	8	BOLT (M10X1.5X25-MM)	
	8T-4121	8	WASHER-HARD (11X21X2.5-MM THK)	

M - METRIC PART
Y - SEPARATE ILLUSTRATION

<END>

365-5541 CONTROL AR-HYDRAULIC—DOZER ANGLE, FRONT LIFT, RIPPER, WING MAST, WING TILT FLOAT

S/N: B551-UP

FOR USE WITH 312-2204—PAGE: 889, 351-5178—PAGE: 10

CANNOT BE USED WITH ANY OTHER CONTROL AR-HYDRAULIC

SMCS-5050 **i07746463**

NOTE	PART NUMBER	QTY	PART NAME 1 2 3 4 5 6 (PRODUCT LEVEL)	SEE PAGE
Y	*360-7615*	1	CONTROL GP-ELECTROHYDRAULIC (AUXILIARY)	775
Y	*344-2764*	1	CONTROL GP-ELECTROHYDRAULIC (RIPPER)	769
Y	*311-8592*	1	ELECTRONICS GP-IMPLEMENT (IMPLEMENT 2)	171
Y	*305-2946*	1	LINES GP-HYDRAULIC (FRONT LIFT)	565
Y	*305-2948*	1	LINES GP-HYDRAULIC (DOZER ANGLE, SNOW PLOW)	569
Y	*473-0557*	1	LINES GP-RIPPER	608
Y	**487-3031**	1	VALVE GP-BANK 6 (FRONT FRAME, REAR)	671
Y	**487-3019**	1	VALVE GP-CONTROL (FRONT FRAME)	723
Y	*319-5180*	1	WIRING GP-AUXILIARY (FRONT)	285
Y	*329-6117*	1	WIRING GP-ELECTRONIC CONTROL (HYDRAULIC IMPLEMENT)	295
M	**8T-4136**	4	BOLT (M10X1.5X25-MM)	
M	**8T-4195**	3	BOLT (M10X1.5X30-MM)	
	4H-1225	3	WASHER (11X22X6-MM THK)	
	8T-4121	4	WASHER-HARD (11X21X2.5-MM THK)	

M - METRIC PART
Y - SEPARATE ILLUSTRATION

<END>

422-1612 CONTROL AR-HYDRAULIC

S/N: B551-UP

BASE 8

CANNOT BE USED WITH ANY OTHER CONTROL AR-HYDRAULIC

SMCS-5050 **i07736416**

NOTE	PART NUMBER	QTY	PART NAME 1 2 3 4 5 6 (PRODUCT LEVEL)	SEE PAGE
Y	**487-3027**	1	VALVE GP-BANK 3 (REAR)	642
Y	**487-3013**	1	VALVE GP-BANK 5 (FRONT FRAME)	650
M	**8T-4136**	8	BOLT (M10X1.5X25-MM)	
	8T-4121	8	WASHER-HARD (11X21X2.5-MM THK)	

M - METRIC PART
Y - SEPARATE ILLUSTRATION

<END>

438-5421 CONTROL AR-HYDRAULIC—SCARIFIER

S/N: B551-UP

FOR USE WITH 364-2034—PAGE: 9

CANNOT BE USED WITH ANY OTHER CONTROL AR-HYDRAULIC

SMCS-5050 **i07622874**

NOTE	PART NUMBER	QTY	PART NAME 1 2 3 4 5 6 (PRODUCT LEVEL)	SEE PAGE
Y	*344-2764*	1	CONTROL GP-ELECTROHYDRAULIC (RIPPER)	769
Y	*305-2953*	1	LINES GP-HYDRAULIC (SCARIFIER)	571
Y	**487-3027**	1	VALVE GP-BANK 3 (REAR)	642
Y	**487-3015**	1	VALVE GP-BANK 6 (FRONT FRAME)	662
M	**8T-4136**	8	BOLT (M10X1.5X25-MM)	
	8T-4121	8	WASHER-HARD (11X21X2.5-MM THK)	

M - METRIC PART
Y - SEPARATE ILLUSTRATION

<END>

438-5423 CONTROL AR-HYDRAULIC—FRONT LIFT

S/N: B551-UP

FOR USE WITH 312-2204—PAGE: 889

CANNOT BE USED WITH ANY OTHER CONTROL AR-HYDRAULIC, 351-5178—PAGE: 10

SMCS-5050 **i07659698**

NOTE	PART NUMBER	QTY	PART NAME 1 2 3 4 5 6 (PRODUCT LEVEL)	SEE PAGE
Y	*344-2765*	1	CONTROL GP-ELECTROHYDRAULIC	771
Y	*305-2946*	1	LINES GP-HYDRAULIC (FRONT LIFT)	565
Y	**487-3027**	1	VALVE GP-BANK 3 (REAR)	642
Y	**487-3014**	1	VALVE GP-BANK 6 (FRONT FRAME)	658
M	**8T-4136**	8	BOLT (M10X1.5X25-MM)	
	8T-4121	8	WASHER-HARD (11X21X2.5-MM THK)	

M - METRIC PART
Y - SEPARATE ILLUSTRATION

<END>

438-5425 CONTROL AR-HYDRAULIC—FRONT LIFT, WING MAST, WING TILT

S/N: B551-UP

FOR USE WITH 312-2204—PAGE: 889

CANNOT BE USED WITH ANY OTHER CONTROL AR-HYDRAULIC

SMCS-5050 **i07764769**

NOTE	PART NUMBER	QTY	PART NAME 1 2 3 4 5 6 (PRODUCT LEVEL)	SEE PAGE
Y	*360-7615*	1	CONTROL GP-ELECTROHYDRAULIC (AUXILIARY)	775
Y	*311-8592*	1	ELECTRONICS GP-IMPLEMENT (IMPLEMENT 2)	171
Y	*305-2946*	1	LINES GP-HYDRAULIC (FRONT LIFT)	565
Y	**487-3029**	1	VALVE GP-BANK 5 (REAR)	653
Y	**487-3014**	1	VALVE GP-BANK 6 (FRONT FRAME)	658
Y	*319-5180*	1	WIRING GP-AUXILIARY (FRONT)	285
Y	*329-6117*	1	WIRING GP-ELECTRONIC CONTROL (HYDRAULIC IMPLEMENT)	295
M	**8T-4136**	8	BOLT (M10X1.5X25-MM)	
	8T-4121	8	WASHER-HARD (11X21X2.5-MM THK)	

M - METRIC PART
Y - SEPARATE ILLUSTRATION

<END>

438-5426 CONTROL AR-HYDRAULIC—DOZER ANGLE, FRONT LIFT, SCARIFIER, WING MAST, WING TILT

S/N: B551-UP

FOR USE WITH 312-2204—PAGE: 889, 351-5178—PAGE: 10

CANNOT BE USED WITH ANY OTHER CONTROL AR-HYDRAULIC

SMCS-5050 **i07659505**

NOTE	PART NUMBER	QTY	PART NAME 1 2 3 4 5 6 (PRODUCT LEVEL)	SEE PAGE
Y	*360-7615*	1	CONTROL GP-ELECTROHYDRAULIC (AUXILIARY)	775
Y	*311-8592*	1	ELECTRONICS GP-IMPLEMENT (IMPLEMENT 2)	171
Y	*305-2946*	1	LINES GP-HYDRAULIC (FRONT LIFT)	565
Y	*305-2947*	1	LINES GP-HYDRAULIC (DOZER, SNOW PLOW)	567
Y	*305-2953*	1	LINES GP-HYDRAULIC (SCARIFIER)	571
Y	**487-3029**	1	VALVE GP-BANK 5 (REAR)	653
Y	**487-3018**	1	VALVE GP-BANK 8 (FRONT)	687
Y	*319-5180*	1	WIRING GP-AUXILIARY (FRONT)	285
Y	*329-6117*	1	WIRING GP-ELECTRONIC CONTROL (HYDRAULIC IMPLEMENT)	295
M	**8T-4136**	8	BOLT (M10X1.5X25-MM)	
	8T-4121	8	WASHER-HARD (11X21X2.5-MM THK)	

M - METRIC PART
Y - SEPARATE ILLUSTRATION

<END>

233-7721 CYLINDER & MTG GP-ARTICULATION

S/N: B551-UP

PART OF 577-1377 COMMON AR

SMCS-5265 **i02773199**

NOTE	REF NO	GRAPHIC REF	PART NUMBER	QTY	PART NAME 1 2 3 4 5 6 (PRODUCT LEVEL)	SEE PAGE
B	1	1	**2K-0420**	12	WASHER (1.766X3.5X0.032-IN THK)	
Y	2	1	**247-0096**	2	CYLINDER GP-ARTICULATION	535
	3	1	**305-3384**	4	PIN AS	
	4	1	**170-3093**	4	BUSHING	
	5	1	**3B-5316**	4	PIN-COTTER	
	6	1	**5P-1076**	4	WASHER-HARD (13.5X30X4-MM THK)	
M	7	1	**8T-4956**	4	BOLT (M12X1.75X35-MM)	

B - USE AS REQUIRED
M - METRIC PART
Y - SEPARATE ILLUSTRATION

233-7721 **CYLINDER & MTG GP-ARTICULATION** (contd.) **i02773199**

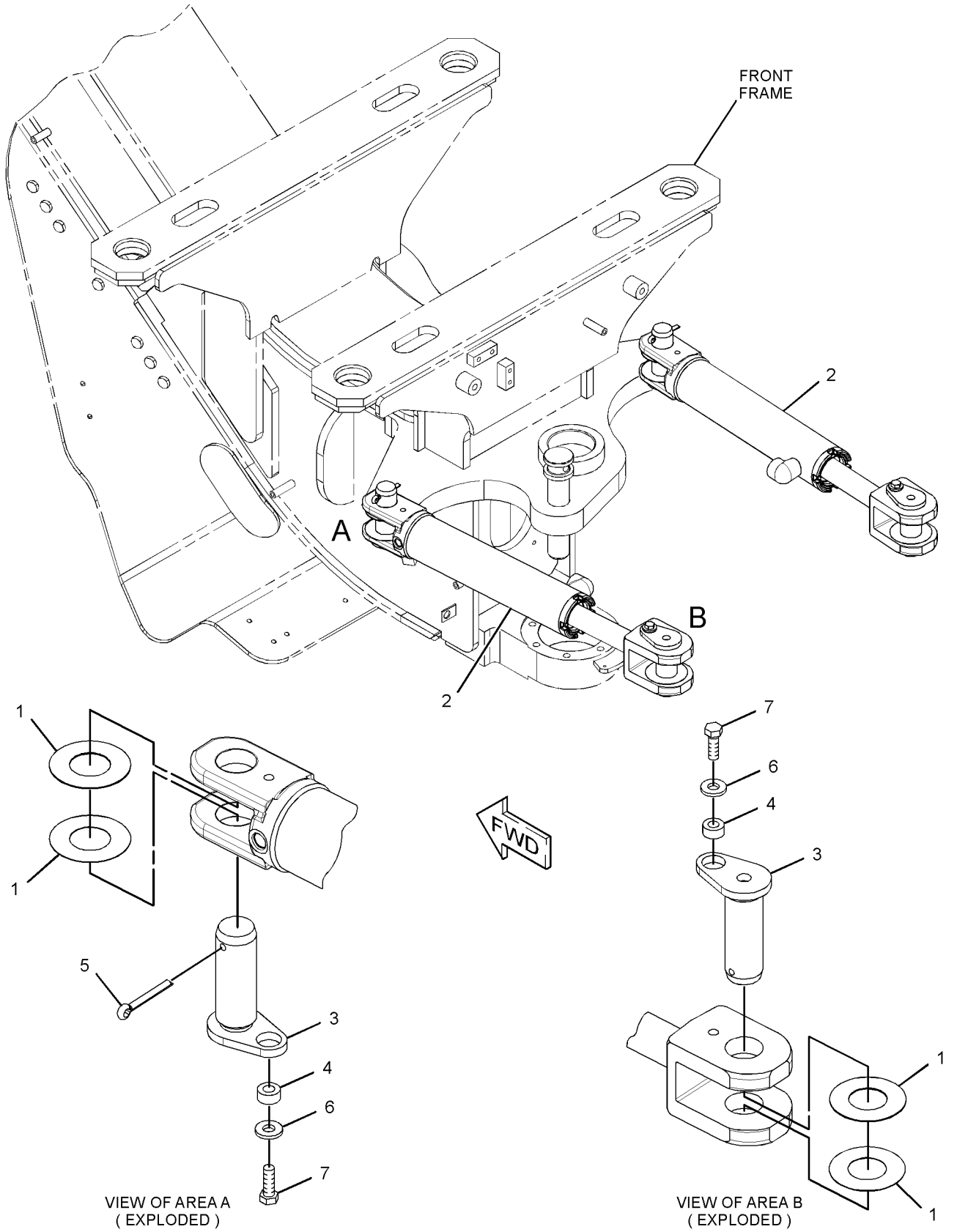

GRAPHIC #1 <END> g01343410

305-2897 CYLINDER & MTG GP-BLADE LIFT

S/N: B551-UP

PART OF 364-1989 OPTION AR-MACHINE

SMCS-5102 **i03921312**

NOTE	REF NO	GRAPHIC REF	PART NUMBER	QTY	PART NAME 1 2 3 4 5 6 (PRODUCT LEVEL)	SEE PAGE
	1	1	**3B-8485**	2	ELBOW	
	2	1	**8W-2842**	4	CAP AS	
					(EACH INCLUDES)	
	2A	1	**3P-1461**	1	SEAL-LIP TYPE	
	2B	1	**8D-7996**	1	BUSHING	
Y	3	1	**335-1974**	2	CYLINDER GP-LIFT (BLADE)	541
	4	1	**266-6149**	2	CAP	
	5	1	**279-5267**	4	INSERT	
B	6	1	**279-5268**	8	SHIM (0.5-MM THK)	
M	7	1	**114-6099**	4	BOLT (M24X3X80-MM)	
	8	1	**267-3506**	4	WASHER-HARD (26X44X4-MM THK)	
	9	1	**279-6631**	8	BOLT (M12X1.75X100-MM)	
	10	1	**279-6632**	8	WASHER (13.5X25.5X3-MM THK)	

B - USE AS REQUIRED
M - METRIC PART
Y - SEPARATE ILLUSTRATION

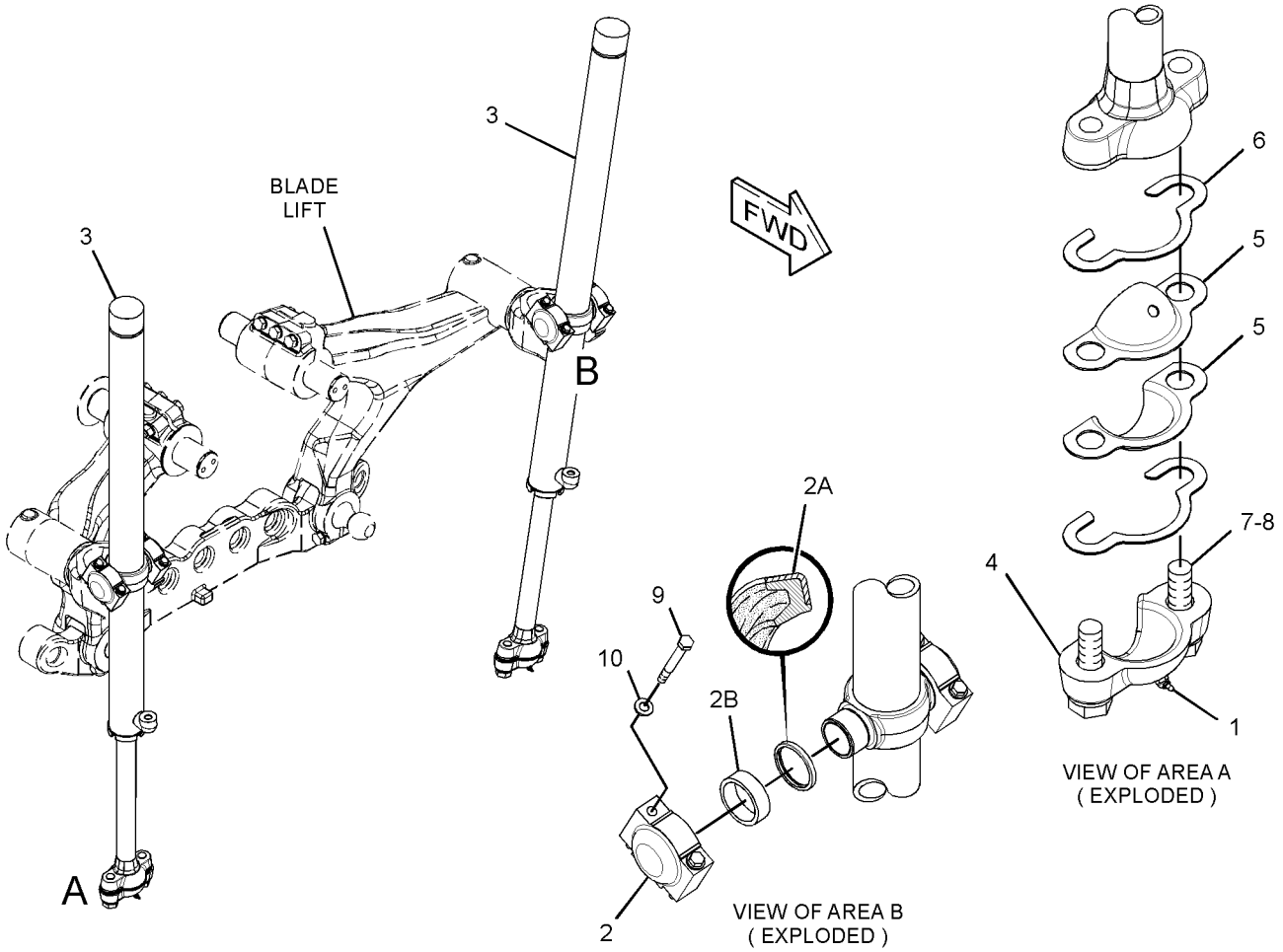

GRAPHIC #1 <END> g01347120

233-7723 CYLINDER & MTG GP-BLADE TIP

S/N: B551-UP

PART OF 577-1377 COMMON AR

SMCS-5106 **i07570373**

NOTE	REF NO	GRAPHIC REF	PART NUMBER	QTY	PART NAME 1 2 3 4 5 6 (PRODUCT LEVEL)	SEE PAGE
M	1	1	**8T-0389**	2	LOCKNUT (M10X1.5-THD)	
M	2	1	**8T-4198**	2	BOLT (M10X1.5X100-MM)	
Y	3	1	**131-7191**	1	CYLINDER GP-BLADE TIP	537
	4	1	**293-7546**	1	PIN	
	5	1	**293-7547**	1	PIN	
	6	1	*148-8374*	2	ELBOW AS	
					(EACH INCLUDES)	
		1	**6V-8723**	1	ELBOW	
		1	**3K-0360**	1	SEAL-O-RING	
		1	**6V-8397**	1	SEAL-O-RING	
	7	1	**2G-3967**	2	SPACER (1.266X3X0.781-IN)	
	8	1	**8F-4102**	2	PLATE-SEAL	

M - METRIC PART
Y - SEPARATE ILLUSTRATION

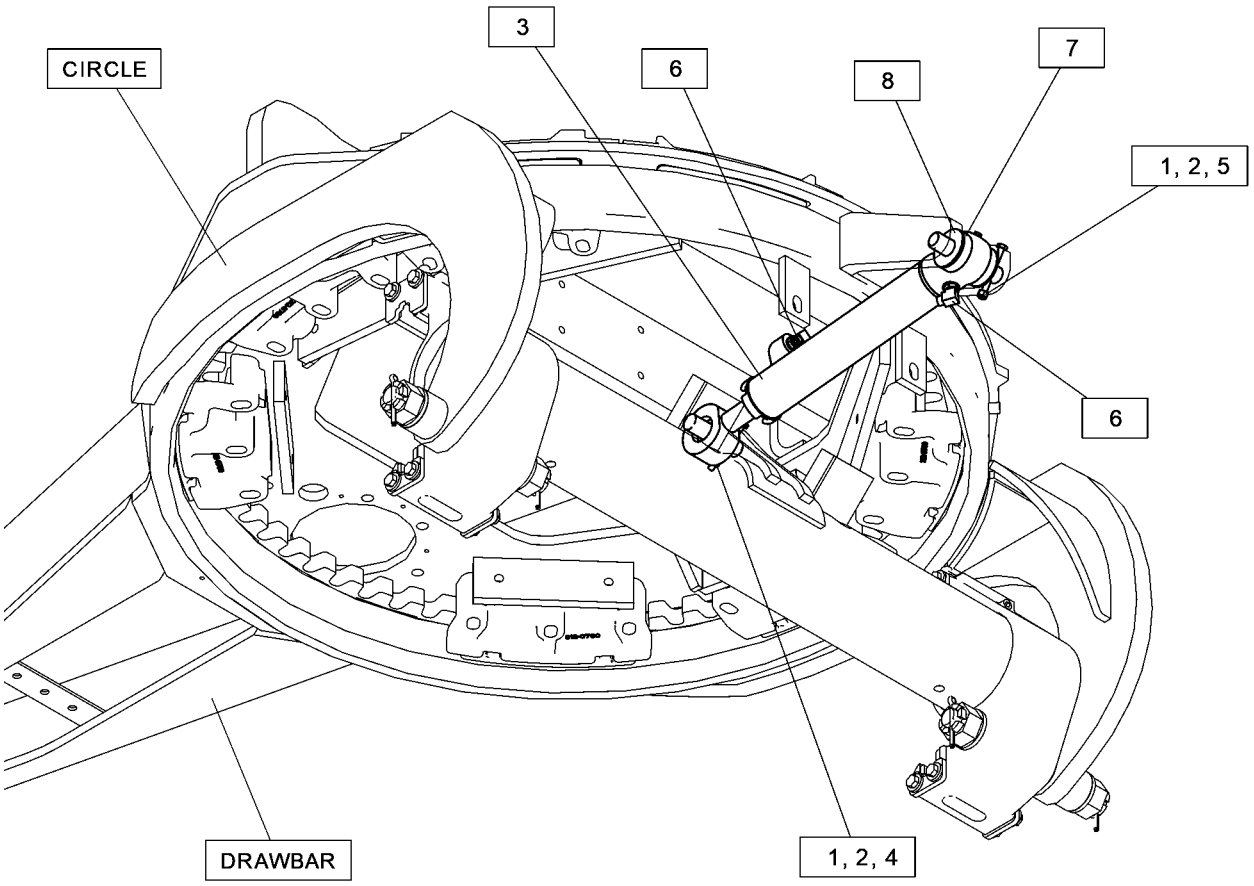

GRAPHIC #1 <END> g06403983

263-2788 CYLINDER & MTG GP-CENTERSHIFT

S/N: B551-UP

PART OF 577-1377 COMMON AR

SMCS-5223 **i02780464**

NOTE	REF NO	GRAPHIC REF	PART NUMBER	QTY	PART NAME 1 2 3 4 5 6 (PRODUCT LEVEL)	SEE PAGE
	1	1	**3B-8485**	2	ELBOW	
Y	2	1	**262-1907**	1	CYLINDER GP-CENTERSHIFT	539
	3	1	**266-6149**	2	CAP	
	4	1	**279-5267**	4	INSERT	
B	5	1	**279-5268**	8	SHIM (0.5-MM THK)	
M	6	1	**114-6099**	4	BOLT (M24X3X80-MM)	
	7	1	**267-3506**	4	WASHER-HARD (26X44X4-MM THK)	

B - USE AS REQUIRED
M - METRIC PART
Y - SEPARATE ILLUSTRATION

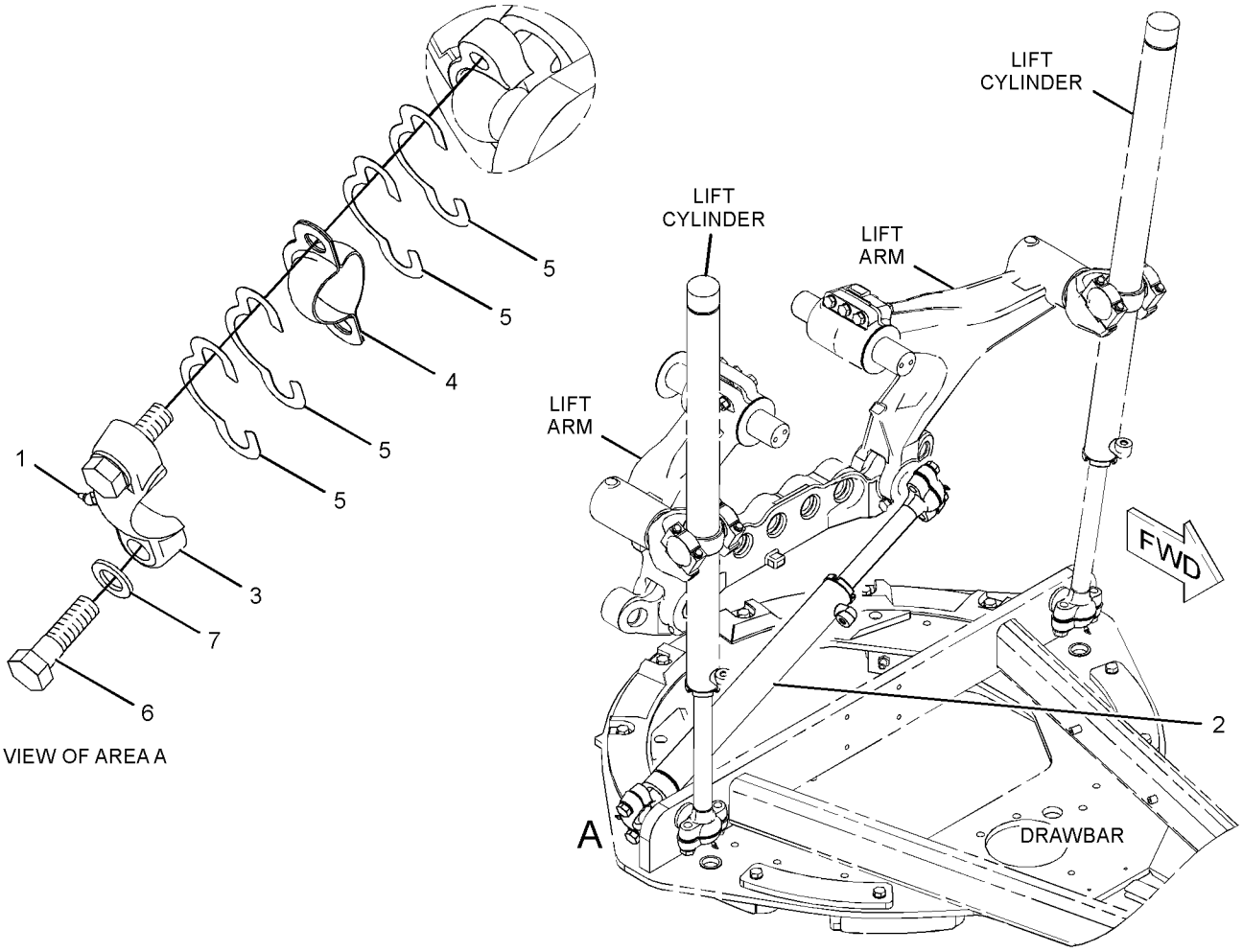

GRAPHIC #1 <END> g01339337

8W-2913 CYLINDER & MTG GP-SCARIFIER

S/N: B551-UP

PART OF 310-9425 SCARIFIER AR

SMCS-5213, 6165 **i03301191**

NOTE	REF NO	GRAPHIC REF	PART NUMBER	QTY	PART NAME 1 2 3 4 5 6 (PRODUCT LEVEL)	SEE PAGE
	1	1	**7K-9202**	4	SEAL-LIP TYPE	
	2	1	**8D-7086**	2	BEARING	
Y	3	1	**165-2510**	1	CYLINDER GP-SCARIFIER	543
	4	1	**6G-7187**	2	LOCK	
	5	1	**8D-7225**	2	PIN	
	6	1	**5P-2228**	4	BOLT (1/2-13X1-IN)	
	7	1	**8T-4223**	4	WASHER-HARD (13.5X25.5X3-MM THK)	

Y - SEPARATE ILLUSTRATION

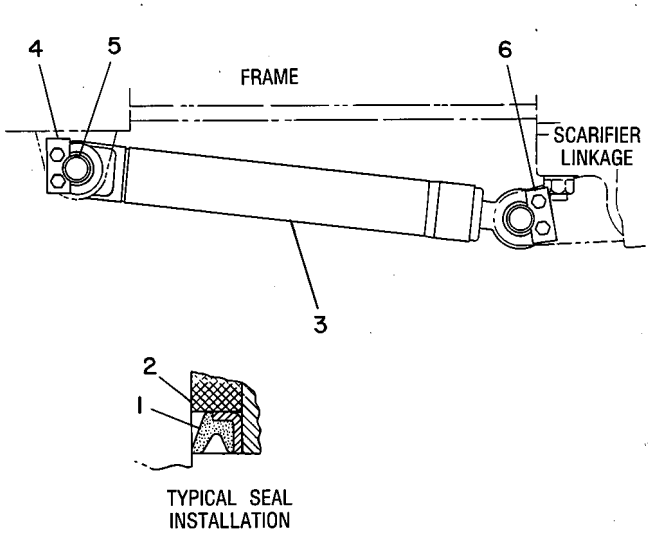

GRAPHIC #1 <END> g00108274

246-6115 CYLINDER & MTG GP-SIDESHIFT

S/N: B551-UP

PART OF 577-1377 COMMON AR

SMCS-5229 **i06857235**

NOTE	REF NO	GRAPHIC REF	PART NUMBER	QTY	PART NAME 1 2 3 4 5 6 (PRODUCT LEVEL)	SEE PAGE
	1	1	**248-5627**	1	BRACKET	
	2	1	**249-5643**	1	PIN	
	3	1	**312-6156**	1	PIN	
M	4	1	**166-1880**	4	BOLT (M20X2.5X75-MM)	
Y	5	1	**249-4116**	1	CYLINDER GP-SIDESHIFT	545
	6	1	**283-1578**	4	WASHER-HARD (22X45X10-MM THK)	
	7	1	**3B-4647**	2	PIN-COTTER	
	8	1	**6H-0211**	6	WASHER (1.563X2.75X0.06-IN THK)	
	9	1	**9R-0109**	4	WASHER (41X64X3-MM THK)	

M - METRIC PART
Y - SEPARATE ILLUSTRATION

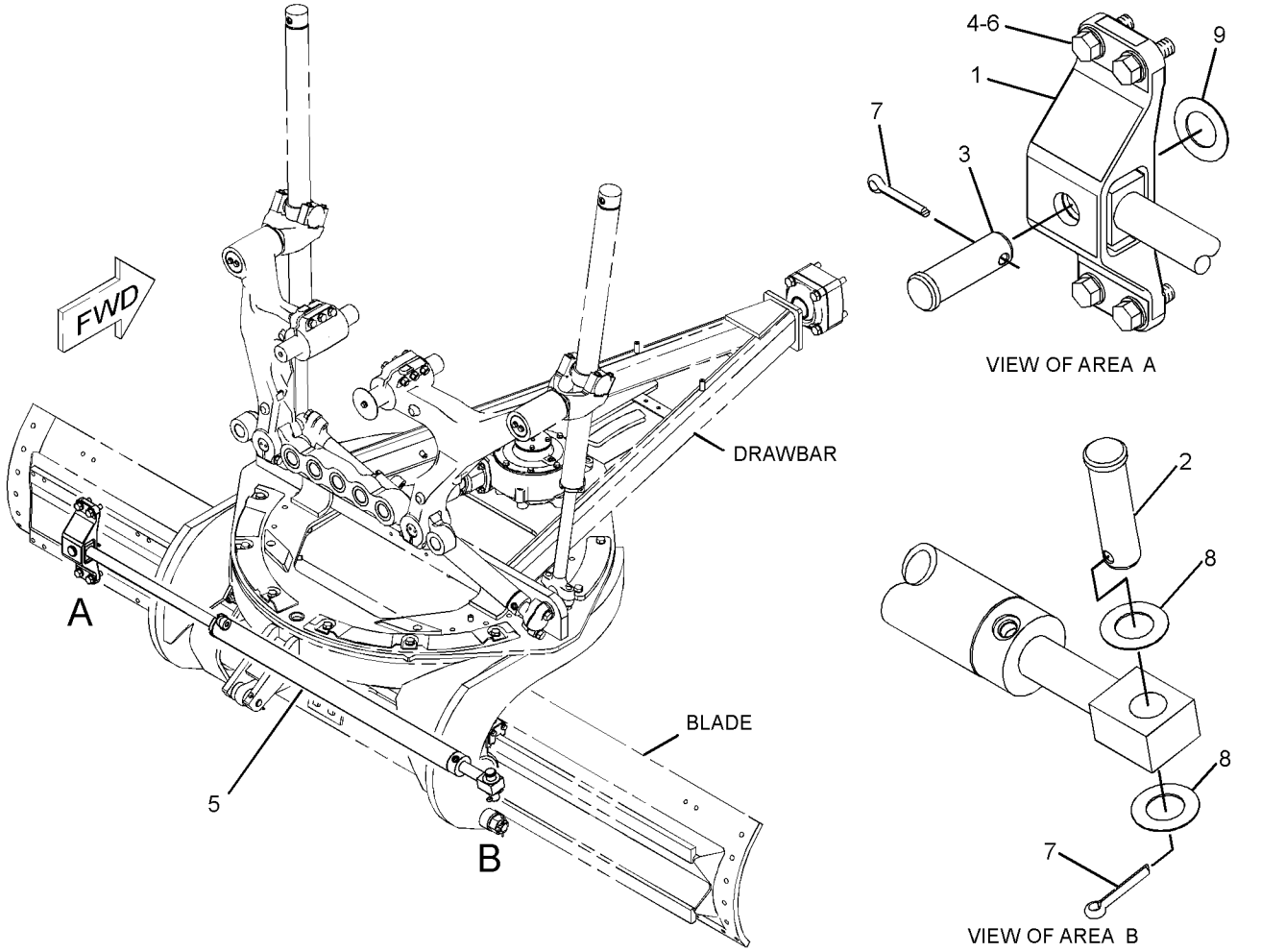

GRAPHIC #1 <END> g02494817

390-0593 CYLINDER & MTG GP-STEERING

S/N: B551-UP

PART OF 433-6117 AXLE GP-FRONT

SMCS-4303 **i05413874**

NOTE	REF NO	GRAPHIC REF	PART NUMBER	QTY	PART NAME 1 2 3 4 5 6 (PRODUCT LEVEL)	SEE PAGE
	1	1	**249-3505**	2	RACE-BEARING	
	2	1	**257-2758**	2	PIN AS	
	3	1	**258-9981**	2	SPACER (32.16X38.1X8.65-MM THK)	
	4	1	**274-6808**	2	BALL STUD	
	5	1	**285-0612**	2	CAP AS-DUST	
	6	1	**314-2606**	2	SEAL-BOOT	
Y	7	1	**389-6062**	2	CYLINDER GP-STEERING	547
	8	1	**2F-8057**	2	NUT-SLOTTED	
	9	1	**3B-4618**	2	PIN-COTTER	
	10	1	**3B-8489**	2	FITTING-GREASE (1/8-27 PTF)	
	11	1	**3J-8500**	2	RING-RETAINING	
	12	1	**4F-8824**	2	SEAL-O-RING	
	13	1	**8T-4121**	2	WASHER-HARD (11X21X2.5-MM THK)	
M	14	1	**8T-4137**	2	BOLT (M10X1.5X20-MM)	

M - METRIC PART
Y - SEPARATE ILLUSTRATION

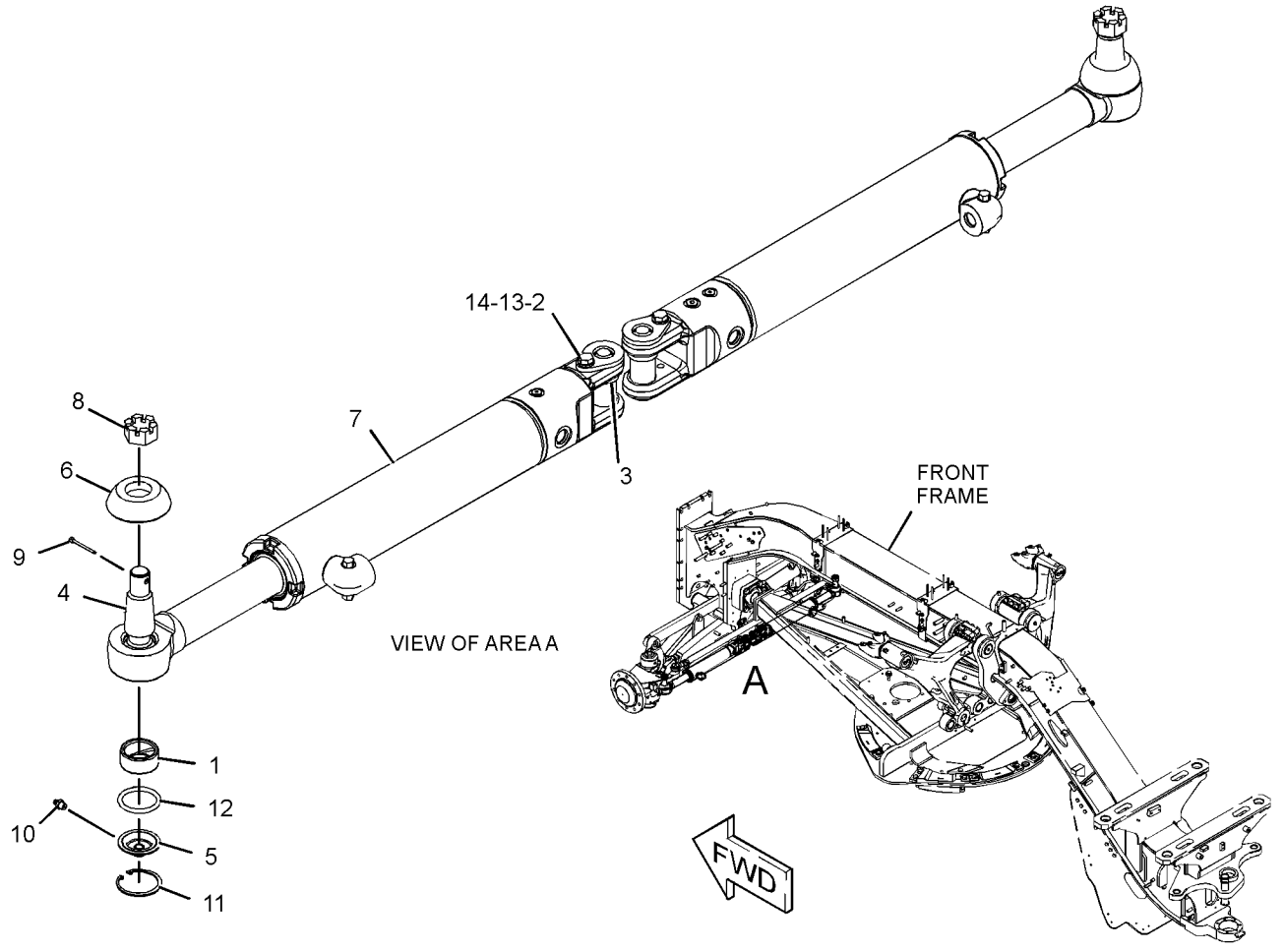

GRAPHIC #1 <END> g03420036

260-8713 CYLINDER & MTG GP-WHEEL LEAN

S/N: B551-UP

PART OF 433-6117 AXLE GP-FRONT

SMCS-5211 **i05906927**

NOTE	REF NO	GRAPHIC REF	PART NUMBER	QTY	PART NAME 1 2 3 4 5 6 (PRODUCT LEVEL)	SEE PAGE
	1	1	**264-9726**	1	PIN	
	2	1	**6G-7187**	1	LOCK	
	3	1	**7K-9202**	4	SEAL-LIP TYPE	
Y	4	1	**249-5299**	1	CYLINDER GP-WHEEL LEAN	549
	5	1	**3B-8489**	2	FITTING-GREASE (1/8-27 PTF)	
	6	1	**5P-8245**	2	WASHER-HARD (13.5X25.5X3-MM THK)	
M	7	1	**6V-3668**	2	BOLT (M12X1.75X30-MM)	

M - METRIC PART
Y - SEPARATE ILLUSTRATION

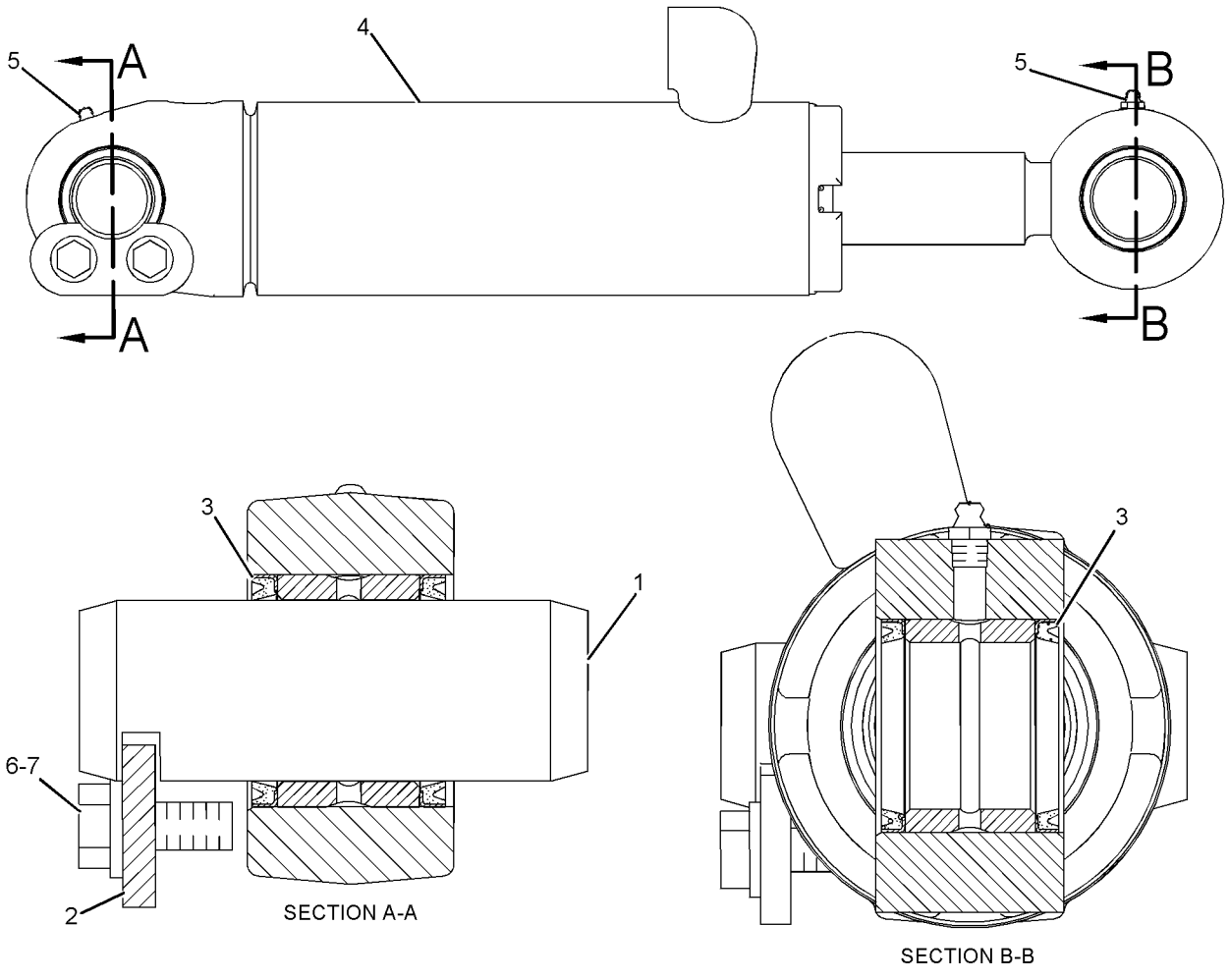

GRAPHIC #1 <END> g01112178

247-0096 CYLINDER GP-ARTICULATION

S/N: B551-UP
82.6-MM (3.3-IN) BORE X 282.3-MM (11.1-IN) STROKE
PART OF 233-7721 CYLINDER & MTG GP-ARTICULATION

SMCS-5265 **i06824783**

NOTE	REF NO	GRAPHIC REF	PART NUMBER	QTY	PART NAME 1 2 3 4 5 6 (PRODUCT LEVEL)	SEE PAGE
	1	1	**6E-0123**	1	HEAD AS	
J		1	**227-1143**	1	SEAL-WIPER	
	2	1	**249-5300**	1	CYLINDER AS	
	3	1	**249-5303**	1	PISTON	
	4	1	**249-5304**	1	ROD AS	
J	5	1	**167-2192**	1	SEAL AS-BUFFER	
J	6	1	**167-2302**	1	SEAL-U-CUP	
M	7	1	**173-9683**	1	BOLT (M30X3.5X90-MM)	
J	8	1	**175-7897**	1	SEAL-O-RING	
J	9	1	**227-1143**	1	SEAL-WIPER	
J	10	1	**4T-6779**	1	RING	
J	11	1	**6J-0793**	1	SEAL AS	
		1	**6J-0789**	1	RING-EXPANDER	
		1	**6J-0790**	1	SEAL	
J	12	1	**6J-1381**	1	RING-BACKUP	
J	13	1	**8J-6371**	1	RING-WEAR	
	14	1	**9X-8399**	1	WASHER (33X56X6-MM THK)	
					AVAILABLE REPAIR KIT(S):	
J			**246-5926**	1	KIT-SEAL (HYDRAULIC CYLINDER)	
					(INCLUDES RINGS & SEALS) (FOR USE WITH REHS1392)	

J - KIT MARKED J SERVICES PART(S) MARKED J
M - METRIC PART

247-0096 **CYLINDER GP-ARTICULATION (**contd.**)** **i06824783**

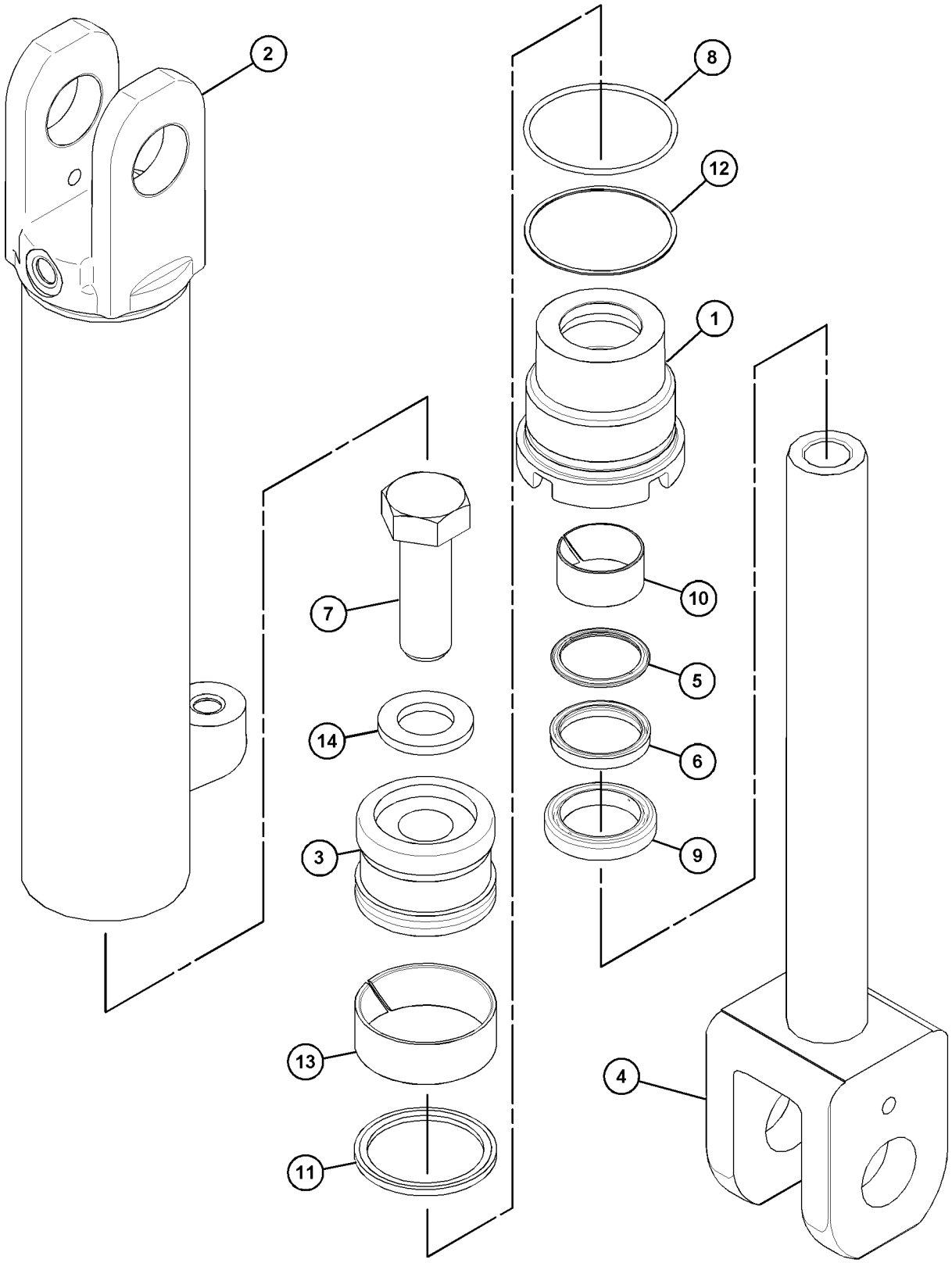

GRAPHIC #1 <END> g06130292

131-7191 CYLINDER GP-BLADE TIP

S/N: B551-UP
69.85-MM (2.75-IN) BORE X 307-MM (12.09-IN) STROKE
PART OF 233-7723 CYLINDER & MTG GP-BLADE TIP

SMCS-5106 **i06259435**

NOTE	REF NO	GRAPHIC REF	PART NUMBER	QTY	PART NAME 1 2 3 4 5 6 (PRODUCT LEVEL)	SEE PAGE
R	1	1	**131-7194**	1	CYLINDER AS	
		1	**2D-8652**	1	BEARING	
M	2	1	**178-2991**	1	BOLT-SELF-LOCKING (M20X2.5X70-MM)	
	3	1	**8T-3282**	1	WASHER-HARD (22X35X3.5-MM THK)	
J	4	1	**5J-7010**	1	SEAL AS	
J	5	1	**8J-0112**	1	RING-WEAR	
	6	1	**9T-2457**	1	PISTON	
J	7	1	**175-7895**	1	SEAL-O-RING	
J	8	1	**4J-9225**	1	RING-BACKUP	
	9	1	**6E-4940**	1	HEAD	
R	10	1	**131-7195**	1	ROD AS	
		1	**2D-8652**	1	BEARING	
J	11	1	**4T-6780**	1	RING-WEAR	
J	12	1	**167-2186**	1	SEAL AS-BUFFER	
J	13	1	**167-2294**	1	SEAL-U-CUP	
J	14	1	**226-8202**	1	SEAL-WIPER	
					AVAILABLE REPAIR KIT(S):	
J			**233-9204**	1	KIT-SEAL (HYDRAULIC CYLINDER)	
					(INCLUDES RINGS & SEALS) (FOR USE WITH REHS1392)	
			472-8025	1	KIT-HYDRAULIC CYLINDER SEAL	
					(INCLUDES RINGS & SEALS)	

J - KIT MARKED J SERVICES PART(S) MARKED J
M - METRIC PART
R - REMANUFACTURED PART MAY BE AVAILABLE

131-7191 **CYLINDER GP-BLADE TIP (**contd.**)** **i06259435**

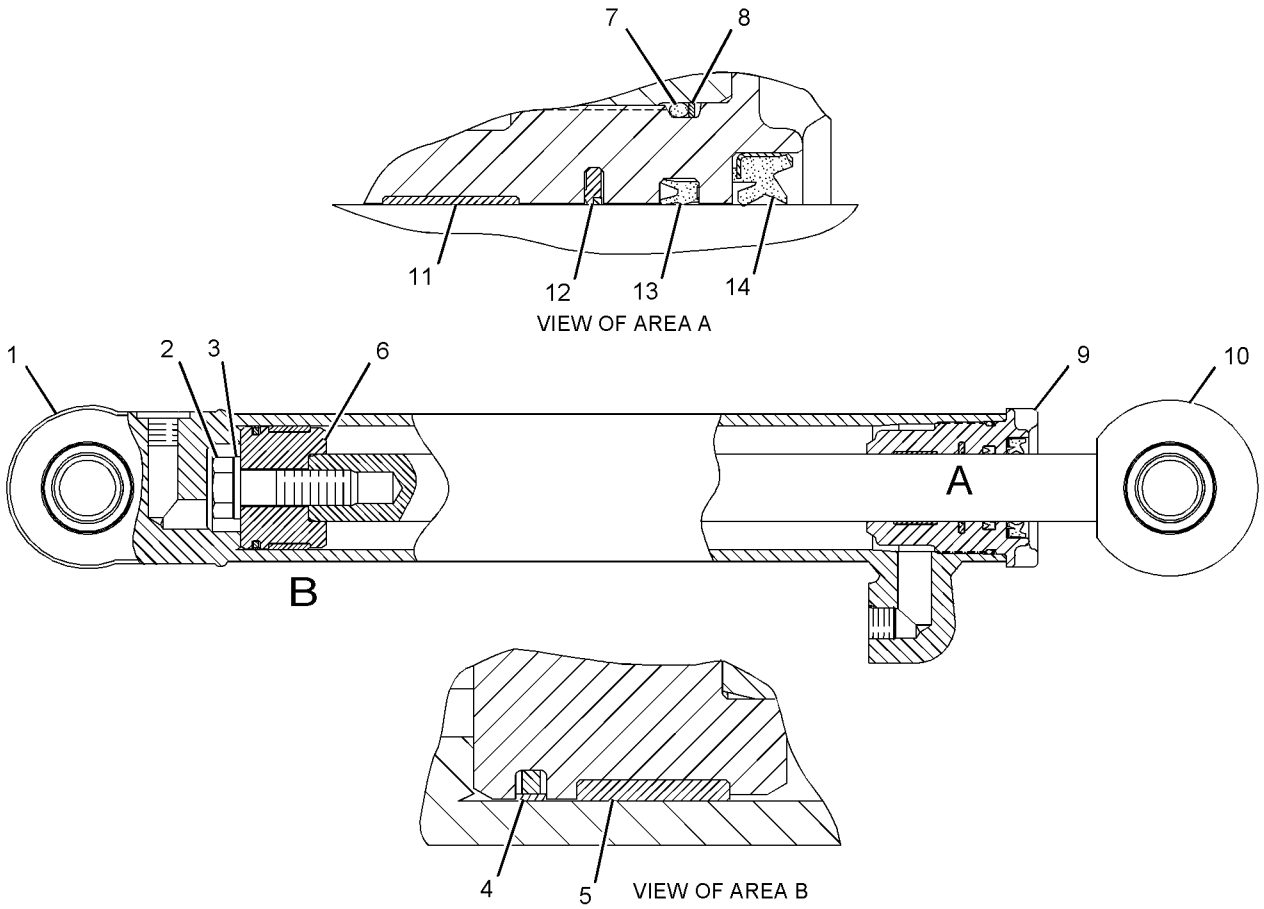

GRAPHIC #1

<END>

g01097877

262-1907 CYLINDER GP-CENTERSHIFT

S/N: B551-UP

76.2-MM (3-IN) BORE X 630-MM (25-IN) STROKE

PART OF 263-2788 CYLINDER & MTG GP-CENTERSHIFT

SMCS-5223 **i04449899**

NOTE	REF NO	GRAPHIC REF	PART NUMBER	QTY	PART NAME 1 2 3 4 5 6 (PRODUCT LEVEL)	SEE PAGE
	1	1	**6E-1131**	1	PISTON	
	2	1	**148-2593**	1	HEAD	
R	3	1	**262-1920**	1	ROD AS	
R	4	1	**262-1926**	1	CYLINDER AS	
J	5	1	**289-2935**	1	SEAL AS-BUFFER	
J	6	1	**289-2946**	1	SEAL-U-CUP	
M	7	1	**173-9683**	1	BOLT (M30X3.5X90-MM)	
J	8	1	**175-7896**	1	SEAL-O-RING	
J	9	1	**308-1845**	1	SEAL-WIPER	
	10	1	**3S-7023**	1	WASHER (34X57X6-MM THK)	
J	11	1	**4T-5613**	1	RING-WEAR	
J	12	1	**6J-1972**	1	SEAL AS	
J	13	1	**6J-5731**	1	RING-BACKUP	
J	14	1	**6J-5733**	1	RING-WEAR	
					AVAILABLE REPAIR KIT(S):	
J			**238-4462**	1	KIT-SEAL (HYDRAULIC CYLINDER)	
					(INCLUDES RINGS & SEALS) (FOR USE WITH REHS1392)	

J - KIT MARKED J SERVICES PART(S) MARKED J
M - METRIC PART
R - REMANUFACTURED PART MAY BE AVAILABLE

262-1907 **CYLINDER GP-CENTERSHIFT (**contd.**)** **i04449899**

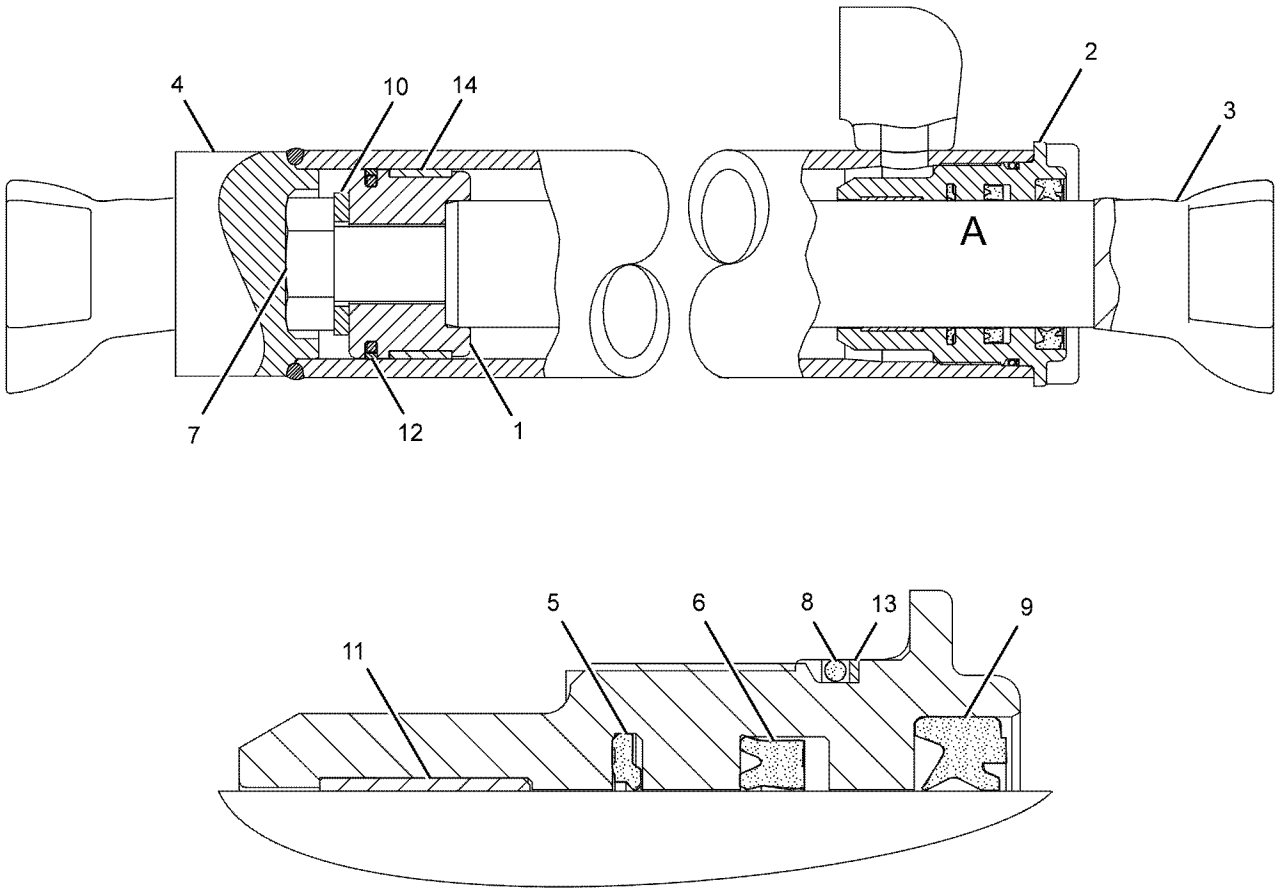

VIEW OF AREA A

GRAPHIC #1 <END> g01137549

335-1974 CYLINDER GP-LIFT–BLADE

S/N: B551-UP
76.2-MM (3-IN) BORE X 1257-MM (49.5-IN) STROKE
PART OF 305-2897 CYLINDER & MTG GP-BLADE LIFT

SMCS-5102 **i06273953**

NOTE	REF NO	GRAPHIC REF	PART NUMBER	QTY	PART NAME 1 2 3 4 5 6 (PRODUCT LEVEL)	SEE PAGE
	1	1	**6E-1131**	1	PISTON	
	2	1	**148-2593**	1	HEAD	
	3	1	**262-1919**	1	ROD AS	
	4	1	**289-2935**	1	SEAL AS-BUFFER	
	5	1	**336-6681**	1	CYLINDER AS	
	5A	1	**8J-6384**	2	BUSHING	
M	6	1	**173-9683**	1	BOLT (M30X3.5X90-MM)	
	7	1	**175-7896**	1	SEAL-O-RING	
	8	1	**289-2946**	1	SEAL-U-CUP	
	9	1	**308-1845**	1	SEAL-WIPER	
	10	1	**4K-0684**	1	WASHER-HARD (34X55X6-MM THK)	
	11	1	**4T-5613**	1	RING-WEAR	
	12	1	**6J-1972**	1	SEAL AS	
	13	1	**6J-5731**	1	RING-BACKUP	
	14	1	**6J-5733**	1	RING-WEAR	

M - METRIC PART

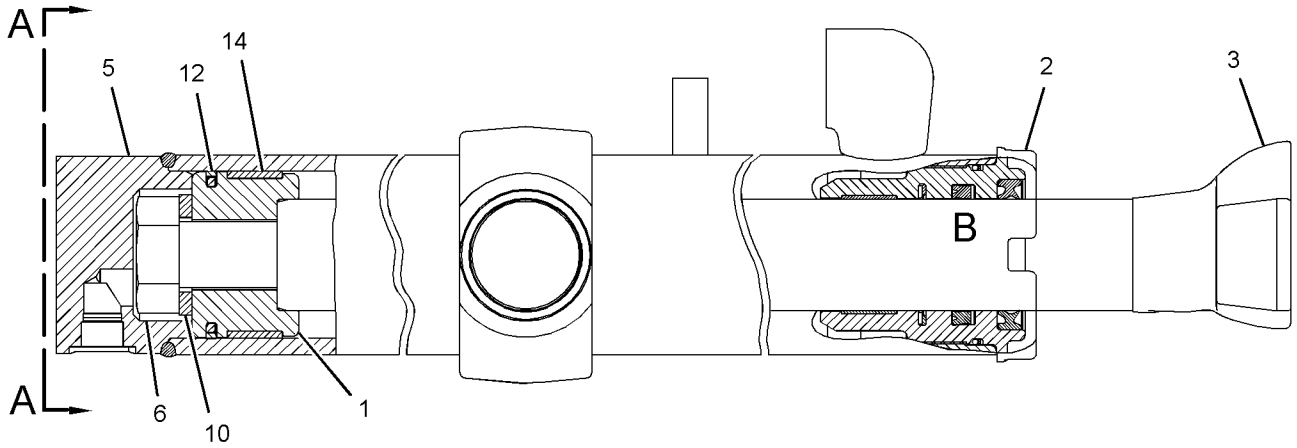

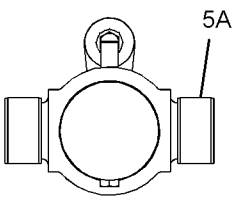

VIEW A-A

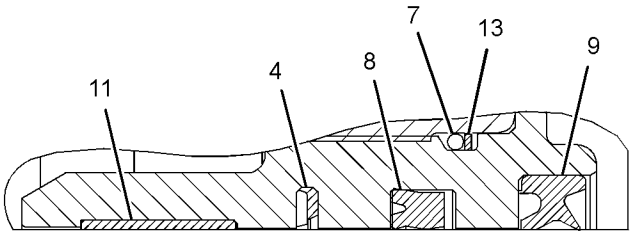

VIEW OF AREA B

GRAPHIC #1 <END> g02176155

326-2227 CYLINDER GP-RIPPER

S/N: B551-UP
110-MM (4.33-IN) BORE X 383.5-MM (15.01-IN) STROKE
PART OF 324-0889, 539-6894 RIPPER AR

SMCS-5352, 5356 **i06268015**

NOTE	REF NO	GRAPHIC REF	PART NUMBER	QTY	PART NAME 1 2 3 4 5 6 (PRODUCT LEVEL)	SEE PAGE
	1	1	**5J-7865**	1	RING-BACKUP	
	2	1	**9X-7301**	1	SEAL AS	
	3	1	**175-7901**	1	SEAL-O-RING	
	4	1	**233-0619**	1	SEAL-WIPER	
	5	1	**266-9389**	1	PISTON	
	6	1	**266-9967**	1	HEAD	
	7	1	**310-2186**	1	SEAL-O-RING	
R	8	1	**329-5113**	1	CYLINDER AS	
R	9	1	**329-5116**	1	ROD AS	
	10	1	**119-5434**	1	RING	
	11	1	**141-0709**	1	RING-WEAR	
	12	1	**167-2183**	1	SEAL AS-BUFFER	
	13	1	**167-2303**	1	SEAL-U-CUP	
	14	1	**2K-0512**	1	LOCKNUT	

R - REMANUFACTURED PART MAY BE AVAILABLE

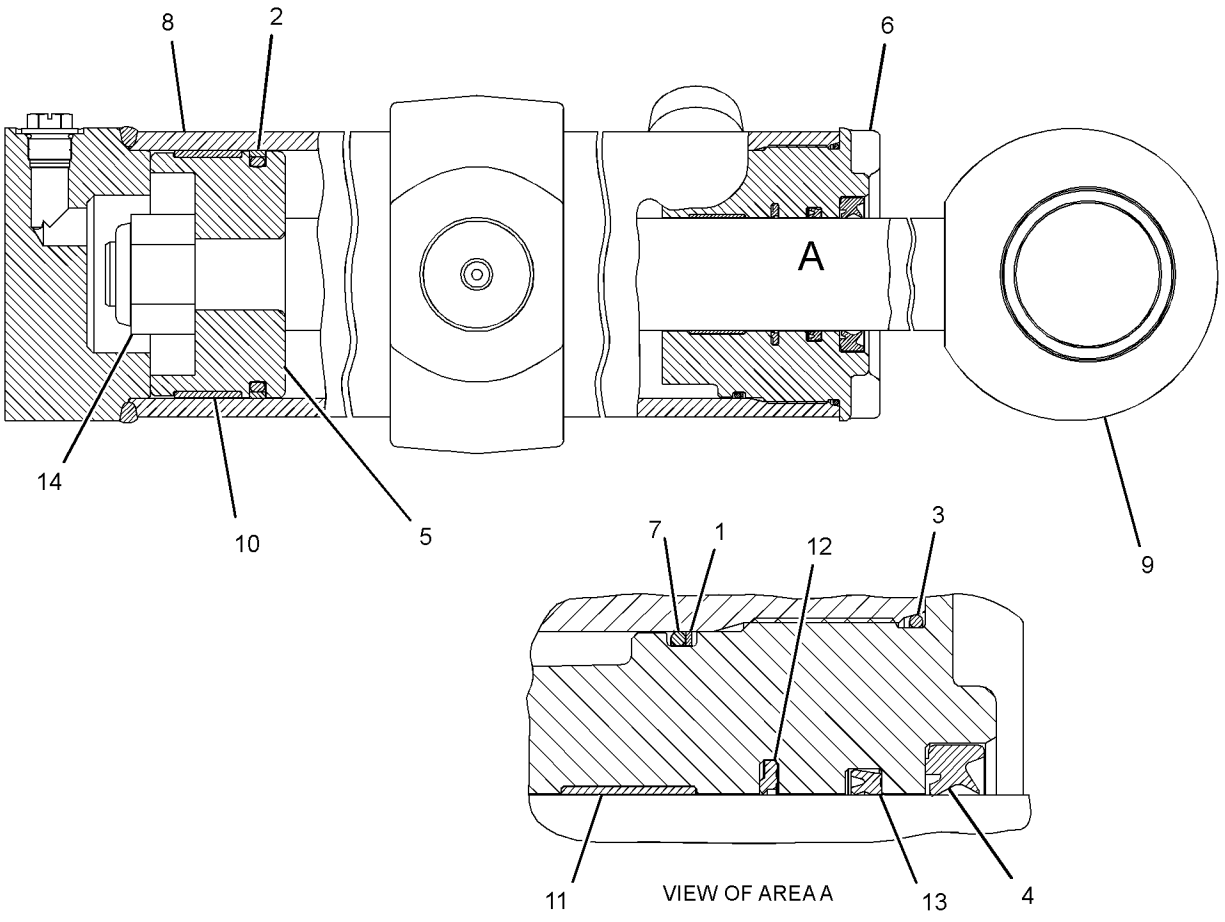

GRAPHIC #1 <END> g02154661

165-2510 CYLINDER GP-SCARIFIER

S/N: B551-UP
76.2-MM (3-IN) BORE X 406.5-MM (16-IN) STROKE
PART OF 8W-2913 CYLINDER & MTG GP-SCARIFIER

SMCS-5213 **i07236233**

NOTE	REF NO	GRAPHIC REF	PART NUMBER	QTY	PART NAME 1 2 3 4 5 6 (PRODUCT LEVEL)	SEE PAGE
	1	1	**9T-4211**	1	PISTON	
	2	1	**168-9108**	1	CYLINDER AS	
	3	1	**168-9110**	1	ROD AS	
	4	1	**184-9843**	1	HEAD	
J	5	1	**167-2190**	1	SEAL AS-BUFFER	
J	6	1	**439-4526**	1	SEAL-U-CUP	
J	7	1	**308-1880**	1	SEAL-WIPER	
M	8	1	**173-9779**	1	BOLT (M24X3X80-MM)	
J	9	1	**175-7896**	1	SEAL-O-RING	
J	10	1	**4T-6907**	1	RING-WEAR	
J	11	1	**9X-7337**	1	SEAL AS	
J	12	1	**6J-5731**	1	RING-BACKUP	
J	13	1	**6J-5733**	1	RING-WEAR	
	14	1	**6V-8237**	1	WASHER (26X44X4-MM THK)	
					AVAILABLE REPAIR KIT(S):	
J			**376-9017**	1	KIT-SEAL (HYDRAULIC CYLINDER)	
					(INCLUDES RINGS & SEALS) (FOR USE WITH REHS1392)	

J - KIT MARKED J SERVICES PART(S) MARKED J
M - METRIC PART

165-2510 **CYLINDER GP-SCARIFIER (**contd.**)** **i07236233**

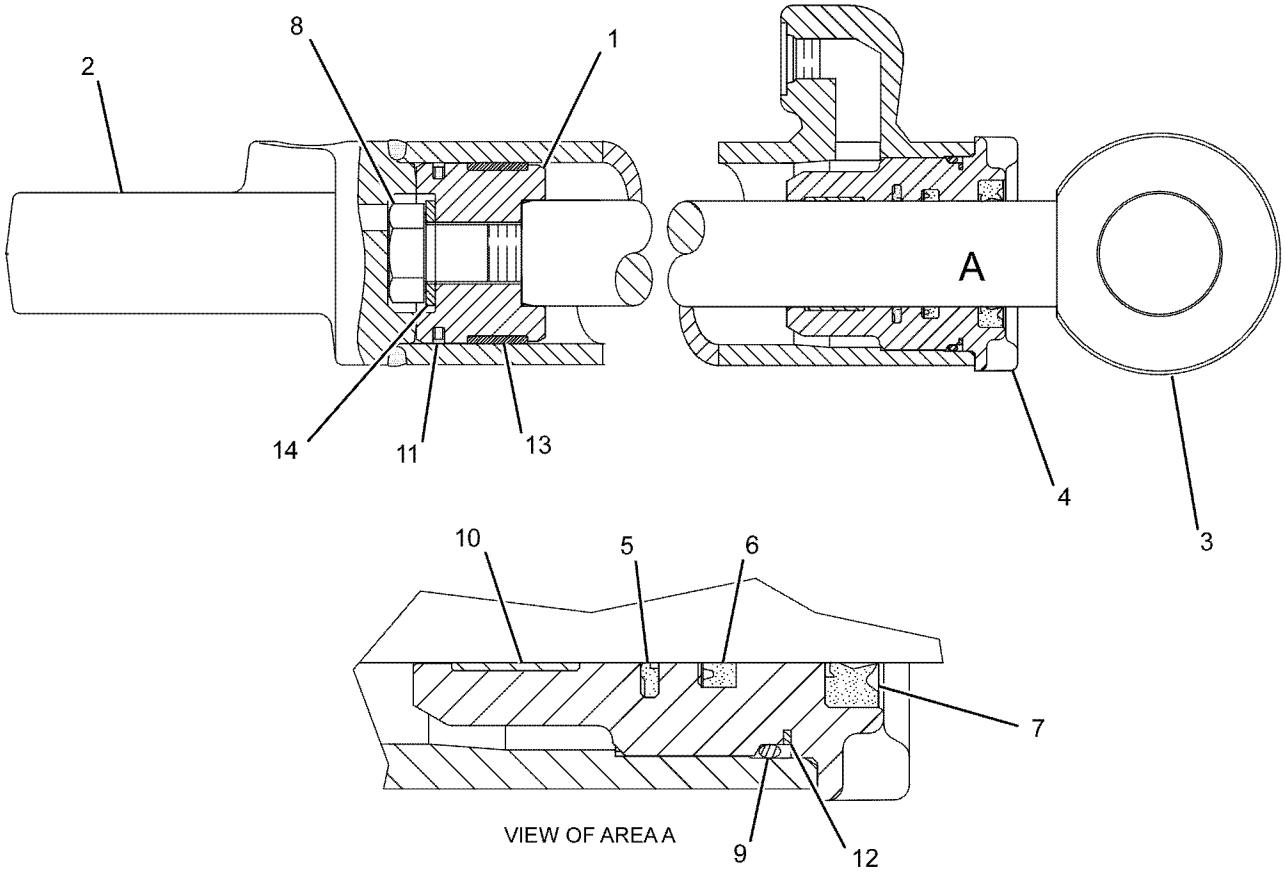

GRAPHIC #1 <END> g01045248

249-4116 CYLINDER GP-SIDESHIFT

S/N: B551-UP
76.2-MM(3-IN) BORE X 1175-MM(46-IN) STROKE
PART OF 246-6115 CYLINDER & MTG GP-SIDESHIFT

SMCS-5229 **i04390547**

NOTE	REF NO	GRAPHIC REF	PART NUMBER	QTY	PART NAME 1 2 3 4 5 6 (PRODUCT LEVEL)	SEE PAGE
R	1	1	**249-4117**	1	CYLINDER AS	
M	2	1	**8T-0667**	1	BOLT (M24X3X100-MM)	
	3	1	**150-1280**	1	WASHER-HARD (26X44X22-MM THK)	
	4	1	**9T-4211**	1	PISTON	
J	5	1	**175-7896**	1	SEAL-O-RING	
J	6	1	**6J-5731**	1	RING-BACKUP	
R	7	1	**249-4120**	1	ROD AS	
	8	1	**184-9843**	1	HEAD	
J	9	1	**308-1880**	1	SEAL-WIPER	
J	10	1	**351-8628**	1	SEAL-U-CUP	
J	11	1	**167-2190**	1	SEAL AS-BUFFER	
J	12	1	**4T-6907**	1	RING-WEAR	
J	13	1	**6J-5733**	1	RING-WEAR	
J	14	1	**6J-1972**	1	SEAL AS	
					AVAILABLE REPAIR KIT(S):	
J			**376-9017**	1	KIT-SEAL (HYDRAULIC CYLINDER)	
					(INCLUDES RINGS & SEALS) (FOR USE WITH REHS1392)	

J - KIT MARKED J SERVICES PART(S) MARKED J
M - METRIC PART
R - REMANUFACTURED PART MAY BE AVAILABLE

249-4116 **CYLINDER GP-SIDESHIFT (**contd.**)** **i04390547**

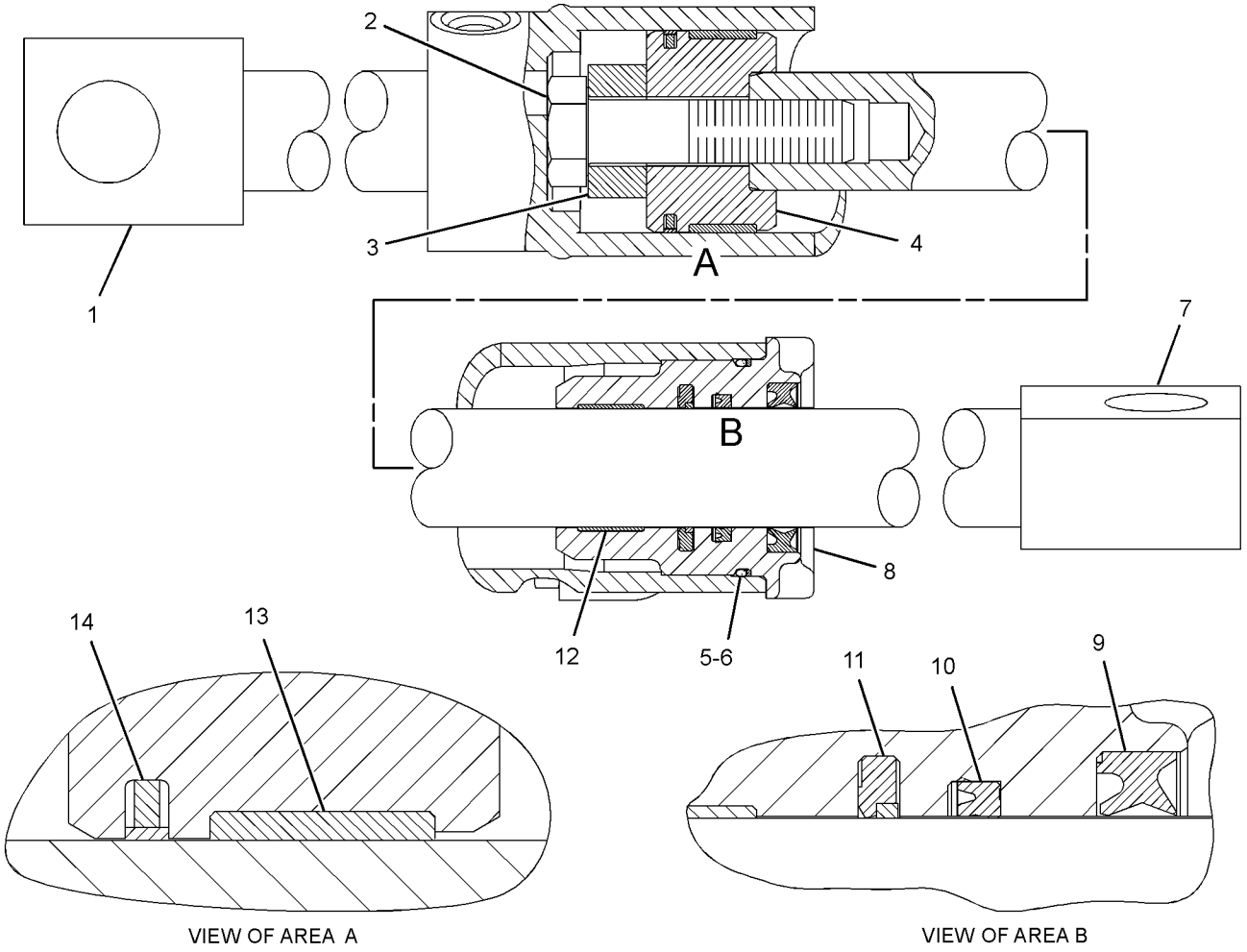

GRAPHIC #1 <END> g02223758

389-6062 CYLINDER GP-STEERING

S/N: B551-UP
76.2-MM (3-IN) BORE X 287-MM (11.3-IN) STROKE
PART OF 390-0593 CYLINDER & MTG GP-STEERING

SMCS-4303 **i07788033**

NOTE	REF NO	GRAPHIC REF	PART NUMBER	QTY	PART NAME 1 2 3 4 5 6 (PRODUCT LEVEL)	SEE PAGE
	1	1	**4T-5613**	1	RING-WEAR	
	2	1	**6J-1972**	1	SEAL AS	
		1	**6J-1973**	1	RING-EXPANDER	
		1	**6J-1974**	1	SEAL	
	3	1	**6J-5731**	1	RING-BACKUP	
	4	1	**151-7038**	1	HEAD	
	5	1	**217-3312**	1	MAGNET	
	6	1	**223-3353**	1	RING-WEAR	
	7	1	**289-2935**	1	SEAL AS-BUFFER	
	8	1	**421-4023**	1	SEAL-U-CUP	
	9	1	**308-1845**	1	SEAL-WIPER	
M	10	1	**350-3842**	2	SETSCREW (M8X1.25X12.3-MM)	
	11	1	**451-2628**	1	SENSOR GP-POSITION (LINEAR) (STEERING CYLINDER)	
		1	**118-8586**	1	SEAL-O-RING	
		1	**420-5767**	1	RING-BACKUP	
	12	1	**376-8250**	1	SPRING-WAVE	
	13	1	**383-7670**	1	PISTON	
	14	1	**389-6077**	1	CYLINDER AS-STEERING	
		1	**310-4759**	1	BOSS AS	
		1	*207-8218*	1	PLUG AS	
		1	**7J-0204**	1	SEAL-O-RING	
		1	**9S-8007**	1	PLUG (3/8-24-THD)	
	15	1	**449-5422**	1	ROD AS	
	16	1	**435-3388**	1	RECEPTACLE AS	
M	17	1	**109-1393**	3	BOLT-SOCKET HEAD (M4X0.7X10-MM)	
	18	1	**175-7896**	1	SEAL-O-RING	
	19	1	**3J-7354**	1	SEAL-O-RING	
	20	1	**5S-4455**	1	RING-RETAINING	
M	21	1	**8T-9102**	1	SETSCREW-SOCKET (M5X0.8X10-MM)	
	22	1	**9S-8002**	1	PLUG (7/16-20-THD)	

M - METRIC PART

389-6062 **CYLINDER GP-STEERING (**contd.**)** **i07788033**

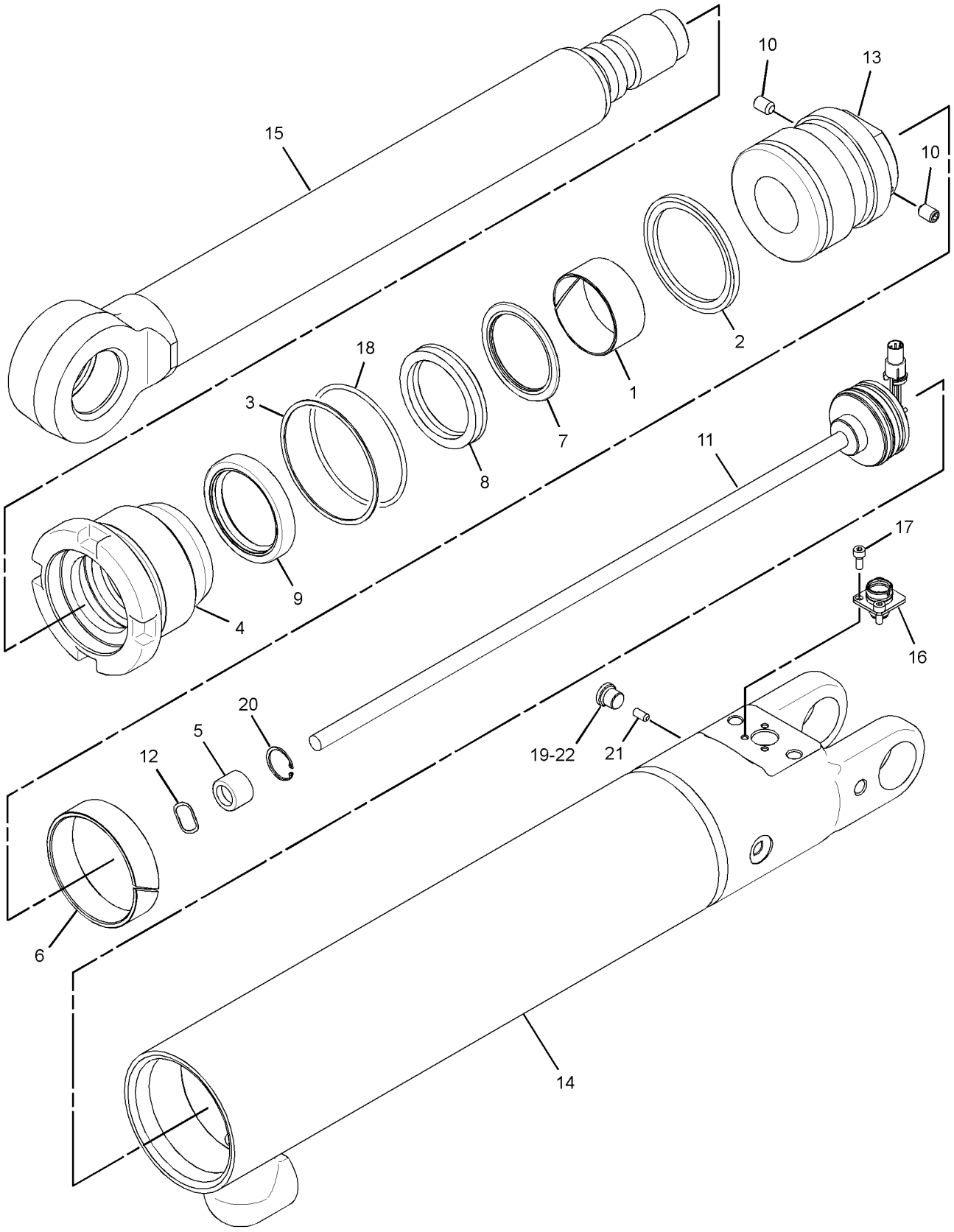

GRAPHIC #1 <END> g03420849

249-5299 CYLINDER GP-WHEEL LEAN

S/N: B551-UP
88.9-MM (3.5-IN) BORE X 149-MM (5.8-IN) STROKE
PART OF 260-8713 CYLINDER & MTG GP-WHEEL LEAN

SMCS-5211 **i04444251**

NOTE	REF NO	GRAPHIC REF	PART NUMBER	QTY	PART NAME 1 2 3 4 5 6 (PRODUCT LEVEL)	SEE PAGE
	1	1	**251-1550**	1	CYLINDER AS	
	1A	1	**2G-8631**	1	BUSHING	
M	2	1	**173-9683**	1	BOLT (M30X3.5X90-MM)	
	3	1	**9X-8399**	1	WASHER (33X56X6-MM THK)	
J	4	1	**4T-8054**	1	SEAL AS	
J	5	1	**7J-9885**	1	RING-WEAR	
	6	1	**9T-9040**	1	PISTON	
J	7	1	**175-7898**	1	SEAL-O-RING	
J	8	1	**1S-0669**	1	RING (BACKUP)	
	9	1	**6E-4974**	1	HEAD	
		1	**308-1845**	1	SEAL-WIPER	
R	10	1	**121-9245**	1	ROD AS	
	10A	1	**2G-8631**	1	BUSHING	
J	11	1	**308-1845**	1	SEAL-WIPER	
J	12	1	**356-8331**	1	SEAL-U-CUP	
J	13	1	**289-2935**	1	SEAL AS-BUFFER	
J	14	1	**4T-5613**	1	RING-WEAR	
					AVAILABLE REPAIR KIT(S):	
J			**376-9011**	1	KIT-HYD CYLINDER SEAL	
					(INCLUDES RINGS & SEALS) (FOR USE WITH REHS1392)	

J - KIT MARKED J SERVICES PART(S) MARKED J
M - METRIC PART
R - REMANUFACTURED PART MAY BE AVAILABLE

249-5299 **CYLINDER GP-WHEEL LEAN (**contd.**)** **i04444251**

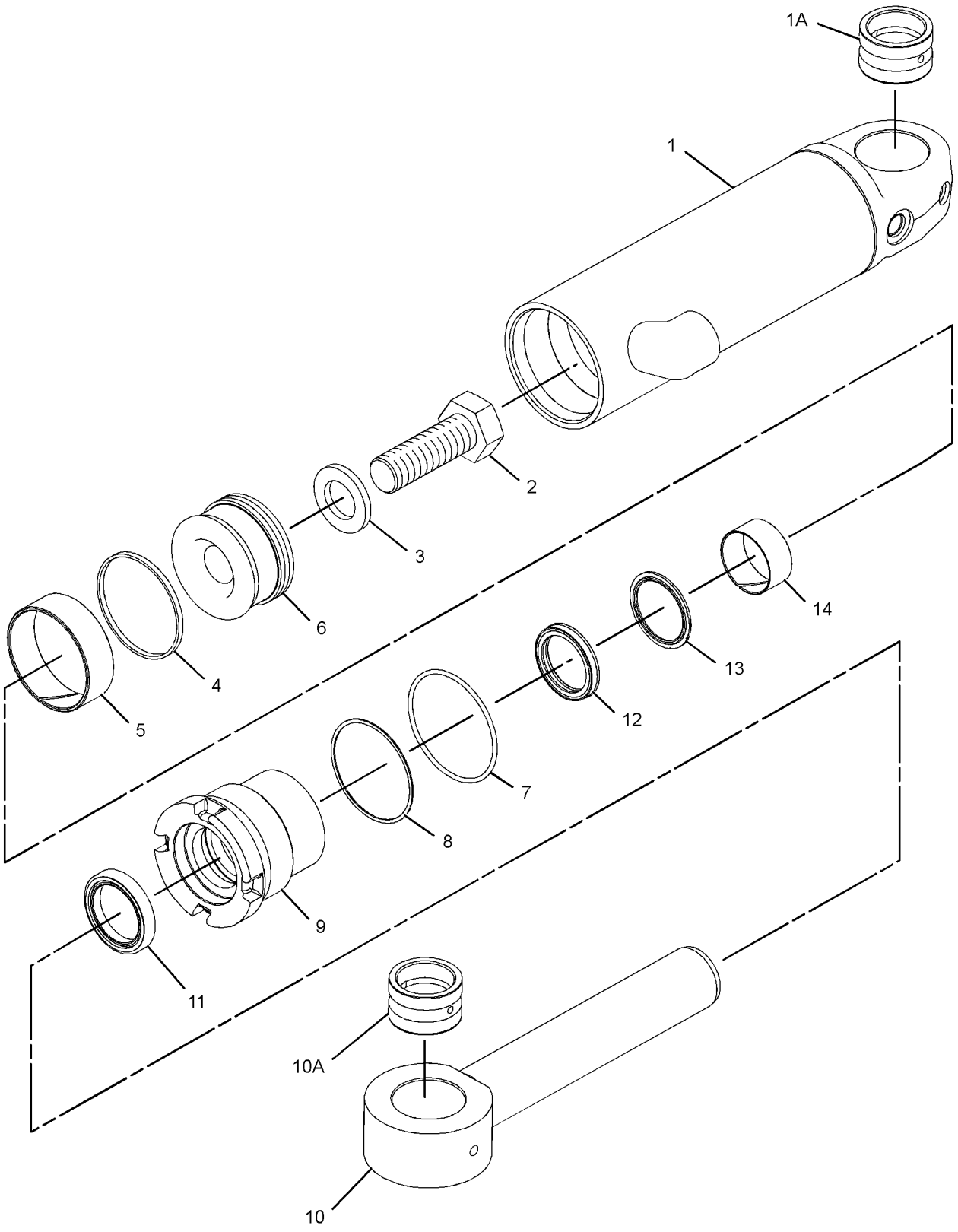

GRAPHIC #1 <END> g02121834

423-9923 DRIVE GP-CIRCLE

S/N: B551-UP

PART OF 577-1377 COMMON AR

SMCS-5207 **i07828792**

NOTE	REF NO	GRAPHIC REF	PART NUMBER	QTY	PART NAME 1 2 3 4 5 6 (PRODUCT LEVEL)	SEE PAGE
	1	1	**1B-4038**	2	CUP-BEARING	
	2	1	**1B-4046**	2	CONE-BEARING	
	3	2	**2G-0478**	5	PLATE-CLUTCH	
	4	1	**2G-6695**	1	BRACKET	
R	5	1	**5K-5288**	1	SEAL GP-DUO-CONE	
	5A	1	**5K-5129**	2	RING-SEALING	
	6	2	**6G-5534**	1	COVER AS	
	6A	2	**6G-5537**	1	BEARING	
	7	2	**6G-5538**	1	COVER	
	8	2	**6G-5542**	2	SPACER (119.2X178X9.3-MM THK)	
B	9	2	**6G-6122**	1	SPRING-DISC	
	10	2	**6Y-7953**	6	DISC-FRICTION	
B	11	1	**7D-8983**	10	SHIM (0.005-IN THK)	
B	12	1	**7D-8984**	6	SHIM (0.007-IN THK)	
	13	1	**457-0799**	1	LOCKNUT	
	14	1	**8D-7424**	1	SPACER (48X81X6-MM THK)	
	15	2	**8T-0336**	1	FITTING-PRESSURE RELIEF	
	16	1	**9D-1491**	1	COUPLING	
Y	17	1	**105-3196**	1	MOTOR GP-GEROTOR (CIRCLE DRIVE)	621
	18	1	**253-4678**	1	HOUSING AS-DRIVE	
	18A	1	**8D-7426**	1	BUSHING	
		1	**2D-8154**	4	STUD-TAPERLOCK (1/2-13X2.36-IN)	
M		1	**286-2631**	4	STUD-TAPERLOCK (M20X2.5X85-MM)	
B	19	2	**307-1959**	6	SHIM (0.13-MM THK)	
B	20	2	**307-1960**	1	SHIM (0.25-MM THK)	
	21	2	**307-1961**	1	PLATE	
B	22	2	**307-1962**	4	SHIM (0.5-MM THK)	
	23	2	**323-8674**	1	GEAR-WORM (36-TEETH)	
	24	1	**323-8675**	1	WORM-CIRCLE DRIVE	
	25	2	**458-3867**	1	SHAFT-DRIVE	
	26	1	**458-3868**	1	PINION-CIRCLE DRIVE	
	27	1	**0S-1585**	4	BOLT (1/2-13X1.5-IN)	
	28	1	**1A-1415**	1	NUT (1-7/8-12-THD)	
	29	1	**1B-5174**	1	PLUG-PIPE	
	30	1	**1F-7958**	4	NUT-FULL (1/2-13-THD)	
	31	1	**1H-7339**	1	SEAL-O-RING	
	32	2	**2B-0858**	1	PLUG-PIPE	
	33	1	**2H-3935**	1	SEAL-O-RING	
	34	2	**2B-8293**	1	SEAL-O-RING	
	35	1	**4H-6996**	1	PIN-SPRING	
	36	2	**5H-4909**	1	SEAL-O-RING	
	37	2	**5K-8454**	3	BOLT (1/2-13X1.12-IN)	
	38	1,2	**5P-8245**	16	WASHER-HARD (13.5X25.5X3-MM THK)	
	39	2	**5S-7379**	4	BOLT (3/8-16X0.875-IN)	
	40	2	**6G-5539**	1	GASKET	
	41	2	**6G-5548**	1	SPACER (69.5X89X0.8-MM THK)	
	42	2	**6H-1717**	5	BOLT (1/2-13X1.125-IN)	
M	43	2	**6V-5686**	3	BOLT (M16X2X50-MM)	

423-9923 **DRIVE GP-CIRCLE (**contd.**)** **i07828792**

NOTE	REF NO	GRAPHIC REF	PART NUMBER	QTY	PART NAME 1 2 3 4 5 6 (PRODUCT LEVEL)	SEE PAGE
	44	2	**8D-5054**	3	WASHER-HARD (17X30X3-MM THK)	
	45	1,2	**8D-7425**	2	WASHER-THRUST (2.81X4.25X0.12-IN THK)	
	46	2	**8T-4896**	4	WASHER-HARD (10.2X18.5X2.5-MM THK)	

B - USE AS REQUIRED
M - METRIC PART
R - REMANUFACTURED PART MAY BE AVAILABLE
Y - SEPARATE ILLUSTRATION

423-9923 **DRIVE GP-CIRCLE (**contd.**)** **i07828792**

REFER TO ALL ILLUSTRATIONS OF
THIS GROUP FOR AUXILIARY VIEWS

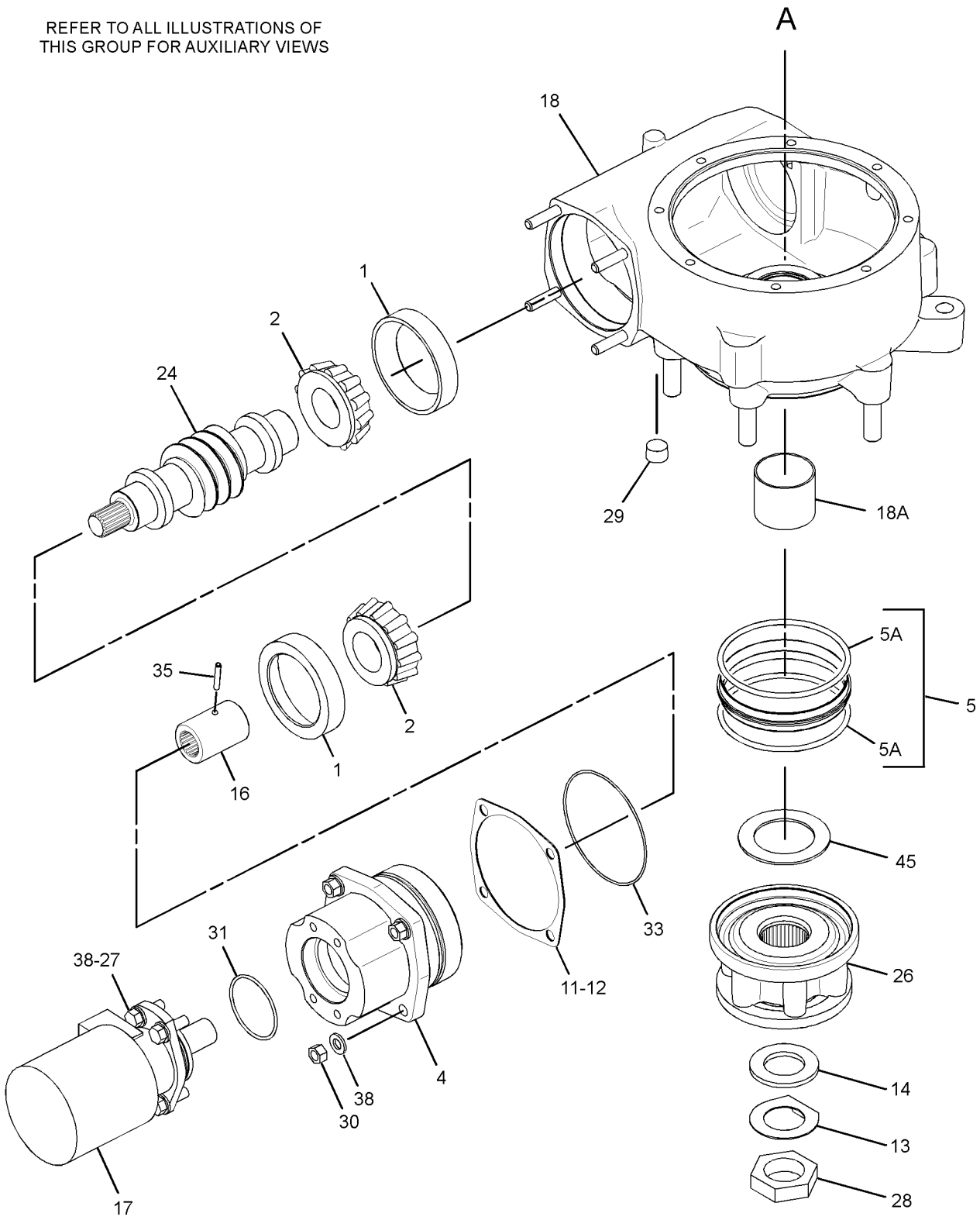

GRAPHIC #1

g03375248

423-9923 **DRIVE GP-CIRCLE (**contd.**)** **i07828792**

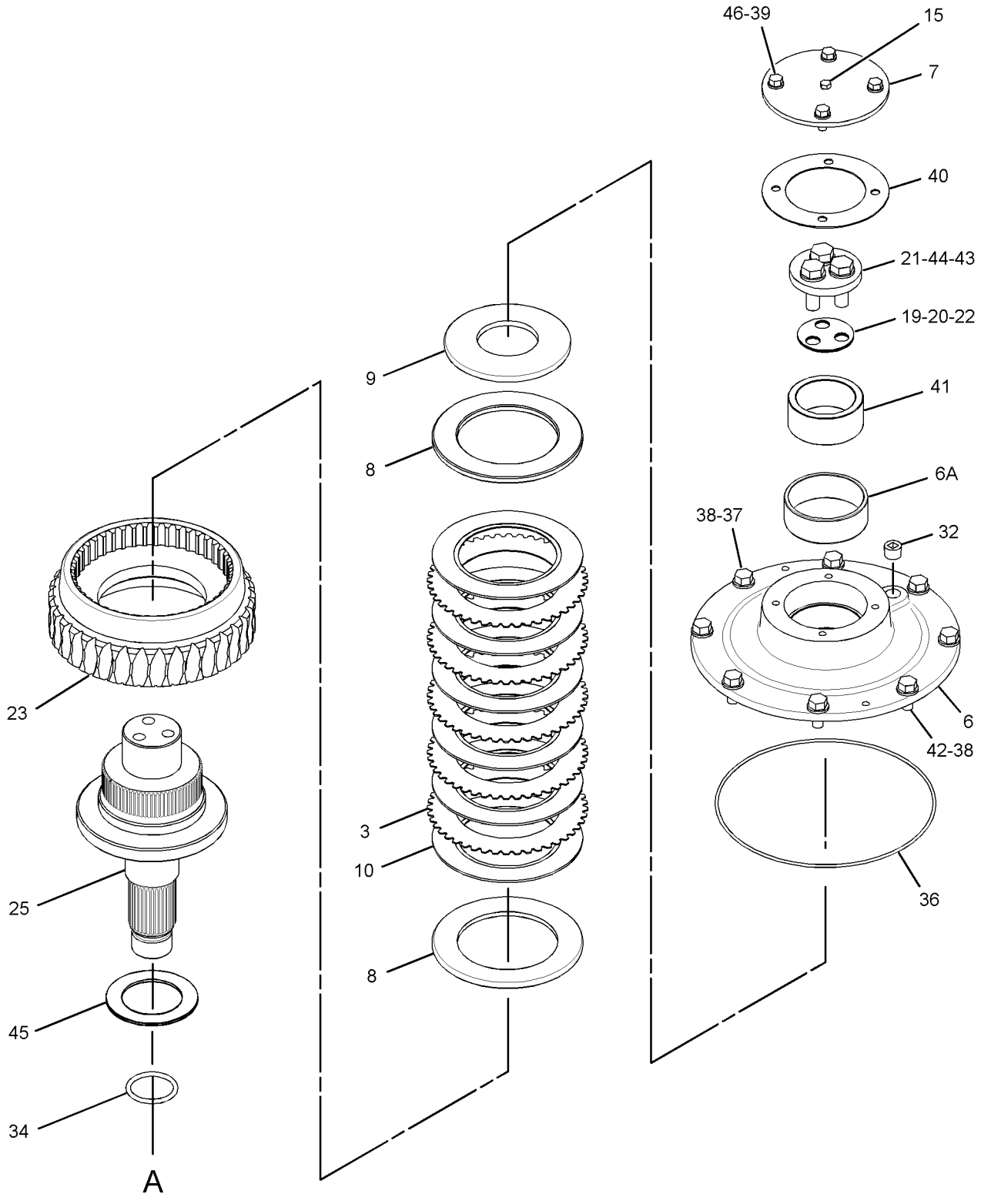

GRAPHIC #2 <END> g03887211

250-3507 FILTER & MTG GP-HYDRAULIC

S/N: B551-UP

PART OF 231-5061 SERVICE CENTER AR

SMCS-5068 **i04789601**

NOTE	REF NO	GRAPHIC REF	PART NUMBER	QTY	PART NAME 1 2 3 4 5 6 (PRODUCT LEVEL)	SEE PAGE
	1	1	*148-8407*	1	PLUG AS	
		1	**9S-4191**	1	PLUG (9/16-18-THD)	
		1	**3J-1907**	1	SEAL-O-RING	
	3	1	**242-0407**	1	VALVE AS-DRAIN (HYDRAULIC FILTER)	
	4	1	**245-7603**	1	TUBE AS	
	5	1	**245-8964**	1	BLOCK	
Y	6	1	**249-2307**	1	FILTER GP-OIL (HYDRAULIC TANK RETURN)	558
	7	1	**257-8897**	1	HOSE-MOLDED	
	8	1	*148-8408*	2	PLUG AS	
					(EACH INCLUDES)	
		1	**9S-4183**	1	PLUG (1-1/16-12-THD)	
		1	**3D-2824**	1	SEAL-O-RING	
	9	1	*156-4283*	1	CONNECTOR AS	
		1	**8T-7926**	1	CONNECTOR	
		1	**6K-6307**	1	SEAL-O-RING	
		1	**8T-0315**	1	SEAL-O-RING	
	10	1	**294-9701**	1	TUBE AS	
	11	1	**294-9702**	1	TUBE AS	
	12	1	**4J-0524**	2	SEAL-O-RING	
M	13	1	**7X-2543**	2	BOLT (M10X1.5X120-MM)	
	14	1	**8T-4121**	8	WASHER-HARD (11X21X2.5-MM THK)	
M	15	1	**8T-4133**	2	NUT (M10X1.5-THD)	
M	16	1	**8T-4183**	8	BOLT (M12X1.75X40-MM)	
M	17	1	**8T-4195**	4	BOLT (M10X1.5X30-MM)	
	18	1	**8T-4223**	8	WASHER-HARD (13.5X25.5X3-MM THK)	
	19	1	**8T-6703**	4	CLAMP-HOSE	
	20	1	**8X-5489**	1	SLEEVE	
G	21	1	**122-6908**		HOSE-HYDRAULIC (6.3-IN)	
E	22	1	**9X-2023**		HOSE (31-CM)	

E - ORDER BY THE CENTIMETER
G - ORDER BY THE INCH
M - METRIC PART
Y - SEPARATE ILLUSTRATION

250-3507 **FILTER & MTG GP-HYDRAULIC (**contd.**)** **i04789601**

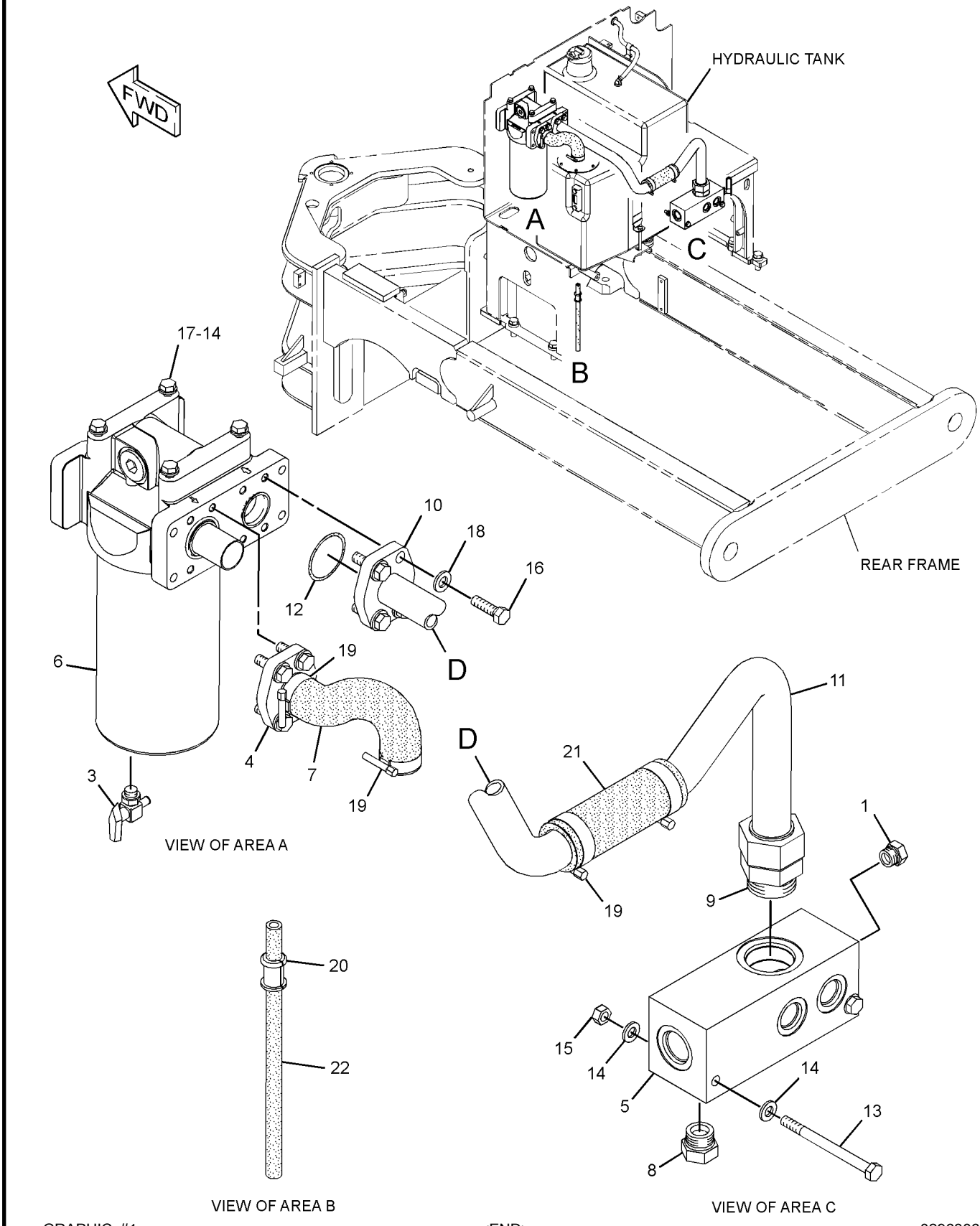

GRAPHIC #1 <END> g02963065

191-9784 FILTER GP-OIL

S/N: B551-UP

PART OF 473-0556 LINES GP-PUMP

SMCS-5068, 5093

i02773400

NOTE	REF NO	GRAPHIC REF	PART NUMBER	QTY	PART NAME 1 2 3 4 5 6 (PRODUCT LEVEL)	SEE PAGE
	1	1	**1G-8878**	1	FILTER-OIL (ADVANCED EFFICIENCY)	
	2	1	**7X-8549**	1	SWITCH AS-PRESSURE (FILTER BYPASS)	
		1	**3J-1907**	1	SEAL-O-RING	
	3	1	**8C-3451**	1	CAP-DUST (HYDRAULIC OIL)	
	4	1	**183-7264**	1	VALVE AS-FLUID SAMPLING	
	5	1	**3J-1907**	1	SEAL-O-RING	

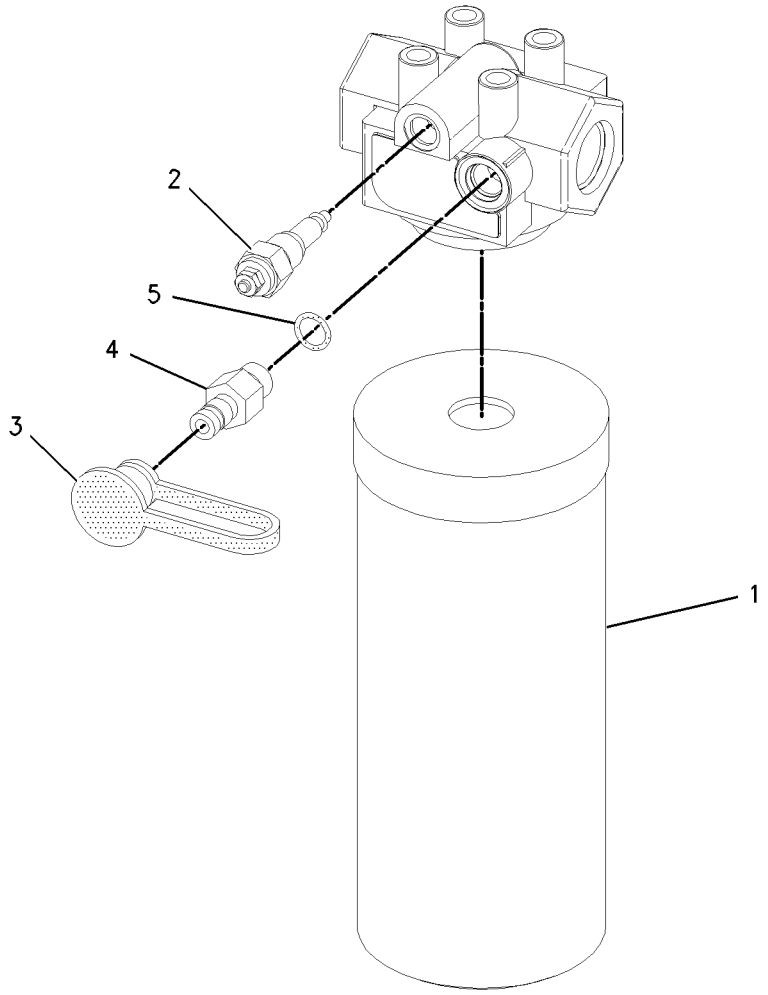

GRAPHIC #1 <END> g00977327

249-2307 FILTER GP-OIL

S/N: B551-UP
INTERNAL BYPASS
PART OF 250-3507 FILTER & MTG GP-HYDRAULIC

SMCS-5068, 5093 **i07836957**

NOTE	REF NO	GRAPHIC REF	PART NUMBER	QTY	PART NAME 1 2 3 4 5 6 (PRODUCT LEVEL)	SEE PAGE
	1	1	**338-3540**	1	FILTER ELEMENT-OIL (ULTRA HIGH EFFICIENCY) (HYDRAULIC TANK)	
					(INCLUDES HOUSING SEAL)	
C	2	1	**321-5967**	1	HOUSING GP-FILTER (OIL)	
		1	**9S-8004**	1	PLUG (9/16-18-THD)	
		1	**214-7568**	1	SEAL-O-RING	
Y	3	1	*249-2308*	1	BASE GP-OIL FILTER (HYDRAULIC TANK RETURN)	518
	4	1	**214-7568**	1	SEAL-O-RING	
	5	1	**6V-5048**	1	SEAL-O-RING	
	6	1	**9S-4185**	1	PLUG (3/4-16-THD)	
	7	1	**9S-4191**	1	PLUG (9/16-18-THD)	
	8	1	**130-0229**	1	SEAL-O-RING	
F			**8L-2786**	1	SEAL-O-RING	

C - CHANGE FROM PREVIOUS TYPE
F - NOT SHOWN
Y - SEPARATE ILLUSTRATION

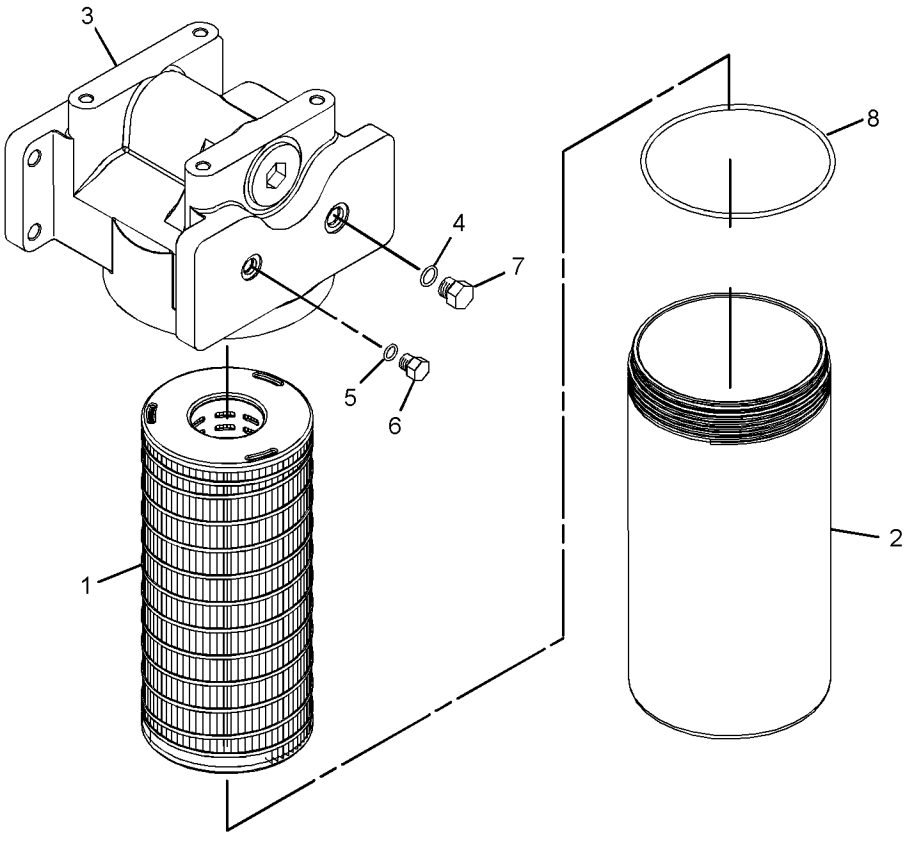

GRAPHIC #1 <END> g01447672

279-8137 LINES GP-HYDRAULIC—FRONT BLADE

S/N: B551-UP

FOR USE WITH 309-6809—PAGE: 873

PART OF 351-5178 OPTION AR-WORK TOOL

SMCS-5057 **i03754799**

NOTE	REF NO	GRAPHIC REF	PART NUMBER	QTY	PART NAME 1 2 3 4 5 6 (PRODUCT LEVEL)	SEE PAGE
I	1	1	**113-0999**	2	HOSE AS	
	2	1	*148-8366*	2	ELBOW AS	
					(EACH INCLUDES)	
		1	**6V-8987**	1	ELBOW	
		1	**6V-8397**	2	SEAL-O-RING	
	3	1	*150-3028*	2	ELBOW AS	
					(EACH INCLUDES)	
		1	**6V-9343**	1	ELBOW	
		1	**3D-2824**	1	SEAL-O-RING	
		1	**6V-8397**	1	SEAL-O-RING	
	4	1	**3E-7403**	2	ADAPTER	
	5	1	**6V-8398**	2	SEAL-O-RING	
	6	1	**6V-9168**	2	NUT (11/16-16-THD)	

I - REFER TO HYDRAULIC INFORMATION SYSTEM

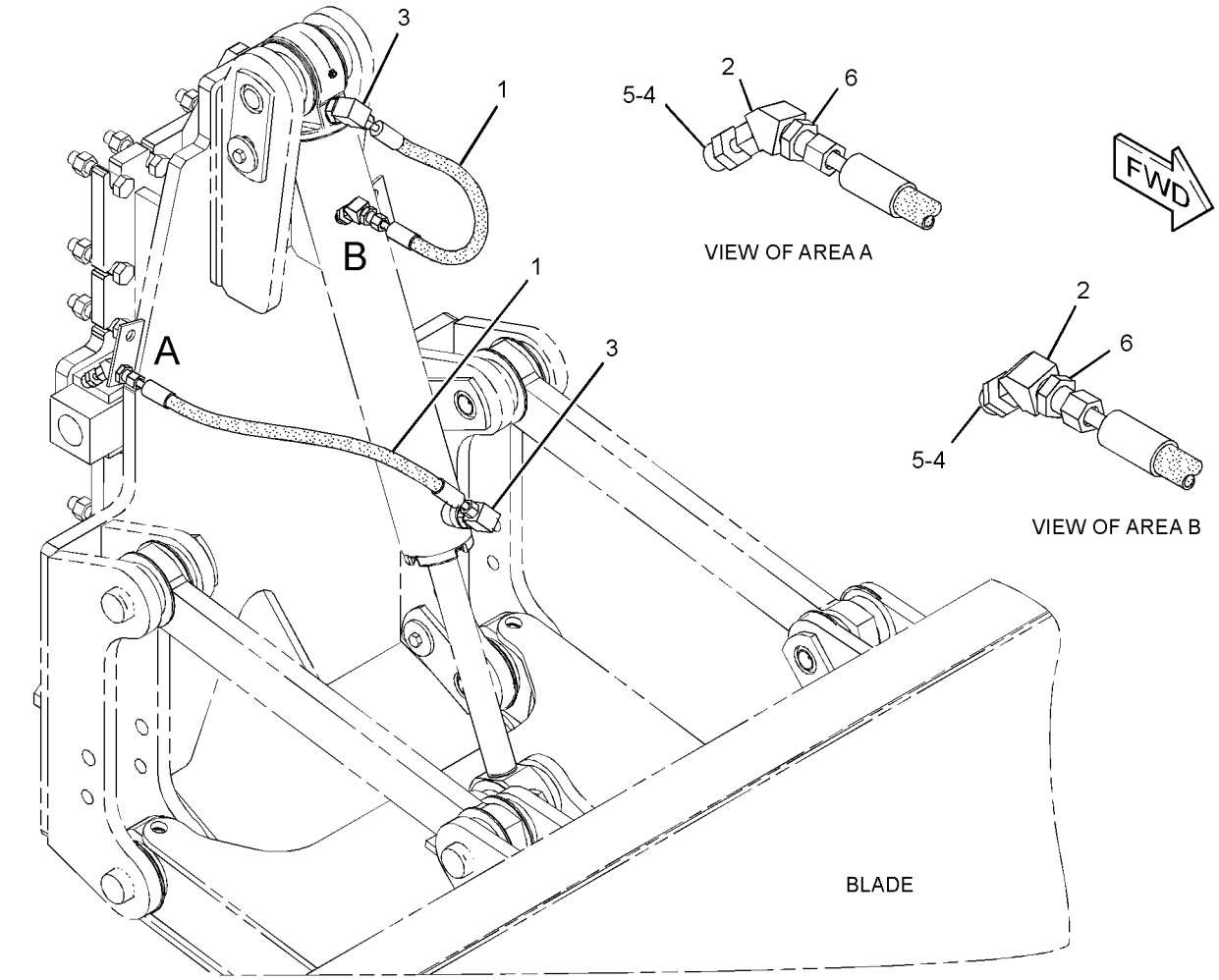

GRAPHIC #1 <END> g02033040

305-2926 LINES GP-HYDRAULIC—CIRCLE, DRAWBAR, MOLDBOARD

S/N: B551-UP

PART OF 364-1989 OPTION AR-MACHINE

SMCS-5057 **i07562785**

NOTE	REF NO	GRAPHIC REF	PART NUMBER	QTY	PART NAME 1 2 3 4 5 6 (PRODUCT LEVEL)	SEE PAGE
	1	1	**3S-2093**	2	STRAP-CABLE	
	2	1	**5P-0599**	2	CLAMP-BAND	
	3	1	**8W-3991**	2	JUNCTION BLOCK	
	4	1	**9R-8870**	2	BLOCK	
	5	1	**245-1375**	1	GUIDE AS-HOSE	
	6	1	**246-6341**	2	CLAMP	
	7	1	**246-6342**	8	CLAMP	
I	8	1	**286-8181**	1	HOSE AS	
	9	1	**296-4308**	1	TUBE AS	
	10	1	**296-4309**	1	TUBE AS	
	11	1	**297-2813**	3	TUBE AS	
	12	1	**297-2814**	3	TUBE AS	
I	13	1	**312-8373**	1	HOSE AS	
I	14	1	**312-8381**	1	HOSE AS	
CI	15	1	**312-8383**	1	HOSE AS	
	16	1	*164-5605*	2	CONNECTOR AS	
					(EACH INCLUDES)	
		1	**8T-0076**	1	CONNECTOR	
		1	**3K-0360**	1	SEAL-O-RING	
		1	**6V-8397**	1	SEAL-O-RING	
CI	17	1	**484-1274**	1	HOSE AS	
CI	18	1	**486-9093**	1	HOSE AS	
I	19	1	**323-5746**	1	HOSE AS	
CI	20	1	**365-3994**	1	HOSE AS	
	21	1	**447-4049**	2	CLAMP	
	22	1	**447-4050**	2	CLAMP	
	23	1	*148-8340*	12	CONNECTOR AS	
					(EACH INCLUDES)	
		1	**6V-8639**	1	CONNECTOR	
		1	**3K-0360**	1	SEAL-O-RING	
		1	**6V-8398**	1	SEAL-O-RING	
	24	1	*148-8354*	2	ELBOW AS	
					(EACH INCLUDES)	
		1	**6V-9002**	1	ELBOW	
		1	**3K-0360**	1	SEAL-O-RING	
		1	**6V-8398**	1	SEAL-O-RING	
	25	1	*148-8358*	1	ELBOW AS	
		1	**6V-8624**	1	ELBOW	
		1	**2M-9780**	1	SEAL-O-RING	
		1	**6V-8398**	1	SEAL-O-RING	
C	26	1	*148-8364*	1	ELBOW AS	
		1	**6V-8625**	1	ELBOW	
		1	**3K-0360**	1	SEAL-O-RING	
		1	**6V-8398**	1	SEAL-O-RING	
	27	1	*148-8372*	1	ELBOW AS	
		1	**6V-8721**	1	ELBOW	
		1	**2M-9780**	1	SEAL-O-RING	
		1	**6V-8398**	1	SEAL-O-RING	

305-2926 **LINES GP-HYDRAULIC (**contd.**)** **i07562785**

NOTE	REF NO	GRAPHIC REF	PART NUMBER	QTY	PART NAME 1 2 3 4 5 6 (PRODUCT LEVEL)	SEE PAGE
	28	1	*148-8374*	6	ELBOW AS	
					(EACH INCLUDES)	
		1	**6V-8723**	1	ELBOW	
		1	**3K-0360**	1	SEAL-O-RING	
		1	**6V-8397**	1	SEAL-O-RING	
C	29	1	*148-8318*	1	CONNECTOR AS	
		1	**3K-0360**	1	SEAL-O-RING	
		1	**6V-8397**	1	SEAL-O-RING	
		1	**6V-8634**	1	CONNECTOR	
M	30	1	**344-5675**	9	NUT (M10X1.5-THD)	
I	31	1	**442-6228**	1	HOSE AS	
CI	32	1	**450-5267**	1	HOSE AS	
	33	1	**5G-3676**	4	GROMMET	
C	34	1	**6D-4246**	2	CLIP (LOOP)	
C	35	1	**6D-4247**	1	CLIP	
	36	1	**6V-8398**	6	SEAL-O-RING	
	37	1	**7X-7729**	2	WASHER (11X25X3-MM THK)	
	38	1	**8T-1887**	2	CLIP (SLOT)	
	39	1	**8T-1888**	2	CLIP (TAB)	
	40	1	**8T-1889**	2	CLIP (SLOT)	
	41	1	**8T-1890**	2	CLIP (TAB)	
	42	1	**8T-1895**	2	CLIP (SLOT)	
	43	1	**8T-1896**	2	CLIP (TAB)	
C	44	1	**8T-4121**	33	WASHER-HARD (11X21X2.5-MM THK)	
CM	45	1	**8T-4136**	3	BOLT (M10X1.5X25-MM)	
M	46	1	**8T-4137**	7	BOLT (M10X1.5X20-MM)	
M	47	1	**8T-4172**	2	BOLT (M10X1.5X80-MM)	
M	48	1	**8T-4185**	1	BOLT (M10X1.5X50-MM)	
M	49	1	**8T-4186**	5	BOLT (M10X1.5X40-MM)	
M	50	1	**8T-4195**	6	BOLT (M10X1.5X30-MM)	
	51	1	**9M-4594**	4	SPACER (0.406X0.875X0.75-IN THK)	
CI	52	1	**484-1275**	1	HOSE AS	
CI	53	1	**485-9584**	1	HOSE AS	
C	54	1	**122-0450**	1	GROMMET	
C	55	1	**8T-1897**	1	CLIP (SLOT)	
C	56	1	**8T-1898**	1	CLIP (TAB)	
	57	1	**541-6632**	12	CLIP (LOOP)	

C - CHANGE FROM PREVIOUS TYPE
I - REFER TO HYDRAULIC INFORMATION SYSTEM
M - METRIC PART

305-2926 **LINES GP-HYDRAULIC (**contd.**)** **i07562785**

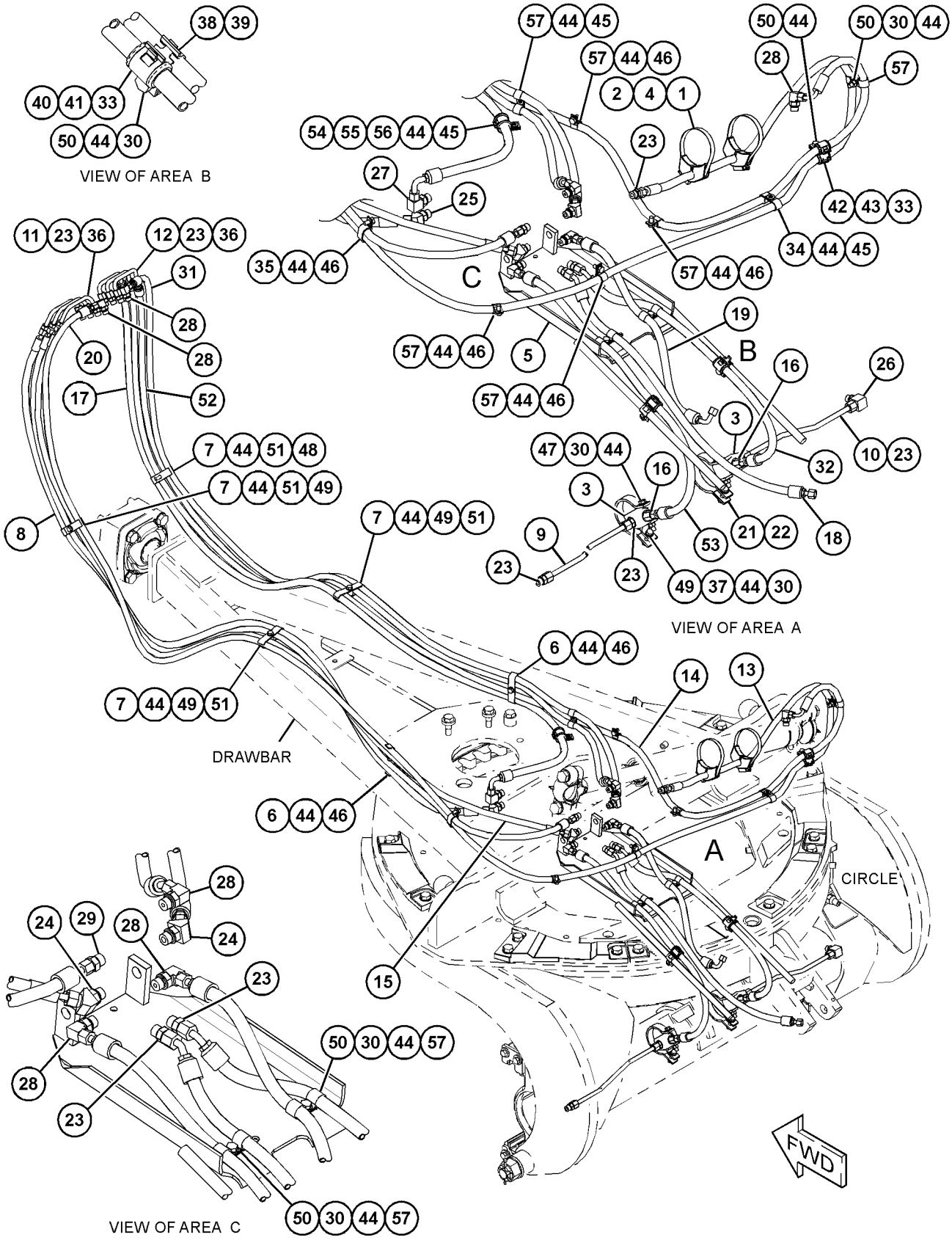

GRAPHIC #1 <END> g06370936

305-2927 LINES GP-HYDRAULIC—BLADE LIFT

S/N: B551-UP
8-CIRCUIT
CANNOT BE USED WITH 364-2037—PAGE: 519

SMCS-5057 **i07562775**

NOTE	REF NO	GRAPHIC REF	PART NUMBER	QTY	PART NAME 1 2 3 4 5 6 (PRODUCT LEVEL)	SEE PAGE
	1	1	**7C-6921**	2	SPACER (11X20X22.8-MM THK)	
	2	1	*164-5605*	1	CONNECTOR AS	
		1	**8T-0076**	1	CONNECTOR	
		1	**3K-0360**	1	SEAL-O-RING	
		1	**6V-8397**	1	SEAL-O-RING	
I	3	1	**218-4484**	1	HOSE AS	
I	4	1	**238-6665**	1	HOSE AS	
I	5	1	**292-1880**	1	HOSE AS	
I	6	1	**307-4399**	1	HOSE AS	
	7	1	**122-0450**	4	GROMMET	
	8	1	*148-8340*	1	CONNECTOR AS	
		1	**6V-8639**	1	CONNECTOR	
		1	**3K-0360**	1	SEAL-O-RING	
		1	**6V-8398**	1	SEAL-O-RING	
	9	1	*148-8363*	2	ELBOW AS	
					(EACH INCLUDES)	
		1	**6V-9876**	1	ELBOW	
		1	**3K-0360**	1	SEAL-O-RING	
		1	**6V-8397**	1	SEAL-O-RING	
	10	1	*148-8364*	3	ELBOW AS	
					(EACH INCLUDES)	
		1	**6V-8625**	1	ELBOW	
		1	**3K-0360**	1	SEAL-O-RING	
		1	**6V-8398**	1	SEAL-O-RING	
	11	1	*148-8374*	1	ELBOW AS	
		1	**6V-8723**	1	ELBOW	
		1	**3K-0360**	1	SEAL-O-RING	
		1	**6V-8397**	1	SEAL-O-RING	
	12	1	**5G-3676**	4	GROMMET	
	13	1	**6D-4244**	1	CLIP (LOOP)	
	14	1	**541-6632**	2	CLIP (LOOP)	
	15	1	**6D-4247**	2	CLIP	
	16	1	**8T-1889**	4	CLIP (SLOT)	
	17	1	**8T-1890**	4	CLIP (TAB)	
	18	1	**8T-1897**	4	CLIP (SLOT)	
	19	1	**8T-1898**	4	CLIP (TAB)	
	20	1	**8T-4121**	8	WASHER-HARD (11X21X2.5-MM THK)	
M	21	1	**8T-4182**	2	BOLT (M10X1.5X45-MM)	
M	22	1	**8T-4195**	2	BOLT (M10X1.5X30-MM)	
M	23	1	**8T-4196**	2	BOLT (M10X1.5X35-MM)	
M	24	1	**8T-4136**	2	BOLT (M10X1.5X25-MM)	

I - REFER TO HYDRAULIC INFORMATION SYSTEM
M - METRIC PART

305-2927 **LINES GP-HYDRAULIC (**contd.**)** **i07562775**

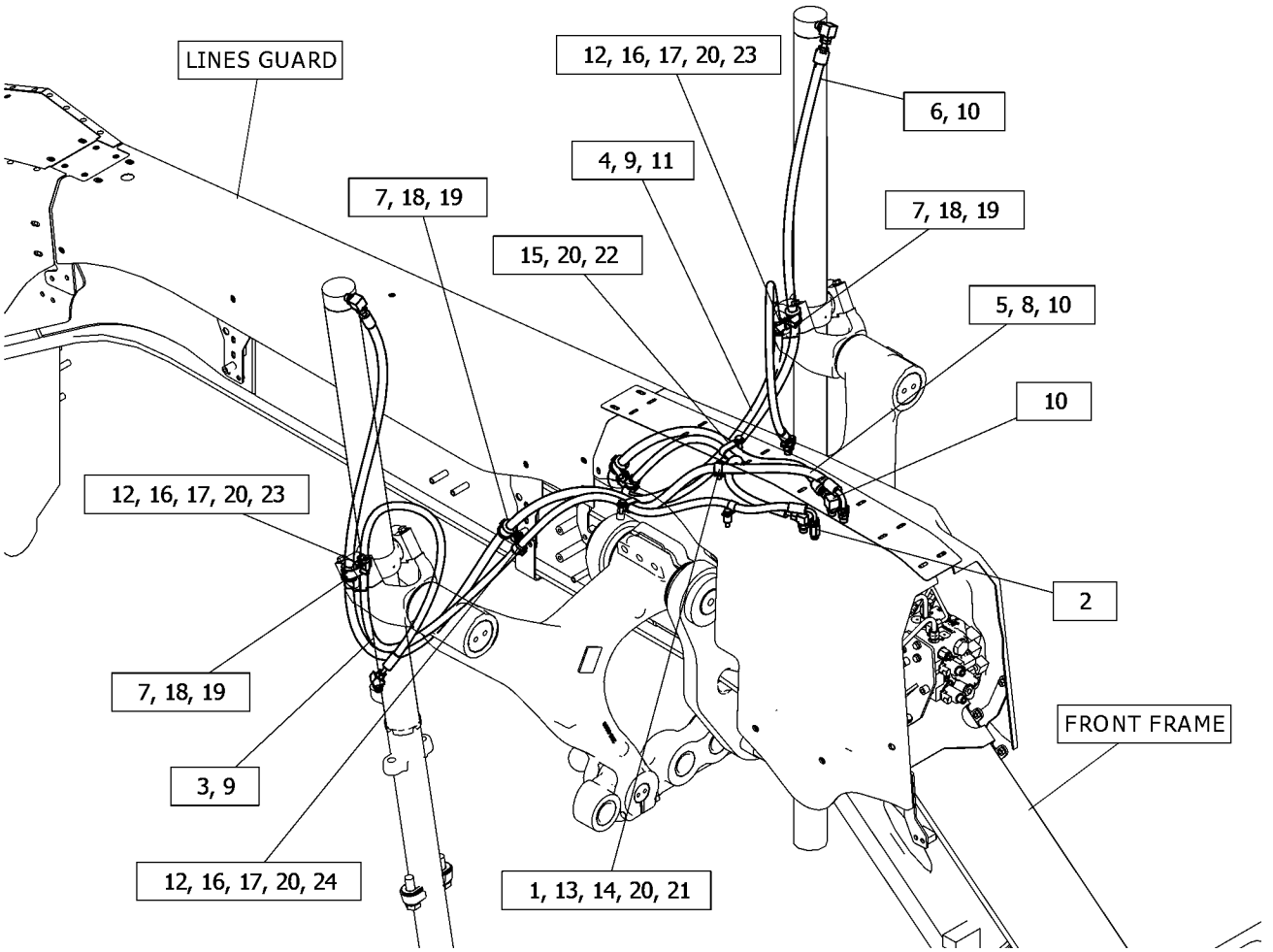

GRAPHIC #1 <END> g06402420

305-2946 LINES GP-HYDRAULIC—FRONT LIFT

S/N: B551-UP
1-CIRCUIT
PART OF 365-3354, 365-3355, 365-3368, 365-3369, 365-3370, 365-3371, 365-5540, 365-5541, 438-5423, 438-5425, 438-5426 CONTROL AR-HYDRAULIC

SMCS-5057 **i06855071**

NOTE	REF NO	GRAPHIC REF	PART NUMBER	QTY	PART NAME 1 2 3 4 5 6 (PRODUCT LEVEL)	SEE PAGE
I	1	1	**153-8085**	1	HOSE AS	
	2	1	**133-3260**	1	SPACER (11X19X10-MM THK)	
	3	1	*148-8340*	2	CONNECTOR AS	
					(EACH INCLUDES)	
		1	**6V-8639**	1	CONNECTOR	
		1	**3K-0360**	1	SEAL-O-RING	
		1	**6V-8398**	1	SEAL-O-RING	
	4	1	*150-4043*	2	CONNECTOR AS	
					(EACH INCLUDES)	
		1	**6V-9873**	1	CONNECTOR	
		1	**3J-1907**	1	SEAL-O-RING	
		1	**6V-8398**	1	SEAL-O-RING	
BJM	5	1	**231-0336**	1	STUD-TAPERLOCK (M10X1.5X70-MM)	
I	6	1	**244-0734**	1	HOSE AS	
	7	1	**6D-4244**	4	CLIP (LOOP)	
	8	1	**192-5017**	1	BRACKET AS	
BJM	9	1	**7X-2543**	1	BOLT (M10X1.5X120-MM)	
BJ	10	1	**7Y-3283**	1	SPACER (13.88X21.34X95-MM THK)	
BJ	11	1	**8T-4121**	5	WASHER-HARD (11X21X2.5-MM THK)	
BJM	12	1	**344-5675**	1	NUT (M10X1.5-THD)	
M	13	1	**8T-4136**	2	BOLT (M10X1.5X25-MM)	
M	14	1	**8T-4186**	1	BOLT (M10X1.5X40-MM)	
BL	15	1	**8T-7934**	1	WASHER-HARD (11X21X5-MM THK)	

B - USE AS REQUIRED
I - REFER TO HYDRAULIC INFORMATION SYSTEM
J - DO NOT USE ON AWD MACHINES
L - DO NOT INCLUDE ADDITIONAL WASHER WHEN MULTIPLE P-CLIPS ARE BETWEEN BOLT AND SPACER
M - METRIC PART

305-2946 **LINES GP-HYDRAULIC (**contd.**)** **i06855071**

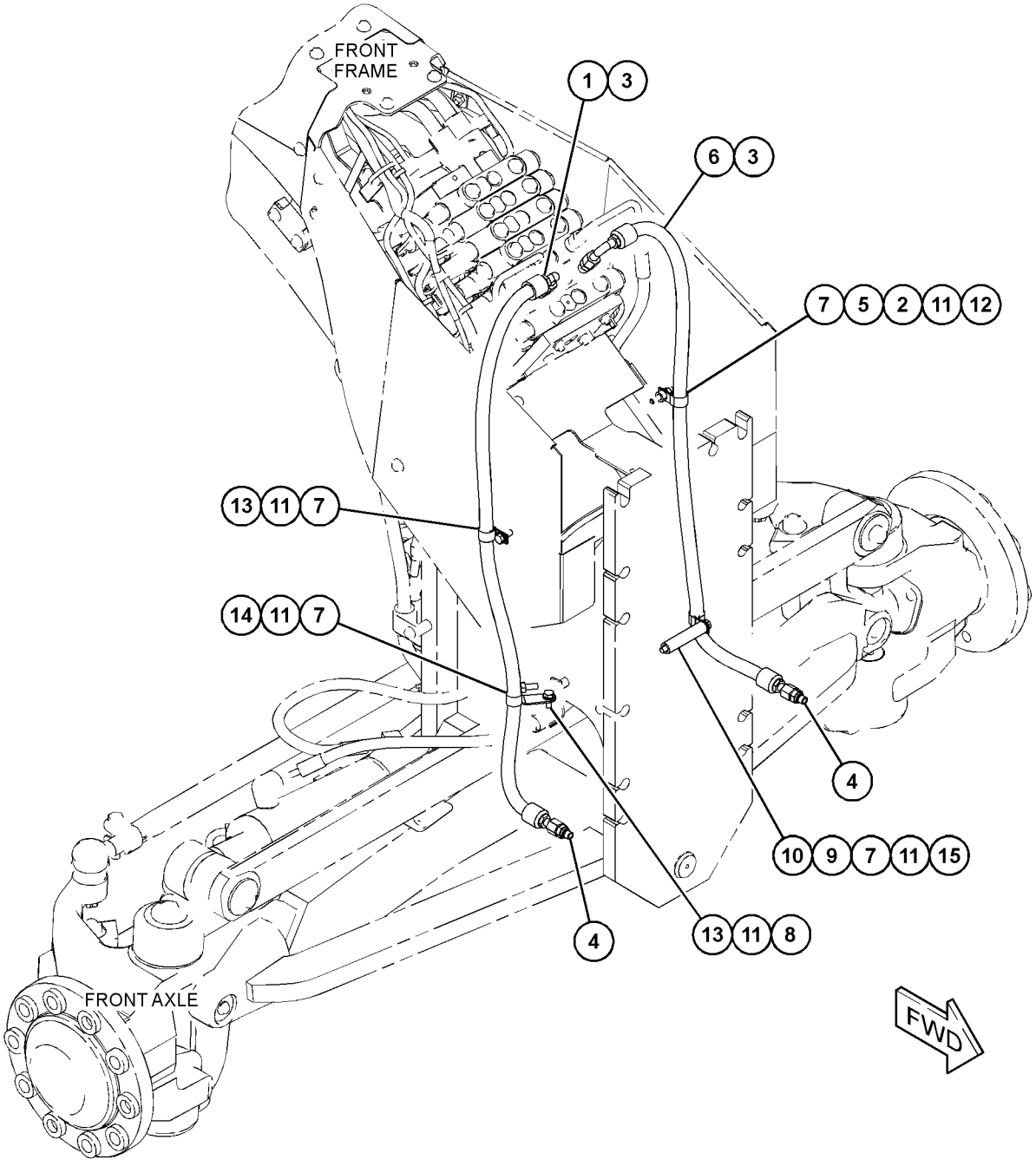

GRAPHIC #1 <END> g06158952

305-2947 LINES GP-HYDRAULIC—DOZER, SNOW PLOW

S/N: B551-UP
1-CIRCUIT
PART OF 365-3354, 365-3370, 438-5426 CONTROL AR-HYDRAULIC

SMCS-5057 **i05544996**

NOTE	REF NO	GRAPHIC REF	PART NUMBER	QTY	PART NAME 1 2 3 4 5 6 (PRODUCT LEVEL)	SEE PAGE
I	1	1	**244-0734**	1	HOSE AS	
I	2	1	**9W-4363**	1	HOSE AS	
	3	1	*148-8340*	2	CONNECTOR AS	
					(EACH INCLUDES)	
		1	**6V-8639**	1	CONNECTOR	
		1	**3K-0360**	1	SEAL-O-RING	
		1	**6V-8398**	1	SEAL-O-RING	
	4	1	*150-4043*	1	CONNECTOR AS	
		1	**6V-9873**	1	CONNECTOR	
		1	**3J-1907**	1	SEAL-O-RING	
		1	**6V-8398**	1	SEAL-O-RING	
	5	1	*164-5624*	1	ELBOW AS	
		1	**9X-2085**	1	ELBOW	
		1	**3J-1907**	1	SEAL-O-RING	
		1	**6V-8398**	1	SEAL-O-RING	
	6	1	**6D-4244**	2	CLIP (LOOP)	
B	7	1	**3E-4321**	2	CLIP (LOOP)	

B - USE AS REQUIRED
I - REFER TO HYDRAULIC INFORMATION SYSTEM

305-2947 **LINES GP-HYDRAULIC (**contd.**)** **i05544996**

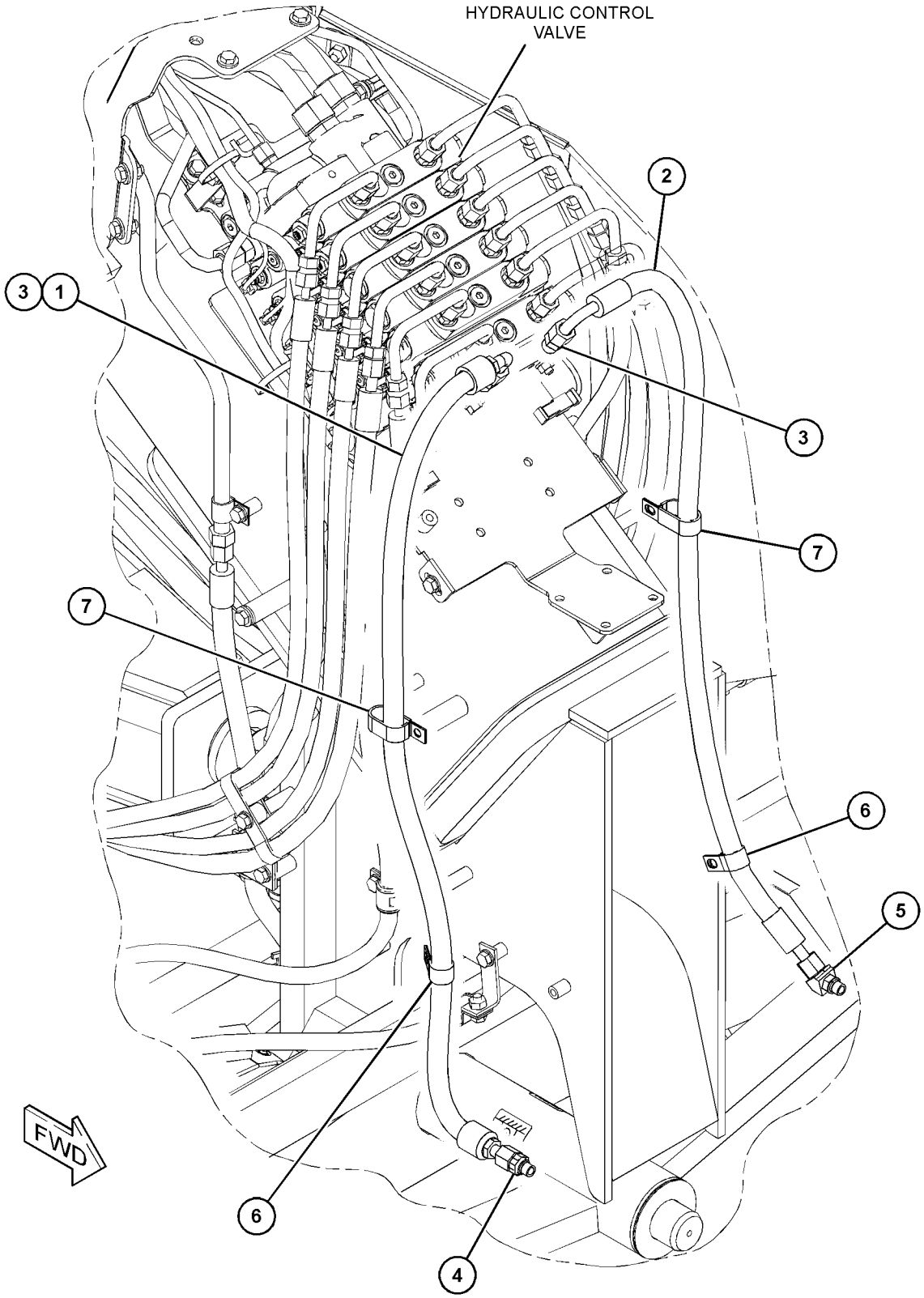

GRAPHIC #1 <END> g03519338

305-2948 LINES GP-HYDRAULIC—DOZER ANGLE, SNOW PLOW

S/N: B551-UP
2-CIRCUIT
PART OF 365-3371, 365-5541 CONTROL AR-HYDRAULIC

SMCS-5057 **i05589651**

NOTE	REF NO	GRAPHIC REF	PART NUMBER	QTY	PART NAME 1 2 3 4 5 6 (PRODUCT LEVEL)	SEE PAGE
I	1	1	**9W-4363**	1	HOSE AS	
I	2	1	**293-5704**	1	HOSE AS	
	3	1	*148-8340*	4	CONNECTOR AS	
					(EACH INCLUDES)	
		1	**6V-8639**	1	CONNECTOR	
		1	**3K-0360**	1	SEAL-O-RING	
		1	**6V-8398**	1	SEAL-O-RING	
	4	1	*148-8345*	1	CONNECTOR AS	
		1	**6V-8638**	1	CONNECTOR	
		1	**2M-9780**	1	SEAL-O-RING	
		1	**6V-8398**	1	SEAL-O-RING	
	5	1	*148-8358*	1	ELBOW AS	
		1	**6V-8624**	1	ELBOW	
		1	**6V-8398**	1	SEAL-O-RING	
		1	**2M-9780**	1	SEAL-O-RING	
	6	1	*150-4043*	1	CONNECTOR AS	
		1	**6V-9873**	1	CONNECTOR	
		1	**3J-1907**	1	SEAL-O-RING	
		1	**6V-8398**	1	SEAL-O-RING	
	7	1	*164-5624*	1	ELBOW AS	
		1	**9X-2085**	1	ELBOW	
		1	**3J-1907**	1	SEAL-O-RING	
		1	**6V-8398**	1	SEAL-O-RING	
I	8	1	**214-1542**	1	HOSE AS	
I	9	1	**244-0734**	1	HOSE AS	
B	10	1	**3E-4321**	4	CLIP (LOOP)	
	11	1	**6D-4244**	2	CLIP (LOOP)	
	12	1	**6V-1228**	1	CLIP	

B - USE AS REQUIRED
I - REFER TO HYDRAULIC INFORMATION SYSTEM

305-2948 **LINES GP-HYDRAULIC (**contd.**)** **i05589651**

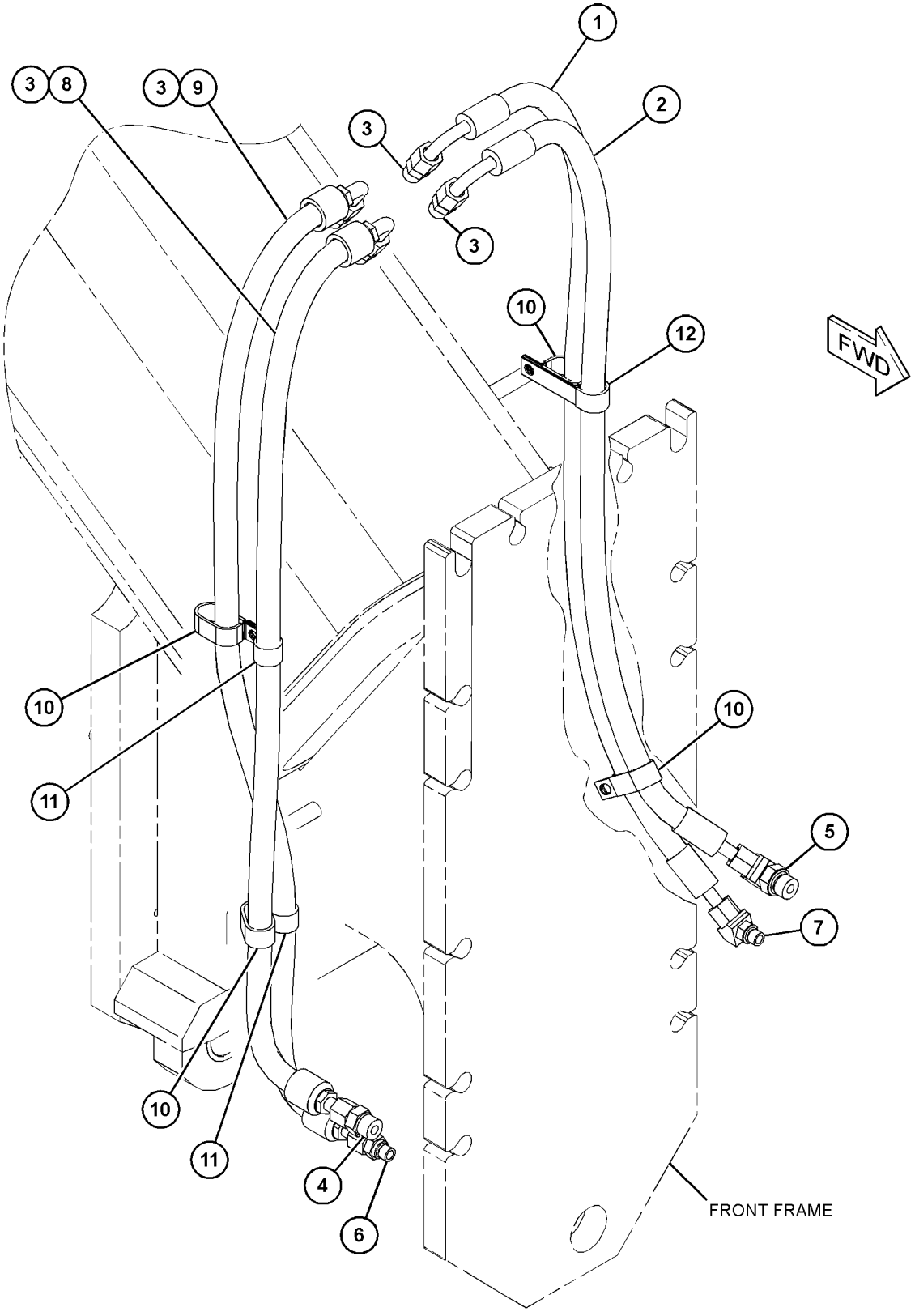

GRAPHIC #1 <END> g03569512

305-2953 LINES GP-HYDRAULIC—SCARIFIER

S/N: B551-UP
1-CIRCUIT
PART OF 365-3355, 438-5421, 438-5426 CONTROL AR-HYDRAULIC

SMCS-5057 **i07232248**

NOTE	REF NO	GRAPHIC REF	PART NUMBER	QTY	PART NAME 1 2 3 4 5 6 (PRODUCT LEVEL)	SEE PAGE
I	1	1	**310-1627**	1	HOSE AS	
I	2	1	**310-1629**	1	HOSE AS	
	3	1	*148-8318*	2	CONNECTOR AS	
					(EACH INCLUDES)	
		1	**6V-8634**	1	CONNECTOR	
		1	**3K-0360**	1	SEAL-O-RING	
		1	**6V-8397**	1	SEAL-O-RING	
	4	1	*148-8374*	1	ELBOW AS	
		1	**6V-8723**	1	ELBOW	
		1	**3K-0360**	1	SEAL-O-RING	
		1	**6V-8397**	1	SEAL-O-RING	
	5	1	*164-5605*	1	CONNECTOR AS	
		1	**8T-0076**	1	CONNECTOR	
		1	**3K-0360**	1	SEAL-O-RING	
		1	**6V-8397**	1	SEAL-O-RING	
BM	6	1	**180-3998**	1	STUD (M10X1.5X55-MM)	
	7	1	**199-7854**	1	SPACER (11.8X20X45-MM THK)	
	8	1	**6D-4246**	9	CLIP (LOOP)	
	9	1	**8T-4121**	8	WASHER-HARD (11X21X2.5-MM THK)	
M	10	1	**8T-4133**	1	NUT (M10X1.5-THD)	
M	11	1	**8T-4136**	6	BOLT (M10X1.5X25-MM)	
M	12	1	**8T-6466**	1	BOLT (M10X1.5X60-MM)	

B - USE AS REQUIRED
I - REFER TO HYDRAULIC INFORMATION SYSTEM
M - METRIC PART

305-2953 **LINES GP-HYDRAULIC (**contd.**)** **i07232248**

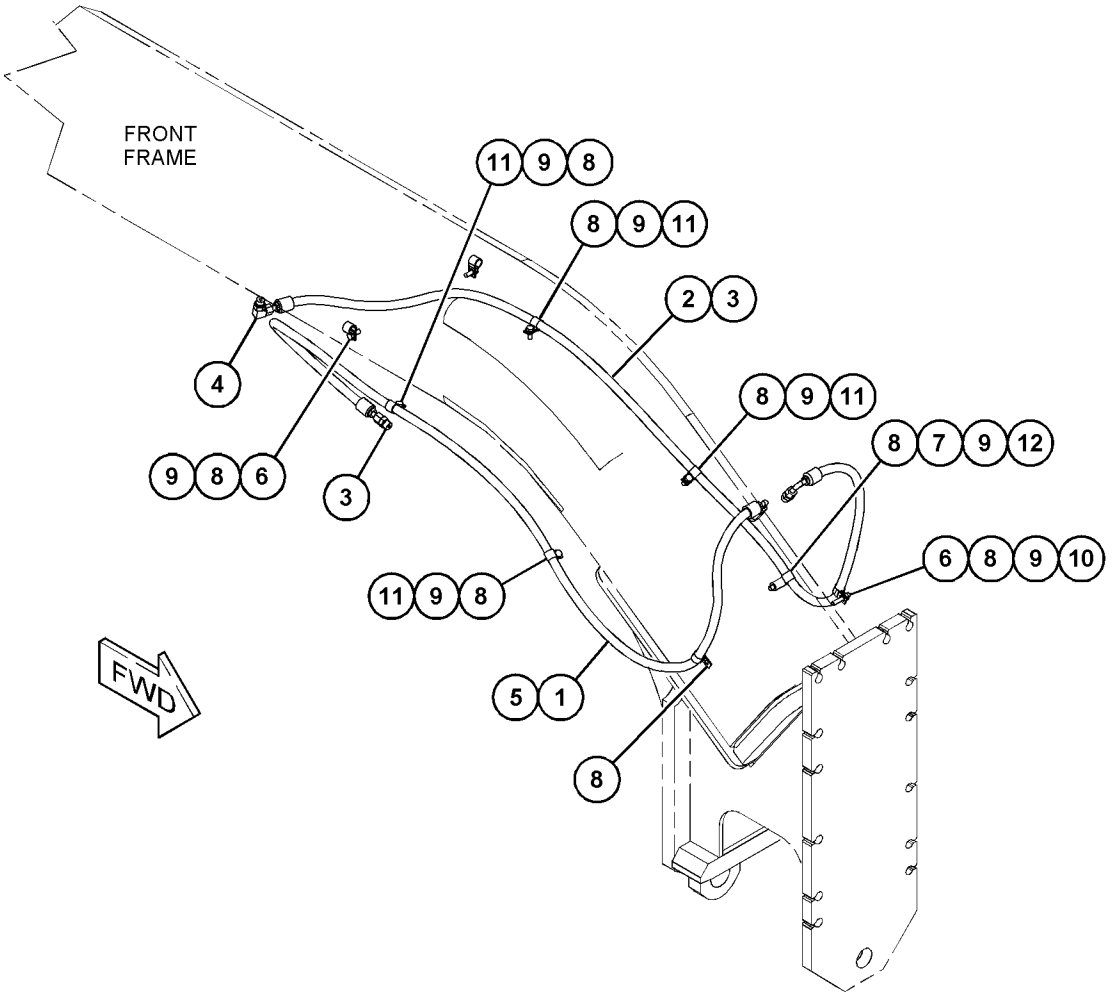

GRAPHIC #1 <END> g06261515

358-5267 LINES GP-HYDRAULIC—BLADE LIFT

S/N: B551-UP
WITH ACCUMULATOR
PART OF 364-2037 CONTROL AR-HYDRAULIC

SMCS-5057 **i05389513**

NOTE	REF NO	GRAPHIC REF	PART NUMBER	QTY	PART NAME 1 2 3 4 5 6 (PRODUCT LEVEL)	SEE PAGE
	1	2	**4N-5091**	2	SPACER (0.53X1X3.375-IN THK)	
	2	2	**7C-6921**	3	SPACER (11X20X22.8-MM THK)	
I	3	2	**8X-5564**	1	HOSE AS	
I	4	2	**108-0705**	1	HOSE AS	
I	5	2	**153-8085**	1	HOSE AS	
	6	2	**162-7449**	2	CLAMP	
	7	2	*164-5605*	1	CONNECTOR AS	
		2	**8T-0076**	1	CONNECTOR	
		2	**3K-0360**	1	SEAL-O-RING	
		2	**6V-8397**	1	SEAL-O-RING	
I	8	2	**105-3002**	1	HOSE AS	
I	9	2	**222-2259**	1	HOSE AS	
M	10	2	**8T-4185**	1	BOLT (M10X1.5X50-MM)	
	11	2	**330-6552**	1	PLATE AS	
Y	12	2	*348-9256*	2	ACCUMULATOR GP-BLADE CUSHION (CHARGED)	516
I	13	2	**349-8743**	1	HOSE AS	
	14	2	**122-0450**	3	GROMMET	
	15	2	*148-8340*	1	CONNECTOR AS	
		2	**6V-8639**	1	CONNECTOR	
		2	**3K-0360**	1	SEAL-O-RING	
		2	**6V-8398**	1	SEAL-O-RING	
	16	2	*148-8363*	2	ELBOW AS	
					(EACH INCLUDES)	
		2	**6V-9876**	1	ELBOW	
		2	**3K-0360**	1	SEAL-O-RING	
		2	**6V-8397**	1	SEAL-O-RING	
	17	2	*148-8364*	4	ELBOW AS	
					(EACH INCLUDES)	
		2	**6V-8625**	1	ELBOW	
		2	**3K-0360**	1	SEAL-O-RING	
		2	**6V-8398**	1	SEAL-O-RING	
	18	2	*148-8374*	1	ELBOW AS	
		2	**6V-8723**	1	ELBOW	
		2	**3K-0360**	1	SEAL-O-RING	
		2	**6V-8397**	1	SEAL-O-RING	
	19	2	*148-8381*	1	ELBOW AS	
		2	**8T-5429**	1	ELBOW	
		2	**3D-2824**	1	SEAL-O-RING	
		2	**6V-8398**	1	SEAL-O-RING	
	20	2	*148-8415*	1	REDUCER AS	
		2	**6V-8936**	1	REDUCER	
		2	**6V-8397**	1	SEAL-O-RING	
	21	2	*148-8444*	2	TEE AS-SWIVEL	
					(EACH INCLUDES)	
		2	**6V-9837**	1	TEE-SWIVEL	
		2	**6V-8398**	2	SEAL-O-RING	
	22	2	*155-7321*	1	ADAPTER AS	

358-5267 **LINES GP-HYDRAULIC (**contd.**)** **i05389513**

NOTE	REF NO	GRAPHIC REF	PART NUMBER	QTY	PART NAME 1 2 3 4 5 6 (PRODUCT LEVEL)	SEE PAGE
		2	**6V-1722**	1	ADAPTER	
		2	**3D-2824**	1	SEAL-O-RING	
	23	2	*164-5544*	1	ELBOW AS	
		2	**3E-2333**	1	ELBOW	
		2	**6V-8398**	1	SEAL-O-RING	
M	24	2	**180-3998**	3	STUD (M10X1.5X55-MM)	
	26	2	**5G-3676**	4	GROMMET	
	27	2	**6D-4244**	3	CLIP (LOOP)	
	28	2	**6D-4246**	2	CLIP (LOOP)	
	29	2	**6D-4247**	2	CLIP	
	30	2	**7X-0334**	2	BOLT (1/2-13X5-IN)	
	32	2	**8T-1889**	4	CLIP (SLOT)	
	33	2	**8T-1890**	4	CLIP (TAB)	
	34	2	**8T-1897**	3	CLIP (SLOT)	
	35	2	**8T-1898**	3	CLIP (TAB)	
	36	2	**8T-4121**	15	WASHER-HARD (11X21X2.5-MM THK)	
M	37	2	**8T-4133**	3	NUT (M10X1.5-THD)	
M	38	2	**8T-4136**	2	BOLT (M10X1.5X25-MM)	
M	39	2	**8T-4182**	2	BOLT (M10X1.5X45-MM)	
M	40	2	**8T-4195**	2	BOLT (M10X1.5X30-MM)	
M	41	2	**8T-4196**	2	BOLT (M10X1.5X35-MM)	
	42	2	**8T-4223**	2	WASHER-HARD (13.5X25.5X3-MM THK)	

I - REFER TO HYDRAULIC INFORMATION SYSTEM
M - METRIC PART
Y - SEPARATE ILLUSTRATION

358-5267 **LINES GP-HYDRAULIC (**contd.**)** **i05389513**

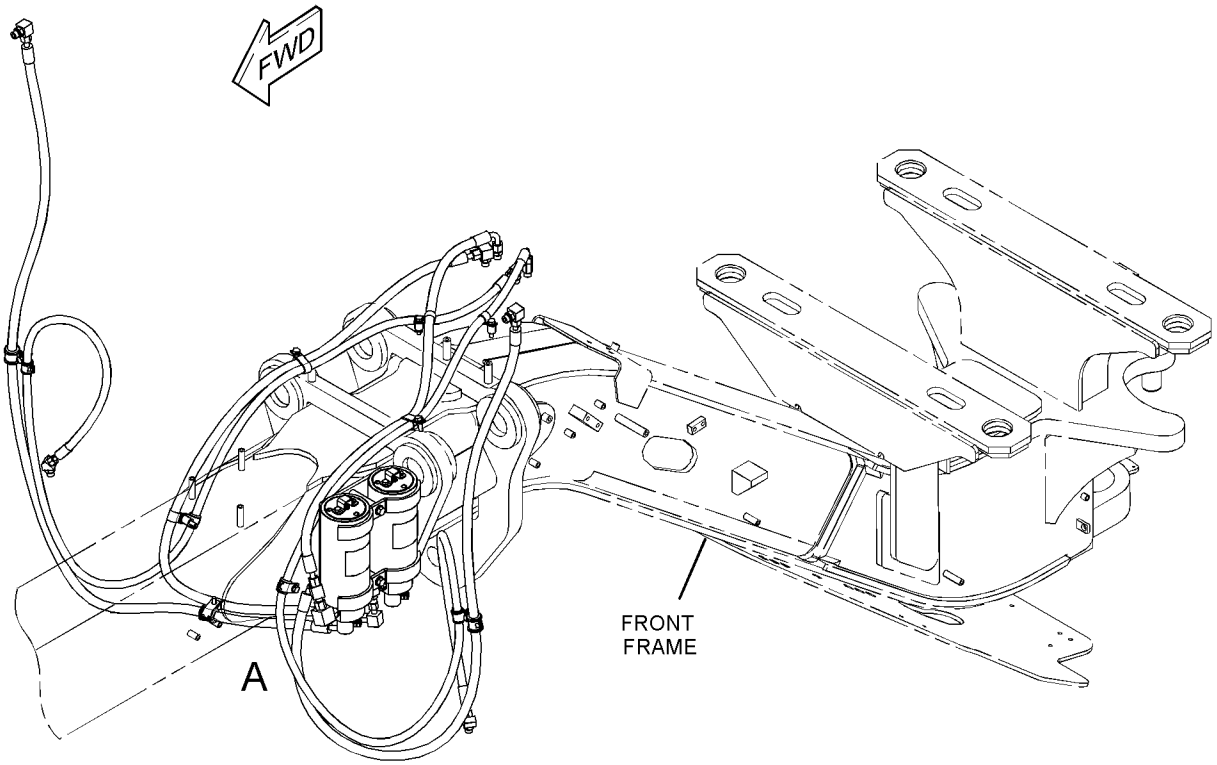

REFER TO ALL ILLUSTRATIONS OF
THIS GROUP FOR AUXILIARY VIEWS

GRAPHIC #1 g02237215

358-5267 **LINES GP-HYDRAULIC (**contd.**)** **i05389513**

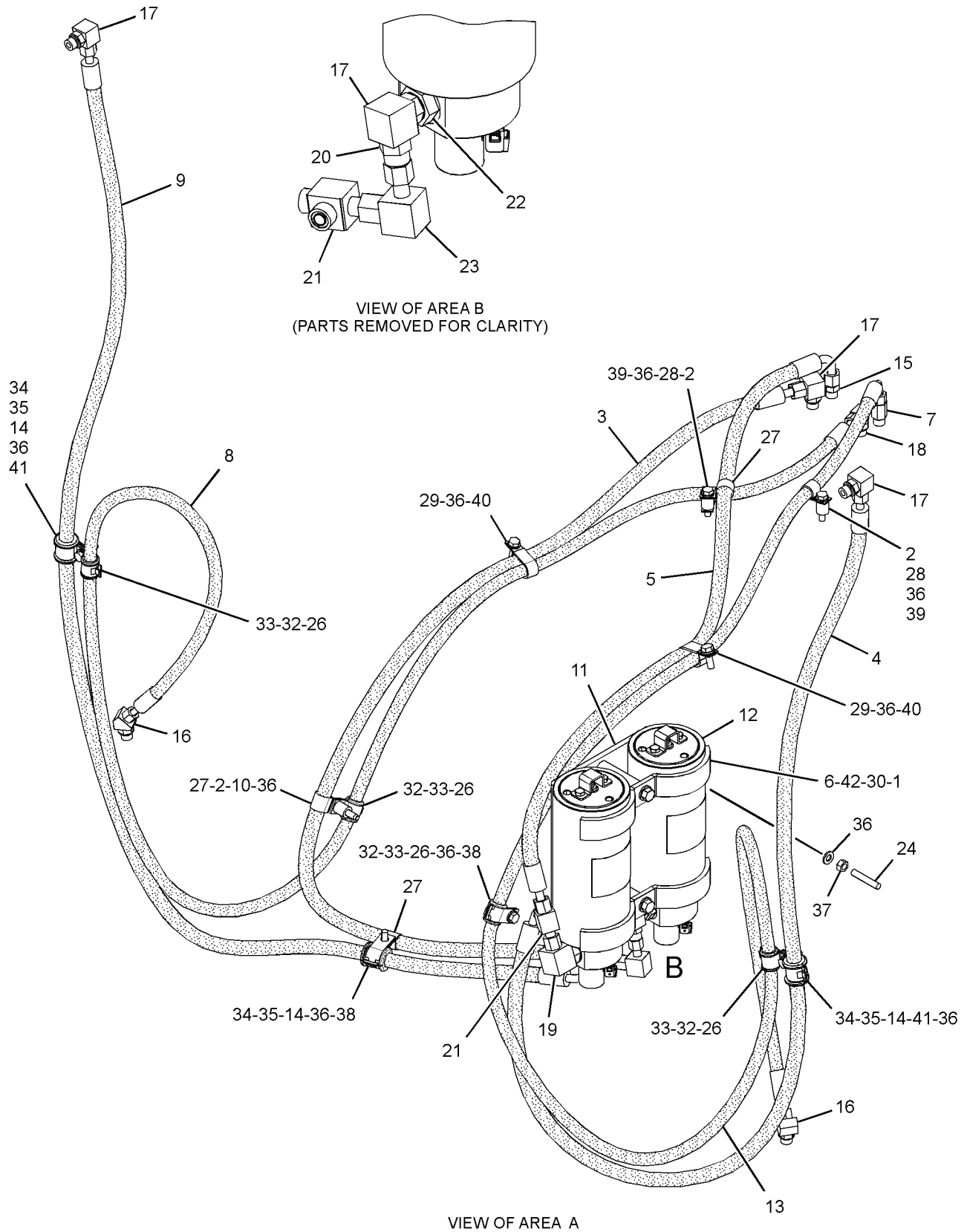

GRAPHIC #2

<END>

g03408433

360-9698 LINES GP-HYDRAULIC—BLADE LIFT

S/N: B551-UP
WITH ACCUMULATOR
PART OF 364-2035 CONTROL AR-HYDRAULIC

SMCS-5057 **i05389428**

NOTE	REF NO	GRAPHIC REF	PART NUMBER	QTY	PART NAME 1 2 3 4 5 6 (PRODUCT LEVEL)	SEE PAGE
	1	2	**4N-5091**	2	SPACER (0.53X1X3.375-IN THK)	
	2	2	**7C-6921**	3	SPACER (11X20X22.8-MM THK)	
I	3	2	**8X-5564**	1	HOSE AS	
I	4	2	**108-0705**	1	HOSE AS	
I	5	2	**153-8085**	1	HOSE AS	
	6	2	**162-7449**	2	CLAMP	
	7	2	*164-5605*	1	CONNECTOR AS	
		2	**8T-0076**	1	CONNECTOR	
		2	**3K-0360**	1	SEAL-O-RING	
		2	**6V-8397**	1	SEAL-O-RING	
I	8	2	**105-3002**	1	HOSE AS	
I	9	2	**222-2259**	1	HOSE AS	
M	10	2	**8T-4185**	1	BOLT (M10X1.5X50-MM)	
Y	11	2	*327-8568*	2	ACCUMULATOR GP-BLADE CUSHION (CHARGED)	515
	12	2	**330-6552**	1	PLATE AS	
I	13	2	**349-8743**	1	HOSE AS	
	14	2	**122-0450**	3	GROMMET	
	15	2	*148-8340*	1	CONNECTOR AS	
		2	**6V-8639**	1	CONNECTOR	
		2	**3K-0360**	1	SEAL-O-RING	
		2	**6V-8398**	1	SEAL-O-RING	
	16	2	*148-8363*	2	ELBOW AS	
					(EACH INCLUDES)	
		2	**6V-9876**	1	ELBOW	
		2	**3K-0360**	1	SEAL-O-RING	
		2	**6V-8397**	1	SEAL-O-RING	
	17	2	*148-8364*	4	ELBOW AS	
					(EACH INCLUDES)	
		2	**6V-8625**	1	ELBOW	
		2	**3K-0360**	1	SEAL-O-RING	
		2	**6V-8398**	1	SEAL-O-RING	
	18	2	*148-8374*	1	ELBOW AS	
		2	**6V-8723**	1	ELBOW	
		2	**3K-0360**	1	SEAL-O-RING	
		2	**6V-8397**	1	SEAL-O-RING	
	19	2	*148-8381*	1	ELBOW AS	
		2	**8T-5429**	1	ELBOW	
		2	**3D-2824**	1	SEAL-O-RING	
		2	**6V-8398**	1	SEAL-O-RING	
	20	2	*148-8415*	1	REDUCER AS	
		2	**6V-8936**	1	REDUCER	
		2	**6V-8397**	1	SEAL-O-RING	
	21	2	*148-8444*	2	TEE AS-SWIVEL	
					(EACH INCLUDES)	
		2	**6V-9837**	1	TEE-SWIVEL	
		2	**6V-8398**	2	SEAL-O-RING	
	22	2	*155-7321*	1	ADAPTER AS	

360-9698 **LINES GP-HYDRAULIC (**contd.**)** **i05389428**

NOTE	REF NO	GRAPHIC REF	PART NUMBER	QTY	PART NAME 1 2 3 4 5 6 (PRODUCT LEVEL)	SEE PAGE
		2	**6V-1722**	1	ADAPTER	
		2	**3D-2824**	1	SEAL-O-RING	
	23	2	*164-5544*	1	ELBOW AS	
		2	**3E-2333**	1	ELBOW	
		2	**6V-8398**	1	SEAL-O-RING	
M	24	2	**180-3998**	3	STUD (M10X1.5X55-MM)	
	26	2	**5G-3676**	4	GROMMET	
	27	2	**6D-4244**	3	CLIP (LOOP)	
	28	2	**6D-4246**	2	CLIP (LOOP)	
	29	2	**6D-4247**	2	CLIP	
	30	2	**7X-0334**	2	BOLT (1/2-13X5-IN)	
	32	2	**8T-1889**	4	CLIP (SLOT)	
	33	2	**8T-1890**	4	CLIP (TAB)	
	34	2	**8T-1897**	3	CLIP (SLOT)	
	35	2	**8T-1898**	3	CLIP (TAB)	
	36	2	**8T-4121**	15	WASHER-HARD (11X21X2.5-MM THK)	
M	37	2	**8T-4133**	3	NUT (M10X1.5-THD)	
M	38	2	**8T-4136**	2	BOLT (M10X1.5X25-MM)	
M	39	2	**8T-4182**	2	BOLT (M10X1.5X45-MM)	
M	40	2	**8T-4195**	2	BOLT (M10X1.5X30-MM)	
M	41	2	**8T-4196**	2	BOLT (M10X1.5X35-MM)	
	42	2	**8T-4223**	2	WASHER-HARD (13.5X25.5X3-MM THK)	

I - REFER TO HYDRAULIC INFORMATION SYSTEM
M - METRIC PART
Y - SEPARATE ILLUSTRATION

360-9698 **LINES GP-HYDRAULIC (**contd.**)** **i05389428**

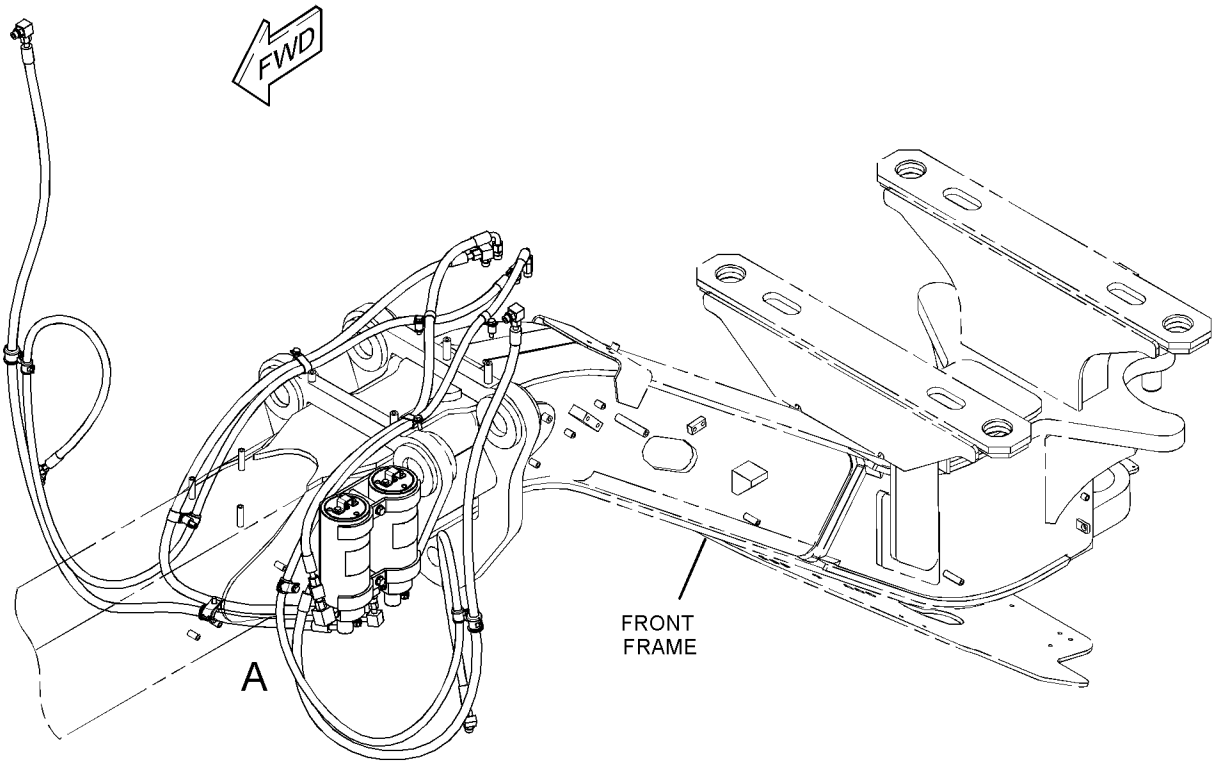

REFER TO ALL ILLUSTRATIONS OF
THIS GROUP FOR AUXILIARY VIEWS

GRAPHIC #1 g02162956

360-9698 **LINES GP-HYDRAULIC (**contd.**)** **i05389428**

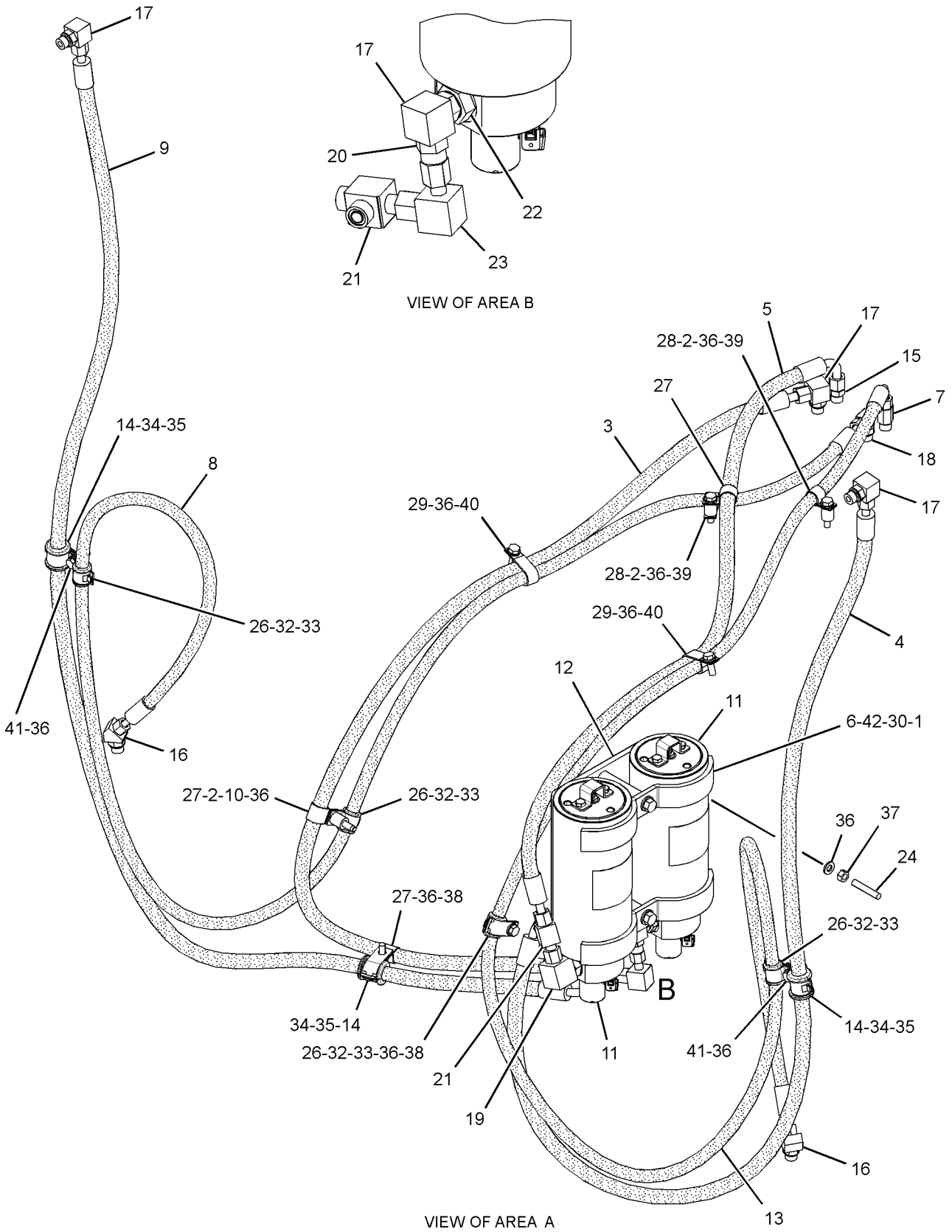

GRAPHIC #2

<END>

g03408442

380-8323 LINES GP-HYDRAULIC—ARTICULATION

S/N: B551-UP

PART OF 364-1989 OPTION AR-MACHINE

SMCS-5057 **i07654565**

NOTE	REF NO	GRAPHIC REF	PART NUMBER	QTY	PART NAME 1 2 3 4 5 6 (PRODUCT LEVEL)	SEE PAGE
	1	1	**5P-1717**	2	CLAMP-HOSE	
	2	1	**7K-1181**	2	STRAP-CABLE	
I	3	1	**7T-0629**	1	HOSE AS	
I	4	1	**194-2150**	1	HOSE AS	
	5	1	**246-3349**	2	BLOCK	
	6	1	**265-2122**	1	TUBE AS	
	7	1	**265-2123**	1	TUBE AS	
I	8	1	**271-7495**	2	HOSE AS	
I	9	2	**355-9820**	1	HOSE AS	
I	10	2	**387-8675**	1	HOSE AS	
	11	2	**392-7055**	1	TUBE AS	
	12	2	**441-0638**	1	TUBE AS	
	13	1	**100-4336**	3	CLIP (LOOP)	
	14	1,2	*148-8340*	4	CONNECTOR AS	
					(EACH INCLUDES)	
		1,2	**3K-0360**	1	SEAL-O-RING	
		1,2	**6V-8398**	1	SEAL-O-RING	
		1,2	**6V-8639**	1	CONNECTOR	
	15	1	*148-8374*	2	ELBOW AS	
					(EACH INCLUDES)	
		1	**3K-0360**	1	SEAL-O-RING	
		1	**6V-8397**	1	SEAL-O-RING	
		1	**6V-8723**	1	ELBOW	
	16	1	*153-6246*	2	TEE AS	
					(EACH INCLUDES)	
		1	**6V-8397**	3	SEAL-O-RING	
		1	**7X-0820**	1	TEE	
	17	1	**541-6637**	4	CLIP (LOOP)	
M	18	2	**309-1906**	2	STUD-TAPERLOCK (M10X1.5X55-MM)	
M	19	1	**344-5675**	4	NUT (M10X1.5-THD)	
	20	2	**5P-9299**	2	CLIP (LOOP)	
	21	2	**541-6632**	4	CLIP (LOOP)	
	22	2	**6V-8397**	2	SEAL-O-RING	
	23	1	**6V-8398**	2	SEAL-O-RING	
	24	1	**6V-9168**	2	NUT (11/16-16-THD)	
M	25	2	**8T-0389**	2	LOCKNUT (M10X1.5-THD)	
	26	1,2	**8T-4121**	15	WASHER-HARD (11X21X2.5-MM THK)	
M	27	1,2	**8T-4136**	4	BOLT (M10X1.5X25-MM)	
M	28	1,2	**8T-4137**	4	BOLT (M10X1.5X20-MM)	
M	29	2	**8T-4195**	1	BOLT (M10X1.5X30-MM)	

I - REFER TO HYDRAULIC INFORMATION SYSTEM
M - METRIC PART

380-8323 **LINES GP-HYDRAULIC (**contd.**)** **i07654565**

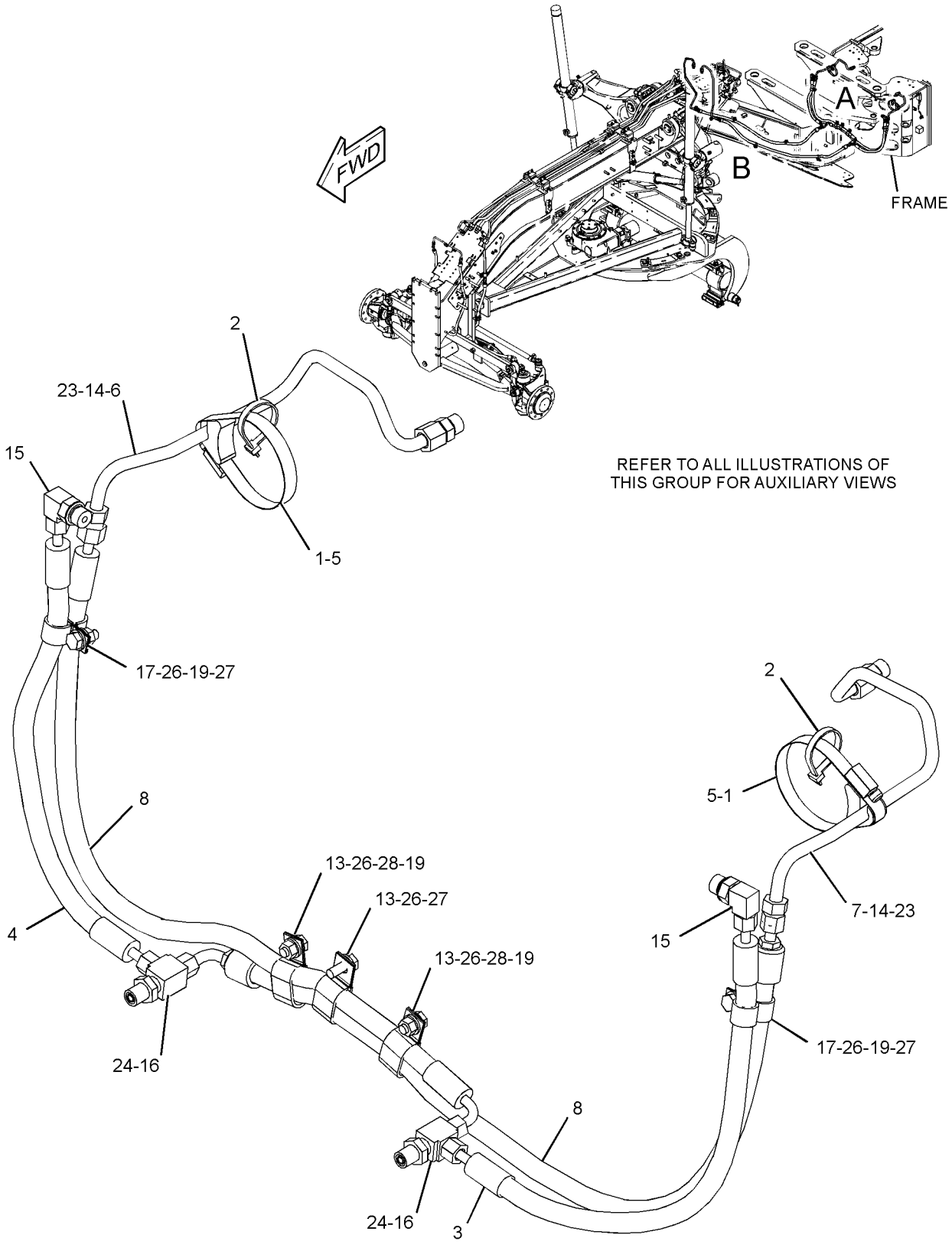

VIEW OF AREA A

GRAPHIC #1 g03420741

380-8323 **LINES GP-HYDRAULIC (**contd.**)** **i07654565**

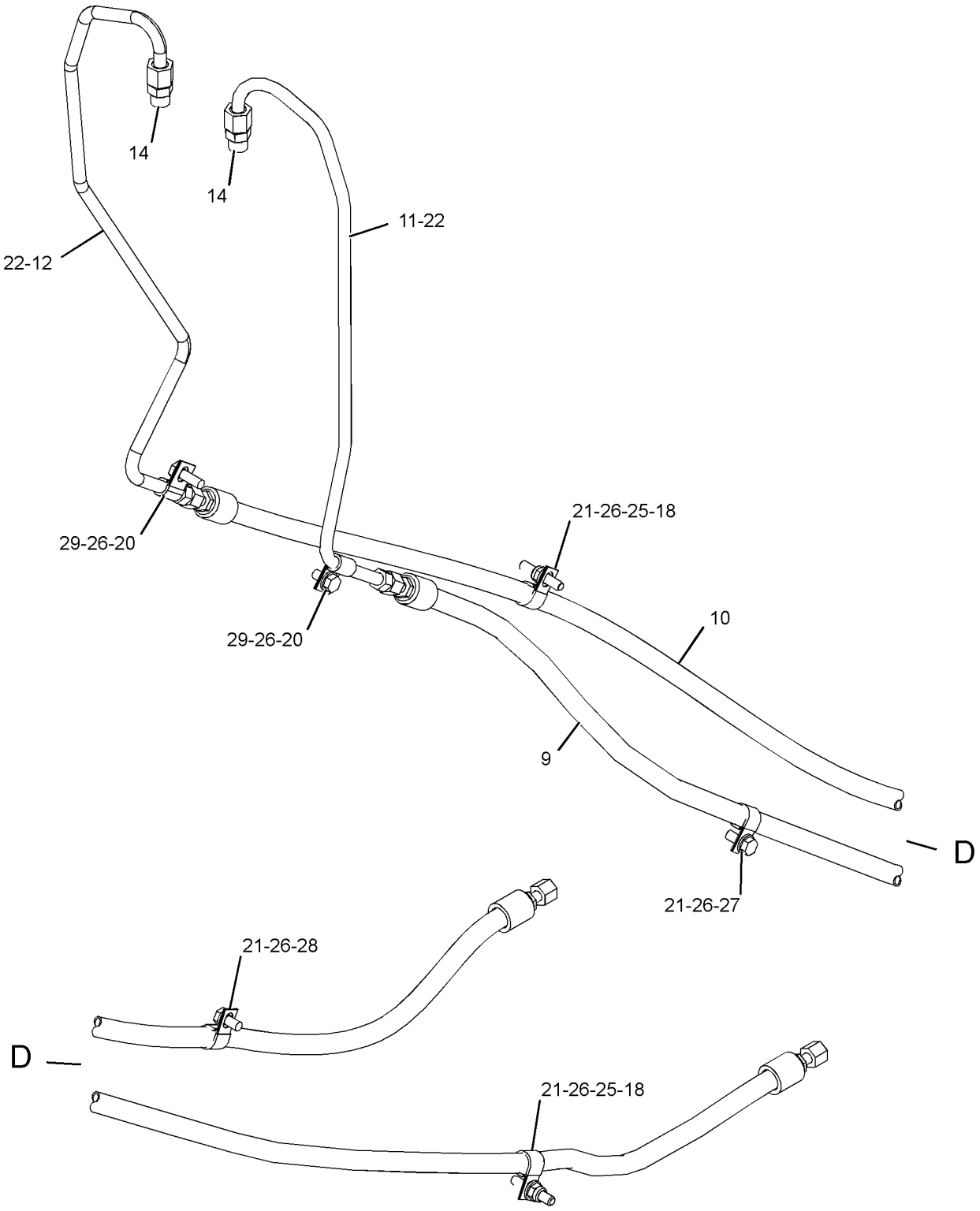

VIEW OF AREA B

GRAPHIC #2 <END> g03420746

423-9100 LINES GP-HYDRAULIC—CENTERSHIFT LOCK

S/N: B551-UP

PART OF 364-1989 OPTION AR-MACHINE

SMCS-5057 **i07381311**

NOTE	REF NO	GRAPHIC REF	PART NUMBER	QTY	PART NAME 1 2 3 4 5 6 (PRODUCT LEVEL)	SEE PAGE
I	1	1	**148-7027**	1	HOSE AS	
	2	1	**205-5596**	1	SPACER (11X15X35-MM THK)	
	3	1	*148-8336*	1	CONNECTOR AS	
		1	**3J-1907**	1	SEAL-O-RING	
		1	**6V-8397**	1	SEAL-O-RING	
		1	**6V-8636**	1	CONNECTOR	
	4	1	*148-8378*	1	ELBOW AS	
		1	**3J-1907**	1	SEAL-O-RING	
		1	**6V-8397**	1	SEAL-O-RING	
		1	**6V-8724**	1	ELBOW	
C	5	1	*250-1417*	1	ELBOW AS	
		1	**3J-1907**	1	SEAL-O-RING	
		1	**6V-8397**	2	SEAL-O-RING	
		1	**250-1416**	1	ELBOW	
	6	1	*150-3074*	1	ORIFICE AS	
		1	**3J-1907**	1	SEAL-O-RING	
		1	**6V-8397**	1	SEAL-O-RING	
		1	**110-5266**	1	ORIFICE (1.6-MM)	
	7	1	*164-5544*	1	ELBOW AS	
		1	**3E-2333**	1	ELBOW	
		1	**6V-8398**	1	SEAL-O-RING	
M	8	1	**259-7140**	1	STUD-TAPERLOCK (M10X1.5X80-MM)	
CI	9	1	**542-2504**	1	HOSE AS	
I	10	1	**445-2557**	1	HOSE AS	
CI	11	1	**542-2503**	1	HOSE AS	
	12	1	**8M-2773**	2	CLIP (LOOP)	
M	13	1	**8T-0389**	1	LOCKNUT (M10X1.5-THD)	
	14	1	**8T-4121**	2	WASHER-HARD (11X21X2.5-MM THK)	
M	15	1	**8T-4136**	1	BOLT (M10X1.5X25-MM)	

C - CHANGE FROM PREVIOUS TYPE
I - REFER TO HYDRAULIC INFORMATION SYSTEM
M - METRIC PART

423-9100 **LINES GP-HYDRAULIC (**contd.**)** **i07381311**

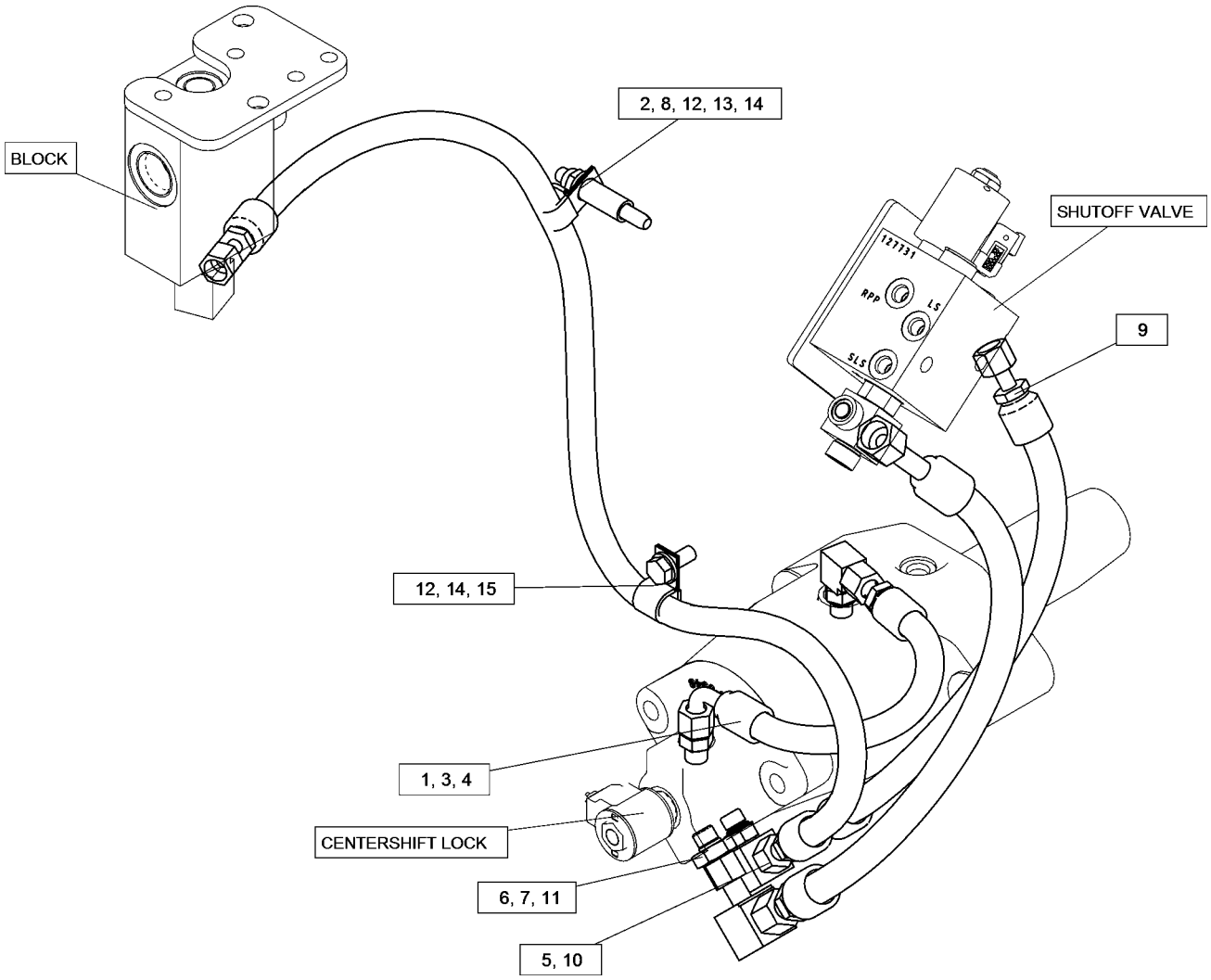

GRAPHIC #1 <END> g06302508

473-0558 LINES GP-HYDRAULIC

S/N: B551-UP

FOR USE WITH 365-5539—PAGE: 522

SMCS-5057 **i06895791**

NOTE	REF NO	GRAPHIC REF	PART NUMBER	QTY	PART NAME 1 2 3 4 5 6 (PRODUCT LEVEL)	SEE PAGE
I	1	1	**246-4389**	1	HOSE AS	
	2	1	**243-1353**	1	SPACER (11X20X35-MM THK)	
	3	1	**293-4709**	1	TUBE AS	
I	4	1	**363-2189**	1	HOSE AS	
	5	1	**387-8683**	1	TUBE AS	
	6	1	**091-0081**	1	SPACER (10.5X20X10-MM THK)	
	7	1	**100-4336**	7	CLIP (LOOP)	
	8	1	**111-9251**	2	WASHER-HARD (20X35X1.6-MM THK)	
	9	1	*148-8340*	2	CONNECTOR AS	
					(EACH INCLUDES)	
		1	**6V-8639**	1	CONNECTOR	
		1	**3K-0360**	1	SEAL-O-RING	
		1	**6V-8398**	1	SEAL-O-RING	
	10	1	*149-5452*	2	UNION AS (STRAIGHT)	
					(EACH INCLUDES)	
		1	**6V-8994**	1	UNION (STRAIGHT)	
		1	**6V-8397**	2	SEAL-O-RING	
	11	1	**4D-9517**	1	CLIP	
	12	1	**5G-3676**	2	GROMMET	
	13	1	**5P-9299**	1	CLIP (LOOP)	
	14	1	**6D-4246**	1	CLIP (LOOP)	
	15	1	**6V-8398**	2	SEAL-O-RING	
	16	1	**6V-9168**	2	NUT (11/16-16-THD)	
	17	1	**6V-9829**	2	CAP (ORFS)	
	18	1	**8T-1895**	2	CLIP (SLOT)	
	19	1	**8T-1896**	2	CLIP (TAB)	
	20	1	**8T-4121**	8	WASHER-HARD (11X21X2.5-MM THK)	
M	21	1	**8T-4136**	1	BOLT (M10X1.5X25-MM)	
M	22	1	**8T-4137**	5	BOLT (M10X1.5X20-MM)	
M	23	1	**8T-4186**	1	BOLT (M10X1.5X40-MM)	
M	24	1	**8T-6466**	1	BOLT (M10X1.5X60-MM)	

I - REFER TO HYDRAULIC INFORMATION SYSTEM
M - METRIC PART

473-0558 **LINES GP-HYDRAULIC (**contd.**)** **i06895791**

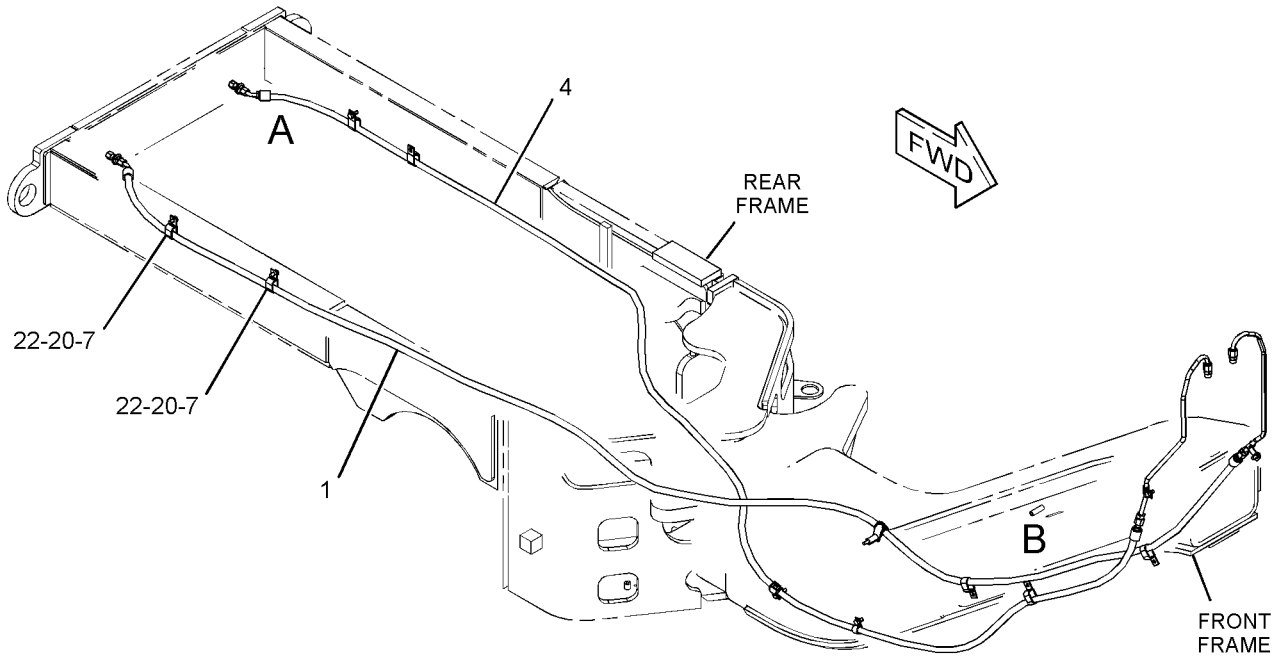

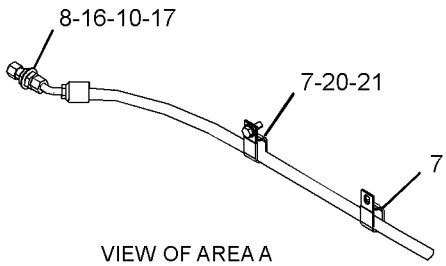

VIEW OF AREA A

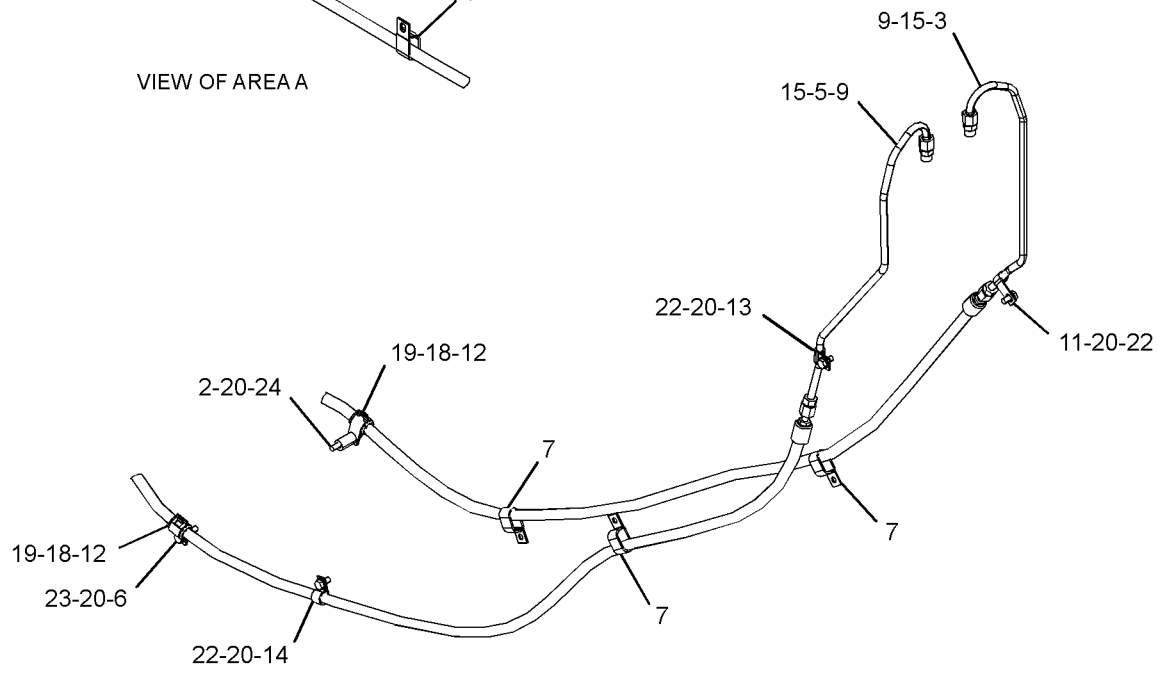

VIEW OF AREA B

GRAPHIC #1 <END> g06058042

332-3941 LINES GP-HYDRAULIC FAN

S/N: B551-UP

PART OF 577-1377 COMMON AR

SMCS-1386, 1387, 5057 **i07570377**

NOTE	REF NO	GRAPHIC REF	PART NUMBER	QTY	PART NAME 1 2 3 4 5 6 (PRODUCT LEVEL)	SEE PAGE
	1	1	**6V-0852**	1	CAP-DUST	
	2	1	*148-8430*	1	TEE AS	
		1	**7X-0873**	1	TEE	
		1	**6V-9746**	1	SEAL-O-RING	
I	3	1	**186-2506**	1	HOSE AS	
	4	1	*241-2443*	1	ELBOW AS	
		1	**241-2451**	1	ELBOW	
		1	**3J-1907**	1	SEAL-O-RING	
		1	**7J-9108**	1	SEAL-O-RING	
Y	5	1	**353-2604**	1	MANIFOLD GP-CONTROL (BRAKE, HYDRAULIC FAN)	618
	6	1	**284-0009**	1	TUBE AS	
	7	1	**297-9843**	1	PLATE AS	
CI	8	1	**375-1719**	1	HOSE AS	
CI	9	1	**375-1718**	1	HOSE AS	
I	10	1	**325-6533**	1	HOSE AS	
	11	1	**333-2101**	1	BRACKET AS	
	12	1	**105-1866**	2	CLIP	
I	14	1	**134-4772**	1	HOSE AS	
	15	1	*148-8322*	3	CONNECTOR AS	
					(EACH INCLUDES)	
		1	**6V-8640**	1	CONNECTOR	
		1	**2M-9780**	1	SEAL-O-RING	
		1	**6V-9746**	1	SEAL-O-RING	
	16	1	*148-8336*	1	CONNECTOR AS	
		1	**6V-8636**	1	CONNECTOR	
		1	**3J-1907**	1	SEAL-O-RING	
		1	**6V-8397**	1	SEAL-O-RING	
	17	1	*148-8341*	1	CONNECTOR AS	
		1	**6V-8713**	1	CONNECTOR	
		1	**3D-2824**	1	SEAL-O-RING	
		1	**7J-9108**	1	SEAL-O-RING	
	18	1	*148-8361*	2	ELBOW AS (90-DEG)	
					(EACH INCLUDES)	
		1	**6V-9200**	1	ELBOW	
		1	**3J-7354**	1	SEAL-O-RING	
		1	**6V-8397**	1	SEAL-O-RING	
	19	1	*148-8446*	1	TEE AS-SWIVEL	
		1	**6V-9838**	1	TEE-SWIVEL	
		1	**7J-9108**	2	SEAL-O-RING	
C	20	1	**149-7738**	1	CLIP (LOOP)	
	21	1	*164-5567*	1	COUPLER AS-QUICK DISCONNECT (MALE)	
		1	**6V-3965**	1	FITTING (QUICK DISCONNECT)	
		1	**214-7568**	1	SEAL-O-RING	
C	22	1	**130-9984**	2	CLIP (LOOP)	
	23	1	**1P-4578**	2	FLANGE-HALF	
	24	1	**3S-8664**	1	CLIP (LOOP)	
	25	1	**4J-0522**	1	SEAL-O-RING	
	26	1	**4J-5267**	1	SEAL-O-RING	

332-3941 **LINES GP-HYDRAULIC FAN** (contd.) **i07570377**

NOTE	REF NO	GRAPHIC REF	PART NUMBER	QTY	PART NAME 1 2 3 4 5 6 (PRODUCT LEVEL)	SEE PAGE
C	27	1	**4S-1962**	2	CLIP (LOOP)	
C	28	1	**164-4227**	1	CLIP (LOOP)	
	29	1	**5P-4325**	1	CLIP (LOOP)	
	30	1	**6D-4244**	4	CLIP (LOOP)	
C	31	1	**067-3045**	5	CLIP (LOOP)	
	32	1	**091-9035**	1	SPACER (11X25X20-MM THK)	
	33	1	**7D-7233**	2	CLIP (LOOP)	
M	34	1	**7X-2543**	1	BOLT (M10X1.5X120-MM)	
	35	1	**7X-7729**	2	WASHER (11X25X3-MM THK)	
	36	1	**8C-3205**	2	FLANGE-HALF	
C	37	1	**8T-4121**	29	WASHER-HARD (11X21X2.5-MM THK)	
CM	38	1	**344-5675**	7	NUT (M10X1.5-THD)	
CM	39	1	**8T-4136**	3	BOLT (M10X1.5X25-MM)	
M	40	1	**8T-4137**	1	BOLT (M10X1.5X20-MM)	
M	41	1	**8T-4185**	1	BOLT (M10X1.5X50-MM)	
M	42	1	**8T-4195**	6	BOLT (M10X1.5X30-MM)	
M	43	1	**8T-4196**	10	BOLT (M10X1.5X35-MM)	
	44	1	**8T-6703**	2	CLAMP-HOSE	
G	45	1	**122-6908**		HOSE-HYDRAULIC (26-IN)	
M	46	1	**8T-5436**	1	BOLT (M10X1.5X130-MM)	
	47	1	**8S-0948**	1	CLIP	

C - CHANGE FROM PREVIOUS TYPE
G - ORDER BY THE INCH
I - REFER TO HYDRAULIC INFORMATION SYSTEM
M - METRIC PART
Y - SEPARATE ILLUSTRATION

332-3941 **LINES GP-HYDRAULIC FAN (**contd.**)** **i07570377**

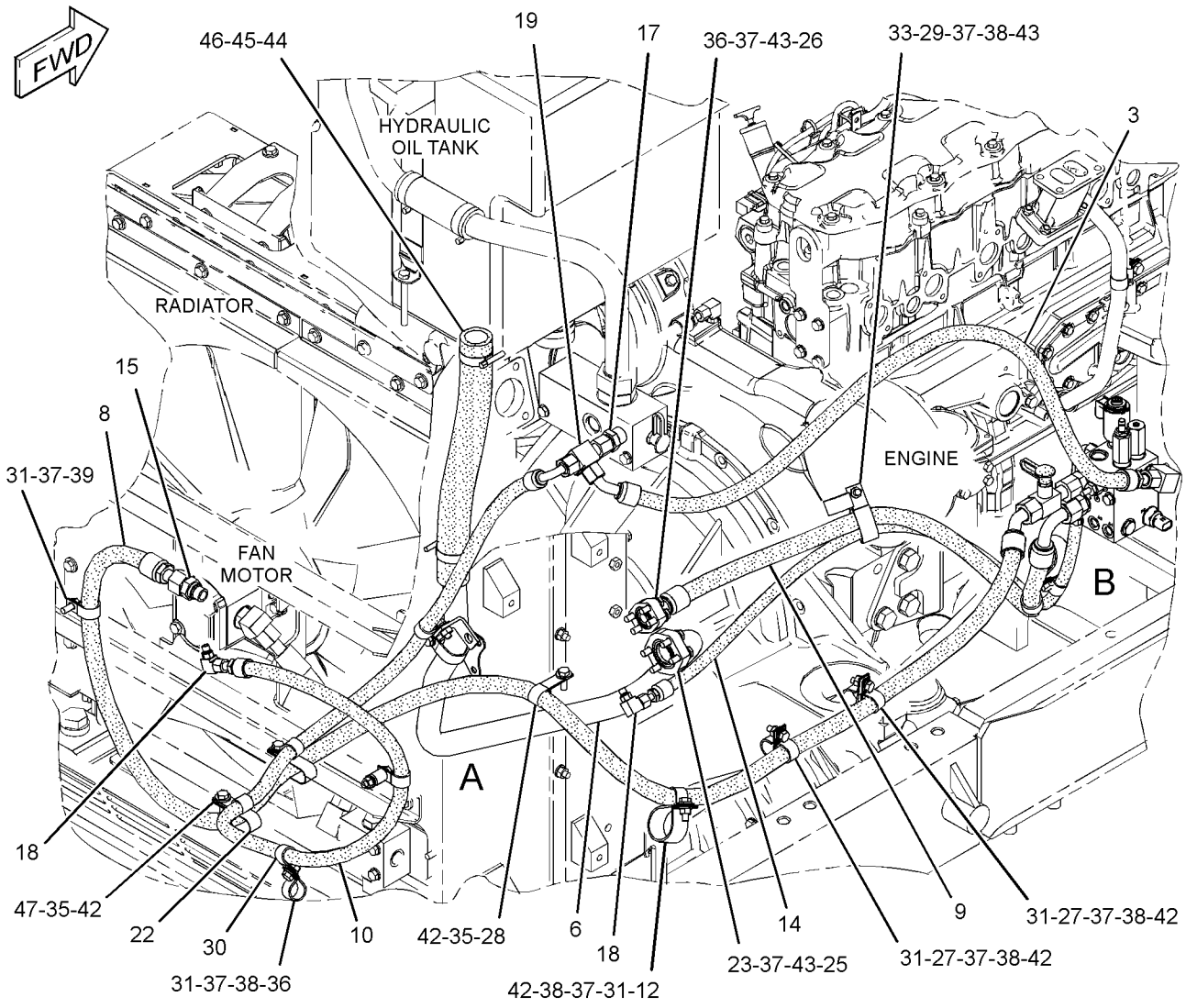

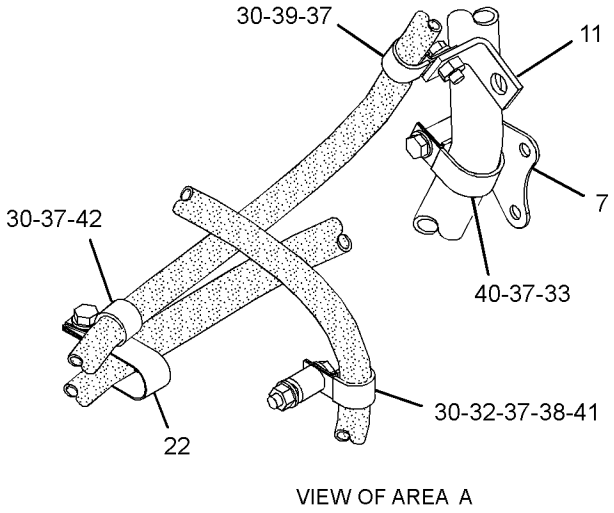

VIEW OF AREA A

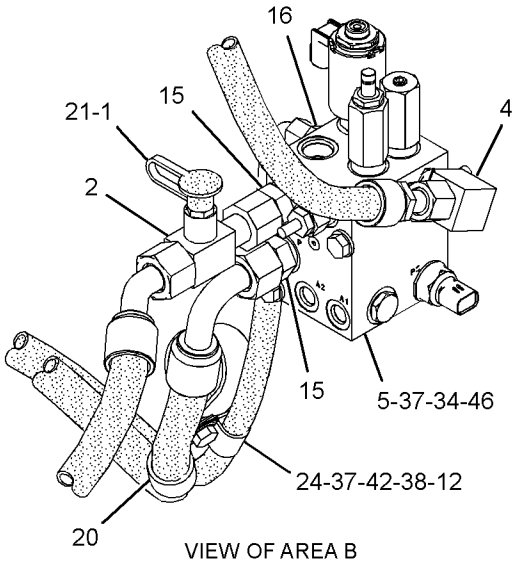

VIEW OF AREA B

GRAPHIC #1 <END> g03012560

333-1285 LINES GP-HYDRAULIC FAN—COLD WEATHER

S/N: B551-UP

PART OF 333-6001 COLD WEATHER AR

SMCS-1386, 1387, 5057 **i05622969**

NOTE	REF NO	GRAPHIC REF	PART NUMBER	QTY	PART NAME 1 2 3 4 5 6 (PRODUCT LEVEL)	SEE PAGE
Y	1	1	**332-1166**	1	VALVE GP-SOLENOID (24-VOLT) (HYDRAULIC FAN)	742
	2	1	**332-4527**	1	TUBE AS	
	3	1	**332-4528**	1	TUBE AS	
	4	1	**332-4714**	1	BRACKET	
	5	1	**332-4721**	1	BRACKET AS	
M		1	**6V-9632**	2	NUT-WELD (M6X1-THD)	
M		1	**8T-3490**	1	NUT-WELD (M10X1.5-THD)	
I	6	1	**335-2590**	1	HOSE AS	
	7	1	*148-8326*	1	CONNECTOR AS	
		1	**3J-7354**	1	SEAL-O-RING	
		1	**6V-8397**	1	SEAL-O-RING	
		1	**6V-9872**	1	CONNECTOR	
	8	1	*148-8336*	1	CONNECTOR AS	
		1	**3J-1907**	1	SEAL-O-RING	
		1	**6V-8397**	1	SEAL-O-RING	
		1	**6V-8636**	1	CONNECTOR	
	9	1	*148-8340*	1	CONNECTOR AS	
		1	**3K-0360**	1	SEAL-O-RING	
		1	**6V-8398**	1	SEAL-O-RING	
		1	**6V-8639**	1	CONNECTOR	
	10	1	*148-8365*	1	ELBOW AS	
		1	**3J-1907**	1	SEAL-O-RING	
		1	**6V-8398**	1	SEAL-O-RING	
		1	**8T-6876**	1	ELBOW	
	11	1	*148-8377*	1	ELBOW AS	
		1	**6V-8397**	2	SEAL-O-RING	
		1	**6V-8980**	1	ELBOW	
	12	1	*148-8378*	1	ELBOW AS	
		1	**3J-1907**	1	SEAL-O-RING	
		1	**6V-8397**	1	SEAL-O-RING	
		1	**6V-8724**	1	ELBOW	
	14	1	**1S-0994**	2	CLIP (LOOP)	
	15	1	**4P-7581**	1	CLIP (LADDER)	
	16	1	**5P-9297**	4	CLIP (LOOP)	
	17	1	**6D-3479**	1	CLIP (LOOP)	
	18	1	**6V-9168**	1	NUT (11/16-16-THD)	
	19	1	**7D-7233**	1	CLIP (LOOP)	
	20	1	**7X-0613**	2	WASHER-HARD (8.8X25.5X5-MM THK)	
M	21	1	**7X-2535**	2	BOLT (M6X1X60-MM)	
	22	1	**8T-4121**	9	WASHER-HARD (11X21X2.5-MM THK)	
M	23	1	**8T-4133**	4	NUT (M10X1.5-THD)	
M	24	1	**8T-4136**	4	BOLT (M10X1.5X25-MM)	
M	25	1	**8T-4195**	1	BOLT (M10X1.5X30-MM)	
	26	1	**9X-8256**	2	WASHER (6.6X12X2-MM THK)	

I - REFER TO HYDRAULIC INFORMATION SYSTEM
M - METRIC PART
Y - SEPARATE ILLUSTRATION

333-1285 **LINES GP-HYDRAULIC FAN (**contd.**)** **i05622969**

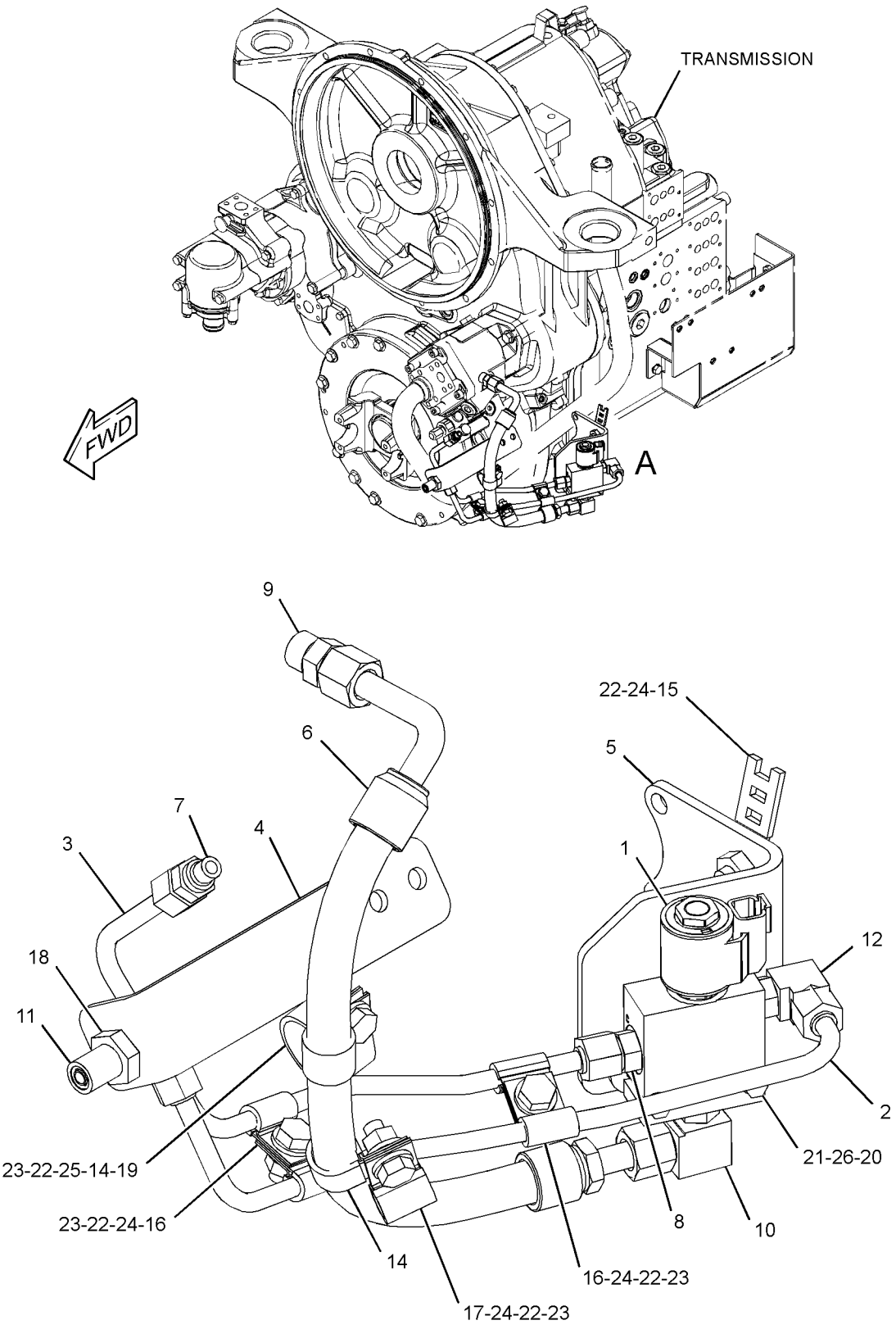

VIEW OF AREA A

GRAPHIC #1 <END> g03573236

289-2081 LINES GP-HYDRAULIC OIL COOLER

S/N: B551-UP

PART OF 577-1377 COMMON AR

SMCS-1374, 5057 **i07652539**

NOTE	REF NO	GRAPHIC REF	PART NUMBER	QTY	PART NAME 1 2 3 4 5 6 (PRODUCT LEVEL)	SEE PAGE
	1	1	**266-1595**	1	VALVE GP-CHECK	
		1	**5K-9090**	1	SEAL-O-RING	
		1	**7M-8485**	1	SEAL-O-RING	
C	2	1	**349-7532**	1	PLATE AS	
M		1	**8T-3490**	8	NUT-WELD (M10X1.5-THD)	
	3	1	**363-8158**	1	PLATE	
	4	1	**365-6873**	1	CORE AS-OIL COOLER (HYDRAULIC)	
CI	5	1	**375-1720**	1	HOSE AS	
C	6	1	**117-7734**	1	TEE-O-RING	
	7	1	*153-6237*	1	ELBOW AS	
		1	**3D-2824**	1	SEAL-O-RING	
		1	**6V-9004**	1	ELBOW	
		1	**6V-9746**	1	SEAL-O-RING	
	8	1	*153-6259*	1	TEE AS	
		1	**3D-2824**	1	SEAL-O-RING	
		1	**6V-8777**	1	TEE-FACE SEAL	
		1	**6V-9746**	2	SEAL-O-RING	
	9	1	**190-4885**	1	SPACER (11X22X50-MM THK)	
C	10	1	*304-8018*	1	ADAPTER AS	
		1	**3D-2824**	1	SEAL-O-RING	
		1	**6V-5258**	1	ADAPTER	
CI	11	1	**375-0431**	1	HOSE AS	
I	12	1	**375-0853**	1	HOSE AS	
C	13	1	**6V-9746**	1	SEAL-O-RING	
C	14	1	**7M-8485**	1	SEAL-O-RING	
	15	1	**7X-7729**	8	WASHER (11X25X3-MM THK)	
C	16	1	**8T-4121**	1	WASHER-HARD (11X21X2.5-MM THK)	
M	17	1	**8T-4136**	4	BOLT (M10X1.5X25-MM)	
CM	18	1	**8T-4195**	4	BOLT (M10X1.5X30-MM)	
M	19	1	**8T-5005**	1	BOLT (M10X1.5X70-MM)	

C - CHANGE FROM PREVIOUS TYPE
I - REFER TO HYDRAULIC INFORMATION SYSTEM
M - METRIC PART

289-2081 **LINES GP-HYDRAULIC OIL COOLER (**contd.**)** **i07652539**

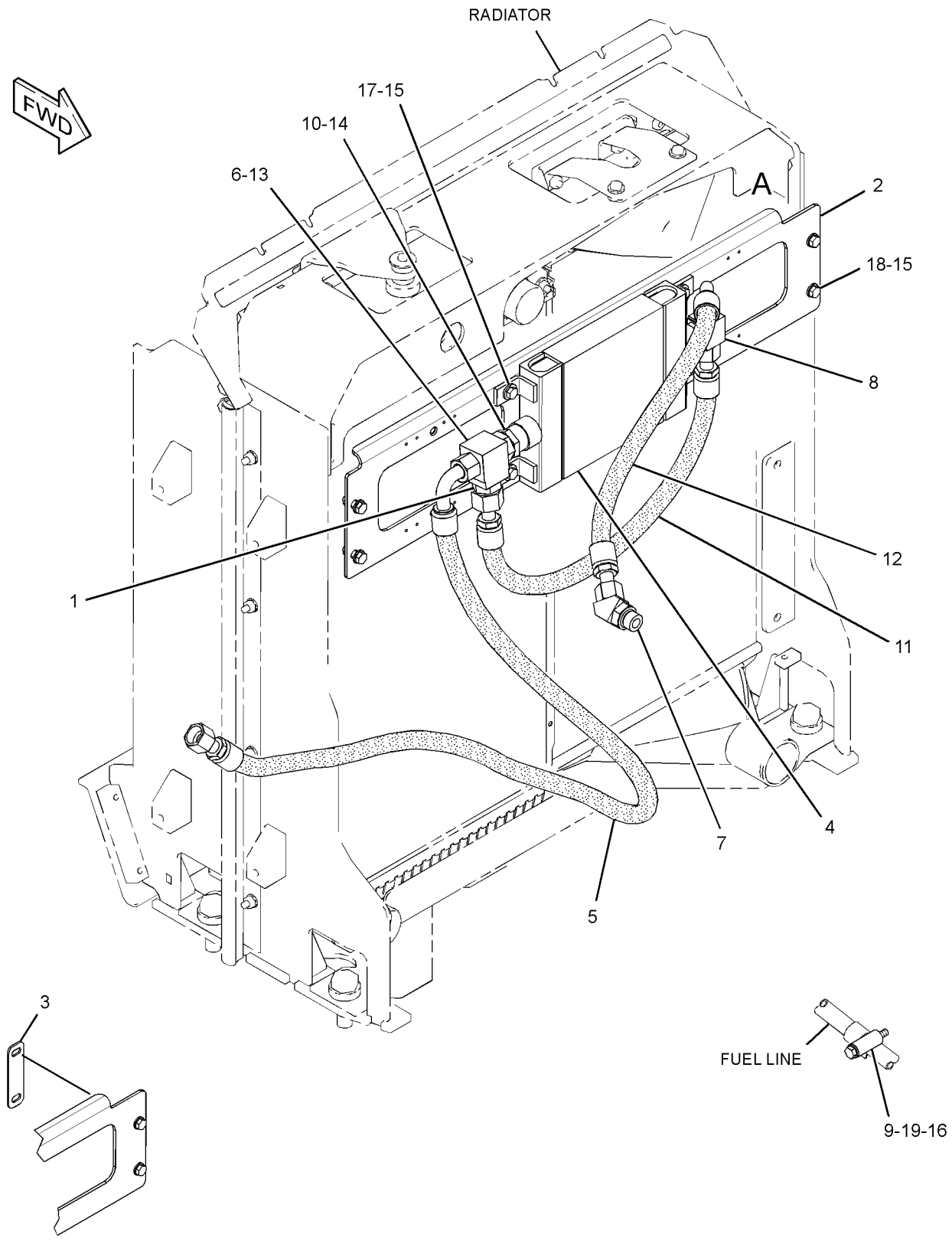

GRAPHIC #1 <END> g06368015

393-6074 LINES GP-PUMP—FRONT

S/N: B551-UP

PART OF 364-1989 OPTION AR-MACHINE

SMCS-5057 **i07427565**

NOTE	REF NO	GRAPHIC REF	PART NUMBER	QTY	PART NAME 1 2 3 4 5 6 (PRODUCT LEVEL)	SEE PAGE
C	1	1	*164-8908*	1	CONNECTOR AS	
		1	**3K-0360**	1	SEAL-O-RING	
		1	**6V-8398**	1	SEAL-O-RING	
		1	**8T-0077**	1	CONNECTOR	
	2	1	**9J-3866**	1	ADAPTER	
	3	1	*148-8370*	1	ELBOW AS	
		1	**6V-8398**	1	SEAL-O-RING	
		1	**6V-9851**	1	ELBOW	
	4	1	**246-6332**	1	TUBE AS	
	5	1	**246-6333**	1	TUBE AS	
	6	1	*250-1467*	1	CONNECTOR AS	
		1	**3J-7354**	1	SEAL-O-RING	
		1	**4J-5477**	1	SEAL-O-RING	
		1	**7I-8663**	1	CONNECTOR	
	7	1	**254-4486**	1	BLOCK	
	8	1	**271-6369**	1	TUBE AS	
	9	1	**291-3919**	1	BLOCK	
	10	1	**291-3920**	1	BLOCK	
	11	1	**291-3921**	1	BLOCK	
	12	1	**291-3922**	1	BLOCK	
	13	1	**291-3923**	1	BLOCK	
	14	1	**291-3924**	1	BLOCK	
	15	1	**291-3925**	1	BLOCK	
	16	1	**291-3926**	1	BLOCK	
Y	17	1	**382-2790**	1	VALVE GP-SHUTOFF (LOAD SENSING)	738
	18	1	**387-8685**	1	PLATE AS	
M		1	**8T-3490**	2	NUT-WELD (M10X1.5-THD)	
	19	1	**393-6188**	1	TUBE AS	
I	20	1	**393-6190**	1	HOSE AS	
	21	1	**393-6191**	1	PLATE AS	
M		1	**8T-3490**	2	NUT-WELD (M10X1.5-THD)	
	22	1	**393-8148**	1	TUBE AS	
	23	1	**393-8149**	1	TUBE AS	
	24	1	**439-2870**	1	TUBE AS	
	25	1	**515-7860**	1	HOSE AS	
I	26	1	**541-0084**	1	HOSE AS	
I	27	1	**543-3586**	1	HOSE AS	
C	28	1	*148-8325*	1	CONNECTOR AS	
		1	**3J-1907**	1	SEAL-O-RING	
		1	**4J-5477**	1	SEAL-O-RING	
		1	**6V-8641**	1	CONNECTOR	
	29	1	*148-8329*	1	CONNECTOR AS	
		1	**4K-1388**	1	SEAL-O-RING	
		1	**5K-9090**	1	SEAL-O-RING	
		1	**8T-6453**	1	CONNECTOR	
	30	1	*148-8335*	6	CONNECTOR AS	
					(EACH INCLUDES)	
		1	**5K-9090**	1	SEAL-O-RING	

393-6074 **LINES GP-PUMP (**contd.**)** **i07427565**

NOTE	REF NO	GRAPHIC REF	PART NUMBER	QTY	PART NAME 1 2 3 4 5 6 (PRODUCT LEVEL)	SEE PAGE
		1	**6V-8635**	1	CONNECTOR	
		1	**7M-8485**	1	SEAL-O-RING	
	31	1	*148-8336*	2	CONNECTOR AS	
					(EACH INCLUDES)	
		1	**3J-1907**	1	SEAL-O-RING	
		1	**6V-8397**	1	SEAL-O-RING	
		1	**6V-8636**	1	CONNECTOR	
	32	1	*148-8342*	3	CONNECTOR AS	
					(EACH INCLUDES)	
		1	**3K-0360**	1	SEAL-O-RING	
		1	**6V-8632**	1	CONNECTOR	
		1	**7J-9108**	1	SEAL-O-RING	
	33	1	*148-8345*	1	CONNECTOR AS	
		1	**2M-9780**	1	SEAL-O-RING	
		1	**6V-8398**	1	SEAL-O-RING	
		1	**6V-8638**	1	CONNECTOR	
	34	1	*148-8351*	1	ELBOW AS	
		1	**4J-5477**	1	SEAL-O-RING	
		1	**6V-9849**	1	ELBOW	
	35	1	*148-8353*	1	ELBOW AS	
		1	**3J-1907**	1	SEAL-O-RING	
		1	**6V-8397**	1	SEAL-O-RING	
		1	**6V-9001**	1	ELBOW	
	36	1	*148-8354*	1	ELBOW AS	
		1	**3K-0360**	1	SEAL-O-RING	
		1	**6V-8398**	1	SEAL-O-RING	
		1	**6V-9002**	1	ELBOW	
	37	1	*148-8369*	1	ELBOW AS	
		1	**3J-7354**	1	SEAL-O-RING	
		1	**4J-5477**	1	SEAL-O-RING	
		1	**6V-8628**	1	ELBOW	
	38	1	*148-8371*	1	ELBOW AS	
		1	**6V-8397**	1	SEAL-O-RING	
		1	**8C-8988**	1	ELBOW	
	39	1	*148-8407*	1	PLUG AS	
		1	**3J-1907**	1	SEAL-O-RING	
		1	**9S-4191**	1	PLUG (9/16-18-THD)	
	40	1	*150-3037*	1	ELBOW AS	
		1	**3K-0360**	1	SEAL-O-RING	
		1	**7J-9108**	1	SEAL-O-RING	
		1	**8T-2530**	1	ELBOW	
	41	1	*150-4031*	2	TEE AS	
					(EACH INCLUDES)	
		1	**6V-9845**	1	TEE-SWIVEL	
		1	**7J-9108**	2	SEAL-O-RING	
	42	1	*164-5615*	1	ELBOW AS	
		1	**4K-1388**	1	SEAL-O-RING	
		1	**5K-9090**	1	SEAL-O-RING	
		1	**8T-8986**	1	ELBOW	
	43	1	*205-3692*	1	ELBOW AS	
		1	**2M-9780**	1	SEAL-O-RING	

393-6074 **LINES GP-PUMP (**contd.**)** **i07427565**

NOTE	REF NO	GRAPHIC REF	PART NUMBER	QTY	PART NAME 1 2 3 4 5 6 (PRODUCT LEVEL)	SEE PAGE
		1	**6V-8397**	1	SEAL-O-RING	
		1	**9X-2134**	1	ELBOW	
	44	1	*268-1646*	1	UNION AS-CROSS	
		1	**3K-0360**	1	SEAL-O-RING	
		1	**6V-8398**	3	SEAL-O-RING	
		1	**268-1645**	1	CROSS	
	45	1	*296-5725*	1	TEE AS	
		1	**3K-0360**	1	SEAL-O-RING	
		1	**7J-9108**	2	SEAL-O-RING	
		1	**109-5811**	1	TEE-O-RING PORT	
M	46	1	**344-5675**	1	NUT (M10X1.5-THD)	
	47	1	**4J-0520**	2	SEAL-O-RING	
	48	1	**6V-8397**	1	SEAL-O-RING	
	49	1	**8C-3206**	2	FLANGE-HALF	
	50	1	**8M-2770**	1	CLIP (LOOP)	
	51	1	**8M-2773**	1	CLIP (LOOP)	
M	52	1	**8T-0389**	8	LOCKNUT (M10X1.5-THD)	
	53	1	**8T-4121**	22	WASHER-HARD (11X21X2.5-MM THK)	
M	54	1	**8T-4136**	5	BOLT (M10X1.5X25-MM)	
M	55	1	**8T-4195**	2	BOLT (M10X1.5X30-MM)	
M	56	1	**8T-4198**	2	BOLT (M10X1.5X100-MM)	
M	57	1	**8T-5005**	4	BOLT (M10X1.5X70-MM)	

C - CHANGE FROM PREVIOUS TYPE
I - REFER TO HYDRAULIC INFORMATION SYSTEM
M - METRIC PART
Y - SEPARATE ILLUSTRATION

393-6074 **LINES GP-PUMP (**contd.**)** **i07427565**

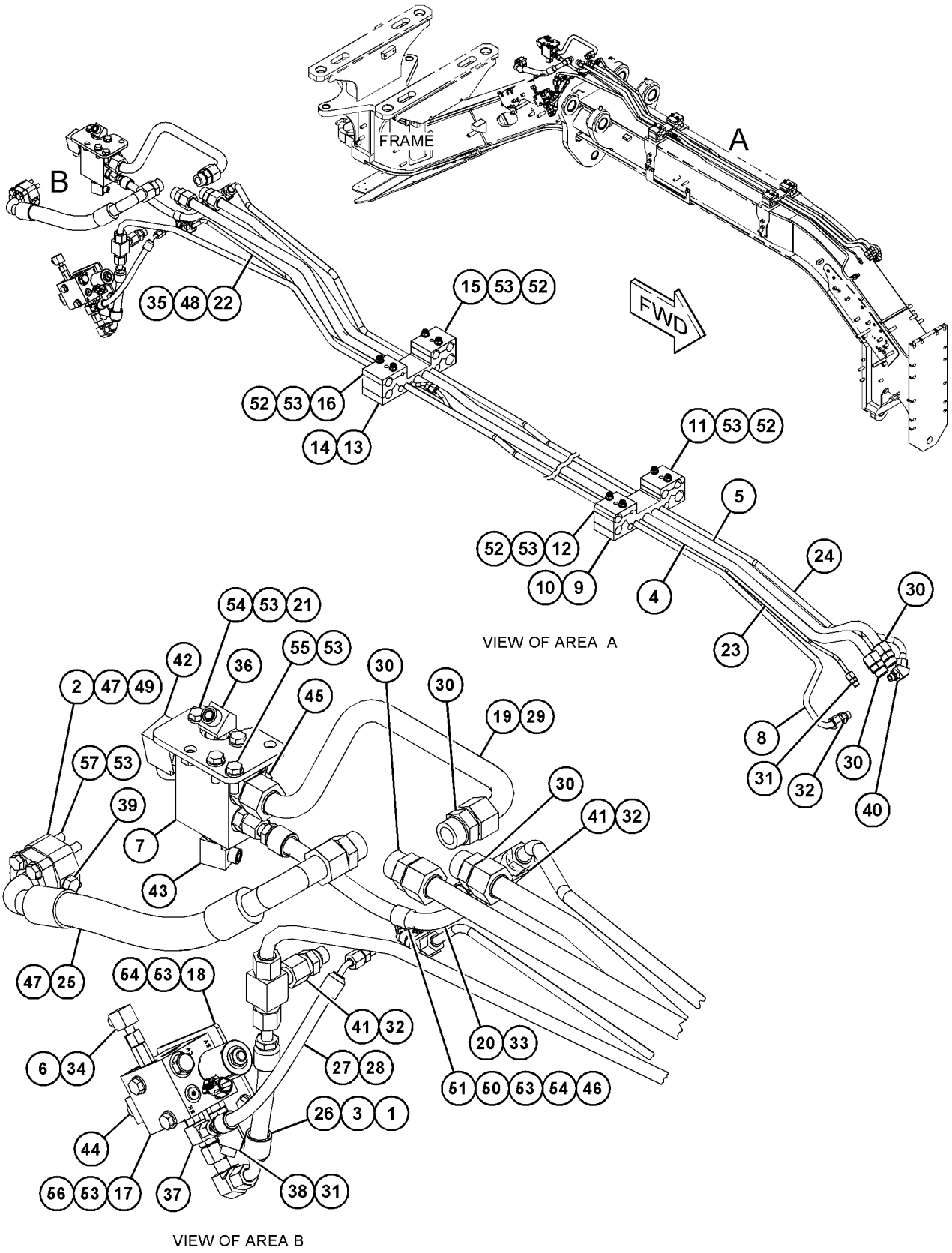

GRAPHIC #1 <END> g06302784

473-0556 LINES GP-PUMP–REAR

S/N: B551-UP

PART OF 364-1989 OPTION AR-MACHINE

SMCS-5057 **i07577176**

NOTE	REF NO	GRAPHIC REF	PART NUMBER	QTY	PART NAME 1 2 3 4 5 6 (PRODUCT LEVEL)	SEE PAGE
	1	1	**296-6859**	1	PLATE AS	
M		1	**8T-3490**	2	NUT-WELD (M10X1.5-THD)	
	2	3	**309-5244**	1	PLATE AS	
M		3	**7X-2544**	2	BOLT (M10X1.5X140-MM)	
	3	3	**6N-6984**	2	MOUNT-RUBBER	
	4	3	*165-2273*	1	VALVE AS-SHUTOFF	
		3	**3K-0360**	1	SEAL-O-RING	
		3	**6V-7238**	1	VALVE-SHUTOFF	
	5	2	**8Y-7452**	1	TEE-O-RING	
	6	3	*184-2420*	1	ADAPTER AS	
		3	**3E-7401**	1	ADAPTER	
		3	**6V-8397**	1	SEAL-O-RING	
Y	7	3	**191-9784**	1	FILTER GP-OIL	557
	8	3	**193-9230**	1	VALVE GP-CHECK	
		3	**3D-2824**	1	SEAL-O-RING	
		3	**6V-9746**	1	SEAL-O-RING	
	9	3	**246-3352**	1	TUBE AS	
I	10	3	**246-3359**	1	HOSE AS	
	11	2	**247-4243**	1	BLOCK	
	12	2	**247-4244**	1	BLOCK	
	13	2	**247-4245**	1	BLOCK	
	14	2	**247-4250**	1	PLATE	
	15	2	**255-0683**	1	PLATE	
	16	3	**255-3631**	1	VALVE GP-CHECK	
		3	**2S-4078**	1	SEAL-O-RING	
		3	**6V-8400**	1	SEAL-O-RING	
	17	2	**257-7066**	1	BRACKET AS	
	18	2	**262-8361**	1	BLOCK	
	19	2	**262-8364**	1	BLOCK	
	20	2	**262-8365**	1	BLOCK	
	21	2	**262-8366**	1	BLOCK	
	22	2	**262-8370**	1	BLOCK	
	23	2	**262-8371**	1	BLOCK	
	24	2	**262-8372**	1	BLOCK	
	25	2	**264-0638**	1	PLATE	
	26	3	**266-8804**	1	PLATE	
	27	2	**270-7103**	1	PLATE AS	
	28	3	**271-8510**	1	PLATE	
	29	2	**279-6612**	1	PLATE	
	30	2	**279-9022**	1	BLOCK	
	31	2	**279-9023**	1	BLOCK	
	32	2	**282-2953**	1	PLATE AS	
	33	2	**282-9913**	1	PLATE AS	
M		2	**7X-2544**	2	BOLT (M10X1.5X140-MM)	
M		2	**8T-4178**	4	BOLT (M10X1.5X90-MM)	
M		2	**8T-5436**	2	BOLT (M10X1.5X130-MM)	
	34	1	**293-4664**	1	PLATE	

473-0556 **LINES GP-PUMP (**contd.**)** **i07577176**

NOTE	REF NO	GRAPHIC REF	PART NUMBER	QTY	PART NAME 1 2 3 4 5 6 (PRODUCT LEVEL)	SEE PAGE
	35	1	**293-4667**	1	PLATE AS	
	36	1	**293-4668**	1	PLATE AS	
M		1	**8T-3490**	1	NUT-WELD (M10X1.5-THD)	
	37	1	**293-4906**	1	PLATE	
	38	1	**293-4908**	1	BLOCK	
	39	1	**293-4909**	1	BLOCK	
	40	1	**293-4910**	1	BLOCK	
	41	1	**293-4911**	1	BLOCK	
	42	1	**293-4912**	1	BLOCK	
	43	1	**293-4913**	1	BLOCK	
	44	1	**293-4914**	1	BLOCK	
	45	1	**293-4915**	1	BLOCK	
	46	1	**293-4916**	1	BLOCK	
	47	3	**294-4636**	1	BLOCK	
	48	3	**294-4637**	1	BLOCK	
	49	3	**294-4638**	1	BLOCK	
	50	3	**294-4695**	1	BLOCK	
	51	3	**294-4696**	1	BLOCK	
	52	2	**294-4827**	1	PLATE AS	
M		2	**8T-4935**	1	BOSS-WELD (M10X1.5X45-MM)	
	53	2	**294-7811**	1	PLATE AS	
M		2	**8T-3851**	1	BOSS-WELD (M10X1.5X17.5-MM)	
	54	3	**294-7814**	1	PLATE AS	
M		3	**8T-3490**	2	NUT-WELD (M10X1.5-THD)	
	55	2	**295-7914**	1	BLOCK	
	56	2	**295-7915**	1	BLOCK	
	57	3	**296-5270**	1	SENSOR GP-PRESSURE (SECONDARY STEERING)	
	58	3	**296-6012**	1	BRACKET AS	
M		3	**8T-3490**	2	NUT-WELD (M10X1.5-THD)	
M		3	**8T-3851**	1	BOSS-WELD (M10X1.5X17.5-MM)	
	59	2	**299-5783**	1	BLOCK	
	60	2	**299-5784**	1	BLOCK	
	61	2	**299-5786**	1	BLOCK	
	62	2	**299-5787**	1	BLOCK	
	63	1	**301-7318**	1	BRACKET	
I	64	3	**308-9532**	1	HOSE AS	
	65	3	**332-6794**	1	PLATE AS	
	66	2	**351-8678**	1	PLATE AS	
M		2	**8T-3490**	1	NUT-WELD (M10X1.5-THD)	
E	67	1	**230-7471**		SEAL (58-CM EACH)	
I	68	1	**369-2691**	1	HOSE AS	
I	69	1	**369-2692**	1	HOSE AS	
	70	3	*371-7184*	1	FLANGE AS (ELBOW)	
		3	**4J-0522**	1	SEAL-O-RING	
		3	**5K-9090**	1	SEAL-O-RING	
		3	**371-7183**	1	FLANGE-ELBOW	
	71	3	**373-2707**	1	HOSE-MOLDED	
I	72	3	**383-1282**	1	HOSE AS	
I	73	3	**383-1283**	1	HOSE AS	
I	74	3	**383-1285**	1	HOSE AS	
I	75	1	**475-6219**	1	HOSE AS	

473-0556 **LINES GP-PUMP (**contd.**)** **i07577176**

NOTE	REF NO	GRAPHIC REF	PART NUMBER	QTY	PART NAME 1 2 3 4 5 6 (PRODUCT LEVEL)	SEE PAGE
I	76	1	**475-6220**	1	HOSE AS	
I	77	1	**475-6224**	1	HOSE AS	
Y	78	3	**477-1149**	1	MANIFOLD GP-CONTROL (IMPLEMENT, STEERING)	620
M	79	1	**105-3477**	4	BOLT-SOCKET HEAD (M10X1.5X45-MM)	
M	80	3	**108-3819**	4	BOLT-SOCKET HEAD (M12X1.75X70-MM)	
	81	3	**115-6433**	4	WASHER (11X50X6-MM THK)	
	82	3	*148-8307*	1	ADAPTER AS	
		3	**3J-1907**	1	SEAL-O-RING	
		3	**5P-8874**	1	ADAPTER	
	83	3	*148-8315*	2	CONNECTOR AS	
					(EACH INCLUDES)	
		3	**2M-9780**	1	SEAL-O-RING	
		3	**6V-8642**	1	CONNECTOR	
		3	**7J-9108**	1	SEAL-O-RING	
	84	3	*148-8334*	1	CONNECTOR AS	
		3	**2S-4078**	1	SEAL-O-RING	
		3	**6V-8400**	1	SEAL-O-RING	
		3	**8T-3611**	1	CONNECTOR	
	85	3	*148-8341*	1	CONNECTOR AS	
		3	**3D-2824**	1	SEAL-O-RING	
		3	**6V-8713**	1	CONNECTOR	
		3	**7J-9108**	1	SEAL-O-RING	
	86	3	*148-8347*	1	ELBOW AS	
		3	**3D-2824**	1	SEAL-O-RING	
		3	**6V-9007**	1	ELBOW	
		3	**6V-9746**	1	SEAL-O-RING	
	87	2	*148-8352*	2	ELBOW AS	
					(EACH INCLUDES)	
		2	**5K-9090**	1	SEAL-O-RING	
		2	**6V-9854**	1	ELBOW (SWIVEL)	
	88	3	*148-8357*	1	ELBOW AS	
		3	**5K-9090**	1	SEAL-O-RING	
		3	**6V-9008**	1	ELBOW	
		3	**7M-8485**	1	SEAL-O-RING	
	89	3	*148-8370*	2	ELBOW AS	
					(EACH INCLUDES)	
		3	**6V-8398**	1	SEAL-O-RING	
		3	**6V-9851**	1	ELBOW	
	90	3	*148-8381*	1	ELBOW AS	
		3	**3D-2824**	1	SEAL-O-RING	
		3	**6V-8398**	1	SEAL-O-RING	
		3	**8T-5429**	1	ELBOW	
	91	3	*148-8387*	1	ELBOW AS	
		3	**6V-8400**	1	SEAL-O-RING	
		3	**6V-9855**	1	ELBOW	
	92	3	*148-8392*	1	ELBOW AS	
		3	**6V-9746**	1	SEAL-O-RING	
		3	**6V-9853**	1	ELBOW	
	93	3	*148-8393*	1	ELBOW AS	
		3	**6V-9852**	1	ELBOW (SWIVEL)	
		3	**7J-9108**	1	SEAL-O-RING	

473-0556 **LINES GP-PUMP (**contd.**)** **i07577176**

NOTE	REF NO	GRAPHIC REF	PART NUMBER	QTY	PART NAME 1 2 3 4 5 6 (PRODUCT LEVEL)	SEE PAGE
	94	3	*148-8428*	1	TEE AS	
		3	**3K-0360**	1	SEAL-O-RING	
		3	**6V-8398**	2	SEAL-O-RING	
		3	**6V-8782**	1	TEE	
	95	3	*150-4049*	1	ELBOW AS	
		3	**6V-9746**	1	SEAL-O-RING	
		3	**7M-8485**	1	SEAL-O-RING	
		3	**8T-4149**	1	ELBOW	
	96	3	*164-4058*	1	REDUCER AS	
		3	**5K-9090**	1	SEAL-O-RING	
		3	**6V-8948**	1	REDUCER	
	97	2	*164-5567*	1	COUPLER AS-QUICK DISCONNECT (MALE)	
		2	**6V-3965**	1	FITTING (QUICK DISCONNECT)	
		2	**214-7568**	1	SEAL-O-RING	
	98	2	**184-5394**	1	CLIP (LOOP)	
	99	3	**1J-9671**	1	SEAL-O-RING	
	100	3	**1S-0994**	1	CLIP (LOOP)	
	101	3	*268-1646*	1	UNION AS-CROSS	
		3	**3K-0360**	1	SEAL-O-RING	
		3	**6V-8398**	3	SEAL-O-RING	
		3	**268-1645**	1	CROSS	
	102	1	**268-1647**	1	ELBOW	
I	103	3	**293-4942**	1	HOSE AS	
	104	2	**299-5785**	1	BLOCK	
M	105	3	**309-1905**	2	STUD-TAPERLOCK (M10X1.5X100-MM)	
M	106	1,2,3	**344-5675**	6	NUT (M10X1.5-THD)	
	107	2	**3J-7354**	1	SEAL-O-RING	
	109	1	**4D-7388**	1	CLIP (LOOP)	
	110	1	**4J-0522**	1	SEAL-O-RING	
	111	2	**4J-5477**	1	SEAL-O-RING	
	112	3	**5D-1026**	1	CLAMP-BAND	
	113	3	**5H-8848**	1	SEAL-O-RING	
	114	1,2,3	**5P-7468**	3	CLIP (SLOT)	
	115	1,2,3	**5P-7469**	3	CLIP (TAB)	
	116	1,2,3	**5P-8444**	3	GROMMET (37-MM ID)	
	117	1	**5P-9299**	2	CLIP (LOOP)	
	118	1	**6D-1641**	1	CLIP (LOOP)	
	119	2,3	**6D-3479**	2	CLIP (LOOP)	
	120	1	**6D-4244**	1	CLIP (LOOP)	
	121	2	**6V-0852**	1	CAP-DUST	
	122	3	**6V-9168**	1	NUT (11/16-16-THD)	
	123	1	**6W-6672**	1	SPACER (10.5X20X38-MM THK)	
	124	3	**7D-7233**	2	CLIP (LOOP)	
M	125	2	**7X-2544**	2	BOLT (M10X1.5X140-MM)	
	126	2	**7X-7729**	2	WASHER (11X25X3-MM THK)	
M	127	2,3	**8T-0389**	18	LOCKNUT (M10X1.5-THD)	
	128	1,2,3	**8T-4121**	72	WASHER-HARD (11X21X2.5-MM THK)	
M	129	1,2,3	**8T-4136**	17	BOLT (M10X1.5X25-MM)	
M	130	1,2,3	**8T-4137**	21	BOLT (M10X1.5X20-MM)	
M	131	3	**8T-4139**	4	BOLT (M12X1.75X30-MM)	
M	132	3	**8T-4178**	2	BOLT (M10X1.5X90-MM)	

473-0556 **LINES GP-PUMP (**contd.**)** **i07577176**

NOTE	REF NO	GRAPHIC REF	PART NUMBER	QTY	PART NAME 1 2 3 4 5 6 (PRODUCT LEVEL)	SEE PAGE
M	133	2	**8T-4182**	1	BOLT (M10X1.5X45-MM)	
M	134	3	**8T-4186**	2	BOLT (M10X1.5X40-MM)	
M	135	1,2,3	**8T-4195**	8	BOLT (M10X1.5X30-MM)	
	136	3	**8T-4223**	4	WASHER-HARD (13.5X25.5X3-MM THK)	
M	137	3	**8T-4779**	3	BOLT (M16X2X35-MM)	
	138	3	**8T-4984**	2	CLAMP-HOSE	
M	139	1	**8T-5005**	1	BOLT (M10X1.5X70-MM)	
	140	3	**8T-7934**	1	WASHER-HARD (11X21X5-MM THK)	
	141	2	**9X-8250**	2	CLIP (LOOP)	
	142	3	**9X-8257**	3	WASHER (17.5X30X3.5-MM THK)	
G	143	3	**423-1984**		HOSE (5.2-IN)	

E - ORDER BY THE CENTIMETER
G - ORDER BY THE INCH
I - REFER TO HYDRAULIC INFORMATION SYSTEM
M - METRIC PART
Y - SEPARATE ILLUSTRATION

473-0556 **LINES GP-PUMP (**contd.**)** **i07577176**

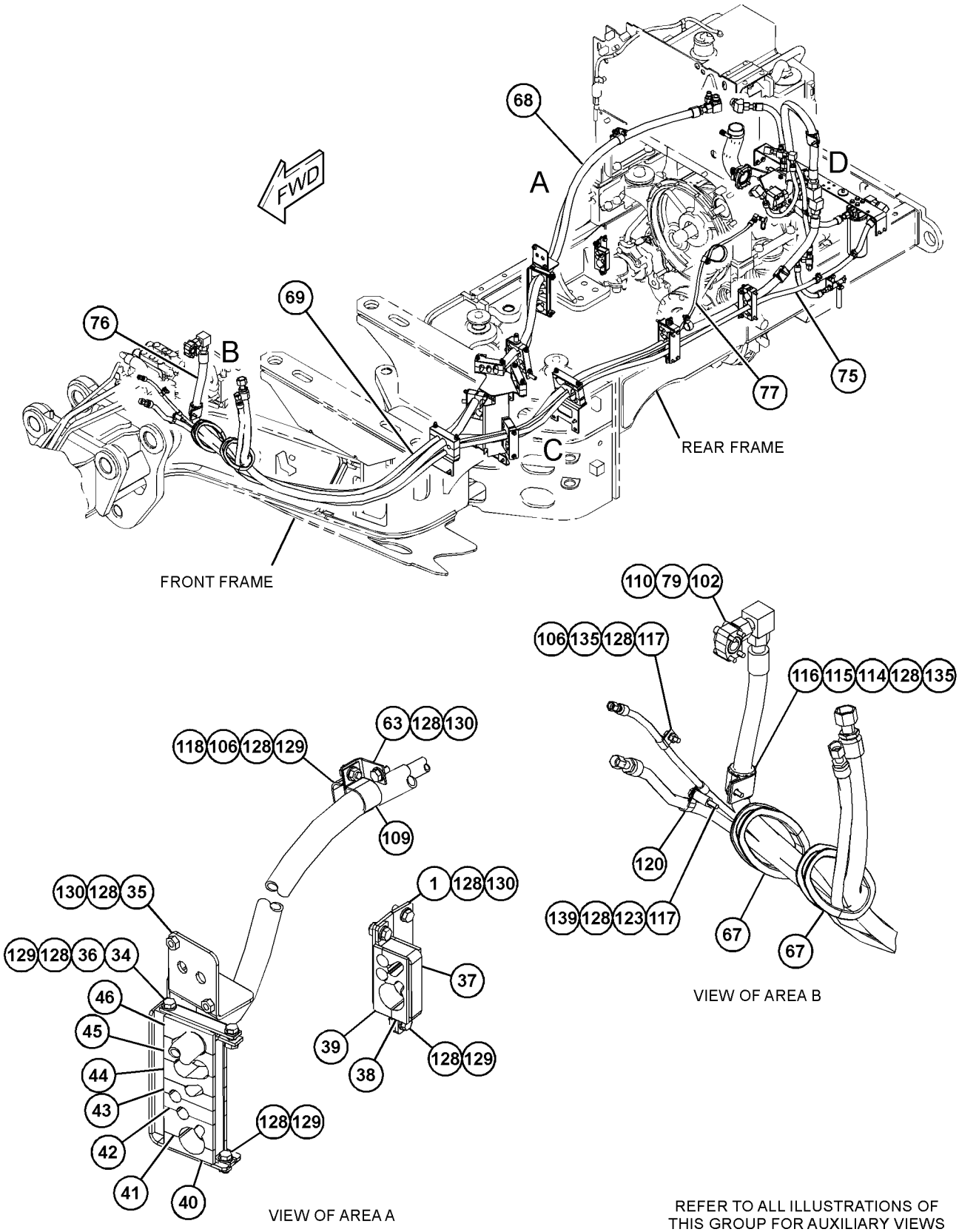

GRAPHIC #1 g06210239

473-0556 **LINES GP-PUMP (**contd.**)** **i07577176**

REFER TO ALL ILLUSTRATIONS OF
THIS GROUP FOR AUXILIARY VIEWS

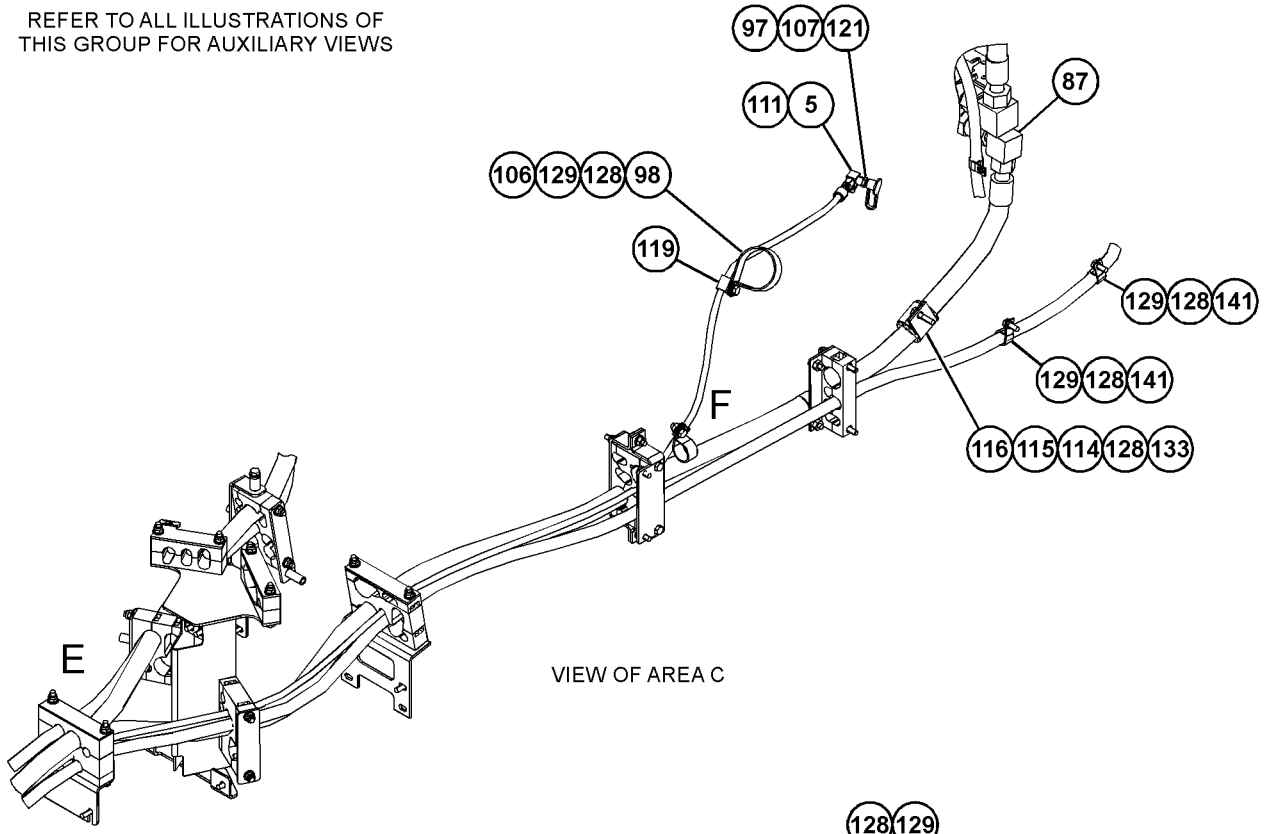

VIEW OF AREA C

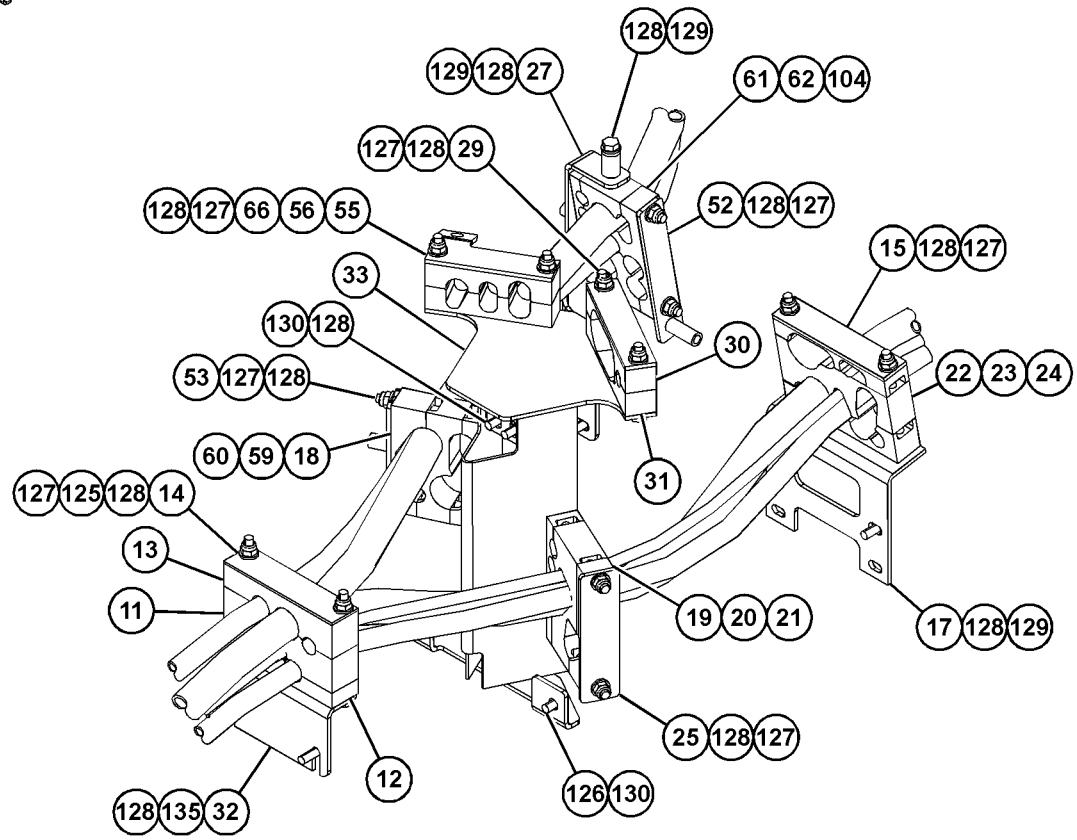

VIEW OF AREA E

GRAPHIC #2 g06058727

473-0556 **LINES GP-PUMP (**contd.**)** **i07577176**

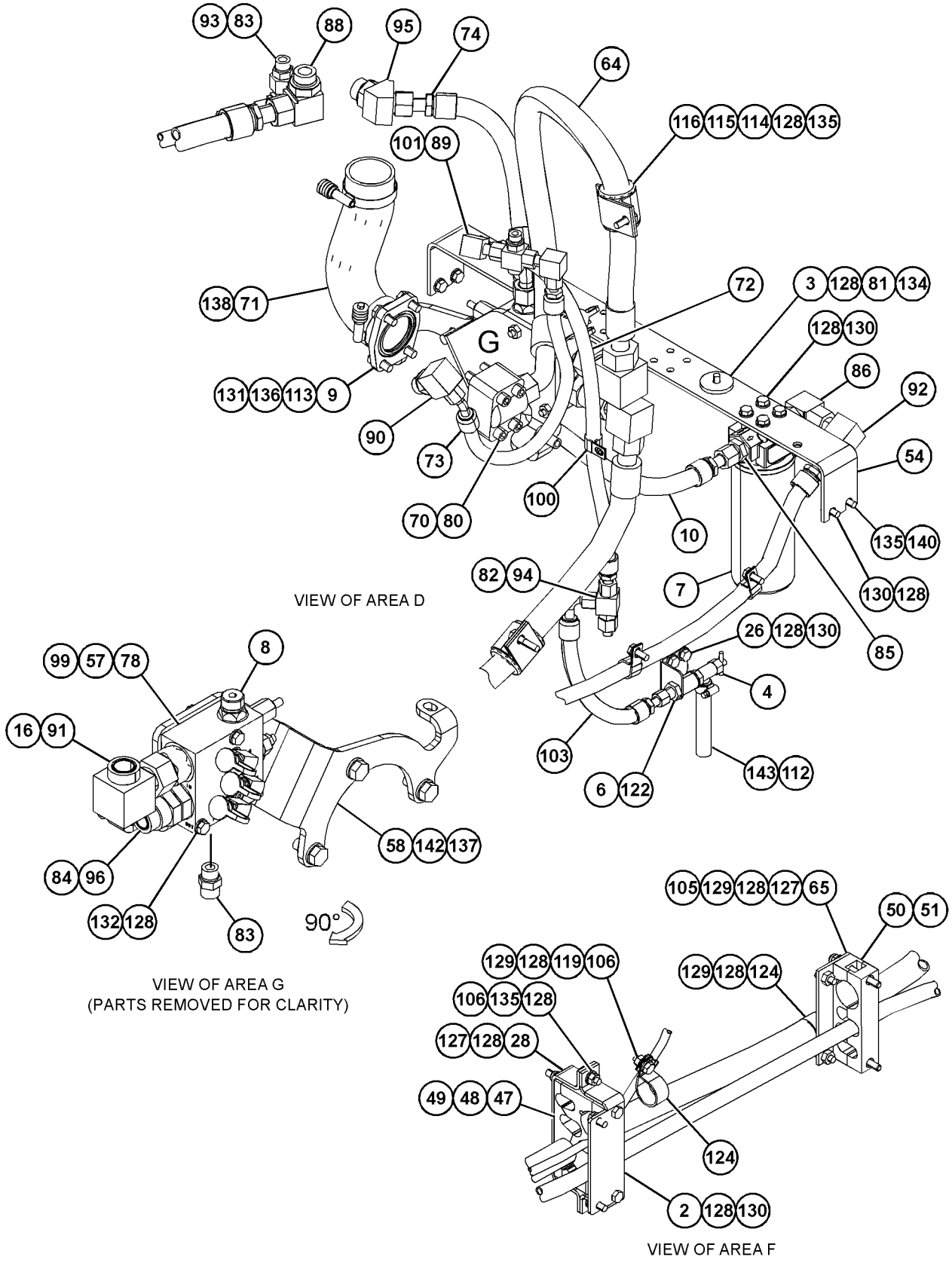

GRAPHIC #3 <END> g06357945

334-8069 LINES GP-RIPPER

S/N: B551-UP

PART OF 324-0889, 539-6894 RIPPER AR

SMCS-5057 **i03921229**

NOTE	REF NO	GRAPHIC REF	PART NUMBER	QTY	PART NAME 1 2 3 4 5 6 (PRODUCT LEVEL)	SEE PAGE
I	1	1	**3T-6848**	1	HOSE AS	
I	2	1	**7I-5412**	1	HOSE AS	
	3	1	*148-8374*	2	ELBOW AS	
					(EACH INCLUDES)	
		1	**6V-8723**	1	ELBOW	
		1	**3K-0360**	1	SEAL-O-RING	
		1	**6V-8397**	1	SEAL-O-RING	
	4	1	**5P-7462**	1	CLIP (SLOT)	
	5	1	**5P-7463**	1	CLIP (TAB)	
	6	1	**6V-0683**	1	GROMMET	

I - REFER TO HYDRAULIC INFORMATION SYSTEM

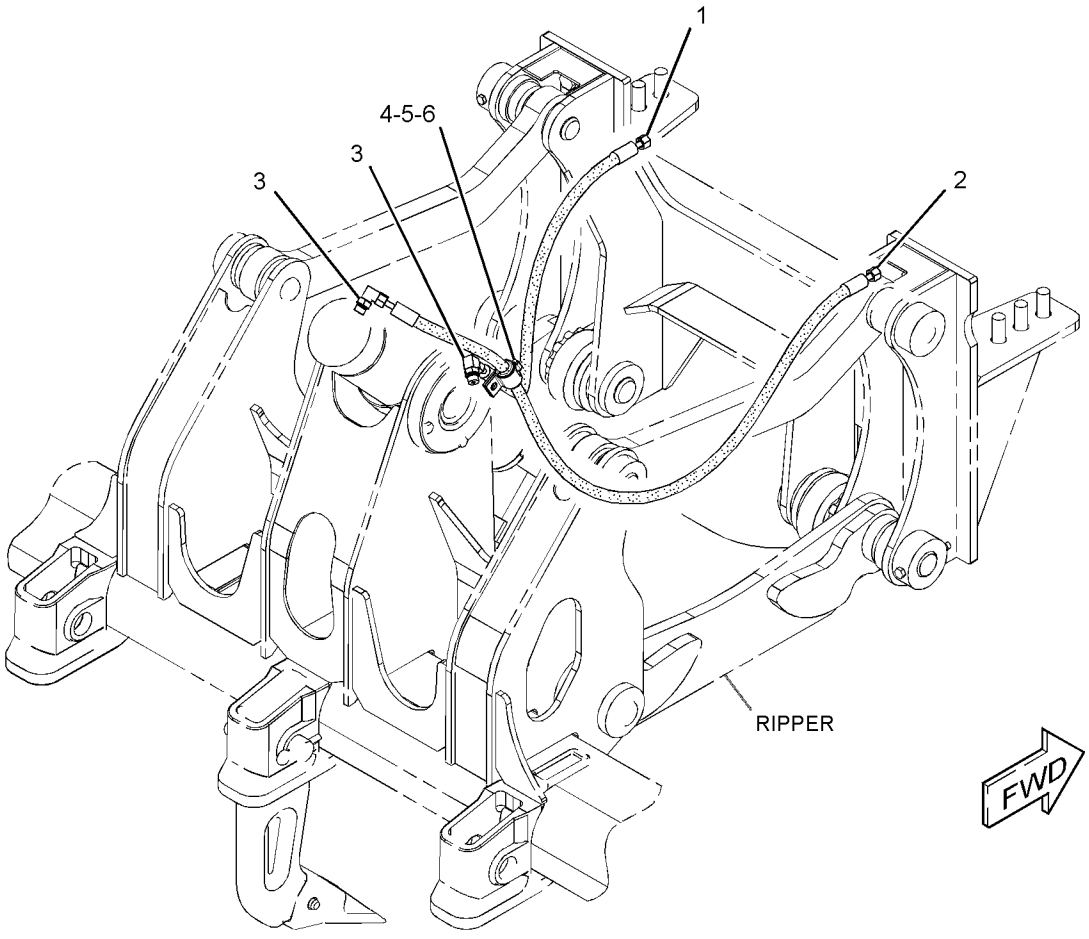

GRAPHIC #1 <END> g02156150

473-0557 LINES GP-RIPPER

S/N: B551-UP

PART OF 365-3354, 365-3355, 365-3368, 365-3369, 365-3370, 365-3371, 365-5539, 365-5540, 365-5541 CONTROL AR-HYDRAULIC

SMCS-5057 **i06559233**

NOTE	REF NO	GRAPHIC REF	PART NUMBER	QTY	PART NAME 1 2 3 4 5 6 (PRODUCT LEVEL)	SEE PAGE
I	1	1	**238-5592**	1	HOSE AS	
	2	1	**293-4707**	1	TUBE AS	
	3	1	**350-9175**	2	PLATE	
	4	1	**441-0637**	1	TUBE AS	
I	5	1	**475-6272**	1	HOSE AS	
	6	1	**111-9251**	2	WASHER-HARD (20X35X1.6-MM THK)	
	7	1	*148-8340*	2	CONNECTOR AS	
					(EACH INCLUDES)	
		1	**6V-8639**	1	CONNECTOR	
		1	**3K-0360**	1	SEAL-O-RING	
		1	**6V-8398**	1	SEAL-O-RING	
	8	1	*149-5452*	2	UNION AS (STRAIGHT)	
					(EACH INCLUDES)	
		1	**6V-8994**	1	UNION (STRAIGHT)	
		1	**6V-8397**	2	SEAL-O-RING	
	9	1	**1S-0994**	4	CLIP (LOOP)	
	10	1	**5P-9299**	2	CLIP (LOOP)	
	11	1	**6V-8398**	2	SEAL-O-RING	
	12	1	**6V-9168**	2	NUT (11/16-16-THD)	
	13	1	**6V-9829**	2	CAP (ORFS)	
	14	1	**8T-4121**	7	WASHER-HARD (11X21X2.5-MM THK)	
M	15	1	**8T-4137**	7	BOLT (M10X1.5X20-MM)	

I - REFER TO HYDRAULIC INFORMATION SYSTEM
M - METRIC PART

473-0557 **LINES GP-RIPPER (**contd.**)** **i06559233**

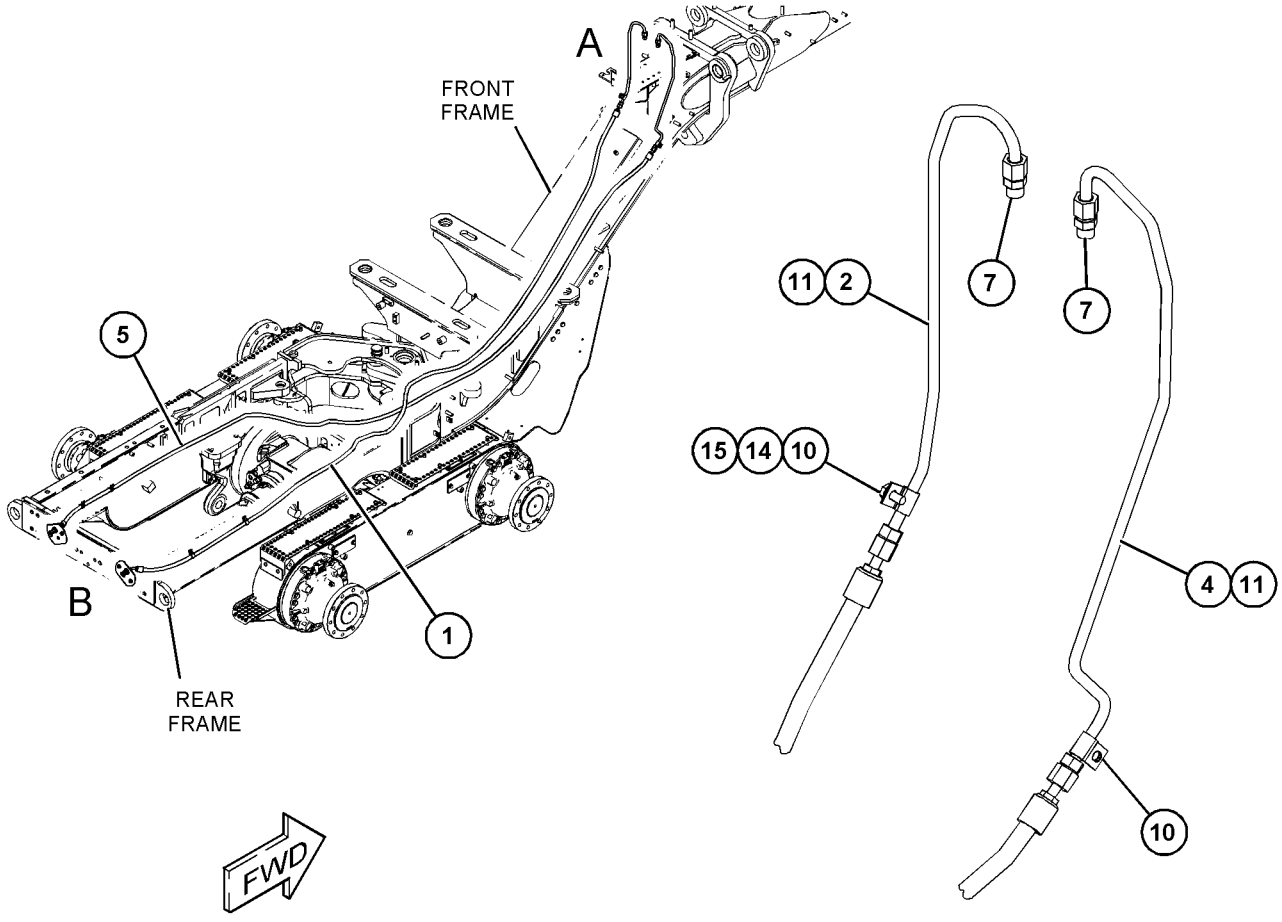

VIEW OF AREA A

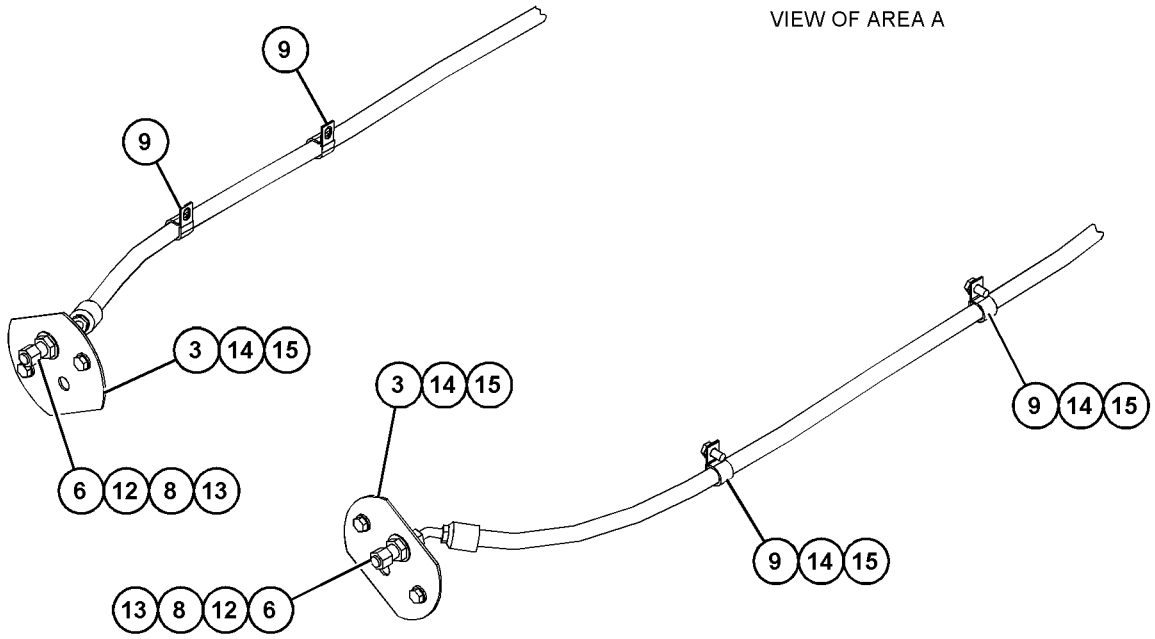

VIEW OF AREA B

GRAPHIC #1 <END> g06056860

231-1531 LINES GP-SECONDARY STEERING

S/N: B551-UP

PART OF 577-1377 COMMON AR

SMCS-4304 **i06865651**

NOTE	REF NO	GRAPHIC REF	PART NUMBER	QTY	PART NAME 1 2 3 4 5 6 (PRODUCT LEVEL)	SEE PAGE
CI	1	1	**382-8162**	1	HOSE AS	
	2	1	**9T-1013**	1	VALVE AS-CHECK	
		1	**3K-0360**	1	SEAL-O-RING	
		1	**6V-8398**	1	SEAL-O-RING	
C	3	1	**336-0981**	1	VALVE AS-RELIEF (SECONDARY STEERING)	
	4	1	**127-9323**	1	BRACKET AS	
I	5	1	**138-9403**	1	HOSE AS	
CI	6	1	**382-8021**	1	HOSE AS	
	7	1	**7D-7233**	1	CLIP (LOOP)	
	8	1	*148-8322*	1	CONNECTOR AS	
		1	**6V-8640**	1	CONNECTOR	
		1	**2M-9780**	1	SEAL-O-RING	
		1	**6V-9746**	1	SEAL-O-RING	
	9	1	*148-8340*	1	CONNECTOR AS	
		1	**6V-8639**	1	CONNECTOR	
		1	**3K-0360**	1	SEAL-O-RING	
		1	**6V-8398**	1	SEAL-O-RING	
	10	1	*281-5898*	1	TEE AS	
		1	**153-6270**	1	TEE	
		1	**3J-1907**	1	SEAL-O-RING	
		1	**6V-8398**	2	SEAL-O-RING	
	11	1	*153-6244*	1	ELBOW AS	
		1	**8T-5389**	1	ELBOW	
		1	**2M-9780**	1	SEAL-O-RING	
		1	**6V-9746**	1	SEAL-O-RING	
	12	1	*155-7321*	1	ADAPTER AS	
		1	**6V-1722**	1	ADAPTER	
		1	**3D-2824**	1	SEAL-O-RING	
	13	1	**067-3045**	3	CLIP (LOOP)	
C	14	1	**8T-4121**	3	WASHER-HARD (11X21X2.5-MM THK)	
M	15	1	**8T-4133**	1	NUT (M10X1.5-THD)	
M	16	1	**8T-4136**	1	BOLT (M10X1.5X25-MM)	
M	17	1	**8T-4137**	1	BOLT (M10X1.5X20-MM)	
CM	18	1	**7X-2534**	2	BOLT (M6X1X50-MM)	
C	19	1	**9X-8256**	2	WASHER (6.6X12X2-MM THK)	

C - CHANGE FROM PREVIOUS TYPE
I - REFER TO HYDRAULIC INFORMATION SYSTEM
M - METRIC PART

231-1531 **LINES GP-SECONDARY STEERING (**contd.**)** **i06865651**

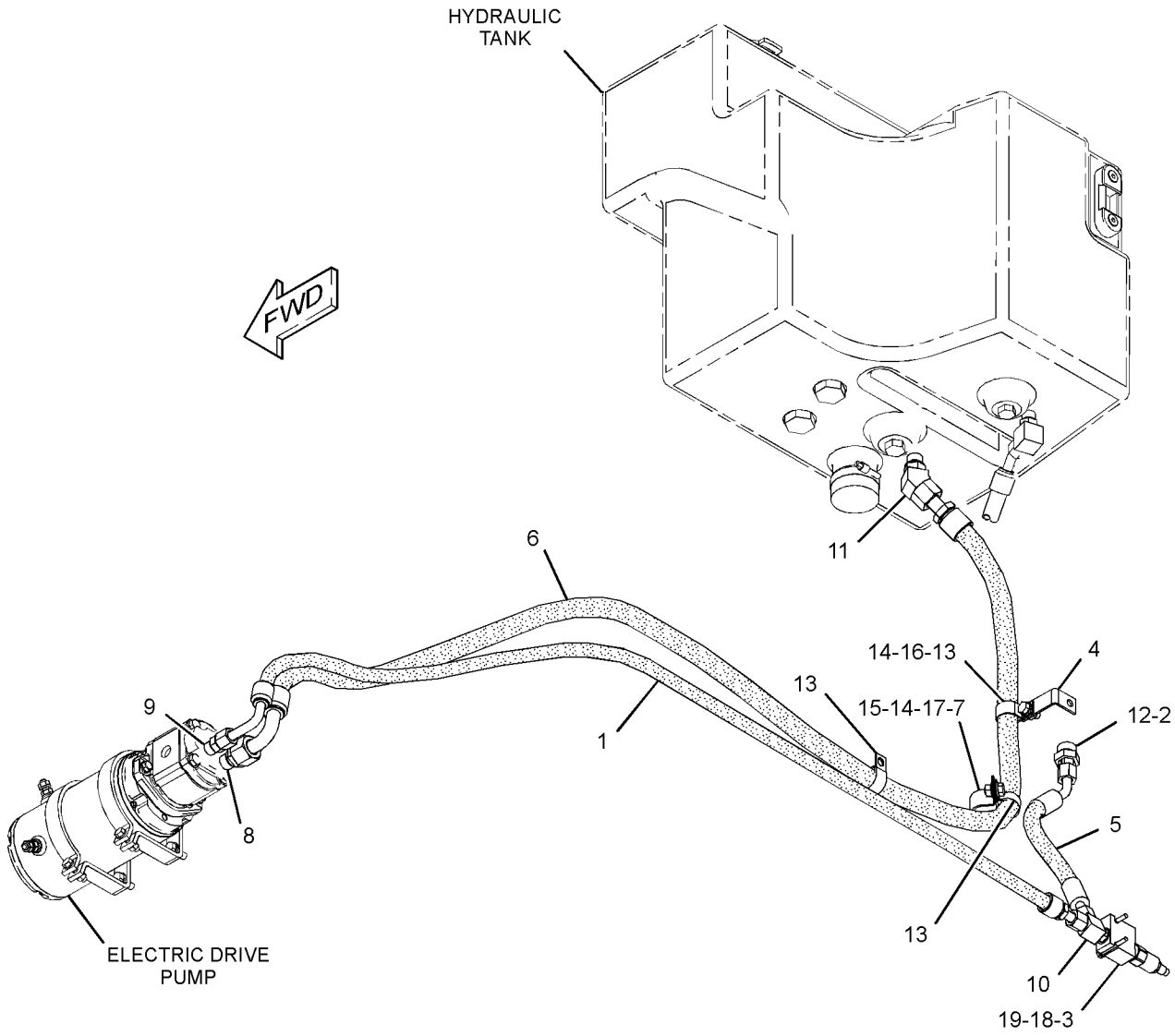

GRAPHIC #1 <END> g02969376

305-2925 LINES GP-STEERING—STEERING CYLINDER

S/N: B551-UP

PART OF 364-1989 OPTION AR-MACHINE

SMCS-4304 **i07589865**

NOTE	REF NO	GRAPHIC REF	PART NUMBER	QTY	PART NAME 1 2 3 4 5 6 (PRODUCT LEVEL)	SEE PAGE
	1	1	**288-6370**	1	TUBE AS	
	2	1	**288-6371**	1	TUBE AS	
I	3	1	**360-0801**	1	HOSE AS	
I	4	1	**360-0802**	1	HOSE AS	
CI	5	1	**389-8983**	1	HOSE AS	
I	6	1	**361-3183**	1	HOSE AS	
I	7	1	**444-1668**	1	HOSE AS	
	9	1	**122-0450**	4	GROMMET	
	11	1	*148-8340*	7	CONNECTOR AS	
					(EACH INCLUDES)	
		1	**6V-8639**	1	CONNECTOR	
		1	**3K-0360**	1	SEAL-O-RING	
		1	**6V-8398**	1	SEAL-O-RING	
	12	1	*148-8374*	1	ELBOW AS	
		1	**6V-8723**	1	ELBOW	
		1	**3K-0360**	1	SEAL-O-RING	
		1	**6V-8397**	1	SEAL-O-RING	
	13	1	*148-8415*	1	REDUCER AS	
		1	**6V-8936**	1	REDUCER	
		1	**6V-8397**	1	SEAL-O-RING	
	14	1	*148-8444*	2	TEE AS-SWIVEL	
					(EACH INCLUDES)	
		1	**6V-9837**	1	TEE-SWIVEL	
		1	**6V-8398**	2	SEAL-O-RING	
	15	1	*164-5586*	1	TEE AS	
		1	**7X-0871**	1	TEE	
		1	**6V-8398**	1	SEAL-O-RING	
M	16	1	**227-6715**	1	STUD (M10X1.5X30-MM)	
	17	1	*341-0078*	1	CONNECTOR AS	
		1	**341-0083**	1	CONNECTOR	
		1	**3J-1907**	1	SEAL-O-RING	
	18	1	**5G-3676**	2	GROMMET	
C	19	1	**541-6632**	4	CLIP (LOOP)	
	20	1	**6V-8398**	2	SEAL-O-RING	
	22	1	**8T-1889**	2	CLIP (SLOT)	
	23	1	**8T-1890**	2	CLIP (TAB)	
	24	1	**8T-1897**	4	CLIP (SLOT)	
	25	1	**8T-1898**	4	CLIP (TAB)	
C	26	1	**8T-4121**	12	WASHER-HARD (11X21X2.5-MM THK)	
CM	28	1	**8T-4136**	5	BOLT (M10X1.5X25-MM)	
M	29	1	**8T-4137**	4	BOLT (M10X1.5X20-MM)	
CI	30	1	**509-9535**	1	HOSE AS	
CM	31	1	**8T-4195**	1	BOLT (M10X1.5X30-MM)	
C	32	1	*148-8370*	1	ELBOW AS	
		1	**6V-8398**	1	SEAL-O-RING	
		1	**6V-9851**	1	ELBOW	
C	33	1	**275-1442**	1	CLIP (TAB)	
C	34	1	**275-1443**	1	CLIP (SLOT)	

305-2925 **LINES GP-STEERING (**contd.**)** **i07589865**

NOTE	REF NO	GRAPHIC REF	PART NUMBER	QTY	PART NAME 1 2 3 4 5 6 (PRODUCT LEVEL)	SEE PAGE
C	35	1	**275-1444**	1	GROMMET	
CM	36	1	**344-5675**	1	NUT (M10X1.5-THD)	

C - CHANGE FROM PREVIOUS TYPE
I - REFER TO HYDRAULIC INFORMATION SYSTEM
M - METRIC PART

305-2925 **LINES GP-STEERING (**contd.**)** **i07589865**

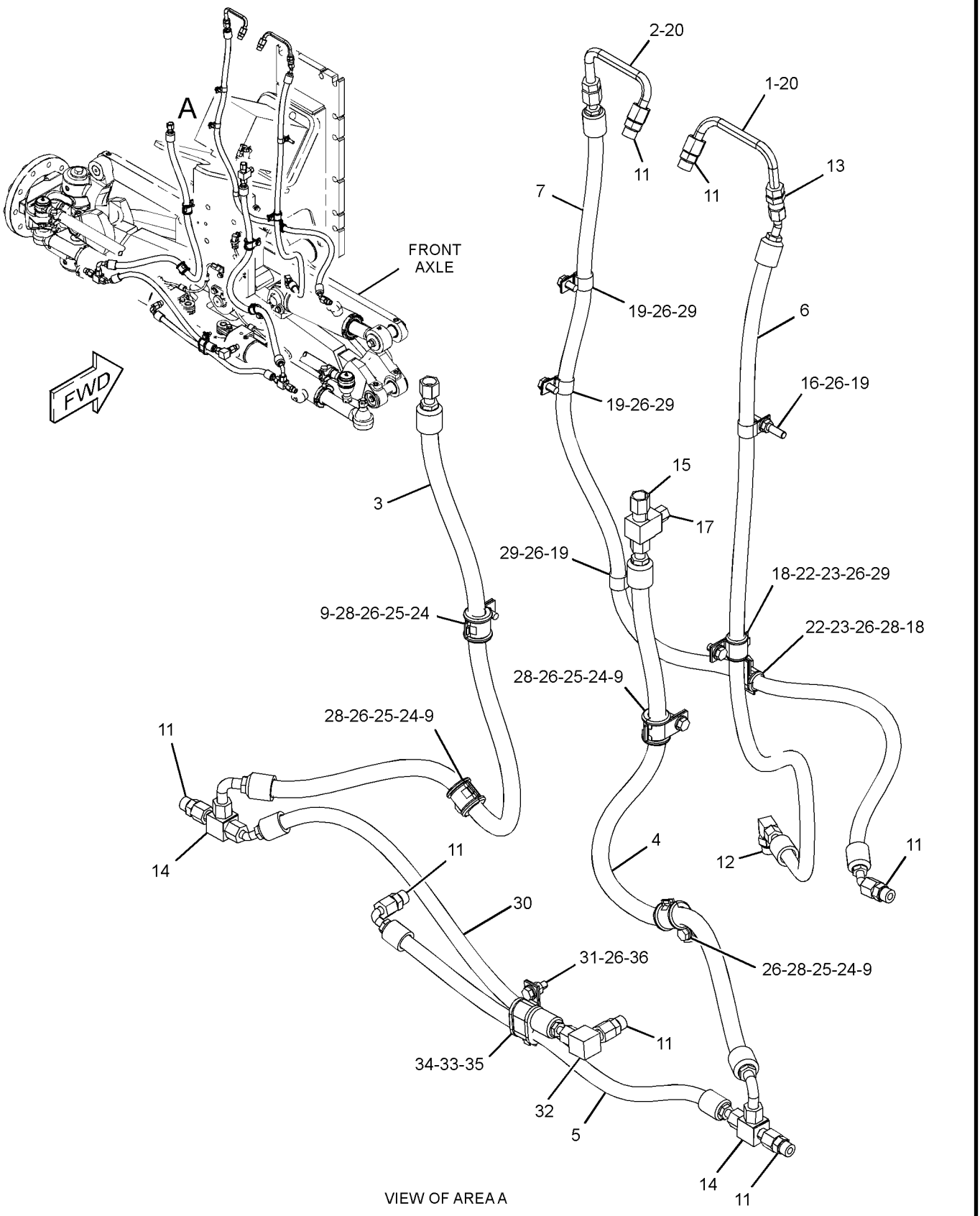

VIEW OF AREA A

GRAPHIC #1

<END>

g06209889

393-6071 LINES GP-STEERING

S/N: B551-UP

PART OF 364-1989 OPTION AR-MACHINE

SMCS-4304 **i07834056**

NOTE	REF NO	GRAPHIC REF	PART NUMBER	QTY	PART NAME 1 2 3 4 5 6 (PRODUCT LEVEL)	SEE PAGE
Y	1	1	**366-6680**	1	VALVE GP-STEERING	743
	2	1	**393-6303**	1	PLATE AS	
M		1	**9R-2613**	2	BOSS-WELD (M10X1.5X25-MM)	
	3	1	**393-6304**	1	TUBE AS	
	4	1	**393-6305**	1	TUBE AS	
	5	1	**542-1199**	1	TUBE AS	
	6	1	**542-2500**	1	TUBE AS	
I	7	1	**393-6308**	1	HOSE AS	
	8	1	**462-7898**	1	TUBE AS	
	9	1	**394-1243**	1	TUBE AS	
	10	1	**423-1871**	1	TUBE AS	
	11	1	**445-2556**	1	TUBE AS	
	12	1	*148-8315*	1	CONNECTOR AS	
		1	**2M-9780**	1	SEAL-O-RING	
		1	**6V-8642**	1	CONNECTOR	
		1	**7J-9108**	1	SEAL-O-RING	
	13	1	*148-8340*	1	CONNECTOR AS	
		1	**3K-0360**	1	SEAL-O-RING	
		1	**6V-8398**	1	SEAL-O-RING	
		1	**6V-8639**	1	CONNECTOR	
	14	1	*148-8345*	1	CONNECTOR AS	
		1	**2M-9780**	1	SEAL-O-RING	
		1	**6V-8398**	1	SEAL-O-RING	
		1	**6V-8638**	1	CONNECTOR	
	15	1	*148-8361*	2	ELBOW AS (90-DEG)	
					(EACH INCLUDES)	
		1	**3J-7354**	1	SEAL-O-RING	
		1	**6V-8397**	1	SEAL-O-RING	
		1	**6V-9200**	1	ELBOW	
	16	1	*148-8370*	1	ELBOW AS	
		1	**6V-8398**	1	SEAL-O-RING	
		1	**6V-9851**	1	ELBOW	
	17	1	*148-8388*	1	ELBOW AS	
		1	**2M-9780**	1	SEAL-O-RING	
		1	**6V-8629**	1	ELBOW	
		1	**6V-9746**	1	SEAL-O-RING	
	18	1	*150-3035*	1	ELBOW AS	
		1	**6V-9746**	1	SEAL-O-RING	
		1	**8T-1718**	1	ELBOW	
	19	1	*150-4043*	1	CONNECTOR AS	
		1	**3J-1907**	1	SEAL-O-RING	
		1	**6V-8398**	1	SEAL-O-RING	
		1	**6V-9873**	1	CONNECTOR	
	20	1	*164-7908*	2	ELBOW AS	
					(EACH INCLUDES)	
		1	**3J-7354**	1	SEAL-O-RING	
		1	**6V-8397**	1	SEAL-O-RING	
		1	**8T-7546**	1	ELBOW	

393-6071 **LINES GP-STEERING** (contd.) **i07834056**

NOTE	REF NO	GRAPHIC REF	PART NUMBER	QTY	PART NAME 1 2 3 4 5 6 (PRODUCT LEVEL)	SEE PAGE
	21	1	**5K-9660**	2	CLIP (LOOP)	
	22	1	**5P-7462**	2	CLIP (SLOT)	
	23	1	**5P-7463**	2	CLIP (TAB)	
	24	1	**6V-0683**	2	GROMMET	
	25	1	**6V-8398**	2	SEAL-O-RING	
	26	1	**6V-9746**	2	SEAL-O-RING	
	27	1	**7X-7729**	3	WASHER (11X25X3-MM THK)	
	28	1	**8M-2773**	1	CLIP (LOOP)	
	29	1	**8T-4121**	3	WASHER-HARD (11X21X2.5-MM THK)	
M	30	1	**8T-4136**	5	BOLT (M10X1.5X25-MM)	
M	31	1	**8T-4182**	1	BOLT (M10X1.5X45-MM)	
M	32	1	**8T-4195**	3	BOLT (M10X1.5X30-MM)	
	33	1	**8T-7934**	3	WASHER-HARD (11X21X5-MM THK)	

I - REFER TO HYDRAULIC INFORMATION SYSTEM
M - METRIC PART
Y - SEPARATE ILLUSTRATION

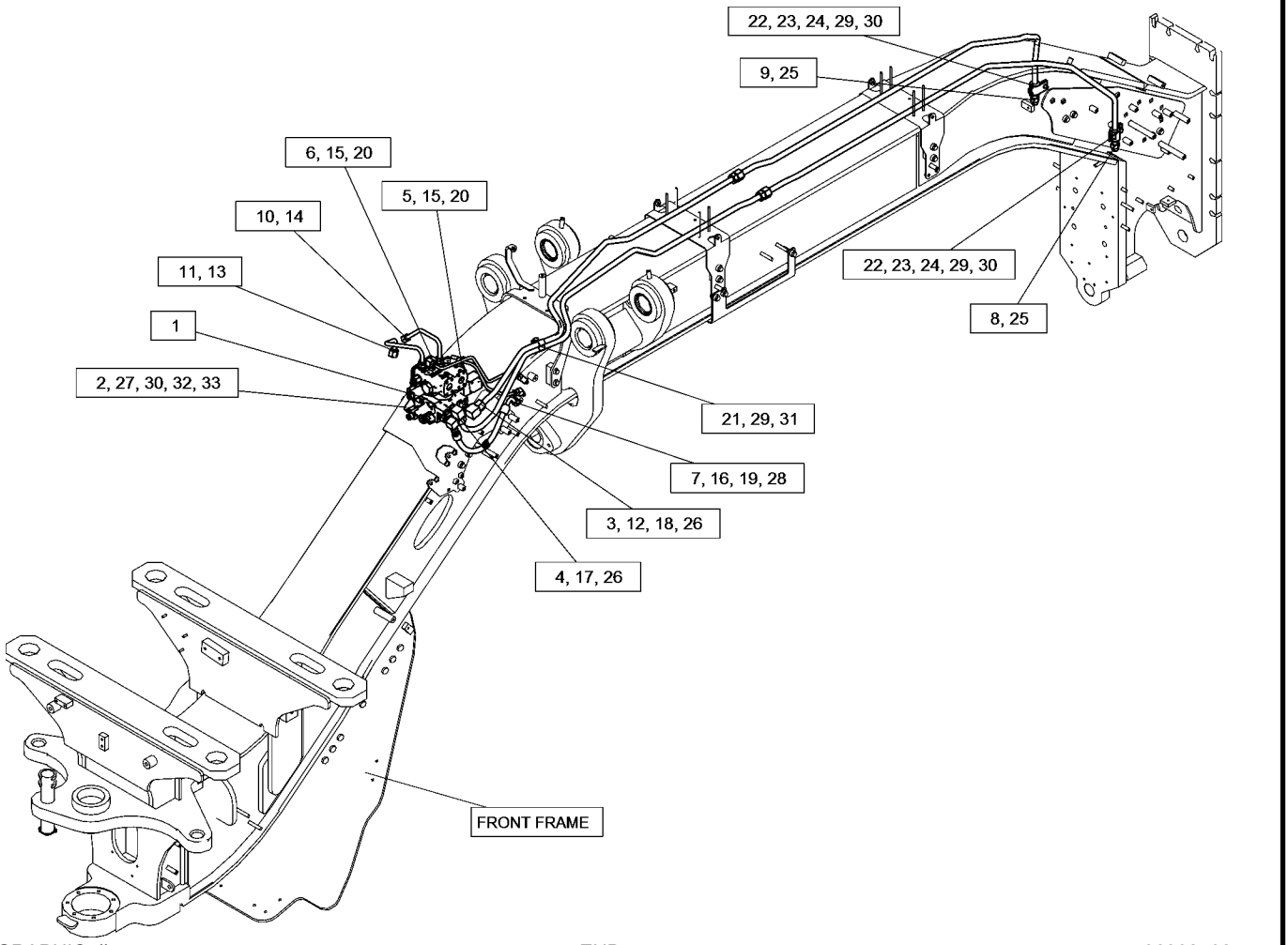

GRAPHIC #1 <END> g06302402

305-2901 LOCK GP-CENTERSHIFT

S/N: B551-UP

PART OF 364-1989 OPTION AR-MACHINE

SMCS-5221 **i07438968**

NOTE	REF NO	GRAPHIC REF	PART NUMBER	QTY	PART NAME 1 2 3 4 5 6 (PRODUCT LEVEL)	SEE PAGE
	1	1	**2H-3931**	1	SEAL-O-RING	
	2	1	**4T-8054**	1	SEAL AS	
	3	1	**512-9912**	1	PISTON	
	4	1	**7K-9204**	1	SEAL-LIP TYPE	
	5	1	**431-8801**	1	CYLINDER	
	6	1	**390-2799**	1	PIN	
	7	1	**380-6949**	1	CAP GP-PROTECTION	
		1	**384-3892**	1	VALVE GP-SOLENOID (CENTERSHIFT LOCK)	
		1	**384-3893**	1	COIL AS	
	9	1	**421-4024**	1	SEAL-U-CUP	
M	10	1	**8T-4175**	2	BOLT (M16X2X90-MM)	
	11	1	**7X-0346**	1	BOLT (5/8-11X2-IN)	
	12	1	**8T-4122**	1	WASHER-HARD (17X32X3.5-MM THK)	
	13	1	**8T-4223**	2	WASHER-HARD (13.5X25.5X3-MM THK)	
	14	1	**8T-8917**	2	BOLT (1/2-13X1.25-IN)	
	15	1	**198-4780**	2	WASHER-HARD (17.5X32X8-MM THK)	
	16	1	**384-7727**	1	SPACER (63.5X80X5-MM THK)	

M - METRIC PART

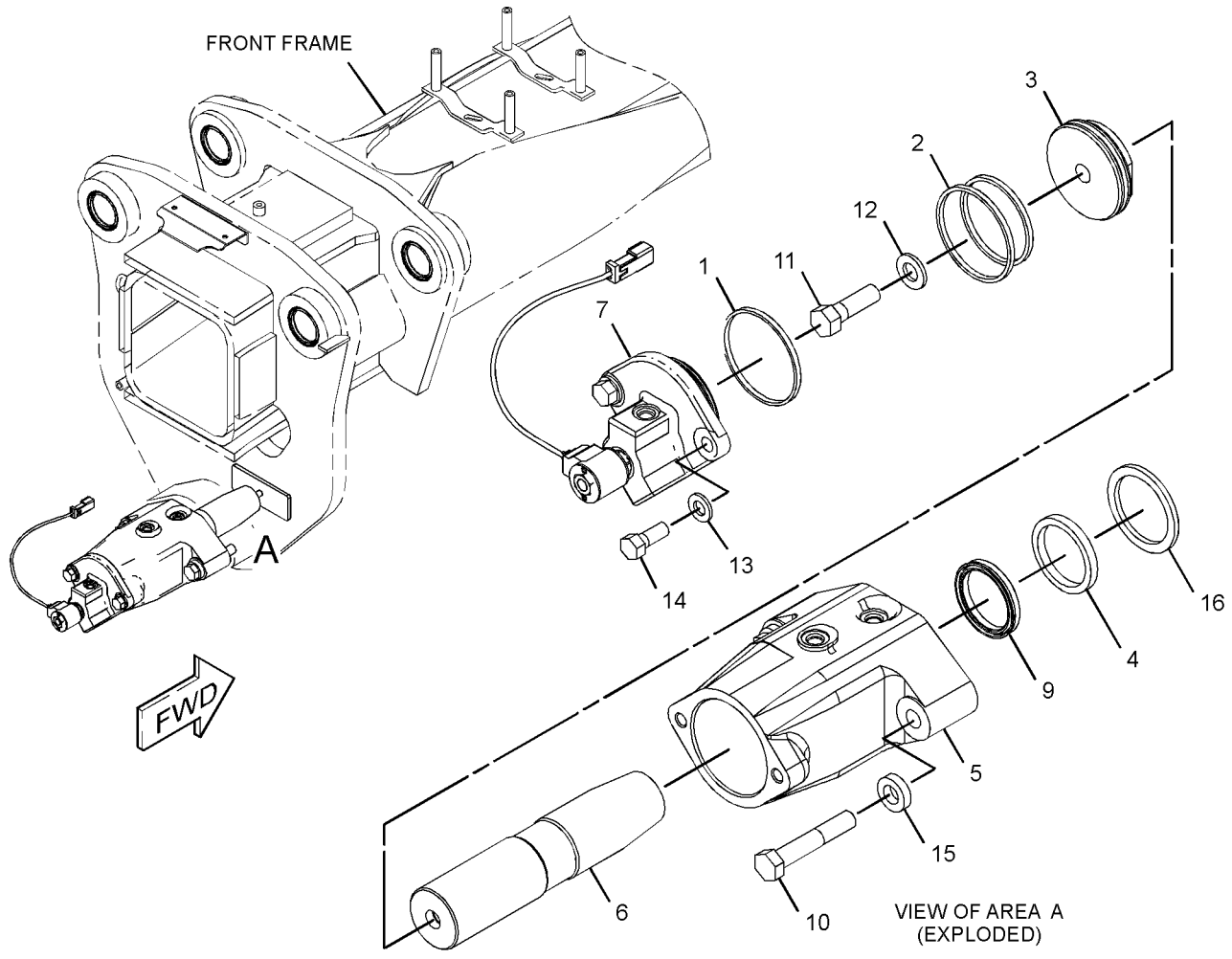

GRAPHIC #1 <END> g06324860

353-2604 MANIFOLD GP-CONTROL—BRAKE, HYDRAULIC FAN

S/N: B551-UP

PART OF 332-3941 LINES GP-HYDRAULIC FAN

SMCS-5051, 5069, 5264, 5467, 5479 **i06610775**

NOTE	REF NO	GRAPHIC REF	PART NUMBER	QTY	PART NAME 1 2 3 4 5 6 (PRODUCT LEVEL)	SEE PAGE
P	1	1	**282-5396**	1	KIT-VALVE (BRAKE ACCUMULATOR)	
					(INCLUDES SEAL-O-RINGS & BACK-UP RINGS)	
Y	2	1	**251-8330**	1	VALVE GP-RELIEF (BRAKE ACCUMULATOR)	737
J	3	1	**474-0524**	1	VALVE GP-SHUTTLE (HYDRAULIC FAN)	
Y	4	1	**277-2132**	1	VALVE GP-DIVERTER (FAN DRIVE)	731
	5	1	**9S-8001**	3	PLUG	
	6	1	**4J-7533**	3	SEAL-O-RING	
	7	1	**9S-8004**	1	PLUG (9/16-18-THD)	
	8	1	**3J-1907**	1	SEAL-O-RING	
Y	9	1	**257-8414**	1	VALVE GP-SHUTTLE (BRAKE ACCUMULATOR)	739
	10	1	**296-5270**	1	SENSOR GP-PRESSURE	
N	11	1	**348-0421**	1	VALVE GP-CHECK (BRAKE, HYDRAULIC FAN)	
Y	12	1	**189-8627**	1	VALVE GP-SOLENOID (HYDRAULIC FAN)	740
	13	1	**6E-5066**	1	SCREEN (HYDRAULIC) (CONTROL MANIFOLD)	
	14	1	**280-0947**	1	PLUG-ORIFICE	
	15	1	**266-1602**	1	PLUG-ORIFICE	
	16	1	**1J-9671**	1	SEAL-O-RING	
					AVAILABLE REPAIR KIT(S):	
P			**200-6282**	1	KIT-SEAL (DIVERTER VALVE)	
					(INCLUDES SEAL-O-RINGS & BACK-UP RINGS)	
J			**457-5280**	1	KIT-SEAL (SHUTTLE VALVE)	
					(INCLUDES SEAL-O-RING & BACK-UP RING)	
N			**189-2102**	1	KIT-SEAL (VALVE)	
					(INCLUDES SEAL-O-RING & BACK-UP RINGS)	

J - KIT MARKED J SERVICES PART(S) MARKED J
N - KIT MARKED N SERVICES PART(S) MARKED N
P - KIT MARKED P SERVICES PART(S) MARKED P
Y - SEPARATE ILLUSTRATION

353-2604 **MANIFOLD GP-CONTROL (**contd.**)** **i06610775**

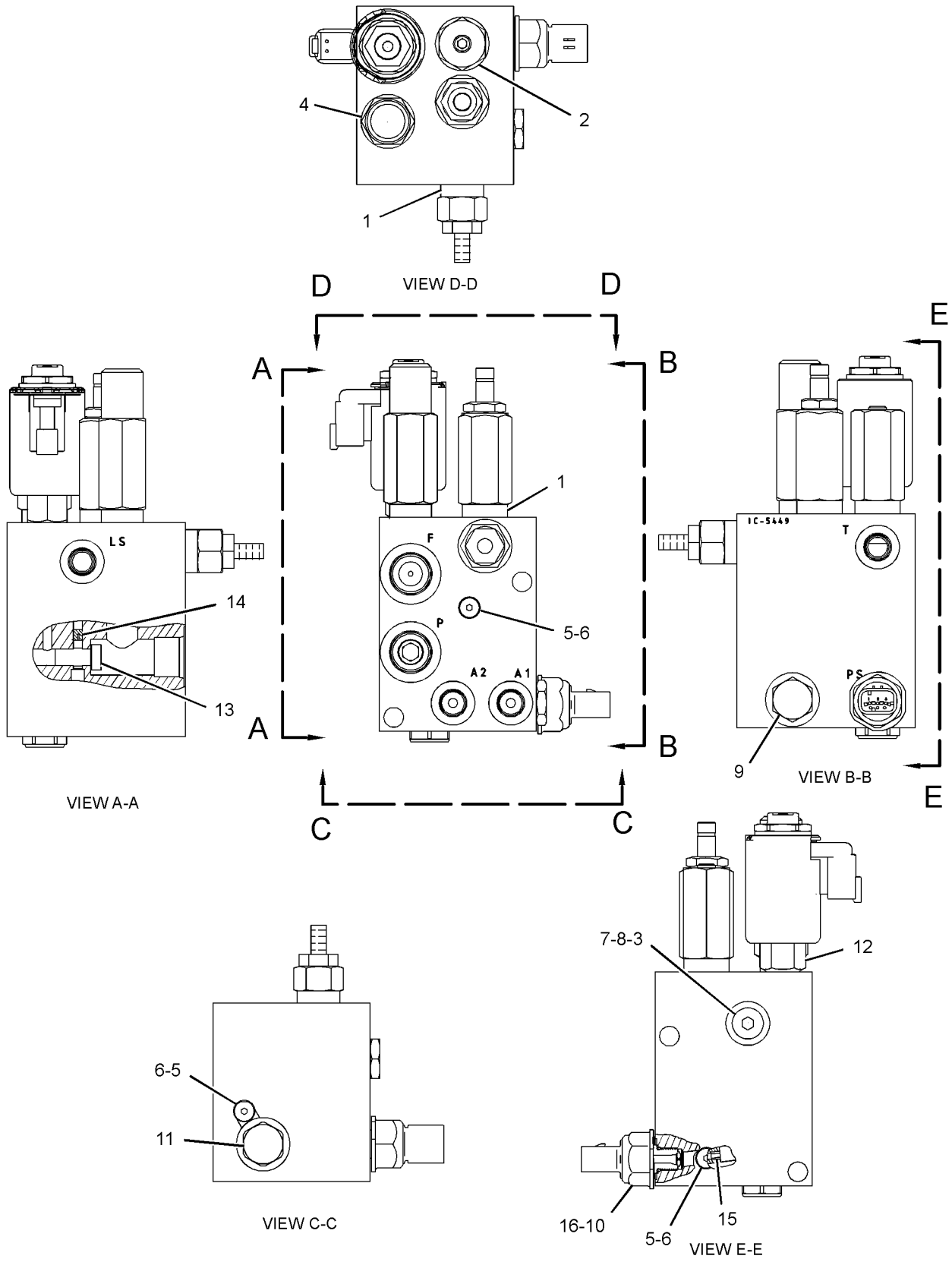

GRAPHIC #1 <END> g02177928

477-1149 MANIFOLD GP-CONTROL–STEERING

S/N: B551-UP

PART OF 473-0556 LINES GP-PUMP

SMCS-5051, 5069, 5264, 5467, 5479 **i06565293**

NOTE	REF NO	GRAPHIC REF	PART NUMBER	QTY	PART NAME 1 2 3 4 5 6 (PRODUCT LEVEL)	SEE PAGE
	1	1	**9S-8002**	2	PLUG (7/16-20-THD)	
Y	2	1	**133-5330**	1	VALVE GP-RELIEF (MAIN)	736
Y	3	1	**252-8038**	1	VALVE GP-PRESSURE REDUCING (PILOT)	732
	4	1	**6V-0852**	2	CAP-DUST	
	5	1	**6V-3965**	2	FITTING (QUICK DISCONNECT)	
	6	1	**3J-1907**	4	SEAL-O-RING	
	7	1	**8C-3446**	1	VALVE-SAMPLING	
	8	1	**3J-7354**	4	SEAL-O-RING	
	9	1	**8C-3451**	1	CAP-DUST (HYDRAULIC OIL)	
	10	1	**6V-8076**	2	ELBOW	
	11	1	**151-5145**	1	ELBOW	

Y - SEPARATE ILLUSTRATION

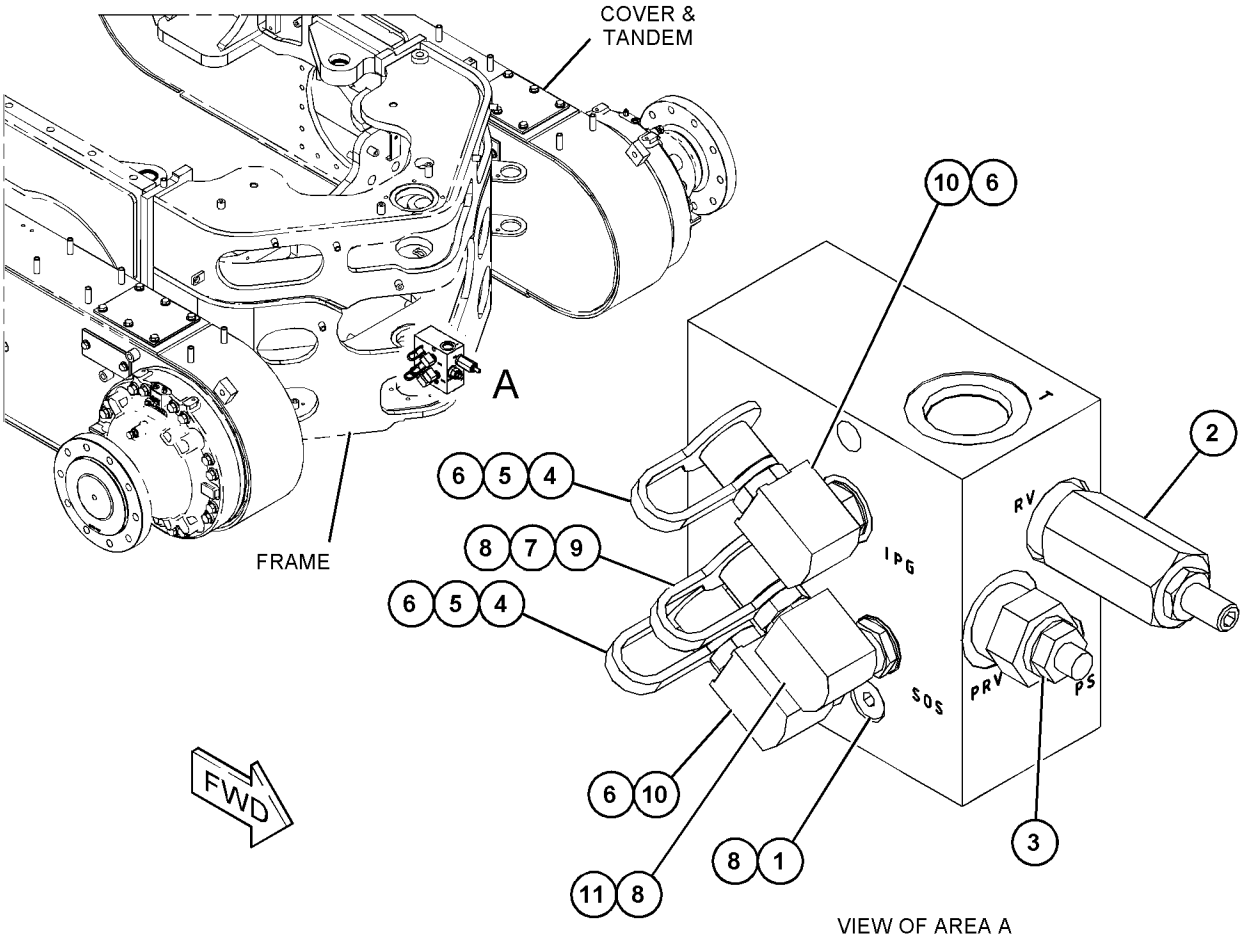

GRAPHIC #1 <END> g06059222

105-3196 MOTOR GP-GEROTOR—CIRCLE DRIVE

S/N: B551-UP

PART OF 423-9923 DRIVE GP-CIRCLE

SMCS-5082 **i07852147**

NOTE	REF NO	GRAPHIC REF	PART NUMBER	QTY	PART NAME 1 2 3 4 5 6 (PRODUCT LEVEL)	SEE PAGE
	1	1	**9T-8051**	7	BOLT (3/8-24X4.12-IN)	
	2	1	**9T-8053**	5	SEAL	
	3	1	**6Y-2935**	1	BEARING	
	4	1	**9T-8054**	1	LINK	
	5	1	**7X-4733**	1	SEAL-LIP TYPE	
	6	1	**9T-8056**	1	SHAFT	
	7	1	**9T-8058**	1	BACKUP	
	8	1	**9T-8059**	1	SEAL	
	9	1	**9T-9071**	1	SHIM	
	10	1	**9T-8061**	1	PLATE	
	11	1	**9J-4963**	1	RING	
	12	1	**9T-8065**	1	MANIFOLD	
	13	1	**9T-8069**	1	PLATE AS	
	14	1	**9T-8067**	1	COVER	
	15	1	**9T-8070**	1	HOUSING AS	
	15A	1	**6Y-2934**	1	BEARING-ROLLER	
	15B	1	**6Y-2932**	1	BEARING-THRUST	
	15C	1	**8T-1698**	1	BEARING AS-NEEDLE	
		1	**6Y-2933**	2	RING-THRUST	
					AVAILABLE REPAIR KIT(S):	
			9T-9072	1	KIT-SEAL (BROOM MOTOR) (CIRCLE DRIVE)	
					(INCLUDES BACKUP RING, SHIM, SEALS & GREASE PACK)	

105-3196 **MOTOR GP-GEROTOR (**contd.**)** **i07852147**

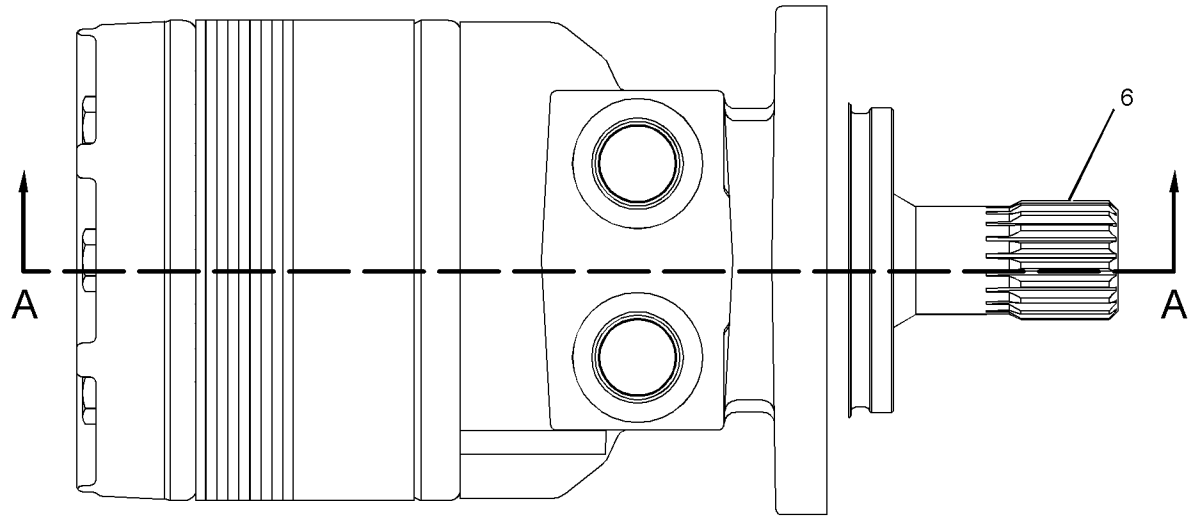

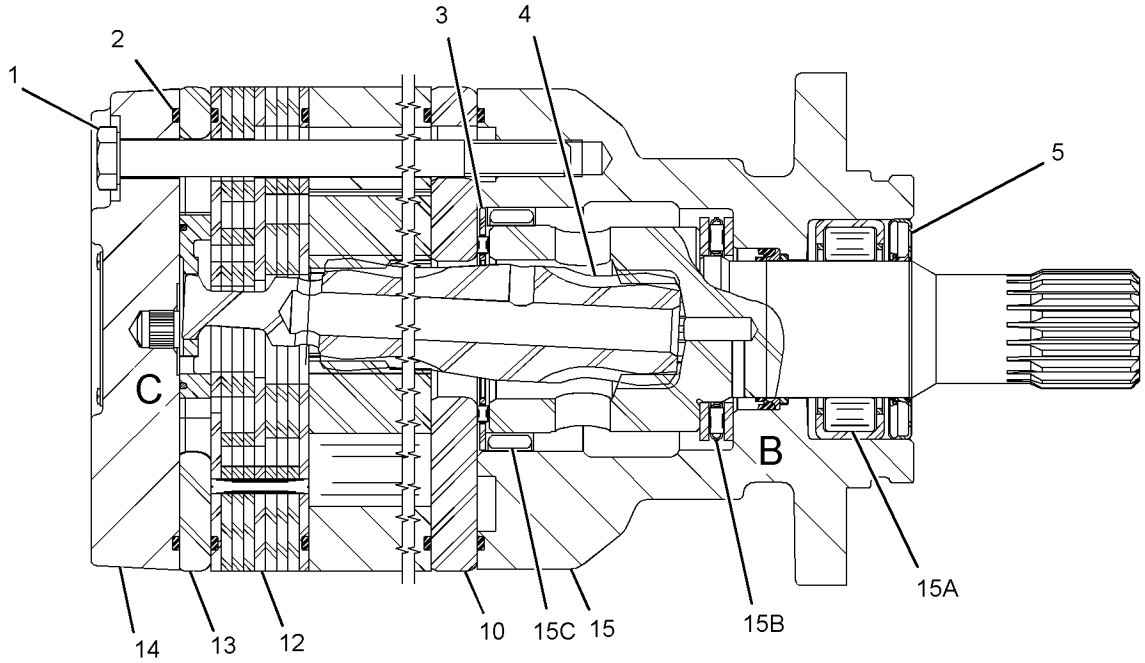

SECTION A-A

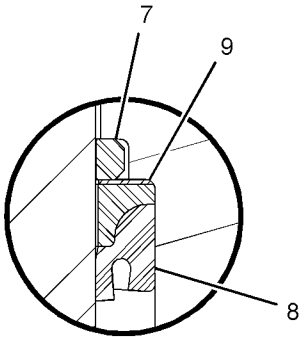

VIEW OF AREA B

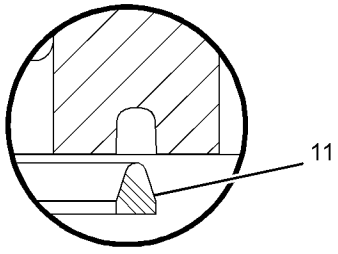

VIEW OF AREA C

GRAPHIC #1 <END> g06454159

393-6073 MOUNTING GP-VALVE

S/N: B551-UP

PART OF 364-1989 OPTION AR-MACHINE

SMCS-5051, 5949 **i05771166**

NOTE	REF NO	GRAPHIC REF	PART NUMBER	QTY	PART NAME 1 2 3 4 5 6 (PRODUCT LEVEL)	SEE PAGE
	1	1	**285-3668**	1	PLATE AS	
M		1	**8T-3490**	8	NUT-WELD (M10X1.5-THD)	
	2	1	**439-6966**	1	PLATE AS	
M		1	**8T-3490**	4	NUT-WELD (M10X1.5-THD)	
M		1	**8Y-4489**	2	BOSS (M10X1.5-THD)	
M		1	**9R-2613**	3	BOSS-WELD (M10X1.5X25-MM)	
M		1	**9R-3761**	1	BOSS (M10X1.5X51-MM)	
M	3	1	**227-6715**	1	STUD (M10X1.5X30-MM)	
	4	1	**7X-7729**	4	WASHER (11X25X3-MM THK)	
	5	1	**8T-4121**	4	WASHER-HARD (11X21X2.5-MM THK)	
M	6	1	**8T-4136**	4	BOLT (M10X1.5X25-MM)	
M	7	1	**8T-4195**	3	BOLT (M10X1.5X30-MM)	

M - METRIC PART

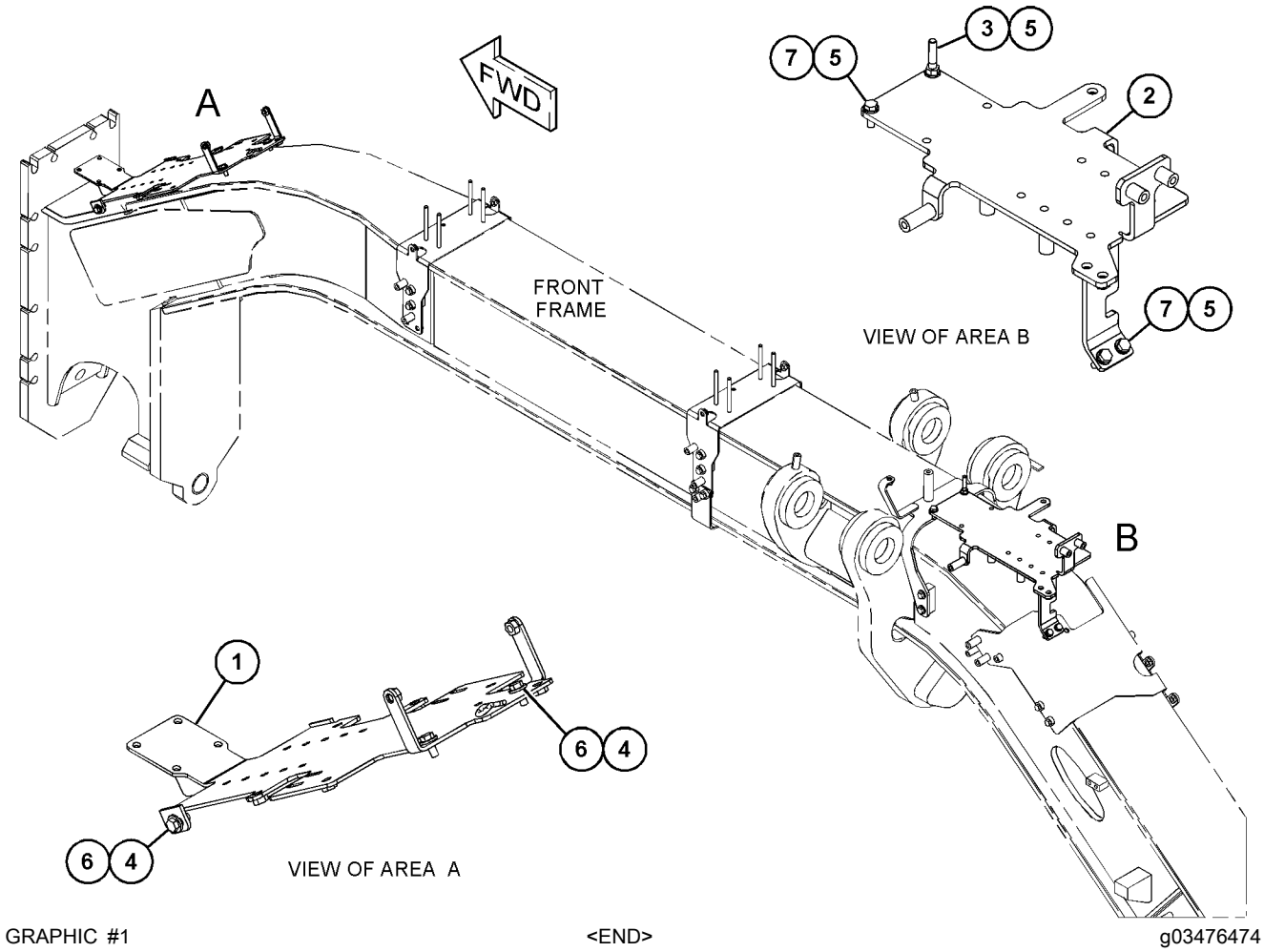

GRAPHIC #1 <END> g03476474

235-8552 PUMP & MTG GP-PISTON–BRAKE, HYDRAULIC FAN

S/N: B551-UP

PART OF 577-1377 COMMON AR

SMCS-5070 **i04899300**

NOTE	REF NO	GRAPHIC REF	PART NUMBER	QTY	PART NAME 1 2 3 4 5 6 (PRODUCT LEVEL)	SEE PAGE
YR	1	1	**250-8337**	1	PUMP GP-PISTON (BRAKE, HYDRAULIC FAN)	628
	2	1	**1H-6227**	1	SEAL-O-RING	
	3	1	**8T-4223**	2	WASHER-HARD (13.5X25.5X3-MM THK)	
M	4	1	**8T-4956**	2	BOLT (M12X1.75X35-MM)	

M - METRIC PART
R - REMANUFACTURED PART MAY BE AVAILABLE
Y - SEPARATE ILLUSTRATION

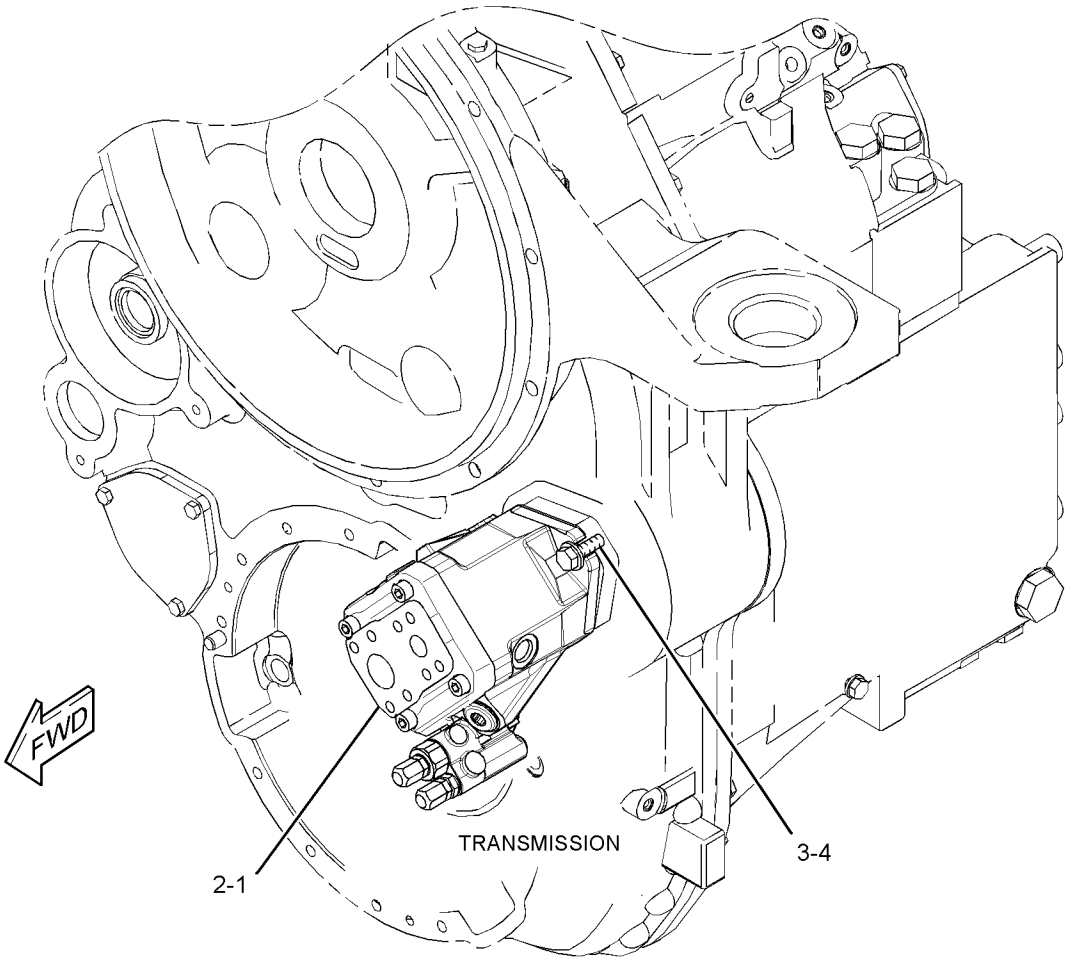

GRAPHIC #1 <END> g01335244

382-6923 PUMP & MTG GP-PISTON

S/N: B551-UP

PART OF 577-1377 COMMON AR

SMCS-5070 **i05367832**

NOTE	REF NO	GRAPHIC REF	PART NUMBER	QTY	PART NAME 1 2 3 4 5 6 (PRODUCT LEVEL)	SEE PAGE
Y	1	1	*366-6621*	1	PUMP GP-PISTON (IMPLEMENT, STEERING)	630
	2	1	**7X-0515**	2	WASHER-HARD (17X35X5-MM THK)	
M	3	1	**8T-4193**	2	BOLT (M16X2X50-MM)	
	4	1	**9X-7371**	1	SEAL-O-RING	

M - METRIC PART
Y - SEPARATE ILLUSTRATION

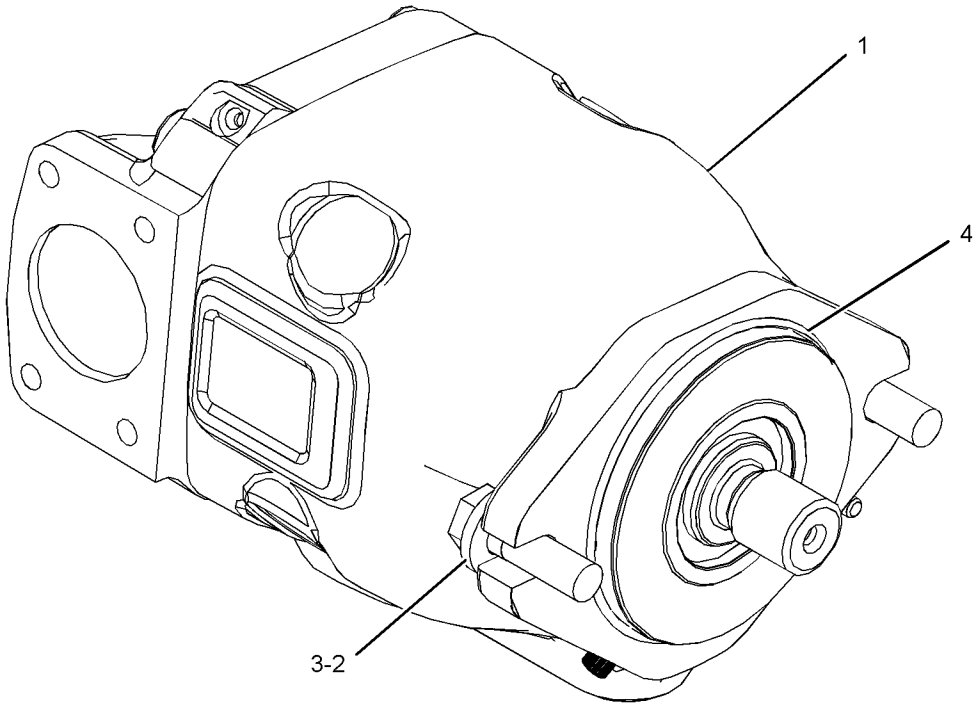

GRAPHIC #1 <END> g03399722

250-1170 PUMP & MTG GP-SECONDARY STEER—ELECTRIC DRIVE

S/N: B551-UP

PART OF 577-1377 COMMON AR

SMCS-4324 **i02774585**

NOTE	REF NO	GRAPHIC REF	PART NUMBER	QTY	PART NAME 1 2 3 4 5 6 (PRODUCT LEVEL)	SEE PAGE
Y	1	1	**273-8714**	1	PUMP GP-GEAR (SECONDARY STEERING)	627
	2	1	**279-8929**	2	CLAMP	
	3	1	**283-9796**	2	CLAMP	
M	4	1	**5C-7261**	2	NUT (M8X1.25-THD)	
M	5	1	**7X-2537**	2	BOLT (M8X1.25X35-MM)	
	6	1	**8T-4121**	4	WASHER-HARD (11X21X2.5-MM THK)	
M	7	1	**8T-4136**	2	BOLT (M10X1.5X25-MM)	
M	8	1	**8T-4195**	2	BOLT (M10X1.5X30-MM)	
	9	1	**8T-4224**	4	WASHER-HARD (8.8X16X2-MM THK)	

M - METRIC PART
Y - SEPARATE ILLUSTRATION

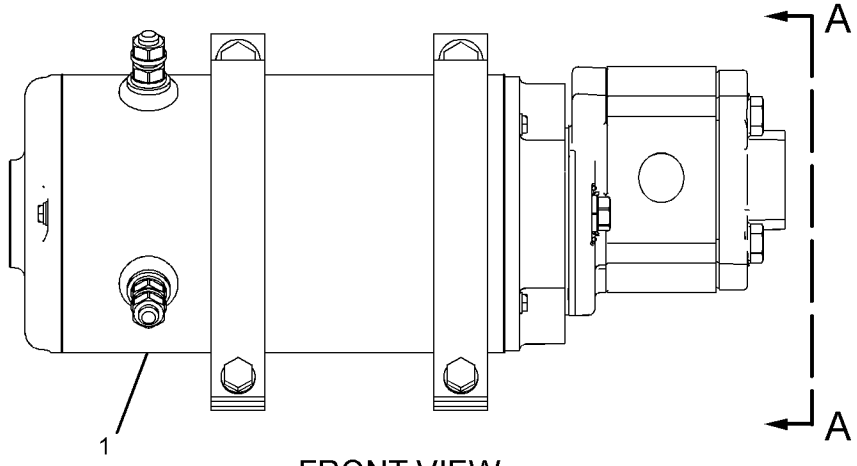

FRONT VIEW

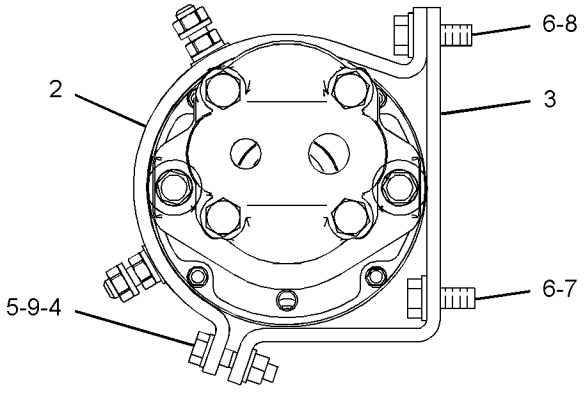

VIEW A-A

GRAPHIC #1 <END> g01285258

273-8714 PUMP GP-GEAR–SECONDARY STEERING

S/N: B551-UP

PART OF 250-1170 PUMP & MTG GP-SECONDARY STEER

SMCS-4306 **i05656433**

NOTE	REF NO	GRAPHIC REF	PART NUMBER	QTY	PART NAME 1 2 3 4 5 6 (PRODUCT LEVEL)	SEE PAGE
	1	1	**419-6115**	1	MOTOR-ELECTRIC (24-VOLT)	
	2	1	**446-6911**	1	PUMP GP-GEAR	
					AVAILABLE REPAIR KIT(S):	
			201-0418	1	KIT-SEAL	
					(INCLUDES RETAINING RING, SHAFT SEAL, BACK-UP RINGS, E-SEALS, O-RINGS)	
			373-3991	1	KIT-GASKET	
					(INCLUDES SCREWS, WASHERS & GASKET)	

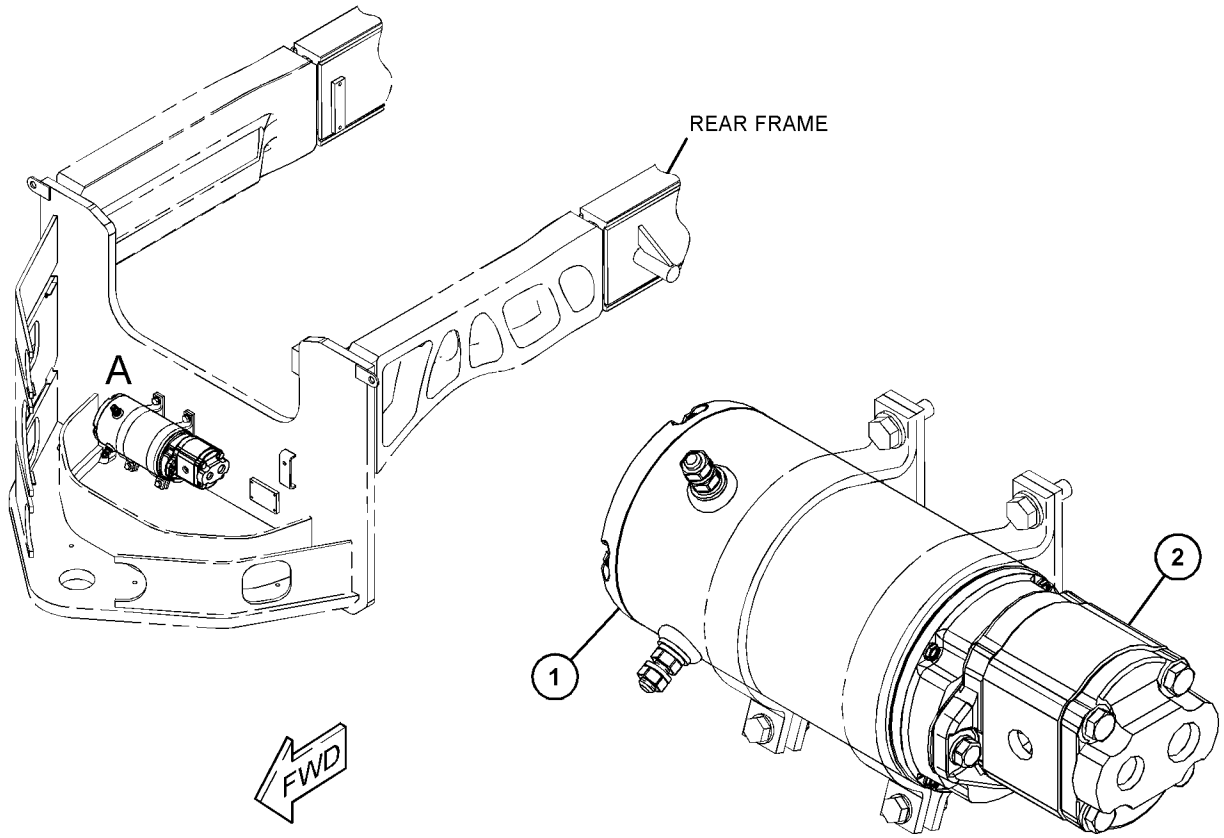

VIEW OF AREA A

GRAPHIC #1 <END> g03590958

250-8337 PUMP GP-PISTON—BRAKE, HYDRAULIC FAN*R

S/N: B551-UP

PART OF 235-8552 PUMP & MTG GP-PISTON

SMCS-5070 **i04899303**

NOTE	REF NO	GRAPHIC REF	PART NUMBER	QTY	PART NAME 1 2 3 4 5 6 (PRODUCT LEVEL)	SEE PAGE
Y	1	1	**259-5504**	1	ROTATING GP-PUMP (BRAKE, HYDRAULIC FAN)	632
	2	1	**168-7861**	1	PISTON-ACTUATOR	
	3	1	**259-5507**	1	ROD-PISTON	
	4	1	**271-6418**	1	SWASHPLATE	
	5	1	**271-6919**	1	SHAFT-DRIVE	
	6	1	**198-5351**	1	PLUG	
	7	1	**194-9472**	1	SPRING	
	8	1	**191-7582**	1	SHIM (2.5-MM THK)	
	9	1	**194-9473**	2	RING	
	10	1	**155-9125**	1	BEARING AS-ROLLER	
	11	1	**191-7583**	1	BEARING-TAPERED	
	12	1	**194-9474**	2	BEARING-CRADLE	
	13	1	**155-9127**	1	SEAL	
	14	1	**133-6578**	1	SEAL-O-RING	
	15	1	**8T-7525**	1	SEAL-O-RING	
	16	1	**168-3504**	1	SEAL	
M	18	1	**8T-9515**	4	BOLT-SOCKET HEAD (M10X1.5X40-MM)	
	19	1	**9S-8005**	1	PLUG (3/4-16-THD)	
	20	1	**120-4394**	1	PLUG-BREAK OFF	
	21	1	**099-3047**	1	DOWEL	
	22	1	**3K-0360**	1	SEAL-O-RING	
Y	23	1	**168-2210**	1	VALVE GP-PUMP CONTROL (PRESSURE, FLOW COMPENSATOR)	733
	24	1	**3J-7354**	1	SEAL-O-RING	
	25	1	**9S-8002**	1	PLUG (7/16-20-THD)	

M - METRIC PART
Y - SEPARATE ILLUSTRATION

250-8337 **PUMP GP-PISTON (**contd.**)** **i04899303**

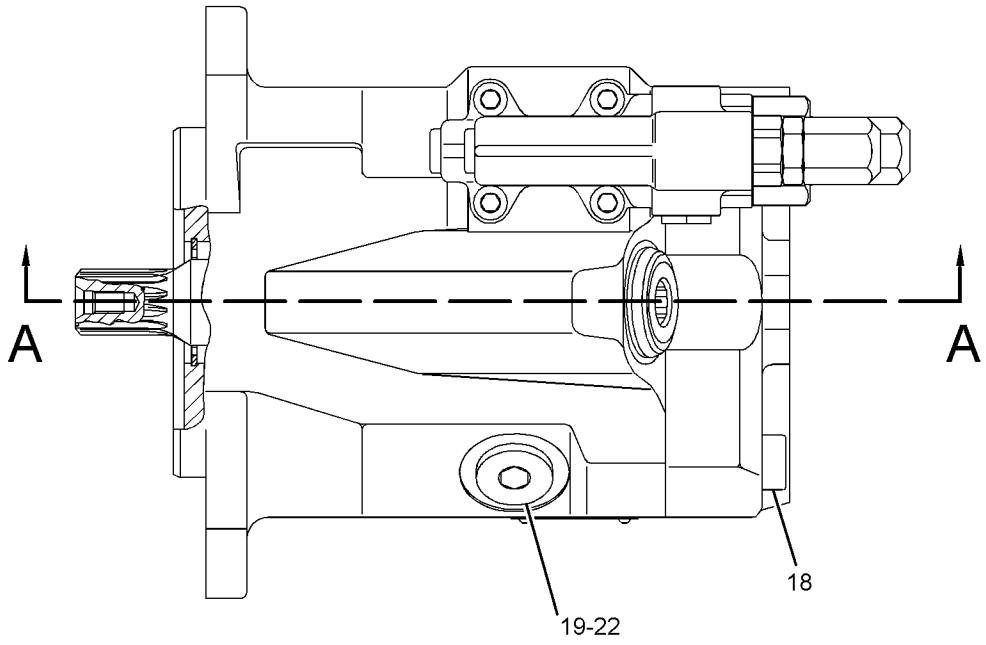

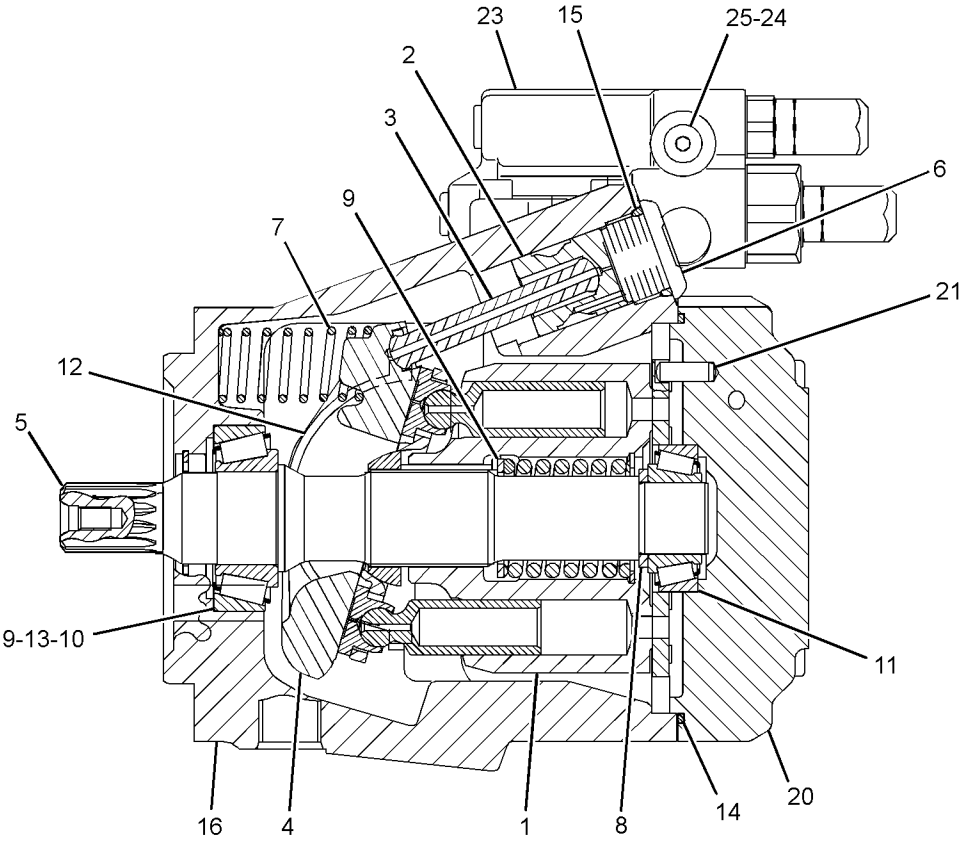

VIEW OF AREA A-A

GRAPHIC #1 <END> g01309678

366-6621 PUMP GP-PISTON

S/N: B551-UP

PART OF 382-6923 PUMP & MTG GP-PISTON

SMCS-5070 **i07834978**

NOTE	REF NO	GRAPHIC REF	PART NUMBER	QTY	PART NAME 1 2 3 4 5 6 (PRODUCT LEVEL)	SEE PAGE
Y	1	1	**389-1201**	1	ROTATING GP-PUMP (IMPLEMENT, STEERING)	633
	2	1	**133-8739**	1	SEAL-LIP TYPE	
	3	1	**351-6096**	1	SWASHPLATE	
	4	1	**280-7870**	1	GASKET	
	5	1	**105-1638**	1	SPACER (30X38X3-MM THK)	
	6	1	**105-3031**	1	CONE-BEARING	
	7	1	**3B-2263**	1	CUP-BEARING	
	8	1	**351-6131**	2	BEARING-CRADLE	
	9	1	**105-3032**	1	CONE-BEARING	
	10	1	**105-3033**	1	CUP-BEARING	
	11	1	**140-1739**	1	RING-RETAINING	
M	12	1	**6V-8201**	4	BOLT-SOCKET HEAD (M16X2X45-MM)	
	13	1	**9X-8979**	1	DOWEL	
Y	14	1	**347-0612**	1	VALVE GP-PUMP CONTROL (FLOW COMPENSATOR) (IMPLEMENT)	735
	15	1	**247-0478**	1	SPRING	
	16	1	**360-3167**	1	PLATE-CONTROL	
	17	1	**120-4394**	1	PLUG-BREAK OFF	
	18	1	**168-3504**	2	SEAL	
	19	1	**214-9203**	1	PLUG-ORIFICE	
	20	1	**379-5187**	1	SPRING	
	21	1	**333-7840**	1	STOP	
	22	1	**245-6116**	1	SHAFT-DRIVE	
					AVAILABLE REPAIR KIT(S):	
			373-9784	1	KIT-SEAL (PISTON)	
					(INCLUDES RINGS & SEALS)	

M - METRIC PART
Y - SEPARATE ILLUSTRATION

366-6621 **PUMP GP-PISTON (**contd.**)** **i07834978**

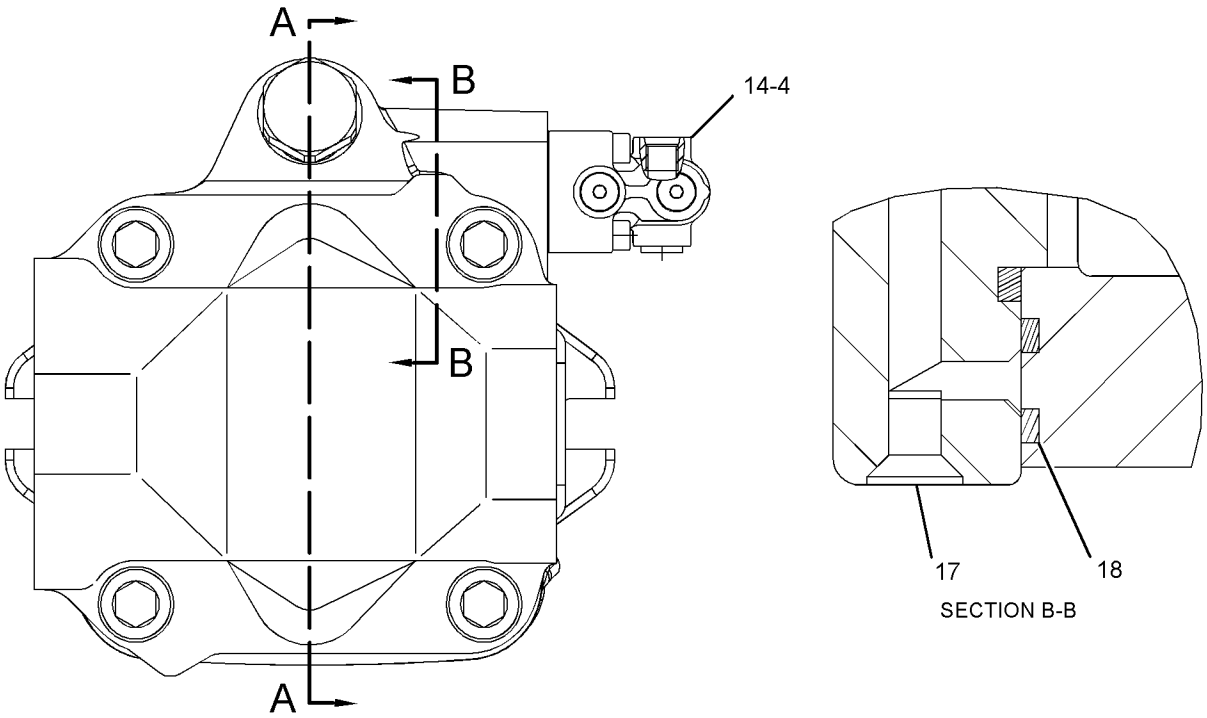

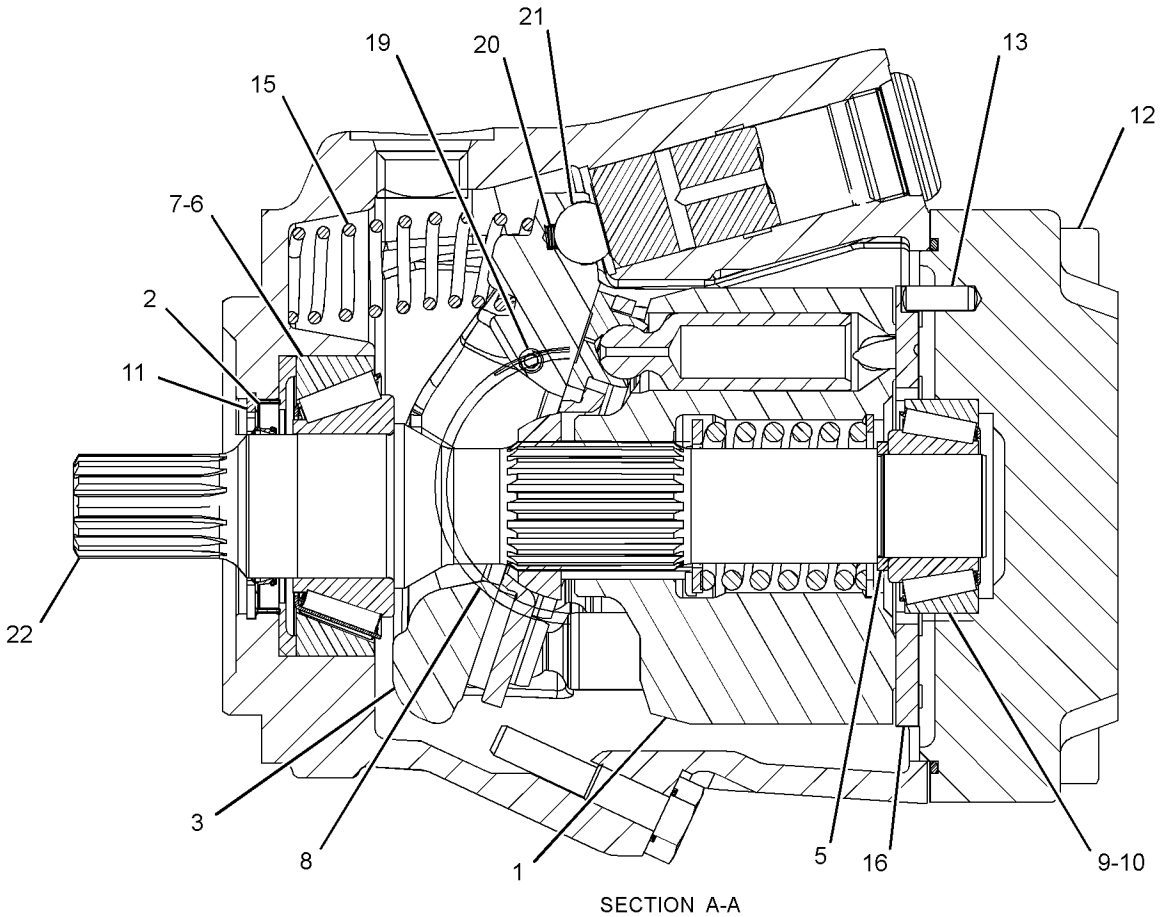

GRAPHIC #1 <END> g03401262

259-5504 ROTATING GP-PUMP

S/N: B551-UP

PART OF 250-8337 PUMP GP-PISTON

SMCS-5070 **i06892061**

NOTE	REF NO	GRAPHIC REF	PART NUMBER	QTY	PART NAME 1 2 3 4 5 6 (PRODUCT LEVEL)	SEE PAGE
	1	1	**259-5501**	9	PISTON AS	
	2	1	**259-5502**	1	BARREL	
	3	1	**266-7837**	1	PLATE	
	4	1	**155-9116**	1	GUIDE-BALL	
	5	1	**155-9117**	1	SPRING	
	6	1	**194-9479**	3	PIN	
	7	1	**194-9480**	1	RING-RETAINING	
	8	1	**194-9481**	1	DISC-THRUST	
	9	1	**194-9478**	1	PLATE-PORT	

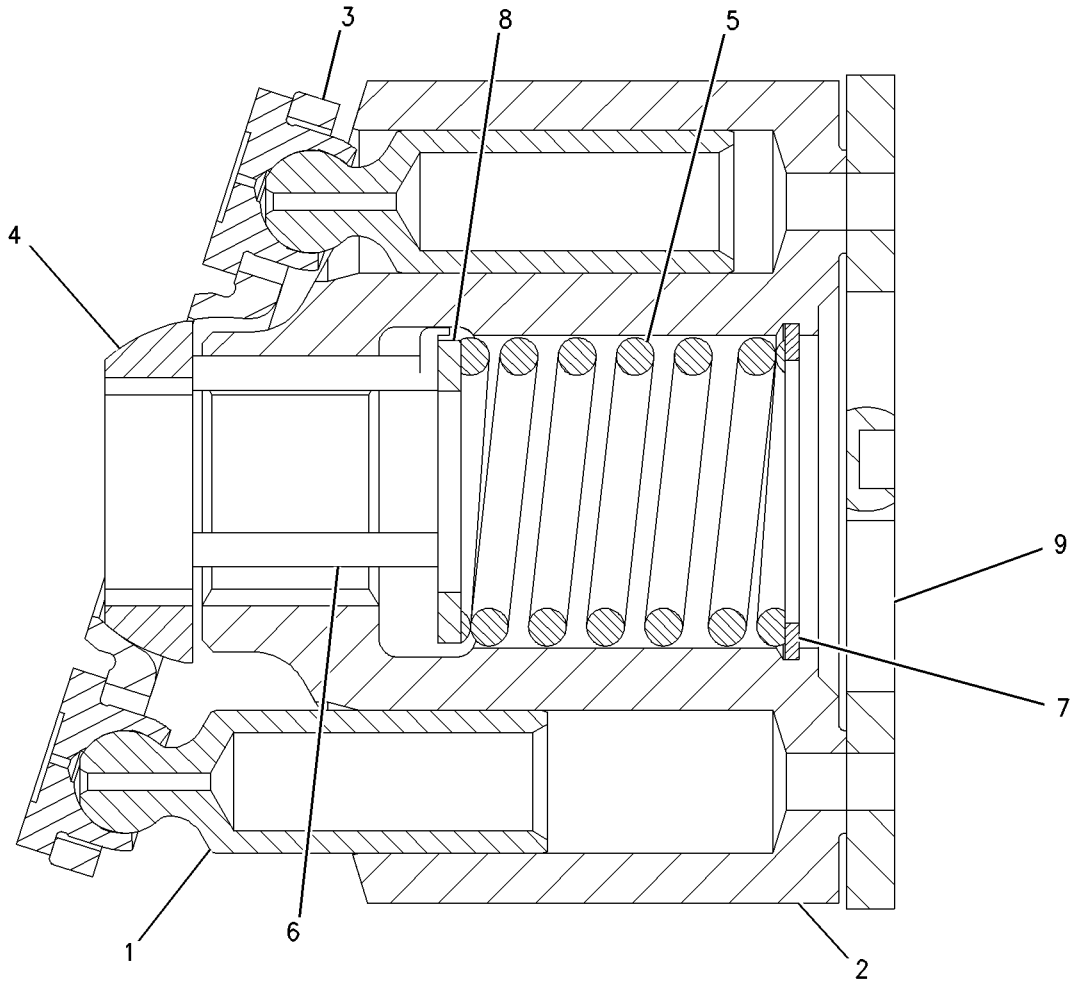

GRAPHIC #1 <END> g00768329

389-1201 ROTATING GP-PUMP

S/N: B551-UP

PART OF 366-6621 PUMP GP-PISTON

SMCS-5070 **i05108769**

NOTE	REF NO	GRAPHIC REF	PART NUMBER	QTY	PART NAME 1 2 3 4 5 6 (PRODUCT LEVEL)	SEE PAGE
	1	1	**105-1646**	9	PISTON AS-PUMP	
	2	1	**188-9637**	1	PLATE-RETRACTION	
	3	1	**105-1648**	1	BEARING	
	4	1	**105-1651**	1	SPRING	
	5	1	**180-6213**	1	RING-RETAINING	
	6	1	**105-1650**	2	SPACER	

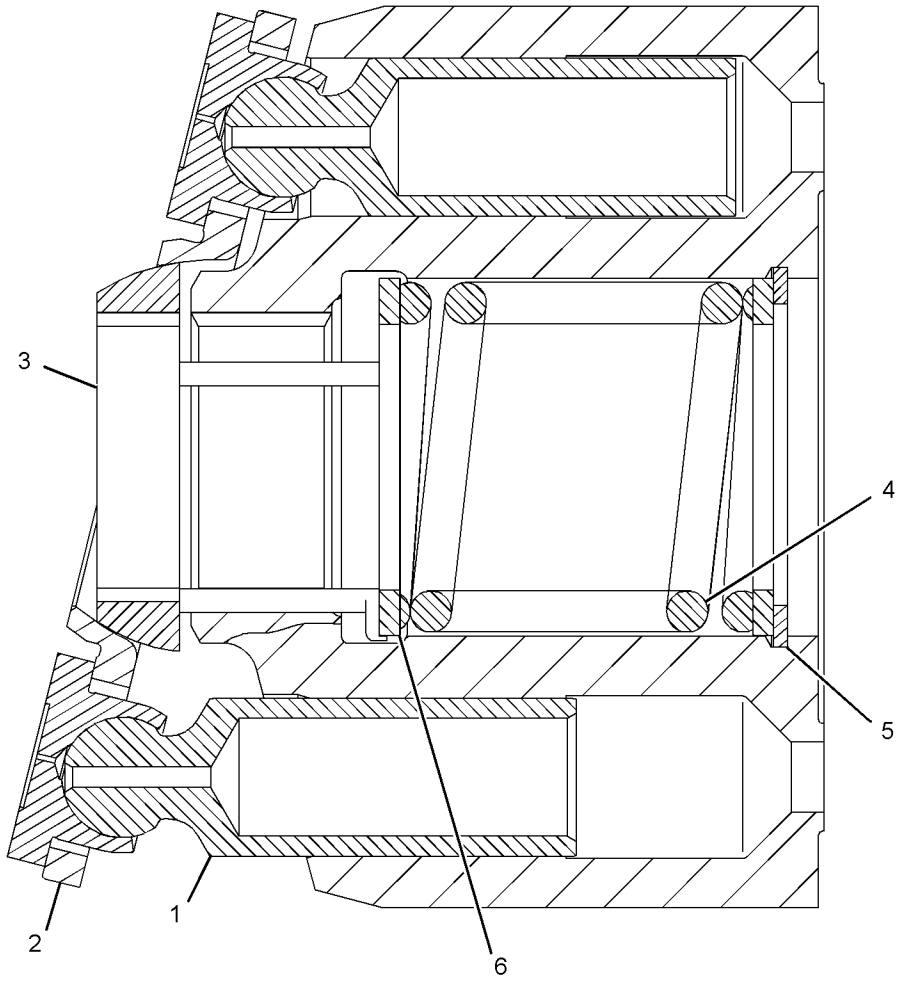

GRAPHIC #1 <END> g03300616

260-6502 SWIVEL GP—CIRCLE DRIVE

S/N: B551-UP

PART OF 362-5222 SWIVEL GP

SMCS-5060 **i07816347**

NOTE	REF NO	GRAPHIC REF	PART NUMBER	QTY	PART NAME 1 2 3 4 5 6 (PRODUCT LEVEL)	SEE PAGE
B	1	1	**5J-1246**	6	SHIM (0.13-MM THK)	
	2	1	**8J-2331**	7	SEAL	
	3	1	**383-4953**	1	ROTOR	
	4	1	**173-1009**	1	RETAINER	
	5	1	**6C-3241**	2	BOLT (1/2-13X1.5-IN)	
	6	1	**383-4954**	1	BODY	
	7	1	*148-8395*	4	PLUG AS	
					(EACH INCLUDES)	
		1	**9S-8005**	1	PLUG (3/4-16-THD)	
		1	**3K-0360**	1	SEAL-O-RING	
	8	1	**173-1007**	2	SEAL	
	9	1	**2H-3928**	7	SEAL-O-RING	
	10	1	**4J-9964**	2	SEAL	

B - USE AS REQUIRED

260-6502 **SWIVEL GP (**contd.**)** **i07816347**

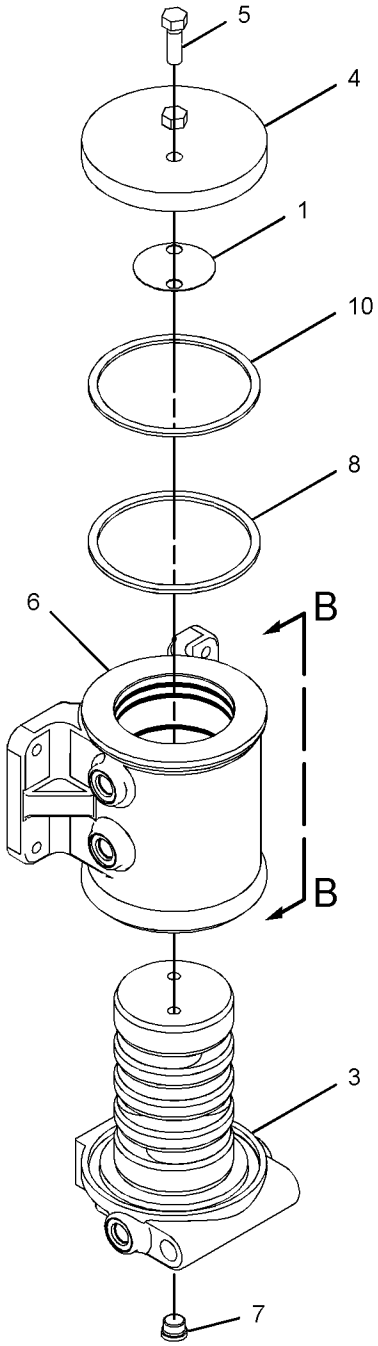

VIEW OF AREA A

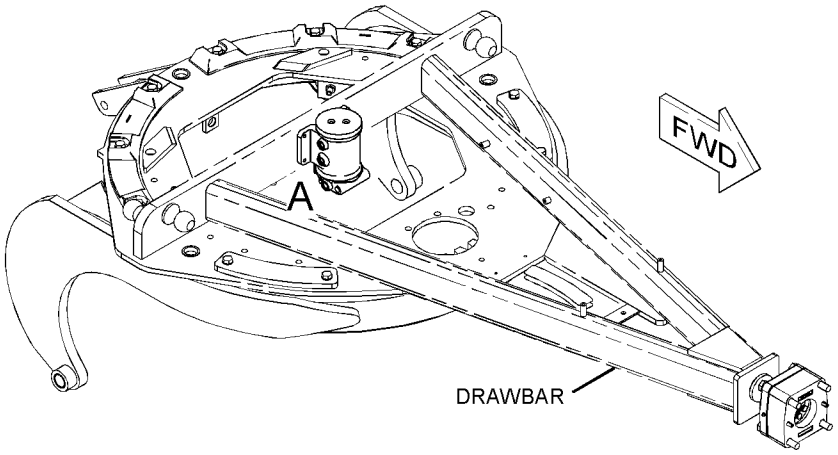

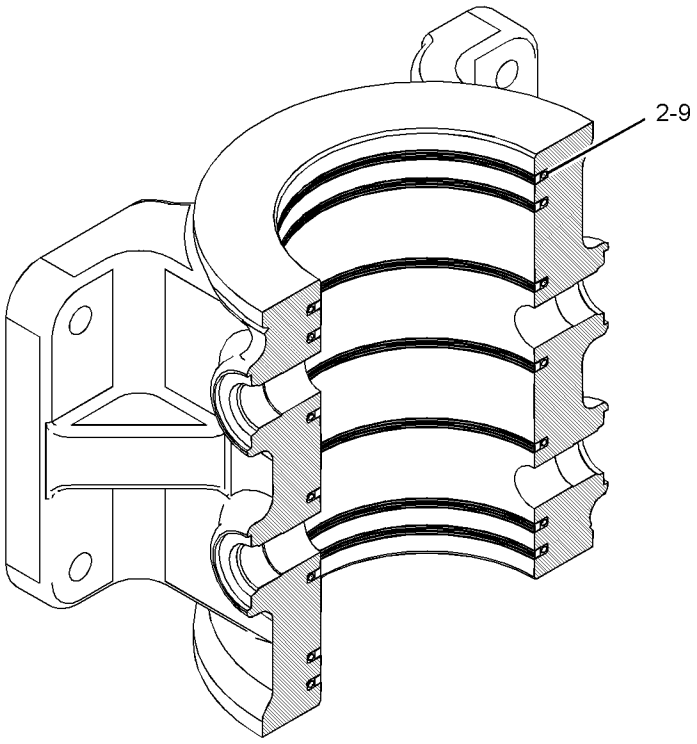

SECTION B-B

GRAPHIC #1 <END> g03642768

362-5222 SWIVEL GP—CIRCLE DRIVE

S/N: B551-UP

PART OF 462-6392 GRADE CONTROL AR

SMCS-5060 **i07641410**

NOTE	REF NO	GRAPHIC REF	PART NUMBER	QTY	PART NAME 1 2 3 4 5 6 (PRODUCT LEVEL)	SEE PAGE
Y	1	1	**260-6502**	1	SWIVEL GP (CIRCLE DRIVE)	634
	2	1	**3B-4628**	2	PIN-COTTER	
	3	1	**8D-9092**	1	PIN	
	4	1	**8T-4223**	4	WASHER-HARD (13.5X25.5X3-MM THK)	
M	5	1	**7Y-0589**	4	BOLT (M12X1.75X90-MM)	
	6	1	**8T-4994**	2	WASHER-HARD (20X36.5X3.5-MM THK)	

M - METRIC PART
Y - SEPARATE ILLUSTRATION

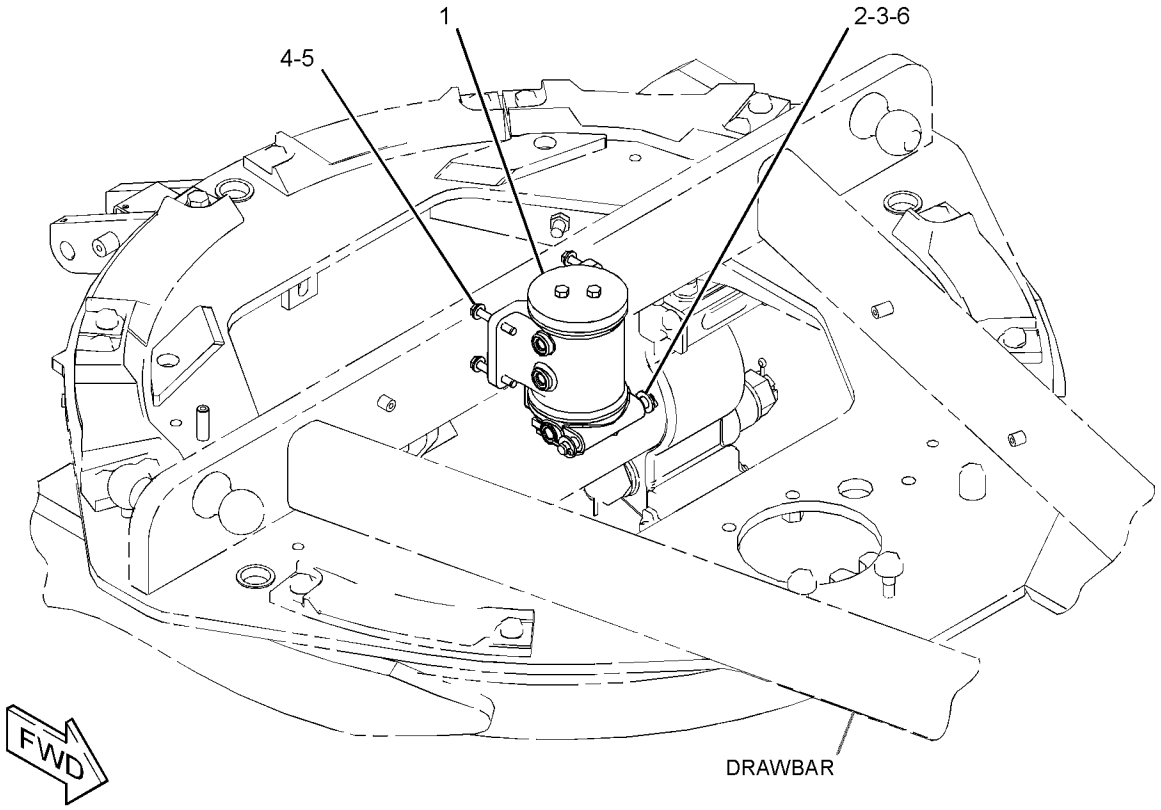

GRAPHIC #1 <END> g03008316

362-5223 SWIVEL GP—CIRCLE DRIVE

S/N: B551-UP
CROSSSLOPE
PART OF 462-6393 GRADE CONTROL AR

SMCS-5060 **i05924722**

NOTE	REF NO	GRAPHIC REF	PART NUMBER	QTY	PART NAME 1 2 3 4 5 6 (PRODUCT LEVEL)	SEE PAGE
CY	1	1	**452-9419**	1	SWIVEL GP (CIRCLE DRIVE)	638
	2	1	**8T-4223**	4	WASHER-HARD (13.5X25.5X3-MM THK)	
M	3	1	**7Y-0589**	4	BOLT (M12X1.75X90-MM)	

C - CHANGE FROM PREVIOUS TYPE
M - METRIC PART
Y - SEPARATE ILLUSTRATION

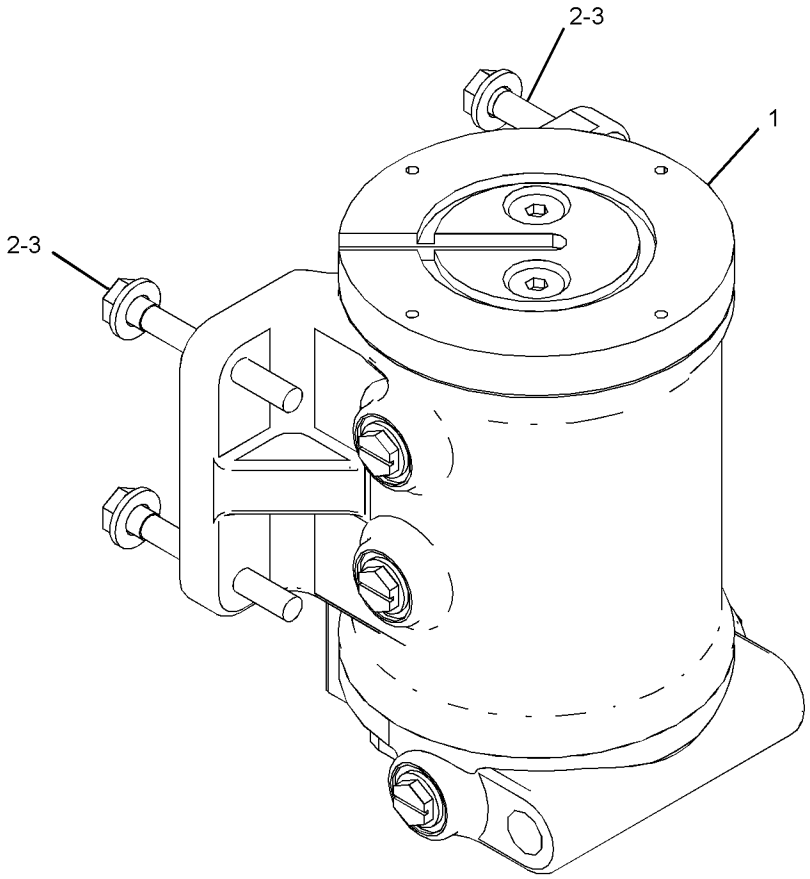

GRAPHIC #1 <END> g03745302

452-9419 SWIVEL GP

S/N: B551-UP

PART OF 362-5223 SWIVEL GP

SMCS-5060 **i07793616**

NOTE	REF NO	GRAPHIC REF	PART NUMBER	QTY	PART NAME 1 2 3 4 5 6 (PRODUCT LEVEL)	SEE PAGE
B	1	1	**5J-1246**	6	SHIM (0.13-MM THK)	
	2	1	**8J-2331**	7	SEAL	
	3	1	**383-4953**	1	ROTOR	
	4	1	*148-8395*	4	PLUG AS	
					(EACH INCLUDES)	
		1	**3K-0360**	1	SEAL-O-RING	
		1	**9S-8005**	1	PLUG (3/4-16-THD)	
	5	1	**383-4954**	1	BODY	
	6	1	**2H-3928**	7	SEAL-O-RING	
	7	1	**452-0946**	1	PLATE	
	8	1	**107-2784**	2	SCREW-FLAT HEAD (1/2-13X1.5-IN)	
	9	1	**173-1007**	2	SEAL	
	10	1	**4J-9964**	2	SEAL	

B - USE AS REQUIRED

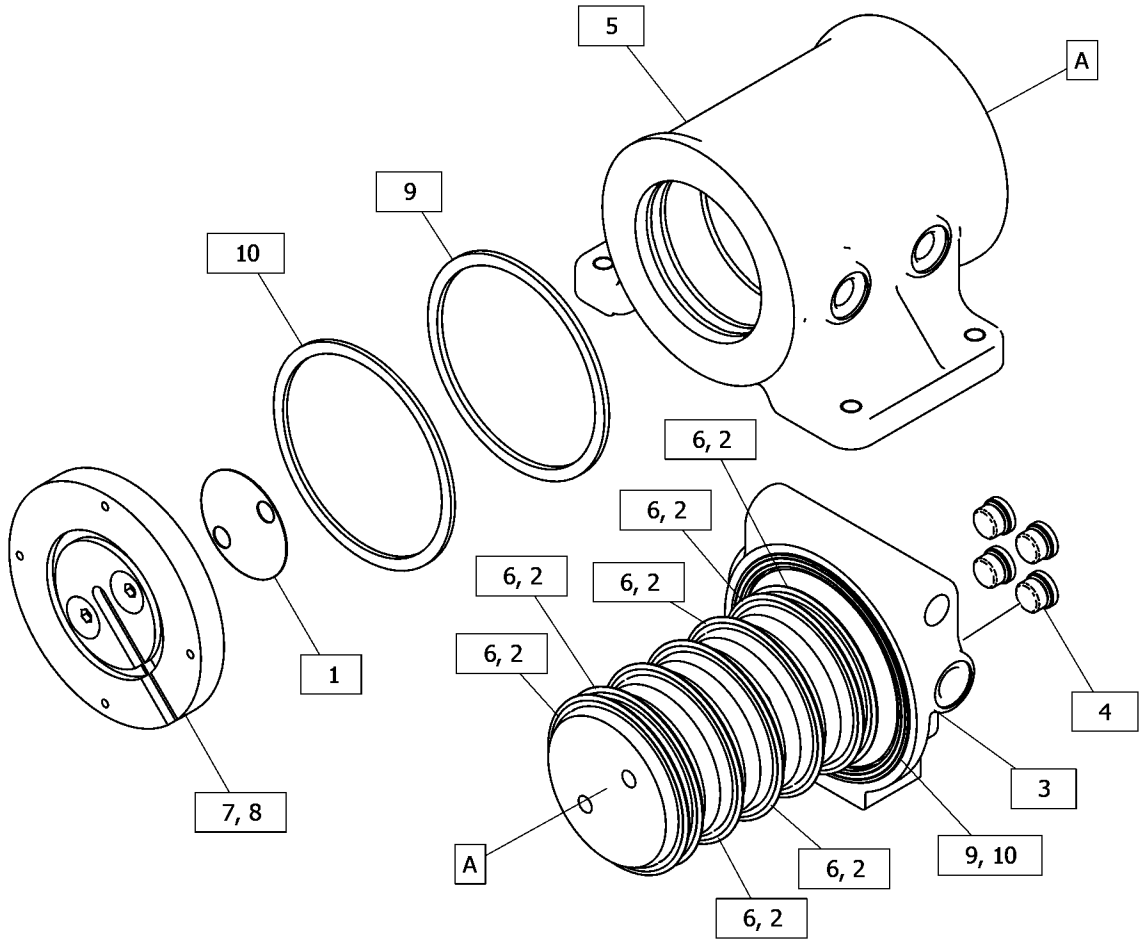

GRAPHIC #1 <END> g06437805

233-4259 TANK & MTG GP-HYDRAULIC

S/N: B551-UP

PART OF 231-5061 SERVICE CENTER AR

SMCS-4332, 5056, 5068 **i07720033**

NOTE	REF NO	GRAPHIC REF	PART NUMBER	QTY	PART NAME 1 2 3 4 5 6 (PRODUCT LEVEL)	SEE PAGE
	1	1	**1P-4278**	3	CLAMP-HOSE	
	2	1	**9R-9925**	1	BREATHER-HYDRAULIC (INLINE)	
Y	3	1	*241-3867*	1	TANK GP-HYDRAULIC	641
	4	1	**250-2784**	1	STRAP AS	
	5	1	**4H-2558**	1	GROMMET	
	6	1	**6D-3479**	4	CLIP (LOOP)	
	7	1	**287-7843**	1	PLATE AS	
M	8	1	**8T-0389**	1	LOCKNUT (M10X1.5-THD)	
	9	1	**8T-4121**	7	WASHER-HARD (11X21X2.5-MM THK)	
M	10	1	**8T-4136**	1	BOLT (M10X1.5X25-MM)	
M	11	1	**8T-4137**	5	BOLT (M10X1.5X20-MM)	
E	12	1	**5P-1442**		HOSE (102.4-CM)	
E	12A	1	**5P-1442**		HOSE (15.4-CM)	

E - ORDER BY THE CENTIMETER
M - METRIC PART
Y - SEPARATE ILLUSTRATION

233-4259 **TANK & MTG GP-HYDRAULIC (**contd.**)** **i07720033**

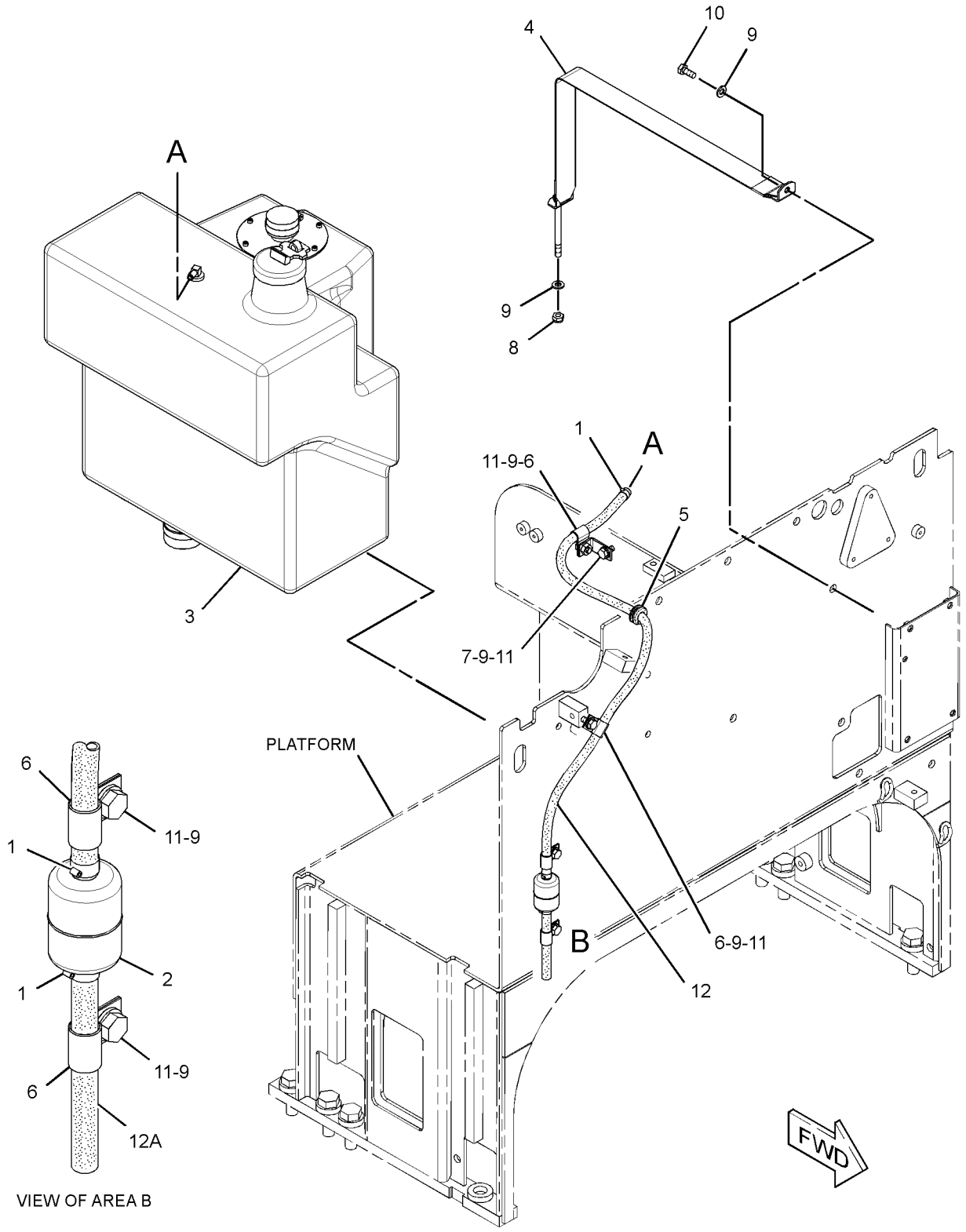

GRAPHIC #1 <END> g01502610

241-3867 TANK GP-HYDRAULIC

S/N: B551-UP
90-LITER (23.8-US GAL)
PART OF 233-4259 TANK & MTG GP-HYDRAULIC

SMCS-4332, 5056, 5068 **i04630066**

NOTE	REF NO	GRAPHIC REF	PART NUMBER	QTY	PART NAME 1 2 3 4 5 6 (PRODUCT LEVEL)	SEE PAGE
	1	1	**142-8937**	1	CAP AS-FILLER (LOCKABLE)	
	2	1	**206-8818**	1	STRAINER (HYDRAULIC TANK)	
	3	1	**241-3868**	1	TANK AS-HYDRAULIC	
	4	1	**250-3443**	1	TUBE AS	
	5	1	**265-5644**	1	GAUGE GP-SIGHT (HYDRAULIC TANK OIL)	
M	6	1	**125-3298**	6	BOLT-SOCKET HEAD (M5X0.8X12-MM)	
	7	1	**132-3056**	1	SEAL-O-RING	
	8	1	*150-3024*	1	ELBOW AS	
		1	**5P-4924**	1	ELBOW	
		1	**3J-1907**	1	SEAL-O-RING	
	9	1	*164-4180*	2	PLUG AS	
					(EACH INCLUDES)	
		1	**9S-4181**	1	PLUG (1-5/16-12-THD)	
		1	**7M-8485**	1	SEAL-O-RING	

M - METRIC PART

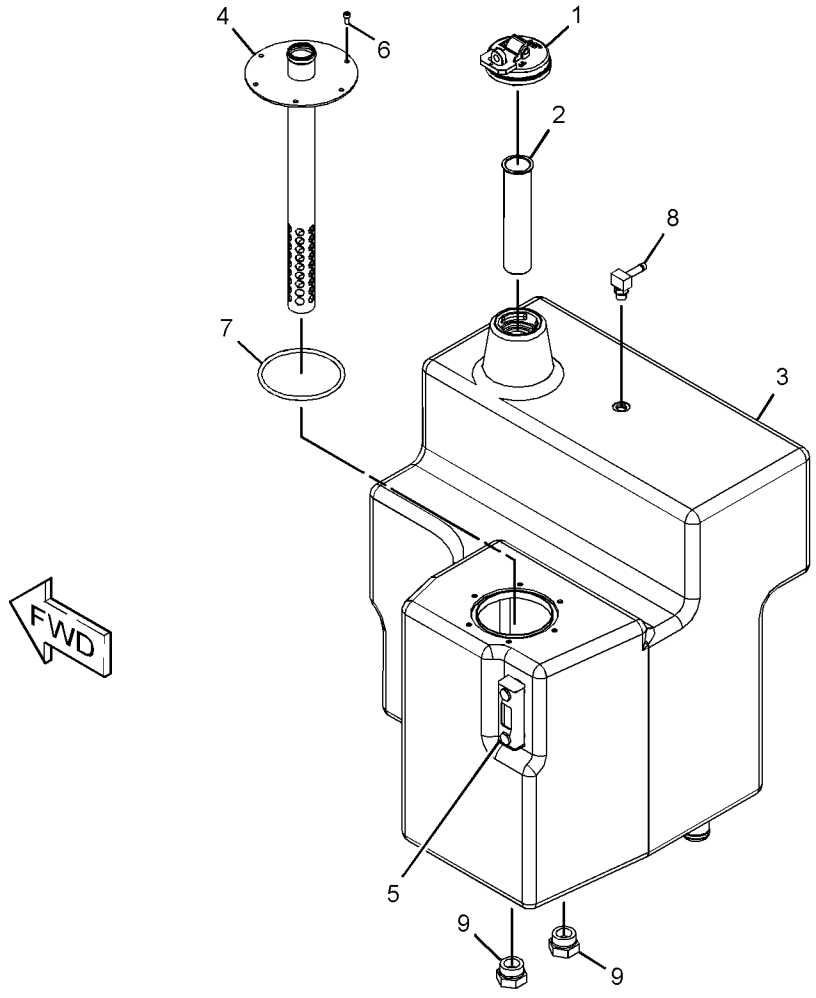

GRAPHIC #1 <END> g02796058

487-3027 VALVE GP-BANK 3–REAR

S/N: B551-UP

PART OF 422-1612, 438-5421, 438-5423 CONTROL AR-HYDRAULIC

SMCS-5051 **i07831080**

NOTE	REF NO	GRAPHIC REF	PART NUMBER	QTY	PART NAME 1 2 3 4 5 6 (PRODUCT LEVEL)	SEE PAGE
	1	1	**2S-4663**	6	SEAL-O-RING	
	2	1	**3K-0360**	3	SEAL-O-RING	
M	3	1	**3T-0849**	12	BOLT-SOCKET HEAD (M6X1X25-MM)	
	5	1	**4J-7533**	3	SEAL-O-RING	
	6	1	**5B-9318**	3	BALL	
	7	1	**6E-3007**	3	SPRING	
M	8	1	**8T-0267**	6	BOLT-SOCKET HEAD (M6X1X12-MM)	
	9	1	**8T-4121**	4	WASHER-HARD (11X21X2.5-MM THK)	
	10	1	**096-3831**	1	ORIFICE	
	11	1	**106-3659**	1	PISTON	
	12	1	**106-3660**	4	PISTON	
	13	1	**212-4961**	3	SPRING	
	14	1	**242-9264**	3	PLUG-ORIFICE	
	15	1	**243-2965**	3	SPOOL	
	16	1	**244-2579**	3	PLUG	
M	17	1	**249-5636**	4	STUD (M10X1.5X200-MM)	
	18	1	**273-1871**	1	COVER	
Y	19	1	**278-1799**	2	VALVE GP-SOLENOID (BLADE LIFT, RH)	741
Y	19A	1	**278-1799**	2	VALVE GP-SOLENOID (BLADE LIFT, LH)	741
Y	19B	1	**278-1799**	2	VALVE GP-SOLENOID (ARTICULATION)	741
	20	1	*292-9221*	1	PLUG AS	
		1	**292-9220**	1	PLUG	
		1	**294-8055**	1	SEAL-O-RING	
H	21	1	**318-3052**	1	VALVE GP-CHECK & RELIEF (BLADE LIFT, LH)	
H	21A	1	**318-3052**	1	VALVE GP-CHECK & RELIEF (BLADE LIFT, RH)	
H	22	1	**318-3115**	1	VALVE GP-CHECK (BLADE LIFT, RH)	
H	22A	1	**318-3115**	1	VALVE GP-CHECK (BLADE LIFT, LH)	
H	23	1	**321-6908**	2	VALVE GP-CHECK (ARTICULATION)	
					(EACH VALVE GP-CHECK INCLUDES)	
H		1	**6V-6580**	1	SEAL-O-RING	
H		1	**9X-7745**	1	SEAL-O-RING	
H		1	**471-6294**	1	SEAL-O-RING	
	24	1	**336-6718**	3	LOCKNUT-FLANGE	
M	25	1	**344-5675**	4	NUT (M10X1.5-THD)	
L	26	1	**361-3059**	1	VALVE GP-RELIEF (PILOT OPERATED)	
	27	1	*366-4699*	3	PLUG AS	
					(EACH INCLUDES)	
		1	**3J-1907**	1	SEAL-O-RING	
		1	**360-3692**	1	PLUG	
	28	1	*366-4700*	10	PLUG AS	
					(EACH INCLUDES)	
		1	**3K-0360**	1	SEAL-O-RING	
		1	**360-3693**	1	PLUG (3/4-16-THD)	
	29	1	*367-6001*	4	PLUG AS	
					(EACH INCLUDES)	
		1	**4J-7533**	1	SEAL-O-RING	
		1	**360-3675**	1	PLUG (5/16-24-THD)	
	30	1	*367-6002*	4	PLUG AS	

487-3027 **VALVE GP-BANK 3 (**contd.**)** **i07831080**

NOTE	REF NO	GRAPHIC REF	PART NUMBER	QTY	PART NAME 1 2 3 4 5 6 (PRODUCT LEVEL)	SEE PAGE
					(EACH INCLUDES)	
		1	**3J-7354**	1	SEAL-O-RING	
		1	**360-3677**	1	PLUG (7/16-20-THD)	
	31	1	*367-6003*	3	PLUG AS	
					(EACH INCLUDES)	
		1	**3K-0360**	1	SEAL-O-RING	
		1	**360-3680**	1	PLUG	
	32	1	**564-6716**	3	COVER-SPRING	
	33	1	**370-8979**	3	COVER	
	35	1	**372-0918**	3	SEAL-INTEGRAL	
	36	1	**380-0794**	12	RETAINER	
	37	1	**526-6377**	1	SPRING	
	38	1	**380-0820**	2	SPRING	
	39	1	**380-0821**	2	SPRING	
	42	1	**382-5518**	1	MANIFOLD-INLET	
AFY			**371-6093**	1	VALVE GP-CONTROL (ARTICULATION)	697
AF			**372-0918**	3	SEAL-INTEGRAL	
AFY			**488-7009**	1	VALVE GP-CONTROL (BLADE LIFT)	729
					AVAILABLE REPAIR KIT(S):	
H			**471-4231**	1	KIT-SEAL (BLADE LIFT)	
					(ALSO INCLUDES BACKUP RINGS)	
L			**133-5545**	1	KIT-SEAL (PILOT OPERATED)	
					(INCLUDES O-RING SEALS & BACKUP RINGS)	

A - NOT PART OF THIS GROUP
F - NOT SHOWN
H - KIT MARKED H SERVICES PART(S) MARKED H
L - KIT MARKED L SERVICES PART(S) MARKED L
M - METRIC PART
Y - SEPARATE ILLUSTRATION

487-3027 **VALVE GP-BANK 3 (**contd.**)** **i07831080**

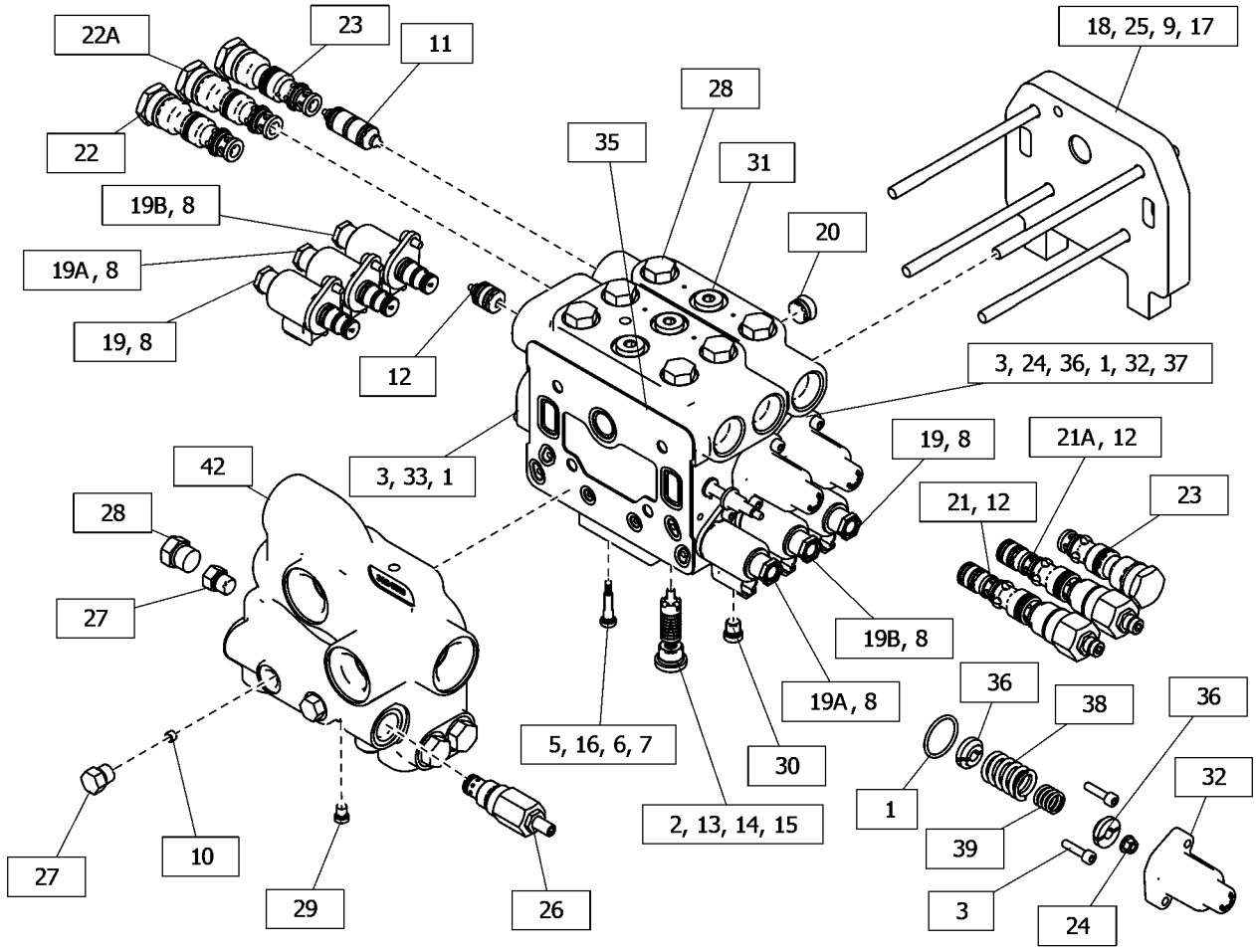

GRAPHIC #1 <END> g06441582

487-3028 VALVE GP-BANK 4–REAR

S/N: B551-UP

PART OF 365-3354, 365-3355, 365-5539, 365-5540 CONTROL AR-HYDRAULIC

SMCS-5051 **i07762011**

NOTE	REF NO	GRAPHIC REF	PART NUMBER	QTY	PART NAME 1 2 3 4 5 6 (PRODUCT LEVEL)	SEE PAGE
	1	3	**2S-4663**	8	SEAL-O-RING	
	2	3	**3K-0360**	4	SEAL-O-RING	
M	3	2,3	**3T-0849**	16	BOLT-SOCKET HEAD (M6X1X25-MM)	
	5	3	**4J-7533**	4	SEAL-O-RING	
	6	3	**5B-9318**	4	BALL	
	7	3	**6E-3007**	4	SPRING	
M	8	2,3	**8T-0267**	8	BOLT-SOCKET HEAD (M6X1X12-MM)	
	9	1	**8T-4121**	4	WASHER-HARD (11X21X2.5-MM THK)	
	10	2	**096-3831**	1	ORIFICE	
	11	2	**106-3659**	2	PISTON	
	12	2	**106-3660**	4	PISTON	
	13	3	**212-4961**	4	SPRING	
	14	3	**242-9264**	4	PLUG-ORIFICE	
	15	3	**243-2965**	4	SPOOL	
	16	3	**244-2579**	4	PLUG	
	17	1	**273-1871**	1	COVER	
Y	18	1	**278-1799**	2	VALVE GP-SOLENOID (RIPPER)	741
Y	18A	1	**278-1799**	2	VALVE GP-SOLENOID (ARTICULATION)	741
Y	18B	1	**278-1799**	2	VALVE GP-SOLENOID (BLADE LIFT, LH)	741
Y	18C	1	**278-1799**	2	VALVE GP-SOLENOID (BLADE LIFT, RH)	741
	19	1	*292-9221*	1	PLUG AS	
		1	**292-9220**	1	PLUG	
		1	**294-8055**	1	SEAL-O-RING	
L	20	2	**318-3040**	1	VALVE GP-CHECK & RELIEF (RIPPER)	
L	21	2	**318-3052**	1	VALVE GP-CHECK & RELIEF (BLADE LIFT, LH)	
L	21A	2	**318-3052**	1	VALVE GP-CHECK & RELIEF (BLADE LIFT, RH)	
L	22	2	**318-3115**	1	VALVE GP-CHECK (BLADE LIFT, RH)	
L	22A	2	**318-3115**	1	VALVE GP-CHECK (BLADE LIFT, LH)	
L	22B	2	**318-3115**	1	VALVE GP-CHECK (RIPPER)	
L	23	2	**321-6908**	2	VALVE GP-CHECK (ARTICULATION)	
					(EACH VALVE GP-CHECK INCLUDES)	
L		2	**6V-6580**	1	SEAL-O-RING	
L		2	**9X-7745**	1	SEAL-O-RING	
L		2	**471-6294**	1	SEAL-O-RING	
	24	3	**336-6718**	4	LOCKNUT-FLANGE	
M	25	1	**344-5675**	4	NUT (M10X1.5-THD)	
H	26	2	**361-3059**	1	VALVE GP-RELIEF (LOAD SENSING)	
	27	2	*366-4699*	3	PLUG AS	
					(EACH INCLUDES)	
		2	**3J-1907**	1	SEAL-O-RING	
		2	**360-3692**	1	PLUG	
	28	1,2,3	*366-4700*	12	PLUG AS	
					(EACH INCLUDES)	
		1,2,3	**3K-0360**	1	SEAL-O-RING	
		1,2,3	**360-3693**	1	PLUG (3/4-16-THD)	
	29	2	*367-6001*	4	PLUG AS	
					(EACH INCLUDES)	
		2	**4J-7533**	1	SEAL-O-RING	

487-3028 **VALVE GP-BANK 4 (**contd.**)** **i07762011**

NOTE	REF NO	GRAPHIC REF	PART NUMBER	QTY	PART NAME 1 2 3 4 5 6 (PRODUCT LEVEL)	SEE PAGE
		2	**360-3675**	1	PLUG (5/16-24-THD)	
	30	2,3	*367-6002*	5	PLUG AS	
					(EACH INCLUDES)	
		2,3	**3J-7354**	1	SEAL-O-RING	
		2,3	**360-3677**	1	PLUG (7/16-20-THD)	
	31	1	*367-6003*	4	PLUG AS	
					(EACH INCLUDES)	
		1	**3K-0360**	1	SEAL-O-RING	
		1	**360-3680**	1	PLUG	
	32	3	**564-6716**	4	COVER-SPRING	
	33	3	**370-8979**	4	COVER	
	34	1	**372-0918**	3	SEAL-INTEGRAL	
	35	3	**380-0794**	16	RETAINER	
	36	3	**526-6377**	2	SPRING	
	37	3	**380-0820**	2	SPRING	
	38	3	**380-0821**	2	SPRING	
	41	1	**382-5518**	1	MANIFOLD-INLET	
	44	1	**248-6175**	4	ROD	
AFJY			**371-6093**	1	VALVE GP-CONTROL (ARTICULATION)	697
AFJ			**372-0918**	4	SEAL-INTEGRAL	
AFJY			**382-3295**	1	VALVE GP-CONTROL (RIPPER)	703
AFJY			**488-7009**	1	VALVE GP-CONTROL (BLADE LIFT)	729
					AVAILABLE REPAIR KIT(S):	
H			**133-5545**	1	KIT-SEAL (LOAD SENSING)	
					(INCLUDES O-RING SEALS & BACKUP RINGS)	
L			**471-4231**	1	KIT-SEAL (ARTICULATION)	
					(ALSO INCLUDES BACKUP RINGS)	

A - NOT PART OF THIS GROUP
F - NOT SHOWN
H - KIT MARKED H SERVICES PART(S) MARKED H
J - REFER TO "FIELD REPLACEMENT REFERENCE" CHART ON GRAPHIC
L - KIT MARKED L SERVICES PART(S) MARKED L
M - METRIC PART
Y - SEPARATE ILLUSTRATION

487-3028 **VALVE GP-BANK 4 (**contd.**)** **i07762011**

REFER TO ALL ILLUSTRATIONS OF THIS GROUP FOR AUXILIARY VIEWS

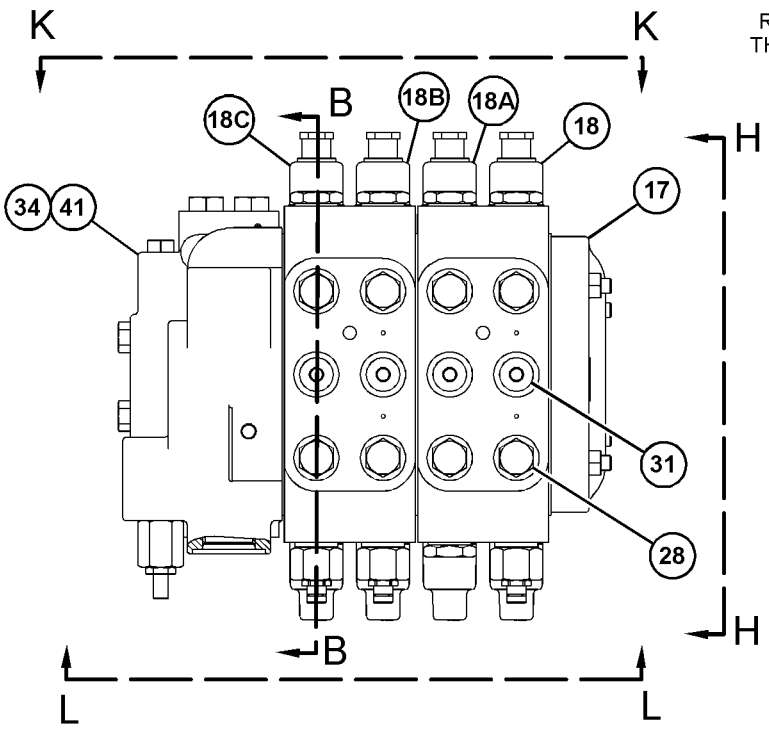

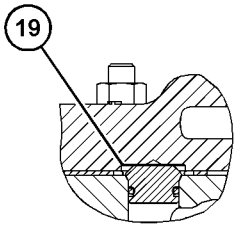

SECTION A-A

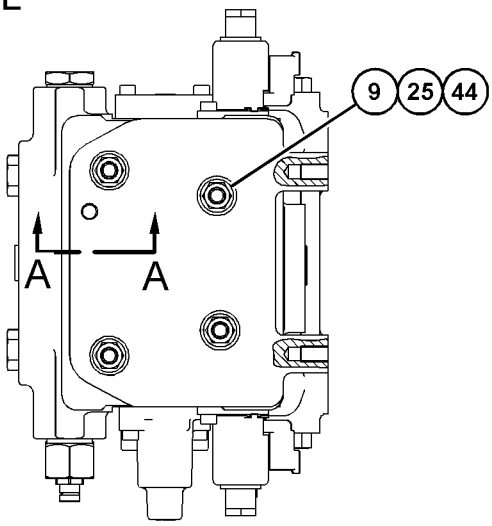

VIEW H-H

INLET ↓ COVER	SERVICE REPAIR REFERENCE FOR SECTION REPLACEMENT				
	SECTION	QTY	PART NO.	NAME	FUNCTION
	BLADE LIFT	1	488-7009	VALVE GP-CONT -P	BLADE LIFT
	ARTICULATION & RIPPER	1	371-6093	VALVE GP-CONT -P	ARTICULATION
		1	372-0918	SEAL-INTEGRAL	SEAL
		1	382-3295	VALVE GP-CONT -P	RIPPER

GRAPHIC #1 g06365122

487-3028 **VALVE GP-BANK 4 (**contd.**)** **i07762011**

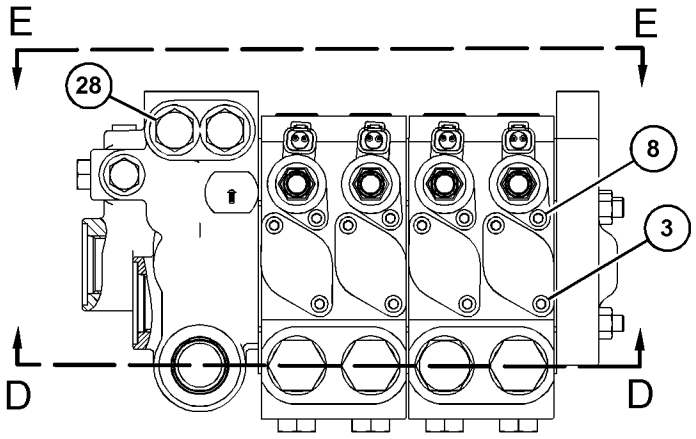

VIEW K-K

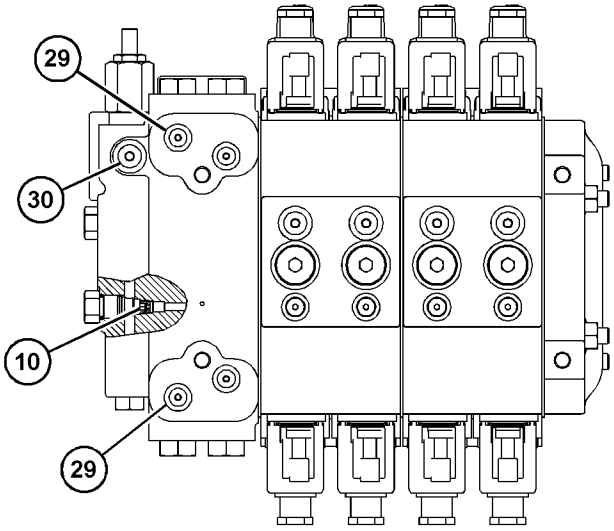

VIEW E-E

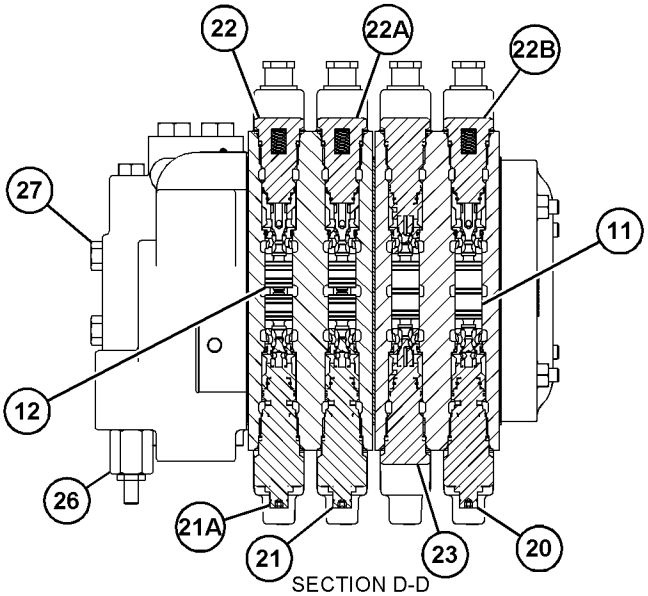

SECTION D-D

GRAPHIC #2 g06365123

487-3028 **VALVE GP-BANK 4 (**contd.**)** **i07762011**

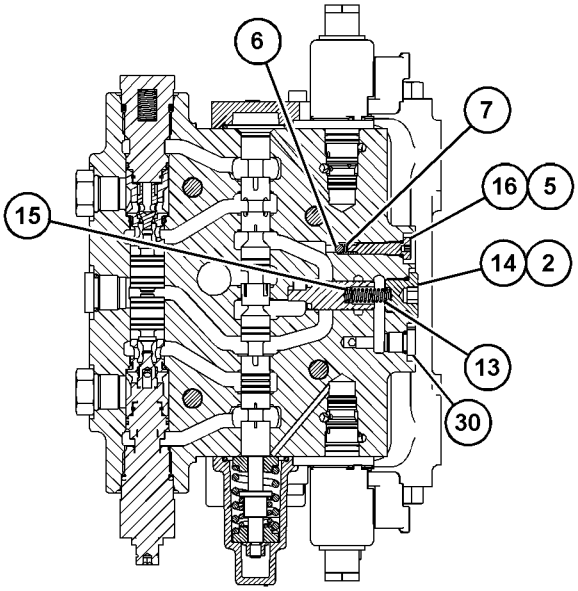

SECTION B-B

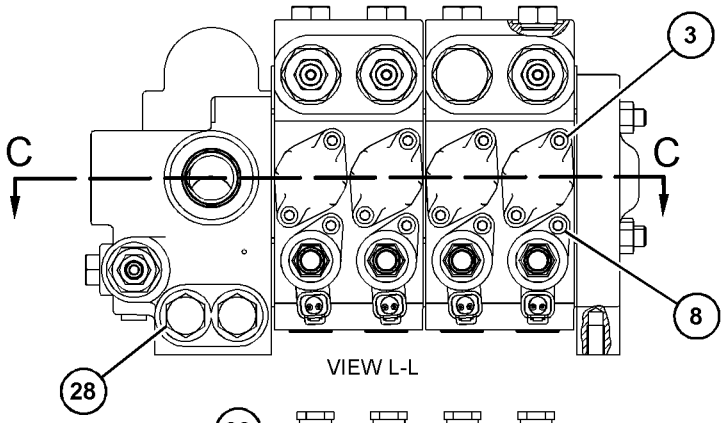

VIEW L-L

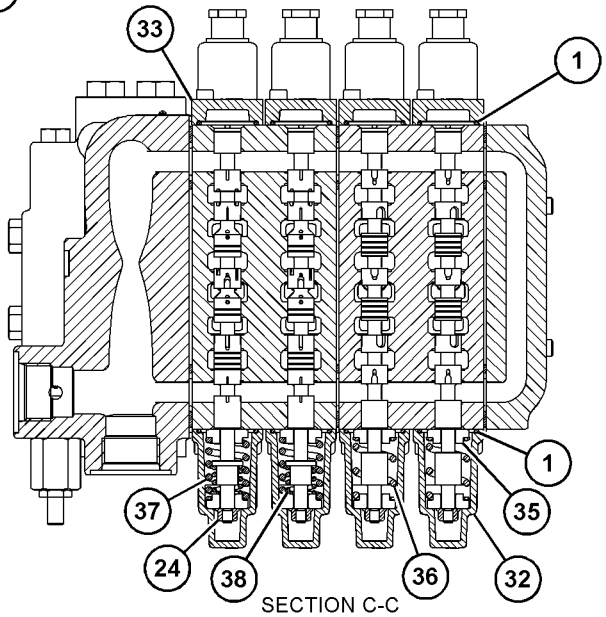

SECTION C-C

GRAPHIC #3 <END> g06365124

487-3013 VALVE GP-BANK 5—FRONT

S/N: B551-UP

PART OF 365-5539, 422-1612 CONTROL AR-HYDRAULIC

SMCS-5051 **i07831073**

NOTE	REF NO	GRAPHIC REF	PART NUMBER	QTY	PART NAME 1 2 3 4 5 6 (PRODUCT LEVEL)	SEE PAGE
	1	1	**248-6174**	4	ROD	
	2	1	**2S-4663**	10	SEAL-O-RING	
	3	1	**3K-0360**	5	SEAL-O-RING	
M	4	1	**3T-0849**	20	BOLT-SOCKET HEAD (M6X1X25-MM)	
	6	1	**4J-7533**	5	SEAL-O-RING	
	7	1	**5B-9318**	5	BALL	
	8	1	**6E-3007**	5	SPRING	
	9	1	**6L-9716**	1	PLUG-PIPE	
M	10	1	**8T-0267**	10	BOLT-SOCKET HEAD (M6X1X12-MM)	
	11	1	**8T-4121**	4	WASHER-HARD (11X21X2.5-MM THK)	
	12	1	**106-3659**	4	PISTON	
	13	1	**212-4961**	5	SPRING	
	14	1	**242-9264**	5	PLUG-ORIFICE	
	15	1	**243-2965**	5	SPOOL	
	16	1	**244-2579**	5	PLUG	
	17	1	**273-1871**	1	COVER	
Y	18	1	**278-1799**	2	VALVE GP-SOLENOID (WHEEL LEAN)	741
Y	18A	1	**278-1799**	2	VALVE GP-SOLENOID (CIRCLE DRIVE)	741
Y	18B	1	**278-1799**	2	VALVE GP-SOLENOID (CENTERSHIFT)	741
Y	18C	1	**278-1799**	2	VALVE GP-SOLENOID (SIDESHIFT)	741
Y	18D	1	**278-1799**	2	VALVE GP-SOLENOID (BLADE TIP)	741
	19	1	*292-9221*	1	PLUG AS	
		1	**292-9220**	1	PLUG	
		1	**294-8055**	1	SEAL-O-RING	
	20	1	**301-4568**	1	ORIFICE	
J	21	1	**318-3040**	1	VALVE GP-CHECK & RELIEF (BLADE TIP)	
J	21A	1	**318-3040**	1	VALVE GP-CHECK & RELIEF (SIDESHIFT)	
J	22	1	**318-3115**	2	VALVE GP-CHECK (CENTERSHIFT)	
J	22A	1	**318-3115**	2	VALVE GP-CHECK (WHEEL LEAN)	
J	22B	1	**318-3115**	1	VALVE GP-CHECK (SIDESHIFT)	
J	22C	1	**318-3115**	1	VALVE GP-CHECK (BLADE TIP)	
	23	1	**336-6718**	5	LOCKNUT-FLANGE	
M	24	1	**344-5675**	4	NUT (M10X1.5-THD)	
	25	1	*366-4699*	2	PLUG AS	
					(EACH INCLUDES)	
		1	**3J-1907**	1	SEAL-O-RING	
		1	**360-3692**	1	PLUG	
	26	1	*366-4700*	14	PLUG AS	
					(EACH INCLUDES)	
		1	**3K-0360**	1	SEAL-O-RING	
		1	**360-3693**	1	PLUG (3/4-16-THD)	
	27	1	*367-6001*	5	PLUG AS	
					(EACH INCLUDES)	
		1	**4J-7533**	1	SEAL-O-RING	
		1	**360-3675**	1	PLUG (5/16-24-THD)	
	28	1	*367-6002*	5	PLUG AS	
					(EACH INCLUDES)	
		1	**3J-7354**	1	SEAL-O-RING	

487-3013 **VALVE GP-BANK 5 (**contd.**)** **i07831073**

NOTE	REF NO	GRAPHIC REF	PART NUMBER	QTY	PART NAME 1 2 3 4 5 6 (PRODUCT LEVEL)	SEE PAGE
		1	**360-3677**	1	PLUG (7/16-20-THD)	
	29	1	*367-6003*	4	PLUG AS	
					(EACH INCLUDES)	
		1	**3K-0360**	1	SEAL-O-RING	
		1	**360-3680**	1	PLUG	
	30	1	**564-6716**	5	COVER-SPRING	
	31	1	**370-8979**	5	COVER	
	33	1	**372-0918**	4	SEAL-INTEGRAL	
	34	1	**380-0794**	20	RETAINER	
	35	1	**526-6377**	5	SPRING	
	41	1	**382-5517**	1	MANIFOLD-INLET	
AFY			**382-3290**	1	VALVE GP-CONTROL (BLADE TIP)	699
AFY			**382-3294**	1	VALVE GP-CONTROL (CENTERSHIFT)	701
AFY			**382-3301**	1	VALVE GP-CONTROL (BLADE TIP)	715
AFY			**382-3305**	1	VALVE GP-CONTROL (WHEEL LEAN)	717
AFY			**382-3316**	1	VALVE GP-CONTROL (CIRCLE)	719
AF			**372-0918**	6	SEAL-INTEGRAL	
					AVAILABLE REPAIR KIT(S):	
J			**471-4231**	1	KIT-SEAL (CHECK VALVE)	
					(INCLUDES O-RING SEALS & BACKUP RINGS)	

A - NOT PART OF THIS GROUP
F - NOT SHOWN
J - KIT MARKED J SERVICES PART(S) MARKED J
M - METRIC PART
Y - SEPARATE ILLUSTRATION

487-3013 **VALVE GP-BANK 5 (**contd.**)** **i07831073**

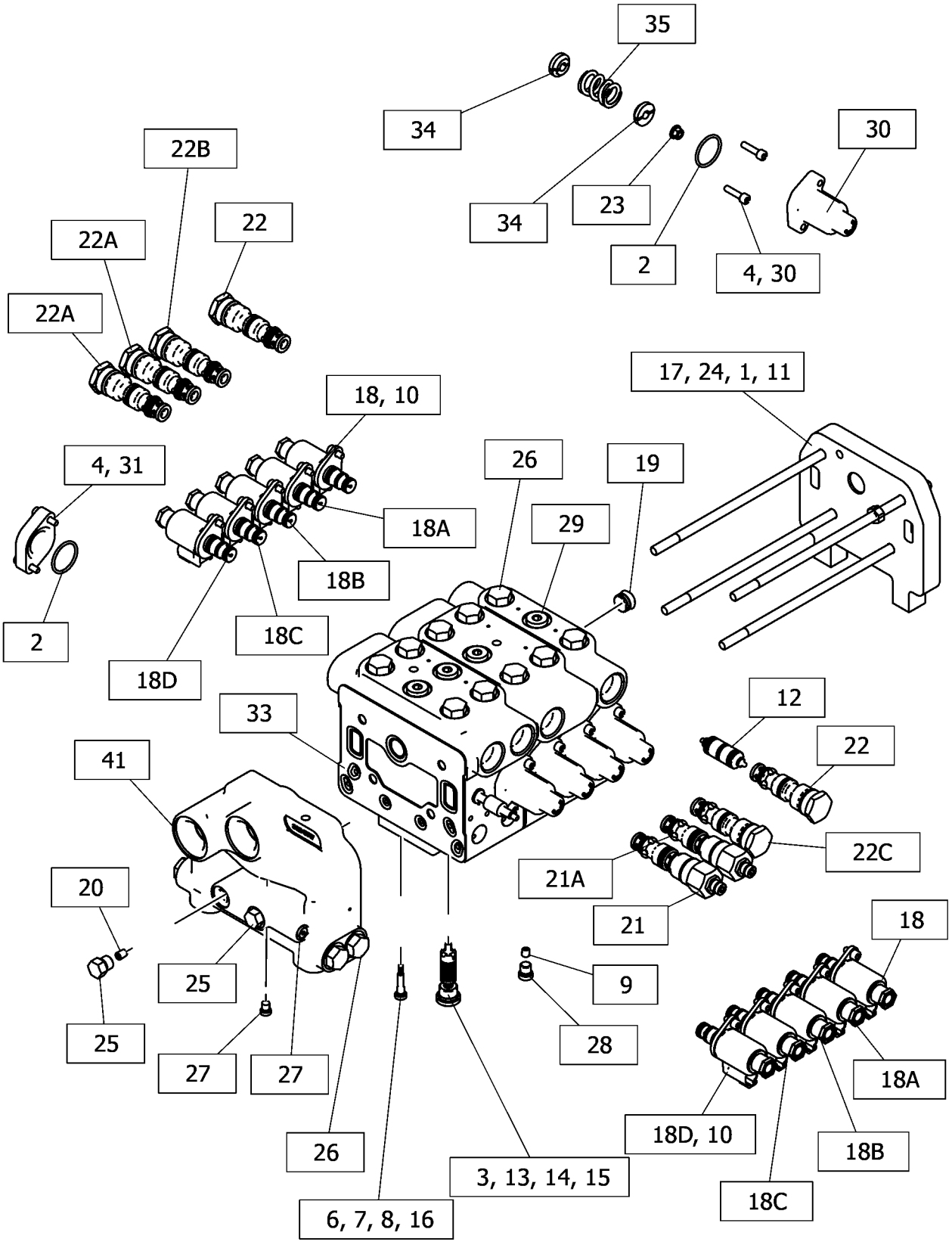

GRAPHIC #1 <END> g06441748

487-3029 VALVE GP-BANK 5–REAR

S/N: B551-UP

PART OF 438-5425, 438-5426 CONTROL AR-HYDRAULIC

SMCS-5051 **i07813864**

NOTE	REF NO	GRAPHIC REF	PART NUMBER	QTY	PART NAME 1 2 3 4 5 6 (PRODUCT LEVEL)	SEE PAGE
	1	2	**3K-0360**	5	SEAL-O-RING	
M	2	1	**3T-0849**	20	BOLT-SOCKET HEAD (M6X1X25-MM)	
	4	2	**4J-7533**	5	SEAL-O-RING	
	5	2	**5B-9318**	5	BALL	
	6	2	**6E-3007**	5	SPRING	
	7	1	**8T-4121**	4	WASHER-HARD (11X21X2.5-MM THK)	
	8	3	**096-3831**	1	ORIFICE	
	9	3	**106-3659**	3	PISTON	
	10	3	**106-3660**	4	PISTON	
	11	2	**212-4961**	5	SPRING	
	12	2	**242-9264**	5	PLUG-ORIFICE	
	13	2	**243-2965**	5	SPOOL	
	14	2	**244-2579**	5	PLUG	
	15	1	**273-1871**	1	COVER	
	16	1	*292-9221*	1	PLUG AS	
		1	**292-9220**	1	PLUG	
		1	**294-8055**	1	SEAL-O-RING	
J	17	3	**318-3040**	2	VALVE GP-CHECK & RELIEF (WING TILT)	
J	17A	3	**318-3040**	2	VALVE GP-CHECK & RELIEF (WING LIFT)	
J	18	3	**318-3052**	1	VALVE GP-CHECK & RELIEF (BLADE LIFT, LH)	
J	18A	3	**318-3052**	1	VALVE GP-CHECK & RELIEF (BLADE LIFT, RH)	
J	19	3	**318-3115**	1	VALVE GP-CHECK (BLADE LIFT, LH)	
J	19A	3	**318-3115**	1	VALVE GP-CHECK (BLADE LIFT, RH)	
J	20	3	**321-6908**	2	VALVE GP-CHECK (ARTICULATION)	
					(EACH VALVE GP-CHECK INCLUDES)	
J		3	**6V-6580**	1	SEAL-O-RING	
J		3	**9X-7745**	1	SEAL-O-RING	
J		3	**471-6294**	1	SEAL-O-RING	
	21	2	**336-6718**	5	LOCKNUT-FLANGE	
M	22	1	**344-5675**	4	NUT (M10X1.5-THD)	
L	23	3	**361-3059**	1	VALVE GP-RELIEF (LOAD SENSING)	
	24	3	*366-4699*	3	PLUG AS	
					(EACH INCLUDES)	
		3	**3J-1907**	1	SEAL-O-RING	
		3	**360-3692**	1	PLUG	
	25	1	*366-4700*	14	PLUG AS	
					(EACH INCLUDES)	
		1	**3K-0360**	1	SEAL-O-RING	
		1	**360-3693**	1	PLUG (3/4-16-THD)	
	26	3	*367-6001*	4	PLUG AS	
					(EACH INCLUDES)	
		3	**4J-7533**	1	SEAL-O-RING	
		3	**360-3675**	1	PLUG (5/16-24-THD)	
	27	2,3	*367-6002*	6	PLUG AS	
					(EACH INCLUDES)	
		2,3	**3J-7354**	1	SEAL-O-RING	
		2,3	**360-3677**	1	PLUG (7/16-20-THD)	
	28	1	*367-6003*	5	PLUG AS	

487-3029 **VALVE GP-BANK 5 (**contd.**)** **i07813864**

NOTE	REF NO	GRAPHIC REF	PART NUMBER	QTY	PART NAME 1 2 3 4 5 6 (PRODUCT LEVEL)	SEE PAGE
					(EACH INCLUDES)	
		1	**3K-0360**	1	SEAL-O-RING	
		1	**360-3680**	1	PLUG	
	29	2	**564-6716**	5	COVER-SPRING	
	30	2	**370-8979**	5	COVER	
	31	1	**372-0918**	4	SEAL-INTEGRAL	
	32	2	**380-0794**	20	RETAINER	
	33	2	**526-6377**	3	SPRING	
	34	2	**380-0820**	2	SPRING	
	35	2	**380-0821**	2	SPRING	
	40	1	**382-5518**	1	MANIFOLD-INLET	
	42	1	**248-6174**	4	ROD	
Y	43	3	**278-1799**	2	VALVE GP-SOLENOID (WING TILT)	741
Y	43A	3	**278-1799**	2	VALVE GP-SOLENOID (WING LIFT)	741
Y	43B	3	**278-1799**	2	VALVE GP-SOLENOID (ARTICULATION)	741
Y	43C	3	**278-1799**	2	VALVE GP-SOLENOID (BLADE LIFT, LH)	741
Y	43D	3	**278-1799**	2	VALVE GP-SOLENOID (BLADE LIFT, RH)	741
	44	2	**2S-4663**	10	SEAL-O-RING	
M	47	1	**8T-0267**	10	BOLT-SOCKET HEAD (M6X1X12-MM)	
AFHY			**488-7009**	1	VALVE GP-CONTROL (BLADE LIFT)	729
AFHY			**382-3296**	1	VALVE GP-CONTROL (WING TILT)	705
AFHY			**382-3297**	1	VALVE GP-CONTROL (WING LIFT)	707
AFHY			**371-6093**	1	VALVE GP-CONTROL (ARTICULATION)	697
AFH			**372-0918**	5	SEAL-INTEGRAL	
					AVAILABLE REPAIR KIT(S):	
J			**471-4231**	1	KIT-SEAL (CHECK VALVE)	
					(ALSO INCLUDES BACKUP RINGS)	
L			**133-5545**	1	KIT-SEAL (LOAD SENSING)	
					(INCLUDES O-RING SEALS & BACKUP RINGS)	

A - NOT PART OF THIS GROUP
F - NOT SHOWN
H - REFER TO "FIELD REPLACEMENT REFERENCE" CHART ON GRAPHIC
J - KIT MARKED J SERVICES PART(S) MARKED J
L - KIT MARKED L SERVICES PART(S) MARKED L
M - METRIC PART
Y - SEPARATE ILLUSTRATION

487-3029 **VALVE GP-BANK 5** (contd.) **i07813864**

REFER TO ALL ILLUSTRATIONS OF THIS GROUP FOR AUXILIARY VIEWS

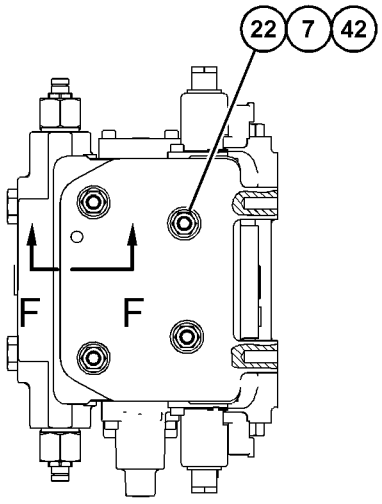

VIEW C-C

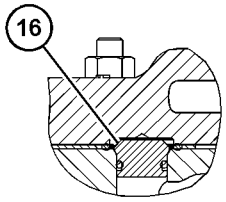

SECTION F-F

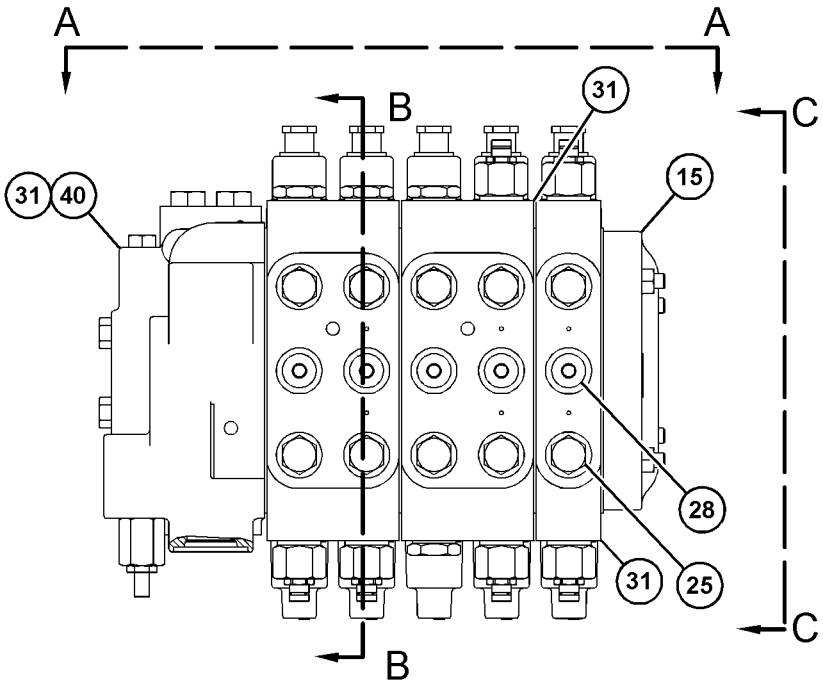

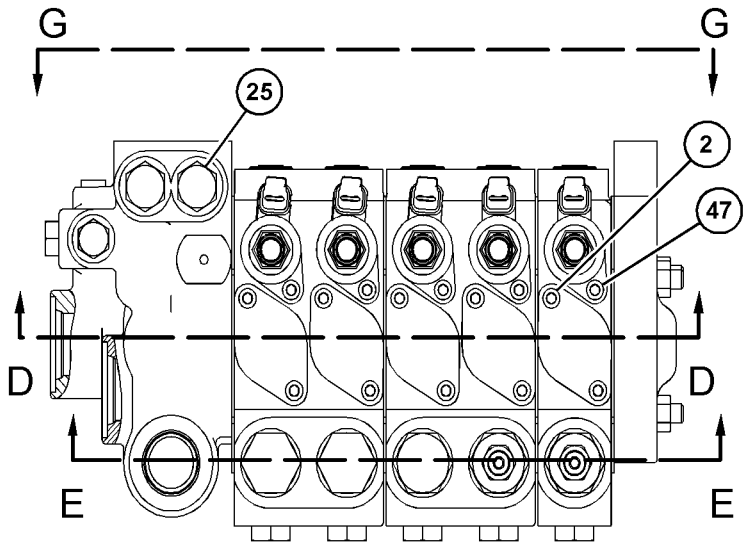

VIEW A-A

	SERVICE REPAIR REFERENCE FOR SECTION REPLACEMENT				
INLET ↓ COVER	SECTION	QTY	PART NO.	NAME	FUNCTION
	BLADE LIFT	1	488-7009	VALVE GP-CONT -P	BLADE LIFT
	ARTICULATION & WING LIFT	1	371-6093	VALVE GP-CONT -P	ARTICULATION
		1	372-0918	SEAL-INTEGRAL	SEAL
		1	382-3297	VALVE GP-CONT -P	WING LIFT
	WING TILT	1	382-3296	VALVE GP-CONT -P	WING TILT

GRAPHIC #1 g06441640

487-3029 **VALVE GP-BANK 5 (**contd.**)** **i07813864**

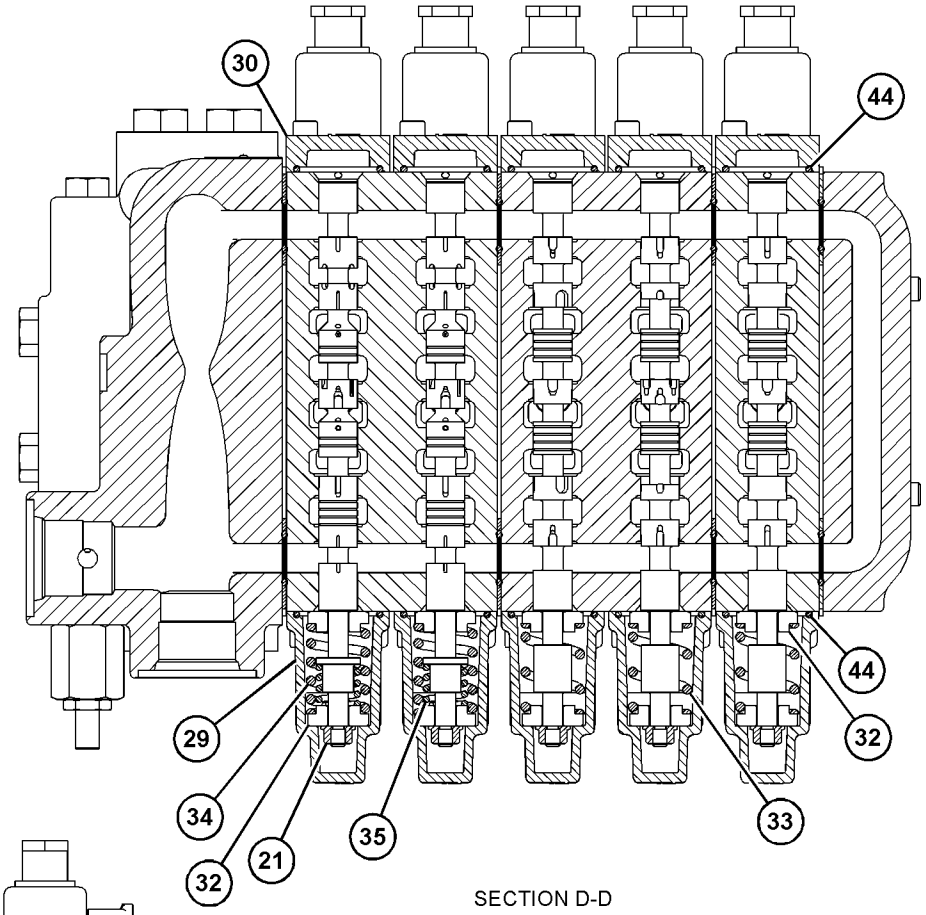

SECTION D-D

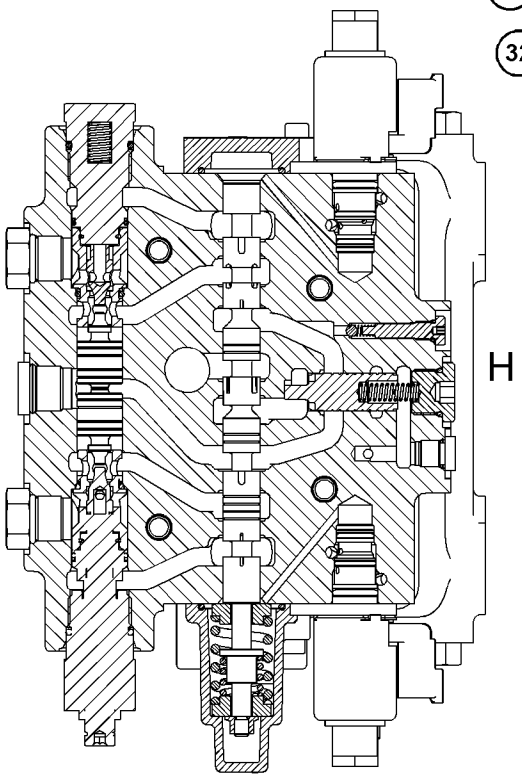

SECTION B-B

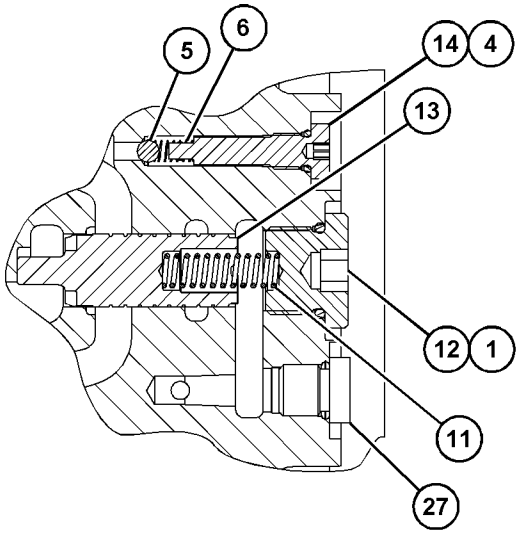

VIEW OF AREA H

GRAPHIC #2 g06439034

487-3029 **VALVE GP-BANK 5 (**contd.**)** **i07813864**

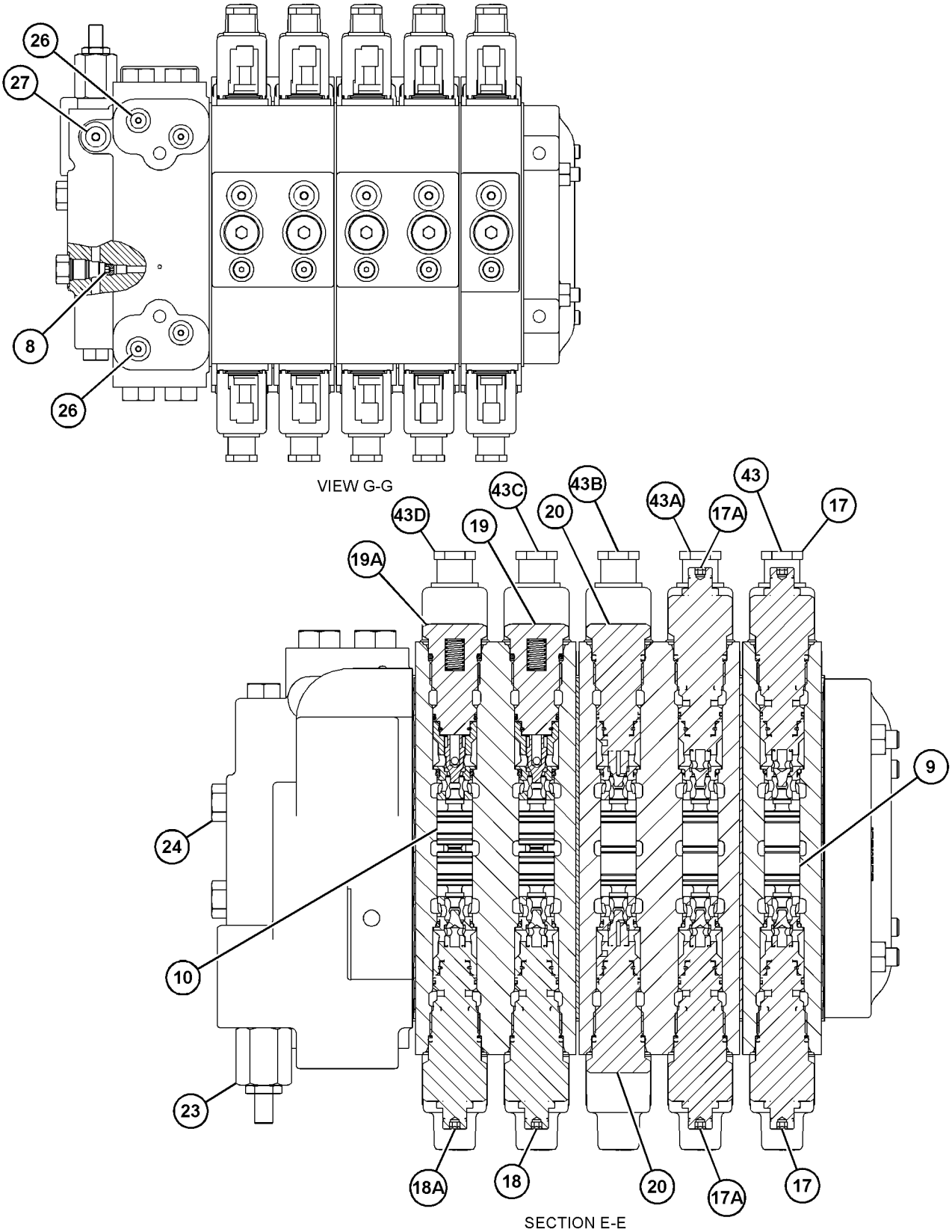

GRAPHIC #3 <END> g06439036

487-3014 VALVE GP-BANK 6–FRONT

S/N: B551-UP

PART OF 365-3368, 365-3369, 365-5540, 438-5423, 438-5425 CONTROL AR-HYDRAULIC

SMCS-5051 **i07782790**

NOTE	REF NO	GRAPHIC REF	PART NUMBER	QTY	PART NAME 1 2 3 4 5 6 (PRODUCT LEVEL)	SEE PAGE
	1	2	**2S-4663**	12	SEAL-O-RING	
	2	2	**3K-0360**	6	SEAL-O-RING	
M	3	1	**3T-0849**	24	BOLT-SOCKET HEAD (M6X1X25-MM)	
	5	2	**4J-7533**	6	SEAL-O-RING	
	6	2	**5B-9318**	6	BALL	
	7	2	**6E-3007**	6	SPRING	
	8	2	**6L-9716**	1	PLUG-PIPE	
M	9	1	**8T-0267**	12	BOLT-SOCKET HEAD (M6X1X12-MM)	
	10	1	**8T-4121**	4	WASHER-HARD (11X21X2.5-MM THK)	
	11	2	**106-3659**	4	PISTON	
	12	2	**106-3660**	2	PISTON	
	13	2	**212-4961**	6	SPRING	
	14	2	**242-9264**	6	PLUG-ORIFICE	
	15	2	**243-2965**	6	SPOOL	
	16	2	**244-2579**	6	PLUG	
	17	1	**249-5334**	4	ROD	
	18	1	**273-1871**	1	COVER	
Y	19	1	**278-1799**	2	VALVE GP-SOLENOID (PLOW LIFT)	741
Y	19A	1	**278-1799**	2	VALVE GP-SOLENOID (WHEEL LEAN)	741
Y	19B	1	**278-1799**	2	VALVE GP-SOLENOID (CIRCLE DRIVE)	741
Y	19C	1	**278-1799**	2	VALVE GP-SOLENOID (CENTERSHIFT)	741
Y	19D	1	**278-1799**	2	VALVE GP-SOLENOID (SIDESHIFT)	741
Y	19E	1	**278-1799**	2	VALVE GP-SOLENOID (BLADE TIP)	741
	20	1	*292-9221*	1	PLUG AS	
		1	**292-9220**	1	PLUG	
		1	**294-8055**	1	SEAL-O-RING	
	21	1	**301-4568**	1	ORIFICE	
H	22	2	**318-3040**	2	VALVE GP-CHECK & RELIEF (BLADE TIP)	
H	23	2	**318-3052**	1	VALVE GP-CHECK & RELIEF (PLOW LIFT)	
H	24	2	**318-3115**	2	VALVE GP-CHECK (CENTERSHIFT)	
H	24A	2	**318-3115**	1	VALVE GP-CHECK (PLOW LIFT)	
H	24B	2	**318-3115**	2	VALVE GP-CHECK (WHEEL LEAN)	
H	24C	2	**318-3115**	1	VALVE GP-CHECK (SIDESHIFT)	
H	24D	2	**318-3115**	1	VALVE GP-CHECK (BLADE TIP)	
					(EACH VLAVE GP-CHECK INCLUDES)	
H		2	**6V-6580**	1	SEAL-O-RING	
H		2	**9X-7745**	1	SEAL-O-RING	
H		2	**471-6294**	1	SEAL-O-RING	
	25	2	**336-6718**	6	LOCKNUT-FLANGE	
M	26	1	**344-5675**	4	NUT (M10X1.5-THD)	
	27	1	*366-4699*	2	PLUG AS	
					(EACH INCLUDES)	
		1	**3J-1907**	1	SEAL-O-RING	
		1	**360-3692**	1	PLUG	
	28	1	*366-4700*	16	PLUG AS	
					(EACH INCLUDES)	
		1	**3K-0360**	1	SEAL-O-RING	
		1	**360-3693**	1	PLUG (3/4-16-THD)	

487-3014 **VALVE GP-BANK 6 (**contd.**)** **i07782790**

NOTE	REF NO	GRAPHIC REF	PART NUMBER	QTY	PART NAME 1 2 3 4 5 6 (PRODUCT LEVEL)	SEE PAGE
	29	1	*367-6001*	5	PLUG AS	
					(EACH INCLUDES)	
		1	**4J-7533**	1	SEAL-O-RING	
		1	**360-3675**	1	PLUG (5/16-24-THD)	
	30	2	*367-6002*	6	PLUG AS	
					(EACH INCLUDES)	
		2	**3J-7354**	1	SEAL-O-RING	
		2	**360-3677**	1	PLUG (7/16-20-THD)	
	31	1	*367-6003*	5	PLUG AS	
					(EACH INCLUDES)	
		1	**3K-0360**	1	SEAL-O-RING	
		1	**360-3680**	1	PLUG	
	32	2	**564-6716**	6	COVER-SPRING	
	33	2	**370-8979**	6	COVER	
	34	1	**372-0918**	4	SEAL-INTEGRAL	
	35	2	**380-0794**	24	RETAINER	
	36	2	**526-6377**	5	SPRING	
	37	2	**380-0820**	1	SPRING	
	38	2	**380-0821**	1	SPRING	
	45	1	**382-5517**	1	MANIFOLD-INLET	
AFJ			**372-0918**	7	SEAL-INTEGRAL	
AFJY			**382-3290**	1	VALVE GP-CONTROL (BLADE TIP)	699
AFJY			**382-3294**	1	VALVE GP-CONTROL (CENTERSHIFT)	701
AFJY			**382-3298**	1	VALVE GP-CONTROL (LIFT)	709
AFJY			**382-3301**	1	VALVE GP-CONTROL (BLADE TIP) (SIDE)	715
AFJY			**382-3305**	1	VALVE GP-CONTROL (WHEEL LEAN)	717
AFJY			**382-3316**	1	VALVE GP-CONTROL (CIRCLE)	719
					AVAILABLE REPAIR KIT(S):	
H			**471-4231**	1	KIT-SEAL (CHECK VALVE)	
					(ALSO INCLUDES BACKUP RINGS)	

A - NOT PART OF THIS GROUP
F - NOT SHOWN
H - KIT MARKED H SERVICES PART(S) MARKED H
J - REFER TO "FIELD REPLACEMENT REFERENCE" CHART ON GRAPHIC
M - METRIC PART
Y - SEPARATE ILLUSTRATION

487-3014 **VALVE GP-BANK 6 (**contd.**)** **i07782790**

REFER TO ALL ILLUSTRATIONS OF
THIS GROUP FOR AUXILIARY VIEWS

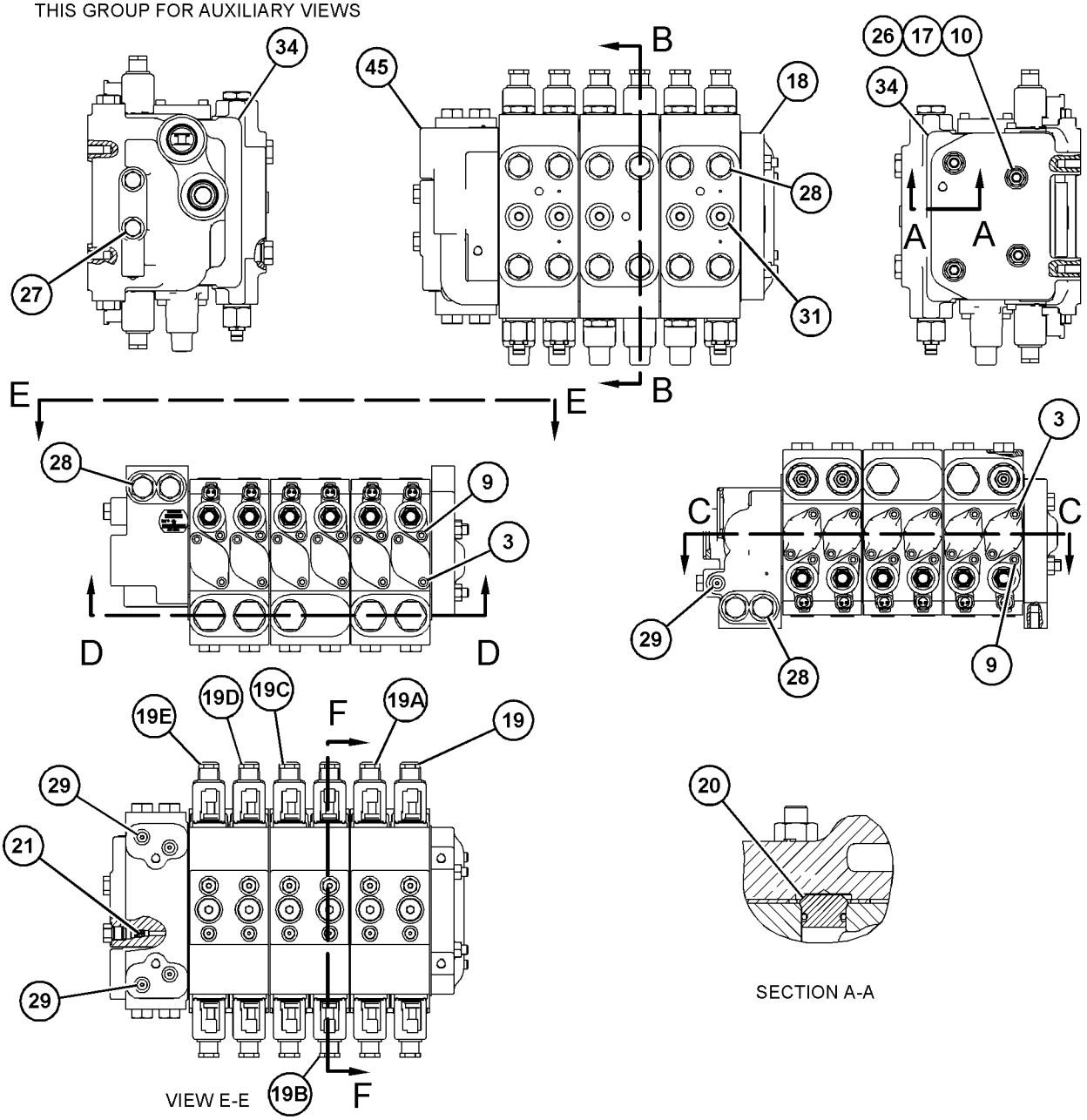

	SERVICE REPAIR REFERENCE FOR SECTION REPLACEMENT				
	SECTION	QTY	PART NO.	NAME	FUNCTION
INLET ↓ COVER	BLADE TIP & SIDE SHIFT	1	382-3290	VALVE GP-CONT -P	BLADE TIP
		1	372-0918	SEAL-INTEGRAL	SEAL
		1	382-3301	VALVE GP-CONT -P	SIDE SHIFT
	CENTER SHIFT & CIRCLE DRIVE	1	382-3294	VALVE GP-CONT -P	CENTER SHIFT
		1	372-0918	SEAL-INTEGRAL	SEAL
		1	382-3316	VALVE GP-CONT -P	CIRCLE DRIVE
	WHEEL LEAN & PLOW LIFT	1	382-3305	VALVE GP-CONT -P	WHEEL LEAN
		1	372-0918	SEAL-INTEGRAL	SEAL
		1	382-3298	VALVE GP-CONT -P	PLOW LIFT

GRAPHIC #1 g06328802

487-3014 **VALVE GP-BANK 6 (**contd.**)** **i07782790**

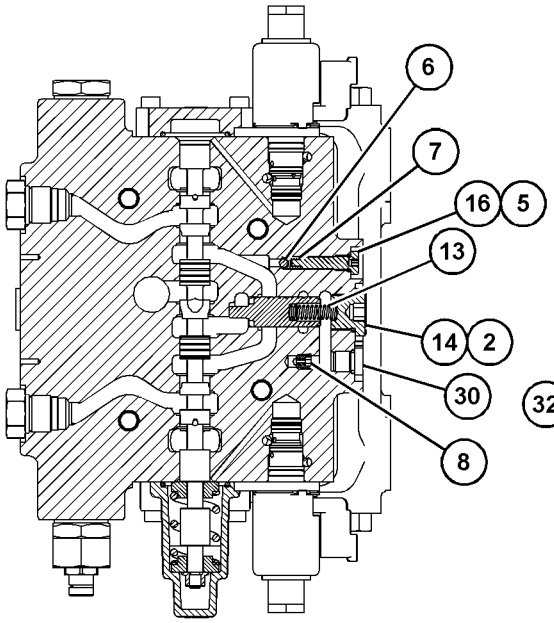

SECTION B-B

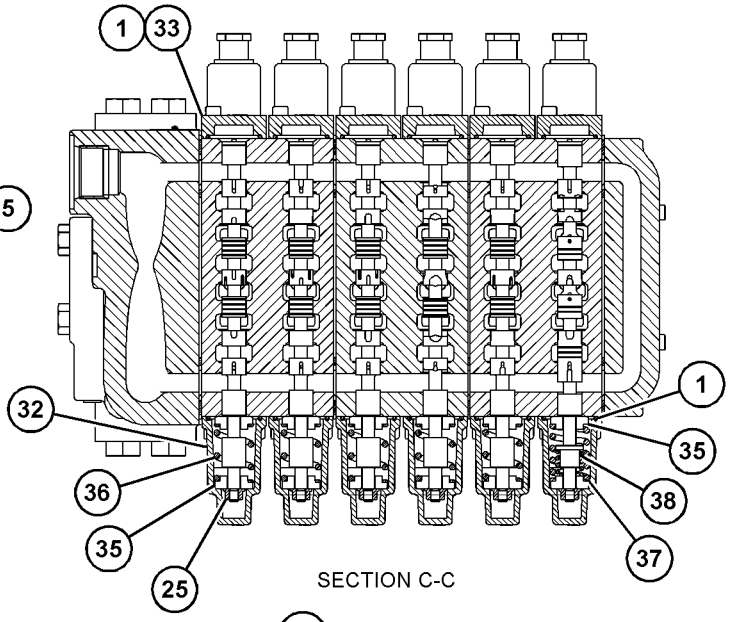

SECTION C-C

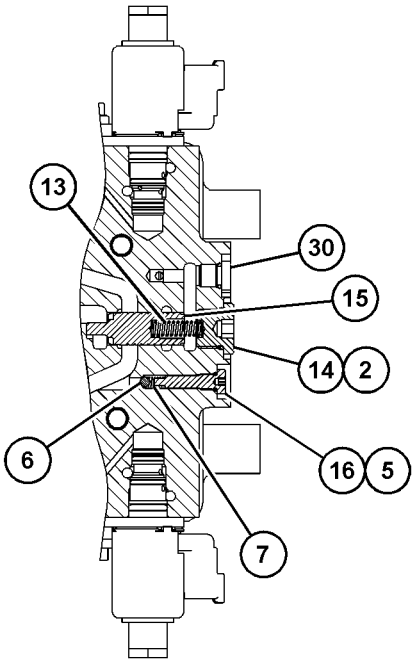

SECTION F-F

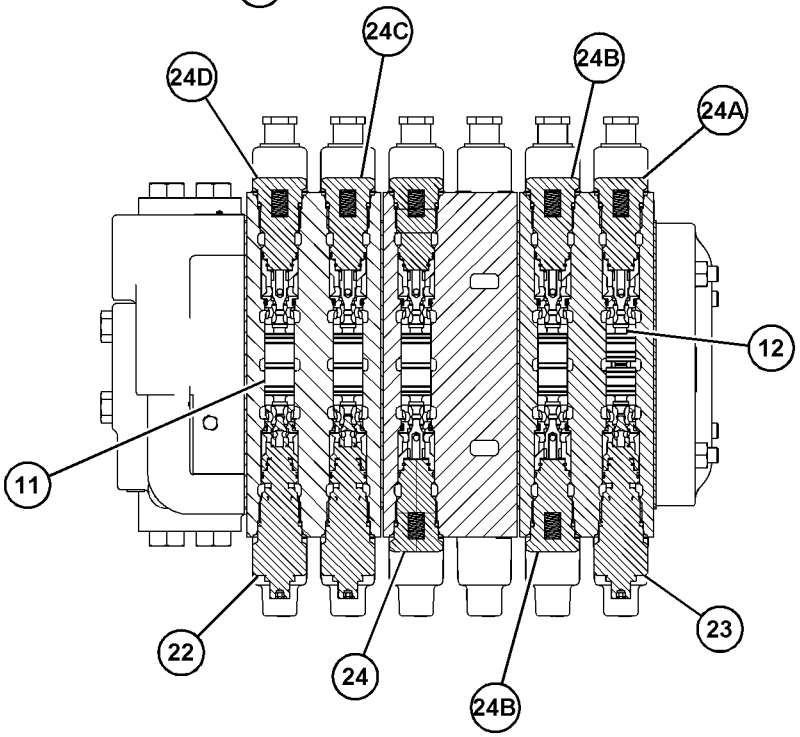

SECTION D-D

GRAPHIC #2 <END> g06328803

487-3015 VALVE GP-BANK 6—FRONT

S/N: B551-UP

PART OF 438-5421 CONTROL AR-HYDRAULIC

SMCS-5051 **i07831071**

NOTE	REF NO	GRAPHIC REF	PART NUMBER	QTY	PART NAME 1 2 3 4 5 6 (PRODUCT LEVEL)	SEE PAGE
	1	2	**106-3659**	5	PISTON	
	2	3	**212-4961**	6	SPRING	
	3	3	**242-9264**	6	PLUG-ORIFICE	
	4	3	**243-2965**	6	SPOOL	
	5	3	**244-2579**	6	PLUG	
	6	1	**249-5334**	4	ROD	
	7	1	**273-1871**	1	COVER	
Y	8	2	**278-1799**	2	VALVE GP-SOLENOID (SCARIFIER)	741
Y	8A	2	**278-1799**	2	VALVE GP-SOLENOID (WHEEL LEAN)	741
Y	8B	2	**278-1799**	2	VALVE GP-SOLENOID (CIRCLE DRIVE)	741
Y	8C	2	**278-1799**	2	VALVE GP-SOLENOID (CENTERSHIFT)	741
Y	8D	2	**278-1799**	2	VALVE GP-SOLENOID (SIDESHIFT)	741
Y	8E	2	**278-1799**	2	VALVE GP-SOLENOID (BLADE TIP)	741
	9	1	*292-9221*	1	PLUG AS	
		1	**292-9220**	1	PLUG	
		1	**294-8055**	1	SEAL-O-RING	
	10	3	**2S-4663**	12	SEAL-O-RING	
	11	2	**301-4568**	1	ORIFICE	
L	12	2	**318-3036**	1	VALVE GP-CHECK & RELIEF (SCARIFIER)	
L	13	2	**318-3040**	1	VALVE GP-CHECK & RELIEF (BLADE TIP)	
L	13A	2	**318-3040**	1	VALVE GP-CHECK & RELIEF (SIDESHIFT)	
L	14	2	**318-3115**	2	VALVE GP-CHECK (CENTERSHIFT)	
L	14A	2	**318-3115**	2	VALVE GP-CHECK (WHEEL LEAN)	
L	14B	2	**318-3115**	1	VALVE GP-CHECK (BLADE TIP)	
L	14C	2	**318-3115**	1	VALVE GP-CHECK (SIDESHIFT)	
L	14D	2	**318-3115**	1	VALVE GP-CHECK (SCARIFIER)	
					(EACH VALVE GP-CHECK INCLUDES)	
L		2	**6V-6580**	1	SEAL-O-RING	
L		2	**9X-7745**	1	SEAL-O-RING	
L		2	**471-6294**	1	SEAL-O-RING	
	15	3	**336-6718**	6	LOCKNUT-FLANGE	
M	16	1	**344-5675**	4	NUT (M10X1.5-THD)	
	17	1	*366-4699*	2	PLUG AS	
					(EACH INCLUDES)	
		1	**3J-1907**	1	SEAL-O-RING	
		1	**360-3692**	1	PLUG	
	18	1,2,3	*366-4700*	16	PLUG AS	
					(EACH INCLUDES)	
		1,2,3	**3K-0360**	1	SEAL-O-RING	
		1,2,3	**360-3693**	1	PLUG (3/4-16-THD)	
	19	2,3	*367-6001*	5	PLUG AS	
					(EACH INCLUDES)	
		2,3	**4J-7533**	1	SEAL-O-RING	
		2,3	**360-3675**	1	PLUG (5/16-24-THD)	
	20	3	*367-6002*	6	PLUG AS	
					(EACH INCLUDES)	
		3	**3J-7354**	1	SEAL-O-RING	
		3	**360-3677**	1	PLUG (7/16-20-THD)	

487-3015 **VALVE GP-BANK 6 (**contd.**)** **i07831071**

NOTE	REF NO	GRAPHIC REF	PART NUMBER	QTY	PART NAME 1 2 3 4 5 6 (PRODUCT LEVEL)	SEE PAGE
	21	1	*367-6003*	5	PLUG AS	
					(EACH INCLUDES)	
		1	**3K-0360**	1	SEAL-O-RING	
		1	**360-3680**	1	PLUG	
	22	3	**564-6716**	6	COVER-SPRING	
	23	3	**370-8979**	6	COVER	
	24	1	**372-0918**	4	SEAL-INTEGRAL	
	25	3	**380-0794**	24	RETAINER	
	26	3	**526-6377**	6	SPRING	
	32	1	**382-5517**	1	MANIFOLD-INLET	
	33	3	**3K-0360**	6	SEAL-O-RING	
M	34	2,3	**3T-0849**	24	BOLT-SOCKET HEAD (M6X1X25-MM)	
	39	3	**4J-7533**	6	SEAL-O-RING	
	41	3	**5B-9318**	6	BALL	
	42	3	**6E-3007**	6	SPRING	
	43	3	**6L-9716**	1	PLUG-PIPE	
M	44	2,3	**8T-0267**	12	BOLT-SOCKET HEAD (M6X1X12-MM)	
	45	1	**8T-4121**	4	WASHER-HARD (11X21X2.5-MM THK)	
AFY			**382-3290**	1	VALVE GP-CONTROL (BLADE TIP)	699
AFY			**382-3294**	1	VALVE GP-CONTROL (CENTERSHIFT)	701
AFY			**382-3300**	1	VALVE GP-CONTROL (SCARIFIER)	713
AFY			**382-3301**	1	VALVE GP-CONTROL (BLADE TIP) (SIDE)	715
AFY			**382-3305**	1	VALVE GP-CONTROL (WHEEL LEAN)	717
AFY			**382-3316**	1	VALVE GP-CONTROL (CIRCLE)	719
AF			**372-0918**	7	SEAL-INTEGRAL	
					AVAILABLE REPAIR KIT(S):	
L			**471-4231**	1	KIT-SEAL	
					(ALSO INCLUDES BACKUP RINGS)	

A - NOT PART OF THIS GROUP
F - NOT SHOWN
L - KIT MARKED L SERVICES PART(S) MARKED L
M - METRIC PART
Y - SEPARATE ILLUSTRATION

487-3015 **VALVE GP-BANK 6 (**contd.**)** **i07831071**

REFER TO ALL ILLUSTRATIONS OF
THIS GROUP FOR AUXILIARY VIEWS

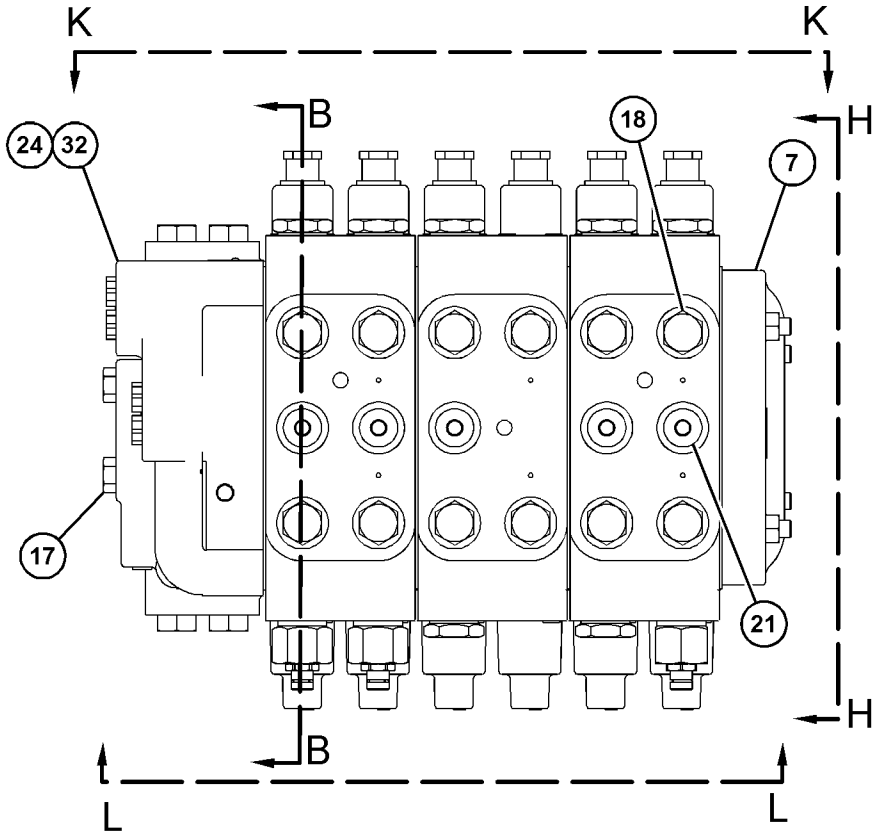

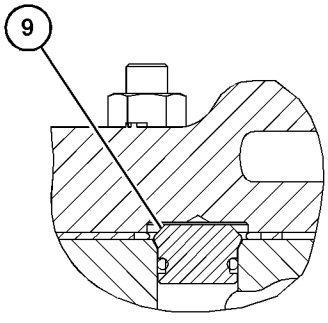

SECTION A-A

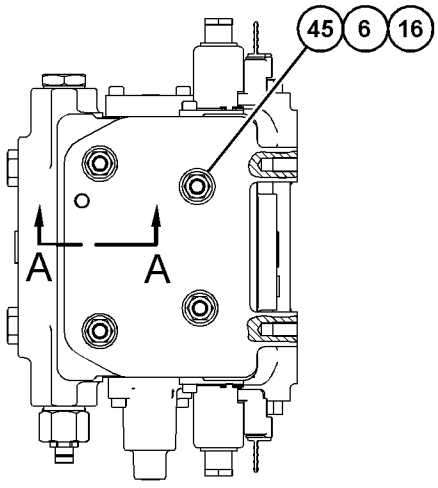

VIEW H-H

GRAPHIC #1 g06441645

487-3015 **VALVE GP-BANK 6 (**contd.**)** **i07831071**

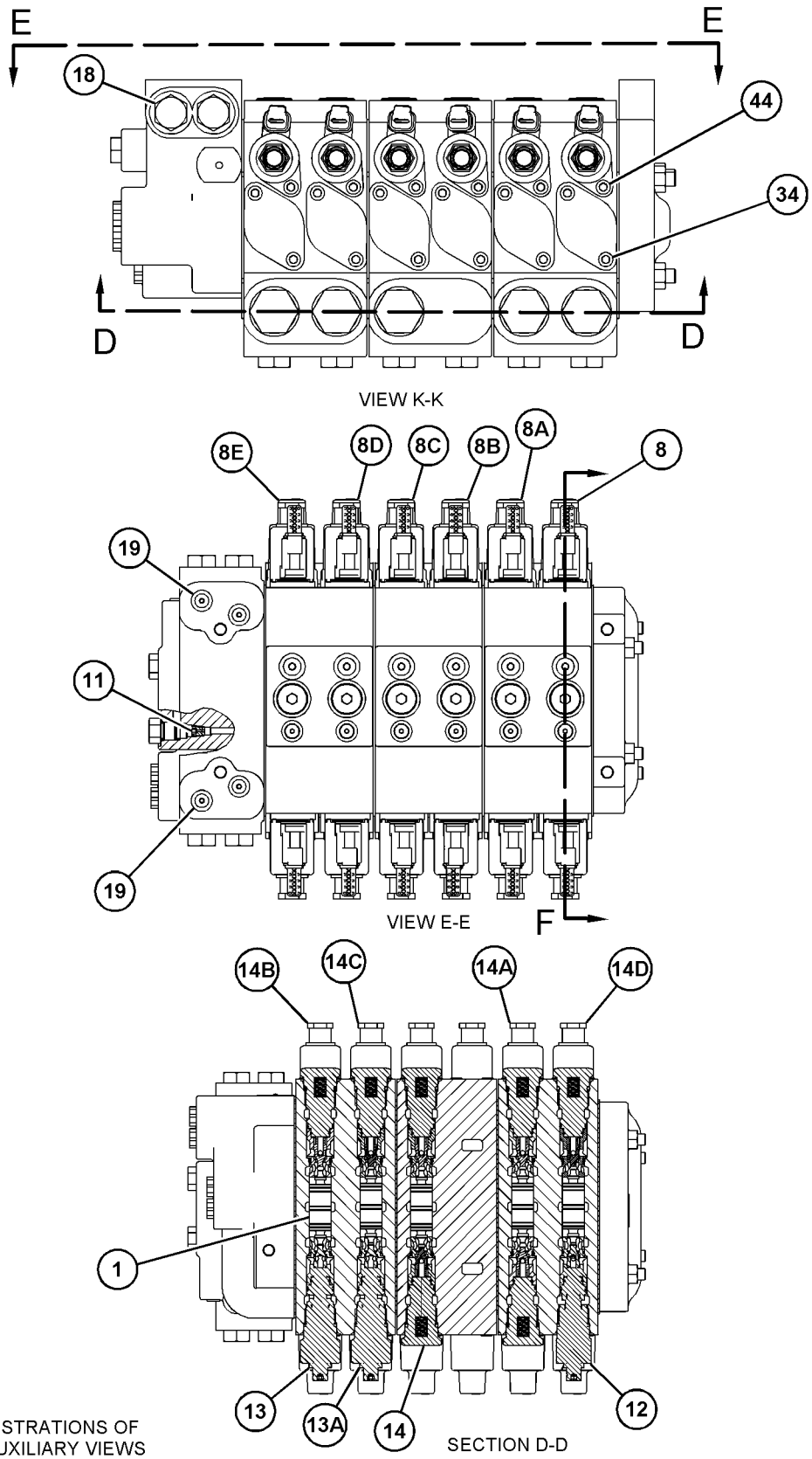

REFER TO ALL ILLUSTRATIONS OF THIS GROUP FOR AUXILIARY VIEWS

GRAPHIC #2

g06441646

487-3015 **VALVE GP-BANK 6 (**contd.**)** **i07831071**

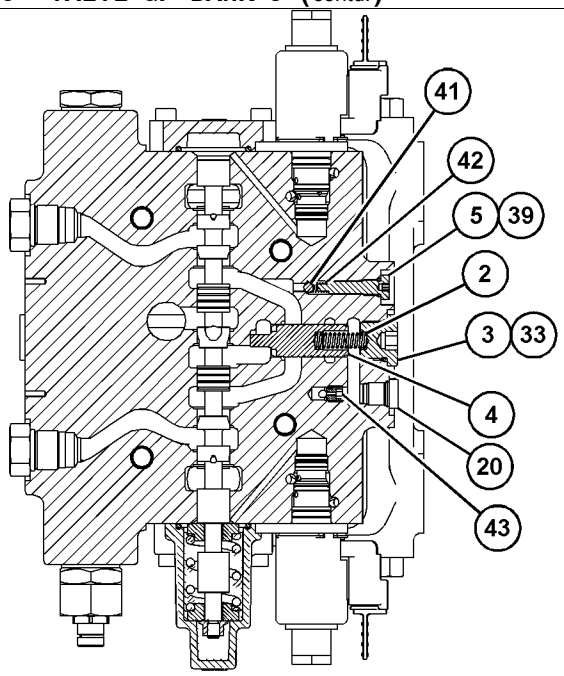

SECTION B-B

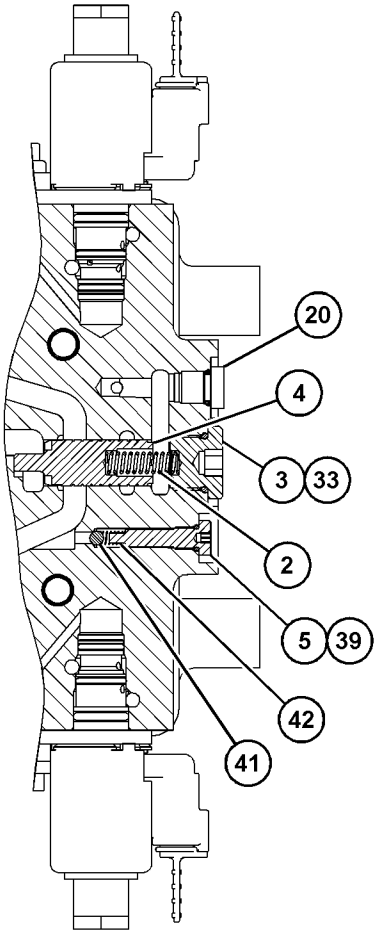

VIEW F

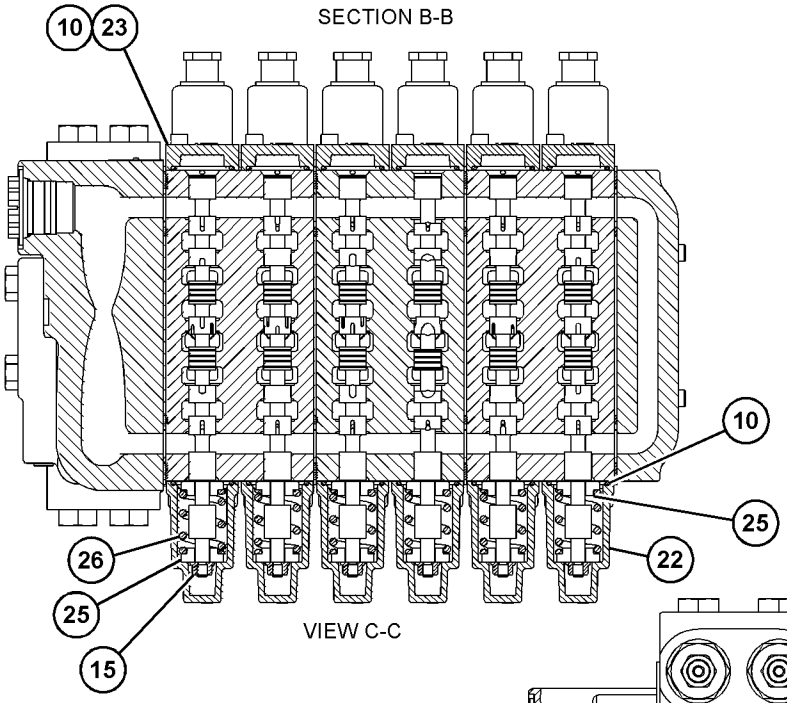

VIEW C-C

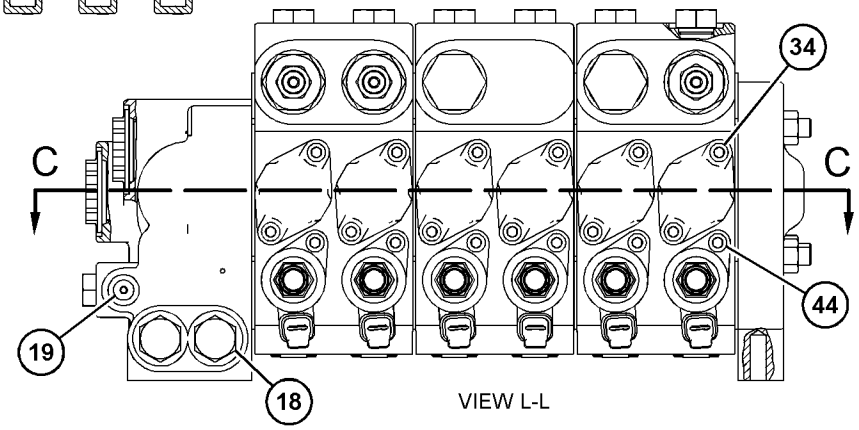

VIEW L-L

GRAPHIC #3 <END> g06438959

487-3030 VALVE GP-BANK 6–REAR

S/N: B551-UP

PART OF 365-3369, 365-3370, 365-3371 CONTROL AR-HYDRAULIC

SMCS-5051 **i07831051**

NOTE	REF NO	GRAPHIC REF	PART NUMBER	QTY	PART NAME 1 2 3 4 5 6 (PRODUCT LEVEL)	SEE PAGE
	1	1	**096-3831**	1	ORIFICE	
	2	1	**106-3659**	4	PISTON	
	3	1	**106-3660**	4	PISTON	
	4	2	**212-4961**	6	SPRING	
	5	2	**242-9264**	6	PLUG-ORIFICE	
	6	2	**243-2965**	6	SPOOL	
	7	2	**244-2579**	6	PLUG	
	8	2	**249-5334**	4	ROD	
	9	1	**273-1871**	1	COVER	
Y	10	1,2	**278-1799**	12	VALVE GP-SOLENOID	741
	11	2	*292-9221*	1	PLUG AS	
		2	**292-9220**	1	PLUG	
		2	**294-8055**	1	SEAL-O-RING	
	12	1,2	**2S-4663**	12	SEAL-O-RING	
J	13	1	**318-3040**	2	VALVE GP-CHECK & RELIEF (WING TILT)	
J	13A	1	**318-3040**	2	VALVE GP-CHECK & RELIEF (WING LIFT)	
J	13B	1	**318-3040**	1	VALVE GP-CHECK & RELIEF (RIPPER)	
J	14	1	**318-3052**	1	VALVE GP-CHECK & RELIEF (BLADE LIFT, LH)	
J	14A	1	**318-3052**	1	VALVE GP-CHECK & RELIEF (BLADE LIFT, RH)	
J	15	1	**318-3115**	1	VALVE GP-CHECK (RIPPER)	
J	15A	1	**318-3115**	1	VALVE GP-CHECK (BLADE LIFT, LH)	
J	15B	1	**318-3115**	1	VALVE GP-CHECK (BLADE LIFT, RH)	
J	16	1	**321-6908**	2	VALVE GP-CHECK (ARTICULATION)	
	17	2	**336-6718**	6	LOCKNUT-FLANGE	
M	18	2	**344-5675**	4	NUT (M10X1.5-THD)	
L	19	1	**361-3059**	1	VALVE GP-RELIEF (LOAD SENSING)	
	20	1	*366-4699*	3	PLUG AS	
					(EACH INCLUDES)	
		1	**3J-1907**	1	SEAL-O-RING	
		1	**360-3692**	1	PLUG	
	21	1,2	*366-4700*	16	PLUG AS	
					(EACH INCLUDES)	
		1,2	**3K-0360**	1	SEAL-O-RING	
		1,2	**360-3693**	1	PLUG (3/4-16-THD)	
	22	1	*367-6001*	4	PLUG AS	
					(EACH INCLUDES)	
		1	**4J-7533**	1	SEAL-O-RING	
		1	**360-3675**	1	PLUG (5/16-24-THD)	
	23	1	*367-6002*	7	PLUG AS	
					(EACH INCLUDES)	
		1	**3J-7354**	1	SEAL-O-RING	
		1	**360-3677**	1	PLUG (7/16-20-THD)	
	24	1	*367-6003*	6	PLUG AS	
					(EACH INCLUDES)	
		1	**3K-0360**	1	SEAL-O-RING	
		1	**360-3680**	1	PLUG	
	25	1	**564-6716**	6	COVER-SPRING	
	26	2	**370-8979**	6	COVER	

487-3030 **VALVE GP-BANK 6 (**contd.**)** **i07831051**

NOTE	REF NO	GRAPHIC REF	PART NUMBER	QTY	PART NAME 1 2 3 4 5 6 (PRODUCT LEVEL)	SEE PAGE
	27	2	**372-0918**	4	SEAL-INTEGRAL	
	28	2	**380-0794**	24	RETAINER	
	29	1	**526-6377**	4	SPRING	
	30	1	**380-0820**	2	SPRING	
	31	1	**380-0821**	2	SPRING	
	36	2	**382-5518**	1	MANIFOLD-INLET	
	37	2	**3K-0360**	6	SEAL-O-RING	
M	38	1,2	**3T-0849**	24	BOLT-SOCKET HEAD (M6X1X25-MM)	
	42	2	**4J-7533**	6	SEAL-O-RING	
	43	2	**5B-9318**	6	BALL	
	44	2	**6E-3007**	6	SPRING	
M	45	1,2	**8T-0267**	12	BOLT-SOCKET HEAD (M6X1X12-MM)	
	46	2	**8T-4121**	4	WASHER-HARD (11X21X2.5-MM THK)	
AFY			**371-6093**	1	VALVE GP-CONTROL (ARTICULATION)	697
AF			**372-0918**	6	SEAL-INTEGRAL	
AFY			**382-3295**	1	VALVE GP-CONTROL (RIPPER)	703
AFY			**382-3296**	1	VALVE GP-CONTROL (WING TILT)	705
AFY			**382-3297**	1	VALVE GP-CONTROL (WING LIFT)	707
AFY			**488-7009**	1	VALVE GP-CONTROL (BLADE LIFT)	729
					AVAILABLE REPAIR KIT(S):	
J			**471-4231**	1	KIT-SEAL (CHECK VALVE)	
					(INCLUDES O-RING SEALS & BACKUP RINGS)	
L			**133-5545**	1	KIT-SEAL (LOAD SENSING)	
					(INCLUDES O-RING SEALS & BACKUP RINGS)	

A - NOT PART OF THIS GROUP
F - NOT SHOWN
J - KIT MARKED J SERVICES PART(S) MARKED J
L - KIT MARKED L SERVICES PART(S) MARKED L
M - METRIC PART
Y - SEPARATE ILLUSTRATION

487-3030 **VALVE GP-BANK 6 (**contd.**)** **i07831051**

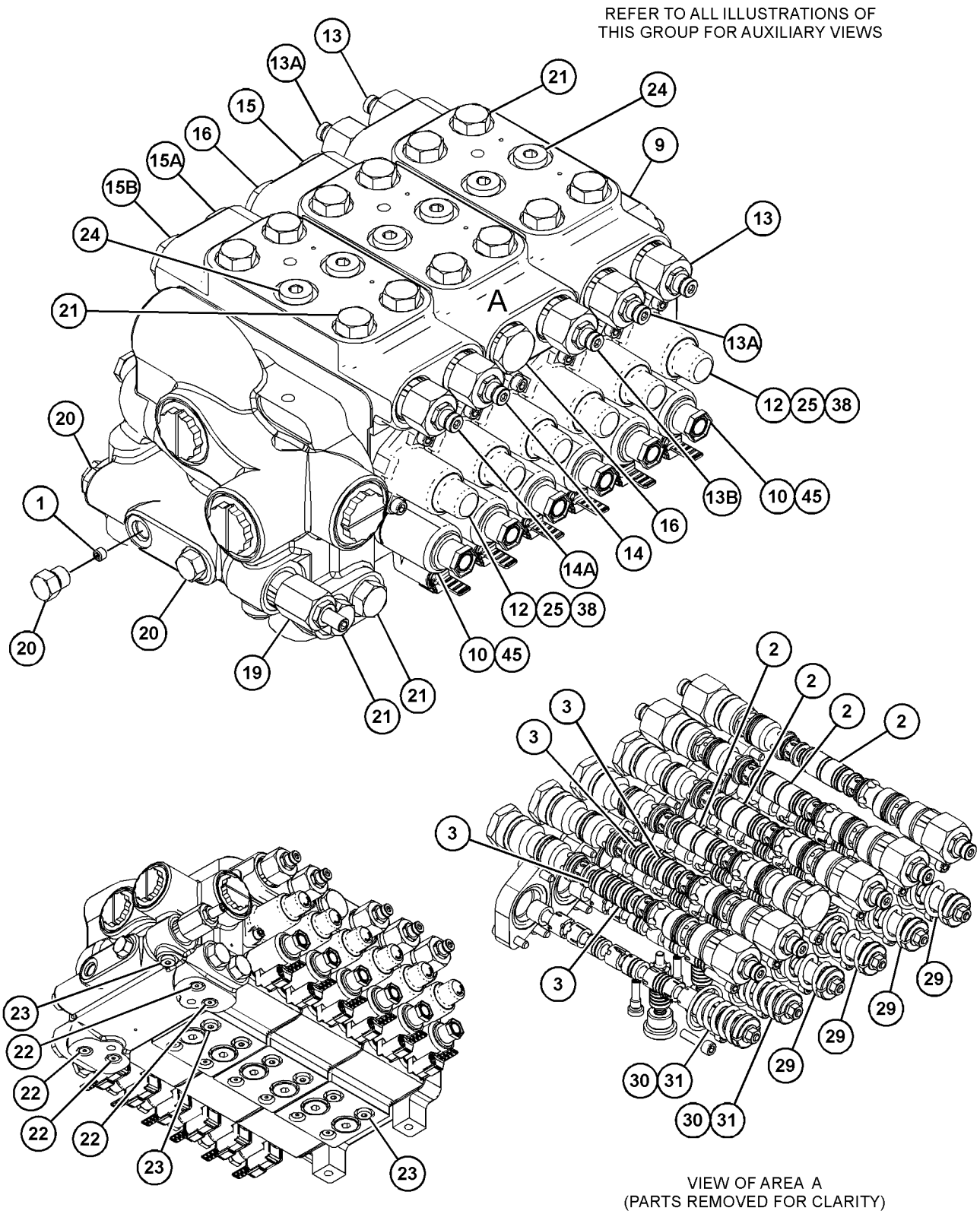

GRAPHIC #1 g06398429

487-3030 **VALVE GP-BANK 6 (**contd.**)** **i07831051**

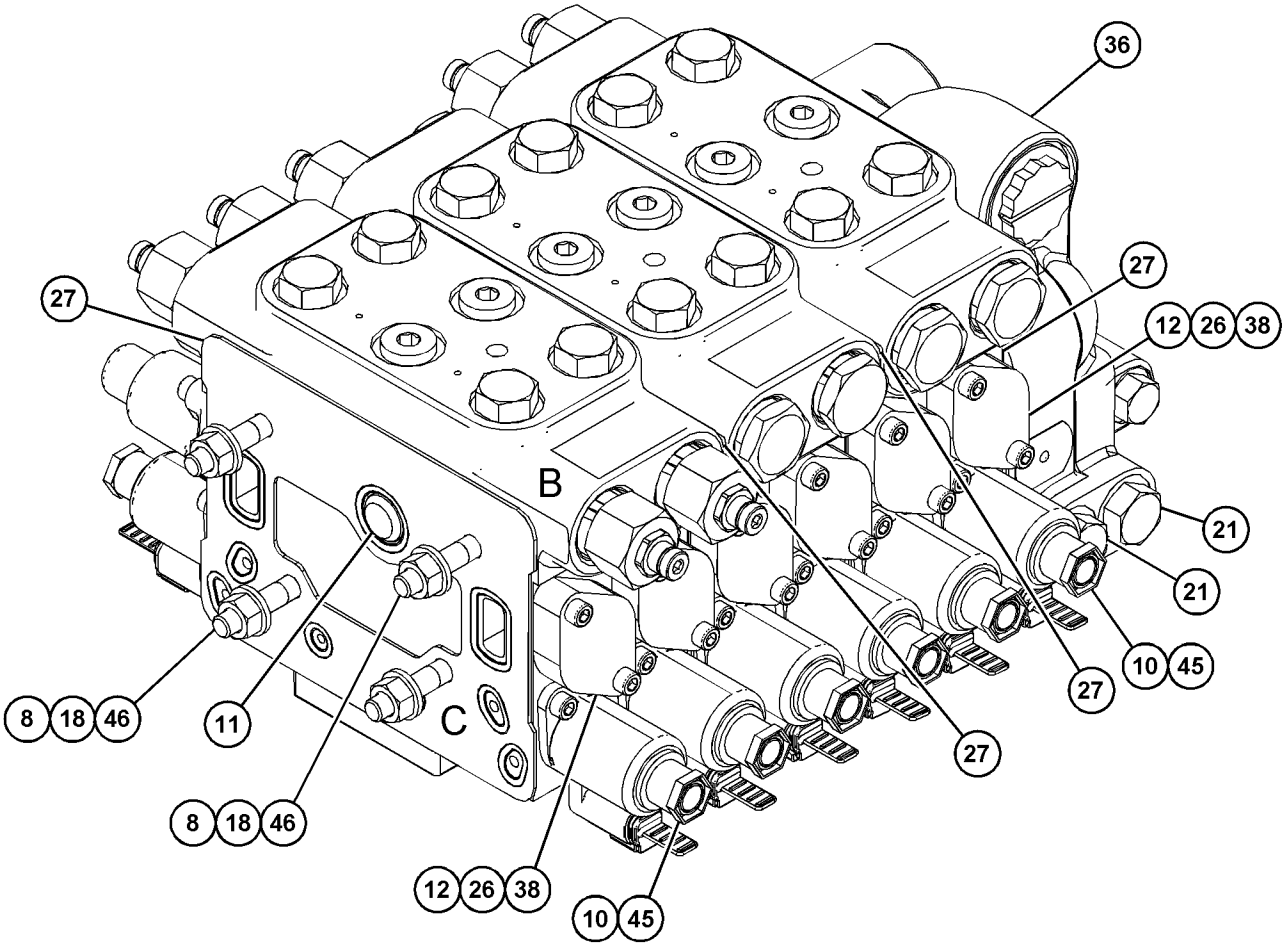

180°

VIEW OF AREA A
(PARTS REMOVED FOR CLARITY)

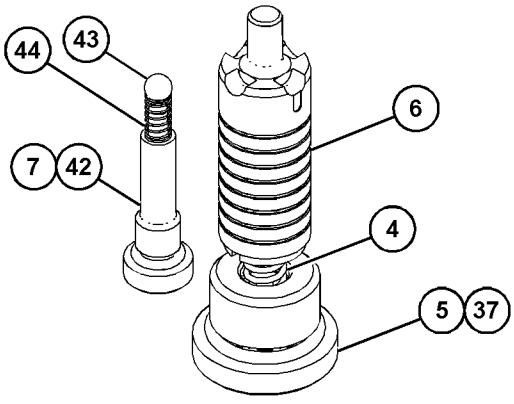

VIEW OF AREA C
(PARTS REMOVED FOR CLARITY)

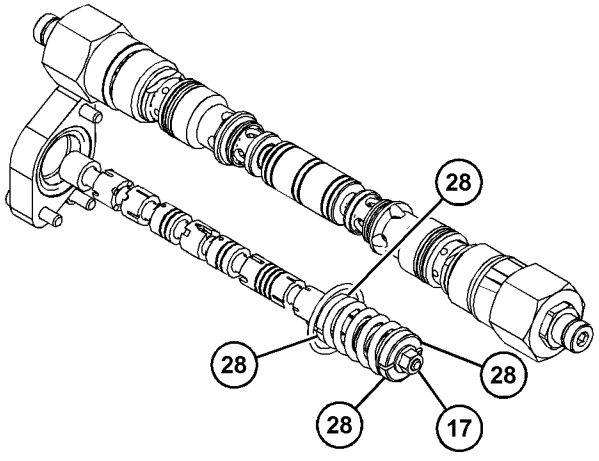

VIEW OF AREA B
(PARTS REMOVED FOR CLARITY)

GRAPHIC #2 <END> g06399044

487-3031 VALVE GP-BANK 6–REAR

S/N: B551-UP

PART OF 365-3368, 365-5541 CONTROL AR-HYDRAULIC

SMCS-5051 **i07772257**

NOTE	REF NO	GRAPHIC REF	PART NUMBER	QTY	PART NAME 1 2 3 4 5 6 (PRODUCT LEVEL)	SEE PAGE
	1	3	**096-3831**	1	ORIFICE	
	2	2	**106-3659**	3	PISTON	
	3	2	**106-3660**	6	PISTON	
	4	2	**212-4961**	6	SPRING	
	5	2	**242-9264**	6	PLUG-ORIFICE	
	6	2	**243-2965**	6	SPOOL	
	7	2	**244-2579**	6	PLUG	
	8	1	**249-5334**	4	ROD	
	9	1	**273-1871**	1	COVER	
Y	10	3	**278-1799**	2	VALVE GP-SOLENOID (BLADE LIFT, RH)	741
Y	10A	3	**278-1799**	2	VALVE GP-SOLENOID (BLADE LIFT, LH)	741
Y	10B	3	**278-1799**	2	VALVE GP-SOLENOID (ARTICULATION)	741
Y	10C	3	**278-1799**	2	VALVE GP-SOLENOID (RIPPER)	741
Y	10D	3	**278-1799**	2	VALVE GP-SOLENOID (WING LIFT)	741
Y	10E	3	**278-1799**	2	VALVE GP-SOLENOID (WING TILT)	741
	11	1	*292-9221*	1	PLUG AS	
		1	**292-9220**	1	PLUG	
		1	**294-8055**	1	SEAL-O-RING	
	12	3	**2S-4663**	12	SEAL-O-RING	
J	13	2	**318-3040**	2	VALVE GP-CHECK & RELIEF (WING TILT)	
J	13A	2	**318-3040**	2	VALVE GP-CHECK & RELIEF (WING LIFT)	
J	13B	2	**318-3040**	1	VALVE GP-CHECK & RELIEF (RIPPER)	
J	14	2	**318-3052**	1	VALVE GP-CHECK & RELIEF (BLADE LIFT, RH)	
J	14A	2	**318-3052**	1	VALVE GP-CHECK & RELIEF (BLADE LIFT, LH)	
J	15	2	**318-3115**	1	VALVE GP-CHECK (BLADE LIFT, RH)	
J	15A	2	**318-3115**	1	VALVE GP-CHECK (BLADE LIFT, LH)	
J	15B	2	**318-3115**	1	VALVE GP-CHECK (RIPPER)	
					(EACH INCLUDES)	
J		2	**6V-6580**	1	SEAL-O-RING	
J		2	**9X-7745**	1	SEAL-O-RING	
J		2	**471-6294**	1	SEAL-O-RING	
J	16	2	**321-6908**	2	VALVE GP-CHECK (ARTICULATION)	
					(EACH INCLUDES)	
J		2	**6V-6580**	1	SEAL-O-RING	
J		2	**9X-7745**	1	SEAL-O-RING	
J		2	**471-6294**	1	SEAL-O-RING	
	17	3	**336-6718**	6	LOCKNUT-FLANGE	
M	18	1	**344-5675**	4	NUT (M10X1.5-THD)	
L	19	3	**361-3059**	1	VALVE GP-RELIEF (LOAD SENSING)	
	20	1	*366-4699*	3	PLUG AS	
					(EACH INCLUDES)	
		1	**3J-1907**	1	SEAL-O-RING	
		1	**360-3692**	1	PLUG	
	21	1	*366-4700*	16	PLUG AS	
					(EACH INCLUDES)	
		1	**3K-0360**	1	SEAL-O-RING	
		1	**360-3693**	1	PLUG (3/4-16-THD)	
	22	3	*367-6001*	4	PLUG AS	

487-3031 **VALVE GP-BANK 6 (**contd.**)** **i07772257**

NOTE	REF NO	GRAPHIC REF	PART NUMBER	QTY	PART NAME 1 2 3 4 5 6 (PRODUCT LEVEL)	SEE PAGE
					(EACH INCLUDES)	
		3	**4J-7533**	1	SEAL-O-RING	
		3	**360-3675**	1	PLUG (5/16-24-THD)	
	23	2,3	*367-6002*	7	PLUG AS	
					(EACH INCLUDES)	
		2,3	**3J-7354**	1	SEAL-O-RING	
		2,3	**360-3677**	1	PLUG (7/16-20-THD)	
	24	1	*367-6003*	6	PLUG AS	
					(EACH INCLUDES)	
		1	**3K-0360**	1	SEAL-O-RING	
		1	**360-3680**	1	PLUG	
	25	3	**564-6716**	6	COVER-SPRING	
	26	3	**370-8979**	6	COVER	
	27	1	**372-0918**	4	SEAL-INTEGRAL	
	28	3	**380-0794**	24	RETAINER	
	29	3	**526-6377**	3	SPRING	
	30	3	**380-0820**	3	SPRING	
	31	3	**380-0821**	3	SPRING	
	36	1	**382-5518**	1	MANIFOLD-INLET	
	37	2	**3K-0360**	6	SEAL-O-RING	
M	38	1	**3T-0849**	24	BOLT-SOCKET HEAD (M6X1X25-MM)	
	42	2	**4J-7533**	6	SEAL-O-RING	
	43	2	**5B-9318**	6	BALL	
	44	2	**6E-3007**	6	SPRING	
M	45	1	**8T-0267**	12	BOLT-SOCKET HEAD (M6X1X12-MM)	
	46	1	**8T-4121**	4	WASHER-HARD (11X21X2.5-MM THK)	
AFH			**372-0918**	6	SEAL-INTEGRAL	
AFHY			**371-6093**	1	VALVE GP-CONTROL (ARTICULATION)	697
AFHY			**488-7009**	1	VALVE GP-CONTROL (BLADE LIFT)	729
AFHY			**382-3295**	1	VALVE GP-CONTROL (RIPPER)	703
AFHY			**382-3297**	1	VALVE GP-CONTROL (WING LIFT)	707
AFHY			**382-3323**	1	VALVE GP-CONTROL (WING TILT)	721
					AVAILABLE REPAIR KIT(S):	
J			**471-4231**	1	KIT-SEAL	
					(INCLUDES O-RING SEALS & BACKUP RINGS)	
L			**133-5545**	1	KIT-SEAL	
					(INCLUDES O-RING SEALS & BACKUP RINGS)	

A - NOT PART OF THIS GROUP
F - NOT SHOWN
H - REFER TO "FIELD REPLACE REFERENCE" CHART ON GRAPHIC
J - KIT MARKED J SERVICES PART(S) MARKED J
L - KIT MARKED L SERVICES PART(S) MARKED L
M - METRIC PART
Y - SEPARATE ILLUSTRATION

487-3031 **VALVE GP-BANK 6 (**contd.**)** **i07772257**

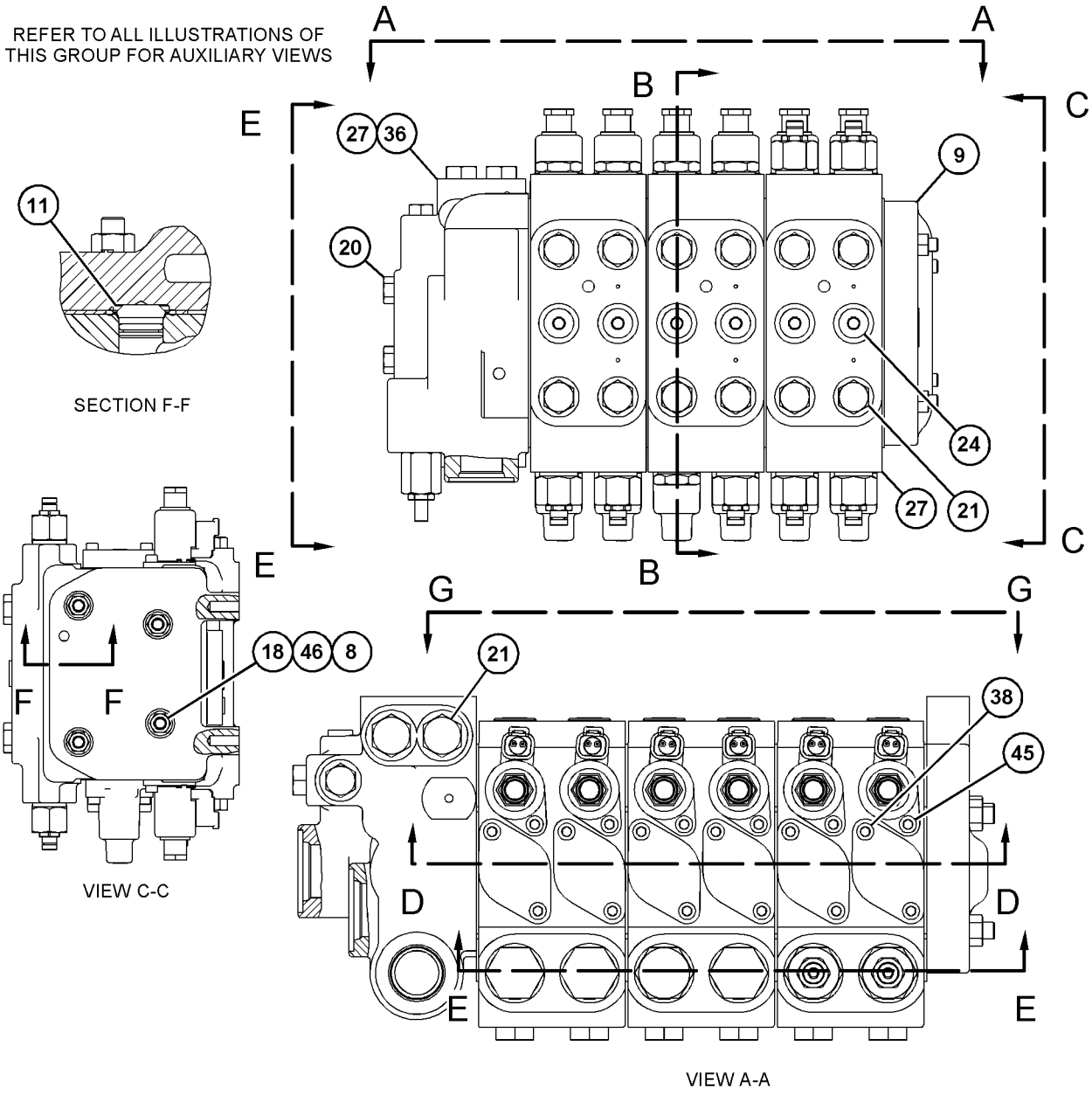

	SERVICE REPAIR REFERENCE FOR SECTION REPLACEMENT				
	SECTION	QTY	PART NO.	NAME	FUNCTION
INLET	BLADE LIFT	1	488-7009	VALVE GP-CONT -P	BLADE LIFT
	ARTICULATION & RIPPER	1	371-6093	VALVE GP-CONT -P	ARTICULATION
		1	372-0918	SEAL-INTEGRAL	SEAL
		1	382-3295	VALVE GP-CONT -P	RIPPER
COVER	WING LIFT & WING TILT + FLOAT	1	382-3297	VALVE GP-CONT -P	WING LIFT
		1	372-0918	SEAL-INTEGRAL	SEAL
		1	382-3323	VALVE GP-CONT -P	WING TILT + FLOAT

GRAPHIC #1 g06386921

487-3031 **VALVE GP-BANK 6 (**contd.**)** **i07772257**

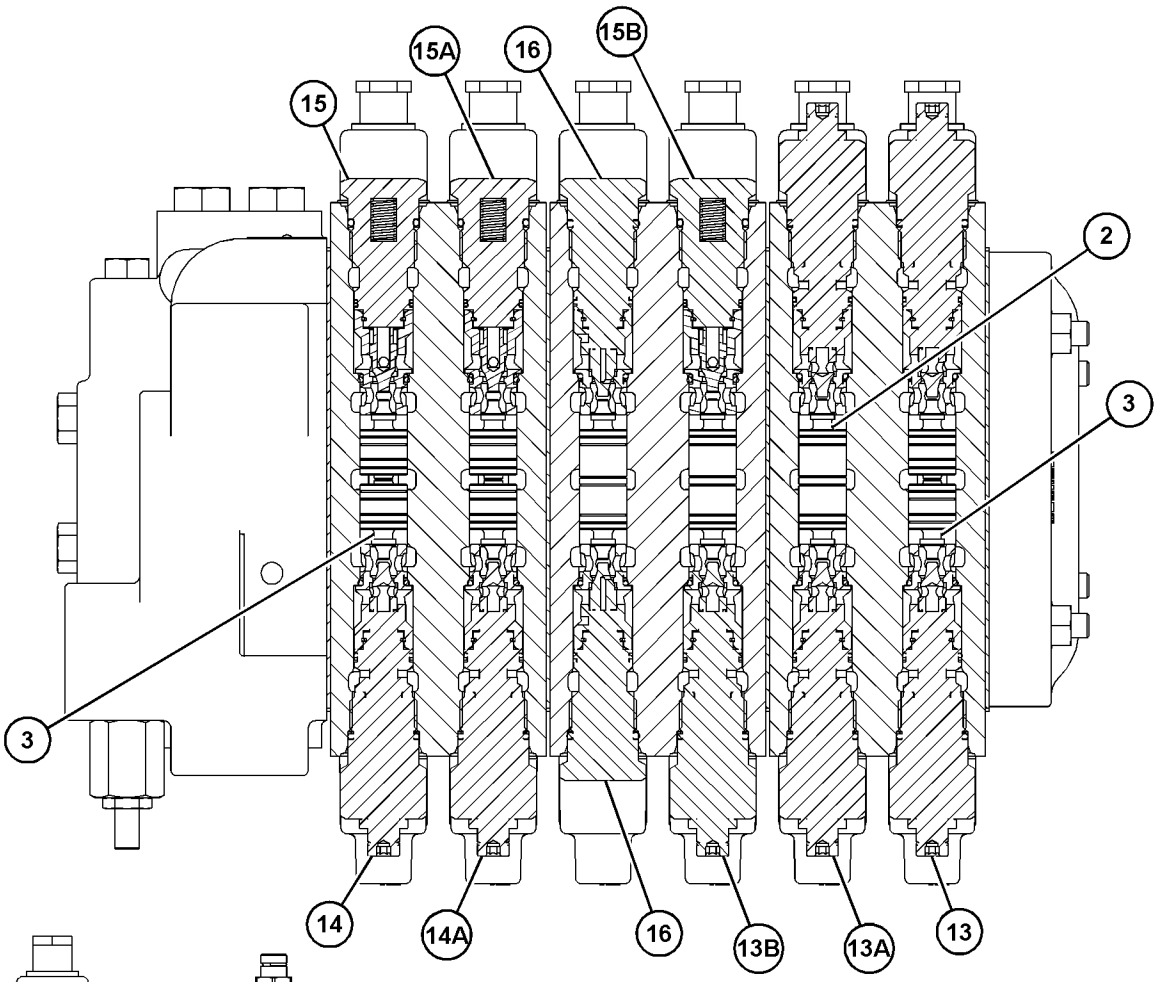

SECTION E-E

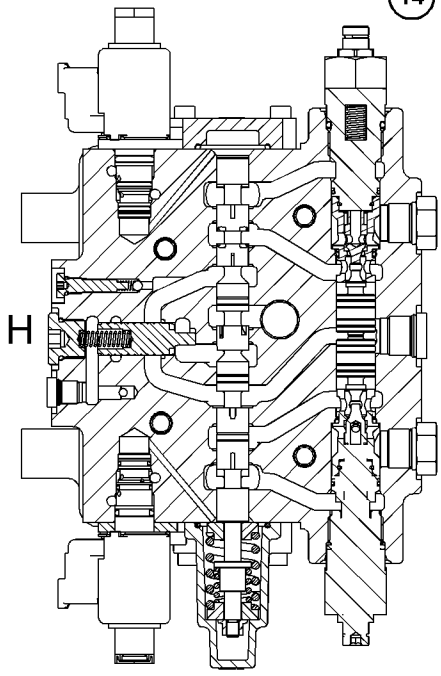

SECTION B-B

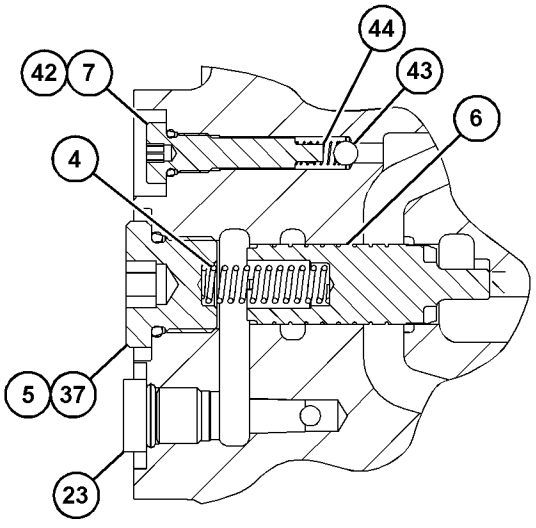

VIEW OF AREA H

GRAPHIC #2 g06386922

487-3031 **VALVE GP-BANK 6 (**contd.**)** **i07772257**

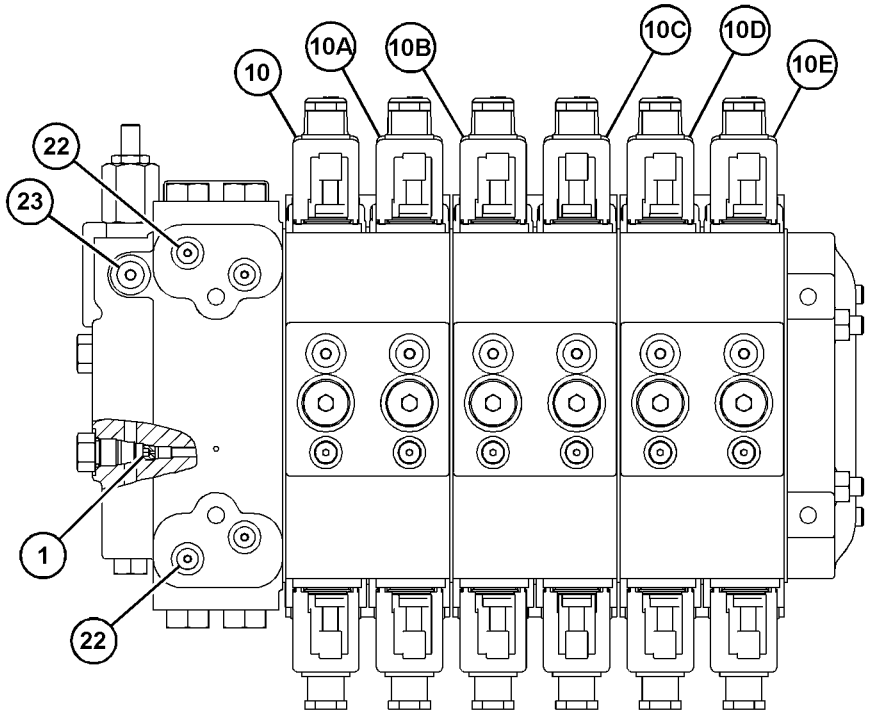

VIEW G-G

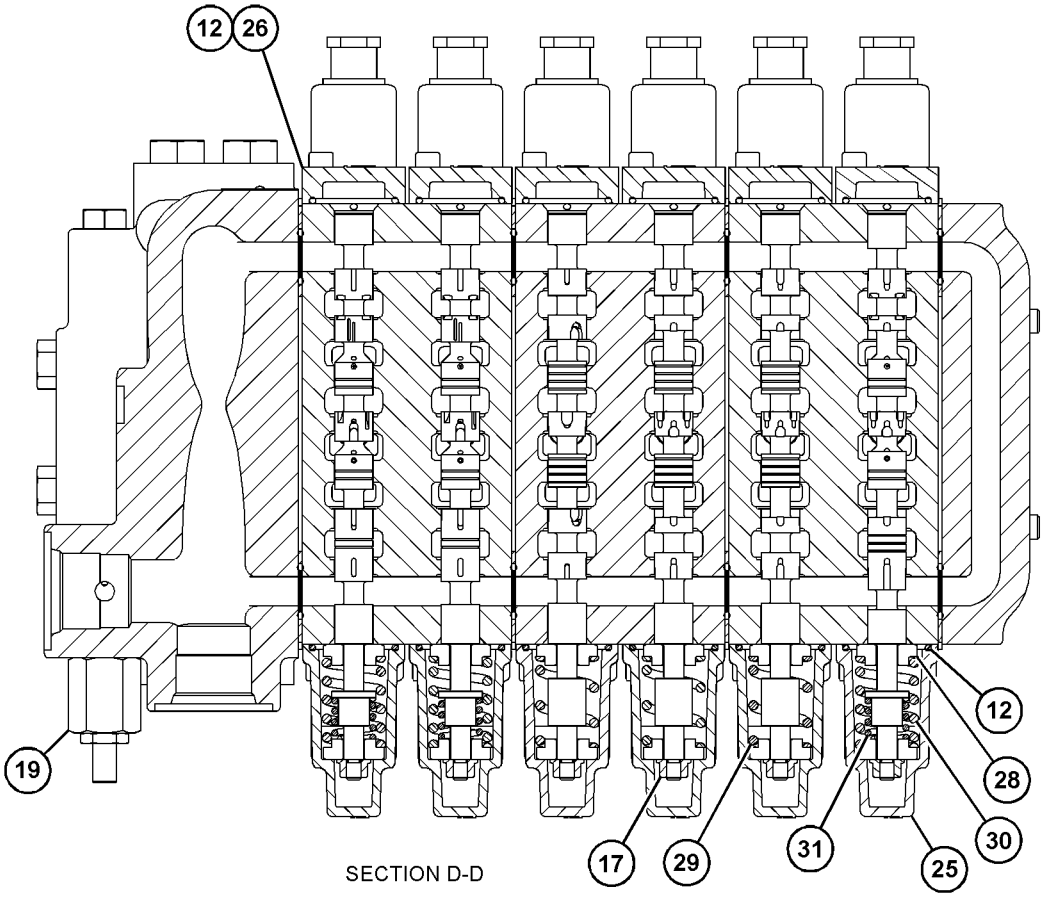

SECTION D-D

GRAPHIC #3 <END> g06386923

487-3016 VALVE GP-BANK 7–FRONT

S/N: B551-UP

PART OF 365-3355 CONTROL AR-HYDRAULIC

SMCS-5051 **i07816378**

NOTE	REF NO	GRAPHIC REF	PART NUMBER	QTY	PART NAME 1 2 3 4 5 6 (PRODUCT LEVEL)	SEE PAGE
	1	2	**3K-0360**	7	SEAL-O-RING	
M	2	1	**3T-0849**	28	BOLT-SOCKET HEAD (M6X1X25-MM)	
M	3	1	**8T-0267**	14	BOLT-SOCKET HEAD (M6X1X12-MM)	
	4	2	**4J-7533**	7	SEAL-O-RING	
	5	2	**5B-9318**	7	BALL	
	6	2	**6E-3007**	7	SPRING	
	7	2	**6L-9716**	1	PLUG-PIPE	
	8	1	**8T-4121**	4	WASHER-HARD (11X21X2.5-MM THK)	
	9	2	**106-3659**	5	PISTON	
	10	2	**106-3660**	2	PISTON	
	11	2	**212-4961**	7	SPRING	
	12	2	**242-9264**	7	PLUG-ORIFICE	
	13	2	**243-2965**	7	SPOOL	
	14	2	**244-2579**	7	PLUG	
	15	1	**246-3193**	4	ROD	
	16	1	**273-1871**	1	COVER	
	17	1	*292-9221*	1	PLUG AS	
		1	**292-9220**	1	PLUG	
		1	**294-8055**	1	SEAL-O-RING	
	18	3	**301-4568**	1	ORIFICE	
J	19	2	**318-3036**	1	VALVE GP-CHECK & RELIEF (SCARIFIER)	
J	20	2	**318-3040**	1	VALVE GP-CHECK & RELIEF (BLADE TIP)	
J	20A	2	**318-3040**	1	VALVE GP-CHECK & RELIEF (SIDESHIFT)	
J	21	2	**318-3052**	1	VALVE GP-CHECK & RELIEF (PLOW LIFT)	
J	22	2	**318-3115**	1	VALVE GP-CHECK (BLADE TIP)	
J	22A	2	**318-3115**	1	VALVE GP-CHECK (SIDESHIFT)	
J	22B	2	**318-3115**	2	VALVE GP-CHECK (CENTERSHIFT)	
J	22C	2	**318-3115**	2	VALVE GP-CHECK (WHEEL LEAN)	
J	22D	2	**318-3115**	1	VALVE GP-CHECK (SCARIFIER)	
J	22E	2	**318-3115**	1	VALVE GP-CHECK (PLOW LIFT)	
					(EACH VALVE GP-CHECK INCLUDES)	
J		2	**6V-6580**	1	SEAL-O-RING	
J		2	**9X-7745**	1	SEAL-O-RING	
J		2	**471-6294**	1	SEAL-O-RING	
	23	2	**336-6718**	7	LOCKNUT-FLANGE	
M	24	1	**344-5675**	4	NUT (M10X1.5-THD)	
	25	1	*366-4699*	2	PLUG AS	
					(EACH INCLUDES)	
		1	**3J-1907**	1	SEAL-O-RING	
		1	**360-3692**	1	PLUG	
	26	1	*366-4700*	18	PLUG AS	
					(EACH INCLUDES)	
		1	**3K-0360**	1	SEAL-O-RING	
		1	**360-3693**	1	PLUG (3/4-16-THD)	
	27	1,3	*367-6001*	5	PLUG AS	
					(EACH INCLUDES)	
		1,3	**4J-7533**	1	SEAL-O-RING	
		1,3	**360-3675**	1	PLUG (5/16-24-THD)	

487-3016 **VALVE GP-BANK 7 (**contd.**)** **i07816378**

NOTE	REF NO	GRAPHIC REF	PART NUMBER	QTY	PART NAME 1 2 3 4 5 6 (PRODUCT LEVEL)	SEE PAGE
	28	2	*367-6002*	7	PLUG AS	
					(EACH INCLUDES)	
		2	**3J-7354**	1	SEAL-O-RING	
		2	**360-3677**	1	PLUG (7/16-20-THD)	
	29	1	*367-6003*	6	PLUG AS	
					(EACH INCLUDES)	
		1	**3K-0360**	1	SEAL-O-RING	
		1	**360-3680**	1	PLUG	
	30	2	**564-6716**	7	COVER-SPRING	
	31	2	**370-8979**	7	COVER	
	32	1	**372-0918**	5	SEAL-INTEGRAL	
	33	2	**380-0794**	28	RETAINER	
	34	2	**526-6377**	6	SPRING	
	35	2	**380-0820**	1	SPRING	
	36	2	**380-0821**	1	SPRING	
	37	2	**2S-4663**	14	SEAL-O-RING	
Y	38	3	**278-1799**	2	VALVE GP-SOLENOID (PLOW LIFT)	741
Y	38A	3	**278-1799**	2	VALVE GP-SOLENOID (SCARIFIER)	741
Y	38B	3	**278-1799**	2	VALVE GP-SOLENOID (WHEEL LEAN)	741
Y	38C	3	**278-1799**	2	VALVE GP-SOLENOID (CIRCLE DRIVE)	741
Y	38D	3	**278-1799**	2	VALVE GP-SOLENOID (CENTERSHIFT)	741
Y	38E	3	**278-1799**	2	VALVE GP-SOLENOID (SIDESHIFT)	741
Y	38F	3	**278-1799**	2	VALVE GP-SOLENOID (BLADE TIP)	741
	39	1	**382-5517**	1	MANIFOLD-INLET	
AFH			**372-0918**	8	SEAL-INTEGRAL	
AFHY			**382-3290**	1	VALVE GP-CONTROL (BLADE TIP)	699
AFHY			**382-3294**	1	VALVE GP-CONTROL (CENTERSHIFT)	701
AFHY			**382-3298**	1	VALVE GP-CONTROL (LIFT)	709
AFHY			**382-3300**	1	VALVE GP-CONTROL (SCARIFIER)	713
AFHY			**382-3301**	1	VALVE GP-CONTROL (BLADE TIP)	715
AFHY			**382-3305**	1	VALVE GP-CONTROL (WHEEL LEAN)	717
AFHY			**382-3316**	1	VALVE GP-CONTROL (CIRCLE)	719
					AVAILABLE REPAIR KIT(S):	
J			**471-4231**	1	KIT-SEAL (CHECK VALVE)	
					(ALSO INCLUDES BACKUP RINGS)	

A - NOT PART OF THIS GROUP
F - NOT SHOWN
H - REFER TO "FIELD REPLACEMENT REFERENCE" CHART ON GRAPHIC
J - KIT MARKED J SERVICES PART(S) MARKED J
M - METRIC PART
Y - SEPARATE ILLUSTRATION

487-3016 **VALVE GP-BANK 7 (**contd.**)** **i07816378**

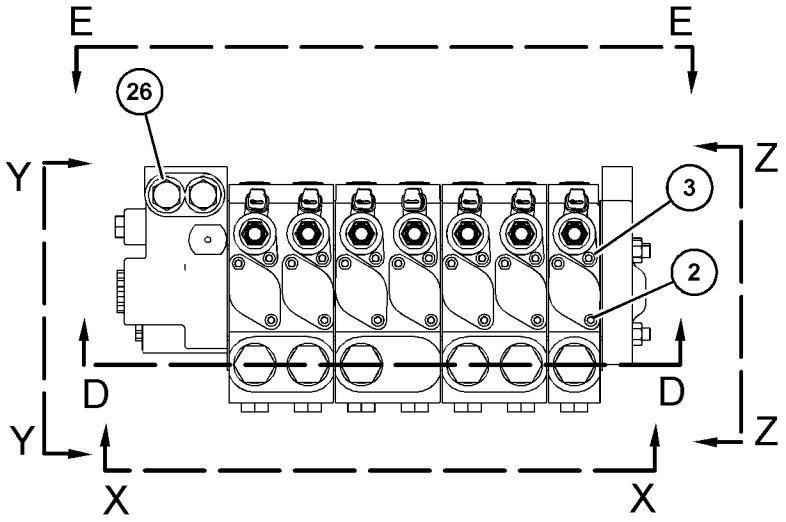

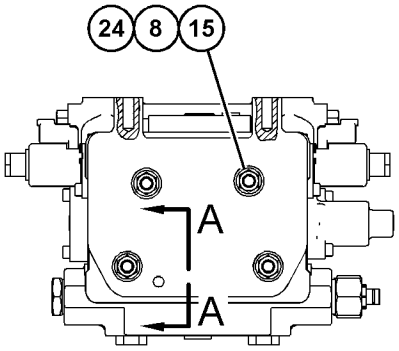

VIEW Z-Z

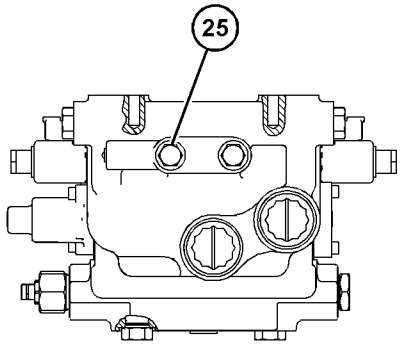

VIEW Y-Y

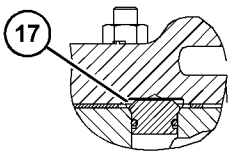

SECTION A-A

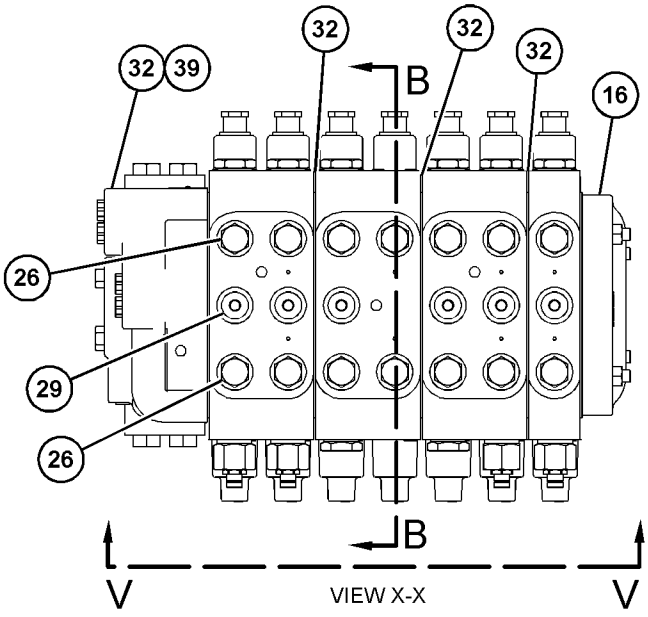

VIEW X-X

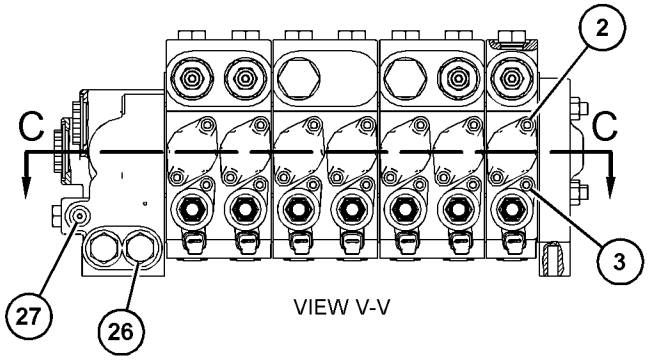

VIEW V-V

REFER TO ALL ILLUSTRATIONS OF
THIS GROUP FOR AUXILIARY VIEWS

GRAPHIC #1 g06441653

487-3016 **VALVE GP-BANK 7 (**contd.**)** **i07816378**

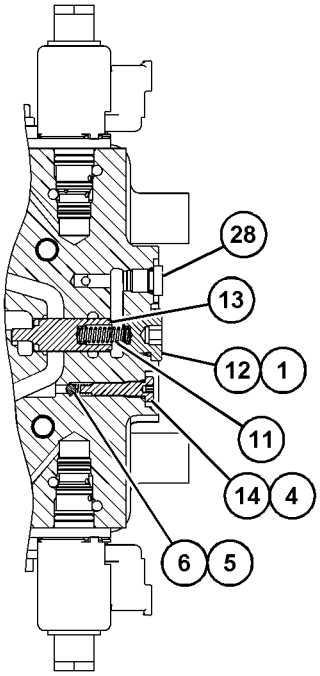

SECTION F-F

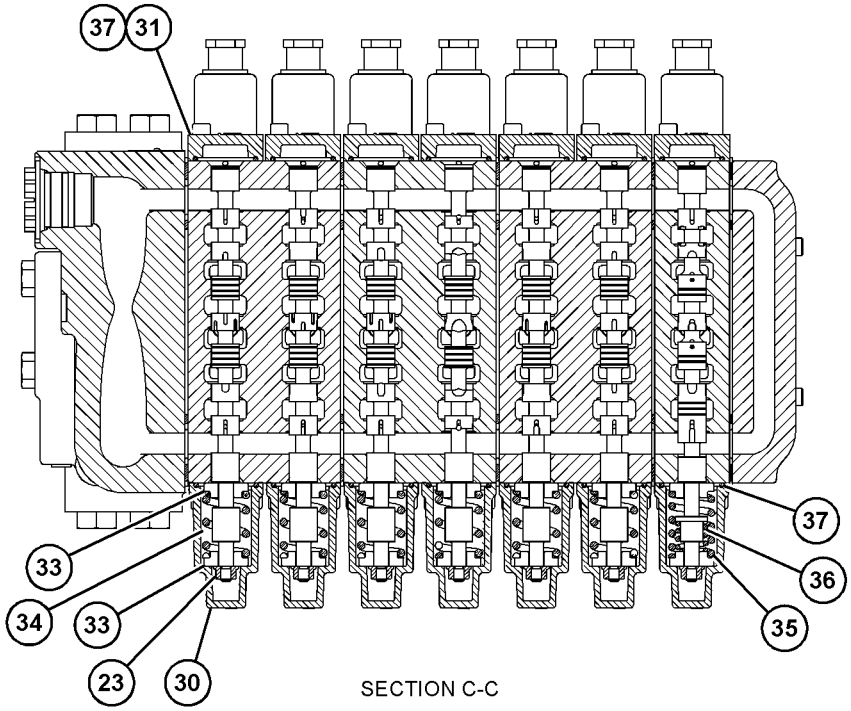

SECTION C-C

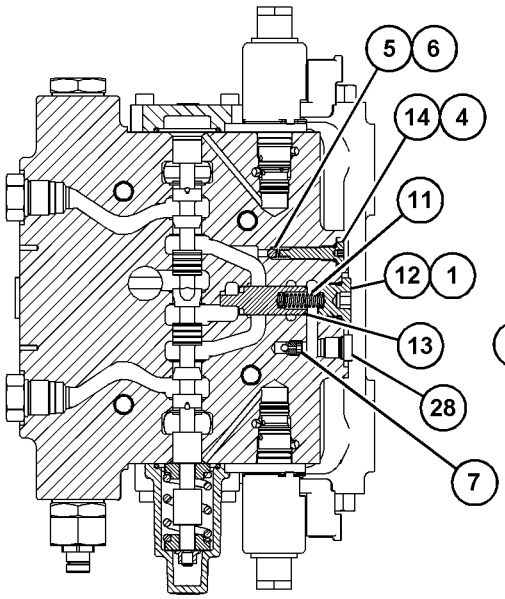

SECTION B-B

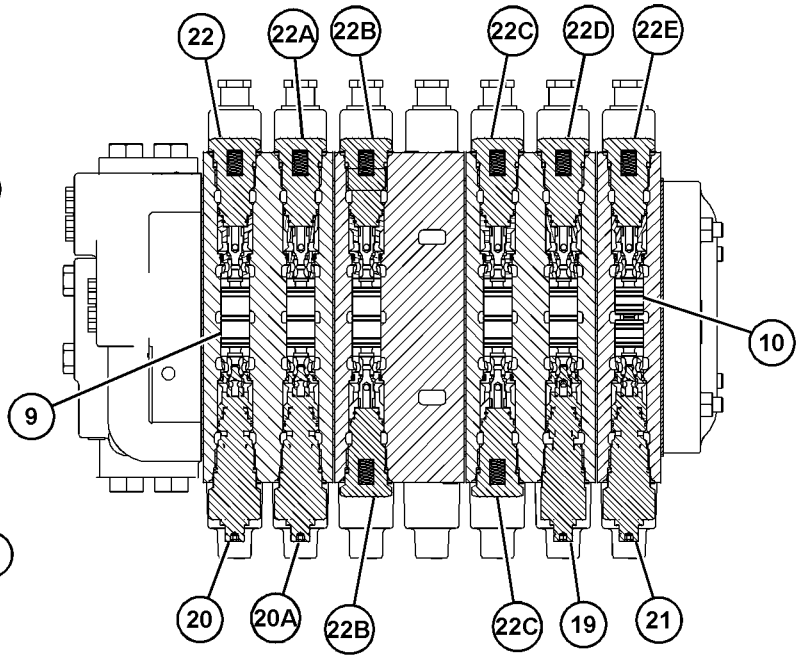

SECTION D-D

GRAPHIC #2 g06438968

487-3016 **VALVE GP-BANK 7 (**contd.**)** **i07816378**

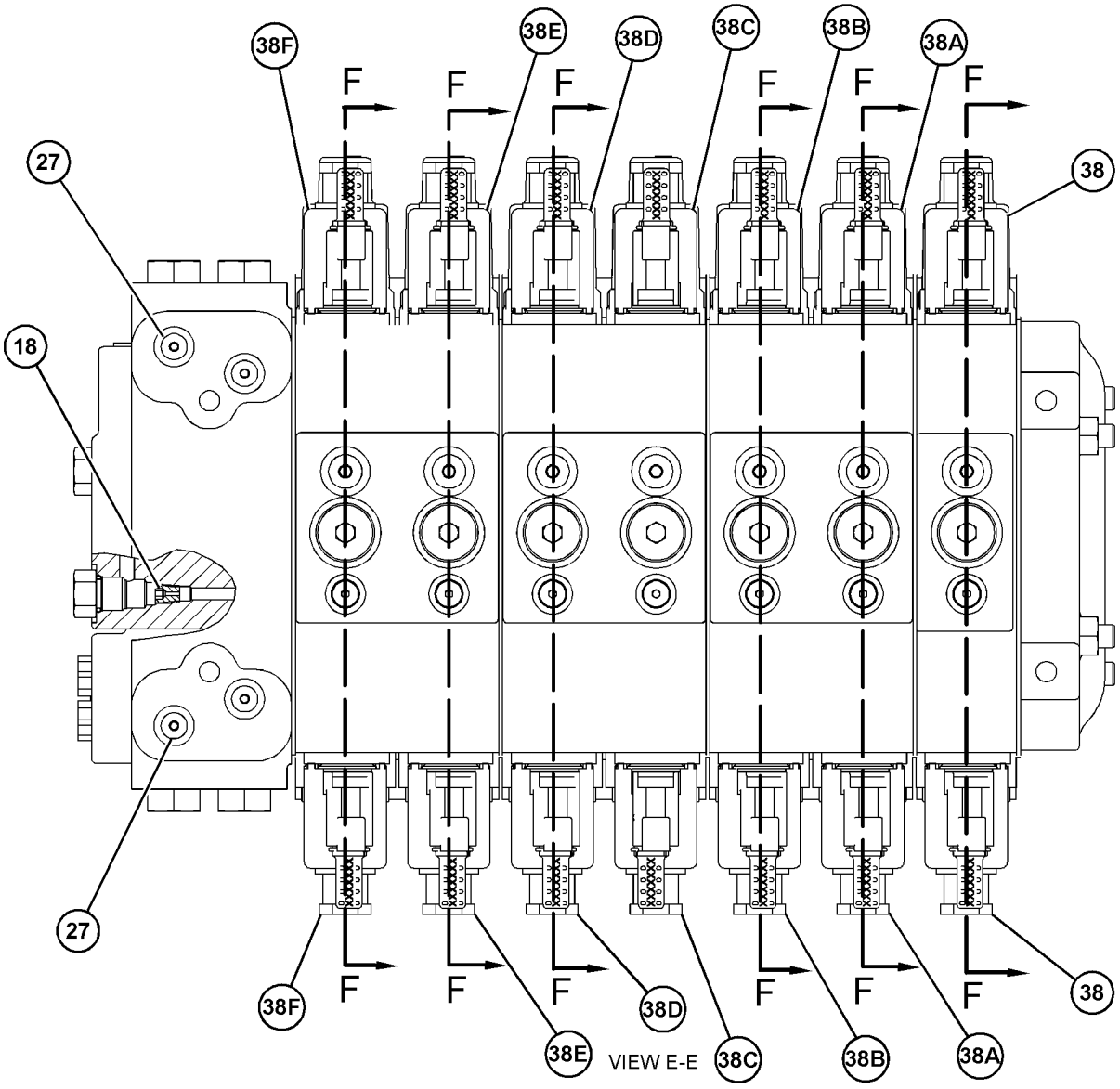

	SERVICE REPAIR REFERENCE FOR SECTION REPLACEMENT				
	SECTION	QTY	PART NO.	NAME	FUNCTION
INLET ⇩ COVER	BLADE TIP & SIDE SHIFT	1	382-3290	VALVE GP-CONT -P	BLADE TIP
		1	372-0918	SEAL-INTEGRAL	SEAL
		1	382-3301	VALVE GP-CONT -P	SIDE SHIFT
	CENTER SHIFT & CIRCLE DRIVE	1	382-3294	VALVE GP-CONT -P	CENTER SHIFT
		1	372-0918	SEAL-INTEGRAL	SEAL
		1	382-3316	VALVE GP-CONT -P	CIRCLE DRIVE
	WHEEL LEAN & SCARIFIER (MID)	1	382-3305	VALVE GP-CONT -P	WHEEL LEAN
		1	372-0918	SEAL-INTEGRAL	SEAL
		1	382-3300	VALVE GP-CONT -P	SCARIFIER (MID)
	PLOW LIFT	1	382-3298	VALVE GP-CONT -P	PLOW LIFT

GRAPHIC #3 <END> g06441654

487-3017 VALVE GP-BANK 7–FRONT

S/N: B551-UP

PART OF 365-3354, 365-3370 CONTROL AR-HYDRAULIC

SMCS-5051 **i07798319**

NOTE	REF NO	GRAPHIC REF	PART NUMBER	QTY	PART NAME 1 2 3 4 5 6 (PRODUCT LEVEL)	SEE PAGE
	1	2	**106-3659**	5	PISTON	
	2	2	**106-3660**	2	PISTON	
	3	3	**212-4961**	7	SPRING	
	4	3	**242-9264**	7	PLUG-ORIFICE	
	5	3	**243-2965**	7	SPOOL	
	6	3	**244-2579**	7	PLUG	
	7	4	**246-3193**	4	ROD	
	8	1	**273-1871**	1	COVER	
Y	9	2	**278-1799**	2	VALVE GP-SOLENOID (PLOW ANGLE)	741
Y	9A	2	**278-1799**	2	VALVE GP-SOLENOID (PLOW LIFT)	741
Y	9B	2	**278-1799**	2	VALVE GP-SOLENOID (WHEEL LEAN)	741
Y	9C	2	**278-1799**	2	VALVE GP-SOLENOID (CIRCLE DRIVE)	741
Y	9D	2	**278-1799**	2	VALVE GP-SOLENOID (CENTERSHIFT)	741
Y	9E	2	**278-1799**	2	VALVE GP-SOLENOID (SIDESHIFT)	741
Y	9F	2	**278-1799**	2	VALVE GP-SOLENOID (BLADE TIP)	741
	10	4	*292-9221*	1	PLUG AS	
		4	**294-8055**	1	SEAL-O-RING	
		4	**292-9220**	1	PLUG	
	11	3	**2S-4663**	14	SEAL-O-RING	
	12	2	**301-4568**	1	ORIFICE	
H	13	2	**318-3040**	1	VALVE GP-CHECK & RELIEF (PLOW ANGLE)	
H	13A	2	**318-3040**	1	VALVE GP-CHECK & RELIEF (BLADE TIP)	
H	13B	2	**318-3040**	1	VALVE GP-CHECK & RELIEF (SIDESHIFT)	
H	14	2	**318-3052**	1	VALVE GP-CHECK & RELIEF (PLOW LIFT)	
H	15	2	**318-3115**	1	VALVE GP-CHECK (PLOW ANGLE)	
H	15A	2	**318-3115**	1	VALVE GP-CHECK (PLOW LIFT)	
H	15B	2	**318-3115**	2	VALVE GP-CHECK (WHEEL LEAN)	
H	15C	2	**318-3115**	2	VALVE GP-CHECK (CENTERSHIFT)	
H	15D	2	**318-3115**	1	VALVE GP-CHECK (SIDESHIFT)	
H	15E	2	**318-3115**	1	VALVE GP-CHECK (BLADE TIP)	
					(EACH VALVE GP-CHECK INCLUDES)	
H		2	**6V-6580**	1	SEAL-O-RING	
H		2	**9X-7745**	1	SEAL-O-RING	
H		2	**471-6294**	1	SEAL-O-RING	
	16	3	**336-6718**	7	LOCKNUT-FLANGE	
M	17	4	**344-5675**	4	NUT (M10X1.5-THD)	
	18	4	*366-4699*	2	PLUG AS	
					(EACH INCLUDES)	
		4	**3J-1907**	1	SEAL-O-RING	
		4	**360-3692**	1	PLUG	
	19	1,2,3	*366-4700*	18	PLUG AS	
					(EACH INCLUDES)	
		1,2,3	**3K-0360**	1	SEAL-O-RING	
		1,2,3	**360-3693**	1	PLUG (3/4-16-THD)	
	20	2,3	*367-6001*	5	PLUG AS	
					(EACH INCLUDES)	
		2,3	**4J-7533**	1	SEAL-O-RING	
		2,3	**360-3675**	1	PLUG (5/16-24-THD)	

487-3017 **VALVE GP-BANK 7 (**contd.**)** **i07798319**

NOTE	REF NO	GRAPHIC REF	PART NUMBER	QTY	PART NAME 1 2 3 4 5 6 (PRODUCT LEVEL)	SEE PAGE
	21	3	*367-6002*	7	PLUG AS	
					(EACH INCLUDES)	
		3	**3J-7354**	1	SEAL-O-RING	
		3	**360-3677**	1	PLUG (7/16-20-THD)	
	22	1	*367-6003*	6	PLUG AS	
					(EACH INCLUDES)	
		1	**3K-0360**	1	SEAL-O-RING	
		1	**360-3680**	1	PLUG	
	23	3	**564-6716**	7	COVER-SPRING	
	24	3	**370-8979**	7	COVER	
	26	1	**372-0918**	5	SEAL-INTEGRAL	
	27	3	**380-0794**	28	RETAINER	
	28	3	**526-6377**	6	SPRING	
	29	3	**380-0820**	1	SPRING	
	30	3	**380-0821**	1	SPRING	
	38	1	**382-5517**	1	MANIFOLD-INLET	
	39	3	**3K-0360**	7	SEAL-O-RING	
M	40	2,3	**3T-0849**	28	BOLT-SOCKET HEAD (M6X1X25-MM)	
	45	3	**4J-7533**	7	SEAL-O-RING	
	46	3	**5B-9318**	7	BALL	
	47	3	**6E-3007**	7	SPRING	
	48	3	**6L-9716**	1	PLUG-PIPE	
M	49	2,3	**8T-0267**	14	BOLT-SOCKET HEAD (M6X1X12-MM)	
	50	4	**8T-4121**	4	WASHER-HARD (11X21X2.5-MM THK)	
AFJ			**372-0918**	8	SEAL-INTEGRAL	
AFJY			**382-3290**	1	VALVE GP-CONTROL (BLADE TIP)	699
AFJY			**382-3294**	1	VALVE GP-CONTROL (CENTERSHIFT)	701
AFJY			**382-3298**	1	VALVE GP-CONTROL (LIFT)	709
AFJY			**382-3299**	1	VALVE GP-CONTROL (RIPPER)	711
AFJY			**382-3301**	1	VALVE GP-CONTROL (BLADE TIP)	715
AFJY			**382-3305**	1	VALVE GP-CONTROL (WHEEL LEAN)	717
AFJY			**382-3316**	1	VALVE GP-CONTROL (CIRCLE)	719
					AVAILABLE REPAIR KIT(S):	
H			**471-4231**	1	KIT-SEAL (CHECK VALVE)	
					(ALSO INCLUDES BACKUP RINGS)	

A - NOT PART OF THIS GROUP
F - NOT SHOWN
H - KIT MARKED H SERVICES PART(S) MARKED H
J - REFER TO "FIELD REPLACEMENT REFERENCE" CHART ON GRAPHIC
M - METRIC PART
Y - SEPARATE ILLUSTRATION

487-3017 **VALVE GP-BANK 7 (**contd.**)** **i07798319**

REFER TO ALL ILLUSTRATIONS OF
THIS GROUP FOR AUXILIARY VIEWS

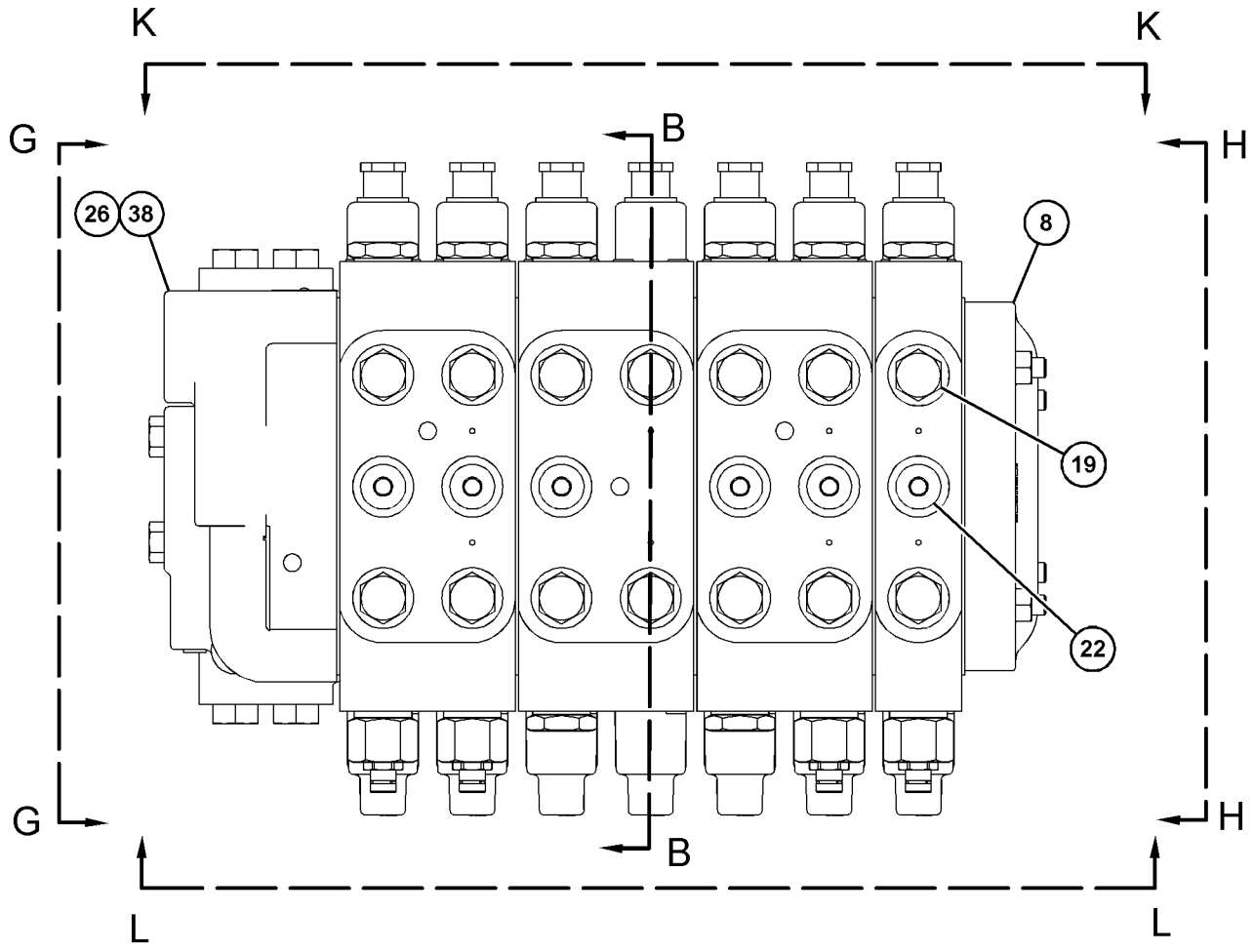

	SERVICE REPAIR REFERENCE FOR SECTION REPLACEMENT				
	SECTION	QTY	PART NO.	NAME	FUNCTION
INLET ↓ COVER	BLADE TIP & SIDE SHIFT	1	382-3290	VALVE GP-CONT -P	BLADE TIP
		1	372-0918	SEAL-INTEGRAL	SEAL
		1	382-3301	VALVE GP-CONT -P	SIDE SHIFT
	CENTER SHIFT & CIRCLE DRIVE	1	382-3294	VALVE GP-CONT -P	CENTER SHIFT
		1	372-0918	SEAL-INTEGRAL	SEAL
		1	382-3316	VALVE GP-CONT -P	CIRCLE DRIVE
	WHEEL LEAN & PLOW LIFT	1	382-3305	VALVE GP-CONT -P	WHEEL LEAN
		1	372-0918	SEAL-INTEGRAL	SEAL
		1	382-3298	VALVE GP-CONT -P	PLOW LIFT
	PLOW ANGLE	1	382-3299	VALVE GP-CONT -P	PLOW ANGLE

GRAPHIC #1 g06395926

487-3017 **VALVE GP-BANK 7 (**contd.**)** **i07798319**

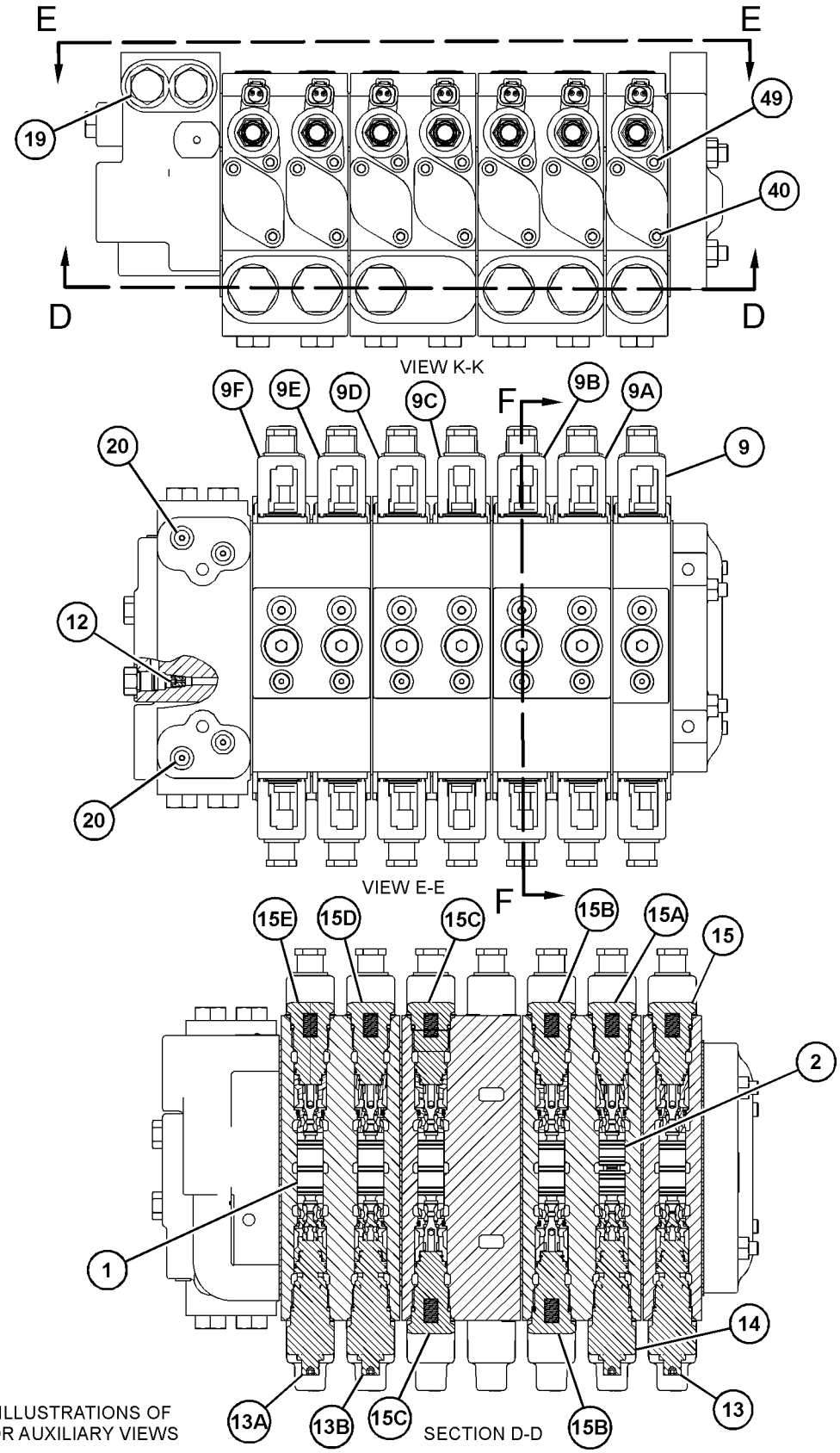

REFER TO ALL ILLUSTRATIONS OF THIS GROUP FOR AUXILIARY VIEWS

GRAPHIC #2

g06395928

487-3017 **VALVE GP-BANK 7 (**contd.**)** **i07798319**

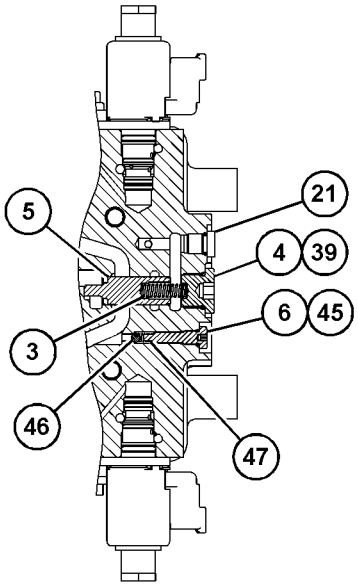

SECTION F-F

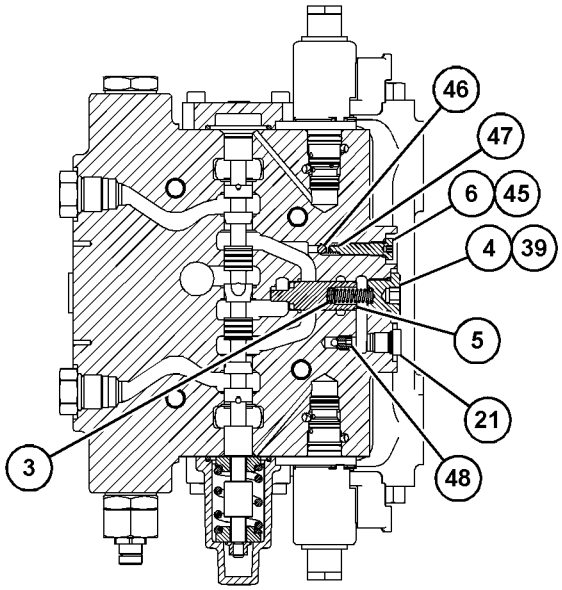

SECTION B-B

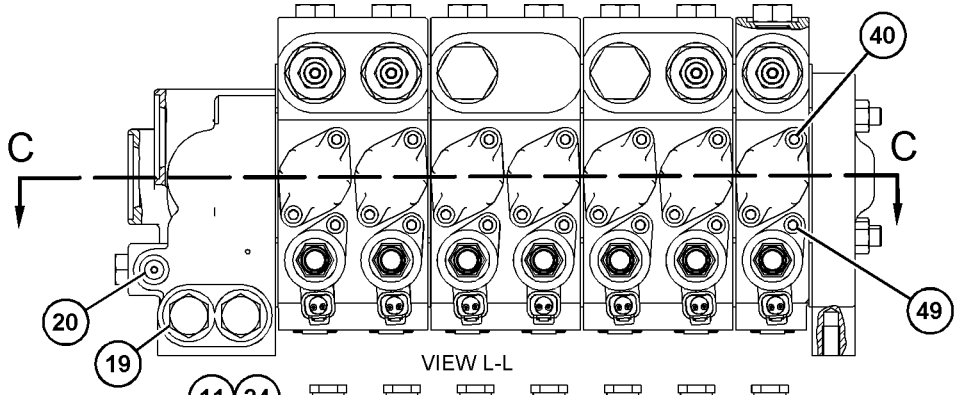

VIEW L-L

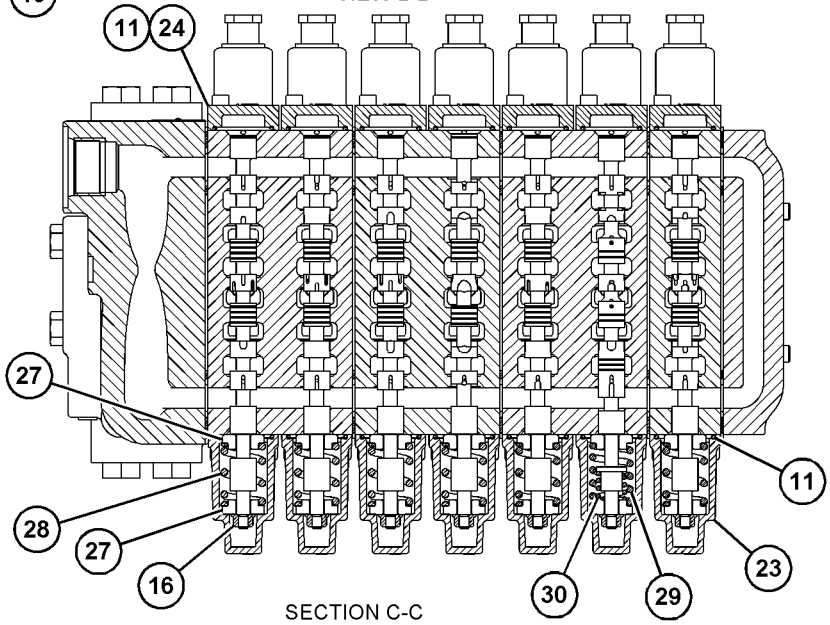

SECTION C-C

GRAPHIC #3

g06439779

487-3017 **VALVE GP-BANK 7 (**contd.**)** **i07798319**

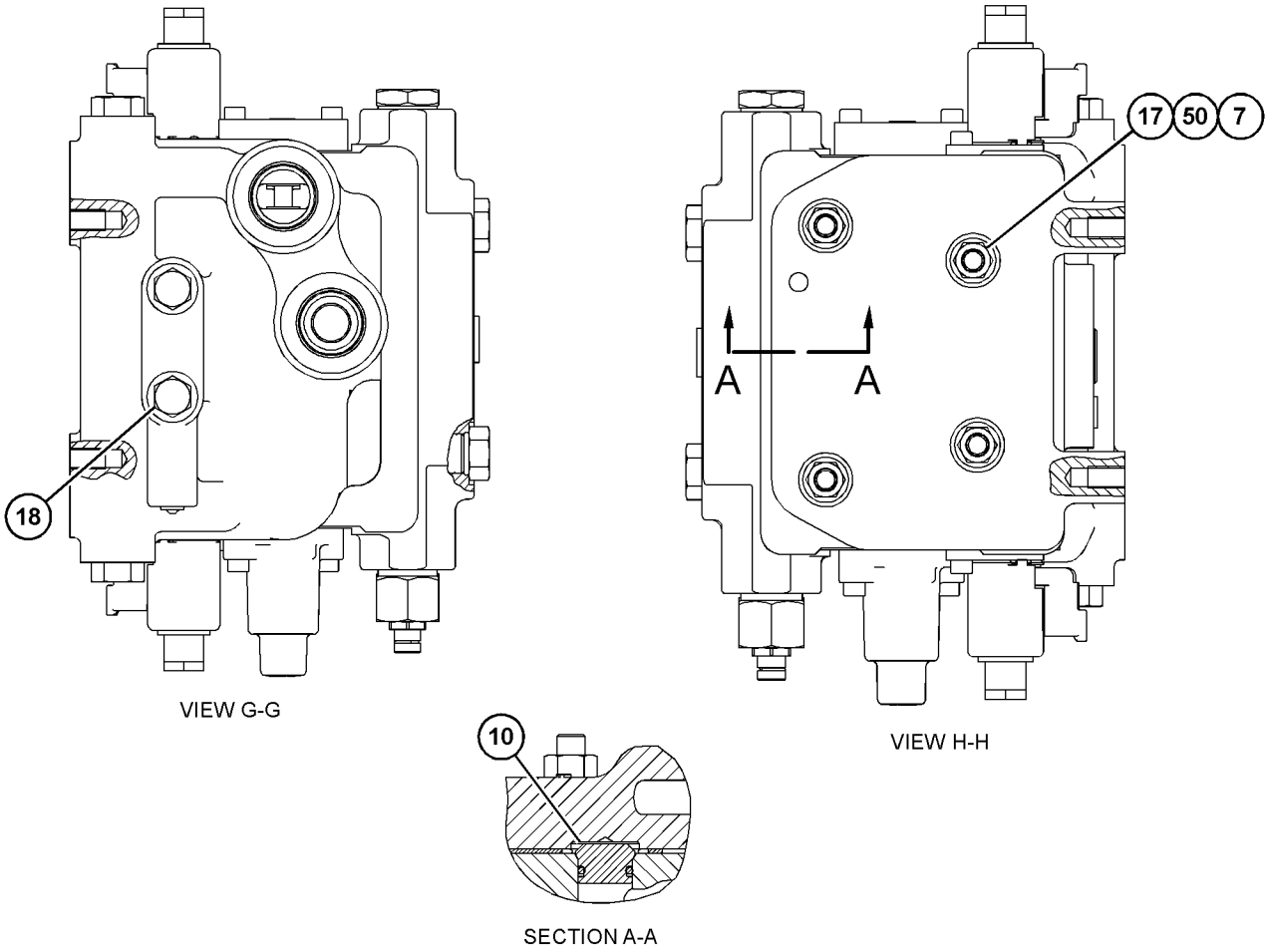

GRAPHIC #4 <END> g06395931

487-3018 VALVE GP-BANK 8–FRONT

S/N: B551-UP

PART OF 438-5426 CONTROL AR-HYDRAULIC

SMCS-5051 **i07830450**

NOTE	REF NO	GRAPHIC REF	PART NUMBER	QTY	PART NAME 1 2 3 4 5 6 (PRODUCT LEVEL)	SEE PAGE
	1	3	**106-3659**	6	PISTON	
	2	3	**106-3660**	2	PISTON	
	3	2	**212-4961**	8	SPRING	
	4	2	**242-9264**	8	PLUG-ORIFICE	
	5	2	**243-2965**	8	SPOOL	
	6	2	**244-2579**	8	PLUG	
	7	1	**249-5637**	4	ROD	
	8	1	**273-1871**	1	COVER	
Y	9	1	**278-1799**	2	VALVE GP-SOLENOID (PLOW ANGLE)	741
Y	9A	1	**278-1799**	2	VALVE GP-SOLENOID (PLOW LIFT)	741
Y	9B	1	**278-1799**	2	VALVE GP-SOLENOID (SCARIFIER)	741
Y	9C	1	**278-1799**	2	VALVE GP-SOLENOID (WHEEL LEAN)	741
Y	9D	1	**278-1799**	2	VALVE GP-SOLENOID (CIRCLE DRIVE)	741
Y	9E	1	**278-1799**	2	VALVE GP-SOLENOID (CENTERSHIFT)	741
Y	9F	1	**278-1799**	2	VALVE GP-SOLENOID (SIDESHIFT)	741
Y	9G	1	**278-1799**	2	VALVE GP-SOLENOID (BLADE TIP)	741
	10	1	*292-9221*	1	PLUG AS	
		1	**292-9220**	1	PLUG	
		1	**294-8055**	1	SEAL-O-RING	
	11	3	**2S-4663**	16	SEAL-O-RING	
	12	1	**301-4568**	1	ORIFICE	
J	13	3	**318-3036**	1	VALVE GP-CHECK & RELIEF (SCARIFIER)	
J	14	3	**318-3040**	1	VALVE GP-CHECK & RELIEF (PLOW ANGLE)	
J	14A	3	**318-3040**	1	VALVE GP-CHECK & RELIEF (SIDESHIFT)	
J	14B	3	**318-3040**	1	VALVE GP-CHECK & RELIEF (BLADE TIP)	
J	15	3	**318-3052**	1	VALVE GP-CHECK & RELIEF (PLOW LIFT)	
J	16	3	**318-3115**	1	VALVE GP-CHECK (PLOW ANGLE)	
J	16A	3	**318-3115**	1	VALVE GP-CHECK (PLOW LIFT)	
J	16B	3	**318-3115**	1	VALVE GP-CHECK (SCARIFIER)	
J	16C	3	**318-3115**	2	VALVE GP-CHECK (WHEEL LEAN)	
J	16D	3	**318-3115**	2	VALVE GP-CHECK (CENTERSHIFT)	
J	16E	3	**318-3115**	1	VALVE GP-CHECK (SIDESHIFT)	
J	16F	3	**318-3115**	1	VALVE GP-CHECK (BLADE TIP)	
					(EACH VALVE GP-CHECK INCLUDES)	
J		3	**6V-6580**	1	SEAL-O-RING	
J		3	**9X-7745**	1	SEAL-O-RING	
J		3	**471-6294**	1	SEAL-O-RING	
	17	3	**336-6718**	8	LOCKNUT-FLANGE	
M	18	1	**344-5675**	4	NUT (M10X1.5-THD)	
	19	1	*366-4699*	2	PLUG AS	
					(EACH INCLUDES)	
		1	**3J-1907**	1	SEAL-O-RING	
		1	**360-3692**	1	PLUG	
	20	1,2	*366-4700*	20	PLUG AS	
					(EACH INCLUDES)	
		1,2	**3K-0360**	1	SEAL-O-RING	
		1,2	**360-3693**	1	PLUG (3/4-16-THD)	
	21	1	*367-6001*	5	PLUG AS	

487-3018 **VALVE GP-BANK 8 (**contd.**)** **i07830450**

NOTE	REF NO	GRAPHIC REF	PART NUMBER	QTY	PART NAME 1 2 3 4 5 6 (PRODUCT LEVEL)	SEE PAGE
					(EACH INCLUDES)	
		1	**4J-7533**	1	SEAL-O-RING	
		1	**360-3675**	1	PLUG (5/16-24-THD)	
	22	2	*367-6002*	8	PLUG AS	
					(EACH INCLUDES)	
		2	**3J-7354**	1	SEAL-O-RING	
		2	**360-3677**	1	PLUG (7/16-20-THD)	
	23	1	*367-6003*	7	PLUG AS	
					(EACH INCLUDES)	
		1	**3K-0360**	1	SEAL-O-RING	
		1	**360-3680**	1	PLUG	
	24	3	**564-6716**	8	COVER-SPRING	
	25	3	**370-8979**	8	COVER	
	26	1	**372-0918**	5	SEAL-INTEGRAL	
	27	3	**380-0794**	32	RETAINER	
	28	3	**526-6377**	7	SPRING	
	29	3	**380-0820**	1	SPRING	
	30	3	**380-0821**	1	SPRING	
	38	1	**382-5517**	1	MANIFOLD-INLET	
	39	2	**3K-0360**	8	SEAL-O-RING	
M	40	1,2	**3T-0849**	32	BOLT-SOCKET HEAD (M6X1X25-MM)	
	45	2	**4J-7533**	8	SEAL-O-RING	
	47	2	**5B-9318**	8	BALL	
	48	2	**6E-3007**	8	SPRING	
	49	2	**6L-9716**	1	PLUG-PIPE	
M	50	1,2	**8T-0267**	16	BOLT-SOCKET HEAD (M6X1X12-MM)	
	51	1	**8T-4121**	4	WASHER-HARD (11X21X2.5-MM THK)	
AFY			**382-3299**	1	VALVE GP-CONTROL (RIPPER)	711
AFY			**382-3300**	1	VALVE GP-CONTROL (SCARIFIER)	713
AFY			**382-3301**	1	VALVE GP-CONTROL (BLADE TIP)	715
AFY			**382-3305**	1	VALVE GP-CONTROL (WHEEL LEAN)	717
AFY			**382-3316**	1	VALVE GP-CONTROL (CIRCLE)	719
AFY			**382-3294**	1	VALVE GP-CONTROL (CENTERSHIFT)	701
AFY			**382-3298**	1	VALVE GP-CONTROL (LIFT)	709
AFY			**382-3290**	1	VALVE GP-CONTROL (BLADE TIP)	699
AF			**372-0918**	9	SEAL-INTEGRAL	
					AVAILABLE REPAIR KIT(S):	
J			**471-4231**	1	KIT-SEAL (CHECK VALVE)	
					(ALSO INCLUDES BACKUP RINGS)	

A - NOT PART OF THIS GROUP
F - NOT SHOWN
J - KIT MARKED J SERVICES PART(S) MARKED J
M - METRIC PART
Y - SEPARATE ILLUSTRATION

487-3018 **VALVE GP-BANK 8** (contd.) **i07830450**

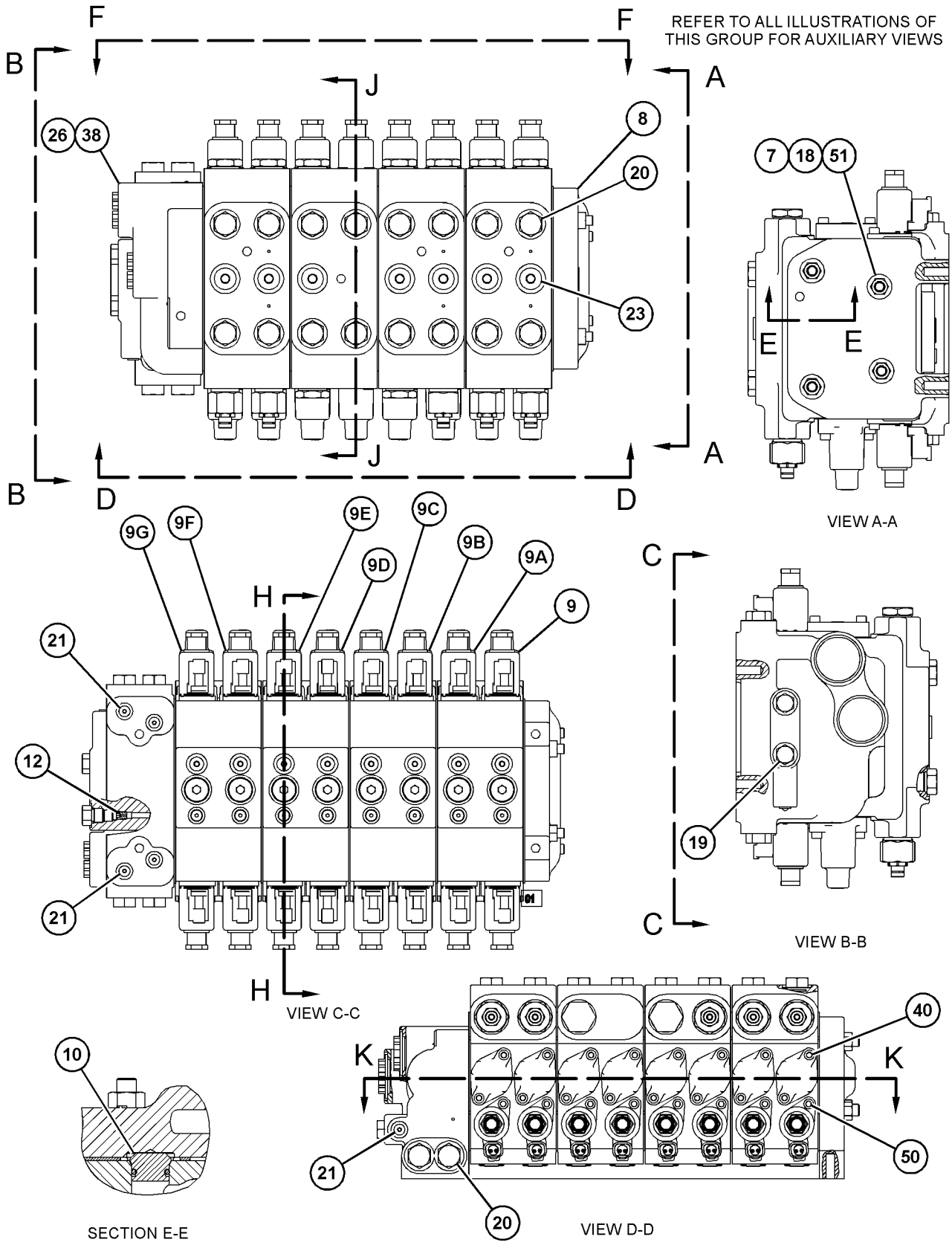

GRAPHIC #1

g06357574

487-3018 **VALVE GP-BANK 8 (**contd.**)** **i07830450**

REFER TO ALL ILLUSTRATIONS OF
THIS GROUP FOR AUXILIARY VIEWS

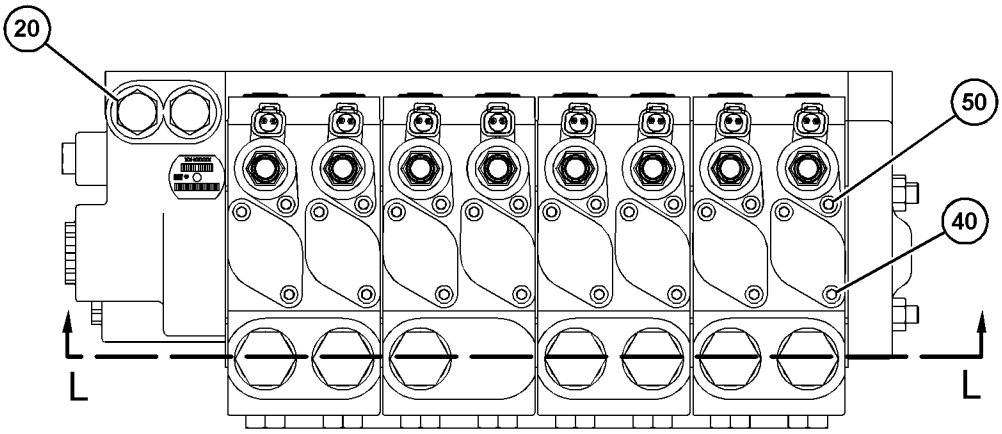

VIEW F-F

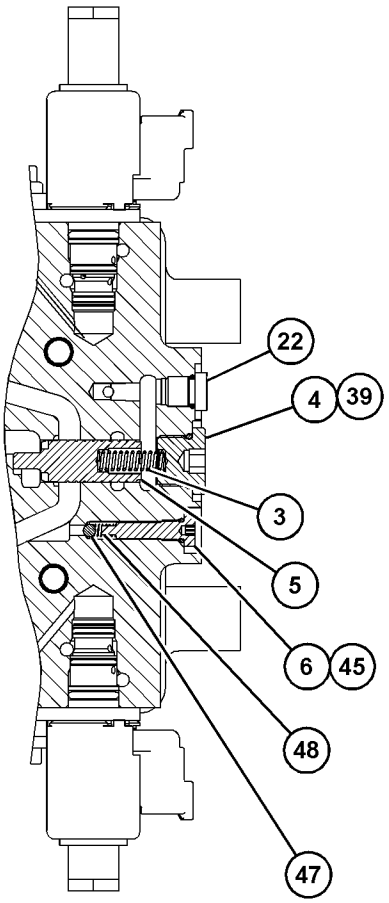

SECTION H-H

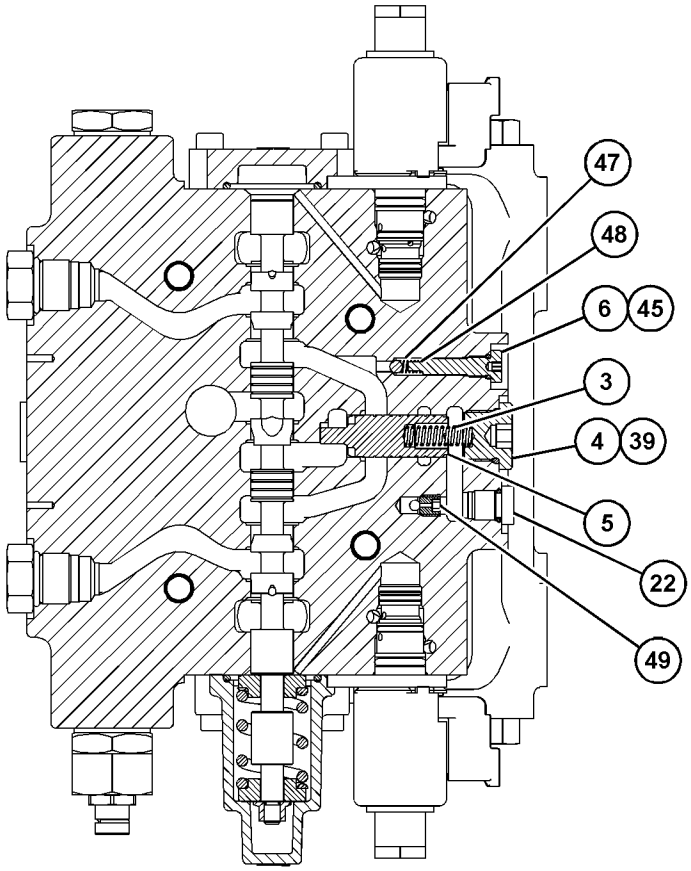

SECTION J-J

GRAPHIC #2 g06439783

487-3018 **VALVE GP-BANK 8 (**contd.**)** **i07830450**

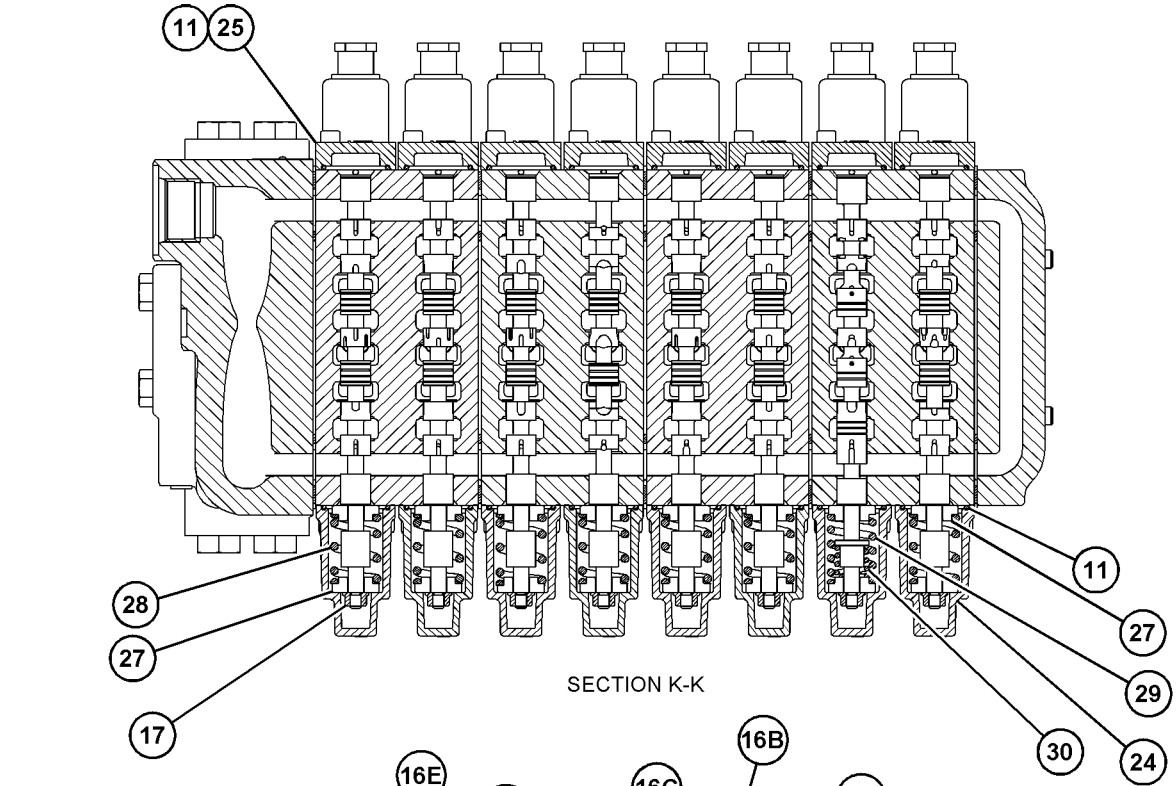

SECTION K-K

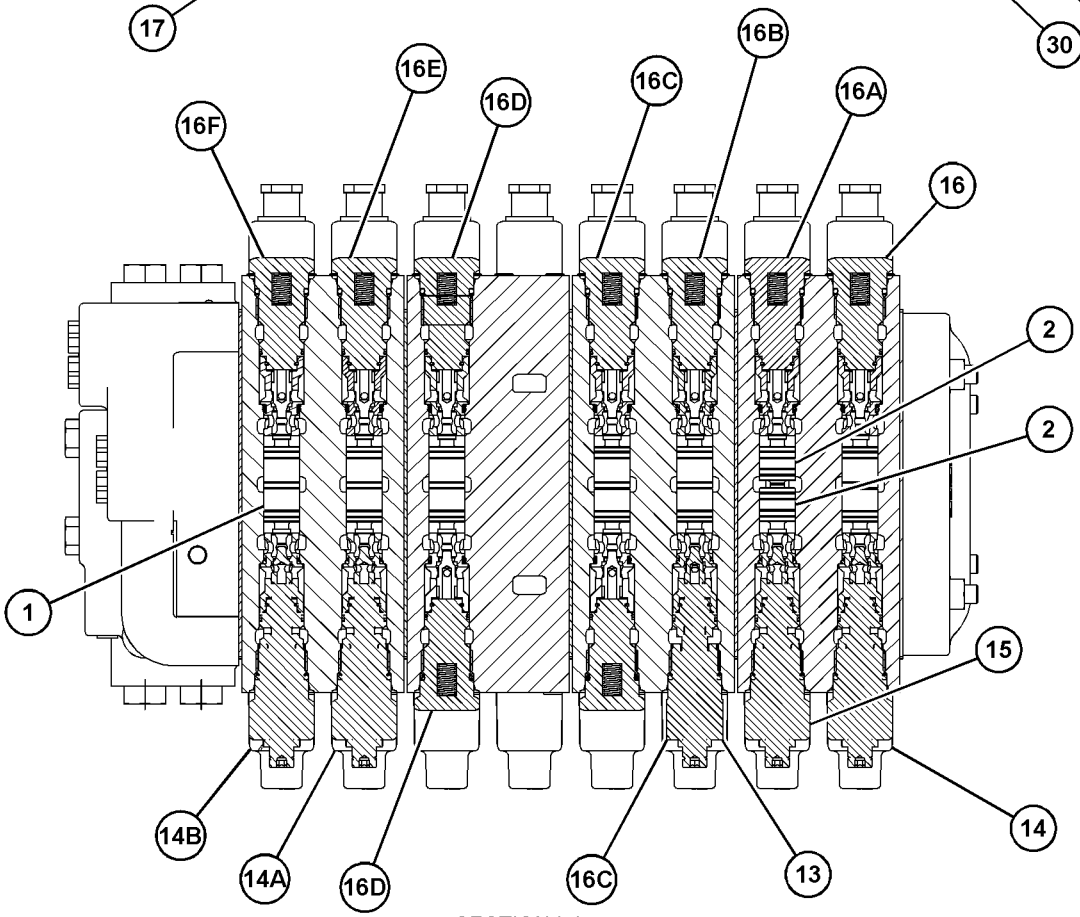

SECTION L-L

GRAPHIC #3 <END> g06439784

158-9956 VALVE GP-CHECK

S/N: B551-UP

PART OF 382-2790 VALVE GP-SHUTOFF

SMCS-5067 **i02106248**

NOTE	REF NO	GRAPHIC REF	PART NUMBER	QTY	PART NAME 1 2 3 4 5 6 (PRODUCT LEVEL)	SEE PAGE
	1	1	**3K-0360**	1	SEAL-O-RING	
	2	1	**161-6154**	1	SEAL-O-RING	
	3	1	**6E-0381**	1	RING-BACKUP	

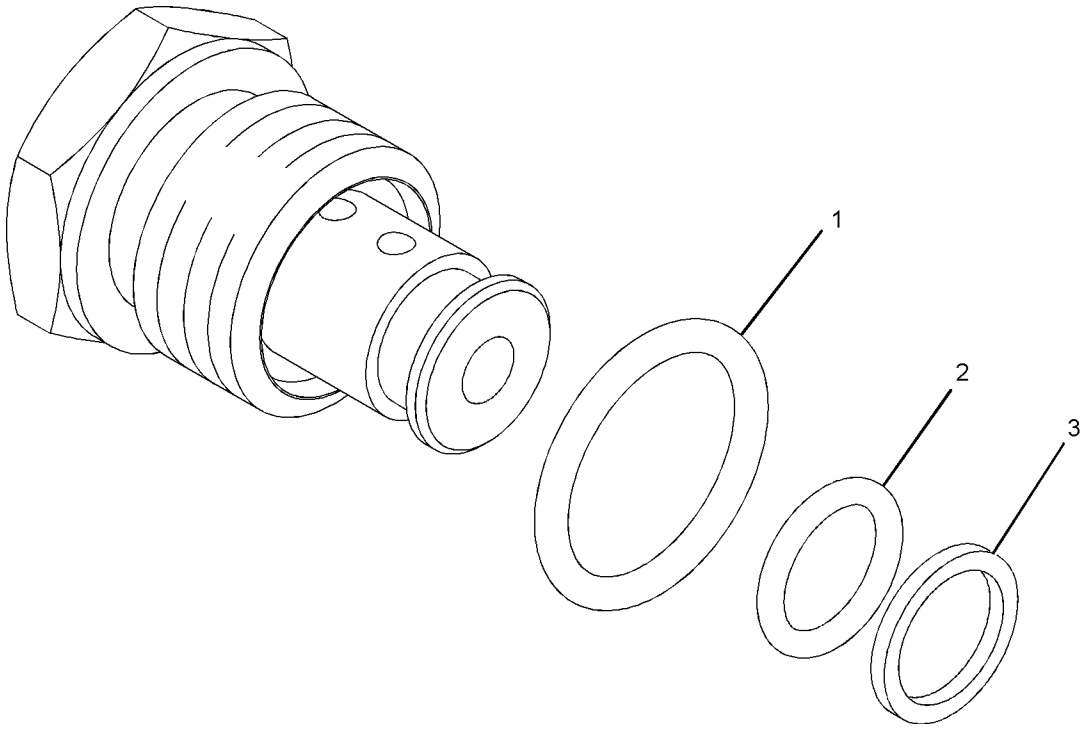

GRAPHIC #1 <END> g01016882

366-6686 VALVE GP-CONTROL—STEERING

S/N: B551-UP

PART OF 366-6680 VALVE GP-STEERING

SMCS-5051 **i05459695**

NOTE	REF NO	GRAPHIC REF	PART NUMBER	QTY	PART NAME 1 2 3 4 5 6 (PRODUCT LEVEL)	SEE PAGE
	1	1	**1T-0936**	2	PLUG-ORIFICE	
M	2	1	**8T-0267**	2	BOLT-SOCKET HEAD (M6X1X12-MM)	
Y	3	1	**252-8038**	1	VALVE GP-PRESSURE REDUCING (PRIMARY STEERING)	732
Y	4	1	**278-1799**	2	VALVE GP-SOLENOID (WING TILT)	741
	5	1	**282-8827**	8	PLUG	
	6	1	**361-9760**	1	SPRING	
J	7	1	**363-6519**	1	VALVE GP-RELIEF	
	8	1	*366-4695*	1	PLUG AS	
		1	**3J-1907**	1	SEAL-O-RING	
		1	**360-3679**	1	PLUG-CONNECTOR (9/16-18-THD)	
	9	1	**7M-8485**	1	SEAL-O-RING	
	10	1	**7J-9933**	1	SEAL-O-RING	
	11	1	*369-6858*	1	PLUG AS	
		1	**7M-8485**	1	SEAL-O-RING	
		1	**360-3697**	1	PLUG	
	12	1	**372-7875**	1	PLUG	
	13	1	**1P-3700**	1	SEAL-RECTANGULAR	
	14	1	**1P-3702**	1	SEAL-RECTANGULAR	
	15	1	**4J-9535**	3	SEAL-O-RING	
					AVAILABLE REPAIR KIT(S):	
J			**120-9051**	1	KIT-SEAL (CHECK VALVE) (RELIEF VALVE)	
					(INCLUDES RINGS)	

J - KIT MARKED J SERVICES PART MARK J
M - METRIC PART
Y - SEPARATE ILLUSTRATION

366-6686 **VALVE GP-CONTROL (**contd.**)** **i05459695**

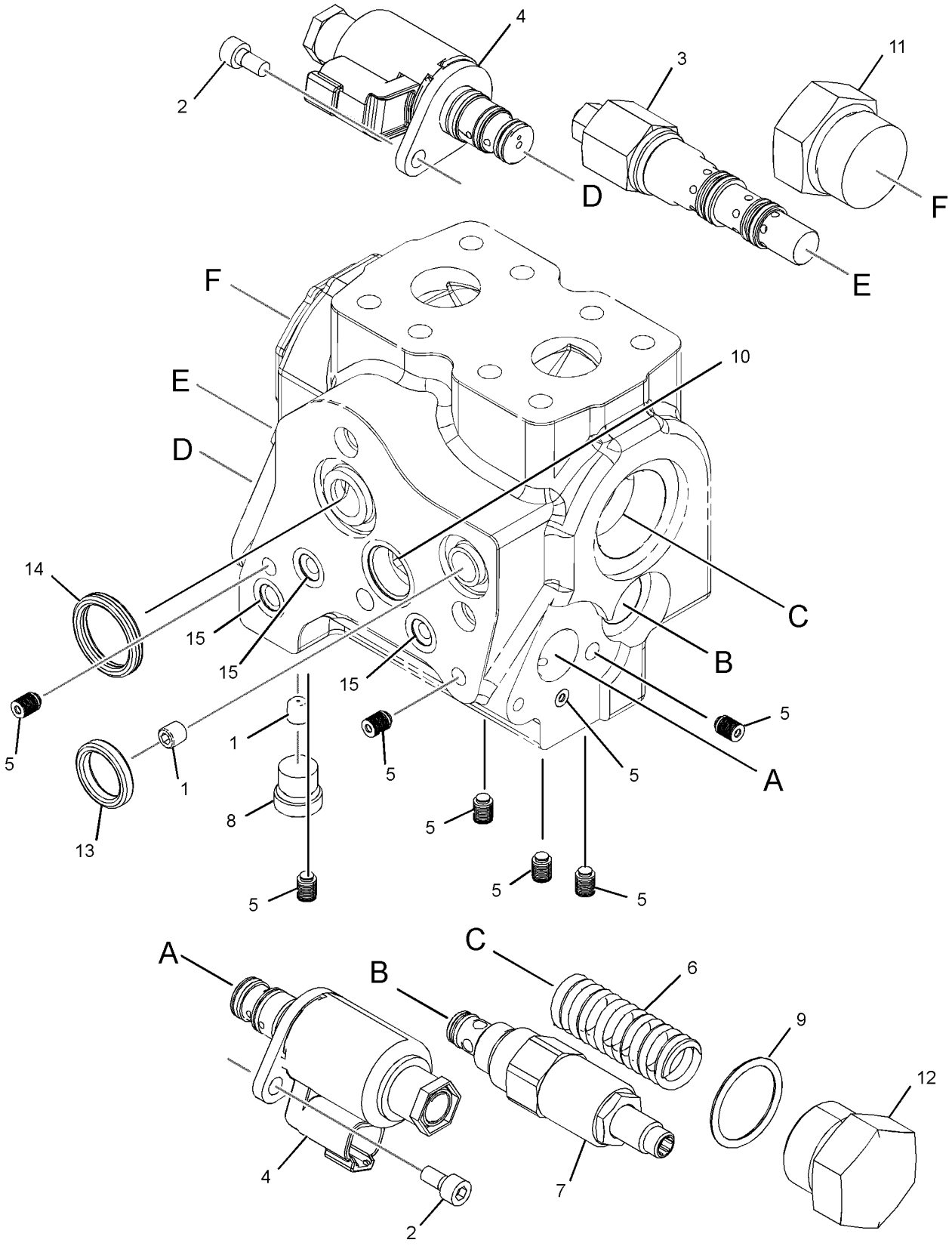

GRAPHIC #1 <END> g03506104

366-6692 VALVE GP-CONTROL–STEERING

S/N: B551-UP

PART OF 366-6680 VALVE GP-STEERING

SMCS-5051 **i07788566**

NOTE	REF NO	GRAPHIC REF	PART NUMBER	QTY	PART NAME 1 2 3 4 5 6 (PRODUCT LEVEL)	SEE PAGE
M	1	1	**8T-0267**	2	BOLT-SOCKET HEAD (M6X1X12-MM)	
Y	2	1	**278-1799**	2	VALVE GP-SOLENOID (STEERING)	741
	3	1	**282-8827**	10	PLUG	
	4	1	**313-3966**	2	VALVE GP-SHUTTLE (STEERING)	
L	5	1	**461-2544**	1	SENSOR AS (SPOOL)	
	6	1	**341-0825**	1	PROBE AS (SPOOL)	
	7	1	**352-6515**	1	VALVE GP-SOLENOID (PILOT)	
		1	**305-1981**	1	COIL AS (24-VOLT)	
	8	1	**361-9761**	1	HOUSING	
	9	1	**363-8120**	1	PLUG	
M	10	1	**3T-0849**	4	BOLT-SOCKET HEAD (M6X1X25-MM)	
	11	1	**336-6718**	1	LOCKNUT-FLANGE	
	12	1	**366-6701**	2	VALVE GP-RELIEF (OIL PRESSURE)	
					(EACH INCLUDES)	
		1	**7J-9108**	1	SEAL-O-RING	
	13	1	*367-6002*	2	PLUG AS	
					(EACH INCLUDES)	
		1	**360-3677**	1	PLUG (7/16-20-THD)	
		1	**3J-7354**	1	SEAL-O-RING	
	14	1	*367-6003*	2	PLUG AS	
					(EACH INCLUDES)	
		1	**360-3680**	1	PLUG	
		1	**3K-0360**	1	SEAL-O-RING	
	15	1	**564-6716**	1	COVER-SPRING	
	16	1	**377-2121**	1	SPRING	
	17	1	**380-0794**	4	RETAINER	
	18	1	**095-1582**	1	SEAL-O-RING	
M	19	1	**6V-8653**	2	BOLT-SOCKET HEAD (M6X1X40-MM)	
	20	1	**2S-4663**	2	SEAL-O-RING	
					PARTS SHOWN IN GRAPHIC(S) WITHOUT A REFERENCE NUMBER ARE NOT SERVICED SEPARATELY	
					AVAILABLE REPAIR KIT(S):	
LY			**505-1454**	1	KIT-SENSOR & MOUNTING (SPOOL)	199

L - KIT MARKED L SERVICES PART(S) MARKED L
M - METRIC PART
Y - SEPARATE ILLUSTRATION

366-6692 **VALVE GP-CONTROL (**contd.**)** **i07788566**

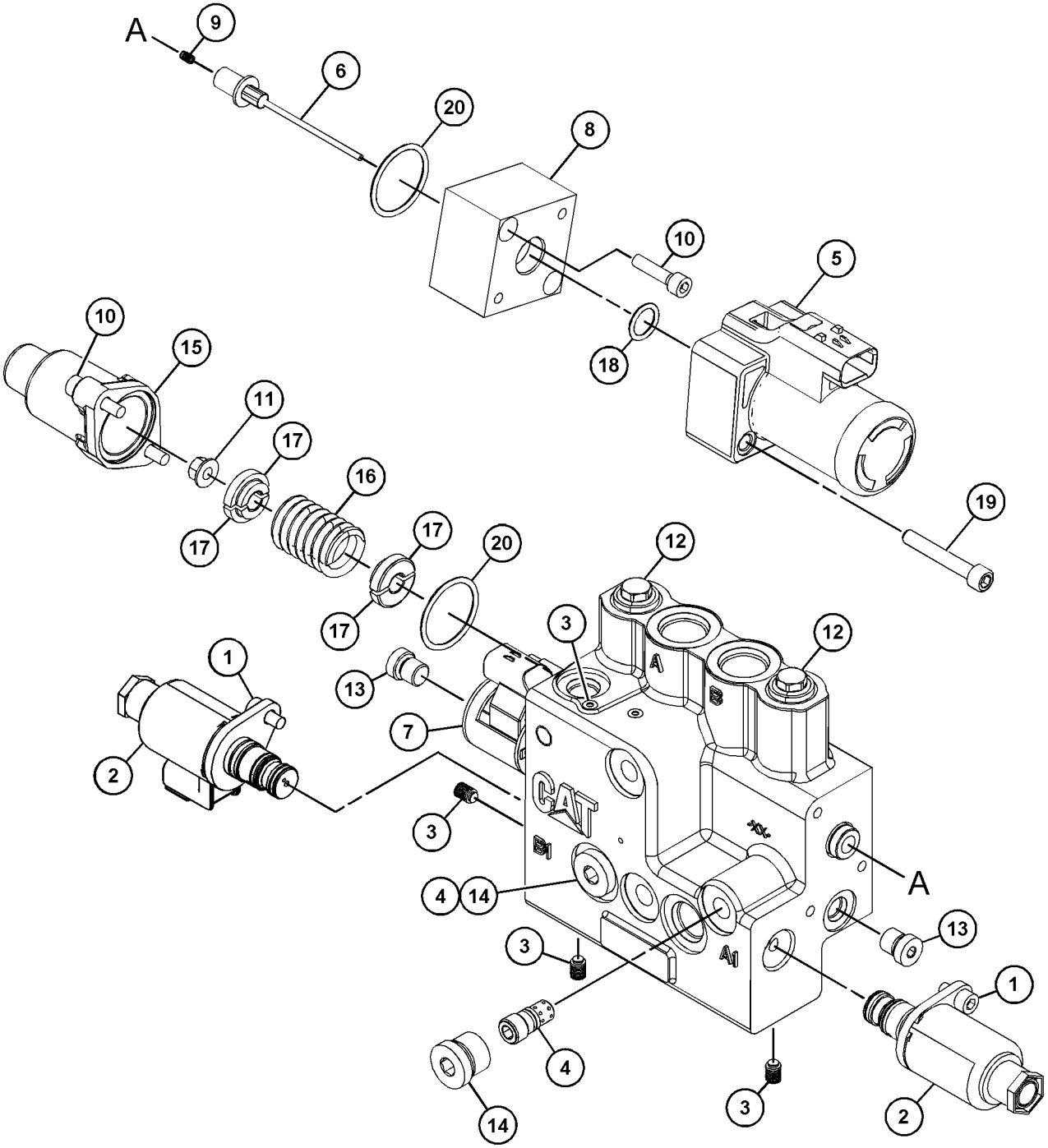

GRAPHIC #1 <END> g06056808

371-6093 VALVE GP-CONTROL–ARTICULATION

S/N: B551-UP

PART OF 487-3027 VALVE GP-BANK 3, 487-3028 VALVE GP-BANK 4, 487-3029 VALVE GP-BANK 5, 487-3030, 487-3031 VALVE GP-BANK 6

SMCS-5051 **i07788563**

NOTE	REF NO	GRAPHIC REF	PART NUMBER	QTY	PART NAME 1 2 3 4 5 6 (PRODUCT LEVEL)	SEE PAGE
M	1	1	**8T-0267**	2	BOLT-SOCKET HEAD (M6X1X12-MM)	
	2	1	**6E-3007**	1	SPRING	
	3	1	**106-3659**	1	PISTON	
	4	1	**212-4961**	1	SPRING	
	5	1	**242-9264**	1	PLUG-ORIFICE	
	6	1	**243-2965**	1	SPOOL	
	7	1	**244-2579**	1	PLUG	
Y	8	1	**278-1799**	2	VALVE GP-SOLENOID (ARTICULATION)	741
J	9	1	**321-6908**	2	VALVE GP-CHECK (ARTICULATION)	
					(EACH INCLUDES)	
J		1	**6V-6580**	1	SEAL-O-RING	
J		1	**9X-7745**	1	SEAL-O-RING	
J		1	**471-6294**	1	SEAL-O-RING	
	10	1	*367-6002*	1	PLUG AS	
		1	**3J-7354**	1	SEAL-O-RING	
		1	**360-3677**	1	PLUG (7/16-20-THD)	
	11	1	*367-6003*	1	PLUG AS	
		1	**3K-0360**	1	SEAL-O-RING	
		1	**360-3680**	1	PLUG	
	12	1	**564-6716**	1	COVER-SPRING	
	13	1	**526-6377**	1	SPRING	
	16	1	**380-0794**	4	RETAINER	
	19	1	**2S-4663**	2	SEAL-O-RING	
	20	1	**336-6718**	1	LOCKNUT-FLANGE	
	21	1	**3K-0360**	1	SEAL-O-RING	
M	22	1	**3T-0849**	4	BOLT-SOCKET HEAD (M6X1X25-MM)	
	23	1	**4J-7533**	1	SEAL-O-RING	
	24	1	**5B-9318**	1	BALL	
					PARTS SHOWN IN GRAPHIC(S) WITHOUT A REFERENCE NUMBER ARE NOT SERVICED SEPARATELY	
					AVAILABLE REPAIR KIT(S):	
J			**325-2588**	1	KIT-SEAL (ARTICULATION)	
					(INCLUDES SEAL-O-RINGS & BACKUP RINGS)	

J - KIT MARKED J SERVICES PART(S) MARKED J
M - METRIC PART
Y - SEPARATE ILLUSTRATION

371-6093 **VALVE GP-CONTROL (**contd.**)** **i07788563**

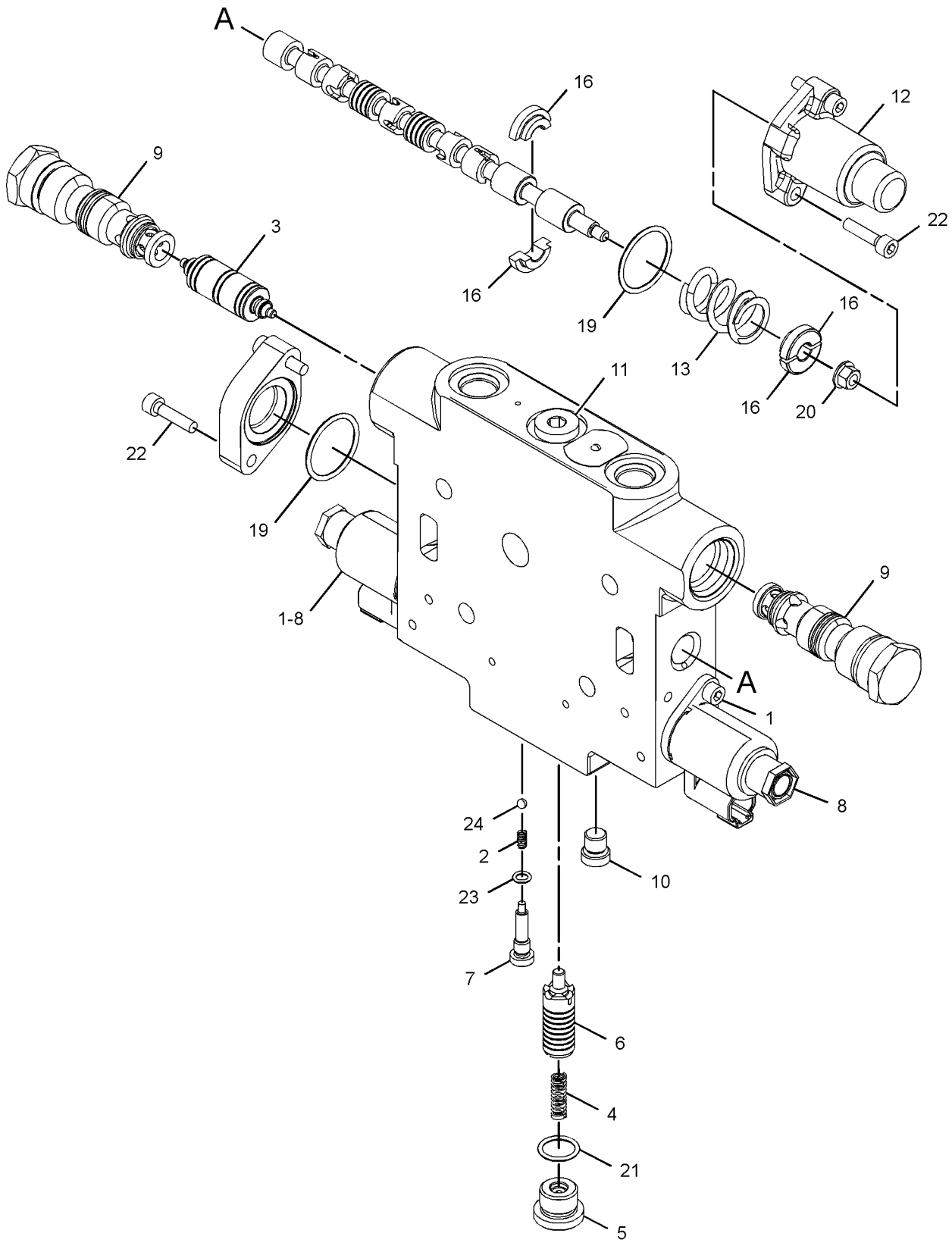

GRAPHIC #1 <END> g06029777

382-3290 VALVE GP-CONTROL—BLADE TIP

S/N: B551-UP

PART OF 487-3013 VALVE GP-BANK 5, 487-3014, 487-3015 VALVE GP-BANK 6, 487-3016, 487-3017 VALVE GP-BANK 7, 487-3018 VALVE GP-BANK 8, 487-3019 VALVE GP-CONTROL

SMCS-5051 **i07820808**

NOTE	REF NO	GRAPHIC REF	PART NUMBER	QTY	PART NAME 1 2 3 4 5 6 (PRODUCT LEVEL)	SEE PAGE
M	1	1	**8T-0267**	2	BOLT-SOCKET HEAD (M6X1X12-MM)	
	2	1	**6E-3007**	1	SPRING	
	3	1	**106-3659**	1	PISTON	
	4	1	**212-4961**	1	SPRING	
	5	1	**242-9264**	1	PLUG-ORIFICE	
	6	1	**243-2965**	1	SPOOL	
	7	1	**244-2579**	1	PLUG	
Y	8	1	**278-1799**	2	VALVE GP-SOLENOID (BLADE TIP)	741
J	9	1	**318-3040**	1	VALVE GP-CHECK & RELIEF (BLADE TIP)	
J	10	1	**318-3115**	1	VALVE GP-CHECK (BLADE TIP)	
J		1	**6V-6580**	1	SEAL-O-RING	
J		1	**9X-7745**	1	SEAL-O-RING	
J		1	**471-6294**	1	SEAL-O-RING	
	11	1	*367-6002*	1	PLUG AS	
		1	**360-3677**	1	PLUG (7/16-20-THD)	
		1	**3J-7354**	1	SEAL-O-RING	
	12	1	*367-6003*	1	PLUG AS	
		1	**360-3680**	1	PLUG	
		1	**3K-0360**	1	SEAL-O-RING	
	13	1	**564-6716**	1	COVER-SPRING	
	14	1	**526-6377**	1	SPRING	
	15	1	**370-8979**	1	COVER	
	16	1	**380-0794**	4	RETAINER	
	20	1	**2S-4663**	2	SEAL-O-RING	
	21	1	**336-6718**	1	LOCKNUT-FLANGE	
	22	1	**3K-0360**	1	SEAL-O-RING	
M	23	1	**3T-0849**	4	BOLT-SOCKET HEAD (M6X1X25-MM)	
	24	1	**4J-7533**	1	SEAL-O-RING	
	25	1	**5B-9318**	1	BALL	
					AVAILABLE REPAIR KIT(S):	
J			**471-4231**	1	KIT-SEAL	
					(ALSO INCLUDES BACKUP RINGS)	

J - KIT MARKED J SERVICES PART(S) MARKED J
M - METRIC PART
Y - SEPARATE ILLUSTRATION

382-3290 **VALVE GP-CONTROL (**contd.**)** **i07820808**

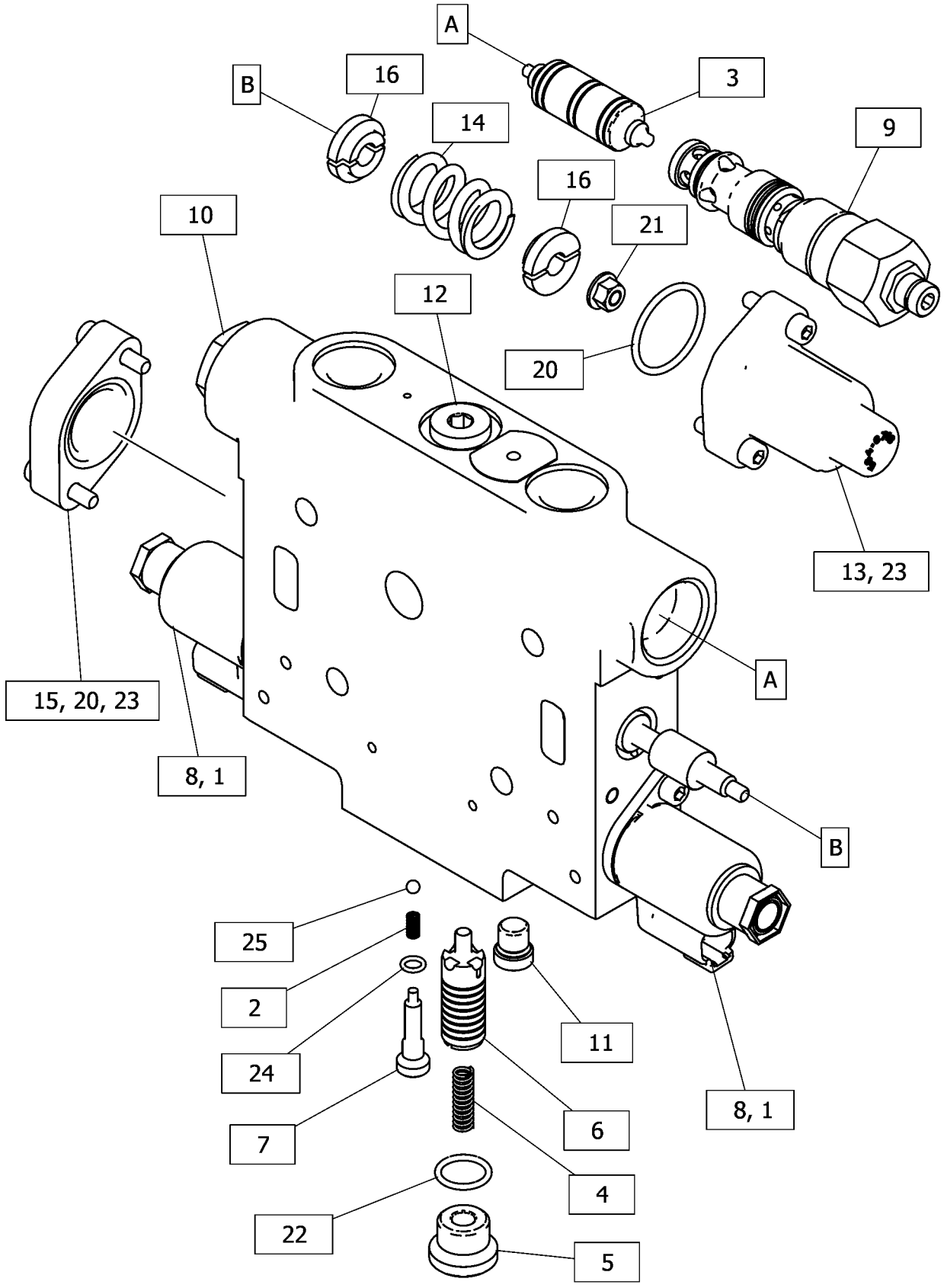

GRAPHIC #1 <END> g06437499

382-3294 VALVE GP-CONTROL—CENTER SHIFT

S/N: B551-UP

PART OF 487-3013 VALVE GP-BANK 5, 487-3014, 487-3015 VALVE GP-BANK 6, 487-3016, 487-3017 VALVE GP-BANK 7, 487-3018 VALVE GP-BANK 8, 487-3019 VALVE GP-CONTROL

SMCS-5051 **i07788569**

NOTE	REF NO	GRAPHIC REF	PART NUMBER	QTY	PART NAME 1 2 3 4 5 6 (PRODUCT LEVEL)	SEE PAGE
M	1	1	**8T-0267**	2	BOLT-SOCKET HEAD (M6X1X12-MM)	
	2	1	**6E-3007**	1	SPRING	
	3	1	**106-3659**	1	PISTON	
	4	1	**212-4961**	1	SPRING	
	5	1	**242-9264**	1	PLUG-ORIFICE	
	6	1	**243-2965**	1	SPOOL	
	7	1	**244-2579**	1	PLUG	
Y	8	1	**278-1799**	2	VALVE GP-SOLENOID (BLADE CENTERSHIFT)	741
J	9	1	**318-3115**	2	VALVE GP-CHECK (BLADE CENTERSHIFT)	
	10	1	*367-6002*	1	PLUG AS	
		1	**360-3677**	1	PLUG (7/16-20-THD)	
		1	**3J-7354**	1	SEAL-O-RING	
	11	1	*367-6003*	1	PLUG AS	
		1	**360-3680**	1	PLUG	
		1	**3K-0360**	1	SEAL-O-RING	
	12	1	**564-6716**	1	COVER-SPRING	
	13	1	**526-6377**	1	SPRING	
	15	1	**380-0794**	4	RETAINER	
	19	1	**2S-4663**	2	SEAL-O-RING	
	20	1	**336-6718**	1	LOCKNUT-FLANGE	
	21	1	**3K-0360**	1	SEAL-O-RING	
M	22	1	**3T-0849**	4	BOLT-SOCKET HEAD (M6X1X25-MM)	
	23	1	**4J-7533**	1	SEAL-O-RING	
	24	1	**5B-9318**	1	BALL	
					PARTS SHOWN IN GRAPHIC(S) WITHOUT A REFERENCE NUMBER ARE NOT SERVICED SEPARATELY	
					AVAILABLE REPAIR KIT(S):	
J			**325-2588**	1	KIT-SEAL	
					(INCLUDES SEAL-O-RINGS & BACKUP RINGS)	

J - KIT MARKED J SERVICES PART(S) MARKED J
M - METRIC PART
Y - SEPARATE ILLUSTRATION

382-3294 **VALVE GP-CONTROL (**contd.**)** **i07788569**

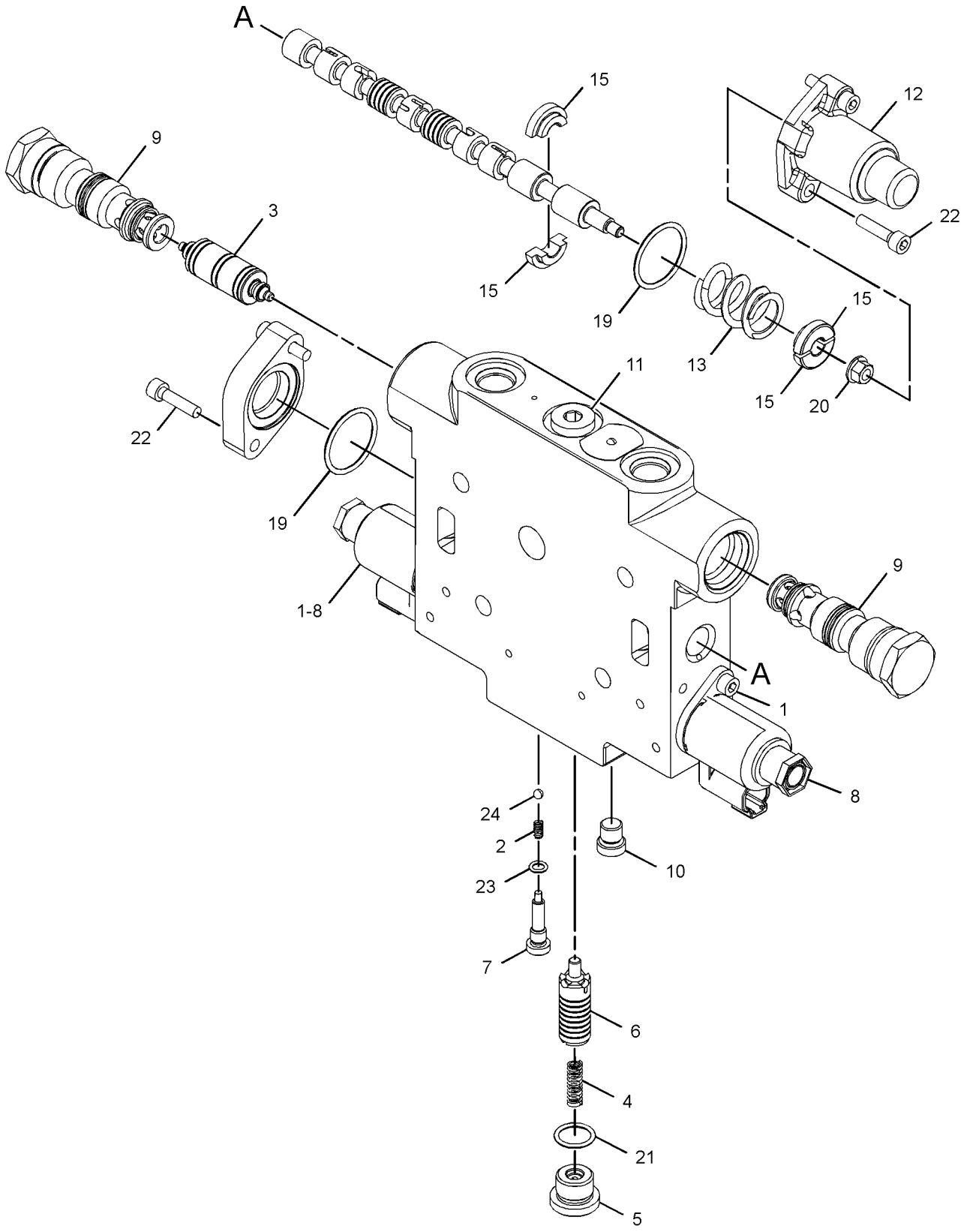

GRAPHIC #1 <END> g06029567

382-3295 VALVE GP-CONTROL–RIPPER

S/N: B551-UP

PART OF 487-3028 VALVE GP-BANK 4, 487-3030, 487-3031 VALVE GP-BANK 6

SMCS-5051 **i07788572**

NOTE	REF NO	GRAPHIC REF	PART NUMBER	QTY	PART NAME 1 2 3 4 5 6 (PRODUCT LEVEL)	SEE PAGE
M	1	1	**8T-0267**	2	BOLT-SOCKET HEAD (M6X1X12-MM)	
	2	1	**6E-3007**	1	SPRING	
	3	1	**106-3659**	1	PISTON	
	4	1	**212-4961**	1	SPRING	
	5	1	**242-9264**	1	PLUG-ORIFICE	
	6	1	**243-2965**	1	SPOOL	
	7	1	**244-2579**	1	PLUG	
Y	8	1	**278-1799**	2	VALVE GP-SOLENOID (RIPPER)	741
J	9	1	**318-3040**	1	VALVE GP-CHECK & RELIEF (LINE, LIFT)	
J	10	1	**318-3115**	1	VALVE GP-CHECK	
	11	1	*367-6002*	1	PLUG AS	
		1	**360-3677**	1	PLUG (7/16-20-THD)	
		1	**3J-7354**	1	SEAL-O-RING	
	12	1	*367-6003*	1	PLUG AS	
		1	**360-3680**	1	PLUG	
		1	**3K-0360**	1	SEAL-O-RING	
	13	1	**564-6716**	1	COVER-SPRING	
	14	1	**526-6377**	1	SPRING	
	16	1	**380-0794**	4	RETAINER	
	20	1	**2S-4663**	2	SEAL-O-RING	
	21	1	**336-6718**	1	LOCKNUT-FLANGE	
	22	1	**3K-0360**	1	SEAL-O-RING	
M	23	1	**3T-0849**	4	BOLT-SOCKET HEAD (M6X1X25-MM)	
	24	1	**4J-7533**	1	SEAL-O-RING	
	25	1	**5B-9318**	1	BALL	
					PARTS SHOWN IN GRAPHIC(S) WITHOUT A REFERENCE NUMBER ARE NOT SERVICED SEPARATELY	
					AVAILABLE REPAIR KIT(S):	
J			**325-2588**	1	KIT-SEAL	
					(INCLUDES SEAL O-RINGS & BACKUP RINGS)	

J - KIT MARKED J SERVICES PART(S) MARKED J
M - METRIC PART
Y - SEPARATE ILLUSTRATION

382-3295 **VALVE GP-CONTROL (**contd.**)** **i07788572**

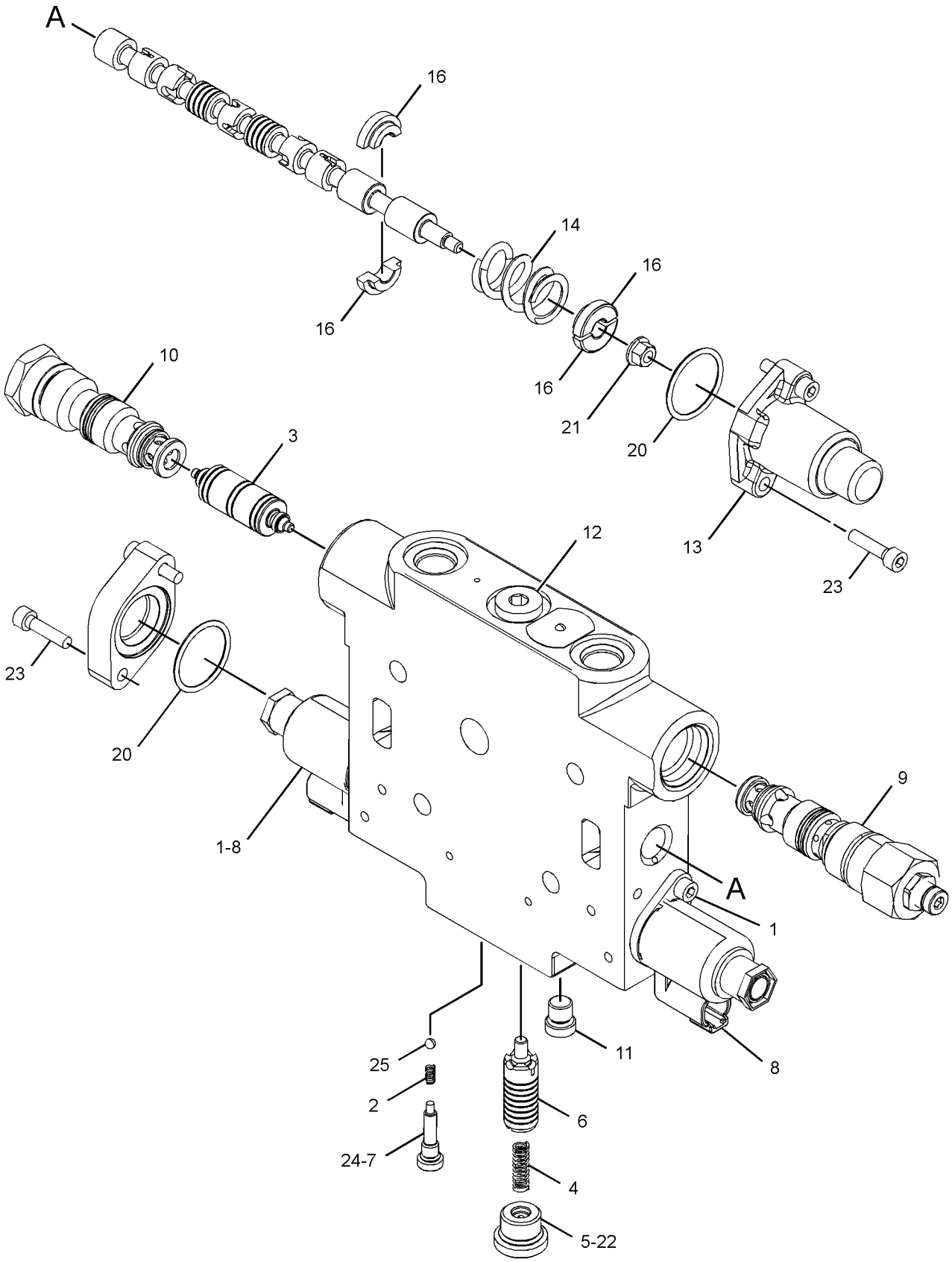

GRAPHIC #1 <END> g06029550

382-3296 VALVE GP-CONTROL—WING TILT

S/N: B551-UP

PART OF 487-3029 VALVE GP-BANK 5, 487-3030 VALVE GP-BANK 6

SMCS-5051 **i07820769**

NOTE	REF NO	GRAPHIC REF	PART NUMBER	QTY	PART NAME 1 2 3 4 5 6 (PRODUCT LEVEL)	SEE PAGE
M	1	1	**8T-0267**	2	BOLT-SOCKET HEAD (M6X1X12-MM)	
	2	1	**6E-3007**	1	SPRING	
	3	1	**106-3659**	1	PISTON	
	4	1	**212-4961**	1	SPRING	
	5	1	**242-9264**	1	PLUG-ORIFICE	
	6	1	**243-2965**	1	SPOOL	
	7	1	**244-2579**	1	PLUG	
Y	8	1	**278-1799**	2	VALVE GP-SOLENOID (WING TILT)	741
J	9	1	**318-3040**	2	VALVE GP-CHECK & RELIEF (LINE, TILT)	
	10	1	*367-6002*	1	PLUG AS	
		1	**3J-7354**	1	SEAL-O-RING	
		1	**360-3677**	1	PLUG (7/16-20-THD)	
	11	1	*367-6003*	1	PLUG AS	
		1	**3K-0360**	1	SEAL-O-RING	
		1	**360-3680**	1	PLUG	
	12	1	**564-6716**	1	COVER-SPRING	
	13	1	**526-6377**	1	SPRING	
	14	1	**380-0794**	4	RETAINER	
	15	1	**370-8979**	1	COVER	
	18	1	**2S-4663**	2	SEAL-O-RING	
	19	1	**336-6718**	1	LOCKNUT-FLANGE	
	21	1	**3K-0360**	1	SEAL-O-RING	
M	22	1	**3T-0849**	4	BOLT-SOCKET HEAD (M6X1X25-MM)	
	23	1	**4J-7533**	1	SEAL-O-RING	
	24	1	**5B-9318**	1	BALL	
					PARTS SHOWN IN GRAPHIC(S) WITHOUT A REFERENCE NUMBER ARE NOT SERVICED SEPARATELY	
					AVAILABLE REPAIR KIT(S):	
J			**471-4231**	1	KIT-SEAL	
					(INCLUDES O-RINGS & BACKUP RINGS)	

J - KIT MARKED J SERVICE PART(S) MARKED J
M - METRIC PART
Y - SEPARATE ILLUSTRATION

382-3296 **VALVE GP-CONTROL** (contd.) **i07820769**

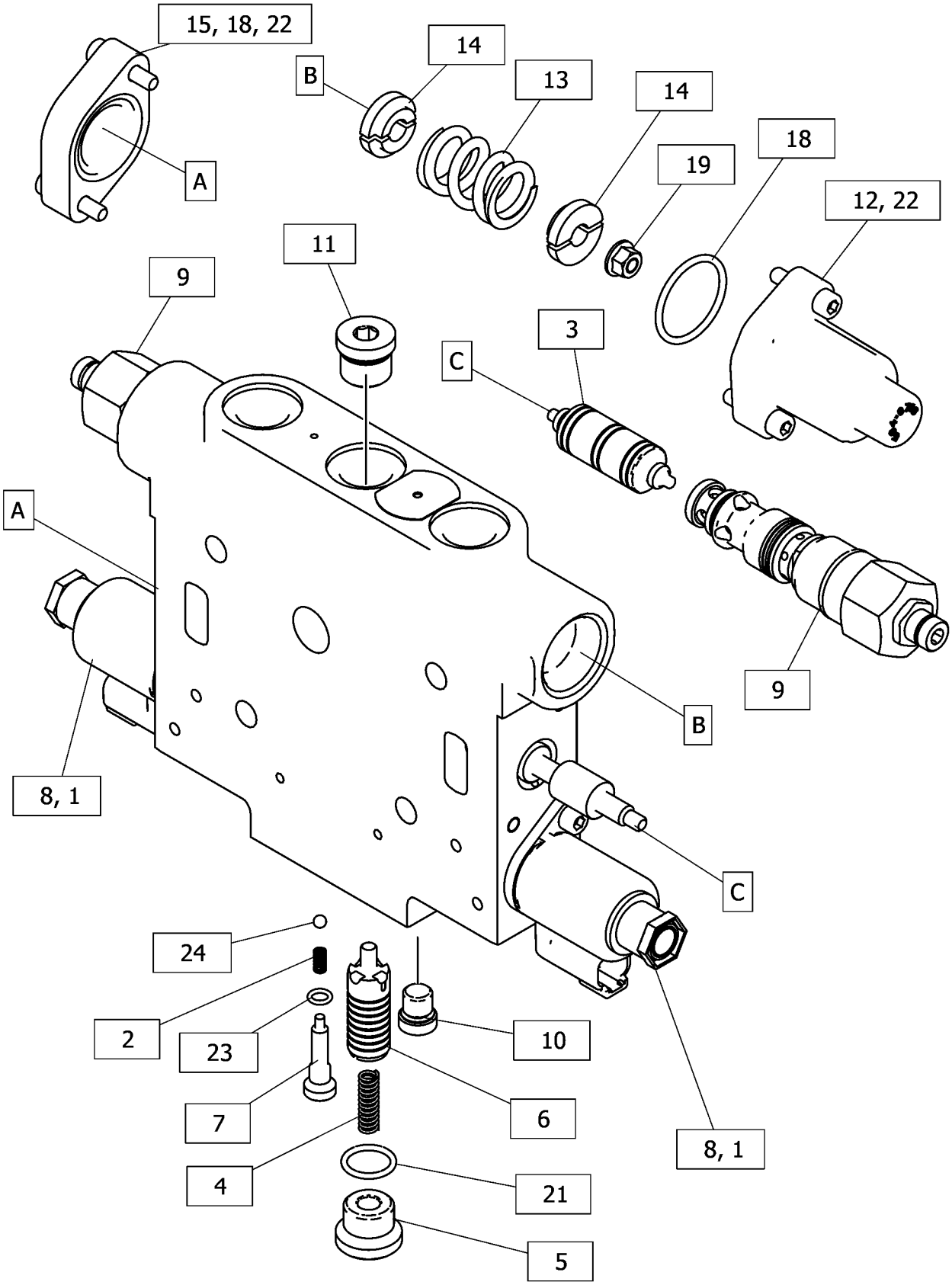

GRAPHIC #1 <END> g06437323

382-3297 VALVE GP-CONTROL—WING LIFT

S/N: B551-UP

PART OF 487-3029 VALVE GP-BANK 5, 487-3030, 487-3031 VALVE GP-BANK 6

SMCS-5051 **i07788570**

NOTE	REF NO	GRAPHIC REF	PART NUMBER	QTY	PART NAME 1 2 3 4 5 6 (PRODUCT LEVEL)	SEE PAGE
M	1	1	**8T-0267**	2	BOLT-SOCKET HEAD (M6X1X12-MM)	
	2	1	**6E-3007**	1	SPRING	
	3	1	**106-3659**	1	PISTON	
	4	1	**212-4961**	1	SPRING	
	5	1	**242-9264**	1	PLUG-ORIFICE	
	6	1	**243-2965**	1	SPOOL	
	7	1	**244-2579**	1	PLUG	
Y	8	1	**278-1799**	2	VALVE GP-SOLENOID (WING TILT)	741
J	9	1	**318-3040**	2	VALVE GP-CHECK & RELIEF (LINE, LIFT)	
	10	1	*367-6002*	1	PLUG AS	
		1	**3J-7354**	1	SEAL-O-RING	
		1	**360-3677**	1	PLUG (7/16-20-THD)	
	11	1	*367-6003*	1	PLUG AS	
		1	**3K-0360**	1	SEAL-O-RING	
		1	**360-3680**	1	PLUG	
	12	1	**564-6716**	1	COVER-SPRING	
	13	1	**526-6377**	1	SPRING	
	15	1	**380-0794**	4	RETAINER	
	19	1	**2S-4663**	2	SEAL-O-RING	
	20	1	**336-6718**	1	LOCKNUT-FLANGE	
	21	1	**3K-0360**	1	SEAL-O-RING	
M	22	1	**3T-0849**	4	BOLT-SOCKET HEAD (M6X1X25-MM)	
	23	1	**4J-7533**	1	SEAL-O-RING	
	24	1	**5B-9318**	1	BALL	
					PARTS SHOWN IN GRAPHIC(S) WITHOUT A REFERENCE NUMBER ARE NOT SERVICED SEPARATELY	
					AVAILABLE REPAIR KIT(S):	
J			**325-2588**	1	KIT-SEAL (WING LIFT)	
					(KIT INCLUDES O-RINGS & BACKUP RINGS)	

J - KIT MARKED J SERVICES PART(S) MARKED J
M - METRIC PART
Y - SEPARATE ILLUSTRATION

382-3297 **VALVE GP-CONTROL (**contd.**)** **i07788570**

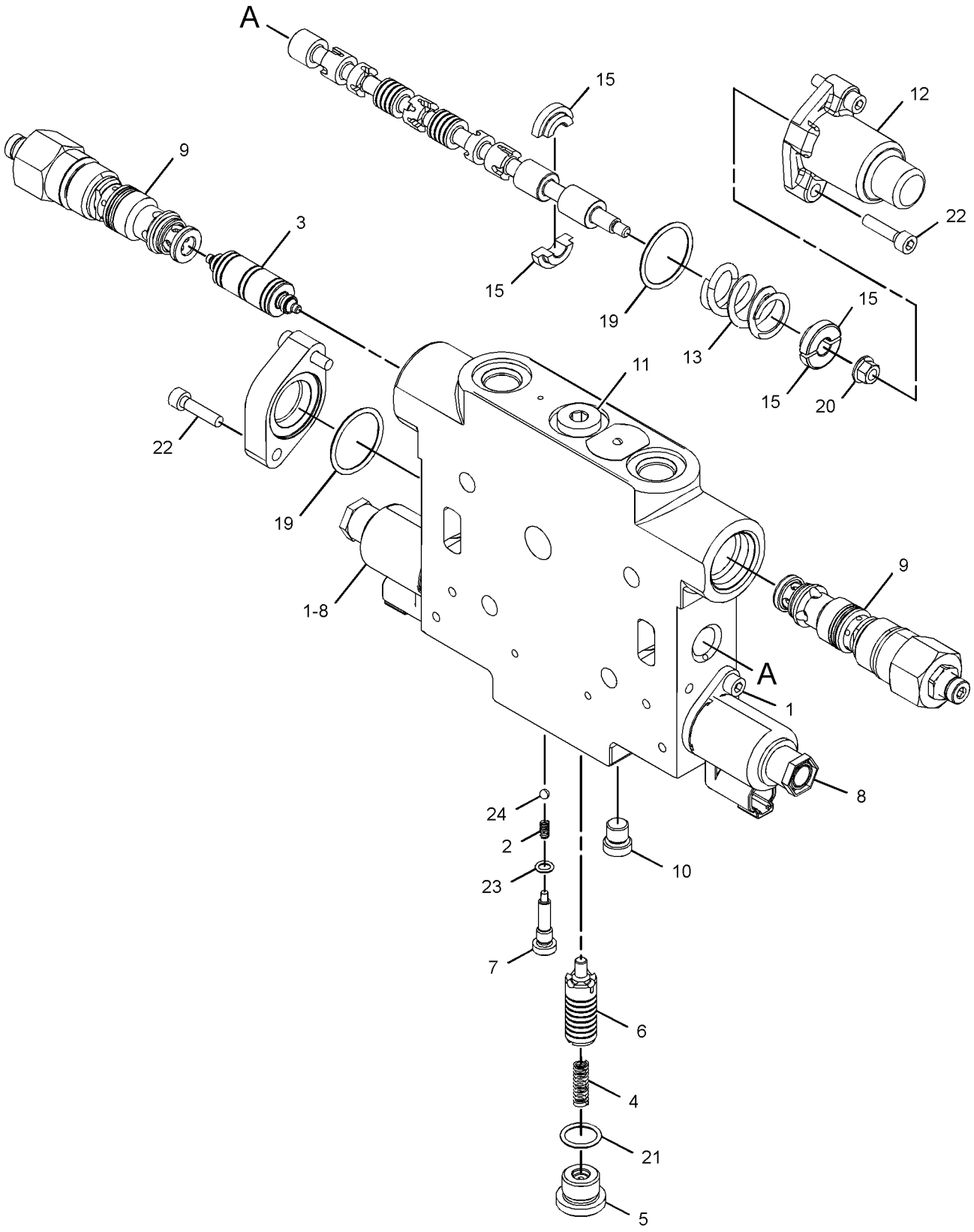

GRAPHIC #1 <END> g06029560

382-3298 VALVE GP-CONTROL—PLOW LIFT

S/N: B551-UP

PART OF 487-3014 VALVE GP-BANK 6, 487-3016, 487-3017 VALVE GP-BANK 7, 487-3018 VALVE GP-BANK 8, 487-3019 VALVE GP-CONTROL

SMCS-5051 **i07772642**

NOTE	REF NO	GRAPHIC REF	PART NUMBER	QTY	PART NAME 1 2 3 4 5 6 (PRODUCT LEVEL)	SEE PAGE
	1	1	**6E-3007**	1	SPRING	
	2	1	**106-3660**	2	PISTON	
	3	1	**212-4961**	1	SPRING	
	4	1	**242-9264**	1	PLUG-ORIFICE	
	5	1	**243-2965**	1	SPOOL	
	6	1	**244-2579**	1	PLUG	
Y	7	1	**278-1799**	2	VALVE GP-SOLENOID (BULLDOZER LIFT, PLOW)	741
J	8	1	**318-3052**	1	VALVE GP-CHECK & RELIEF (BULLDOZER LIFT, PLOW)	
J	9	1	**318-3115**	1	VALVE GP-CHECK (BULLDOZER LIFT, PLOW)	
J		1	**6V-6580**	1	SEAL-O-RING	
J		1	**9X-7745**	1	SEAL-O-RING	
J		1	**471-6294**	1	SEAL-O-RING	
	10	1	*367-6002*	1	PLUG AS	
		1	**360-3677**	1	PLUG (7/16-20-THD)	
		1	**3J-7354**	1	SEAL-O-RING	
	11	1	*367-6003*	1	PLUG AS	
		1	**360-3680**	1	PLUG	
		1	**3K-0360**	1	SEAL-O-RING	
	12	1	**564-6716**	1	COVER-SPRING	
	15	1	**380-0794**	4	RETAINER	
	16	1	**380-0820**	1	SPRING	
	17	1	**380-0821**	1	SPRING	
	20	1	**2S-4663**	2	SEAL-O-RING	
	21	1	**336-6718**	1	LOCKNUT-FLANGE	
	22	1	**3K-0360**	1	SEAL-O-RING	
M	23	1	**3T-0849**	4	BOLT-SOCKET HEAD (M6X1X25-MM)	
	25	1	**4J-7533**	1	SEAL-O-RING	
	26	1	**5B-9318**	1	BALL	
M	27	1	**8T-0267**	2	BOLT-SOCKET HEAD (M6X1X12-MM)	
					PARTS SHOWN IN GRAPHIC(S) WITHOUT A REFERENCE NUMBER ARE NOT SERVICED SEPARATELY	
					AVAILABLE REPAIR KIT(S):	
J			**325-2588**	1	KIT-SEAL	
					(INCLUDES SEAL-O-RINGS & RING-BACKUPS)	

J - KIT MARKED J SERVICES PART(S) MARKED J
M - METRIC PART
Y - SEPARATE ILLUSTRATION

382-3298 **VALVE GP-CONTROL (**contd.**)** **i07772642**

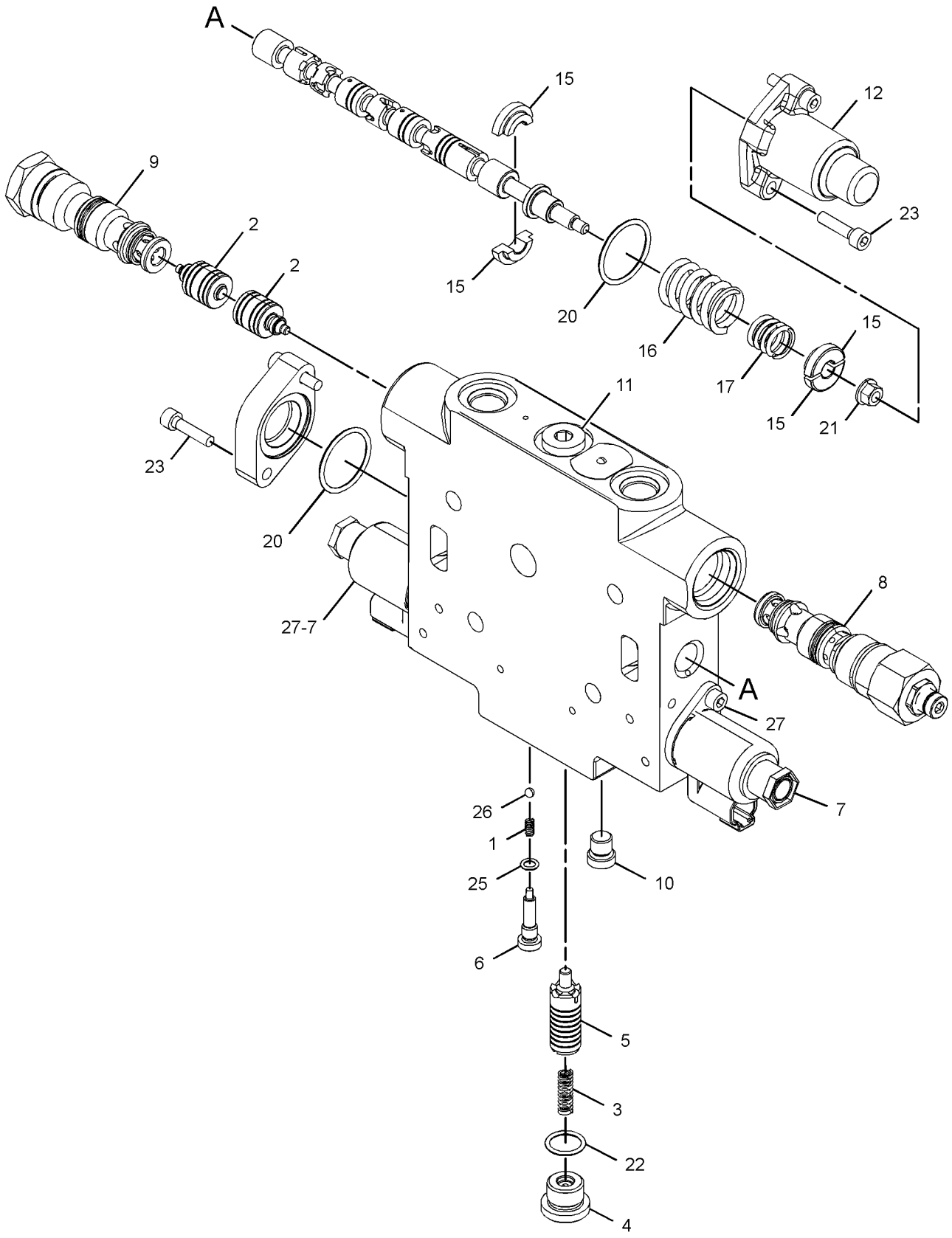

GRAPHIC #1 <END> g03404197

382-3299 VALVE GP-CONTROL—RIPPER

S/N: B551-UP

PART OF 487-3017 VALVE GP-BANK 7, 487-3018 VALVE GP-BANK 8, 487-3019 VALVE GP-CONTROL

SMCS-5051 **i07772660**

NOTE	REF NO	GRAPHIC REF	PART NUMBER	QTY	PART NAME 1 2 3 4 5 6 (PRODUCT LEVEL)	SEE PAGE
M	1	1	**8T-0267**	2	BOLT-SOCKET HEAD (M6X1X12-MM)	
	2	1	**6E-3007**	1	SPRING	
	3	1	**106-3659**	1	PISTON	
	4	1	**212-4961**	1	SPRING	
	5	1	**242-9264**	1	PLUG-ORIFICE	
	6	1	**243-2965**	1	SPOOL	
	7	1	**244-2579**	1	PLUG	
Y	8	1	**278-1799**	2	VALVE GP-SOLENOID (RIPPER)	741
J	9	1	**318-3040**	1	VALVE GP-CHECK & RELIEF (RIPPER)	
J	10	1	**318-3115**	1	VALVE GP-CHECK	
J		1	**6V-6580**	1	SEAL-O-RING	
J		1	**9X-7745**	1	SEAL-O-RING	
J		1	**471-6294**	1	SEAL-O-RING	
	11	1	*367-6002*	1	PLUG AS	
		1	**3J-7354**	1	SEAL-O-RING	
		1	**360-3677**	1	PLUG (7/16-20-THD)	
	12	1	*367-6003*	1	PLUG AS	
		1	**3K-0360**	1	SEAL-O-RING	
		1	**360-3680**	1	PLUG	
	13	1	**564-6716**	1	COVER-SPRING	
	14	1	**526-6377**	1	SPRING	
	16	1	**380-0794**	4	RETAINER	
	20	1	**2S-4663**	2	SEAL-O-RING	
	21	1	**336-6718**	1	LOCKNUT-FLANGE	
	22	1	**3K-0360**	1	SEAL-O-RING	
M	23	1	**3T-0849**	4	BOLT-SOCKET HEAD (M6X1X25-MM)	
	24	1	**4J-7533**	1	SEAL-O-RING	
	25	1	**5B-9318**	1	BALL	
					PARTS SHOWN IN GRAPHIC(S) WITHOUT A REFERENCE NUMBER ARE NOT SERVICED SEPARATELY	
					AVAILABLE REPAIR KIT(S):	
J			**471-4231**		KIT-SEAL (PLOW ANGLE)	
					(KIT INCLUDES O-RING SEALS & BACKUP RING)	

J - KIT MARKED J SERVICES PART(S) MARKED J
M - METRIC PART
Y - SEPARATE ILLUSTRATION

382-3299 **VALVE GP-CONTROL (**contd.**)** **i07772660**

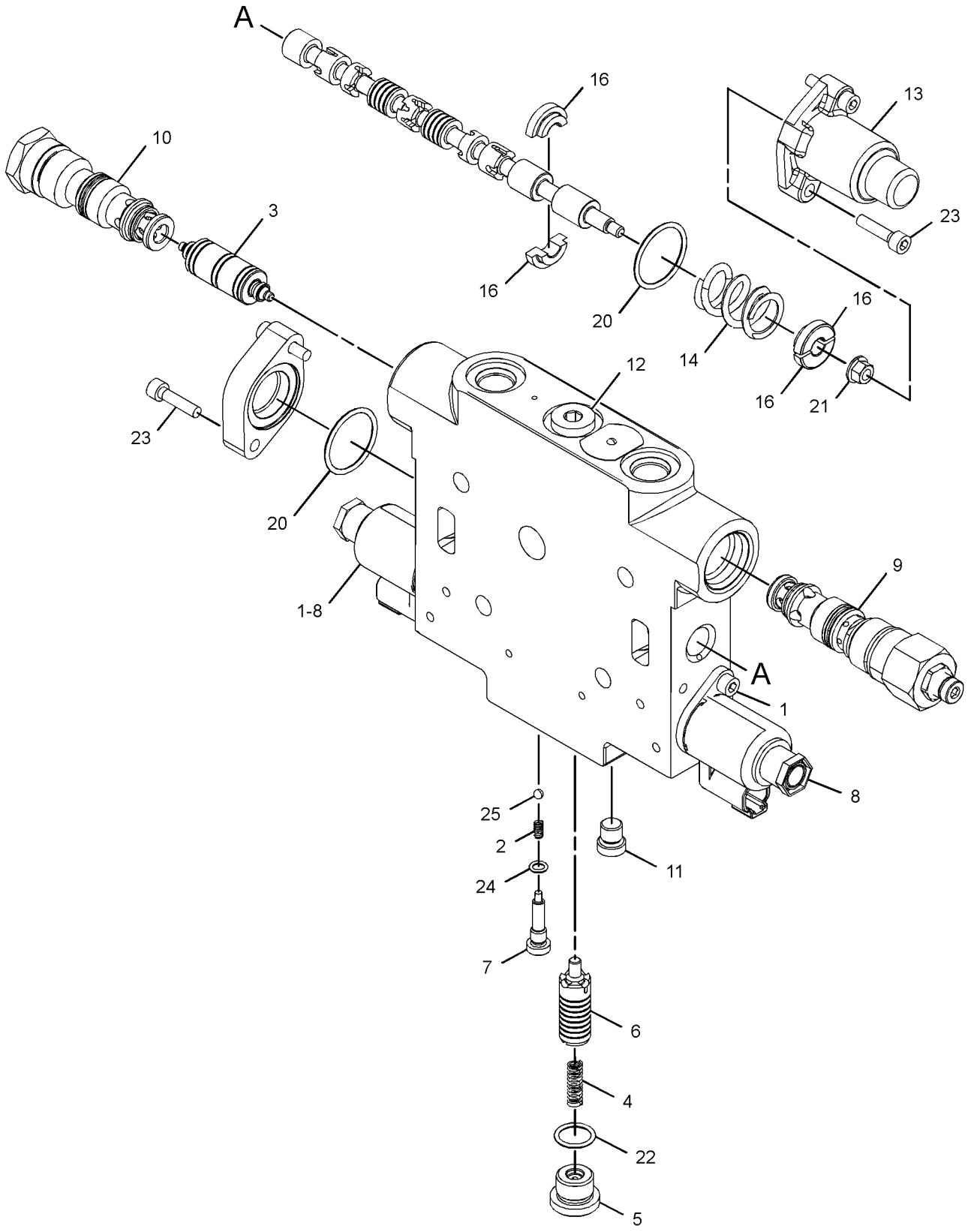

GRAPHIC #1 <END> g06029552

382-3300 VALVE GP-CONTROL—SCARIFIER

S/N: B551-UP

PART OF 487-3015 VALVE GP-BANK 6, 487-3016 VALVE GP-BANK 7, 487-3018 VALVE GP-BANK 8

SMCS-5051 **i07793918**

NOTE	REF NO	GRAPHIC REF	PART NUMBER	QTY	PART NAME 1 2 3 4 5 6 (PRODUCT LEVEL)	SEE PAGE
M	1	1	**8T-0267**	2	BOLT-SOCKET HEAD (M6X1X12-MM)	
	2	1	**6E-3007**	1	SPRING	
	3	1	**106-3659**	1	PISTON	
	4	1	**212-4961**	1	SPRING	
	5	1	**242-9264**	1	PLUG-ORIFICE	
	6	1	**243-2965**	1	SPOOL	
	7	1	**244-2579**	1	PLUG	
Y	8	1	**278-1799**	2	VALVE GP-SOLENOID (SCARIFIER)	741
J	9	1	**318-3036**	1	VALVE GP-CHECK & RELIEF (SCARIFIER)	
J	10	1	**318-3115**	1	VALVE GP-CHECK (SCARIFIER)	
J		1	**471-6294**	1	SEAL-O-RING	
J		1	**6V-6580**	1	SEAL-O-RING	
J		1	**9X-7745**	1	SEAL-O-RING	
	11	1	*367-6002*	1	PLUG AS	
		1	**3J-7354**	1	SEAL-O-RING	
		1	**360-3677**	1	PLUG (7/16-20-THD)	
	12	1	*367-6003*	1	PLUG AS	
		1	**3K-0360**	1	SEAL-O-RING	
		1	**360-3680**	1	PLUG	
	13	1	**564-6716**	1	COVER-SPRING	
	14	1	**526-6377**	1	SPRING	
	15	1	**370-8979**	1	COVER	
	16	1	**380-0794**	4	RETAINER	
	20	1	**2S-4663**	2	SEAL-O-RING	
	21	1	**336-6718**	1	LOCKNUT-FLANGE	
	22	1	**3K-0360**	1	SEAL-O-RING	
M	23	1	**3T-0849**	4	BOLT-SOCKET HEAD (M6X1X25-MM)	
	24	1	**4J-7533**	1	SEAL-O-RING	
	25	1	**5B-9318**	1	BALL	
					PARTS SHOWN IN GRAPHIC(S) WITHOUT A REFERENCE NUMBER ARE NOT SERVICED SEPARATELY	
					AVAILABLE REPAIR KIT(S):	
J			**471-4231**	1	KIT-SEAL (CHECK VALVE)	
					(INCLUDES O-RING SEALS & BACKUP RINGS)	

J - KIT MARKED J SERVICES PART(S) MARKED J
M - METRIC PART
Y - SEPARATE ILLUSTRATION

382-3300 **VALVE GP-CONTROL** (contd.) **i07793918**

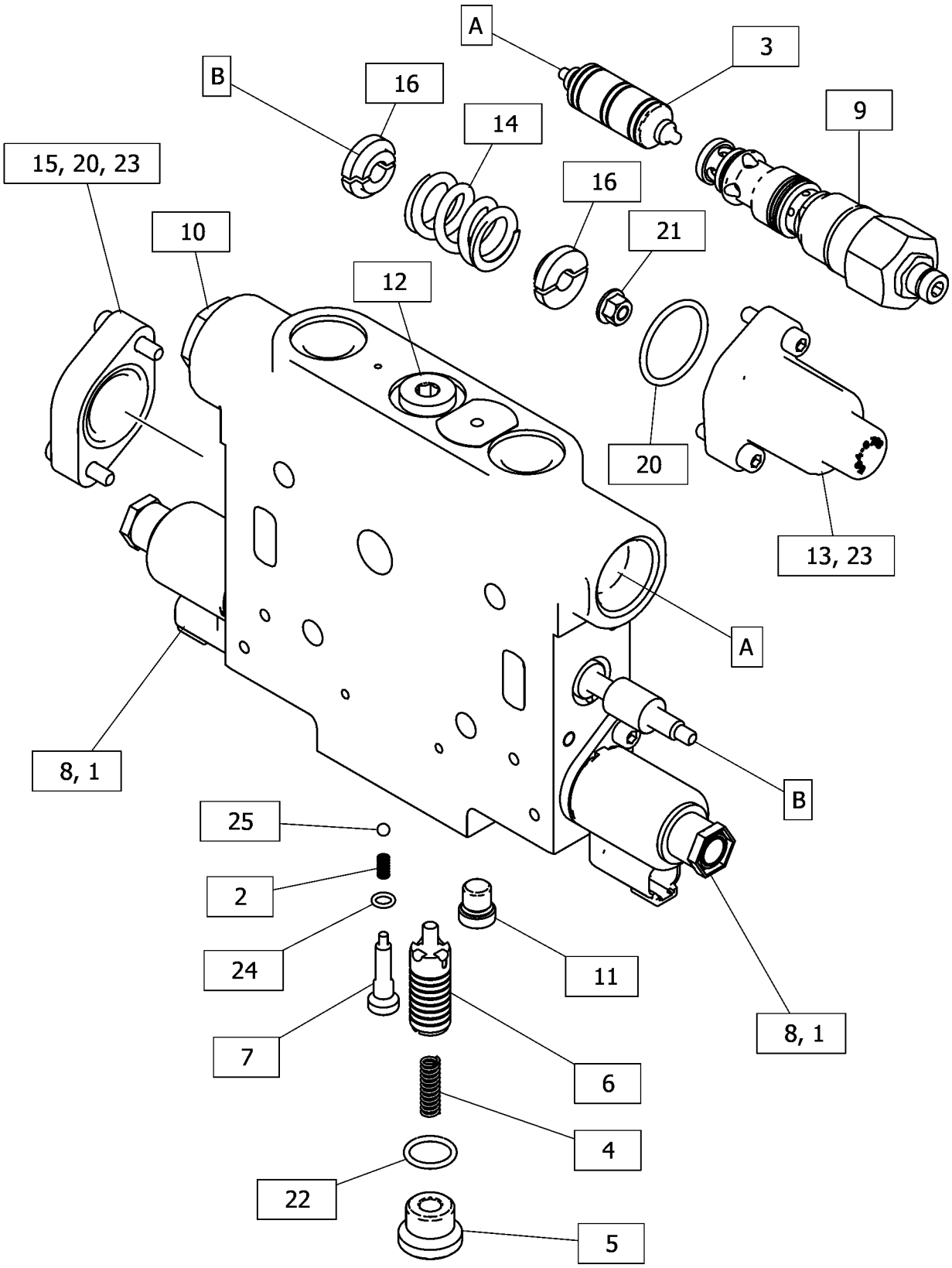

GRAPHIC #1 <END> g06437546

382-3301 VALVE GP-CONTROL—BLADE TIP

S/N: B551-UP

PART OF 487-3013 VALVE GP-BANK 5, 487-3014, 487-3015 VALVE GP-BANK 6, 487-3016, 487-3017 VALVE GP-BANK 7, 487-3018 VALVE GP-BANK 8, 487-3019 VALVE GP-CONTROL

SMCS-5051 **i07669898**

NOTE	REF NO	GRAPHIC REF	PART NUMBER	QTY	PART NAME 1 2 3 4 5 6 (PRODUCT LEVEL)	SEE PAGE
M	1	1	**8T-0267**	2	BOLT-SOCKET HEAD (M6X1X12-MM)	
	2	1	**6E-3007**	1	SPRING	
	3	1	**106-3659**	1	PISTON	
	4	1	**212-4961**	1	SPRING	
	5	1	**242-9264**	1	PLUG-ORIFICE	
	6	1	**243-2965**	1	SPOOL	
	7	1	**244-2579**	1	PLUG	
Y	8	1	**278-1799**	2	VALVE GP-SOLENOID (BLADE TIP)	741
J	9	1	**318-3040**	1	VALVE GP-CHECK & RELIEF (BLADE TIP)	
J	10	1	**318-3115**	1	VALVE GP-CHECK (BLADE TIP)	
J		1	**471-6294**	1	SEAL-O-RING	
J		1	**6V-6580**	1	SEAL-O-RING	
J		1	**9X-7745**	1	SEAL-O-RING	
	11	1	*367-6002*	1	PLUG AS	
		1	**3J-7354**	1	SEAL-O-RING	
		1	**360-3677**	1	PLUG (7/16-20-THD)	
	12	1	*367-6003*	1	PLUG AS	
		1	**3K-0360**	1	SEAL-O-RING	
		1	**360-3680**	1	PLUG	
	13	1	**564-6716**	1	COVER-SPRING	
	14	1	**526-6377**	1	SPRING	
	16	1	**380-0794**	4	RETAINER	
	20	1	**2S-4663**	2	SEAL-O-RING	
	21	1	**336-6718**	1	LOCKNUT-FLANGE	
	22	1	**3K-0360**	1	SEAL-O-RING	
M	23	1	**3T-0849**	4	BOLT-SOCKET HEAD (M6X1X25-MM)	
	24	1	**4J-7533**	1	SEAL-O-RING	
	25	1	**5B-9318**	1	BALL	
					AVAILABLE REPAIR KIT(S):	
J			**471-4231**		KIT-SEAL (BLADE TIP)	
					(INCLUDES SEAL RINGS & BACKUP RINGS)	

J - KIT MARKED J SERVICES PART(S) MARKED J
M - METRIC PART
Y - SEPARATE ILLUSTRATION

382-3301 **VALVE GP-CONTROL (**contd.**)** **i07669898**

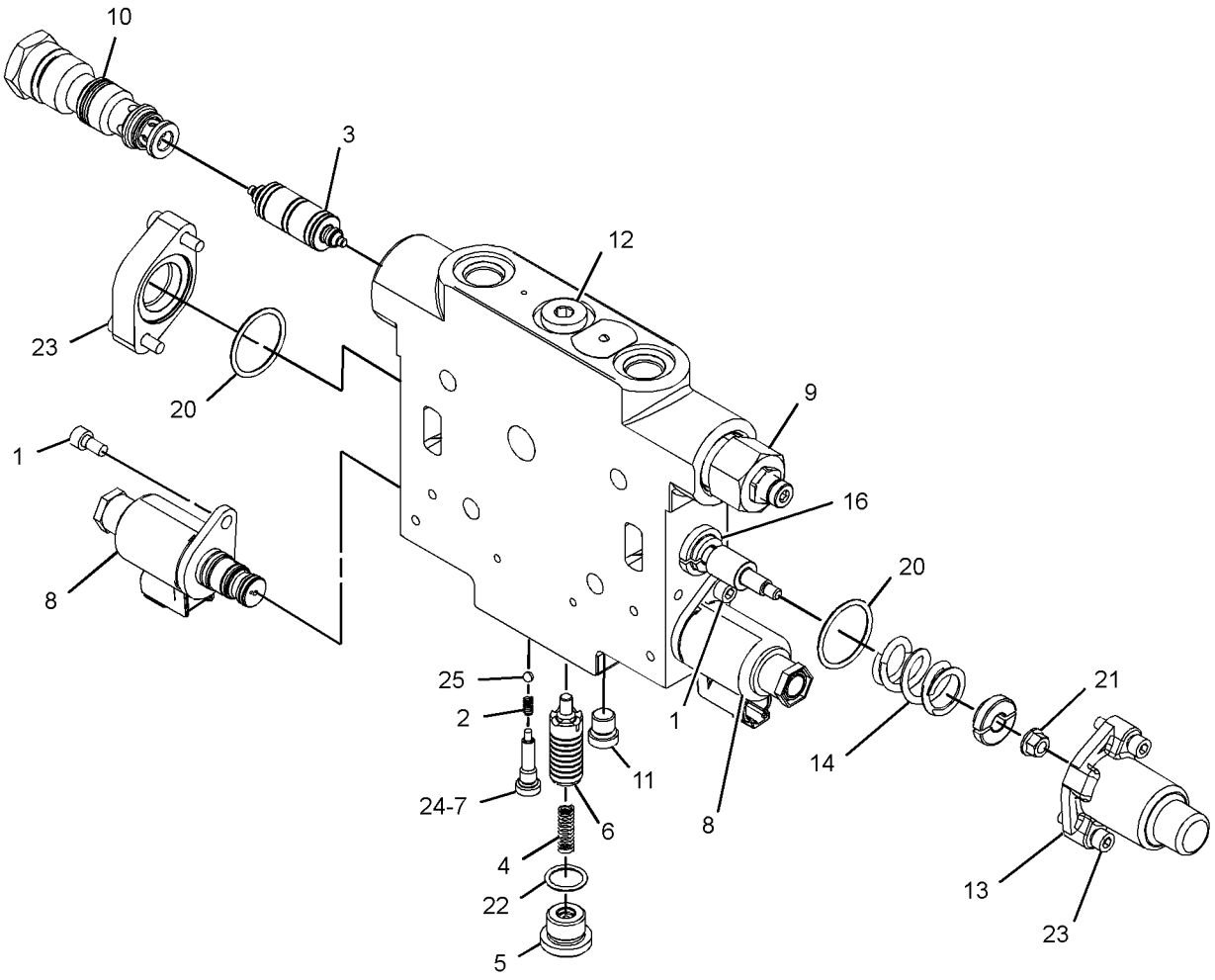

GRAPHIC #1 <END> g06029522

382-3305 VALVE GP-CONTROL—WHEEL LEAN

S/N: B551-UP

PART OF 487-3013 VALVE GP-BANK 5, 487-3014, 487-3015 VALVE GP-BANK 6, 487-3016, 487-3017 VALVE GP-BANK 7, 487-3018 VALVE GP-BANK 8, 487-3019 VALVE GP-CONTROL

SMCS-5051 **i07784995**

NOTE	REF NO	GRAPHIC REF	PART NUMBER	QTY	PART NAME 1 2 3 4 5 6 (PRODUCT LEVEL)	SEE PAGE
M	1	1	**8T-0267**	2	BOLT-SOCKET HEAD (M6X1X12-MM)	
	2	1	**6E-3007**	1	SPRING	
	3	1	**106-3659**	1	PISTON	
	4	1	**212-4961**	1	SPRING	
	5	1	**242-9264**	1	PLUG-ORIFICE	
	6	1	**243-2965**	1	SPOOL	
	7	1	**244-2579**	1	PLUG	
Y	8	1	**278-1799**	2	VALVE GP-SOLENOID (WHEEL LEAN)	741
J	9	1	**318-3115**	2	VALVE GP-CHECK (WHEEL LEAN)	
	10	1	*367-6002*	1	PLUG AS	
		1	**360-3677**	1	PLUG (7/16-20-THD)	
		1	**3J-7354**	1	SEAL-O-RING	
	11	1	*367-6003*	1	PLUG AS	
		1	**360-3680**	1	PLUG	
		1	**3K-0360**	1	SEAL-O-RING	
	12	1	**564-6716**	1	COVER-SPRING	
	13	1	**526-6377**	1	SPRING	
	15	1	**380-0794**	4	RETAINER	
	19	1	**2S-4663**	2	SEAL-O-RING	
	20	1	**336-6718**	1	LOCKNUT-FLANGE	
	21	1	**3K-0360**	1	SEAL-O-RING	
M	22	1	**3T-0849**	4	BOLT-SOCKET HEAD (M6X1X25-MM)	
	23	1	**4J-7533**	1	SEAL-O-RING	
	24	1	**5B-9318**	1	BALL	
					PARTS SHOWN IN GRAPHIC(S) WITHOUT A REFERENCE NUMBER ARE NOT SERVICED SEPARATELY	
					AVAILABLE REPAIR KIT(S):	
J			**325-2588**	1	KIT-SEAL	
					(INCLUDES SEAL-O-RINGS & RING-BACKUPS)	

J - KIT MARKED J SERVICES PART(S) MARKED J
M - METRIC PART
Y - SEPARATE ILLUSTRATION

382-3305 **VALVE GP-CONTROL (**contd.**)** **i07784995**

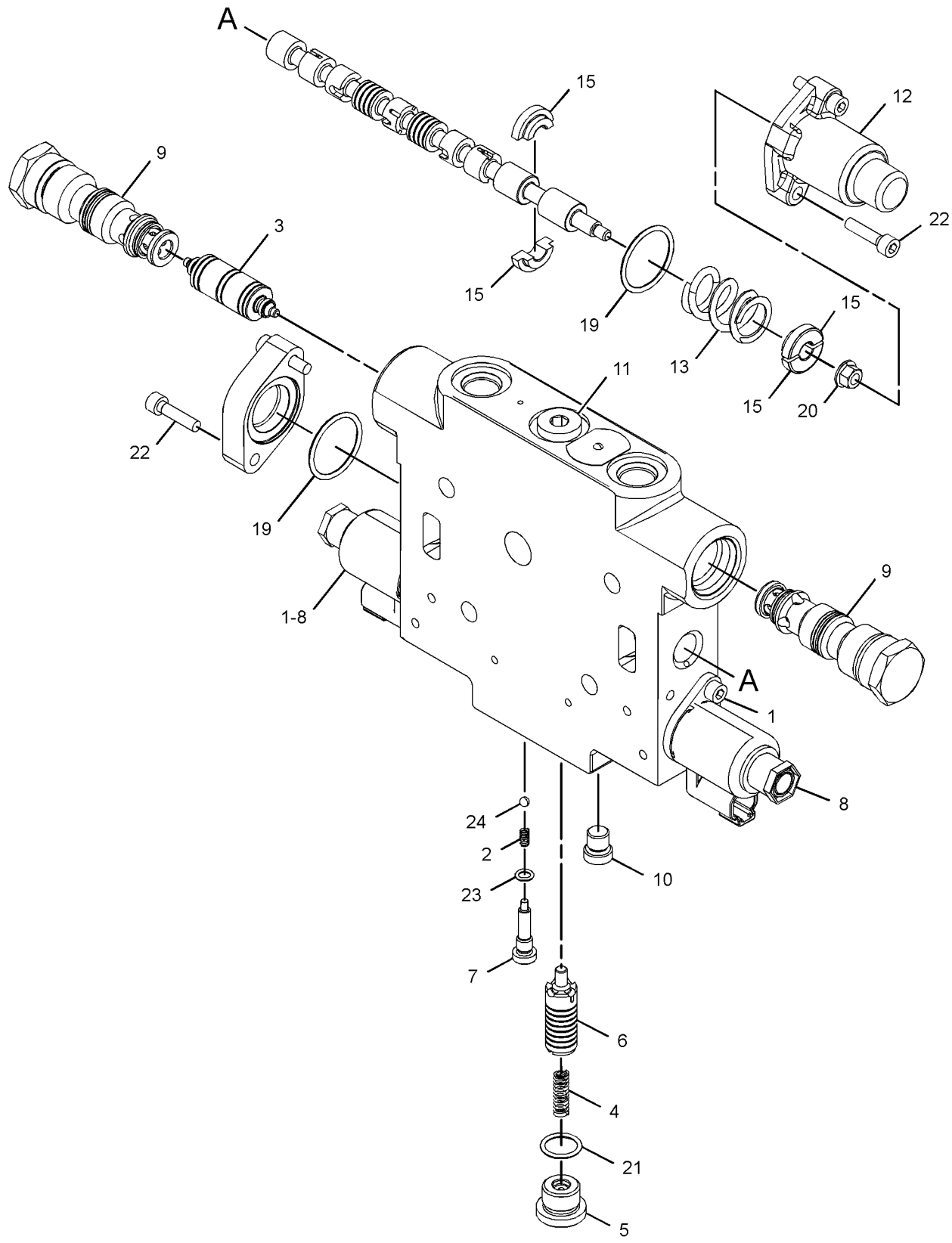

GRAPHIC #1 <END> g06029502

382-3316 VALVE GP-CONTROL—CIRCLE

S/N: B551-UP

PART OF 487-3013 VALVE GP-BANK 5, 487-3014, 487-3015 VALVE GP-BANK 6, 487-3016, 487-3017 VALVE GP-BANK 7, 487-3018 VALVE GP-BANK 8, 487-3019 VALVE GP-CONTROL

SMCS-5051 **i07787951**

NOTE	REF NO	GRAPHIC REF	PART NUMBER	QTY	PART NAME 1 2 3 4 5 6 (PRODUCT LEVEL)	SEE PAGE
M	1	1	**8T-0267**	2	BOLT-SOCKET HEAD (M6X1X12-MM)	
	2	1	**6E-3007**	1	SPRING	
	3	1	**6L-9716**	1	PLUG-PIPE	
	4	1	**106-3659**	1	PISTON	
	5	1	**212-4961**	1	SPRING	
	6	1	**242-9264**	1	PLUG-ORIFICE	
	7	1	**243-2965**	1	SPOOL	
	8	1	**244-2579**	1	PLUG	
Y	9	1	**278-1799**	2	VALVE GP-SOLENOID (CIRCLE DRIVE)	741
J	10	1	**304-9654**	2	VALVE GP-CHECK	
					(EACH INCLUDES)	
L		1	**471-6294**	1	SEAL-O-RING	
L		1	**6V-6580**	1	SEAL-O-RING	
L		1	**9X-7745**	1	SEAL-O-RING	
	11	1	*367-6002*	1	PLUG AS	
		1	**3J-7354**	1	SEAL-O-RING	
		1	**360-3677**	1	PLUG (7/16-20-THD)	
	12	1	*367-6003*	1	PLUG AS	
		1	**3K-0360**	1	SEAL-O-RING	
		1	**360-3680**	1	PLUG	
	13	1	**564-6716**	1	COVER-SPRING	
	14	1	**526-6377**	1	SPRING	
	16	1	**380-0794**	4	RETAINER	
	20	1	**2S-4663**	2	SEAL-O-RING	
	21	1	**336-6718**	1	LOCKNUT-FLANGE	
	22	1	**3K-0360**	1	SEAL-O-RING	
M	23	1	**3T-0849**	4	BOLT-SOCKET HEAD (M6X1X25-MM)	
	24	1	**4J-7533**	1	SEAL-O-RING	
	25	1	**5B-9318**	1	BALL	
					AVAILABLE REPAIR KIT(S):	
JL			**325-2588**	1	KIT-SEAL (CIRCLE DRIVE)	
					(INCLUDES SEAL-O-RINGS & RING BACKUPS)	

J - KIT MARKED J SERVICES PART(S) MARKED J
L - PARTS MARKED L INCLUDED IN KIT MARKED L
M - METRIC PART
Y - SEPARATE ILLUSTRATION

382-3316 **VALVE GP-CONTROL (**contd.**)** **i07787951**

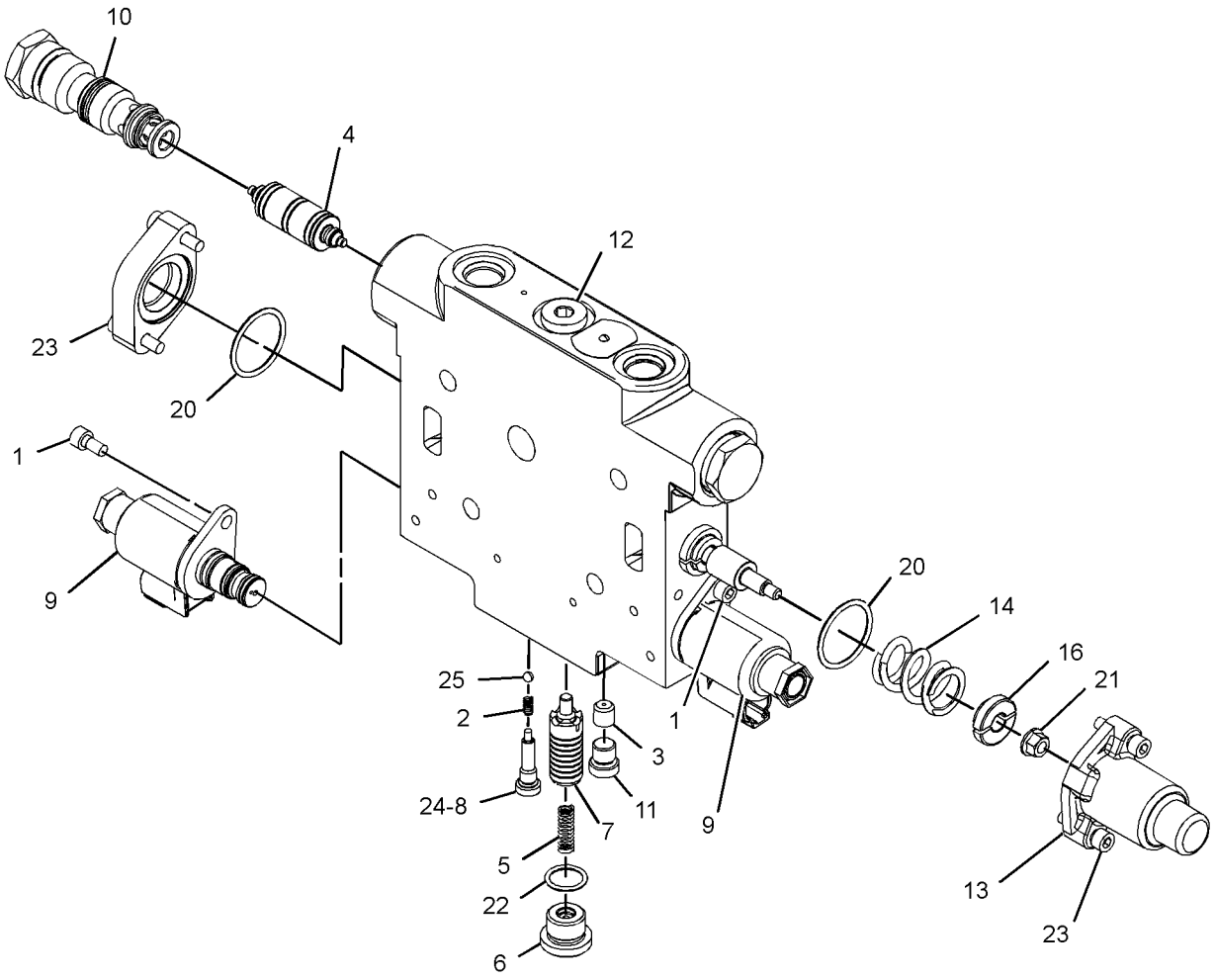

GRAPHIC #1 <END> g06029488

382-3323 VALVE GP-CONTROL—WING TILT

S/N: B551-UP

PART OF 487-3031 VALVE GP-BANK 6

SMCS-5051 **i07772602**

NOTE	REF NO	GRAPHIC REF	PART NUMBER	QTY	PART NAME 1 2 3 4 5 6 (PRODUCT LEVEL)	SEE PAGE
	1	1	**2S-4663**	2	SEAL-O-RING	
	2	1	**3K-0360**	1	SEAL-O-RING	
	3	1	**4J-7533**	1	SEAL-O-RING	
	4	1	**6E-3007**	1	SPRING	
	5	1	**106-3660**	2	PISTON	
	6	1	**212-4961**	1	SPRING	
	7	1	**242-9264**	1	PLUG-ORIFICE	
	8	1	**243-2965**	1	SPOOL	
	9	1	**244-2579**	1	PLUG	
Y	10	1	**278-1799**	2	VALVE GP-SOLENOID (WING TILT)	741
J	11	1	**318-3040**	2	VALVE GP-CHECK & RELIEF (WING TILT)	
	12	1	*367-6002*	1	PLUG AS	
		1	**3J-7354**	1	SEAL-O-RING	
		1	**360-3677**	1	PLUG (7/16-20-THD)	
	13	1	*367-6003*	1	PLUG AS	
		1	**3K-0360**	1	SEAL-O-RING	
		1	**360-3680**	1	PLUG	
	14	1	**564-6716**	1	COVER-SPRING	
	17	1	**380-0794**	4	RETAINER	
	18	1	**380-0820**	1	SPRING	
	19	1	**380-0821**	1	SPRING	
	22	1	**336-6718**	1	LOCKNUT-FLANGE	
M	23	1	**3T-0849**	4	BOLT-SOCKET HEAD (M6X1X25-MM)	
	25	1	**5B-9318**	1	BALL	
M	26	1	**8T-0267**	2	BOLT-SOCKET HEAD (M6X1X12-MM)	
					AVAILABLE REPAIR KIT(S):	
J			**471-4231**	1	KIT-SEAL	
					(INCLUDES RINGS & SEALS)	

J - KIT MARKED J SERVICES PART(S) MARKED J
M - METRIC PART
Y - SEPARATE ILLUSTRATION

382-3323 **VALVE GP-CONTROL (**contd.**)** **i07772602**

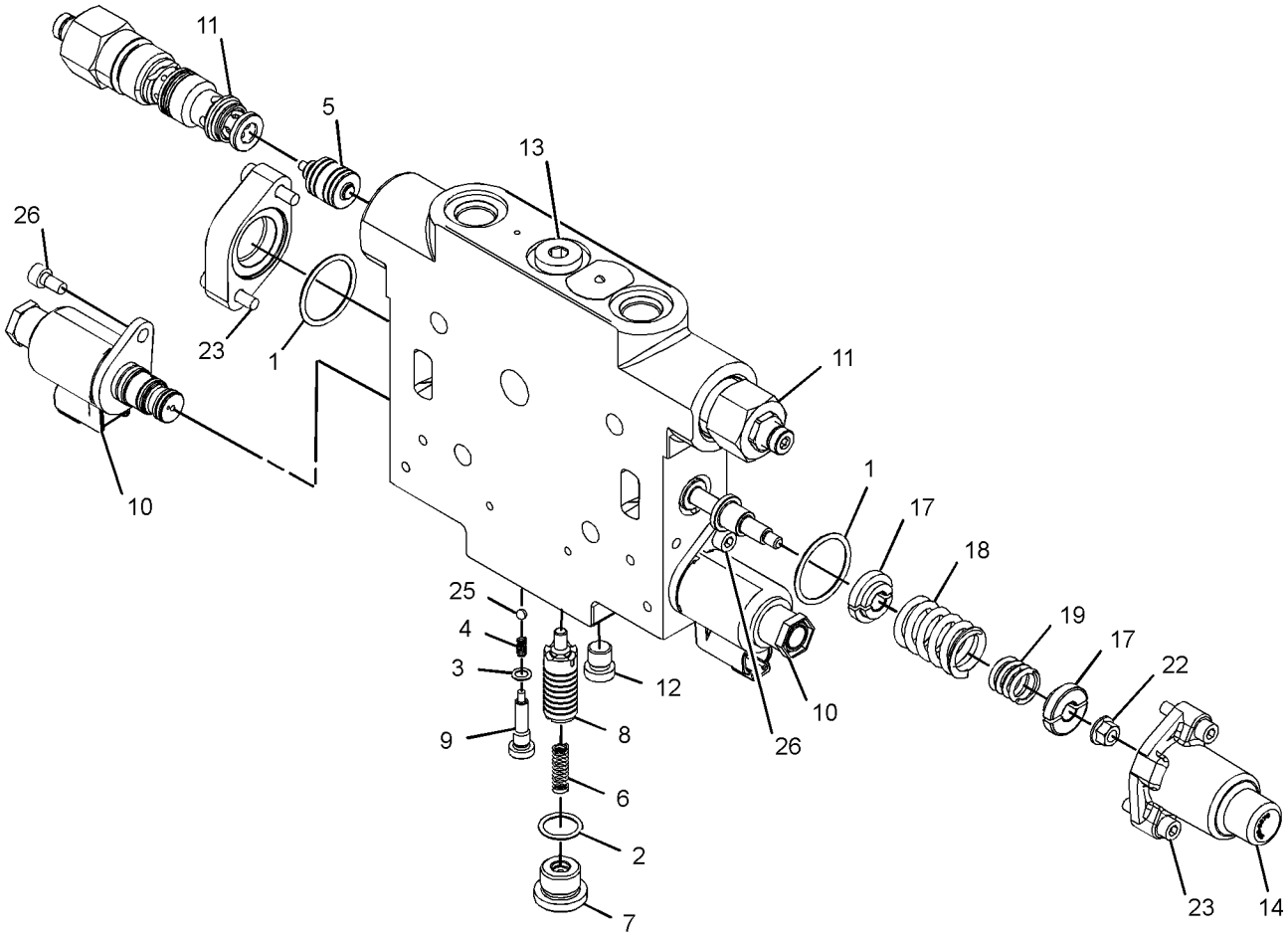

GRAPHIC #1 <END> g03413078

487-3019 VALVE GP-CONTROL–FRONT

S/N: B551-UP

PART OF 365-3371, 365-5541 CONTROL AR-HYDRAULIC

SMCS-5051 **i07833929**

NOTE	REF NO	GRAPHIC REF	PART NUMBER	QTY	PART NAME 1 2 3 4 5 6 (PRODUCT LEVEL)	SEE PAGE
	1	2	**106-3659**	6	PISTON	
	2	2	**106-3660**	2	PISTON	
	3	3	**212-4961**	8	SPRING	
	4	3	**242-9264**	8	PLUG-ORIFICE	
	5	3	**243-2965**	8	SPOOL	
	6	3	**244-2579**	8	PLUG	
	7	4	**249-5637**	4	ROD	
	8	1	**273-1871**	1	COVER	
Y	9	2	**278-1799**	2	VALVE GP-SOLENOID (BLADE TIP)	741
Y	9A	2	**278-1799**	2	VALVE GP-SOLENOID (SIDESHIFT)	741
Y	9B	2	**278-1799**	2	VALVE GP-SOLENOID (CENTERSHIFT)	741
Y	9C	2	**278-1799**	2	VALVE GP-SOLENOID (CIRCLE DRIVE)	741
Y	9D	2	**278-1799**	2	VALVE GP-SOLENOID (WHEEL LEAN)	741
Y	9E	2	**278-1799**	2	VALVE GP-SOLENOID (PLOW LIFT)	741
Y	9F	2	**278-1799**	4	VALVE GP-SOLENOID (PLOW ANGLE)	741
	10	4	*292-9221*	1	PLUG AS	
		4	**292-9220**	1	PLUG	
		4	**294-8055**	1	SEAL-O-RING	
	11	3	**2S-4663**	16	SEAL-O-RING	
	12	2	**301-4568**	1	ORIFICE	
H	13	2	**318-3040**	1	VALVE GP-CHECK & RELIEF (BLADE TIP)	
H	13A	2	**318-3040**	1	VALVE GP-CHECK & RELIEF (SIDESHIFT)	
H	13B	2	**318-3040**	2	VALVE GP-CHECK & RELIEF (PLOW ANGLE)	
H	14	2	**318-3052**	1	VALVE GP-CHECK & RELIEF (PLOW LIFT)	
H	15	2	**318-3115**	1	VALVE GP-CHECK (BLADE TIP)	
H	15A	2	**318-3115**	1	VALVE GP-CHECK (SIDESHIFT)	
H	15B	2	**318-3115**	2	VALVE GP-CHECK (CENTERSHIFT)	
H	15C	2	**318-3115**	2	VALVE GP-CHECK (WHEEL LEAN)	
H	15D	2	**318-3115**	1	VALVE GP-CHECK (PLOW LIFT)	
H	15E	2	**318-3115**	2	VALVE GP-CHECK (PLOW ANGLE)	
					(EACH VALVE GP-CHECK INCLUDES)	
H		2	**6V-6580**	1	SEAL-O-RING	
H		2	**9X-7745**	1	SEAL-O-RING	
H		2	**471-6294**	1	SEAL-O-RING	
	16	3	**336-6718**	8	LOCKNUT-FLANGE	
M	17	4	**344-5675**	4	NUT (M10X1.5-THD)	
	18	4	*366-4699*	2	PLUG AS	
					(EACH INCLUDES)	
		4	**3J-1907**	1	SEAL-O-RING	
		4	**360-3692**	1	PLUG	
	19	1,2,3	*366-4700*	20	PLUG AS	
					(EACH INCLUDES)	
		1,2,3	**3K-0360**	1	SEAL-O-RING	
		1,2,3	**360-3693**	1	PLUG (3/4-16-THD)	
	20	2,3	*367-6001*	5	PLUG AS	
					(EACH INCLUDES)	
		2,3	**4J-7533**	1	SEAL-O-RING	
		2,3	**360-3675**	1	PLUG (5/16-24-THD)	

487-3019 **VALVE GP-CONTROL (**contd.**)** **i07833929**

NOTE	REF NO	GRAPHIC REF	PART NUMBER	QTY	PART NAME 1 2 3 4 5 6 (PRODUCT LEVEL)	SEE PAGE
	21	3	*367-6002*	8	PLUG AS	
					(EACH INCLUDES)	
		3	**3J-7354**	1	SEAL-O-RING	
		3	**360-3677**	1	PLUG (7/16-20-THD)	
	22	1	*367-6003*	7	PLUG AS	
					(EACH INCLUDES)	
		1	**3K-0360**	1	SEAL-O-RING	
		1	**360-3680**	1	PLUG	
	23	3	**564-6716**	8	COVER-SPRING	
	24	3	**370-8979**	8	COVER	
	25	1	**372-0918**	5	SEAL-INTEGRAL	
	26	3	**380-0794**	32	RETAINER	
	27	3	**526-6377**	7	SPRING	
	28	3	**380-0820**	1	SPRING	
	29	3	**380-0821**	1	SPRING	
	37	1	**382-5517**	1	MANIFOLD-INLET	
	38	3	**3K-0360**	8	SEAL-O-RING	
M	39	2,3	**3T-0849**	32	BOLT-SOCKET HEAD (M6X1X25-MM)	
	44	3	**4J-7533**	8	SEAL-O-RING	
	45	3	**5B-9318**	8	BALL	
	46	3	**6E-3007**	8	SPRING	
	47	3	**6L-9716**	1	PLUG-PIPE	
M	48	2,3	**8T-0267**	16	BOLT-SOCKET HEAD (M6X1X12-MM)	
	49	4	**8T-4121**	4	WASHER-HARD (11X21X2.5-MM THK)	
AFJ			**372-0918**	9	SEAL-INTEGRAL	
AFJY			**382-3290**	1	VALVE GP-CONTROL (BLADE TIP)	699
AFJY			**382-3294**	1	VALVE GP-CONTROL (CENTERSHIFT)	701
AFJY			**382-3298**	1	VALVE GP-CONTROL (LIFT)	709
AFJY			**382-3299**	2	VALVE GP-CONTROL (RIPPER)	711
AFJY			**382-3301**	1	VALVE GP-CONTROL (BLADE TIP)	715
AFJY			**382-3305**	1	VALVE GP-CONTROL (WHEEL LEAN)	717
AFJY			**382-3316**	1	VALVE GP-CONTROL (CIRCLE)	719
					AVAILABLE REPAIR KIT(S):	
H			**471-4231**	1	KIT-SEAL	
					(ALSO INCLUDES BACKUP RINGS)	

A - NOT PART OF THIS GROUP
F - NOT SHOWN
H - KIT MARKED H SERVICES PART(S) MARKED H
J - REFER TO "FIELD REPLACEMENT REFERENCE" CHART ON GRAPHIC
M - METRIC PART
Y - SEPARATE ILLUSTRATION

487-3019 **VALVE GP-CONTROL (**contd.**)** **i07833929**

REFER TO ALL ILLUSTRATIONS OF
THIS GROUP FOR AUXILIARY VIEWS

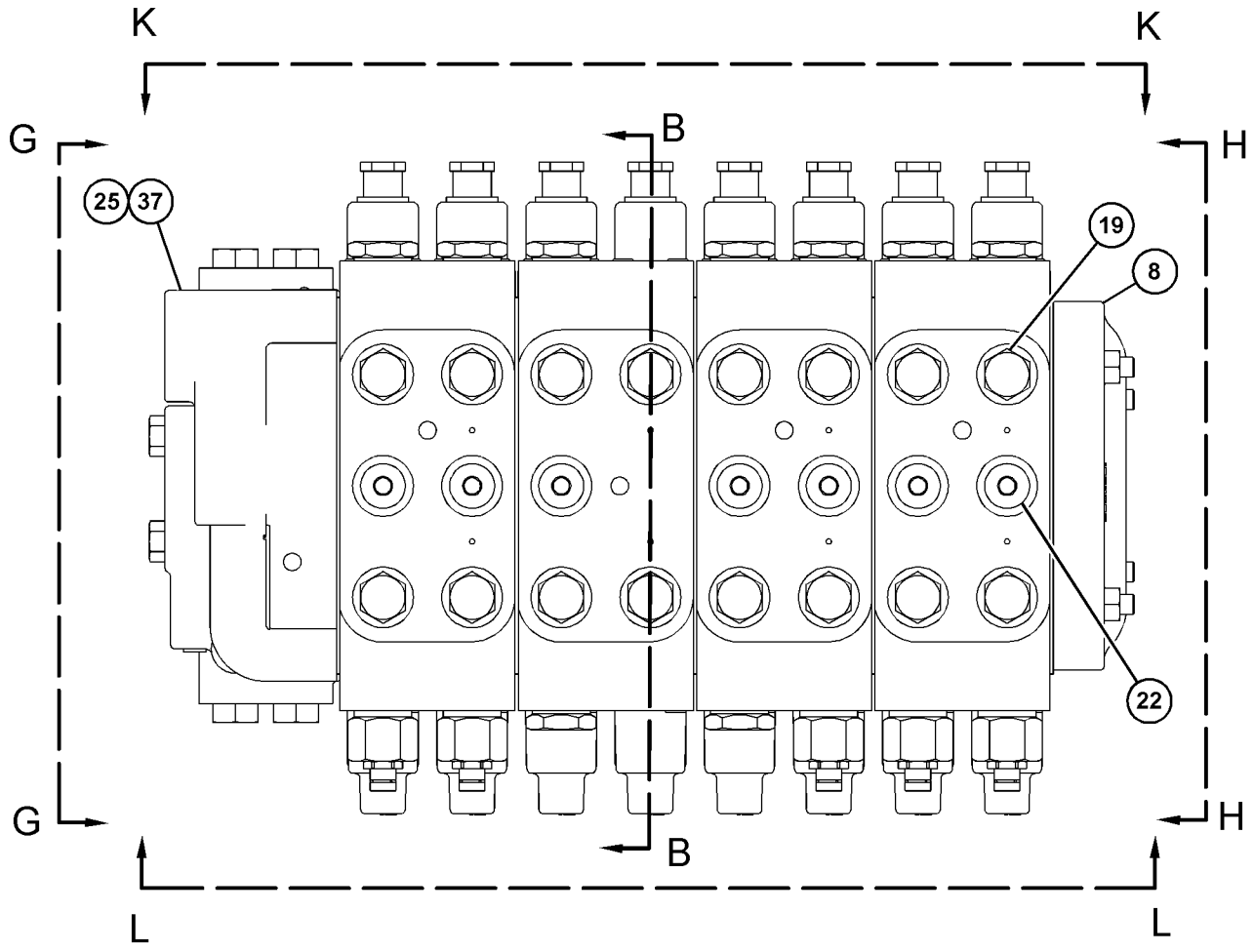

	SERVICE REPAIR REFERENCE FOR SECTION REPLACEMENT				
	SECTION	QTY	PART NO.	NAME	FUNCTION
INLET ↓ COVER	BLADE TIP & SIDE SHIFT	1	382-3290	VALVE GP-CONT -P	BLADE TIP
		1	372-0918	SEAL-INTEGRAL	SEAL
		1	382-3301	VALVE GP-CONT -P	SIDE SHIFT
	CENTER SHIFT & CIRCLE DRIVE	1	382-3294	VALVE GP-CONT -P	CENTER SHIFT
		1	372-0918	SEAL-INTEGRAL	SEAL
		1	382-3316	VALVE GP-CONT -P	CIRCLE DRIVE
	WHEEL LEAN & PLOW LIFT	1	382-3305	VALVE GP-CONT -P	WHEEL LEAN
		1	372-0918	SEAL-INTEGRAL	SEAL
		1	382-3298	VALVE GP-CONT -P	PLOW LIFT
	PLOW ANGLE & PLOW ANGLE	1	382-3299	VALVE GP-CONT -P	PLOW ANGLE
		1	372-0918	SEAL-INTEGRAL	SEAL
		1	382-3299	VALVE GP-CONT -P	PLOW ANGLE

GRAPHIC #1 g06393200

487-3019 **VALVE GP-CONTROL (**contd.**)** **i07833929**

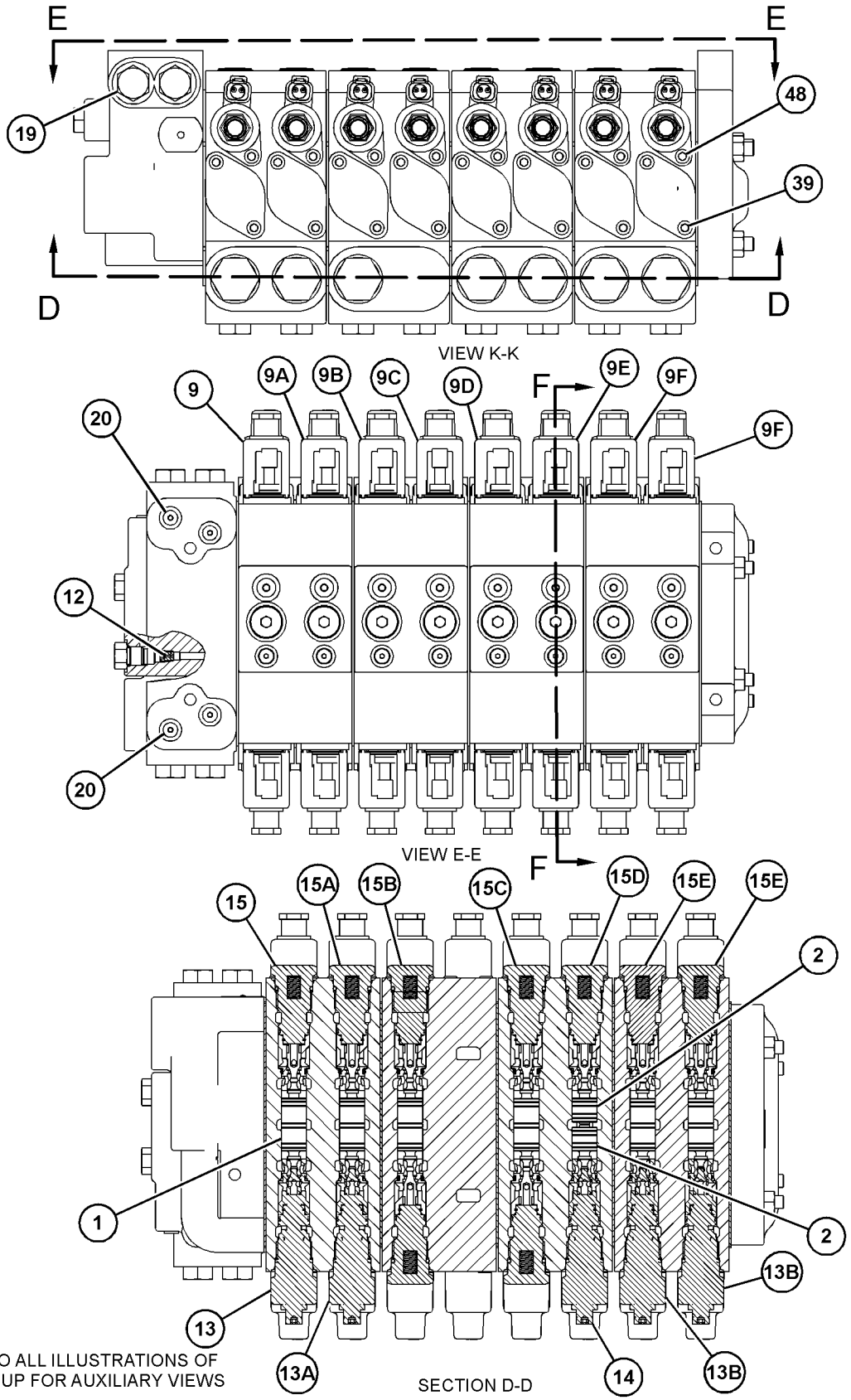

REFER TO ALL ILLUSTRATIONS OF THIS GROUP FOR AUXILIARY VIEWS

GRAPHIC #2

g06449506

487-3019 **VALVE GP-CONTROL** (contd.) **i07833929**

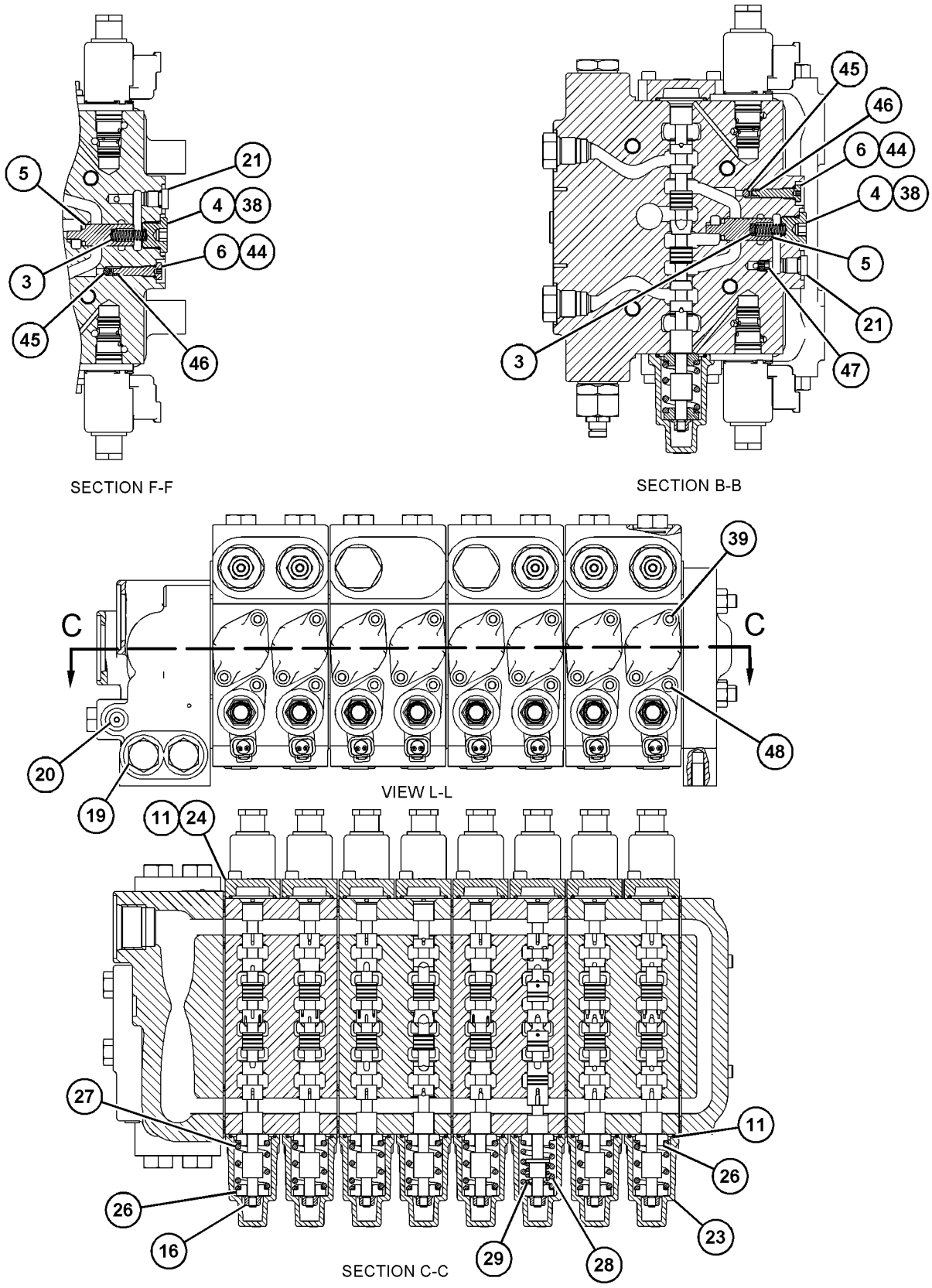

GRAPHIC #3 g06449507

487-3019 **VALVE GP-CONTROL (**contd.**)** **i07833929**

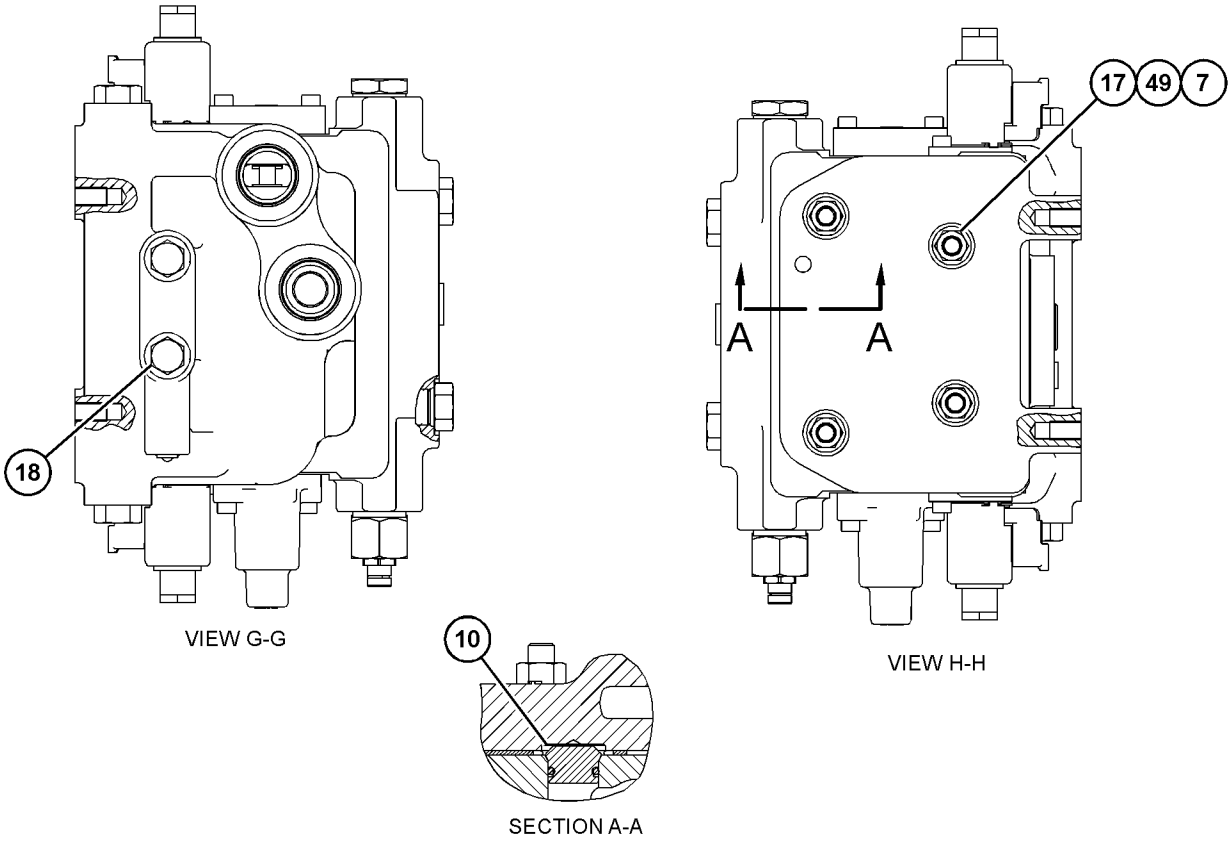

GRAPHIC #4 <END> g06393203

488-7009 VALVE GP-CONTROL–BLADE LIFT

S/N: B551-UP

PART OF 487-3027 VALVE GP-BANK 3, 487-3028 VALVE GP-BANK 4, 487-3029 VALVE GP-BANK 5, 487-3030, 487-3031 VALVE GP-BANK 6

SMCS-5051 **i07788584**

NOTE	REF NO	GRAPHIC REF	PART NUMBER	QTY	PART NAME 1 2 3 4 5 6 (PRODUCT LEVEL)	SEE PAGE
	1	1	**6E-3007**	2	SPRING	
	2	1	**106-3660**	4	PISTON	
	3	1	**212-4961**	2	SPRING	
	4	1	**242-9264**	2	PLUG-ORIFICE	
	5	1	**243-2965**	2	SPOOL	
	6	1	**244-2579**	2	PLUG	
Y	7	1	**278-1799**	4	VALVE GP-SOLENOID (BLADE LIFT)	741
J	8	1	**318-3052**	2	VALVE GP-CHECK & RELIEF (LINE, LIFT)	
J	9	1	**318-3115**	2	VALVE GP-CHECK (LIFT)	
					(EACH INCLUDES)	
		1	**6V-6580**	1	SEAL-O-RING	
		1	**9X-7745**	1	SEAL-O-RING	
		1	**471-6294**	1	SEAL-O-RING	
	10	1	*367-6002*	2	PLUG AS	
					(EACH INCLUDES)	
		1	**3J-7354**	1	SEAL-O-RING	
		1	**360-3677**	1	PLUG (7/16-20-THD)	
	11	1	*367-6003*	2	PLUG AS	
					(EACH INCLUDES)	
		1	**3K-0360**	1	SEAL-O-RING	
		1	**360-3680**	1	PLUG	
	12	1	**564-6716**	2	COVER-SPRING	
	13	1	**370-8979**	2	COVER	
	15	1	**380-0794**	8	RETAINER	
	16	1	**380-0820**	2	SPRING	
	17	1	**380-0821**	2	SPRING	
	20	1	**2S-4663**	4	SEAL-O-RING	
	21	1	**336-6718**	2	LOCKNUT-FLANGE	
	22	1	**3K-0360**	2	SEAL-O-RING	
M	23	1	**3T-0849**	8	BOLT-SOCKET HEAD (M6X1X25-MM)	
	24	1	**4B-4158**	1	SCREW-DRIVE (NO 4X0.25-IN)	
	25	1	**4J-7533**	2	SEAL-O-RING	
	26	1	**5B-9318**	2	BALL	
M	27	1	**8T-0267**	4	BOLT-SOCKET HEAD (M6X1X12-MM)	
					PARTS SHOWN IN GRAPHIC(S) WITHOUT A REFERENCE NUMBER ARE NOT SERVICED SEPARATELY	
					AVAILABLE REPAIR KIT(S):	
J			**471-4231**	1	KIT-SEAL	
					(INCLUDES O-RING SEALS & BACKUP RINGS)	

J - KIT MARKED J SERVICES PART(S) MARKED J
M - METRIC PART
Y - SEPARATE ILLUSTRATION

488-7009 **VALVE GP-CONTROL (**contd.**)** **i07788584**

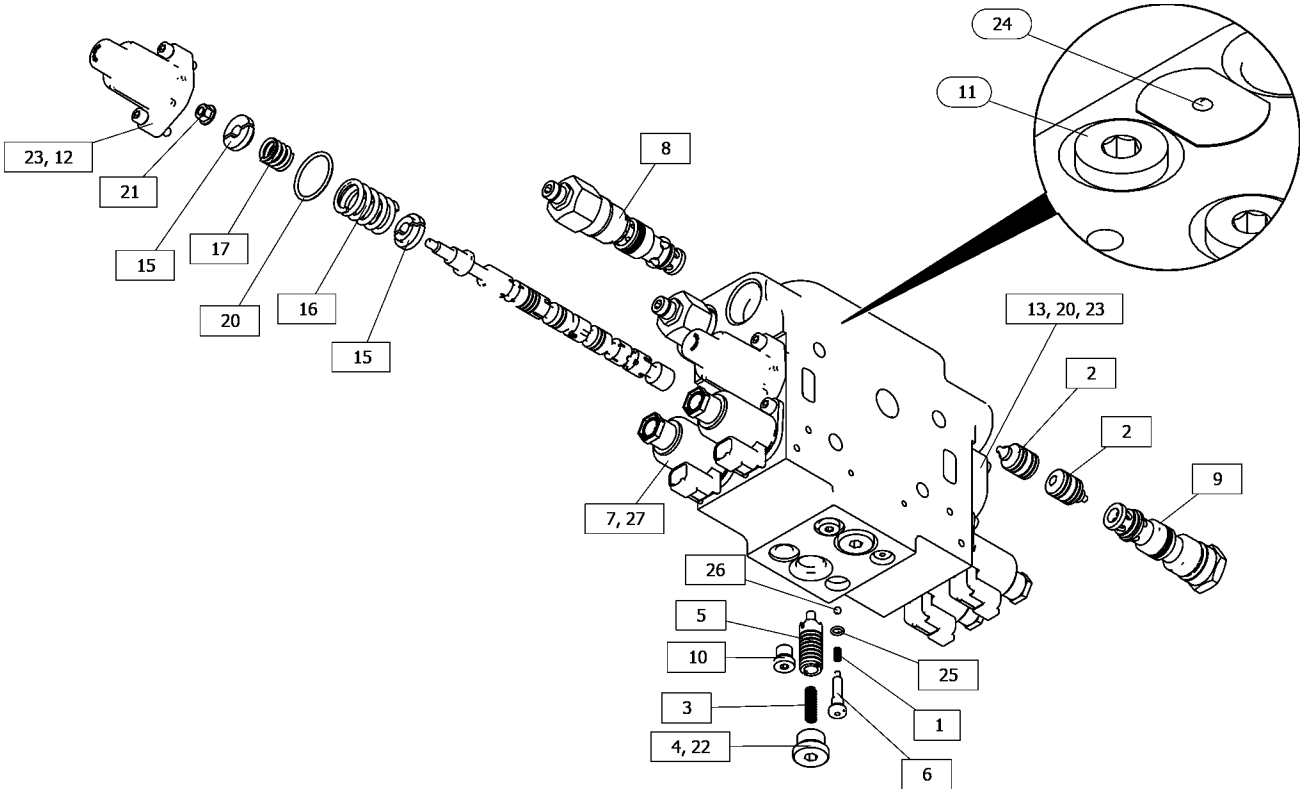

GRAPHIC #1 <END> g06423780

277-2132 VALVE GP-DIVERTER–FAN DRIVE

S/N: B551-UP

PART OF 353-2604 MANIFOLD GP-CONTROL

SMCS-5066 **i02780838**

NOTE	REF NO	GRAPHIC REF	PART NUMBER	QTY	PART NAME 1 2 3 4 5 6 (PRODUCT LEVEL)	SEE PAGE
J	1	1	**2M-9780**	1	SEAL-O-RING	
J	2	1	**6V-5142**	1	SEAL-O-RING	
J	3	1	**169-1617**	2	RING-BACKUP	
J	4	1	**095-1751**	1	SEAL-O-RING	
J	5	1	**169-1616**	2	RING-BACKUP	
					AVAILABLE REPAIR KIT(S):	
J			**200-6282**	1	KIT-SEAL (DIVERTER VALVE) (HYDRAULIC FAN FLUID FLOW)	
					(INCLUDES SEALS & RINGS)	

J - KIT MARKED J INCLUDES PART(S) MARKED J

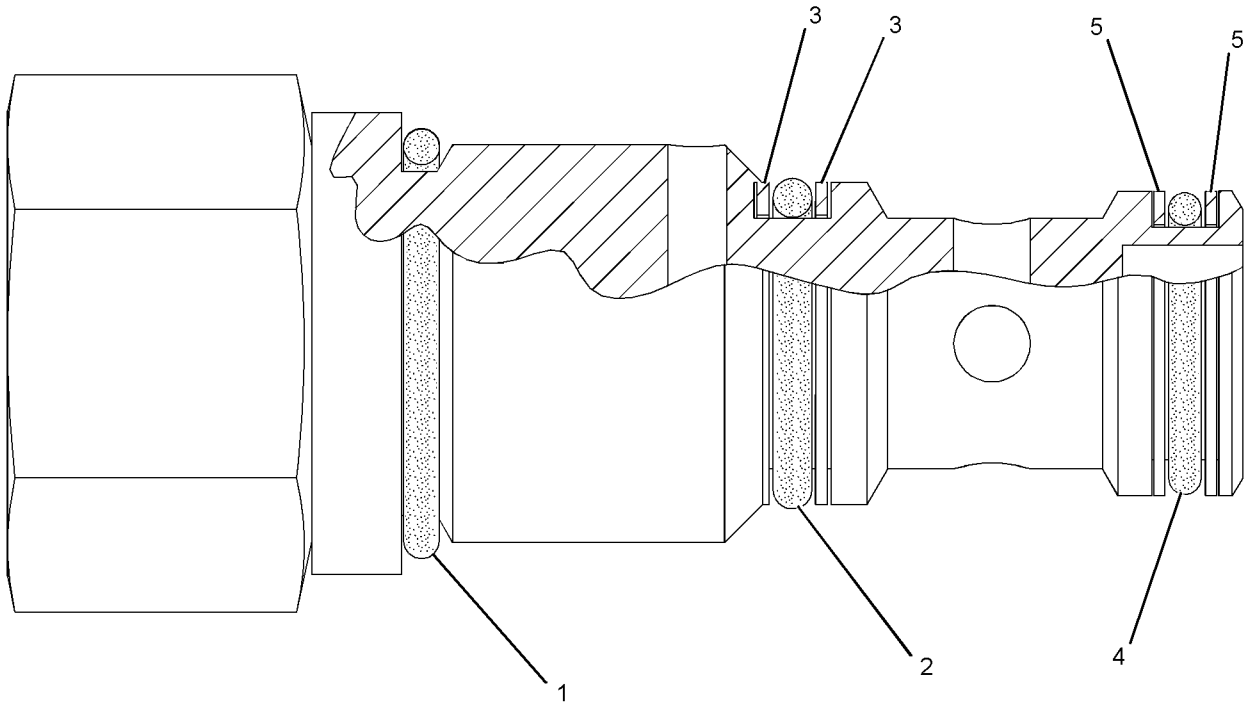

GRAPHIC #1 <END> g01109584

252-8038 VALVE GP-PRESSURE REDUCING

S/N: B551-UP

PART OF 477-1149 MANIFOLD GP-CONTROL, 366-6686 VALVE GP-CONTROL

SMCS-5117, 5467 **i05432017**

NOTE	REF NO	GRAPHIC REF	PART NUMBER	QTY	PART NAME 1 2 3 4 5 6 (PRODUCT LEVEL)	SEE PAGE
	1	1	**2M-9780**	1	SEAL-O-RING	
	2	1	**6V-3505**	1	RING-BACKUP	
	3	1	**8C-3132**	1	SEAL-O-RING	
	4	1	**6E-0410**	1	SEAL-O-RING	
	5	1	**5P-2199**	1	RING-BACKUP	

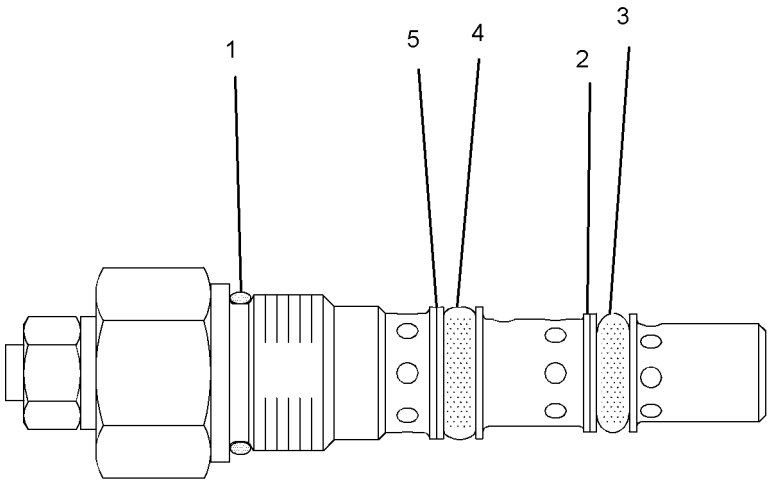

GRAPHIC #1 <END> g01089904

168-2210 VALVE GP-PUMP CONTROL–PRESSURE, FLOW COMPENSATOR

S/N: B551-UP

PART OF 250-8337 PUMP GP-PISTON

SMCS-5455 **i07383606**

NOTE	REF NO	GRAPHIC REF	PART NUMBER	QTY	PART NAME 1 2 3 4 5 6 (PRODUCT LEVEL)	SEE PAGE
	1	1	**6E-6528**	6	SEAL	
	2	1	**6E-6527**	2	PLUG	
	3	1	**6E-3268**	1	RETAINER-SPRING	
	4	1	**6E-3275**	1	SPRING	
	5	1	**6E-3274**	1	SPRING	
	6	1	**033-6043**	1	SEAL-O-RING	
	7	1	**6E-3272**	1	SEAT	
	8	1	**201-0780**	1	ORIFICE	
M	9	1	**6E-6538**	2	NUT-ADJUSTMENT (M8X1-THD)	
M	10	1	**6E-6537**	2	SCREW-ADJUSTMENT (M8X1X28-MM)	
M	11	1	**6E-6539**	2	NUT-CAP (M8X1-THD)	
	12	1	**6E-3273**	1	SEAT	
	13	1	**6E-6536**	1	PLUG	
	14	1	**6V-8352**	1	SEAL-O-RING	
	15	1	**193-1036**	1	SPRING	
	16	1	**6E-3276**	1	SPRING	
	17	1	**462-7927**	1	COLLAR-SPRING	
	18	1	**105-2145**	1	VALVE-ORIFICE	
	19	1	**5P-9262**	1	SEAL-O-RING	
	20	1	**3J-7354**	1	SEAL-O-RING	
	21	1	**9S-8002**	1	PLUG (7/16-20-THD)	
M	22	1	**8T-8442**	4	BOLT-SOCKET HEAD (M6X1X30-MM)	
	23	1	**228-7088**	3	SEAL-O-RING	

M - METRIC PART

168-2210 **VALVE GP-PUMP CONTROL (**contd.**)** **i07383606**

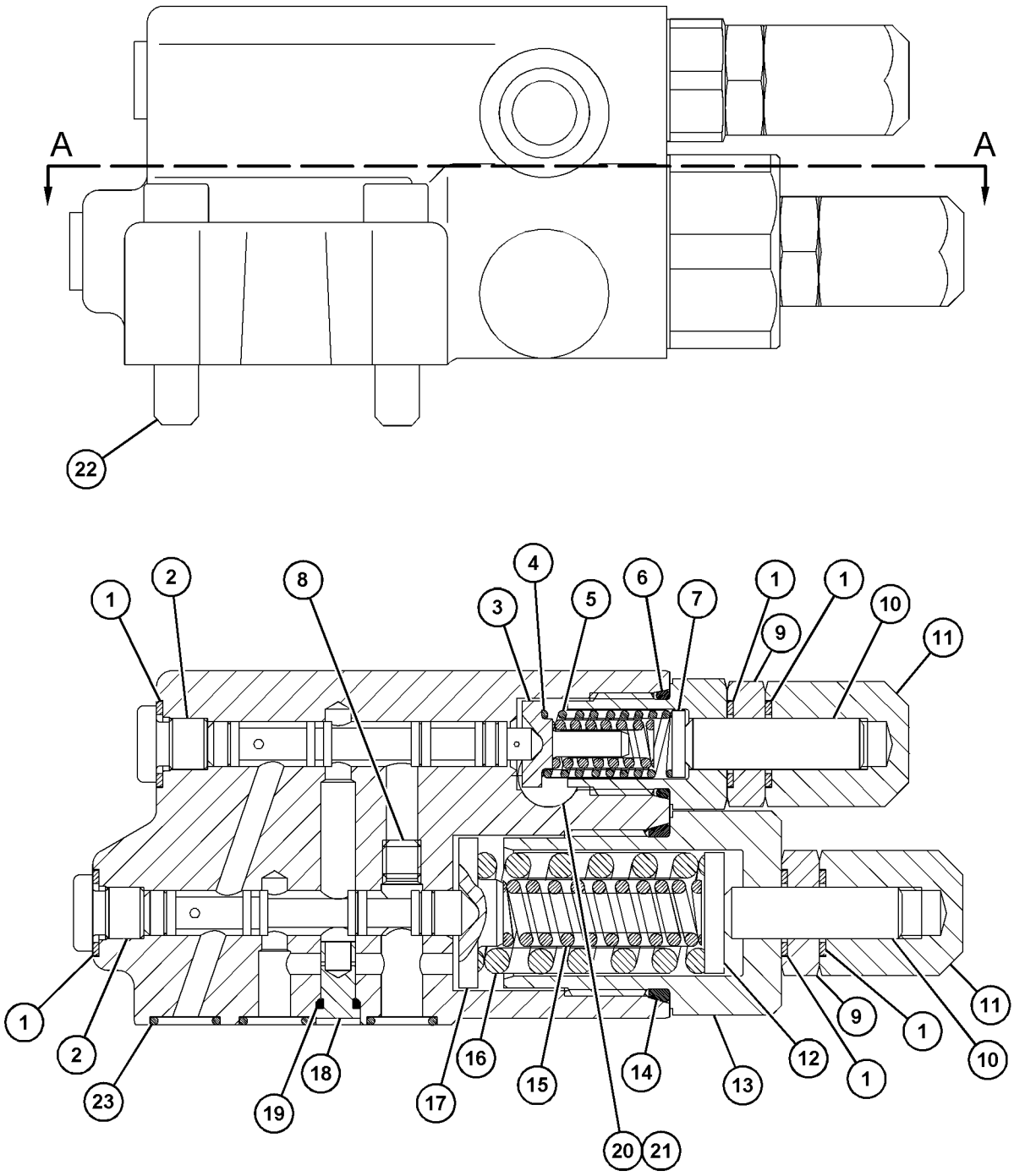

SECTION A-A

GRAPHIC #1 <END> g06314254

347-0612 VALVE GP-PUMP CONTROL–FLOW COMPENSATOR

S/N: B551-UP

PART OF 366-6621 PUMP GP-PISTON

SMCS-5455 **i05325561**

NOTE	REF NO	GRAPHIC REF	PART NUMBER	QTY	PART NAME 1 2 3 4 5 6 (PRODUCT LEVEL)	SEE PAGE
M	1	1	**8T-8442**	4	BOLT-SOCKET HEAD (M6X1X30-MM)	
	2	1	**280-7870**	1	GASKET	
	3	1	**6E-6528**	2	SEAL	
	4	1	**9S-8002**	1	PLUG (7/16-20-THD)	
	5	1	**3J-7354**	1	SEAL-O-RING	
	6	1	**033-6043**	1	SEAL-O-RING	
	7	1	**033-6034**	1	SEAL-O-RING	
	8	1	**6E-6527**	2	PLUG	
					AVAILABLE REPAIR KIT(S):	
			293-8350	1	KIT-SEAL (FLOW COMPENSATOR)	
					(INCLUDES O-RINGS & BACK-UP RINGS)	

M - METRIC PART

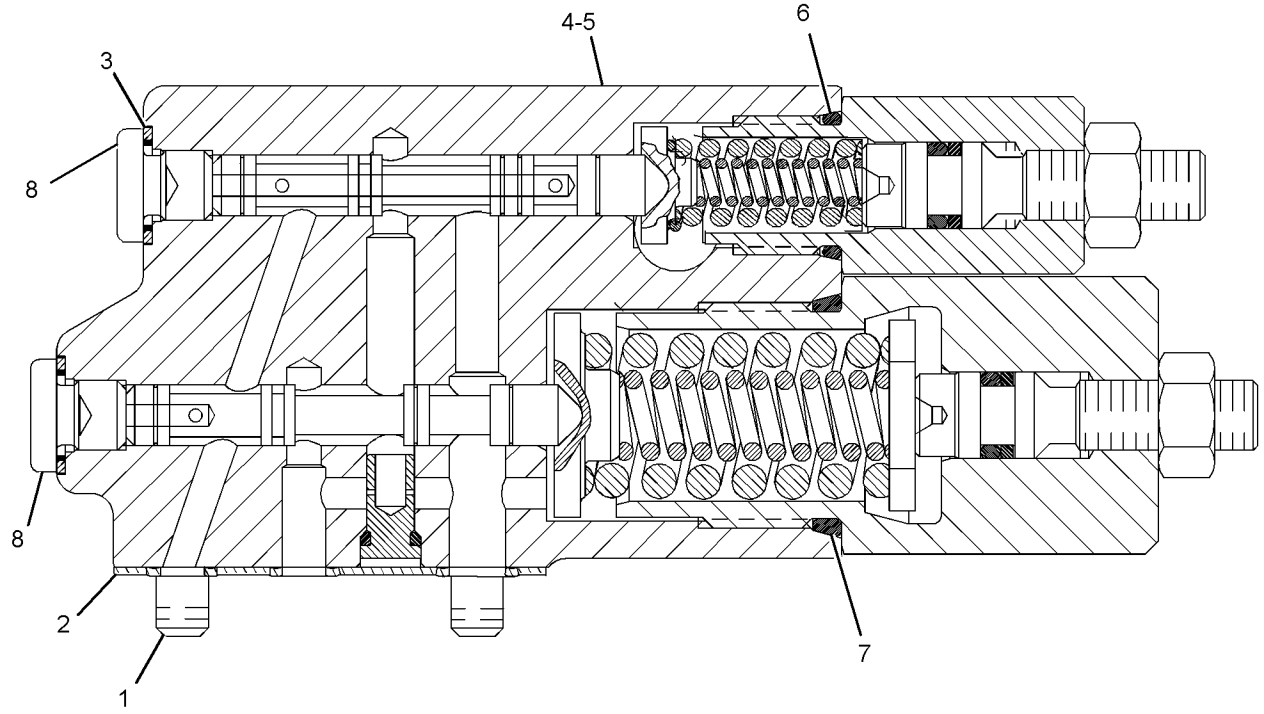

GRAPHIC #1 <END> g03113698

133-5330 VALVE GP-RELIEF

S/N: B551-UP
DIRECT OPERATED
PART OF 477-1149 MANIFOLD GP-CONTROL

SMCS-4322, 5069, 5072, 5117

i02773417

NOTE	REF NO	GRAPHIC REF	PART NUMBER	QTY	PART NAME 1 2 3 4 5 6 (PRODUCT LEVEL)	SEE PAGE
J	1	1	**161-6149**	1	SEAL-O-RING	
J	2	1	**161-6161**	2	RING-BACKUP	
J	3	1	**2M-9780**	1	SEAL-O-RING	
					AVAILABLE REPAIR KIT(S):	
J			**133-5545**	1	KIT-SEAL	
					(INCLUDES SEAL RINGS & BACK-UP RING)	

J - KIT MARKED J INCLUDES PART(S) MARKED J

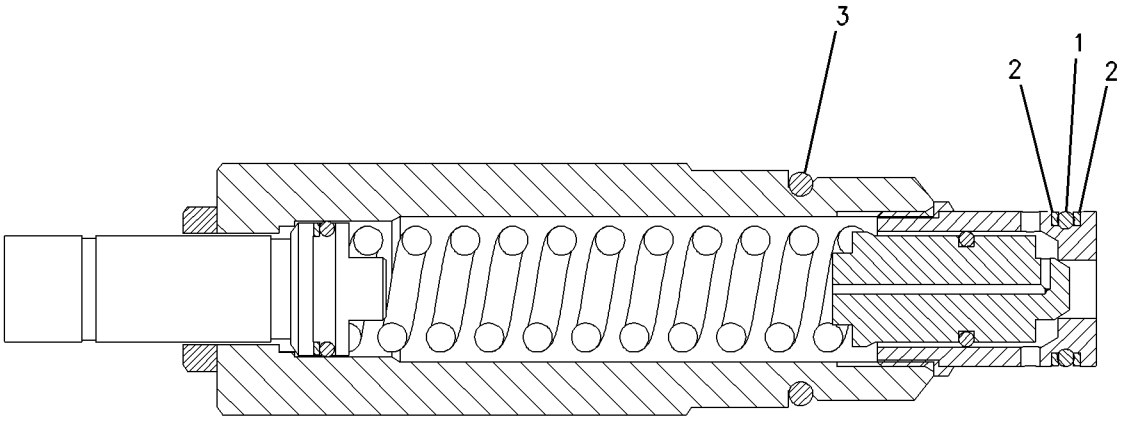

GRAPHIC #1

<END>

g00705020

251-8330 VALVE GP-RELIEF

S/N: B551-UP
DIRECT OPERATED
PART OF 353-2604 MANIFOLD GP-CONTROL

SMCS-4322, 5069, 5072, 5117

i05180921

NOTE	REF NO	GRAPHIC REF	PART NUMBER	QTY	PART NAME 1 2 3 4 5 6 (PRODUCT LEVEL)	SEE PAGE
J	1	1	**2M-9780**	1	SEAL-O-RING	
J	2	1	**161-6149**	1	SEAL-O-RING	
J	3	1	**161-6161**	2	RING-BACKUP	
					AVAILABLE REPAIR KIT(S):	
			133-5545	1	KIT-SEAL	
					KIT INCLUDES SEAL-O-RINGS & BACK-UP RINGS	

J - KIT MARKED J INCLUDES PART(S) MARKED J

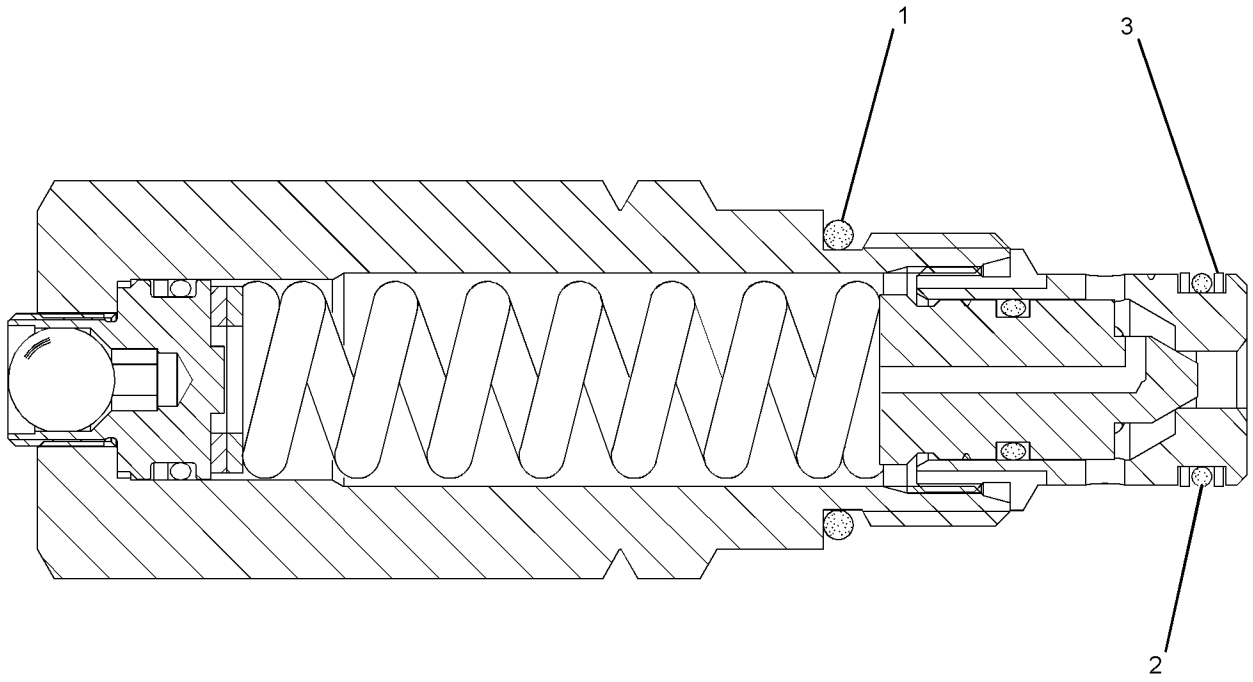

GRAPHIC #1

<END>

g03321998

382-2790 VALVE GP-SHUTOFF–LOAD SENSING

S/N: B551-UP

PART OF 393-6074 LINES GP-PUMP

SMCS-5059, 5130, 5143, 5479 **i06791416**

NOTE	REF NO	GRAPHIC REF	PART NUMBER	QTY	PART NAME 1 2 3 4 5 6 (PRODUCT LEVEL)	SEE PAGE
	1	1	**252-0741**	1	VALVE GP-SOLENOID	
		1	**156-5970**	1	NUT (1/2-20-THD)	
		1	**362-6151**	1	COIL AS	
	2	1	**474-0524**	1	VALVE GP-SHUTTLE	
		1	**457-5280**	1	KIT-SEAL (SHUTTLE VALVE)	
					(INCLUDES BACK UP RING & O-RING)	
Y	3	1	**158-9956**	1	VALVE GP-CHECK	692
	4	1	**9S-8002**	3	PLUG (7/16-20-THD)	
	5	1	**3J-7354**	3	SEAL-O-RING	

Y - SEPARATE ILLUSTRATION

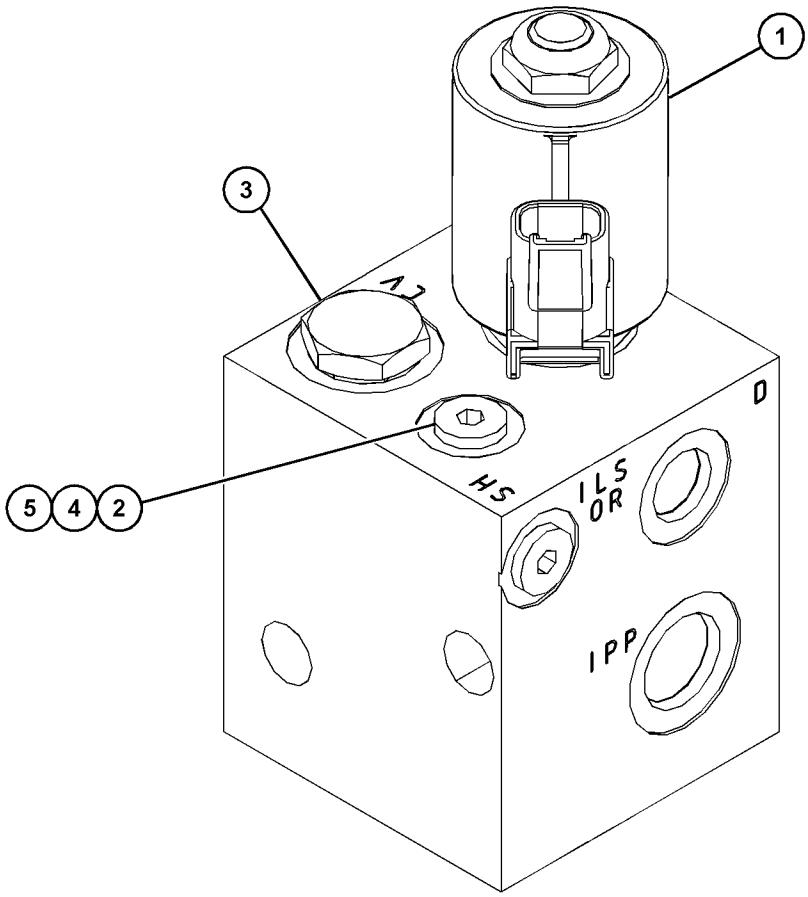

GRAPHIC #1 <END> g06085910

257-8414 VALVE GP-SHUTTLE

S/N: B551-UP

PART OF 353-2604 MANIFOLD GP-CONTROL

SMCS-5079 **i02708474**

NOTE	REF NO	GRAPHIC REF	PART NUMBER	QTY	PART NAME 1 2 3 4 5 6 (PRODUCT LEVEL)	SEE PAGE
	1	1	**3K-0360**	1	SEAL-O-RING	
	2	1	**161-6149**	1	SEAL-O-RING	
	3	1	**095-1750**	1	SEAL-O-RING	
	4	1	**161-6161**	1	RING-BACKUP	
	5	1	**187-0541**	1	RING-BACKUP	

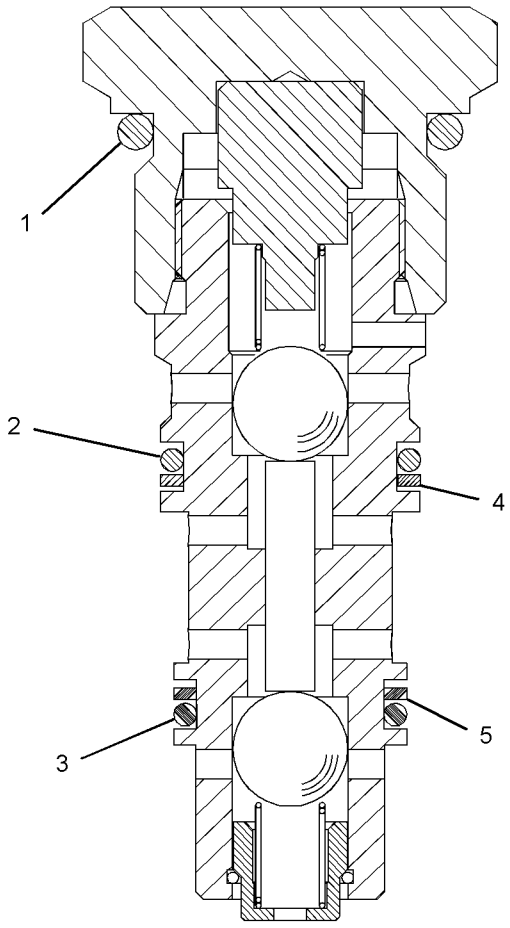

GRAPHIC #1 <END> g01104191

189-8627 VALVE GP-SOLENOID

S/N: B551-UP

24-VOLT

PART OF 353-2604 MANIFOLD GP-CONTROL

SMCS-5479 **i05143709**

NOTE	REF NO	GRAPHIC REF	PART NUMBER	QTY	PART NAME 1 2 3 4 5 6 (PRODUCT LEVEL)	SEE PAGE
	1	1	**312-8629**	1	COIL AS (24-VOLT)	
	2	1	**191-9247**	1	WASHER (19.15X31.65X2.36-MM THK)	
	3	1	**198-2914**	1	NUT (3/4-32-THD)	
					PARTS SHOWN IN GRAPHIC(S) WITHOUT A REFERENCE NUMBER ARE NOT SERVICED SEPARATELY	

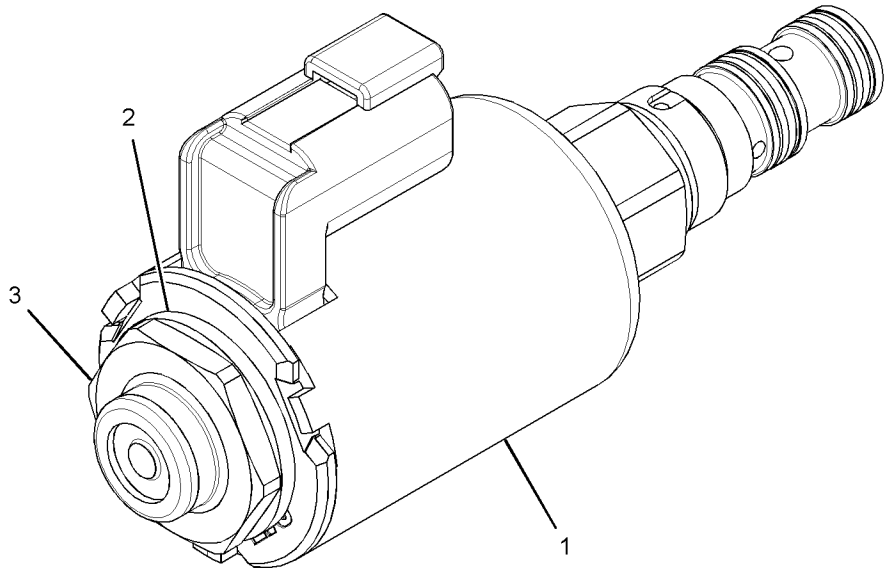

GRAPHIC #1 <END> g01947439

278-1799 VALVE GP-SOLENOID

S/N: B551-UP

PART OF 487-3027 VALVE GP-BANK 3, 487-3028 VALVE GP-BANK 4, 487-3013, 487-3029 VALVE GP-BANK 5, 487-3014, 487-3015, 487-3030, 487-3031 VALVE GP-BANK 6, 487-3016, 487-3017 VALVE GP-BANK 7, 487-3018 VALVE GP-BANK 8, 366-6686, 366-6692, 371-6093, 382-3290, 382-3294, 382-3295, 382-3296, 382-3297, 382-3298, 382-3299, 382-3300, 382-3301, 382-3305, 382-3316, 382-3323, 487-3019, 488-7009 VALVE GP-CONTROL

SMCS-5479 **i02779495**

NOTE	REF NO	GRAPHIC REF	PART NUMBER	QTY	PART NAME 1 2 3 4 5 6 (PRODUCT LEVEL)	SEE PAGE
	1	1	**8C-6711**	1	NUT-RETAINER (1/2-20-THD)	
	2	1	**226-9622**	1	COIL AS-SOLENOID (24-VOLT)	
	3	1	**4K-2039**	1	SEAL-O-RING	
	4	1	**5L-4758**	1	SEAL-O-RING	
	5	1	**6F-4855**	1	SEAL-O-RING	

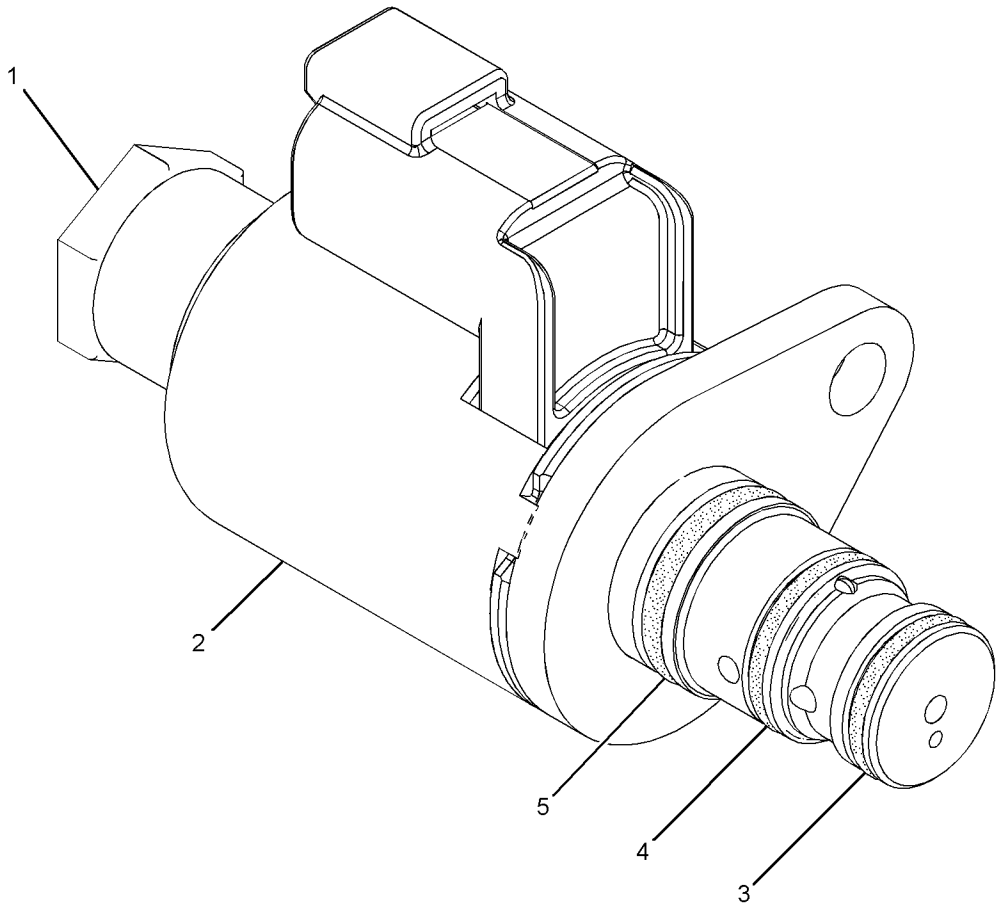

GRAPHIC #1 <END> g01281815

332-1166 VALVE GP-SOLENOID

S/N: B551-UP

24-VOLT

PART OF 333-1285 LINES GP-HYDRAULIC FAN

SMCS-5479 **i04091590**

NOTE	REF NO	GRAPHIC REF	PART NUMBER	QTY	PART NAME 1 2 3 4 5 6 (PRODUCT LEVEL)	SEE PAGE
	1	1	**251-3268**	1	VALVE GP-SOLENOID (24-VOLT)	
		1	**250-6148**	1	COIL AS (24-VOLT)	

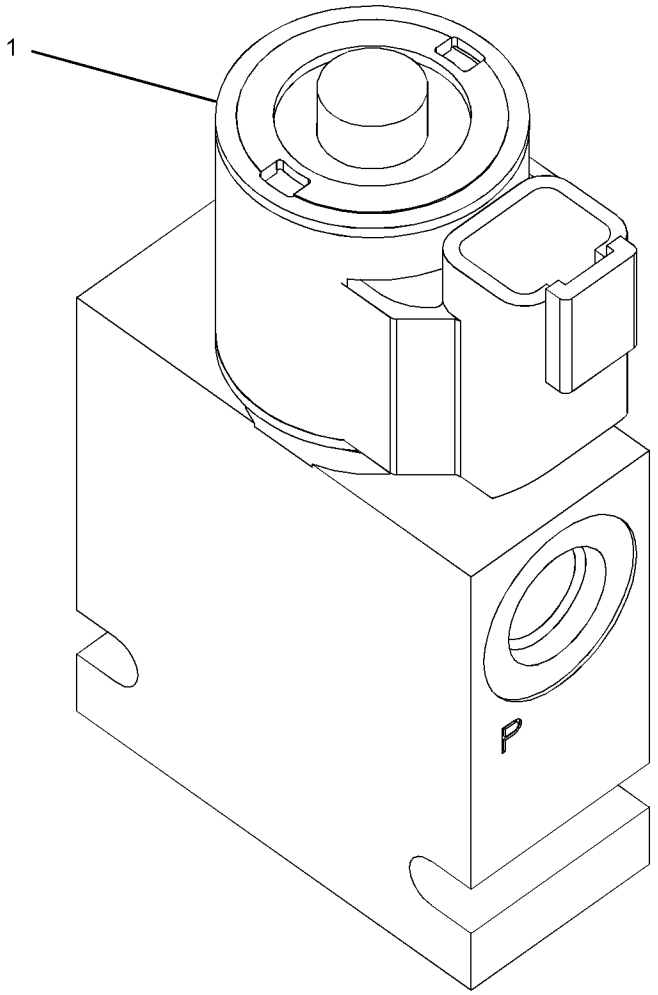

GRAPHIC #1 <END> g02158410

366-6680 VALVE GP-STEERING

S/N: B551-UP

PART OF 393-6071 LINES GP-STEERING

SMCS-4307, 4322 **i06034002**

NOTE	REF NO	GRAPHIC REF	PART NUMBER	QTY	PART NAME 1 2 3 4 5 6 (PRODUCT LEVEL)	SEE PAGE
M	1	1	**8T-4198**	3	BOLT (M10X1.5X100-MM)	
Y	2	1	**366-6686**	1	VALVE GP-CONTROL (STEERING PRIORITY)	693
Y	3	1	**366-6692**	1	VALVE GP-CONTROL (STEERING)	695
	4	1	**8T-4121**	3	WASHER-HARD (11X21X2.5-MM THK)	

M - METRIC PART
Y - SEPARATE ILLUSTRATION

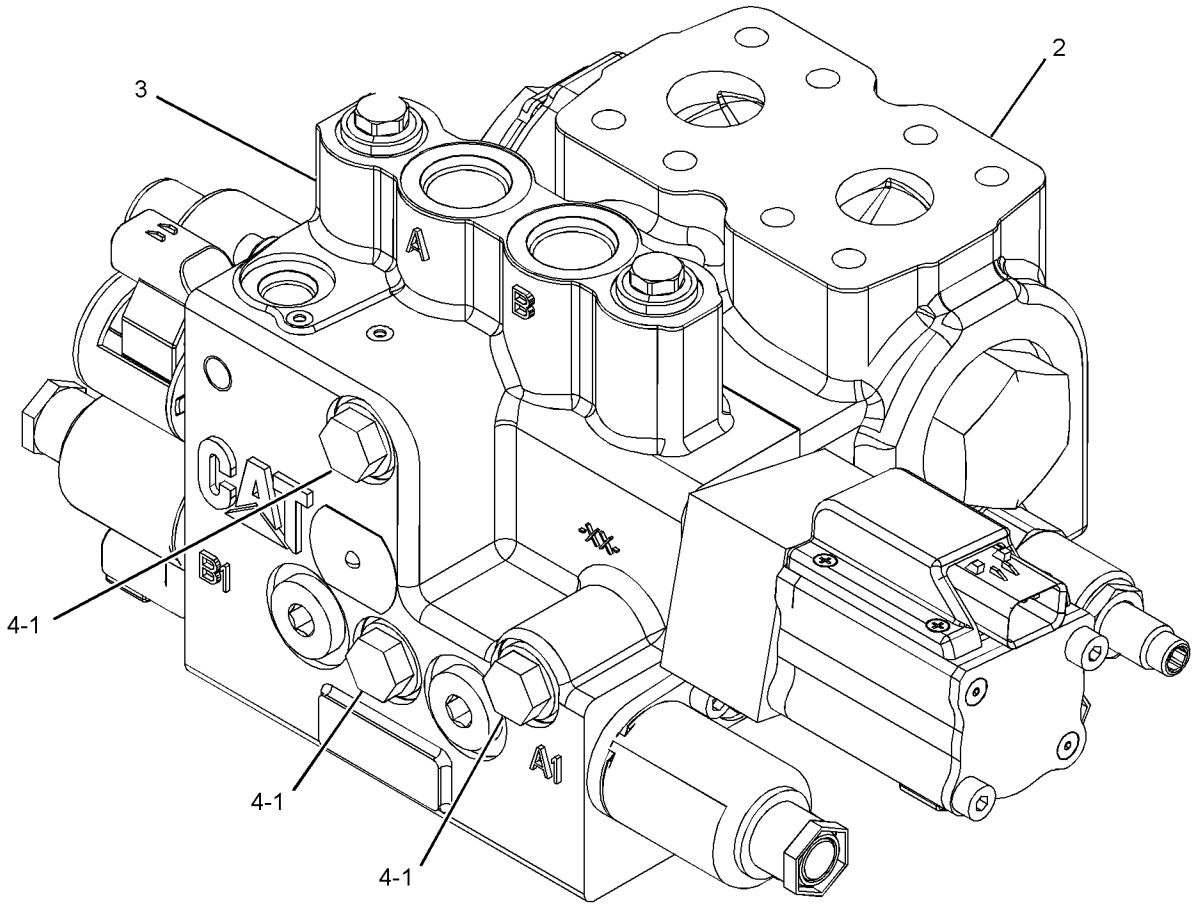

GRAPHIC #1 <END> g03452837

243-6660 CIRCLE GP

S/N: B551-UP

PART OF 577-1377 COMMON AR

SMCS-6152, 6154, 6155 **i07828433**

NOTE	REF NO	GRAPHIC REF	PART NUMBER	QTY	PART NAME 1 2 3 4 5 6 (PRODUCT LEVEL)	SEE PAGE
CM	1	1	**8T-4648**	2	BOLT (M12X1.75X70-MM)	
M	2	1	**129-2220**	6	SETSCREW-SOCKET (M20X2.5X80-MM)	
BC	3	1	**190-0627**	22	SHIM (2-MM THK)	
	4	1	**243-6650**	1	CIRCLE AS	
	5	1	**243-6652**	4	COVER	
	6	1	**253-4646**	2	PLATE AS	
	7	1	**265-6722**	4	COVER	
	8	1	**276-1318**	2	STRIP-WEAR	
	9	1	**276-1319**	2	STRIP-WEAR	
	10	1	**283-1578**	4	WASHER-HARD (22X45X10-MM THK)	
	11	1	**285-6124**	16	WASHER-HARD (16X35X5-MM THK)	
M	12	1	**285-6125**	16	BOLT (M14X2-THD)	
C	13	1	**3B-8489**	2	FITTING-GREASE (1/8-27 PTF)	
	14	1	**446-1526**	2	STRIP-WEAR	
	15	1	**466-1604**	2	SPACER	
	16	1	**467-5183**	8	BUSHING	
C	17	1	**526-6468**	2	PIN	
C	18	1	**526-6469**	2	COLLAR	
	19	1	**558-2398**	1	MOUNTING GP-BLADE	
CM	20	1	**6V-7687**	2	LOCKNUT (M12X1.75-THD)	
M	21	1	**6V-7688**	6	LOCKNUT (M20X2.5-THD)	
C	22	1	**7X-0584**	2	WASHER-HARD (13.5X20.5X2-MM THK)	

B - USE AS REQUIRED
C - CHANGE FROM PREVIOUS TYPE
M - METRIC PART

243-6660 **CIRCLE GP (**contd.**)** **i07828433**

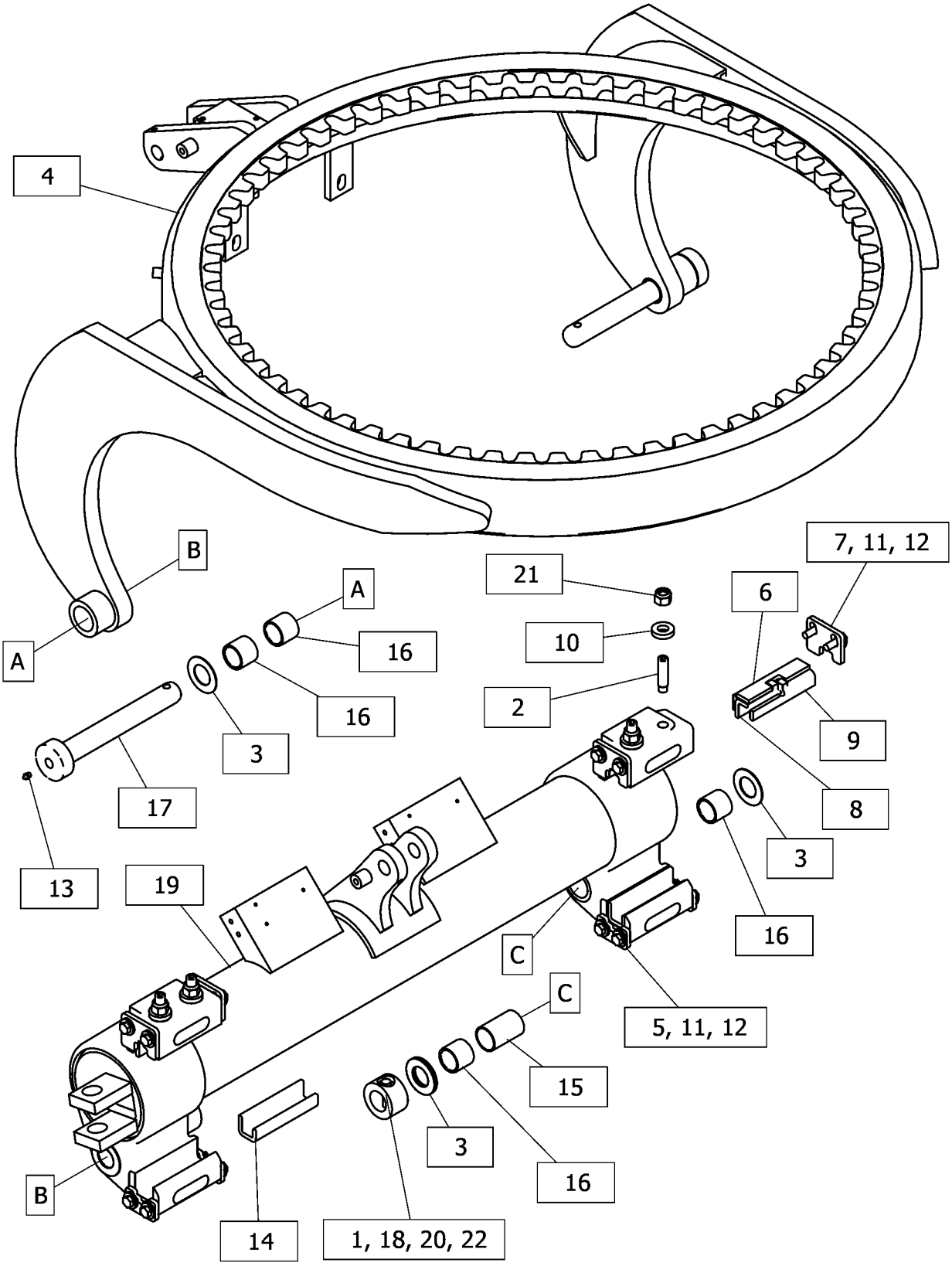

GRAPHIC #1 <END> g06404380

253-4630 DRAWBAR GP

S/N: B551-UP

PART OF 577-1377 COMMON AR

SMCS-6153 **i07620461**

NOTE	REF NO	GRAPHIC REF	PART NUMBER	QTY	PART NAME 1 2 3 4 5 6 (PRODUCT LEVEL)	SEE PAGE
	1	1	**1D-5119**	12	NUT (3/4-10-THD)	
	2	1	**3B-8489**	1	FITTING-GREASE (1/8-27 PTF)	
	3	1	**6G-5442**	1	BALL	
	4	1	**6K-6444**	2	SPACER	
	5	1	**7J-8782**	3	PLUG	
	6	1	**333-0960**	6	STRIP-WEAR	
M	7	1	**201-8034**	18	BOLT (M20X2.5X120-MM)	
	8	1	**312-0780**	6	SHOE-CIRCLE GUIDE	
	9	1	**253-4651**	1	DRAWBAR & YOKE AS	
	9A	1	**178-3086**	3	STUD-BALL	
	9B	1	**243-1786**	1	SHAFT AS	
	9C	1	**243-6658**	1	PLATE	
	9D	1	**243-6659**	1	PLATE	
	9E	1	**285-4247**	1	PLATE	
	9F	1	**285-4265**	1	PLATE	
M	9G	1	**178-7023**	4	BOSS (M10X1.5X30-MM)	
M	9H	1	**7Y-6338**	2	BOSS (M10X1.5X70-MM)	
M	9J	1	**8Y-3795**	1	BOSS (M10X1.5X39-MM)	
M	9K	1	**9R-2672**	7	BOSS-THREADED (M10X1.5X120-MM)	
M	9L	1	**9R-9866**	2	BOSS-THREADED (M10X1.5-THD)	
	10	1	**302-6338**	6	STRIP-WEAR	
B	11	1	**302-6337**	6	SHIM (10-MM THK)	
B	12	1	**302-6335**	12	SHIM (0.25-MM THK)	
B		1	**302-6336**	42	SHIM (0.5-MM THK)	
	14	1	**261-4672**	1	CAP (DRAWBAR)	
	15	1	**261-4673**	1	ADAPTER	
B	16	1	**261-4674**	4	SHIM (0.8-MM THK)	
B		1	**261-4675**	6	SHIM (0.25-MM THK)	
B		1	**261-4676**	1	SHIM (0.12-MM THK)	
	19	1	**342-7352**	4	COVER	
	20	1	**342-7353**	1	COVER	
	21	1	**342-7351**	1	COVER	
	22	1	**283-1578**	20	WASHER-HARD (22X45X10-MM THK)	
M	23	1	**288-3678**	14	BOLT (M20X2.5X45-MM)	
	24	1	**3E-5001**	2	PIN-SPRING	
M	25	1	**147-5112**	4	BOLT (M24X3X150-MM)	
M	26	1	**550-3302**	2	BOLT-HEAD (M20X2.5X80-MM)	
	27	1	**8T-4167**	4	WASHER-HARD (26X44X4-MM THK)	
	28	1	**8T-4123**	18	WASHER (22X35X3.5-MM THK)	
M	29	1	**483-0424**	4	LOCKNUT (M20X2.5-THD)	
M	30	1	**287-5701**	2	BOLT (M20X2.5X50-MM)	
	31	1	**289-0580**	12	SETSCREW (3/4-10X2.5-IN)	
	32	1	**5P-8291**	5	BOLT (3/4-16X2-IN)	
M	33	1	**6V-8653**	2	BOLT-SOCKET HEAD (M6X1X40-MM)	
BFJ			**302-6335**	24	SHIM (0.25-MM THK)	
BFJ			**302-6336**	60	SHIM (0.5-MM THK)	

253-4630 **DRAWBAR GP (**contd.**)** **i07620461**

NOTE	REF NO	GRAPHIC REF	PART NUMBER	QTY	PART NAME 1 2 3 4 5 6 (PRODUCT LEVEL)	SEE PAGE

B - USE AS REQUIRED
F - NOT SHOWN
J - LOCATED IN THE TOOLBOX
M - METRIC PART

253-4630 **DRAWBAR GP** (contd.) **i07620461**

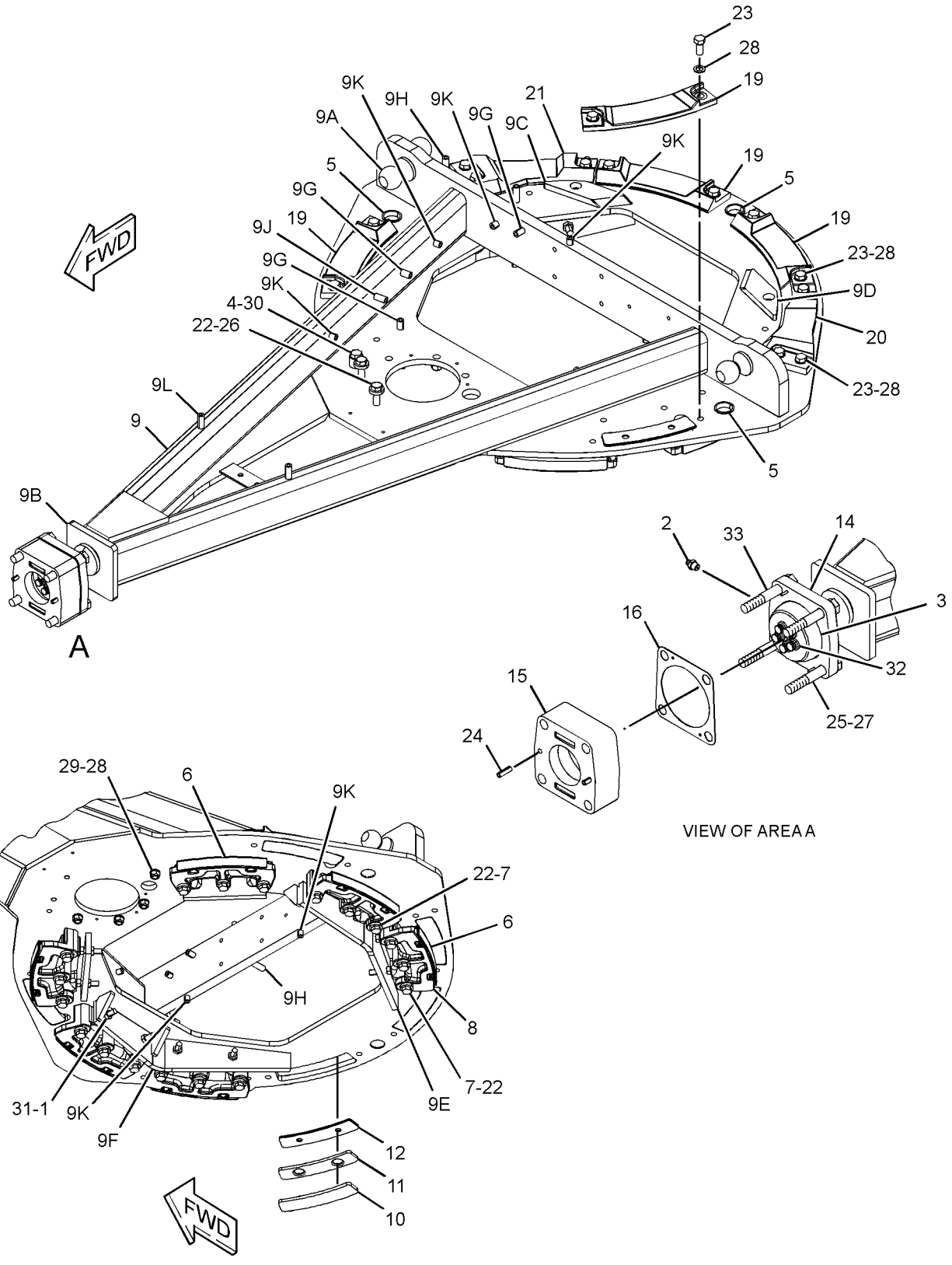

GRAPHIC #1 <END> g06384219

387-8752 AIR CONDITIONER & MOUNTING GP

S/N: B551-UP

PART OF 361-3133 AIR CONDITIONER GP

SMCS-7320 **i04859467**

NOTE	REF NO	GRAPHIC REF	PART NUMBER	QTY	PART NAME 1 2 3 4 5 6 (PRODUCT LEVEL)	SEE PAGE
	1	1	**249-0410**	2	GASKET	
	2	1	**249-0411**	1	GASKET	
	3	1	**249-0937**	1	DUCT	
	4	1	**265-7454**	1	GASKET	
Y	5	1	**285-8055**	1	AIR CONDITIONER GP	751
	6	1	**387-8731**	2	SPACER	
	7	1	**118-5619**	2	SCREW-FLAT HEAD (6-20X1-IN)	
	8	1	**145-6669**	2	SCREW-SELF-TAPPING (10X0.75-IN)	
	9	1	**8T-4121**	4	WASHER-HARD (11X21X2.5-MM THK)	
M	10	1	**8T-4172**	2	BOLT (M10X1.5X80-MM)	
M	11	1	**8T-4196**	2	BOLT (M10X1.5X35-MM)	
D	12	1	**5P-5637**		SEAL (0.5-M)	
D	13	1	**5P-5643**		SEAL (0.5-M)	
D	14	1	**5P-5927**		SEAL (1.3-M)	

D - ORDER BY THE METER
M - METRIC PART
Y - SEPARATE ILLUSTRATION

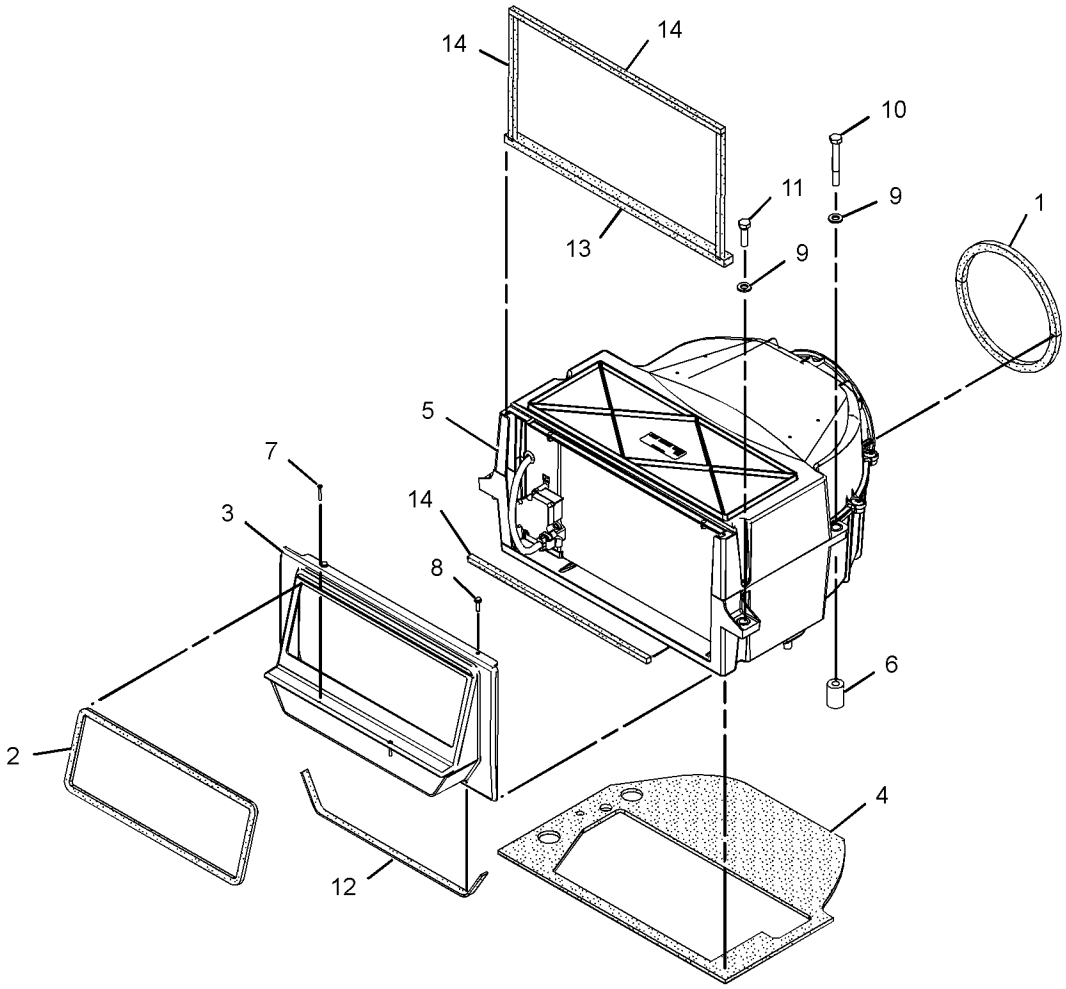

GRAPHIC #1 <END> g03003540

261-0775 AIR CONDITIONER AR–HVAC

S/N: B551-UP

PART OF 577-1377 COMMON AR

SMCS-7320 **i04839952**

NOTE	PART NUMBER	QTY	PART NAME 1 2 3 4 5 6 (PRODUCT LEVEL)	SEE PAGE
Y	*246-6714*	1	COMPRESSOR & MTG GP-REFRIG	761
Y	*232-4738*	1	CONDENSER & MTG GP-REFRIGERANT	763
Y	*255-1249*	1	LINES GP-AIR CONDITIONER	805
Y	*255-1248*	1	LINES GP-HEATER	810
	114-0061	1	PLATE-INSTRUCTION (NO SERVICE-READ OMM) (AIR CONDITIONER LINES)	
			(ON THE RIGHT FRONT DASH POST OF THE ENCLOSURE, 530-MM ABOVE THE BOTTOM PANEL'S TOP SURFACE)	

Y - SEPARATE ILLUSTRATION

<END>

285-8055 AIR CONDITIONER GP

S/N: B551-UP

PART OF 387-8752 AIR CONDITIONER & MOUNTING GP

SMCS-7320 **i07619999**

NOTE	REF NO	GRAPHIC REF	PART NUMBER	QTY	PART NAME 1 2 3 4 5 6 (PRODUCT LEVEL)	SEE PAGE
	1	1	**119-9631**	1	SWITCH-TEMPERATURE (AIR CONDITIONER)	
	2	1	**3S-2093**	2	STRAP-CABLE	
	3	1	**6T-6708**	2	WASHER (7X28.6X4.1-MM THK)	
	4	1	**125-9740**	1	RESISTOR	
C	5	1	**133-9012**	2	FUSE (15-AMPERE) (AIR CONDITIONER, HEATER)	
	6	1	**249-0934**	1	CASE AS	
	7	1	**249-0938**	1	CASE	
	8	1	**263-9466**	1	PLATE	
	9	1	**265-7434**	1	SEAL	
	10	1	**265-7435**	1	GASKET	
	11	1	**273-0342**	1	FILM-IDENTIFICATION (SERIAL NUMBER)	
	12	1	**276-9015**	1	HARNESS AS-MOTOR (HVAC)	
		1	**7T-0093**	2	PIN-CONNECTOR (12-GA TO 14-GA)	
		1	**8T-8729**	4	PIN-CONNECTOR (16-GA TO 20-GA)	
		1	**8T-8737**	1	PLUG-SEAL	
		1	**9W-0852**	3	PIN-CONNECTOR (14-GA TO 16-GA)	
		1	**100-6674**	3	SEAL-CONNECTOR	
		1	**118-5125**	1	CLIP (LOOP)	
E		1	**119-3662**		TUBE-HEAT SHRINK (10.85-MM DIA) (7-CM)	
E		1	**125-7875**		TUBE-HEAT SHRINK (7.44-MM DIA) (5-CM)	
		1	**5P-5618**	3	TERMINAL-BLADE (10-GA TO 12-GA)	
		1	**5P-4571**	5	TERMINAL-BLADE (14-GA TO 16-GA)	
		1	**2L-8067**	2	TERMINAL-RING (10-GA TO 12-GA, 1/4-IN SCREW)	
		1	**102-8806**	1	KIT-RECEPTACLE (8-PIN)	
		1	**177-9645**	1	KIT-RECEPTACLE (2-PIN)	
					(EACH RECEPTACLE KIT INCLUDES RECEPTACLE AS & WEDGE)	
		1	**3E-3389**	1	WEDGE-RECEPTACLE LOCK (8-PIN)	
	14	1	**278-3354**	1	FILM-INSTRUCTION (HVAC WATER, DRAINING, FILLING)	
	15	1	**279-1124**	1	GROMMET	
C	16	1	**322-6674**	1	PLATE	
C	17	1	**322-6675**	1	PLATE AS	
C	18	1	**466-7341**	1	FAN AS (24-VOLT, A/C, HEATER) (9-BLADE)	
		1	**1F-7958**	1	NUT-FULL (1/2-13-THD)	
C	19	1	**328-8755**	1	WIRE AS	
CM	20	1	**129-3178**	1	LOCKNUT (M6X1-THD)	
C	21	1	**132-5793**	2	SCREW-WASHER HEAD (4-40X0.25-IN)	
M	22	1	**7X-0490**	1	BOLT (M6X1X200-MM)	
	23	1	**6V-1668**	2	WASHER (6.5X29.1X3-MM THK)	
	24	1	**6V-6717**	2	SCREW-WASHER HEAD (8-32X9.52-MM)	
C	25	1	**8T-4205**	10	WASHER-HARD (7.2X14.5X2-MM THK)	
	26	1	**9X-2038**	4	WASHER (7X19X2-MM THK)	
CM	27	1	**9X-2044**	14	SCREW-TRUSS HEAD (M6X1X16-MM)	
	28	1	**6D-5801**	3	LOCKNUT (8-32-THD)	
	29	1	**238-8839**	1	CORE AS-HEATER	
	30	1	**238-8840**	1	COIL AS-EVAPORATOR	
	31	1	**245-1596**	1	ACTUATOR (WATER VALVE)	

285-8055 **AIR CONDITIONER GP (**contd.**)** **i07619999**

NOTE	REF NO	GRAPHIC REF	PART NUMBER	QTY	PART NAME 1 2 3 4 5 6 (PRODUCT LEVEL)	SEE PAGE
	32	1	**281-2588**	6	SCREW-SELF-TAPPING	
	33	1	**450-4968**	2	SCREW-HEX HEAD (8-16X0.5-IN)	
	34	1	**465-7612**	1	CLIP	
	35	1	**470-3946**	1	SEAL-O-RING	
	36	1	**521-2576**	1	VALVE AS-CONTROL (AIR CONDITIONER)	
		1	**262-4930**	1	TUBE AS	
		1	**465-7612**	1	CLIP	
		1	**470-3946**	1	SEAL-O-RING	
	37	1	**521-3096**	1	PLATE AS	
	38	1	**525-2467**	3	SPACER (4.34X9.53X15.9-MM THK)	

C - CHANGE FROM PREVIOUS TYPE
E - ORDER BY THE CENTIMETER
M - METRIC PART

285-8055 **AIR CONDITIONER GP (**contd.**)** **i07619999**

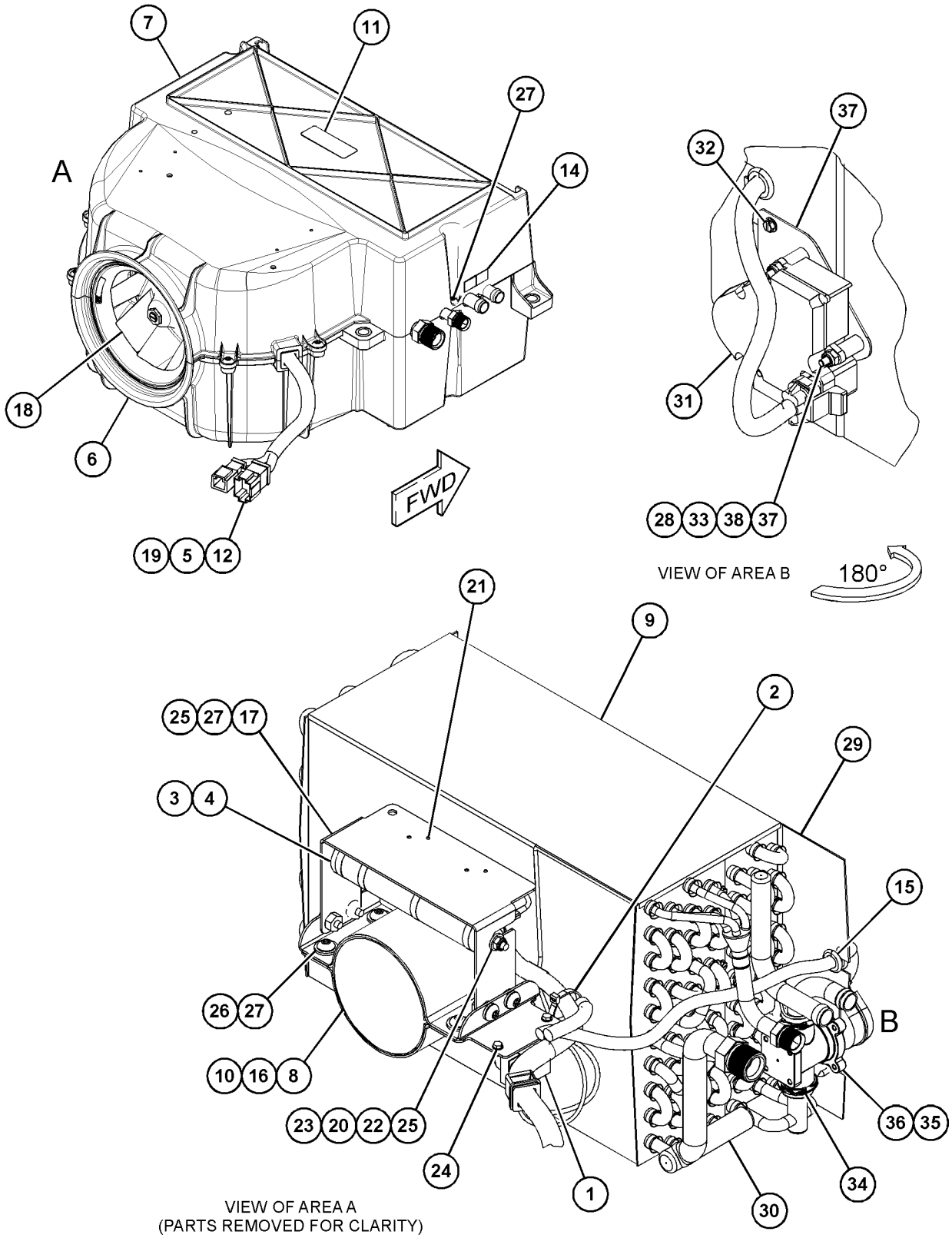

GRAPHIC #1 <END> g06257709

361-3133 AIR CONDITIONER GP

S/N: B551-UP

PART OF 420-1977, 575-9874, 575-9875 CAB AR

SMCS-7320 **i04897963**

NOTE	PART NUMBER	QTY	PART NAME 1 2 3 4 5 6 (PRODUCT LEVEL)	SEE PAGE
Y	*387-8752*	1	AIR CONDITIONER & MOUNTING GP	749
Y	*300-4231*	1	CONTROL GP-AIR & TEMPERATURE	766
Y	*244-2701*	1	DUCT & FILTER GP-CAB AIR	794
Y	*361-3134*	1	LINES GP-AIR CONDITIONER	807
Y	*250-2933*	1	LINES GP-HEATER (CAB)	809

Y - SEPARATE ILLUSTRATION

<END>

292-0609 ARMREST GP–RH

S/N: B551-UP

PART OF 345-1271 SUPPORT GP-CONTROL

SMCS-7307 **i03017381**

NOTE	REF NO	GRAPHIC REF	PART NUMBER	QTY	PART NAME 1 2 3 4 5 6 (PRODUCT LEVEL)	SEE PAGE
	1	1	**233-3278**	1	BRACKET AS (RH)	
	2	1	**253-8868**	1	PIN-SPRING	
	3	1	**283-7980**	1	CUSHION AS	
M	4	1	**3E-8020**	4	SCREW-TRUSS HEAD (M6X1X25-MM)	
	5	1	**122-7666**	1	SPRING	
	6	1	**8C-8430**	1	SETSCREW-SOCKET (10-24X1-IN)	
	7	1	**292-0611**	2	BUSHING	
	8	1	**292-0612**	1	BUSHING	
	9	1	**292-0614**	1	ROD	
	10	1	**292-0618**	1	KNOB	

M - METRIC PART

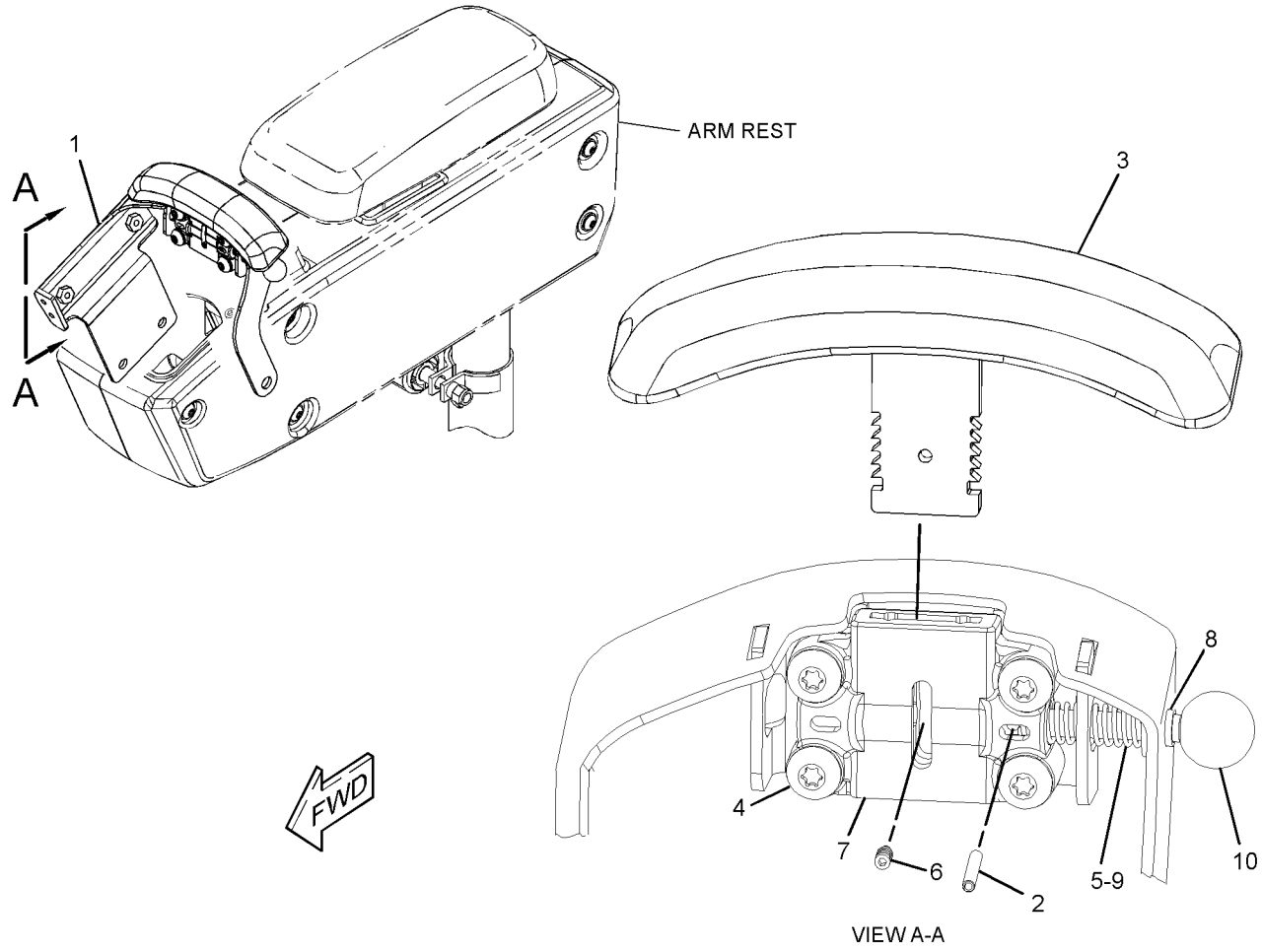

GRAPHIC #1 <END> g01391688

292-0617 ARMREST GP–LH

S/N: B551-UP

PART OF 345-1272 SUPPORT GP-CONTROL

SMCS-7307 **i03017451**

NOTE	REF NO	GRAPHIC REF	PART NUMBER	QTY	PART NAME 1 2 3 4 5 6 (PRODUCT LEVEL)	SEE PAGE
	1	1	**233-3277**	1	BRACKET AS (LH)	
	2	1	**253-8868**	1	PIN-SPRING	
	3	1	**283-7980**	1	CUSHION AS	
M	4	1	**3E-8020**	4	SCREW-TRUSS HEAD (M6X1X25-MM)	
	5	1	**8C-8430**	1	SETSCREW-SOCKET (10-24X1-IN)	
	6	1	**122-7666**	1	SPRING	
	7	1	**292-0611**	2	BUSHING	
	8	1	**292-0612**	1	BUSHING	
	9	1	**292-0614**	1	ROD	
	10	1	**292-0618**	1	KNOB	

M - METRIC PART

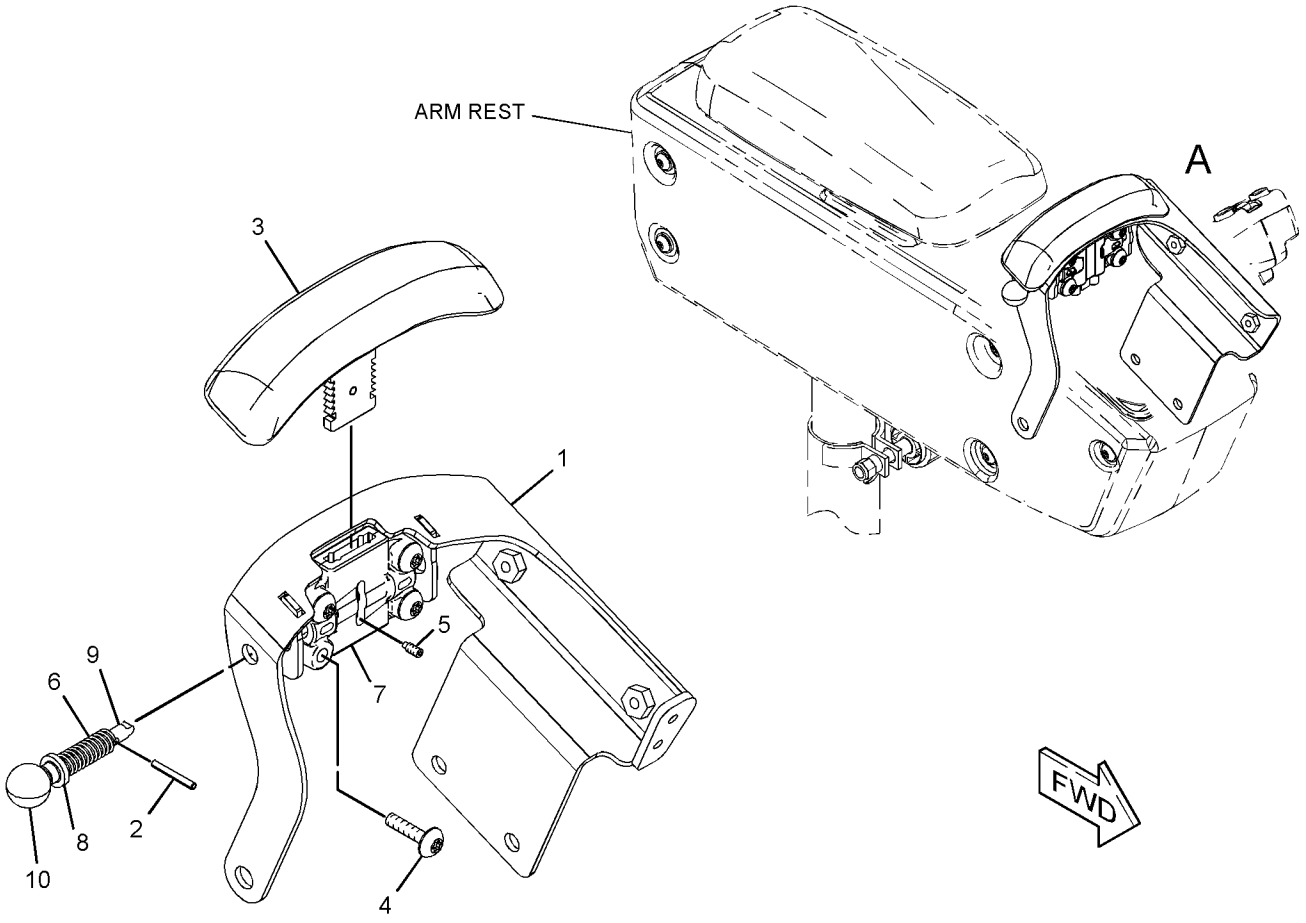

VIEW OF AREA A

GRAPHIC #1 <END> g01391674

389-1906 CAB AR

S/N: B551-UP

CANNOT BE USED WITH 389-1907—PAGE: 4

SMCS-7301 **i07764502**

NOTE	PART NUMBER	QTY	PART NAME 1 2 3 4 5 6 (PRODUCT LEVEL)	SEE PAGE
Y	**575-9874**	1	CAB AR (BASE)	759
Y	*233-3116*	1	SEAT & MOUNTING GP	834

Y - SEPARATE ILLUSTRATION

<END>

391-8968 CAB AR—COMFORT

S/N: B551-UP

CANNOT BE USED WITH 397-5305—PAGE: 4

SMCS-7301 **i06540828**

NOTE	PART NUMBER	QTY	PART NAME 1 2 3 4 5 6 (PRODUCT LEVEL)	SEE PAGE
Y	*361-3136*	1	CONVERTER GP-ELECTRICAL (RADIO)	169
Y	*477-1257*	1	RADIO GP (AM/FM/WB)	832
	360-0116	1	SHADE AS-SUN	

Y - SEPARATE ILLUSTRATION

<END>

420-1977 CAB AR–AUSTRALIA

S/N: B551-UP

PLUS

PART OF 565-4306 OPTION AR-REGIONAL

SMCS-7301 **i07712168**

NOTE	PART NUMBER	QTY	PART NAME 1 2 3 4 5 6 (PRODUCT LEVEL)	SEE PAGE
Y	*361-3133*	1	AIR CONDITIONER GP	754
Y	*345-1277*	1	CONTROL & MTG GP-JOYSTICK (OPERATOR PLATFORM)	764
Y	*233-3135*	1	CONVERTER GP-ELECTRICAL	168
Y	*363-4962*	1	COVER GP-CAB	783
Y	*250-9257*	1	ELECTRONICS GP-IMPLEMENT (MASTER)	171
Y	*250-9258*	1	ELECTRONICS GP-IMPLEMENT (IMPLEMENT 2)	171
Y	*233-3137*	1	FAN GP-CIRCULATING (DEFROSTER)	798
Y	*381-8141*	1	FILM GP	907
Y	*447-2230*	1	LINER GP-CAB	803
Y	*420-2055*	1	MIRROR GP-REAR VIEW (INTERIOR)	820
Y	*233-3122*	1	MOUNTING GP-ANTENNA (RADIO)	823
Y	*367-2375*	1	MOUNTING GP-CONTROL	826
Y	*381-8140*	1	PANEL GP-INSTRUMENT (FRONT CONSOLE)	827
Y	*381-7049*	1	ROPS GP	833
Y	*233-3150*	1	SEAT & MOUNTING GP (AIR)	834
Y	*550-6606*	1	SWITCH GP-ROCKER (ROADING LIGHTS)	280
Y	*381-2494*	1	TRIM GP-CAB (HVAC)	850
Y	*381-8211*	1	WINDOW GP-VENT	858
Y	*310-2029*	1	WIPER & WASHER GP-WINDOW (FRONT)	859
Y	*330-3868*	1	WIPER GP-WINDOW (REAR)	861
Y	*381-8142*	1	WIPER GP-WINDOW	866
Y	*372-6063*	1	WIRING GP-CAB	286
	415-7222	1	FILM-WARNING (ROPS, FOPS, READ OMM)	

Y - SEPARATE ILLUSTRATION

<END>

575-9874 CAB AR

S/N: B551-UP

PART OF 389-1906 CAB AR

SMCS-7301 **i07764510**

NOTE	PART NUMBER	QTY	PART NAME 1 2 3 4 5 6 (PRODUCT LEVEL)	SEE PAGE
Y	*361-3133*	1	AIR CONDITIONER GP	754
Y	*345-1277*	1	CONTROL & MTG GP-JOYSTICK (OPERATOR PLATFORM)	764
Y	*233-3135*	1	CONVERTER GP-ELECTRICAL	168
Y	*363-4962*	1	COVER GP-CAB	783
Y	*250-9257*	1	ELECTRONICS GP-IMPLEMENT (MASTER)	171
Y	*250-9258*	1	ELECTRONICS GP-IMPLEMENT (IMPLEMENT 2)	171
Y	*381-8141*	1	FILM GP	907
Y	*447-2230*	1	LINER GP-CAB	803
Y	*233-3208*	1	MIRROR GP-REAR VIEW (INTERIOR)	817
Y	*233-3122*	1	MOUNTING GP-ANTENNA (RADIO)	823
Y	*367-2375*	1	MOUNTING GP-CONTROL	826
Y	*381-8140*	1	PANEL GP-INSTRUMENT (FRONT CONSOLE)	827
Y	**381-7048**	1	ROPS GP	833
Y	*550-6606*	1	SWITCH GP-ROCKER (ROADING LIGHTS)	280
Y	*381-2494*	1	TRIM GP-CAB (HVAC)	850
Y	*381-8211*	1	WINDOW GP-VENT	858
Y	*310-2029*	1	WIPER & WASHER GP-WINDOW (FRONT)	859
Y	*372-6063*	1	WIRING GP-CAB	286
	575-9147	1	FILM-ROPS	

Y - SEPARATE ILLUSTRATION

<END>

575-9875 CAB AR

S/N: B551-UP

PART OF 389-1907 OPTION AR-CAB

SMCS-7301 **i07764546**

NOTE	PART NUMBER	QTY	PART NAME 1 2 3 4 5 6 (PRODUCT LEVEL)	SEE PAGE
Y	*361-3133*	1	AIR CONDITIONER GP	754
Y	*345-1277*	1	CONTROL & MTG GP-JOYSTICK (OPERATOR PLATFORM)	764
Y	*233-3135*	1	CONVERTER GP-ELECTRICAL	168
Y	*363-4962*	1	COVER GP-CAB	783
Y	*250-9257*	1	ELECTRONICS GP-IMPLEMENT (MASTER)	171
Y	*250-9258*	1	ELECTRONICS GP-IMPLEMENT (IMPLEMENT 2)	171
Y	*381-8141*	1	FILM GP	907
Y	*447-2230*	1	LINER GP-CAB	803
Y	*233-3208*	1	MIRROR GP-REAR VIEW (INTERIOR)	817
Y	*233-3122*	1	MOUNTING GP-ANTENNA (RADIO)	823
Y	*367-2375*	1	MOUNTING GP-CONTROL	826
Y	*381-8140*	1	PANEL GP-INSTRUMENT (FRONT CONSOLE)	827
Y	**381-7049**	1	ROPS GP	833
Y	*550-6606*	1	SWITCH GP-ROCKER (ROADING LIGHTS)	280
Y	*381-2494*	1	TRIM GP-CAB (HVAC)	850
Y	*381-8211*	1	WINDOW GP-VENT	858
Y	*310-2029*	1	WIPER & WASHER GP-WINDOW (FRONT)	859
Y	*381-8142*	1	WIPER GP-WINDOW	866
Y	*372-6063*	1	WIRING GP-CAB	286
	575-9147	1	FILM-ROPS	

Y - SEPARATE ILLUSTRATION

<END>

246-6714 COMPRESSOR & MTG GP-REFRIG

S/N: B551-UP

PART OF 261-0775 AIR CONDITIONER AR

SMCS-1802 **i06851390**

NOTE	REF NO	GRAPHIC REF	PART NUMBER	QTY	PART NAME 1 2 3 4 5 6 (PRODUCT LEVEL)	SEE PAGE
	1	1	**7W-3872**	2	SLEEVE	
Y	2	1	**464-9988**	1	COMPRESSOR GP-REFRIGERANT	762
	3	1	**266-6026**	1	SUPPORT	
	4	1	**198-4776**	3	WASHER-HARD (8.8X20X8-MM THK)	
M	5	1	**7X-2537**	4	BOLT (M8X1.25X35-MM)	
M	6	1	**7X-2538**	4	BOLT (M8X1.25X100-MM)	
	7	1	**8T-4224**	5	WASHER-HARD (8.8X16X2-MM THK)	

M - METRIC PART
Y - SEPARATE ILLUSTRATION

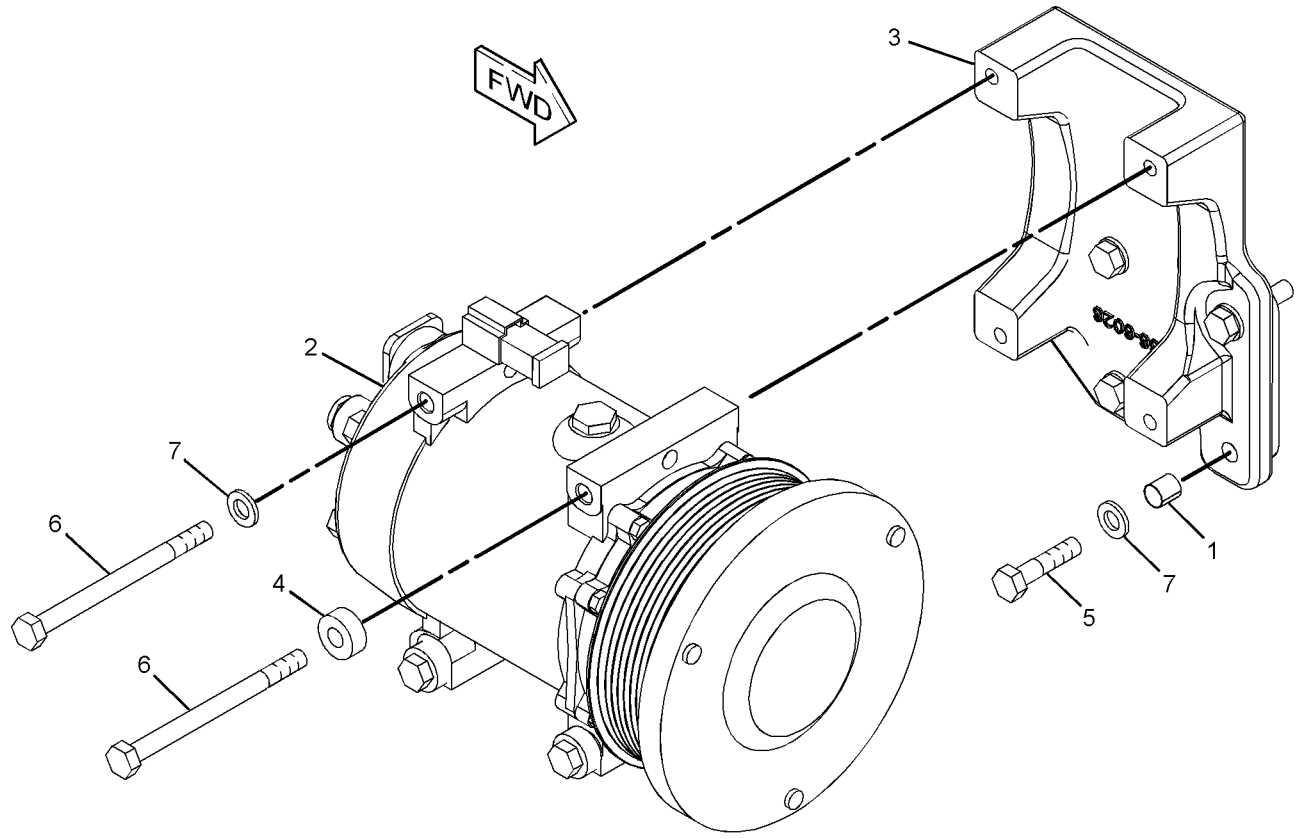

GRAPHIC #1 <END> g01152332

464-9988 COMPRESSOR GP-REFRIGERANT

S/N: B551-UP

PART OF 246-6714 COMPRESSOR & MTG GP-REFRIG

SMCS-1802 **i06807012**

NOTE	REF NO	GRAPHIC REF	PART NUMBER	QTY	PART NAME 1 2 3 4 5 6 (PRODUCT LEVEL)	SEE PAGE
	1	1	**9X-7385**	2	SEAL-O-RING	
	2	1	**102-8802**	1	KIT-RECEPTACLE (2-PIN)	
					(INCLUDES RECEPTACLE AS & WEDGE)	
	3	1	**314-4018**	1	VALVE AS-PRESSURE RELIEF	
	4	1	**7T-4532**	1	PLUG AS	

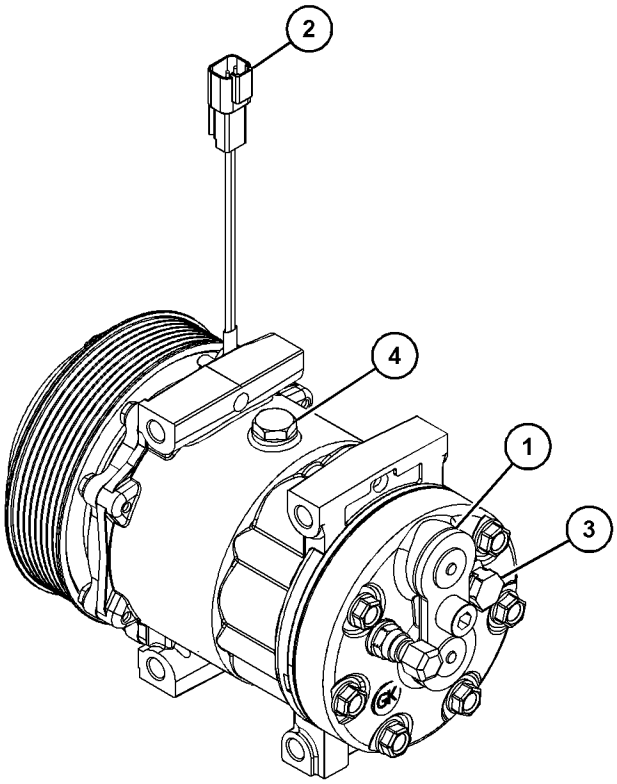

GRAPHIC #1 <END> g06056039

232-4738 CONDENSER & MTG GP-REFRIGERANT—AIR CONDITIONER

S/N: B551-UP

PART OF 261-0775 AIR CONDITIONER AR

SMCS-1805 **i04840171**

NOTE	REF NO	GRAPHIC REF	PART NUMBER	QTY	PART NAME 1 2 3 4 5 6 (PRODUCT LEVEL)	SEE PAGE
C	1	1	**364-0676**	1	CORE AS-CONDENSER (AIR CONDITIONER)	
M	2	1	**5C-7261**	4	NUT (M8X1.25-THD)	
	3	1	**5P-4116**	4	WASHER-HARD (8.8X20.5X2-MM THK)	
CM	4	1	**7X-2537**	4	BOLT (M8X1.25X35-MM)	
C	5	1	**8C-9987**	8	WASHER (8.3X28X2.5-MM THK)	

C - CHANGE FROM PREVIOUS TYPE
M - METRIC PART

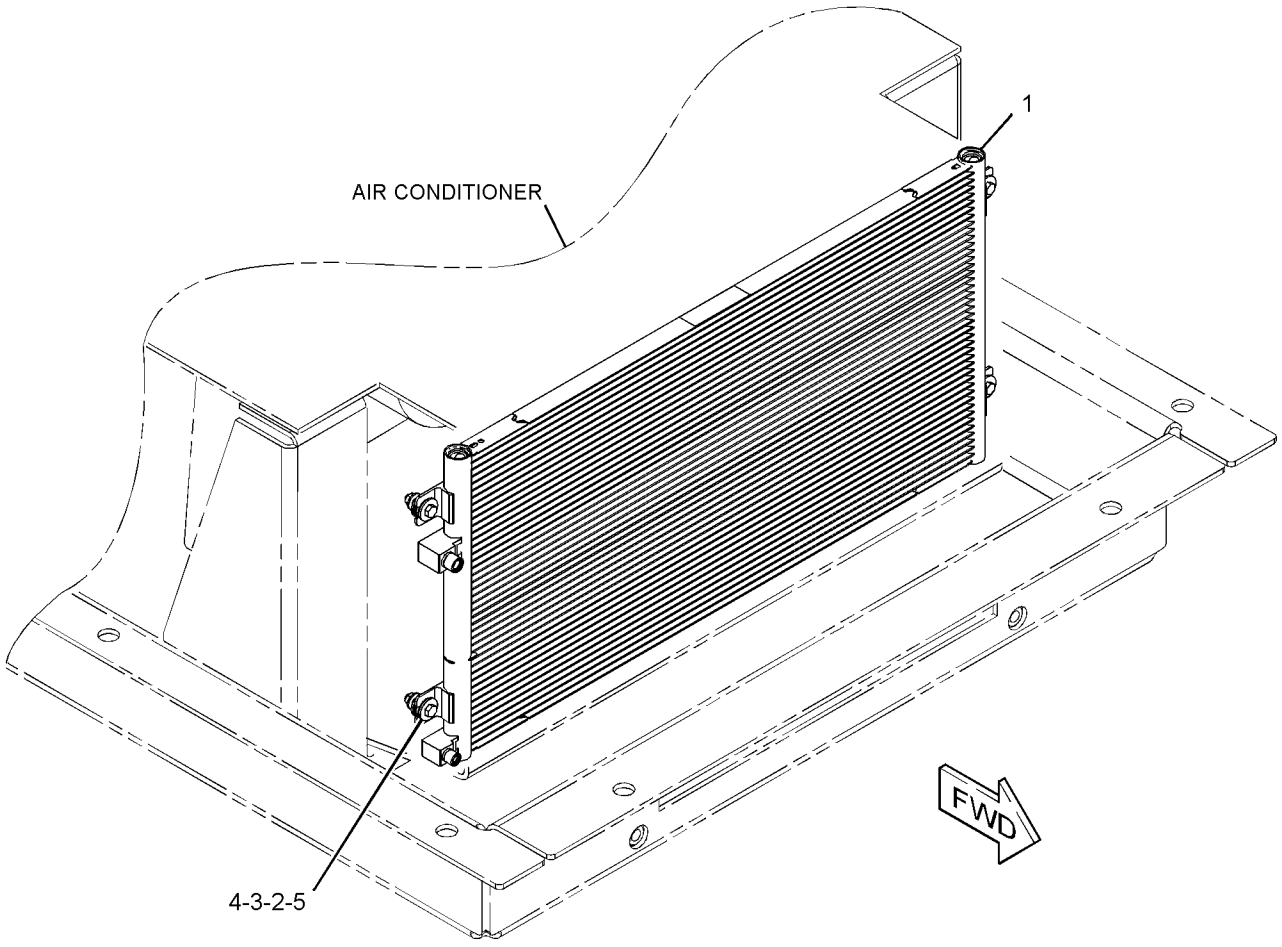

GRAPHIC #1 <END> g02981869

345-1277 CONTROL & MTG GP-JOYSTICK—OPERATOR PLATFORM

S/N: B551-UP

PART OF 420-1977, 575-9874, 575-9875 CAB AR

SMCS-5063, 5705

i06600778

NOTE	REF NO	GRAPHIC REF	PART NUMBER	QTY	PART NAME 1 2 3 4 5 6 (PRODUCT LEVEL)	SEE PAGE
Y	1	1	*345-1271*	1	SUPPORT GP-CONTROL (JOYSTICK, RH)	840
Y	2	1	*345-1272*	1	SUPPORT GP-CONTROL (JOYSTICK, LH)	842
	3	1	**6V-5839**	8	WASHER (11X21X2.5-MM THK)	
M	4	1	**8T-4196**	8	BOLT (M10X1.5X35-MM)	
	5	1	**310-2042**	4	PLATE	
	6	1	**140-5945**	1	FILM-IDENTIFICATION (HORN)	

M - METRIC PART
Y - SEPARATE ILLUSTRATION

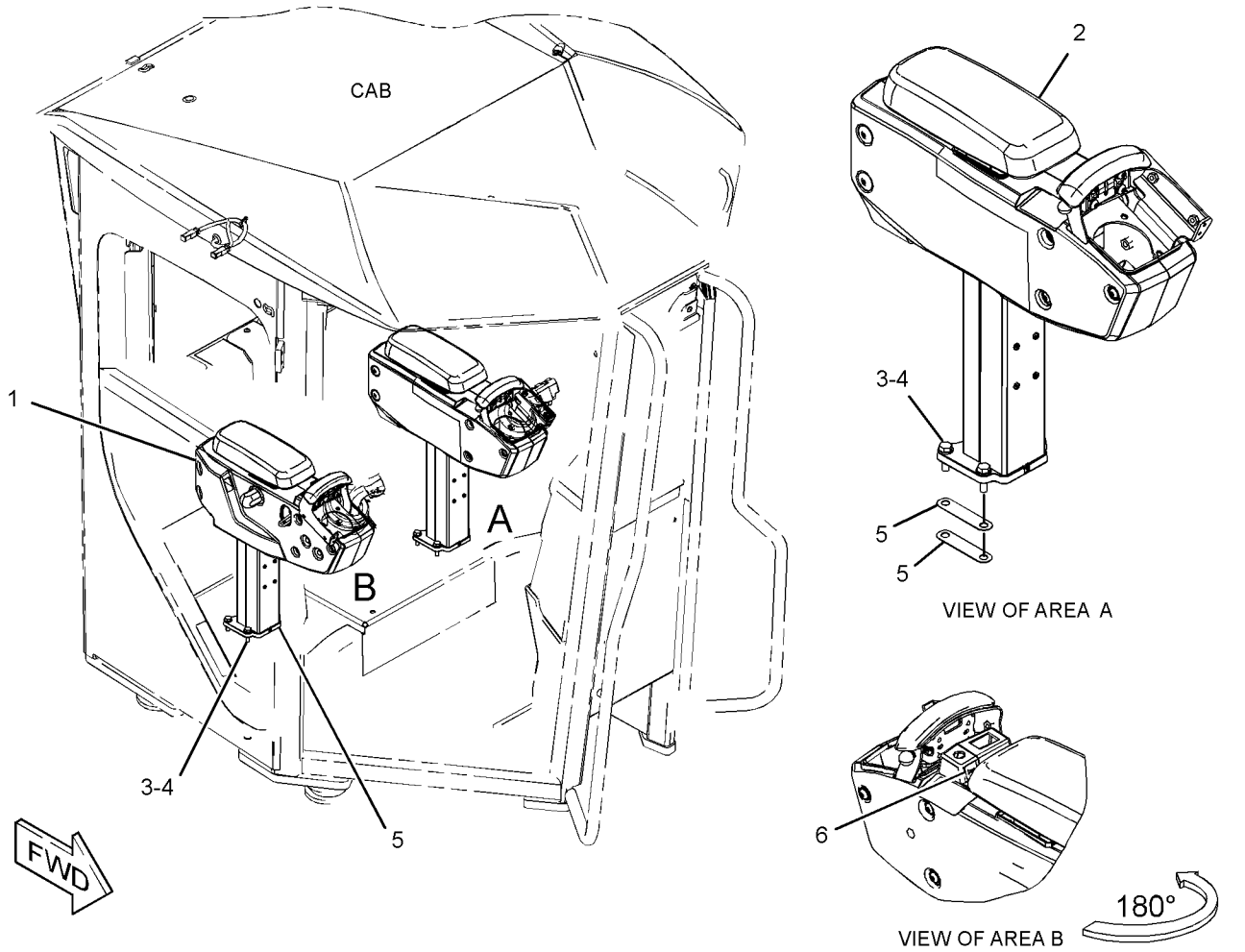

GRAPHIC #1

<END>

g03787096

357-9151 CONTROL & MTG GP-JOYSTICK

S/N: B551-UP

CANNOT BE USED WITH 458-8701—PAGE: 782

SMCS-5063, 5705 **i04247849**

NOTE	PART NUMBER	QTY	PART NAME 1 2 3 4 5 6 (PRODUCT LEVEL)	SEE PAGE
Y	**360-2987**	1	CONTROL GP-JOYSTICK (LH)	777
Y	**348-6995**	1	CONTROL GP-JOYSTICK (RH)	776
M	**9X-2546**	8	BOLT (M6X1X20-MM)	

M - METRIC PART
Y - SEPARATE ILLUSTRATION

<END>

442-0054 CONTROL & MTG GP-JOYSTICK

S/N: B551-UP

PART OF 458-8701 CONTROL GP-JOYSTICK

SMCS-5063, 5705 **i05957746**

NOTE	PART NUMBER	QTY	PART NAME 1 2 3 4 5 6 (PRODUCT LEVEL)	SEE PAGE
Y	*441-0358*	1	CONTROL GP-JOYSTICK (LH)	780
Y	*441-0362*	1	CONTROL GP-JOYSTICK (RH)	781
M	**9X-2546**	8	BOLT (M6X1X20-MM)	

M - METRIC PART
Y - SEPARATE ILLUSTRATION

<END>

300-4231 CONTROL GP-AIR & TEMPERATURE

S/N: B551-UP

PART OF 361-3133 AIR CONDITIONER GP

SMCS-7451 **i04039895**

NOTE	REF NO	GRAPHIC REF	PART NUMBER	QTY	PART NAME 1 2 3 4 5 6 (PRODUCT LEVEL)	SEE PAGE
	1	1	**248-4220**	1	PANEL AS (AIR CONDITIONER, HEATER CONT)	
	1A	1	**271-7312**	1	KNOB (TEMPERATURE CONTROL)	
	1B	1	**285-7415**	1	KNOB (BLOWER FAN SPEED)	
	2	1	**284-3662**	1	SWITCH AS-ROCKER (24-VOLT) (AIR CONDITIONER ON, OFF)	
M	3	1	**9X-2045**	2	SCREW-TRUSS HEAD (M6X1X20-MM)	

M - METRIC PART

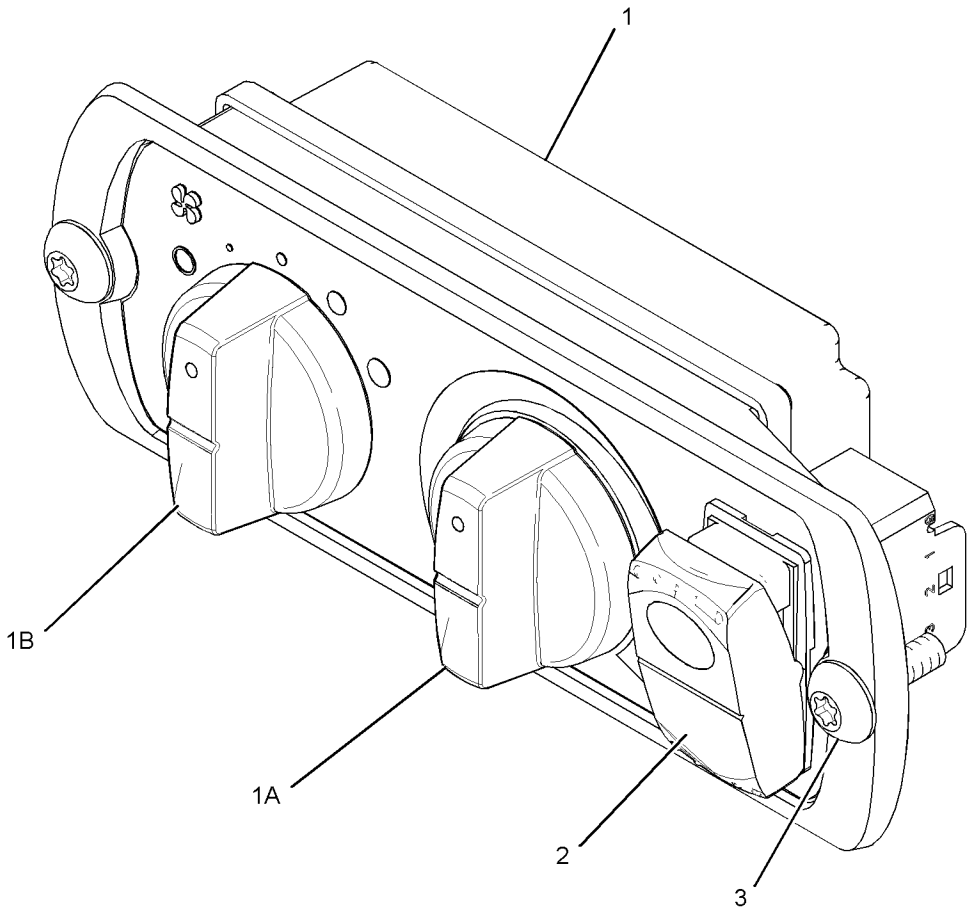

GRAPHIC #1 <END> g01323364

272-8441 CONTROL GP-ELECTROHYDRAULIC—WITHOUT AUXILIARY LEVER

S/N: B551-UP

PART OF 360-7616 CONTROL GP-ELECTROHYDRAULIC

SMCS-5702, 5705 **i05331127**

NOTE	REF NO	GRAPHIC REF	PART NUMBER	QTY	PART NAME 1 2 3 4 5 6 (PRODUCT LEVEL)	SEE PAGE
	1	1	**295-8260**	1	COVER	
	2	1	**292-8706**	1	CONTROL GP-ELECTROHYDRAULIC	
	2A	1	**8T-8737**	1	PLUG-SEAL	
	2B	1	**9X-3401**	11	PIN-CONNECTOR (16-GA TO 18-GA)	
	2C	1	**190-7615**	1	KIT-RECEPTACLE (12-PIN)	
					(INCLUDES RECEPTACLE AS & WEDGE)	
	2D	1	**281-4655**	1	FILM-INSTRUCTION (AUXILIARY)	
	3	1	**292-8703**	1	PALMREST	
	4	1	**292-8054**	1	BRACKET	

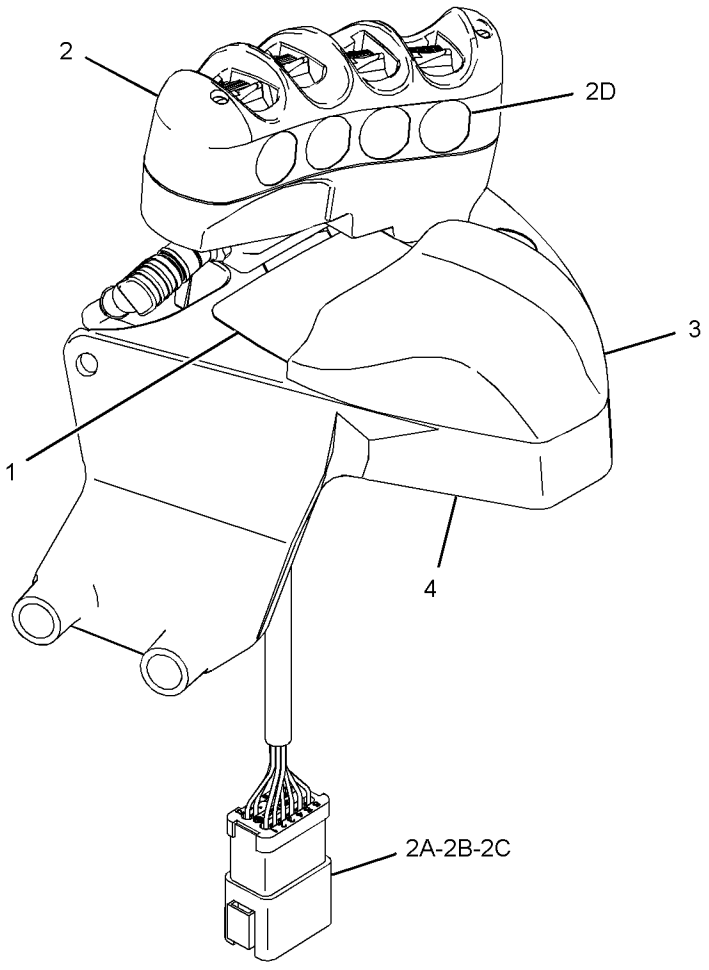

GRAPHIC #1 <END> g01349062

272-8442 CONTROL GP-ELECTROHYDRAULIC—WITH AUXILIARY LEVER

S/N: B551-UP
WITH MINI JOYSTICK
PART OF 360-7615 CONTROL GP-ELECTROHYDRAULIC

SMCS-5702, 5705 **i06670675**

NOTE	REF NO	GRAPHIC REF	PART NUMBER	QTY	PART NAME 1 2 3 4 5 6 (PRODUCT LEVEL)	SEE PAGE
	1	1	**247-0737**	1	CONTROL GP-JOYSTICK (ELECTRONIC CONTROL)	
	1A	1	**292-8705**	1	BOOT	
	2	1	**292-8706**	1	CONTROL GP-ELECTROHYDRAULIC	
	2A	1	**8T-8737**	1	PLUG-SEAL	
	2B	1	**9X-3401**	11	PIN-CONNECTOR (16-GA TO 18-GA)	
	2C	1	**190-7615**	1	KIT-RECEPTACLE (12-PIN)	
					(INCLUDES RECEPTACLE AS & WEDGE)	
	2D	1	**281-4655**	1	FILM-INSTRUCTION (AUXILIARY)	
	3	1	**292-8703**	1	PALMREST	
	4	1	**292-8054**	1	BRACKET	

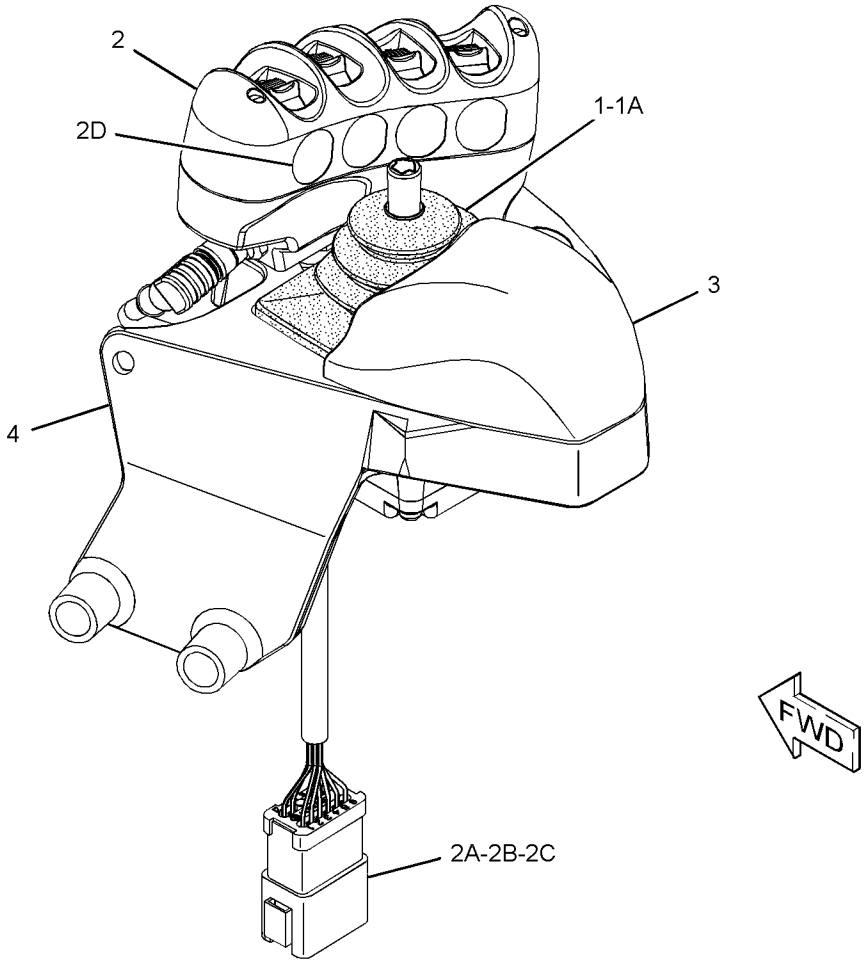

GRAPHIC #1 <END> g03405308

344-2764 CONTROL GP-ELECTROHYDRAULIC

S/N: B551-UP

PART OF 365-3354, 365-3355, 365-3368, 365-3369, 365-3370, 365-3371, 365-5539, 365-5541, 438-5421 CONTROL AR-HYDRAULIC

SMCS-5702, 5705 **i06984708**

NOTE	REF NO	GRAPHIC REF	PART NUMBER	QTY	PART NAME 1 2 3 4 5 6 (PRODUCT LEVEL)	SEE PAGE
C	1	1	**466-0907**	1	CONTROL AS-PROPORTIONAL (REAR IMPLEMENT)	
		1	**8T-8737**	3	PLUG-SEAL	
		1	**9X-3401**	3	PIN-CONNECTOR (16-GA TO 18-GA)	
		1	**281-3136**	1	RECEPTACLE AS-CONNECTOR (6-PIN)	
	2	1	**251-2247**	1	GROMMET	
	3	1	**281-0387**	1	PLATE (REAR)	
	4	1	**281-0390**	1	GRIP	
	5	1	**281-0431**	1	PLATE AS	
	6	1	**286-0277**	1	FILM-INSTRUCTION (NO FLOAT)	
	7	1	**299-1030**	1	ENCLOSURE AS	
	8	1	**334-9395**	1	KNOB	
	9	1	**351-8482**	1	BRACKET	
	10	1	**352-1502**	1	BEARING	
	11	1	**352-2586**	1	BOLT-SPECIAL	
M	12	1	**127-2170**	2	SCREW-TRUSS HEAD (M8X1.25X20-MM)	
M	13	1	**225-3109**	5	SCREW-TRUSS HEAD (M4X0.7X14-MM)	

C - CHANGE FROM PREVIOUS TYPE
M - METRIC PART

344-2764 **CONTROL GP-ELECTROHYDRAULIC (**contd.**)** **i06984708**

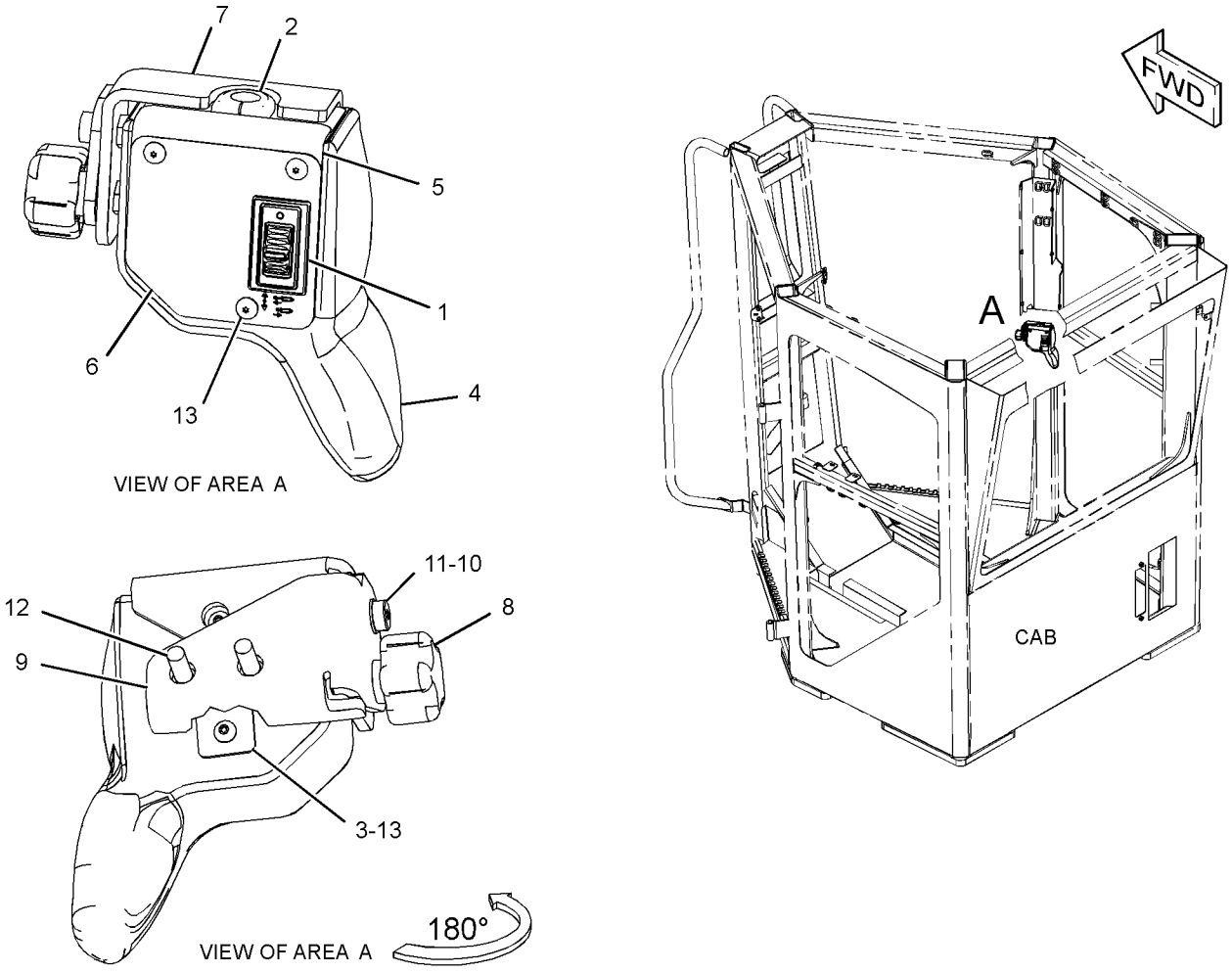

GRAPHIC #1 <END> g06186977

344-2765 CONTROL GP-ELECTROHYDRAULIC

S/N: B551-UP

PART OF 438-5423 CONTROL AR-HYDRAULIC

SMCS-5702, 5705 **i06125921**

NOTE	REF NO	GRAPHIC REF	PART NUMBER	QTY	PART NAME 1 2 3 4 5 6 (PRODUCT LEVEL)	SEE PAGE
	1	1	**251-2247**	1	GROMMET	
	2	1	**279-5308**	1	LAMP AS-LED (24-VOLT, GREEN)	
		1	**186-3735**	2	PIN-CONNECTOR (16-GA TO 18-GA)	
	3	1	**358-4932**	1	CONTROL AS-PROPORTIONAL (RIPPER)	
		1	**8T-8737**	1	PLUG-SEAL	
		1	**9X-3401**	5	PIN-CONNECTOR (16-GA TO 18-GA)	
		1	**281-3137**	1	RECEPTACLE AS-CONNECTOR (6-PIN)	
	4	1	**281-0387**	1	PLATE (REAR)	
	5	1	**281-0390**	1	GRIP	
	6	1	**281-0431**	1	PLATE AS	
	7	1	**286-0276**	1	FILM-INSTRUCTION (FLOAT)	
	8	1	**299-1030**	1	ENCLOSURE AS	
	9	1	**334-9395**	1	KNOB	
	10	1	**351-8482**	1	BRACKET	
	11	1	**352-1502**	1	BEARING	
	12	1	**352-2586**	1	BOLT-SPECIAL	
M	13	1	**127-2170**	2	SCREW-TRUSS HEAD (M8X1.25X20-MM)	
M	14	1	**225-3109**	5	SCREW-TRUSS HEAD (M4X0.7X14-MM)	
E	15	1	**282-0808**		SLEEVE (31-CM)	
	16	1	**230-4012**	1	RECEPTACLE AS-CONNECTOR (2-PIN)	

E - ORDER BY THE CENTIMETER
M - METRIC PART

344-2765 **CONTROL GP-ELECTROHYDRAULIC (**contd.**)** **i06125921**

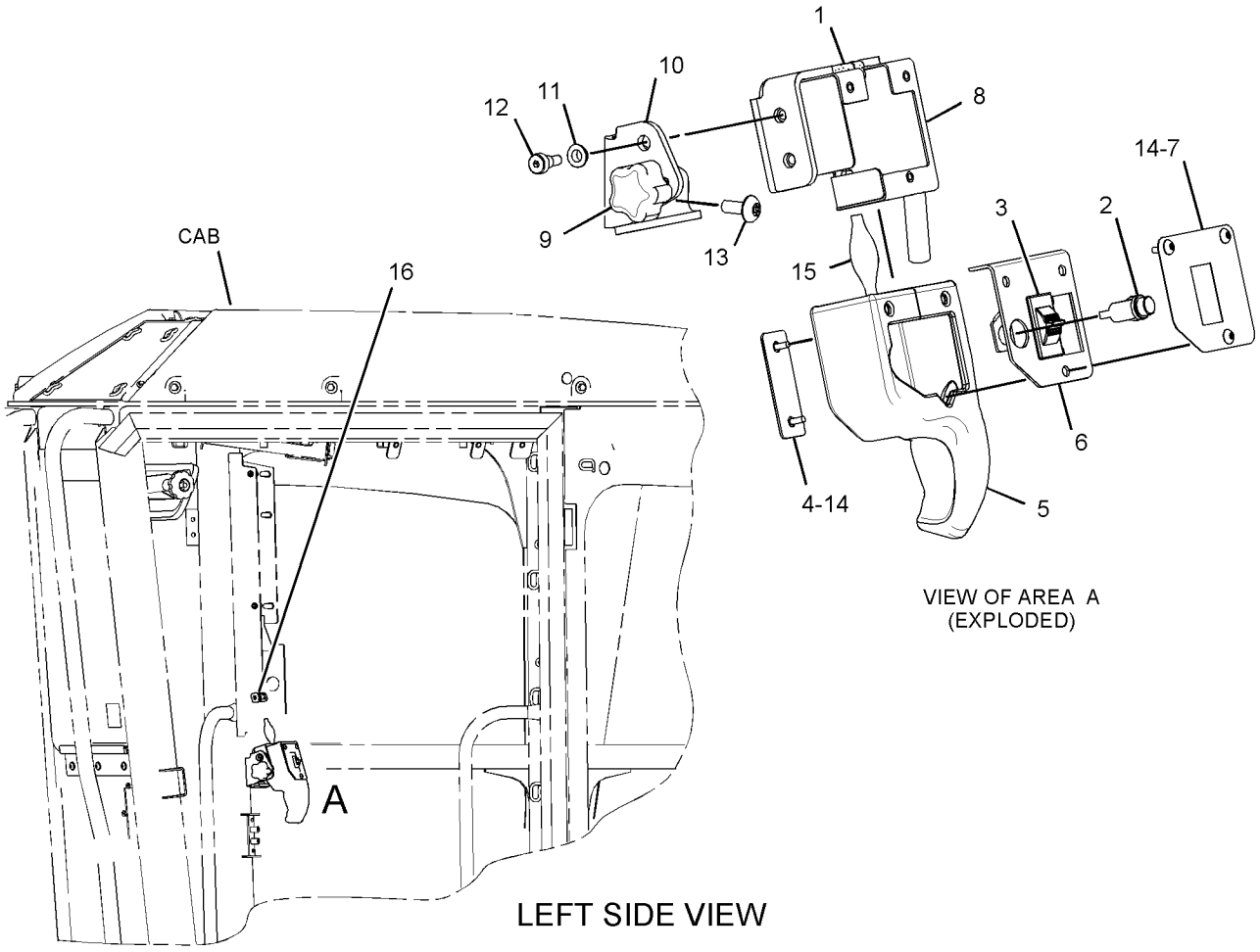

VIEW OF AREA A
(EXPLODED)

LEFT SIDE VIEW

GRAPHIC #1 <END> g02723259

344-2766 CONTROL GP-ELECTROHYDRAULIC

S/N: B551-UP

PART OF 365-5540 CONTROL AR-HYDRAULIC

SMCS-5702, 5705

i06984661

NOTE	REF NO	GRAPHIC REF	PART NUMBER	QTY	PART NAME 1 2 3 4 5 6 (PRODUCT LEVEL)	SEE PAGE
C	1	1	**466-0907**	1	CONTROL AS-PROPORTIONAL (IMPLEMENT)	
		1	**8T-8737**	3	PLUG-SEAL	
		1	**9X-3401**	3	PIN-CONNECTOR (16-GA TO 18-GA)	
		1	**281-3136**	1	RECEPTACLE AS-CONNECTOR (6-PIN)	
	2	1	**251-2247**	1	GROMMET	
	3	1	**279-5308**	1	LAMP AS-LED (24-VOLT, GREEN)	
		1	**8T-8729**	2	PIN-CONNECTOR (16-GA TO 20-GA)	
C	4	1	**466-0908**	1	CONTROL AS-PROPORTIONAL (FRONT IMPLEMENT)	
		1	**8T-8737**	3	PLUG-SEAL	
		1	**9X-3401**	3	PIN-CONNECTOR (16-GA TO 18-GA)	
		1	**281-3137**	1	RECEPTACLE AS-CONNECTOR (6-PIN)	
	5	1	**281-0387**	1	PLATE (REAR)	
	6	1	**281-0390**	1	GRIP	
	7	1	**281-0431**	1	PLATE AS	
	8	1	**286-0274**	1	FILM-INSTRUCTION (FLOAT/NO FLOAT)	
	9	1	**299-1030**	1	ENCLOSURE AS	
	10	1	**334-9395**	1	KNOB	
	11	1	**351-8482**	1	BRACKET	
	12	1	**352-1502**	1	BEARING	
	13	1	**352-2586**	1	BOLT-SPECIAL	
M	14	1	**127-2170**	2	SCREW-TRUSS HEAD (M8X1.25X20-MM)	
M	15	1	**225-3109**	5	SCREW-TRUSS HEAD (M4X0.7X14-MM)	
E	16	1	**282-0808**		SLEEVE (31-CM)	
	17	1	**230-4012**	1	RECEPTACLE AS-CONNECTOR (2-PIN)	

C - CHANGE FROM PREVIOUS TYPE
E - ORDER BY THE CENTIMETER
M - METRIC PART

344-2766 **CONTROL GP-ELECTROHYDRAULIC (**contd.**)** **i06984661**

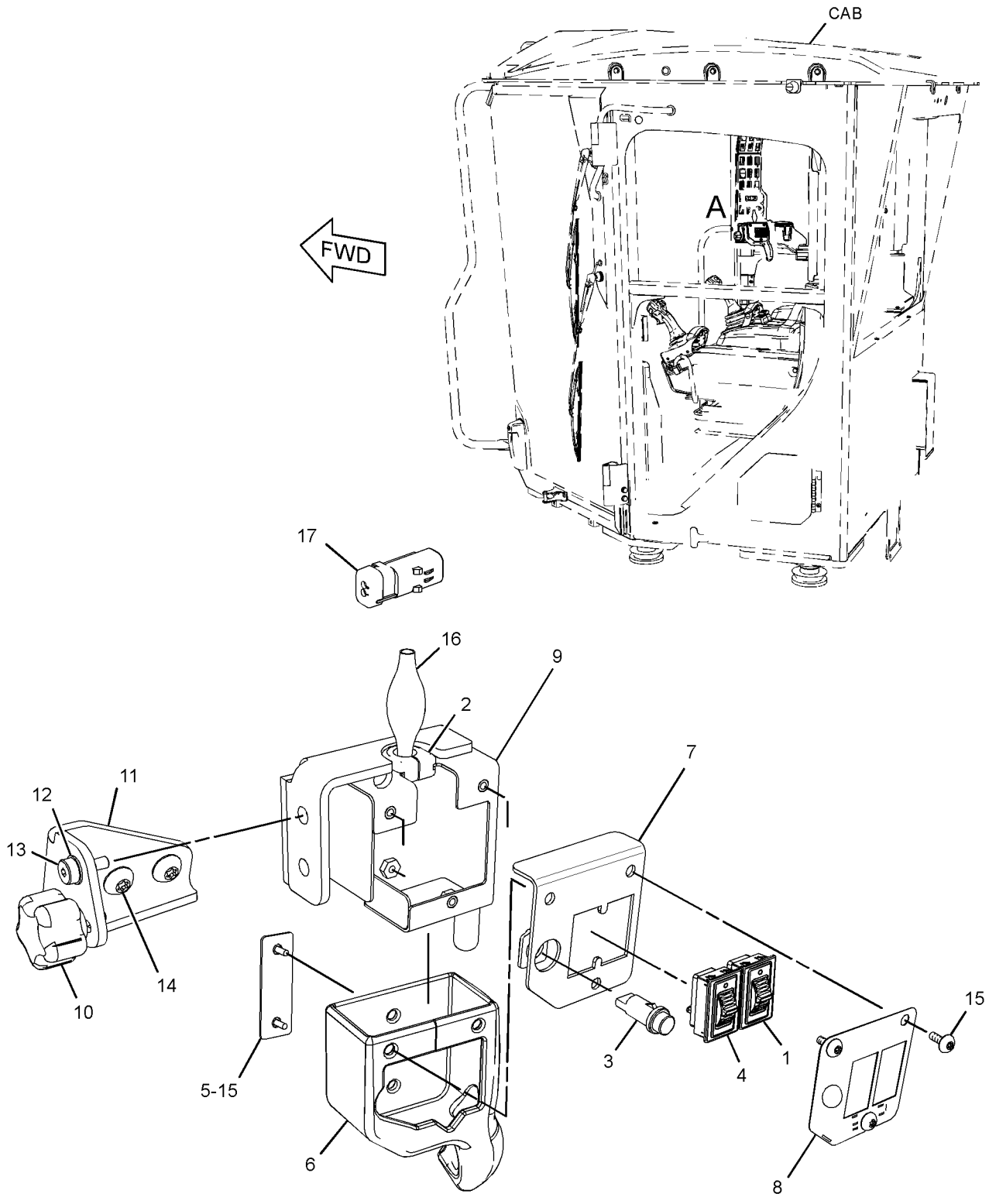

VIEW OF AREA A
(EXPLODED)

GRAPHIC #1 <END> g06186941

360-7615 CONTROL GP-ELECTROHYDRAULIC—AUXILIARY CONTROL

S/N: B551-UP
CONTROL POD
PART OF 365-3368, 365-3369, 365-3370, 365-3371, 365-5541, 438-5425, 438-5426 CONTROL AR-HYDRAULIC

SMCS-5702, 5705 **i05098154**

NOTE	PART NUMBER	QTY	PART NAME 1 2 3 4 5 6 (PRODUCT LEVEL)	SEE PAGE
Y	**272-8442**	1	CONTROL GP-ELECTROHYDRAULIC (WITH AUXILIARY LEVER)	768
M	**5C-9553**	1	BOLT (M6X1X16-MM)	
M	**7X-0818**	2	BOLT (M8X1.25X45-MM)	
	9X-8256	1	WASHER (6.6X12X2-MM THK)	
	5P-4116	2	WASHER-HARD (8.8X20.5X2-MM THK)	

M - METRIC PART
Y - SEPARATE ILLUSTRATION

<END>

360-7616 CONTROL GP-ELECTROHYDRAULIC—AUXILIARY CONTROL

S/N: B551-UP
CONTROL POD
PART OF 365-3354, 365-3355 CONTROL AR-HYDRAULIC

SMCS-5702, 5705 **i05098156**

NOTE	PART NUMBER	QTY	PART NAME 1 2 3 4 5 6 (PRODUCT LEVEL)	SEE PAGE
Y	**272-8441**	1	CONTROL GP-ELECTROHYDRAULIC (WITHOUT AUXILIARY LEVER)	767
M	**5C-9553**	1	BOLT (M6X1X16-MM)	
M	**7X-0818**	2	BOLT (M8X1.25X45-MM)	
	9X-8256	1	WASHER (6.6X12X2-MM THK)	
	5P-4116	2	WASHER-HARD (8.8X20.5X2-MM THK)	

M - METRIC PART
Y - SEPARATE ILLUSTRATION

<END>

348-6995 CONTROL GP-JOYSTICK–RH

S/N: B551-UP

PART OF 357-9151 CONTROL & MTG GP-JOYSTICK, 441-0362 CONTROL GP-JOYSTICK

SMCS-3168, 4343, 5063, 5705 **i06204497**

NOTE	REF NO	GRAPHIC REF	PART NUMBER	QTY	PART NAME 1 2 3 4 5 6 (PRODUCT LEVEL)	SEE PAGE
	1	1	**169-0705**	9	PLUG-SEAL	
	2	1	**174-3091**	1	KIT-RECEPTACLE (12-PIN)	
					(INCLUDES RECEPTACLE AS & WEDGE)	
	3	1	**247-0733**	1	BOOT	
	4	1	**9X-3401**	15	PIN-CONNECTOR (16-GA TO 18-GA)	
	5	1	**8T-8737**	9	PLUG-SEAL	
	6	1	**271-2811**	1	KIT-RECEPTACLE (12-PIN)	
					(INCLUDES RECEPTACLE AS & WEDGE)	
J	7	1	**442-0052**	1	KIT-JOYSTICK	
					(INCLUDES TAPE, TAPE REMOVAL TOOL, SCREWS, NUTS, BOLT, BIT & WASHERS)	

J - USED ONLY WHEN ADVANCED CONTROL JOYSTICK IS MOUNTED TO JOYSTICK HANDLE

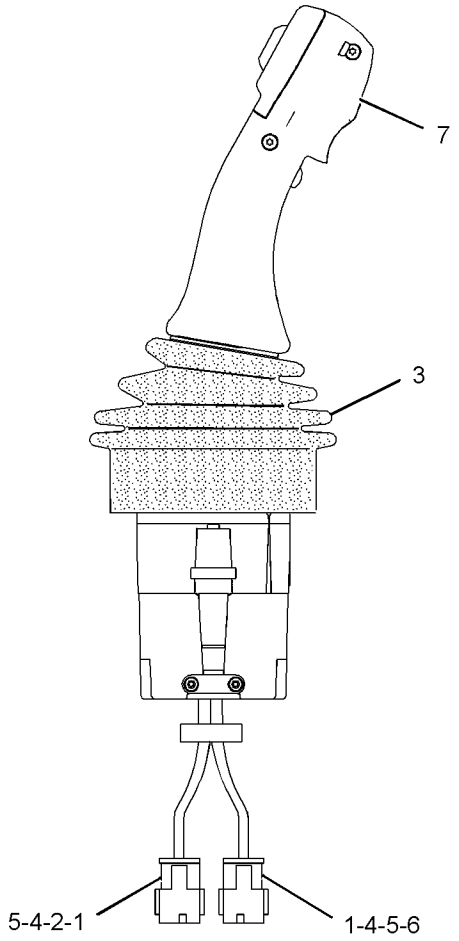

RIGHT SIDE VIEW

GRAPHIC #1 <END> g03834013

360-2987 CONTROL GP-JOYSTICK–LH

S/N: B551-UP

PART OF 357-9151 CONTROL & MTG GP-JOYSTICK, 441-0358 CONTROL GP-JOYSTICK

SMCS-3168, 4343, 5063, 5705

i06204499

NOTE	REF NO	GRAPHIC REF	PART NUMBER	QTY	PART NAME 1 2 3 4 5 6 (PRODUCT LEVEL)	SEE PAGE
	1	1	**169-0705**	5	PLUG-SEAL	
	2	1	**174-3091**	1	KIT-RECEPTACLE (12-PIN)	
					(INCLUDES RECEPTACLE AS & WEDGE)	
	3	1	**247-0733**	1	BOOT	
	4	1	**9X-3401**	23	PIN-CONNECTOR (16-GA TO 18-GA)	
	5	1	**8T-8737**	5	PLUG-SEAL	
	6	1	**271-2811**	1	KIT-RECEPTACLE (12-PIN)	
	7	1	**151-9274**	1	KIT-RECEPTACLE (4-PIN)	
					(EACH RECEPTACLE KIT INCLUDES RECEPTACLE AS & WEDGE)	
	8	1	**342-9971**	1	SWITCH AS (FORWARD, NEUTRAL, REVERSE)	
J	9	1	**442-0052**	1	KIT-JOYSTICK	
					(INCLUDES TAPE, TAPE REMOVAL TOOL, SCREWS, BOLT, NUTS, BIT & WASHERS)	

J - KIT USED ONLY WHEN ADVANCED CONTROL JOYSTICK IS MOUNTED TO JOYSTICK HANDLE)

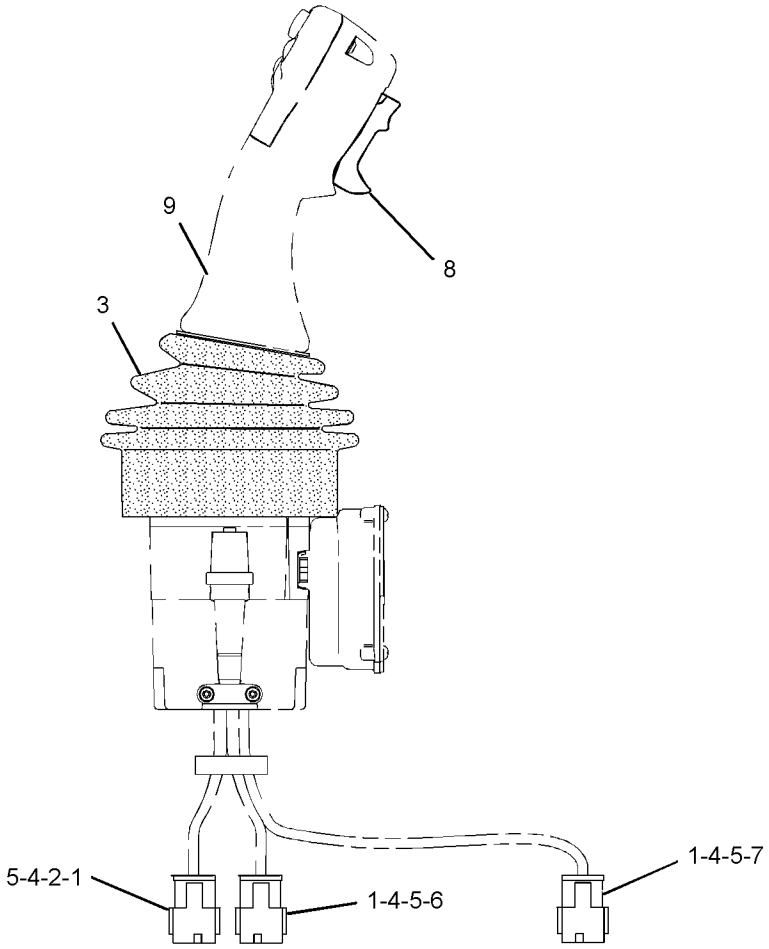

GRAPHIC #1 <END> g03853228

434-2232 CONTROL GP-JOYSTICK–LH

S/N: B551-UP

PART OF 441-0358 CONTROL GP-JOYSTICK

SMCS-3168, 4343, 5063, 5705 **i05958135**

NOTE	REF NO	GRAPHIC REF	PART NUMBER	QTY	PART NAME 1 2 3 4 5 6 (PRODUCT LEVEL)	SEE PAGE
	1	1	**174-3091**	1	KIT-RECEPTACLE (12-PIN)	
					(INCLUDES RECEPTACLE AS & WEDGE)	
	2	1	**9X-3401**	10	PIN-CONNECTOR (16-GA TO 18-GA)	
	3	1	**144-0331**	1	CAP-PUSH BUTTON (YELLOW) (AUTOMATIC, MANUAL)	
	3A	1	**144-0331**	1	CAP-PUSH BUTTON (YELLOW) (NOT USED)	
	4	1	**8T-8737**	2	PLUG-SEAL	
					AVAILABLE REPAIR KIT(S):	
			442-0052	1	KIT-JOYSTICK (ATTACHMENT)	
					(INCLUDES TAPE, SCREWS, BOLT, NUTS, TORX BIT & WASHERS)	

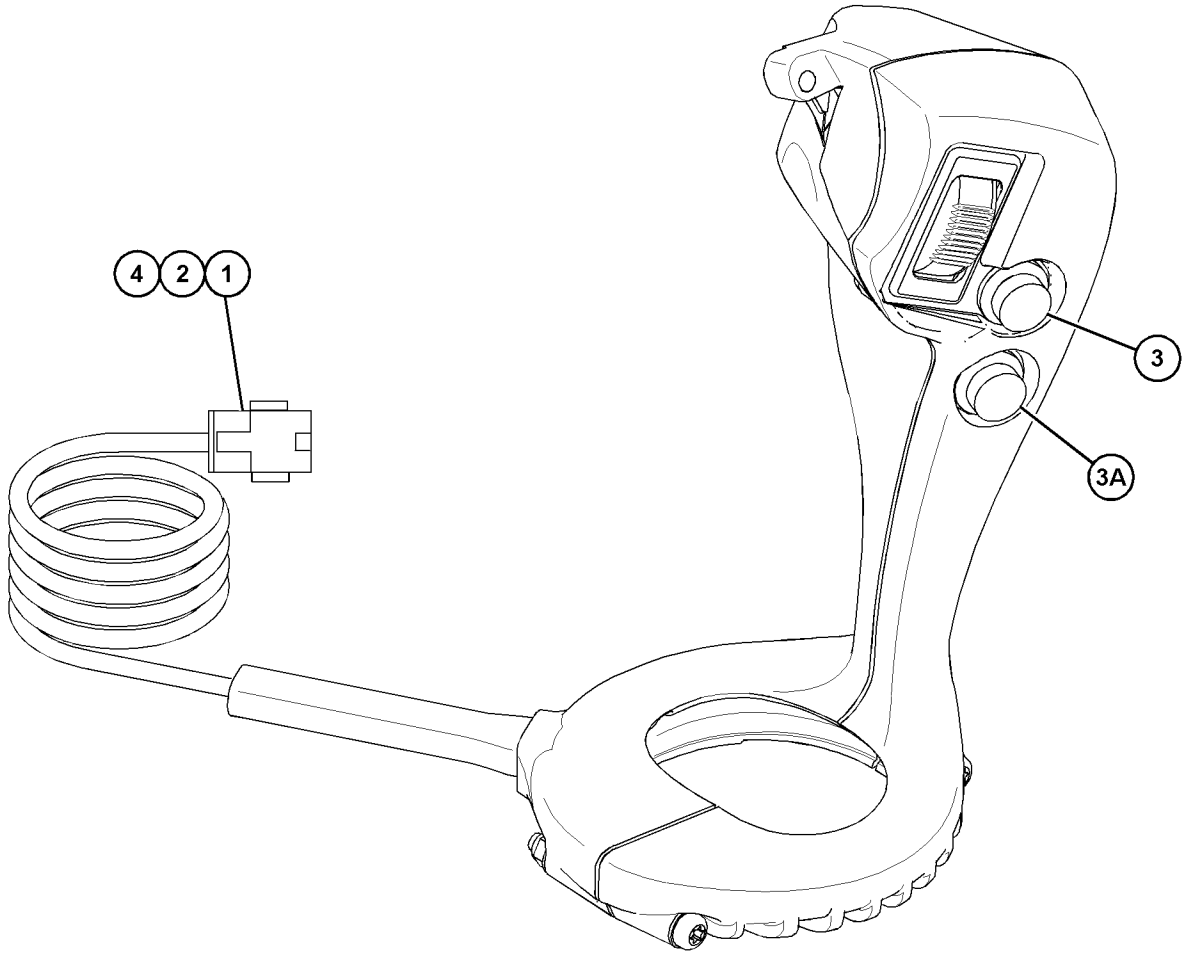

GRAPHIC #1 <END> g03745883

434-2233 CONTROL GP-JOYSTICK–RH

S/N: B551-UP

PART OF 441-0362 CONTROL GP-JOYSTICK

SMCS-3168, 4343, 5063, 5705 **i05958178**

NOTE	REF NO	GRAPHIC REF	PART NUMBER	QTY	PART NAME 1 2 3 4 5 6 (PRODUCT LEVEL)	SEE PAGE
	1	1	**174-3091**	1	KIT-RECEPTACLE (12-PIN)	
					(INCLUDES RECEPTACLE AS & WEDGE)	
	2	1	**9X-3401**	11	PIN-CONNECTOR (16-GA TO 18-GA)	
	3	1	**144-0331**	1	CAP-PUSH BUTTON (YELLOW) (AUTOMATIC, MANUAL)	
	3A	1	**144-0331**	1	CAP-PUSH BUTTON (YELLOW) (NOT USED)	
	4	1	**8T-8737**	1	PLUG-SEAL	
					AVAILABLE REPAIR KIT(S):	
			442-0052	1	KIT-JOYSTICK (ATTACHMENT)	
					(INCLUDES TAPE, SCREWS, BOLT, NUTS, TORX BIT & WASHERS)	

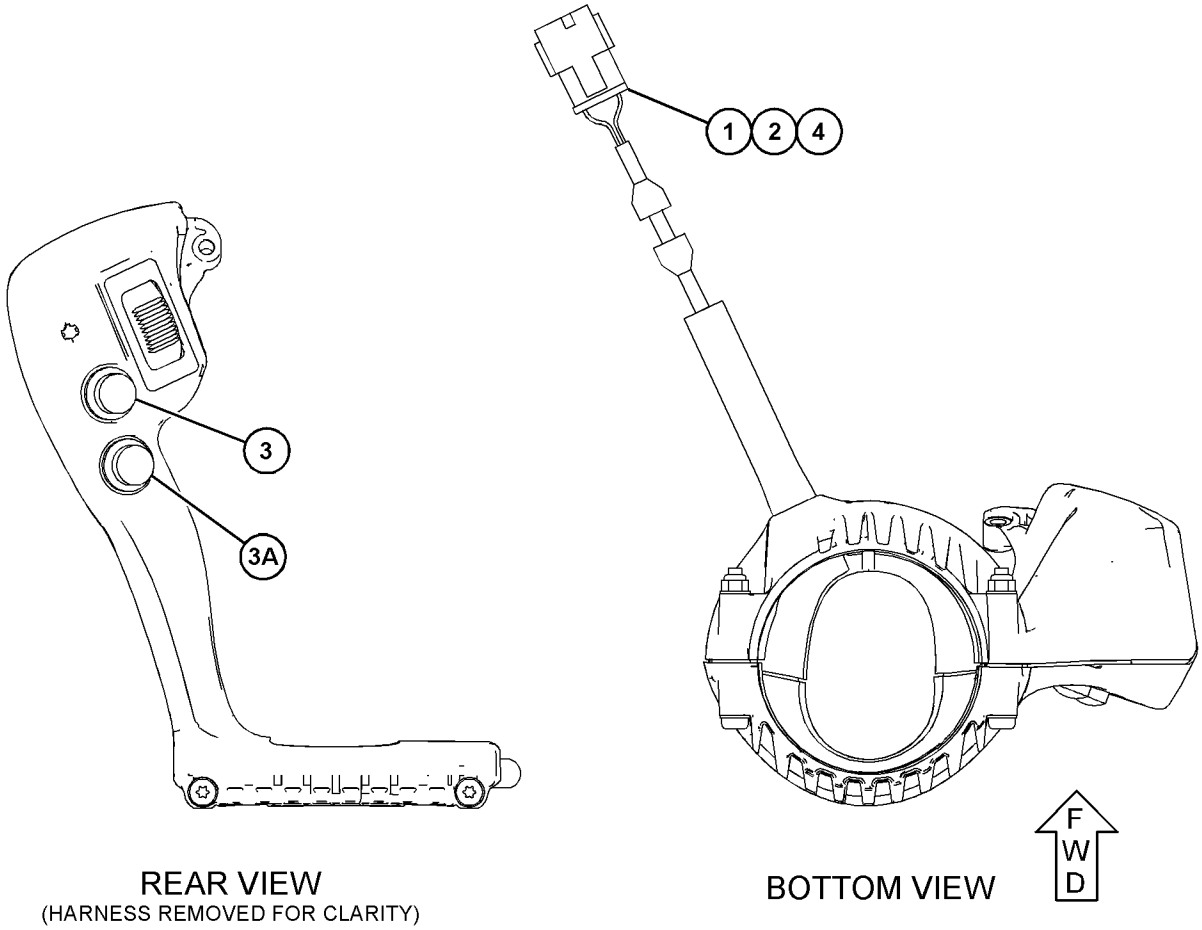

REAR VIEW
(HARNESS REMOVED FOR CLARITY)

BOTTOM VIEW

GRAPHIC #1 <END> g03748213

441-0358 CONTROL GP-JOYSTICK–LH

S/N: B551-UP

PART OF 442-0054 CONTROL & MTG GP-JOYSTICK

SMCS-3168, 4343, 5063, 5705

i06670676

NOTE	REF NO	GRAPHIC REF	PART NUMBER	QTY	PART NAME 1 2 3 4 5 6 (PRODUCT LEVEL)	SEE PAGE
	1	1	**144-0331**	2	CAP-PUSH BUTTON (YELLOW) (AUTOMATIC, MANUAL)	
Y	2	1	**360-2987**	1	CONTROL GP-JOYSTICK (LH)	777
Y	3	1	**434-2232**	1	CONTROL GP-JOYSTICK (LH)	778
					AVAILABLE REPAIR KIT(S):	
			442-0052	1	KIT-JOYSTICK (ATTACHMENT)	
					(INCLUDES TAPE, SCREWS, BOLT, NUTS, TORX BIT & WASHERS)	

Y - SEPARATE ILLUSTRATION

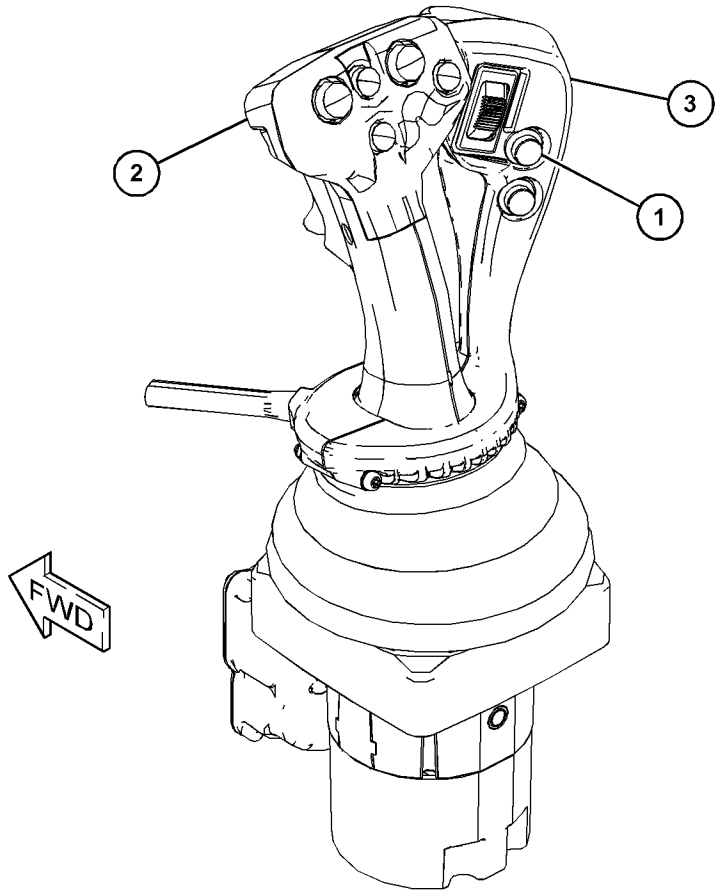

GRAPHIC #1

<END>

g06066687

441-0362 CONTROL GP-JOYSTICK–RH

S/N: B551-UP

PART OF 442-0054 CONTROL & MTG GP-JOYSTICK

SMCS-3168, 4343, 5063, 5705 **i05958150**

NOTE	REF NO	GRAPHIC REF	PART NUMBER	QTY	PART NAME 1 2 3 4 5 6 (PRODUCT LEVEL)	SEE PAGE
	1	1	**144-0331**	2	CAP-PUSH BUTTON (YELLOW)	
Y	2	1	**348-6995**	1	CONTROL GP-JOYSTICK (RH)	776
Y	3	1	**434-2233**	1	CONTROL GP-JOYSTICK (RH)	779
					AVAILABLE REPAIR KIT(S):	
			442-0052	1	KIT-JOYSTICK	
					(INCLUDES TAPE, TAPE REMOVAL TOOLS, SCREWS, NUTS, BOLT, TORX BIT & WASHERS)	

Y - SEPARATE ILLUSTRATION

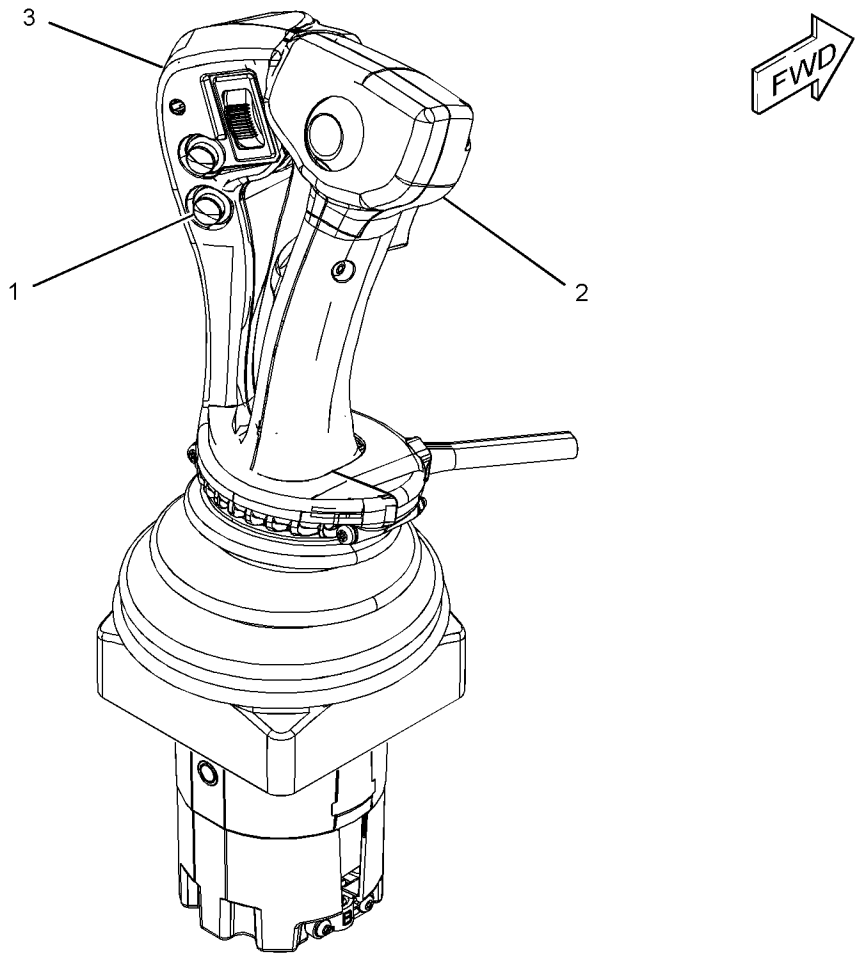

GRAPHIC #1 <END> g03742468

458-8701 CONTROL GP-JOYSTICK

S/N: B551-UP
PERFORMANCE CONTROL MODULES
CANNOT BE USED WITH 357-9151—PAGE: 765
PART OF 492-0730 OPTION AR-GRADE CONTROL

SMCS-3168, 4343, 5063, 5705 **i06670686**

NOTE	REF NO	GRAPHIC REF	PART NUMBER	QTY	PART NAME 1 2 3 4 5 6 (PRODUCT LEVEL)	SEE PAGE
Y	1	1	**438-3108**	1	HARNESS AS-WIRING (JOYSTICK)	193
Y	2	1	*442-0054*	1	CONTROL & MTG GP-JOYSTICK	765
	3	1	**457-7811**	1	FILM-IDENTIFICATION (GRADE CONTROL)	
	4	1	**457-7812**	1	FILM-IDENTIFICATION (INSTRUCTION)	

Y - SEPARATE ILLUSTRATION

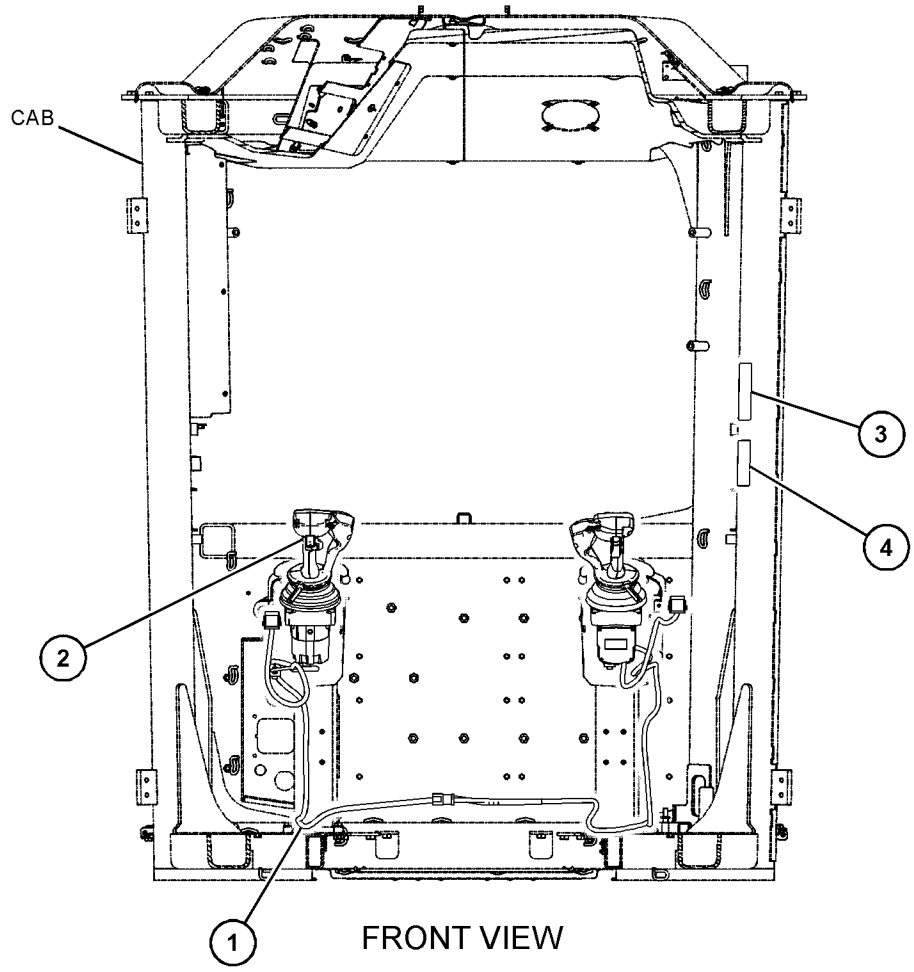

FRONT VIEW

GRAPHIC #1 <END> g03741548

363-4962 COVER GP-CAB

S/N: B551-UP

PART OF 420-1977, 575-9874, 575-9875 CAB AR

SMCS-7301 **i04864455**

NOTE	PART NUMBER	QTY	PART NAME 1 2 3 4 5 6 (PRODUCT LEVEL)	SEE PAGE
M	**8T-4189**	3	BOLT (M8X1.25X20-MM)	
	363-4961	1	COVER	
	356-5177	1	COVER-VENT	
D	**6V-5746**		TRIM (0.8-M)	
	5P-4116	3	WASHER-HARD (8.8X20.5X2-MM THK)	

D - ORDER BY THE METER
M - METRIC PART

<END>

252-1805 CUSHION GP-ARM

S/N: B551-UP

PART OF 345-1271, 345-1272 SUPPORT GP-CONTROL

SMCS-7307 **i02891466**

NOTE	REF NO	GRAPHIC REF	PART NUMBER	QTY	PART NAME 1 2 3 4 5 6 (PRODUCT LEVEL)	SEE PAGE
	1	1	**233-3245**	1	PLATE	
	2	1	**233-3272**	1	CUSHION AS	
M	3	1	**5C-9553**	2	BOLT (M6X1X16-MM)	
	4	1	**9X-8256**	2	WASHER (6.6X12X2-MM THK)	

M - METRIC PART

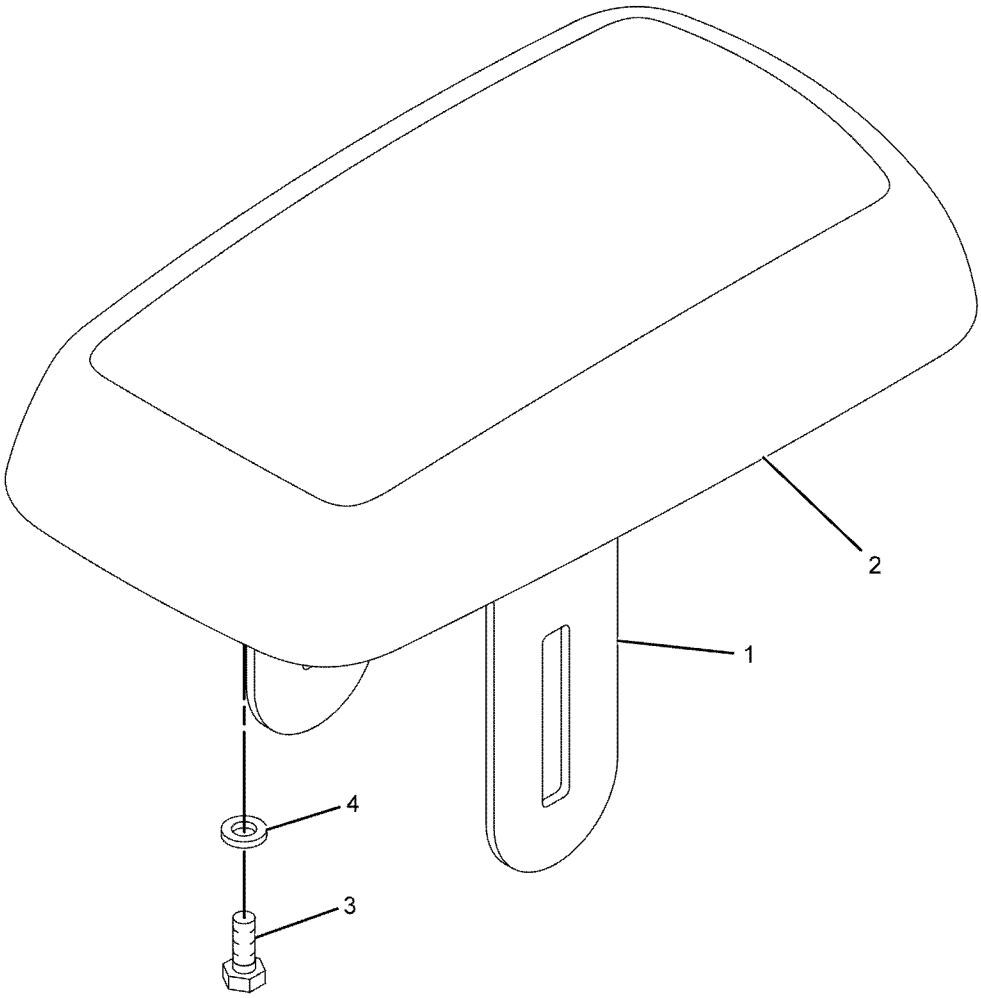

GRAPHIC #1 <END> g01109286

447-2229 DISPLAY GP-CAMERA

S/N: B551-UP

PART OF 391-4396 CAMERA AR

SMCS-7347 **i06736200**

NOTE	REF NO	GRAPHIC REF	PART NUMBER	QTY	PART NAME 1 2 3 4 5 6 (PRODUCT LEVEL)	SEE PAGE
	1	1	**251-8248**	1	CABLE AS-COMMUNICATION	
	2	1	**333-8153**	1	CONNECTION AS	
	3	1	**464-6047**	1	MODULE GP-DISPLAY (WORK AREA VISUAL SYSTEM)	
		1	**8T-8729**	5	PIN-CONNECTOR (16-GA TO 20-GA)	
		1	**8T-8737**	1	PLUG-SEAL	
		1	**102-8805**	1	KIT-RECEPTACLE (6-PIN)	
					(INCLUDES RECEPTACLE AS & WEDGE)	
		1	**344-3847**	1	CABLE AS (DISPLAY)	
	4	1	**3S-2093**	11	STRAP-CABLE	
M	5	1	**8T-2226**	4	SCREW-MACHINE (M5X0.8X10-MM)	
	6	1	**9X-8267**	4	WASHER (6.6X12X2-MM THK)	

M - METRIC PART

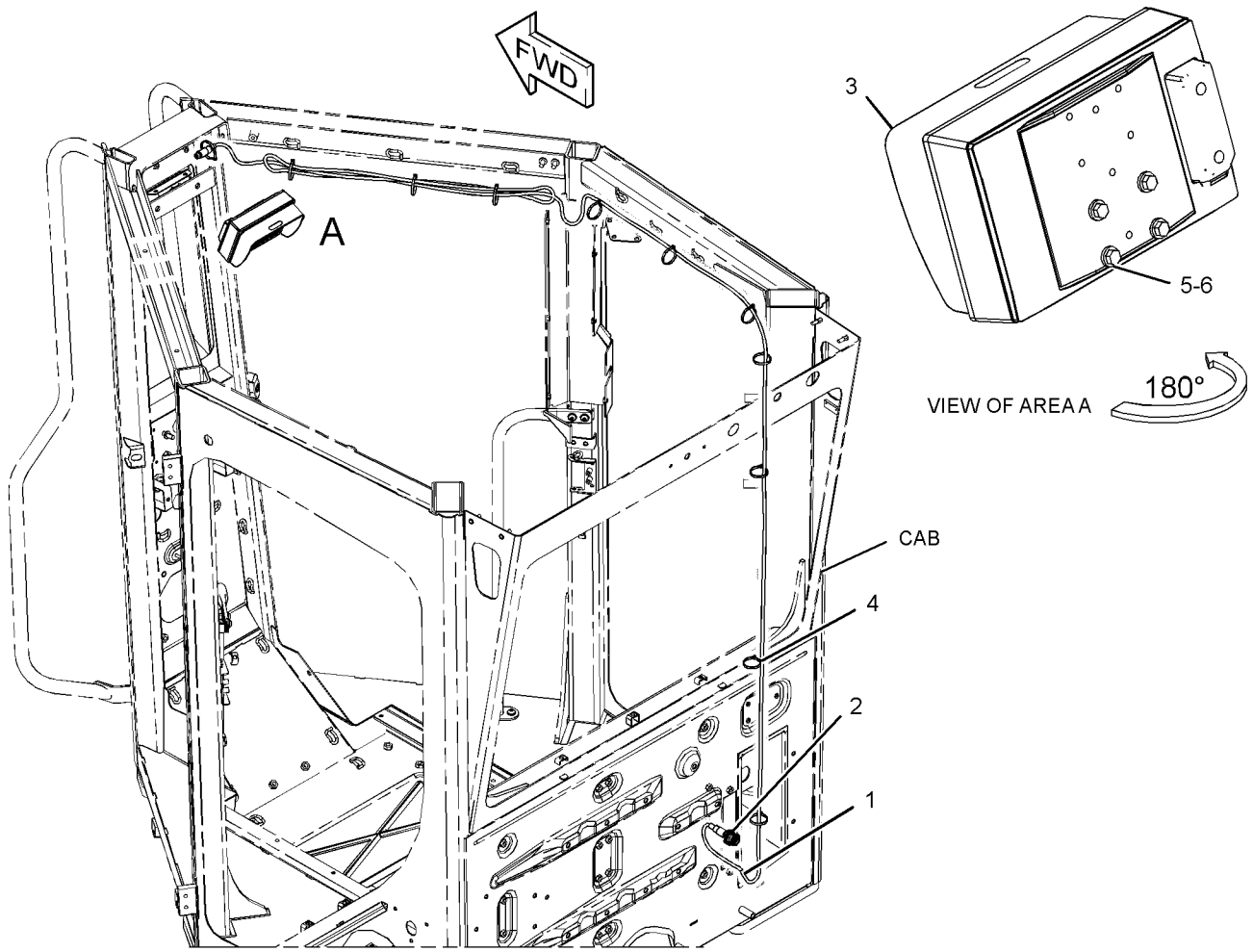

GRAPHIC #1 <END> g03512586

357-9199 DOOR GP-CAB—RH

S/N: B551-UP

PART OF 381-7048, 381-7049 ROPS GP

SMCS-7308 **i06859838**

NOTE	REF NO	GRAPHIC REF	PART NUMBER	QTY	PART NAME 1 2 3 4 5 6 (PRODUCT LEVEL)	SEE PAGE
M	1	2	**172-8591**	3	NUT-CLIP (M6X1-THD)	
	2	2	**6V-7636**	2	PIN AS-SPRING	
M	3	2	**184-0983**	1	NUT-HEX FLANGE (M12X1.75-THD)	
J	4	2	**252-1862**	1	HANDLE AS-PULL	
	5	2	**252-1863**	1	GASKET	
	6	2	**261-1731**	1	BOOT	
	7	2	**269-2890**	1	CLEVIS	
	8	2	**269-2892**	1	PIN	
	9	2	**269-2893**	1	CLIP	
	10	2	**272-1623**	1	BELLCRANK AS	
	11	2	**285-3692**	1	SPACER-SPECIAL	
	12	1	**295-6405**	1	LATCH AS (RH)	
	13	2	**507-2767**	1	STRIKER AS	
	14	2	**299-1020**	1	LEVER GP-CAB DOOR	
		2	**8T-7971**	2	WASHER-HARD (13.5X25.5X5-MM THK)	
M		2	**9X-2042**	2	SCREW-TRUSS HEAD (M6X1X12-MM)	
		2	**114-6658**	2	WASHER (6.5X17X1-MM THK)	
		2	**115-9345**	1	KNOB-CONTROL	
		2	**299-1024**	1	LEVER	
		2	**299-1441**	1	SPRING	
		2	**299-1442**	1	SPRING	
	15	2	**299-1660**	1	CABLE AS	
		2	**7S-9930**	2	RING-RETAINING	
		2	**159-0052**	2	PIN-CLEVIS	
	16	2	**328-4985**	1	LATCH AS-DOOR (RH)	
	17	1	**357-0728**	1	HARNESS AS-WINDOW WIPER (LH)	
		1	**102-8805**	1	KIT-RECEPTACLE (6-PIN)	
					(INCLUDES RECEPTACLE AS & WEDGE)	
E		1	**8T-2225**		TUBE-HEAT SHRINK (25.4-MM DIA) (9-CM)	
		1	**8T-8737**	2	PLUG-SEAL	
		1	**9X-3402**	5	SOCKET-CONNECTOR (16-GA TO 18-GA)	
					—OR—	
		1	**126-1768**	5	SOCKET-CONNECTOR (14-GA TO 16-GA)	
E		1	**144-0195**		HOSE (119-CM)	
		1	**9X-3401**	5	PIN-CONNECTOR (16-GA TO 18-GA)	
					—OR—	
		1	**126-1767**	5	PIN-CONNECTOR (14-GA TO 16-GA)	
		1	**155-2274**	1	KIT-CONNECTING PLUG (6-PIN)	
					(INCLUDES PLUG AS, WEDGE, & INTERFACE SEAL)	
		1	**297-4169**	2	GROMMET	
B		1	**329-3734**		TAPE-ELECTRICAL	
	18	1	*357-9181*	1	DOOR GP-CAB (RH)	
M		1	**7Y-9096**	2	SCREW-TRUSS HEAD (M6X1X6-MM)	
M		1	**9X-2042**	3	SCREW-TRUSS HEAD (M6X1X12-MM)	
M		1	**308-2903**	3	NUT-WELD (M6X1-THD)	
	19	2	**357-9187**	1	HANDLE AS-PULL	
	20	2	**357-9188**	1	PLATE	
	21	1	**357-9190**	1	BRACKET AS	

357-9199 **DOOR GP-CAB (**contd.**)** **i06859838**

NOTE	REF NO	GRAPHIC REF	PART NUMBER	QTY	PART NAME 1 2 3 4 5 6 (PRODUCT LEVEL)	SEE PAGE
	22	2	**357-9191**	1	BUMPER	
	23	1	**357-9236**	1	GLASS (DOOR)	
	24	2	**357-9260**	1	COVER (WIPER-RH)	
	25	2	**357-9261**	1	COVER-LATCH	
Y	26	1	*357-9652*	1	WIPER GP-WINDOW (DOOR, RH)	862
	27	2	**357-9755**	1	LINKAGE	
	28	2	**361-0421**	1	COVER	
	29	1	**372-7541**	1	BRACKET AS	
M		1	**8T-3612**	1	NUT-WELD (M8X1.25-THD)	
	30	2	**376-4793**	1	HANDLE AS-PULL	
M		2	**6V-9632**	1	NUT-WELD (M6X1-THD)	
	31	1	**380-6158**	2	HINGE AS	
					(EACH INCLUDES)	
	31A	1	**372-5042**	2	BUSHING	
	32	1	**4E-1384**	1	BUMPER-CONICAL	
	33	1,2	**114-6658**	4	WASHER (6.5X17X1-MM THK)	
M	34	2	**3E-8020**	4	SCREW-TRUSS HEAD (M6X1X25-MM)	
M	35	1	**5C-7261**	1	NUT (M8X1.25-THD)	
	36	1	**6D-4244**	2	CLIP (LOOP)	
M	37	1	**8T-4000**	2	SCREW-WASHER HEAD (M8X1.25X4.8-MM)	
	38	1,2	**7X-7729**	12	WASHER (11X25X3-MM THK)	
M	39	1	**8T-7547**	2	BOLT (M8X1.25X30-MM)	
M	40	1	**9X-2042**	2	SCREW-TRUSS HEAD (M6X1X12-MM)	
M	41	2	**9X-2043**	13	SCREW-TRUSS HEAD (M6X1X14-MM)	
M	42	1,2	**9X-2044**	4	SCREW-TRUSS HEAD (M6X1X16-MM)	
M	43	1,2	**9X-2125**	10	BOLT-LOCKING (M10X1.5X25-MM)	
E	44	2	**331-9731**		SEAL (4-CM)	
E	45	1	**353-7114**		SEAL (440-CM)	
E	46	2	**367-2761**		SEAL (500-CM)	
	47	2	**108-5471**	1	CLEVIS	
M	48	1	**8T-4195**	2	BOLT (M10X1.5X30-MM)	
	49	2	**6V-8185**	1	NUT (1/4-20-THD)	
	50	2	**3S-2093**	1	STRAP-CABLE	
	51	2	**7X-0605**	1	WASHER-HARD (13X28X1.6-MM THK)	
	52	2	**242-5206**	4	SPACER (6.4X12.5X0.76-MM THK)	

B - USE AS REQUIRED
E - ORDER BY THE CENTIMETER
J - REQUIRES CORPORATE KEY
M - METRIC PART
Y - SEPARATE ILLUSTRATION

357-9199 **DOOR GP-CAB** (contd.) **i06859838**

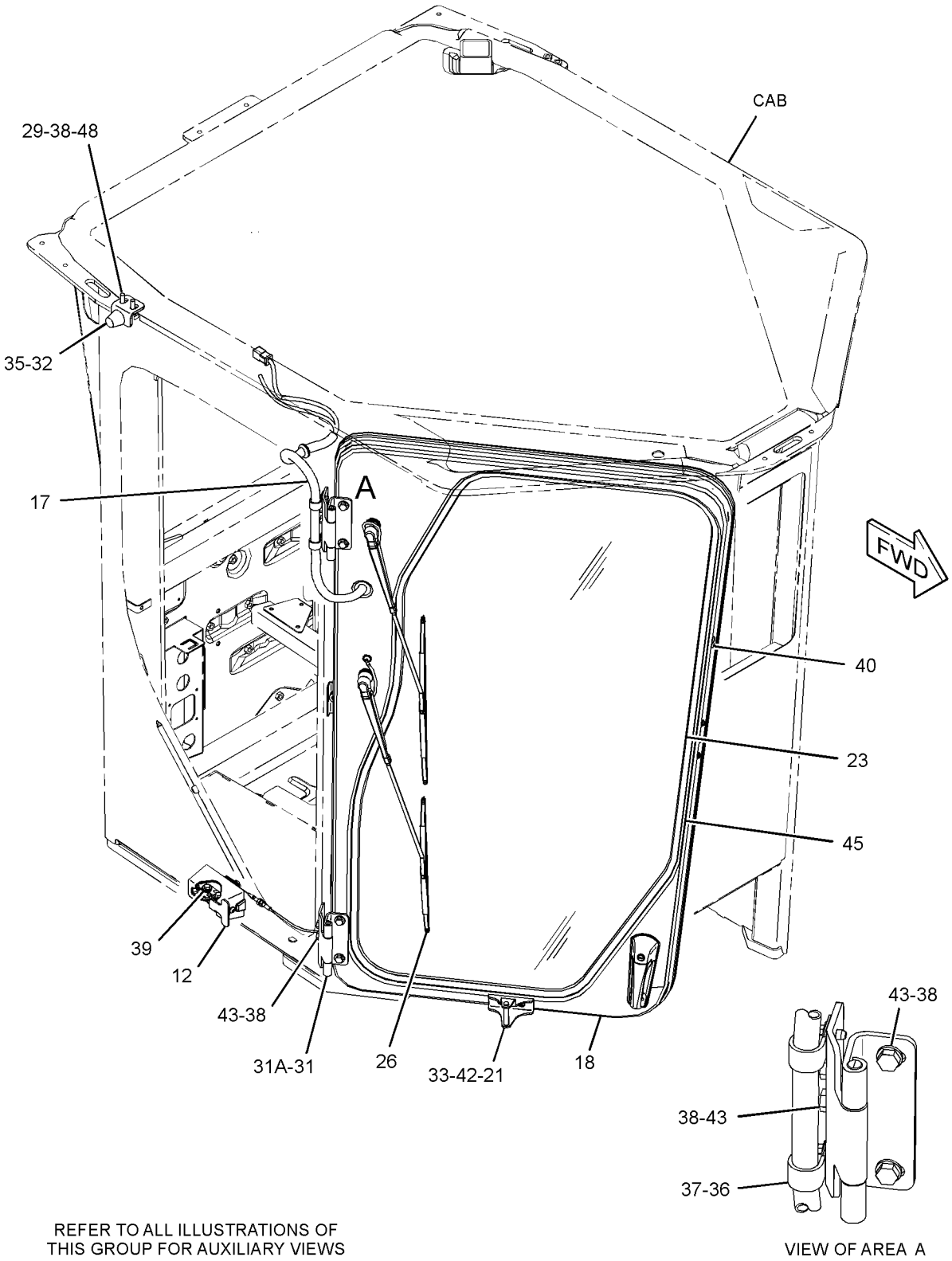

GRAPHIC #1 g06058343

357-9199 **DOOR GP-CAB (**contd.**)** **i06859838**

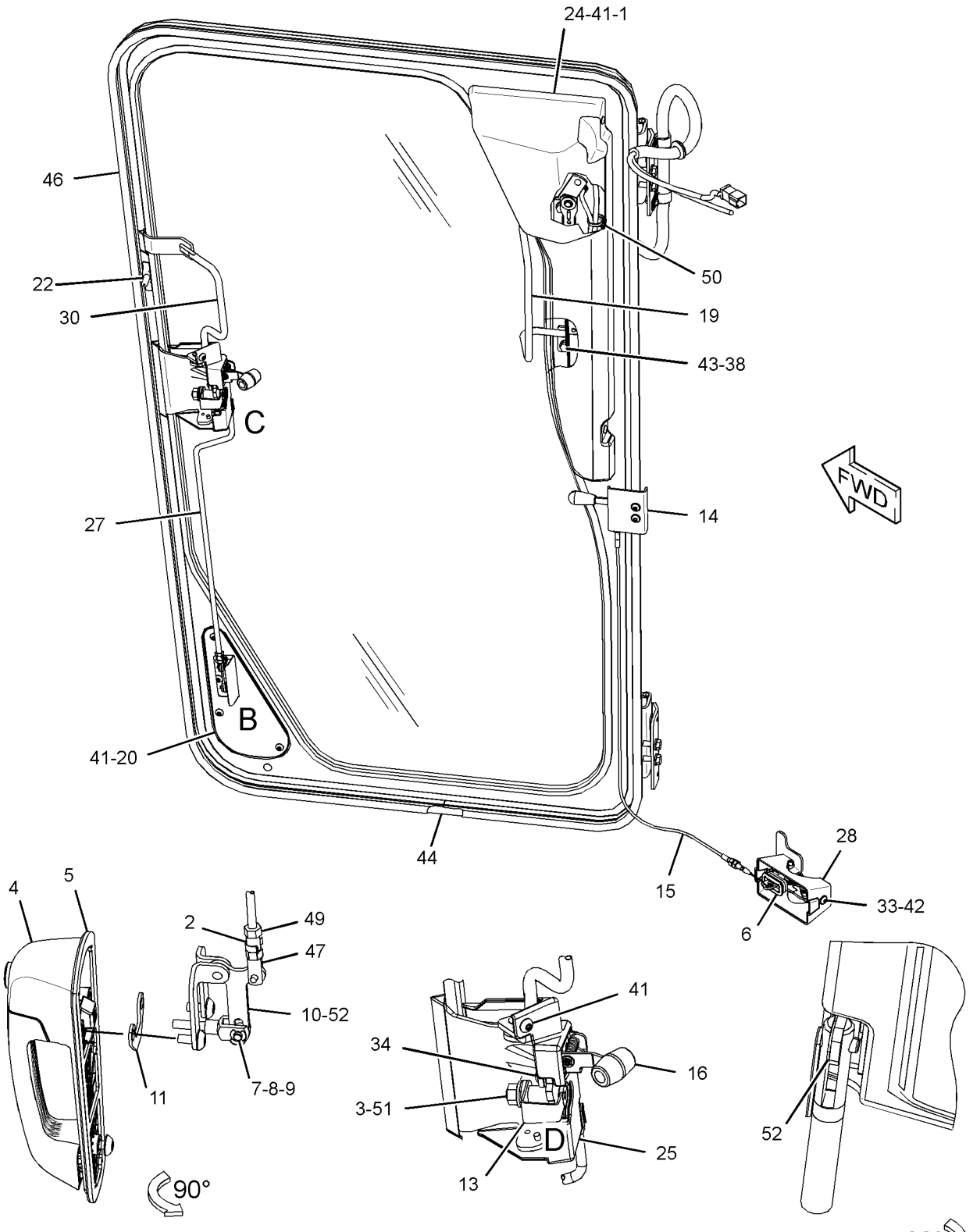

VIEW OF AREA B
(PARTS REMOVED FOR CLARITY)

VIEW OF AREA C

VIEW OF AREA D

GRAPHIC #2 <END> g06150098

357-9200 DOOR GP-CAB—LH

S/N: B551-UP

PART OF 381-7048, 381-7049 ROPS GP

SMCS-7308 **i06860943**

NOTE	REF NO	GRAPHIC REF	PART NUMBER	QTY	PART NAME 1 2 3 4 5 6 (PRODUCT LEVEL)	SEE PAGE
M	1	2	**172-8591**	3	NUT-CLIP (M6X1-THD)	
	2	2	**6V-7636**	2	PIN AS-SPRING	
M	3	2	**184-0983**	1	NUT-HEX FLANGE (M12X1.75-THD)	
J	4	2	**252-1862**	1	HANDLE AS-PULL	
	5	2	**252-1863**	1	GASKET	
	6	1	**261-1731**	1	BOOT	
	7	2	**269-2890**	1	CLEVIS	
	8	2	**269-2892**	1	PIN	
	9	2	**269-2893**	1	CLIP	
	10	2	**272-1623**	1	BELLCRANK AS	
	11	2	**285-3692**	1	SPACER-SPECIAL	
	12	1	**295-6406**	1	LATCH AS (LH)	
	13	2	**507-2767**	1	STRIKER AS	
Y	14	1	**299-1021**	1	LEVER GP-CAB DOOR	802
	15	1	**299-1660**	1	CABLE AS	
		1	**7S-9930**	2	RING-RETAINING	
		1	**159-0052**	2	PIN-CLEVIS	
	16	2	**328-4984**	1	LATCH AS-DOOR (LH)	
	17	1	**357-0728**	1	HARNESS AS-WINDOW WIPER (LH)	
		1	**102-8805**	1	KIT-RECEPTACLE (6-PIN)	
					(INCLUDES RECEPTACLE AS & WEDGE)	
E		1	**8T-2225**		TUBE-HEAT SHRINK (25.4-MM DIA) (9-CM)	
		1	**8T-8737**	2	PLUG-SEAL	
		1	**9X-3402**	5	SOCKET-CONNECTOR (16-GA TO 18-GA)	
					—OR—	
		1	**126-1768**	5	SOCKET-CONNECTOR (14-GA TO 16-GA)	
E		1	**144-0195**		HOSE (134-CM)	
		1	**9X-3401**	5	PIN-CONNECTOR (16-GA TO 18-GA)	
					—OR—	
		1	**126-1767**	5	PIN-CONNECTOR (14-GA TO 16-GA)	
		1	**155-2274**	1	KIT-CONNECTING PLUG (6-PIN)	
					(INCLUDES PLUG AS, WEDGE, & INTERFACE SEAL)	
		1	**297-4169**	2	GROMMET	
B		1	**329-3734**		TAPE-ELECTRICAL	
	18	1	**357-9182**	1	DOOR AS (LH)	
M		1	**308-2903**	3	NUT-WELD (M6X1-THD)	
M		1	**7Y-9096**	2	SCREW-TRUSS HEAD (M6X1X6-MM)	
M		1	**9X-2042**	3	SCREW-TRUSS HEAD (M6X1X12-MM)	
	19	2	**357-9187**	1	HANDLE AS-PULL	
	20	2	**357-9188**	1	PLATE	
	21	1	**357-9190**	1	BRACKET AS	
	22	2	**357-9191**	1	BUMPER	
	23	1	**357-9236**	1	GLASS (DOOR)	
	24	2	**357-9257**	1	COVER (WIPER-LH)	
	25	2	**357-9258**	1	COVER-LATCH	
Y	26	1	*357-9653*	1	WIPER GP-WINDOW (DOOR, LH)	864
	27	2	**357-9755**	1	LINKAGE	

357-9200 **DOOR GP-CAB (**contd.**)** **i06860943**

NOTE	REF NO	GRAPHIC REF	PART NUMBER	QTY	PART NAME 1 2 3 4 5 6 (PRODUCT LEVEL)	SEE PAGE
	28	1	**361-0421**	1	COVER	
	29	1	**372-7541**	1	BRACKET AS	
M		1	**8T-3612**	1	NUT-WELD (M8X1.25-THD)	
	30	2	**376-4794**	1	HANDLE AS-PULL	
M		2	**6V-9632**	1	NUT-WELD (M6X1-THD)	
	31	1,2	**380-6158**	2	HINGE AS	
					(EACH INCLUDES)	
	31A	1	**372-5042**	2	BUSHING	
	32	1	**4E-1384**	1	BUMPER-CONICAL	
	33	1	**114-6658**	4	WASHER (6.5X17X1-MM THK)	
M	34	2	**3E-8020**	4	SCREW-TRUSS HEAD (M6X1X25-MM)	
M	35	1	**5C-7261**	1	NUT (M8X1.25-THD)	
	36	1	**6D-4244**	2	CLIP (LOOP)	
M	37	1	**8T-4000**	2	SCREW-WASHER HEAD (M8X1.25X4.8-MM)	
	38	1,2	**7X-7729**	12	WASHER (11X25X3-MM THK)	
M	39	1	**8T-7547**	2	BOLT (M8X1.25X30-MM)	
M	40	2	**9X-2042**	2	SCREW-TRUSS HEAD (M6X1X12-MM)	
M	41	2	**9X-2043**	13	SCREW-TRUSS HEAD (M6X1X14-MM)	
M	42	1	**9X-2044**	4	SCREW-TRUSS HEAD (M6X1X16-MM)	
M	43	1,2	**9X-2125**	10	BOLT-LOCKING (M10X1.5X25-MM)	
E	44	2	**331-9731**		SEAL (4-CM)	
E	45	1	**353-7114**		SEAL (440-CM)	
E	46	1	**367-2761**		SEAL (500-CM)	
	47	2	**108-5471**	1	CLEVIS	
M	48	1	**8T-4195**	2	BOLT (M10X1.5X30-MM)	
	49	2	**6V-8185**	1	NUT (1/4-20-THD)	
	50	2	**3S-2093**	1	STRAP-CABLE	
	51	2	**7X-0605**	1	WASHER-HARD (13X28X1.6-MM THK)	
	52	2	**242-5206**	4	SPACER (6.4X12.5X0.76-MM THK)	

B - USE AS REQUIRED
E - ORDER BY THE CENTIMETER
J - REQUIRES CORPORATE KEY
M - METRIC PART
Y - SEPARATE ILLUSTRATION

357-9200 **DOOR GP-CAB** (contd.) **i06860943**

REFER TO ALL ILLUSTRATIONS OF
THIS GROUP FOR AUXILIARY VIEWS

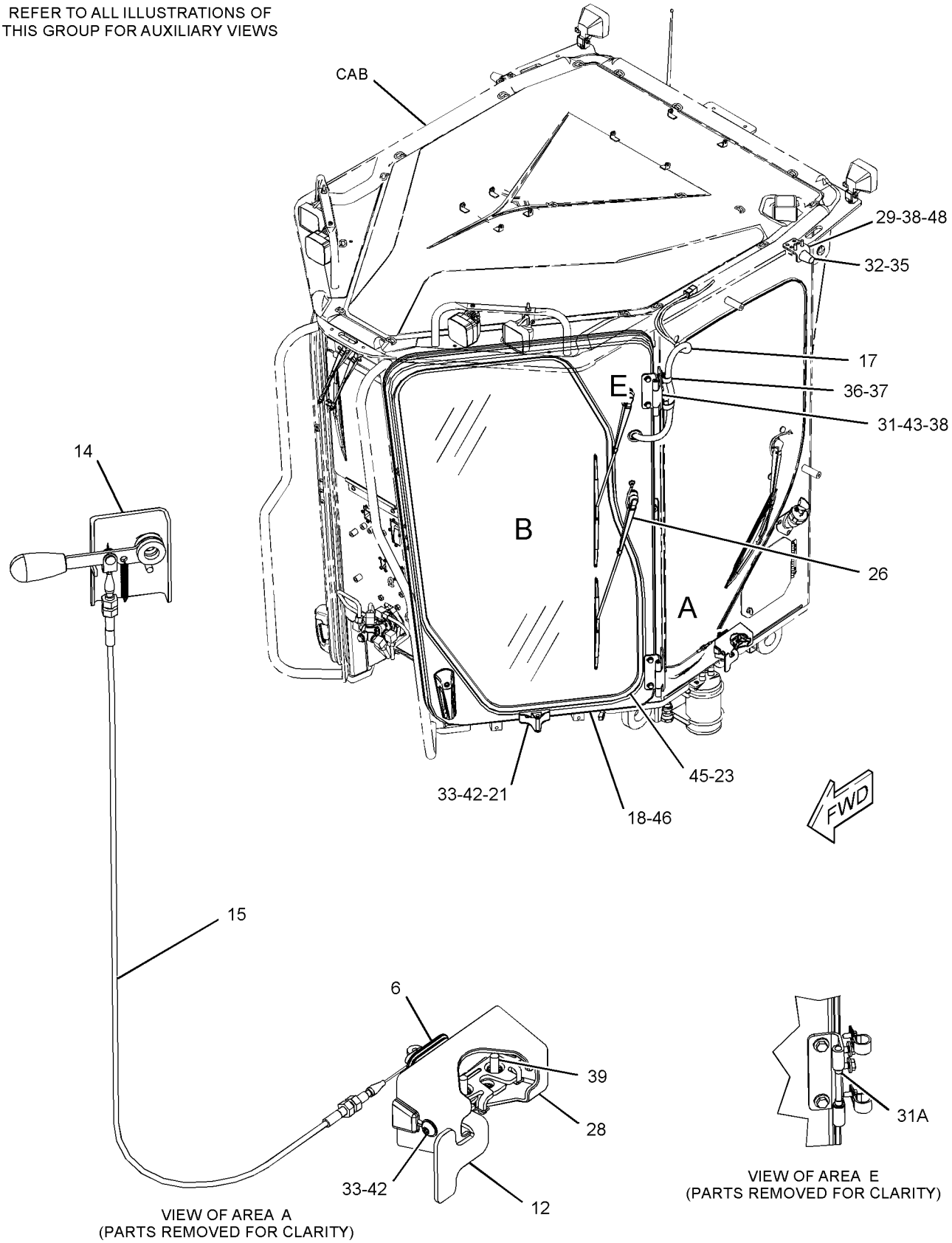

VIEW OF AREA A
(PARTS REMOVED FOR CLARITY)

VIEW OF AREA E
(PARTS REMOVED FOR CLARITY)

GRAPHIC #1 g06058321

357-9200 **DOOR GP-CAB (**contd.**)** **i06860943**

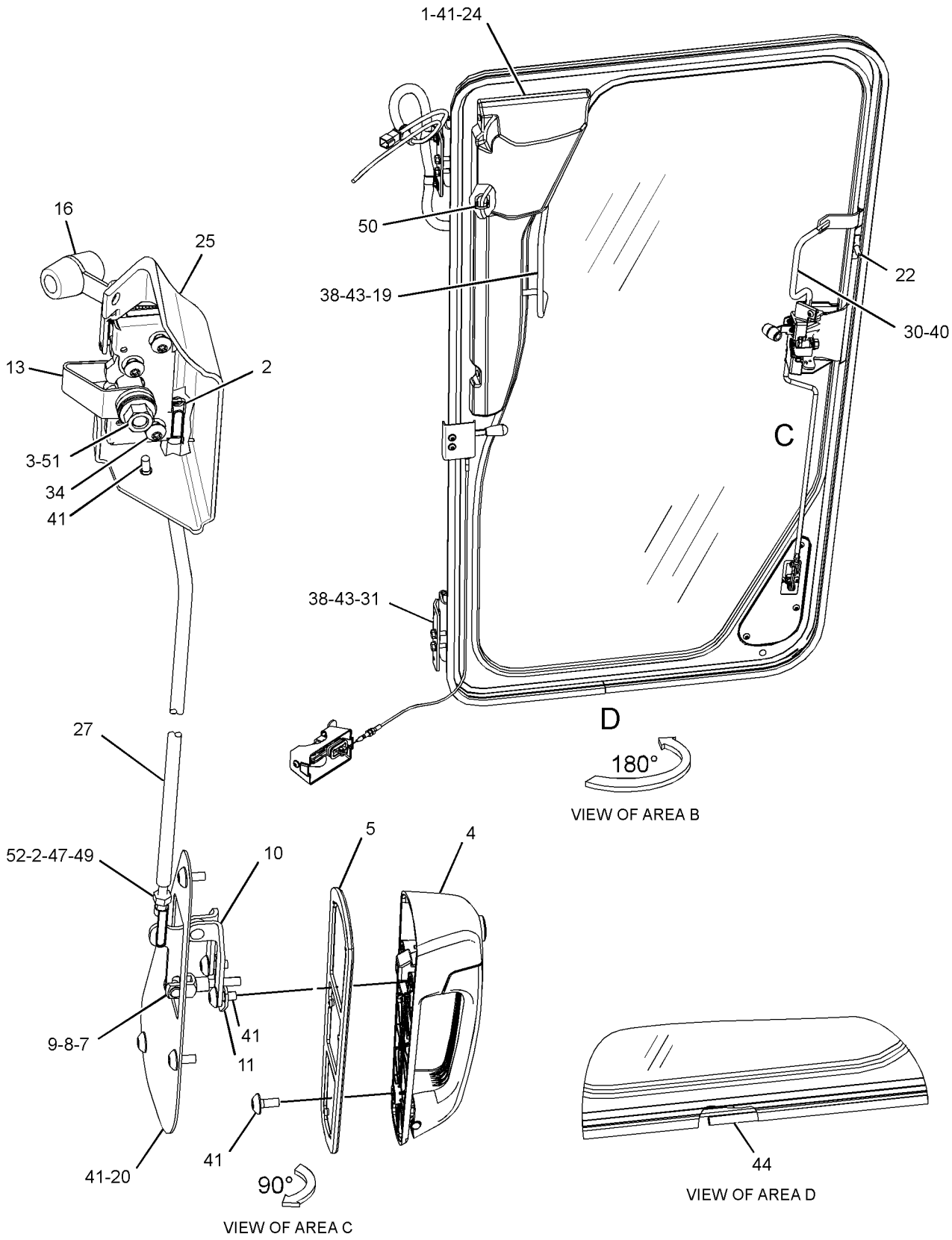

GRAPHIC #2 <END> g06150114

244-2701 DUCT & FILTER GP-CAB AIR

S/N: B551-UP

PART OF 361-3133 AIR CONDITIONER GP

SMCS-7337, 7342, 734D **i07098966**

NOTE	REF NO	GRAPHIC REF	PART NUMBER	QTY	PART NAME 1 2 3 4 5 6 (PRODUCT LEVEL)	SEE PAGE
	1	1	**2R-2376**	2	WASHER (7X16X0.8-MM THK)	
	2	1	**149-1912**	1	FILTER ELEMENT-CAB AIR (CAB HEATER, AIR CONDITIONER)	
					—OR—	
		1	**220-8800**	1	FILTER ELEMENT-CAB AIR (ACTIVATED CHARCOAL)	
	3	1	**211-2660**	1	FILTER ELEMENT-AIR (CAB HEATER, AIR CONDITIONER)	
	4	1	**297-4139**	1	DUCT	
	5	1	**297-4140**	1	DUCT	
	6	1	**525-4816**	1	DUCT AS	
		1	**7K-4201**	2	NUT-SPEED	
	7	1	**274-2385**	1	COVER	
	8	1	**274-2392**	2	SCREW-THUMB	
	9	1	**5P-4115**	1	WASHER-HARD (7.2X19X2-MM THK)	
M	10	1	**6V-6317**	2	BOLT (M10X1.5X20-MM)	
M	11	1	**8T-0640**	1	BOLT (M6X1X30-MM)	
	12	1	**8T-4121**	2	WASHER-HARD (11X21X2.5-MM THK)	
E	13	1	**126-5648**		SEAL (70-CM)	

E - ORDER BY THE CENTIMETER
M - METRIC PART

244-2701 **DUCT & FILTER GP-CAB AIR (**contd.**)** **i07098966**

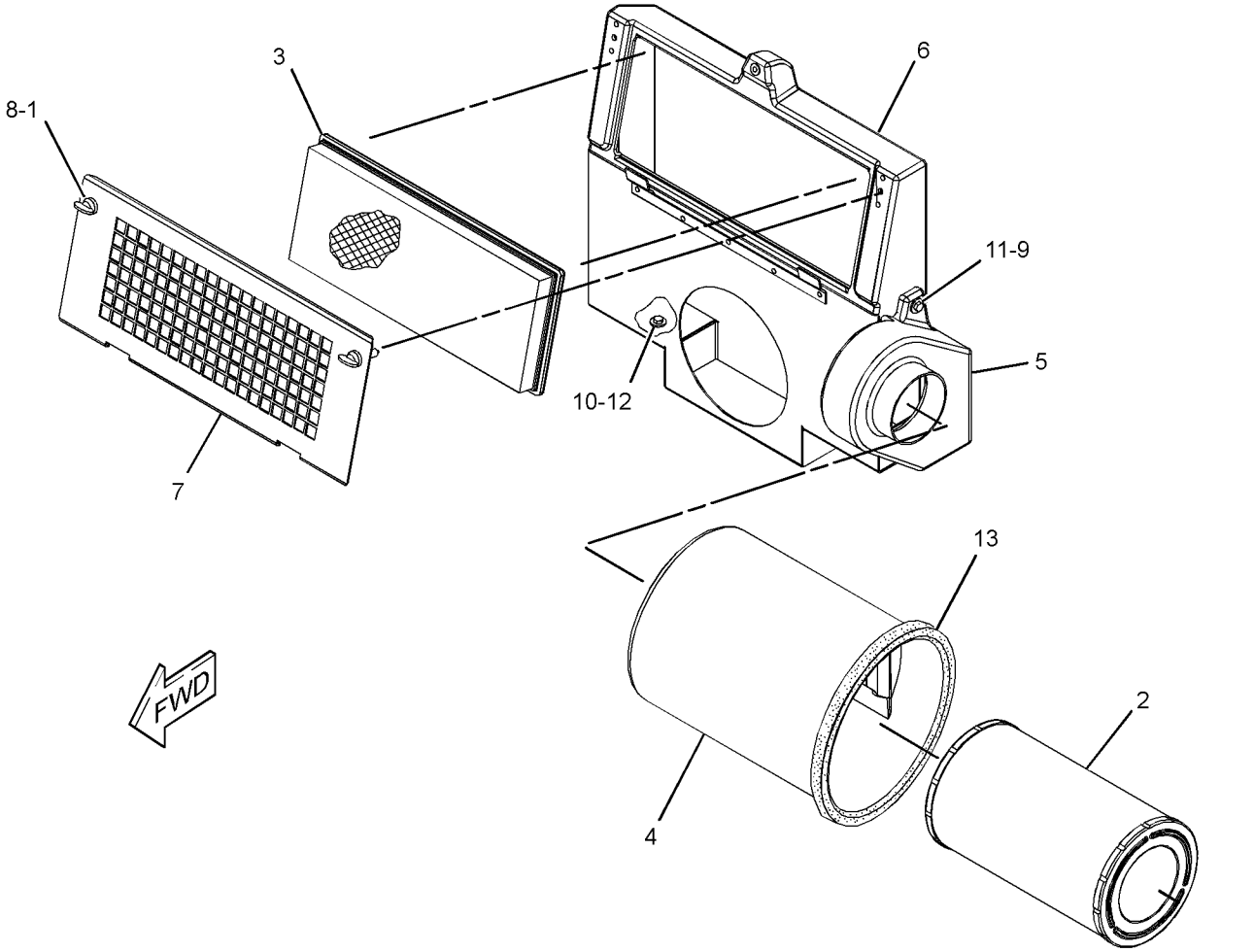

GRAPHIC #1 <END> g02334244

170-5334 FAN GP-CIRCULATING—FRONT DEFROSTER

S/N: B551-UP

24-VOLT

PART OF 233-3137 FAN GP-CIRCULATING

SMCS-7316 **i05833551**

NOTE	REF NO	GRAPHIC REF	PART NUMBER	QTY	PART NAME 1 2 3 4 5 6 (PRODUCT LEVEL)	SEE PAGE
	1	1	**1B-2713**	1	BOLT (1/4-20X1.75-IN)	
	2	1	**3D-8747**	1	BRACKET	
	3	1	**383-7644**	1	FAN AS (4-BLADE)	
	4	1	**3D-8749**	1	GUARD	
	5	1	**3T-6774**	1	GROMMET	
	6	1	**9X-9689**	1	BASE-FAN	
	7	1	**135-1979**	1	BRACKET	
CY	8	1	**436-9180**	1	MOTOR GP-ELECTRIC (CIRCULATING FAN)	239
	9	1	**031-4155**	1	LOCKNUT (5/16-18-THD)	
	10	1	**1M-1230**	2	NUT-LOCKING (10-32-THD)	
	11	1	**2D-6235**	1	LOCKNUT (1/4-20-THD)	
	12	1	**3D-8752**	1	LOCKNUT (5/16-24-THD)	
	13	1	**4M-0061**	1	BOLT (5/16-18X0.75-IN)	
	14	1	**5P-0537**	4	WASHER-HARD (7.2X14.5X2-MM THK)	
	15	1	**6G-5987**	1	BRACKET	
	16	1	**7L-8316**	1	SETSCREW-SOCKET (10-32X2.54-IN)	
	17	1	**7T-0582**	1	BOLT	
	18	1	**9M-1974**	3	WASHER-HARD (8.8X16X2-MM THK)	
	19	1	**9T-5241**	2	WASHER (9.53X18X1-MM THK)	

C - CHANGE FROM PREVIOUS TYPE
Y - SEPARATE ILLUSTRATION

170-5334 **FAN GP-CIRCULATING (**contd.**)** **i05833551**

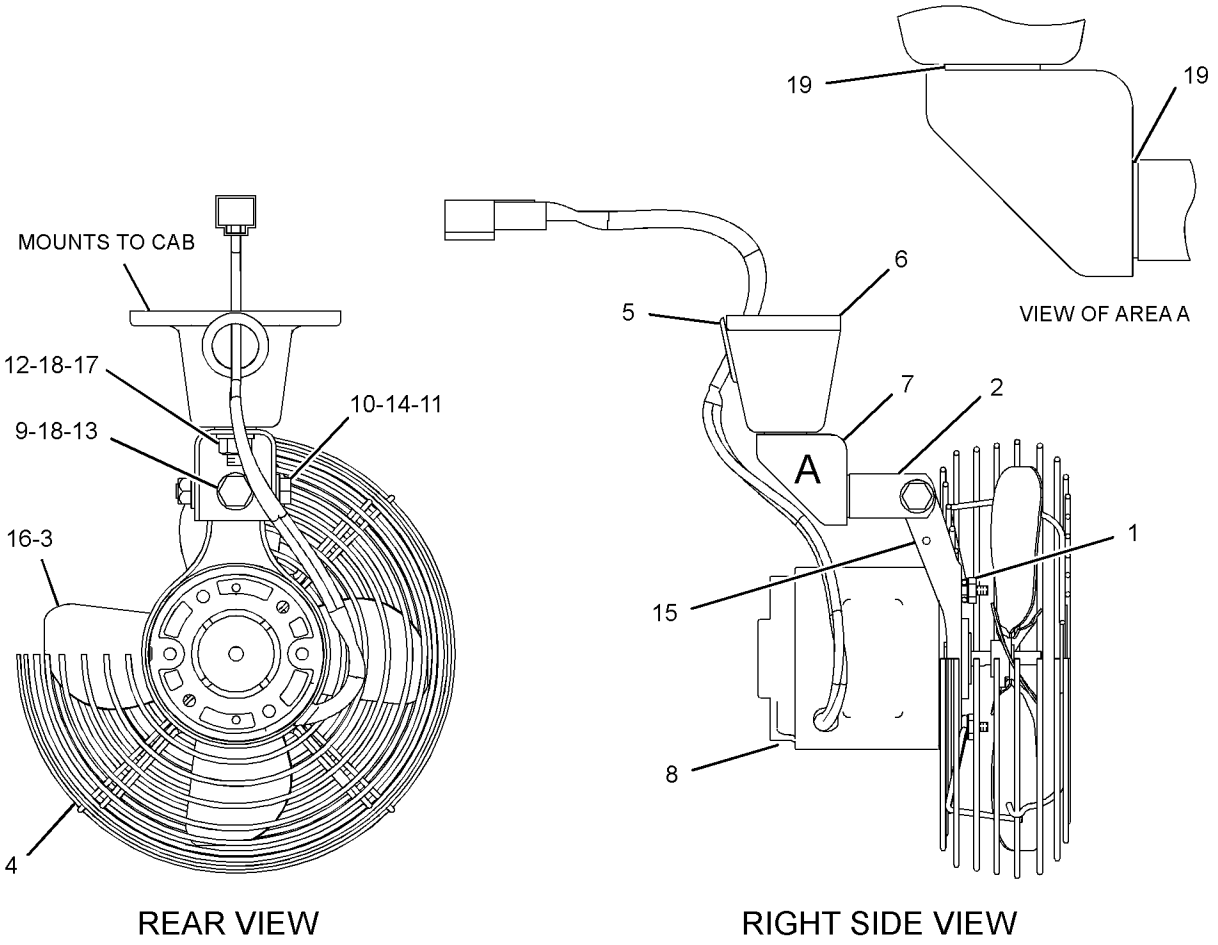

GRAPHIC #1 <END> g03634976

233-3137 FAN GP-CIRCULATING–DEFROSTER

S/N: B551-UP
WITH SWITCH
PART OF 420-1977 CAB AR, 389-1907 OPTION AR-CAB

SMCS-7316 **i05841632**

NOTE	REF NO	GRAPHIC REF	PART NUMBER	QTY	PART NAME 1 2 3 4 5 6 (PRODUCT LEVEL)	SEE PAGE
	1	1	**7T-4003**	1	RESISTOR	
Y	2	1	**170-5334**	1	FAN GP-CIRCULATING (FRONT DEFROSTER)	796
	3	1	**367-5211**	1	SWITCH AS-ROCKER (24-VOLT) (FAN BLOWER SPEED)	
C	4	1	**154-8079**	2	NUT-RETAINER	
M	5	1	**9X-2045**	4	SCREW-TRUSS HEAD (M6X1X20-MM)	
CM	6	1	**213-7315**	2	SCREW-TRUSS HEAD (M4X0.7X25-MM)	
	7	1	**5P-8441**	1	GROMMET	

C - CHANGE FROM PREVIOUS TYPE
M - METRIC PART
Y - SEPARATE ILLUSTRATION

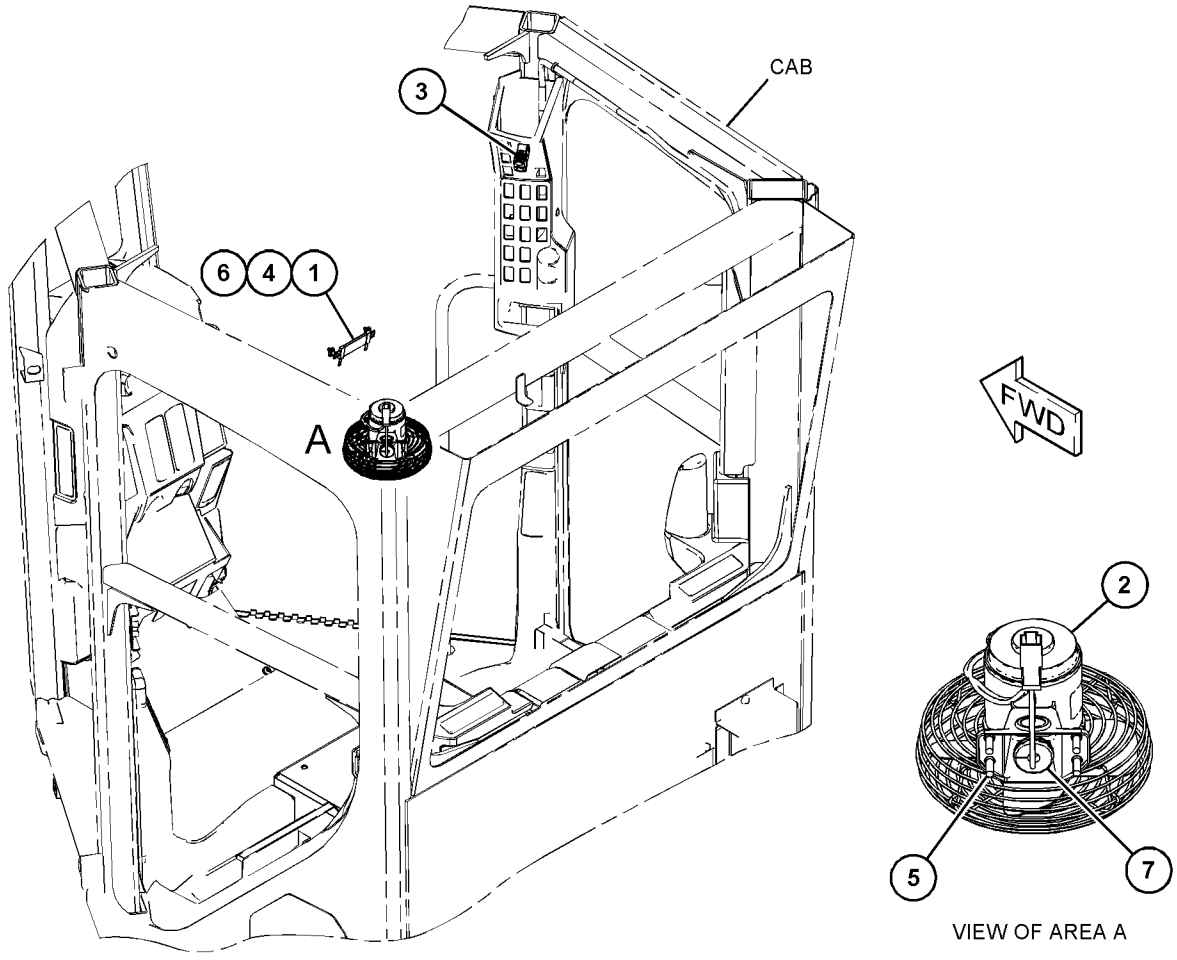

GRAPHIC #1 <END> g03694727

174-2231 HOUSING GP-SEAT SUSPENSION

S/N: B551-UP

PART OF 160-7165 SUSPENSION GP-SEAT

SMCS-7321, 7324

i01883773

NOTE	REF NO	GRAPHIC REF	PART NUMBER	QTY	PART NAME 1 2 3 4 5 6 (PRODUCT LEVEL)	SEE PAGE
	1	1	**1Y-7927**	1	PIN	
	2	1	**2D-6235**	2	LOCKNUT (1/4-20-THD)	
	3	1	**2M-7819**	4	RING-RETAINING	
	4	1	**3D-2975**	2	RING-RETAINING	
	5	1	**4B-5059**	6	WASHER (15X29.5X2.5-MM THK)	
	6	1	**4N-2927**	2	RACE-THRUST BEARING	
	7	1	**5D-4822**	2	RING-RETAINING	
	8	1	**5P-8445**	4	RING-RETAINING	
	9	1	**5V-0770**	2	BOLT-CARRIAGE (1/4-20X0.74-IN)	
	10	1	**7M-7219**	1	BEARING-THRUST	
	11	1	**7V-5191**	2	SPACER (28X10X7.1-MM THK)	
	12	1	**8L-8413**	2	STRAP-CABLE (WHITE)	
	13	1	**8S-7803**	4	RING-RETAINING	
	14	1	**8Y-6041**	1	ARM AS	
	15	1	**8Y-6045**	1	CAM	
	16	1	**8Y-6046**	1	PIN	
	17	1	**8Y-6047**	2	PIN	
	18	1	**8Y-6060**	2	ROLLER	
	19	1	**8Y-6062**	1	LINK-ACTUATOR	
	20	1	**8Y-6063**	1	LINK-ACTUATOR	
	21	1	**8Y-6064**	2	ROLLER-SLIDER	
	22	1	**8Y-6066**	1	SPRING	
	23	1	**8Y-6067**	1	SPACER (10.54-MM THK)	
	24	1	**8Y-6068**	1	NUT (3/8X16-THD)	
	25	1	**8Y-6069**	1	ADJUSTER AS	
	26	1	**9X-8918**	3	SCREW-FLAT HEAD (8-32X0.5-IN)	
	27	1	**095-0878**	1	PIN-SPRING	
	28	1	**131-4242**	1	BOLT (3/8-16X5.18-IN)	
	29	1	**131-5167**	1	KNOB AS-ADJUSTMENT (SEAT SUSPENSION)	
	30	1	**161-5967**	1	SHAFT	
	31	1	**174-2237**	1	FRAME AS-SUSPENSION	
JZ	32	1		1	KNOB-HEIGHT (SEAT SUSPENSION)	
JZ	33	1		1	KNOB-HEIGHT (SEAT SUSPENSION)	
LZ	34	1		2	SPRING	
LZ	35	1		2	BUSHING	
VZ	36	1		2	SPRING	
VZ	37	1		2	SPACER	
VZ	38	1		2	BUSHING-GUIDE	
VZ	39	1		2	ROD	
PZ	40	1		1	TAPE-INDICATOR	
PZ	41	1		1	GUIDE	
SZ	42	1		1	PIN	
SZ	43	1		1	FOLLOWER-CAM	
TZ	44	1		1	PIN	
TZ	45	1		1	FOLLOWER-CAM	
UZ	46	1		2	ROLLER AS	
UZ	47	1		1	ROLLER AS	

174-2231 **HOUSING GP-SEAT SUSPENSION** (contd.) **i01883773**

NOTE	REF NO	GRAPHIC REF	PART NUMBER	QTY	PART NAME 1 2 3 4 5 6 (PRODUCT LEVEL)	SEE PAGE
QZ	48	1		3	BUMPER	
					AVAILABLE REPAIR KIT(S):	
J			**8Y-5945**	1	KIT-SUSPENSION KNOB (HEIGHT ADJUSTMENT) (SUSPENSION SEAT)	
L			**8Y-6859**	1	KIT-SPRING (SUSPENSION SEAT)	
V			**8Y-6860**	1	KIT-SPRING (HEIGHT ADJUSTMENT) (SUSPENSION SEAT)	
P			**100-3224**	1	KIT-INDICATOR (WEIGHT ADJUSTMENT) (SUSPENSION SEAT)	
Q			**100-5179**	1	KIT-BUMPER (WEIGHT ADJUSTMENT) (SUSPENSION SEAT)	
S			**108-4086**	1	KIT-FOLLOWER (SUSPENSION SEAT)	
T			**108-4087**	1	KIT-FOLLOWER (SUSPENSION SEAT)	
U			**108-4103**	1	KIT-BEARING (SUSPENSION SEAT)	

J - KIT MARKED J INCLUDES PART(S) MARKED J
L - KIT MARKED L INCLUDES PARTS MARKED L AND RETAINING RING
P - KIT MARKED P INCLUDES PARTS MARKED P AND CABLE STRAP
Q - KIT MARKED Q INCLUDES PART(S) MARKED Q
S - KIT MARKED S INCLUDES PART(S) MARKED S
T - KIT MARKED T INCLUDES PART(S) MARKED T
U - KIT MARKED U INCLUDES PART(S) MARKED U
V - KIT MARKED V INCLUDES PART(S) MARKED V
Z - NOT SERVICED SEPARATELY

174-2231 **HOUSING GP-SEAT SUSPENSION** (contd.) **i01883773**

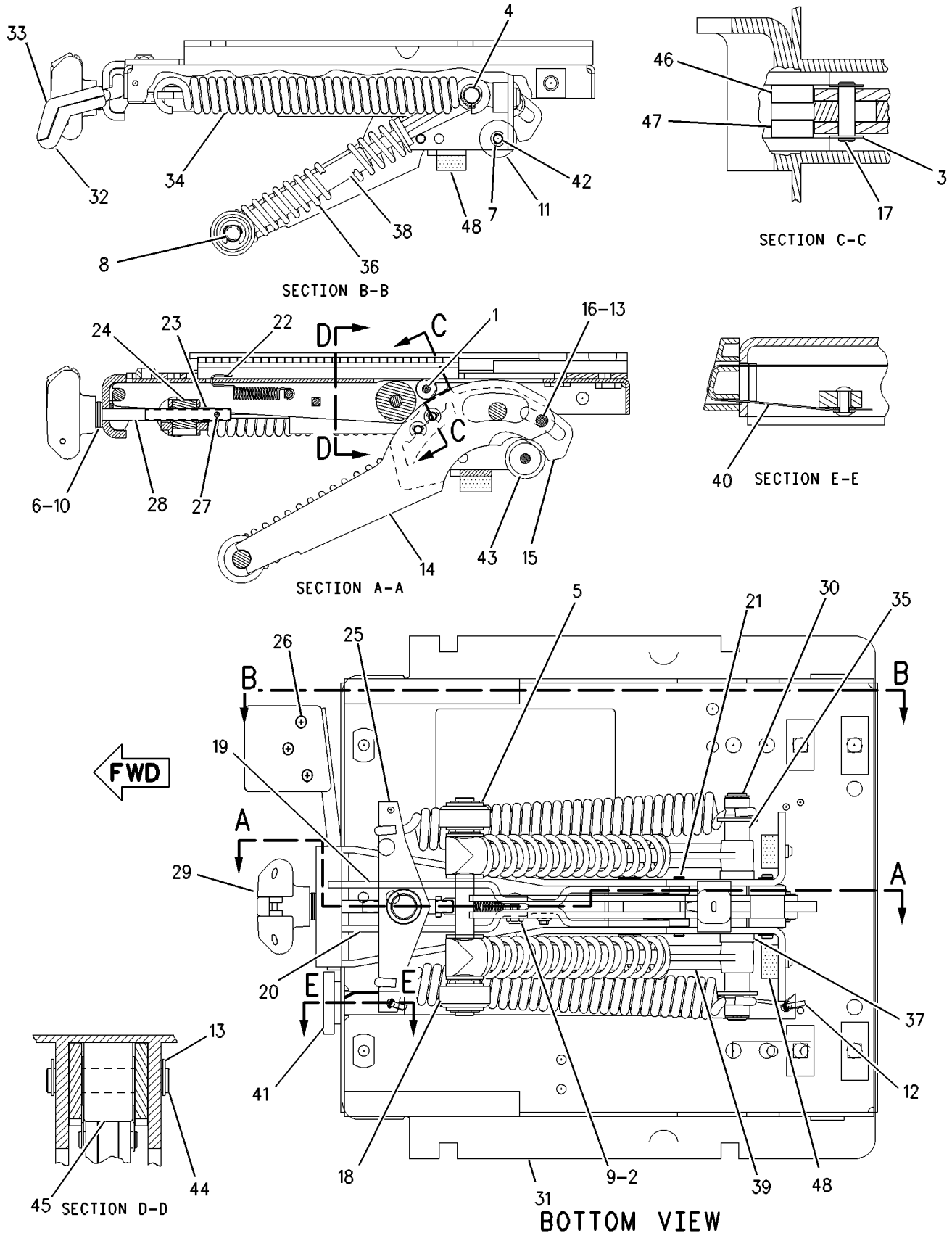

GRAPHIC #1 <END> g00608620

299-1021 LEVER GP-CAB DOOR

S/N: B551-UP

PART OF 357-9200 DOOR GP-CAB

SMCS-7308 **i06649533**

NOTE	REF NO	GRAPHIC REF	PART NUMBER	QTY	PART NAME 1 2 3 4 5 6 (PRODUCT LEVEL)	SEE PAGE
	1	1	**115-9345**	1	KNOB-CONTROL	
	2	1	**299-1023**	1	BRACKET	
	3	1	**299-1024**	1	LEVER	
	4	1	**299-1441**	1	SPRING	
	5	1	**299-1442**	1	SPRING	
	6	1	**114-6658**	2	WASHER (6.5X17X1-MM THK)	
	7	1	**8T-7971**	2	WASHER-HARD (13.5X25.5X5-MM THK)	
M	8	1	**9X-2042**	2	SCREW-TRUSS HEAD (M6X1X12-MM)	

M - METRIC PART

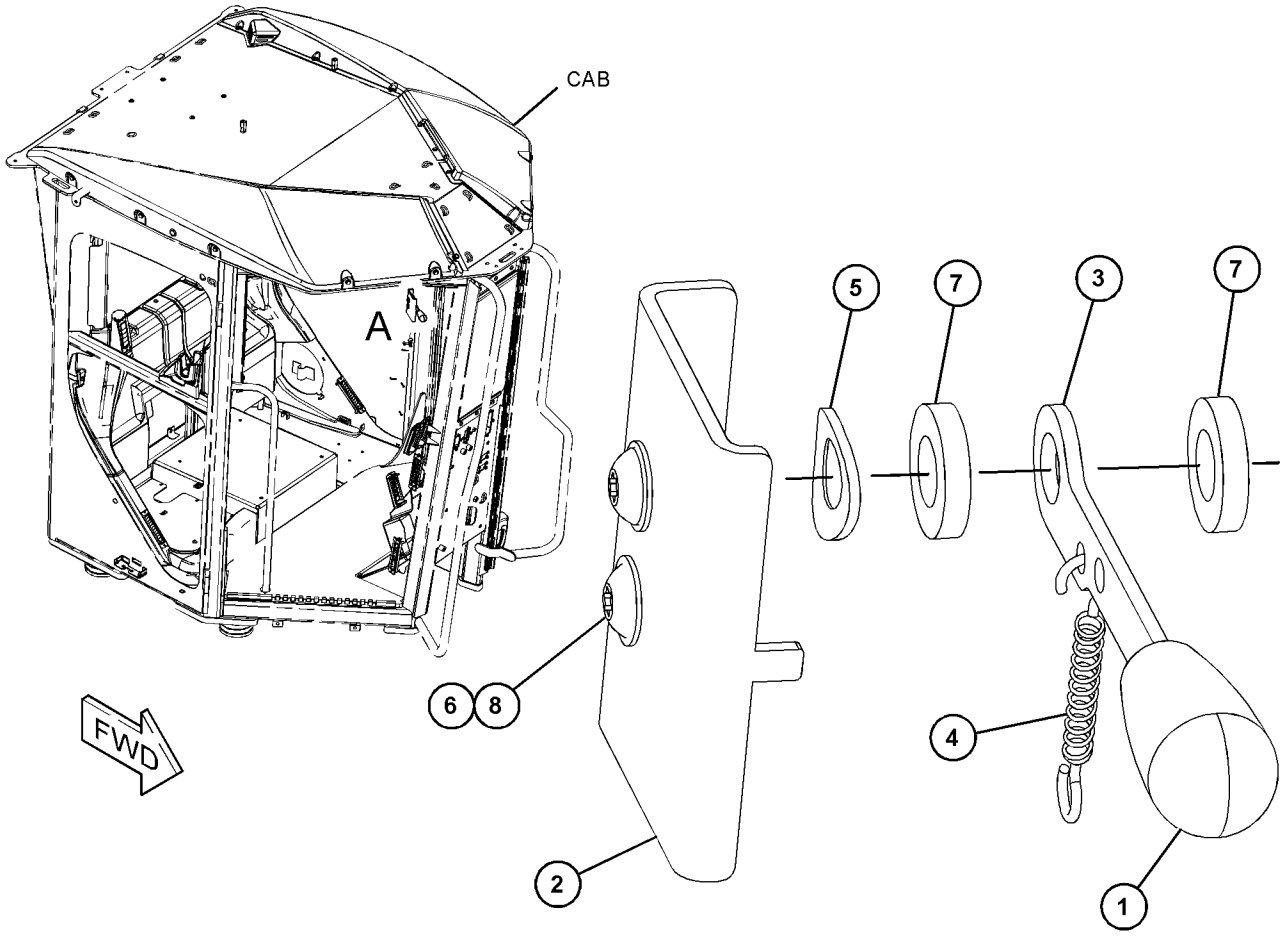

VIEW OF AREA A
(EXPLODED)

GRAPHIC #1 <END> g06060104

447-2230 LINER GP-CAB

S/N: B551-UP

PART OF 420-1977, 575-9874, 575-9875 CAB AR

SMCS-7329 **i06674903**

NOTE	REF NO	GRAPHIC REF	PART NUMBER	QTY	PART NAME 1 2 3 4 5 6 (PRODUCT LEVEL)	SEE PAGE
CY	1	1	**375-1478**	1	LAMP GP-DOME (24-VOLT) (CAB)	201
M	2	1	**172-8591**	18	NUT-CLIP (M6X1-THD)	
	3	1	**5T-1625**	1	PLATE AS	
	4	1	**096-0192**	3	LOCKWASHER	
	5	1	**9R-0932**	1	LATCH	
	6	1	**101-0003**	2	FASTENER	
	7	1	**112-8728**	3	SCREW (10-32X1.25-IN)	
	8	1	**131-5171**	1	CLIP	
	9	1	**250-8335**	2	LAMP AS (24-VOLT) (IMPLEMENT CONTROL)	
					(EACH INCLUDES)	
		1	**102-8802**	1	KIT-RECEPTACLE (2-PIN)	
					(INCLUDES RECEPTACLE AS & WEDGE)	
		1	**8T-8729**	2	PIN-CONNECTOR (16-GA TO 20-GA)	
	10	1	**330-3862**	1	PLATE	
	11	1	**330-3863**	1	FILM-INSTRUCTION (WIPER)	
	12	1	**330-3864**	1	PLATE	
	13	1	**344-0980**	1	PLATE AS	
	14	1	**361-0423**	1	COVER	
	15	1	**361-0426**	1	LINER AS-CAB (LH)	
		1	**174-5763**	6	CLIP	
	16	1	**361-0427**	1	LINER AS-CAB (RH)	
		1	**174-5763**	10	CLIP	
	17	1	**363-5824**	1	PLATE AS	
	18	1	**114-6658**	6	WASHER (6.5X17X1-MM THK)	
	19	1	**096-6166**	4	WASHER-HARD (4.5X9X1-MM THK)	
	20	1	**7X-0579**	18	WASHER-HARD (8.8X25.5X2-MM THK)	
	21	1	**9K-5635**	8	SCREW-TAPPING (8-18X1-IN)	
	22	1	**9U-4784**	6	INSERT	
M	23	1	**9X-2045**	10	SCREW-TRUSS HEAD (M6X1X20-MM)	
M	24	1	**9X-2046**	11	SCREW-TRUSS HEAD (M6X1X35-MM)	
D	25	1	**8T-5372**		SEAL (0.6-M)	
M	26	1	**446-1483**	3	SCREW-TRUSS HEAD (M6X1X45-MM)	
	27	1	**206-3747**	3	SPACER (6.3X12.7X32-MM THK)	
	28	1	**160-2169**	2	SPACER (7X11X8.4-MM THK)	

C - CHANGE FROM PREVIOUS TYPE
D - ORDER BY THE METER
M - METRIC PART
Y - SEPARATE ILLUSTRATION

447-2230 **LINER GP-CAB (**contd.**)** **i06674903**

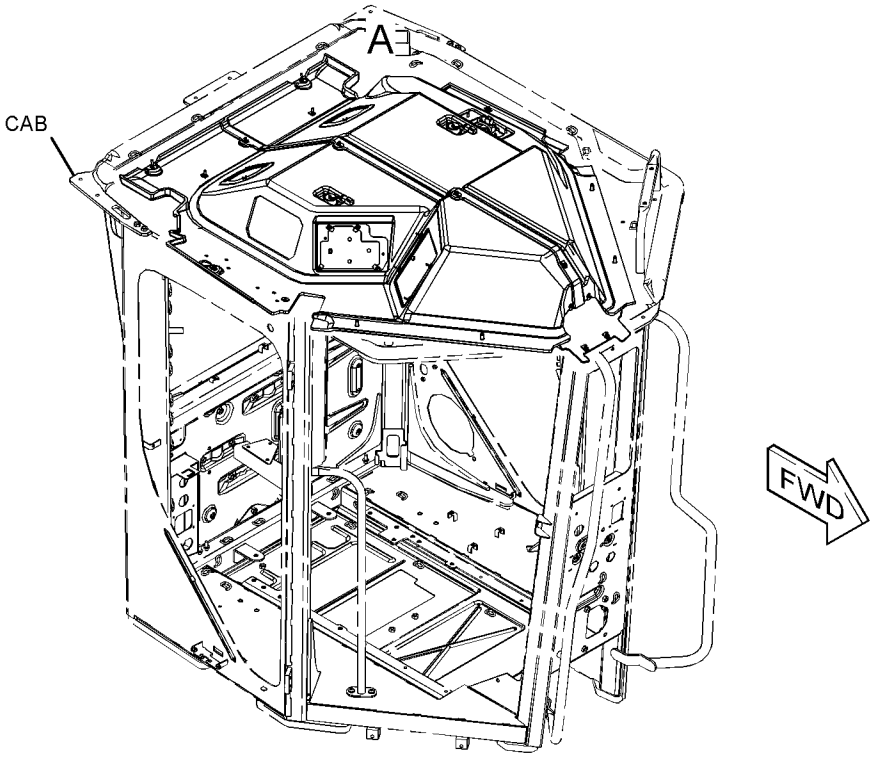

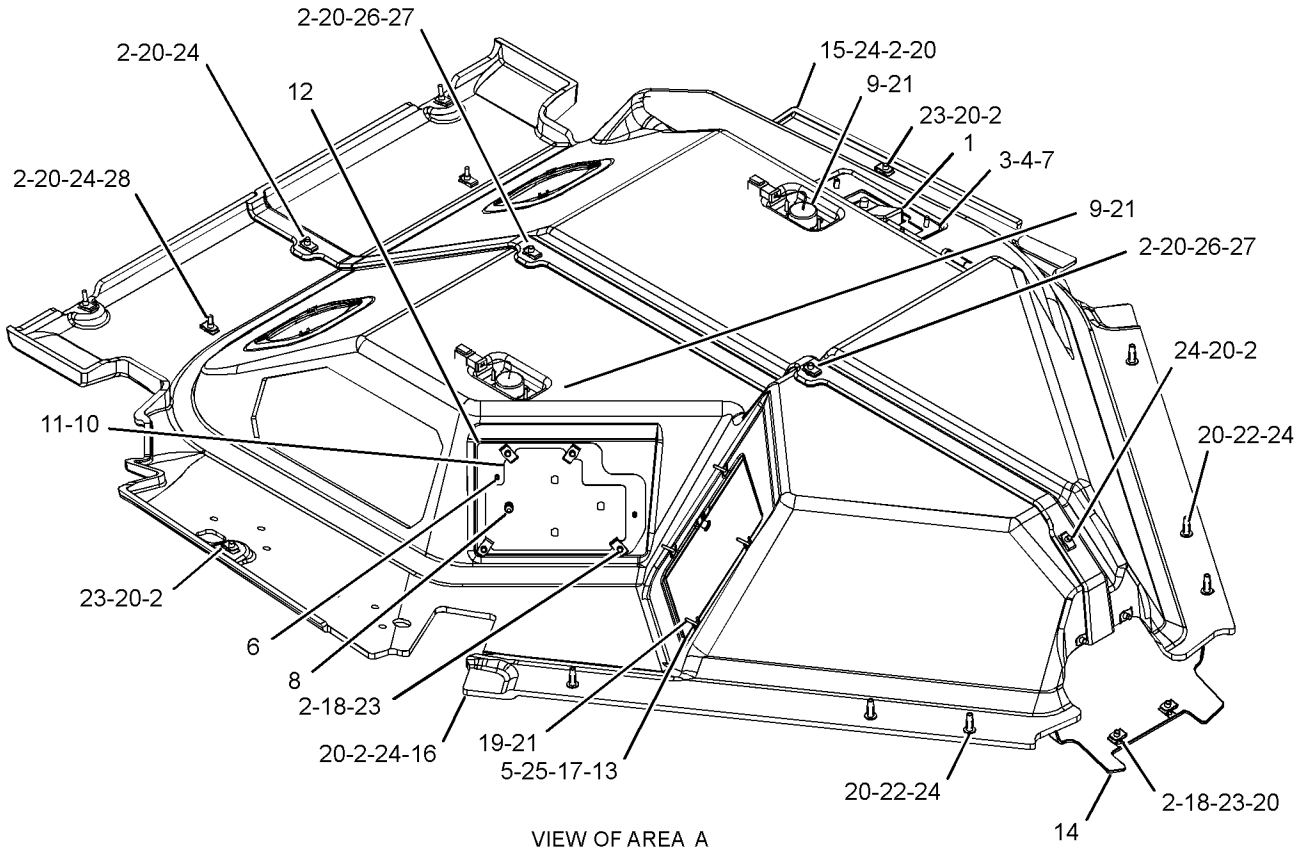

VIEW OF AREA A

GRAPHIC #1 <END> g06069888

255-1249 LINES GP-AIR CONDITIONER

S/N: B551-UP

PART OF 261-0775 AIR CONDITIONER AR

SMCS-1808 **i04840276**

NOTE	REF NO	GRAPHIC REF	PART NUMBER	QTY	PART NAME 1 2 3 4 5 6 (PRODUCT LEVEL)	SEE PAGE
	1	1	**1P-6356**	1	PLATE	
	2	1	**355-3148**	1	SWITCH AS-PRESSURE (HIGH, LOW) (COMPRESSOR, HIGH SIDE)	
		1	**102-8802**	1	KIT-RECEPTACLE (2-PIN)	
					(INCLUDES RECEPTACLE AS & WEDGE)	
		1	**8T-8729**	2	PIN-CONNECTOR (16-GA TO 20-GA)	
	3	1	**149-6371**	1	SWITCH AS-PRESSURE (A/C COMPRESSOR CLUTCH) (COMPRESSOR, LOW SIDE)	
		1	**102-8802**	1	KIT-RECEPTACLE (2-PIN)	
					(INCLUDES RECEPTACLE AS & WEDGE)	
		1	**8T-8729**	2	PIN-CONNECTOR (16-GA TO 20-GA)	
	4	1	**189-3158**	1	SUPPRESSOR-ARC	
C	5	1	**203-2287**	1	CLIP	
	6	1	**290-2705**	1	TUBE AS	
I	7	1	**380-3951**	1	HOSE AS	
	8	1	**335-1374**	1	TUBE AS	
I	9	1	**380-3952**	1	HOSE AS	
CI	10	1	**352-9744**	1	HOSE AS	
M	11	1	**085-8091**	1	BOLT (M10X1.5X55-MM)	
C	12	1	**122-0450**	1	GROMMET	
	13	1	**5K-5338**	1	CLIP (LOOP)	
	14	1	**5P-1075**	1	WASHER-HARD (10.2X22.5X3-MM THK)	
	15	1	**5P-9299**	1	CLIP (LOOP)	
	16	1	**6K-8178**	1	CLIP (LOOP)	
C	17	1	**8T-1897**	1	CLIP (SLOT)	
C	18	1	**8T-1898**	1	CLIP (TAB)	
C	19	1	**8T-4121**	3	WASHER-HARD (11X21X2.5-MM THK)	
M	20	1	**8T-4136**	1	BOLT (M10X1.5X25-MM)	
M	21	1	**8T-4137**	1	BOLT (M10X1.5X20-MM)	
CM	22	1	**8T-4195**	1	BOLT (M10X1.5X30-MM)	
	23	1	**9X-7378**	2	SEAL-O-RING	
	24	1	**9X-7380**	2	SEAL-O-RING	
	25	1	**9X-7381**	2	SEAL-O-RING	
	26	1	**9X-7382**	1	SEAL-O-RING	
	27	1	**9X-7383**	1	SEAL-O-RING	
	28	1	**9X-7385**	2	SEAL-O-RING	
CE	29	1	**7I-1024**		GUARD-HOSE (86-CM)	

C - CHANGE FROM PREVIOUS TYPE
E - ORDER BY THE CENTIMETER
I - REFER TO HYDRAULIC INFORMATION SYSTEM
M - METRIC PART

255-1249 **LINES GP-AIR CONDITIONER (**contd.**)** **i04840276**

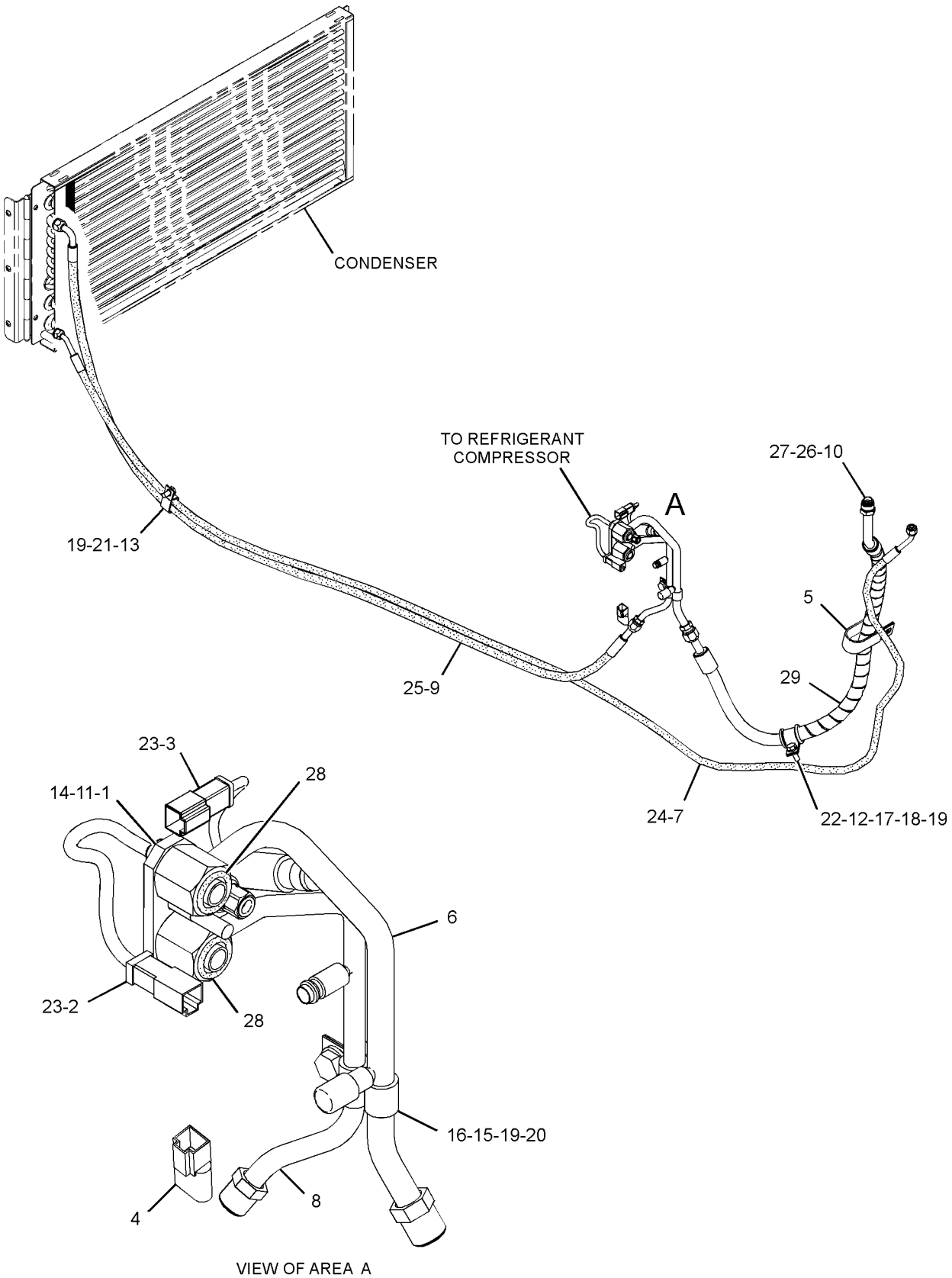

VIEW OF AREA A

GRAPHIC #1 <END> g02986656

361-3134 LINES GP-AIR CONDITIONER

S/N: B551-UP

PART OF 361-3133 AIR CONDITIONER GP

SMCS-1808 **i07670342**

NOTE	REF NO	GRAPHIC REF	PART NUMBER	QTY	PART NAME 1 2 3 4 5 6 (PRODUCT LEVEL)	SEE PAGE
	1	1	**186-6189**	1	ACCUMULATOR-REFRIGERANT	
	2	1	**250-3528**	1	TUBE AS	
	3	1	**250-3529**	1	TUBE AS	
	4	1	**283-4236**	1	DRYER AS-AIR (IN-LINE)	
I	5	1	**260-5807**	1	HOSE AS	
I	6	1	**260-5808**	1	HOSE AS	
	7	1	**361-3138**	1	CLAMP	
	8	1	**361-3139**	1	CLAMP	
	9	1	**1S-1015**	1	CLIP (LOOP)	
	10	1	**5P-9297**	1	CLIP (LOOP)	
	11	1	**8T-4121**	6	WASHER-HARD (11X21X2.5-MM THK)	
M	12	1	**8T-4137**	5	BOLT (M10X1.5X20-MM)	
	13	1	**9M-8406**	1	CLIP (LOOP)	
	14	1	**9X-7380**	1	SEAL-O-RING	
	15	1	**9X-7381**	2	SEAL-O-RING	
	16	1	**9X-7382**	1	SEAL-O-RING	
	17	1	**9X-7383**	2	SEAL-O-RING	
M	18	1	**8T-4186**	1	BOLT (M10X1.5X40-MM)	
	19	1	**133-6934**	1	SPACER (11X20X25-MM THK)	

I - REFER TO HYDRAULIC INFORMATION SYSTEM
M - METRIC PART

361-3134 **LINES GP-AIR CONDITIONER (**contd.**)** **i07670342**

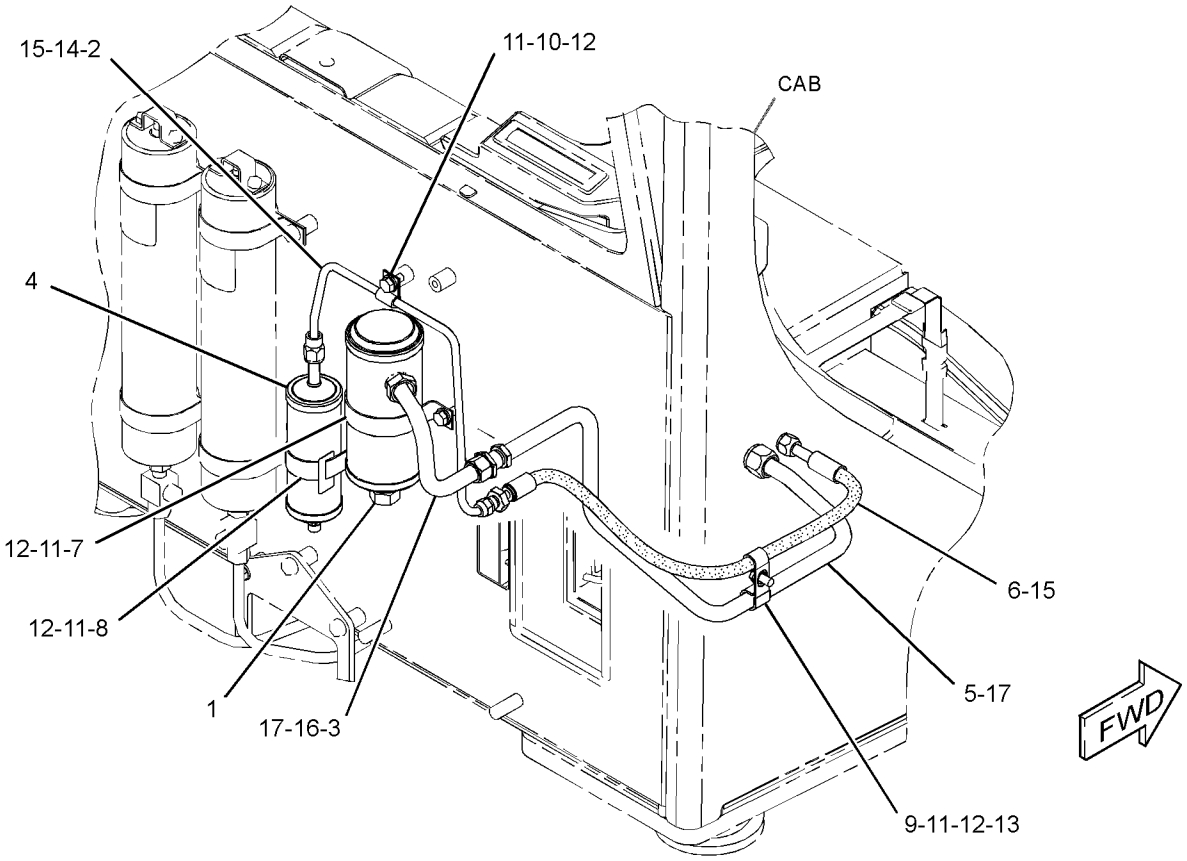

GRAPHIC #1 <END> g03003956

250-2933 LINES GP-HEATER–CAB

S/N: B551-UP

PART OF 361-3133 AIR CONDITIONER GP

SMCS-1812, 7304 **i06213478**

NOTE	REF NO	GRAPHIC REF	PART NUMBER	QTY	PART NAME 1 2 3 4 5 6 (PRODUCT LEVEL)	SEE PAGE
	1	1	**9X-2488**	4	CLAMP-HOSE	
	2	1	**260-5806**	1	PLATE AS	
	3	1	**278-3354**	1	FILM-INSTRUCTION (HVAC WATER, DRAINING, FILLING)	
	4	1	**5P-4116**	2	WASHER-HARD (8.8X20.5X2-MM THK)	
	5	1	**6D-1641**	1	CLIP (LOOP)	
	6	1	**8T-4121**	1	WASHER-HARD (11X21X2.5-MM THK)	
M	7	1	**8T-4191**	1	BOLT (M10X1.5X16-MM)	
M	8	1	**8T-4908**	2	BOLT (M8X1.25X25-MM)	
E	9	1	**136-1953**		HOSE (85-CM)	
E	9A	1	**136-1953**		HOSE (87-CM)	
D	10	1	**5P-5637**		SEAL (0.6-M)	

D - ORDER BY THE METER
E - ORDER BY THE CENTIMETER
M - METRIC PART

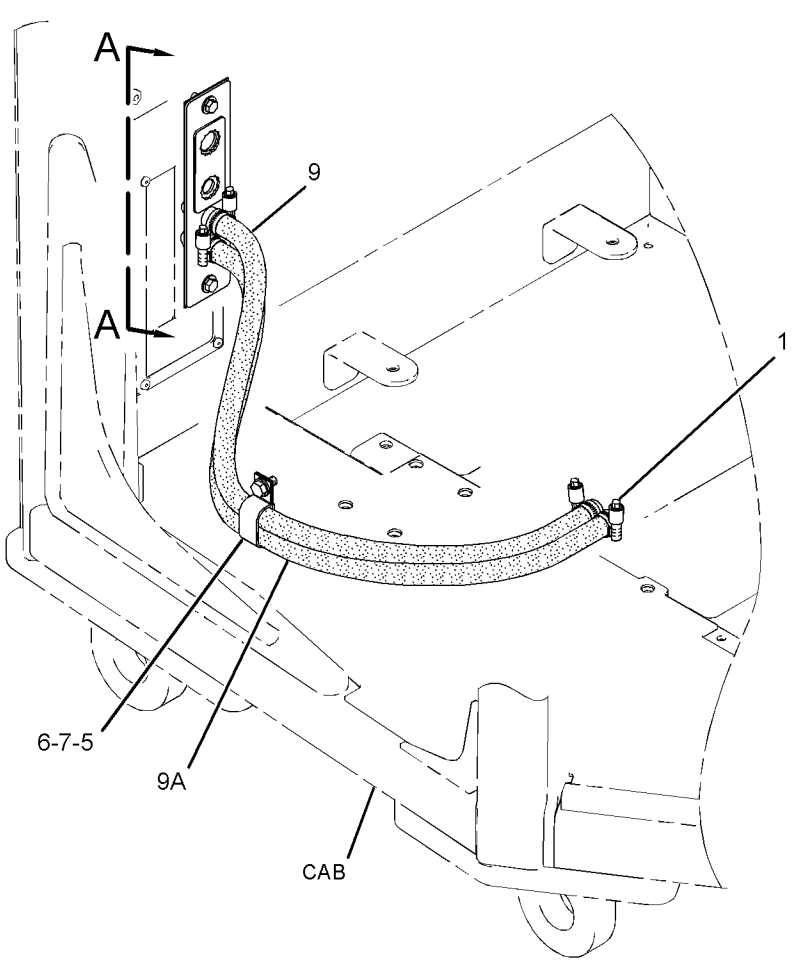

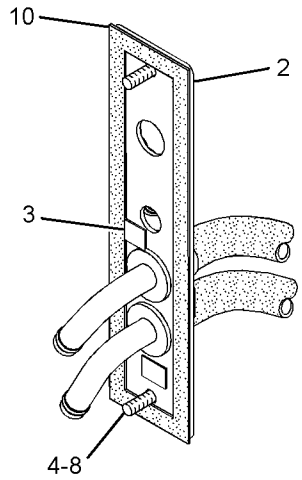

VIEW A-A



GRAPHIC #1 <END> g01280970

255-1248 LINES GP-HEATER

S/N: B551-UP

PART OF 261-0775 AIR CONDITIONER AR

SMCS-1812, 7304 **i04032499**

NOTE	REF NO	GRAPHIC REF	PART NUMBER	QTY	PART NAME 1 2 3 4 5 6 (PRODUCT LEVEL)	SEE PAGE
	1	1	**156-5782**	1	SPACER (17.5X30X10-MM THK)	
	2	1	**194-4864**	1	ELBOW	
	3	1	**290-3385**	1	PLATE AS	
C	4	1	**355-8950**	1	TUBE AS	
	5	1	**091-0081**	1	SPACER (10.5X20X10-MM THK)	
C	6	1	**124-6257**	4	CLAMP-HOSE	
C	7	1	*150-4048*	1	ELBOW AS	
		1	**6V-8722**	1	ELBOW	
		1	**3K-0360**	1	SEAL-O-RING	
		1	**7J-9108**	1	SEAL-O-RING	
	8	1	**2M-9780**	1	SEAL-O-RING	
C	9	1	**3E-4321**	2	CLIP (LOOP)	
	10	1	**6K-8178**	1	CLIP (LOOP)	
	11	1	**7X-0510**	1	WASHER-HARD (15.5X29X3-MM THK)	
M	12	1	**8C-3425**	1	BOLT (M14X2X35-MM)	
	13	1	**8T-4121**	1	WASHER-HARD (11X21X2.5-MM THK)	
M	14	1	**8T-4137**	1	BOLT (M10X1.5X20-MM)	
CE	15	1	**5P-0767**		HOSE (141-CM)	
E	15A	1	**5P-0767**		HOSE (163-CM)	

C - CHANGE FROM PREVIOUS TYPE
E - ORDER BY THE CENTIMETER
M - METRIC PART

255-1248 **LINES GP-HEATER (**contd.**)** **i04032499**

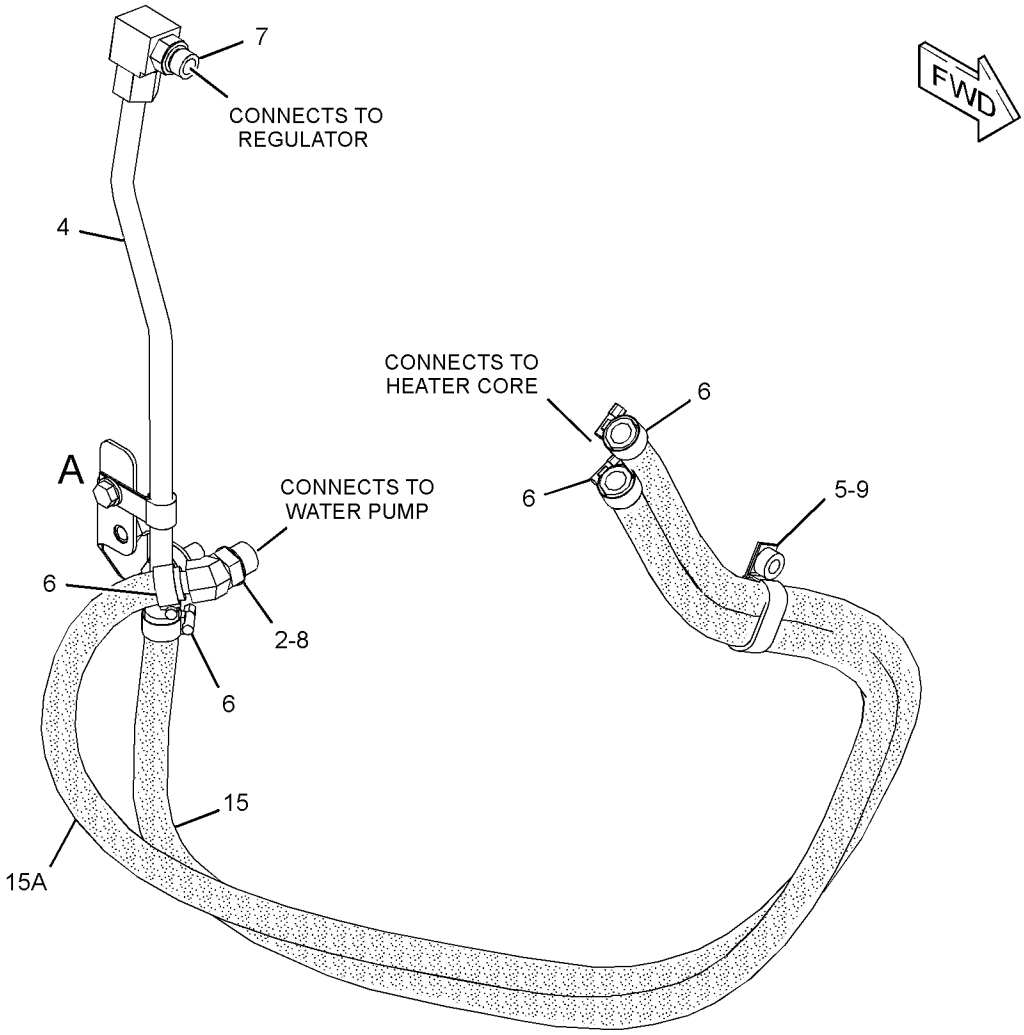

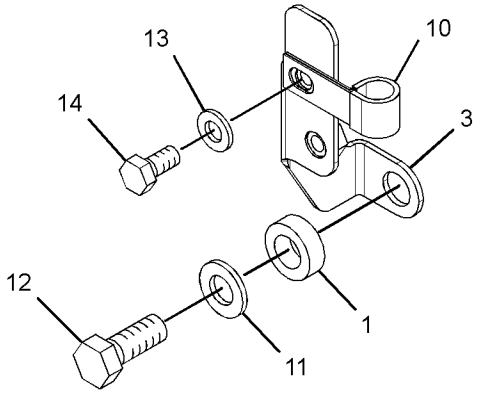

VIEW OF AREA A
(EXPLODED)

GRAPHIC #1 <END> g02237894

6V-1970 LITERATURE GP

S/N: B551-UP

PART OF 577-1377 COMMON AR

SMCS-0374, 0375

i00607038

NOTE	PART NUMBER	QTY	PART NAME 1 2 3 4 5 6 (PRODUCT LEVEL)	SEE PAGE
	5P-8500	2	KEY	
	2Y-3209	2	SEAL-WIRE	

<END>

339-6165 MIRROR GP–INTERIOR, REAR

S/N: B551-UP

PART OF 492-0729 CONVERSION AR-CERTIFICATION

SMCS-7319 **i04889317**

NOTE	REF NO	GRAPHIC REF	PART NUMBER	QTY	PART NAME 1 2 3 4 5 6 (PRODUCT LEVEL)	SEE PAGE
	1	1	**395-4314**	1	MIRROR AS	
		1	**3K-6060**	1	LOCKNUT (3/8-16-THD)	
	2	1	**397-7506**	1	BRACKET	
M	3	1	**127-2170**	2	SCREW-TRUSS HEAD (M8X1.25X20-MM)	
	4	1	**5P-4116**	2	WASHER-HARD (8.8X20.5X2-MM THK)	

M - METRIC PART

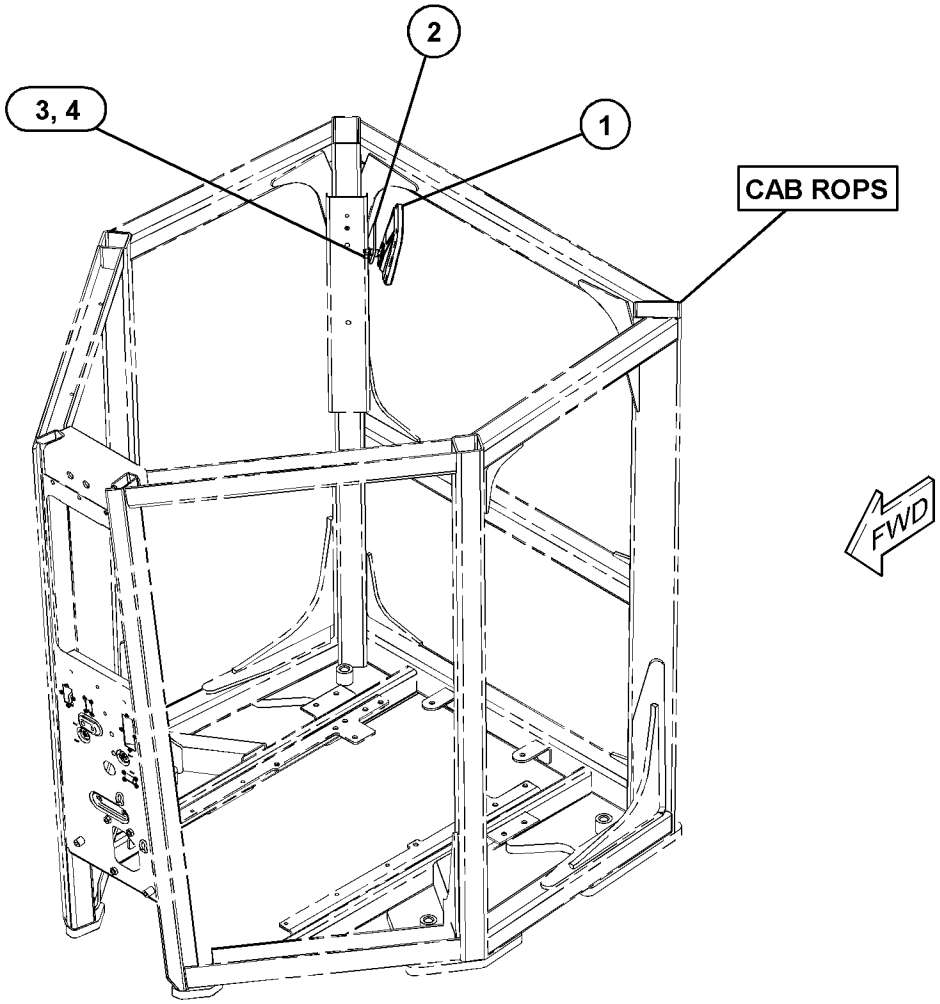

GRAPHIC #1 <END> g03140537

339-8788 MIRROR GP—EXTERIOR

S/N: B551-UP

PART OF 492-0728, 492-0729 CONVERSION AR-CERTIFICATION, 536-5229 OPTION AR-REGIONAL

SMCS-7319 **i07793934**

NOTE	REF NO	GRAPHIC REF	PART NUMBER	QTY	PART NAME 1 2 3 4 5 6 (PRODUCT LEVEL)	SEE PAGE
	1	1	**339-6167**	4	BLOCK	
	2	1	**339-6168**	4	BLOCK	
	3	1	**466-9209**	2	CLIP	
	4	1	**339-6543**	2	MIRROR AS	
	5	1	**215-4809**	2	MIRROR-CONVEX	
	6	1	**341-3142**	2	TUBE	
	7	1	**2K-4973**	2	LOCKNUT (3/8-16-THD)	
	8	1	**8T-4121**	8	WASHER-HARD (11X21X2.5-MM THK)	
M	9	1	**8T-4185**	8	BOLT (M10X1.5X50-MM)	
	10	1	**9X-2027**	2	WASHER (11X18X2-MM THK)	
	11	1	**5B-3180**	2	NUT (5/16-18-THD)	
	12	1	**6V-8189**	2	NUT (5/16-18-THD)	
	13	1	**6V-8918**	2	BOLT (5/16-18X1.25-IN)	
	14	1	**8T-4224**	4	WASHER-HARD (8.8X16X2-MM THK)	

M - METRIC PART

339-8788 **MIRROR GP (**contd.**)** **i07793934**

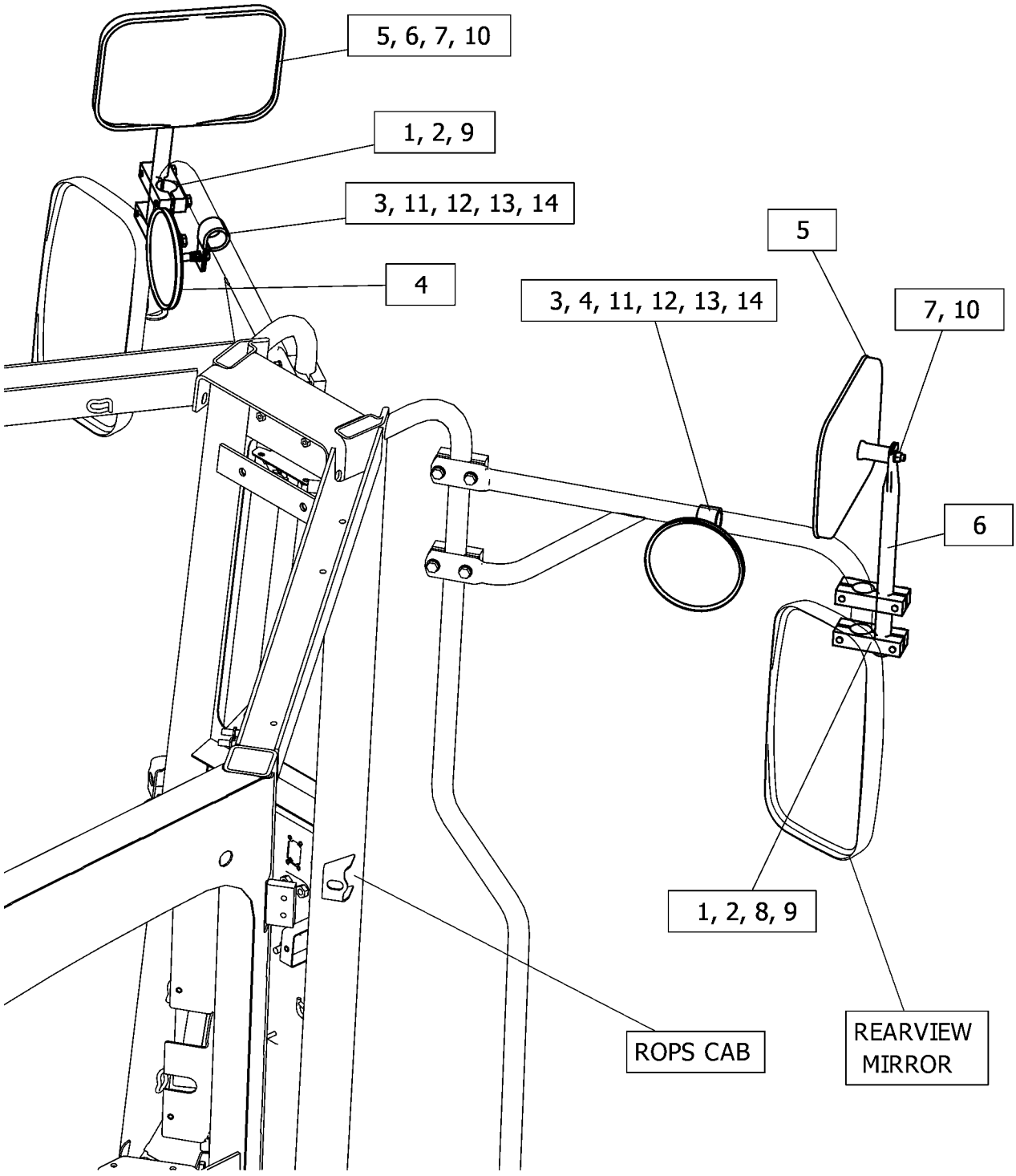

GRAPHIC #1 <END> g06437266

105-9659 MIRROR GP-REAR VIEW—INTERIOR

S/N: B551-UP

PART OF 233-3208 MIRROR GP-REAR VIEW

SMCS-7319 **i00599732**

NOTE	REF NO	GRAPHIC REF	PART NUMBER	QTY	PART NAME 1 2 3 4 5 6 (PRODUCT LEVEL)	SEE PAGE
	1	1	**9P-9388**	1	KNOB	
	2	1	**5P-6874**	1	MIRROR	
	3	1	**5K-9179**	1	BOLT-CARRIAGE (3/8-16X11-IN)	
	4	1	**6Y-5113**	1	BRACKET	
	5	1	**8T-4121**	2	WASHER-HARD (11X21X2.5-MM THK)	
M	6	1	**8T-4195**	2	BOLT (M10X1.5X30-MM)	

M - METRIC PART

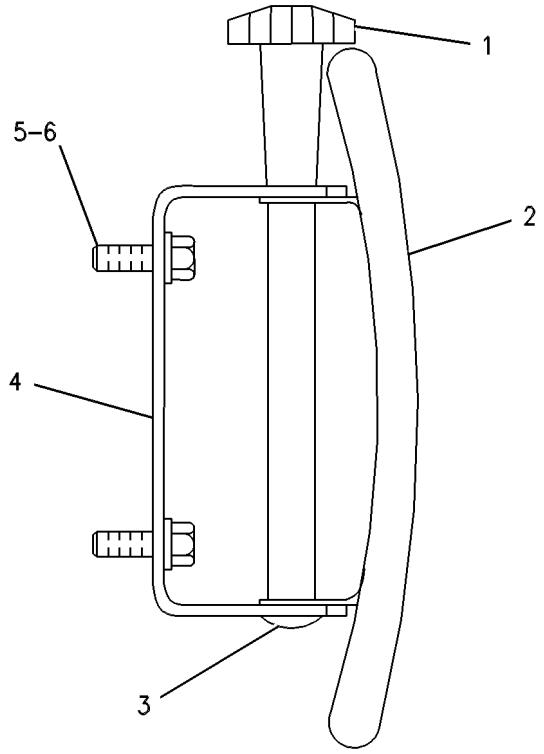

GRAPHIC #1 <END> g00254288

233-3208 MIRROR GP-REAR VIEW—INTERIOR

S/N: B551-UP

PART OF 575-9874, 575-9875 CAB AR

SMCS-7319 **i06515131**

NOTE	PART NUMBER	QTY	PART NAME 1 2 3 4 5 6 (PRODUCT LEVEL)	SEE PAGE
Y	*105-9659*	1	MIRROR GP-REAR VIEW (INTERIOR)	816

Y - SEPARATE ILLUSTRATION

<END>

233-3295 MIRROR GP-REAR VIEW—EXTERIOR

S/N: B551-UP
DUAL
CANNOT BE USED WITH 233-3296—PAGE: 819
PART OF 565-4306 OPTION AR-REGIONAL, 565-9420 ROADING AR

SMCS-7319 **i05210765**

NOTE	REF NO	GRAPHIC REF	PART NUMBER	QTY	PART NAME 1 2 3 4 5 6 (PRODUCT LEVEL)	SEE PAGE
	1	1	**123-4586**	4	BLOCK	
	2	1	**291-9154**	4	BLOCK	
	3	1	**259-4758**	2	MIRROR AS	
	4	1	**265-8941**	2	TUBE AS	
	5	1	**8T-4121**	8	WASHER-HARD (11X21X2.5-MM THK)	
M	6	1	**189-5358**	8	BOLT (M10X1.5X60-MM)	

M - METRIC PART

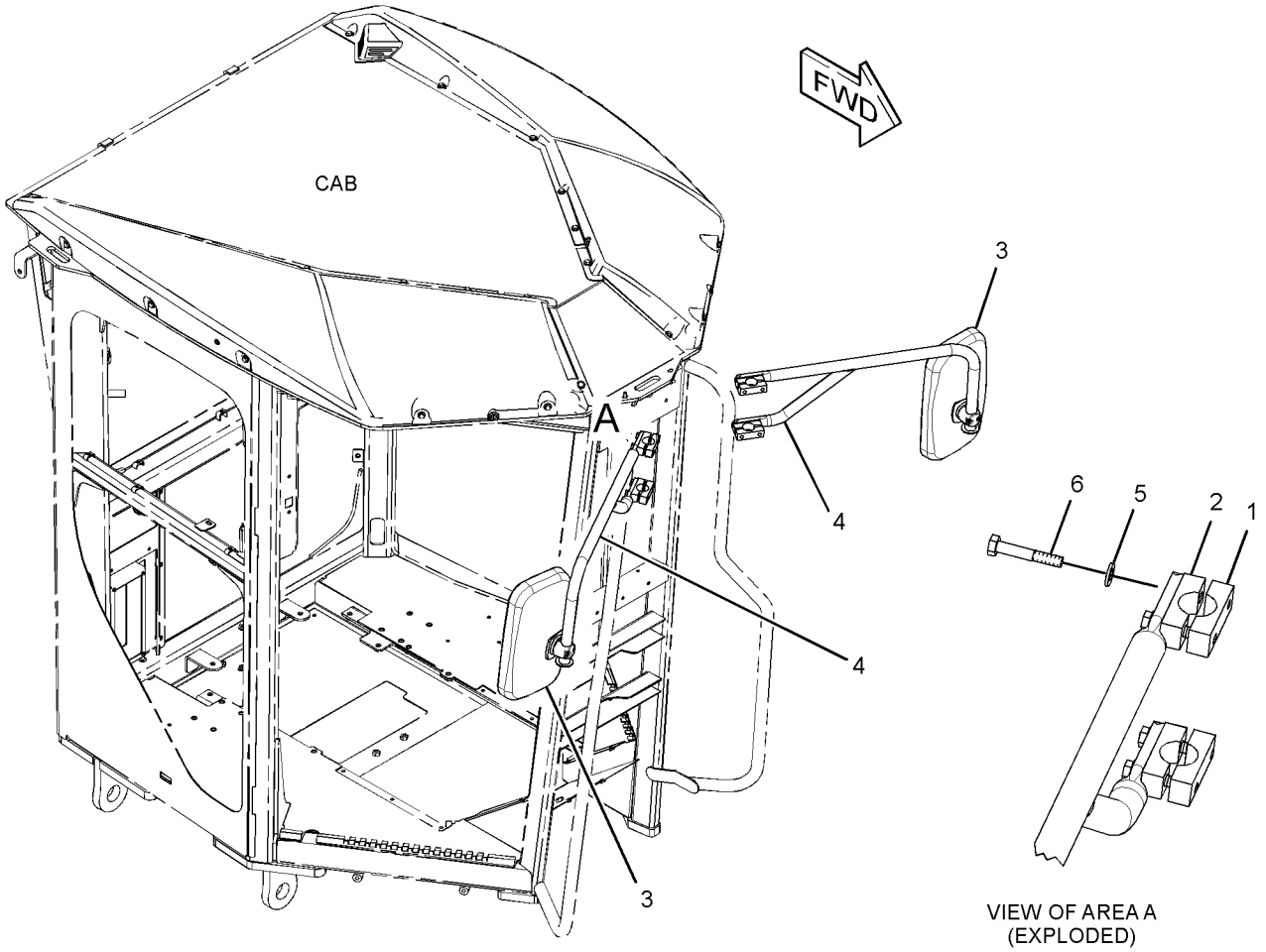

GRAPHIC #1 <END> g01792194

233-3296 MIRROR GP-REAR VIEW—EXTERIOR, HEATED

S/N: B551-UP
ELECTRIC
CANNOT BE USED WITH 233-3295—PAGE: 818

SMCS-7319 **i05924079**

NOTE	REF NO	GRAPHIC REF	PART NUMBER	QTY	PART NAME 1 2 3 4 5 6 (PRODUCT LEVEL)	SEE PAGE
	1	1	**123-4586**	4	BLOCK	
CY	2	1	*343-1824*	1	SWITCH GP-ROCKER (HEATED MIRRORS)	279
	3	1	**259-4759**	2	MIRROR AS	
					(EACH INCLUDES)	
		1	**102-8802**	1	KIT-RECEPTACLE (2-PIN)	
					(INCLUDES RECEPTACLE AS & WEDGE)	
		1	**186-3735**	2	PIN-CONNECTOR (16-GA TO 18-GA)	
	4	1	**265-8941**	2	TUBE AS	
	5	1	**291-9154**	4	BLOCK	
M	6	1	**189-5358**	8	BOLT (M10X1.5X60-MM)	
	7	1	**8T-4121**	8	WASHER-HARD (11X21X2.5-MM THK)	

C - CHANGE FROM PREVIOUS TYPE
M - METRIC PART
Y - SEPARATE ILLUSTRATION

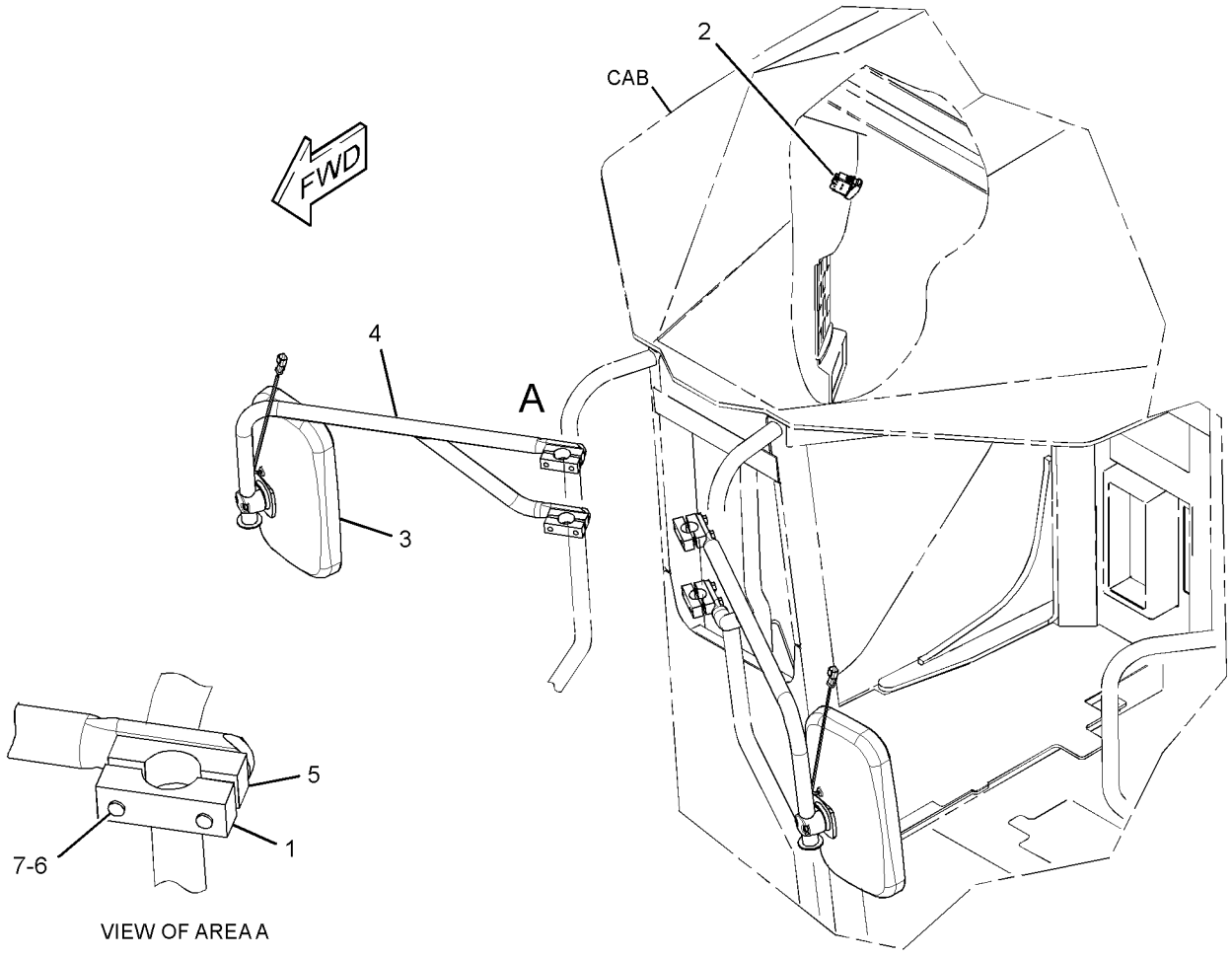

VIEW OF AREA A

GRAPHIC #1 <END> g01929189

420-2055 MIRROR GP-REAR VIEW–INTERIOR

S/N: B551-UP

PART OF 420-1977 CAB AR

SMCS-7319 **i06050028**

NOTE	REF NO	GRAPHIC REF	PART NUMBER	QTY	PART NAME 1 2 3 4 5 6 (PRODUCT LEVEL)	SEE PAGE
	1	1	**6Y-5113**	1	BRACKET	
	2	1	**9P-9388**	1	KNOB	
	3	1	**311-7773**	1	MIRROR	
	4	1	**5K-9179**	1	BOLT-CARRIAGE (3/8-16X11-IN)	
	5	1	**8T-4121**	2	WASHER-HARD (11X21X2.5-MM THK)	
M	6	1	**8T-4195**	2	BOLT (M10X1.5X30-MM)	

M - METRIC PART

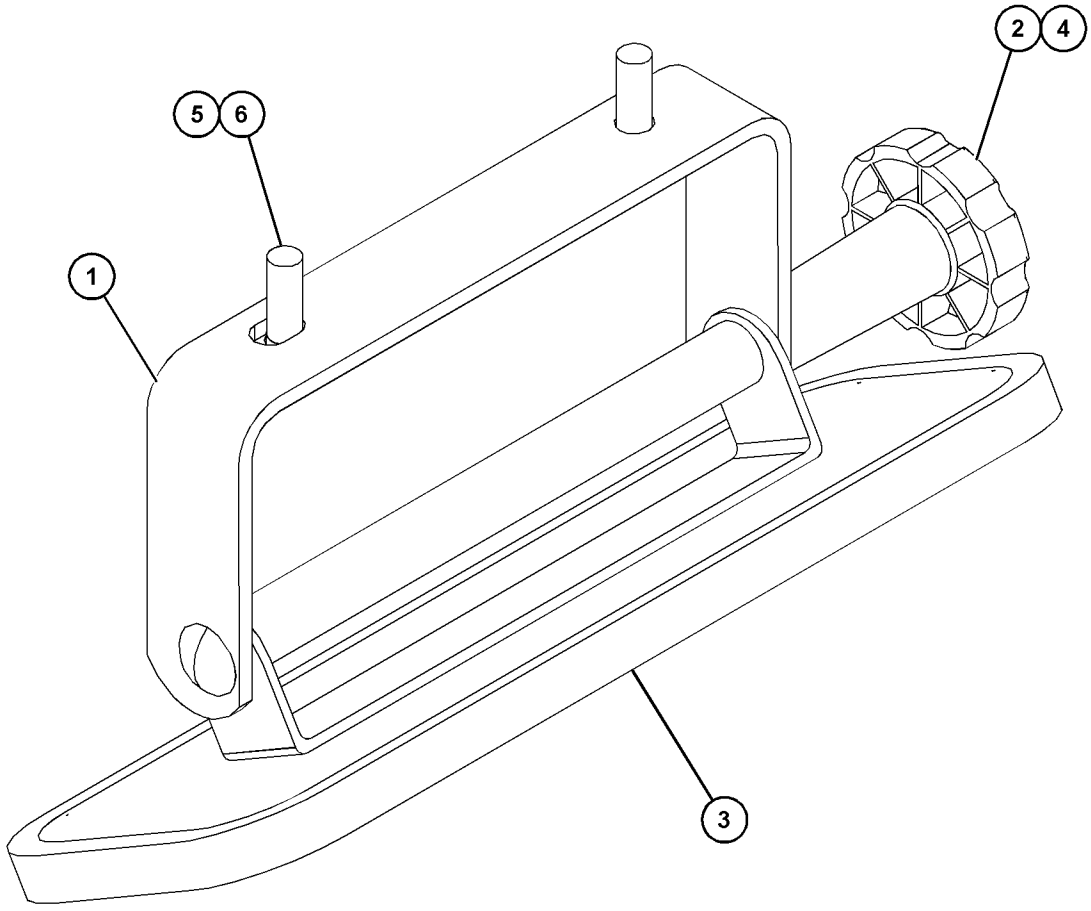

GRAPHIC #1 <END> g03798146

295-1120 MOTOR GP-WINDOW WIPER

S/N: B551-UP

24-VOLT

PART OF 310-2029 WIPER & WASHER GP-WINDOW

SMCS-7305 **i07834979**

NOTE	REF NO	GRAPHIC REF	PART NUMBER	QTY	PART NAME 1 2 3 4 5 6 (PRODUCT LEVEL)	SEE PAGE
	1	1	**135-0611**	1	MOTOR GP-WINDOW WIPER (24-VOLT, 2-SPEED) (FRONT)	
	2	1	**206-5823**	2	CAP (WIPER MOTOR)	
	3	1	**3F-9556**	2	LOCKWASHER	
M	4	1	**5C-7261**	2	NUT (M8X1.25-THD)	

M - METRIC PART

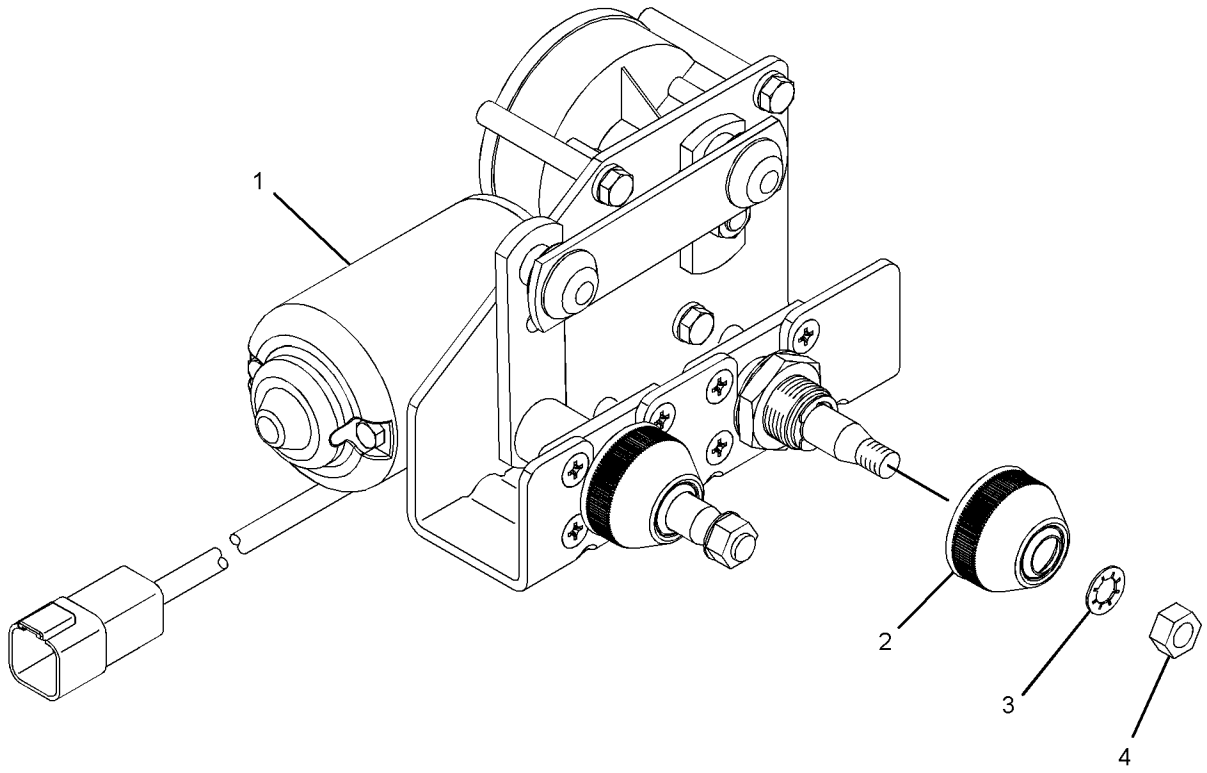

GRAPHIC #1 <END> g01315464

457-3648 MOTOR GP-WINDOW WIPER–REAR

S/N: B551-UP
24-VOLT
PART OF 330-3868 WIPER GP-WINDOW

SMCS-7305 **i06057345**

NOTE	REF NO	GRAPHIC REF	PART NUMBER	QTY	PART NAME 1 2 3 4 5 6 (PRODUCT LEVEL)	SEE PAGE
	1	1	**102-8805**	1	KIT-RECEPTACLE (6-PIN)	
					(INCLUDES RECEPTACLE AS & WEDGE)	
	2	1	**3F-9556**	1	LOCKWASHER	
M	3	1	**5C-7261**	1	NUT (M8X1.25-THD)	
	4	1	**263-3823**	1	CAP-WIPER	
	5	1	**8T-8729**	5	PIN-CONNECTOR (16-GA TO 20-GA)	
	6	1	**8T-8737**	1	PLUG-SEAL	

M - METRIC PART

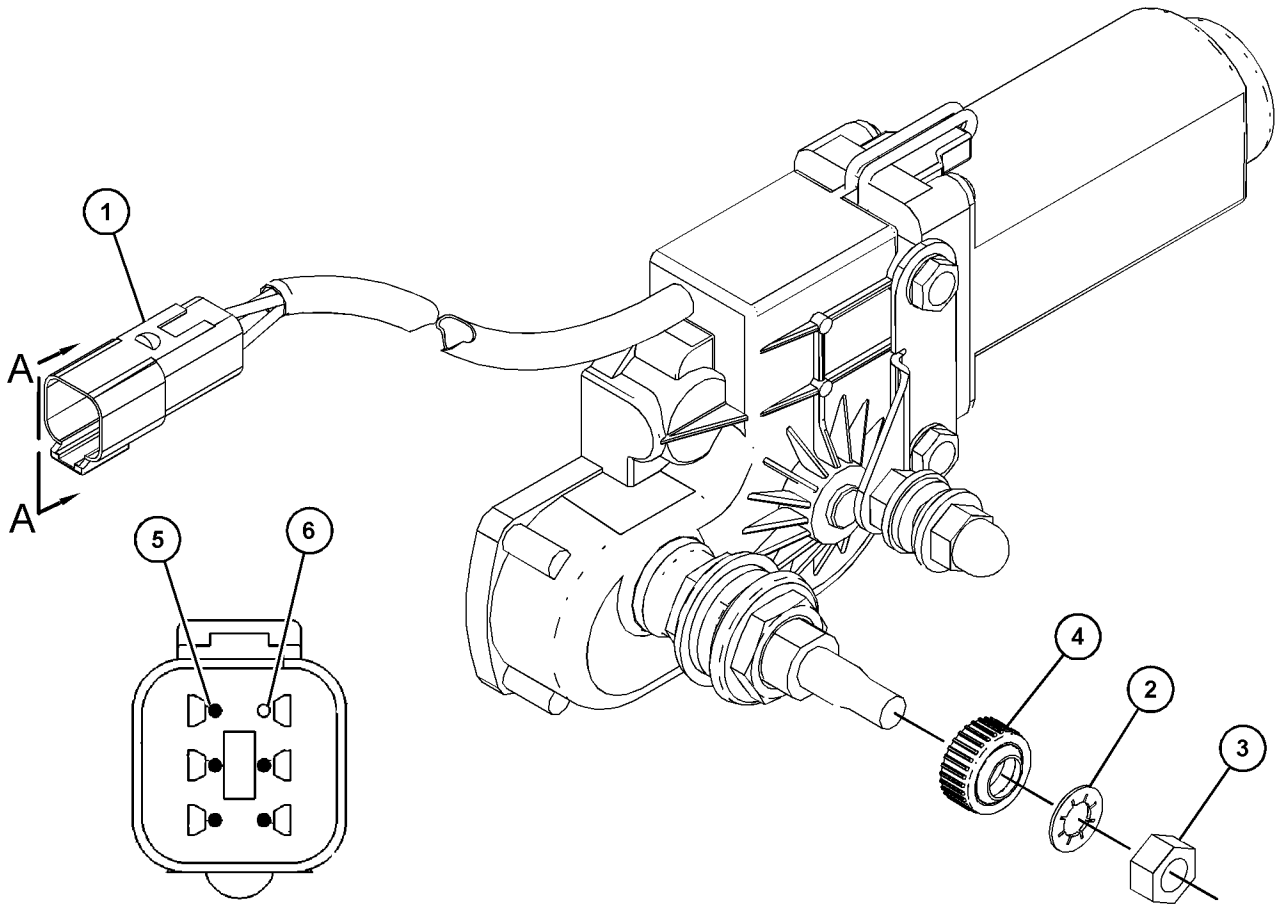

VIEW A-A

GRAPHIC #1 <END> g03794660

233-3122 MOUNTING GP-ANTENNA–RADIO

S/N: B551-UP

PART OF 420-1977, 575-9874, 575-9875 CAB AR

SMCS-7338 **i06638179**

NOTE	REF NO	GRAPHIC REF	PART NUMBER	QTY	PART NAME 1 2 3 4 5 6 (PRODUCT LEVEL)	SEE PAGE
	1	1	**6T-7695**	2	SPEAKER AS-RADIO	
	2	1	**7K-1181**	1	STRAP-CABLE	
	3	1	**437-3856**	1	ANTENNA AS	
	4	1	**101-3055**	2	COVER-SPEAKER	
	5	1	**323-0201**	8	SCREW	

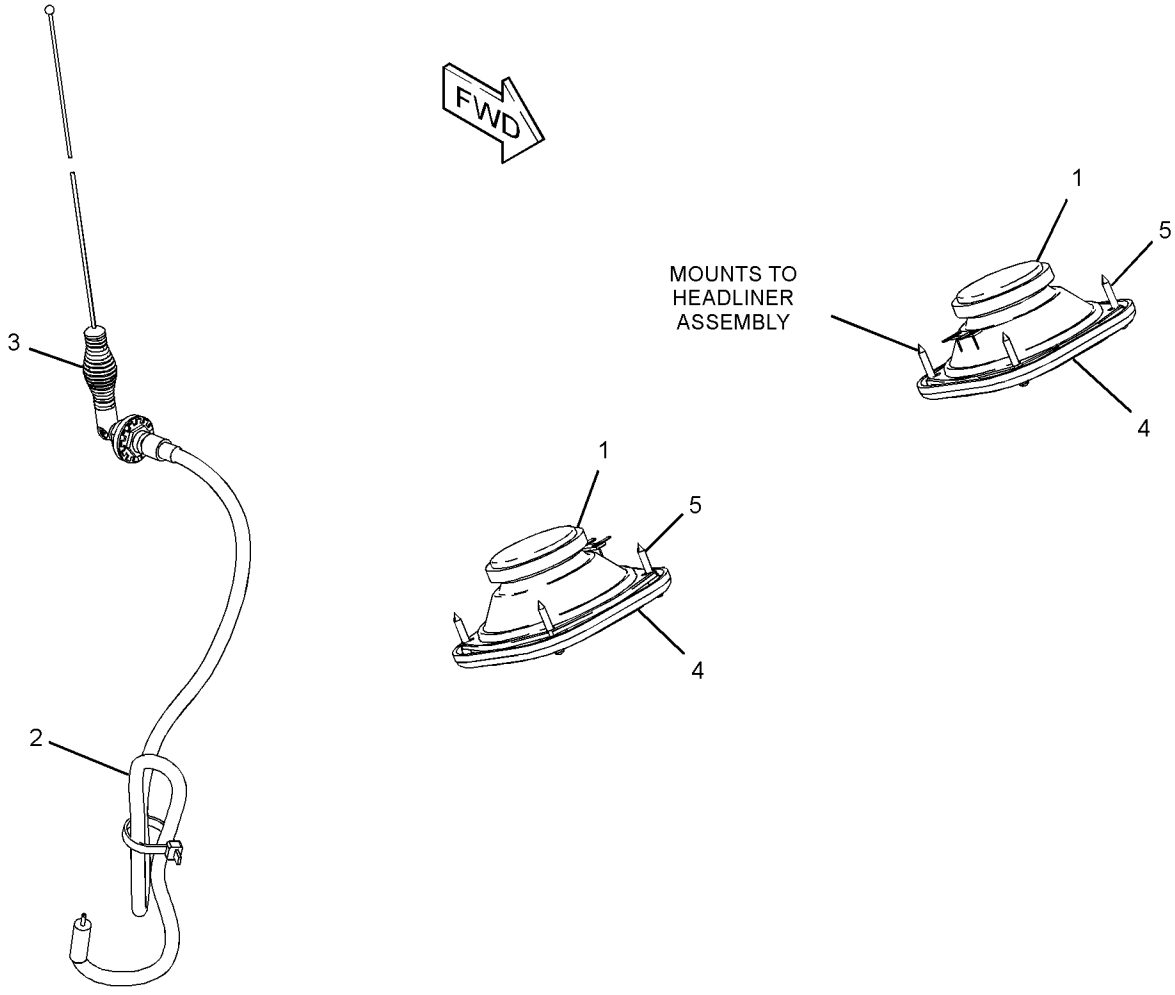

GRAPHIC #1 <END> g03720654

254-5395 MOUNTING GP-CAB

S/N: B551-UP

PART OF 354-8029 MOUNTING GP-CAB

SMCS-7266, 7301 **i03336380**

NOTE	REF NO	GRAPHIC REF	PART NUMBER	QTY	PART NAME 1 2 3 4 5 6 (PRODUCT LEVEL)	SEE PAGE
	1	1	**3E-4898**	4	SLEEVE	
	2	1	**7Y-2174**	8	WASHER (24.5X130X12-MM THK)	
	3	1	**117-8131**	8	MOUNT AS	
M	4	1	**7X-2465**	4	BOLT (M24X3X180-MM)	
	5	1	**8T-4167**	4	WASHER-HARD (26X44X4-MM THK)	

M - METRIC PART

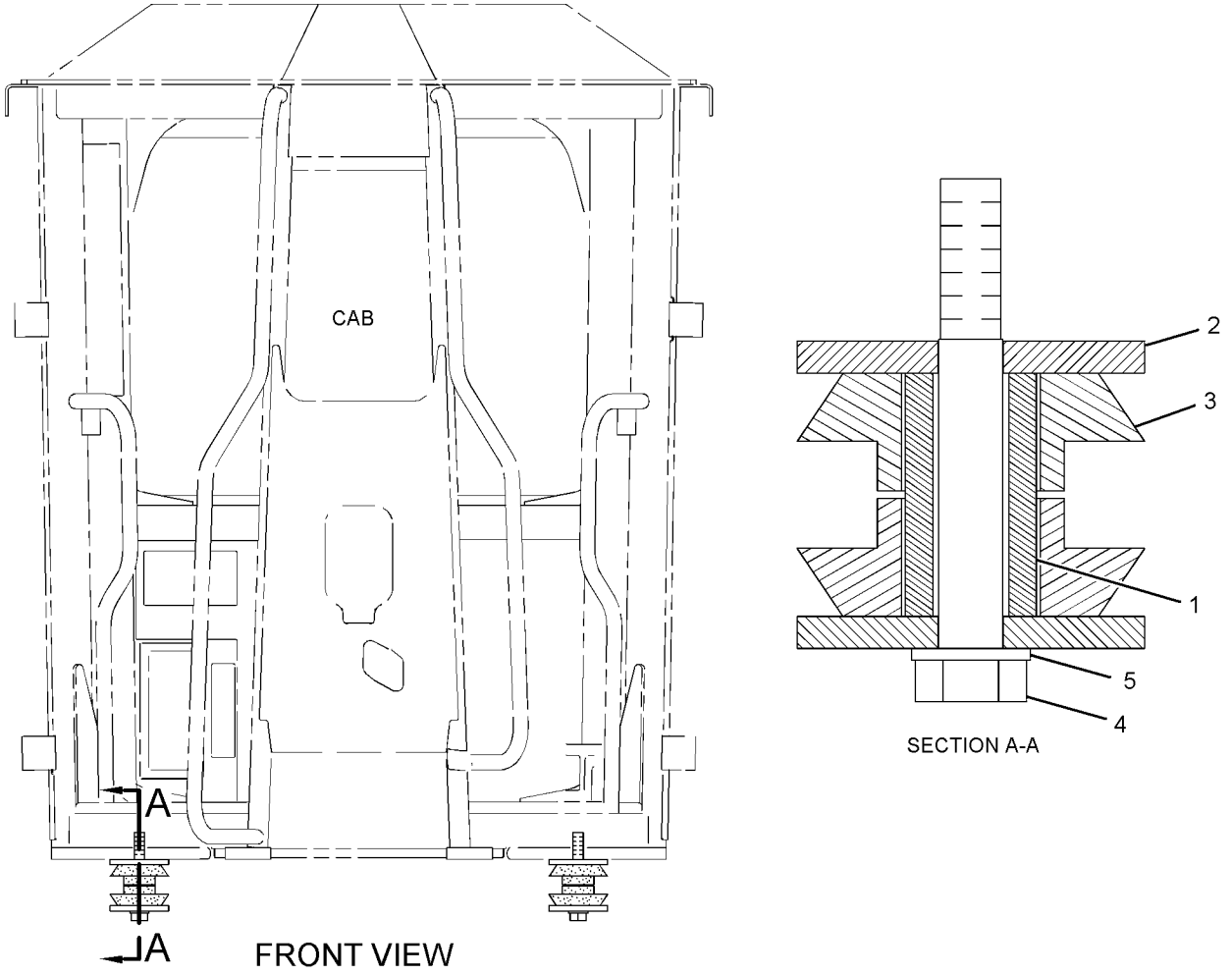

GRAPHIC #1 <END> g01862535

354-8029 MOUNTING GP-CAB

S/N: B551-UP

PART OF 577-1377 COMMON AR

SMCS-7266, 7301 **i07609280**

NOTE	REF NO	GRAPHIC REF	PART NUMBER	QTY	PART NAME 1 2 3 4 5 6 (PRODUCT LEVEL)	SEE PAGE
C	1	1	**547-4492**	1	INDICATOR-LEVEL (MACHINE)	
Y	2	1	*254-5395*	1	MOUNTING GP-CAB	824

C - CHANGE FROM PREVIOUS TYPE
Y - SEPARATE ILLUSTRATION

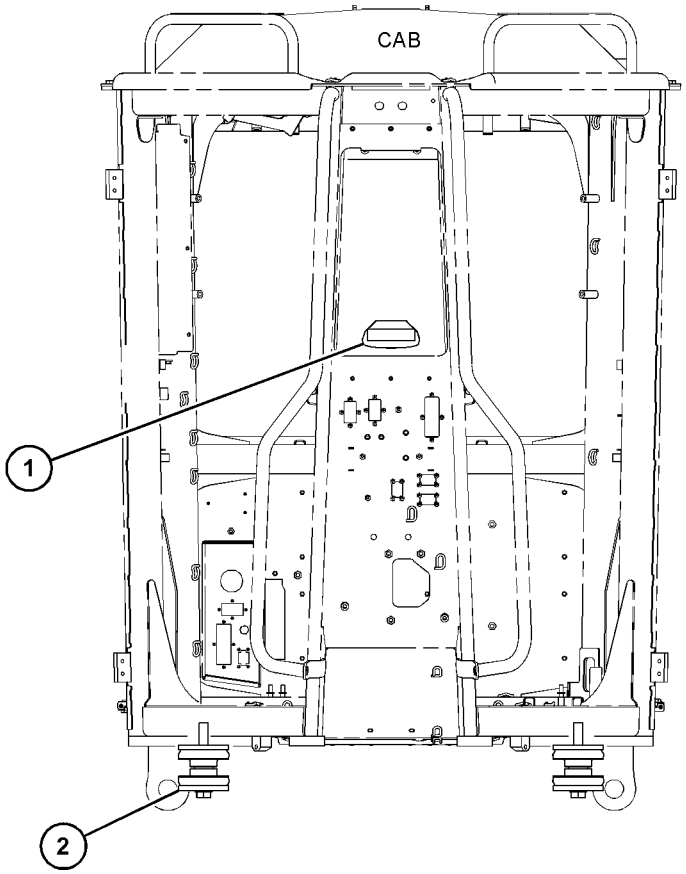

FRONT VIEW

GRAPHIC #1 <END> g06314024

367-2375 MOUNTING GP-CONTROL–IMPLEMENT

S/N: B551-UP

PART OF 420-1977, 575-9874, 575-9875 CAB AR

SMCS-5063 **i06670691**

NOTE	REF NO	GRAPHIC REF	PART NUMBER	QTY	PART NAME 1 2 3 4 5 6 (PRODUCT LEVEL)	SEE PAGE
	1	1	**6I-1418**	8	SPACER (8.2X12.7X28.7-MM THK)	
	2	1	**7K-3215**	1	BOSS (0.413X1X0.630-IN THK)	
	3	1	**8T-9655**	16	MOUNT-ISOLATION	
Y	4	1	*275-8969*	1	CONTROL GP-UNPROGRAMMED (IMPLEMENT 2)	166
Y	5	1	*275-8970*	1	CONTROL GP-UNPROGRAMMED (IMPLEMENT 1)	166
	6	1	**288-1401**	2	BRACKET	
	7	1	**311-8366**	8	WASHER-HARD (8.8X16X2-MM THK)	
	8	1	**5P-4116**	8	WASHER-HARD (8.8X20.5X2-MM THK)	
M	9	1	**7X-0818**	7	BOLT (M8X1.25X45-MM)	
M	10	1	**8T-4199**	8	BOLT (M8X1.25X12-MM)	
	11	1	**8T-4224**	2	WASHER-HARD (8.8X16X2-MM THK)	
M	12	1	**8T-6869**	1	BOLT (M8X1.25X60-MM)	

M - METRIC PART
Y - SEPARATE ILLUSTRATION

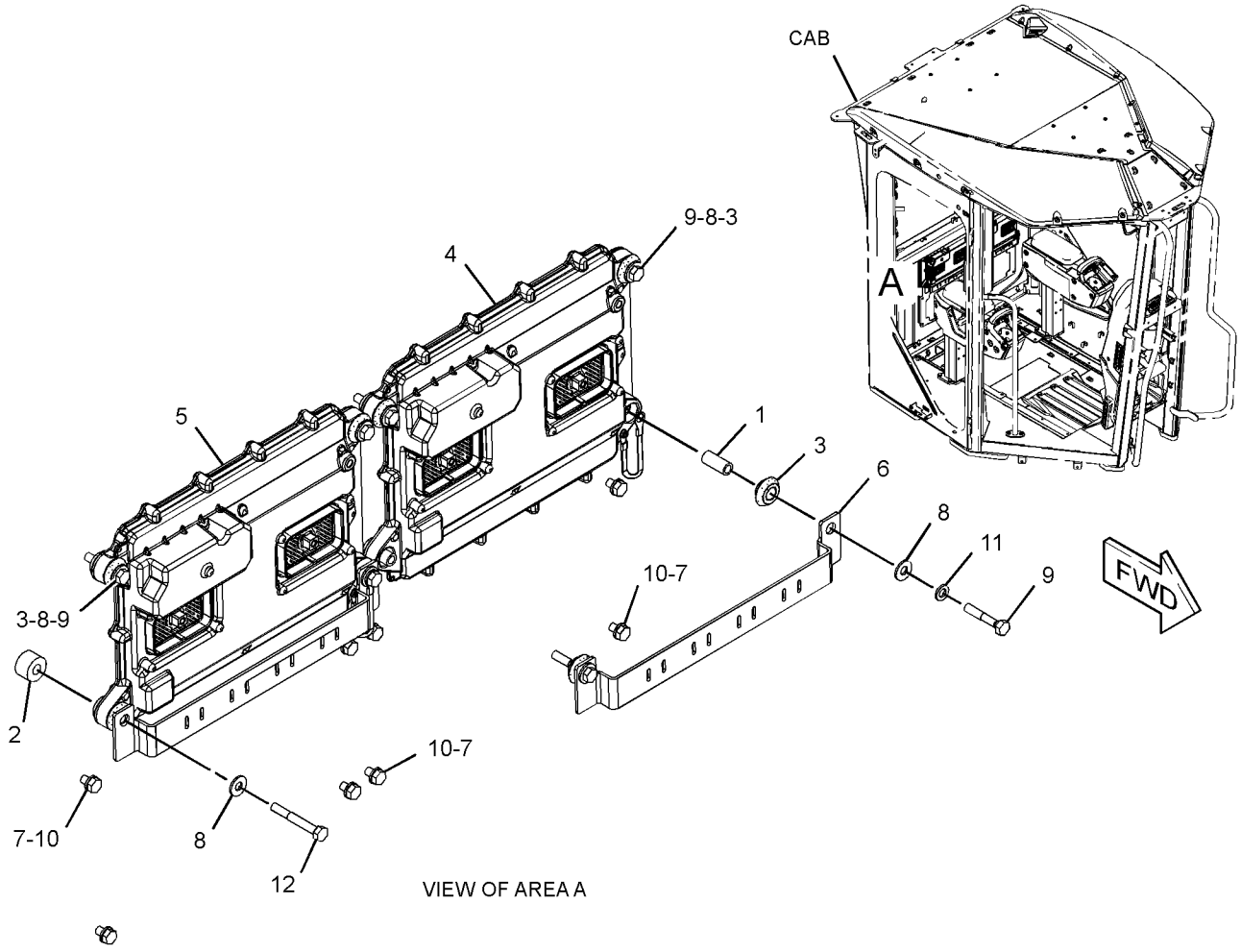

GRAPHIC #1

<END>

g03003602

381-8140 PANEL GP-INSTRUMENT—FRONT CONSOLE

S/N: B551-UP

PART OF 420-1977, 575-9874, 575-9875 CAB AR

SMCS-7450, 7451 **i06280005**

NOTE	REF NO	GRAPHIC REF	PART NUMBER	QTY	PART NAME 1 2 3 4 5 6 (PRODUCT LEVEL)	SEE PAGE
	1	1	**4E-8722**	2	NUT (RETAINER)	
	2	1	**8Y-6388**	4	LOUVER AS-VENT	
	3	1	**114-6658**	8	WASHER (6.5X17X1-MM THK)	
	4	1	**171-4047**	5	LOUVER AS-VENT	
	5	1	**294-0998**	1	PLENUM AS	
	6	1	**294-0999**	1	PLENUM	
	7	1	**294-1016**	1	FILM-INFORMATION (CONSOLE, LH)	
	8	1	**294-1019**	1	FILM-INFORMATION (CONSOLE, RH)	
	9	1	**357-2258**	1	COVER AS	
M		1	**6V-9632**	4	NUT-WELD (M6X1-THD)	
	10	1	**356-5171**	1	PLATE AS	
M		1	**8T-3612**	3	NUT-WELD (M8X1.25-THD)	
	11	1	**357-2269**	1	BRACKET AS	
M		1	**6V-9632**	2	NUT-WELD (M6X1-THD)	
	12	1	**361-0424**	1	PANEL-DASH	
	13	1	**7X-0579**	4	WASHER-HARD (8.8X25.5X2-MM THK)	
	14	1	**104-2091**	18	SCREW-FLAT HEAD (6-20X0.5-IN)	
M	15	1	**111-4627**	2	SCREW-MACHINE (M6X1X30-MM)	
M	16	1	**127-2170**	5	SCREW-TRUSS HEAD (M8X1.25X20-MM)	
M	17	1	**9X-2046**	2	SCREW-TRUSS HEAD (M6X1X35-MM)	
M	19	1	**5C-2890**	2	NUT (M6X1-THD)	
	20	1	**9N-0869**	5	WASHER-HARD (8.8X25.5X2-MM THK)	
	21	1	**9X-2038**	2	WASHER (7X19X2-MM THK)	
M	22	1	**9X-2043**	6	SCREW-TRUSS HEAD (M6X1X14-MM)	
M	23	1	**9X-2044**	4	SCREW-TRUSS HEAD (M6X1X16-MM)	
M	24	1	**9X-2045**	2	SCREW-TRUSS HEAD (M6X1X20-MM)	
E	25	1	**7X-2634**		SEAL (56-CM)	

E - ORDER BY THE CENTIMETER
M - METRIC PART

381-8140 **PANEL GP-INSTRUMENT (**contd.**)** **i06280005**

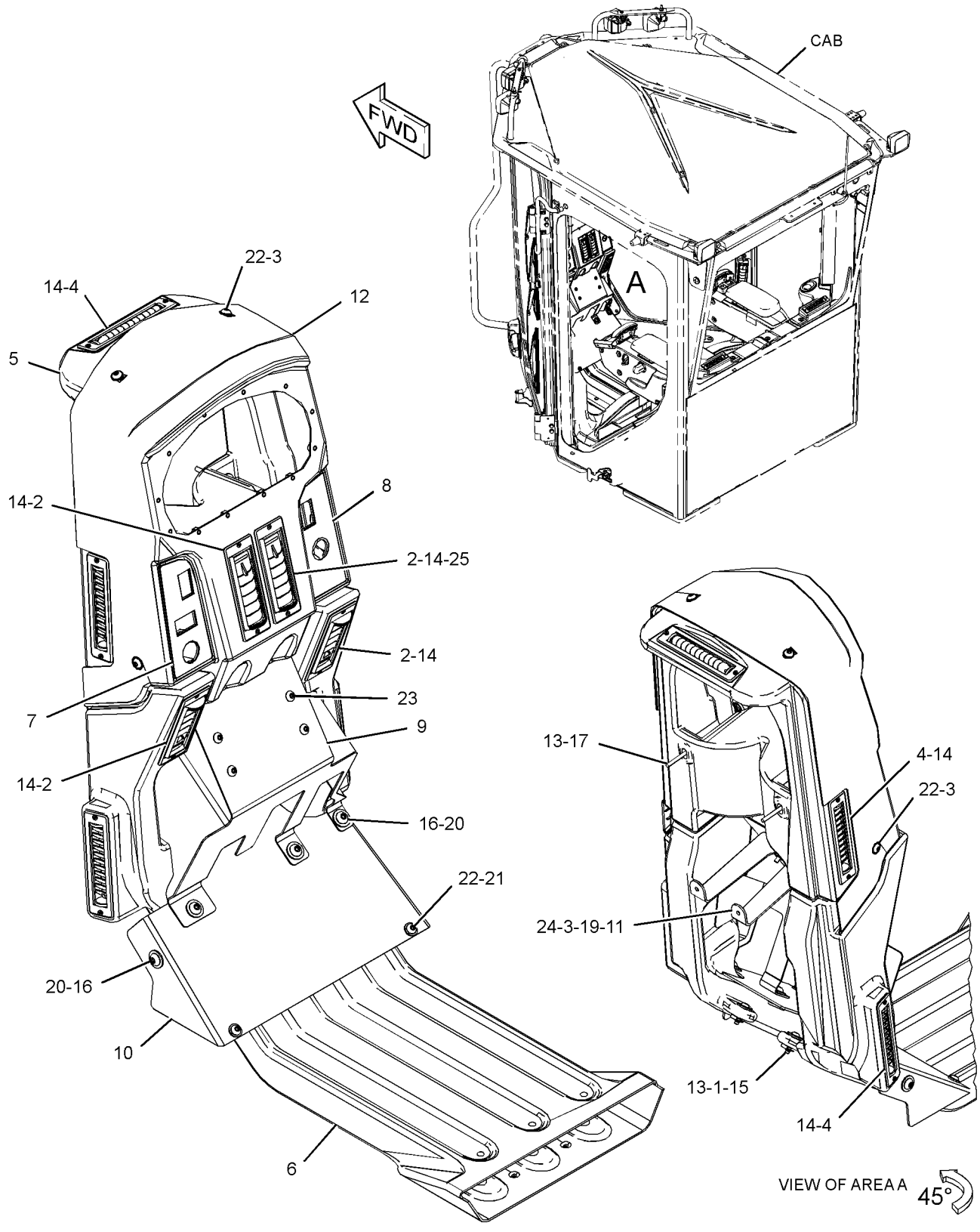

GRAPHIC #1 <END> g02996940

265-8943 PEDAL GP-BRAKE, XMSN & GOV

S/N: B551-UP

PART OF 346-6901 PEDAL GP-BRAKE, XMSN & GOV

SMCS-1265, 3191, 4269

i04759243

NOTE	REF NO	GRAPHIC REF	PART NUMBER	QTY	PART NAME 1 2 3 4 5 6 (PRODUCT LEVEL)	SEE PAGE
CY	1	1	**266-1467**	1	SENSOR GP-POSITION (ROTARY)	254
CY	1A	1	**266-1467**	1	SENSOR GP-POSITION (ROTARY) (XMSN MODULATOR CONTROL)	254
Y	2	1	**171-3759**	1	SWITCH GP-LIMIT (BRAKE PEDAL)	269
Y	2A	1	**171-3759**	1	SWITCH GP-LIMIT (XMSN MODULATOR CONTROL)	269
	3	1	**374-9690**	1	SWITCH AS-LIMIT (BRAKE LIGHT)	
		1	**8T-8729**	3	PIN-CONNECTOR (16-GA TO 20-GA)	
		1	**102-8803**	1	KIT-RECEPTACLE (3-PIN)	
					(INCLUDES RECEPTACLE AS & WEDGE)	
	4	1	**366-9670**	1	SPRING	

C - CHANGE FROM PREVIOUS TYPE
Y - SEPARATE ILLUSTRATION

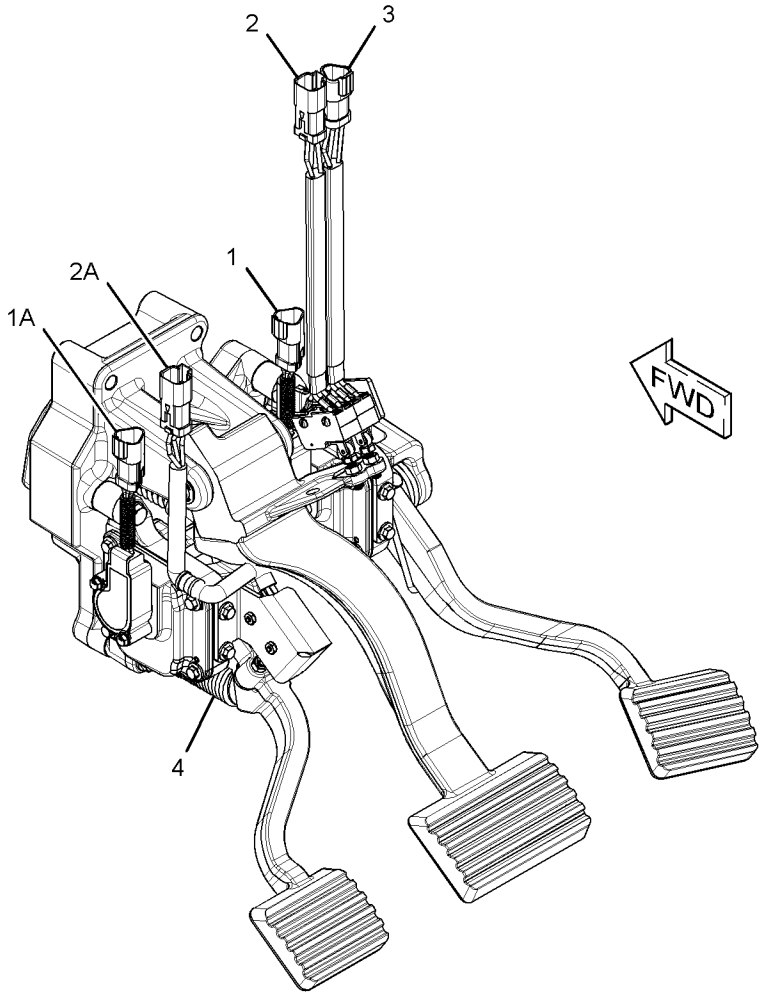

GRAPHIC #1 <END> g02331856

346-6901 PEDAL GP-BRAKE, XMSN & GOV

S/N: B551-UP

PART OF 233-3142, 252-1810 CONTROL GP-SERVICE BRAKE, 356-4256 LINES GP-SERVICE BRAKE

SMCS-1265, 3191, 4269

i04040246

NOTE	REF NO	GRAPHIC REF	PART NUMBER	QTY	PART NAME 1 2 3 4 5 6 (PRODUCT LEVEL)	SEE PAGE
	1	1	**355-7411**	1	VALVE GP-BRAKE CONTROL	
Y	2	1	**265-8943**	1	PEDAL GP-BRAKE, XMSN & GOV	829
					AVAILABLE REPAIR KIT(S):	
			360-4432	1	KIT-REPAIR	
					(INCLUDES RINGS, CUP & BOOT)	

Y - SEPARATE ILLUSTRATION

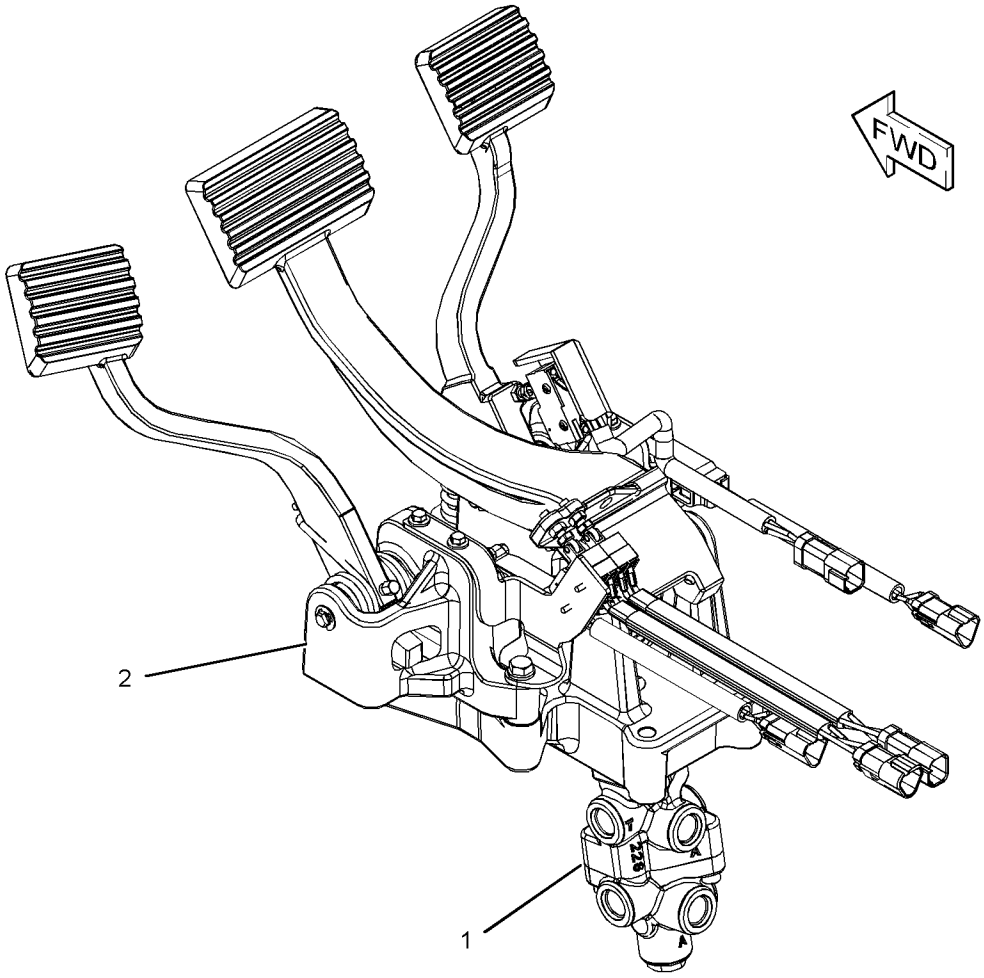

GRAPHIC #1 <END> g02221555

477-1250 RADIO GP—AM/FM/WB/CD/XM/USB/BLUETOOTH

S/N: B551-UP

PART OF 397-5305 OPTION AR-CAB

SMCS-7338 **i06553861**

NOTE	REF NO	GRAPHIC REF	PART NUMBER	QTY	PART NAME 1 2 3 4 5 6 (PRODUCT LEVEL)	SEE PAGE
	1	1	**7K-1181**	7	STRAP-CABLE	
	2	1	**136-5490**	1	BUSHING (RADIO MOUNT)	
Y	3	1	**200-5728**	1	HARNESS AS-RADIO (FLANGE)	186
	4	1	**344-5594**	1	HARNESS AS-RADIO (AUXILIARY)	
	5	1	**349-8642**	1	MICROPHONE (BLUETOOTH)	
	6	1	**353-1634**	1	HARNESS AS-RADIO (BLUETOOTH)	
	7	1	**462-9620**	1	RADIO GP (AM/FM/BLUETOOTH)	

Y - SEPARATE ILLUSTRATION

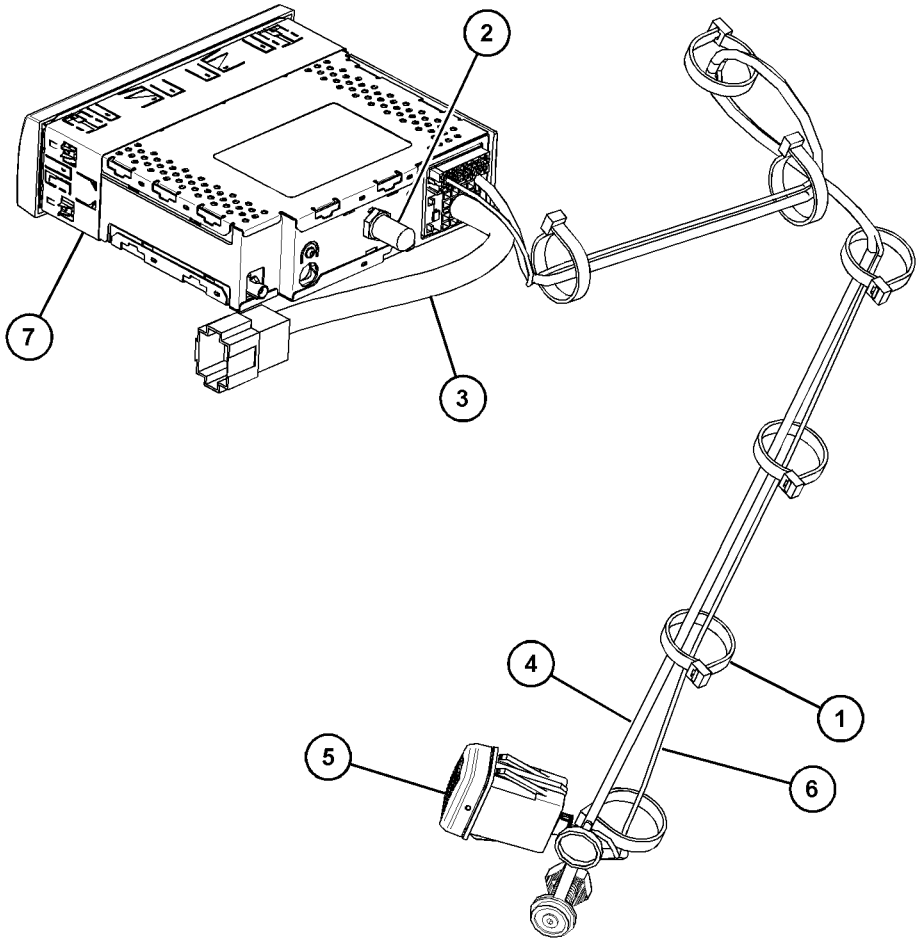

GRAPHIC #1 <END> g06054482

477-1257 RADIO GP–AM/FM/WB

S/N: B551-UP

PART OF 391-8968 CAB AR

SMCS-7338 **i06540831**

NOTE	REF NO	GRAPHIC REF	PART NUMBER	QTY	PART NAME 1 2 3 4 5 6 (PRODUCT LEVEL)	SEE PAGE
	1	1	**136-5490**	1	BUSHING (RADIO MOUNT)	
Y	2	1	**200-5728**	1	HARNESS AS-RADIO (FLANGE)	186
	3	1	**462-9618**	1	RADIO (AM/FM/WB)	

Y - SEPARATE ILLUSTRATION

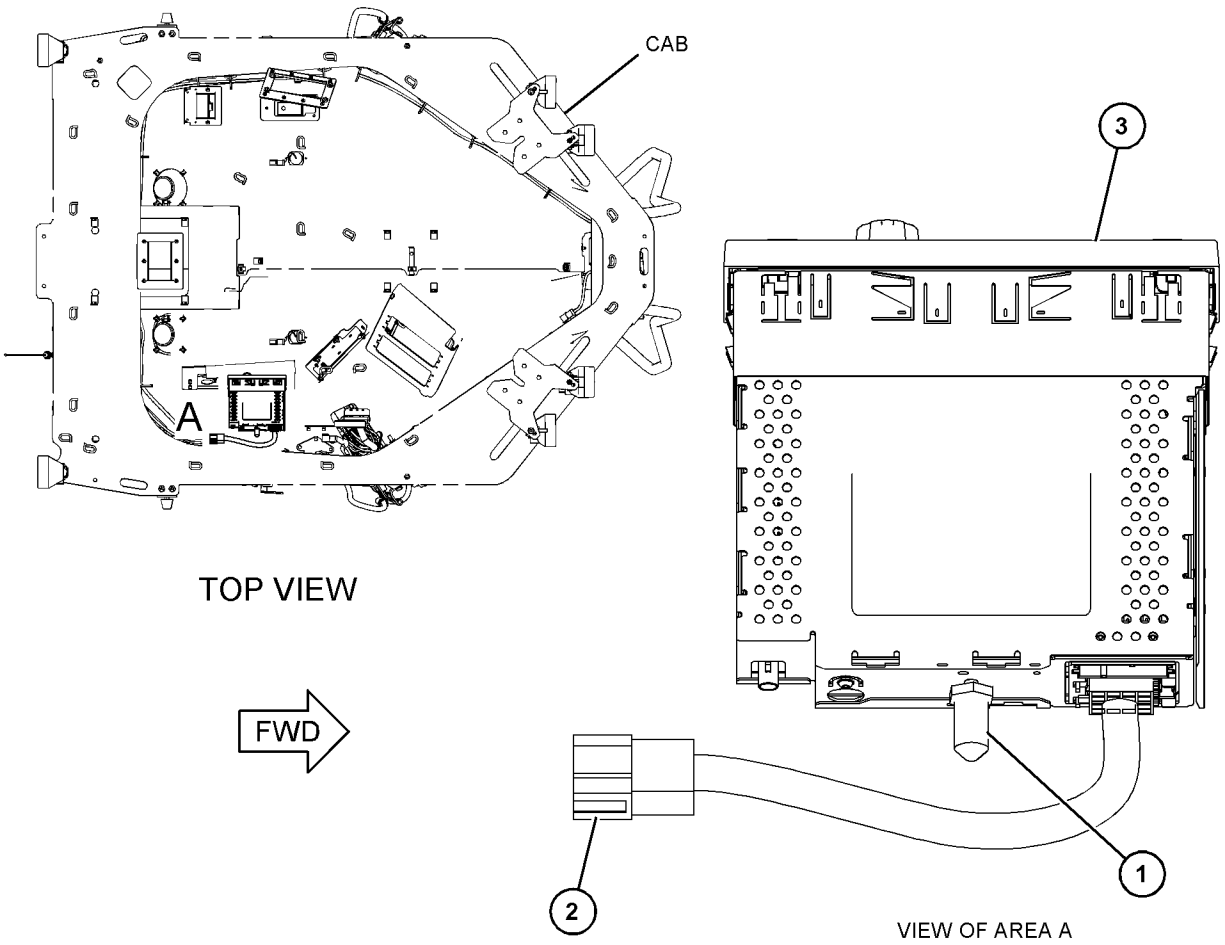

GRAPHIC #1 <END> g06026474

381-7048 ROPS GP

S/N: B551-UP
STANDARD GLASS
PART OF 575-9874 CAB AR

SMCS-7177, 7323 **i05949155**

NOTE	PART NUMBER	QTY	PART NAME 1 2 3 4 5 6 (PRODUCT LEVEL)	SEE PAGE
Y	*357-9199*	1	DOOR GP-CAB (RH)	786
Y	*357-9200*	1	DOOR GP-CAB (LH)	790
Y	*356-5163*	1	HANDRAIL GP	458
Y	*300-1870*	1	WINDOW GP-CAB (REAR, SIDE)	855
Y	*363-6709*	1	WINDOW GP-CAB (FRONT)	856
	357-2257	1	CAB AS-ROPS	
BM	**127-2170**	3	SCREW-TRUSS HEAD (M8X1.25X20-MM)	
B	**5P-4116**	3	WASHER-HARD (8.8X20.5X2-MM THK)	

B - USE AS REQUIRED
M - METRIC PART
Y - SEPARATE ILLUSTRATION

<END>

381-7049 ROPS GP

S/N: B551-UP
STANDARD GLASS
PART OF 420-1977, 575-9875 CAB AR

SMCS-7177, 7323 **i05949157**

NOTE	PART NUMBER	QTY	PART NAME 1 2 3 4 5 6 (PRODUCT LEVEL)	SEE PAGE
Y	*357-9199*	1	DOOR GP-CAB (RH)	786
Y	*357-9200*	1	DOOR GP-CAB (LH)	790
Y	*356-5163*	1	HANDRAIL GP	458
Y	*381-8143*	1	WINDOW GP-CAB	857
Y	*363-6709*	1	WINDOW GP-CAB (FRONT)	856
	357-2257	1	CAB AS-ROPS	
BM	**127-2170**	3	SCREW-TRUSS HEAD (M8X1.25X20-MM)	
B	**5P-4116**	3	WASHER-HARD (8.8X20.5X2-MM THK)	

B - USE AS REQUIRED
M - METRIC PART
Y - SEPARATE ILLUSTRATION

<END>

233-3116 SEAT & MOUNTING GP

S/N: B551-UP

CANNOT BE USED WITH 233-3150—PAGE: 834

PART OF 389-1906 CAB AR

SMCS-7312 **i07250273**

NOTE	PART NUMBER	QTY	PART NAME 1 2 3 4 5 6 (PRODUCT LEVEL)	SEE PAGE
Y	**504-4302**	1	SEAT GP-SUSPENSION	839
M	**8T-4136**	4	BOLT (M10X1.5X25-MM)	
	8T-4121	4	WASHER-HARD (11X21X2.5-MM THK)	

M - METRIC PART
Y - SEPARATE ILLUSTRATION

<END>

233-3150 SEAT & MOUNTING GP

S/N: B551-UP

CANNOT BE USED WITH 233-3116—PAGE: 834

PART OF 420-1977 CAB AR, 389-1907 OPTION AR-CAB

SMCS-7312 **i06851197**

NOTE	PART NUMBER	QTY	PART NAME 1 2 3 4 5 6 (PRODUCT LEVEL)	SEE PAGE
Y	**421-1234**	1	SEAT GP-SUSPENSION	838
M	**8T-4136**	4	BOLT (M10X1.5X25-MM)	
	8T-4121	4	WASHER-HARD (11X21X2.5-MM THK)	

M - METRIC PART
Y - SEPARATE ILLUSTRATION

<END>

222-0345 SEAT BELT GP–RETRACTABLE

S/N: B551-UP

PART OF 421-1234, 504-4302 SEAT GP-SUSPENSION

SMCS-7327 **i07184526**

NOTE	REF NO	GRAPHIC REF	PART NUMBER	QTY	PART NAME 1 2 3 4 5 6 (PRODUCT LEVEL)	SEE PAGE
(NO SERVICED PARTS)						

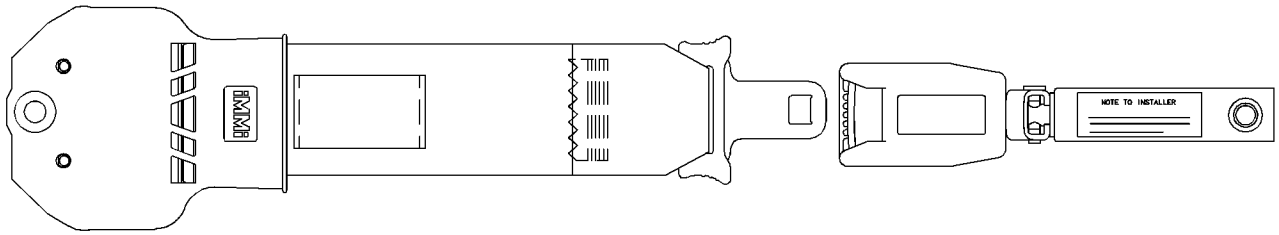

GRAPHIC #1 <END> g01196135

489-6480 SEAT GP—CLOTH, AIR

S/N: B551-UP

24-VOLT

PART OF 421-1234, 504-4302 SEAT GP-SUSPENSION

SMCS-7312 **i06851280**

NOTE	REF NO	GRAPHIC REF	PART NUMBER	QTY	PART NAME 1 2 3 4 5 6 (PRODUCT LEVEL)	SEE PAGE
M	1	1	**8T-4908**	4	BOLT (M8X1.25X25-MM)	
	2	1	**229-1494**	1	EXTENSION GP-BACKREST (CLOTH)	
	3	1	**277-8103**	3	PLUG	
	4	1	**355-3016**	1	PLATE AS	
	5	1	**488-2137**	1	KIT-SHAFT (RECLINER)	
					(INCLUDES SHAFT, CABLE AS, LEVERS, RECLINER AS & BOLT)	
	6	1	**389-0879**	1	PAN-SEAT BACK	
	7	1	**488-1670**	1	PAN AS	
	8	1	**436-1687**	1	KIT-LATCH	
					(INCLUDES BOLTS, LATCHES, RODS, SPRINGS & WASHERS)	
	9	1	**436-1688**	1	KIT-SEAT	
					(INCLUDES RETAINERS, ROD, SPRINGS & WASHERS)	
	10	1	**443-8288**	1	KIT-SEAT CUSHION	
					(INCLUDES SWITCH AS, SPRING, PLATE, HARNESS AS, CUSHIONS & SCREWS)	
	11	1	**443-8573**	1	KIT-HANDLE (SEAT ADJUSTMENT)	
					(INCLUDES ROD, LEVERS, RETAINERS, SPRINGS & WASHERS)	

M - METRIC PART

489-6480 **SEAT GP** (contd.) **i06851280**

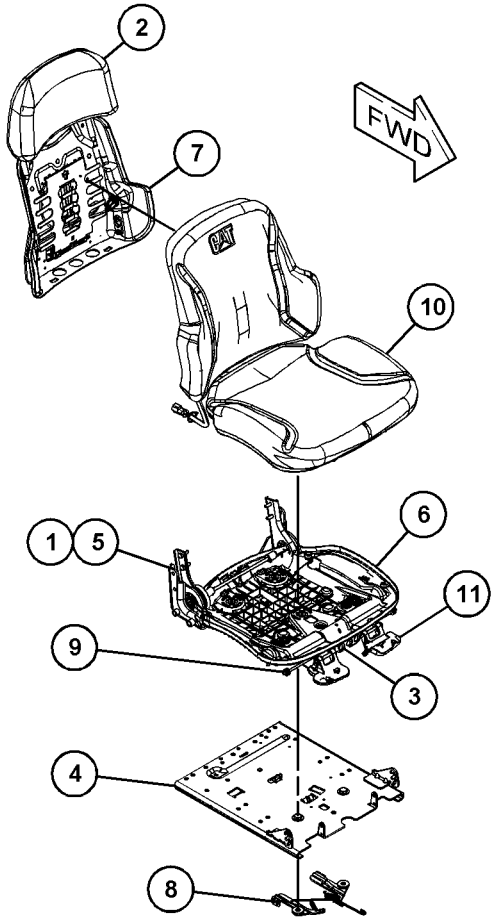

GRAPHIC #1 <END> g06094471

421-1234 SEAT GP-SUSPENSION—CLOTH, AIR

S/N: B551-UP
24-VOLT
PART OF 233-3150 SEAT & MOUNTING GP

SMCS-7312 **i06851257**

NOTE	REF NO	GRAPHIC REF	PART NUMBER	QTY	PART NAME 1 2 3 4 5 6 (PRODUCT LEVEL)	SEE PAGE
Y	1	1	**222-0345**	1	SEAT BELT GP (RETRACTABLE, 3-IN)	835
Y	2	1	**256-8768**	1	SUSPENSION GP-SEAT	846
Y	3	1	**489-6480**	1	SEAT GP (CLOTH, AIR)	836
	4	1	**173-7035**	1	KIT-SLIDER BLOCK (SUSPENSION SEAT)	
					(INCLUDES WASHERS, BOLT, BLOCK-SLIDER & SETSCREWS)	
	5	1	**498-4463**	1	KIT-LITERATURE HOLDER	
					(INCLUDES LANYARD, RETAINER, HOLDER & RIVET-POP)	

Y - SEPARATE ILLUSTRATION

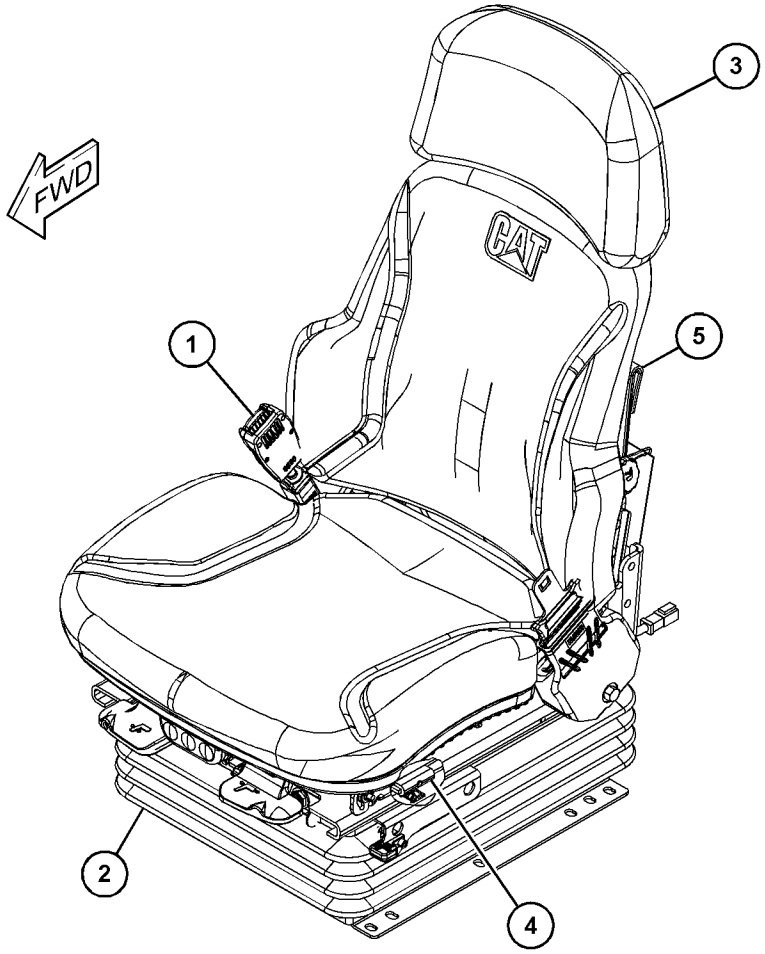

GRAPHIC #1 <END> g06142432

504-4302 SEAT GP-SUSPENSION—CLOTH

S/N: B551-UP

PART OF 233-3116 SEAT & MOUNTING GP

SMCS-7312 **i07243899**

NOTE	REF NO	GRAPHIC REF	PART NUMBER	QTY	PART NAME 1 2 3 4 5 6 (PRODUCT LEVEL)	SEE PAGE
Y	1	1	**160-7165**	1	SUSPENSION GP-SEAT	844
Y	2	1	**222-0345**	1	SEAT BELT GP (RETRACTABLE, 3-IN)	835
Y	3	1	**489-6480**	1	SEAT GP	836
	4	1	**173-7035**	1	KIT-SLIDER BLOCK (SUSPENSION SEAT)	
					(INCLUDES WASHERS, BOLT, SLIDER BLOCKS & SETSCREWS)	
	5	1	**498-4463**	1	KIT-LITERATURE HOLDER	
		1	**4K-9429**	6	RIVET-POP	
		1	**5P-7957**	1	LANYARD	
		1	**173-2052**	1	RETAINER	
		1	**178-7907**	1	HOLDER (LITERATURE)	

Y - SEPARATE ILLUSTRATION

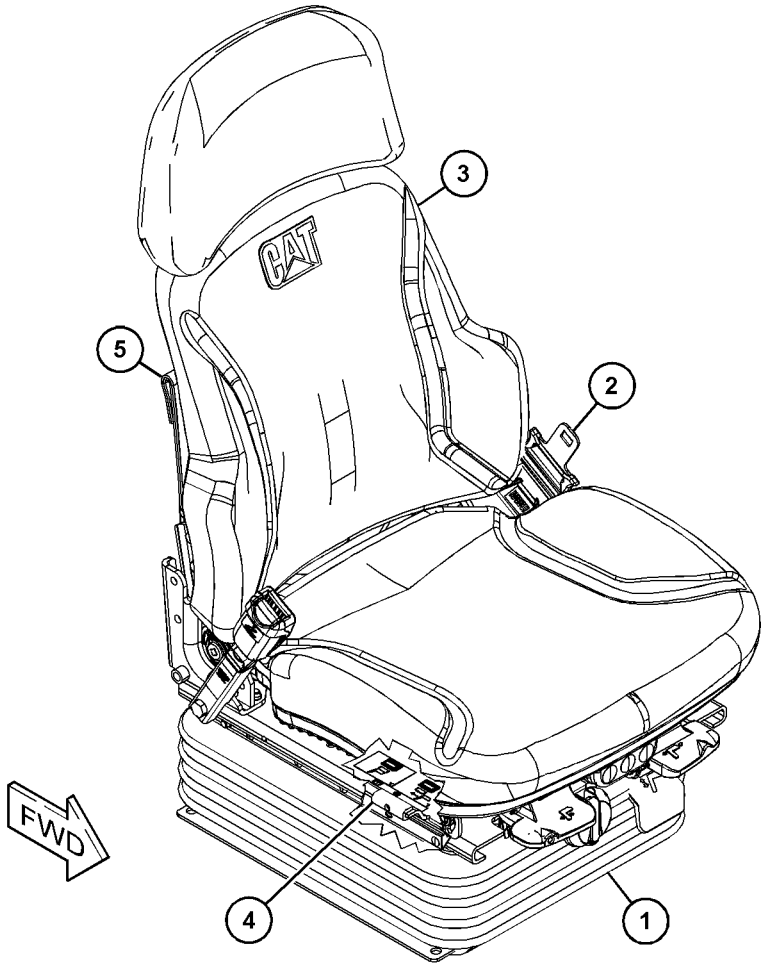

GRAPHIC #1 <END> g06243875

345-1271 SUPPORT GP-CONTROL—JOYSTICK, RH

S/N: B551-UP

PART OF 345-1277 CONTROL & MTG GP-JOYSTICK

SMCS-4343, 6150 **i06846297**

NOTE	REF NO	GRAPHIC REF	PART NUMBER	QTY	PART NAME 1 2 3 4 5 6 (PRODUCT LEVEL)	SEE PAGE
M	1	1	**172-8591**	10	NUT-CLIP (M6X1-THD)	
	2	1	**8X-1386**	1	SPACER (12.2X23X22-MM THK)	
	3	1	**233-3248**	2	BUSHING	
	4	1	**233-3252**	1	SHAFT AS	
	5	1	**233-3270**	1	SUPPORT AS (RH)	
	6	1	**233-3275**	1	BRACKET AS (RH)	
	7	1	**251-2247**	2	GROMMET	
Y	8	1	**252-1805**	1	CUSHION GP-ARM	784
	9	1	**252-1808**	1	SUPPORT AS (RH)	
		1	**3G-0622**	2	RING-RETAINING	
		1	**7X-0605**	2	WASHER-HARD (13X28X1.6-MM THK)	
M		1	**9X-2044**	2	SCREW-TRUSS HEAD (M6X1X16-MM)	
		1	**114-6658**	2	WASHER (6.5X17X1-MM THK)	
		1	**294-1001**	1	PLATE AS	
M		1	**6V-9632**	2	NUT-WELD (M6X1-THD)	
	10	1	**253-3482**	1	KNOB AS (ARMREST ADJUSTMENT)	
	11	1	**253-3483**	1	PLATE AS	
	12	1	**253-3484**	2	WASHER (13X46X3.5-MM THK)	
Y	13	1	*292-0609*	1	ARMREST GP (RH)	755
	14	1	**456-1559**	1	ADJUSTER AS	
	15	1	**345-1273**	1	COVER	
	16	1	**345-1274**	1	COVER	
	17	1	**346-0626**	1	BRACKET	
	18	1	**346-9581**	1	FILM-IDENTIFICATION (OPERATOR CONTROLS, RH)	
	19	1	**114-6658**	10	WASHER (6.5X17X1-MM THK)	
M	20	1	**5C-9553**	2	BOLT (M6X1X16-MM)	
	21	1	**7J-5925**	1	PIN-COTTER	
	22	1	**7X-0578**	2	WASHER-HARD (10.2X32X2.5-MM THK)	
M	23	1	**8T-4200**	3	BOLT (M8X1.25X16-MM)	
	24	1	**8T-4224**	10	WASHER-HARD (8.8X16X2-MM THK)	
M	25	1	**8T-4908**	7	BOLT (M8X1.25X25-MM)	
M	26	1	**9X-2043**	2	SCREW-TRUSS HEAD (M6X1X14-MM)	
M	27	1	**9X-2045**	10	SCREW-TRUSS HEAD (M6X1X20-MM)	
	28	1	**9X-8256**	2	WASHER (6.6X12X2-MM THK)	
D	29	1	**8T-6936**		SEAL (0.1-M EACH)	

D - ORDER BY THE METER
M - METRIC PART
Y - SEPARATE ILLUSTRATION

345-1271 **SUPPORT GP-CONTROL (**contd.**)** **i06846297**

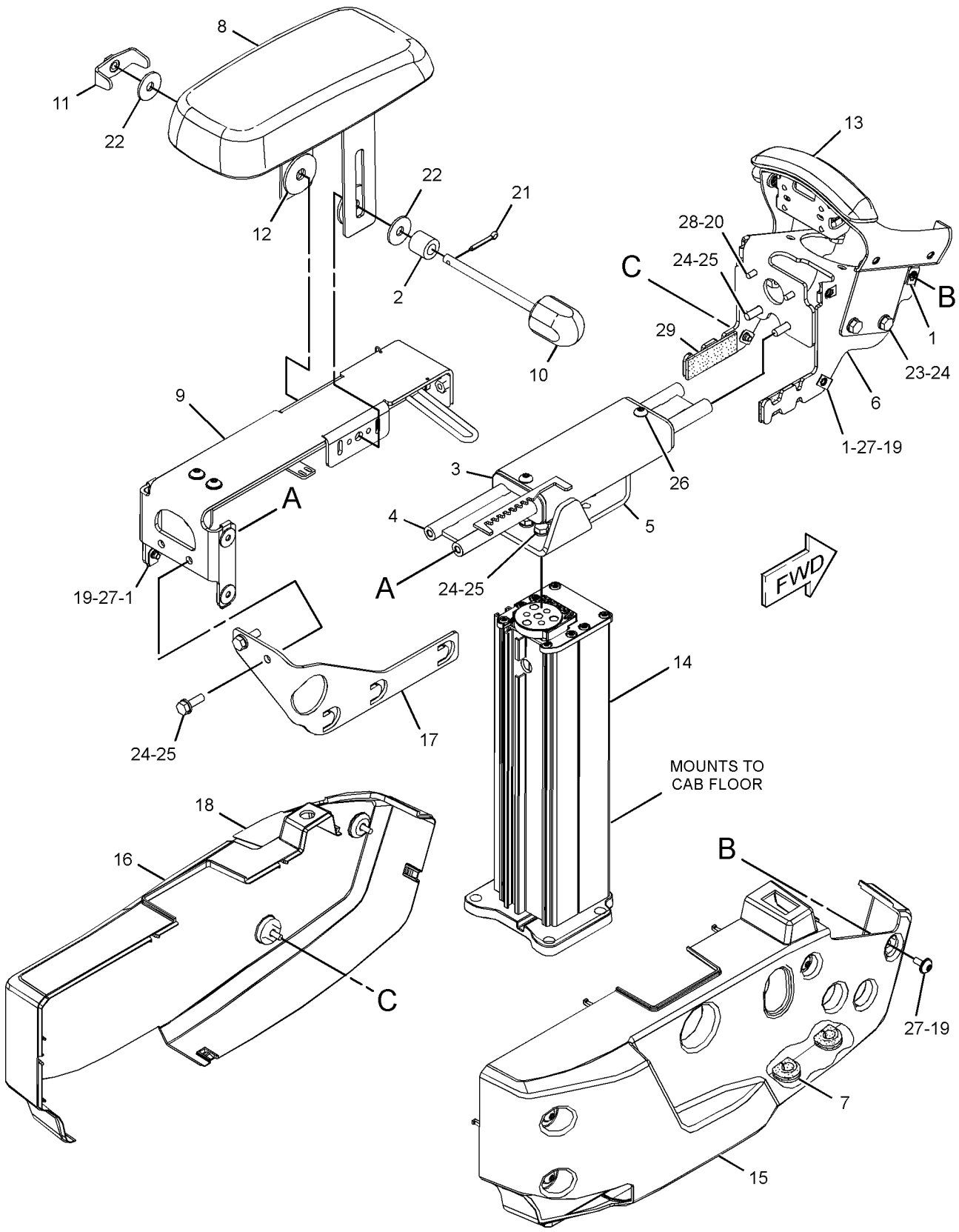

GRAPHIC #1 <END> g02261233

345-1272 SUPPORT GP-CONTROL—JOYSTICK, LH

S/N: B551-UP

PART OF 345-1277 CONTROL & MTG GP-JOYSTICK

SMCS-4343, 6150 **i06846441**

NOTE	REF NO	GRAPHIC REF	PART NUMBER	QTY	PART NAME 1 2 3 4 5 6 (PRODUCT LEVEL)	SEE PAGE
M	1	1	**172-8591**	10	NUT-CLIP (M6X1-THD)	
	2	1	**8X-1386**	1	SPACER (12.2X23X22-MM THK)	
	3	1	**233-3227**	1	SUPPORT AS (LH)	
	4	1	**233-3248**	2	BUSHING	
	5	1	**233-3252**	1	SHAFT AS	
	6	1	**251-2247**	1	GROMMET	
Y	7	1	**252-1805**	1	CUSHION GP-ARM	784
	8	1	**252-1807**	1	SUPPORT AS (LH)	
		1	**3G-0622**	2	RING-RETAINING	
		1	**7X-0605**	2	WASHER-HARD (13X28X1.6-MM THK)	
M		1	**9X-2044**	2	SCREW-TRUSS HEAD (M6X1X16-MM)	
		1	**114-6658**	2	WASHER (6.5X17X1-MM THK)	
		1	**294-1001**	1	PLATE AS	
M		1	**6V-9632**	2	NUT-WELD (M6X1-THD)	
	9	1	**253-3482**	1	KNOB AS (ARMREST ADJUSTMENT)	
	10	1	**253-3483**	1	PLATE AS	
	11	1	**253-3484**	2	WASHER (13X46X3.5-MM THK)	
	12	1	**272-8329**	1	BRACKET AS (LH)	
Y	13	1	*292-0617*	1	ARMREST GP (LH)	756
	14	1	**456-1559**	1	ADJUSTER AS	
	15	1	**345-1275**	1	COVER	
	16	1	**345-1276**	1	COVER	
	17	1	**346-0627**	1	BRACKET	
	18	1	**346-9580**	1	FILM-IDENTIFICATION (OPERATOR CONTROLS, LH)	
	19	1	**114-6658**	10	WASHER (6.5X17X1-MM THK)	
M	20	1	**5C-9553**	2	BOLT (M6X1X16-MM)	
	21	1	**7J-5925**	1	PIN-COTTER	
	22	1	**7X-0578**	2	WASHER-HARD (10.2X32X2.5-MM THK)	
M	23	1	**8T-4200**	3	BOLT (M8X1.25X16-MM)	
	24	1	**8T-4224**	10	WASHER-HARD (8.8X16X2-MM THK)	
M	25	1	**8T-4908**	7	BOLT (M8X1.25X25-MM)	
M	26	1	**9X-2043**	2	SCREW-TRUSS HEAD (M6X1X14-MM)	
M	27	1	**9X-2045**	10	SCREW-TRUSS HEAD (M6X1X20-MM)	
	28	1	**9X-8256**	2	WASHER (6.6X12X2-MM THK)	
D	29	1	**8T-6936**		SEAL (0.1-M EACH)	

D - ORDER BY THE METER
M - METRIC PART
Y - SEPARATE ILLUSTRATION

345-1272 **SUPPORT GP-CONTROL (**contd.**)** **i06846441**

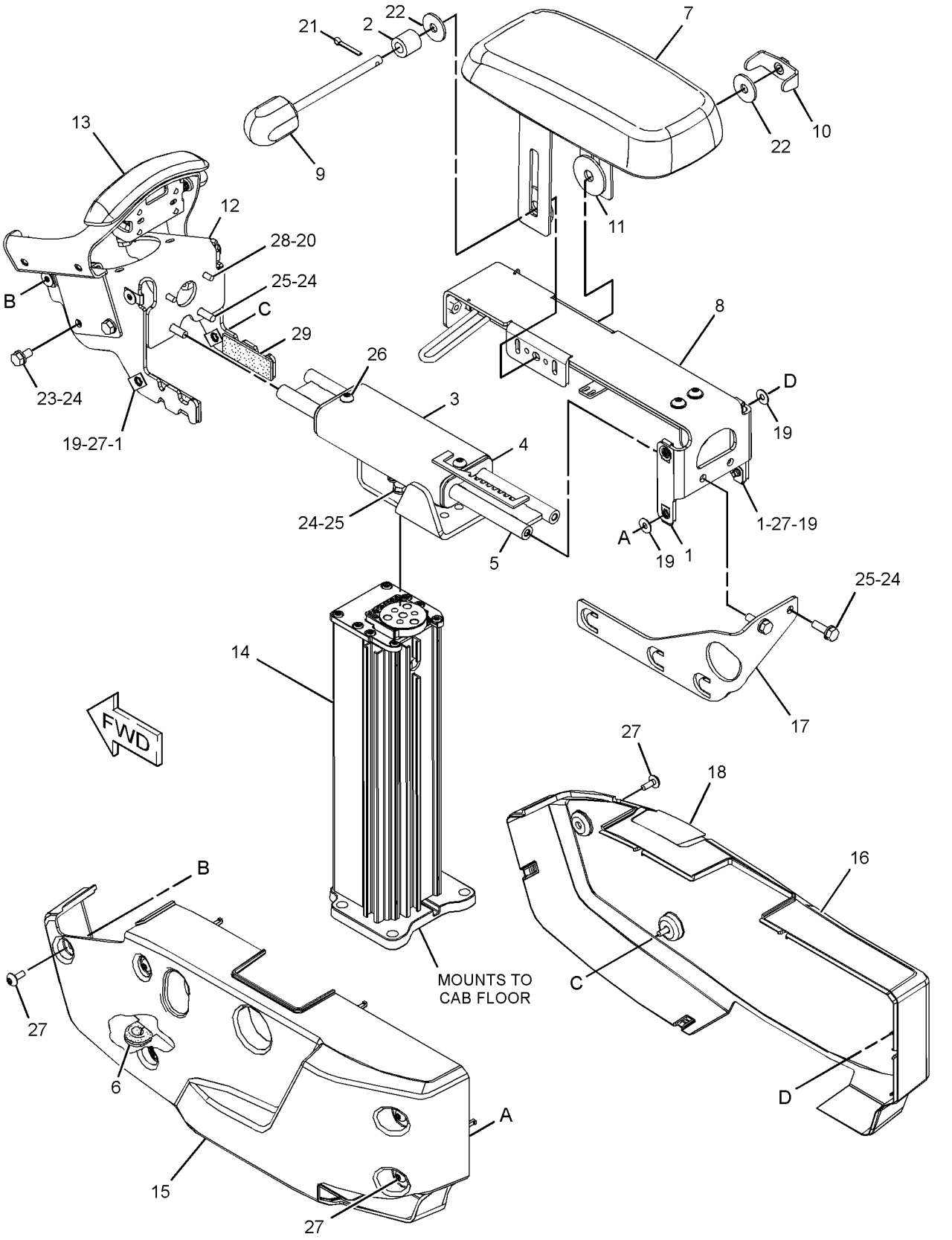

GRAPHIC #1 <END> g02257793

160-7165 SUSPENSION GP-SEAT

S/N: B551-UP

PART OF 504-4302 SEAT GP-SUSPENSION

SMCS-7324 **i06605552**

NOTE	REF NO	GRAPHIC REF	PART NUMBER	QTY	PART NAME 1 2 3 4 5 6 (PRODUCT LEVEL)	SEE PAGE
	1	1	**2K-4973**	2	LOCKNUT (3/8-16-THD)	
	2	1	**4V-7884**	2	BEARING	
	3	1	**4V-8577**	4	BEARING	
	4	1	**5V-1497**	1	RETAINER	
	5	1	**8Y-5965**	1	ABSORBER AS-SHOCK	
	6	1	**8Y-6012**	1	ARM AS-SUSPENSION	
	7	1	**8Y-6014**	1	HOUSING AS (LOWER)	
	8	1	**8Y-6024**	2	SHAFT AS	
J	9	1	**101-0003**	20	FASTENER	
J	10	1	**166-6781**	6	FASTENER	
J	11	1	**163-1146**	3	FASTENER	
	12	1	**145-0326**	1	FILM-INSTRUCTION (SEAT ADJUSTMENT)	
	13	1	**169-7380**	1	BOLT-SOCKET HEAD (3/8-16X0.375-IN)	
Y	14	1	**174-2231**	1	HOUSING GP-SEAT SUSPENSION	799
J	15	1	**197-7689**	3	FASTENER	
					AVAILABLE REPAIR KIT(S):	
J			**8Y-5944**	1	KIT-SUSPENSION BOOT (SEAT)	
					(INCLUDES BOOT, RETAINER & FASTENERS)	
			101-4194	1	KIT-TETHER BELT (SUSPENSION SEAT)	
					(INCLUDES BELTS)	
			101-4195	1	KIT-SUSPENSION ROLLER (SUSPENSION SEAT)	
					(INCLUDES ROLLERS)	

J - KIT MARKED J INCLUDES PART(S) MARKED J
Y - SEPARATE ILLUSTRATION

160-7165 **SUSPENSION GP-SEAT (**contd.**)** **i06605552**

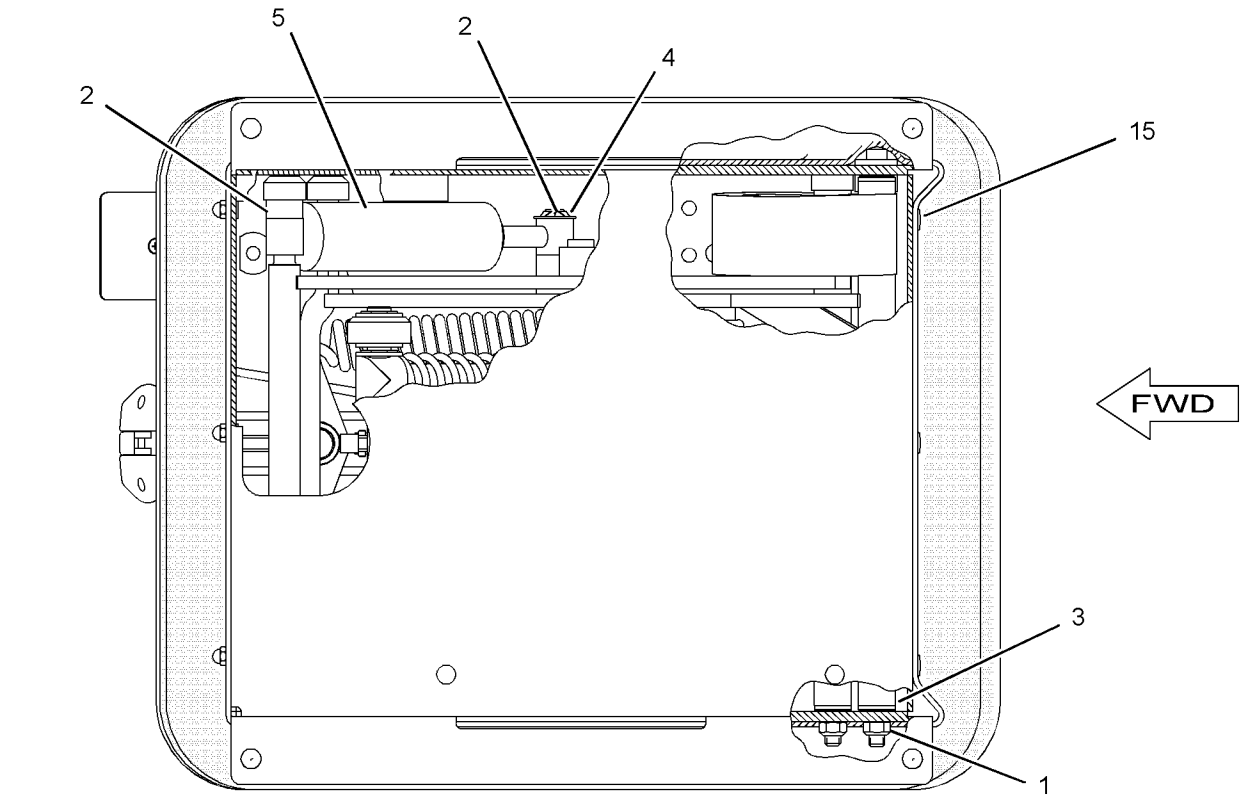

BOTTOM VIEW

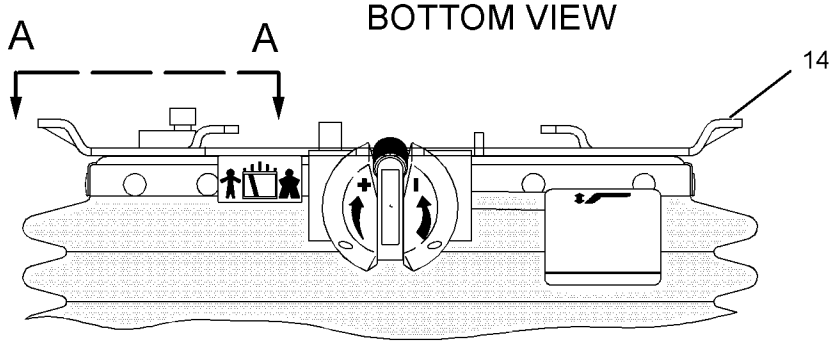

FRONT VIEW

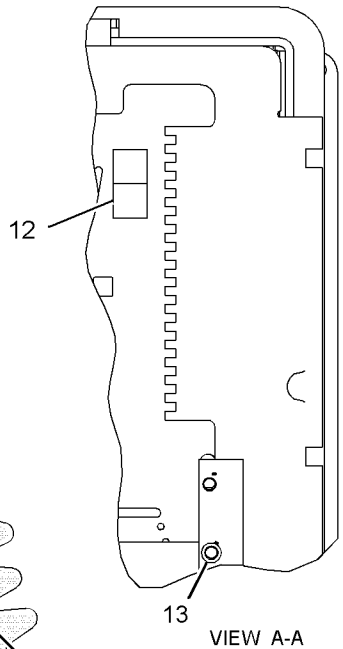

VIEW A-A

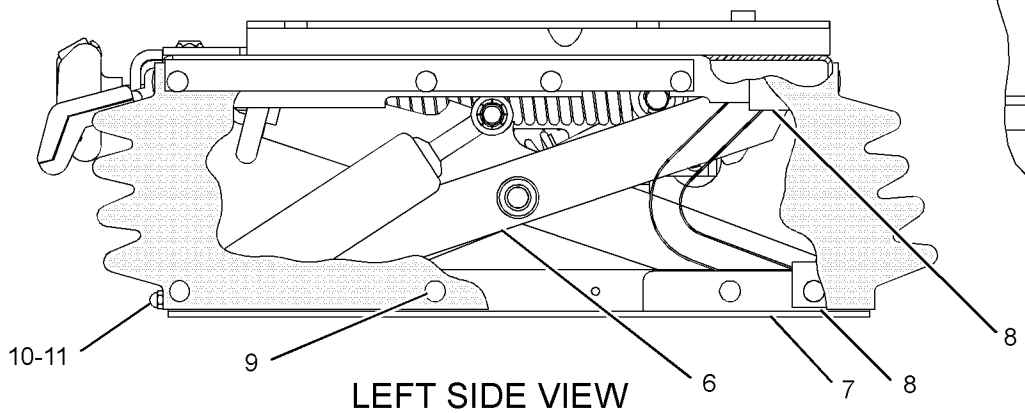

LEFT SIDE VIEW

GRAPHIC #1 <END> g01486873

256-8768 SUSPENSION GP-SEAT—AIR

S/N: B551-UP
24-VOLT
PART OF 421-1234 SEAT GP-SUSPENSION

SMCS-7324 **i05711035**

NOTE	REF NO	GRAPHIC REF	PART NUMBER	QTY	PART NAME 1 2 3 4 5 6 (PRODUCT LEVEL)	SEE PAGE
	1	1	**3P-9900**	5	WASHER (10.5X30X3-MM THK)	
	2	1	**4B-4278**	2	WASHER (10.2X20.5X1.6-MM THK)	
	3	1	**4V-8577**	12	BEARING	
	5	1	**101-0003**	26	FASTENER	
	6	1	**145-0326**	1	FILM-INSTRUCTION (SEAT ADJUSTMENT)	
	7	1	**164-1234**	1	PLATE	
	8	1	**169-7380**	1	BOLT-SOCKET HEAD (3/8-16X0.375-IN)	
	10	1	**192-7752**	4	SHAFT AS	
	11	1	**192-7755**	1	HOUSING AS (LOWER)	
C	12	1	**314-5274**	1	SHAFT (INNER)	
	13	1	**192-7767**	1	SCISSORS AS	
	14	1	**192-7783**	1	TOGGLE AS (WIDE)	
	15	1	**192-7787**	1	TOGGLE AS (NARROW)	
	16	1	**192-7790**	1	HOUSING AS (UPPER)	
	17	1	**192-7795**	1	BOOT	
	18	1	**433-5754**	1	HARNESS AS-WIRING (SEAT AIR COMPRESSOR)	
		1	**102-8802**	1	KIT-RECEPTACLE (2-PIN)	
					(INCLUDES RECEPTACLE AS & WEDGE)	
		1	**5P-4571**	2	TERMINAL-BLADE (14-GA TO 16-GA)	
		1	**097-7234**	2	TERMINAL-BLADE (18-GA TO 22-GA)	
		1	**9X-3401**	2	PIN-CONNECTOR (16-GA TO 18-GA)	
					—OR—	
		1	**126-1767**	2	PIN-CONNECTOR (14-GA TO 16-GA)	
B		1	**1P-0810**		TAPE-ELECTRICAL	
B		1	**329-3734**		TAPE-ELECTRICAL	
	19	1	**192-7810**	1	SPRING AS-AIR	
		1	**5P-4423**	1	ELBOW	
	20	1	**192-7812**	1	BOLT-SPECIAL	
	21	1	**192-7820**	3	BUMPER	
C	22	1	**314-5275**	1	SHAFT (OUTER)	
	25	1	**108-4311**	1	SCREW-MACHINE (3/8-16X0.75-IN)	
	26	1	**2K-4973**	8	LOCKNUT (3/8-16-THD)	
	27	1	**3J-4818**	1	LOCKWASHER	
M	28	1	**5C-2890**	3	NUT (M6X1-THD)	
D	29	1	**5P-6010**		TUBE (0.257-M)	
D	29A	1	**5P-6010**		TUBE (0.356-M)	
	30	1	**8T-9371**	1	BOLT (3/8-16X0.5-IN)	
E	31	1	**211-5358**		CONDUIT-FLEXIBLE (26.7-CM)	
E	31A	1	**211-5358**		CONDUIT-FLEXIBLE (35.6-CM)	
	34	1	**442-8151**	1	CLIP-CABLE	
	35	1	**3S-2093**	4	STRAP-CABLE	
					AVAILABLE REPAIR KIT(S):	
			192-7799	1	KIT-AIR VALVE & SWITCH (SEAT)	
					(INCLUDES KNOB ASSEMBLY)	
			212-7779	1	KIT-SHOCK ABSORBER (SUSPENSION SEAT)	
					(INCLUDES, LOCKNUTS, BALL, LOCKWASHER, STRAP, SPRING, CLAMP, ADJUSTERS, BOLTS, BEARINGS, WASHERS, SHOCK ABSORBER,	

256-8768 **SUSPENSION GP-SEAT (**contd.**)** **i05711035**

NOTE	REF NO	GRAPHIC REF	PART NUMBER	QTY	PART NAME 1 2 3 4 5 6 (PRODUCT LEVEL)	SEE PAGE
					BRACKETS, KIT, CABLE ASSEMBLY & KNOB)	
			211-9294	1	KIT-TETHER (SEAT)	
					(INCLUDES TETHER)	
			213-5170	1	KIT-SEAT ADJUSTER (SEAT ADJUSTMENT)	
					(INCLUDES BOLTS, NUTS, ROD, ARM & HOUSING)	
H			**212-7783**	1	KIT-PULLEY	
					(INCLUDES PIN, PULLEY, RETAINING RING, SETSCREW & SPRING)	
			397-6405	1	KIT-SEAT AIR COMPRESSOR	
					(INCLUDES STRAP, SCREWS, COMPRESSOR AS, BRACKET-MOUNT & HARNESS ASSEMBLIES)	

B - USE AS REQUIRED
C - CHANGE FROM PREVIOUS TYPE
D - ORDER BY THE METER
E - ORDER BY THE CENTIMETER
H - KIT MARKED H SERVICES 212-7779 KIT-SHOCK ABSORBER
M - METRIC PART

256-8768 **SUSPENSION GP-SEAT (**contd.**)** **i05711035**

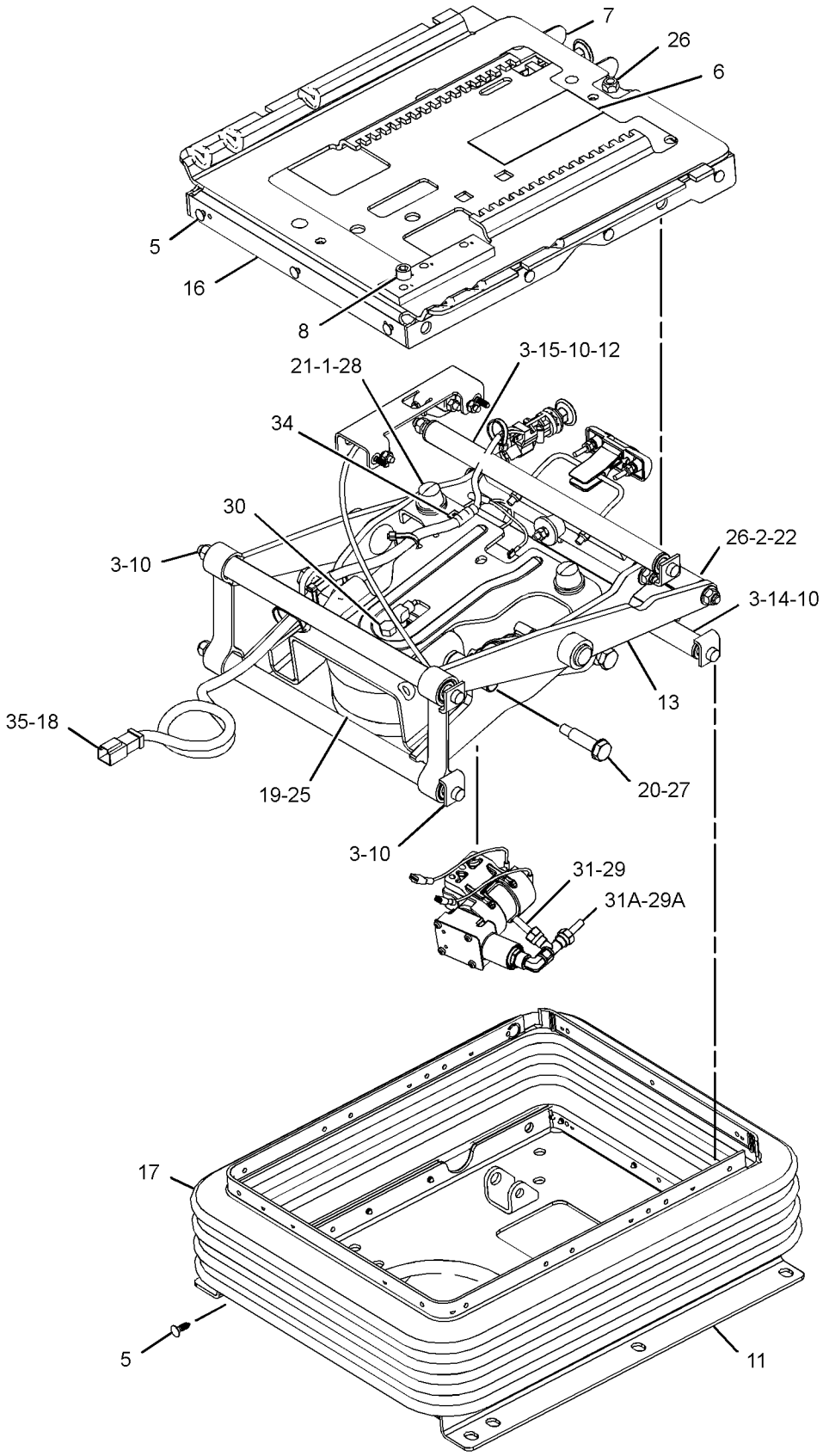

GRAPHIC #1 <END> g03637837

325-9410 TANK GP-WINDOW WASHER

S/N: B551-UP

PART OF 310-2029 WIPER & WASHER GP-WINDOW

SMCS-7306 **i05257509**

NOTE	REF NO	GRAPHIC REF	PART NUMBER	QTY	PART NAME 1 2 3 4 5 6 (PRODUCT LEVEL)	SEE PAGE
	1	1	**6W-5698**	1	GROMMET	
	2	1	**416-0021**	3	PUMP AS-WASHER (24-VOLT)	
	3	1	**261-3345**	1	CONNECTOR	
	4	1	**267-8715**	3	GROMMET	
	5	1	**321-5236**	3	PLUG	
	6	1	**355-9823**	1	TANK AS-WINDOW WASHER	

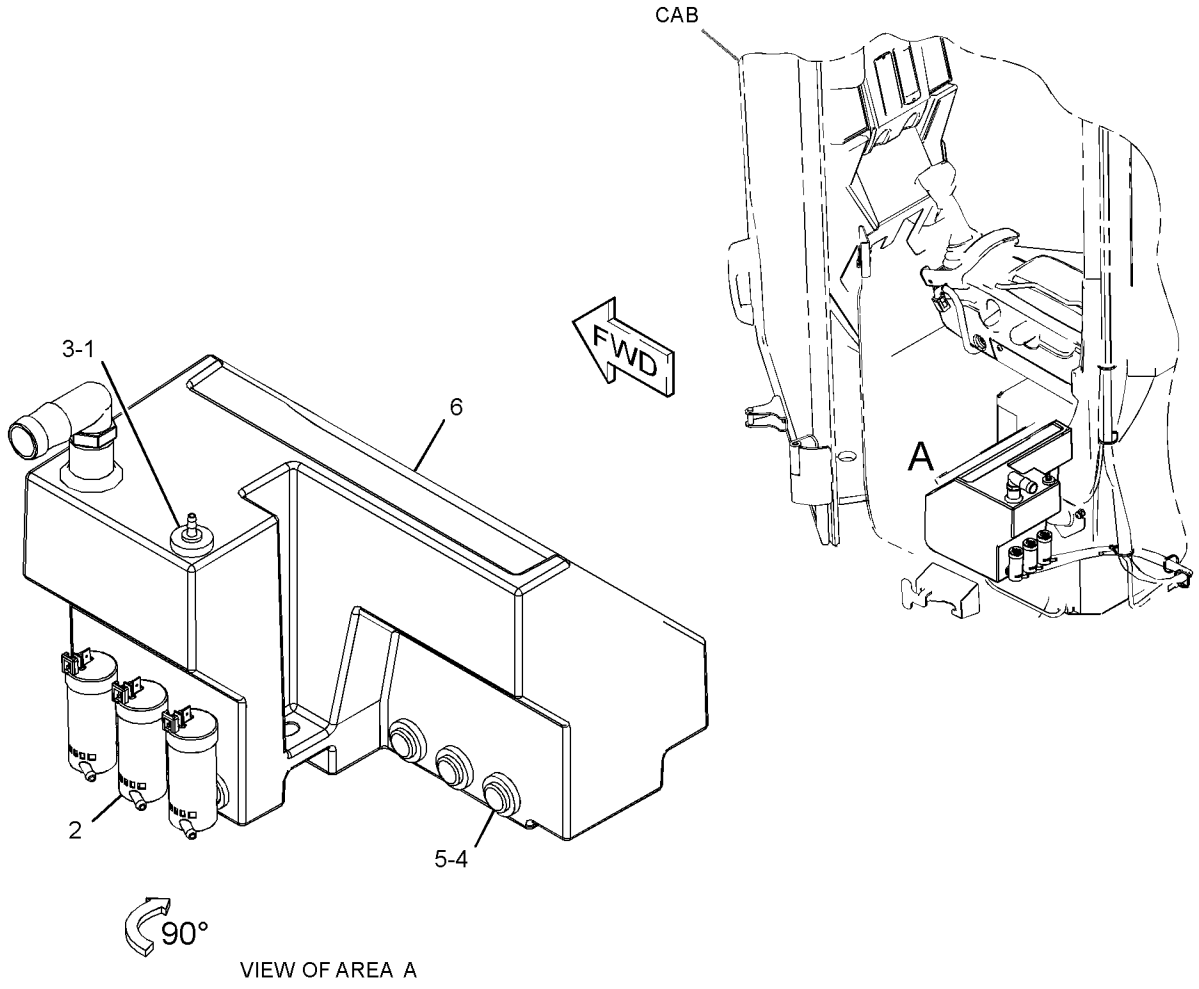

VIEW OF AREA A

GRAPHIC #1 <END> g03348559

381-2494 TRIM GP-CAB–HVAC

S/N: B551-UP

PART OF 420-1977, 575-9874, 575-9875 CAB AR

SMCS-7329 **i06857325**

NOTE	REF NO	GRAPHIC REF	PART NUMBER	QTY	PART NAME 1 2 3 4 5 6 (PRODUCT LEVEL)	SEE PAGE
B	1	1,3	**1R-0622**	6	PLUG-BUTTON	
	2	1	**6V-8928**	1	HOOK-COAT	
	3	1	**8Y-6379**	1	KIT-HAMMER (CAB WINDOW)	
					(INCLUDES BRACKET & HAMMER)	
	4	2	**8Y-6388**	4	LOUVER AS-VENT	
B	5	1	**9U-8263**	1	COVER	
B	6	1	**144-4107**	2	FASTENER	
	7	1	**164-8474**	2	LOUVER AS-VENT	
	8	2	**171-4047**	4	LOUVER AS-VENT	
C	9	3	**214-9186**	5	BUTTON	
C	10	1	**228-6089**	1	PLUG (ROCKER SWITCH)	
	11	2	**274-2392**	1	SCREW-THUMB	
	12	2	**294-1002**	1	PLENUM (LOWER, RH)	
	13	2	**294-1004**	1	PLENUM (LOWER, LH)	
	14	2	**297-4170**	1	INSULATION	
	15	1	**303-9456**	1	CUP HOLDER	
	16	2	**325-1258**	1	PLENUM (UPPER, RH)	
	17	2	**325-1260**	1	PLENUM (UPPER, LH)	
	18	1	**325-9407**	1	FILM-IDENTIFICATION (WRITE DATA)	
	19	1	**330-3865**	1	PLATE AS	
M		1	**6V-9632**	2	NUT-WELD (M6X1-THD)	
M		1	**9X-2032**	1	NUT-WELD (M4X0.7-THD)	
		1	**419-3214**	6	BOSS	
C	20	2,3	**334-6090**	6	STUD	
	21	1	**343-6499**	1	COVER AS (RH)	
M		1	**6V-9632**	1	NUT-WELD (M6X1-THD)	
M		1	**8T-3612**	6	NUT-WELD (M8X1.25-THD)	
M		1	**9X-2032**	1	NUT-WELD (M4X0.7-THD)	
	22	1	**343-6500**	1	COVER AS (LH)	
M		1	**6V-9632**	4	NUT-WELD (M6X1-THD)	
M		1	**8T-3612**	4	NUT-WELD (M8X1.25-THD)	
	23	2	**357-2261**	1	SUPPORT AS	
M		2	**6V-9632**	3	NUT-WELD (M6X1-THD)	
M		2	**8T-3490**	4	NUT-WELD (M10X1.5-THD)	
	24	2	**357-2270**	1	COVER AS	
	25	2	**361-0429**	1	PANEL (LH)	
C	26	2	**368-8072**	1	PANEL (RH)	
	27	1	**373-4446**	1	PLUG	
	28	1	**398-8490**	1	COVER AS-PANEL	
		1	**398-3672**	1	PANEL-COVER	
		1	**297-4162**	1	FILM-IDENTIFICATION (SWITCH PANEL, UPPER)	
		1	**398-9593**	1	FILM-IDENTIFICATION (SWITCH PANEL, LOWER)	
C	29	2	**417-6775**	1	TRAY	
	30	3	**419-7776**	1	COVER AS	
M		3	**6V-9632**	2	NUT-WELD (M6X1-THD)	
M		3	**8T-3490**	2	NUT-WELD (M10X1.5-THD)	
C	31	2	**419-8564**	2	STRAP	
C	32	1	**436-7082**	1	TRAY	

381-2494 **TRIM GP-CAB (**contd.**)** **i06857325**

NOTE	REF NO	GRAPHIC REF	PART NUMBER	QTY	PART NAME 1 2 3 4 5 6 (PRODUCT LEVEL)	SEE PAGE
C	33	1	**437-8991**	1	NET AS (STORAGE)	
C	34	2	**438-8077**	1	BIN-STORAGE	
C	35	2	**438-8078**	1	BIN-STORAGE	
C	36	2,3	**439-9973**	6	CLIP	
C	37	3	**441-7480**	1	PLATE AS	
M		3	**9R-2672**	1	BOSS-THREADED (M10X1.5X120-MM)	
M		3	**9R-2821**	1	BOSS (M10X1.5X15-MM)	
C	38	3	**443-6429**	1	FLOOR MAT AS	
C	39	2	**445-6466**	2	TUBE AS	
C	40	2	**448-3613**	1	STRAP	
C	41	2	**463-6185**	1	LINER	
C	42	2	**463-6186**	1	LINER	
	43	1	**096-6166**	1	WASHER-HARD (4.5X9X1-MM THK)	
	44	2	**104-2091**	16	SCREW-FLAT HEAD (6-20X0.5-IN)	
M	45	2	**111-4627**	6	SCREW-MACHINE (M6X1X30-MM)	
C	46	1	**232-1473**	15	WASHER (6X18X1-MM THK)	
M	47	1	**162-2165**	1	BOLT-SOCKET HEAD (M4X0.7X16-MM)	
M	48	1	**195-0936**	6	INSERT-THREADED (M6X1-THD)	
C	49	2,3	**212-6891**	6	RETAINER	
	50	2	**4I-3069**	1	WASHER-HARD (7X15.5X0.8-MM THK)	
	51	2	**2V-2015**	1	NUT-SPEED	
	52	1	**2V-3726**	1	BUMPER	
M	53	1,2	**3E-8020**	8	SCREW-TRUSS HEAD (M6X1X25-MM)	
M	54	2	**172-8591**	7	NUT-CLIP (M6X1-THD)	
	55	1	**6K-3273**	4	RIVET-POP	
M	57	1	**8T-4191**	4	BOLT (M10X1.5X16-MM)	
	58	2	**7X-0579**	8	WASHER-HARD (8.8X25.5X2-MM THK)	
	59	1	**8C-9660**	6	WASHER (4.6X7.9X0.8-MM THK)	
	60	1	**8R-3695**	1	GROMMET	
	61	2	**8T-4121**	10	WASHER-HARD (11X21X2.5-MM THK)	
M	62	2	**8T-4195**	6	BOLT (M10X1.5X30-MM)	
C	64	2,3	**9X-2038**	11	WASHER (7X19X2-MM THK)	
CM	65	1,3	**9X-2043**	9	SCREW-TRUSS HEAD (M6X1X14-MM)	
CM	66	1,2	**9X-2044**	6	SCREW-TRUSS HEAD (M6X1X16-MM)	
M	67	3	**9X-2045**	6	SCREW-TRUSS HEAD (M6X1X20-MM)	
D	68	1,2	**5P-5927**		SEAL (0.9-M)	
D	69	2	**8T-6936**		SEAL (4.5-M EACH)	

B - USE AS REQUIRED
C - CHANGE FROM PREVIOUS TYPE
D - ORDER BY THE METER
M - METRIC PART

381-2494 **TRIM GP-CAB** (contd.) **i06857325**

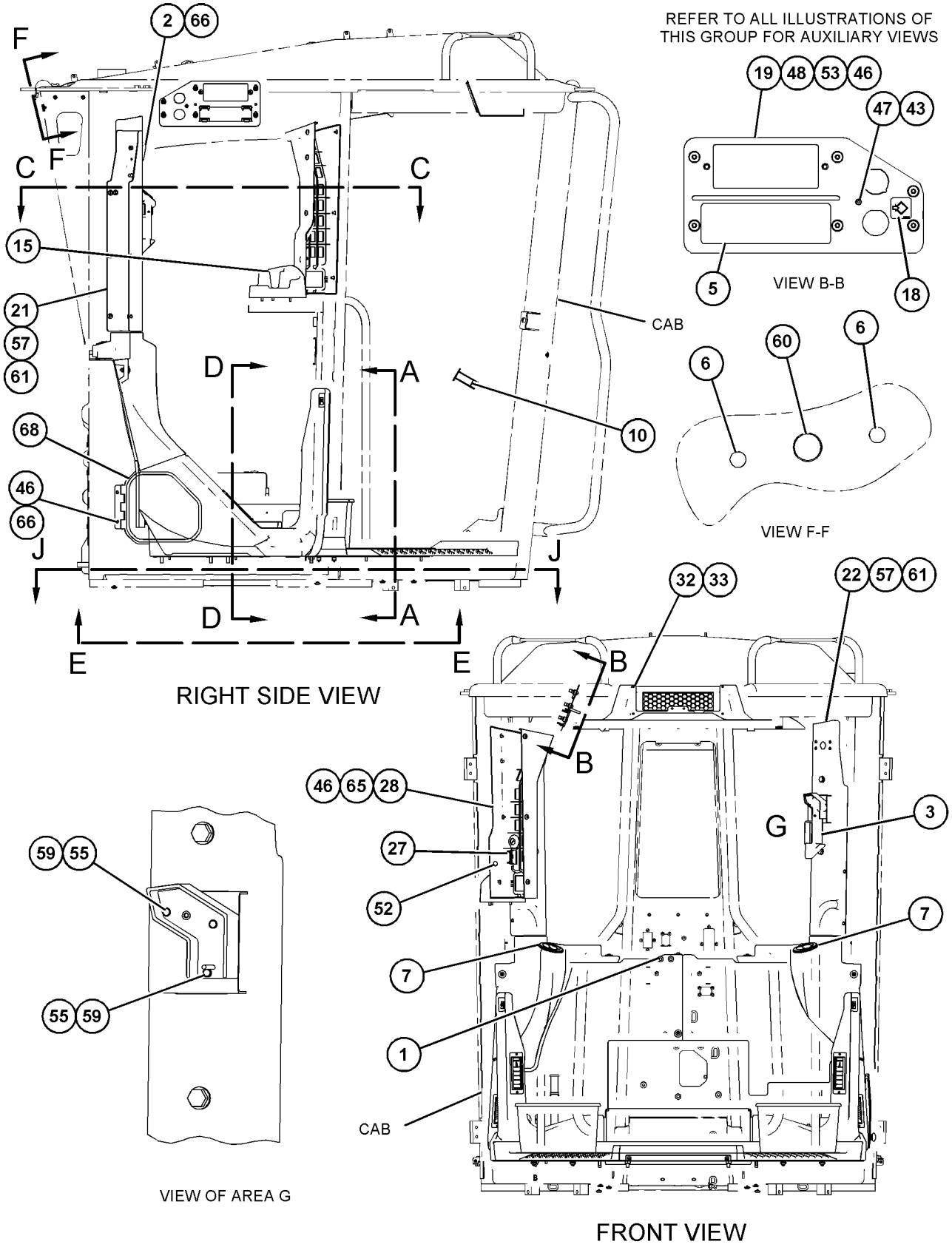

GRAPHIC #1 g06133670

381-2494 **TRIM GP-CAB (**contd.**)** **i06857325**

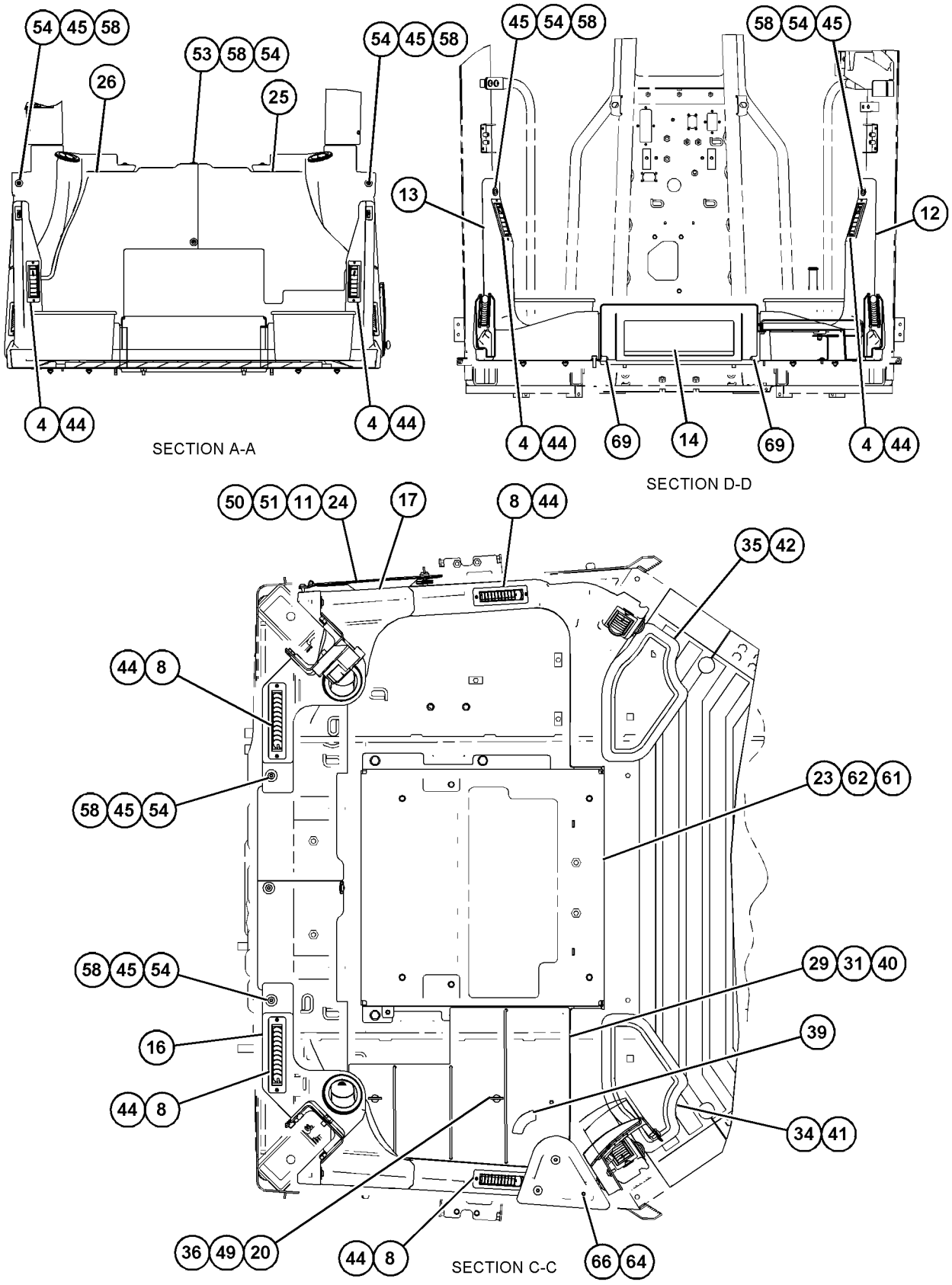

GRAPHIC #2 g06007586

381-2494 **TRIM GP-CAB** (contd.) **i06857325**

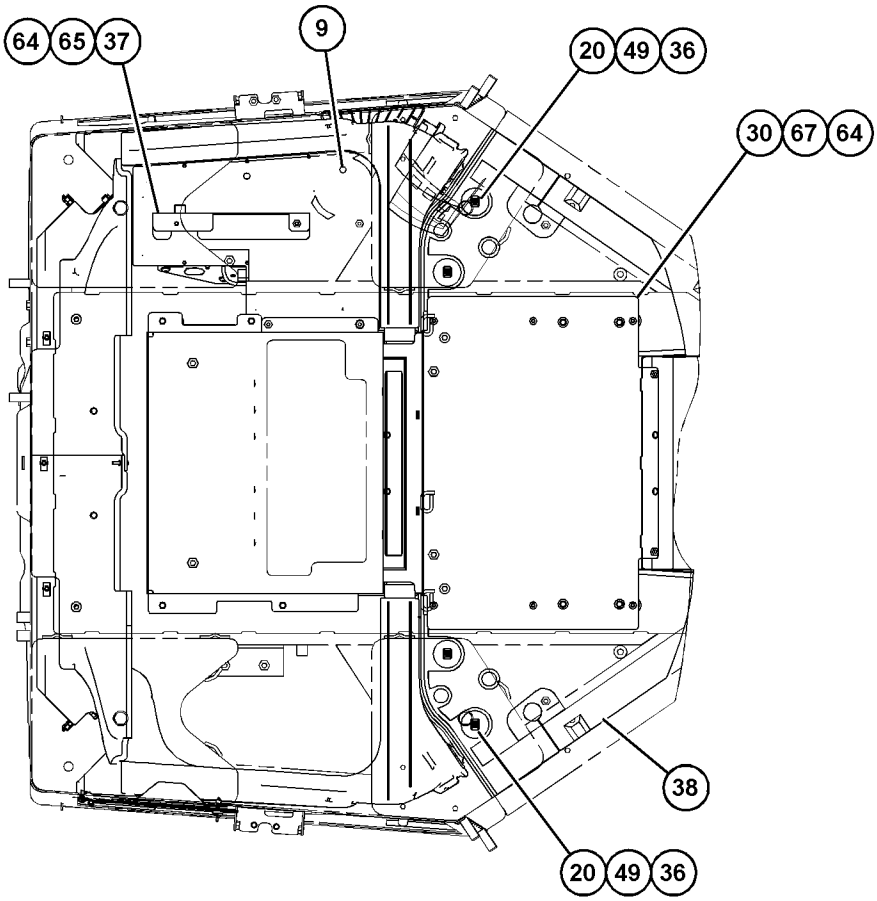

VIEW E-E

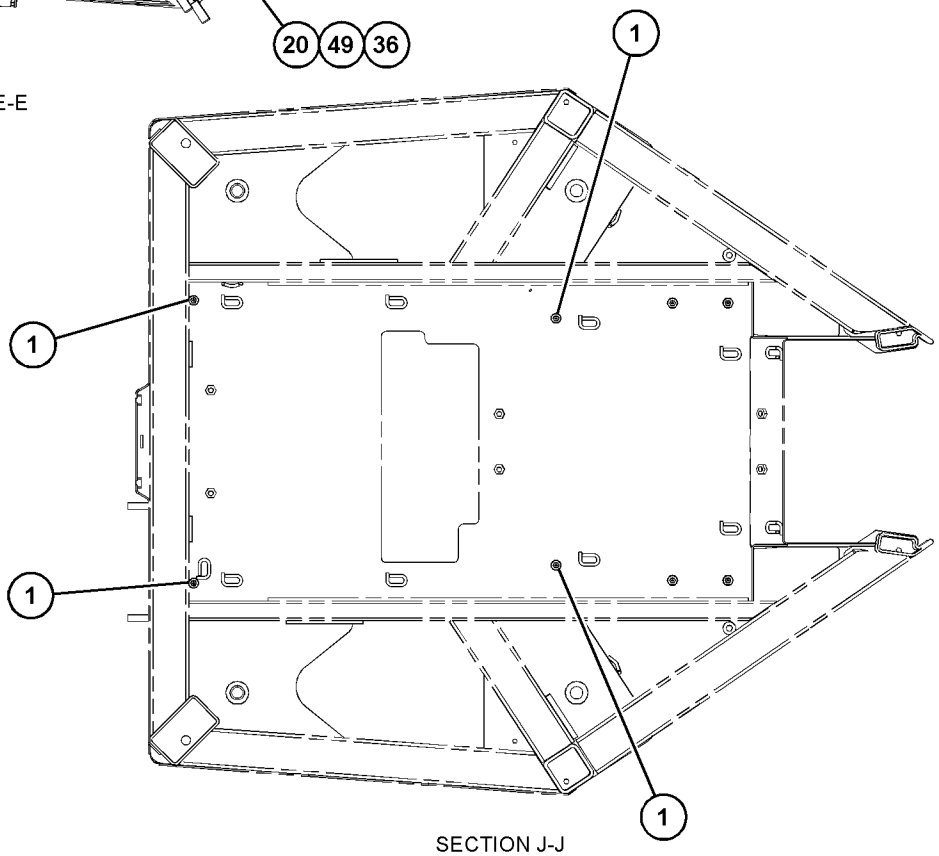

SECTION J-J

GRAPHIC #3 <END> g06007587

300-1870 WINDOW GP-CAB—REAR, SIDE

S/N: B551-UP
LOWER
PART OF 381-7048 ROPS GP

SMCS-7310 **i04466070**

NOTE	REF NO	GRAPHIC REF	PART NUMBER	QTY	PART NAME 1 2 3 4 5 6 (PRODUCT LEVEL)	SEE PAGE
	1	1	**110-7524**	6	BUTTON	
	2	1	**214-9186**	2	BUTTON	
	3	1	**233-3235**	1	GLASS-REAR	
	4	1	**300-1871**	1	GLASS (RH)	
	5	1	**300-1872**	1	GLASS (LH)	
E	6	1	**3E-3000**		SEAL (392-CM EACH)	

E - ORDER BY THE CENTIMETER

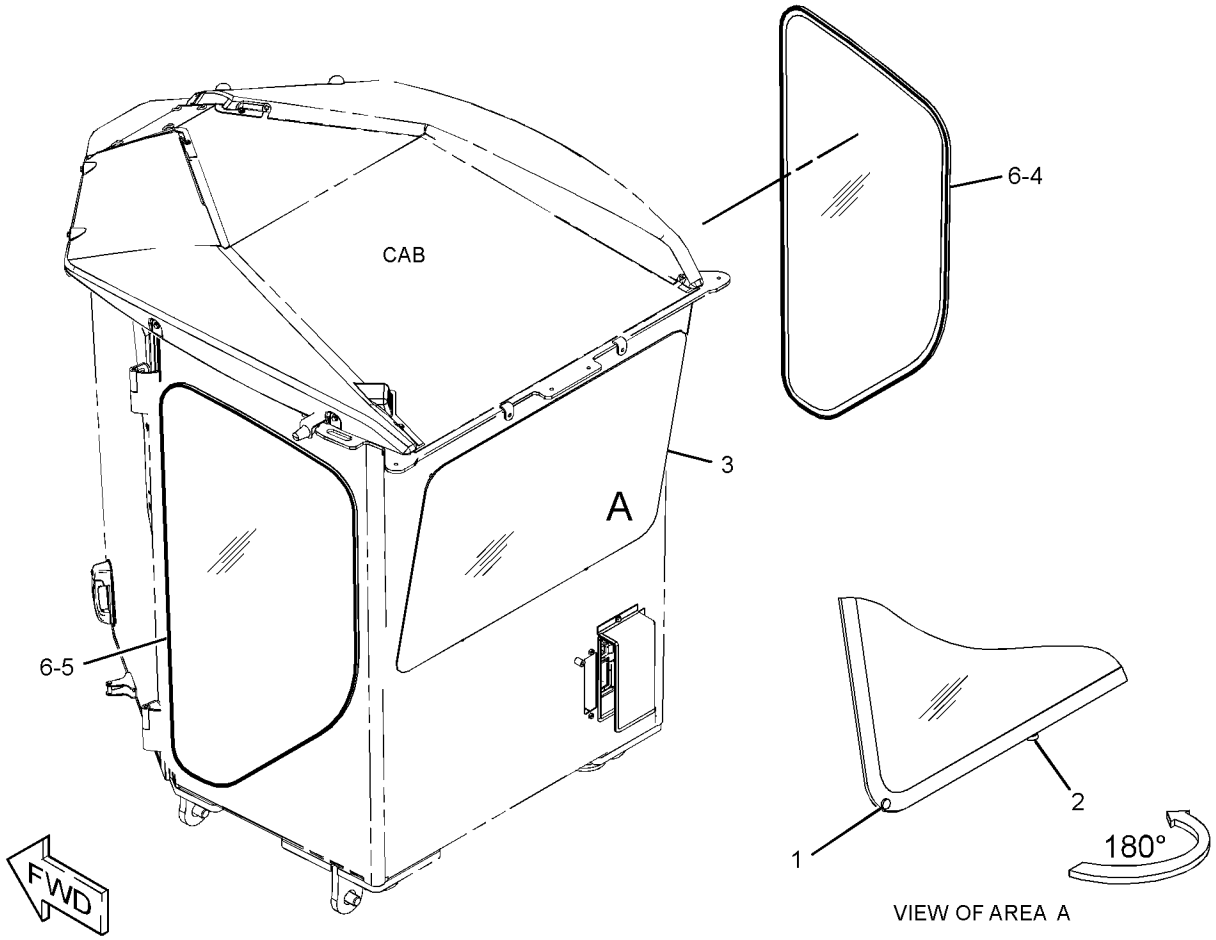

GRAPHIC #1 <END> g02722716

363-6709 WINDOW GP-CAB–FRONT

S/N: B551-UP

PART OF 381-7048, 381-7049 ROPS GP

SMCS-7310 **i05949140**

NOTE	REF NO	GRAPHIC REF	PART NUMBER	QTY	PART NAME 1 2 3 4 5 6 (PRODUCT LEVEL)	SEE PAGE
	1	1	**114-6658**	6	WASHER (6.5X17X1-MM THK)	
	2	1	**363-6708**	1	GLASS	
	3	1	**294-1018**	2	BRACKET	
M	4	1	**9X-2045**	6	SCREW-TRUSS HEAD (M6X1X20-MM)	
E	5	1	**294-1015**		SEAL (26-CM EACH)	
E	6	1	**294-1014**		SEAL-GLASS (169-CM)	

E - ORDER BY THE CENTIMETER
M - METRIC PART

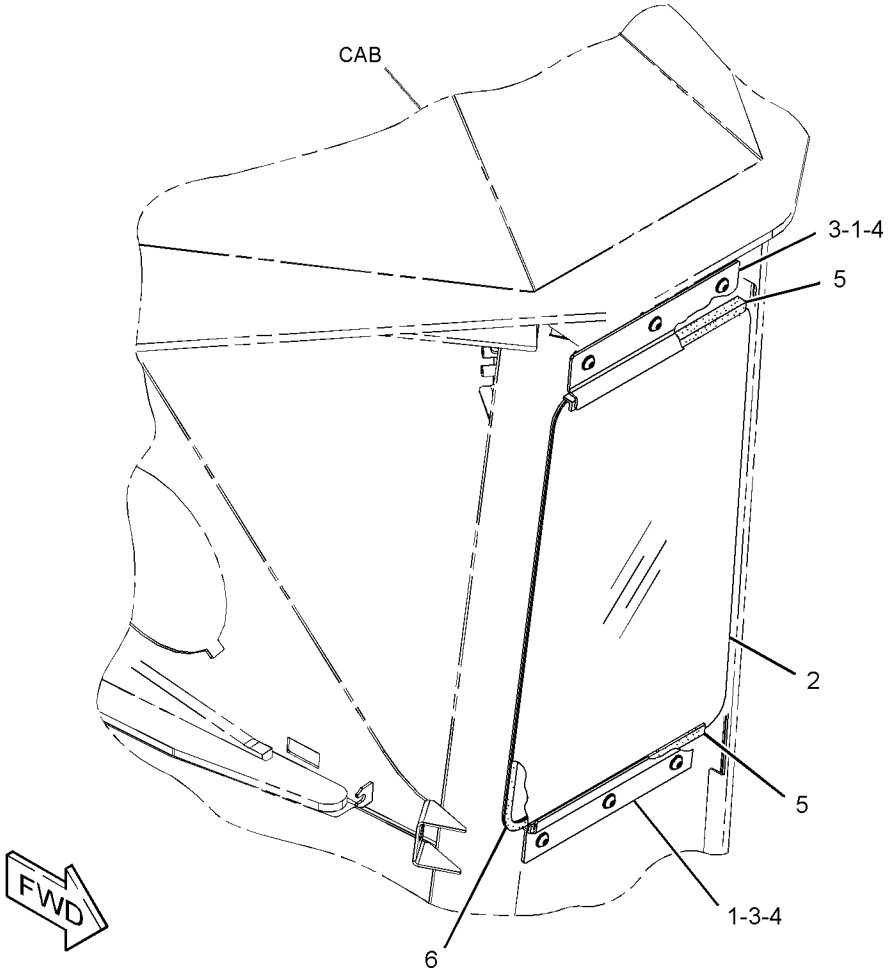

GRAPHIC #1 <END> g02310715

381-8143 WINDOW GP-CAB

S/N: B551-UP

PART OF 381-7049 ROPS GP

SMCS-7310 **i04868509**

NOTE	REF NO	GRAPHIC REF	PART NUMBER	QTY	PART NAME 1 2 3 4 5 6 (PRODUCT LEVEL)	SEE PAGE
	1	1	**110-7524**	6	BUTTON	
	2	1	**214-9186**	2	BUTTON	
	3	1	**233-3235**	1	GLASS-REAR	
	4	1	**300-1874**	1	GLASS (RH)	
	5	1	**300-1875**	1	GLASS (LH)	
E	6	1	**3E-3000**		SEAL (398-CM EACH)	

E - ORDER BY THE CENTIMETER

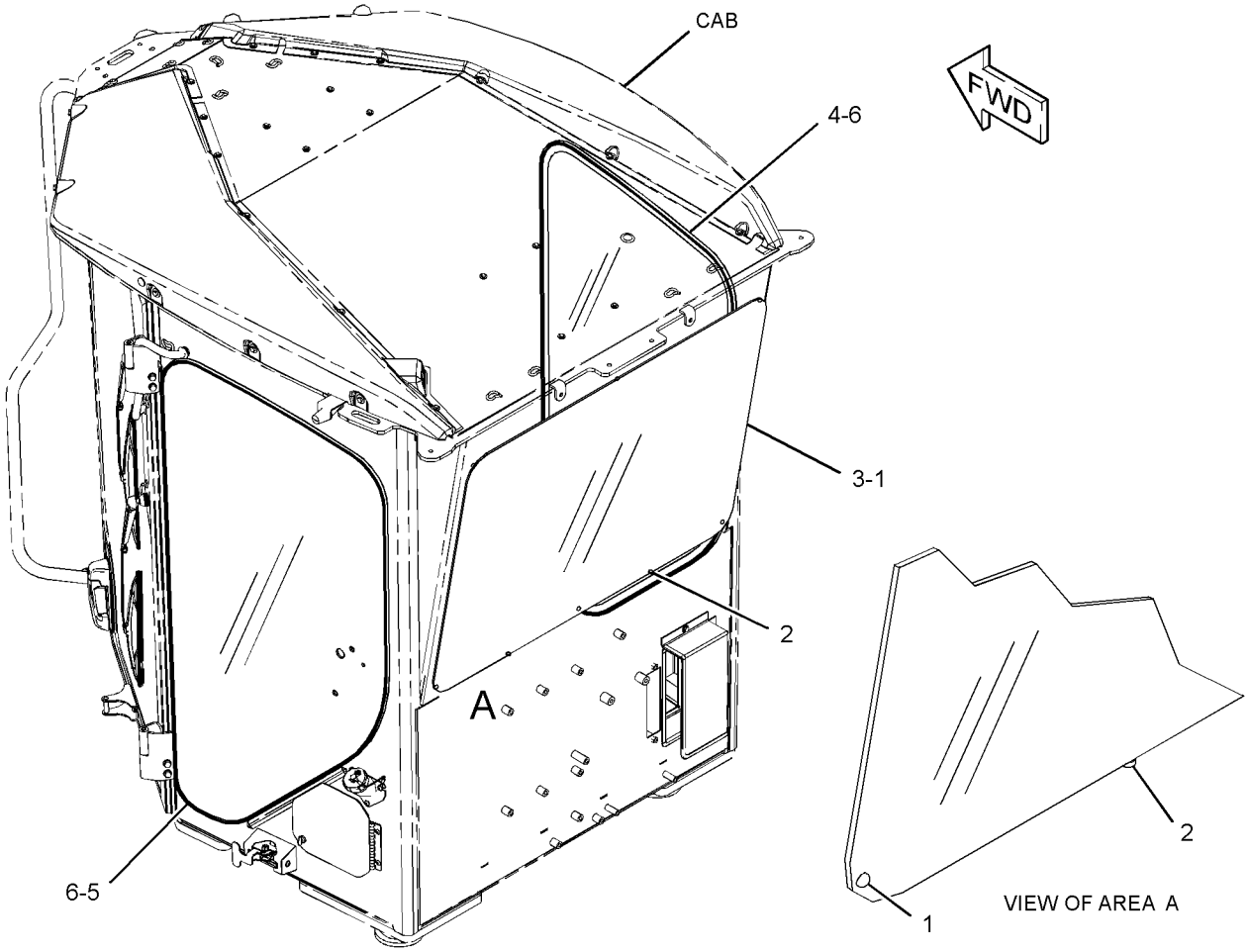

GRAPHIC #1 <END> g02997976

381-8211 WINDOW GP-VENT

S/N: B551-UP

PART OF 420-1977, 575-9874, 575-9875 CAB AR

SMCS-7310 **i07671283**

NOTE	REF NO	GRAPHIC REF	PART NUMBER	QTY	PART NAME 1 2 3 4 5 6 (PRODUCT LEVEL)	SEE PAGE
	1	1	**4B-5059**	2	WASHER (15X29.5X2.5-MM THK)	
	2	1	**341-8342**	2	LATCH AS-WINDOW	
					(EACH INCLUDES)	
		1	**8Y-8294**	1	LATCH AS-WINDOW	
		1	**335-2228**	1	PIN-GROOVED	
		1	**332-8658**	1	BRACKET	
	3	1	**376-9207**	2	VENT AS	
	4	1	**114-6658**	4	WASHER (6.5X17X1-MM THK)	
M	5	1	**3E-4302**	4	SCREW-FLAT HEAD (M4X0.7X10-MM)	
M	6	1	**3E-8020**	4	SCREW-TRUSS HEAD (M6X1X25-MM)	
E	7	1	**148-5355**		SEAL (42-CM EACH)	

E - ORDER BY THE CENTIMETER
M - METRIC PART

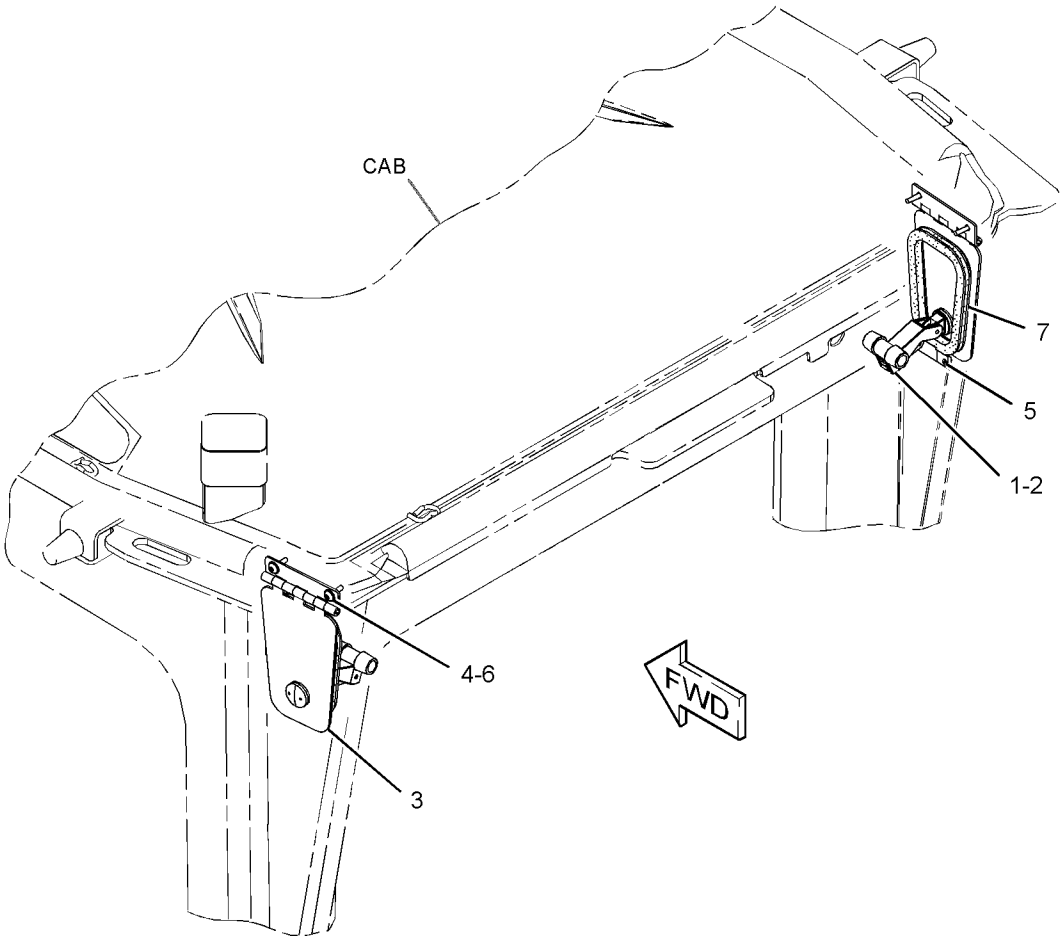

GRAPHIC #1 <END> g02724286

310-2029 WIPER & WASHER GP-WINDOW—FRONT

S/N: B551-UP

PART OF 420-1977, 575-9874, 575-9875 CAB AR

SMCS-7305, 7306 **i05841634**

NOTE	REF NO	GRAPHIC REF	PART NUMBER	QTY	PART NAME 1 2 3 4 5 6 (PRODUCT LEVEL)	SEE PAGE
	1	1	**3S-2093**	15	STRAP-CABLE	
	2	1	**3V-3263**	2	CONNECTOR (HOSE)	
	3	1	**4E-8722**	3	NUT (RETAINER)	
	4	1	**6V-5853**	1	BLADE AS-WIPER (450-MM) (FRONT, UPPER)	
	5	1	**444-9544**	3	VALVE AS-CHECK (WINDOW WASHER)	
	6	1	**8T-5400**	1	CONNECTOR	
	7	1	**8V-7162**	1	CABLE	
	8	1	**114-6658**	3	WASHER (6.5X17X1-MM THK)	
	9	1	**180-0149**	3	TUBE	
	10	1	**240-2172**	1	SPOUT	
	11	1	**248-2621**	1	ARM GP-WINDOW WIPER (FRONT, UPPER)	
		1	**136-3188**	2	CLIP	
		1	**136-3191**	1	NOZZLE AS-WASHER	
E		1	**194-5171**		HOSE (55-CM)	
	12	1	**276-3884**	1	CAP-VENTED (WASHER TANK)	
Y	13	1	**295-1120**	1	MOTOR GP-WINDOW WIPER	821
Y	14	1	*325-9410*	1	TANK GP-WINDOW WASHER	849
	15	1	**336-7699**	2	CLAMP	
	16	1	**7X-0579**	3	WASHER-HARD (8.8X25.5X2-MM THK)	
M	17	1	**9X-2044**	3	SCREW-TRUSS HEAD (M6X1X16-MM)	
M	18	1	**9X-2046**	3	SCREW-TRUSS HEAD (M6X1X35-MM)	
E	19	1	**8I-1362**		HOSE (33-CM)	
E	20	1	**144-0195**		HOSE (320-CM)	
E	20A	1	**144-0195**		HOSE (83-CM)	
E	20B	1	**144-0195**		HOSE (213-CM)	
E	20C	1	**144-0195**		HOSE (342-CM)	
E	20D	1	**144-0195**		HOSE (18-CM EACH)	
	21	1	**445-1508**	1	GASKET	

E - ORDER BY THE CENTIMETER
M - METRIC PART
Y - SEPARATE ILLUSTRATION

310-2029 **WIPER & WASHER GP-WINDOW (**contd.**)** **i05841634**

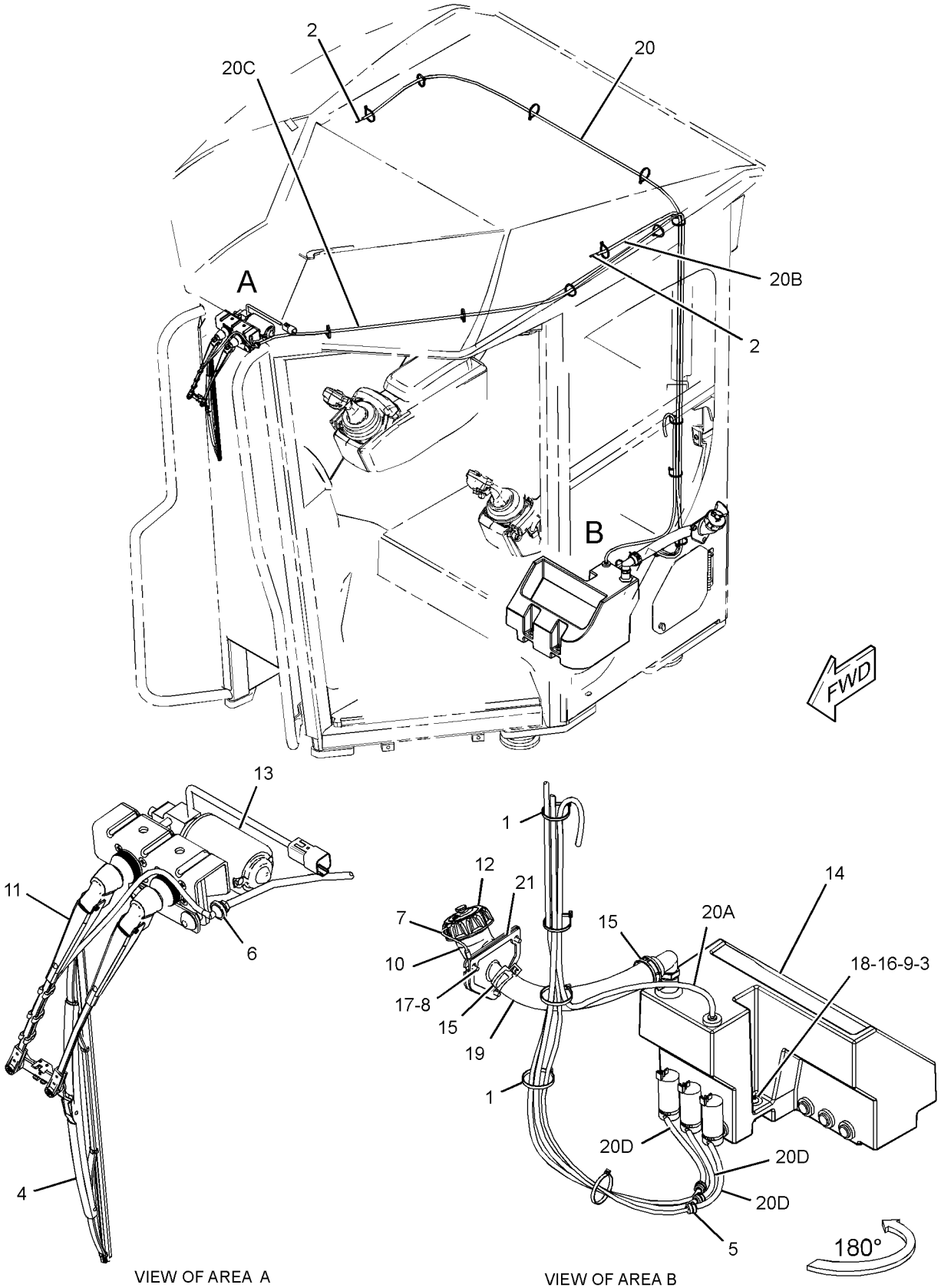

VIEW OF AREA A

VIEW OF AREA B

GRAPHIC #1 <END> g03694235

330-3868 WIPER GP-WINDOW–REAR

S/N: B551-UP

PART OF 420-1977 CAB AR

SMCS-7305 **i06057280**

NOTE	REF NO	GRAPHIC REF	PART NUMBER	QTY	PART NAME 1 2 3 4 5 6 (PRODUCT LEVEL)	SEE PAGE
	1	1	**444-9544**	1	VALVE AS-CHECK (WINDOW WASHER)	
	2	1	**8T-5400**	1	CONNECTOR	
	3	1	**112-5869**	1	ARM AS-WINDOW WIPER	
E		1	**194-5171**		HOSE (43-CM)	
		1	**305-9192**	1	NOZZLE AS-WASHER	
	4	1	**146-6433**	1	BLADE AS-WIPER (500-MM)	
	5	1	**416-0021**	1	PUMP AS-WASHER (24-VOLT)	
Y	6	1	**275-7764**	1	SWITCH GP-WIPER (24-VOLT, INTERMITTENT)	282
CY	7	1	**457-3648**	1	MOTOR GP-WINDOW WIPER	822
E	8	1	**144-0195**		HOSE (276-CM)	
E	8A	1	**144-0195**		HOSE (18-CM)	

C - CHANGE FROM PREVIOUS TYPE
E - ORDER BY THE CENTIMETER
Y - SEPARATE ILLUSTRATION

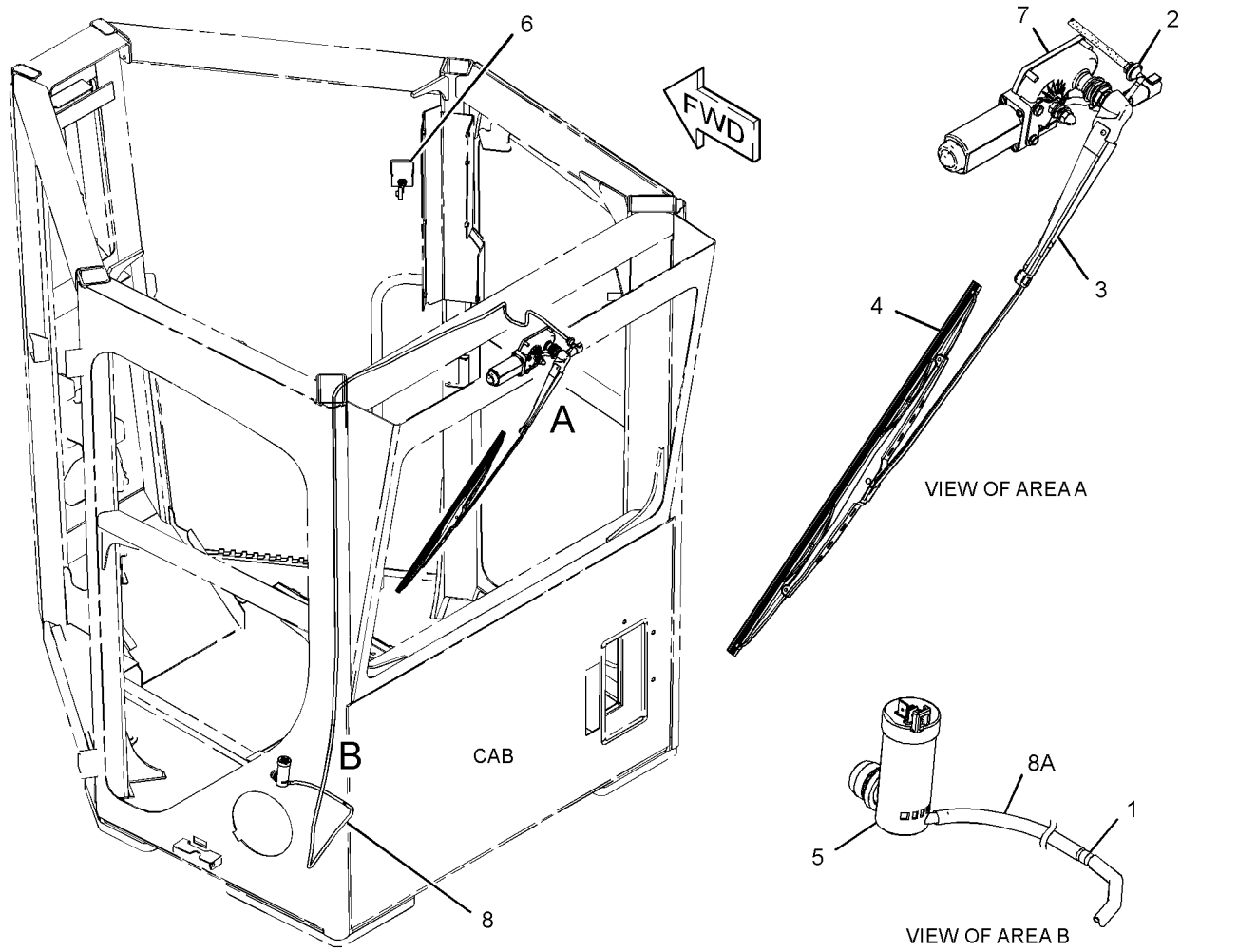

GRAPHIC #1 <END> g03351889

357-9652 WIPER GP-WINDOW—DOOR, RH

S/N: B551-UP

PART OF 357-9199 DOOR GP-CAB

SMCS-7305 **i07830444**

NOTE	REF NO	GRAPHIC REF	PART NUMBER	QTY	PART NAME 1 2 3 4 5 6 (PRODUCT LEVEL)	SEE PAGE
	1	1	**2U-4504**	1	TEE	
	2	1	**3S-2093**	3	STRAP-CABLE	
	3	1	**5C-8811**	1	BLADE AS-WIPER (500-MM) (UPPER)	
	4	1	**6V-5851**	1	BLADE AS-WIPER (400-MM) (LOWER)	
	5	1	**7Y-3474**	1	VALVE AS-CHECK (WINDOW WASHER)	
	6	1	**8T-5400**	2	CONNECTOR	
	7	1	**256-9448**	1	ARM GP-WINDOW WIPER (UPPER)	
		1	**8T-1119**	1	NOZZLE AS-WASHER	
		1	**240-8666**	3	CLIP	
E		1	**194-5171**		HOSE (58-CM)	
	8	1	**295-1117**	1	ARM GP-WINDOW WIPER (LOWER)	
		1	**8T-1119**	1	NOZZLE AS-WASHER	
		1	**240-8666**	3	CLIP	
E		1	**194-5171**		HOSE (60-CM)	
	9	1	**357-9654**	1	LINKAGE GP-WIPER	
		1	**3F-9556**	2	LOCKWASHER	
M		1	**5C-7261**	2	NUT (M8X1.25-THD)	
		1	**206-5823**	2	CAP (WIPER MOTOR)	
	10	1	**389-2249**	1	MOTOR GP-WINDOW WIPER (24-VOLT, 2-SPEED)	
		1	**8T-8729**	5	PIN-CONNECTOR (16-GA TO 20-GA)	
		1	**8T-8737**	1	PLUG-SEAL	
		1	**102-8805**	1	KIT-RECEPTACLE (6-PIN)	
					(INCLUDES RECEPTACLE AS & WEDGE)	
	11	1	**3F-9556**	1	LOCKWASHER	
M	12	1	**5C-7261**	1	NUT (M8X1.25-THD)	
	13	1	**1H-3244**	3	LOCKWASHER	
M	14	1	**8T-4970**	3	BOLT (M6X1X14-MM)	
E	15	1	**144-0195**		HOSE (11-CM EACH)	
E	15A	1	**144-0195**		HOSE (18-CM)	

E - ORDER BY THE CENTIMETER
M - METRIC PART

357-9652 **WIPER GP-WINDOW (**contd.**)** **i07830444**

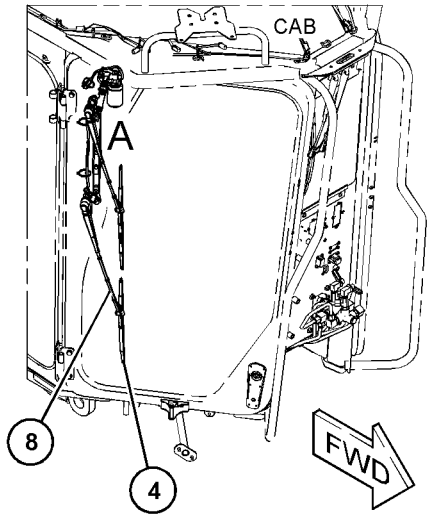

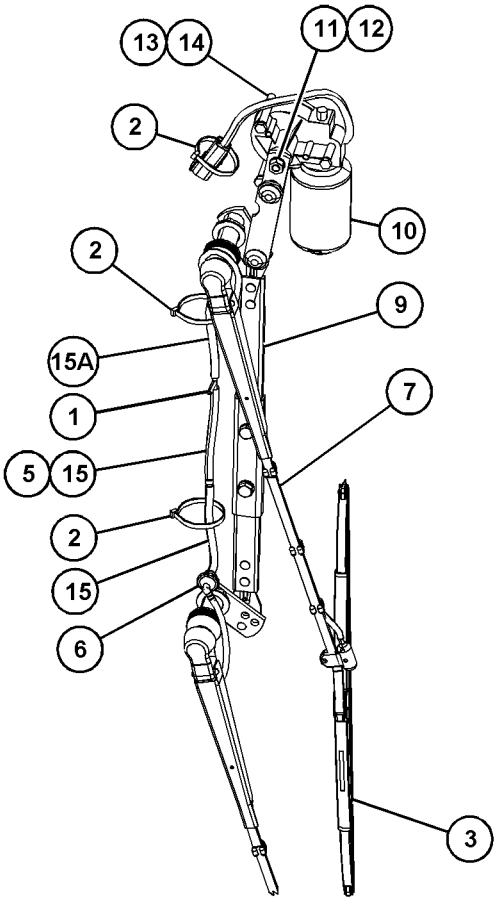

VIEW OF AREA A

GRAPHIC #1 <END> g06092579

357-9653 WIPER GP-WINDOW—DOOR, LH

S/N: B551-UP

PART OF 357-9200 DOOR GP-CAB

SMCS-7305 **i07830333**

NOTE	REF NO	GRAPHIC REF	PART NUMBER	QTY	PART NAME 1 2 3 4 5 6 (PRODUCT LEVEL)	SEE PAGE
	1	1	**2U-4504**	1	TEE	
	2	1	**3S-2093**	3	STRAP-CABLE	
	3	1	**5C-8811**	1	BLADE AS-WIPER (500-MM) (UPPER)	
	4	1	**6V-5851**	1	BLADE AS-WIPER (400-MM) (LOWER)	
	5	1	**7Y-3474**	1	VALVE AS-CHECK (WINDOW WASHER)	
	6	1	**8T-5400**	2	CONNECTOR	
	7	1	**295-1118**	1	ARM GP-WINDOW WIPER (UPPER)	
		1	**8T-1118**	1	NOZZLE AS-WASHER	
		1	**240-8666**	3	CLIP	
E		1	**194-5171**		HOSE (58-CM)	
	8	1	**295-1119**	1	ARM GP-WINDOW WIPER (LOWER)	
		1	**8T-1118**	1	NOZZLE AS-WASHER	
		1	**240-8666**	3	CLIP	
E		1	**194-5171**		HOSE (60-CM)	
	9	1	**357-9655**	1	LINKAGE GP-WIPER (LH)	
		1	**3F-9556**	2	LOCKWASHER	
M		1	**5C-7261**	2	NUT (M8X1.25-THD)	
		1	**206-5823**	2	CAP (WIPER MOTOR)	
	10	1	**389-2250**	1	MOTOR GP-WINDOW WIPER (24-VOLT, 2-SPEED)	
		1	**8T-8729**	5	PIN-CONNECTOR (16-GA TO 20-GA)	
		1	**8T-8737**	1	PLUG-SEAL	
		1	**102-8805**	1	KIT-RECEPTACLE (6-PIN)	
					(INCLUDES RECEPTACLE AS & WEDGE)	
	11	1	**3F-9556**	1	LOCKWASHER	
M	12	1	**5C-7261**	1	NUT (M8X1.25-THD)	
	13	1	**1H-3244**	3	LOCKWASHER	
M	14	1	**8T-4970**	3	BOLT (M6X1X14-MM)	
E	15	1	**144-0195**		HOSE (11-CM EACH)	
E	15A	1	**144-0195**		HOSE (18-CM)	

E - ORDER BY THE CENTIMETER
M - METRIC PART

357-9653 **WIPER GP-WINDOW (**contd.**)** **i07830333**

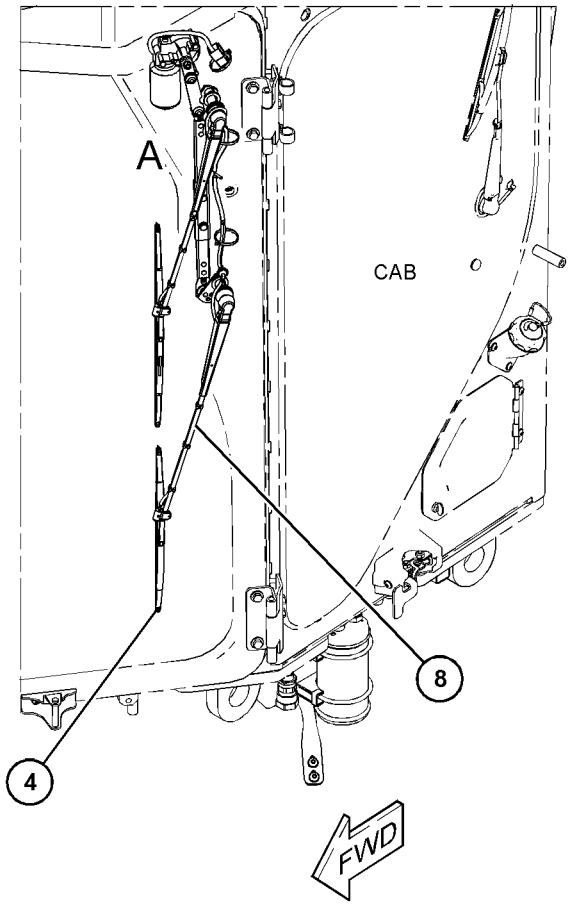

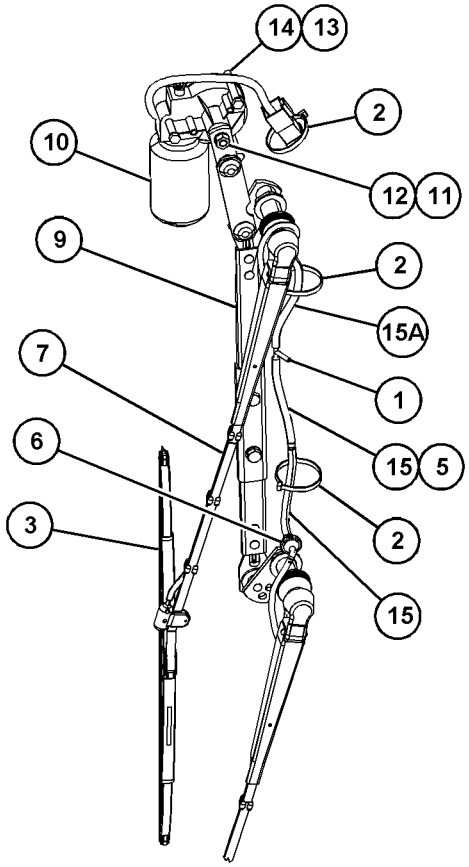

VIEW OF AREA A

GRAPHIC #1 <END> g06092578

381-8142 WIPER GP-WINDOW

S/N: B551-UP

PART OF 420-1977, 575-9875 CAB AR

SMCS-7305 **i06294449**

NOTE	REF NO	GRAPHIC REF	PART NUMBER	QTY	PART NAME 1 2 3 4 5 6 (PRODUCT LEVEL)	SEE PAGE
B	1	1	**3S-2093**	4	STRAP-CABLE	
	2	1	**6V-5851**	2	BLADE AS-WIPER (400-MM) (DOOR, RH, LH)	
	3	1	**444-9544**	2	VALVE AS-CHECK	
	4	1	**8T-5400**	2	CONNECTOR	
	5	1	**416-0021**	2	PUMP AS-WASHER (24-VOLT)	
	6	1	**235-6175**	1	HARNESS AS-WINDOW WIPER	
		1	**102-8804**	1	KIT-RECEPTACLE (4-PIN)	
					(INCLUDES RECEPTACLE AS & WEDGE)	
E		1	**125-7874**		TUBE-HEAT SHRINK (5.72-MM DIA) (10-CM)	
		1	**9X-3402**	6	SOCKET-CONNECTOR (16-GA TO 18-GA)	
					—OR—	
		1	**126-1768**	6	SOCKET-CONNECTOR (14-GA TO 16-GA)	
		1	**9X-3401**	4	PIN-CONNECTOR (16-GA TO 18-GA)	
					—OR—	
		1	**126-1767**	4	PIN-CONNECTOR (14-GA TO 16-GA)	
		1	**155-2260**	2	KIT-CONNECTING PLUG (3-PIN)	
					(EACH PLUG KIT INCLUDES PLUG AS, WEDGES & INTERFACE SEAL)	
B		1	**329-3734**		TAPE-ELECTRICAL	
	7	1	**260-2579**	1	ARM AS-WIPER (LH)	
E		1	**194-5171**		HOSE (33-CM)	
		1	**305-9194**	1	NOZZLE AS-WASHER	
	8	1	**270-4884**	1	ARM AS-WIPER (RH)	
E		1	**194-5171**		HOSE (33-CM)	
		1	**305-9195**	1	NOZZLE AS-WASHER	
	9	1	**295-4243**	2	WASHER-RUBBER	
	10	1	**451-0116**	1	MOTOR GP-WINDOW WIPER (RH)	
					(EACH MOTOR GP-WINDOW WIPER INCLUDES)	
		1	**3F-9556**	1	LOCKWASHER	
M		1	**5C-7261**	1	NUT (M8X1.25-THD)	
		1	**8T-8729**	3	PIN-CONNECTOR (16-GA TO 20-GA)	
		1	**102-8803**	1	KIT-RECEPTACLE (3-PIN)	
					(INCLUDES RECEPTACLE AS & WEDGE)	
	11	1	**451-0115**	1	MOTOR GP-WINDOW WIPER (LH)	
E	12	1	**144-0195**		HOSE (10-CM EACH)	
E	12A	1	**144-0195**		HOSE (403-CM)	
E	12B	1	**144-0195**		HOSE (139-CM)	

B - USE AS REQUIRED
E - ORDER BY THE CENTIMETER
M - METRIC PART

381-8142 **WIPER GP-WINDOW (**contd.**)** **i06294449**

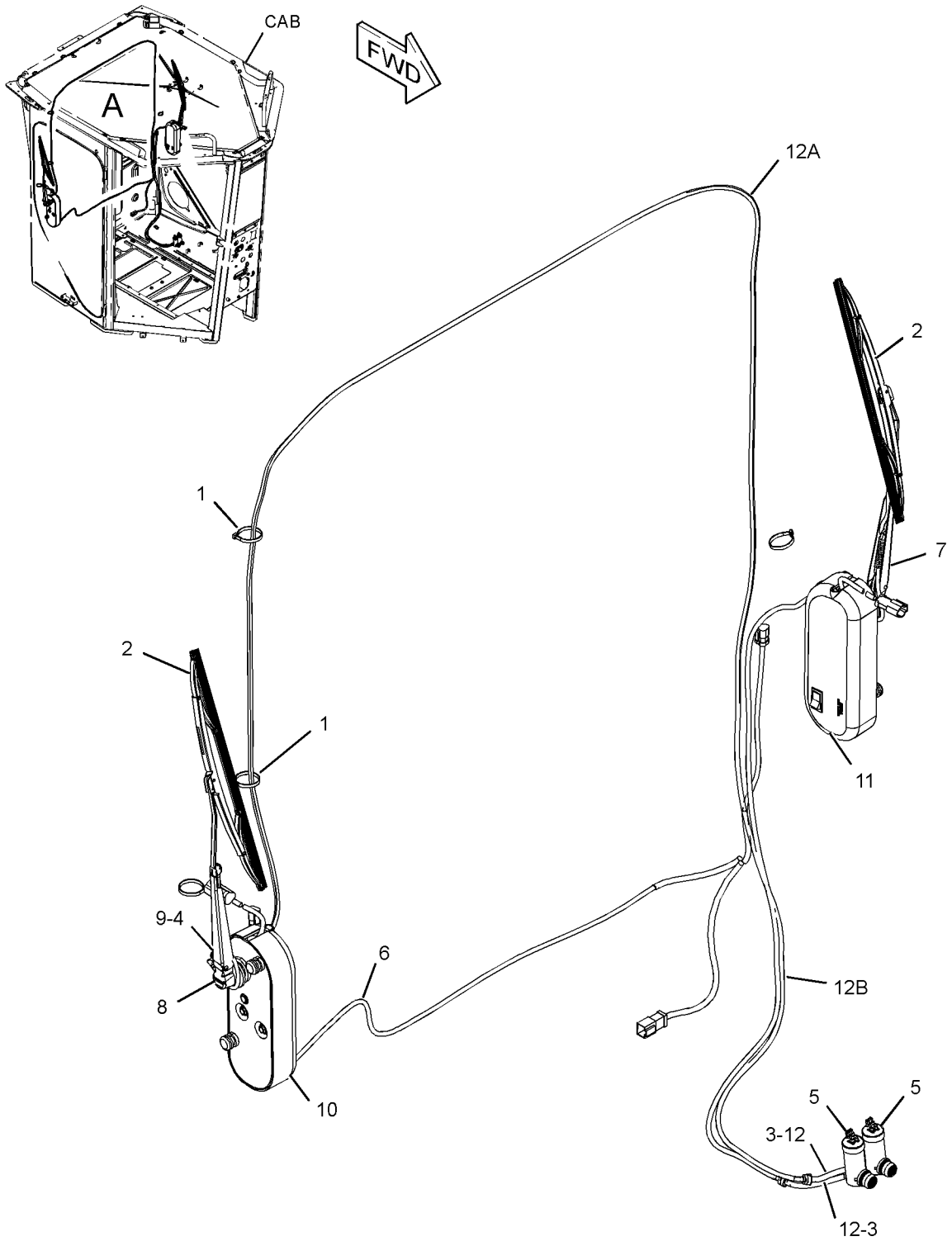

VIEW OF AREA A

GRAPHIC #1 <END> g03635063

233-7148 BIT GP-END

S/N: B551-UP

FOR USE WITH 243-6702—PAGE: 870, 243-6703—PAGE: 871, 243-6704—PAGE: 872

CANNOT BE USED WITH 233-7160—PAGE: 869, 233-7139—PAGE: 880, 233-7143—PAGE: 880

PART OF 349-3046, 349-3047 OPTION AR-WORK TOOL

SMCS-6804 **i02778901**

NOTE	PART NUMBER	QTY	PART NAME 1 2 3 4 5 6 (PRODUCT LEVEL)	SEE PAGE
	8E-5529	2	BIT-END (MOLDBOARD)	
	5J-4773	10	BOLT-PLOW (3/4-10X2.5-IN)	
	2J-3506	10	NUT-FULL (3/4-10-THD)	

<END>

233-7160 BIT GP-END

S/N: B551-UP
OVERLAY
FOR USE WITH 243-6704—PAGE: 872
CANNOT BE USED WITH 233-7148—PAGE: 868
PART OF 349-3048 OPTION AR-WORK TOOL

SMCS-6804 **i04760202**

NOTE	REF NO	GRAPHIC REF	PART NUMBER	QTY	PART NAME 1 2 3 4 5 6 (PRODUCT LEVEL)	SEE PAGE
	1	1	**6Y-2805**	2	BIT-END (OVERLAY)	
	2	1	**8E-5529**	2	BIT-END (MOLDBOARD)	
	3	1	**1J-6762**	2	BOLT-PLOW (3/4-10X3-IN)	
	4	1	**2J-3506**	12	NUT-FULL (3/4-10-THD)	
	5	1	**5F-8933**	6	BOLT-PLOW (3/4-10X3.75-IN)	
	6	1	**5J-4773**	4	BOLT-PLOW (3/4-10X2.5-IN)	

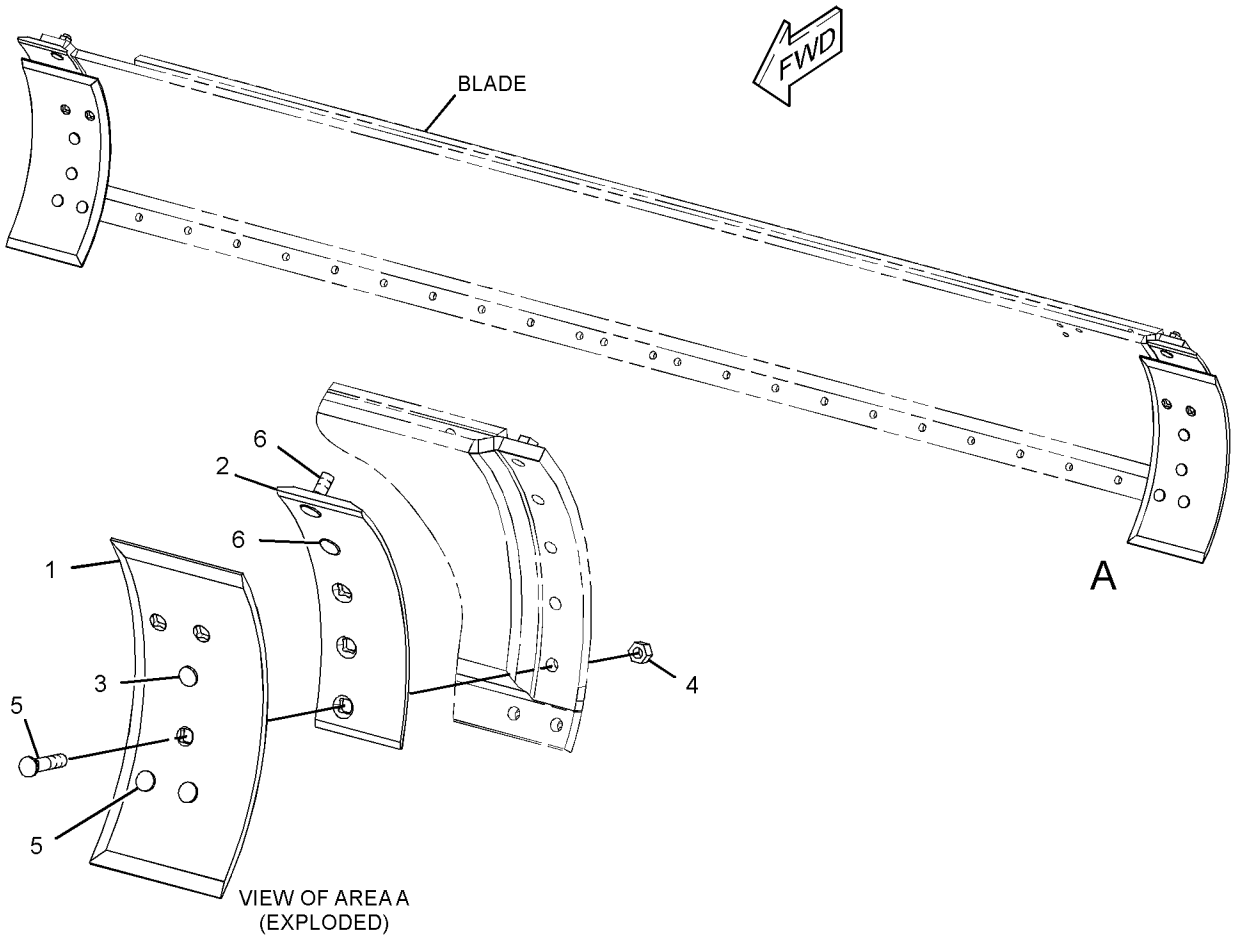

GRAPHIC #1 <END> g02874902

243-6702 BLADE GP

S/N: B551-UP
12-FT
FOR USE WITH 233-7148—PAGE: 868
CANNOT BE USED WITH 243-6704—PAGE: 872, 243-6703—PAGE: 871
PART OF 349-3046 OPTION AR-WORK TOOL

SMCS-6151 **i02782252**

NOTE	REF NO	GRAPHIC REF	PART NUMBER	QTY	PART NAME 1 2 3 4 5 6 (PRODUCT LEVEL)	SEE PAGE
	1	1	**260-7792**	1	MOLDBOARD AS	

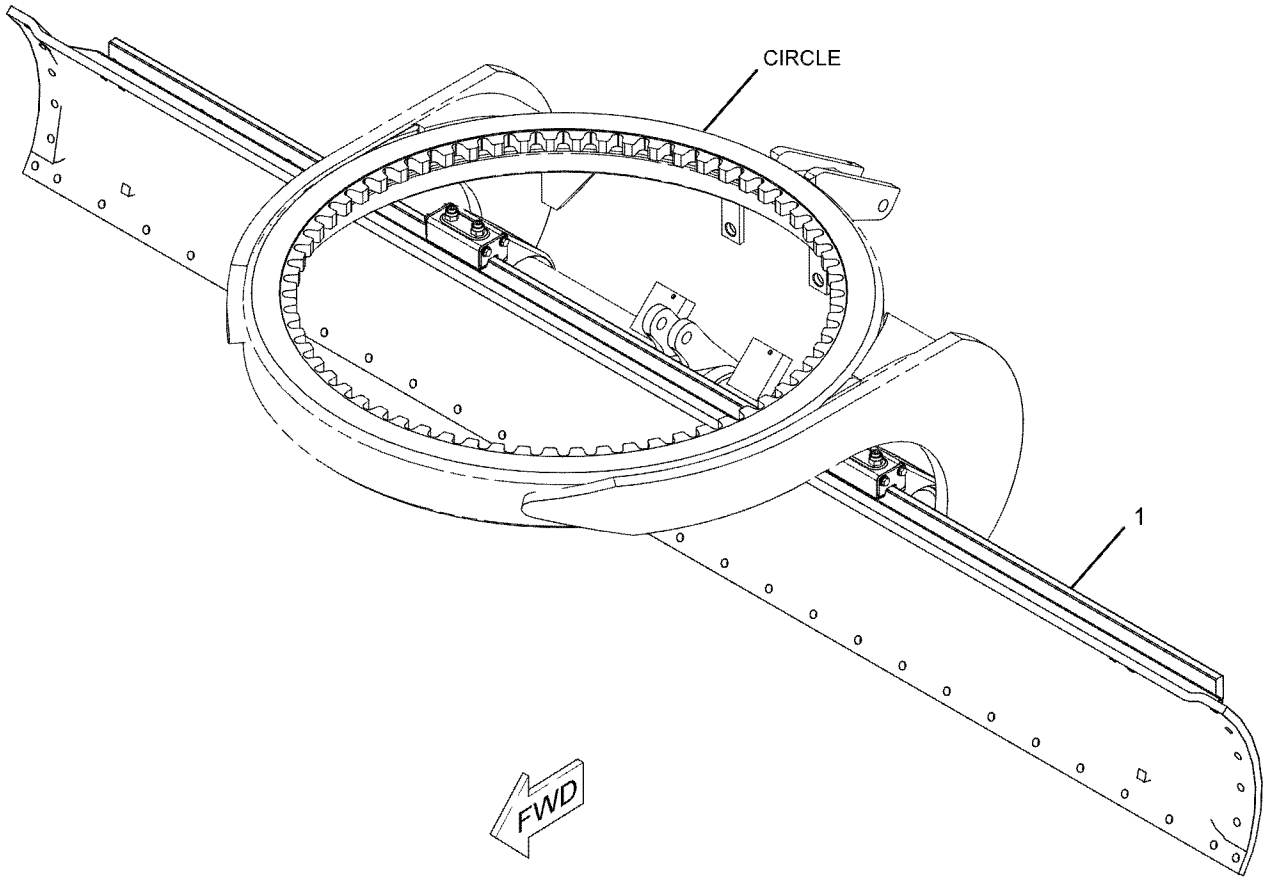

GRAPHIC #1 <END> g01129892

243-6703 BLADE GP

S/N: B551-UP
14-FT X 24-IN
FOR USE WITH 233-7148—PAGE: 868
CANNOT BE USED WITH 243-6702—PAGE: 870, 243-6704—PAGE: 872
PART OF 349-3047 OPTION AR-WORK TOOL

SMCS-6151 **i02782361**

NOTE	REF NO	GRAPHIC REF	PART NUMBER	QTY	PART NAME 1 2 3 4 5 6 (PRODUCT LEVEL)	SEE PAGE
	1	1	**260-7793**	1	MOLDBOARD AS	

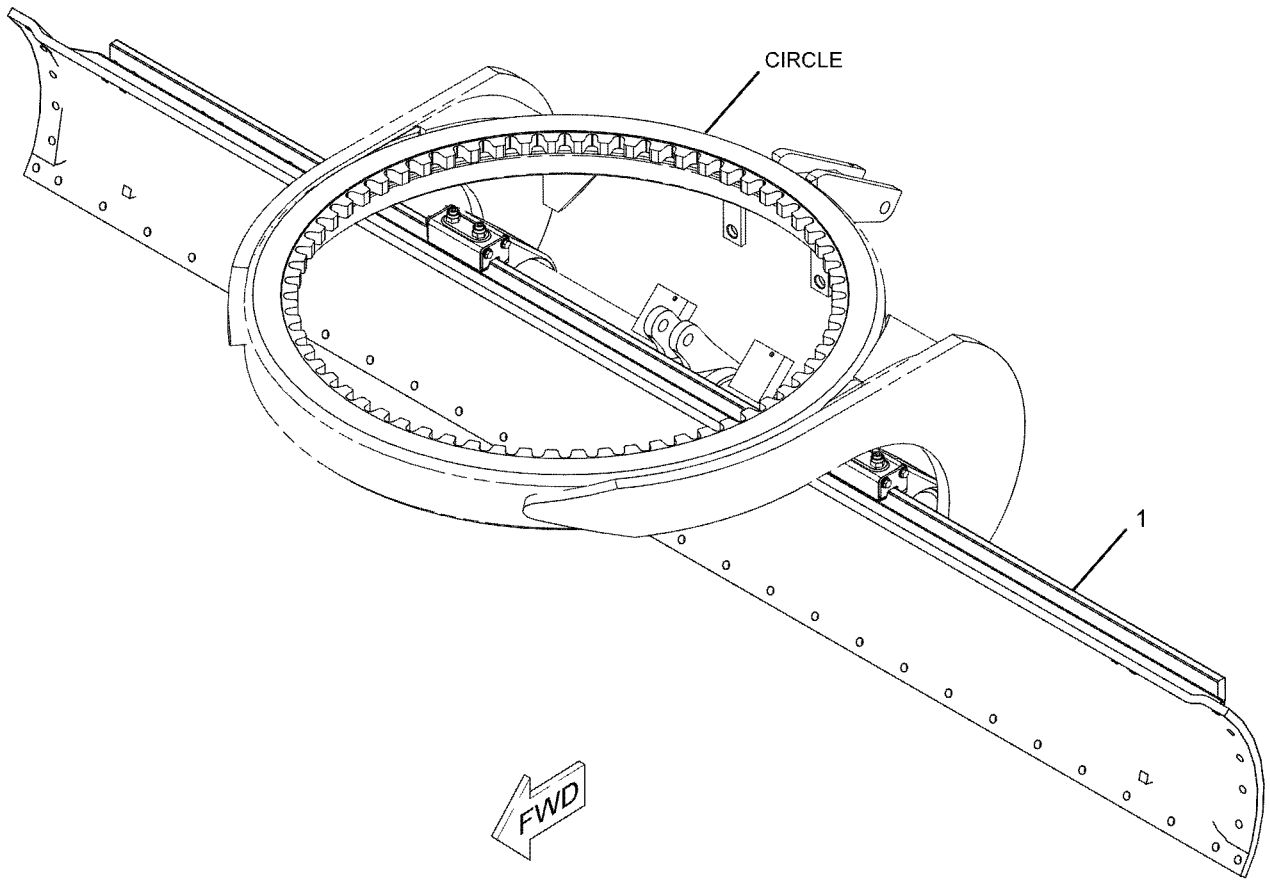

GRAPHIC #1 <END> g01129892

243-6704 BLADE GP

S/N: B551-UP
14-FT X 27-IN
FOR USE WITH 233-7148—PAGE: 868
CANNOT BE USED WITH 243-6703—PAGE: 871, 243-6702—PAGE: 870
PART OF 349-3048 OPTION AR-WORK TOOL

SMCS-6151 **i02782467**

NOTE	REF NO	GRAPHIC REF	PART NUMBER	QTY	PART NAME 1 2 3 4 5 6 (PRODUCT LEVEL)	SEE PAGE
	1	1	**260-7794**	1	MOLDBOARD AS	

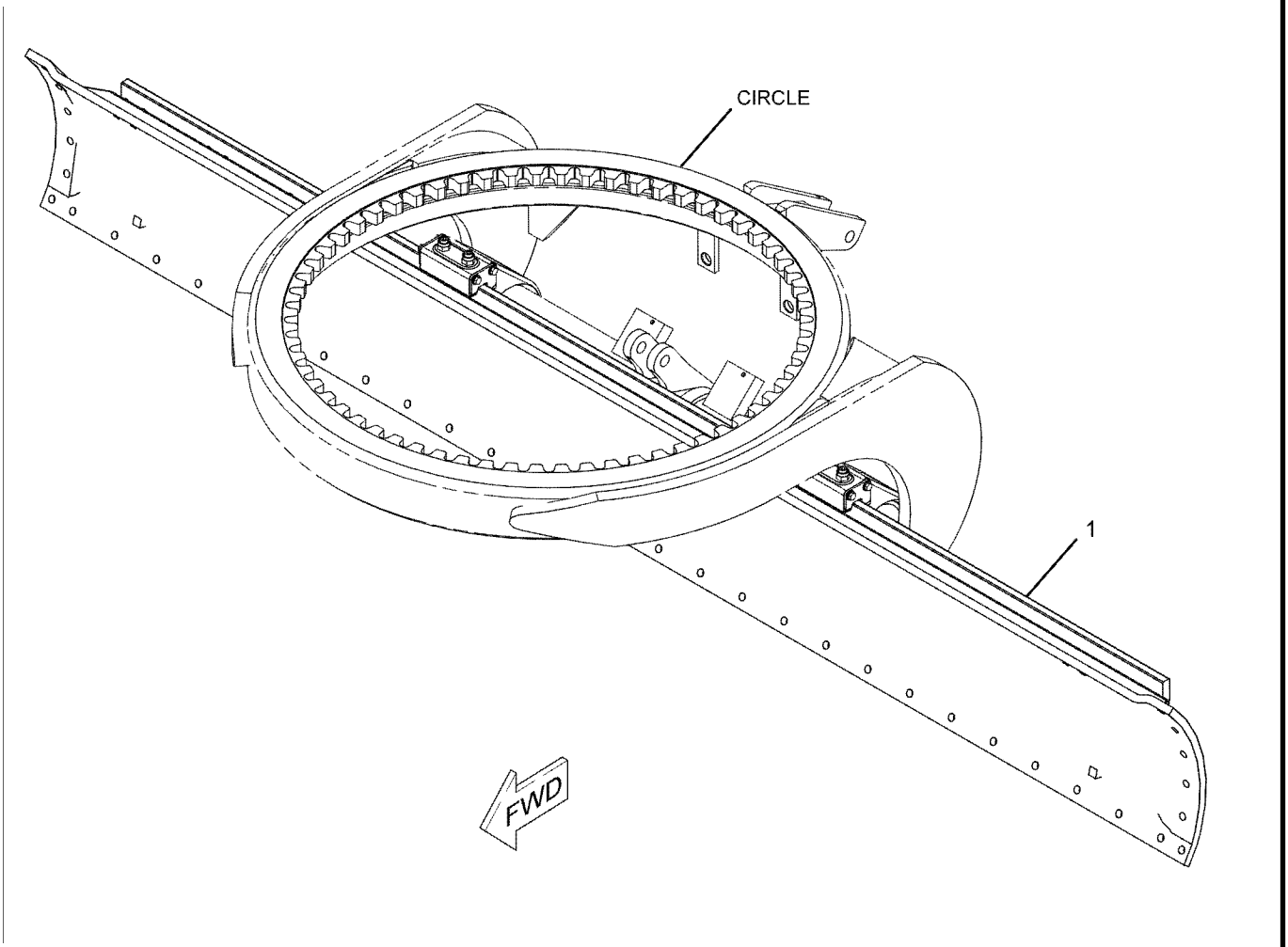

GRAPHIC #1 <END> g01129893

309-6809 BLADE GP-BULLDOZER—FRONT

S/N: B551-UP

CANNOT BE USED WITH 250-3071—PAGE: 470, 312-2204—PAGE: 889

PART OF 351-5178 OPTION AR-WORK TOOL

SMCS-6060 **i06819290**

NOTE	REF NO	GRAPHIC REF	PART NUMBER	QTY	PART NAME 1 2 3 4 5 6 (PRODUCT LEVEL)	SEE PAGE
	1	1	**2K-2306**	2	LINK	
	2	1	**3B-8489**	2	FITTING-GREASE (1/8-27 PTF)	
	3	1	**3B-8491**	8	FITTING-GREASE (1/8-27 PTF)	
	4	1	**4T-3010**	2	EDGE-CUTTING (END)	
	5	1	**7P-1577**	8	PIN AS	
	6	1	**136-1711**	2	PIN AS	
	7	1	**169-4088**	1	LINK AS	
	8	1	**169-4089**	1	EDGE-CUTTING (CENTER)	
	9	1	**169-4092**	1	MOLDBOARD AS	
	10	1	**247-4412**	1	PLATE AS	
	12	1	**309-7496**	1	SUPPORT AS	
Y	13	1	**314-9338**	1	CYLINDER GP-HYDRAULIC (BULLDOZER)	878
	14	1	**283-1578**	28	WASHER-HARD (22X45X10-MM THK)	
	15	1	**286-0466**	14	BOLT (M20X2.5X100-MM)	
M	16	1	**286-0742**	14	NUT (M20X2.5-THD)	
	17	1	**2J-3506**	17	NUT-FULL (3/4-10-THD)	
	18	1	**4F-7827**	17	BOLT-PLOW (3/4-10X2.25-IN)	
	19	1	**5M-6214**	4	PLUG (1/8-27 PTF)	
B	20	1	**5V-6454**	18	WASHER (52X120X1.6-MM THK)	
B	21	1	**5V-6455**	20	WASHER (52X120X3-MM THK)	
	22	1	**7G-8839**	10	SPACER (13.5X57X6-MM THK)	
M	23	1	**7X-2553**	8	BOLT (M16X2X40-MM)	
M	24	1	**8T-4139**	10	BOLT (M12X1.75X30-MM)	
	25	1	**9X-8257**	8	WASHER (17.5X30X3.5-MM THK)	

B - USE AS REQUIRED
M - METRIC PART
Y - SEPARATE ILLUSTRATION

309-6809 **BLADE GP-BULLDOZER (**contd.**)** **i06819290**

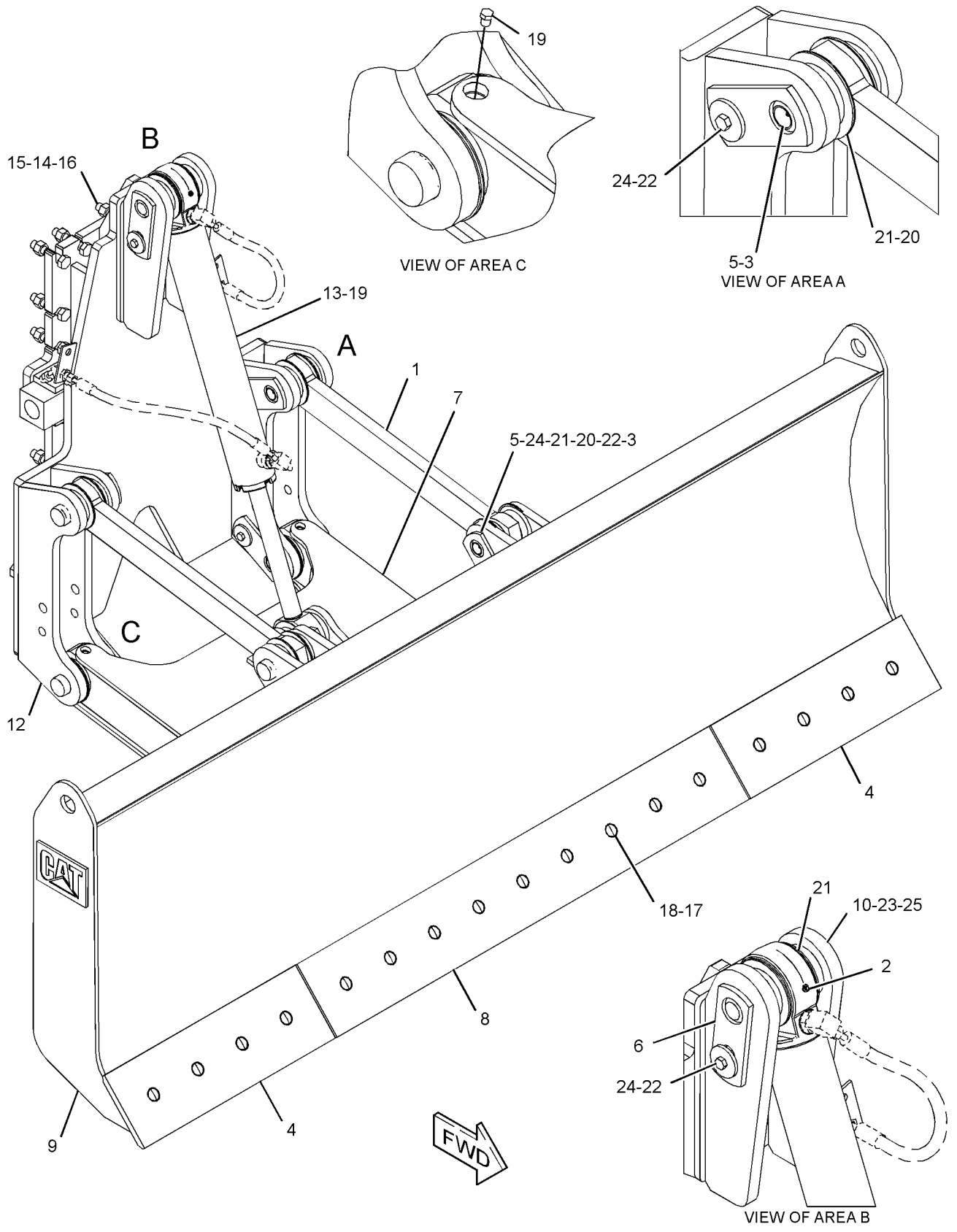

GRAPHIC #1 <END> g02211134

293-5559 BRACE GP–WORK TOOL LIFT

S/N: B551-UP

PART OF 293-5556 LIFT GP-WORK TOOL

SMCS-0635 **i05563314**

NOTE	REF NO	GRAPHIC REF	PART NUMBER	QTY	PART NAME 1 2 3 4 5 6 (PRODUCT LEVEL)	SEE PAGE
	1	1	**269-8775**	2	BRACE AS	
					(EACH INCLUDES)	
M		1	**8T-6462**	1	BOSS-WELD (M10X1.5X25-MM)	
M	2	1	**112-3927**	6	BOLT (M20X2.5X90-MM)	
	3	1	**8T-1739**	28	WASHER-HARD (21X40X3.5-MM THK)	
M	4	1	**7X-2565**	8	BOLT (M20X2.5X100-MM)	
M	5	1	**8T-4131**	14	NUT (M20X2.5-THD)	
M	6	1	**6V-7676**	4	NUT (M24X3-THD)	
M	7	1	**7X-2577**	4	BOLT (M24X3X90-MM)	
	8	1	**8T-4167**	4	WASHER-HARD (26X44X4-MM THK)	

M - METRIC PART

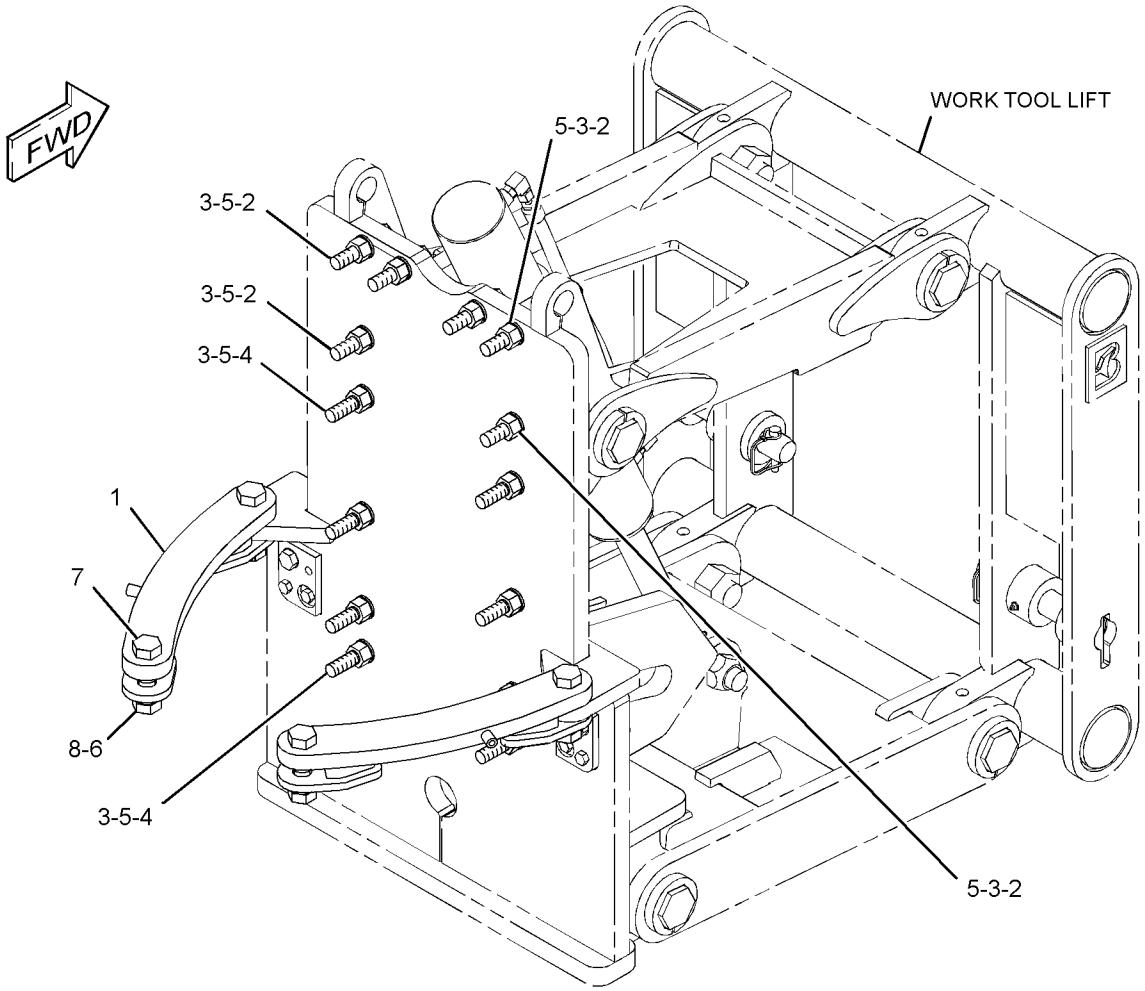

GRAPHIC #1 <END> g01325650

360-5074 BRACKET GP-SCARIFIER

S/N: B551-UP

PART OF 364-2034 OPTION AR-SCARIFIER

SMCS-6162 **i05215511**

NOTE	REF NO	GRAPHIC REF	PART NUMBER	QTY	PART NAME 1 2 3 4 5 6 (PRODUCT LEVEL)	SEE PAGE
	1	1	**360-5075**	1	BRACKET AS	
	2	1	**360-5077**	1	BRACKET AS	
M		1	**9R-2613**	4	BOSS-WELD (M10X1.5X25-MM)	

M - METRIC PART

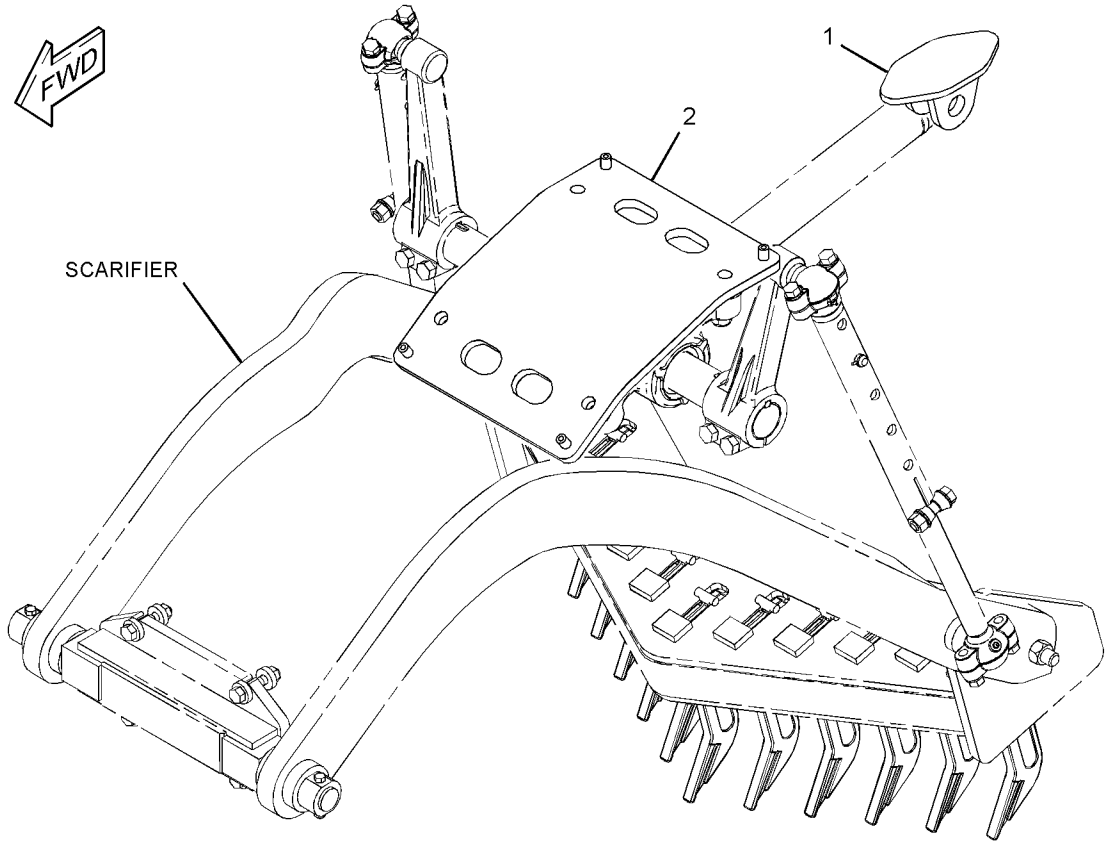

GRAPHIC #1 <END> g02249954

217-3501 CYLINDER GP-HYDRAULIC—WORK TOOL LIFT

S/N: B551-UP

PART OF 293-5556 LIFT GP-WORK TOOL

SMCS-7562 **i02788553**

NOTE	REF NO	GRAPHIC REF	PART NUMBER	QTY	PART NAME 1 2 3 4 5 6 (PRODUCT LEVEL)	SEE PAGE
	1	1	**2K-7468**	1	LOCKNUT (1-1/4-12-THD)	
	2	1	**4T-6907**	1	RING-WEAR	
	3	1	**4T-8054**	1	SEAL AS	
	4	1	**7J-9885**	1	RING-WEAR	
	5	1	**167-2190**	1	SEAL AS-BUFFER	
	6	1	**219-7242**	1	TUBE AS	
	7	1	**219-7243**	1	ROD AS	
	8	1	**219-7244**	1	PISTON	
	9	1	**219-7245**	1	HEAD	
	10	1	**231-3539**	1	SEAL-WIPER	
	11	1	**167-2300**	1	SEAL-U-CUP	
	12	1	**2H-3931**	2	SEAL-O-RING	
	13	1	**4J-9224**	1	RING-BACKUP	

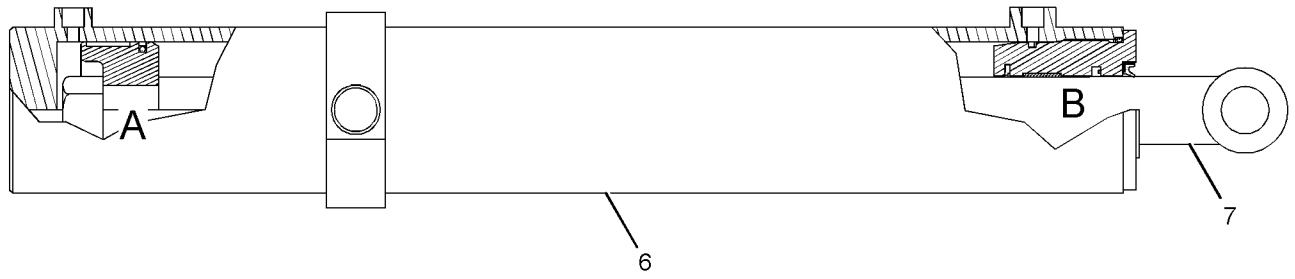

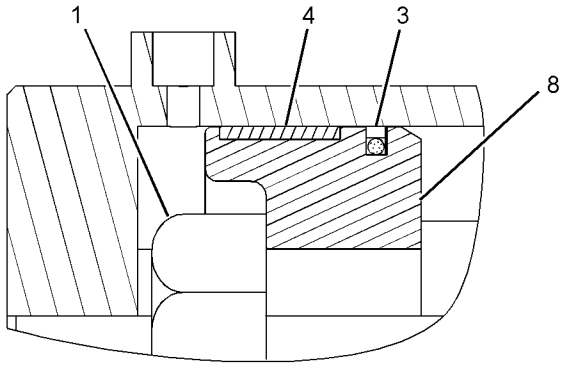

VIEW OF AREA A

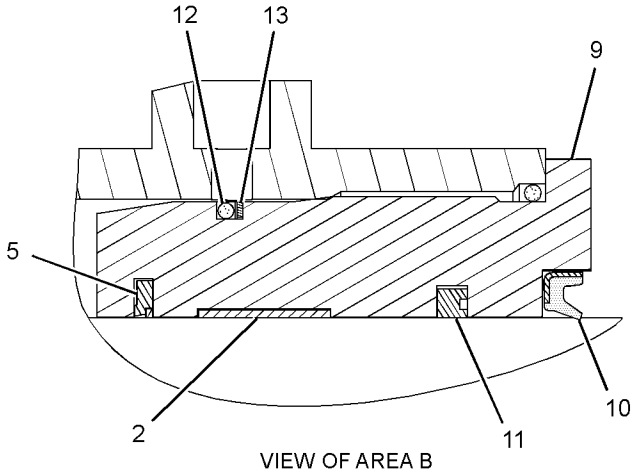

VIEW OF AREA B

GRAPHIC #1 <END> g01159664

314-9338 CYLINDER GP-HYDRAULIC

S/N: B551-UP

88.9-MM (3.5-IN) BORE X 549-MM (21.6-IN) STROKE. STEERING

PART OF 309-6809 BLADE GP-BULLDOZER

SMCS-7562 **i06091270**

NOTE	REF NO	GRAPHIC REF	PART NUMBER	QTY	PART NAME 1 2 3 4 5 6 (PRODUCT LEVEL)	SEE PAGE
R	1	1	**163-0325**	1	CYLINDER AS	
		1	*173-7211*	1	CAP AS	
		1	**1K-6985**	2	RING-RETAINING	
		1	**364-8483**	1	BEARING-ALIGNING	
	2	1	**163-0326**	1	PISTON	
R	3	1	**163-0327**	1	ROD AS	
		1	**1K-6985**	2	RING-RETAINING	
		1	**9M-1328**	1	BEARING-SELF-ALIGNING	
	4	1	**314-9339**	1	HEAD	
M	5	1	**173-9779**	1	BOLT (M24X3X80-MM)	
J	6	1	**175-7898**	1	SEAL-O-RING	
J	7	1	**308-1880**	1	SEAL-WIPER	
J	8	1	**308-1883**	1	SEAL AS	
J	9	1	**308-1884**	1	SEAL AS	
J	10	1	**4J-9224**	1	RING-BACKUP	
J	11	1	**4T-6907**	1	RING-WEAR	
J	12	1	**4T-8054**	1	SEAL AS	
	13	1	**6V-8237**	1	WASHER (26X44X4-MM THK)	
J	14	1	**7J-9885**	1	RING-WEAR	
					AVAILABLE REPAIR KIT(S):	
J			**326-0503**	1	KIT-SEAL	

J - KIT MARKED J SERVICES PART(S) MARKED J
M - METRIC PART
R - REMANUFACTURED PART MAY BE AVAILABLE

314-9338 **CYLINDER GP-HYDRAULIC** (contd.) **i06091270**

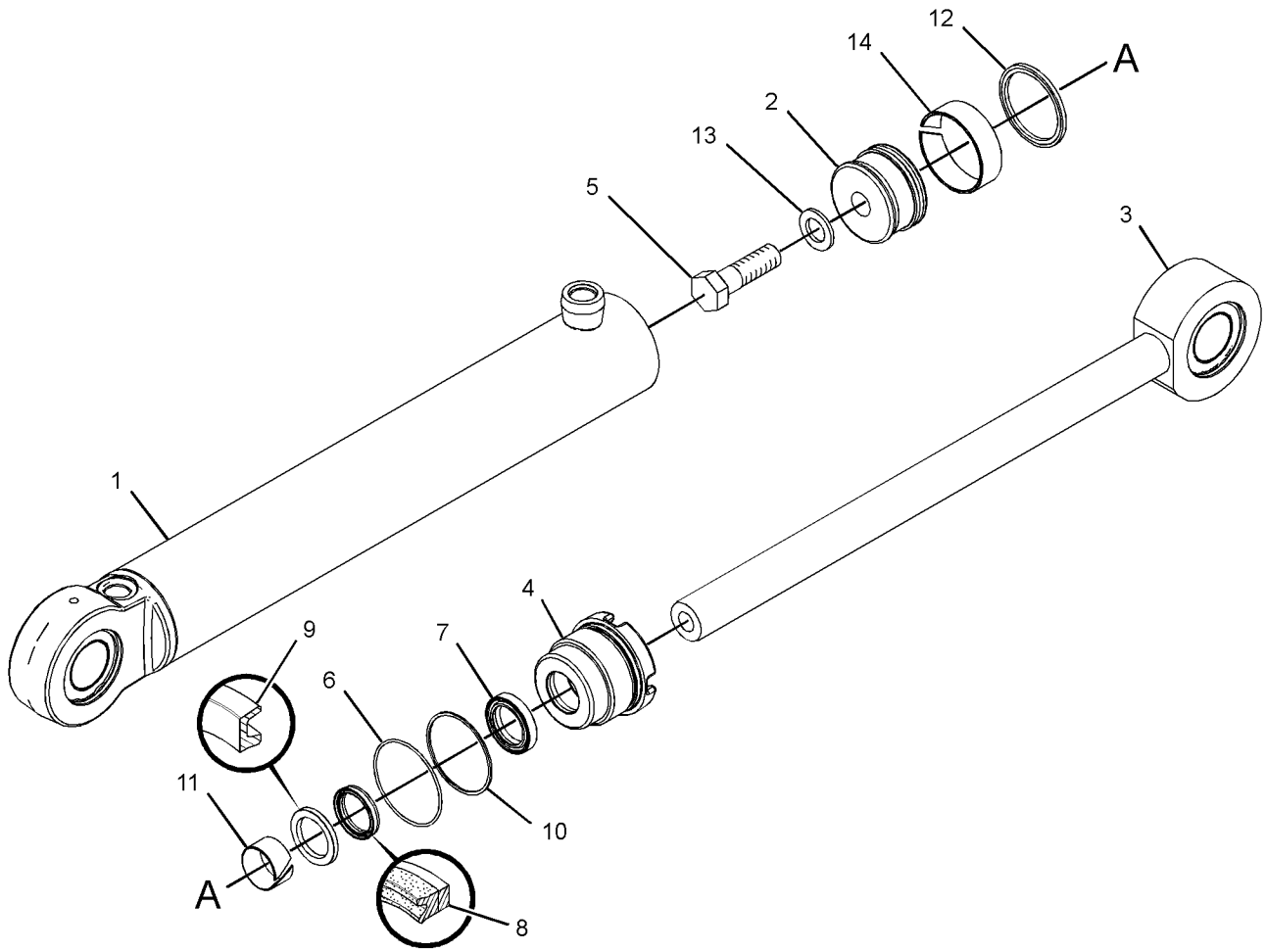

GRAPHIC #1 <END> g01518744

233-7139 EDGE GP-CUTTING

S/N: B551-UP
FOR USE WITH 243-6702—PAGE: 870
CANNOT BE USED WITH 233-7143—PAGE: 880
PART OF 349-3046 OPTION AR-WORK TOOL

SMCS-6801 **i02778777**

NOTE	PART NUMBER	QTY	PART NAME 1 2 3 4 5 6 (PRODUCT LEVEL)	SEE PAGE
	5J-4773	26	BOLT-PLOW (3/4-10X2.5-IN)	
	9J-3657	2	EDGE-CUTTING (6-FT EACH)	
	2J-3506	26	NUT-FULL (3/4-10-THD)	

<END>

233-7143 EDGE GP-CUTTING

S/N: B551-UP
14-FT
FOR USE WITH 243-6703—PAGE: 871, 243-6704—PAGE: 872
CANNOT BE USED WITH 233-7139—PAGE: 880
PART OF 349-3047, 349-3048 OPTION AR-WORK TOOL

SMCS-6801 **i02778871**

NOTE	PART NUMBER	QTY	PART NAME 1 2 3 4 5 6 (PRODUCT LEVEL)	SEE PAGE
	5J-4773	30	BOLT-PLOW (3/4-10X2.5-IN)	
	7D-1577	2	EDGE-CUTTING (7-FT EACH)	
	2J-3506	30	NUT-FULL (3/4-10-THD)	

<END>

524-8603 EXTENSION GP-BLADE

S/N: B551-UP
BLADE EXTENSION ATTACHMENT KIT

SMCS-6173 **i06922559**

NOTE	PART NUMBER	QTY	PART NAME 1 2 3 4 5 6 (PRODUCT LEVEL)	SEE PAGE
	452-3137	1	ANGLE AS	
	2A-1538	2	BOLT (3/4-10X2.25-IN)	
	5F-8933	10	BOLT-PLOW (3/4-10X3.75-IN)	
	5J-4773	5	BOLT-PLOW (3/4-10X2.5-IN)	
	232-2146	1	EDGE-CUTTING	
	250-0613	1	EXTENSION	
	2J-3506	15	NUT-FULL (3/4-10-THD)	
	452-3135	1	PLATE AS	
	110-5334	2	SPACER (3-MM THK)	
	176-5642	1	SPACER (2-MM THK)	
	176-5643	2	SPACER (1-MM THK)	
	2S-0115	2	WASHER-HARD (20X36.5X5-MM THK)	

<END>

524-8604 EXTENSION GP-BLADE

S/N: B551-UP

BLADE ATTACHMENT KIT

SMCS-6173 **i06922561**

NOTE	PART NUMBER	QTY	PART NAME 1 2 3 4 5 6 (PRODUCT LEVEL)	SEE PAGE
	452-3137	1	ANGLE AS	
	2A-1538	2	BOLT (3/4-10X2.25-IN)	
	5F-8933	10	BOLT-PLOW (3/4-10X3.75-IN)	
	5J-4773	5	BOLT-PLOW (3/4-10X2.5-IN)	
	3G-2165	1	EDGE-CUTTING	
	133-7524	1	EXTENSION	
	2J-3506	15	NUT-FULL (3/4-10-THD)	
	452-3134	1	PLATE AS	
	110-5334	3	SPACER (3-MM THK)	
	176-5642	1	SPACER (2-MM THK)	
	176-5643	2	SPACER (1-MM THK)	
	2S-0115	2	WASHER-HARD (20X36.5X5-MM THK)	

<END>

524-8605 EXTENSION GP-BLADE

S/N: B551-UP

BLADE ATTACHMENT KIT

SMCS-6173 **i06922557**

NOTE	PART NUMBER	QTY	PART NAME 1 2 3 4 5 6 (PRODUCT LEVEL)	SEE PAGE
	110-5336	1	ANGLE AS	
	2A-1538	2	BOLT (3/4-10X2.25-IN)	
	5F-8933	10	BOLT-PLOW (3/4-10X3.75-IN)	
	5J-4773	5	BOLT-PLOW (3/4-10X2.5-IN)	
	232-2146	1	EDGE-CUTTING	
	243-6683	1	EXTENSION	
	2J-3506	15	NUT-FULL (3/4-10-THD)	
	243-6684	1	PLATE AS	
	110-5334	2	SPACER (3-MM THK)	
	176-5642	1	SPACER (2-MM THK)	
	176-5643	2	SPACER (1-MM THK)	
	2S-0115	2	WASHER-HARD (20X36.5X5-MM THK)	

<END>

524-8606 EXTENSION GP-BLADE

S/N: B551-UP

BLADE ATTACHMENT KIT

SMCS-6173 **i06922550**

NOTE	PART NUMBER	QTY	PART NAME 1 2 3 4 5 6 (PRODUCT LEVEL)	SEE PAGE
	110-5336	1	ANGLE AS	
	2A-1538	2	BOLT (3/4-10X2.25-IN)	
	5F-8933	10	BOLT-PLOW (3/4-10X3.75-IN)	
	5J-4773	5	BOLT-PLOW (3/4-10X2.5-IN)	
	3G-2165	1	EDGE-CUTTING	
	133-7523	1	EXTENSION	
	2J-3506	15	NUT-FULL (3/4-10-THD)	
	176-5639	1	PLATE AS	
	110-5334	3	SPACER (3-MM THK)	
	176-5642	1	SPACER (2-MM THK)	
	176-5643	2	SPACER (1-MM THK)	
	2S-0115	2	WASHER-HARD (20X36.5X5-MM THK)	

<END>

296-3008 LIFT GP-BLADE

S/N: B551-UP

PART OF 577-1377 COMMON AR

SMCS-6151 **i07631713**

NOTE	REF NO	GRAPHIC REF	PART NUMBER	QTY	PART NAME 1 2 3 4 5 6 (PRODUCT LEVEL)	SEE PAGE
	1	1	**7D-8875**	4	WASHER-THRUST (2.515X3.62X0.075-IN THK)	
	2	1	**7D-8878**	4	WASHER-THRUST (3.015X4.22X0.075-IN THK)	
B	3	1	**7D-8879**	8	SHIM (0.127-MM THK)	
B	4	1	**7D-8881**	6	SHIM (0.254-MM THK)	
B	5	1	**7D-8882**	2	SHIM (0.508-MM THK)	
B	6	2	**8D-4336**	2	WASHER-THRUST (76.6X146X1.90-MM THK)	
	7	2	**8X-5106**	1	STUD-BALL	
	8	1	**8X-5107**	1	PIN	
	9	3	**381-0356**	1	BAR AS-LINK	
	9A	3	**8X-5108**	2	BUSHING	
	9B	3	**382-4604**	7	BUSHING	
B	10	2	**123-8187**	6	WASHER-THRUST (76.6X146X1-MM THK)	
M	11	2	**201-8034**	6	BOLT (M20X2.5X120-MM)	
M	12	1	**8T-0558**	4	BOLT-SELF-LOCKING (M12X1.75X50-MM)	
	13	2	**259-4483**	2	PIN	
	14	2	**259-4492**	2	LOCK	
	15	3	**296-3004**	1	ARM AS-LIFT (LH)	
	15A	3	**7D-8889**	1	BEARING (76.35-MM ID)	
	15B	3	**8D-8168**	1	BEARING (63.65-MM ID)	
	16	3	**296-3005**	1	ARM AS-LIFT (RH)	
	16A	3	**7D-8889**	1	BEARING (76.35-MM ID)	
	16B	3	**8D-8168**	1	BEARING (63.65-MM ID)	
	17	1	**261-8541**	2	YOKE AS	
					(EACH INCLUDES)	
		1	**2G-8233**	1	RING	
	18	1	**261-8543**	2	RETAINER	
	19	2	**261-8545**	1	PLATE	
	20	2	**261-8547**	2	LOCK	
M	21	2	**8T-4910**	1	BOLT (M12X1.75X60-MM)	
M	22	1,2	**112-3926**	4	BOLT (M20X2.5X110-MM)	
	23	1,2	**8T-4123**	16	WASHER (22X35X3.5-MM THK)	
	24	2	**8T-4223**	1	WASHER-HARD (13.5X25.5X3-MM THK)	
M	25	2	**8T-4131**	6	NUT (M20X2.5-THD)	
	26	1,2	**3P-1461**	4	SEAL-LIP TYPE	
	27	1	**5F-0149**	2	SEAL-O-RING	
	28	1	**7D-8876**	2	WASHER-THRUST (65.07X92.08X2.39-MM THK)	
	29	1	**7D-8877**	2	WASHER-THRUST (77.77X107.19X2.39-MM THK)	
	30	1	**7D-8883**	2	SEAL	
	31	1	**7D-8884**	2	SEAL	
	32	1	**7H-2444**	2	SEAL-O-RING	
	33	1	**198-4778**	4	WASHER-HARD (13.5X30X12-MM THK)	

B - USE AS REQUIRED
M - METRIC PART

296-3008 **LIFT GP-BLADE (**contd.**)** **i07631713**

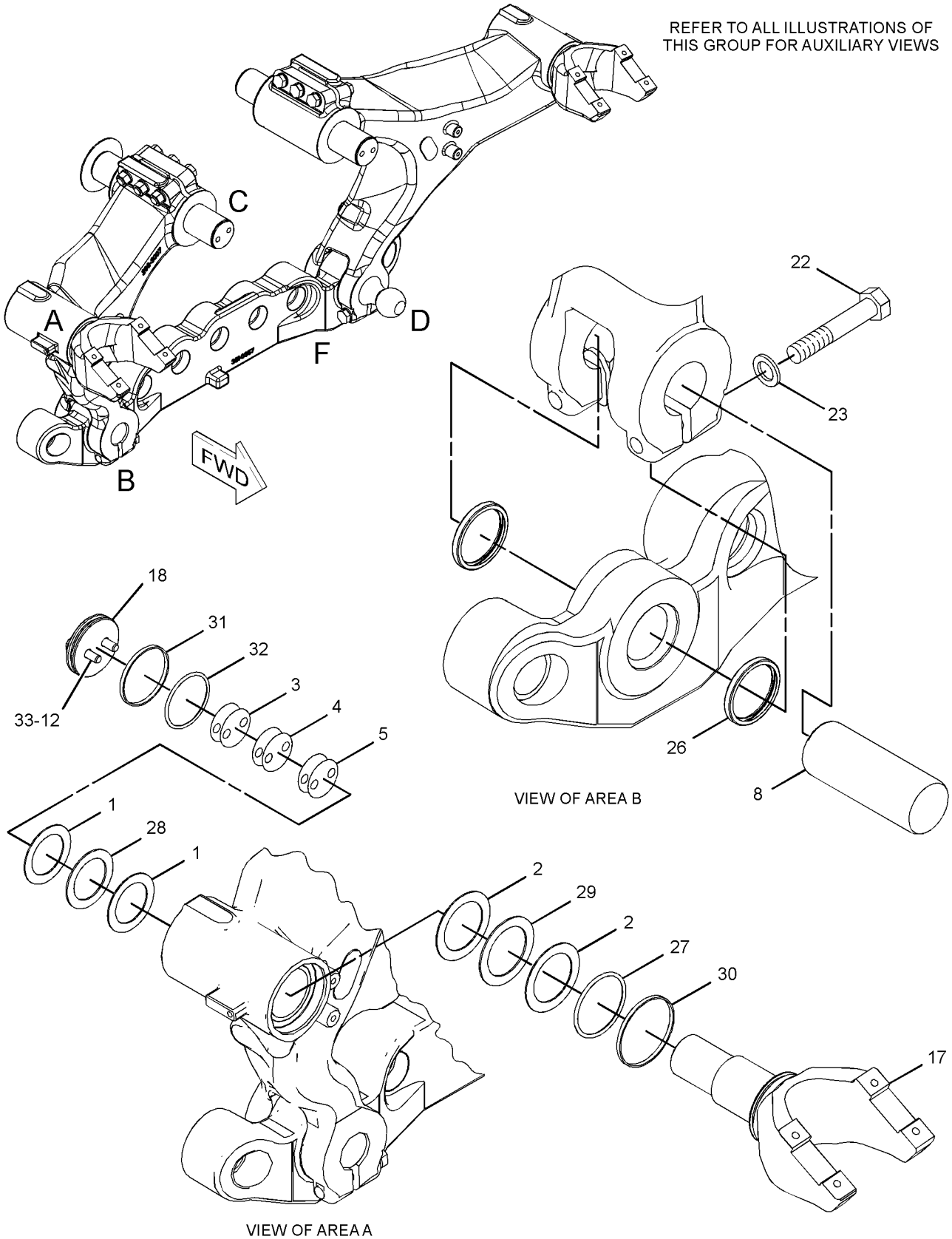

GRAPHIC #1 g06357505

296-3008 **LIFT GP-BLADE (**contd.**)** **i07631713**

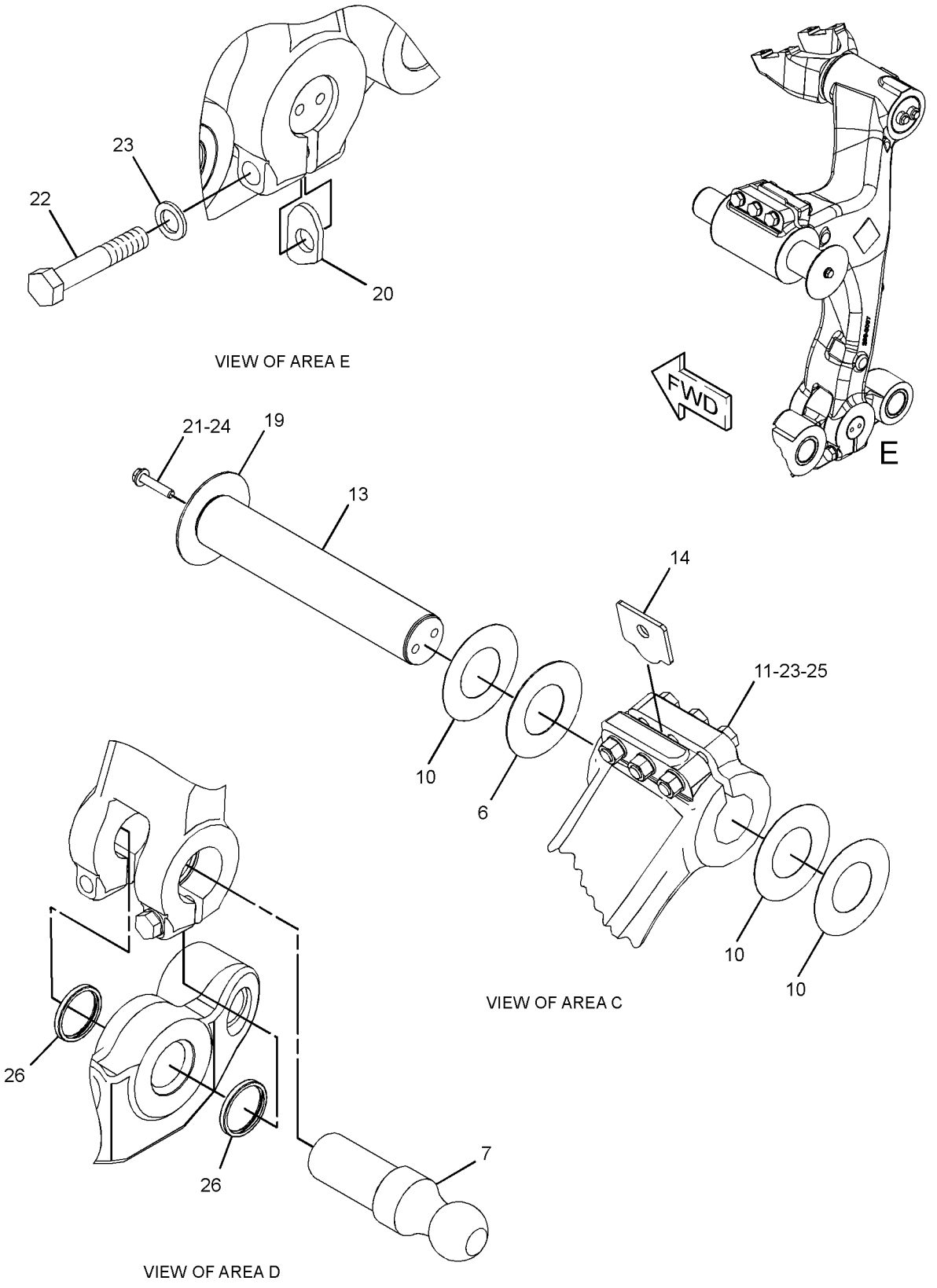

GRAPHIC #2 g06357506

296-3008 **LIFT GP-BLADE (**contd.**)** **i07631713**

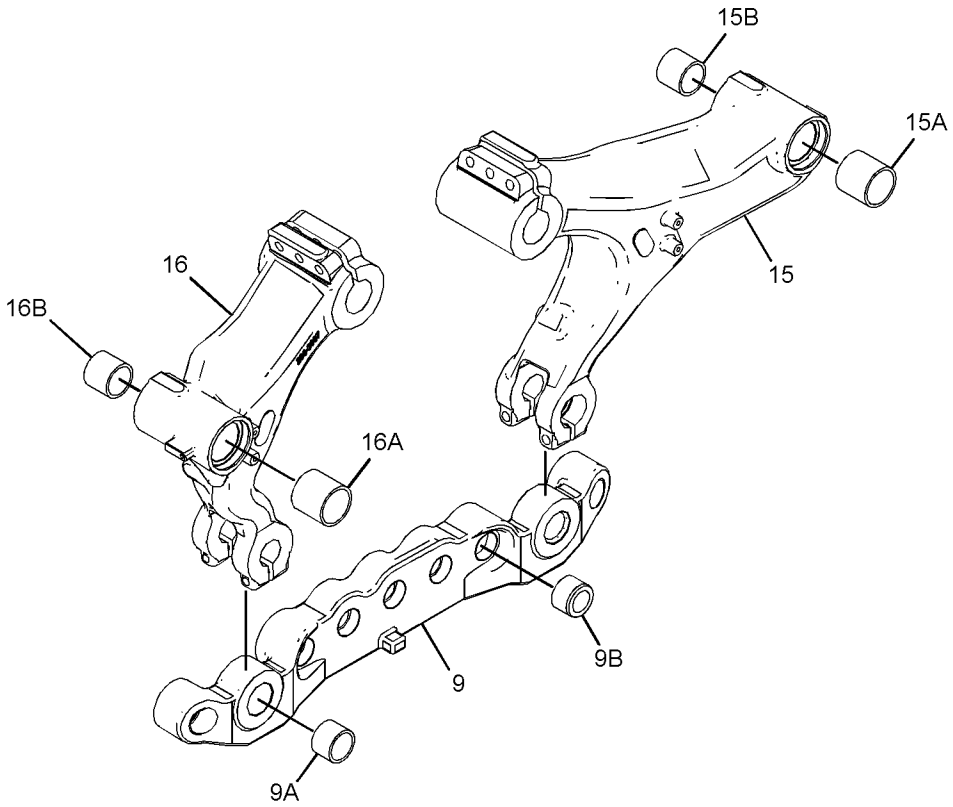

VIEW OF AREA F
(PARTS REMOVED FOR CLARITY)

GRAPHIC #3 <END> g06272197

293-5556 LIFT GP-WORK TOOL

S/N: B551-UP

FOR USE WITH PLOW/BULLDOZER-LIFT VALVE AND LINES GP TO FRONT OF MOTORGRADER

PART OF 312-2204 LIFT GP-WORK TOOL

SMCS-6050, 6159, 6701 **i07377525**

NOTE	REF NO	GRAPHIC REF	PART NUMBER	QTY	PART NAME 1 2 3 4 5 6 (PRODUCT LEVEL)	SEE PAGE
	1	1	**1F-6762**	4	BOLT (1-1/2-12X4.5-IN)	
	2	1	**2K-7468**	1	LOCKNUT (1-1/4-12-THD)	
	3	1	**3B-8489**	11	FITTING-GREASE (1/8-27 PTF)	
	4	1	**4H-6511**	1	BOLT (1-1/4-12X6.5-IN)	
	5	1	**5F-9891**	4	BOLT (1-1/2-12X6-IN)	
	6	1	**9X-2521**	8	NUT-FULL	
	7	1	**137-4234**	1	PLATE-IDENTIFICATION (WORK TOOL)	
	8	1	**170-4910**	1	FRAME AS-COUPLER	
	9	1	**172-8121**	2	SPACER (34.925X60.325X14.2-MM THK)	
	10	1	**172-8122**	2	PIN AS	
	11	1	**172-8125**	3	PIN (SNAP)	
	12	1	**172-8126**	1	FILM-WARNING (CRUSH HAZARD)	
	13	1	**172-8127**	1	PIN AS (LOCKING)	
I	14	1	**172-8287**	1	HOSE AS	
I	15	1	**172-8288**	1	HOSE AS	
	16	1	**194-3655**	2	BEARING GP	
	17	1	**195-3330**	1	PLATE AS-MOUNTING	
Y	18	1	**217-3501**	1	CYLINDER GP-HYDRAULIC (WORK TOOL LIFT)	877
	19	1	**284-7971**	1	ARM AS (LOWER)	
	20	1	**284-7972**	1	ARM AS (UPPER)	
	22	1	**2M-9780**	4	SEAL-O-RING	
	23	1	**3J-1907**	4	SEAL-O-RING	
	24	1	**5P-8245**	4	WASHER-HARD (13.5X25.5X3-MM THK)	
	25	1	**6V-8397**	4	SEAL-O-RING	
	26	1	**6V-8636**	1	CONNECTOR	
	27	1	**6V-8724**	3	ELBOW (90-DEG)	
	28	1	**9X-8875**	4	BOLT (1/2-13X3.5-IN)	
FY			*293-5559*	1	BRACE GP (WORK TOOL LIFT)	875

F - NOT SHOWN
I - REFER TO HYDRAULIC INFORMATION SYSTEM
Y - SEPARATE ILLUSTRATION

293-5556 **LIFT GP-WORK TOOL (**contd.**)** **i07377525**

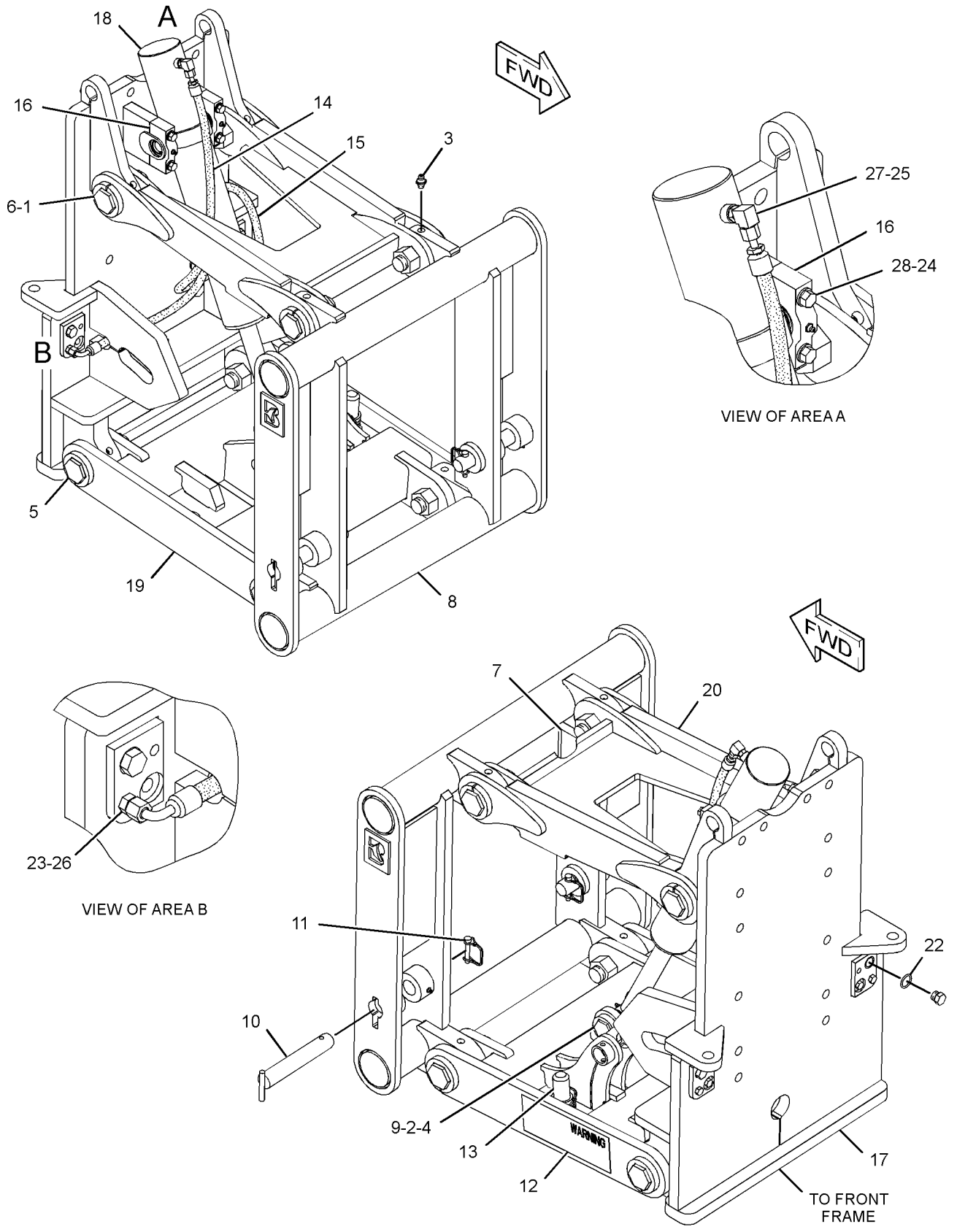

GRAPHIC #1 <END> g01325600

312-2204 LIFT GP-WORK TOOL

S/N: B551-UP

FOR USE WITH 359-3925—PAGE: 894, 365-3354—PAGE: 519, 365-3355—PAGE: 520, 365-3368—PAGE: 520, 365-3369—PAGE: 521

CANNOT BE USED WITH 250-3071—PAGE: 470, 309-6809—PAGE: 873, 351-5178—PAGE: 10

SMCS-6050, 6159, 6701

i05893060

NOTE	PART NUMBER	QTY	PART NAME 1 2 3 4 5 6 (PRODUCT LEVEL)	SEE PAGE
Y	*293-5556*	1	LIFT GP-WORK TOOL	887

Y - SEPARATE ILLUSTRATION

<END>

332-2282 MOUNTING GP-RIPPER

S/N: B551-UP

PART OF 324-0889 RIPPER AR

SMCS-6324 **i03921213**

NOTE	REF NO	GRAPHIC REF	PART NUMBER	QTY	PART NAME 1 2 3 4 5 6 (PRODUCT LEVEL)	SEE PAGE
	1	1	**3W-7254**	2	SPACER (47X80X20-MM THK)	
	2	1	**3W-7256**	2	SPACER (47X80X16-MM THK)	
	3	1	**6P-5647**	2	BOSS	
	4	1	**104-4523**	2	CAM AS	
	5	1	**293-2476**	2	PIN	
	6	1	**332-2284**	2	LINK AS	
	7	1	**332-7384**	1	PLATE AS	
M	8	1	**106-4175**	8	BOLT (M20X2.5X60-MM)	
M	9	1	**114-6099**	6	BOLT (M24X3X80-MM)	
M	10	1	**129-3180**	2	LOCKNUT (M12X1.75-THD)	
	11	1	**267-3507**	6	WASHER-HARD (26X47X12-MM THK)	
	12	1	**283-1578**	8	WASHER-HARD (22X45X10-MM THK)	
M	13	1	**7X-2544**	2	BOLT (M10X1.5X140-MM)	
M	14	1	**8T-0389**	4	LOCKNUT (M10X1.5-THD)	
M	15	1	**8T-5041**	2	BOLT (M12X1.75X120-MM)	
M	16	1	**8T-6685**	2	BOLT (M10X1.5X110-MM)	
	17	1	**9W-7469**	2	PIN	
	18	1	**9W-7470**	2	PIN	

M - METRIC PART

332-2282 **MOUNTING GP-RIPPER (**contd.**)** **i03921213**

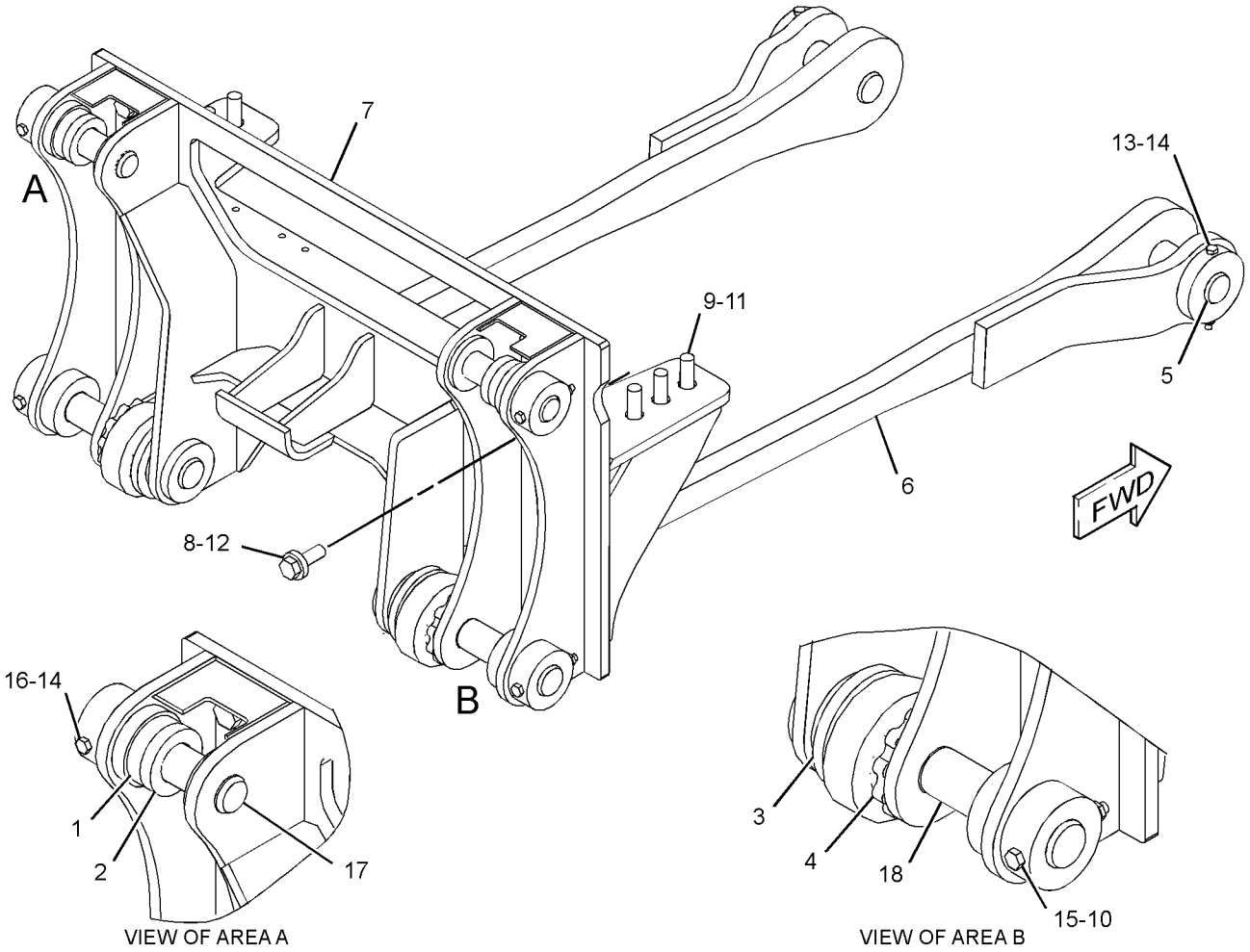

GRAPHIC #1 <END> g02157062

539-6885 MOUNTING GP-RIPPER

S/N: B551-UP

PART OF 539-6894 RIPPER AR

SMCS-6324 **i07748459**

NOTE	REF NO	GRAPHIC REF	PART NUMBER	QTY	PART NAME 1 2 3 4 5 6 (PRODUCT LEVEL)	SEE PAGE
	1	1	**3W-7254**	2	SPACER (47X80X20-MM THK)	
	2	1	**3W-7256**	2	SPACER (47X80X16-MM THK)	
	3	1	**6P-5647**	2	BOSS	
	4	1	**7X-0445**	1	BOLT (1-1/4-7X5-IN)	
	5	1	**7X-0451**	1	NUT-FULL (1-1/4-7-THD)	
	6	1	**7X-0533**	2	WASHER-HARD (34X55X6-MM THK)	
M	7	1	**7X-2544**	2	BOLT (M10X1.5X140-MM)	
M	8	1	**8T-0389**	4	LOCKNUT (M10X1.5-THD)	
M	9	1	**8T-5041**	2	BOLT (M12X1.75X120-MM)	
M	10	1	**8T-6685**	2	BOLT (M10X1.5X110-MM)	
	11	1	**9W-7469**	2	PIN	
	12	1	**9W-7470**	2	PIN	
	13	1	**104-4523**	2	CAM AS	
M	14	1	**106-4175**	8	BOLT (M20X2.5X60-MM)	
M	15	1	**114-6099**	6	BOLT (M24X3X80-MM)	
M	16	1	**129-3180**	2	LOCKNUT (M12X1.75-THD)	
	17	1	**267-3507**	6	WASHER-HARD (26X47X12-MM THK)	
	18	1	**283-1578**	8	WASHER-HARD (22X45X10-MM THK)	
	19	1	**293-2476**	2	PIN	
	20	1	**332-2284**	2	LINK AS	
	21	1	**539-6876**	1	PLATE	
	22	1	**539-6877**	1	PLATE	
	23	1	**539-6892**	1	PLATE AS	

M - METRIC PART

539-6885 **MOUNTING GP-RIPPER** (contd.) **i07748459**

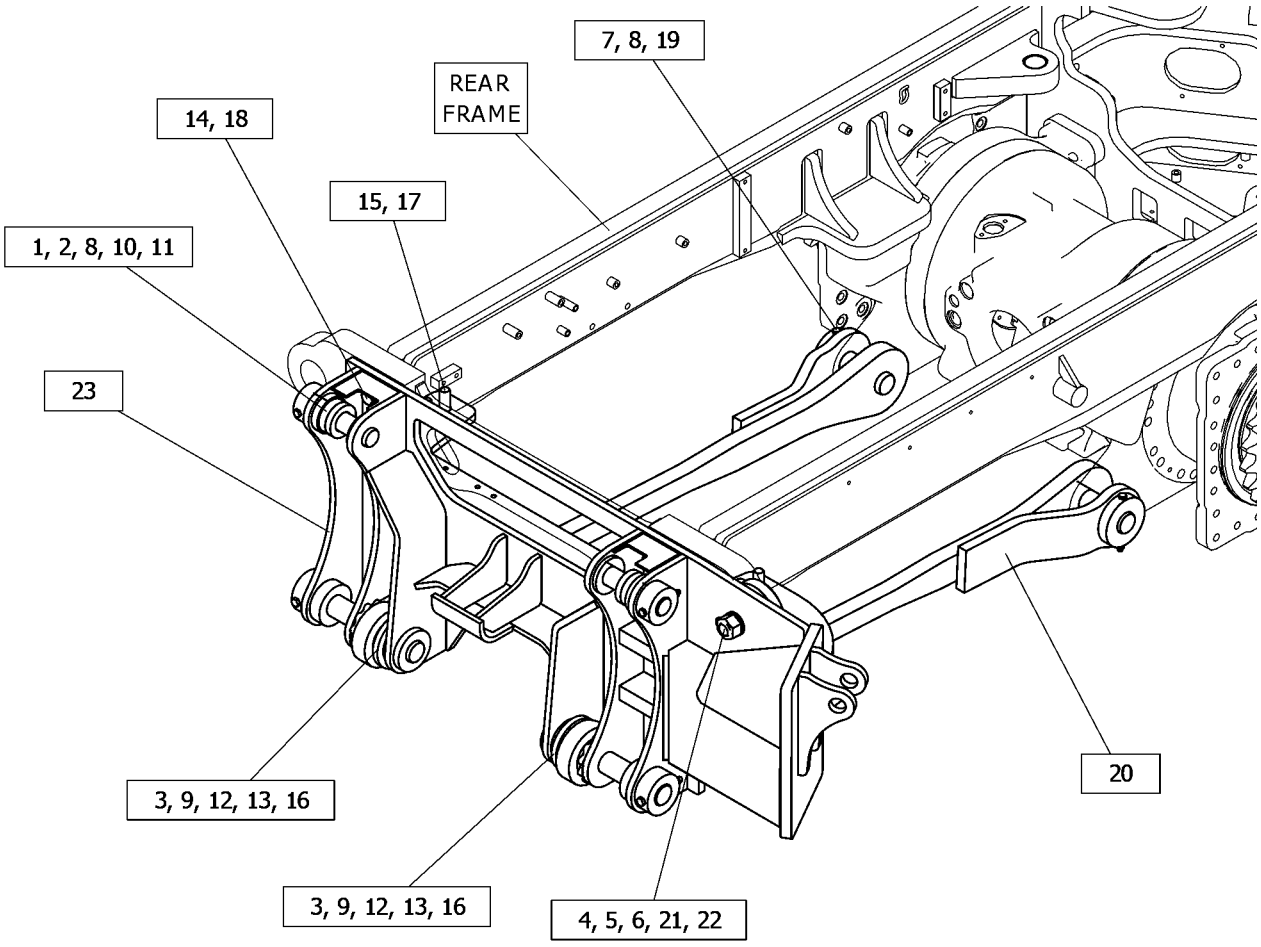

GRAPHIC #1 <END> g06399134

359-3925 MOUNTING GP-SNOW WING–FRONT LIFT

S/N: B551-UP

SMCS-6158 **i06635600**

NOTE	REF NO	GRAPHIC REF	PART NUMBER	QTY	PART NAME 1 2 3 4 5 6 (PRODUCT LEVEL)	SEE PAGE
	1	1	**257-5177**	2	PLATE	

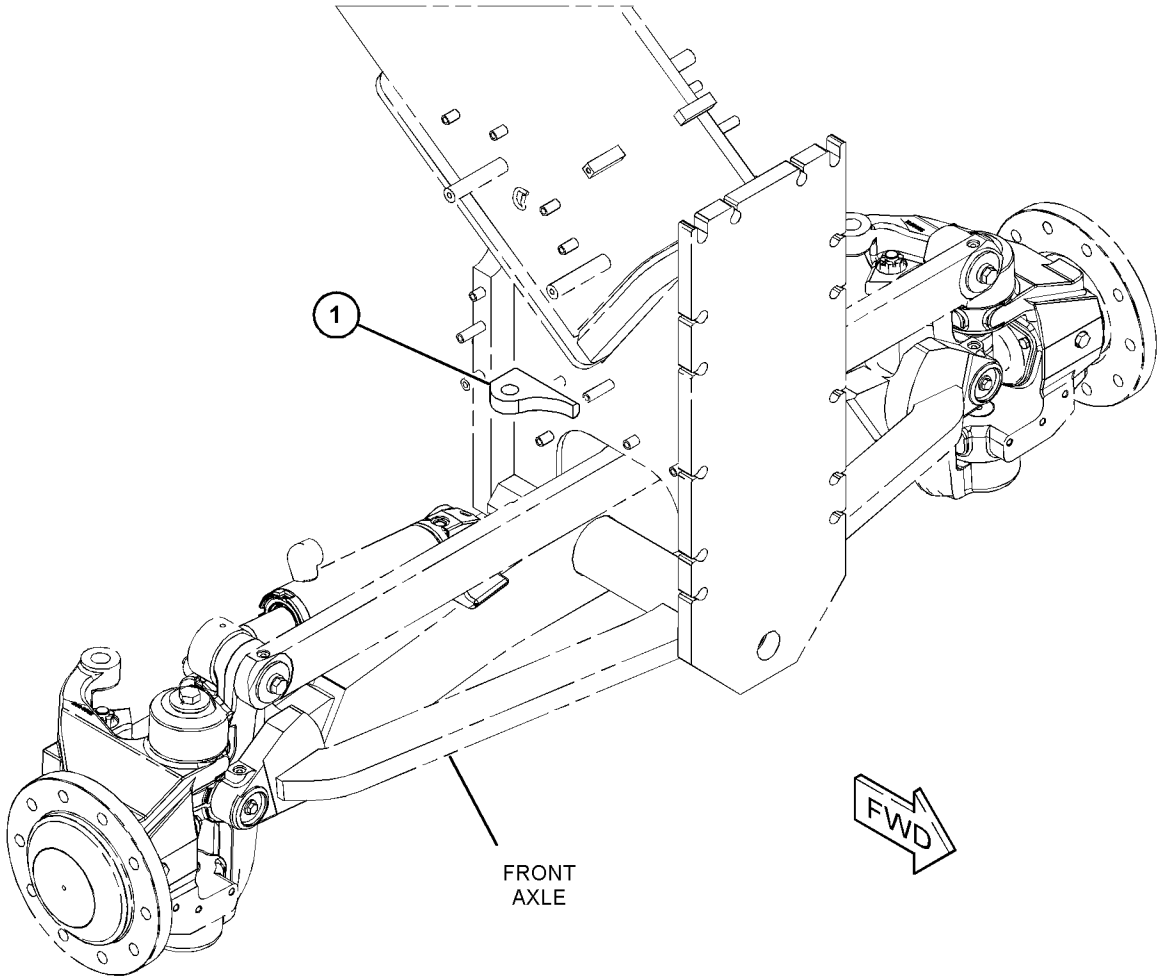

GRAPHIC #1 <END> g06056366

360-5080 MOUNTING GP-SNOW WING

S/N: B551-UP

PART OF 390-9182, 551-6546 OPTION AR-MACHINE

SMCS-6158 **i06748984**

NOTE	REF NO	GRAPHIC REF	PART NUMBER	QTY	PART NAME 1 2 3 4 5 6 (PRODUCT LEVEL)	SEE PAGE
	1	1	**260-6731**	1	PLATE AS	
	2	1	**284-8931**	1	PLATE-MOUNTING	
	3	1	**379-5657**	1	PLATE (LH)	
	4	1	**379-5658**	1	PLATE (RH)	
	5	1	**495-9537**	1	PLATE (LH)	
	6	1	**495-9536**	1	PLATE (RH)	
	7	1	**385-5267**	1	PLATE	

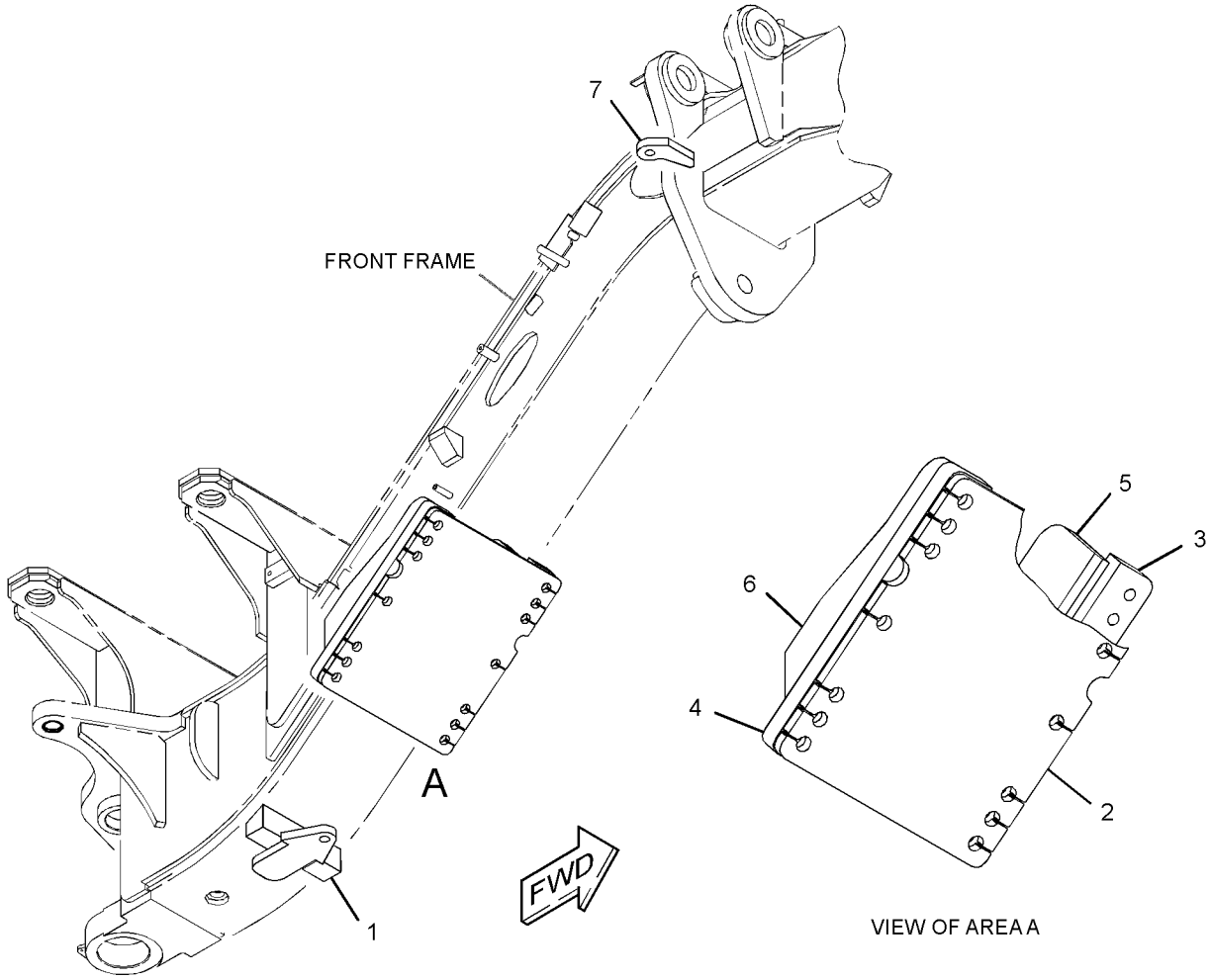

GRAPHIC #1 <END> g02316673

324-0889 RIPPER AR

S/N: B551-UP

FOR USE WITH 365-3355—PAGE: 520

CANNOT BE USED WITH 337-7510—PAGE: 461, 393-4882—PAGE: 462

SMCS-6325 **i05893061**

NOTE	REF NO	GRAPHIC REF	PART NUMBER	QTY	PART NAME 1 2 3 4 5 6 (PRODUCT LEVEL)	SEE PAGE
Y	1	1	*325-3355*	1	RIPPER GP	898
Y	2	1	*326-2227*	1	CYLINDER GP-RIPPER	542
Y	3	1	*332-2282*	1	MOUNTING GP-RIPPER	890
Y	4	1	*334-8069*	1	LINES GP-RIPPER (REAR)	607

Y - SEPARATE ILLUSTRATION

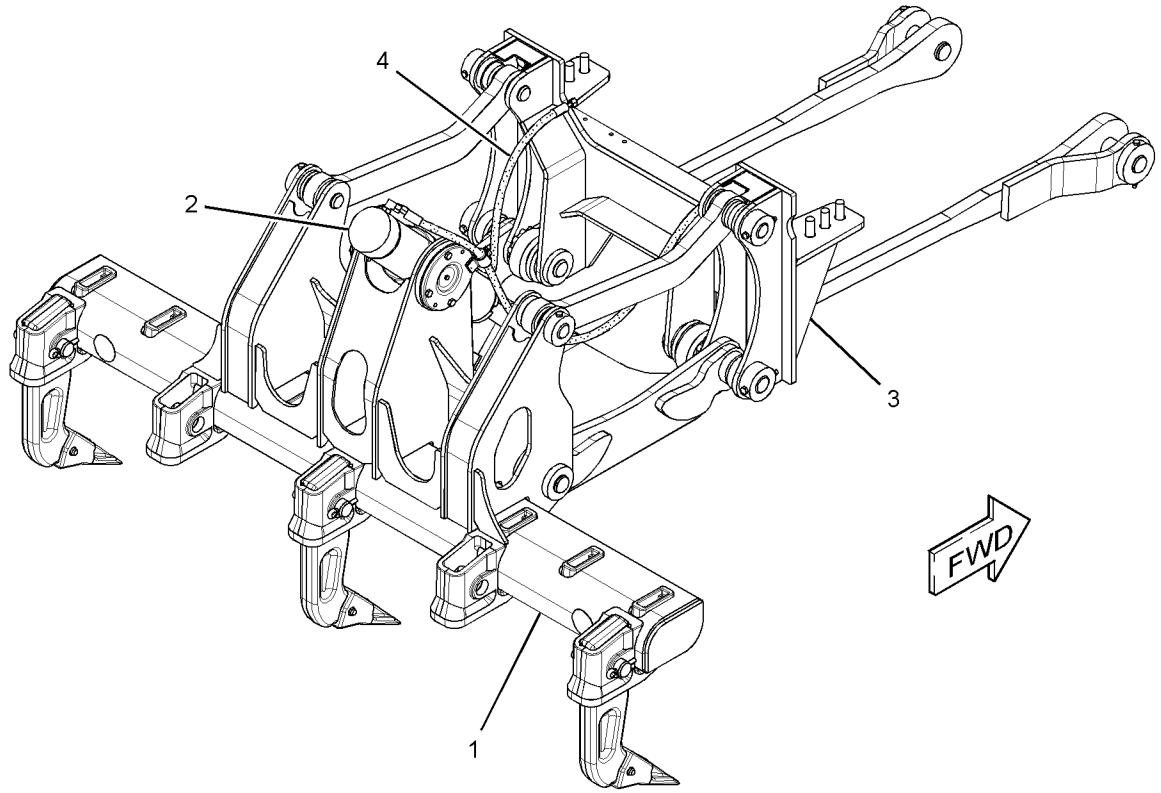

GRAPHIC #1 <END> g02155942

539-6894 RIPPER AR

S/N: B551-UP

SMCS-6325 **i07748380**

NOTE	PART NUMBER	QTY	PART NAME 1 2 3 4 5 6 (PRODUCT LEVEL)	SEE PAGE
Y	**326-2227**	1	CYLINDER GP-RIPPER	542
Y	*334-8069*	1	LINES GP-RIPPER	607
Y	*539-6885*	1	MOUNTING GP-RIPPER	892
Y	*325-3355*	1	RIPPER GP	898

Y - SEPARATE ILLUSTRATION

<END>

325-3355 RIPPER GP

S/N: B551-UP

PART OF 324-0889, 539-6894 RIPPER AR

SMCS-6325 **i04109475**

NOTE	REF NO	GRAPHIC REF	PART NUMBER	QTY	PART NAME 1 2 3 4 5 6 (PRODUCT LEVEL)	SEE PAGE
	1	1	**2K-0703**	1	BAR	
	2	1	**4K-3150**	2	PIN	
Y	3	1	*8J-1434*	3	TOOTH GP-RIPPER (STRAIGHT)	904
	4	1	**190-5386**	2	FILM-IDENTIFICATION (ROUND RED REFLECTIVE)	
	5	1	**325-3354**	1	CARRIAGE AS	
	6	1	**332-2295**	1	LINK AS-LOWER	
	7	1	**332-6143**	1	LINK & BEARING AS (RH)	
		1	**3G-2581**	2	BEARING	
		1	**325-3353**	1	LINK AS	
	8	1	**332-6144**	1	LINK & BEARING AS (LH)	
		1	**3G-2581**	2	BEARING	
		1	**332-6145**	1	LINK AS	
	9	1	**334-7584**	1	PIN	
	10	1	**342-2107**	2	TRUNNION AS	
					(EACH INCLUDES)	
	10A	1	**332-2297**	1	BUSHING	
		1	**4K-3004**	1	BEARING-TRUNNION SUPPLEMENTARY	
	11	1	**2D-0626**	8	SEAL	
	12	1	**5M-6214**	2	PLUG (1/8-27 PTF)	
M	13	1	**6V-7687**	10	LOCKNUT (M12X1.75-THD)	
M	14	1	**6V-7744**	2	LOCKNUT (M10X1.5-THD)	
	15	1	**7K-9203**	8	SEAL-LIP TYPE	
	16	1	**7K-9205**	2	SEAL-LIP TYPE	
	17	1	**8J-7008**	2	PIN	
M	18	1	**8T-4192**	2	BOLT (M12X1.75X25-MM)	
M	19	1	**8T-4198**	2	BOLT (M10X1.5X100-MM)	
M	20	1	**8T-4648**	1	BOLT (M12X1.75X70-MM)	
M	21	1	**8T-4910**	7	BOLT (M12X1.75X60-MM)	
M	22	1	**8T-5041**	2	BOLT (M12X1.75X120-MM)	

M - METRIC PART
Y - SEPARATE ILLUSTRATION

325-3355 **RIPPER GP (**contd.**)** **i04109475**

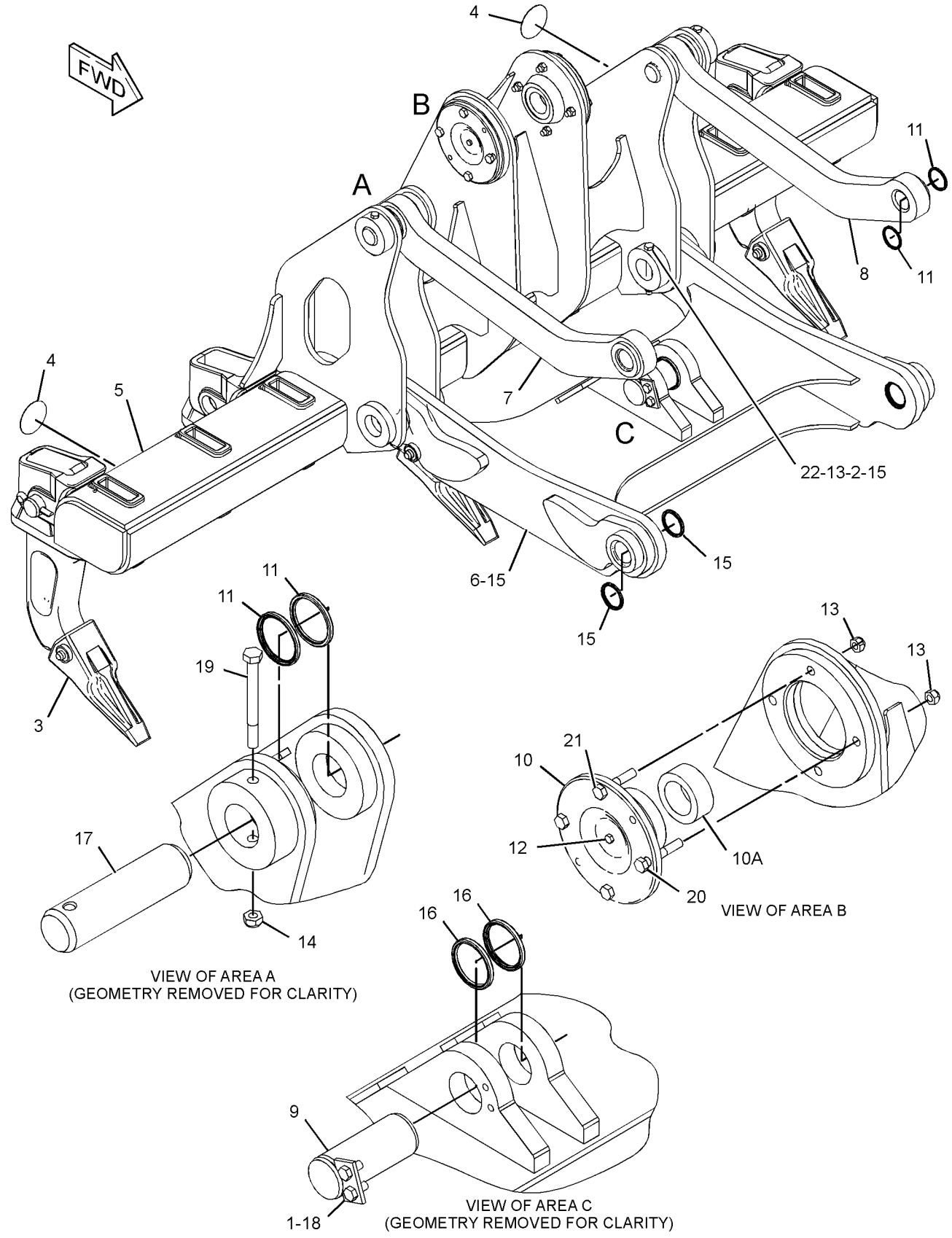

GRAPHIC #1

<END>

g02156876

310-9425 SCARIFIER AR–VEE TYPE

S/N: B551-UP

PART OF 364-2034 OPTION AR-SCARIFIER

SMCS-6162, 6325, 6811 **i05179838**

NOTE	REF NO	GRAPHIC REF	PART NUMBER	QTY	PART NAME 1 2 3 4 5 6 (PRODUCT LEVEL)	SEE PAGE
Y	1	1	*8W-2913*	1	CYLINDER & MTG GP-SCARIFIER	531
Y	2	1	*310-9428*	1	SCARIFIER GP (VEE TYPE)	901

Y - SEPARATE ILLUSTRATION

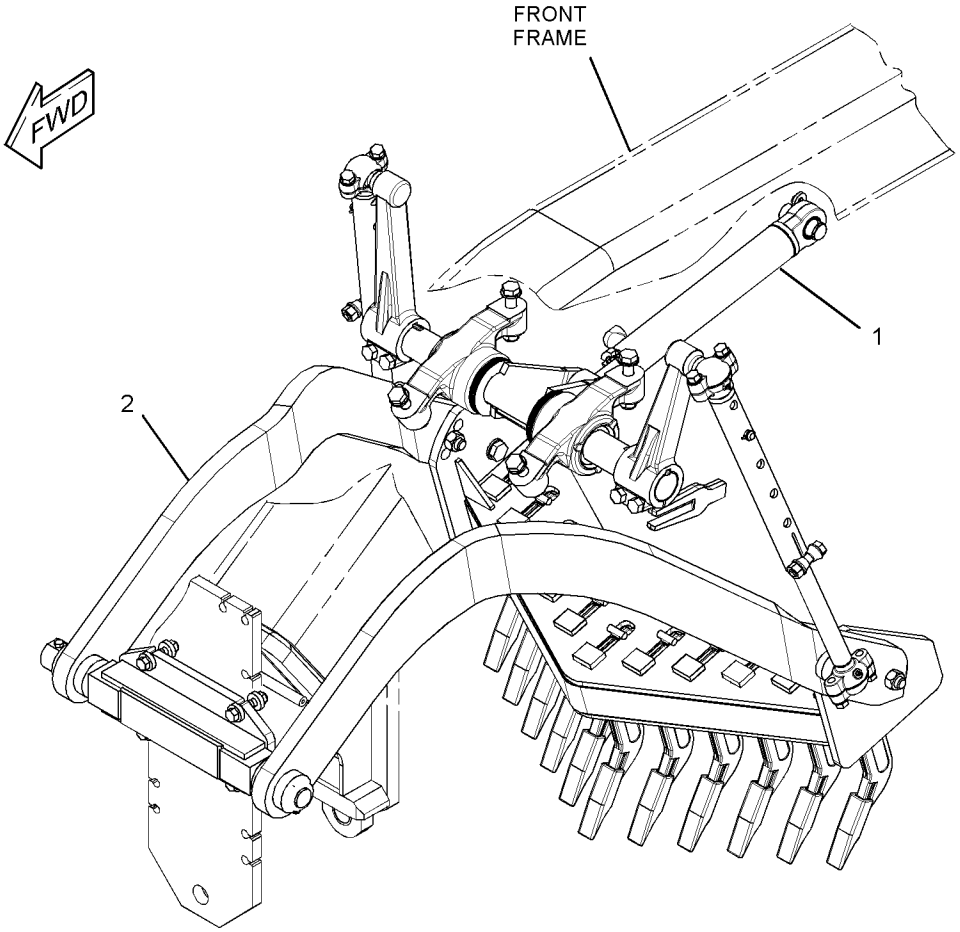

GRAPHIC #1 <END> g01594053

310-9428 SCARIFIER GP–VEE TYPE

S/N: B551-UP
11-TEETH
PART OF 310-9425 SCARIFIER AR

SMCS-6162, 6325, 6811

i03744141

NOTE	REF NO	GRAPHIC REF	PART NUMBER	QTY	PART NAME 1 2 3 4 5 6 (PRODUCT LEVEL)	SEE PAGE
	1	1	**7X-0386**	2	BOLT (7/8-9X3.5-IN)	
	3	1	**2G-4332**	1	BLOCK AS-SCARIFIER	
		1	**7D-8825**	11	SPACER	
		1	**7D-8826**	11	SPACER	
	4	1	**6K-3632**	4	LOCKNUT (1-8-THD)	
	5	1	**3B-8489**	4	FITTING-GREASE (1/8-27 PTF)	
	6	1	**7X-0450**	4	NUT-FULL (1-1/8-7-THD)	
	7	1	**4D-6086**	2	KEY	
	8	1	**5B-0577**	2	COLLAR	
	9	1	**5D-8159**	2	PIN AS	
	10	1	**5K-1458**	11	GROMMET	
	11	1	**5K-1459**	11	LOCK PIN	
	12	1	**6B-3260**	1	TOOL	
	13	1	**6F-6992**	4	CAP-BALL SOCKET	
	14	1	**6Y-5230**	11	TOOTH-SCARIFIER	
	15	1	**7D-2196**	2	SLEEVE AS-LINK	
					(EACH INCLUDES)	
		1	**7D-2136**	1	SOCKET-BALL	
B	16	1	**7F-1327**	32	SHIM (0.03-IN THK)	
	17	1	**8D-1268**	2	ARM AS-LIFT	
					(EACH INCLUDES)	
		1	**7D-8245**	1	STUD-BALL	
	18	1	**7X-0443**	4	BOLT (1-8X5.5-IN)	
	19	1	**7X-0423**	4	BOLT (1-1/8-7X4.5-IN)	
	20	1	**8W-0663**	2	BRACKET AS	
					(EACH INCLUDES)	
		1	**3B-8489**	1	FITTING-GREASE (1/8-27 PTF)	
		1	**107-8374**	2	BEARING	
	21	1	**8X-6075**	1	BOLSTER AS	
	22	1	**9D-5516**	2	LINK AS-LIFT	
					(EACH INCLUDES)	
		1	**7D-2135**	1	SOCKET-BALL	
	23	1	**107-8375**	1	SHAFT AS	
	24	1	**118-7880**	1	DRAWBAR AS	
		1	**2G-7728**	2	COLLAR	
		1	**8W-5597**	1	STUD-BALL	
	25	1	**118-7881**	1	DRAWBAR AS	
		1	**2G-7728**	2	COLLAR	
		1	**8W-5597**	1	STUD-BALL	
	26	1	**195-7218**	11	SHANK	
B	27	1	**198-9811**	16	SPACER (83X145X3-MM THK)	
B	28	1	**198-9812**	3	SPACER (83X145X2-MM THK)	
	29	1	**8T-8924**	8	BOLT (3/4-10X2.5-IN)	
	30	1	**8C-8842**	4	BOLT (3/4-10X4-IN)	
	31	1	**6V-8188**	2	NUT (1/2-13-THD)	
	32	1	**330-6877**	1	SHAFT	
	33	1	**6V-8182**	4	NUT (3/4-10-THD)	

310-9428 **SCARIFIER GP (**contd.**)** **i03744141**

NOTE	REF NO	GRAPHIC REF	PART NUMBER	QTY	PART NAME 1 2 3 4 5 6 (PRODUCT LEVEL)	SEE PAGE
	34	1	**282-0882**	4	WASHER-HARD (33X56X6-MM THK)	
	35	1	**5D-8161**	2	PIN	
	36	1	**8T-4223**	2	WASHER-HARD (13.5X25.5X3-MM THK)	
	37	1	**8T-4994**	8	WASHER-HARD (20X36.5X3.5-MM THK)	
	38	1	**8T-5361**	8	WASHER-HARD (28X49X5-MM THK)	
	39	1	**6K-0545**	6	LOCKNUT (7/8-9-THD)	
	40	1	**7X-0390**	4	BOLT (7/8-9X5-IN)	
	41	1	**8C-6913**	4	WASHER-HARD (24X41.5X4-MM THK)	
	42	1	**6C-9149**	8	WASHER (22X50X10-MM THK)	
	43	1	**7X-0328**	2	BOLT (1/2-13X3.5-IN)	

B - USE AS REQUIRED

310-9428 **SCARIFIER GP (**contd.**)** **i03744141**

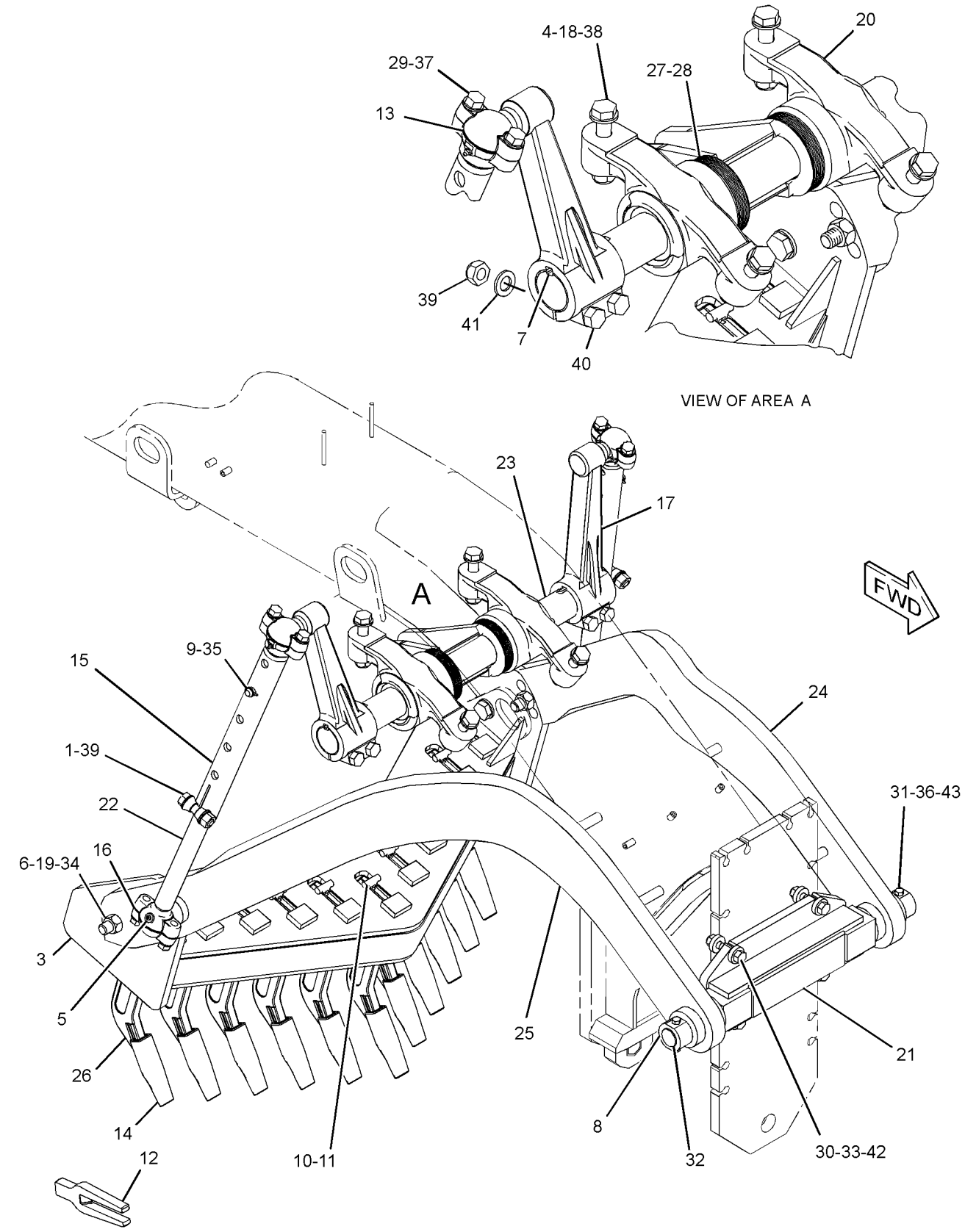

GRAPHIC #1 <END> g01753714

8J-1434 TOOTH GP-RIPPER—STRAIGHT

S/N: B551-UP

PART OF 325-3355 RIPPER GP

SMCS-6808 **i05893021**

NOTE	REF NO	GRAPHIC REF	PART NUMBER	QTY	PART NAME 1 2 3 4 5 6 (PRODUCT LEVEL)	SEE PAGE
	1	1	**3B-5325**	2	PIN-COTTER	
	2	1	**2K-6413**	1	PIN	
	3	1	**9J-6586**	1	SHANK	
	4	1	**136-8308**	1	PIN	
	5	1	**6Y-0309**	1	TIP-RIPPER (PENETRATION)	
	6	1	**114-0359**	1	RETAINER AS	

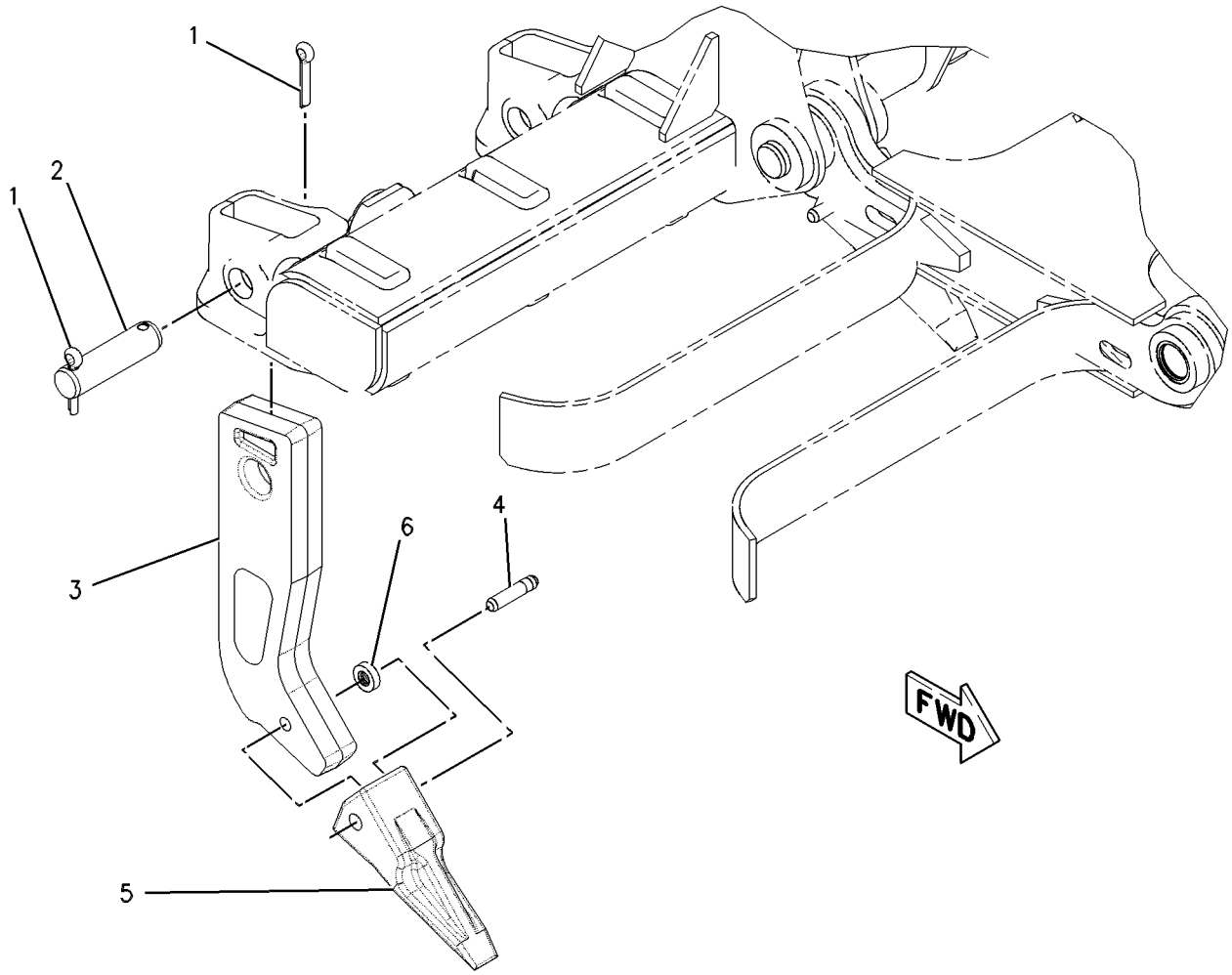

GRAPHIC #1 <END> g00632727

4K-3330 TOOTH GP-SCARIFIER

S/N: B551-UP
9 TEETH

SMCS-6807 **i05893020**

NOTE	REF NO	GRAPHIC REF	PART NUMBER	QTY	PART NAME 1 2 3 4 5 6 (PRODUCT LEVEL)	SEE PAGE
	1	1	**5K-1459**	9	LOCK PIN	
	2	1	**5K-1458**	9	GROMMET	
	3	1	**195-7218**	9	SHANK	
	4	1	**6Y-5230**	9	TOOTH-SCARIFIER	
F			**6B-3260**	1	TOOL	

F - NOT SHOWN

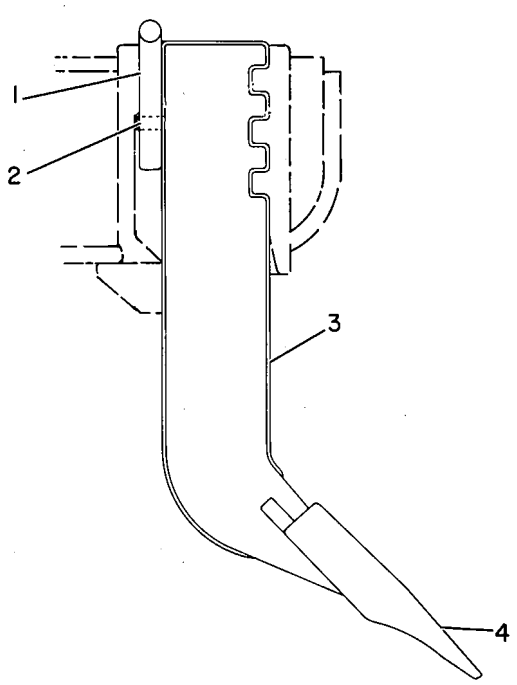

GRAPHIC #1 <END> g00108148

247-8622 BOX GP-TOOL

S/N: B551-UP

PART OF 577-1377 COMMON AR

SMCS-7259 **i06554644**

NOTE	REF NO	GRAPHIC REF	PART NUMBER	QTY	PART NAME 1 2 3 4 5 6 (PRODUCT LEVEL)	SEE PAGE
	1	1	**246-2641**	1	PADLOCK GP	
		1	**5P-8500**	1	KEY	
	2	1	**8W-0791**	1	BOX AS-TOOL	
C	3	1	**8T-4226**	2	WASHER-PLATED (10.5X45X3-MM THK)	
C	4	1	**7X-7729**	6	WASHER (11X25X3-MM THK)	
M	5	1	**344-5675**	2	NUT (M10X1.5-THD)	
M	6	1	**8T-4136**	4	BOLT (M10X1.5X25-MM)	

C - CHANGE FROM PREVIOUS TYPE
M - METRIC PART

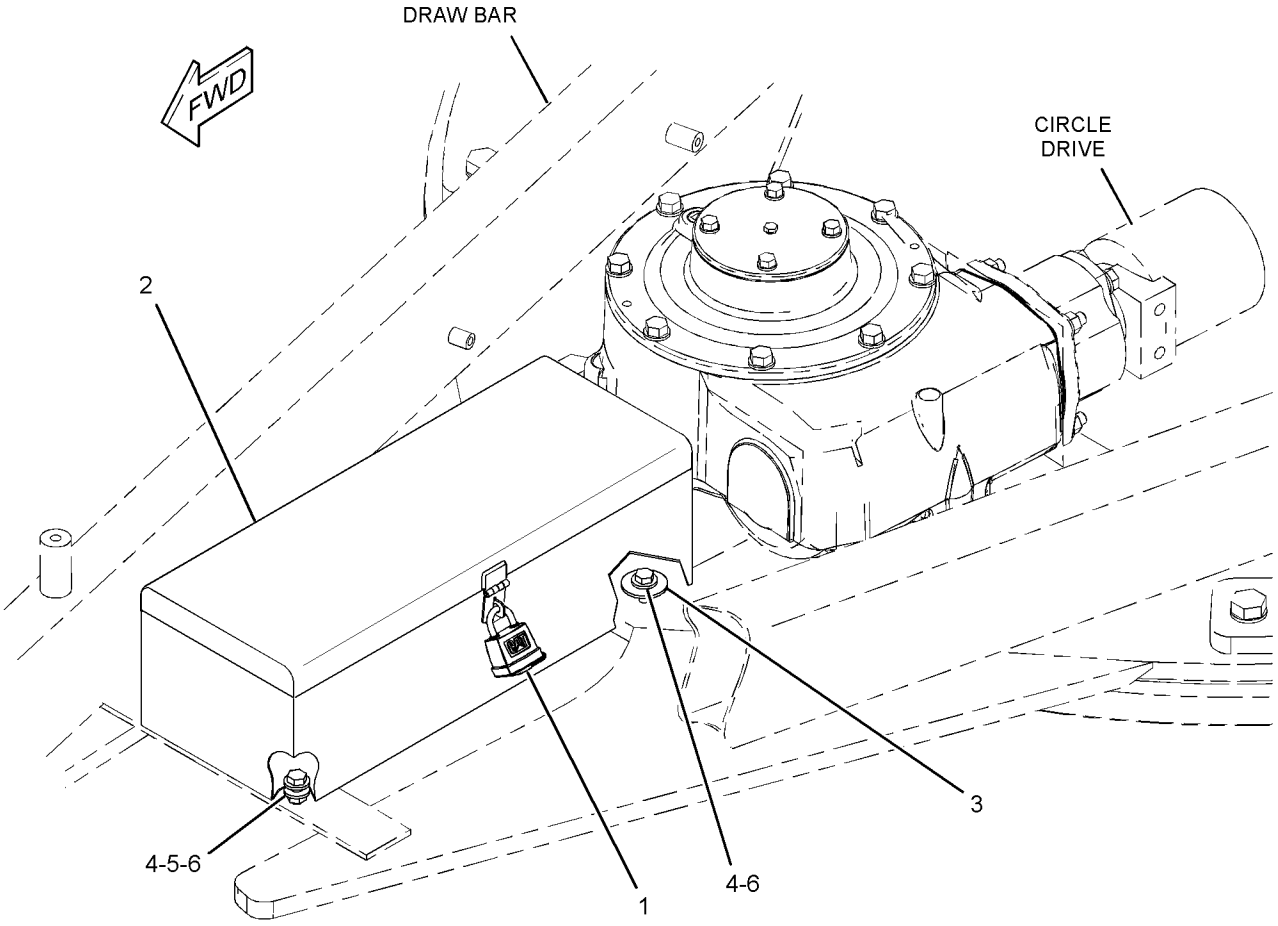

GRAPHIC #1 <END> g06057601

246-6711 FILM GP—VARIABLE HORSEPOWER PLUS

S/N: B551-UP

PART OF 577-1377 COMMON AR

SMCS-0375, 7000, 7405, 7557 **i03972169**

NOTE	PART NUMBER	QTY	PART NAME 1 2 3 4 5 6 (PRODUCT LEVEL)	SEE PAGE
	280-1034	2	FILM-IDENTIFICATION (VARIABLE HORSEPOWER PLUS)	
			(ON RH & LH SIDE DOORS OF ENCLOSURE GP)	
J	**249-6751**	1	CONFIGURATION-PREMIUM	
J - DLR INSTALL CONFIG:SEE IRM: EES03-01				
			<END>	

381-8141 FILM GP

S/N: B551-UP

PART OF 420-1977, 575-9874, 575-9875 CAB AR

SMCS-0375, 7000, 7405, 7557 **i05270848**

NOTE	PART NUMBER	QTY	PART NAME 1 2 3 4 5 6 (PRODUCT LEVEL)	SEE PAGE
	356-2212	2	FILM	
			(ON CAB INTERIOR SIDE OF TWO FRONT A-POSTS)	
			<END>	

511-5471 FILM GP

S/N: B551-UP
CANADIAN MARKET
PART OF 367-7798 OPTION AR-REGIONAL

SMCS-0375, 7000, 7405, 7557 **i06844550**

NOTE	REF NO	GRAPHIC REF	PART NUMBER	QTY	PART NAME 1 2 3 4 5 6 (PRODUCT LEVEL)	SEE PAGE
	1	1	**504-1365**	1	FILM-IDENTIFICATION (CANADIAN STANDARDS ASSOCIATION)	

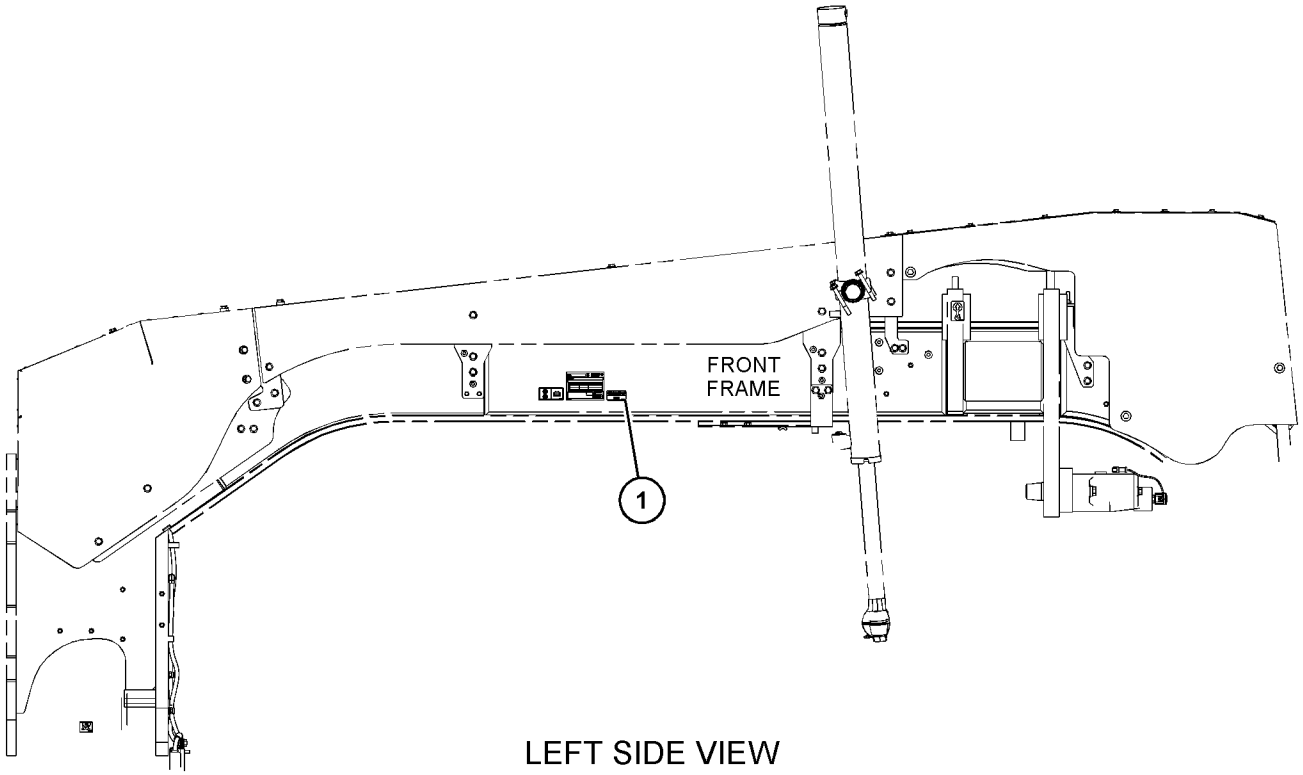

LEFT SIDE VIEW

GRAPHIC #1 <END> g06138823

578-6058 FILM GP

S/N: B551-UP

PART OF 578-6053, 578-6054 PLATE & FILM GP

SMCS-0375, 7000, 7405, 7557

i07793913

NOTE	REF NO	GRAPHIC REF	PART NUMBER	QTY	PART NAME 1 2 3 4 5 6 (PRODUCT LEVEL)	SEE PAGE
	1	1	**570-5873**	2	FILM-IDENTIFICATION (CAT) (SIDE)	
	2	1	**575-0139**	1	FILM-IDENTIFICATION (CAT) (REAR)	
	3	1	**575-9173**	2	FILM-IDENTIFICATION (150)	

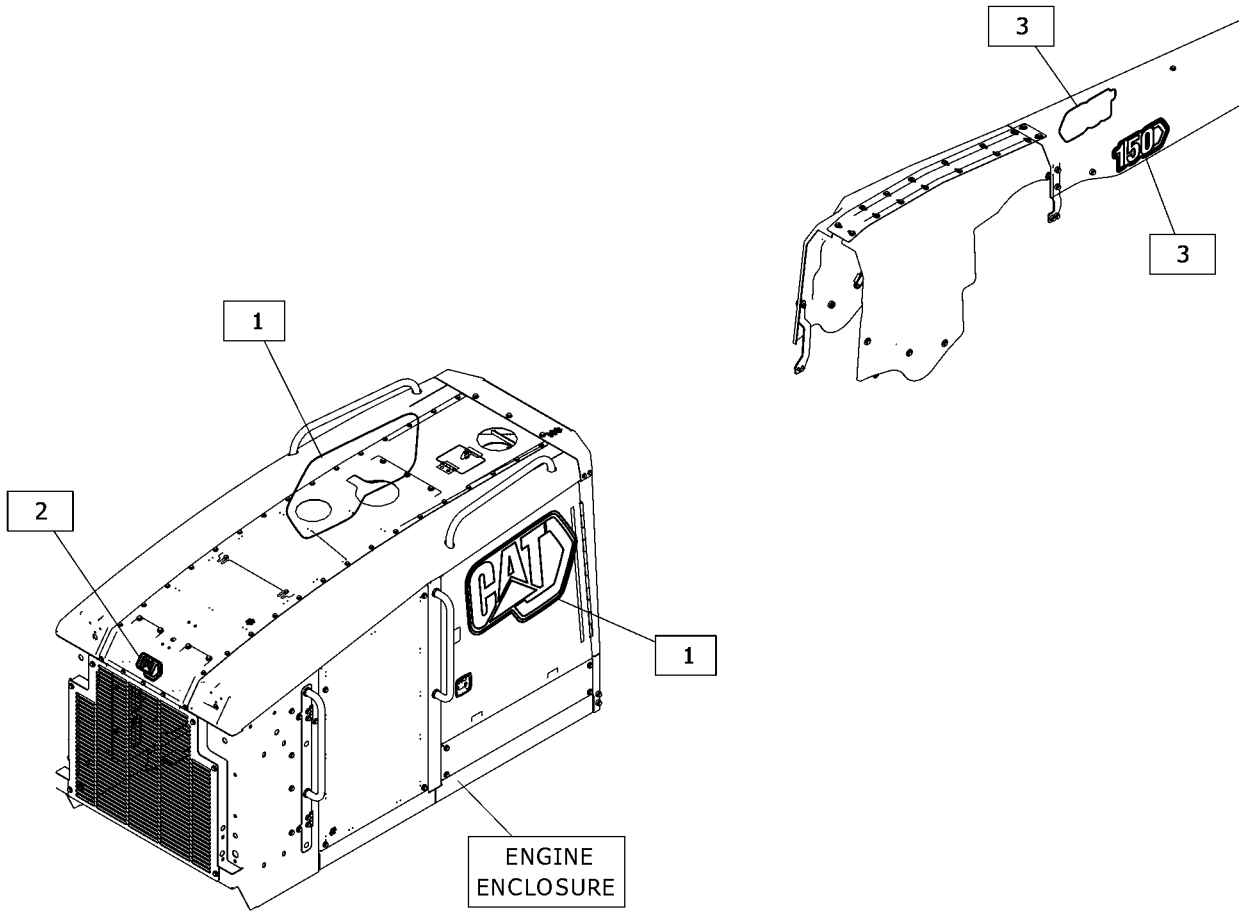

GRAPHIC #1 <END> g06440083

267-3184 FILM GP-INTERNATIONAL

S/N: B551-UP

PART OF 302-5133, 302-8670, 302-8671, 302-8672, 302-8673, 302-8674, 302-8675, 302-8676, 302-8677, 302-8678, 302-8679, 302-8680, 302-8681, 302-8682, 302-8683, 302-8684, 302-8685, 302-8686, 302-8687 PLATE & FILM GP

SMCS-7557 **i05794957**

NOTE	REF NO	GRAPHIC REF	PART NUMBER	QTY	PART NAME 1 2 3 4 5 6 (PRODUCT LEVEL)	SEE PAGE
	1	1	**100-5612**	1	FILM-INSTRUCTION (ALTERNATE EXIT, REMOVE WINDOW)	
	2	1	**219-0302**	1	FILM-WARNING (NO WELD, NO DRILL, READ OMM)	
	3	1	**228-2616**	1	FILM-WARNING (UNIVERSAL, READ OMM)	
	4	1	**227-7391**	1	FILM-WARNING (SEAT BELT, INTERNATIONAL)	
	5	1	**249-6688**	1	FILM-WARNING (CRUSH HAZARD, READ MANUAL)	
	6	1	**307-0047**	1	FILM-INFORMATION (PRODUCT LINK, READ OMM)	
	7	1	**260-7653**	1	FILM-WARNING (EXPLOSION HAZARD, PRODUCT LINK)	

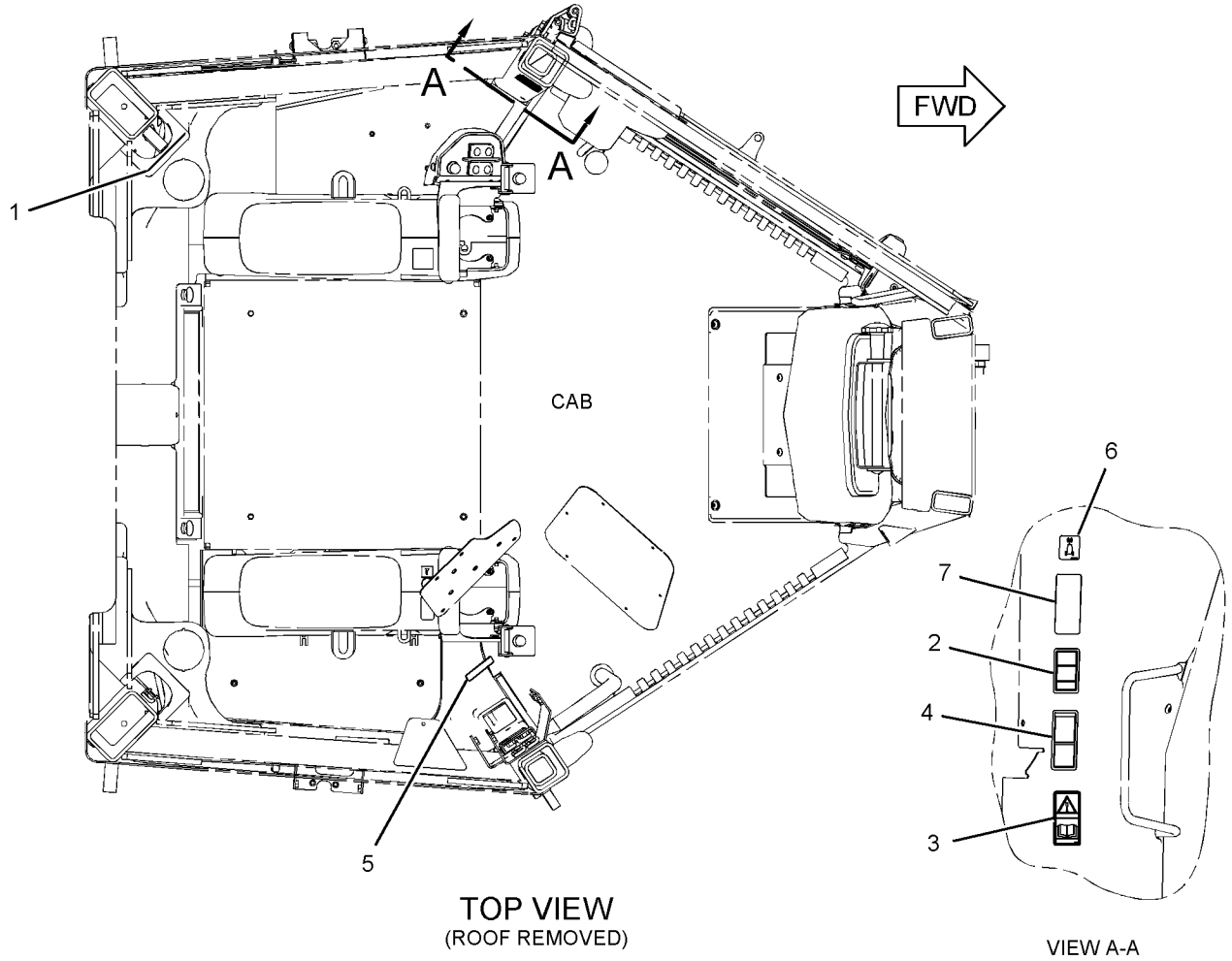

TOP VIEW
(ROOF REMOVED)

VIEW A-A

GRAPHIC #1 <END> g03051756

267-3183 FILM GP-U.S.

S/N: B551-UP

PART OF 302-8669 PLATE & FILM GP

SMCS-7557 **i05794955**

NOTE	REF NO	GRAPHIC REF	PART NUMBER	QTY	PART NAME 1 2 3 4 5 6 (PRODUCT LEVEL)	SEE PAGE
	1	1	**100-5612**	1	FILM-INSTRUCTION (ALTERNATE EXIT, REMOVE WINDOW)	
	2	1	**219-0302**	1	FILM-WARNING (NO WELD, NO DRILL, READ OMM)	
	3	1	**228-2615**	1	FILM-WARNING (UNIVERSAL, U.S.)	
	4	1	**227-7390**	1	FILM-WARNING (SEAT BELT)	
	5	1	**249-6687**	1	FILM-WARNING (CRUSH HAZARD)	
	6	1	**260-7652**	1	FILM-WARNING (PRODUCT LINK 300, U.S.)	
	7	1	**307-0047**	1	FILM-INFORMATION (PRODUCT LINK, READ OMM)	

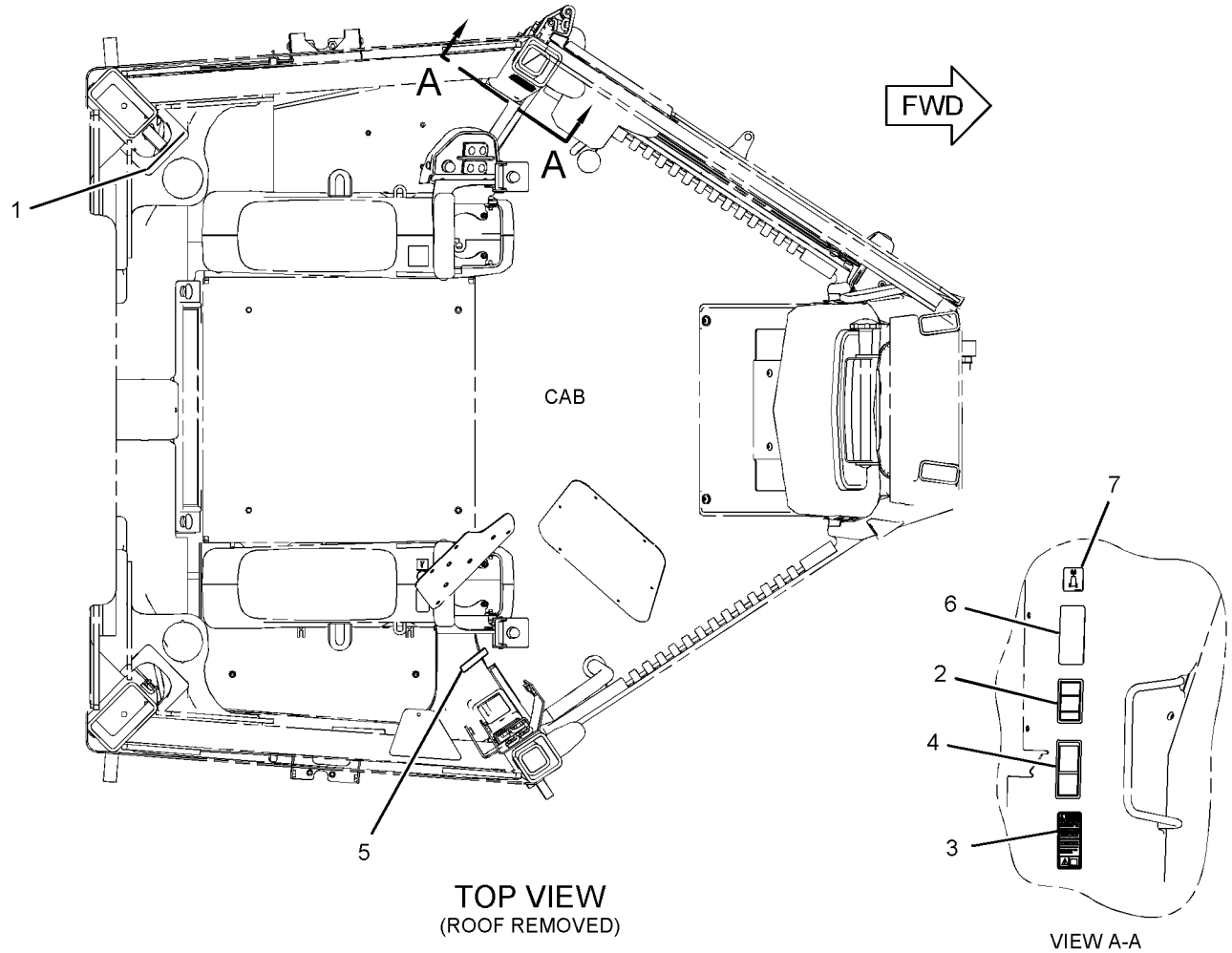

TOP VIEW
(ROOF REMOVED)

VIEW A-A

GRAPHIC #1 <END> g03051676

302-5133 PLATE & FILM GP—BRITISH, WITH MONITOR SOFTWARE

S/N: B551-UP

SMCS-7405, 7557 **i07787903**

NOTE	PART NUMBER	QTY	PART NAME 1 2 3 4 5 6 (PRODUCT LEVEL)	SEE PAGE
Y	*446-4842*	1	ELECTRONICS GP-MONITOR	172
Y	*267-3184*	1	FILM GP-INTERNATIONAL	910
Y	*578-6054*	1	PLATE & FILM GP	921

Y - SEPARATE ILLUSTRATION

<END>

302-8669 PLATE & FILM GP—ENGLISH, WITH MONITOR SOFTWARE

S/N: B551-UP

SMCS-7405, 7557 **i07787643**

NOTE	PART NUMBER	QTY	PART NAME 1 2 3 4 5 6 (PRODUCT LEVEL)	SEE PAGE
Y	*446-4842*	1	ELECTRONICS GP-MONITOR	172
Y	*267-3183*	1	FILM GP-U.S.	911
Y	*578-6053*	1	PLATE & FILM GP	917

Y - SEPARATE ILLUSTRATION

<END>

302-8670 PLATE & FILM GP—PORTUGUESE, WITH MONITOR SOFTWARE

S/N: B551-UP

SMCS-7405, 7557 **i07787886**

NOTE	PART NUMBER	QTY	PART NAME 1 2 3 4 5 6 (PRODUCT LEVEL)	SEE PAGE
Y	*446-4842*	1	ELECTRONICS GP-MONITOR	172
Y	*267-3184*	1	FILM GP-INTERNATIONAL	910
Y	*578-6054*	1	PLATE & FILM GP	921

Y - SEPARATE ILLUSTRATION

<END>

302-8671 PLATE & FILM GP—SPANISH, WITH MONITOR SOFTWARE

S/N: B551-UP

SMCS-7405, 7557 **i07787895**

NOTE	PART NUMBER	QTY	PART NAME 1 2 3 4 5 6 (PRODUCT LEVEL)	SEE PAGE
Y	*446-4842*	1	ELECTRONICS GP-MONITOR	172
Y	*267-3184*	1	FILM GP-INTERNATIONAL	910
Y	*578-6054*	1	PLATE & FILM GP	921

Y - SEPARATE ILLUSTRATION

<END>

302-8672 PLATE & FILM GP—FRENCH, WITH MONITOR SOFTWARE

S/N: B551-UP

SMCS-7405, 7557 **i07787889**

NOTE	PART NUMBER	QTY	PART NAME 1 2 3 4 5 6 (PRODUCT LEVEL)	SEE PAGE
Y	*446-4842*	1	ELECTRONICS GP-MONITOR	172
Y	*267-3184*	1	FILM GP-INTERNATIONAL	910
Y	*578-6054*	1	PLATE & FILM GP	921

Y - SEPARATE ILLUSTRATION

<END>

302-8673 PLATE & FILM GP—GERMAN, WITH MONITOR SOFTWARE

S/N: B551-UP

SMCS-7405, 7557 **i07787876**

NOTE	PART NUMBER	QTY	PART NAME 1 2 3 4 5 6 (PRODUCT LEVEL)	SEE PAGE
Y	*446-4842*	1	ELECTRONICS GP-MONITOR	172
Y	*267-3184*	1	FILM GP-INTERNATIONAL	910
Y	*578-6054*	1	PLATE & FILM GP	921

Y - SEPARATE ILLUSTRATION

<END>

302-8674 PLATE & FILM GP—DUTCH, WITH MONITOR SOFTWARE

S/N: B551-UP

SMCS-7405, 7557 **i07787882**

NOTE	PART NUMBER	QTY	PART NAME 1 2 3 4 5 6 (PRODUCT LEVEL)	SEE PAGE
Y	*446-4848*	1	ELECTRONICS GP-MONITOR	173
Y	*267-3184*	1	FILM GP-INTERNATIONAL	910
Y	*578-6054*	1	PLATE & FILM GP	921

Y - SEPARATE ILLUSTRATION

<END>

302-8675 PLATE & FILM GP—DANISH, WITH MONITOR SOFTWARE

S/N: B551-UP

SMCS-7405, 7557 **i07787890**

NOTE	PART NUMBER	QTY	PART NAME 1 2 3 4 5 6 (PRODUCT LEVEL)	SEE PAGE
Y	*446-4843*	1	ELECTRONICS GP-MONITOR	172
Y	*267-3184*	1	FILM GP-INTERNATIONAL	910
Y	*578-6054*	1	PLATE & FILM GP	921

Y - SEPARATE ILLUSTRATION

<END>

302-8676 PLATE & FILM GP—FINNISH, WITH MONITOR SOFTWARE

S/N: B551-UP

SMCS-7405, 7557 **i07787902**

NOTE	PART NUMBER	QTY	PART NAME 1 2 3 4 5 6 (PRODUCT LEVEL)	SEE PAGE
Y	*446-4843*	1	ELECTRONICS GP-MONITOR	172
Y	*267-3184*	1	FILM GP-INTERNATIONAL	910
Y	*578-6054*	1	PLATE & FILM GP	921

Y - SEPARATE ILLUSTRATION

<END>

302-8677 PLATE & FILM GP—SWEDISH, WITH MONITOR SOFTWARE

S/N: B551-UP

SMCS-7405, 7557 **i07787896**

NOTE	PART NUMBER	QTY	PART NAME 1 2 3 4 5 6 (PRODUCT LEVEL)	SEE PAGE
Y	*446-4843*	1	ELECTRONICS GP-MONITOR	172
Y	*267-3184*	1	FILM GP-INTERNATIONAL	910
Y	*578-6054*	1	PLATE & FILM GP	921

Y - SEPARATE ILLUSTRATION

<END>

302-8678 PLATE & FILM GP—NORWEGIAN, WITH MONITOR SOFTWARE

S/N: B551-UP

SMCS-7405, 7557 **i07787878**

NOTE	PART NUMBER	QTY	PART NAME 1 2 3 4 5 6 (PRODUCT LEVEL)	SEE PAGE
Y	*446-4848*	1	ELECTRONICS GP-MONITOR	173
Y	*267-3184*	1	FILM GP-INTERNATIONAL	910
Y	*578-6054*	1	PLATE & FILM GP	921

Y - SEPARATE ILLUSTRATION

<END>

302-8679 PLATE & FILM GP—ITALIAN, WITH MONITOR SOFTWARE

S/N: B551-UP

SMCS-7405, 7557 **i07787891**

NOTE	PART NUMBER	QTY	PART NAME 1 2 3 4 5 6 (PRODUCT LEVEL)	SEE PAGE
Y	*446-4845*	1	ELECTRONICS GP-MONITOR	172
Y	*267-3184*	1	FILM GP-INTERNATIONAL	910
Y	*578-6054*	1	PLATE & FILM GP	921

Y - SEPARATE ILLUSTRATION

<END>

302-8680 PLATE & FILM GP—GREEK, WITH MONITOR SOFTWARE

S/N: B551-UP

SMCS-7405, 7557 **i07787881**

NOTE	PART NUMBER	QTY	PART NAME 1 2 3 4 5 6 (PRODUCT LEVEL)	SEE PAGE
Y	*446-4845*	1	ELECTRONICS GP-MONITOR	172
Y	*267-3184*	1	FILM GP-INTERNATIONAL	910
Y	*578-6054*	1	PLATE & FILM GP	921

Y - SEPARATE ILLUSTRATION

<END>

302-8681 PLATE & FILM GP—HEBREW, WITH MONITOR SOFTWARE

S/N: B551-UP

SMCS-7405, 7557 **i07787894**

NOTE	PART NUMBER	QTY	PART NAME 1 2 3 4 5 6 (PRODUCT LEVEL)	SEE PAGE
Y	*446-4845*	1	ELECTRONICS GP-MONITOR	172
Y	*267-3184*	1	FILM GP-INTERNATIONAL	910
Y	*578-6054*	1	PLATE & FILM GP	921

Y - SEPARATE ILLUSTRATION

<END>

302-8682 PLATE & FILM GP—TURKISH, WITH MONITOR SOFTWARE

S/N: B551-UP

SMCS-7405, 7557 **i07787883**

NOTE	PART NUMBER	QTY	PART NAME 1 2 3 4 5 6 (PRODUCT LEVEL)	SEE PAGE
Y	*446-4849*	1	ELECTRONICS GP-MONITOR	173
Y	*267-3184*	1	FILM GP-INTERNATIONAL	910
Y	*578-6054*	1	PLATE & FILM GP	921

Y - SEPARATE ILLUSTRATION

<END>

302-8683 PLATE & FILM GP—RUSSIAN, WITH MONITOR SOFTWARE

S/N: B551-UP

SMCS-7405, 7557 **i07787641**

NOTE	PART NUMBER	QTY	PART NAME 1 2 3 4 5 6 (PRODUCT LEVEL)	SEE PAGE
Y	*446-4846*	1	ELECTRONICS GP-MONITOR	172
Y	*267-3184*	1	FILM GP-INTERNATIONAL	910
Y	*578-6054*	1	PLATE & FILM GP	921

Y - SEPARATE ILLUSTRATION

<END>

302-8684 PLATE & FILM GP—ARABIC, WITH MONITOR SOFTWARE

S/N: B551-UP

SMCS-7405, 7557 **i07787898**

NOTE	PART NUMBER	QTY	PART NAME 1 2 3 4 5 6 (PRODUCT LEVEL)	SEE PAGE
Y	*446-4846*	1	ELECTRONICS GP-MONITOR	172
Y	*267-3184*	1	FILM GP-INTERNATIONAL	910
Y	*578-6054*	1	PLATE & FILM GP	921

Y - SEPARATE ILLUSTRATION

<END>

302-8685 PLATE & FILM GP—CHINESE, WITH MONITOR SOFTWARE

S/N: B551-UP

SMCS-7405, 7557 **i07787900**

NOTE	PART NUMBER	QTY	PART NAME 1 2 3 4 5 6 (PRODUCT LEVEL)	SEE PAGE
Y	*446-4849*	1	ELECTRONICS GP-MONITOR	173
Y	*267-3184*	1	FILM GP-INTERNATIONAL	910
Y	*578-6054*	1	PLATE & FILM GP	921

Y - SEPARATE ILLUSTRATION

<END>

302-8686 PLATE & FILM GP—ROMANIAN, WITH MONITOR SOFTWARE

S/N: B551-UP

SMCS-7405, 7557 **i07787893**

NOTE	PART NUMBER	QTY	PART NAME 1 2 3 4 5 6 (PRODUCT LEVEL)	SEE PAGE
Y	*446-4847*	1	ELECTRONICS GP-MONITOR	172
Y	*267-3184*	1	FILM GP-INTERNATIONAL	910
Y	*578-6054*	1	PLATE & FILM GP	921

Y - SEPARATE ILLUSTRATION

<END>

302-8687 PLATE & FILM GP—SLOVENIAN, WITH MONITOR SOFTWARE

S/N: B551-UP

SMCS-7405, 7557 **i07787888**

NOTE	PART NUMBER	QTY	PART NAME 1 2 3 4 5 6 (PRODUCT LEVEL)	SEE PAGE
Y	*446-4848*	1	ELECTRONICS GP-MONITOR	173
Y	*267-3184*	1	FILM GP-INTERNATIONAL	910
Y	*578-6054*	1	PLATE & FILM GP	921

Y - SEPARATE ILLUSTRATION

<END>

578-6053 PLATE & FILM GP

S/N: B551-UP
US MARKET
PART OF 302-8669 PLATE & FILM GP

SMCS-7405, 7557 **i07787642**

NOTE	REF NO	GRAPHIC REF	PART NUMBER	QTY	PART NAME 1 2 3 4 5 6 (PRODUCT LEVEL)	SEE PAGE
	1	1	**3E-1552**	1	FILM-INSTRUCTION (TRANSMISSION FILTER)	
	2	2	**5P-1174**	1	FILM-IDENTIFICATION (TRANSMISSION OIL FILL CAP)	
	3	2	**5P-1175**	1	FILM-IDENTIFICATION (ENGINE OIL FILL)	
	4	1,2,3	**246-2641**	3	PADLOCK GP	
					(EACH INCLUDES)	
		1,2,3	**5P-8500**	1	KEY	
					(ONE PADLOCK FOR EACH OF THE FOLLOWING COMPONENTS) (1-ON HYDRAULIC TANK) (1-ON FUEL TANK) (1-ON BATTERY)	
	5	1	**9X-8355**	1	FILM-IDENTIFICATION (BLADE CENTERSHIFT)	
	6	2	**109-0361**	1	FILM-INSTRUCTION (ENGINE SHUTDOWN)	
	7	2	**129-7680**	1	FILM-INSTRUCTION (HYDRAULIC TANK OIL DRAIN)	
	8	1	**134-7258**	1	FILM-INFORMATION (EXTENDED LIFE COOLANT)	
	9	2	**146-6747**	1	FILM-INFORMATION (24-VOLT)	
	10	2	**158-7864**	1	FILM-IDENTIFICATION (HYDRAULIC OIL)	
	11	2	**190-5386**	2	FILM-IDENTIFICATION (ROUND RED REFLECTIVE)	
	12	1	**225-0313**	1	FILM-WARNING (JUMP START, READ OMM, U.S.)	
	13	3	**225-4150**	1	PLATE-SERVICE INFORMATION (MACHINE)	
	14	1,2	**226-1242**	2	FILM-WARNING (CRUSH HAZARD, STAY BACK, U.S.)	
	15	2	**226-1275**	1	FILM-WARNING (CRUSH HAZARD, READ OMM, U.S.)	
	19	1,2	**239-4990**	2	FILM-WARNING (HIGH PRESSURE CYLINDER)	
	20	1,2	**248-5245**	2	FILM-INFORMATION (LIFT EYE, TIE-DOWN LOCATION)	
	22	3	**249-8575**	1	FILM-WARNING (NO DRILL, WELD, READ OMM)	
	23	1	**263-6901**	1	FILM-WARNING (HOT FLUID)	
	24	2	**275-3292**	1	FILM-IDENTIFICATION (GREASE POINT)	
	25	1	**286-1089**	1	FILM-INFORMATION (FLUID LEVEL)	
	26	2	**292-9390**	2	FILM-WARNING (HAND CRUSH HAZARD, STAY BACK)	
	27	1	**293-3823**	1	FILM-IDENTIFICATION (ARTICULATION LOCK)	
	28	1	**329-5707**	1	FILM-IDENTIFICATION (OIL GRADE, READ OMM)	
	29	1,2	**331-5818**	2	FILM-WARNING (HYDRAULIC STEERING)	
	30	3	**367-0844**	1	FILM-INSTRUCTION (FUEL, READ OMM)	
	32	3	**243-5289**	2	FILM-IDENTIFICATION (LIFT POINT)	
	33	2	**573-3323**	1	FILM-NOTICE (SHIPPING)	
Y	34	1	*578-6058*	1	FILM GP	909
	35	3	**156-5762**	2	FILM-INFORMATION (TIE-DOWN LOCATION)	
E	38	3	**117-9978**		FILM-STRIPE (RED) (11-CM EACH)	

E - ORDER BY THE CENTIMETER
Y - SEPARATE ILLUSTRATION

578-6053 **PLATE & FILM GP (**contd.**)** **i07787642**

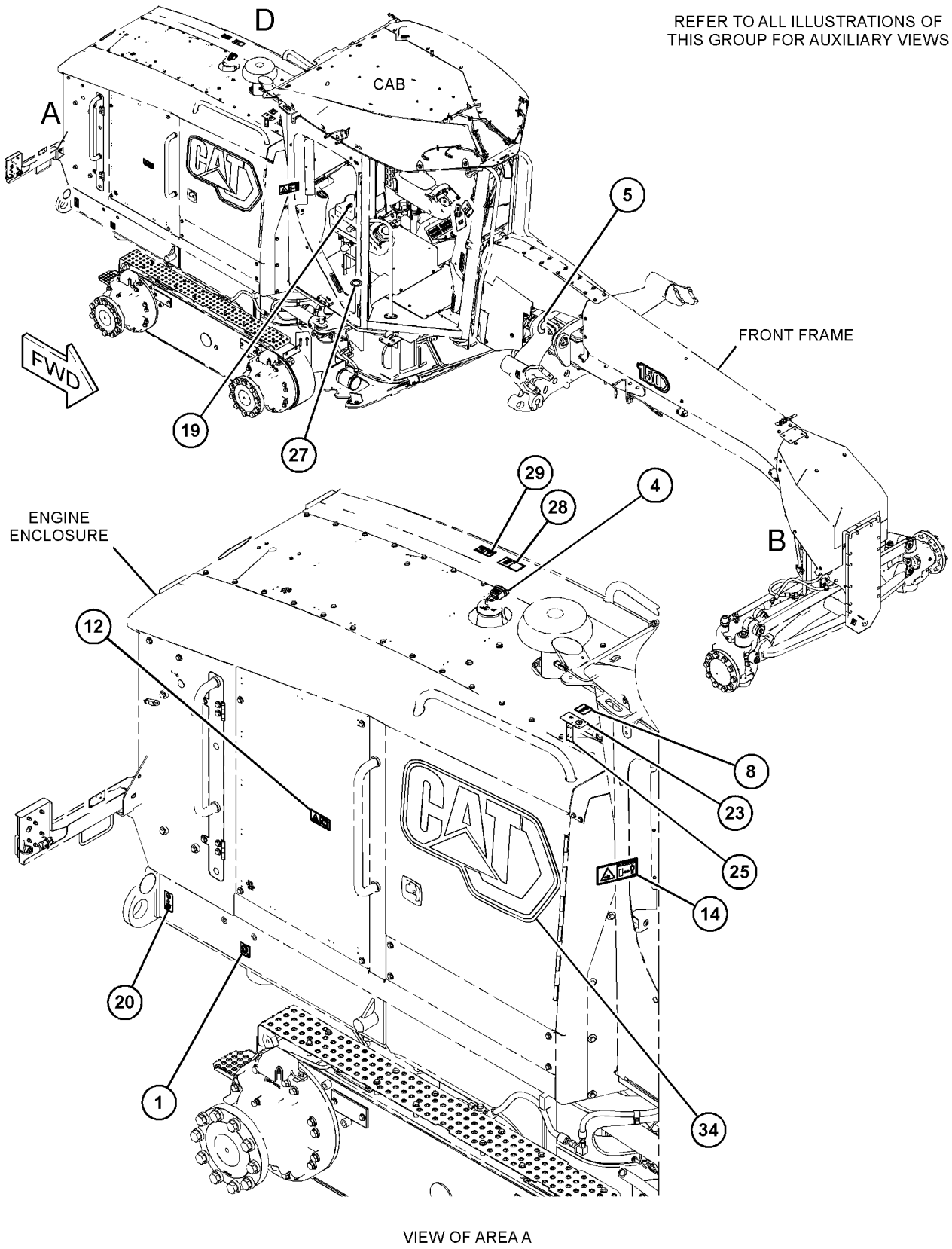

VIEW OF AREA A

GRAPHIC #1 g06442183

578-6053 **PLATE & FILM GP** (contd.) **i07787642**

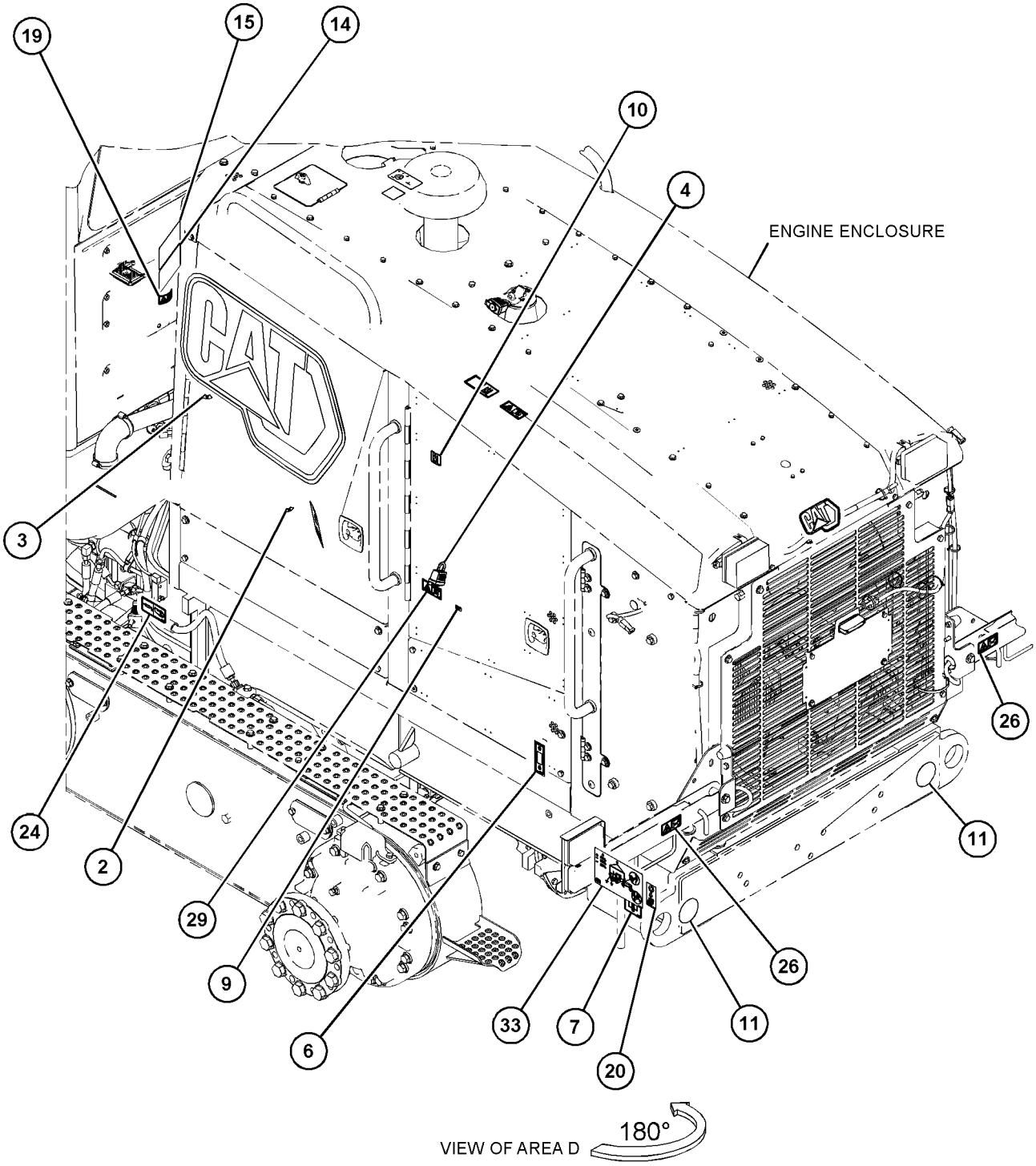

GRAPHIC #2 g06442191

578-6053 **PLATE & FILM GP** (contd.) **i07787642**

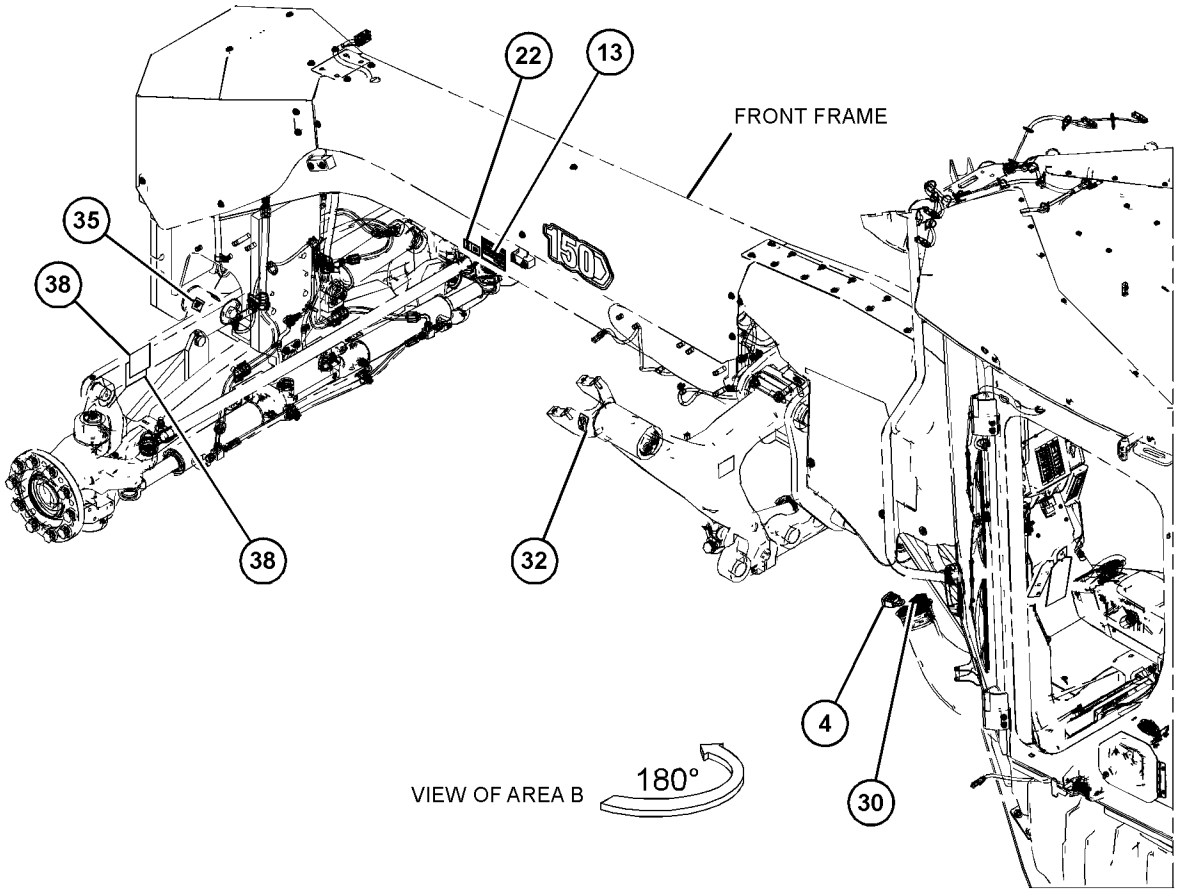

GRAPHIC #3 <END> g06442198

578-6054 PLATE & FILM GP

S/N: B551-UP

INTERNATIONAL MARKET

PART OF 302-5133, 302-8670, 302-8671, 302-8672, 302-8673, 302-8674, 302-8675, 302-8676, 302-8677, 302-8678, 302-8679, 302-8680, 302-8681, 302-8682, 302-8683, 302-8684, 302-8685, 302-8686, 302-8687 PLATE & FILM GP

SMCS-7405, 7557

i07787635

NOTE	REF NO	GRAPHIC REF	PART NUMBER	QTY	PART NAME 1 2 3 4 5 6 (PRODUCT LEVEL)	SEE PAGE
	1	1	**3E-1552**	1	FILM-INSTRUCTION (TRANSMISSION FILTER)	
	2	2	**5P-1174**	1	FILM-IDENTIFICATION (TRANSMISSION OIL FILL CAP)	
	3	2	**5P-1175**	1	FILM-IDENTIFICATION (ENGINE OIL FILL)	
	4	1,2,3	**5P-8502**	3	PADLOCK GP	
					(EACH INCLUDES)	
		1,2,3	**5P-8500**	2	KEY	
	5	1	**9X-8355**	1	FILM-IDENTIFICATION (BLADE CENTERSHIFT)	
	6	2	**109-0361**	1	FILM-INSTRUCTION (ENGINE SHUTDOWN)	
	7	2	**129-7680**	1	FILM-INSTRUCTION (HYDRAULIC TANK OIL DRAIN)	
	8	1	**134-7258**	1	FILM-INFORMATION (EXTENDED LIFE COOLANT)	
	9	2	**146-6747**	1	FILM-INFORMATION (24-VOLT)	
	11	2	**190-5386**	2	FILM-IDENTIFICATION (ROUND RED REFLECTIVE)	
	12	3	**225-4150**	1	PLATE-SERVICE INFORMATION (MACHINE)	
	16	2	**239-4991**	2	FILM-WARNING (HIGH PRESSURE CYLINDER)	
	17	1	**241-3720**	1	FILM-WARNING (RECOIL SPRING)	
	18	1,2	**248-5245**	2	FILM-INFORMATION (LIFT EYE, TIE-DOWN LOCATION)	
	20	3	**249-8575**	1	FILM-WARNING (NO DRILL, WELD, READ OMM)	
	21	2	**275-3292**	1	FILM-IDENTIFICATION (GREASE POINT)	
	22	1	**286-1089**	1	FILM-INFORMATION (FLUID LEVEL)	
	23	2	**292-9391**	2	FILM-WARNING (HAND CRUSH HAZARD, STAY BACK)	
	24	2	**293-3823**	1	FILM-IDENTIFICATION (ARTICULATION LOCK)	
	25	1	**329-5707**	1	FILM-IDENTIFICATION (OIL GRADE, READ OMM)	
	26	3	**367-0844**	1	FILM-INSTRUCTION (FUEL, READ OMM)	
	27	3	**515-7907**	1	PLATE-SERIAL NUMBER (MACHINE)	
	28	1	**222-7944**	2	FILM-WARNING (DO NOT OPERATE, READ OMM, INTL)	
	29	1	**225-0312**	1	FILM-WARNING (JUMP START, READ OMM, INTL)	
	30	1,2	**226-1240**	2	FILM-WARNING (CRUSH HAZARD, STAY BACK, INTL)	
	31	2	**226-1274**	1	FILM-WARNING (CRUSH HAZARD, READ OMM, INTL)	
	32	3	**243-5289**	2	FILM-IDENTIFICATION (LIFT POINT)	
	33	1	**263-6902**	1	FILM-WARNING (HOT FLUID)	
	34	1,2	**334-6758**	2	FILM-WARNING (COLD START, READ OMM)	
	35	2	**573-3323**	1	FILM-NOTICE (SHIPPING)	
Y	36	1	*578-6058*	1	FILM GP	909
	37	3	**156-5762**	2	FILM-INFORMATION (TIE-DOWN LOCATION)	
	40	3	**117-9978**	22	FILM-STRIPE (RED)	

Y - SEPARATE ILLUSTRATION

578-6054 **PLATE & FILM GP** (contd.) **i07787635**

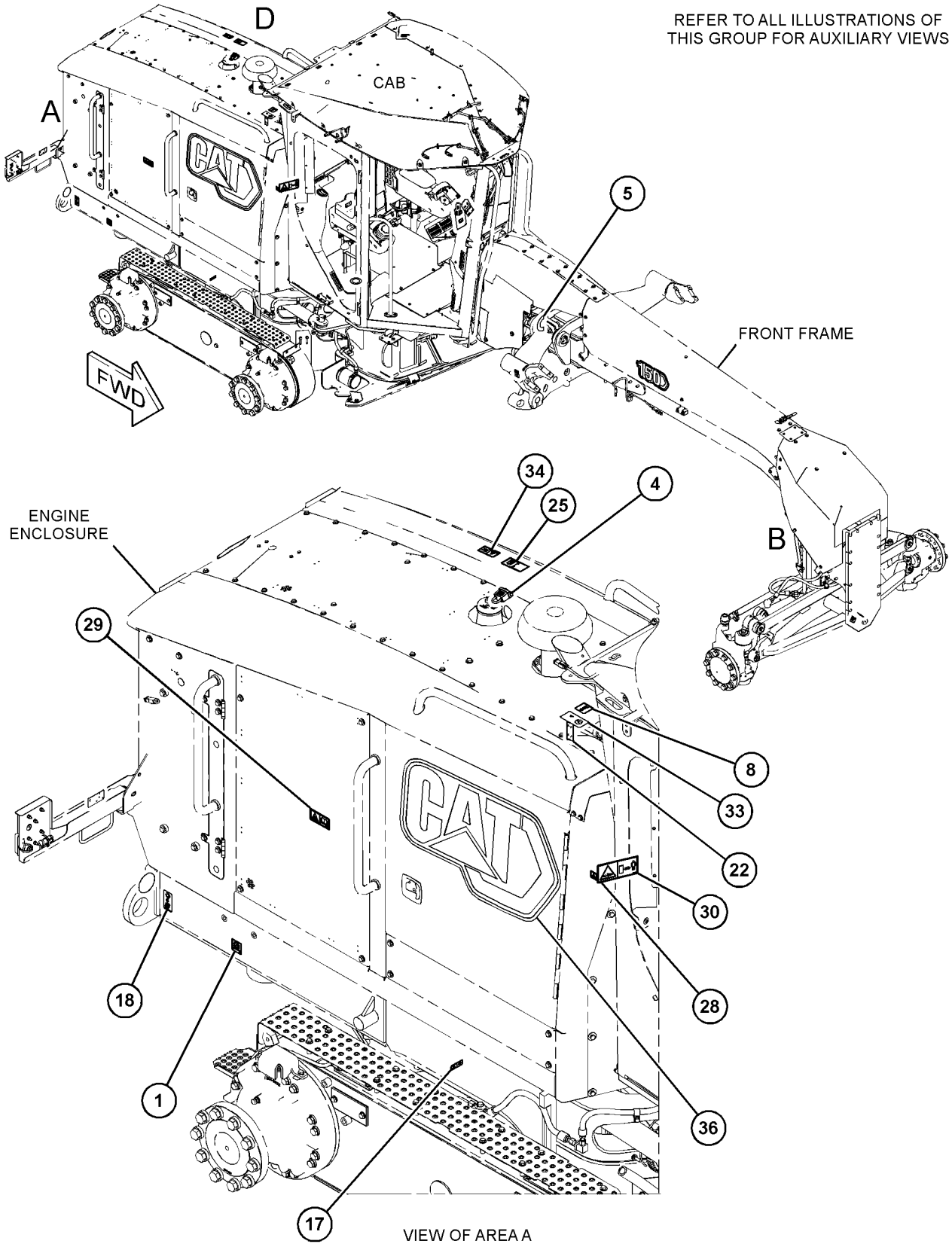

GRAPHIC #1 g06441791

578-6054 **PLATE & FILM GP** (contd.) **i07787635**

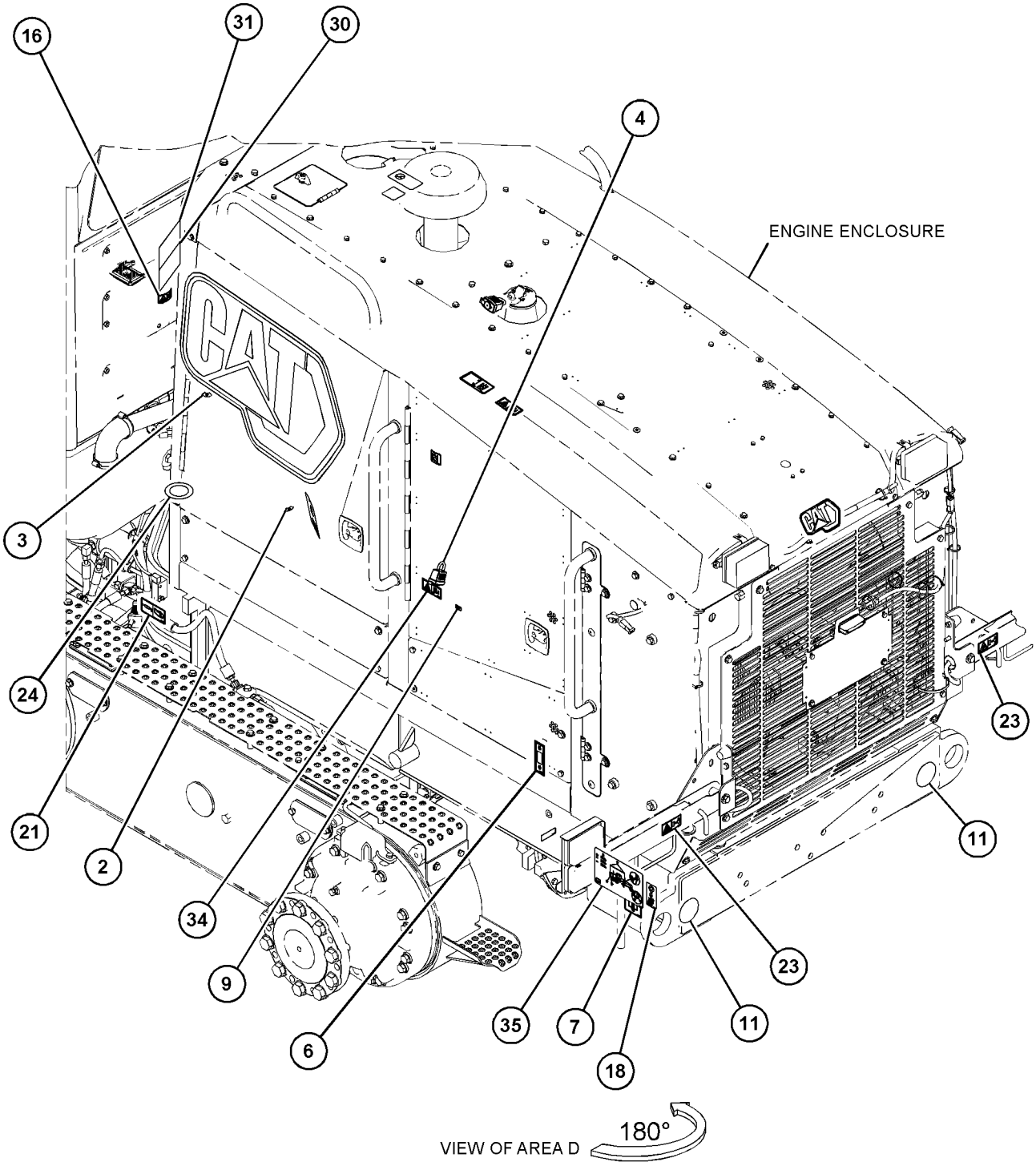

GRAPHIC #2 g06441817

578-6054 **PLATE & FILM GP (**contd.**)** **i07787635**

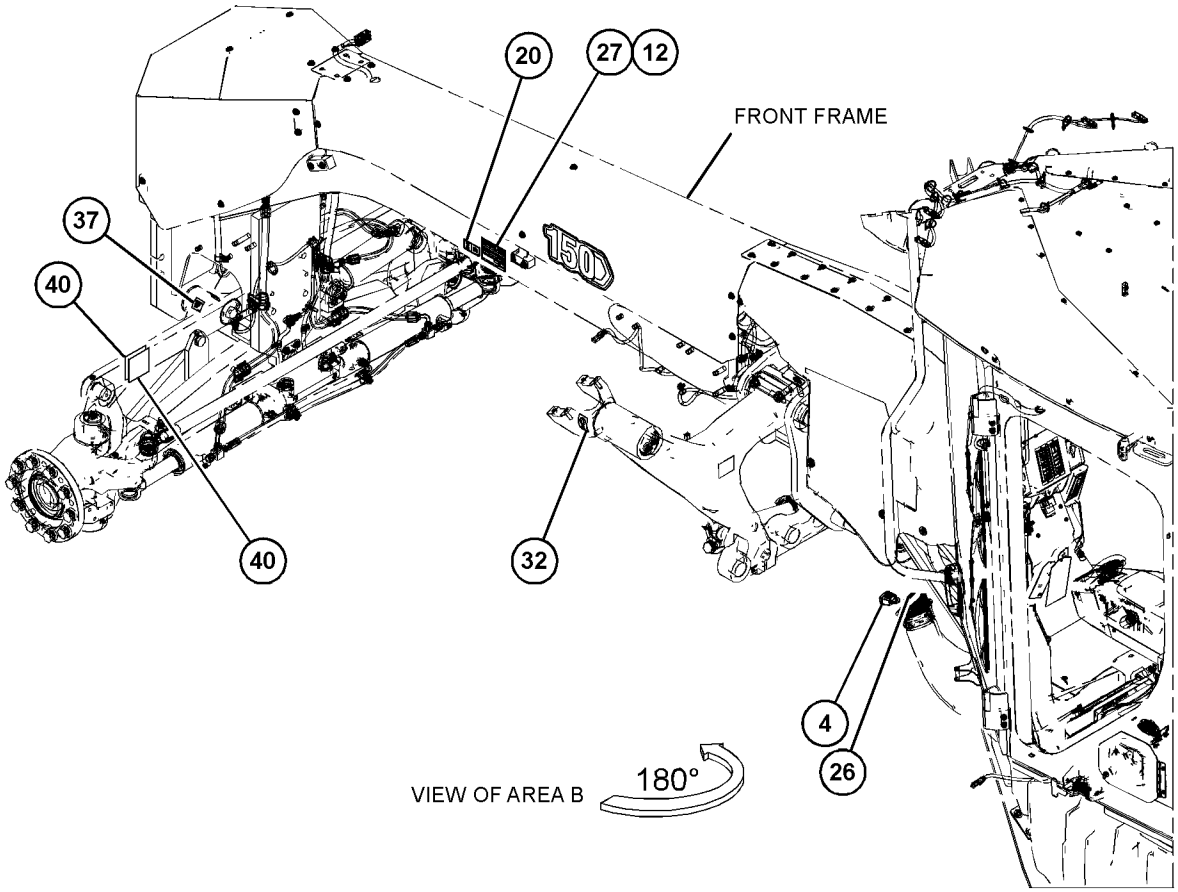

GRAPHIC #3 <END> g06443564

354-8706 PLATE-SERIAL NUMBER

S/N: B551-UP

SMCS-7557 **i06656237**

NOTE	REF NO	GRAPHIC REF	PART NUMBER	QTY	PART NAME 1 2 3 4 5 6 (PRODUCT LEVEL)	SEE PAGE
					(NO SERVICED PARTS)	

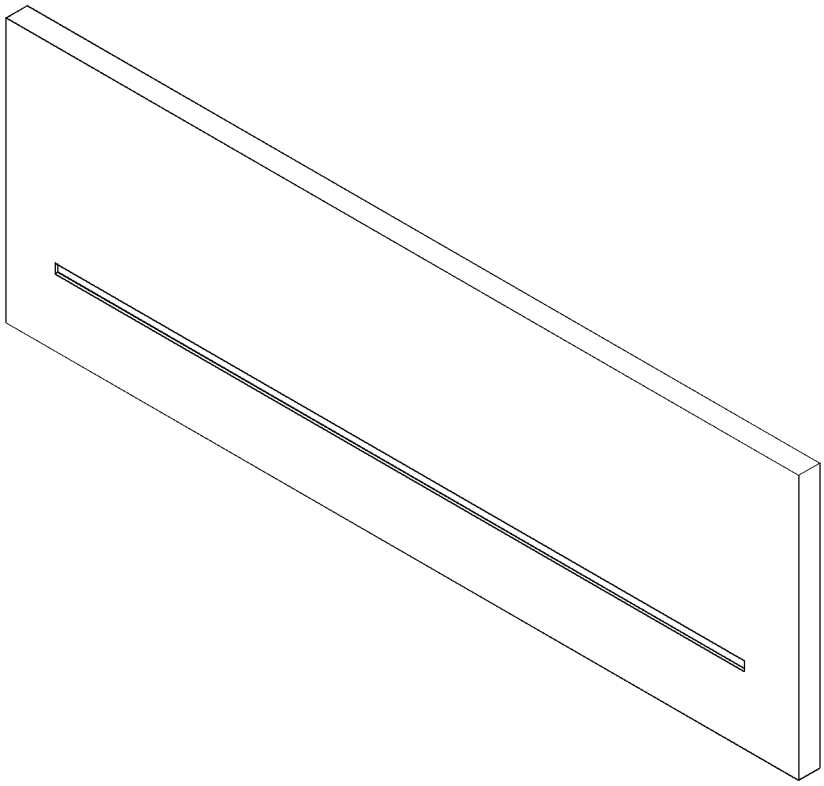

GRAPHIC #1 <END> g06065710

236-8922 TANK GP-AIR

S/N: B551-UP

PART OF 261-0610 AIR COMPRESSOR AR

SMCS-5505 **i07242302**

NOTE	REF NO	GRAPHIC REF	PART NUMBER	QTY	PART NAME 1 2 3 4 5 6 (PRODUCT LEVEL)	SEE PAGE
	1	1	**1P-4278**	1	CLAMP-HOSE	
	2	1	**1P-9328**	1	FITTING	
	3	1	**2G-1034**	1	VALVE-AIR RELIEF	
	4	1	**5F-5434**	1	VALVE AS-VENT	
	5	1	**172-9284**	1	VALVE-BALL	
J	6	1	**205-7187**	1	GOVERNOR AS (AIR COMPRESSOR)	
		1	**2S-2923**	1	COVER AS	
I	7	1	**177-0279**	1	HOSE AS	
	9	1	**246-6651**	1	TANK-AIR	
	13	1	**4H-2558**	1	GROMMET	
	14	1	**4S-7606**	1	ELBOW	
	15	1	**6K-8178**	2	CLIP (LOOP)	
	16	1	**6V-7535**	1	ELBOW-PIPE	
	17	1	**7J-8611**	1	ELBOW-PIPE	
	18	1	**8T-6757**	4	PLUG-PIPE	
	20	1	**9X-8256**	2	WASHER (6.6X12X2-MM THK)	
E	21	1	**5P-1465**		HOSE (104-CM)	
	22	1	**174-5907**	1	CLIP (LOOP)	
	23	1	*164-5567*	1	COUPLER AS-QUICK DISCONNECT (MALE)	
		1	**6V-3965**	1	FITTING (QUICK DISCONNECT)	
		1	**3J-1907**	1	SEAL-O-RING	
M	24	1	**8T-4189**	4	BOLT (M8X1.25X20-MM)	
M	25	1	**8T-4137**	1	BOLT (M10X1.5X20-MM)	
	26	1	**8T-4121**	1	WASHER-HARD (11X21X2.5-MM THK)	
M	27	1	**8T-3844**	2	BOLT (M6X1X70-MM)	
	28	1	*148-8337*	1	CONNECTOR AS	
		1	**4J-5477**	1	SEAL-O-RING	
		1	**8C-6866**	1	CONNECTOR	
	29	1	**6V-0852**	1	CAP-DUST	
I	30	1	**6D-9855**	1	HOSE AS	
	31	1	**5P-4116**	4	WASHER-HARD (8.8X20.5X2-MM THK)	
I	32	1	**310-4235**	1	HOSE AS	
	33	1	*169-5863*	1	ADAPTER AS	
		1	**7X-7945**	1	ADAPTER (9/16-18-THD)	
		1	**4J-5477**	1	SEAL-O-RING	
	34	1	*165-4931*	1	ELBOW AS	
		1	**6V-8077**	1	ELBOW	
		1	**3J-1907**	1	SEAL-O-RING	
	36	1	**2P-1279**	1	LOCKNUT (9/16-18-THD)	
	37	1	**5B-7890**	1	PLUG-PIPE	
					AVAILABLE REPAIR KIT(S):	
J			**9M-0402**	1	KIT-GOVERNOR OVERHAUL (AIR COMPRESSOR)	
					(INCLUDES GROMMETS, FILTERS, SPRING, VALVE, COVER, RING, & GASKET)	

E - ORDER BY THE CENTIMETER
I - REFER TO HYDRAULIC INFORMATION SYSTEM
J - KIT MARKED J SERVICES PART(S) MARKED J
M - METRIC PART

236-8922 **TANK GP-AIR (**contd.**)** **i07242302**

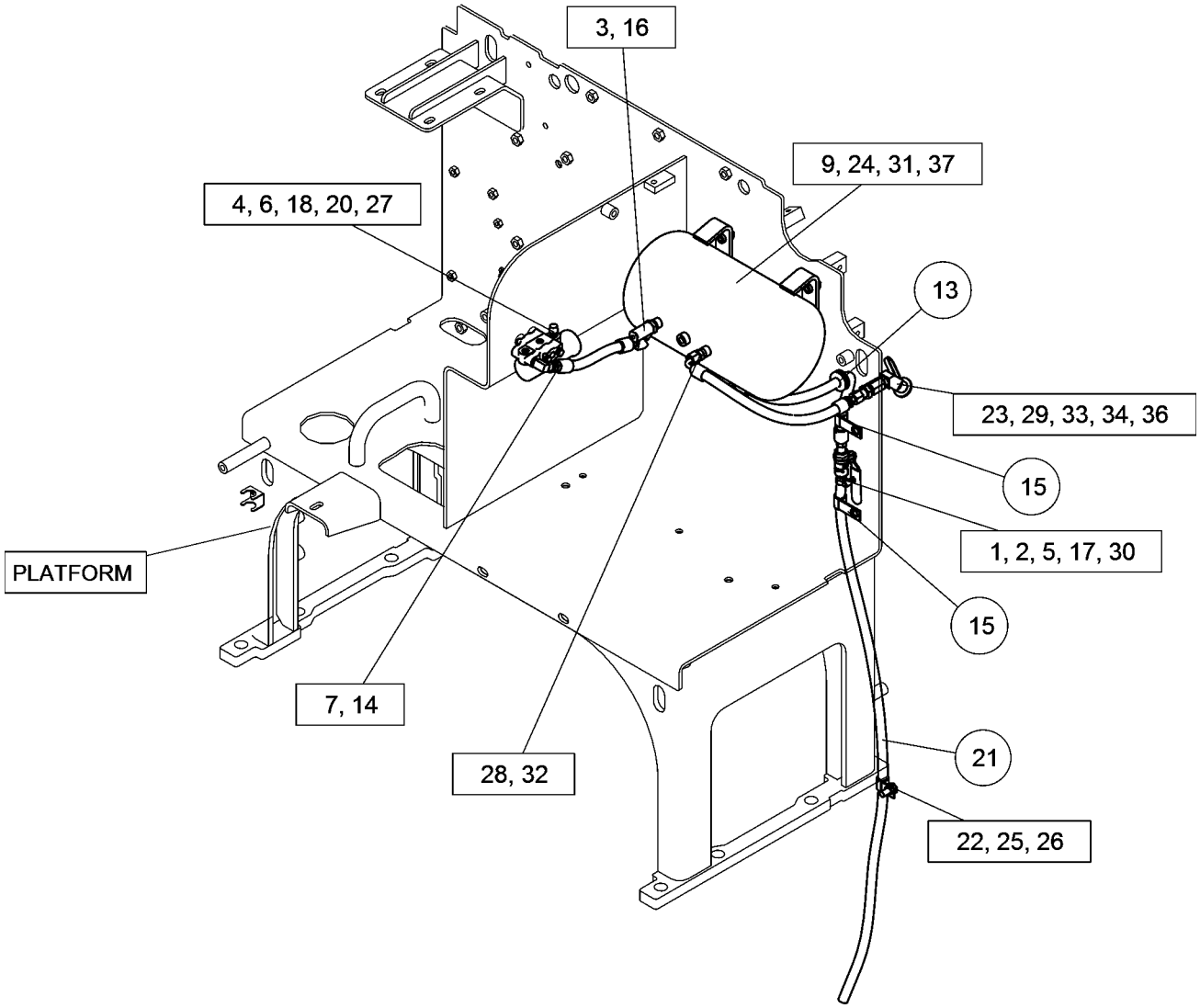

GRAPHIC #1 <END> g06272551

PART NUMBER INDEX

Part	Page
0	
0S-1585	551
0S-1588	110
1	
1A-1415	551
1B-2578	271
	273
1B-2713	796
1B-4038	551
1B-4046	551
1B-5170	348
1B-5174	551
1B-8705	17
	24
1D-5119	746
1F-6762	887
1F-7854	300
1F-7958	551
	751
1G-8878	557
1H-3244	141
	245
	247
	438
	862
	864
1H-3338	270
1H-6227	624
1H-7339	551
1J-2860	370
1J-4757	370
1J-6762	305
	869
1J-9671	39
	484
	485
	486
	487
	488
	489
	602
	618
1K-6870	305
1K-6985	878
1M-1230	796
1M-4095	402
1M-6119	148
	150
	319
	322
1M-6120	148
	150
	319
	322
1N-5999	30
1N-8062	127
1P-0604	358
1P-0810	180
	362
	846
1P-3700	693
1P-3702	693
1P-4278	639
	926
1P-4577	386
1P-4578	386
	588
1P-6356	805
1P-9328	926
1R-0622	850
1R-0749	109
1R-0762	108
1R-1807	60
1S-0669	549
1S-0724	66
1S-0994	89
	116
	506
	591
	602
	608
1S-1015	807
1S-1476	320
1S-2563	63
1S-6420	324
1S-7251	265
	319
	322
	323
1S-7252	265
	311
	319
	323
1S-9110	346
1S-9593	183
1S-9799	386
1T-0043	348
1T-0205	348
1T-0936	693
1U-8846	39
	41
	95
	97
1V-6688	326
	328
1V-7801	120
1W-2431	103
1W-2715	33
1W-4738	38
1W-4741	38
1W-4746	38
1W-8407	25
1Y-7927	799
2	
2A-1162	39
2A-1538	880
	881
	882
2A-3034	98
2A-4429	33
2B-0858	551
2B-8293	551
2B-9174	374
	376
2B-9373	396
2C-8746	435
2D-0094	368
2D-0626	898
2D-2507	423
	430
2D-2508	423
	430
2D-2509	423
	430
2D-2511	430
2D-2565	423
2D-2654	428
2D-6235	796
	799
2D-6642	42
2D-8154	551
2D-8652	338
	537
2D-8910	506
2D-9454	370
2D-9455	370
2F-7888	314
2F-8057	465
	533
2G-0478	551
2G-0617	221
	223
	241
	243
2G-0988	221
	223
	241
	243
2G-1034	926
2G-3865	341
2G-3967	529
2G-4332	901
2G-5673	467
2G-6595	423
	430
2G-6695	551
2G-7728	901
2G-8233	883
2G-8615	340
2G-8624	340
2G-8626	340
2G-8631	338
	549
2G-8741	340
2G-8777	340
2H-3920	281
2H-3922	267
2H-3928	634
	638
2H-3931	617
	877
2H-3935	551
2H-6489	348
2H-6490	402
2J-3506	305
	868
	869
	873
	880
	881
	882
2J-8163	340
2K-0420	526
2K-0512	542
2K-0703	898
2K-1738	352
2K-2306	873
2K-4821	141
2K-4973	814
	844
	846
2K-6413	904
2K-7468	877
	887
2L-6726	490
2L-8049	188
2L-8052	181
	188
2L-8057	188
2L-8060	181
	188
2L-8067	751
2L-8069	181
	188
2L-8075	163
	245
2L-8077	322
	323
2L-8078	163
2L-8079	156
	158
	160
	181
	184
	188
	295
	322
	323
2M-6471	27
2M-7819	799
2M-9780	60
	116
	348
	403
	560
	569
	588
	596
	601
	610
	615
	731
	732
	736
	737
	810
	887
2P-1279	926
2P-1692	362
2P-2216	15
2P-2537	60
2P-8421	331
	347
2R-2376	794
2R-6806	114
2S-0115	880
	881
	882
2S-0736	372
2S-2053	62
2S-2923	926
2S-3029	348
2S-4078	348
	386
	599
	601
2S-4663	417
	642
	645
	650
	654
	658
	662
	667
	671
	677
	681
	687
	695
	697
	699
	701
	703
	705
	707
	709
	711

PART NUMBER INDEX

Part	Page
	713
	715
	717
	719
	721
	723
	729
2S-5835	417
2T-3013	408
	409
	410
2U-4504	862
	864
2V-1771	311
2V-2015	851
2V-3726	439
	851
2V-4332	459
2W-0027	49
2W-6544	18
2W-7213	27
2W-7381	34
2W-8147	24
2Y-3209	812
2Y-5829	52
	53
	66
2Y-9402	107

3

3B-2263	630
3B-4504	270
3B-4618	340
	533
3B-4619	314
3B-4623	326
3B-4628	636
3B-4647	532
3B-5316	526
3B-5325	435
	904
3B-6552	464
3B-6769	464
3B-7896	464
3B-8485	528
	530
3B-8486	340
3B-8488	341
3B-8489	340
	464
	533
	534
	744
	746
	873
	887
	901
3B-8491	873
3B-8921	356
	358
3D-2239	430
3D-2824	48
	65
	69
	75
	89
	331
	347
	368
	387
	506
	555
	559
	573
	574
	577
	578
	588
	593
	599
	601
	610
3D-2975	799
3D-2981	403
3D-5279	506
3D-8317	417
3D-8747	796
3D-8749	796
3D-8752	796
3E-1552	917
	921
3E-2333	574
	578
	584
3E-3000	855
	857
3E-3371	192
	314
3E-3377	182
	191
	193
	269
3E-3383	169
	185
	191
	251
	313
3E-3389	193
	287
	751
3E-3390	314
3E-3636	300
3E-4302	858
3E-4321	567
	569
	810
3E-4352	62
	63
	114
	252
3E-4353	15
	64
	346
3E-4354	112
3E-4367	184
	187
3E-4887	45
3E-4888	45
3E-4898	824
3E-5001	746
3E-5169	313
3E-5226	180
3E-5239	313
3E-6328	▶140
	286
3E-6909	335
3E-7401	81
	599
3E-7403	559
3E-7445	386
3E-8006	113
3E-8020	755
	756
	787
	791
	851
	858
3E-8557	184
	187
3E-8558	187
3E-9375	254
3E-9412	56
3E-9854	210
3F-5792	39
3F-9556	141
	274
	821
	822
	862
	864
	866
3G-0622	840
	842
3G-2165	881
	882
3G-2581	898
3G-8054	508
3G-8057	508
3H-5552	27
3H-7654	56
3J-1907	39
	300
	314
	331
	360
	363
	368
	380
	384
	386
	387
	417
	490
	500
	502
	504
	508
	511
	555
	557
	565
	567
	569
	584
	588
	591
	595
	596
	601
	610
	612
	615
	618
	620
	641
	642
	645
	650
	653
	658
	662
	667
	671
	676
	681
	687
	693
	723
	887
	926
3J-4818	846
3J-5390	87
3J-7354	39
	344
	393
	547
	588
	591
	595
	596
	602
	615
	620
	628
	643
	646
	650
	653
	659
	662
	667
	672
	677
	682
	688
	695
	697
	699
	701
	703
	705
	707
	709
	711
	713
	715
	717
	719
	721
	724
	729
	733
	735
	738
3J-8500	533
3K-0360	14
	39
	75
	81
	89
	116
	117
	340
	360
	403
	417
	500
	502
	504
	529
	560
	561
	563
	565
	567
	569
	571
	573
	577
	581
	586
	591
	595

► PRIMARY REFERENCE

PART NUMBER INDEX

Part	Page
	596
	597
	599
	602
	607
	608
	610
	612
	615
	628
	634
	638
	642
	643
	645
	646
	650
	651
	653
	654
	658
	659
	662
	663
	667
	668
	671
	672
	676
	677
	681
	682
	687
	688
	692
	695
	697
	699
	701
	703
	705
	707
	709
	711
	713
	715
	717
	719
	721
	723
	724
	729
	739
	810
3K-0715	347
3K-6060	813
3K-8460	39
3K-9520	221
	223
	241
	243
3P-0337	358
3P-0764	263
3P-1156	64
	73
3P-1461	528
	883
3P-1932	380
3P-9900	846
3R-6790	16
3R-9965	176
3S-0004	396
3S-2093	116
	148
	150
	156
	158
	160
	176
	180
	188
	196
	216
	226
	227
	229
	230
	232
	237
	245
	263
	284
	288
	289
	295
	297
	300
	308
	313
	319
	322
	323
	326
	328
	333
	334
	363
	380
	560
	751
	785
	787
	791
	846
	859
	862
	864
	866
3S-6049	319
	322
3S-6050	148
	150
3S-7023	539
3S-8664	311
	588
3S-9233	344
3T-0849	642
	645
	650
	653
	658
	663
	668
	672
	676
	682
	688
	695
	697
	699
	701
	703
	705
	707
	709
	711
	713
	715
	717
	719
	721
	724
	729
3T-0851	215
3T-0852	207
	208
	229
	230
	231
	236
3T-2662	246
3T-4377	402
3T-6774	796
3T-6848	607
3V-2431	119
	335
3V-3263	859
3W-7254	890
	892
3W-7256	890
	892
	16
4B-3365	344
4B-4158	729
4B-4274	220
	246
	314
4B-4277	247
4B-4278	846
4B-4863	134
	136
4B-5059	799
	858
4B-7270	492
	494
4B-8394	374
	376
4B-9880	417
4C-9612	48
4D-1248	148
	150
4D-1326	273
4D-1432	311
4D-2560	506
4D-2886	300
4D-3704	374
	376
4D-6086	901
4D-6695	374
	376
4D-7388	506
	602
4D-7733	506
4D-7735	16
	116
	508
4D-7794	299
	314
4D-8123	464
4D-9517	586
4E-1384	787
	791
4E-5724	245
4E-8722	827
	859
4F-2294	272
4F-5695	29
4F-6024	38
4F-7827	873
4F-7952	194
	195
	395
4F-8824	533
4F-9029	68
4F-9653	119
4H-1225	520
	521
	522
	523
4H-2558	506
	639
	926
4H-6112	403
4H-6511	887
4H-6996	551
4I-0755	492
	494
4I-3069	851
4I-6140	69
4I-8897	65
4J-0520	387
	389
	597
4J-0522	387
	588
	600
	602
4J-0524	84
	555
4J-5267	588
4J-5351	344
4J-5477	344
	360
	387
	595
	596
	602
	926
4J-7533	618
	642
	645
	650
	653
	658
	659
	662
	663
	667
	668
	672
	676
	681
	682
	688
	697
	699
	701
	703
	705
	707
	709
	711
	713
	715
	717
	719
	721
	723
	724
	729
4J-8996	348

PART NUMBER INDEX

Part	Page
4J-9224	877
	878
4J-9225	537
4J-9535	693
4J-9964	634
	638
4K-0684	541
4K-1388	344
	595
	596
4K-2039	741
4K-3004	898
4K-3150	898
4K-3330	▶905
4K-4879	423
	430
4K-4881	429
4K-6781	459
4K-7463	459
4K-7464	459
4K-8603	347
4K-8734	459
4K-8864	363
4K-9429	839
4L-1250	220
4L-6499	271
	273
4L-7125	309
4M-0061	796
4M-0189	39
	368
4M-2381	417
4M-5905	417
4M-6107	352
	354
4M-6108	348
4M-6425	333
4N-1230	38
4N-2927	799
4N-5091	573
	577
4N-8227	195
4P-5918	18
	297
4P-7428	156
	158
	160
	221
	223
	241
	243
4P-7429	314
4P-7581	116
	221
	223
	226
	229
	299
	300
	305
	315
	324
	331
	334
	363
	380
	591
4P-7582	315
	363
4P-8134	110
	176
	299
	300
	331
	363
4S-1962	305
	315
	320
	389
	589
4S-4455	315
4S-5565	335
4S-5879	492
	494
4S-7606	506
	926
4T-3010	873
4T-5613	539
	541
	547
	549
4T-6779	535
4T-6780	537
4T-6907	543
	545
	877
	878
4T-8054	549
	617
	877
	878
4V-0015	459
4V-7884	844
4V-8577	844
	846
4W-0253	86
4W-2026	19
4W-7592	86
4Y-8939	116
4Y-9652	18
5	
5A-3604	370
5A-4878	237
5B-0577	901
5B-1866	57
5B-3180	814
5B-7890	926
5B-9318	642
	645
	650
	653
	658
	663
	668
	672
	676
	682
	688
	697
	699
	701
	703
	705
	707
	709
	711
	713
	715
	717
	719
	721
	724
	729
5C-2890	127
	200
	237
	246
	270
	293
	324
	326
	328
	333
	827
	846
5C-7261	18
	116
	177
	205
	289
	297
	315
	366
	626
	763
	787
	791
	821
	822
	862
	864
	866
5C-7423	352
	354
5C-8811	862
	864
5C-9553	279
	289
	315
	775
	784
	840
	842
5C-9583	216
	217
5D-1026	89
	602
5D-4822	799
5D-8159	901
5D-8161	902
5D-9629	326
5F-0149	883
5F-0304	39
5F-3092	347
5F-5434	926
5F-7054	455
5F-8933	869
	880
	881
	882
5F-9144	111
	372
5F-9891	887
5G-3676	561
	563
	574
	578
	586
	612
5H-3701	492
	494
5H-4909	551
5H-8848	602
5H-8985	352
	354
	356
	358
5I-4370	116
5J-1246	634
	638
5J-4773	868
	869
	880
	881
	882
5J-7010	537
5J-7333	470
5J-7865	542
5K-0983	459
5K-0987	459
5K-0988	459
5K-0989	459
5K-1458	901
	905
5K-1459	901
	905
5K-3294	89
	305
	511
5K-5068	464
5K-5129	340
	492
	494
	551
5K-5288	340
	492
	494
	551
5K-5338	508
	805
5K-8454	551
5K-9090	386
	389
	390
	593
	595
	596
	600
	601
	602
5K-9179	816
	820
5K-9660	616
5L-4758	741
5L-4759	344
5M-2894	367
5M-3062	484
	485
	486
	487
	488
	489
	515
	516
	517
5M-3320	396
5M-6214	340
	873
	898
5M-7937	347
	490
5N-4185	59
5N-4454	368
5P-0537	796
5P-0599	560
5P-0765	387
5P-0767	810
5P-1075	805
5P-1076	75
	120
	234
	326

▶ PRIMARY REFERENCE

PART NUMBER INDEX

Part	Page
	477
	526
5P-1174	917
	921
5P-1175	917
	921
5P-1230	89
5P-1251	89
5P-1259	81
5P-1262	81
5P-1442	639
5P-1465	926
5P-1717	581
5P-2199	732
5P-2228	531
5P-2230	103
5P-2369	103
5P-2957	181
5P-3454	245
	297
5P-3779	485
5P-3863	347
5P-3924	348
5P-4115	156
	158
	160
	198
	289
	326
	328
	794
5P-4116	81
	93
	116
	143
	145
	207
	208
	216
	229
	230
	231
	232
	234
	236
	284
	295
	315
	320
	324
	366
	439
	442
	444
	454
	458
	463
	763
	775
	783
	809
	813
	826
	833
	926
5P-4135	305
5P-4325	589
5P-4423	846
5P-4483	347
5P-4484	347
5P-4571	181
	751
	846
5P-4924	641
5P-4961	81
5P-5297	490
5P-5602	181
5P-5618	181
	751
5P-5630	263
5P-5637	749
	809
5P-5643	749
5P-5677	269
5P-5927	749
	851
5P-6006	163
5P-6010	846
5P-6629	464
5P-6874	816
5P-7462	508
	607
	616
5P-7463	508
	607
	616
5P-7468	81
	602
5P-7469	81
	602
5P-7470	120
5P-7471	120
5P-7657	309
5P-7701	382
	518
5P-7703	120
5P-7815	518
5P-7957	839
5P-7958	289
5P-7970	63
	110
	114
5P-8066	66
5P-8196	60
5P-8211	400
5P-8245	19
	36
	39
	55
	75
	368
	374
	376
	534
	551
	887
5P-8246	39
5P-8247	26
	141
5P-8291	746
5P-8347	79
	363
5P-8439	439
5P-8441	798
5P-8444	602
5P-8445	799
5P-8500	812
	906
	917
	921
5P-8502	921
5P-8525	293
5P-8843	338
5P-8874	334
	601
5P-8890	341
5P-9085	464
5P-9135	221
	223
	241
	243
5P-9262	733
5P-9297	63
	285
	315
	591
	807
5P-9299	116
	285
	496
	498
	513
	581
	586
	602
	608
	805
5P-9617	60
	79
5S-4455	547
5S-7349	141
5S-7379	551
5S-7382	387
5T-0906	340
5T-1625	803
5V-0770	799
5V-1497	844
5V-6454	873
5V-6455	873
	563
	574
	578
6D-4492	506
6D-5257	176
6D-5801	751
6D-7889	362
6D-9855	926
6E-0123	535
6E-0381	692
6E-0410	732
6E-1131	539
	541
6E-3007	642
	645
	650
	653
	658
	663
	668
	672
	676
	682
	688
	697
	699
	701
	703
	705
	707
	709
	711
	713
	715
	717
	719
	721
	724
	729
6E-3268	733
6E-3272	733
6E-3273	733
6E-3274	733
6E-3275	733
6E-3276	733
6E-4940	537
6E-4974	549
6E-5066	618
6E-6527	733
	735
6E-6528	733
	735
6E-6536	733
6E-6537	733
6E-6538	733
6E-6539	733
6F-0253	286
6F-3930	423
	430
6F-4855	741
6F-6672	490
6F-6992	901
6F-7045	267
6F-7062	50
6G-5442	746
6G-5534	551
6G-5537	551
6G-5538	551
6G-5539	551
6G-5542	551
6G-5548	551
6G-5987	796
6G-6122	551
6G-7187	120

6

Part	Page
6A-5591	39
6B-3223	492
	494
6B-3260	901
	905
6B-5072	403
6B-6684	75
6C-3060	134
6C-3241	634
6C-9149	902
6D-1641	602
	809
6D-3479	315
	387
	591
	602
	639
6D-4244	315
	563
	565
	567
	569
	574
	578
	589
	602
	787
	791
6D-4246	305
	315
	324
	508
	561
	571
	574
	578
	586
6D-4247	561

PART NUMBER INDEX

Part	Page
	467
	531
	534
6H-0211	532
6H-1717	551
6I-1418	295
	826
6I-8642	348
6I-8911	352
6I-8912	352
	354
	356
	358
6I-9248	344
6I-9249	344
6I-9502	352
	354
	356
	358
6J-0789	535
6J-0790	535
6J-0793	535
6J-1381	535
6J-1972	539
	541
	545
	547
6J-1973	547
6J-1974	547
6J-5731	539
	541
	543
	545
	547
6J-5733	539
	541
	543
	545
6K-0545	902
6K-3273	436
	475
	851
6K-3632	901
6K-4076	446
6K-6307	555
6K-6444	746
6K-8178	805
	810
	926
6L-9716	650
	658
	663
	676
	682
	688
	719
	724
6N-6984	599
6N-7523	182
6P-5647	890
	892
6P-6256	439
6T-6708	751
6T-7695	823
6V-0484	380
6V-0491	288
6V-0683	508
	607
	616
6V-0852	348
	360
	363
	380
	417
	500
	502
	504
	588
	602
	620
	926
6V-0894	315
6V-0974	508
6V-1228	305
	569
6V-1581	81
6V-1582	81
6V-1614	269
6V-1668	751
6V-1720	347
6V-1722	574
	578
	610
6V-1819	352
	354
	356
	358
6V-1820	38
	348
6V-1827	289
6V-1889	65
6V-1970	2
	►812
6V-2317	18
	20
	60
	400
6V-2449	374
	376
6V-3250	30
	79
6V-3251	30
	84
6V-3265	114
	315
6V-3303	374
	376
	492
	494
6V-3505	732
6V-3538	25
6V-3668	534
6V-3823	368
6V-3918	41
	86
6V-3940	16
	17
	49
	64
	79
	252
	348
	417
6V-3965	348
	360
	380
	413
	414
	415
	416
	417
	500
	502
	504
	588
	602
	620
	926
6V-4248	64
	66
	114
6V-4249	34
6V-4292	89
6V-4368	406
6V-4589	275
6V-4604	75
6V-5048	127
	380
	558
6V-5063	50
	84
6V-5142	731
6V-5192	39
	308
6V-5215	363
6V-5217	41
6V-5218	66
	417
6V-5219	68
6V-5221	14
	97
6V-5222	363
6V-5223	79
6V-5258	593
6V-5686	344
	551
6V-5696	19
	55
	56
	341
6V-5698	18
6V-5746	439
	783
6V-5759	348
6V-5815	71
6V-5839	14
	20
	32
	38
	39
	43
	63
	66
	71
	114
	122
	344
	348
	363
	379
	764
6V-5842	344
	395
6V-5843	37
6V-5844	39
	341
6V-5851	862
	864
	866
6V-5853	859
6V-6317	14
	38
	63
	348
	363
	794
6V-6580	642
	645
	653
	658
	662
	671
	676
	681
	687
	697
	699
	709
	711
	713
	715
	719
	723
	729
6V-6604	478
6V-6609	15
	51
	79
	84
	261
6V-6717	751
6V-7238	599
6V-7357	237
	315
6V-7535	926
6V-7636	786
	790
6V-7673	38
6V-7676	875
6V-7687	744
	898
6V-7688	744
6V-7728	15
6V-7732	346
6V-7742	344
6V-7744	246
	439
	444
	477
	898
6V-7981	122
6V-8076	500
	502
	504
	620
6V-8077	363
	417
	926
6V-8133	341
6V-8149	19
	368
6V-8182	901
6V-8185	787
	791
6V-8186	274
6V-8187	313
6V-8188	143
	145
	901
6V-8189	141
	814
6V-8201	630
6V-8212	103
	348
6V-8224	498
	513
6V-8237	543
	878
6V-8352	733
6V-8369	281
6V-8376	246
6V-8378	246
	271
	273
	274
6V-8397	81

► PRIMARY REFERENCE

PART NUMBER INDEX

Part	Page
	120
	344
	360
	384
	386
	508
	511
	529
	559
	560
	561
	563
	571
	573
	577
	581
	584
	586
	588
	591
	596
	597
	599
	607
	608
	612
	615
	887
6V-8398	116
	117
	500
	502
	504
	508
	511
	559
	560
	561
	563
	565
	567
	569
	573
	574
	577
	578
	581
	584
	586
	591
	595
	596
	597
	601
	602
	608
	610
	612
	615
	616
6V-8400	387
	599
	601
6V-8523	81
6V-8624	560
	569
6V-8625	15
	116
	500
	502
	504
	560
	563
	573
	577
	581
	586
	591
	595
	596
	597
	601
	602
	608
	610
	612
	615
	616
6V-8627	15
	360
6V-8628	15
	344
	596
6V-8629	615
6V-8632	596
6V-8634	360
	561
	571
6V-8635	386
	389
	596
6V-8636	119
	384
	386
	508
	584
	588
	591
	596
	887
6V-8638	569
	596
	615
6V-8639	15
	500
	502
	504
	560
	563
	565
	567
	569
	573
	577
	581
	586
	591
	608
	610
	612
	615
6V-8640	588
	610
6V-8641	387
	595
6V-8642	601
	615
6V-8653	199
	695
	746
6V-8713	588
	601
6V-8721	116
	560
6V-8722	810
6V-8723	529
	561
	563
	571
	573
	577
	581
	607
	612
6V-8724	360
	384
	386
	584
	591
	887
6V-8765	16
6V-8777	593
6V-8782	500
	502
	504
	602
6V-8918	814
6V-8928	850
6V-8936	120
	573
	577
	612
6V-8948	602
6V-8980	591
6V-8987	508
	559
6V-8994	586
	608
6V-8998	386
6V-9001	511
	596
6V-9002	117
	560
	596
6V-9004	75
	593
6V-9005	390
6V-9007	65
	69
	601
6V-9008	390
	601
6V-9023	308
6V-9027	79
	366
6V-9028	363
6V-9168	81
	344
	508
	559
	581
	586
	591
	602
	608
6V-9172	387
6V-9182	75
6V-9189	202
	206
	210
	444
6V-9200	588
	615
6V-9343	559
6V-9512	389
6V-9632	245
	293
	314
	463
	591
	787
	791
	827
	840
	842
	850
6V-9746	65
	69
	75
	588
	593
	599
	601
	602
	610
	615
	616
6V-9829	586
	608
6V-9833	368
6V-9837	500
	502
	504
	573
	577
	612
6V-9838	588
6V-9839	69
6V-9845	596
6V-9849	596
6V-9850	81
	384
6V-9851	508
	595
	601
	612
	615
6V-9852	601
6V-9853	601
6V-9854	386
	601
6V-9855	601
6V-9872	591
6V-9873	114
	511
	565
	567
	569
	615
6V-9875	386
6V-9876	563
	573
	577
6W-5698	849
6W-6672	602
6W-7636	506
6Y-0309	904
6Y-0976	354
6Y-0983	356
6Y-1001	356
6Y-1114	354
	356
	358
6Y-1115	352
	354
	356
	358
6Y-1116	352
6Y-1119	352
	354
6Y-1888	354
6Y-1890	358
6Y-1891	354
	356
6Y-1895	354
	356
6Y-2307	354
6Y-2312	356
	358
6Y-2419	356
6Y-2425	356
	358
6Y-2805	869
6Y-2932	621
6Y-2933	621
6Y-2934	621
6Y-2935	621
6Y-3083	347
6Y-3849	490

PART NUMBER INDEX

Part	Page
6Y-3860	400
6Y-5010	396
6Y-5113	816
	820
6Y-5230	901
	905
6Y-7953	551
6Y-7981	358
6Y-9960	45

7

7C-1493	60
7C-6921	62
	563
	573
	577
7C-7431	91
	106
7D-1577	880
7D-1649	55
	305
7D-1677	370
7D-2135	901
7D-2136	901
7D-2196	901
7D-5252	423
	430
7D-7111	134
7D-7233	65
	89
	300
	387
	508
	589
	591
	602
	610
7D-7496	450
7D-8245	901
7D-8437	492
	494
7D-8439	374
	376
	492
	494
7D-8441	374
	376
	492
	494
7D-8636	340
7D-8637	340
7D-8643	340
7D-8825	901
7D-8826	901
7D-8875	883
7D-8876	883
7D-8877	883
7D-8878	883
7D-8879	883
7D-8881	883
7D-8882	883
7D-8883	883
7D-8884	883
7D-8889	883
7D-8983	551
7D-8984	551
7E-0759	79
7E-1313	47
7E-2968	26
7E-4761	81
7E-6794	42
7E-7589	54
7E-7590	11
	►54
7E-7779	33
7E-8570	366
7F-1327	901
7G-4822	352
	354
	356
	358
7G-4998	518
7G-7917	180
	187
	245
	287
7G-7918	180
	187
	245
7G-7919	180
	187
	245
7G-8839	873
7H-2444	883
7H-3171	403
7I-1024	805
7I-5412	607
7I-8663	595
7J-0204	547
7J-3554	368
7J-5925	840
	842
7J-6356	120
7J-8611	379
	926
7J-8782	746
7J-9108	588
	596
	597
	601
	615
	695
	810
7J-9885	549
	877
	878
7J-9933	693
7K-1181	116
	130
	134
	136
	137
	160
	221
	223
	241
	243
	246
	285
	287
	289
	293
	299
	300
	305
	311
	313
	319
	322
	331
	508
	581
	823
	831
7K-3215	826
7K-4201	794
7K-9202	446
	449
	531
	534
7K-9203	898
7K-9204	446
	617
7K-9205	898
7L-8316	796
7M-1297	518
7M-7219	799
7M-8485	69
	75
	344
	347
	348
	368
	380
	386
	389
	390
	593
	596
	601
	602
	641
	693
7N-0296	263
7N-0718	148
	150
	►267
7N-2059	263
7N-5274	148
	150
7N-5683	25
7N-9017	188
7N-9801	283
7P-1577	873
7R-2750	180
7R-2751	180
7R-3029	182
7S-4001	370
7S-5005	113
	127
7S-9930	786
	790
7T-0020	201
7T-0093	179
	751
7T-0094	184
7T-0582	796
7T-0629	581
7T-1099	300
	305
	435
	463
7T-4003	798
7T-4532	762
7T-4897	352
	354
	356
	358
7T-6496	347
7T-6799	286
7T-9302	282
7T-9987	322
7U-4891	220
7V-5191	799
7V-6571	320
7W-3872	18
	761
7W-5340	64
7W-9737	72
7W-9738	72
7W-9740	72
7W-9930	72
7X-0328	902
7X-0334	574
	578
7X-0346	617
7X-0386	901
7X-0390	902
7X-0423	901
7X-0443	901
7X-0445	892
7X-0450	901
7X-0451	892
7X-0481	143
	145
7X-0490	751
7X-0510	810
7X-0515	625
7X-0533	892
7X-0578	840
	842
7X-0579	455
	481
	803
	827
	851
	859
7X-0584	744
7X-0599	194
	195
7X-0605	490
	787
	791
	840
	842
7X-0608	289
7X-0613	591
7X-0620	271
	273
7X-0632	16
	481
7X-0750	300
7X-0818	295
	442
	775
	826
7X-0820	581
7X-0851	341
7X-0871	612
7X-0873	588
7X-2393	326
7X-2459	360
7X-2465	824
7X-2534	610
7X-2535	156
	158
	160
	591
7X-2536	89
7X-2537	626
	761
	763
7X-2538	761
7X-2539	123
7X-2543	508
	555
	565
	589
7X-2544	599
	602
	890
	892
7X-2546	87

► PRIMARY REFERENCE

PART NUMBER INDEX

Part	Page
7X-2549	120
	444
	490
7X-2553	873
7X-2554	442
7X-2557	120
7X-2561	341
7X-2562	393
7X-2563	474
7X-2565	45
	875
7X-2575	392
	462
7X-2576	74
7X-2577	875
7X-2585	45
7X-2634	827
7X-4733	621
7X-6222	187
7X-6315	163
7X-7644	8
7X-7729	69
	75
	78
	81
	87
	92
	109
	116
	120
	148
	150
	246
	289
	306
	311
	326
	341
	366
	437
	439
	441
	442
	444
	446
	450
	452
	455
	457
	475
	478
	481
	483
	508
	561
	589
	593
	602
	616
	623
	787
	791
	906
7X-7877	452
7X-7945	926
7X-7958	65
	69
7X-8549	557
7Y-0589	636
	637
7Y-2174	824
7Y-3283	565
7Y-3474	862
	864
7Y-6338	446
	746
7Y-7388	289
7Y-9096	786
	790

8

Part	Page
8B-1615	378
	379
8C-0537	39
8C-0620	100
	101
	120
8C-0622	370
8C-2926	396
8C-3089	400
8C-3132	732
8C-3205	589
8C-3206	387
	389
	597
8C-3210	348
8C-3425	810
8C-3445	60
8C-3446	60
	380
	620
8C-3447	380
8C-3451	557
	620
8C-3681	89
8C-3793	315
8C-5053	131
	139
8C-5607	156
	158
	160
	196
8C-5608	156
	158
	160
	196
8C-5748	210
8C-5918	148
	150
8C-6354	179
	289
8C-6711	127
	741
8C-6798	389
8C-6857	305
8C-6866	926
8C-6913	902
8C-6959	116
8C-8430	755
	756
8C-8514	163
8C-8580	246
8C-8842	901
8C-8988	596
8C-8989	508
8C-9660	851
8C-9987	763
8D-1268	901
8D-3902	374
	376
8D-4336	883
8D-5054	552
8D-7086	446
	449
	531
8D-7225	531
8D-7424	551
8D-7425	552
8D-7426	551
8D-7996	528
8D-8168	883
8D-9092	636
8D-9159	446
8D-9671	311
8E-1143	417
8E-1263	352
	354
8E-1911	358
8E-3366	2
	▶367
8E-5287	368
8E-5529	868
	869
8E-5734	354
	356
	358
8E-5736	358
8E-5742	352
	354
	356
	358
8E-8319	352
	354
	356
	358
8F-1434	246
	271
	273
	274
8F-1974	300
8F-3469	352
	354
	356
	358
8F-4102	529
8F-7219	111
8F-9538	492
	494
8H-2046	59
8H-5244	57
8H-5303	267
8H-5306	267
8I-1362	859
8J-0112	537
8J-1434	898
	▶904
8J-2331	634
	638
8J-6371	535
8J-6384	541
8J-7008	898
8K-0530	450
8K-1433	439
8L-2786	380
	383
	558
8L-5189	344
8L-8413	148
	150
	319
	322
	799
8M-2770	305
	335
	597
8M-2773	116
	305
	384
	584
	597
	616
8M-3368	506
8M-4295	358
8M-4992	347
8M-5253	417
8M-5860	29
8M-6521	347
8M-8489	396
8M-9315	39
8N-1517	180
	245
8N-1518	187
8N-1521	187
8N-1522	180
	245
8N-1523	179
	245
8N-1540	180
	245
8N-1541	187
8N-1544	245
8N-1545	188
8N-1548	180
	245
8N-1549	188
8N-1725	319
8R-3695	851
8R-8088	143
	145
8S-0948	311
	589
8S-2634	319
	322
8S-7048	313
8S-7803	799
8S-8820	66
8S-9129	400
8S-9130	400
8T-0076	560
	563
	571
	573
	577
8T-0077	595
8T-0088	344
8T-0100	20
	35
	56
	363
8T-0106	55
8T-0122	245
8T-0151	380
8T-0226	16
8T-0267	642
	645
	650
	654
	658
	663
	668
	672
	676
	682
	688
	693
	695
	697
	699
	701
	703
	705
	707
	709

▶ PRIMARY REFERENCE

PART NUMBER INDEX

Part	Page
	711
	713
	715
	717
	719
	721
	724
	729
8T-0276	60
8T-0281	465
8T-0293	50
	368
8T-0315	555
8T-0328	168
	246
	289
8T-0336	551
8T-0355	396
	400
8T-0372	374
	376
8T-0389	120
	148
	150
	204
	211
	212
	213
	214
	237
	452
	508
	529
	581
	584
	597
	602
	639
	890
	892
8T-0558	306
	883
8T-0640	794
8T-0643	20
	39
8T-0644	84
	395
8T-0667	545
8T-0707	348
8T-1117	89
8T-1118	864
8T-1119	862
8T-1158	363
	411
8T-1159	119
	492
	494
8T-1698	621
8T-1718	615
8T-1739	875
8T-1887	508
	561
8T-1888	509
	561
8T-1889	114
	116
	561
	563
	574
	578
	612
8T-1890	114
	116
	228
	231
	561
	563
	574
	578
	612
	805
8T-1895	228
	231
	561
	586
8T-1896	561
	586
8T-1897	561
	563
	574
	578
	612
	805
8T-1898	561
	563
	574
	578
	612
	805
8T-1905	116
8T-2225	786
	790
8T-2226	785
8T-2353	252
8T-2396	14
8T-2530	596
8T-2920	300
8T-3282	32
	537
8T-3490	63
	78
	92
	103
	116
	117
	240
	245
	300
	305
	309
	335
	347
	362
	386
	438
	442
	446
	450
	455
	457
	463
	475
	481
	498
	508
	509
	591
	593
	595
	599
	600
	623
	850
8T-3491	84
8T-3597	120
	444
8T-3611	601
8T-3612	305
	438
	442
	481
	787
	791
	827
	850
8T-3666	34
8T-3727	374
	376
8T-3844	156
	158
	160
	333
	926
8T-3851	300
	600
8T-4000	787
	791
8T-4121	16
	44
	47
	65
	75
	81
	89
	98
	103
	106
	116
	143
	145
	148
	150
	204
	221
	223
	226
	227
	229
	230
	237
	240
	241
	243
	246
	251
	289
	299
	300
	305
	309
	311
	315
	320
	324
	328
	330
	331
	335
	348
	360
	380
	384
	387
	389
	390
	444
	450
	464
	477
	478
	496
	498
	506
8T-4122	617
8T-4123	45
	98
	305
	393
	746
	883
8T-4131	875
	883
8T-4133	87
	89
	116
	227
	237

► PRIMARY REFERENCE

PART NUMBER INDEX

Part	Page
	289
	300
	384
	475
	478
	506
	509
	555
	571
	574
	578
	591
	610
8T-4136	16
	43
	65
	69
	75
	78
	81
	89
	116
	120
	148
	150
	226
	227
	229
	230
	247
	251
	300
	305
	311
	315
	320
	324
	326
	366
	384
	387
	390
	437
	439
	455
	457
	475
	478
	481
	483
	509
	519
	520
	521
	522
	523
	524
	525
	561
	563
	565
	571
	574
	578
	581
	584
	586
	589
	591
	593
	597
	602
	610
	612
	616
	623
	626
	639
	805
	834
	906
8T-4137	75
	81
	89
	148
	150
	240
	246
	289
	299
	300
	305
	311
	315
	320
	324
	330
	331
	335
	341
	348
	368
	455
	464
	478
	483
	496
	498
	506
	509
	513
	533
	561
	581
	586
	589
	602
	608
	610
	612
	639
	805
	807
	810
	926
8T-4138	156
	158
	160
	198
	246
	251
	289
	293
8T-4139	75
	120
	311
	444
	462
	467
	602
	873
8T-4140	441
8T-4149	75
	602
8T-4154	205
8T-4167	462
	746
	824
	875
8T-4171	309
	330
	441
8T-4172	47
	75
	328
	561
	749
8T-4175	450
	617
8T-4176	326
8T-4178	390
	444
	599
	602
8T-4179	120
	246
	311
	320
	324
8T-4182	15
	87
	98
	311
	315
	442
	496
	498
	513
	563
	574
	578
	603
	616
8T-4183	45
	103
	320
	555
8T-4184	380
	439
8T-4185	92
	148
	150
	240
	450
	452
	509
	561
	573
	577
	589
	814
8T-4186	44
	87
	89
	143
	145
	237
	240
	300
	311
	320
	324
	390
	475
	496
	498
	511
	513
	561
	565
	586
	603
	807
8T-4189	81
	134
	136
	250
	263
	284
	289
	315
	348
	439
	442
	454
	455
	481
	783
	926
8T-4191	311
	441
	444
	496
	498
	513
	809
	851
8T-4192	120
	194
	195
	305
	898
8T-4193	625
8T-4194	45
	324
8T-4195	44
	47
	65
	75
	81
	92
	103
	116
	221
	223
	227
	230
	237
	241
	243
	300
	315
	380
	439
	446
	450
	452
	455
	457
	475
	478
	496
	498
	509
	511
	513
	520
	521
	522
	523
	555
	561
	563
	574
	578
	581

PART NUMBER INDEX

Part	Page
	589
	591
	593
	597
	603
	612
	616
	623
	626
	787
	791
	805
	816
	820
	851
8T-4196	47
	81
	92
	98
	103
	109
	116
	120
	237
	306
	311
	348
	379
	387
	389
	437
	439
	475
	481
	509
	563
	574
	578
	589
	749
	764
8T-4198	529
	597
	743
	898
8T-4199	826
8T-4200	840
	842
8T-4205	141
	200
	246
	309
	315
	333
	751
8T-4222	439
	455
	496
	498
	513
8T-4223	16
	120
	143
	145
	221
	223
	241
	243
	246
	306
	311
	320
	324
	326
	333
	380
	403
	406
	450
	459
	462
	467
	531
	555
	574
	578
	603
	617
	624
	636
	637
	883
	902
8T-4224	20
	21
	89
	134
	136
	141
	177
	202
	205
	206
	210
	250
	263
	289
	295
	297
	315
	333
	439
	626
	761
	814
	826
	840
	842
8T-4226	87
	92
	906
8T-4244	306
8T-4648	744
	898
8T-4778	465
8T-4779	387
	442
	603
8T-4780	98
8T-4835	143
	145
8T-4896	387
	552
8T-4908	216
	232
	234
	348
	439
	442
	463
	481
	809
	836
	840
	842
8T-4910	883
	898
8T-4935	600
8T-4956	75
	120
	311
	406
	441
	444
	450
	477
	526
	624
8T-4970	293
	862
	864
8T-4983	406
8T-4984	81
	603
8T-4994	636
	902
8T-5001	221
	223
	241
	243
8T-5002	372
8T-5005	301
	311
	360
	387
	477
	593
	597
	603
8T-5041	890
	892
	898
8T-5361	902
8T-5372	803
8T-5389	610
8T-5400	859
	861
	862
	864
	866
8T-5413	300
8T-5429	84
	573
	577
	601
8T-5436	589
	599
8T-5439	462
8T-6381	45
8T-6430	462
8T-6453	595
8T-6462	875
8T-6466	306
	496
	498
	506
	513
	571
	586
8T-6685	890
	892
8T-6703	81
	386
	555
	589
8T-6757	926
8T-6868	16
8T-6869	123
	826
8T-6870	366
	444
8T-6876	511
	591
8T-6912	87
	202
	206
	207
	208
	229
	230
	231
	236
8T-6936	840
	842
	851
8T-7338	459
8T-7525	628
8T-7546	615
8T-7547	366
	787
	791
8T-7926	555
8T-7934	478
	565
	603
	616
8T-7950	32
8T-7971	45
	444
	786
	802
8T-8441	344
8T-8442	56
	733
	735
8T-8729	140
	184
	185
	186
	187
	189
	190
	191
	192
	196
	200
	201
	211
	212
	215
	217
	218
	219
	220
	245
	270
	274
	276
	283
	286
	295
	299
	300
	313
	314
	319
	322
	323
	362
	751
	773
	785
	803
	805
	822
	829

► PRIMARY REFERENCE

PART NUMBER INDEX

Part	Page
	862
	864
	866
8T-8730	184
	185
	188
	190
	191
	192
	196
	245
	246
	272
	285
	299
	313
	314
	319
	322
	323
	324
	326
	362
8T-8737	156
	158
	160
	169
	176
	180
	182
	183
	184
	185
	186
	187
	189
	191
	193
	196
	211
	212
	246
	281
	285
	287
	288
	295
	313
	314
	319
	322
	323
	326
	335
	362
	368
	751
	767
	768
	769
	771
	773
	776
	777
	778
	779
	785
	786
	790
	822
	862
	864
8T-8827	311
8T-8874	234
	247
8T-8917	617
8T-8924	901
8T-8986	596
8T-9102	547
8T-9371	846
8T-9515	628
8T-9530	435
8T-9655	123
	153
	295
	363
	826
8T-9756	148
	150
8U-2622	200
8V-7162	859
8V-9708	311
8W-0663	901
8W-0791	906
8W-2842	528
8W-2913	►531
	900
8W-3991	560
8W-5597	901
8W-6469	338
8W-6626	450
8W-8528	319
	322
8W-9566	428
8W-9594	429
8X-1386	840
	842
8X-5106	883
8X-5107	883
8X-5108	883
8X-5489	555
8X-5564	573
	577
8X-6075	901
8X-8377	346
8Y-1816	324
8Y-3795	446
	746
8Y-4489	120
	446
	450
	623
8Y-5944	844
8Y-5945	800
8Y-5965	844
8Y-6012	844
8Y-6014	844
8Y-6024	844
8Y-6041	799
8Y-6045	799
8Y-6046	799
8Y-6047	799
8Y-6060	799
8Y-6062	799
8Y-6063	799
8Y-6064	799
8Y-6066	799
8Y-6067	799
8Y-6068	799
8Y-6069	799
8Y-6379	850
8Y-6388	827
	850
8Y-6859	800
8Y-6860	800
8Y-7452	599
8Y-8294	858
8Y-9603	265

9

Part	Page
9B-2923	237
9B-7233	246
9C-5344	240
	300
	305
	452
9D-1491	551
9D-3075	374
	376
	492
	494
9D-3311	446
9D-3523	467
9D-3767	441
9D-5516	901
9D-6196	81
9D-6197	81
9D-6589	446
9D-7047	374
	376
	492
	494
9F-2247	374
	376
9G-0002	148
	150
9G-0003	148
	150
9G-0005	148
	150
9G-2758	148
	150
9G-3695	269
9G-4343	245
9G-4344	297
9G-5127	379
9G-7101	305
9H-0846	368
9J-3657	880
9J-3866	386
	595
9J-4963	621
9J-6586	904
9K-5635	803
9K-7951	423
	430
9L-3334	313
9L-6770	141
9M-0402	926
9M-1328	878
9M-1974	14
	16
	18
	41
	56
	60
	64
	66
	79
	86
	97
	110
	114
	153
	308
	348
	363
	417
	796
9M-2042	348
9M-2092	341
9M-2110	417
9M-2904	62
	368
9M-4594	561
9M-7958	130
	131
	134
	136
	137
	139
9M-8406	315
	324
	807
9N-0869	35
	123
	153
	363
	827
9N-4155	396
9N-5253	194
9P-9388	816
	820
9R-0109	532
9R-0932	803
9R-2613	615
	623
	876
9R-2620	289
	441
9R-2672	245
	446
	508
	746
	851
9R-2821	116
	245
	851
9R-3761	623
9R-5008	98
9R-6414	148
	150
9R-8870	560
9R-9866	446
	746
9R-9925	639
9S-1316	326
9S-4167	108
	109
9S-4181	131
	139
	348
	382
	641
9S-4182	39
	366
9S-4183	75
	368
	555
9S-4185	558
9S-4190	403
9S-4191	39
	368
	511
	555
	558
	596
9S-8001	618
9S-8002	30
	547
	620
	628
	733
	735
	738
9S-8004	30

► PRIMARY REFERENCE

PART NUMBER INDEX

Part	Page
	380
	417
	490
	558
	618
9S-8005	14
	39
	340
	380
	383
	628
	634
	638
9S-8006	27
	30
	348
9S-8007	547
9S-8008	48
	50
	347
9S-8010	348
	518
9S-9334	30
	347
	368
	380
	518
9T-1013	610
9T-2457	537
9T-4211	543
	545
9T-5241	796
9T-8051	621
9T-8053	621
9T-8054	621
9T-8056	621
9T-8058	621
9T-8059	621
9T-8061	621
9T-8065	621
9T-8067	621
9T-8069	621
9T-8070	621
9T-9040	549
9T-9071	621
9T-9072	621
9U-4784	803
9U-8263	850
9U-8669	417
9U-8815	352
	354
9U-9995	352
9W-0844	182
	184
	188
	191
	232
	237
	313
	326
9W-0852	182
	185
	187
	232
	237
	239
	313
	751
9W-1454	347
9W-2029	352
	354
9W-4363	567
	569
9W-5134	►400
	405
9W-6465	347
9W-6467	358
9W-6582	45
9W-6584	45
9W-7038	348
9W-7469	890
	892
9W-7470	890
	892
9W-8095	45
9W-9371	352
	354
9W-9905	352
	354
	356
	358
9W-9920	45
9X-0196	286
9X-0261	334
9X-0262	252
9X-0352	245
9X-1046	168
	289
9X-1054	187
	313
9X-1056	178
	188
	313
9X-1386	269
9X-1813	270
	275
	276
	284
9X-2023	555
9X-2026	293
9X-2027	478
	814
9X-2032	850
9X-2038	156
	158
	160
	475
	751
	827
	851
9X-2042	786
	787
	790
	791
	802
9X-2043	169
	333
	787
	791
	827
	840
	842
	851
9X-2044	751
	787
	791
	827
	840
	842
	851
	859
9X-2045	766
	798
	803
	827
	840
	842
	851
	856
9X-2046	803
	827
	859
9X-2085	567
	569
9X-2098	60
9X-2099	20
9X-2125	341
	455
	457
	787
	791
9X-2133	89
9X-2134	597
9X-2305	72
9X-2488	809
9X-2492	500
	502
	504
9X-2506	188
9X-2521	887
9X-2546	765
9X-2615	461
9X-3265	187
9X-3401	137
	156
	158
	160
	169
	178
	180
	182
	183
	184
	185
	187
	189
	191
	193
	251
	254
	269
	275
	287
	295
	313
	314
	362
	767
	768
	769
	771
	773
	776
	777
	778
	779
	786
	790
	846
	866
9X-3402	156
	158
	160
	169
	178
	180
	182
	184
	185
	188
	189
	190
	191
	193
	286
	287
	288
	295
	314
	335
	362
	786
	790
	866
9X-3465	211
	212
9X-3982	81
9X-4244	202
	204
	205
	206
9X-4385	182
	189
	190
9X-4391	184
	187
9X-4494	215
9X-4519	322
	323
9X-4609	363
9X-5615	184
	187
9X-6016	246
9X-6165	156
	158
	160
	196
9X-6458	110
9X-6620	91
	106
9X-6772	188
	309
9X-6856	180
	245
9X-6857	187
9X-7301	542
9X-7337	543
9X-7345	203
	209
9X-7371	625
9X-7378	805
9X-7380	805
	807
9X-7381	805
	807
9X-7382	805
	807
9X-7383	805
	807
9X-7385	762
	805
9X-7737	275
9X-7745	642
	645
	653
	658
	662
	671
	676
	681
	687
	697
	699
	709
	711
	713

► PRIMARY REFERENCE

PART NUMBER INDEX

Part	Page
	715
	719
	723
	729
9X-8243	191
9X-8250	301
	390
	603
9X-8256	156
	158
	160
	237
	246
	251
	279
	286
	293
	315
	324
	326
	328
	330
	348
	441
	591
	610
	775
	784
	840
	842
	926
9X-8257	387
	442
	450
	459
	603
	873
9X-8258	45
9X-8267	14
	127
	785
9X-8268	39
	344
	370
9X-8355	917
	921
9X-8399	535
	549
9X-8403	252
9X-8875	887
9X-8916	26
9X-8918	799
9X-8979	630
9X-9365	203
	209
9X-9689	796
9X-9825	319
	322

0

Part	Page
002-6453	403
008-8381	15
014-0816	282
030-0060	340
030-0061	340
030-1712	308
030-7962	116
030-8190	15
030-8194	126
030-8276	114
031-4155	796
033-6027	58
033-6031	14
033-6033	276
033-6034	735
033-6043	733
	735
033-6783	387
033-8248	89
	314
033-9412	457
036-7232	313
061-6737	114
061-9455	20
064-3843	490
067-3045	589
	610
068-9526	97
070-0107	105
085-8091	805
089-7960	457
091-0081	586
	810
091-9035	589
092-4924	286
095-0817	309
095-0878	799
095-1207	438
095-1582	695
095-1678	383
	386
095-1750	739
095-1751	731
096-0192	803
096-3831	642
	645
	653
	667
	671
096-4883	116
	240
096-6166	169
	289
	803
	851
097-7234	846
099-3047	628
099-3649	21
	93

1

Part	Page
100-3224	800
100-3253	213
	214
100-3254	213
	214
100-3255	213
	214
100-3320	183
100-4336	581
	586
100-5041	188
100-5179	800
100-5612	910
	911
100-6674	751
101-0003	803
	844
	846
101-3055	823
101-3128	153
101-3934	39
101-4194	844
101-4195	844
102-5881	354
	356
	358
102-8801	156
	158
	160
	178
	179
	183
	187
	287
	309
	362
102-8802	137
	140
	183
	184
	185
	187
	190
	196
	200
	215
	216
	217
	218
	220
	232
	237
	239
	245
	270
	274
	276
	277
	283
	284
	289
	299
	313
	319
	322
	323
	326
	328
	762
	803
	805
	819
	846
102-8803	179
	184
	187
	192
	196
	201
	219
	254
	314
	326
	328
	829
	866
102-8804	179
	182
	184
	185
	189
	191
	193
	269
	286
	287
	300
	866
102-8805	169
	179
	185
	191
	196
	211
	212
	295
	313
	362
	785
	786
	790
	822
	862
	864
102-8806	189
	193
	281
	751
103-5796	435
104-2091	827
	851
104-3601	215
104-4523	890
	892
105-1638	630
105-1646	633
105-1648	633
105-1650	633
105-1651	633
105-1866	588
105-2145	733
105-3002	573
	577
105-3031	630
105-3032	630
105-3033	630
105-3196	551
	▶621
105-3477	601
105-3482	320
	324
105-9659	▶816
	817
106-3659	642
	645
	650
	653
	658
	662
	667
	671
	676
	681
	687
	697
	699
	701
	703
	705
	707
	711
	713
	715
	717
	719
	723
106-3660	642
	645
	653

▶ PRIMARY REFERENCE

PART NUMBER INDEX

Part	Page
	658
	667
	671
	676
	681
	687
	709
	721
	723
	729
106-4175	890
	892
106-4835	424
107-1716	305
107-2784	638
107-7604	27
107-7694	17
107-7708	24
107-8374	901
107-8375	901
108-0705	573
	577
108-3612	20
108-3819	601
108-4086	800
108-4087	800
108-4103	800
108-4311	846
108-5471	787
	791
108-5751	352
109-0361	917
	921
109-0887	322
	323
109-1393	547
109-3207	112
109-5811	597
110-4213	423
110-4214	423
110-5266	584
110-5334	880
	881
	882
110-5336	881
	882
110-7149	492
	494
110-7524	855
	857
110-7618	18
110-8769	314
110-8827	69
111-2416	183
111-4627	827
	851
111-9110	484
	485
	486
	487
	488
	489
	515
	516
	517
111-9251	305
	586
	608
112-1574	395
	396
112-3926	883
112-3927	875
112-3931	466
112-4550	251
112-5869	861
112-8728	803
112-9736	75
	87
	478
112-9813	423
113-0999	559
113-6069	37
113-8373	246
113-8490	286
113-8491	286
113-8492	286
114-0061	750
114-0359	904
114-0561	382
114-2687	66
114-6099	528
	530
	890
	892
114-6658	786
	787
	791
	802
	803
	827
	840
	842
	856
	858
	859
114-8843	192
	362
115-3519	169
115-4072	37
115-4219	37
115-4223	79
115-4550	417
115-6433	601
115-9345	786
	802
116-0118	313
	326
	328
116-4627	396
116-5763	455
117-2311	168
117-2927	368
117-3643	11
	►73
117-7734	593
117-8131	824
117-8721	338
117-9409	326
117-9978	917
	921
118-1727	11
	►19
118-5125	751
118-5619	749
118-7880	901
118-7881	901
118-8586	547
119-2942	66
119-3025	83
119-3662	178
	182
	183
	184
	188
	245
	287
	295
	326
	362
	751
119-5094	178
	187
119-5434	542
119-9631	751
120-4394	628
	630
120-9051	693
121-3307	87
	92
121-9245	549
122-0450	561
	563
	573
	577
	612
	805
122-5855	15
122-6908	386
	555
	589
122-7666	755
	756
122-8340	478
122-8905	131
	139
123-0707	136
123-1373	148
123-1904	15
123-4586	818
	819
123-7615	288
123-8187	883
124-2528	498
	513
124-6257	15
	810
124-7346	271
125-1302	245
	►270
125-3298	641
125-7874	156
	158
	160
	169
	181
	183
	184
	185
	188
	193
	245
	246
	269
	287
	288
	295
	314
	866
125-7875	156
	158
	160
	181
	182
	183
	184
	185
	188
	189
	190
	191
	193
	245
125-7876	191
125-9740	751
126-1757	20
126-1767	156
	158
	160
	169
	176
	178
	180
	183
	189
	193
	254
	287
	295
	362
	786
	790
	846
	866
126-1768	156
	158
	160
	169
	176
	178
	180
	189
	193
	286
	287
	288
	295
	362
	786
	790
	866
126-1773	368
126-1774	179
	187
	295
	309
126-5011	183
126-5211	110
126-5466	79
126-5648	794
126-8240	44
127-2170	458
	769
	771
	773
	813
	827
	833
127-9323	305
	508
	610
128-4123	180
128-4249	179
128-5016	180
129-1132	64
129-1133	11
	►64
129-2220	744
129-2861	366

► PRIMARY REFERENCE

PART NUMBER INDEX

Part	Page
129-3178	751
129-3180	326
	890
	892
129-3181	490
129-5096	143
	145
129-7679	69
129-7680	917
	921
130-0229	558
130-3515	211
	212
130-5300	198
	237
	241
	243
	246
	251
	289
	299
	300
	305
	309
	314
	324
	331
	363
	380
130-5301	221
	223
	241
	243
130-9984	386
	588
131-2182	44
131-3539	305
131-3919	354
	356
	358
131-3987	453
131-4242	799
131-4428	338
131-5167	799
131-5171	803
131-7191	529
	►537
131-7194	537
131-7195	537
132-0338	326
132-1805	148
	150
	300
132-3056	641
132-5789	227
	230
	299
	300
	314
	324
	331
	363
	380
132-5793	751
132-8487	305
132-9625	352
132-9628	354
132-9630	356
132-9633	356
132-9637	358
133-3260	565
133-4995	32
133-5330	620
	►736
133-5545	643
	646
	654
	668
	672
	736
	737
133-6578	628
133-6934	311
	314
	807
133-7523	882
133-7524	881
133-8739	630
133-9012	751
134-0165	444
134-2540	156
	158
	160
	180
	182
	187
	191
	287
	288
	314
134-3355	314
	330
134-3987	297
	314
134-4126	163
134-4483	33
134-4772	588
134-7258	917
	921
135-0611	821
135-1979	796
135-2543	297
	308
135-5009	322
	323
135-5010	188
135-5975	182
135-9819	15
	19
136-0822	20
136-1711	873
136-1953	809
136-3188	859
136-3191	859
136-4183	37
136-5490	831
	832
136-7227	126
	263
136-8308	904
137-1602	107
137-4234	887
137-6645	75
	257
137-6715	33
137-6717	57
137-6718	33
137-9410	221
	223
	241
	243
138-3252	32
138-7198	57
138-8402	57
138-8403	57
138-9403	610
138-9868	57
139-4081	►42
	56
139-4084	42
140-0860	311
140-1739	630
140-5945	764
140-6188	33
140-9670	33
141-0709	542
141-2760	286
141-5519	458
141-6141	465
141-9203	478
142-7289	32
142-8937	641
143-4654	59
143-7356	459
143-9392	153
144-0195	786
	790
	859
	861
	862
	864
	866
144-0331	778
	779
	780
	781
144-0367	98
144-4107	850
144-8344	89
	311
	314
	320
	324
145-0162	24
145-0164	24
145-0168	24
145-0170	24
145-0326	844
	846
145-2901	143
	145
145-3757	386
145-4496	384
145-6669	749
145-8039	347
146-1842	340
146-1843	340
146-6433	861
146-6747	917
	921
146-7453	65
	134
147-0182	84
147-0385	89
147-1444	309
147-1445	156
	158
	160
	187
	295
147-1446	187
	295
147-5112	746
147-8214	33
147-8218	29
147-8220	33
148-1925	362
148-2593	539
	541
148-2903	112
148-5355	858
148-7027	584
148-7841	372
148-8307	601
148-8309	331
	347
148-8315	601
	615
148-8318	360
	561
	571
148-8322	588
	610
148-8323	386
148-8325	387
	595
148-8326	591
148-8329	595
148-8334	601
148-8335	386
	389
	595
148-8336	384
	386
	508
	584
	588
	591
	596
148-8337	926
148-8340	500
	502
	504
	560
	563
	565
	567
	569
	573
	577
	581
	586
	591
	608
	610
	612
	615
148-8341	588
	601
148-8342	596
148-8345	569
	596
	615
148-8347	65
	69
	601
148-8351	596
148-8352	386
	601
148-8353	511
	596
148-8354	117
	560
	596
148-8355	390
148-8357	390
	601
148-8358	560
	569
148-8360	75
148-8361	588
	615
148-8363	563
	573
	577
148-8364	116

► PRIMARY REFERENCE

PART NUMBER INDEX

Part	Page
	500
	502
	504
	560
	563
	573
	577
148-8365	511
	591
148-8366	508
	559
148-8367	81
	384
148-8368	360
148-8369	344
	596
148-8370	508
	595
	601
	612
	615
148-8371	596
148-8372	116
	560
148-8374	529
	561
	563
	571
	573
	577
	581
	607
	612
148-8377	591
148-8378	360
	384
	386
	584
	591
148-8381	573
	577
	601
148-8387	601
148-8388	615
148-8392	601
148-8393	601
148-8395	39
	340
	634
	638
148-8405	39
148-8406	347
	368
	380
148-8407	39
	368
	511
	555
	596
148-8408	75
	368
	555
148-8409	347
148-8415	120
	573
	577
	612
148-8428	500
	502
	504
	602
148-8430	588
148-8443	360
148-8444	500
	502
	504
	573
	577
	612
148-8446	588
148-8449	69
149-1912	794
149-5240	112
149-5452	586
	608
149-6371	805
149-7738	588
149-8142	81
150-1280	545
150-3024	641
150-3026	89
150-3028	559
150-3035	615
150-3037	596
150-3065	380
150-3073	389
150-3074	584
150-4031	596
150-4043	511
	565
	567
	569
	615
150-4048	810
150-4049	75
	602
150-4086	148
	150
	324
150-9870	237
151-5145	620
151-7038	547
151-9274	179
	777
151-9275	251
153-5700	150
153-5710	148
153-6237	75
	593
153-6241	508
153-6244	610
153-6246	581
153-6259	593
153-6270	610
153-7036	127
153-8085	565
	573
	577
154-6626	63
154-8079	798
154-9023	79
	393
155-1142	340
155-2026	386
155-2255	156
	158
	160
	179
	182
	193
	287
	288
	314
	608
155-2256	156
	158
	160
	285
155-2258	178
	182
	193
	287
	288
	314
155-2259	288
155-2260	156
	158
	160
	179
	187
	192
	286
	287
	326
	328
	331
	335
	866
155-2265	179
	183
	196
155-2270	179
	183
	184
	185
	187
	190
	191
	196
	216
	232
	237
	245
	246
	260
	272
	285
	288
	299
	309
	313
	314
	320
	322
	323
	326
	328
	362
155-2271	179
	184
	190
	191
	287
	335
155-2274	169
	179
	184
	185
	187
	368
	786
	790
155-3624	39
155-5114	362
155-7321	573
	577
	610
155-9116	632
155-9117	632
155-9125	628
155-9127	628
156-4283	555
156-5762	917
	921
156-5782	810
156-5970	738
156-6175	156
	158
	160
	326
	328
157-0670	79
	393
157-7130	33
158-2336	484
	485
158-6072	107
158-7864	917
158-9956	►692
	738
159-0052	786
	790
159-0303	11
	►50
159-0927	352
	354
159-8047	311
159-8049	148
	150
	319
159-8050	148
	150
	265
	311
	319
	323
159-9322	156
	158
	160
	180
	187
	288
	295
160-0018	311
160-0564	311
160-1744	384
160-2169	293
	803
160-2246	130
	134
	136
	137
160-3518	186
	287
160-5131	79
160-7165	839
	►844
160-7689	187
	288
160-8184	38
160-8492	348
160-8748	409
160-8750	408
161-5967	799
161-6149	736
	737
	739
161-6154	692
161-6161	736
	737
	739
161-6713	352

► PRIMARY REFERENCE

PART NUMBER INDEX

Part	Page
	354
161-6963	107
161-8068	396
162-0177	380
	417
	490
162-2165	134
	169
	289
	851
162-2480	475
162-3148	62
162-7120	446
162-7449	573
	577
162-8068	11
	▶51
163-0325	878
163-0326	878
163-0327	878
163-1146	844
163-2478	33
164-0210	59
164-1234	846
164-2108	413
	414
	415
	416
164-4058	602
164-4180	348
	641
164-4227	589
164-5544	574
	578
	584
164-5557	116
164-5567	348
	360
	380
	417
	500
	502
	504
	588
	602
	926
164-5569	69
164-5586	612
164-5605	560
	563
	571
	573
	577
164-5615	596
164-5619	348
164-5624	567
	569
164-7556	202
	204
	205
	206
164-7908	615
164-8474	850
164-8908	595
165-0017	191
165-2273	599
165-2510	531
	▶543
165-3928	367
165-4446	11
	▶41
165-4854	386
165-4929	347
165-4931	363
	417
	926
166-0690	314
166-1776	20
166-1781	20
166-1880	461
	470
	532
166-2905	48
166-6781	844
166-9130	508
167-0206	435
167-2183	542
167-2186	537
167-2190	543
	545
	877
167-2192	535
167-2294	537
167-2300	877
167-2302	535
167-2303	542
167-8121	34
167-8712	309
167-8713	309
167-8714	309
168-2210	628
	▶733
168-3504	628
	630
168-7861	628
168-8806	15
168-9108	543
168-9110	543
169-0705	776
	777
169-1616	731
169-1617	731
169-3130	▶44
	143
	145
169-4088	873
169-4089	873
169-4092	873
169-5414	305
169-5863	926
169-7380	844
	846
170-0432	424
170-0493	515
	516
	517
170-3093	526
170-4910	887
170-5334	▶796
	798
170-9328	311
171-0596	180
171-2210	245
171-2215	245
171-3759	▶269
	829
171-4047	827
	850
171-7091	352
171-7095	354
171-9375	490
172-3511	286
172-4211	300
172-4863	245
172-6298	102
172-7966	417
172-7968	417
172-8037	186
172-8039	186
172-8121	887
172-8122	887
172-8125	887
172-8126	887
172-8127	887
172-8287	887
172-8288	887
172-8591	786
	790
	803
	840
	842
	851
172-9284	926
172-9367	34
173-1007	634
	638
173-1009	634
173-2052	839
173-7035	838
	839
173-7211	878
173-9683	535
	539
	541
	549
173-9779	543
	878
174-0503	182
	187
	191
	287
	288
174-2231	▶799
	844
174-2237	799
174-3091	179
	287
	776
	777
	778
	779
174-4181	87
174-5415	105
174-5763	803
174-5907	148
	150
	311
	320
	926
174-7449	417
174-7875	300
174-9570	▶111
	124
174-9692	305
175-3366	180
175-3676	48
175-3721	39
	368
175-4168	163
175-4291	202
	205
175-4292	202
	205
	206
175-7453	366
175-7895	537
175-7896	539
	541
	543
	545
	547
175-7897	535
175-7898	549
	878
175-7901	542
176-2947	179
	287
176-5639	882
176-5642	880
	881
	882
176-5643	880
	881
	882
177-0035	452
177-0279	926
177-0581	98
177-9645	179
	751
177-9648	179
177-9653	169
177-9953	▶141
	143
178-2176	508
178-2991	537
178-3086	746
178-3707	374
	376
178-5544	15
178-6450	442
178-7023	746
178-7907	839
179-0006	▶271
	330
179-1538	368
179-1539	368
179-7383	14
179-8128	127
179-9392	289
180-0149	859
180-3998	102
	571
	574
	578
180-6213	633
180-8424	15
	84
180-9852	424
180-9900	289
183-3399	66
	119
183-3407	30
183-4000	475
183-6854	102
183-6856	102
183-7262	348
183-7264	557
183-7602	446
184-0983	786
	790
184-2420	81
	599
184-2509	81
184-5394	116
	602
184-7036	295
184-9843	543
	545
185-1860	180
185-1861	288
185-2638	141
185-2639	141
185-2644	141
185-2645	141
185-2647	141
185-2648	141

▶ PRIMARY REFERENCE

PART NUMBER INDEX

Part	Page
185-2650	141
185-2653	141
185-2654	141
185-2655	141
185-2658	141
185-3241	113
186-2506	588
186-3735	216
	281
	284
	771
	819
186-6189	807
187-0541	739
187-3369	490
187-8194	38
187-8222	38
188-0633	490
188-2162	347
188-3959	148
	150
188-9637	633
189-2102	618
189-3158	180
	245
	288
	313
	805
189-5358	818
	819
189-5433	11
	►60
189-8627	618
	►740
189-8772	102
189-8777	72
189-8780	11
	►95
190-0627	744
190-0649	47
190-1105	116
	►123
190-3848	319
	323
190-3849	319
	323
190-3850	486
	487
	488
	489
	515
	516
190-4885	593
190-5386	898
	917
	921
190-7614	287
190-7615	767
	768
191-0522	58
191-0523	►58
	119
191-1782	123
191-1783	123
191-6587	►260
	300
191-7582	628
191-7583	628
191-8303	257
191-8304	258
191-9247	740
191-9784	►557
	599
192-2981	12
	►71
192-4594	97
192-5017	565
192-7752	846
192-7755	846
192-7767	846
192-7783	846
192-7787	846
192-7790	846
192-7795	846
192-7799	846
192-7810	846
192-7812	846
192-7820	846
193-1036	733
193-1736	127
193-2200	490
193-5576	300
193-9230	599
194-2150	581
194-3655	887
194-4046	319
	322
194-4047	322
194-4864	810
194-5171	859
	861
	862
	864
	866
194-5226	182
	183
	331
194-5227	182
	183
	331
194-8742	344
194-9472	628
194-9473	628
194-9474	628
194-9478	632
194-9479	632
194-9480	632
194-9481	632
195-0936	851
195-1068	109
195-3330	887
195-7218	901
	905
195-7988	286
196-2036	500
	502
	504
196-2412	180
196-2413	180
196-8876	185
197-4977	347
197-7259	180
197-7689	844
197-8419	66
197-9353	49
197-9372	49
197-9386	49
198-2914	740
198-4768	340
	374
	376
	492
	494
198-4769	344
198-4776	442
	761
198-4777	92
	103
	438
	446
	455
198-4778	87
	103
	320
	438
	441
	883
198-4780	441
	617
198-4781	45
	470
	474
198-4782	74
198-5351	628
198-5389	196
198-9811	901
198-9812	901
199-4318	436
	453
199-7560	363
199-7854	571
199-7891	141
199-8436	141
199-9985	136
2	
200-4495	37
200-4497	71
	►72
200-5728	►186
	831
	832
200-6282	618
	731
201-0418	627
201-0780	733
201-5464	►218
	326
201-7713	370
201-8034	746
	883
201-8476	372
201-8477	372
201-8478	344
201-8480	372
201-8481	370
202-0313	181
202-0314	181
202-5397	180
	288
202-6473	374
	376
202-6611	202
202-6614	204
	205
	206
203-1558	484
	485
203-2287	805
203-3768	102
203-9007	179
204-0813	196
204-1297	181
	288
204-1611	314
204-2281	300
	313
204-8000	289
	300
	314
204-9734	509
205-0826	196
205-1280	119
205-1320	37
205-1321	12
	►37
205-3692	596
205-5596	584
205-7187	926
205-8257	196
206-1345	297
206-3747	803
206-4228	11
	►79
206-4669	65
	69
206-5162	196
206-5208	196
206-5823	821
	862
	864
206-6875	60
206-8818	641
206-9292	382
206-9295	276
207-8218	547
208-9277	308
208-9282	308
208-9283	308
209-0229	344
209-0230	344
209-4527	344
209-4578	98
209-9234	126
210-3321	18
210-4458	386
210-5590	12
	►24
210-7722	102
211-0052	179
211-2660	794
211-5358	846
211-6807	183
211-7730	126
211-9294	847
212-3652	12
	►49
212-3924	►215
	234
212-4174	65
	69
212-4288	17
212-4289	12
	►17
212-4893	24
212-4961	642
	645
	650
	653
	658
	662
	667
	671
	676
	681
	687
	697
	699
	701
	703
	705
	707
	709

► PRIMARY REFERENCE

PART NUMBER INDEX

Part	Page
	711
	713
	715
	717
	719
	721
	723
	729
212-6891	851
212-7779	846
212-7783	847
213-0064	108
213-0142	184
213-3193	49
213-3733	216
213-5170	847
213-7315	798
213-9100	284
214-1542	569
214-2470	337
214-2484	▶257
	362
214-2485	▶258
	362
214-4677	265
214-7566	15
	30
	60
	252
	334
214-7567	252
	255
214-7568	15
	30
	60
	66
	68
	96
	109
	114
	116
	119
	122
	129
	131
	139
	252
	256
	334
	348
	360
	363
	380
	413
	414
	415
	416
	500
	502
	504
	558
	588
	602
214-9186	850
	855
	857
214-9203	630
215-2315	297
215-2693	387
215-4809	814
216-2211	120
216-5586	27
217-3312	547
217-3501	▶877
	887
217-5763	490
217-9060	393
218-0404	196
218-2373	413
	414
	415
	416
218-3339	358
218-4484	563
218-8655	127
219-0302	910
	911
219-0314	93
219-3309	56
219-5847	▶30
	32
219-5849	12
	▶32
219-6314	196
219-6488	▶202
	235
219-7242	877
219-7243	877
219-7244	877
219-7245	877
220-0684	112
220-1194	11
	▶62
220-4125	100
	101
220-4335	492
	494
220-4336	492
	494
220-8678	111
220-8800	794
221-0318	136
221-3494	66
221-3700	130
	137
221-4482	12
	▶25
221-8040	372
222-0345	▶835
	838
	839
222-2259	573
	577
222-2367	486
	487
	488
	489
	515
	516
	517
222-5893	18
222-5915	79
222-5917	▶182
	297
222-5946	11
	▶59
222-7843	370
222-7944	921
223-3353	547
223-3490	305
223-4779	181
224-0003	▶14
	15
224-2821	216
	232
224-3247	17
224-6638	49
225-0312	921
225-0313	917
225-0947	106
225-3109	769
	771
	773
225-4150	917
	921
226-1240	921
226-1242	917
226-1274	921
226-1275	917
226-7473	153
	▶165
226-8202	537
226-8696	68
226-9622	741
227-1143	535
227-1200	29
227-3101	438
227-3103	438
227-5904	113
	122
	127
227-5942	79
227-6715	612
	623
227-7390	911
227-7391	910
228-2615	911
228-2616	910
228-3323	182
228-3621	34
228-4947	257
	258
	259
228-5897	127
228-6054	211
	212
228-6056	211
	212
228-6089	286
	850
228-7088	15
	733
228-7089	116
	119
228-7090	114
	131
	139
228-8510	62
228-9657	141
229-1494	836
229-2580	286
229-5153	24
229-5154	24
229-5155	24
229-5156	24
229-6266	49
229-8841	11
	▶18
229-8844	35
229-8851	308
230-2566	182
230-3671	100
	101
230-4009	176
230-4010	176
230-4011	183
	189
	191
	275
	288
	320
	323
	362
230-4012	189
	266
	288
	771
	773
230-4013	183
	184
	187
	314
230-5010	288
230-5011	288
230-7471	600
230-9174	246
231-0336	565
231-1531	2
	▶610
231-2114	2
	▶93
231-2156	2
	▶45
231-2313	2
	▶75
231-2315	74
	▶87
231-2316	74
	▶478
231-3047	114
231-3539	877
231-3930	178
231-5055	3
	4
	▶480
231-5061	2
	▶474
232-0343	114
	▶129
232-0895	189
	335
232-1473	851
232-1693	153
232-1754	56
232-2146	880
	881
232-2678	2
	▶459
232-3717	12
	▶56
232-4738	750
	▶763
233-0619	542
233-3116	757
	▶834
233-3122	758
	759
	760
	▶823
233-3135	▶168
	758
	759
	760
233-3137	4
	758
	▶798
233-3142	3
	▶496
233-3150	4
	758
	▶834
233-3208	759
	760
	▶817
233-3227	842
233-3235	855

▶ PRIMARY REFERENCE

PART NUMBER INDEX

Part	Page
	857
233-3245	784
233-3248	840
	842
233-3252	840
	842
233-3270	840
233-3272	784
233-3275	840
233-3277	756
233-3278	755
233-3295	8
	10
	▶818
233-3296	▶819
233-3387	▶105
233-4259	474
	▶639
233-4611	5
	▶148
233-4620	6
	▶203
233-4623	225
	▶326
233-4631	4
	▶216
233-7139	9
	▶880
233-7143	9
	▶880
233-7148	9
	▶868
233-7160	9
	▶869
233-7721	2
	▶526
233-7723	2
	▶529
233-8134	347
233-9204	537
234-0819	396
234-0821	396
234-0823	396
234-0826	396
234-4325	203
	▶204
234-5012	252
	▶261
234-5013	252
	▶262
	334
234-7730	204
234-7731	204
235-2412	▶352
	405
235-2413	▶354
	405
235-2414	▶356
	405
235-2448	15
235-3530	362
	▶417
235-4123	181
	288
235-5527	57
235-6175	866
235-8552	2
	▶624
235-8724	124
235-8725	▶124
	126
235-9631	492
	494
235-9651	125
236-1924	5
	▶150
236-1928	328
236-2340	148
	150
236-2341	319
236-4545	263
236-4615	286
236-4616	233
236-4630	279
236-6221	252
	▶259
236-8826	305
236-8921	2
	▶464
236-8922	13
	▶926
237-0227	183
	187
	189
	314
	362
237-0336	156
	158
	160
	288
237-8063	11
	▶68
237-9736	198
	237
238-0112	363
238-2706	49
238-2720	49
238-4462	539
238-5079	30
238-5080	15
	97
	109
	262
	380
238-5081	27
	97
238-5082	15
	16
238-5084	30
	131
	139
238-5592	608
238-6665	563
238-8813	196
238-8824	▶277
	337
238-8827	▶196
238-8839	751
238-8840	751
238-9561	5
	▶263
239-1134	263
	▶283
239-2402	113
	127
239-3105	372
239-4990	917
239-4991	921
239-5921	15
239-6379	328
239-7352	288
239-7353	288
240-2172	859
240-2767	73
240-7192	322
240-7193	313
240-8666	862
	864
241-0037	485
	486
	487
	488
	489
	515
	516
	517
241-0542	110
241-2443	588
241-2451	588
241-3720	921
241-3722	490
241-3867	639
	▶641
241-3868	641
241-4194	263
241-5645	20
241-6205	417
241-6215	500
	502
	504
241-6218	417
241-8368	245
	▶272
241-8534	75
242-0407	555
242-1555	286
242-1583	314
242-3282	196
242-3360	107
242-3864	60
242-5206	787
	791
242-9264	642
	645
	650
	653
	658
	662
	667
	671
	676
	681
	687
	697
	699
	701
	703
	705
	707
	709
	711
	713
	715
	717
	719
	721
	723
	729
243-1352	226
	229
243-1353	586
243-1786	746
243-2289	87
243-2965	642
	645
	650
	653
	658
	662
	667
	671
	676
	681
	687
	699
	701
	703
	705
	707
	709
	711
	713
	715
	717
	719
	721
	723
	729
243-5289	917
	921
243-5362	182
	189
	190
243-6650	744
243-6652	744
243-6658	746
243-6659	746
243-6660	2
	▶744
243-6683	881
243-6684	881
243-6702	9
	▶870
243-6703	9
	▶871
243-6704	9
	▶872
244-0734	565
	567
	569
244-2579	642
	645
	650
	653
	658
	662
	667
	671
	676
	681
	687
	697
	699
	701
	703
	705
	707
	709
	711
	713
	715
	717
	719
	721
	723
	729
244-2701	754
	▶794
244-3114	362
	▶412
244-3168	153
244-4500	35
244-5682	344
245-1181	411
	420

PART NUMBER INDEX

Part	Page
245-1375	560
245-1596	751
245-1811	411
245-1912	411
	420
245-2797	463
245-2798	463
245-2810	326
245-2811	326
245-2812	326
245-2813	326
245-2814	326
245-2815	480
245-3259	41
245-3555	411
245-4393	15
245-4630	259
245-6116	630
245-6375	94
245-6376	94
245-6795	96
245-7339	54
245-7434	179
	288
245-7603	555
245-8021	180
245-8025	180
245-8842	148
	150
245-8964	555
246-1670	148
	150
246-1672	223
	243
246-1685	216
	232
246-2641	906
	917
246-3193	676
	681
246-3298	508
246-3303	500
	502
	504
246-3305	500
	502
	504
246-3307	500
	502
	504
246-3349	581
246-3352	599
246-3359	599
246-3483	444
246-4389	586
246-4611	93
246-4615	94
246-5926	535
246-6115	2
	▶532
246-6332	595
246-6333	595
246-6341	560
246-6342	560
246-6651	926
246-6704	2
	▶98
246-6705	▶65
246-6706	2
	▶116
246-6707	2
	▶81
246-6711	2
	▶907
246-6714	750
	▶761
246-6719	13
	▶15
246-8746	402
246-8752	402
246-8777	490
246-8780	490
247-0096	526
	▶535
247-0270	11
	▶55
247-0271	55
247-0478	630
247-0733	776
	777
247-0737	768
247-4243	599
247-4244	599
247-4245	599
247-4247	508
247-4250	599
247-4412	873
247-4993	362
247-6430	▶328
247-8303	▶358
	405
247-8602	98
247-8622	2
	▶906
247-8629	352
	354
247-9711	352
	354
247-9729	93
	▶94
247-9730	94
247-9766	478
247-9769	478
247-9930	358
248-0409	75
248-0671	75
	▶78
248-0677	87
248-0679	478
248-0833	344
248-2169	255
248-2284	309
248-2378	403
248-2621	859
248-2841	233
	268
	289
248-2886	354
248-4220	766
248-5245	917
	921
248-5627	532
248-6174	650
	654
248-6175	646
248-6225	340
248-6364	98
248-6925	10
	▶337
249-0313	145
249-0410	749
249-0411	749
249-0934	751
249-0937	749
249-0938	751
249-2307	555
	▶558
249-2308	▶518
	558
249-3505	533
249-3860	▶484
	500
249-4088	500
	502
	504
249-4091	496
	498
	513
249-4116	532
	▶545
249-4117	545
249-4120	545
249-5299	534
	▶549
249-5300	535
249-5303	535
249-5304	535
249-5334	658
	662
	667
	671
249-5478	277
249-5487	278
249-5636	642
249-5637	687
	723
249-5643	532
249-6687	911
249-6688	910
249-6692	5
	▶453
249-6718	356
249-6751	907
249-7386	87
249-8540	65
	69
249-8575	917
	921
250-0613	880
250-0684	478
250-1170	2
	▶626
250-1416	584
250-1417	584
250-1467	595
250-2138	411
250-2139	360
	▶411
250-2177	263
250-2299	277
250-2784	639
250-2933	754
	▶809
250-2984	93
250-3071	▶470
250-3443	641
250-3507	474
	▶555
250-3528	807
250-3529	807
250-4091	403
250-4095	403
250-4330	221
	241
250-4357	453
250-4358	453
250-4359	453
250-4360	453
250-6148	742
250-8305	36
250-8307	110
250-8309	11
	▶34
250-8312	2
	▶36
250-8315	11
	▶66
250-8318	11
	▶91
250-8320	11
	▶48
250-8335	803
250-8337	624
	▶628
250-9257	▶171
	758
	759
	760
250-9258	▶171
	758
	759
	760
250-9304	134
250-9305	131
	139
251-0077	309
251-1133	305
251-1153	442
251-1550	549
251-2243	496
	▶500
251-2247	769
	771
	773
	840
	842
251-2305	38
251-2449	442
251-3265	313
251-3268	▶419
	421
	742
251-4162	293
251-5743	105
251-6673	347
251-6674	347
251-8248	293
	785
251-8330	618
	▶737
251-9571	309
252-0098	430
252-0100	430
252-0102	426
	▶428
	433
252-0104	▶429
	431
252-0106	423
	▶430
252-0111	424
	▶430
252-0112	424
	▶430
252-0741	738
252-0990	459
252-1462	100
	101
252-1805	▶784
	840
	842
252-1807	842
252-1808	840
252-1810	3
	4
	▶498

▶ PRIMARY REFERENCE

PART NUMBER INDEX

Part	Page
252-1811	498
	►502
252-1824	459
252-1862	786
	790
252-1863	786
	790
252-2177	45
252-2237	362
	►420
252-7801	33
252-8000	152
	►293
252-8038	620
	693
	►732
252-9513	75
253-1967	►309
253-2723	►143
253-2724	10
	►145
253-3476	496
	498
	513
253-3482	840
	842
253-3483	840
	842
253-3484	840
	842
253-3485	286
253-3489	286
253-4630	2
	►746
253-4646	744
253-4651	746
253-4678	551
253-5303	347
253-5306	362
253-5322	347
253-5327	380
253-8868	755
	756
253-9557	322
254-3286	379
254-3813	11
	►106
254-4486	595
254-5395	►824
	825
254-6802	98
254-6997	3
	►89
254-7890	422
	►423
254-7904	►422
254-7955	422
	►424
254-7971	►422
254-8155	►205
	226
	227
255-0683	599
255-1243	2
	►386
255-1244	2
	►384
255-1248	750
	►810
255-1249	750
	►805
255-1250	13
	►506
255-1283	13
	►100
255-1284	►101
255-1566	2
	►392
255-3482	305
255-3631	599
255-8575	374
	376
256-0193	48
256-3830	56
	►57
256-3831	►52
	57
256-3832	52
256-3834	►53
	57
256-3835	53
256-5308	87
256-6070	36
256-6453	261
	262
256-6915	123
	►126
256-8730	313
256-8768	838
	►846
256-9448	862
256-9651	36
257-1702	492
	494
257-2758	533
257-5022	515
	516
257-5177	894
257-5703	91
257-7066	599
257-7224	3
	►284
257-8299	97
257-8414	618
	►739
257-8467	11
	►102
257-8751	15
257-8897	555
257-9799	340
258-8676	136
258-8723	11
	►35
258-8949	313
258-9981	533
259-0134	216
	►217
	232
259-2627	459
259-4483	883
259-4492	883
259-4758	818
259-4759	819
259-5501	632
259-5502	632
259-5504	628
	►632
259-5507	628
259-7138	344
259-7140	584
259-9283	459
259-9287	►211
	241
	243
259-9288	►212
	241
	243
260-2579	866
260-5716	127
260-5806	809
260-5807	807
260-5808	807
260-6502	►634
	636
260-6728	287
260-6731	895
260-6878	478
260-7486	340
260-7524	52
	53
260-7596	358
260-7652	911
260-7653	910
260-7759	60
260-7792	870
260-7793	871
260-7794	872
260-8602	340
260-8713	340
	►534
261-0524	180
261-0610	►13
261-0775	2
	►750
261-1502	►200
	326
	328
261-1731	786
	790
261-3223	293
261-3345	849
261-4672	746
261-4673	746
261-4674	746
261-4675	746
261-4676	746
261-4907	268
	280
261-8541	883
261-8543	883
261-8545	883
261-8547	883
262-0284	127
262-0413	4
	►442
262-0568	94
262-1907	530
	►539
262-1919	541
262-1920	539
262-1926	539
262-2827	247
262-3963	444
262-4930	752
262-5610	492
	494
262-6672	►395
	405
262-6674	►389
	405
262-7688	81
262-7689	81
262-7692	81
262-7721	366
262-7857	366
262-8057	98
262-8058	98
262-8360	2
	►393
262-8361	599
262-8364	599
262-8365	599
262-8366	599
262-8370	599
262-8371	599
262-8372	599
263-1786	143
	145
263-2788	2
	►530
263-3350	100
	101
263-3351	100
	101
263-3774	►26
	27
263-3823	822
263-6540	335
263-6891	148
	150
263-6901	917
263-6902	921
263-7428	396
263-7429	347
263-7434	►368
	405
263-9466	751
264-0194	374
	376
264-0196	374
	376
264-0575	370
264-0638	599
264-1180	467
264-1434	12
	►84
264-3152	103
264-3617	267
	289
264-4297	75
264-5346	200
264-5732	183
264-6156	56
264-6157	29
264-7021	143
	145
264-7029	183
	189
	275
	320
	323
	362
264-7030	183
	189
	362
264-7522	3
	►313
264-9726	534
265-2122	581
265-2123	581
265-4043	15
265-5644	641
265-6722	744
265-7434	751
265-7435	751
265-7454	749
265-8941	818
	819
265-8943	►829
	830
265-8970	134
265-8971	130
	134
	137
265-9125	346
265-9383	379

► PRIMARY REFERENCE

PART NUMBER INDEX

Part	Page
265-9385	81
266-0199	374
	376
266-1467	▶254
	829
266-1595	593
266-1602	618
266-2423	3
	▶483
266-6025	143
	145
266-6026	761
266-6149	528
	530
266-7315	340
266-7589	89
266-7650	81
266-7651	81
266-7711	75
266-7712	75
266-7713	75
266-7837	632
266-8804	599
266-9389	542
266-9967	542
267-1402	252
	▶255
267-3183	▶911
	912
267-3184	▶910
	912
	913
	914
	915
	916
267-3506	461
	528
	530
267-3507	392
	466
	890
	892
267-3508	461
267-4743	73
267-8715	849
267-8821	441
267-9386	98
268-1645	597
	602
268-1646	597
	602
268-1647	602
268-1839	12
	▶125
268-5817	143
	145
268-6570	2
	▶74
268-8080	293
268-8082	293
268-9602	137
269-1021	134
269-2890	786
	790
269-2892	786
	790
269-2893	786
	790
269-3277	333
269-4150	3
	▶330
269-4156	313
269-6650	81
269-6974	386
269-8775	875
270-2679	179
270-3651	120
270-4884	866
270-6989	▶475
270-7103	599
270-8407	475
270-9583	120
271-2510	421
271-2811	776
	777
271-5590	180
271-5599	181
271-6369	595
271-6418	628
271-6919	628
271-7312	766
271-7495	581
271-8510	599
271-8528	370
271-8529	370
271-8680	370
272-0388	23
272-1045	▶366
	393
272-1623	786
	790
272-1956	102
272-2379	163
272-5444	346
272-5446	346
272-5449	346
272-7116	370
272-7121	370
272-7239	148
	150
272-8009	▶346
	374
	376
272-8329	842
272-8441	▶767
	775
272-8442	▶768
	775
273-0342	751
273-1871	642
	645
	650
	653
	658
	662
	667
	671
	676
	681
	687
	723
273-8714	626
	▶627
274-2385	794
274-2392	794
	850
274-3774	184
	185
	237
	285
	288
274-3777	184
274-3781	187
274-6217	421
274-6717	313
274-6719	252
	334
274-6808	533
274-6816	340
	▶465
275-0572	463
275-0595	11
	▶20
275-0596	11
	▶308
275-1253	▶275
	334
275-1307	11
	▶97
275-1442	612
275-1443	612
275-1444	613
275-3292	917
	921
275-3393	87
275-7741	▶281
	282
275-7764	▶282
	289
	861
275-8969	▶166
	826
275-8970	▶166
	826
275-9650	▶171
	286
276-1318	744
276-1319	744
276-1786	319
276-3276	134
276-3620	459
276-3622	459
276-3674	63
276-3681	11
	▶63
276-3884	859
276-6146	333
276-6793	252
276-7498	245
276-8722	465
276-8723	465
276-8724	465
276-9015	751
276-9459	360
277-0648	465
277-2132	618
	▶731
277-4837	89
277-5431	116
277-8103	836
277-8283	38
277-9409	8
	10
	▶232
277-9410	232
277-9411	237
278-0098	469
278-0951	8
	▶469
278-1799	642
	645
	650
	654
	658
	662
	667
	671
	677
	681
	687
	693
	695
	697
	699
	701
	703
	705
	707
	709
	711
	713
	715
	717
	719
	721
	723
	729
	▶741
278-3319	492
	494
278-3320	374
	376
278-3354	751
	809
279-1124	751
279-2568	374
	376
279-4346	344
279-4355	340
279-4356	340
279-4357	340
279-5267	528
	530
279-5268	528
	530
279-5308	286
	771
	773
279-5643	39
279-5644	11
	▶39
279-5648	39
279-6612	599
279-6631	528
279-6632	528
279-8137	10
	▶559
279-8929	626
279-9022	599
279-9023	599
279-9658	313
280-0947	618
280-1034	907
280-1766	386
280-2709	286
280-2710	286
280-2748	49
280-4244	286
280-4432	344
280-4438	344
280-7066	360
280-7870	630
	735
280-7911	508
280-7912	508
280-7913	508
280-8912	477
280-8969	▶245
	311
280-8973	245
280-8974	245
280-8976	245
280-9455	246
281-0228	227
	230
281-0387	769

▶ PRIMARY REFERENCE

PART NUMBER INDEX

Part	Page
	771
	773
281-0390	769
	771
	773
281-0431	769
	771
	773
281-2588	752
281-3136	769
	773
281-3137	771
	773
281-3395	180
	287
281-3431	120
281-3432	120
281-3433	120
281-4655	767
	768
281-5825	246
281-5898	610
281-9356	496
	498
	513
282-0808	771
	773
282-0882	902
282-2953	599
282-5396	618
282-8827	693
	695
282-9913	599
283-1224	308
283-1578	532
	744
	746
	873
	890
	892
283-4236	807
283-5830	300
283-6447	181
283-6947	286
283-7960	176
	▶250
283-7980	755
	756
283-8106	180
283-9796	626
284-0009	588
284-2425	347
284-3619	228
	231
284-3623	286
284-3662	766
284-5016	374
284-5018	376
284-5019	394
	▶427
284-5020	427
	▶492
284-5021	427
	▶494
284-5022	492
	494
284-5023	492
	494
284-5025	2
	▶466
284-7971	887
284-7972	887
284-8450	442
284-8931	895
284-8959	492
	494
284-8960	492
	494
284-9552	492
	494
284-9553	492
	494
284-9554	492
	494
284-9555	492
	494
284-9556	492
	494
284-9557	492
	494
285-0592	394
	▶403
285-0593	403
285-0594	403
285-0612	533
285-3668	623
285-3692	786
	790
285-4247	746
285-4265	746
285-5600	245
285-6124	744
285-6125	744
285-7415	766
285-8055	749
	▶751
285-9066	143
	145
286-0274	773
286-0276	771
286-0277	769
286-0323	286
286-0466	873
286-0742	873
286-1089	917
	921
286-1278	475
286-1605	438
286-2439	319
286-2631	551
286-3197	389
286-4435	8
	▶237
286-5163	237
286-5299	508
286-5672	496
	498
	513
286-8181	560
286-9155	370
286-9714	475
286-9718	326
	328
286-9725	475
287-1686	246
287-1687	246
287-1688	246
287-5701	746
287-5718	120
287-6436	311
287-6688	240
287-7843	639
287-8222	372
287-8223	370
	▶372
287-8828	311
288-0693	240
288-0735	459
288-1401	826
288-1402	286
288-3678	746
288-3687	246
288-5507	313
	362
288-5515	240
288-5516	240
288-6370	612
288-6371	612
288-6508	344
	▶374
288-6509	344
	▶376
288-7146	288
288-7324	183
288-8988	2
	▶438
288-9251	344
288-9473	508
288-9588	438
	▶463
289-0213	116
289-0580	746
289-2081	2
	▶593
289-2527	246
289-2528	246
289-2935	539
	541
	547
	549
289-2946	539
	541
289-4086	480
289-4087	480
289-4088	480
289-5150	189
289-9520	313
289-9726	429
290-1505	428
290-2705	805
290-3263	347
290-3385	810
290-3921	337
	▶467
290-4134	490
290-5749	▶210
	235
290-7296	370
290-7514	401
	410
291-1348	75
291-1884	311
291-1889	319
291-1891	319
291-1965	386
291-2162	313
291-3817	319
291-3919	595
291-3920	595
291-3921	595
291-3922	595
291-3923	595
291-3924	595
291-3925	595
291-3926	595
291-4826	300
291-4827	300
291-6874	374
	376
291-8144	84
291-9154	818
	819
292-0609	▶755
	840
292-0611	755
	756
292-0612	755
	756
292-0614	755
	756
292-0617	▶756
	842
292-0618	755
	756
292-0970	313
292-1880	563
292-3091	438
292-3092	438
292-4417	81
292-8054	767
	768
292-8703	767
	768
292-8705	768
292-8706	767
	768
292-8741	311
292-9220	642
	645
	650
	653
	658
	662
	667
	671
	676
	681
	687
	723
292-9221	642
	645
	650
	653
	658
	662
	667
	671
	676
	681
	687
	723
292-9390	917
292-9391	921
293-0213	370
293-0730	112
293-2476	890
	892
293-3823	917
	921
293-4622	11
	▶47
293-4664	599
293-4667	600
293-4668	600
293-4707	608
293-4709	586
293-4906	600
293-4908	600
293-4909	600
293-4910	600
293-4911	600
293-4912	600
293-4913	600
293-4914	600
293-4915	600
293-4916	600

▶ PRIMARY REFERENCE

PART NUMBER INDEX

Part	Page
293-4942	602
293-5368	372
293-5556	▶887
	889
293-5559	▶875
	887
293-5704	569
293-7546	529
293-7547	529
293-8335	466
293-8350	735
293-9136	289
293-9619	45
294-0998	827
294-0999	827
294-1001	840
	842
294-1002	850
294-1004	850
294-1014	856
294-1015	856
294-1016	827
294-1018	856
294-1019	827
294-4636	600
294-4637	600
294-4638	600
294-4695	600
294-4696	600
294-4827	600
294-7675	95
	▶96
294-7811	600
294-7814	600
294-8055	642
	645
	650
	653
	658
	662
	667
	671
	676
	681
	687
	723
294-9701	555
294-9702	555
295-1117	862
295-1118	864
295-1119	864
295-1120	▶821
	859
295-1578	438
295-2349	75
295-3839	438
295-4243	866
295-6405	786
295-6406	790
295-7612	81
295-7914	600
295-7915	600
295-8062	347
295-8260	767
295-8387	481
295-8389	481
295-8390	481
295-8391	481
295-8963	309
296-0727	450
296-3004	883
296-3005	883
296-3008	2
	▶883
296-3446	265
296-4308	560
296-4309	560
296-4355	481
296-4922	309
296-5270	600
	618
296-5725	597
296-6012	600
296-6047	444
296-6051	444
296-6052	444
296-6859	599
296-7739	480
296-8060	256
296-9931	247
297-0760	279
297-1225	508
297-2537	340
297-2813	560
297-2814	560
297-2825	490
297-4139	794
297-4140	794
297-4162	850
297-4169	786
	790
297-4170	850
297-5874	475
297-5877	475
297-5878	475
297-5879	475
297-6867	11
	▶177
297-7129	455
297-8035	475
297-8332	386
297-8334	386
297-8335	386
297-8336	386
297-8776	▶351
	394
297-8777	351
297-8778	351
297-9843	588
298-3643	174
	175
	▶240
298-3644	240
299-1020	786
299-1021	790
	▶802
299-1023	802
299-1024	786
	802
299-1030	769
	771
	773
299-1441	786
	802
299-1442	786
	802
299-1660	786
	790
299-5783	600
299-5784	600
299-5785	602
299-5786	600
299-5787	600
299-8905	347

3

Part	Page
300-1870	833
	▶855
300-1871	855
300-1872	855
300-1874	857
300-1875	857
300-4231	754
	▶766
300-7933	60
301-0960	508
301-4568	650
	658
	662
	676
	681
	687
	723
301-7318	600
301-7789	20
301-7790	20
302-5133	▶912
302-6335	746
302-6336	746
302-6337	746
302-6338	746
302-8669	▶912
302-8670	▶912
302-8671	▶912
302-8672	▶913
302-8673	▶913
302-8674	▶913
302-8675	▶913
302-8676	▶914
302-8677	▶914
302-8678	▶914
302-8679	▶914
302-8680	▶915
302-8681	▶915
302-8682	▶915
302-8683	▶915
302-8684	▶916
302-8685	▶916
302-8686	▶916
302-8687	▶916
303-2253	437
303-3357	252
	▶256
303-5952	297
303-9456	850
304-4924	21
304-5687	166
	295
	362
304-8018	593
304-8032	403
304-9224	402
304-9654	719
305-1981	695
305-2148	▶402
	405
305-2897	7
	▶528
305-2901	7
	▶617
305-2925	7
	▶612
305-2926	7
	▶560
305-2927	▶563
305-2946	519
	520
	521
	522
	523
	524
	525
	▶565
305-2947	519
	521
	525
	▶567
305-2948	522
	523
	▶569
305-2953	520
	524
	525
	▶571
305-3352	372
305-3353	372
305-3384	526
305-5362	183
305-8141	25
	▶27
305-9192	861
305-9194	866
305-9195	866
306-4148	347
306-5622	372
306-5628	372
306-5629	372
306-5635	372
306-7053	490
306-8127	134
	137
306-9997	245
306-9998	246
307-0047	910
	911
307-1735	11
	▶21
307-1959	551
307-1960	551
307-1961	551
307-1962	551
307-2671	30
307-2673	380
307-4399	563
308-0398	386
308-0860	110
308-1845	539
	541
	547
	549
308-1880	543
	545
	878
308-1883	878
308-1884	878
308-2903	786
	790
308-3071	478
308-3072	478
308-3073	478
308-3869	171
308-6274	435
308-6276	▶435
308-6409	103
308-7354	444
308-7358	444
308-7360	444
308-7363	444
308-7368	▶444
308-7372	444
308-7373	444
308-7380	444

▶ PRIMARY REFERENCE

PART NUMBER INDEX

Part	Page
308-7649	444
308-7777	438
308-9323	▶185
	300
308-9367	▶191
	305
308-9370	▶241
308-9371	▶243
308-9380	6
	▶226
308-9382	6
	▶227
308-9396	305
308-9532	600
309-1833	78
309-1834	78
309-1835	78
309-1836	78
309-1905	602
309-1906	581
309-5131	27
309-5244	599
309-6809	10
	▶873
309-6831	180
309-6887	511
309-7496	873
309-8763	370
309-9886	179
310-0674	179
310-1627	571
310-1629	571
310-2029	758
	759
	760
	▶859
310-2042	764
310-2174	444
310-2186	542
310-3221	2
	▶174
	405
310-4235	926
310-4759	547
310-4972	75
310-6179	511
310-7255	29
310-7257	29
310-7307	422
	▶424
310-7308	422
	▶424
310-7313	422
	▶424
310-7325	▶422
310-7326	▶422
310-7331	▶422
310-9247	21
310-9425	9
	▶900
310-9428	900
	▶901
311-1502	344
311-2812	288
311-2813	286
311-3865	8
	▶468
311-3866	468
311-7773	820
311-8290	403
311-8366	826
311-8592	▶171
	519
	520
	521
	522
	523
	525
311-8743	191
312-0780	746
312-2204	▶889
312-5972	5
	▶436
312-6156	532
312-8373	560
312-8381	560
312-8383	560
312-8629	740
313-3966	695
313-4620	113
	127
313-5270	444
	471
313-5271	442
	471
313-6409	15
313-6411	15
313-6460	360
313-7162	322
313-7164	322
313-7165	322
313-7167	323
313-7229	323
313-9614	114
314-2606	533
314-3260	370
314-4018	762
314-5274	846
314-5275	846
314-9338	873
	▶878
314-9339	878
315-0180	319
	323
315-1251	▶206
	228
	235
315-1349	481
315-6093	490
315-9843	30
316-0557	438
316-0560	463
316-8226	182
317-1009	344
317-3176	180
317-3356	311
318-2589	191
318-3036	662
	676
	687
	713
318-3040	645
	650
	653
	658
	662
	667
	671
	676
	681
	687
	699
	703
	705
	707
	711
	715
	721
	723
318-3052	642
	645
	653
	658
	667
	671
	676
	681
	687
	709
	723
	729
318-3115	642
	645
	650
	653
	658
	662
	667
	671
	676
	681
	687
	699
	701
	703
	709
	711
	713
	715
	717
	723
	729
318-9105	511
318-9127	511
318-9128	511
318-9129	511
319-0697	481
319-0699	481
319-0700	481
319-0704	481
319-0705	481
319-0706	481
319-0709	481
319-0712	481
319-0713	481
319-0725	481
319-2305	463
319-5096	300
319-5180	▶285
	519
	520
	521
	522
	523
	525
319-5181	285
319-6209	334
319-6234	30
319-6240	114
319-6698	459
319-6699	459
319-7077	2
	▶441
320-8117	515
	516
320-9861	286
321-1446	438
321-3884	438
321-5236	849
321-5967	558
321-6908	642
	645
	653
	658
	667
	671
	676
	681
	687
	709
	723
	729
321-6987	▶278
	519
321-7238	438
321-8635	122
321-8638	122
321-8710	194
321-8711	195
322-0819	455
322-2733	▶183
	297
322-6674	751
322-6675	751
323-0201	823
323-1779	438
323-1780	438
323-2550	438
323-2551	438
323-5169	1
	▶331
323-5746	560
323-6835	390
323-6970	▶437
323-8674	551
323-8675	551
323-9149	390
323-9474	66
323-9531	413
	415
	416
324-0889	▶896
324-3355	▶192
	331
324-3356	▶190
	331
324-9254	1
	▶390
325-1258	850
325-1260	850
325-2588	697
	701
	703
	707
	709
	717
	719
325-3353	898
325-3354	898
325-3355	896
	897
	▶898
325-6533	588
325-9407	850
325-9410	▶849
	859
325-9568	180
325-9697	400
326-0503	878
326-0610	438
326-0612	438
326-1237	395
	▶396
326-1253	396
326-1644	111
326-2227	▶542
	896
	897
326-4208	295
327-0560	305
327-0561	305
327-3797	437

▶ PRIMARY REFERENCE

PART NUMBER INDEX

Part	Page
	457
327-8568	▶515
	577
328-4984	790
328-4985	786
328-7073	500
	502
	504
328-7074	500
	502
	504
328-8425	311
	319
328-8426	319
	323
328-8755	751
328-9669	374
	376
329-0411	374
	376
329-3356	333
329-3707	134
	137
329-3734	180
	193
	287
	288
	786
	790
	846
	866
329-5113	542
329-5116	542
329-5451	334
329-5518	252
329-5707	917
	921
329-6117	▶295
	519
	520
	521
	522
	523
	525
330-3356	286
330-3563	▶130
	132
330-3566	134
330-3568	134
330-3570	134
330-3862	803
330-3863	803
330-3864	803
330-3865	850
330-3868	758
	▶861
330-6038	12
	▶252
330-6552	573
	577
330-6877	901
330-9757	116
331-1080	454
331-1081	454
331-3575	180
331-3600	180
331-3710	221
	223
	241
	243
331-4222	179
	287
331-4223	179
331-4224	179
	288
331-4226	179
	288
331-4227	287
331-5818	917
331-6861	286
331-9731	787
	791
332-1166	591
	▶742
332-1543	▶194
332-1544	▶195
332-2282	▶890
	896
332-2284	890
	892
332-2295	898
332-2297	898
332-3604	439
332-3941	2
	▶588
332-4527	591
332-4528	591
332-4714	591
332-4721	591
332-5669	419
332-6143	898
332-6144	898
332-6145	898
332-6794	600
332-7384	890
332-8658	858
332-8832	382
332-8833	380
	▶382
333-0486	442
333-0487	442
333-0488	442
333-0489	442
333-0490	442
333-0492	442
333-0493	442
333-0960	746
333-1285	1
	▶591
333-2101	588
333-2758	299
333-6001	▶1
	5
333-7840	630
333-8153	785
333-8538	251
334-3855	11
	▶153
334-6090	850
334-6758	921
334-7584	898
334-8049	▶219
	326
	328
334-8069	▶607
	896
	897
334-9395	769
	771
	773
335-1374	805
335-1974	528
	▶541
335-2228	858
335-2590	591
335-3982	15
335-8336	3
	▶477
335-9214	120
335-9433	1
	▶299
336-0981	610
336-6681	541
336-6718	642
	645
	650
	653
	658
	662
	667
	671
	676
	681
	687
	695
	697
	699
	701
	703
	705
	707
	709
	711
	713
	715
	717
	719
	721
	723
	729
336-7699	859
337-3544	47
337-5270	383
	386
337-7510	▶461
337-7511	461
337-7978	287
337-9078	▶273
338-1132	▶220
338-3540	558
338-8860	180
339-2958	289
339-6165	4
	▶813
339-6167	814
339-6168	814
339-6543	814
339-7814	43
339-7815	11
	▶43
339-8788	3
	4
	8
	▶814
340-7161	168
341-0078	612
341-0083	612
341-0825	695
341-2719	75
341-3142	814
341-6021	311
341-8342	858
342-2107	898
342-4977	18
342-7351	746
342-7352	746
342-7353	746
342-9971	777
343-1211	76
343-1824	▶279
	819
343-4501	444
343-4502	444
343-5527	111
343-6499	850
343-6500	850
343-8739	490
344-0980	803
344-0983	225
	▶233
344-0985	6
	▶268
344-2764	519
	520
	521
	522
	523
	524
	▶769
344-2765	524
	▶771
344-2766	523
	▶773
344-3847	785
344-5594	831
344-5673	156
	158
	160
	438
344-5674	20
	439
344-5675	65
	221
	223
	230
	241
	243
	305
	314
	387
	390
	439
	561
	565
	581
	589
	597
	602
	613
	642
	645
	650
	653
	658
	662
	667
	671
	676
	681
	687
	723
	906
344-7389	362
345-1237	89
345-1271	764
	▶840
345-1272	764
	▶842
345-1273	840
345-1274	840
345-1275	842
345-1276	842
345-1277	758
	759
	760
	▶764

▶ PRIMARY REFERENCE

PART NUMBER INDEX

Part	Page
345-1998	348
345-1999	347
345-3661	63
346-0626	840
346-0627	842
346-6901	496
	498
	513
	▶830
346-9580	842
346-9581	840
347-0612	630
	▶735
347-0799	287
347-1668	293
347-3148	79
347-7407	383
348-0421	618
348-6995	765
	▶776
	781
348-7341	323
348-7748	103
348-7842	169
348-7886	143
	145
348-9256	▶516
	573
348-9257	▶485
348-9258	▶517
349-3046	▶9
349-3047	▶9
349-3048	▶9
349-3051	▶5
349-3052	▶5
349-3053	▶5
	10
349-3582	66
349-5332	438
349-5335	480
349-6137	▶378
	394
349-6146	2
	▶394
349-6273	438
349-7059	134
	137
349-7532	593
349-8642	831
349-8743	573
	577
350-3842	547
350-3913	412
	▶413
350-7735	134
	137
350-8820	436
350-9175	608
350-9729	106
	▶107
350-9781	107
351-0274	79
351-0925	492
	494
351-5178	▶10
351-6096	630
351-6131	630
351-8482	769
	771
	773
351-8628	545
351-8678	600
351-9810	446
351-9811	7
	▶446
351-9918	202
	204
	205
	206
	210
352-0401	81
352-1486	103
352-1502	769
	771
	773
352-2138	▶83
	86
352-2139	84
	▶86
352-2586	769
	771
	773
352-3964	300
352-6515	695
352-9744	805
353-1634	831
353-2604	588
	▶618
353-3319	▶6
353-3810	313
353-4515	314
353-4688	382
	▶383
353-5112	252
353-5124	30
353-5125	30
353-7114	787
	791
353-7953	114
353-7954	116
354-0672	143
	145
354-8027	198
354-8029	2
	▶825
354-8357	438
354-8358	438
354-8415	300
354-8706	▶925
355-2954	7
	▶120
355-3016	836
355-3148	805
355-5071	323
355-7411	830
355-8950	810
355-9820	581
355-9823	849
356-2212	907
356-2396	446
356-2412	446
356-2419	446
356-2956	2
	▶508
356-2972	394
	▶511
356-2977	▶360
	394
356-3380	▶189
	334
356-3647	174
	175
	▶305
356-3649	▶182
	305
356-3650	300
356-4256	8
	▶513
356-4257	▶504
	513
356-5163	▶458
	833
356-5165	458
356-5171	827
356-5177	783
356-5178	198
356-5748	21
	▶23
356-7515	220
356-8331	549
357-0728	786
	790
357-2191	455
357-2257	833
357-2258	827
357-2261	850
357-2262	7
	▶228
357-2263	234
357-2269	827
357-2270	850
357-5030	▶131
	133
357-5031	131
	139
357-6002	386
357-6336	2
	▶379
357-9151	▶765
357-9181	786
357-9182	790
357-9187	786
	790
357-9188	786
	790
357-9190	786
	790
357-9191	787
	790
357-9199	▶786
	833
357-9200	▶790
	833
357-9236	787
	790
357-9257	790
357-9258	790
357-9260	787
357-9261	787
357-9652	787
	▶862
357-9653	790
	▶864
357-9654	862
357-9655	864
357-9755	787
	790
358-3848	314
358-4889	283
358-4932	771
358-5267	519
	▶573
359-3925	▶894
359-5179	156
	158
	160
359-5180	180
360-0116	4
	757
360-0801	612
360-0802	612
360-1767	287
360-2086	335
360-2087	335
360-2968	176
360-2969	176
360-2974	287
360-2987	765
	▶777
	780
360-3167	630
360-3675	642
	646
	650
	653
	659
	662
	667
	672
	676
	681
	688
	723
360-3677	79
	252
	643
	646
	651
	653
	659
	662
	667
	672
	676
	681
	688
	695
	697
	699
	701
	703
	705
	707
	709
	711
	713
	715
	717
	719
	721
	724
	729
360-3678	84
	252
360-3679	68
	96
	109
	114
	252
	693
360-3680	51
	79
	84
	97
	109
	643
	646
	651
	654
	659
	663
	667
	672
	677
	682
	688

▶ PRIMARY REFERENCE

PART NUMBER INDEX

Part	Page
	695
	697
	699
	701
	703
	705
	707
	709
	711
	713
	715
	717
	719
	721
	723
360-3693	642
	645
	650
	653
	658
	662
	667
	671
	676
	681
	687
	723
360-3697	693
360-4432	830
360-5074	9
	▶876
360-5075	876
360-5077	876
360-5080	7
	▶895
360-7615	520
	521
	522
	523
	525
	▶775
360-7616	519
	520
	▶775
360-9698	519
	▶577
361-0421	787
	791
361-0423	803
361-0424	827
361-0426	803
361-0427	803
361-0429	850
361-1045	156
	160
361-2115	131
	139
361-3059	642
	645
	653
	667
	671
361-3133	▶754
	758
	759
	760
361-3134	754
	▶807
361-3136	4
	▶169
	757
361-3137	10
	▶198
361-3138	496
	498
	513
	807
361-3139	807
361-3183	612
361-4699	464
361-5860	438
361-5941	390
	▶421
361-8119	▶486
	502
361-8120	▶487
	504
361-8121	▶488
361-8122	▶489
361-9760	693
361-9761	695
361-9763	486
	487
	488
	489
362-1307	137
362-1308	130
362-5222	7
	174
	▶636
362-5223	175
	▶637
362-6151	738
362-9558	20
363-0347	333
363-2189	586
363-4122	134
363-4325	175
	▶333
363-4961	783
363-4962	758
	759
	760
	▶783
363-5824	803
363-6519	693
363-6708	856
363-6709	833
	▶856
363-7275	175
363-8054	403
363-8120	695
363-8158	593
364-0526	2
	▶401
364-0569	401
	▶407
364-0570	407
	▶408
364-0571	407
	▶409
364-0676	763
364-1989	▶7
364-2034	▶9
364-2035	▶519
364-2037	▶519
364-2075	492
	494
364-3731	490
364-8483	878
365-0581	15
365-2124	344
	▶370
365-2125	▶344
	394
365-3354	▶519
365-3355	▶520
365-3368	▶520
365-3369	▶521
365-3370	▶521
365-3371	▶522
365-3994	560
365-5539	▶522
365-5540	▶523
365-5541	▶523
365-5731	346
365-6668	450
365-6873	593
365-9252	340
365-9253	340
366-2458	450
366-2459	3
	4
	▶450
366-4675	84
366-4695	693
366-4699	642
	645
	650
	653
	658
	662
	667
	671
	676
	681
	687
	723
366-4700	642
	645
	650
	653
	658
	662
	667
	671
	676
	681
	687
	723
366-6182	481
366-6621	625
	▶630
366-6680	615
	▶743
366-6686	▶693
	743
366-6692	▶695
	743
366-6701	695
366-6783	457
366-8275	103
366-9416	287
366-9670	829
367-0844	917
	921
367-2375	758
	759
	760
	▶826
367-2761	787
	791
367-5209	288
367-5211	798
367-5212	233
367-5213	286
367-6001	642
	645
	650
	653
	659
	662
	667
	671
	676
	681
	687
	723
367-6002	642
	646
	650
	653
	659
	662
	667
	672
	677
	682
	688
	695
	697
	699
	701
	703
	705
	707
	709
	711
	713
	715
	717
	719
	721
	724
	729
367-6003	643
	646
	651
	653
	659
	663
	667
	672
	677
	682
	688
	695
	697
	699
	701
	703
	705
	707
	709
	711
	713
	715
	717
	719
	721

PART NUMBER INDEX

Part	Page
	724
	729
367-6905	▶452
367-7422	344
367-7457	438
367-7795	▶3
367-7798	▶8
368-2369	191
	322
	323
368-2370	191
368-6237	457
368-6239	▶457
368-7627	446
368-8072	850
368-8606	464
368-9766	4
	8
	▶234
369-1253	406
369-2691	600
369-2692	600
369-4096	233
369-6662	129
369-6858	693
369-9842	335
370-8979	643
	646
	651
	654
	659
	663
	667
	672
	677
	682
	688
	699
	705
	713
	724
	729
371-3230	438
371-6093	643
	646
	654
	668
	672
	▶697
371-7174	15
371-7183	600
371-7184	600
371-7186	252
371-7905	74
	▶92
371-7951	368
371-8115	187
371-8160	2
	▶103
371-8952	508
372-0918	643
	646
	651
	654
	659
	663
	668
	672
	677
	682
	688
	724
372-1596	103
372-2526	511
372-5042	787
	791
372-6063	▶286
	758
	759
	760
372-6294	509
372-7541	787
	791
372-7875	693
373-2707	600
373-3991	627
373-4328	314
373-4446	850
373-8970	156
	160
373-9784	630
374-4558	▶6
374-7463	179
	187
	313
374-7465	179
374-7466	179
	187
374-7467	179
374-7468	156
	158
	160
	179
	288
374-8372	180
374-9690	829
375-0431	593
375-0851	75
375-0853	593
375-1478	▶201
	803
375-1718	588
375-1719	588
375-1720	593
376-1555	134
376-4477	3
	4
	▶454
376-4793	787
376-4794	791
376-6732	92
376-7136	103
376-8250	547
376-9011	549
376-9017	543
	545
376-9207	858
377-1602	3
	4
	▶481
377-2121	695
377-2508	338
377-3052	481
377-3053	481
377-5227	211
	212
377-6222	130
	134
	136
	137
377-9603	79
379-5187	630
379-5657	895
379-5658	895
380-0680	134
	137
380-0794	643
	646
	651
	654
	659
	663
	668
	672
	677
	682
	688
	724
	729
380-0820	643
	646
	654
	659
	668
	672
	677
	682
	688
	709
	721
	724
	729
380-0821	643
	646
	654
	659
	668
	672
	677
	682
	688
	709
	721
	724
	729
380-0830	289
380-3033	300
380-3951	805
380-3952	805
380-6158	787
	791
380-6949	617
380-8323	7
	▶581
381-0356	883
381-2494	758
	759
	760
	▶850
381-4306	▶338
	340
381-4308	340
381-4309	340
381-7048	759
	▶833
381-7049	758
	760
	▶833
381-8140	758
	759
	760
	▶827
381-8141	758
	759
	760
	▶907
381-8142	758
	760
	▶866
381-8143	833
	▶857
381-8211	758
	759
	760
	▶858
382-2790	595
	▶738
382-3290	651
	659
	663
	677
	682
	688
	▶699
	724
382-3294	651
	659
	663
	677
	682
	688
	▶701
	724
382-3295	646
	668
	672
	▶703
382-3296	654
	668
	▶705
382-3297	654
	668
	672
	▶707
382-3298	659
	677
	682
	▶709
382-3299	682
	688
	▶711
	724
382-3300	663
	677
	688
	▶713
382-3301	651
	659
	663
	677
	682
	688
	▶715
	724
382-3305	651
	659
	663
	677
	682
	688

▶ PRIMARY REFERENCE

PART NUMBER INDEX

Part	Page
	▶717
	724
382-3316	651
	659
	663
	677
	682
	688
	▶719
	724
382-3323	672
	▶721
382-3560	478
382-3562	478
382-4604	883
382-5517	651
	659
	663
	677
	682
	688
	724
382-5518	643
	646
	654
	668
	672
382-6923	2
	▶625
382-6931	▶132
382-7980	457
382-8021	610
382-8162	610
382-9784	457
382-9785	457
383-1282	600
383-1283	600
383-1285	600
383-1286	508
383-4953	634
	638
383-4954	634
	638
383-7644	796
383-7670	547
384-3892	617
384-3893	617
384-7727	617
384-8750	419
384-9225	15
385-0044	92
385-4432	412
	▶414
385-5267	895
385-5563	171
385-5564	171
385-5772	15
385-5989	156
	158
	160
386-0444	251
387-8499	▶12
387-8675	581
387-8683	586
387-8685	595
387-8731	749
387-8752	▶749
	754
388-7016	103
388-7390	470
388-7675	319
388-7676	148
	150
389-0879	836
389-1183	12
	▶122
389-1201	630
	▶633
389-1906	▶757
389-1907	▶4
389-2061	474
389-2249	862
389-2250	864
389-3708	68
	96
	109
	114
	252
389-6062	533
	▶547
389-6077	547
389-8983	612
389-9478	323
390-0593	340
	▶533
390-2799	617
390-8589	113
	127
390-9182	▶7
391-4396	3
	4
	8
	▶152
391-4440	▶192
	300
391-4443	192
391-4444	▶191
	192
391-6329	114
391-8968	▶757
392-0773	252
392-7055	581
393-4879	462
393-4880	462
393-4881	462
393-4882	▶462
393-6071	7
	▶615
393-6073	7
	▶623
393-6074	7
	▶595
393-6188	595
393-6190	595
393-6191	595
393-6303	615
393-6304	615
393-6305	615
393-6308	615
393-6368	446
393-8148	595
393-8149	595
394-0438	137
394-1243	615
394-1511	7
	▶455
394-1751	455
395-4314	813
396-0393	252
396-0404	84
396-0405	51
	79
	84
396-3192	446
396-3298	▶113
	127
396-3303	3
	▶405
396-6551	347
396-8415	12
	▶119
396-9056	425
396-9714	3
	8
	▶319
396-9715	319
	323
396-9719	3
	▶311
397-1180	378
397-5305	▶4
	8
397-6405	847
397-7506	813
397-8066	407
	▶410
398-0940	▶274
	308
398-3672	850
398-5596	97
	109
398-5598	79
398-5601	97
398-5610	15
398-5612	50
	84
398-5632	114
398-8490	850
398-9593	850
4	
415-7222	758
416-0021	849
	861
	866
416-5382	11
416-7158	289
416-9123	2
	▶265
417-6775	850
418-8566	11
	▶114
419-0845	154
	155
419-3214	850
419-4129	▶109
	117
419-6115	627
419-6912	11
	▶334
419-7776	850
419-8564	850
420-1867	116
420-1977	8
	▶758
420-2055	758
	▶820
420-2068	▶108
	110
420-2896	116
420-3318	11
	▶110
420-4900	116
420-5767	547
420-9730	114
421-1234	834
	▶838
421-4023	547
421-4024	617
421-5583	220
421-5584	220
421-5585	220
421-7810	▶235
422-1612	▶524
422-2480	367
422-4682	506
422-4683	506
422-6861	▶347
	405
423-1871	615
423-1984	16
	603
423-1986	69
	130
	136
	137
423-2775	141
423-4654	▶362
	405
423-9100	▶584
423-9923	2
	▶551
424-4322	179
424-7735	11
	▶297
425-4565	412
	▶415
425-6734	412
	▶416
426-1256	▶3
426-4162	84
430-8985	449
430-9004	2
	▶449
431-4287	4
	▶322
431-7841	117
431-8735	287
431-8801	617
432-2644	394
	▶406
433-5754	846
433-6116	2
	▶337
433-6117	337
	▶340
433-7105	338
	340
434-1092	11
	▶38
434-2232	▶778
	780
434-2233	▶779
	781
435-2072	5
	▶154
435-3388	547
435-4845	455
435-8660	154
	155
436-1687	836
436-1688	836
436-2452	362
436-2623	490
436-2626	490
436-2627	405
	▶490
436-3254	305
436-3331	116
436-3344	15
436-7082	850
436-9102	265

PART NUMBER INDEX

Part	Page
	▶266
436-9180	▶239
	796
436-9181	314
437-3856	823
437-8991	851
438-3108	▶193
	782
438-5421	▶524
438-5423	▶524
438-5425	▶525
438-5426	▶525
438-8077	851
438-8078	851
438-8638	64
439-1817	84
439-1960	15
439-2801	▶133
439-2870	595
439-4526	543
439-6966	623
439-9973	851
440-0257	▶276
	382
440-2104	147
	▶164
440-3431	423
	▶425
440-3433	▶423
440-9820	3
	4
	▶471
441-0358	765
	▶780
441-0362	765
	▶781
441-0637	608
441-0638	581
441-7014	446
441-7480	851
442-0052	776
	777
	778
	779
	780
	781
442-0054	▶765
	782
442-1609	133
	▶134
442-1610	133
	▶136
442-2341	438
442-2343	438
442-2344	438
442-2350	438
442-2351	438
442-6228	561
442-7199	147
	▶167
442-8151	846
443-0882	7
	▶335
443-0884	335
443-6429	851
443-8288	836
443-8573	836
444-1668	612
444-6523	211
	212
444-7826	414
444-9544	859
	861
	866
444-9628	438
445-1508	859
445-1528	169
445-2556	615
445-2557	584
445-6466	851
446-1445	438
446-1483	803
446-1526	744
446-4842	▶172
	912
	913
446-4843	▶172
	913
	914
446-4845	▶172
	914
	915
446-4846	▶172
	915
	916
446-4847	▶172
	916
446-4848	▶173
	913
	914
	916
446-4849	▶173
	915
	916
446-6911	627
447-0763	455
447-2229	152
	▶785
447-2230	758
	759
	760
	▶803
447-3143	426
447-4049	560
447-4050	560
448-0412	423
	▶426
448-1893	305
448-1938	▶189
	305
448-2602	156
	158
	160
448-3613	851
448-4273	288
448-5577	▶423
448-8651	335
448-9013	15
448-9278	472
448-9317	472
449-2127	169
449-2861	438
449-5422	547
450-4968	752
450-5267	561
450-6228	480
450-6230	480
451-0115	866
451-0116	866
451-0386	15
451-2628	547
452-0946	638
452-3134	881
452-3135	880
452-3137	880
	881
452-9419	637
	▶638
454-7807	477
455-0704	191
	288
455-0705	184
	187
	314
455-0706	180
455-0707	288
455-0709	176
	180
	287
455-6348	250
455-7867	179
456-1559	840
	842
456-3346	▶156
	164
456-3347	▶158
	164
456-3348	▶160
	164
457-0799	551
457-2082	251
457-3648	▶822
	861
457-5046	154
	▶251
457-5280	618
	738
457-6044	131
457-7811	782
457-7812	782
458-2072	5
	▶154
458-3867	551
458-3868	551
458-7281	132
	▶137
458-8701	5
	▶782
459-0786	147
	▶163
459-3196	174
	▶176
460-3760	130
	136
	137
460-3761	136
460-3764	137
460-3794	136
460-4049	156
	160
461-2544	199
	695
461-5203	11
	▶12
461-5232	148
461-9801	154
462-6392	▶174
462-6393	5
	▶175
462-7898	615
462-7927	733
462-9618	832
462-9620	831
463-1734	455
463-5584	8
	▶164
463-5585	▶164
463-5586	▶164
463-6185	851
463-6186	851
463-8243	331
463-8352	12
463-9605	164
	▶173
463-9608	164
	▶173
463-9611	164
	▶173
463-9613	▶147
	156
	158
	160
463-9614	▶147
	158
	160
463-9615	▶147
	156
	160
464-6047	785
464-9988	761
	▶762
465-7612	752
466-0907	769
	773
466-0908	773
466-1384	477
466-1604	744
466-7341	751
466-9209	814
467-5183	744
467-8535	286
470-3946	752
471-4231	643
	646
	651
	654
	659
	663
	668
	672
	677
	682
	688
	699
	705
	711
	713
	715
	721
	724
	729
471-6294	642
	645
	653
	658
	662
	671
	676
	681
	687
	697
	699
	709
	711
	713
	715
	719
	723
	729
471-9240	7
	▶300
472-1128	455
472-1143	455
472-8025	537
473-0556	7
	▶599

▶ PRIMARY REFERENCE

PART NUMBER INDEX

Part	Page
473-0557	519
	520
	521
	522
	523
	▶608
473-0558	▶586
473-8155	211
	212
473-8156	211
	212
474-0524	618
	738
474-5410	▶190
	305
475-6219	600
475-6220	601
475-6224	601
475-6272	608
476-3381	286
476-8768	122
	▶127
477-1149	601
	▶620
477-1250	4
	▶831
477-1257	757
	▶832
478-7893	130
	137
478-7932	165
481-7206	155
481-8298	455
481-8300	444
483-0424	746
483-2354	▶155
484-1274	560
484-1275	561
485-9584	561
486-5117	477
486-9093	560
487-2807	30
	▶33
487-2810	▶29
	33
487-3013	522
	524
	▶650
487-3014	520
	521
	523
	524
	525
	▶658
487-3015	524
	▶662
487-3016	520
	▶676
487-3017	519
	521
	▶681
487-3018	525
	▶687
487-3019	522
	523
	▶723
487-3027	524
	▶642
487-3028	519
	520
	522
	523
	▶645
487-3029	525
	▶653
487-3030	521
	522
	▶667
487-3031	520
	523
	▶671
487-7761	213
	214
487-7762	213
	214
488-1670	836
488-2137	836
488-2140	195
488-7009	643
	646
	654
	668
	672
	▶729
489-2731	24
489-6480	▶836
	838
	839
490-2370	266
491-1256	333
491-1257	333
492-0728	▶3
492-0729	▶4
492-0730	▶5
492-1813	42
492-5710	132
	▶139
492-7328	477
495-9536	895
495-9537	895
498-4463	838
	839
498-8523	333

5

500-8530	450
501-1173	▶69
501-1174	69
502-9305	442
502-9306	442
502-9307	442
502-9308	442
504-1365	908
504-4302	834
	▶839
505-1454	▶199
	695
505-5361	119
506-0163	446
506-2265	2
	▶11
507-2767	786
	790
509-4135	354
	356
	358
509-4136	352
	354
509-4138	358
509-4139	358
509-6660	120
509-9535	612
511-2430	305
511-2431	305
511-5471	8
	▶908
512-9912	617
515-4664	452
515-4666	452
515-4669	452
515-5427	10
	▶472
515-7860	595
515-7907	921
517-0553	18
519-8440	455
520-2844	171
520-2944	173
520-5007	380
520-5008	▶380
	405
520-7338	172
520-7339	172
520-7340	172
520-7341	172
520-7342	172
520-7343	173
520-7344	173
521-2576	752
521-3096	752
524-2229	▶178
	289
524-6492	49
524-8603	▶880
524-8604	▶881
524-8605	▶881
524-8606	▶882
525-2467	752
525-4816	794
525-5297	▶213
	221
	223
525-5298	▶214
	221
	223
526-6377	643
	646
	651
	654
	659
	663
	668
	672
	677
	682
	688
	697
	699
	701
	703
	705
	707
	711
	713
	715
	717
	719
	724
526-6468	744
526-6469	744
530-1615	444
530-1616	442
530-1617	442
536-3666	455
536-3668	455
536-5229	▶8
539-6876	892
539-6877	892
539-6885	▶892
	897
539-6892	892
539-6894	▶897
540-3236	425
	430
	▶431
540-3237	431
	▶432
540-3238	432
540-3243	432
540-3254	432
540-3755	426
	▶433
540-3756	433
	▶434
540-3757	434
540-3758	434
540-3759	434
540-6848	▶398
	433
540-6849	398
540-6850	398
540-6851	398
540-6852	▶399
	431
540-6853	399
540-6854	399
540-6855	399
541-0084	595
541-4602	390
541-6632	561
	563
	581
	612
541-6637	581
542-1199	615
542-2500	615
542-2503	584
542-2504	584
543-3586	595
547-4492	825
547-6515	374
	376
549-4994	120
550-2445	▶207
	209
	229
	230
	231
	236
550-2446	▶208
	236
550-3302	746
550-4901	6
	▶229
550-4904	6
	▶230
550-4905	6
	▶209
550-6606	▶280
	758
	759
	760
550-6608	▶236
550-6609	7
	▶231
551-6544	▶6
551-6546	▶7
552-6072	173
553-2588	▶221
553-2589	▶223
553-2611	▶185
	221
	223

PART NUMBER INDEX

Part	Page
	241
	243
555-8914	▶184
	300
556-9087	65
557-1714	475
557-1716	475
557-1719	475
557-7627	▶112
	125
558-2398	744
558-6550	156
	160
559-8198	▶179
	288
559-9492	167
	173
560-0261	173
560-6324	174
560-8856	8
	10
	▶225
564-6716	643
	646
	651
	654
	659
	663
	667
	672
	677
	682
	688
	695
	697
	699
	701
	703
	705
	707
	709
	711
	713
	715
	717
	719
	721
	724
	729
564-9571	▶187
	314
565-1026	▶10
565-4306	▶8
565-9420	▶10
568-0700	475
568-5111	164
570-2575	483
570-5873	909
570-9278	455
570-9279	455
573-3323	917
	921
575-0139	909
575-9147	759
	760
575-9173	909
575-9874	757
	▶759
575-9875	4
	▶760
577-1377	▶2
578-6053	912
	▶917
578-6054	912
	913
	914
	915
	916
	▶921
578-6058	▶909
	917
	921

▶ PRIMARY REFERENCE

MEMORANDA



©2019 Caterpillar
All Rights Reserved

CAT, CATERPILLAR, LET'S DO THE WORK, their respective logos, “Caterpillar Yellow”, the "Power Edge" and Cat "Modern Hex" trade dress as well as corporate and product identity used herein, are trademarks of Caterpillar and may not be used without permission.