RUTHZIL TRATOR COMERCIAL DE PEÇAS LTDA 11 97083-6812 ROLANDO CITRANGULO

JOHN DEERE

CATALOGO DE PIEZAS

160C LC EXCAVADORA

PC9085S (Sep-13) Español

Worldwide Construction and Forestry Division
Worldwide Edition
Printed in U.S.A. (Revised)
COPYRIGHT © 2013
DEERE & COMPANY
Moline, Illinois
All rights reserved

160C LC Excavator

T166017B A.1



Left Hand Side View Of John Deere 160C LC Excavator

(Manufactured 2002-2007)

(Specifications And Design Subject To Change Without Notice.)

Al cliente

Los números de pieza en este catálogo de piezas eran correctos al momento de la publicación del catálogo. Es nuestra política mejorar continuamente nuestras máquinas y, por lo tanto, los números de pieza están sujetos a cambios. Al pedir las piezas, consultar al concesionario para verificar los números de pieza.

Unidades de medida SI

Siempre que sea aplicable, en todo este catálogo de piezas las dimensiones se indican en el sistema métrico.

Identificación de resistencia de pernos y tornillos

En este catálogo, los pernos y tornillos que deben tener características de resistencia alta equivalentes al grado 8 de SAE se identifican con la descripción HS SAE 8 (valor de sistema métrico 10.9). Todos los pernos y tornillos estándar son de grado 5 SAE (valor de sistema métrico 8.8) o inferior.

Información de lista de número de serie

La información de número de serie se lista para indicar la máquina en la cual se puede usar la pieza; por ejemplo:

	–		**La pieza puede usarse en todos los productos.**
000000	–		**La pieza puede usarse en los productos a partir del número de serie listado.**
	–	**000000**	**La pieza puede usarse en los productos hasta e inclusive el número de serie listado.**
000000	–	**000000**	**La pieza puede usarse en los productos entre e inclusive el número de serie listado.**

Cuando aparece XXXXXX en vez de un número de serie, se modificó el número de serie, pero el número de serie preciso no se tenía disponible en el momento de producción del catálogo.

Si se requieren números de identificación de producto o números de serie para reclamaciones de garantía o la correspondencia acerca de este producto, es muy importante suministrar todos los caracteres. No es posible sobreenfatizar este punto.

Flecha de sentido

Las flechas se emplean en las ilustraciones para indicar la parte delantera de la unidad. Los lados derecho e izquierdo se determinan mirando en el sentido de avance de la máquina.

Ilustraciones encerradas en cuadros

Al cuadro que encierra todas las piezas vendidas como un conjunto, se asigna un número de referencia que se emplea en la lista de piezas. Un cuadro sin número de referencia incluye piezas no actuales.

Conjuntos completos

Los conjuntos completos se listan en negritas. Pedir por separado. No incluir en el pedido de piezas de repuesto.

Orientación del motor

Los lados derecho e izquierdo se determinan al pararse junto al volante del motor y mirar hacia el motor.

Componentes John Deere Reman

Las piezas de repuesto listadas en este catálogo son para la reparación del equipo original. A pesar de que la mayoría de las piezas de repuesto puedan servir para reparar los componentes reconstruidos, en el proceso de reconstrucción se puede modificar los componentes de modo que las piezas de repuesto no sean adecuadas para usar.

Dientes de cucharón

Se pueden hallar repuestos adicionales para el cucharón en el catálogo de componentes del cucharón. Dientes de cucharón PC 9555

Serial Number Location

Each 160C LC excavator has four serial number plates: A product identification number plate, an engine serial number plate, a hydraulic pump serial number plate and a swing motor serial number plate.
The product identification plate is located on the forward right hand side of the cab.
The engine serial number plate is located on the right side of the cylinder block near the fuel pump and the engine oil filter.
The hydraulic pump serial number plate is located near the front of the hydraulic pump
The swing motor serial number plate is located on the top of the swing motor.
If product identification numbers or serial numbers are required for warranty claims or correspondence pertaining to this product. It is extremely important that all characters be furnished. This point cannot be overemphasized.

Product Identification Number

TP48883 A.1

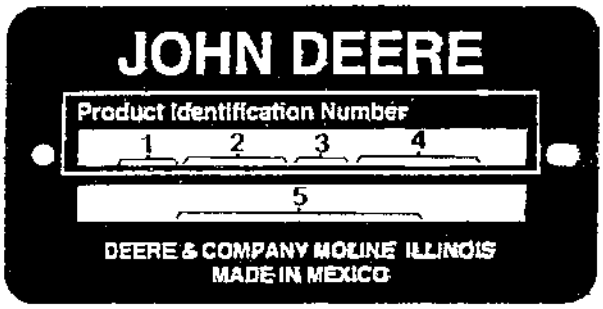

TP48883

First Line	Designates
FF	Manufacturer — John Deere
160	Model
X	Configuration
123456	Serial Number (Example)
Second Line	**Designates**
EXCAVATOR	Unit Type

Chapa de número de serie del motor — 4045 y 6068

RGP13837 A.1

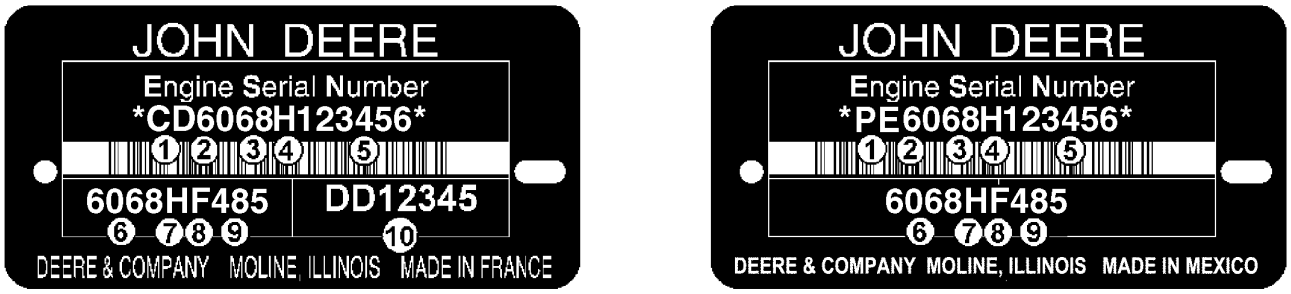

RGP13837

El número de serie del motor consta de 13 caracteres	
Primer renglón	Indica
1 — Dos letras para indicar la fábrica del motor	PE: Torreón, México; CD: Saran, Francia; JX: Rosario, Argentina
2 — Un dígito para indicar la cantidad de cilindros	4 cilindros, 6 cilindros
3 — Tres dígitos para indicar la cilindrada en litros	045: 4.5 litros, 068: 6.8 litros
4 — Una letra para indicar el tipo de aspiración	A= Turbocompresor con posenfriador aire-agua D= Aspiración natural T= Turbocompresor H= Turbocompresor con posenfriador aire-aire S= Turbocompresor con posenfriador aire-agua de mar
5 — Seis dígitos	123456= Número secuencial de fabricación del motor Los números secuenciales empiezan en 000001
El tipo de motor consta de 9 caracteres alfanuméricos	
6 — Cuatro dígitos	Igual a los puntos 2 y 3 que se detallaron anteriormente
7 — Una letra para indicar el tipo de aspiración	Igual al punto 4 que se detalló anteriormente
8 — Una o dos letras para indicar el uso de máquinas OEM	F: OEM; FM: Marino; FH: HazLoc; FN: Gas natural comprimido
8 — Una o dos letras para indicar el uso de vehículos John Deere	DW, KV: Construcción; RW, LV, L, BM: Tractor, TJ: Silvicultura; H, Z, CQ: Cosechadora combinada; N: Cosechadora/pulverizadora; E: Hileradora
9 — Dos o tres dígitos para indicar la versión	485
10 — Dos letras y 5 ó 6 dígitos que indican el número de pieza del motor	DD12345 (solo motores fabricados en Saran)

Marcas comerciales

En este catálogo de piezas pueden aparecer las siguientes marcas comerciales de Deere and Company:

Best Bid™	CounterParts™	DEERE™ (Deere™)
Dura-Trax™	Fanggs™	Guardian™
HTH™	Jagz™	JDLink™
MARKS™	MIC™ [Centro de información de máquina]	MTH™
Power Curve™	Powerllel™	PowerShift Plus™
Powerwize™	POWR SAVR™	PowrShift™
ProPath™	Quad-Cool™	Quik-Tatch™
SC-2™	Side-Tracker™	Stinger™
StructureALL™	Swamper™	TMC™ [Control total de la máquina]
ValueSelect™	Waratah™	Worksite Pro™
FlexBox™	Funk™	iTorque™
Phoenix™	Phoenix International™	PowerTech
PowerTech™ E	PowerTech™ M	PowerTech™ Plus
Precision Joint™	SHIFT-O-MATIC™	SWEDA™ (eje doble extremo súper ancho)
TeamMate™	TeamMate™II	TeamMate™ IV
TMII™	TMIII™	

Comentarios y abreviaturas

Los comentarios y las abreviaturas siguientes pueden aparecer en este catálogo de piezas. Consultar la tabla siguiente para las traducciones.

Frase	Significado	Frase	Significado
ALSO ORDER, ORD W/	Pedir también	MFWD	Tracción delantera mecánica
AMP	Amperio	NA, NOT USED THIS APPL	No se usa para esta aplicación
APPL, APPL ONLY	Esta aplicación solamente	NLA	Ya no está disponible
AR	Según se requiera	NSEP	No disponible por separado
ASSY	Conjunto completo	OD	Diámetro exterior
BOAC	Borde cortante empernado	OPTIONAL	Opcional
CCW	Sentido contrahorario	OR	O
COMPLETE	Completo	ORD, ORDER	Pedir
COMPLETE GOODS	Mercancía completa	OS	Sobretamaño
CONVENIENCE ASSY, CA	Conjunto de comodidad	OUTER	Exterior
CTL, CUT TO LENGTH	Cortar según se requiera	PKG, PACKG	Paquete, paquete de
CW	Sentido horario	PTO	Toma de fuerza
ENGINE	Motor	RATIO	Relación
FOR	Para	REAR	Posterior, parte trasera
FRONT	Frente, frontal	REMAN	Remanufacturado
GAS	Gasolina	REPL	Reemplaza a
HFWD	Tracción delantera hidráulica	RH	Lado derecho
HP	Caballos de fuerza	SN	Número de serie
HS, HEAD MARKED	Resistencia alta, cabeza marcada	STD	Estándar
ID	Diámetro interior	SUB	Sustituido por
INCH	Pulgada	SUB COMPONENTS	Sustituir componentes (del juego o conjunto)
INCL KEYS	Incluye los elementos ...	SUB FOR	Sustitución para
INCL, INCLUDES	Incluye…	TEETH, Z	Número de dientes de engranaje
INCLUYE PIEZAS/ ELEMENTOS MARCADOS	Incluye las piezas/elementos marcados...	TK	Espesor
INNER	Interior	UP, UPPER	Arriba, superior
KIT	Juego	US	Subtamaño
L	Número de eslabones	USE UNTIL EXHAUSTED	Usar hasta que se acabe
LL, LINE FILL	Llenado de línea	USE WITH	Usar con
LGP	Baja presión sobre suelo	VEC	Controlador electrónico de vehículo
LGTH	Largo	VLC	Centro eléctrico del vehículo
LH	Lado izquierdo	W/	Con
LOW, LOWER	Bajo, inferior	W/O	Sin
LT	Cadena de oruga larga	WHOLE GOODS	Mercancía completa
MAKE FROM, MF	Fabricar de	WT	Cadena de oruga ancha
MARKED	Marcado	XLT	Cadena de oruga extra larga
MATCHED SET	Conjunto apareado		

Índice

01 RUEDAS, NEUMATICOS Y ORUGAS
0130 SISTEMAS DE ORUGAS 30
0133 RODILLOS 42
02 EJES, DIFERENCIALES Y SISTEMAS DE SUSPENSION
0260 EJES, DIFERENCIALES Y SISTEMAS DE SUSPENSION HIDR. (INCLUYE TRACCION DELANTERA) 52
0262 VALVULAS 64
0263 LINEAS, MANGUERAS Y ADAPTADORES 66
0267 MOTOR IMPULSOR HIDRAULICO 68
04 Motor
0400 Motor 4045HP051 70
05 SISTEMA AUXILIAR DEL MOTOR
0505 AUXILIARES DE ARRANQUE PARA TIEMPO FRIO 144
0510 SISTEMAS DE ENFRIAMIENTO DEL MOTOR 152
0512 VENTILADOR 158
0520 SISTEMA DE ADMISION DE AIRE 160
0530 SISTEMAS DE ESCAPE EXTERNOS 162
0540 MONTAJE DEL MOTOR 164
0560 SISTEMAS EXTERNOS DE SUMINISTRO DE COMBUSTIBLE 166
13 VARIOS VEHICULO
1322 ETIQUETAS Y MARCAS COMERCIALES 172
1369 GRASAS, ACEITES, COMBUSTIBLES Y REFRIGERANTES 178
16 SISTEMAS ELECTRICOS DEL VEHICULO
1671 BATERIAS, SOPORTE Y CABLES 180
1672 ALAMBRADO DEL ALTERNADOR, REGULADOR Y SISTEMA DE CARGA 182
1674 GRUPO DE CABLES E INTERRUPTORES 184
17 BASTIDOR, CHASIS O ESTRUCTURA DE APOYO
1740 INSTALACION DE BASTIDOR 212
1741 BASTIDOR DE MOTOR O PRINCIPAL 218
1749 PESOS DEL CHASIS 220
18 PUESTO DEL OPERADOR
1810 CABINA DEL OPERADOR 222
1821 ASIENTO Y CINTURON DE SEGURIDAD 258
1830 CALEFACTOR Y ACONDICIONADOR DE AIRE 268
19 CHAPA METALICA Y STYLING
1910 CAPO O COMPARTIMIENTO DEL MOTOR 290
20 SEGURIDAD, COMODIDAD Y VARIOS
2001 RADIO 310
2002 ESPEJO 312
2004 DISPOSITIVOS DE AVISO INCL. BOCINA Y ALARMA DE RETROCESO 316
33 EXCAVADORA
3302 CUCHARON CON DIENTES 320
3315 VARILLAJE DE CONTROLES 354
3340 BASTIDORES EXCAVADORA 374
3344 AGUILON 378
3345 VARILLAJE DEL CUCHARON 380
3360 SISTEMA HIDRAULICO 386
3361 BOMBA HIDRAULICA 404
3362 VALVULAS DE CONTROL Y RETENCION DE CARGA 416
3363 LINEAS, MANGUERAS Y ADAPTADORES 450
3364 DEPOSITO HIDRAULICO 510
3365 CILINDROS HIDRAULICOS 514
43 SISTEMA DE GIRO, ROTACION O PIVOTE

Índice, continuación

4360 SISTEMA HIDRAULICO....522
4367 MOTORES....526
4367 MOTORES....526

Índice alfabético

Página

3.00 INCH SEAT BELT KIT ... 262
4425 Timing Gear Cover ... 76
6710 Engine Sensors ... 137
8822 (OIL FILTER) ... 75
9102 Primary Fuel Filter ... 122

A

A/C COMPRESSOR BRACKET, DRIVE BELT, AND REFRIGERANT HOSES ... 274
A/C COMPRESSOR DRIVE BELT ... 274
A/C COMPRESSOR DRIVE BELT TENSION PULLEY ... 274
ACCESS DOOR, HYDRAULIC PUMP COMPARTMENT ... 294
ACCESS DOOR, RADIATOR COMPARTMENT ... 294
ADAPTER, ENGINE COOLANT ... 116
ADJUSTER, TRACK CHAIN TENSION ... 38
ADJUSTING STRAP, ALTERNATOR ... 128
AIR CLEANER ... 160
AIR CLEANER TO TURBOCHARGER HOSE ... 160
AIR CLEANER TO TURBOCHARGER LINE ... 160
AIR CLEANER, RESTRICTION SENSOR AND HOSES TO TURBOCHARGER ... 160
AIR CONDITIONER ... 268
AIR CONDITIONER COMPRESSOR ... 276
Air Conditioner Compressor Components ... 278
AIR CONDITIONER COMPRESSOR COMPONENTS ... 278
AIR CONDITIONER COMPRESSOR, CONDENSER, AND RECEIVER/DRYER ... 276
AIR CONDITIONER CONDENSER ... 276
AIR CONDITIONER EVAPORATOR ... 270
AIR CONDITIONER EVAPORATOR FLOW CONTROL VALVE ... 270
AIR CONDITIONER EVAPORATOR HOSE ... 270
AIR CONDITIONER PRESSURE SWITCH ... 270
AIR CONDITIONER RECEIVER/DRYER ... 276
AIR CONDITIONER SENSOR ... 276
AIR CONDITIONER THERMOSTAT ... 270
AIR CONDITIONER UNIT COMPONENTS ... 270, 272
AIR CONDITIONER WIRE HARNESS ... 276
AIR COOLER ... 152
AIR DIFFUSER, CAB REAR ... 282
AIR DISCHARGE DUCT, CAB HEATER AND A/C ... 280
AIR DUCT, CAB LOWER RIGHT ... 280
AIR DUCT, HVAC UNIT ... 268
AIR FILTER RESTRICTION INDICATOR ... 160
AIR FILTER, AIR CLEANER ... 160
AIR INTAKE ... 106
AIR INTAKE DUCT, CAB HEATER AND A/C ... 280
AIR INTAKE GASKET ... 106
AIR INTAKE SYSTEM ... 106
AIR INTAKE TEMPERATURE SENSOR ... 106
AIR TEMPERATURE SENSOR-6710-4045HP051 ... 137
ALARM, PROPEL MOTION ... 318
ALTERNATOR ... 182
ALTERNATOR ADJUSTING STRAP ... 128
ALTERNATOR AND WIRING HARNESS ... 182
ALTERNATOR FAN ... 182
ALTERNATOR MOUNTING ... 128
ALTERNATOR MOUNTING BRACKETS ... 128
ALTERNATOR PULLEY ... 182
ALTERNATOR WIRING HARNESS ... 182
ALUMINIUM OIL PAN (ESN. 274011-334596) (274011 - 334596) ... 92
ANTENNA, RADIO ... 232
ANTI-DRIFT KIT, ARM ... 400
ANTI-DRIFT KIT, BOOM ... 402
ANTI-DRIFT VALVE (ARM) ... 400
ANTI-DRIFT VALVE (BOOM) ... 402
ARM (LONG ARM, 3.1M) ... 376
ARM (STANDARD ARM, 2.6M) ... 374
ARM ANTI-DRIFT KIT ... 400
ARM AUXILIARY LINE (FACTORY INSTALLED) ... 504
ARM AUXILIARY PLUMBING SHUT-OFF VALVE (FACTORY INSTALLED) ... 504
ARM CYLINDER ... 518
ARM CYLINDER BARREL ... 518
ARM CYLINDER COMPONENTS AND OIL LINES ... 518
ARM CYLINDER OIL LINE ... 518
ARM CYLINDER ROD ... 518
ARM CYLINDER SEAL KIT ... 518
ARM CYLINDER TO ARM PIN (LONG ARM, 3.1M) ... 376
ARM CYLINDER TO ARM PIN (STANDARD ARM, 2.6M) ... 374
ARM CYLINDER TO BOOM LINE HOSE ... 492
ARM CYLINDER TO BOOM PIN ... 378
ARM HOSES AND LINES (FACTORY AUXILIARY PLUMBING) ... 504
ARM LINE (AUXILIARY HYDRAULIC LINE KIT) (FIELD) ... 506
ARM LINE (FACTORY INSTALLED AUXILIARY PLUMBING) ... 504
ARM LINE TO BOOM LINE HOSE (FACTORY INSTALLED AUXILIARY PLUMBING) ... 504
ARM LINE TO BOOM LINE HOSE (FIELD) (AUXILIARY HYDRAULIC LINE KIT) ... 506
ARM TO ARM CYLINDER PIN (LONG ARM, 3.1M) ... 376
ARM TO ARM CYLINDER PIN (STANDARD ARM, 2.6M) ... 374
ARM TO BOOM PIN ... 378
ARM TO BUCKET CYLINDER PIN (LONG ARM, 3.1M) ... 376
ARM TO BUCKET CYLINDER PIN (STANDARD ARM, 2.6M) ... 374
ARM TO BUCKET PIN (LONG ARM, 3.1M) ... 376
ARM TO BUCKET PIN (STANDARD ARM, 2.6M) ... 374
ARM TO GUIDE LINK PIN (LONG ARM, 3.1M) ... 376
ARM TO GUIDE LINK PIN (STANDARD ARM, 2.6M) ... 374
ARM, BUCKET CYLINDER, AND LINKAGE KIT (LONG ARM, 3.1M) ... 376
ARM, BUCKET CYLINDER, AND LINKAGE KIT (STANDARD ARM, 2.6M) ... 374
ARM, WINDSHIELD WIPER ... 232
ARMREST ... 258
ARMS, ROCKER ... 73
ASHTRAY ... 224
ATTACHING PINS, BUCKET THUMB ... 350, 352
AUXILIARY 2-WAY HYDRAULIC FOOT PEDAL CONTROL ... 366
AUXILIARY ARM PLUMBING (FACTORY INSTALLED) ... 504
AUXILIARY CRANKSHAFT DRIVE PULLEY ... 131
AUXILIARY DRIVE ADAPTER COVER (SAE "A" MOUNT, 9 TOOTH) ... 386
AUXILIARY DRIVE ADAPTER COVER (SAE "B" MOUNT, 13 TOOTH) ... 388
AUXILIARY DRIVE ADAPTER KIT (SAE "A" MOUNT, 9 TOOTH) ... 386
AUXILIARY DRIVE ADAPTER KIT (SAE "B" MOUNT, 13 TOOTH) ... 388
AUXILIARY DRIVE ADAPTER OIL LINE (SAE "A" MOUNT, 9 TOOTH) ... 386
AUXILIARY DRIVE ADAPTER OIL LINE (SAE "B" MOUNT, 13 TOOTH) ... 388
AUXILIARY DRIVE COVER ... 79
AUXILIARY ELECTRIC FOOT SWITCH ... 390
AUXILIARY EXTERIOR CAB LIGHTING, CAB TOP ... 192
AUXILIARY FOOT CONTROL VALVE COMPONENTS ... 372
AUXILIARY FOOT CONTROL VALVE SEAL KIT ... 372
AUXILIARY FOOT PEDAL CONTROL ... 366
AUXILIARY HYDRAULIC HOSES AND LINES KIT (BOOM AND ARM)(FIELD) ... 506
AUXILIARY HYDRAULIC OPTIONAL LOW PRESSURE RETURN PLUMBING ... 508
AUXILIARY HYDRAULIC PLUMBING (AT CONTROL VALVE, FACTORY INSTALLED) ... 500
AUXILIARY HYDRAULIC PLUMBING KIT (FIELD) ... 506
AUXILIARY PLUMBING BOOM LINES (FACTORY INSTALLED) ... 502
AUXILIARY PLUMBING OIL LINE TO CONTROL VALVE (FACTORY INSTALL) ... 498
AUXILIARY SOLENOID AND FLOW CONTROL VALVE KIT (1-WAY) ... 398
AXLE, LOWER ROLLER, TRACK ... 46
AXLE, TRACK LOWER ROLLER, REPLACEMENT ... 48

B

BALANCER SHAFT, ENGINE ... 108
BAR, DITCH CLEANING BUCKET ... 334, 336
BARREL, ARM CYLINDER ... 518
BARREL, BUCKET CYLINDER ... 520
BARREL, LEFT BOOM CYLINDER ... 516
BARREL, RIGHT BOOM CYLINDER ... 514
BASE, SEAT ... 264
BATTERY ... 180
BATTERY CABLE ... 180
BATTERY COVER ... 180
BATTERY RELAY ... 180
BATTERY, BATTERY CABLES, RELAY AND COVER ... 180
BEARING, PROPEL GEARBOX ... 62
BEARING, SWING GEARBOX ... 522
BEARING, SWING MOTOR ... 526
BEARING, TRACK IDLER (REPLACEMENT) ... 36
BEARINGS, C0NNECTING ROD ... 78
BELT IDLER TENSIONER, FAN ... 132
BELT, A/C COMPRESSOR DRIVE ... 274
BELT, CRANKSHAFT PULLEY ... 130
BELT, ENGINE ACCESSORY DRIVE ... 130
BELT, FAN DRIVE ... 134
BELT, SEAT ... 266

Índice alfabético, continuación

Página

BELT, SEAT (3.00 INCH) ... 262
BERCO REPLACEMENT UPPER TRACK ROLLER ... 44
BEVERAGE HOLDER ... 226
BLADE, DEFROSTER FAN ... 288
BLADE, WINDSHIELD WIPER ... 232
BLOCK, CYLINDER ... 80
BLOWER FAN, HVAC UNIT ... 272
BLOWER, DEFROSTER FAN ... 288
BOOM ... 378
BOOM ANTI-DRIFT KIT ... 402
BOOM ASSEMBLY AND PINS ... 378
BOOM CYLINDER (LEFT) ... 516
BOOM CYLINDER (RIGHT) ... 514
BOOM CYLINDER HOSE TO CONTROL VALVE LINE ... 460
BOOM CYLINDER OIL LINE SUPPORT BRACKET ... 460
BOOM CYLINDER TO BOOM PIN ... 378
BOOM CYLINDER TO MAIN FRAME PIN ... 218
BOOM CYLINDER TO OIL LINE HOSE ... 460
BOOM HOSES AND LINES (FACTORY INSTALLED AUXILIARY PLUMBING) ... 502
BOOM LIGHT MOUNTING BRACKET ... 378
BOOM LIGHT WIRING HARNESS ... 188
BOOM LIGHTS AND WORK LIGHTS ... 190
BOOM LINE (AUXILIARY HYDRAULIC LINE KIT) (FIELD) ... 506
BOOM LINE (FACTORY INSTALLED AUXILIARY PLUMBING) ... 502
BOOM LINE (TO ARM AND BUCKET CYLINDER) ... 492
BOOM LINE TO ARM CYLINDER HOSE ... 492
BOOM LINE TO ARM LINE HOSE (FACTORY INSTALLED AUXILIARY PLUMBING) ... 504
BOOM LINE TO ARM LINE HOSE (FIELD) (AUXILIARY HYDRAULIC LINE KIT) ... 506
BOOM LINE TO BOOM LINE HOSE (FACTORY INSTALLED AUXILIARY PLUMBING) ... 502
BOOM LINE TO BUCKET CYLINDER HOSE (LONG ARM, 3.1M) ... 376
BOOM LINE TO BUCKET CYLINDER HOSE (STANDARD ARM, 2.6M) ... 374
BOOM LINE TO CONTROL VALVE HOSE (ARM AND BUCKET CYLINDERS) ... 496
BOOM LINE TO CONTROL VALVE HOSE (FACTORY INSTALLED AUXILIARY PLUMBING) ... 500
BOOM LINE TO CONTROL VALVE HOSE (FIELD) (AUXILIARY HYDRAULIC LINE KIT) ... 506
BOOM LINE TO SELECTOR VALVE HOSE (FACTORY INSTALLED AUXILIARY PLUMBING) ... 500
BOOM LINES TO ARM AND BUCKET CYLINDERS ... 492
BOOM MOUNTING LUBRICATION HOSE ... 494
BOOM TO ARM CYLINDER PIN ... 378
BOOM TO ARM PIN ... 378
BOOM TO BOOM CYLINDER PIN ... 378
BOOM TO FRAME PIN LUBRICATION LINE ... 494
BOOM TO MAIN FRAME PIN ... 212
BOOM WORK LIGHT ... 190
BOOM WORK LIGHT WIRE HARNESS ... 190
BOTTOM ACCESS COVER ... 292
BOTTOM PROTECTION COVER ... 292
BOTTOM PROTECTION COVERS ... 292
Bowl, Sediment (Fuel Filter)-9102-4045HP051 ... 122
BOX, CIRCUIT ... 198, 200
BOX, FUSE ... 198, 200
BOX, TOOL ... 302
BRACKET, BOOM CYLINDER OIL LINE SUPPORT ... 460
BRACKET, BOOM LIGHT MOUNTING ... 378
BRACKET, CAB REAR CONSOLE SUPPORT ... 252
BRACKET, CONTROL VALVE MOUNTING ... 418
BRACKET, ENGINE MOUNTING ... 164
BRACKET, FRONT MIDDLE DECK COVER SUPPORT ... 298
BRACKET, HYDRAULIC PUMP COMPARTMENT COVER SUPPORT ... 296
BRACKET, MUFFLER ... 162
BRACKET, PILOT SHUT-OFF LEVER ... 364
BRACKET, PILOT SIGNAL MANIFOLD MOUNTING ... 474
BRACKET, PROPEL PILOT CONTROLLER HOSE SUPPORT ... 478
BRACKET, RADIATOR SUPPORT ... 156
BRACKET, SEAT BASE ... 264
BRACKET, SEAT BELT ... 266
BRACKET, SELECTOR VALVE SUPPORT (AUXILIARY PLUMBING) ... 500
BRACKET, WINDSHIELD WASHER RESERVOIR MOUNTING ... 250
BRAKE VALVE COMPONENTS, PROPEL MOTOR ... 64
BRAKE VALVE, PROPEL MOTOR ... 68
Bucket Curl, Flow Control Hydraulic Valve ... 424
BUCKET CYLINDER ... 520
BUCKET CYLINDER BARREL ... 520

Página

BUCKET CYLINDER COMPONENTS AND OIL LINES ... 520
BUCKET CYLINDER OIL LINE ... 520
BUCKET CYLINDER ROD ... 520
BUCKET CYLINDER SEAL KIT ... 520
BUCKET CYLINDER TO ARM PIN (LONG ARM, 3.1M) ... 376
BUCKET CYLINDER TO ARM PIN (STANDARD ARM, 2.6M) ... 374
BUCKET CYLINDER TO BOOM LINE HOSE (LONG ARM, 3.1M) ... 376
BUCKET CYLINDER TO BOOM LINE HOSE (STANDARD ARM, 2.6M) ... 374
BUCKET CYLINDER TO LINK PIN (LONG ARM, 3.1M) ... 376
BUCKET CYLINDER TO LINK PIN (STANDARD ARM, 2.6M) ... 374
Bucket Dump, Flow Control Hydraulic Valve ... 428
BUCKET DUMP, FLOW CONTROL HYDRAULIC VALVE ... 426
BUCKET GUIDE LINK ... 384
BUCKET GUIDE LINKS ... 384
BUCKET KIT, ROADBUILDER ... 340
BUCKET LINK ... 380
BUCKET LINK BUSHING, REPLACEMENT ... 382
BUCKET LINK TO BUCKET PIN (LONG ARM, 3.1M) ... 376
BUCKET LINK TO BUCKET PIN (STANDARD ARM, 2.6M) ... 374
BUCKET LINK TO CYLINDER PIN (LONG ARM, 3.1M) ... 376
BUCKET LINK TO CYLINDER PIN (STANDARD ARM, 2.6M) ... 374
BUCKET TEETH (GENERAL PURPOSE OR HEAVY DUTY) ... 342
BUCKET THUMB ATTACHING PINS ... 350, 352
BUCKET TO ARM PIN (LONG ARM, 3.1M) ... 376
BUCKET TO ARM PIN (STANDARD ARM, 2.6M) ... 374
BUCKET TO BUCKET LINK PIN (LONG ARM, 3.1M) ... 376
BUCKET TO BUCKET LINK PIN (STANDARD ARM, 2.6M) ... 374
BUCKET, DITCHING ... 338
BUCKET, GENERAL PURPOSE ... 320, 322
BUCKET, GENERAL PURPOSE, HIGH CAPACITY ... 324, 326
BUCKET, HEAVY DUTY ... 328, 330, 332
BUCKET, TOOTH ASSEMBLY, HIGH CAPACITY ... 344
BUCKET, TOOTH ASSEMBLY, HIGH CAPACITY (CONTINUED) ... 346
BULB, DOME LIGHT ... 232
BULB, FRONT WORK LIGHT, TOP CAB EXTERIOR ... 192
BULB, LIGHT, BOOM WORK LIGHT ... 190
BULB, LIGHT, FRONT RIGHT WORK LIGHT ... 190
BUSHING, DITCH CLEANING BUCKET ... 334, 336
BUSHING, REPLACEMENT BUCKET LINK ... 382

C

CAB ... 230
CAB COMPONENTS (FRONT AND TOP) ... 238
CAB COMPONENTS (RIGHT WINDOW) ... 240
CAB COMPONENTS (TOP) ... 242
CAB COMPONENTS (TOP, LEFT AND REAR SIDES) ... 234
CAB COMPONENTS (WINDSHIELD WIPER, RADIO SPEAKER, ANTENNA, ESCAPE HAMMER) ... 232
CAB DISPLAY MONITOR ... 196
CAB DISPLAY MONITOR AND WIRING HARNESS ... 196
CAB DISPLAY MONITOR WIRING HARNESS ... 196
CAB DISPLAY MONITOR WIRING HARNESS DIODE ... 196
Cab Door Assembly, Latch and Windows ... 236
CAB DOOR COMPONENTS ... 236
CAB DOOR HOLD OPEN LATCH COMPONENTS ... 248
CAB DOOR INSIDE HANDRAIL ... 236
CAB DOOR LATCH ... 236
CAB DOOR LOCK ... 236
CAB DOOR WINDOW ... 236
CAB ESCAPE HATCH, STEEL ... 244
CAB FLOOR MAT ... 252
CAB FLOOR PLATE ... 254
CAB FLOOR PLATFORM ... 254
CAB FRONT WINDOW ... 238
CAB FRONT WINDOW HANDLE ... 238
CAB FRONT WINDOW TRACK ... 238
CAB FRONT WINDOWS, HANDLES AND OPENING TRACKS ... 238
CAB HANDRAIL, LEFT SIDE ... 234
CAB HEATER AND A/C AIR DISCHARGE DUCT ... 280
CAB HEATER AND A/C AIR INTAKE FILTER ... 280
CAB HEATER AND AIR CONDITIONER UNIT DUCTS AND HOSES ... 268
CAB HEATER/AIR CONDITIONER AIR INTAKE AND DISCHARGE DUCTS ... 280
CAB HEATER/AIR CONDITIONER AIR INTAKE DUCT ... 280
CAB INSIDE LOWER RIGHT COVER ... 226
CAB LEFT AND REAR WINDOWS, ROOF AND HANDRAIL ... 234
CAB LEFT AND RIGHT CONSOLE COVERS ... 224
CAB LEFT AND RIGHT CONSOLES ... 222
CAB LEFT CONSOLE ... 222

Índice alfabético, continuación

Página

CAB LEFT CONSOLE COVER ... 224
CAB LEFT WINDOW ... 234
CAB LOWER RIGHT AIR DUCT ... 280
CAB MAIN WIRING HARNESS ... 198, 200
CAB MAIN WIRING HARNESS, FUSES AND IGNITION SWITCH .. 198, 200
CAB MOUNT ISOLATOR (TO MAIN FRAME) ... 228
CAB MOUNTED REAR VIEW MIRROR, LEFT (UNITS BUILT JUNE 2006 AND AFTER) ... 314
CAB MOUNTING (TO MAIN FRAME) ... 228
CAB PLATFORM ... 254
CAB REAR AIR DIFFUSER ... 282
CAB REAR CONSOLE COVER ... 282
CAB REAR CONSOLE COVER, POWER SUPPLY, AND AIR DIFFUSER ... 282
CAB REAR CONSOLE PLATFORM ... 252
CAB REAR CONSOLE SUPPORT BRACKET ... 252
CAB REAR CONSOLE SUPPORT BRACKETS AND FLOOR MATS ... 252
CAB REAR POWER SUPPLY ... 282
CAB REAR POWER SUPPLY WIRING HARNESS ... 282
CAB REAR VEHICLE CONTROLLER ... 198, 200
CAB REAR WINDOW ... 234
CAB RIGHT CONSOLE ... 222
CAB RIGHT CONSOLE CONTROLLER ... 198, 200
CAB RIGHT CONSOLE COVER ... 224
CAB RIGHT WINDOW ... 240
CAB RIGHT WINDOW GUARD ... 240
CAB RIGHT WINDOWS AND GUARDS ... 240
CAB ROOF ... 234
CAB TO MAIN FRAME MOUNTING ... 228
CAB TOP HATCH ... 242
CAB TOP HATCH (STEEL) ... 244
CAB TOP HATCH AND SUN SHADE ... 242
CAB TOP HATCH CYLINDER ... 242
CAB TOP SUN SHADE ... 242
CAB TOP WINDOW ... 242
CAB TOP, HEADLINER ... 234
CAB WINDOW VANDAL PROTECTION KIT ... 256
CAB, COMPLETE ... 230
CABLE, BATTERY ... 180
CABLE, GROUND, STARTER ... 126
CABLE, MIC ... 186
CAMSHAFT ... 72
CAMSHAFT GEAR ... 72
CAP, ENGINE OIL FILL ... 74
CAP, FUEL FILLER ... 166
CAP, MAIN BEARING ... 80
CAP, RADIATOR ... 152
CENTER JOINT SEAL ... 54
CENTER JOINT TOP COVER ... 52
CHAIN IDLER, TRACK (REPLACEMENT) ... 36
CHAIN, TRACK ... 40
CHARGE AIR COOLER ... 152
CHARGE AIR COOLER TO AIR INTAKE HOSE ... 152
CHARGE AIR COOLER TO TURBOCHARGER HOSE ... 152
CIGARETTE LIGHTER ... 282
CIRCUIT BOX ... 198, 200
CLAMP, BUCKET, DIRECT ... 350
CLAMP, BUCKET, PROGRESSIVE ... 352
CLAMPS, ENGINE WIRING HARNESS ... 204
CLEANER, AIR ... 160
CLUTCH, COMPRESSOR, AIR CONDITIONER ... 278
CLUTCH, STARTER MOTOR ... 126
CODE 6710 SENSORS-6710-4045HP051 ... 137
CODE 8822 - OIL FILTER (HP051) ... 75
COLD WEATHER STARTING AID ... 144
COLD WEATHER STARTING AID SPRAY NOZZLE ... 144
COLD WEATHER STARTING AID SUPPORT ... 144
COMPLETE CAB ... 230
COMPONENTS FOR STARTING MOTOR ... 126
COMPONENTS, DIG AND SWING PILOT CONTROLLER (SN -XXXXXX) ... 356
COMPONENTS, DIG AND SWING PILOT CONTROLLER(SN XXXXXX-) ... 358
COMPRESSOR, AIR CONDITIONER ... 276
COMPRESSOR, AIR CONDITIONER, COMPONENTS ... 278
Condenser To Compressor Refrigerant Hose ... 274
Condenser To Receiver/Dryer Refrigerant Hose ... 274
CONDENSER, AIR CONDITIONER ... 276
CONNECTING ROD AND PISTON-CYLINDER LINER KIT ... 78
CONNECTING ROD BEARINGS ... 78
CONNECTING ROD, PISTON ... 78

Página

CONNECTORS, ENGINE WIRING HARNESS ... 204
CONSOLE COVER, CAB LEFT ... 224
CONSOLE COVER, CAB REAR ... 282
CONSOLE COVER, CAB RIGHT ... 224
CONSOLE, CAB LEFT ... 222
CONSOLE, CAB RIGHT ... 222
CONSOLE, CONTROL, WITH IGNITION ... 198, 200
CONTROL CONSOLE WITH IGNITION ... 198, 200
CONTROL LEVER COMPONENTS, PILOT (DIG AND SWING) ... 354
CONTROL LEVER, PROPEL PILOT ... 360
CONTROL PATTERN SELECTOR KIT ... 394
CONTROL PEDAL, PROPEL PILOT ... 360
CONTROL UNIT, ENGINE ... 208
CONTROL VALVE ... 416
CONTROL VALVE BOTTOM TO PILOT SIGNAL MANIFOLD LINE .. 474
CONTROL VALVE COMPONENTS (4 SPOOL SIDE) ... 420
CONTROL VALVE COMPONENTS (5 SPOOL SIDE) ... 422
CONTROL VALVE COMPONENTS (BOTTOM) ... 424
CONTROL VALVE COMPONENTS (MIDDLE SEALS) ... 430
CONTROL VALVE COMPONENTS (TOP SPOOLS, 4 SPOOL SIDE) ... 428
CONTROL VALVE COMPONENTS (TOP SPOOLS, 5 SPOOL SIDE) ... 426
CONTROL VALVE COMPONENTS, AUXILIARY FOOT ... 372
CONTROL VALVE FITTINGS TO PILOT SIGNAL MANIFOLD (FOOT CONTROL, PILOT SYSTEM) ... 366
CONTROL VALVE HOSE (PILOT HOSE) ... 470
CONTROL VALVE HOSE TO OIL TANK ... 486
CONTROL VALVE HOSE TO PILOT SIGNAL MANIFOLD (1 WAY/2 WAY ELECTRIC VALVE) ... 392
CONTROL VALVE HOSE TO PILOT SIGNAL MANIFOLD (FOOT CONTROL,PILOT SYSTEM) ... 366
CONTROL VALVE LINE TO SELECTOR VALVE HOSE(FACTORY INSTALLED AUX. PLUMBING) ... 500
CONTROL VALVE MIDDLE SEAL ... 430
CONTROL VALVE MIDDLE SEALS ... 430
CONTROL VALVE MOUNTING BRACKET ... 418
CONTROL VALVE MOUNTING BRACKETS ... 418
CONTROL VALVE PRESSURE AND RETURN AUXILIARY PLUMBING (FACTORY) ... 500
CONTROL VALVE PRESSURE SENSOR ... 474
CONTROL VALVE SOLENOID COMPONENTS ... 432
CONTROL VALVE TO BOOM CYLINDER HOSE LINE ... 460
CONTROL VALVE TO BOOM CYLINDER HOSES AND LINES ... 460
CONTROL VALVE TO BOOM LINE HOSE (ARM AND BUCKET CYLINDERS) ... 496
CONTROL VALVE TO BOOM LINE HOSE (FACTORY INSTALLED AUXILIARY PLUMBING) ... 500
CONTROL VALVE TO BOOM LINE HOSE (FIELD) (AUXILIARY HYDRAULIC LINE KIT) ... 506
CONTROL VALVE TO BOOM LINE HOSES (FOR ARM AND BUCKET CYLINDERS) ... 496
CONTROL VALVE TO HOSE LINE (AUXILIARY PLUMBING, FACTORY INSTALL) ... 498
CONTROL VALVE TO HOSE LINE(AUXILIARY PLUMBING, FACTORY INSTALL) ... 498
CONTROL VALVE TO HYDRAULIC PUMP HOSE (HIGH PRESSURE) ... 452
CONTROL VALVE TO HYDRAULIC RESERVOIR HOSE (AUXILIARY SOLENOID/FLOW CONTROL) ... 398
CONTROL VALVE TO HYDRAULIC RESERVOIR HOSE (PILOT HOSE) ... 486, 488
CONTROL VALVE TO HYDRAULIC RESERVOIR LINE (RETURN LINE) ... 454
CONTROL VALVE TO OIL COOLER LINE ... 456
CONTROL VALVE TO OIL TANK RETURN LINE ... 454
CONTROL VALVE TO PILOT SIGNAL MANIFOLD HOSE ... 472
CONTROL VALVE TO ROTARY MANIFOLD HOSES ... 464
CONTROL VALVE TO SIGNAL MANIFOLD HOSE (AUXILIARY SOLENOID/FLOW CONTROL) ... 398
CONTROL VALVE TO SOLENOID VALVE HOSE ... 488
CONTROL VALVE TO SOLENOID VALVE HOSE (PILOT HOSE) .. 470, 472
CONTROL VALVE TO SWING MOTOR HOSE ... 462
CONTROL VALVE TO SWING MOTOR HOSE (DRAIN HOSE) ... 458
CONTROL VALVE TO SWING MOTOR HOSES ... 462
CONTROL VALVE TOP TO PILOT SIGNAL MANIFOLD LINE ... 476
CONTROL VALVE, FLOW, HYDRAULIC OIL ... 454
CONTROLLER COMPONENTS, HYDRAULIC PUMP OUTPUT ... 408
CONTROLLER COMPONENTS, PROPEL PILOT ... 362
CONTROLLER, AIR CONDITIONER ... 268
CONTROLLER, CAB REAR VEHICLE ... 198, 200
CONTROLLER, ENGINE, FUEL ... 104

Índice alfabético, continuación

Página

CONTROLLER, FUEL INJECTION PUMP 104
CONTROLLER, HEATER..... 268
CONTROLLER, MIC 184
CONTROLLER, PILOT (COMPONENTS) (DIG AND SWING) (SN -XXXXXX) 356
CONTROLLER, PILOT (COMPONENTS) (DIG AND SWING) (SN XXXXXX-) 358
CONTROLLER, VEHICLE, REAR CAB 198, 200
CONVERTER, POWER (24-VOLT TO 12-VOLT) 210
COOLANT HEATER..... 146, 148
COOLANT HEATER KIT, FUEL FIRED..... 146, 148
COOLANT TEMP SENSOR-6710-4045HP051..... 137
COOLER, CHARGE AIR..... 152
COOLER, HYDRAULIC OIL..... 152
COOLER, OIL..... 152
COOLING FAN, ENGINE 158
COOLING PACKAGE AND HYDRAULIC PUMP COMPARTMENT DOORS..... 304
COOLING PACKAGE COMPARTMENT DOOR 304
COOLING PACKAGE COMPARTMENT DOOR LATCH..... 304
CORE, HEATER..... 270
COUNTERWEIGHT 220
COUNTERWEIGHT MOUNTING..... 220
COUNTERWEIGHT PAD 220
COUNTERWEIGHT, MOUNTING AND PADS 220
COUPLER, ENGINE TO HYDRAULIC PUMP 404
COUPLER, HIGH PRESSURE HOSE TO HYDRAULIC PUMP 452
COUPLER, HYDRAULIC PUMP TO HIGH PRESSURE HOSE 452
COUPLER, RETURN LINE TO OIL COOLER (CONTROL VALVE TO OIL COOLER LINE)..... 456
COVER, AUXILIARY DRIVE 79
COVER, AUXILIARY DRIVE ADAPTER (SAE "A" MOUNT, 9 TOOTH) 386
COVER, AUXILIARY DRIVE ADAPTER (SAE "B" MOUNT, 13 TOOTH) 388
COVER, BATTERY 180
COVER, BOTTOM ACCESS..... 292
COVER, BOTTOM PROTECTION..... 292
COVER, CAB INSIDE LOWER RIGHT..... 226
COVER, CAB LEFT CONSOLE..... 224
COVER, CAB REAR CONSOLE..... 282
COVER, CAB RIGHT CONSOLE..... 224
COVER, ENGINE..... 300
COVER, ENGINE THERMOSTAT HOUSING.....114
COVER, FRONT MIDDLE DECK..... 298
COVER, FUSE BOX..... 198, 200
COVER, HYDRAULIC PUMP COMPARTMENT..... 296
COVER, HYDRAULIC PUMP COMPARTMENT ACCESS..... 294
COVER, OIL FILLER OPENING, ENGINE 86
COVER, PROPEL MOTOR..... 60
COVER, RADIATOR COMPARTMENT..... 298
COVER, RADIATOR COMPARTMENT ACCESS..... 294
COVER, RADIATOR FRONT 290
COVER, RADIATOR REAR 290
COVER, ROCKER ARM 74
COVER, ROTARY MANIFOLD TOP 52
COVER, SWING BEARING GREASE BATH..... 216
Cover, Timing Gear-4425-4045HP051 76
COVER, TOOL BOX 302
COVER, TRACK CHAIN TENSION ADJUSTER 30
COVER, UNDER..... 292
COVER, WINDOW..... 256
CRANKSHAFT 70
CRANKSHAFT AUXILIARY DRIVE PULLEY..... 131
CRANKSHAFT GEAR..... 70
CRANKSHAFT MAIN BEARINGS..... 70
CRANKSHAFT POSITION SENSOR-6710-4045HP051 137
CRANKSHAFT PULLEY 130
CRANKSHAFT PULLEY AND DRIVE BELT..... 130
CRANKSHAFT PULLEY, AUXILIARY DRIVE 131
CRANKSHAFT SPEED SENSOR-6710-4045HP051 137
CRANKSHAFT TIMING WHEEL..... 70
CRANKSHAFT, IDLER GEARS, MAIN BEARINGS..... 70
CUP HOLDER..... 226
CUTTING EDGE, DITCH CLEANING BUCKET 334, 336
CUTTING EDGE, GENERAL PURPOSE BUCKET..... 320, 322
CUTTING EDGE, HEAVY DUTY BUCKET..... 328, 330
CUTTING EDGE, HIGH CAPACITY GENERAL PURPOSE BUCKET..... 324
CUTTING EDGE,ESCO BUCKET..... 348
CYLINDER BLOCK 80
CYLINDER BLOCK FITTINGS..... 80
CYLINDER HEAD 100

Página

CYLINDER HEAD GASKET..... 100
CYLINDER HEAD REMOVAL GASKET SET 140
CYLINDER HEAD VENTILATING HOSE, ENGINE 98
CYLINDER HEAD WITH VALVES AND GASKET 100
CYLINDER LINER AND PISTON KIT 78
CYLINDER LINER O-RING KIT 78
CYLINDER LINER, PISTON 78
CYLINDER SEAL KIT..... 350, 352
CYLINDER, ARM 518
CYLINDER, BOOM (LEFT)..... 516
CYLINDER, BOOM (RIGHT)..... 514
CYLINDER, BUCKET..... 520
CYLINDER, CAB TOP HATCH 242
CYLINDER, DIRECT HYDRAULIC THUMB 350
CYLINDER, ETHER START FLUID 144
CYLINDER, PROGRESSIVE HYDRAULIC THUMB..... 352

D

DECAL, AUXILIARY CONTROL 390
DECAL, IGNITION SWITCH 224
DECAL, PILOT SHUT-OFF LEVER 224
DECAL, ROCKER ARM COVER 74
DECALS (ENGLISH)..... 172
DECALS (FRENCH)..... 174, 176
DECK COVER, FRONT MIDDLE..... 298
DEFROSTER / AIR CIRCULATION FAN 288
DEFROSTER FAN 288
DIESEL FIRED ENGINE COOLANT HEATER KIT (KITS BUILT AFTER MARCH 2009)..... 148
DIESEL FIRED FUEL COOLANT HEATER KIT 146, 148
DIFFUSER, CAB REAR AIR 282
DIG AND SWING PILOT CONTROL LEVER COMPONENTS..... 354
DIG AND SWING PILOT CONTROLLER COMPONENTS (SN -XXXXXX) 356
DIG AND SWING PILOT CONTROLLER COMPONENTS (SN XXXXXX-) 358
DIGITAL DISPLAY, FUEL FIRED COOLANT HEATER KIT 146, 148
DIODE, CAB DISPLAY MONITOR WIRING HARNESS 196
DIODE, CAB MAIN WIRING HARNESS..... 198, 200
DIPSTICK, ENGINE OIL 84
DIPSTICK, SWING GEARBOX..... 522
Direct Hydraulic Thumb Kit..... 350
DISPLAY MONITOR, CAB 196
DITCH CLEANING BUCKET..... 334, 336
DITCHING BUCKET..... 338
DOME LIGHT WIRING HARNESS 232
DOME LIGHT, CAB 232
DOOR COMPONENTS, CAB..... 236
DOOR LATCH, CAB..... 236, 248
DOOR LATCH, COOLING PACKAGE COMPARTMENT..... 304
DOOR LATCH, HYDRAULIC PUMP COMPARTMENT 304
DOOR LATCH, RADIATOR COMPARTMENT 304
DOOR LOCK..... 306
DOOR LOCK COMPONENTS, RIGHT SERVICE DOOR COMPONENTS 306
DOOR LOCK, CAB..... 236
DOOR WINDOW, CAB..... 236
DOOR, COOLING PACKAGE COMPARTMENT 304
DOOR, HYDRAULIC PUMP COMPARTMENT..... 304
DOOR, HYDRAULIC PUMP COMPARTMENT ACCESS..... 294
DOOR, RADIATOR COMPARTMENT..... 304
DOOR, RADIATOR COMPARTMENT ACCESS..... 294
DOOR, SERVICE, SIDE REAR..... 304
DOOR, TROPICAL, SIDE SERVICE COMPARTMENTS 304
DRAIN HOSE (SWING MOTOR TO CONTROL VALVE AND RETURN LINE)..... 458
DRAIN HOSES (SWING MOTOR TO CONTROL VALVE, RETURN LINE)..... 458
DRIVE ADAPTER KIT, AUXILIARY (SAE "B" MOUNT, 13 TOOTH).. 388
DRIVE SPROCKET, TRACK CHAIN..... 56
DRIVE, STARTER MOTOR CLUTCH 126
DUCT, CAB HEATER AND A/C AIR DISCHARGE 280
DUCT, CAB HEATER AND A/C AIR INTAKE..... 280
DUCT, CAB LOWER RIGHT AIR 280
DUCT, HVAC UNIT..... 268
DUCT, REAR TRAY..... 282

E

EAR ASSEMBLY, GENERAL PURPOSE BUCKET 320, 322

Índice alfabético, continuación

Página

EAR ASSEMBLY, HIGH CAPACITY GENERAL PURPOSE BUCKET ... 324
ECU ... 104
EDGE PROTECTOR KIT, HEAVY DUTY BUCKET ... 328, 330
ELECTRIC FOOT SWITCH (FOR ONE SOLENOID AUXILIARY CONTROL) ... 390
ELECTRIC SOLENOID VALVE KIT (W/O PRESSURE SWITCH, 1 WAY/2 WAY) ... 392
ELEMENT, AIR CLEANER ... 160
ELEMENT, ENGINE COOLANT HEATER ... 150
ELEMENT, ENGINE OIL FILTER ... 96
ELEMENT, ENGINE OIL FILTER (8822) (HP051) ... 75
ELEMENT, FUEL FILTER ... 120
Element, Fuel Filter-9102-4045HP051 ... 122
ENGINE ACCESSORY DRIVE BELT ... 130
ENGINE AIR INTAKE TO AIR COOLER HOSE ... 152
ENGINE BALANCER SHAFT ... 108
ENGINE COMPARTMENT HOOD ... 300
ENGINE CONTROL UNIT ... 208
ENGINE CONTROL UNIT ASSEMBLY ... 208
ENGINE CONTROL UNIT FUSE ... 208
ENGINE CONTROL UNIT TEMPERATURE SENSOR ... 114
ENGINE CONTROL UNIT WIRING HARNESS ... 206
ENGINE CONTROLLER, FUEL ... 104
ENGINE COOLANT ADAPTER ... 116
ENGINE COOLANT HEATER ... 150
ENGINE COOLANT RECOVERY HOSE ... 154
ENGINE COOLANT RECOVERY SYSTEM ... 154
ENGINE COOLANT RECOVERY TANK ... 154
ENGINE COOLANT TEMPERATURE SENSOR ... 114
ENGINE COOLANT TEMPERATURE SWITCH ... 100
ENGINE COOLANT WATER TANK ... 154
ENGINE COOLING FAN ... 158
ENGINE COOLING FAN AND HUB ... 158
ENGINE COOLING FAN HUB ... 158
ENGINE COOLING FAN SPACER ... 158
ENGINE COVER ... 300
ENGINE CYLINDER HEAD VENTILATING HOSE ... 98
ENGINE FLYWHEEL ... 136
ENGINE FLYWHEEL HOUSING (071872 -) ... 125
ENGINE FRONT FIREWALL PANEL ... 298
ENGINE FRONT PLATE ... 79
ENGINE FRONT PLATE WITHOUT REAR AUXILIARY FUNCTION ... 79
ENGINE GASKET SET ... 140
ENGINE GASKET SET, OVERHAUL ... 142
ENGINE MAJOR OVERHAUL GASKET SET ... 142
ENGINE MOUNTING BRACKET ... 164
ENGINE MOUNTING BRACKETS AND ISOLATORS ... 164
ENGINE MOUNTING ISOLATOR ... 164
ENGINE MOUNTS ... 164
ENGINE OIL BY-PASS VALVE ... 80
ENGINE OIL COOLER ... 116
ENGINE OIL COOLER WITH ADAPTER ... 116
ENGINE OIL DIPSTICK ... 84
ENGINE OIL DIPSTICK TUBE ... 84
ENGINE OIL DRAIN VALVE (ALUMINUM PAN) (ESN. 274011- 334596) (274011 - 334596) ... 92
ENGINE OIL DRAIN VALVE (STEEL OIL PAN) (ESN 334597-) (334597 -) ... 94
ENGINE OIL FILL CAP ... 74
ENGINE OIL FILLER OPENING COVER ... 86
ENGINE OIL FILTER (8822) (HP051) ... 75
ENGINE OIL FILTER HEADER (8822) (HP051) ... 75
ENGINE OIL FILTER HEADER AND FILTER ELEMENT ... 96
ENGINE OIL PAN (ALUMINUM) (ESN. 274011- 334596) (274011 - 334596) ... 92
ENGINE OIL PAN (ESN -274010) (- 274010) ... 90
ENGINE OIL PAN (STEEL) (ESN 334597-) (334597 -) ... 94
ENGINE OIL PAN DRAIN VALVE (ESN -274010) (- 274010) ... 90
ENGINE OIL PAN GASKET (ALUMINUM OIL PAN) (ESN. 274011- 334596) (274011 - 334596) ... 92
ENGINE OIL PAN GASKET (ESN -274010) (- 274010) ... 90
ENGINE OIL PAN GASKET (STEEL OIL PAN) (ESN 334597-) (334597 -) ... 94
ENGINE OIL PAN WITH OIL LEVEL SENSOR (ESN -274010) (- 274010) ... 90
ENGINE OIL PRESSURE REGULATING VALVE ... 80
ENGINE OIL PRESSURE SWITCH ... 80
ENGINE OIL PUMP ... 88
ENGINE OIL PUMP GEAR ... 88
ENGINE OIL PUMP INTAKE ... 88
ENGINE PISTON ... 78
ENGINE SHORT BLOCK ... 82

Página

ENGINE THERMOSTAT ... 114
ENGINE THERMOSTAT HOUSING ... 114
ENGINE THERMOSTAT HOUSING COVER ... 114
ENGINE TO HEATER CORE HOSE (HEATER HOSE) ... 286
ENGINE TO HEATER CORE HOSES ... 286
ENGINE TO HYDRAULIC PUMP COUPLER ... 404
ENGINE TO RADIATOR HOSE ... 152
ENGINE VENTILATING HOSE, CYLINDER HEAD ... 98
ENGINE WIRING CONNECTORS ... 204
ENGINE WIRING HARNESS ... 202
ENGINE WIRING HARNESS AND CONNECTORS ... 204
ESCAPE HAMMER ... 232
ESCAPE HATCH ... 244
ESCO BUCKET CUTTING EDGE ... 348
ESCO BUCKET CUTTING EDGES, TEETH AND ADAPTERS ... 348
ESCO BUCKET TEETH ... 348
ETHER COLD WEATHER STARTING AID ... 144
ETHER START FLUID CYLINDER ... 144
ETHER VALVE ... 144
EVAPORATOR, AIR CONDITIONER ... 270
EXHAUST MANIFOLD ... 102
EXHAUST PIPE ... 162
EXHAUST PIPE, FUEL FIRED COOLANT HEATER KIT ... 146, 148
EXHAUST PIPE, MUFFLER AND BRACKET ... 162
EXHAUST VALVE ... 100
EXTERIOR CAB LIGHTING, CAB TOP ... 192

F

FAN BELT IDLER TENSIONER ... 132
FAN BELT WITH PULLEY ... 134
FAN DRIVE ... 132
FAN DRIVE BELT ... 134
FAN DRIVE HOUSING ... 132
FAN DRIVE HUB ... 132
FAN DRIVE PULLEY ... 132
FAN DRIVE SUPPORT ... 132
FAN DRIVE SUPPORTS, BELT TENSIONER ... 132
FAN SHROUD ... 152
FAN, ALTERNATOR ... 182
FAN, DEFROSTER ... 288
FAN, ENGINE COOLING ... 158
FAN, HVAC UNIT BLOWER ... 272
FILLER CAP, FUEL ... 166
FILLER STRAINER, FUEL ... 166
FILTER ELEMENT, PILOT ... 466
FILTER KIT, FUEL ... 120
FILTER RESTRICTION INDICATOR, HYDRAULIC ... 512
FILTER, AIR CLEANER ... 160
FILTER, AIR CONDITIONING AIR DUCT ... 268
FILTER, CAB HEATER AND A/C AIR INTAKE ... 280
FILTER, ENGINE OIL ... 96
FILTER, ENGINE OIL (8822) (HP051) ... 75
FILTER, FUEL, LINE TO FUEL INJECTION PUMP ... 118
FILTER, FUEL, LINE TO FUEL TRANSFER PUMP ... 118
FILTER, HEATER AIR DUCT ... 268
FILTER, HYDRAULIC RESERVOIR ... 510
FILTER, LEFT PILOT CONTROLLER TO SHUT- OFF VALVE ... 482
FILTER, OIL TANK ... 510
FILTER, PILOT SHUTOFF VALVE TO PROPEL PILOT CONTROLLER VALVE ... 480
FILTER, PROPEL PILOT CONTROLLER VALVE TO PILOT SHUTOFF VALVE ... 480
FILTER, RIGHT PILOT CONTROLLER TO SHUT- OFF VALVE ... 484
FILTER, SUCTION, OIL TANK ... 510
Final Fuel Filter ... 120
FINAL FUEL FILTER FUEL LINES ... 118
FINAL FUEL FILTER TO FUEL COOLER HOSE ... 170
FINAL FUEL FILTER, FUEL LINE, BRACKET ... 118
FITTING, PILOT SIGNAL MANIFOLD (CONTROL VALVE SIDE) ... 444
FITTING, PILOT SIGNAL MANIFOLD (PILOT CONTROLLER SIDE) ... 442
FITTINGS, CONTROL PATTERN SELECTOR KIT ... 394
FITTINGS, MECHANICAL PATTERN CHANGER VALVE ... 396
FLOAT, FUEL LEVEL ... 166
FLOOR MAT ... 252
FLOOR PLATE ... 254
FLOW CONTROL HYDRAULIC VALVE (BUCKET DUMP) ... 426
Flow Control Hydraulic Valve, (Bucket Curl) ... 424
Flow Control Hydraulic Valve, (Bucket Dump) ... 428
FLOW CONTROL VALVE, AIR CONDITIONER EVAPORATOR ... 270
FLOW CONTROL VALVE, HYDRAULIC OIL ... 454

Índice alfabético, continuación

Página

FLOW REGULATOR COMPONENTS, HYDRAULIC PUMP 410
FLOW REGULATOR TO SIGNAL MANIFOLD HOSE (AUXILIARY SOLENOID/FLOW CONTROL) 398
FLYWHEEL 136
FLYWHEEL HOUSING (PE6068TT051) (ESN.071872-) (071872 -) 125
FLYWHEEL RING GEAR 136
FLYWHEEL, ENGINE 136
FLYWHEEL, HOUSING (071872 -) 125
FOOT CONTROL COMPONENTS, AUXILIARY VALVE 372
FOOT PEDAL CONTROL REPLACEMENT, TWO-WAY HYDRAULIC 368
FOOT PEDAL CONTROL, HYDRAULIC (2-WAY) (AUXILIARY) 366
FOOT SWITCH, AUXILIARY ELECTRIC 390
FOOTREST 360
FRAME ASSEMBLY, MAIN 218
FRAME, TRACK 30
FRONT CAB LIGHTING 192
FRONT IDLER 34
FRONT IDLER SHAFT 34
FRONT MIDDLE DECK COVER 298
FRONT MIDDLE DECK COVER SUPPORT BRACKET 298
FRONT PANEL, RADIATOR COMPARTMENT 290
FRONT WINDOW, CAB 238
FRONT WORK LIGHT, RIGHT 190
FUEL COOLER TO FINAL FUEL FILTER HOSE 170
FUEL COOLER TO PRIMARY FUEL FILTER HOSE 170
FUEL FILLER CAP 166
FUEL FILLER STRAINER 166
FUEL FILTER ELEMENT 120
Fuel Filter Element-9102-4045HP051 122
Fuel Filter Head, Primary-9102-4045HP051 122
Fuel Filter Kit-9102-4045HP051 122
FUEL FILTER SERVICE KIT 120
FUEL FIRED COOLANT HEATER KIT 146, 148
FUEL FIRED COOLANT HEATER KIT (KITS BUILT PRIOR TO MARCH 2009) 146
FUEL HEATER PRIMARY FILTER KIT 120
FUEL INJECTION LINES 104
FUEL INJECTION NOZZLE 104
FUEL INJECTION PUMP 104
FUEL INJECTION PUMP CONTROLLER 104
FUEL INJECTION PUMP LINE TO FUEL FILTER 118
FUEL INJECTION PUMP TEMPERATURE SENDER 104
FUEL INJECTION PUMP, STANADYNE DE10 SERVICE KITS 138
FUEL INJECTION PUMP,FUEL INJECTION LINES AND ENGINE CONTROLLER 104
FUEL INJECTOR LEAKOFF LINE TO FUEL TANK HOSE 170
FUEL LEVEL FLOAT 166
FUEL LEVEL SENSOR 166
FUEL LINE 104
FUEL LINES, FINAL FUEL FILTER 118
FUEL PUMP, FUEL FIRED COOLANT HEATER KIT 146, 148
FUEL TANK 166
FUEL TANK MOUNTING 168
FUEL TANK TO FUEL INJECTOR LEAKOFF LINE HOSE 170
FUEL TANK TO PRIMARY FUEL FILTER HOSE 170
FUEL TANK, LEVEL FLOAT AND FILLER CAP 166
FUEL TEMPERATURE SENDER, FUEL INJECTION PUMP 104
FUEL TRANSFER PUMP 124
FUEL TRANSFER PUMP LINE TO FUEL FILTER 118
FUEL TRANSFER PUMP PUSH ROD 124
FUSE BOX 198, 200
FUSE BOX COVER 198, 200
FUSE, CAB MAIN WIRING HARNESS 198, 200
FUSE, ENGINE CONTROL UNIT 208

G

GASKET SET, CYLINDER HEAD REMOVAL 140
GASKET SET, ENGINE MAJOR OVERHAUL 142
GASKET SET, IN CHASSIS OVERHAUL 140
GASKET, AIR INTAKE 106
GASKET, CYLINDER HEAD 100
GASKET, ENGINE OIL PAN (ALUMINUM PAN) (ESN. 274011- 334596) (274011 - 334596) 92
GASKET, ENGINE OIL PAN (ESN -274010) (- 274010) 90
GASKET, ENGINE OIL PAN (STEEL OIL PAN) (ESN 334597-) (334597 -) 94
GASKET, ROCKER ARM COVER 74
Gasket, Timing Gear Cover-4425-4045HP051 76
GASKET, TURBOCHARGER 110

Página

Gauge, Hydraulic Reservoir Oil Level 510
GEAR, CAMSHAFT 72
GEAR, CRANKSHAFT 70
GEAR, ENGINE OIL PUMP 88
GEAR, FUEL INJECTION PUMP 104
GEARBOX COMPONENTS, PROPEL 62
GEARBOX COMPONENTS, SWING 522
GEARBOX MOUNTING, PROPEL 56
GEARBOX MOUNTING, SWING 524
GENERAL PURPOSE BUCKET 320, 322
GENERAL PURPOSE BUCKET (SEE FOOTNOTE) 320
GENERAL PURPOSE BUCKET CUTTING EDGE 320
GENERAL PURPOSE BUCKET MOLDBOARD 320
GENERAL PURPOSE BUCKET, HIGH CAPACITY 324, 326
GENERAL PURPOSE HIGH CAPACITY BUCKET 324, 326
GENERAL PURPOSE HIGH CAPACITY BUCKET (SEE FOOTNOTE) 322
GROUND CABLE 198, 200
GROUND CABLE, STARTER 126
GROUND STRAP 194, 198, 200
GROUND STRAP, STARTER 126
GUARD KIT, VANDAL 256
GUARD, CAB RIGHT WINDOW 240
GUARDS, WINDOW 256
GUIDE, TRACK LOWER 32

H

HAMMER, ESCAPE 232
HANDLE, CAB DOOR HOLD OPEN LATCH 248
HANDLE, CAB FRONT WINDOW 238
HANDLE, SECONDARY EXIT 246
HANDRAIL, CAB LEFT SIDE 234
HANDRAIL, INSIDE DOOR 236
HANDRAIL, RIGHT FRONT 302
HARNESS, ALTERNATOR WIRING 182
HARNESS, BOOM LIGHT WIRING 188
HARNESS, CAB DISPLAY MONITOR WIRING 196
HARNESS, CAB REAR POWER SUPPLY WIRING 282
HARNESS, DEFROSTER FAN WIRING 288
HARNESS, ENGINE WIRING 202
HARNESS, FRONT CAB TOP EXTERIOR WORK LIGHT 192
HARNESS, HORN WIRING 316
HARNESS, HYDRAULIC FILTER RESTRICTION INDICATOR WIRING 512
HARNESS, MOTION ALARM WIRING 318
HARNESS, VEHICLE MAIN WIRING 194
HARNESS, WIRE, AIR CONDITIONER 276
HARNESS, WIRE, BOOM WORK LIGHT 190
HARNESS, WIRE, ENGINE CONTROL UNIT 206
HARNESS, WIRE, FOOT SWITCH 390
HARNESS, WIRE, FUEL FIRED COOLANT HEATER KIT 146, 148
HARNESS, WIRING, DOME LIGHT 232
HARNESS, WIRING; ENGINE 204
HARNESS, WIRING, EXTENSION 198, 200
HARNESS, WIRING, MAIN, CAB 198, 200
HARNESS, WIRING, RADIO 310
HARNESS, WIRING, RADIO ANTENNA 232
HARNESS, WIRING, RADIO SPEAKER 232
HARNESS, WIRING, STARTER 126
HARNESS, WIRING, STARTER RELAY 180
HARNESS, WIRING, WINDSHIELD WIPER MOTOR 232
HATCH, CAB ESCAPE 244
HATCH, CAB TOP 242
HEAD, CYLINDER 100
HEADER, ENGINE OIL FILTER 96
HEADER, ENGINE OIL FILTER (8822) (HP051) 75
Header, Fuel Filter-9102-4045HP051 122
HEADLINER, CAB TOP 234
HEAT ELEMENT, ENGINE COOLANT HEATER 150
HEATER AND A/C CONTROLLER TO HVAC UNIT WIRING HARNESS 268
HEATER AND AIR CONDITIONER UNIT COMPONENTS 270
HEATER AND AIR CONDITIONER UNIT COMPONENTS (CONTINUED) 272
HEATER CONTROLLER, CAB 268
HEATER CORE 270
HEATER CORE TO ENGINE HOSE (HEATER HOSE) 286
HEATER KIT, FUEL FIRED COOLANT 146, 148
HEATER THERMOSTAT 270
HEATER UNIT 268
HEATER UNIT COMPONENTS 270, 272

Índice alfabético, continuación

Página

HEATER, ENGINE COOLANT 150
HEAVY DUTY BUCKET 328, 330, 332
HEAVY DUTY BUCKET (SEE FOOTNOTE)..... 328
HEAVY DUTY BUCKET CUTTING EDGE 328, 330
HEAVY DUTY BUCKET EDGE PROTECTOR KIT 328, 330
HEAVY DUTY BUCKET MOLDBOARD 328, 330
HEAVY DUTY BUCKET SIDE CUTTER KIT..... 328, 330
HEAVY DUTY OR GENERAL PURPOSE BUCKET TOOTH ASSEMBLY..... 342
HIGH CAPACITY BUCKET TEETH 344
HIGH CAPACITY BUCKET TEETH (CONTINUED)..... 346
HIGH CAPACITY BUCKET TOOTH ASSEMBLY..... 344
HIGH CAPACITY BUCKET TOOTH ASSEMBLY (CONTINUED)..... 346
HIGH CAPACITY BUCKET, GENERAL PURPOSE 324, 326
HIGH PRESSURE HOSE TO HYDRAULIC PUMP COUPLER 452
HOLDER, BEVERAGE..... 226
HOOD, ENGINE COMPARTMENT 300
HORN..... 316
HORN AND WIRING HARNESS..... 316
HORN WIRING HARNESS 316
HOSE TO CONTROL VALVE LINE (AUXILIARY PLUMBING, FACTORY INSTALL)..... 498
HOSE, AIR CLEANER TO TURBOCHARGER..... 160
HOSE, AIR CONDITIONER EVAPORATOR..... 270
HOSE, ARM CYLINDER TO BOOM LINE 492
HOSE, ARM LINE TO BOOM LINE (FACTORY INSTALLED AUXILIARY PLUMBING) 504
HOSE, ARM LINE TO BOOM LINE (FIELD) (AUXILIARY HYDRAULIC LINE KIT) 506
HOSE, BOOM AUXILIARY LINE TO RETURN LINE (AUXILIARY HYDRAULIC OPTIONAL RETURN)..... 508
HOSE, BOOM CYLINDER TO OIL LINE 460
HOSE, BOOM LINE TO ARM CYLINDER 492
HOSE, BOOM LINE TO ARM LINE (FACTORY INSTALLED AUXILIARY PLUMBING) 504
HOSE, BOOM LINE TO ARM LINE (FIELD) (AUXILIARY HYDRAULIC LINE KIT) 506
HOSE, BOOM LINE TO BOOM LINE (FACTORY INSTALLED AUXILIARY PLUMBING) 502
HOSE, BOOM LINE TO BUCKET CYLINDER (LONG ARM, 3.1M).. 376
HOSE, BOOM LINE TO BUCKET CYLINDER (STANDARD ARM, 2.6M)..... 374
HOSE, BOOM LINE TO CONTROL VALVE (ARM AND BUCKET CYLINDERS) 496
HOSE, BOOM LINE TO CONTROL VALVE (FACTORY INSTALLED AUXILIARY PLUMBING) 500
HOSE, BOOM LINE TO CONTROL VALVE (FIELD) (AUXILIARY HYDRAULIC LINE KIT)..... 506
HOSE, BOOM LINE TO SELECTOR VALVE (FACTORY INSTALLED AUXILIARY PLUMBING) 500
Hose, Boom Mounted Lubrication 494
HOSE, BUCKET CYLINDER TO BOOM LINE (LONG ARM, 3.1M).. 376
HOSE, BUCKET CYLINDER TO BOOM LINE (STANDARD ARM, 2.6M)..... 374
HOSE, CHARGE AIR COOLER TO AIR INTAKE 152
HOSE, CHARGE AIR COOLER TO TURBOCHARGER 152
Hose, Compressor To HVAC Unit (Refrigerant) 284
Hose, Condenser To Compressor (Refrigerant)..... 274
Hose, Condenser To Receiver/Dryer (Refrigerant)..... 274
HOSE, CONTROL PATTERN SELECTOR KIT..... 394
HOSE, CONTROL VALVE LINE TO SELECTOR VALVE(FACTORY INSTALLED AUX. PLUMBING) 500
HOSE, CONTROL VALVE TO BOOM LINE (ARM AND BUCKET CYLINDERS) 496
HOSE, CONTROL VALVE TO BOOM LINE (FACTORY INSTALLED AUXILIARY PLUMBING) 500
HOSE, CONTROL VALVE TO BOOM LINE (FIELD) (AUXILIARY HYDRAULIC LINE KIT)..... 506
HOSE, CONTROL VALVE TO HYDRAULIC PUMP (HIGH PRESSURE) 452
HOSE, CONTROL VALVE TO HYDRAULIC RESERVOIR (PILOT HOSE)..... 486
HOSE, CONTROL VALVE TO HYDRAULIC RESERVOIR(PILOT HOSE)..... 488
HOSE, CONTROL VALVE TO OIL TANK..... 486
HOSE, CONTROL VALVE TO PILOT SIGNAL MANIFOLD..... 472
HOSE, CONTROL VALVE TO PILOT SIGNAL MANIFOLD (1 WAY/2 WAY ELECTRIC VALVE) 392
HOSE, CONTROL VALVE TO RESERVOIR (AUX SOLENOID AND FLOW CONTROL)(1-WAY)..... 398
HOSE, CONTROL VALVE TO ROTARY MANIFOLD 464
HOSE, CONTROL VALVE TO SIGNAL MANIFOLD (AUXILIARY SOLENOID/FLOW CONTROL) 398

Página

HOSE, CONTROL VALVE TO SOLENOID VALVE 488
HOSE, CONTROL VALVE TO SOLENOID VALVE (PILOT HOSE).. 470, 472
HOSE, CONTROL VALVE TO SWING MOTOR 462
HOSE, CONTROL VALVE TO SWING MOTOR (DRAIN HOSE) 458
HOSE, DRAIN (SWING MOTOR TO CONTROL VALVE AND RETURN LINE)..... 458
HOSE, ENGINE AIR INTAKE TO AIR COOLER..... 152
HOSE, ENGINE COOLANT (RADIATOR TO WATER TANK)..... 154
HOSE, ENGINE COOLANT (WATER TANK TO RADIATOR)..... 154
HOSE, ENGINE TO HEATER CORE (HEATER HOSE)..... 286
HOSE, ENGINE TO RADIATOR 152
HOSE, ENGINE VENTILATING, CYLINDER HEAD 98
HOSE, FINAL FUEL FILTER TO FUEL COOLER 170
HOSE, FLOW REGULATOR TO SIGNAL MANIFOLD (AUXILIARY SOLENOID/FLOW CONTROL) 398
HOSE, FROM CONTROL VALVE (PILOT HOSE)..... 470
HOSE, FROM CONTROL VALVE TO PILOT SIGNAL MANIFOLD (FOOT CONTROL,PILOT SYSTEM)..... 366
HOSE, FROM FOOT PEDAL CONTROL TO PILOT SHUTOFF VALVE (PILOT SYSTEM)..... 366
HOSE, FROM FOOT PEDAL CONTROL TO PILOT SIGNAL MANIFOLD (PILOT SYSTEM)..... 366
HOSE, FROM HVAC UNIT..... 268
HOSE, FROM PILOT SHUT-OFF VALVE TO SOLENOID VALVE (PILOT SYSTEM)..... 392
HOSE, FROM PILOT SHUTOFF VALVE TO FOOT PEDAL CONTROL (PILOT SYSTEM)..... 366
HOSE, FROM PILOT SIGNAL MANIFOLD TO CONTROL VALVE (FOOT CONTROL,PILOT SYS)..... 366
HOSE, FROM PILOT SIGNAL MANIFOLD TO FOOT PEDAL CONTROL (PILOT SYSTEM)..... 366
Hose, From Pilot Signal Manifold To Solenoid Valve..... 394
HOSE, FROM SOLENOID TO PILOT SHUT-OFF VALVE (PILOT SYSTEM) 392
HOSE, FROM SOLENOID VALVE TO PILOT SIGNAL MANIFOLD.. 394
HOSE, FUEL COOLER TO FINAL FUEL FILTER 170
HOSE, FUEL COOLER TO PRIMARY FUEL FILTER 170
HOSE, FUEL INJECTOR LEAKOFF LINE TO FUEL TANK 170
HOSE, FUEL TANK TO FUEL INJECTOR LEAKOFF LINE 170
HOSE, FUEL TANK TO PRIMARY FUEL FILTER 170
HOSE, HEATER CORE TO ENGINE (HEATER HOSE)..... 286
Hose, HVAC Unit To Compressor (Refrigerant) 284
Hose, HVAC Unit To Receiver/Dryer (Refrigerant)..... 284
HOSE, HYDRAULIC FILTER RESTRICTION INDICATOR..... 512
HOSE, HYDRAULIC PUMP REGULATOR TO PILOT FILTER SOLENOID VALVE 468
HOSE, HYDRAULIC PUMP REGULATOR TO PILOT SIGNAL MANIFOLD..... 468
HOSE, HYDRAULIC PUMP REGULATOR TO RESERVOIR..... 468
HOSE, HYDRAULIC PUMP TO CONTROL VALVE (HIGH PRESSURE)..... 452
HOSE, HYDRAULIC PUMP TO OIL TANK (SUCTION) 450
HOSE, HYDRAULIC PUMP TO RESERVOIR (LOW PRESSURE).. 450
HOSE, HYDRAULIC RESERVOIR TO CONTROL VALVE (PILOT HOSE)..... 486
HOSE, HYDRAULIC RESERVOIR TO CONTROL VALVE(PILOT HOSE)..... 488
HOSE, HYDRAULIC RESERVOIR TO PILOT SHUT- OFF VALVE.. 490
HOSE, HYDRAULIC RESERVOIR TO PILOT SIGNAL MANIFOLD.. 488
HOSE, HYDRAULIC RESERVOIR TO PILOT SIGNAL MANIFOLD (PILOT HOSE) 486
HOSE, HYDRAULIC RESERVOIR TO PUMP (LOW PRESSURE).. 450
HOSE, HYDRAULIC RESERVOIR TO PUMP REGULATOR 468
HOSE, HYDRAULIC RESERVOIR TO SOLENOID VALVE..... 466
HOSE, HYDRAULIC RESERVOIR TO SOLENOID VALVE (PILOT SYSTEM) 392
HOSE, LEFT PILOT CONTROLLER TO SHUT-OFF VALVE..... 482
HOSE, LEFT PILOT CONTROLLER TO SIGNAL MANIFOLD..... 482
HOSE, OIL LINE TO BOOM CYLINDER 460
HOSE, OIL TANK TO CONTROL VALVE..... 486
HOSE, OIL TANK TO HYDRAULIC PUMP (SUCTION) 450
HOSE, OIL TANK TO PILOT SIGNAL MANIFOLD 486
HOSE, PILOT FILTER SOLENOID VALVE TO HYDRAULIC PUMP REGULATOR 468
HOSE, PILOT FILTER SOLENOID VALVE TO RETURN LINE 488
HOSE, PILOT FILTER SOLENOID VALVE TO SOLENOID VALVE.. 466
HOSE, PILOT FILTER TO PILOT PUMP 466
HOSE, PILOT PUMP TO PILOT FILTER 466
HOSE, PILOT SHUT-OFF VALVE TO HYDRAULIC RESERVOIR... 490
HOSE, PILOT SHUT-OFF VALVE TO LEFT PILOT CONTROLLER.. 482
HOSE, PILOT SHUT-OFF VALVE TO RIGHT PILOT CONTROLLER..... 484

Índice alfabético, continuación

Página

HOSE, PILOT SHUT-OFF VALVE TO SIGNAL MANIFOLD 490
HOSE, PILOT SHUT-OFF VALVE TO SOLENOID VALVE 490
HOSE, PILOT SHUTOFF VALVE TO PROPEL PILOT CONTROLLER VALVE 480
HOSE, PILOT SIG. MAN. TO CONTROL VALVE (AUXILIARY SOLENOID/FLOW CONTROL) 398
HOSE, PILOT SIG. MAN. TO SOLENOID VALVE (AUXILIARY SOLENOID/FLOW CONTROL) 398
HOSE, PILOT SIGNAL MANIFOLD TO CONTROL VALVE..... 472
HOSE, PILOT SIGNAL MANIFOLD TO CONTROL VALVE (1 WAY/2 WAY ELECTRIC VALVE) 392
HOSE, PILOT SIGNAL MANIFOLD TO HYDRAULIC PUMP REGULATOR 468
HOSE, PILOT SIGNAL MANIFOLD TO HYDRAULIC RESERVOIR.. 488
HOSE, PILOT SIGNAL MANIFOLD TO HYDRAULIC RESERVOIR (PILOT HOSE) 486
HOSE, PILOT SIGNAL MANIFOLD TO LEFT PILOT CONTROLLER..... 482
HOSE, PILOT SIGNAL MANIFOLD TO OIL TANK 486
HOSE, PILOT SIGNAL MANIFOLD TO PROPEL PILOT CONTROLLER..... 478
HOSE, PILOT SIGNAL MANIFOLD TO RIGHT PILOT CONTROLLER..... 484
HOSE, PILOT SIGNAL MANIFOLD TO SHUT-OFF VALVE 490
HOSE, PILOT SIGNAL MANIFOLD TO SOLENOID VALVE..... 472
HOSE, PILOT SIGNAL MANIFOLD TO SOLENOID VALVE (PILOT SYSTEM) 392
HOSE, PILOT SIGNAL MANIFOLD TO SWING MOTOR (PILOT HOSE)..... 470
HOSE, PRIMARY FUEL FILTER TO FUEL COOLER 170
HOSE, PRIMARY FUEL FILTER TO FUEL TANK 170
HOSE, PROPEL MOTOR TO ROTARY MANIFOLD 66
HOSE, PROPEL PILOT CONTROLLER TO PILOT SIGNAL MANIFOLD..... 478
HOSE, PROPEL PILOT CONTROLLER VALVE TO PILOT SHUTOFF VALVE 480
HOSE, RADIATOR TO ENGINE 152
Hose, Receiver/Dryer to HVAC Unit (Refrigerant)..... 274
HOSE, RESERVOIR TO CONTROL VALVE (AUX SOLENOID AND FLOW CONTROL)(1-WAY)..... 398
HOSE, RESERVOIR TO SOLENOID VALVE (AUXILIARY SOLENOID/FLOW CONTROL) 398
HOSE, RETURN LINE TO BOOM AUXILIARY LINE (AUXILIARY HYDRAULIC OPTIONAL RETURN)..... 508
HOSE, RETURN LINE TO PILOT FILTER SOLENOID VALVE 488
HOSE, RETURN LINE TO ROTARY MANIFOLD (DRAIN HOSE) ... 458
HOSE, RETURN LINE TO SELECTOR VALVE (FACTORY INSTALLED AUXILIARY PLUMBING) 500
HOSE, RETURN LINE TO SHUTOFF VALVE (AUXILIARY HYDRAULIC OPTIONAL RETURN)..... 508
HOSE, RETURN LINE TO SWING MOTOR (DRAIN HOSE)..... 458
HOSE, RIGHT PILOT CONTROLLER TO SHUT-OFF VALVE 484
HOSE, RIGHT PILOT CONTROLLER TO SIGNAL MANIFOLD 484
HOSE, ROTARY MANIFOLD TO CONTROL VALVE 464
HOSE, ROTARY MANIFOLD TO PROPEL MOTOR 66
HOSE, ROTARY MANIFOLD TO RETURN LINE (DRAIN HOSE) ... 458
HOSE, ROTARY MANIFOLD TO SOLENOID VALVE (PILOT HOSE)..... 472
HOSE, SELECTOR VALVE TO BOOM LINE (FACTORY INSTALLED AUXILIARY PLUMBING) 500
HOSE, SELECTOR VALVE TO CONTROL VALVE LINE (FACTORY INSTALLED AUX. PLUMBING) 500
HOSE, SELECTOR VALVE TO RETURN LINE (FACTORY INSTALLED AUXILIARY PLUMBING) 500
HOSE, SHUT-OFF VALVE TO SOLENOID VALVE (AUXILIARY SOLENOID/FLOW CONTROL) 398
HOSE, SHUTOFF VALVE TO RETURN LINE (AUXILIARY HYDRAULIC OPTIONAL RETURN)..... 508
HOSE, SIGNAL MANIFOLD TO FLOW REGULATOR (AUXILIARY SOLENOID/FLOW CONTROL) 398
HOSE, SOLENOID VALVE TO CONTROL VALVE 488
HOSE, SOLENOID VALVE TO CONTROL VALVE (PILOT HOSE).. 470, 472
HOSE, SOLENOID VALVE TO HYDRAULIC RESERVOIR..... 466
HOSE, SOLENOID VALVE TO HYDRAULIC RESERVOIR (PILOT SYSTEM) 392
HOSE, SOLENOID VALVE TO PILOT FILTER SOLENOID VALVE.. 466
HOSE, SOLENOID VALVE TO PILOT SHUT-OFF VALVE 490
HOSE, SOLENOID VALVE TO PILOT SIGNAL MANIFOLD..... 472
HOSE, SOLENOID VALVE TO PILOT SIGNAL MANIFOLD (PILOT SYSTEM) 392
HOSE, SOLENOID VALVE TO RESERVOIR (AUXILIARY SOLENOID/FLOW CONTROL) 398

Página

HOSE, SOLENOID VALVE TO ROTARY MANIFOLD (PILOT HOSE)..... 472
HOSE, SOLENOID VALVE TO SHUT-OFF VALVE (AUXILIARY SOLENOID/FLOW CONTROL) 398
HOSE, SOLENOID VALVE TO SIGNAL MANIFOLD (AUXILIARY SOLENOID/FLOW CONTROL) 398
HOSE, SWING MOTOR TO CONTROL VALVE 462
HOSE, SWING MOTOR TO CONTROL VALVE (DRAIN HOSE) 458
HOSE, SWING MOTOR TO PILOT SIGNAL MANIFOLD (PILOT HOSE)..... 470
HOSE, SWING MOTOR TO RETURN LINE (DRAIN HOSE) 458
HOSE, TURBOCHARGER TO AIR CLEANER..... 160
HOSE, TURBOCHARGER TO CHARGE AIR COOLER 152
HOSE, WINDSHIELD WASHER 232
HOSES, MECHANICAL PATTERN CHANGER 396
HOSES, TURBOCHARGER 110
HOUSING, ENGINE THERMOSTAT..... 114
HOUSING, FAN DRIVE..... 132
HOUSING, FLYWHEEL (071872 -) 125
HUB, ENGINE COOLING FAN..... 158
HUB,FAN DRIVE 132
HVAC UNIT BLOWER FAN..... 272
HVAC UNIT BLOWER MOTOR 272
HVAC UNIT DUCT 268
HVAC UNIT MOTOR 270
HVAC Unit To Receiver/Dryer Hose (Refrigerant) 284
HYD. HOSES, SINGLE PEDAL KIT..... 370
HYDRAULIC CYLINDER, ARM..... 518
HYDRAULIC CYLINDER, BOOM (LEFT) 516
HYDRAULIC CYLINDER, BOOM (RIGHT)..... 514
HYDRAULIC CYLINDER, BUCKET..... 520
HYDRAULIC FILTER RESTRICTION INDICATOR..... 512
HYDRAULIC FILTER RESTRICTION INDICATOR HOSE..... 512
HYDRAULIC FILTER RESTRICTION INDICATOR KIT 512
Hydraulic Filter Restriction Indicator Switch 512
HYDRAULIC FOOT PEDAL CONTROL (2-WAY)..... 366
HYDRAULIC FOOT PEDAL CONTROL REPLACEMENT, TWO-WAY..... 368
HYDRAULIC LINES, PILOT (PROPEL PILOT CONTROLLER VALVE TO SHUTOFF VALVE)..... 480
HYDRAULIC LINES, PILOT SHUTOFF VALVE TO PROPEL PILOT CONTROLLER VALVE 480
HYDRAULIC OIL FLOW CONTROL VALVE..... 454
HYDRAULIC OIL RESERVOIR..... 510
HYDRAULIC OIL RESERVOIR AND FILTERS..... 510
HYDRAULIC OIL TANK..... 510
HYDRAULIC PLUMBING, AUXILIARY (AT CONTROL VALVE, FACTORY INSTALLED)..... 500
HYDRAULIC PUMP COMPARTMENT ACCESS DOOR..... 294
HYDRAULIC PUMP COMPARTMENT COVER..... 296
HYDRAULIC PUMP COMPARTMENT COVER SUPPORT BRACKET 296
HYDRAULIC PUMP COMPARTMENT DOOR..... 304
HYDRAULIC PUMP COMPARTMENT DOOR LATCH 304
HYDRAULIC PUMP COMPARTMENT TOP COVER AND SUPPORTS 296
HYDRAULIC PUMP COMPONENTS..... 406
HYDRAULIC PUMP CONTROLLER TO HOUSING SEAL..... 408
HYDRAULIC PUMP FLOW REGULATOR COMPONENTS..... 410
HYDRAULIC PUMP OUTPUT CONTROLLER COMPONENTS 408
HYDRAULIC PUMP PISTON ASSEMBLY (FRONT OF MACHINE WHEN INSTALLED)..... 414
HYDRAULIC PUMP PISTON ASSEMBLY (INSTALLED ON FRONT OF MACHINE) 414
HYDRAULIC PUMP PISTON ASSEMBLY (INSTALLED ON REAR OF MACHINE) 412
HYDRAULIC PUMP PISTON ASSEMBLY (REAR OF MACHINE WHEN INSTALLED)..... 412
HYDRAULIC PUMP PRESSURE SENSOR 404
HYDRAULIC PUMP PRESSURE SENSOR (INSERTS FROM TOP)..... 406
HYDRAULIC PUMP REGULATOR TO PILOT FILTER SOLENOID VALVE HOSE 468
HYDRAULIC PUMP REGULATOR TO PILOT SIGNAL MANIFOLD HOSE 468
HYDRAULIC PUMP REGULATOR TO RESERVOIR HOSE 468
HYDRAULIC PUMP TO CONTROL VALVE HIGH PRESSURE HOSES..... 452
HYDRAULIC PUMP TO CONTROL VALVE HOSE (HIGH PRESSURE) 452
HYDRAULIC PUMP TO ENGINE COUPLER 404
HYDRAULIC PUMP TO HIGH PRESSURE HOSE COUPLER 452
HYDRAULIC PUMP TO OIL TANK HOSE (SUCTION) 450

Índice alfabético, continuación

Página

HYDRAULIC PUMP TO RESERVOIR HOSE (LOW PRESSURE)... 450
HYDRAULIC PUMP TO RESERVOIR LINE (LOW PRESSURE)..... 450
HYDRAULIC RESERVOIR FILTER 510
HYDRAULIC RESERVOIR HOSE TO SOLENOID VALVE (PILOT SYSTEM) 392
Hydraulic Reservoir Oil Level Gauge 510
HYDRAULIC RESERVOIR SENSOR 510
HYDRAULIC RESERVOIR TO CONTROL VALVE (RETURN LINE)..... 454
HYDRAULIC RESERVOIR TO CONTROL VALVE HOSE (AUXILIARY SOLENOID/FLOW CONTROL) 398
HYDRAULIC RESERVOIR TO CONTROL VALVE HOSE (PILOT HOSE)..... 486, 488
HYDRAULIC RESERVOIR TO OIL COOLER LINE (RETURN LINE)..... 454
HYDRAULIC RESERVOIR TO PILOT SHUT-OFF VALVE HOSE 490
HYDRAULIC RESERVOIR TO PILOT SIGNAL MANIFOLD HOSE.. 488
HYDRAULIC RESERVOIR TO PILOT SIGNAL MANIFOLD HOSE (PILOT HOSE)..... 486
HYDRAULIC RESERVOIR TO PUMP HOSE (LOW PRESSURE)... 450
HYDRAULIC RESERVOIR TO PUMP LINE (LOW PRESSURE)..... 450
HYDRAULIC RESERVOIR TO PUMP LOW PRESSURE HOSES AND LINES..... 450
HYDRAULIC RESERVOIR TO PUMP REGULATOR HOSE 468
HYDRAULIC RESERVOIR TO SOLENOID VALVE HOSE..... 466
HYDRAULIC RESERVOIR TO SOLENOID VALVE HOSE (AUXILIARY SOLENOID/FLOW CONTROL) 398
Hydraulic Restrictor Valve 454
HYDRAULIC THUMB KIT, DIRECT 350
HYDRAULIC THUMB KIT, PROGRESSIVE..... 352

I

IDLER PULLEY 134
IDLER SPROCKET 34
IDLER, TRACK CHAIN (REPLACEMENT) 36
IDLER,FRONT..... 34
IGNITION KEY 198, 200
IGNITION SWITCH 198, 200
IGNITION SWITCH DECAL 224
IGNITION SWITCH LABEL 224
IN CHASSIS OVERHAUL GASKET SET..... 140
INDICATOR, AIR FILTER RESTRICTION..... 160
INDICATOR, HYDRAULIC FILTER..... 512
INJECTION FUEL PUMP, SERVICE KITS..... 138
INLET, WATER PUMP..... 112
INTAKE VALVE..... 100
INTAKE, AIR..... 106
INTAKE, ENGINE OIL PUMP..... 88
ISOLATOR, BETWEEN MAINFRAME AND RADIATOR 156
ISOLATOR, BETWEEN RADIATOR AND MAINFRAME 156
ISOLATOR, CAB MOUNT (TO MAIN FRAME) 228
ISOLATOR, ENGINE MOUNTING 164
ISOLATOR, RADIATOR BOTTOM 156

K

KEY, IGNITION..... 198, 200
KIT, 3.00 INCH SEAT BELT ,..... 262
KIT, ANTI-DRIFT ARM 400
KIT, ANTI-DRIFT BOOM 402
KIT, ARM CYLINDER SEAL..... 518
KIT, ARM, BUCKET CYLINDER, AND LINKAGE (LONG ARM, 3.1M)..... 376
KIT, ARM, BUCKET CYLINDER, AND LINKAGE (STANDARD ARM, 2.6M)..... 374
KIT, AUXILIARY DRIVE ADAPTER (SAE "A" MOUNT, 9 TOOTH)... 386
KIT, AUXILIARY DRIVE ADAPTER (SAE "B" MOUNT, 13 TOOTH).. 388
KIT, AUXILIARY FOOT CONTROL VALVE SEAL..... 372
KIT, AUXILIARY HYDRAULIC HOSES (FIELD)..... 506
KIT, BUCKET CYLINDER SEAL 520
KIT, CONTROL PATTERN SELECTOR 394
KIT, CYLINDER LINER AND PISTON..... 78
KIT, CYLINDER LINER O-RING..... 78
KIT, DIRECT HYDRAULIC THUMB 350
KIT, ENGINE MAJOR OVERHAUL GASKET..... 142
KIT, FUEL FILTER SERVICE 120
KIT, FUEL FIRED COOLANT HEATER..... 146, 148
KIT, FUEL HEATER PRIMARY FILTER 120
KIT, HEAVY DUTY BUCKET EDGE PROTECTOR 328, 330
KIT, HYDRAULIC FILTER RESTRICTION INDICATOR..... 512

Página

KIT, LEFT BOOM CYLINDER SEAL 516
KIT, MECHANICAL PATTERN CHANGER 396
KIT, MIC CUSTOMER 186
KIT, O-RING, METRIC..... 178
KIT, PROGRESSIVE HYDRAULIC THUMB..... 352
KIT, PROPEL MOTOR BRAKE VALVE SEAL..... 64
KIT, RIGHT BOOM CYLINDER SEAL..... 514
KIT, ROADBUILDER BUCKET..... 340
KIT, SEAL, PROPEL GEARBOX..... 62
KIT, SEAL, PROPEL MOTOR 68
KIT, SEAT FOAM..... 258
KIT, SEAT HARDWARE 260
KIT, SEAT LUMBAR 258
KIT, SEAT SLIDE TRACK..... 264
KIT, SECONDARY EXIT..... 246
KIT, SIDE CUTTERS, HEAVY DUTY BUCKET..... 328, 330
KIT, SIDE CUTTERS, HIGH CAPACITY GENERAL PURPOSE BUCKET..... 324
KIT, SINGLE PEDAL CONTROL..... 370
KIT, SOLENOID CONTROL AND FLOW CONTROL (1-WAY) 398
KIT, SWING MOTOR SEAL..... 526
KIT, TRACK CHAIN, MASTER PIN 40
KIT, TWO-WAY HYDRAULIC FOOT PEDAL CONTROL REPLACEMENT 368
KIT, VANDAL PROTECTION..... 256
KIT, WATER PUMP REPAIR 113
KIT, WEAR SHROUD, HIGH CAPACITY GENERAL PURPOSE BUCKET..... 324
KIT, WINDOW GUARDS 256
KIT,SOLENOID VALVE, 1WAY/2WAY, WITHOUT PRESSURE SWITCH..... 392
KITS, SERVICE, FUEL INJECTION PUMP 138

L

LABEL, AUXILIARY CONTROL 390
LABEL, IGNITION SWITCH 224
LABEL, PILOT CONTROL LEVER..... 394
LABEL, PILOT SHUT-OFF LEVER 224
LABEL, ROCKER ARM COVER 74
LABEL, SECONDARY EXIT..... 246
LABEL, SINGLE PEDAL CONTROL KIT 370
LABELS (ENGLISH)..... 172
LABELS (FRENCH)..... 174, 176
LABELS AND DECALS (ENGLISH)..... 172
LABELS AND DECALS (FRENCH)..... 174
LABELS AND DECALS (SPANISH)..... 176
LAMP, FRONT CAB TOP EXTERIOR WORK LIGHT..... 192
LATCH COMPONENTS, CAB DOOR HOLD OPEN..... 248
LATCH, CAB DOOR..... 236
LATCH, COOLING PACKAGE COMPARTMENT DOOR..... 304
LATCH, DOOR LOCK, RIGHT SERVICE DOOR COMPONENTS... 306
Latch, Engine Compartment Hood 300
LATCH, HYDRAULIC PUMP COMPARTMENT DOOR 304
LATCH, LEFT SERVICE DOOR, COMPONENTS..... 308
LATCH, RADIATOR COMPARTMENT DOOR 304
LATCH, TROPICAL DOOR, SIDE SERVICE COMPARTMENTS..... 304
LEFT BOOM CYLINDER BARREL 516
LEFT BOOM CYLINDER COMPONENTS AND OIL LINES 516
LEFT BOOM CYLINDER OIL LINE..... 516
LEFT BOOM CYLINDER ROD..... 516
LEFT BOOM CYLINDER SEAL KIT..... 516
LEFT CONSOLE COVER, CAB..... 224
LEFT CONSOLE STORAGE COMPARTMENT..... 224
LEFT CONSOLE, CAB..... 222
LEFT PILOT CONTROLLER TO SHUT-OFF VALVE FILTER..... 482
LEFT PILOT CONTROLLER TO SHUT-OFF VALVE HOSE..... 482
LEFT PILOT CONTROLLER TO SIGNAL MANIFOLD HOSE..... 482
Left Rear View Mirror (Units Built Before June 2006)..... 312
LEFT REAR VIEW MIRROR (UNITS BUILT JUNE 2006 AND AFTER)..... 314
LEFT REAR VIEW MIRROR(UNITS BUILT JUNE 2006 AND AFTER)..... 314
LEFT SERVICE DOOR LOCK COMPONENTS..... 308
LENS, FRONT CAB TOP EXTERIOR WORK LIGHT..... 192
Level Gauge, Hydraulic Reservoir Oil 510
LEVEL SENSOR, FUEL 166
LEVER, DOOR LOCK, RIGHT SERVICE DOOR COMPONENTS... 306
LEVER, PILOT CONTROL (DIG AND SWING) 354
LEVER, PILOT SHUT-OFF 364
LEVER, PROPEL PILOT CONTROL 360
LIGHT BULB, BOOM WORK LIGHT..... 190

Índice alfabético, continuación

Página

LIGHT BULB, FRONT RIGHT WORK LIGHT ... 190
LIGHT WIRING HARNESS, BOOM ... 188
LIGHT, BOOM WORK ... 190
LIGHT, DOME, CAB ... 232
Light, Front Top Cab Exterior ... 192
LIGHT, RIGHT FRONT WORK ... 190, 302
LIGHTER, REAR TRAY ... 282
LINE, AIR CLEANER TO TURBOCHARGER ... 160
LINE, ARM (AUXILIARY HYDRAULIC LINE KIT) (FIELD) ... 506
LINE, ARM (FACTORY INSTALLED AUXILIARY PLUMBING) ... 504
LINE, ARM AUXILIARY (FACTORY INSTALLED) ... 504
LINE, ARM CYLINDER OIL ... 518
LINE, AUXILIARY DRIVE ADAPTER OIL (SAE "A" MOUNT, 9 TOOTH) ... 386
LINE, AUXILIARY DRIVE ADAPTER OIL (SAE "B" MOUNT, 13 TOOTH) ... 388
LINE, BOOM (AUXILIARY HYDRAULIC LINE KIT)(FIELD) ... 506
LINE, BOOM (FACTORY INSTALLED AUXILIARY PLUMBING) ... 502
LINE, BOOM (TO ARM AND BUCKET CYLINDER) ... 492
LINE, BOOM CYLINDER HOSE TO CONTROL VALVE ... 460
LINE, BOOM MOUNTED LUBRICATION ... 494
LINE, BOOM TO FRAME PIN LUBRICATION ... 494
LINE, BUCKET CYLINDER OIL ... 520
LINE, CONTROL VALVE BOTTOM TO PILOT SIGNAL MANIFOLD ... 474
LINE, CONTROL VALVE TO BOOM CYLINDER HOSE ... 460
LINE, CONTROL VALVE TO HOSE (AUXILIARY PLUMBING, FACTORY INSTALL) ... 498
LINE, CONTROL VALVE TO HYDRAULIC RESERVOIR (RETURN LINE) ... 454
LINE, CONTROL VALVE TO OIL COOLER ... 456
LINE, CONTROL VALVE TO OIL TANK ... 486
LINE, CONTROL VALVE TOP TO PILOT SIGNAL MANIFOLD ... 476
LINE, CYLINDER BLOCK TO ENGINE OIL PUMP ... 88
LINE, ENGINE OIL PUMP TO CYLINDER BLOCK ... 88
LINE, FINAL FUEL FILTER ... 118
LINE, FUEL ... 104
LINE, FUEL FILTER TO FUEL INJECTION PUMP ... 118
LINE, FUEL FILTER TO FUEL TRANSFER PUMP ... 118
LINE, FUEL INJECTION PUMP TO FUEL FILTER ... 118
LINE, FUEL TRANSFER PUMP TO FUEL FILTER ... 118
LINE, HOSE TO CONTROL VALVE (AUXILIARY PLUMBING, FACTORY INSTALL) ... 498
LINE, HYDRAULIC PUMP TO OIL TANK (SUCTION) ... 450
LINE, HYDRAULIC PUMP TO RESERVOIR (LOW PRESSURE) ... 450
LINE, HYDRAULIC RESERVOIR TO CONTROL VALVE (RETURN LINE) ... 454
LINE, HYDRAULIC RESERVOIR TO OIL COOLER (RETURN LINE) ... 454
LINE, HYDRAULIC RESERVOIR TO PUMP (LOW PRESSURE) ... 450
LINE, LEFT BOOM CYLINDER OIL ... 516
LINE, OIL COOLER TO CONTROL VALVE ... 456
LINE, OIL COOLER TO HYDRAULIC RESERVOIR (RETURN LINE) ... 454
LINE, OIL TANK TO CONTROL VALVE ... 486
LINE, OIL TANK TO HYDRAULIC PUMP (SUCTION) ... 450
LINE, OIL TANK TO PILOT SIGNAL MANIFOLD ... 486
LINE, PILOT SIGNAL MANIFOLD TO CONTROL VALVE BOTTOM ... 474
LINE, PILOT SIGNAL MANIFOLD TO CONTROL VALVE TOP ... 476
LINE, PILOT SIGNAL MANIFOLD TO OIL TANK ... 486
LINE, RETURN (CONTROL VALVE TO OIL TANK) ... 454
LINE, RETURN (OIL COOLER TO OIL TANK) ... 454
LINE, RETURN (OIL TANK TO CONTROL VALVE) ... 454
LINE, RETURN (OIL TANK TO OIL COOLER) ... 454
LINE, RIGHT BOOM CYLINDER OIL ... 514
LINE, TURBOCHARGER TO AIR CLEANER ... 160
LINER, CYLINDER, PISTON ... 78
LINES, FUEL INJECTION ... 104
LINES, PILOT SHUTOFF VALVE TO PROPEL PILOT CONTROLLER VALVE ... 480
LINES, PROPEL PILOT CONTROLLER VALVE TO PILOT SHUTOFF VALVE ... 480
LINES, TURBOCHARGER OIL ... 110
LINK TO ARM PIN (LONG ARM, 3.1M) ... 376
LINK TO ARM PIN (STANDARD ARM, 2.6M) ... 374
LINK, BUCKET ... 380
LINK, BUCKET GUIDE ... 384
LINK, BUCKET, REPLACEMENT ... 382
LINK, TRACK ... 40
LOCK, CAB DOOR ... 236
LOCK, CAB TOP HATCH ... 242
LOCK, COOLING PACKAGE COMPARTMENT DOOR ... 304

Página

LOCK, HYDRAULIC PUMP COMPARTMENT DOOR ... 304
LOCK, LEFT SERVICE DOOR, COMPONENTS ... 308
LOCK, RADIATOR COMPARTMENT DOOR ... 304
LOCK, RIGHT SERVICE DOOR, COMPONENTS ... 306
LOCK, SIDE SERVICE DOOR ... 304
LOCK, TROPICAL DOOR, SIDE SERVICE COMPARTMENTS ... 304
Long Arm, Pins and Bucket Cylinder Hoses (3.1 M) ... 376
LOW PRESSURE FUEL HOSES FROM FUEL TANK TO ENGINE ... 170
LOW PRESSURE FUEL HOSES, FUEL TANK TO ENGINE ... 170
LOWER RIGHT COVER, CAB INSIDE ... 226
LOWER ROLLER ... 46
LOWER ROLLER (REPLACEMENT) ... 48
LOWER ROLLER ASSEMBLY, TRACK ... 46
LOWER ROLLER, TRACK ... 50
LOWER ROLLER, TRACK, REPLACEMENT ... 48
LOWER TRACK CHAIN ROLLER (REPLACEMENT) ... 50
LUBRICATION HOSE, BOOM MOUNTED ... 494
LUBRICATION HOSES AND LINES (ON BOOM) ... 494
LUBRICATION LINE, BOOM TO FRAME PIN ... 494

M

MAIN BEARING CAP ... 80
MAIN BEARINGS, CRANKSHAFT ... 70
MAIN FRAME AND BOOM CYLINDER PINS ... 218
MAIN FRAME ASSEMBLY ... 218
MAIN FRAME STEP ... 218
MAIN FRAME TO BOOM CYLINDER PIN ... 218
MAIN FRAME TO BOOM PIN ... 212
MAIN HYDRAULIC PUMP COMPONENTS ... 406
MAIN HYDRAULIC PUMP MOUNTING ... 404
MAIN HYDRAULIC PUMP MOUNTING AND COUPLER ... 404
MAIN HYDRAULIC PUMP OUTPUT CONTROLLER COMPONENTS ... 408
MAIN WIRING HARNESS, VEHICLE ... 194
MAJOR OVERHAUL GASKET KIT (ENGINE) ... 142
MANIFOLD FITTING, PILOT SIGNAL (CONTROL VALVE SIDE) ... 444
MANIFOLD FITTINGS, PILOT SIGNAL (PILOT CONTROLLER SIDE) ... 442
MANIFOLD, EXHAUST ... 102
MANIFOLD, PILOT SIGNAL (HOUSING AND GASKETS) ... 438
MANIFOLD, PILOT SIGNAL (HOUSING AND GASKETS-CONTINUED) ... 440
MANIFOLD, ROTARY ... 58
MANIFOLD, SOLENOID VALVE(PILOT FILTER) ... 436
MAT, CAB FLOOR ... 252
MECHANICAL PATTERN CHANGER KIT ... 396
MECHANICAL PATTERN CHANGER VALVE ... 396
METRIC O-RING KIT ... 178
MIC CABLE ... 186
MIC CONTROLLER ... 184
MIC CUSTOMER KIT ... 186
MIC CUSTOMER KIT AND CABLE ... 186
MIDDLE DECK COVER, FRONT ... 298
MIRROR, CAB MOUNTED REAR VIEW, LEFT (UNITS BUILT JUNE 2006 AND AFTER) ... 314
MIRROR, LEFT REAR VIEW ... 312
MIRROR, REAR VIEW, LEFT (UNITS BUILT JUNE 2006 AND AFTER) ... 314
MIRROR, REAR VIEW, RIGHT FRONT ... 302
MOLDBOARD, GENERAL PURPOSE BUCKET ... 320, 322
MOLDBOARD, HEAVY DUTY BUCKET ... 328, 330
MOLDBOARD, HIGH CAPACITY GENERAL PURPOSE BUCKET ... 324
MONITOR, CAB DISPLAY ... 196
MOTION ALARM SWITCH ... 318
MOTION ALARM WIRING HARNESS ... 318
MOTION ALARM, PROPEL ... 318
MOTOR COMPONENTS, SWING ... 526
MOTOR COVER, PROPEL ... 60
MOTOR, DEFROSTER FAN ... 288
MOTOR, HVAC UNIT ... 270
MOTOR, HVAC UNIT BLOWER ... 272
MOTOR, PROPEL, COMPONENTS ... 68
MOTOR, STARTER ... 126
MOTOR, WINDSHIELD WIPER ... 232
MOUNTING BRACKET, ENGINE ... 164
MOUNTING, FUEL TANK ... 168
MOUNTING, SWING BEARING ... 216
MOUNTING, SWING GEARBOX ... 524
MOUNTS, ENGINE ... 164
MUFFLER ... 162
MUFFLER BRACKET ... 162

Índice alfabético, continuación

Página

N

NOZZLE, COLD WEATHER STARTING AID SPRAY 144
NOZZLE, FUEL INJECTION 104
NOZZLE, WINDSHIELD WASHER 232

O

O-RING KIT, METRIC 178
OIL BY-PASS VALVE, ENGINE 80
OIL COOLER TO CONTROL VALVE LINE 456
OIL COOLER TO HYDRAULIC RESERVOIR LINE (RETURN LINE) 454
OIL COOLER TO OIL TANK RETURN LINE 454
OIL COOLER, ENGINE 116
OIL COOLER, HYDRAULIC 152
OIL FILLER NECK COVER 86
OIL FILLER OPENING COVER, ENGINE 86
OIL FILTER ELEMENT, ENGINE 96
OIL FILTER HEADER, ENGINE 96
OIL FILTER,ENGINE (8822) (HP051) 75
OIL LEVEL SENSOR, ENGINE (ESN -274010) (- 274010) 90
OIL LINE TO BOOM CYLINDER HOSE 460
OIL LINE, ARM CYLINDER 518
OIL LINE, AUXILIARY DRIVE ADAPTER (SAE "A" MOUNT, 9 TOOTH) 386
OIL LINE, AUXILIARY DRIVE ADAPTER (SAE "B" MOUNT, 13 TOOTH) 388
OIL LINE, BUCKET CYLINDER 520
OIL LINE, LEFT BOOM CYLINDER 516
OIL LINE, RIGHT BOOM CYLINDER 514
OIL PAN - STEEL (ESN 334597-) (334597 -) 94
OIL PAN, ENGINE (ALUMINUM) (ESN. 274011- 334596) (274011 - 334596) 92
OIL PAN, ENGINE (ESN -274010) (- 274010) 90
OIL PAN, ENGINE (STEEL) (ESN 334597-) (334597 -) 94
OIL PRESSURE REGULATING VALVE, ENGINE 80
OIL PRESSURE SWITCH, ENGINE 80
OIL TANK HOSE TO CONTROL VALVE 486
OIL TANK HOSE TO PILOT SIGNAL MANIFOLD 486
OIL TANK SENSOR 510
OIL TANK TO CONTROL VALVE RETURN LINE 454
OIL TANK TO HYDRAULIC PUMP HOSE (SUCTION) 450
OIL TANK TO OIL COOLER RETURN LINE 454
OIL TANK, HYDRAULIC 510
ONEWAY/2WAY SOLENOID VALVE KIT, WITHOUT PRESSURE SWITCH 392
OUTLET (24 VOLT) 282

P

PAD, COUNTERWEIGHT 220
PAN, ENGINE OIL (ALUMINUM) (ESN. 274011- 334596) (274011 - 334596) 92
PAN, ENGINE OIL (ESN -274010) (- 274010) 90
PAN, ENGINE OIL (STEEL) (ESN 334597-) (334597 -) 94
PANEL, ENGINE FRONT FIREWALL 298
PANEL, RADIATOR COMPARTMENT FRONT 290
PANEL, RADIATOR COMPARTMENT REAR 290
PATTERN CHANGER VALVE, MECHANICAL 396
PATTERN SELECTOR CONTROL KIT 394
PEDAL CONTROL, HYDRAULIC FOOT (2-WAY) 366
PEDAL, PROPEL PILOT CONTROL 360
PILOT CONTROL LEVER COMPONENTS (DIG AND SWING) 354
PILOT CONTROL LEVER LABEL 394
PILOT CONTROL LEVER, PROPEL 360
PILOT CONTROL PEDAL, PROPEL 360
PILOT CONTROLLER COMPONENTS (DIG AND SWING) 354
PILOT CONTROLLER COMPONENTS, PROPEL 362
PILOT CONTROLLER VALVE COMPONENTS (DIG AND SWING)(SN -XXXXXX) 356
PILOT CONTROLLER VALVE COMPONENTS (DIG AND SWING)(SN XXXXXX-) 358
PILOT CONTROLLER VALVE COMPONENTS(DIG AND SWING)(SN -XXXXXX) 356
PILOT CONTROLLER VALVE COMPONENTS(FRONT AND SWING)(SN XXXXXX-) 358
PILOT FILTER AND HOSES 466
PILOT FILTER ELEMENT 466
PILOT FILTER SOLENOID VALVE TO PUMP REGULATOR HOSE 468
PILOT FILTER SOLENOID VALVE TO RETURN LINE HOSE 488
PILOT FILTER SOLENOID VALVE TO SOLENOID VALVE HOSE 466
PILOT FILTER TO PILOT PUMP HOSE 466
PILOT HOSES (CONTROL VALVE TO SIGNAL MANIFOLD, SOLENOID VALVE) 472
PILOT HOSES (CONTROL VALVE) (PILOT SIGNAL MANIFOLD TO SWING DEVICE) 470
PILOT HOSES (LEFT CONTROLLER TO SIGNAL MANIFOLD, SHUTOFF VALVE) 482
PILOT HOSES (OIL TANK TO CONTROL VALVE, SIGNAL MANIFOLD) 486
PILOT HOSES (PUMP REGULATOR TO SOLENOID VALVE, SIGNAL MANIFOLD) 468
PILOT HOSES (RESERVOIR TO CONTROL VALVE, SIGNAL MANIFOLD) 488
PILOT HOSES(PILOT SHUT-OFF VALVE TO SIGNAL MANIFOLD, RESERVOIR) 490
PILOT HOSES(RIGHT CONTROLLER TO SIGNAL MANIFOLD, SHUTOFF VALVE) 484
PILOT HYDRAULIC LINES 480
PILOT HYDRAULIC LINES (PROPEL PILOT CONTROLLER VALVE TO SHUTOFF VALVE) 480
PILOT LINES (PILOT SIGNAL MANIFOLD TO BOTTOM OF CONTROL VALVE) 474
PILOT LINES (PILOT SIGNAL MANIFOLD TO TOP OF CONTROL VALVE) 476
PILOT PUMP TO PILOT FILTER HOSE 466
PILOT SHUT-OFF LEVER 364
PILOT SHUT-OFF LEVER AND MOUNTING BRACKET 364
PILOT SHUT-OFF LEVER BRACKET 364
PILOT SHUT-OFF LEVER DECAL 224
PILOT SHUT-OFF LEVER LABEL 224
PILOT SHUT-OFF VALVE HOSE TO SOLENOID (PILOT SYSTEM) 392
PILOT SHUT-OFF VALVE TO HYDRAULIC RESERVOIR HOSE 490
PILOT SHUT-OFF VALVE TO LEFT PILOT CONTROLLER HOSE 482
PILOT SHUT-OFF VALVE TO RIGHT PILOT CONTROLLER HOSE 484
PILOT SHUT-OFF VALVE TO SIGNAL MANIFOLD HOSE 490
PILOT SHUT-OFF VALVE TO SOLENOID VALVE HOSE 490
PILOT SHUTOFF VALVE COMPONENTS 448
PILOT SHUTOFF VALVE FITTINGS TO FOOT PEDAL CONTROL (PILOT SYSTEM) 366
PILOT SHUTOFF VALVE HOSE TO FOOT PEDAL CONTROL (PILOT SYSTEM) 366
PILOT SIG. MAN. TO CONTROL VALVE HOSE (AUXILIARY SOLENOID/FLOW CONTROL) 398
PILOT SIG. MAN. TO FLOW REGULATOR HOSE (AUXILIARY SOLENOID/FLOW CONTROL) 398
PILOT SIG. MAN. TO SOLENOID VALVE HOSE (AUXILIARY SOLENOID/FLOW CONTROL) 398
PILOT SIGNAL MANIFOLD (HOUSING AND GASKETS) 438, 440
PILOT SIGNAL MANIFOLD (HOUSING AND GASKETS-CONTINUED) 440
PILOT SIGNAL MANIFOLD FITTING (CONTROL VALVE SIDE) 444
PILOT SIGNAL MANIFOLD FITTINGS (CONTROL VALVE SIDE) 444
PILOT SIGNAL MANIFOLD FITTINGS (PILOT CONTROLLER SIDE) 442
PILOT SIGNAL MANIFOLD FITTINGS TO FOOT PEDAL CONTROL (PILOT SYSTEM) 366
PILOT SIGNAL MANIFOLD HOSE TO CONTROL VALVE (1 WAY/2 WAY ELECTRIC VALVE) 392
PILOT SIGNAL MANIFOLD HOSE TO FOOT PEDAL CONTROL (PILOT SYSTEM) 366
PILOT SIGNAL MANIFOLD HOSE TO OIL TANK 486
PILOT SIGNAL MANIFOLD HOSE TO SOLENOID VALVE (PILOT SYSTEM) 392
PILOT SIGNAL MANIFOLD MOUNTING BRACKET 474
PILOT SIGNAL MANIFOLD TO CONTROL VALVE BOTTOM LINE 474
PILOT SIGNAL MANIFOLD TO CONTROL VALVE HOSE 472
PILOT SIGNAL MANIFOLD TO CONTROL VALVE TOP LINE 476
PILOT SIGNAL MANIFOLD TO HYDRAULIC PUMP REGULATOR HOSE 468
PILOT SIGNAL MANIFOLD TO HYDRAULIC RESERVOIR HOSE 488
PILOT SIGNAL MANIFOLD TO HYDRAULIC RESERVOIR HOSE (PILOT HOSE) 486
PILOT SIGNAL MANIFOLD TO LEFT PILOT CONTROLLER HOSE 482
PILOT SIGNAL MANIFOLD TO PROPEL PILOT CONTROLLER HOSE 478
PILOT SIGNAL MANIFOLD TO RIGHT PILOT CONTROLLER HOSE 484
PILOT SIGNAL MANIFOLD TO SHUT-OFF VALVE HOSE 490

Índice alfabético, continuación

Página

PILOT SIGNAL MANIFOLD TO SOLENOID VALVE HOSE ... 472
PILOT SIGNAL MANIFOLD TO SWING MOTOR HOSE (PILOT HOSE) ... 470
PILOT SIGNAL MANIFOLD VALVE SPOOL ... 446
PILOT SIGNAL MANIFOLD VALVE SPOOLS ... 446
PILOT VALVE (DIG AND SWING) ... 354
PIN, ARM CYLINDER TO ARM (LONG ARM, 3.1M) ... 376
PIN, ARM CYLINDER TO ARM (STANDARD ARM, 2.6M) ... 374
PIN, ARM CYLINDER TO BOOM ... 378
PIN, ARM TO ARM CYLINDER (LONG ARM, 3.1M) ... 376
PIN, ARM TO ARM CYLINDER (STANDARD ARM, 2.6M) ... 374
PIN, ARM TO BOOM ... 378
PIN, ARM TO BUCKET (LONG ARM, 3.1M) ... 376
PIN, ARM TO BUCKET (STANDARD ARM, 2.6M) ... 374
PIN, ARM TO BUCKET CYLINDER (LONG ARM, 3.1M) ... 376
PIN, ARM TO BUCKET CYLINDER (STANDARD ARM, 2.6M) ... 374
PIN, ARM TO LINK (LONG ARM, 3.1M) ... 376
PIN, ARM TO LINK (STANDARD ARM, 2.6M) ... 374
PIN, BOOM CYLINDER TO BOOM ... 378
PIN, BOOM CYLINDER TO MAIN FRAME ... 218
PIN, BOOM TO ARM ... 378
PIN, BOOM TO ARM CYLINDER ... 378
PIN, BOOM TO BOOM CYLINDER ... 378
PIN, BOOM TO MAIN FRAME ... 212
PIN, BUCKET CYLINDER TO ARM (LONG ARM, 3.1M) ... 376
PIN, BUCKET CYLINDER TO ARM (STANDARD ARM, 2.6M) ... 374
PIN, BUCKET CYLINDER TO LINK (LONG ARM, 3.1M) ... 376
PIN, BUCKET CYLINDER TO LINK (STANDARD ARM, 2.6M) ... 374
PIN, BUCKET LINK TO BUCKET (LONG ARM, 3.1M) ... 376
PIN, BUCKET LINK TO BUCKET (STANDARD ARM, 2.6M) ... 374
PIN, BUCKET LINK TO CYLINDER (LONG ARM, 3.1M) ... 376
PIN, BUCKET LINK TO CYLINDER (STANDARD ARM, 2.6M) ... 374
PIN, BUCKET TO ARM (LONG ARM, 3.1M) ... 376
PIN, BUCKET TO ARM (STANDARD ARM, 2.6M) ... 374
PIN, BUCKET TO BUCKET LINK (LONG ARM, 3.1M) ... 376
PIN, BUCKET TO BUCKET LINK (STANDARD ARM, 2.6M) ... 374
PIN, LINK TO ARM (LONG ARM, 3.1M) ... 376
PIN, LINK TO ARM (STANDARD ARM, 2.6M) ... 374
PIN, MAIN FRAME TO BOOM ... 212
PIN, MAIN FRAME TO BOOM CYLINDER ... 218
PIPE, EXHAUST ... 162
PIPE, EXHAUST, FUEL FIRED COOLANT HEATER KIT ... 146, 148
PISTON ASSEMBLY, HYDRAULIC PUMP (FRONT OF MACHINE WHEN INSTALLED) ... 414
PISTON ASSEMBLY, HYDRAULIC PUMP (REAR OF MACHINE WHEN INSTALLED) ... 412
PISTON RINGS ... 78
PISTON, ENGINE ... 78
PIVOT, DITCH CLEANING BUCKET ... 334, 336
PLATE, ANTI-SLIP, ON TOOL BOX ... 302
PLATE, CAB FLOOR ... 254
PLATE, ENGINE FRONT ... 79
PLATE, ROTARY MANIFOLD TOP ... 52
PLATFORM ... 254
PLATFORM, CAB REAR CONSOLE ... 252
PLUG, OIL PAN (ALUMINUM PAN) (ESN. 274011- 334596) (274011 - 334596) ... 92
PLUG, OIL PAN (ESN -274010) (- 274010) ... 90
PLUG, OIL PAN (STEEL PAN) (ESN 334597-) (334597 -) ... 94
PLUMBING, AUXILIARY ARM (FACTORY INSTALLED) ... 504
PLUMBING, AUXILIARY HYDRAULIC (FIELD) ... 506
POWER CONVERTER (24-VOLT TO 12-VOLT) ... 210
POWER SUPPLY, CAB REAR ... 282
PRESSURE RELIEF VALVE (FACTORY INSTALLED AUXILIARY PLUMBING) ... 500
PRESSURE RELIEF VALVE, SWING MOTOR ... 526
PRESSURE SENSOR, CONTROL VALVE ... 474
PRESSURE SENSOR, HYDRAULIC PUMP ... 404
PRESSURE SENSOR, HYDRAULIC PUMP (INSERTS FROM TOP) ... 406
PRESSURE SENSOR, SWING MOTOR ... 476
PRESSURE SWITCH, AIR CONDITIONER ... 270
PRIMARY FUEL FILTER TO FUEL COOLER HOSE ... 170
PRIMARY FUEL FILTER TO FUEL TANK HOSE ... 170
Progressive Hydraulic Thumb Kit ... 352
PROPEL GEARBOX COMPONENTS ... 62
PROPEL GEARBOX MOUNTING ... 56
PROPEL GEARBOX MOUNTING AND SPROCKET ... 56
PROPEL GEARBOX SEAL KIT ... 62
PROPEL MOTION ALARM ... 318
PROPEL MOTOR BRAKE RELIEF VALVE ... 64
PROPEL MOTOR BRAKE VALVE ... 68
PROPEL MOTOR BRAKE VALVE COMPONENTS ... 64

Página

PROPEL MOTOR BRAKE VALVE SEAL KIT ... 64
PROPEL MOTOR COMPONENTS ... 68
PROPEL MOTOR COVER ... 60
PROPEL MOTOR COVERS ... 60
PROPEL MOTOR PLUMBING ... 66
PROPEL MOTOR SEAL KIT ... 68
PROPEL MOTOR TO ROTARY MANIFOLD HOSE ... 66
PROPEL PILOT CONTROL LEVER ... 360
PROPEL PILOT CONTROL LEVERS, PEDALS, AND FOOTRESTS ... 360
PROPEL PILOT CONTROL PEDAL ... 360
PROPEL PILOT CONTROLLER COMPONENTS ... 362
PROPEL PILOT CONTROLLER HOSE SUPPORT BRACKET ... 478
PROPEL PILOT CONTROLLER TO PILOT SIGNAL MANIFOLD HOSE ... 478
PROPEL PILOT CONTROLLER TO SIGNAL MANIFOLD HOSES ... 478
PULLEY, A/C COMPRESSOR DRIVE BELT TENSION ... 274
PULLEY, ALTERNATOR ... 182
PULLEY, CRANKSHAFT ... 130
PULLEY, CRANKSHAFT AUXILIARY DRIVE ... 131
PULLEY, FAN DRIVE ... 132
PULLEY, IDLER ... 134
PULLEY, WATER PUMP ... 112
PUMP COMPARTMENT COVER, HYDRAULIC ... 296
PUMP COMPONENTS, HYDRAULIC ... 406
PUMP FLOW REGULATOR COMPONENTS, HYDRAULIC ... 410
PUMP MOUNTING, MAIN HYDRAULIC ... 404
PUMP OUTPUT CONTROLLER COMPONENTS, HYDRAULIC ... 408
PUMP PISTON ASSEMBLY, HYDRAULIC (FRONT OF MACHINE WHEN INSTALLED) ... 414
PUMP PISTON ASSEMBLY, HYDRAULIC (REAR OF MACHINE WHEN INSTALLED) ... 412
PUMP, ENGINE OIL ... 88
Pump, Fuel Fired Coolant Heater Kit ... 148
PUMP, FUEL INJECTION ... 104
PUMP, FUEL INJECTION, SERVICE KITS ... 138
PUMP, FUEL TRANSFER ... 124
PUMP, FUEL, FUEL FIRED COOLANT HEATER KIT ... 146
PUMP, WATER ... 113
PUMP, WINDSHIELD WASHER ... 250
PUSH ROD, FUEL TRANSFER PUMP ... 124
PUSH RODS ... 73

R

RADIATOR ... 152
RADIATOR AND FRONT MIDDLE DECK COVERS ... 298
RADIATOR AND HYDRAULIC PUMP COMPARTMENT ACCESS DOORS ... 294
RADIATOR BOTTOM ISOLATOR ... 156
RADIATOR CAP ... 152
RADIATOR COMPARTMENT ACCESS DOOR ... 294
RADIATOR COMPARTMENT COVER ... 298
RADIATOR COMPARTMENT DOOR ... 304
RADIATOR COMPARTMENT FRONT AND REAR PANELS ... 290
RADIATOR COMPARTMENT FRONT PANEL ... 290
RADIATOR COMPARTMENT REAR PANEL ... 290
RADIATOR MOUNTING ... 156
RADIATOR MOUNTING AND SUPPORT BRACKET ... 156
RADIATOR SUPPORT BRACKET ... 156
RADIATOR TO ENGINE HOSE ... 152
RADIATOR TRASHSCREEN ... 152
RADIATOR, OIL COOLER AND CHARGE AIR COOLER ... 152
RADIO (AM/FM) ... 310
RADIO ANTENNA ... 232
RADIO MOUNTING BRACKET ... 310
RADIO SPEAKER ... 232
RADIO SPEAKER WIRING HARNESS ... 232
RADIO WIRING HARNESS ... 310
RADIO, MOUNTING BRACKETS, AND WIRING HARNESS ... 310
REAR AIR DIFFUSER, CAB ... 282
REAR CONSOLE COVER, CAB ... 282
REAR PANEL, RADIATOR COMPARTMENT ... 290
REAR TRAY ... 282
REAR VIEW MIRROR, LEFT ... 312
REAR VIEW MIRROR, LEFT (UNITS BUILT JUNE 2006 AND AFTER) ... 314
REAR VIEW MIRROR, RIGHT FRONT ... 302
REAR WINDOW, CAB ... 234
RECEIVER/DRYER, AIR CONDITIONER ... 276
RECOVERY TANK, ENGINE COOLANT ... 154

Índice alfabético, continuación

Página

REFRIGERANT HOSES (HVAC UNIT TO COMPRESSOR AND RECEIVER/DRYER) ... 284
REGULATOR ASSEMBLY, MAIN HYDRAULIC PUMP ... 408
REGULATOR COMPONENTS, HYDRAULIC PUMP FLOW ... 410
REGULATOR, MAIN HYDRAULIC PUMP ... 406
RELAY, BATTERY ... 180
RELAY, CAB MAIN WIRING HARNESS ... 198, 200
RELAY, FRONT CAB TOP EXTERIOR WORK LIGHT AND HARNESS ... 192
RELAY, STARTER ... 180
RELIEF VALVE (IN AUXILIARY HYDRAULIC LINE SPOOL OF CONTROL VALVE)(FIELD) ... 506
RELIEF VALVE, PRESSURE (FACTORY INSTALLED AUXILIARY PLUMBING) ... 500
RELIEF VALVE, PROPEL MOTOR BRAKE VALVE ... 64
RELIEF VALVE, SWING MOTOR PRESSURE ... 526
Reman Alternator ... 182
REMAN CAMSHAFT ... 72
REMAN CONNECTING ROD ... 78
REMAN CYLINDER HEAD ... 100
REMAN FUEL INJECTION PUMP ... 104
REMAN HYDRAULIC MOTOR ... 56, 64, 68
REMAN HYDRAULIC PUMP ... 406
REMAN HYDRAULIC SWING MOTOR ... 522, 526
Reman Injection Nozzle ... 104
REMAN MANIFOLD ... 58
REMAN OIL PUMP ... 88
REMAN SWING BEARING ... 214
REMAN TURBOCHARGER ... 110
REMAN WATER PUMP ... 113
Reman, Water Pump-4425-4045HP051 ... 76
REPAIR KIT, WATER PUMP ... 113
REPLACEMENT BUCKET LINK ... 382
Replacement Upper Roller ... 44
RESERVOIR, HYDRAULIC OIL ... 510
RESERVOIR, WINDSHIELD WASHER ... 250
RESISTOR, ENGINE CONTROL UNIT WIRE HARNESS ... 206
RESTRICTION INDICATOR, AIR FILTER ... 160
RETURN LINE (CONTROL VALVE TO OIL TANK) ... 454
RETURN LINE (OIL TANK TO CONTROL VALVE) ... 454
RETURN LINE TO OIL COOLER COUPLER (CONTROL VALVE TO OIL COOLER LINE) ... 456
RETURN LINE TO PILOT FILTER SOLENOID VALVE HOSE ... 488
RETURN LINE TO ROTARY MANIFOLD HOSE (DRAIN HOSE) ... 458
RETURN LINE TO SELECTOR VALVE HOSE (FACTORY INSTALLED AUXILIARY PLUMBING) ... 500
RETURN LINE TO SHUTOFF VALVE HOSE (AUXILIARY HYDRAULIC OPTIONAL RETURN) ... 508
RETURN LINE TO SWING MOTOR HOSE (DRAIN HOSE) ... 458
RETURN LINES (CONTROL VALVE AND OIL COOLER TO OIL TANK) ... 454
RETURN LINES (OIL COOLER TO OIL TANK) ... 454
RETURN LINES (OIL TANK TO OIL COOLER) ... 454
RIGHT BOOM CYLINDER BARREL ... 514
RIGHT BOOM CYLINDER COMPONENTS AND OIL LINES ... 514
RIGHT BOOM CYLINDER OIL LINE ... 514
RIGHT BOOM CYLINDER ROD ... 514
RIGHT BOOM CYLINDER SEAL KIT ... 514
RIGHT CONSOLE COVER, CAB ... 224
RIGHT CONSOLE STORAGE COMPARTMENT ... 224
RIGHT CONSOLE, CAB ... 222
RIGHT COVER ... 226
RIGHT COVER, CAB INSIDE LOWER ... 226
RIGHT FRONT WORK LIGHT ... 190, 302
RIGHT PILOT CONTROLLER TO SHUT-OFF VALVE FILTER ... 484
RIGHT PILOT CONTROLLER TO SHUT-OFF VALVE HOSE ... 484
RIGHT PILOT CONTROLLER TO SIGNAL MANIFOLD HOSE ... 484
RIGHT WINDOW GUARD, CAB ... 240
RIGHT WINDOW, CAB ... 240
RING GEAR, FLYWHEEL ... 136
RINGS, PISTON ... 78
ROADBUILDER BUCKET KIT ... 340
ROADBUILDER BUCKET KIT (SEE FOOTNOTE) ... 340
ROCKER ARM COVER ... 74
ROCKER ARM COVER AND OIL FILLER CAP ... 74
ROCKER ARM COVER GASKET ... 74
ROCKER ARM SHAFT ... 73
ROCKER ARMS ... 73
ROCKER ARMS, SHAFTS AND PUSH RODS ... 73
ROD, ARM CYLINDER ... 518
ROD, BUCKET CYLINDER ... 520
ROD, CONNECTING, PISTON ... 78
ROD, LEFT BOOM CYLINDER ... 516

Página

ROD, RIGHT BOOM CYLINDER ... 514
RODS, PUSH ... 73
ROLLER, LOWER TRACK ... 50
ROLLER, LOWER, TRACK ... 46
ROLLER, LOWER, TRACK, REPLACEMENT ... 48
ROLLER, TRACK CARRIER, REPLACEMENT, UPPER ... 44
ROLLER, TRACK CARRIER, UPPER ... 42
ROLLER, UPPER ... 42
Roller, Upper, Replacement ... 44
ROLLER, UPPPER, REPLACEMENT ... 44
ROOF COVER, STEEL ... 244
ROOF, CAB ... 234
ROTARY MANIFOLD ... 58
ROTARY MANIFOLD (TRACK FRAME) SEAL ... 54
ROTARY MANIFOLD SEAL ... 54
ROTARY MANIFOLD TO CONTROL VALVE HOSE ... 464
ROTARY MANIFOLD TO PROPEL MOTOR HOSE ... 66
ROTARY MANIFOLD TO PROPEL MOTOR HOSES ... 66
ROTARY MANIFOLD TO RETURN LINE HOSE (DRAIN HOSE) ... 458
ROTARY MANIFOLD TO SOLENOID VALVE HOSE (PILOT HOSE) ... 472
ROTARY MANIFOLD TOP COVER ... 52
ROTARY MANIFOLD TOP COVER AND PLATE ... 52
ROTARY MANIFOLD TOP PLATE ... 52

S

SAFETY DECALS AND LABELS (ENGLISH) ... 172
SAFETY DECALS AND LABELS (FRENCH) ... 174, 176
SCREEN, AIR CLEANER ... 160
SEAL KIT, ARM CYLINDER ... 518
SEAL KIT, AUXILIARY FOOT CONTROL VALVE ... 372
SEAL KIT, BUCKET CYLINDER ... 520
SEAL KIT, LEFT BOOM CYLINDER ... 516
SEAL KIT, PROPEL GEARBOX ... 62
SEAL KIT, PROPEL MOTOR ... 68
SEAL KIT, PROPEL MOTOR BRAKE VALVE ... 64
SEAL KIT, RIGHT BOOM CYLINDER ... 514
SEAL KIT, SWING MOTOR ... 526
SEAL, CENTER JOINT ... 54
SEAL, CONTROL VALVE, MIDDLE ... 430
SEAL, HYDRAULIC PUMP CONTROLLER TO HOUSING ... 408
SEAL, ROTARY MANIFOLD ... 54
SEAL, TRACK FRAME ... 54
SEAL, UNDERCARRIAGE ... 54
SEAT ... 258
SEAT AND SEAT SUSPENSION ASSEMBLY ... 258
SEAT BASE ... 264
SEAT BASE BRACKET ... 264
SEAT BASE BRACKET AND SLIDER KIT ... 264
SEAT BELT ... 266
SEAT BELT (3.00 INCH) ... 262
SEAT BELT BRACKET ... 266
SEAT BELT KIT, (3.00 INCH) ... 262
SEAT FOAM KIT ... 258
SEAT HARDWARE SERVICE KIT ... 260
SEAT LUMBAR KIT ... 258
SEAT SLIDE TRACK KIT ... 264
SEAT SUSPENSION ... 258
SECONDARY EXIT HANDLE ... 246
SECONDARY EXIT KIT ... 246
SECONDARY EXIT LABEL ... 246
SELECTOR VALVE (AUXILIARY PLUMBING) ... 500
SELECTOR VALVE SUPPORT BRACKET (AUXILIARY PLUMBING) ... 500
SELECTOR VALVE TO BOOM LINE HOSE (FACTORY INSTALLED AUXILIARY PLUMBING) ... 500
SELECTOR VALVE TO CONTROL VALVE LINE HOSE (FACTORY INSTALLED AUX. PLUMBING) ... 500
SELECTOR VALVE TO RETURN LINE HOSE (FACTORY INSTALLED AUXILIARY PLUMBING) ... 500
SELF ALIGNING BUSHING, DITCH CLEANING BUCKET ... 334
SENDER, ENGINE COOLANT WATER TANK ... 154
SENDER, FUEL TEMPERATURE, FUEL INJECTION PUMP ... 104
SENSOR, AIR CONDITIONER ... 276
SENSOR, AIR FILTER RESTRICTION INDICATOR ... 160
SENSOR, AIR INTAKE TEMPERATURE ... 106
SENSOR, CONTROL VALVE PRESSURE ... 474
SENSOR, ENGINE CONTROL UNIT, TEMPERATURE ... 114
SENSOR, ENGINE COOLANT TEMPERATURE ... 114
SENSOR, ENGINE OIL LEVEL (ESN -274010) (- 274010) ... 90
SENSOR, FUEL LEVEL ... 166

Índice alfabético, continuación

Página

SENSOR, HYDRAULIC PUMP PRESSURE ... 404
SENSOR, HYDRAULIC PUMP PRESSURE (INSERTS FROM TOP) ... 406
SENSOR, HYDRAULIC RESERVOIR ... 510
SENSOR, OIL TANK ... 510
SENSOR, SWING MOTOR PRESSURE ... 476
SENSOR, TEMPERATURE, FUEL INJECTION PUMP ... 104
SENSOR,AIR TEMPERATURE-6710-4045HP051 ... 137
SENSOR,COOLANT TEMP-6710-4045HP051 ... 137
SENSOR,CRANKSHAFT POSITION-6710-4045HP051 ... 137
SENSOR,CRANKSHAFT SPEED-6710-4045HP051 ... 137
SENSOR,TACHOMETER-6710-4045HP051 ... 137
SERVICE DOOR LOCK, LEFT, COMPONENTS ... 308
SERVICE DOOR, COOLING PACKAGE COMPARTMENT ... 304
SERVICE DOOR, HYDRAULIC PUMP COMPARTMENT ... 304
SERVICE DOOR, SIDE ... 304
SERVICE KITS- FUEL INJECTION PUMP, STANADYNE DE10 ... 138
SERVICE KITS, INJECTION PUMP ... 138
SHADE, SUN, CAB TOP ... 242
SHAFT, ENGINE BALANCER ... 108
SHAFT, ROCKER ARM ... 73
SHAFT, SWING GEARBOX ... 522
SHAFT, SWING MOTOR ... 526
SHAFT,FRONT IDLER ... 34
SHANK, BUCKET TOOTH (GENERAL PURPOSE OR HEAVY DUTY) ... 342
SHOE, TRACK ... 40
SHORT BLOCK, ENGINE ... 82
SHROUD, FAN ... 152
SHUT-OFF VALVE (AUXILIARY HYDRAULIC OPTIONAL RETURN) ... 508
SHUT-OFF VALVE TO SOLENOID VALVE HOSE (AUXILIARY SOLENOID/FLOW CONTROL) ... 398
SHUT-OFF VALVE, ARM AUXILIARY PLUMBING (FACTORY INSTALLED) ... 504
SHUTOFF VALVE COMPONENTS, PILOT ... 448
SHUTOFF VALVE TO RETURN LINE HOSE (AUXILIARY HYDRAULIC OPTIONAL RETURN) ... 508
SIDE CUTTER KIT, HEAVY DUTY BUCKET ... 328, 330
SIDE CUTTERS, GENERAL PURPOSE BUCKET ... 322
SIDE CUTTERS, HIGH CAPACITY GENERAL PURPOSE BUCKET ... 324
SIGNAL MANIFOLD FITTING, PILOT (CONTROL VALVE SIDE) ... 444
SIGNAL MANIFOLD FITTING, PILOT (PILOT CONTROLLER SIDE) ... 442
SIGNAL MANIFOLD, PILOT (HOUSING AND GASKETS) ... 438
SIGNAL MANIFOLD, PILOT (HOUSING AND GASKETS-CONTINUED) ... 440
SINGLE PEDAL CONTROL KIT ... 370
SINGLE PEDAL CONTROL KIT HYD. HOSES ... 370
SOLENOID CONTROL AND FLOW CONTROL KIT (1-WAY) ... 398
SOLENOID CONTROL VALVE, AUXILIARY (1-WAY) ... 398
SOLENOID VALVE COMPONENTS (ON CONTROL VALVE) ... 432
SOLENOID VALVE COMPONENTS (ON PILOT FILTER) ... 434
SOLENOID VALVE HOSE TO HYDRAULIC RESERVOIR (PILOT SYSTEM) ... 392
SOLENOID VALVE HOSE TO PILOT SHUT-OFF VALVE (PILOT SYSTEM) ... 392
SOLENOID VALVE HOSE TO PILOT SIGNAL MANIFOLD (PILOT SYSTEM) ... 392
SOLENOID VALVE KIT, 1WAY/2WAY, WITHOUT PRESSURE SWITCH ... 392
SOLENOID VALVE MANIFOLD (PILOT FILTER) ... 436
SOLENOID VALVE MANIFOLD(PILOT FILTER) ... 436
SOLENOID VALVE TO CONTROL VALVE HOSE ... 488
SOLENOID VALVE TO CONTROL VALVE HOSE (PILOT HOSE) ... 470, 472
SOLENOID VALVE TO HYDRAULIC RESERVOIR HOSE ... 466
SOLENOID VALVE TO HYDRAULIC RESERVOIR HOSE (AUXILIARY SOLENOID/FLOW CONTROL) ... 398
SOLENOID VALVE TO PILOT FILTER SOLENOID VALVE HOSE ... 466
SOLENOID VALVE TO PILOT SHUT-OFF VALVE HOSE ... 490
SOLENOID VALVE TO PILOT SIGNAL MANIFOLD HOSE ... 472
SOLENOID VALVE TO ROTARY MANIFOLD HOSE (PILOT HOSE) ... 472
SOLENOID VALVE TO SHUT-OFF VALVE HOSE (AUXILIARY SOLENOID/FLOW CONTROL) ... 398
SOLENOID VALVE TO SIGNAL MANIFOLD HOSE (AUXILIARY SOLENOID/FLOW CONTROL) ... 398
SOLENOID VALVE, CONTROL PATTERN SELECTOR KIT ... 394
SPACER, ENGINE COOLING FAN ... 158
SPEAKER, RADIO ... 232
SPOOL, PILOT SIGNAL MANIFOLD VALVE ... 446

Página

SPRING, TRACK CHAIN TENSION ADJUSTER ... 38
SPROCKET, TRACK CHAIN DRIVE ... 56
STANDARD ARM, PINS, AND BUCKET CYLINDER HOSES (2.6M) ... 374
STARTER GROUND CABLE ... 126
STARTER MOTOR ... 126
STARTER MOTOR CLUTCH DRIVE ... 126
STARTER MOTOR SWITCH ... 126
STARTER RELAY ... 180
STARTER RELAY WIRING HARNESS ... 180
STARTER WIRING HARNESS ... 126
STARTING AID, COLD WEATHER ... 144
STEEL COVER, TOP CAB ... 244
STEP, MAIN FRAME ... 218
STEP, TRACK FRAME ... 30
STORAGE COMPARTMENT, LEFT CONSOLE ... 224
STORAGE COMPARTMENT, RIGHT CONSOLE ... 224
STRAINER, FUEL FILLER ... 166
STRAP, GROUND ... 194
STRAP, GROUND, STARTER ... 126
SUN SHADE, CAB TOP ... 242
SUPPLY, POWER ... 282
SUPPORT,FAN DRIVE ... 132
SUSPENSION, SEAT ... 258
SWING BEARING COMPONENTS ... 214
SWING BEARING GREASE BATH COVER ... 216
SWING BEARING LOWER MOUNTING AND GREASE BATH COVER ... 216
SWING BEARING MOUNTING ... 216
SWING GEARBOX BEARING ... 522
SWING GEARBOX COMPONENTS ... 522
SWING GEARBOX COMPONENTS AND DIPSTICK ... 522
SWING GEARBOX DIPSTICK ... 522
SWING GEARBOX MOUNTING ... 524
SWING GEARBOX SHAFT ... 522
SWING MOTOR BEARING ... 526
SWING MOTOR COMPONENTS ... 526
SWING MOTOR PRESSURE RELIEF VALVE ... 526
SWING MOTOR PRESSURE SENSOR ... 476
SWING MOTOR SEAL KIT ... 526
SWING MOTOR SHAFT ... 526
SWING MOTOR TO CONTROL VALVE HOSE ... 462
SWING MOTOR TO CONTROL VALVE HOSE (DRAIN HOSE) ... 458
SWING MOTOR TO PILOT SIGNAL MANIFOLD HOSE (PILOT HOSE) ... 470
SWING MOTOR TO RETURN LINE HOSE (DRAIN HOSE) ... 458
SWITCH, DEFROSTER FAN ... 288
SWITCH, ENGINE COOLANT TEMPERATURE ... 100
SWITCH, ENGINE OIL PRESSURE ... 80
SWITCH, FOOT, AUXILIARY ELECTRIC ... 390
Switch, Front Cab Top Exterior Work Light And Harness ... 192
SWITCH, HYDRAULIC FILTER RESTRICTION INDICATOR ... 512
SWITCH, IGNITION ... 198, 200
SWITCH, LEVEL, ENGINE COOLANT WATER TANK ... 154
SWITCH, MOTION ALARM ... 318
SWITCH, STARTER MOTOR ... 126

T

TACHOMETER SENSOR-6710-4045HP051 ... 137
TANK MOUNTING, FUEL ... 168
TANK, ENGINE COOLANT RECOVERY ... 154
TANK, FUEL ... 166
TANK, HYDRAULIC OIL ... 510
TANK, WATER, ENGINE COOLANT ... 154
TANK, WINDSHIELD WASHER ... 250
TEETH, BUCKET (GENERAL PURPOSE OR HEAVY DUTY) ... 342
TEETH, BUCKET, HIGH CAPACITY ... 344
TEETH, HEAVY DUTY BUCKET ... 332
TEETH, HIGH CAPACITY BUCKET ... 326
TEETH,ESCO BUCKET ... 348
TEMPERATURE SENSOR, ENGINE CONTROL UNIT ... 114
TEMPERATURE SENSOR, ENGINE COOLANT ... 114
TEMPERATURE SENSOR, FUEL INJECTION PUMP ... 104
TENSION ADJUSTER, TRACK CHAIN ... 38
TENSIONER, FAN BELT IDLER ... 132
THERMOSTAT COVER, THERMOSTAT, SENSOR ... 114
THERMOSTAT, AIR CONDITIONER ... 270, 272
THERMOSTAT, ENGINE ... 114
THERMOSTAT, HEATER ... 270
THUMB, DIRECT HYDRAULIC ... 350
THUMB, PROGRESSIVE HYDRAULIC ... 352

Índice alfabético, continuación

Página

Timing Gear Cover-4425-4045HP051 ... 76
TOOL BOX ... 302
TOOL BOX ANTI-SLIP PLATE ... 302
TOOL BOX COVER ... 302
TOOL BOX, COVER, AND RIGHT FRONT HANDRAIL ... 302
TOOTH ASSEMBLY (GENERAL PURPOSE OR HEAVY DUTY) ... 342
TOOTH ASSEMBLY, HIGH CAPACITY BUCKET ... 344
TOOTH ASSEMBLY, HIGH CAPACITY BUCKET (CONTINUED) ... 346
TOP CAB HATCH, STEEL ... 244
TOP HATCH, CAB ... 242
TRACK CARRIER REPLACEMENT ROLLER, UPPER ... 44
TRACK CARRIER ROLLER, UPPER ... 42
TRACK CHAIN ASSEMBLY ... 40
TRACK CHAIN DRIVE SPROCKET ... 56
TRACK CHAIN IDLER (REPLACEMENT) ... 36
TRACK CHAIN MASTER PIN KIT ... 40
TRACK CHAIN TENSION ADJUSTER ... 38
TRACK CHAIN TENSION ADJUSTER COVER ... 30
TRACK CHAINS ... 40
TRACK FRAME ... 30
TRACK FRAME SEAL ... 54
TRACK FRAME STEP ... 30
TRACK FRONT IDLER ... 34
TRACK GUIDE, LOWER ... 32
TRACK LINK ... 40
TRACK LOWER GUIDE ... 32
TRACK LOWER ROLLER ASSEMBLY ... 46
TRACK ROLLER, LOWER ... 50
TRACK SHOE ... 40
TRACK, REPLACEMENT LOWER ROLLER ASSEMBLY ... 48
TRASHSCREEN, RADIATOR ... 152
TRAY, REAR ... 282
TROPICAL DOOR, SIDE SERVICE COMPARTMENTS ... 304
TUBE, CYLINDER BLOCK TO ENGINE OIL PUMP ... 88
TUBE, CYLINDER HEAD COVER TO WATER PUMP ... 114
TUBE, ENGINE OIL PUMP TO CYLINDER BLOCK ... 88
TUBE, WATER PUMP TO CYLINDER HEAD COVER ... 114
TURBOCHARGER AND OIL LINES ... 110
TURBOCHARGER TO AIR CLEANER HOSE ... 160
TURBOCHARGER TO AIR CLEANER LINE ... 160
TURBOCHARGER TO CHARGE AIR COOLER HOSE ... 152
TWO-WAY HYDRAULIC FOOT PEDAL CONTROL REPLACEMENT ... 368

U

UNDER COVER ... 292
UNDERCARRIAGE ... 30
UNDERCARRIAGE SEAL ... 54
UPPER ROLLER ... 42
UPPER ROLLER, REPLACEMENT ... 44

V

V-BELT, FAN DRIVE ... 134
V-BELT, IDLER PULLEY ... 134
VALVE COMPONENTS, PILOT CONTROLLER (DIG AND SWING) (SN -XXXXXX) ... 356
VALVE COMPONENTS, PILOT CONTROLLER (DIG AND SWING)(SN XXXXXX-) ... 358
VALVE COMPONENTS, PILOT SHUTOFF ... 448
VALVE KIT,SOLENOID, 1WAY/2WAY, WITHOUT PRESSURE SWITCH ... 392
VALVE MANIFOLD, SOLENOID(PILOT FILTER) ... 436
VALVE SPOOL, PILOT SIGNAL MANIFOLD ... 446
VALVE, ANTI-DRIFT (ARM) ... 400
VALVE, ANTI-DRIFT (BOOM) ... 402
VALVE, ARM AUXILIARY PLUMBING SHUT-OFF (FACTORY INSTALLED) ... 504
VALVE, AUXILIARY FOOT CONTROL ... 372
VALVE, BRAKE, PROPEL MOTOR ... 68
VALVE, CONTROL ... 416
Valve, Control, Components (Bottom) ... 424
VALVE, CONTROL, COMPONENTS (MIDDLE SEAL) ... 430
VALVE, CONTROL, COMPONENTS (TOP SPOOLS, 4 SPOOL SIDE) ... 428
VALVE, CONTROL, COMPONENTS (TOP SPOOLS, 5 SPOOL SIDE) ... 426
VALVE, CONTROL, COMPONENTS(4 SPOOL SIDE) ... 420
VALVE, CONTROL, COMPONENTS(5 SPOOL SIDE) ... 422
VALVE, ENGINE OIL BY-PASS ... 80
VALVE, ENGINE OIL DRAIN (ALUMINUM PAN) (ESN. 274011-334596) (274011 - 334596) ... 92
VALVE, ENGINE OIL DRAIN (STEEL OIL PAN) (ESN 334597-) (334597 -) ... 94
VALVE, ENGINE OIL PRESSURE REGULATING ... 80
VALVE, ETHER ... 144
VALVE, EXHAUST ... 100
VALVE, FLOW CONTROL, AIR CONDITIONER EVAPORATOR ... 270
VALVE, FLOW CONTROL, HYDRAULIC OIL ... 454
Valve, Hydraulic Restrictor ... 454
VALVE, INTAKE ... 100
VALVE, MECHANICAL PATTERN CHANGER ... 396
VALVE, PILOT (DIG AND SWING) ... 354
VALVE, PRESSURE RELIEF (FACTORY INSTALLED AUXILIARY PLUMBING) ... 500
VALVE, PROPEL MOTOR BRAKE RELIEF ... 64
VALVE, RELIEF (IN AUXILIARY HYDRAULIC LINE SPOOL OF CONTROL VALVE)(FIELD) ... 506
VALVE, SELECTOR (AUXILIARY PLUMBING) ... 500
VALVE, SHUT-OFF (AUXILIARY HYDRAULIC OPTIONAL RETURN) ... 508
VALVE, SOLENOID (CONTROL PATTERN SELECTOR KIT) ... 394
VALVE, SOLENOID, COMPONENTS (ON CONTROL VALVE) ... 432
VALVE, SOLENOID, COMPONENTS (ON PILOT FILTER) ... 434
VALVE, SWING MOTOR PRESSURE RELIEF ... 526
VANDAL COVER KIT ... 256
VANDAL GUARD KIT ... 256
VEHICLE CONTROLLER, CAB REAR ... 198, 200
VEHICLE MAIN WIRING HARNESS ... 194
VENTILATING HOSE, ENGINE CYLINDER HEAD ... 98
VENTILATING SYSTEM ... 98

W

WARNING DECALS AND LABELS (ENGLISH) ... 172
WARNING DECALS AND LABELS (FRENCH) ... 174, 176
WATER PUMP ... 113
WATER PUMP INLET ... 112
WATER PUMP PULLEY ... 112
WATER PUMP PULLEY AND INLET ... 112
WATER PUMP REPAIR KIT ... 113
WATER PUMP WITH REPAIR KIT ... 113
Water Pump-4425-4045HP051 ... 76
WATER TANK, ENGINE COOLANT ... 154
WEAR BARS, GENERAL PURPOSE BUCKET ... 322
WEAR BARS, HEAVY DUTY BUCKET ... 328, 330
WEAR BARS, HIGH CAPACITY GENERAL PURPOSE BUCKET ... 324
WEIGHT, ENGINE BALANCER SHAFT ... 108
WHEEL, TIMING, CRANKSHAFT ... 70
WINDOW GUARD, CAB RIGHT ... 240
WINDOW GUARDS ... 256
WINDOW WASHER ... 250
WINDOW, CAB DOOR ... 236
WINDOW, CAB FRONT ... 238
WINDOW, CAB LEFT ... 234
WINDOW, CAB REAR ... 234
WINDOW, CAB RIGHT ... 240
WINDOW, CAB TOP ... 242
WINDSHIELD ... 238
WINDSHIELD WASHER ... 250
WINDSHIELD WASHER HOSE ... 232
WINDSHIELD WASHER NOZZLE ... 232
WINDSHIELD WASHER PUMP ... 250
WINDSHIELD WASHER RESERVOIR ... 250
WINDSHIELD WASHER RESERVOIR MOUNTING BRACKET ... 250
WINDSHIELD WASHER RESERVOIR, PUMP AND MOUNTING BRACKET ... 250
WINDSHIELD WIPER ... 232
WINDSHIELD WIPER ARM ... 232
WINDSHIELD WIPER BLADE ... 232
WINDSHIELD WIPER MOTOR ... 232
WINDSHIELD WIPER MOTOR WIRING HARNESS ... 232
WINDSHIELD WIPER, RADIO SPEAKERS AND ANTENNA ... 232
WIPER, WINDSHIELD ... 232
WIRE HARNESS, AIR CONDITIONER ... 276
WIRE HARNESS, BOOM WORK LIGHT ... 190
WIRE HARNESS, FOOT SWITCH ... 390
WIRE HARNESS, FUEL FIRED COOLANT HEATER KIT ... 146, 148
WIRING CONNECTORS, ENGINE WIRING HARNESS ... 204
WIRING HARNESS CONNECTORS, ENGINE WIRING HARNESS ... 204
WIRING HARNESS EXTENSION ... 198, 200

Índice alfabético, continuación

Página

WIRING HARNESS, ALTERNATOR 182
WIRING HARNESS, BOOM LIGHT 188
WIRING HARNESS, CAB DISPLAY MONITOR 196
WIRING HARNESS, CAB REAR POWER SUPPLY 282
WIRING HARNESS, CAB, MAIN 198, 200
WIRING HARNESS, DEFROSTER FAN 288
WIRING HARNESS, DOME LIGHT 232
WIRING HARNESS, ENGINE 202, 204
WIRING HARNESS, ENGINE CONTROL UNIT 206
WIRING HARNESS, FROM HEATER AND A/C CONTROLLER TO HVAC UNIT 268
WIRING HARNESS, FRONT CAB TOP EXTERIOR WORK LIGHT .. 192
WIRING HARNESS, HORN 316
WIRING HARNESS, HYDRAULIC FILTER RESTRICTION INDICATOR 512
WIRING HARNESS, MOTION ALARM 318
WIRING HARNESS, RADIO 310
WIRING HARNESS, RADIO ANTENNA 232
WIRING HARNESS, RADIO SPEAKER 232
WIRING HARNESS, STARTER 126
WIRING HARNESS, STARTER RELAY 180
WIRING HARNESS, VEHICLE MAIN 194
WIRING HARNESS, WINDSHIELD WIPER MOTOR 232
WORK LIGHT, BOOM 190
WORK LIGHT, RIGHT FRONT 190, 302
WORK LIGHTS, CAB TOP, EXTERIOR 192

Y

YOKE, FRONT IDLER 34
YOKE, TRACK IDLER (REPLACEMENT) 36

TRACK FRAME
BATI DE CHENILLE
BASTIDOR DE CADENAS

T153294 A.1

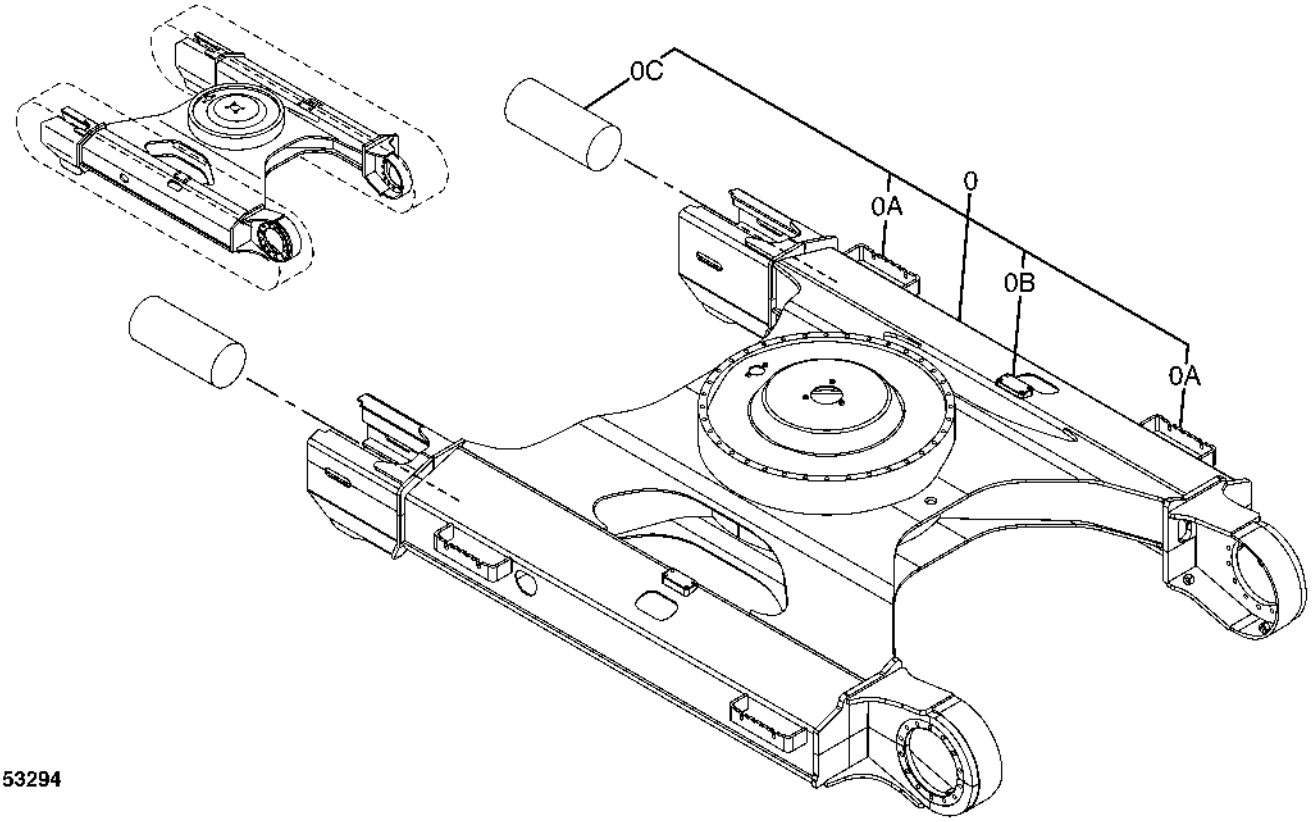

T153294

Pos.	*Ref.*	*Descripción*	*Cant.*	*Núm. de serie*	*Notas*
0	AP37381	Bastidor	1		NLA
0A	4446989	Peldaño	4	-XXXXXX	
	9738781	Soporte	4	XXXXXX-	
0B	3087108	Soporte	4		
0C	4445428	Guía	2		

TRACK LOWER GUIDE
GUIDE INFERIEUR DE CHENILLE
GUIA INFERIOR DE CADENA

TP58757 A.1

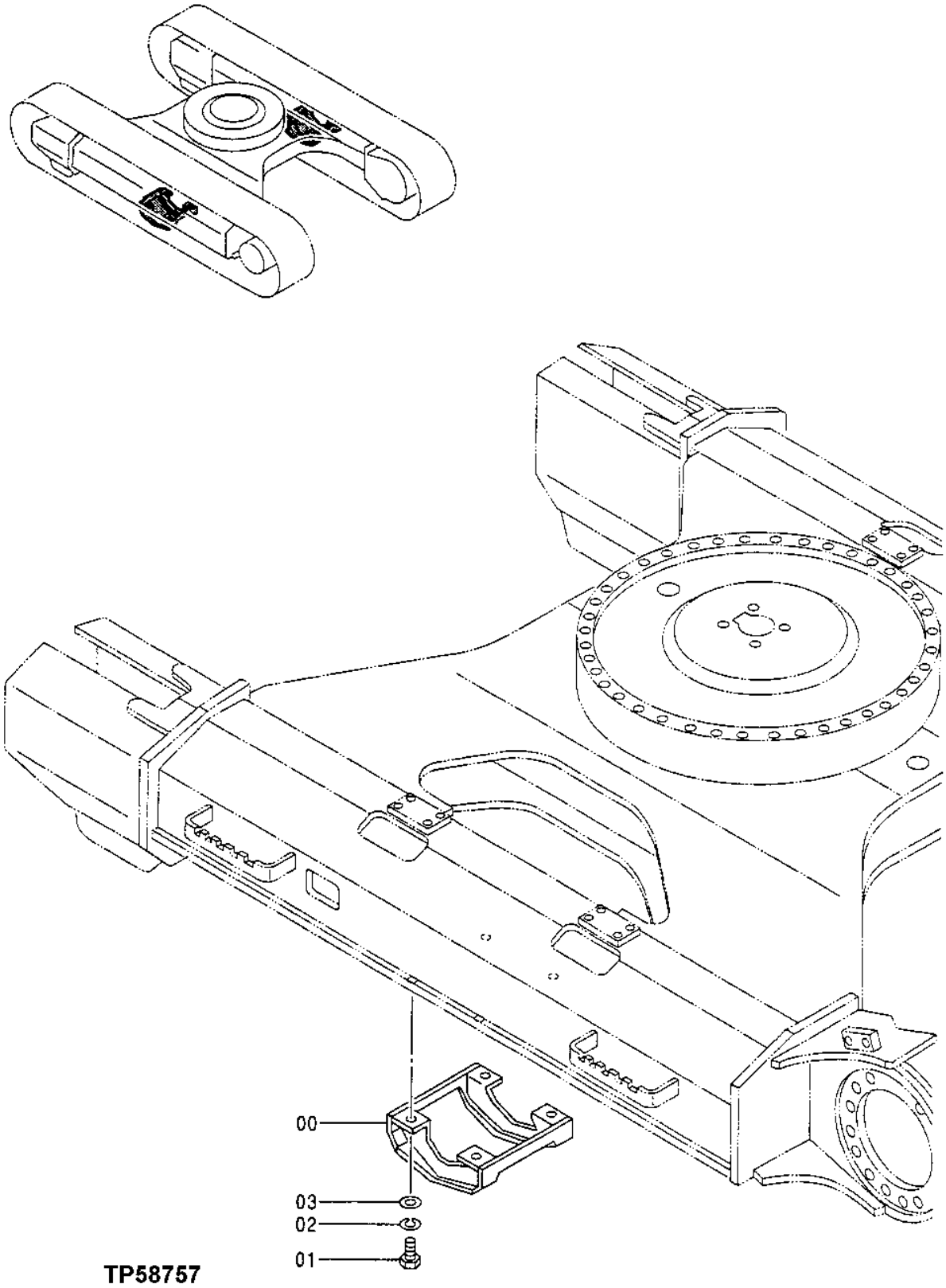

Pos.	*Ref.*	*Descripción*	*Cant.*	*Núm. de serie*	*Notas*
0	AT314587	Soporte	1		(SUB FOR 8052020)
1	19M8232	Tornillo	4		M18 X 50
2	12H236	Arandela de seguridad	4		3/4"
3	24M7353	Arandela	4		20 X 34 X 3 mm

TRACK FRONT IDLER
TENDEUR AVANT DE CHENILLE
RUEDA TENSORA DELANTERA DE ORUGAS

T163601 A.1

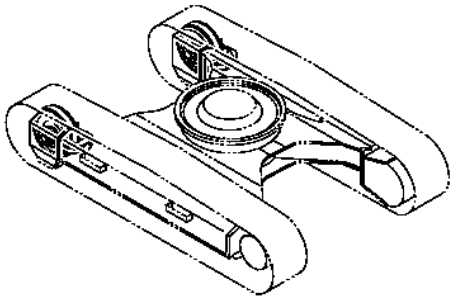

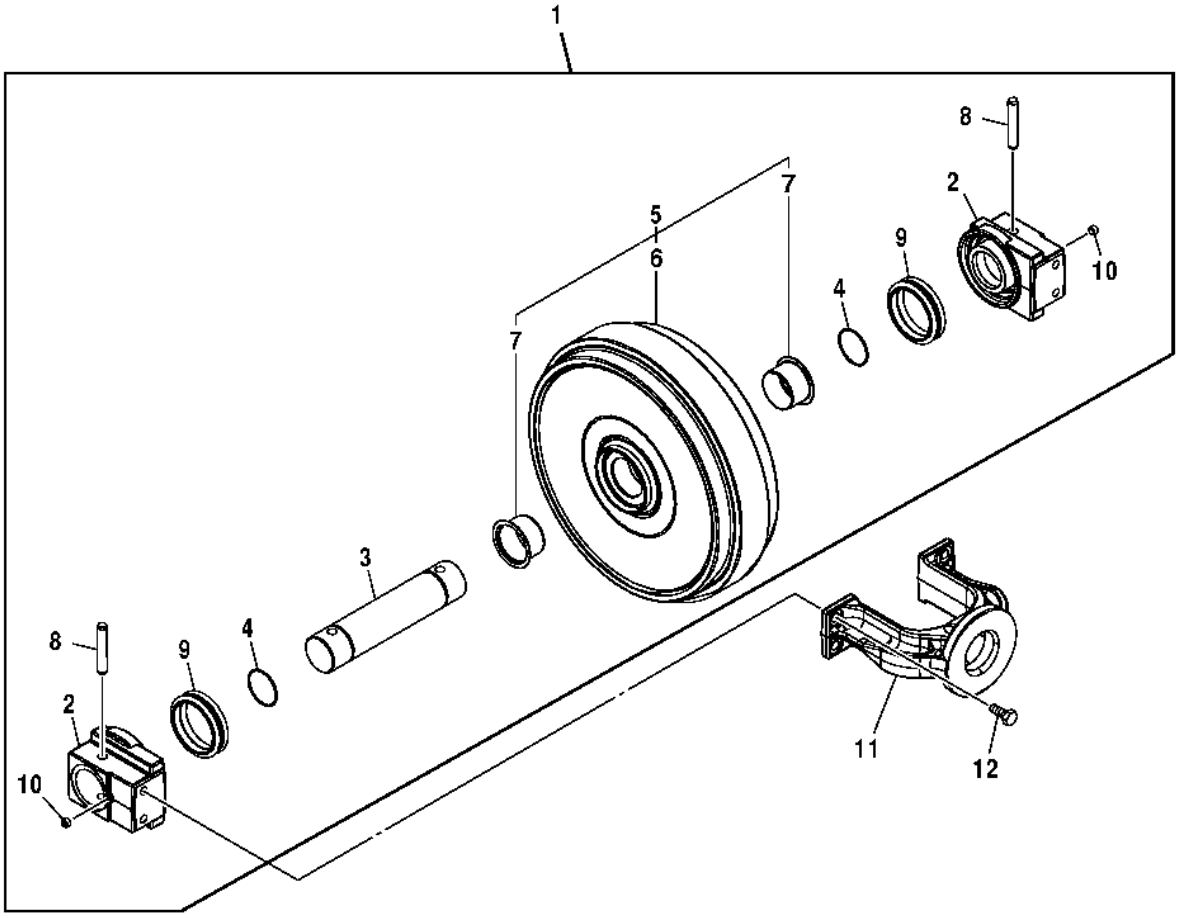

T163601

Pos.	*Ref.*	*Descripción*	*Cant.*	*Núm. de serie*	*Notas*
1	.....	Rueda de cadena	1		(SUB 9242964R)(AT301568 NLA)
2	DH100030	Cojinete	2		(SUB FOR THDH100030)
3	AT180022	Árbol	1		
4	AT180019	Anillo tórico	2		69.400 X 3.100 mm (2.732" X 0.122")
5	AT180020	Caja de rodillos	1		
6	DH100001	Rueda dentada	1		(SUB FOR THDH100001)
7	AT180021	Casquillo	2		75 X 79 X 48.500 mm (2-61/64" X 3.110" X 1.909")
8	AT180015	Bulón	2		20.500 X 107 mm (0.807" X 4.213")
9	AT180017	Retén	2		
10	AT180007	Tapón hermético	2		
11	DH100029	Horquilla	1		(SUB FOR THDH100029)
12	19M8035	Tornillo	4		M16 X 35

JOHN DEERE DEALER ORDER DIRECTLY FROM DURA-TRAX™ DIRECT
CONCESSIONNAIRES JOHN DEERE COMMANDER DIRECTEMENT AUPRES DE DURA-TRAX™ DIRECT
CONCESIONARIOS JOHN DEERE PEDIR DIRECTAMENTE DE DURA-TRAX™ DIRECT

TRACK CHAIN IDLER (REPLACEMENT)
TENDEUR DE CHAINE DE CHENILLE (RECHANGE)
RODILLO TENSOR DE CADENA DE ORUGA (REPUESTO)

TX1095293 A.1

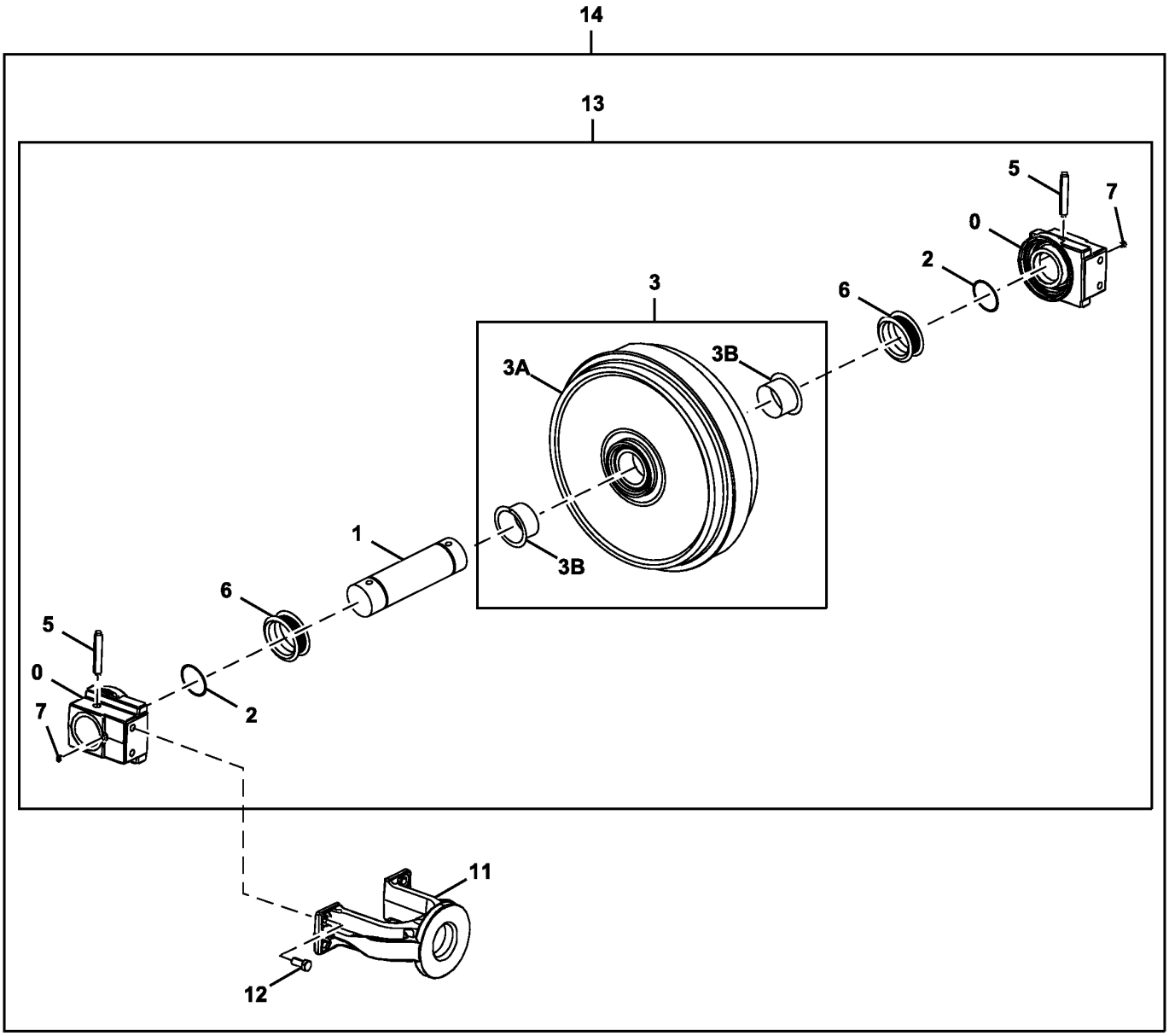

TX1095293

Pos.	*Ref.*	*Descripción*	*Cant.*	*Núm. de serie*	*Notas*
0	1032503R	Cojinete	2		SUB FOR 1032503
1	3070162R	Eje	1		SUB FOR 3070162
2	AT180019	Anillo tórico	2		SUB FOR A810070
3	9242963R	Rueda loca	1		SUB FOR 9242963
3A	.....	Rueda loca	1		7047084 NLA
3B	3103096R	Casquillo	2		SUB FOR 3103096
5	4126209R	Pasador	2		SUB FOR 4126209
6	AT180017	Retén	2		SUB FOR 4153731 OR TH100433
7	94-2011	Tapón hermético	2		SUB FOR 4315607
11	DH100029	Horquilla	1		SUB FOR 1026777
12	19M8035	Tornillo	4		M16 X 35, SUB FOR J901635
13	9242964R	Rueda de cadena	1		SUB FOR 9242964
14	.....	Rueda de cadena	1		9242965 NLA

JOHN DEERE DEALER ORDER DIRECTLY FROM DURA-TRAX™ DIRECT
CONCESSIONNAIRES JOHN DEERE COMMANDER DIRECTEMENT AUPRES DE DURA-TRAX™ DIRECT
CONCESIONARIOS JOHN DEERE PEDIR DIRECTAMENTE DE DURA-TRAX™ DIRECT

TRACK CHAIN TENSION ADJUSTER
DISPOSITIF DE REGLAGE DE TENSION DE CHAINE DE CHENILLE
AJUSTADOR DE TENSION DE CADENA DE ORUGA

T157470 A.1

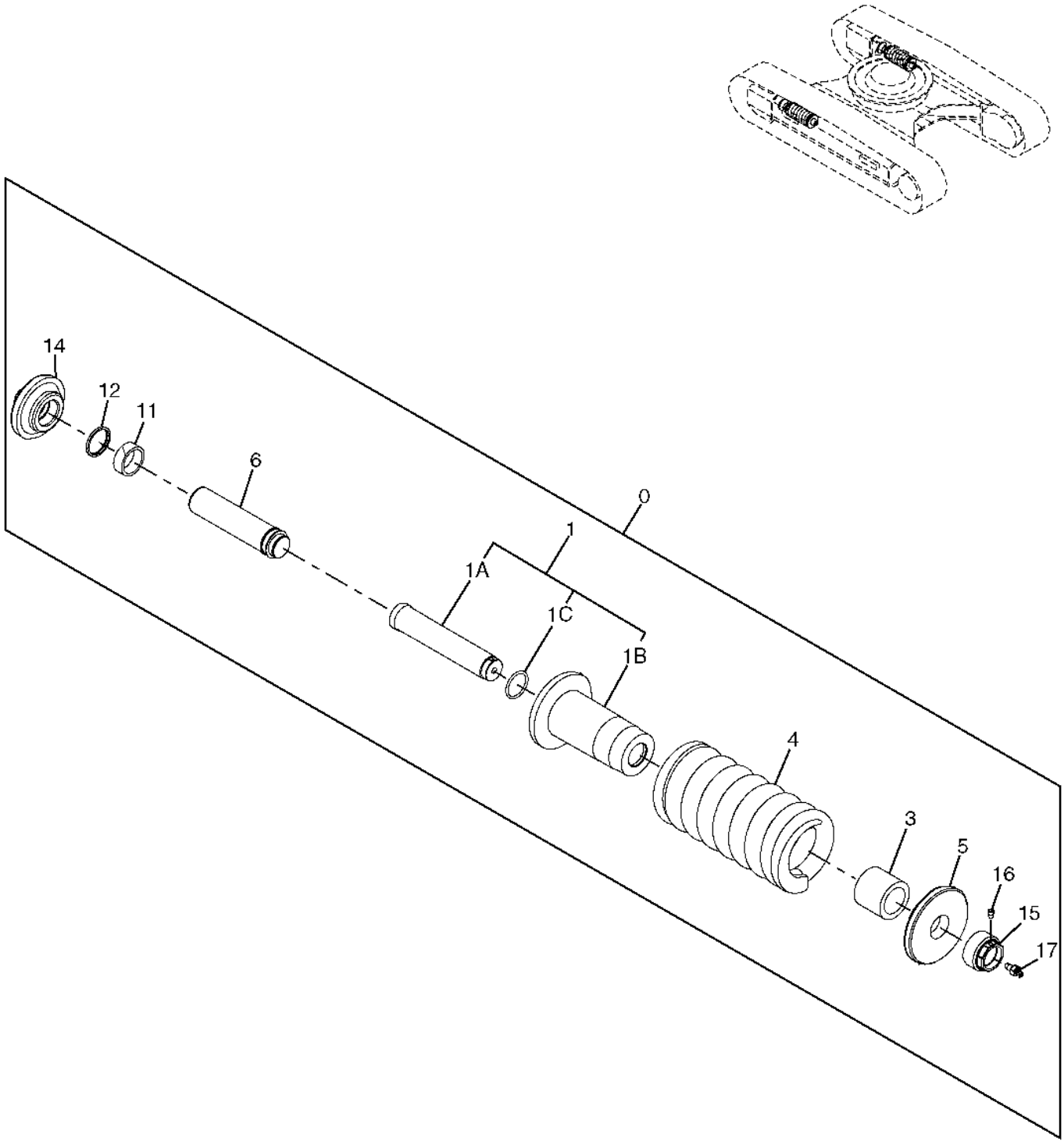

T157470

Pos.	*Ref.*	*Descripción*	*Cant.*	*Núm. de serie*	*Notas*
0	.....	Ajustador	2		
1	.....	Cilindro	1		
1A	T191461	Vástago	1		NLA; ORDER AT404640
	AT404640	Cilindro	1		
1B	T191457	Cilindro	1		NLA; ORDER AT404640
	AT404640	Cilindro	1		
1C	T191413	Anillo tórico	1		
3	T191460	Espaciador	1		
4	T191458	Muelle	1		
5	T191462	Arandela	1		
6	T191455	Vástago	1		
11	T191459	Retén	1		
12	T191456	Retén	1		
14	T191464	Portador	1		
15	T191463	Tuerca	1		
16	AT180393	Tapón hermético	1		SUB FOR T191408
17	T191406	Engrasador	1		

TRACK CHAINS
CHAINES DE CHENILLES
CADENAS

T200424 A.1

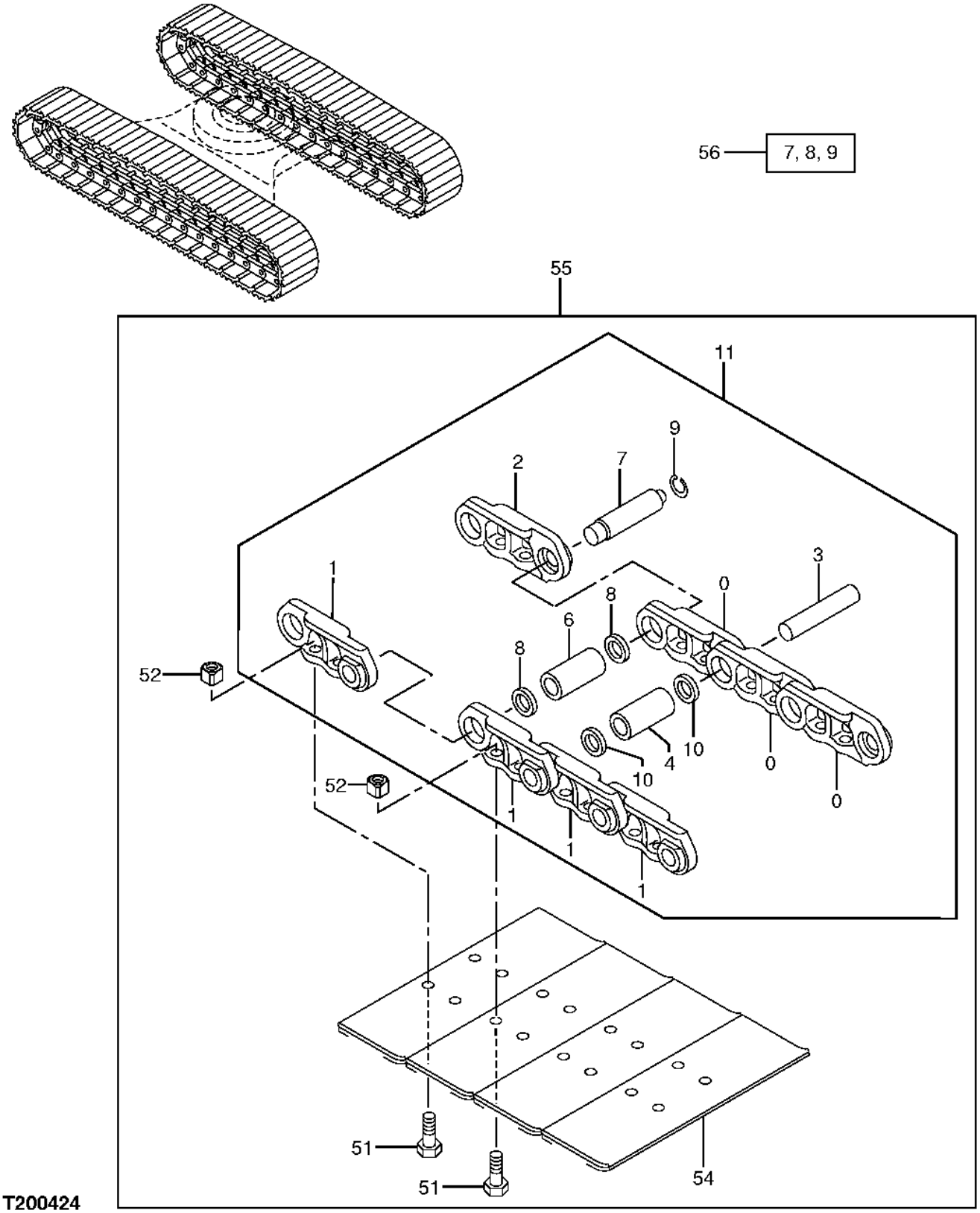

T200424

Pos.	*Ref.*	*Descripción*	*Cant.*	*Núm. de serie*	*Notas*
0	AT180025	Articulación	42		Derecho, (SUB FOR T191399)
1	AT180027	Articulación	43		Izquierdo, (SUB FOR T191398)
2	T209261	Eslabón maestro, derecho	1		Maestro derecho, (SUB FOR T191397)
3	AT180028	Bulón	42		(SUB FOR T191394)
4	AT186162	Casquillo	42		(SUB FOR T191396)
6	AT219468	Casquillo	1		(SUB FOR T191395)
7	T209260	Bulón maestro de oruga	1		(SUB FOR AT174861 OR T191393)
8	AT219471	Espaciador	1		Maestro, (SUB FOR T191392)
9	T209259	Anillo elástico	2		(SUB FOR AT174863 OR T191390)
10	AT186161	Retén	84		(SUB FOR TH100434, T191391 OR 94-2011)
11	AT311605	Cadena de oruga sin zapatas	1		(SUB FOR AT280860)
51	AT180036	Perno de oruga	172		M18 X 52, (SUB FOR T191421)
52	AT180048	Tuerca	172		M18, (SUB FOR T191422)
54	AT180034	Zapata abierta c/3 nervad.	43		(600 MM) , Ancho, (SUB FOR T191420)
	AT180035	Zapata abierta c/3 nervad.	43		(700 MM) , Ancho, (SUB FOR T191419)
55	AT311608	Cadena de oruga con zapatas	1		(600 MM ZAPATAS)
	AT311610	Cadena de oruga con zapatas	1		(700 MM ZAPATAS)
56	AT313621	Juego para cadena	1		Maestro, Conjunto, (INCLUDES T209259, T209260 AND (2) AT219471)

UPPER ROLLER
GALET SUPERIEUR
RODILLO SUPERIOR

T157471 A.1

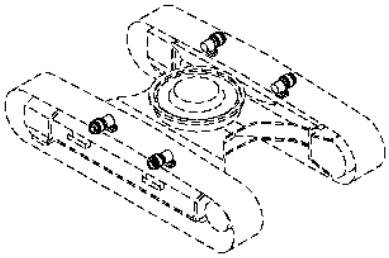

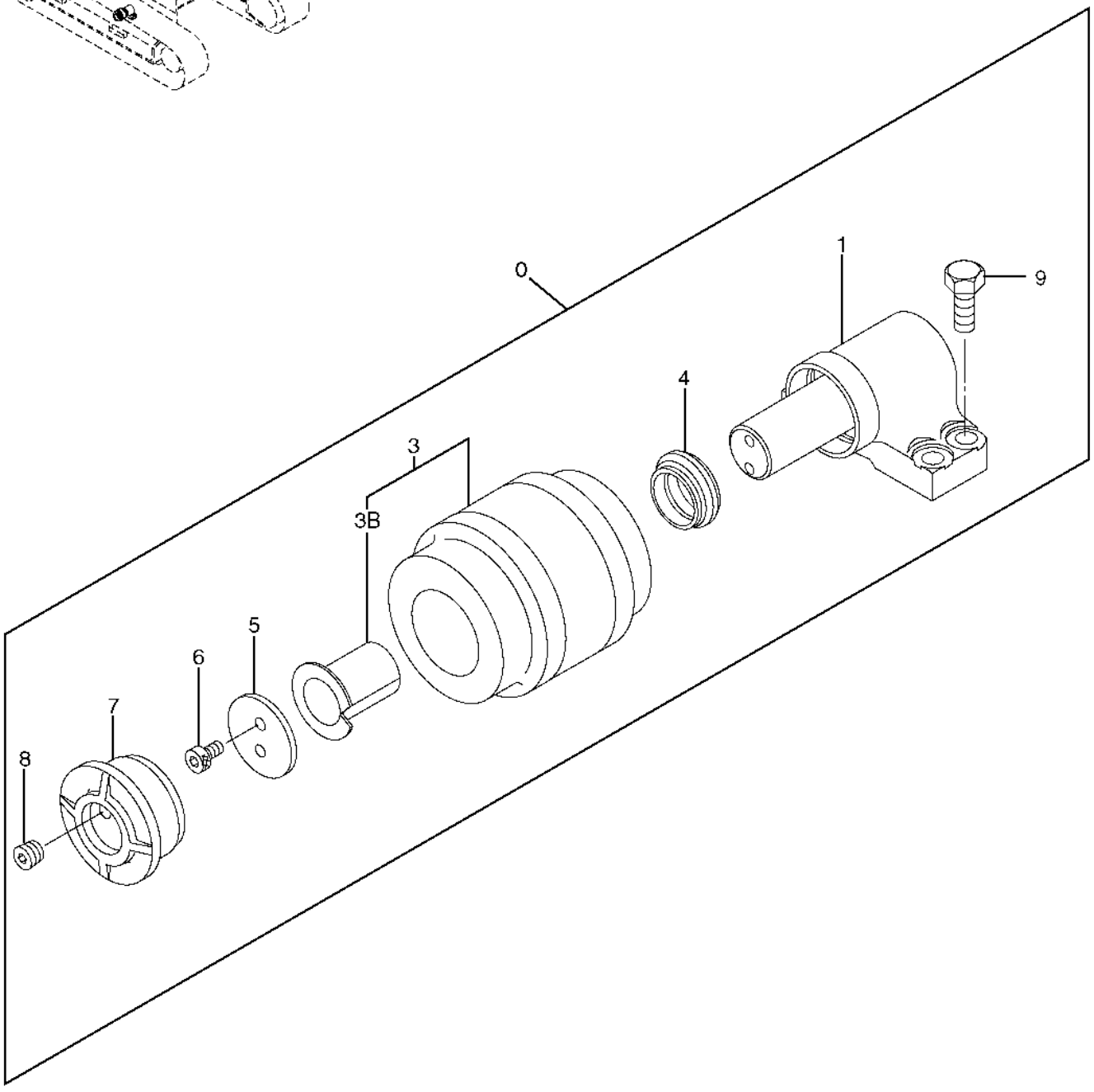

T157471

Pos.	*Ref.*	*Descripción*	*Cant.*	*Núm. de serie*	*Notas*
0	.....	Rodillo	4		(AP39243 NLA) , (SUB AP34667)
	AP34667	Rodillo	4		
1	.....	Soporte	1		(AT280856 NLA) , (PARA REEMPLAZO AP39243 SOLAMENTE)
3	.....	Caja de rodillos	1		(AT280857 NLA) , (PARA REEMPLAZO AP39243 SOLAMENTE)
3B	AT180004	Casquillo	1		(USE WITH AP34667)
	T191382	Casquillo	1		(USE WITH AP39243)
4	AT180008	Retén	1		(USE WITH AP34667)
	T191380	Retén	1		(USE WITH AP39243)
5	AT180005	Arandela	1		(USE WITH AP34667)
	T191379	Arandela de empuje	1		(USE WITH AP39243)
6	AT180006	Tornillo	2		(USE WITH AP34667)
	M351018	Tornillo	2		(USE WITH AP39243) (SUB FOR T191378)
7	T191377	Tapadera	1		(USE WITH AP39243)
8	AT180007	Tapón hermético	1		(USE WITH AP34667)
	AT180007	Tapón hermético	1		(USE WITH AP39243) (SUB FOR T191381 OR T191383)
9	19M7488	Tornillo	16		M16 X 40, (USO SIN ESPACIADOR 4334245)
	19M8295	Tornillo	16		M16 X 55, (USE WITH 4334245)

Replacement Upper Roller
Galet supérieur de rechange
Rodillo superior de reemplazo

T158549 A.1

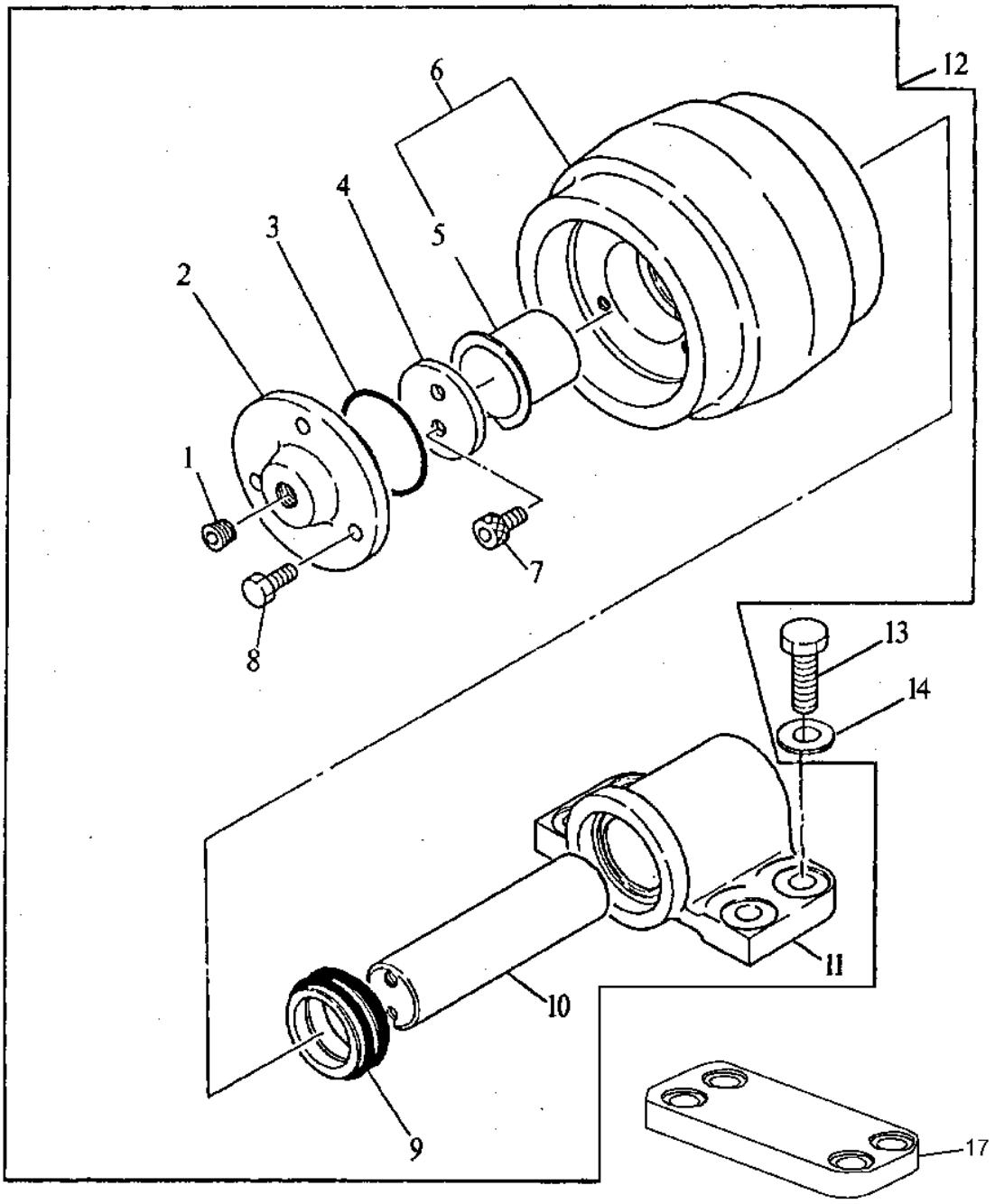

T158549

Pos.	*Ref.*	*Descripción*	*Cant.*	*Núm. de serie*	*Notas*
1	AT180007	Tapón hermético	1		
2	.....	Tapadera	1		(NO DISPONIBLE)
3	.....	Anillo tórico	1		(NO DISPONIBLE)
4	AT180005	Arandela	1		
5	AT180004	Casquillo	1		40 X 44 X 61.500 mm (1.575" X 1.732" X 2.421")
6	.....	Rodillo	1		(NO DISPONIBLE)
7	AT180006	Tornillo	2		M10 X 18
8	.....	Tornillo	4		(NO DISPONIBLE)
9	AT180008	Retén	1		
10	.....	Árbol	1		(NO DISPONIBLE)
11	.....	Apoyo	1		(NO DISPONIBLE)
12	AP34667	Rodillo	4		(ALSO ORDER 4334245 AND (4) 19M8295)
13	19M8295	Tornillo	16		M16 X 55, (USE WITH 4334245)
	19M7488	Tornillo	16		M16 X 40, (USO SIN ESPACIADOR 4334245)
14	.....	Arandela	16		(R73290 NA)
17	4334245	Espaciador	4		

LOWER ROLLER
GALET INFERIEUR
RODILLO INFERIOR

T200710 A.1

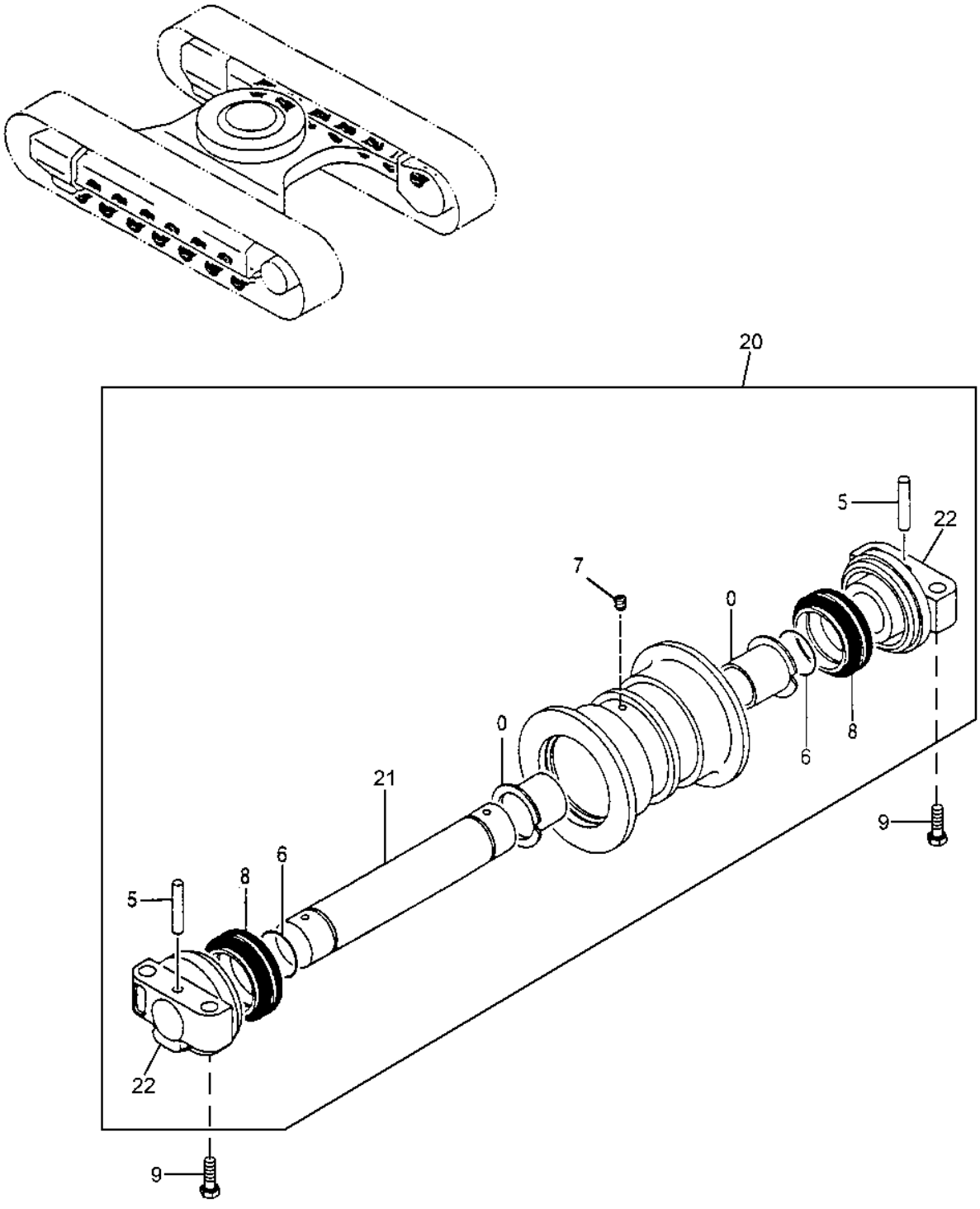

T200710

Pos.	*Ref.*	*Descripción*	*Cant.*	*Núm. de serie*	*Notas*
0	T191402	Casquillo	2		
5	T191404	Pasador elástico	2		
6	AT180425	Anillo tórico	2		(SUB FOR T191403)
7	AT180378	Tapón hermético	1		(SUB FOR T191400)
8	AT180861	Manguera hidr. - confección	2		
9	4331851	Tornillo	56		
20	.....	Rodillo	14		(AP39240 NLA) , (SUB AP34666)
21	.....	Árbol	1		(T191405 NLA)
22	.....	Soporte	2		(T191401 NLA)

LOWER ROLLER (REPLACEMENT)
GALET INFERIEUR (RECHANGE)
RODILLO INFERIOR (REPUESTO)

TP40127 A.1

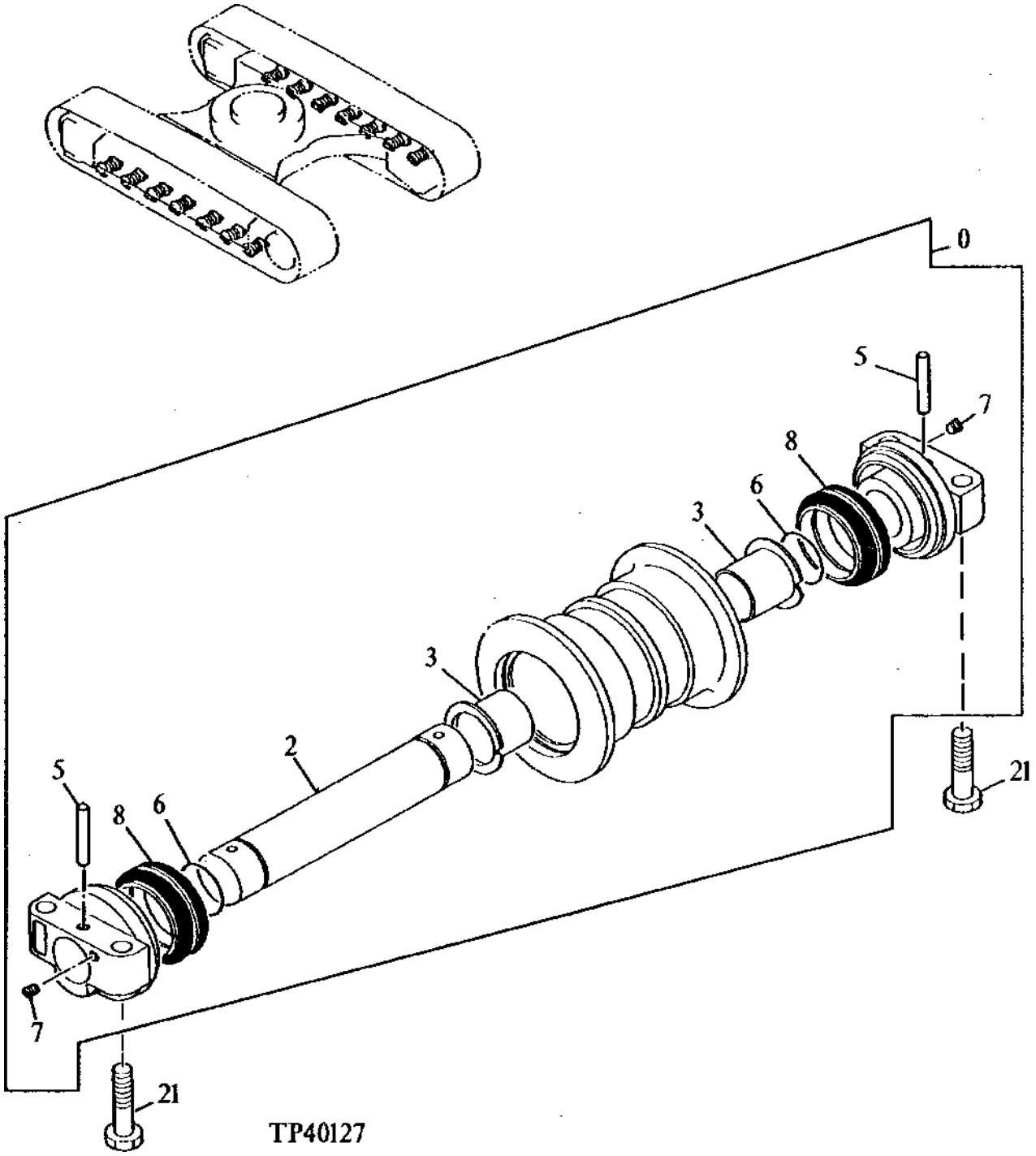

Pos.	*Ref.*	*Descripción*	*Cant.*	*Núm. de serie*	*Notas*
0	.....	Rodillo	16		(AP34666 NLA)
2	.....	Árbol	1		(NO DISPONIBLE)
3	AT180013	Casquillo	2		65 X 69 X 64.500 mm (2.559" X 2.717" X 2.539")
5	AT180009	Bulón	2		
6	AT180012	Anillo tórico	2		59.400 X 3.100 mm (2.339" X 0.122")
7	AT180007	Tapón hermético	2		
8	AT180011	Retén	2		
21	4331851	Tornillo	56		M18 X 90, (SUB FOR AT213839)

LOWER TRACK CHAIN ROLLER (REPLACEMENT)
GALET INFERIEUR DE CHAINE DE CHENILLE (RECHANGE)
RODILLO DE CADENA DE ORUGAS INFERIOR (REPUESTO)

TX1017913 A.1

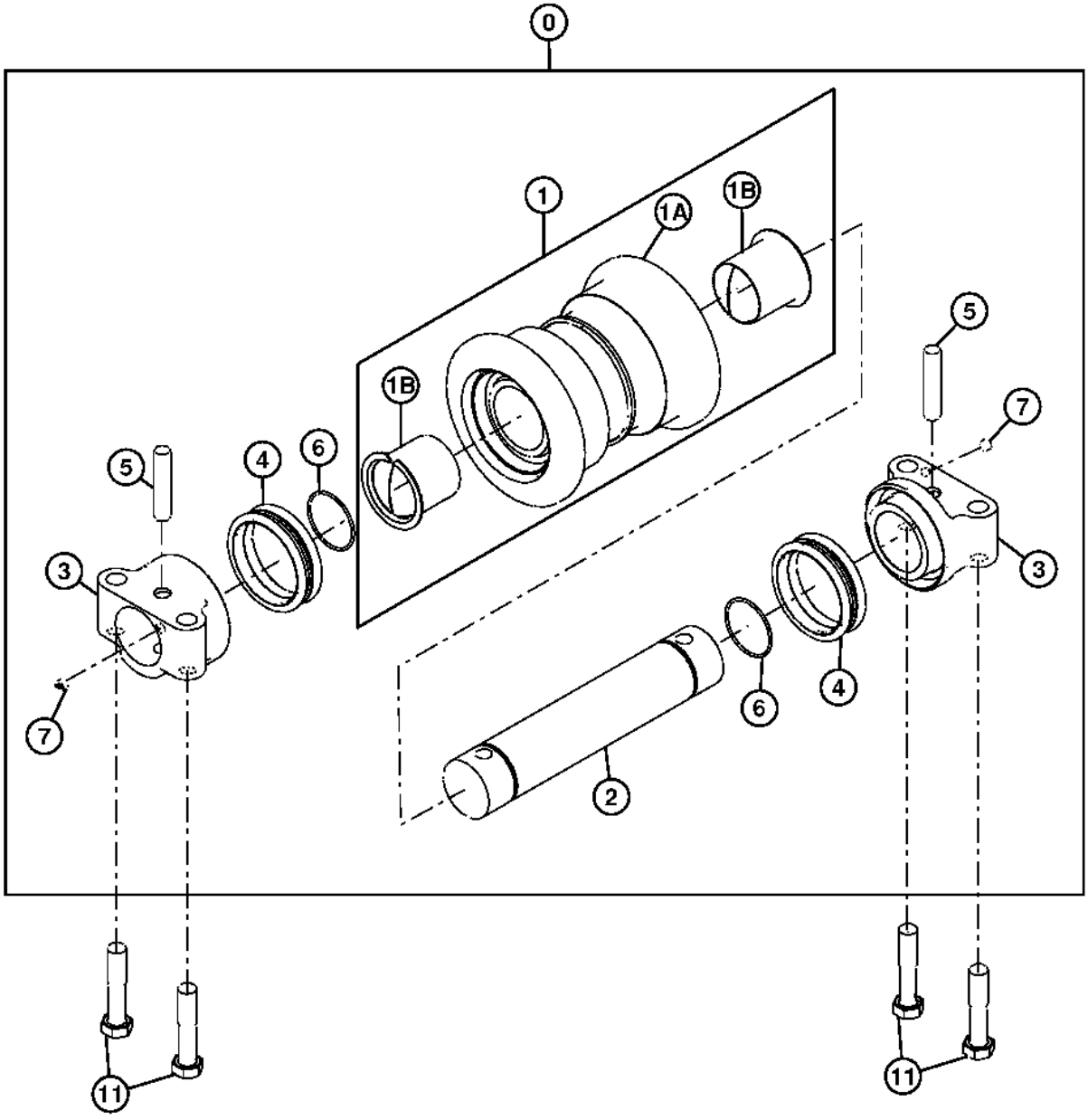

TX1017913

Pos.	*Ref.*	*Descripción*	*Cant.*	*Núm. de serie*	*Notas*
0	AT332621	Rodillo	1		(SUB FOR AP34666)
1	.....	Rodillo	1		(9156396 NLA)
1A	.....	Rodillo	1		(7031988 NLA)
1B	AT180013	Casquillo	2		(SUB FOR 3047030)
2	.....	Eje	1		(3046945 NLA)
3	.....	Apoyo	2		(2036934 NLA)
4	AT180011	Retén	2		(SUB FOR 4317586)
5	.....	Pasador	2		(4137684 NLA)
6	AT180012	Anillo tórico	2		
7	AT180007	Tapón hermético	2		(SUB FOR 4315607)
11	4331851	Tornillo	4		

JOHN DEERE DEALER ORDER DIRECTLY FROM DURATRAX DIRECT
CONCESSIONNAIRES JOHN DEERE COMMANDER DIRECTEMENT AUPRES DE DURTRAX DIRECT
CONCESIONARIOS JOHN DEERE PEDIR DIRECTAMENTE DE DURATRAX DIRECT

ROTARY MANIFOLD TOP COVER AND PLATE
PROTECTION SUPERIEURE ET PLAQUE DU COLLECTEUR ROTATIF
CUBIERTA SUPERIOR DEL COLECTOR GIRATORIO Y PLACA

T189077 A.1

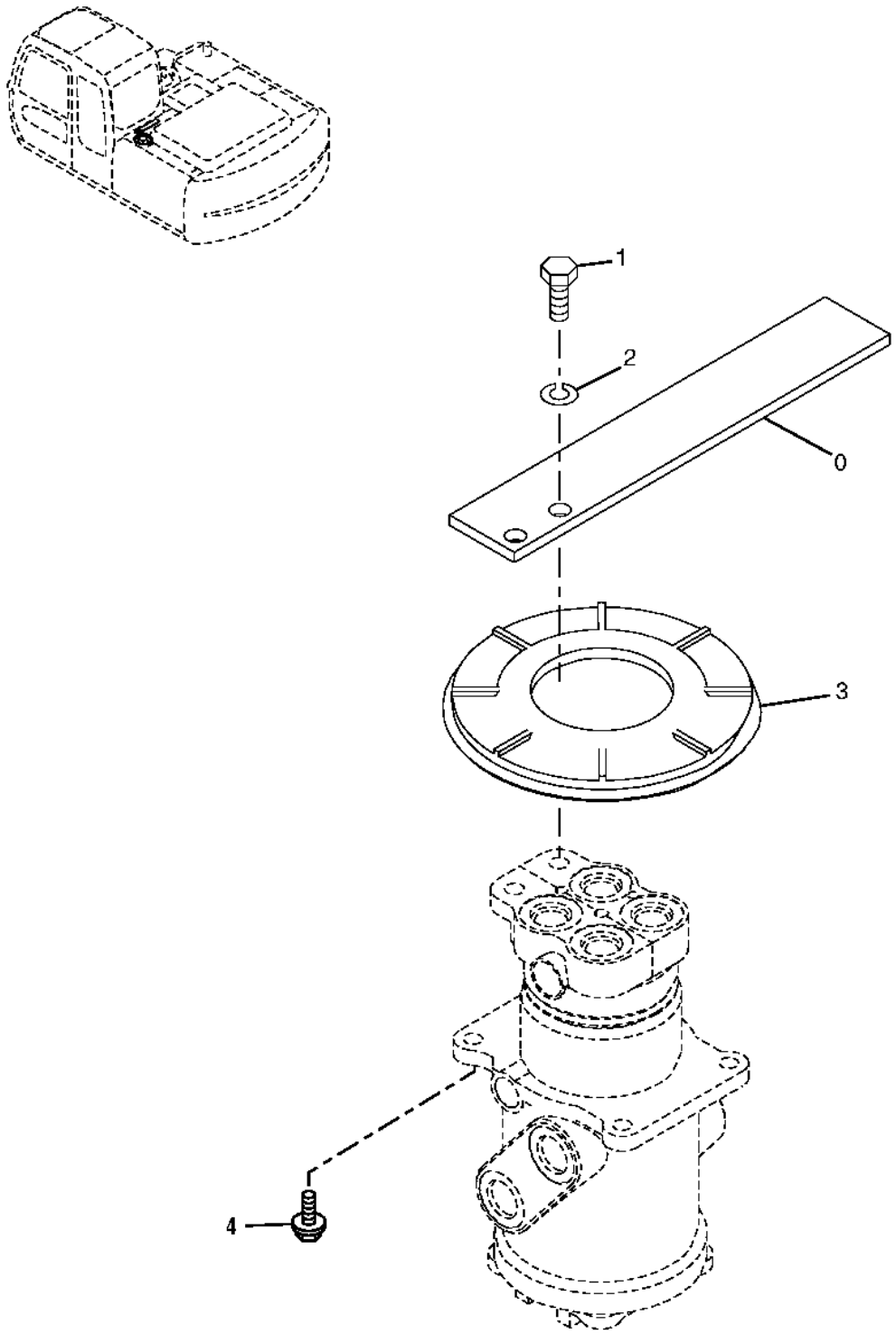

T189077

Pos.	*Ref.*	*Descripción*	*Cant.*	*Núm. de serie*	*Notas*
0	3091100	Tope	1		
1	19M6332	Tornillo	2		M14 X 35
2	12H317	Arandela de seguridad	2		9/16"
3	4428007	Tapadera	1		
4	19M7403	Tornillo	4		M12 X 35

ROTARY MANIFOLD (TRACK FRAME) SEAL
JOINT DE COLLECTEUR ROTATIF (BATI DE CHENILLE)
SELLO COLECTOR GIRATORIO (BASTIDOR DE CADENAS)

T192733 A.1

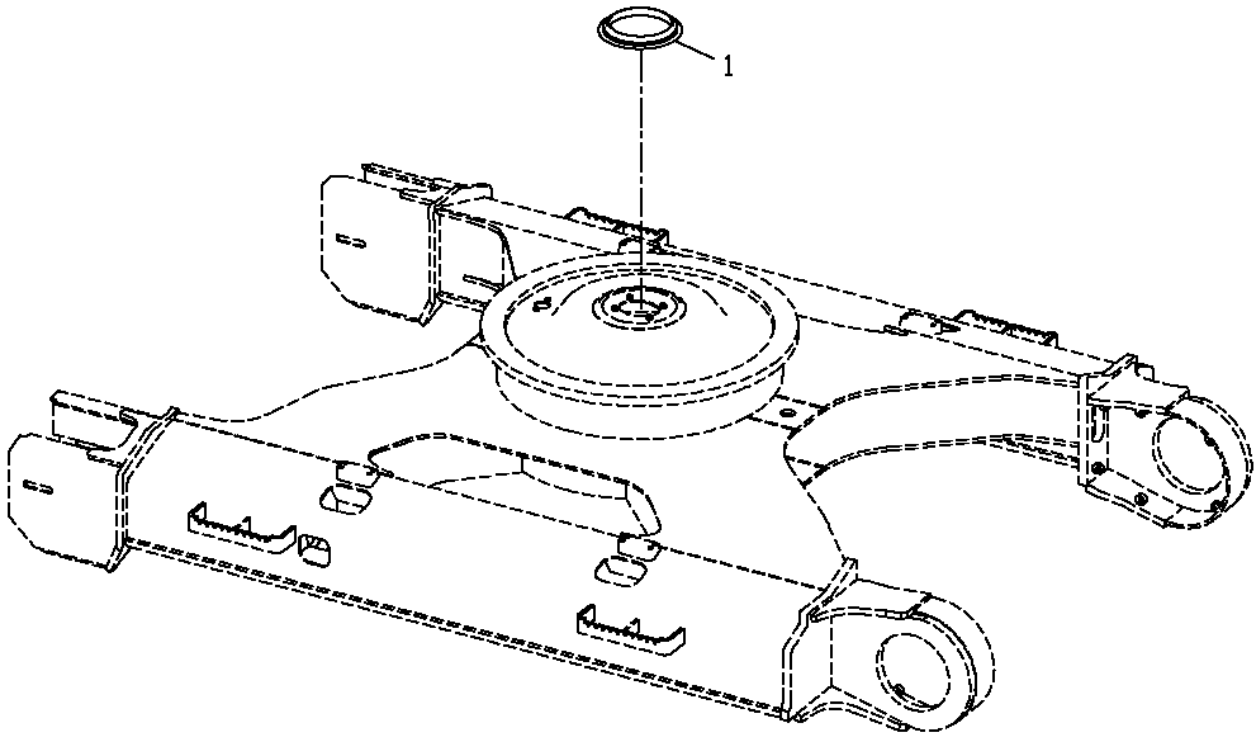

T192733

Pos.	*Ref.*	*Descripción*	*Cant.*	*Núm. de serie*	*Notas*
1	4483676	Retén	1		(SUB FOR 9229187)

PROPEL GEARBOX MOUNTING AND SPROCKET
SUPPORT DE MONTAGE DE BOITE D'ENGRENAGES DE PROPULSION ET PIGNONS
MONTAJE DE LA CAJA DE ENGRANAJES DE PROPULSION Y RUEDA DENTADA

T157469 A.1

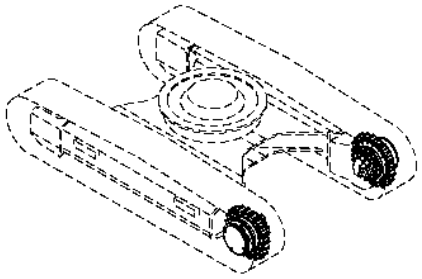

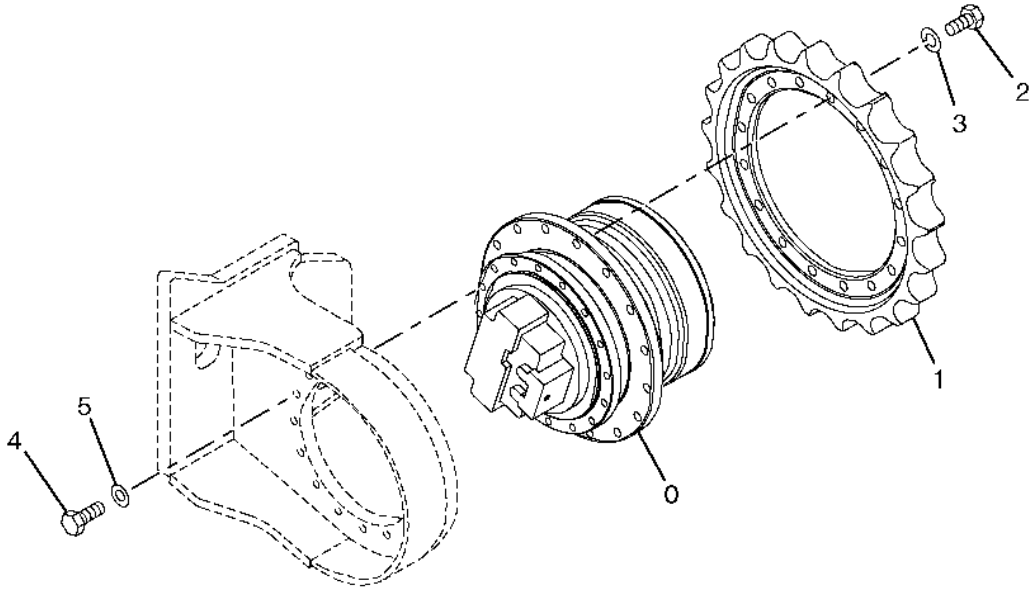

T157469

Pos.	*Ref.*	*Descripción*	*Cant.*	*Núm. de serie*	*Notas*
0	4447928	Motor hidráulico	1		NLA, (ORDER 4447928EX)
	4447928EX	Motor hidráulico reman.	1		(REMAN FOR 4447928)
1	AT311804	Rueda dentada	1		(SUB FOR 1018740)
2	19M8002	Tornillo	16		M20 X 55
3	12M7070	Arandela de seguridad	16		20 mm
4	4272305	Tornillo	32		
5	24M7338	Arandela	32		17 X 30 X 3 mm

ROTARY MANIFOLD
COLLECTEUR ROTATIF
COLECTOR GIRATORIO

TX1057307 A.1

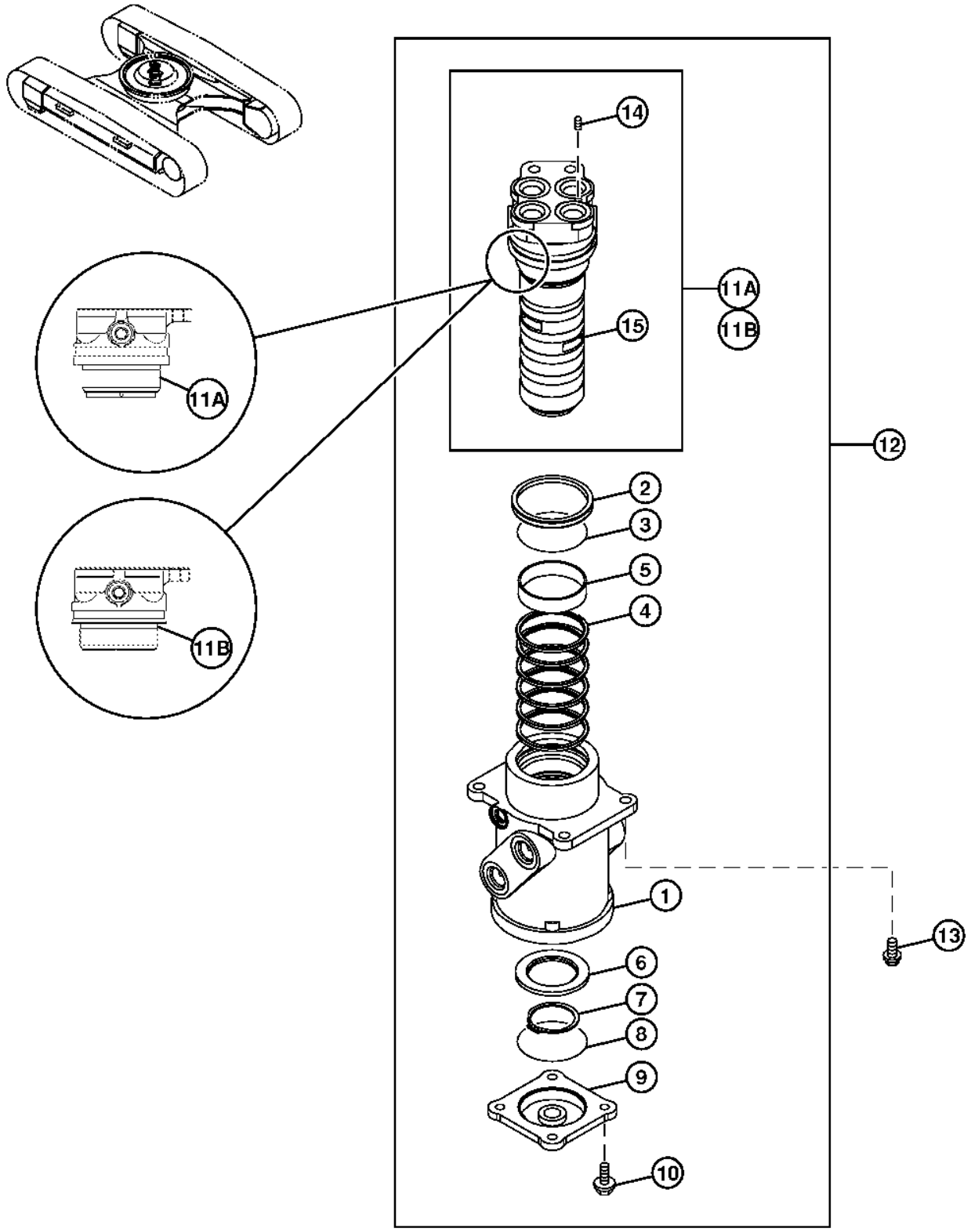

TX1057307

Pos.	*Ref.*	*Descripción*	*Cant.*	*Núm. de serie*	*Notas*
1	.....	Carcasa	1		(0003542 NLA)
	0001190	Carcasa	1		(USE WITH 9145787)
2	4390776	Retén	1		(USE WITH 9181005)
	AT154321	Retén	1		(USE WITH 9145787) (SUB FOR 4272803)
3	AT264418	Anillo tórico	1		(SUB FOR 4367664)
4	AT154162	Retén	6		(SUB FOR 4231543)
5	4241780	Casquillo	1		
6	3070250	Anillo	1		
7	40M7048	Anillo elástico	1		(SUB FOR 991347)
8	CH16109	Empaquetadura	1		(SUB FOR A810100)
9	2034607	Tapadera	1		
10	19M7662	Tornillo	4		M10 X 30, (SUB FOR J011030)
11A	.....	Husillo	1		(USE WITH 4390776 AND 0003542)(9181005 NLA)
11B	9145787	Husillo	1		(USE WITH AT154321 AND 0001190)
12	9107265	Colector	1		Para aplicaciones no en NA, (SUB FOR 9101521)
	9107265EX	Colector reman.	1		Para aplicaciones NA, (REMAN FOR 9107265)
13	19M7403	Tornillo	4		M12 X 35, (SUB FOR J011235)
	12H301	Arandela de seguridad	4		1/2"
14	4239611	Tapón	1		
15	.....	Husillo	1		(0001193 NLA)

PROPEL MOTOR COVERS
COUVERCLES DE MOTEUR DE PROPULSION
CUBIERTAS DEL MOTOR DE PROPULSION

T157476 A.1

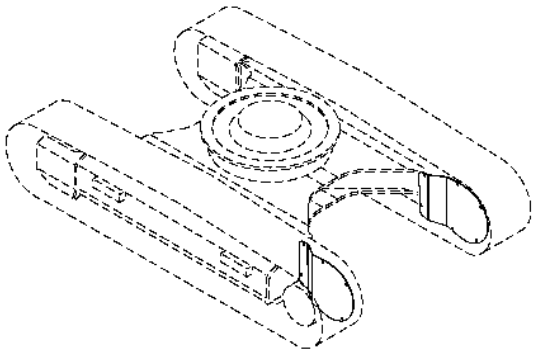

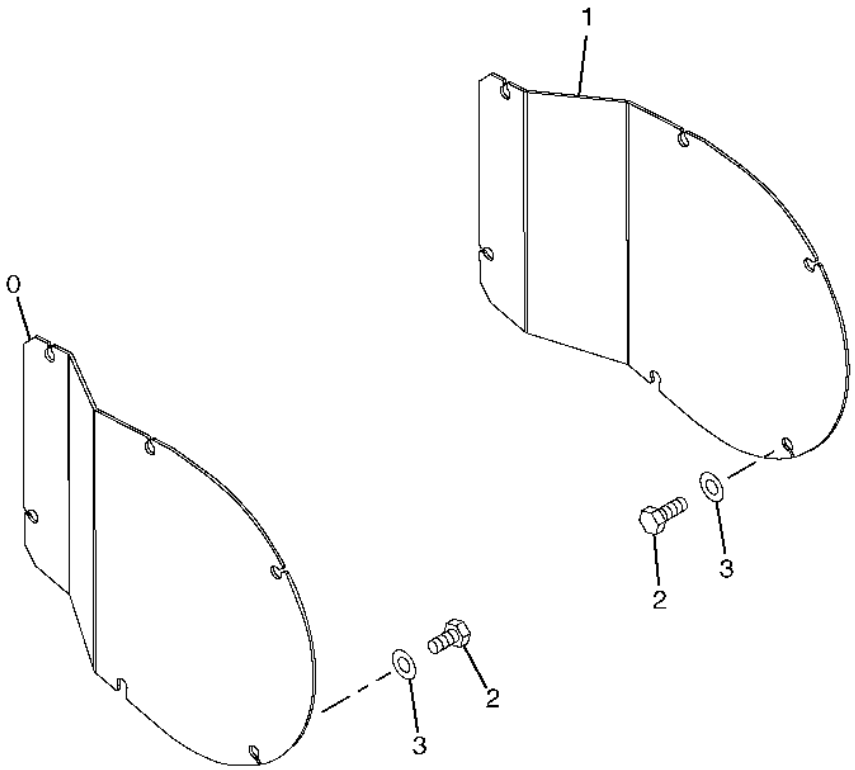

T157476

Pos.	*Ref.*	*Descripción*	*Cant.*	*Núm. de serie*	*Notas*
0	P68470	Tapadera	1		
1	P68469	Tapadera	1		
2	19M6332	Tornillo	12		M14 X 35
3	AT200011	Arandela	12		

PROPEL GEARBOX COMPONENTS
COMPOSANTS BOITE ENGRENAGES A PROPULSION
COMPONENTES DE CAJA DE ENGRANAJES DE PROPULSION

TX1046387 A.1

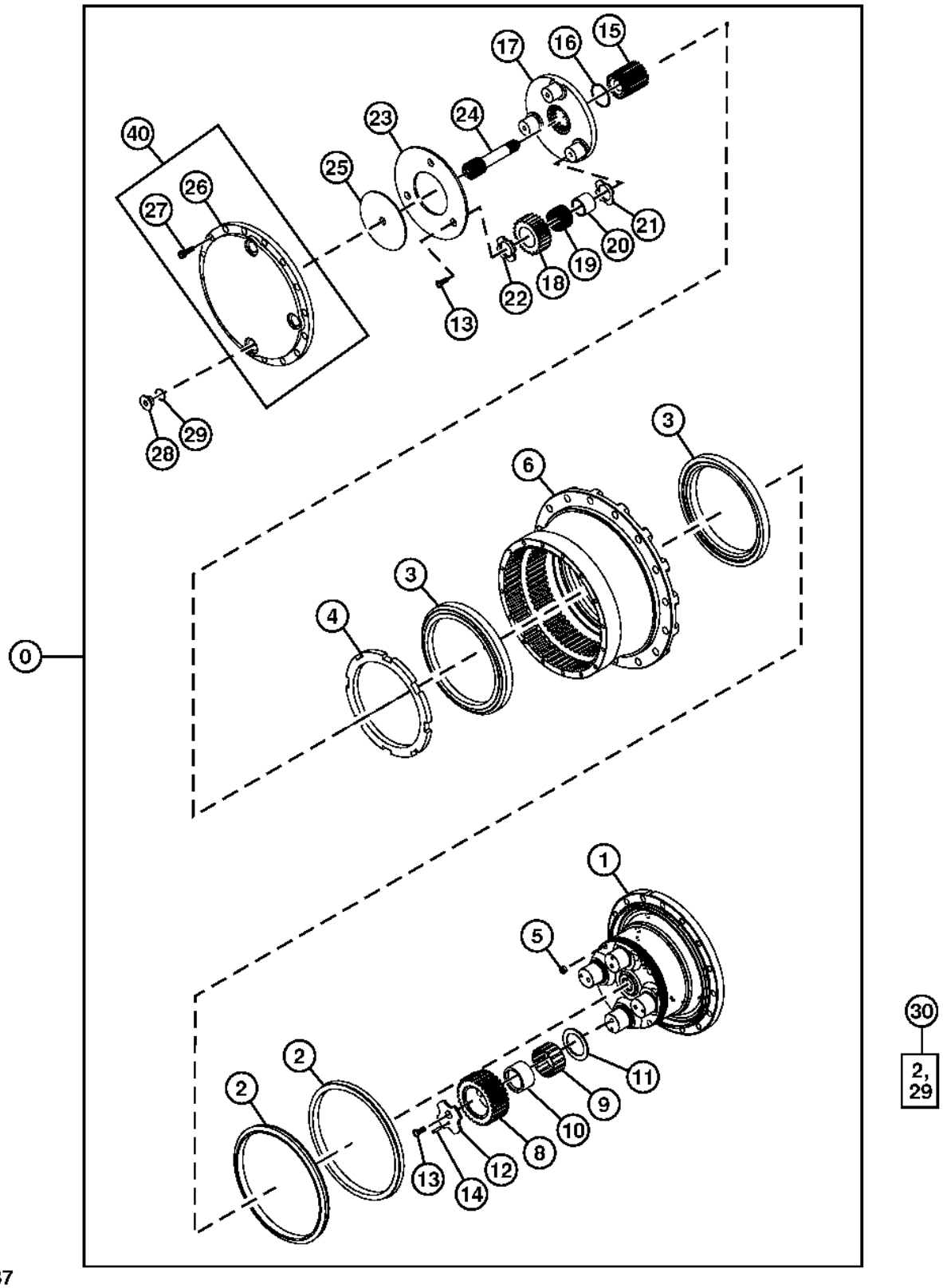

TX1046387

Pos.	*Ref.*	*Descripción*	*Cant.*	*Núm. de serie*	*Notas*
0	4466663	Transmisión	1		
1	4468766	Portador	1		
2	0251523	Retén	1		
3	0693002	Rodamiento rodillos cil.	2		
4	0693003	Tuerca	1		
5	0732202	Tapón roscado	4		
6	.....	Carcasa	1		
8	0796002	Engranaje	4		
9	0693005	Rodamiento de agujas	4		
10	0693006	Pista de rodamiento	4		
11	0692508	Arandela de empuje	4		
12	0693007	Placa de desgaste	4		
13	0693008	Tornillo	7		
14	4051262	Pasador elástico	4		
15	0796003	Engranaje	1		
16	0693010	Anillo elástico	1		
17	0796004	Portador	1		
18	0796012	Engranaje	3		
19	0796005	Rodillo	3		
20	0693013	Pista de rodamiento	3		
21	0796006	Arandela	3		
22	0796007	Placa	3		
23	0796008	Placa	1		
24	0796009	Engranaje	1		
25	0796010	Placa	1		
26	0796011	Tapadera	1		Unidades fabricadas antes de agosto de 2007, USE WITH 0693018
	.....	Tapadera	1		Unidades fabricadas antes de agosto de 2007, USE WITH 0411634
27	0693018	Tornillo	16		Unidades fabricadas antes de agosto de 2007, USE WITH 0796011
	0411634	Tornillo	16		Unidades fabricadas antes de agosto de 2007, USE WITH 0796015
28	0693019	Tapón hermético	3		
29	AT318035	Anillo tórico	3		(SUB FOR 4506424)
30	.....	Juego de retenes	1		4402987 NLA
40	0796016	Tapadera	1		

PROPEL MOTOR BRAKE VALVE COMPONENTS
COMPOSANTS DE LA SOUPAPE DE FREIN MOTEUR A PROPULSION
COMPONENTES DE LA VALVULA DE FRENOS DEL MOTOR DE PROPULSION

T162224 A.1

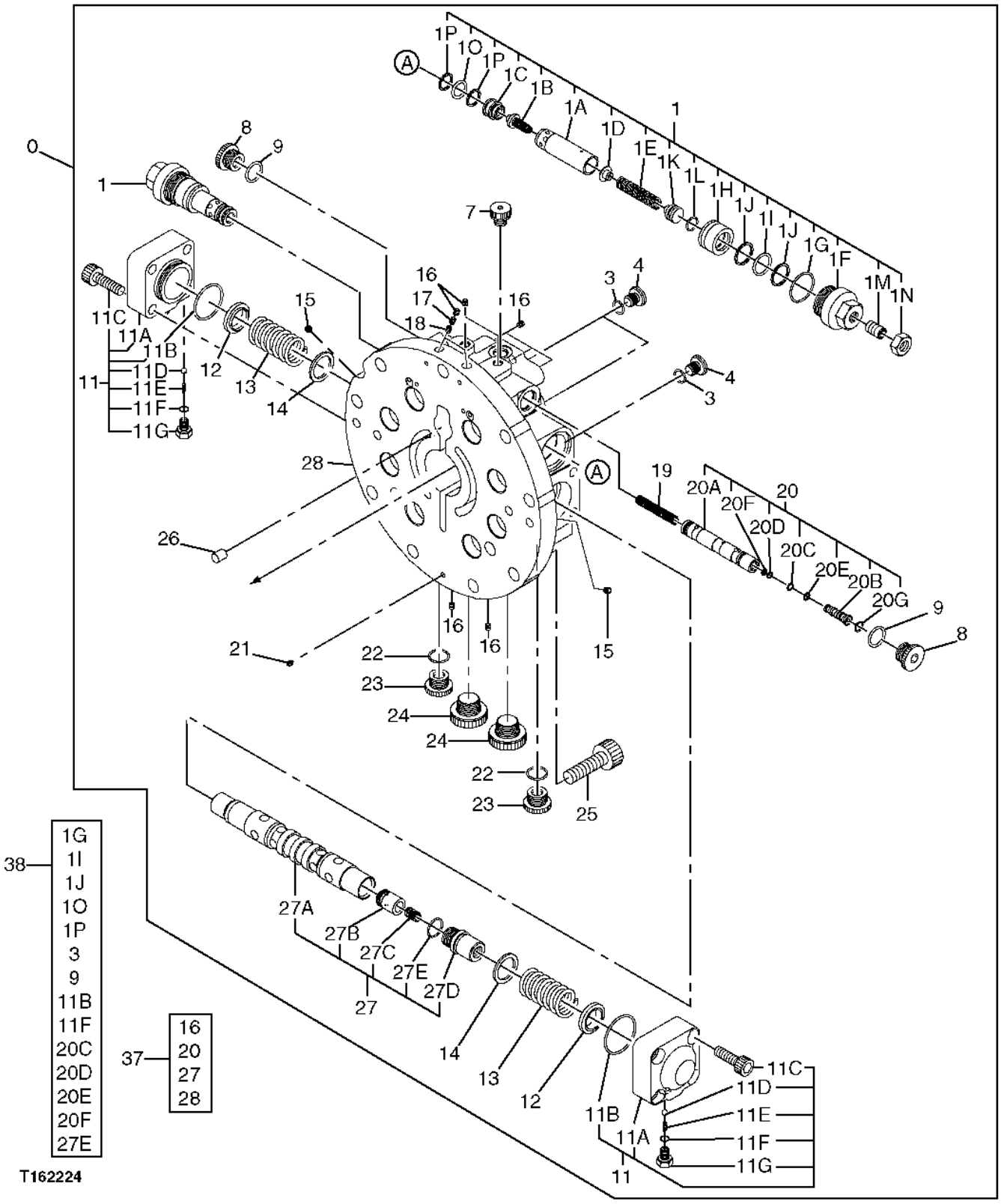

Pos.	Ref.	Descripción	Cant.	Núm. de serie	Notas
0	4447928EX	Motor hidráulico reman.	1		NLA, (REMAN FOR 4447928)
1	0692903	Válvula descarga de presión	2		
1A	.....	Carcasa	1		
1B	.....	Cono de válvula	1		
1C	.....	Asiento	1		
1D	.....	Placa	1		
1E	.....	Muelle	1		
1F	.....	Tapón	1		
1G	R29936	Anillo tórico	1		
1H	.....	Pistón	1		
1I	985099	Anillo tórico	1		
1J	4S01079	Anillo reforzador	2		(SUB FOR 0310023)
1K	.....	Guía	1		
1L	.....	Anillo tórico	1		
1M	.....	Tornillo de fijación	1		
1N	.....	Tuerca	1		
1O	T111819	Anillo tórico	1		(SUB FOR 4506415)
1P	4040814	Anillo reforzador	2		
3	M800650	Empaquetadura	3		(SUB FOR 957366)
4	0436608	Tapón hermético	3		
7	.....	Tapón	1		
8	0671002	Tapón hermético	2		
9	4506418	Anillo tórico	2		
11	0310026	Tapa	2		
11A	.....	Gorro	1		
11B	A811040	Anillo tórico	1		
11C	.....	Tornillo	4		
11D	.....	Bola	1		
11E	.....	Muelle	1		
11F	4506408	Anillo tórico	1		
11G	.....	Tapón	1		
12	0251404	Placa	2		
13	0411501	Muelle	2		
14	0163601	Placa	2		
15	.....	Obturador	2		
16	.....	Tapón	9		
17	.....	Obturador	2		
18	.....	Obturador	2		
19	0671001	Muelle	1		
20	.....	Válvula	1		
20A	.....	Carrete	1		
20B	.....	Filtro	1		
20C	4506406	Anillo tórico	1		
20D	4506405	Anillo tórico	1		
20E	4101947	Anillo reforzador	1		
20F	0250914	Anillo reforzador	1		
20G	.....	Anillo elástico	1		
21	.....	Obturador	1		
22	4506418	Anillo tórico	2		
23	0671002	Tapón hermético	2		
24	.....	Tapón	2		
25	0692905	Tornillo	9		
26	0396814	Pasador	1		
27	.....	Émbolo	1		
27A	.....	Émbolo	1		
27B	.....	Válvula de retención	2		
27C	.....	Muelle	2		
27D	.....	Tapón	2		
27E	4506418	Anillo tórico	2		
28	.....	Placa	1		
37	4402983	Tapadera	1		
38	.....	Juego de retenes	1		(4476033 NLA)

ROTARY MANIFOLD TO PROPEL MOTOR HOSES
FLEXIBLES COLLECTEUR ROTATIF A MOTEUR A PROPULSION
COLECTOR GIRATORIO A MANGUERAS DEL MOTOR DE PROPULSION

T157475 A.1

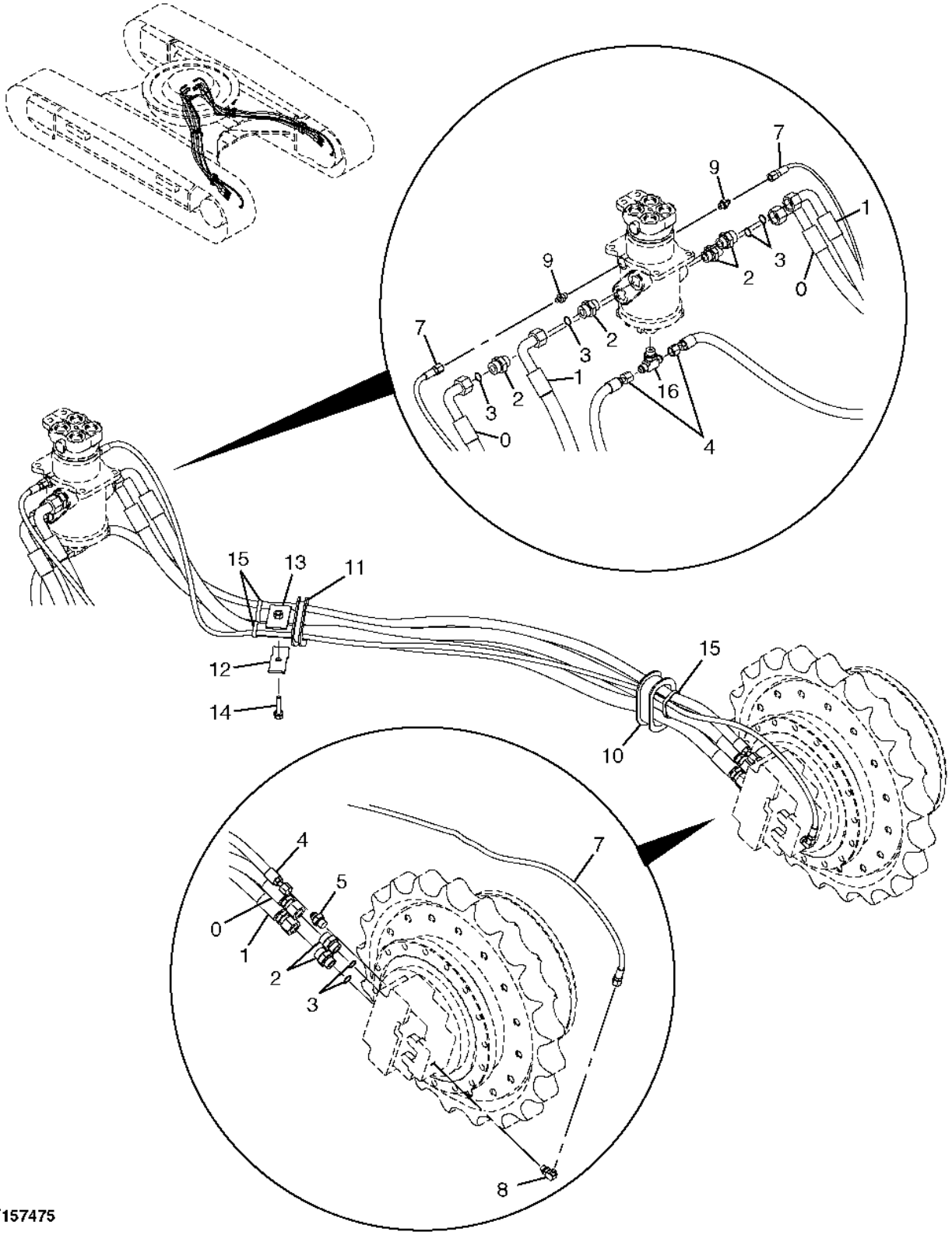

Pos.	*Ref.*	*Descripción*	*Cant.*	*Núm. de serie*	*Notas*
0	4294429	Manguera hidr. - confección	2		(SUB FOR AP34735)
1	4294429	Manguera hidr. - confección	2		(SUB FOR AP34735)
2	A853166	Racor adaptador	8		
	AT318035	Anillo tórico	1		(SUB FOR 4506424)
3	T77858	Anillo tórico	8		
4	4259489	Manguera hidr. - confección	1		(SUB FOR AP38204)
5	A852144	Racor adaptador	2		
	4506418	Anillo tórico	2		
7	4458065	Manguera hidr. - confección	1		(SUB FOR AP38205)
8	4154670	Racor acodado	2		(SUB FOR A852322, P67984 OR THA852322)
	M800650	Empaquetadura	2		(SUB FOR 957366)
9	A852122	Racor adaptador	2		
	M800650	Empaquetadura	2		(SUB FOR 957366)
10	4440382	Casquillo	2		
11	4445210	Casquillo	1		
12	4202103	Abrazadera	1		
13	9727822	Abrazadera	1		
14	19M7361	Tornillo	1		M12 X 50
	12H301	Arandela de seguridad	1		1/2"
15	R76477	Cinta de atar	3		
16	A852544	Conexión en t	1		
	4506418	Anillo tórico	1		

PROPEL MOTOR COMPONENTS
COMPOSANTS DE MOTEUR DE PROPULSION
COMPONENTES DEL MOTOR PROPULSOR

T157326 A.1

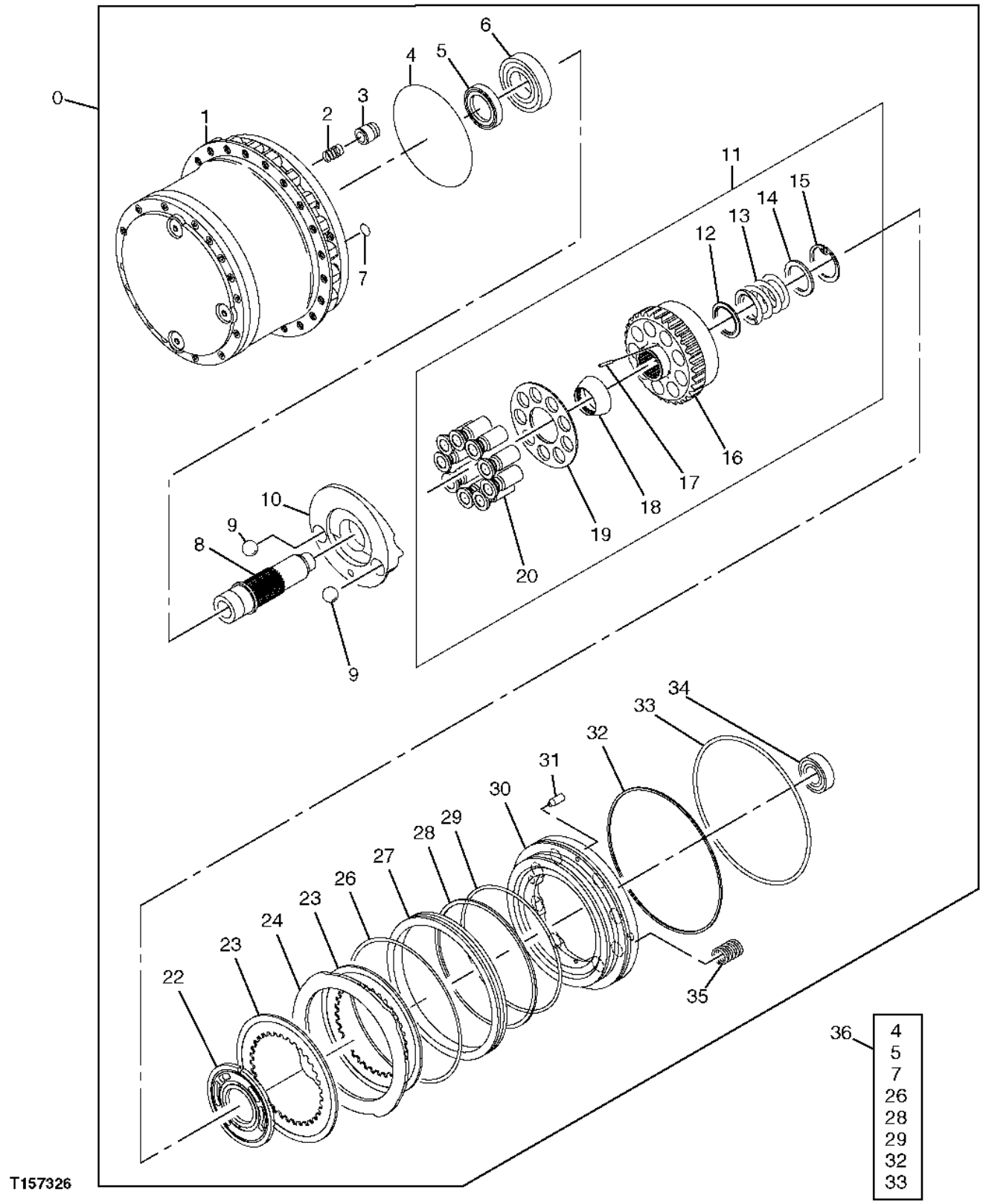

Pos.	Ref.	Descripción	Cant.	Núm. de serie	Notas
0	4447928	Motor hidráulico	1		(NLA) (ORDER 4447928EX)
	4447928EX	Motor hidráulico reman.	1		Válvula de freno, (REMAN FOR 4447928)
1	4466663	Transmisión	1		
2	0411418	Muelle	2		
3	.....	Pistón	2		(NLA)
4	4S01093	Anillo tórico	1		(SUB FOR 0411419, 4S00240, 0365427)
5	4S00881	Retén	1		(SUB FOR 0692805)
6	0692803	Rodamiento de bolas	1		
7	CH17167	Anillo tórico	4		(SUB FOR 4506320)
8	0692801	Árbol	1		
9	0411409	Bola	2		
10	0411408	Placa	1		
11	0411402	Bloque de cilindros	1		
12	0411406	Casquillo	1		
13	0411405	Muelle	1		
14	0411404	Casquillo	1		
15	0411403	Anillo elástico	1		
16	.....	Bloque de cilindros	1		
17	0411407	Bulón	3		
18	0636102	Portador	1		
19	0636101	Placa	1		
20	.....	Pistón	9		
22	0411420	Placa	1		
23	0411414	Placa	2		
24	0814501	Placa	1		
26	4S00613	Anillo tórico	1		(SUB FOR 0158847)
27	0814502	Casquillo	1		
28	4138945	Anillo reforzador	1		
29	AT264241	Anillo tórico	1		(SUB FOR A811180)
30	0411415	Pistón	1		
31	0251319	Pasador	4		
32	4S00899	Anillo reforzador	1		(SUB FOR 0411417)
33	4S01094	Anillo tórico	1		(SUB FOR AT170299, 0411416, TH109953 OR 0308623)
34	0692804	Rodamiento de bolas	1		
35	0310020	Muelle	8		
36	4476033	Juego de retenes	1		(NLA)

CRANKSHAFT, IDLER GEARS, MAIN BEARINGS
VILEBREQUIN, PIGNON INTERMEDIAIRE, PALIERS PRINCIPAUX
CIGUENAL, ENGRANAJE INTERMEDIO, COJINETES DE BANCADA

T145419 A.1

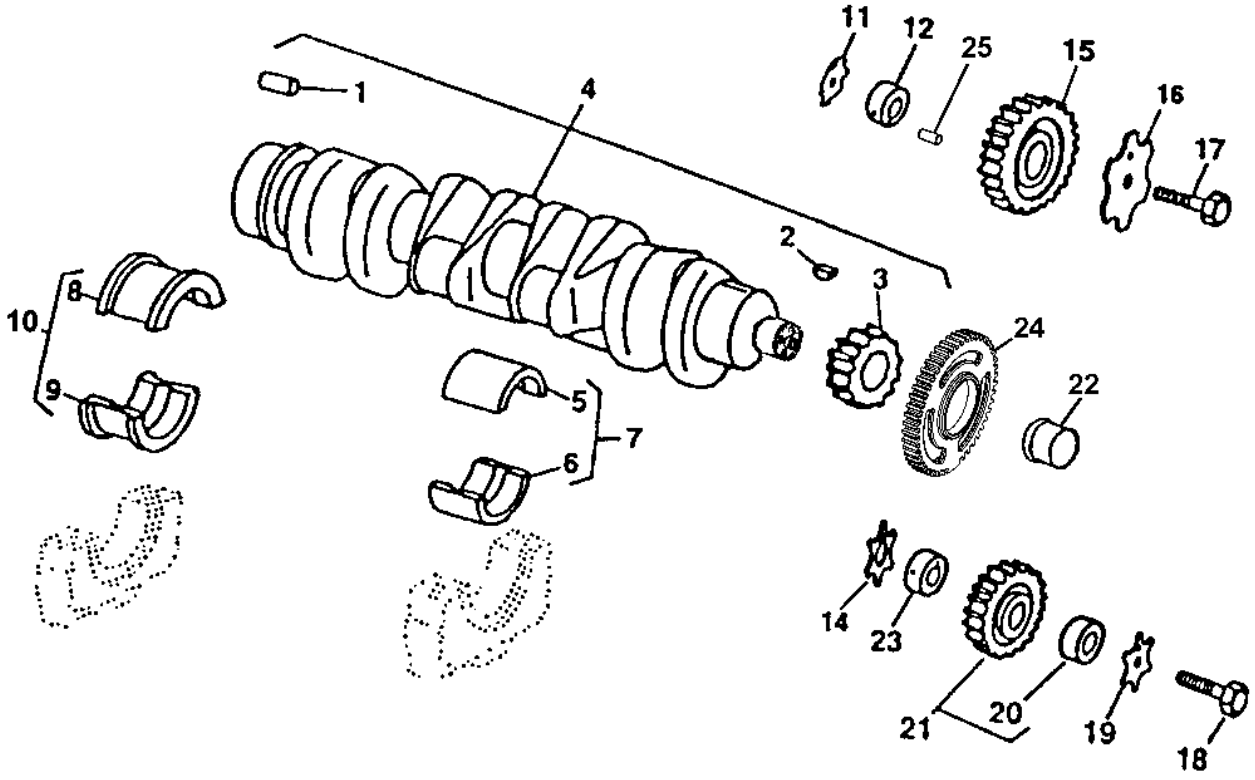

T145419

Pos.	*Ref.*	*Descripción*	*Cant.*	*Núm. de serie motor*	*Notas*
1	R48685	Pasador de centraje	1		
2	R505609	Chaveta	1		
3	R120631	Engranaje	1		(Z = 30)
4	RE504638	Cigüeñal	1		(MARKED R113596) (ALSO ORDER RE59811)
5	.....	Cojinete	4		(US LOWER .254MM), (MARKED R130575)
	.....	Cojinete	4		
6	.....	Cojinete	4		
	.....	Cojinete	4		
7	RE65165	Juego de rodamientos	4		STD
	RE65911	Cojinete	4		US .254MM
8	.....	Cojinete	1		
	.....	Cojinete	1		
9	.....	Cojinete	1		
	.....	Cojinete	1		
10	RE65168	Juego de rodamientos	1		STD
	RE65912	Rodamiento axial	1		US .254MM
11	R123174	Arandela de seguridad	1		
12	R120641	Árbol	1		
14	R101225	Arandela de empuje	1		
15	RE56313	Engranaje	1		(MARKED R120635)
16	R131283	Arandela de empuje	1		
17	19M8997	Tornillo	1		M10 X 65
18	19M8966	Tornillo	1		M10 X 50
19	R131283	Arandela de empuje	1		
20	R114193	Casquillo	1		
21	RE56369	Engranaje	1		(MARKED R120636)
22	RE59811	Manguito	1		
23	R114194	Árbol	1		
24	R501489	Rueda	1		
25	34H288	Pasador elástico	1		3/16" X 1-3/4"

CAMSHAFT
ARBRE A CAMES
ARBOL DE LEVAS

TP69520 A.1

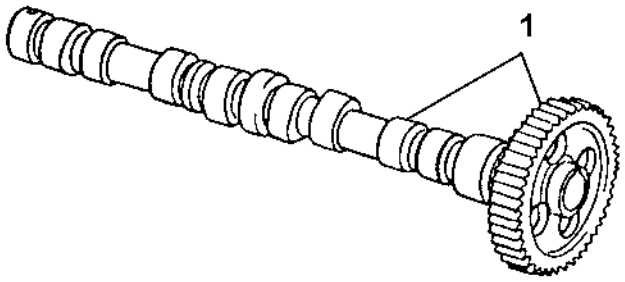

TP69520

Pos.	*Ref.*	*Descripción*	*Cant.*	*Núm. de serie motor*	*Notas*
1	RE507595	Árbol de levas	1		(MARKED R504534 OR RE522316)
	SE501815	Árbol de levas remanufacturado	1		(REMAN FOR RE507595)

ROCKER ARMS, SHAFTS AND PUSH RODS
ARBRES DES CULBUTEURS
EJE DE BALANCINES

TP49263 A.1

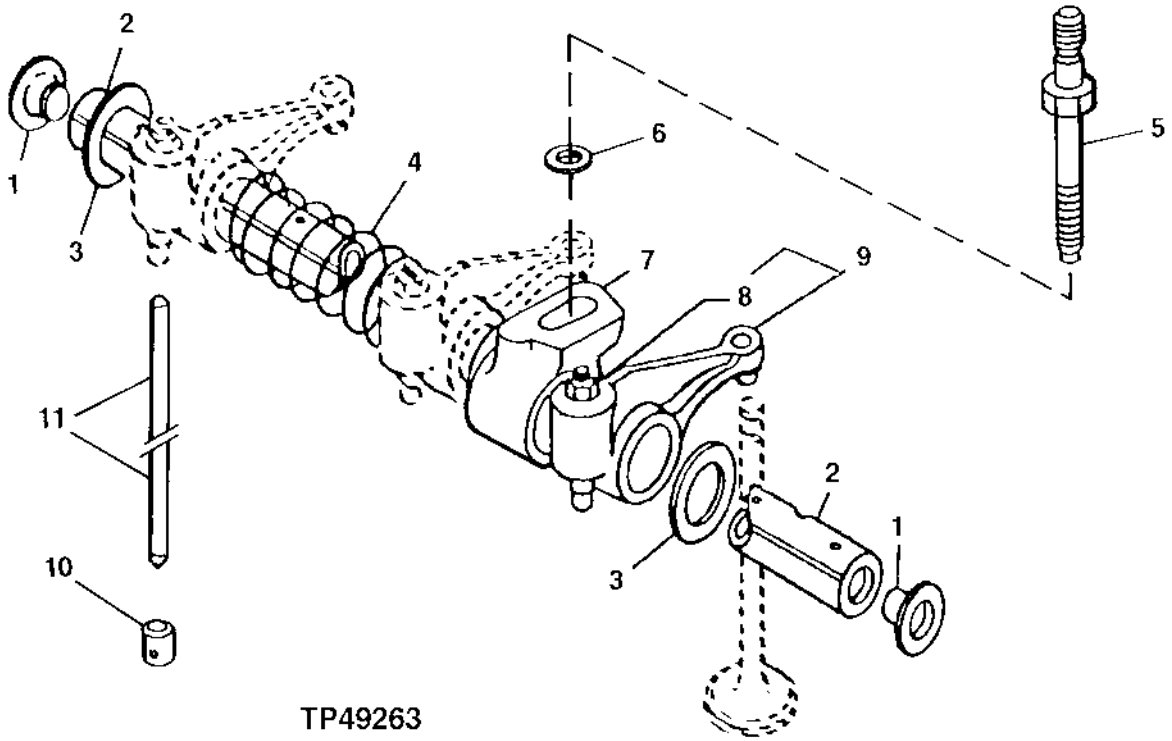

TP49263

Pos.	*Ref.*	*Descripción*	*Cant.*	*Núm. de serie motor*	*Notas*
1	R54565	Tapón	2		
2	R123513	Eje de balancines	1		
3	T20316	Arandela	2		
4	T20314	Muelle	3		
5	R123271	Espárrago	4		
6	24M7346	Arandela	4		11 X 20 X 2 mm
7	R123161	Apoyo	4		
8	14M7148	Tuerca	1		M10
9	RE68695	Balancín	8		
10	R123565	Seguidor de leva	8		
11	R107731	Varilla de empuje	8		

ROCKER ARM COVER AND OIL FILLER CAP
CACHE-CULBUTEURS ET BOUCHON DE REMPLISSAGE D'HUILE
CUBIERTA DEL BALANCIN Y TAPA DE LLENADO DE ACEITE

RGP8669 A.1

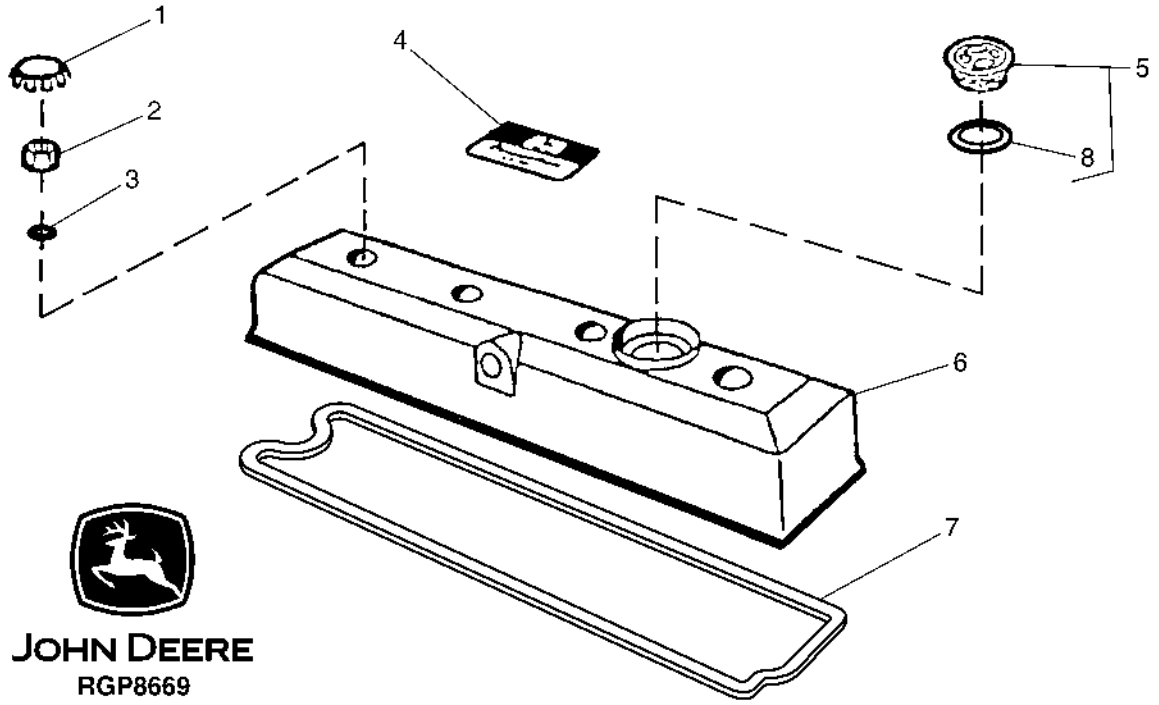

Pos.	*Ref.*	*Descripción*	*Cant.*	*Núm. de serie motor*	*Notas*
1	H23125	Tapón	4		
2	R123574	Tuerca	4		
3	R123575	Anillo tórico	4		
4	R116324	Medallón	1		
5	RE500005	Tapón de llenado	1		
6	RE70403	Tapa de válvula	1		
7	R123542	Junta	1		USE WITH ROCKER ARM COVER MARKED R135361, R135389, R501311
	RE520539	Juego de juntas	AR		HIGH TEMPERATURE GASKET
8	R502902	Empaquetadura	1		

8822 (OIL FILTER)
8822 (FILTRE A HUILE)
8822 (FILTRO DE ACEITE)

RE507937PCDE02 A.1

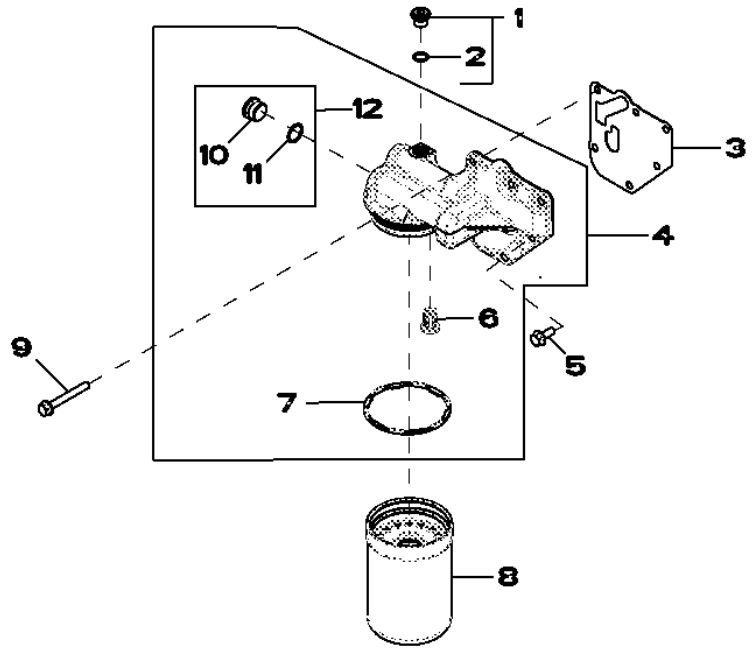

Pos.	*Ref.*	*Descripción*	*Cant.*	*Núm. de serie motor*	*Notas*
1	RE52242	Tapón de vaciado	1		
2	51M7042	Anillo tórico	1		13.300 X 2.200 mm
3	R500374	Junta	1		
4	RE504564	Cabeza de filtro	1		
5	RE67238	Tornillo	1		
6	RE504543	Válvula	1		
7	R502513	Retén	1		
8	RE504836	Filtro de aceite	1		ALSO ORDER R502513; SUB FOR RE541420
9	19M7802	Tornillo	5		M8 X 65
10	R116115	Conexión	1		
11	51M7045	Anillo tórico	1		19.300 X 2.200 mm
12	RE505232	Conexión	2		

4425 Timing Gear Cover
4425 Carter de distribution
4425 Tapa de distribución

4425_RE508049_PCD A.2

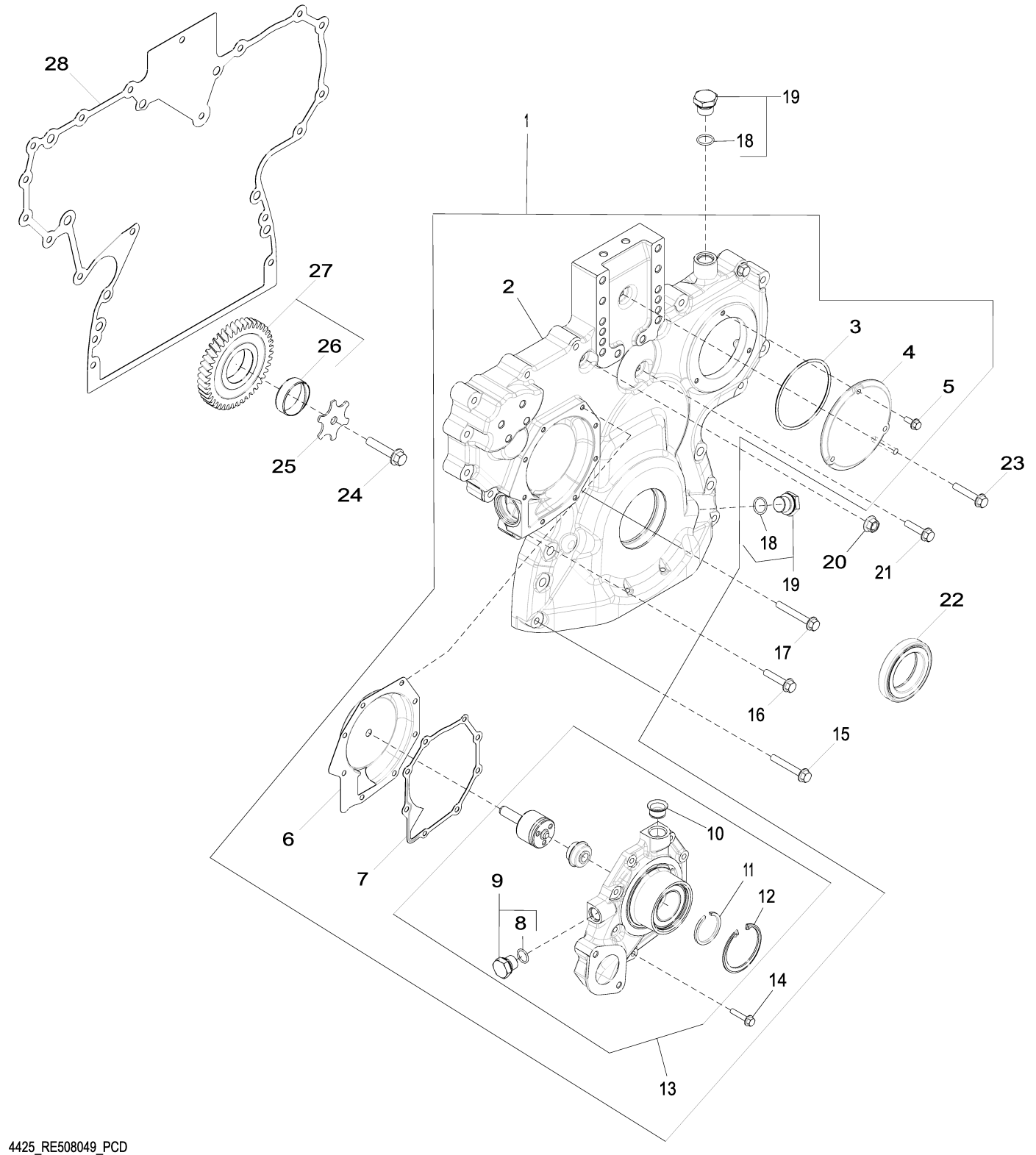

4425_RE508049_PCD

Pos.	Ref.	Descripción	Cant.	Núm. de serie motor	Notas
1	RE523469	Tapadera	1		USE WITH R520131
	RE506382	Tapadera	1		USE WITH R523182
2	R520129	Tapadera	1		USE WITH R520131
	R504724	Tapadera	1		USE WITH R523182
3	R121424	Anillo tórico	1		
4	R121411	Tapadera	3		
5	19M7775	Tornillo	1		M6 X 16
6	R503560	Inserto	1		
7	R123417	Junta	1		
8	51M7043	Anillo tórico	1		15.300 X 2.200 mm
9	RE46685	Tapón hermético	1		
10	R123226	Retén	1		
11	A364R	Anillo elástico	1		
12	R71228	Anillo	8		
13	RE505980	Bomba de agua	2		
	SE501609	Bomba de agua reman.	1		REMAN FOR RE505980
14	19M7796	Tornillo	10		M6 X 30
15	19M7979	Tornillo	1		M8 X 55
16	19M8317	Tornillo	1		M8 X 40
17	19M7801	Tornillo	2		M8 X 60
18	51M7044	Anillo tórico	6		17.300 X 2.200 mm
19	RE517370	Conexión	1		
20	14M7296	Tuerca con brida	1		M10
21	19M8291	Tornillo	1		M8 X 35
22	RE538097	Retén	1		SUB FOR RE516340
23	RE67239	Tornillo	1		
24	19M8966	Tornillo	1		M10 X 50
25	R131283	Arandela de empuje	1		
26	R114193	Casquillo	1		
27	RE56369	Engranaje	1		
28	R520131	Junta	1		USE WITH RE523469 OR R520129
	R523182	Junta	1		USE WITH RE506382 OR R504724 SUB FOR R136515

CONNECTING ROD AND PISTON-CYLINDER LINER KIT
BIELLE ET PISTON-CHEMISE, JEU DE PIECES
BIELA Y PISTON-CAMISA DE CILINDRO, JUEGO

TP49283 A.1

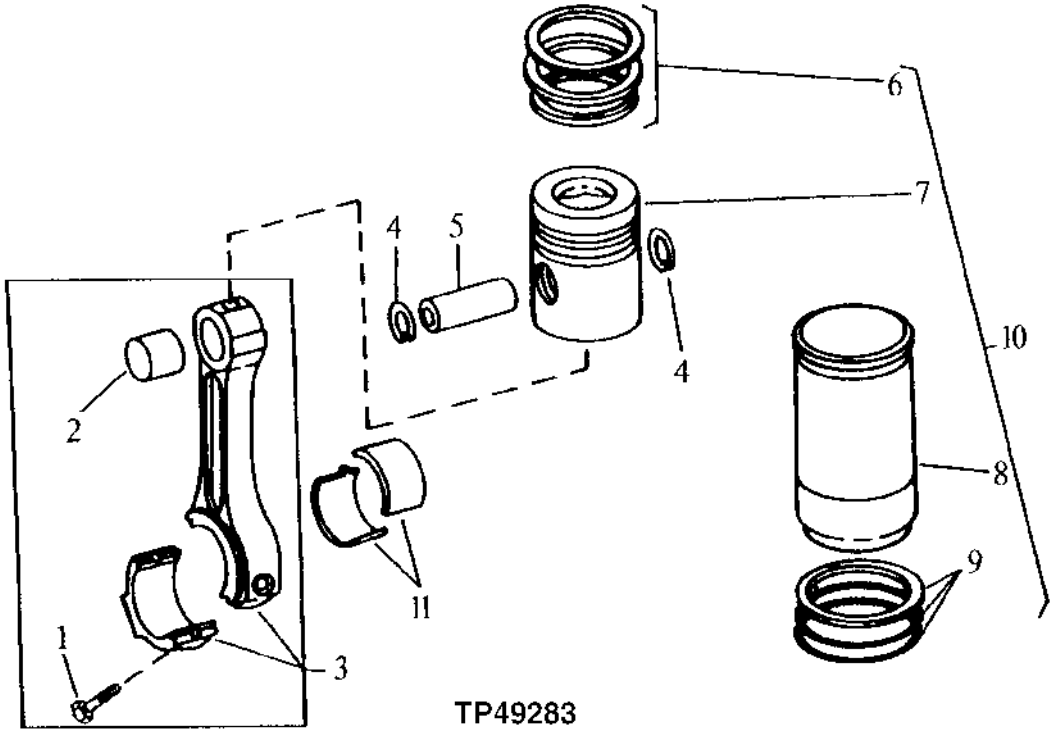

Pos.	*Ref.*	*Descripción*	*Cant.*	*Núm. de serie motor*	*Notas*
1	R501124	Tornillo	8		(USE WITHR500335)
2	R114082	Casquillo	8		
3	RE500608	Biela	4		(MARKED R500335)
	SE501094	Biela reman.	4		(REMAN FOR RE500608)
4	R54114	Anillo elástico	8		
5	R123177	Eje del pistón	4		
6	RE507852	Juego segmentos de pistón	4		
7	.....	Pistón	4		STD
8	.....	Camisa de cilindro	4		
9	AR65507	Juego de anillos tóricos	4		
10	RE508082	Juego de pistón y camisa	4		
11	RE65908	Cojinete	4		STD
	RE65909	Cojinete	4		.010" US

ENGINE FRONT PLATE WITHOUT REAR AUXILIARY FUNCTION
PLAQUE AVANT DU MOTEUR SANS FONCTION SUPPLEMENTAIRE ARRIERE
PLACA DELANTERA DEL MOTOR SIN FUNCION TRASERA ADICIONAL

TP49620 A.1

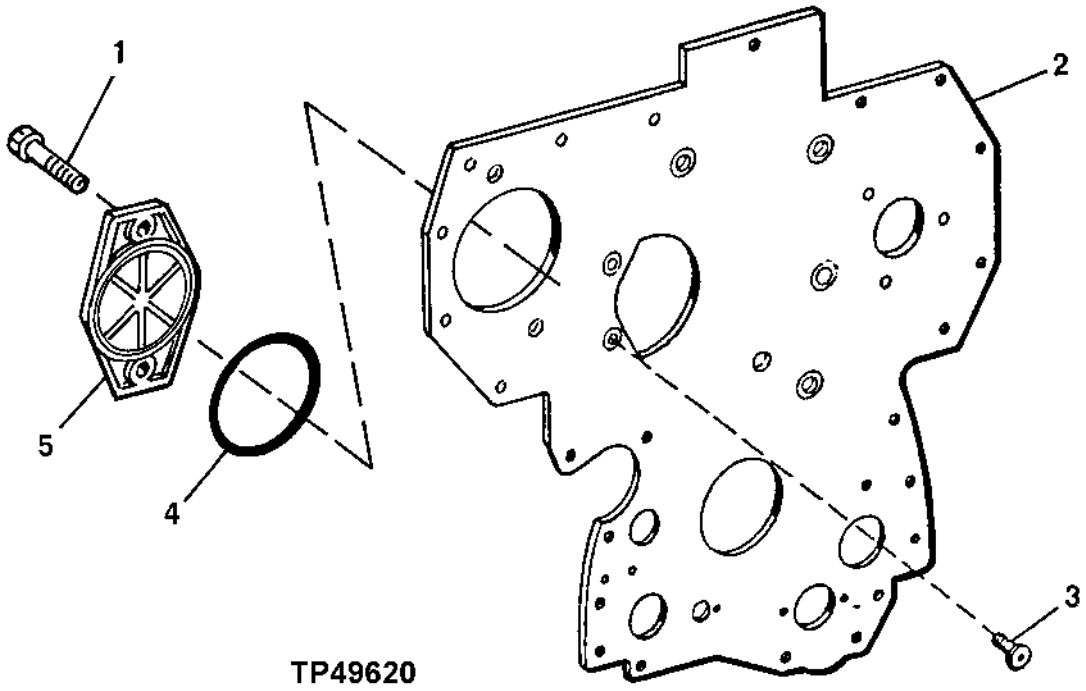

Pos.	*Ref.*	*Descripción*	*Cant.*	*Núm. de serie motor*	*Notas*
1	19M7790	Tornillo	2		M12 X 35
2	R134526	Placa	1		
3	R136475	Tornillo	4		
4	T20758	Anillo tórico	1		
5	R135757	Tapadera	1		

CYLINDER BLOCK FITTINGS
RACCORDS SUR BLOC-CYLINDRES
RACORES DEL BLOQUE DE CILINDRO

T146510 A.1

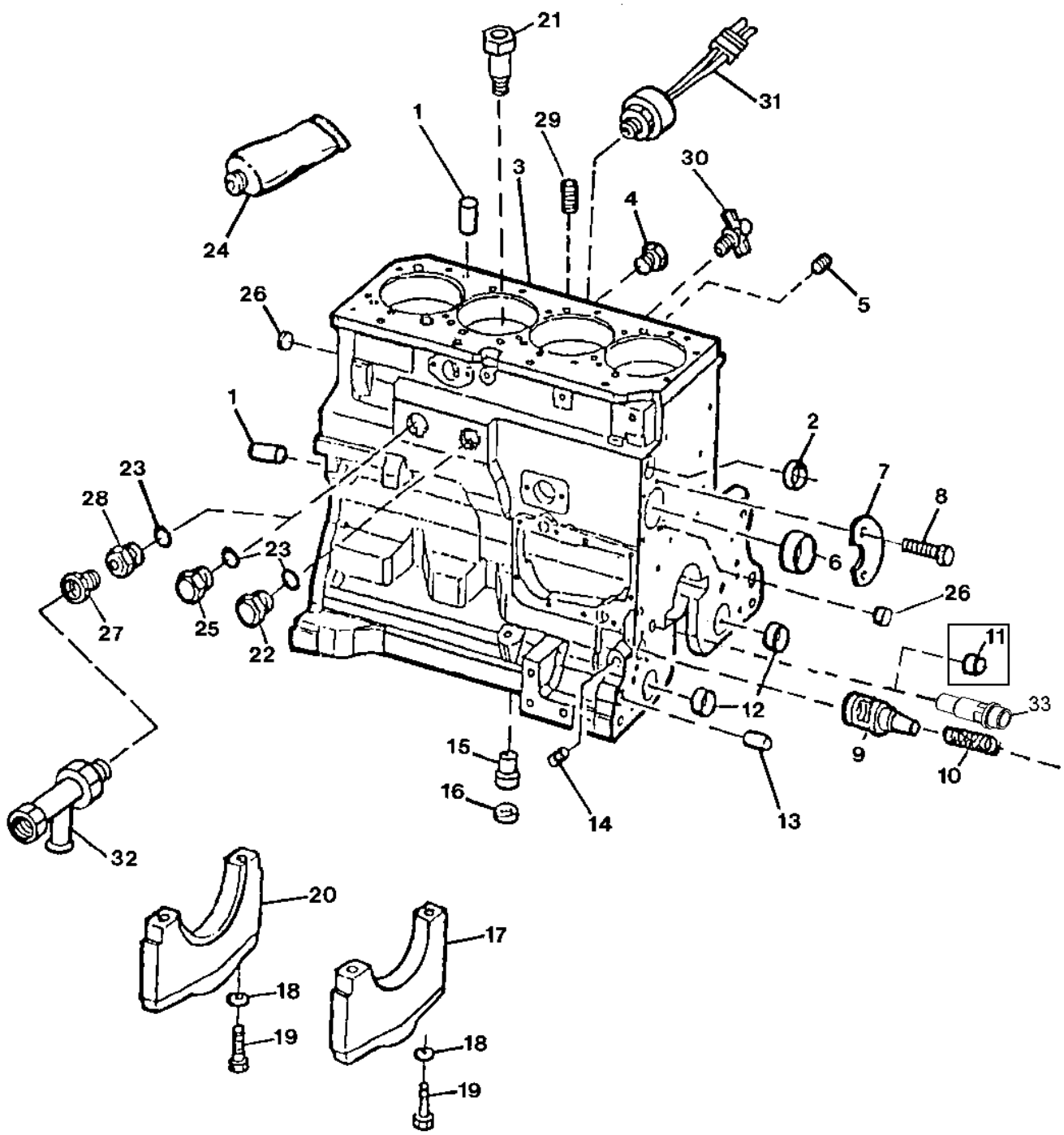

T146510

Pos.	Ref.	Descripción	Cant.	Núm. de serie motor	Notas
1	R48685	Pasador de centraje	4		
2	R116466	Tapón	1		
3	.....	Bloque de cilindros	1		(MARKED R115081) (ORDER RE520023)
4	R55233	Tapón roscado	1		
5	R104592	Tapón roscado	5		
6	R119874	Casquillo	1		
7	R132518	Placa	1		
8	19M8999	Tornillo	2		M8 X 25
9	R121043	Válvula	1		
10	R111137	Muelle	1		
11	R26493	Casquillo	1		
12	R115299	Casquillo	6		
13	R26650	Pasador de centraje	2		
14	15H623	Tapón roscado	1		3/8"
15	R115390	Casquillo	1		
16	R75892	Anillo tórico	1		
17	R114241	Tapa de cojinete	4		
18	T20168	Arandela	10		
19	T23474	Tornillo	10		
20	R132186	Tapa de cojinete	1		
21	R131182	Obturador	4		
22	RE508185	Conexión	1		
23	U13639	Anillo tórico	2		
24	PM38655	Sellador	1		(SUB FOR TY6304)
25	RE508185	Conexión	1		
26	T18891	Tapón	2		
27	RE46685	Tapón hermético	1		
28	R123616	Tapón	1		
29	RE57836	Tapón roscado	AR		12.700 mm (1/2"), (SUB FOR 15H624)
30	AT13740	Grifo de vaciado	1		
31	RE55145	Interruptor	1		
32	RE507952	Grifo de vaciado	1		
33	RE505501	Válvula de purga	1		

ENGINE SHORT BLOCK
MONTEUR DEPOUILLE POUR RECHANGE
MOTOR BASICO

TX1007690 A.1

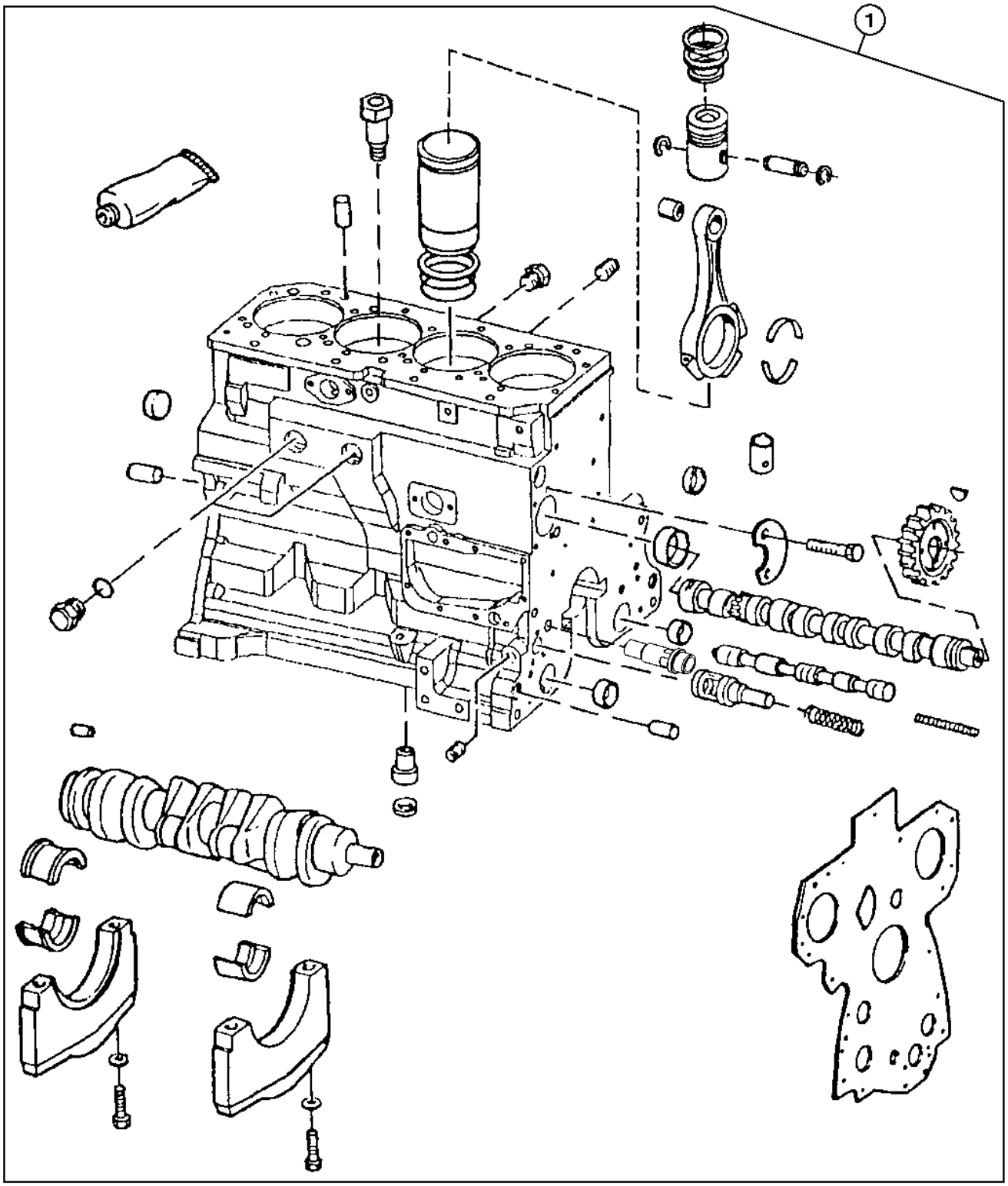

TX1007690

Pos.	Ref.	Descripción	Cant.	Núm. de serie motor	Notas
1	RE520023	Bloque de cil.con piez.mov.	1		(MARKED R115081) (SUB FOR RE508078)

ENGINE OIL DIPSTICK
JAUGE A HUILE MOTEUR
ASPILLA PARA MEDIR EL NIVEL DE ACEITE DEL MOTOR

TX1005103 A.1

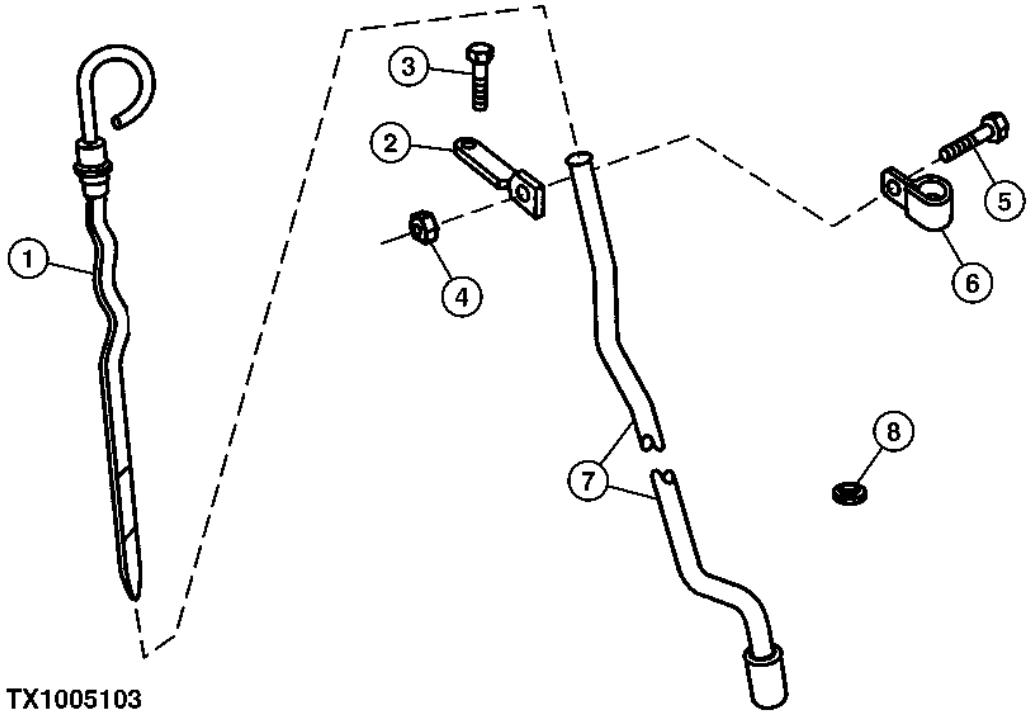

TX1005103

Pos.	*Ref.*	*Descripción*	*Cant.*	*Núm. de serie motor*	*Notas*
1	RE66178	Aspilla	1		
2	R134552	Soporte	1		
3	19M7784	Tornillo	1		M10 X 20
4	14M7298	Tuerca con brida	1		M8
5	19M7866	Tornillo	1		M8 X 20
6	T28862	Abrazadera	1		
7	R502465	Tubo de aspilla de nivel	1		
8	R502725	Tapón	1		

OIL FILLER NECK COVER
GOULOTTE DE REMPLISSAGE D'HUILE CACHE
BOCA DE LLENADO DE ACEITE CUBIERTA

TP53437 A.1

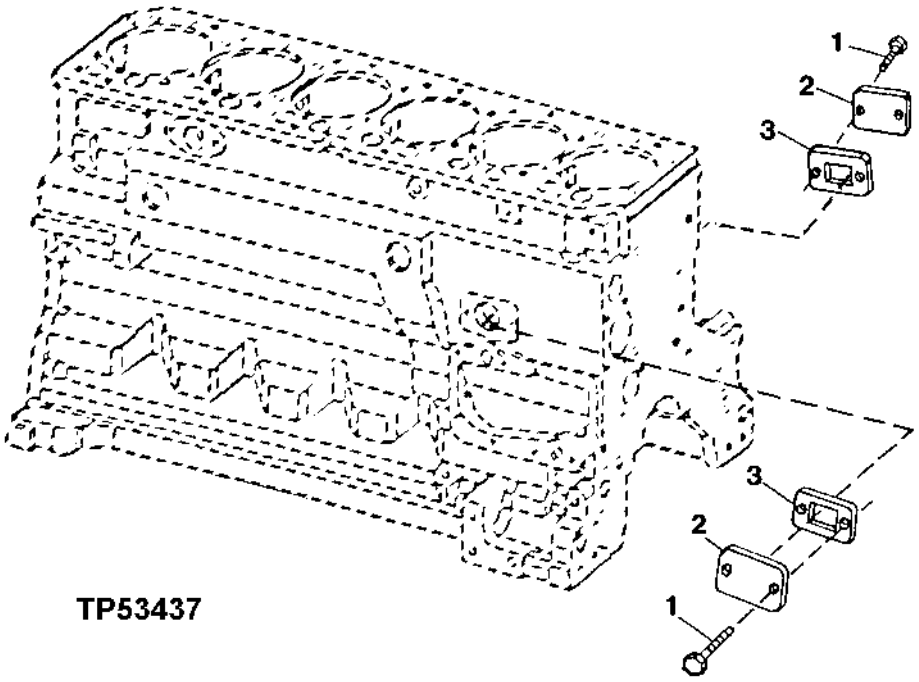

Pos.	*Ref.*	*Descripción*	*Cant.*	*Núm. de serie motor*	*Notas*
1	RE67238	Tornillo	4		M8 X 20
2	R116296	Tapadera	2		
3	R136495	Junta	2		

ENGINE OIL PUMP INTAKE
POMPE A HUILE MOTEUR ET ADMISSION DE POMPE A HUILE
BOMBA DE ACEITE DEL MOTOR Y ADMISION DE LA BOMBA

TX1004721 A.1

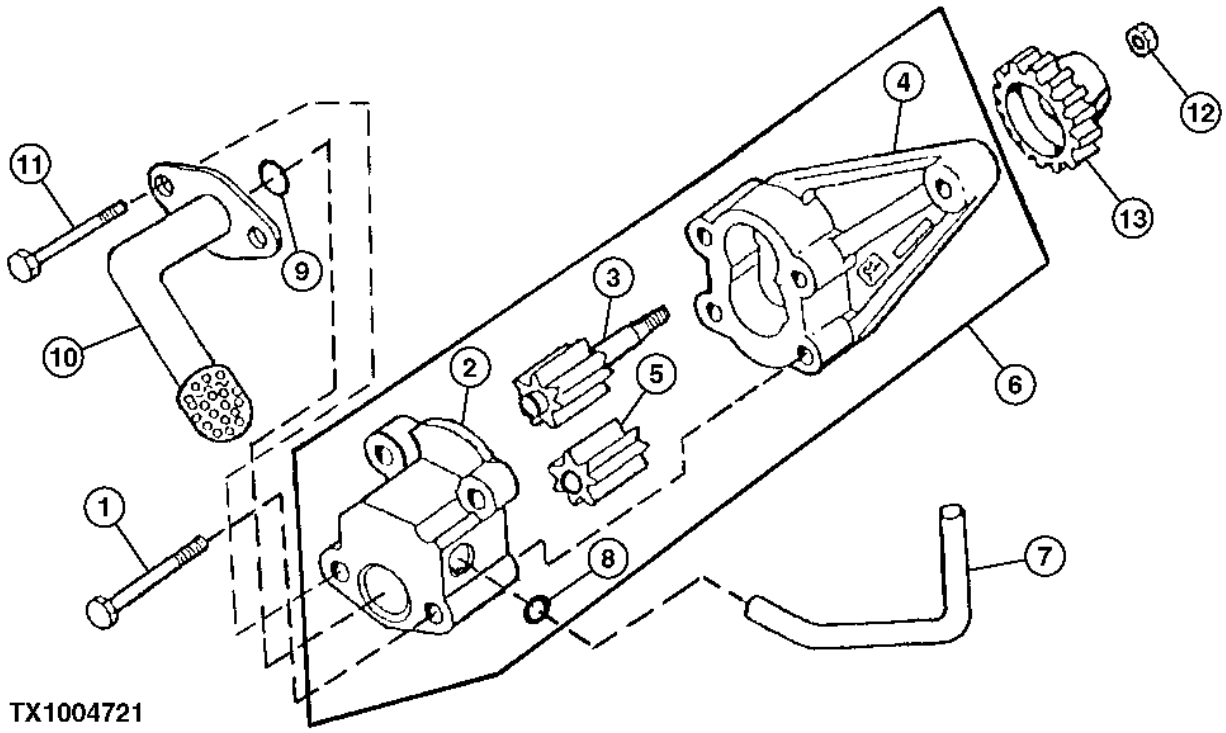

TX1004721

Pos.	*Ref.*	*Descripción*	*Cant.*	*Núm. de serie motor*	*Notas*
1	19M8987	Tornillo	2		M8 X 65
2	.....	Tapadera	1		
3	.....	Engranaje	1		
4	.....	Carcasa	1		
5	.....	Engranaje	1		
6	RE504914	Bomba de aceite	1		
	SE501814	Bomba de aceite reman.	1		(REMAN FOR RE504914)
7	R121376	Tubo	1		
8	R97185	Anillo tórico	1		
9	R61871	Anillo tórico	1		
10	RE57619	Entrada bomba aceite	1		
11	19M8986	Tornillo	2		M8 X 100
12	14M7066	Tuerca	1		M12
13	R120638	Engranaje	1		(Z = 30)

ENGINE OIL PAN WITH OIL LEVEL SENSOR (ESN -274010) (- 274010)
CARTER D'HUILE MOTEUR ET CAPEUR DE NIVEAU D'HUILE (MOTEUR, N0. DE SERIE -274010) (- 274010)
CARTER DE ACEITE DEL MOTOR Y SENSOR DE NIVEL DE ACEITE (NO. DE SERIE DEL MOTOR -274010) (- 274010)

TP49547 A.1

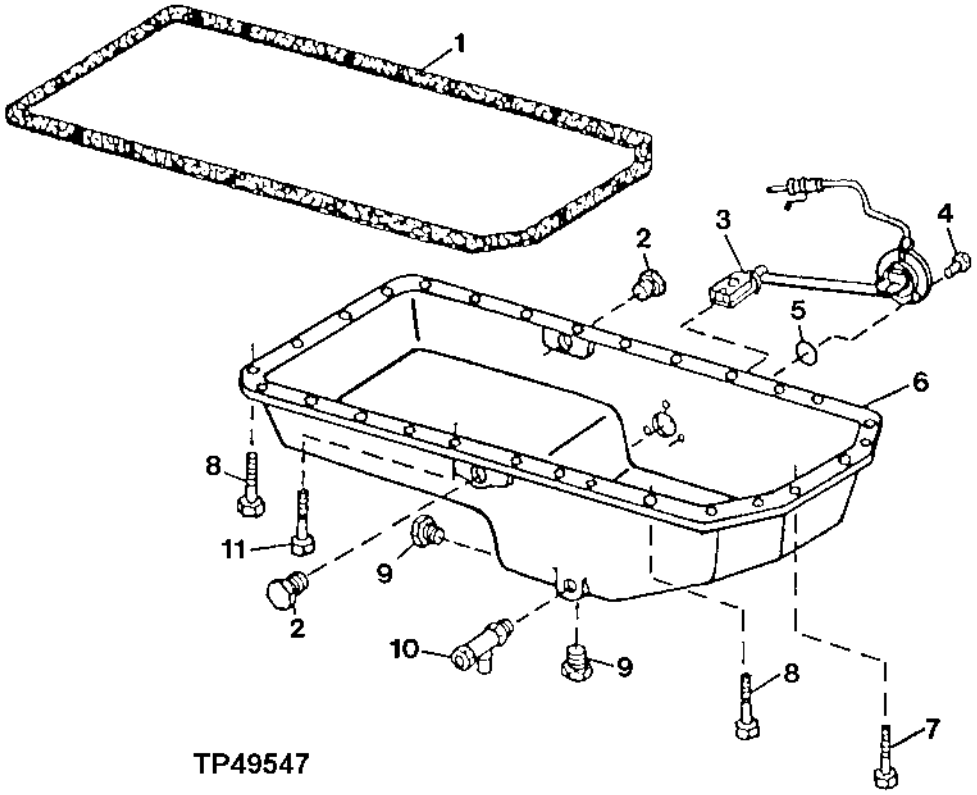

Pos.	*Ref.*	*Descripción*	*Cant.*	*Núm. de serie motor*	*Notas*
1	R123353	Junta	1		
2	RE46687	Tapón de vaciado	2		
3	RE16223	Sensor	1		
4	19M7560	Tornillo	3		M6 X 16
5	R47154	Anillo tórico	1		
6	R121622	Cárter de aceite	1		
7	19M7868	Tornillo	4		M8 X 30
8	19M7867	Tornillo	24		M8 X 25
9	RE46685	Tapón hermético	2		
10	RE507952	Grifo de vaciado	1		
11	19M7799	Tornillo	4		M8 X 45

ALUMINIUM OIL PAN (ESN. 274011-334596) (274011 - 334596)
CARTER D'HUILE EN ALUMINIUM (ESN. 274011-334596) (274011 - 334596)
CARTER DE ACEITE DE ALUMINIO (ESN. 274011-334596) (274011 - 334596)

RGP11506 A.1

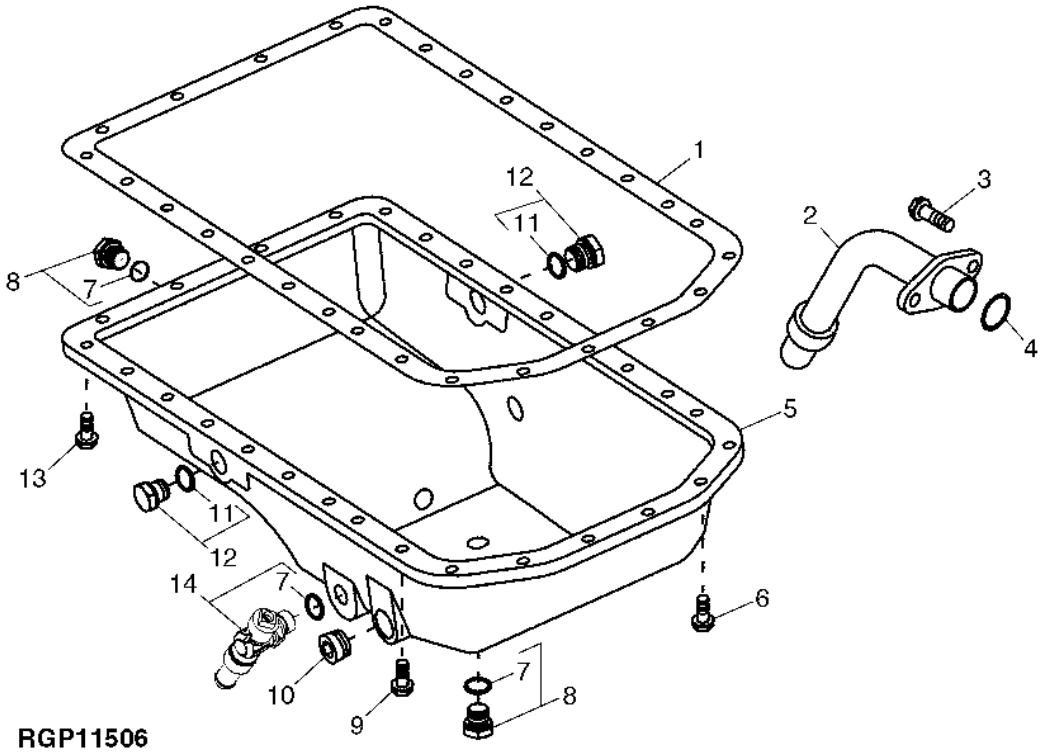

Pos.	*Ref.*	*Descripción*	*Cant.*	*Núm. de serie motor*	*Notas*
1	R123353	Junta	1		
2	RE57619	Entrada bomba aceite	1		
3	19M8986	Tornillo	2		M8 X 100
4	R61871	Anillo tórico	1		
5	R121621	Cárter de aceite	1		
6	19M7868	Tornillo	6		M8 X 30
7	51M7043	Anillo tórico	3		15.300 X 2.200 mm
8	RE46685	Tapón hermético	2		
9	19M7867	Tornillo	18		M8 X 25
10	15H690	Tapón roscado	1		3/4"
11	51M7045	Anillo tórico	2		19.300 X 2.200 mm
12	RE46687	Tapón de vaciado	2		
13	19M7799	Tornillo	4		M8 X 45
14	RE507952	Grifo de vaciado	1		

OIL PAN - STEEL (ESN 334597-) (334597 -)
CARTER D'HUILE - ACIER (ESN 334597-) (334597 -)
CARTER DEL MOTOR - ACERO (ESN 334597-) (334597 -)

RGP11507 A.1

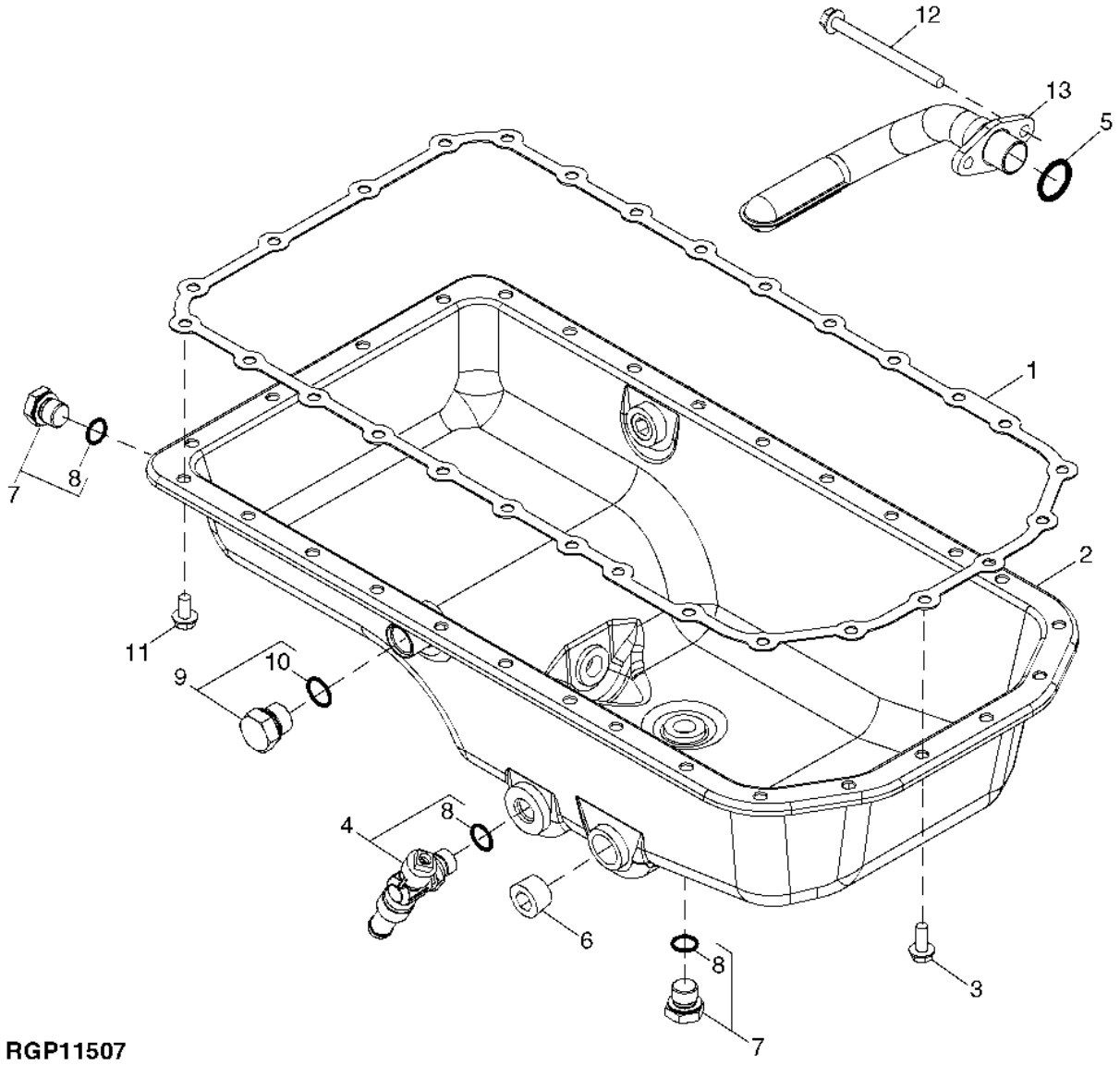

RGP11507

Pos.	*Ref.*	*Descripción*	*Cant.*	*Núm. de serie motor*	*Notas*
1	R521493	Junta	1		
2	RE520147	Cárter de aceite	1		
3	19M8062	Tornillo	6		M8 X 20
4	RE507952	Grifo de vaciado	1		
5	R61871	Anillo tórico	1		
6	15H690	Tapón roscado	1		3/4"
7	RE46685	Tapón hermético	2		M18
8	51M7043	Anillo tórico	3		15.300 X 2.200 mm
9	RE46687	Tapón de vaciado	2		M22
10	51M7045	Anillo tórico	2		19.300 X 2.200 mm
11	19M8163	Tornillo	22		M8 X 16
12	19M8986	Tornillo	2		M8 X 100
13	RE57619	Entrada bomba aceite	1		

ENGINE OIL FILTER HEADER AND FILTER ELEMENT
ENGINE OIL FILTER HEADER AND FILTER ELEMENT
CABEZAL DEL FILTRO DE ACEITE DEL MOTOR Y ELEMENTO DEL FILTRO

T145377 A.1

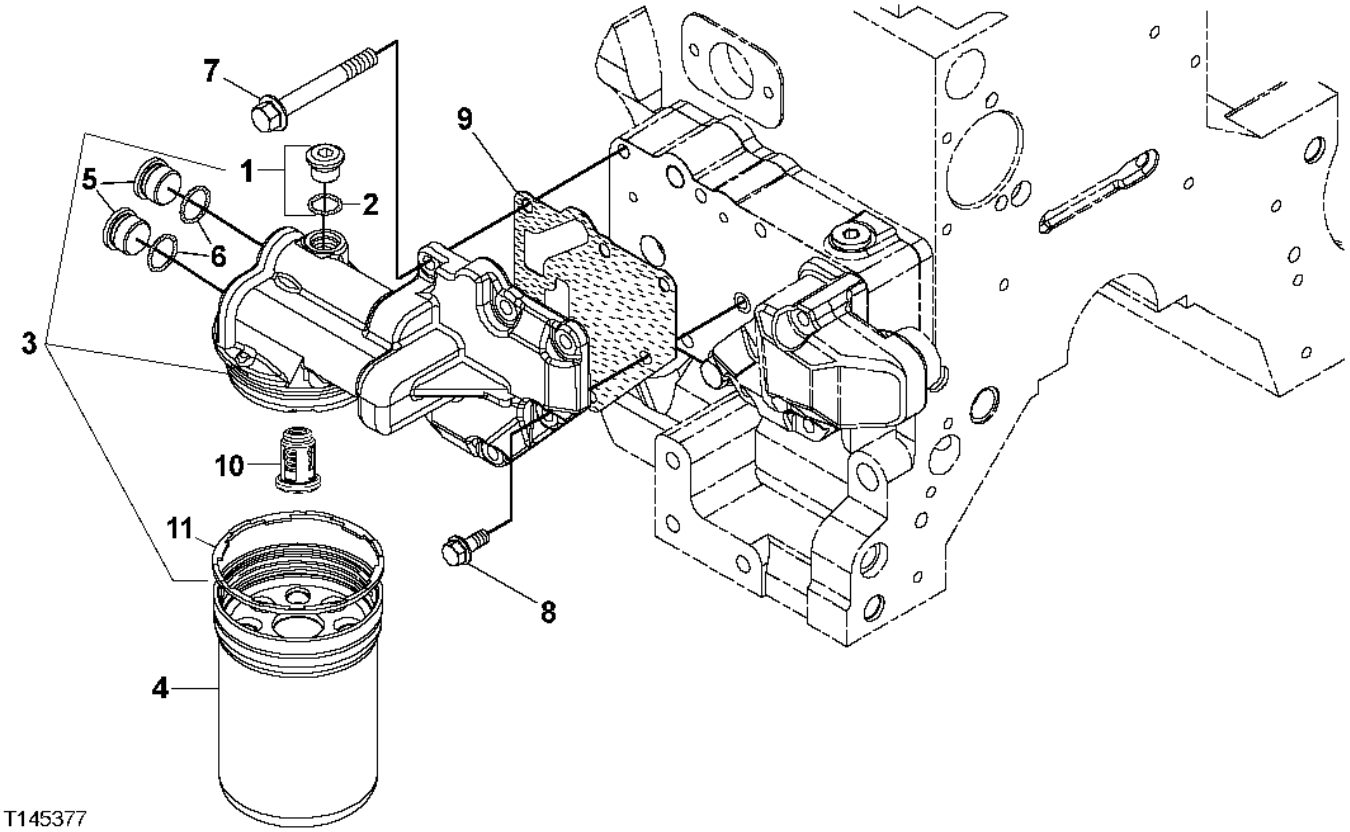

Pos.	*Ref.*	*Descripción*	*Cant.*	*Núm. de serie motor*	*Notas*
1	RE52242	Tapón de vaciado	1		M16 X 1.5
2	51M7042	Anillo tórico	1		13.300 X 2.200 mm
3	RE504564	Cabeza de filtro	1		(MARKED R502505)
4	RE504836	Filtro de aceite	1		(ALSO ORDER R502513)
5	R116115	Conexión	2		
6	51M7045	Anillo tórico	2		19.300 X 2.200 mm
7	19M7802	Tornillo	5		M8 X 65
8	RE67238	Tornillo	1		M8 X 20,
9	R500374	Junta	1		
10	RE504543	Válvula	1		
11	R502513	Retén	1		

VENTILATING SYSTEM
SYSTEME DE VENTILATION
SISTEMA DE VENTILACION

T144930 A.1

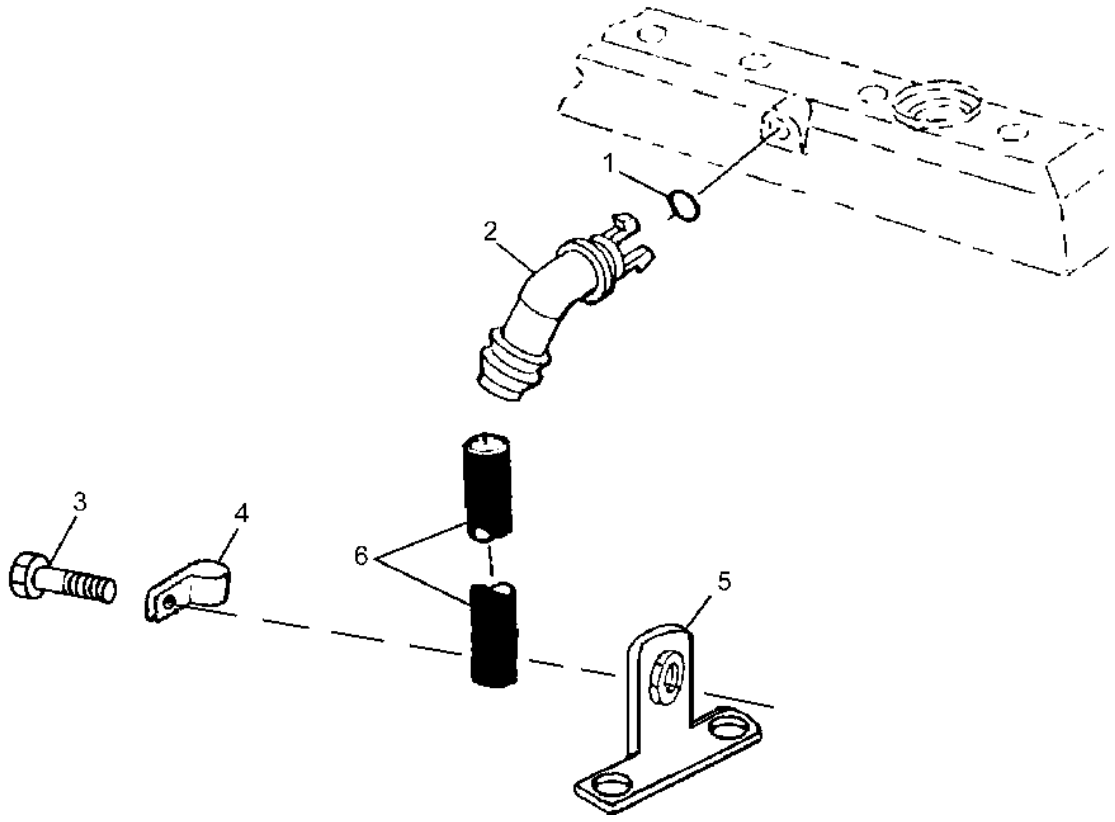

T144930

Pos.	Ref.	Descripción	Cant.	Núm. de serie motor	Notas
1	R72328	Anillo tórico	1		18.720 X 2.616 mm (0.737" X 0.103")
2	R120467	Racor acodado	1		
	R123586	Racor acodado	1		(USE WITH RE506871)
3	19M7783	Tornillo	1		M10 X 16, (USE WITH RE506871)
4	R72659	Abrazadera	1		(USE WITH RE506871)
5	RE506871	Soporte	1		(USE WITH R123586)
6	.....	Manguera	1		(MAKE FROM TY22450)(CTL) 54 INCH

CYLINDER HEAD WITH VALVES AND GASKET
CULASSE AVEC SOUPAPES AVEC JOINT
CULATA CON VALVULAS CON JUNTA

TP55161 A.1

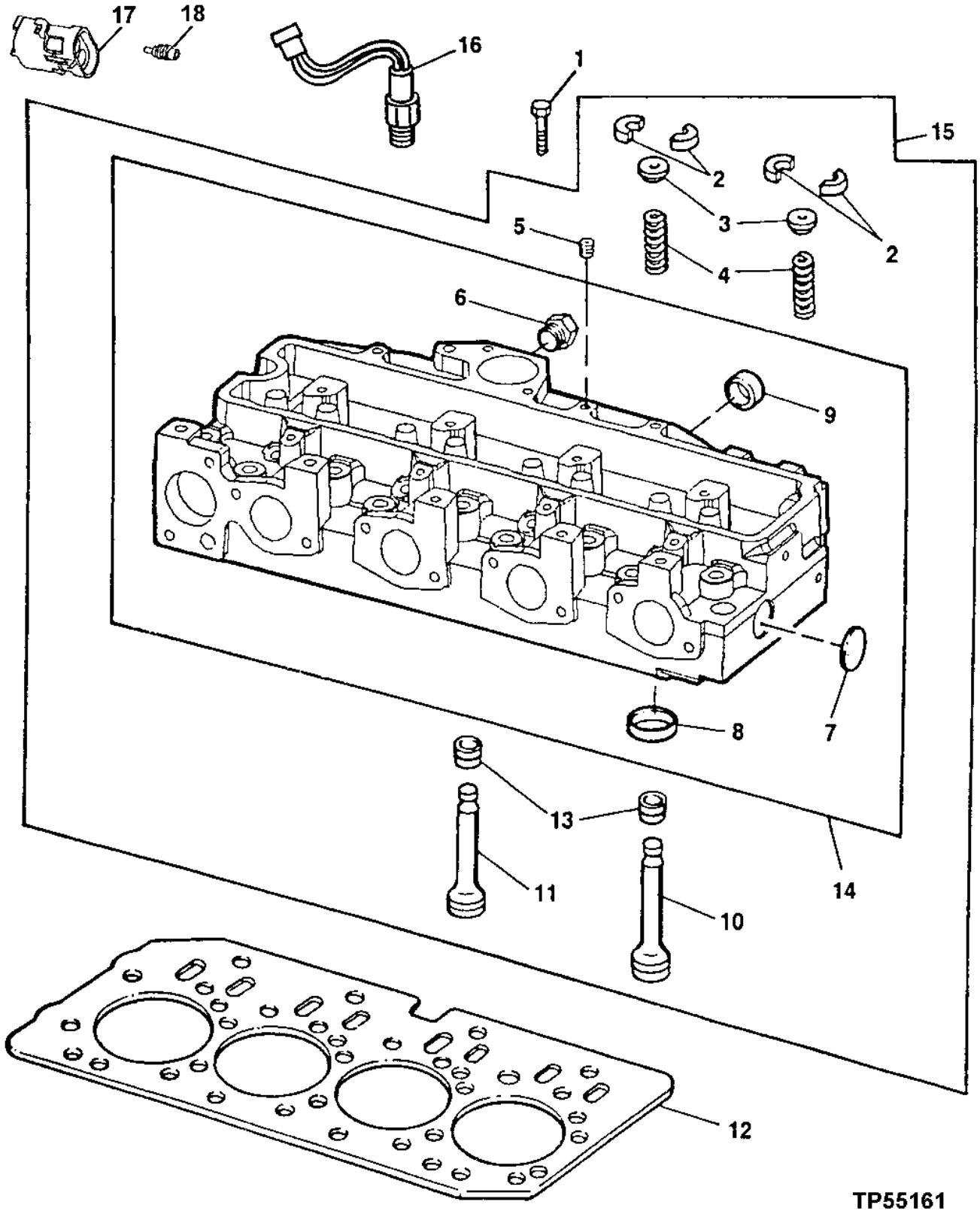

Pos.	Ref.	Descripción	Cant.	Núm. de serie motor	Notas
1	R85363	Tornillo	18		
2	R91889	Retenedor	16		
3	RE60005	Rotador	8		
4	R26125	Muelle	8		
5	R104592	Tapón roscado	1		
6	T58477	Tapón hermético	1		
	R26906	Anillo tórico	1		
7	CD16284	Tapón	1		
8	R98063	Anillo asiento de válvula	4		
	R98335	Anillo asiento de válvula	4		
	R85687	Anillo asiento de válvula	4		
	R93910	Anillo asiento de válvula	4		
9	R43409	Tapón	2		
10	R90692	Válvula de escape	4		STD
11	R98062	Válvula de admisión	4		STD
12	R116515	Junta de culata	1		
13	RE31617	Retén	8		
14	.....	Culata	1		(MARKED R121402)
15	RE57234	Culata	1		(MARKED R121402)
	SE501579	Culata reman.	1		(REMAN FOR RE57234)
16	RE528600	Termocontacto	1		(SUB FOR AT174989, THIS APPLICATION)
17	R78053	Conjunto de conector eléc.	1		
18	R78064	Tapón para cavidad eléc.	1		

EXHAUST MANIFOLD
COLLECTEUR D'ECHAPPEMENT
COLECTOR DE ESCAPE

TP58371 A.1

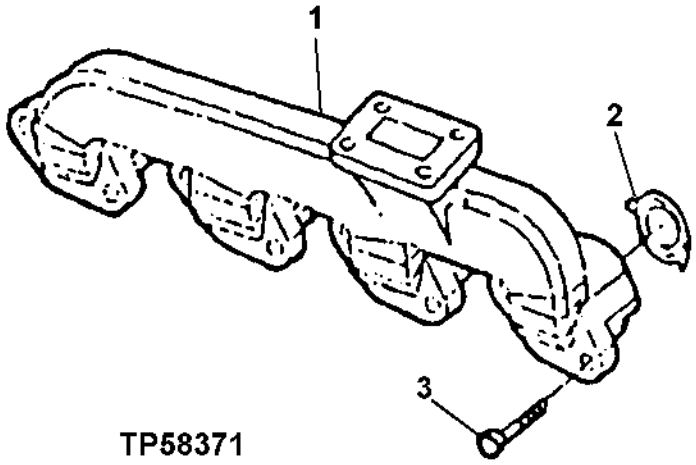

TP58371

Pos.	*Ref.*	*Descripción*	*Cant.*	*Núm. de serie motor*	*Notas*
1	R132509	Colector de escape	1		
2	R90658	Junta	4		
3	19M7810	Tornillo	8		M10 X 80

FUEL INJECTION PUMP,FUEL INJECTION LINES AND ENGINE CONTROLLER
POMPE D'INJECTION DE CARBURANT, CONDUITES ET CONTROLEUR DE MOTEUR
BOMBA DE INYECCION DE COMBUSTIBLE, LINEAS Y UNIDAD DE CONTROL DEL MOTOR

T153834 A.1

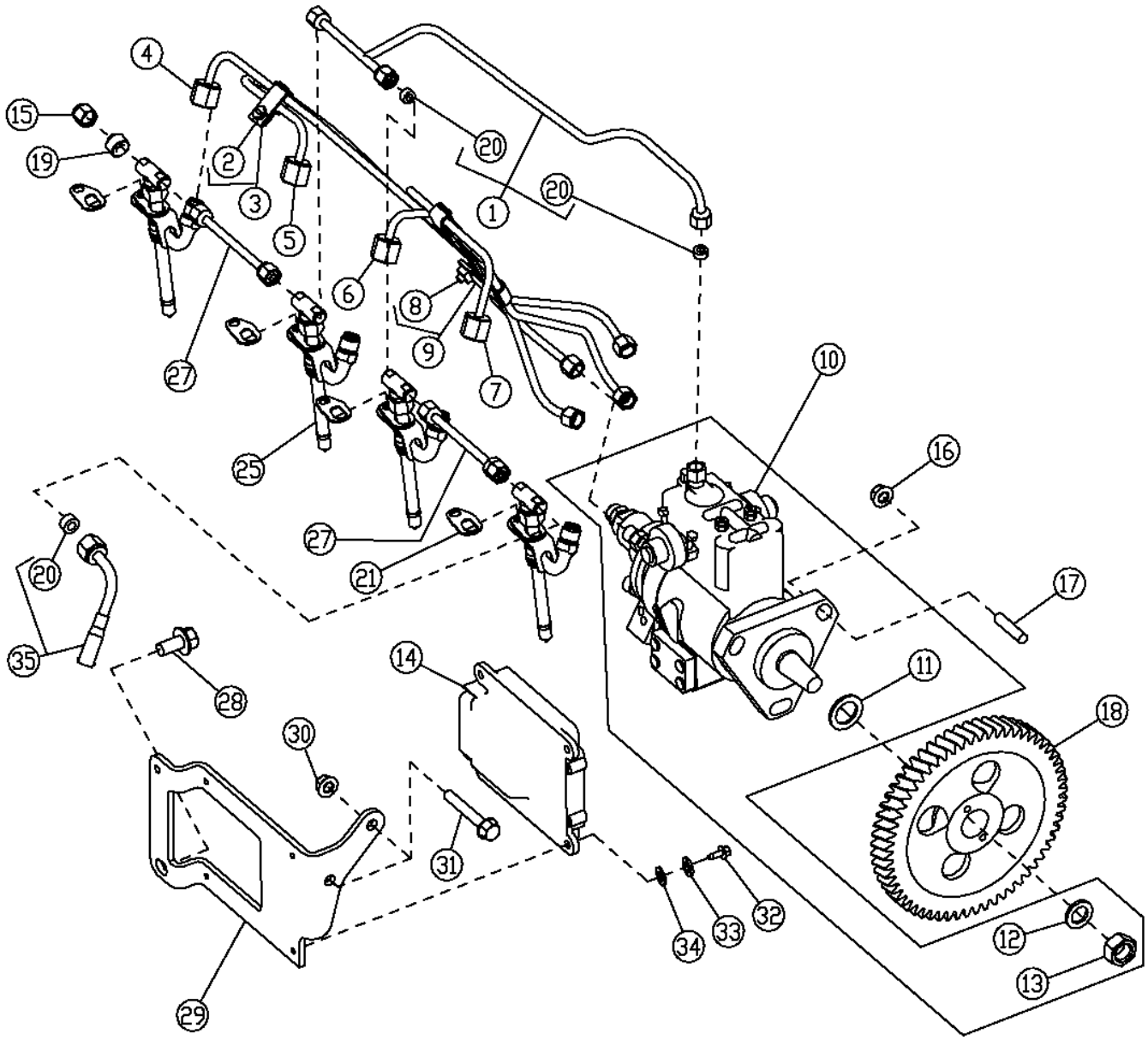

T153834

Pos.	Ref.	Descripción	Cant.	Núm. de serie motor	Notas
1	RE507598	Tubería de combustible	1		
2	19M6614	Tornillo	2		M6 X 12
3	RE19797	Abrazadera	2		
4	RE507649	Tubería de combustible	1		NO.4
5	RE507648	Tubería de combustible	1		NO.3
6	RE507647	Tubería de combustible	1		NO.2
7	RE507646	Tubería de combustible	1		NO.1
8	19M6614	Tornillo	1		M6 X 12
9	RE19799	Abrazadera	1		
10	RE518086	Bomba de inyección	1		MARKED RE518167; 12V
	SE501234	Bomba de inyección reman.	1		REMAN FOR RE518086
	RE521822	Sensor temp. combustible	1		KIT DE10 TEMPURATURE SENSOR; NOT ILLUSTRATED
11	R502076	Anillo tórico	1		
12	R132874	Arandela	1		
13	R91360	Tuerca	1		M14
14	RE522529	Controlador elect.del motor	1		SUB FOR RE518177, OR RE519775 THIS APPLICATION
15	R123593	Tuerca de unión	1		
16	14M7298	Tuerca con brida	3		M8
17	R116386	Espárrago	3		
18	R505472	Engranaje	1		
19	AR85519	Tapón	1		
20	R51936	Arandela de guarnición	4		
21	RE508716	Abrazadera	4		
25	RE531436	Tobera	4		INCLUDES T24472, R92352 AND R500390; SUB FOR RE507766
	SE500830	Inyector reman.	1		PKG OF 4 , NLA
	SE501103	Inyector reman.	4		PKG OF 1 , REMAN FOR RE531436
	RE531116	Juego	1		
27	RE68748	Tubo	2		
	R51936	Arandela de guarnición	4		
	R123593	Tuerca de unión	4		
28	19M7784	Tornillo	1		M10 X 20
29	R503520	Soporte	1		
30	14M7298	Tuerca con brida	2		M8
31	19M7979	Tornillo	2		M8 X 55
32	19M7640	Tornillo	4		M5 X 12
33	12H316	Arandela de seguridad	4		0.216"
34	24M7027	Arandela	4		5.300 X 10 X 1 mm
35	RE16142	Tubería de combustible	1		

AIR INTAKE SYSTEM
SYSTEME D'ADMISSION D'AIR
SISTEMA DE ADMISION DE AIRE

T144949 A.1

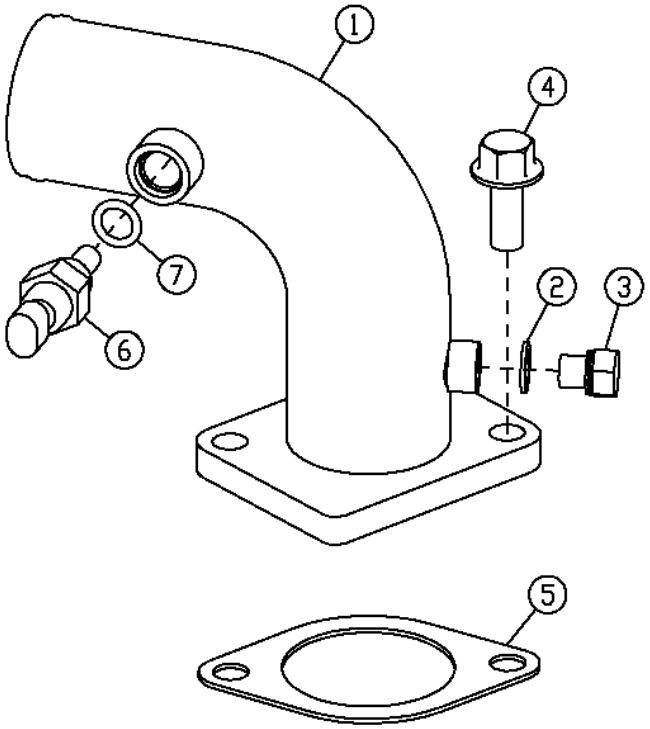

T144949

Pos.	*Ref.*	*Descripción*	*Cant.*	*Núm. de serie motor*	*Notas*
1	RE506991	Admisión de aire	1		
2	51M7039	Anillo tórico	1		8.100 X 1.600 mm
3	RE60071	Conexión	1		
4	19M7786	Tornillo	2		M10 X 30
5	R81275	Junta	1		
6	RE61812	Sensor	1		
7	51M7041	Anillo tórico	1		11.300 X 2.200 mm

ENGINE BALANCER SHAFT
ARBRE D'EQUILIBRAGE
EJE EQUILIBRADOR

T153911 A.1

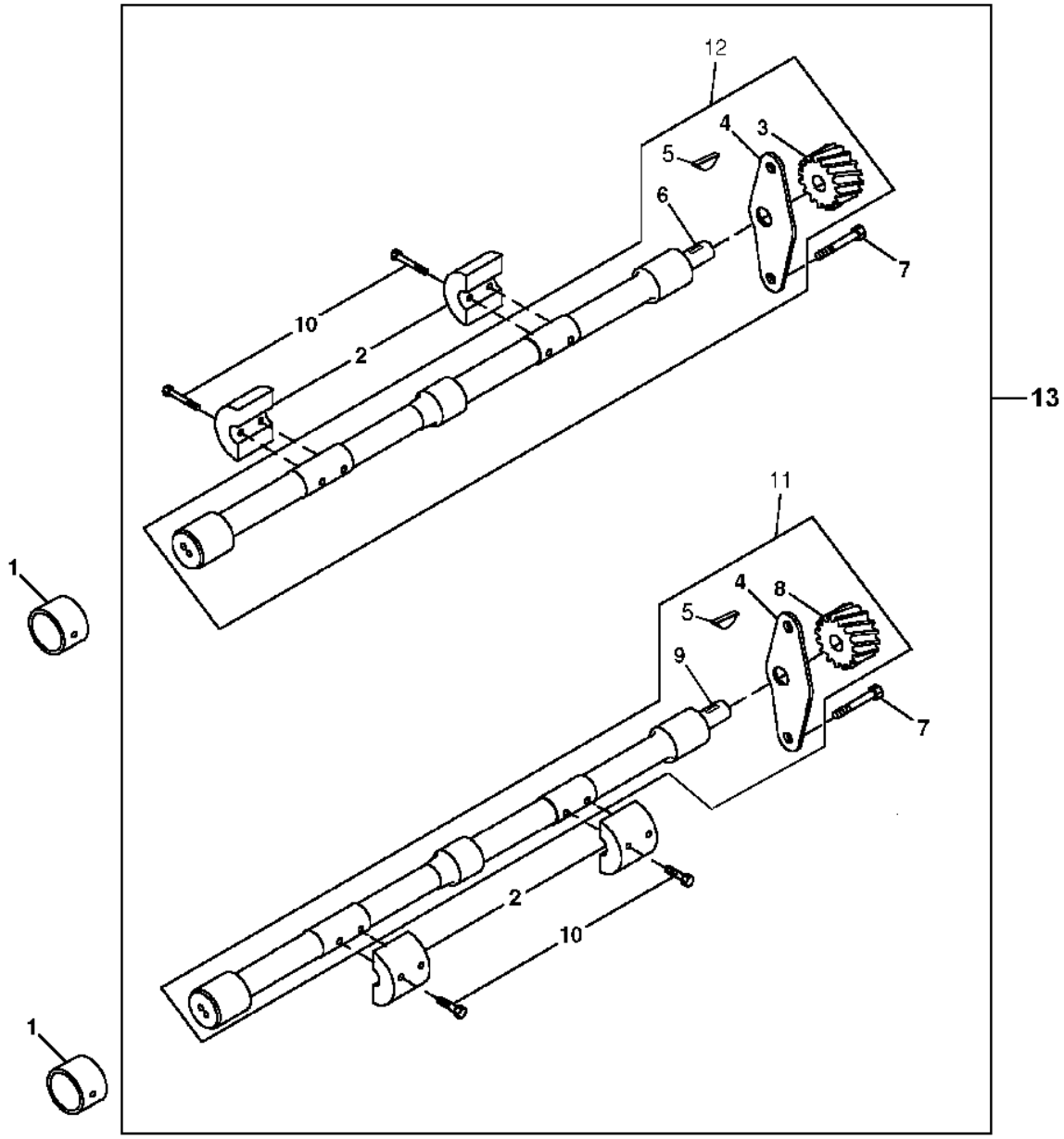

T153911

Pos.	*Ref.*	*Descripción*	*Cant.*	*Núm. de serie motor*	*Notas*
1	R115299	Casquillo	6		
2	R500650	Lastre	4		
3	.....	Engranaje	1		(MARKED R500668)RH
4	.....	Placa	2		
5	R133303	Chaveta	2		
6	.....	Eje equilibrador	1		
7	19M8998	Tornillo	4		M8 X 12
8	.....	Engranaje	1		
9	.....	Eje equilibrador	1		
10	19M8882	Tornillo	8		M8 X 40
11	RE500448	Eje equilibrador	1		RH
12	RE500449	Eje equilibrador	1		LH
13	RE504742	Kit de equilibrador	1		

TURBOCHARGER AND OIL LINES
CONDUITES D'HUILE DU TURBOCOMPRESSEUR
TUBERIAS DE ACEITE DEL TUBOCARGADOR

RGP8863 A.1

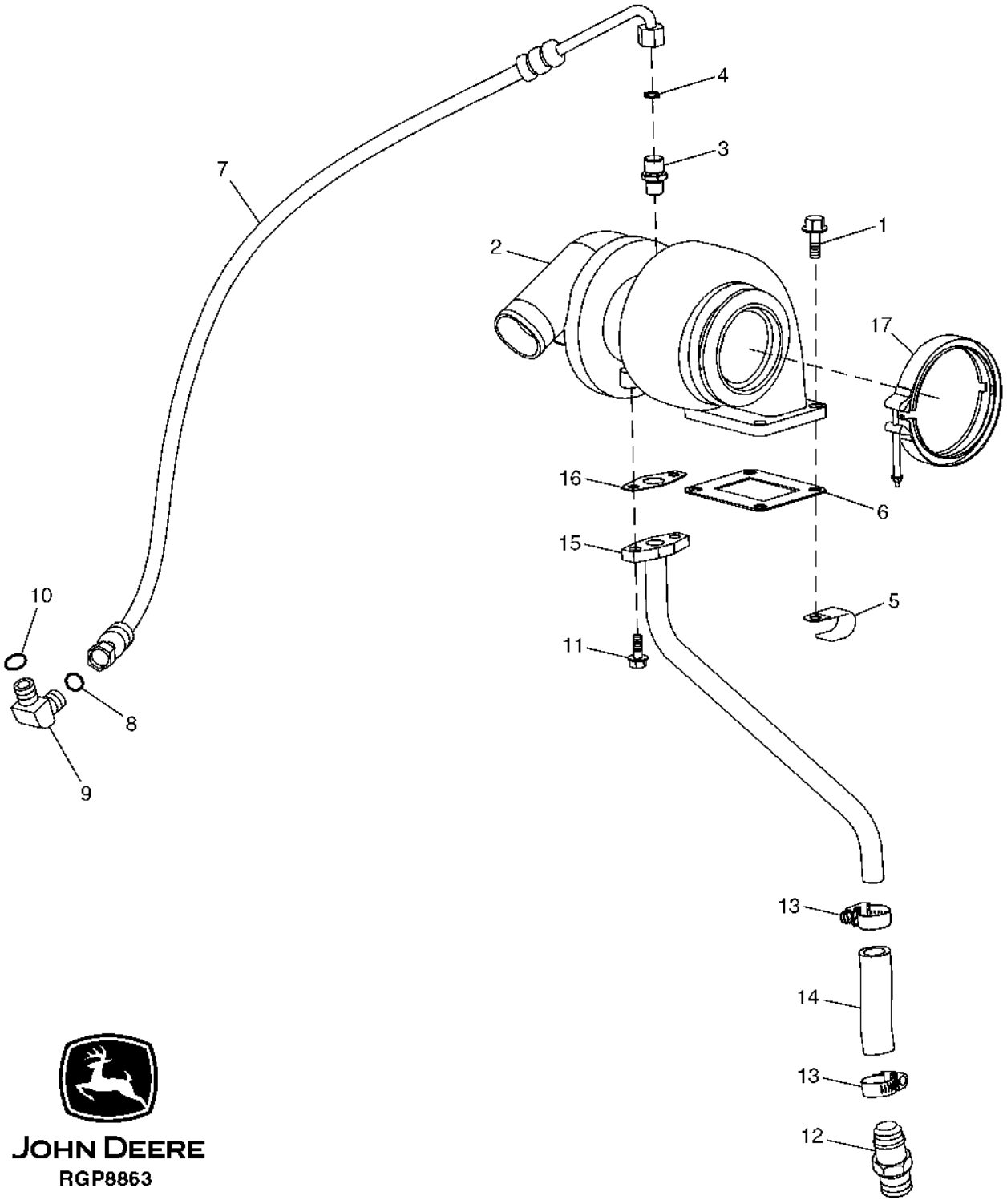

JOHN DEERE
RGP8863

Pos.	Ref.	Descripción	Cant.	Núm. de serie motor	Notas
1	19M7785	Tornillo	4		M10 X 25
2	RE517786	Turbocargador	1		(SUB FOR RE515977)
	SE501674	Turbocompresor reman.	1		(REMAN FOR RE517786)
	RE60069	Turbocompresor reman.	1		
	SE500268	Turbocompresor reman.	1		(REMAN FOR RE60069)
	RE509572	Turbocompresor reman.	1		(MARKED RE509640)
	SE501155	Turbocompresor reman.	1		(MARKED RE526872)
3	M87733	Racor adaptador	1		
4	R63548	Anillo tórico	1		
5	R72853	Abrazadera	4		
6	R92097	Junta	1		
7	RE503211	Manguera	1		
8	51M7042	Anillo tórico	1		13.300 X 2.200 mm
9	38H5154	Racor acodado	1		
10	T77613	Anillo tórico	1		
11	19M7775	Tornillo	2		M6 X 16
12	RE54885	Conexión de manguera	1		
13	RE65978	Abrazadera	2		
14	.....	Manguera	1		(MAKE FROM R120013)(CTL)
15	RE509605	Tubería de aceite	1		
16	R503891	Junta	1		
17	RE40048	Abrazadera	1		

WATER PUMP PULLEY AND INLET
POULIE DE POMPE A EAU AVEC ADMISSION
POLEA DE LA BOMBA DE AGUA CON ENTRADA

RGP8859 A.1

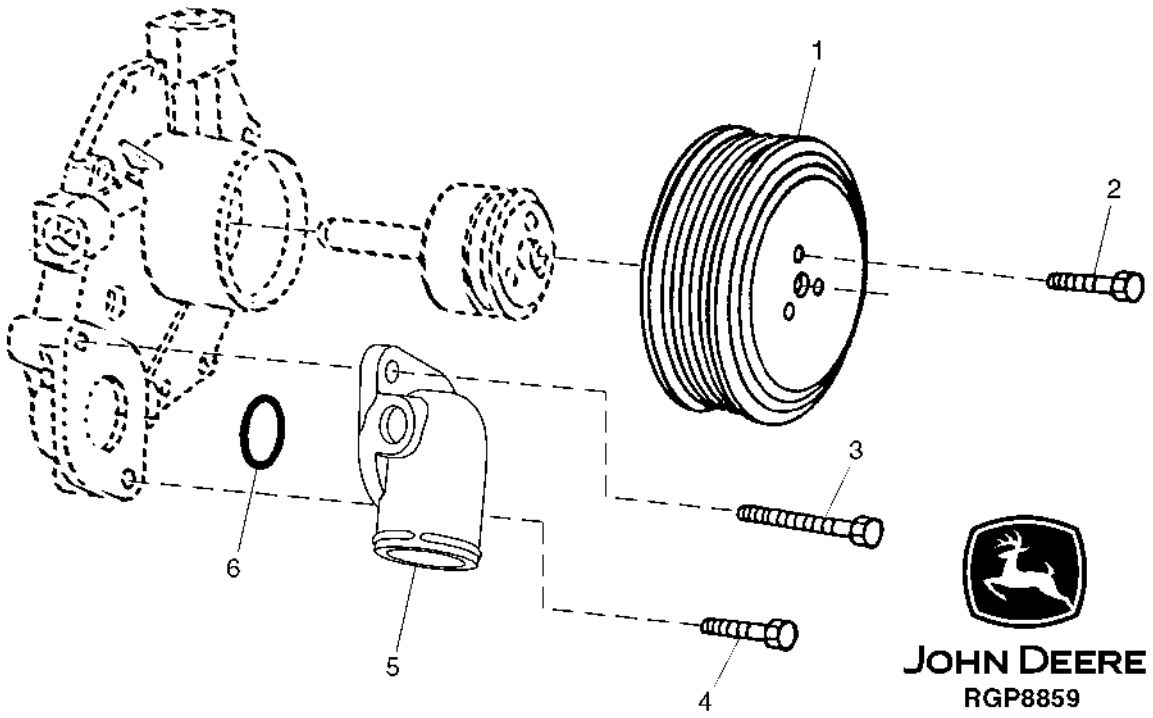

Pos.	*Ref.*	*Descripción*	*Cant.*	*Núm. de serie motor*	*Notas*
1	R115250	Polea	1		
2	19M7774	Tornillo	3		M6 X 12
3	19M7802	Tornillo	1		M8 X 65
4	19M7867	Tornillo	1		M8 X 25
5	R121635	Racor acodado	1		
6	R89944	Anillo tórico	1		50.394 X 3.531 mm (1-63/64" X 0.139")

WATER PUMP WITH REPAIR KIT
POMPE A EAU AVEC JEU DE REPARATION
BOMBA DE AGUA CON JUEGO DE REPARACION

T153222 A.1

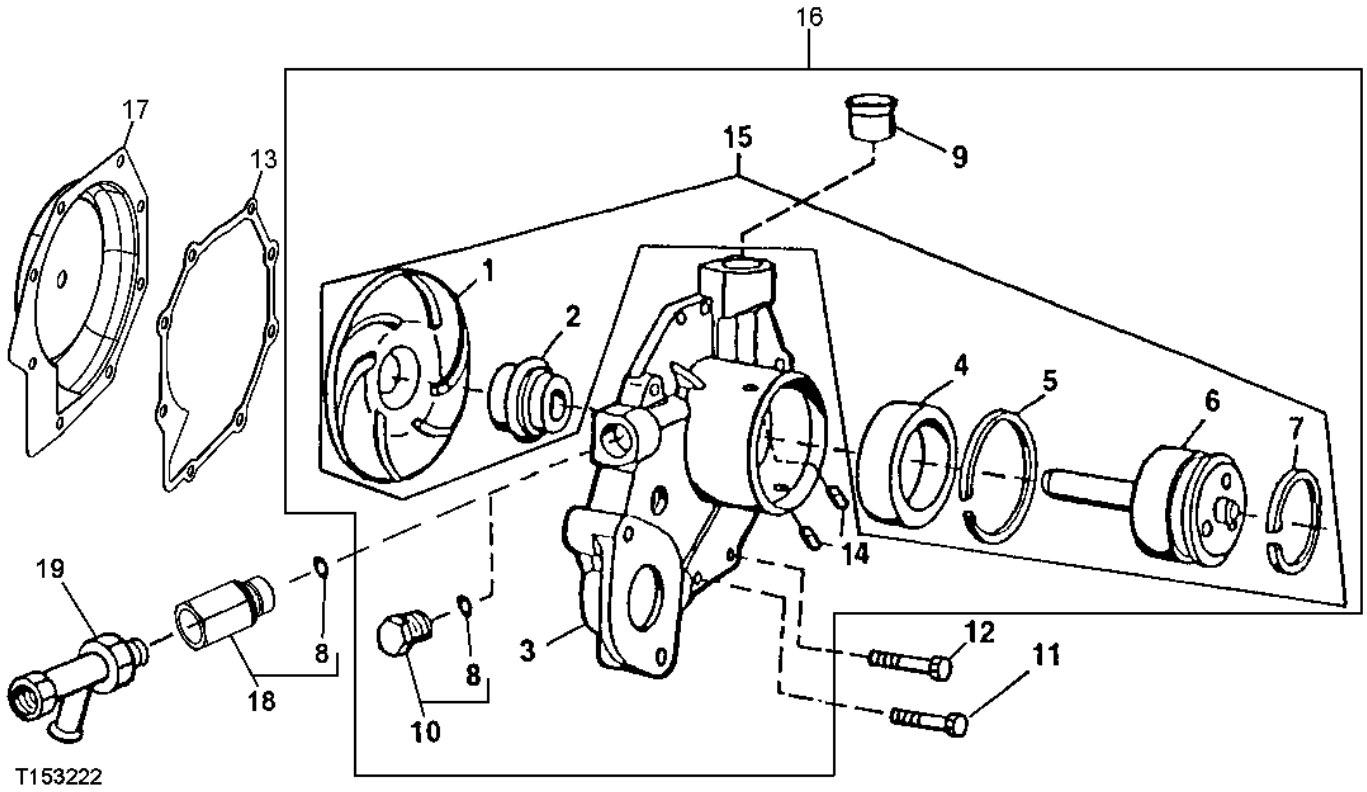

Pos.	*Ref.*	*Descripción*	*Cant.*	*Núm. de serie motor*	*Notas*
1	.....	Impulsor	1		(MARKED R123395)
2	.....	Retén	1		
3	.....	Carcasa	1		
4	.....	Rodamiento de bolas	1		
5	.....	Anillo	1		
6	.....	Árbol	1		
7	A364R	Anillo elástico	1		
8	51M7043	Anillo tórico	2		15.300 X 2.200 mm
9	R123226	Retén	1		
10	RE46685	Tapón hermético	1		
11	19M7863	Tornillo	5		M6 X 25
12	19M7796	Tornillo	3		M6 X 30
13	R123417	Junta	1		
14	R100369	Filtro	2		
15	RE509813	Kit de motor de combustión	1		
16	RE505980	Bomba de agua	1		(MARKED R503509)
	SE501609	Bomba de agua reman.	1		(REMAN FOR RE505980)
17	RE508566	Inserto	1		
18	RE520229	Racor adaptador	1		(SUB FOR RE68908)
19	RE507952	Grifo de vaciado	1		

THERMOSTAT COVER, THERMOSTAT, SENSOR
COUVERCLE DE THERMOSTAT, THERMOSTAT, CAPTEUR
TAPADERA TERMOSTATO, TERMOSTATO, SENSORE

TX1007689 A.1

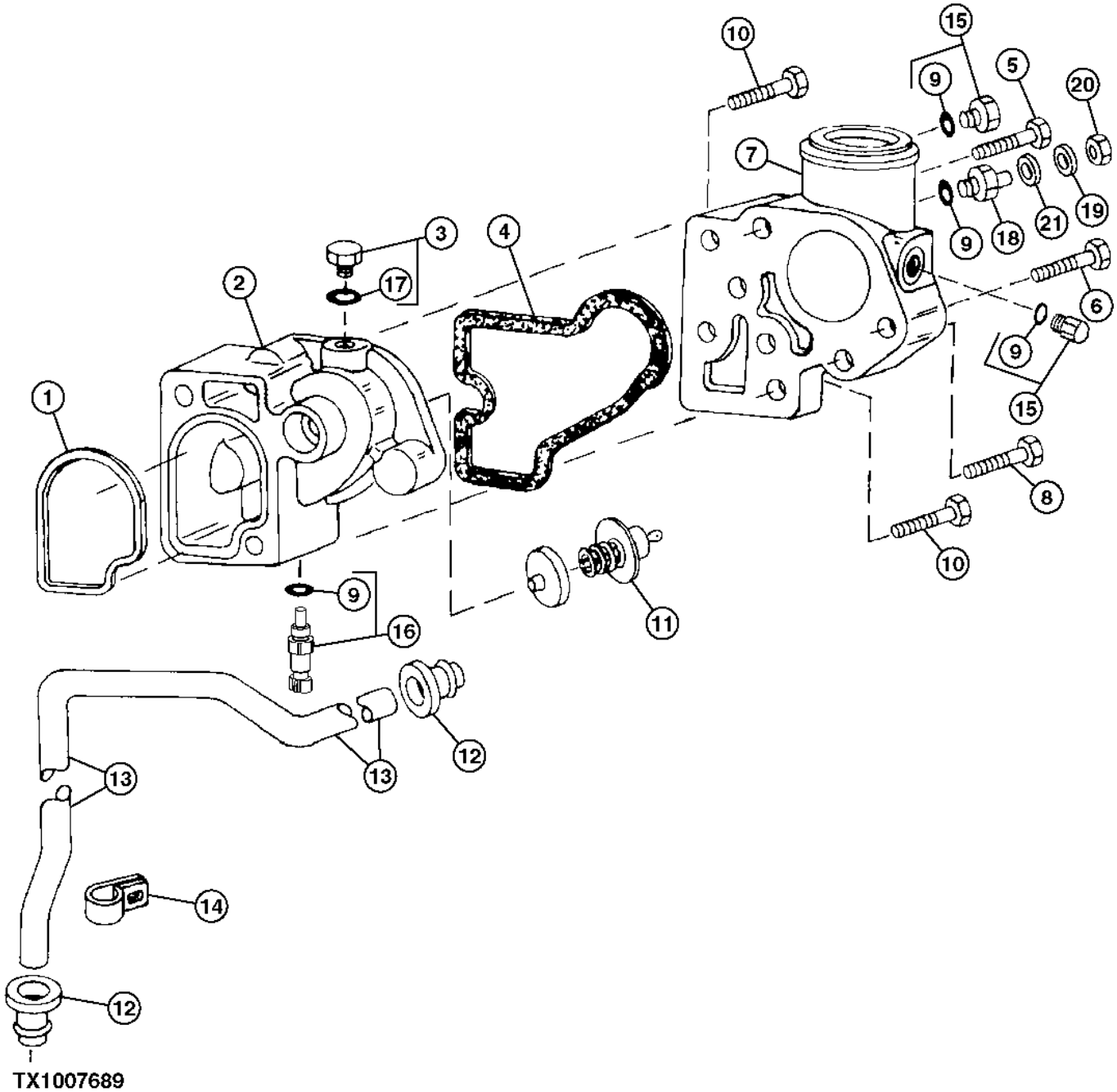

Pos.	*Ref.*	*Descripción*	*Cant.*	*Núm. de serie motor*	*Notas*
1	R501228	Retén	1		
2	R500471	Carcasa	1		
3	RE46686	Conexión	1		
4	R501227	Retén	1		
5	19M7810	Tornillo	1		M10 X 80
6	19M7785	Tornillo	1		M10 X 25
7	R500472	Tapadera	1		
8	19M7809	Tornillo	1		M10 X 70
9	51M7041	Anillo tórico	4		11.300 X 2.200 mm
10	19M7811	Tornillo	2		M10 X 90
11	RE520831	Termostato	1		(SUB FOR RE506300, THIS APPLICATION)
12	R123226	Retén	2		
13	R500704	Tubo	1		
14	R123324	Abrazadera	1		
15	RE46684	Tapón hermético	3		
16	RE52722	Sensor de temperatura	1		
17	51M7040	Anillo tórico	1		9.300 X 2.200 mm
18	4456798	Sensor	1		
19	12M7064	Arandela de seguridad	1		5 mm
20	14M7297	Tuerca	1		M5
21	24M7027	Arandela	1		5.300 X 10 X 1 mm

ENGINE OIL COOLER WITH ADAPTER
REFROIDISSEUR D'HUILE MOTEUR AVEC ADAPTATEUR
REFRIGERADOR DEL ACEITE DEL MOTOR CON ADAPTADOR

RGP8862 A.1

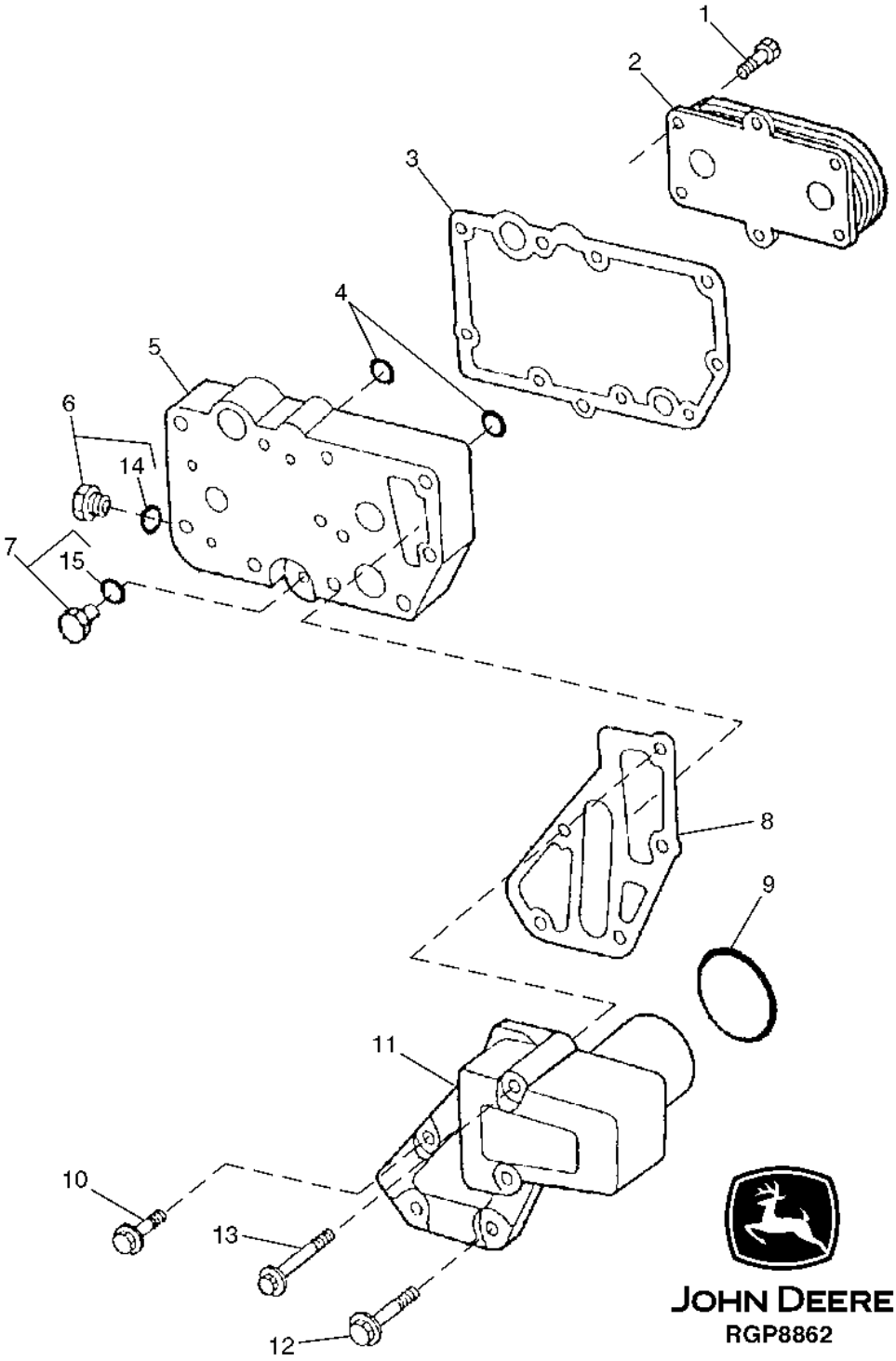

Pos.	*Ref.*	*Descripción*	*Cant.*	*Núm. de serie motor*	*Notas*
1	RE67231	Tornillo	6		
2	RE522821	Refrigerador de aceite	1		(SUB FOR RE56690, THIS APPLICATION)
3	R123501	Junta	1		
4	T122075	Anillo tórico	2		29.820 X 2.616 mm (1.174" X 0.103")
5	R123471	Carcasa	1		
6	RE46685	Tapón hermético	1		
7	RE46686	Conexión	1		
8	R501428	Junta	1		
9	R504734	Anillo tórico	1		
10	19M7802	Tornillo	2		M8 X 65
11	R502811	Racor adaptador	1		
12	19M7970	Tornillo	2		M8 X 100
13	RE67238	Tornillo	1		
14	51M7043	Anillo tórico	1		15.300 X 2.200 mm
15	51M7040	Anillo tórico	1		9.300 X 2.200 mm

FINAL FUEL FILTER, FUEL LINE, BRACKET
FILTRE A COMBUSTIBLE FINAL, CONDUITE DE COMBUSTIBLE, SUPPORT
FILTRO FINAL DE COMBUSTIBLE, TUBERIA DE COMBUSTIBLE, SOPORTE

TX1007688 A.1

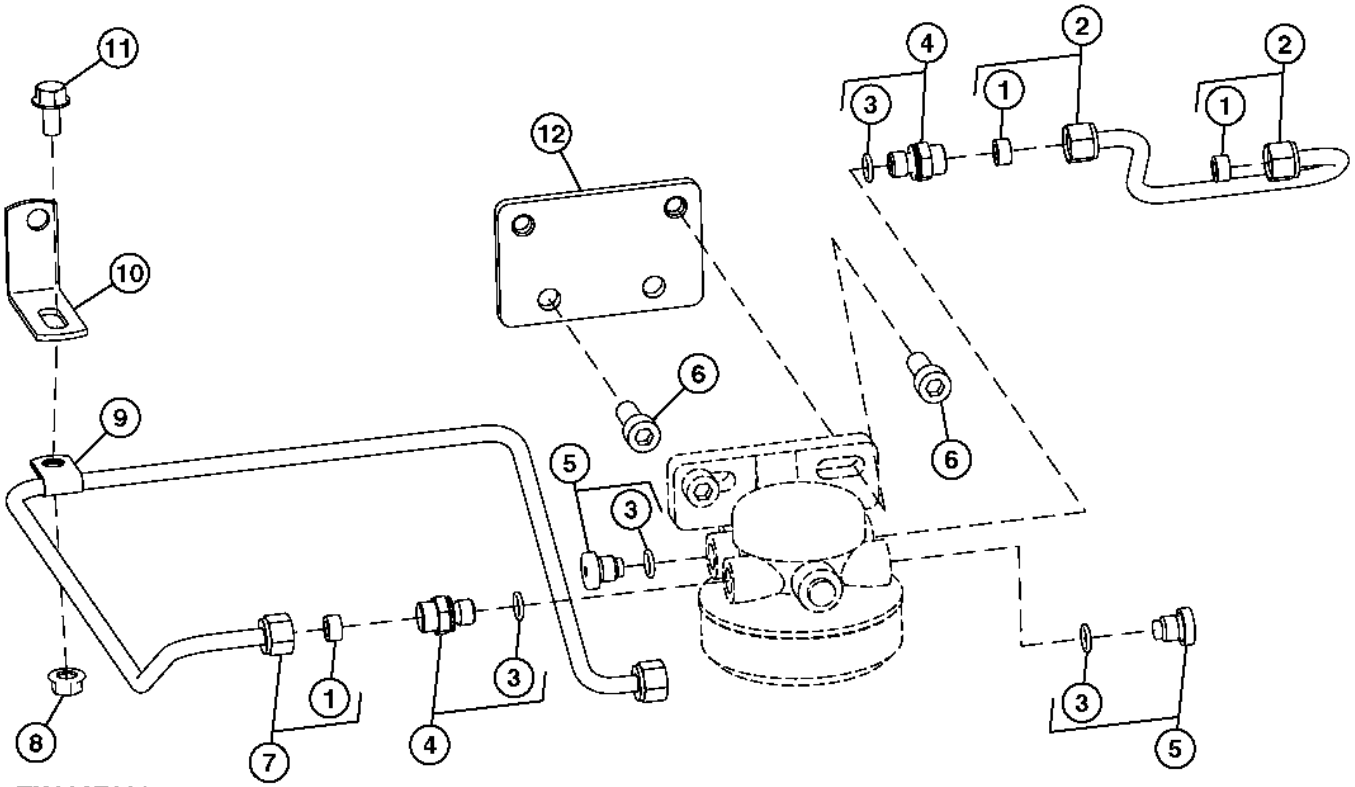

TX1007688

Pos.	*Ref.*	*Descripción*	*Cant.*	*Núm. de serie motor*	*Notas*
1	R74012	Arandela de guarnición	4		
2	RE507997	Tubería de combustible	1		
3	51M7040	Anillo tórico	1		9.300 X 2.200 mm
4	RE60029	Racor adaptador	2		
5	RE46686	Conexión	2		
6	19M7784	Tornillo	2		M10 X 20
7	RE507996	Tubería de combustible	1		
8	14M7298	Tuerca con brida	1		M8
9	T14050	Abrazadera	1		
10	R116116	Soporte	1		
11	19M7865	Tornillo	1		M8 X 16
12	R123566	Soporte	1		

Final Fuel Filter
Filtre à carburant final
Filtro de combustible final

TX1001276 A.1

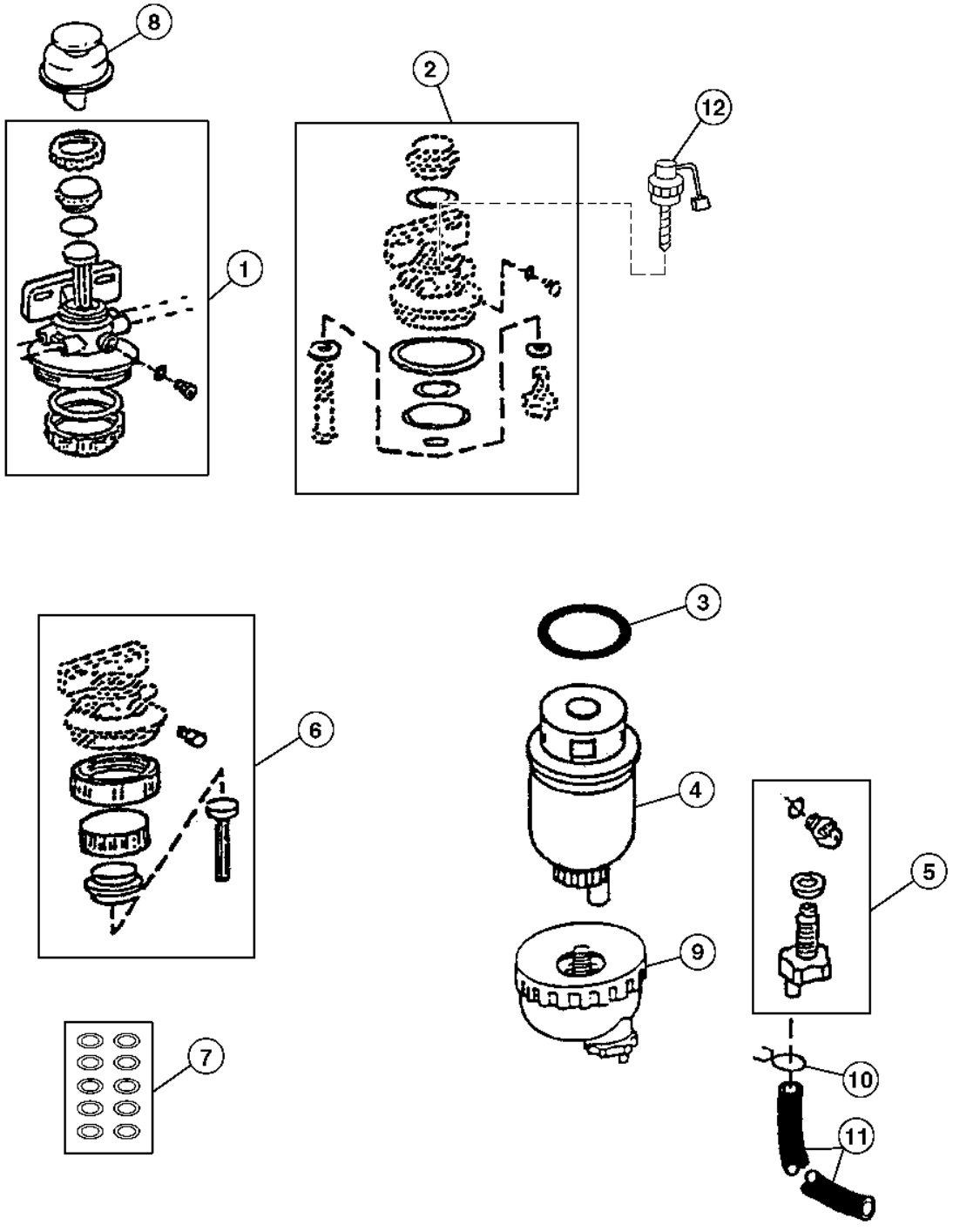

TX1001276

Pos.	Ref.	Descripción	Cant.	Núm. de serie motor	Notas
1	RE509794	Cabeza de filtro	1		
2	RE516553	Juego de retenes	1		
3	R113565	Anillo tórico	1		
4	RE62419	Filtro de combustible	1		WITH DRAIN VALVE
	RE509031	Cartucho de filtro	1		WITHOUT DRAIN VALVE
	RE516477	Cartucho de filtro	1		(ANTI-FUEL GELLING) (USED IN COLD CLIMATE APPLICATIONS)
5	RE60854	Kit de válvulas	1		
6	RE51649	Juego de retenes	1		
7	RE516512	Juego de anillos tóricos	1		(WITHOUT HAND PRIMER) (CONTAINS 10 PIECES)
	RE516513	Kit de reparación de bombas	1		(WITH HAND PRIMER) (CONTAINS 10 PIECES)
8	RE515404	Kit de filtros	1		HAND PRIMER ASSEMBLY KIT
9	RE51650	Vaso de decantación	1		
10	T13254	Abrazadera	1		
11	R126086	Manguera	1		
12	RE504134	Juego reparación motor	1		24 V, FUEL HEATER

9102 Primary Fuel Filter
9102 Filtre à carburant primaire
9102 Filtro primario de combustible

9102_RE508051_PCD A.1

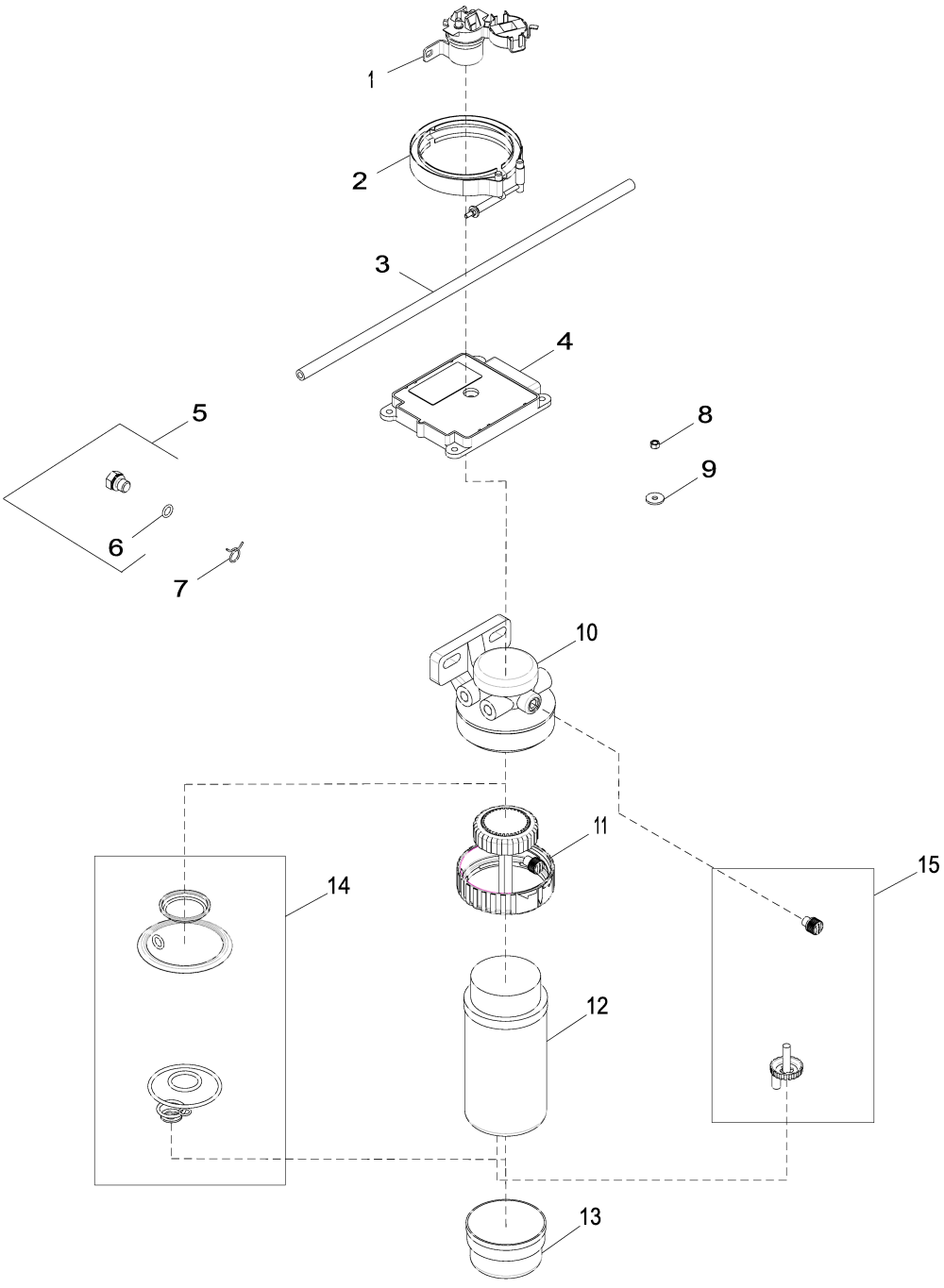

9102_RE508051_PCD

Pos.	Ref.	Descripción	Cant.	Núm. de serie motor	Notas
1	AT145341	Relé	1		SUB FOR AT141012
	AT38449	Cable de masa	1		(A)
2	RE40048	Abrazadera	1		
3	R126086	Manguera	1		
4	RE532629	Controlador elect.del motor	1		SUB FOR RE522529
5	RE46686	Conexión	2		
6	51M7040	Anillo tórico	1		9.300 X 2.200 mm
7	T13254	Abrazadera	1		
	T190303	Abrazadera	1		(A)
8	14M7297	Tuerca	1		M5
9	24M7210	Arandela	1		5.500 X 18 X 2 mm
10	RE508847	Cabeza de filtro	1		
11	RE526834	Kit de filtros	1		
	RE515404	Kit de filtros	1		(A) HAND PRIMER ASSEMBLY KIT
	RE516513	Kit de reparación de bombas	1		(A) (WITH HAND PRIMER) (CONTAINS 10 PIECES)
12	RE509036	Filtro de combustible	1		
13	RE51650	Vaso de decantación	1		
14	RE516553	Juego de retenes	1		
15	RE60854	Kit de válvulas	1		

(A) Not Illustrated
Non illustré
No se ilustra

FUEL TRANSFER PUMP
POMPE DE TRANSFERT DE CARBURANT
BOMBA DE TRANSFERENCIA DE COMBUSTIBLE

T153331 A.1

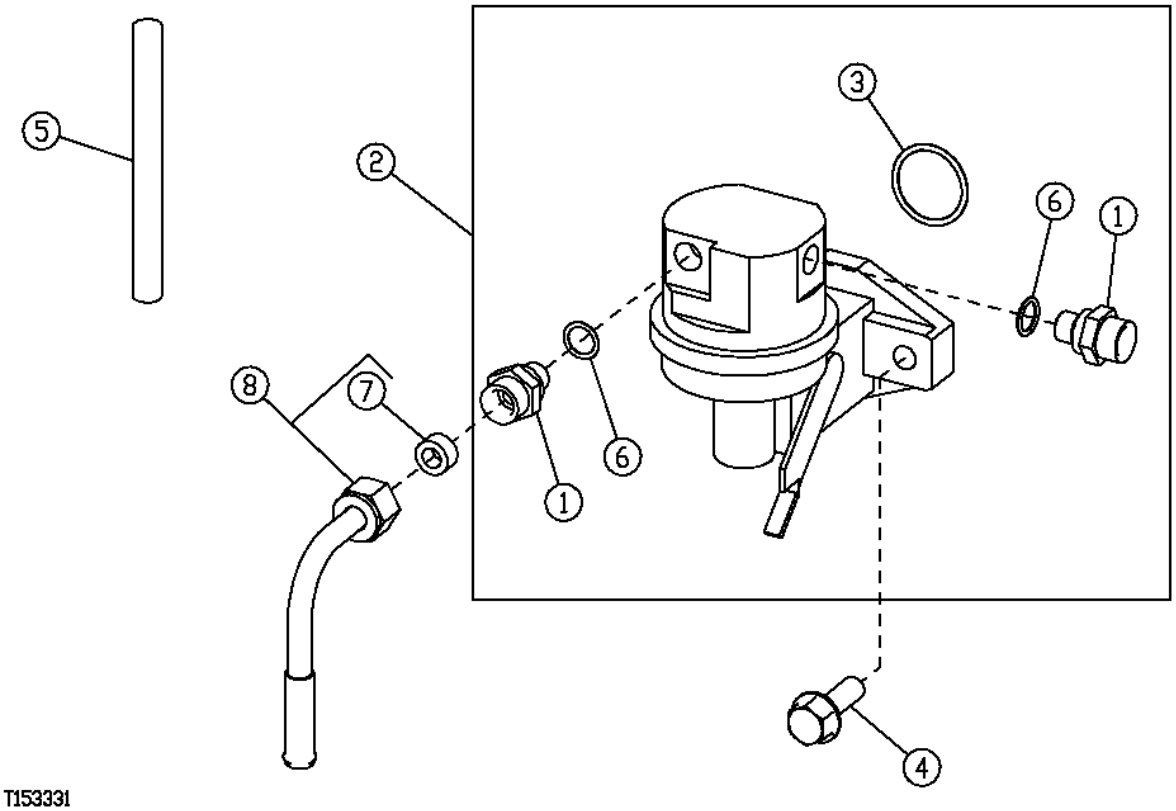

T153331

Pos.	*Ref.*	*Descripción*	*Cant.*	*Núm. de serie motor*	*Notas*
1	R500270	Conexión	2		
2	RE66153	Bomba de alimentación	1		
3	R123273	Anillo tórico	1		
4	RE504233	Tornillo	2		
5	R133405	Pasador	1		
6	R500271	Anillo tórico	2		
7	R74012	Arandela de guarnición	1		
8	AP35377	Racor adaptador	1		

FLYWHEEL HOUSING (PE6068TT051) (ESN.071872-) (071872 -)
CARTER VOLANT (PE6068TT051) (ESN.071872-) (071872 -)
CAJA DEL VOLANTE MOTOR (PE6068TT051) (ESN.071872-) (071872 -)

TP62293 A.1

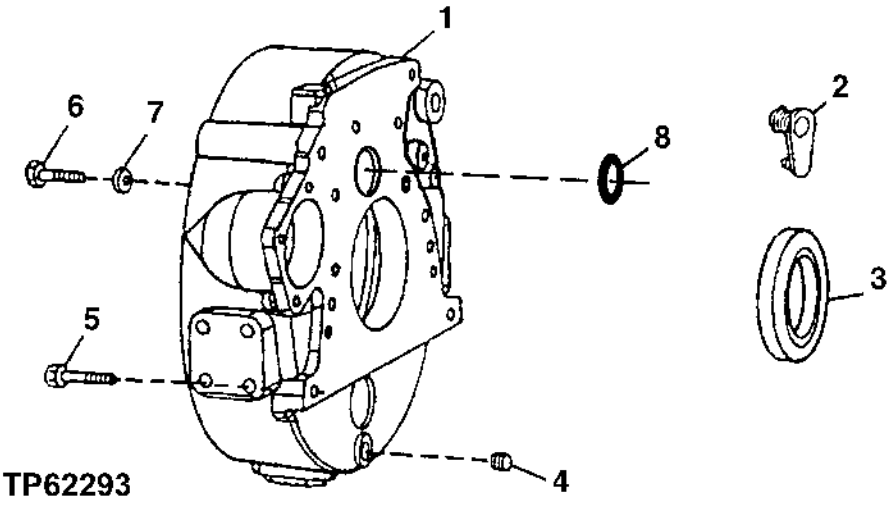

Pos.	*Ref.*	*Descripción*	*Cant.*	*Núm. de serie motor*	*Notas*
1	R123208	Carcasa	1		(SUB R503444 AND R61467)
	R503444	Carcasa	1		
2	R131768	Tapón	1		
3	RE44574	Retén	1		
4	RE57836	Tapón roscado	1		12.700 mm (1/2"), (SUB FOR 15H624)
5	19M8306	Tornillo	4		M12 X 50
6	R135918	Tornillo	8		
7	T77258	Arandela	AR		
8	R61467	Anillo tórico	1		

COMPONENTS FOR STARTING MOTOR
COMPOSANTS POUR DEMARREUR
COMPONENTES PARA MOTOR DE ARRANQUE

T188382 A.1

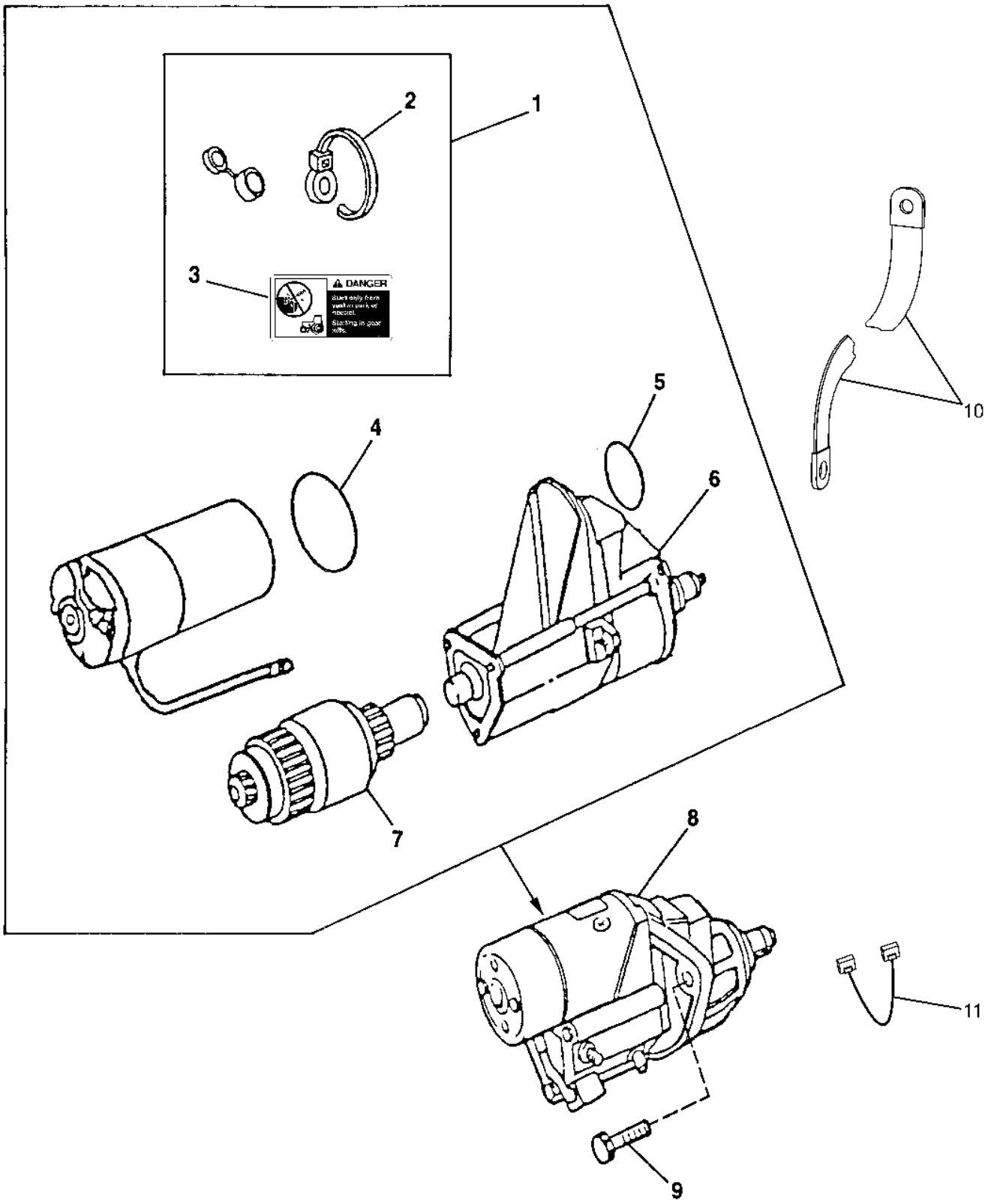

T153930

Pos.	*Ref.*	*Descripción*	*Cant.*	*Núm. de serie*	*Notas*
1	RE70756	Tapadera	1		
2	R96703	Cinta de atar	1		
3	T146102	Etiqueta adhesiva	1		
4	R135509	Anillo tórico	1		
5	R135510	Anillo tórico	1		
6	RE70681	Interruptor	1		
7	RE70487	Embrague	1		
8	RE500345	Juego p. motor de arranque	1		
9	19M7786	Tornillo	3		M10 X 30
10	AT38449	Cable de masa	1		
11	4448296	Grupo de cables	1		

ALTERNATOR MOUNTING
SUPPORT DE L'ALTERNATEUR
SOPORTE DEL ALTERNADOR

TX1007687 A.1

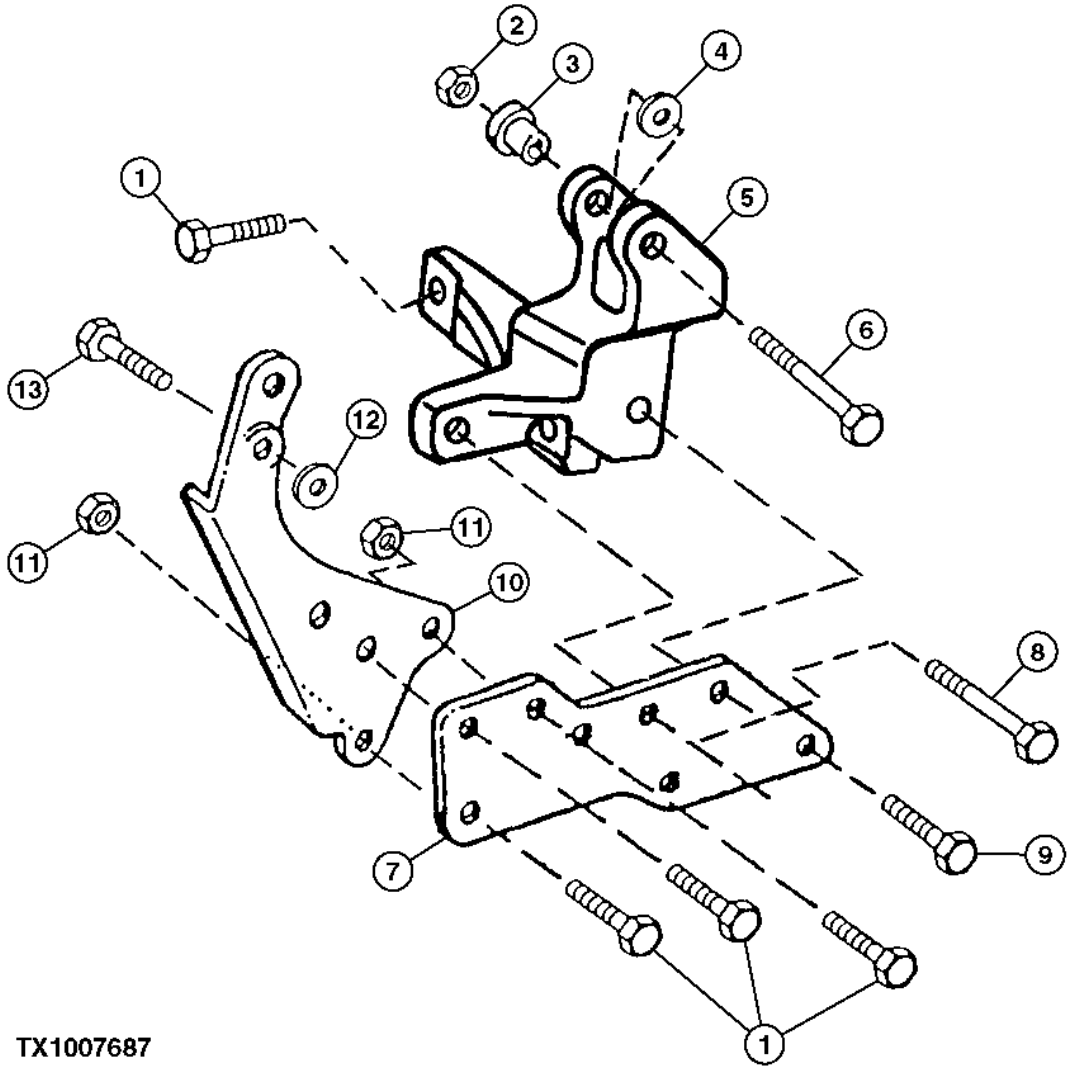

TX1007687

Pos.	*Ref.*	*Descripción*	*Cant.*	*Núm. de serie motor*	*Notas*
1	19M7786	Tornillo	5		M10 X 30
2	14M7296	Tuerca con brida	1		M10
3	R100377	Casquillo	1		
4	R64525	Arandela de empuje	1		
5	R132166	Soporte	1		
6	19M7812	Tornillo	1		M10 X 100
7	R132913	Apoyo	1		
8	19M7785	Tornillo	3		M10 X 25
9	19M7801	Tornillo	1		M8 X 60
10	R500531	Tira	1		
11	14M7296	Tuerca con brida	3		M10
12	R48808	Arandela	1		
13	19M7867	Tornillo	1		M8 X 25

CRANKSHAFT PULLEY AND DRIVE BELT
POULIE DE VILEBREQUIN AVEC COURROIE D'ENTRAINEMENT
POLEA DEL CIGUENAL CON CORREA DE TRANSMISION

TP53312 A.1

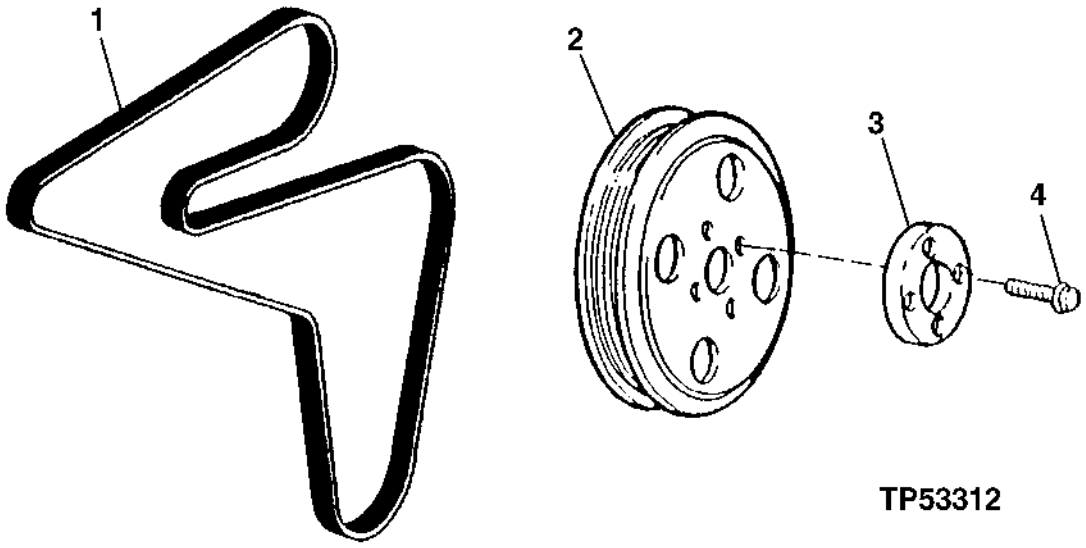

Pos.	*Ref.*	*Descripción*	*Cant.*	*Núm. de serie motor*	*Notas*
1	R123442	Correa trapezoidal	1		(1585 MM LARGO)
2	R133295	Polea	1		
3	R123486	Racor adaptador	1		
4	R121897	Tornillo	4		

CRANKSHAFT PULLEY, AUXILIARY DRIVE
POULIE DE VILEBREQUIN, ENTRAINEMENT AUXILIAIRE
POLEA DEL CIGUENAL, TRANSMISION ADICIONAL

TP53330 A.1

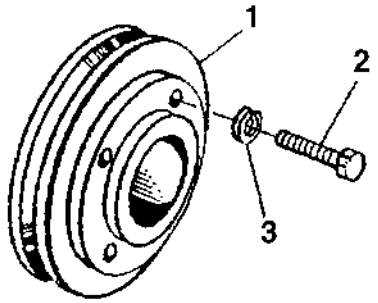

TP53330

Pos.	*Ref.*	*Descripción*	*Cant.*	*Núm. de serie motor*	*Notas*
1	R504762	Polea	1		
2	19H2633	Tornillo	1		3/8" X 1-1/2"
3	12H304	Arandela de seguridad	2		3/8"

FAN DRIVE SUPPORTS, BELT TENSIONER
SUPPORTS DE L'ENTRAINEMENT DU VENTILATEUR, TENDEUR DE LA COURROIE D'ENTRAINMENT
SOPORTES DEL ACCIONAMIENTO DEL VENTILADOR, ENSOR DE LA CORREA DE TRANSMISION

RGP8888 A.1

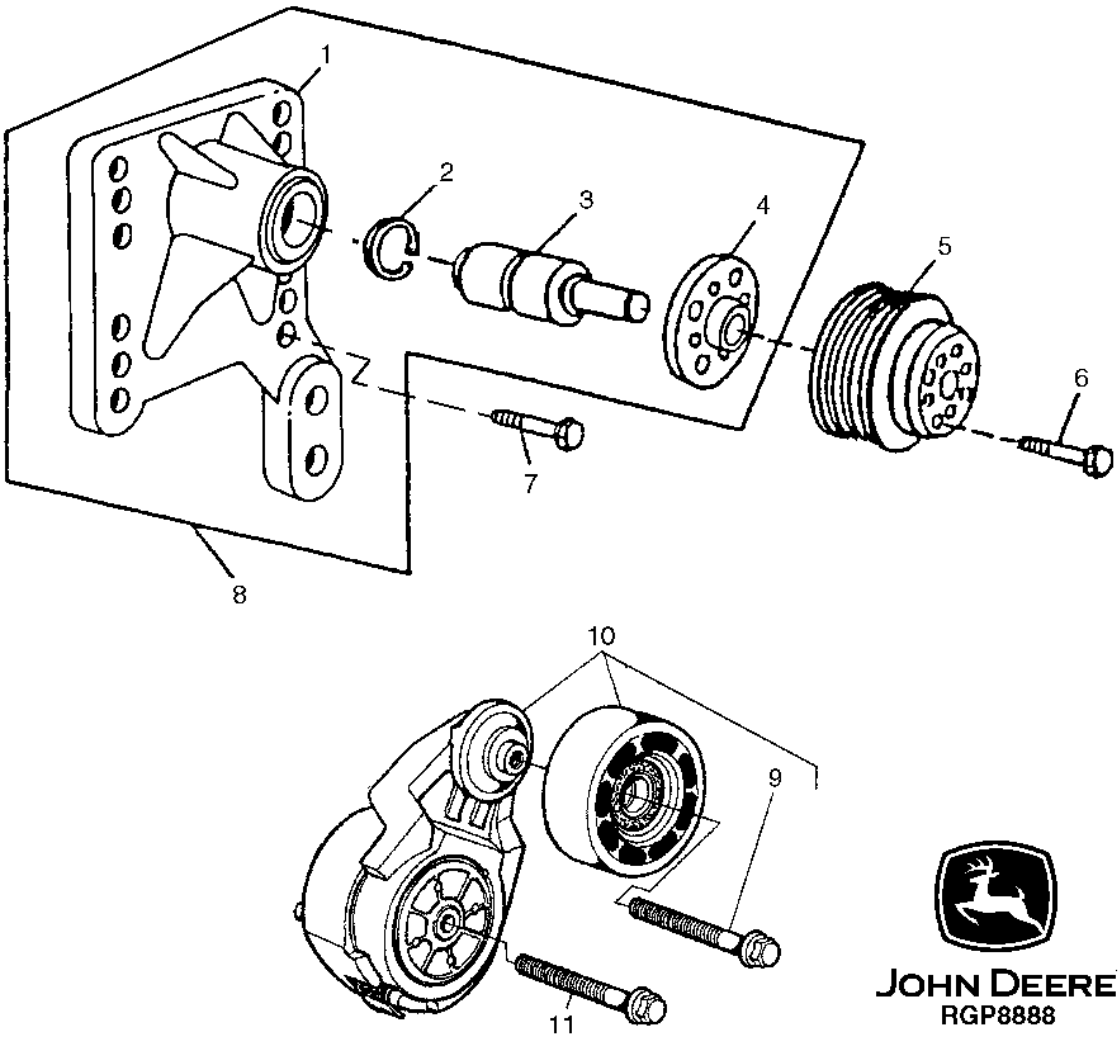

Pos.	Ref.	Descripción	Cant.	Núm. de serie motor	Notas
1	.....	Caja de rodam. (incluid.)	1		(MARKED R500598) (ORDER RE500539)
2	E1343FN	Anillo elástico	1		(USE WITH RE503664)
	H80753	Anillo elástico	1		(USE WITH RE500539)
3	.....	Árbol	1		
4	.....	Cubo	1		
	.....	Cubo	1		
5	R128662	Polea	1		
6	19M7784	Tornillo	4		M10 X 20
7	19M7835	Tornillo	4		M10 X 35
8	RE503664	Apoyo	1	-297301	(MARKED R502014)
	RE500539	Transmisión del ventilador	1	297302-	(MARKED R500304)
9	R503813	Tornillo	1		
10	RE70536	Tensor de correa	1		(SUB THIS APPLICATIONRE518097 ,24M7106 ,19M818 ,AND R518210)
11	19M8131	Tornillo	1		M10 X 70, (USE WITH RE70536)

FAN BELT WITH PULLEY
COURROIE DE VENTILATEUR AVEC POULIE DU VENTILATEUR
CORREA DE VENTILADOR CON POLEA DEL VENTILADOR

TP58352 A.1

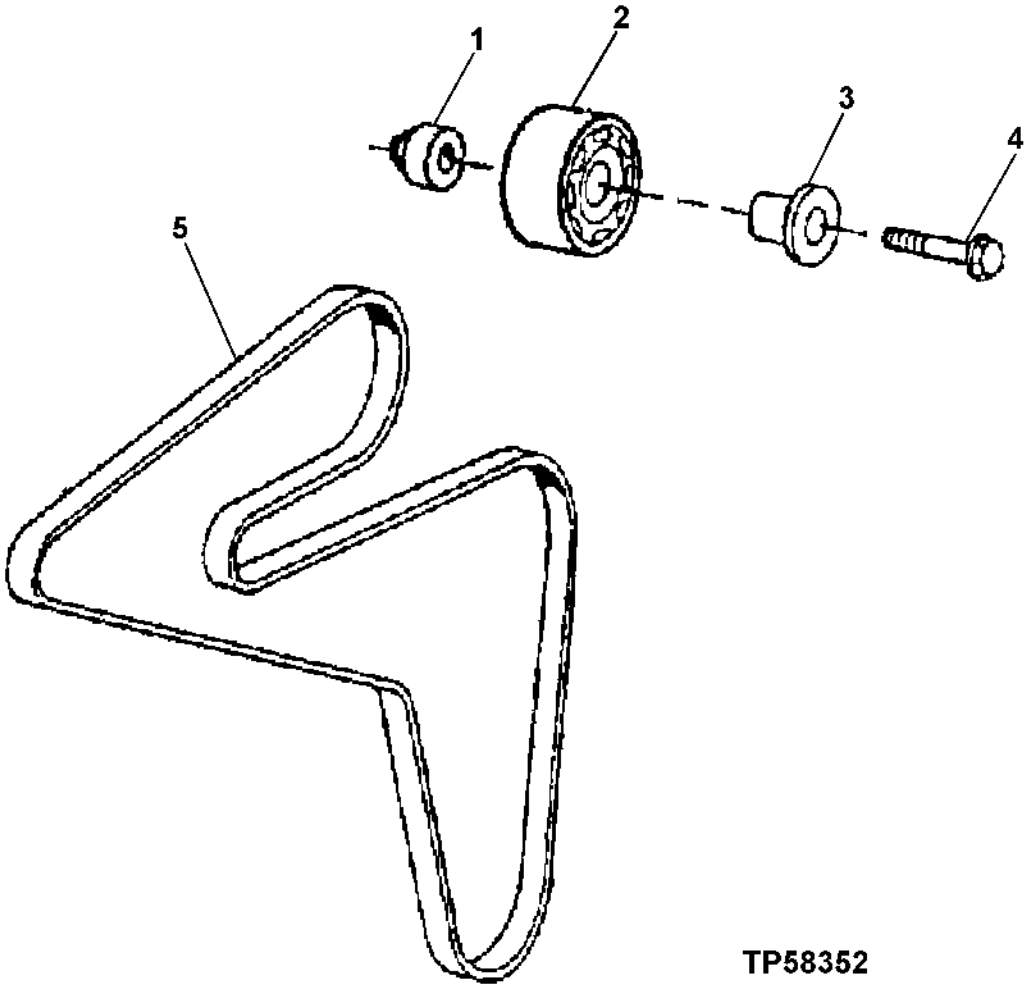

Pos.	*Ref.*	*Descripción*	*Cant.*	*Núm. de serie motor*	*Notas*
1	R500320	Espaciador	1		
2	RE505264	Polea	1		
3	R502079	Manguito	1		
4	19M7808	Tornillo	1		M10 X 65
5	R123442	Correa trapezoidal	1		

FLYWHEEL
VOLANT
VOLANTE MOTOR

TP49557 A.1

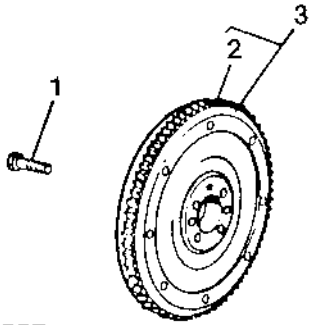

TP49557

Pos.	*Ref.*	*Descripción*	*Cant.*	*Núm. de serie motor*	*Notas*
1	R135918	Tornillo	6		
2	R28811	Corona de tren planetario	1		(Z = 129)
3	RE500527	Volante	1		(MARKED R500293)

6710 Engine Sensors
6710 Capteurs du moteur
6710 Sensores de motor

RE509332RGP01 A.1

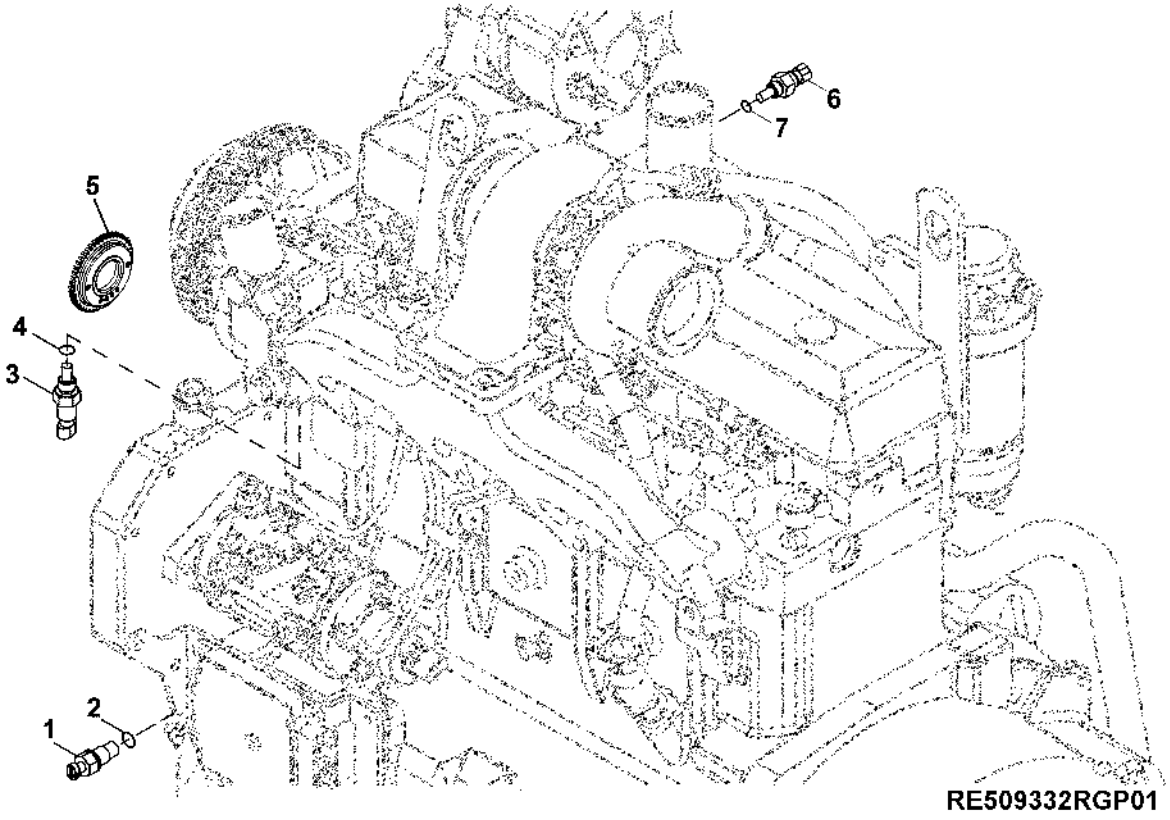

Pos.	*Ref.*	*Descripción*	*Cant.*	*Núm. de serie motor*	*TF275*	*Notas*
1	RE519144	Sensor	1			(SUB FOR RE508195) (INCLUDES 51M7044)
2	51M7044	Anillo tórico	1			17.300 X 2.200 mm
3	RE52722	Sensor de temperatura	1			(ALSO ORDER 51M7041)
4	51M7041	Anillo tórico	1			11.300 X 2.200 mm
5	R517471	Rueda	1			
6	RE61812	Sensor	1			(ALSO ORDER 51M7041)
7	51M7041	Anillo tórico	1			11.300 X 2.200 mm

SERVICE KITS- FUEL INJECTION PUMP, STANADYNE DE10
KITS D'ENTRETIEN - POMPE D'INJECTION DE CARBURANT, STANADYNE DE10
CONJUNTO DE REPARACION- BOMBA DE INJECCION, STANADYNE DE10

CDP45922 A.1

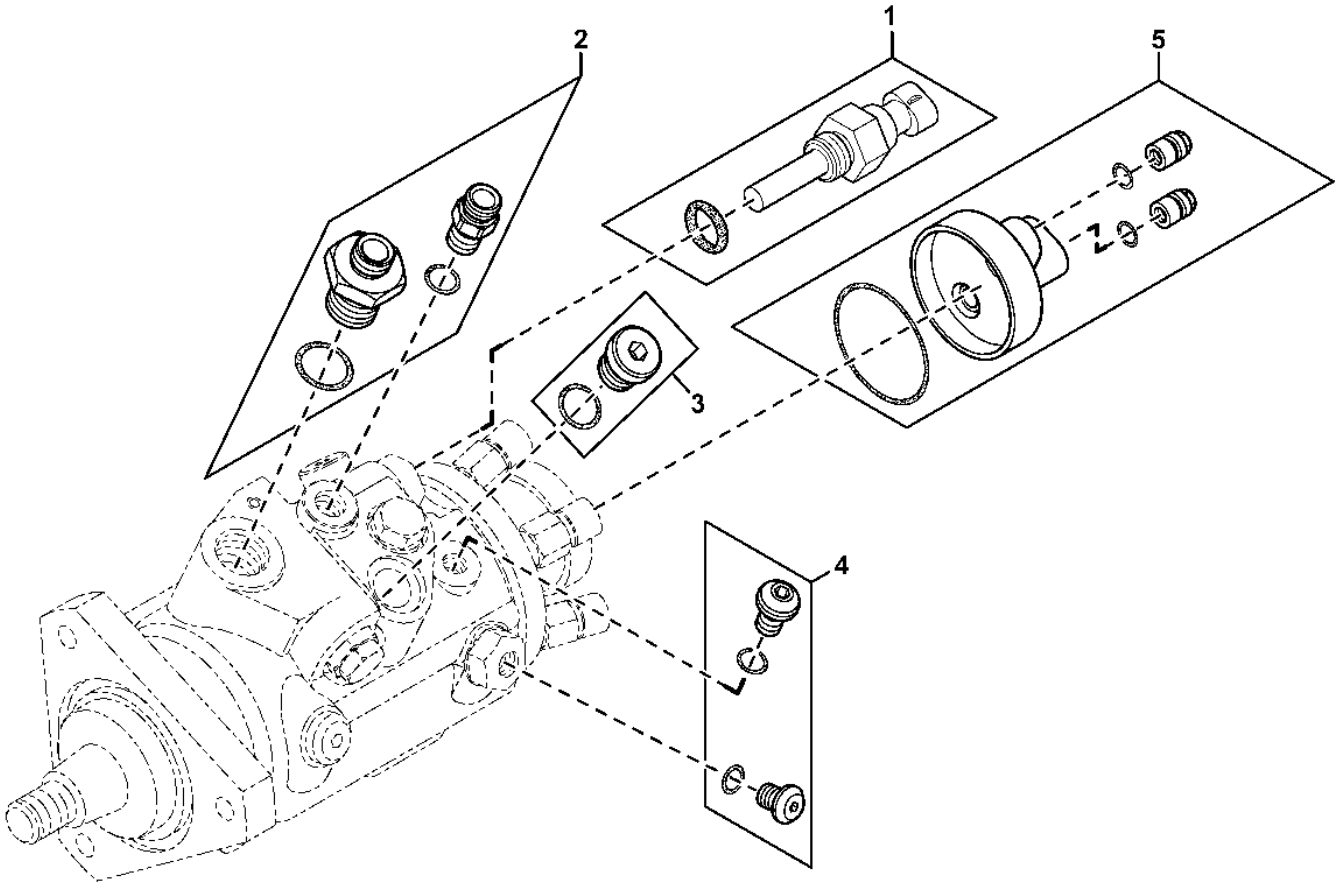

CDP45922

Pos.	Ref.	Descripción	Cant.	Núm. de serie motor	Notas
1	RE521822	Juego reparación motor	1		(A)
2	RE521823	Juego reparación motor	1		(B)
3	RE521824	Juego reparación motor	1		(C)
4	RE521825	Kit de bombas	1		(D)
5	RE522109	Kit de solenoides	1		(E)

(A) FUEL TEMPERATURE SENSOR
CAPTEUR DE TEMPÉRATURE DE CARBURANT
SENSOR DE TEMPERATURA DE COMBUSTIBLE

(B) PRESSURE REGULATOR AND FUEL INLET CONNECTOR
RÉGULATEUR DE PRESSION ET CONNECTEUR D'ENTRÉE DE CARBURANT
REGULADOR DE PRESION Y CONEXION DE ADMISION DE COMBUSTIBLE

(C) TIMING PIN HOLE PLUG
BOUCHON DE TROU DE PIGE DE CALAGE
TAPON PARA AGUJERO DE SINCRONIZACION

(D) TRANSFER PUMP TAP SCREW AND VENT WIRE ACCESS SCREW
VIS DE ROBINET DE POMPE DE TRANSFERT ET VIS D'ACCÈS D'AÉRATION
TORNILLO DEL TAPON DE LA BOMBA DE ALIMENTACION Y TORNILLO DE PURGA

(E) SOLENOID CONNECTOR ASSEMBLY
CONNECTEUR SOLÉNOÏDE
CONJUNTO PARA LA INSTALA CON DE LA ELECTROVALVULA

ENGINE GASKET SET
JEU DE JOINTS MOTEUR
JUEGO DE JUNTAS DEL MOTOR

RGP8860 A.1

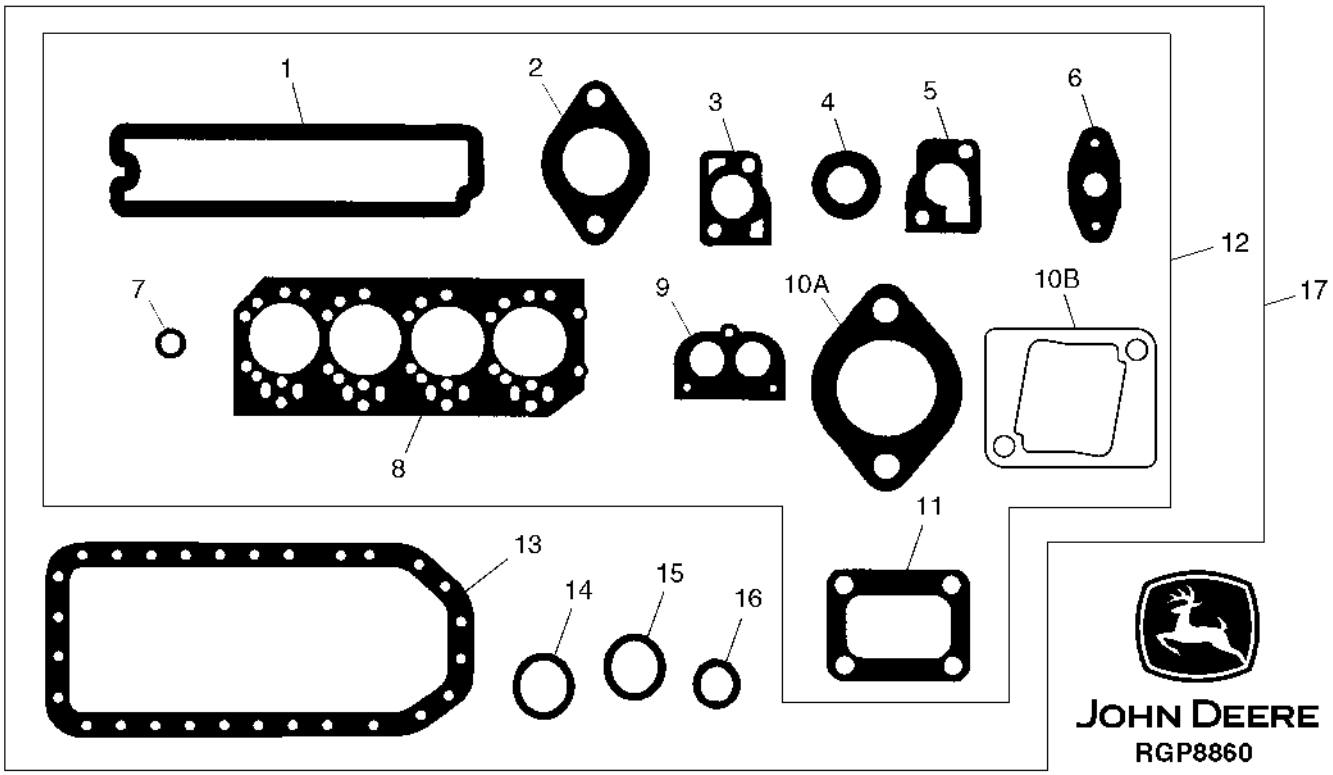

Pos.	*Ref.*	*Descripción*	*Cant.*	*Núm. de serie motor*	*Notas*
1	R123542	Junta	1		
2	R90658	Junta	4		
3	R502814	Junta	1		
4	R123226	Retén	2		
5	R123345	Junta	1		
6	R503891	Junta	1		
7	R123575	Anillo tórico	4		
8	R116515	Junta de culata	1		
9	R501373	Junta	1		
10A	R81275	Junta	1		
10B	R133893	Junta	1		
11	R92097	Junta	1		
12	RE66082	Juego de juntas	1		
13	R123353	Junta	1		
14	R75892	Anillo tórico	1		
15	R97185	Anillo tórico	1		
16	R61871	Anillo tórico	1		
17	RE66084	Juego de juntas	1		

ENGINE GASKET SET, OVERHAUL
JEU DE JOINTS MOTEUR, REVISION
JUEGO DE JUNTAS DEL MOTOR, REACONDICIONAMIENTO

RGP8861 A.1

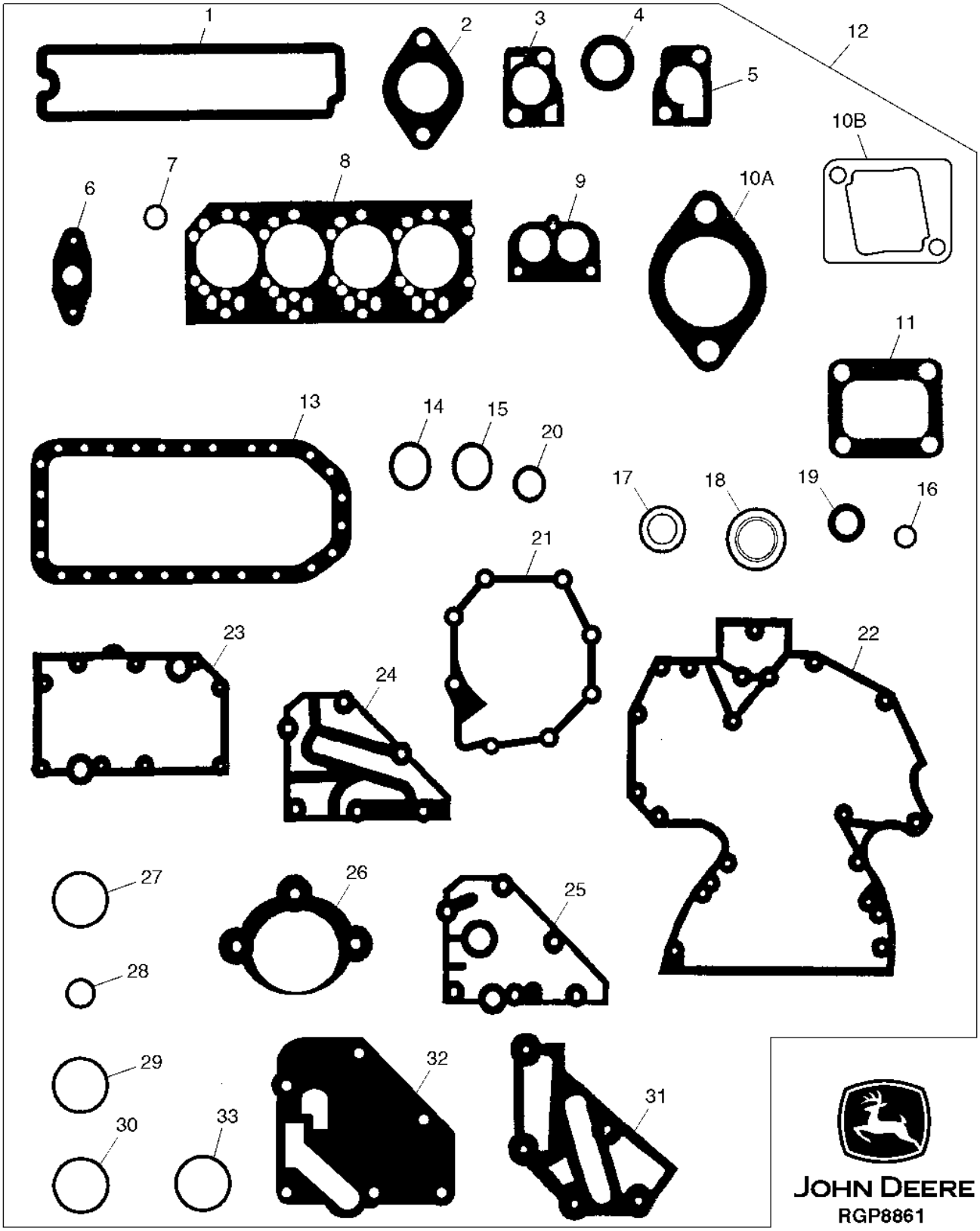

Pos.	*Ref.*	*Descripción*	*Cant.*	*Núm. de serie motor*	*Notas*
1	R123542	Junta	1		
2	R90658	Junta	4		
3	R502814	Junta	1		
4	R123226	Retén	2		
5	R123345	Junta	1		
6	R503891	Junta	1		
7	R123575	Anillo tórico	4		
8	R116515	Junta de culata	1		
9	R501373	Junta	1		
10A	R81275	Junta	1		
10B	R133893	Junta	1		
11	R92097	Junta	1		
12	RE501455	Juego de juntas	1		
	RE508083	Juego reparación motor	1		(SUB RE515748)
13	R123353	Junta	1		
14	R75892	Anillo tórico	1		
15	R97185	Anillo tórico	1		
16	R61871	Anillo tórico	1		
17	A4827R	Arandela	1		
18	RE44574	Retén	1		
19	RE59810	Retén	1		(SUB RE516340)
20	R112316	Válvula	1		
21	R123417	Junta	1		
22	R136516	Junta	1		
23	R123501	Junta	1		
24	R123504	Junta	1		
25	R123525	Junta	AR		
26	R53108	Junta	1		
27	R72328	Anillo tórico	4		
28	R89944	Anillo tórico	1		
29	R61105	Anillo tórico	2		
30	T122075	Anillo tórico	2		
31	R501428	Junta	1		
32	R500374	Junta	1		
33	R123273	Anillo tórico	1		

ETHER COLD WEATHER STARTING AID
AIDE AU DEMARRAGE A L'ETHER
AUXILAR DE ARRANQUE CON ETER

T209536 A.1

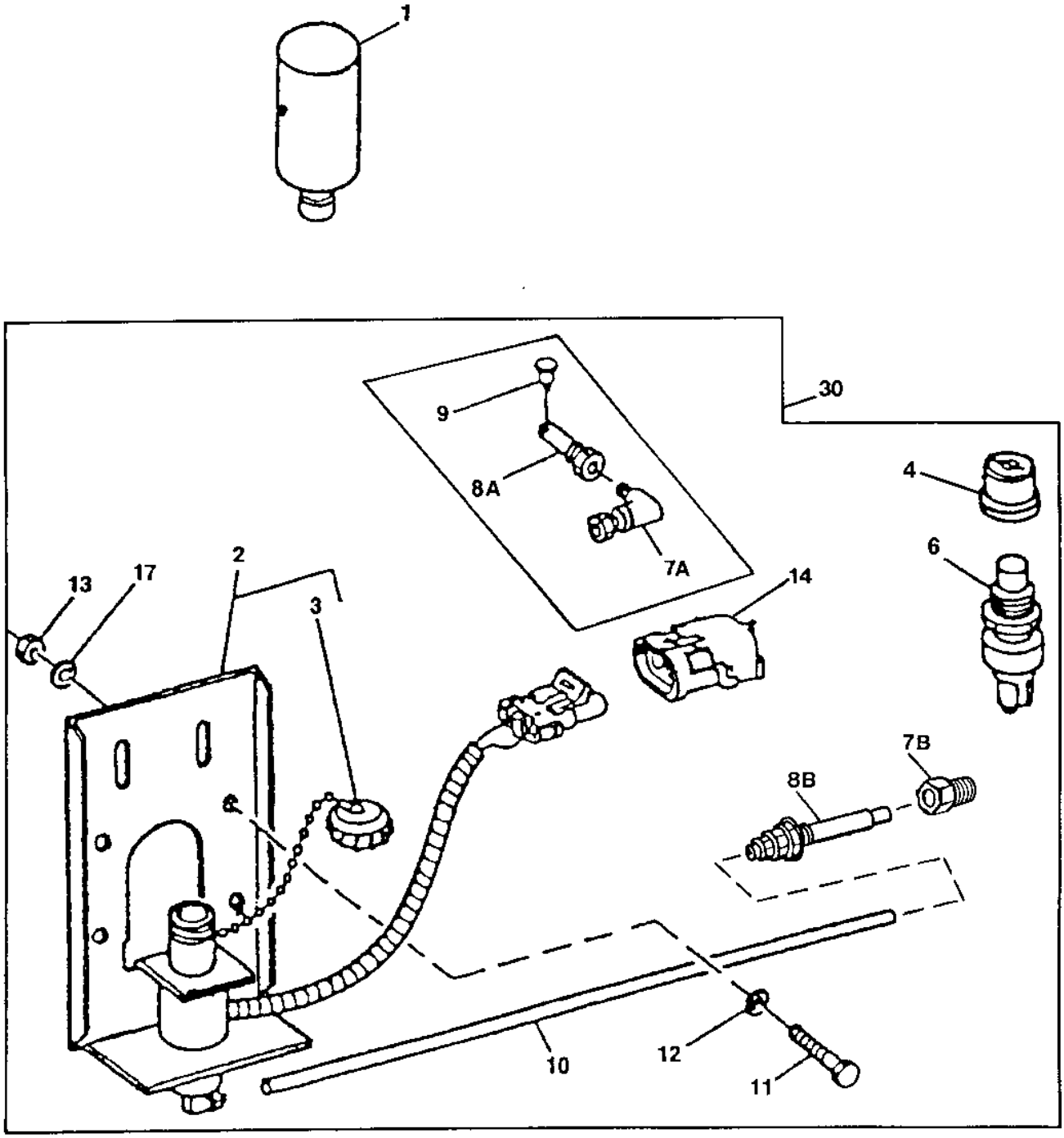

T209536

Pos.	*Ref.*	*Descripción*	*Cant.*	*Núm. de serie*	*Notas*
1	AT171162	Líquido para arranque	1		
2	AT170759	Solenoide	1		
3	AT171539	Tapa	1		
4	.....	Tapa	1		(YA NO ES NECESARIO)
6	4384759	Interruptor	1		SUB FOR AT178893
7A	RE21790	Racor acodado	1		SUB FOR AT183222, AND T175293THIS APPLICATION
7B	T175293	Racor adaptador	1		
8A	R47160	Portainyector	1		SUB FOR AT183222, AND T175293THIS APPLICATION
8B	AT183222	Tobera	1		
9	T155858	Tobera	1		USE WITH R47160
10	.....	Tubo	1		DT5069 NLA , (CTL)
11	19M7407	Tornillo	4		M8 X 25
12	.....	Arandela	4		12M7065 NLA
13	14M7273	Tuerca	4		M8
14	.....	Conector	1		(AL2976T YA NO ES NECESARIO)
17	24M7055	Arandela	4		8.400 X 16 X 1.600 mm
18	R44302	Cinta de atar	AR		(NO SE ILUSTRA)
30	.....	Conjunto de modificación	1		WHOLE GOODS (ETER)

FUEL FIRED COOLANT HEATER KIT (KITS BUILT PRIOR TO MARCH 2009)
KIT CHAUFFE-BLOC THERMIQUE (KITS CONSTRUITS AVANT MARS 2009)
JGO. CALEFACTOR REFRIGERANTE ENCEND. POR COMBUST. (JUEGOS CONSTRUIDOS DESPUES DE MARZO DE 2009)

TX1064128 A.1

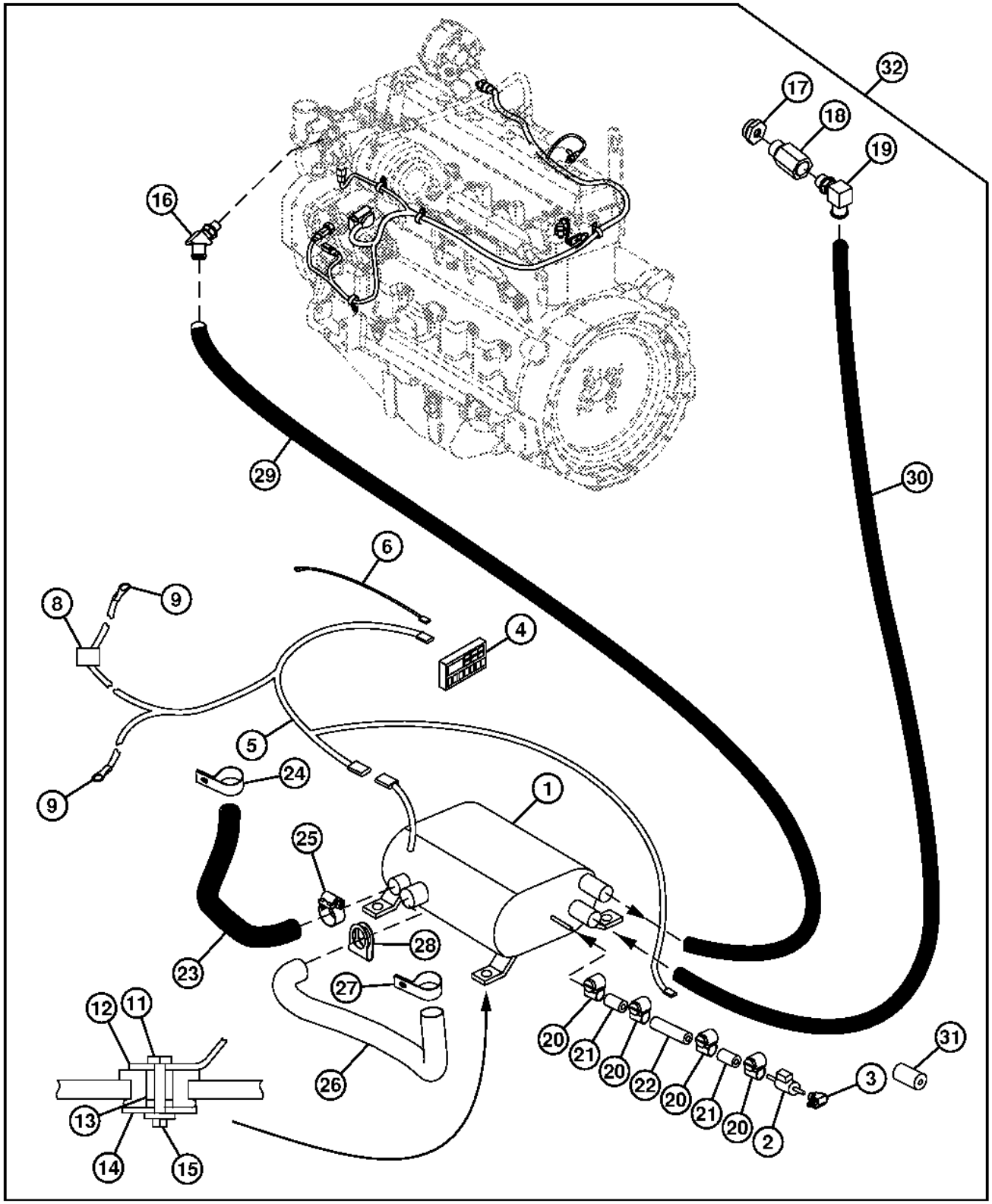

TX1064128

Pos.	*Ref.*	*Descripción*	*Cant.*	*Núm. de serie*	*Notas*
1	AT222697	Precalentador del agua	1		
2	AT307812	Bomba de alimentación	1		
3	T120343	Conexión en t	1		
4	AT221990	Pantalla digital	1		
5	AT307817	Grupo de cables	1		
6	AT307271	Conductor eléctrico	1		
8	AT307277	Conductor eléctrico	1		
9	.....	Ojete	1		
11	19M7874	Tornillo	4		M6 X 30
12	AT116162	Aislante	4		
13	L101283	Espaciador	4		
14	M142541	Arandela	4		
15	N207956	Tuerca de seguridad	4		
16	AT221439	Racor acodado	1		P/ABRIR LUMBRERA EN CUBIERTA CAJA TERMOSTATO
17	R123616	Tapón	1		
18	RE520229	Racor adaptador	1		(SUB FOR RE68908)
19	AT221440	Conexión	1		
20	AR48236	Abrazadera	4		
21	T177580	Manguera	2		
22	T206125	Manguera	1		
23	T206127	Manguera a Granel	1		(MANGUERA ENTRADA AIRE)
24	T179306	Abrazadera	1		
25	AR21837	Abrazadera para mangueras	1		
26	T206126	Tubo de escape	1		
27	T179306	Abrazadera	1		
28	AT221605	Abrazadera	1		
29	.....	Manguera a Granel	1		(CTL) 90 INCH
30	.....	Manguera a Granel	1		(CTL) 100 INCH
31	AT307815	Aislante	1		
32	**AT307267**	**Juego**	**1**		**(WHOLE GOODS) JUEGO CALENT REFRIG MOTOR ENCENDIDO C/DIESEL**

DIESEL FIRED ENGINE COOLANT HEATER KIT (KITS BUILT AFTER MARCH 2009)
KIT CHAUFFE-BLOC ALIMENTE PAR DIESEL (KITS CONSTRUITS APRES MARS 2009)
KIT CALENT REFRIG MOTOR ENCENDIDO POR DIESEL (JUEGOS CONSTRUIDOS DESPUES DEMARZO DE 2009)

TX1092974 A.1

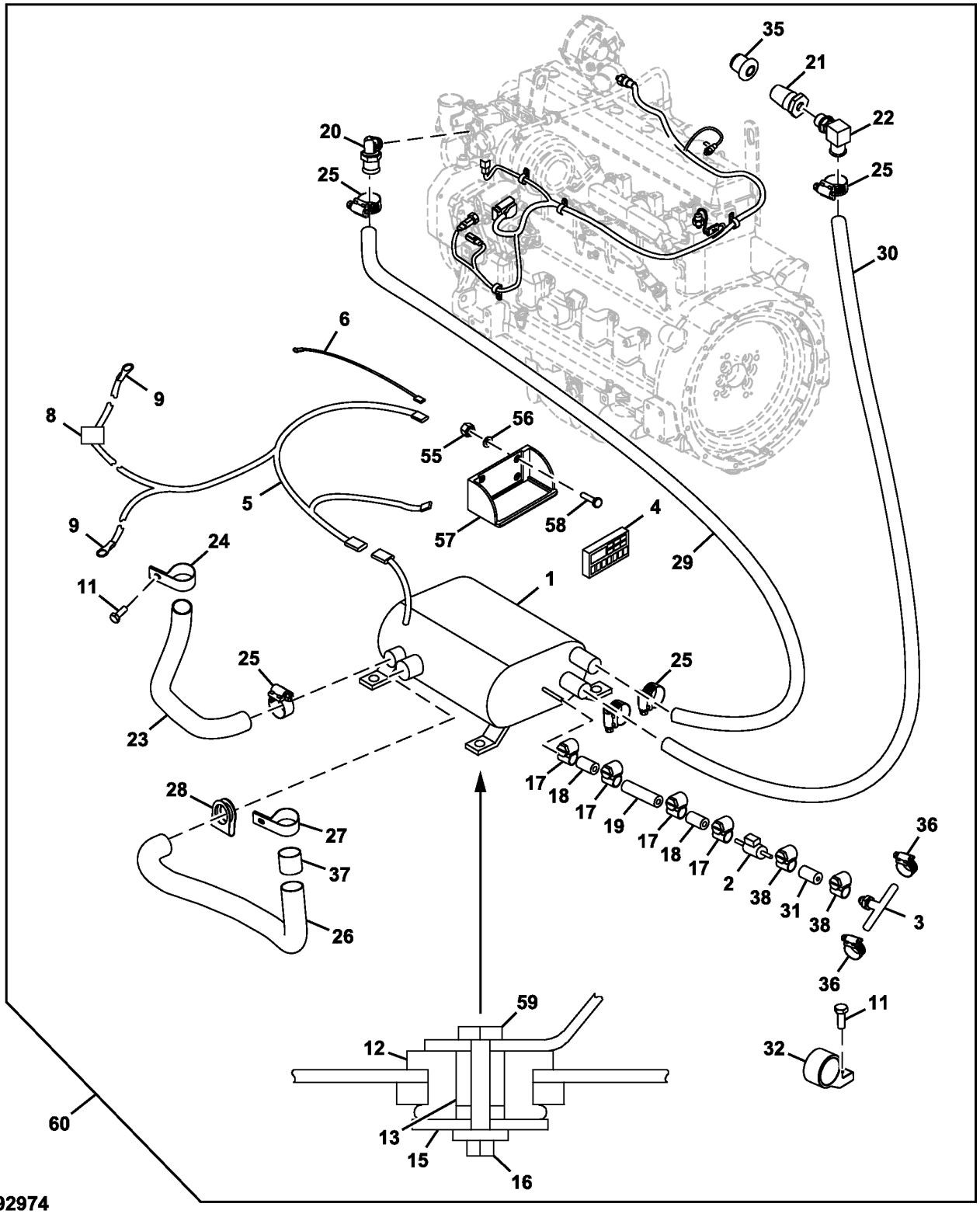

TX1092974

Pos.	Ref.	Descripción	Cant.	Núm. de serie	Notas
1	AT222697	Precalentador del agua	1		(INCLUDES AT223099)
2	AT223099	Bomba de alimentación	1		
3	T205639	Conexión en t	1		
4	AT221990	Pantalla digital	1		
5	AT307817	Grupo de cables	1		
6	AT307271	Conductor eléctrico	1		
7	.....	Terminal eléctrico	1		
8	AT307277	Conductor eléctrico	1		
9	.....	Ojete	1		
11	19M7874	Tornillo	7		M6 X 30
12	AT116162	Aislante	4		
13	L101283	Espaciador	4		
15	N207956	Tuerca de seguridad	4		
16	AT221439	Racor acodado	4		P/ABRIR LUMBRERA EN CUBIERTA CAJA TERMOSTATO
17	AT353138	Abrazadera	1		
18	T177580	Manguera	1		(SUB FOR RE68908)
19	T206125	Manguera	1		
20	AT221439	Racor acodado	4		
21	T177580	Manguera	2		
22	AT366772	Conexión	1		
23	T206127	Manguera a Granel	1		Manguera entrada aire
24	T179306	Abrazadera	1		
25	AT301917	Abrazadera para mangueras	5		
26	T206126	Tubo de escape	1		
27	T179306	Abrazadera	1		
28	AT221605	Abrazadera	1		
29	.....	Manguera a Granel	1		(MAKE FROM TY22330, CTL 90 IN.)
30	.....	Manguera a Granel	1		(MAKE FROM TY22330, CTL 100 IN.)
31	.....	Manguera	1		(AT307816 NLA) (MAKE FROM TY22330, CTL)
32	AT307815	Aislante	1		
35	R123616	Tapón	1		
36	RE32361	Abrazadera para mangueras	2		
37	T177575	Tapa para lluvia	1		
38	AT353137	Abrazadera	2		
55	14M7100	Tuerca	4		M4
56	24M7210	Arandela	4		5.500 X 18 X 2 mm
57	AT389672	Kit de molduras	1		SUB FOR T255175
58	19M8078	Tornillo	4		M4 X 16
59	19M7774	Tornillo	6		M6 X 12
60	AT307267	Juego	1		(WHOLE GOODS) , Kit calent refrig motor encendido por diesel

ENGINE COOLANT HEATER
CHAUFFE-BLOC MOTEUR
CALEFACTOR DE REFRIGERANTE DE MOTOR

TP15727 A.1

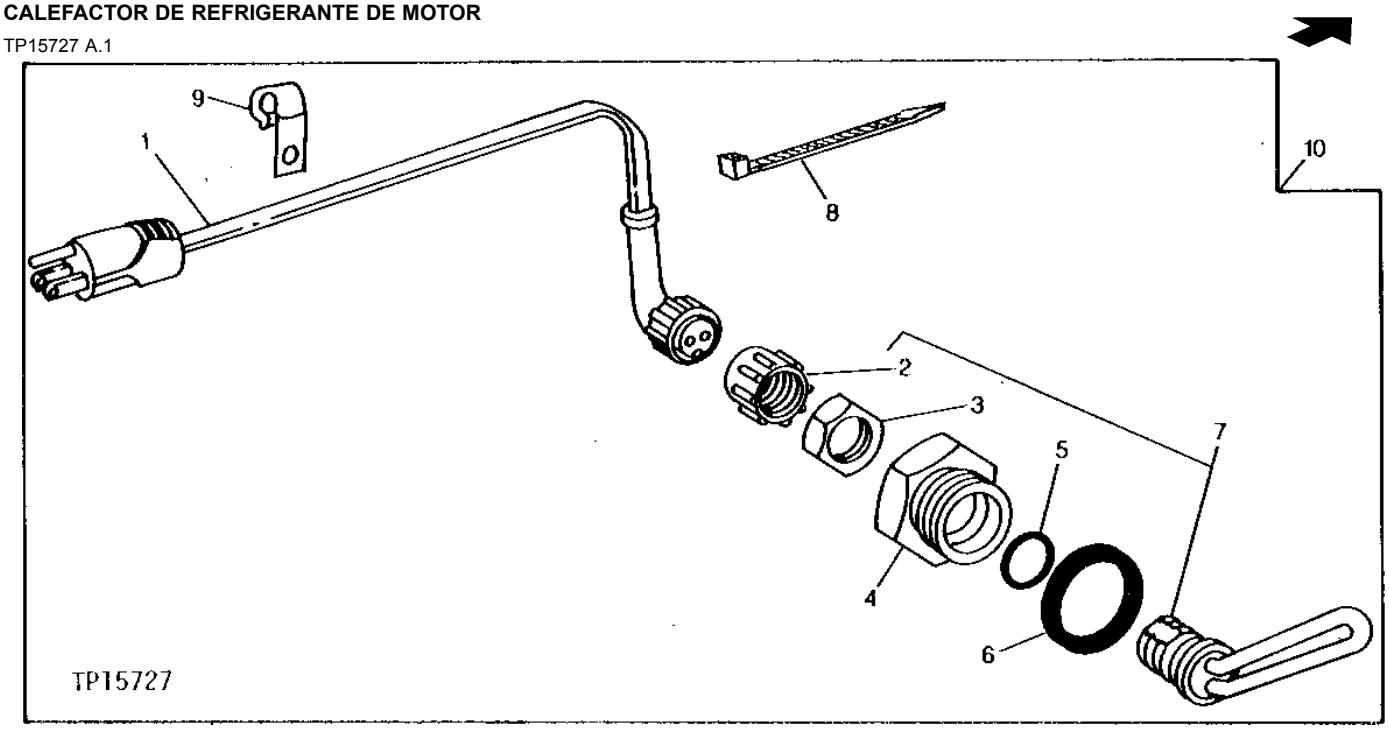

Pos.	*Ref.*	*Descripción*	*Cant.*	*Núm. de serie*	*Notas*
1	AT73296	Cable de alimentación	1		
2	.....	Tapa	1		(R54510 NLA)
3	.....	Tuerca	1		(R54511 NLA)
4	R54123	Racor adaptador	1		
5	R206883	Arandela	1		(SUB FOR R47693)
6	U13639	Anillo tórico	1		37.465 X 2.997 mm (1.475" X 0.118")
7	RE42139	Elemento calorífico	1		(SUB FOR AR62399, THIS APPLICATION)
8	H77698	Cinta de atar	1		(SUB FOR R44302, THIS APPLICATION)
9	T19935	Abrazadera	1		
10	AT74940	Precalentador del agua	1		WHOLE GOODS

RADIATOR, OIL COOLER AND CHARGE AIR COOLER
RADIATEUR, REFROIDISSEURS D'HUILE ET D'AIR DE SURALIMENTATION
RADIADOR, ENFRIADOR DE ACEITE Y ENFRIADOR DE AIRE DE CARGA

T191229 A.1

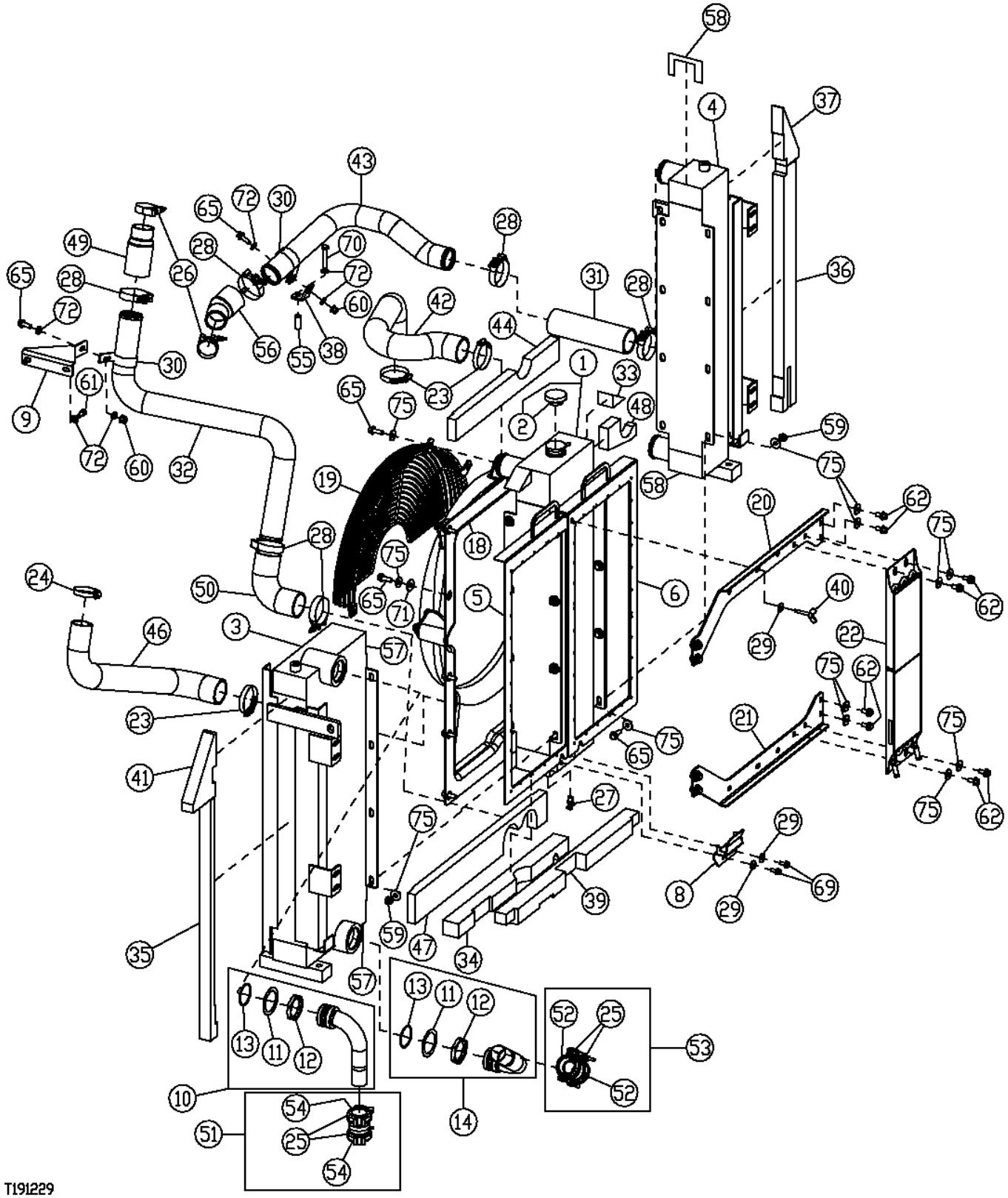

Pos.	Ref.	Descripción	Cant.	Núm. de serie	Notas
1	AT317586	Radiador	1		SUB FOR AP35298
2	AT173610	Tapón de llenado	1		
3	AT317587	Refrigerador de aceite	1		SUB FOR AP35299
4	AT317606	Intercooler	1		Enfriador de aire de carga, SUB FOR AP35300
5	AP35301	Malla	1		PANTALLA ANTIBASURA IZQUIERDA
6	AP35302	Malla	1		PANTALLA ANTIBASURA DERECHA
8	AP35306	Coraza	1		
9	AP35307	Ángulo	1		
10	AP35316	Conexión	1		
11	P61266	Arandela	2		
12	P61267	Tuerca de seguridad	2		
13	R43750	Anillo tórico	2		
14	AP35317	Conexión	1		
18	AP35337	Coraza	1		ENVUELTA DEL VENTILADOR
19	AP35338	Protección	1		PROTECTOR DE VENTILADOR
20	AP35372	Ángulo	1		
21	AP35373	Ángulo	1		
22	AP35374	Intercambiador de calor	1		ENFRIADOR DE COMBUSTIBLE
23	DH400620	Abrazadera para mangueras	3		(AR21999 NO SE USA PARA ESTA APLICACION)
24	TY22485	Abrazadera para mangueras	1		(AR40418 NO SE USA PARA ESTA APLICACION)
25	.....	Abrazadera para mangueras	4		(SE PROPORCIONA CON JUEGOS)
26	AT105289	Abrazadera	2		
27	AT13740	Grifo de vaciado	1		
28	AT198270	Abrazadera	6		
29	24M7298	Arandela	3		8.400 X 25 X 2 mm
30	F1451R	Abrazadera	2		
31	TY24409	Manguera a Granel	1		(ENFRIADOR AIRE CARGA A COLECTOR ADMISION)
32	P61235	Tubo	1		(TURBO A ENFRIADOR AIRE DE CARGA)
33	P61236	Aislante	2		(DEFLECTOR TANQUE SUPERIOR)
34	P61237	Tira/alfombrilla	1		
35	P61238	Tira/alfombrilla	1		
36	P61239	Tira/alfombrilla	1		
37	P61249	Tira/alfombrilla	1		
38	P61265	Ángulo	1		
39	P61273	Tira/alfombrilla	1		
40	P61323	Tornillo de mariposa	1		
41	P61332	Tira/alfombrilla	1		
42	P61333	Manguito de radiador	1		
43	P61334	Tubo	1		(TUBO ENFRIADOR DE AIRE DE CARGA)
44	P61335	Tira/alfombrilla	1		
46	P61337	Manguera	1		MANGUERA RADIADOR INFERIOR
47	P61338	Tira/alfombrilla	1		
48	P61339	Tira/alfombrilla	1		
49	P61340	Manguera	1		TURBO A ENFRIADOR AIRE DE CARGA (LADO CALIENTE)
50	P61341	Manguito de radiador	1		TURBO A ENFRIADOR AIRE DE CARGA (LADO FRIO)
51	4712341	Acoplamiento	1		SUB FOR 4069801 AND 4196259
52	4196260	Retén	2		NLA, ORDER 4067834
53	4067834	Acoplamiento	1		
54	4196259	Retén	2		NLA, ORDER 4712341, SUB FOR TH106966
55	28H1497	Casquillo	1		0.493" X 0.675" X 1-1/2"
56	T160123	Manguera	1		ENFRIADOR AIRE CARGA A ADMISION CULATA (LADO FRIO)
57	T63018	Aislante	1		
58	DH400609	Aislante	1		(AT66778 NO SE USA PARA ESTA APLICACION)
59	14M7296	Tuerca con brida	11		M10
60	14M7400	Tuerca de seguridad	2		M10
61	J781020	Tornillo	2		M10 X 20
62	19M7784	Tornillo	14		M10 X 20
65	19M7786	Tornillo	32		M10 X 30
69	19M7866	Tornillo	2		M8 X 20
70	19M8499	Tornillo	1		M10 X 60
71	24H1330	Arandela	10		15/32" X 1-3/8" X 7/64"
72	24M7239	Arandela	7		10.700 X 21 X 2.500 mm
75	24M7296	Arandela	62		10.500 X 30 X 2.500 mm

ENGINE COOLANT RECOVERY SYSTEM
SYSTEME RECUPERATION LIQUIDE REFROIDISSEMENT MOTEUR
SISTEMA DE RECUPERACION DEL REFRIGERANTE DEL MOTOR

T188383 A.1

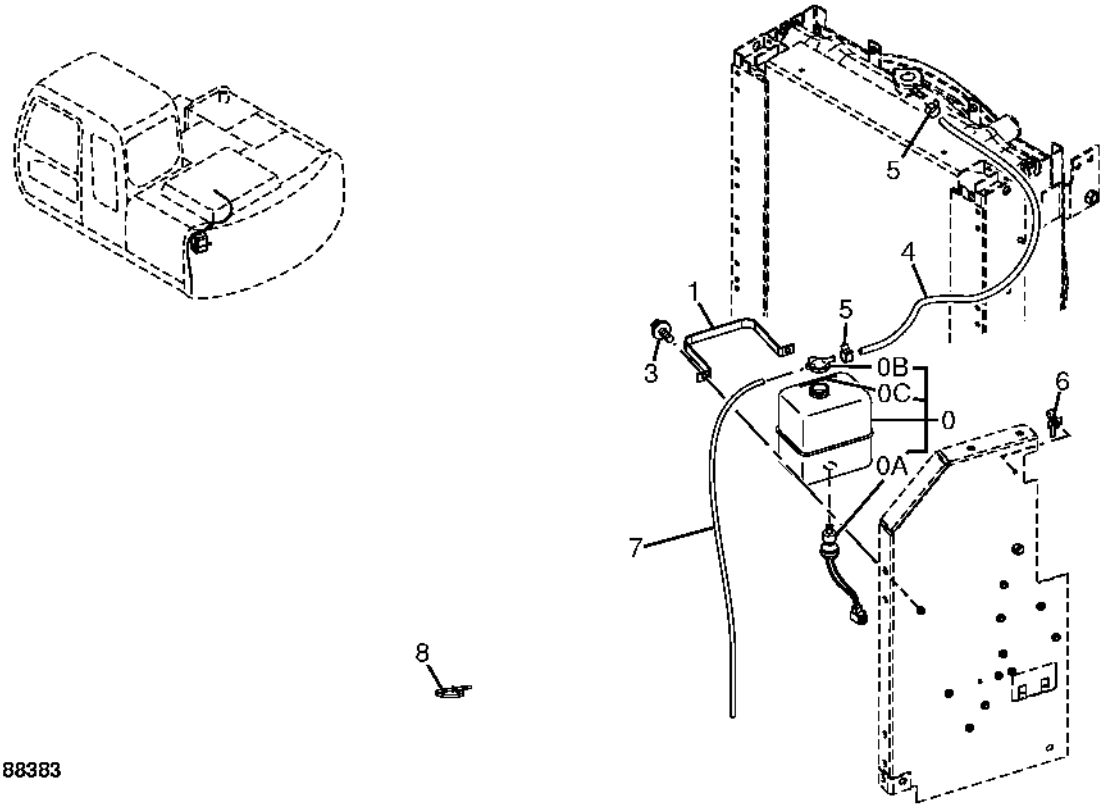

T188383

Pos.	*Ref.*	*Descripción*	*Cant.*	*Núm. de serie*	*Notas*
0	4130139	Tanque	1		
0A	4153251	Emisor	1		
0B	4396809	Tapa	1		
0C	4288260	Placa	1		
1	4180555	Soporte	1		
3	19M7881	Tornillo	2		M8 X 20
	24M7055	Arandela	2		8.400 X 16 X 1.600 mm
4	T79477	Manguera	1		(CUT TO LENGTH)
5	AR48236	Abrazadera	2		
6	4254600	Presilla	1		
7	T79477	Manguera	1		(CUT TO LENGTH)
8	H77698	Cinta de atar	1		

RADIATOR MOUNTING AND SUPPORT BRACKET
SUPPORTS DE MONTAGE ET D'APPUI DE RADIATEUR
MONTAJE DEL RADIADOR Y ESCUADRA DE SOPORTE

T191216 A.1

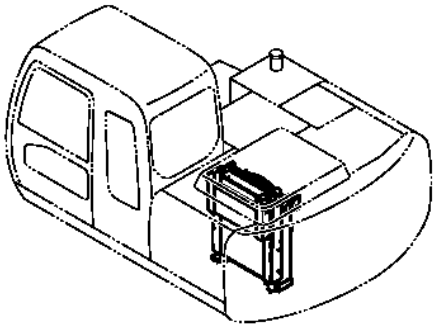

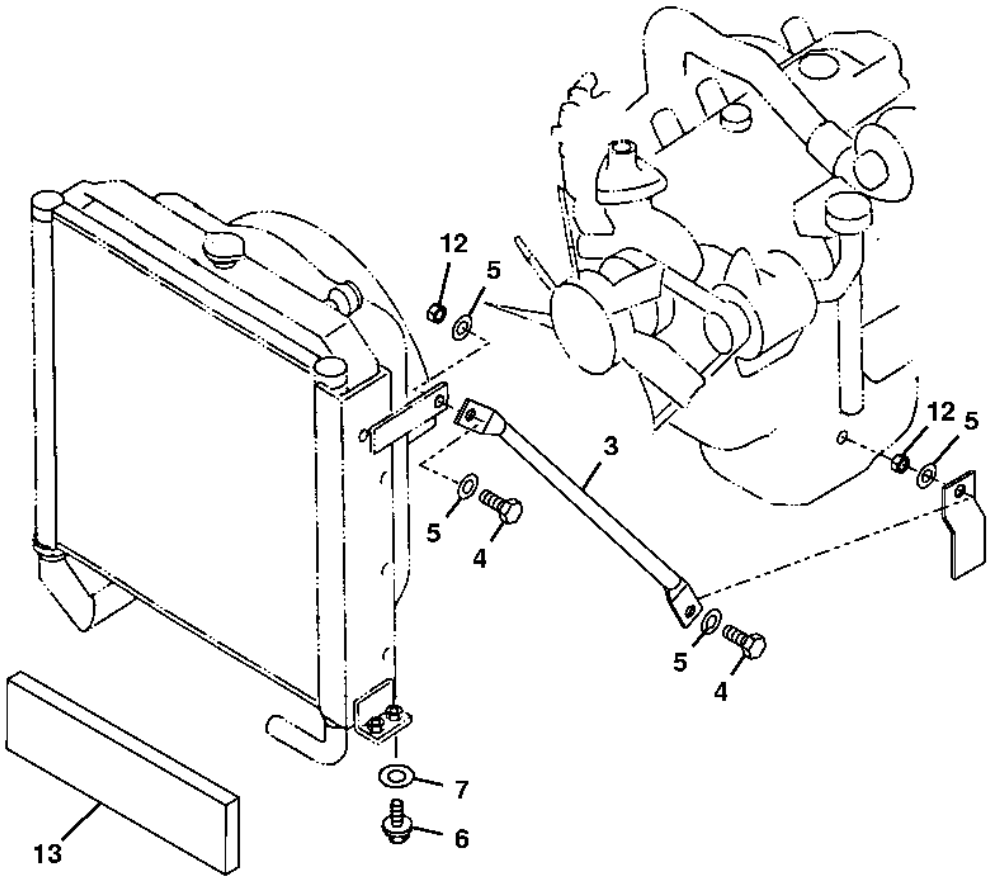

T191216

Pos.	*Ref.*	*Descripción*	*Cant.*	*Núm. de serie*	*Notas*
3	P68157	Bulón	1		
4	19M7409	Tornillo	2		M16 X 50
5	24M7241	Arandela	4		17 X 34 X 4 mm
6	19M7814	Tornillo	4		M12 X 50
7	24M7180	Arandela	4		13 X 37 X 3 mm, (SUB FOR 24M7345, THIS APPLICATION)
12	14M7328	Tuerca de seguridad	2		M16
13	P63201	Tira/alfombrilla	1		

ENGINE COOLING FAN AND HUB
VENTILATEUR DE REFROIDISSEMENT DE MOTEUR ET MOYEU
CUBO Y VENTILADOR DE ENFRIAMIENTO DEL MOTOR

RGP8668 A.1

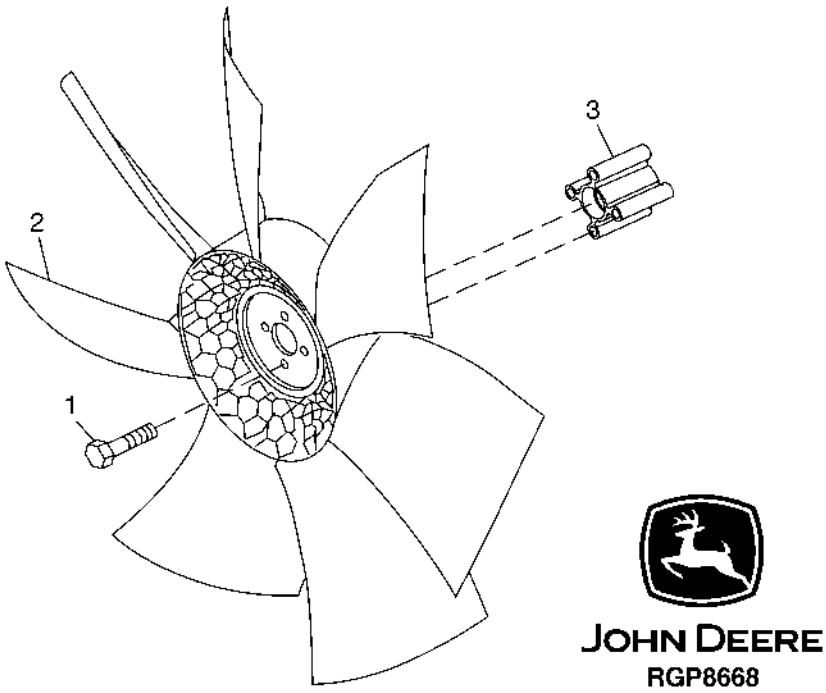

Pos.	*Ref.*	*Descripción*	*Cant.*	*Núm. de serie motor*	*Notas*
1	19M7811	Tornillo	4		M10 X 90
2	AP35324	Ventilador aspiración	1		
3	R81911	Espaciador	1		

AIR CLEANER, RESTRICTION SENSOR AND HOSES TO TURBOCHARGER
FILTRE A AIR, CAPTEUR D'OBSTRUCTION ET FLEXIBLES RELIES AU TURBOCOMPRESSEUR
FILTRO DE AIRE, SENSOR DE RESTRICCION Y MANGUERAS A TURBOALIMENTADOR

T188389 A.1

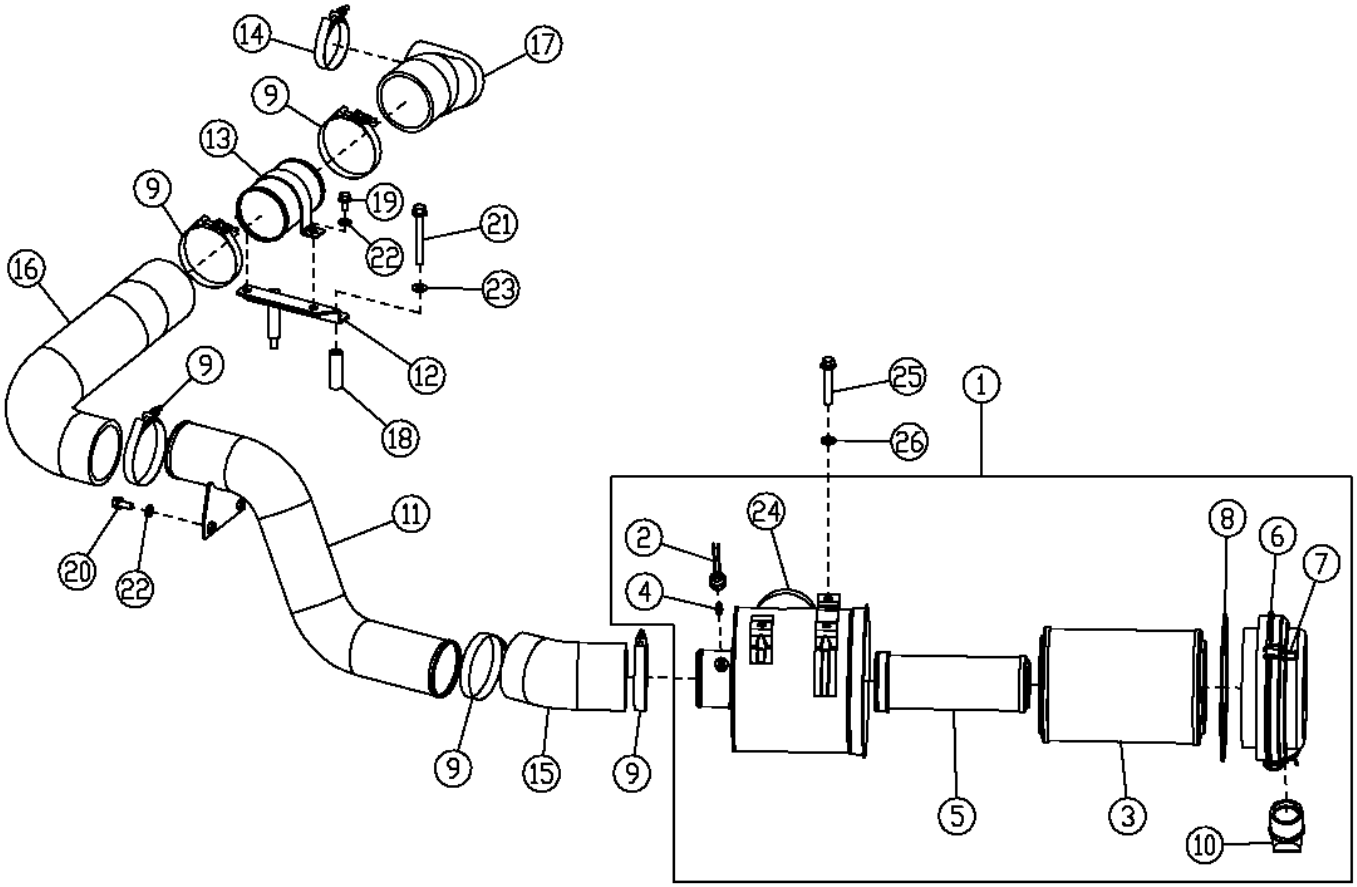

T188389

Pos.	*Ref.*	*Descripción*	*Cant.*	*Núm. de serie*	*Notas*
1	AP35304	Filtro de aire	1		
2	AP33252	Sensor	1		
3	AP35310	Filtro de aire	1		
4	AR44361	Conexión	1		
5	AT175345	Filtro de aire	1		
6	AT175357	Tapadera	1		
7	AT209926	Pestillo	3		
8	T163113	Anillo tórico	1		
9	AP35251	Abrazadera para mangueras	5		
10	T158495	Válvula	1		
11	AP35330	Tubería	1		
12	AP35331	Soporte	1		
13	AT218156	Tubo	1		
14	AT50923	Abrazadera para mangueras	1		
15	P61290	Manguera	1		
16	P61291	Manguera	1		
17	P61292	Manguera	1		
18	T161818	Casquillo	2		
19	19M7784	Tornillo	2		M10 X 20
20	19M7785	Tornillo	2		M10 X 25
21	19M7820	Tornillo	2		M12 X 100
22	24M7239	Arandela	2		10.700 X 21 X 2.500 mm
23	24M7240	Arandela	2		13 X 25 X 3 mm
24	AT206888	Tapa	1		
25	19M7875	Tornillo	3		M10 X 70, (FILTRO DE AIRE A CUBIERTA SUPERIOR)
26	24M7101	Arandela	3		11 X 34 X 3 mm

EXHAUST PIPE, MUFFLER AND BRACKET
TUYAU D'ECHAPPEMENT, SILENCIEUX ET SUPPORT
TUBO DE ESCAPE, SILENCIADOR Y ESCUADRA

T188390 A.1

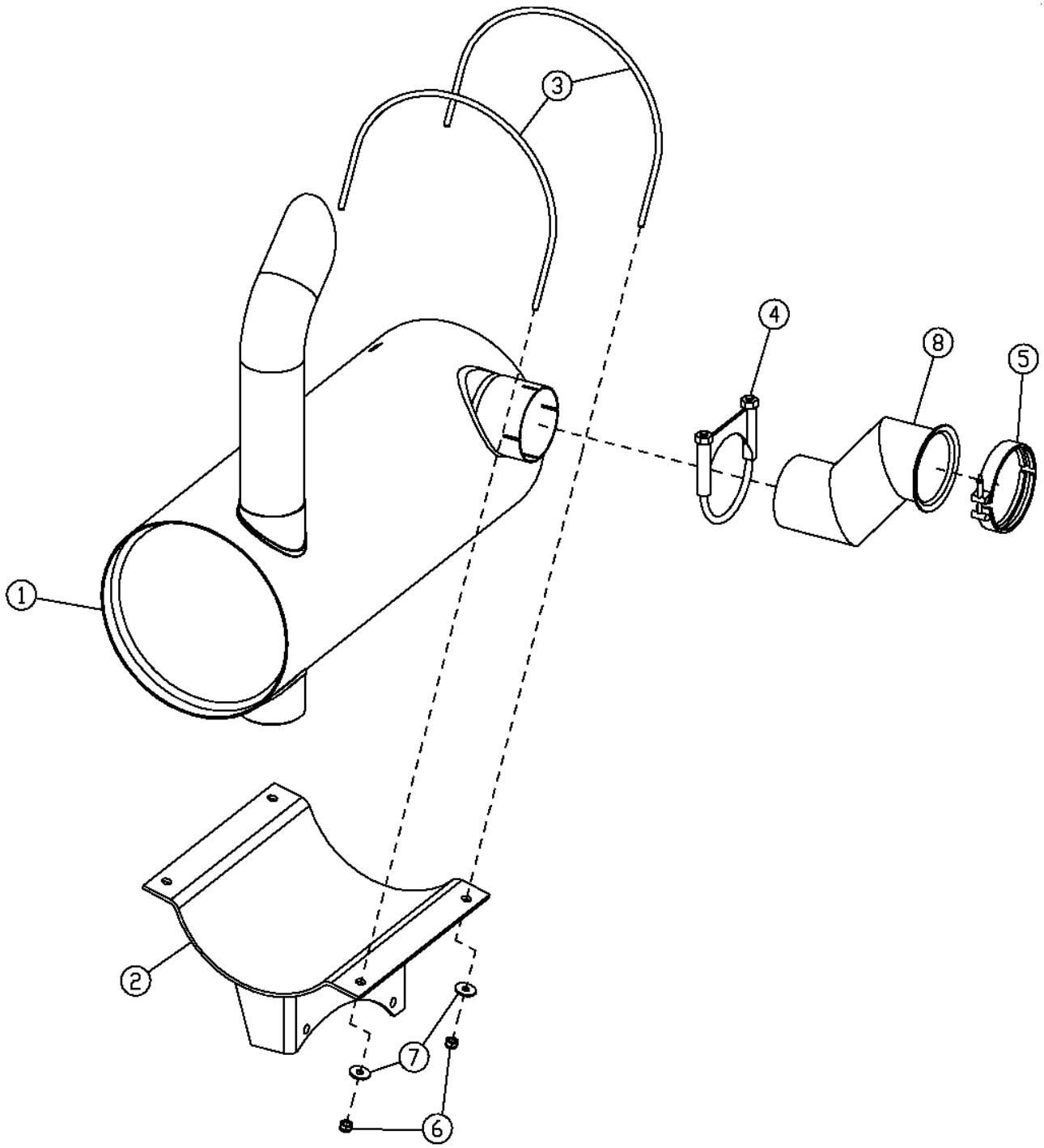

T188390

Pos.	*Ref.*	*Descripción*	*Cant.*	*Núm. de serie*	*Notas*
1	AP35308	Silenciador	1		
2	AP35250	Apoyo	2		
3	P60649	Perno con gancho	2		
4	AT147401	Abrazadera	1		
5	RE40048	Abrazadera	1		
6	14M7166	Tuerca de seguridad	4		M8
7	24M7298	Arandela	4		8.400 X 25 X 2 mm
8	P61112	Tubo de escape	1		

ENGINE MOUNTING BRACKETS AND ISOLATORS
SUPPORTS ET ISOLATEURS MONTAGE MOTEUR
ESCUADRAS DE MONTAJE DEL MOTOR Y AMORTIGUADORES

T158627 A.1

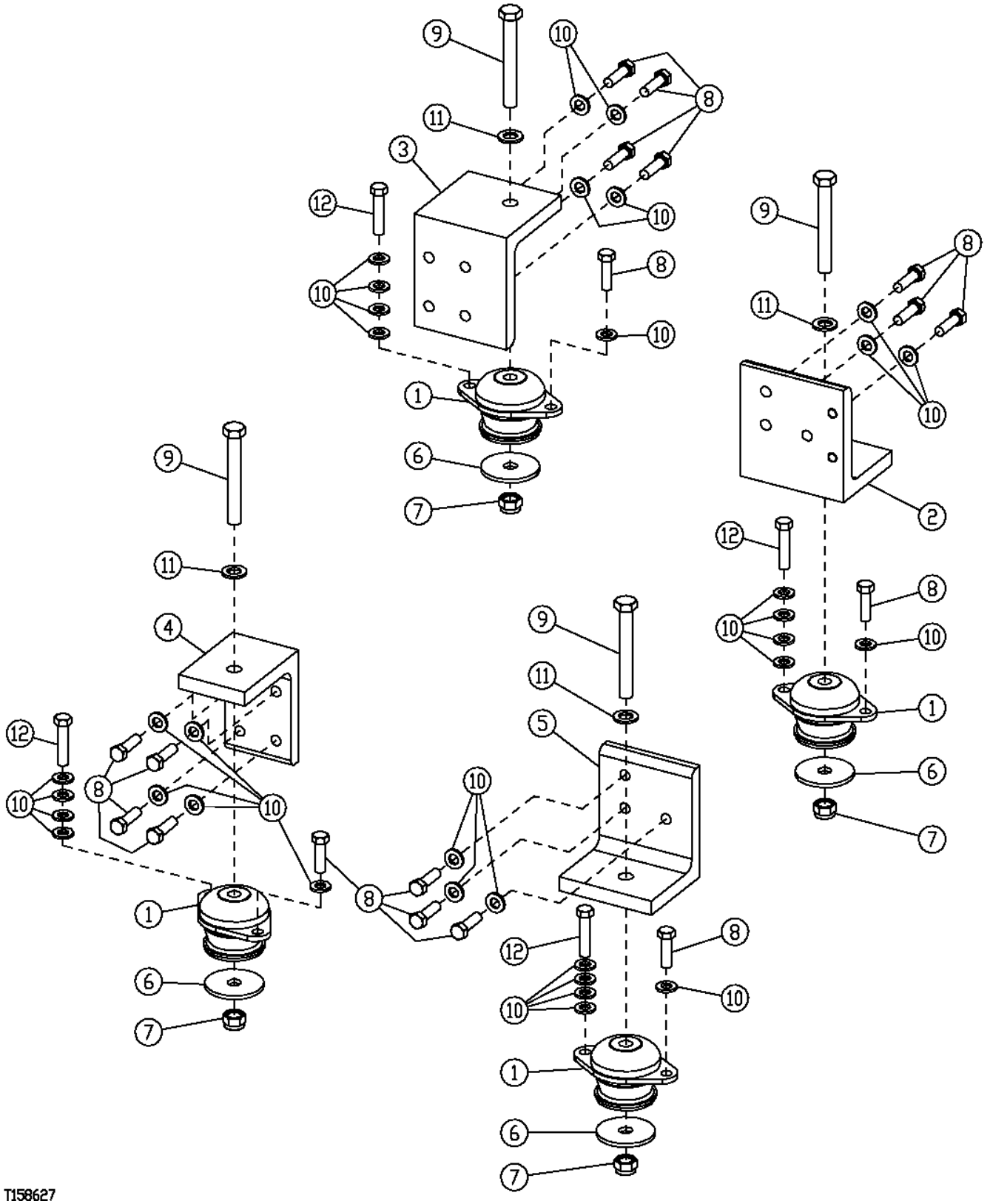

Pos.	*Ref.*	*Descripción*	*Cant.*	*Núm. de serie*	*Notas*
1	AP35325	Aislante	4		
2	P61260	Ángulo	1		
3	P61261	Ángulo	1		
4	P61262	Ángulo	1		
5	P61263	Ángulo	1		
6	R111207	Arandela	4		
7	14M7328	Tuerca de seguridad	4		M16
8	19M7493	Tornillo	18		M12 X 40
9	19M7941	Tornillo	4		M16 X 120
10	24M7240	Arandela	34		13 X 25 X 3 mm, SE REQUIEREN ARANDELAS P/ESTAB TORSIONAL
11	24M7338	Arandela	4		17 X 30 X 3 mm
12	19M7362	Tornillo	4		M12 X 55

FUEL TANK, LEVEL FLOAT AND FILLER CAP
RESERVOIR DE CARBURANT, FLOTTEUR DE NIVEAU ET BOUCHON DE REMPLISSAGE
TANQUE DE COMBUSTIBLE, FLOTACION DE NIVEL Y TAPA DE LLENADO

TX1007685 A.1

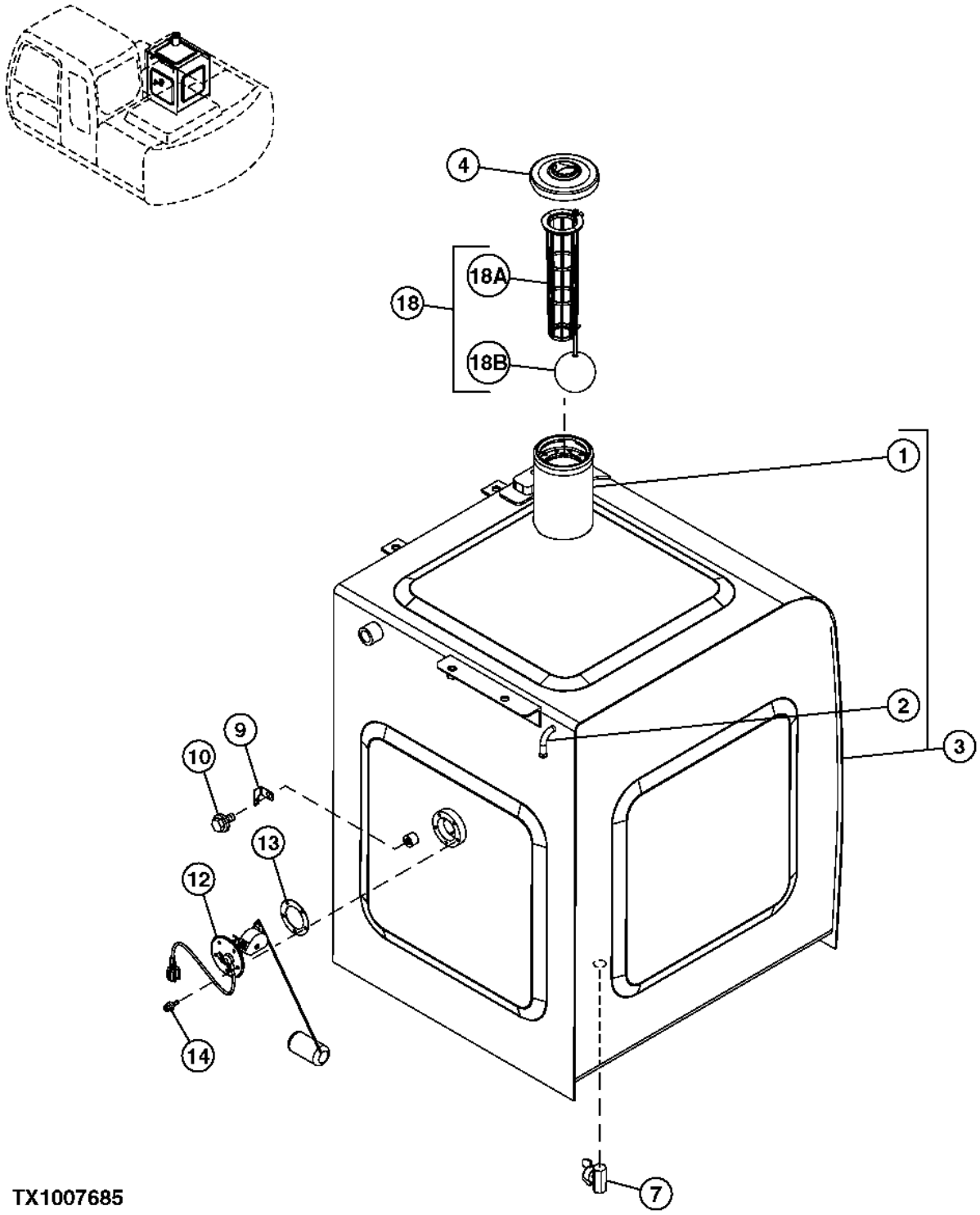

TX1007685

Pos.	*Ref.*	*Descripción*	*Cant.*	*Núm. de serie*	*Notas*
1	4121497	Tubo	1		
2	4249777	Tubería	1		
3	AP37578	Tanque de combustible	1		
4	AT321249	Tapón de llenado	1		(LLAVE CON CERRADURA) (PEDIR LLAVE POR SEPARADO)
	AT323462	Tapón de llenado	1		(SE PUEDE CERRAR CON CANDADO) (CANDADO NO INCLUIDO)
	AT194969	Llave	1		
	4168820	Empaquetadura	1		
6	4449361	Racor acodado	1		Main Fuel Line, No se ilustra
7	AT13740	Grifo de vaciado	1		
9	4257159	Soporte	1		
10	19M7938	Tornillo	1		M10 X 20
	12M7066	Arandela de seguridad	1		10 mm
12	4660782	Flotador	1		(SUB FOR 4257128)
13	T211051	Junta	1		(SUB FOR U42323)
14	21M7278	Tornillo	5		M5 X 10
	12M7064	Arandela de seguridad	5		5 mm
18	4353560	Colador	1		
18A	4353560	Colador	1		(SUB FOR 4372619)
18B	4372620	Flotador	1		

FUEL TANK MOUNTING
MONTAGE DE RESERVOIR DE CARBURANT
MONTAJE DEL TANQUE DE COMBUSTIBLE

TP54540 A.1

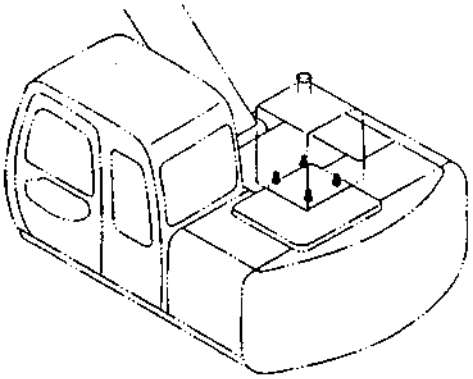

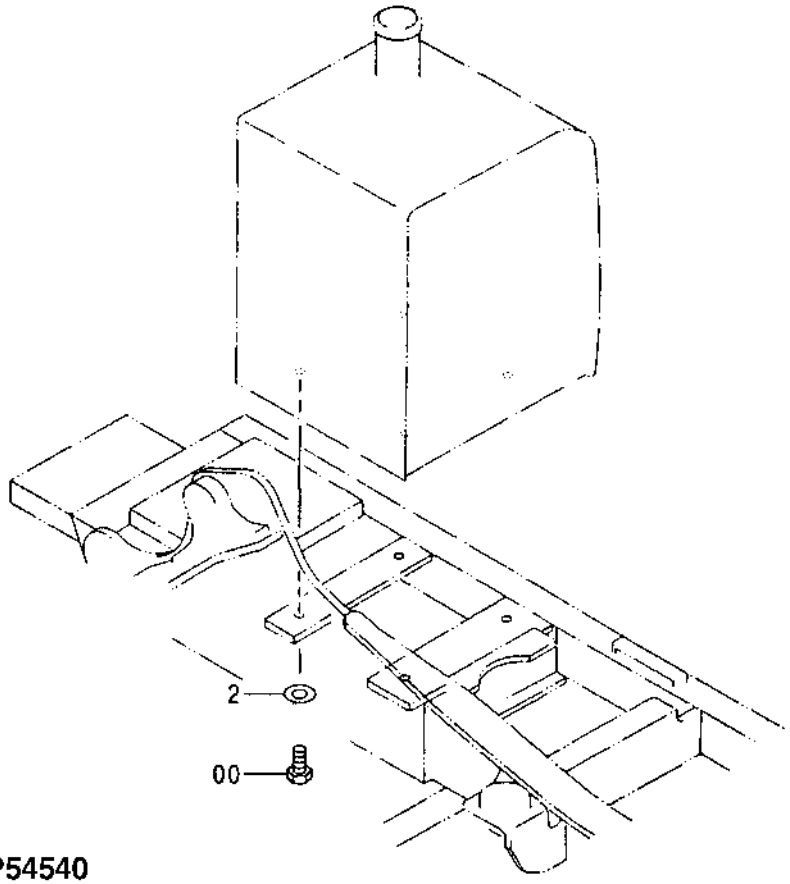

TP54540

Pos.	*Ref.*	*Descripción*	*Cant.*	*Núm. de serie*	*Notas*
0	19M8035	Tornillo	4		M16 X 35
2	24M7241	Arandela	4		17 X 34 X 4 mm

LOW PRESSURE FUEL HOSES FROM FUEL TANK TO ENGINE
FLEXIBLES DE CARBURANT BASSE PRESSION RELIANT LE RESERVOIR DE CARBURANT AU MOTEUR
MANGUERAS DE COMBUSTIBLE DE PRESION BAJA DEL TANQUE DE COMBUSTIBLE AL MOTOR

TX1007684 A.1

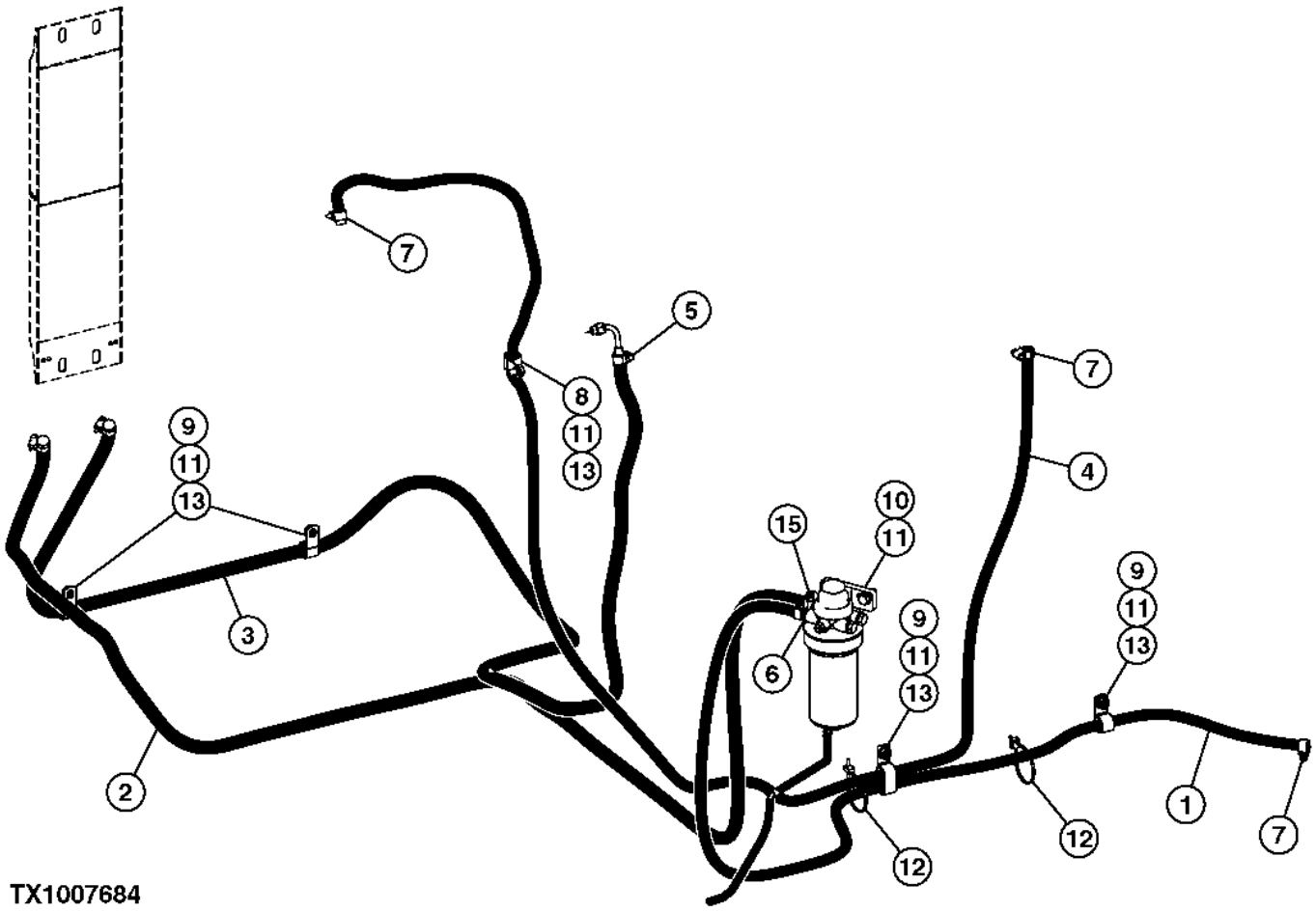

TX1007684

Pos.	*Ref.*	*Descripción*	*Cant.*	*Núm. de serie*	*Notas*
1	.....	Manguera	1		(CTL) 2000MM
2	.....	Manguera	1		(CTL)
3	.....	Manguera	1		(CTL)
4	.....	Manguera	1		(CTL) 3070MM
5	AP35377	Racor adaptador	1		
6	AP35375	Conexión	1		
7	AT145649	Abrazadera	8		
8	19M8440	Tornillo	2		M10 X 25
9	19M7274	Tornillo	5		M8 X 70
10	19M7576	Tornillo	2		M10 X 30
11	24M7028	Arandela	8		10.500 X 20 X 2 mm
12	H77698	Cinta de atar	2		
13	4190266	Presilla	4		
14	T24432	Abrazadera	2		(SUB FOR 4190277)
15	RE500576	Conexión	1		

LABELS AND DECALS (ENGLISH)
ETIQUETTES ET AUTOCOLLANTS (ANGLAIS)
ETIQUETAS Y ADHESIVOS (INGLESE)

TX1011704 A.1

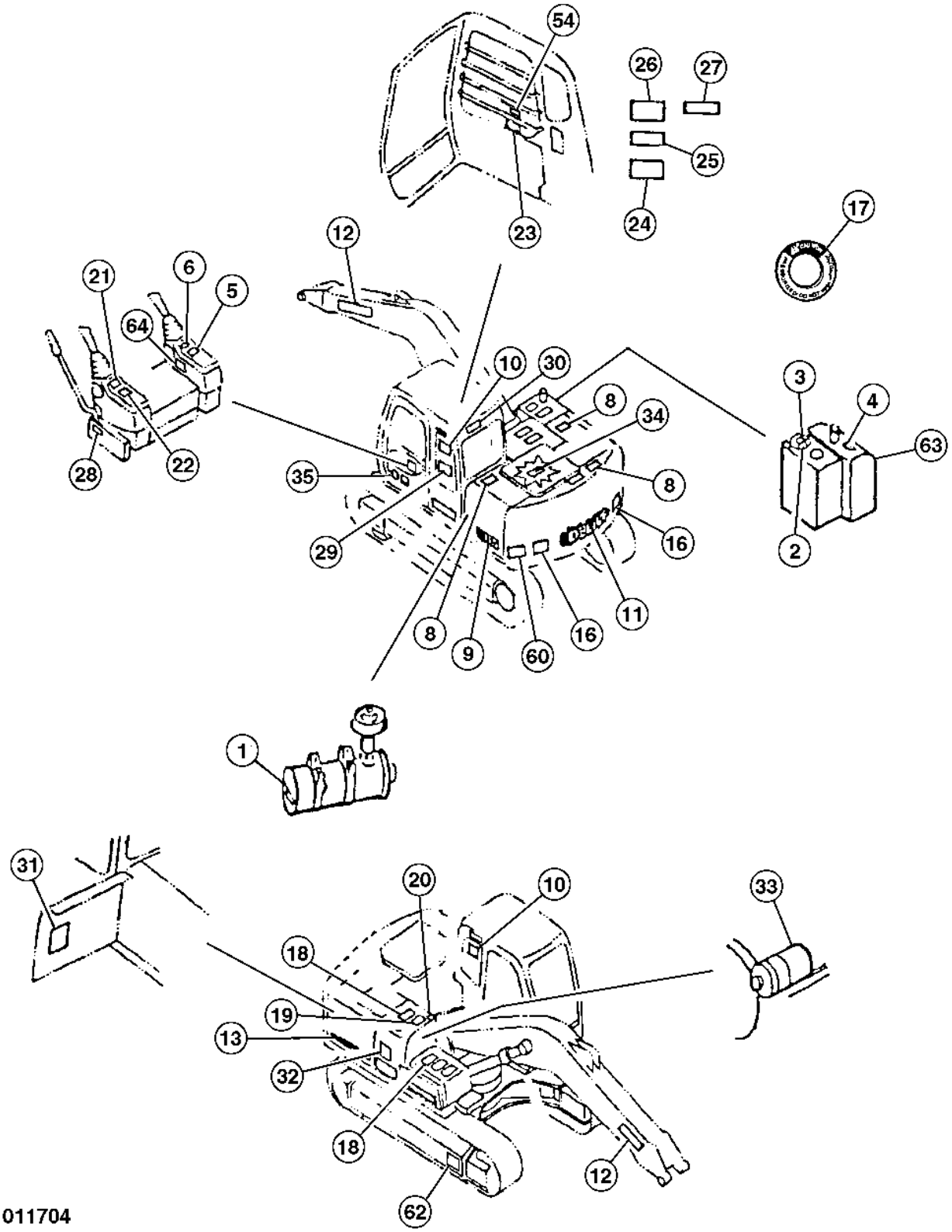

TX1011704

Pos.	*Ref.*	*Descripción*	*Cant.*	*Núm. de serie*	*Notas*
1	R56902	Etiqueta adhesiva	1		FILTRO DE AIRE
2	P63448	Etiqueta adhesiva	1		(INFORMACION PURGA DE BOMA)
3	T101942	Etiqueta adhesiva	1		HUILE HYDRAULIQUE
4	T79632	Etiqueta adhesiva	1		(DIESEL SOLAMENTE)
5	4264805	Etiqueta adhesiva	1		(LLAVE DE ENCENDIDO)
6	.....	Etiqueta adhesiva	1		(PALANCA CONTROL DER. - PATRON SAE) (FONDO BLANCO)
	T159843	Etiqueta adhesiva	1		(PALANCA CONTROL DER.) (CONFIG. JOHN DEERE) (FONDO AMARILLO)
7	JD5760	Etiqueta adhesiva	2		CIERVO SALTANDO (NO SE ILUSTRA)
8	4121128	Estera	3		
9	T190519	Etiqueta adhesiva	1		(160C LC)
10	JD5765	Etiqueta adhesiva	2		(CIERVO SALTANDO)
11	T180076	Etiqueta adhesiva	1		(DEERE)
12	T185129	Etiqueta adhesiva	2		(DEERE)
13	T190519	Etiqueta adhesiva	1		(160C LC)
16	JD5909	Catadióptrico	2		(T160910 NLA) , ROJ(O, A)
17	T146671	Adhesivo de seguridad	1		ATENCION - TAPA DEL RADIADOR
18	H21259	Estera	10		
19	.....	Estera	1		(ANTI-SKID)(AT178903 NLA) , (SUB H21259)
20	H21259	Estera	1		
21	.....	Etiqueta adhesiva	1		PALANCA CONTROL IZQ. (PATRON SAE) (FONDO BLANCO)
	T159844	Etiqueta adhesiva	1		PALANCA CONTROL IZQ. (PATRON JOHN DEERE) (FONDO AMARILLO)
22	4288971	Etiqueta adhesiva	1		(AUXILIAR ARRANQUE/ANUL. MOVIMIENTO)
23	T188862	Etiqueta adhesiva	1		(ARRANQUE/PARADA DE MOTOR)
24	T159887	Adhesivo de seguridad	1		PRECAUCION (LEER MANUAL DEL OPERADOR)
25	T146668	Adhesivo de seguridad	1		ADVERTENCIA ARTICULATION APLASTANTE
26	T146667	Adhesivo de seguridad	1		PELIGRO - ELECTROCUCION
27	T190393	Etiqueta adhesiva	1		IMPORTANTE - ROMPER VENT P/SALIDA AUXILIAR
28	4299059	Etiqueta adhesiva	1		Bloqueo hidráulico, (SUB FOR T138886)
29	T190517	Etiqueta adhesiva	1	-XXXXXX	CAPACIDAD DE LEVANTE
	T203811	Etiqueta adhesiva	1	XXXXXX-	CAPACIDAD DE LEVANTE
30	T187535	Etiqueta adhesiva	1		ADVIERTA (CERRADURA) DE LA VENTANA (FRENTE)
31	T208024	Etiqueta adhesiva	1		(MANTENIMIENTO PERIODICO)
32	T149983	Etiqueta adhesiva	1		IMPORTANTE - NIVEL DE ACEITE
33	T146102	Etiqueta adhesiva	1		ARRANQUE EN DERIVACION
34	T152657	Adhesivo de seguridad	1		IMPORTANTE - RADIADOR
35	T187642	Etiqueta adhesiva	2		PUERTA
54	T201519	Etiqueta adhesiva	1		PATRON DE OPERACION
55	T187710	Etiqueta adhesiva	1		PRECAUCION (TAPA DE ACEITE, DEPS. HIDR.) (NO SE ILUSTRA)
60	T190310	Adhesivo de seguridad	2		ADVERTENCIA (ESTANCIA CLARA)
61	T188737	Etiqueta adhesiva	1		CUBIERTA CONTRA VANDALISMO (NO SE ILUSTRA)
62	4129669	Etiqueta adhesiva	1		CADENA
63	T187757	Etiqueta adhesiva	1		ADVERTENCIA, PROTECTOR DE VENTILADOR
64	T163997	Etiqueta adhesiva	1		HOJA

LABELS AND DECALS (FRENCH)
ETIQUETTES ET AUTOCOLLANTS (FRANCAIS)
ETIQUETAS Y ADHESIVOS (FRANCES)

TX1023018 A.1

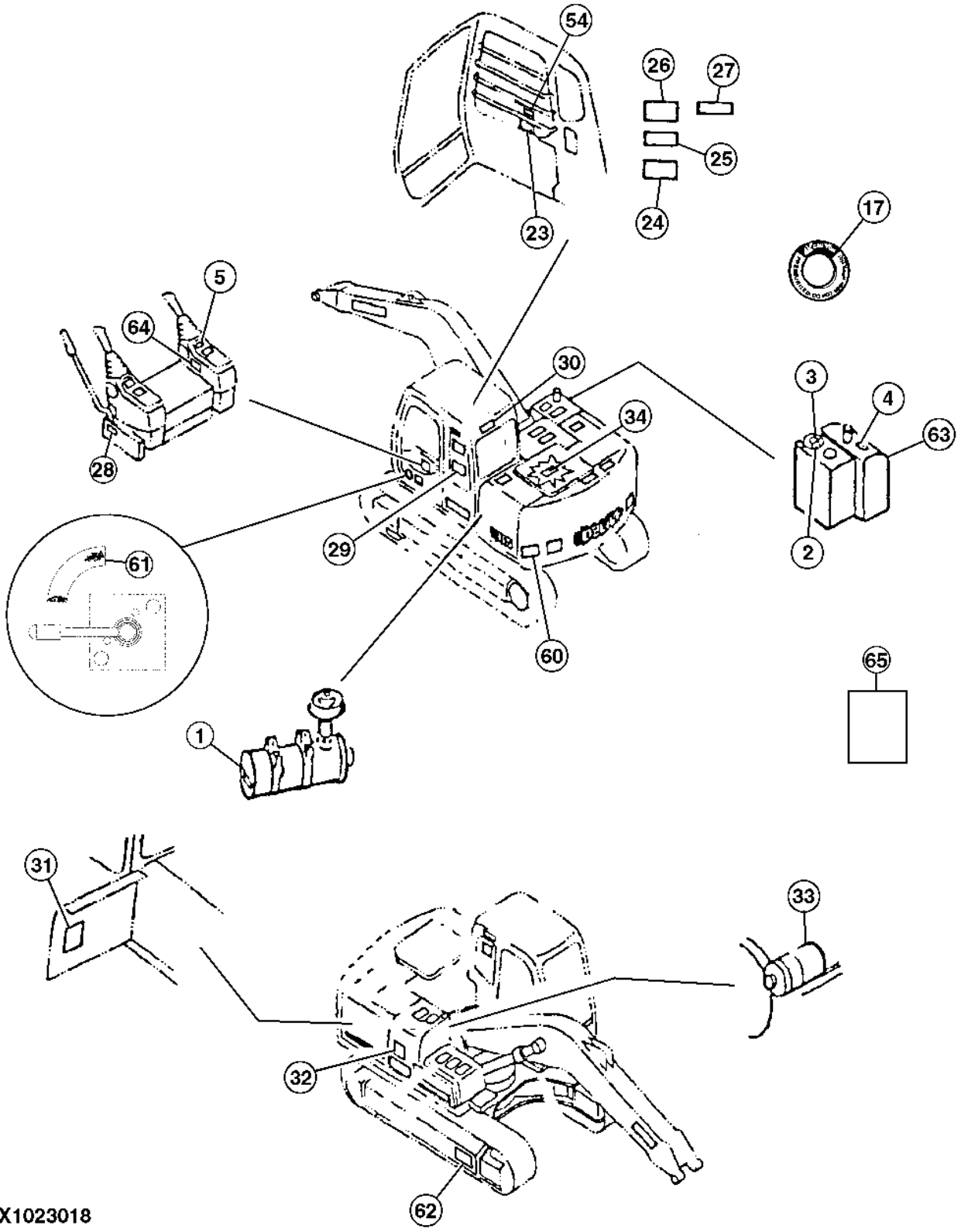

Pos.	*Ref.*	*Descripción*	*Cant.*	*Núm. de serie*	*Notas*
1	T222757	Etiqueta adhesiva	1		FILTRO DE AIRE
2	T222805	Etiqueta adhesiva	1		(INFORMACION PURGA DE BOMA)
3	T102618	Etiqueta adhesiva	1		HUILE HYDRAULIQUE
4	T114681	Etiqueta adhesiva	1		(DIESEL SOLAMENTE)
5	T222837	Etiqueta adhesiva	1		(LLAVE DE ENCENDIDO)
17	T181296	Etiqueta adhesiva	1		ATENCION - TAPA DEL RADIADOR
23	T222938	Etiqueta adhesiva	1		(ARRANQUE/PARADA DE MOTOR)
24	T162774	Etiqueta adhesiva	1		PRECAUCION (LEER MANUAL DEL OPERADOR)
25	T222823	Etiqueta adhesiva	1		ADVERTENCIA ARTICULATION APLASTANTE
26	T222831	Etiqueta adhesiva	1		PELIGRO - ELECTROCUCION
27	T190393	Etiqueta adhesiva	1		IMPORTANTE - ROMPER VENT P/SALIDA AUXILIAR
28	T222833	Etiqueta adhesiva	1		Bloqueo hidráulico
29	T222875	Etiqueta adhesiva	1	-XXXXXX	CAPACIDAD DE LEVANTE
	T222899	Etiqueta adhesiva	1	XXXXXX-	Capacidad de levante
30	T190799	Adhesivo de seguridad	1		ADVIERTA (CERRADURA) DE LA VENTANA (FRENTE)
31	T222711	Etiqueta adhesiva	1		(MANTENIMIENTO PERIODICO)
32	T222777	Etiqueta adhesiva	1		IMPORTANTE - NIVEL DE ACEITE
33	T146104	Adhesivo de seguridad	1		ARRANQUE EN DERIVACION
34	T222773	Etiqueta adhesiva	1		IMPORTANTE - RADIADOR
54	T201548	Etiqueta adhesiva	1		PATRON DE OPERACION
55	T190801	Etiqueta adhesiva	1		PRECAUCION (TAPA DE ACEITE, DEPS. HIDR.) (NO SE ILUSTRA)
60	T222786	Etiqueta adhesiva	2		ADVERTENCIA (ESTANCIA CLARA)
61	T228108	Etiqueta adhesiva	1		COMBIADOR PATRON (VALVULA SELECTORA DE PATRON)
62	T222755	Etiqueta adhesiva	1		CADENA
63	T187758	Etiqueta adhesiva	1		ADVERTENCIA, PROTECTOR DE VENTILADOR
64	T222954	Etiqueta adhesiva	1		(HOJA)
65	.....	Etiqueta	1		ACEITE DEL MOTOR
66	T222763	Etiqueta adhesiva	1		CUBIERTA CONTRA VANDALISMO (NO SE ILUSTRA)

LABELS AND DECALS (SPANISH)
ETIQUETTES ET AUTOCOLLANTS (ESPAGNOLE)
ETIQUETAS Y ADHESIVOS (ESPAGNOLE)

TX1023018 A.1

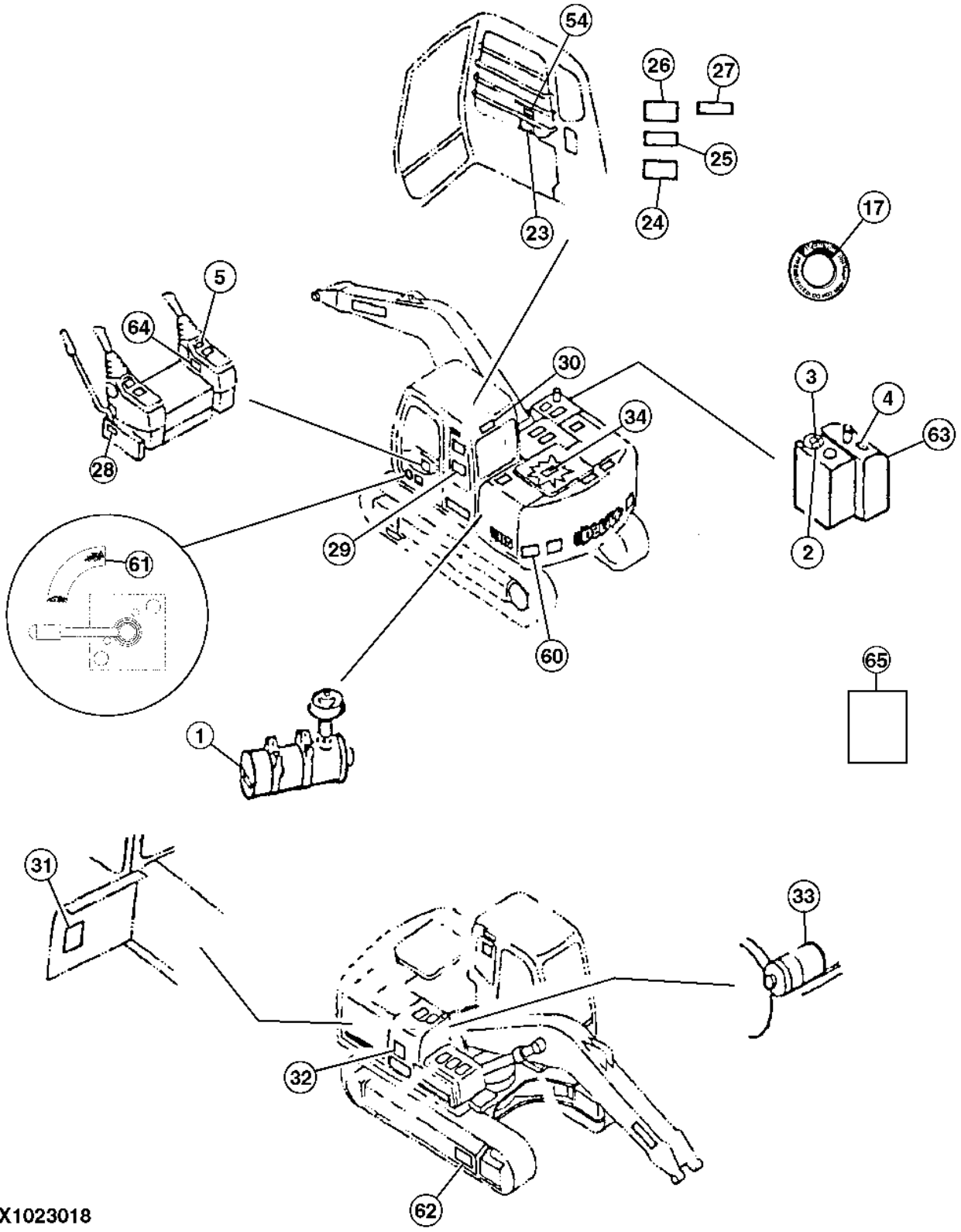

TX1023018

Pos.	Ref.	Descripción	Cant.	Núm. de serie	Notas
1	T222758	Etiqueta adhesiva	1		FILTRO DE AIRE
2	T222806	Etiqueta adhesiva	1		(INFORMACION PURGA DE BOMA)
3	T102620	Etiqueta adhesiva	1		HUILE HYDRAULIQUE
4	T127575	Etiqueta adhesiva	1		(DIESEL SOLAMENTE)
5	T222838	Etiqueta adhesiva	1		(LLAVE DE ENCENDIDO)
17	T181295	Etiqueta adhesiva	1		ATENCION - TAPA DEL RADIADOR
23	T222939	Etiqueta adhesiva	1		(ARRANQUE/PARADA DE MOTOR)
24	T162754	Etiqueta adhesiva	1		PRECAUCION (LEER MANUAL DEL OPERADOR)
25	T222823	Etiqueta adhesiva	1		ADVERTENCIA ARTICULATION APLASTANTE
26	T222832	Etiqueta adhesiva	1		PELIGRO - ELECTROCUCION
27	T222927	Etiqueta adhesiva	1		IMPORTANTE - ROMPER VENT P/SALIDA AUXILIAR
28	T222834	Etiqueta adhesiva	1		Bloqueo hidráulico
29	T222876	Etiqueta adhesiva	1	-XXXXXX	CAPACIDAD DE LEVANTE
	T222900	Etiqueta adhesiva	1	XXXXXX-	Capacidad de levante
30	T190803	Etiqueta adhesiva	1		ADVIERTA (CERRADURA) DE LA VENTANA (FRENTE)
31	T222712	Etiqueta adhesiva	1		(MANTENIMIENTO PERIODICO)
32	T222778	Etiqueta adhesiva	1		IMPORTANTE - NIVEL DE ACEITE
33	T146106	Adhesivo de seguridad	1		ARRANQUE EN DERIVACION
34	T222774	Etiqueta adhesiva	1		IMPORTANTE - RADIADOR
54	T201547	Etiqueta adhesiva	1		PATRON DE OPERACION
55	T190802	Etiqueta adhesiva	1		PRECAUCION (TAPA DE ACEITE, DEPS. HIDR.) (NO SE ILUSTRA)
60	T222787	Etiqueta adhesiva	2		ADVERTENCIA (ESTANCIA CLARA)
61	T228108	Etiqueta adhesiva	1		CAMBIADOR PATRON (VALVULA SELECTORA DE PATRON)
62	T222756	Etiqueta adhesiva	1		CADENA
63	T187759	Etiqueta adhesiva	1		ADVERTENCIA, PROTECTOR DE VENTILADOR
64	T222955	Etiqueta adhesiva	1		(HOJA)
65	.....	Etiqueta	1		ACEITE DEL MOTOR
66	T222763	Etiqueta adhesiva	1		CUBIERTA CONTRA VANDALISMO (NO SE ILUSTRA)

METRIC O-RING KIT
KIT DE JOINTS TORIQUES METRIQUES
JUEGO DE ANILLO 'O' METRICO

TX1039051 A.1

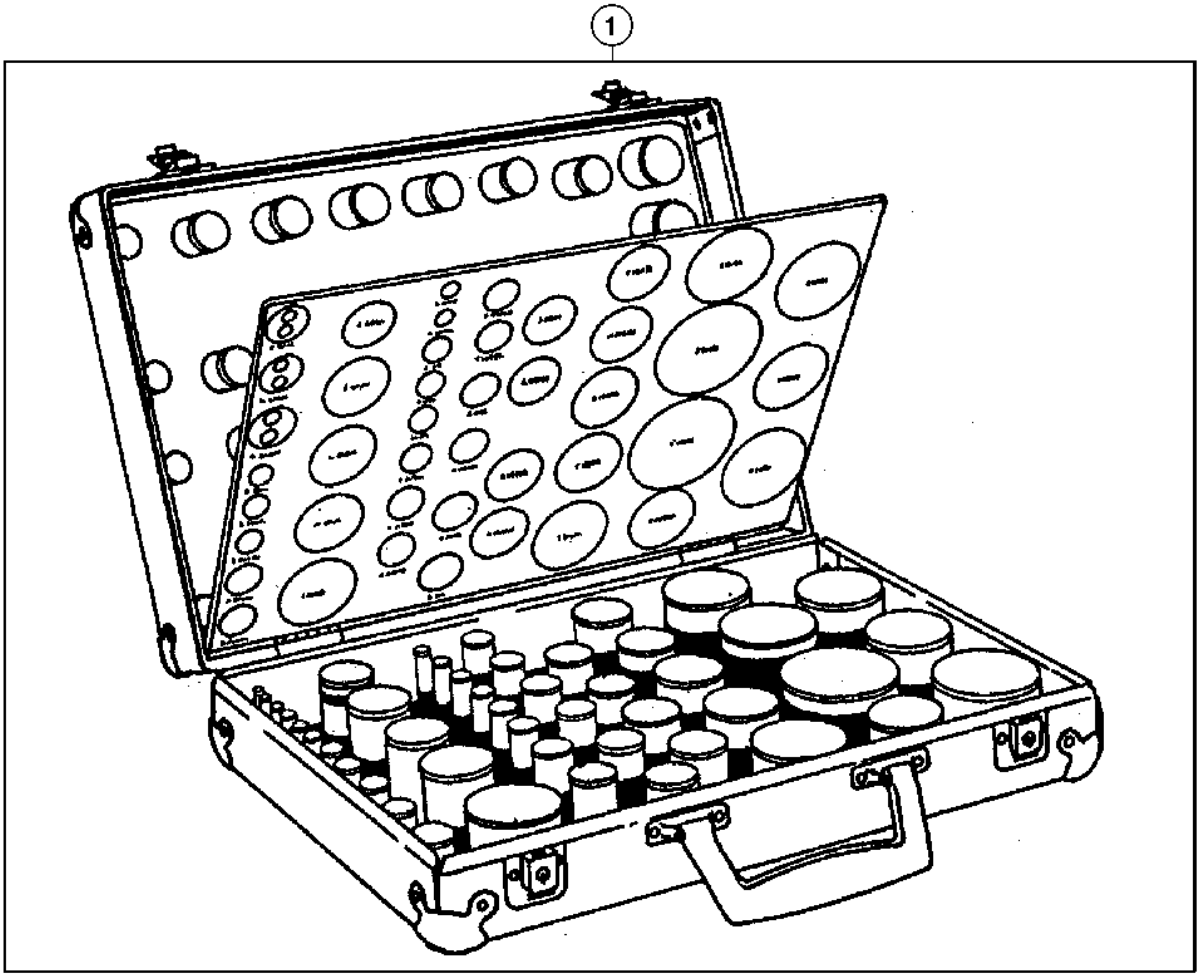

TX1039051

Pos.	*Ref.*	*Descripción*	*Cant.*	*Núm. de serie*	*Notas*
1	AT130157	Juego de anillos tóricos	1		(CONTIENE TODOS ELEMENTOS ENUMERADOS ABAJO)
	CH11436	Anillo tórico	5		49.400 X 3.100 mm (1.945" X 0.122")
	CH11569	Empaquetadura	5		
	CH11570	Anillo tórico	5		13.800 X 2.400 mm (0.543" X 3/32")
	CH11571	Empaquetadura	5		
	CH11572	Empaquetadura	2		
	CH12329	Empaquetadura	5		
	CH14634	Anillo tórico	5		17.800 X 2.400 mm (0.701" X 3/32")
	CH14701	Anillo tórico	5		39.400 X 3.100 mm (1.551" X 0.122")
	CH17167	Anillo tórico	2		9.800 X 1.900 mm (0.386" X 0.075")
	CH19111	Anillo tórico	5		7.645 X 1.778 mm (0.301" X 0.070")
	M800650	Empaquetadura	10		
	M800893	Empaquetadura	5		
	AT264324	Anillo tórico	5		
	AT318035	Anillo tórico	10		
	AT264347	Anillo tórico	5		
	A811030	Anillo tórico	5		29.400 X 3.100 mm (1.157" X 0.122")
	4506408	Anillo tórico	2		7.800 X 1.900 mm (0.307" X 0.075")
	TH101926	Anillo tórico	5		28.700 X 3.500 mm (1.130" X 0.138")
	957474	Anillo tórico	2		39.700 X 3.500 mm (1-9/16" X 0.138")
	A811040	Anillo tórico	2		39.400 X 3.100 mm (1.551" X 0.122")
	4153084	Anillo tórico	2		3.800 X 1.900 mm (0.150" X 0.075")
	4S00734	Anillo tórico	5		(SUB FOR 0976602)
	970860	Anillo tórico	2		37.700 X 3.500 mm (1-31/64" X 0.138")
	AT264360	Anillo tórico	2		
	T110590	Empaquetadura	5		
	T110593	Empaquetadura	5		
	T59014	Anillo tórico	5		24.994 X 3.531 mm (63/64" X 0.139")
	A811045R	Anillo tórico	5		
	U10778	Anillo tórico	5		16.358 X 2.210 mm (0.644" X 0.087")
	U17409	Anillo tórico	5		26.594 X 2.946 mm (1-3/64" X 0.116")
	4506418	Anillo tórico	10		17.800 X 2.400 mm (0.701" X 3/32")

BATTERY, BATTERY CABLES, RELAY AND COVER
BATTERIE, CABLES DE BATTERIE, RELAIS ET COUVERCLE
BATERIA, CABLES DE LA BATERIA, RELE Y CUBIERTA

T188399 A.1

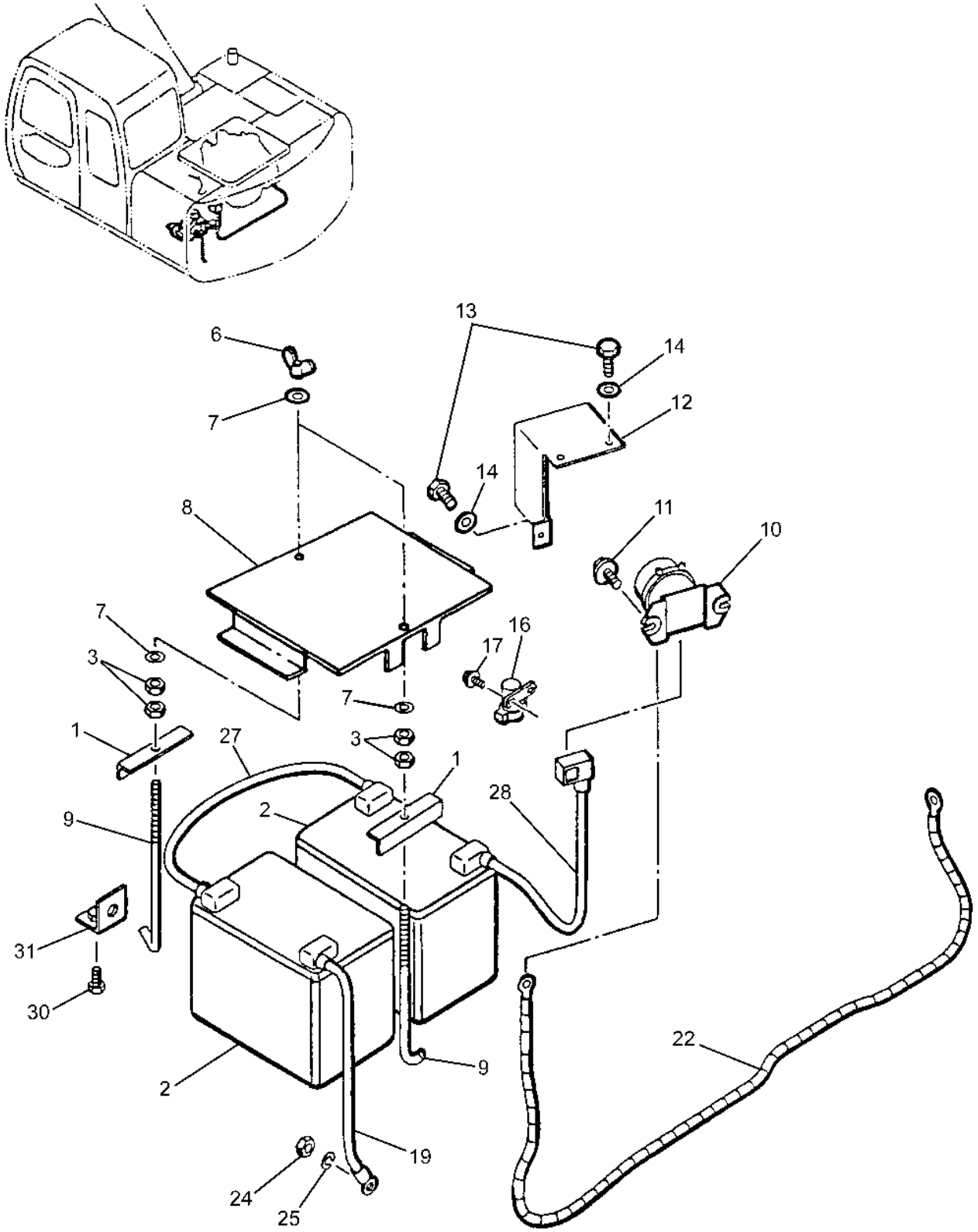

T188399

Pos.	*Ref.*	*Descripción*	*Cant.*	*Núm. de serie*	*Notas*
1	AT200425	Ángulo	2		
2	TY25803	Batería con carga seca	2		(T174338 NLA)
3	14M7274	Tuerca	4		M10
6	14M7025	Tuerca de mariposa	2		M10
7	24M7028	Arandela	4		10.500 X 20 X 2 mm, (SUB FOR A590110)
8	DH800107	Tapadera	1		(SUB FOR P60923)
9	4257034	Perno con gancho	2		
10	4255762	Comprobador de baterías	1		
11	21M7288	Tornillo	2		M6 X 10
12	3087816	Tapadera	1		
13	19M7162	Tornillo	3		M8 X 16
14	24M7055	Arandela	3		8.400 X 16 X 1.600 mm
16	AT145341	Relé	1		
17	21M7267	Tornillo	2		M6 X 20
19	AR45925	Cable de batería	1		
22	4373214	Grupo de cables	1		
27	AP33487	Grupo de cables	1		
28	AP33486	Grupo de cables	1		
30	19M7402	Tornillo	2		M10 X 25
	24M7028	Arandela	2		10.500 X 20 X 2 mm
	12M7066	Arandela de seguridad	2		10 mm
31	AP33477	Soporte	1		

ALTERNATOR AND WIRING HARNESS
ALTERNATEUR ET FAISCEAU DE FILS
ARNES DE ALAMBRADO Y ALTERNADOR

T188404 A.1

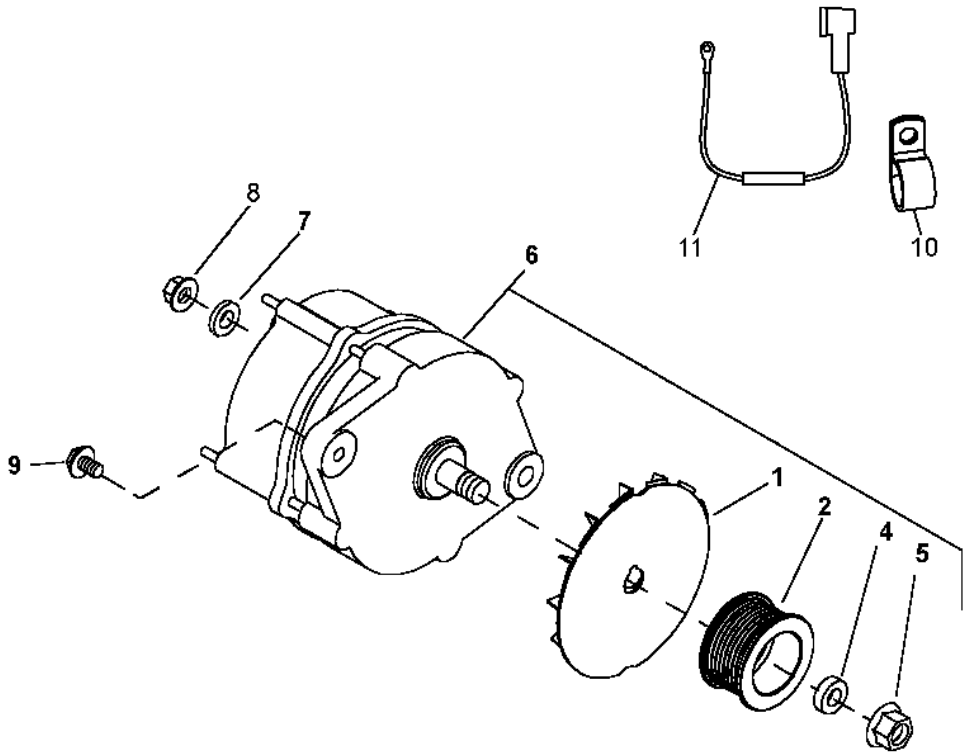

T188404

Pos.	*Ref.*	*Descripción*	*Cant.*	*Núm. de serie motor*	*Notas*
1	T158584	Ventilador	1		
2	R501486	Polea	1		
4	R48808	Arandela	1		
5	14M7296	Tuerca con brida	1		M10
6	AT161324	Alternador	1		AT185696 CONVENIENCE ASSY (24V, 45 AMP) , (SUB TY24322) (SUB FOR AT185696)
	TY24322	Alternador	1		NLA; ORDER SE501341
	SE501341	Alternador	1		REMAN FOR AT161324, AT185696 OR TY24322
	AT163156	Regulador	1		
	H144095	Alternador	1		
7	14M7297	Tuerca	1		M5
8	24M7210	Arandela	1		5.500 X 18 X 2 mm
10	T190303	Abrazadera	1		
11	AT197149	Grupo de cables	1		

MIC CONTROLLER
CONTROLEUR MIC
UNIDAD DE CONTROL MIC

T153299 A.1

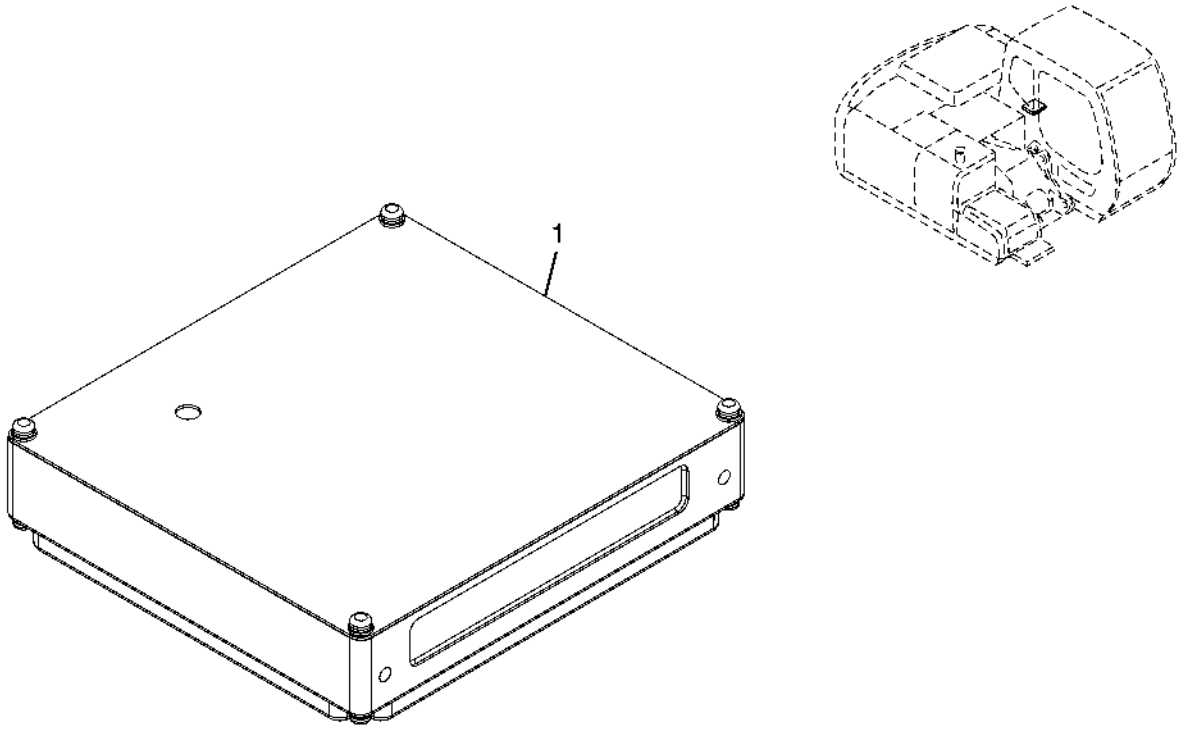

T153299

Pos.	*Ref.*	*Descripción*	*Cant.*	*Núm. de serie*	*Notas*
1	9239568	Controldr electrón.vehículo	1		(SUB FOR 9212078, THIS APPLICATION) (SUB FOR 9194416)

MIC CUSTOMER KIT AND CABLE
KIT ET CABLE CLIENT MIC
CABLE Y JUEGO PARA CLIENTE MIC

TX1008354 A.1

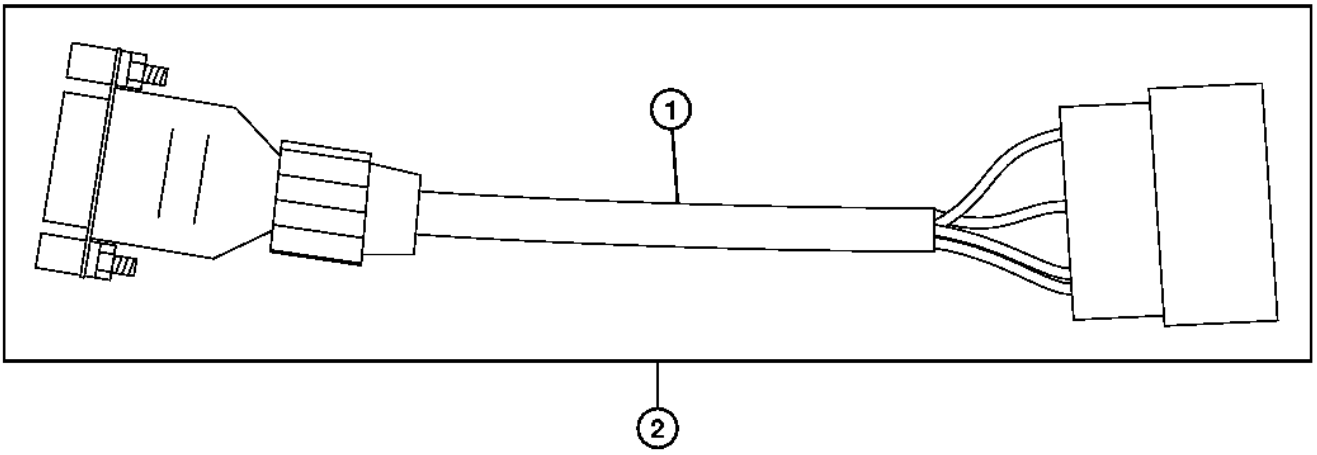

TX1008354

Pos.	*Ref.*	*Descripción*	*Cant.*	*Núm. de serie*	*Notas*
1	TH3100010	Cable	1		
2	.....	Conjunto de modificación	1		Kit de centro de información de máquina, (INCLUYE SOFTWARE Y CABLE)

BOOM LIGHT WIRING HARNESS
FAISCEAU DE CABLAGE D'ECLAIRAGE DE FLECHE
ARNES DE ALAMBRADO DE LUZ DE AGUILON

T143274 A.1

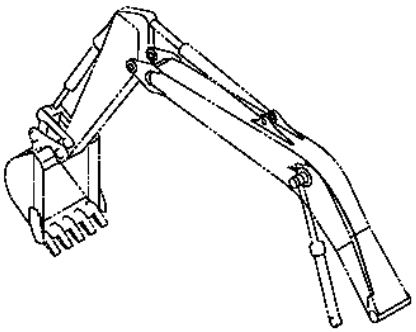

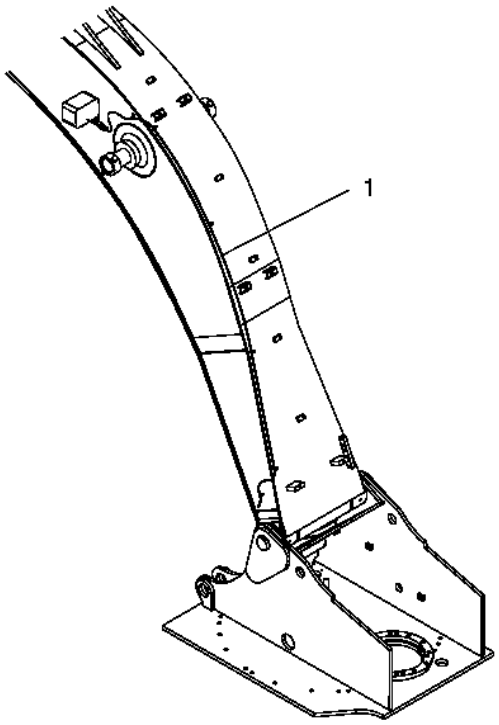

T143274

Pos.	*Ref.*	*Descripción*	*Cant.*	*Núm. de serie*	*Notas*
1	4430382	Grupo de cables	1		

BOOM LIGHTS AND WORK LIGHTS
ECLAIRAGE DE FLECHE ET PROJECTEURS DE TRAVAIL
LUCES DE TRABAJO Y LUCES DE AGUILON

T157409 A.1

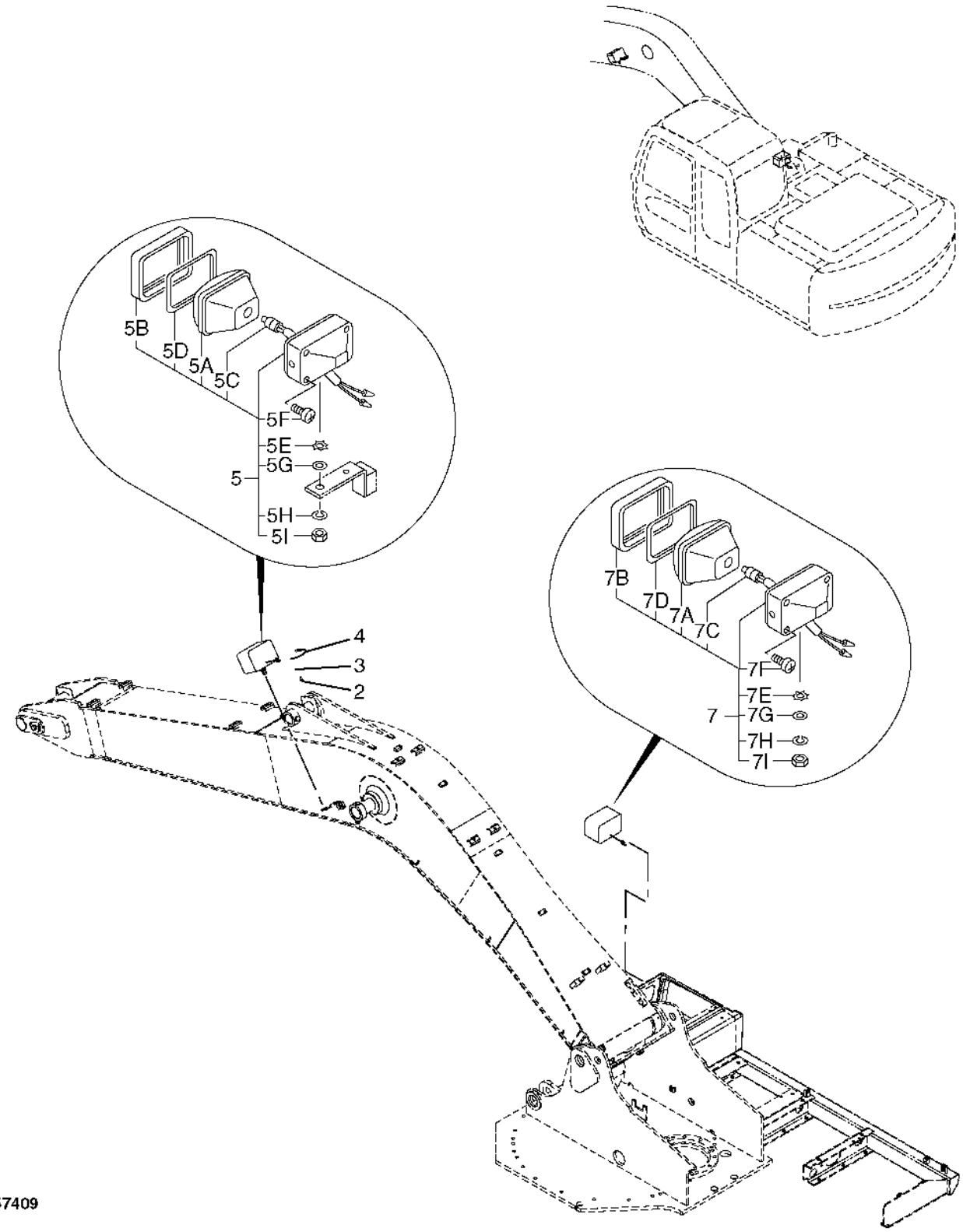

Pos.	*Ref.*	*Descripción*	*Cant.*	*Núm. de serie*	*Notas*
2	M430613	Tornillo	1		
3	12M7006	Arandela de seguridad	1		6 mm, (SUB FOR A590906)
4	4254604	Grupo de cables	1		
5	4326800	Faro	1		
5A	4326801	Lente	1		
5B	4326802	Bastidor	1		
5C	4285648	Lámpara	1		
5D	4326803	Junta	1		
5E	4307026	Arandela	1		
5F	37H19	Tornillo	4		(SUB FOR 4307027)
5G	24M7085	Arandela	1		15 X 28 X 2.500 mm, (SUB FOR A590114)
5H	12H317	Arandela de seguridad	1		9/16", (SUB FOR A590914)
5I	14M7345	Tuerca	1		M14, (SUB FOR J952014)
7	AT165110	Faro	1		(SUB FOR 4326800)
7A	4326801	Lente	1		
7B	4326802	Bastidor	1		
7C	4285648	Lámpara	1		
7D	4326803	Junta	1		
7E	4307026	Arandela	1		
7F	37H19	Tornillo	4		(SUB FOR 4307027)
7G	24M7085	Arandela	1		15 X 28 X 2.500 mm, (SUB FOR A590114)
7H	12H317	Arandela de seguridad	1		9/16", (SUB FOR A590914)
7I	14M7345	Tuerca	1		M14, (SUB FOR J952014)

FRONT CAB LIGHTING
ECLAIRAGE DE CABINE AVANT
LUCES DELANTERAS DE CABINA

T207660 A.1

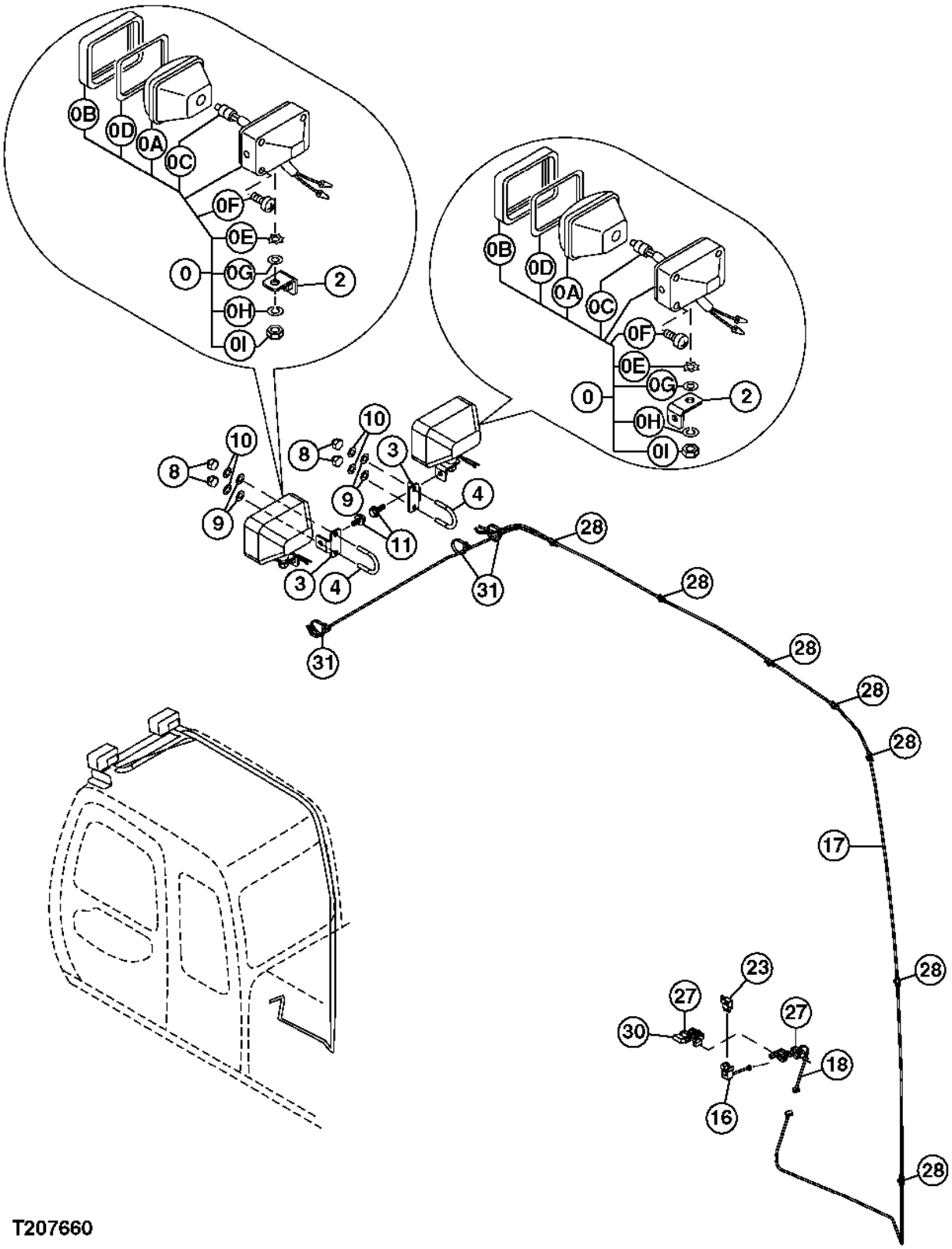

Pos.	*Ref.*	*Descripción*	*Cant.*	*Núm. de serie*	*Notas*
0	4326800	Faro	2		(SUB FOR 4336570)
0A	4326801	Lente	1		
0B	4326802	Bastidor	1		
0C	AT135758	Lámpara	1		(SUB FOR 4285648 OR AT154990)
0D	4326803	Junta	1		
0E	4307026	Arandela	1		
0F	37H19	Tornillo	4		(SUB FOR 4307027)
0G	24M7085	Arandela	1		15 X 28 X 2.500 mm, (SUB FOR A590114)
0H	12H317	Arandela de seguridad	1		9/16", (SUB FOR A590914)
0I	14M7345	Tuerca	1		M14, (SUB FOR J952014)
2	9756005	Soporte	2		
3	4447765	Soporte	2		
4	4447868	Perno en u	2		
8	4447870	Tuerca	4		
9	24M7028	Arandela	4		10.500 X 20 X 2 mm, (SUB FOR J253110 OR A590110)
10	12M7066	Arandela de seguridad	4		10 mm, (SUB FOR J252210)
11	.....	Tornillo	2		(J271030 NLA) , (SUB 19M7168, 12M7066 AND 24M7096)
	19M7168	Tornillo	1		M10 X 30
	12M7066	Arandela de seguridad	1		10 mm
	24M7096	Arandela	1		10.500 X 18 X 1.600 mm
16	4451681	Grupo de cables	1		
17	4362178	Grupo de cables	1		
18	4366592	Grupo de cables	1		
23	4414207	Relé	1		
27	4326365	Presilla	6		(SUB FOR 4289708)
28	4050373	Presilla	7		
30	3074559	Grupo de cables	1		
31	H77698	Cinta de atar	3		(SUB FOR 4055312)

VEHICLE MAIN WIRING HARNESS
FAISCEAU CABLAGE PRINCIPAL VEHICULE
ARNES DE ALAMBRADO PRINCIPAL DEL VEHICULO

T188650 A.1

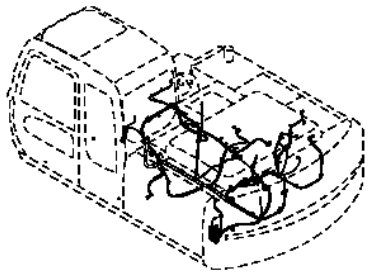

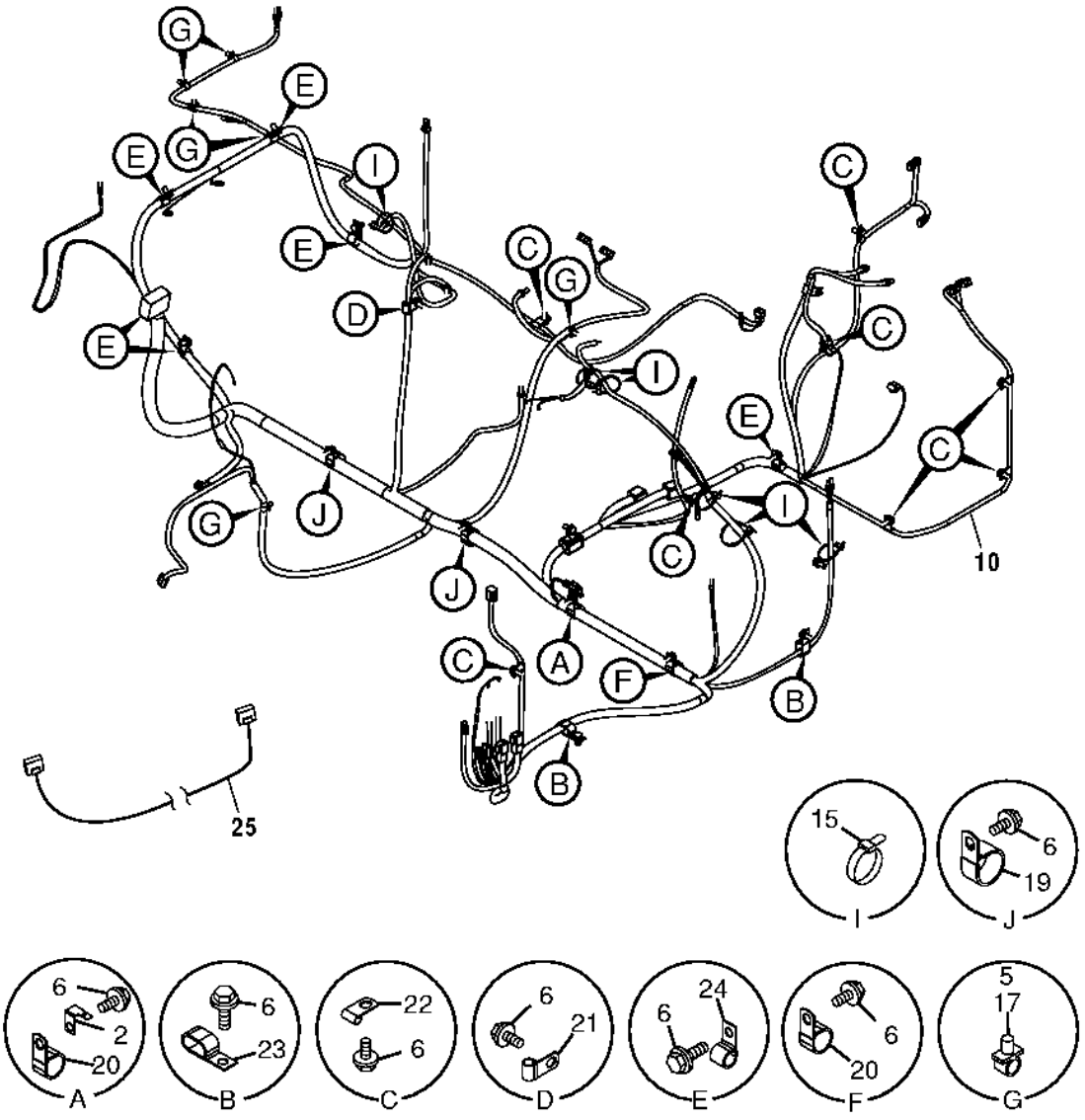

T188650

Pos.	*Ref.*	*Descripción*	*Cant.*	*Núm. de serie*	*Notas*
2	4257159	Soporte	1		
5	4449250	Presilla	4		
6	19M7938	Tornillo	26		M10 X 20
10	0004910	Grupo de cables	1		(VEA SOLUCION DTAC PARA JUEGO DE REPARACION Y CONECTORES)
10A	4270554	Fusible	2		(NO SE ILUSTRA)
10B	4287670	Fusible	1		(NO SE ILUSTRA)
15	R76477	Cinta de atar	6		
17	4449250	Presilla	6		
19	AT121321	Abrazadera para mangueras	2		
20	XCL-19	Abrazadera para mangueras	2		(SUB FOR 4192035)
21	4190275	Abrazadera	1		
22	4190261	Presilla	8		
23	T32854	Abrazadera	3		(SUB FOR 4190282)
24	T28949	Abrazadera	8		(SUB FOR TH108460 OR 4190273)
25	AT303736	Grupo de cables	1	XXXXXX-	(SIN SENSOR DE CARTER DE ACEITE) ARNES PUENTE DEL ARNES PRINCIPAL AL BASTIDOR

CAB DISPLAY MONITOR AND WIRING HARNESS
MONITEUR DE CABINE ET FAISCEAU DE FILS
MONITOR DE PANTALLA DE CABINA Y ARNES DE ALAMBRADO

T143273 A.1

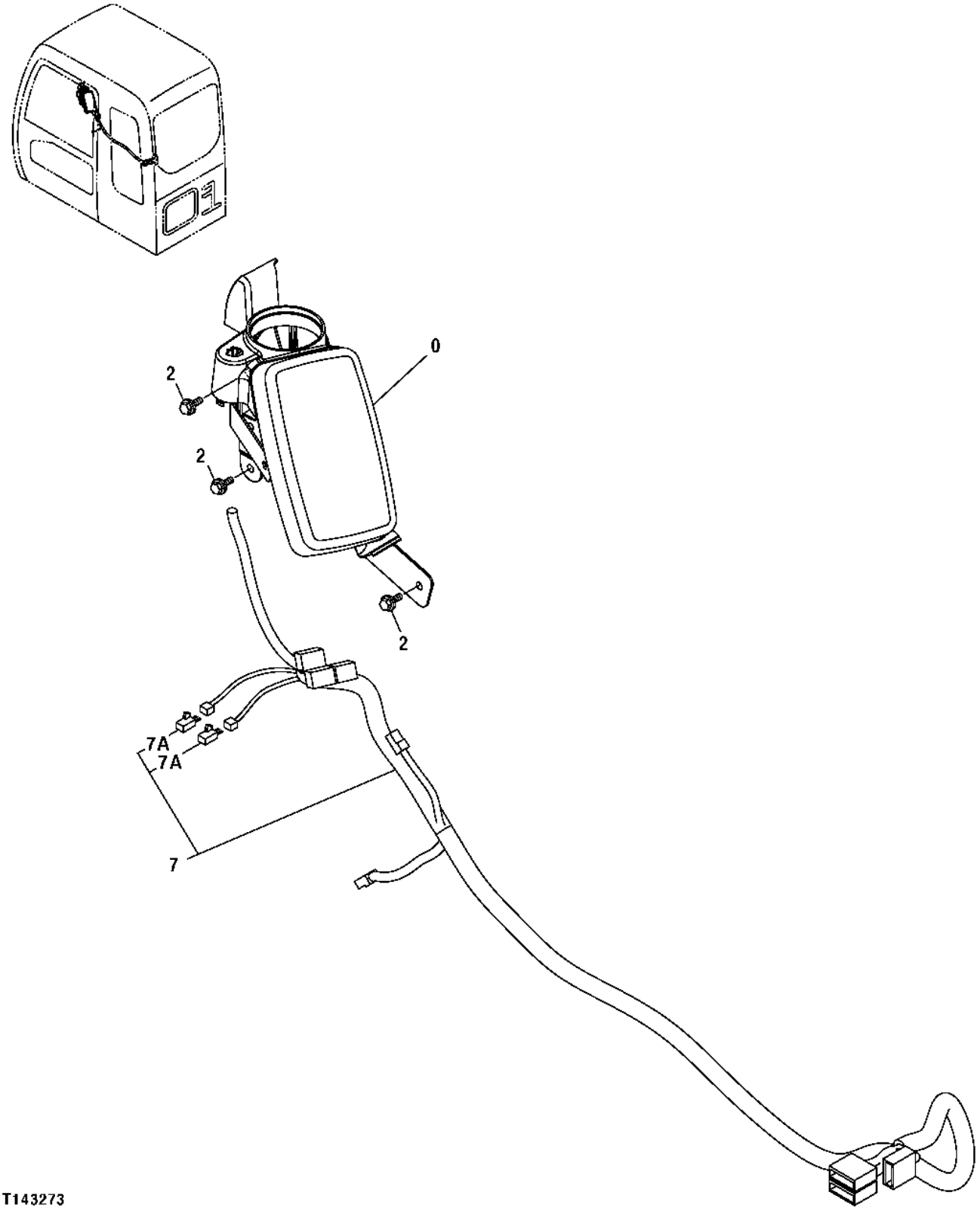

Pos.	*Ref.*	*Descripción*	*Cant.*	*Núm. de serie*	*Notas*
0	FYA00019931	Monitor	1	-XXXXXX	SUB FOR 4456486, Usar con sensor de nivel de aceite
	FYA00019932	Monitor	1	XXXXXX-	SUB FOR 4609754
2	19M7932	Tornillo	3		M8 X 16
	.....	Arandela	3		12M7065 NLA
7	1027579	Grupo de cables	1		
7A	4456778	Diodo	2		

CAB MAIN WIRING HARNESS, FUSES AND IGNITION SWITCH
FAISCEAU DE FILS PRINCIPAL DE CABINE, FUSIBLES ET CONTACTEUR D'ALLUMAGE
ARNES DE ALAMBRADO PRINC. DE LA CABINA, FUSIBLES Y LLAVE DE CONTACTO

T161605 A.1

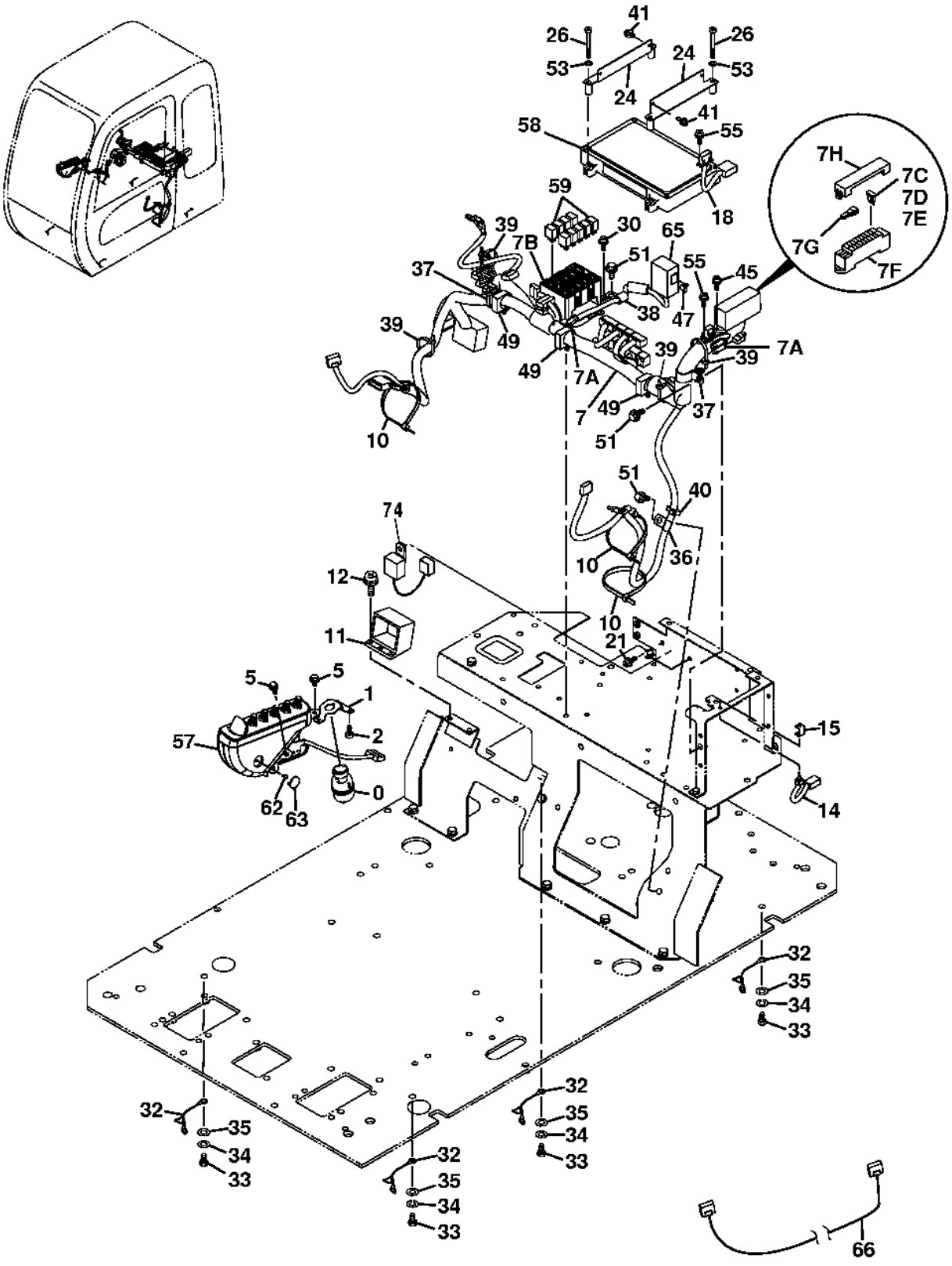

T161605

Pos.	*Ref.*	*Descripción*	*Cant.*	*Núm. de serie*	*Notas*
0	4477373	Interruptor	1		
	AT194969	Llave	1		
1	3087882	Soporte	1		
2	4361800	Tornillo	3		
5	J010814	Tornillo con arandela	3		
7	0004069	Grupo de cables	1		
7A	4456778	Diodo	5		
7B	4427429	Circuito encerrado	1		
7C	57M7688	Fusible	10		(5 AMP) , (SUB FOR 4428910)
7D	57M7689	Fusible	7		(10 AMP) , (SUB FOR 4428911)
7E	57M7691	Fusible	2		(20 AMP) , (SUB FOR 4436736)
7F	4460037	Caja de fusibles	1		
7G	4436737	Extractor	1		
7H	4443490	Tapadera	1		
10	H77698	Cinta de atar	3		(SUB FOR 4121859)
11	4431090	Conjunto de conector eléc.	1		
12	21M7267	Tornillo	2		M6 X 20
	12M7006	Arandela de seguridad	2		6 mm
	24M7293	Arandela	2		6.500 X 13 X 1.600 mm
14	4359384	Interruptor	1		
15	4367375	Soporte	1		
18	4439897	Grupo de cables	1		
21	19M8425	Tornillo	2		M6 X 16
	12M7006	Arandela de seguridad	2		6 mm
	24M7293	Arandela	2		6.500 X 13 X 1.600 mm
24	8082329	Soporte	2		
26	M430660	Tornillo	4		
30	21M7267	Tornillo	4		M6 X 20
	12M7006	Arandela de seguridad	4		6 mm
	24M7293	Arandela	4		6.500 X 13 X 1.600 mm
32	4281293	Cable de masa	4		
33	J901016	Tornillo	4		
34	A590910	Arandela	4		
35	24M7028	Arandela	4		10.500 X 20 X 2 mm, (SUB FOR A590110)

CAB MAIN WIRING HARNESS, FUSES AND IGNITION SWITCH
FAISCEAU DE FILS PRINCIPAL DE CABINE, FUSIBLES ET CONTACTEUR D'ALLUMAGE
ARNES DE ALAMBRADO PRINC. DE LA CABINA, FUSIBLES Y LLAVE DE CONTACTO

T161605 A.1

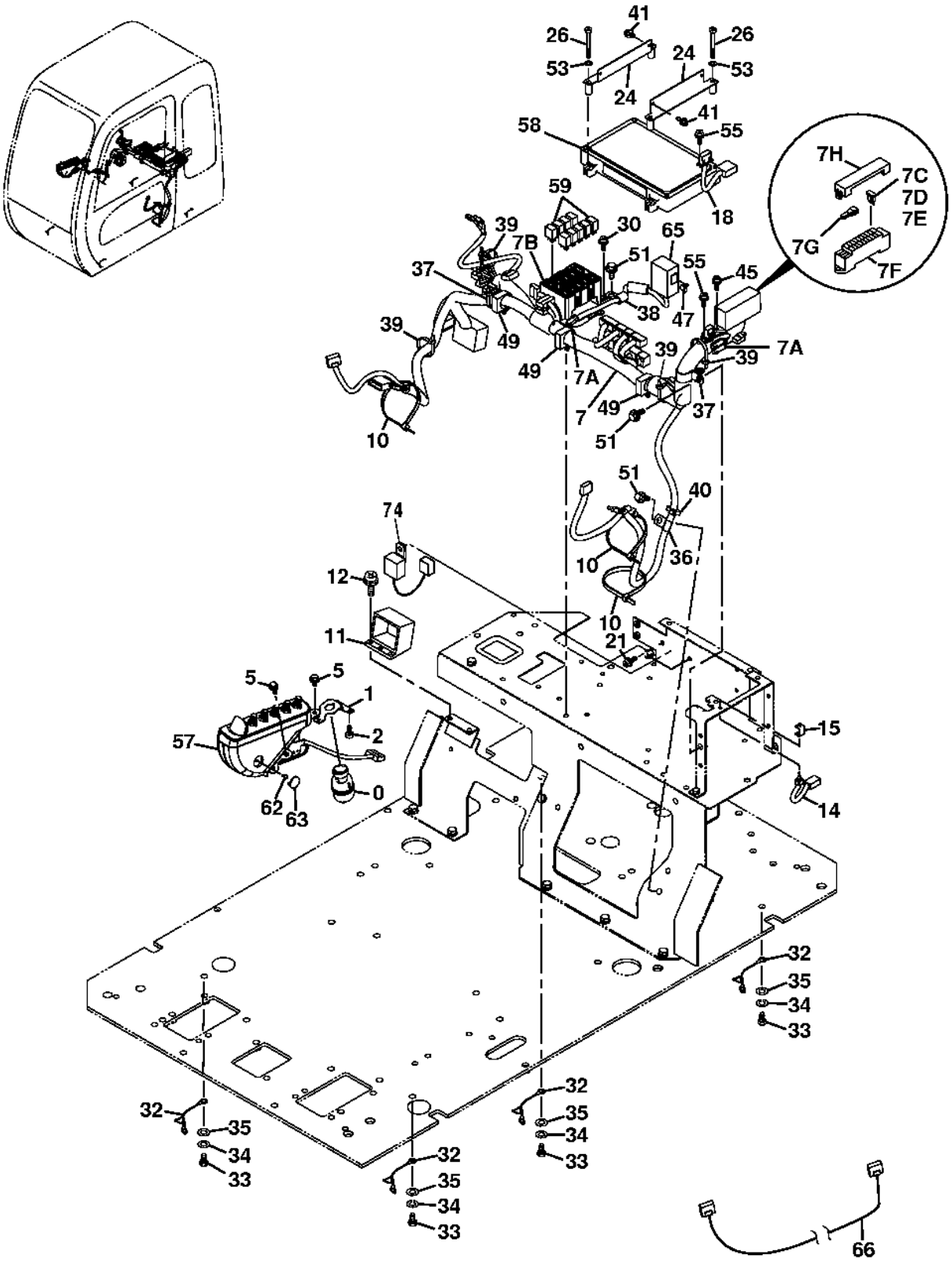

T161605

Pos.	*Ref.*	*Descripción*	*Cant.*	*Núm. de serie*	*Notas*
36	4190261	Presilla	1		
37	XCL-19	Abrazadera para mangueras	1		SUB FOR 4192035
38	R73384	Abrazadera	1		SUB FOR 4190253
39	H77698	Cinta de atar	5		SUB FOR 4055312
40	H77698	Cinta de atar	1		SUB FOR 4055311, M88199
41	19M7700	Tornillo	4		M5 X 10
	12M7064	Arandela de seguridad	4		5 mm
	24M7348	Arandela	4		5.500 X 10 X 1 mm
45	21M7267	Tornillo	2		M6 X 20
	12M7006	Arandela de seguridad	2		6 mm
	24M7293	Arandela	2		6.500 X 13 X 1.600 mm
47	19M7162	Tornillo	2		M8 X 16
	.....	Arandela	2		12M7065 NLA
	24H1136	Arandela	2		11/32" X 11/16" X 0.065"
49	4449019	Presilla	3		
51	19M7938	Tornillo	3		M10 X 20
	12M7066	Arandela de seguridad	3		10 mm
53	24M7054	Arandela	4		6.400 X 12 X 1.600 mm
55	J460310	Tornillo	4		
57	4454518	Consola de control	1		
	4482656	Dial de control	1		Velocidad
	4483208	Dial de control	4		
	4483209	Dial de control	1		
	4370152	Faro	2		
	4483206	Interruptor	1		HARNESS
58	9226757	Controldr electrón.vehículo	1		SUB FOR 4457210
59	4436534	Relé	9		
62	4381572	Tornillo	1		
63	4426354	Tapa	1		
65	.....	Relé	1		4452160 NOT USED THIS APPLICATION
66	2048203	Grupo de cables	1		(2.75M EXTENSION)
	2048184	Grupo de cables	1		(4.6M EXTENSION)
74	AT195741	Relé	1		(ALTERNADOR)

ENGINE WIRING HARNESS
FAISCEAU DE FILS DE MOTEUR
ARNES DE ALAMBRADO DEL MOTOR

T148745 A.1

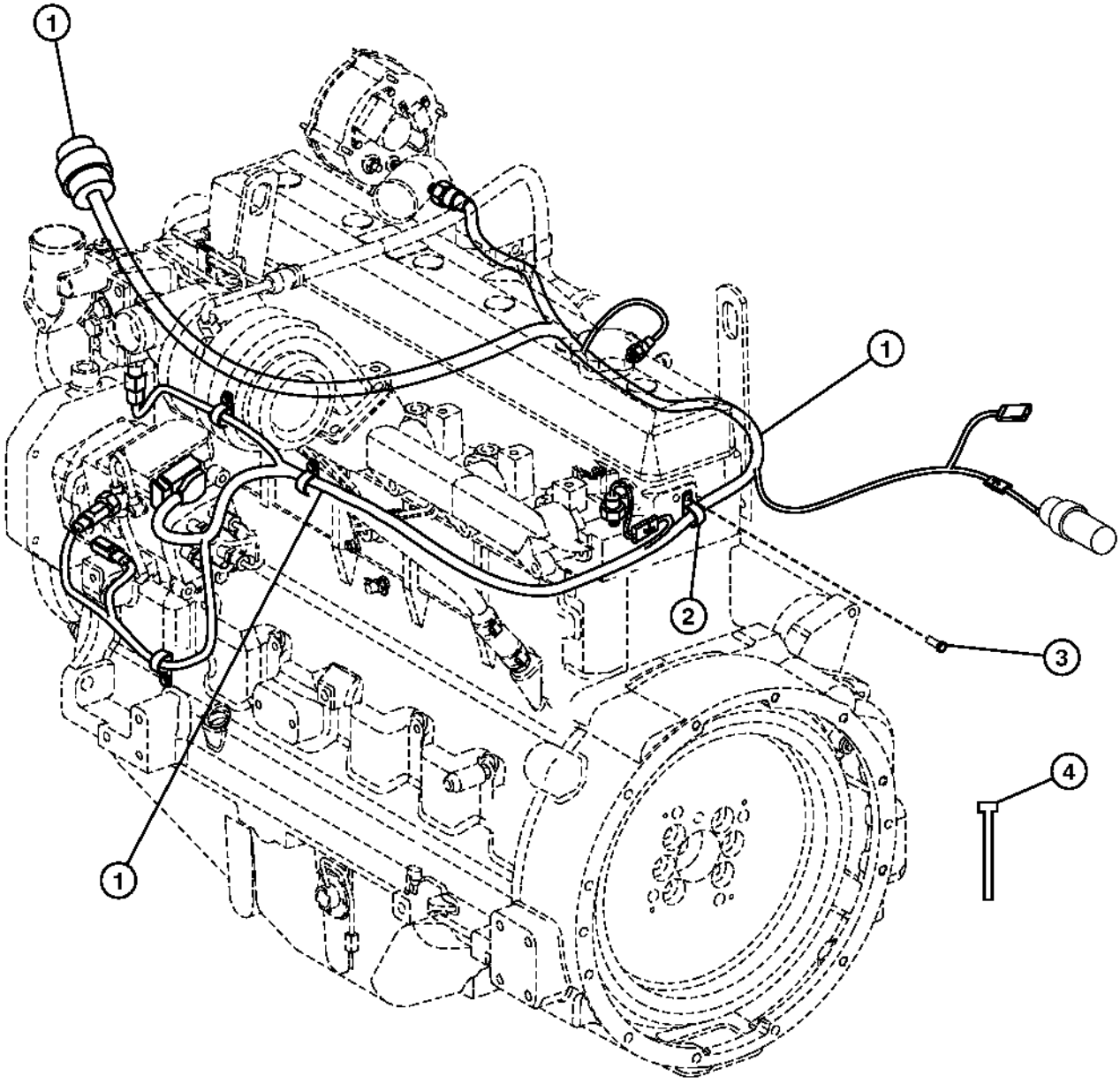

T148745

Pos.	*Ref.*	*Descripción*	*Cant.*	*Núm. de serie*	*Notas*
1	AT191463	Grupo de cables	1		Ver la página separada para los conectores del grupo de cables del motor
2	T75197	Abrazadera	4		
3	19M7783	Tornillo	4		M10 X 16
4	R44302	Cinta de atar	8		

ENGINE WIRING HARNESS AND CONNECTORS
FAISCEAU DE FILS MOTEUR ET CONNECTEURS
ARNES DE ALAMBRADO DEL MOTOR Y CONECTORES

TX1029112 A.1

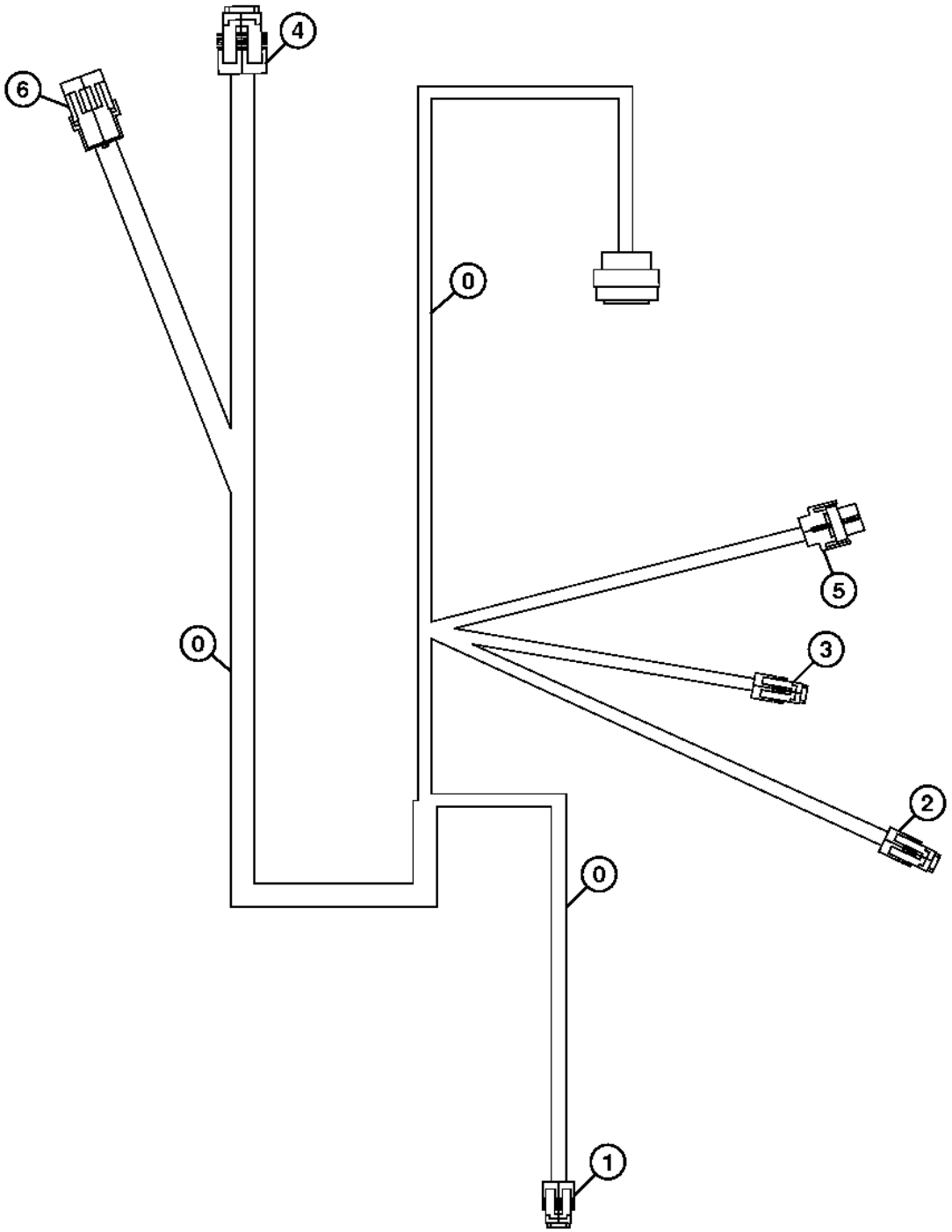

TX1029112

Pos.	*Ref.*	*Descripción*	*Cant.*	*Núm. de serie*	*Notas*
0	AT191463	Grupo de cables	1		Motor
1	57M7278	Caja de conectores eléc.	1		Sincronización del motor (cigüeñal)
	57M7829	Terminal eléctrico	2		
2	57M7278	Caja de conectores eléc.	1		Temperatura de combustible
	57M7829	Terminal eléctrico	2		
3	57M7278	Caja de conectores eléc.	1		Temperatura de refrigerante
	57M7829	Terminal eléctrico	2		
4	57M7278	Caja de conectores eléc.	1		Temperatura de aire de colector, Felpudo
	57M7829	Terminal eléctrico	2		
5	57M7344	Caja de conectores eléc.	1		Bomba de inyección
	57M8259	Terminal eléctrico	2		
	R78059	Conjunto de conector eléc.	1		
	R78064	Tapón para cavidad eléc.	1		
6	R78053	Conjunto de conector eléc.	1		Interruptor de temperatura del motor

ENGINE CONTROL UNIT WIRING HARNESS
FAISCEAU DE CABLAGE DE L'UNITE DE COMMANDE DU MOTEUR
ARNES DE ALAMBRADO DE LA UNIDAD DE CONTROL DEL MOTOR

TX1005943 A.1

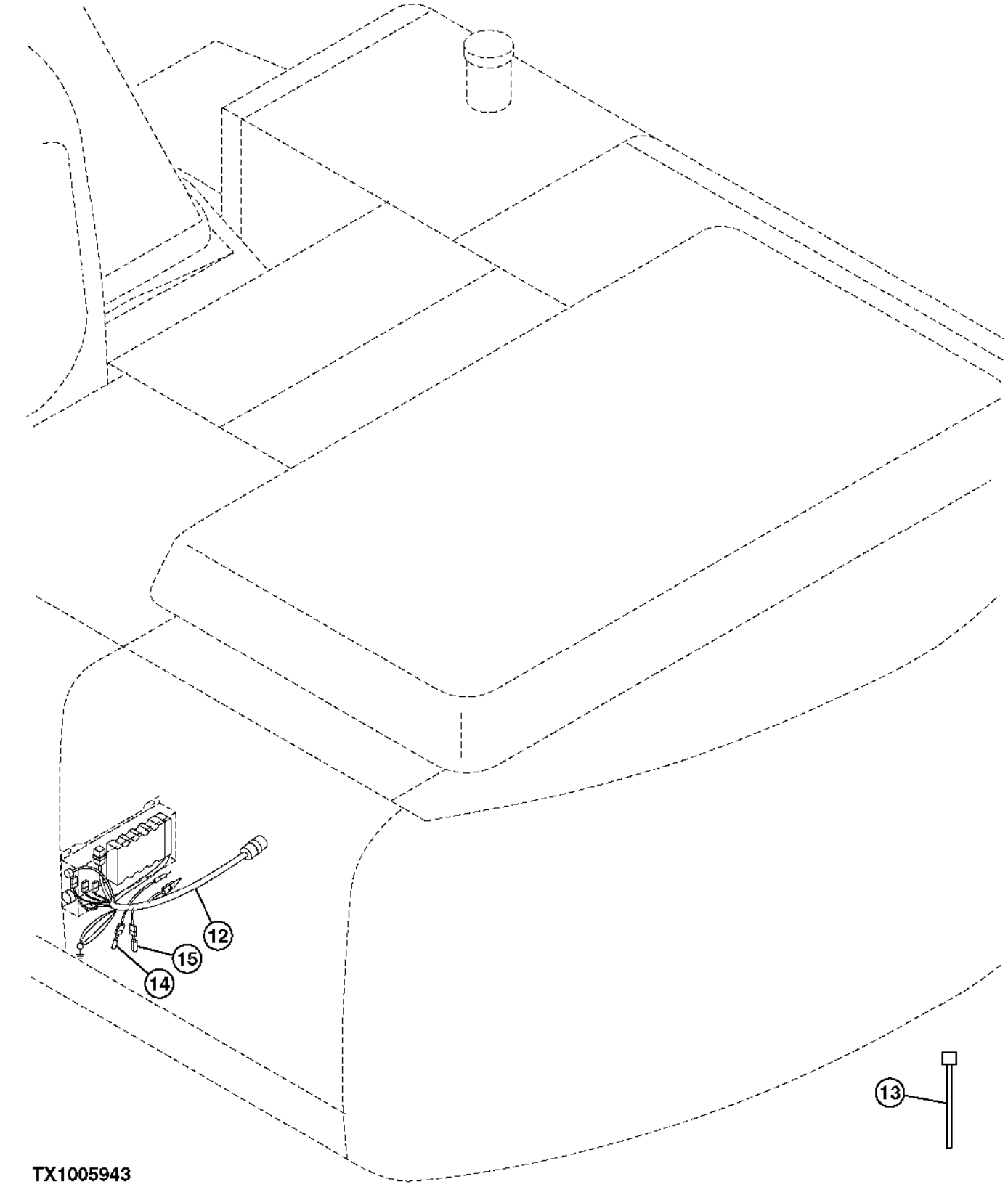

Pos.	*Ref.*	*Descripción*	*Cant.*	*Núm. de serie*	*Notas*
12	AT191462	Grupo de cables	1		
13	H77698	Cinta de atar	AR		
14	AT202778	Conjunto de conector eléc.	1		(NODO DE TERMINACION)
15	AT190929	Resistencia eléctrica	1		

ENGINE CONTROL UNIT ASSEMBLY
ENSEMBLE DE L'UNITE DE COMMANDE DU MOTEUR
CONJUNTO DE LA UNIDAD DE CONTROL DEL MOTOR

T188419 A.1

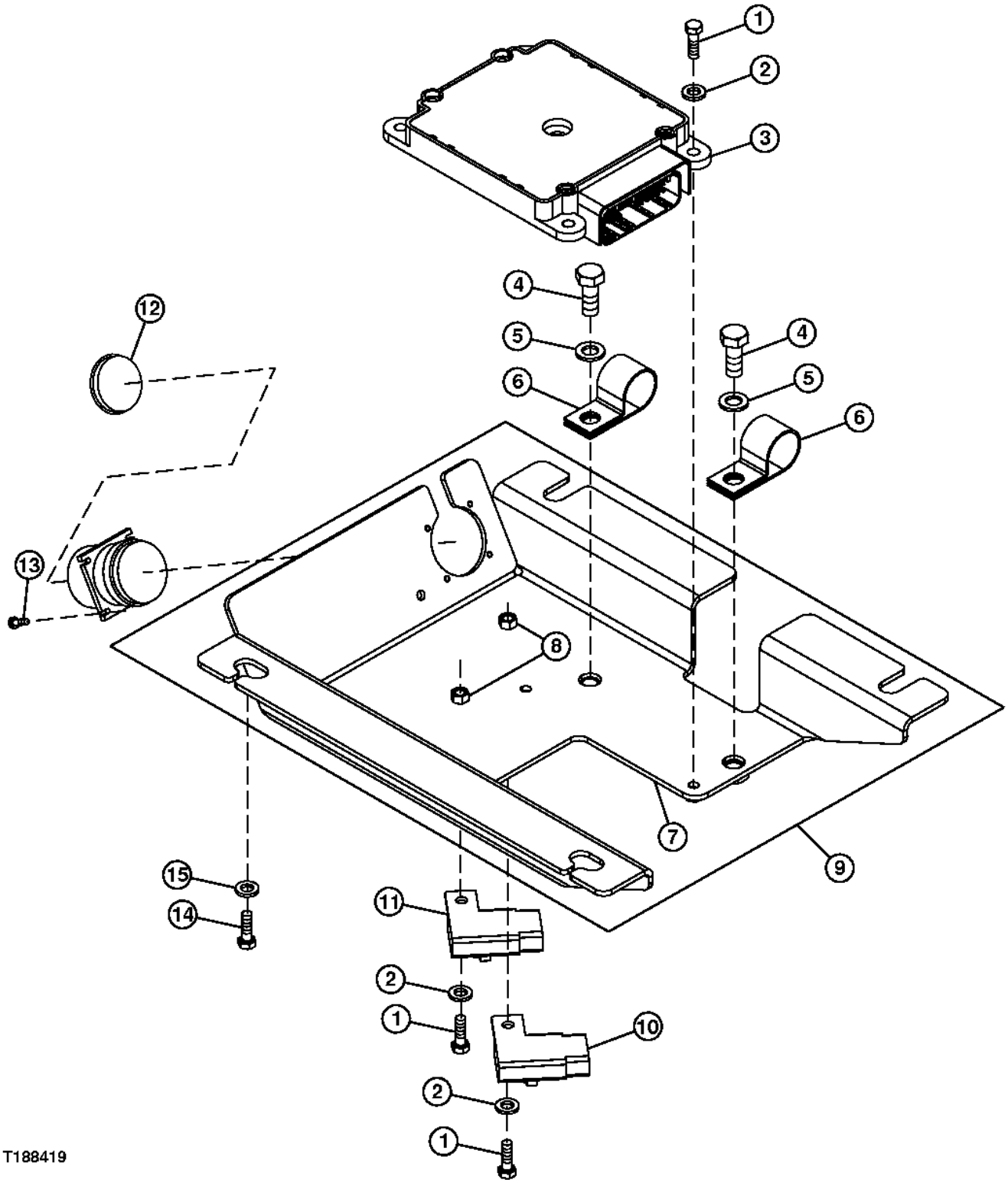

Pos.	*Ref.*	*Descripción*	*Cant.*	*Núm. de serie*	*Notas*
1	19M7372	Tornillo	6		M5 X 16
2	24M7088	Arandela	6		6.600 X 12 X 1.600 mm
3	RE532629	Controlador elect.del motor	1		(ECU EN BLANCO) (DEBE DESCARGAR EL SOFTWARE DE ACUERDO CON EL NUMERO DE SERIE DEL MOTOR)
4	19M7881	Tornillo	2		M8 X 20
5	24M7095	Arandela	2		8.400 X 15 X 1.600 mm
6	T78787	Abrazadera	2		
7	.....	Perfil en u	1		(T188696 NLA) , (SUB AT196349)
8	14M7297	Tuerca	6		M5
9	AT196349	Apoyo	1		
10	57M7121	Fusible	1		ECU (10 AMP)
11	57M7125	Fusible	1		SERVICE EXPERT™ (5 AMP)
12	57M7477	Capuchón de conector eléc.	1		
13	21M7394	Tornillo	4		M3 X 10
14	19M8533	Tornillo	4		M10 X 25
15	24M7028	Arandela	4		10.500 X 20 X 2 mm

POWER CONVERTER (24-VOLT TO 12-VOLT)
CONVERTISSEUR D'ALIMENTATION (24 VOLT A 12 VOLT)
CONVERTIDOR DE ALIMENTACION (24 V A 12 V)

T157389 A.1

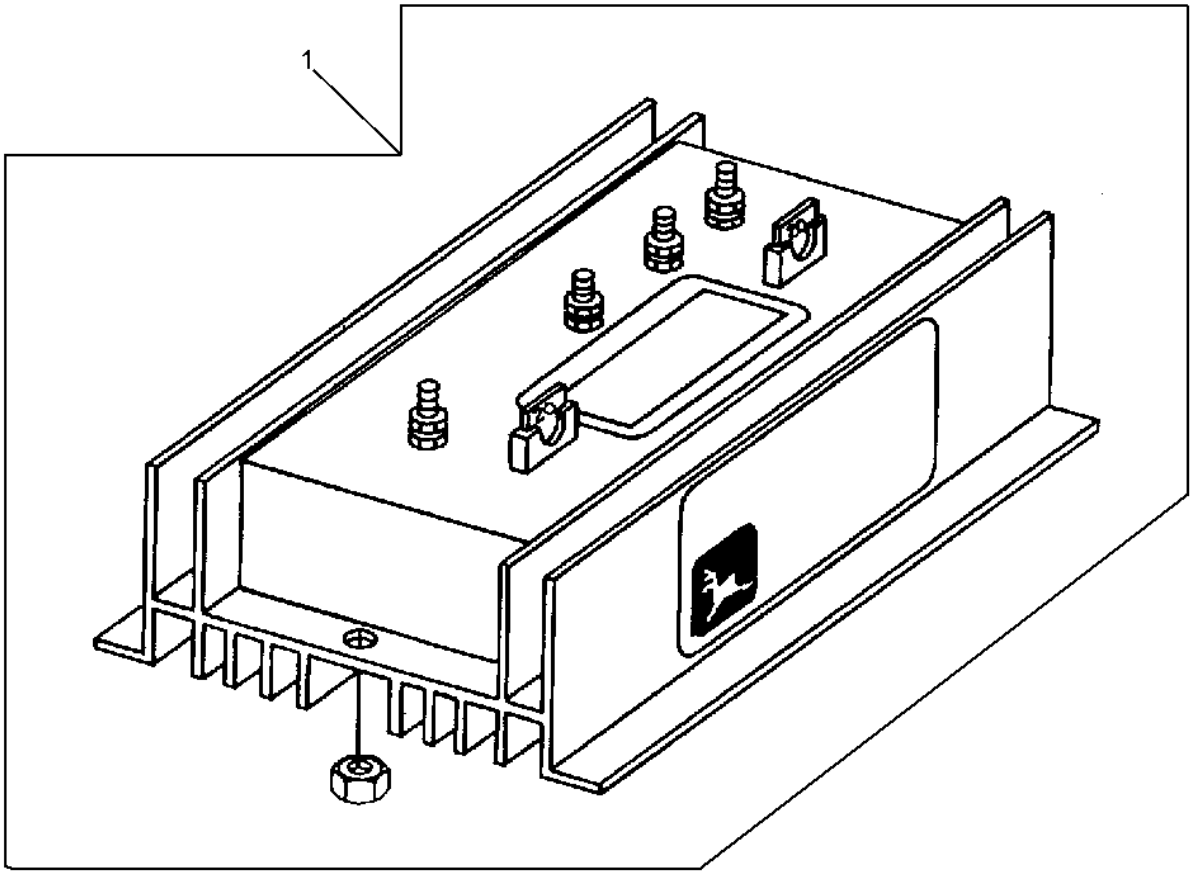

T157389

Pos.	*Ref.*	*Descripción*	*Cant.*	*Núm. de serie*	*Notas*
1	AT142288	Convertidor	1		(10/20 AMP - 24/12 V)
	14H786	Tuerca	2		1/4", (NO SE ILUSTRA)

BOOM TO MAIN FRAME PIN
ENTRE FLECHE ET AXE DE CHASSIS PRINCIPAL
AGUILON A PASADOR DE BASTIDOR PRINCIPAL

TX1054430 A.1

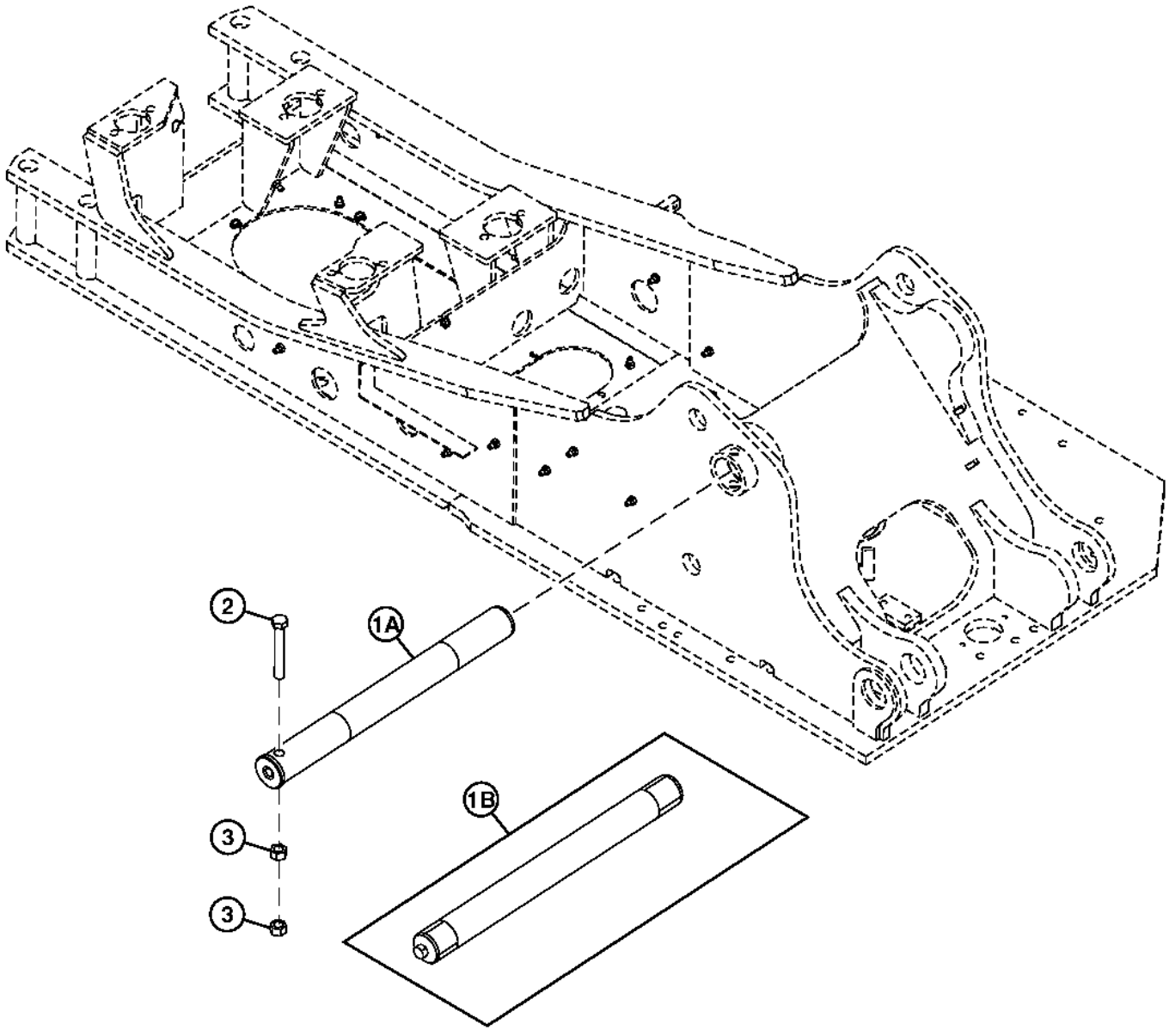

TX1054430

Pos.	*Ref.*	*Descripción*	*Cant.*	*Núm. de serie*	*Notas*
1A	P64864	Pasador	1		
1B	AT361189	Pasador	1		(PASADOR EXPANSOR OPCIONAL)
	T248605	Manguito	2		
2	19M8503	Tornillo	1		M20 X 160
3	14M7277	Tuerca	2		M20

SWING BEARING COMPONENTS
COMPOSANTS DE ROULEMENTS DE PIVOTEMENT
COMPONENTES DEL COJINETE DE GIRO

TP67055 A.1

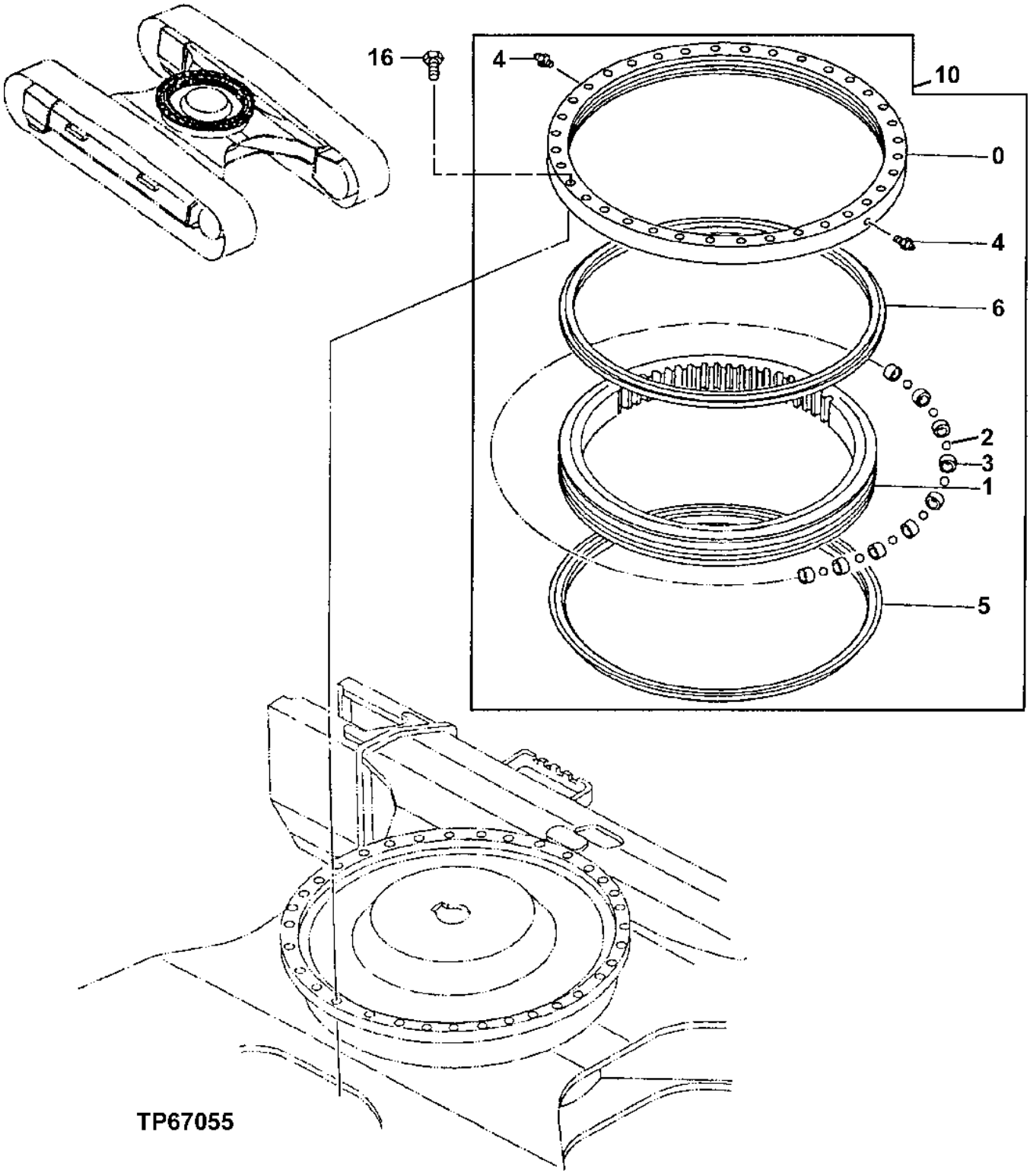

Pos.	*Ref.*	*Descripción*	*Cant.*	*Núm. de serie*	*Notas*
0	.....	Pista de rodamiento	1		
1	.....	Pista de rodamiento	1		
2	4428919	Bola	121		SUB FOR 4355728
3	4127708	Espaciador	121		
4	TH100074	Engrasador	2		
5	T203958	Retén	1		4631753 NLA, SUB FOR 4634010; ALSO ORDER PM37391 AND AT66866; ALSO ORDER T216880, Instrucciones de montaje
6	T203958	Retén	1		4631753 NLA, SUB FOR 4634010; ALSO ORDER PM37391 AND AT66866; ALSO ORDER T216880, Instrucciones de montaje
10	9169646	Rodamiento central	1		NLA; ORDER 9169646EX
	9169646EX	Rodamiento de torreta reman	1		REMAN FOR 9169646
16	4348589	Tornillo	36		
	J257220	Arandela elástica	36		

SWING BEARING LOWER MOUNTING AND GREASE BATH COVER
SUPPORT DE MONTAGE INFERIEUR ET COUVERCLE DE BAIN D'HUILE DE ROULEMENT DE PIVOTEMENT
MONTAJE INFERIOR DEL COJINETE DE GIRO Y CUBIERTA CON BANO DE GRASA

T189631 A.1

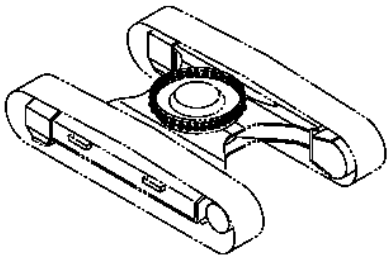

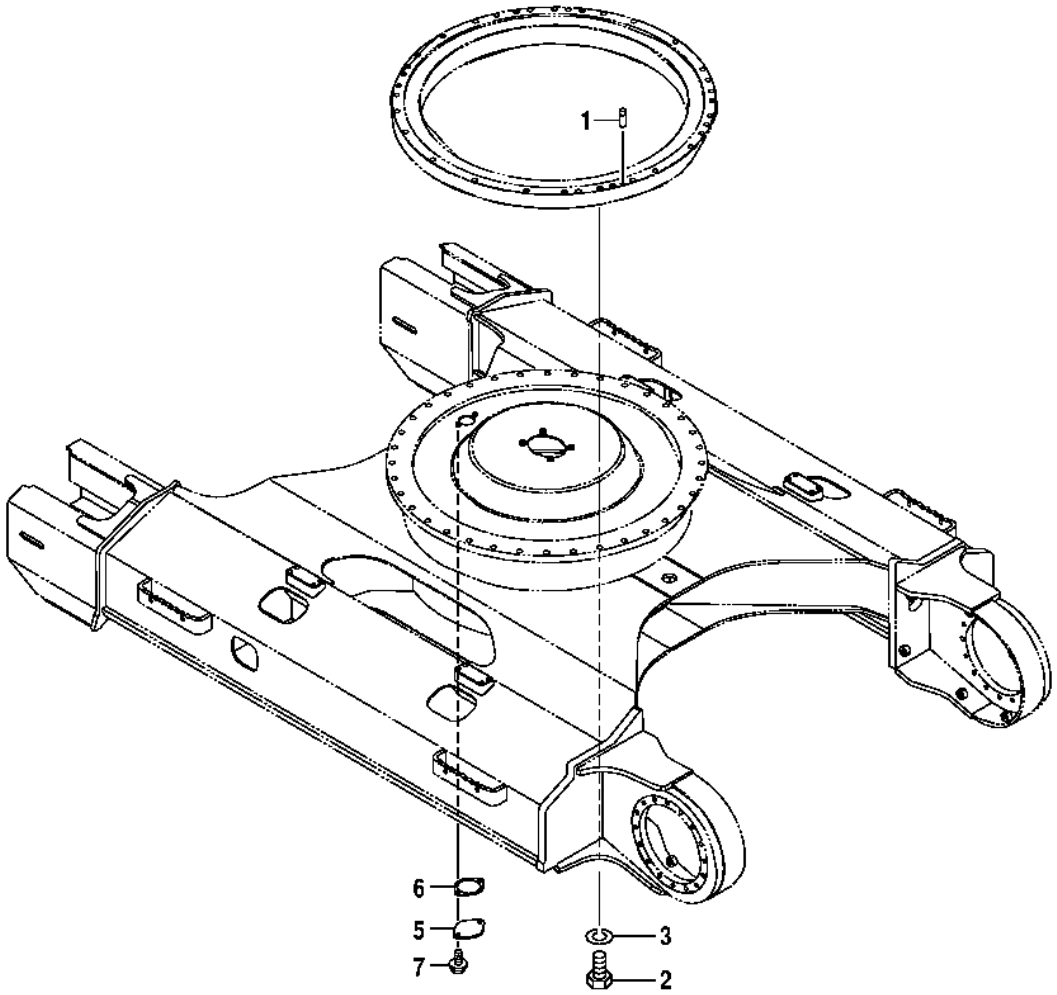

T189631

Pos.	*Ref.*	*Descripción*	*Cant.*	*Núm. de serie*	*Notas*
1	4425980	Bulón	1		
2	4348589	Tornillo	36		
3	J257220	Arandela elástica	36		
5	4128863	Placa	1		
6	4272297	Junta	1		
7	19M7402	Tornillo	2		M10 X 25
	12M7066	Arandela de seguridad	2		10 mm

MAIN FRAME AND BOOM CYLINDER PINS
CHASSIS PRINCIPAL ET AXES DE VERIN DE FLECHE
BASTIDOR PRINCIPAL Y PASADORES DEL CILINDRO DE AGUILON

T162225 A.1

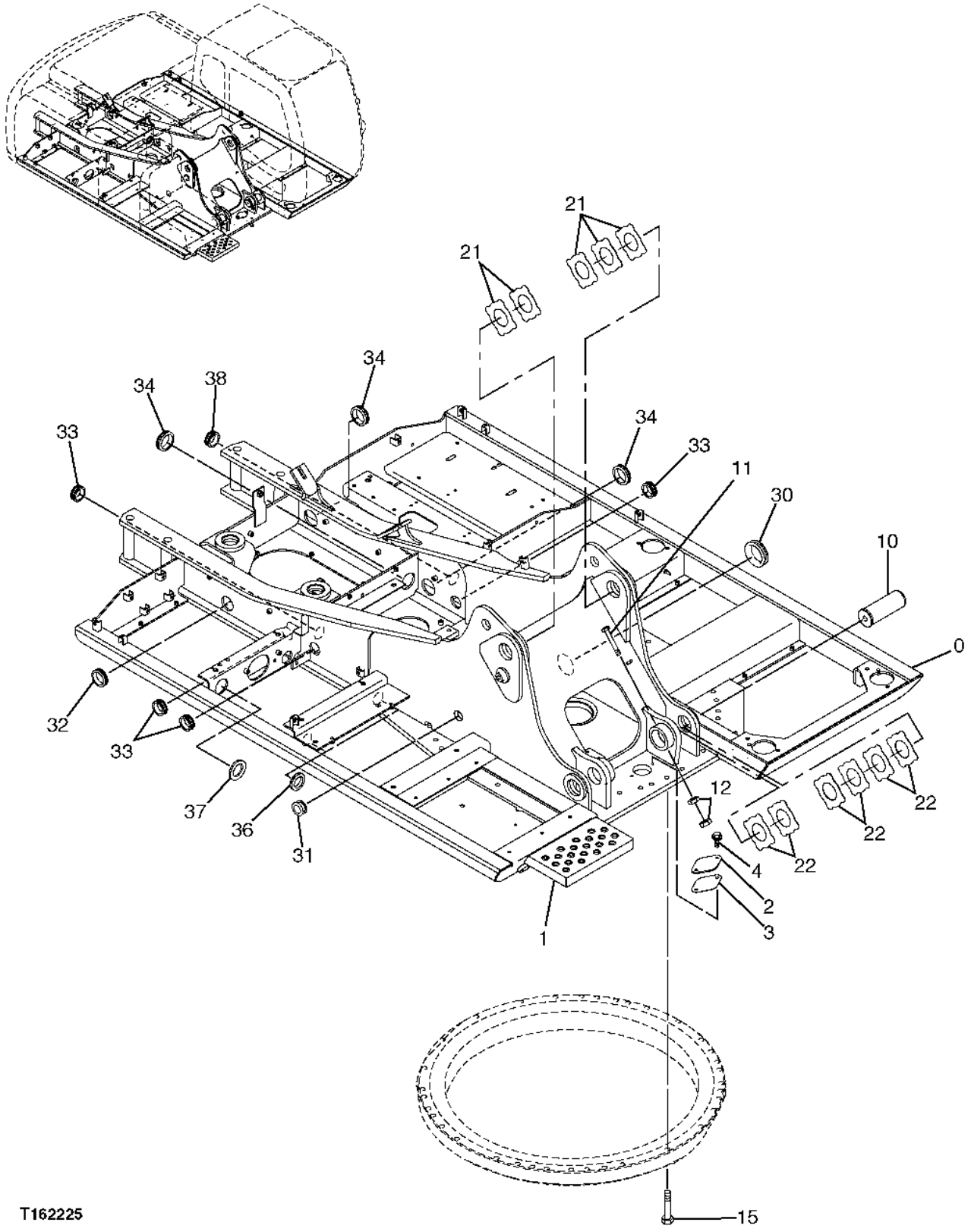

Pos.	*Ref.*	*Descripción*	*Cant.*	*Núm. de serie*	*Notas*
0	.....	Bastidor principal	1	-005117	(DH500062 NLA)
	5008790	Bastidor principal	1	005118-	
1	3094103	Peldaño	1		(SUB FOR 3084653)
2	4255799	Tapadera	1		
3	4161735	Junta	1		
4	19M7402	Tornillo	2		M10 X 25
	12M7066	Arandela de seguridad	2		10 mm
10	P64865	Bulón	2		
11	19M8503	Tornillo	2		M20 X 160
12	14M7277	Tuerca	4		M20
15	J922095	Tornillo	31		
21	4361179R	Arandela de empuje	5		(SUB FOR 4361179)
22	4361604R	Arandela de empuje	6		(SUB FOR 4361604)
30	4190960	Pasamuros	1		
31	4221018	Casquillo	1		
32	4201749	Pasamuros	1		
33	4201749	Pasamuros	4		
34	4292762	Casquillo	3		
36	4509404	Pasamuros	2		
37	4618055	Pasamuros	1		(SUB FOR 4211191)
38	4201749	Pasamuros	1		

COUNTERWEIGHT, MOUNTING AND PADS
CONTREPOIDS, SUPPORT DE MONTAGE ET PATINS
CONTRAPESO, MONTAJE Y TACOS

T192677 A.1

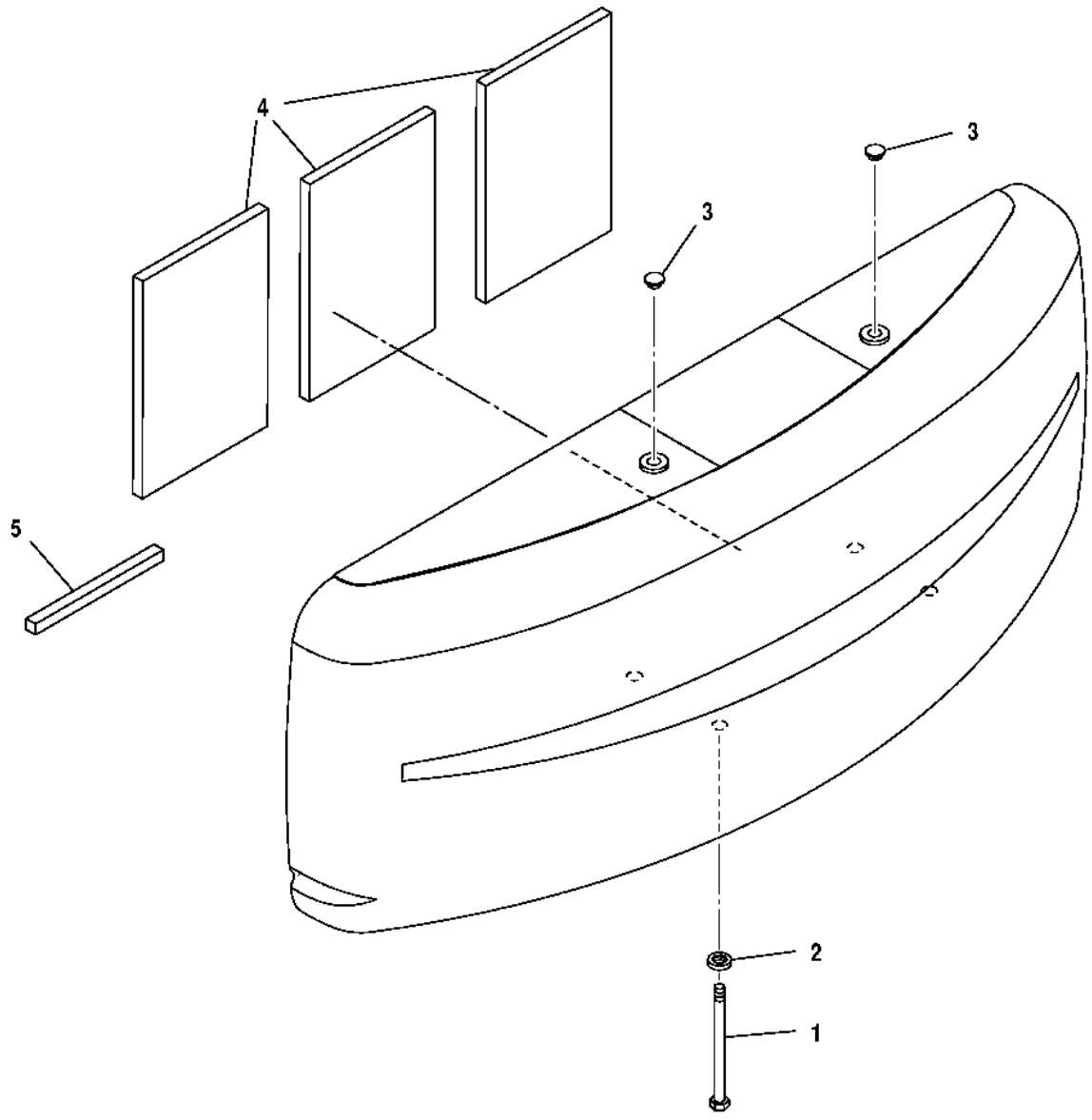

T192677

Pos.	*Ref.*	*Descripción*	*Cant.*	*Núm. de serie*	*Notas*
0	.....	Contrapeso	1	-XXXXXX	(AP38187 NLA) , (CONTRAPESO 3000KG)
	DH500060	Contrapeso	1	XXXXXX-	(CONTRAPESO 3300KG)
1	J932726	Tornillo	4		
2	4126485	Casquillo	4		
3	4149678	Tapón	2	-XXXXXX	
	DH400360	Tapa	2	XXXXXX-	
4	P67782	Aislante	3		
5	P65620	Aislante	1		

CAB LEFT AND RIGHT CONSOLES
CONSOLE CABINE GAUCHE ET DROITE
CONSOLA DERECHA E IZQUIERDA DE LA CABINA

T142593 A.1

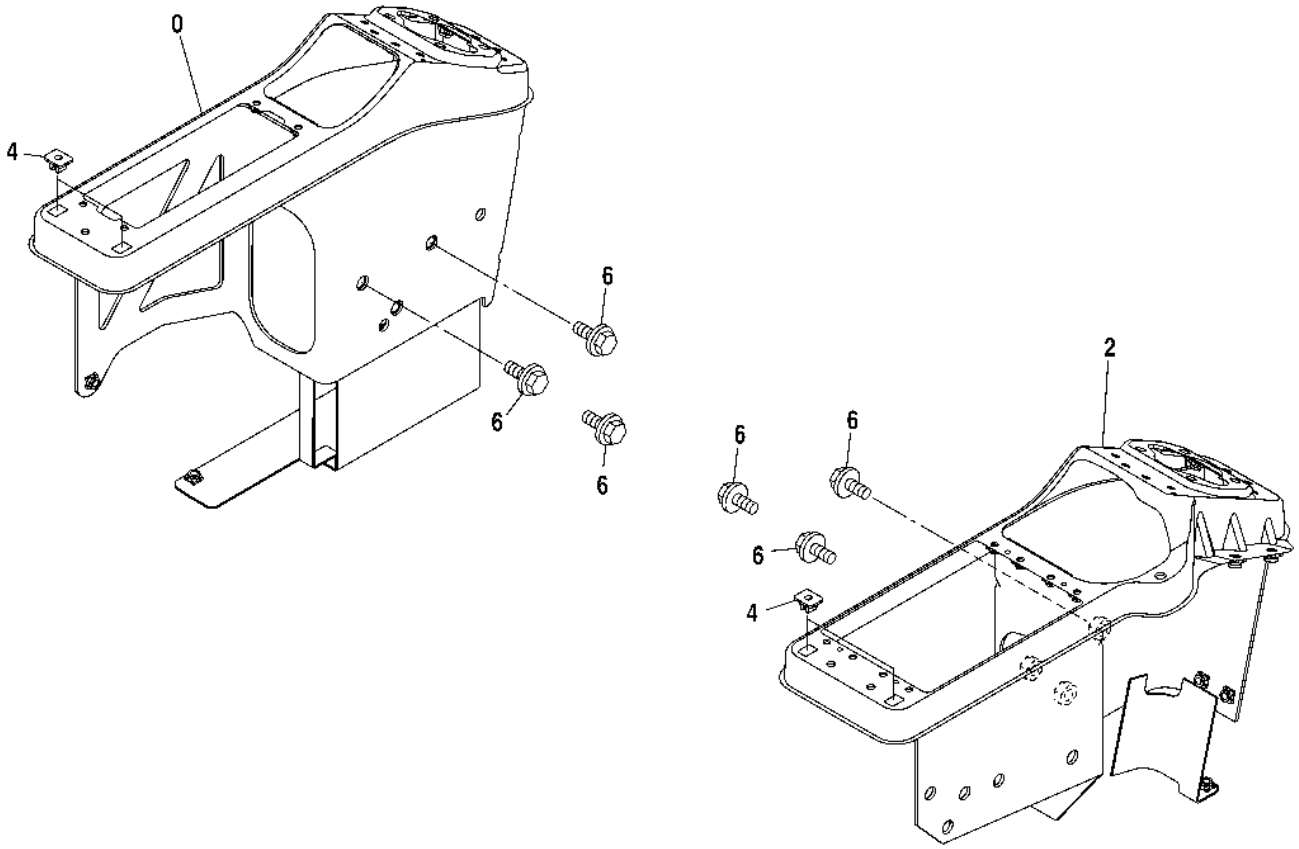

T142593

Pos.	*Ref.*	*Descripción*	*Cant.*	*Núm. de serie*	*Notas*
0	TH7036594	Consola	1		(LH)
2	TH7036595	Consola	1		(RH)
4	AT213958	Presilla	4		
6	19M7402	Tornillo	6		M10 X 25
	24M7096	Arandela	6		10.500 X 18 X 1.600 mm
	12M7066	Arandela de seguridad	6		10 mm

CAB LEFT AND RIGHT CONSOLE COVERS
PROTECTIONS DE CONSOLES GAUCHE ET DROITE DE CABINE
CUBIERTAS DE CONSOLAS DERECHA E IZQUIERDA DE LA CABINA

T142594 A.1

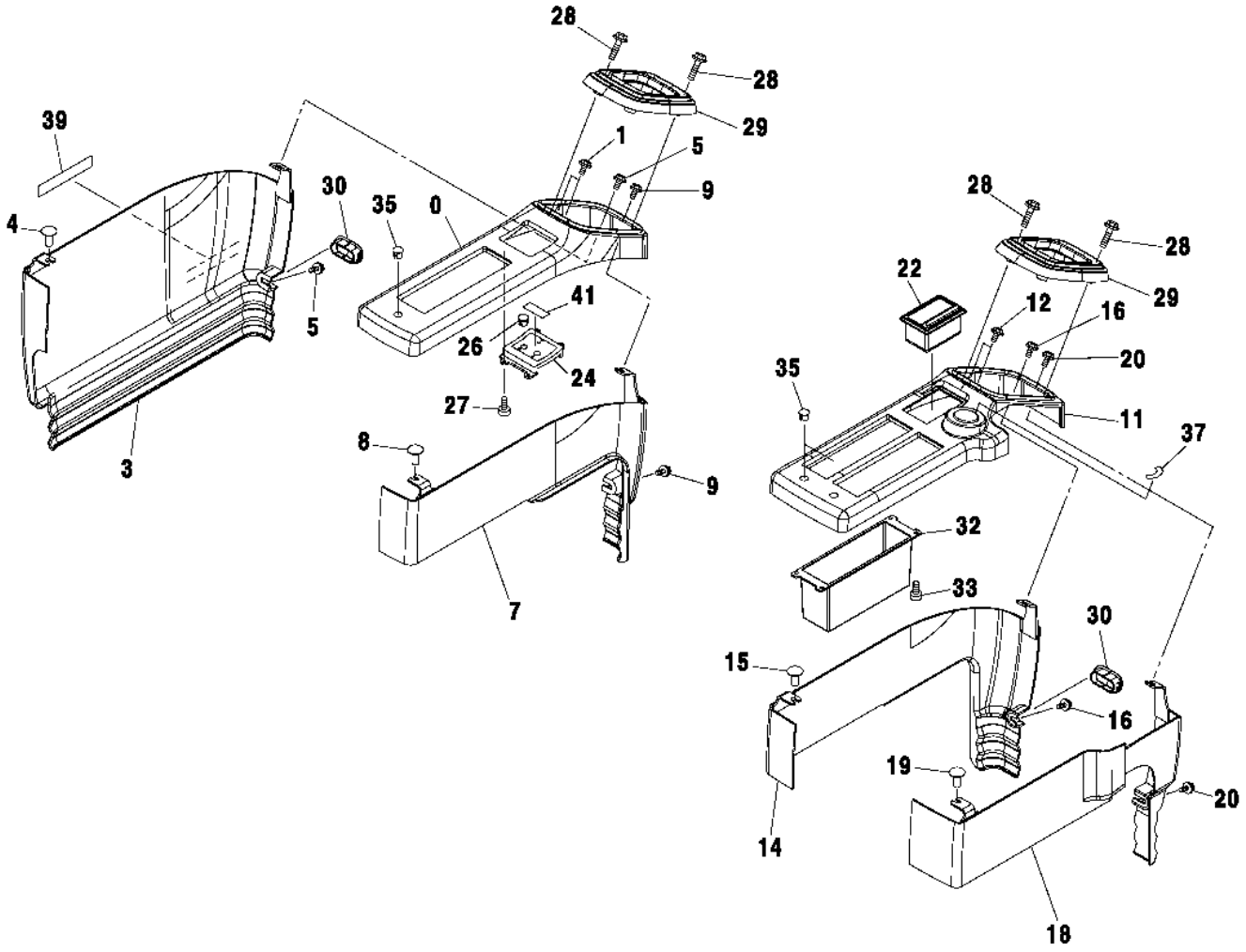

T142594

Pos.	*Ref.*	*Descripción*	*Cant.*	*Núm. de serie*	*Notas*
0	TH4420875	Tapadera	1		
1	21M7246	Tornillo	3		M6 X 16
	12M7006	Arandela de seguridad	3		6 mm
	24M7105	Arandela	3		6 X 12 X 1.600 mm
3	TH4420876	Tapadera	1		
4	AT214012	Tornillo	1		
5	21M7246	Tornillo	5		M6 X 16
	12M7006	Arandela de seguridad	5		6 mm
	24M7105	Arandela	5		6 X 12 X 1.600 mm
7	TH4420877	Tapadera	1		
8	AT214012	Tornillo	1		
9	21M7246	Tornillo	2		M6 X 16
	12M7006	Arandela de seguridad	2		6 mm
	24M7105	Arandela	2		6 X 12 X 1.600 mm
11	TH4420878	Tapadera	1		
12	21M7246	Tornillo	4		M6 X 16
	12M7006	Arandela de seguridad	4		6 mm
	24M7105	Arandela	4		6 X 12 X 1.600 mm
14	TH4420879	Tapadera	1		
15	AT214012	Tornillo	1		
16	21M7246	Tornillo	2		M6 X 16
	12M7006	Arandela de seguridad	2		6 mm
	24M7105	Arandela	2		6 X 12 X 1.600 mm
18	TH4420880	Tapadera	1		(TH4451095 NLA)
19	AT214012	Tornillo	1		
20	21M7246	Tornillo	2		M6 X 16
	12M7006	Arandela de seguridad	2		6 mm
	24M7105	Arandela	2		6 X 12 X 1.600 mm
22	TH4415024	Cenicero	1		
24	3091842	Panel	1		(SUB FOR TH3091842)
26	AT215503	Tapa	1		
27	TH4452613	Tornillo	1		
28	19M7177	Tornillo	8		M6 X 35
	12M7006	Arandela de seguridad	8		6 mm
	24M7293	Arandela	8		6.500 X 13 X 1.600 mm
29	TH2045509	Tapadera	2		
30	TH4441117	Tapa	2		
32	TH3090025	Portador	1		
33	AT214011	Tornillo	4		
35	TH4448990	Tapa	3		
37	4264805	Etiqueta adhesiva	1		(LLAVE DE ENCENDIDO)
39	T138886	Etiqueta adhesiva	1		(BLOQUEO)
41	.....	Etiqueta adhesiva	1		(TH4459435 NLA)

RIGHT COVER
COUVERCLE DROIT
CUBIERTA DERECHA

T142595 A.1

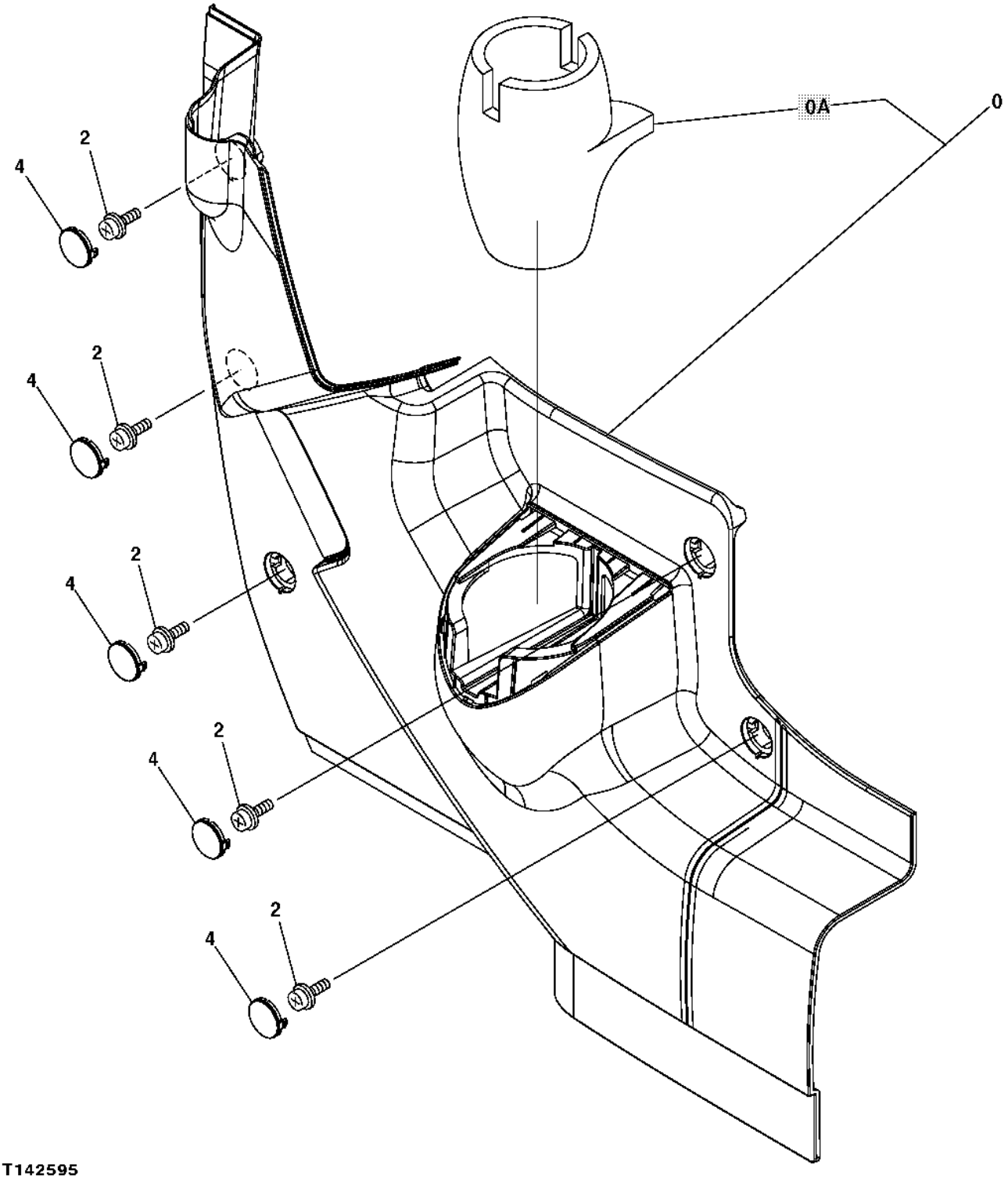

Pos.	*Ref.*	*Descripción*	*Cant.*	*Núm. de serie*	*Notas*
0	TH4445917	Tapadera	1		
0A	TH4445932	Tapadera	1		
2	19M8425	Tornillo	5		M6 X 16
	12M7006	Arandela de seguridad	5		6 mm
	24M7293	Arandela	5		6.500 X 13 X 1.600 mm
4	TH4426354	Tapa	5		

CAB TO MAIN FRAME MOUNTING
MONTAGE CABINE A CHASSIS PRINCIPAL
MONTAJE DE CABINA A BASTIDOR PRINCIPAL

T150989 A.1

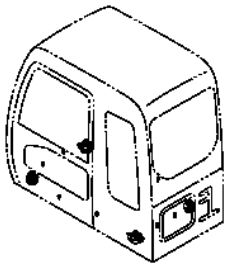

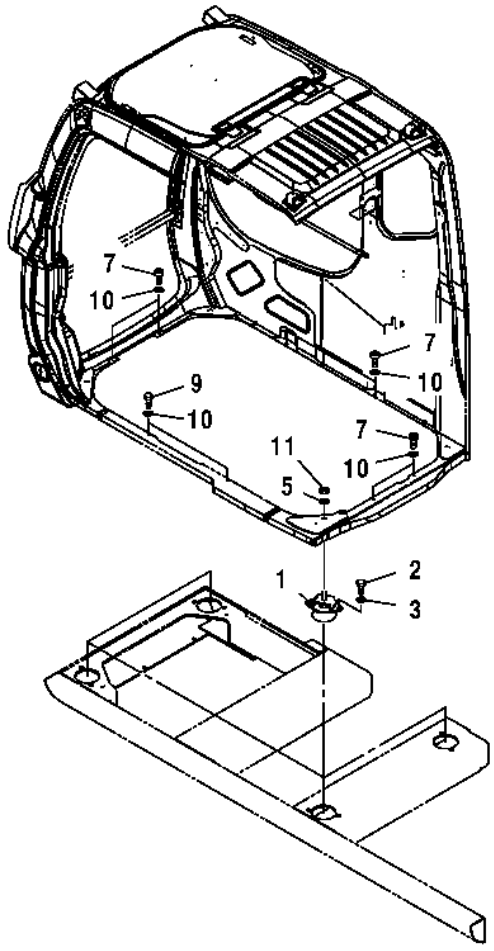

T150989

Pos.	*Ref.*	*Descripción*	*Cant.*	*Núm. de serie*	*Notas*
1	4409999	Aislante	4		
2	19M7493	Tornillo	8		M12 X 40, (SUB FOR 4330785 OR J921240)
3	12H301	Arandela de seguridad	8		1/2"
5	24M7338	Arandela	4		17 X 30 X 3 mm
7	19M8337	Tornillo	4		M10 X 30
9	19M7402	Tornillo	6		M10 X 25
	12M7066	Arandela de seguridad	6		10 mm
	24M7028	Arandela	6		10.500 X 20 X 2 mm
10	24M7346	Arandela	8		11 X 20 X 2 mm
11	14M7328	Tuerca de seguridad	4		M16

CAB
CABINE
CABINA

T150990 A.1

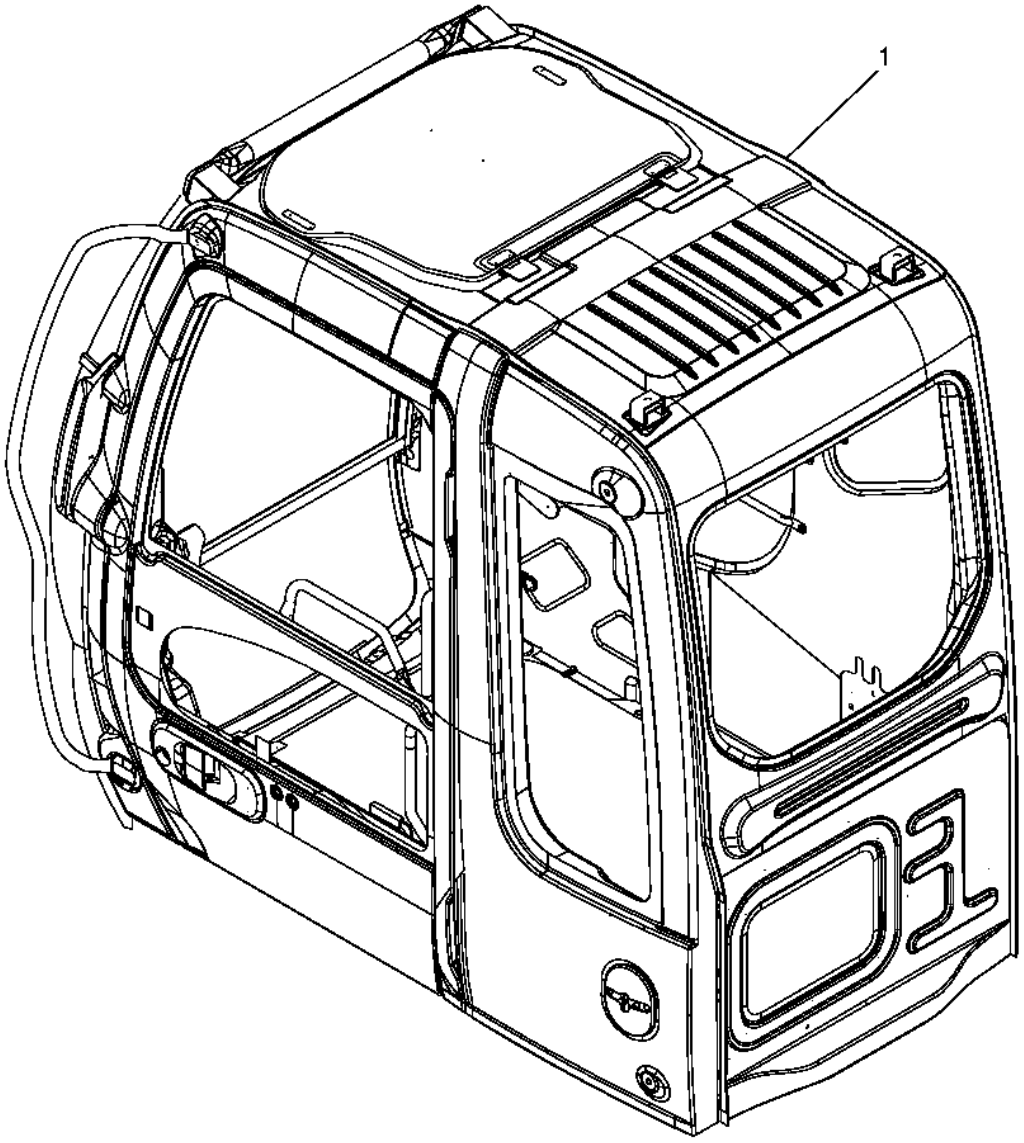

T150990

Pos.	*Ref.*	*Descripción*	*Cant.*	*Núm. de serie*	*Notas*
1	9202944	Cabina	1		(VER PAGINAS SIGUIENTES PARA COMPONENTES)

WINDSHIELD WIPER, RADIO SPEAKERS AND ANTENNA
ESSUIE-GLACE, HAUT-PARLEURS ET ANTENNE RADIO
LIMPIAPARABRISAS, ALTAVOCES DEL RADIO Y ANTENA

T196845 A.1

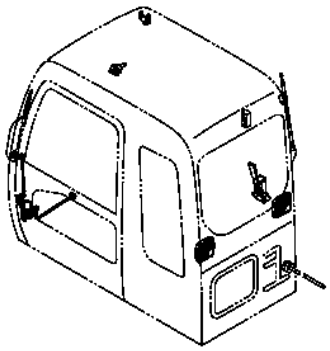

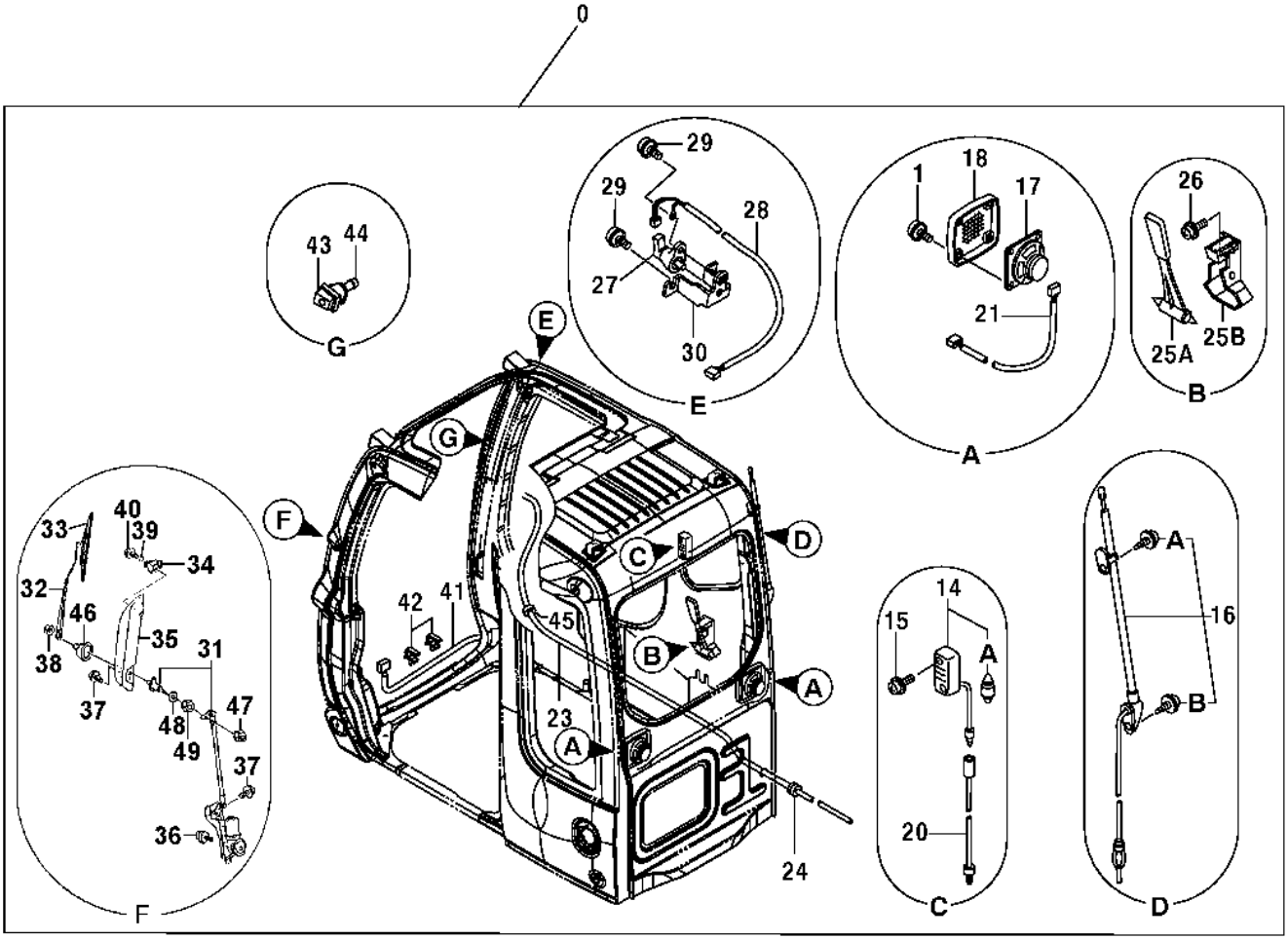

T196845

Pos.	Ref.	Descripción	Cant.	Núm. de serie	Notas
0	9202944	Cabina	1		SUB FOR 4474296 OR 4602549, Contiene todas las piezas indicadas en esta página, Componentes adicionales listados en páginas distintas
1	TH4456427	Tornillo	8		
14	4187082	Faro	1		SUB FOR TH108567
14A	4698994	Lámpara	1		SUB FOR TH108568, 4187083
15	TH4456428	Tornillo	2		
16	AT131697	Antena	1		
16A	AT131864	Tornillo	1		
16B	AT131865	Tornillo	1		
17	4361302	Altavoz	2		SUB FOR AT214007
18	4364504	Enrejado	2		SUB FOR AT214017
20	4260369	Grupo de cables	1		SUB FOR AT154278
21	AT214061	Grupo de cables	2		
23	AT214063	Manguera	1		
24	4287903	Pasamuros	1		SUB FOR AT154413
25A	4362700	Martillo	1		SUB FOR T158020
25B	2038764	Soporte	1		SUB FOR T158021
26	TH4456428	Tornillo	2		
27	AT182625	Interruptor	1		
28	AT182626	Grupo de cables	1		
29	4456428	Tornillo	3		
30	TH4456429	Soporte	1		
31	TH4453690	Motor de limpiaparabrisas	1		
32	TH4453687	Brazo de limpiaparabrisas	1		
33	TH4453686	Hoja de limpiaparabrisas	1		
34	TH4456433	Portador	1		
35	TH4456434	Protección	1		
36	19M7881	Tornillo	3		M8 X 20
	.....	Arandela	3		12M7065 NLA
	24M7055	Arandela	3		8.400 X 16 X 1.600 mm
37	TH4456238	Tornillo	4		
38	14M7273	Tuerca	1		M8
39	AT154150	Anillo tórico	1		5.800 X 1.900 mm (0.228" X 0.075")
40	TH4456458	Tornillo	1		
41	TH4456435	Grupo de cables	1		
42	TH4456436	Presilla	2		
43	TH4456450	Tobera	1		
44	4367481	Válvula hidr. regul. caudal	1		SUB FOR AT214041
45	AT214079	Pasamuros	1		
46	4603011	Tapa	1		
47	4603012	Tuerca	1		
48	4603013	Arandela	1		
49	4431859	Tuerca	1		

CAB LEFT AND REAR WINDOWS, ROOF AND HANDRAIL
GLACES ARRIERE ET GAUCHE, TOIT ET MAIN COURANTE DE LA CABINE
VENTANAS TRASERA E IZQUIERDA DE CABINA, TECHO Y PASAMANOS

T201892 A.1

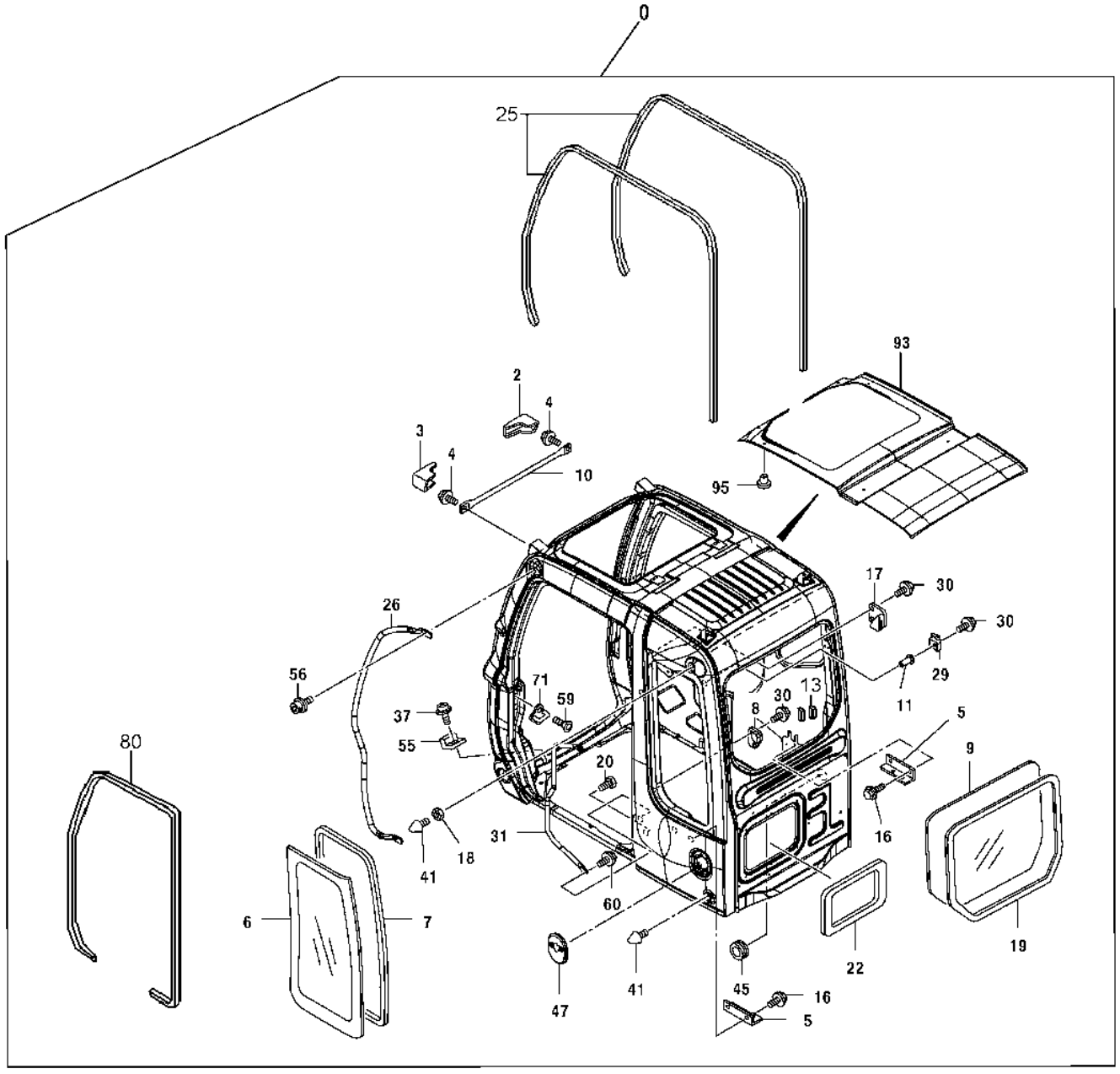

T201892

Pos.	Ref.	Descripción	Cant.	Núm. de serie	Notas
0	9202944	Cabina	1		(CONTIENE TODOS ELEMENTOS EN ESTA PAGINA - COMPONENTES ADICIONALES EN PAGINAS ANTERIORES Y POSTERIORES)
2	TH4456177	Tapadera	1		
3	TH4456178	Tapadera	1		
4	TH4456179	Tornillo	2		
5	TH4456181	Soporte	2		
6	.....	Cristal de ventana	1		(4602580 NLA) , (BRONCE)
	4602567	Cristal de ventana	1		(VERDE)
7	AT218190	Retén	1		
8	TH4456183	Aislante	1		
9	.....	Cristal de ventana	1		(BRONCE)
	4602569R	Cristal de ventana	1		(VERDE)
10	4474300	Tubo	1		
11	TH4456185	Tuerca	1		
13	4603008	Aislante	2		
16	19M7402	Tornillo	4		M10 X 25
	12M7066	Arandela de seguridad	4		10 mm
	24M7028	Arandela	4		10.500 X 20 X 2 mm
17	TH4456182	Aislante	1		
18	4414857	Tuerca	1		(SUB FOR AT157068)
19	.....	Cristal de ventana	1		(SUB 4602569R)(4448314 NLA)
	4602569R	Cristal de ventana	1		(VERDE)
	4602577	Aislante	1		(USE WITH 4602569R)
20	19M8425	Tornillo	1		M6 X 16
	24H1287	Arandela	1		9/32" X 5/8" X 0.065"
	12M7006	Arandela de seguridad	1		6 mm
22	TH4453667	Aislante	1		
25	4456175	Aislante	2		
26	4474298J	Pasamano	1		(SUB FOR 4474298)
29	TH4456184	Aislante	1		
30	AT214310	Tornillo con arandela	5		
31	TH4453663	Pasamano	1		
37	21M7246	Tornillo	2		M6 X 16
	12M7006	Arandela de seguridad	2		6 mm
	24M7293	Arandela	2		6.500 X 13 X 1.600 mm
41	4304827	Paragolpes	2		(SUB FOR AT156970)
45	AT214078	Pasamuros	1		
47	4474299	Tapadera	1		
55	AT214173	Aislante	2		
56	19M7550	Tornillo	2		M10 X 35
	24H1305	Arandela	2		13/32" X 13/16" X 0.065"
	12M7066	Arandela de seguridad	2		10 mm
59	4320163	Tornillo	2		(SUB FOR AT200584)
60	.....	Tornillo con arandela	2		(AT214305 OR 4372219 NLA)
	19M7662	Tornillo	2		M10 X 30, (SUB FOR J901030)
	24M7346	Arandela	2		11 X 20 X 2 mm, (SUB FOR J922010)
71	AT214129	Perno de cierre	1		
80	4453672	Aislante	1		
93	TH4453665	Chapa	1		
95	TH4453666	Presilla	14		

Cab Door Assembly, Latch and Windows
Portière de cabine, loquet et glaces
Conjunto de puerta de cabina, pestillo y ventanas

TX1134046 A.1

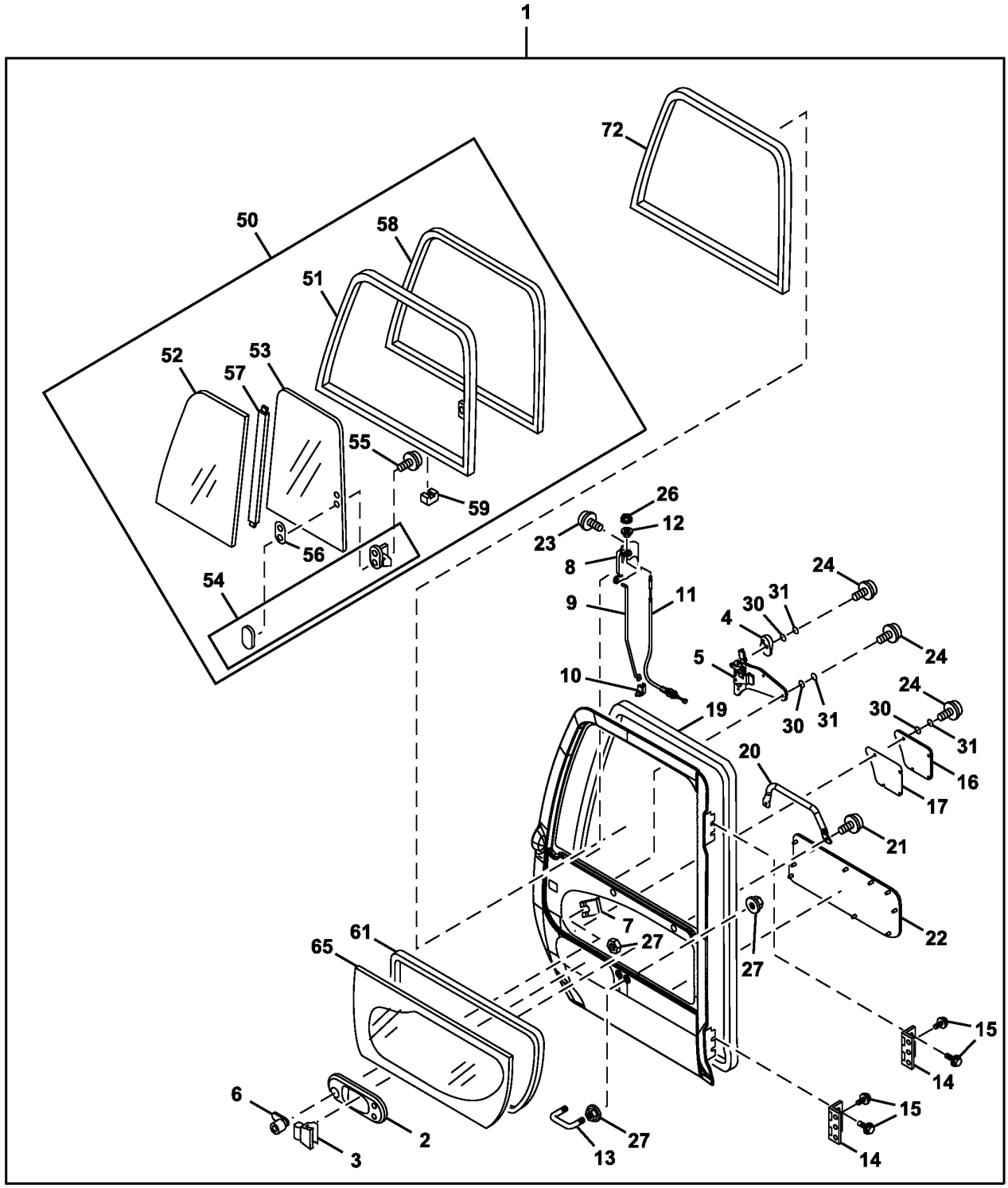

TX1134046

Pos.	Ref.	Descripción	Cant.	Núm. de serie	Notas
0	9202944	Cabina	1		(SUB FOR 4474296 OR 4602549), No se ilustra, Contiene todos elementos en esta pág. - componentes adicionales enumerados páginas separadas
1	4474301	Puerta	1		Conjunto
2	TH4455979	Tapadera	1		
3	4369645	Mango	1		Exterior, SUB FOR AT214145
4	TH4455975	Mango	1		Interior
5	4620431	Mango	1		(INNER)
6	AT176789	Cerradura	1		
7	4372091	Presilla	1		(SUB FOR AT214290)
8	TH4455982	Cerradura	1		
9	TH4455983	Vástago	1		
10	TH4444664	Portador	1		
11	4456171	Alambre	1	-XXXXXX	(SUB FOR TH4456171)
	4623165	Alambre	1	XXXXXX-	(ALSO ORDER 4623166)
12	TH4455981	Casquillo	1		
13	AT214160	Perno en u	1		
14	4455980	Bisagra	2		(SUB FOR 4474303 OR TH4455980)
15	AT214313	Tornillo con arandela	6		
16	4474304	Tapadera	1		
17	TH4455977	Aislante	1		
19	TH4455978	Burlete	1		
20	TH4453670	Pasamano	1		
21	AT214299	Tornillo con arandela	2		
22	4453671	Chapa	1		
23	AT213624	Tornillo	3		
	AT214314	Arandela	3		
24	21M7285	Tornillo	8		M6 X 12, (SUB FOR 21M7246)
26	4456172	Tuerca	1		
27	4414857	Tuerca	4		(SUB FOR AT157068)
28	4623166	Presilla	1	XXXXXX-	(USE WITH 4623165), No se ilustra
29	4320147	Presilla	AR		(USE WITH 4453671), No se ilustra
30	12M7006	Arandela de seguridad	8		6 mm
31	24M7293	Arandela	8		6.500 X 13 X 1.600 mm
50	4453676	Ventana	1		(SUB FOR TH4453676), Bronce
	4602582	Ventana	1		Verde
51	4453673	Bastidor	1		
52	.....	Cristal de ventana	1		(TH4448308, 4448308 NLA), Bronce
	4602564R	Cristal de ventana	1		(SUB FOR 4602564), Verde
53	.....	Cristal de ventana	1		(4448309 NLA) (SUB FOR TH4448309) (SUB 4602565R), Bronce
	4602565R	Cristal de ventana	1		(SUB FOR 4602565), Verde
54	AT214152	Cerradura	1		
55	AT213608	Tornillo con arandela	2		
56	AT214292	Junta	1		
57	TH4453675	Aislante	1		
58	TH4453674	Ventana	1		
59	4147896	Espaciador	3		(SUB FOR TH108646)
61	AT218141	Retén	1		
65	4448310	Cristal de ventana	1		(SUB FOR 4468943), Bronce
	4602566	Cristal de ventana	1		Verde
72	TH4448315	Aislante	1		

CAB FRONT WINDOWS, HANDLES AND OPENING TRACKS
GLACES AVANT DE CABINE, POIGNEES ET CHEMINS DE ROULEMENT POUR OUVERTURE
VENTANAS DEL. CABINA, PASAMANOS Y CADENAS DE ABERTURA

T146541 A.1

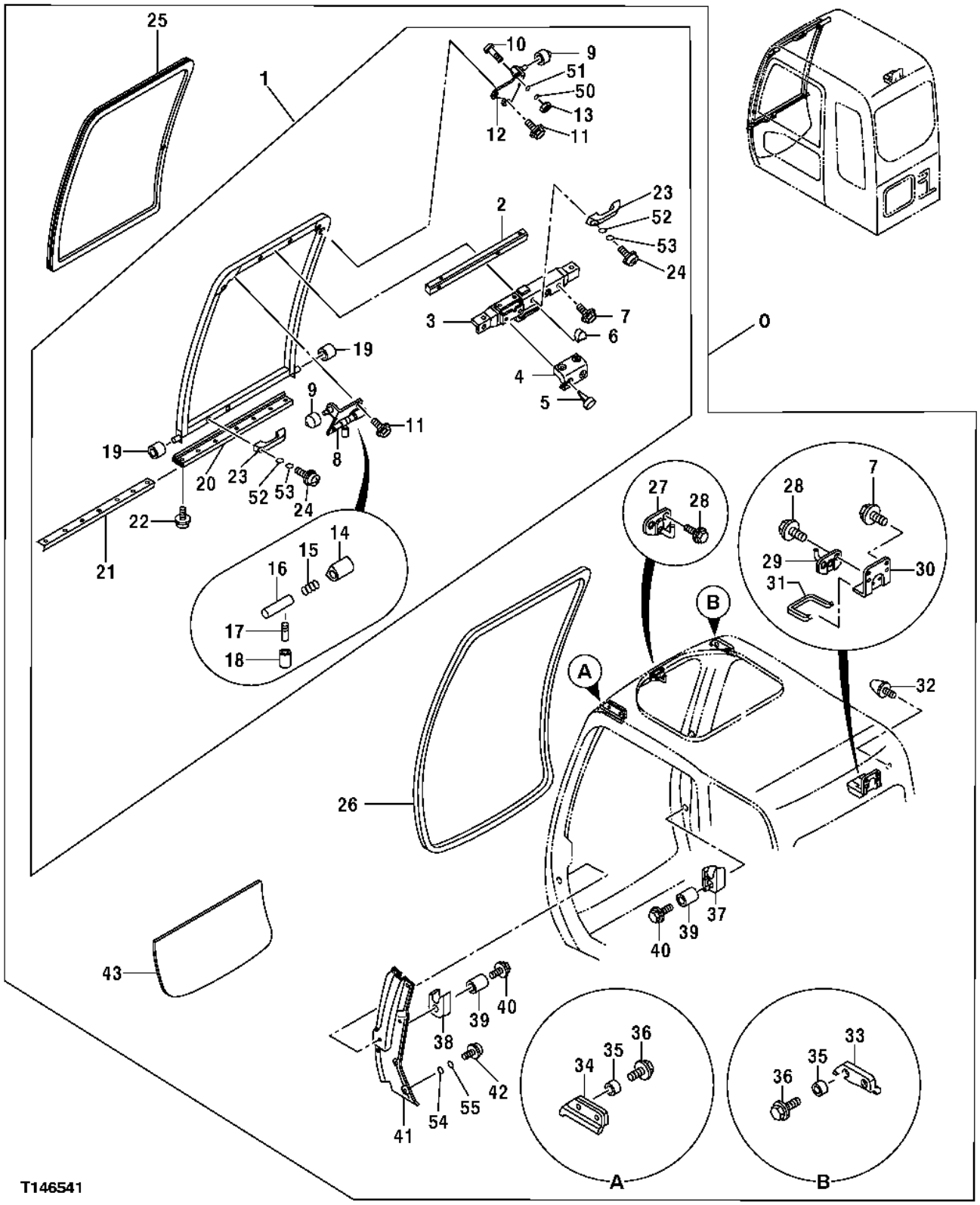

Pos.	Ref.	Descripción	Cant.	Núm. de serie	Notas
0	9202944	Cabina	1		(CONTIENE TODOS ELEMENTOS EN ESTA PAGINA - COMPONENTES ADICIONALES EN PAGINAS ANTERIORES Y POSTERIORES)
1	TH4453689	Ventana	1		
2	TH4456218	Tuerca soldable	1		
3	TH4456219	Cerradura	1		
4	TH4456220	Tapadera	1		
5	TH4456221	Presilla	4		
6	TH4456222	Tapadera	1		
7	AT214311	Tornillo con arandela	4		
8	TH4456223	Soporte	1		
9	TH4456224	Rodillo	2		
10	TH4456225	Tornillo	1		
11	.....	Tornillo con arandela	4		(AT214305 OR 4372219 NLA)
	19M7662	Tornillo	4		M10 X 30, (SUB FOR J901030)
	24M7346	Arandela	4		11 X 20 X 2 mm, (SUB FOR J922010)
12	TH4456226	Soporte	1		
13	19M7361	Tornillo	1		M12 X 50
14	TH4456227	Tapadera	1		
15	494918	Muelle	1		(SUB FOR TH106783)
16	AT214104	Pasador	1		
17	4295480	Palanca	1		(SUB FOR AT156993)
18	4295876	Tapadera	1		(SUB FOR AT156994)
19	4204558	Rodillo	2		(SUB FOR TH108638)
20	TH4456228	Aislante	1		
21	TH4456229	Placa	1		
22	AT214301	Tornillo	4		
23	4204579	Mango	2		(SUB FOR TH108661)
24	19M8425	Tornillo	4		M6 X 16
25	4448306	Cristal de ventana	1		(BRONCE)
	4602562	Cristal de ventana	1		(VERDE)
26	TH4456230	Aislante	1		
27	TH4456231	Perno de cierre	1		
28	AT214297	Tornillo con arandela	4		
29	TH4456232	Perno de cierre	1		
30	TH4456233	Soporte	1		
31	TH4456234	Aislante	1		
32	4204586	Paragolpes	1		(SUB FOR TH108668)
33	TH4456235	Aislante	1		
34	TH4456236	Aislante	1		
35	TH4456237	Casquillo	4		
36	TH4456238	Tornillo	4		
37	TH4456239	Tope	1		
38	TH4456240	Tope	1		
39	TH4456241	Casquillo	2		
40	TH4456242	Tornillo	2		
41	4474532	Tapadera	1		
42	21M7246	Tornillo	6		M6 X 16
43	.....	Cristal de ventana	1		(BRONCE) (4448307 NLA)
	4602563R	Cristal de ventana	1		(VERDE)
50	12M7068	Arandela de seguridad	1		14 mm
51	24M7047	Arandela	1		13 X 24 X 2.500 mm
52	12M7006	Arandela de seguridad	4		6 mm
53	24M7293	Arandela	4		6.500 X 13 X 1.600 mm
54	12M7006	Arandela de seguridad	6		6 mm
55	24M7293	Arandela	6		6.500 X 13 X 1.600 mm

CAB RIGHT WINDOWS AND GUARDS
GLACES ET PROTECTIONS DROITES DE CABINE
PROTECTORES Y VENTANAS LADO DERECHO DE LA CABINA

TX1062036 A.1

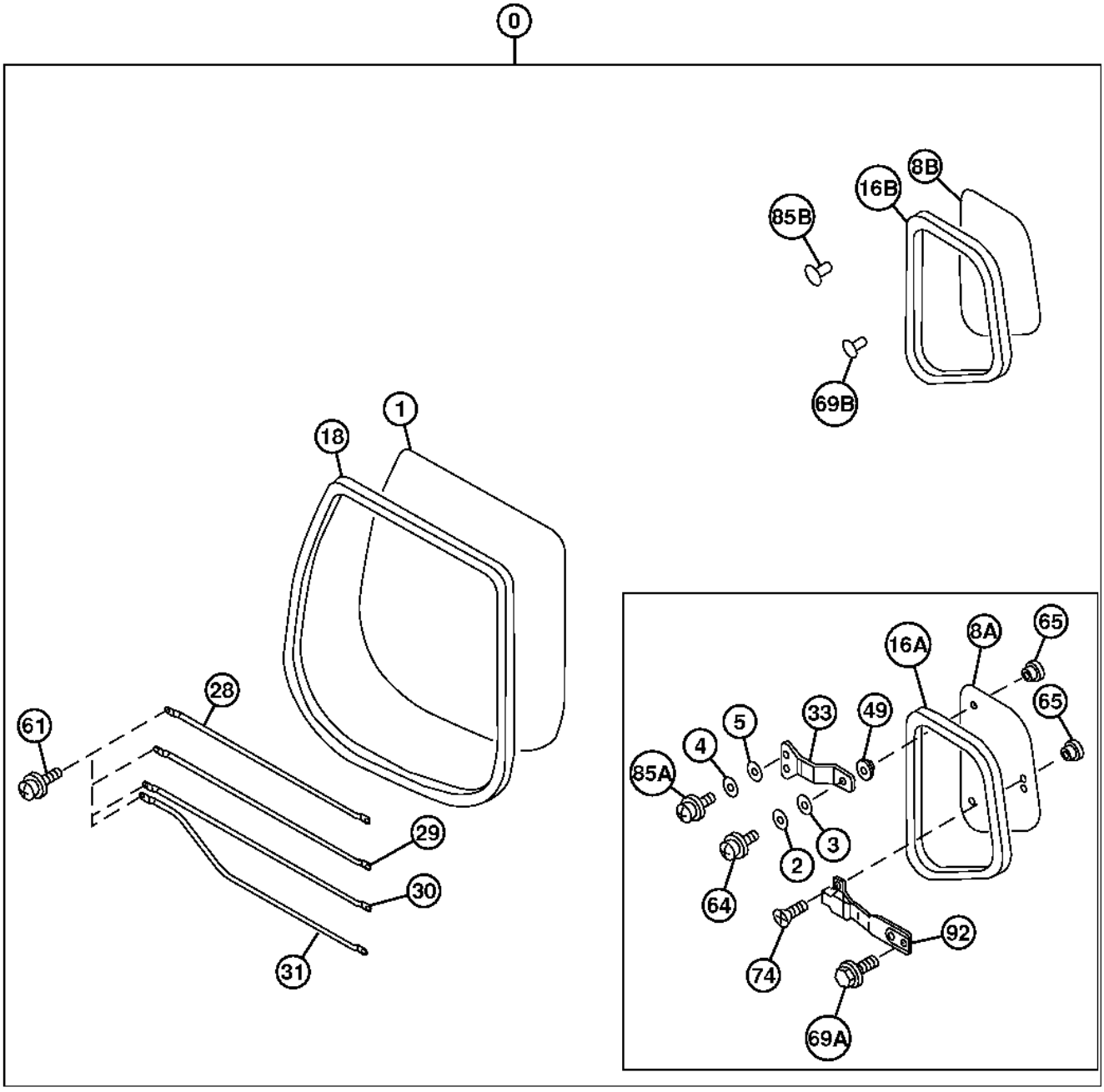

TX1062036

Pos.	Ref.	Descripción	Cant.	Núm. de serie	Notas
0	9202944	Cabina	1		SUB FOR 4474296 OR 4602549, CONTAINS ALL ITEMS ON THIS PAGE, ADDITIONAL COMPONENTS LISTED ON PREVIOUS AND FOLLOWING PAGES
1	.....	Cristal de ventana	1		Tinte bronce, SUB 4602568R, 4448312 NLA
	4602568R	Cristal de ventana	1		Tinte verde, SUB FOR 4602568
2	12M7064	Arandela de seguridad	2	-XXXXXX	5 mm
3	24M7348	Arandela	2	-XXXXXX	5.500 X 10 X 1 mm
4	12M7006	Arandela de seguridad	4	-XXXXXX	6 mm
5	24M7293	Arandela	4	-XXXXXX	6.500 X 13 X 1.600 mm
8A	7602570	PART MISSING IN WISE	1	-XXXXXX	SUB FOR 4448313, Tinte bronce, Bisagra
8B	4602570	Cristal de ventana	1	XXXXXX-	Tinte verde, Fijo
16A	4463390	Aislante	1	-XXXXXX	SUB FOR 4453680
16B	4602576	Aislante	1	XXXXXX-	
18	TH4448318	Aislante	1		
28	TH4453681	Protección	1		
29	4463392	Protección	1		SUB FOR 4453682 AND TH4453682
30	4463393	Protección	1		SUB FOR TH4453683 AND 4453683
31	4463394	Protección	1		SUB FOR TH4453683 AND 4453684
33	AT214169	Muelle	2	-XXXXXX	
49	AT214170	Casquillo	2	-XXXXXX	
61	AT214299	Tornillo con arandela	8		
64	21M6070	Tornillo	2	-XXXXXX	M5 X 16
65	AT214172	Casquillo	4	-XXXXXX	
69A	AT214309	Tornillo con arandela	2	-XXXXXX	
69B	4377817	Presilla	2	XXXXXX-	
74	AT214300	Tornillo	2	-XXXXXX	
85A	21M7246	Tornillo	4	-XXXXXX	M6 X 16
85B	4372088	Presilla	4	XXXXXX-	
92	AT214171	Cerradura	1	-XXXXXX	

CAB TOP HATCH AND SUN SHADE
TRAPPE SUPERIEURE ET PARE-SOLEIL DE CABINE
TAPASOL Y ESCOTILLA SUPERIOR DE CABINA

T188477 A.1

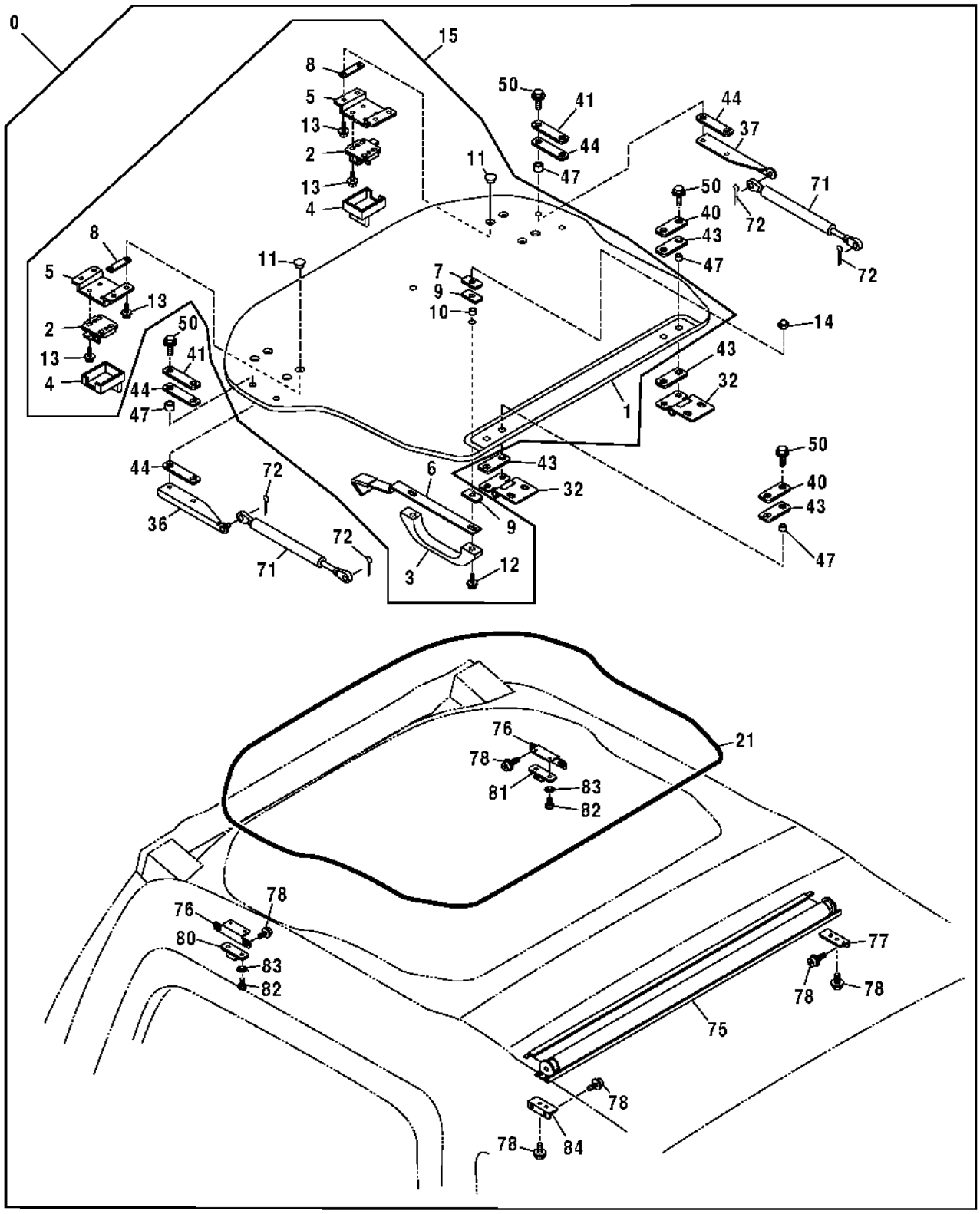

T188477

Pos.	Ref.	Descripción	Cant.	Núm. de serie	Notas
0	9202944	Cabina	1		(CONTIENE TODOS ELEMENTOS EN ESTA PAGINA - COMPONENTES ADICIONALES EN PAGINAS ANTERIORES Y POSTERIORES)
1	4460405	Ventana	1		
2	4369615	Cerradura	2		SUB FOR (2) AT214118
3	4204579	Mango	1		SUB FOR 4411821
4	4369616	Tapadera	2		SUB FOR (2) AT214119
5	4474479	Soporte	2		
6	4474498	Soporte	1		
7	4386452	Placa	2		
8	4474480	Empaquetadura	4		
9	4386450	Empaquetadura	4		
10	4474494	Casquillo	2		
11	4369674	Casquillo	8		SUB FOR (8) AT214172
12	.....	Tornillo con arandela	2		J680630 NLA
	21M7466	Tornillo	2		M6 X 30
	12M7006	Arandela de seguridad	2		6 mm
	24M7054	Arandela	2		6.400 X 12 X 1.600 mm
13	J680514	Tornillo con arandela	16		SUB FOR (16) AT213610
14	4474493	Tuerca	2		
15	.....	Techo	1		JUEGO (CONJUNTO DEL TECHO) (4456952 NLA)
21	4474515	Aislante	1		
32	4474478	Bisagra	2		
36	4477219	Soporte	1		
37	4477218	Soporte	1		
40	4474477	Placa	2		
41	4477217	Placa	2		
43	4474476	Empaquetadura	4		
44	4477216	Empaquetadura	4		
47	4474482	Casquillo	8		
50	19M7162	Tornillo	8		M8 X 16, SUB FOR (8) AT214307
	.....	Arandela	8		12M7065 NLA
	24M1136	Arandela	8		
71	4369619	Cilindro	2		SUB FOR (2) AT214122
72	H132922	Pasador de aletas	4		
75	4474499	Rodillo	1		
76	4474514	Soporte	2		
77	4609477	Soporte	1		(RH)
	4609479	Tornillo	1		
	4609480	Aislante	1		
78	4609479	Tornillo	12		SUB FOR 4444634
80	4474518	Tope	1		
81	4474517	Tope	1		
82	21M7258	Tornillo	4		M4 X 8
83	4459249	Arandela	4		
84	4609478	Soporte	1		(LH)
	4609479	Tornillo	1		
	4609480	Aislante	1		

CAB TOP HATCH (STEEL)
TRAPPE SUPERIEURE DE CABINE (ACIER)
PORTEZUELA SUPERIOR DE LA CABINA (ACERO)

TX1031923 A.1

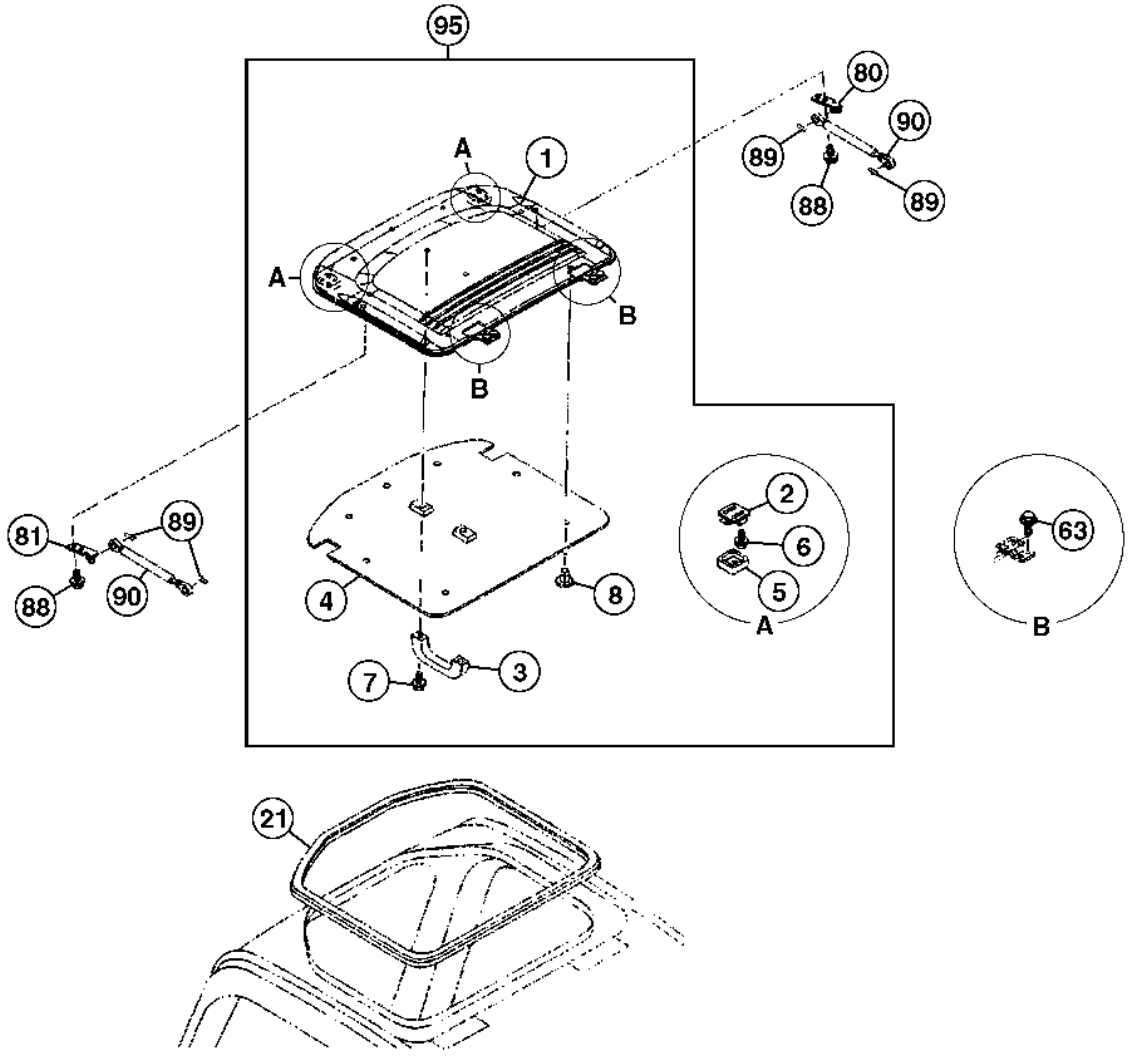

TX1031923

Pos.	*Ref.*	*Descripción*	*Cant.*	*Núm. de serie*	*Notas*
1	.....	Techo	1		4453678 NSEP
2	4369615	Cerradura	2		
3	4204579	Mango	1		
4	4453679	Chapa	1		
5	4369616	Tapadera	2		
6	.....	Tornillo	8		J460514 NLA
	21M7265	Tornillo	8		M5 X 12
7	.....	Tornillo	2		J460616 NLA
	19M8425	Tornillo	2		M6 X 16
	12M7006	Arandela de seguridad	2		6 mm
	24M7293	Arandela	2		6.500 X 13 X 1.600 mm
8	4453666	Presilla	7		
21	4474515	Aislante	1		
63	.....	Tornillo	4		J020816 NLA
	19M7162	Tornillo	4		M8 X 16
	.....	Arandela	4		12M7065 NLA
	24H1136	Arandela	4		11/32" X 11/16" X 0.065"
80	AT307247	Soporte	1		SUB FOR 4369617
81	AT307248	Soporte	1		SUB FOR 4369618
88	.....	Tornillo	4		4372222 NLA
	19M7162	Tornillo	4		M8 X 16
	.....	Arandela	4		12M7065 NLA
	24M7036	Arandela	4		9 X 16 X 1.600 mm
89	H132922	Pasador de aletas	4		SUB FOR 4022697
90	4369619	Cilindro	2		
95	4453677	Techo	1		

SECONDARY EXIT KIT
KIT D'ISSUE SECONDAIRE
JUEGO DE SALIDA AUXILIAR

T150988 A.1

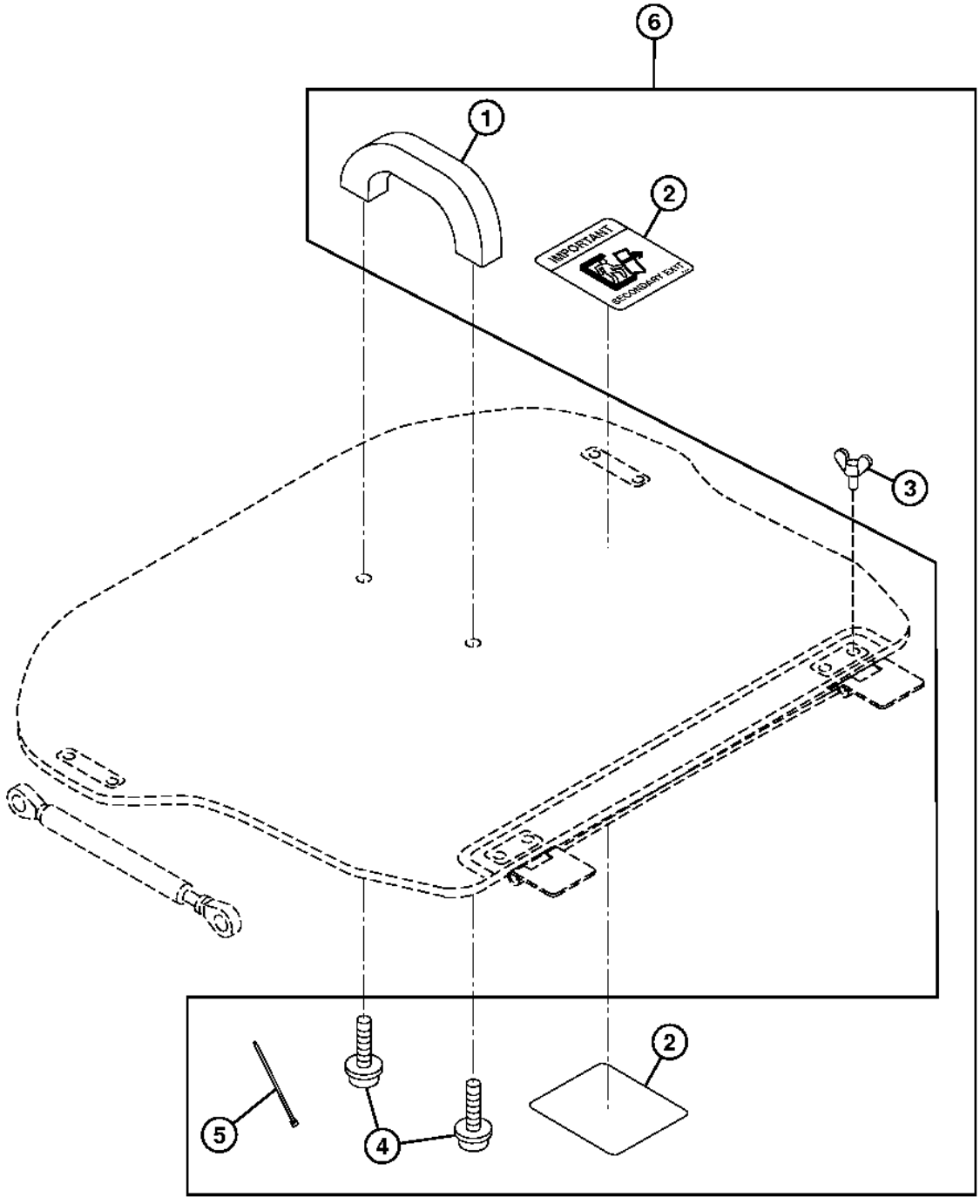

T150988

Pos.	*Ref.*	*Descripción*	*Cant.*	*Núm. de serie*	*Notas*
1	4204579	Mango	1		(SUB FOR TH108661)
2	T167256	Etiqueta adhesiva	2		(INGLESE)
	T222929	Etiqueta adhesiva	2		(FRANCES)
	T222930	Etiqueta adhesiva	2		(ESPANOL
3	21M7243	Tornillo de mariposa	4		M8 X 16
4	21M7455	Tornillo	2		M6 X 20, (SUB FOR 21M7322 OR 21M7085)
5	R44302	Cinta de atar	2		
6	**.....**	**Juego**	**1**		**(AT196567 NLA) (ORDER COMPONENTS)**

CAB DOOR HOLD OPEN LATCH COMPONENTS
COMPOSANTS DU LOQUET DE MAINTIEN DE LA PORTIERE DE CABINE
COMPONENTES DE PESTILLO DE FIJACION DE PUERTA DE CABINA EN POSICION ABIERTA

T142617 A.1

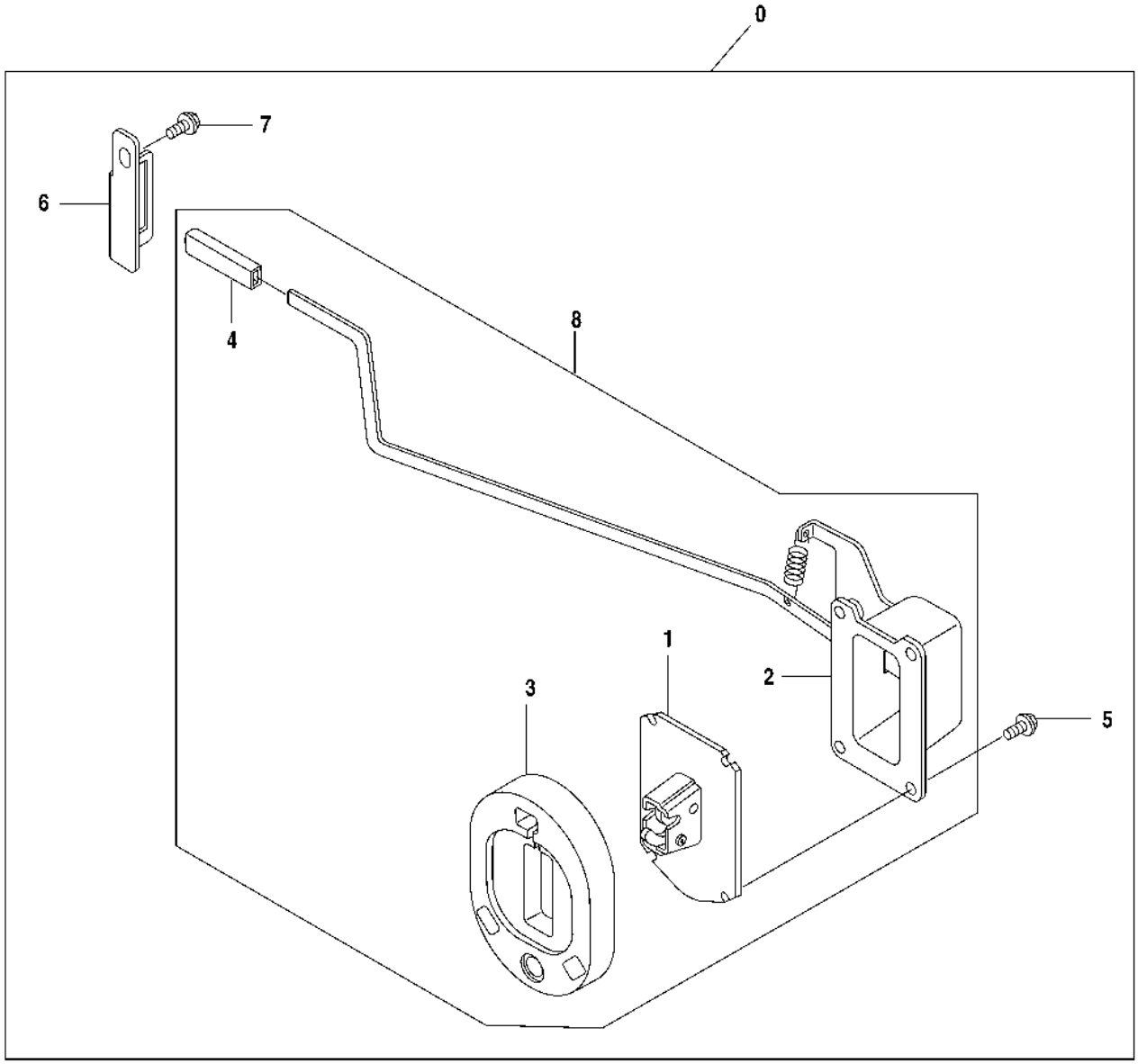

T142617

Pos.	*Ref.*	*Descripción*	*Cant.*	*Núm. de serie*	*Notas*
0	9202944	Cabina	1		(CONTIENE TODOS ELEMENTOS EN ESTA PAGINA - COMPONENTES ADICIONALES PAGINAS ANTERIORES)
1	.....	Fiador	1		(TH4456245 NLA)
2	TH4456246	Caja	1		
3	TH4456247	Tope	1		
4	4089012	Tapa	4		
5	19M7881	Tornillo	4		M8 X 20
	.....	Arandela	4		12M7065 NLA
6	TH4456248	Tope	1		
7	19M7402	Tornillo	1		M10 X 25
	12M7066	Arandela de seguridad	1		10 mm
	24M7028	Arandela	1		10.500 X 20 X 2 mm
8	TH4456244	Fiador	1		CONJUNTO DE TRABA DE PUERTA

WINDSHIELD WASHER RESERVOIR, PUMP AND MOUNTING BRACKET
RESERVOIR DE LAVE-GLACE, POMPE ET SUPPORT MONTAGE
DEPOSITO DEL LAVAPARABRISAS, BOMBA Y ESCUADRA DE MONTAJE

T143286 A.1

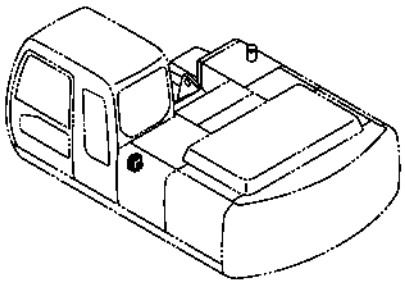

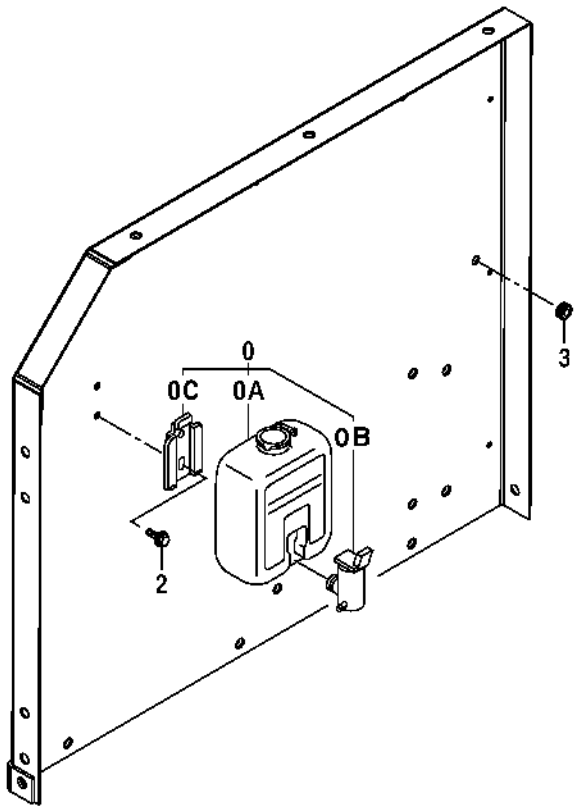

T143286

Pos.	*Ref.*	*Descripción*	*Cant.*	*Núm. de serie*	*Notas*
0	AT177804	Lavaparabrisas	1		
0A	AT177805	Depósito	1		
0B	AT187562	Bomba	1		
0C	AT177806	Soporte	1		
2	19M7923	Tornillo	2		M6 X 12
	24M7054	Arandela	2		6.400 X 12 X 1.600 mm
	12M7006	Arandela de seguridad	2		6 mm
3	TH102171	Pasamuros	1		

CAB REAR CONSOLE SUPPORT BRACKETS AND FLOOR MATS
SUPPORTS DE CONSOLE ARRIERE DE CABINE ET TAPIS DE PLANCHER
ESCUADRAS DE SOPORTE DE LA CONSOLA TRASERA DE LA CABINA Y FELPUDOS

T142627 A.1

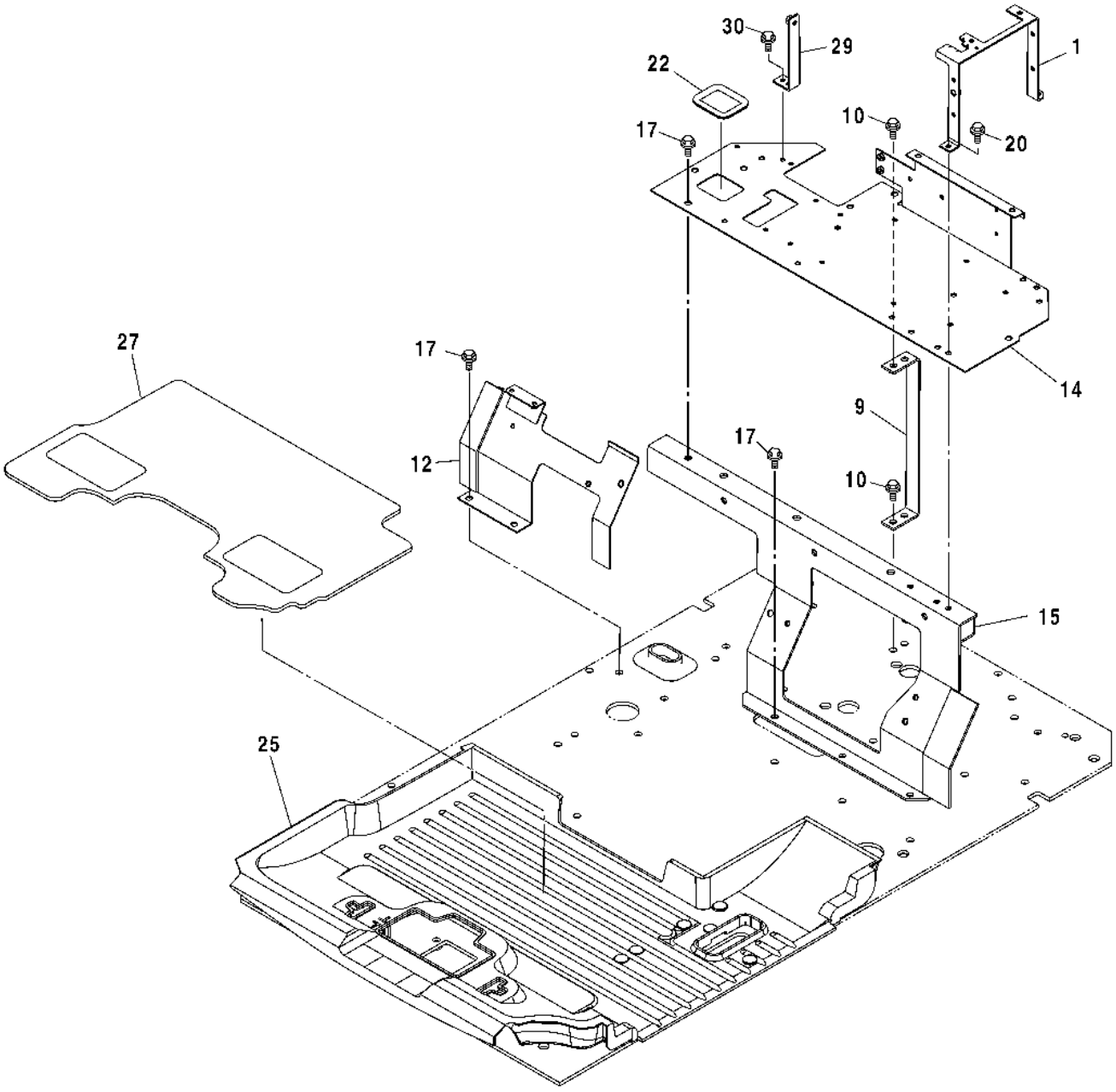

Pos.	*Ref.*	*Descripción*	*Cant.*	*Núm. de serie*	*Notas*
1	TH7039389	Soporte	1		
9	TH8076619	Apoyo	1		
10	19M7402	Tornillo	3		M10 X 25
	12M7066	Arandela de seguridad	3		10 mm
12	TH6019838	Soporte	1		
14	TH6019252	Soporte	1		
15	TH5007342	Soporte	1		
17	19M7402	Tornillo	7		M10 X 25
	12M7066	Arandela de seguridad	7		10 mm
	24M7028	Arandela	7		10.500 X 20 X 2 mm
20	19M7881	Tornillo	2		M8 X 20
	.....	Arandela	2		12M7065 NLA
22	TH4445220	Casquillo	1		
25	TH0003929	Estera	1		
27	TH4448601	Estera	1		
29	TH9757192	Soporte	1		
30	19M8425	Tornillo	2		M6 X 16
	12M7006	Arandela de seguridad	2		6 mm
	24M7293	Arandela	2		6.500 X 13 X 1.600 mm

CAB FLOOR PLATFORM
PLATE-FORME DE PLANCHER DE CABINE
PLATAFORMA DEL PISO DE CABINA

T146603 A.1

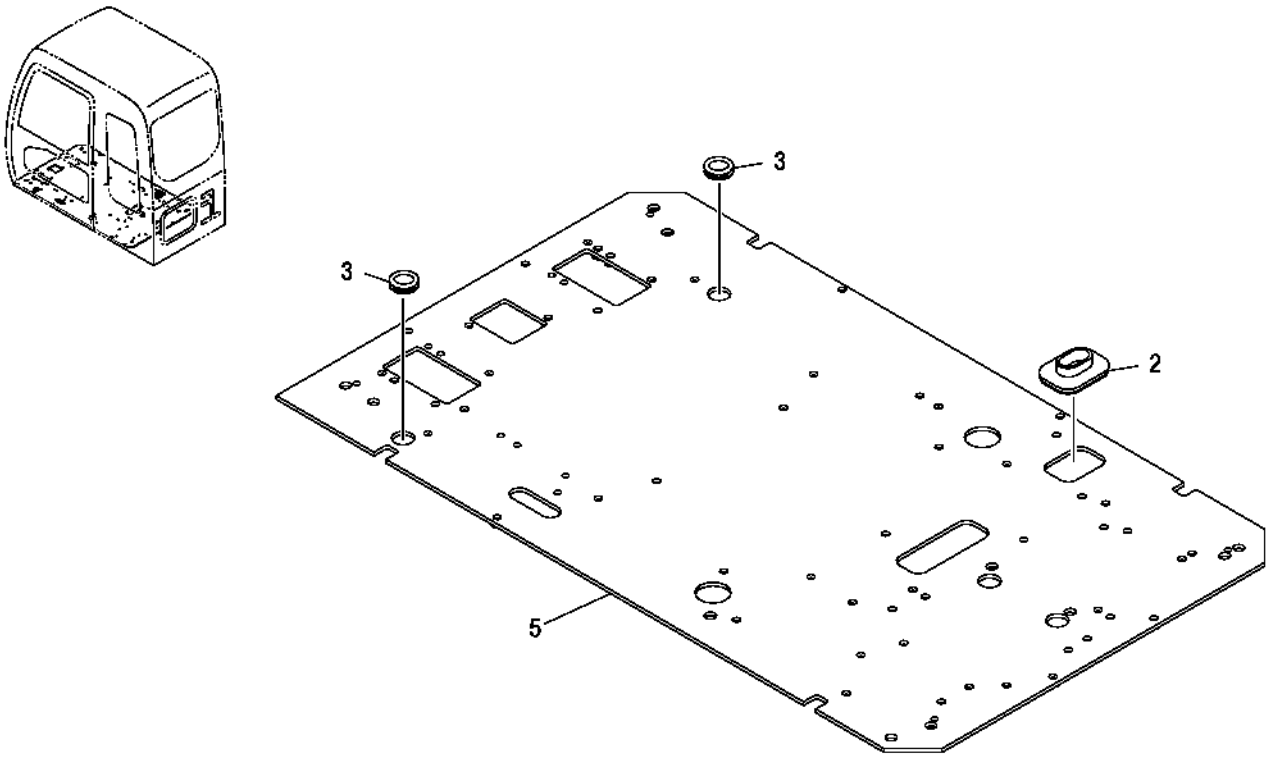

T146603

Pos.	*Ref.*	*Descripción*	*Cant.*	*Núm. de serie*	*Notas*
2	AT213954	Pasamuros	1		
3	4205084	Pasamuros	2		(SUB FOR TH108616)
5	6020352	Placa	1		

CAB WINDOW VANDAL PROTECTION KIT
KIT ANTIVANDALISME DE GLACE DE CABINE
JUEGO PROTECCION CONTRA VANDALISMO DE VENTANA DE CABINA

T150991 A.1

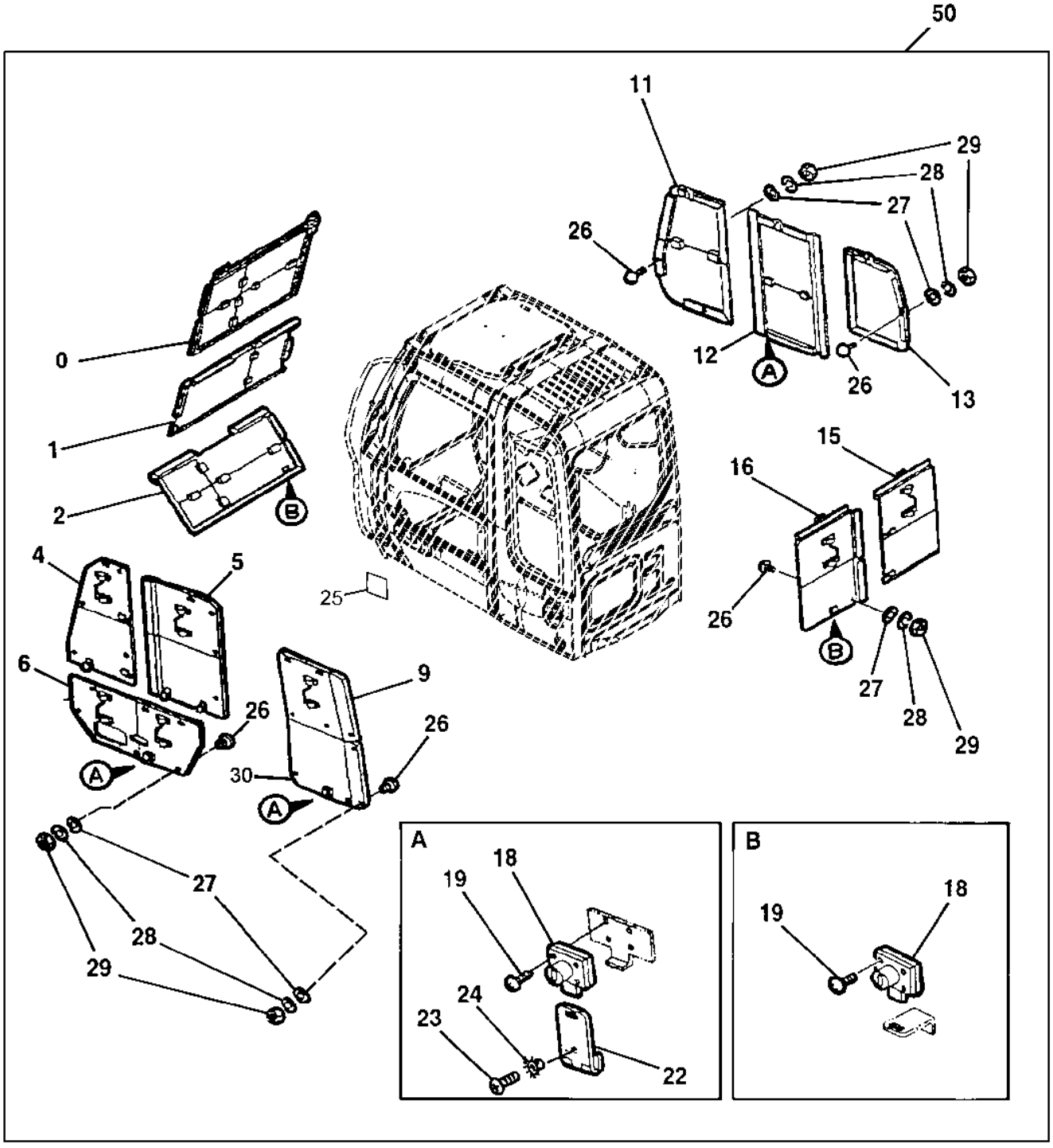

T150991

Pos.	*Ref.*	*Descripción*	*Cant.*	*Núm. de serie*	*Notas*
0	AP38748	Tapadera	1		
1	AP38749	Tapadera	1		
2	AP38750	Tapadera	1		
4	7041828	Tapadera	1		(SUB FOR AP38751)
5	AP38752	Tapadera	1		
6	AP38753	Tapadera	1		
9	AP38754	Tapadera	1		
11	AP38756	Tapadera	1		
12	AP38757	Tapadera	1		
13	8086966	Tapadera	1		(SUB FOR AP38758)
15	AP38760	Tapadera	1		
16	AP38759	Tapadera	1		
18	4361601	Cerradura	5		(SUB FOR AT176636)
18A	AT194969	Llave	1		(H800) (NO SE ILUSTRA)
19	21M7022	Tornillo	20		M5 X 20
	12M7064	Arandela de seguridad	20		5 mm
22	TH108983	Bisagra	3		
23	21M7249	Tornillo	6		M5 X 10
24	T205218	Arandela	6		(SUB FOR TH111908, 4107762)
25	T188737	Etiqueta adhesiva	1		
26	AT155189	Tope	33		
27	24M7027	Arandela	33		5.300 X 10 X 1 mm
28	12M7064	Arandela de seguridad	33		5 mm
29	14M7297	Tuerca	33		M5
30	AP38755	Tapadera	1		
50	.....	Conjunto de modificación	1		WHOLE GOODS (PROTECCION CONTRA VANDALISMO)

SEAT AND SEAT SUSPENSION ASSEMBLY
SIEGE ET SUSPENSION DE SIEGE
CONJUNTO DE SUSPENSION DEL ASIENTO Y ASIENTO

T144308 A.1

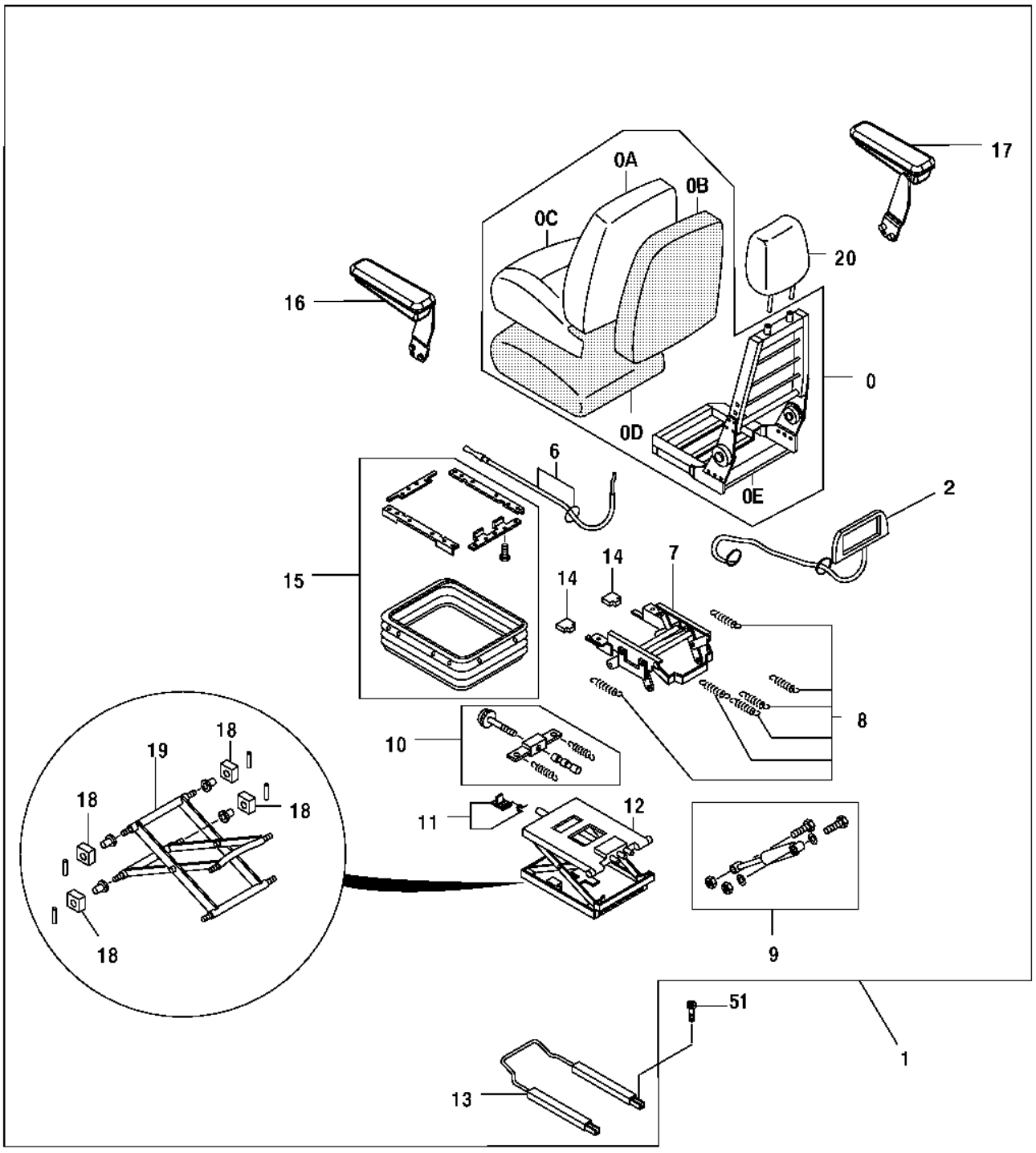

T144308

Pos.	*Ref.*	*Descripción*	*Cant.*	*Núm. de serie*	*Notas*
0	4486189R	Asiento	1		Kit de parte superior de asiento, (SUB FOR AT195286)
0A	4486190R	Funda	1		(SUB FOR AT309263)
0B	4392796R	Tira/alfombrilla	1		(SUB FOR AT309264)
0C	4486191R	Tapadera	1		Tela, (SUB FOR AT195278)
0D	4392798R	Tira/alfombrilla	1		(SUB FOR AT195279)
0E	.....	Bastidor	1		
1	4458290R	Asiento	1		Tela, (SUB FOR AT193964)
2	AT195284	Juego para asiento	1		Kit de soporte lumbar neumático
6	4392800R	Cable	1		(SUB FOR AT216522)
7	4392801R	Mozo	1		JUEGO DE CABLE DE RECLINADOR
8	4370199R	Muelle	1		(SUB FOR AT195287)
9	4392803R	Amortiguador de torsión	1		(KIT) , (SUB FOR AT180973 OR 4392803)
10	4392804R	Ajustador	1		RESORTE DE ELEVACION DE ALTURA
11	4392805R	Tope	1		(SUB FOR AT180975 OR 4392805) (SUB FOR AT322189)
12	4392806R	Suspensión del asiento	1		(SUB FOR AT180976 OR 4392806)
13	4660734R	Ajustador	1		(SUB FOR AT180977 OR 4392807 OR 4392807R OR 4660734)
14	AT329374	Mango	1		Perilla, (SUB FOR AT216532 OR 4392808R)
15	4392809R	Tapadera	1		(JUEGO DE CUBIERTA DE SUSPENSION)
16	AT329375	Juego de reposabrazos	1		LH
17	AT329376	Juego de reposabrazos	1		RH
18	4392812R	Casquillo	1		KIT , (SUB FOR AT180979 OR 4392812)
19	4392813R	Articulación	1		Kit de pivote central/palanca, (SUB FOR AT180980 OR 4392813)
20	4486192R	Apoyacabeza	1		(SUB FOR AT195280)
51	19M7647	Tornillo	4		M8 X 16

SEAT HARDWARE SERVICE KIT
KIT D'ENTRETIEN DE BOULONNERIE DE SIEGE
JUEGO DE SERVICIO DE TORNILLERIA DEL ASIENTO

TX1009879 A.1

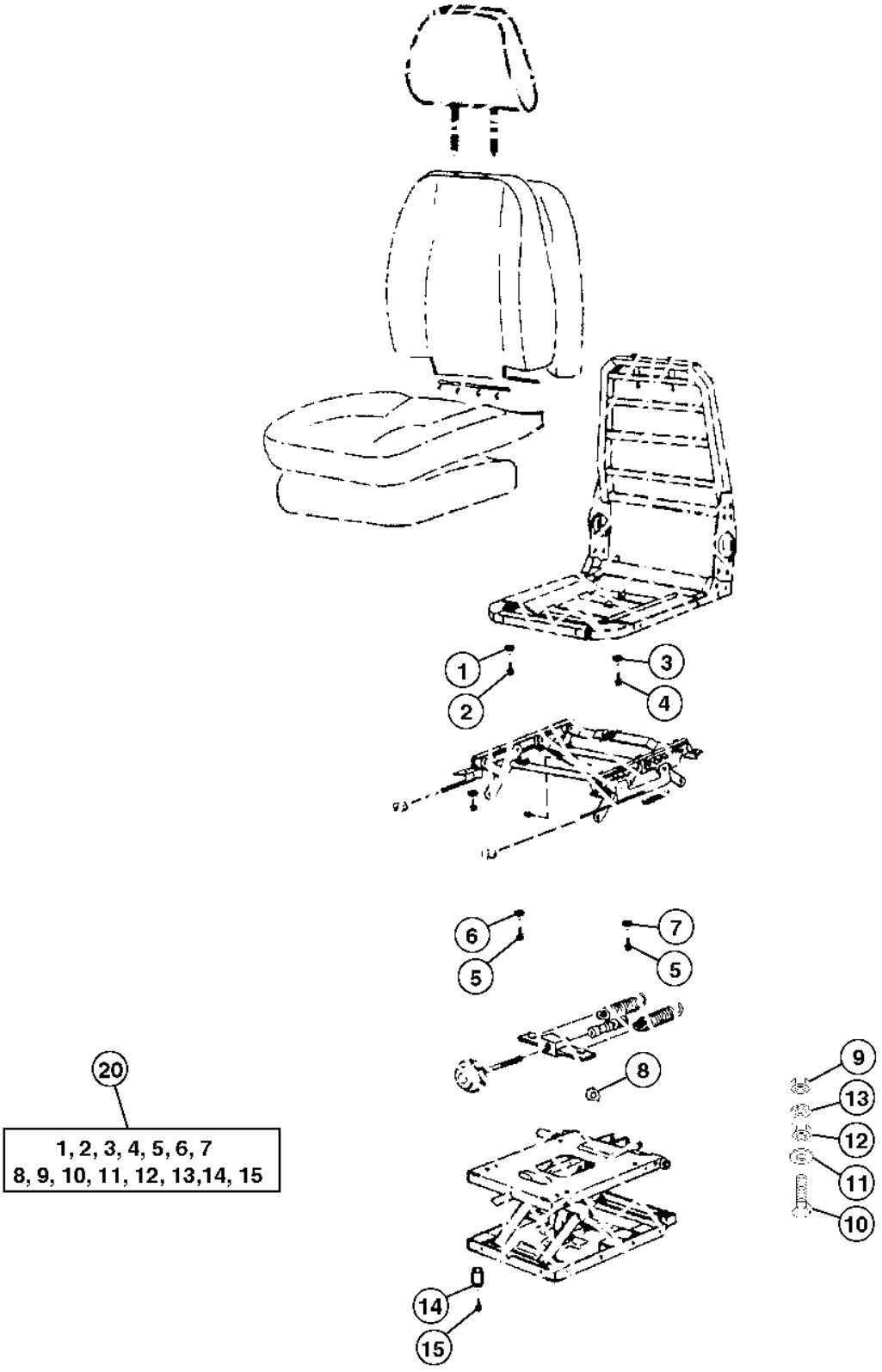

Pos.	*Ref.*	*Descripción*	*Cant.*	*Núm. de serie*	*Notas*
1	.....	Arandela	4		(157020 NLA) MIEMBRO VERTICAL ELEVADOR A TORNILLERÍA SUPERIOR
2	.....	Tornillo	4		(157070 NLA) MIEMBRO VERTICAL ELEVADOR A TORNILLERÍA SUPERIOR
3	.....	Arandela	4		(2160621013 NLA) MIEMBRO VERTICAL ELEVADOR A TORNILLERIA SUPERIOR
4	.....	Tornillo	4		(53511340001 NLA) SUJETA EL MIEMBRO VERICAL ELEVADOR AL ASIENTO SUPERIOR
5	.....	Tornillo	4		(79495 NLA) MEIMBRO VERTICAL ELEVADOR A TORNILLERIA DE SUSPENSION
6	.....	Espaciador	2		(151141 NLA) MIEMBRO VERTICAL ELEVADOR A TORNILLERÍA DE SUSPENSION
7	.....	Arandela	2		(151207 NLA) MIEMBRO VERTICAL ELEVADOR A TORNILLERÍA DE SUSPENSION
8	.....	Arandela	4		(53530010007 NLA) MEIMBRO VERTICAL ELEVADOR A TORNILLERIA DE SUSPENSION
9	.....	Tuerca	6		(53500250005 NLA) RIELES DE CORREDERA A SUSPENSION
10	.....	Tornillo	6		(53490210001 NLA) RIELES DE CORREDERA A SUSPENSION
11	.....	Arandela	6		(53530020006 NLA) RIELES DE CORREDERA A SUSPENSION
12	.....	Espaciador	6		(166579 NLA) RIELES DE CORREDERA A SUSPENSION
13	.....	Arandela	6		(2160821019 NLA) DEBAJO DE LA TUERCA EN RIEL DE CORREDERA A SUSPENSION
14	.....	Espaciador	4		(150584 NLA) ENTRE RIEL DE CORREDERA Y ESCUADRAS DE SUSPENSION
15	.....	Tornillo	4		(2050616016 NLA) ESCUADRAS DE RIEL DE CORREDERA DELANTERAS A SUSPENSION)
20	AT335573	Kit de tornilleria	1		

3.00 INCH SEAT BELT KIT
KIT DE CEINTURE DE SECURITE 3.00 IN.
JUEGO DEL CINTURON DE SEGURIDAD 3.00 PULG.

T144006 A.1

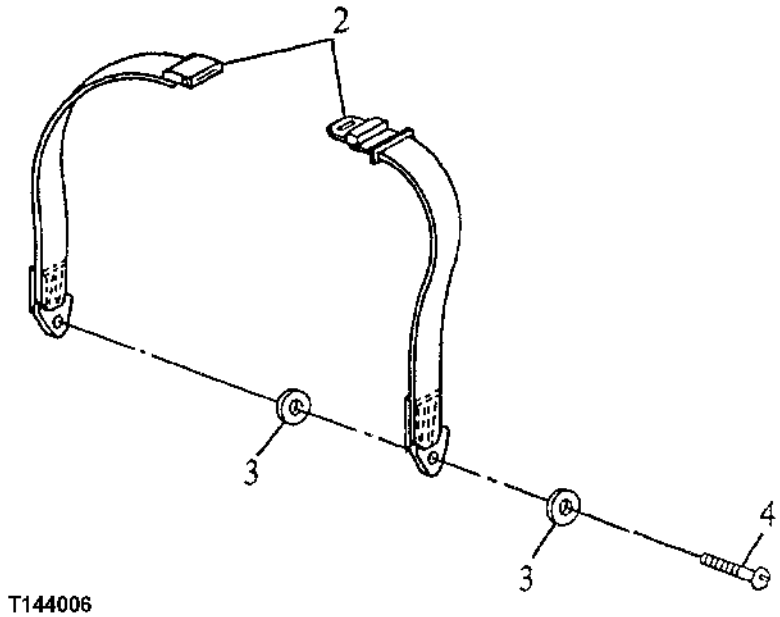

T144006

Pos.	*Ref.*	*Descripción*	*Cant.*	*Núm. de serie*	*Notas*
2	AT173678	Cinturón de seguridad	1		(INCLUYE TORNILLERIA)
	T157779	Tuerca con brida	2		11.112 mm (7/16"), 7/16" (NO SE ILUSTRA)
3	T105740	Arandela	4		
4	R41778	Tornillo	2		11.125 X 31.750 mm (7/16" X 1-1/4")

SEAT BASE BRACKET AND SLIDER KIT
KIT DE SUPPORT ET DE GLISSIERE DE BASE DE SIEGE
ESCUADRA BASE DEL ASIENTO Y JUEGO DE DESLIZADORES

T142631 A.1

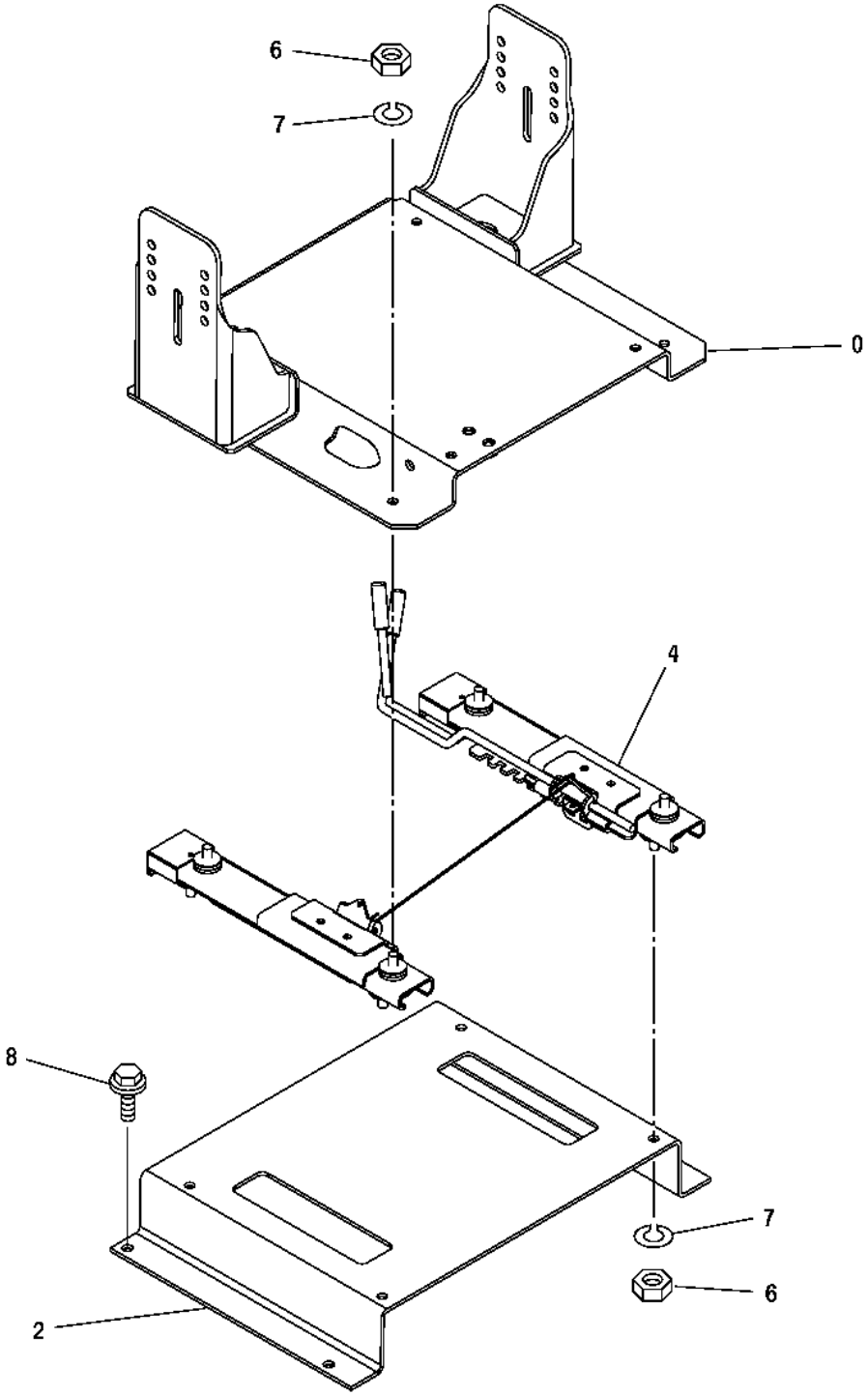

T142631

Pos.	*Ref.*	*Descripción*	*Cant.*	*Núm. de serie*	*Notas*
0	6020125	Soporte	1		(SUB FOR TH6020171)
2	TH3089486	Soporte	1		
4	TH4405128	Conjunto raíles asiento	1		
6	14M7444	Tuerca	8		M10, (SUB FOR TH104196 AND J952010)
7	12M7066	Arandela de seguridad	8		10 mm
8	19M7402	Tornillo	4		M10 X 25

SEAT BELT
CEINTURE DE SÉCURITÉ
CINTURÓN DE SEGURIDAD

T188984 A.1

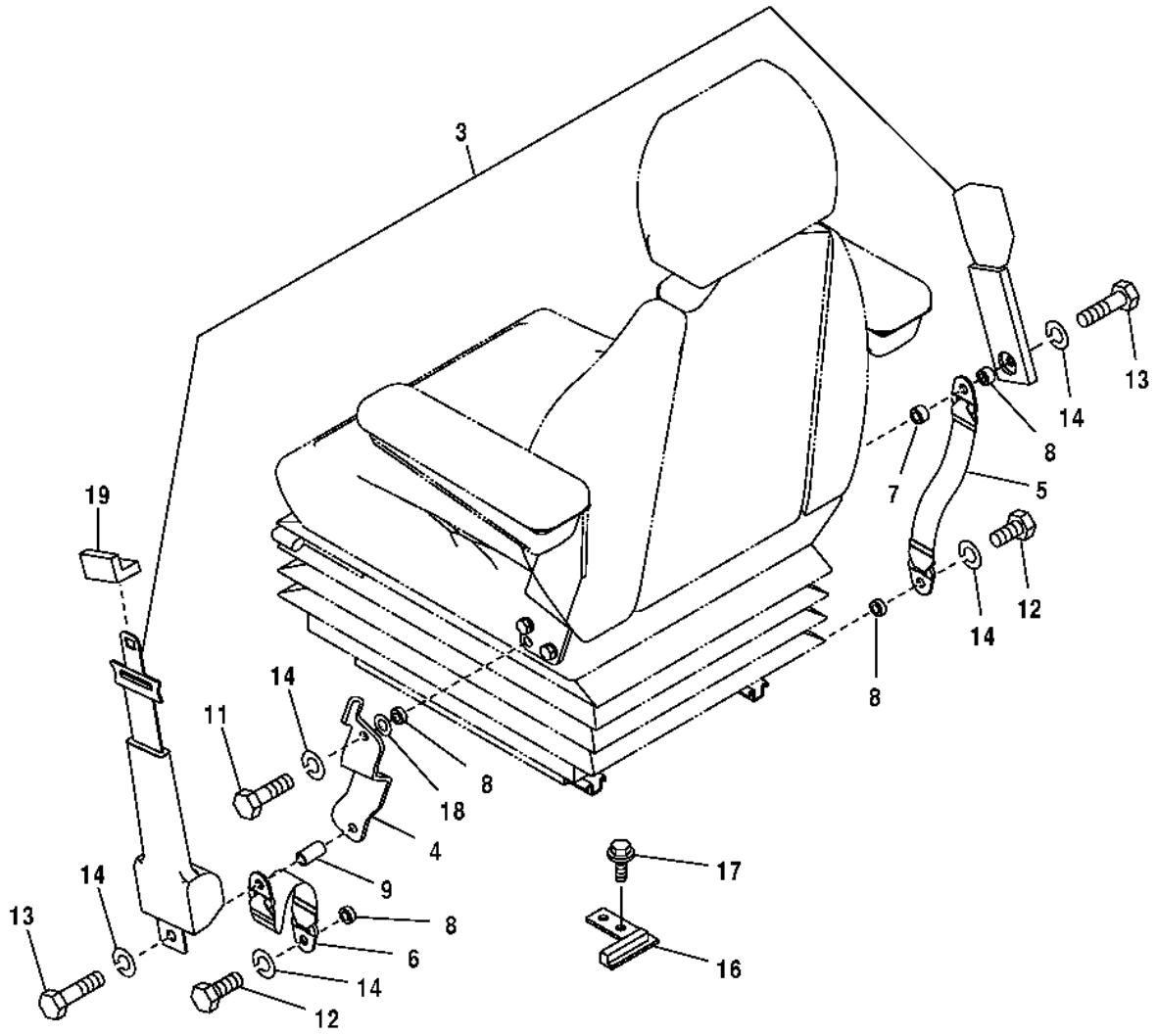

T188984

Pos.	*Ref.*	*Descripción*	*Cant.*	*Núm. de serie*	*Notas*
3	4384239	Cinturón de seguridad	1		
4	7042657	Soporte	1		
5	4382410	Cinturón de seguridad	1		
6	4453869	Cinturón de seguridad	1		
7	4453874	Espaciador	1		
8	4372200	Espaciador	4		(SUB FOR P60915)
9	4382432	Manguito	1		
11	4333835	Tornillo	2		
12	19H3187	Tornillo	2		7/16" X 1-1/2", (SUB FOR 4235232)
13	4380534	Tornillo	2		
14	12H293	Arandela de seguridad	5		7/16", (SUB FOR J219167)
16	9756736	Soporte	1		
17	19M7402	Tornillo	2		M10 X 25
	12M7066	Arandela de seguridad	2		10 mm
18	24M7047	Arandela	1		13 X 24 X 2.500 mm
19	3097862	Casquillo	1		

CAB HEATER AND AIR CONDITIONER UNIT DUCTS AND HOSES
CONDUITS ET FLEXIBLES DU CHAUFFAGE ET DU CLIMATISEUR DE CABINE
MANGUERAS Y DUCTOS UNIDAD ACONDICIONADOR DE AIRE Y CALEFACTOR DE CABINA

T201991 A.1

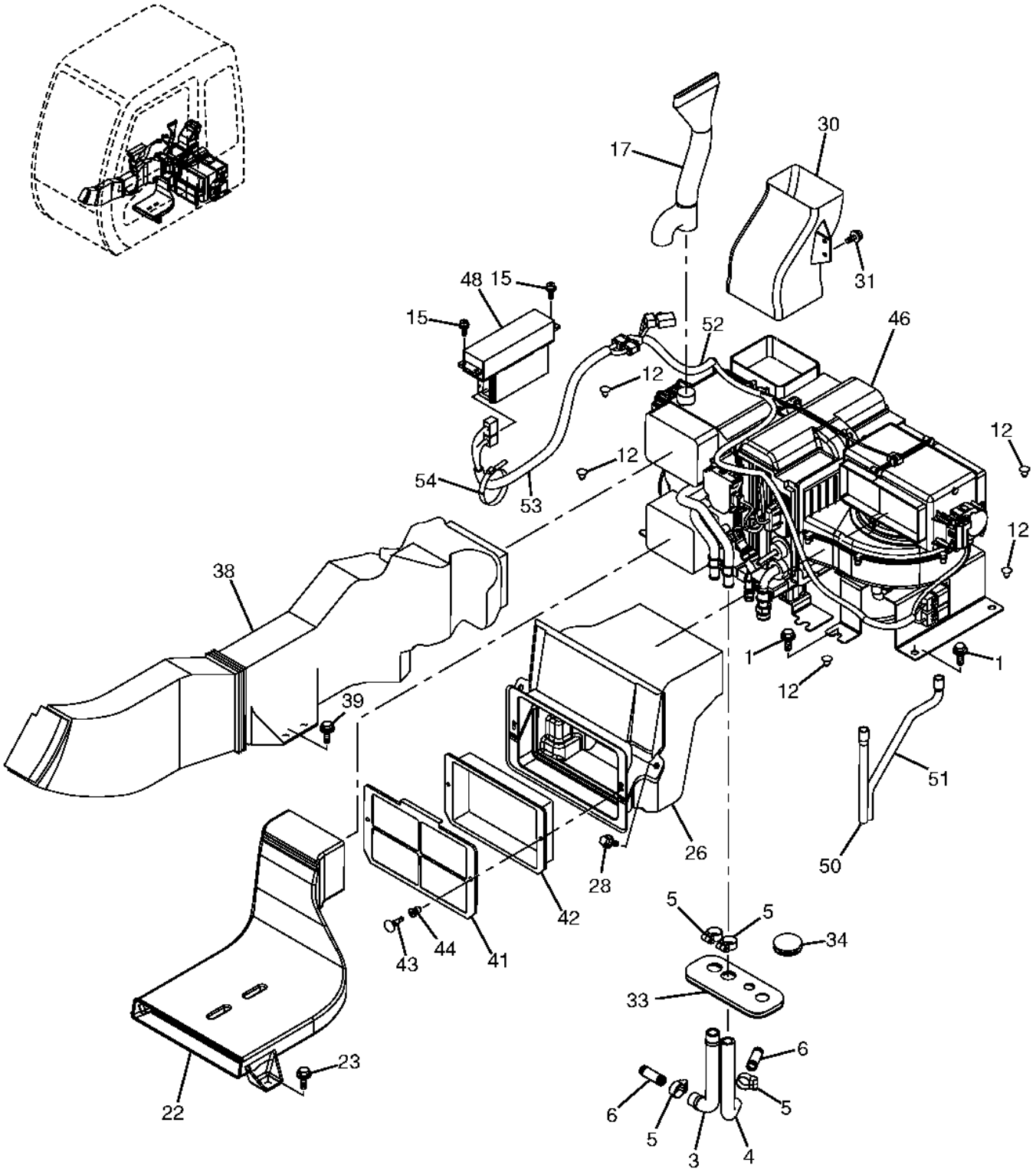

T201991

Pos.	*Ref.*	*Descripción*	*Cant.*	*Núm. de serie*	*Notas*
1	19M7402	Tornillo	6		M10 X 25
	12M7066	Arandela de seguridad	6		10 mm
	24M7028	Arandela	6		10.500 X 20 X 2 mm
3	4344638	Manguera	1		SUB FOR 4366623
4	4344638	Manguera	1		
5	4514699	Abrazadera	4		
6	4347396	Conexión	2		
12	4280359	Tapón	5		
15	21M7265	Tornillo	4		M5 X 12
17	4436442	Conducto de aire	1		
22	4426155	Conducto de aire	1		
23	19M7662	Tornillo	2		M10 X 30
	12M7066	Arandela de seguridad	2		10 mm
	24M7028	Arandela	2		10.500 X 20 X 2 mm
26	4431227	Conducto de aire	1		
28	19M7881	Tornillo	2		M8 X 20
	.....	Arandela	2		12M7065 NLA
	24M7055	Arandela	2		8.400 X 16 X 1.600 mm
30	4426157	Conducto de aire	1		
31	19M8425	Tornillo	2		M6 X 16
	12M7006	Arandela de seguridad	2		6 mm
	24M7293	Arandela	2		6.500 X 13 X 1.600 mm
33	2044923	Casquillo	1		
34	4288445	Tapón	1		
38	4426158	Conducto de aire	1		
39	19M7662	Tornillo	2		M10 X 30
	12M7066	Arandela de seguridad	2		10 mm
	24M7028	Arandela	2		10.500 X 20 X 2 mm
41	4S00684	Enrejado	1		SUB FOR 4441139
42	4S00683	Filtro	1		SUB FOR 4484453
43	4441059	Presilla	2		
44	4441061	Presilla	2		
46	4431079	Acondicionador de aire	1		
48	4431080	Controlador calentador aire	1		
50	.....	Manguera	1		(CUT TO LENGTH)
51	4441131	Manguito de refrigerante	1		
52	4452187	Grupo de cables	1		
53	4452188	Grupo de cables	1		
54	H77698	Cinta de atar	1		SUB FOR 4121859

HEATER AND AIR CONDITIONER UNIT COMPONENTS
COMPOSANTS DU CLIMATISEUR ET DU CHAUFFAGE
COMPONENTES DE UNIDAD ACONDICIONADOR DE AIRE Y CALEFACTOR

T160182 A.1

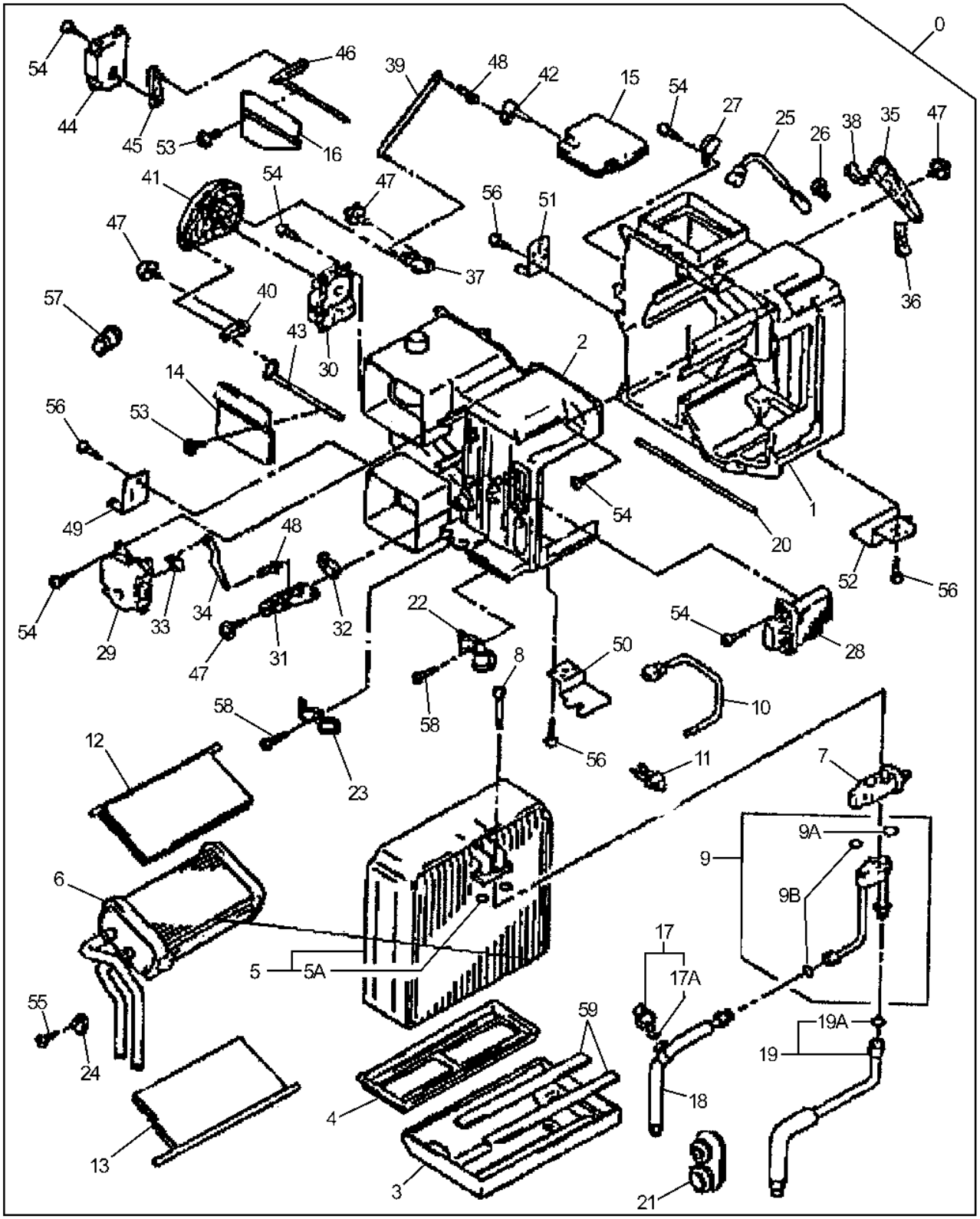

T160182

Pos.	Ref.	Descripción	Cant.	Núm. de serie	Notas
0	4431079	Acondicionador de aire	1		Completo, Incluye motor vent, ventilador y termostato, (INCLUYE TODAS PARTES EN ESTA PAG - COMPONENTES ADICIONALES ENUMERARON EN PAGINA VENTILADOR HVAC)
1	4475264	Caja	1		
2	4475265	Caja	1		
3	4475283	Caja	1		
4	4475284	Placa	1		
5	4469056	Evaporador	1		
5A	4622346	Anillo tórico	2		SUB FOR 4674883, 4350206 OR 4509180
6	4469057	Núcleo	1		
7	4465995	Válvula hidr. regul. caudal	1		
8	4475285	Tornillo	2		
9	4475286	Perfil estructural	1		
9A	4622346	Anillo tórico	1		SUB FOR 4674883, 4450206, 4350206 OR 4509180
9B	4350187	Anillo tórico	2		
10	4469058	Termostato	1		
11	4475287	Presilla	2		
12	4475288	Puerta	1		
13	4475289	Puerta	1		
14	4475290	Puerta	1		
15	4475291	Polea con amortiguador	1		
16	4475345	Puerta	1		
17	4469059	Interruptor	1		(PRESION)
17A	4475346	Anillo tórico	1		
18	4475347	Manguera	1		
19	4475348	Manguera	1		
19A	4622346	Anillo tórico	1		SUB FOR 4674883, 4350206 OR 4509180
20	4475349	Empaquetadura	1		
21	4475350	Aislante	1		
22	4475351	Presilla	1		
23	4475352	Presilla	1		
24	4475353	Soporte	1		
25	4418144	Termostato	1		
26	4418143	Abrazadera	1		
27	4418142	Soporte	1		
28	4469060	Circuito integrado	1		
29	4469061	Motor	1		
30	4469062	Motor	1		
31	4475364	Placa	1		
32	4475365	Palanca	1		
33	4475366	Palanca	1		
34	4475367	Vástago	1		
35	4475368	Placa	1		
36	4475369	Palanca	1		
37	4475370	Placa	1		
38	4475371	Palanca	1		
39	4475372	Vástago	1		
40	4475399	Placa	1		
41	4475400	Placa	1		
42	4475401	Palanca	1		
43	4475402	Palanca	1		
44	4469063	Motor	1		
45	4475403	Palanca	1		
46	4475404	Palanca	1		
47	4475405	Tornillo	4		(TORNILLO CON ROSCA)
48	4469047	Abrazadera	2		
49	4475406	Soporte	1		
50	4475407	Soporte	1		
51	4475430	Soporte	1		
52	4475431	Soporte	1		
53	4475432	Tornillo	4		
54	4382883	Tornillo	23		(ATERRAJADO)
55	4236448	Tornillo	1		
56	4382882	Tornillo	8		(TORNILLO CON ROSCA)
57	4475433	Casquillo	1		
58	4475434	Tornillo	2		(TORNILLO CON ROSCA)
59	4475435	Empaquetadura	2		

HEATER AND AIR CONDITIONER UNIT COMPONENTS (CONTINUED)
COMPOSANTS DU CLIMATISEUR ET DU CHAUFFAGE (SUITE)
COMPONENTES DE UNIDAD ACONDICIONADOR DE AIRE Y CALEFACTOR (CONTINUACION)

T160183 A.1

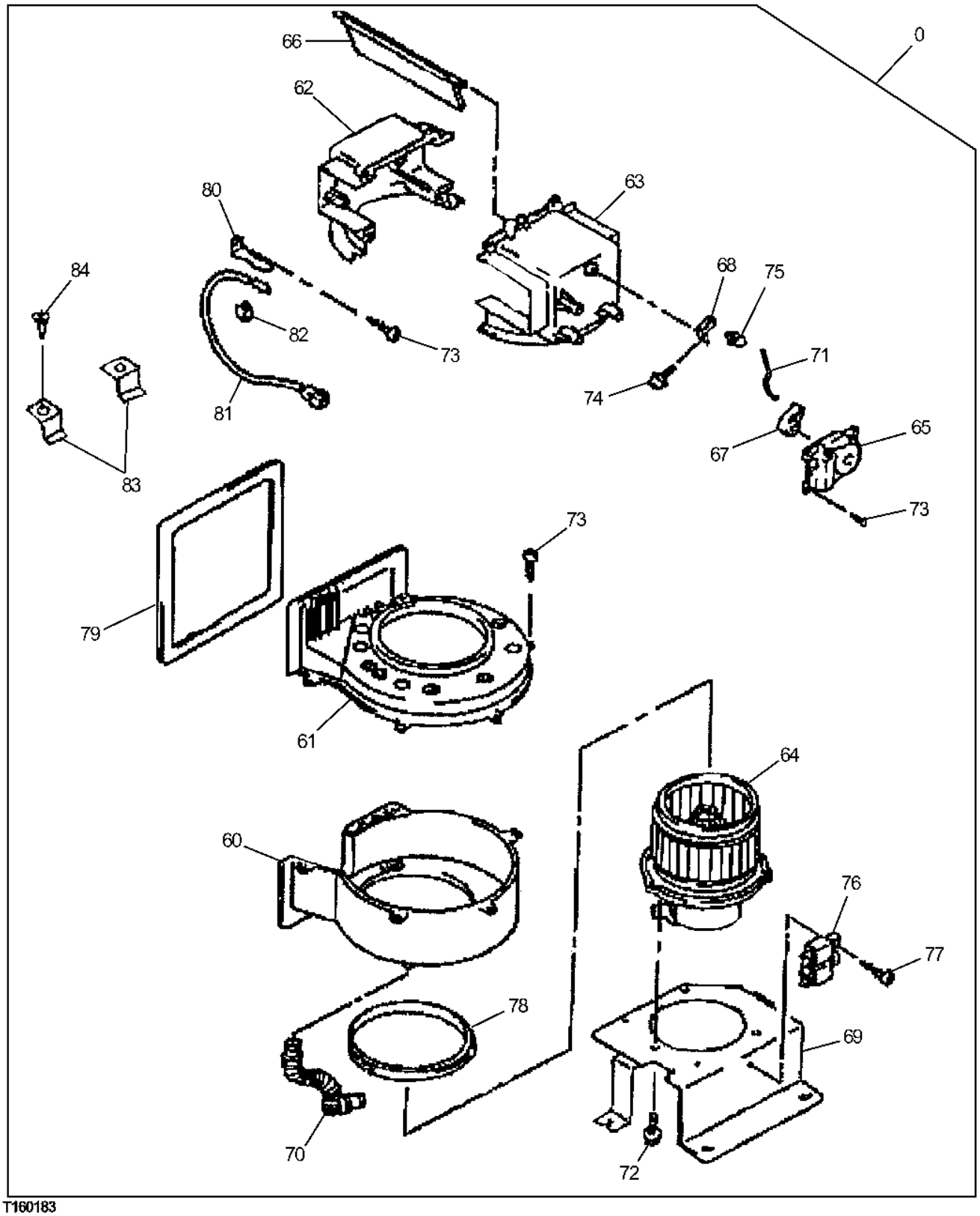

T160183

Pos.	Ref.	Descripción	Cant.	Núm. de serie	Notas
0	4431079	Acondicionador de aire	1		COMPLETE , Compon. adicionales listados en otra página
60	4475247	Caja	1		
61	4475248	Caja	1		
62	4475249	Caja	1		
63	4475250	Caja	1		
64	4469040	Motor eléctrico	1		
65	4469063	Motor	1		
66	.....	Puerta	1		(4469043 NLA)
67	.....	Palanca	1		(4469044 NLA)
68	.....	Palanca	1		(4469045 NLA)
69	4475257	Soporte	1		
70	4475258	Manguera	1		
71	.....	Árbol	1		(4469046 NLA)
72	4475259	Tornillo	3		
73	4382883	Tornillo	17		(SUB FOR 4482883)
74	4475260	Tornillo	1		
75	4469047	Abrazadera	1		
76	4382860	Relé	2		
77	4382832	Tornillo	2		
78	4475261	Empaquetadura	1		
79	4475262	Empaquetadura	1		
80	4475263	Soporte	1		
81	4418147	Termostato	1		
82	4418149	Abrazadera	1		
83	4475229	Soporte	2		
84	4382882	Tornillo	2		

A/C COMPRESSOR BRACKET, DRIVE BELT, AND REFRIGERANT HOSES
SUPPORT DU COMPRESSEUR, COURROIE D ENTRAINEMENT ET REFRIGERANT DE LA CLIMATISATION
ESCUADRA COMPRESOR ACONDICIONADOR DE AIRE, CORREA Y MANGUERAS DE REFRIGERANTE

TX1096771 A.1

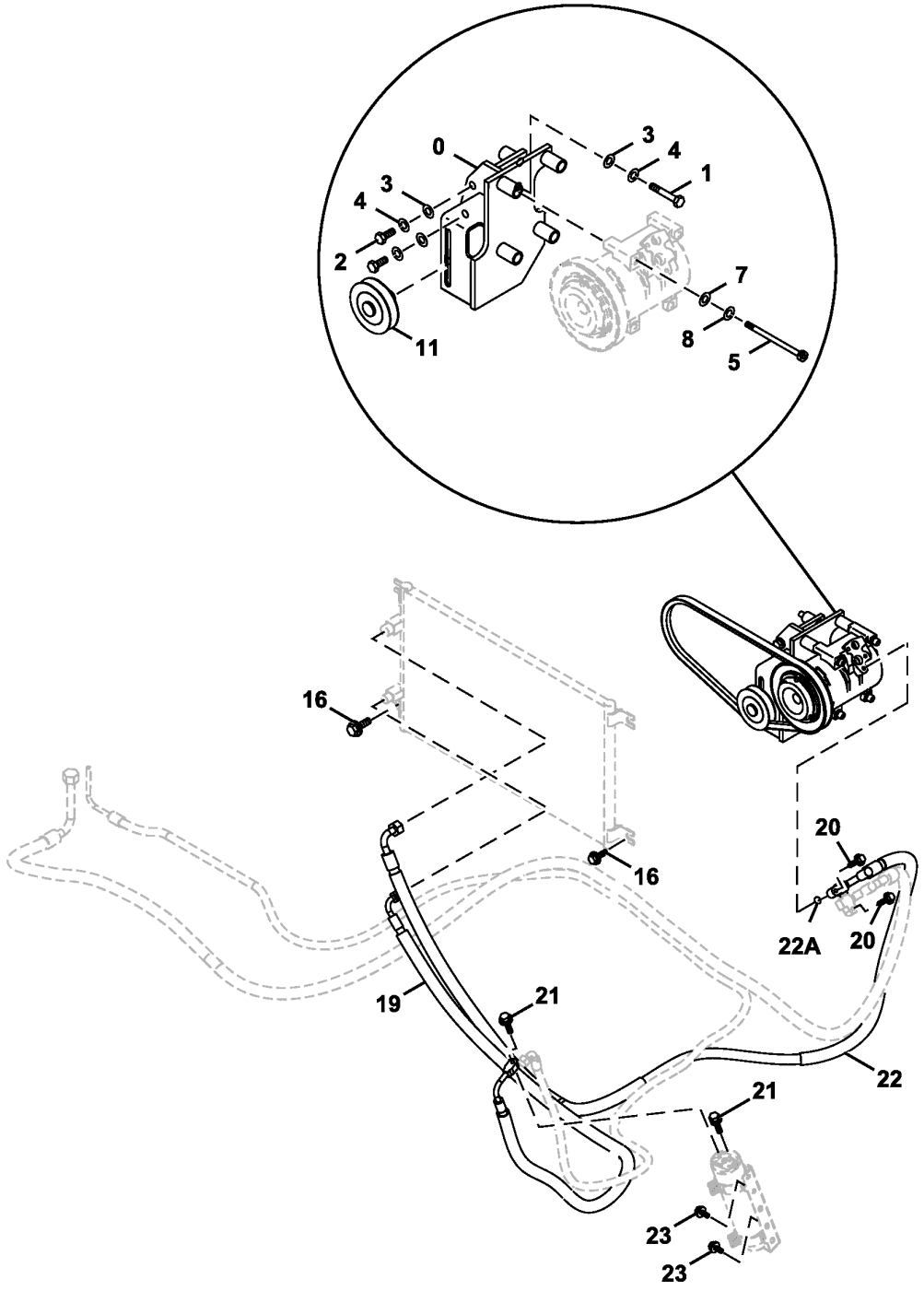

TX1096771

Pos.	*Ref.*	*Descripción*	*Cant.*	*Núm. de serie*	*Notas*
0	AP37369	Soporte	1		
1	19M7403	Tornillo	2		M12 X 35
2	19M7488	Tornillo	2		M16 X 40
3	24M7053	Arandela	4		17 X 30 X 3 mm
4	24M7047	Arandela	4		13 X 24 X 2.500 mm
5	19M8006	Tornillo	4		M8 X 120
7	24M7055	Arandela	4		8.400 X 16 X 1.600 mm
8	.....	Arandela	4		12M7065 NLA
11	4346770	Polea	1		
11A	4451204	Tornillo	1		No se ilustra
12	P70104	Correa trapezoidal	1		48 in.
	AT397199	Correa trapezoidal	1		45 in.
16	19M7402	Tornillo	4		M10 X 25
	12M7066	Arandela de seguridad	4		10 mm
	24M7096	Arandela	4		10.500 X 18 X 1.600 mm
19	4429678	Manguito de refrigerante	1		
20	19M7874	Tornillo	2		M6 X 30
	12H302	Arandela de seguridad	2		1/4"
	24M7054	Arandela	2		6.400 X 12 X 1.600 mm
21	19M7286	Tornillo	2		M6 X 25
	12M7006	Arandela de seguridad	2		6 mm
	24M7054	Arandela	2		6.400 X 12 X 1.600 mm
22	4482953	Manguito de refrigerante	1		
22A	M800650	Empaquetadura	1		
23	19M7139	Tornillo	2		M8 X 20
	.....	Arandela	2		12M7065 NLA
	24M7055	Arandela	2		8.400 X 16 X 1.600 mm

AIR CONDITIONER COMPRESSOR, CONDENSER, AND RECEIVER/DRYER
COMPRESSEUR, CONDENSATEUR ET FLACON SECHEUR CLIMATISEUR
COMPRESOR DEL AIRE ACONDICIONADO, CONDENSADOR Y RECEPTOR/SECADOR

T160181 A.1

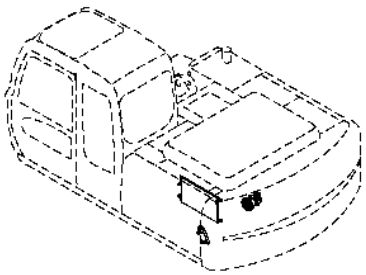

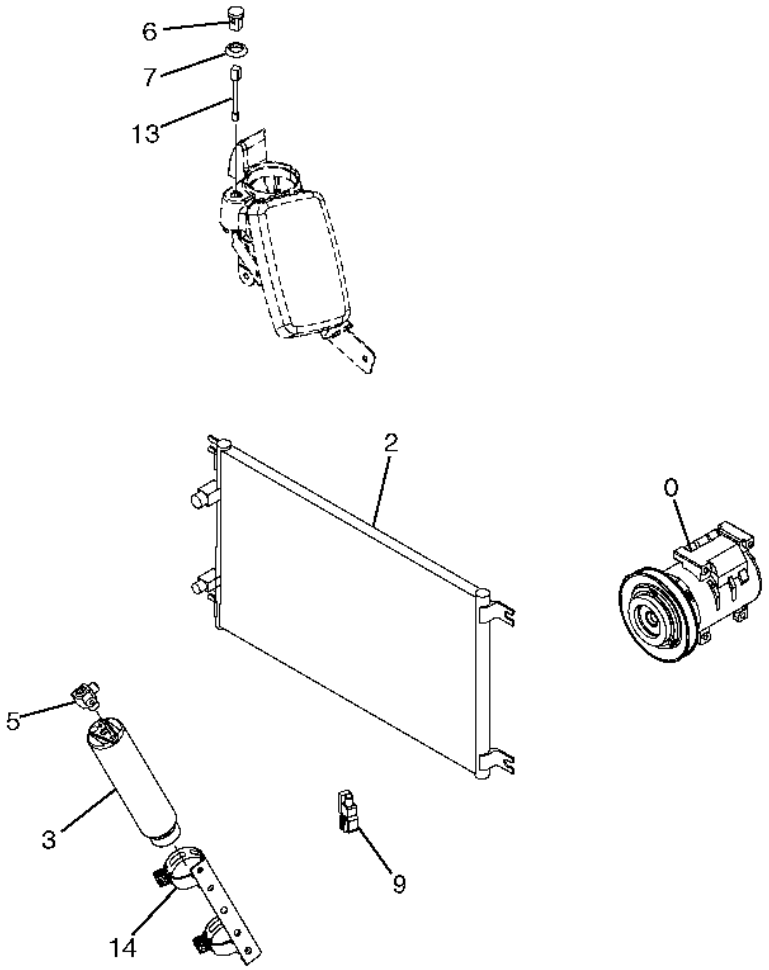

T160181

Pos.	*Ref.*	*Descripción*	*Cant.*	*Núm. de serie*	*Notas*
0	4431081	Compresor	1		Componentes en páginas aparte
2	4617327	Condensador de vapor	1		(DOES NOT REQUIRE 8082202 THIS APPLICATION) (4431082 NLA)
3	4333461	Tanque	1		
5	4374958	Racor adaptador	1		
6	4405814	Sensor	1		
7	4405194	Espaciador	1		
9	4405815	Sensor	1		
13	4413801	Grupo de cables	1		
14	4446657	Portador	1		

Air Conditioner Compressor Components
Composants de compresseur de climatisation
Componentes de compresor de aire acondicionado

T207671 A.1

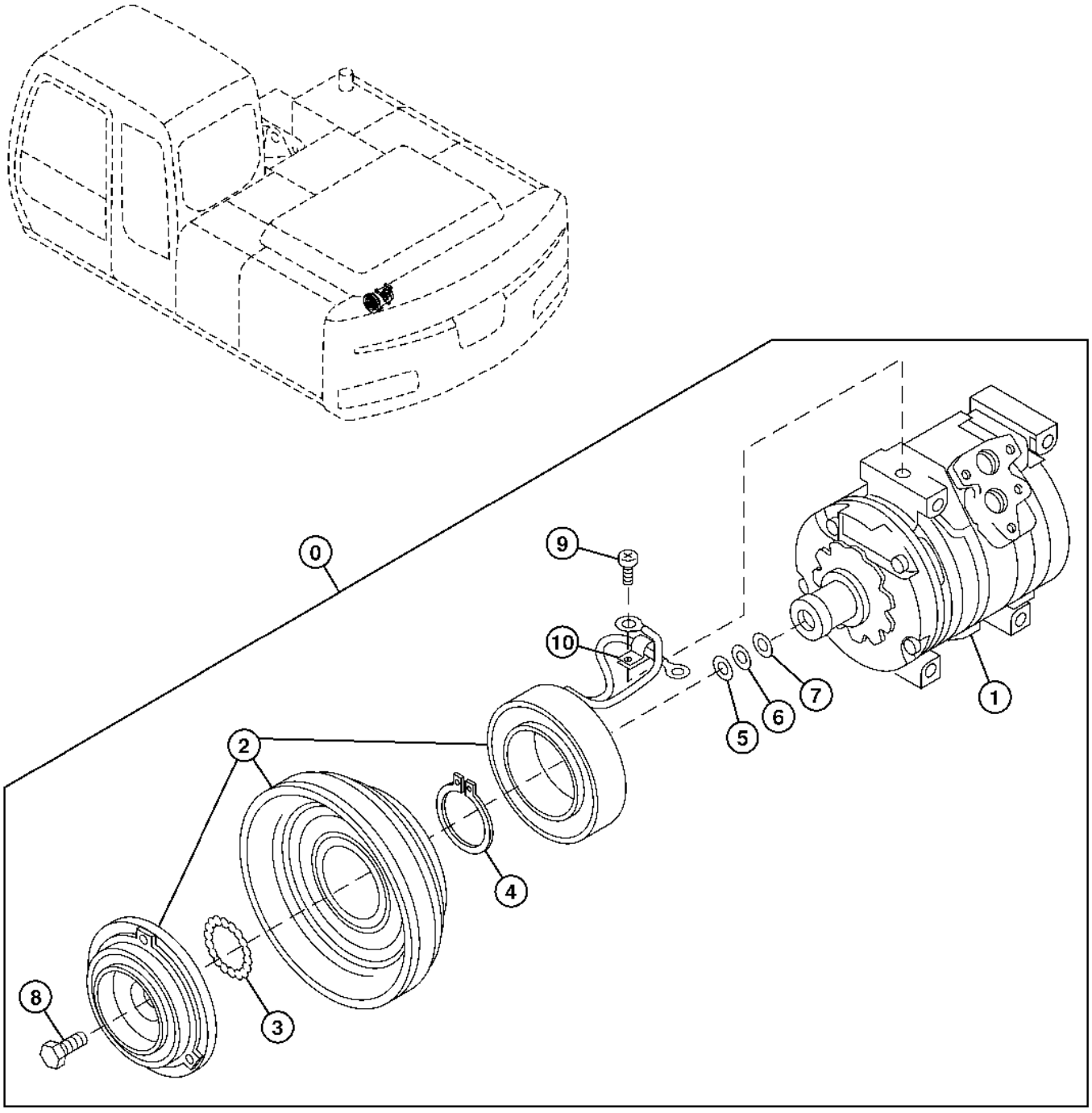

T207671

Pos.	*Ref.*	*Descripción*	*Cant.*	*Núm. de serie*	*Notas*
0	4431081	Compresor	1		
1	.....	Compresor	1		(4469049 NLA)
2	4469051	Embrague	1		
3	4475230	Anillo	1		
4	4475236	Anillo	1		
5	4475237	Arandela	1		
6	4475242	Arandela	1		
7	4475243	Arandela	1		
8	4475244	Tornillo	1		
9	4475245	Tornillo	1		
10	4475246	Abrazadera	1		

CAB HEATER/AIR CONDITIONER AIR INTAKE AND DISCHARGE DUCTS
CONDUITS DE DECHARGE ET D'ADMISSION D'AIR DU CHAUFFAGEE/CLIMATISEUR DE CABINE
DUCTOS DESCARGA Y ADMISION DE ACONDICIONADOR DE AIRE/CALEFACTOR DE CABINA

T147810 A.1

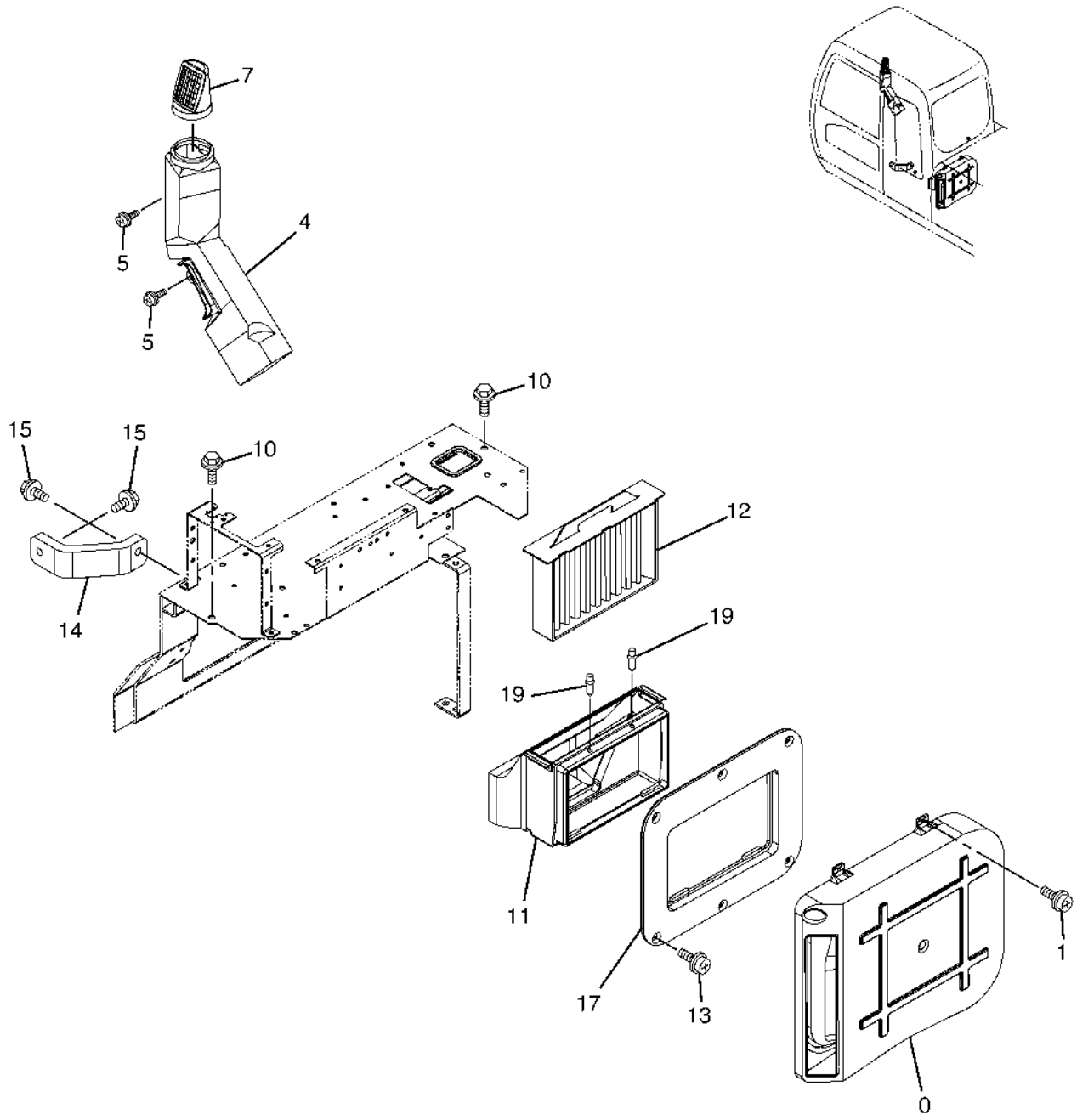

T147810

Pos.	*Ref.*	*Descripción*	*Cant.*	*Núm. de serie*	*Notas*
0	4426160	Conducto de aire	1		
1	19M8425	Tornillo	6		M6 X 16
	12M7006	Arandela de seguridad	6		6 mm
	24M7293	Arandela	6		6.500 X 13 X 1.600 mm
4	4426159	Conducto de aire	1		
	4653923	Enrejado	1		(NO SE ILUSTRA)
5	19M8425	Tornillo	2		M6 X 16
	12M7006	Arandela de seguridad	2		6 mm
	24M7293	Arandela	2		6.500 X 13 X 1.600 mm
7	4449068	Conducto de aire	1		
10	19M7402	Tornillo	2		M10 X 25, (SUB FOR J031025)
	12M7066	Arandela de seguridad	2		10 mm
	24M7296	Arandela	2		10.500 X 30 X 2.500 mm
11	4433064	Conducto de aire	1		
12	4S00640	Filtro	1		(SUB FOR 4350249)
13	19M8425	Tornillo	6		M6 X 16
	12M7006	Arandela de seguridad	6		6 mm
	24M7293	Arandela	6		6.500 X 13 X 1.600 mm
14	3091234	Apoyo	1		
15	19M7572	Tornillo	2		M10 X 45, (SUB FOR J031045) (USE WITH 12M7066 AND 24M7296)
	12M7066	Arandela de seguridad	2		10 mm
	24M7296	Arandela	2		10.500 X 30 X 2.500 mm
17	4449348	Conducto de aire	1		
19	4445916	Presilla	2		

CAB REAR CONSOLE COVER, POWER SUPPLY, AND AIR DIFFUSER
PROTECTION DE CONSOLE ARRIERE, ALIMENTATION ELECTRIQUE ET DIFFUSEUR D'AIR DE CABINE
CUBIERTA DE CONSOLA TRASERA DE CABINA, FUENTE DE ALIMENTACION Y DIFUSOR DE AIRE

T196517 A.1

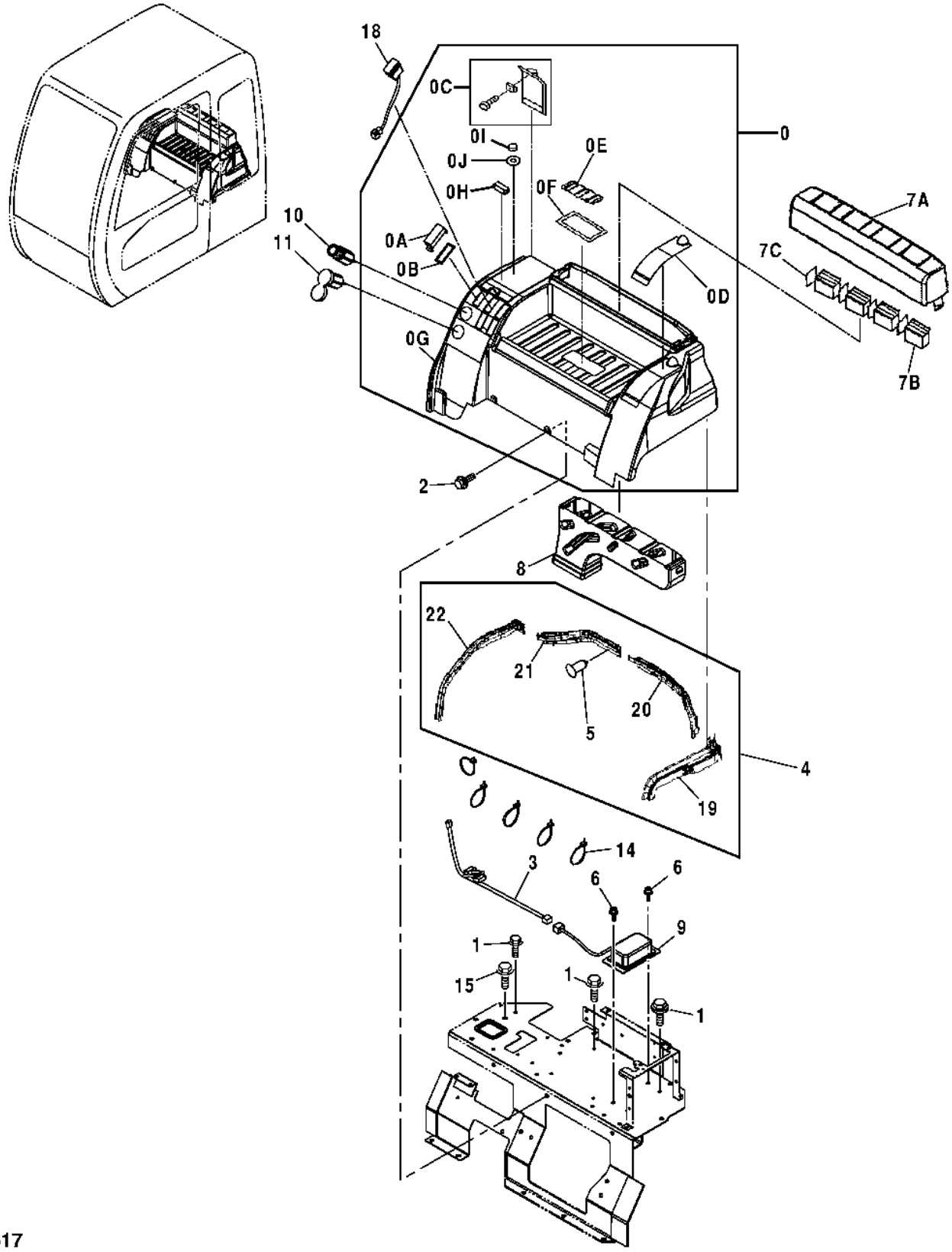

Pos.	*Ref.*	*Descripción*	*Cant.*	*Núm. de serie*	*Notas*
0	4433793	Bandeja	1		SUB FOR TH4433793
0A	4456725	Tapadera	5		SUB FOR TH4456725
0B	4456723	Aislante	5		SUB FOR TH4456723
0C	4458228	Tapadera	1		(RELE)
0D	4458230	Tapadera	1		(FUSIBLE)
0E	4458231	Tapadera	1		(CENTRAL)
0F	4458232	Retén	1		
0G	4458227	Bandeja	1		
0H	4458229	Imán	1		
0I	4458233	Tapadera	1		
0J	4458234	Retén	1		
1	19M7866	Tornillo	3		M8 X 20, SUB FOR AT213603 OR J050820, USE WITH 24M7036 AND 12M7065
	24M7036	Arandela	3		9 X 16 X 1.600 mm
	.....	Arandela	3		12M7065 NLA
2	19M7402	Tornillo	2		M10 X 25
	12M7066	Arandela de seguridad	2		10 mm
	24M7028	Arandela	2		10.500 X 20 X 2 mm
3	3091204	Grupo de cables	1		SUB FOR TH3091204
4	.....	Banda de guarnición	1		4436132 NLA
5	4425573	Presilla	13		SUB FOR TH4425573
6	19M8425	Tornillo	2		M6 X 16
	12M7006	Arandela de seguridad	2		6 mm
	24M7293	Arandela	2		6.500 X 13 X 1.600 mm
7	4433794	Tapadera	1		SUB FOR TH4433794
7A	.....	Tapadera	1		(4458235 NLA)
7B	4458236	Ventana de aireación	4		
7C	4458237	Soporte	4		
8	4426156	Conducto de aire	1		SUB FOR TH4426156
9	4450008	Rectificador	1		SUB FOR TH4450008
10	AR60937	Encendedor	1		(12 VOLT)
	AU42809	Resistencia eléctrica	1		(12 VOLT)
	AT78634	Conductor eléctrico	1		(12 VOLT)
	AT78633	Carcasa	1		(12 VOLT)
	.....	Encendedor	1		4357862 NLA , (24 VOLT)
11	4432965	Terminal eléctrico	1		SUB FOR TH4432965
14	H77698	Cinta de atar	5		
15	19M7938	Tornillo	1		M10 X 20
	12M7066	Arandela de seguridad	1		10 mm
18	4352947	Interruptor	2		(PARA USO CON FUNCIONES AUXILIARES)
19	.....	Banda de guarnición	1		4458238 NLA
20	.....	Banda de guarnición	1		4458239 NLA
21	.....	Banda de guarnición	1		4458240 NLA
22	.....	Banda de guarnición	1		4458241 NLA

REFRIGERANT HOSES (HVAC UNIT TO COMPRESSOR AND RECEIVER/DRYER)
FLEXIBLES DU REFRIGERANT(ENTRE CHAUFFAGE, VENTILATION CLIMATISATION COMPRESSEUR FLACON SECHEUR)
MANGUERAS DE REFRIGERANTE (UNIDAD HVAC A COMPRESOR Y RECEPTOR/SECADOR)

TX1096772 A.1

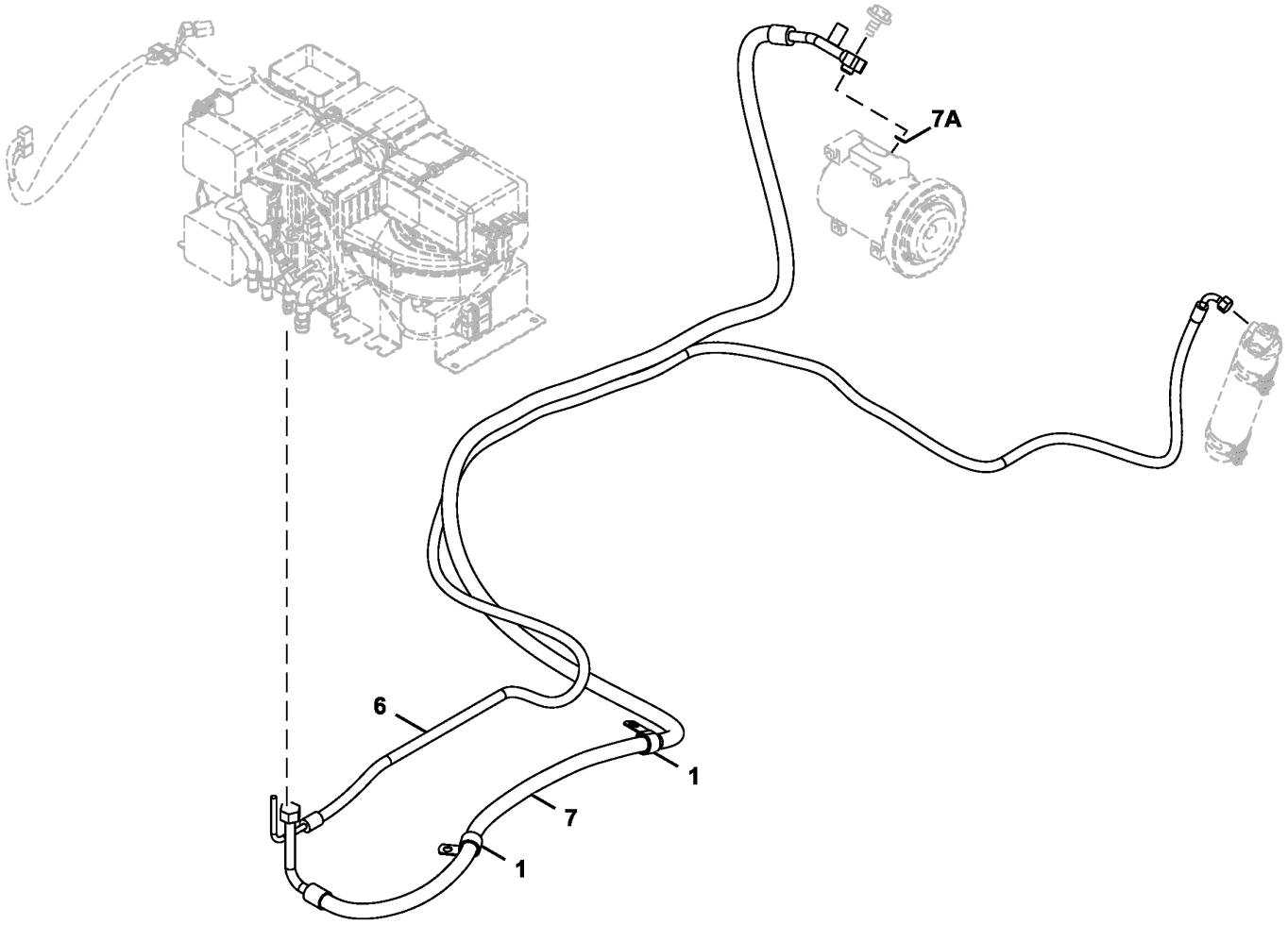

TX1096772

Pos.	*Ref.*	*Descripción*	*Cant.*	*Núm. de serie*	*Notas*
1	4190263	Presilla	2		
6	4483775	Manguito de refrigerante	1		
7	4483774	Manguito de refrigerante	1		
7A	4622346	Anillo tórico	1		SUB FOR 4674883

ENGINE TO HEATER CORE HOSES
FLEXIBLES ENTRE LE MOTEUR ET LE FAISCEAU D'APPAREIL DE CHAUFFAGE
MOTOR A MANGUERAS DEL NUCLEO DEL CALEFACTOR

T189380 A.1

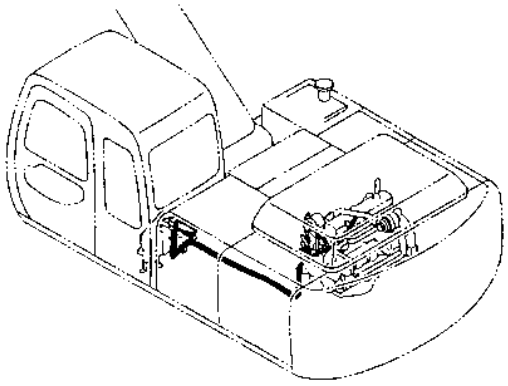

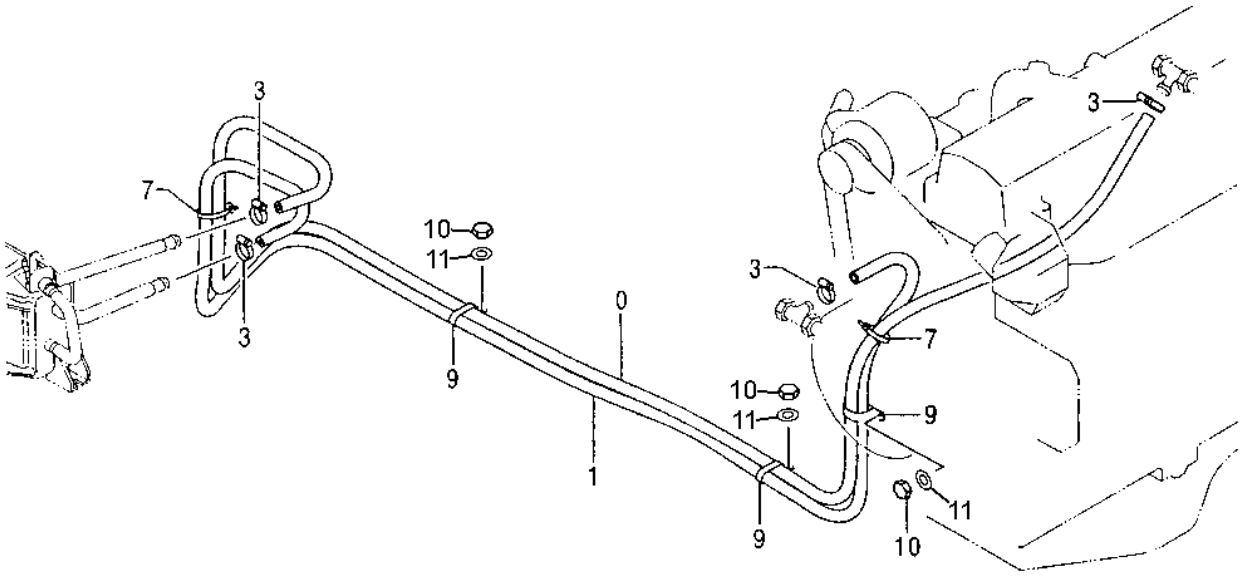

T189380

Pos.	*Ref.*	*Descripción*	*Cant.*	*Núm. de serie*	*Notas*
0	.....	Manguera a Granel	1		(IN) (P65143 NLA) , (CUT TO LENGTH)
1	.....	Manguera a Granel	1		(OUT) (P65144 NLA) , (CUT TO LENGTH)
3	WZ2141223	Abrazadera para mangueras	4		(SUB FOR AA34965)
7	H77698	Cinta de atar	AR		
9	R50454	Abrazadera	3		(SUB FOR TH109445 OR 4192034)
10	14M7274	Tuerca	3		M10
11	24M7346	Arandela	3		11 X 20 X 2 mm

DEFROSTER / AIR CIRCULATION FAN
VENTILATEUR DE CIRCULATION D'AIR
VENTILADOR DE LA CIRCULACION DE AIRE

T215045 A.1

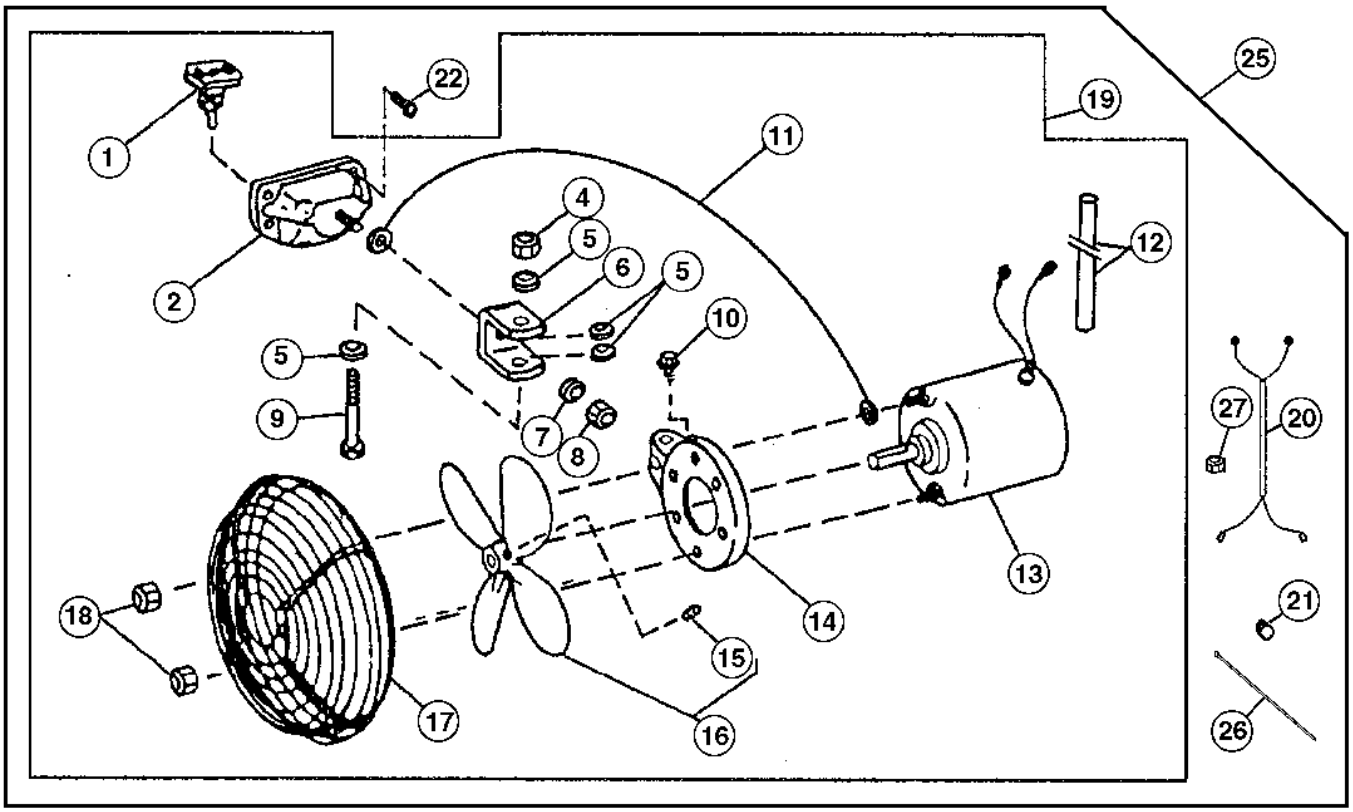

T215045

Pos.	*Ref.*	*Descripción*	*Cant.*	*Núm. de serie*	*Notas*
1	T55564	Int. alternante/basculante	1		
2	.....	Zócalo	1		
4	.....	Tuerca de seguridad	1		(USAR E19700 SI ESTA DISPONIBLE)
5	T27860	Arandela	4		
6	.....	Soporte	1		
7	24H1136	Arandela	2		11/32" X 11/16" X 0.065"
8	.....	Tuerca de seguridad	1		
9	19H2650	Tornillo	1		1/4" X 2"
10	N162946	Tornillo	1		
11	.....	Conductor eléctrico	1		(MAKE FROM TY26194)
12	T105943	Tubo	1		
13	.....	Motor	1		
14	.....	Soporte	1		
15	.....	Tornillo de fijación	1		
16	AT101945	Paleta de ventilador	1		
17	AT101944	Protección	1		
18	.....	Tuerca de seguridad	2		
19	AT84953	Ventilador	1		
20	AT159804	Grupo de cables	1		
21	R26409	Pasamuros	1		
22	37H129	Tornillo	4		
25	.....	Kit de ventiladores	1		(WHOLE GOODS) , (VENTILADOR CIRCULACION DE AIRE)
26	H77698	Cinta de atar	6		
27	T59951	Presilla	3		

RADIATOR COMPARTMENT FRONT AND REAR PANELS
PANNEAUX AVANT ET ARRIERE DU COMPARTIMENT DU RADIATEUR
TABLEROS DELANTERO Y TRASERO DEL COMPARTIMIENTO DEL RADIADOR

T157459 A.1

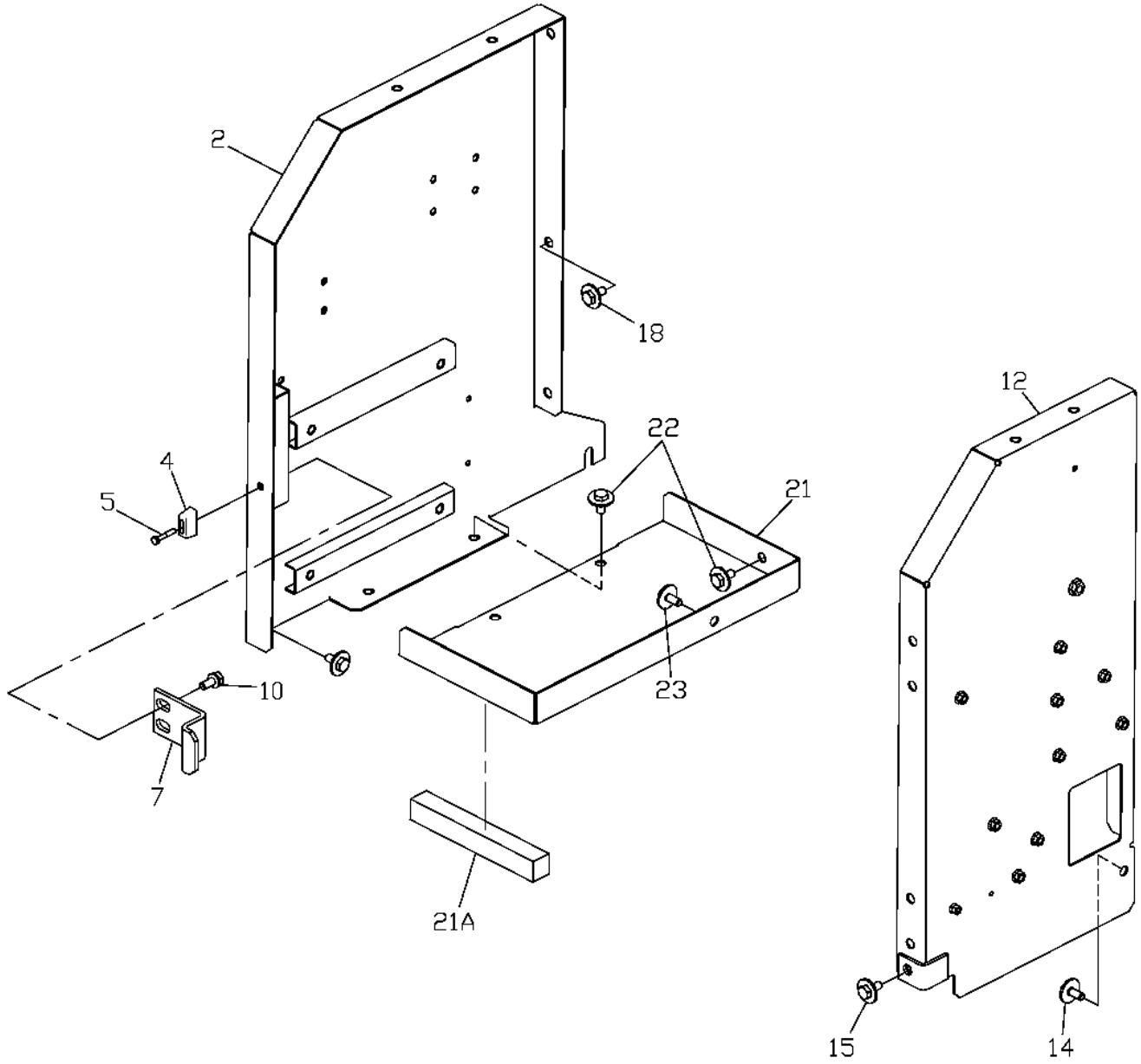

T157459

Pos.	*Ref.*	*Descripción*	*Cant.*	*Núm. de serie*	*Notas*
2	AP38132	Tapadera	1		
4	4609950	Tope	1		(SUB FOR 4424157)
5	19M7177	Tornillo	1		M6 X 35
7	4431357	Tope	1		
10	19M7402	Tornillo	2		M10 X 25
	24M7028	Arandela	2		10.500 X 20 X 2 mm
12	AP37259	Tapadera	1		
14	19M7402	Tornillo	1		M10 X 25, (SUB FOR J031025)
	12M7066	Arandela de seguridad	1		10 mm
	24M7296	Arandela	1		10.500 X 30 X 2.500 mm
15	19M7662	Tornillo	1		M10 X 30
	12M7066	Arandela de seguridad	1		10 mm
	24M7028	Arandela	1		10.500 X 20 X 2 mm
18	19M7402	Tornillo	5		M10 X 25
	12M7066	Arandela de seguridad	5		10 mm
	24M7028	Arandela	5		10.500 X 20 X 2 mm
21	AP38131	Tapadera	1		
21A	P68386	Aislante	2		
22	19M7402	Tornillo	3		M10 X 25
	12M7066	Arandela de seguridad	3		10 mm
	24M7028	Arandela	3		10.500 X 20 X 2 mm
23	19M7662	Tornillo	1		M10 X 30
	12M7066	Arandela de seguridad	1		10 mm
	24M7028	Arandela	1		10.500 X 20 X 2 mm

BOTTOM PROTECTION COVERS
COUVERCLES DE PROTECTION INFERIEURE
CUBIERTAS DE PROTECCION INFERIORES

T189381 A.1

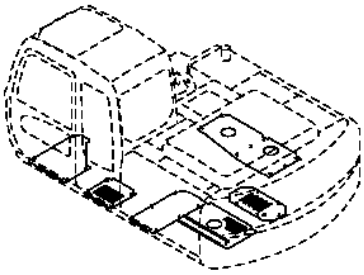

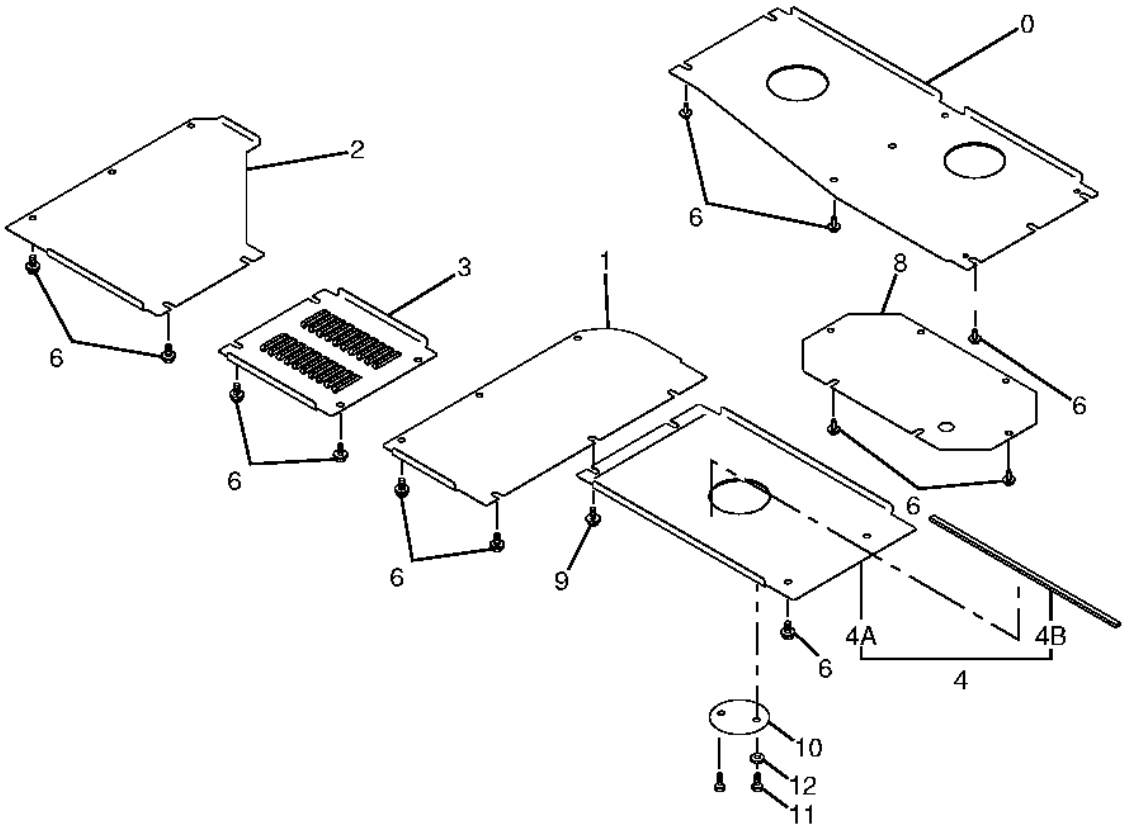

T189381

Pos.	*Ref.*	*Descripción*	*Cant.*	*Núm. de serie*	*Notas*
0	P68283	Tapadera	1	-044736	
	DH200050	Tapadera	1	044737-	
1	P68282	Tapadera	1	-044736	
	DH300140	Tapadera	1	044737-	
2	P68280	Tapadera	1	-044736	
	3091146	Tapadera	1	044737-	
3	P68281	Tapadera	1	-044736	
	3091147	Tapadera	1	044737-	
4	AP37668	Tapadera	1		
4A	P65608	Tapadera	1		
4B	4448658	Aislante	1		
6	19M7662	Tornillo	34		M10 X 30
	24M7101	Arandela	34		11 X 34 X 3 mm
8	P67743	Tapadera	1		
9	19M7938	Tornillo	2		M10 X 20
	24M7101	Arandela	2		11 X 34 X 3 mm
10	P65608	Tapadera	1		
11	19M7402	Tornillo	2		M10 X 25
12	24M7101	Arandela	2		11 X 34 X 3 mm

RADIATOR AND HYDRAULIC PUMP COMPARTMENT ACCESS DOORS
PORTES D'ACCES AUX COMPARTIMENTS DE RADIATEUR ET DE POMPE HYDRAULIQUE
PUERTAS DE ACCESO DEL COMPARTIMIENTO DE BOMBA HIDRAULICA Y RADIADOR

TX1033263 A.1

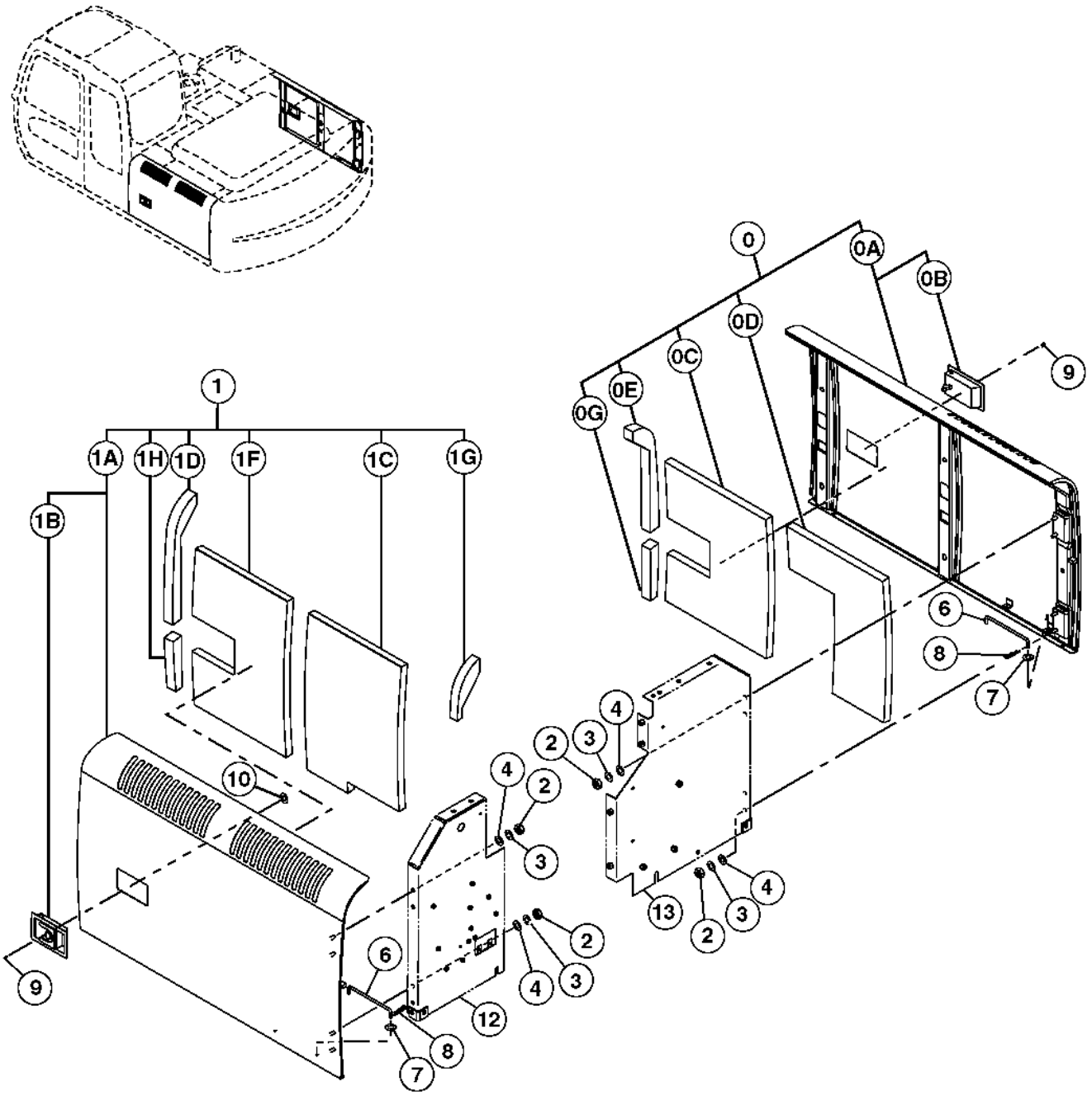

TX1033263

Pos.	*Ref.*	*Descripción*	*Cant.*	*Núm. de serie*	*Notas*
0	AP38139	Piezas cadena montaje	1		Puerta, RH
0A	.....	Puerta	1		(AP38140 NLA)
0B	AT166994	Pestillo	1		(PESTILLO CON 4 AGUJEROS)
	DH400030	Pestillo	1		(PESTILLO CON 6 AGUJEROS)
0C	P68332	Aislante	1		
0D	P68333	Aislante	1		
0E	P67816	Aislante	1		
0G	P68167	Aislante	1		
1	AP38141	Piezas cadena montaje	1		LH
1A	.....	Puerta	1		(AP38142 NLA)
1B	AT166994	Pestillo	1		(PESTILLO CON 4 AGUJEROS)
	DH400030	Pestillo	1		(PESTILLO CON 6 AGUJEROS)
1C	P68336	Aislante	1		
1D	P67816	Aislante	1		
1F	P68335	Aislante	1		
1G	P61598	Aislante	1		
1H	P68167	Aislante	1		
2	14M7274	Tuerca	8		M10
3	12M7066	Arandela de seguridad	8		10 mm
4	24M7028	Arandela	8		10.500 X 20 X 2 mm
6	4341788	Vástago	2		(SUB FOR 4341788J)
7	24M7055	Arandela	2		8.400 X 16 X 1.600 mm, (SUB FOR A590108)
8	H132922	Pasador de aletas	2		
9	M63200	Remache	12		
10	24M7138	Arandela	12		5.300 X 15 X 1.200 mm
12	7040103	Tapadera	1		
13	8085922	Tapadera	1		

HYDRAULIC PUMP COMPARTMENT TOP COVER AND SUPPORTS
COUVERCLE SUPERIEUR ET SUPPORTS DE COMPARTIMENT DE POMPE HYDRAULIQUE
CUBIERTA SUPERIOR DEL COMPARTIMIENTO DE LA BOMBA HIDRAULICA Y SOPORTES

T189441 A.1

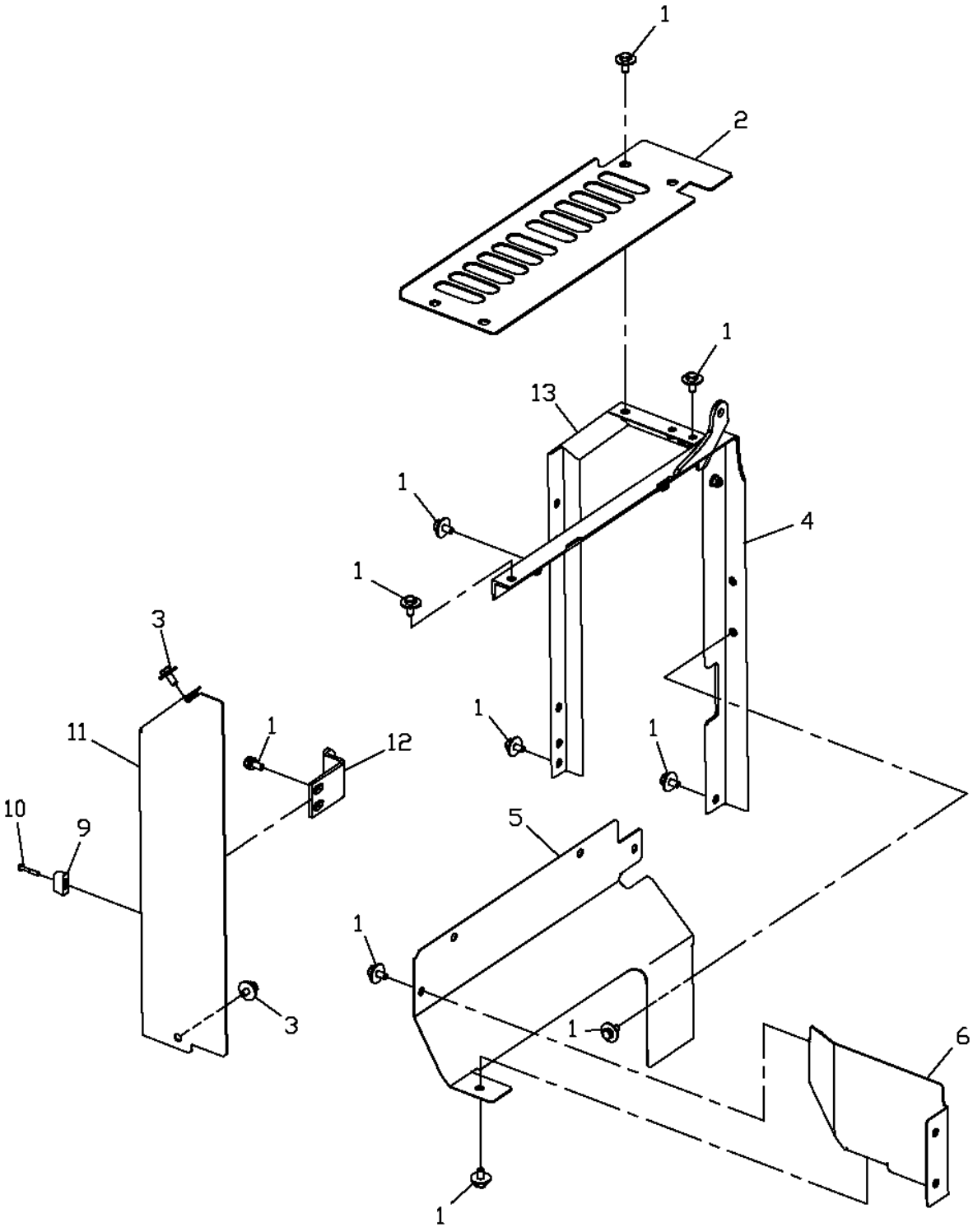

Pos.	*Ref.*	*Descripción*	*Cant.*	*Núm. de serie*	*Notas*
1	19M7402	Tornillo	17		M10 X 25
	24M7101	Arandela	17		11 X 34 X 3 mm
2	P70469	Tapadera	1		
3	19M7402	Tornillo	2		M10 X 25
	24M7028	Arandela	2		10.500 X 20 X 2 mm
4	AP38148	Apoyo	1		
5	P68347	Tapadera	1		
6	AP38155	Tapadera	1		
9	4609950	Tope	1		(SUB FOR 4424157)
10	19M7177	Tornillo	1		M6 X 35
11	AP38153	Tapadera	1		
12	4431357	Tope	1		
13	AP37250	Apoyo	1		

RADIATOR AND FRONT MIDDLE DECK COVERS
RADIATEUR ET PROTECTIONS DE PONT AVANT MEDIAN
RADIADOR Y CUBIERTAS DE PLATAFORMA CENTRAL DELANTERA

T165368 A.1

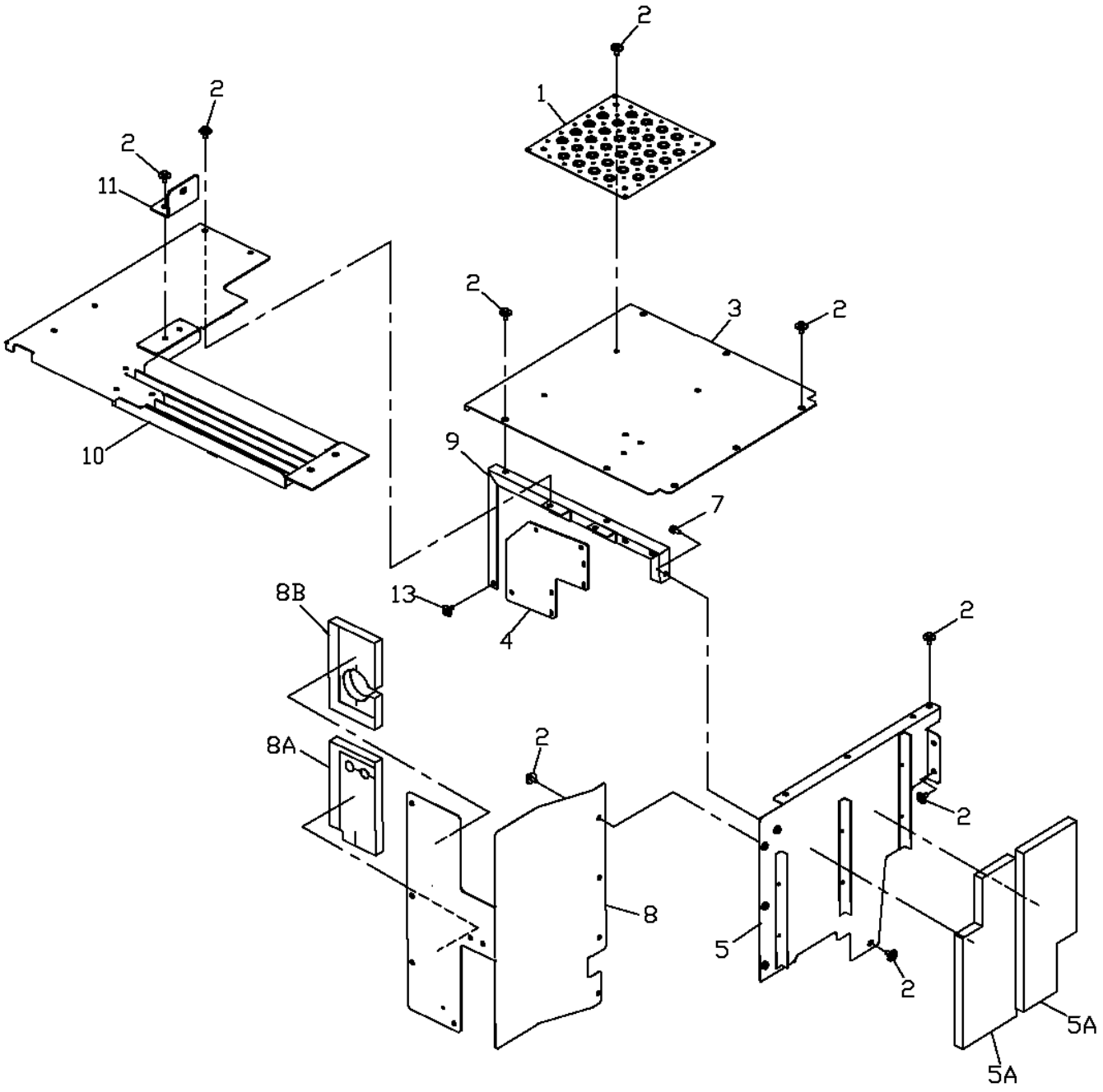

T165368

Pos.	*Ref.*	*Descripción*	*Cant.*	*Núm. de serie*	*Notas*
1	P70989	Placa	1		
2	19M7402	Tornillo	27		M10 X 25
	24M7101	Arandela	27		11 X 34 X 3 mm
3	AP38149	Tapadera	1	-044764	
	DH600036	Tapadera	1	044765-	
4	T201367	Refuerzo	1		
5	AP38157	Tapadera	1		(INCLUDES P67782) (SUB FOR AP38135)
5A	P67782	Aislante	2		
7	19M7402	Tornillo	1		M10 X 25
	24M7028	Arandela	1		10.500 X 20 X 2 mm
8	AP38130	Tapadera	1		(INCLUDES P70496 AND P70495)
8A	.....	Aislante	1		(P70496 NLA) , (ORDER AP38130)
8B	.....	Aislante	1		(P70495 NLA) , (ORDER AP38130)
9	AP38150	Apoyo	1		
10	AP38154	Tapadera	1		
11	P67780	Ángulo	1		
13	19M7938	Tornillo	1		M10 X 20
	24M7028	Arandela	1		10.500 X 20 X 2 mm

ENGINE COMPARTMENT HOOD
CAPOT DU COMPARTIMENT MOTEUR
CAPO DEL COMPARTIMIENTO DEL MOTOR

TX1117870 A.1

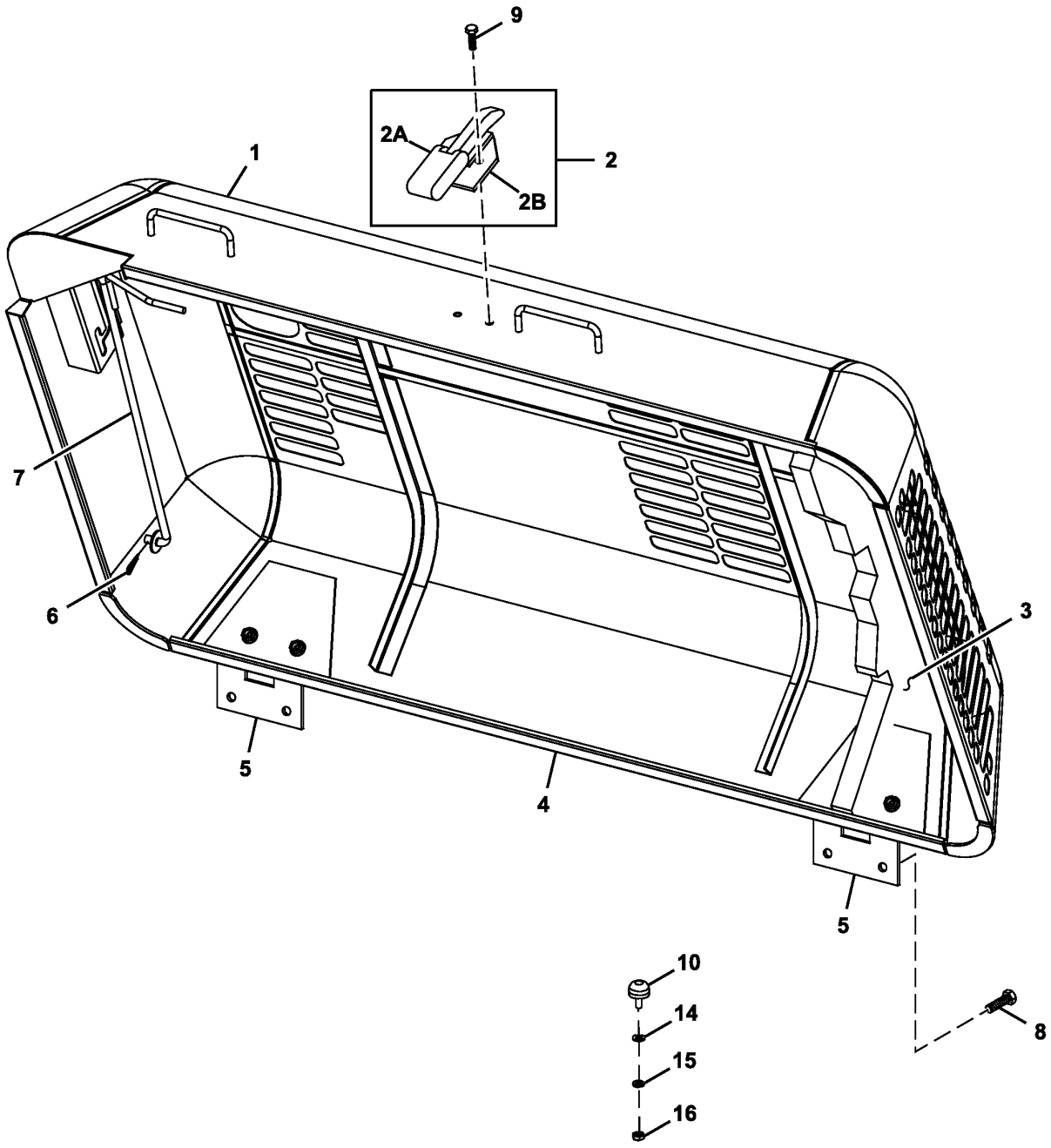

TX1117870

Pos.	*Ref.*	*Descripción*	*Cant.*	*Núm. de serie*	*Notas*
1	DH500067	Capó	1		(SUB FOR AP35339)
2	4361455	Fiador	1		
3	P70773	Tira/alfombrilla	1		
4	DH400621	Aislante	3		Ajuste 3 de lado izquierdo a cerrojo, (P66463 NLA)
	DH400613	Aislante	1		De pestillo a esquina izq. superior
5	DH300125	Bisagra	2		(SUB FOR P61315)
6	11H236	Pasador de aletas	2		1/8" X 1"
7	AP35340	Vástago	1		
8	19M7872	Tornillo	8		M12 X 25
	24M7047	Arandela	8		13 X 24 X 2.500 mm
9	19M7881	Tornillo	4		M8 X 20
	24M7055	Arandela	4		8.400 X 16 X 1.600 mm
10	4294508	Paragolpes	2		
14	24M7028	Arandela	2		10.500 X 20 X 2 mm
15	12M7066	Arandela de seguridad	2		10 mm
16	14M7274	Tuerca	2		M10

TOOL BOX, COVER, AND RIGHT FRONT HANDRAIL
BOITE A OUTILS, COUVERCLE ET MAIN COURANTE AVANT DROITE
CAJA DE HERRAMIENTAS, CUBIERTA Y PASAMANOS DELANTERO DERECHO

T192402 A.1

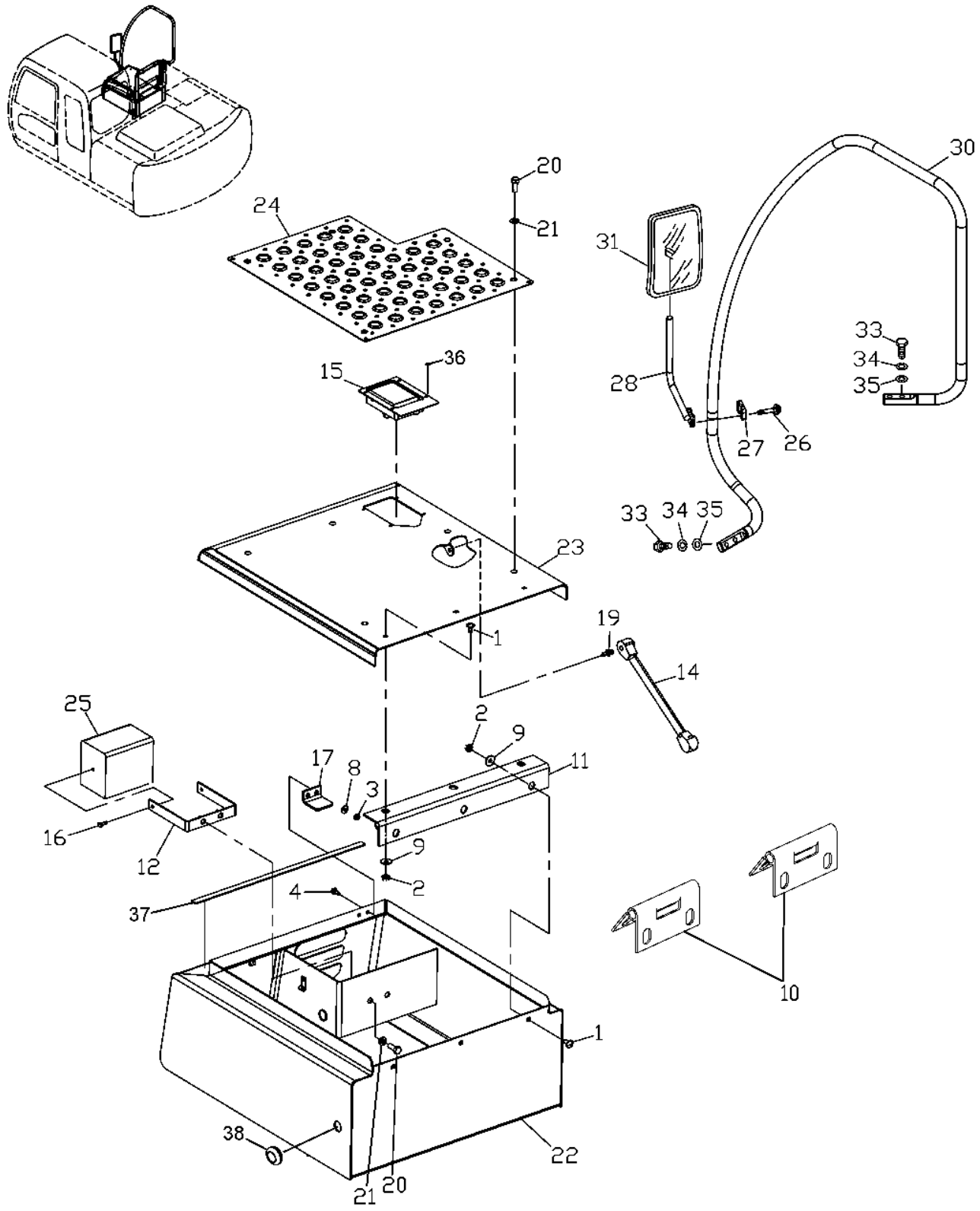

T192402

Pos.	Ref.	Descripción	Cant.	Núm. de serie	Notas
1	03M7184	Tornillo	3		M8 X 20, (CON BISAGRA GRANDE 1)
	03M7190	Tornillo	4		M10 X 20, (CON BISAGRAS PEQUENAS 2)
2	14M7298	Tuerca con brida	3		M8, (CON BISAGRA GRANDE 1)
	14M7296	Tuerca con brida	4		M10, (CON BISAGRAS PEQUENAS 2)
3	14M7303	Tuerca con brida	1		M6
4	19M7775	Tornillo	1		M6 X 16
8	24M7139	Arandela	1		6.400 X 18 X 1.600 mm
9	24M7298	Arandela	6		8.400 X 25 X 2 mm, (CON BISAGRA GRANDE 1)
	24M7296	Arandela	8		10.500 X 30 X 2.500 mm, (CON BISAGRAS PEQUENAS 2)
10	DH300125	Bisagra	1		SUB FOR P61315
11	DH300125	Bisagra	1		SUB FOR AP33223
12	AP33341	Soporte	1		
14	AT146294	Cilindro	4		SUB FOR DH200049
15	AT166994	Pestillo	1		
16	19M7560	Tornillo	1		M6 X 16
17	P60616	Perno de cierre	2		
19	T142651	Espárrago con bola	2		
20	19M7402	Tornillo	2		M10 X 25
21	24M7028	Arandela	7		10.500 X 20 X 2 mm
22	DH500068	Caja de herramientas	1		SUB FOR AP36328, AP39351
23	AP39145	Tapadera	1		
24	P70345	Placa	1		
25	4274478	Faro delantero	1		
26	.....	Arandela	1		12M7065 NLA
	19M7981	Tornillo	1		M8 X 55
27	DH400660	Abrazadera	1		(4425481 NLA)
28	8124253	Soporte	1		SUB FOR 8077521
30	4600251	Pasamano	1		SUB FOR 7039248 OR 7039248J
31	4420724	Espejo retrovisor	1		
33	19M7493	Tornillo	4		M12 X 40, SUB FOR J921240
34	A590912	Arandela de seguridad	4		
35	24M7047	Arandela	4		13 X 24 X 2.500 mm, SUB FOR A590112
36	M63200	Remache	6		
37	P60752	Aislante	1		
38	4613243	Pasamuros	1		SUB FOR 94-2807

COOLING PACKAGE AND HYDRAULIC PUMP COMPARTMENT DOORS
PORTES DE COMPARTIMENTS D'ENSEMBLE DE REFROIDISSEMENT ET DE POMPE HYDRAULIQUE
CONJUNTO DE ENFRIAMIENTO Y PUERTAS DEL COMPARTIMIENTO DE BOMBA HIDRAULICA

T165694 A.1

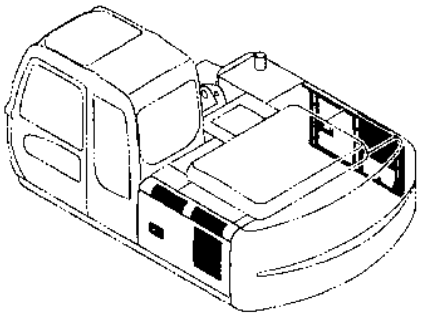

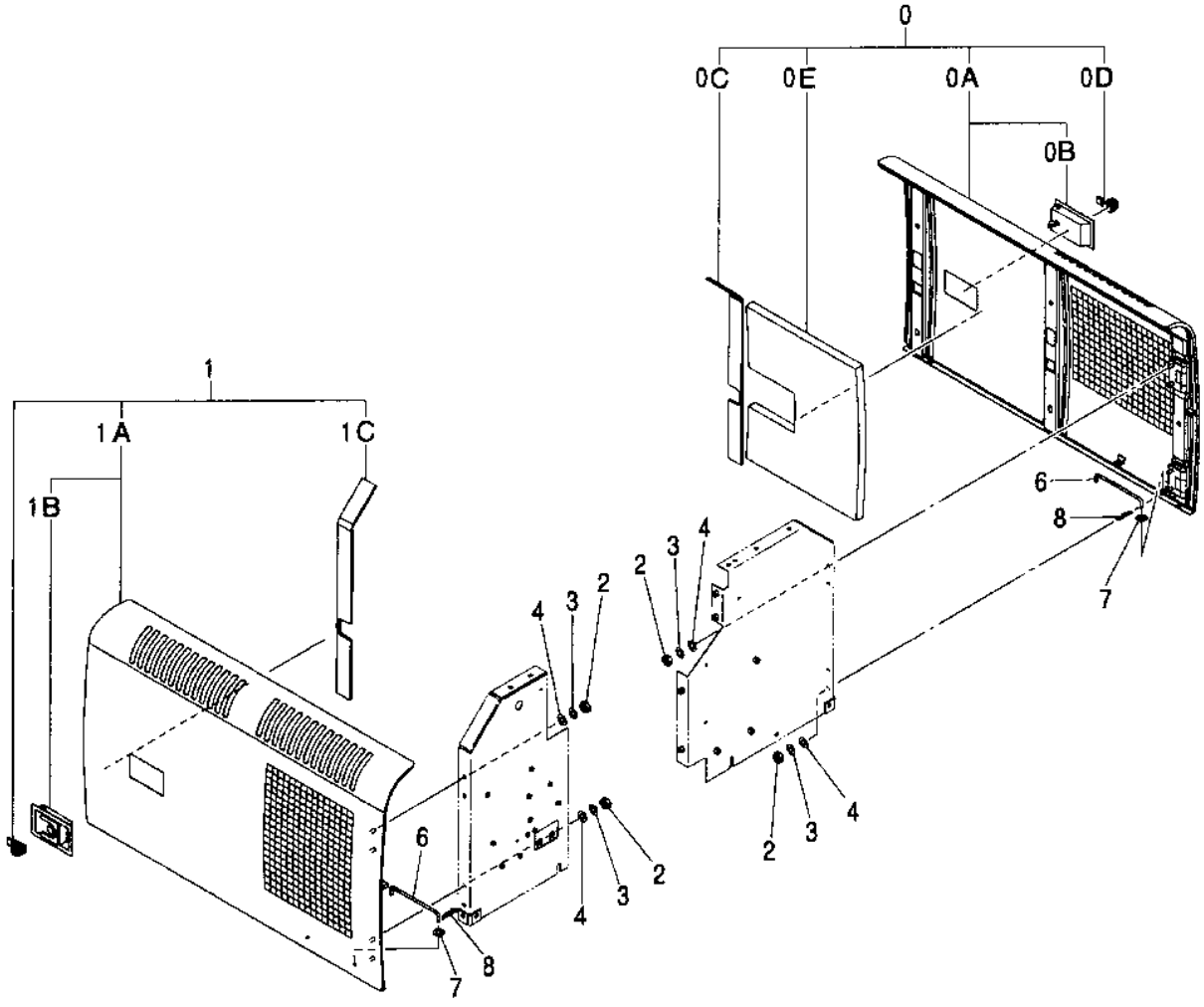

T165694

Pos.	*Ref.*	*Descripción*	*Cant.*	*Núm. de serie*	*Notas*
0	7042508	Puerta	1		(ASSY)
0A	.....	Puerta	1		(5008357 NLA)
0B	4409446	Cerradura	1		Soldado, (VER PAG SEPARADA PARA OBTENER DETALLES)
	DH400030	Pestillo	1		Remache
0C	4425575	Aislante	1		
0D	4409446	Cerradura	1		Soldado
	DH400030	Pestillo	1		Remache
0E	4447473	Aislante	1		
1	7042507	Puerta	1		(ASSY)
1A	.....	Puerta	1		(5008356 NLA)
1B	4409394	Cerradura	1		(VER PAG SEPARADA PARA OBTENER DETALLES)
1C	4425575	Aislante	1		
2	14M7274	Tuerca	8		M10
3	12M7066	Arandela de seguridad	8		10 mm
4	24M7028	Arandela	8		10.500 X 20 X 2 mm
6	4341788	Vástago	2		(SUB FOR 4341788J)
7	24M7055	Arandela	2		8.400 X 16 X 1.600 mm, (SUB FOR A590108)
8	4022697	Pasador de aletas	2		

DOOR LOCK
LOQUET DE PORTE
CERRADURA DE PUERTA

T207785 A.1

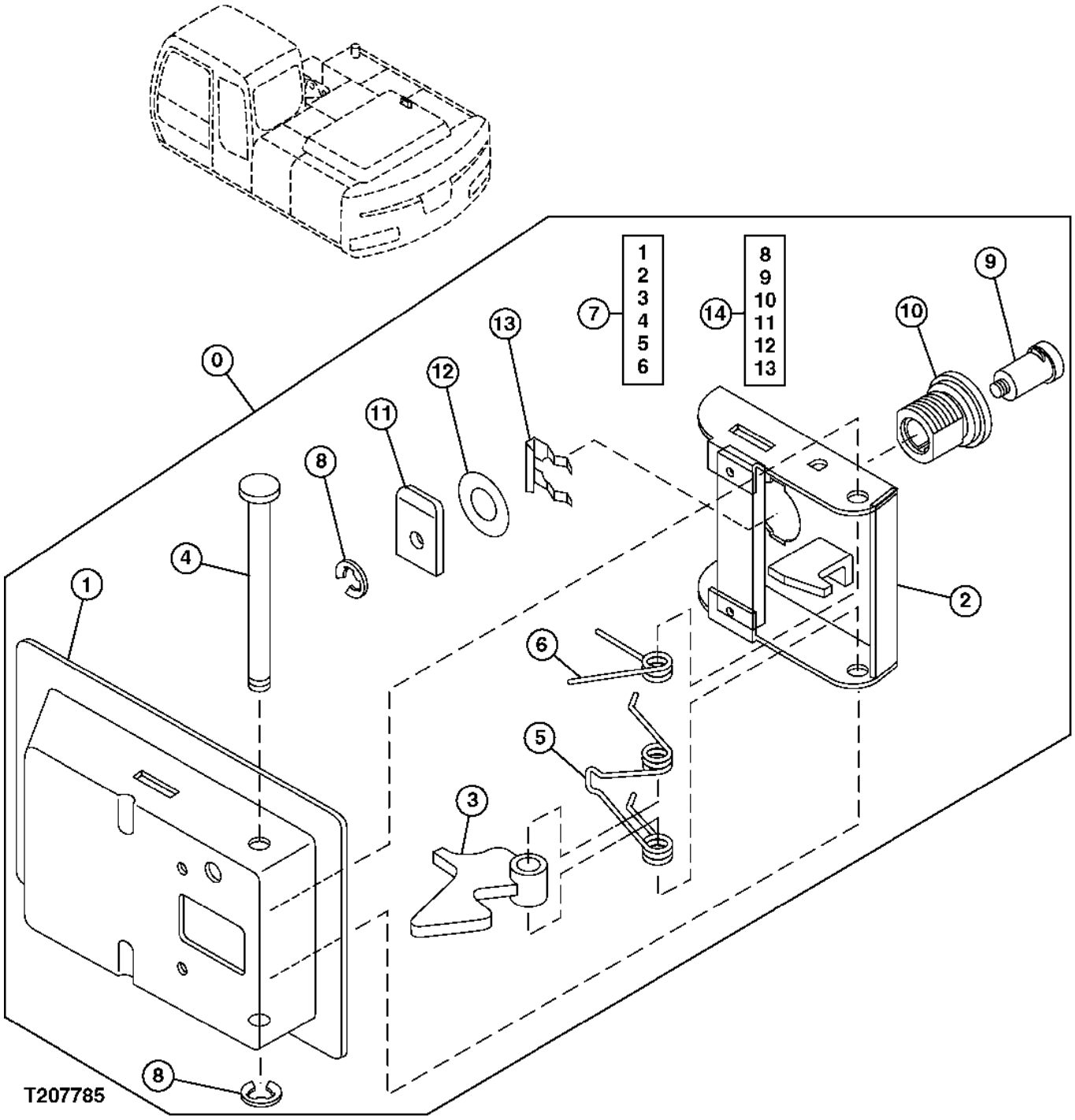

Pos.	*Ref.*	*Descripción*	*Cant.*	*Núm. de serie*	*Notas*
0	4409446	Cerradura	1		
1	4461343	Tapadera	1		
2	4461344	Pestillo	1		
3	4461345	Palanca	1		
4	4461346	Árbol	1		
5	4461347	Muelle	1		
6	4461348	Muelle	1		
7	4409447	Cerradura	1		
8	4461337	Anillo	2		
9	.....	Cerradura	1		(4461338 NLA)
10	.....	Caja	1		(4461339 NLA)
11	.....	Placa	1		(4461340 NLA)
12	.....	Arandela	2		(4461341 NLA)
13	4461342	Presilla	1		
14	4409396	Cerradura	1		

LEFT SERVICE DOOR LOCK COMPONENTS
VERROU DE PORTE D'ACCES GAUCHE
BLOQUEO DE PUERTA DE SERVICIO IZQ.

T207786 A.1

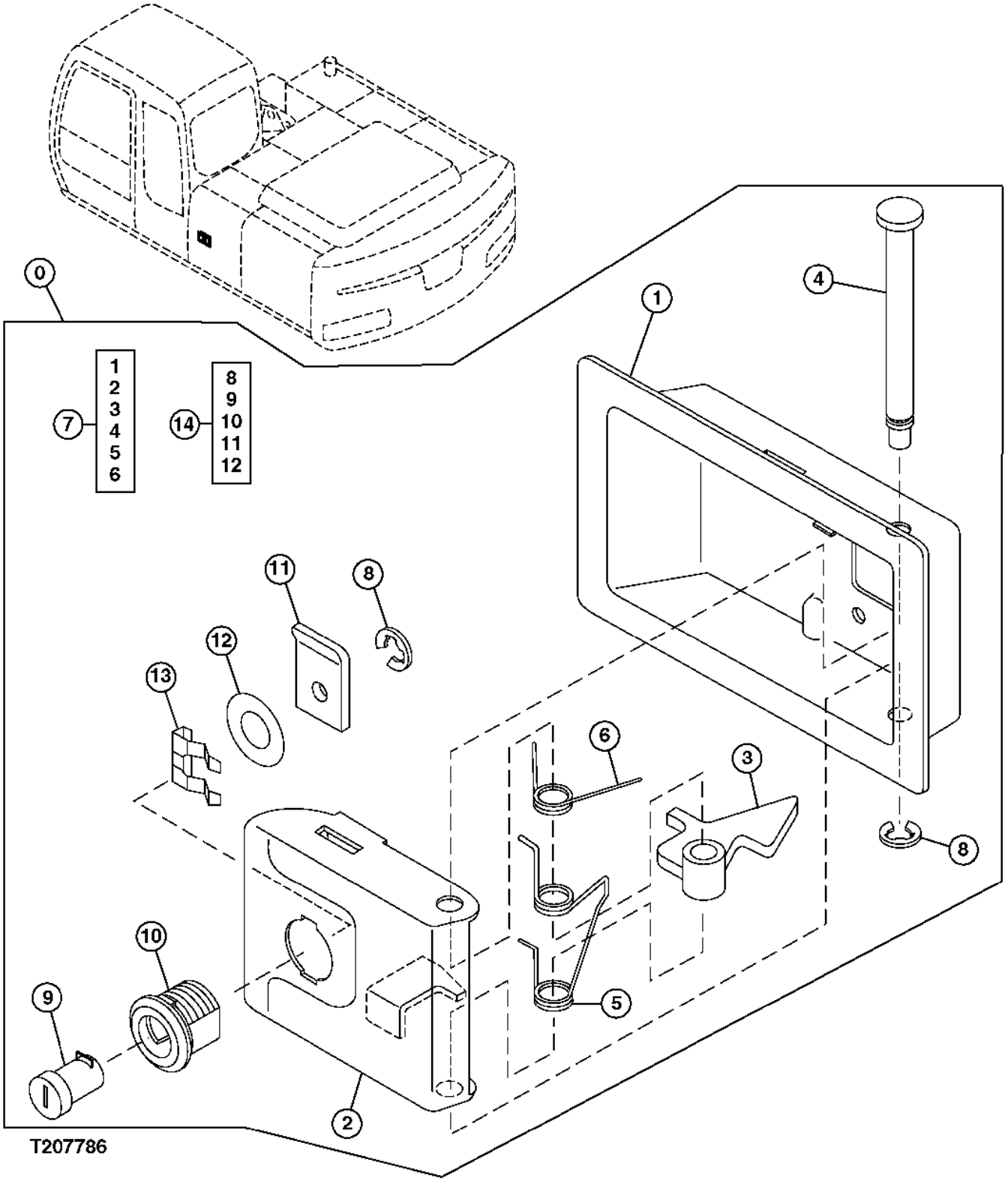

Pos.	*Ref.*	*Descripción*	*Cant.*	*Núm. de serie*	*Notas*
0	4409394	Cerradura	1		
1	4461343	Tapadera	1		
2	4461344	Pestillo	1		
3	4461345	Palanca	1		
4	4461346	Árbol	1		
5	4461347	Muelle	1		
6	4461348	Muelle	1		
7	4409395	Cerradura	1		
8	4461337	Anillo	2		
9	.....	Cerradura	1		(4461338 NLA)
10	.....	Caja	1		(4461339 NLA)
11	.....	Placa	1		(4461340 NLA)
12	.....	Arandela	2		(4461341 NLA)
13	4461342	Presilla	1		
14	4409396	Cerradura	1		

RADIO, MOUNTING BRACKETS, AND WIRING HARNESS
RADIO, FAISCEAU DE CABLAGE ET SUPPORTS DE MONTAGE
RADIO, ARNES DE ALAMBRADO Y ESCUADRAS DE MONTAJE

T157403 A.1

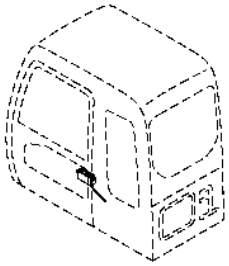

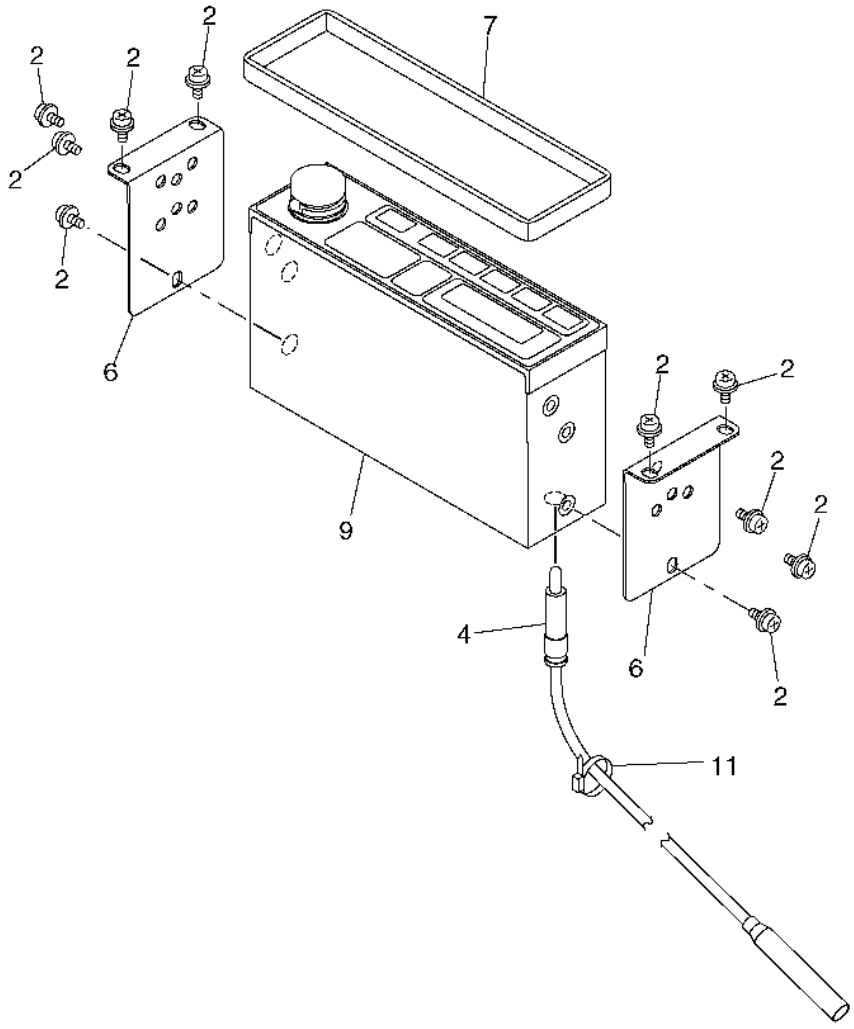

T157403

Pos.	*Ref.*	*Descripción*	*Cant.*	*Núm. de serie*	*Notas*
2	J460510	Tornillo	10		
4	4321872	Grupo de cables	1		SUB FOR 4102096
6	4341706	Soporte	2		
7	4368973	Aislante	1		
9	FYA00010751	Radio	1		SUB FOR 4728505, 4613913, 4351187 OR 4640468
11	H77698	Cinta de atar	1		SUB FOR 4055311, M88199

Left Rear View Mirror (Units Built Before June 2006)
Left Rear View Mirror (Units Built Before June 2006)
Left Rear View Mirror (Units Built Before June 2006)

T151065 A.1

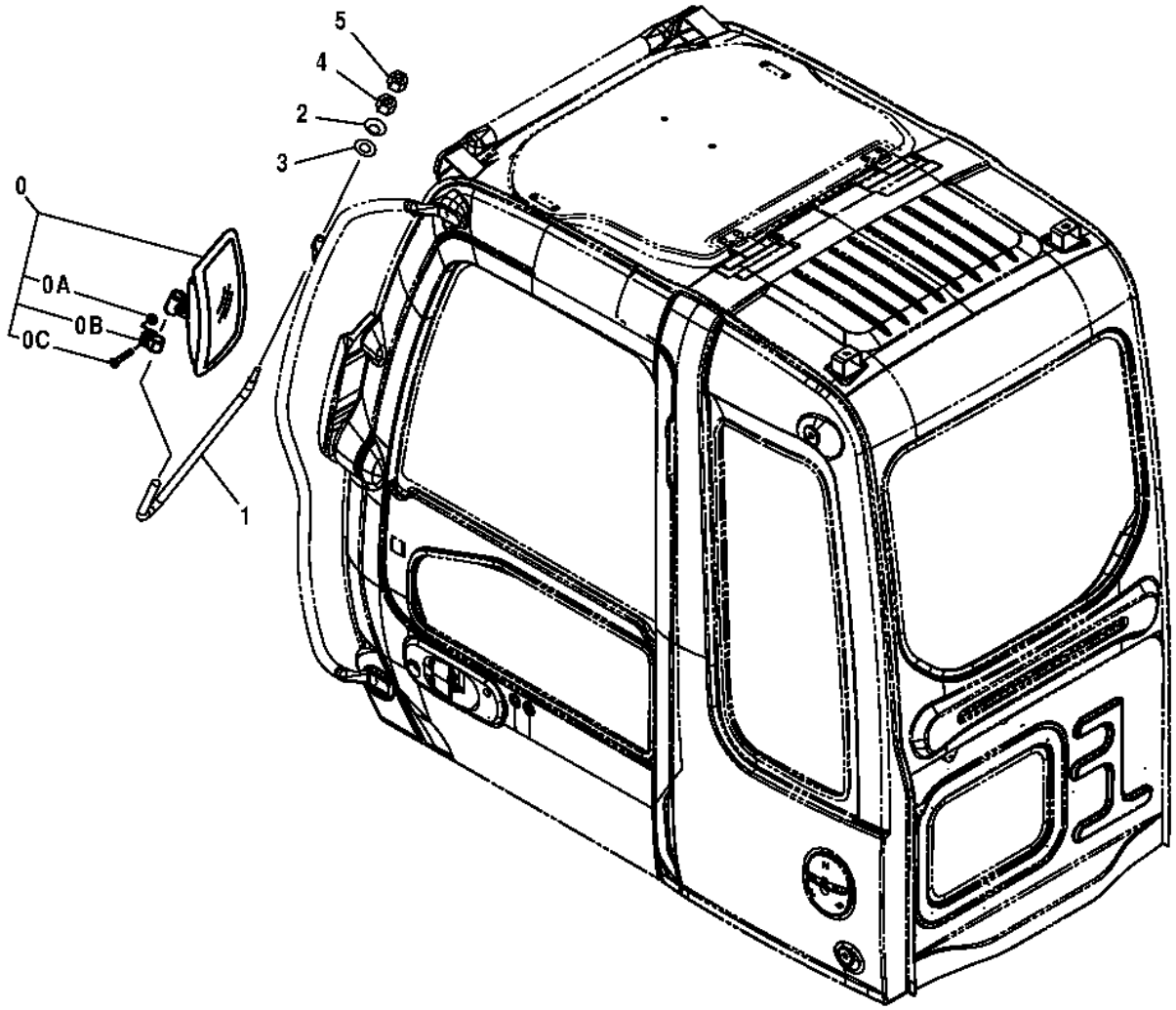

T151065

Pos.	*Ref.*	*Descripción*	*Cant.*	*Núm. de serie*	*Notas*
0	4420724	Espejo retrovisor	1		(SUB FOR AT185207)
0A	14M7400	Tuerca de seguridad	1		M10
0B	.....	Abrazadera	1		(NO ESTA DISPONIBLE PARA SERVICIO)
0C	03M7193	Tornillo	1		M10 X 35
1	.....	Soporte	1		(3091096 NLA) (SUB 8106372 ALSO ORDER 4642023 AND 24M7047)
2	TH104118	Arandela	2		
3	24M7047	Arandela	2		13 X 24 X 2.500 mm
4	14M7275	Tuerca	1		M12
5	TH4449509	Tuerca	1		

LEFT REAR VIEW MIRROR(UNITS BUILT JUNE 2006 AND AFTER)
RETROVISEUR GAUCHE(UNITES CONSTRUITES A PARTIR DE JUIN 2006)
ESPEJO RETROVISOR IZQUIERDO(FABRICADAS EN JUNIO 2006 Y POSTERIORMENTE)

TX1019852 A.1

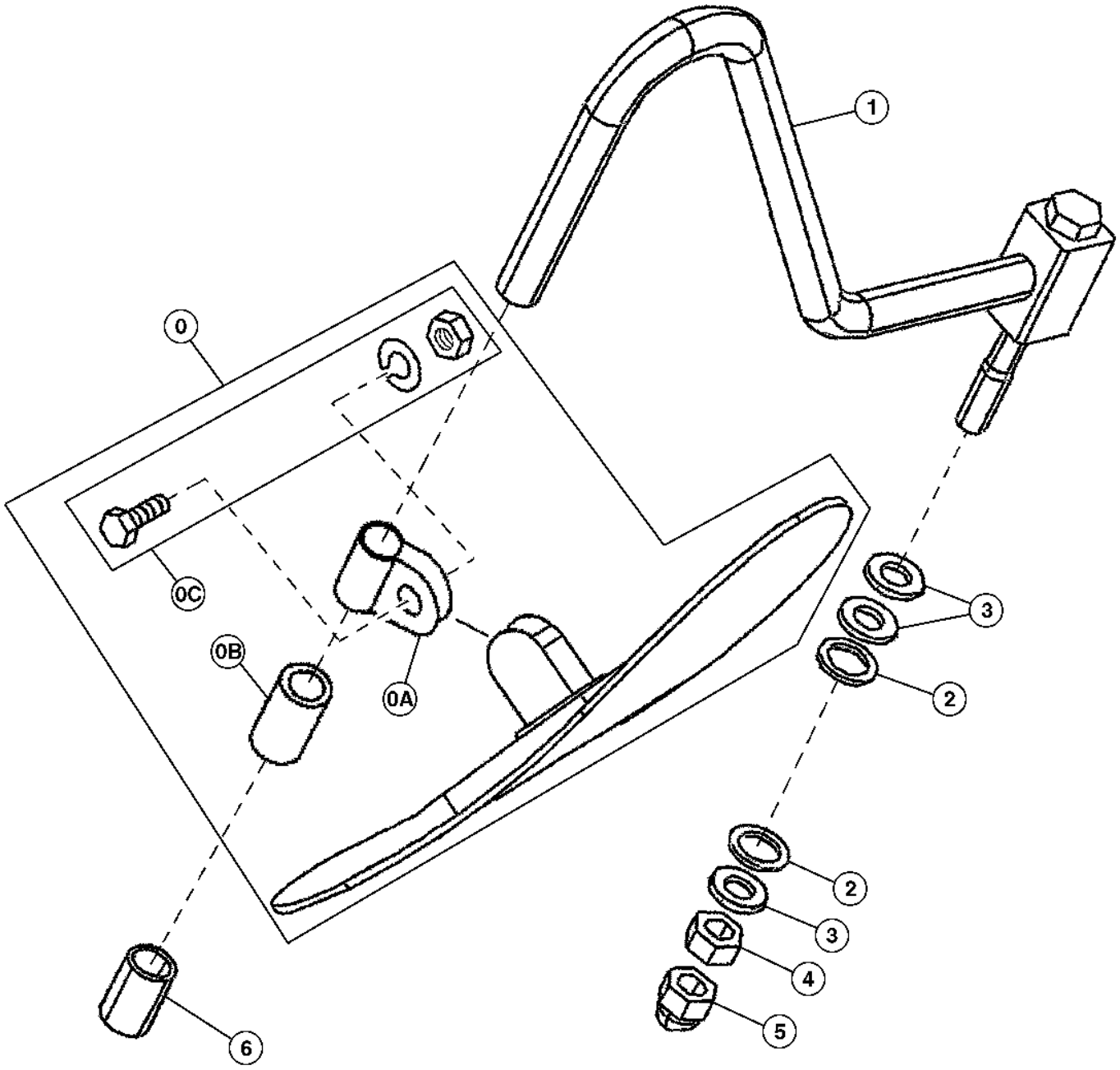

TX1019852

Pos.	*Ref.*	*Descripción*	*Cant.*	*Núm. de serie*	*Notas*
0	4420724	Espejo retrovisor	1		(SUB FOR 4416704)
0A	4460536	Portador	1		
0B	4460582	Empaquetadura	1		
0C	4634798	Tornillo	1		
1	8106372	Soporte	1		
2	4172172	Arandela	2		
3	24M7047	Arandela	3		13 X 24 X 2.500 mm, (SUB FOR J253112 OR A590112)
4	14M7275	Tuerca	1		M12, (SUB FOR J231212 OR J950012)
5	4449509	Tapa	1		
6	4642023	Tapa	1		

HORN AND WIRING HARNESS
AVERTISSEUR ET FAISCEAU DE CABLAGE
ARNES DE ALAMBRADO Y BOCINA

T157454 A.1

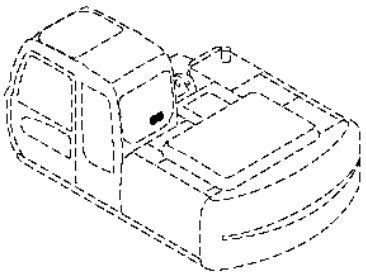

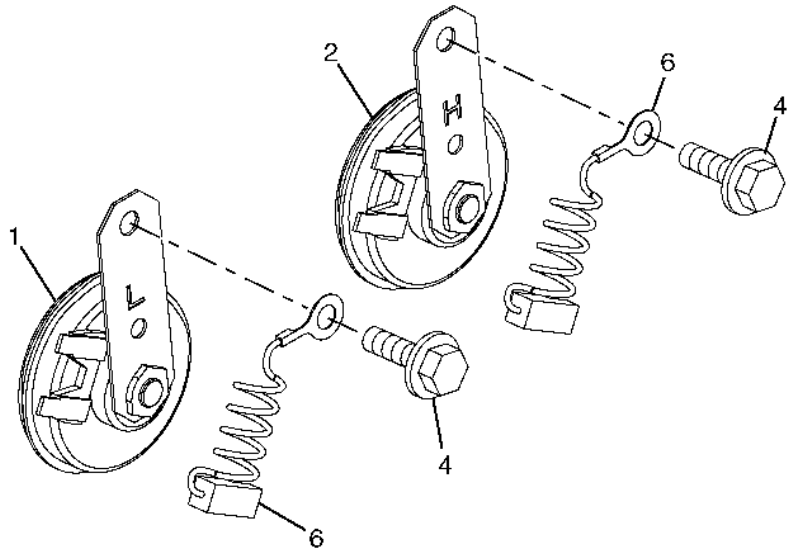

T157454

Pos.	*Ref.*	*Descripción*	*Cant.*	*Núm. de serie*	*Notas*
1	AT64237	Bocina	1		
2	AT64237	Bocina	1		
4	19M7163	Tornillo	2		M8 X 25
	12M7065	Arandela de seguridad	2		8 mm
	24M7055	Arandela	1		8.400 X 16 X 1.600 mm
6	4254603	Grupo de cables	2		

PROPEL MOTION ALARM
AVERTISSEUR DE PROPULSION
ALARMA DE MOVIMIENTO DE PROPULSION

T157456 A.1

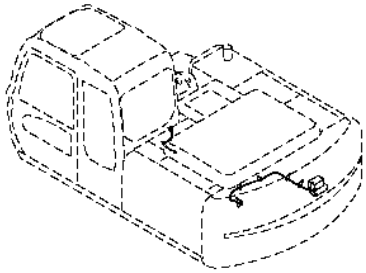

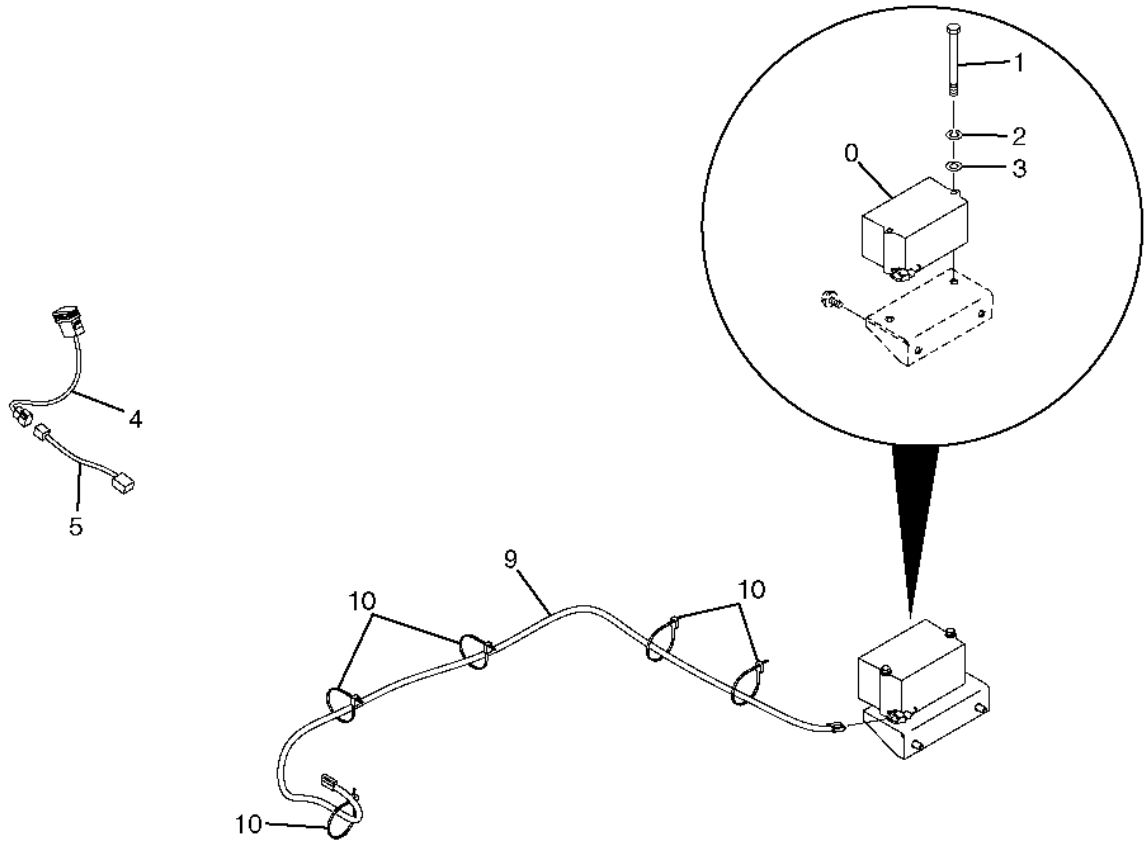

T157456

Pos.	*Ref.*	*Descripción*	*Cant.*	*Núm. de serie*	*Notas*
0	AT301074	Sistema de alarma	1		(SUB FOR 4283028)
1	19M8456	Tornillo	2		M8 X 100
2	12M7065	Arandela de seguridad	2		8 mm
3	24M7055	Arandela	2		8.400 X 16 X 1.600 mm
4	4384758	Interruptor	1		
5	4468981	Grupo de cables	1		
9	3088568	Grupo de cables	1		
10	R76477	Cinta de atar	5		
11	4190261	Presilla	1		(NO SE ILUSTRA)
12	H77698	Cinta de atar	1		(NO SE ILUSTRA)

GENERAL PURPOSE BUCKET (SEE FOOTNOTE)
USAGE GENERAL BENNE (VOIR NOTES EN BAS DE PAGE)
USO GENERAL CUCHARON (CONSULTE NOTA DE PIE DE PAGINA)

TX1007682 A.1

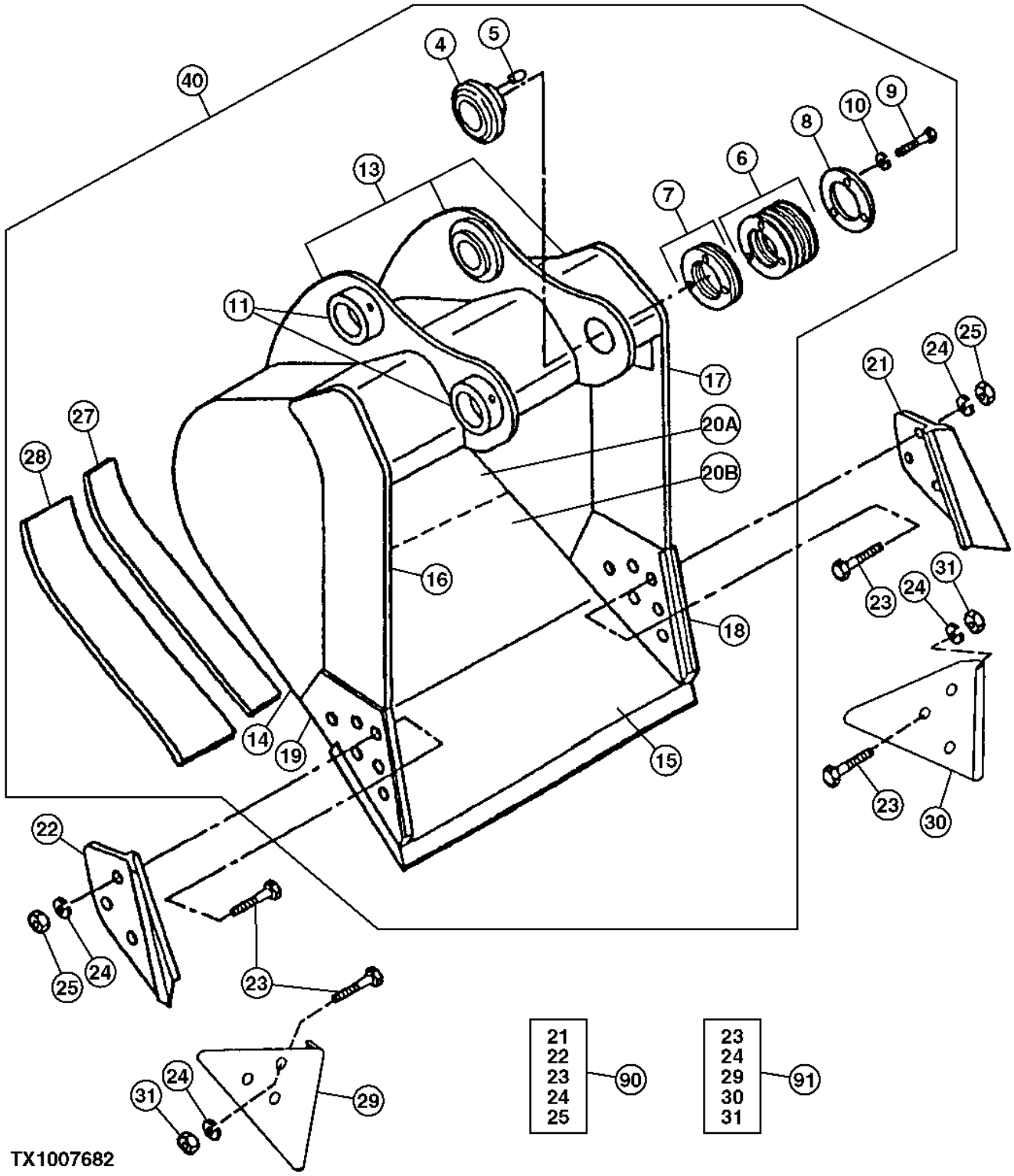

Pos.	Ref.	Descripción	Cant.	Núm. de serie	Notas
4	.....	Casquillo de articulación	1		(AT131083 NLA)
5	R48685	Pasador de centraje	1		
6	TH104512	Arandela	9		1 MM
7	TH104513	Suplemento	1		
8	TH104514	Espaciador	1		
9	19H2706	Tornillo	3		5/8" X 2"
10	12H294	Arandela de seguridad	3		5/8"
11	TH104509	Casquillo	2		
13	C607429	Pivote	1		(B) (ENSAMBLE BLANCO DE OREJETAS DE CUCHARON)
14	607048	Placa	2		(B) (RH / LH)
15	AT131081	Borde Cortante Dura-Max	1		(B) (CUT TO LENGTH)
16	304954	Segadora vertical	1		(B) (UPPER RH)
17	304955	Segadora vertical	1		(B) (UPPER LH)
18	304953	Segadora vertical	1		(B) (LH)
19	304952	Segadora vertical	1		(B) (RH)
20A	604676	Vertedera	1		(B) (24 INCH) , Superior
	604678	Vertedera	1		(B) (30 INCH) , Superior
	604679	Vertedera	1		(B) (36 INCH) , Superior
	604680	Vertedera	1		(B) (42 INCH) , Superior
	604681	Vertedera	1		(B) (48 INCH) , Superior
20B	604667	Vertedera	1		(B) (24 INCH) , Bajada
	604669	Vertedera	1		(B) (30 INCH) , Bajada
	604670	Vertedera	1		(B) (36 INCH) , Bajada
	604671	Vertedera	1		(B) (42 INCH) , Bajada
	604672	Vertedera	1		(B) (48 INCH) , Bajada
21	.....	Borde cortante	1		(SUB AT131080)
22	.....	Borde cortante	1		(SUB AT131080)
23	09H1770	Tornillo	6		7/8" X 2-1/2"
24	12H245	Arandela de seguridad	6		7/8"
25	14H1077	Tuerca	6		7/8"
27	304966	Barra	1		(B) (INNER) (DESGASTE)
28	606618	Barra	2		(B) (OUTER) (DESGASTE)
29	.....	Coraza	1		(DESGASTE)
30	.....	Coraza	1		(DESGASTE)
31	14H1044	Tuerca	6		7/8"
40	.....	Cucharón excavadora	1		(A) (AT163580 NLA) (24 INCH/0.50 CUBIC YARD) (WHOLE GOODS) , (SUB FOR AT131018 OR AT131138)
	.....	Cucharón excavadora	1		(A) (AT163581 NLA) (30 INCH/0.64 CUBIC YARD) (WHOLE GOODS) , (SUB FOR AT131019 OR AT131139)
	.....	Cucharón excavadora	1		(A) (AT163582 NLA) (36 INCH/0.78 CUBIC YARD) (WHOLE GOODS) , (SUB FOR AT131020 OR AT131140)
	.....	Cucharón excavadora	1		(A) (AT163583 NLA) (42 INCH/0.92 CUBIC YARD) (WHOLE GOODS) , (SUB FOR AT131021 OR AT131141)
	.....	Cucharón excavadora	1		(A) (AT163584 NLA) (48 INCH/1.06 CUBIC YARD) (WHOLE GOODS) , (SUB FOR AT131022 OR AT131142)
90	.....	Juego	1		(AT131080 NLA) , Kit de cortador lateral
91	.....	Juego	1		(AT167874 NLA) , Kit de protector de borde

(A) AVAILABLE TOOTH ASSEMBLIES ON SEPARATE PAGE
ENSEMBLES DE DENTS DISPONIBLES SUR PAGE SEPAREE
CONJUNTOS DE DIENTES DISPONIBLES EN UNA PAGINA SEPARADA

(B) JOHN DEERE DEALER ORDER DIRECTLY FROM CENTRAL FABRICATORS
CONCESSIONNAIRES JOHN DEERE COMMANDER DIRECTEMENT AUPRES DE CENTRAL FABRICATORS
CONCESIONARIOS JOHN DEERE - PEDIR DIRECTAMENTE DE CENTRAL FABRICATORS

GENERAL PURPOSE HIGH CAPACITY BUCKET (SEE FOOTNOTE)
BENNE A GRANDE CONTENANCE USAGE GENERAL (VOIR NOTES EN BAS DE PAGE)
CUCHARON DE USO GENERAL DE CAPACIDAD ALTA (CONSULTE NOTA DE PIE DE PAGINA)

T136984 A.1

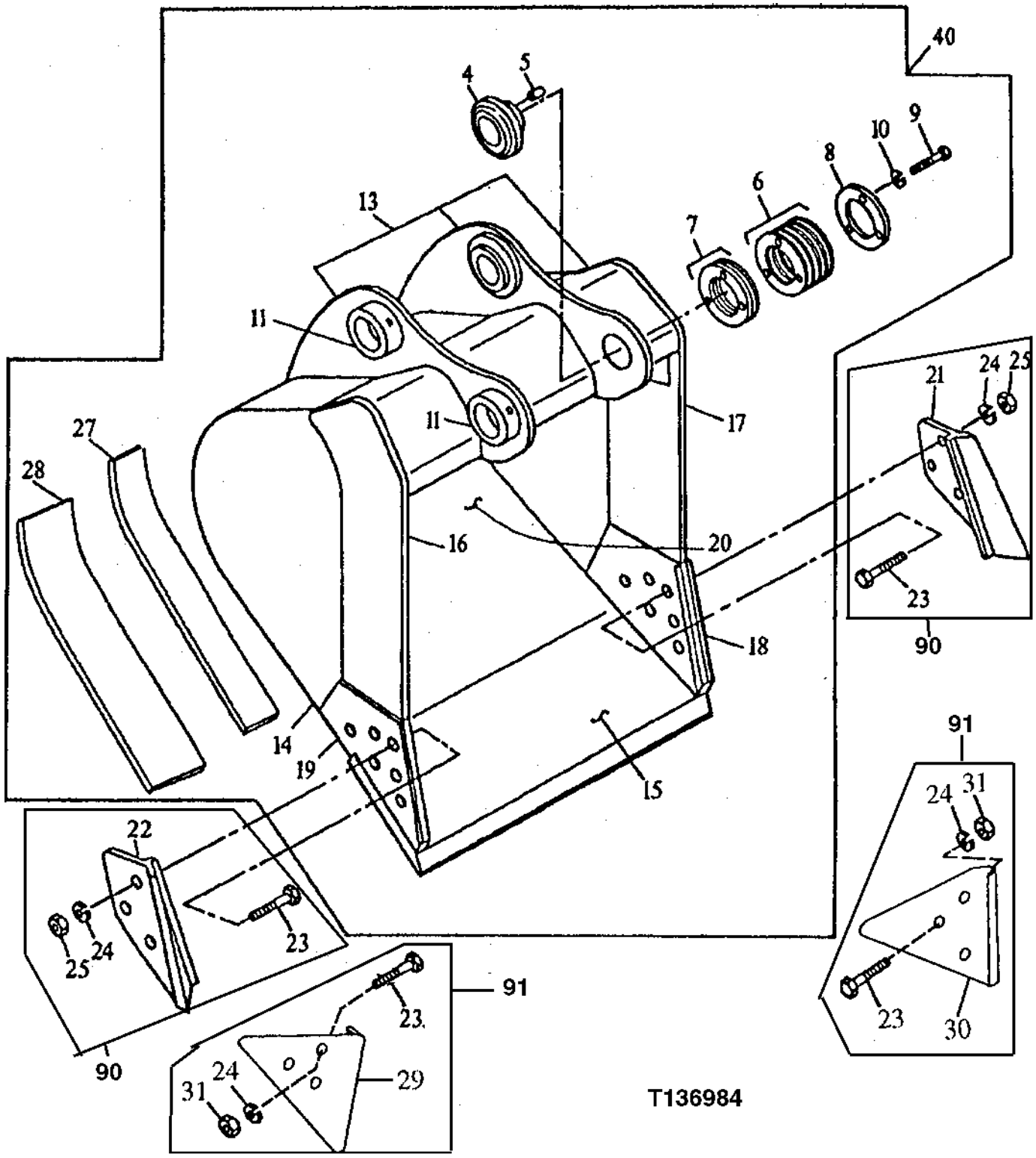

Pos.	Ref.	Descripción	Cant.	Núm. de serie	Notas
4	.....	Casquillo de articulación	1		(AT131083 NLA)
5	R48685	Pasador de centraje	1		
6	TH104512	Arandela	6		1 MM
7	TH104513	Suplemento	2		
8	TH104514	Espaciador	1		
9	19H2706	Tornillo	3		5/8" X 2"
10	12H294	Arandela de seguridad	3		5/8"
11	TH104509	Casquillo	2		
13	C607429	Pivote	1		(B) Conjunto de orejeta ciega de cucharón
14	300298	Placa	2		(B) (RH / LH)
15	AT131082	Borde cortante	1		(CUT TO LENGTH)
16	300296	Segadora vertical	1		(B) (UPPER RH)
17	300297	Segadora vertical	1		(B) (UPPER LH)
18	300295	Segadora vertical	1		(B) (LH)
19	300294	Segadora vertical	1		(B) (RH)
20A	600252	Vertedera	1		(B) (UPPER) (24 INCH)
	600253	Vertedera	1		(B) (UPPER) (30 INCH)
	600254	Vertedera	1		(B) (UPPER) (36 INCH)
	600255	Vertedera	1		(B) (UPPER) (42 INCH)
20B	600247	Vertedera	1		(B) (LOWER) (24 INCH)
	600248	Vertedera	1		(B) (LOWER) (30 INCH)
	600249	Vertedera	1		(B) (LOWER) (36 INCH)
	600250	Vertedera	1		(B) (LOWER) (42 INCH)
21	.....	Borde cortante	1		(LH) , (SUB AT131080)
22	.....	Borde cortante	1		(RH) , (SUB AT131080)
23	09H1770	Tornillo	6		7/8" X 2-1/2"
24	12H245	Arandela de seguridad	6		7/8"
25	14H1077	Tuerca	6		7/8"
27	300156	Barra	1		(B) (INNER) , Desgaste
28	306452	Barra	2		(B) (OUTER) , Desgaste
29	.....	Coraza	1		Desgaste, (SUB AT167874)
30	.....	Coraza	1		Desgaste, (SUB AT167874)
31	14H1044	Tuerca	6		7/8"
40	.....	Cucharón excavadora	1		(A) (AT163586 NLA) (24 INCH/0.59 CUBIC YARD) (WHOLE GOODS) , (SUB AT332675) (SUB FOR AT131023 OR AT131143)
	.....	Cucharón excavadora	1		(A) (AT163585 NLA) (30 INCH/0.77 CUBIC YARD) (WHOLE GOODS) , (SUB AT332676) (SUB FOR AT131024 OR AT131144)
	.....	Cucharón excavadora	1		(A) (AT163587 NLA) (36 INCH/0.95 CUBIC YARD) (WHOLE GOODS) , (SUB AT332677) (SUB FOR AT131025 OR AT131145)
	.....	Cucharón excavadora	1		(A) (AT163588 NLA) (42 INCH/1.12 CUBIC YARD) (WHOLE GOODS) , (SUB AT332678) (SUB FOR AT131026 OR AT131146)
	.....	Cucharón excavadora	1		(A) (AT199353 NLA) (48 INCH/1.30 CUBIC YARD) (WHOLE GOODS)
90	.....	Juego	1		(AT131080 NLA) , Kit de cortador lateral
91	.....	Juego	1		(AT167874 NLA) , Protector de borde

(A) AVAILABLE TOOTH ASSEMBLIES ON SEPARATE PAGE
ENSEMBLES DE DENTS DISPONIBLES SUR PAGE SEPAREE
CONJUNTOS DE DIENTES DISPONIBLES EN UNA PAGINA SEPARADA

(B) ORDER DIRECTLY FROM CENTRAL FABRICATORS
A COMMANDER DIRECTEMENT AUPRES DES FABRICANTS CENTRAUX
PIDA DIRECTAMENTE A LOS FABRICANTES CENTRALES

GENERAL PURPOSE HIGH CAPACITY BUCKET
BENNE GRANDE CONTENANCE A USAGE GENERAL
CUCHARON UNIVERSAL DE CAPACIDAD ALTA

TX1007089 A.1

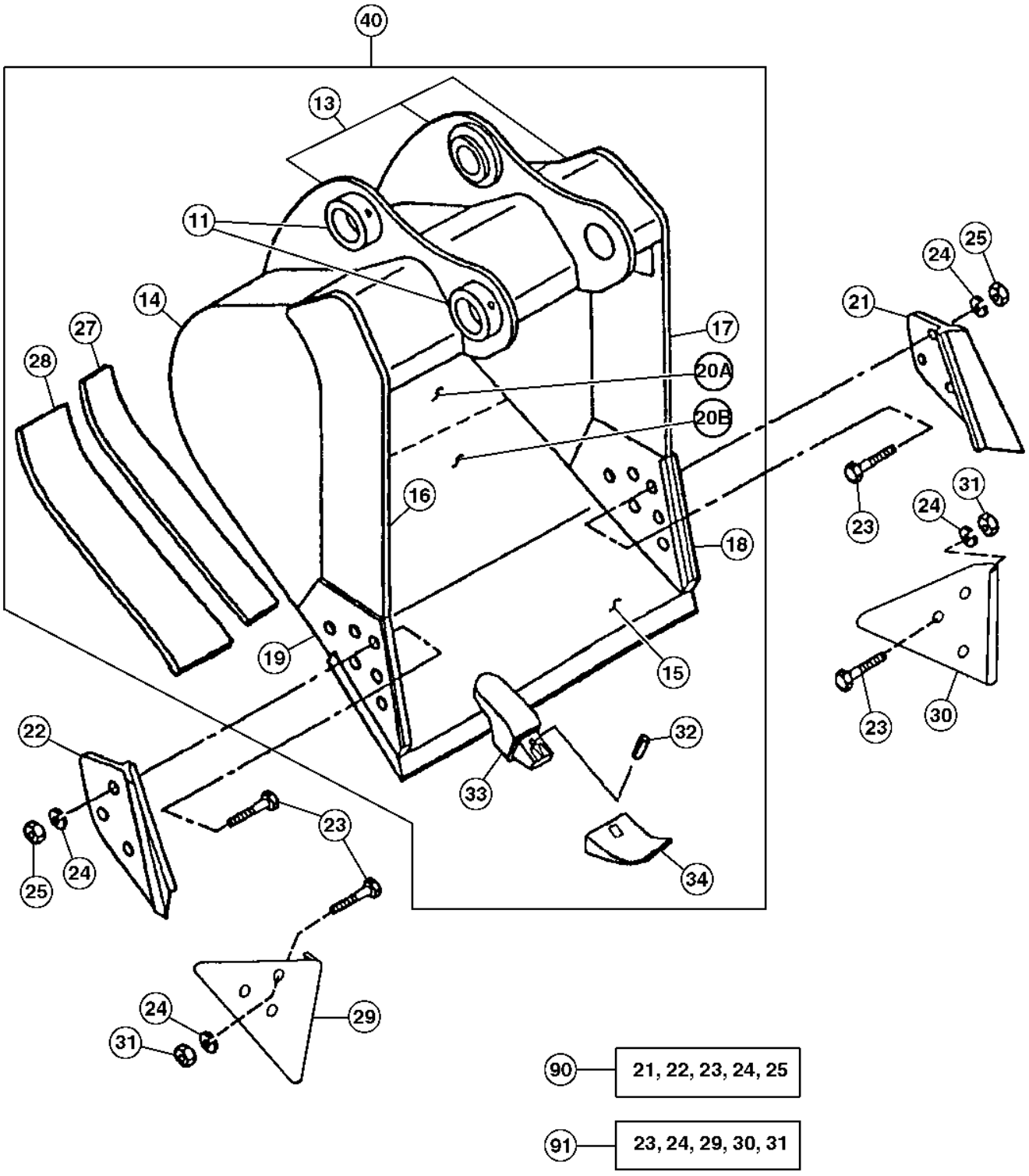

TX1007089

Pos.	*Ref.*	*Descripción*	*Cant.*	*Núm. de serie*	*Notas*
11	TH104509	Casquillo	2		
13	C607429	Pivote	1		(A) (ENSAMBLE BLANCO DE OREJETAS DE CUCHARON)
14	300298	Placa	2		(A) (RH / LH)
15	AT131082	Borde cortante	1		(CUT TO LENGTH)
16	300296	Segadora vertical	1		(A) (UPPER RH)
17	300297	Segadora vertical	1		(A) (UPPER LH)
18	300295	Segadora vertical	1		(A) (LH)
19	300294	Segadora vertical	1		(A) (RH)
20A	600252	Vertedera	1		(A) (UPPER) (24 INCH)
	600253	Vertedera	1		(A) (UPPER) (30 INCH)
	600254	Vertedera	1		(A) (UPPER) (36 INCH)
	600255	Vertedera	1		(A) (UPPER) (42 INCH)
20B	600247	Vertedera	1		(A) (LOWER) (24 INCH)
	600248	Vertedera	1		(A) (LOWER) (30 INCH)
	600249	Vertedera	1		(A) (LOWER) (36 INCH)
	600250	Vertedera	1		(A) (LOWER) (42 INCH)
21	.....	Borde cortante	1		(SUB AT131080)
22	.....	Borde cortante	1		(SUB AT131080)
23	09H1770	Tornillo	6		7/8" X 2-1/2"
24	12H245	Arandela de seguridad	6		7/8"
25	14H1077	Tuerca	6		7/8"
27	300156	Barra	1		(A) (INNER) (DESGASTE)
28	306452	Barra	2		(A) (OUTER) (DESGASTE)
29	.....	Coraza	1		(DESGASTE)
30	.....	Coraza	1		(DESGASTE)
31	14H1044	Tuerca	6		7/8"
32	TK290	Pasador	AR		
33	T158X290	Adaptador dentado cuchara	AR		
34	TF290	Diente	AR		
40	.....	Cucharón excavadora	1		(24 INCH/0.59 CUBIC YARD) (4 TEETH) (AT332675 NLA) , (SUB FOR AT131023, AT131143 OR AT163586) (AT339080 NLA)
	.....	Cucharón excavadora	1		(30 INCH/0.77 CUBIC YARD) (4 TEETH) (AT332676 NLA) , (SUB FOR AT131024, AT131144 OR AT163585) (AT339082 NLA)
	.....	Cucharón excavadora	1		(36 INCH/0.95 CUBIC YARD) (5 TEETH) (AT332677 NLA) , (SUB FOR AT131025, AT131145 OR AT163587) (AT339084 NLA)
	.....	Cucharón excavadora	1		(42 INCH/1.12 CUBIC YARD) (6 TEETH) (AT332678 NLA) , (SUB FOR AT131026, AT131146 OR AT163588) (AT339086 NLA)
90	.....	Juego	1		(AT131080 NLA) , Kit de cortador lateral
91	.....	Juego	1		(AT167874 NLA) , Kit de protector de borde

(A) JOHN DEERE DEALER ORDER DIRECTLY FROM CENTRAL FABRICATORS
CONCESSIONNAIRES JOHN DEERE COMMANDER DIRECTEMENT AUPRES DE CENTRAL FABRICATORS
CONCESIONARIOS JOHN DEERE - PEDIR DIRECTAMENTE DE CENTRAL FABRICATORS

REFER TO PC 9555 FOR ADDITIONAL BUCKET TOOTH OPTIONS
SE REPORTER A PC9555 POUR DES OPTIONS SUPPLEMENTAIRES DE DENTS DE BENNE
CONSULTAR PC9555 PARA OPCIONES ADICIONALES DE DIENTES DE CUCHARON

GENERAL PURPOSE HIGH CAPACITY BUCKET
BENNE GRANDE CONTENANCE A USAGE GENERAL
CUCHARON UNIVERSAL DE CAPACIDAD ALTA

TX1057932 A.1

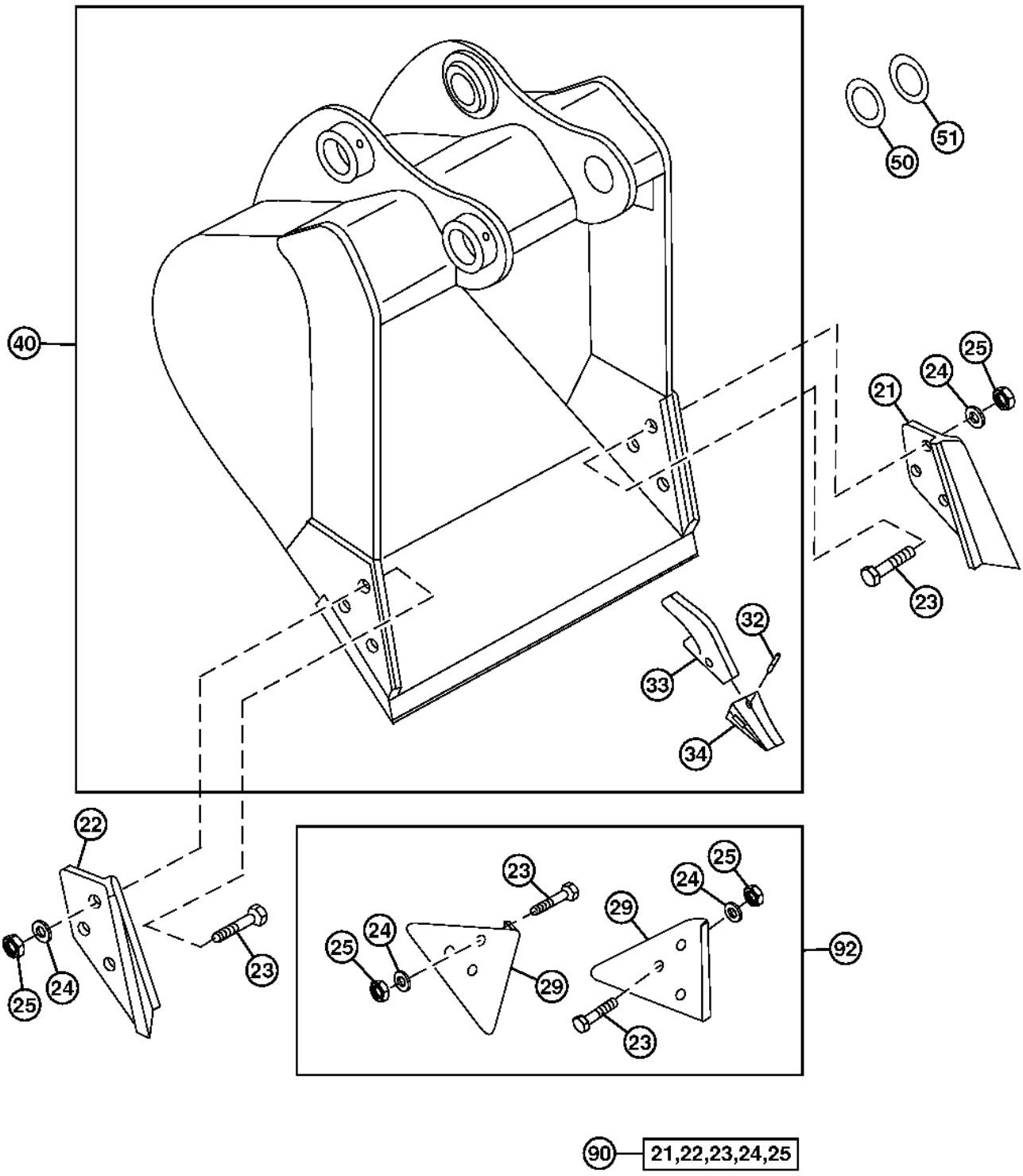

TX1057932

Pos.	*Ref.*	*Descripción*	*Cant.*	*Núm. de serie*	*Notas*
21	CE17748L3	Hoja lateral	1		
22	CE17748R3	Hoja lateral	1		
23	09H1772	Tornillo	12		7/8" X 3-1/2"
24	12H245	Arandela de seguridad	12		7/8"
25	14H1077	Tuerca	12		7/8"
29	TPDE31329	Coraza	2		(DESGASTE)
32	TK290	Pasador	AR		
33	T158X290	Adaptador dentado cuchara	AR		
34	TF290	Diente	AR		
40	**AT339080**	**Cucharón excavadora**	**1**		**(WHOLEGOODS) (24 INCH - 0.54 CUBIC YARD) (4 TEETH) , (SUB FOR AT163586 OR AT332675)**
	AT339082	**Cucharón excavadora**	**1**		**(WHOLEGOODS) (30 INCH - .72 CUBIC YARD) (4 TEETH) , (SUB FOR AT163585 OR AT332676)**
	AT339084	**Cucharón excavadora**	**1**		**(WHOLEGOODS) (36 INCH - .91 CUBIC YARD) (5 TEETH) , (SUB FOR AT163587 OR AT332677)**
	AT339086	**Cucharón excavadora**	**1**		**(WHOLEGOODS) (42 INCH - 1.11 CUBIC YARD) (5 TEETH) , (SUB FOR AT163588 OR AT332678)**
50	T241930	Arandela	AR		85 X 140 X 1 mm (3.346" X 5.512" X 0.039"), (1 MM)
51	T241937	Suplemento	AR		(.5 MM)
90	**AT342512**	**Juego**	**1**		
92	**AT342511**	**Juego**	**1**		**(JUEGO DE PROTECTOR DE BORDE)**

REFER TO PC9555 FOR ADDITIONAL BUCKET TOOTH OPTIONS.
SE REPORTER A PC9555 POUR DES OPTIONS SUPPLEMENTAIRES DE DENTS DE BENNE
CONSULTAR PC9555 PARA OPCIONES ADICIONALES DE DIENTES DE CUCHARON

HEAVY DUTY BUCKET (SEE FOOTNOTE)
BENNE A USAGE INTENSIF (VOIR NOTES EN BAS DE PAGE)
CUCHARON PARA SERVICIO SEVERO (CONSULTE NOTA DE PIE DE PAGINA)

TX1007682 A.1

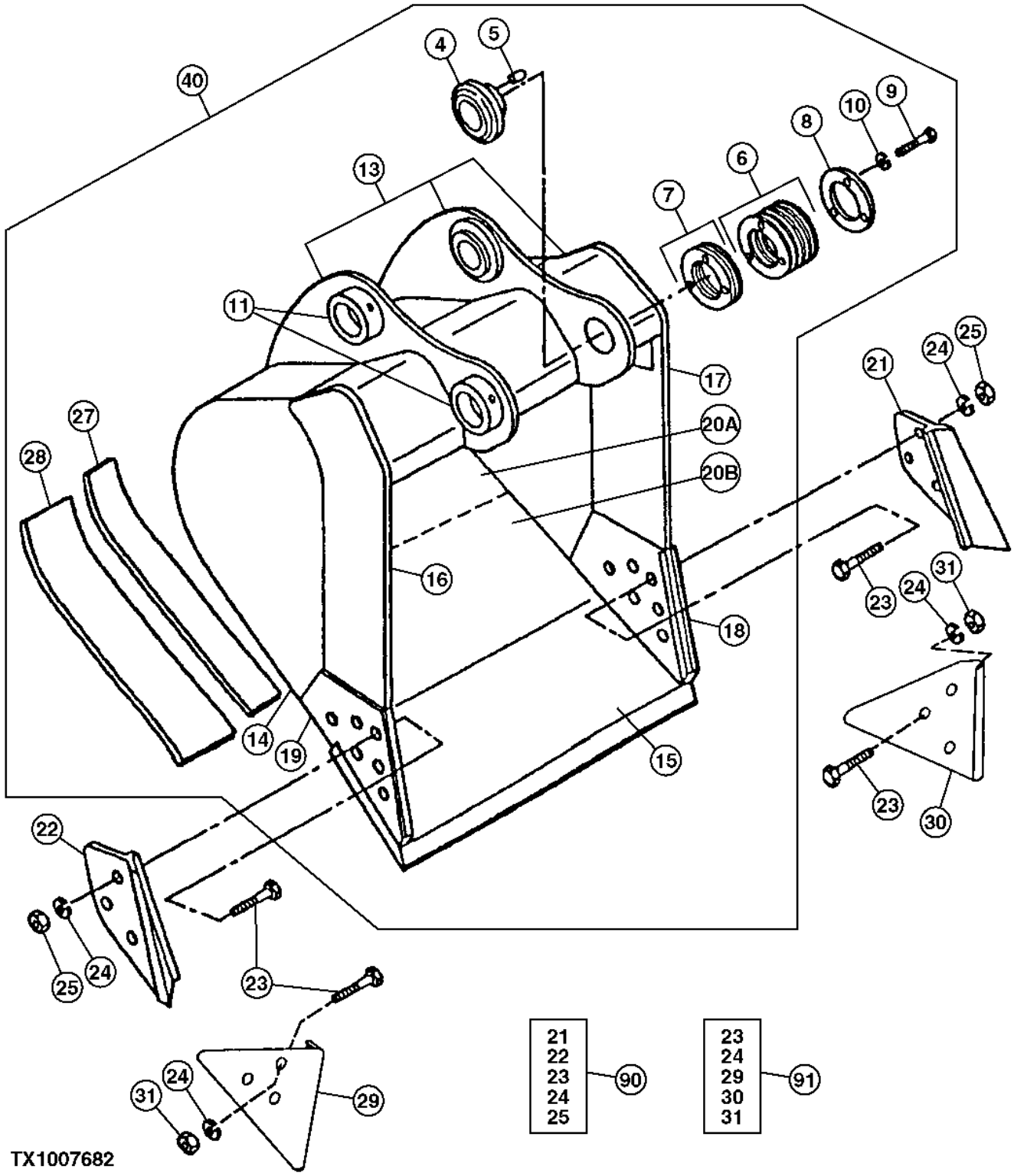

Pos.	Ref.	Descripción	Cant.	Núm. de serie	Notas
4	.....	Casquillo de articulación	1		(AT131083 NLA)
5	R48685	Pasador de centraje	1		
6	TH104512	Arandela	9		1 MM
7	TH104513	Suplemento	1		
8	TH104514	Espaciador	1		
9	19H2706	Tornillo	3		5/8" X 2"
10	12H294	Arandela de seguridad	3		5/8"
11	TH104509	Casquillo	2		
13	C607429	Pivote	1		(B) (ENSAMBLE BLANCO DE OREJETAS DE CUCHARON)
14	300167	Placa	2		(B) (RH / LH)
15	AT131082	Borde cortante	1		(CUT TO LENGTH)
16	300159	Segadora vertical	1		(B) (UPPER RH)
17	300160	Segadora vertical	1		(B) (UPPER LH)
18	300158	Segadora vertical	1		(B) (LH)
19	300157	Segadora vertical	1		(B) (RH)
20A	600113	Vertedera	1		(B) (UPPER) (24 INCH)
	600114	Vertedera	1		(B) (UPPER) (30 INCH)
	600115	Vertedera	1		(B) (UPPER) (36 INCH)
20B	600118	Vertedera	1		(B) (UPPER) (24 INCH)
	600119	Vertedera	1		(B) (UPPER) (30 INCH)
	600120	Vertedera	1		(B) (UPPER) (36 INCH)
21	.....	Borde cortante	1		(SUB AT131080)
22	.....	Borde cortante	1		(SUB AT131080)
23	09H1770	Tornillo	6		7/8" X 2-1/2"
24	12H245	Arandela de seguridad	6		7/8"
25	14H1077	Tuerca	6		7/8"
27	300156	Barra	1		(B) (DESGASTE)
28	306452	Barra	2		(B) (DESGASTE)
29	.....	Coraza	1		(DESGASTE)
30	.....	Coraza	1		(DESGASTE)
31	14H1044	Tuerca	6		7/8"
40	.....	Cucharón excavadora	1		(A) (AT131147 NLA) (24 INCH/0.59 CUBIC YARD) (WHOLE GOODS) , (SUB AT332679) (SUB FOR AT163589 OR AT131027)
	.....	Cucharón excavadora	1		(A) (AT131148 NLA) (30 INCH/0.77 CUBIC YARD) (WHOLE GOODS) , (SUB AT332680) (SUB FOR AT163590 OR AT131028)
	.....	Cucharón excavadora	1		(A) (AT131149 NLA) (36 INCH/0.95 CUBIC YARD) (WHOLE GOODS) , (SUB AT332681) (SUB FOR AT163591 OR AT131029)
	.....	Cucharón excavadora	1		(A) (AT160742 NLA) (42 INCH/1.12 CUBIC YARD) (WHOLE GOODS) , (SUB AT332682) (SUB FOR AT163592 OR AT160742)
90	.....	Juego	1		(AT131080 NLA) , Kit de cortador lateral
91	.....	Juego	1		(AT167874 NLA) , Kit de protector de borde

ALSO ORDER BUCKET TOOTH ASSEMBLIES
COMMANDER AUSSI LES ENSEMBLES DE DENTS DE BENNE
TAMBIEN PIDA CONJUNTOS DE DIENTES DE CUCHARON

(A) AVAILABLE TOOTH ASSEMBLIES ON SEPARATE PAGE
ENSEMBLES DE DENTS DISPONIBLES USUR PAGE SEPAREE
CONJUNTOS DE DIENTES DISPONIBLES EN UNA PAGINA SEPARADA

(B) JOHN DEERE DEALER ORDER DIRECTLY FROM CENTRAL FABRICATORS
CONCESSIONNAIRES JOHN DEERE COMMANDER DIRECTEMENT AUPRES DE CENTRAL FABRICATORS
CONCESIONARIOS JOHN DEERE - PEDIR DIRECTAMENTE DE CENTRAL FABRICATORS

HEAVY DUTY BUCKET
BENNE A USAGE INTENSIF
CUCHARON PARA SERVICIO SEVERO

TX1007089 A.1

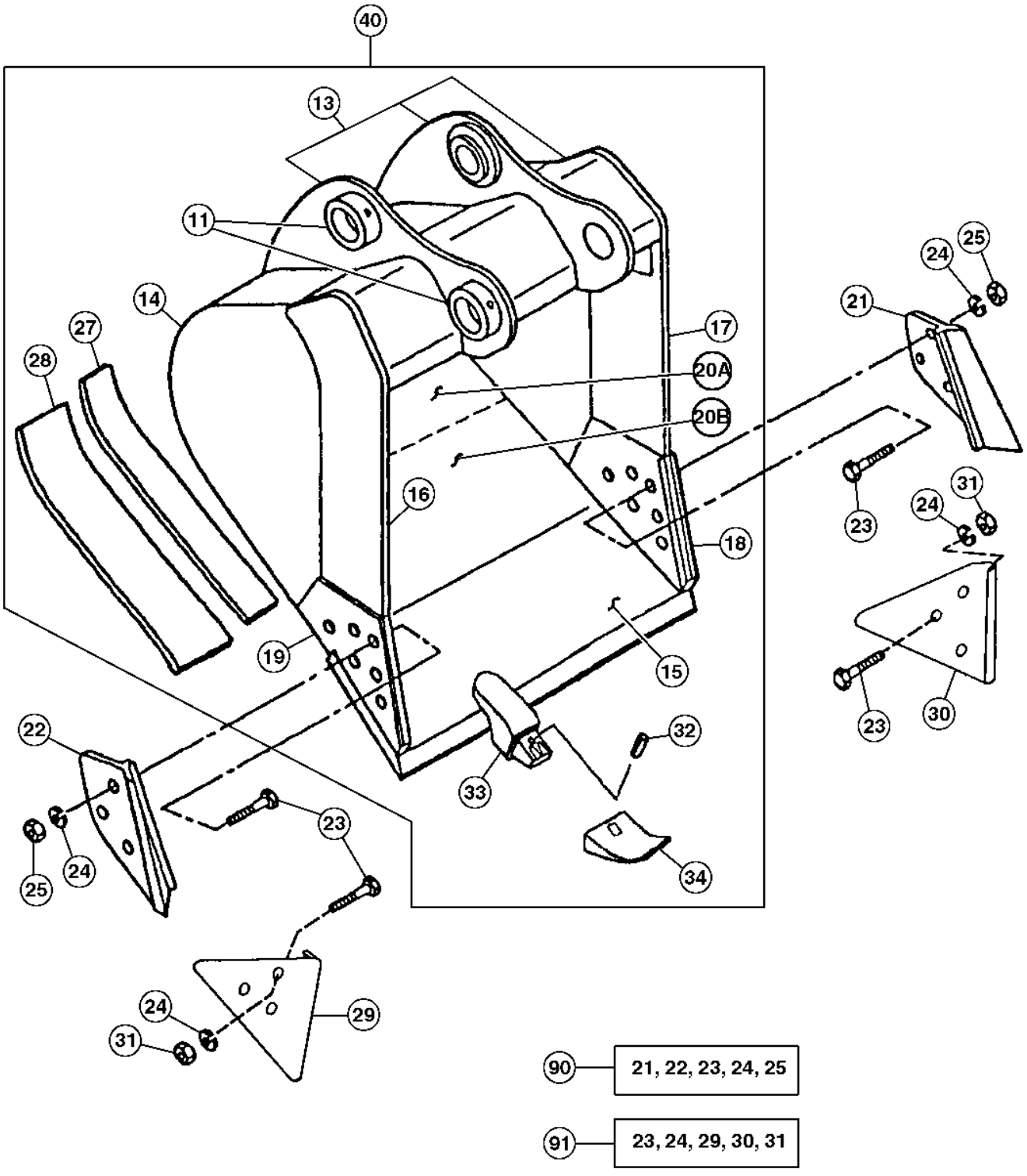

TX1007089

Pos.	Ref.	Descripción	Cant.	Núm. de serie	Notas
11	TH104509	Casquillo	2		
13	C607429	Pivote	1		(A) (ENSAMBLE BLANCO DE OREJETAS DE CUCHARON)
14	300167	Placa	2		(A) (RH / LH)
15	AT131082	Borde cortante	1		(CUT TO LENGTH)
16	300159	Segadora vertical	1		(A) (UPPER RH)
17	300160	Segadora vertical	1		(A) (UPPER LH)
18	300158	Segadora vertical	1		(A) (LH)
19	300157	Segadora vertical	1		(A) (RH)
20A	600113	Vertedera	1		(A) (UPPER) (24 INCH)
	600114	Vertedera	1		(A) (UPPER) (30 INCH)
	600115	Vertedera	1		(A) (UPPER) (36 INCH)
20B	600118	Vertedera	1		(A) (UPPER) (24 INCH)
	600119	Vertedera	1		(A) (UPPER) (30 INCH)
	600120	Vertedera	1		(A) (UPPER) (36 INCH)
21	.....	Borde cortante	1		(SUB AT131080)
22	.....	Borde cortante	1		(SUB AT131080)
23	09H1770	Tornillo	6		7/8" X 2-1/2"
24	12H245	Arandela de seguridad	6		7/8"
25	14H1077	Tuerca	6		7/8"
27	300156	Barra	1		(DESGASTE)
28	306452	Barra	2		(OUTER) (DESGASTE)
29	.....	Coraza	1		(DESGASTE)
30	.....	Coraza	1		(DESGASTE)
31	14H1044	Tuerca	6		7/8"
32	TK290	Pasador	AR		
33	T158X290	Adaptador dentado cuchara	AR		
34	TF290	Diente	AR		
40	.....	Cucharón excavadora	1		(24 INCH/0.59 CUBIC YARD) (4 TEETH) (AT332679 NLA) , (SUB FOR AT131027, AT131147 OR AT163589) (SUB AT339088)
	.....	Cucharón excavadora	1		(30 INCH/0.77 CUBIC YARD) (4 TEETH) (AT332680 NLA) , (SUB FOR AT131028, AT131148 OR AT163590) (SUB AT339090)
	.....	Cucharón excavadora	1		(36 INCH/0.95 CUBIC YARD) (5 TEETH) (AT332681 NLA) , (SUB FOR AT131029, AT131149 OR AT163591) (SUB AT339092)
	.....	Cucharón excavadora	1		(42 INCH/1.12 CUBIC YARD) (6 TEETH) (AT332682 NLA) , (SUB FOR AT160741, AT160742 OR AT163592) (SUB AT339094)
90	.....	Juego	1		(AT131080 NLA) , Kit de cortador lateral
91	.....	Juego	1		(AT167874 NLA) , Kit de protector de borde

(A) JOHN DEERE DEALER ORDER DIRECTLY FROM CENTRAL FABRICATORS
CONCESSIONNAIRES JOHN DEERE COMMANDER DIRECTEMENT AUPRES DE CENTRAL FABRICATORS
CONCESIONARIOS JOHN DEERE - PEDIR DIRECTAMENTE DE CENTRAL FABRICATORS

REFER TO PC 9555 FOR ADDITIONAL BUCKET TOOTH OPTIONS
SE REPORTER A PC9555 POUR DES OPTIONS SUPPLEMENTAIRES DE DENTS DE BENNE
CONSULTAR PC9555 PARA OPCIONES ADICIONALES DE DIENTES DE CUCHARON

HEAVY DUTY BUCKET
BENNE A USAGE INTENSIF
CUCHARON PARA SERVICIO SEVERO

TX1057932 A.1

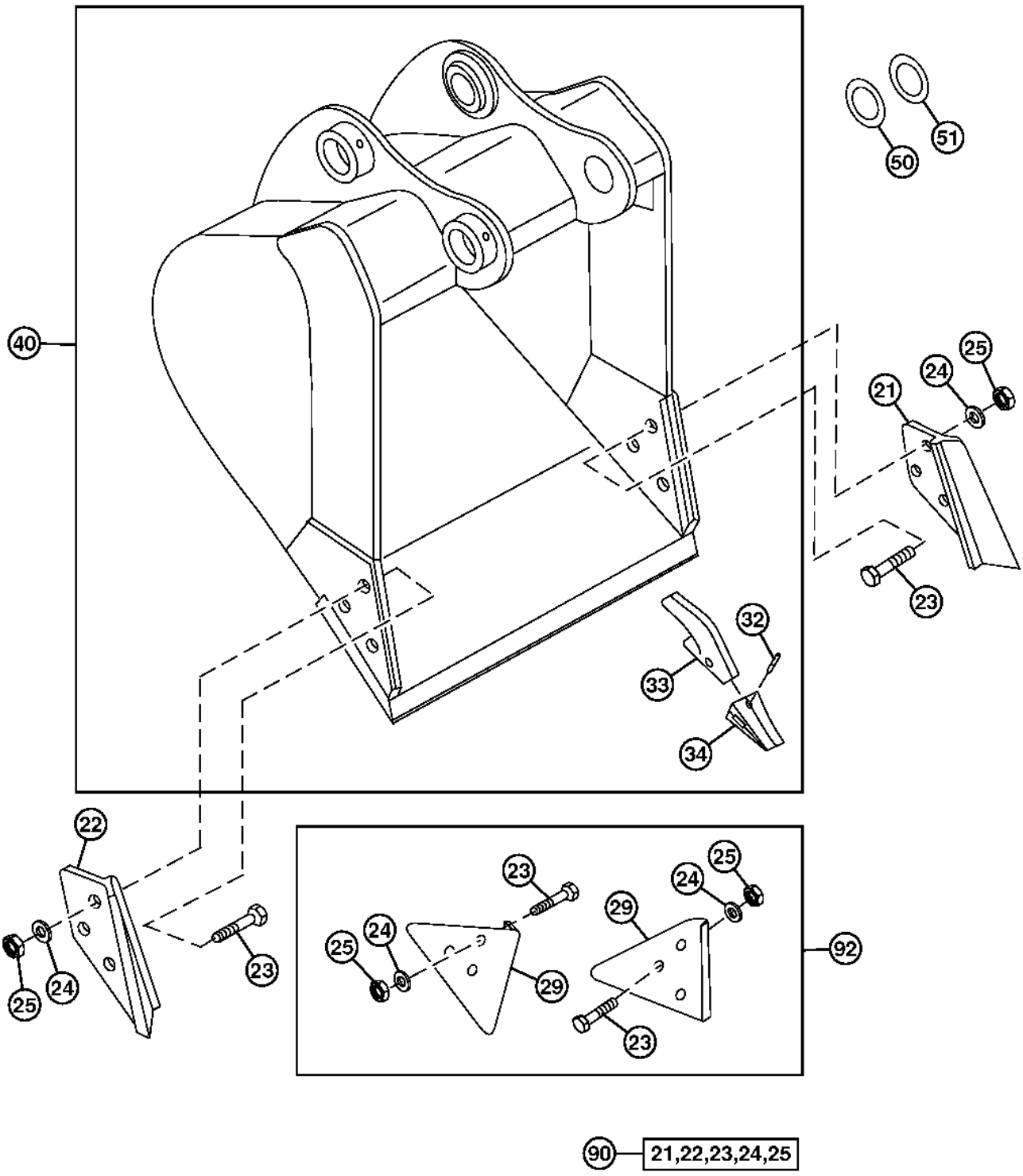

TX1057932

Pos.	*Ref.*	*Descripción*	*Cant.*	*Núm. de serie*	*Notas*
21	CE17748L3	Hoja lateral	1		
22	CE17748R3	Hoja lateral	1		
23	09H1772	Tornillo	12		7/8" X 3-1/2"
24	12H245	Arandela de seguridad	12		7/8"
25	14H1077	Tuerca	12		7/8"
29	TPDE31329	Coraza	2		(DESGASTE)
32	TK290	Pasador	AR		
33	T158X290	Adaptador dentado cuchara	AR		
34	TF290	Diente	AR		
40	**AT339088**	**Cucharón excavadora**	**1**		**(WHOLEGOODS) (24 INCH - 0.48 CUBIC YARD) (4 TEETH) , (SUB FOR AT163589 OR AT332679)**
	AT339090	**Cucharón excavadora**	**1**		**(WHOLEGOODS) (30 INCH - .65 CUBIC YARD) (4 TEETH) , (SUB FOR AT332680)**
	AT339092	**Cucharón excavadora**	**1**		**(WHOLEGOODS) (36 INCH - .81 CUBIC YARD) (5 TEETH) , (SUB FOR AT332681)**
	AT339094	**Cucharón excavadora**	**1**		**(WHOLEGOODS) (42 INCH - .99 CUBIC YARD) (5 TEETH) , (SUB FOR AT332682)**
50	T241930	Arandela	AR		85 X 140 X 1 mm (3.346" X 5.512" X 0.039"), (1 MM)
51	T241937	Suplemento	AR		(.5 MM)
90	**AT342512**	**Juego**	**1**		
92	**AT342511**	**Juego**	**1**		**(JUEGO DE PROTECTOR DE BORDE)**

REFER TO PC9555 FOR ADDITIONAL BUCKET TOOTH OPTIONS.
SE REPORTER A PC9555 POUR DES OPTIONS SUPPLEMENTAIRES DE DENTS DE BENNE
CONSULTAR PC9555 PARA OPCIONES ADICIONALES DE DIENTES DE CUCHARON

DITCH CLEANING BUCKET
GODET CUREUR DE FOSSE
CUCHARON PARA LIMPIAR ZANJAS

TX1002116 A.1

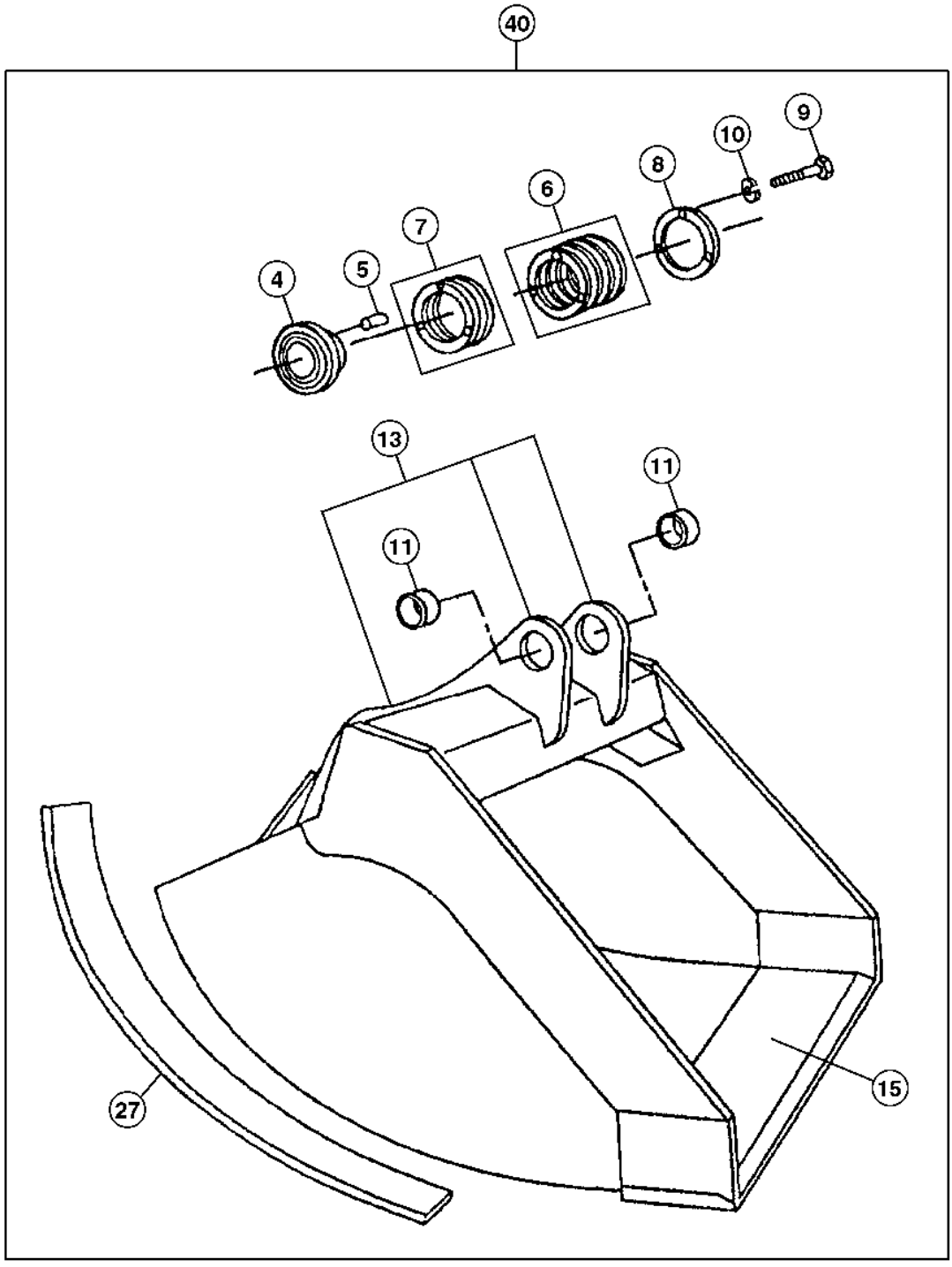

TX1002116

Pos.	*Ref.*	*Descripción*	*Cant.*	*Núm. de serie*	*Notas*
4	.....	Casquillo de articulación	1		(AT131083 NLA)
5	R48685	Pasador de centraje	1		
6	TH104512	Arandela	6		1.0 MM
7	TH104513	Suplemento	2		
8	TH104514	Espaciador	1		
9	19H2706	Tornillo	3		5/8" X 2"
10	12H294	Arandela de seguridad	3		5/8"
11	TH104509	Casquillo	2		
13	C607429	Pivote	1		(A) Conjunto de orejeta ciega de cucharón
15	AT131089	Borde cortante	1		(CUT TO LENGTH)
27	300292	Barra	4		(A) Pletina de desgaste
40	.....	Cucharón excavadora	1		(A) (AT199354 NLA) (72 INCH/1.06 CUBIC YARD) (WHOLE GOODS)
	.....	Cucharón excavadora	1		(A) (AT131031 NLA) (60 INCH/0.90 CUBIC YARD) (WHOLE GOODS) , (SUB AT332683)

(A) JOHN DEERE DEALER ORDER DIRECTLY FROM CENTRAL FABRICATORS.
CONCESSIONNAIRES JOHN DEERE COMMANDER DIRECTEMENT AUPRES DE CENTRAL FABRICATORS.
CONCESIONARIOS JOHN DEERE - PEDIR DIRECTAMENTE DE CENTRAL FABRICATORS.

DITCH CLEANING BUCKET
GODET CUREUR DE FOSSE
CUCHARON PARA LIMPIAR ZANJAS

TX1007436 A.1

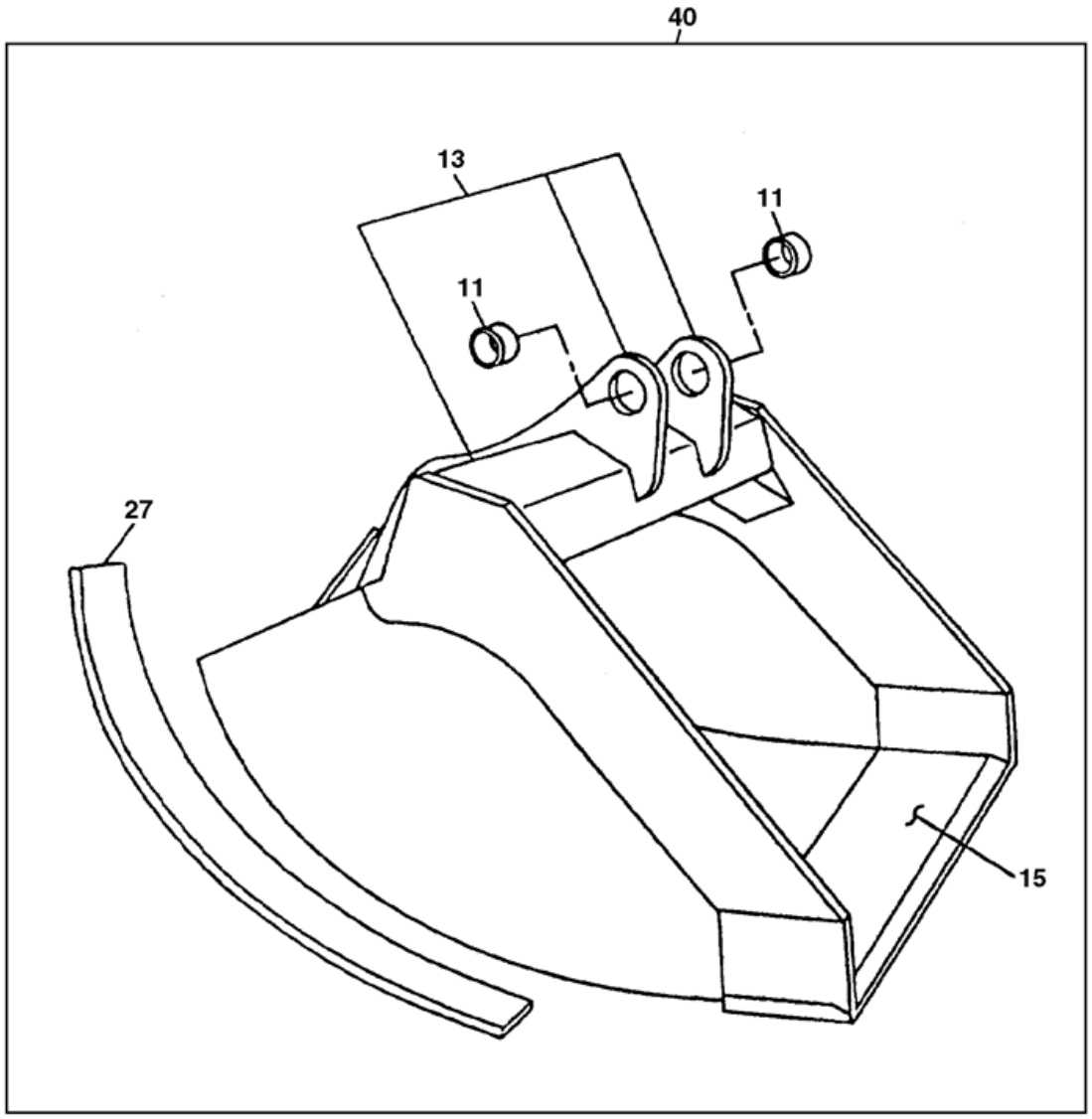

TX1007436

Pos.	*Ref.*	*Descripción*	*Cant.*	*Núm. de serie*	*Notas*
11	TH104509	Casquillo	2		
13	C607429	Pivote	1		(A) Conjunto de orejeta ciega de cucharón
15	AT131089	Borde cortante	1		(CUT TO LENGTH)
27	300292	Barra	4		(A) Pletina de desgaste
40	.....	Cucharón excavadora	1		(A) (60 INCH/0.90 CUBIC YARD) (AT332683 NLA) , (SUB AT339096)

(A) JOHN DEERE DEALER ORDER DIRECTLY FROM CENTRAL FABRICATORS.
CONCESSIONNAIRES JOHN DEERE COMMANDER DIRECTEMENT AUPRES DE CENTRAL FABRICATORS.
CONCESIONARIOS JOHN DEERE - PEDIR DIRECTAMENTE DE CENTRAL FABRICATORS.

DITCHING BUCKET
BENNE D'EXCAVATION DE FOSSES
CUCHARON DE ZANJEO

TX1055281 A.1

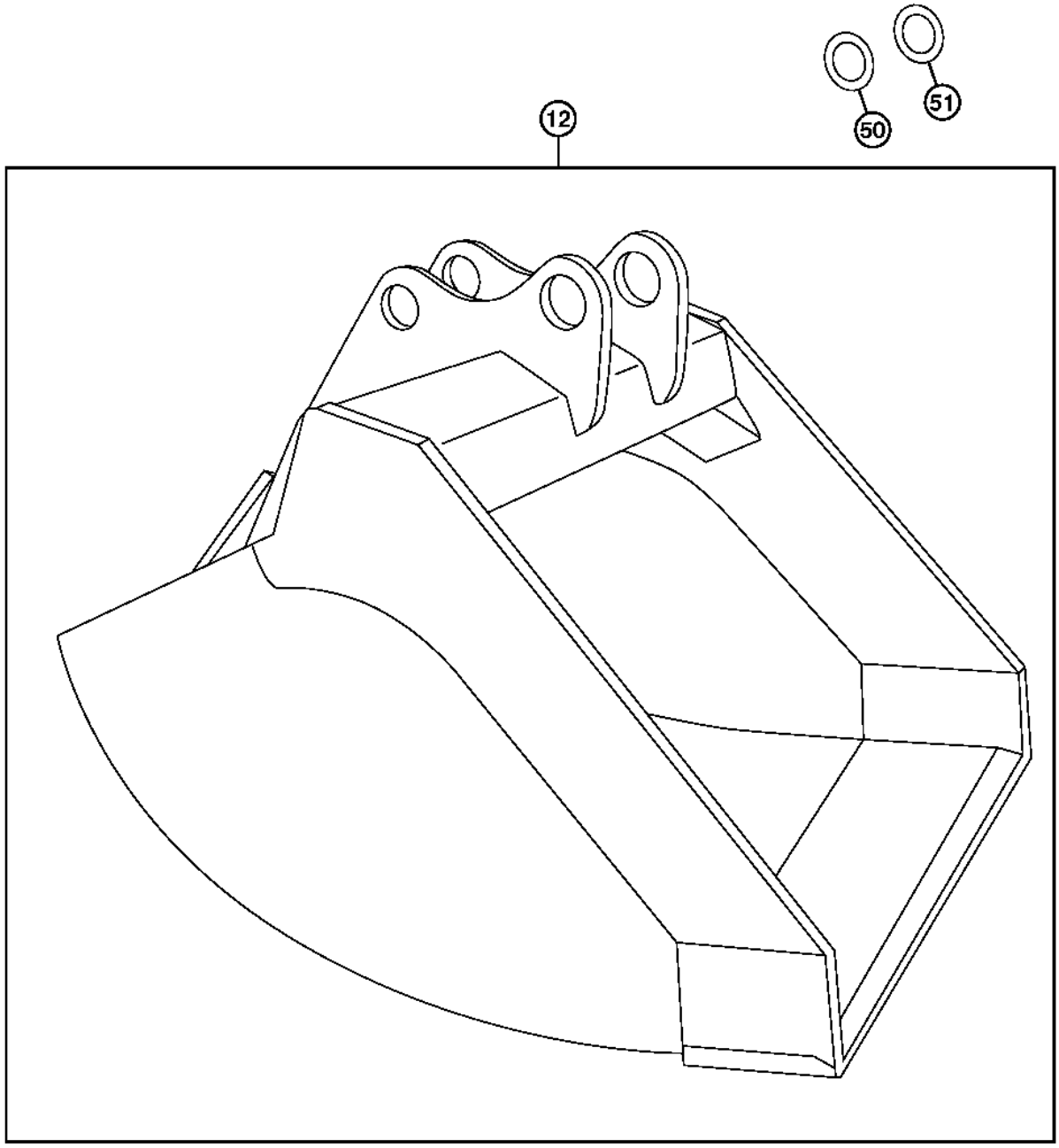

TX1055281

Pos.	*Ref.*	*Descripción*	*Cant.*	*Núm. de serie*	*Notas*
12	**AT339096**	**Cucharón excavadora**	**1**		**(SUB FOR AT332683)(WHOLEGOODS) (60 INCH - .83 CUBIC YARD)**
50	T241930	Arandela	AR		85 X 140 X 1 mm (3.346" X 5.512" X 0.039"), (1 MM)
51	T241937	Suplemento	AR		(.5 MM)

ROADBUILDER BUCKET KIT (SEE FOOTNOTE)
KIT DE GODET DE CONSTRUCTION DES ROUTES (VOIR NOTES EN BAS DE PAGE)
JUEGO DE CUCHARON PARA CONSTRUCCION DE CARRETERAS (CONSULTE NOTA DE PIE DE PAGINA)

T141017 A.1

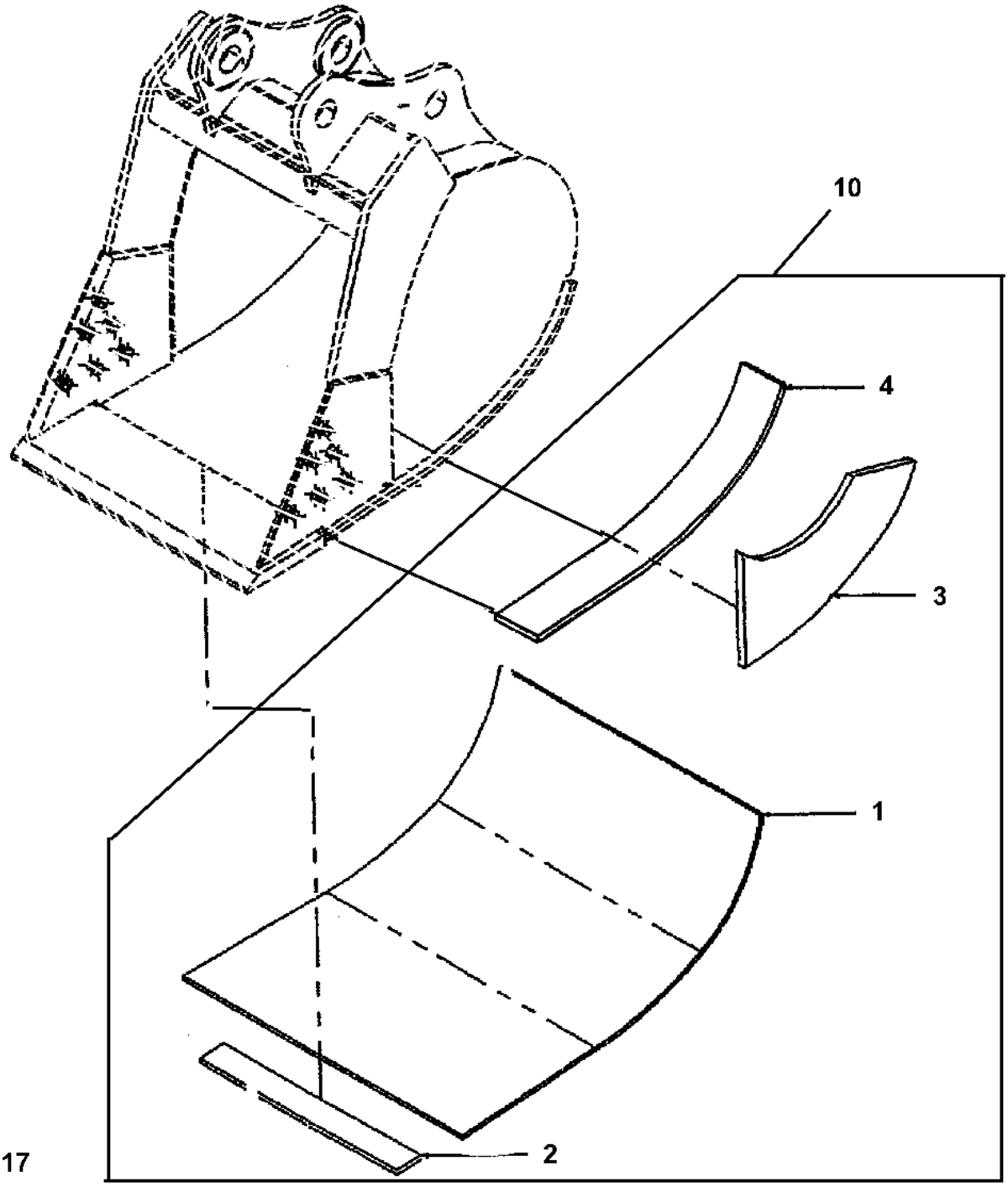

Pos.	*Ref.*	*Descripción*	*Cant.*	*Núm. de serie*	*Notas*
1	623371	Vertedera	1		(A) Usar con cucharón de 30 in.
	623372	Vertedera	1		(A) Usar con cucharón de 36 in.
	623373	Vertedera	1		(A) Usar con cucharón de 42 in.
2	28031	Barra	5		(A) Usar con cucharón de 30 in., Desgaste
	28037	Barra	5		(A) Usar con cucharón de 36 in., Desgaste
	28043	Barra	5		(A) Usar con cucharón de 42 in., Desgaste
3	322555	Placa	2		(A)
4	306452	Placa	2		(A) Desgaste
10	.....	Juego	1		(AT187243 NLA) , Also Order 30 in. Heavy Duty High Capacity Bucket
	.....	Juego	1		(AT187244 NLA) , Also Order 36 in. Heavy Duty High Capacity Bucket
	.....	Juego	1		(AT187245 NLA) , Also Order 42 in. Heavy Duty High Capacity Bucket

(A) ORDER FROM CENTRAL FABRICATORS
A COMMANDER AUPRES DES FABRICANTS CENTRAUX
PIDA A LOS FABRICANTES CENTRALES
ORDER BUCKET SEPARATELY
COMMANDER LA BENNE SEPAREMENT
PIDA CUCHARON POR SEPARADO

HEAVY DUTY OR GENERAL PURPOSE BUCKET TOOTH ASSEMBLY
DENTS DE BENNE A USAGE GENERAL OU USAGE INTENSIF
CONJUNTO DE DIENTES DEL CUCHARON DE USO GENERAL O SERVICIO SEVERO

TX1001612 A.1

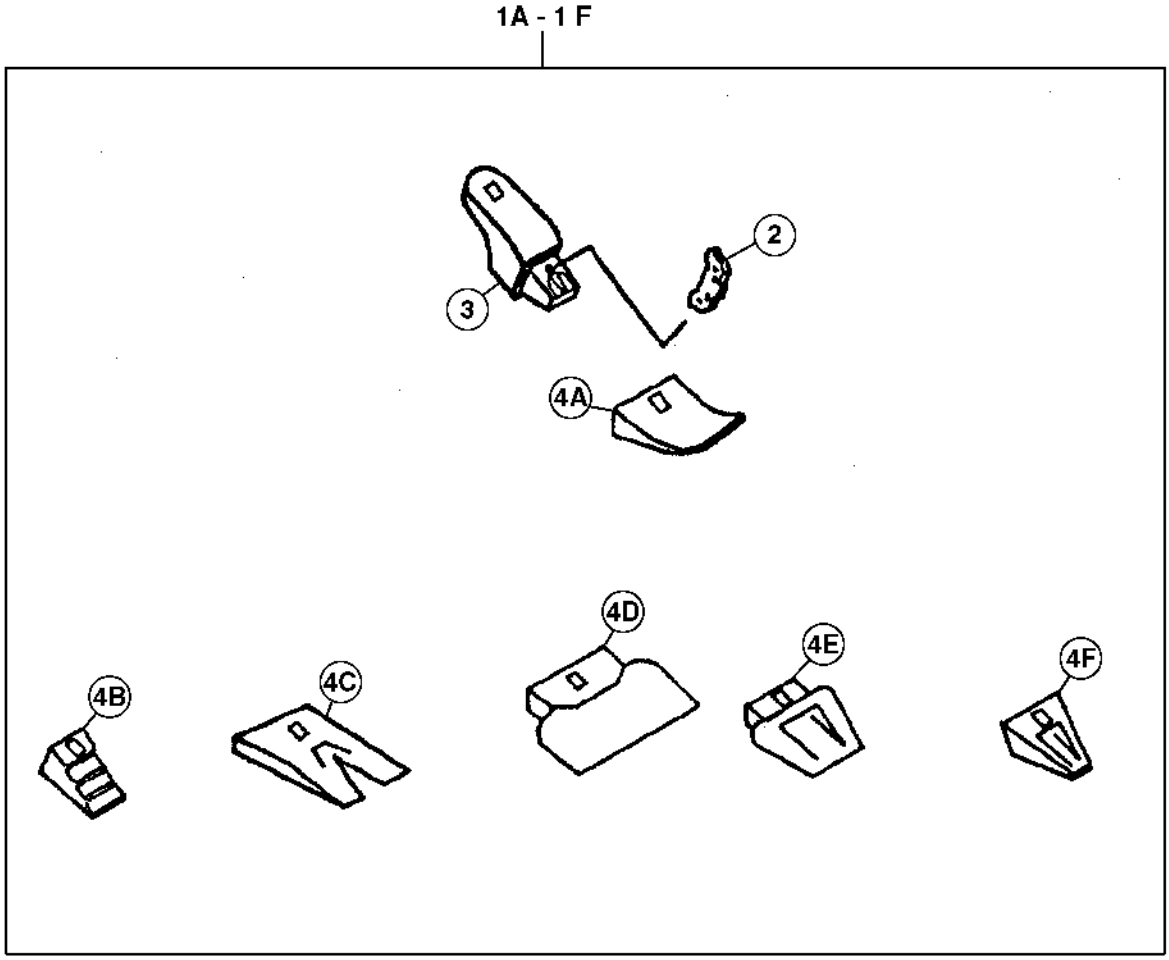

TX1001612

Pos.	*Ref.*	*Descripción*	*Cant.*	*Núm. de serie*	*Notas*
1A	.....	Juego	1		(A) (AT163528 NLA) , Fanggs™ 220
1B	.....	Juego	1		(A) (AT163532 NLA) , Estándar 220
1C	.....	Juego	1		(A) (AT163536 NLA) , Twin Tiger 220
1D	.....	Juego	1		(A) (AT163535 NLA) , Abocinado
1E	.....	Juego	1		(A) (AT163534 NLA) , Panel de abrasión
1F	.....	Juego	1		(A) (AT163533 NLA) , Tiger 220
	.....	Juego	1		(A) (AT178740 NLA) , Tiger 290
1G	.....	Juego	1		(A) (AT167184 NLA) , Estándar ESCO
1H	.....	Juego	1		(A) (AT167186 NLA) , Tiger Twin ESCO
1I	.....	Juego	1		(A) (AT167187 NLA) , Abocinado ESCO
1J	.....	Juego	1		(A) (AT167185 NLA) , Tiger ESCO
1K	.....	Juego	1		(A) (AT167188 NLA) , Repuesto Fanggs™ para Caterpillar
1L	.....	Juego	1		(A) (AT167189 NLA) , Repuesto estándar para Caterpillar
1M	.....	Juego	1		(A) (AT167191 NLA) , Repuesto Twin Tiger para Caterpillar
1N	.....	Juego	1		(A) (AT167190 NLA) , Repuesto Tiger para Caterpillar
1O	.....	Juego	1		(A) (AT199349 NLA) , Juego de dientes Super V-Style EV39SYL
1P	.....	Juego	1		(A) (AT178531 NLA) , Diente
1Q	.....	Juego	1		(A) (AT178533 NLA) , Diente
1R	.....	Juego	1		(A) (AT178535 NLA) , Diente
1S	.....	Juego	1		(A) (AT178537 NLA) , Diente
2	TP160L	Pasador elástico	1		(SUB FOR TP160, THIS APPLICATION), Use With 220 Tooth
	TK290	Pasador	1		Use With 290 Tooth
	EX21LK	Pasador	1		ESCO
	T9J2308	Bulón	1		Caterpillar
	EV23PN	Bulón	1		Estilo V EV23SYL
3	T109X220	Adaptador dentado cuchara	1		Use With 220 Tooth
	T127X290	Adaptador dentado cuchara	1		Use With 290 Tooth
	EX5849-21	Adaptador dentado cuchara	1		ESCO
	T3G6304	Adaptador dentado cuchara	1		Caterpillar
	EV5849-V23	Adaptador dentado cuchara	1		Estilo V EV23SYL
	T158X290	Adaptador dentado cuchara	1		Use With 290 Tooth
4A	TF220	Diente	1		(ALSO ORDER TP160L), Fanggs™ 220
	TF290	Diente	1		Fanggs™290
4B	TX220	Diente	1		(ALSO ORDER TP160L), Estándar 220
	TX290	Diente	1		Estándar 290
4C	TX220WT	Diente	1		(ALSO ORDER TP160L), Twin Tiger 220
	TX290WT	Diente	1		
4D	TX220F	Diente	1		(ALSO ORDER TP160L), Twin Tiger 290
4E	TX220AP	Diente	1		(ALSO ORDER TP160L)
4F	TT220	Diente	1		(ALSO ORDER TP160L), Tiger 220
	TT290	Diente	1		Tiger 290
4G	EX21SYL	Diente	1		(A) Estándar ESCO
4H	EX21TVIP	Diente	1		(A) Tiger Twin ESCO
4I	EX21S5F	Diente	1		(A) Abocinado ESCO
4J	EX21VIP	Diente	1		(A) Tiger ESCO
4K	TF1U3302D	Diente	1		(A) Repuesto Fanggs™ para Caterpillar
4L	T1U3302	Diente	1		(A) Repuesto estándar para Caterpillar
4M	TX1U3302WT	Diente	1		(A) Repuesto Twin Tiger para Caterpillar
4N	TT1U3302	Diente	1		(A) Repuesto Tiger para Caterpillar
4O	EV23SYL	Diente	1		(A) Estilo V EV23SYL
5	T3G9609	Arandela	1		(A) Repuesto para Caterpillar

(A) NOT ILLUSTRATED
NON ILLUSTRES
NO SE ILUSTRA

(B) NOT ILLUSTRATED - SEE ESCO TOOTH PAGE
NON ILLUSTRES - VOIR PAGE DE DENTS ESCO
NO SE ILUSTRA - CONSULTE LA PAGINA DE DIENTES ESCO
REFER TO PC 9555 FOR ADDITIONAL BUCKET TOOTH OPTIONS
SE REPORTER A PC9555 POUR DES OPTIONS SUPPLEMENTAIRES DE DENTS DE BENNE
CONSULTAR PC9555 PARA OPCIONES ADICIONALES DE DIENTES DE CUCHARON

HIGH CAPACITY BUCKET TOOTH ASSEMBLY
DENT DE BENNE GRANDE CONTENANCE
CONJUNTO DE DIENTES DEL CUCHARON DE ALTA CAPACIDAD

TX1009049 A.1

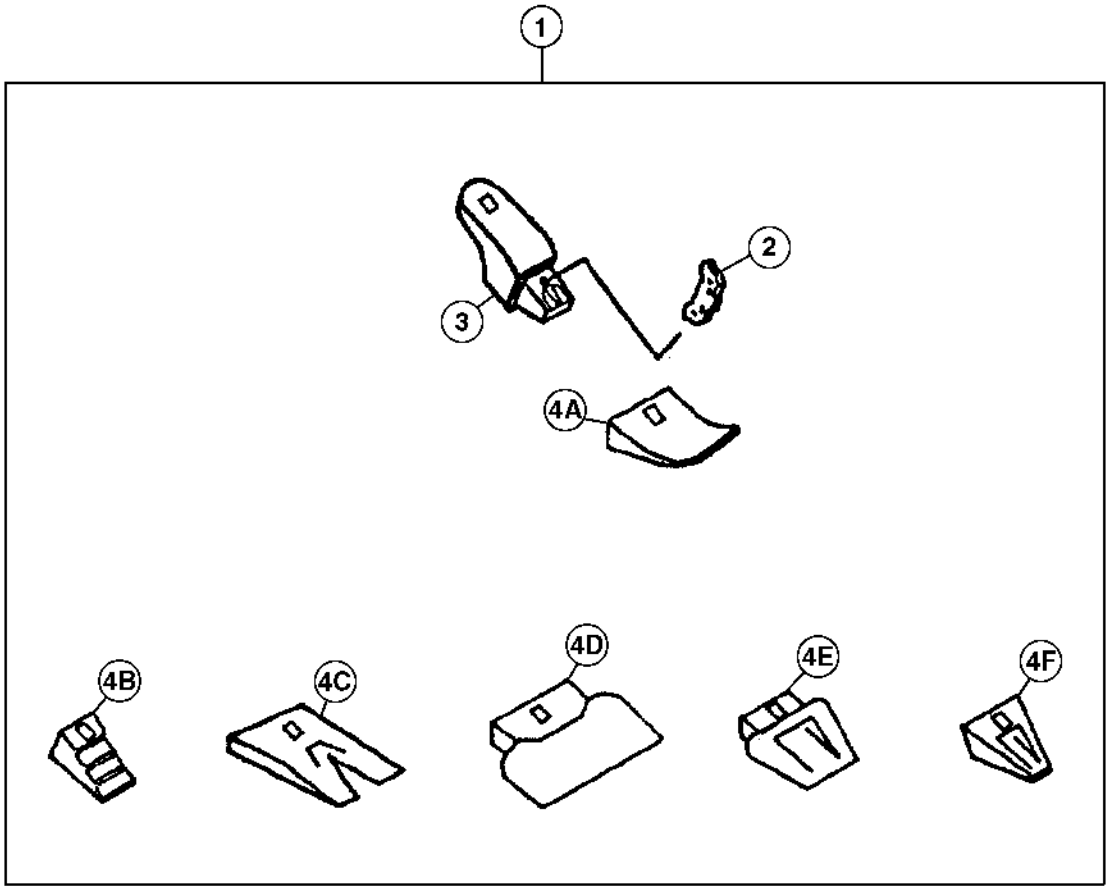

TX1009049

Pos.	*Ref.*	*Descripción*	*Cant.*	*Núm. de serie*	*Notas*
1A	.....	Juego	1		(AT162538 NLA) , Fanggs™ 310
	.....	Juego	1		(AT178531 NLA) , Fanggs™290
1B	.....	Juego	1		(AT163539 NLA) , Estándar 310
	.....	Juego	1		(AT178533 NLA) , Estándar 290
1C	.....	Juego	1		(AT163543 NLA) , Twin Tiger 310
	.....	Juego	1		(AT178537 NLA) , Twin Tiger 290
1D	.....	Juego	1		(AT163542 NLA) , Abocinado
1E	.....	Juego	1		(AT163541 NLA) , Panel de abrasión
1F	.....	Juego	1		(AT163540 NLA) , Tiger 310
	.....	Juego	1		(AT178534 NLA) , Tiger 330
	.....	Juego	1		(AT178535 NLA) , Tiger 290
1G	.....	Juego	1		(AT163544 NLA) , Estándar ESCO
1H	.....	Juego	1		(AT163547 NLA) , Tiger Twin ESCO
1I	.....	Juego	1		(AT163546 NLA) , Abocinado ESCO
1J	.....	Juego	1		(AT163545 NLA) , Tiger ESCO
1K	.....	Juego	1		(AT167192 NLA) , Repuesto Fanggs™ para Caterpillar
1L	.....	Juego	1		(AT167193 NLA) , Repuesto estándar para Caterpillar
1M	.....	Juego	1		(AT167195 NLA) , Repuesto Twin Tiger para Caterpillar
1N	.....	Juego	1		(AT167194 NLA) , Repuesto Tiger para Caterpillar

(A) (NOT ILLUSTRATED)
(NON ILLUSTRES)
(NO SE ILUSTRA)
FOR USE WITH 24, 30, 36 OR 42 INCH BUCKETS
A UTILISER AVEC BENNE DE 24, 30, 36, 42 INCH
USAR CON CUCHARON DE 24, 30, 36, 42 IN.
REFER TO PC9555 FOR ADDITIONAL BUCKET TOOTH OPTIONS
SE REPORTER A PC9555 POUR DES OPTIONS SUPPLEMENTAIRES DE DENTS DE BENNE
CONSULTAR PC9555 PARA OPCIONES ADICIONALES DE DIENTES DE CUCHARON

HIGH CAPACITY BUCKET TOOTH ASSEMBLY (CONTINUED)
DENT DE BENNE GRANDE CONTENANCE (SUITE)
CONJUNTO DE DIENTES DEL CUCHARON DE ALTA CAPACIDAD (CONTINUACION)

TX1009049 A.1

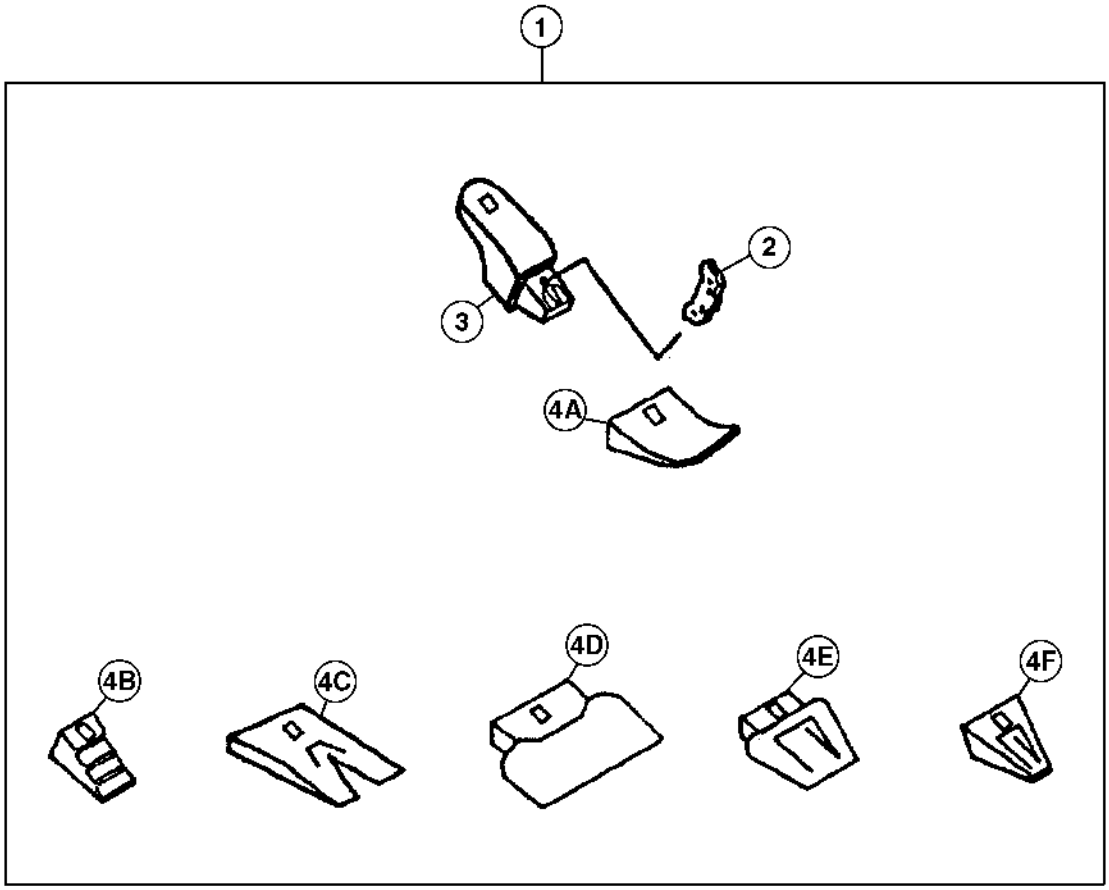

TX1009049

Pos.	*Ref.*	*Descripción*	*Cant.*	*Núm. de serie*	*Notas*
2	TP160	Pasador	1		(SUB FOR TP160L, THIS APPLICATION), Usar con conjuntos de 310 dientes
	TK290	Pasador	1		Usar con conjuntos de 290 dientes
	EX27VPN	Pasador	1		(A) (B) (G)
	T9J2358	Bulón	1		(A) (H)
3	T153X310	Adaptador dentado cuchara	1		Usar con conjuntos de 310 dientes
	T158X290	Adaptador dentado cuchara	1		Usar con conjuntos de 290 dientes
	EX5850-27V	Adaptador dentado cuchara	1		(A) (B) (G)
	T3G8354	Adaptador dentado cuchara	1		(A) (H)
4A	TF310	Diente	1		(E) (ALSO ORDER TP160L)
	TF290	Diente	1		(E)
4B	TX310	Diente	1		(F) (ALSO ORDER TP160L)
	TX290	Diente	1		(F)
4C	TX310WT	Diente	1		(D) (ALSO ORDER TP160L)
	TX290WT	Diente	1		(D)
4D	TX310F	Diente	1		(ALSO ORDER TP160L)
4E	TX310AP	Diente	1		(ALSO ORDER TP160L)
4F	TT310	Diente	1		(C) (ALSO ORDER TP160L)
	TT290	Diente	1		(C)
4G	EX27SYL	Diente	1		(A) (B) Estándar ESCO
4H	EX27TVIP	Diente	1		(A) (B) Tiger Twin ESCO
4I	EX27S6F	Diente	1		(A) (B) Abocinado ESCO
4J	EX27VIP	Diente	1		(A) (B) Tiger ESCO
4K	TF1U3352D	Diente	1		(A) Repuesto Fanggs™ para Caterpillar
4L	T1U3352	Diente	1		(A) Repuesto estándar para Caterpillar
4M	TX1U3352WT	Diente	1		(A) Repuesto Twin Tiger para Caterpillar
4N	TT1U3352	Diente	1		(A) Repuesto Tiger para Caterpillar
4O	EV29SYL	Diente	1		(A) Para juego de dientes Super V-Style EV39SYL
5	T3G9549	Retenedor	1		(A) (H)
6	EX27VPL	Tapón	1		(A) (B)

(A) NOT ILLUSTRATED
NON ILLUSTRES
NO SE ILUSTRA

(B) SEE ESCO TOOTH PAGE
VOIR PAGE DE DENTS ESCO
CONSULTE LA PAGINA DE DIENTES ESCO

(C) TIGER
TIGER
TIGER

(D) TWIN TIGER
TWIN TIGER
TWIN TIGER

(E) FANGGS™
FANGGS™
FANGGS™

(F) STANDARD
STANDARD
ESTANDAR

(G) ESCO
ESCO
ESCO

(H) CATERPILLAR REPLACEMENT
RECHANGE CATERPILLAR
REEMPLAZO CATERPILLAR

FOR USE WITH 24, 30, 36 OR 42 INCH BUCKET
A UTILISER AVEC BENNE DE 24, 30, 36, 42 POUCES
USAR CON CUCHARON DE 24, 30, 36, 42 PULGADA

REFER TO PC9555 FOR ADDITIONAL BUCKET TOOTH OPTIONS
SE REPORTER A PC9555 POUR DES OPTIONS SUPPLEMENTAIRES DE DENTS DE BENNE
CONSULTAR PC9555 PARA OPCIONES ADICIONALES DE DIENTES DE CUCHARON

ESCO BUCKET CUTTING EDGES, TEETH AND ADAPTERS
TRANCHANTS, DENTS ET ADAPTATEURS DE GODETS ESCO
BORDES CORTANTES DEL CUCHARON ESCO, DIENTES Y ADAPTADORES

TX1006166 A.1

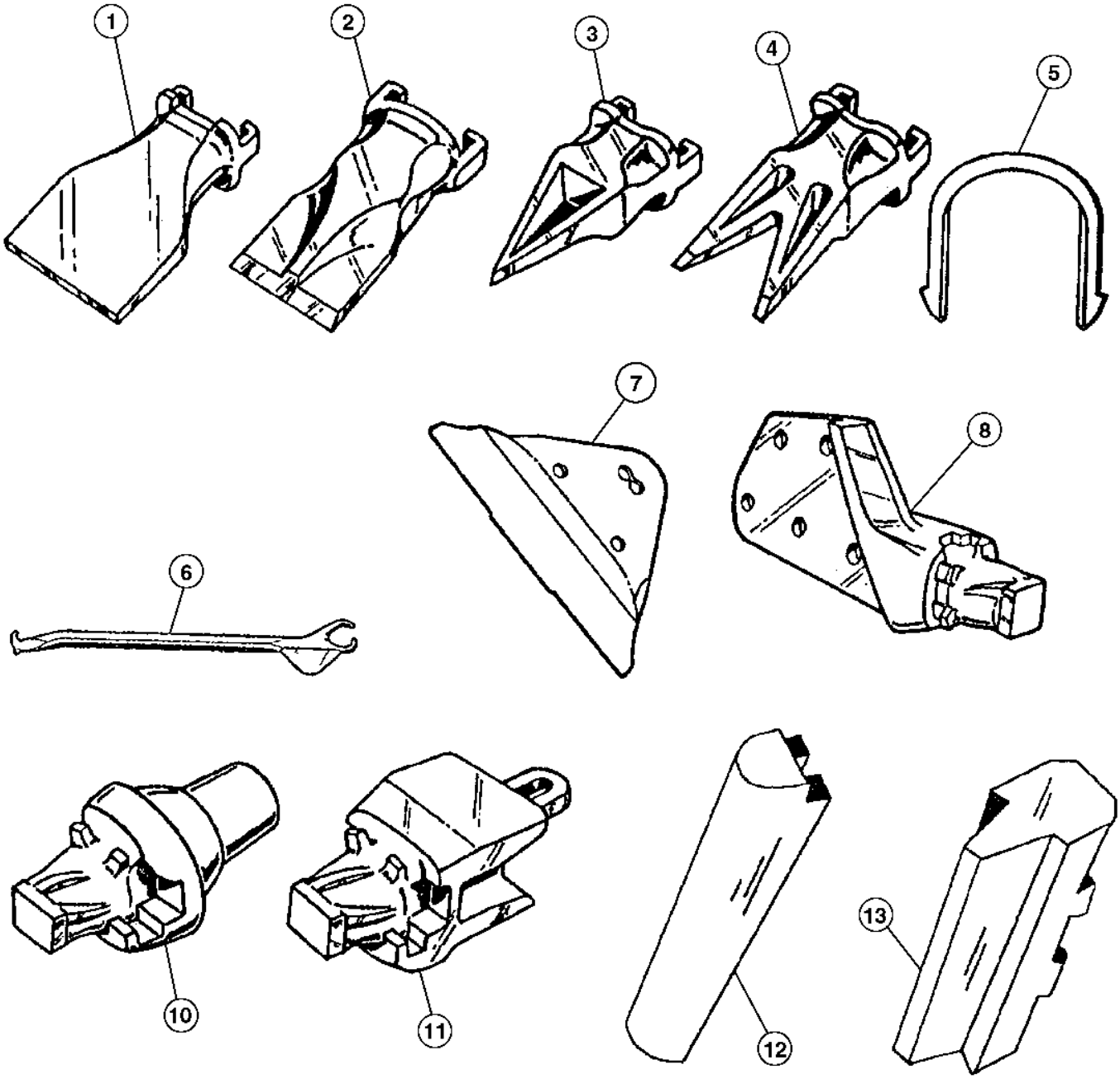

TX1006166

Pos.	*Ref.*	*Descripción*	*Cant.*	*Núm. de serie*	*Notas*
1	EX37S7F	Diente	AR		
2	EX37SYL	Diente	AR		
	EX47SYL	Diente	AR		
	EX21SYL	Diente	AR		
	EX27SYL	Diente	AR		
3	EX37VIP	Diente	AR		
4	EX37TVIP	Diente	AR		
5	EX37LKS	Retén de diente	AR		(SUB FOR EX37LK)
	EX47LK	Pasador	AR		
	EX21LKS	Retén de diente	AR		(SUB FOR EX21LK)
	EX27LK	Pasador	AR		
	EX27VPN	Pasador	AR		
6	EX3-4-57QRT	Herramienta	AR		
7	TPDE31329	Coraza	AR		(SUB FOR EX31329-X)
8	.....	Adaptador dentado cuchara	AR		(EX1506-37 NLA) , (LH)(LH)
	.....	Adaptador dentado cuchara	AR		(EX1507-37 NLA) , (RH)
10	.....	Accesorio escarificador	AR		(EX450-37 NLA)
11	EX129A-37	Adaptador dentado cuchara	AR		
	EX5824-37	Adaptador dentado cuchara	AR		
	EX1829A-47	Adaptador dentado cuchara	AR		
	EX5850-27V	Adaptador dentado cuchara	AR		(SUB FOR EX5827-27, EX27VPN AND EX27VPL)
	EX5849-21	Adaptador dentado cuchara	AR		(SUB FOR EX4894-21)
12	EX29W1	Cuna	AR		(SUB FOR T52975)
	EX20W1	Cuna	AR		(SUB FOR T38819)
13	EX20SP	Carrete	AR		(SUB FOR T38818)
	EX29SP	Carrete	AR		(SUB FOR T52974)
14	EX27VPL	Tapón	AR		No se ilustra

REFER TO PC9555 FOR ADDITIONAL BUCKET TOOTH OPTIONS.
SE REPORTER A PC9555 POUR DES OPTIONS SUPPLEMENTAIRES DE DENTS DE BENNE
CONSULTAR PC9555 PARA OPCIONES ADICIONALES DE DIENTES DE CUCHARON

Direct Hydraulic Thumb Kit
Kit de pouce hydraulique direct
Kit de pulgar con mando hidráulico directo

TX1017375 A.1

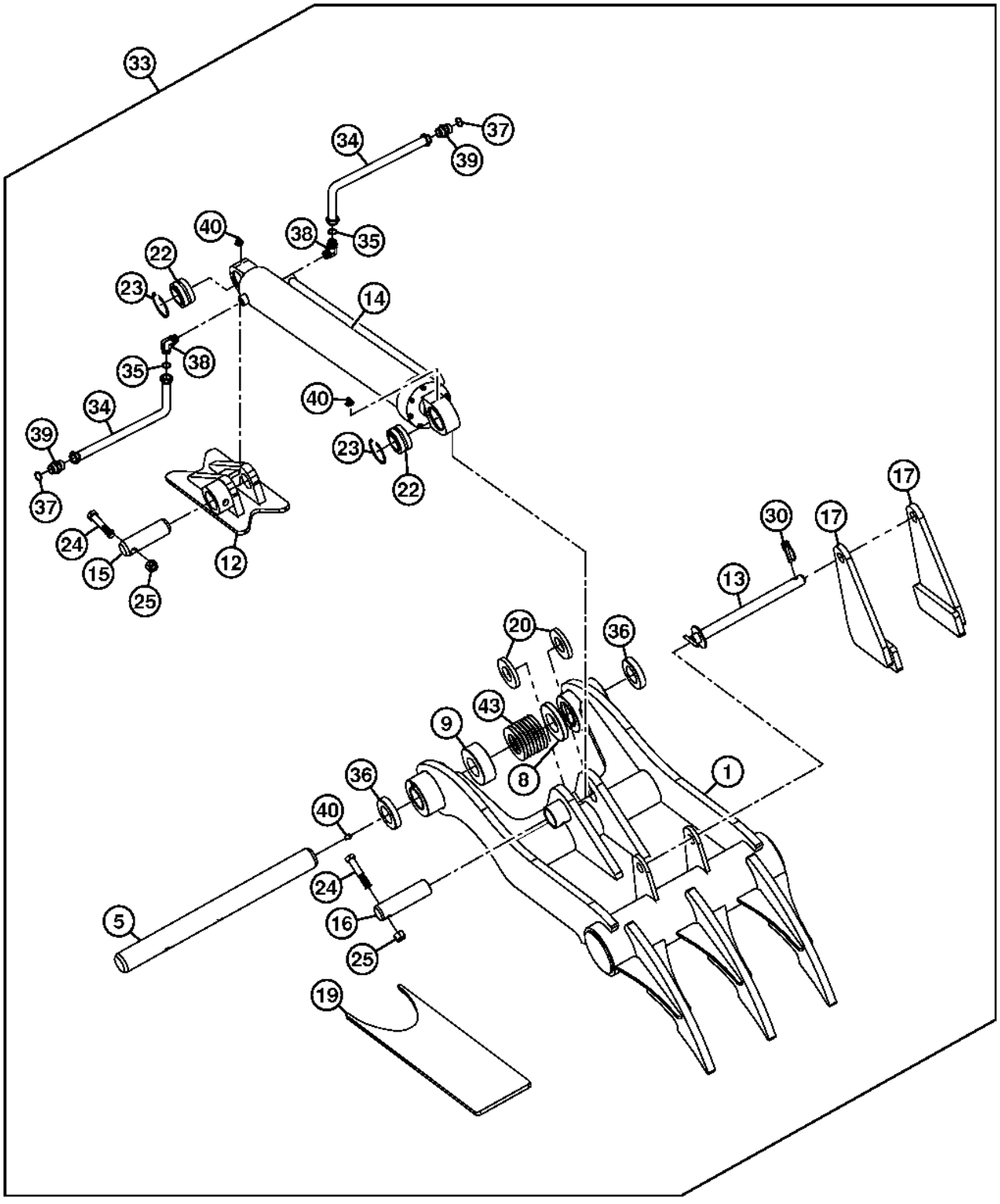

TX1017375

Pos.	*Ref.*	*Descripción*	*Cant.*	*Núm. de serie*	*Notas*
1	.....	Abrazadera	1		
5	AT339861	Pasador	1		
8	.....	Espaciador	1		
9	.....	Espaciador	1		
12	.....	Soporte	1		
13	T229308	Pasador	1		
14	AT339877	Cilindro hidráulico	1		
	AT339879	Juego de retenes	1		No se ilustra
15	T229331	Pasador	1		
16	AT339876	Pasador	1		
17	.....	Soporte	2		Traba
19	.....	Refuerzo	1		
20	T229423	Arandela de empuje	2		
22	AT339878	Casquillo	2		
23	T229413	Anillo elástico	2		
24	19H3196	Tornillo	2		3/4" X 4"
25	T25879	Tuerca	2		
30	T115753	Bulón	1		
33	**AT339846**	**Abrazadera**	**1**		**Cucharón de 30 in.**
	AT341012	**Abrazadera**	**1**		**Cucharón de 36 in.**
	AT341013	**Abrazadera**	**1**		**Cucharón de 42 in.**
34	AT339691	Manguera hidr. - confección	2		
35	R26375	Anillo tórico	2		
36	T229309	Casquillo	2		
37	U12547	Anillo tórico	2		
38	X128C5OXS	Conexión	2		
39	X1216F4OMXS	Adaptador	2		
40	JD5815	Engrasador	2		
43	T229509	Suplemento	10		(SUB FOR T229310)

Progressive Hydraulic Thumb Kit
Kit de pouce hydraulique progressif
Kit de pulgar con mando hidráulico progresivo

TX1017497 A.1

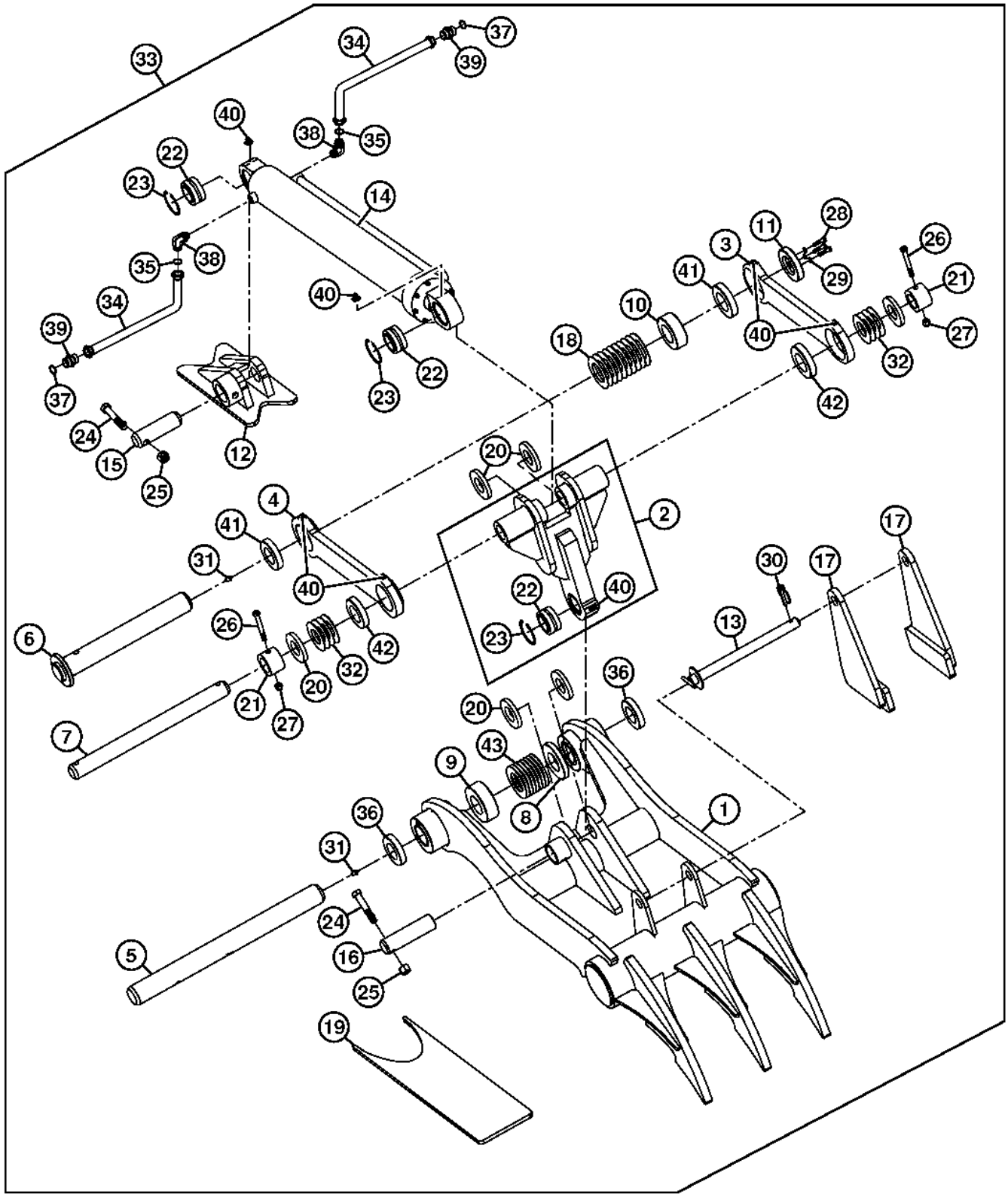

TX1017497

Pos.	*Ref.*	*Descripción*	*Cant.*	*Núm. de serie*	*Notas*
1	.....	Abrazadera	1		
2	AT339863	Articulación	1		
3	AT339865	Articulación	1		
4	AT339864	Articulación	1		
5	AT339861	Pasador	1		
6	AT339866	Pasador	1		
7	AT339867	Pasador	1		
8	.....	Espaciador	1		
9	.....	Espaciador	1		
10	.....	Espaciador	1		
11	T229312	Tapa	1		
12	.....	Soporte	1		
13	T229308	Pasador	1		
14	AT339877	Cilindro hidráulico	1		
	AT339879	Juego de retenes	1		No se ilustra
15	T229331	Pasador	1		
16	AT339876	Pasador	1		
17	.....	Soporte	2		Traba
18	T229509	Suplemento	10		(SUB FOR T229310)
19	.....	Refuerzo	1		
20	T229423	Arandela de empuje	6		
21	T229431	Collar	2		
22	AT339878	Casquillo	3		
23	T229413	Anillo elástico	3		
24	19H3196	Tornillo	2		3/4" X 4"
25	T25879	Tuerca	2		
26	19H3550	Tornillo	2		1/2" X 4"
27	U16721	Tuerca de seguridad	2		
28	19H2633	Tornillo	3		3/8" X 1-1/2"
29	12H304	Arandela de seguridad	3		3/8"
30	T115753	Bulón	1		
31	JD7769	Engrasador	1		
32	T229428	Suplemento	8		
33	**AT339845**	**Abrazadera**	**1**		**Cucharón de 30 in., No debe usarse con brazo de 8 ft 6 in (2.60 m)**
	AT341010	**Abrazadera**	**1**		**Cucharón de 36 in., No debe usarse con brazo de 8 ft 6 in (2.60 m)**
	AT341011	**Abrazadera**	**1**		**Cucharón de 42 in., No debe usarse con brazo de 8 ft 6 in (2.60 m)**
34	AT342741	Manguera hidráulica	2		
35	R26375	Anillo tórico	2		
36	T229309	Casquillo	2		
37	U12547	Anillo tórico	2		
38	X128C5OXS	Conexión	2		
39	X1216F4OMXS	Conexión de manguera	2		
40	JD5815	Engrasador	7		
41	T229322	Casquillo	2		
42	T229327	Casquillo	2		
43	T229509	Suplemento	10		(SUB FOR T229310)

DIG AND SWING PILOT CONTROL LEVER COMPONENTS
COMPOSANTS DU LEVIER DE COMMANDE PILOTE DE CREUSEMENT ET DE PIVOTEMENT
COMPONENTES DE PALANCA DE CONTROL PILOTO DE GIRO Y EXCAVACION

T145759 A.1

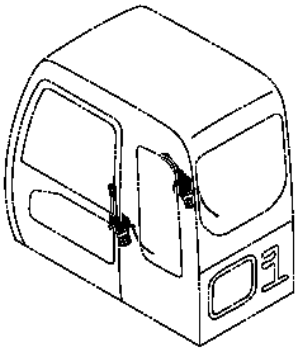

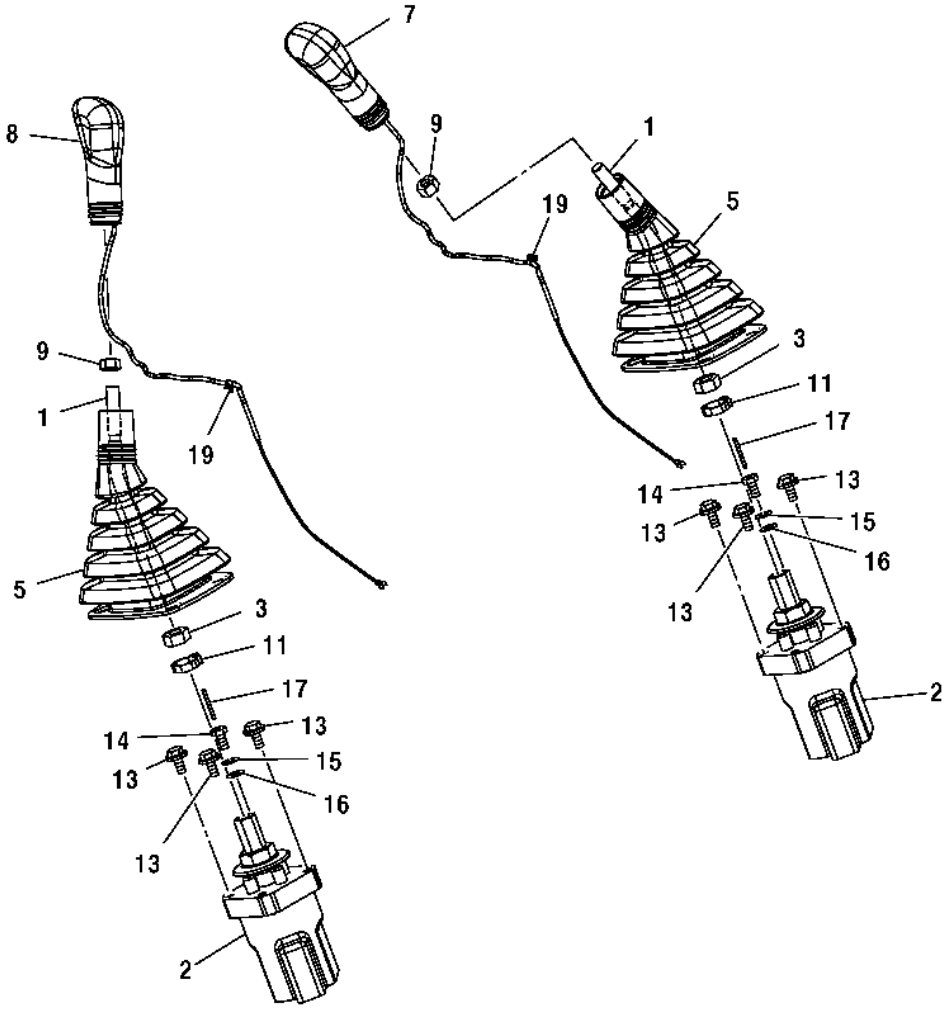

T145759

Pos.	*Ref.*	*Descripción*	*Cant.*	*Núm. de serie*	*Notas*
1	4445322	Palanca	2		SUB FOR TH4445322 AND 9195304
2	9239583	Válvula de control hidrául.	2	-XXXXXX	USE IF AVAILABLE, IF NOT AVAILABLE SUB 9239583 , SUB FOR TH9195304 AND 9195304, ALSO ORDER (3) 19M7139, (3) 24M7055 AND 4609956
	9239583	Válvula de control hidrául.	2	XXXXXX-	
3	14M7141	Tuerca	2		M14
5	2045470	Envoltura	2		SUB FOR TH2045470
7	2045473	Asa	1		
8	2045472	Asa	1		SUB FOR TH2045472
9	14M7357	Tuerca	2		M12
11	H77698	Cinta de atar	2		
13	19M7932	Tornillo	6	-XXXXXX	M8 X 16
	.....	Arandela	6	-XXXXXX	12M7065 NLA
	19M7932	Tornillo	6	-XXXXXX	M8 X 16, SUB FOR 19M7162
	19M7139	Tornillo	6	XXXXXX-	M8 X 20, SUB FOR J260820 OR J900820
	24M7055	Arandela	6	XXXXXX-	8.400 X 16 X 1.600 mm, SUB FOR A590108
14	4438279	Tornillo	2	-XXXXXX	SUB FOR TH4438279
	4609956	Tornillo	2	XXXXXX-	
15	.....	Arandela	2		12M7065 NLA
16	24M7055	Arandela	2		8.400 X 16 X 1.600 mm
17	34M7086	Pasador elástico	2		3 X 32 mm
19	H77698	Cinta de atar	2		

PILOT CONTROLLER VALVE COMPONENTS(DIG AND SWING)(SN -XXXXXX)
COMPOSANTS DE SOUPAPE DE COMMANDE PILOTE (CREUSEMENT ET PIVOTEMENT)(SN -XXXXXX)
COMPONENTES DE VALVULA DE UNIDAD DE CONTROL PILOTO (EXCAVACION Y GIRO)(SN -XXXXXX)

T142561 A.1

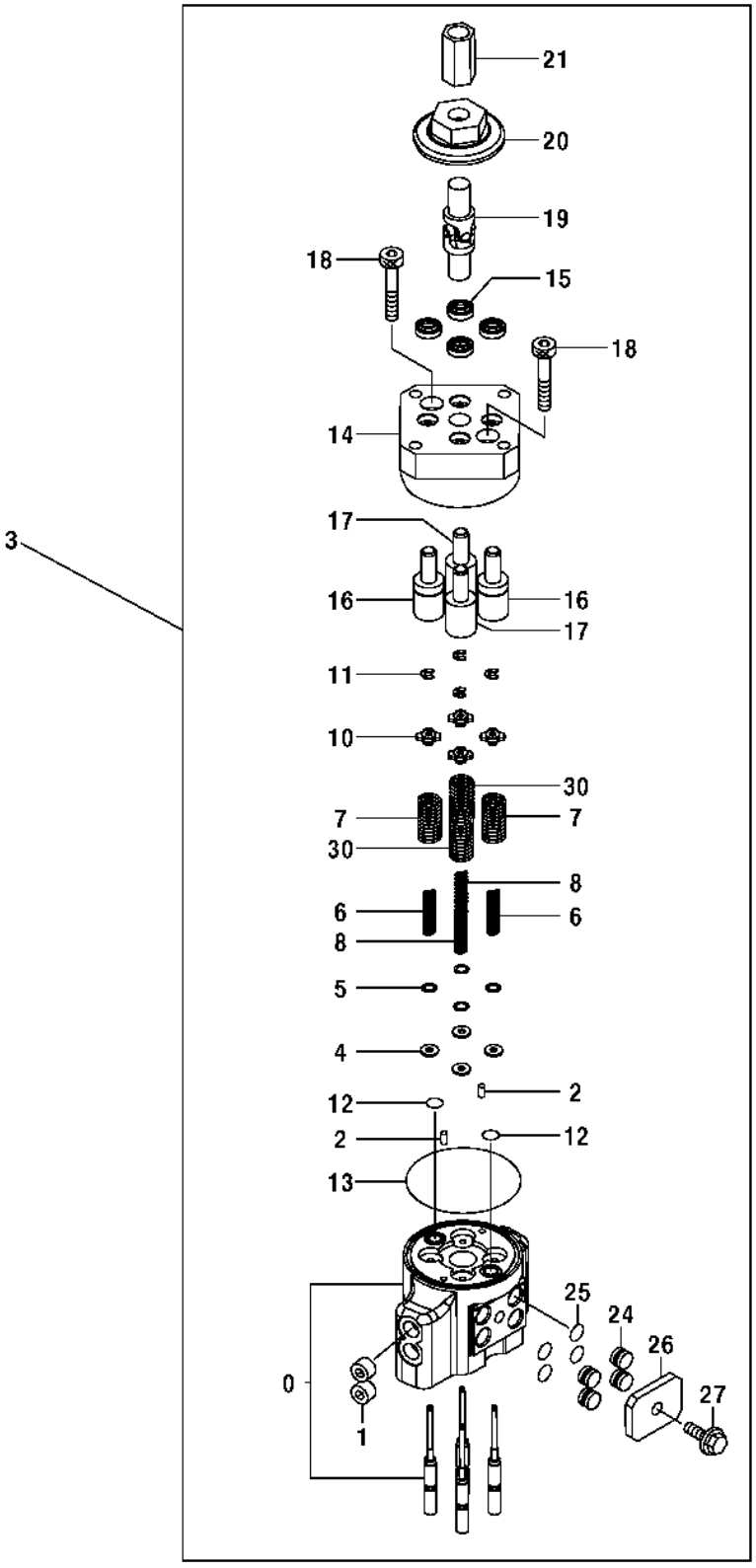

T142561

Pos.	Ref.	Descripción	Cant.	Núm. de serie componente	Notas
0	.....	Caja	1		(TH8081319 NLA)
1	94-2011	Tapón hermético	2		
2	J400408	Pasador	2		
3	.....	Válvula de control hidrául.	1		(9195304 NLA) , (SUB 9239583)
4	4410898	Espaciador	4		
5	4173208	Suplemento	12		
6	4425414	Muelle	2		
7	4421771	Muelle	2		
8	4429120	Muelle	2		
10	4429119	Guía	4		
11	4437333	Anillo elástico	4		
12	4431914	Anillo tórico	2		
13	4431915	Anillo tórico	1		
14	.....	Colector	1	-044062	(2044350 NLA) , (COLECTOR TIENE UNA MARCA PUNZON EN CARA SUP)
	9234284	Colector	1	044063-	COLECTOR TIENE DOS MARCAS PUNZON EN CARA SUP
15	4447050	Retén	4	-044062	(SUB 9234284, (4) 4477852, (2) 9759158 AND (2) 9759157) (USE WITH 2044350)
	.....	Retén	4	044063-	(4477852 NLA)
16	.....	Pistón	2	-044062	(9754825 NLA) , (SUB 9234284, (4) 4477852, (2) 9759158 AND (2) 9759157) (USE WITH 2044350)
	9759157	Pistón	2	044063-	(SUB FOR 9754825) (ALSO ORDER (4) 4477852, 9234284, (2) 9759158) (USE WITH 9234284)
17	.....	Pistón	2	-044062	(9754826 NLA) , (SUB 9234284, (4) 4477852, (2) 9759158 AND (2) 9759157) (USE WITH 2044350)
	9759158	Pistón	2	044063-	(SUB FOR 9754826, (4) 4477852, (2) 9759158, 9234284) (USE WITH 9234284)
18	19M8923	Tornillo	2		M8 X 45, (SUB FOR J780845)
19	4335060	Cardán	1		
20	4639115	Leva	1		(SUB FOR 4437106)
21	4182067	Raedera	1		
24	4442323	Tapón roscado	4		
25	CH11560	Empaquetadura	4		
26	4442339	Placa	1		
27	19M7932	Tornillo	1		M8 X 16
30	4446960	Muelle	2		

PILOT CONTROLLER VALVE COMPONENTS(FRONT AND SWING)(SN XXXXXX-)
COMPOSANTS DE SOUPAPE DE COMMANDE PILOTE (AVANT ET PIVOTANT) (SN XXXXXX-)
COMPONENTES DE VALVULA DE UNIDAD DE CONTROL PILOTO (DELANTERO Y GIRO) (SN XXXXXX-)

T206912 A.1

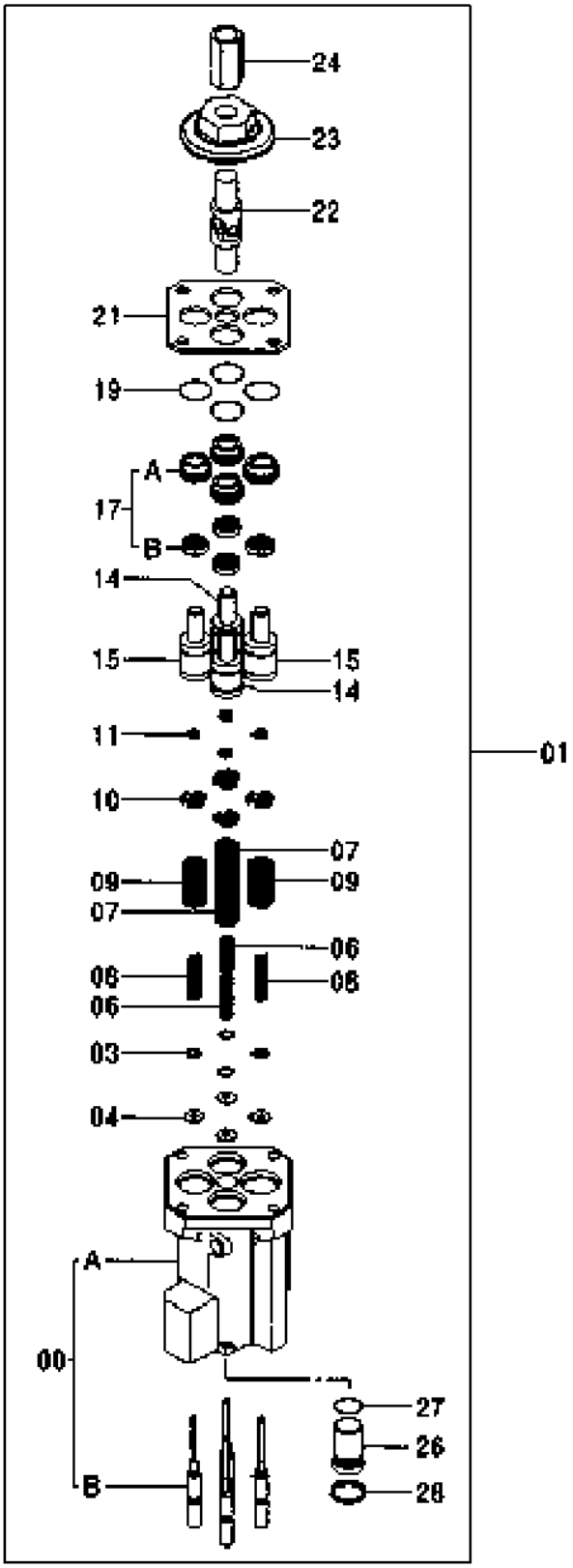

T206912

Pos.	*Ref.*	*Descripción*	*Cant.*	*Núm. de serie componente*	*Notas*
0	.....	Caja	1		(8094446 NLA)
0A	.....	Carcasa	1		(NLA)
0B	.....	Carrete	4		(NLA)
1	9239583	Válvula de control hidrául.	1		
3	4662206	Suplemento	4		(SUB FOR 4203411)
4	4410898	Espaciador	4		
6	4429120	Muelle	2		
7	4446960	Muelle	2		
8	4425414	Muelle	2		
9	4421771	Muelle	2		
10	4615610	Guía	4		
11	4437333	Anillo elástico	4		
14	9759157	Pistón	2		
15	9759158	Pistón	2		
17	9246436	Manguito	4		
17A	.....	Manguito	1		(NLA)
17B	.....	Retén	1		(NLA)
19	4201993	Anillo tórico	4		
21	4614296	Placa	1		
22	4335060	Cardán	1		
23	4639115	Leva	1		(SUB FOR 4437106)
24	4182067	Raedera	1		
26	4614286	Tapón	1		
27	4170585	Anillo tórico	1		
28	4614331	Anillo elástico	1		

PROPEL PILOT CONTROL LEVERS, PEDALS, AND FOOTRESTS
LEVIERS DE COMMANDE PILOTES DE PROPULSION, PEDALES ET REPOSE-PIED
PALANCAS DE CONTROL PILOTO DE PROPULSION, PEDALES Y APOYAPIES

T142559 A.1

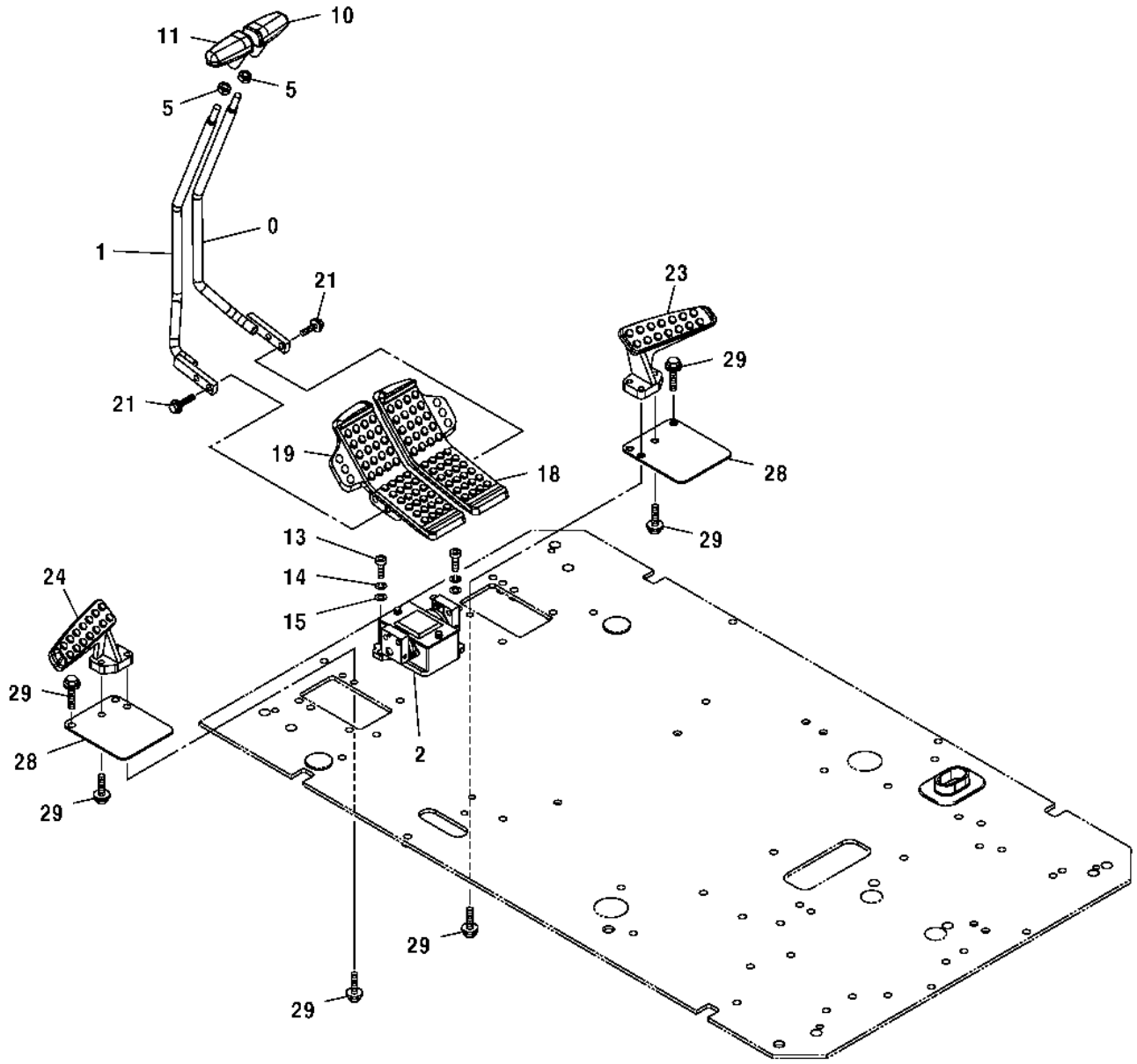

T142559

Pos.	*Ref.*	*Descripción*	*Cant.*	*Núm. de serie*	*Notas*
0	8075450	Palanca	1		
1	8075449	Palanca	1		
2	9195307	Válvula de control hidrául.	1	-XXXXXX	Unidades fabricadas antes de febrero de 2003
	9235551	Válvula de control hidrául.	1	XXXXXX-	(SUB FOR 9226365), Unidades fabricadas en febrero de 2003 y después
5	4424185	Tuerca	2		
10	2051176	Asa	1		(SUB FOR 2045468)
11	2051177	Asa	1		(SUB FOR 2045469)
13	19M8337	Tornillo	2		M10 X 30, (SUB FOR J781035)
14	12M7066	Arandela de seguridad	2		10 mm
15	24M7028	Arandela	2		10.500 X 20 X 2 mm
18	1024384	Pedal	1		
19	1024224	Pedal	1		
21	.....	Tornillo con arandela	4		(J021050 NLA)
	19M8600	Tornillo	4		M10 X 50
	24M7106	Arandela	4		10 X 18 X 2.500 mm
	12M7066	Arandela de seguridad	4		10 mm
23	1015478	Reposapiés	1		
24	1015477	Reposapiés	1		
28	3052543	Tapadera	2		
29	19M7550	Tornillo	8		M10 X 35
	12M7066	Arandela de seguridad	8		10 mm

PROPEL PILOT CONTROLLER COMPONENTS
COMPOSANTS DE COMMANDE PILOTE DE PROPULSION
COMPONENTES DE LA UNIDAD DE CONTROL PILOTO DE PROPULSION

T142562 A.1

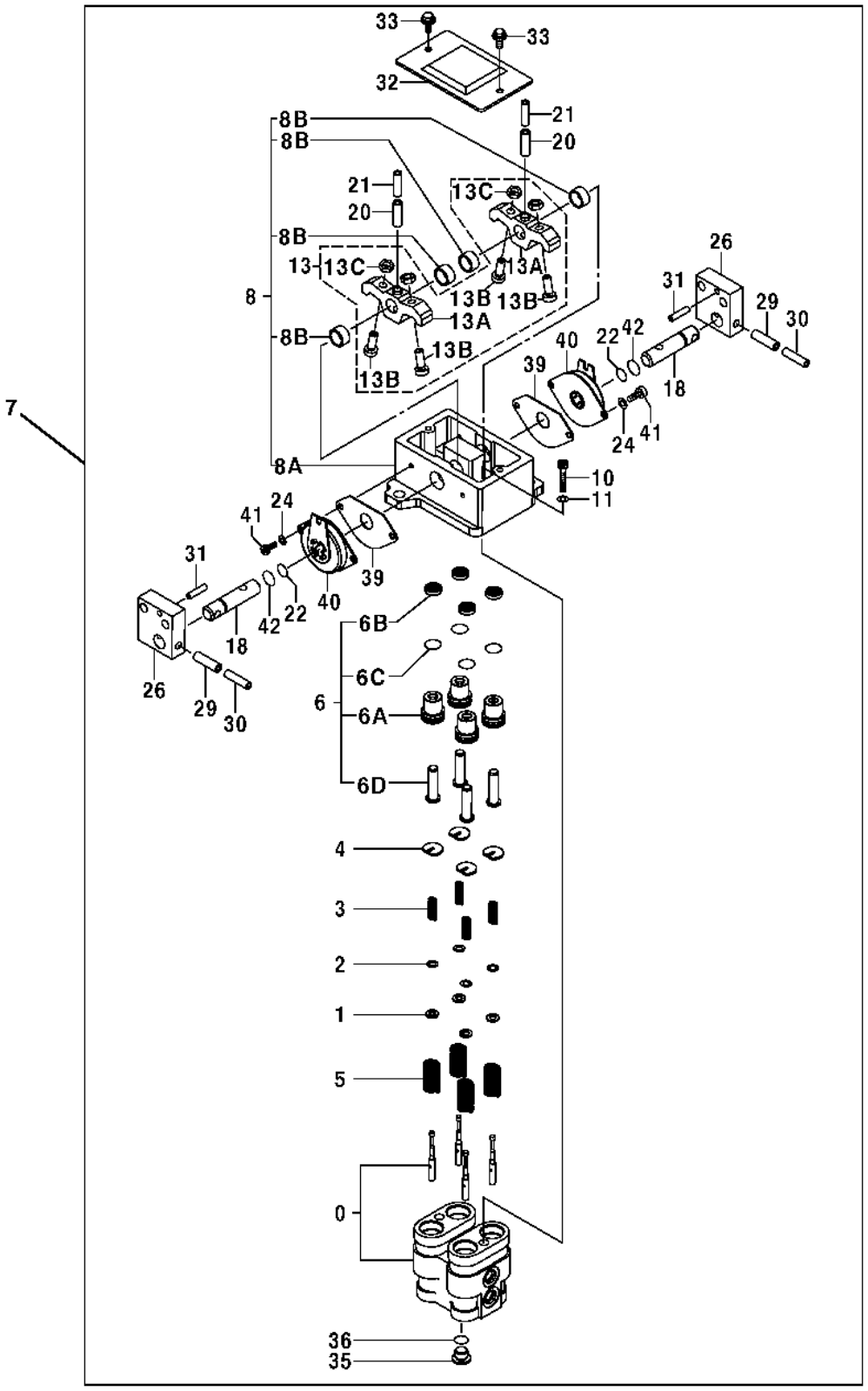

T142562

Pos.	*Ref.*	*Descripción*	*Cant.*	*Núm. de serie*	*Notas*
0	.....	Carcasa	1		(8063718 NLA)
1	4319299	Espaciador	4		
2	4662206	Suplemento	12		(SUB FOR 4203411)
3	4368629	Muelle de compresión	4		
4	4364970	Guía	4		
5	4368630	Muelle de compresión	4		
6	9151724	Émbolo	4		(41MM OD)
6A	.....	Casquillo	1		(NLA)
6B	4447050	Retén	1		
6C	CH11562	Anillo tórico	1		
6D	3072517	Émbolo	1		
7	9195307	Válvula de control hidrául.	1		
8	.....	Portador	1		(9184275 NLA)
8A	.....	Portador	1		(NLA)
8B	4437433	Casquillo	4		
10	19M7576	Tornillo	2		M10 X 30, (SUB FOR J781030)
11	12M7066	Arandela de seguridad	2		10 mm
13	9199146	Kit de levas	2		
13A	.....	Leva	1		(3087264 NLA)
13B	4425290	Tornillo	2		
13C	14M7254	Tuerca	2		M8, (SUB FOR 4122395)
18	4425305	Bulón	2		
20	34M7225	Pasador elástico	2		8 X 28 mm
21	4213419	Pasador elástico	2		
22	4185600	Anillo tórico	2		
24	12M7006	Arandela de seguridad	4		6 mm
26	3087987	Soporte	2		
29	34M7124	Pasador elástico	2		8 X 30 mm
30	34M7062	Pasador elástico	2		5 X 32 mm
31	4051262	Pasador elástico	2		
32	8077903	Tapadera	1		
33	19M7923	Tornillo	2		M6 X 12
	12M7006	Arandela de seguridad	2		6 mm
	24M7293	Arandela	2		6.500 X 13 X 1.600 mm
35	4208977	Tapón de vaciado	1		
36	CH11561	Empaquetadura	1		
39	4437432	Junta	2		
40	4428902	Amortiguador de torsión	2		
41	J780612	Tornillo	4		
42	4447067	Anillo tórico	2		

PILOT SHUT-OFF LEVER AND MOUNTING BRACKET
LEVIER DE ROBINET D'ARRET PILOTE ET SUPPORT DE MONTAGE
PALANCA DE CORTE PILOTO Y ESCUADRA DE MONTAJE

T142560 A.1

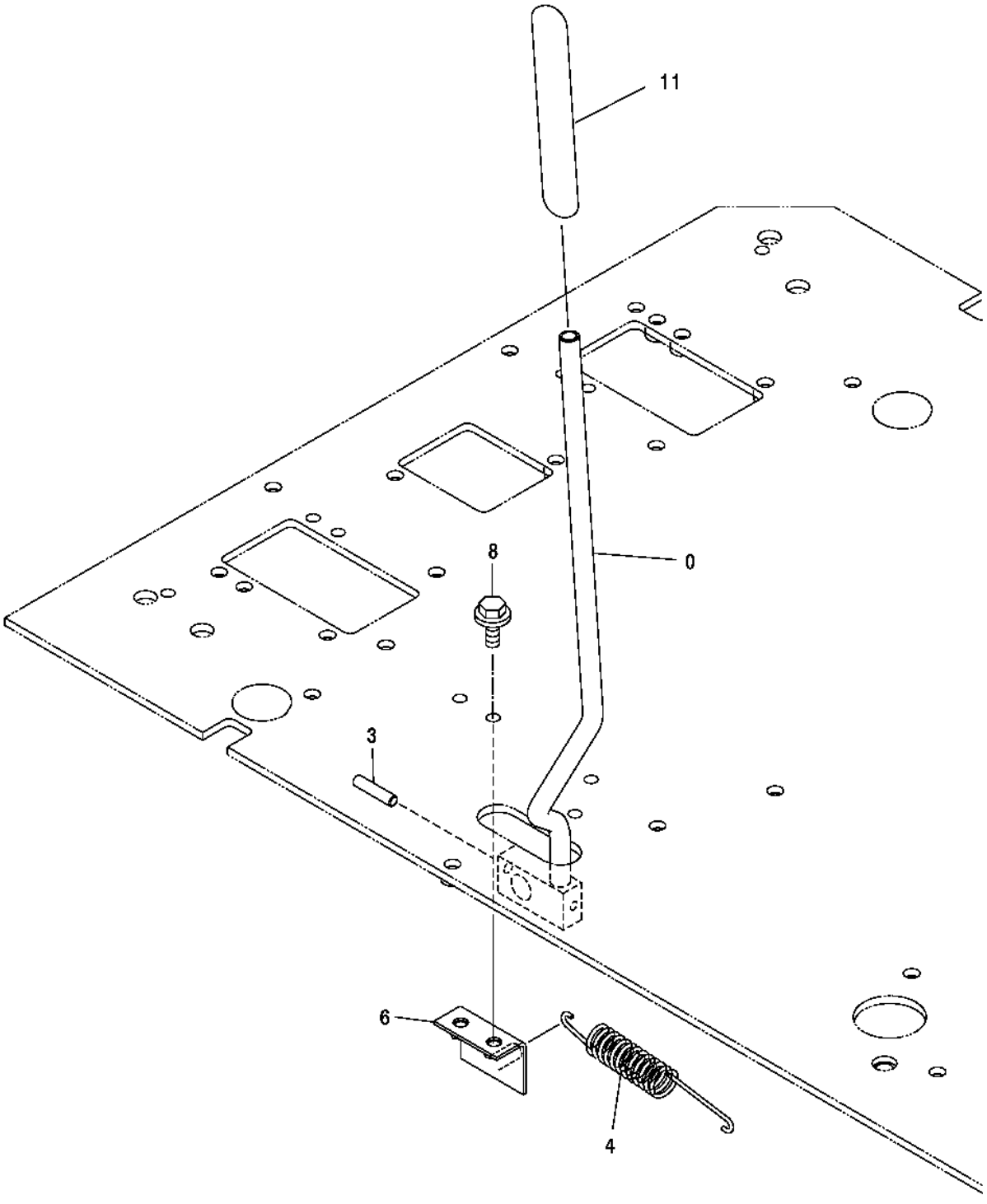

T142560

Pos.	*Ref.*	*Descripción*	*Cant.*	*Núm. de serie*	*Notas*
0	7035503	Palanca	1		
3	4116310	Pasador elástico	1		
4	4189184	Muelle de tracción	1		
6	8073901	Soporte	1		
8	19M7662	Tornillo	2		M10 X 30
	12M7066	Arandela de seguridad	2		10 mm
	24M7028	Arandela	2		10.500 X 20 X 2 mm
11	3089848	Asa	1		

AUXILIARY 2-WAY HYDRAULIC FOOT PEDAL CONTROL
COMMANDE HYDRAULIQUE A PEDALE AUXILIAIRE 2 VOIES
CONTROL DE PEDAL HIDRAULICO DE 2 VIAS AUXILIAR

TX1005469 A.1

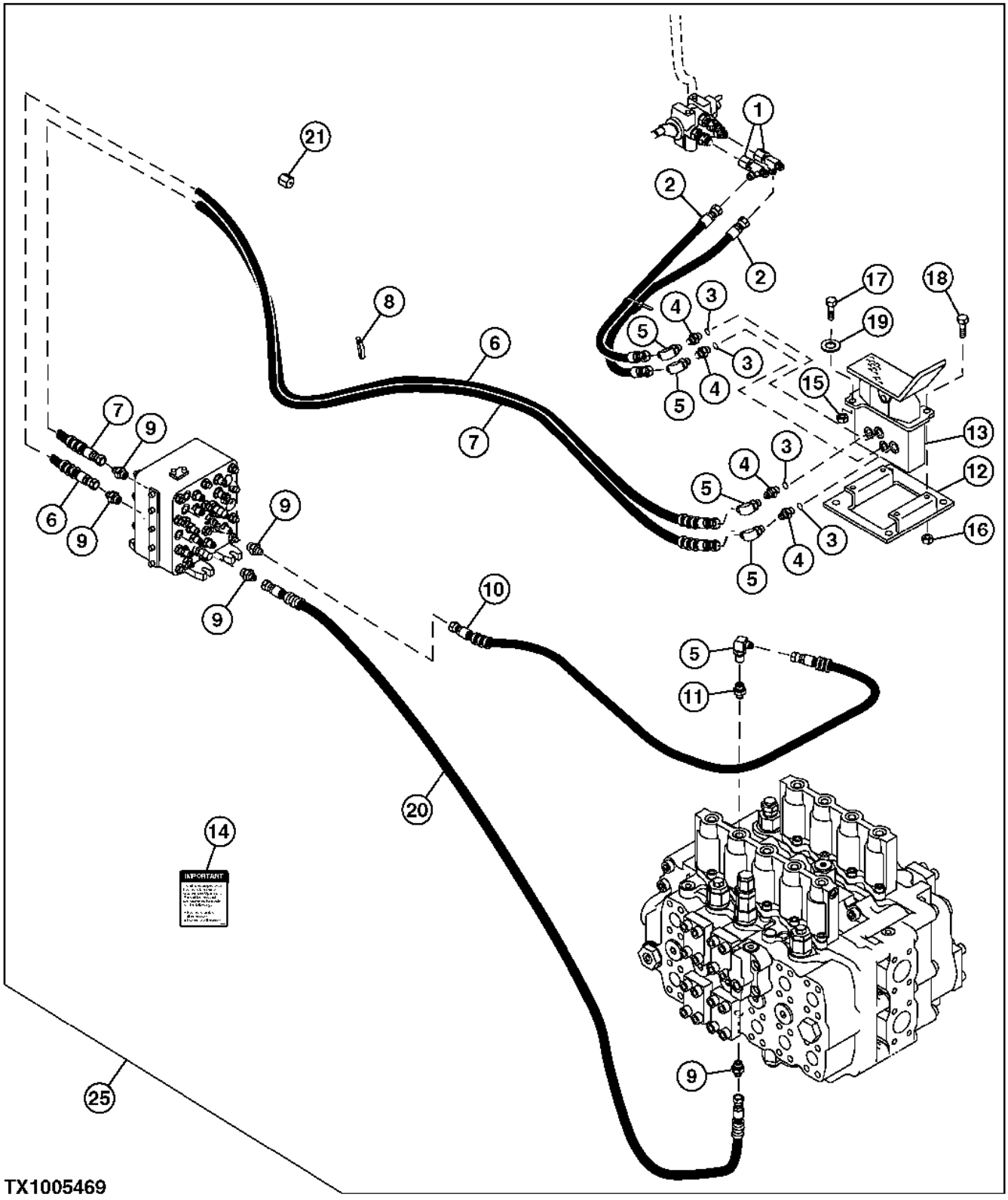

Pos.	*Ref.*	*Descripción*	*Cant.*	*Núm. de serie*	*Notas*
0	.....	Conjunto de modificación	1		WHOLEGOODS
1	AT36921	Conexión en t	2		
2	AH108250	Manguera	2		9/16" X 787 mm (31") X 9/16"
3	R26448	Anillo tórico	4		
4	R27212	Conexión	4		
5	AE24616	Racor acodado	5		
6	AE42067	Manguera hidráulica	1		9/16" X 3699 mm (145-3/4") X 9/16"
7	AE42067	Manguera hidráulica	1		9/16" X 3699 mm (145-3/4") X 9/16"
8	H77698	Cinta de atar	5		
9	4200466	Racor adaptador	5		(SUB FOR TH108320)
	CH11570	Anillo tórico	5		
10	AT68901	Manguera hidr. - confección	2		9/16" X 964 mm (38") X 9/16"
11	4202422	Racor adaptador	1		(SUB FOR TH108440)
	CH11570	Anillo tórico	1		
12	AT115535	Apoyo	1		
13	AT152120	Válvula	1		
14	T149434	Etiqueta adhesiva	1		ROMPEDORA/TRITURADORA INTERVALOS DE MANTENIMIENTO (INGLESE)
	T222992	Etiqueta adhesiva	1		ROMPEDORA/TRITURADORA INTERVALOS DE MANTENIMIENTO (FRANCES)
	T222993	Etiqueta adhesiva	1		ROMPEDORA/TRITURADORA INTERVALOS DE MANTENIMIENTO (ESPANOL)
15	14M7296	Tuerca con brida	1		M10
16	14M7298	Tuerca con brida	4		M8
17	19M7784	Tornillo	2		M10 X 20
18	19M7866	Tornillo	4		M8 X 20
19	24M7296	Arandela	2		10.500 X 30 X 2.500 mm
20	AR90081	Manguera hidr. - confección	1		
21	R31147	Conexión	1		(LINEA DE VACIADO LUMBRERA DEL TANQUE)

TWO-WAY HYDRAULIC FOOT PEDAL CONTROL REPLACEMENT
REMPLACEMENT DE LA COMMANDE DE PEDALE HYDRAULIQUE A DEUX VOIES
PIEZA DE SUSTITUCION PARA CONTROL POR PEDAL HIDRAULICO DE DOS VIAS

TX1012913 A.1

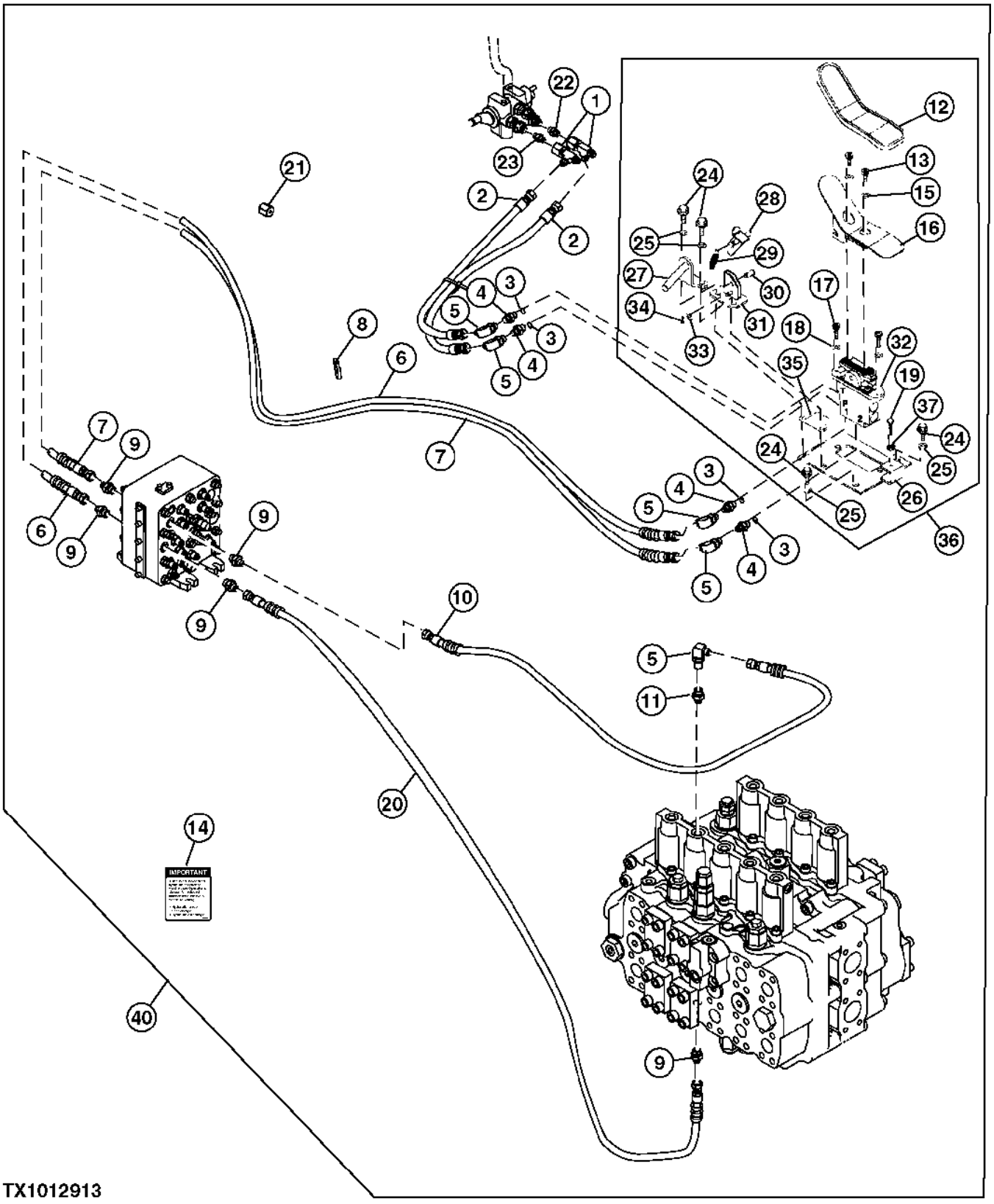

Pos.	Ref.	Descripción	Cant.	Núm. de serie	Notas
0	.....	Conjunto de modificación	1		WHOLEGOODS
1	AT36921	Conexión en t	2		
2	AH108250	Manguera	2		
3	R26448	Anillo tórico	4		
4	A852123	Racor adaptador	4		
5	AE24616	Racor acodado	5		
6	AE42067	Manguera hidráulica	1		
7	AE42067	Manguera hidráulica	1		
8	H77698	Cinta de atar	5		
9	4200466	Racor adaptador	5		(SUB FOR TH108320)
	CH11570	Anillo tórico	1		
10	AT68901	Manguera hidr. - confección	1		
11	4202422	Racor adaptador	1		(SUB FOR TH108440)
	CH11570	Anillo tórico	1		
12	4283758	Tapadera	1		
13	J781020	Tornillo	2		
14	T149434	Etiqueta adhesiva	1		ROMPEDORA/TRITURADORA INTERVALOS DE MANTENIMIENTO (INGLESE)
	T222992	Etiqueta adhesiva	1		ROMPEDORA/TRITURADORA INTERVALOS DE MANTENIMIENTO (FRANCES)
	T222993	Etiqueta adhesiva	1		ROMPEDORA/TRITURADORA INTERVALOS DE MANTENIMIENTO (ESPANOL)
15	12M7066	Arandela de seguridad	2		10 mm
16	8084644	Pedal	1		
17	19M7576	Tornillo	2		M10 X 30, (SUB FOR J781030)
18	12M7066	Arandela de seguridad	2		10 mm
19	4317640	Tornillo	1		
20	AR90081	Manguera hidr. - confección	1		
21	R31147	Conexión	1		(LINEA DE VACIADO LUMBRERA DEL TANQUE)
22	4261938	Conexión	1		(NA)
23	4200466	Racor adaptador	1		(NA)
24	19M7784	Tornillo	4		M10 X 20
25	24M7296	Arandela	4		10.500 X 30 X 2.500 mm
26	8087747	Placa	1		
27	8083128	Soporte	1		
28	8084658	Tope	1		
29	4279604	Muelle	1		
30	4287795	Pasador	1		
31	8080596	Soporte	1		
32	9197490	Válvula de mando acc. hidr.	1		
33	24M7028	Arandela	1		10.500 X 20 X 2 mm
34	11M7080	Pasador de aletas	1		2.500 X 16 mm
35	4461388	Suplemento	1		
36	9198415	Válvula de control hidrául.	1		(NLA) (ORDER COMPONENTS)
37	14M7273	Tuerca	1		M8

SINGLE PEDAL CONTROL KIT
KIT DE COMMANDE A PEDALE UNIQUE
JUEGO DE CONTROL CON UN PEDAL

TX1005954 A.1

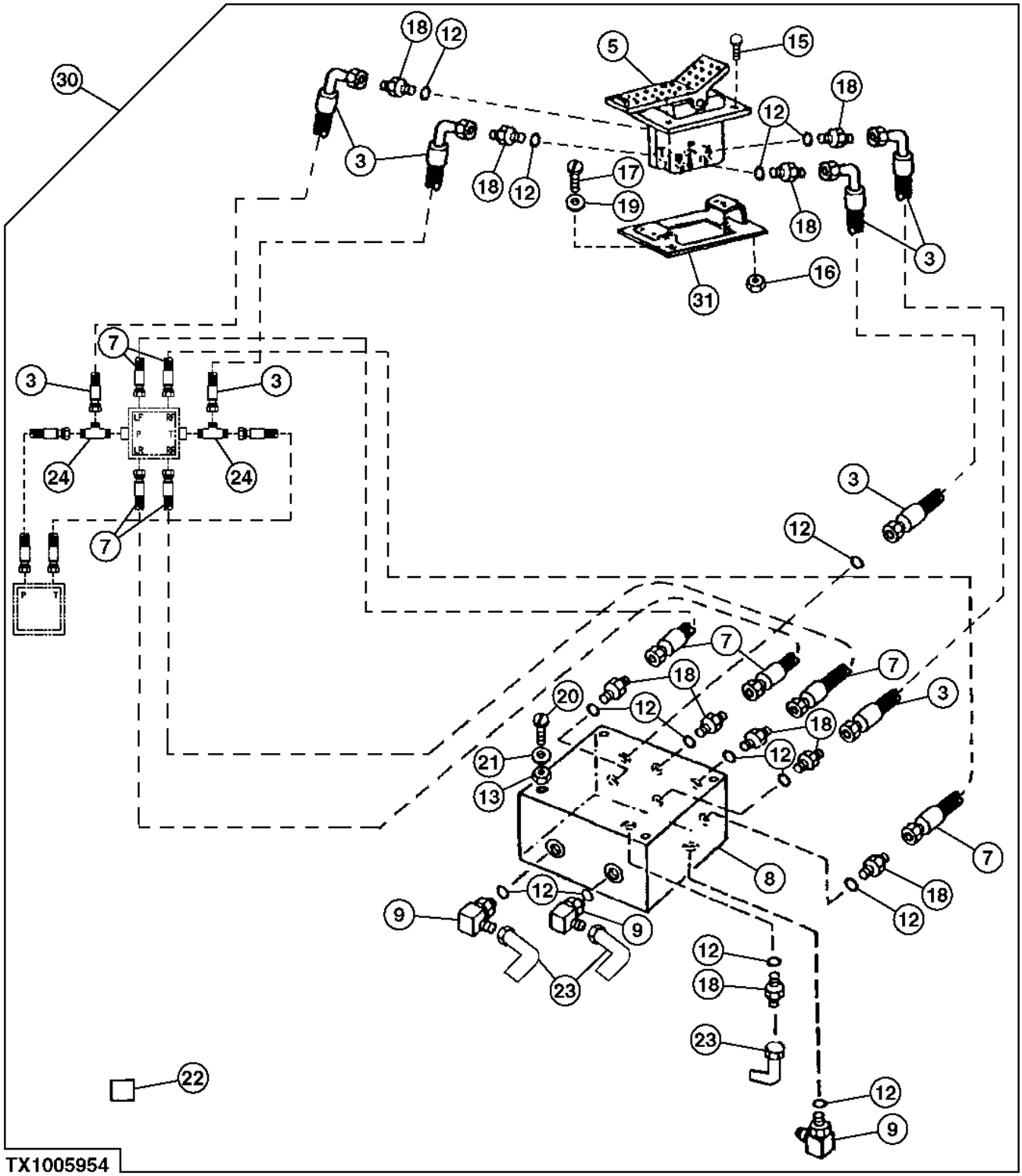

Pos.	*Ref.*	*Descripción*	*Cant.*	*Núm. de serie*	*Notas*
3	AT71082	Manguera hidr. - confección	4		9/16" X 711 mm (28") X 9/16"
5	AT152120	Válvula	1		(PATA)
7	AT215538	Manguera hidr. - confección	4		9/16" X 880 mm (34-3/4") X 9/16"
8	AT170459	Válvula de mando acc. hidr.	1		
9	AT35121	Racor acodado	3		
12	R26448	Anillo tórico	14		11.887 X 1.981 mm (0.468" X 5/64")
13	14M7273	Tuerca	4		M8
15	19M7866	Tornillo	4		M8 X 20
16	14M7298	Tuerca con brida	4		M8
17	19M7784	Tornillo	2		M10 X 20
18	R27212	Conexión	11		
19	24M7296	Arandela	2		10.500 X 30 X 2.500 mm
20	19M8456	Tornillo	4		M8 X 100
21	24M7036	Arandela	4		9 X 16 X 1.600 mm
22	T153674	Etiqueta adhesiva	1		(SIN SISTEMA HIDRAULICO AUXILIAR) (INF. DELANTERA VENTANA CABINA LADO DERECHO)
	T153676	Etiqueta adhesiva	1		Con sistema hidráulico auxiliar
23	AE24616	Racor acodado	3		
24	AT36921	Conexión en t	2		
30	.....	Conjunto de modificación	1		(WHOLEGOODS) (JUEGO DE PROPULSION CON UN PEDAL)
31	AT115535	Apoyo	1		

AUXILIARY FOOT CONTROL VALVE COMPONENTS
COMPOSANTS DE SOUPAPE DE COMMANDE A PEDALE AUXILIAIRE
COMPONENTES VALVULA CONTROL PEDAL AUXILIAR

TP68659 A.1

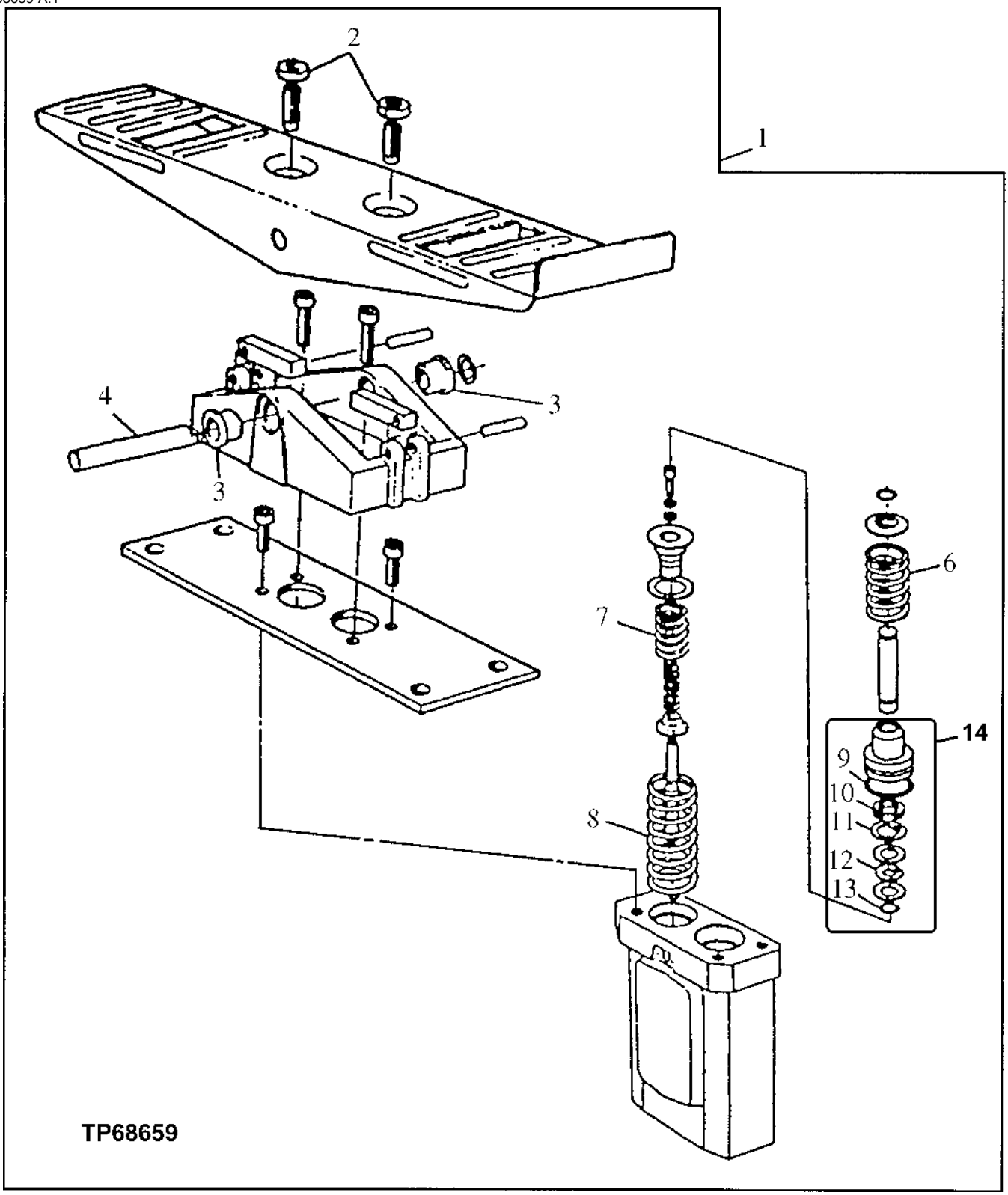

Pos.	*Ref.*	*Descripción*	*Cant.*	*Núm. de serie*	*Notas*
1	**AT152120**	**Válvula**	**1**		**WHOLEGOODS**
2	14M7151	Tuerca	2		M8
3	T139695	Casquillo	2		
4	T139696	Árbol	1		
6	T139694	Muelle	2		
7	T139693	Muelle	2		
8	T114617	Muelle	2		
9	.....	Retén	1		
10	.....	Retén	1		
11	.....	Anillo elástico	1		
12	.....	Anillo elástico	1		
13	.....	Anillo tórico	1		
14	AT115146	Juego de retenes	1		

STANDARD ARM, PINS, AND BUCKET CYLINDER HOSES (2.6M)
BRAS STANDARD, AXES ET FLEXIBLES DE VERIN DE BENNE (2.6M)
BRAZO ESTANDAR, PASADORES Y MANGUERAS DE CILINDRO DE CUCHARON (2.6M)

T189819 A.1

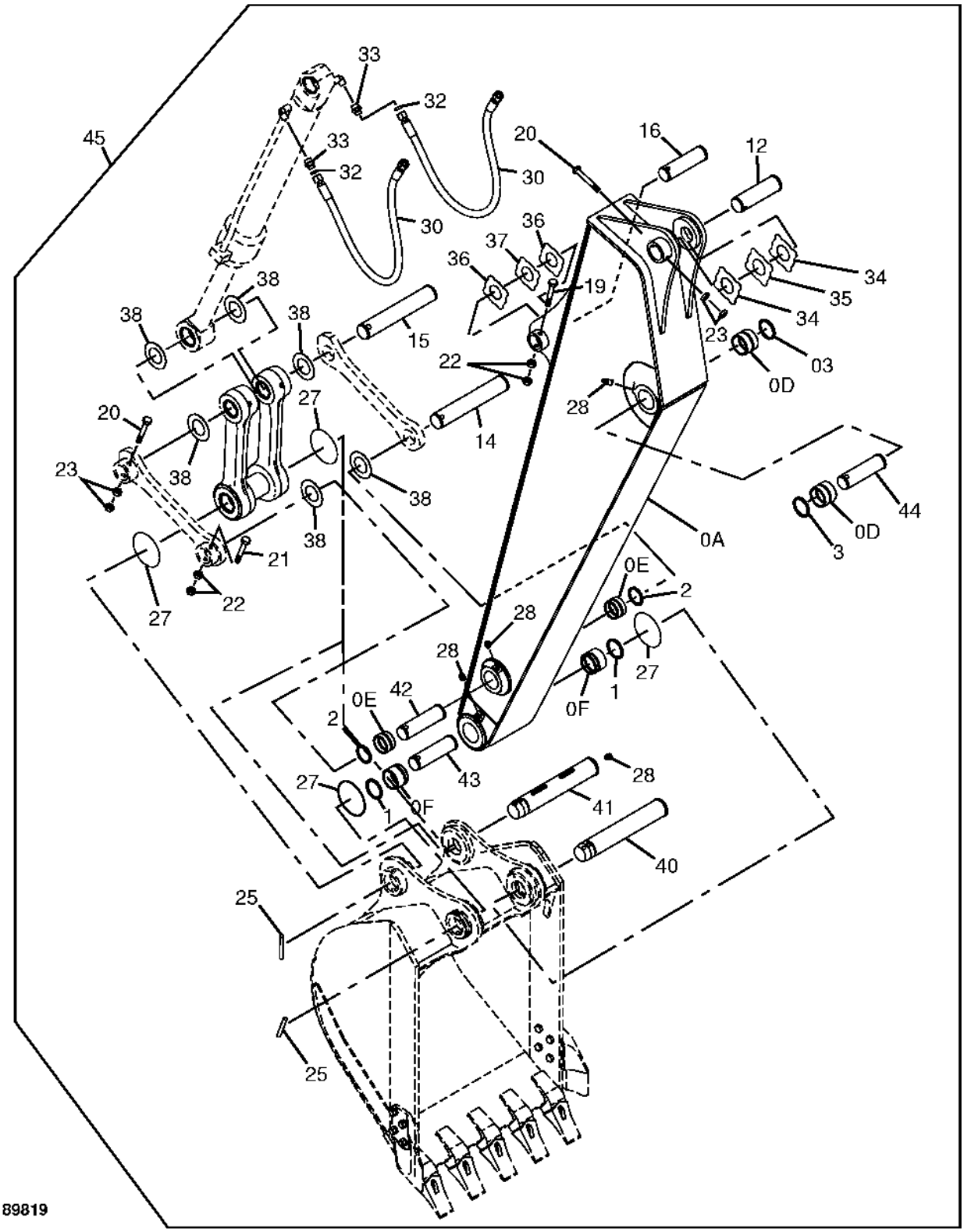

Pos.	*Ref.*	*Descripción*	*Cant.*	*Núm. de serie*	*Notas*
0A	.....	Brazo	1		AP37397 NLA; SUB 7039349; ALSO ORDER 3090347
	7039349	Brazo	1		
0D	4447016	Casquillo	2		
0E	4409122	Casquillo	2		
0F	4409178	Casquillo	2		
0G	8070638	Resalte	1		Partes extremo brazo reemplazo, No se ilustra
1	TH102446	Retén	2		
2	TH104472	Retén	2		
3	TH102446	Retén	2		
12	T144753	Pasador	1		70.924 X 228 mm (2.792" X 8.976"), SUB FOR FFSB108069, T104324
14	.....	Pasador	1		P64850 NLA
15	P64850	Pasador	1		SUB FOR P68430
16	.....	Pasador	1		P94849 NLA
19	19M7941	Tornillo	1		M16 X 120
20	19M8043	Tornillo	2		M16 X 140
21	19M7941	Tornillo	1		M16 X 120
22	14M7276	Tuerca	4		M16
23	14M7276	Tuerca	4		M16, SUB FOR J950020
25	19M7941	Tornillo	2		M16 X 120
	14M7276	Tuerca	2		M16
27	4089028	Anillo tórico	4		(ANILLO "O" ESTANDAR)
	AT349466	Retén	4		(ANILLO "O" DIVIDO)
28	TH100074	Engrasador	7		
30	4296268	Manguera hidr. - confección	2		SUB FOR AP34851
32	T77858	Anillo tórico	2		
33	A853166	Racor adaptador	2		
	AT318035	Anillo tórico	1		SUB FOR 4506424
34	4361293	Placa	2		SUB FOR 4444288
35	4361294	Placa	1		SUB FOR 4444289
36	4444290	Placa	2		
37	4444291	Arandela de empuje	1		
38	4450011	Arandela de empuje	6		
40	P68431	Pasador	1		
41	P68432	Pasador	1		
42	.....	Tubo	1		P68277 NLA
43	.....	Tubo	1		P68276 NLA
44	.....	Tubo	1		P68278 NLA
45	**AT197291**	**Juego**	**1**		**WHOLE GOODS, Incluye brazo, cilindro de cucharón y varillaje completo**

Long Arm, Pins and Bucket Cylinder Hoses (3.1 M)
Bras long, axes et flexibles de vérin de benne (3,1 m)
Brazo largo, pasadores y mangueras del cilindro del cucharón (3,1 M)

T189819 A.1

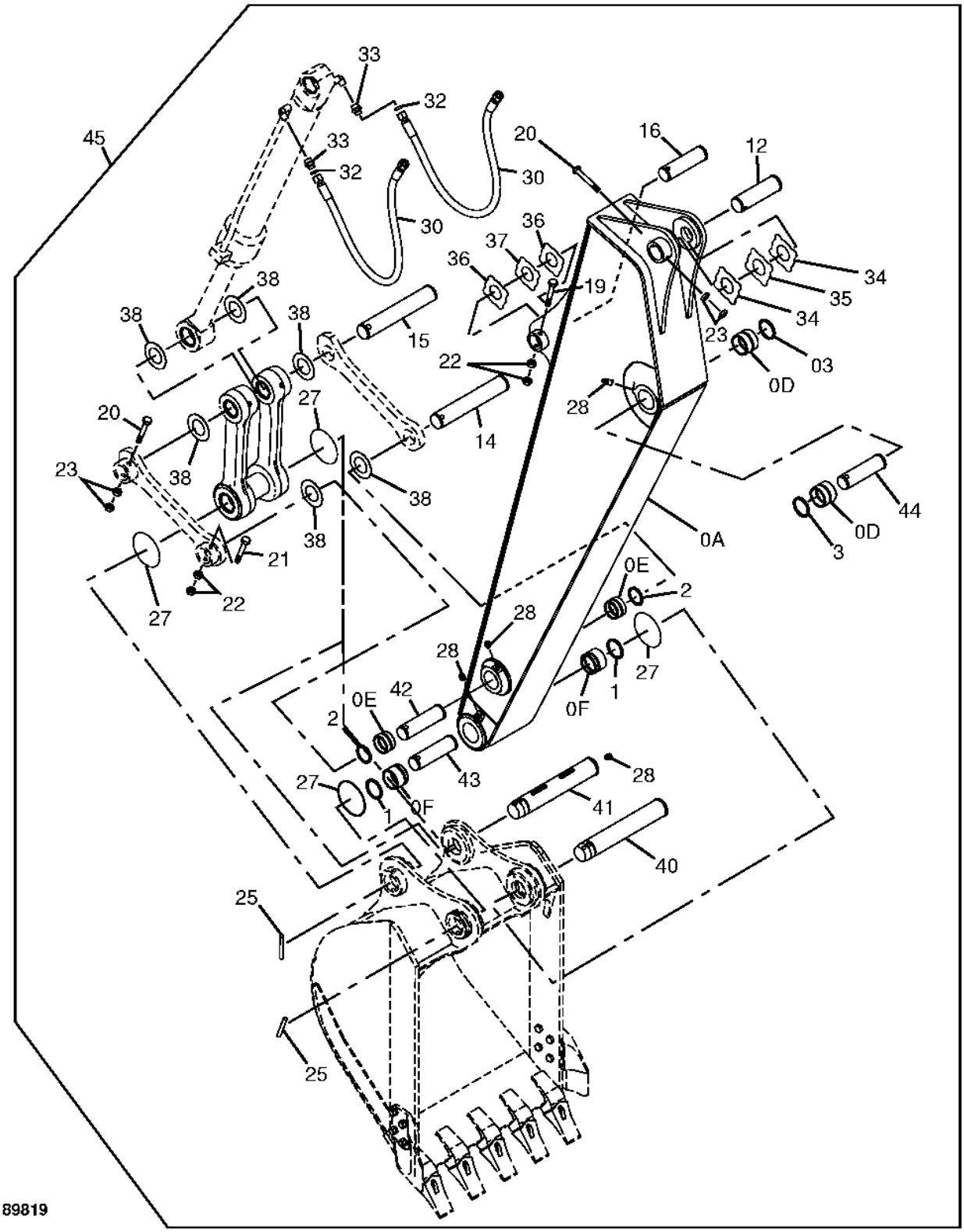

Pos.	*Ref.*	*Descripción*	*Cant.*	*Núm. de serie*	*Notas*
0A	AP37403	Brazo	1		
0D	4447016	Casquillo	2		
0E	4409122	Casquillo	2		
0F	4409178	Casquillo	2		
0G	8070638	Resalte	1		Partes extremo brazo reemplazo, No se ilustra
1	TH102446	Retén	2		
2	TH104472	Retén	2		
3	TH102446	Retén	2		
12	T144753	Pasador	1		70.924 X 228 mm (2.792" X 8.976"), SUB FOR FFSB108069, T104324
14	.....	Pasador	1		P64850 NLA
15	P64850	Pasador	1		SUB FOR P68430
16	.....	Pasador	1		P64849 NLA
19	19M7941	Tornillo	1		M16 X 120
20	19M7907	Tornillo	2		M20 X 140
21	19M7941	Tornillo	1		M16 X 120
22	14M7276	Tuerca	4		M16
23	14M7277	Tuerca	4		M20, SUB FOR J950020
25	19M7941	Tornillo	2		M16 X 120
	14M7276	Tuerca	2		M16
27	TH102444	Anillo tórico	4		
28	TH100074	Engrasador	7		
30	4296269	Manguera hidr. - confección	2		SUB FOR AP34850
32	T77858	Anillo tórico	2		
33	A853166	Racor adaptador	2		
	AT318035	Anillo tórico	1		SUB FOR 4506424
34	4361293	Placa	2		SUB FOR 4444288
35	4361294	Placa	1		SUB FOR 4444289
36	4444290	Placa	2		
37	4444291	Arandela de empuje	1		
38	4450011	Arandela de empuje	6		
40	P68431	Pasador	1		
41	P68432	Pasador	1		
42	.....	Tubo	1		P68277 NLA
43	.....	Tubo	1		P68276 NLA
44	.....	Tubo	1		P68278 NLA
45	**AT197292**	**Juego**	**1**		**WHOLE GOODS, Incluye brazo, cilindro de cucharón y varillaje completo**

BOOM ASSEMBLY AND PINS
FLECHE ET AXES
PASADORES Y CONJUNTO DE AGUILON

TX1056994 A.1

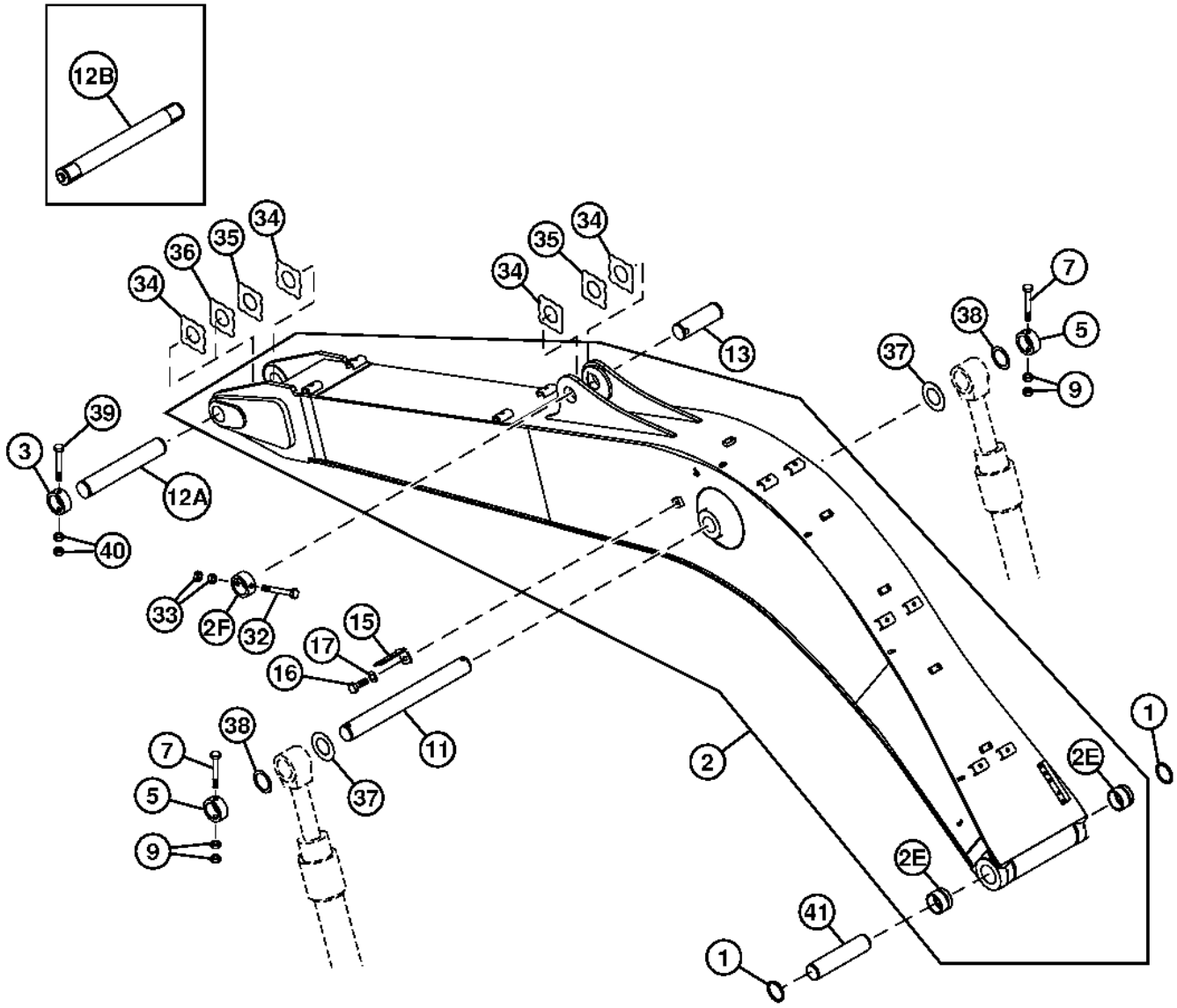

TX1056994

Pos.	*Ref.*	*Descripción*	*Cant.*	*Núm. de serie*	*Notas*
1	TH102446	Retén	2		
2	AP37389	Pluma lateral	1		
2E	4447016	Casquillo	2		
2F	4434952	Tope	2		
3	P60972	Tope	1		
5	DH400662	Retenedor	2		(SUB FOR P65012)
7	19M8043	Tornillo	2		M16 X 140
9	14M7276	Tuerca	4		M16
11	P64818	Pasador	1		
12A	P68480	Pasador	1		
12B	AT361190	Pasador	1		Pasador expansor opcional
	T248605	Manguito	2		
13	3090347	Bulón	1		
15	4224631	Ángulo	1		(SUB FOR TH111685)
16	J901425	Tornillo	1		(SUB FOR TH104071)
17	12H317	Arandela de seguridad	1		9/16"
32	19M7907	Tornillo	1		M20 X 140
33	14M7277	Tuerca	2		M20
34	AT214030	Arandela de empuje	4		
35	AT214040	Arandela de empuje	2		
36	TH104296	Arandela	2		
37	4450012	Arandela de empuje	2		
38	4447890	Arandela de empuje	2		
39	19M7907	Tornillo	1		M20 X 140
40	14M7277	Tuerca	2		M20
41	P68279	Tubo	1		(NLA)

BUCKET LINK
TRINGLERIE DE GODET
BRAZOS DEL CUCHARON

T157482 A.1

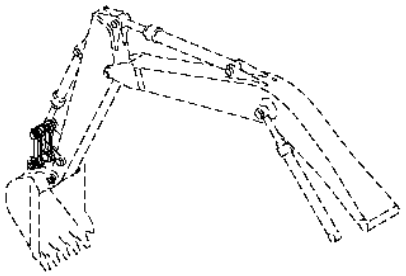

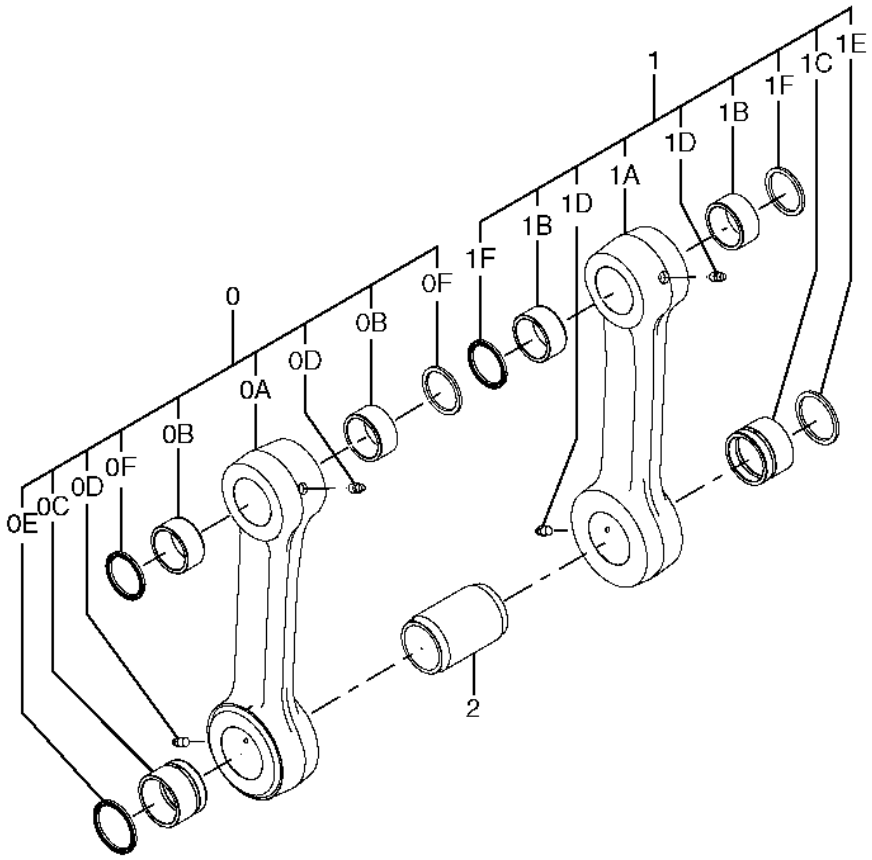

T157482

Pos.	*Ref.*	*Descripción*	*Cant.*	*Núm. de serie*	*Notas*
0	.....	Articulación	1		(SUB 8083071)(AP38288 NLA)
0A	.....	Articulación	1		(AP38289 NLA)
0B	AT126136	Casquillo	2		
0C	4409178	Casquillo	1		
0D	TH100074	Engrasador	2		
0E	TH102446	Retén	1		
0F	TH104472	Retén	2		
1	.....	Articulación	1		(SUB 8083072)(AP38286 NLA)
1A	.....	Articulación	1		(AP38287 NLA)
1B	AT126136	Casquillo	2		
1C	4409178	Casquillo	1		
1D	TH100074	Engrasador	2		
1E	TH102446	Retén	1		
1F	TH104472	Retén	2		
2	T104348	Espaciador	1		(SUB FOR 4154425)

REPLACEMENT BUCKET LINK
RECHANGE TRINGLERIE DE BENNE
REPUESTO ESLABON DE CUCHARON

TX1029107 A.1

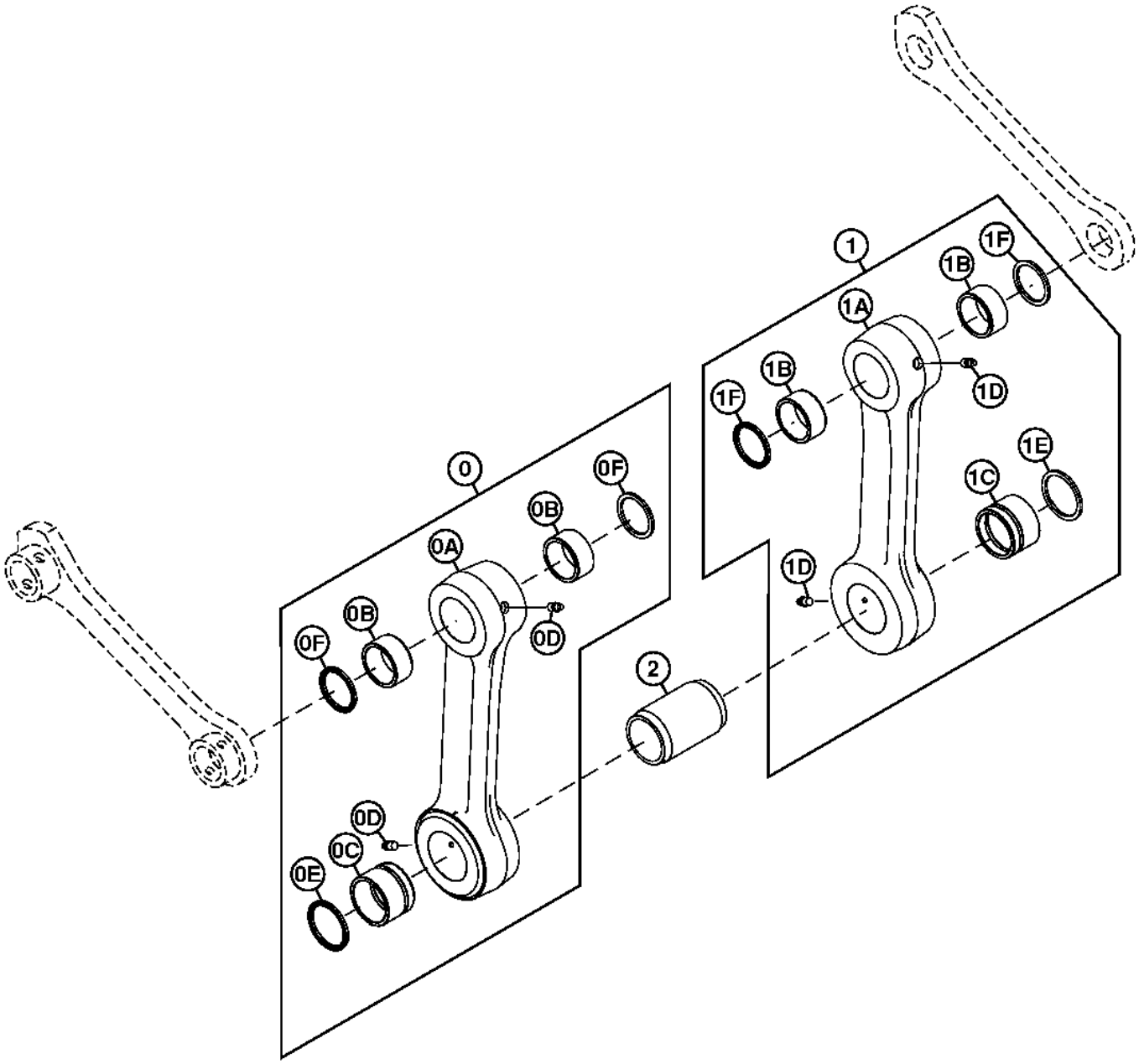

TX1029107

Pos.	*Ref.*	*Descripción*	*Cant.*	*Núm. de serie*	*Notas*
0	8083071	Articulación	1		
0A	.....	Articulación	1		(2045753 NLA)
0B	4352400	Casquillo	2		
0C	4409178	Casquillo	1		
0D	TH100074	Engrasador	2		(SUB FOR J75481)
0E	TH102446	Retén	1		(SUB FOR 4067902)
0F	TH104472	Retén	2		(SUB FOR 4084578)
1	8083072	Articulación	1		
1A	.....	Articulación	1		(2046064 NLA)
1B	4352400	Casquillo	2		
1C	4409178	Casquillo	1		
1D	TH100074	Engrasador	2		(SUB FOR J75481)
1E	TH102446	Retén	1		(SUB FOR 4067902)
1F	TH104472	Retén	2		(SUB FOR 4084578)
2	4154425	Espaciador	1		

BUCKET GUIDE LINKS
BIELLES DE GUIDAGE DE BENNE
ESLABONES GUIA DEL CUCHARON

T143326 A.1

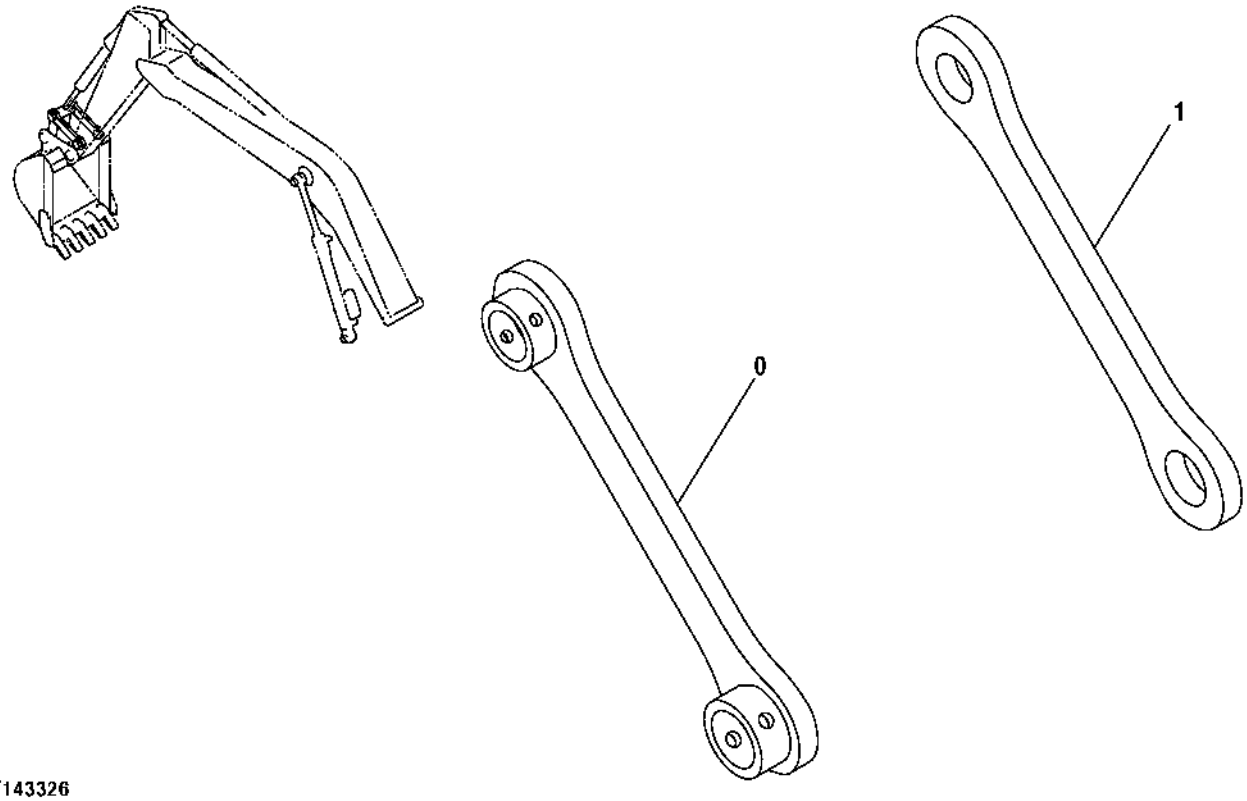

T143326

Pos.	*Ref.*	*Descripción*	*Cant.*	*Núm. de serie*	*Notas*
0	AP34756	Articulación	1		
1	P64846	Articulación	1		

AUXILIARY DRIVE ADAPTER KIT (SAE "A" MOUNT, 9 TOOTH)
KIT D'ADAPTATEUR D'ENTRAINEMENT AUXILIAIRE (MONTAGE SAE A, DENT 9)
JUEGO DE ADAPTADORES DE MANDO AUXILIAR (SOPORTE SAE A, 9 DIENTES)

RGP9008 A.1

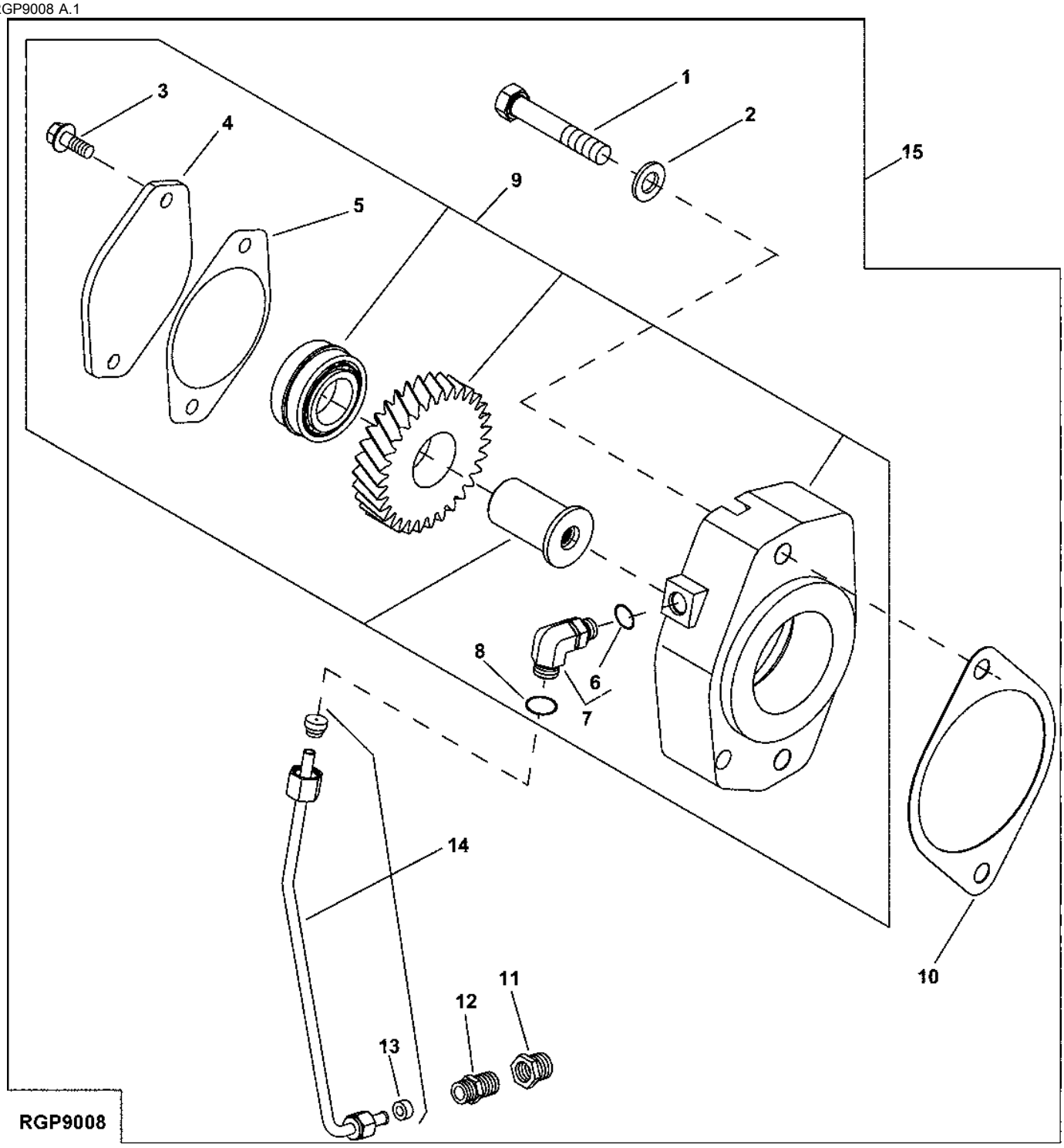

Pos.	*Ref.*	*Descripción*	*Cant.*	*Núm. de serie motor*	*Notas*
1	19M7753	Tornillo	2		M12 X 70
2	24M7047	Arandela	2		13 X 24 X 2.500 mm
3	19M7785	Tornillo	2		M10 X 25
4	R85145	Tapadera	1		
5	R96935	Junta	1		
6	51M7040	Anillo tórico	1		9.300 X 2.200 mm
7	.....	Racor acodado	1		(38H5015 NLA)
8	T77814	Anillo tórico	1		7.650 X 1.780 mm (0.301" X 0.070")
9	RE500825	Racor adaptador	1		(MARKED R135120)
10	R522690	Junta	1		(SUB FOR R134465)
11	15H642	Casquillo roscado	1		1/4"
12	R110664	Acoplamiento	1		
13	R51936	Arandela de guarnición	1		
14	RE500718	Tubería de aceite	1		
15	RE500884	Racor adaptador	1		

AUXILIARY DRIVE ADAPTER KIT (SAE "B" MOUNT, 13 TOOTH)
KIT D'ADAPTATEUR D'ENTRAINEMENT AUXILIAIRE (MONTAGE SAE B, DENT 13)
JUEGO DE ADAPTADORES DE MANDO AUXILIAR (SOPORTE SAE B, 13 DIENTES)

RGP8512 A.1

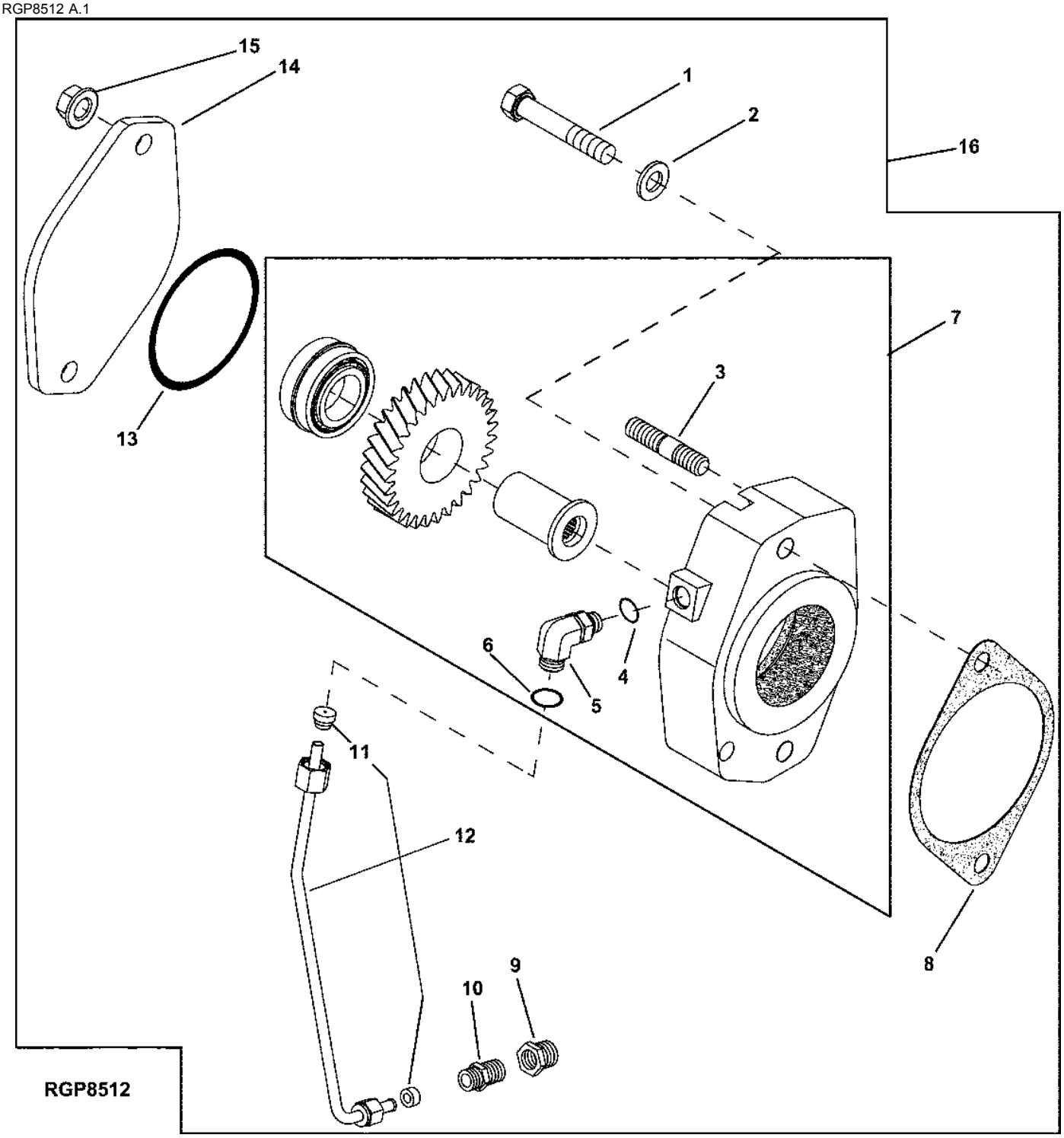

Pos.	*Ref.*	*Descripción*	*Cant.*	*Núm. de serie motor*	*Notas*
1	19M7753	Tornillo	2		M12 X 70
2	24M7047	Arandela	2		13 X 24 X 2.500 mm
3	42M7071	Espárrago	2		
4	T77814	Anillo tórico	1		7.650 X 1.780 mm (0.301" X 0.070")
5	.....	Racor acodado	1		(38H5015 NLA)
6	T77814	Anillo tórico	1		7.650 X 1.780 mm (0.301" X 0.070")
7	RE500824	Racor adaptador	1		(MARKED R135121)
8	R522690	Junta	1		(SUB FOR R134465)
9	15H642	Casquillo roscado	1		1/4"
10	R110664	Acoplamiento	1		
11	R51936	Arandela de guarnición	1		
12	RE500718	Tubería de aceite	1		
13	T20758	Anillo tórico	1		107.620 X 2.616 mm (4.237" X 0.103")
14	R135757	Tapadera	1		
15	14M7299	Tuerca con brida	2		M12
16	RE500883	Racor adaptador	1		

ELECTRIC FOOT SWITCH (FOR ONE SOLENOID AUXILIARY CONTROL)
PEDALE ELECTRIQUE (POUR UNE ELECTROVANNE AUXILIAIRE)
INTERRUPTOR PEDAL ELECTRICO (PARA UN CONTROL AUXILIAR DE SOLENOIDE)

TX1005465 A.1

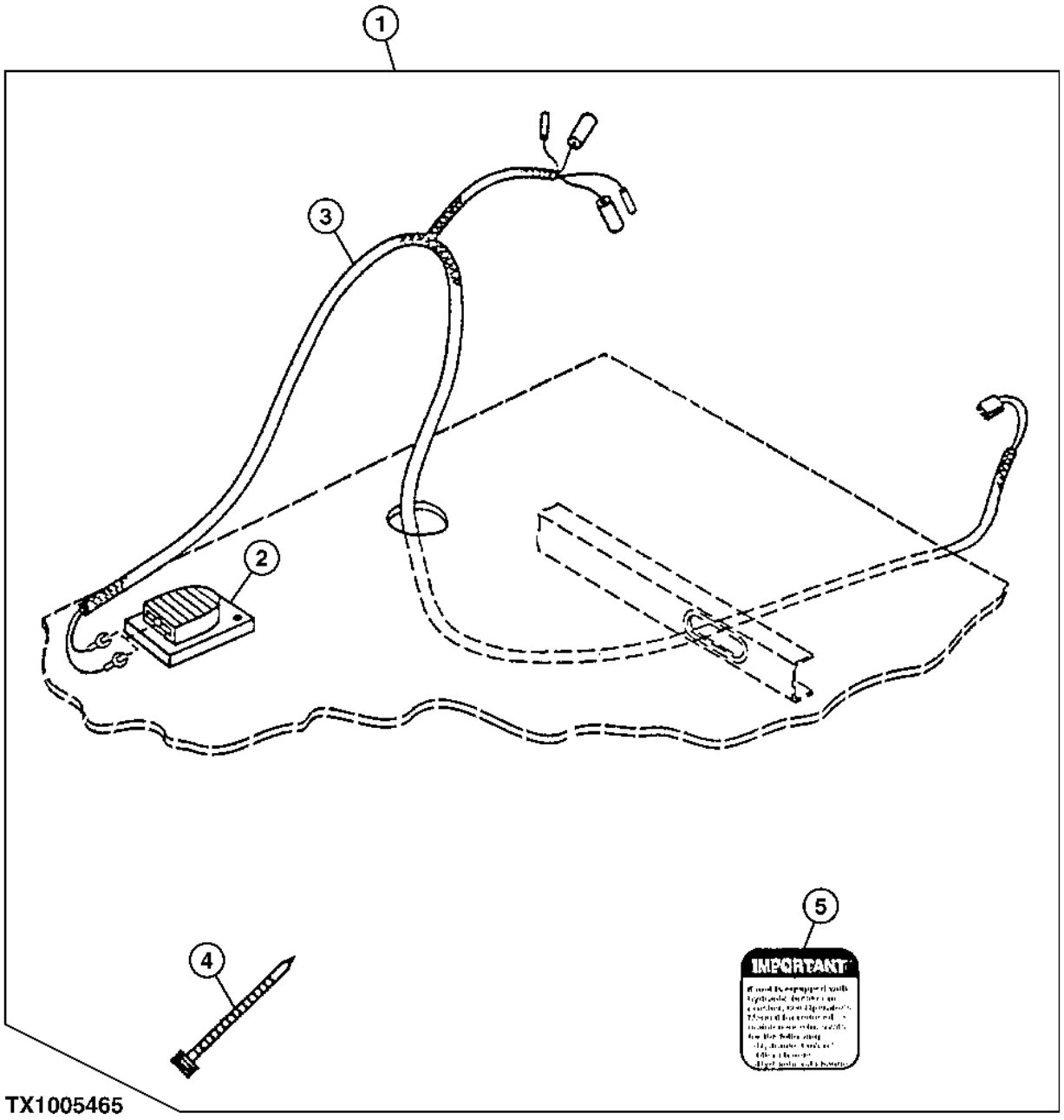

Pos.	*Ref.*	*Descripción*	*Cant.*	*Núm. de serie*	*Notas*
1	**AT196587**	**Interruptor**	**1**		**WHOLEGOODS INTERRUPTOR PEDAL ELEC. PARA VALVULA AUXILIAR**
2	AT82210	Interruptor	1		(CONTROL DE PEDAL ELECTRICO)
3	AT196588	Grupo de cables	1		
4	R44302	Cinta de atar	2		(AR)
5	T149434	Etiqueta adhesiva	1		(INGLESE)
	T222992	Etiqueta adhesiva	1		(FRANCES)
	T222993	Etiqueta adhesiva	1		(ESPANOL)

ELECTRIC SOLENOID VALVE KIT (W/O PRESSURE SWITCH, 1 WAY/2 WAY)
KIT D'ELECTROVANNE ELECTRIQUE (SANS INTERRUPTEUR DE PRESSION, 1 TIROIR/2 TIROIR)
JUEGO DE VALVULA DE SOLENOIDE ELECTRICO (SIN INTERRUPTOR DE PRESION, 1 VIAS/2 VIAS)

T200912 A.1

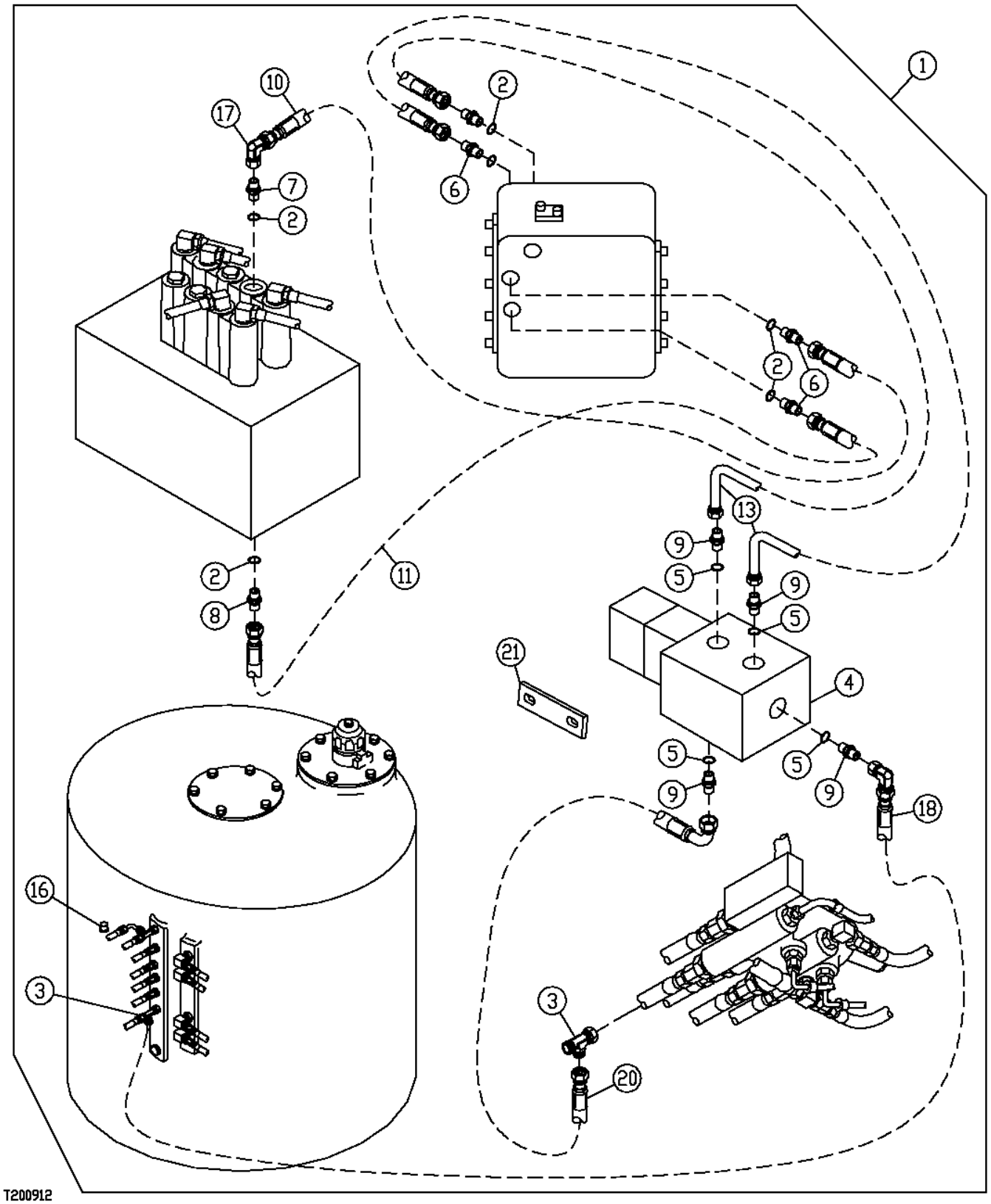

Pos.	*Ref.*	*Descripción*	*Cant.*	*Núm. de serie*	*Notas*
1	.....	Conjunto de modificación	1		(WHOLEGOODS) , (INCLUDES H102543 (AT195713 NLA)), Válvula de solenoide eléctrico
2	CH11570	Anillo tórico	6		13.800 X 2.400 mm (0.543" X 3/32")
3	AT36921	Conexión en t	2		
4	AT180585	Electroválvula	1		
	AT139433	Bobina eléctrica	2		
5	R26448	Anillo tórico	4		11.887 X 1.981 mm (0.468" X 5/64")
6	4200466	Racor adaptador	4		
7	AT130053	Racor adaptador	1		
8	AT131445	Racor adaptador	1		
9	R27212	Conexión	4		
10	AT108783	Manguera hidr. - confección	1		9/16" X 567 mm (22-1/4") X 9/16"
11	AR90081	Manguera hidr. - confección	1		9/16" X 1270 mm (50") X 9/16"
12	24M7054	Arandela	4		6.400 X 12 X 1.600 mm, (NO SE ILUSTRA)
13	AT68901	Manguera hidr. - confección	2		9/16" X 964 mm (38") X 9/16"
14	14M7272	Tuerca	2		M6, No se ilustra
15	19M7529	Tornillo	2		M6 X 55, (NO SE ILUSTRA)
16	R31147	Conexión	1		(TAPA)
17	AE24616	Racor acodado	1		
18	AT71732	Manguera hidr. - confección	1		9/16" X 1422 mm (56") X 9/16"
20	AT78124	Manguera hidr. - confección	1		9/16" X 3531 mm (139") X 9/16"
21	T202379	Tira	1		

CONTROL PATTERN SELECTOR KIT
KIT DE SELECTION DE CONFIGURATION DE COMMANDE
JUEGO DE SELECCION DE CONFIGURACION DE CONTROL

T191711 A.1

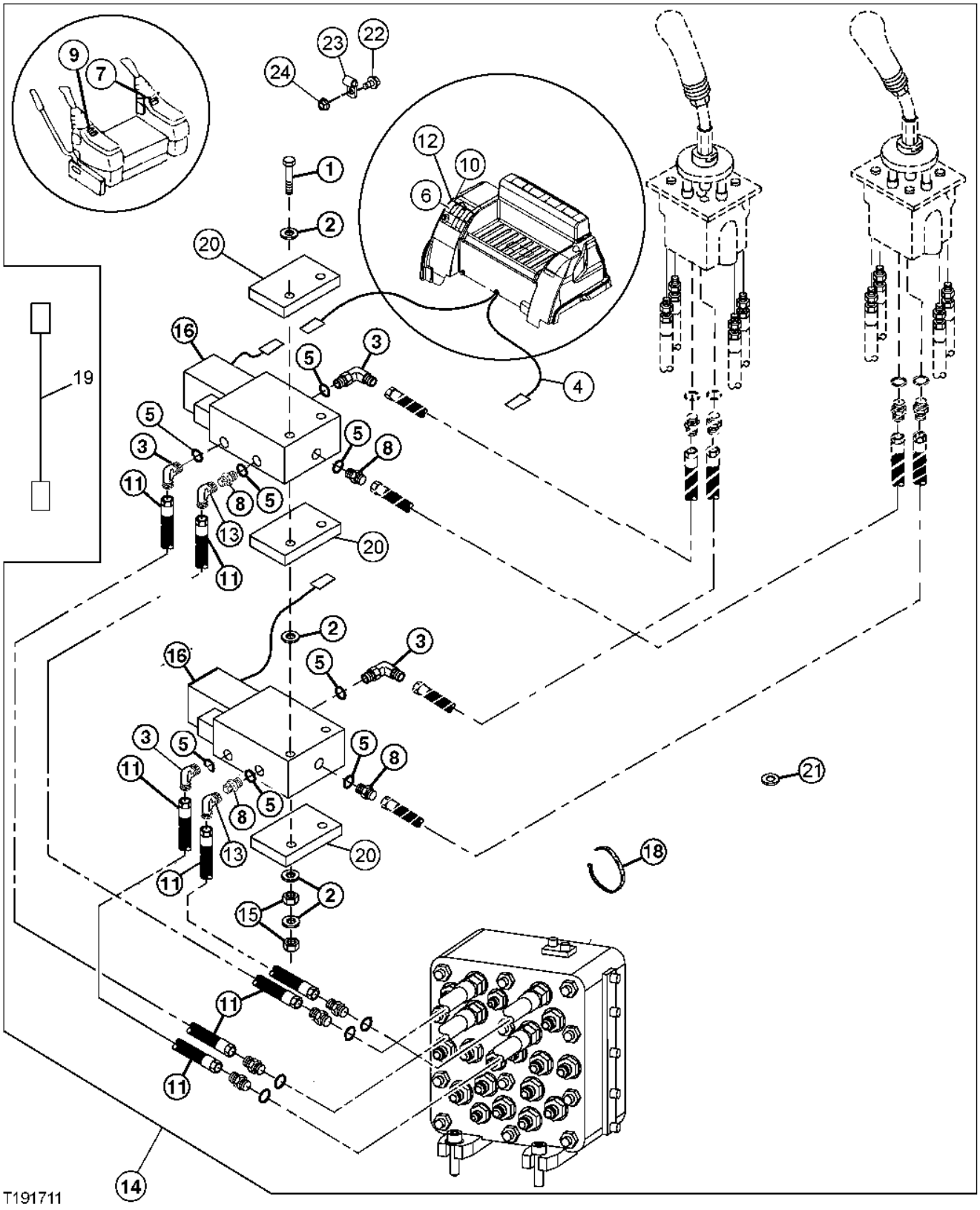

Pos.	*Ref.*	*Descripción*	*Cant.*	*Núm. de serie*	*Notas*
1	19M8332	Tornillo	2		M6 X 90
2	24M7100	Arandela	10		6.600 X 22 X 2 mm
3	AT35121	Racor acodado	4		37 DEG FLARE O-RING
4	AT307710	Grupo de cables	1		(SUB FOR AT190535)
5	R26448	Anillo tórico	8		
6	AT83721	Int. alternante/basculante	1		Bloqueo
7	T159843	Etiqueta adhesiva	4		CONTROL DERECHO
8	R27212	Conexión	4		
9	T159844	Etiqueta adhesiva	1		Control izquierdo
10	T184858	Etiqueta adhesiva	1		Configuración de controles
11	AT71082	Manguera hidr. - confección	4		
12	37H43	Tornillo	2		IMPULSOR AUTORROSCANTE
13	AE24616	Racor acodado	2		
14	.....	Juego	1		(AT307709 NLA) (WHOLEGOODS) , (SUB FOR AT191397), Kit selección configuración de control
15	14M7272	Tuerca	4		M6
16	AT306723	Válvula proporcional elect.	2		DESCONEXION DE PASADOR
	.....	Bobina eléctrica	1		(AT140041 NLA)
18	R44302	Cinta de atar	AR		
19	AT304407	Grupo de cables	1		(EXTENSION)
20	T202379	Soporte	3		
21	T63817	Pasamuros	1		
22	19M7863	Tornillo	3		M6 X 25
23	T22645	Presilla	4		
24	14M7272	Tuerca	3		M6
25	AR94101	Diodo	1		No se ilustra

MECHANICAL PATTERN CHANGER KIT
KIT DE CHANGEMENT DE CONFIGURATION MECANIQUE
JUEGO DE CAMBIO DE CONFIGURACION MECANICA

T197438 A.1

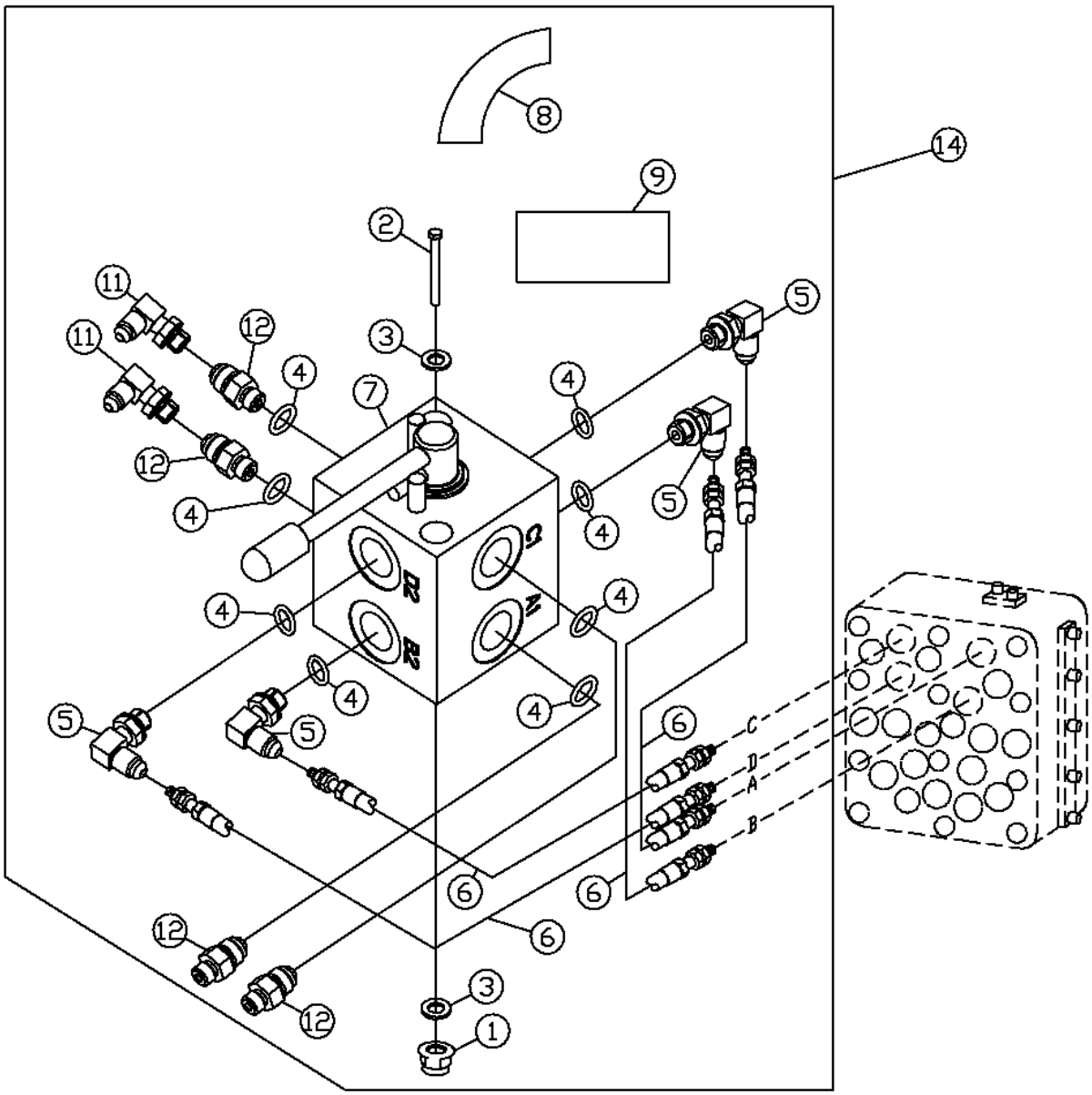

T197438

Pos.	*Ref.*	*Descripción*	*Cant.*	*Núm. de serie*	*Notas*
1	14M7396	Tuerca de seguridad	2		M8
2	19M8504	Tornillo	2		M8 X 80
3	24M7095	Arandela	4		8.400 X 15 X 1.600 mm
4	R28782	Anillo tórico	8		
5	AH63565	Racor acodado	4		
6	AT306775	Manguera hidr. - confección	4		
7	AT306737	Válvula hidráulica manual	1		
8	T205175	Etiqueta adhesiva	1		
9	T201519	Etiqueta adhesiva	1		
11	AE24616	Racor acodado	2		
12	T61120	Racor adaptador	4		
14	**AT306757**	**Conjunto de modificación**	**1**		**(WHOLEGOODS)**

AUXILIARY SOLENOID AND FLOW CONTROL VALVE KIT (1-WAY)
KIT D'ELECTROVANNE AUXILIAIRE ET DE REGULATEUR DE DEBIT (1 VOIES)
SOLENOIDE AUXILIAR Y JUEGO DE VALVULA DE CONTROL DE CAUDAL (DE 1 VIAS)

T189802 A.1

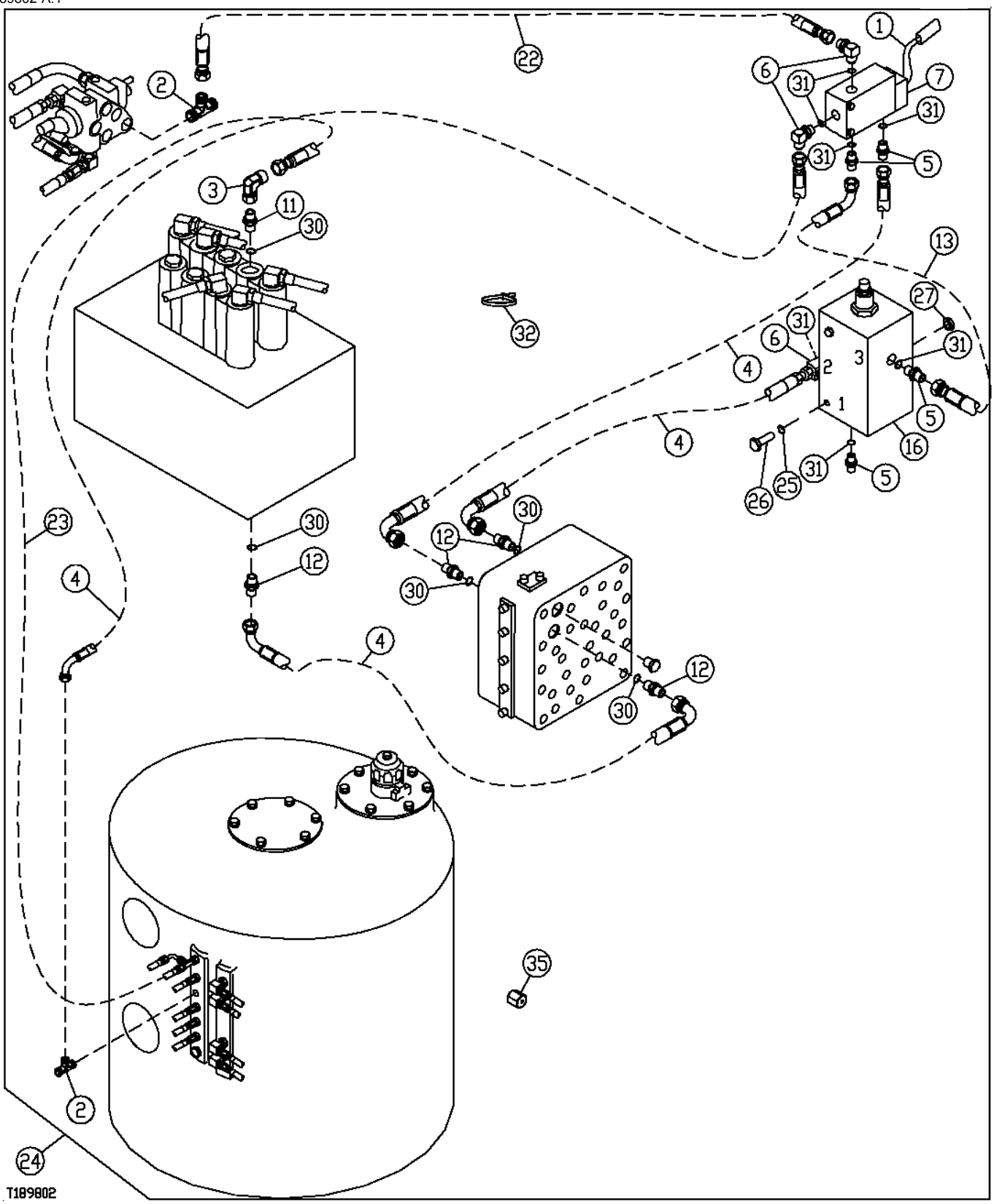

Pos.	*Ref.*	*Descripción*	*Cant.*	*Núm. de serie*	*Notas*
1	AT191297	Grupo de cables	1		
2	AT36921	Conexión en t	3		
3	AE24616	Racor acodado	1		
4	AT71732	Manguera hidr. - confección	4		
5	R27212	Conexión	4		
6	AT35121	Racor acodado	4		
7	AT306723	Válvula proporcional elect.	1		(SUB FOR AT116486 AND AT140041), Solenoide
	.....	Bobina eléctrica	1		(AT140041 NLA)
11	AT130053	Racor adaptador	1		
12	4200466	Racor adaptador	4		
13	AE42718	Manguera hidr. - confección	1		
16	AT186623	Válvula presión hidráulica	1		
22	AT130684	Manguera hidr. - confección	1		9/16" X 2520 mm (99-1/4") X 9/16"
23	AT71082	Manguera hidr. - confección	1		9/16" X 711 mm (28") X 9/16"
24	.....	Conjunto de modificación	1		(WHOLEGOODS) , (ALSO ORDER T188662 (AT186622 NLA))
25	24M7139	Arandela	4		6.400 X 18 X 1.600 mm, (NO SE ILUSTRA)
26	19M7529	Tornillo	4		M6 X 55
27	14M7272	Tuerca	4		M6
30	CH11570	Anillo tórico	5		
31	R26448	Anillo tórico	7		
32	R44302	Cinta de atar	4		
33	AH75160	Racor acodado	1		No se ilustra
35	R31147	Conexión	1		
36	T201367	Refuerzo	1		Escuadra montaje, No se ilustra
37	19M7867	Tornillo	3		M8 X 25, No se ilustra
38	14M7298	Tuerca con brida	3		M8, No se ilustra

ARM ANTI-DRIFT KIT
KIT DE STABILISATION DU BRAS
JUEGO ANTICAIDA DE BRAZO

T192468 A.1

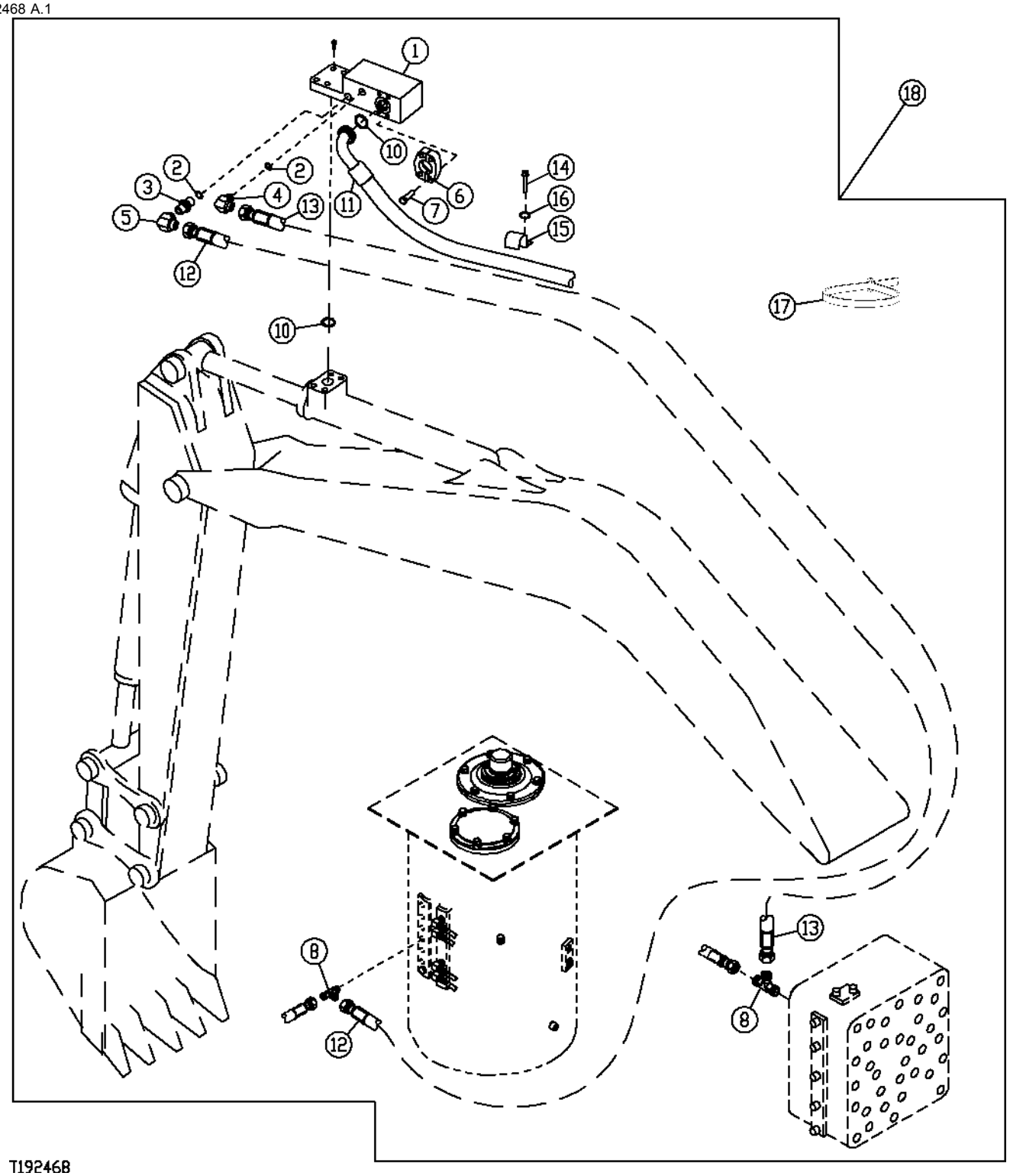

Pos.	*Ref.*	*Descripción*	*Cant.*	*Núm. de serie*	*Notas*
1	AT303703	Válvula de retención	1		
2	AT300313	Anillo de sellado	2		
3	X6F4OMXS	Racor adaptador	1		
4	X6C4OMXS	Racor acodado	1		
5	AE24616	Racor acodado	1		
6	T107446	Conexión con brida	2		
7	19M8963	Tornillo	4		M10 X 35
8	AT36921	Conexión en t	2		
10	T72888	Anillo tórico	2		
11	AT303666	Manguera hidr. - confección	1		
12	AT303668	Manguera hidr. - confección	1		
13	AT303667	Manguera hidr. - confección	1		
14	19M7402	Tornillo	1		M10 X 25
15	T126057	Abrazadera	1		
16	24M7028	Arandela	1		10.500 X 20 X 2 mm
17	H77698	Cinta de atar	20		
18	**AT303665**	**Juego**	**1**		**(ALSO ORDER AT304849), Juego anticaída de brazo**

BOOM ANTI-DRIFT KIT
KIT ANTI-TRACTION FLECHE
JUEGO ANTICAIDA DE AGUILON

T192474 A.1

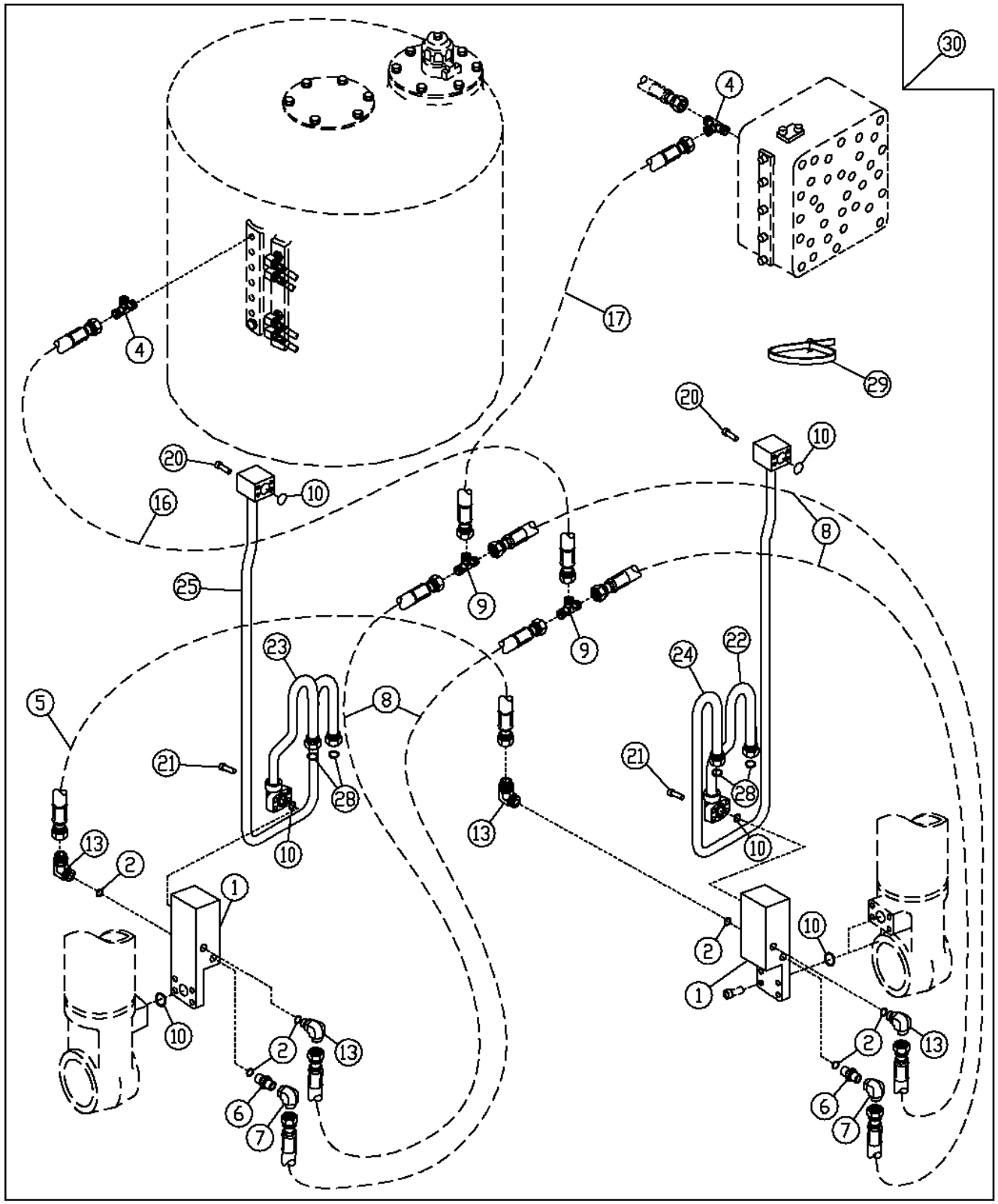

T192474

Pos.	*Ref.*	*Descripción*	*Cant.*	*Núm. de serie*	*Notas*
1	AT303955	Válvula de retención	2		(ALSO ORDER (4) 19M9057)
2	AT300313	Anillo de sellado	6		
4	AT36921	Conexión en t	2		
5	AT300337	Manguera hidr. - confección	1		
6	X6F4OMXS	Racor adaptador	2		
7	AE24616	Racor acodado	2		
8	AT303956	Manguera hidr. - confección	4		
9	.....	Racor adaptador	2		(X6JTX-S NLA)
10	T72888	Anillo tórico	4		
13	X6C4OMXS	Racor acodado	4		
16	AT300465	Manguera hidr. - confección	1		
17	AT300466	Manguera hidr. - confección	1		
21	19M8412	Tornillo	8		M10 X 55
22	AT303635	Tubería de aceite	1		Tubo de aceite inferior izq.
23	AT302980	Tubería de aceite	1		Tubo de aceite der. inferior
24	AT303634	Tubería de aceite	1		
25	AT303524	Tubería de aceite	1		
26	19M9057	Tornillo	4		M10 X 50, (USE WITH AT303955)(MOUNTING BOLT) (NOT ILLUSTRATED) (NOT INCLUDED IN KIT)
28	T77857	Anillo tórico	2		
29	H77698	Cinta de atar	20		
30	**AT304847**	**Juego**	**1**		**Juego antidesplazamiento de aguilón**

MAIN HYDRAULIC PUMP MOUNTING AND COUPLER
SUPPORT DE MONTAGE ET ACCOUPLEMENT DE POMPE HYDRAULIQUE PRINCIPALE
ACOPLADOR Y MONTAJE DE BOMBA HIDRAULICA PRINCIPAL

TX1082075 A.1

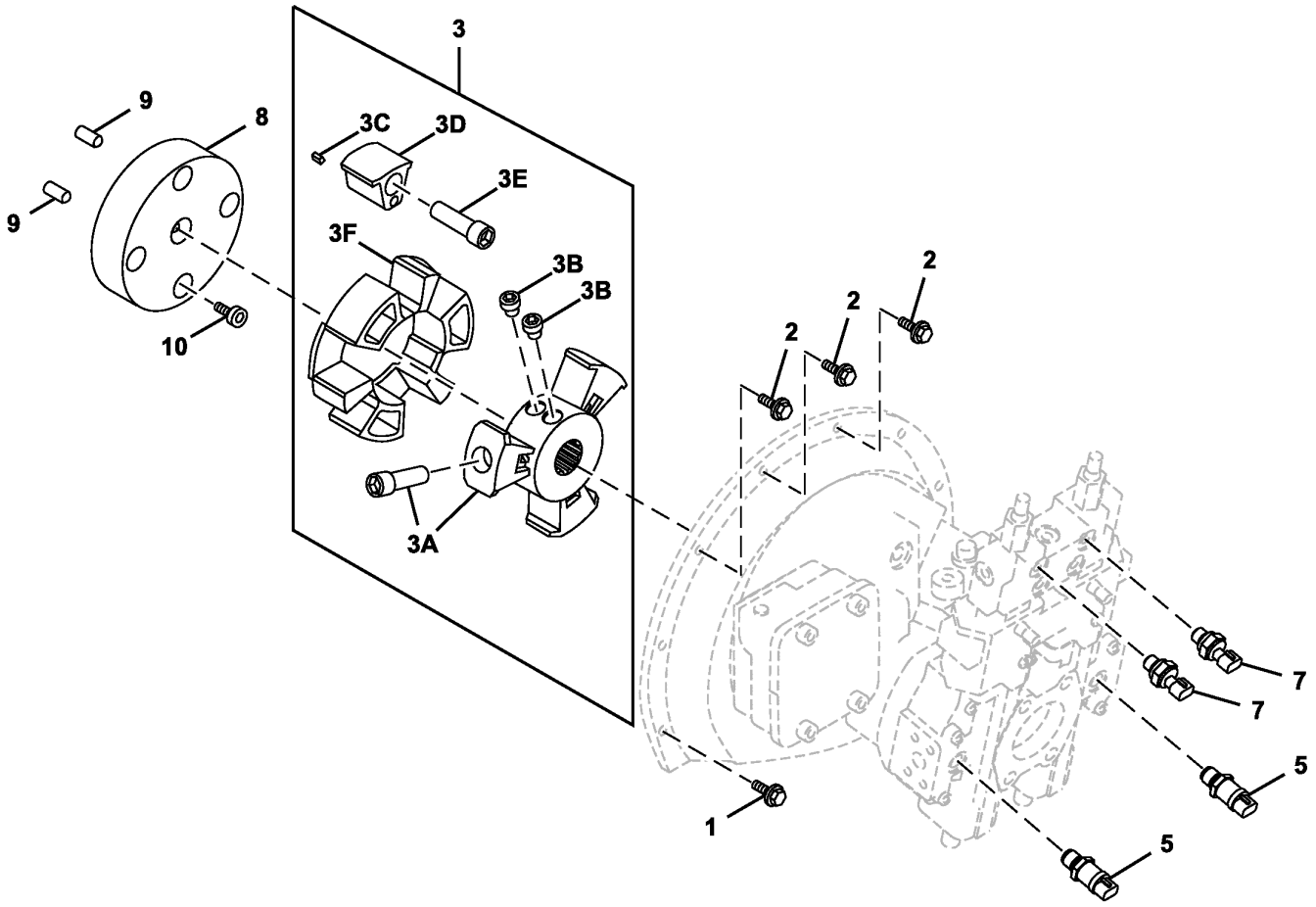

TX1082075

Pos.	*Ref.*	*Descripción*	*Cant.*	*Núm. de serie*	*Notas*
1	19M7662	Tornillo	5		M10 X 30
	12M7066	Arandela de seguridad	5		10 mm
2	19M7550	Tornillo	3		M10 X 35
	12M7066	Arandela de seguridad	3		10 mm
3	4449494	Acoplamiento	1	-044369	Usar con eje de bomba de 14 dientes de 1.25 in. de diámetro
	4616689	Acoplamiento	1	044370-044415	Usar con eje de bomba de 17 dientes de 1.50 in. de diámetro
	4449494	Acoplamiento	1	044416-044440	Usar con eje de bomba de 14 dientes de 1.25 in. de diámetro
	4616689	Acoplamiento	1	044441-	Usar con eje de bomba de 17 dientes de 1.50 in. de diámetro
3A	.....	Cubo	1	-044369	(4629353 NLA)
	4629351	Cubo	1	044370-044415	
	.....	Cubo	1	044416-044440	(4629353 NLA)
	4629351	Cubo	1	044441-	
3B	4702173	Tornillo de fijación	2		
3C	34M7117	Pasador elástico	4		5 X 10 mm
3D	4334892	Inserto	4		
3E	4334894	Tornillo	4		
3F	4334891	Acoplamiento	1		
5	4436271	Sensor	2		(PRESION)
	4153097	Anillo tórico	1		
7	4436536	Sensor	2		(PRESION)
	4153095	Anillo tórico	1		
8	P64258	Espaciador	1		
9	34M7117	Pasador elástico	2		5 X 10 mm
10	19M8208	Tornillo	4		M16 X 50, (AGREGAR LOCTITE A PERNO ANTES DE ARMAR)

MAIN HYDRAULIC PUMP COMPONENTS
COMPOSANTS DE POMPE HYDRAULIQUE PRINCIPALE
COMPONENTES DE BOMBA HIDRAULICA PRINCIPAL

TX1052103 A.1

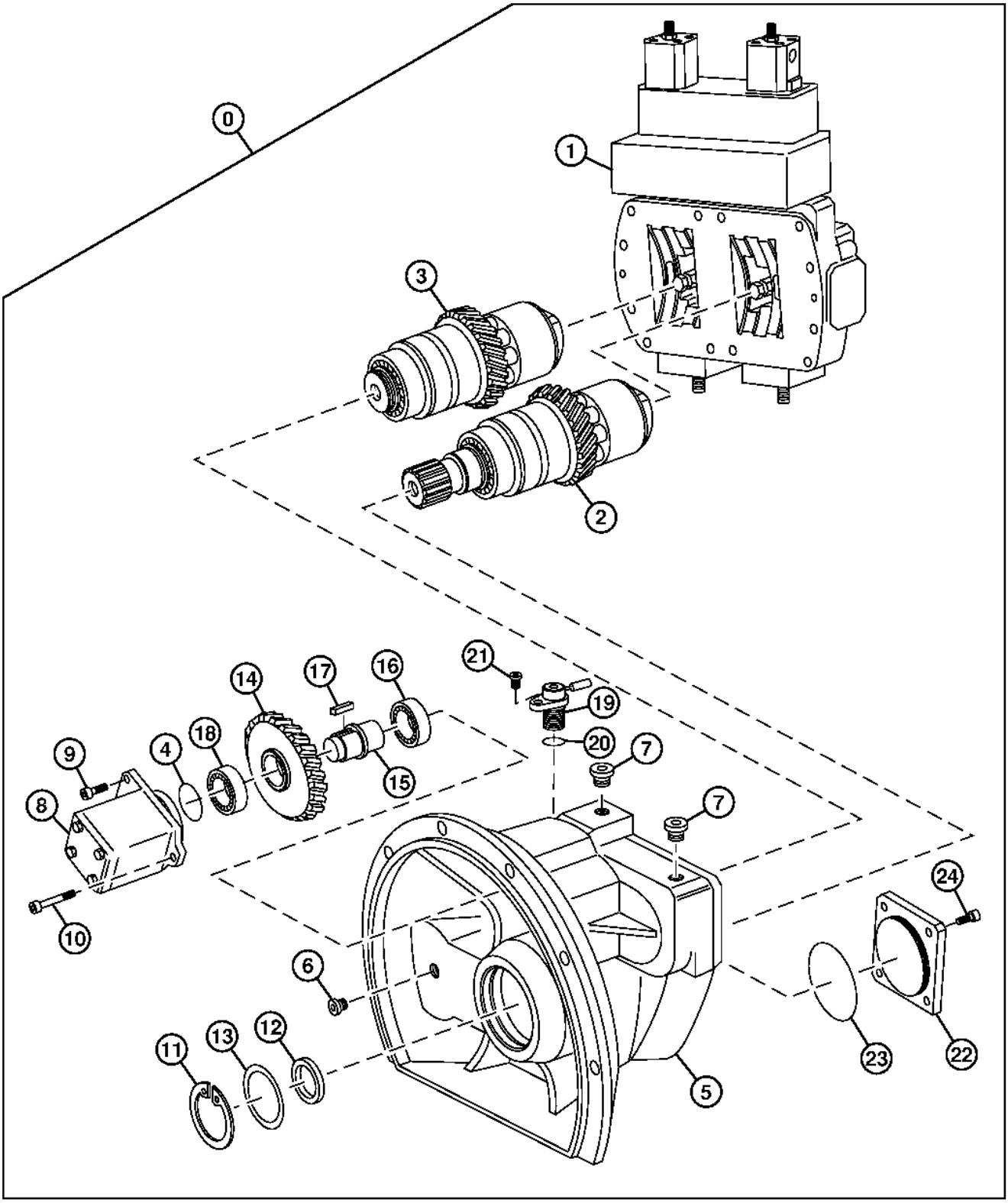

TX1052103

Pos.	Ref.	Descripción	Cant.	Núm. de serie	Notas
0	.....	Bomba hidráulica	1	-044440	4471746 NLA , SUB FOR 4471746EX, SUB 4626267EX, ALSO ORDER 4629351
	4626267	Bomba hidráulica	1	044441-	NLA, ORDER 4626267EX
	4626267	Bomba hidráulica	1	044441-	REMAN FOR 4626267
1	4479654	Regulador	1		
2	.....	Juego	1	-044440	(GRUPO GIRATORIO(EJE 14 DIENTES))
	4636056	Interruptor giratorio	1	044441-	(GRUPO GIRATORIO(EJE 17 DIENTES))
3	4479657	Camisa válv.distrib.rotat.	1		
4	0942002	Anillo tórico	1		
5	.....	Carcasa	1		
6	0838401	Tapón roscado	1		
7	0838402	Tapón roscado	2		
8	0942001	Bomba	1		SUB FOR 0838403
9	0838404	Tornillo	2		
10	0838405	Tornillo	2		
11	0838406	Anillo	1		
12	0838407	Anillo	1		
13	0838408	Suplemento	1		
14	0838409	Engranaje	1		
15	0838410	Árbol	1		
16	0838411	Rodamiento rodillos cónicos	1		
17	0838412	Chaveta	1		
18	0838411	Rodamiento rodillos cónicos	1		
19	0486103	Sensor	1		SUB FOR 0838413
20	0838414	Anillo tórico	1		
21	0838415	Tornillo	1		
22	0838416	Tapadera	1		
23	0838417	Anillo tórico	1		
24	0838418	Tornillo	4		

MAIN HYDRAULIC PUMP OUTPUT CONTROLLER COMPONENTS
COMPOSANTS DE CONTROLEUR DE SORTIE DE POMPE HYDRAULIQUE PRINCIPALE
COMPONENTES DE UNIDAD DE CONTROL DE SALIDA DE LA BOMBA HIDRAULICA PRINCIPAL

T157306 A.1

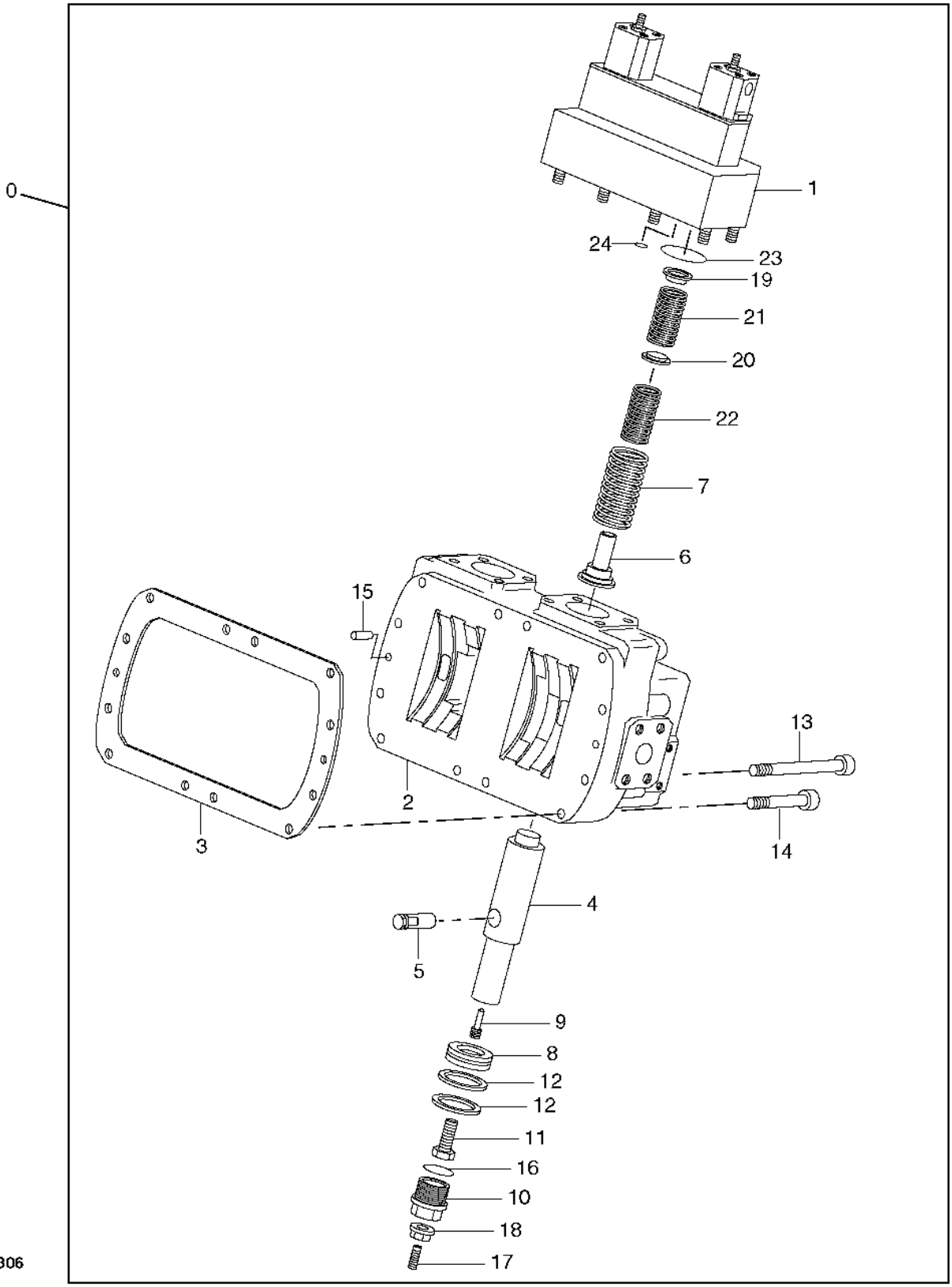

Pos.	*Ref.*	*Descripción*	*Cant.*	*Núm. de serie*	*Notas*
0	4479654	Regulador	1		
1	4479655	Regulador	1		
2	.....	Carcasa	1		
3	0838501	Junta	1		
4	.....	Pistón	2		
5	.....	Vástago	2		
6	0838502	Asiento de válvula	2		
7	0838503	Muelle	2		
8	0838504	Pistón	2		
9	0838505	Bulón	2		
10	0838506	Tornillo	2		
11	0838507	Tornillo	2		
12	0838508	Anillo	4		
13	0838509	Tornillo	4		
14	0838510	Tornillo	6		
15	0838511	Bulón	2		
16	0838512	Anillo tórico	2		
17	0838513	Bulón	2		
18	0838514	Tuerca	2		
19	0838515	Asiento de válvula	2		
20	0838516	Asiento de válvula	2		
21	0838517	Muelle	2		
22	0838518	Muelle	2		
23	0838519	Anillo tórico	2		
24	4S00621	Anillo tórico	4		(SUB FOR 0838520)

HYDRAULIC PUMP FLOW REGULATOR COMPONENTS
COMPOSANTS DE REGULATEUR DE DEBIT DE POMPE HYDRAULIQUE
COMPONENTES DEL REGULADOR DE CAUDAL DE BOMBA HIDRAULICA

T157319 A.1

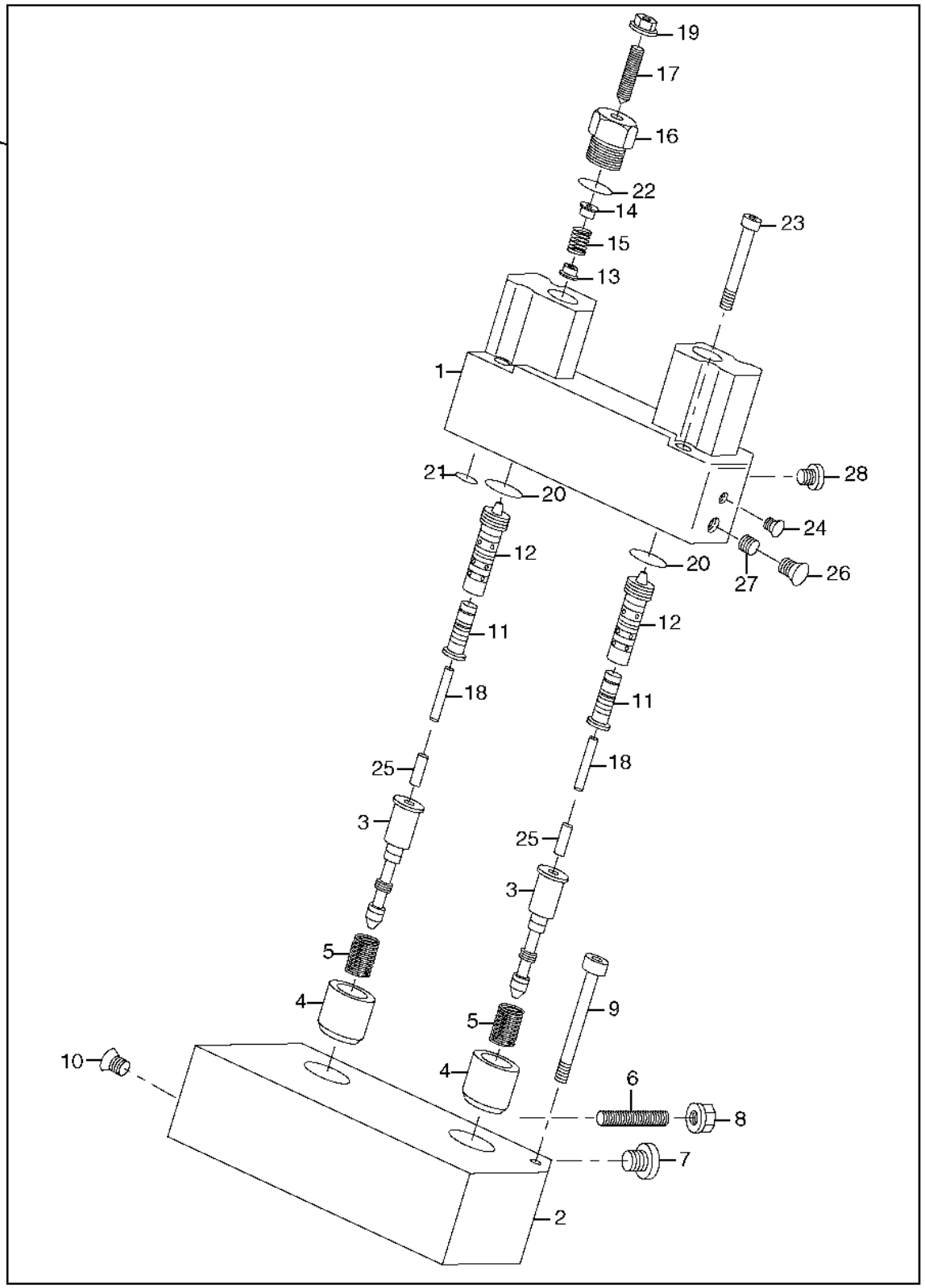

Pos.	Ref.	Descripción	Cant.	Núm. de serie	Notas
0	4479655	Regulador	1		
1	.....	Carcasa	1		
2	.....	Carcasa	1		
3	.....	Pistón	2		
4	0838601	Casquillo	2		
5	0838602	Muelle	2		
6	0838603	Tornillo	2		
7	0838401	Tapón roscado	2		
8	AT119542	Tuerca de seguridad	2		(SUB FOR 0838604)
9	0838605	Tornillo	6		
10	0838606	Tapón roscado	1		
11	.....	Pistón	2		
12	.....	Casquillo	2		
13	0838607	Asiento de válvula	2		
14	0838608	Asiento de válvula	2		
15	0838609	Muelle	2		
16	0838610	Guía	2		
17	0838611	Tornillo	2		
18	0838612	Bulón	2		
19	AT119542	Tuerca de seguridad	2		(SUB FOR 0838604)
20	0838613	Anillo tórico	2		
21	4S00621	Anillo tórico	2		(SUB FOR 0838520)
22	0838614	Anillo tórico	2		
23	0838615	Tornillo	6		
24	0838606	Tapón roscado	4		
25	0838616	Bulón	2		
26	0838617	Tapón roscado	1		
27	0838618	Tapón roscado	1		
28	0838619	Tapón roscado	2		

HYDRAULIC PUMP PISTON ASSEMBLY (INSTALLED ON REAR OF MACHINE)
PISTON DE POMPE HYDRAULIQUE (INSTALLE SUR ARRIERE DE LA MACHINE)
CONJUNTO DE EMBOLOS DE LA BOMBA HIDRAULICA (INSTALADO EN PARTE TRASERA DE MAQUINA)

T157322 A.1

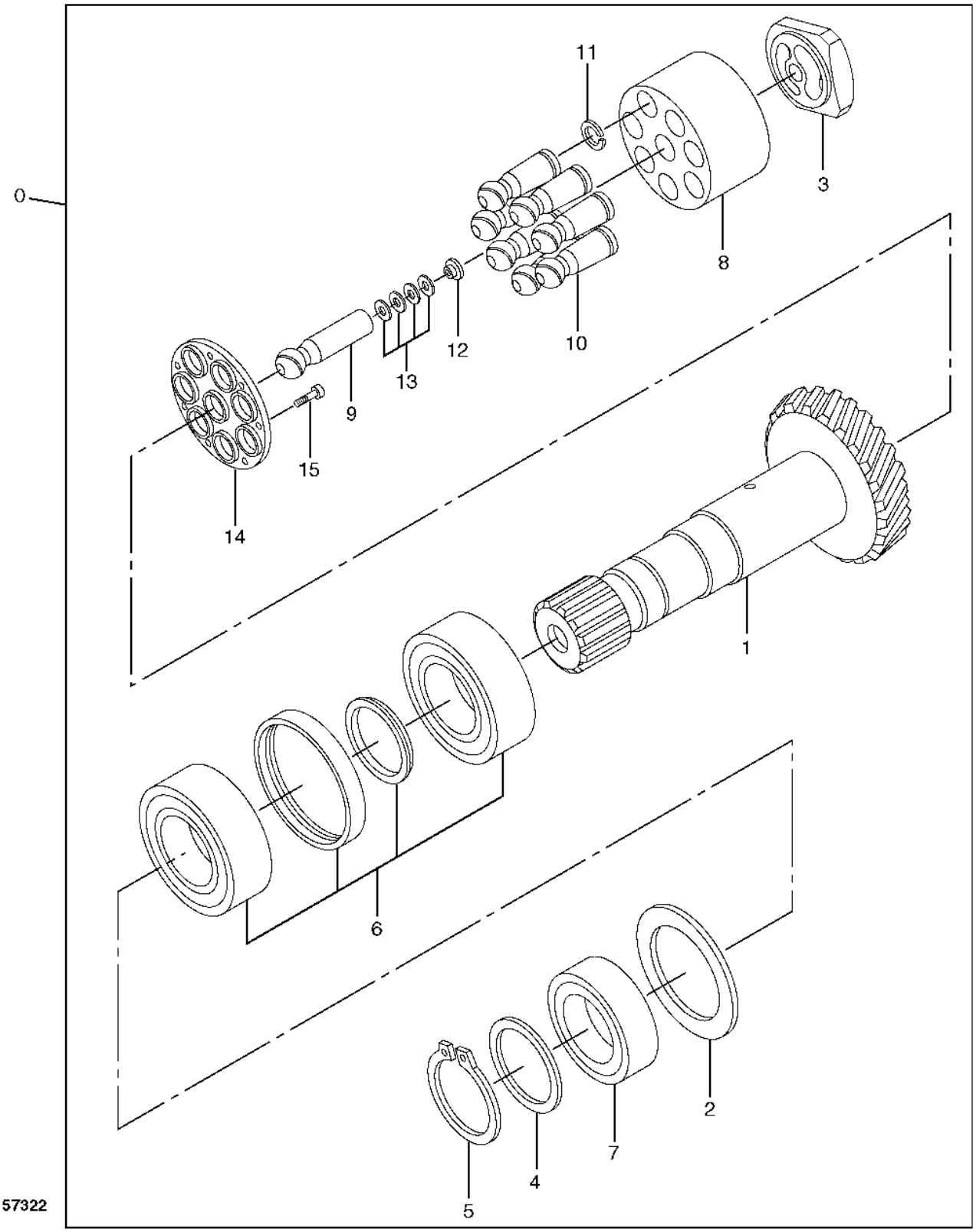

Pos.	*Ref.*	*Descripción*	*Cant.*	*Núm. de serie*	*Notas*
0	4479656	Juego	1		
1	.....	Árbol	1		
2	.....	Suplemento sólido	1		
3	.....	Placa	1		
4	0838701	Placa	1		
5	0838702	Anillo	1		
6	.....	Rodamiento de rodillos	1		
7	.....	Rodamiento de rodillos	1		
8	.....	Bloque de cilindros	1		
9	.....	Pasador	1		
10	.....	Pistón	7		
11	.....	Anillo de pistón	7		
12	.....	Placa	1		
13	.....	Muelle	4		
14	.....	Placa	1		
15	.....	Tornillo	14		

HYDRAULIC PUMP PISTON ASSEMBLY (INSTALLED ON FRONT OF MACHINE)
PISTON DE POMPE HYDRAULIQUE (INSTALLE SUR AVANT DE LA MACHINE)
CONJUNTO DE EMBOLOS DE LA BOMBA HIDRAULICA (INSTALADO EN FRENTE DE LA MAQUINA)

T157324 A.1

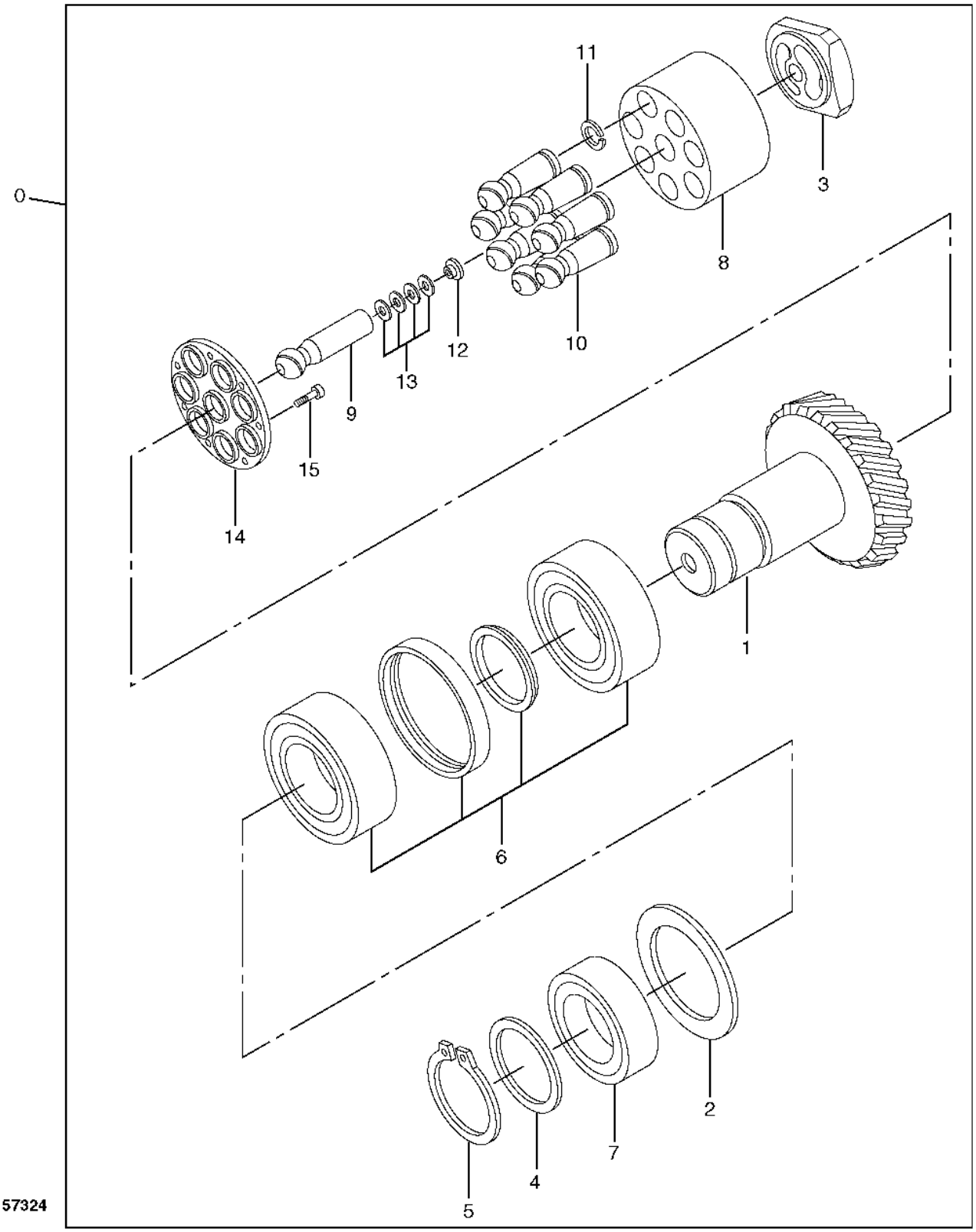

Pos.	*Ref.*	*Descripción*	*Cant.*	*Núm. de serie*	*Notas*
0	4479657	Camisa válv.distrib.rotat.	1		
1	.....	Árbol	1		
2	.....	Suplemento sólido	1		
3	.....	Placa	1		
4	0838701	Placa	1		
5	0838702	Anillo	1		
6	.....	Rodamiento de rodillos	1		
7	.....	Rodamiento de rodillos	1		
8	.....	Bloque de cilindros	1		
9	.....	Pasador	1		
10	.....	Pistón	7		
11	.....	Anillo de pistón	7		
12	.....	Placa	1		
13	.....	Muelle	4		
14	.....	Placa	1		
15	.....	Tornillo	14		

CONTROL VALVE
DISTRIBUTEUR
VALVULA DE CONTROL

TX1007829 A.1

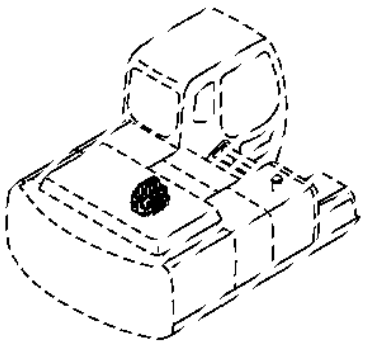

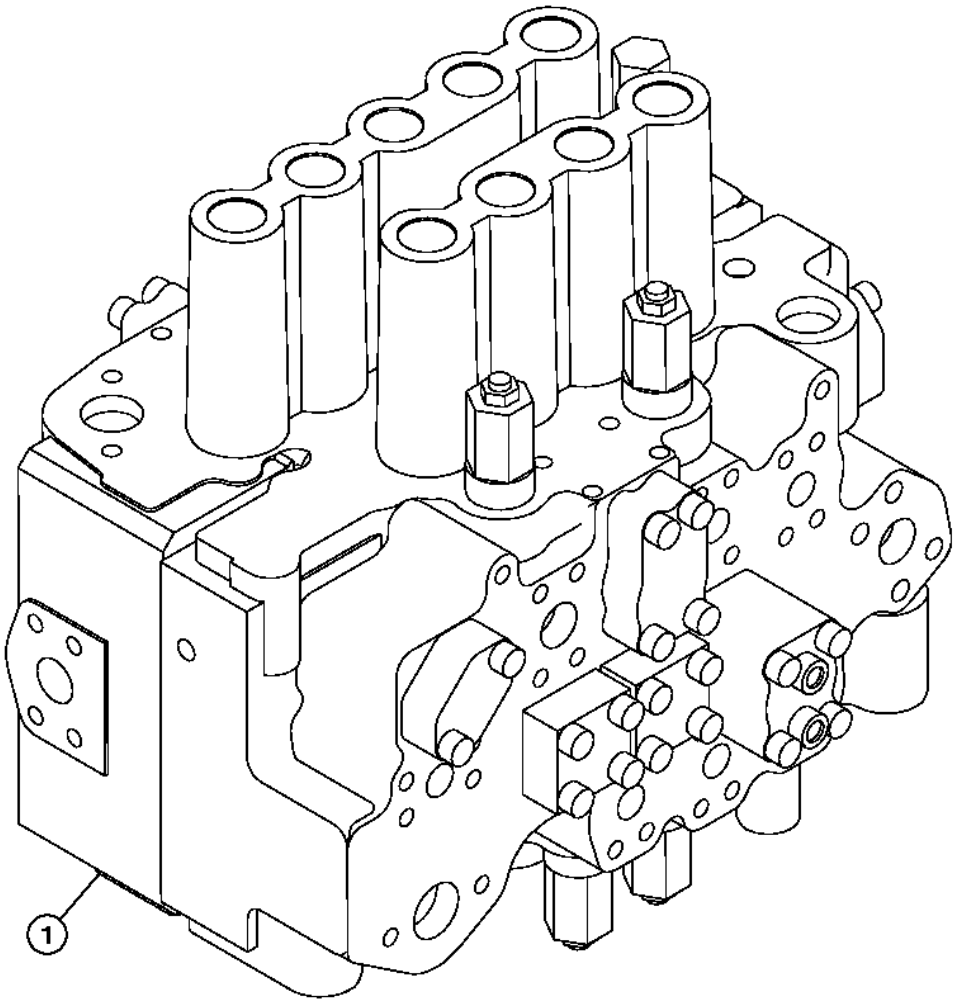

TX1007829

Pos.	*Ref.*	*Descripción*	*Cant.*	*Núm. de serie*	*Notas*
0	9215128	Válvula de mando acc. hidr.	1		

CONTROL VALVE MOUNTING BRACKETS
SUPPORTS DE MONTAGE DE DISTRIBUTEUR
ESCUADRAS DE MONTAJE DE LA VALVULA DE CONTROL

TX1007680 A.1

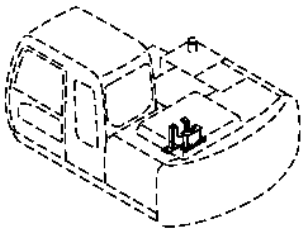

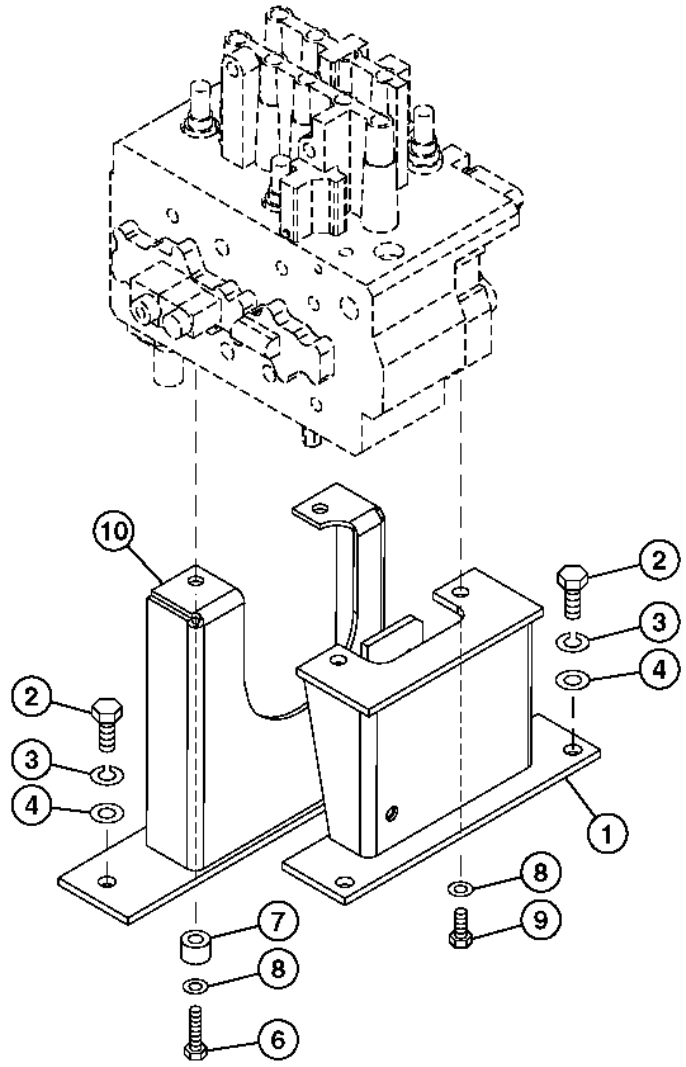

TX1007680

Pos.	*Ref.*	*Descripción*	*Cant.*	*Núm. de serie*	*Notas*
0	8077220	Soporte	1		
1	8077221	Soporte	1		
2	19M7488	Tornillo	4		M16 X 40
3	12H294	Arandela de seguridad	4		5/8"
4	24M7053	Arandela	4		17 X 30 X 3 mm
6	19M9169	Tornillo	2		M14 X 50, (SUB FOR P61969)
7	4364009	Espaciador	2		
8	AT200011	Arandela	4		
9	19M7877	Tornillo	2		M14 X 30

CONTROL VALVE COMPONENTS (4 SPOOL SIDE)
COMPOSANTS DU DISTRIBUTEUR (COTE 4 TIROIRS)
COMPONENTES DE LA VALVULA DE CONTROL (LADO DE CARRETE 4)

T157474 A.1

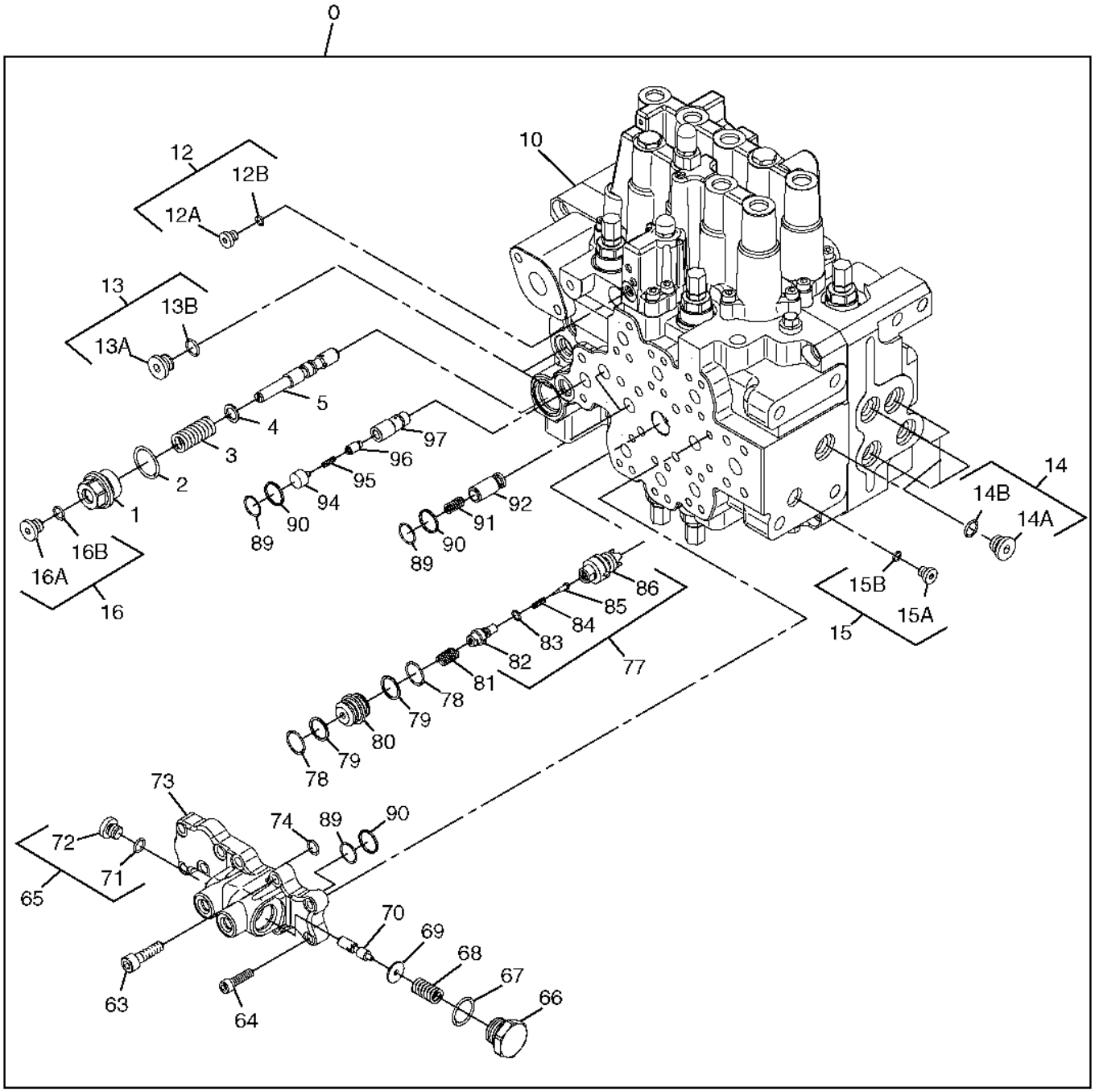

T157474

Pos.	Ref.	Descripción	Cant.	Núm. de serie	Notas
0	9215128	Válvula de mando acc. hidr.	1		(COMPONENTES ADICIONALES EN PAGS SIGUIENTES)
1	2046625	Tapón roscado	1		
2	AT264347	Anillo tórico	1		(SUB FOR 4506428)
3	2046612	Muelle	1		
4	2046481	Arandela	1		
5	2046596	Carrete	1		
10	.....	Carcasa	1		
12	9134109	Tapón de vaciado	2		
12A	9134109	Tapón de vaciado	1		(SUB FOR 4336165)
12B	4506408	Anillo tórico	1		
13	9134111	Conexión	7		
13A	4336167	Tapón hermético	1		
13B	CH11570	Anillo tórico	1		
14	9134111	Conexión	7		
14A	4336167	Tapón hermético	1		
14B	CH11570	Anillo tórico	1		(SUB FOR 4509180)
15	9134109	Tapón de vaciado	2		
15A	9134109	Tapón de vaciado	1		(SUB FOR 4336165)
15B	4506408	Anillo tórico	1		
16	.....	Tapón roscado	2		(9134100 NLA)
16A	4336166	Tapón roscado	1		
16B	M800650	Empaquetadura	1		
63	M341036	Tornillo	7		
64	M340830	Tornillo	3		
65	.....	Tapón roscado	2		(9134100 NLA)
66	2046620	Tapón roscado	1		
67	AT318035	Anillo tórico	1		(SUB FOR 4506424)
68	2046425	Muelle	1		
69	2046482	Arandela	1		
70	2046381	Carrete	1		
71	M800650	Empaquetadura	1		
72	4336166	Tapón roscado	1		
73	0004161	Placa	1		
74	4506412	Empaquetadura	1		
77	9200478	Asiento de válvula	1		
78	985099	Anillo tórico	2		
79	2046501	Anillo	2		
80	2046405	Casquillo	1		
81	2046423	Muelle	1		
82	2046453	Tapón roscado	1		
83	4506408	Anillo tórico	1		
84	2046420	Muelle	1		
85	2046394	Válvula de retención	1		
86	1029245	Asiento de válvula	1		
89	2046490	Anillo tórico	4		
90	2046502	Anillo	4		
91	2046415	Muelle	2		
92	2046395	Válvula de retención	2		
94	2046621	Tapón roscado	1		
95	2046607	Muelle	1		
96	2046602	Válvula de retención	1		
97	2046614	Casquillo	1		

CONTROL VALVE COMPONENTS (5 SPOOL SIDE)
COMPOSANTS DU DISTRIBUTEUR (COTE 5 TIROIRS)
COMPONENTES DE LA VALVULA DE CONTROL (LADO DE CARRETE 5)

T157464 A.1

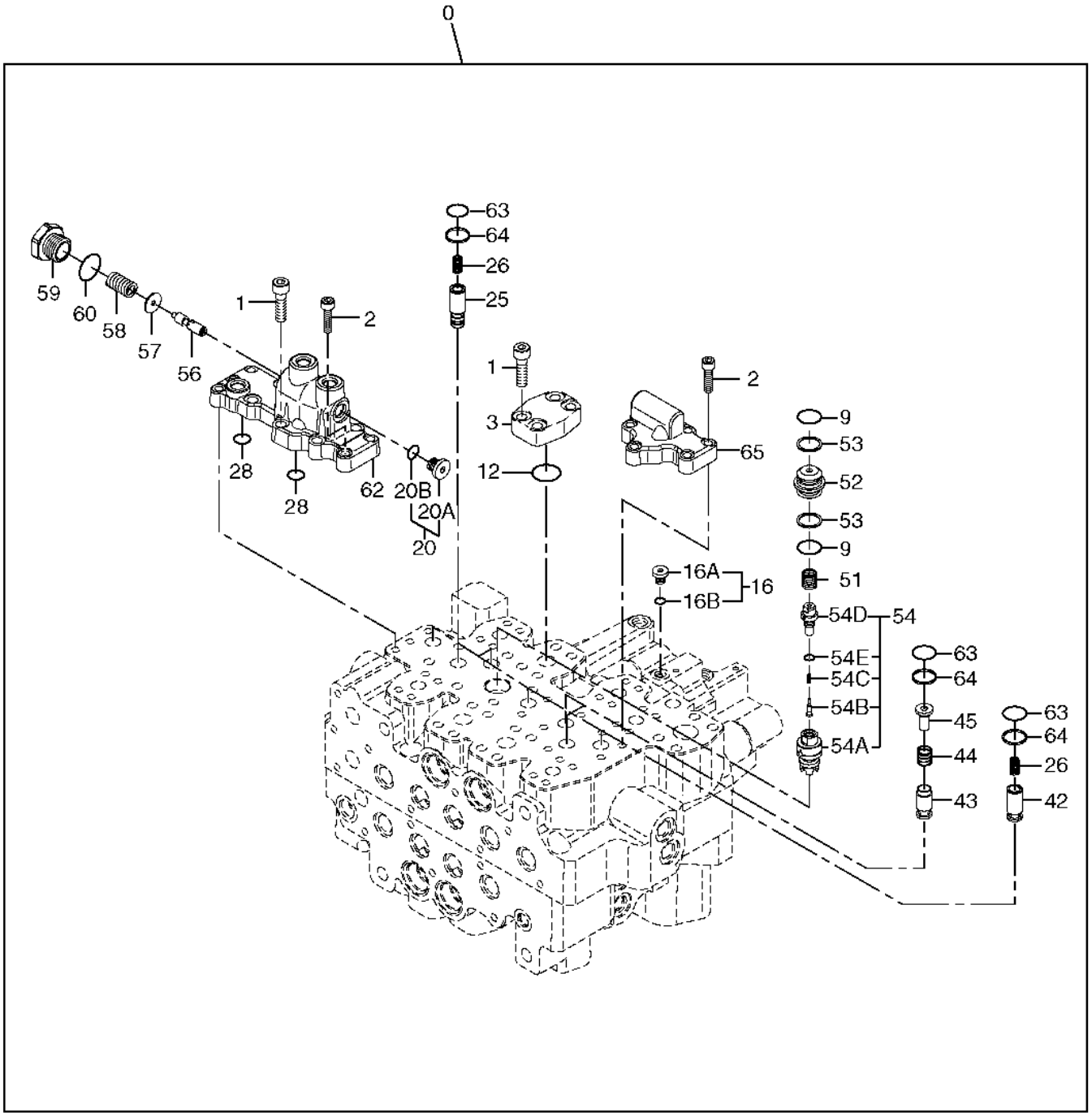

T157464

Pos.	Ref.	Descripción	Cant.	Núm. de serie	Notas
0	9215128	Válvula de mando acc. hidr.	1		Componentes adicionales en páginas anteriores y siguientes
1	19M8963	Tornillo	14		M10 X 35
2	19M8735	Tornillo	11		M8 X 30
3	2046512	Placa	2		
9	985099	Anillo tórico	2		
12	4314064	Anillo tórico	2		
16	9134109	Tapón de vaciado	1		
16A	9134109	Tapón de vaciado	1		SUB FOR 4336165
16B	4506408	Anillo tórico	1		
20	.....	Tapón roscado	1		9134100 NLA
20A	4336166	Tapón roscado	1		
20B	M800650	Empaquetadura	1		
25	2046605	Válvula hidr. regul. caudal	1		
26	2046415	Muelle	5		
28	4506412	Empaquetadura	2		
42	2046395	Válvula de retención	4		
43	2046398	Válvula de retención	2		
44	2046424	Muelle	2		
45	2046412	Asiento de válvula	2		
51	2046423	Muelle	1		
52	2046405	Casquillo	1		
53	2046501	Anillo	2		
54	9200481	Asiento de válvula	1		
54A	.....	Asiento de válvula	1		1029246 NLA
54B	.....	Válvula de retención	1		2046394 NLA
54C	.....	Muelle	1		2046420 NLA
54D	.....	Tapón roscado	1		2046453 NLA
54E	4506408	Anillo tórico	1		
56	2046381	Carrete	1		
57	2046482	Arandela	1		
58	2046425	Muelle	1		
59	2046447	Tapón roscado	1		
60	AT318035	Anillo tórico	1		SUB FOR 4506424
62	0004163	Placa	1		
63	2046490	Anillo tórico	7		
64	2046502	Anillo	7		
65	2054358	Placa	1		ALONG WITH 4670242 (3) AND 4670243 (3), SUB FOR 1029308

CONTROL VALVE COMPONENTS (BOTTOM)
COMPOSANTS DU DISTRIBUTEUR (LE FOND)
COMPONENTES DE LA VALVULA DE CONTROL (FONDO)

TX1135464 A.1

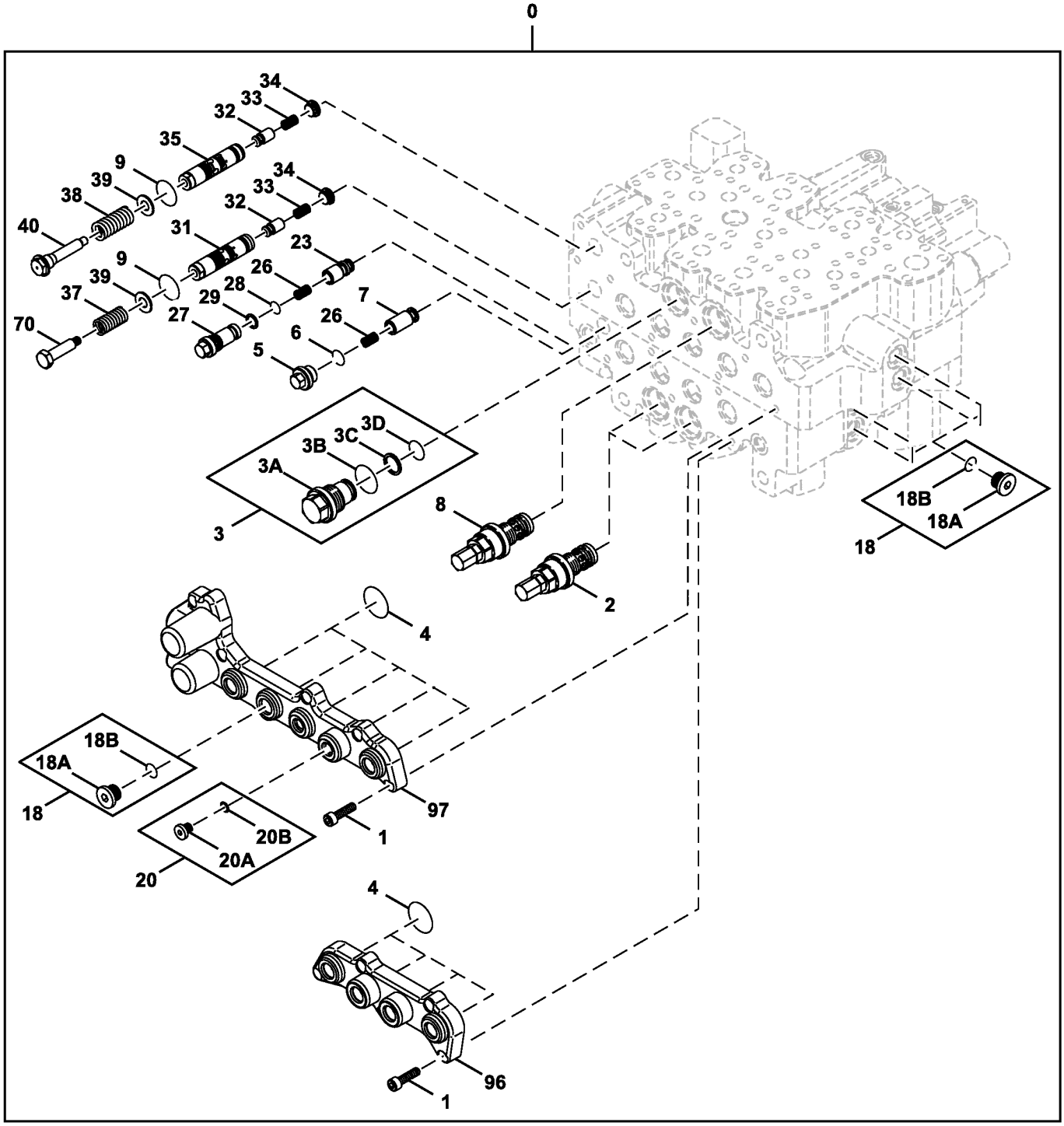

TX1135464

Pos.	*Ref.*	*Descripción*	*Cant.*	*Núm. de serie*	*Notas*
0	9215128	Válvula de mando acc. hidr.	1		Componentes adicionales en páginas anteriores y siguientes
1	19M8735	Tornillo	14		M8 X 30
2	9200495	Válvula hidr. regul. caudal	2		Retracción de cucharón
3	9200483	Tapón roscado	1		
3A	2046444	Tapón roscado	1		
3B	AT264347	Anillo tórico	1		SUB FOR 4506428
3C	2046498	Anillo elástico	1		
3D	CH12329	Empaquetadura	1		
4	2046491	Anillo tórico	9		
5	2046623	Tapón roscado	1		
6	4506419	Anillo tórico	1		
7	2046603	Válvula de retención	1		
8	9200492	Válvula hidr. regul. caudal	1		
9	2046488	Anillo tórico	2		
18	9134111	Conexión	5		
18A	4336167	Tapón hermético	1		
18B	CH11570	Anillo tórico	1		SUB FOR 4509180
20	.....	Tapón roscado	1		9134100 NLA
20A	4336166	Tapón roscado	1		
20B	M800650	Empaquetadura	1		
23	2046604	Válvula hidr. regul. caudal	1		
26	2046415	Muelle	2		
27	2046449	Tapón roscado	1		
28	4506412	Empaquetadura	1		
29	2046494	Anillo reforzador	1		
31	2046594	Carrete	1		
32	2046601	Válvula de retención	2		
33	2046609	Muelle	2		
34	2046622	Tapón roscado	2		
35	2046595	Carrete	1		
37	2046610	Muelle	1		
38	2046611	Muelle	1		
39	2046615	Arandela	2		
40	2046619	Tornillo	1		
70	2046458	Tornillo	1		
96	1029310	Carcasa	1		
97	0004169	Carcasa	1		

CONTROL VALVE COMPONENTS (TOP SPOOLS, 5 SPOOL SIDE)
COMPOSANTS DU DISTRIBUTEUR (TIROIRS SUPERIEURS, COTE 5 TIROIRS)
COMPONENTES DE LA VALVULA DE CONTROL (CARRETES SUPERIORES, LADO DE 5 CARRETES)

T157329 A.1

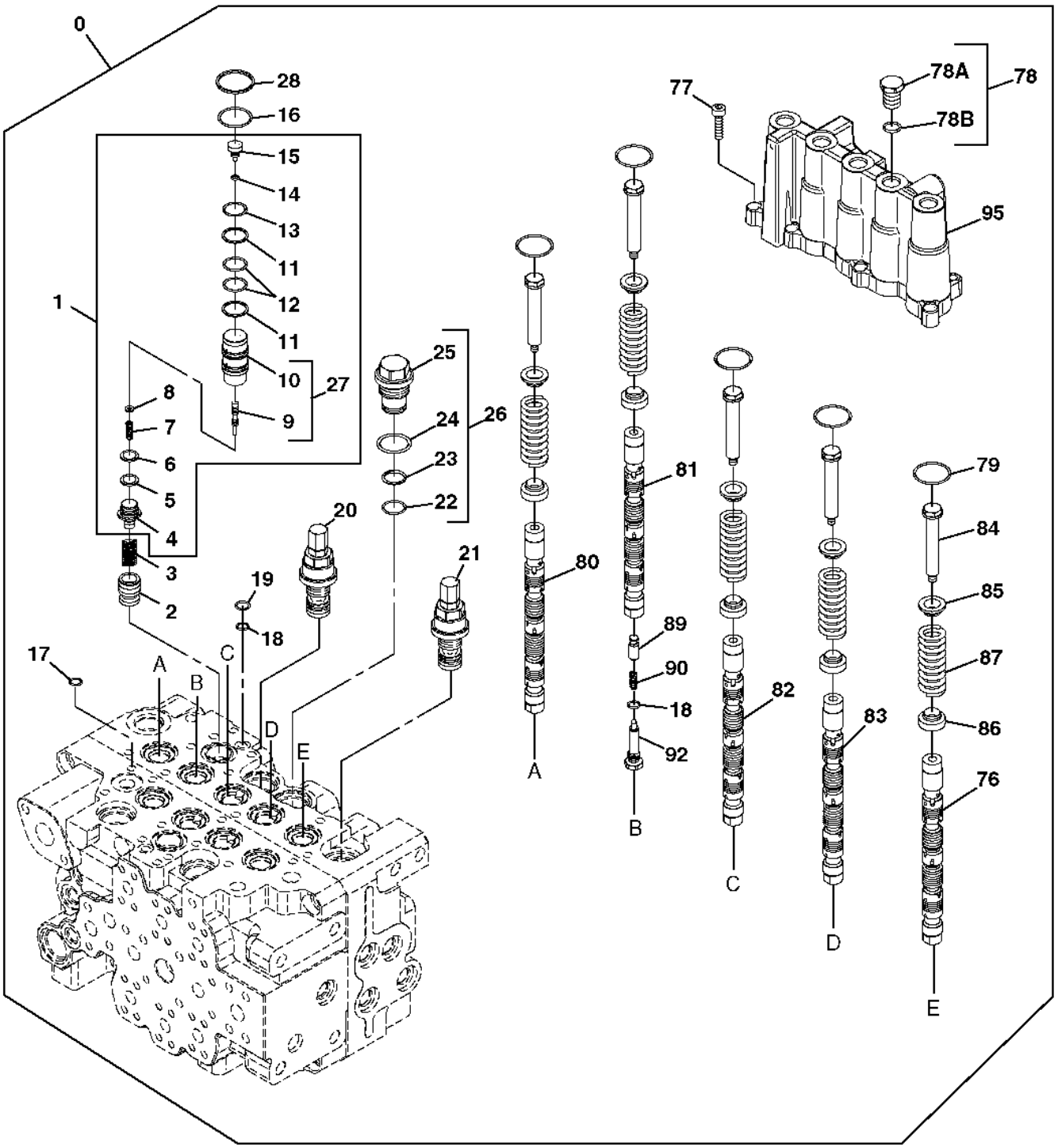

T157329

Pos.	*Ref.*	*Descripción*	*Cant.*	*Núm. de serie*	*Notas*
0	9215128	Válvula de mando acc. hidr.	1		(COMPONENTES ADICIONALES EN PAGINAS ANTERIORES Y SIGUIENTES)
1	9201381	Válvula de carrete	1		
2	.....	Válvula	1		(2046592 NLA)
	3110097	Válvula	1		
3	2046418	Muelle	1		
4	2046455	Tapón roscado	1		
5	CH11570	Anillo tórico	1		(SUB FOR 4509180)
6	2046499	Anillo	1		
7	2046608	Muelle	1		
8	2046484	Arandela	1		
9	.....	Carrete	1		
10	.....	Carcasa	1		
11	2046504	Anillo	2		
12	4S00734	Anillo tórico	2		(SUB FOR 4509181, TH103574 OR AT264354 OR 0976602)
13	4506420	Empaquetadura	1		
14	4506405	Anillo tórico	1		
15	2046593	Tope	1		
16	4303809	Anillo tórico	1		
17	4506408	Anillo tórico	1		
18	CH17167	Anillo tórico	2		(SUB FOR 4506320)
19	2046627	Anillo	1		
20	9200491	Válvula hidr. regul. caudal	1		Vaciado de cucharón
21	9208771	Válvula descarga de presión	1		
22	4506420	Empaquetadura	1		
23	2046498	Anillo elástico	1		
24	AT264347	Anillo tórico	1		(SUB FOR 4506428)
25	2046444	Tapón roscado	1		
26	9200483	Tapón roscado	1		
27	.....	Carrete	1		(9201383 NLA)
28	2046626	Anillo	1		
76	.....	Carrete	1		
77	M340830	Tornillo	10		
78	9201529	Tapón roscado	1		
78A	2046654	Tapón roscado	1		
78B	CH11570	Anillo tórico	1		(SUB FOR 4509180)
79	2046491	Anillo tórico	5		
80	.....	Carrete	1		
81	.....	Carrete	1		
82	.....	Carrete	1		
83	.....	Carrete	1		
84	2046457	Tornillo	5		
85	2046410	Asiento de válvula	5		
86	2046411	Asiento de válvula	5		
87	2046613	Muelle	5		
89	2046392	Válvula hidr. regul. caudal	1		
90	2046419	Muelle	1		
92	2046451	Tapón roscado	1		
95	9248946	Carcasa	1		(SUB FOR 0004167)

CONTROL VALVE COMPONENTS (TOP SPOOLS, 4 SPOOL SIDE)
COMPOSANTS DU DISTRIBUTEUR (TIROIRS SUPERIEURS, COTE 4 TIROIRS)
COMPONENTES DE LA VALVULA DE CONTROL (CARRETES SUPERIORES, LADO DE 4 CARRETES)

TX1135463 A.1

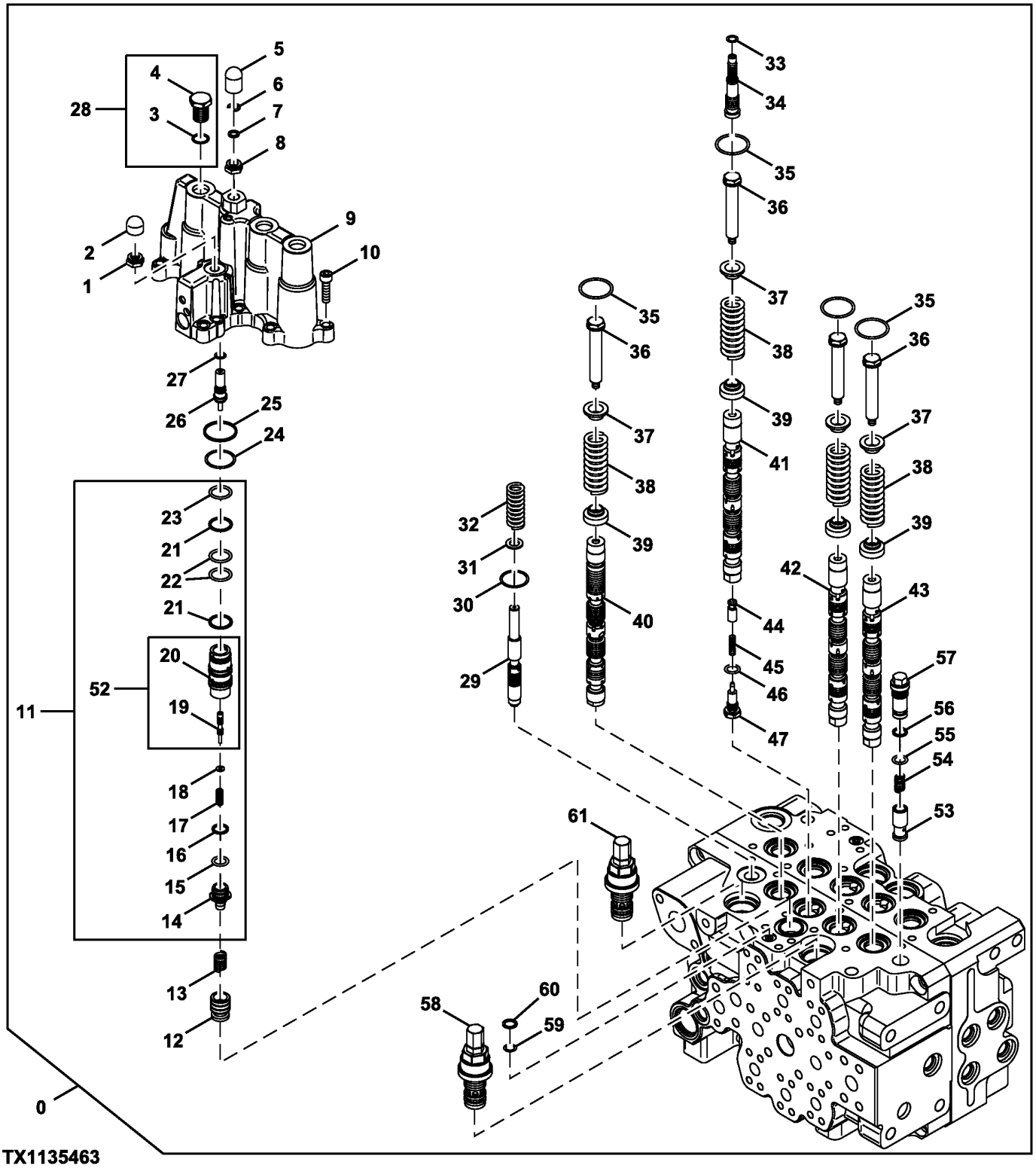

Pos.	Ref.	Descripción	Cant.	Núm. de serie	Notas
0	9215128	Válvula de mando acc. hidr.	1		Componentes adicionales en páginas anteriores
1	2046469	Tuerca	1		
2	2046527	Tapa	1		
3	CH11570	Anillo tórico	1		
4	2046654	Tapón roscado	1		
5	2046528	Tapa	1		
6	4453198	Anillo	1		
7	2046480	Arandela	1		
8	2046469	Tuerca	1		
9	9248945	Carcasa	1		SUB FOR 0004165
10	19M8735	Tornillo	11		M8 X 30
11	9281598	Válvula	1		SUB FOR 9201382
12	.....	Válvula	1		2046592 NLA
	3110097	Válvula	1		
13	2046418	Muelle	1		
14	2046455	Tapón roscado	1		
15	CH11570	Anillo tórico	1		
16	2046499	Anillo	1		
17	2046608	Muelle	1		
18	2046484	Arandela	1		
19	.....	Carrete	1		
20	.....	Carcasa	1		
21	2046504	Anillo	2		
22	4S00734	Anillo tórico	2		SUB FOR TH103574 OR AT264354 OR 0976602
23	CH12329	Empaquetadura	1		
24	4303809	Anillo tórico	1		
25	2046626	Anillo	1		
26	2046618	Tornillo	1		
27	CH11569	Empaquetadura	1		
28	9201529	Tapón roscado	1		
29	3094130	Carrete	1		
30	2046488	Anillo tórico	1		
31	2046481	Arandela	1		
32	2046431	Muelle	1		
33	CH11569	Empaquetadura	1		
34	2046462	Tornillo	1		
35	2046491	Anillo tórico	4		
36	2045457	Tornillo	4		
37	2046410	Asiento de válvula	4		
38	2046613	Muelle	4		
39	2046411	Asiento de válvula	4		
40	.....	Carrete	1		
41	.....	Carrete	1		
42	.....	Carrete	1		
43	.....	Carrete	1		
44	2046392	Válvula hidr. regul. caudal	1		
45	2046419	Muelle	1		
46	CH17167	Anillo tórico	1		
47	2046452	Tapón roscado	1		
52	.....	Carrete	1		9201384 NLA
53	2046600	Válvula de retención	1		
54	2046415	Muelle	1		
55	4506412	Empaquetadura	1		
56	2046494	Anillo reforzador	1		
57	2046449	Tapón roscado	1		
58	9200491	Válvula hidr. regul. caudal	1		Vaciado de cucharón
59	CH17167	Anillo tórico	1		SUB FOR 4506320
60	2046627	Anillo	1		
61	9200492	Válvula hidr. regul. caudal	1		

CONTROL VALVE MIDDLE SEALS
JOINTS MEDIANS DE DISTRIBUTEUR
SELLOS CENTRALES DE LA VALVULA DE CONTROL

T157359 A.1

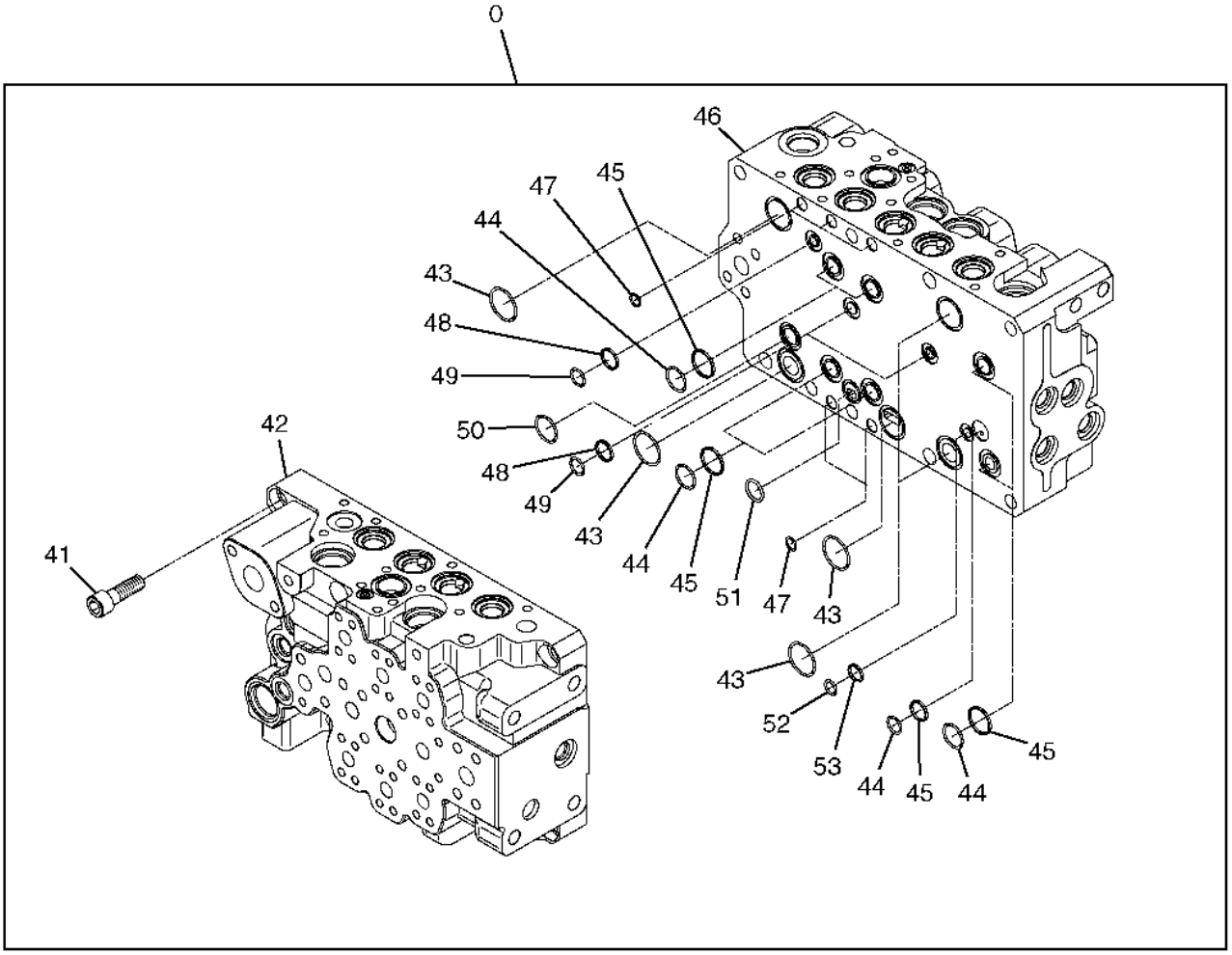

T157359

Pos.	*Ref.*	*Descripción*	*Cant.*	*Núm. de serie*	*Notas*
0	9215128	Válvula de mando acc. hidr.	1		
41	19M8734	Tornillo	9		M14 X 45
42	.....	Carcasa	1		
43	4303809	Anillo tórico	5		
44	985099	Anillo tórico	7		
45	2046492	Anillo reforzador	7		
46	.....	Carcasa	1		
47	CH17167	Anillo tórico	5		
48	2046493	Anillo reforzador	3		
49	CH11570	Anillo tórico	3		
50	4314064	Anillo tórico	1		
51	CH12329	Empaquetadura	1		
52	M800650	Empaquetadura	1		
53	2046599	Anillo reforzador	1		

SOLENOID VALVE COMPONENTS (ON CONTROL VALVE)
COMPOSANTS D'ELECTROVANNE (SUR LE DISTRIBUTEUR)
COMPONENTES DE LA VALVULA DE SOLENOIDE (EN VALVULA DE CONTROL)

T153137 A.1

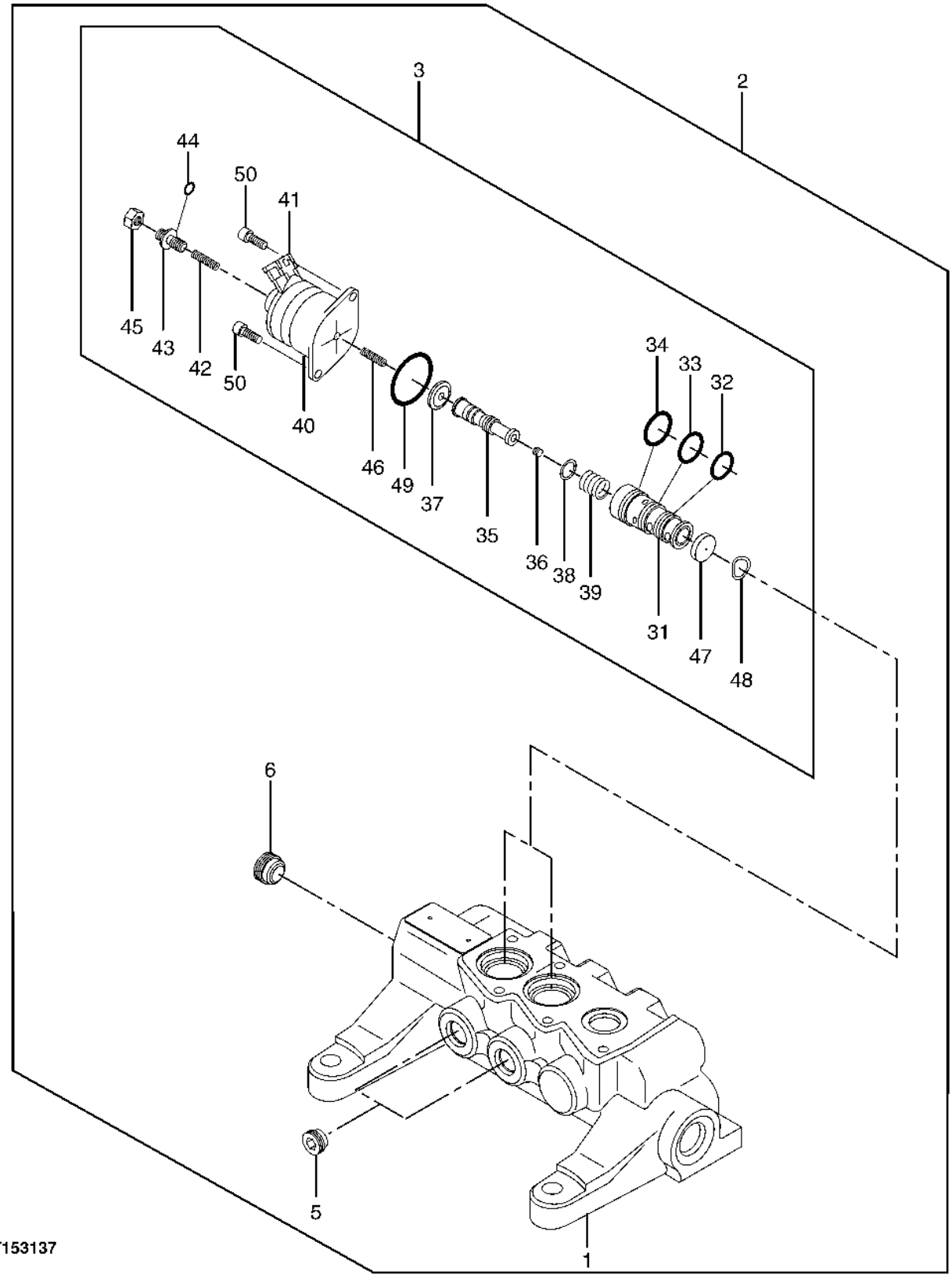

Pos.	*Ref.*	*Descripción*	*Cant.*	*Núm. de serie*	*Notas*
1	.....	Carcasa	1		
2	9218283	Electroválvula	1		(SUB FOR 9218271)
3	4455991	Electroválvula	2		
5	9761179	Tapón	2		(SUB FOR 4455986)
6	4455987	Tapón roscado	1		
31	.....	Manguito	1		
32	4185600	Anillo tórico	1		(SUB FOR 0408409, AT153902 OR TH4185600)
33	0408410	Anillo tórico	1		
34	4163873	Anillo tórico	1		(SUB FOR 0408411 OR TH106081)
35	.....	Válvula de carrete	1		
36	.....	Obturador	1		
37	.....	Diafragma	1		
38	.....	Arandela	1		
39	.....	Muelle	1		
40	.....	Solenoide	1		
41	.....	Casquillo	1		
42	.....	Muelle	1		
43	.....	Tornillo	1		
44	.....	Anillo tórico	1		
45	.....	Tuerca	1		
46	.....	Muelle	1		
47	.....	Placa	1		
48	4455990	Arandela	1		
49	4455989	Retén	1		
50	0387804	Tornillo	2		

SOLENOID VALVE COMPONENTS (ON PILOT FILTER)
COMPOSANTS D'ELECTROVANNE (SUR LE FILTRE PILOTE)
COMPONENTES DE LA VALVULA DE SOLENOIDE (EN FILTRO PILOTO)

T189145 A.1

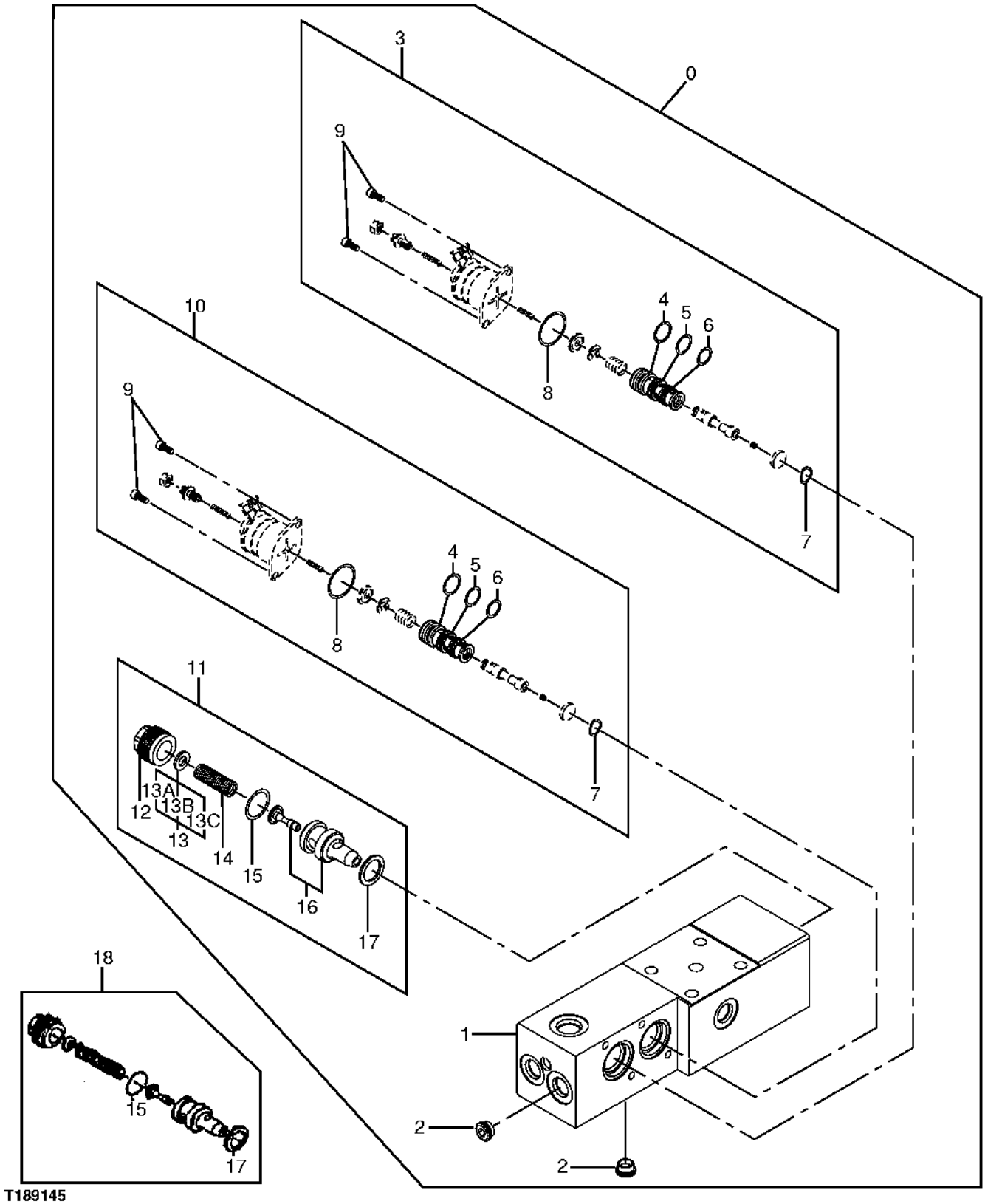

T189145

Pos.	*Ref.*	*Descripción*	*Cant.*	*Núm. de serie*	*Notas*
0	.....	Electroválvula	1		(4445490 OR 9218276 NLA) , (SUB 9220219)
1	.....	Carcasa	1		
2	9761179	Tapón	2		(SUB FOR 4455986)
3	4457822	Electroválvula	1		
4	4185600	Anillo tórico	2		(SUB FOR 0408409, AT153902 OR TH4185600)
5	0408410	Anillo tórico	2		
6	4163873	Anillo tórico	2		(SUB FOR 0408411 OR TH106081)
7	4455990	Arandela	2		
8	4455989	Retén	2		
9	0387804	Tornillo	4		
10	4462950	Electroválvula	1		
11	9218296	Electroválvula hidráulica	1		(SUB FOR 0709701)
12	0308709	Tapón hermético	1		
13	9228867	Suplemento	1		(SUB FOR 4293211)
13A	4606473	Suplemento	2		(SUB FOR 4309836)
13B	4487297	Suplemento	2		(SUB FOR 4309837)
13C	.....	Suplemento	2		(4309838 NLA)
13D	4601120	Suplemento	2		
14	.....	Muelle	1		
15	4487138	Anillo tórico	1		(SUB FOR 0308705)
16	.....	Válvula descarga de presión	1		(0308703 NLA) , (SUB 9218128)
17	4487648	Junta	1		(SUB FOR 0308704)
18	.....	Válvula descarga de presión	1		(4309970 NLA) , (SUB 9218128)
	9218128	Electroválvula hidráulica	1		(SUB FOR 4309970) (NLA)

SOLENOID VALVE MANIFOLD (PILOT FILTER)
COLLECTEUR A ELECTROVANNES (FILTRE PILOTE)
COLECTOR DE VALVULA DE SOLENOIDE (FILTRO PILOTO)

T207453 A.1

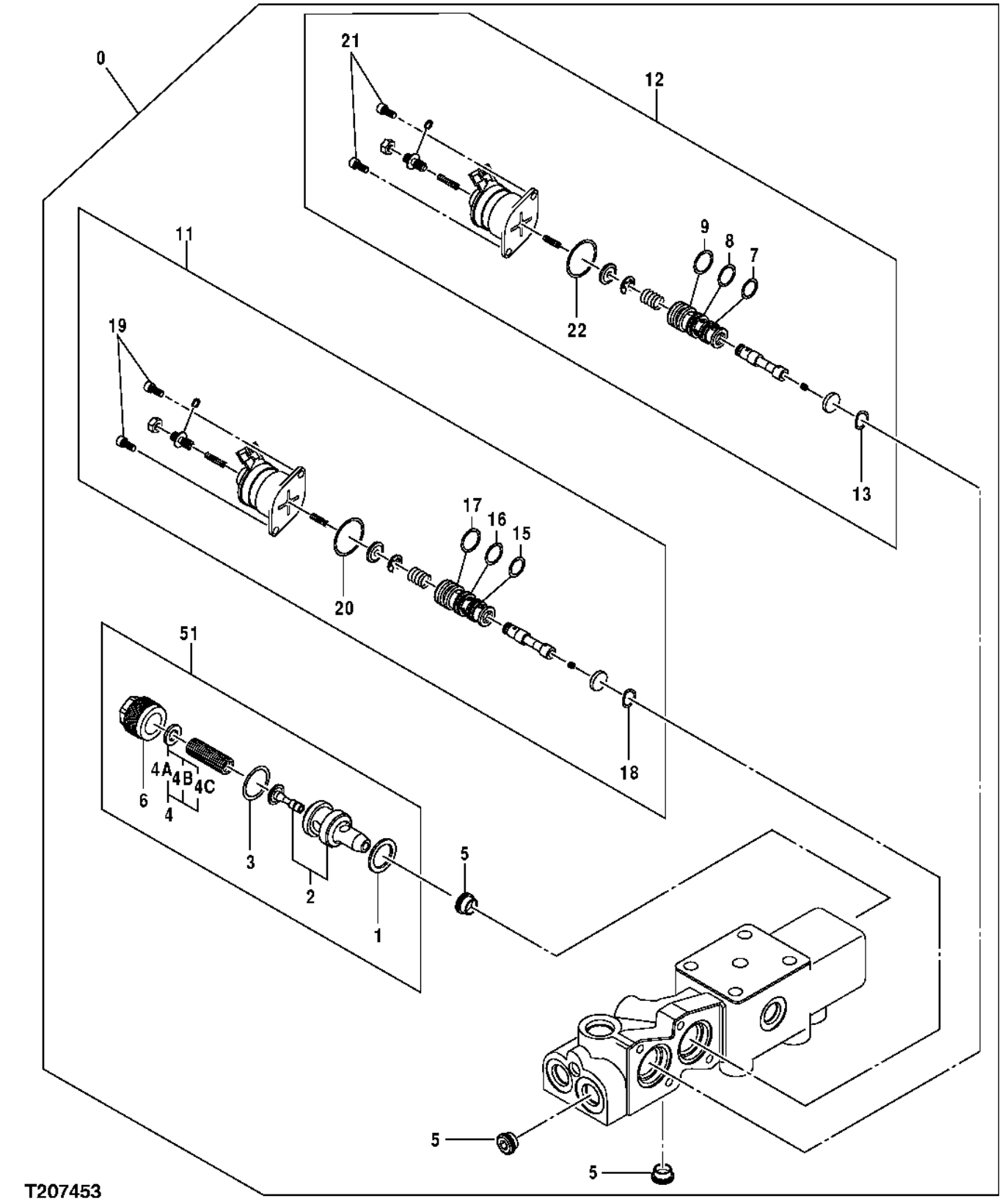

Pos.	*Ref.*	*Descripción*	*Cant.*	*Núm. de serie*	*Notas*
0	9220219	Electroválvula	1		(SUB FOR TH4445490, 4445490 OR 9218276)
1	4487648	Junta	1		
2	.....	Válvula	1		(9230429 NO DISPONIBLE)
3	4487138	Anillo tórico	1		
4	.....	Juego de suplementos	1		(9252140 NO DISPONIBLE)
4A	4606473	Suplemento	2		(0.25)
4B	4487297	Suplemento	2		(0.5)
4C	4601120	Suplemento	2		(1.0)
5	9761179	Tapón	3		(SUB FOR 4455986)
6	.....	Tapón	1		(4602816 NO DISPONIBLE)
7	4185600	Anillo tórico	1		
8	R99052	Anillo tórico	1		(SUB FOR 4484118 OR 0408410)
9	4163873	Anillo tórico	1		(SUB FOR 4484116, AT153904, 0408411 OR TH106081)
11	9221114	Electroválvula	1		
12	9221114	Electroválvula	1		
13	4489678	Arandela	1		
15	4185600	Anillo tórico	1		
16	R99052	Anillo tórico	1		(SUB FOR 4484118 OR 0408410)
17	4163873	Anillo tórico	1		(SUB FOR 4484116, AT153904, 0408411 OR TH106081)
18	4489678	Arandela	1		
19	T111645	Tornillo	2		(SUB FOR M340513)
20	0670802	Anillo tórico	1		(SUB FOR 4484114 OR 4455989)
21	T111645	Tornillo	2		(SUB FOR M340513)
22	0670802	Anillo tórico	1		(SUB FOR 4484114 OR 4455989)
51	.....	Válvula descarga de presión	1		(9252141 NO DISPONIBLE)

PILOT SIGNAL MANIFOLD (HOUSING AND GASKETS)
MANIFOLD DE SIGNAL PILOTE (CARTER ET JOINTS)
COLECTOR DE SENALES PILOTO (CAJA Y EMPAQUETADURAS)

T149601 A.1

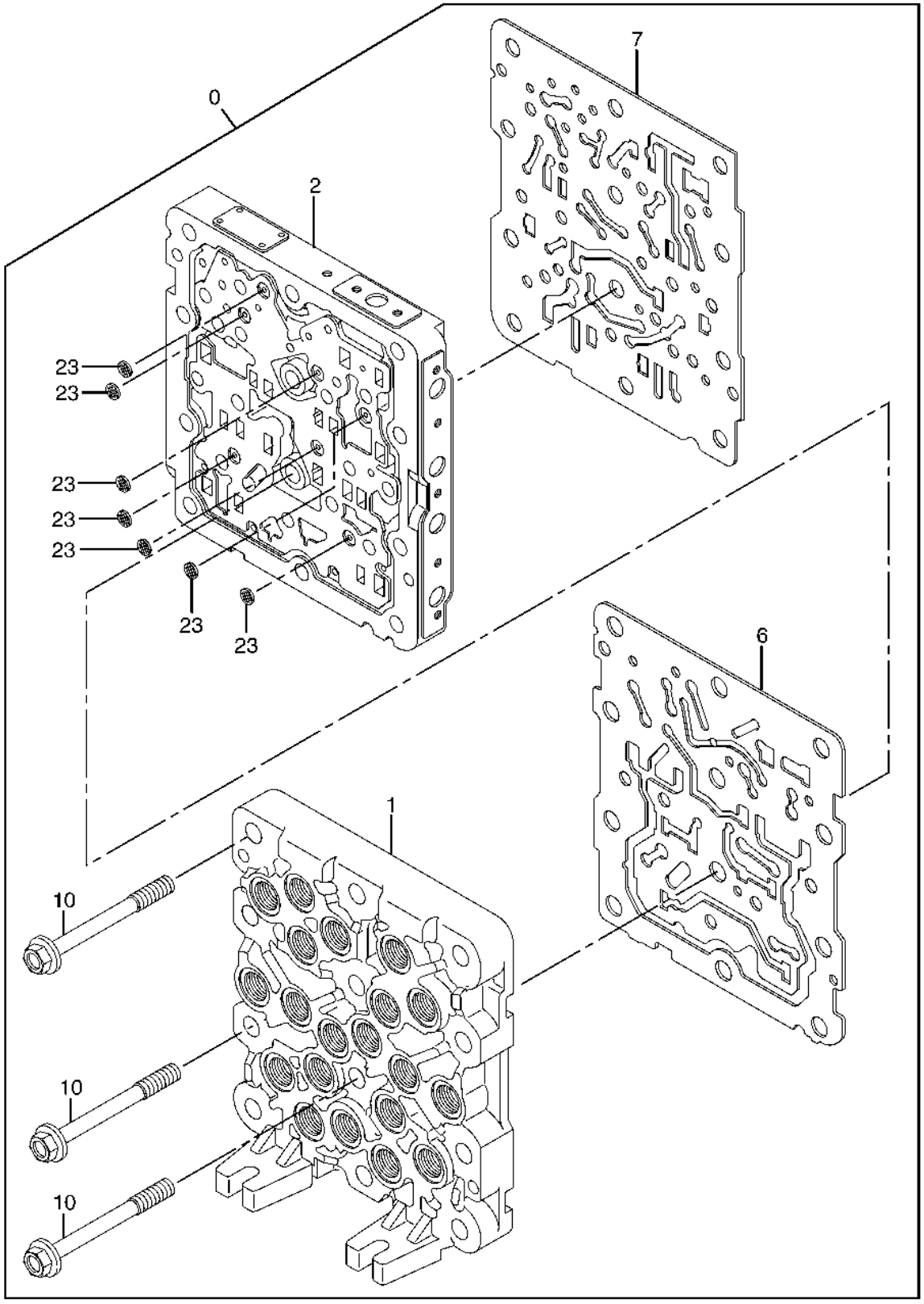

T149601

Pos.	*Ref.*	*Descripción*	*Cant.*	*Núm. de serie*	*Notas*
0	4468336	Válvula hidr. regul. caudal	1		
1	.....	Carcasa	1		
2	.....	Carcasa	1		
6	.....	Junta	1		
7	.....	Junta	1		
10	.....	Tornillo	12		
23	.....	Cartucho de filtro	7		

PILOT SIGNAL MANIFOLD (HOUSING AND GASKETS)
MANIFOLD DE SIGNAL PILOTE (CARTER ET JOINTS)
COLECTOR DE SENALES PILOTO (CAJA Y EMPAQUETADURAS)

T149603 A.1

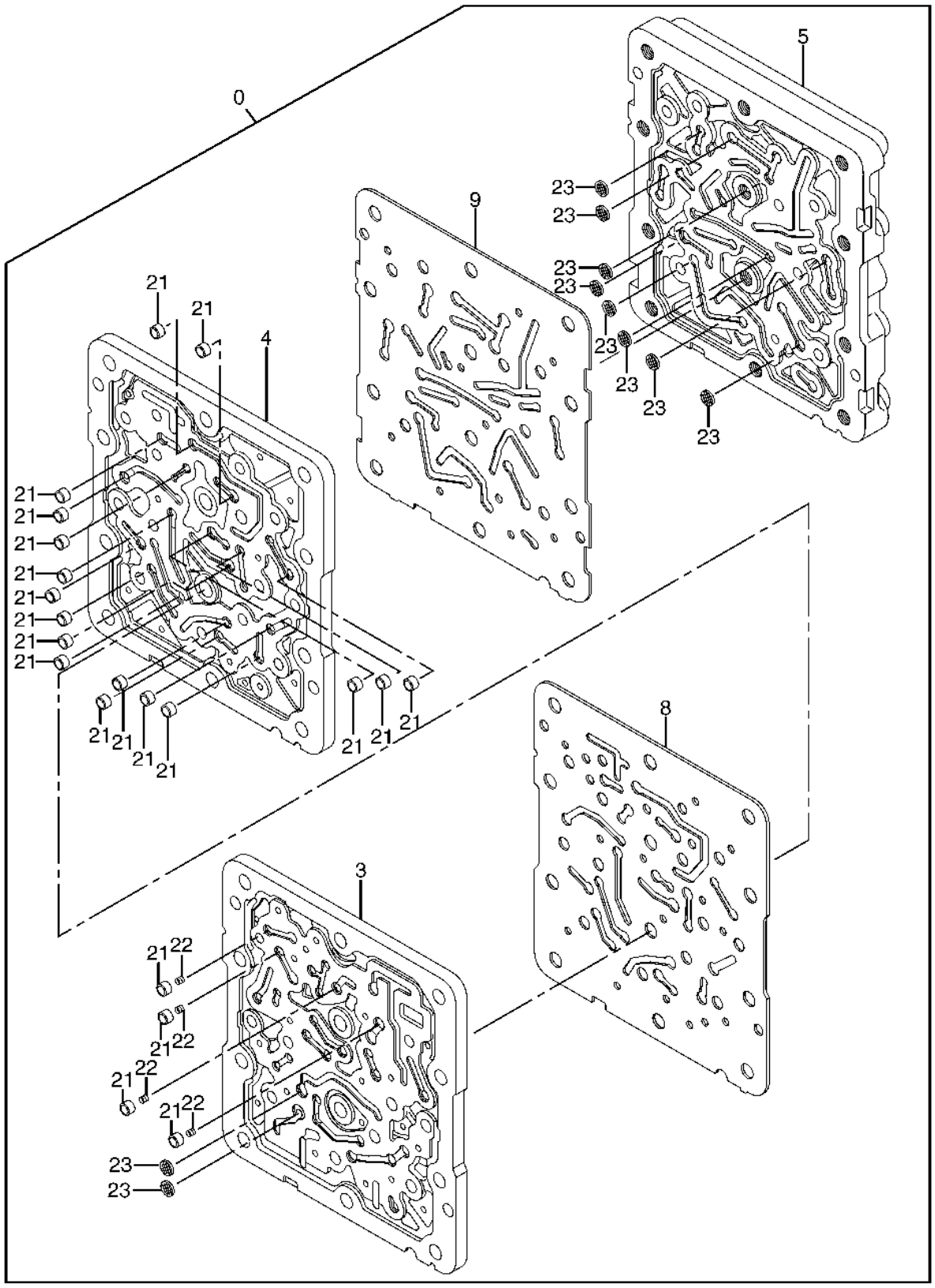

Pos.	*Ref.*	*Descripción*	*Cant.*	*Núm. de serie*	*Notas*
0	4468336	Válvula hidr. regul. caudal	1		
3	.....	Carcasa	1		
4	.....	Carcasa	1		
5	.....	Carcasa	1		
8	.....	Junta	1		
9	.....	Junta	1		
21	.....	Manguito	21		
22	.....	Muelle	4		
23	.....	Cartucho de filtro	10		

PILOT SIGNAL MANIFOLD FITTINGS (PILOT CONTROLLER SIDE)
RACCORDS DE COLLECTEUR DE SIGNAL PILOTE (COTE CONTROLEUR PILOTE)
ADAPTADORES DEL COLECTOR DE SENALES PILOTO (LADO DEL CONTROLADOR PILOTO)

T149604 A.1

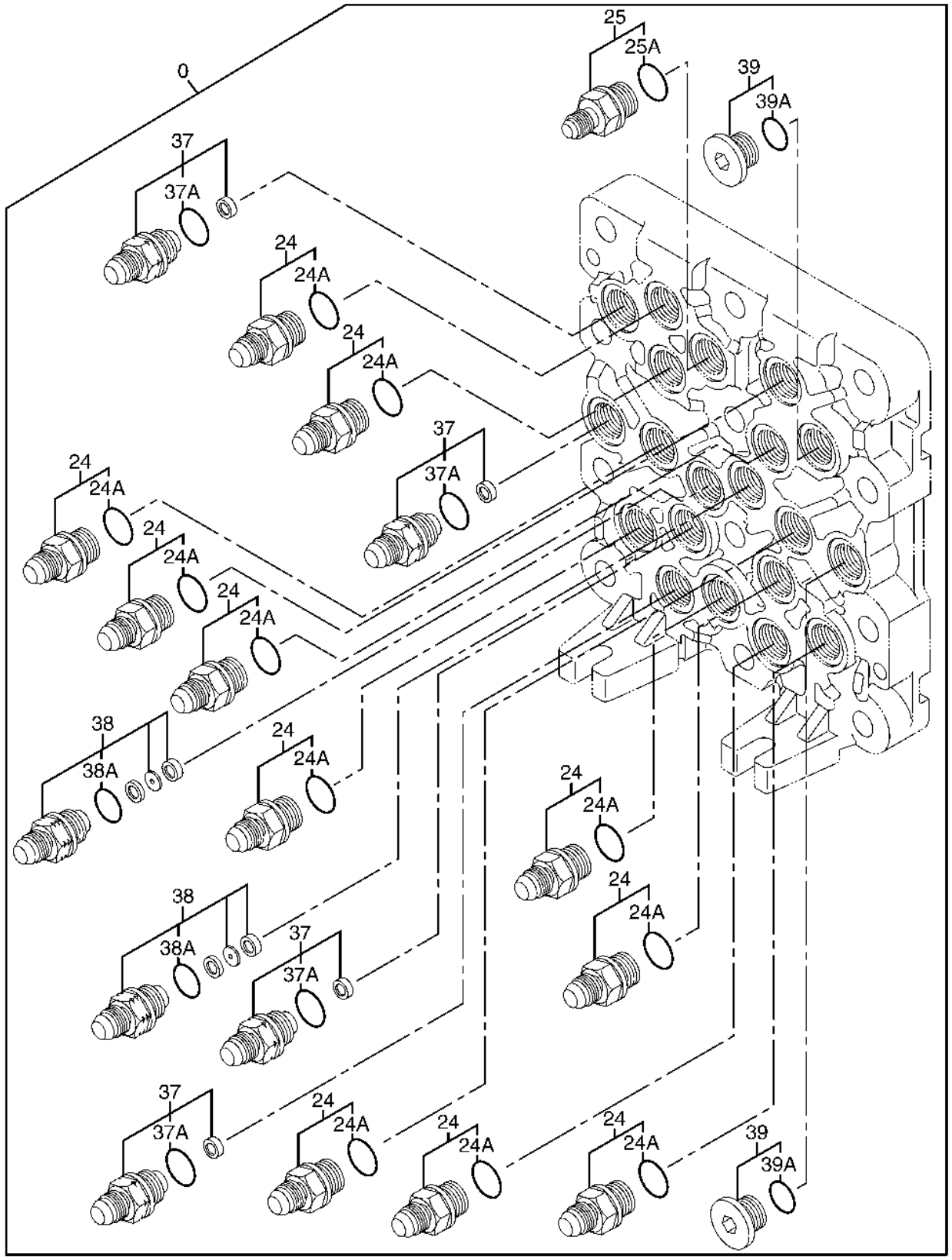

Pos.	*Ref.*	*Descripción*	*Cant.*	*Núm. de serie*	*Notas*
0	4468336	Válvula hidr. regul. caudal	1		
24	4451784	Racor adaptador	11		
24A	CH11570	Anillo tórico	1		
25	4451785	Racor adaptador	1		
25A	CH11570	Anillo tórico	1		
37	4451787	Racor adaptador	4		
37A	CH11570	Anillo tórico	1		
38	4451788	Racor adaptador	2		
38A	CH11570	Anillo tórico	1		
39	4451789	Tapón roscado	2		
39A	CH11570	Anillo tórico	1		

PILOT SIGNAL MANIFOLD FITTINGS (CONTROL VALVE SIDE)
RACCORDS DE COLLECTEUR DE SIGNAL PILOTE (COTE DISTRIBUTEUR)
ADAPTADORES DEL COLECTOR DE SENALES PILOTO (LADO VALVULA DE CONTROL)

T149605 A.1

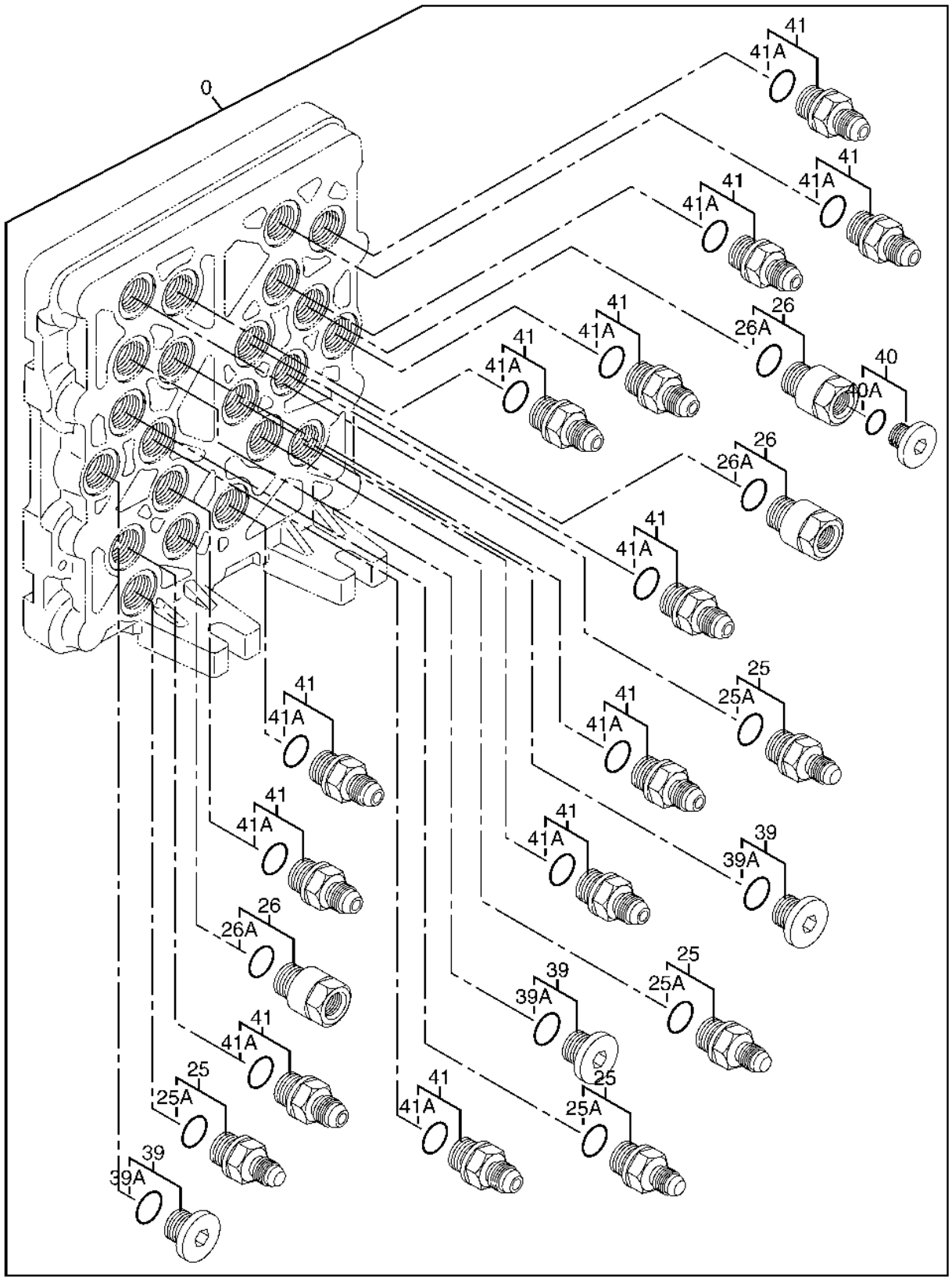

Pos.	*Ref.*	*Descripción*	*Cant.*	*Núm. de serie*	*Notas*
0	4468336	Válvula hidr. regul. caudal	1		
25	4451785	Racor adaptador	4		
25A	CH11570	Anillo tórico	1		
26	4451786	Reductor	3		
26A	CH11570	Anillo tórico	1		
39	4451789	Tapón roscado	3		
39A	CH11570	Anillo tórico	1		
40	4451790	Tapón roscado	1		
40A	M800650	Empaquetadura	1		(SUB FOR 957366)
41	4451797	Racor adaptador	12		
41A	CH11570	Anillo tórico	1		

PILOT SIGNAL MANIFOLD VALVE SPOOLS
TIROIRS DE DISTRIBUTEUR DE COLLECTEUR DE SIGNAL PILOTE
CARRETES DE VALVULA DEL COLECTOR DE SENALES PILOTO

T149610 A.1

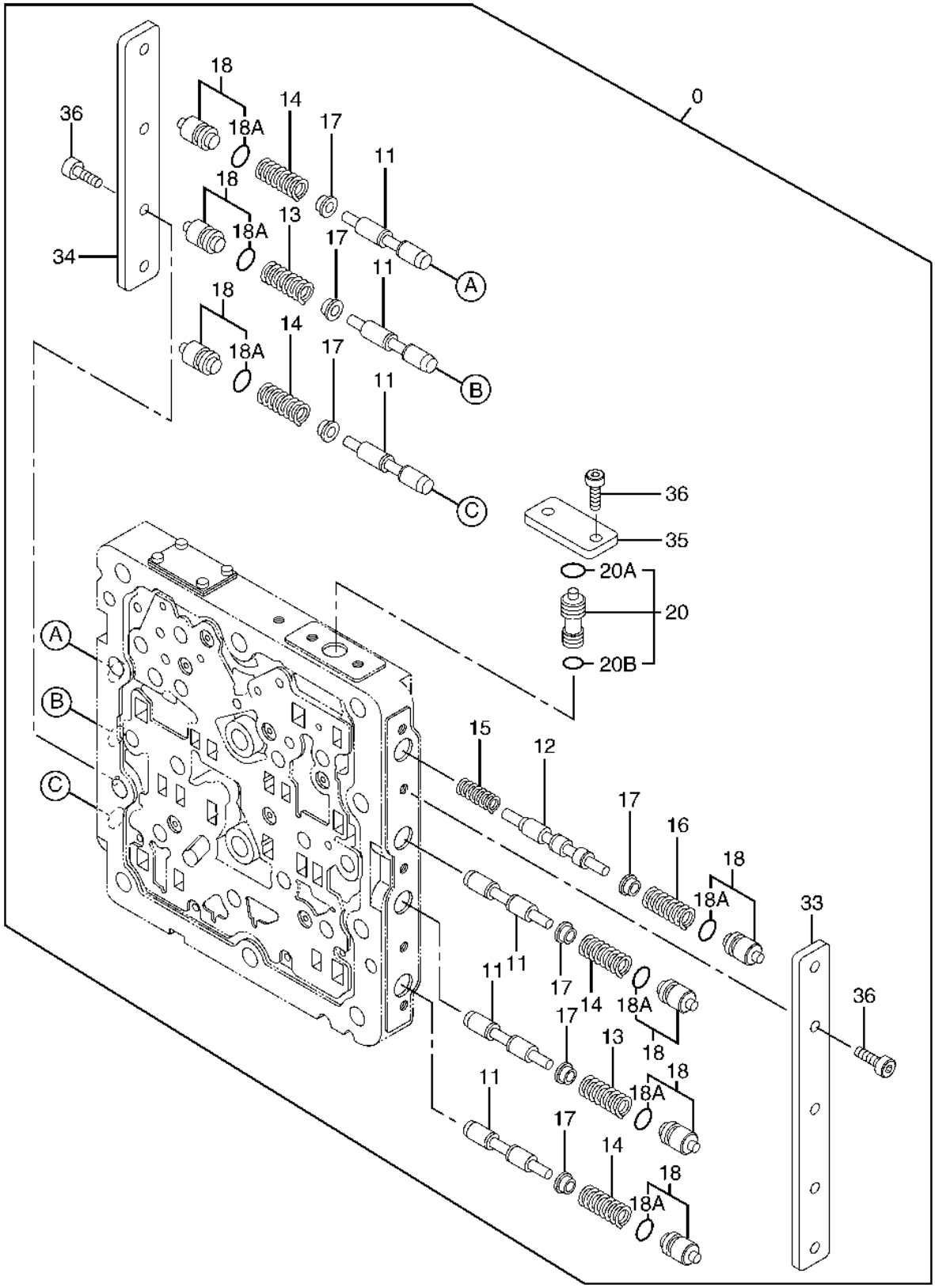

Pos.	*Ref.*	*Descripción*	*Cant.*	*Núm. de serie*	*Notas*
0	4468336	Válvula hidr. regul. caudal	1		
11	4453819	Válvula de carrete	6		
12	4453820	Válvula de carrete	1		
13	0788703	Muelle	2		
14	0788704	Muelle	4		
15	0788705	Muelle	1		
16	0788706	Muelle	1		
17	0788707	Asiento de válvula	7		
18	4452647	Tapón roscado	7		
18A	4140436	Empaquetadura	1		
20	4452649	Válvula hidr. regul. caudal	1		
20A	4140436	Empaquetadura	1		
20B	992526	Empaquetadura	1		
33	0788710	Placa	1		
34	0788711	Placa	1		
35	0788712	Placa	1		
36	0788713	Tornillo	11		

PILOT SHUTOFF VALVE COMPONENTS
COMPOSANTS DU ROBINET D'ARRET PILOTE
COMPONENTES DE VALVULA DE CORTE PILOTO

T157478 A.1

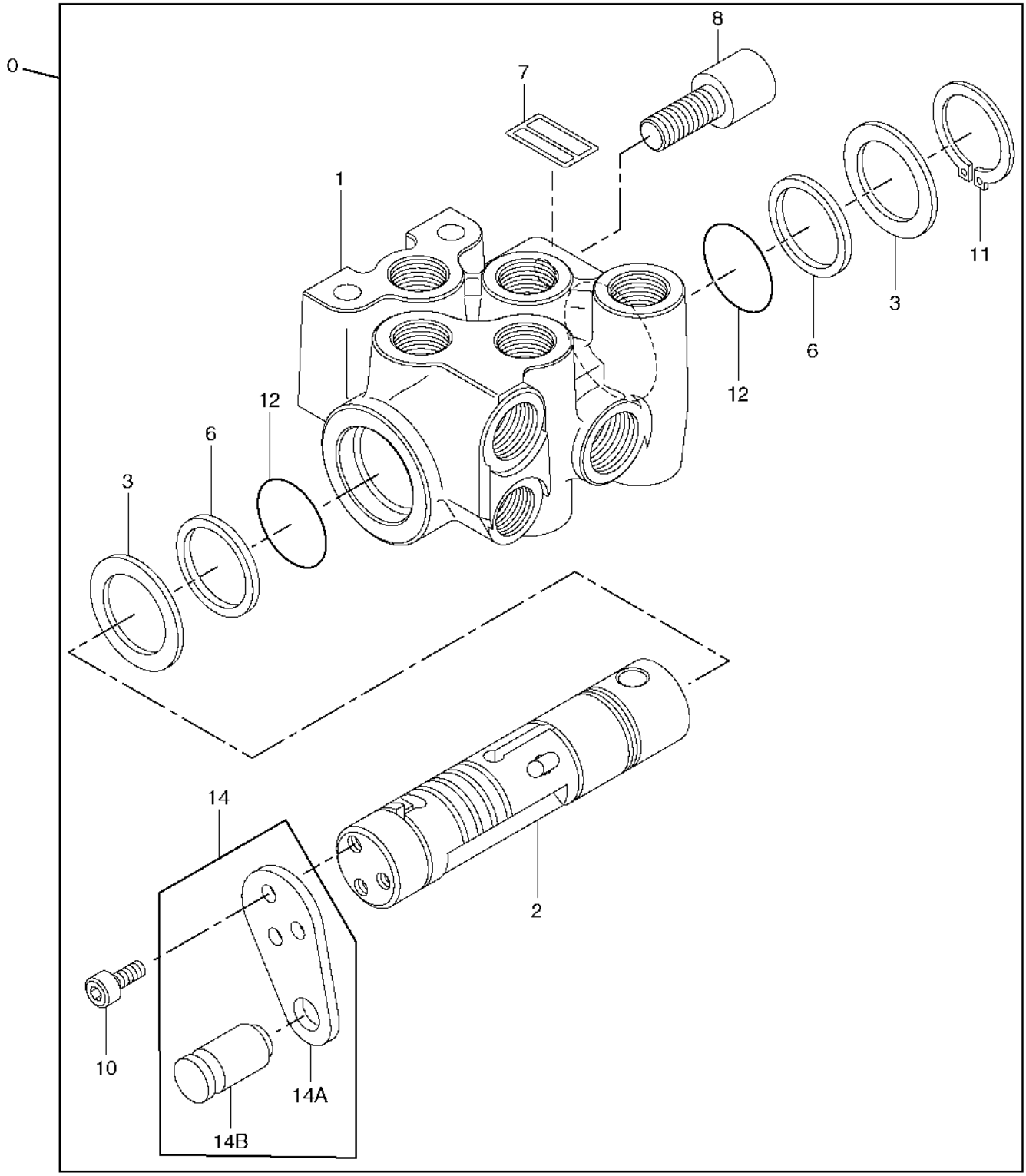

T157478

Pos.	*Ref.*	*Descripción*	*Cant.*	*Núm. de serie*	*Notas*
0	4407253	Válvula hidr. regul. caudal	1		
1	.....	Carcasa	1		
2	.....	Válvula de carrete	1		
3	0794201	Arandela	2		
6	0794202	Anillo	2		
7	.....	Placa de identificación	1		
8	0794203	Bulón	1		
10	0794204	Tornillo	3		
11	0794205	Anillo elástico	1		
12	0794206	Anillo tórico	2		
14	0794207	Soporte	1		
14A	.....	Soporte	1		
14B	.....	Pasador	1		

HYDRAULIC RESERVOIR TO PUMP LOW PRESSURE HOSES AND LINES
FLEXIBLES ET CONDUITES BASSE PRESSION ENTRE RESERVOIR HYDRAULIQUE ET POMPE
DEPOSITO HIDRAULICO A MANGUERAS DE PRESION BAJA DE BOMBA Y LINEAS

T210231 A.1

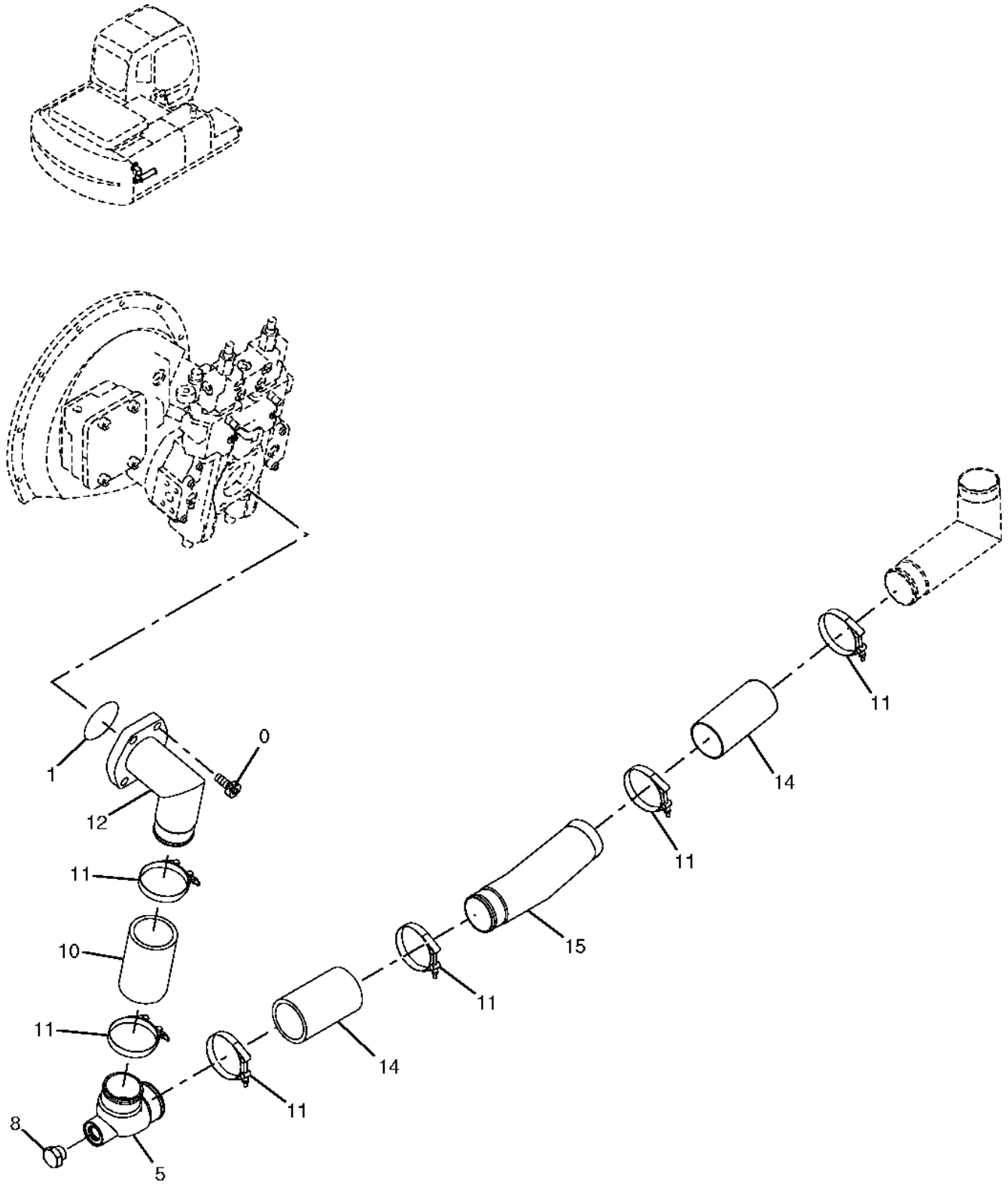

T210231

Pos.	*Ref.*	*Descripción*	*Cant.*	*Núm. de serie*	*Notas*
0	19M8490	Tornillo	4		M16 X 40
1	CH17854	Empaquetadura	1		
4	AT43291	Abrazadera para mangueras	2		
5	3073276	Tubería	1		(ASPIRACION)
8	A885006	Tapón	1		
	AT318035	Anillo tórico	1		(SUB FOR 4506424)
10	P68661	Manguera	1		(CORTAR A LONGITUD 214 MM)
11	AT37476	Abrazadera para mangueras	6		
12	8082633	Tubería	1		(ASPIRACION)
14	P68661	Manguera	2		(CORTAR A LONGITUD 136 MM)
15	AP38120	Tubo	1		

HYDRAULIC PUMP TO CONTROL VALVE HIGH PRESSURE HOSES
FLEIXBLES HAUTE PRESSION ENTRE POMPE HYDRAULIQUE ET DISTRIBUTEUR
BOMBA HIDRAULICA A MANGUERAS PRESION ALTA DE VALVULA CONTROL

TX1048924 A.1

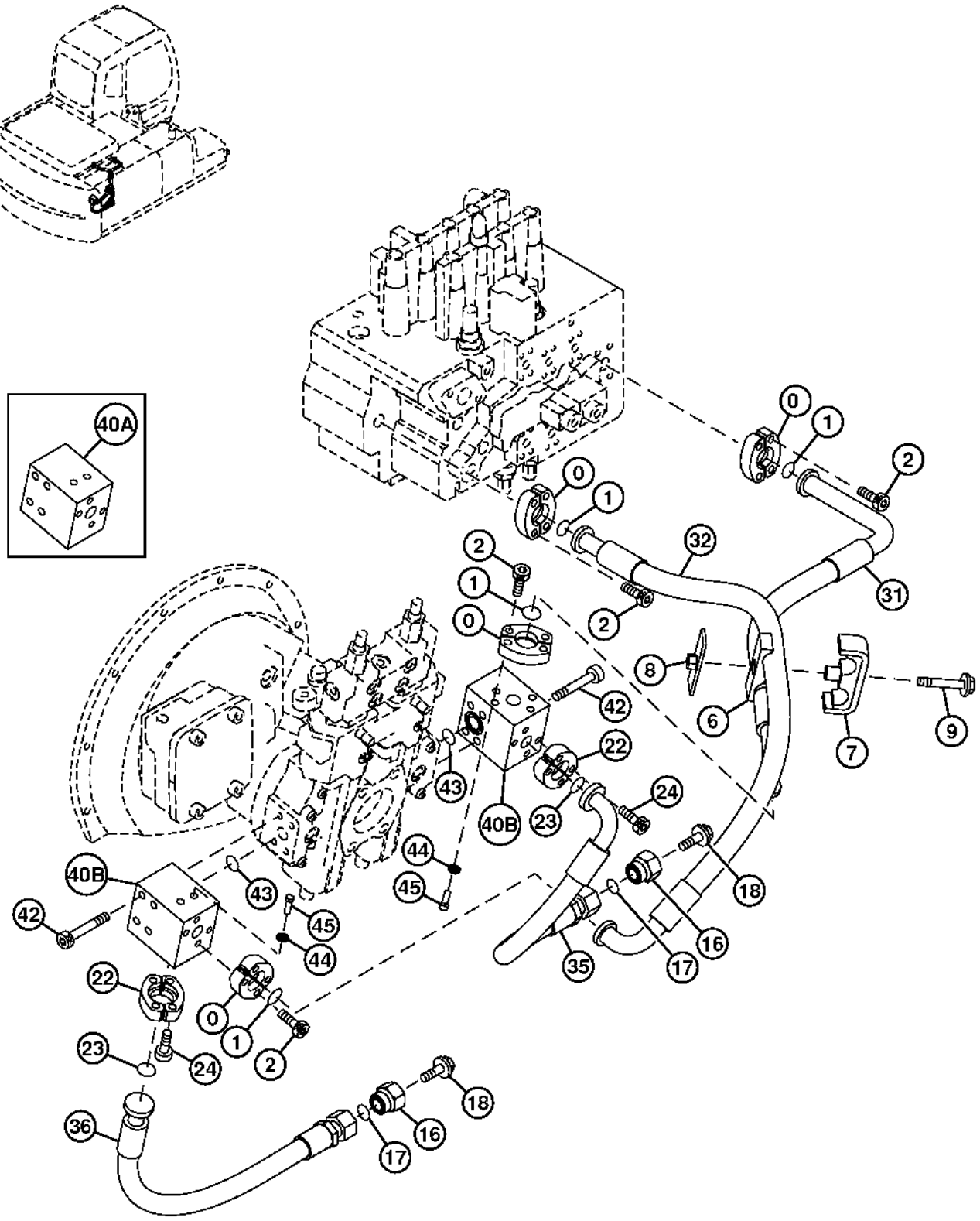

TX1048924

Pos.	Ref.	Descripción	Cant.	Núm. de serie	Notas
0	T107446	Conexión con brida	8		
1	T59014	Anillo tórico	4		
2	19M7576	Tornillo	16		M10 X 30, (SUB FOR J781030)
6	3072291	Aislante	1		
7	8061722	Abrazadera	1		
8	9738975	Abrazadera	1		
9	19M8088	Tornillo	1		M12 X 75
	12H301	Arandela de seguridad	1		1/2"
16	4204882	Tapón hermético	2		
17	T77858	Anillo tórico	2		
18	19M7403	Tornillo	2		M12 X 35
	12H301	Arandela de seguridad	2		1/2"
22	T107446	Conexión con brida	4		
23	T59014	Anillo tórico	2		
24	19M7576	Tornillo	8		M10 X 30, (SUB FOR J781030)
31	DH400572	Manguera hidráulica	1		(SUB FOR AP38256)
32	DH400573	Manguera hidr. - confección	1		(SUB FOR AP38257)
35	4463608	Manguera hidr. - confección	1		(SUB FOR AP38258)
36	4463609	Manguera hidr. - confección	1		(SUB FOR AP38259)
40A	.....	Válvula de retención	2	-XXXXXX	(9218493 NLA)
40B	3106731	Adaptador	2	XXXXXX-	(ALSO ORDER (2) 19M8231 AND (2) 24M7345)
42	P68427	Tornillo	8		
43	TH101300	Anillo tórico	2		(SUB FOR J222012)
44	24M7345	Arandela	4	XXXXXX-	13.500 X 24 X 2.500 mm, (SUB FOR J901216)
45	19M8231	Tornillo	4	XXXXXX-	M12 X 16

RETURN LINES (CONTROL VALVE AND OIL COOLER TO OIL TANK)
CONDUITES DE RETOUR (ENTRE DISTRIBUTEUR / REFROIDISSEUR D'HUILE ET RESERVOIR D'HUILE)
LINEAS DE RETORNO (VALVULA DE CONTROL Y ENFRIADOR DE ACEITE AL TANQUE DE ACEITE)

TX1118492 A.1

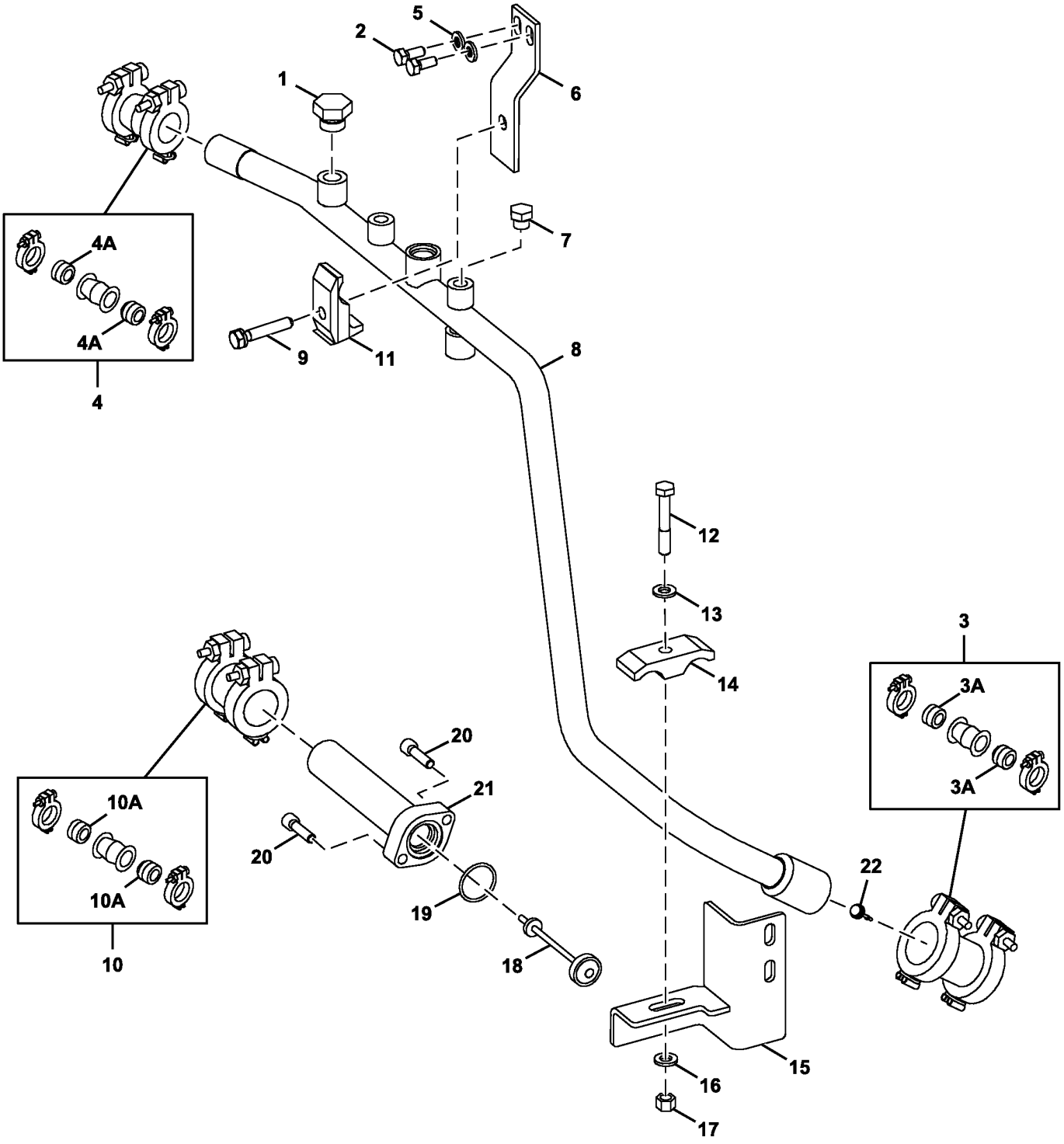

TX1118492

Pos.	*Ref.*	*Descripción*	*Cant.*	*Núm. de serie*	*Notas*
1	A885006	Tapón	1		
2	19M7402	Tornillo	2		M10 X 25
3	4067834	Acoplamiento	1		
3A	4196260	Retén	2		NLA, ORDER 4067834
4	FXV00000005	Acoplamiento	1		SUB FOR 4071213
4A	FXV00000005	Acoplamiento	2		SUB FOR 4196258
5	24M7346	Arandela	2		11 X 20 X 2 mm
6	DH800119	Soporte	1		
7	A885003	Tapón roscado	1		
8	AP38239	Tubería	1		Tubo de tanque de aceite a enfriador
9	19M8348	Tornillo	1		M12 X 65
10	4712341	Acoplamiento	1		SUB FOR 4069801 AND 4196259
10A	4196259	Retén	2		NLA, ORDER 4712341
11	4190127	Abrazadera	1		
12	19M8088	Tornillo	1		M12 X 75
13	24M7240	Arandela	1		13 X 25 X 3 mm
14	4189860	Abrazadera	1		
15	DH400683	Soporte	1		
16	24M7240	Arandela	1		13 X 25 X 3 mm
17	14M7168	Tuerca de seguridad	1		M12
18	4266481	Válvula hidr. regul. caudal	1		
19	A811040	Anillo tórico	1		
20	L159272	Tornillo	2		SUB FOR J781040
21	8064356	Tubería	1		SUB FOR AP33538, Línea de retorno, Tubo de tanque de aceite a válvula de control
22	4276584	Válvula hidr. regul. caudal	1		Válvula de restricción hidráulica

CONTROL VALVE TO OIL COOLER LINE
ENTRE DISTRIBUTEUR A CONDUITE DU REFROIDISSEUR D'HUILE
VALVULA DE CONTROL A LINEA DEL ENFRIADOR DE ACEITE

TX1007678 A.1

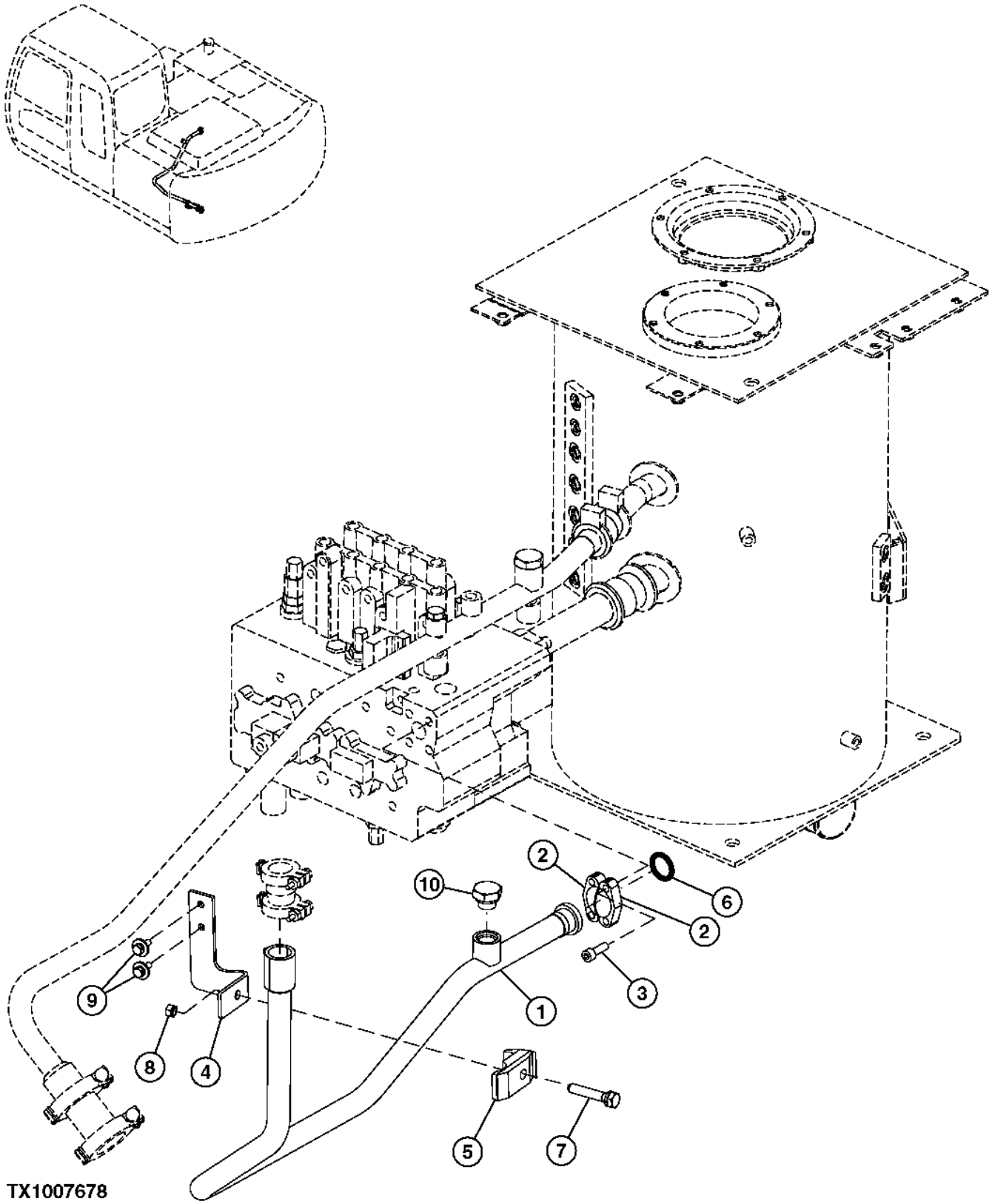

Pos.	*Ref.*	*Descripción*	*Cant.*	*Núm. de serie*	*Notas*
1	AP38136	Tubería	1		
2	H61354	Conexión con brida	2		
3	19M7576	Tornillo	4		M10 X 30, (SUB FOR J781030)
4	DH800121	Soporte	1	044543-	
5	4190127	Abrazadera	1	044543-	
6	T78313	Anillo tórico	1		
7	19M8348	Tornillo	1	044543-	M12 X 65
8	4137295	Tuerca soldable	1	044543-	
9	19M7662	Tornillo	2	044543-	M10 X 30, (SUB FOR J031030)
	12M7067	Arandela de seguridad	2	044543-	12 mm
	24M7346	Arandela	2	044543-	11 X 20 X 2 mm
10	A885006	Tapón	1		(P68008 NLA)
	AT318035	Anillo tórico	1		(SUB FOR 4506424)

DRAIN HOSES (SWING MOTOR TO CONTROL VALVE, RETURN LINE)
FLEXIBLES DE VIDANGE (ENTRE MOTEUR DE BASCULEMENT ET DISTRIBUTEUR, CONDUITE DE RETOUR)
MANGUERAS DE VACIADO (MOTOR DE GIRO A VALVULA DE CONTROL, LINEA DE RETORNO)

T198743 A.1

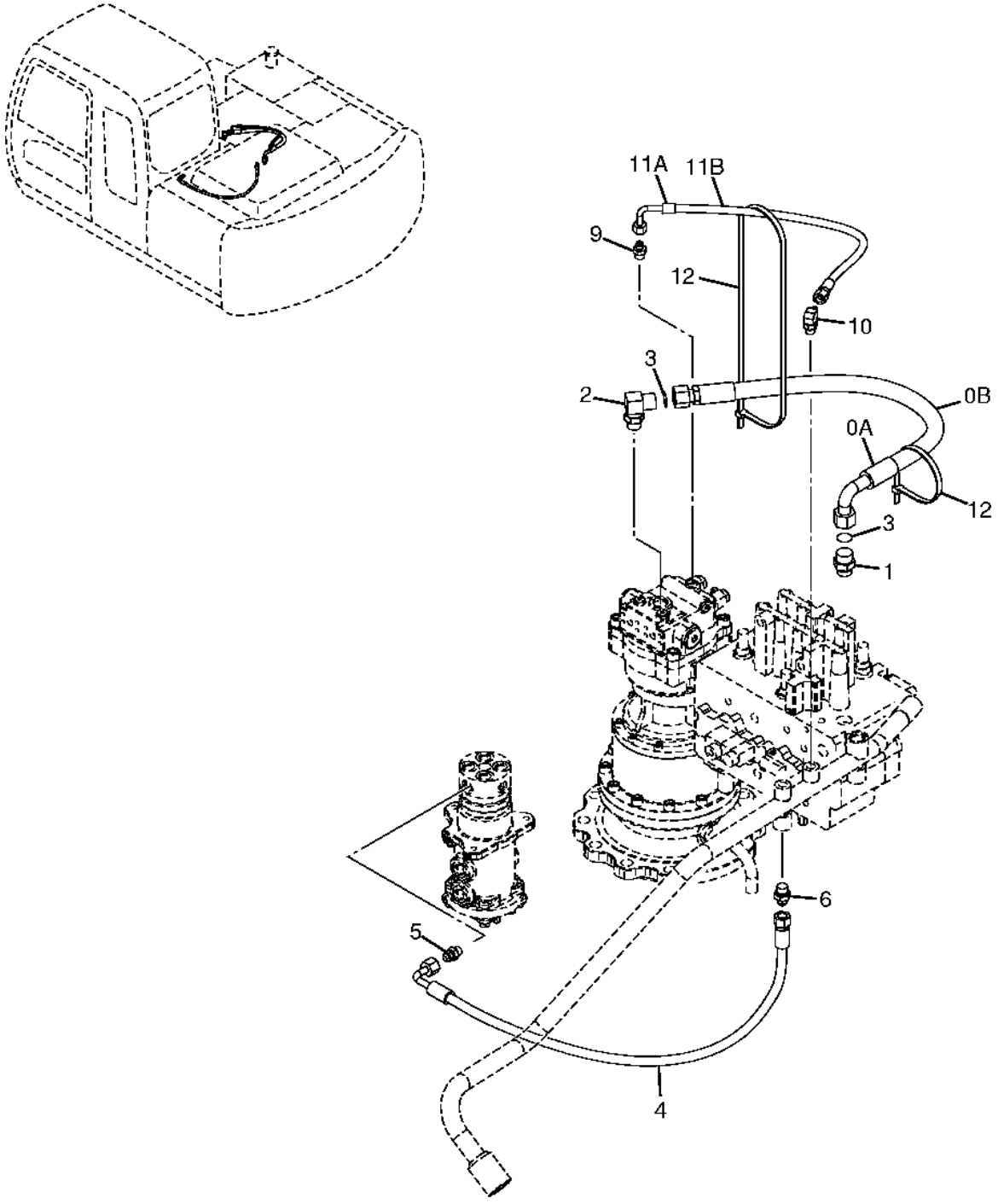

T198743

Pos.	*Ref.*	*Descripción*	*Cant.*	*Núm. de serie*	*Notas*
0A	4448240	Manguera hidr. - confección	1		SUB FOR AP38241 OR 9204551, MAKE FROM XHG-075, BULK MATERIAL, CTL
0B	.....	Protección de manguera	1		MAKE FROM XHG-075, BULK MATERIAL, CUT TO LENGTH , 4327294 NLA
1	A853166	Racor adaptador	1		
	AT318035	Anillo tórico	1		SUB FOR 4506424
2	A853366	Racor acodado	1		
	AT318035	Anillo tórico	1		SUB FOR 4506424
3	T77858	Anillo tórico	2		
4	4454381	Manguera hidr. - confección	1		SUB FOR AP38243
5	A852134	Racor adaptador	1		
	CH11570	Anillo tórico	1		SUB FOR 4509180
6	A852144	Racor adaptador	1		
	4506418	Anillo tórico	1		
9	A852133	Racor adaptador	1		
	CH11570	Anillo tórico	1		SUB FOR 4509180
10	A852333	Racor acodado	1		
	CH11570	Anillo tórico	1		SUB FOR 4509180
11A	4437738	Manguera hidráulica	1		SUB FOR AP38242 OR 9204552
11B	4327315	Protección de manguera	1		4327293 NLA
12	R76477	Cinta de atar	2		

CONTROL VALVE TO BOOM CYLINDER HOSES AND LINES
FLEXIBLES ET CONDUITES ENTRE DISTRIBUTEUR ET VERIN DE FLECHE
VALVULA DE CONTROL A MANGUERAS DEL CILINDRO DE AGUILON Y LINEAS

TX1007677 A.1

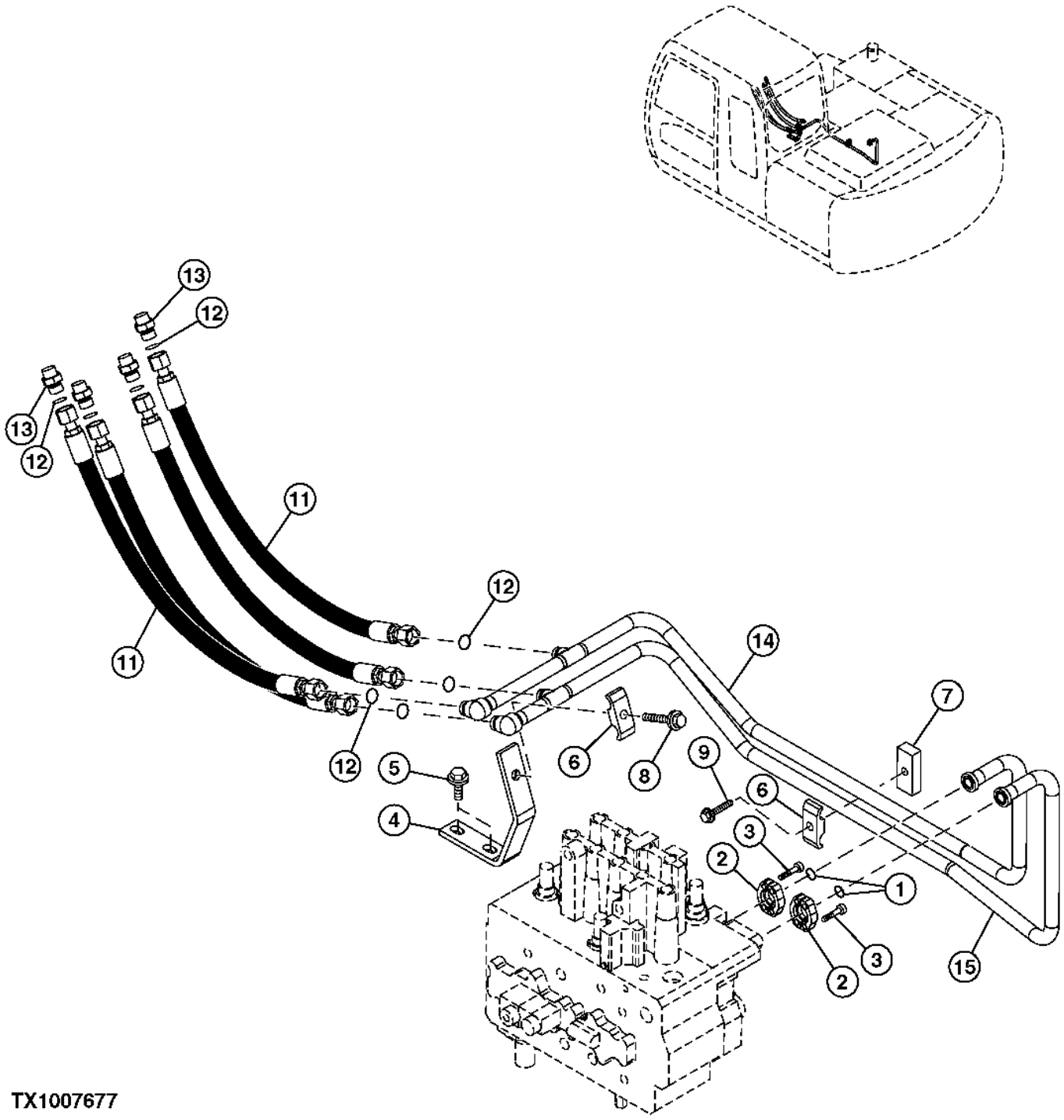

Pos.	*Ref.*	*Descripción*	*Cant.*	*Núm. de serie*	*Notas*
1	R69667	Anillo tórico	2		
2	TH108341	Conexión con brida	4		
3	19M7657	Tornillo	8		M8 X 25, (SUB FOR P61954 OR J780825)
4	AP38544	Soporte	1		
5	19M7872	Tornillo	2		M12 X 25
	12H301	Arandela de seguridad	2		1/2"
	24M7047	Arandela	2		13 X 24 X 2.500 mm
6	4285723	Abrazadera	2		Goma
	4189859	Abrazadera	2		Acero
7	4369262	Colector	1		
8	19M7363	Tornillo	1		M12 X 60
	12H301	Arandela de seguridad	1		1/2"
9	19M7363	Tornillo	1		M12 X 60
	12H301	Arandela de seguridad	1		1/2"
11	4463611	Manguera hidr. - confección	4		(SUB FOR AP38245)
12	T77858	Anillo tórico	8		
13	A853166	Racor adaptador	4		
	AT318035	Anillo tórico	1		(SUB FOR 4506424)
14	8082645	Tubería	1		
15	8082650	Tubería	1		(SUB FOR AP38244)

CONTROL VALVE TO SWING MOTOR HOSES
FLEXIBLES ENTRE DISTRIBUTEUR A MOTEUR DE PIVOTEMENT
VALVULA DE CONTROL A MANGUERAS DEL MOTOR DE GIRO

T211399 A.1

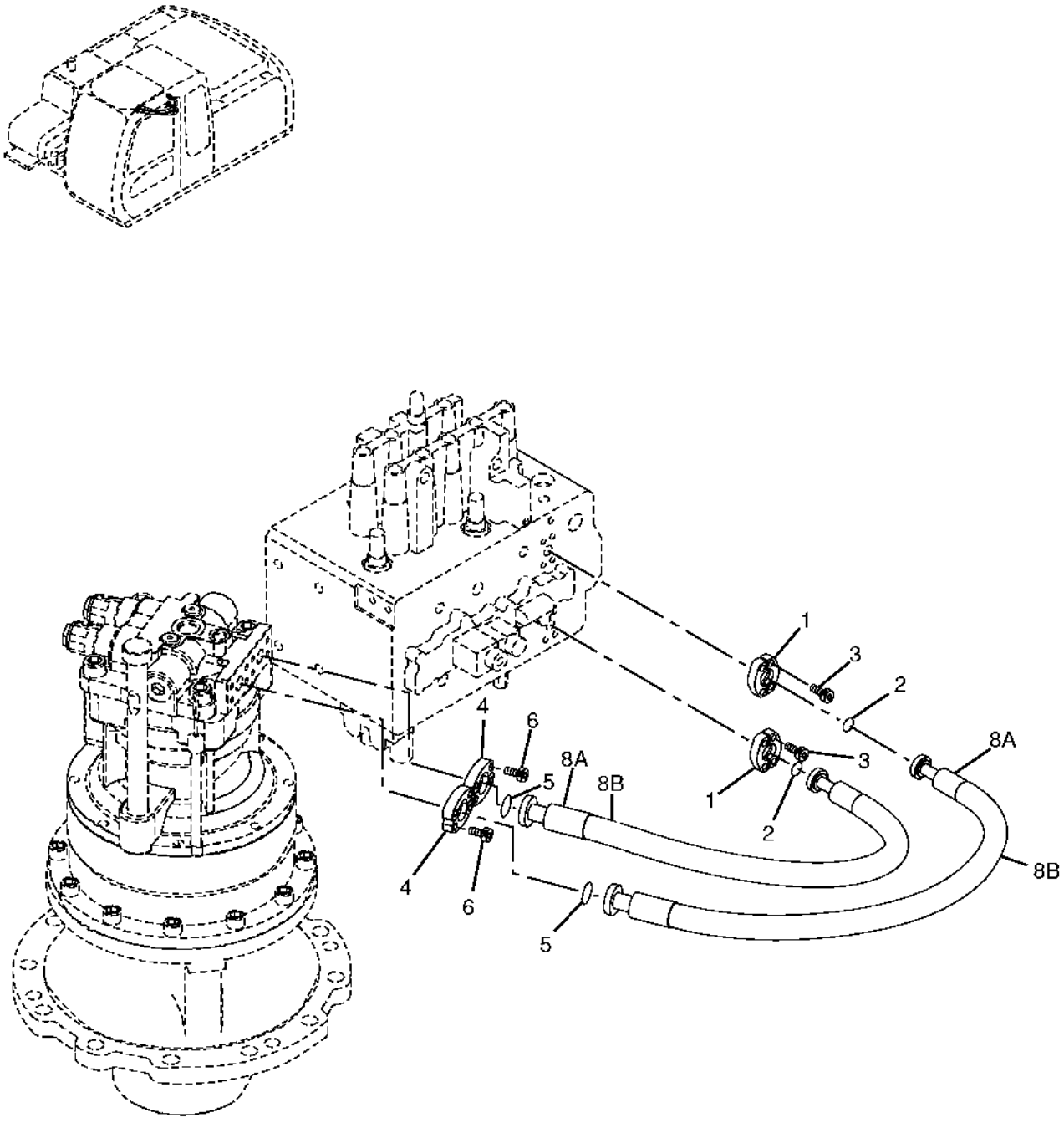

T211399

Pos.	*Ref.*	*Descripción*	*Cant.*	*Núm. de serie*	*Notas*
1	4510173	Conexión	4		
2	R69667	Anillo tórico	2		
3	19M7657	Tornillo	8		M8 X 25, (SUB FOR P61954 OR J780825)
4	R29424	Conexión con brida	4		
5	T59014	Anillo tórico	2		
6	19M7576	Tornillo	8		M10 X 30, (SUB FOR J781030)
8A	4459113	Manguera hidráulica	1		HACER DE MAT A GRANEL XHG-075, CORTE A LARGO)HACER DE MAT A GRANEL XHG-075, CORTE A LARGO)
8B	.....	Protección de manguera	1		(MAKE FROM XHG-075, BULK MATERIAL, CUT TO LENGTH) , (4327294 NLA)

CONTROL VALVE TO ROTARY MANIFOLD HOSES
FLEXIBLES ENTRE DISTRIBUTEUR DE LAME ET COLLECTEUR ROTATIF
VALVULA DE CONTROL DE HOJA A MANGUERAS DE COLECTOR GIRATORIO

T198690 A.1

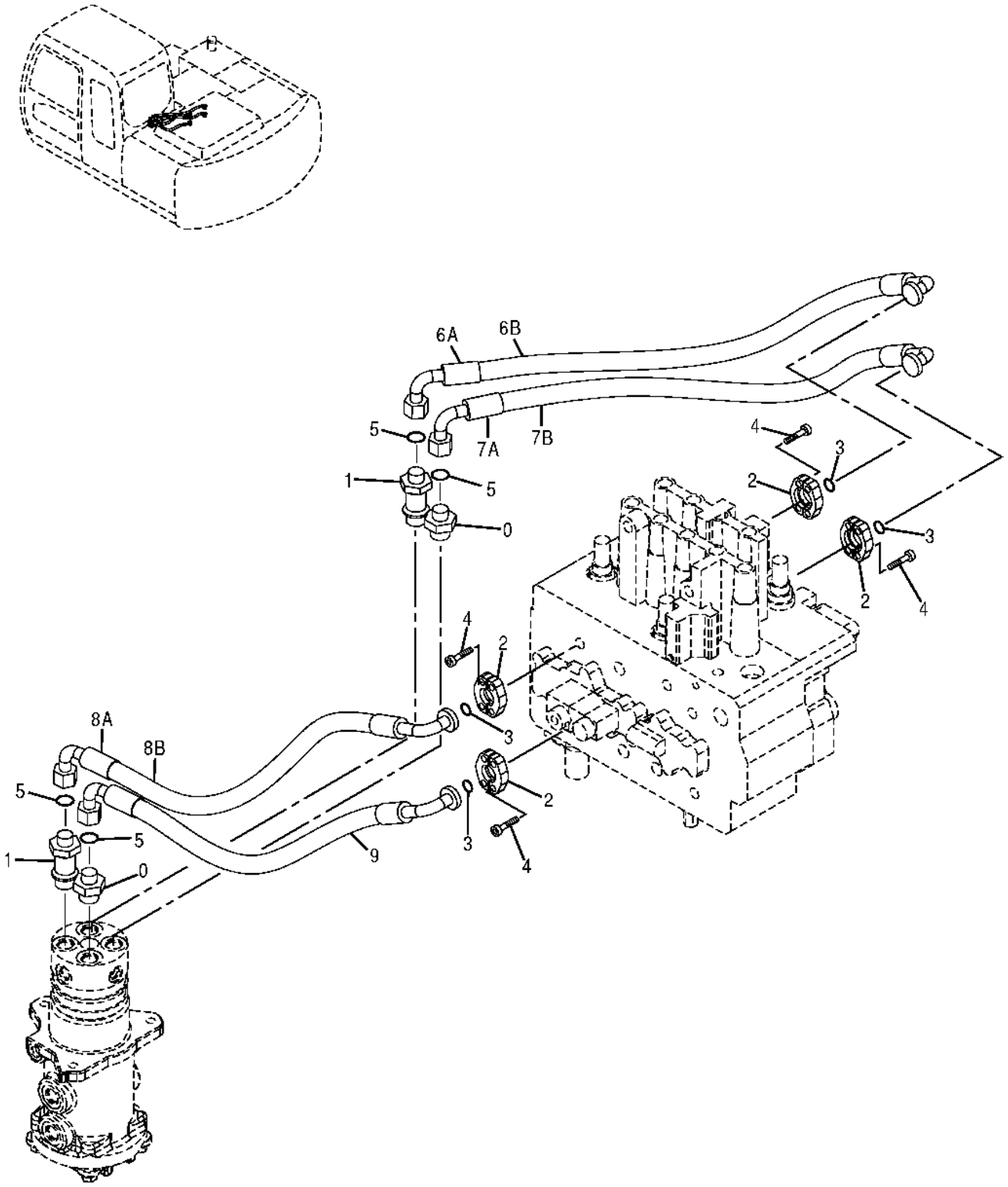

Pos.	*Ref.*	*Descripción*	*Cant.*	*Núm. de serie*	*Notas*
0	A853166	Racor adaptador	2		(SUB FOR 4506424)
	AT318035	Anillo tórico	1		
1	4189539	Racor adaptador	2		(SUB FOR AT107393)
	AT318035	Anillo tórico	1		(SUB FOR 4506424)
2	TH108341	Conexión con brida	8		
3	R69667	Anillo tórico	4		
4	19M7657	Tornillo	16		M8 X 25, (SUB FOR P61954 OR J780825)
5	T77858	Anillo tórico	4		
6A	4448251	Manguera hidráulica	1		(SUB FOR AP38251 OR 9196926) (MF XHG-075 CTL)
6B	.....	Protección de manguera	1		(4327294 NLA) (MF XHG-075 CTL)
7A	4448250	Manguera hidráulica	1		(SUB FOR AP38252 OR 9196927) (MF XHG-075 CTL)
7B	.....	Protección de manguera	1		(4327294 NLA) (MF XHG-075 CTL)
8A	4458774	Manguera hidráulica	1		(SUB FOR AP38253 OR 9204656) (MF (2) XHG-075 CTL)
8B	.....	Protección de manguera	2		(4327294 NLA) (MF XHG-075 CTL)
9A	4448252	Manguera hidráulica	1		(SUB FOR AP38254 OR 9196928) (MF XHG-075 CTL)
9B	.....	Protección de manguera	1		(4327294 NLA) (MF XHG-075 CTL)

PILOT FILTER AND HOSES
FILTRE ET FLEXIBLES PILOTE
FILTRO PILOTO Y MANGUERAS

TX1007676 A.1

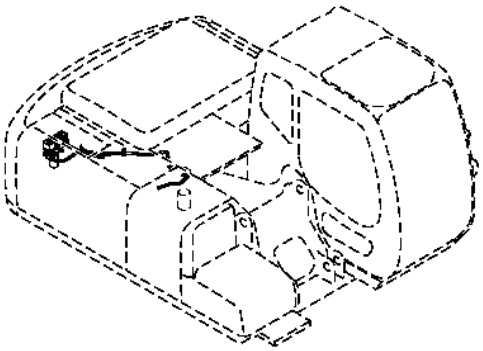

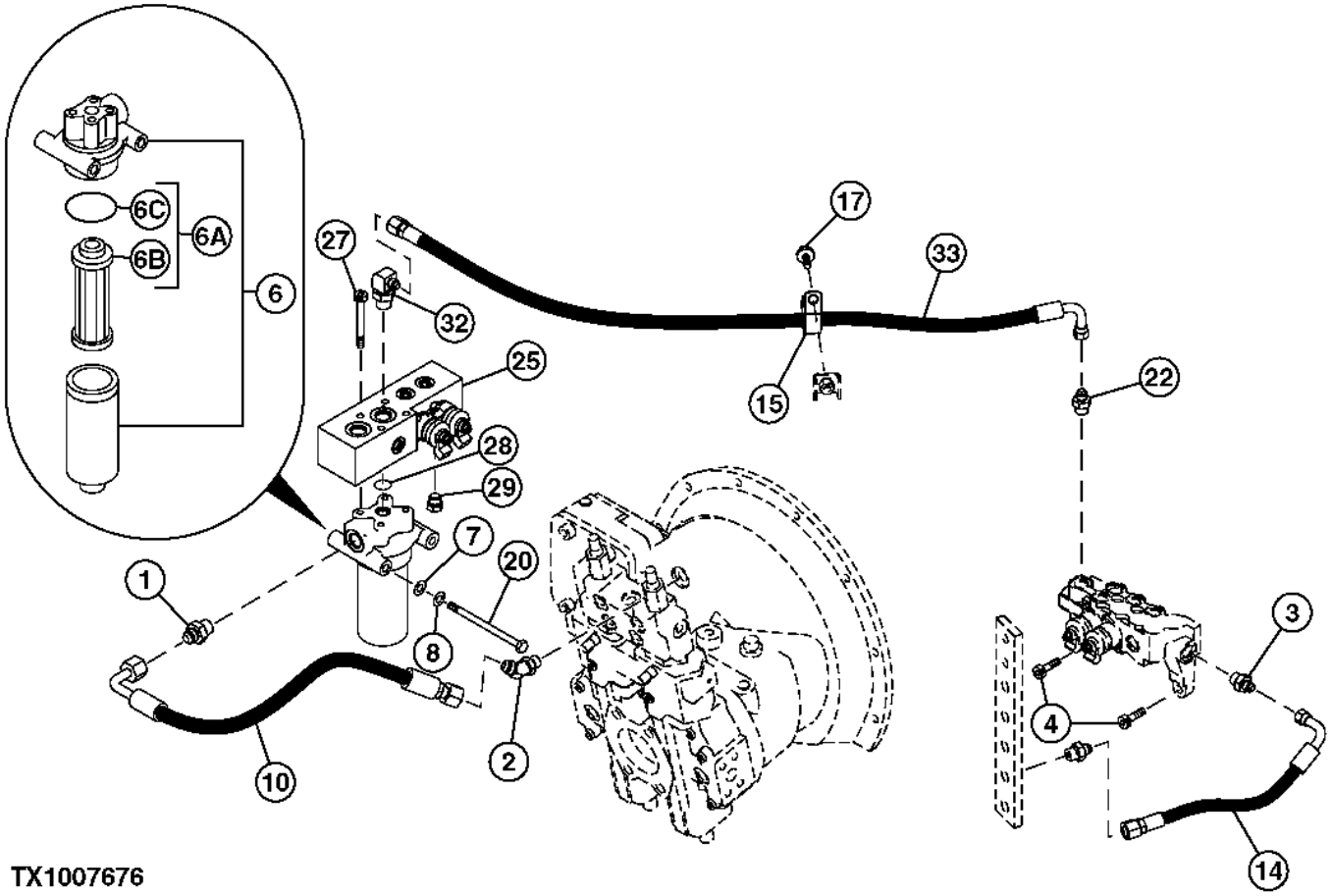

TX1007676

Pos.	*Ref.*	*Descripción*	*Cant.*	*Núm. de serie*	*Notas*
0	A852144	Racor adaptador	1		
	4506418	Anillo tórico	1		
2	A852234	Racor acodado	1		
	CH11570	Anillo tórico	1		(SUB FOR 4509180)
3	A852133	Racor adaptador	1		
	CH11570	Anillo tórico	1		(SUB FOR 4509180)
4	19M7576	Tornillo	2		M10 X 30, (SUB FOR J781030)
6	AT213834	Cabeza de filtro	1		
6A	AT214263	Cartucho de filtro	1		
6B	.....	Cartucho de filtro	1		(4191301 NLA)
6C	TH105683	Anillo tórico	1		(SUB FOR A811060)
7	24M7028	Arandela	2		10.500 X 20 X 2 mm
8	12M7066	Arandela de seguridad	2		10 mm
10	DH400577	Manguera hidr. - confección	1		(SUB FOR AP38219)
14	4445714	Manguera hidr. - confección	1		(SUB FOR P67923)
15	N198631	Abrazadera	1		(SUB FOR TH109598 OR 4190265)
17	19M7402	Tornillo	1		M10 X 25
	12M7066	Arandela de seguridad	1		10 mm
20	19M8343	Tornillo	2		M10 X 120
22	A852133	Racor adaptador	1		
	CH11570	Anillo tórico	1		(SUB FOR 4509180)
25	9220219	Electroválvula	1		(SUB FOR 4445490 OR 9218276)
27	J780880	Tornillo	4		
28	TH102561	Anillo tórico	1		
29	A885002	Tapón	1		
	M800650	Empaquetadura	1		(SUB FOR 957366)
32	A852343	Racor acodado	1		
	4506418	Anillo tórico	1		
33	DH400606	Manguera hidráulica	1		(750MM) (ORDER XHG-075;(DH900426 NLA)
	.....	Protección de manguera	1		(MAKE FROM XHG-075, CUT TO LENGTH) (750MM) , (4327294 NLA)

PILOT HOSES (PUMP REGULATOR TO SOLENOID VALVE, SIGNAL MANIFOLD)
FLEXIBLES PILOTE (DU REGULATEUR DE POMPE A L'ELECTROVANNE, COLLECTEUR DE SIGNAL)
MANGUERAS PILOTO (REGULADOR DE LA BOMBA A VALVULA DE SOLENOIDE, COLECTOR DE SENALES)

T198741 A.1

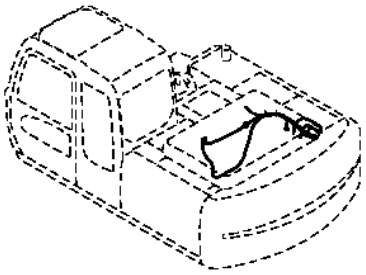

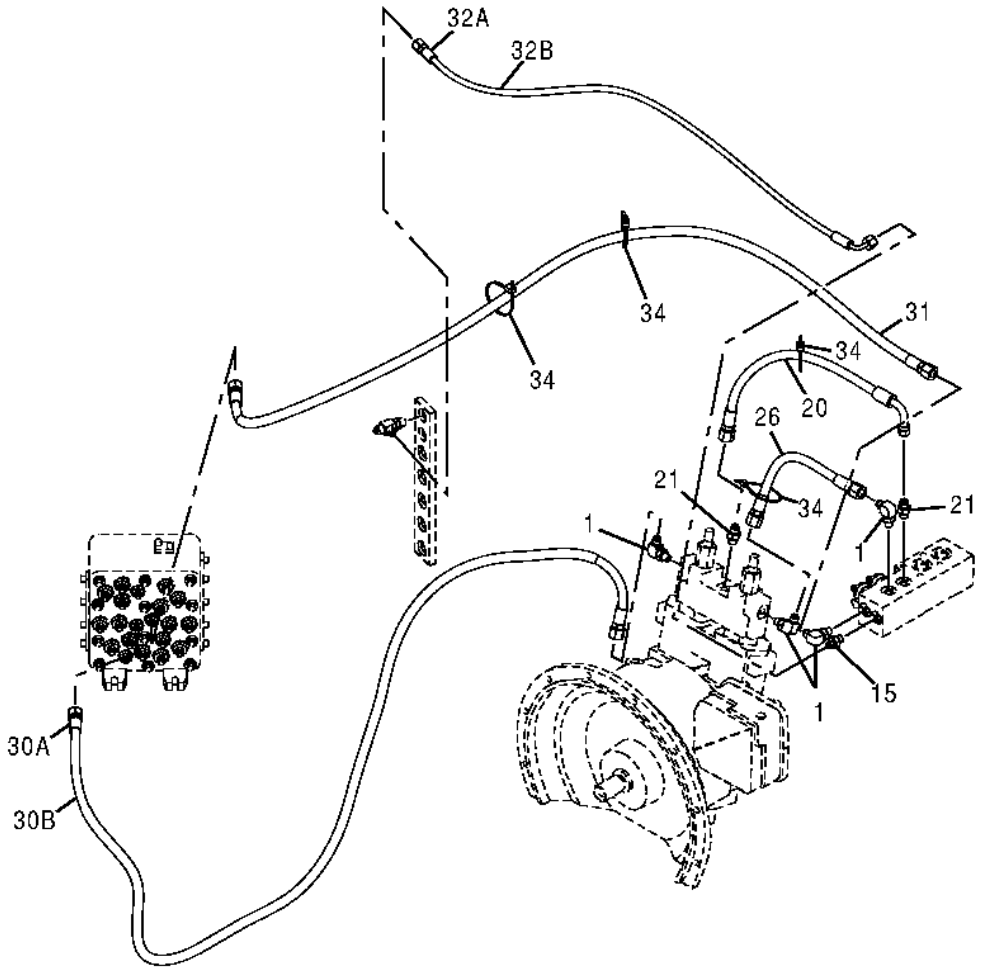

T198741

Pos.	*Ref.*	*Descripción*	*Cant.*	*Núm. de serie*	*Notas*
1	A852323	Racor acodado	4		
	M800650	Empaquetadura	1		SUB FOR 957366
15	4200465	Racor adaptador	1		SUB FOR TH108328
	M800650	Empaquetadura	1		SUB FOR 957366
20	DH400578	Manguera hidr. - confección	1		SUB FOR AP38222
21	A852123	Racor adaptador	2		
	M800650	Empaquetadura	1		SUB FOR 957366
26	DH400580	Manguera hidr. - confección	1		SUB FOR AP38223
30A	4449272	Manguera hidráulica	1		SUB FOR AP38224 OR 9204536
30B	4327315	Protección de manguera	3		4327293 NLA
31	DH900409	Manguera hidr. - confección	1		SUB FOR AP38225
32A	4437943	Manguera hidr. - confección	1		(4449273 NO SE USA PARA ESTA APLICACION)
32B	4327315	Protección de manguera	1		4327293 NLA
34	H77698	Cinta de atar	4		SUB FOR 4055312

PILOT HOSES (CONTROL VALVE) (PILOT SIGNAL MANIFOLD TO SWING DEVICE)
FLEXIBLES PILOTE (DISTRIBUTEUR) (ENTRE MANIFOLD DE SIGNAL PILOTE ET MOTEUR DE PIVOTEMENT)
MANGUERAS PILOTO (VALVULA DE CONTROL) (COLECTOR DE SENAL PILOTO A MOTOR DE GIRO)

T198685 A.1

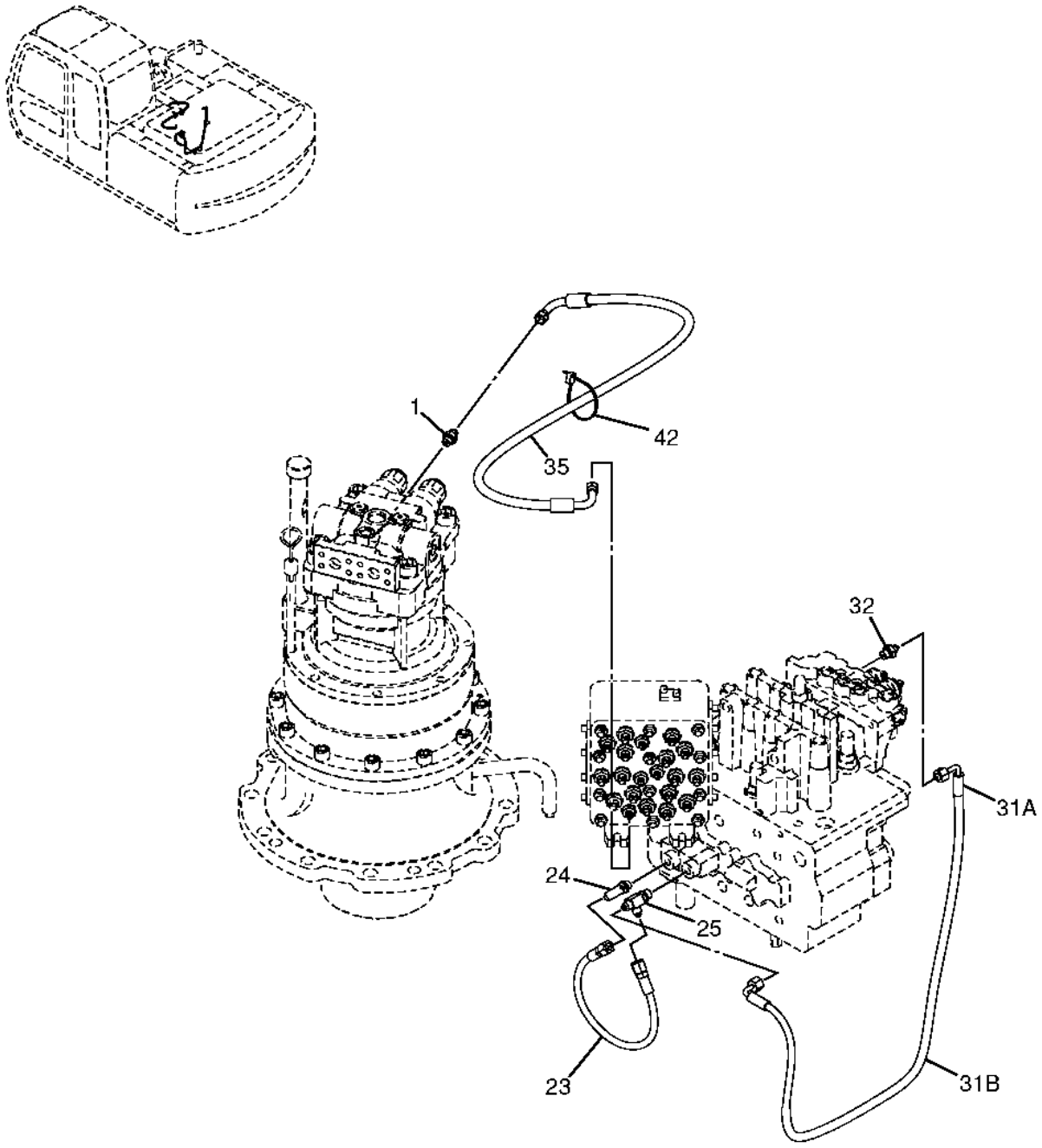

T198685

Pos.	*Ref.*	*Descripción*	*Cant.*	*Núm. de serie*	*Notas*
1	A852123	Racor adaptador	1		
	M800650	Empaquetadura	1		SUB FOR 957366
23	4442331	Manguera hidráulica	1		SUB FOR P67920
24	4154670	Racor acodado	1		SUB FOR TH100951
	M800650	Empaquetadura	1		SUB FOR 957366
25	A852422	Conexión en t	1		
	M800650	Empaquetadura	1		SUB FOR 957366
31A	4445676	Manguera hidr. - confección	1		SUB FOR P68012 OR 9195591
31B	4327315	Protección de manguera	2		4327293 NLA
32	A852122	Racor adaptador	1		
	M800650	Empaquetadura	1		SUB FOR 957366
35	DH900293	Manguera hidr. - confección	1		SUB FOR AP38227 OR 4467087
42	R76477	Cinta de atar	1		

PILOT HOSES (CONTROL VALVE TO SIGNAL MANIFOLD, SOLENOID VALVE)
FLEXIBLES PILOTE (ENTRE DISTRIBUTEUR A COLLECTEUR DE SIGNAL, ELECTROVANNE)
MANGUERAS PILOTO (VALVULA DE CONTROL A COLECTOR DE SENALES, VALVULA DE SOLENOIDE)

T198695 A.1

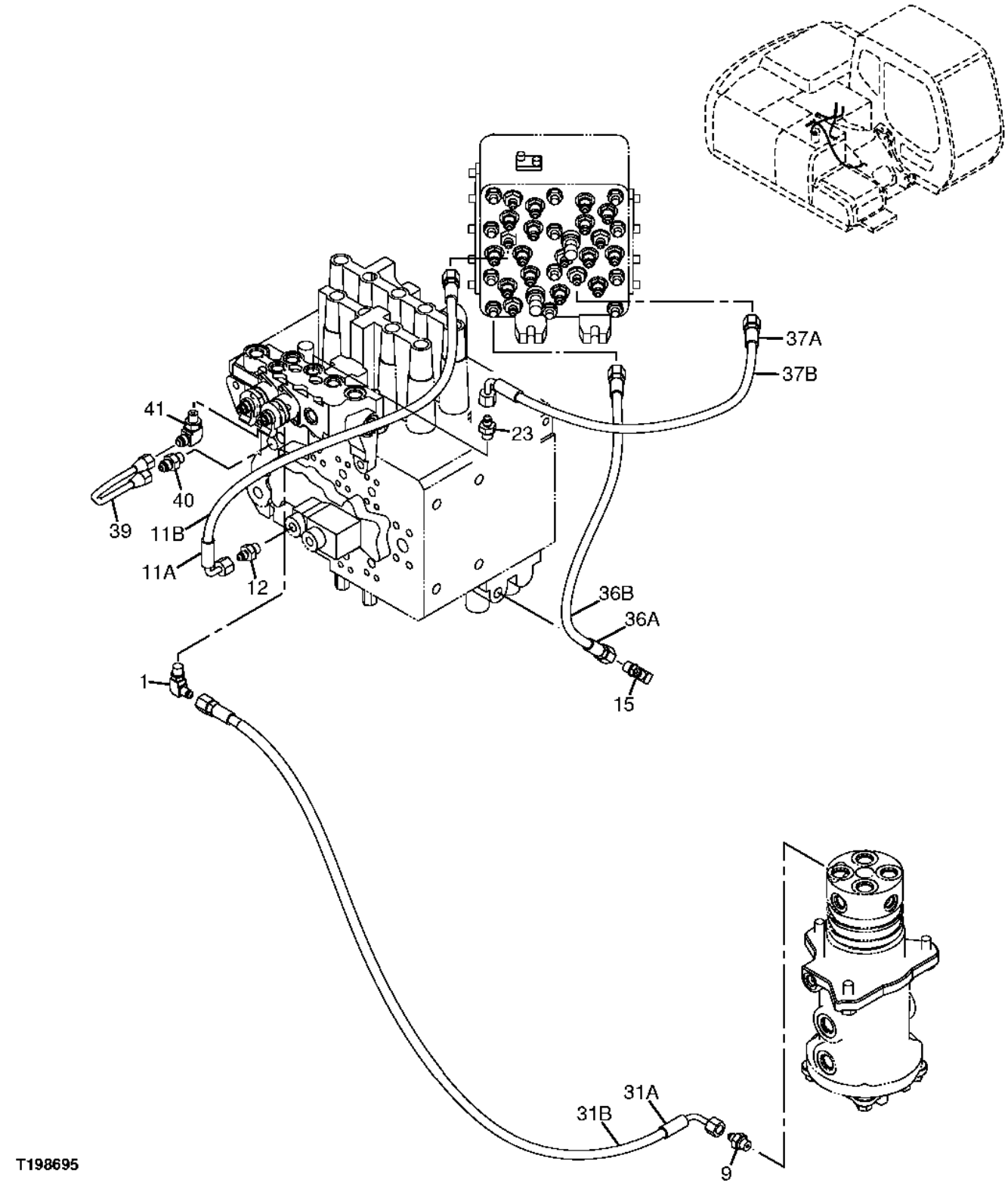

Pos.	*Ref.*	*Descripción*	*Cant.*	*Núm. de serie*	*Notas*
1	4154670	Racor acodado	1		SUB FOR TH100951
	M800650	Empaquetadura	1		SUB FOR 957366
9	4200465	Racor adaptador	1		SUB FOR TH108328
	M800650	Empaquetadura	1		SUB FOR 957366
11A	4427782	Manguera hidráulica	1		SUB FOR P67913 OR 9204539
11B	4327315	Protección de manguera	1		4327293 NLA
12	4200465	Racor adaptador	1		SUB FOR TH108328
	M800650	Empaquetadura	1		SUB FOR 957366
15	4154670	Racor acodado	1		SUB FOR TH100951
	M800650	Empaquetadura	1		SUB FOR 957366
23	4200465	Racor adaptador	1		SUB FOR TH108328
	M800650	Empaquetadura	1		SUB FOR 957366
31A	4416886	Manguera hidr. - confección	1		SUB FOR AP38228 OR 9204541
31B	4327315	Protección de manguera	2		4327293 NLA
36A	4437282	Manguera hidráulica	1		SUB FOR P68013 OR 9197588
36B	4327315	Protección de manguera	1		4327293 NLA
37A	4453172	Manguera hidráulica	1		SUB FOR P68014 OR 9197594 OR 4437388
37B	4327315	Protección de manguera	1		4327293 NLA
39	4452289	Tubería	1		SUB FOR P67950
40	AT155270	Conexión	1		
	M800650	Empaquetadura	1		SUB FOR 957366
41	AT160584	Conexión	1		
	M800650	Empaquetadura	1		SUB FOR 957366

PILOT LINES (PILOT SIGNAL MANIFOLD TO BOTTOM OF CONTROL VALVE)
CONDUITES PILOTES (DU COLLECTEUR DE SIGNAL PILOTE AU BAS DU DISTRIBUTEUR)
LINEAS PILOTO (COLECTOR DE SENAL PILOTO A PARTE INF. DE VALVULA DE CONTROL)

TX1007675 A.1

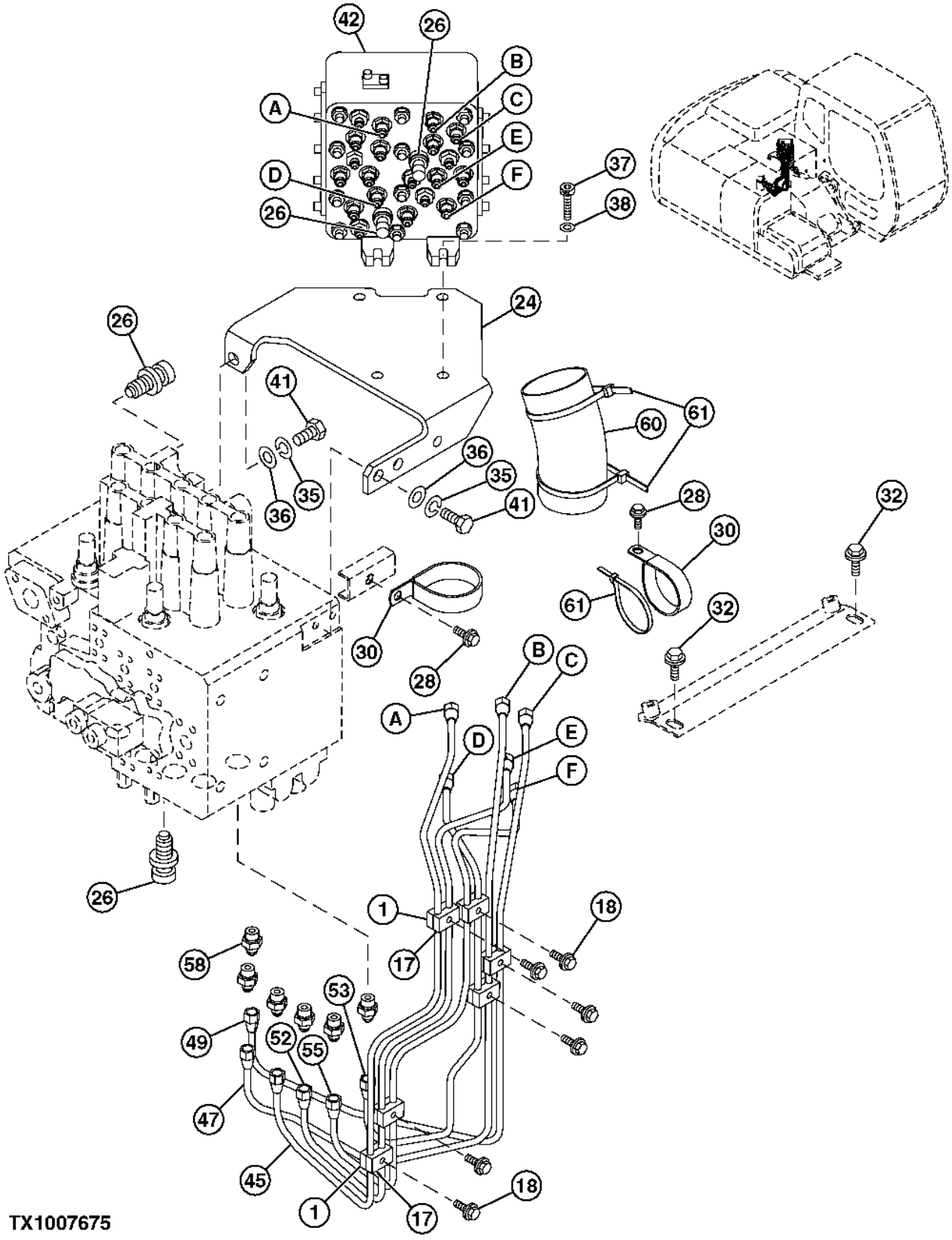

Pos.	*Ref.*	*Descripción*	*Cant.*	*Núm. de serie*	*Notas*
1	9735305	Abrazadera	6		(SUB FOR AP33637)
17	9735306	Abrazadera	6		(SUB FOR AP33638)
18	19M7163	Tornillo	6		M8 X 25
24	8081659	Soporte	1		
26	4436535	Sensor	4		
28	19M7402	Tornillo	2		M10 X 25
	12M7066	Arandela de seguridad	2		10 mm
	24M7028	Arandela	2		10.500 X 20 X 2 mm
30	4204136	Presilla	2		
32	19M7402	Tornillo	2		M10 X 25
	12M7066	Arandela de seguridad	2		10 mm
	24M7028	Arandela	2		10.500 X 20 X 2 mm
35	12H317	Arandela de seguridad	3		9/16"
36	24M7085	Arandela	3		15 X 28 X 2.500 mm
37	AT213615	Tornillo	4		
38	24M7028	Arandela	4		10.500 X 20 X 2 mm
41	19M6332	Tornillo	3		M14 X 35
42	4468336	Válvula hidr. regul. caudal	1		(ALSO ORDER 4467088 AND A852123)
43	4467088	Manguera	1		No se ilustra
44	A852123	Racor adaptador	1		No se ilustra
45	3091717	Tubería	1		
47	3091735	Tubería	1		
49	3091736	Tubería	1		
52	3091718	Tubería	1		
53	3091719	Tubería	1		
55	3091739	Tubería	1		
58	AT213809	Conexión	6		
	CH11570	Anillo tórico	1		
60	4453084	Pasamuros	1		
61	R76477	Cinta de atar	4		

PILOT LINES (PILOT SIGNAL MANIFOLD TO TOP OF CONTROL VALVE)
CONDUITES PILOTES (DU COLLECTEUR DE SIGNAL PILOTE AU HAUT DU DISTRIBUTEUR)
LINEAS PILOTO (COLECTOR DE SENAL PILOTO A PARTE SUP. DE VALVULA DE CONTROL)

T157397 A.1

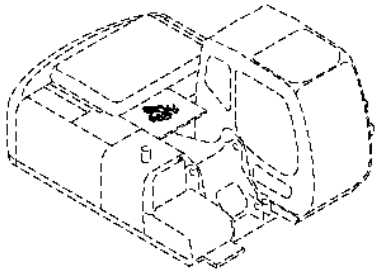

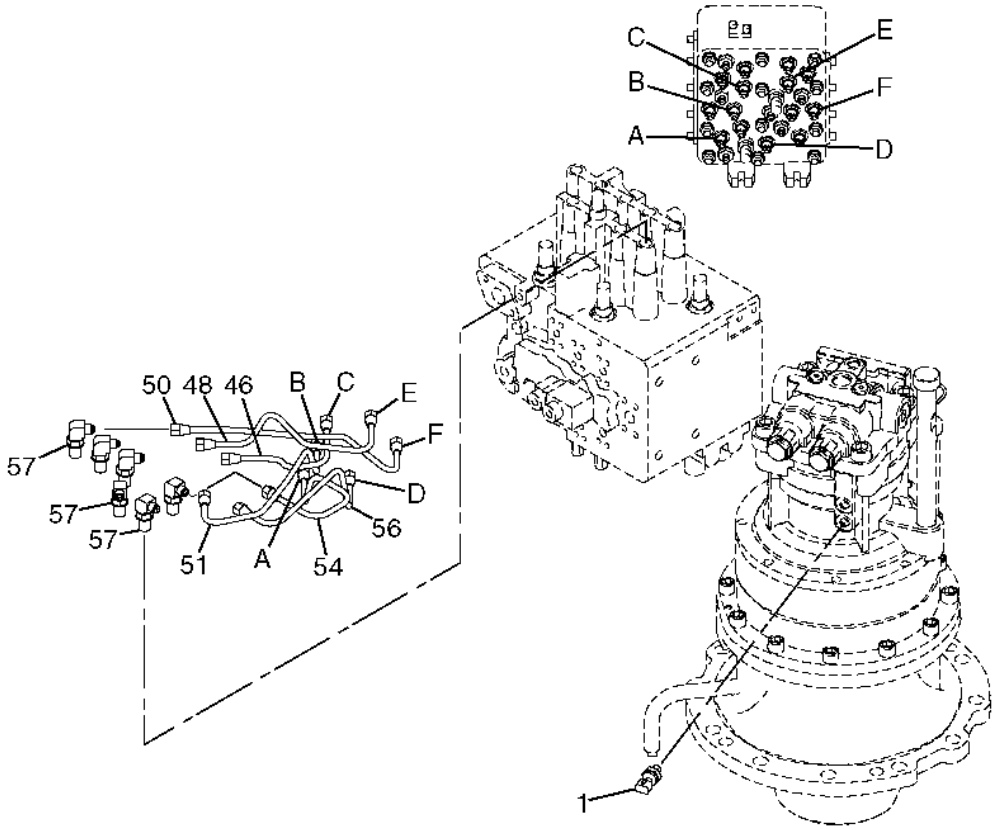

T157397

Pos.	*Ref.*	*Descripción*	*Cant.*	*Núm. de serie*	*Notas*
1	4436535	Sensor	1		
46	4452290	Tubería	1		
48	4452341	Tubería	1		
50	4452342	Tubería	1		
51	4452291	Tubería	1		
54	4452292	Tubería	1		
56	4452362	Tubería	1		
57	4420392	Conexión	6		
	CH11570	Anillo tórico	1		

PROPEL PILOT CONTROLLER TO SIGNAL MANIFOLD HOSES
FLEXIBLES ENTRE CONTROLEUR PILOTE DE PROPULSION ET MANIFOLD DE SIGNAL
UNIDAD DE CONTROL PILOTO DE PROPULSION A MANGUERAS DEL COLECTOR DE SENAL

T157398 A.1

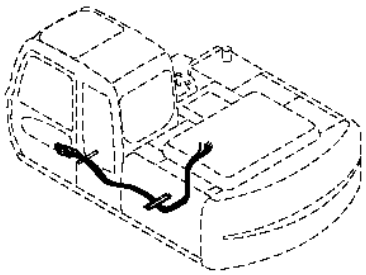

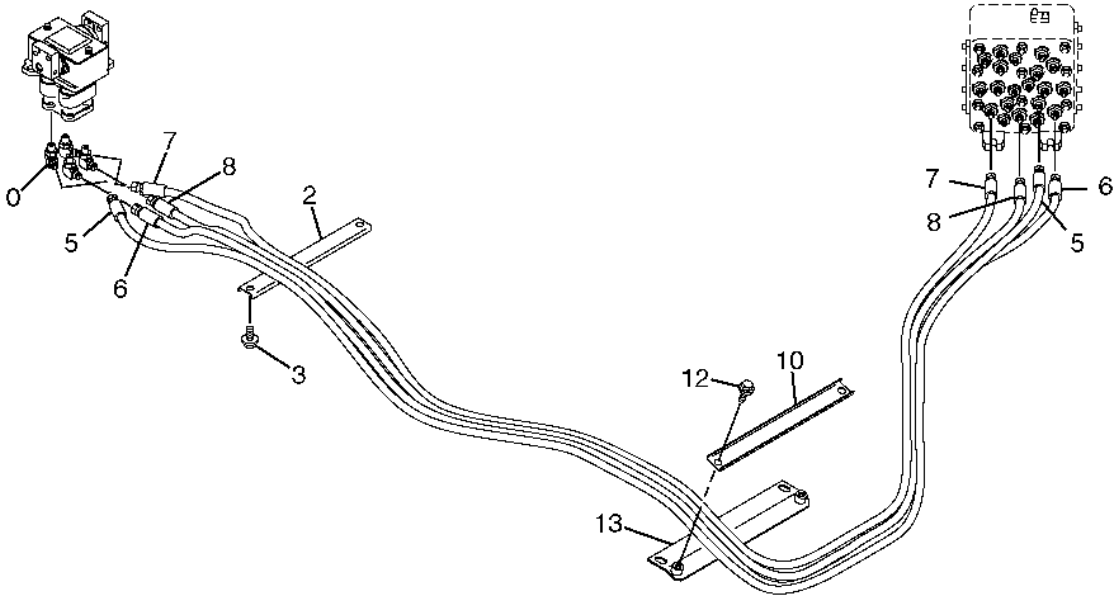

T157398

Pos.	*Ref.*	*Descripción*	*Cant.*	*Núm. de serie*	*Notas*
0	A852323	Racor acodado	4		
	M800650	Empaquetadura	1		(SUB FOR 957366)
2	4341877	Perfil en u	1		
3	19M7402	Tornillo	2		M10 X 25
	12M7066	Arandela de seguridad	2		10 mm
	24M7096	Arandela	2		10.500 X 18 X 1.600 mm
5	4449418	Manguera hidr. - confección	1		
6	4449427	Manguera hidr. - confección	1		
7	4449428	Manguera hidr. - confección	1		
8	4449429	Manguera hidr. - confección	1		
10	4425177	Perfil en u	1		
12	19M7402	Tornillo	2		M10 X 25
	12M7066	Arandela de seguridad	2		10 mm
	24M7028	Arandela	2		10.500 X 20 X 2 mm
13	8077444	Soporte	1		

PILOT HYDRAULIC LINES
CONDUITES HYDRAULIQUES PILOTES
LINEAS HIDRAULICAS PILOTO

T147785 A.1

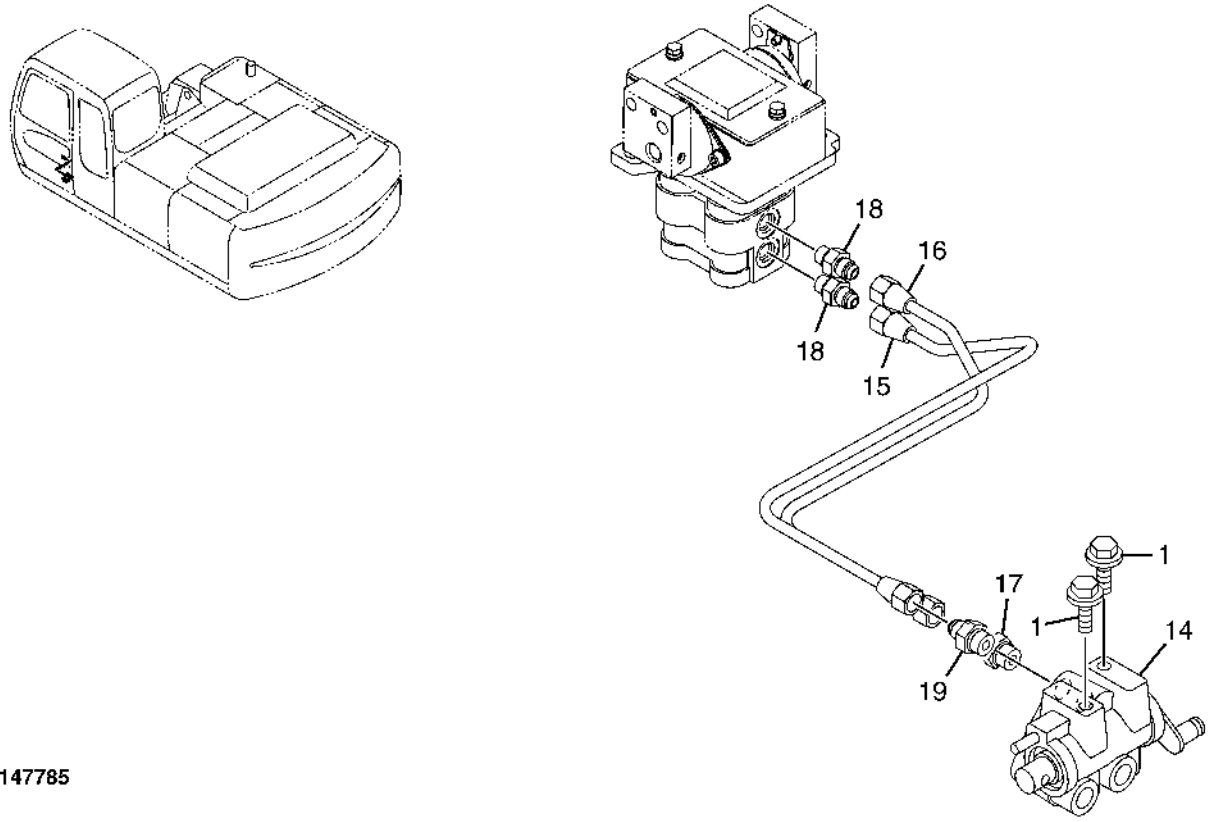

T147785

Pos.	*Ref.*	*Descripción*	*Cant.*	*Núm. de serie*	*Notas*
1	19M7402	Tornillo	2		M10 X 25
	12M7066	Arandela de seguridad	2		10 mm
	24M7028	Arandela	2		10.500 X 20 X 2 mm
14	4407253	Válvula hidr. regul. caudal	1		
15	4452052	Tubería de aceite	1	-XXXXXX	
	4607398	Tubería de aceite	1	XXXXXX-	
16	4452053	Tubería de aceite	1	-XXXXXX	
	4607399	Tubería de aceite	1	XXXXXX-	
17	4255305	Conexión	1		(SUB FOR AT213809)
	CH11570	Anillo tórico	1		
18	4255304	Conexión	2		(SUB FOR AT155270)
	M800650	Empaquetadura	1		
19	4452326	Filtro	1		
	CH11570	Anillo tórico	1		

PILOT HOSES (LEFT CONTROLLER TO SIGNAL MANIFOLD, SHUTOFF VALVE)
FLEXIBLES PILOTE (ENTRE LE CONTROLEUR GAUCHE ET LE COLLECTEUR DE SIGNAL, ROBINET D'ARRET)
MANGUERAS PILOTO (UNIDAD DE CONTROL IZQ. A COLECTOR DE SENALES, VALVULA DE CORTE)

T189625 A.1

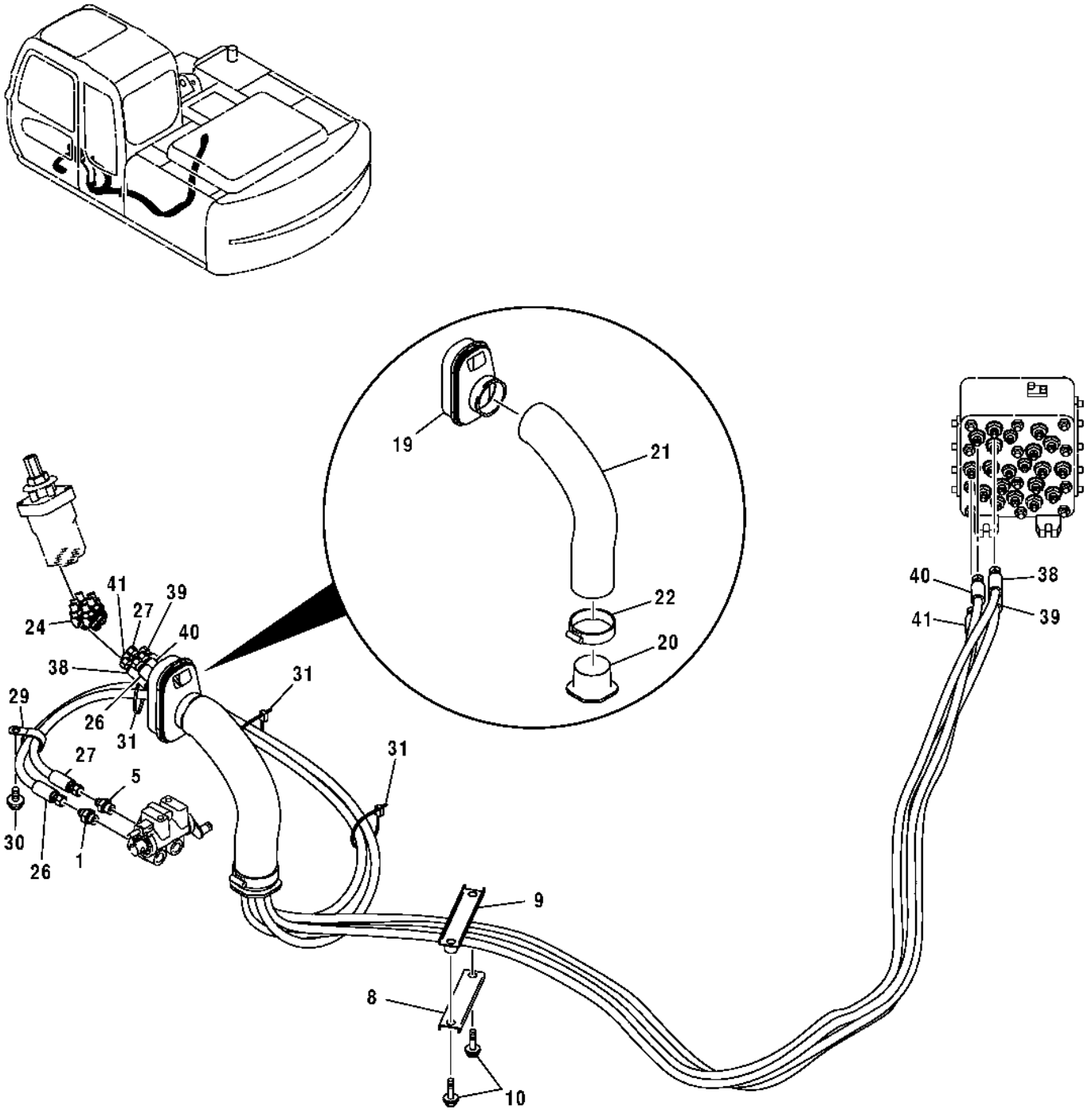

T189631

Pos.	*Ref.*	*Descripción*	*Cant.*	*Núm. de serie*	*Notas*
1	4261938	Conexión	1		
	CH11570	Anillo tórico	1		
5	A852133	Racor adaptador	1		
	CH11570	Anillo tórico	1		
8	4412666	Abrazadera	1		
9	9751787	Abrazadera	1		
10	19M7358	Tornillo	2		M10 X 40
	12M7066	Arandela de seguridad	2		10 mm
19	2045998	Casquillo	1		
20	3079728	Casquillo	1		
21	4351175	Manguera	1		
22	4351774	Abrazadera	1		
24	A852223	Racor acodado	6		
	M800650	Empaquetadura	6		
26	4437656	Manguera hidr. - confección	1		
27	4437653	Manguera hidr. - confección	1		
29	XCL-29	Abrazadera para mangueras	1		(SUB FOR 4190264 OR 4193848)
30	19M8324	Tornillo	1		M10 X 16
	12M7067	Arandela de seguridad	1		12 mm
31	H77698	Cinta de atar	3		
38	4450437	Manguera hidr. - confección	1		
39	4450535	Aislante	1		
40	4455188	Manguera hidr. - confección	1		
41	4450436	Manguera hidr. - confección	1		

PILOT HOSES(RIGHT CONTROLLER TO SIGNAL MANIFOLD, SHUTOFF VALVE)
FLEXIBLES PILOTE (DU CONTROLEUR DROIT AU COLLECTEUR DE SIGNAL, ROBINET D'ARRET)
MANGUERAS PILOTO (UNIDAD DE CONTROL DERECHA A COLECTOR DE SENALES, VALVULA DE CORTE)

T189626 A.1

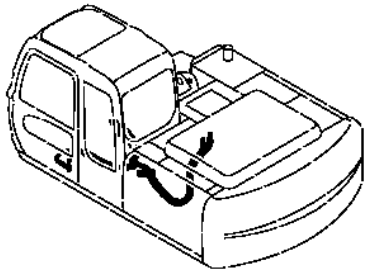

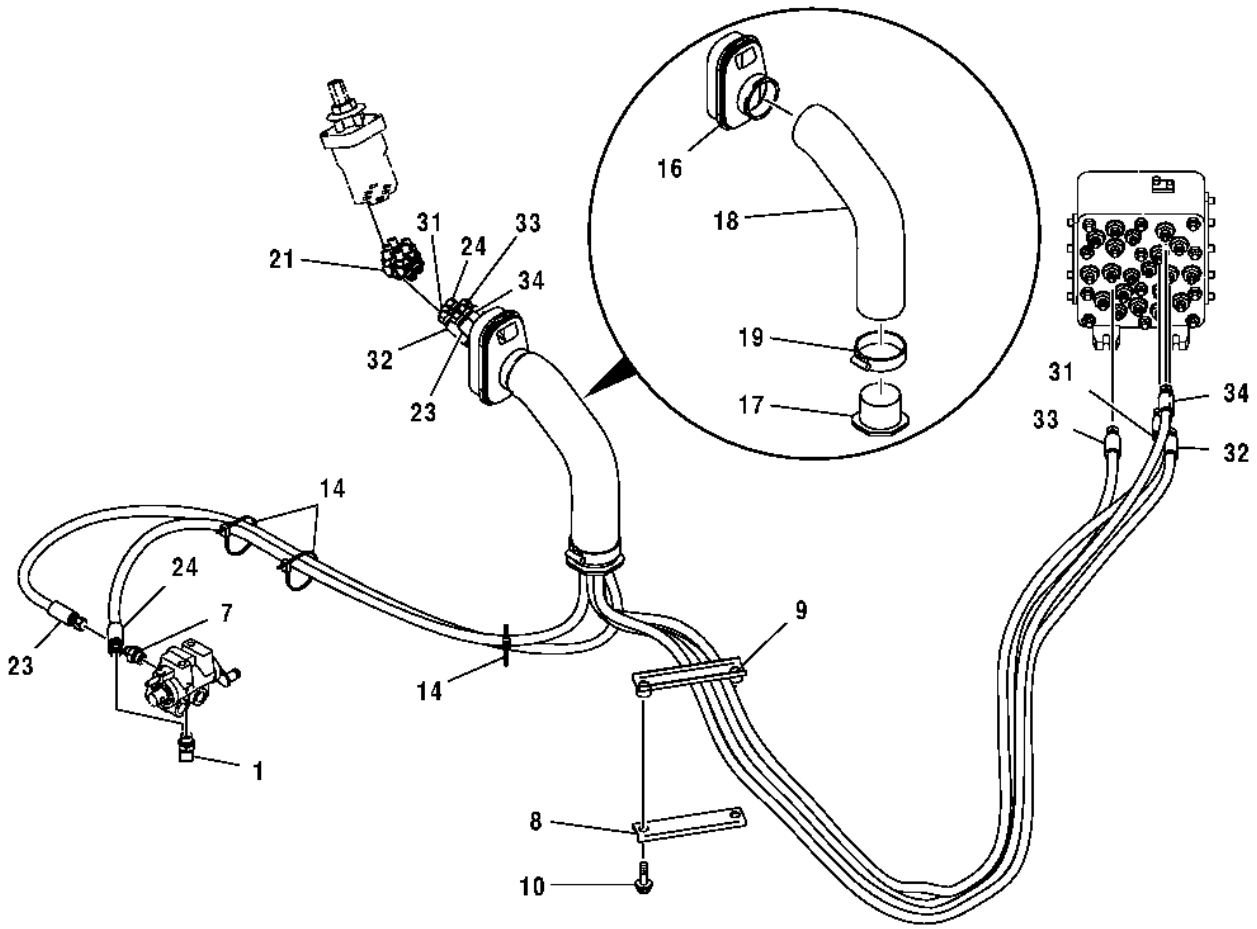

T189626

Pos.	*Ref.*	*Descripción*	*Cant.*	*Núm. de serie*	*Notas*
1	A852223	Racor acodado	1		
	CH11570	Anillo tórico	1		
7	4261938	Conexión	1		
	CH11570	Anillo tórico	1		
8	4412666	Abrazadera	1		
9	9751787	Abrazadera	1		
10	19M7358	Tornillo	2		M10 X 40
	12M7066	Arandela de seguridad	2		10 mm
14	H77698	Cinta de atar	3		
16	2045998	Casquillo	1		
17	3079728	Casquillo	1		
18	4351175	Manguera	1		
19	4351774	Abrazadera	1		
21	A852223	Racor acodado	6		
	M800650	Empaquetadura	6		
23	4438290	Manguera hidráulica	1		
24	4438288	Manguera hidr. - confección	1		
31	4438260	Manguera hidráulica	1		
32	4437088	Manguera hidráulica	1		
33	4455196	Manguera hidr. - confección	1		
34	4443902	Manguera hidr. - confección	1		(SUB FOR 4443896)

PILOT HOSES (OIL TANK TO CONTROL VALVE, SIGNAL MANIFOLD)
FLEXIBLES PILOTE (DU RESERVOIR D'HUILE AU DISTRIBUTEUR, COLLECTEUR DE SIGNAL)
MANGUERAS PILOTO (TANQUE DE ACEITE A VALVULA DE CONTROL, COLECTOR DE SENALES)

T198687 A.1

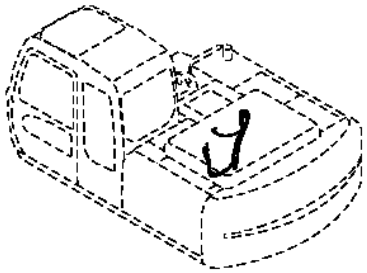

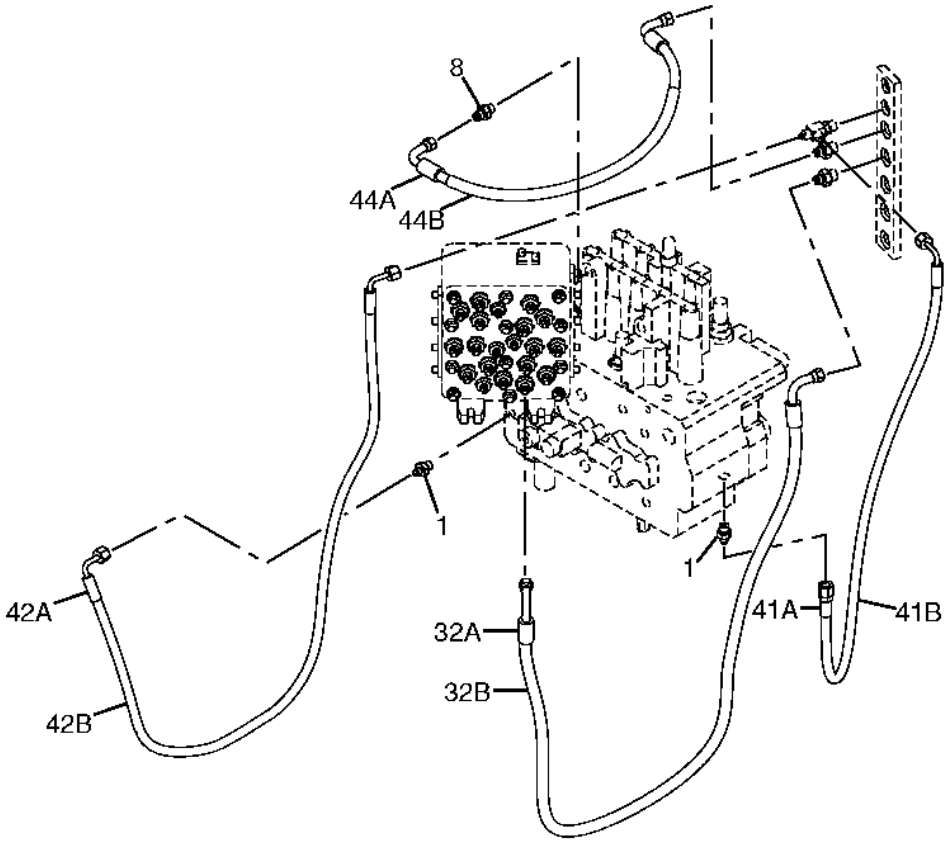

T198687

Pos.	*Ref.*	*Descripción*	*Cant.*	*Núm. de serie*	*Notas*
1	A852122	Racor adaptador	2		
	M800650	Empaquetadura	1		SUB FOR 957366
8	A852123	Racor adaptador	1		
	M800650	Empaquetadura	1		SUB FOR 957366
32A	4445799	Manguera hidr. - confección	1		SUB FOR P67926 OR 9195590
32B	4327315	Protección de manguera	3		4327293 NLA
41A	4449281	Manguera hidr. - confección	1		SUB FOR AP38231 OR 9204548
41B	4327315	Protección de manguera	1		4327293 NLA
42A	4449280	Manguera hidr. - confección	1		SUB FOR AP38232 OR 9204549
42B	4327315	Protección de manguera	2		4327293 NLA
44A	4461133	Manguera hidr. - confección	1		SUB FOR AP38233 OR 9205689
44B	4327315	Protección de manguera	1		4327293 NLA

PILOT HOSES (RESERVOIR TO CONTROL VALVE, SIGNAL MANIFOLD)
FLEXIBLES PILOTE (DU RESERVOIR AU DISTRIBUTEUR, COLLECTEUR DE SIGNAL)
MANGUERAS PILOTO (DEPOSITO A VALVULA DE CONTROL, COLECTOR DE SENALES)

T198686 A.1

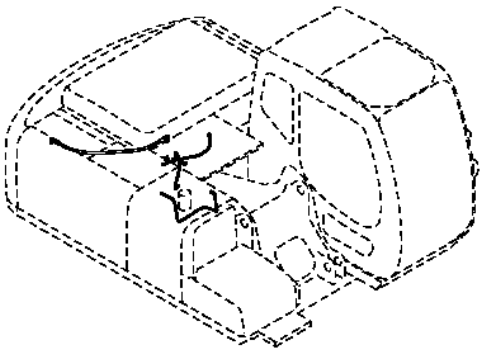

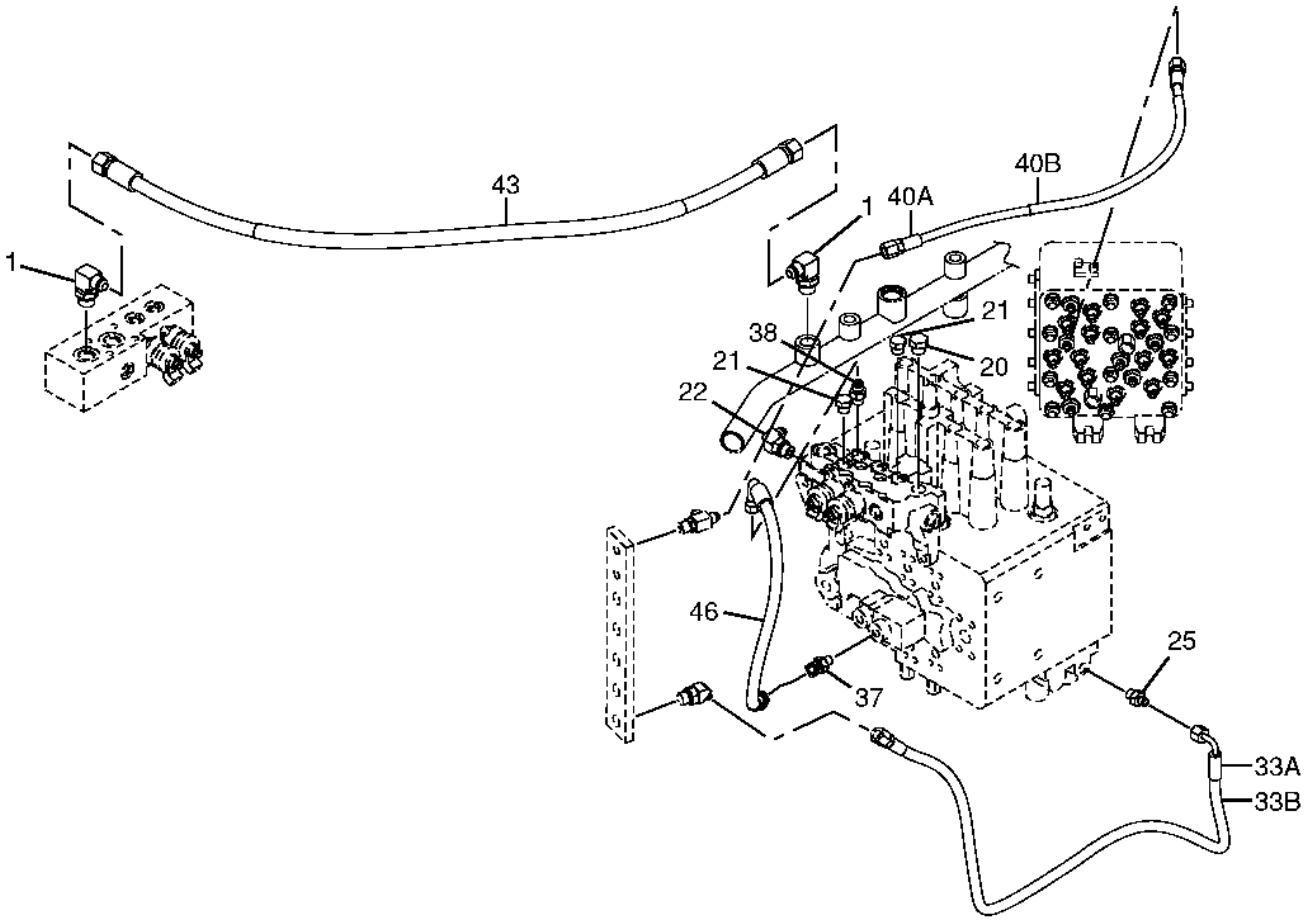

T198686

Pos.	*Ref.*	*Descripción*	*Cant.*	*Núm. de serie*	*Notas*
1	4154672	Racor acodado	2		
	4506418	Anillo tórico	1		
20	A885003	Tapón roscado	1		
	CH11570	Anillo tórico	1		
21	A885002	Tapón	2		
	M800650	Empaquetadura	1		
22	A852333	Racor acodado	1		SUB FOR TH101047, SUB FOR 4154671
	CH11570	Anillo tórico	1		
25	4200465	Racor adaptador	1		SUB FOR TH108328
	M800650	Empaquetadura	1		
33A	4445718	Manguera hidr. - confección	1		SUB FOR P67925 OR 9195588
33B	4327315	Protección de manguera	2		4327293 NLA
37	A852223	Racor acodado	1		
	M800650	Empaquetadura	1		
38	A852123	Racor adaptador	1		
	M800650	Empaquetadura	1		
40A	4427838	Manguera hidr. - confección	1		SUB FOR 9194324
40B	4327315	Protección de manguera	1		4327293 NLA
43	DH900410	Manguera hidr. - confección	1		SUB FOR AP38235
46	4465291	Manguera hidr. - confección	1		SUB FOR AP38236

PILOT HOSES(PILOT SHUT-OFF VALVE TO SIGNAL MANIFOLD, RESERVOIR)
FLEXIBLES PILOTE (DU ROBINET DARRET PILOTE AU COLLECTEUR DE SIGNAL, RESERVOIR)
MANGUERAS PILOTO (VALVULA DE CORTE PILOTO A COLECTOR DE SENALES, DEPOSITO)

TX1007674 A.1

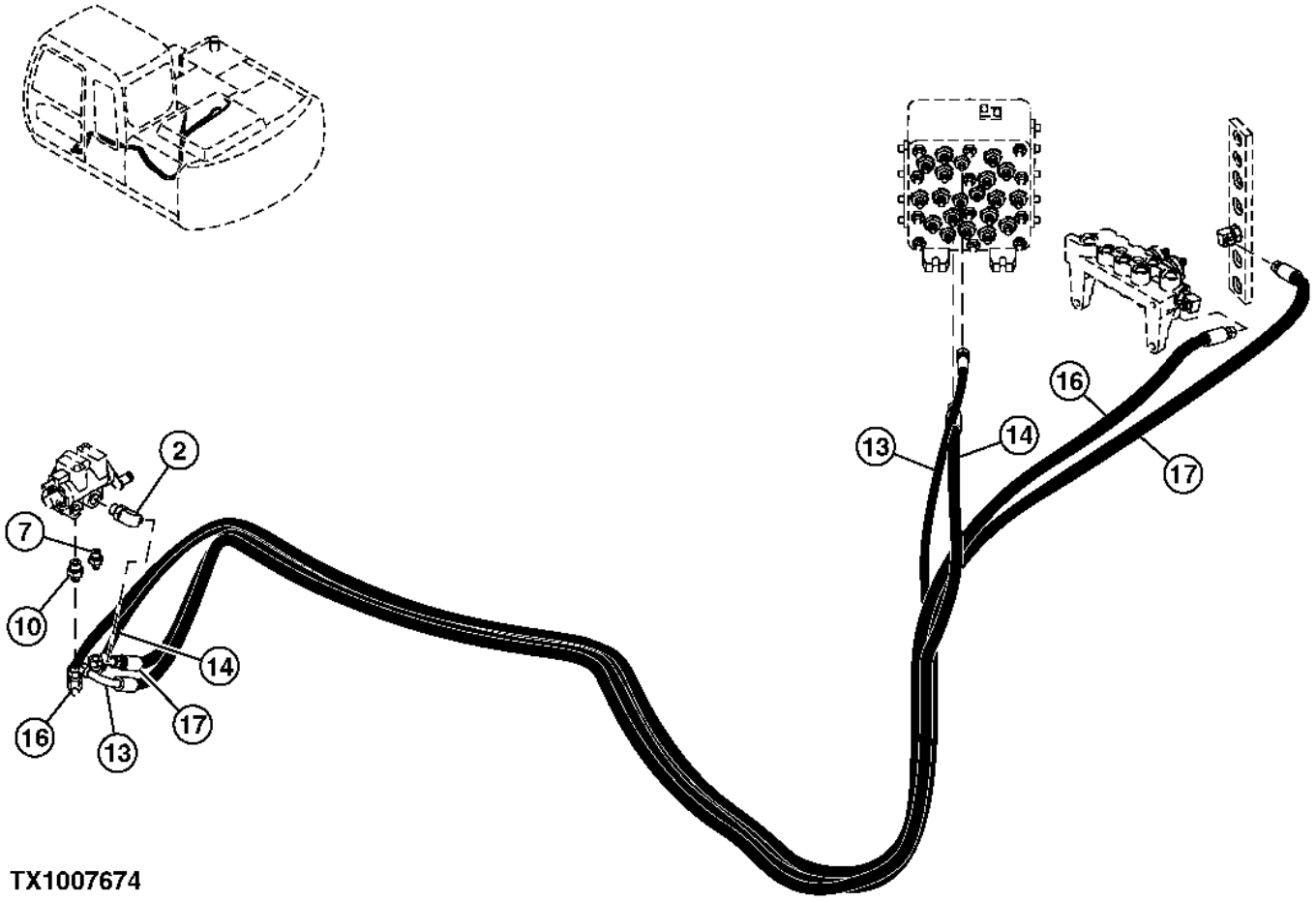

TX1007674

Pos.	*Ref.*	*Descripción*	*Cant.*	*Núm. de serie*	*Notas*
2	A852333	Racor acodado	2		
	CH11570	Anillo tórico	1		SUB FOR 4509180
7	A852122	Racor adaptador	1		
	M800650	Empaquetadura	1		
10	A852133	Racor adaptador	1		
	CH11570	Anillo tórico	1		SUB FOR 4509180
13	4449440	Manguera hidr. - confección	1		
14	4456152	Manguera hidr. - confección	1		
16	4449441	Manguera hidr. - confección	1		
	4327315	Protección de manguera	1		4327293 NLA
17	4449442	Manguera hidr. - confección	1		
	4327315	Protección de manguera	1		4327293 NLA

BOOM LINES TO ARM AND BUCKET CYLINDERS
CONDUITES DE FLECHE RELIEES AUX VERINS DE BRAS ET DE BENNE
LINEAS DE AGUILON A BRAZO Y CILINDROS DE CUCHARON

T157484 A.1

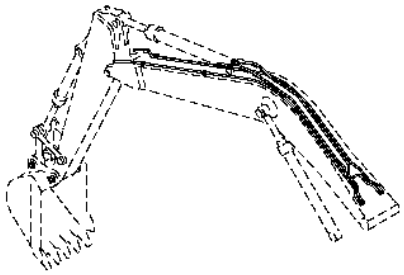

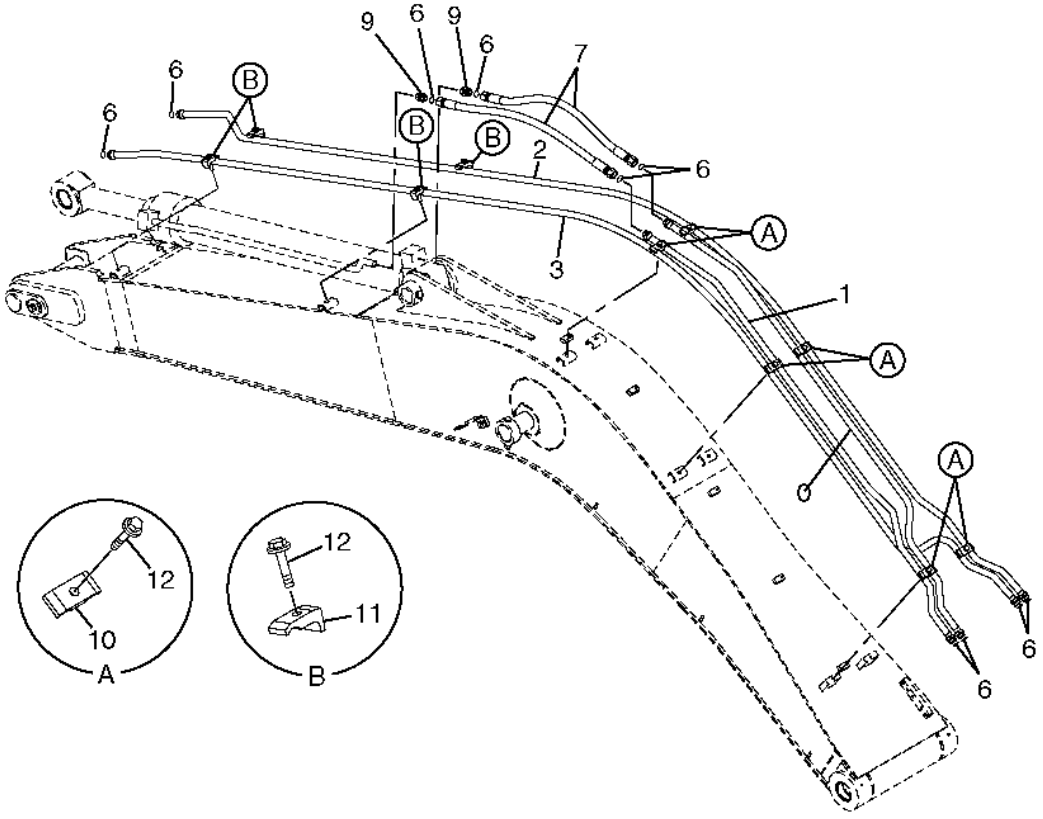

T157484

Pos.	*Ref.*	*Descripción*	*Cant.*	*Núm. de serie*	*Notas*
0	AP35006	Tubo	1		
1	AP35007	Tubo	1		
2	8080299J	Tubería	1		(SUB FOR 8080299)
3	8082323	Tubería	1		
6	T77858	Anillo tórico	10		
7	4384989	Manguera hidr. - confección	2		(SUB FOR AP35010)
9	A853166	Racor adaptador	2		
	AT318035	Anillo tórico	1		(SUB FOR 4506424)
10	4285723	Abrazadera	6		Goma
	4189859	Abrazadera	6		Acero
11	4190126	Abrazadera	4		
12	19M7363	Tornillo	10		M12 X 60
	12H301	Arandela de seguridad	10		1/2"

LUBRICATION HOSES AND LINES (ON BOOM)
FLEXIBLES ET CONDUITES DE LUBRIFICATION (SUR LA FLECHE)
LINEAS Y MANGUERAS DE LUBRICACION (EN AGUILON)

T153248 A.1

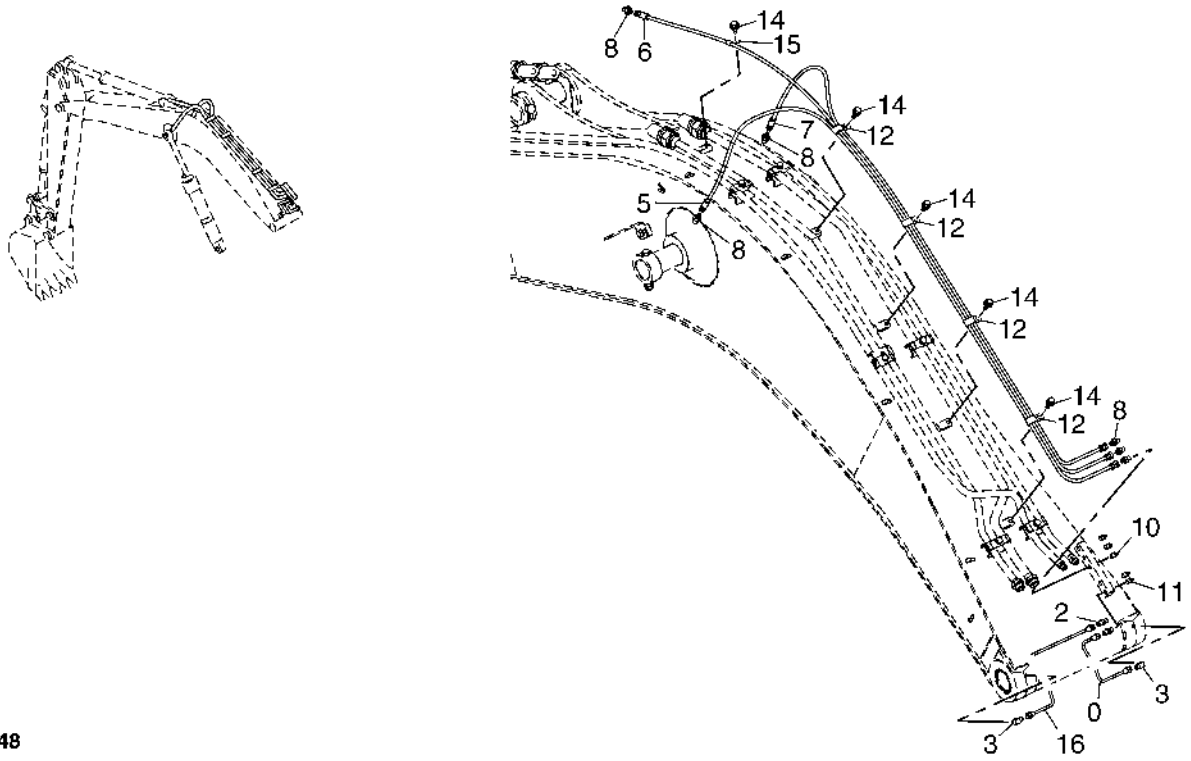

T153248

Pos.	*Ref.*	*Descripción*	*Cant.*	*Núm. de serie*	*Notas*
0	AP38273	Tubería	1		
1	AP38274	Tubería	1		
2	AT176258	Racor acodado	2		
3	AT176256	Racor adaptador	2		
5	4429280	Manguera hidr. - confección	1		(SUB FOR AP38275)
6	4460875	Manguera hidr. - confección	1		
7	4460871	Manguera hidr. - confección	1		
8	4154651	Racor adaptador	6		(SUB FOR TH100963)
10	JD7769	Engrasador	5		
12	T152608	Abrazadera	4		(SUB FOR AT154207)
13	TH109649	Presilla	1		
14	19M8324	Tornillo	5		M10 X 16
	12M7067	Arandela de seguridad	5		12 mm

CONTROL VALVE TO BOOM LINE HOSES (FOR ARM AND BUCKET CYLINDERS)
FLEXIBLES ENTRE DISTRIBUTEUR ET CONDUITE DE FLECHE (POUR VERINS DE BRAS ET DE BENNE)
VALVULA DE CONTROL A MANGUERAS DE LA LINEA DE AGUILON (PARA CILINDROS DE BRAZO Y CUCHARON)

T189629 A.1

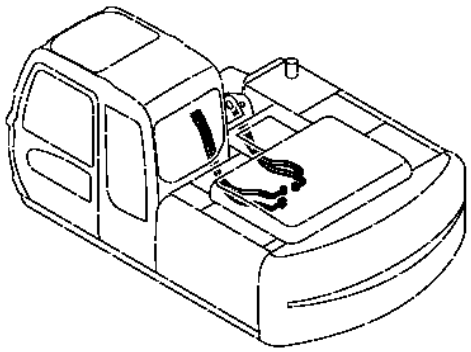

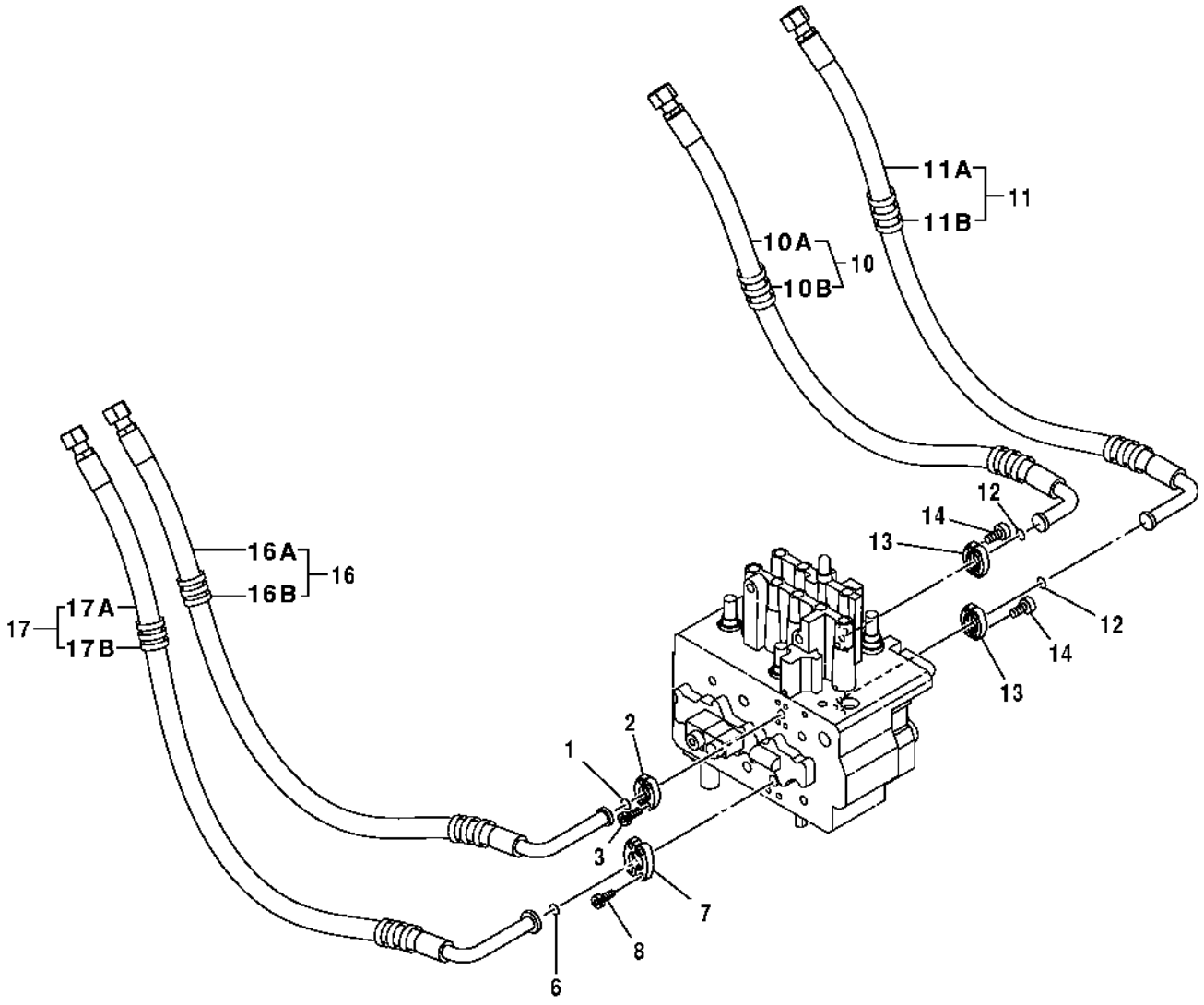

T189629

Pos.	*Ref.*	*Descripción*	*Cant.*	*Núm. de serie*	*Notas*
1	R69667	Anillo tórico	1		
2	4510173	Conexión	2		
3	19M7657	Tornillo	4		M8 X 25, (SUB FOR P61954 OR J780825)
6	T59014	Anillo tórico	1		
7	R29424	Conexión con brida	2		
8	19M7576	Tornillo	4		M10 X 30, (SUB FOR J781030)
10	.....	Manguera hidráulica	1		(AP38246 O 9197392 NLA)
10A	4448755	Manguera hidráulica	1		
10B	.....	Protección de manguera	AR		(MAKE FROM XHG-075, CUT TO LENGTH) , (4327294 NLA)
11	.....	Manguera hidráulica	1		(AP38247 O 9197391 NLA)
11A	4448753	Manguera hidráulica	1		
11B	.....	Protección de manguera	AR		(MAKE FROM XHG-075, CUT TO LENGTH) , (4327294 NLA)
12	R69667	Anillo tórico	2		
13	4510173	Conexión	4		
14	19M7657	Tornillo	1		M8 X 25, (SUB FOR J780825)
16	.....	Manguera hidráulica	1		(9204553 NLA)
16A	4452987	Manguera hidráulica	1		
16B	.....	Protección de manguera	AR		(MAKE FROM XHG-075, CUT TO LENGTH) , (4327294 NLA)
17	.....	Manguera hidráulica	1		(9204554 NLA)
17A	4331596	Manguera hidráulica	1		
17B	.....	Protección de manguera	AR		(MAKE FROM XHG-075, CUT TO LENGTH) , (4327294 NLA)

CONTROL VALVE TO HOSE LINE(AUXILIARY PLUMBING, FACTORY INSTALL)
CONDUITE ENTRE DISTRIBUTEUR ET FLEXIBLE (TUYAUTERIE AUXILIAIRE, INSTALLE EN USINE)
VALVULA DE CONTROL A LINEA DE LA MANGUERA (TUBERIA AUXILIAR, INSTALADO EN LA FABRICA)

TX1007673 A.1

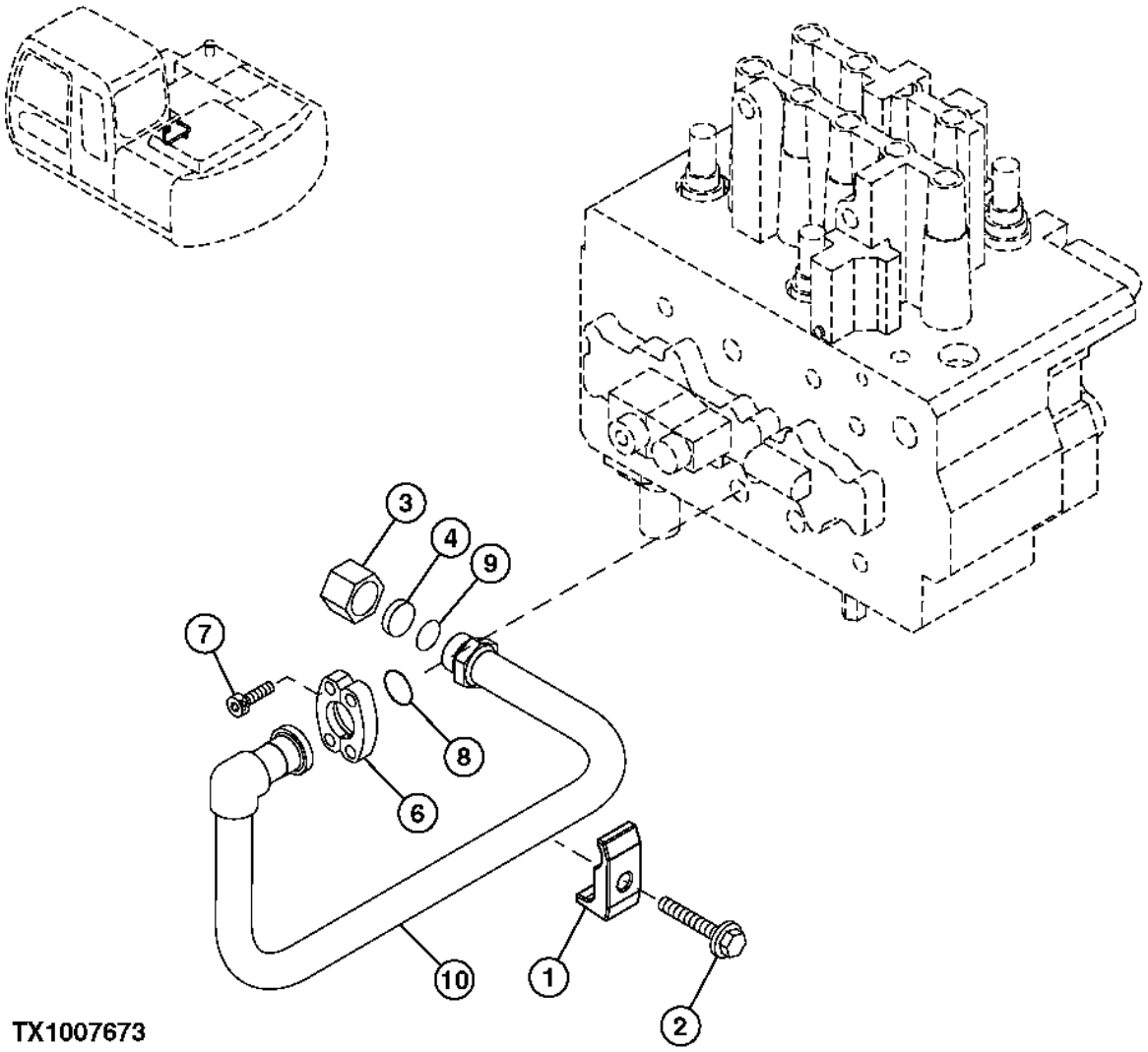

TX1007673

Pos.	*Ref.*	*Descripción*	*Cant.*	*Núm. de serie*	*Notas*
0	8080641	Tubería	1		
1	4190126	Abrazadera	1		
2	19M8348	Tornillo	1		M12 X 65, (SUB FOR J011265)
3	4188136	Tuerca de unión	1		
4	4189094	Tapón hermético	1		
6	R29424	Conexión con brida	2		(SUB FOR 986910)
7	19M7576	Tornillo	4		M10 X 30, (SUB FOR J781030)
8	971489	Anillo tórico	1		
9	4187308	Anillo tórico	1		

CONTROL VALVE PRESSURE AND RETURN AUXILIARY PLUMBING (FACTORY)
CONDUITES DE PRESSION DE DISTRIBUTEUR ET DE RETOUR AUXILIAIRE (USINE)
PRESION DE VALVULA DE CONTROL Y TUBERIA AUXILIAR DE RETORNO (FABRICA)

T189357 A.1

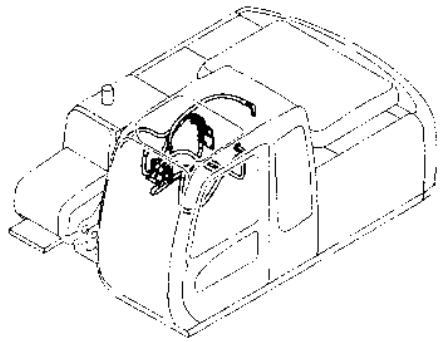

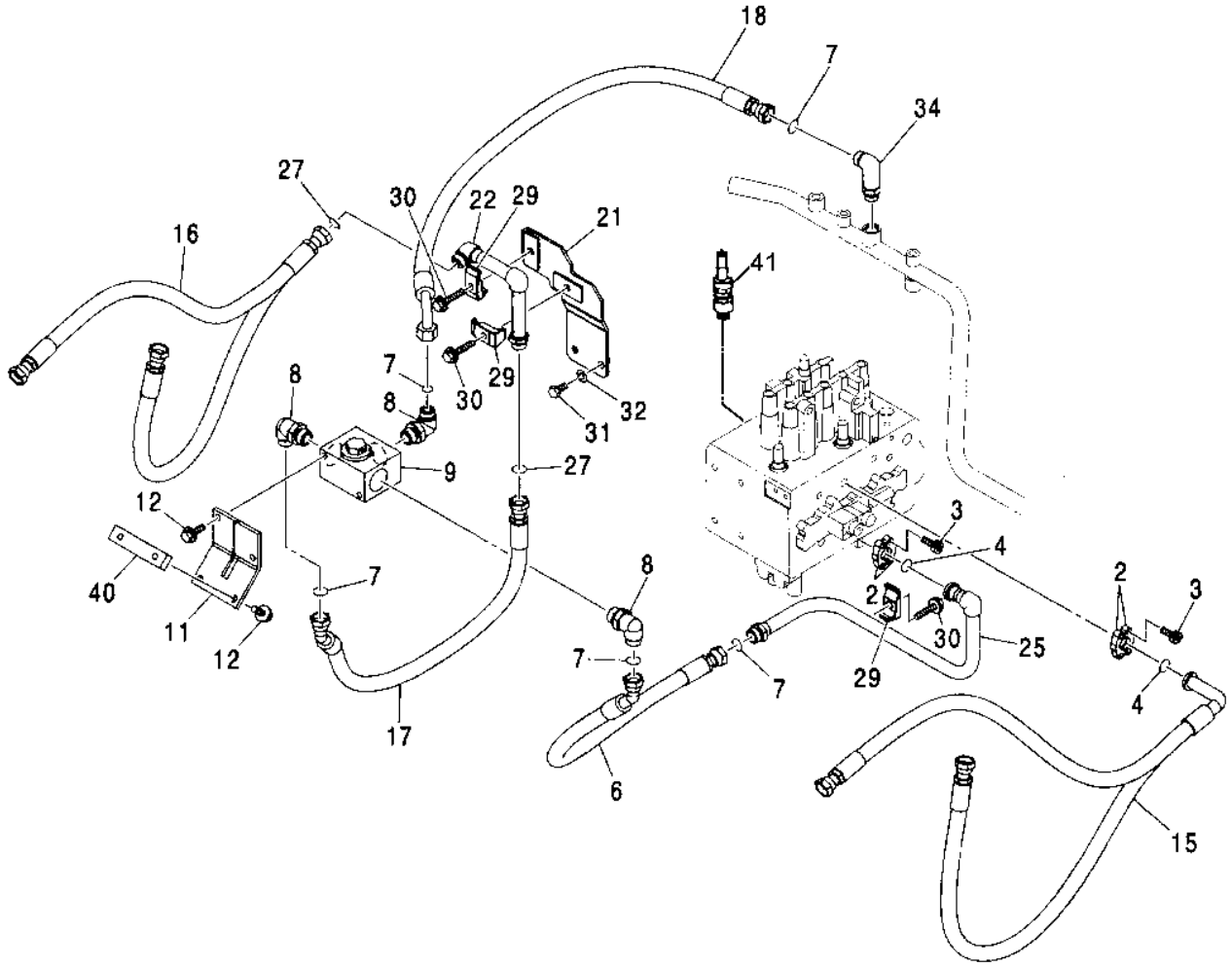

T189357

Pos.	*Ref.*	*Descripción*	*Cant.*	*Núm. de serie*	*Notas*
2	R29424	Conexión con brida	2		
3	19M7576	Tornillo	4		M10 X 30, (SUB FOR J781030)
4	T59014	Anillo tórico	1		
6	4463182	Manguera hidr. - confección	1		
7	T77858	Anillo tórico	5		
8	A853386	Racor acodado	2		
	TH101926	Anillo tórico	2		
9	4455599	Válvula	1		(SUB FOR 4609664)
11	9748713	Soporte	1		
12	19M8011	Tornillo	2		M12 X 30
15	4324160	Manguera hidráulica	1		
16	4250079	Manguera hidr. - confección	1		
17	4463183	Manguera hidr. - confección	1		
18	4463186	Manguera hidr. - confección	1		
21	8085734	Soporte	1		
22	8085733	Tubería	1		
25	8080641	Tubería	1		
27	T77858	Anillo tórico	2		
29	4190126	Abrazadera	3		
30	19M8348	Tornillo	3		M12 X 65
31	J901425	Tornillo	2		
32	12H317	Arandela de seguridad	2		9/16"
34	4267201	Racor acodado	1		
	AT318035	Anillo tórico	1		(SUB FOR 4506424)
40	4385023	Tornillo	1		
41	9208772	Válvula descarga de presión	1		

BOOM HOSES AND LINES (FACTORY INSTALLED AUXILIARY PLUMBING)
FLEXIBLES ET CONDUITES DE FLECHE (TUYAUTERIE AUXILIAIRE INSTALLEE A L'USINE)
LINEAS Y MANGUERAS DE AGUILON (TUBERIA AUXILIAR INSTALADA EN LA FABRICA)

T189361 A.1

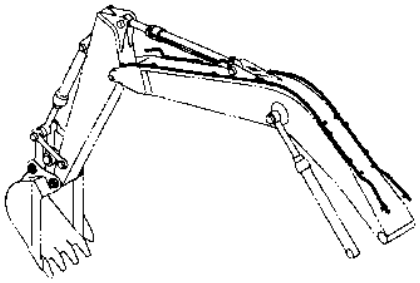

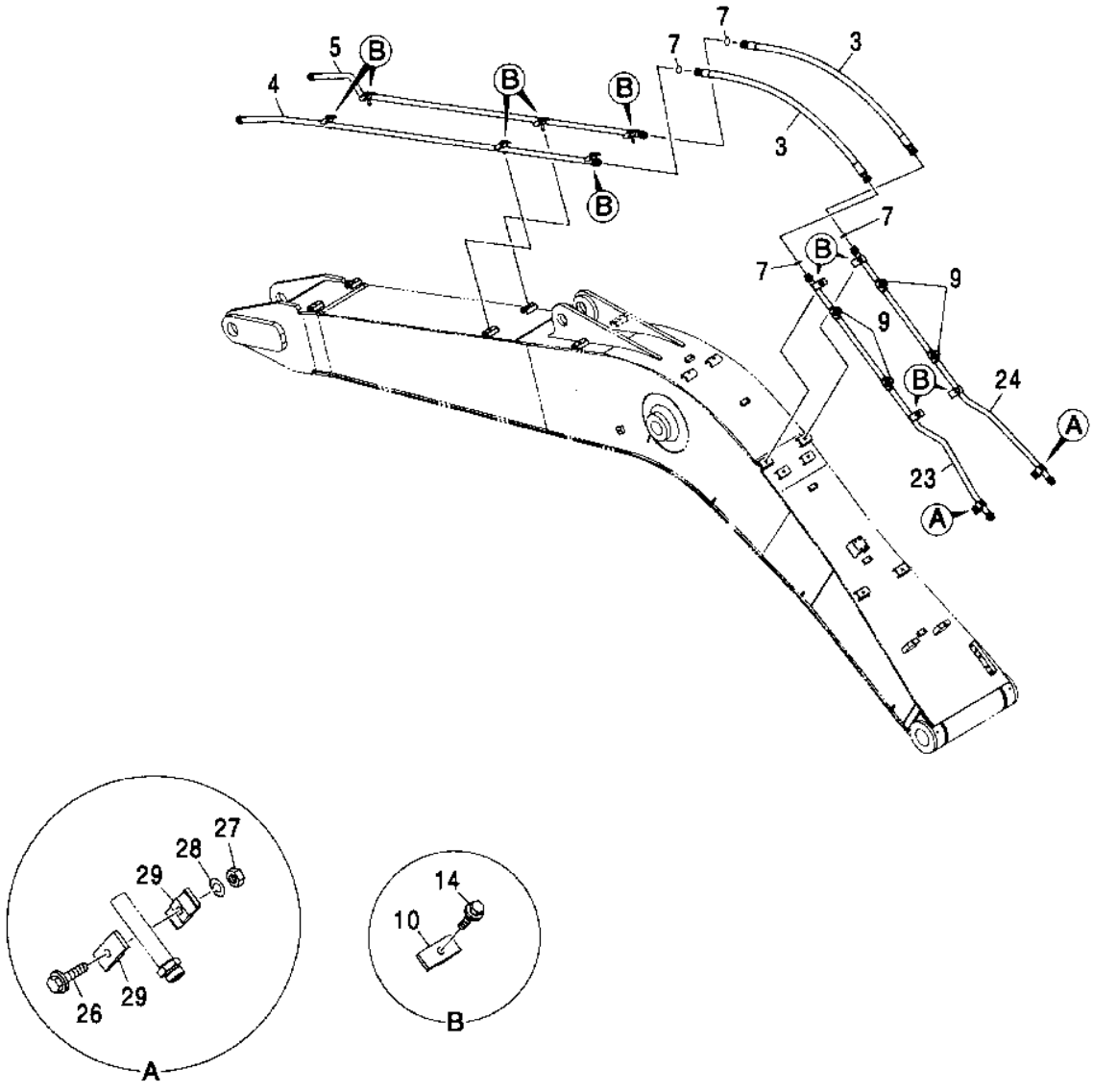

T189361

Pos.	*Ref.*	*Descripción*	*Cant.*	*Núm. de serie*	*Notas*
3	AT131293	Manguera hidr. - confección	2		
4	DH800103	Tubería	1		(SUB FOR 8085735, THIS APPLICATION)
5	DH800104	Tubería	1		(SUB FOR 8085736, THIS APPLICATION)
7	T77858	Anillo tórico	4		
9	4174542	Tapón de vaciado	4		
	AT318035	Anillo tórico	4		(SUB FOR 4506424)
10	4285723	Abrazadera	10		Goma
	4189859	Abrazadera	10		Acero
14	19M7363	Tornillo	10		M12 X 60
23	9749068	Tubería	1		
24	9749069	Tubería	1		
26	19M8348	Tornillo	2		M12 X 65
27	14M7275	Tuerca	2		M12
28	12H301	Arandela de seguridad	2		1/2"
29	4285723	Abrazadera	4		Goma
	4189859	Abrazadera	4		Acero

ARM HOSES AND LINES (FACTORY AUXILIARY PLUMBING)
FLEXIBLES ET CONDUITES DE BRAS (TUYAUTERIE AUXILIAIRE D'USINE)
LINEAS Y MANGUERAS DEL BRAZO (TUBERIA AUXILIAR DE FABRICA)

T191189 A.1

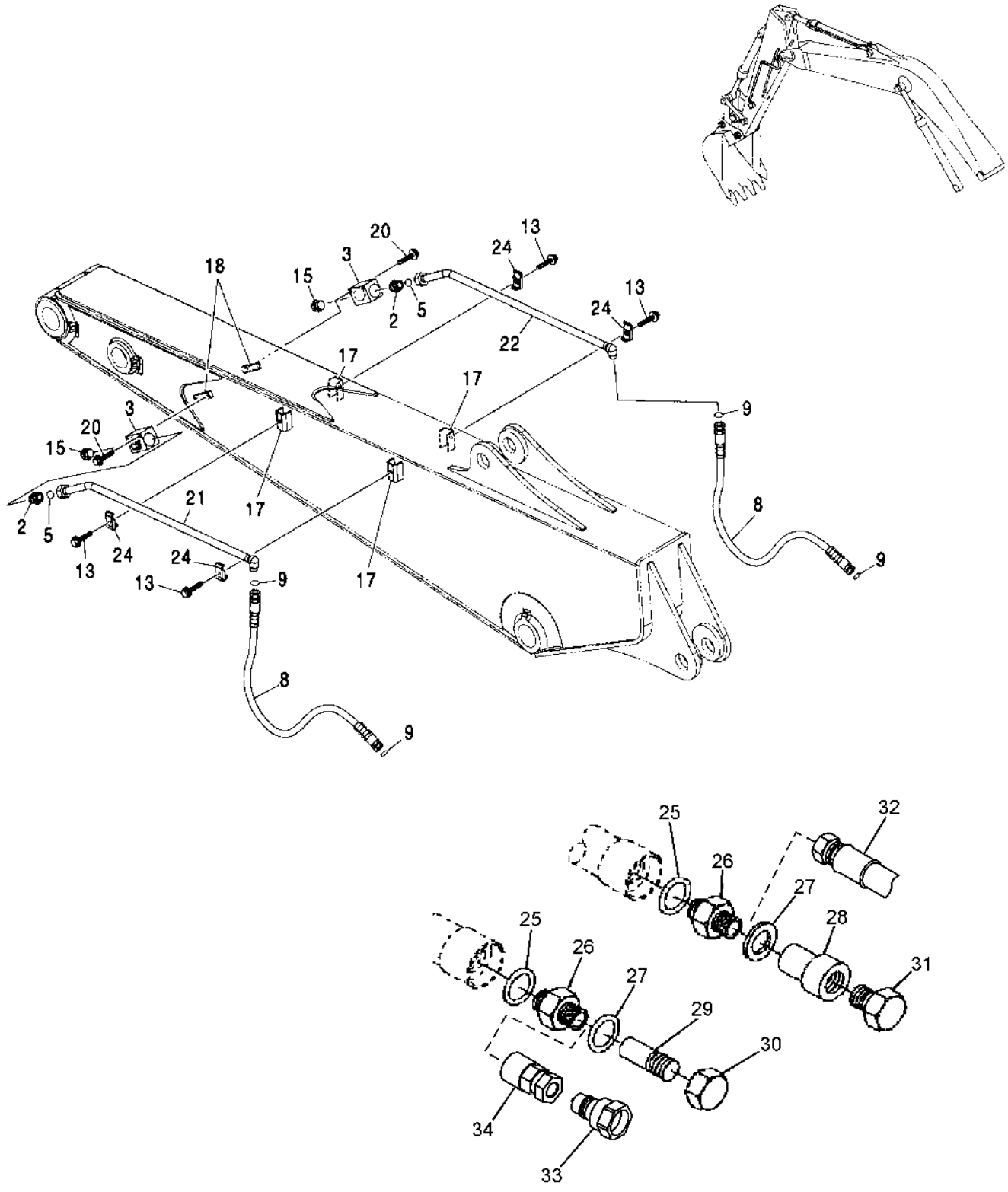

T191189

Pos.	Ref.	Descripción	Cant.	Núm. de serie	Notas
2	A853188	Racor adaptador	2		
	TH101926	Anillo tórico	2		
3	4447675	Válvula hidr. regul. caudal	2		(SUB FOR 4600164)
5	T76938	Anillo tórico	2		
8	AT215504	Manguera hidr. - confección	2		(PARA USO CON BRAZO 2.60 M)
	AT155744	Manguera hidr. - confección	2		(PARA USO CON BRAZO 3.10 M)
9	T77858	Anillo tórico	4		
13	19M8348	Tornillo	4		M12 X 65
15	4113926	Conexión	2		
	TH101926	Anillo tórico	2		
17	9753840	Soporte	4		
18	4434246	Soporte	2		
20	19M8081	Tornillo	4		M10 X 80
21	8084592	Tubería	1		
22	8085737	Tubería	1		
24	4190126	Abrazadera	4		
25	TH101926	Anillo tórico	2		
26	4189535	Racor adaptador	2		(1" ORFS)
	AT318016	Racor adaptador	2		(3/4" ORFS)
	AT301151	Conexión	2		(1" SAE, MACHO)
	X1216F4OMXS	Racor adaptador	2		(3/4" 37 GRADOS)
	X16F4OMXS	Racor adaptador	2		(1" 37 GRADOS)
	AT305641	Conexión	2		(3/4" SAE, MACHO)
27	R29936	Anillo tórico	2		
28	AT186111	Enchufe rápido	1		(1" HEMBRA)(ACOPLADOR CON TORNILLO)
	.....	Juego	1		(AT189410 NLA)
29	AT186112	Enchufe rápido	1		(1" MACHO)(ACOPLADOR CON TORNILLO)
	.....	Juego	1		(AT189409 NLA)
30	AT186113	Tapa	1		
31	AT186114	Tapón	1		
32	X1JS782016	Conexión de manguera	2		EXTREMO MANGUERA - 1 1/4 X 1 IN. PULG. RECTO
	X1J9782016	Conexión de manguera	2		EXTREMO MANGUERA - 90 PULG.1 1/4 X 1 GRADOS
33	AT117365	Macho acoplamiento hidrául.	2		ACOPLADOR RAPIDO MACHO (-12) 1 1/16 ANILLO 'O' SAE
	AT120498	Acoplamiento	2		ANILLO 'O' (-16) 1 5/16 SAE ACOPLADOR RAPIDO MACHO
34	AT117364	Hembra acoplam. hidrául.	2		ANILLO 'O' (-12) 1 1/16 SAE ACOPL RAPIDO HEMBRA
	AT120499	Acoplamiento	2		ANILLO 'O' (-16) 1 5/16 SAE ACOPL RAPIDO HEMBRA

AUXILIARY HYDRAULIC HOSES AND LINES KIT (BOOM AND ARM)(FIELD)
KIT DE FLEXIBLES ET CONDUITES HYDRAULIQUES AUXILIAIRES (FLECHE ET BRAS) (TERRAIN)
JUEGO DE LINEAS Y MANGUERAS HIDRAULICAS AUXILIARES (AGUILON Y BRAZO) (CAMPO)

T191196 A.1

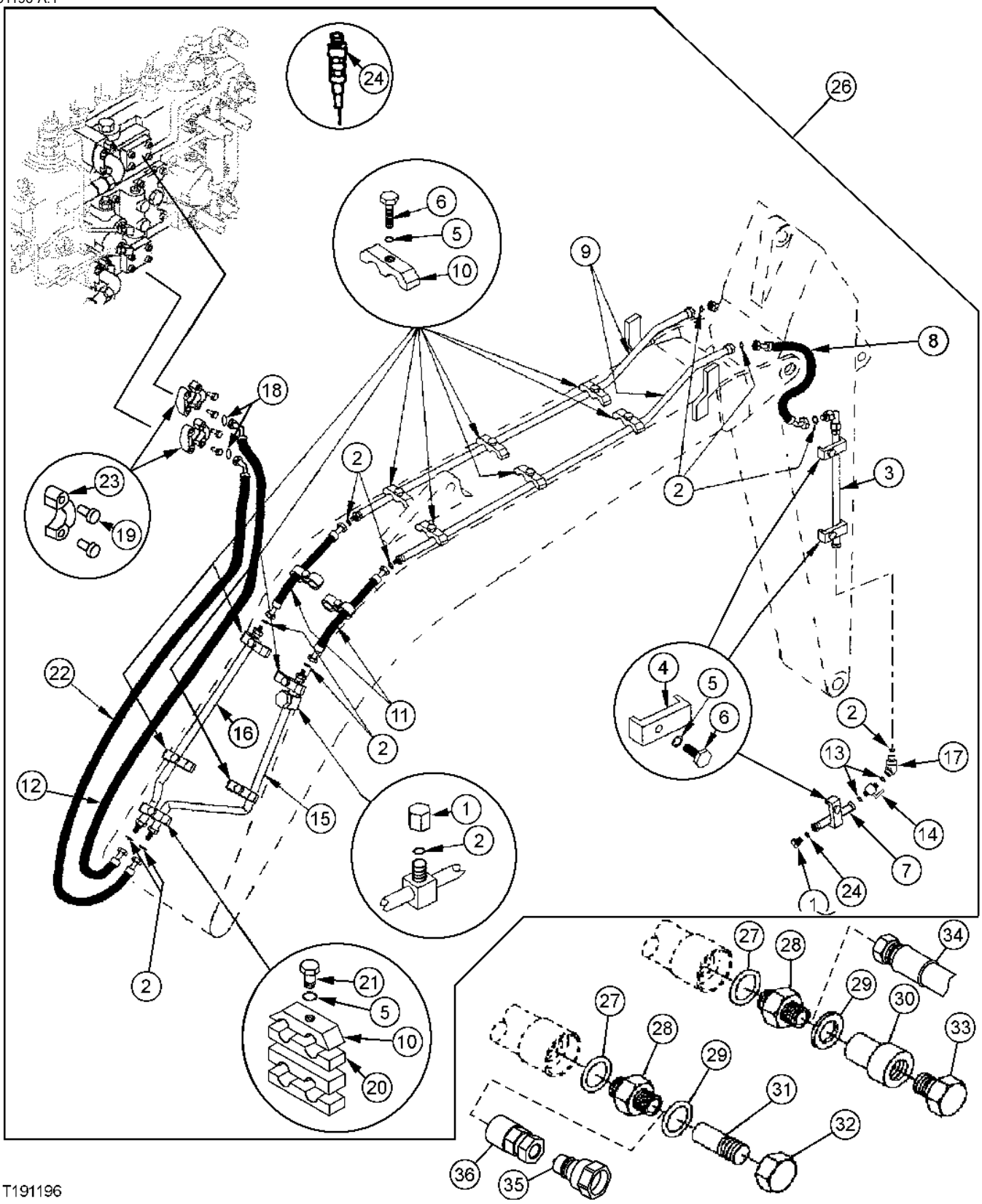

T191196

Pos.	Ref.	Descripción	Cant.	Núm. de serie	Notas
1	38H1418	Conexión	2		
2	T77858	Anillo tórico	13		
3	AT160177	Tubo de aceite	2		
4	4190126	Abrazadera	4		
5	12H301	Arandela de seguridad	17		1/2"
6	19M7363	Tornillo	14		M12 X 60
7	38H1215	Racor adaptador	2		
8	AP35235	Manguera hidr. - confección	2		(CON BRAZO LARGO DE 3.1 M)
	AT160176	Manguera hidr. - confección	2		(CON BRAZO CORTO DE 2.6 M), No incluido con kit
9	AT160159	Tubo de aceite	2		
10	4285723	Abrazadera	11		Goma
	4189859	Abrazadera	11		Acero
11	AT160161	Manguera hidr. - confección	2		
12	AP35233	Manguera	1		
13	U12547	Anillo tórico	4		
14	AT197375	Llave de bola	2		
15	AP35231	Tubo	1		
16	AP35230	Tubo	1		
17	38H1431	Racor acodado	2		
18	T59014	Anillo tórico	2		
19	19M8337	Tornillo	8		M10 X 30
20	AT318021	Abrazadera	1		(SUB FOR 4285722)
21	AP35234	Manguera hidr. - confección	1		
22	19M7943	Tornillo	1		M12 X 90
23	R29424	Conexión con brida	4		
24	9200504	Válvula descarga de presión	2		
26	.....	Conjunto de modificación	1		(AUXILIARY HYDRAULIC HOSES AND LINES) (WHOLE GOODS) , (CON BRAZO 2.6M)
27	U12547	Anillo tórico	2		
28	38H1179	Racor adaptador	2		(1" ORFS)
	38H1215	Racor adaptador	2		(3/4" ORFS)
	AT83306	Racor adaptador	2		(1" SAE, MACHO)
	R27267	Conexión	2		(3/4" 37 DEGRES)
	T34433	Racor adaptador	2		(1" 37 DEGRES)
29	R29936	Anillo tórico	2		
30	AT186111	Enchufe rápido	1		(1" HEMBRA)(ACOPLADOR CON TORNILLO)
	.....	Juego	1		(AT189410 NLA)
31	AT186112	Enchufe rápido	1		(1" MACHO)(ACOPLADOR CON TORNILLO)
	.....	Juego	1		(AT189409 NLA)
32	AT186113	Tapa	1		
33	AT186114	Tapón	1		
34	X1JS78-20-16	Conexión de manguera	2		EXTREMO DE MANGUERA-1 1/4 X 1 IN. PULG. RECTO
	X1J978-20-16	Racor acodado	2		EXTREMO DE MANGUERA - 90 PULG. 1 1/4 X 1 IN GRADOS
35	AT117365	Macho acoplamiento hidrául.	2		ENCHUFE RÁPIDO MACHO (-12) ANILLO TÓRICO SAE 1 1/16
	AT120498	Acoplamiento	2		ANILLO 'O' (-16) 1 5/16 SAE ACOPLADOR RAPIDO MACHO
36	AT117364	Hembra acoplam. hidrául.	2		ANILLO 'O' (-12) 1 1/16 SAE ACOPL RAPIDO HEMBRA
	AT120499	Acoplamiento	2		ANILLO 'O' (-16) 1 5/16 SAE ACOPL RAPIDO HEMBRA

AUXILIARY HYDRAULIC OPTIONAL LOW PRESSURE RETURN PLUMBING
CONSUITES DE RETOUR BASSE PRESSION OPTIONNELLES HYDRAULIQUES AUXILIAIRES
TUBERIA DE RETORNO DE PRESION BAJA OPCIONAL HIDRAULICA AUXILIAR

T191246 A.1

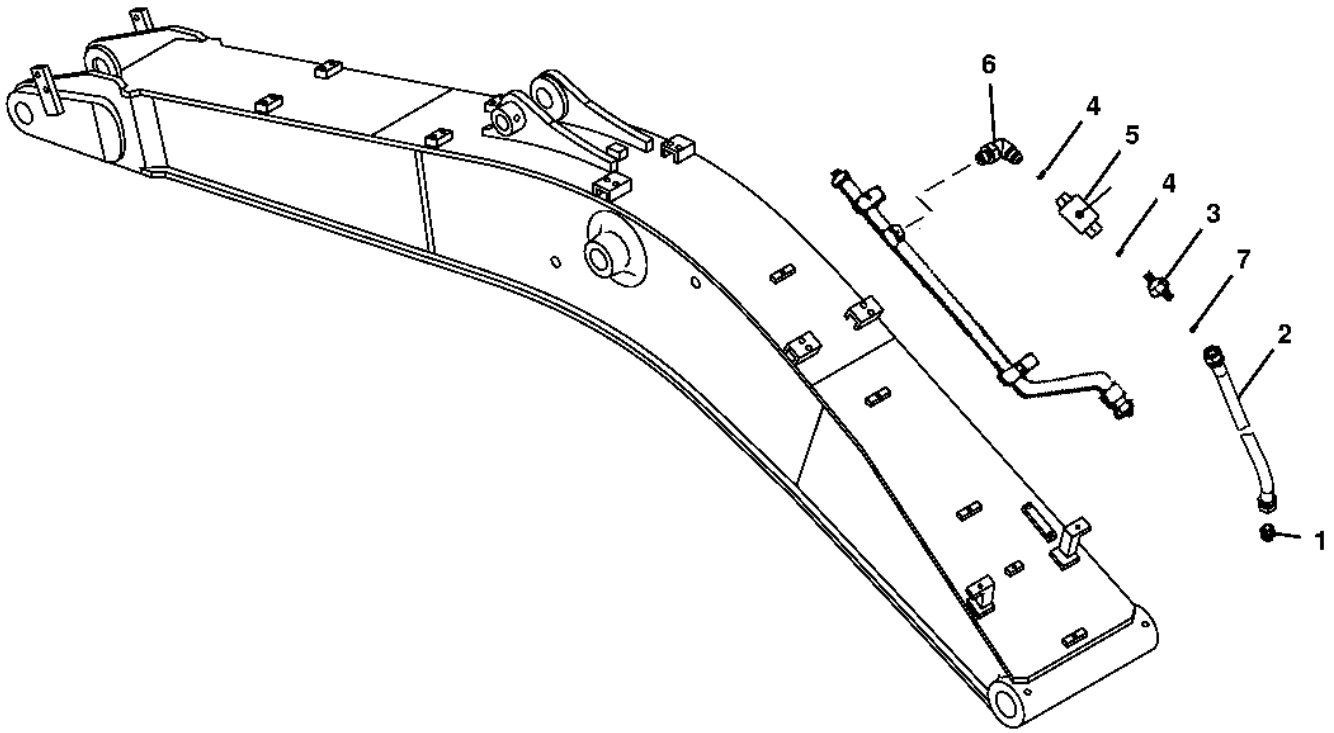

T191246

Pos.	*Ref.*	*Descripción*	*Cant.*	*Núm. de serie*	*Notas*
1	A853166	Racor adaptador	1		(SUB FOR 4189619)
2	AT304740	Manguera hidr. - confección	1		
3	38H1163	Racor adaptador	1		
4	U12547	Anillo tórico	2		
5	AT197375	Llave de bola	1		
6	38H1097	Racor acodado	1		
7	T77858	Anillo tórico	1		

HYDRAULIC OIL RESERVOIR AND FILTERS
FILTRE A AIR ET ELEMENTS DE FILTRE
FILTRO DE AIRE Y ELEMENTOS

T191787 A.1

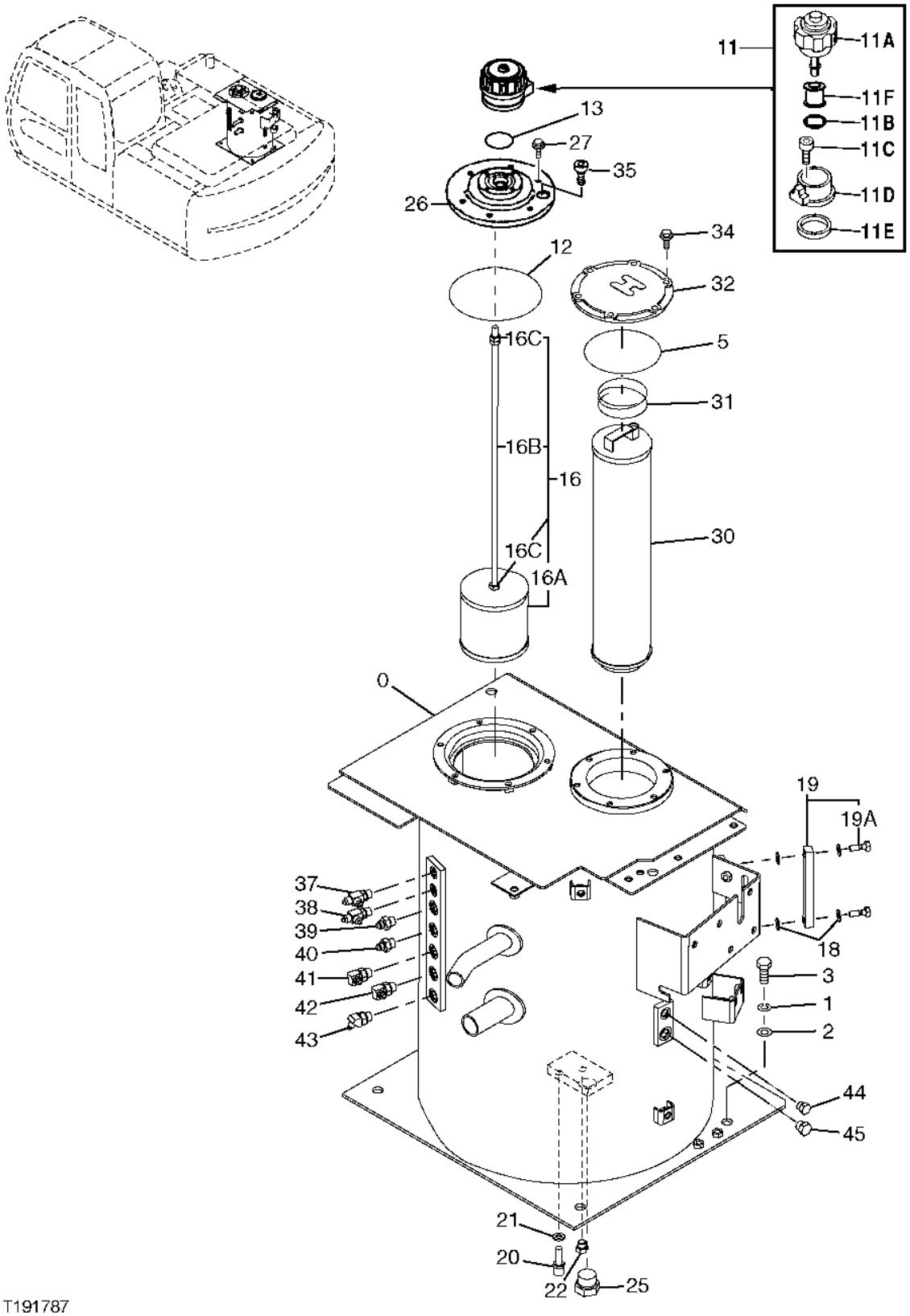

T191787

Pos.	Ref.	Descripción	Cant.	Núm. de serie	Notas
0	AP37580	Tanque hidráulico	1		
1	12H294	Arandela de seguridad	4		5/8"
2	24M7338	Arandela	4		17 X 30 X 3 mm
3	19M7488	Tornillo	4		M16 X 40
5	AT127247	Anillo tórico	1		
11	.....	Respiradero	1		(AT167079 NLA)
11A	4326285	Tapa	1		
11B	953612	Anillo tórico	1		
11C	19M8146	Tornillo	3		M5 X 16
11D	4222875	Zócalo	1		
11E	4222876	Empaquetadura	1		
11F	4251384	Cartucho de filtro	1		
12	TH100679	Anillo tórico	1		
13	CH11571	Empaquetadura	1		
16	.....	Filtro	1		(4424867 NLA) , Aspiración
16A	4285577	Colador	1		
16B	4454418	Vástago	1		
16C	14M7274	Tuerca	3		M10, (SUB FOR J950010)
18	TH100675	Arandela	4		
19	TH108293	Indicador de nivel	1		
19A	TH101894	Conexión	2		
20	AT154921	Sensor	1		
21	AT154922	Junta	1		
22	A885002	Tapón	1		
	M800650	Empaquetadura	1		
25	A885008	Tapón roscado	1		(SUB FOR THA885008)
	TH101926	Anillo tórico	1		(SUB FOR 4506429)
26	8084816	Tapadera	1		
27	19M7938	Tornillo	6		M10 X 20
28	19M7768	Tornillo	4		M6 X 16, (NO SE ILUSTRA)
30	4443596	Cartucho de filtro	1		
31	4444482	Muelle	1		
32	4443782	Tapadera	1		
34	19M7938	Tornillo	6		M10 X 20
35	4209653	Tapón hermético	1		
37	A852422	Conexión en t	1		
	M800650	Empaquetadura	1		
38	A852422	Conexión en t	1		
	M800650	Empaquetadura	1		
39	A852133	Racor adaptador	1		
	M800650	Empaquetadura	1		
40	A852133	Racor adaptador	1		
	CH11570	Anillo tórico	1		
41	A852333	Racor acodado	1		
	CH11570	Anillo tórico	1		
42	A852233	Racor acodado	1		
	CH11570	Anillo tórico	1		
43	A852232	Tapón hermético	1		
	CH11570	Anillo tórico	1		
44	A885002	Tapón	1		
	M800650	Empaquetadura	1		
45	A885003	Tapón roscado	1		
	CH11570	Anillo tórico	1		(SUB FOR 4509180)

HYDRAULIC FILTER RESTRICTION INDICATOR
TEMOIN D'OBSTRUCTION DU FILTRE HYDRAULIQUE
INDICADOR DE RESTRICCION DE FILTRO HIDRAULICO

TX1007659 A.1

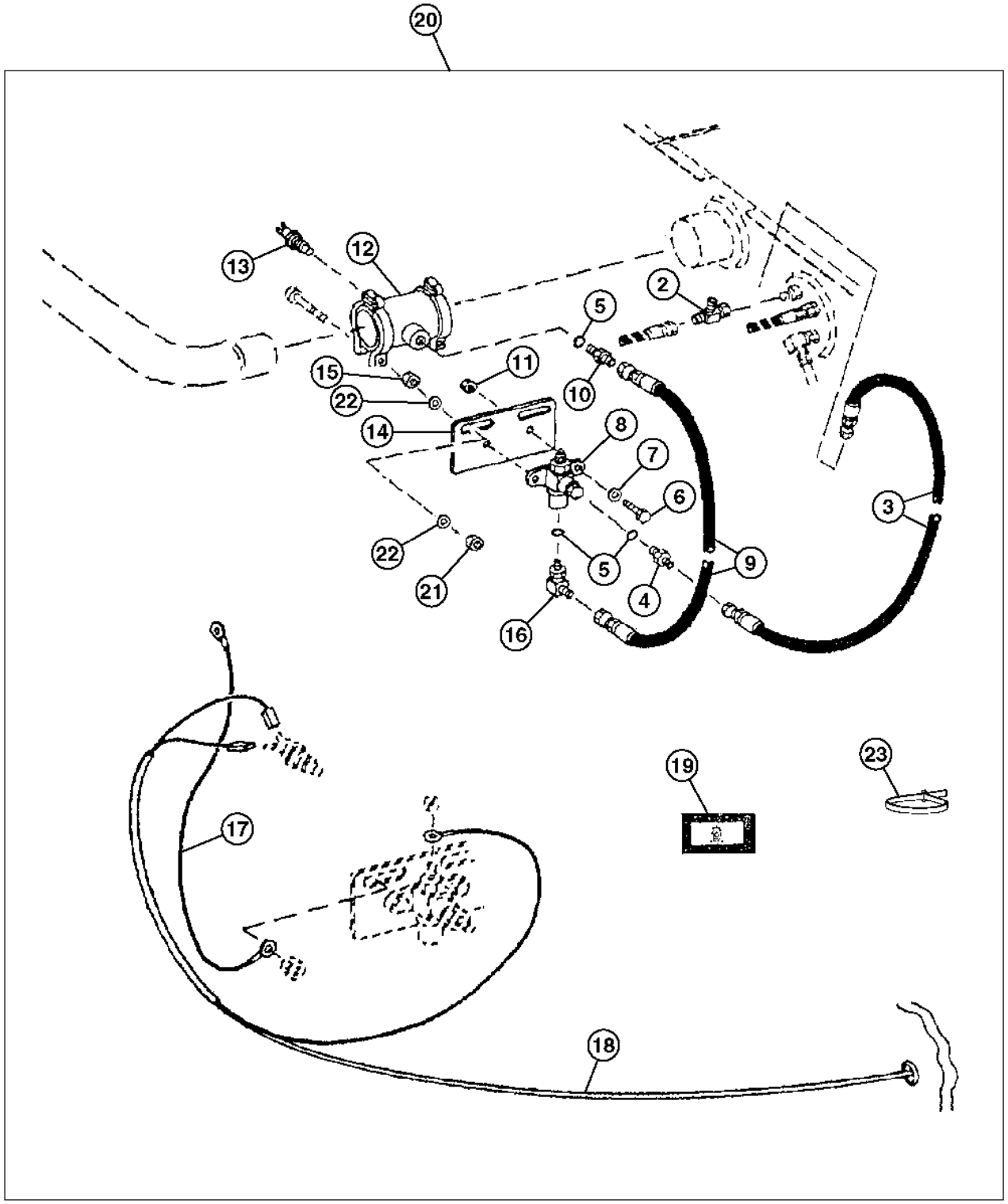

TX1007659

Pos.	*Ref.*	*Descripción*	*Cant.*	*Núm. de serie*	*Notas*
2	AE45056	Conexión en t	1		
3	AH97777	Manguera hidr. - confección	1		11.1252" X 406 mm (16") X 11.1252"
4	H75414	Racor adaptador	1		
5	T70177	Anillo tórico	3		
6	19H1919	Tornillo	2		1/4" X 5/8"
7	24H1286	Arandela	2		9/32" X 1/2" X 1/16"
8	AT131436	Manocontacto	1		
9	AT38628	Manguera hidr. - confección	1		
10	R27212	Conexión	1		
11	14H786	Tuerca	2		1/4"
12	AT134345	Acoplamiento	1		
13	AT131437	Interruptor	1		
14	T138910	Soporte	1		
15	14M7274	Tuerca	2		M10
16	AT35121	Racor acodado	1		
17	AR76140	Conductor eléctrico	1		
18	AT196334	Grupo de cables	1		(SUB FOR AT157668)
19	T153187	Etiqueta adhesiva	1		(AMBAR)
20	.....	Conjunto de modificación	1		WHOLEGOODS
21	14M7273	Tuerca	2		M8
22	24M7036	Arandela	2		9 X 16 X 1.600 mm
23	R44302	Cinta de atar	AR		

RIGHT BOOM CYLINDER COMPONENTS AND OIL LINES
COMPOSANTS ET CONDUITES D'HUILE DU VERIN DE FLECHE DROITE
COMPONENTES DE CILINDRO DE AGUILON LADO DERECHO Y LINEAS DE ACEITE

T157345 A.1

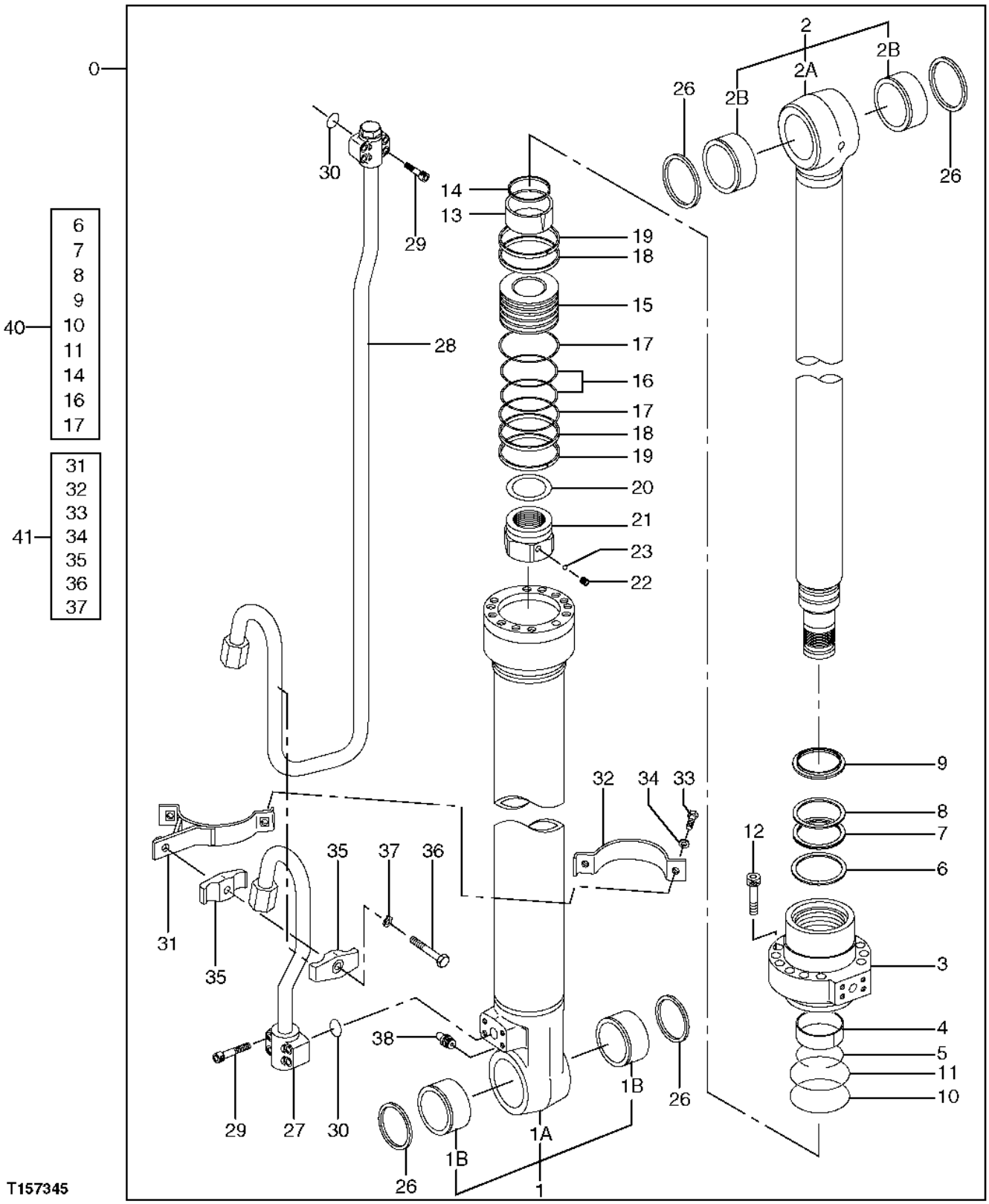

T157345

Pos.	*Ref.*	*Descripción*	*Cant.*	*Núm. de serie*	*Notas*
0	9206376J	Cilindro hidráulico	1		(SUB FOR 4448531, 9206376 OR 4448531EX)
1	0828901	Cuerpo de cil. hidráulico	1		
1A	.....	Tubo	1		
1B	4370747	Casquillo	2		
2	0828902	Vástago	1		
2A	.....	Vástago	1		
2B	4352398	Casquillo	2		
3	0828903	Culata	1		
4	AT264314	Anillo anti-desgaste	1		(SUB FOR T108041, 0309304)
5	0208604	Anillo elástico	1		
6	0789206	Anillo	1		(K)
7	AT264357	Retén	1		(K) (SUB FOR TH104925)
8	AT264358	Anillo reforzador	1		(K) (SUB FOR TH104926)
9	H157235	Retén	1		(K)
10	AT264223	Anillo tórico	1		(K) (SUB FOR A811105)
11	AT264259	Anillo reforzador	1		(K) (SUB FOR 0298904, 0482410, AT153829)
12	0408805	Tornillo	12		
13	0409005	Cojinete	1		
14	H157237	Retén	1		(K)
15	0409007	Pistón	1		
16	AT264386	Anillo	1		(K) (SUB FOR 0240915)
17	AT264262	Anillo reforzador	2		(K) (SUB FOR 0409008)
18	0667008	Retén	2		
19	AT264260	Anillo	2		(SUB FOR 0298907)
20	AT153937	Suplemento	1		(SUB FOR 0409010)
21	0789506	Tuerca	1		
22	0309011	Tornillo de fijación	1		
23	0111707	Bola	1		
26	TH102446	Retén	4		(SUB FOR 4067902)
27	0828908	Tubería	1		(SUB FOR 0828904, THIS APPLICATION)
28	0828909	Tubería	1		(SUB FOR 0828905) (ALSO ORDER (4) 19M7662 AND A853144)
	A853144	Racor adaptador	1		(NO SE ILUSTRA)
29	19M8213	Tornillo	8		M10 X 50, (SUB FOR 0309019, THIS APPLICATION)
30	AT264360	Anillo tórico	2		(SUB FOR 4506430)
31	0828906	Kit de cintas	1		(SUB FOR 0828907)
32	H163453	Cinta	1		
33	0408815	Tornillo	2		
34	12M7066	Arandela de seguridad	2		10 mm, (SUB FOR 0325913)
35	0236915J	Semiabrazadera	2		(SUB FOR 0236915)
36	0254312	Tornillo	1		
37	A590914	Arandela de seguridad	1		
38	J75481	Retén	1		
40	4467379	Juego de retenes	1		(INCLUYE TODAS LAS PARTES (K)
41	0828906	Kit de cintas	1		

LEFT BOOM CYLINDER COMPONENTS AND OIL LINES
COMPOSANTS DE VERIN DE FLECHE ET CONDUITES D'HUILE
COMPONENTES CILINDRO DE AGUILON IZQ. Y LINEAS DE ACEITE

T162226 A.1

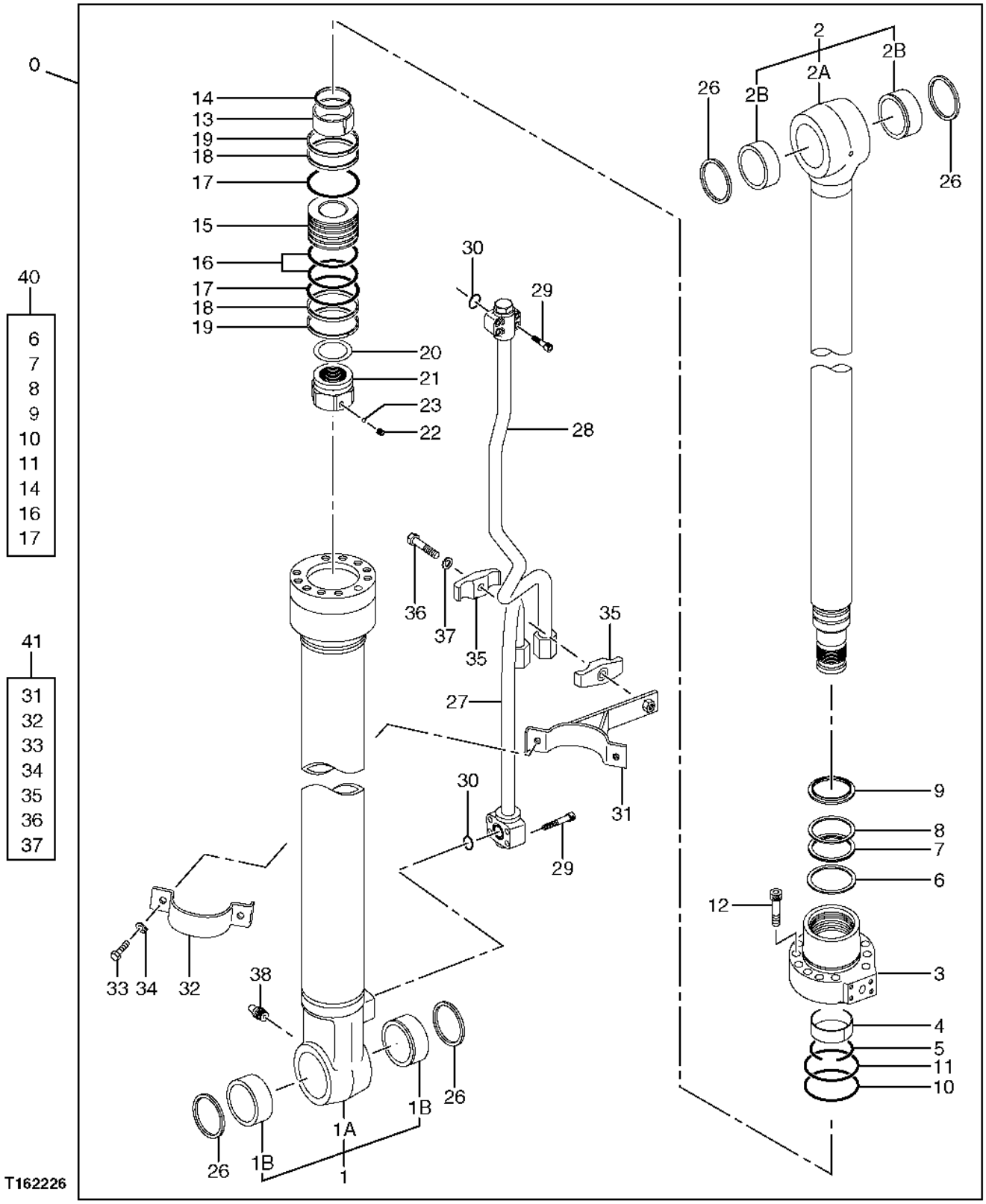

Pos.	*Ref.*	*Descripción*	*Cant.*	*Núm. de serie*	*Notas*
0	9206377J	Cilindro hidráulico	1		(SUB FOR 4448532, 9206377 OR 4448532EX)
1	0829101	Cuerpo de cil. hidráulico	1		
1A	.....	Tubo	1		
1B	4370747	Casquillo	2		
2	0828902	Vástago	1		
2A	.....	Vástago	1		
2B	4352398	Casquillo	2		
3	0828903	Culata	1		
4	AT264314	Anillo anti-desgaste	1		(SUB FOR T108041, 0309304)
5	0208604	Anillo elástico	1		
6	0789206	Anillo	1		(K)
7	AT264357	Retén	1		(K) (SUB FOR TH104925, 0208605)
8	AT264358	Anillo reforzador	1		(K) (SUB FOR TH104926, 0208606)
9	0667006	Aro rascador	1		(K)
10	AT264223	Anillo tórico	1		(K) (SUB FOR A811105)
11	AT264259	Anillo reforzador	1		(K) (SUB FOR 0298904, 0482410, AT153829)
12	0408805	Tornillo	12		
13	0409005	Cojinete	1		
14	0667007	Retén	1		(K)
15	0409007	Pistón	1		
16	AT264386	Anillo	1		(SUB FOR 0240915)
17	AT264262	Anillo reforzador	2		(SUB FOR 0409008)
18	0667008	Retén	2		
19	AT264260	Anillo	2		(SUB FOR 0298907)
20	AT153937	Suplemento	1		(SUB FOR 0409010)
21	0789506	Tuerca	1		
22	0309011	Tornillo de fijación	1		
23	0111707	Bola	1		
26	TH102446	Retén	4		(SUB FOR 4067902)
27	0829105	Tubería	1		(SUB FOR 0829103, THIS APPLICATION)
28	0829106	Tubería	1		(SUB FOR 0829104, THIS APPLICATION)
29	19M7662	Tornillo	8		M10 X 30, (SUB FOR 0309019, THIS APPLICATION) (SUB FOR 4486953, J971030, J901030)
30	AT264360	Anillo tórico	2		(SUB FOR 4506430)
31	0828906	Kit de cintas	1		(SUB FOR 0828907)
32	H163453	Cinta	1		(SUB FOR 0609115)
33	0408815	Tornillo	2		
34	12M7066	Arandela de seguridad	2		10 mm, (SUB FOR 0325913)
35	0236915J	Semiabrazadera	2		(SUB FOR 0236915)
36	0254312	Tornillo	1		
37	A590914	Arandela de seguridad	1		
38	J75481	Retén	1		
40	4467379	Juego de retenes	1		(INCLUYE TODAS LAS PARTES (K)
41	0828906	Kit de cintas	1		

ARM CYLINDER COMPONENTS AND OIL LINES
COMPOSANTS VERIN BRAS ET CONDUITES HUILE
COMPONENTES CILINDRO DEL BRAZO Y LINEAS DE ACEITE

T203157 A.1

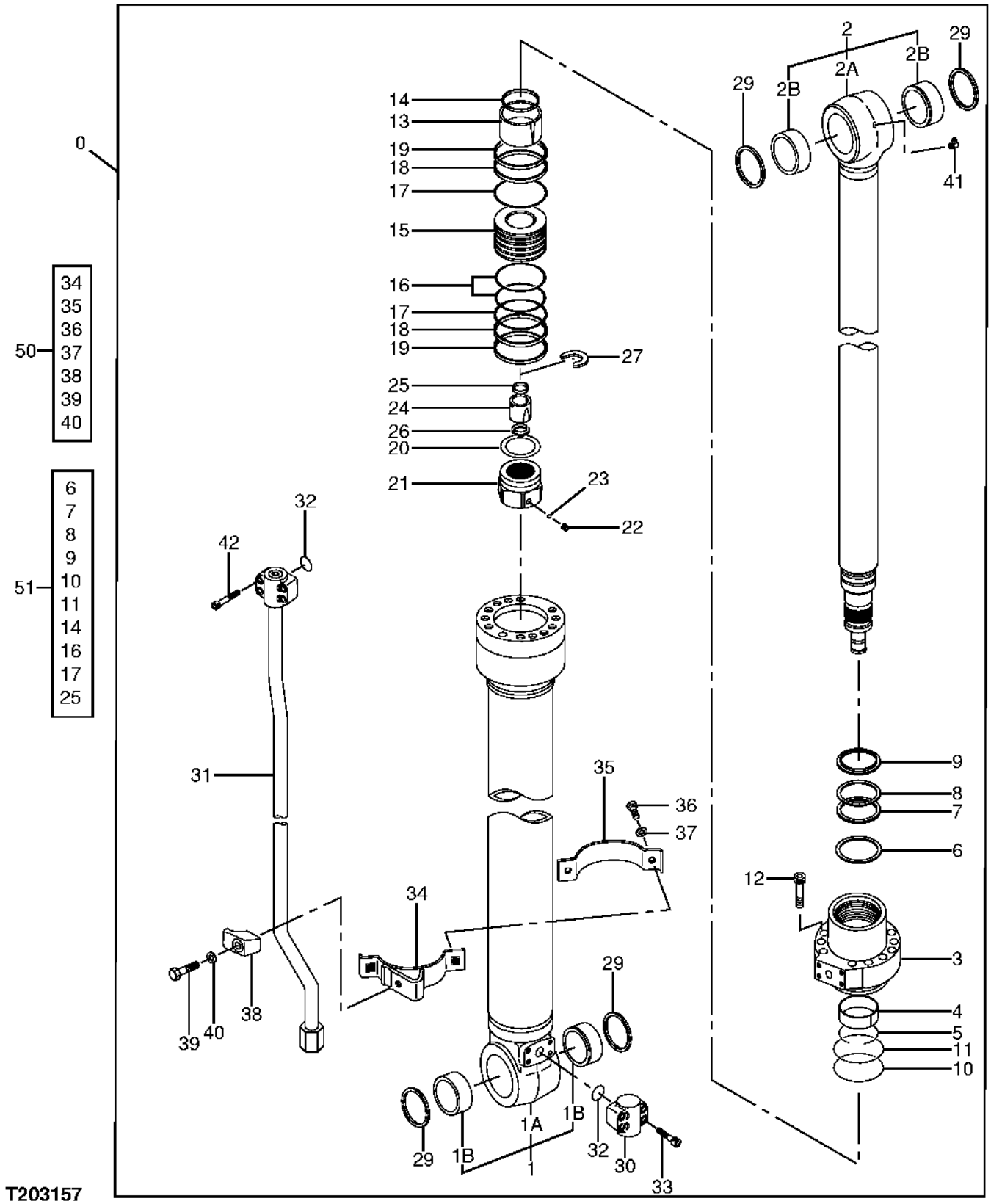

Pos.	Ref.	Descripción	Cant.	Núm. de serie	Notas
0	9206378J	Cilindro hidráulico	1		(SUB FOR 4448533 AND 4448533EX)
1	0829301	Cuerpo de cil. hidráulico	1		
1A	.....	Tubo	1		
1B	4352400	Casquillo	2		
2	0829302	Vástago	1		
2A	.....	Vástago	1		
2B	4352400	Casquillo	2		
3	0829303	Culata	1		
4	AT264321	Casquillo	1		(SUB FOR 0325904)
5	0237407	Anillo	1		
6	4S00706	Anillo	1		(K) (SUB FOR 0829304, 0927507, 0973905, 1119303)
7	4S00707	Empaquetadura	1		(K) (SUB FOR 0105301, AT264350, 0973906 OR 1119304)
8	AT264351	Anillo reforzador	1		(K) (SUB FOR 0237419)
9	0829305	Anillo	1		(K)
10	AT264342	Anillo tórico	1		(K) (SUB FOR A811115)
11	AT264359	Anillo reforzador	1		(K) (SUB FOR 0261310)
12	19M8931	Tornillo	12		M16 X 75, (SUB FOR 0409705)
13	0829306	Empaquetadura	1		
14	4S00776	Retén	1		(K) (SUB FOR 0829307)
15	0409708	Pistón	1		
16	AT264355	Retén	1		(SUB FOR 0258205)
17	0409709	Anillo reforzador	2		
18	0667206	Retén	2		
19	AT264356	Anillo anti-desgaste	2		(SUB FOR 0261308)
20	T108030	Suplemento	1		(SUB FOR 0309013)
21	0788907	Tuerca	1		
22	0309011	Tornillo de fijación	1		
23	0111707	Bola	1		
24	0409913	Anillo	1		
25	0667411	Retén	1		(K)
26	0409915	Anillo	2		
27	0686406	Anillo elástico	1		
29	TH104472	Retén	4		(SUB FOR 4084578)
30	.....	Cardán	1		(0409016 NLA)
	0796601	Cardán	1		(USE WITH A853166, 19M7662 AND 12M7066)
31	0829310	Tubería	1		(SUB FOR 0829308)
32	AT264360	Anillo tórico	2		(SUB FOR 4506430)
33	19M8213	Tornillo	4		M10 X 50, (SUB FOR 0309019)
34	0767609	Cinta	1		
35	0309017	Abrazadera	1		
36	0408815	Tornillo	2		
37	12M7066	Arandela de seguridad	2		10 mm, (SUB FOR 0325913)
38	H238070	Abrazadera	1		(SUB FOR 0309021 AND T108036)
39	0667013	Tornillo	1		
40	0208516	Arandela de seguridad	1		
41	AH226482	Engrasador	1		(SUB FOR 0225709 OR CH18478)
42	19M8337	Tornillo	4		M10 X 30
43	A853166	Racor adaptador	1		(NO SE ILUSTRA)
44	19M7662	Tornillo	4		M10 X 30, (NO SE ILUSTRA)
45	12M7066	Arandela de seguridad	4		10 mm, (NO SE ILUSTRA)
50	.....	Juego	1		(0829309 NLA)
51	4467380	Juego de retenes	1		(INCLUYE TODAS LAS PARTES (K)

BUCKET CYLINDER COMPONENTS AND OIL LINES
COMPOSANTS DU VERIN DE BRAS ET CONDUITES D'HUILE
COMPONENTES DE CILINDRO DE CUCHARON Y LINEAS DE ACEITE

T157354 A.1

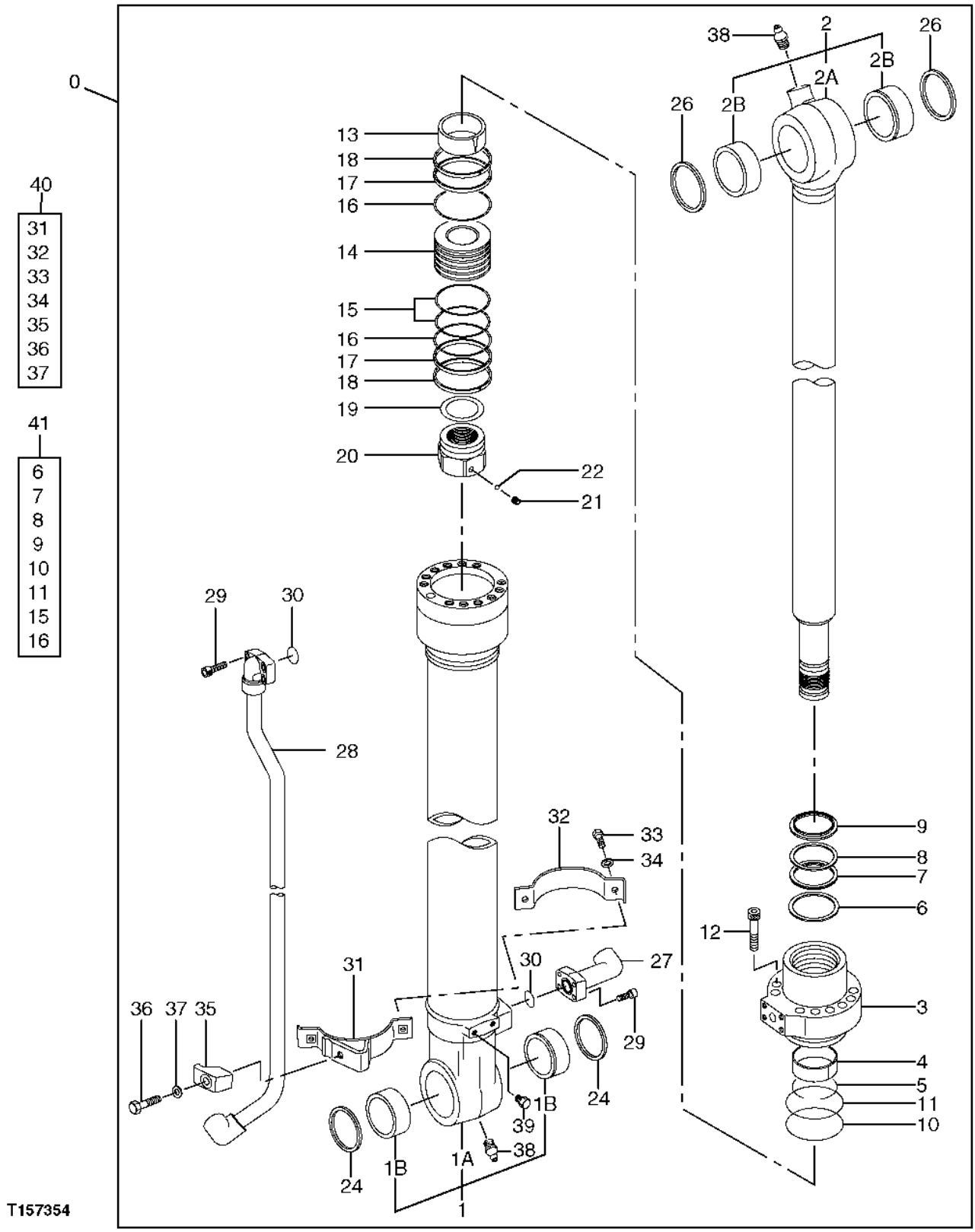

Pos.	*Ref.*	*Descripción*	*Cant.*	*Núm. de serie*	*Notas*
0	9206379J	Cilindro hidráulico	1		(SUB FOR 4448534, 9206379 OR 4448534EX)
1	0694401	Cuerpo de cil. hidráulico	1		
1A	.....	Tubo	1		
1B	4362025	Casquillo	2		
2	0829501	Vástago	1		
2A	.....	Vástago	1		
2B	4352400	Casquillo	2		
3	H158027	Guía vástago cilindro hidr.	1		(SUB FOR 0675105 OR 0789905)
4	0310504	Anillo anti-desgaste	1		
5	TH109312	Anillo elástico	1		(SUB FOR 0240904)
6	0789906	Anillo	1		(K)
7	0240911	Empaquetadura	1		(K)
8	0240912	Anillo reforzador	1		(K)
9	0667504	Retén	1		(K)
10	AT264319	Anillo tórico	1		(K) (SUB FOR A811100)
11	0310506	Anillo reforzador	1		(K)
12	0408805	Tornillo	12		
13	0694403	Anillo	1		
14	H158463	Pistón	1		(SUB FOR 0408808)
15	AT264387	Anillo	1		(K) (SUB FOR 0310508)
16	0408809	Anillo reforzador	2		(K)
17	0907801	Aro rascador	2		
18	AT264388	Anillo	2		(SUB FOR 0310510)
19	TH109328	Suplemento	1		(SUB FOR 0310514)
20	0789307	Tuerca	1		
21	0309011	Tornillo de fijación	1		
22	0111707	Bola	1		
24	4065687	Retén	2		
26	TH104472	Retén	2		(SUB FOR 4084578)
27	0309312	Racor acodado	1		
28	0694404	Tubería de aceite	1		
29	19M8337	Tornillo	8		M10 X 30, (SUB FOR 0158855)
30	AT264360	Anillo tórico	2		(SUB FOR 4506430)
31	AH152929	Abrazadera	1		(SUB FOR 0675108)
32	H159705	Cinta	1		(SUB FOR 0409612)
33	0408815	Tornillo	2		
34	12M7066	Arandela de seguridad	2		10 mm, (SUB FOR 0325913)
35	H238070	Abrazadera	1		(SUB FOR 0309021 AND T108036)
36	0667013	Tornillo	1		
37	0208516	Arandela de seguridad	1		
38	J75481	Retén	2		
39	19M8017	Tornillo	2		M12 X 20, (SUB FOR 0409110)
40	.....	Juego	1		(0675109 NLA)
41	4467381	Juego de retenes	1		(INCLUYE TODAS LAS PARTES (K)

SWING GEARBOX COMPONENTS AND DIPSTICK
BOITE D'ENGRENAGES DE PIVOTEMENT ET JAUGE
CAJA DE ENGRANAJES DE GIRO Y VARILLA DE MEDICION

TX1007672 A.1

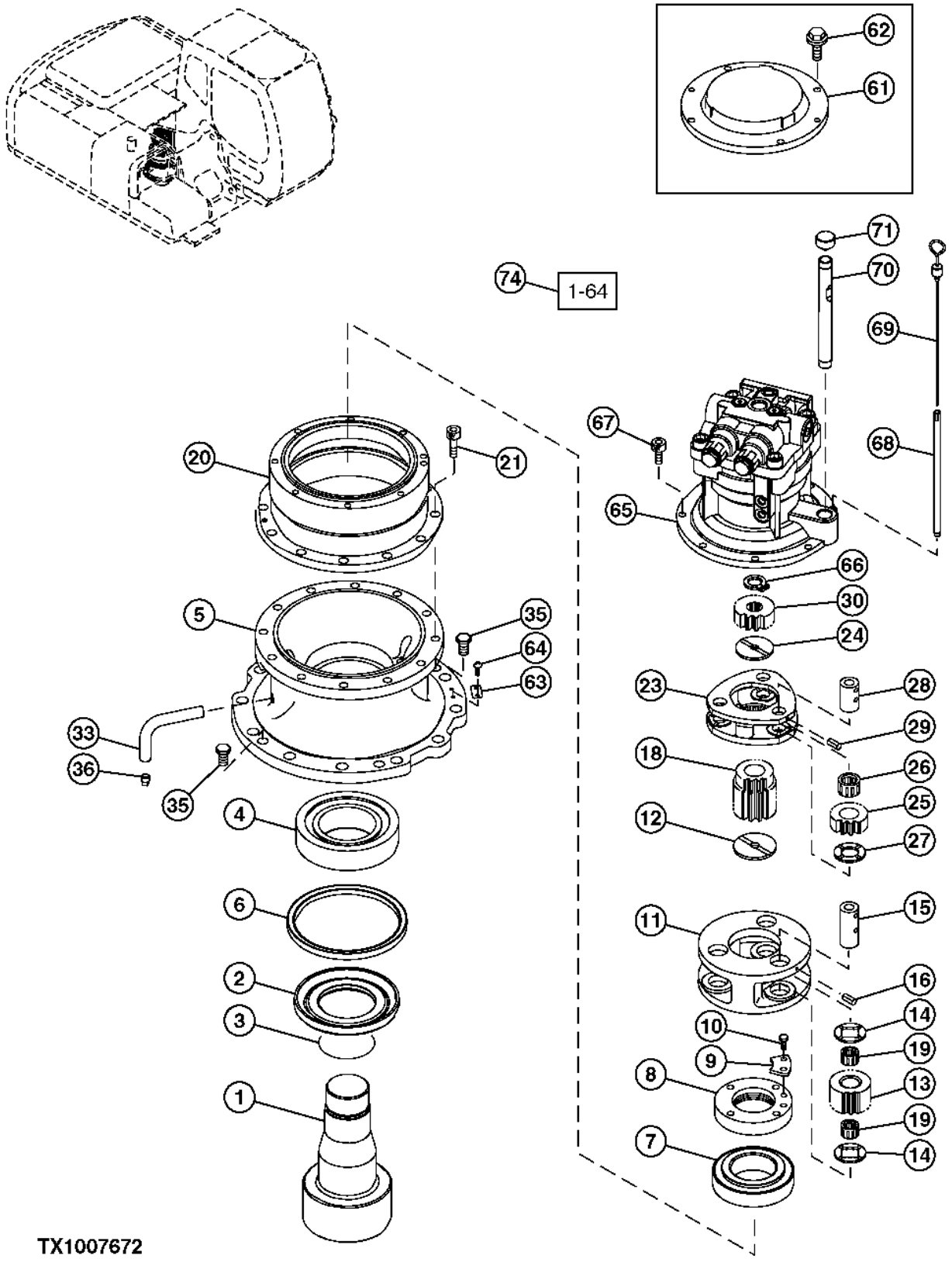

Pos.	*Ref.*	*Descripción*	*Cant.*	*Núm. de serie*	*Notas*
1	2044634	Árbol	1		
2	3083742	Manguito	1		
3	AT264339	Anillo tórico	1		(SUB FOR A811120)
4	4402481	Rodamiento rodillos cil.	1		
5	.....	Carcasa	1		(1032876 NLA)
6	4411535	Retén	1		
7	4667150	Cojinete	1		(SUB FOR 4402637)
8	3086064	Tuerca	1		
9	4474191	Placa	1		(SUB FOR 4411122)
10	19M8324	Tornillo	2		M10 X 16
11	1026662	Portaplanetarios	1		
12	4642361	Placa	1		(SUB FOR 4187590)
13	3084729	Engranaje	3		
14	4336929	Placa de desgaste	6		
15	4488904	Pasador	3		(USE WITH 4631475) (SUB FOR 4336925)
16	4027427	Pasador elástico	3		
18	3080912	Engranaje solar	1		
19	4631475	Rodamiento de agujas	6		(USE WITH 4488904) (SUB FOR 4461644, 4427630)
20	1025957	Corona de tren planetario	1		
21	19M8445	Tornillo	12		M16 X 45
23	1028723	Portaplanetarios	1		
24	4403371	Placa	1		
25	3102045	Engranaje	3		(SUB FOR 3090504)
26	4404506	Rodamiento de agujas	3		
27	4403082	Placa	3		
28	4336923	Pasador	3		
29	4051262	Pasador elástico	3		
30	3090503	Engranaje	1		
33	3089362	Tubería	1		
35	4445352	Tapón roscado	2		
36	94-2012	Tapón hermético	1		
61	3090308	Tapadera	1		
62	19M8011	Tornillo	8		M12 X 30
	12M7067	Arandela de seguridad	8		12 mm
63	3053093	Placa	1		
64	37H99	Tornillo	2		0.100" X 1/4"
65	4448202	Motor hidráulico	1		NLA, (ORDER 4448202EX)
	4448202EX	Motor hidráulico reman.	1		(REMAN FOR 4448202)
66	40M7046	Anillo elástico	1		(SUB FOR 991342)
67	19M8168	Tornillo	8		M12 X 25, (SUB FOR M341228)
68	4449144	Tubería	1		
69	3090862	Aspilla	1		
70	4332658	Tubo	1		
71	4343365	Tapa	1		
74	9194506	Motor hidráulico	1		

SWING GEARBOX MOUNTING
SUPPORT DE MONTAGE DE BOITE D'ENGRENAGES DE PIVOTEMENT
MONTAJE DE CAJA DE ENGRANAJES DE GIRO

TP58719 A.1

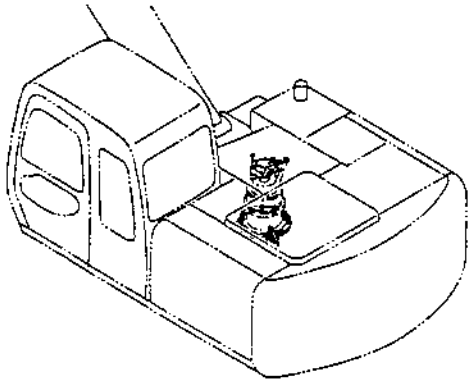

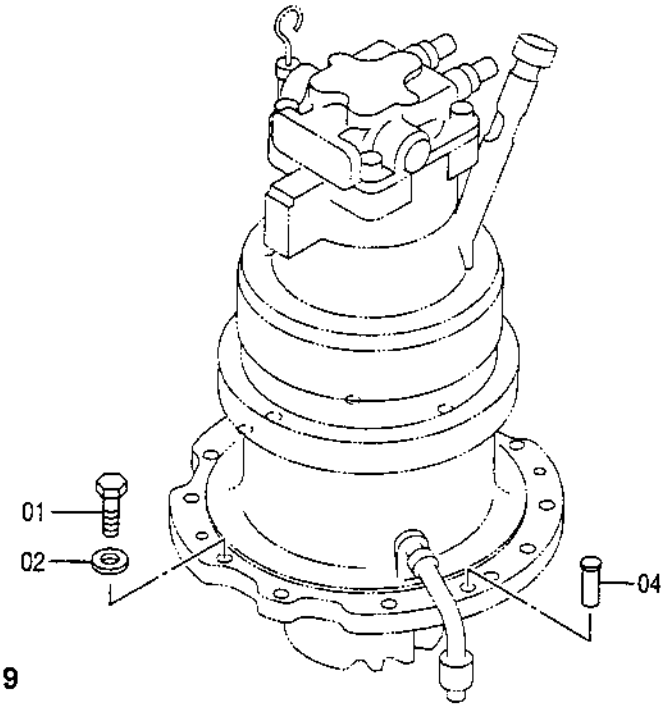

TP58719

Pos.	*Ref.*	*Descripción*	*Cant.*	*Núm. de serie*	*Notas*
1	19M8224	Tornillo	12		M20 X 60, (SUB FOR J922060)
2	J222020	Arandela	12		
4	4080398	Bulón	2		

SWING MOTOR COMPONENTS
COMPOSANTS DU MOTEUR DE PIVOTEMENT
COMPONENTES DEL MOTOR DE GIRO

TX1011561 A.1

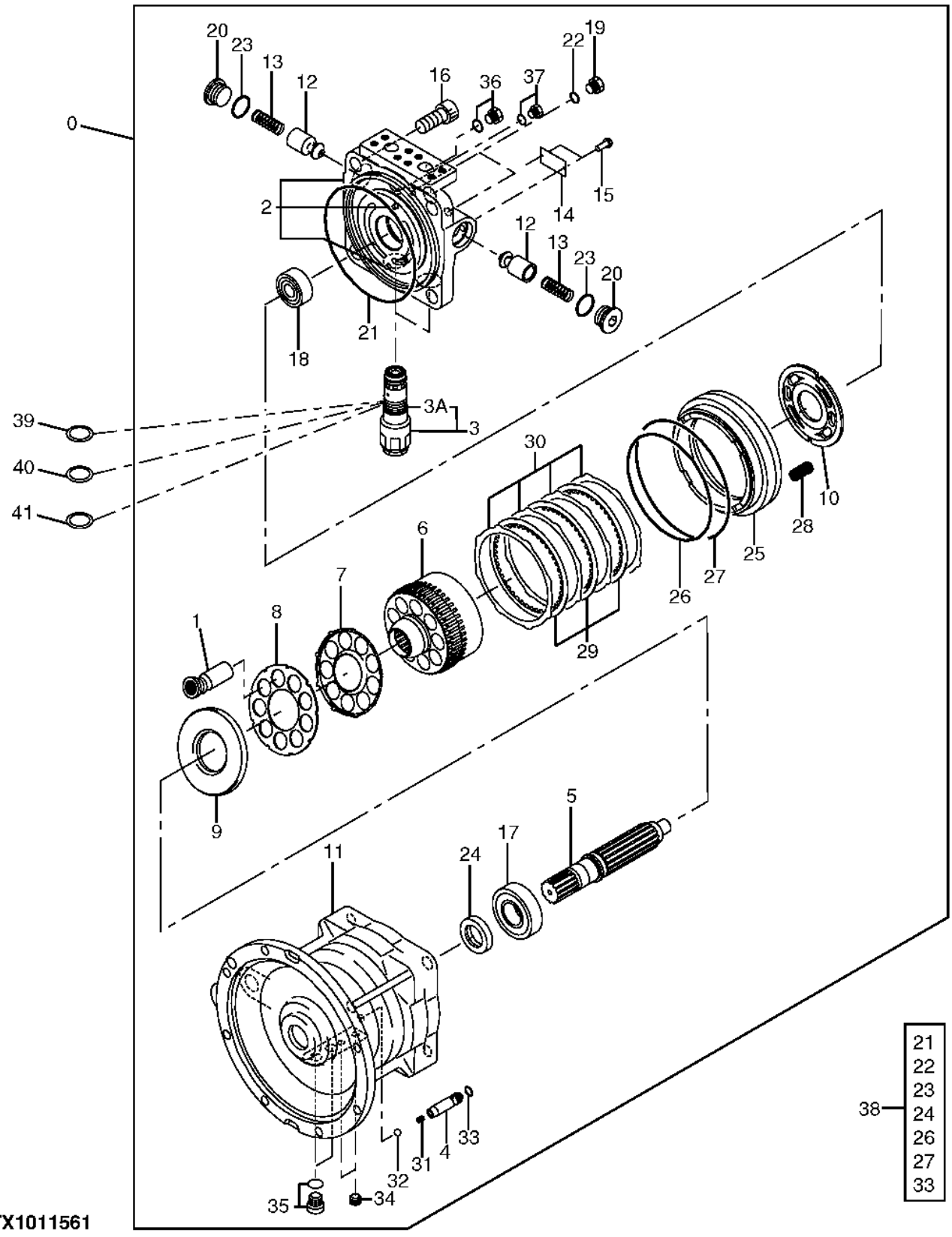

Pos.	*Ref.*	*Descripción*	*Cant.*	*Núm. de serie*	*Notas*
0	4448202	Motor hidráulico	1		NLA, (ORDER 4448202EX)
	4448202EX	Motor hidráulico reman.	1		(REMAN FOR 4448202)
1	0788801	Pistón	1		1 paquete contiene 9 piezas
2	0788802	Tapadera	1		
3	4470919	Válvula de retención	2		
3A	A811030	Anillo tórico	2		
4	0788803	Émbolo	1		
5	0788804	Árbol	1		
6	0788805	Colector	1		
7	0788806	Placa	1		
8	0788807	Retenedor	1		
9	0788808	Placa	1		
10	0788809	Placa	1		
11	.....	Carcasa	1		(0814401 NLA)
12	0409215	Émbolo	2		
13	0409216	Muelle	2		
14	.....	Placa de identificación	1		(0625508 NLA)
15	0625509	Tornillo	2		
16	0365318	Tornillo	4		
17	0788811	Rodamiento rodillos cil.	1		
18	0677203	Rodamiento rodillos cil.	1		(SUB FOR 0788812)
19	0629404	Tapón hermético	2		
20	0692708	Tapón hermético	2		
21	4S01095	Anillo tórico	1		(K) (SUB FOR 0425115)
22	M800650	Empaquetadura	2		(K)
23	AT264347	Anillo tórico	2		(K) (SUB FOR 4506428)
24	0788813	Retén	1		(K)
25	0788814	Pistón	1		
26	4S00218	Anillo tórico	1		(K) (SUB FOR 0353321)
27	T80622	Anillo tórico	1		(K) (SUB FOR 0425117)
28	0788815	Muelle	24		
29	0788816	Arandela de empuje	3		
30	0788817	Plato de arrastre	4		
31	0788818	Muelle	1		
32	0221509	Bola	1		
33	CH11568	Empaquetadura	1		(K) (SUB FOR 4506407)
34	0263019	Tapón roscado	2		
35	0628705	Tapón roscado	2		
36	0694825	Tapón roscado	1		
37	0788819	Tapón roscado	1		
38	.....	Juego de retenes	1		(0814402 NLA) (SUMINISTRAR COMPONENTES) (INCLUYE TODAS LAS PARTES (K)
39	R67193	Suplemento	AR		
40	R55158	Suplemento	AR		
41	R55159	Suplemento	AR		

Índice numeríco

Ref.	*Pos.*	*Página*
0001190	1	59
0001190	11B	59
0001193	15	59
0003542	1	59
0003542	11A	59
0004069	7	199
0004161	73	421
0004163	62	423
0004165	9	429
0004167	95	427
0004169	97	425
0004910	10	195
0105301	7	519
0111707	23	515
0111707	23	517
0111707	23	519
0111707	22	521
0158847	26	69
0158855	29	521
0163601	14	65
0208516	40	519
0208516	37	521
0208604	5	515
0208604	5	517
0208605	7	517
0208606	8	517
0221509	32	527
0225709	41	519
0236915	35	515
0236915	35	517
0236915J	35	515
0236915J	35	517
0237407	5	519
0237419	8	519
0240904	5	521
0240911	7	521
0240912	8	521
0240915	16	515
0240915	16	517
0250914	20F	65
0251319	31	69
0251404	12	65
0251523	2	63
0254312	36	515
0254312	36	517
0258205	16	519
0261308	19	519
0261310	11	519
0263019	34	527
0298904	11	515
0298904	11	517
0298907	19	515
0298907	19	517
0308623	33	69
0308703	16	435
0308704	17	435
0308705	15	435
0308709	12	435
0309011	22	515
0309011	22	517
0309011	22	519
0309011	21	521
0309013	20	519
0309017	35	519
0309019	29	515
0309019	29	517
0309019	33	519
0309021	38	519
0309021	35	521
0309304	4	515
0309304	4	517
0309312	27	521
0310020	35	69
0310023	1J	65
0310026	11	65
0310504	4	521
0310506	11	521
0310508	15	521
0310510	18	521
0310514	19	521
0325904	4	519
0325913	34	515
0325913	34	517
0325913	37	519
0325913	34	521
0353321	26	527
0365318	16	527
0365427	4	69
0387804	50	433
0387804	9	435
0396814	26	65
03M7184	1	303
03M7190	1	303
03M7193	0C	313
0408409	32	433
0408409	4	435
0408410	33	433
0408410	5	435
0408410	16	437
0408410	8	437
0408411	34	433
0408411	6	435
0408411	17	437
0408411	9	437
0408805	12	515
0408805	12	517
0408805	12	521
0408808	14	521
0408809	16	521
0408815	33	515
0408815	33	517
0408815	36	519
0408815	33	521
0409005	13	515
0409005	13	517
0409007	15	515
0409007	15	517
0409008	17	515
0409008	17	517
0409010	20	515
0409010	20	517
0409016	30	519
0409110	39	521
0409215	12	527
0409216	13	527
0409612	32	521
0409705	12	519
0409708	15	519
0409709	17	519
0409913	24	519
0409915	26	519
0411402	11	69
0411403	15	69
0411404	14	69
0411405	13	69
0411406	12	69
0411407	17	69
0411408	10	69
0411409	9	69
0411414	23	69
0411415	30	69
0411416	33	69
0411417	32	69
0411418	2	69
0411419	4	69
0411420	22	69
0411501	13	65
0411634	26	63
0411634	27	63
0425115	21	527
0425117	27	527
0436608	4	65
0482410	11	515
0482410	11	517
0486103	19	407
0609115	32	517
0625508	14	527
0625509	15	527
0628705	35	527
0629404	19	527
0636101	19	69
0636102	18	69
0667006	9	517
0667007	14	517
0667008	18	515
0667008	18	517
0667013	39	519
0667013	36	521
0667206	18	519
0667411	25	519
0667504	9	521
0670802	20	437
0670802	22	437
0671001	19	65
0671002	23	65
0671002	8	65
0675105	3	521
0675108	31	521
0675109	40	521
0677203	18	527
0686406	27	519
0692508	11	63
0692708	20	527
0692801	8	69
0692803	6	69
0692804	34	69
0692805	5	69
0692903	1	65
0692905	25	65
0693002	3	63
0693003	4	63
0693005	9	63
0693006	10	63
0693007	12	63
0693008	13	63
0693010	16	63
0693013	20	63
0693018	26	63
0693018	27	63
0693019	28	63
0694401	1	521
0694403	13	521
0694404	28	521
0694825	36	527
0709701	11	435
0732202	5	63
0767609	34	519
0788703	13	447
0788704	14	447
0788705	15	447
0788706	16	447
0788707	17	447
0788710	33	447
0788711	34	447
0788712	35	447
0788713	36	447
0788801	1	527
0788802	2	527
0788803	4	527
0788804	5	527
0788805	6	527
0788806	7	527
0788807	8	527
0788808	9	527
0788809	10	527
0788811	17	527
0788812	18	527
0788813	24	527
0788814	25	527
0788815	28	527
0788816	29	527
0788817	30	527
0788818	31	527
0788819	37	527
0788907	21	519
0789206	6	515
0789206	6	517
0789307	20	521
0789506	21	515
0789506	21	517
0789905	3	521
0789906	6	521
0794201	3	449
0794202	6	449
0794203	8	449
0794204	10	449
0794205	11	449
0794206	12	449
0794207	14	449
0796002	8	63
0796003	15	63
0796004	17	63

Índice numeríco, continuación

Ref.	Pos.	Página
0796005	19	63
0796006	21	63
0796007	22	63
0796008	23	63
0796009	24	63
0796010	25	63
0796011	26	63
0796011	27	63
0796012	18	63
0796015	27	63
0796016	40	63
0796601	30	519
0814401	11	527
0814402	38	527
0814501	24	69
0814502	27	69
0828901	1	515
0828902	2	515
0828902	2	517
0828903	3	515
0828903	3	517
0828904	27	515
0828905	28	515
0828906	31	515
0828906	41	515
0828906	31	517
0828906	41	517
0828907	31	515
0828907	31	517
0828908	27	515
0828909	28	515
0829101	1	517
0829103	27	517
0829104	28	517
0829105	27	517
0829106	28	517
0829301	1	519
0829302	2	519
0829303	3	519
0829304	6	519
0829305	9	519
0829306	13	519
0829307	14	519
0829308	31	519
0829309	50	519
0829310	31	519
0829501	2	521
0838401	6	407
0838401	7	411
0838402	7	407
0838403	8	407
0838404	9	407
0838405	10	407
0838406	11	407
0838407	12	407
0838408	13	407
0838409	14	407
0838410	15	407
0838411	16	407
0838411	18	407
0838412	17	407
0838413	19	407
0838414	20	407
0838415	21	407
0838416	22	407
0838417	23	407
0838418	24	407
0838501	3	409
0838502	6	409
0838503	7	409
0838504	8	409
0838505	9	409
0838506	10	409
0838507	11	409
0838508	12	409
0838509	13	409
0838510	14	409
0838511	15	409
0838512	16	409
0838513	17	409
0838514	18	409
0838515	19	409
0838516	20	409
0838517	21	409
0838518	22	409
0838519	23	409
0838520	24	409
0838520	21	411
0838601	4	411
0838602	5	411
0838603	6	411
0838604	19	411
0838604	8	411
0838605	9	411
0838606	10	411
0838606	24	411
0838607	13	411
0838608	14	411
0838609	15	411
0838610	16	411
0838611	17	411
0838612	18	411
0838613	20	411
0838614	22	411
0838615	23	411
0838616	25	411
0838617	26	411
0838618	27	411
0838619	28	411
0838701	4	413
0838701	4	415
0838702	5	413
0838702	5	415
0907801	17	521
0927507	6	519
0942001	8	407
0942002	4	407
0973905	6	519
0973906	7	519
0976602	1	179
0976602	12	427
0976602	22	429
09H1770	23	321
09H1770	23	323
09H1770	23	325
09H1770	23	329
09H1770	23	331
09H1772	23	327
09H1772	23	333
1015477	24	361
1015478	23	361
1018740	1	57
1024224	19	361
1024384	18	361
1025957	20	523
1026662	11	523
1026777	11	37
1027579	7	197
1028723	23	523
1029245	86	421
1029246	54A	423
1029308	65	423
1029310	96	425
1032503	0	37
1032503R	0	37
1032876	5	523
1119303	6	519
1119304	7	519
11H236	6	301
11M7080	34	369
12H236	2	33
12H245	24	321
12H245	24	323
12H245	24	325
12H245	24	327
12H245	24	329
12H245	24	331
12H245	24	333
12H293	14	267
12H294	10	321
12H294	10	323
12H294	10	329
12H294	10	335
12H294	3	419
12H294	1	511
12H301	3	229
12H301	18	453
12H301	9	453
12H301	5	461
12H301	8	461
12H301	9	461
12H301	12	493
12H301	28	503
12H301	5	507
12H301	13	59
12H301	14	67
12H302	20	275
12H304	3	131
12H304	29	353
12H316	33	105
12H317	5H	191
12H317	7H	191
12H317	0H	193
12H317	17	379
12H317	35	475
12H317	32	501
12H317	2	53
12M7006	3	191
12M7006	12	199
12M7006	21	199
12M7006	30	199
12M7006	45	201
12M7006	1	225
12M7006	12	225
12M7006	16	225
12M7006	20	225
12M7006	28	225
12M7006	5	225
12M7006	9	225
12M7006	2	227
12M7006	20	235
12M7006	37	235
12M7006	30	237
12M7006	52	239
12M7006	54	239
12M7006	4	241
12M7006	12	243
12M7006	7	245
12M7006	2	251
12M7006	30	253
12M7006	31	269
12M7006	21	275
12M7006	1	281
12M7006	13	281
12M7006	5	281
12M7006	6	283
12M7006	24	363
12M7006	33	363
12M7064	19	115
12M7064	14	167
12M7064	41	201
12M7064	2	241
12M7064	19	257
12M7064	28	257
12M7065	12	145
12M7065	2	197
12M7065	47	201
12M7065	36	233
12M7065	50	243
12M7065	63	245
12M7065	88	245
12M7065	5	249
12M7065	20	253
12M7065	28	269
12M7065	23	275
12M7065	8	275
12M7065	1	283
12M7065	26	303
12M7065	4	317
12M7065	2	319
12M7065	13	355
12M7065	15	355
12M7066	10	167
12M7066	30	181
12M7066	10	193
12M7066	11	193
12M7066	51	201
12M7066	7	217
12M7066	4	219

Índice numeríco, continuación

Ref.	*Pos.*	*Página*
12M7066	6	223
12M7066	9	229
12M7066	16	235
12M7066	56	235
12M7066	7	249
12M7066	10	253
12M7066	17	253
12M7066	7	265
12M7066	17	267
12M7066	1	269
12M7066	23	269
12M7066	39	269
12M7066	16	275
12M7066	10	281
12M7066	15	281
12M7066	15	283
12M7066	2	283
12M7066	14	291
12M7066	15	291
12M7066	18	291
12M7066	22	291
12M7066	23	291
12M7066	3	295
12M7066	15	301
12M7066	3	305
12M7066	14	361
12M7066	21	361
12M7066	29	361
12M7066	11	363
12M7066	8	365
12M7066	15	369
12M7066	18	369
12M7066	1	405
12M7066	2	405
12M7066	17	467
12M7066	8	467
12M7066	28	475
12M7066	32	475
12M7066	12	479
12M7066	3	479
12M7066	1	481
12M7066	10	483
12M7066	10	485
12M7066	34	515
12M7066	34	517
12M7066	30	519
12M7066	37	519
12M7066	45	519
12M7066	34	521
12M7067	9	457
12M7067	30	483
12M7067	14	495
12M7067	62	523
12M7068	50	239
12M7070	3	57
14H1044	31	321
14H1044	31	323
14H1044	31	325
14H1044	31	329
14H1044	31	331
14H1077	25	321
14H1077	25	323
14H1077	25	325
14H1077	25	327
14H1077	25	329
14H1077	25	331
14H1077	25	333
14H786	1	211
14H786	11	513
14M7025	6	181
14M7066	12	89
14M7100	55	149
14M7141	3	355
14M7148	8	73
14M7151	2	373
14M7166	6	163
14M7168	17	455
14M7254	13C	363
14M7272	14	393
14M7272	15	395
14M7272	24	395
14M7272	27	399
14M7273	13	145
14M7273	38	233
14M7273	37	369
14M7273	13	371
14M7273	21	513
14M7274	3	181
14M7274	10	287
14M7274	2	295
14M7274	16	301
14M7274	2	305
14M7274	16C	511
14M7274	15	513
14M7275	4	313
14M7275	4	315
14M7275	27	503
14M7276	22	375
14M7276	23	375
14M7276	25	375
14M7276	22	377
14M7276	25	377
14M7276	9	379
14M7277	3	213
14M7277	12	219
14M7277	23	377
14M7277	33	379
14M7277	40	379
14M7296	11	129
14M7296	2	129
14M7296	59	153
14M7296	5	182
14M7296	2	303
14M7296	15	367
14M7296	20	77
14M7297	20	115
14M7297	8	123
14M7297	7	182
14M7297	8	209
14M7297	29	257
14M7298	16	105
14M7298	30	105
14M7298	8	119
14M7298	2	303
14M7298	16	367
14M7298	16	371
14M7298	38	399
14M7298	4	85
14M7299	15	389
14M7303	3	303
14M7328	12	157
14M7328	7	165
14M7328	11	229
14M7345	5I	191
14M7345	7I	191
14M7345	0I	193
14M7357	9	355
14M7396	1	397
14M7400	60	153
14M7400	0A	313
14M7444	6	265
150584	14	261
151141	6	261
151207	7	261
157020	1	261
157070	2	261
15H623	14	81
15H624	4	125
15H624	29	81
15H642	11	387
15H642	9	389
15H690	10	93
15H690	6	95
166579	12	261
19H1919	6	513
19H2633	2	131
19H2633	28	353
19H2650	9	289
19H2706	9	321
19H2706	9	323
19H2706	9	329
19H2706	9	335
19H3187	12	267
19H3196	24	351
19H3196	24	353
19H3550	26	353
19M6332	41	475
19M6332	1	53
19M6332	2	61
19M6614	2	105
19M6614	8	105
19M7139	23	275
19M7139	13	355
19M7139	2	355
19M7162	13	181
19M7162	47	201
19M7162	50	243
19M7162	63	245
19M7162	88	245
19M7162	13	355
19M7163	4	317
19M7163	18	475
19M7168	11	193
19M7177	28	225
19M7177	5	291
19M7177	10	297
19M7274	9	171
19M7286	21	275
19M7358	10	483
19M7358	10	485
19M7361	13	239
19M7361	14	67
19M7362	12	165
19M7363	8	461
19M7363	9	461
19M7363	12	493
19M7363	14	503
19M7363	6	507
19M7372	1	209
19M7402	30	181
19M7402	7	217
19M7402	4	219
19M7402	6	223
19M7402	9	229
19M7402	16	235
19M7402	7	249
19M7402	10	253
19M7402	17	253
19M7402	8	265
19M7402	17	267
19M7402	1	269
19M7402	16	275
19M7402	10	281
19M7402	2	283
19M7402	10	291
19M7402	14	291
19M7402	18	291
19M7402	22	291
19M7402	11	293
19M7402	1	297
19M7402	3	297
19M7402	2	299
19M7402	7	299
19M7402	20	303
19M7402	14	401
19M7402	2	455
19M7402	17	467
19M7402	28	475
19M7402	32	475
19M7402	12	479
19M7402	3	479
19M7402	1	481
19M7403	1	275
19M7403	18	453
19M7403	4	53
19M7403	13	59
19M7407	11	145
19M7409	4	157
19M7488	2	275
19M7488	2	419
19M7488	9	43
19M7488	13	45
19M7488	3	511
19M7493	8	165
19M7493	2	229
19M7493	33	303
19M7529	15	393
19M7529	26	399
19M7550	56	235

Índice numeríco, continuación

Ref.	*Pos.*	*Página*
19M7550	29	361
19M7550	2	405
19M7560	16	303
19M7560	4	91
19M7572	15	281
19M7576	10	171
19M7576	10	363
19M7576	17	369
19M7576	2	453
19M7576	24	453
19M7576	3	457
19M7576	6	463
19M7576	4	467
19M7576	8	497
19M7576	7	499
19M7576	3	501
19M7640	32	105
19M7647	51	259
19M7657	3	461
19M7657	3	463
19M7657	4	465
19M7657	14	497
19M7657	3	497
19M7662	60	235
19M7662	11	239
19M7662	23	269
19M7662	39	269
19M7662	15	291
19M7662	23	291
19M7662	6	293
19M7662	8	365
19M7662	1	405
19M7662	9	457
19M7662	28	515
19M7662	29	517
19M7662	30	519
19M7662	44	519
19M7662	10	59
19M7700	41	201
19M7753	1	387
19M7753	1	389
19M7768	28	511
19M7774	2	112
19M7774	59	149
19M7775	11	111
19M7775	4	303
19M7775	5	77
19M7783	3	203
19M7783	3	99
19M7784	28	105
19M7784	6	119
19M7784	6	133
19M7784	62	153
19M7784	19	161
19M7784	17	367
19M7784	24	369
19M7784	17	371
19M7784	3	85
19M7785	1	111
19M7785	6	115
19M7785	8	129
19M7785	20	161
19M7785	3	387
19M7786	4	106
19M7786	9	127
19M7786	1	129
19M7786	65	153
19M7790	1	79
19M7796	12	113
19M7796	14	77
19M7799	11	91
19M7799	13	93
19M7801	9	129
19M7801	17	77
19M7802	3	112
19M7802	10	117
19M7802	9	75
19M7802	7	96
19M7808	4	135
19M7809	8	115
19M7810	3	102
19M7810	5	115
19M7811	10	115
19M7811	1	158
19M7812	6	129
19M7814	6	157
19M7820	21	161
19M7835	7	133
19M7863	11	113
19M7863	22	395
19M7865	11	119
19M7866	69	153
19M7866	1	283
19M7866	18	367
19M7866	15	371
19M7866	5	85
19M7867	4	112
19M7867	13	129
19M7867	37	399
19M7867	8	91
19M7867	9	93
19M7868	7	91
19M7868	6	93
19M7872	8	301
19M7872	5	461
19M7874	11	147
19M7874	11	149
19M7874	20	275
19M7875	25	161
19M7877	9	419
19M7881	3	155
19M7881	4	209
19M7881	36	233
19M7881	5	249
19M7881	20	253
19M7881	28	269
19M7881	9	301
19M7907	20	377
19M7907	32	379
19M7907	39	379
19M7923	2	251
19M7923	33	363
19M7932	2	197
19M7932	13	355
19M7932	27	357
19M7938	10	167
19M7938	6	195
19M7938	51	201
19M7938	15	283
19M7938	9	293
19M7938	13	299
19M7938	27	511
19M7938	34	511
19M7941	9	165
19M7941	19	375
19M7941	21	375
19M7941	25	375
19M7941	19	377
19M7941	21	377
19M7941	25	377
19M7943	22	507
19M7970	12	117
19M7979	31	105
19M7979	15	77
19M7981	26	303
19M8002	2	57
19M8006	5	275
19M8011	12	501
19M8011	62	523
19M8017	39	521
19M8035	0	169
19M8035	12	35
19M8035	12	37
19M8043	20	375
19M8043	7	379
19M8062	3	95
19M8078	58	149
19M8081	20	505
19M8088	9	453
19M8088	12	455
19M8131	11	133
19M8146	11C	511
19M8163	11	95
19M8168	67	523
19M818	10	133
19M8208	10	405
19M8213	29	515
19M8213	33	519
19M8224	1	525
19M8231	40B	453
19M8231	45	453
19M8232	1	33
19M8291	21	77
19M8295	9	43
19M8295	12	45
19M8295	13	45
19M8306	5	125
19M8317	16	77
19M8324	30	483
19M8324	14	495
19M8324	10	523
19M8332	1	395
19M8337	7	229
19M8337	13	361
19M8337	19	507
19M8337	42	519
19M8337	29	521
19M8343	20	467
19M8348	9	455
19M8348	7	457
19M8348	2	499
19M8348	30	501
19M8348	26	503
19M8348	13	505
19M8412	21	403
19M8425	21	199
19M8425	2	227
19M8425	20	235
19M8425	24	239
19M8425	7	245
19M8425	30	253
19M8425	31	269
19M8425	1	281
19M8425	13	281
19M8425	5	281
19M8425	6	283
19M8440	8	171
19M8445	21	523
19M8456	1	319
19M8456	20	371
19M8490	0	451
19M8499	70	153
19M8503	2	213
19M8503	11	219
19M8504	2	397
19M8533	14	209
19M8600	21	361
19M8734	41	431
19M8735	2	423
19M8735	1	425
19M8735	10	429
19M8882	10	109
19M8923	18	357
19M8931	12	519
19M8963	7	401
19M8963	1	423
19M8966	18	71
19M8966	24	77
19M8986	11	89
19M8986	3	93
19M8986	12	95
19M8987	1	89
19M8997	17	71
19M8998	7	109
19M8999	8	81
19M9057	1	403
19M9057	26	403
19M9169	6	419
2034607	9	59
2036934	3	51
2038764	25B	233
2044350	14	357
2044350	15	357
2044350	16	357
2044350	17	357
2044634	1	523
2044923	33	269
2045457	36	429
2045468	10	361

Índice numeríco, continuación

Ref.	*Pos.*	*Página*
2045469	11	361
2045470	5	355
2045472	8	355
2045473	7	355
2045753	0A	383
2045998	19	483
2045998	16	485
2046064	1A	383
2046381	70	421
2046381	56	423
2046392	89	427
2046392	44	429
2046394	85	421
2046394	54B	423
2046395	92	421
2046395	42	423
2046398	43	423
2046405	80	421
2046405	52	423
2046410	85	427
2046410	37	429
2046411	86	427
2046411	39	429
2046412	45	423
2046415	91	421
2046415	26	423
2046415	26	425
2046415	54	429
2046418	3	427
2046418	13	429
2046419	90	427
2046419	45	429
2046420	84	421
2046420	54C	423
2046423	81	421
2046423	51	423
2046424	44	423
2046425	68	421
2046425	58	423
2046431	32	429
2046444	3A	425
2046444	25	427
2046447	59	423
2046449	27	425
2046449	57	429
2046451	92	427
2046452	47	429
2046453	82	421
2046453	54D	423
2046455	4	427
2046455	14	429
2046457	84	427
2046458	70	425
2046462	34	429
2046469	1	429
2046469	8	429
2046480	7	429
2046481	4	421
2046481	31	429
2046482	69	421
2046482	57	423
2046484	8	427
2046484	18	429
2046488	9	425
2046488	30	429
2046490	89	421
2046490	63	423
2046491	4	425
2046491	79	427
2046491	35	429
2046492	45	431
2046493	48	431
2046494	29	425
2046494	56	429
2046498	3C	425
2046498	23	427
2046499	6	427
2046499	16	429
2046501	79	421
2046501	53	423
2046502	90	421
2046502	64	423
2046504	11	427
2046504	21	429
2046512	3	423
2046527	2	429
2046528	5	429
2046592	2	427
2046592	12	429
2046593	15	427
2046594	31	425
2046595	35	425
2046596	5	421
2046599	53	431
2046600	53	429
2046601	32	425
2046602	96	421
2046603	7	425
2046604	23	425
2046605	25	423
2046607	95	421
2046608	7	427
2046608	17	429
2046609	33	425
2046610	37	425
2046611	38	425
2046612	3	421
2046613	87	427
2046613	38	429
2046614	97	421
2046615	39	425
2046618	26	429
2046619	40	425
2046620	66	421
2046621	94	421
2046622	34	425
2046623	5	425
2046625	1	421
2046626	28	427
2046626	25	429
2046627	19	427
2046627	60	429
2046654	78A	427
2046654	4	429
2048184	66	201
2048203	66	201
2050616016	15	261
2051176	10	361
2051177	11	361
2054358	65	423
2160621013	3	261
2160821019	13	261
21M6070	64	241
21M7022	19	257
21M7085	4	247
21M7243	3	247
21M7246	1	225
21M7246	12	225
21M7246	16	225
21M7246	20	225
21M7246	5	225
21M7246	9	225
21M7246	37	235
21M7246	24	237
21M7246	42	239
21M7246	85A	241
21M7249	23	257
21M7258	82	243
21M7265	6	245
21M7265	15	269
21M7267	17	181
21M7267	12	199
21M7267	30	199
21M7267	45	201
21M7278	14	167
21M7285	24	237
21M7288	11	181
21M7322	4	247
21M7394	13	209
21M7455	4	247
21M7466	12	243
24H1136	47	201
24H1136	63	245
24H1136	7	289
24H1286	7	513
24H1287	20	235
24H1305	56	235
24H1330	71	153
24M1136	50	243
24M7027	34	105
24M7027	21	115
24M7027	27	257
24M7028	11	171
24M7028	30	181
24M7028	7	181
24M7028	9	193
24M7028	35	199
24M7028	15	209
24M7028	9	229
24M7028	16	235
24M7028	7	249
24M7028	17	253
24M7028	1	269
24M7028	23	269
24M7028	39	269
24M7028	2	283
24M7028	10	291
24M7028	15	291
24M7028	18	291
24M7028	22	291
24M7028	23	291
24M7028	4	295
24M7028	3	297
24M7028	13	299
24M7028	7	299
24M7028	14	301
24M7028	21	303
24M7028	4	305
24M7028	15	361
24M7028	8	365
24M7028	33	369
24M7028	16	401
24M7028	7	467
24M7028	28	475
24M7028	32	475
24M7028	38	475
24M7028	12	479
24M7028	1	481
24M7036	88	245
24M7036	1	283
24M7036	21	371
24M7036	22	513
24M7047	51	239
24M7047	18	267
24M7047	4	275
24M7047	8	301
24M7047	35	303
24M7047	1	313
24M7047	3	313
24M7047	3	315
24M7047	2	387
24M7047	2	389
24M7047	5	461
24M7053	3	275
24M7053	4	419
24M7054	53	201
24M7054	12	243
24M7054	2	251
24M7054	20	275
24M7054	21	275
24M7054	12	393
24M7055	17	145
24M7055	3	155
24M7055	14	181
24M7055	36	233
24M7055	28	269
24M7055	23	275
24M7055	7	275
24M7055	7	295
24M7055	9	301
24M7055	7	305
24M7055	4	317
24M7055	3	319
24M7055	13	355
24M7055	16	355
24M7055	2	355
24M7085	5G	191
24M7085	7G	191
24M7085	0G	193

Índice numeríco, continuación

Ref.	*Pos.*	*Página*
24M7085	36	475
24M7088	2	209
24M7095	5	209
24M7095	3	397
24M7096	11	193
24M7096	6	223
24M7096	16	275
24M7096	3	479
24M7100	2	395
24M7101	26	161
24M7101	12	293
24M7101	6	293
24M7101	9	293
24M7101	1	297
24M7101	2	299
24M7105	1	225
24M7105	12	225
24M7105	16	225
24M7105	20	225
24M7105	5	225
24M7105	9	225
24M7106	10	133
24M7106	21	361
24M7138	10	295
24M7139	8	303
24M7139	25	399
24M7180	7	157
24M7210	9	123
24M7210	56	149
24M7210	8	182
24M7239	72	153
24M7239	22	161
24M7240	23	161
24M7240	10	165
24M7240	13	455
24M7240	16	455
24M7241	5	157
24M7241	2	169
24M7293	12	199
24M7293	21	199
24M7293	30	199
24M7293	45	201
24M7293	28	225
24M7293	2	227
24M7293	37	235
24M7293	31	237
24M7293	53	239
24M7293	55	239
24M7293	5	241
24M7293	7	245
24M7293	30	253
24M7293	31	269
24M7293	1	281
24M7293	13	281
24M7293	5	281
24M7293	6	283
24M7293	33	363
24M7296	75	153
24M7296	10	281
24M7296	15	281
24M7296	14	291
24M7296	9	303
24M7296	19	367
24M7296	25	369
24M7296	19	371
24M7298	29	153
24M7298	7	163
24M7298	9	303
24M7338	11	165
24M7338	5	229
24M7338	2	511
24M7338	5	57
24M7345	7	157
24M7345	40B	453
24M7345	44	453
24M7346	10	229
24M7346	60	235
24M7346	11	239
24M7346	11	287
24M7346	5	455
24M7346	9	457
24M7346	6	73
24M7348	41	201
24M7348	3	241
24M7353	3	33
28031	2	341
28037	2	341
28043	2	341
28H1497	55	153
300156	27	323
300156	27	325
300156	27	329
300156	27	331
300157	19	329
300157	19	331
300158	18	329
300158	18	331
300159	16	329
300159	16	331
300160	17	329
300160	17	331
300167	14	329
300167	14	331
300292	27	335
300292	27	337
300294	19	323
300294	19	325
300295	18	323
300295	18	325
300296	16	323
300296	16	325
300297	17	323
300297	17	325
300298	14	323
300298	14	325
3046945	2	51
3047030	1B	51
304952	19	321
304953	18	321
304954	16	321
304955	17	321
304966	27	321
3052543	28	361
3053093	63	523
306452	28	323
306452	28	325
306452	28	329
306452	28	331
306452	4	341
3070162	1	37
3070162R	1	37
3070250	6	59
3072291	6	453
3072517	6D	363
3073276	5	451
3074559	30	193
3079728	20	483
3079728	17	485
3080912	18	523
3083742	2	523
3084653	1	219
3084729	13	523
3086064	8	523
3087108	0B	31
3087264	13A	363
3087816	12	181
3087882	1	199
3087987	26	363
3088568	9	319
3089362	33	523
3089848	11	365
3090308	61	523
3090347	0A	375
3090347	13	379
3090503	30	523
3090504	25	523
3090862	69	523
3091096	1	313
3091100	0	53
3091146	2	293
3091147	3	293
3091204	3	283
3091234	14	281
3091717	45	475
3091718	52	475
3091719	53	475
3091735	47	475
3091736	49	475
3091739	55	475
3091842	24	225
3094103	1	219
3094130	29	429
3097862	19	267
3102045	25	523
3103096	3B	37
3103096R	3B	37
3106731	40B	453
3110097	2	427
3110097	12	429
322555	3	341
34H288	25	71
34M7062	30	363
34M7086	17	355
34M7117	3C	405
34M7117	9	405
34M7124	29	363
34M7225	20	363
37H129	22	289
37H19	5F	191
37H19	7F	191
37H19	0F	193
37H43	12	395
37H99	64	523
38H1097	6	509
38H1163	3	509
38H1179	28	507
38H1215	28	507
38H1215	7	507
38H1418	1	507
38H1431	17	507
38H5015	7	387
38H5015	5	389
38H5154	9	111
4022697	89	245
4022697	8	305
4027427	16	523
4040814	1P	65
4050373	28	193
4051262	31	363
4051262	29	523
4051262	14	63
4055311	40	201
4055311	11	311
4055312	31	193
4055312	39	201
4055312	34	469
4065687	24	521
4067834	52	153
4067834	53	153
4067834	3	455
4067834	3A	455
4067902	0E	383
4067902	1E	383
4067902	26	515
4067902	26	517
4069801	51	153
4069801	10	455
4071213	4	455
4080398	4	525
4084578	0F	383
4084578	1F	383
4084578	29	519
4084578	26	521
4089012	4	249
4089028	27	375
40M7046	66	523
40M7048	7	59
4101947	20E	65
4102096	4	311
4107762	24	257
4113926	15	505
4116310	3	365
4121128	8	173
4121497	1	167
4121859	10	199
4121859	54	269
4122395	13C	363
4126209	5	37
4126209R	5	37

Índice numeríco, continuación

Ref.	*Pos.*	*Página*
4126485	2	221
4127708	3	215
4128863	5	217
4129669	62	173
4130139	0	155
4137295	8	457
4137684	5	51
4138945	28	69
4140436	18A	447
4140436	20A	447
4147896	59	237
4149678	3	221
4153084	1	179
4153095	7	405
4153097	5	405
4153251	0A	155
4153731	6	37
4154425	2	381
4154425	2	383
4154651	8	495
4154670	24	471
4154670	1	473
4154670	15	473
4154670	8	67
4154671	22	489
4154672	1	489
4161735	3	219
4163873	34	433
4163873	6	435
4163873	17	437
4163873	9	437
4168820	4	167
4170585	27	359
4172172	2	315
4173208	5	357
4174542	9	503
4180555	1	155
4182067	21	357
4182067	24	359
4185600	22	363
4185600	32	433
4185600	4	435
4185600	15	437
4185600	7	437
4187082	14	233
4187083	14A	233
4187308	9	499
4187590	12	523
4188136	3	499
4189094	4	499
4189184	4	365
4189535	26	505
4189539	1	465
4189619	1	509
4189859	6	461
4189859	10	493
4189859	10	503
4189859	29	503
4189859	10	507
4189860	14	455
4190126	11	493
4190126	1	499
4190126	29	501
4190126	24	505
4190126	4	507
4190127	11	455
4190127	5	457
4190253	38	201
4190261	22	195
4190261	36	201
4190261	11	319
4190263	1	285
4190264	29	483
4190265	15	467
4190266	13	171
4190273	24	195
4190275	21	195
4190277	14	171
4190282	23	195
4190960	30	219
4191301	6B	467
4192034	9	287
4192035	20	195
4192035	37	201
4193848	29	483
4196258	4A	455
4196259	51	153
4196259	54	153
4196259	10	455
4196259	10A	455
4196260	52	153
4196260	3A	455
4200465	15	469
4200465	12	473
4200465	23	473
4200465	9	473
4200465	25	489
4200466	9	367
4200466	23	369
4200466	9	369
4200466	6	393
4200466	12	399
4201749	32	219
4201749	33	219
4201749	38	219
4201993	19	359
4202103	12	67
4202422	11	367
4202422	11	369
4203411	3	359
4203411	2	363
4204136	30	475
4204558	19	239
4204579	23	239
4204579	3	243
4204579	3	245
4204579	1	247
4204586	32	239
4204882	16	453
4205084	3	255
4208977	35	363
4209653	35	511
4211191	37	219
4213419	21	363
4221018	31	219
4222875	11D	511
4222876	11E	511
4224631	15	379
4231543	4	59
4235232	12	267
4236448	55	271
4239611	14	59
4241780	5	59
4249777	2	167
4250079	16	501
4251384	11F	511
4254600	6	155
4254603	6	317
4254604	4	191
4255304	18	481
4255305	17	481
4255762	10	181
4255799	2	219
4257034	9	181
4257128	12	167
4257159	9	167
4257159	2	195
4259489	4	67
4260369	20	233
4261938	22	369
4261938	1	483
4261938	7	485
4264805	5	173
4264805	37	225
4266481	18	455
4267201	34	501
4270554	10A	195
4272297	6	217
4272305	4	57
4272803	2	59
4274478	25	303
4276584	22	455
4279604	29	369
4280359	12	269
4281293	32	199
4283028	0	319
4283758	12	369
4285577	16A	511
4285648	5C	191
4285648	7C	191
4285648	0C	193
4285722	20	507
4285723	6	461
4285723	10	493
4285723	10	503
4285723	29	503
4285723	10	507
4287670	10B	195
4287795	30	369
4287903	24	233
4288260	0C	155
4288445	34	269
4288971	22	173
4289708	27	193
4292762	34	219
4293211	13	435
4294429	0	67
4294429	1	67
4294508	10	301
4295480	17	239
4295876	18	239
4296268	30	375
4296269	30	377
4299059	28	173
42M7071	3	389
4303809	16	427
4303809	24	429
4303809	43	431
4304827	41	235
4307026	5E	191
4307026	7E	191
4307026	0E	193
4307027	5F	191
4307027	7F	191
4307027	0F	193
4309836	13A	435
4309837	13B	435
4309838	13C	435
4309970	18	435
4314064	12	423
4314064	50	431
4315607	7	37
4315607	7	51
4317586	4	51
4317640	19	369
4319299	1	363
4320147	29	237
4320163	59	235
4321872	4	311
4324160	15	501
4326285	11A	511
4326365	27	193
4326800	5	191
4326800	7	191
4326800	0	193
4326801	5A	191
4326801	7A	191
4326801	0A	193
4326802	5B	191
4326802	7B	191
4326802	0B	193
4326803	5D	191
4326803	7D	191
4326803	0D	193
4327293	11B	459
4327293	30B	469
4327293	32B	469
4327293	31B	471
4327293	11B	473
4327293	31B	473
4327293	36B	473
4327293	37B	473
4327293	32B	487
4327293	41B	487
4327293	42B	487
4327293	44B	487
4327293	33B	489
4327293	40B	489
4327293	16	491

Índice numeríco, continuación

Ref.	Pos.	Página
4327293	17	491
4327294	0B	459
4327294	8B	463
4327294	6B	465
4327294	7B	465
4327294	8B	465
4327294	9B	465
4327294	33	467
4327294	10B	497
4327294	11B	497
4327294	16B	497
4327294	17B	497
4327315	11B	459
4327315	30B	469
4327315	32B	469
4327315	31B	471
4327315	11B	473
4327315	31B	473
4327315	36B	473
4327315	37B	473
4327315	32B	487
4327315	41B	487
4327315	42B	487
4327315	44B	487
4327315	33B	489
4327315	40B	489
4327315	16	491
4327315	17	491
4330785	2	229
4331596	17A	497
4331851	9	47
4331851	21	49
4331851	11	51
4332658	70	523
4333461	3	277
4333835	11	267
4334245	9	43
4334245	12	45
4334245	13	45
4334245	17	45
4334891	3F	405
4334892	3D	405
4334894	3E	405
4335060	19	357
4335060	22	359
4336165	12A	421
4336165	15A	421
4336165	16A	423
4336166	16A	421
4336166	72	421
4336166	20A	423
4336166	20A	425
4336167	13A	421
4336167	14A	421
4336167	18A	425
4336570	0	193
4336923	28	523
4336925	15	523
4336929	14	523
4341706	6	311
4341788	6	295
4341788	6	305
4341788J	6	295
4341788J	6	305
4341877	2	479
4343365	71	523
4344638	3	269
4344638	4	269
4346770	11	275
4347396	6	269
4348589	16	215
4348589	2	217
4350187	9B	271
4350206	19A	271
4350206	5A	271
4350206	9A	271
4350249	12	281
4351175	21	483
4351175	18	485
4351187	9	311
4351774	22	483
4351774	19	485
4352398	2B	515
4352398	2B	517
4352400	0B	383
4352400	1B	383
4352400	1B	519
4352400	2B	519
4352400	2B	521
4352947	18	283
4353560	18	167
4353560	18A	167
4355728	2	215
4357862	10	283
4359384	14	199
4361179	21	219
4361179R	21	219
4361293	34	375
4361293	34	377
4361294	35	375
4361294	35	377
4361302	17	233
4361455	2	301
4361601	18	257
4361604	22	219
4361604R	22	219
4361800	2	199
4362025	1B	521
4362178	17	193
4362700	25A	233
4364009	7	419
4364504	18	233
4364970	4	363
4366592	18	193
4366623	3	269
4367375	15	199
4367481	44	233
4367664	3	59
4368629	3	363
4368630	5	363
4368973	7	311
4369262	7	461
4369615	2	243
4369615	2	245
4369616	4	243
4369616	5	245
4369617	80	245
4369618	81	245
4369619	71	243
4369619	90	245
4369645	3	237
4369674	11	243
4370152	57	201
4370199R	8	259
4370747	1B	515
4370747	1B	517
4372088	85B	241
4372091	7	237
4372200	8	267
4372219	60	235
4372219	11	239
4372222	88	245
4372619	18A	167
4372620	18B	167
4373214	22	181
4374958	5	277
4377817	69B	241
4380534	13	267
4381572	62	201
4382410	5	267
4382432	9	267
4382832	77	273
4382860	76	273
4382882	56	271
4382882	84	273
4382883	54	271
4382883	73	273
4384239	3	267
4384758	4	319
4384759	6	145
4384989	7	493
4385023	40	501
4386450	9	243
4386452	7	243
4390776	11A	59
4390776	2	59
4392796R	0B	259
4392798R	0D	259
4392800R	6	259
4392801R	7	259
4392803	9	259
4392803R	9	259
4392804R	10	259
4392805	11	259
4392805R	11	259
4392806	12	259
4392806R	12	259
4392807	13	259
4392807R	13	259
4392808R	14	259
4392809R	15	259
4392812	18	259
4392812R	18	259
4392813	19	259
4392813R	19	259
4396809	0B	155
4402481	4	523
4402637	7	523
4402983	37	65
4402987	30	63
4403082	27	523
4403371	24	523
4404506	26	523
4405194	7	277
4405814	6	277
4405815	9	277
4407253	0	449
4407253	14	481
4409122	0E	375
4409122	0E	377
4409178	0F	375
4409178	0F	377
4409178	0C	381
4409178	1C	381
4409178	0C	383
4409178	1C	383
4409394	1B	305
4409394	0	309
4409395	7	309
4409396	14	307
4409396	14	309
4409446	0B	305
4409446	0D	305
4409446	0	307
4409447	7	307
4409999	1	229
4410898	4	357
4410898	4	359
4411122	9	523
4411535	6	523
4411821	3	243
4412666	8	483
4412666	8	485
4413801	13	277
4414207	23	193
4414857	18	235
4414857	27	237
4416704	0	315
4416886	31A	473
4418142	27	271
4418143	26	271
4418144	25	271
4418147	81	273
4418149	82	273
4420392	57	477
4420724	31	303
4420724	0	313
4420724	0	315
4421771	7	357
4421771	9	359
4424157	4	291
4424157	9	297
4424185	5	361
4424867	16	511
4425177	10	479
4425290	13B	363
4425305	18	363
4425414	6	357
4425414	8	359

Índice numeríco, continuación

Ref.	Pos.	Página
4425481	27	303
4425573	5	283
4425575	0C	305
4425575	1C	305
4425980	1	217
4426155	22	269
4426156	8	283
4426157	30	269
4426158	38	269
4426159	4	281
4426160	0	281
4426354	63	201
4427429	7B	199
4427630	19	523
4427782	11A	473
4427838	40A	489
4428007	3	53
4428902	40	363
4428910	7C	199
4428911	7D	199
4428919	2	215
4429119	10	357
4429120	8	357
4429120	6	359
4429280	5	495
4429678	19	275
4430382	1	189
4431079	46	269
4431079	0	271
4431079	0	273
4431080	48	269
4431081	0	277
4431081	0	279
4431082	2	277
4431090	11	199
4431227	26	269
4431357	7	291
4431357	12	297
4431859	49	233
4431914	12	357
4431915	13	357
4432965	11	283
4433064	11	281
4433793	0	283
4433794	7	283
4434246	18	505
4434952	2F	379
4436132	4	283
4436271	5	405
4436442	17	269
4436534	59	201
4436535	26	475
4436535	1	477
4436536	7	405
4436736	7E	199
4436737	7G	199
4437088	32	485
4437106	20	357
4437106	23	359
4437282	36A	473
4437333	11	357
4437333	11	359
4437388	37A	473
4437432	39	363
4437433	8B	363
4437653	27	483
4437656	26	483
4437738	11A	459
4437943	32A	469
4438260	31	485
4438279	14	355
4438288	24	485
4438290	23	485
4439897	18	199
4440382	10	67
4441059	43	269
4441061	44	269
4441131	51	269
4441139	41	269
4442323	24	357
4442331	23	471
4442339	26	357
4443490	7H	199
4443596	30	511
4443782	32	511
4443896	34	485
4443902	34	485
4444288	34	375
4444288	34	377
4444289	35	375
4444289	35	377
4444290	36	375
4444290	36	377
4444291	37	375
4444291	37	377
4444482	31	511
4444634	78	243
4445210	11	67
4445322	1	355
4445352	35	523
4445428	0C	31
4445490	0	435
4445490	0	437
4445490	25	467
4445676	31A	471
4445714	14	467
4445718	33A	489
4445799	32A	487
4445916	19	281
4446657	14	277
4446960	30	357
4446960	7	359
4446989	0A	31
4447016	0D	375
4447016	0D	377
4447016	2E	379
4447050	15	357
4447050	6B	363
4447067	42	363
4447473	0E	305
4447675	3	505
4447765	3	193
4447868	4	193
4447870	8	193
4447890	38	379
4447928	0	57
4447928	0	65
4447928	0	69
4447928EX	0	57
4447928EX	0	65
4447928EX	0	69
4448202	65	523
4448202	0	527
4448202EX	65	523
4448202EX	0	527
4448240	0A	459
4448250	7A	465
4448251	6A	465
4448252	9A	465
4448296	11	127
4448306	25	239
4448307	43	239
4448308	52	237
4448309	53	237
4448310	65	237
4448312	1	241
4448313	8A	241
4448314	19	235
4448531	0	515
4448531EX	0	515
4448532	0	517
4448532EX	0	517
4448533	0	519
4448533EX	0	519
4448534	0	521
4448534EX	0	521
4448658	4B	293
4448753	11A	497
4448755	10A	497
4449019	49	201
4449068	7	281
4449144	68	523
4449250	17	195
4449250	5	195
4449272	30A	469
4449273	32A	469
4449280	42A	487
4449281	41A	487
4449348	17	281
4449361	6	167
4449418	5	479
4449427	6	479
4449428	7	479
4449429	8	479
4449440	13	491
4449441	16	491
4449442	17	491
4449494	3	405
4449509	5	315
4450008	9	283
4450011	38	375
4450011	38	377
4450012	37	379
4450206	9A	271
4450436	41	483
4450437	38	483
4450535	39	483
4451204	11A	275
4451681	16	193
4451784	24	443
4451785	25	443
4451785	25	445
4451786	26	445
4451787	37	443
4451788	38	443
4451789	39	443
4451789	39	445
4451790	40	445
4451797	41	445
4452052	15	481
4452053	16	481
4452160	65	201
4452187	52	269
4452188	53	269
4452289	39	473
4452290	46	477
4452291	51	477
4452292	54	477
4452326	19	481
4452341	48	477
4452342	50	477
4452362	56	477
4452647	18	447
4452649	20	447
4452987	16A	497
4453084	60	475
4453172	37A	473
4453198	6	429
4453666	8	245
4453671	22	237
4453671	29	237
4453672	80	235
4453673	51	237
4453676	50	237
4453677	95	245
4453678	1	245
4453679	4	245
4453680	16A	241
4453682	29	241
4453683	30	241
4453684	31	241
4453819	11	447
4453820	12	447
4453869	6	267
4453874	7	267
4454381	4	459
4454418	16B	511
4454518	57	201
4455188	40	483
4455196	33	485
4455599	9	501
4455980	14	237
4455986	5	433
4455986	2	435
4455986	5	437
4455987	6	433
4455989	49	433
4455989	8	435
4455989	20	437

Índice numeríco, continuación

Ref.	Pos.	Página
4455989	22	437
4455990	48	433
4455990	7	435
4455991	3	433
4456152	14	491
4456171	11	237
4456172	26	237
4456175	25	235
4456428	29	233
4456486	0	197
4456723	0B	283
4456725	0A	283
4456778	7A	197
4456778	7A	199
4456798	18	115
4456952	15	243
4457210	58	201
4457822	3	435
4458065	7	67
4458227	0G	283
4458228	0C	283
4458229	0H	283
4458230	0D	283
4458231	0E	283
4458232	0F	283
4458233	0I	283
4458234	0J	283
4458235	7A	283
4458236	7B	283
4458237	7C	283
4458238	19	283
4458239	20	283
4458240	21	283
4458241	22	283
4458290R	1	259
4458774	8A	465
4459113	8A	463
4459249	83	243
4460037	7F	199
4460405	1	243
4460536	0A	315
4460582	0B	315
4460871	7	495
4460875	6	495
4461133	44A	487
4461337	8	307
4461337	8	309
4461338	9	307
4461338	9	309
4461339	10	307
4461339	10	309
4461340	11	307
4461340	11	309
4461341	12	307
4461341	12	309
4461342	13	307
4461342	13	309
4461343	1	307
4461343	1	309
4461344	2	307
4461344	2	309
4461345	3	307
4461345	3	309
4461346	4	307
4461346	4	309
4461347	5	307
4461347	5	309
4461348	6	307
4461348	6	309
4461388	35	369
4461644	19	523
4462950	10	435
4463182	6	501
4463183	17	501
4463186	18	501
4463390	16A	241
4463392	29	241
4463393	30	241
4463394	31	241
4463608	35	453
4463609	36	453
4463611	11	461
4465291	46	489
4465995	7	271
4466663	0	63
4466663	1	69
4467087	35	471
4467088	42	475
4467088	43	475
4467379	40	515
4467379	40	517
4467380	51	519
4467381	41	521
4468336	0	439
4468336	0	441
4468336	0	443
4468336	0	445
4468336	0	447
4468336	42	475
4468766	1	63
4468943	65	237
4468981	5	319
4469040	64	273
4469043	66	273
4469044	67	273
4469045	68	273
4469046	71	273
4469047	48	271
4469047	75	273
4469049	1	279
4469051	2	279
4469056	5	271
4469057	6	271
4469058	10	271
4469059	17	271
4469060	28	271
4469061	29	271
4469062	30	271
4469063	44	271
4469063	65	273
4470919	3	527
4471746	0	407
4471746EX	0	407
4474191	9	523
4474296	0	233
4474296	0	237
4474296	0	241
4474298	26	235
4474298J	26	235
4474299	47	235
4474300	10	235
4474301	1	237
4474303	14	237
4474304	16	237
4474476	43	243
4474477	40	243
4474478	32	243
4474479	5	243
4474480	8	243
4474482	47	243
4474493	14	243
4474494	10	243
4474498	6	243
4474499	75	243
4474514	76	243
4474515	21	243
4474515	21	245
4474517	81	243
4474518	80	243
4474532	41	239
4475229	83	273
4475230	3	279
4475236	4	279
4475237	5	279
4475242	6	279
4475243	7	279
4475244	8	279
4475245	9	279
4475246	10	279
4475247	60	273
4475248	61	273
4475249	62	273
4475250	63	273
4475257	69	273
4475258	70	273
4475259	72	273
4475260	74	273
4475261	78	273
4475262	79	273
4475263	80	273
4475264	1	271
4475265	2	271
4475283	3	271
4475284	4	271
4475285	8	271
4475286	9	271
4475287	11	271
4475288	12	271
4475289	13	271
4475290	14	271
4475291	15	271
4475345	16	271
4475346	17A	271
4475347	18	271
4475348	19	271
4475349	20	271
4475350	21	271
4475351	22	271
4475352	23	271
4475353	24	271
4475364	31	271
4475365	32	271
4475366	33	271
4475367	34	271
4475368	35	271
4475369	36	271
4475370	37	271
4475371	38	271
4475372	39	271
4475399	40	271
4475400	41	271
4475401	42	271
4475402	43	271
4475403	45	271
4475404	46	271
4475405	47	271
4475406	49	271
4475407	50	271
4475430	51	271
4475431	52	271
4475432	53	271
4475433	57	271
4475434	58	271
4475435	59	271
4476033	38	65
4476033	36	69
4477216	44	243
4477217	41	243
4477218	37	243
4477219	36	243
4477373	0	199
4477852	15	357
4477852	16	357
4477852	17	357
4479654	1	407
4479654	0	409
4479655	1	409
4479655	0	411
4479656	0	413
4479657	3	407
4479657	0	415
4482656	57	201
4482883	73	273
4482953	22	275
4483206	57	201
4483208	57	201
4483209	57	201
4483676	1	55
4483774	7	285
4483775	6	285
4484114	20	437
4484114	22	437
4484116	17	437
4484116	9	437
4484118	16	437
4484118	8	437
4484453	42	269
4486189R	0	259
4486190R	0A	259

Índice numeríco, continuación

Ref.	*Pos.*	*Página*
4486191R	0C	259
4486192R	20	259
4486953	29	517
4487138	15	435
4487138	3	437
4487297	13B	435
4487297	4B	437
4487648	17	435
4487648	1	437
4488904	15	523
4488904	19	523
4489678	13	437
4489678	18	437
4506320	18	427
4506320	59	429
4506320	7	69
4506405	14	427
4506405	20D	65
4506406	20C	65
4506407	33	527
4506408	1	179
4506408	12B	421
4506408	15B	421
4506408	83	421
4506408	16B	423
4506408	54E	423
4506408	17	427
4506408	11F	65
4506412	74	421
4506412	28	423
4506412	28	425
4506412	55	429
4506415	1O	65
4506418	1	179
4506418	6	459
4506418	0	467
4506418	32	467
4506418	1	489
4506418	22	65
4506418	27E	65
4506418	9	65
4506418	16	67
4506418	5	67
4506419	6	425
4506420	13	427
4506420	22	427
4506424	33	375
4506424	33	377
4506424	67	421
4506424	60	423
4506424	8	451
4506424	10	457
4506424	1	459
4506424	2	459
4506424	13	461
4506424	0	465
4506424	1	465
4506424	9	493
4506424	34	501
4506424	9	503
4506424	29	63
4506424	2	67
4506428	2	421
4506428	3B	425
4506428	24	427
4506428	23	527
4506429	25	511
4506430	30	515
4506430	30	517
4506430	32	519
4506430	30	521
4509180	19A	271
4509180	5A	271
4509180	9A	271
4509180	14B	421
4509180	18B	425
4509180	5	427
4509180	78B	427
4509180	10	459
4509180	5	459
4509180	9	459
4509180	2	467
4509180	22	467
4509180	3	467
4509180	10	491
4509180	2	491
4509180	45	511
4509181	12	427
4509404	36	219
4510173	1	463
4510173	13	497
4510173	2	497
4514699	5	269
4600164	3	505
4600251	30	303
4601120	13D	435
4601120	4C	437
4602549	0	233
4602549	0	237
4602549	0	241
4602562	25	239
4602563R	43	239
4602564	52	237
4602564R	52	237
4602565	53	237
4602565R	53	237
4602566	65	237
4602567	6	235
4602568	1	241
4602568R	1	241
4602569R	19	235
4602569R	9	235
4602570	8B	241
4602576	16B	241
4602577	19	235
4602580	6	235
4602582	50	237
4602816	6	437
4603008	13	235
4603011	46	233
4603012	47	233
4603013	48	233
4606473	13A	435
4606473	4A	437
4607398	15	481
4607399	16	481
4609477	77	243
4609478	84	243
4609479	77	243
4609479	78	243
4609479	84	243
4609480	77	243
4609480	84	243
4609664	9	501
4609754	0	197
4609950	4	291
4609950	9	297
4609956	14	355
4609956	2	355
4613243	38	303
4613913	9	311
4614286	26	359
4614296	21	359
4614331	28	359
4615610	10	359
4616689	3	405
4617327	2	277
4618055	37	219
4620431	5	237
4622346	19A	271
4622346	5A	271
4622346	9A	271
4622346	7A	285
4623165	11	237
4623165	28	237
4623166	11	237
4623166	28	237
4626267	0	407
4626267EX	0	407
4629351	3A	405
4629351	0	407
4629353	3A	405
4631475	15	523
4631475	19	523
4631753	5	215
4631753	6	215
4634010	5	215
4634010	6	215
4634798	0C	315
4636056	2	407
4639115	20	357
4639115	23	359
4640468	9	311
4642023	1	313
4642023	6	315
4642361	12	523
4653923	4	281
4660734	13	259
4660734R	13	259
4660782	12	167
4662206	3	359
4662206	2	363
4667150	7	523
4670242	65	423
4670243	65	423
4674883	19A	271
4674883	5A	271
4674883	9A	271
4674883	7A	285
4698994	14A	233
4702173	3B	405
4712341	51	153
4712341	54	153
4712341	10	455
4712341	10A	455
4728505	9	311
494918	15	239
4S00218	26	527
4S00240	4	69
4S00613	26	69
4S00621	24	409
4S00621	21	411
4S00640	12	281
4S00683	42	269
4S00684	41	269
4S00706	6	519
4S00707	7	519
4S00734	1	179
4S00734	12	427
4S00734	22	429
4S00776	14	519
4S00881	5	69
4S00899	32	69
4S01079	1J	65
4S01093	4	69
4S01094	33	69
4S01095	21	527
5008356	1A	305
5008357	0A	305
5008790	0	219
51M7039	2	106
51M7040	17	115
51M7040	15	117
51M7040	3	119
51M7040	6	123
51M7040	6	387
51M7041	7	106
51M7041	9	115
51M7041	3	137
51M7041	4	137
51M7041	6	137
51M7041	7	137
51M7042	8	111
51M7042	2	75
51M7042	2	96
51M7043	8	113
51M7043	14	117
51M7043	8	77
51M7043	7	93
51M7043	8	95
51M7044	1	137
51M7044	2	137
51M7044	18	77
51M7045	11	75
51M7045	11	93
51M7045	10	95
51M7045	6	96
53490210001	10	261
53500250005	9	261

Índice numeríco, continuación

Ref.	Pos.	Página
53511340001	4	261
53530010007	8	261
53530020006	11	261
57M7121	10	209
57M7125	11	209
57M7278	1	205
57M7278	2	205
57M7278	3	205
57M7278	4	205
57M7344	5	205
57M7477	12	209
57M7688	7C	199
57M7689	7D	199
57M7691	7E	199
57M7829	1	205
57M7829	2	205
57M7829	3	205
57M7829	4	205
57M8259	5	205
600113	20A	329
600113	20A	331
600114	20A	329
600114	20A	331
600115	20A	329
600115	20A	331
600118	20B	329
600118	20B	331
600119	20B	329
600119	20B	331
600120	20B	329
600120	20B	331
600247	20B	323
600247	20B	325
600248	20B	323
600248	20B	325
600249	20B	323
600249	20B	325
600250	20B	323
600250	20B	325
600252	20A	323
600252	20A	325
600253	20A	323
600253	20A	325
600254	20A	323
600254	20A	325
600255	20A	323
600255	20A	325
6020125	0	265
6020352	5	255
604667	20B	321
604669	20B	321
604670	20B	321
604671	20B	321
604672	20B	321
604676	20A	321
604678	20A	321
604679	20A	321
604680	20A	321
604681	20A	321
606618	28	321
607048	14	321
623371	1	341
623372	1	341
623373	1	341
7031988	1A	51
7035503	0	365
7039248	30	303
7039248J	30	303
7039349	0A	375
7040103	12	295
7041828	4	257
7042507	1	305
7042508	0	305
7042657	4	267
7047084	3A	37
7602570	8A	241
79495	5	261
8052020	0	33
8061722	7	453
8063718	0	363
8064356	21	455
8070638	0G	375
8070638	0G	377
8073901	6	365
8075449	1	361
8075450	0	361
8077220	0	419
8077221	1	419
8077444	13	479
8077521	28	303
8077903	32	363
8080299	2	493
8080299J	2	493
8080596	31	369
8080641	0	499
8080641	25	501
8081659	24	475
8082202	2	277
8082323	3	493
8082329	24	199
8082633	12	451
8082645	14	461
8082650	15	461
8083071	0	381
8083071	0	383
8083072	1	381
8083072	1	383
8083128	27	369
8084592	21	505
8084644	16	369
8084658	28	369
8084816	26	511
8085733	22	501
8085734	21	501
8085735	4	503
8085736	5	503
8085737	22	505
8085922	13	295
8086966	13	257
8087747	26	369
8094446	0	359
8106372	1	313
8106372	1	315
8124253	28	303
9101521	12	59
9107265	12	59
9107265EX	12	59
9134100	16	421
9134100	65	421
9134100	20	423
9134100	20	425
9134109	12	421
9134109	12A	421
9134109	15	421
9134109	15A	421
9134109	16	423
9134109	16A	423
9134111	13	421
9134111	14	421
9134111	18	425
9145787	1	59
9145787	11B	59
9145787	2	59
9151724	6	363
9156396	1	51
9169646	10	215
9169646EX	10	215
9181005	11A	59
9181005	2	59
9184275	8	363
9194324	40A	489
9194416	1	185
9194506	74	523
9195304	1	355
9195304	2	355
9195304	3	357
9195307	2	361
9195307	7	363
9195588	33A	489
9195590	32A	487
9195591	31A	471
9196926	6A	465
9196927	7A	465
9196928	9A	465
9197391	11	497
9197392	10	497
9197490	32	369
9197588	36A	473
9197594	37A	473
9198415	36	369
9199146	13	363
9200478	77	421
9200481	54	423
9200483	3	425
9200483	26	427
9200491	20	427
9200491	58	429
9200492	8	425
9200492	61	429
9200495	2	425
9200504	24	507
9201381	1	427
9201382	11	429
9201383	27	427
9201384	52	429
9201529	78	427
9201529	28	429
9202944	1	231
9202944	0	233
9202944	0	235
9202944	0	237
9202944	0	239
9202944	0	241
9202944	0	243
9202944	0	249
9204536	30A	469
9204539	11A	473
9204541	31A	473
9204548	41A	487
9204549	42A	487
9204551	0A	459
9204552	11A	459
9204553	16	497
9204554	17	497
9204656	8A	465
9205689	44A	487
9206376	0	515
9206376J	0	515
9206377	0	517
9206377J	0	517
9206378J	0	519
9206379	0	521
9206379J	0	521
9208771	21	427
9208772	41	501
9212078	1	185
9215128	0	417
9215128	0	421
9215128	0	423
9215128	0	425
9215128	0	427
9215128	0	429
9215128	0	431
9218128	16	435
9218128	18	435
9218271	2	433
9218276	0	435
9218276	0	437
9218276	25	467
9218283	2	433
9218296	11	435
9218493	40A	453
9220219	0	435
9220219	0	437
9220219	25	467
9221114	11	437
9221114	12	437
9226365	2	361
9226757	58	201
9228867	13	435
9229187	1	55
9230429	2	437
9234284	14	357
9234284	15	357
9234284	16	357
9234284	17	357
9235551	2	361
9239568	1	185
9239583	2	355

Índice numeríco, continuación

Ref.	*Pos.*	*Página*
9239583	3	357
9239583	1	359
9242963	3	37
9242963R	3	37
9242964	13	37
9242964R	1	35
9242964R	13	37
9242965	14	37
9246436	17	359
9248945	9	429
9248946	95	427
9252140	4	437
9252141	51	437
9281598	11	429
94-2011	1	357
94-2011	7	37
94-2011	10	41
94-2012	36	523
94-2807	38	303
953612	11B	511
957366	40A	445
957366	29	467
957366	1	469
957366	15	469
957366	21	469
957366	1	471
957366	24	471
957366	25	471
957366	32	471
957366	1	473
957366	12	473
957366	15	473
957366	23	473
957366	40	473
957366	41	473
957366	9	473
957366	0	479
957366	1	487
957366	8	487
957366	3	65
957366	8	67
957366	9	67
957474	1	179
970860	1	179
971489	8	499
9727822	13	67
9735305	1	475
9735306	17	475
9738781	0A	31
9738975	8	453
9748713	11	501
9749068	23	503
9749069	24	503
9751787	9	483
9751787	9	485
9753840	17	505
9754825	16	357
9754826	17	357
9756005	2	193
9756736	16	267
9759157	15	357
9759157	16	357
9759157	17	357
9759157	14	359
9759158	15	357
9759158	16	357
9759158	17	357
9759158	15	359
9761179	5	433
9761179	2	435
9761179	5	437
985099	78	421
985099	9	423
985099	44	431
985099	1I	65
986910	6	499
991342	66	523
991347	7	59
992526	20B	447
A364R	7	113
A364R	11	77
A4827R	17	143
A590108	7	295
A590108	7	305
A590108	13	355
A590110	7	181
A590110	9	193
A590110	35	199
A590112	35	303
A590112	3	315
A590114	5G	191
A590114	7G	191
A590114	0G	193
A590906	3	191
A590910	34	199
A590912	34	303
A590914	5H	191
A590914	7H	191
A590914	0H	193
A590914	37	515
A590914	37	517
A810070	2	37
A810100	8	59
A811030	1	179
A811030	3A	527
A811040	1	179
A811040	19	455
A811040	11B	65
A811045R	1	179
A811060	6C	467
A811100	10	521
A811105	10	515
A811105	10	517
A811115	10	519
A811120	3	523
A811180	29	69
A852122	32	471
A852122	1	487
A852122	7	491
A852122	9	67
A852123	4	369
A852123	21	469
A852123	1	471
A852123	42	475
A852123	44	475
A852123	8	487
A852123	38	489
A852133	9	459
A852133	22	467
A852133	3	467
A852133	5	483
A852133	10	491
A852133	39	511
A852133	40	511
A852134	5	459
A852144	6	459
A852144	0	467
A852144	5	67
A852223	24	483
A852223	1	485
A852223	21	485
A852223	37	489
A852232	43	511
A852233	42	511
A852234	2	467
A852322	8	67
A852323	1	469
A852323	0	479
A852333	10	459
A852333	22	489
A852333	2	491
A852333	41	511
A852343	32	467
A852422	25	471
A852422	37	511
A852422	38	511
A852544	16	67
A853144	28	515
A853166	33	375
A853166	33	377
A853166	1	459
A853166	13	461
A853166	0	465
A853166	9	493
A853166	1	509
A853166	30	519
A853166	43	519
A853166	2	67
A853188	2	505
A853366	2	459
A853386	8	501
A885002	29	467
A885002	21	489
A885002	22	511
A885002	44	511
A885003	7	455
A885003	20	489
A885003	45	511
A885006	8	451
A885006	1	455
A885006	10	457
A885008	25	511
AA34965	3	287
AE24616	5	367
AE24616	5	369
AE24616	23	371
AE24616	17	393
AE24616	13	395
AE24616	11	397
AE24616	3	399
AE24616	5	401
AE24616	7	403
AE42067	6	367
AE42067	7	367
AE42067	6	369
AE42067	7	369
AE42718	13	399
AE45056	2	513
AH108250	2	367
AH108250	2	369
AH152929	31	521
AH226482	41	519
AH63565	5	397
AH75160	33	399
AH97777	3	513
AL2976T	14	145
AP33223	11	303
AP33252	2	161
AP33341	12	303
AP33477	31	181
AP33486	28	181
AP33487	27	181
AP33538	21	455
AP33637	1	475
AP33638	17	475
AP34666	20	47
AP34666	0	49
AP34666	0	51
AP34667	0	43
AP34667	3B	43
AP34667	4	43
AP34667	5	43
AP34667	6	43
AP34667	8	43
AP34667	12	45
AP34735	0	67
AP34735	1	67
AP34756	0	385
AP34850	30	377
AP34851	30	375
AP35006	0	493
AP35007	1	493
AP35010	7	493
AP35230	16	507
AP35231	15	507
AP35233	12	507
AP35234	21	507
AP35235	8	507
AP35250	2	163
AP35251	9	161
AP35298	1	153
AP35299	3	153
AP35300	4	153
AP35301	5	153
AP35302	6	153
AP35304	1	161
AP35306	8	153
AP35307	9	153
AP35308	1	163

Índice numeríco, continuación

Ref.	Pos.	Página
AP35310	3	161
AP35316	10	153
AP35317	14	153
AP35324	2	158
AP35325	1	165
AP35330	11	161
AP35331	12	161
AP35337	18	153
AP35338	19	153
AP35339	1	301
AP35340	7	301
AP35372	20	153
AP35373	21	153
AP35374	22	153
AP35375	6	171
AP35377	8	124
AP35377	5	171
AP36328	22	303
AP37250	13	297
AP37259	12	291
AP37369	0	275
AP37381	0	31
AP37389	2	379
AP37397	0A	375
AP37403	0A	377
AP37578	3	167
AP37580	0	511
AP37668	4	293
AP38120	15	451
AP38130	8	299
AP38130	8A	299
AP38130	8B	299
AP38131	21	291
AP38132	2	291
AP38135	5	299
AP38136	1	457
AP38139	0	295
AP38140	0A	295
AP38141	1	295
AP38142	1A	295
AP38148	4	297
AP38149	3	299
AP38150	9	299
AP38153	11	297
AP38154	10	299
AP38155	6	297
AP38157	5	299
AP38187	0	221
AP38204	4	67
AP38205	7	67
AP38219	10	467
AP38222	20	469
AP38223	26	469
AP38224	30A	469
AP38225	31	469
AP38227	35	471
AP38228	31A	473
AP38231	41A	487
AP38232	42A	487
AP38233	44A	487
AP38235	43	489
AP38236	46	489
AP38239	8	455
AP38241	0A	459
AP38242	11A	459
AP38243	4	459
AP38244	15	461
AP38245	11	461
AP38246	10	497
AP38247	11	497
AP38251	6A	465
AP38252	7A	465
AP38253	8A	465
AP38254	9A	465
AP38256	31	453
AP38257	32	453
AP38258	35	453
AP38259	36	453
AP38273	0	495
AP38274	1	495
AP38275	5	495
AP38286	1	381
AP38287	1A	381
AP38288	0	381
AP38289	0A	381
AP38544	4	461
AP38748	0	257
AP38749	1	257
AP38750	2	257
AP38751	4	257
AP38752	5	257
AP38753	6	257
AP38754	9	257
AP38755	30	257
AP38756	11	257
AP38757	12	257
AP38758	13	257
AP38759	16	257
AP38760	15	257
AP39145	23	303
AP39240	20	47
AP39243	0	43
AP39243	1	43
AP39243	3	43
AP39243	3B	43
AP39243	4	43
AP39243	5	43
AP39243	6	43
AP39243	7	43
AP39243	8	43
AP39351	22	303
AR21837	25	147
AR21999	23	153
AR40418	24	153
AR44361	4	161
AR45925	19	181
AR48236	20	147
AR48236	5	155
AR60937	10	283
AR62399	7	150
AR65507	9	78
AR76140	17	513
AR85519	19	105
AR90081	20	367
AR90081	20	369
AR90081	11	393
AR94101	25	395
AT101944	17	289
AT101945	16	289
AT105289	26	153
AT107393	1	465
AT108783	10	393
AT115146	14	373
AT115535	12	367
AT115535	31	371
AT116162	12	147
AT116162	12	149
AT116486	7	399
AT117364	34	505
AT117364	36	507
AT117365	33	505
AT117365	35	507
AT119542	19	411
AT119542	8	411
AT120498	33	505
AT120498	35	507
AT120499	34	505
AT120499	36	507
AT121321	19	195
AT126136	0B	381
AT126136	1B	381
AT127247	5	511
AT130053	7	393
AT130053	11	399
AT130157	1	179
AT130684	22	399
AT131018	40	321
AT131019	40	321
AT131020	40	321
AT131021	40	321
AT131022	40	321
AT131023	40	323
AT131023	40	325
AT131024	40	323
AT131024	40	325
AT131025	40	323
AT131025	40	325
AT131026	40	323
AT131026	40	325
AT131027	40	329
AT131027	40	331
AT131028	40	329
AT131028	40	331
AT131029	40	329
AT131029	40	331
AT131031	40	335
AT131080	21	321
AT131080	22	321
AT131080	90	321
AT131080	21	323
AT131080	22	323
AT131080	90	323
AT131080	21	325
AT131080	22	325
AT131080	90	325
AT131080	21	329
AT131080	22	329
AT131080	90	329
AT131080	21	331
AT131080	22	331
AT131080	90	331
AT131081	15	321
AT131082	15	323
AT131082	15	325
AT131082	15	329
AT131082	15	331
AT131083	4	321
AT131083	4	323
AT131083	4	329
AT131083	4	335
AT131089	15	335
AT131089	15	337
AT131138	40	321
AT131139	40	321
AT131140	40	321
AT131141	40	321
AT131142	40	321
AT131143	40	323
AT131143	40	325
AT131144	40	323
AT131144	40	325
AT131145	40	323
AT131145	40	325
AT131146	40	323
AT131146	40	325
AT131147	40	329
AT131147	40	331
AT131148	40	329
AT131148	40	331
AT131149	40	329
AT131149	40	331
AT131293	3	503
AT131436	8	513
AT131437	13	513
AT131445	8	393
AT131697	16	233
AT131864	16A	233
AT131865	16B	233
AT134345	12	513
AT135758	0C	193
AT13740	27	153
AT13740	7	167
AT13740	30	81
AT139433	4	393
AT140041	16	395
AT140041	7	399
AT141012	1	123
AT142288	1	211
AT145341	1	123
AT145341	16	181
AT145649	7	171
AT146294	14	303
AT147401	4	163
AT152120	13	367
AT152120	5	371
AT152120	1	373
AT153829	11	515
AT153829	11	517
AT153902	32	433

Índice numeríco, continuación

Ref.	*Pos.*	*Página*
AT153902	4	435
AT153904	17	437
AT153904	9	437
AT153937	20	515
AT153937	20	517
AT154150	39	233
AT154162	4	59
AT154207	12	495
AT154278	20	233
AT154321	11B	59
AT154321	2	59
AT154413	24	233
AT154921	20	511
AT154922	21	511
AT154990	0C	193
AT155189	26	257
AT155270	40	473
AT155270	18	481
AT155744	8	505
AT156970	41	235
AT156993	17	239
AT156994	18	239
AT157068	18	235
AT157068	27	237
AT157668	18	513
AT159804	20	289
AT160159	9	507
AT160161	11	507
AT160176	8	507
AT160177	3	507
AT160584	41	473
AT160741	40	331
AT160742	40	329
AT160742	40	331
AT161324	6	182
AT162538	1A	345
AT163156	6	182
AT163528	1A	343
AT163532	1B	343
AT163533	1F	343
AT163534	1E	343
AT163535	1D	343
AT163536	1C	343
AT163539	1B	345
AT163540	1F	345
AT163541	1E	345
AT163542	1D	345
AT163543	1C	345
AT163544	1G	345
AT163545	1J	345
AT163546	1I	345
AT163547	1H	345
AT163580	40	321
AT163581	40	321
AT163582	40	321
AT163583	40	321
AT163584	40	321
AT163585	40	323
AT163585	40	325
AT163585	40	327
AT163586	40	323
AT163586	40	325
AT163586	40	327
AT163587	40	323
AT163587	40	325
AT163587	40	327
AT163588	40	323
AT163588	40	325
AT163588	40	327
AT163589	40	329
AT163589	40	331
AT163589	40	333
AT163590	40	329
AT163590	40	331
AT163591	40	329
AT163591	40	331
AT163592	40	329
AT163592	40	331
AT165110	7	191
AT166994	0B	295
AT166994	1B	295
AT166994	15	303
AT167079	11	511
AT167184	1G	343
AT167185	1J	343
AT167186	1H	343
AT167187	1I	343
AT167188	1K	343
AT167189	1L	343
AT167190	1N	343
AT167191	1M	343
AT167192	1K	345
AT167193	1L	345
AT167194	1N	345
AT167195	1M	345
AT167874	91	321
AT167874	29	323
AT167874	30	323
AT167874	91	323
AT167874	91	325
AT167874	91	329
AT167874	91	331
AT170299	33	69
AT170459	8	371
AT170759	2	145
AT171162	1	145
AT171539	3	145
AT173610	2	153
AT173678	2	263
AT174861	7	41
AT174863	9	41
AT174989	16	101
AT175345	5	161
AT175357	6	161
AT176256	3	495
AT176258	2	495
AT176636	18	257
AT176789	6	237
AT177804	0	251
AT177805	0A	251
AT177806	0C	251
AT178531	1P	343
AT178531	1A	345
AT178533	1Q	343
AT178533	1B	345
AT178534	1F	345
AT178535	1R	343
AT178535	1F	345
AT178537	1S	343
AT178537	1C	345
AT178740	1F	343
AT178893	6	145
AT178903	19	173
AT180004	3B	43
AT180004	5	45
AT180005	5	43
AT180005	4	45
AT180006	6	43
AT180006	7	45
AT180007	10	35
AT180007	8	43
AT180007	1	45
AT180007	7	49
AT180007	7	51
AT180008	4	43
AT180008	9	45
AT180009	5	49
AT180011	8	49
AT180011	4	51
AT180012	6	49
AT180012	6	51
AT180013	3	49
AT180013	1B	51
AT180015	8	35
AT180017	9	35
AT180017	6	37
AT180019	4	35
AT180019	2	37
AT180020	5	35
AT180021	7	35
AT180022	3	35
AT180025	0	41
AT180027	1	41
AT180028	3	41
AT180034	54	41
AT180035	54	41
AT180036	51	41
AT180048	52	41
AT180378	7	47
AT180393	16	39
AT180425	6	47
AT180585	4	393
AT180861	8	47
AT180973	9	259
AT180975	11	259
AT180976	12	259
AT180977	13	259
AT180979	18	259
AT180980	19	259
AT182625	27	233
AT182626	28	233
AT183222	7A	145
AT183222	8A	145
AT183222	8B	145
AT185207	0	313
AT185696	6	182
AT186111	28	505
AT186111	30	507
AT186112	29	505
AT186112	31	507
AT186113	30	505
AT186113	32	507
AT186114	31	505
AT186114	33	507
AT186161	10	41
AT186162	4	41
AT186622	24	399
AT186623	16	399
AT187243	10	341
AT187244	10	341
AT187245	10	341
AT187562	0B	251
AT189409	29	505
AT189409	31	507
AT189410	28	505
AT189410	30	507
AT190535	4	395
AT190929	15	207
AT191297	1	399
AT191397	14	395
AT191462	12	207
AT191463	1	203
AT191463	0	205
AT193964	1	259
AT194969	4	167
AT194969	0	199
AT194969	18A	257
AT195278	0C	259
AT195279	0D	259
AT195280	20	259
AT195284	2	259
AT195286	0	259
AT195287	8	259
AT195713	1	393
AT195741	74	201
AT196334	18	513
AT196349	7	209
AT196349	9	209
AT196567	6	247
AT196587	1	391
AT196588	3	391
AT197149	11	182
AT197291	45	375
AT197292	45	377
AT197375	14	507
AT197375	5	509
AT198270	28	153
AT199349	1O	343
AT199353	40	323
AT199354	40	335
AT200011	8	419
AT200011	3	61
AT200425	1	181
AT200584	59	235
AT202778	14	207
AT206888	24	161
AT209926	7	161
AT213603	1	283
AT213608	55	237

Índice numeríco, continuación

Ref.	*Pos.*	*Página*
AT213610	13	243
AT213615	37	475
AT213624	23	237
AT213809	58	475
AT213809	17	481
AT213834	6	467
AT213839	21	49
AT213954	2	255
AT213958	4	223
AT214007	17	233
AT214011	33	225
AT214012	15	225
AT214012	19	225
AT214012	4	225
AT214012	8	225
AT214017	18	233
AT214030	34	379
AT214040	35	379
AT214041	44	233
AT214061	21	233
AT214063	23	233
AT214078	45	235
AT214079	45	233
AT214104	16	239
AT214118	2	243
AT214119	4	243
AT214122	71	243
AT214129	71	235
AT214145	3	237
AT214152	54	237
AT214160	13	237
AT214169	33	241
AT214170	49	241
AT214171	92	241
AT214172	65	241
AT214172	11	243
AT214173	55	235
AT214263	6A	467
AT214290	7	237
AT214292	56	237
AT214297	28	239
AT214299	21	237
AT214299	61	241
AT214300	74	241
AT214301	22	239
AT214305	60	235
AT214305	11	239
AT214307	50	243
AT214309	69A	241
AT214310	30	235
AT214311	7	239
AT214313	15	237
AT214314	23	237
AT215503	26	225
AT215504	8	505
AT215538	7	371
AT216522	6	259
AT216532	14	259
AT218141	61	237
AT218156	13	161
AT218190	7	235
AT219468	6	41
AT219471	56	41
AT219471	8	41
AT221439	16	147
AT221439	16	149
AT221439	20	149
AT221440	19	147
AT221605	28	147
AT221605	28	149
AT221990	4	147
AT221990	4	149
AT222697	1	147
AT222697	1	149
AT223099	1	149
AT223099	2	149
AT264223	10	515
AT264223	10	517
AT264241	29	69
AT264259	11	515
AT264259	11	517
AT264260	19	515
AT264260	19	517
AT264262	17	515
AT264262	17	517
AT264314	4	515
AT264314	4	517
AT264319	10	521
AT264321	4	519
AT264324	1	179
AT264339	3	523
AT264342	10	519
AT264347	1	179
AT264347	2	421
AT264347	3B	425
AT264347	24	427
AT264347	23	527
AT264350	7	519
AT264351	8	519
AT264354	12	427
AT264354	22	429
AT264355	16	519
AT264356	19	519
AT264357	7	515
AT264357	7	517
AT264358	8	515
AT264358	8	517
AT264359	11	519
AT264360	1	179
AT264360	30	515
AT264360	30	517
AT264360	32	519
AT264360	30	521
AT264386	16	515
AT264386	16	517
AT264387	15	521
AT264388	18	521
AT264418	3	59
AT280856	1	43
AT280857	3	43
AT280860	11	41
AT300313	2	401
AT300313	2	403
AT300337	5	403
AT300465	16	403
AT300466	17	403
AT301074	0	319
AT301151	26	505
AT301568	1	35
AT301917	25	149
AT302980	23	403
AT303524	25	403
AT303634	24	403
AT303635	22	403
AT303665	18	401
AT303666	11	401
AT303667	13	401
AT303668	12	401
AT303703	1	401
AT303736	25	195
AT303955	1	403
AT303955	26	403
AT303956	8	403
AT304407	19	395
AT304740	2	509
AT304847	30	403
AT304849	18	401
AT305641	26	505
AT306723	16	395
AT306723	7	399
AT306737	7	397
AT306757	14	397
AT306775	6	397
AT307247	80	245
AT307248	81	245
AT307267	32	147
AT307267	60	149
AT307271	6	147
AT307271	6	149
AT307277	8	147
AT307277	8	149
AT307709	14	395
AT307710	4	395
AT307812	2	147
AT307815	31	147
AT307815	32	149
AT307816	31	149
AT307817	5	147
AT307817	5	149
AT309263	0A	259
AT309264	0B	259
AT311605	11	41
AT311608	55	41
AT311610	55	41
AT311804	1	57
AT313621	56	41
AT314587	0	33
AT317586	1	153
AT317587	3	153
AT317606	4	153
AT318016	26	505
AT318021	20	507
AT318035	1	179
AT318035	33	375
AT318035	33	377
AT318035	67	421
AT318035	60	423
AT318035	8	451
AT318035	10	457
AT318035	1	459
AT318035	2	459
AT318035	13	461
AT318035	0	465
AT318035	1	465
AT318035	9	493
AT318035	34	501
AT318035	9	503
AT318035	29	63
AT318035	2	67
AT321249	4	167
AT322189	11	259
AT323462	4	167
AT329374	14	259
AT329375	16	259
AT329376	17	259
AT332621	0	51
AT332675	40	323
AT332675	40	325
AT332675	40	327
AT332676	40	323
AT332676	40	325
AT332676	40	327
AT332677	40	323
AT332677	40	325
AT332677	40	327
AT332678	40	323
AT332678	40	325
AT332678	40	327
AT332679	40	329
AT332679	40	331
AT332679	40	333
AT332680	40	329
AT332680	40	331
AT332680	40	333
AT332681	40	329
AT332681	40	331
AT332681	40	333
AT332682	40	329
AT332682	40	331
AT332682	40	333
AT332683	40	335
AT332683	40	337
AT332683	12	339
AT335573	20	261
AT339080	40	325
AT339080	40	327
AT339082	40	325
AT339082	40	327
AT339084	40	325
AT339084	40	327
AT339086	40	325
AT339086	40	327
AT339088	40	331
AT339088	40	333
AT339090	40	331
AT339090	40	333
AT339092	40	331
AT339092	40	333
AT339094	40	331

Índice numeríco, continuación

Ref.	*Pos.*	*Página*
AT339094	40	333
AT339096	40	337
AT339096	12	339
AT339691	34	351
AT339845	33	353
AT339846	33	351
AT339861	5	351
AT339861	5	353
AT339863	2	353
AT339864	4	353
AT339865	3	353
AT339866	6	353
AT339867	7	353
AT339876	16	351
AT339876	16	353
AT339877	14	351
AT339877	14	353
AT339878	22	351
AT339878	22	353
AT339879	14	351
AT339879	14	353
AT341010	33	353
AT341011	33	353
AT341012	33	351
AT341013	33	351
AT342511	92	327
AT342511	92	333
AT342512	90	327
AT342512	90	333
AT342741	34	353
AT349466	27	375
AT35121	9	371
AT35121	3	395
AT35121	6	399
AT35121	16	513
AT353137	38	149
AT353138	17	149
AT361189	1B	213
AT361190	12B	379
AT366772	22	149
AT36921	1	367
AT36921	1	369
AT36921	24	371
AT36921	3	393
AT36921	2	399
AT36921	8	401
AT36921	4	403
AT37476	11	451
AT38449	1	123
AT38449	10	127
AT38628	9	513
AT389672	57	149
AT397199	12	275
AT404640	1A	39
AT404640	1B	39
AT43291	4	451
AT50923	14	161
AT64237	1	317
AT64237	2	317
AT66778	58	153
AT66866	5	215
AT66866	6	215
AT68901	10	367
AT68901	10	369
AT68901	13	393
AT71082	3	371
AT71082	11	395
AT71082	23	399
AT71732	18	393
AT71732	4	399
AT73296	1	150
AT74940	10	150
AT78124	20	393
AT78633	10	283
AT78634	10	283
AT82210	2	391
AT83306	28	507
AT83721	6	395
AT84953	19	289
AU42809	10	283
C607429	13	321
C607429	13	323
C607429	13	325
C607429	13	329
C607429	13	331
C607429	13	335
C607429	13	337
CD16284	7	101
CE17748L3	21	327
CE17748L3	21	333
CE17748R3	22	327
CE17748R3	22	333
CH11436	1	179
CH11560	25	357
CH11561	36	363
CH11562	6C	363
CH11568	33	527
CH11569	1	179
CH11569	27	429
CH11569	33	429
CH11570	1	179
CH11570	11	367
CH11570	9	367
CH11570	11	369
CH11570	9	369
CH11570	2	393
CH11570	30	399
CH11570	13B	421
CH11570	14B	421
CH11570	18B	425
CH11570	5	427
CH11570	78B	427
CH11570	15	429
CH11570	3	429
CH11570	49	431
CH11570	24A	443
CH11570	25A	443
CH11570	37A	443
CH11570	38A	443
CH11570	39A	443
CH11570	25A	445
CH11570	26A	445
CH11570	39A	445
CH11570	41A	445
CH11570	10	459
CH11570	5	459
CH11570	9	459
CH11570	2	467
CH11570	22	467
CH11570	3	467
CH11570	58	475
CH11570	57	477
CH11570	17	481
CH11570	19	481
CH11570	1	483
CH11570	5	483
CH11570	1	485
CH11570	7	485
CH11570	20	489
CH11570	22	489
CH11570	10	491
CH11570	2	491
CH11570	40	511
CH11570	41	511
CH11570	42	511
CH11570	43	511
CH11570	45	511
CH11571	1	179
CH11571	13	511
CH11572	1	179
CH12329	1	179
CH12329	3D	425
CH12329	23	429
CH12329	51	431
CH14634	1	179
CH14701	1	179
CH16109	8	59
CH17167	1	179
CH17167	18	427
CH17167	46	429
CH17167	59	429
CH17167	47	431
CH17167	7	69
CH17854	1	451
CH18478	41	519
CH19111	1	179
DH100001	6	35
DH100029	11	35
DH100029	11	37
DH100030	2	35
DH200049	14	303
DH200050	0	293
DH300125	5	301
DH300125	10	303
DH300125	11	303
DH300140	1	293
DH400030	0B	295
DH400030	1B	295
DH400030	0B	305
DH400030	0D	305
DH400360	3	221
DH400572	31	453
DH400573	32	453
DH400577	10	467
DH400578	20	469
DH400580	26	469
DH400606	33	467
DH400609	58	153
DH400613	4	301
DH400620	23	153
DH400621	4	301
DH400660	27	303
DH400662	5	379
DH400683	15	455
DH500060	0	221
DH500062	0	219
DH500067	1	301
DH500068	22	303
DH600036	3	299
DH800103	4	503
DH800104	5	503
DH800107	8	181
DH800119	6	455
DH800121	4	457
DH900293	35	471
DH900409	31	469
DH900410	43	489
DH900426	33	467
DT5069	10	145
E1343FN	2	133
E19700	4	289
EV23PN	2	343
EV23SYL	4O	343
EV29SYL	4O	347
EV5849-V23	3	343
EX129A-37	11	349
EX1506-37	8	349
EX1507-37	8	349
EX1829A-47	11	349
EX20SP	13	349
EX20W1	12	349
EX21LK	2	343
EX21LK	5	349
EX21LKS	5	349
EX21S5F	4I	343
EX21SYL	4G	343
EX21SYL	2	349
EX21TVIP	4H	343
EX21VIP	4J	343
EX27LK	5	349
EX27S6F	4I	347
EX27SYL	4G	347
EX27SYL	2	349
EX27TVIP	4H	347
EX27VIP	4J	347
EX27VPL	6	347
EX27VPL	11	349
EX27VPL	14	349
EX27VPN	2	347
EX27VPN	11	349
EX27VPN	5	349
EX29SP	13	349
EX29W1	12	349
EX3-4-57QRT	6	349
EX31329-X	7	349
EX37LK	5	349
EX37LKS	5	349
EX37S7F	1	349
EX37SYL	2	349

Índice numeríco, continuación

Ref.	*Pos.*	*Página*
EX37TVIP	4	349
EX37VIP	3	349
EX450-37	10	349
EX47LK	5	349
EX47SYL	2	349
EX4894-21	11	349
EX5824-37	11	349
EX5827-27	11	349
EX5849-21	3	343
EX5849-21	11	349
EX5850-27V	3	347
EX5850-27V	11	349
F1451R	30	153
FFSB108069	12	375
FFSB108069	12	377
FXV00000005	4	455
FXV00000005	4A	455
FYA00010751	9	311
FYA00019931	0	197
FYA00019932	0	197
H102543	1	393
H132922	72	243
H132922	89	245
H132922	8	295
H144095	6	182
H157235	9	515
H157237	14	515
H158027	3	521
H158463	14	521
H159705	32	521
H163453	32	515
H163453	32	517
H21259	18	173
H21259	19	173
H21259	20	173
H23125	1	74
H238070	38	519
H238070	35	521
H61354	2	457
H75414	4	513
H77698	8	150
H77698	8	155
H77698	12	171
H77698	31	193
H77698	10	199
H77698	39	201
H77698	40	201
H77698	13	207
H77698	54	269
H77698	14	283
H77698	7	287
H77698	26	289
H77698	11	311
H77698	12	319
H77698	11	355
H77698	19	355
H77698	8	367
H77698	8	369
H77698	17	401
H77698	29	403
H77698	34	469
H77698	31	483
H77698	14	485
H80753	2	133
J010814	5	199
J011030	10	59
J011235	13	59
J011265	2	499
J020816	63	245
J021050	21	361
J031025	10	281
J031025	14	291
J031030	9	457
J031045	15	281
J050820	1	283
J219167	14	267
J222012	43	453
J222020	2	525
J231212	4	315
J252210	10	193
J253110	9	193
J253112	3	315
J257220	16	215
J257220	3	217
J260820	13	355
J271030	11	193
J400408	2	357
J460310	55	201
J460510	2	311
J460514	6	245
J460616	7	245
J680514	13	243
J680630	12	243
J75481	0D	383
J75481	1D	383
J75481	38	515
J75481	38	517
J75481	38	521
J780612	41	363
J780825	3	461
J780825	3	463
J780825	4	465
J780825	14	497
J780825	3	497
J780845	18	357
J780880	27	467
J781020	61	153
J781020	13	369
J781030	10	363
J781030	17	369
J781030	2	453
J781030	24	453
J781030	3	457
J781030	6	463
J781030	4	467
J781030	8	497
J781030	7	499
J781030	3	501
J781035	13	361
J781040	20	455
J900820	13	355
J901016	33	199
J901030	60	235
J901030	11	239
J901030	29	517
J901216	44	453
J901425	16	379
J901425	31	501
J901635	12	37
J921240	2	229
J921240	33	303
J922010	60	235
J922010	11	239
J922060	1	525
J922095	15	219
J932726	1	221
J950010	16C	511
J950012	4	315
J950020	23	375
J950020	23	377
J952010	6	265
J952014	5I	191
J952014	7I	191
J952014	0I	193
J971030	29	517
JD5760	7	173
JD5765	10	173
JD5815	40	351
JD5815	40	353
JD5909	16	173
JD7769	31	353
JD7769	10	495
L101283	13	147
L101283	13	149
L159272	20	455
M142541	14	147
M340513	19	437
M340513	21	437
M340830	64	421
M340830	77	427
M341036	63	421
M341228	67	523
M351018	6	43
M430613	2	191
M430660	26	199
M63200	9	295
M63200	36	303
M800650	1	179
M800650	22A	275
M800650	16B	421
M800650	71	421
M800650	20B	423
M800650	20B	425
M800650	52	431
M800650	40A	445
M800650	29	467
M800650	1	469
M800650	15	469
M800650	21	469
M800650	1	471
M800650	24	471
M800650	25	471
M800650	32	471
M800650	1	473
M800650	12	473
M800650	15	473
M800650	23	473
M800650	40	473
M800650	41	473
M800650	9	473
M800650	0	479
M800650	18	481
M800650	24	483
M800650	21	485
M800650	1	487
M800650	8	487
M800650	21	489
M800650	25	489
M800650	37	489
M800650	38	489
M800650	7	491
M800650	22	511
M800650	37	511
M800650	38	511
M800650	39	511
M800650	44	511
M800650	22	527
M800650	3	65
M800650	8	67
M800650	9	67
M800893	1	179
M87733	3	111
M88199	40	201
M88199	11	311
N162946	10	289
N198631	15	467
N207956	15	147
N207956	15	149
P60616	17	303
P60649	3	163
P60752	37	303
P60915	8	267
P60923	8	181
P60972	3	379
P61112	8	163
P61235	32	153
P61236	33	153
P61237	34	153
P61238	35	153
P61239	36	153
P61249	37	153
P61260	2	165
P61261	3	165
P61262	4	165
P61263	5	165
P61265	38	153
P61266	11	153
P61267	12	153
P61273	39	153
P61290	15	161
P61291	16	161
P61292	17	161
P61315	5	301
P61315	10	303
P61323	40	153
P61332	41	153
P61333	42	153
P61334	43	153
P61335	44	153

Índice numeríco, continuación

Ref.	*Pos.*	*Página*
P61337	46	153
P61338	47	153
P61339	48	153
P61340	49	153
P61341	50	153
P61598	1G	295
P61954	3	461
P61954	3	463
P61954	4	465
P61954	3	497
P61969	6	419
P63201	13	157
P63448	2	173
P64258	8	405
P64818	11	379
P64846	1	385
P64849	16	377
P64850	14	375
P64850	15	375
P64850	14	377
P64850	15	377
P64864	1A	213
P64865	10	219
P65012	5	379
P65143	0	287
P65144	1	287
P65608	10	293
P65608	4A	293
P65620	5	221
P66463	4	301
P67743	8	293
P67780	11	299
P67782	4	221
P67782	5	299
P67782	5A	299
P67816	0E	295
P67816	1D	295
P67913	11A	473
P67920	23	471
P67923	14	467
P67925	33A	489
P67926	32A	487
P67950	39	473
P67984	8	67
P68008	10	457
P68012	31A	471
P68013	36A	473
P68014	37A	473
P68157	3	157
P68167	0G	295
P68167	1H	295
P68276	43	375
P68276	43	377
P68277	42	375
P68277	42	377
P68278	44	375
P68278	44	377
P68279	41	379
P68280	2	293
P68281	3	293
P68282	1	293
P68283	0	293
P68332	0C	295
P68333	0D	295
P68335	1F	295
P68336	1C	295
P68347	5	297
P68386	21A	291
P68427	42	453
P68430	15	375
P68430	15	377
P68431	40	375
P68431	40	377
P68432	41	375
P68432	41	377
P68469	1	61
P68470	0	61
P68480	12A	379
P68661	10	451
P68661	14	451
P70104	12	275
P70345	24	303
P70469	2	297
P70495	8	299
P70495	8B	299
P70496	8	299
P70496	8A	299
P70773	3	301
P70989	1	299
P94849	16	375
PM37391	5	215
PM37391	6	215
PM38655	24	81
R100369	14	113
R100377	3	129
R101225	14	71
R104592	5	101
R104592	5	81
R107731	11	73
R110664	12	387
R110664	10	389
R111137	10	81
R111207	6	165
R112316	20	143
R113565	3	121
R113596	4	71
R114082	2	78
R114193	20	71
R114193	26	77
R114194	23	71
R114241	17	81
R115081	3	81
R115081	1	83
R115250	1	112
R115299	1	109
R115299	12	81
R115390	15	81
R116115	10	75
R116115	5	96
R116116	10	119
R116296	2	86
R116324	4	74
R116386	17	105
R116466	2	81
R116515	12	101
R116515	8	140
R116515	8	143
R119874	6	81
R120013	14	111
R120467	2	99
R120631	3	71
R120635	15	71
R120636	21	71
R120638	13	89
R120641	12	71
R121043	9	81
R121376	7	89
R121402	14	101
R121402	15	101
R121411	4	77
R121424	3	77
R121621	5	93
R121622	6	91
R121635	5	112
R121897	4	130
R123161	7	73
R123174	11	71
R123177	5	78
R123208	1	125
R123226	9	113
R123226	12	115
R123226	4	140
R123226	4	143
R123226	10	77
R123271	5	73
R123273	3	124
R123273	33	143
R123324	14	115
R123345	5	140
R123345	5	143
R123353	13	140
R123353	13	143
R123353	1	91
R123353	1	93
R123395	1	113
R123417	13	113
R123417	21	143
R123417	7	77
R123442	1	130
R123442	5	135
R123471	5	117
R123486	3	130
R123501	3	117
R123501	23	143
R123504	24	143
R123513	2	73
R123525	25	143
R123542	1	140
R123542	1	143
R123542	7	74
R123565	10	73
R123566	12	119
R123574	2	74
R123575	7	140
R123575	7	143
R123575	3	74
R123586	2	99
R123586	5	99
R123593	15	105
R123593	27	105
R123616	17	147
R123616	35	149
R123616	28	81
R126086	11	121
R126086	3	123
R128662	5	133
R130575	5	71
R131182	21	81
R131283	16	71
R131283	19	71
R131283	25	77
R131768	2	125
R132166	5	129
R132186	20	81
R132509	1	102
R132518	7	81
R132874	12	105
R132913	7	129
R133295	2	130
R133303	5	109
R133405	5	124
R133893	10B	140
R133893	10B	143
R134465	10	387
R134465	8	389
R134526	2	79
R134552	2	85
R135120	9	387
R135121	7	389
R135361	7	74
R135389	7	74
R135509	4	127
R135510	5	127
R135757	14	389
R135757	5	79
R135918	6	125
R135918	1	136
R136475	3	79
R136495	3	86
R136515	28	77
R136516	22	143
R206883	5	150
R26125	4	101
R26375	35	351
R26375	35	353
R26409	21	289
R26448	3	367
R26448	3	369
R26448	12	371
R26448	5	393
R26448	5	395
R26448	31	399
R26493	11	81
R26650	13	81
R26906	6	101
R27212	4	367
R27212	18	371
R27212	9	393
R27212	8	395

Índice numeríco, continuación

Ref.	*Pos.*	*Página*
R27212	5	399
R27212	10	513
R27267	28	507
R28782	4	397
R28811	2	136
R29424	4	463
R29424	7	497
R29424	6	499
R29424	2	501
R29424	23	507
R29936	27	505
R29936	29	507
R29936	1G	65
R31147	21	367
R31147	21	369
R31147	16	393
R31147	35	399
R41778	4	263
R43409	9	101
R43750	13	153
R44302	18	145
R44302	8	150
R44302	4	203
R44302	5	247
R44302	4	391
R44302	18	395
R44302	32	399
R44302	23	513
R47154	5	91
R47160	8A	145
R47160	9	145
R47693	5	150
R48685	5	321
R48685	5	323
R48685	5	329
R48685	5	335
R48685	1	71
R48685	1	81
R48808	12	129
R48808	4	182
R500270	1	124
R500271	6	124
R500293	3	136
R500304	8	133
R500320	1	135
R500335	1	78
R500335	3	78
R500374	32	143
R500374	3	75
R500374	9	96
R500390	25	105
R500471	2	115
R500472	7	115
R500531	10	129
R500598	1	133
R500650	2	109
R500668	3	109
R500704	13	115
R501124	1	78
R501227	4	115
R501228	1	115
R501311	7	74
R501373	9	140
R501373	9	143
R501428	8	117
R501428	31	143
R501486	2	182
R501489	24	71
R502014	8	133
R502076	11	105
R502079	3	135
R502465	7	85
R502505	3	96
R502513	7	75
R502513	8	75
R502513	11	96
R502513	4	96
R502725	8	85
R502811	11	117
R502814	3	140
R502814	3	143
R502902	8	74
R503444	1	125
R503509	16	113
R503520	29	105
R503560	6	77
R503813	9	133
R503891	16	111
R503891	6	140
R503891	6	143
R504534	1	72
R50454	9	287
R504724	2	77
R504724	28	77
R504734	9	117
R504762	1	131
R505472	18	105
R505609	2	71
R517471	5	137
R518210	10	133
R51936	20	105
R51936	27	105
R51936	13	387
R51936	11	389
R520129	2	77
R520129	28	77
R520131	1	77
R520131	2	77
R520131	28	77
R521493	1	95
R522690	10	387
R522690	8	389
R523182	1	77
R523182	2	77
R523182	28	77
R53108	26	143
R54114	4	78
R54123	4	150
R54510	2	150
R54511	3	150
R54565	1	73
R55158	40	527
R55159	41	527
R55233	4	81
R56902	1	173
R61105	29	143
R61467	1	125
R61467	8	125
R61871	16	140
R61871	16	143
R61871	9	89
R61871	4	93
R61871	5	95
R63548	4	111
R64525	4	129
R67193	39	527
R69667	1	461
R69667	2	463
R69667	3	465
R69667	1	497
R69667	12	497
R71228	12	77
R72328	27	143
R72328	1	99
R72659	4	99
R72853	5	111
R73290	14	45
R73384	38	201
R74012	1	119
R74012	7	124
R75892	14	140
R75892	14	143
R75892	16	81
R76477	15	195
R76477	10	319
R76477	12	459
R76477	42	471
R76477	61	475
R76477	15	67
R78053	17	101
R78053	6	205
R78059	5	205
R78064	18	101
R78064	5	205
R81275	5	106
R81275	10A	140
R81275	10A	143
R81911	3	158
R85145	4	387
R85363	1	101
R85687	8	101
R89944	6	112
R89944	28	143
R90658	2	102
R90658	2	140
R90658	2	143
R90692	10	101
R91360	13	105
R91889	2	101
R92097	6	111
R92097	11	140
R92097	11	143
R92352	25	105
R93910	8	101
R96703	2	127
R96935	5	387
R97185	15	140
R97185	15	143
R97185	8	89
R98062	11	101
R98063	8	101
R98335	8	101
R99052	16	437
R99052	8	437
RE16142	35	105
RE16223	3	91
RE19797	3	105
RE19799	9	105
RE21790	7A	145
RE31617	13	101
RE32361	36	149
RE40048	17	111
RE40048	2	123
RE40048	5	163
RE42139	7	150
RE44574	3	125
RE44574	18	143
RE46684	15	115
RE46685	10	113
RE46685	6	117
RE46685	9	77
RE46685	27	81
RE46685	9	91
RE46685	8	93
RE46685	7	95
RE46686	3	115
RE46686	7	117
RE46686	5	119
RE46686	5	123
RE46687	2	91
RE46687	12	93
RE46687	9	95
RE500005	5	74
RE500345	8	127
RE500448	11	109
RE500449	12	109
RE500527	3	136
RE500539	1	133
RE500539	2	133
RE500539	8	133
RE500576	15	171
RE500608	3	78
RE500718	14	387
RE500718	12	389
RE500824	7	389
RE500825	9	387
RE500883	16	389
RE500884	15	387
RE501455	12	143
RE503211	7	111
RE503664	2	133
RE503664	8	133
RE504134	12	121
RE504233	4	124
RE504543	6	75
RE504543	10	96
RE504564	4	75
RE504564	3	96
RE504638	4	71

Índice numeríco, continuación

Ref.	*Pos.*	*Página*
RE504742	13	109
RE504836	8	75
RE504836	4	96
RE504914	6	89
RE505232	12	75
RE505264	2	135
RE505501	33	81
RE505980	16	113
RE505980	13	77
RE506300	11	115
RE506382	1	77
RE506382	28	77
RE506871	2	99
RE506871	3	99
RE506871	4	99
RE506871	5	99
RE506991	1	106
RE507595	1	72
RE507598	1	105
RE507646	7	105
RE507647	6	105
RE507648	5	105
RE507649	4	105
RE507766	25	105
RE507852	6	78
RE507952	19	113
RE507952	32	81
RE507952	10	91
RE507952	14	93
RE507952	4	95
RE507996	7	119
RE507997	2	119
RE508078	1	83
RE508082	10	78
RE508083	12	143
RE508185	22	81
RE508185	25	81
RE508195	1	137
RE508566	17	113
RE508716	21	105
RE508847	10	123
RE509031	4	121
RE509036	12	123
RE509572	2	111
RE509605	15	111
RE509640	2	111
RE509794	1	121
RE509813	15	113
RE515404	8	121
RE515404	11	123
RE515748	12	143
RE515977	2	111
RE516340	19	143
RE516340	22	77
RE516477	4	121
RE51649	6	121
RE51650	9	121
RE51650	13	123
RE516512	7	121
RE516513	7	121
RE516513	11	123
RE516553	2	121
RE516553	14	123
RE517370	19	77
RE517786	2	111
RE518086	10	105
RE518097	10	133
RE518167	10	105
RE518177	14	105
RE519144	1	137
RE519775	14	105
RE520023	3	81
RE520023	1	83
RE520147	2	95
RE520229	18	113
RE520229	18	147
RE520539	7	74
RE520831	11	115
RE521822	10	105
RE521822	1	139
RE521823	2	139
RE521824	3	139
RE521825	4	139
RE522109	5	139
RE522316	1	72
RE52242	1	75
RE52242	1	96
RE522529	14	105
RE522529	4	123
RE522821	2	117
RE523469	1	77
RE523469	28	77
RE526834	11	123
RE526872	2	111
RE52722	16	115
RE52722	3	137
RE528600	16	101
RE531116	25	105
RE531436	25	105
RE532629	4	123
RE532629	3	209
RE538097	22	77
RE541420	8	75
RE54885	12	111
RE55145	31	81
RE56313	15	71
RE56369	21	71
RE56369	27	77
RE56690	2	117
RE57234	15	101
RE57619	10	89
RE57619	2	93
RE57619	13	95
RE57836	4	125
RE57836	29	81
RE59810	19	143
RE59811	22	71
RE59811	4	71
RE60005	3	101
RE60029	4	119
RE60069	2	111
RE60071	3	106
RE60854	5	121
RE60854	15	123
RE61812	6	106
RE61812	6	137
RE62419	4	121
RE65165	7	71
RE65168	10	71
RE65908	11	78
RE65909	11	78
RE65911	7	71
RE65912	10	71
RE65978	13	111
RE66082	12	140
RE66084	17	140
RE66153	2	124
RE66178	1	85
RE67231	1	117
RE67238	13	117
RE67238	5	75
RE67238	1	86
RE67238	8	96
RE67239	23	77
RE68695	9	73
RE68748	27	105
RE68908	18	113
RE68908	18	147
RE68908	18	149
RE70403	6	74
RE70487	7	127
RE70536	10	133
RE70536	11	133
RE70681	6	127
RE70756	1	127
SE500268	2	111
SE500830	25	105
SE501094	3	78
SE501103	25	105
SE501155	2	111
SE501234	10	105
SE501341	6	182
SE501579	15	101
SE501609	16	113
SE501609	13	77
SE501674	2	111
SE501814	6	89
SE501815	1	72
T101942	3	173
T102618	3	175
T102620	3	177
T104324	12	375
T104324	12	377
T104348	2	381
T105740	3	263
T105943	12	289
T107446	6	401
T107446	0	453
T107446	22	453
T108030	20	519
T108036	38	519
T108036	35	521
T108041	4	515
T108041	4	517
T109X220	3	343
T110590	1	179
T110593	1	179
T111645	19	437
T111645	21	437
T111819	1O	65
T114617	8	373
T114681	4	175
T115753	30	351
T115753	30	353
T120343	3	147
T122075	4	117
T122075	30	143
T126057	15	401
T127575	4	177
T127X290	3	343
T13254	10	121
T13254	7	123
T138886	28	173
T138886	39	225
T138910	14	513
T139693	7	373
T139694	6	373
T139695	3	373
T139696	4	373
T14050	9	119
T142651	19	303
T144753	12	375
T144753	12	377
T146102	3	127
T146102	33	173
T146104	33	175
T146106	33	177
T146667	26	173
T146668	25	173
T146671	17	173
T149434	14	367
T149434	14	369
T149434	5	391
T149983	32	173
T152608	12	495
T152657	34	173
T153187	19	513
T153674	22	371
T153676	22	371
T153X310	3	347
T155858	9	145
T157779	2	263
T158020	25A	233
T158021	25B	233
T158495	10	161
T158584	1	182
T158X290	33	325
T158X290	33	327
T158X290	33	331
T158X290	33	333
T158X290	3	343
T158X290	3	347
T159843	6	173
T159843	7	395
T159844	21	173
T159844	9	395
T159887	24	173
T160123	56	153
T160910	16	173

Índice numeríco, continuación

Ref.	Pos.	Página
T161818	18	161
T162754	24	177
T162774	24	175
T163113	8	161
T163997	64	173
T167256	2	247
T174338	2	181
T175293	7A	145
T175293	7B	145
T175293	8A	145
T177575	37	149
T177580	21	147
T177580	18	149
T177580	21	149
T179306	24	147
T179306	27	147
T179306	24	149
T179306	27	149
T180076	11	173
T181295	17	177
T181296	17	175
T184858	10	395
T185129	12	173
T187535	30	173
T187642	35	173
T187710	55	173
T187757	63	173
T187758	63	175
T187759	63	177
T188662	24	399
T188696	7	209
T188737	61	173
T188737	25	257
T188862	23	173
T18891	26	81
T190303	7	123
T190303	10	182
T190310	60	173
T190393	27	173
T190393	27	175
T190517	29	173
T190519	13	173
T190519	9	173
T190799	30	175
T190801	55	175
T190802	55	177
T190803	30	177
T191377	7	43
T191378	6	43
T191379	5	43
T191380	4	43
T191381	8	43
T191382	3B	43
T191383	8	43
T191390	9	41
T191391	10	41
T191392	8	41
T191393	7	41
T191394	3	41
T191395	6	41
T191396	4	41
T191397	2	41
T191398	1	41
T191399	0	41
T191400	7	47
T191401	22	47
T191402	0	47
T191403	6	47
T191404	5	47
T191405	21	47
T191406	17	39
T191408	16	39
T191413	1C	39
T191419	54	41
T191420	54	41
T191421	51	41
T191422	52	41
T191455	6	39
T191456	12	39
T191457	1B	39
T191458	4	39
T191459	11	39
T191460	3	39
T191461	1A	39
T191462	5	39
T191463	15	39
T191464	14	39
T19935	9	150
T1U3302	4L	343
T1U3352	4L	347
T201367	4	299
T201367	36	399
T201519	54	173
T201519	9	397
T201547	54	177
T201548	54	175
T20168	18	81
T202379	21	393
T202379	20	395
T20314	4	73
T20316	3	73
T203811	29	173
T203958	5	215
T203958	6	215
T205175	8	397
T205218	24	257
T205639	3	149
T206125	22	147
T206125	19	149
T206126	26	147
T206126	26	149
T206127	23	147
T206127	23	149
T20758	13	389
T20758	4	79
T208024	31	173
T209259	56	41
T209259	9	41
T209260	56	41
T209260	7	41
T209261	2	41
T211051	13	167
T216880	5	215
T216880	6	215
T222711	31	175
T222712	31	177
T222755	62	175
T222756	62	177
T222757	1	175
T222758	1	177
T222763	66	175
T222763	66	177
T222773	34	175
T222774	34	177
T222777	32	175
T222778	32	177
T222786	60	175
T222787	60	177
T222805	2	175
T222806	2	177
T222823	25	175
T222823	25	177
T222831	26	175
T222832	26	177
T222833	28	175
T222834	28	177
T222837	5	175
T222838	5	177
T222875	29	175
T222876	29	177
T222899	29	175
T222900	29	177
T222927	27	177
T222929	2	247
T222930	2	247
T222938	23	175
T222939	23	177
T222954	64	175
T222955	64	177
T222992	14	367
T222992	14	369
T222992	5	391
T222993	14	367
T222993	14	369
T222993	5	391
T22645	23	395
T228108	61	175
T228108	61	177
T229308	13	351
T229308	13	353
T229309	36	351
T229309	36	353
T229310	43	351
T229310	18	353
T229310	43	353
T229312	11	353
T229322	41	353
T229327	42	353
T229331	15	351
T229331	15	353
T229413	23	351
T229413	23	353
T229423	20	351
T229423	20	353
T229428	32	353
T229431	21	353
T229509	43	351
T229509	18	353
T229509	43	353
T23474	19	81
T241930	50	327
T241930	50	333
T241930	50	339
T241937	51	327
T241937	51	333
T241937	51	339
T24432	14	171
T24472	25	105
T248605	1B	213
T248605	12B	379
T255175	57	149
T25879	25	351
T25879	25	353
T27860	5	289
T28862	6	85
T28949	24	195
T32854	23	195
T34433	28	507
T38818	13	349
T38819	12	349
T3G6304	3	343
T3G8354	3	347
T3G9549	5	347
T3G9609	5	343
T52974	13	349
T52975	12	349
T55564	1	289
T58477	6	101
T59014	1	179
T59014	1	453
T59014	23	453
T59014	5	463
T59014	6	497
T59014	4	501
T59014	18	507
T59951	27	289
T61120	12	397
T63018	57	153
T63817	21	395
T70177	5	513
T72888	10	401
T72888	10	403
T75197	2	203
T76938	5	505
T77258	7	125
T77613	10	111
T77814	8	387
T77814	4	389
T77814	6	389
T77857	28	403
T77858	32	375
T77858	32	377
T77858	17	453
T77858	3	459
T77858	12	461
T77858	5	465
T77858	6	493
T77858	27	501
T77858	7	501

Índice numeríco, continuación

Ref.	*Pos.*	*Página*
T77858	7	503
T77858	9	505
T77858	2	507
T77858	7	509
T77858	3	67
T78313	6	457
T78787	6	209
T79477	4	155
T79477	7	155
T79632	4	173
T80622	27	527
T9J2308	2	343
T9J2358	2	347
TF1U3302D	4K	343
TF1U3352D	4K	347
TF220	4A	343
TF290	34	325
TF290	34	327
TF290	34	331
TF290	34	333
TF290	4A	343
TF290	4A	347
TF310	4A	347
TH0003929	25	253
TH100074	4	215
TH100074	28	375
TH100074	28	377
TH100074	0D	381
TH100074	1D	381
TH100074	0D	383
TH100074	1D	383
TH100433	6	37
TH100434	10	41
TH100675	18	511
TH100679	12	511
TH100951	24	471
TH100951	1	473
TH100951	15	473
TH100963	8	495
TH101047	22	489
TH101300	43	453
TH101894	19A	511
TH101926	1	179
TH101926	8	501
TH101926	15	505
TH101926	2	505
TH101926	25	505
TH101926	25	511
TH102171	3	251
TH102444	27	377
TH102446	1	375
TH102446	3	375
TH102446	1	377
TH102446	3	377
TH102446	1	379
TH102446	0E	381
TH102446	1E	381
TH102446	0E	383
TH102446	1E	383
TH102446	26	515
TH102446	26	517
TH102561	28	467
TH103574	12	427
TH103574	22	429
TH104071	16	379
TH104118	2	313
TH104196	6	265
TH104296	36	379
TH104472	2	375
TH104472	2	377
TH104472	0F	381
TH104472	1F	381
TH104472	0F	383
TH104472	1F	383
TH104472	29	519
TH104472	26	521
TH104509	11	321
TH104509	11	323
TH104509	11	325
TH104509	11	329
TH104509	11	331
TH104509	11	335
TH104509	11	337
TH104512	6	321
TH104512	6	323
TH104512	6	329
TH104512	6	335
TH104513	7	321
TH104513	7	323
TH104513	7	329
TH104513	7	335
TH104514	8	321
TH104514	8	323
TH104514	8	329
TH104514	8	335
TH104925	7	515
TH104925	7	517
TH104926	8	515
TH104926	8	517
TH105683	6C	467
TH106081	34	433
TH106081	6	435
TH106081	17	437
TH106081	9	437
TH106783	15	239
TH106966	54	153
TH108293	19	511
TH108320	9	367
TH108320	9	369
TH108328	15	469
TH108328	12	473
TH108328	23	473
TH108328	9	473
TH108328	25	489
TH108341	2	461
TH108341	2	465
TH108440	11	367
TH108440	11	369
TH108460	24	195
TH108567	14	233
TH108568	14A	233
TH108616	3	255
TH108638	19	239
TH108646	59	237
TH108661	23	239
TH108661	1	247
TH108668	32	239
TH108983	22	257
TH109312	5	521
TH109328	19	521
TH109445	9	287
TH109598	15	467
TH109649	13	495
TH109953	33	69
TH111685	15	379
TH111908	24	257
TH2045470	5	355
TH2045472	8	355
TH2045509	29	225
TH3089486	2	265
TH3090025	32	225
TH3091204	3	283
TH3091842	24	225
TH3100010	1	187
TH4185600	32	433
TH4185600	4	435
TH4405128	4	265
TH4415024	22	225
TH4420875	0	225
TH4420876	3	225
TH4420877	7	225
TH4420878	11	225
TH4420879	14	225
TH4420880	18	225
TH4425573	5	283
TH4426156	8	283
TH4426354	4	227
TH4432965	11	283
TH4433793	0	283
TH4433794	7	283
TH4438279	14	355
TH4441117	30	225
TH4444664	10	237
TH4445220	22	253
TH4445322	1	355
TH4445490	0	437
TH4445917	0	227
TH4445932	0A	227
TH4448308	52	237
TH4448309	53	237
TH4448315	72	237
TH4448318	18	241
TH4448601	27	253
TH4448990	35	225
TH4449509	5	313
TH4450008	9	283
TH4451095	18	225
TH4452613	27	225
TH4453663	31	235
TH4453665	93	235
TH4453666	95	235
TH4453667	22	235
TH4453670	20	237
TH4453674	58	237
TH4453675	57	237
TH4453676	50	237
TH4453681	28	241
TH4453682	29	241
TH4453683	30	241
TH4453683	31	241
TH4453686	33	233
TH4453687	32	233
TH4453689	1	239
TH4453690	31	233
TH4455975	4	237
TH4455977	17	237
TH4455978	19	237
TH4455979	2	237
TH4455980	14	237
TH4455981	12	237
TH4455982	8	237
TH4455983	9	237
TH4456171	11	237
TH4456177	2	235
TH4456178	3	235
TH4456179	4	235
TH4456181	5	235
TH4456182	17	235
TH4456183	8	235
TH4456184	29	235
TH4456185	11	235
TH4456218	2	239
TH4456219	3	239
TH4456220	4	239
TH4456221	5	239
TH4456222	6	239
TH4456223	8	239
TH4456224	9	239
TH4456225	10	239
TH4456226	12	239
TH4456227	14	239
TH4456228	20	239
TH4456229	21	239
TH4456230	26	239
TH4456231	27	239
TH4456232	29	239
TH4456233	30	239
TH4456234	31	239
TH4456235	33	239
TH4456236	34	239
TH4456237	35	239
TH4456238	37	233
TH4456238	36	239
TH4456239	37	239
TH4456240	38	239
TH4456241	39	239
TH4456242	40	239
TH4456244	8	249
TH4456245	1	249
TH4456246	2	249
TH4456247	3	249
TH4456248	6	249
TH4456427	1	233
TH4456428	15	233
TH4456428	26	233
TH4456429	30	233
TH4456433	34	233
TH4456434	35	233
TH4456435	41	233

Índice numeríco, continuación

Ref.	Pos.	Página
TH4456436	42	233
TH4456450	43	233
TH4456458	40	233
TH4456723	0B	283
TH4456725	0A	283
TH4459435	41	225
TH5007342	15	253
TH6019252	14	253
TH6019838	12	253
TH6020171	0	265
TH7036594	0	223
TH7036595	2	223
TH7039389	1	253
TH8076619	9	253
TH8081319	0	357
TH9195304	2	355
TH9757192	29	253
THA852322	8	67
THA885008	25	511
THDH100001	6	35
THDH100029	11	35
THDH100030	2	35
TK290	32	325
TK290	32	327
TK290	32	331
TK290	32	333
TK290	2	343
TK290	2	347
TP160	2	343
TP160	2	347
TP160L	2	343
TP160L	4A	343
TP160L	4B	343
TP160L	4C	343
TP160L	4D	343
TP160L	4E	343
TP160L	4F	343
TP160L	2	347
TP160L	4A	347
TP160L	4B	347
TP160L	4C	347
TP160L	4D	347
TP160L	4E	347
TP160L	4F	347
TPDE31329	29	327
TPDE31329	29	333
TPDE31329	7	349
TT1U3302	4N	343
TT1U3352	4N	347
TT220	4F	343
TT290	4F	343
TT290	4F	347
TT310	4F	347
TX1U3302WT	4M	343
TX1U3352WT	4M	347
TX220	4B	343
TX220AP	4E	343
TX220F	4D	343
TX220WT	4C	343
TX290	4B	343
TX290	4B	347
TX290WT	4C	343
TX290WT	4C	347
TX310	4B	347
TX310AP	4E	347
TX310F	4D	347
TX310WT	4C	347
TY22330	29	149
TY22330	30	149
TY22330	31	149
TY22450	6	99
TY22485	24	153
TY24322	6	182
TY24409	31	153
TY25803	2	181
TY26194	11	289
TY6304	24	81
U10778	1	179
U12547	37	351
U12547	37	353
U12547	13	507
U12547	27	507
U12547	4	509
U13639	6	150
U13639	23	81
U16721	27	353
U17409	1	179
U42323	13	167
WZ2141223	3	287
X1216F4OMXS	39	351
X1216F4OMXS	39	353
X1216F4OMXS	26	505
X128C5OXS	38	351
X128C5OXS	38	353
X16F4OMXS	26	505
X1J978-20-16	34	507
X1J9782016	32	505
X1JS78-20-16	34	507
X1JS782016	32	505
X6C4OMXS	4	401
X6C4OMXS	13	403
X6F4OMXS	3	401
X6F4OMXS	6	403
X6JTX-S	9	403
XCL-19	20	195
XCL-19	37	201
XCL-29	29	483
XHG-075	0A	459
XHG-075	0B	459
XHG-075	8A	463
XHG-075	8B	463
XHG-075	6A	465
XHG-075	6B	465
XHG-075	7A	465
XHG-075	7B	465
XHG-075	8A	465
XHG-075	8B	465
XHG-075	9A	465
XHG-075	9B	465
XHG-075	33	467
XHG-075	10B	497
XHG-075	11B	497
XHG-075	16B	497
XHG-075	17B	497
XHG-075;	33	467

Ref.	Pos.	Página