CATERPILLAR®

SEBP4988
December 2008

RUTHZIL TRATOR COMERCIAL DE PEÇAS LTDA 11 97083-6812 ROLANDO

Parts Manual

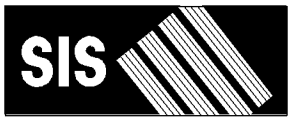

See "General Information" for New Parts Manual Features.

160K Motor Grader

JBP1-Up (Machine)
KHX1-Up (Engine)
DPK1-Up (Transmission)

Powered By C7 Engine
This Parts Manual is also available in .PDF format on Compact Disc (CD-ROM) - Caterpillar Form No. SERP4988

Product and Dealer Information

Note: For product identification plate locations, see the section “Product Identification Information” in the Operation and Maintenance Manual.

Delivery Date: _____

Product Information

Model: _____

Product Identification Number: _____

Engine Serial Number: _____

Transmission Serial Number: _____

Generator Serial Number: _____

Attachment Serial Numbers: _____

Attachment Information: _____

Customer Equipment Number: _____

Dealer Equipment Number: _____

Dealer Information

Name: _____ Branch: _____

Address: _____

_____

_____

	Dealer Contact	Phone Number	Hours
Sales:	_____	_____	_____
Parts:	_____	_____	_____
Service:	_____	_____	_____

MEMORANDA

TABLE OF CONTENTS

Name	Page
GENERAL INFORMATION	A5
REPAIR ALTERNATIVES	A8
SUPPLEMENTAL COOLANT ADDITIVES	A9
MAINTENANCE PARTS	A10
INDEX	A13
MACHINE ARRANGEMENT	1
GENERAL AR	1
ENGINE ARRANGEMENT	3
ENGINE AR-COMPLETE	3
ENGINE AR-CORE	4
INSTALLATION AR-ENGINE	5
BASIC ENGINE	7
AIR COMPRESSOR GP	7
CAMSHAFT GP	11
CARRIER GP-SEAL	12
COVER GP-CYLINDER BLOCK	13
COVER GP-FRONT HOUSING	14
COVER GP-VALVE MECHANISM	16
CRANKSHAFT GP	18
CYLINDER BLOCK GP	20
CYLINDER HEAD AS	24
CYLINDER HEAD GP	25
DAMPER & PULLEY GP	28
DRIVE GP-ACCESSORY	29
DRIVE GP-FAN	30
FASTENER GP-CYLINDER HEAD	32
FASTENER GP-ENGINE	33
FASTENER GP-FRONT HOUSING	34
FLYWHEEL GP	35
GEAR GP-FRONT	36
HOUSING GP-FLYWHEEL	37
HOUSING GP-FRONT	38
LIFTER GP-VALVE	39
LIFTING GP-ENGINE	40
MOUNTING GP-ENGINE	41
PAN GP-OIL	42
PISTON & ROD GP	43
PLUG GP-CYLINDER BLOCK	44
PLUG GP-ENGINE	45
PLUG GP-OIL PAN	46
SEAL GP-CRANKSHAFT	47
VALVE MECHANISM GP	48
LUBRICATION SYSTEM	51
ADAPTER GP-OIL LINE	51
BREATHER GP	52
FILTER GP-ENGINE OIL	53
FUMES DISPOSAL GP	54
GAUGE GP-OIL LEVEL (DIPSTICK)	55
LINES GP-ENGINE OIL	56
LINES GP-DRAIN	57
LINES GP-TURBOCHARGER OIL	58
MANIFOLD GP-ENGINE OIL	60
PUMP GP-ENGINE OIL	61
COOLING SYSTEM	63
COOLER GP-ENGINE OIL	63
COOLING AR	64
FAN GP	65
GUARD GP-FAN	66
LINES GP-WATER	67
PUMP GP-WATER	71
RADIATOR GP	74
TANK GP-WATER	75
AIR INLET AND EXHAUST SYSTEM	77
AFTERCOOLER GP-AIR	77
AIR CLEANER GP	78
COVER GP-AIR INLET	81
ELBOW GP-AIR INLET	82
LINES GP-AIR	83
MANIFOLD GP-EXHAUST	84
MUFFLER GP	85
TURBOCHARGER GP	86
FUEL SYSTEM	88
CONTROL GP-GOVERNOR	88
FILTER GP-WATER SEP & FUEL	90
INJECTOR GP-FUEL	91
LINES GP-FUEL	92
LINES GP-INJECTOR HYD PUMP	96
PUMP & MTG GP-UNIT INJ HYD	97
PUMP GP-FUEL INJECTION	98
PUMP GP-FUEL PRM & WATER SEP	99
REGULATOR GP-FUEL PRESSURE	100
TANK GP-FUEL	101
ELECTRICAL AND STARTING SYSTEM	102
ALARM GP	102
ALTERNATOR AR-CHARGING	103
ALTERNATOR GP-CHARGING	104
BATTERY & WIRING GP	110
CONTROL & MTG GP-ENGINE ELEK	119
CONTROL GP-POWER TRAIN	120
CONTROL GP-UNPROGRAMMED	121
CONVERTER AR-ELECTRICAL	122
CONVERTER GP-ELECTRICAL	123
ELECTRONICS GP-COMMUNICATION	126
ELECTRONICS GP-IMPLEMENT	126
ELECTRONICS GP-POWER TRAIN	126
GRADE CONTROL AR	127
GROUND GP-ELECTRICAL	129

TABLE OF CONTENTS

Name	Page
INSTALLATION AR-COMMUNICATION	130
INSTALLATION GP-COMMUNICATION	131
LAMP GP	133
LAMP GP-DOME	134
LAMP GP-FLOOD	135
LAMP GP-SIGNAL	139
LAMP GP-WARNING BEACON	142
LIGHTING AR-FLOOD	143
LIGHTING AR-ROADING	143
LIGHTING GP-BACKUP	144
LIGHTING GP-FLOOD	146
LIGHTING GP-ROADING	152
LIGHTING GP-SIGNAL	155
LIGHTING GP-WARNING	156
LIGHTING GP-WARNING BEACON	157
MOTOR GP-ELECTRIC	159
MOUNTING GP-GRADE CONTROL	160
PLUG GP-CONNECTOR	162
RADIO GP-COMMUNICATION	163
SENSOR GP-ENGINE	164
SENSOR GP-POSITION	166
SENSOR GP-PRESSURE	168
SENSOR GP-SPEED	174
SENSOR GP-TEMPERATURE	177
STARTING AID AR-ETHER	181
STARTING AID GP-ETHER	182
STARTING MOTOR GP-ELECTRIC	184
SWITCH GP-BYPASS	187
SWITCH GP-DISCONNECT	188
SWITCH GP-LIGHT	189
SWITCH GP-MAGNETIC	190
SWITCH GP-PRESSURE	191
SWITCH GP-WIPER	192
VALVE GP-ETHER STARTING	194
WIRING GP-AIR CONDITIONER	195
WIRING GP-AUXILIARY	197
WIRING GP-BLADE CUSHION	200
WIRING GP-CAB	201
WIRING GP-CONSOLE	205
WIRING GP-ENGINE	207
WIRING GP-ETHER STARTING AID	209
WIRING GP-FRONT	210
WIRING GP-GRADE CONTROL	214
WIRING GP-CHASSIS	215
WIRING GP-POWER RECEPTACLE	218
WIRING GP-REAR	219
WIRING GP-STEERING CONSOLE	225
WIRING GP-TRANSMISSION	227
POWER TRAIN	228
APPLICATION GP-POWER TRAIN	228
AUTOSHIFT AR	228
BASE GP-OIL FILTER	229
CASE & PARTS GP-PLANETARY	230
CHAIN GP-DRIVE	235
CLUTCH GP-TRANSMISSION	236
CONTROL GP-DIFFERENTIAL LOCK	245
CONTROL GP-TRANSMISSION HYD	247
COOLER GP-TRANSMISSION OIL	248
COUPLING GP-TORSIONAL	249
DIFFERENTIAL & BEVEL GEAR GP	250
DIFFERENTIAL AR	252
DIFFERENTIAL GP	253
FINAL DRIVE GP	255
FILLER GP-POWER TRAIN OIL	257
FILTER GP-OIL	258
GEAR GP-BEVEL & PINION	259
LINES GP-TRANSMISSION OIL	261
MOUNTING GP-WHEEL	264
PROTECTION GP-XMSN OIL FILLER	265
PUMP GP-GEAR	266
SCREEN GP-MAGNETIC	268
SHAFT GP-DRIVE	269
SHAFT GP-INPUT	270
TANDEM & COVER GP	271
TRANSMISSION AR	272
UNIVERSAL JOINT GP	273
VALVE & MTG GP-DIFF LOCK	274
VALVE GP-SELECTOR & PRESS CONT	275
VALVE GP-SOLENOID	281
VALVE GP-TRANSMISSION CONTROL	283
WHEEL & TIRE AR	285
WHEEL & TIRE GP	289
WHEEL AR	299
WHEEL GP	300
FRAME AND BODY	307
AXLE GP-FRONT	307
BOSS GP-FRAME	310
BOX GP-BATTERY	312
BUMPER GP-REAR	313
CASE & FRAME GP	315
ENCLOSURE GP-ENGINE	316
FRAME GP-FRONT	320
GUARD GP-BOTTOM	322
GUARD GP-DRIVE SHAFT	323
GUARD GP-PLATFORM	324
HITCH GP-ARTICULATING	331
LINES GP-GREASE	333
LINK GP-STEERING	334
STEP GP	335
SUPPORT GP-BATTERY	336
SUPPORT GP-RADIATOR	337
BRAKING SYSTEM	339
AIR DRYER GP	339
BRAKE GP-PARKING	341
BRAKE GP-SERVICE	343

TABLE OF CONTENTS

Name	Page
CONTROL GP-PARKING BRAKE	345
CONTROL GP-SERVICE BRAKE	347
DRYER & LINES GP-AIR	351
TANK GP-AIR	354
VALVE GP-SOLENOID	357
HYDRAULIC SYSTEM	358
ACCUMULATOR & MTG GP-HYDRAULIC	358
ACCUMULATOR AR-BLADE CUSHION	359
ACCUMULATOR GP-HYDRAULIC	360
CONTROL AR-HYDRAULIC	361
CYLINDER & MTG GP-ARTICULATION	363
CYLINDER & MTG GP-BLADE LIFT	364
CYLINDER & MTG GP-BLADE TIP	365
CYLINDER & MTG GP-CENTERSHIFT	366
CYLINDER & MTG GP-SCARIFIER	367
CYLINDER & MTG GP-SIDESHIFT	368
CYLINDER & MTG GP-STEERING	370
CYLINDER & MTG GP-WHEEL LEAN	371
CYLINDER GP-ARTICULATION	372
CYLINDER GP-CENTERSHIFT	374
CYLINDER GP-HYDRAULIC	376
CYLINDER GP-LIFT	377
CYLINDER GP-RIPPER	378
CYLINDER GP-SCARIFIER	379
CYLINDER GP-SIDESHIFT	380
CYLINDER GP-STEERING	381
CYLINDER GP-WHEEL LEAN	383
DETENT GP-CONTROL VALVE	384
DRIVE GP-CIRCLE	385
GUARD GP-CYLINDER	388
LINES GP-ACCUMULATOR	389
LINES GP-HYDRAULIC	391
LINES GP-PUMP	409
LINES GP-RIPPER	413
LINES GP-STEERING	416
LOCK GP-CENTERSHIFT	420
MANIFOLD GP-CONTROL	421
MANIFOLD GP-VALVE	422
MOTOR GP-GEROTOR	425
PUMP & MTG GP-STEERING	427
PUMP GP-PISTON	428
ROTATING GP-PUMP	430
SHAFT GP-PUMP DRIVE	431
SWIVEL GP	432
TANK & FILTER GP-HYDRAULIC	434
TANK & MTG GP-HYDRAULIC	436
VALVE & LINKAGE GP	437
VALVE GP-BANK 2	503
VALVE GP-BANK 3	504
VALVE GP-BANK 4	507
VALVE GP-BANK 5	515
VALVE GP-BANK 6	525
VALVE GP-BANK 7	529
VALVE GP-COMBINATION	531
VALVE GP-CONTROL	533
VALVE GP-PUMP CONTROL	567
VALVE GP-PURGE	568
VALVE GP-RELIEF	569
VALVE GP-SHUTTLE	577
VALVE GP-SOLENOID	578
IMPLEMENTS	580
CIRCLE GP	580
DRAWBAR GP	590
PLATE GP-PUSH	592
WORK TOOLS	593
BAR GP-LINK	593
BIT GP-END	594
BLADE & TIP AR-POWER	595
BLADE AR	596
BLADE GP	597
BRACKET GP-BLADE	601
BRACKET GP-SCARIFIER	602
EDGE GP-CUTTING	603
EXTENSION GP-BLADE	604
LIFT GP-BLADE	606
MOUNTING GP-RIPPER	608
RIPPER AR	609
RIPPER GP	610
SCARIFIER AR	612
SCARIFIER GP	613
TOOTH GP-RIPPER	617
TOOTH GP-SCARIFIER	618
OPERATOR STATION	619
ACCESSORY GP-CAB	619
ADJUSTER GP-SEAT	621
AIR CONDITIONER & HEATER GP	625
AIR CONDITIONER AR	629
AIR CONDITIONER GP	630
ARMREST GP	631
CAB AR	633
CAB GP	634
COMPRESSOR GP-REFRIGERANT	635
CONDENSER & MTG GP-REFRIGERANT	637
CONSOLE GP-OPERATOR	638
CONTROL GP-CLUTCH	641
CONTROL GP-STEERING	643
CONTROL GP-TRANSMISSION	644
DOOR GP-CAB	646
DUCT & CONTROL GP	653
DUCT GP	654
FAN GP-CIRCULATING	655
FILTER GP-CAB AIR	660
HEATER & MTG GP-CAB	661
HEATER AR-CAB	662

TABLE OF CONTENTS

Name	Page	Name	Page
HEATER GP-CAB	663		
HORN GP-ELECTRIC	667		
HOUSING GP-SEAT SUSPENSION	668		
INDICATOR GP-LEVEL	671		
INSTALLATION AR-RADIO	672		
INSTALLATION GP-RADIO	673		
INSULATION GP-WEATHER	676		
LINER GP-CAB	678		
LINES GP-AIR CONDITIONER	683		
LINES GP-HEATER	685		
LOUVER GP-CAB	687		
MIRROR GP-REAR VIEW	688		
MODULE GP-QUAD GAUGE	693		
MODULE GP-SPEEDOMETER & TACH	694		
MOUNTING GP-ROPS	695		
PAN GP-BACKREST	697		
PANEL GP-CAB	698		
PANEL GP-INSTRUMENT	699		
RECLINER GP-SEAT	704		
ROPS AR	705		
ROPS AR-ENCLOSED	706		
ROPS GP	707		
ROPS GP-ENCLOSED	709		
SCREEN GP-SUN	710		
SEAT BELT GP	711		
SEAT GP	713		
SEAT GP-STATIC	723		
SEAT GP-SUSPENSION	729		
SUPPORT GP-SEAT	731		
SUSPENSION GP-SEAT	733		
VALVE GP-AIR CONTROL	735		
WASHER GP-WINDOW	736		
WINDOW GP-CAB	741		
WINDOW GP-VENT	749		
WIPER AR-WINDOW	750		
WIPER GP-WINDOW	751		
SERVICE EQUIPMENT AND SUPPLIES	756		
BOX GP-TOOL	756		
FILM GP	757		
GREASE GUN GP	758		
PLATE & FILM GP	759		
TOOL GP-HAND	760		
PART NUMBER INDEX	B1		

GENERAL INFORMATION

1. MACHINE IDENTIFICATION

Caterpillar machines are identified by Product Identification Numbers (PIN). Some components included in a machine may be identified by Serial Numbers (S/N). Typical components that will be serialized include engines, transmissions, bulldozers, and rippers. The machine and engine are further identified by arrangement numbers and in some cases modification numbers. These numbers are shown on the product identification plate(s) and on the master plate in the operator's compartment.

Caterpillar dealers need all of these numbers to determine accurate parts identification.

SIS *New Feature*

Effective First Quarter 2001 the Caterpillar Product Identification Number (PIN) changed from 8 to 17 characters. In an effort to provide uniform equipment identification, Caterpillar and other construction equipment manufacturers are moving to comply with the latest version of the product identification numbering standard. Non-road machine PINs are defined by ISO 10261. The new PIN format will apply to all Caterpillar machines and generator sets. The PIN plates and frame marking will display the 17 character PIN. The new format will look like the following:

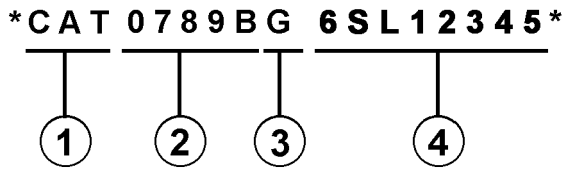

Where:

1. Caterpillar's World Manufacturing Code (characters 1-3)

2. Machine Descriptor (characters 4-8)

3. Check Character (character 9)

4. Machine Indicator Section (MIS) or Product Sequence Number (characters 10-17). These were previously referred to as the Serial Number.

Machines and generator sets produced before First Quarter 2001 will maintain their 8 character PIN format.

Components such as engines, transmissions, axles, etc. and work tools will continue to use an 8 character Serial Number (S/N).

2. ORDERING PARTS

WARNING

When replacement parts are required for this product Caterpillar recommends using Caterpillar replacement parts or parts with equivalent specifications including, but not limited to, physical dimensions, type, strength and material.

Failure to heed this warning can lead to premature failures, product damage, personal injury or death.

Quality Caterpillar replacement parts are available from Caterpillar dealers throughout the world. Their parts inventories are up to date and include all parts normally required to protect your investment in Caterpillar machines. Dealers may offer repair kits or remanufactured parts to allow selection of the most effective repair alternative for a particular situation. When ordering parts, your order should specify the quantity, part number, part name, and the serial number/product identification number of the machine for which the parts are needed.

3. PARTS MANUAL ORGANIZATION

Product information in this manual is presented as "information elements" that represent all of the components for the specific model. Engine Arrangement and Seat Group are examples of information elements. The information elements are organized alphabetically by part name and secondarily by part number within each major section of the manual.

4. TABLE OF CONTENTS

A table of contents (TOC) is found at the beginning of the manual. The TOC lists each section of the manual with a complete list of all information elements organized as they appear in the manual. Page numbers are provided for quick reference to detailed parts identification illustrations and serviceable consist lists.

5. MAINTENANCE PARTS INDEX

The Maintenance Parts Index, located near the beginning of the manual, references most frequently used maintenance part numbers, providing description, quantity, usage and page number. This information is organized alphabetically by part description.

GENERAL INFORMATION

6. INDEX

The index located near the front of the manual is an alphabetical listing of all information elements included in the manual. Page numbers are provided for quick reference to detailed parts identification illustrations and serviceable consist lists.

7. PART NUMBER INDEX

A numerical index listing all part numbers and the corresponding page number(s) appears at the back of the manual.

8. CAPTIONS

Captions located at the beginning of each information element identify the part number and part name along with additional descriptive information. PIN and S/N information found in each caption should be used to select correct information for a specific machine. Field replacement options, identification of optional attachment components, and where used ("part of") information is also provided.

The first line of a caption is shown in larger type font to indicate the beginning of an information element. Captions for additional pages that may be required to illustrate an information element will be shown in standard type font and will include the term *(contd.)* .

9. NON-SERVICED PARTS

In some instances it is necessary to display non-serviced parts that are a link to a lower level serviceable consist lists. These non-serviced part numbers are shown in *italic* type indicating that they are not available.

10. PARTS LIST REFERENCE NUMBERS

Numbers shown in the Ref No column correspond to numbers used in the associated graphic(s). An alphabetic suffix may be added to a reference number to identify lower level consist items. Numbers shown in the Graphic Ref column refer to the graphic number identifier displayed in the lower left corner of each illustration. The Graphic Ref number may be used in combination with the item Ref No to determine the correct part number. There may be intentional omission of a Ref No in a consist list as information is updated to reflect the latest serviceable part numbers.

11. INDENTED PART NAMES

When a part name is indented in a parts list, it is part of (included in) the group or assembly under which it is indented.

12. ILLUSTRATION REFERENCE LETTERS

When necessary, illustrations contain reference letters (A, B, C etc.) that are intended to track lines and harnesses from one point to another. They are also used to show where to reconnect illustrations that have been separated.

13. ABBREVIATIONS AND SYMBOLS

O.D. – Outside Diameter
I.D. – Inside Diameter
A – Not Part Of This Group
B – Use As Required
C – Change From Previous Type
D – Order By The Meter
E – Order By The Centimeter
F – Not Shown
G – Order By The Inch
I – Refer To Hydraulic Information System
M – Metric Part
R – Remfg Part May Be Available
Y – Separate Illustration
Z – Not Serviced Separately

SIS *New Feature*

14. DESCRIPTION OF TYPE CHANGES

Type - A type is defined as any configuration change that requires an additional Information Element for an Arrangement, Group, or Assembly. If serial number breaks for types are not available, a type # (Type 1, Type 2, etc.) will be displayed in the caption. These "type" changes are identified with a "C" note (change from previous type) in the Parts List. Only the "types" that apply to this Parts Manual will be included. Additional types may exist causing "C" notes to appear on an Information Element when no other types are shown.

15.<END>

This symbol indicates the end of an information element.

NOTE:

Continuing improvement and advancement of product design may cause changes to your machine which may not be included in this publication. Whenever a question arises regarding your caterpillar product or this publication, please consult your caterpillar dealer for the latest available information.

GENERAL INFORMATION

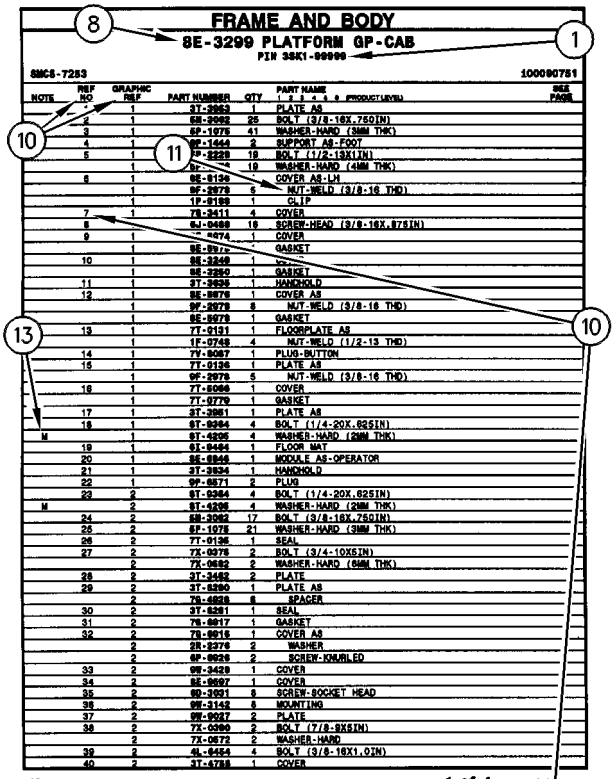

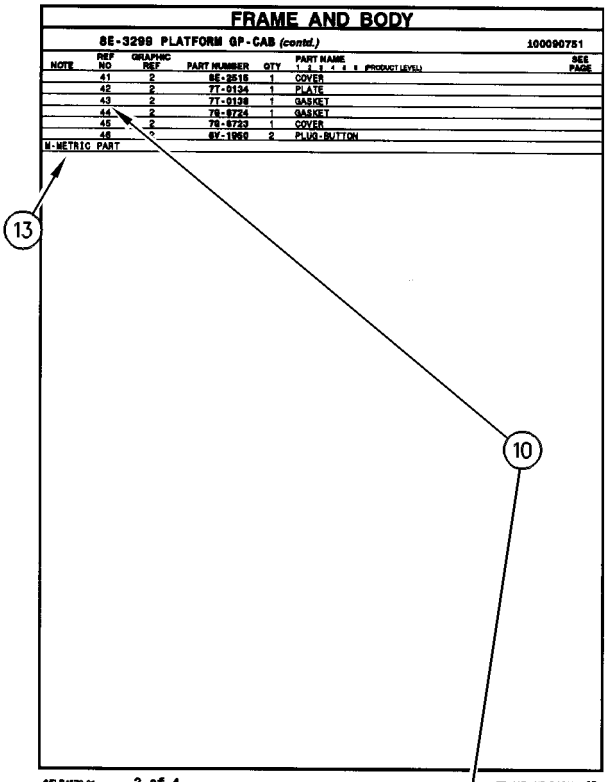

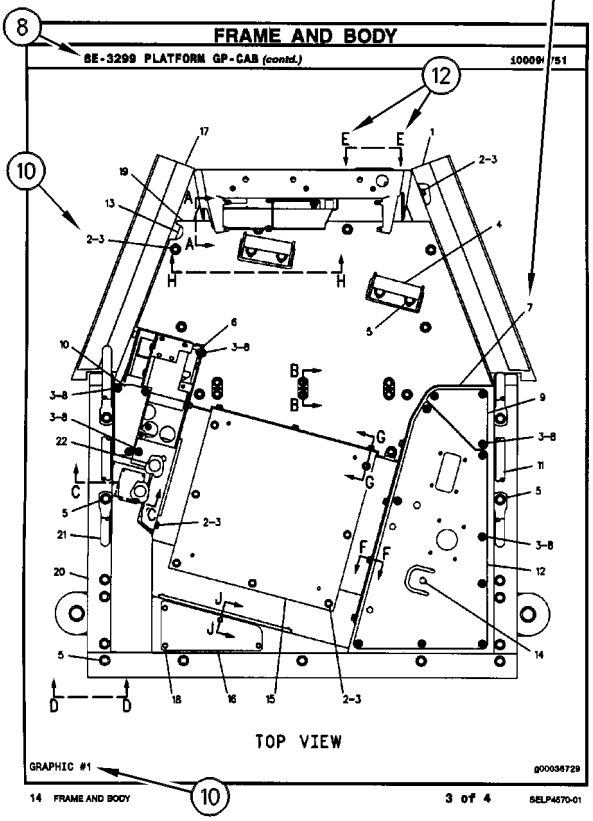

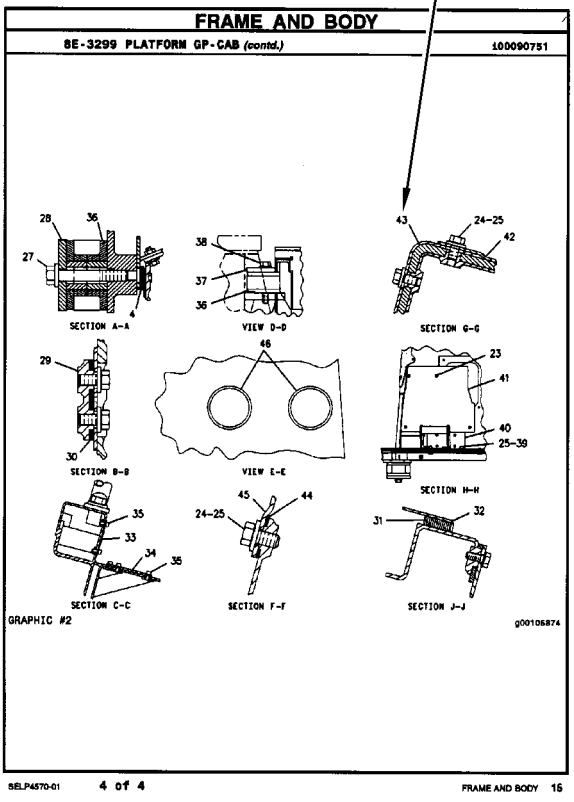

REPAIR ALTERNATIVES

REMANUFACTURED COMPONENTS

As an option when making repairs consider Caterpillar Remanufactured Components. Components that are available through the Caterpillar Remanufactured Program are identified three ways in the parts book:

- with the letter R in the note field of the parts list
- with an R* at the beginning of the first line of the caption
- with an *R at the end of the first line of the caption

Typical components included in the Remanufacturing Program include:

ALTERNATORS
CONNECTING RODS
CRANKSHAFTS - UNDERSIZE
CRANKSHAFTS - UPGRADE TO NEW
CYLINDER HEADS
ELECTRONIC CONTROL MODULES (ECM)
ELECTRONIC SENSORS
FUEL INJECTORS
FUEL NOZZLES
FUEL PUMPS
GOVERNORS
OIL PUMPS
PISTONS
SHORT BLOCKS
STARTERS
TURBOCHARGERS - COMPLETE
TURBOCHARGER CARTRIDGES
WATER PUMPS

Caterpillar Remanufactured engines for many engine arrangements are also available.

SUPPLEMENTAL COOLANT ADDITIVES

CUSTOMER BENEFITS:

Protects against cavitation, foam, erosion, corrosion, and scale buildup in cooling systems.

- Provides measured coolant conditioner.

DESCRIPTION:

Additives deplete from the coolant with normal operation. For this reason, Supplemental Coolant Additives (SCA) must be added to all heavy duty coolants at regular intervals. In addition, when not using a fully formulated, pre-charged antifreeze, like Caterpillar's DEAC, an initial charge of SCA must be added to the cooling system. The amount of SCA added to the system is dependent on the capacity of the system.

The SCA for initial fill is provided as a liquid. SCA's for maintenance intervals are available in liquid form and as a spin-on element. (No Spin-on available for 3600 Family of Engines)

NOTE:

The amount of SCA added at initial fill is not the same as the amount added at maintenance intervals.

The coolant additive elements can be used with any ethylene or propylene glycol type antifreeze which meets ASTM D4985 or ASTM D5345 Specifications.

NOTE:

For use with standard heavy duty coolant only, not for use with Extended Life Coolant.

PARTS NEEDED:

Cooling System Capacity		Liquid SCA at Initial Fill	Liquid SCA at Maintenance*	Spin-on SCA Maintenance Element*
Liters	Gallons			
22-30	(6-8)	3P-2044 (1)	6V-3542 (1)	111-2370 (1)
30-38	(8-10)	3P-2044 (1) 6V-3542 (1)	111-2372 (1)	111-2369 (1)
38-49	(10-13)	3P-2044 (1) 8T-1589 (1)	111-2372 (1)	111-2369 (1)
49-64	(13-17)	3P-2044 (2)	8T-1589 (1)	9N-3368 (1)
64-83	(17-22)	3P-2044 (2) 8T-1589 (1)	111-2372 (1) 6V-3542 (1)	111-2371 (1)
83-114	(22-30)	3P-2044 (3) 8T-1589 (1)	3P-2044 (1)	9N-3718 (1)
114-163	(30-43)	3P-2044 (5)	3P-2044 (1) 6V-3542 (1)	111-2371 (2)
163-242	(43-64)	3P-2044 (8)	3P-2044 (2)	9N-3718 (2)

** Normal maintenance period is 250 hrs. See your Operation and Maintenance Manual for complete coolant maintenance instructions.*

( ) Indicates quantity required.

MAINTENANCE PARTS

DESCRIPTION	PART NUMBER	QTY	WHERE USED	PAGE
AIR INLET AND EXHAUST SYSTEM				
FILTER ELEMENT AS-AIR (SECONDARY)	245-6376	1	AIR CLEANER GP	78
FILTER ELEMENT-AIR (PRIMARY)	245-6375	1	AIR CLEANER GP	78
BASIC ENGINE				
CAP AS-ENGINE OIL FILLER	241-5645	1	COVER GP-FRONT HOUSING	15
SEAL-INTEGRAL	135-9819	1	AIR COMPRESSOR GP	7
SEAL-VALVE COVER	272-0388	1	COVER GP-VALVE MECHANISM	16
V-BELT SET (INCLUDES 3-BELTS)	319-6293	1	DRIVE GP-FAN	31
BRAKING SYSTEM				
ELEMENT-HEATING (AIR DRYER)	203-2423	1	AIR DRYER GP	339
FUSE (10-AMPERE)	9W-1442	1	AIR DRYER GP	340
COOLING SYSTEM				
CAP AS-COOLANT TANK	251-3227	1	TANK GP-WATER	75
GASKET (TEMPERATURE REGULATOR HOUSING)	222-5915	1	LINES GP-WATER	67
REGULATOR-WATER TEMPERATURE (97-DEG C)	115-4223	2	LINES GP-WATER	67
ELECTRICAL AND STARTING SYSTEM				
BATTERY (12-VOLT, MAINTENANCE FREE)	153-5700	2	BATTERY & WIRING GP	112
	153-5710	2	BATTERY & WIRING GP	110
		2	BATTERY & WIRING GP	113
BATTERY (12-VOLT, MAINTENANCE FREE, WET)	3T-5760	2	BATTERY & WIRING GP	117
BELT-DRIVE	9X-8139	1	LAMP GP-WARNING BEACON	142
CAP AS-FILLER (BATTERY)	123-1373	6	BATTERY & WIRING GP	117
CIRCUIT BREAKER AS (105-AMPERE)	171-2212	2	WIRING GP-AUXILIARY	197
FLASHER AS (24-VOLT)	108-0358	1	LIGHTING GP-ROADING	152
		1	SWITCH GP-LIGHT	189
FUSE (10-AMPERE)	9W-1442	1	CONVERTER GP-ELECTRICAL	124
		1	LIGHTING GP-FLOOD	146
		1	LIGHTING GP-FLOOD	149
		1	LIGHTING GP-FLOOD	151
		1	LIGHTING GP-ROADING	152
		1	LIGHTING GP-WARNING	156
		1	LIGHTING GP-WARNING BEACON	157
		1	SWITCH GP-LIGHT	189
		1	WIRING GP-POWER RECEPTACLE	218
		9	WIRING GP-STEERING CONSOLE	225
FUSE (10-AMPERE) (POWER CONVERTER)	9W-1442	1	CONVERTER GP-ELECTRICAL	123
FUSE (15-AMPERE)	9W-1441	1	CONVERTER GP-ELECTRICAL	125
		1	LIGHTING GP-FLOOD	149
		1	LIGHTING GP-ROADING	152
		1	SWITCH GP-LIGHT	189
		1	WIRING GP-CAB	202
		2	WIRING GP-STEERING CONSOLE	225
KEY (BATTERY DISCONNECT)	8H-5306	1	SWITCH GP-DISCONNECT	188
		1	WIRING GP-AUXILIARY	197

MAINTENANCE PARTS

DESCRIPTION	PART NUMBER	QTY	WHERE USED	PAGE
LAMP (24-VOLT)	3E-8825	1	LIGHTING GP-FLOOD	146
		2	LIGHTING GP-FLOOD	149
		1	LIGHTING GP-FLOOD	151
		1	LIGHTING GP-WARNING	156
		1	LIGHTING GP-WARNING BEACON	157
		1	SWITCH GP-LIGHT	189
		1	WIRING GP-BLADE CUSHION	200
		2	WIRING GP-CONSOLE	205
		1	WIRING GP-STEERING CONSOLE	225
LAMP (24-VOLT) (DOME)	7N-9943	1	LAMP GP-DOME	134
LAMP (24-VOLT) (HEADLIGHTS, TAIL LIGHTS)	3E-8825	2	LIGHTING GP-ROADING	152
LAMP (24-VOLT, 21-WATT)	9X-4493	1	LAMP GP	133
LAMP (24-VOLT, 3-WATT)	115-1748	1	WIRING GP-GRADE CONTROL	214
LAMP (24-VOLT, 5.6-WATT)	7N-5876	1	WIRING GP-CONSOLE	205
LAMP (24-VOLT, 70-WATT)	9X-7849	1	LAMP GP-WARNING BEACON	142
LAMP GP-SIGNAL (24-VOLT, TURN) (LH)	199-3368	1	LIGHTING GP-SIGNAL	155
LAMP GP-SIGNAL (24-VOLT, TURN) (RH)	199-3368	1	LIGHTING GP-SIGNAL	155
LAMP-HALOGEN (24-VOLT, 65-WATT)	9X-3463	1	LAMP GP-FLOOD	135
		1	LAMP GP-FLOOD	136
		1	LAMP GP-FLOOD	137
		1	LAMP GP-FLOOD	138
RELAY (24-VOLT)	111-4871	2	WIRING GP-CHASSIS	215
ENGINE ARRANGEMENT				
BELT-SERPENTINE	313-4537	1	INSTALLATION AR-ENGINE	5
FRAME AND BODY				
PLUG-MAGNETIC (DRAIN)	8M-3837	1	CASE & FRAME GP	315
FUEL SYSTEM				
CAP AS-FILLER (FUEL TANK)	7X-7700	1	TANK GP-FUEL	101
FILTER AS-WATER SEP & FUEL (PRIMARY)	326-1644	1	FILTER GP-WATER SEP & FUEL	90
FILTER-FUEL (ADVANCED EFFICIENCY)	1R-0762	1	LINES GP-FUEL	93
STRAINER-FUEL	9P-7121	1	TANK GP-FUEL	101
HYDRAULIC SYSTEM				
CAP-FILLER (HYDRAULIC TANK)	7H-1447	1	TANK & FILTER GP-HYDRAULIC	434
FILTER ELEMENT AS-OIL (ADVANCED EFFICIENCY)	1R-0774	1	TANK & FILTER GP-HYDRAULIC	434
STRAINER (HYDRAULIC)	9J-3047	1	TANK & FILTER GP-HYDRAULIC	434
LUBRICATION SYSTEM				
BREATHER AS (CRANKCASE)	164-0210	1	BREATHER GP	52
FILTER AS-ENGINE OIL (ADVANCED EFFICIENCY)	1R-1807	1	FILTER GP-ENGINE OIL	53

MAINTENANCE PARTS

DESCRIPTION	PART NUMBER	QTY	WHERE USED	PAGE
OPERATOR STATION				
BELT-SERPENTINE	291-4051	1	COMPRESSOR GP-REFRIGERANT	636
BLADE AS-WIPER (255-MM)	6V-8255	2	WINDOW GP-VENT	749
BLADE AS-WIPER (300-MM) (FRONT, LOWER)	123-4355	2	WIPER GP-WINDOW	751
BLADE AS-WIPER (450-MM)	6V-5853	1	WIPER GP-WINDOW	753
BLADE AS-WIPER (450-MM) (FRONT)	6V-5853	1	WIPER GP-WINDOW	751
FILTER ELEMENT AS-CAB AIR	231-4487	2	FILTER GP-CAB AIR	660
FILTER ELEMENT AS-CAB AIR (CAB)	231-4486	1	FILTER GP-CAB AIR	660
	232-1732	1	FILTER GP-CAB AIR	660
	7T-7358	1	FILTER GP-CAB AIR	660
FUSE (10-AMPERE)	9W-1442	1	FAN GP-CIRCULATING	658
		1	FAN GP-CIRCULATING	659
		1	MIRROR GP-REAR VIEW	691
		1	WIPER GP-WINDOW	753
FUSE (15-AMPERE) (HEATER)	9W-1441	1	HEATER & MTG GP-CAB	661
INDICATOR (ENGINE RPM)	288-5736	1	MODULE GP-SPEEDOMETER & TACH	694
INDICATOR (SPEED)	287-3259	1	MODULE GP-SPEEDOMETER & TACH	694
KEY	113-5805	1	HOUSING GP-SEAT SUSPENSION	668
LAMP (12-VOLT)	8M-6176	2	MODULE GP-QUAD GAUGE	693
LAMP (24-VOLT)	107-1983	4	PANEL GP-INSTRUMENT	699
		4	PANEL GP-INSTRUMENT	701
		4	PANEL GP-INSTRUMENT	703
	3E-8825	1	FAN GP-CIRCULATING	658
		1	FAN GP-CIRCULATING	659
		1	MIRROR GP-REAR VIEW	691
	8D-1429	1	AIR CONDITIONER & HEATER GP	625
		1	HEATER GP-CAB	663
LAMP (24-VOLT, 3-WATT)	115-1748	10	PANEL GP-INSTRUMENT	699
		11	PANEL GP-INSTRUMENT	701
		10	PANEL GP-INSTRUMENT	703
LAMP-LED (24-VOLT, WHITE)	163-6508	1	PANEL GP-INSTRUMENT	703
RECEIVER-REFRIGERANT DRYER	257-3227	1	LINES GP-AIR CONDITIONER	683
SEAT BELT GP	8Y-4030	1	SEAT GP	717
SEAT BELT GP (RETRACTABLE)	222-0345	1	SEAT GP	720
POWER TRAIN				
BREATHER (POWER TRAIN OIL FILLER)	9G-5127	1	FILLER GP-POWER TRAIN OIL	257
BREATHER (TANDEM)	4H-6112	1	TANDEM & COVER GP	271
FILTER ELEMENT-OIL (ULTRA HIGH EFFICIENCY) (TRANSMISSION)	1R-1809	1	FILTER GP-OIL	258
		1	LINES GP-TRANSMISSION OIL	261
FILTER-MAGNETIC (TRANSMISSION)	8S-9129	1	CASE & PARTS GP-PLANETARY	230
		1	SCREEN GP-MAGNETIC	268
LAMP (24-VOLT)	3E-8825	1	AUTOSHIFT AR	228
SCREEN-SUCTION (TRANSMISSION)	8S-9130	1	CASE & PARTS GP-PLANETARY	230
		1	SCREEN GP-MAGNETIC	268
SERVICE EQUIPMENT AND SUPPLIES				
CAP-GREASE	1G-1883	23	PLATE & FILM GP	760

INDEX

Name	Page
A	
ACCESSORY GP-CAB–HIGH PROFILE	620
ACCESSORY GP-CAB–LOW PROFILE	619
ACCUMULATOR & MTG GP-HYDRAULIC–BLADE CUSHION	358
ACCUMULATOR AR-BLADE CUSHION	359
ACCUMULATOR GP-HYDRAULIC–CHARGED	360
ACCUMULATOR-REFRIGERANT	683
ADAPTER GP-OIL LINE–ENGINE	51
ADJUSTER GP-SEAT	621
	623
	624
AFTERCOOLER GP-AIR	77
AIR CLEANER GP	78
	79
AIR COMPRESSOR GP	7
	9
AIR CONDITIONER & HEATER GP	625
AIR CONDITIONER AR	629
AIR CONDITIONER GP	630
AIR DRYER GP	339
	340
ALARM GP	102
ALARM GP (BACKUP)	144
ALTERNATOR AR-CHARGING	103
ALTERNATOR GP-CHARGING	104
	106
	108
	109
APPLICATION GP-POWER TRAIN	228
ARMREST GP–LH	632
ARMREST GP–RH	631
ASHTRAY	678
AUTOSHIFT AR	228
AXLE GP-FRONT	307
B	
BAR GP-LINK	593
BASE GP-OIL FILTER	229
BATTERY & WIRING GP	110
	116
BATTERY & WIRING GP–HEAVY DUTY	112
	113
	115
BATTERY (12-VOLT, MAINTENANCE FREE)	110
	112
	113
BATTERY (12-VOLT, MAINTENANCE FREE, WET)	117
BEARING GP-MAIN	18
BELT-DRIVE	142
BELT-SERPENTINE	5
	636
BIT GP-END	594
BLADE & TIP AR-POWER	595
BLADE AR	596
BLADE AS-WIPER (255-MM)	749
BLADE AS-WIPER (300-MM) (FRONT, LOWER)	751
BLADE AS-WIPER (450-MM)	753
BLADE AS-WIPER (450-MM) (FRONT)	751
BLADE GP	597
	598
	599
	600
BOSS GP-FRAME	310
BOX GP-BATTERY	312
BOX GP-TOOL	756
BRACKET GP-BLADE	601
BRACKET GP-SCARIFIER	602
BRAKE GP-PARKING	341
BRAKE GP-SERVICE	343
BREATHER (POWER TRAIN OIL FILLER)	257
BREATHER (TANDEM)	271
BREATHER AS (CRANKCASE)	52
BREATHER GP	52
BUMPER GP-REAR	313
	314
C	
CAB AR–NON-ROPS	633
CAB GP–HIGH PROFILE	634
CAMSHAFT GP	11
CAP AS-COOLANT TANK	75
CAP AS-ENGINE OIL FILLER	15
CAP AS-FILLER (BATTERY)	117
CAP AS-FILLER (FUEL TANK)	101
CAP-FILLER (HYDRAULIC TANK)	434
CAP-GREASE	760
CARRIER GP-SEAL	12
CASE & FRAME GP	315
CASE & PARTS GP-PLANETARY	230
CHAIN GP-DRIVE	235
CIRCLE GP	580
	582
	584
	586
	588
CIRCUIT BREAKER AS (105-AMPERE)	197
CLIP	641
CLUTCH GP-TRANSMISSION	236
CLUTCH GP-TRANSMISSION–FORWARD	241
CLUTCH GP-TRANSMISSION–HIGH, LOW	239
CLUTCH GP-TRANSMISSION–REVERSE, SECOND	243
COMPRESSOR GP-REFRIGERANT	635

INDEX

Name	Page
	636
CONDENSER & MTG GP-REFRIGERANT	637
CONSOLE GP-OPERATOR	638
CONTROL & MTG GP-ENGINE ELEK	119
CONTROL AR-HYDRAULIC–DOZER, PLOW, RIPPER	361
CONTROL AR-HYDRAULIC–RIPPER	361
	362
CONTROL GP-CLUTCH	641
CONTROL GP-DIFFERENTIAL LOCK	245
CONTROL GP-GOVERNOR	88
CONTROL GP-PARKING BRAKE	345
CONTROL GP-POWER TRAIN	120
CONTROL GP-SERVICE BRAKE	347
CONTROL GP-STEERING	643
CONTROL GP-TRANSMISSION	644
CONTROL GP-TRANSMISSION HYD	247
CONTROL GP-UNPROGRAMMED	121
CONTROL GP-UNPROGRAMMED (POWER TRAIN)	120
	228
CONVERTER AR-ELECTRICAL–HIGH PROFILE	122
CONVERTER AR-ELECTRICAL–LOW PROFILE	122
CONVERTER GP-ELECTRICAL	123
CONVERTER GP-ELECTRICAL (24-VOLT TO 12-VOLT)	123
	124
	674
CONVERTER GP-ELECTRICAL–RADIO	124
	125
COOLER GP-ENGINE OIL	63
COOLER GP-TRANSMISSION OIL	248
COOLING AR	64
CORE AS-CONDENSER (REFRIGERANT)	637
CORE AS-ENGINE OIL COOLER	63
CORE AS-HYDRAULIC OIL COOLER	248
CORE AS-RADIATOR	74
COUPLING GP-TORSIONAL	249
COVER GP-AIR INLET	81
COVER GP-CYLINDER BLOCK	13
COVER GP-FRONT HOUSING	14
	15
COVER GP-VALVE MECHANISM	16
CRANKSHAFT GP	18
CYLINDER & MTG GP-ARTICULATION	363
CYLINDER & MTG GP-BLADE LIFT	364
CYLINDER & MTG GP-BLADE TIP	365
CYLINDER & MTG GP-CENTERSHIFT	366
CYLINDER & MTG GP-SCARIFIER	367
CYLINDER & MTG GP-SIDESHIFT	368
CYLINDER & MTG GP-STEERING	370
CYLINDER & MTG GP-WHEEL LEAN	371
CYLINDER BLOCK GP	20
	21
	22
CYLINDER GP-ARTICULATION	372
CYLINDER GP-ARTICULATION–LH	373
CYLINDER GP-CENTERSHIFT	374
CYLINDER GP-HYDRAULIC	376
CYLINDER GP-LIFT–BLADE	377
CYLINDER GP-RIPPER	378
CYLINDER GP-SCARIFIER	379
CYLINDER GP-SIDESHIFT	380
CYLINDER GP-STEERING–LH	381
CYLINDER GP-STEERING–RH	382
CYLINDER GP-WHEEL LEAN	383
CYLINDER HEAD AS	24
CYLINDER HEAD GP	25
	26
	27

D

Name	Page
DAMPER & PULLEY GP	28
DETENT GP-CONTROL VALVE–PLOW, BULLDOZER LIFT	384
DIFFERENTIAL & BEVEL GEAR GP	250
DIFFERENTIAL AR	252
DIFFERENTIAL GP	253
DOOR GP (AIR VENTED)	678
	708
DOOR GP-CAB	651
DOOR GP-CAB–HIGH PROFILE–LH	649
DOOR GP-CAB–HIGH PROFILE–RH	646
DRAWBAR GP	590
DRIVE GP-ACCESSORY	29
DRIVE GP-CIRCLE	385
DRIVE GP-FAN	30
	31
DRYER & LINES GP-AIR	351
	352
DUCT & CONTROL GP–A/C, HEATER DISTRIBUTOR	653
DUCT GP–AIR CONDITIONER, HEATER	654

E

Name	Page
EDGE GP-CUTTING	603
ELBOW GP-AIR INLET	82
ELECTRONICS GP-COMMUNICATION–PRODUCT LINK 300	126
ELECTRONICS GP-IMPLEMENT	126
ELECTRONICS GP-POWER TRAIN	126
ELEMENT-HEATING (AIR DRYER)	339
ENCLOSURE GP-ENGINE	316
ENGINE AR-COMPLETE	3
ENGINE AR-CORE	4
EXTENSION GP-BACKREST	720

INDEX

Name	Page
EXTENSION GP-BLADE–LH	605
EXTENSION GP-BLADE–RH	604

F

FAN GP–RADIATOR	65
FAN GP-CIRCULATING	655
FAN GP-CIRCULATING–DEFROSTER, REAR	659
FAN GP-CIRCULATING–FRONT	656
FAN GP-CIRCULATING–FRONT DEFROSTER	658
FASTENER GP-CYLINDER HEAD	27
	32
FASTENER GP-ENGINE	33
FASTENER GP-FRONT HOUSING	34
FILLER GP-POWER TRAIN OIL	257
FILM (DRAIN, ENGINE COOLANT)	759
FILM (SUNSHADE-CATERPILLAR)	698
FILM GP	757
FILM-CONTROL (AIR CONDITIONER, HEATER)	625
FILM-CONTROL (FAN SPEED, TEMPERATURE)	663
FILM-COVER (BLACK BACKGROUND)	644
FILM-FACE (HEADLIGHTS HIGH, LOW BEAM)	152
	189
FILM-FACE (TURN SIGNAL, HAZARD)	152
	189
FILM-FUSE (PANEL ACTION LAMPS)	202
FILM-IDENTIFICATION (AIR CONDITIONER)	625
FILM-IDENTIFICATION (CAT, LH)	757
FILM-IDENTIFICATION (CAT, RH)	757
FILM-IDENTIFICATION (FUSE BOX)	225
FILM-IDENTIFICATION (HEATER)	663
FILM-IDENTIFICATION (HYDRAULIC SYSTEM MALFUNCTION)	699
FILM-IDENTIFICATION (HYDRAULIC SYSTEM MALFUNCTION) (INSTRUMENT CLUSTER)	701
FILM-INFORMATION (ENGINE, HIGH IDLE, HOLD)	644
FILM-INFORMATION (ENGINE, LOW IDLE, HOLD)	644
FILM-INSTRUCTION (BELT ROUTING)	629
	636
FILM-INSTRUCTION (DO NOT DRILL, WELD ROPS)	708
FILM-INSTRUCTION (SEAT ADJUSTMENT)	733
FILM-PANEL (LH)	699
FILM-PANEL (LH) (INSTRUMENT CLUSTER)	701
FILM-PANEL (RH)	699
FILM-PANEL (RH) (INSTRUMENT CLUSTER)	701
FILM-PANEL (SPEED CONTROL)	644
FILM-PANEL (TRANSMISSION, PARKING BRAKE)	644
FILM-WARNING (ACCUM, HIGH PRESS, READ OMM)	360
FILM-WARNING (CRUSH HAZARD, STAY BACK, INTL)	324
FILM-WARNING (HOT FLUID UNDER PRESS, INTL)	760
FILM-WARNING (NO STEP)	760
FILM-WARNING (NO WELD, NO DRILL, READ OMM)	706
FILTER AS-ENGINE OIL (ADVANCED EFFICIENCY)	53
FILTER AS-WATER SEP & FUEL (PRIMARY)	90
FILTER ELEMENT AS-AIR (SECONDARY)	78
FILTER ELEMENT AS-CAB AIR	660
FILTER ELEMENT AS-CAB AIR (CAB)	660
FILTER ELEMENT AS-OIL (ADVANCED EFFICIENCY)	434
FILTER ELEMENT-AIR (PRIMARY)	78
FILTER ELEMENT-OIL (ULTRA HIGH EFFICIENCY) (TRANSMISSION)	258
	261
FILTER GP-CAB AIR	660
FILTER GP-ENGINE OIL	53
FILTER GP-OIL	258
FILTER GP-WATER SEP & FUEL	90
FILTER-FUEL (ADVANCED EFFICIENCY)	93
FILTER-MAGNETIC (TRANSMISSION)	230
	268
FINAL DRIVE GP	255
FLASHER AS (24-VOLT)	152
	189
FLOOR MAT	327
	329
FLOOR MAT (CAB)	676
FLYWHEEL GP	35
FRAME GP-FRONT	320
FUMES DISPOSAL GP	54
FUSE (10-AMPERE)	124
	146
	149
	151
	152
	156
	157
	189
	218
	225
	340
	658
	659
	691
	753

INDEX

Name	Page
FUSE (10-AMPERE) (POWER CONVERTER)	123
FUSE (15-AMPERE)	125
	149
	152
	189
	202
	225
FUSE (15-AMPERE) (HEATER)	661

G

GASKET (TEMPERATURE REGULATOR HOUSING)	67
GAUGE AS-OIL LEVEL (DIPSTICK) (ENGINE)	55
GAUGE GP-AIR PRESSURE	699
	703
GAUGE GP-AIR PRESSURE (BRAKE)	701
GAUGE GP-FEELER	760
GAUGE GP-OIL LEVEL (DIPSTICK)	55
GAUGE GP-PRESSURE	760
GAUGE-SIGHT (HYDRAULIC)	434
GEAR GP-BEVEL & PINION	259
GEAR GP-FRONT	36
GENERAL AR	1
GRADE CONTROL AR	127
GREASE GUN GP	758
GROUND GP-ELECTRICAL	129
GUARD GP-BOTTOM	322
GUARD GP-CYLINDER	388
GUARD GP-DRIVE SHAFT	323
GUARD GP-FAN	66
GUARD GP-PLATFORM	327
	329
GUARD GP-PLATFORM–ACCUGRADE	324

H

HARNESS AS	215
HARNESS AS-CAB (FRONT)	202
HARNESS AS-CAB (REAR)	202
HARNESS AS-CAB (SWITCH PANEL)	202
HARNESS AS-CHASSIS	215
	219
HARNESS AS-CONSOLE	205
	225
HARNESS AS-CONTROL	699
HARNESS AS-CONTROL (PRODUCT LINK)	130
HARNESS AS-ENGINE (ELECTRONIC CONTROL MODULE)	207
HARNESS AS-ENGINE (FUEL INJECTION)	207
HARNESS AS-FRONT LIGHTING	146
	157
HARNESS AS-HEATER & AIR COND	195
	625
	663
HARNESS AS-LIGHTING	146
	152
HARNESS AS-PANEL	691
	701
HARNESS AS-PANEL (SWITCH)	151
HARNESS AS-PLATFORM	210
HARNESS AS-RADIO (PRODUCT LINK)	130
HARNESS AS-REAR CHASSIS (RELAY)	220
HARNESS AS-REAR CHASSIS (TAIL)	220
HARNESS AS-REAR LIGHTING	148
HARNESS AS-SENSOR (ANGLE)	215
HARNESS AS-SENSOR (ENGINE)	220
HARNESS AS-SENSOR (ROTATION)	215
HARNESS AS-SENSOR (SPEED)	230
HARNESS AS-SENSOR (TRANSMISSION SPEED)	220
HARNESS AS-SOLENOID	149
	200
HARNESS AS-STARTING AID	209
	218
HARNESS AS-SWITCH	125
	201
HARNESS AS-TRANSMISSION	220
	227
HARNESS AS-WIRING	340
HEATER & MTG GP-CAB	661
HEATER AR-CAB	662
HEATER GP-CAB–LIGHT DUTY	663
HITCH GP-ARTICULATING	331
HORN GP-ELECTRIC	667
HOUSING GP-FLYWHEEL	37
HOUSING GP-FRONT	38
HOUSING GP-SEAT SUSPENSION	668

I

INDICATOR (ENGINE RPM)	694
INDICATOR (SPEED)	694
INDICATOR AS-ARTICULATION	693
INDICATOR AS-COOLANT TEMP	693
INDICATOR AS-FUEL LEVEL	693
INDICATOR GP-AIR FILTER CHANGE	79
INDICATOR GP-LEVEL	671
INDICATOR-LEVEL (TEMPERATURE)	671
INJECTOR GP-FUEL	91
INSTALLATION AR-COMMUNICATION–PRODUCT LINK 321SR	130
INSTALLATION AR-ENGINE	5
INSTALLATION AR-RADIO	672
INSTALLATION GP-COMMUNICATION–PRODUCT LINK	131
INSTALLATION GP-RADIO	673
INSTALLATION GP-RADIO–NON-ROPS	674
INSULATION GP-WEATHER–COLD WEATHER	676

INDEX

Name	Page
K	
KEY	668
KEY (BATTERY DISCONNECT)	188
	197
KIT-AIR CONTROL VALVE	735
KIT-IDLER HOUSING-LH (WINDOW)	747
KIT-IDLER HOUSING-RH (WINDOW)	745
KIT-SEAL	379
KIT-SEAL (DIFFERENTIAL LOCK VALVE)	281
L	
LAMP (12-VOLT)	693
LAMP (24-VOLT)	146
	149
	151
	156
	157
	189
	200
	205
	225
	228
	625
	658
	659
	663
	691
	699
	701
	703
LAMP (24-VOLT) (DOME)	134
LAMP (24-VOLT) (HEADLIGHTS, TAIL LIGHTS)	152
LAMP (24-VOLT, 21-WATT)	133
LAMP (24-VOLT, 3-WATT)	214
	699
	701
	703
LAMP (24-VOLT, 5.6-WATT)	205
LAMP (24-VOLT, 70-WATT)	142
LAMP GP	133
LAMP GP-DOME	134
LAMP GP-FLOOD	135
	136
	137
	138
LAMP GP-SIGNAL (24-VOLT, TURN) (LH)	155
LAMP GP-SIGNAL (24-VOLT, TURN) (RH)	155
LAMP GP-SIGNAL–PARK, TURN	140
LAMP GP-SIGNAL–STOP, TAIL	139
LAMP GP-SIGNAL–TURN	141
LAMP GP-WARNING BEACON–ROTATING	142
LAMP-HALOGEN (24-VOLT, 65-WATT)	135
	136
	137
	138
LAMP-LED (24-VOLT, WHITE)	703
LIFT GP-BLADE	606
LIFTER GP-VALVE	39
LIFTING GP-ENGINE	40
LIGHTING AR-FLOOD	143
LIGHTING AR-ROADING	143
LIGHTING GP-BACKUP	144
LIGHTING GP-FLOOD	148
LIGHTING GP-FLOOD–FRONT FRAME	149
LIGHTING GP-FLOOD–RIPPER	146
LIGHTING GP-FLOOD–SNOW WING	151
LIGHTING GP-ROADING	152
LIGHTING GP-ROADING–FRONT	154
LIGHTING GP-SIGNAL–REAR TURN	155
LIGHTING GP-WARNING	156
LIGHTING GP-WARNING BEACON	157
LINER GP-CAB–ENCLOSED –HIGH PROFILE	678
LINES GP-ACCUMULATOR	389
LINES GP-AIR	83
LINES GP-AIR CONDITIONER	683
LINES GP-DRAIN	57
LINES GP-ENGINE OIL	56
LINES GP-FUEL	92
	95
LINES GP-GREASE	333
LINES GP-HEATER	685
LINES GP-HYDRAULIC–BULLDOZER LIFT, PLOW, LH	400
LINES GP-HYDRAULIC–CENTERSHIFT LOCK	407
LINES GP-HYDRAULIC–LH	393
	404
LINES GP-HYDRAULIC–LH BLADE LIFT, CIRCLE DRIVE	401
LINES GP-HYDRAULIC–RH	397
LINES GP-HYDRAULIC–SCARIFIER	391
LINES GP-INJECTOR HYD PUMP	96
LINES GP-PUMP	409
LINES GP-RIPPER	413
	414
LINES GP-STEERING	416
LINES GP-TRANSMISSION OIL	261
LINES GP-TURBOCHARGER OIL	58
LINES GP-WATER	67
	69
LINK GP-STEERING	334
LOCK GP-CENTERSHIFT	420
LOUVER GP-CAB	687
M	
MANIFOLD GP-CONTROL	421

INDEX

Name	Page
MANIFOLD GP-ENGINE OIL	60
MANIFOLD GP-EXHAUST	84
MANIFOLD GP-VALVE–LH	422
MANIFOLD GP-VALVE–RH	424
METER GP-SERVICE	225
MIRROR GP-REAR VIEW–DUAL INSIDE	688
MIRROR GP-REAR VIEW–DUAL INTERIOR	690
MIRROR GP-REAR VIEW–EXTERIOR, HEATED	689
MIRROR GP-REAR VIEW–HEATED	691
MODULE GP-INTERFACE	694
MODULE GP-QUAD GAUGE	693
MODULE GP-SPEEDOMETER & TACH	694
MOTOR GP-ELECTRIC–CIRCULATING FAN	159
MOTOR GP-GEROTOR	425
MOTOR GP-WINDOW WIPER (24-VOLT) (FRONT UPPER)	751
MOTOR GP-WINDOW WIPER (24-VOLT) (REAR)	753
MOTOR GP-WINDOW WIPER (24-VOLT, 2-SPEED)	751
MOTOR GP-WINDOW WIPER (24-VOLT, 2-SPEED) (FRONT, LOWER)	751
MOTOR GP-WINDOW WIPER (24-VOLT, 2-SPEED) (REAR)	753
MOUNTING GP-ENGINE	41
MOUNTING GP-GRADE CONTROL	160 161
MOUNTING GP-RIPPER	608
MOUNTING GP-ROPS	695
MOUNTING GP-WHEEL	264
MUFFLER GP	85

O

Name	Page
ORIFICE AS-AIR CONDITIONER	683

P

Name	Page
PADLOCK GP	101 265 312 336 436 717 719
PADLOCK GP (TOOL BOX)	756
PAN GP-BACKREST	697
PAN GP-OIL	42
PANEL GP-CAB–HIGH PROFILE	698
PANEL GP-INSTRUMENT	699 703
PANEL GP-INSTRUMENT–FRONT CONSOLE	701
PISTON & ROD GP	43
PLATE & FILM GP	759
PLATE GP-CERTIFICATION	706 707
PLATE GP-CERTIFICATION (ROPS, FOPS, OPS, READ OMM)	708
PLATE GP-PUSH	592
PLATE-IDENTIFICATION (ALTERNATOR)	197
PLATE-SERIAL NUMBER (TRANSMISSION)	231
PLATE-WARNING (ROPS, FOPS, OPS, READ OMM)	708
PLUG GP-CONNECTOR–ENGINE HARNESS, PROTECTIVE COVER	162
PLUG GP-CYLINDER BLOCK	44
PLUG GP-ENGINE	45
PLUG GP-OIL PAN	46
PLUG-MAGNETIC (DRAIN)	315
PROTECTION GP-OIL LEVEL GAUGE	265
PROTECTION GP-XMSN OIL FILLER	265
PUMP & MTG GP-STEERING	427
PUMP & MTG GP-UNIT INJ HYD	97
PUMP GP-ENGINE OIL	61 62
PUMP GP-FUEL INJECTION	98
PUMP GP-FUEL PRM & WATER SEP	99
PUMP GP-GEAR	266 267
PUMP GP-METERING (HMU)	643
PUMP GP-PISTON	428
PUMP GP-UNIT INJECTOR HYD	97
PUMP GP-WATER	71 72

R

Name	Page
RADIATOR GP	74
RADIO GP-COMMUNICATION–PRODUCT LINK 121SR	163
RECEIVER-REFRIGERANT DRYER	683
RECLINER GP-SEAT	704
REGULATOR AS-VOLTAGE (24-VOLT)	104 106
REGULATOR GP-FUEL PRESSURE	100
REGULATOR-WATER TEMPERATURE (97-DEG C)	67
RELAY (24-VOLT)	215
RELAY AS (24-VOLT)	201 205 225
RELAY AS (24-VOLT) (BACKUP LIGHT)	144
RELAY AS (24-VOLT) (ETHER STARTING AID)	209
RELAY AS (24-VOLT) (FUEL PRIMING)	220
RIPPER AR	609
RIPPER GP	610
ROCKER ARM GP (EXHAUST)	49

INDEX

Name	Page
ROCKER ARM GP (INTAKE)	49
ROPS AR–HIGH PROFILE	705
ROPS AR-ENCLOSED–HIGH PROFILE	706
ROPS GP–HIGH PROFILE	707
	708
ROPS GP-ENCLOSED	709
ROTATING GP-PUMP	430
S	
SCARIFIER AR–VEE TYPE	612
SCARIFIER GP	613
SCREEN GP-MAGNETIC–TRANSMISSION	268
SCREEN GP-SUN	710
SCREEN-SUCTION (TRANSMISSION)	230
	268
SEAL GP-CRANKSHAFT	47
SEAL GP-DUO-CONE	307
	385
SEAL-INTEGRAL	7
SEAL-VALVE COVER	16
SEAT BELT GP	717
SEAT BELT GP (RETRACTABLE)	720
SEAT BELT GP–RETRACTABLE	711
	712
SEAT GP	718
SEAT GP–CLOTH	713
	720
	721
SEAT GP–VINYL	715
	717
	719
SEAT GP-STATIC	728
SEAT GP-STATIC–CLOTH	723
	724
SEAT GP-STATIC–VINYL	726
SEAT GP-SUSPENSION–CLOTH	729
	730
SEGMENT-CIRCLE	582
	588
SENDER AS-FUEL LEVEL	197
SENDER AS-POSITION (ARTICULATION)	220
SENDER-TEMPERATURE	220
SENSOR AS-PRESSURE	170
SENSOR AS-TEMPERATURE	178
SENSOR GP-ENGINE	164
SENSOR GP-POSITION	166
	167
SENSOR GP-POSITION (ROTARY) (CLUTCH CONTROL)	641
SENSOR GP-POSITION (ROTARY) (GOVERNOR, BRAKE PEDAL)	88
SENSOR GP-PRESSURE	168
	169
	170
	171
	172
	173
SENSOR GP-PRESSURE (ATMOSPHERIC)	164
SENSOR GP-PRESSURE (BOOST)	164
SENSOR GP-PRESSURE (ENGINE OIL)	164
SENSOR GP-PRESSURE (FUEL FILTER)	92
SENSOR GP-PRESSURE (RAIL)	164
SENSOR GP-SPEED	174
	175
	176
SENSOR GP-SPEED (ENGINE TIMING)	164
SENSOR GP-SPEED (MAGNETIC, HIGH OUTPUT)	220
SENSOR GP-SPEED (TRANSMISSION OUTPUT)	231
SENSOR GP-TEMPERATURE	177
	178
	179
	180
SENSOR GP-TEMPERATURE (TRANSMISSION OIL)	231
SERVICE GP-POWER TRAIN	126
SHAFT GP-DRIVE–TRANSMISSION	269
SHAFT GP-INPUT	270
SHAFT GP-PUMP DRIVE	431
SLIP JOINT GP	431
SOFTWARE GP-COMMUNICATION (PRODUCT LINK 121SR)	163
SOFTWARE GP-COMMUNICATION (PRODUCT LINK 300)	126
SOFTWARE GP-POWER TRAIN	126
STARTING AID AR-ETHER	181
STARTING AID GP-ETHER	182
STARTING MOTOR GP-ELECTRIC	184
	185
STEP GP	335
STRAINER (HYDRAULIC)	434
STRAINER-FUEL	101
SUPPORT GP-BATTERY	336
SUPPORT GP-RADIATOR	337
SUPPORT GP-SEAT	731
SUSPENSION GP-SEAT	733
SWASHPLATE GP	428
SWITCH AS	156
	157
	200
SWITCH AS (24-VOLT) (AUXILIARY BACKUP LIGHTS)	146
SWITCH AS (24-VOLT) (FLOODLIGHT, RH)	151
SWITCH AS (24-VOLT) (HEATED MIRRORS)	691
SWITCH AS (AUTOSHIFT ON, OFF)	228
SWITCH AS (CENTERSHIFT PIN)	205
SWITCH AS (CIRCULATING FAN)	658
	659

INDEX

Name	Page
SWITCH AS (TAIL LIGHTS)	225
SWITCH AS (THROTTLE HOLD MODE)	205
SWITCH AS-BALL (CENTERSHIFT INDICATOR)	210
SWITCH AS-LIMIT	225
SWITCH AS-PRESSURE (AIR BRAKE)	210
SWITCH AS-PRESSURE (PARKING BRAKE)	210
SWITCH AS-PRESSURE (REFRIGERANT, HIGH, LOW)	683
SWITCH AS-PRESSURE (REFRIGERANT, LOW SIDE)	683
SWITCH AS-PRESSURE (STOP LIGHT)	210
SWITCH AS-ROCKER (24-VOLT) (AUXILIARY BACKUP LIGHTS)	146
SWITCH AS-ROCKER (24-VOLT) (BLADE CUSHION)	200
SWITCH AS-ROCKER (24-VOLT) (FLOODLIGHT, RH)	151
SWITCH AS-ROCKER (24-VOLT) (WARNING BEACON)	156 157
SWITCH AS-ROCKER (24-VOLT, SEALED, ILLUMINATED)	149 658 659
SWITCH AS-ROCKER (CENTERSHIFT PIN)	205
SWITCH AS-ROCKER (DIFFERENTIAL LOCK)	245
SWITCH AS-ROCKER (THROTTLE LOCK SET, RESET)	205
SWITCH AS-ROTARY	152 189
SWITCH AS-ROTARY (FAN SPEED)	625 663
SWITCH AS-ROTARY (WIPER, WASHER) (FRONT)	202
SWITCH AS-START (KEY)	205
SWITCH AS-TOGGLE (ENGINE SHUTDOWN)	220
SWITCH GP-BYPASS	187
SWITCH GP-DISCONNECT–BATTERY	188
SWITCH GP-LIGHT	189
SWITCH GP-MAGNETIC	190
SWITCH GP-MAGNETIC (24-VOLT)	197
SWITCH GP-PRESSURE–FUEL FILTER–DIFFERENTIAL	191
SWITCH GP-ROTARY (TURN SIGNAL, HAZARD)	152 189
SWITCH GP-WIPER (24-VOLT, INTERMITTENT)	193
SWITCH GP-WIPER (24-VOLT, INTERMITTENT) (FRONT WIPER)	755
SWITCH GP-WIPER (24-VOLT, INTERMITTENT) (REAR)	753
SWITCH GP-WIPER–INTERMITTENT	192
	193
SWITCH-ROCKER (AIR CONDITIONER, HEATER)	189
SWITCH-ROCKER (HEADLIGHTS, TAIL LIGHTS)	152
SWITCH-ROCKER (WORK LIGHTS)	149
SWIVEL GP–CIRCLE DRIVE	432

T

TANDEM & COVER GP	271
TANK & FILTER GP-HYDRAULIC	434
TANK & MTG GP-HYDRAULIC	436
TANK GP-AIR	354
TANK GP-COOLANT	75
TANK GP-FUEL	101
TANK GP-WATER	75
TIE ROD GP (STEERING)	370
TOOL GP-HAND	760
TOOTH GP-RIPPER	617
TOOTH GP-SCARIFIER	618
TRANSMISSION AR	272
TURBOCHARGER GP	86 87

U

UNIVERSAL JOINT GP	273

V

V-BELT SET (INCLUDES 3-BELTS)	31
VALVE & LINKAGE GP	466
VALVE & LINKAGE GP–4-BANK, RH; 2-BANK, LH	437
VALVE & LINKAGE GP–4-BANK, RH; 3-BANK, LH	439 441 443
VALVE & LINKAGE GP–4-BANK, RH; 4-BANK, LH	451
VALVE & LINKAGE GP–4-BANK, RH; 5-BANK, LH	445 447 470 476 480
VALVE & LINKAGE GP–4-BANK, RH, LH	456 458 472 499
VALVE & LINKAGE GP–5-BANK, RH; 4-BANK, LH	464
VALVE & LINKAGE GP–5-BANK, RH; 6-BANK, LH	468

INDEX

Name	Page
	495
VALVE & LINKAGE GP– 5-BANK, RH; 7-BANK, LH	474
	491
VALVE & LINKAGE GP–5-BANK, RH, LH	449
	453
	460
	487
VALVE & LINKAGE GP–6-BANK, RH, LH	462
	483
VALVE & MTG GP-DIFF LOCK	274
VALVE AS	360
VALVE GP-AIR CONTROL	735
VALVE GP-BANK 2–LH	503
VALVE GP-BANK 3–LH	504
	505
	506
VALVE GP-BANK 4–LH	508
	510
	511
	512
	513
VALVE GP-BANK 4–RH	507
	509
	514
VALVE GP-BANK 5–LH	515
	516
	519
	520
	522
	524
VALVE GP-BANK 5–RH	517
	518
	521
VALVE GP-BANK 6–LH	525
	528
VALVE GP-BANK 6–RH	526
	527
VALVE GP-BANK 7–LH	529
	530
VALVE GP-CHECK	533
	535
	537
	539
	547
	551
	553
	555
VALVE GP-COMBINATION	531
VALVE GP-CONTROL (AIR)	735
VALVE GP-CONTROL–ARTICULATION	533
VALVE GP-CONTROL–BLADE LIFT	539
	547
	557
	559
VALVE GP-CONTROL–BLADE TIP	541
VALVE GP-CONTROL– BULLDOZER ANGLE, PLOW, RH	555
VALVE GP-CONTROL– BULLDOZER LIFT, PLOW	561
VALVE GP-CONTROL–CENTERSHIFT	535
VALVE GP-CONTROL–CIRCLE DRIVE	543
VALVE GP-CONTROL–DOZER LIFT, PLOW	553
VALVE GP-CONTROL–RIPPER	551
VALVE GP-CONTROL–SCARIFIER	549
VALVE GP-CONTROL–SIDESHIFT	545
VALVE GP-CONTROL–WHEEL LEAN	537
VALVE GP-CONTROL–WING LIFT	565
VALVE GP-CONTROL–WING TILT	563
VALVE GP-COUNTERBALANCE	424
VALVE GP-DRAIN (COOLANT)	69
VALVE GP-ETHER STARTING	194
VALVE GP-PUMP CONTROL	567
VALVE GP-PURGE	568
VALVE GP-PURGE (AIR DRYER)	339
VALVE GP-RELIEF	549
	569
	570
	571
	572
	573
	574
	575
	576
VALVE GP-RELIEF (BLADE TIP)	541
VALVE GP-SELECTOR & PRESS CONT	275
	278
VALVE GP-SHUTOFF (MANUAL) (FUEL)	92
VALVE GP-SHUTTLE	577
VALVE GP-SOLENOID	281
	282
	357
	578
	579
VALVE GP-SOLENOID (24-VOLT) (SELECTOR & PRESSURE RANGE)	275
VALVE GP-SOLENOID (24-VOLT) (SPEED, RANGE, TRANSMISSION)	278
VALVE GP-SOLENOID (CENTERSHIFT LOCK)	420
VALVE GP-SOLENOID (PARKING BRAKE)	345
VALVE GP-TIRE	289
	290
	291
	292
	293
	294
	296
	297
	300

INDEX

Name	Page
	301
VALVE GP-TIRE (BASIC)	305
VALVE GP-TIRE (TIRE INFLATION)	293
	294
	295
	301
	302
	305
	306
VALVE GP-TRANSMISSION CONTROL	283
VALVE MECHANISM GP	48
	49
VALVE-RELIEF	230
VOLTMETER GP	693

W

WASHER GP-WINDOW–FRONT	736
	739
WASHER GP-WINDOW–REAR	738
WATER SEP & FUEL PRM PUMP GP	99
WHEEL & TIRE AR	285
	286
	287
	288
	289
WHEEL & TIRE GP	289
	290
	291
	292
	293
	294
	295
	296
	297
	298
	299
WHEEL AR	299
	300
WHEEL GP	300
	301
	302
	303
	304
	305
	306
WHEEL GP–BAREFOOT	301
WINDOW GP-CAB–LH	747
WINDOW GP-CAB–RH	745
WINDOW GP-CAB–SIDE SLIDING–HIGH PROFILE	741
WINDOW GP-CAB–SIDE SLIDING HIGH PROFILE	744
WINDOW GP-CAB–SIDE SLIDING–LOW PROFILE	742
	743
WINDOW GP-VENT–CAB	749
WIPER AR-WINDOW–REAR	750
WIPER GP-WINDOW–FRONT	755
WIPER GP-WINDOW–FRONT–HIGH PROFILE	751
WIPER GP-WINDOW–REAR	753
WIRING AS	214
WIRING GP-AIR CONDITIONER	195
WIRING GP-AUXILIARY–FUEL TANK	197
WIRING GP-BLADE CUSHION	200
WIRING GP-CAB	202
WIRING GP-CAB–MACHINE IMMOBILIZER	201
WIRING GP-CHASSIS–ACCUGRADE	215
WIRING GP-CONSOLE	205
WIRING GP-ENGINE	207
WIRING GP-ETHER STARTING AID	209
WIRING GP-FRONT	210
WIRING GP-GRADE CONTROL–CAB, INDICATOR LAMP	214
WIRING GP-POWER RECEPTACLE–CIGARETTE LIGHTER	218
WIRING GP-REAR	219
	220
WIRING GP-STEERING CONSOLE	225
WIRING GP-TRANSMISSION	227

MACHINE ARRANGEMENT

274-7941 GENERAL AR

S/N: JBP1-UP

SMCS-7000 **i03432299**

NOTE	PART NUMBER	QTY	PART NAME 1 2 3 4 5 6 (PRODUCT LEVEL)	SEE PAGE
Y	*310-6459*	1	AIR CLEANER GP	79
Y	*313-2656*	1	AIR COMPRESSOR GP	7
Y	*253-4006*	1	ALTERNATOR GP-CHARGING	108
Y	*134-1080*	1	AXLE GP-FRONT	307
Y	*311-0795*	1	BATTERY & WIRING GP	116
Y	*124-9773*	1	BLADE GP	597
Y	*295-8090*	1	BOX GP-BATTERY	312
Y	*111-1719*	1	BOX GP-TOOL	756
Y	*8W-4265*	1	BRAKE GP-SERVICE	343
Y	*284-5378*	1	BUMPER GP-REAR	314
Y	*311-8138*	1	CASE & FRAME GP	315
Y	*8W-5513*	1	CHAIN GP-DRIVE	235
Y	*113-9426*	1	CIRCLE GP	586
Y	*282-2475*	1	CONSOLE GP-OPERATOR	638
Y	*282-2473*	1	CONTROL GP-CLUTCH	641
Y	*282-2472*	1	CONTROL GP-GOVERNOR	88
Y	*284-5771*	1	CONTROL GP-PARKING BRAKE	345
Y	*283-3499*	1	CONTROL GP-SERVICE BRAKE	347
Y	*7I-4718*	1	CONTROL GP-STEERING	643
Y	*167-9002*	1	CONTROL GP-TRANSMISSION	644
Y	*281-5641*	1	COOLER GP-TRANSMISSION OIL	248
Y	*310-5881*	1	COOLING AR	64
Y	*337-3357*	1	COUPLING GP-TORSIONAL	249
Y	*140-8129*	1	CYLINDER & MTG GP-ARTICULATION	363
Y	*8X-1947*	1	CYLINDER & MTG GP-BLADE LIFT	364
Y	*8X-1944*	1	CYLINDER & MTG GP-CENTERSHIFT	366
Y	*8W-2290*	1	CYLINDER & MTG GP-STEERING	370
Y	*8W-2737*	1	CYLINDER & MTG GP-WHEEL LEAN	371
Y	*8X-1960*	1	DRAWBAR GP	590
Y	**5T-0570**	1	DRIVE GP-CIRCLE	385
Y	*318-9471*	1	DRIVE GP-FAN	31
Y	*202-7593*	1	DRIVE GP-FINAL	255
Y	*311-2741*	1	ENCLOSURE GP-ENGINE	316
Y	**312-0255**	1	ENGINE AR-COMPLETE	3
Y	*284-0824*	1	FAN GP (RADIATOR)	65
Y	**315-4118**	1	FILLER GP-POWER TRAIN OIL	257
Y	*282-2496*	1	FRAME GP-FRONT	320
Y	*115-0632*	1	GEAR GP-BEVEL & PINION	259
Y	*298-8895*	1	GUARD GP-DRIVE SHAFT	323
Y	*282-2469*	1	GUARD GP-PLATFORM	327
Y	*106-4884*	1	HITCH GP-ARTICULATING	331
Y	*295-4371*	1	HORN GP-ELECTRIC	667
Y	*310-6437*	1	INSTALLATION AR-ENGINE	5
Y	*125-0290*	1	LIFT GP-BLADE	606
Y	*311-0864*	1	LINES GP-AIR	83
Y	*310-6469*	1	LINES GP-DRAIN	57
Y	*311-2770*	1	LINES GP-FUEL	92
Y	*7I-4610*	1	LINES GP-GREASE	333
Y	*110-2985*	1	LINES GP-HYDRAULIC (RH)	397
Y	*115-8078*	1	LINES GP-HYDRAULIC (LH BLADE LIFT, CIRCLE DRIVE)	401
Y	*293-0648*	1	LINES GP-HYDRAULIC (CENTERSHIFT LOCK)	407
Y	*299-5544*	1	LINES GP-PUMP	409
Y	*301-4376*	1	LINES GP-STEERING	416
Y	*315-5378*	1	LINES GP-TRANSMISSION OIL	261
Y	*311-0274*	1	LINES GP-WATER	69
Y	*164-8462*	1	LOCK GP-CENTERSHIFT	420

MACHINE ARRANGEMENT

274-7941 **GENERAL AR** ***(contd.)*** **i03432299**

NOTE	PART NUMBER	QTY	PART NAME 1 2 3 4 5 6 (PRODUCT LEVEL)	SEE PAGE
Y	*142-6203*	1	MOUNTING GP-WHEEL	264
Y	*310-6472*	1	MUFFLER GP	85
Y	*316-5238*	1	PANEL GP-INSTRUMENT	703
Y	*302-4196*	1	PLATE & FILM GP	759
Y	*299-5543*	1	PUMP & MTG GP-STEERING	427
Y	*113-4254*	1	SEAT GP (VINYL)	717
Y	*8W-5394*	1	SHAFT GP-DRIVE (TRANSMISSION)	269
Y	*311-0514*	1	SHAFT GP-PUMP DRIVE	431
Y	*295-2933*	1	STEP GP	335
Y	*299-8307*	1	SUPPORT GP-RADIATOR	337
Y	*174-4546*	1	SUPPORT GP-SEAT	731
Y	*190-1689*	1	TANDEM & COVER GP	271
Y	*214-1983*	1	TANK & MTG GP-HYDRAULIC	436
Y	*314-9370*	1	TANK GP-AIR	354
Y	*276-3918*	1	TANK GP-FUEL	101
Y	*311-2766*	1	TANK GP-WATER	75
Y	**275-6546**	1	TRANSMISSION AR	272
Y	*112-6795*	1	VALVE & LINKAGE GP (4-BANK, RH; 2-BANK, LH)	437
Y	*311-0802*	1	WIRING GP-AUXILIARY (FUEL TANK)	197
Y	*284-5346*	1	WIRING GP-CONSOLE	205
Y	*284-5343*	1	WIRING GP-FRONT	210
Y	*284-5348*	1	WIRING GP-REAR (LIGHTS)	219
Y	*311-0794*	1	WIRING GP-REAR	220
Y	*284-5347*	1	WIRING GP-STEERING CONSOLE	225
	6V-1970	1	LITERATURE GP	
	5P-7958	1	SLEEVE-CABLE SPLICE	
	5P-8500	2	KEY	

Y-SEPARATE ILLUSTRATION

<END>

ENGINE ARRANGEMENT

312-0255 ENGINE AR-COMPLETE

S/N: KHX8814-UP
FOR 160 K SERIES MOTOR GRADER APPLICATION
PART OF 274-7941 GENERAL AR

SMCS-1000 **i03338541**

NOTE	PART NUMBER	QTY	PART NAME 1 2 3 4 5 6 (PRODUCT LEVEL)	SEE PAGE
Y	*222-5946*	1	BREATHER GP	52
Y	*4W-3462*	1	CARRIER GP-SEAL	12
Y	**246-9345**	1	CONTROL & MTG GP-ENGINE ELEK	119
Y	*153-1794*	1	COVER GP-AIR INLET	81
Y	*229-8841*	1	COVER GP-CYLINDER BLOCK	13
Y	*275-0595*	1	COVER GP-FRONT HOUSING	15
Y	*118-1727*	1	COVER GP-FRONT HOUSING (ACCESSORY DRIVE)	14
Y	*307-1735*	1	COVER GP-VALVE MECHANISM	16
Y	*250-8309*	1	DAMPER & PULLEY GP	28
Y	*313-4384*	1	DRIVE GP-ACCESSORY	29
Y	*322-0245*	1	ELBOW GP-AIR INLET	82
Y	*312-0254*	1	ENGINE AR-CORE	4
Y	*258-8723*	1	FASTENER GP-CYLINDER HEAD	32
Y	*322-0246*	1	FASTENER GP-ENGINE	33
Y	*116-4556*	1	FASTENER GP-FRONT HOUSING	34
Y	*323-8936*	1	FILTER GP-ENGINE OIL	53
Y	*275-8387*	1	FLYWHEEL GP	35
Y	*220-1194*	1	FUMES DISPOSAL GP	54
Y	*276-3681*	1	GAUGE GP-OIL LEVEL (DIPSTICK) (ENGINE)	55
Y	*297-6867*	1	GROUND GP-ELECTRICAL	129
Y	*197-5210*	1	HOUSING GP-FLYWHEEL	37
Y	*237-9822*	1	LIFTING GP-ENGINE	40
Y	*128-0316*	1	LINES GP-ENGINE OIL	56
Y	*313-3967*	1	LINES GP-FUEL	95
Y	*187-6279*	1	LINES GP-TURBOCHARGER OIL	58
Y	*206-4228*	1	LINES GP-WATER (ENGINE)	67
Y	*237-8063*	1	MANIFOLD GP-ENGINE OIL	60
Y	*183-6845*	1	MANIFOLD GP-EXHAUST (DRY)	84
Y	*311-3542*	1	MOUNTING GP-ENGINE	41
Y	*122-8936*	1	PAN GP-OIL (ENGINE)	42
Y	*235-8200*	1	PLUG GP-CONNECTOR (ENGINE HARNESS, PROT COVER)	162
Y	*159-0303*	1	PLUG GP-CYLINDER BLOCK	44
Y	*162-8068*	1	PLUG GP-ENGINE	45
Y	*323-8959*	1	PLUG GP-OIL PAN	46
Y	*318-2076*	1	PUMP GP-WATER	72
Y	*7E-7590*	1	SEAL GP-CRANKSHAFT	47
Y	*297-5355*	1	SENSOR GP-ENGINE	164
Y	*111-4275*	1	STARTING MOTOR GP-ELECTRIC	184
Y	*198-2714*	1	WIRING GP-ENGINE	207
			PLEASE USE THE GASKET KIT LINK IN SIS OR CONTACT YOUR LOCAL DEALER FOR THE LATEST GASKET KIT INFORMATION	

Y-SEPARATE ILLUSTRATION

ENGINE ARRANGEMENT

312-0254 ENGINE AR-CORE

S/N: KHX8814-UP
166 BKW (223 BHP)
PART OF 312-0255 ENGINE AR-COMPLETE
FOR USE WITH 160 K SERIES MOTOR GRADER

SMCS-1000 **i03339141**

NOTE	PART NUMBER	QTY	PART NAME 1 2 3 4 5 6 (PRODUCT LEVEL)	SEE PAGE
Y	*212-4289*	1	CAMSHAFT GP	11
Y	*117-3643*	1	COOLER GP-ENGINE OIL	63
Y	*210-5590*	1	CRANKSHAFT GP	18
Y	*221-4482*	1	CYLINDER BLOCK GP	20
Y	*219-5849*	1	CYLINDER HEAD GP	27
Y	*205-1321*	1	GEAR GP-FRONT	36
Y	*165-4446*	1	HOUSING GP-FRONT	38
Y	*191-0461*	1	LINES GP-INJECTOR HYD PUMP	96
YR	*212-3652*	6	PISTON & ROD GP	43
Y	*254-0095*	1	PUMP & MTG GP-UNIT INJ HYD	97
Y	*212-2270*	1	PUMP GP-ENGINE OIL	62
Y	*268-1839*	6	PUMP GP-FUEL INJECTION	98
Y	*258-2403*	1	TURBOCHARGER GP	87
Y	*232-3717*	1	VALVE MECHANISM GP	48
	313-4694	1	ELECTRONICS GP-ENGINE RATINGS	
			PLEASE USE THE GASKET KIT LINK IN SIS OR CONTACT YOUR LOCAL DEALER FOR THE LATEST GASKET KIT INFORMATION	

R-REMFG PART MAY BE AVAILABLE
Y-SEPARATE ILLUSTRATION

ENGINE ARRANGEMENT

310-6437 INSTALLATION AR-ENGINE

S/N: JBP1-UP

PART OF 274-7941 GENERAL AR

SMCS-1000 **i03438860**

NOTE	REF NO	GRAPHIC REF	PART NUMBER	QTY	PART NAME 1 2 3 4 5 6 (PRODUCT LEVEL)	SEE PAGE
	1	1	**174-9529**	2	MOUNT AS	
					(EACH INCLUDES)	
		1	**6Y-9960**	1	MOUNT AS	
		1	**9W-7385**	1	SLEEVE	
		1	**9W-7388**	2	WASHER (26X144X12-MM THK)	
	2	1	*192-7357*	2	MOUNT AS	
					(EACH INCLUDES)	
		1	**9W-6582**	1	SLEEVE	
		1	**9W-6584**	1	WASHER (20.5X114X10-MM THK)	
		1	**9W-9920**	1	MOUNT AS	
	3	1	**211-9274**	1	SUPPORT	
	4	1	**211-9275**	1	SUPPORT	
	5	1	**313-4537**	1	BELT-SERPENTINE	
	6	1	**316-6682**	1	PLATE AS	
	7	1	**316-6686**	1	PLATE AS	
	8	1	**198-4776**	4	WASHER-HARD (8.8X20X8-MM THK)	
	9	1	**198-4777**	4	WASHER-HARD (11X25X10-MM THK)	
M	10	1	**8C-3290**	2	BOLT (M24X3X150-MM)	
	11	1	**8T-4121**	12	WASHER-HARD (11X21X2.5-MM THK)	
	12	1	**8T-4123**	10	WASHER (22X35X3.5-MM THK)	
M	13	1	**8T-4136**	4	BOLT (M10X1.5X25-MM)	
	14	1	**8T-4167**	2	WASHER-HARD (26X44X4-MM THK)	
M	15	1	**8T-4196**	12	BOLT (M10X1.5X35-MM)	
M	16	1	**8T-4908**	4	BOLT (M8X1.25X25-MM)	
M	17	1	**8T-6381**	2	BOLT (M20X2.5X120-MM)	
M	18	1	**8T-6430**	8	BOLT (M20X2.5X50-MM)	

M-METRIC PART

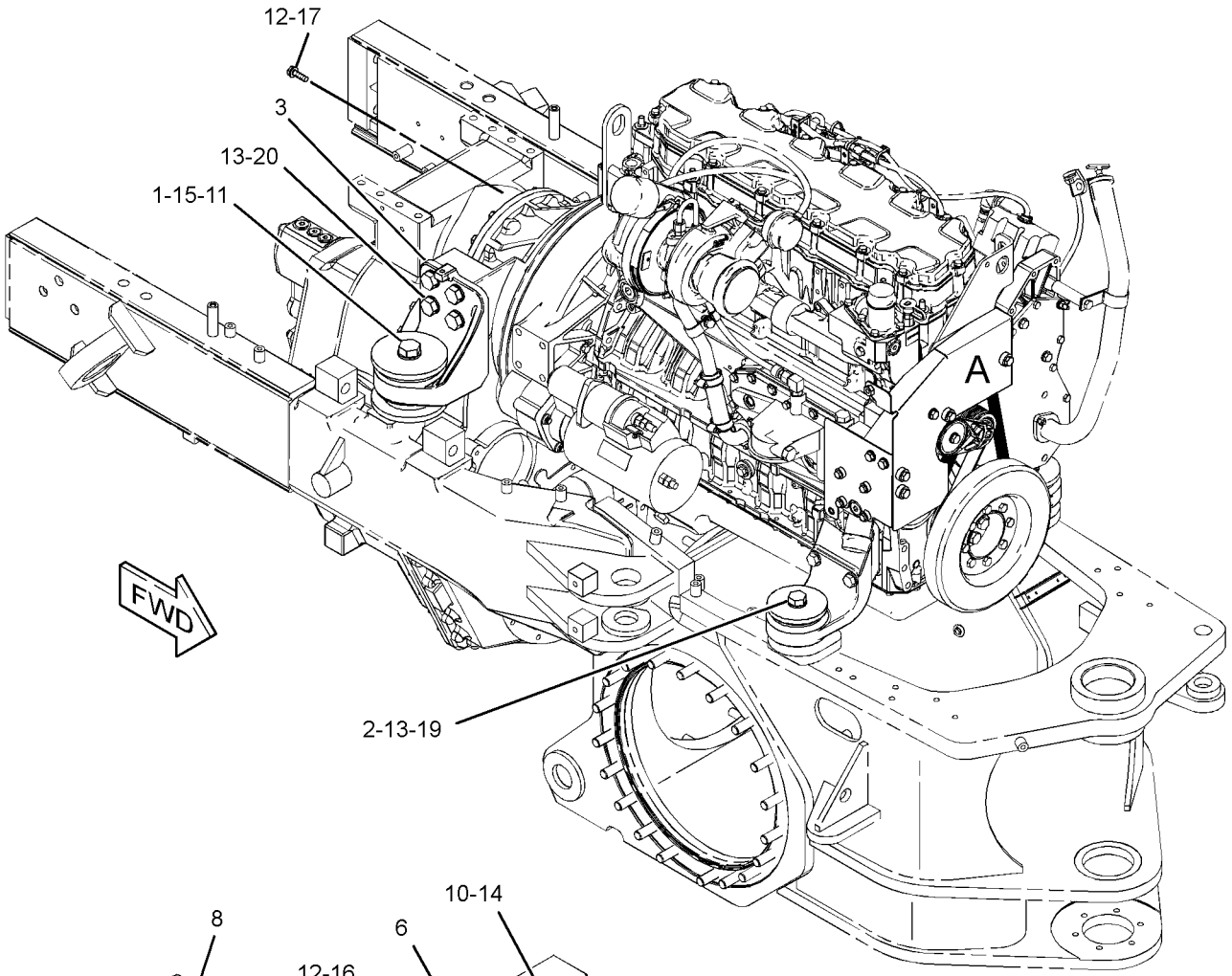

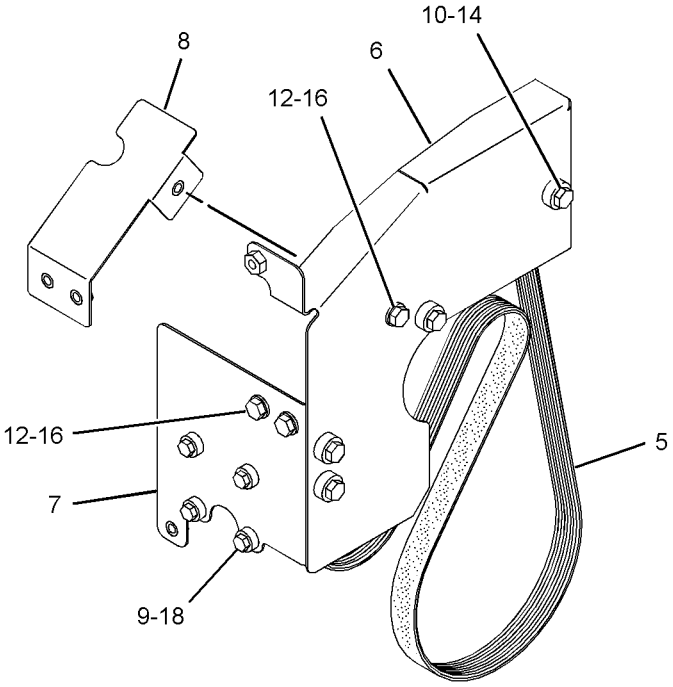

VIEW OF AREA A

GRAPHIC #1 **<END>** g01697633

BASIC ENGINE

313-2656 AIR COMPRESSOR GP

S/N: JBP1-UP

PART OF 274-7941 GENERAL AR

SMCS-1803 **i03435740**

NOTE	REF NO	GRAPHIC REF	PART NUMBER	QTY	PART NAME 1 2 3 4 5 6 (PRODUCT LEVEL)	SEE PAGE
	1	1	**135-9819**	1	SEAL-INTEGRAL	
I	2	1	**145-1849**	1	HOSE AS	
	3	1	**146-8121**	1	SPACER (10.5X14.5X25-MM THK)	
I	4	1	**313-2762**	1	HOSE AS	
	5	1	**313-6100**	1	TUBE AS	
Y	6	1	**314-6148**	1	AIR COMPRESSOR GP (AIR CONDITIONER)	9
	7	1	**315-4150**	1	TUBE AS	
	8	1	*148-8340*	2	CONNECTOR AS	
					(EACH INCLUDES)	
		1	**3K-0360**	1	SEAL-O-RING	
		1	**6V-8398**	1	SEAL-O-RING	
		1	**6V-8639**	1	CONNECTOR	
	9	1	*148-8347*	1	ELBOW AS	
		1	**3D-2824**	1	SEAL-O-RING	
		1	**6V-9007**	1	ELBOW	
		1	**6V-9746**	1	SEAL-O-RING	
	10	1	*148-8364*	1	ELBOW AS	
		1	**3K-0360**	1	SEAL-O-RING	
		1	**6V-8398**	1	SEAL-O-RING	
		1	**6V-8625**	1	ELBOW	
	11	1	*148-8368*	1	ELBOW AS	
		1	**3J-1907**	1	SEAL-O-RING	
		1	**4J-5477**	1	SEAL-O-RING	
		1	**6V-8627**	1	ELBOW	
	12	1	*148-8369*	1	ELBOW AS	
		1	**3J-7354**	1	SEAL-O-RING	
		1	**4J-5477**	1	SEAL-O-RING	
		1	**6V-8628**	1	ELBOW	
	13	1	*155-6258*	1	ELBOW AS	
		1	**3D-2824**	1	SEAL-O-RING	
		1	**6V-8398**	1	SEAL-O-RING	
		1	**127-1647**	1	ELBOW	
	14	1	*165-4927*	1	CONNECTOR AS	
		1	**2T-2991**	1	CONNECTOR	
		1	**4K-1388**	1	SEAL-O-RING	
		1	**6V-9746**	1	SEAL-O-RING	
	15	1	**225-5222**	1	VALVE AS-PRESSURE RELIEF	
		1	**2M-9780**	1	SEAL-O-RING	
	16	1	**1B-3057**	2	CLIP	
	17	1	**8T-4121**	1	WASHER-HARD (11X21X2.5-MM THK)	
M	18	1	**8T-4185**	1	BOLT (M10X1.5X50-MM)	
	19	1	**8T-4223**	2	WASHER-HARD (13.5X25.5X3-MM THK)	
M	20	1	**8T-6868**	2	BOLT (M12X1.75X80-MM)	

I-REFER TO HYDRAULIC INFORMATION SYSTEM
M-METRIC PART
Y-SEPARATE ILLUSTRATION

313-2656 **AIR COMPRESSOR GP** *(contd.)* **i03435740**

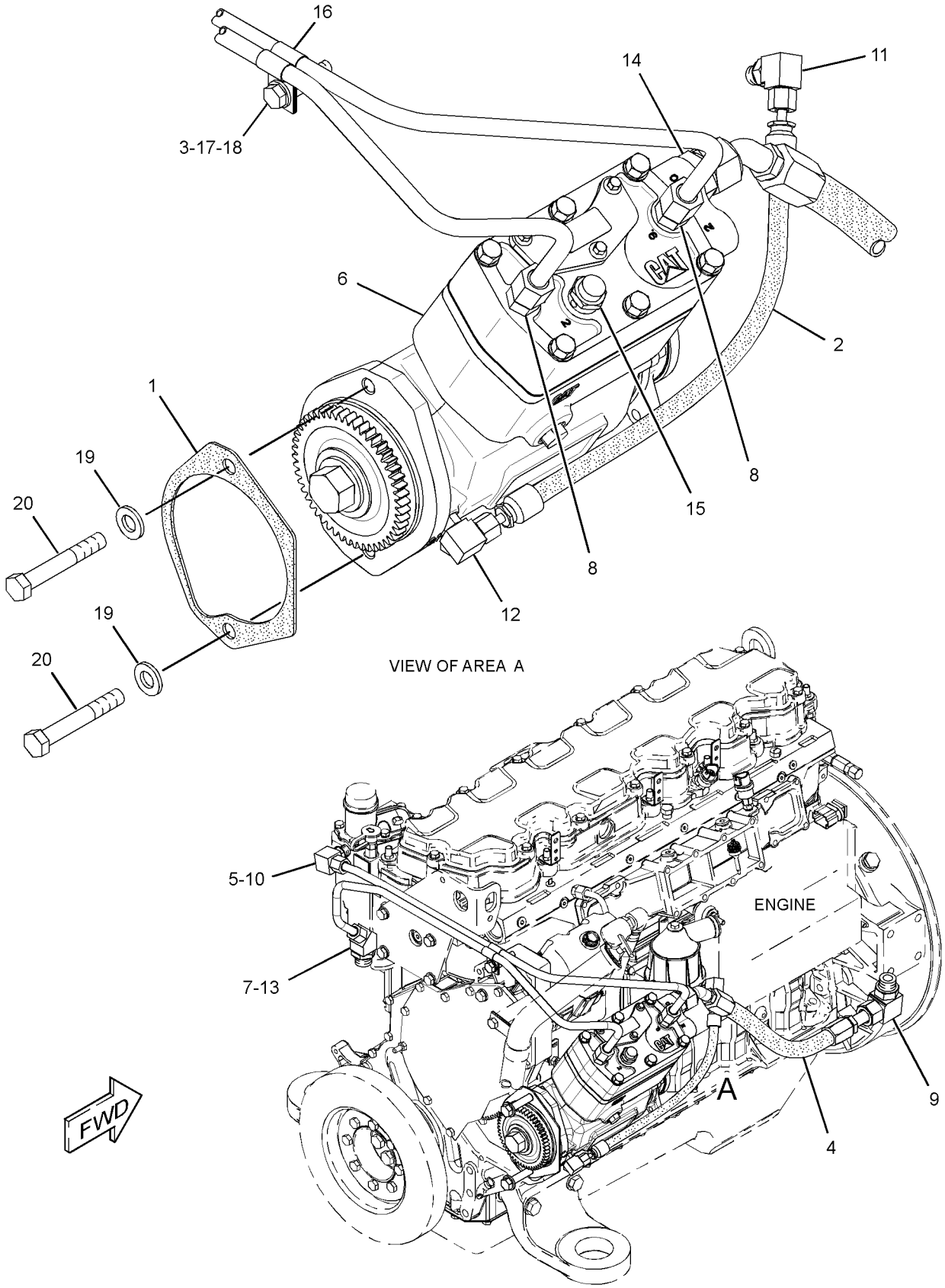

GRAPHIC #1 **<END>** g01689193

BASIC ENGINE

314-6148 AIR COMPRESSOR GP

S/N: JBP1-UP

PART OF 313-2656 AIR COMPRESSOR GP

SMCS-1803 **i03251941**

NOTE	REF NO	GRAPHIC REF	PART NUMBER	QTY	PART NAME 1 2 3 4 5 6 (PRODUCT LEVEL)	SEE PAGE
	1	1	**221-9361**	1	GEAR (50-TEETH)	
	2	1	**267-5212**	2	RING-RETAINING	
	3	1	**287-1690**	1	GASKET	
	4	1	**288-1347**	2	PLUG	
	5	1	**307-6192**	1	GASKET	
	6	1	**307-6200**	1	GASKET	
M	7	1	**271-8090**	3	BOLT-FLANGE HEAD (M6X1X65-MM)	
	8	1	**2P-4358**	1	FLANGE	
	9	1	**3J-1907**	1	SEAL-O-RING	
	10	1	**3K-0360**	1	SEAL-O-RING	
M	11	1	**5A-3604**	4	BOLT-SOCKET HEAD (M8X1.25X25-MM)	
	12	1	**5E-8769**	1	SEAL-O-RING	
	13	1	**6D-1004**	1	GASKET	
	14	1	**6D-7889**	2	SEAL-O-RING	
M	15	1	**6V-1820**	2	BOLT (M10X1.5X30-MM)	
	16	1	**6V-5839**	2	WASHER (11X21X2.5-MM THK)	
	17	1	**8T-4224**	6	WASHER-HARD (8.8X16X2-MM THK)	
	18	1	**9S-4185**	1	PLUG-O-RING	
	19	1	**9S-4191**	1	PLUG-O-RING	
	20	1	**199-4317**	6	BOLT (M10X1.5X115-MM)	
					AVAILABLE REPAIR KIT(S):	
			307-6205	1	KIT-UNLOADER (AIR COMPRESSOR)	
					(KIT INCLUDES SEAL-O-RINGS, SPRINGS, BOLTS, GASKET & GREASE-O-RING)	
			307-6209	1	KIT-CYLINDER HEAD (AIR COMPRESSOR)	
					(KIT INCLUDES HEAD AS, BOLTS & GASKET)	

M-METRIC PART

314-6148 AIR COMPRESSOR GP *(contd.)* i03251941

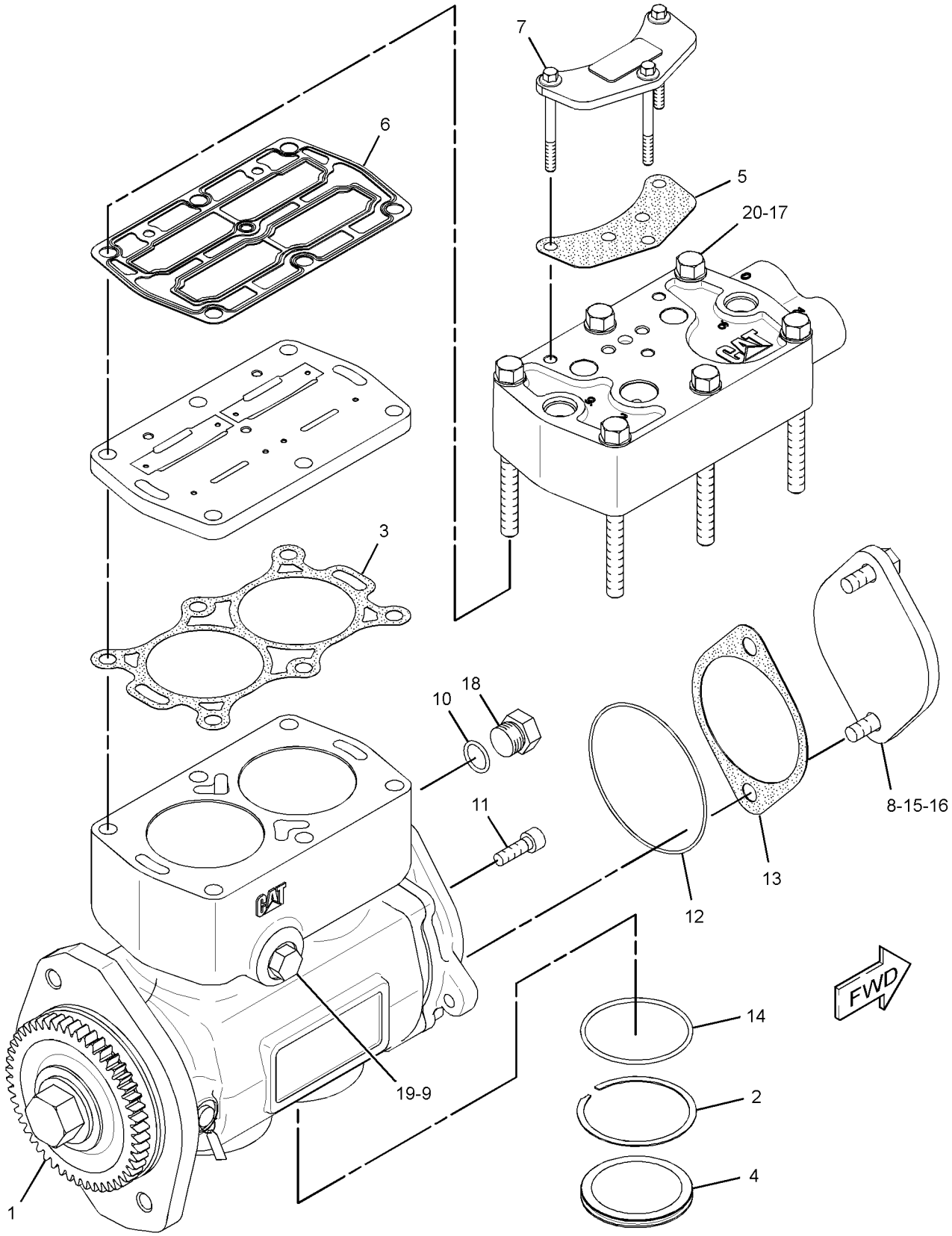

GRAPHIC #1 **<END>** g01689303

BASIC ENGINE

212-4289 CAMSHAFT GP

S/N: KHX8814-UP

PART OF 312-0254 ENGINE AR-CORE

SMCS-1210 **i02215726**

NOTE	REF NO	GRAPHIC REF	PART NUMBER	QTY	PART NAME 1 2 3 4 5 6 (PRODUCT LEVEL)	SEE PAGE
	1	1	**107-7694**	1	PLATE-THRUST	
	2	1	**212-4288**	1	CAMSHAFT AS	
	2A	1	**1B-8705**	1	KEY-WOODRUFF	
	2B	1	**224-3247**	1	GEAR (100-TEETH)	
M	3	1	**6V-3940**	2	BOLT (M8X1.25X25-MM)	

M-METRIC PART

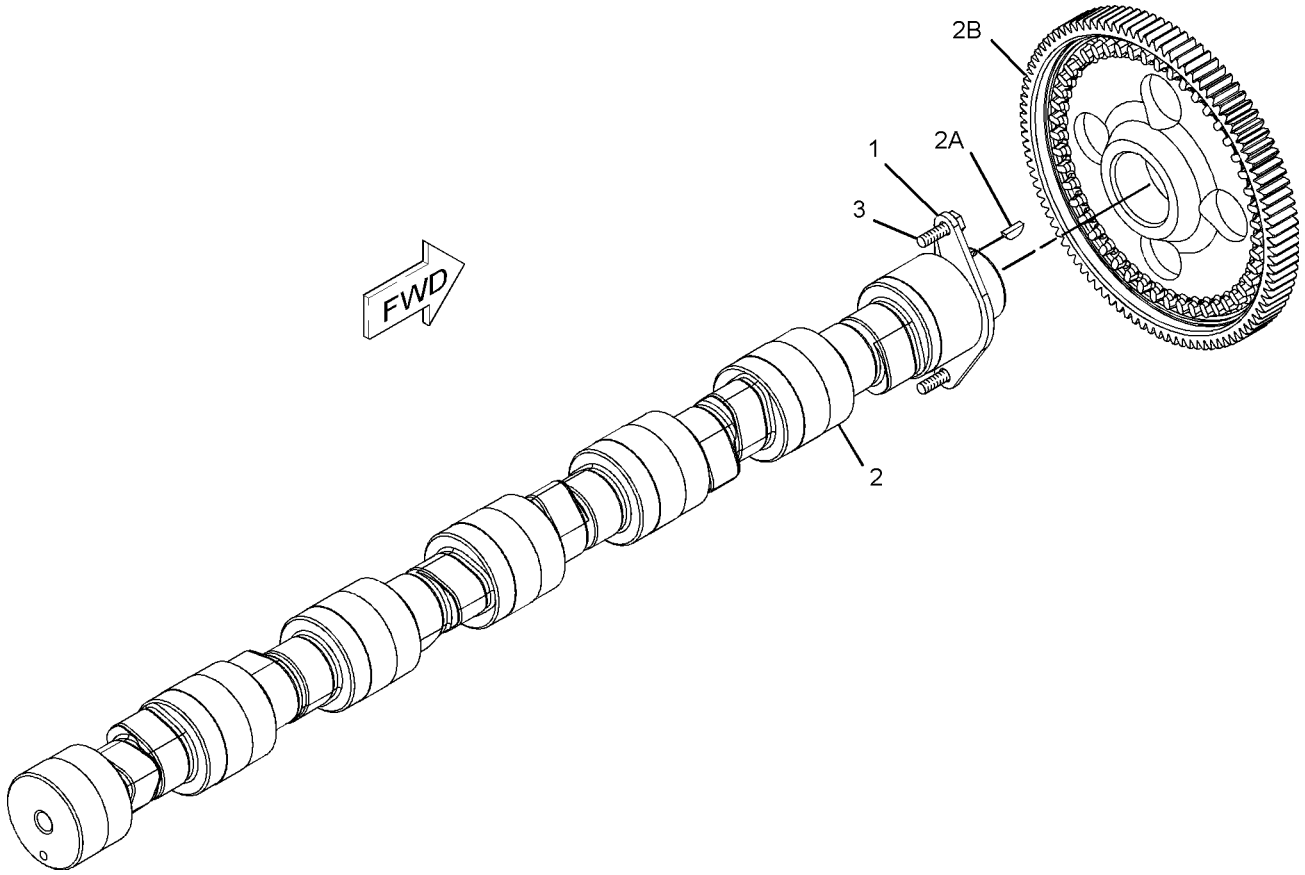

GRAPHIC #1 **<END>** g01099239

4W-3462 CARRIER GP-SEAL

S/N: KHX9914-UP

PART OF 312-0255 ENGINE AR-COMPLETE

SMCS-1161 **i02482079**

NOTE	REF NO	GRAPHIC REF	PART NUMBER	QTY	PART NAME 1 2 3 4 5 6 (PRODUCT LEVEL)	SEE PAGE
	1	1	**2W-6546**	1	COVER	
	2	1	**247-1876**	1	SEAL	
	3	1	**239-0583**	1	GASKET	
	4	1	**6V-3538**	2	DOWEL	
M	5	1	**6V-3940**	8	BOLT (M8X1.25X25-MM)	
	6	1	**9M-1974**	8	WASHER-HARD (8.8X16X2-MM THK)	
BF		1	**4C-9612**		SEALANT-SILICONE	

B-USE AS REQUIRED
F-NOT SHOWN
M-METRIC PART

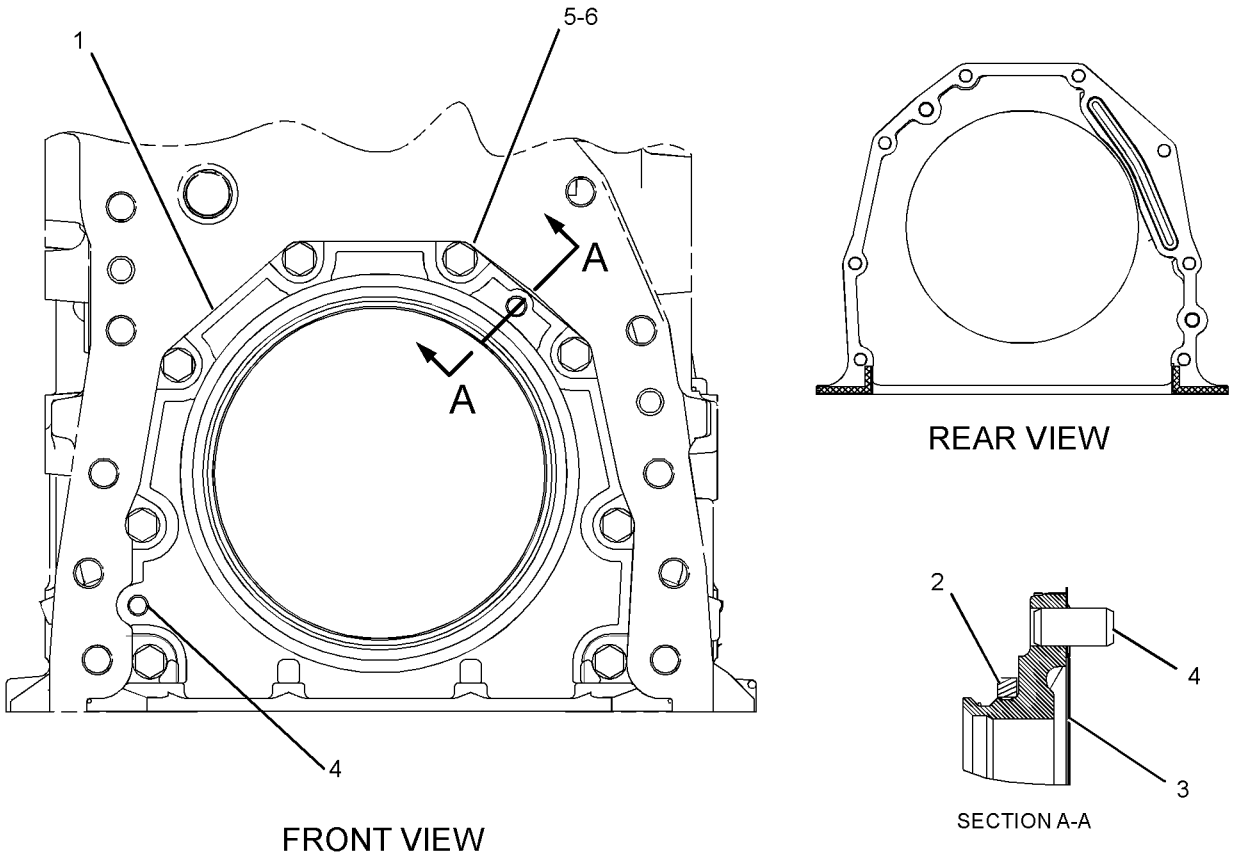

GRAPHIC #1 **<END>** g01239787

229-8841 COVER GP-CYLINDER BLOCK

S/N: KHX8814-UP

PART OF 312-0255 ENGINE AR-COMPLETE

SMCS-1201 **i02789604**

NOTE	REF NO	GRAPHIC REF	PART NUMBER	QTY	PART NAME 1 2 3 4 5 6 (PRODUCT LEVEL)	SEE PAGE
	1	1	**2W-6544**	1	COVER	
	2	1	**4P-5918**	3	CLIP	
	3	1	**4Y-9652**	3	GASKET	
	4	1	**277-4421**	2	COVER-SIDE	
	5	1	**7W-3872**	6	SLEEVE	
	6	1	**110-7618**	4	BOLT AS	
	8	1	**222-5893**	1	COVER AS	
M	8A	1	**6V-5698**	2	SCREW-BUTTON HEAD (M4X0.7X10-MM)	
	9	1	**210-3321**	1	STUD (M8X1.25-THD)	
M	10	1	**5C-7261**	1	NUT (M8X1.25-THD)	
M	11	1	**6V-2317**	23	BOLT (M8X1.25X30-MM)	
	12	1	**9M-1974**	22	WASHER-HARD (8.8X16X2-MM THK)	
B	13	1	**1U-8846**		SEALANT-GASKET	

B-USE AS REQUIRED
M-METRIC PART

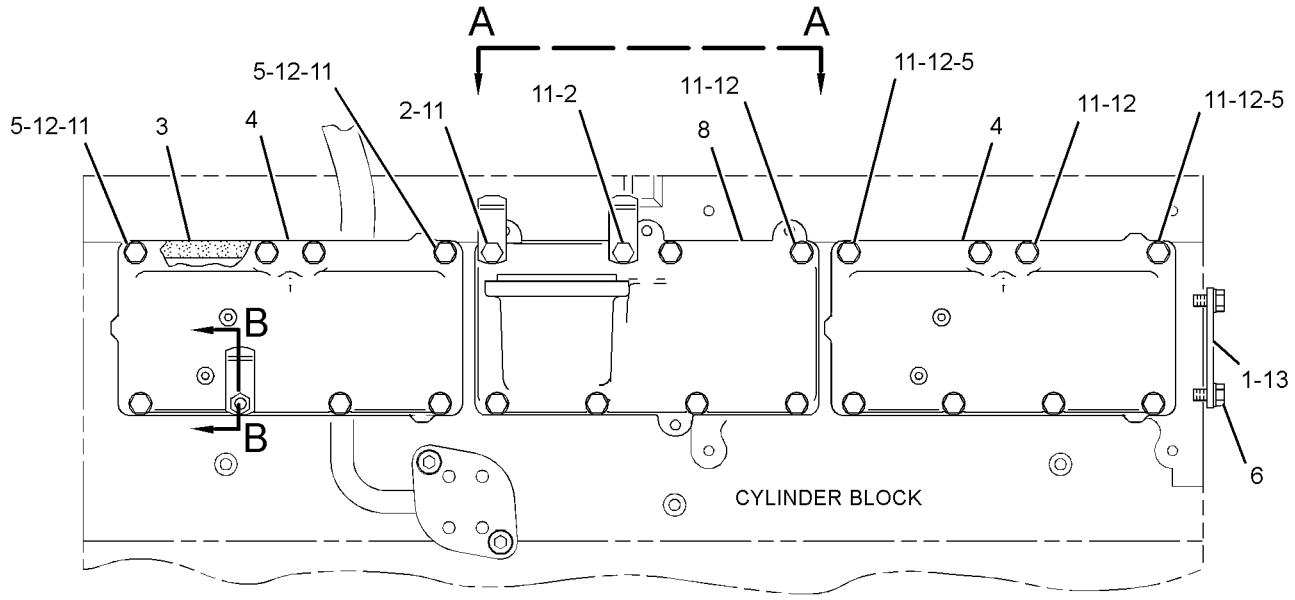

LEFT SIDE VIEW OF ENGINE

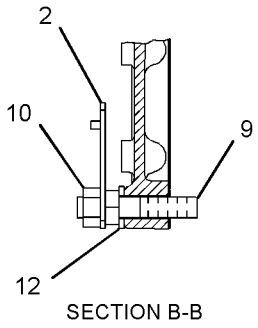

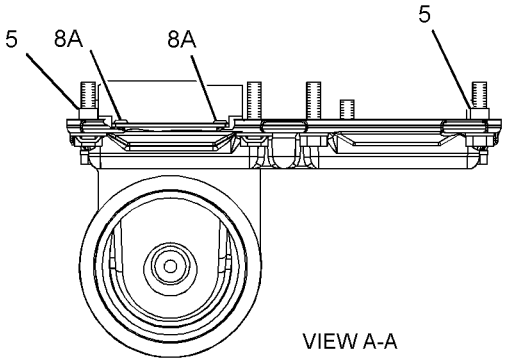

GRAPHIC #1 **<END>** g01331079

BASIC ENGINE

118-1727 COVER GP-FRONT HOUSING

S/N: KHX8814-UP

PART OF 312-0255 ENGINE AR-COMPLETE

SMCS-1151, 1166 **i01671188**

NOTE	REF NO	GRAPHIC REF	PART NUMBER	QTY	PART NAME 1 2 3 4 5 6 (PRODUCT LEVEL)	SEE PAGE
	1	1	**5P-8245**	4	WASHER-HARD (13.5X25.5X3-MM THK)	
M	2	1	**6V-5696**	2	BOLT (M12X1.75X80-MM)	
	3	1	**4W-2026**	1	COVER	
	4	1	**135-9819**	1	SEAL-INTEGRAL	
M	5	1	**6V-8149**	2	NUT (M12X1.75-THD)	

M-METRIC PART

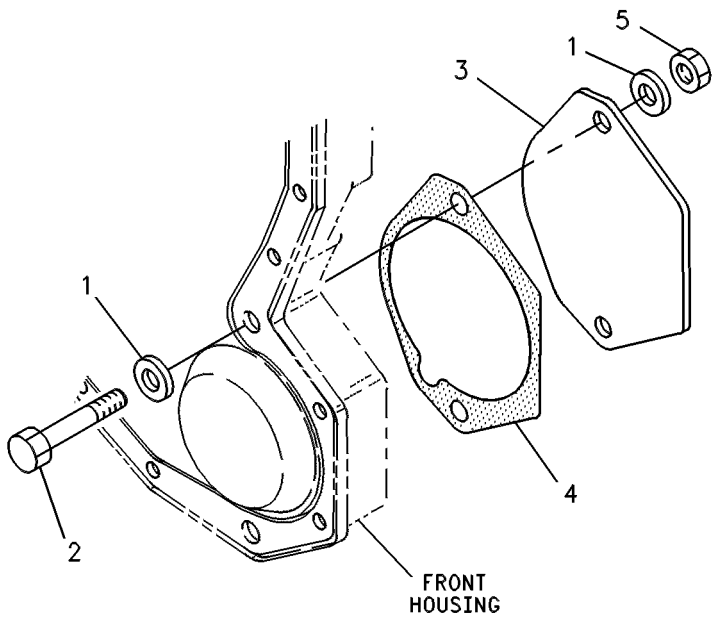

GRAPHIC #1 **<END>** g00245495

BASIC ENGINE

275-0595 COVER GP-FRONT HOUSING

S/N: KHX8814-UP

PART OF 312-0255 ENGINE AR-COMPLETE

SMCS-1151, 1166 **i03087632**

NOTE	REF NO	GRAPHIC REF	PART NUMBER	QTY	PART NAME 1 2 3 4 5 6 (PRODUCT LEVEL)	SEE PAGE
M	1	1	**9X-2099**	1	STUD (M8X1.25X52.75-MM)	
	2	1	**002-3448**	1	CLIP	
	3	1	**108-3612**	1	SPACER (11.13X19.05X53-MM THK)	
	4	1	**159-0286**	1	TUBE AS-FILLER	
	5	1	**166-1776**	1	COVER AS-FRONT	
		1	**126-1757**	2	WASHER (10.85X19.3X1.27-MM THK)	
		1	**136-0822**	2	STUD	
	6	1	**166-1781**	1	GASKET	
	7	1	**241-5645**	1	CAP AS-ENGINE OIL FILLER	
	8	1	**061-9455**	1	SEAL-O-RING	
M	9	1	**5C-7261**	2	NUT (M8X1.25-THD)	
M	10	1	**6V-2317**	10	BOLT (M8X1.25X30-MM)	
	11	1	**6V-5839**	1	WASHER (11X21X2.5-MM THK)	
M	12	1	**8T-0100**	2	BOLT (M8X1.25X60-MM)	
M	13	1	**8T-0643**	1	BOLT (M10X1.5X80-MM)	
	14	1	**8T-4224**	2	WASHER-HARD (8.8X16X2-MM THK)	

M-METRIC PART

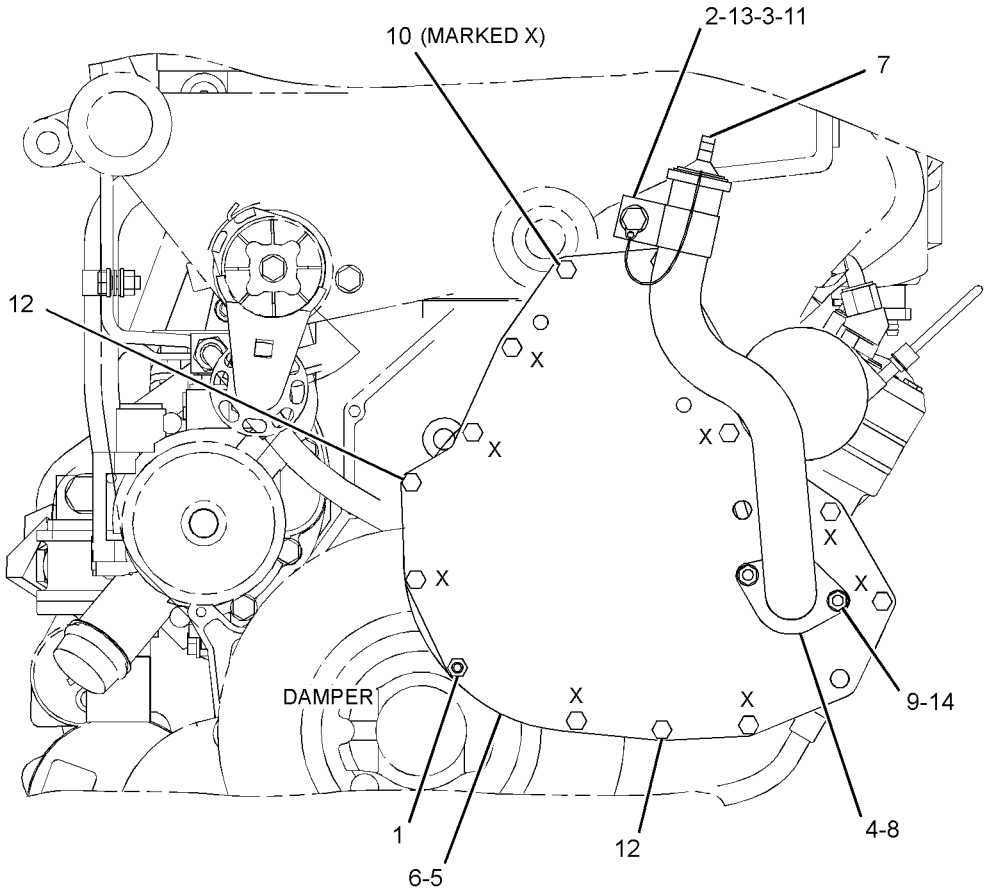

FRONT VIEW OF ENGINE

GRAPHIC #1 **<END>** g01312839

BASIC ENGINE

307-1735 COVER GP-VALVE MECHANISM

S/N: KHX8814-UP

PART OF 312-0255 ENGINE AR-COMPLETE

SMCS-1107, 1120 **i02791485**

NOTE	REF NO	GRAPHIC REF	PART NUMBER	QTY	PART NAME 1 2 3 4 5 6 (PRODUCT LEVEL)	SEE PAGE
	1	1	**271-2417**	1	COVER GP-VALVE MECHANISM	
	1A	1	**244-4486**	1	SEAL-COVER	
		1	**245-6796**	1	COVER AS-BASE	
	2	1	**307-1738**	1	COVER GP-VALVE MECHANISM	
	2A	1	**272-0388**	1	SEAL-VALVE COVER	
M	3	1	**099-3649**	13	BOLT (M8X1.25X40-MM)	
	4	1	**8T-4224**	13	WASHER-HARD (8.8X16X2-MM THK)	

M-METRIC PART

307-1735 **COVER GP-VALVE MECHANISM** *(contd.)* **i02791485**

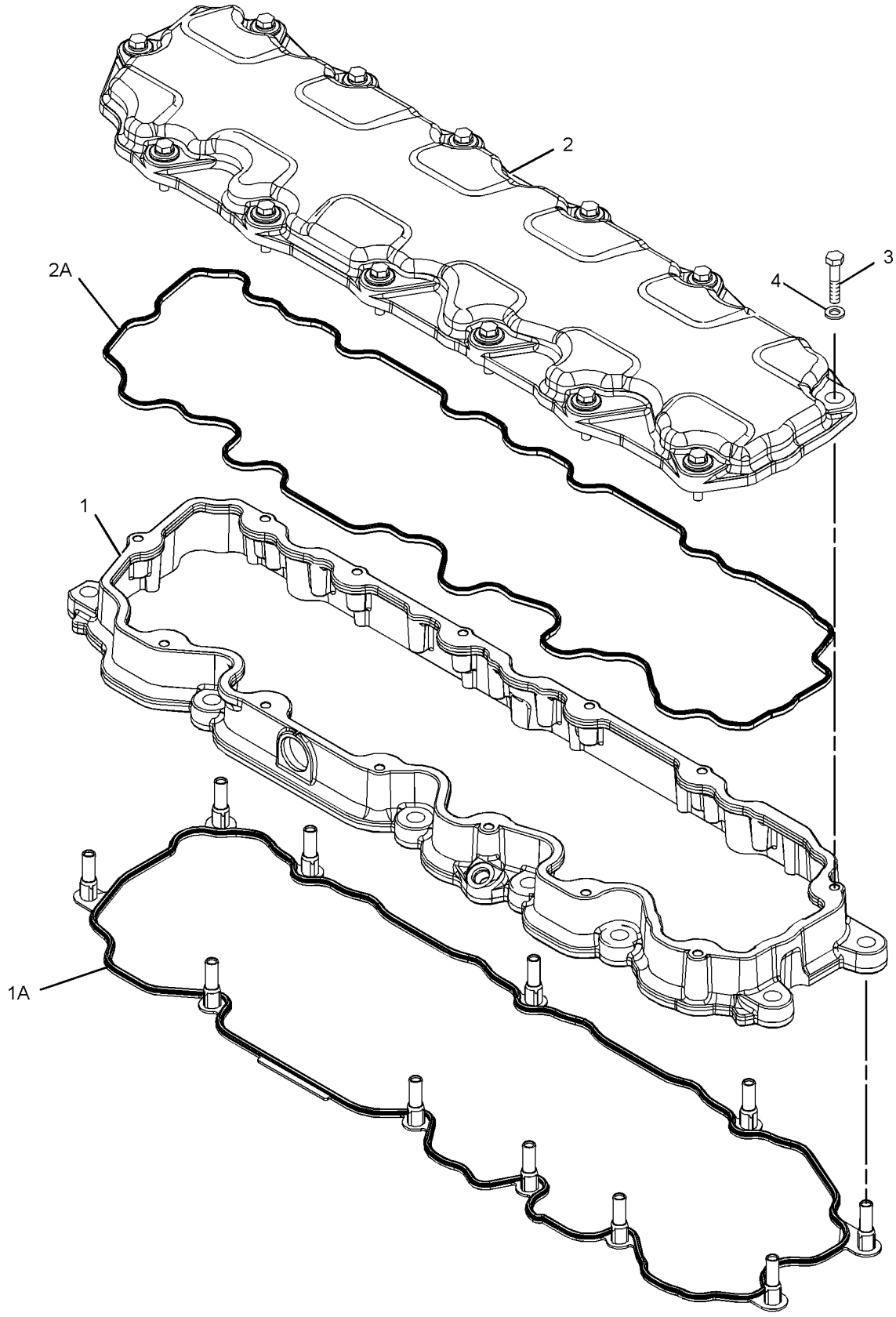

GRAPHIC #1 **<END>** g01348109

BASIC ENGINE

210-5590 CRANKSHAFT GP

S/N: KHX8814-UP

PART OF 312-0254 ENGINE AR-CORE

SMCS-1202, 1203, 1204, 1232 **i02215729**

NOTE	REF NO	GRAPHIC REF	PART NUMBER	QTY	PART NAME 1 2 3 4 5 6 (PRODUCT LEVEL)	SEE PAGE
	1	1	**227-5480**	1	CRANKSHAFT AS	
	1A	1	**1B-8705**	1	KEY-WOODRUFF	
	1B	1	**2W-8147**	1	GEAR (50-TEETH)	
J	2	1	**212-4893**	1	BEARING-THRUST (STANDARD)	
AB		1	**229-5153**		BEARING-THRUST (0.25-MM US)	
AB		1	**229-5154**		BEARING-THRUST (0.5-MM US)	
AB		1	**229-5155**		BEARING-THRUST (0.5-MM OS)	
AB		1	**229-5156**		BEARING-THRUST (0.5-MM US - 0.5-MM OS)	
J	3	1	**107-7708**	6	BEARING-MAIN (STANDARD)	
AB		1	**145-0168**		BEARING-MAIN (0.5-MM OS)	
AB		1	**145-0170**		BEARING-MAIN (0.5-MM US - 0.5-MM OS)	
AB		1	**145-0162**		BEARING-MAIN (0.25-MM US)	
AB		1	**145-0164**		BEARING-MAIN (0.5-MM US)	
ABF		1	**7C-7980**	1	SLEEVE-OIL SEAL	
					(THIS WEAR SLEEVE IS USED ONLY TO SALVAGE (REPAIR) THE REAR SEAL SURFACE OF THE CRANKSHAFT)	
					AVAILABLE REPAIR KIT(S):	
AJ			**196-9519**		BEARING GP-MAIN	

A-NOT PART OF THIS GROUP
B-USE AS REQUIRED
F-NOT SHOWN
J-KIT MARKED J SERVICES PARTS MARKED J

210-5590 **CRANKSHAFT GP** *(contd.)* **i02215729**

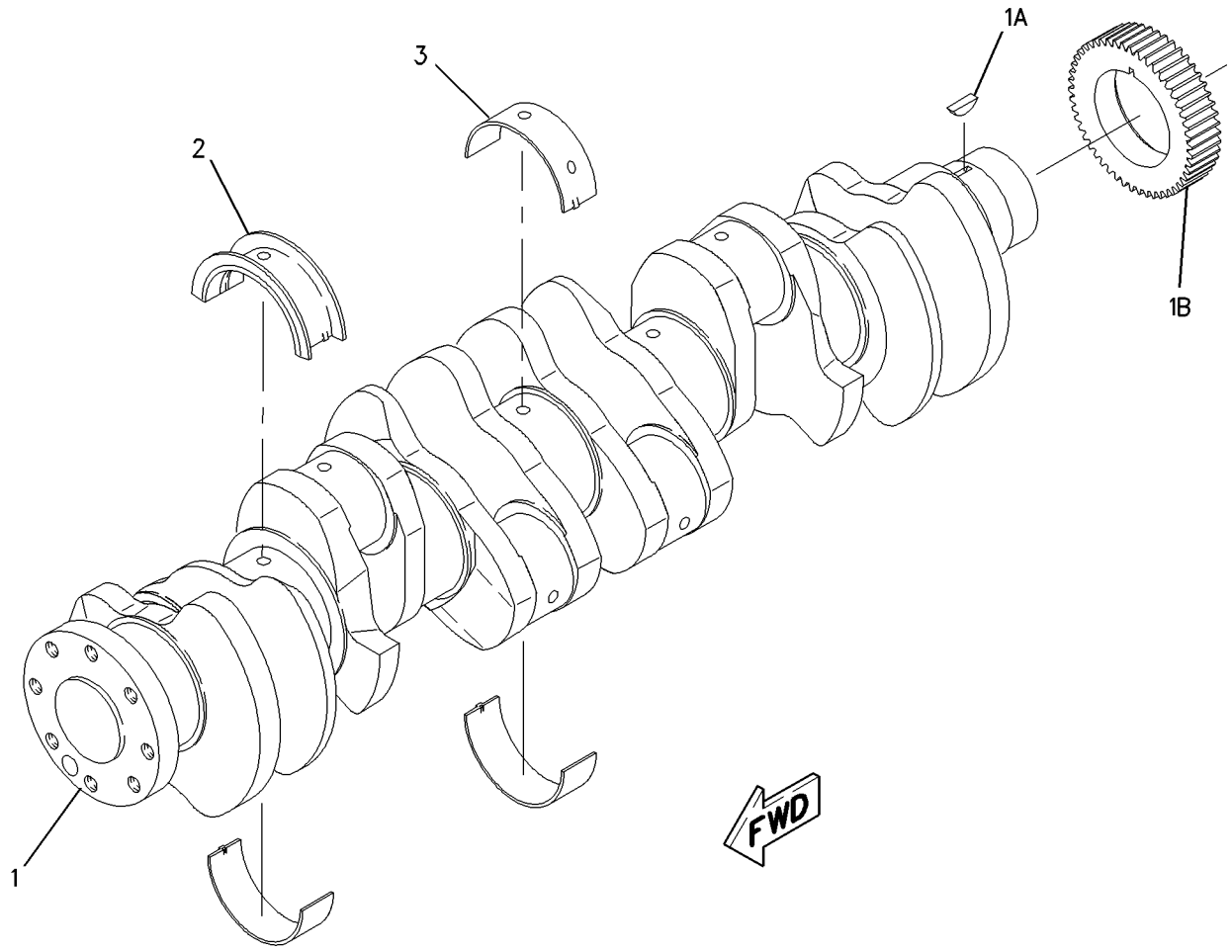

GRAPHIC #1 **<END>** g00977492

BASIC ENGINE

221-4482 CYLINDER BLOCK GP

S/N: KHX8814-UP

PART OF 312-0254 ENGINE AR-CORE

SMCS-1201 **i02690900**

NOTE	REF NO	GRAPHIC REF	PART NUMBER	QTY	PART NAME 1 2 3 4 5 6 (PRODUCT LEVEL)	SEE PAGE
CY	1	1	**305-8141**	1	CYLINDER BLOCK GP	22
	2	1	**7N-5683**	2	DOWEL	
	3	1	**1W-8407**	2	SLEEVE	
	4	1	**6V-3538**	2	DOWEL	

C-CHANGE FROM PREVIOUS TYPE
Y-SEPARATE ILLUSTRATION

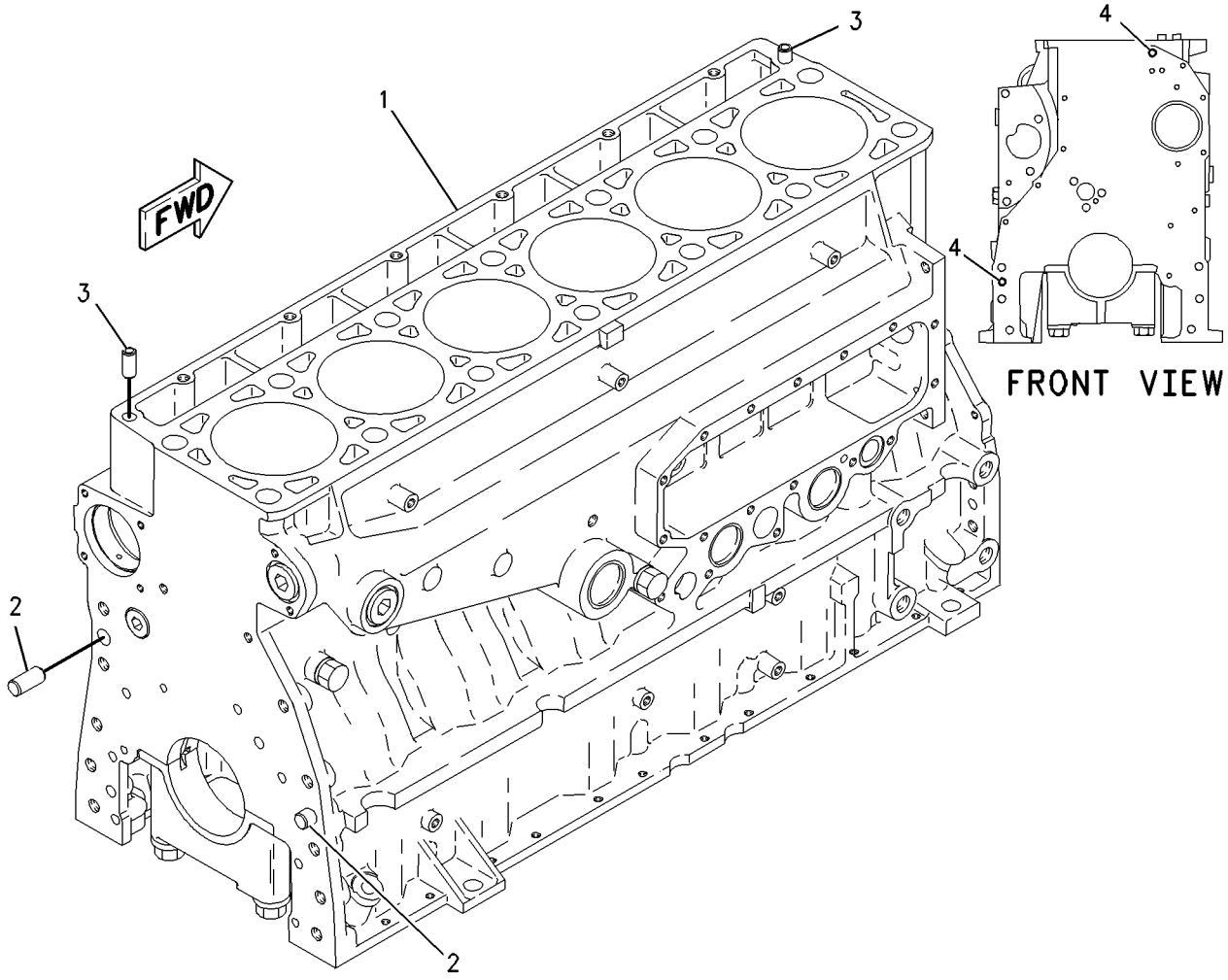

GRAPHIC #1 **<END>** g00800849

263-3774 CYLINDER BLOCK GP

S/N: KHX8814-UP

PART OF 305-8141 CYLINDER BLOCK GP

SMCS-1201 **i02696326**

NOTE	REF NO	GRAPHIC REF	PART NUMBER	QTY	PART NAME 1 2 3 4 5 6 (PRODUCT LEVEL)	SEE PAGE
	1	1	**7E-2968**	7	CAP-CRANKSHAFT BEARING	
M	2	1	**9X-8916**	14	BOLT (M16X2X140-MM)	
	3	1	**5P-8247**	14	WASHER-HARD (17X32X3.5-MM THK)	

M-METRIC PART

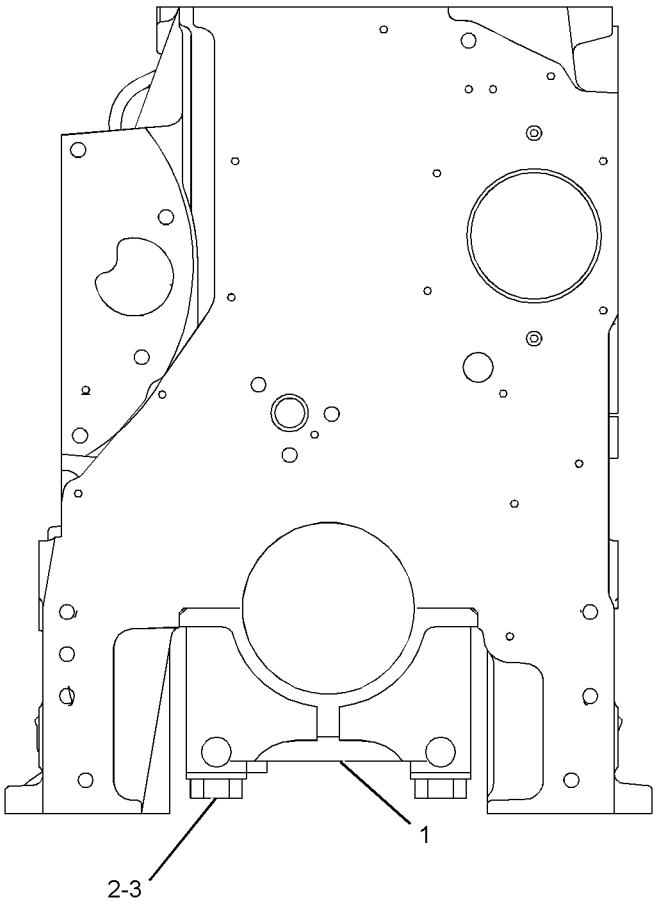

FRONT VIEW

GRAPHIC #1

<END>

g01352581

BASIC ENGINE

305-8141 CYLINDER BLOCK GP

S/N: KHX8814-UP

PART OF 221-4482 CYLINDER BLOCK GP

SMCS-1201 **i02690909**

NOTE	REF NO	GRAPHIC REF	PART NUMBER	QTY	PART NAME 1 2 3 4 5 6 (PRODUCT LEVEL)	SEE PAGE
Y	1	1	*263-3774*	1	CYLINDER BLOCK GP	21
	2	1	**2M-6471**	2	PLUG-CUP	
	3	1	**3H-5552**	1	PLUG-CUP	
	4	1	**9S-8006**	1	PLUG-O-RING	
	5	1	**2M-9780**	1	SEAL-O-RING	
	6	1	**216-5586**	1	BEARING-SLEEVE (CAMSHAFT)	
	7	1	**2W-7213**	6	BEARING-SLEEVE (CAMSHAFT)	

Y-SEPARATE ILLUSTRATION

305-8141 **CYLINDER BLOCK GP** *(contd.)* **i02690909**

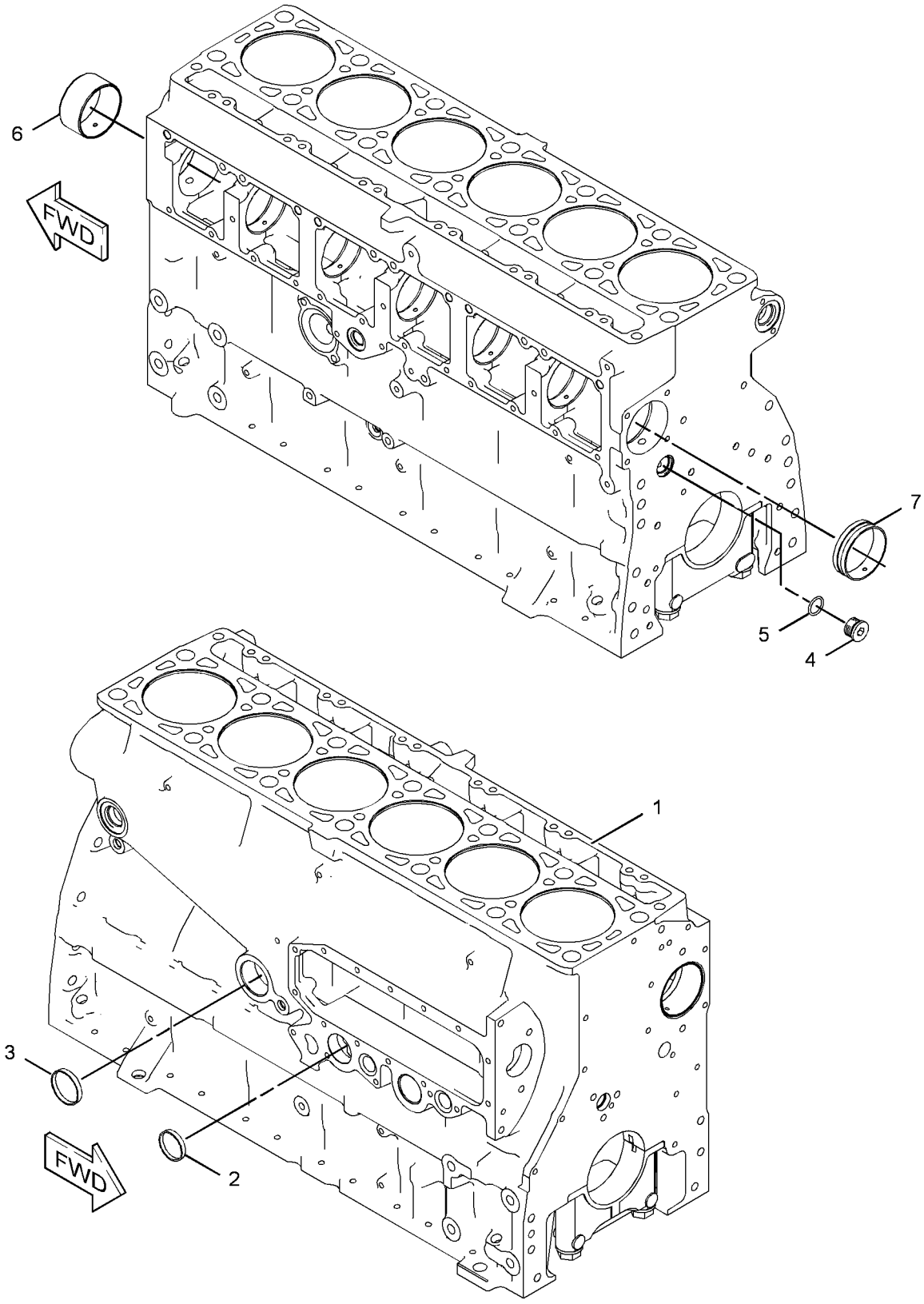

GRAPHIC #1 **<END>** g01348114

BASIC ENGINE

219-5844 CYLINDER HEAD AS

S/N: KHX8814-UP

PART OF 219-5846 CYLINDER HEAD GP

SMCS-1100 **i02215799**

NOTE	REF NO	GRAPHIC REF	PART NUMBER	QTY	PART NAME 1 2 3 4 5 6 (PRODUCT LEVEL)	SEE PAGE
	2	1	**8M-5860**	12	PLUG-CUP	
	3	1	**4F-5695**	2	PLUG-CUP	
	4	1	**227-1200**	6	SLEEVE-INJECTOR	
	5	1	**217-5213**	12	INSERT-VALVE SEAT (INLET)	
	6	1	**147-8218**	6	INSERT-VALVE SEAT (EXHAUST)	
	7	1	**8C-0563**	12	SEAL-O-RING	
	8	1	**9S-9334**	1	PLUG-O-RING	
	9	1	**9X-7712**	1	SEAL-O-RING	

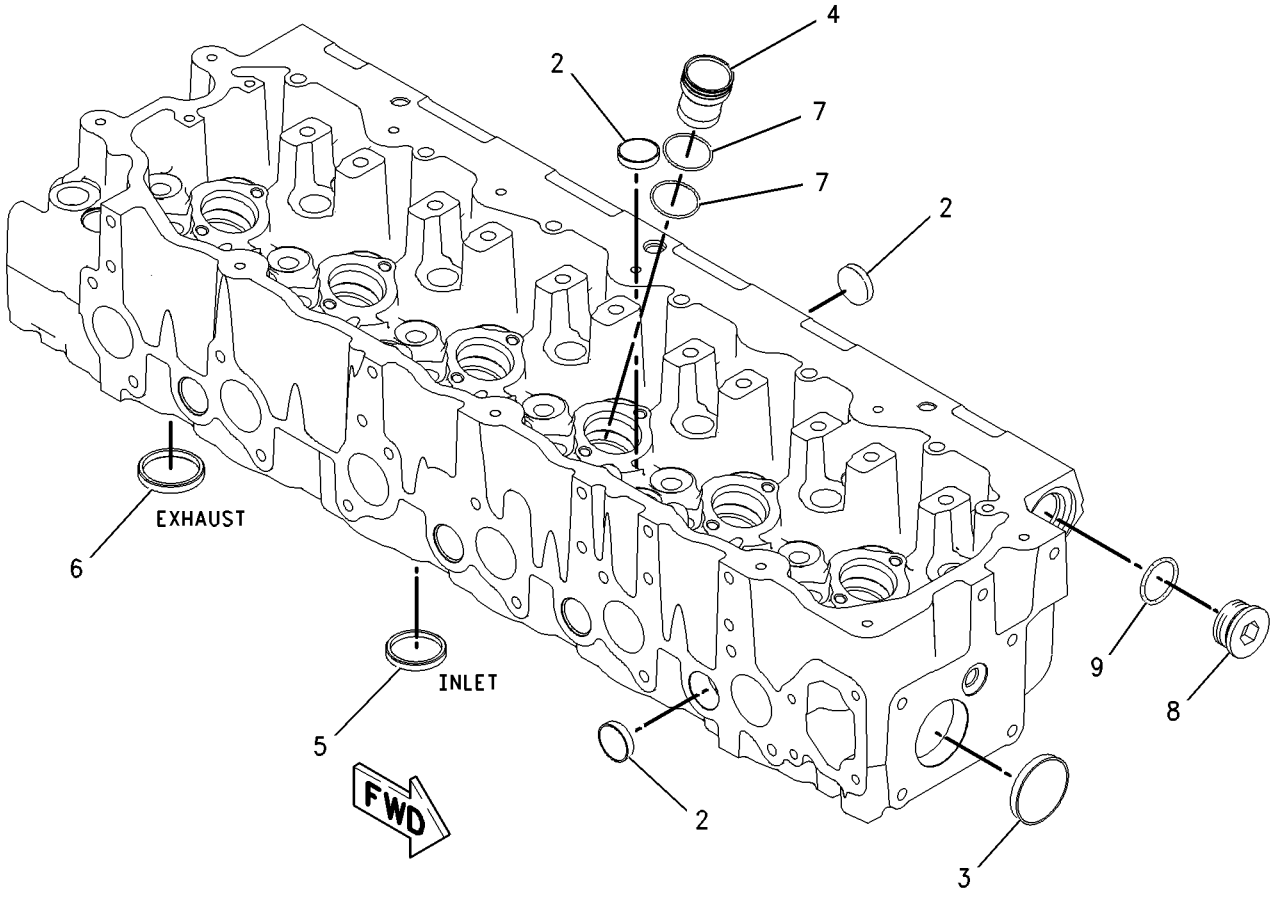

GRAPHIC #1 **<END>** g00948980

219-5846 CYLINDER HEAD GP*R

S/N: KHX8814-UP

PART OF 219-5847 CYLINDER HEAD GP

SMCS-1100 **i02215801**

NOTE	REF NO	GRAPHIC REF	PART NUMBER	QTY	PART NAME 1 2 3 4 5 6 (PRODUCT LEVEL)	SEE PAGE
Y	1	1	*219-5844*	1	CYLINDER HEAD AS	24
	2	1	**145-7390**	12	VALVE-INLET	
	3	1	**147-8211**	6	VALVE-EXHAUST	
	4	1	**1W-2715**	24	LOCK-RETAINER	
	5	1	**7E-7779**	12	RETAINER-SPRING	
	6	1	**147-8214**	12	SEAL-VALVE STEM	
	7	1	**140-9670**	12	GUIDE-VALVE	
	8	1	**137-6718**	6	SPRING-VALVE	
	9	1	**140-6188**	12	SPRING-VALVE	
	10	1	**2A-4429**	12	LOCK-RETAINER	
	11	1	**134-4483**	6	RETAINER-SPRING	
	12	1	**147-8220**	6	GUIDE-VALVE	
	13	1	**163-2478**	6	SEAL-VALVE STEM	
	14	1	**137-6715**	6	SEAT-VALVE SPRING	

Y-SEPARATE ILLUSTRATION

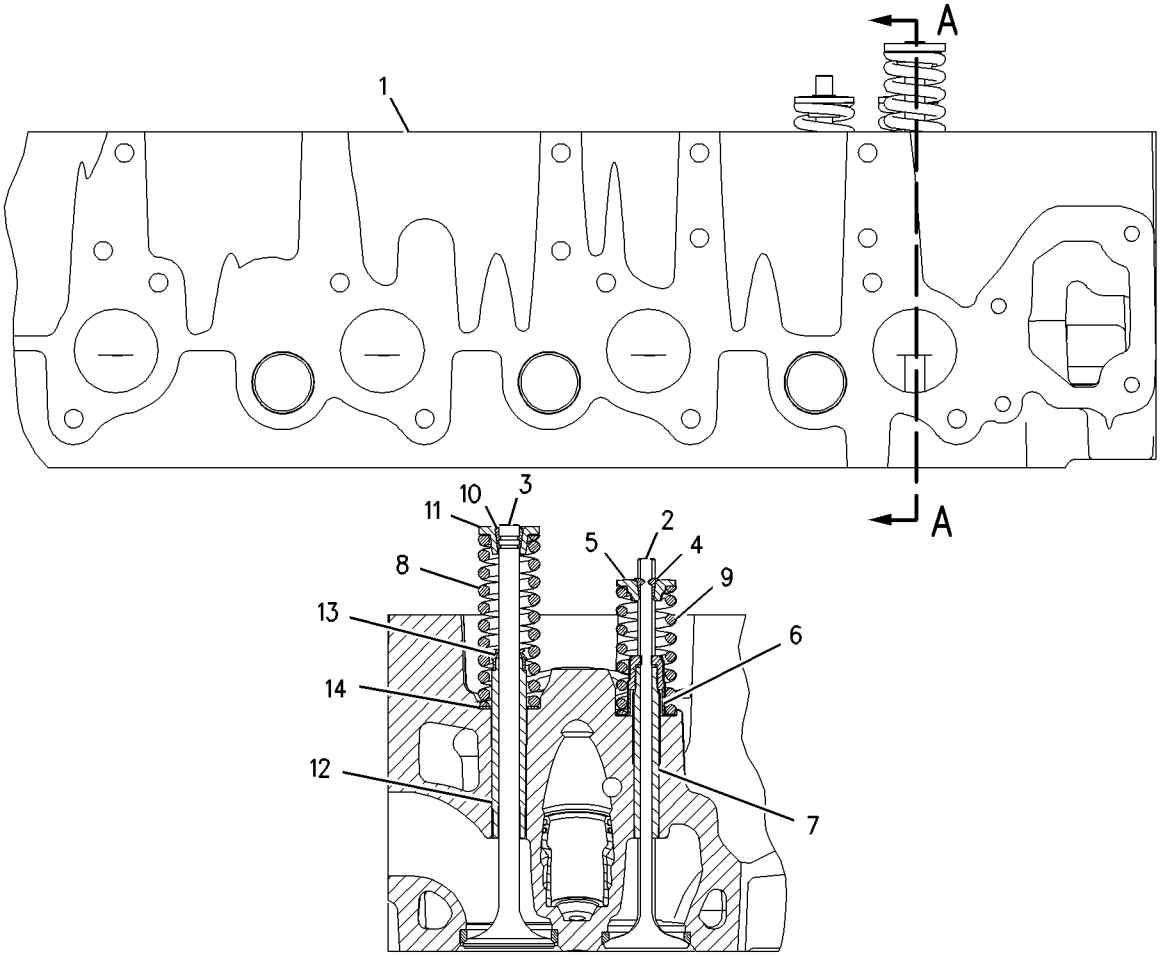

SECTION A-A

GRAPHIC #1 **<END>** g00947786

219-5847 CYLINDER HEAD GP*R

S/N: KHX8814-UP

PART OF 219-5849 CYLINDER HEAD GP

SMCS-1100 **i02215791**

NOTE	REF NO	GRAPHIC REF	PART NUMBER	QTY	PART NAME 1 2 3 4 5 6 (PRODUCT LEVEL)	SEE PAGE
YR	1	1	**219-5846**	1	CYLINDER HEAD GP	25
	2	1	**1N-5999**	2	PLUG-O-RING	
	3	1	**2M-9780**	1	SEAL-O-RING	
	4	1	**3J-1907**	2	SEAL-O-RING	
	5	1	**6V-5048**	6	SEAL-O-RING	
	6	1	**7J-0204**	2	SEAL-O-RING	
	7	1	**9S-8002**	6	PLUG-O-RING	
	8	1	**9S-8004**	2	PLUG-O-RING	
	9	1	**9S-8006**	1	PLUG-O-RING	
	10	1	**9S-9334**	1	PLUG-O-RING	
	11	1	**9X-7712**	1	SEAL-O-RING	

R-REMFG PART MAY BE AVAILABLE
Y-SEPARATE ILLUSTRATION

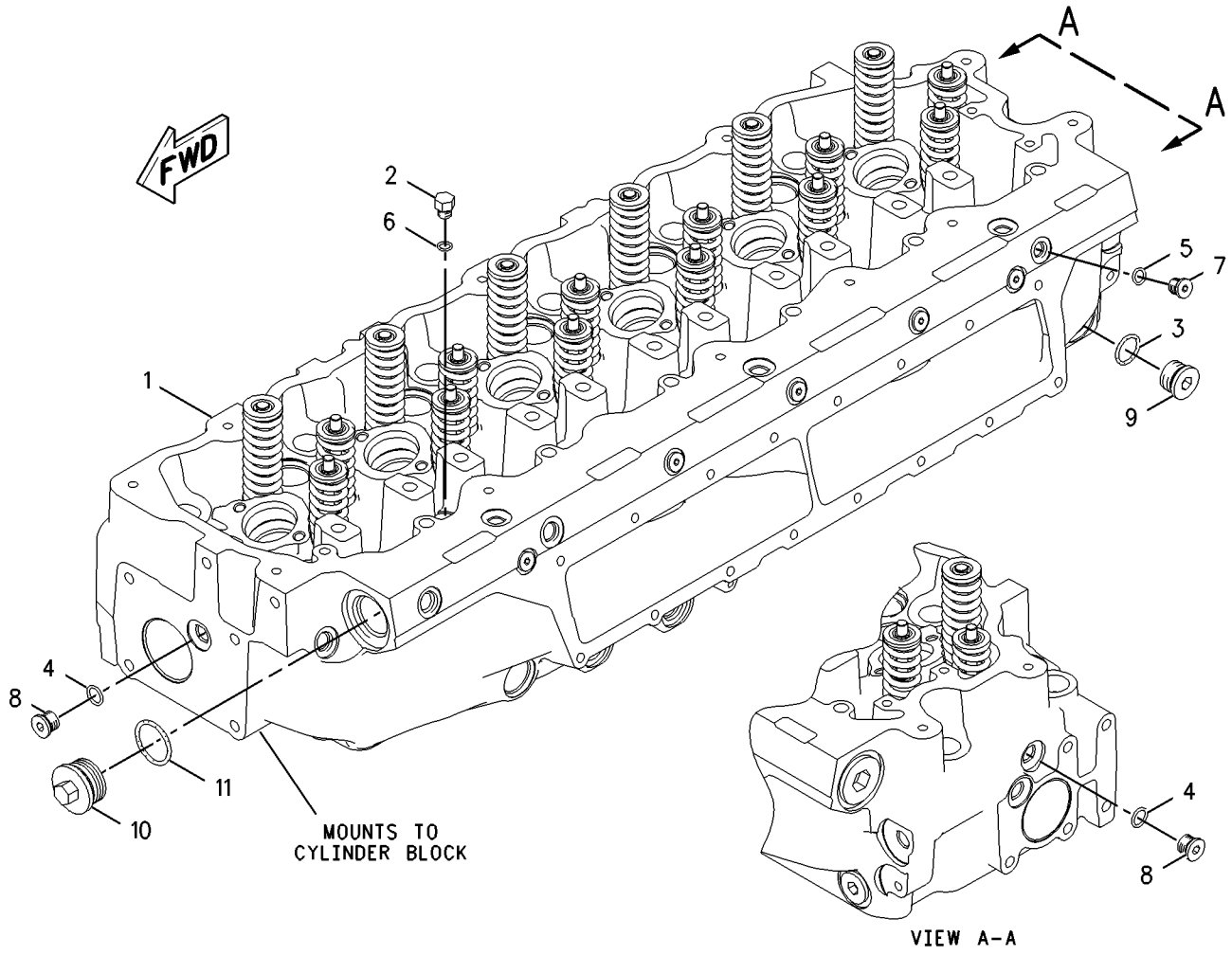

GRAPHIC #1 **<END>** g00947578

219-5849 CYLINDER HEAD GP

S/N: KHX8814-UP

PART OF 312-0254 ENGINE AR-CORE

SMCS-1100 **i02260856**

NOTE	REF NO	GRAPHIC REF	PART NUMBER	QTY	PART NAME 1 2 3 4 5 6 (PRODUCT LEVEL)	SEE PAGE
Y	1	1	*219-5847*	1	CYLINDER HEAD GP	26
	2	1	**133-4995**	1	GASKET-CYLINDER HEAD	
	3	1	*142-7289*	14	FASTENER GP-CYLINDER HEAD	
					(EACH INCLUDES)	
		1	**138-3252**	1	BOLT-12 POINT HEAD	
		1	**8T-3282**	1	WASHER-HARD (22X35X3.5-MM THK)	
M	4	1	**8T-7950**	6	BOLT (M10X1.5X180-MM)	
	5	1	**6V-5839**	6	WASHER (11X21X2.5-MM THK)	

M-METRIC PART
Y-SEPARATE ILLUSTRATION

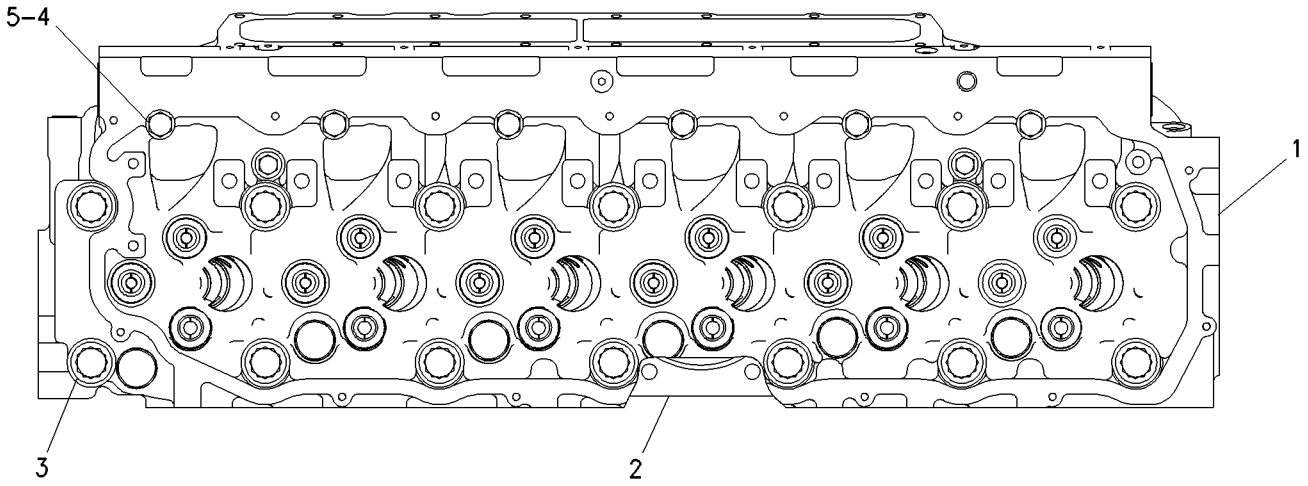

TOP VIEW

GRAPHIC #1 **<END>** g00760746

BASIC ENGINE

250-8309 DAMPER & PULLEY GP

S/N: KHX8814-UP

PART OF 312-0255 ENGINE AR-COMPLETE

SMCS-1205 **i02789612**

NOTE	REF NO	GRAPHIC REF	PART NUMBER	QTY	PART NAME 1 2 3 4 5 6 (PRODUCT LEVEL)	SEE PAGE
	1	1	**2W-7381**	1	PLATE-CLAMP	
	2	1	**167-8121**	1	DAMPER AS	
	3	1	**172-9367**	1	PULLEY-CRANKSHAFT	
	4	1	**228-3621**	1	SPACER (101.5X167X8-MM THK)	
M	5	1	**6V-4249**	8	BOLT (M10X1.5X50-MM)	
M	6	1	**8T-3666**	4	BOLT (M14X2X60-MM)	

M-METRIC PART

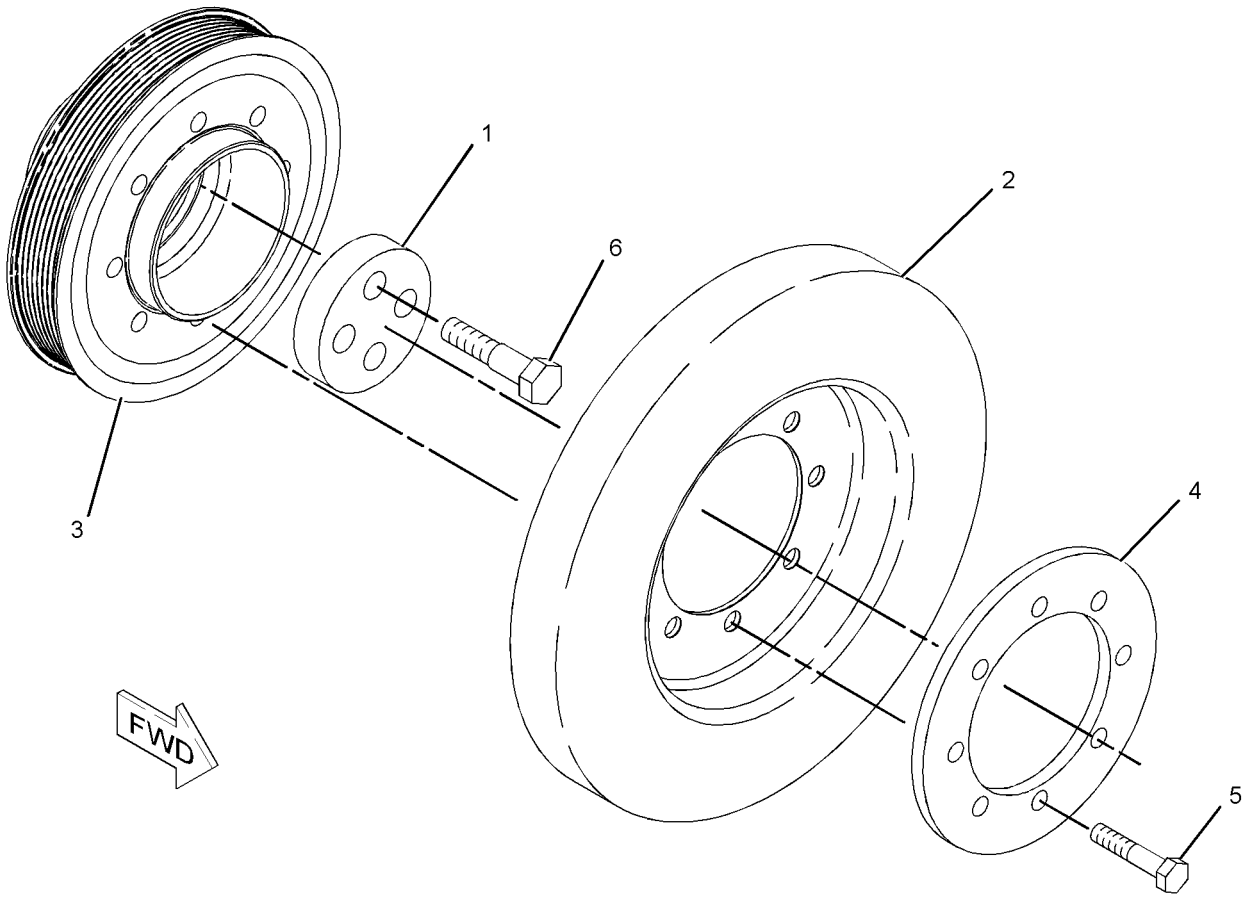

GRAPHIC #1 **<END>** g01148400

BASIC ENGINE

313-4384 DRIVE GP-ACCESSORY

S/N: KHX8814-UP

PART OF 312-0255 ENGINE AR-COMPLETE

SMCS-1207 **i03339007**

NOTE	REF NO	GRAPHIC REF	PART NUMBER	QTY	PART NAME 1 2 3 4 5 6 (PRODUCT LEVEL)	SEE PAGE
	1	1	**124-7792**	1	PULLEY AS-IDLER	
	2	1	**145-2901**	1	COVER-DUST	
	3	1	**220-1209**	1	BELT TENSIONER	
	4	1	**228-4766**	1	PLATE-LIFTING	
	5	1	**263-1786**	1	SPACER	
	6	1	**316-4404**	1	BRACKET AS	
	7	1	**285-9066**	1	BOLT (M8X1.25X65-MM)	
	8	1	**5P-4116**	1	WASHER-HARD (8.8X20.5X2-MM THK)	
	9	1	**8T-4121**	5	WASHER-HARD (11X21X2.5-MM THK)	
M	10	1	**8T-4172**	1	BOLT (M10X1.5X80-MM)	
M	11	1	**8T-4196**	4	BOLT (M10X1.5X35-MM)	

M-METRIC PART

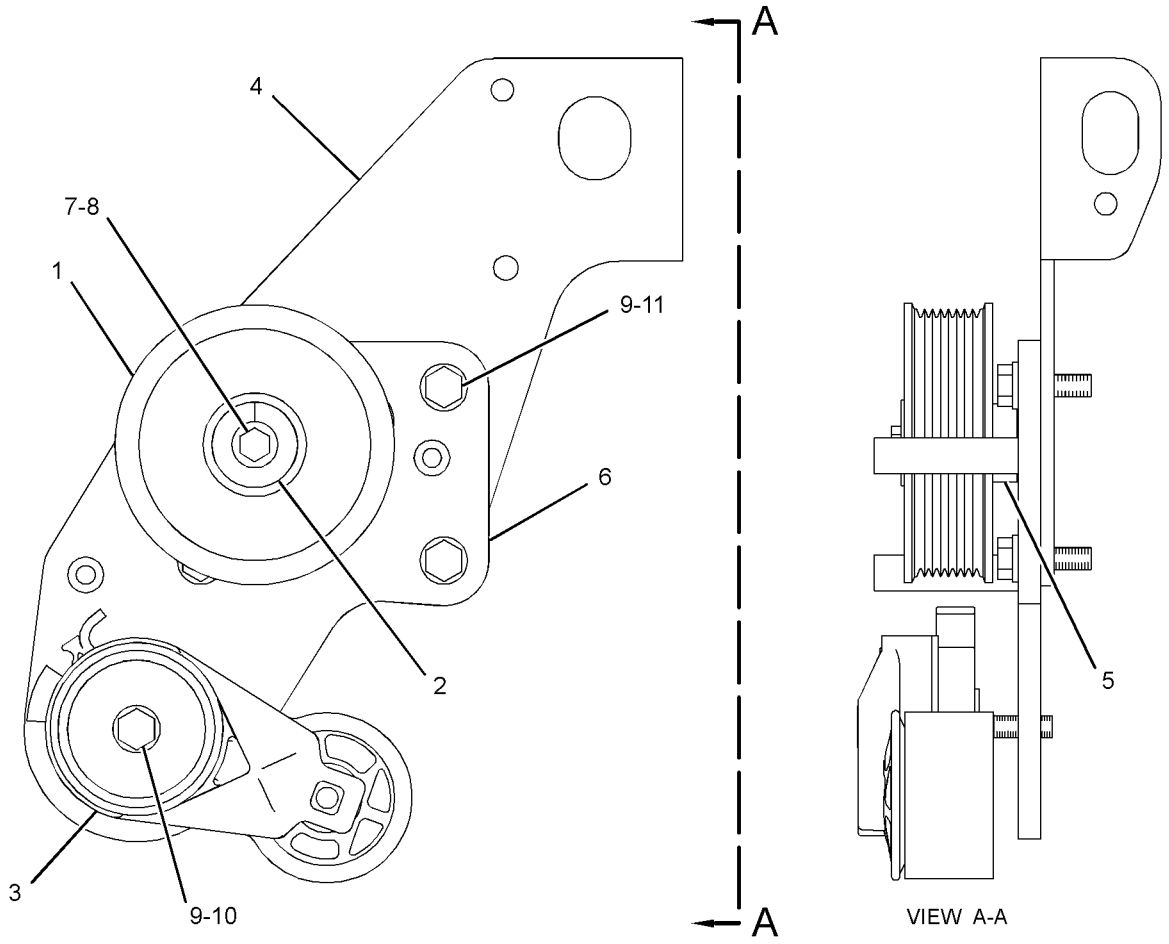

GRAPHIC #1 **<END>** g01716996

BASIC ENGINE

7C-8365 DRIVE GP-FAN

S/N: JBP1-UP

PART OF 318-9471 DRIVE GP-FAN

SMCS-1359 **i03432296**

NOTE	REF NO	GRAPHIC REF	PART NUMBER	QTY	PART NAME 1 2 3 4 5 6 (PRODUCT LEVEL)	SEE PAGE
	1	1	**5S-9062**	1	SPACER (35.032X50.8X15.88-MM THK)	
	2	1	**7C-8370**	1	CAP-DUST	
	3	1	**7C-8366**	1	BRACKET AS	
	4	1	**7C-8369**	1	HUB	
	5	1	**6V-9748**	1	SEAL-LIP TYPE	
	6	1	**4W-1203**	2	CUP-BEARING	
	7	1	**4W-1204**	2	CONE-BEARING	
	8	1	**4W-2042**	1	SPACER (35.3X45.5X38.331-MM THK)	
M	9	1	**6V-8004**	1	BOLT (M12X1.75X120-MM)	
	10	1	**7C-8634**	1	PLATE	

M-METRIC PART

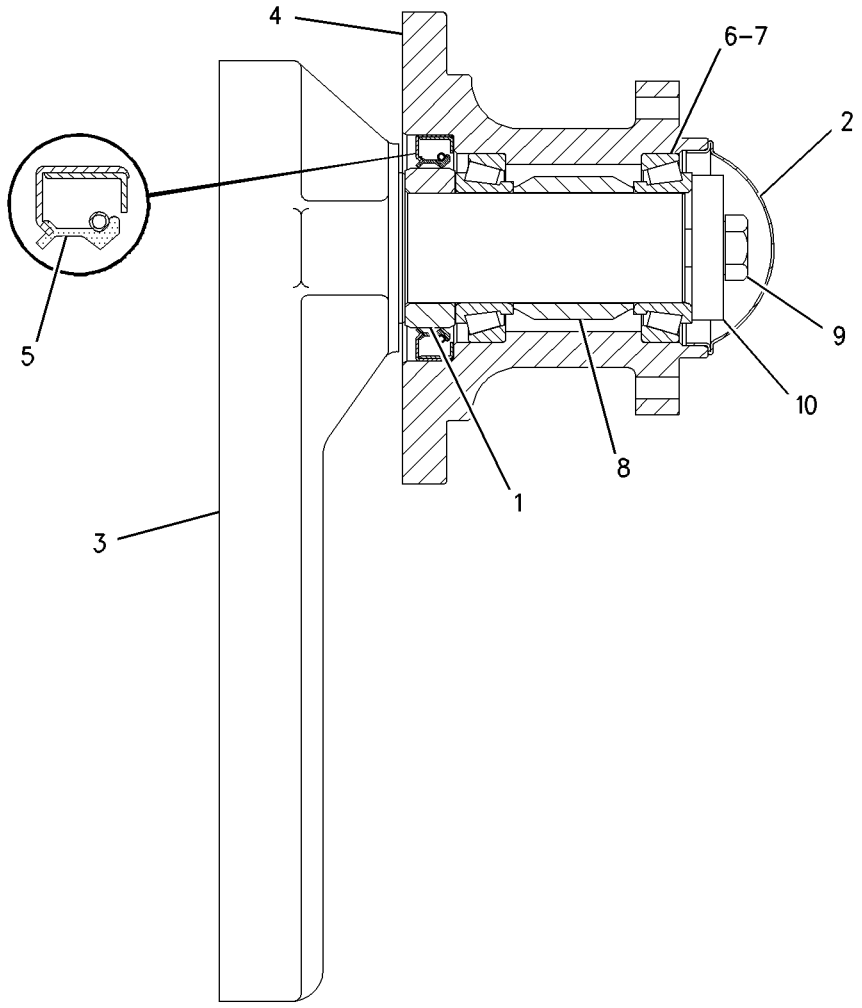

GRAPHIC #1 **<END>** g00799529

BASIC ENGINE

318-9471 DRIVE GP-FAN

S/N: JBP1-UP

PART OF 274-7941 GENERAL AR

SMCS-1359 **i03246261**

NOTE	REF NO	GRAPHIC REF	PART NUMBER	QTY	PART NAME 1 2 3 4 5 6 (PRODUCT LEVEL)	SEE PAGE
Y	1	1	**7C-8365**	1	DRIVE GP-FAN	30
	2	1	**107-9579**	1	PULLEY	
	3	1	**276-7462**	1	ADAPTER-FAN	
	4	1	**294-1136**	1	SUPPORT AS	
	5	1	**318-9543**	1	PULLEY	
	6	1	**319-6293**	1	V-BELT SET (INCLUDES 3-BELTS)	
M	7	1	**7X-0818**	6	BOLT (M8X1.25X45-MM)	
M	8	1	**7X-2553**	4	BOLT (M16X2X40-MM)	
	9	1	**8T-4121**	8	WASHER-HARD (11X21X2.5-MM THK)	
M	10	1	**8T-4185**	4	BOLT (M10X1.5X50-MM)	
M	11	1	**8T-4196**	4	BOLT (M10X1.5X35-MM)	
	12	1	**8T-4224**	12	WASHER-HARD (8.8X16X2-MM THK)	
M	13	1	**8T-4908**	6	BOLT (M8X1.25X25-MM)	
	14	1	**9X-8257**	4	WASHER (17.5X30X3.5-MM THK)	

M-METRIC PART
Y-SEPARATE ILLUSTRATION

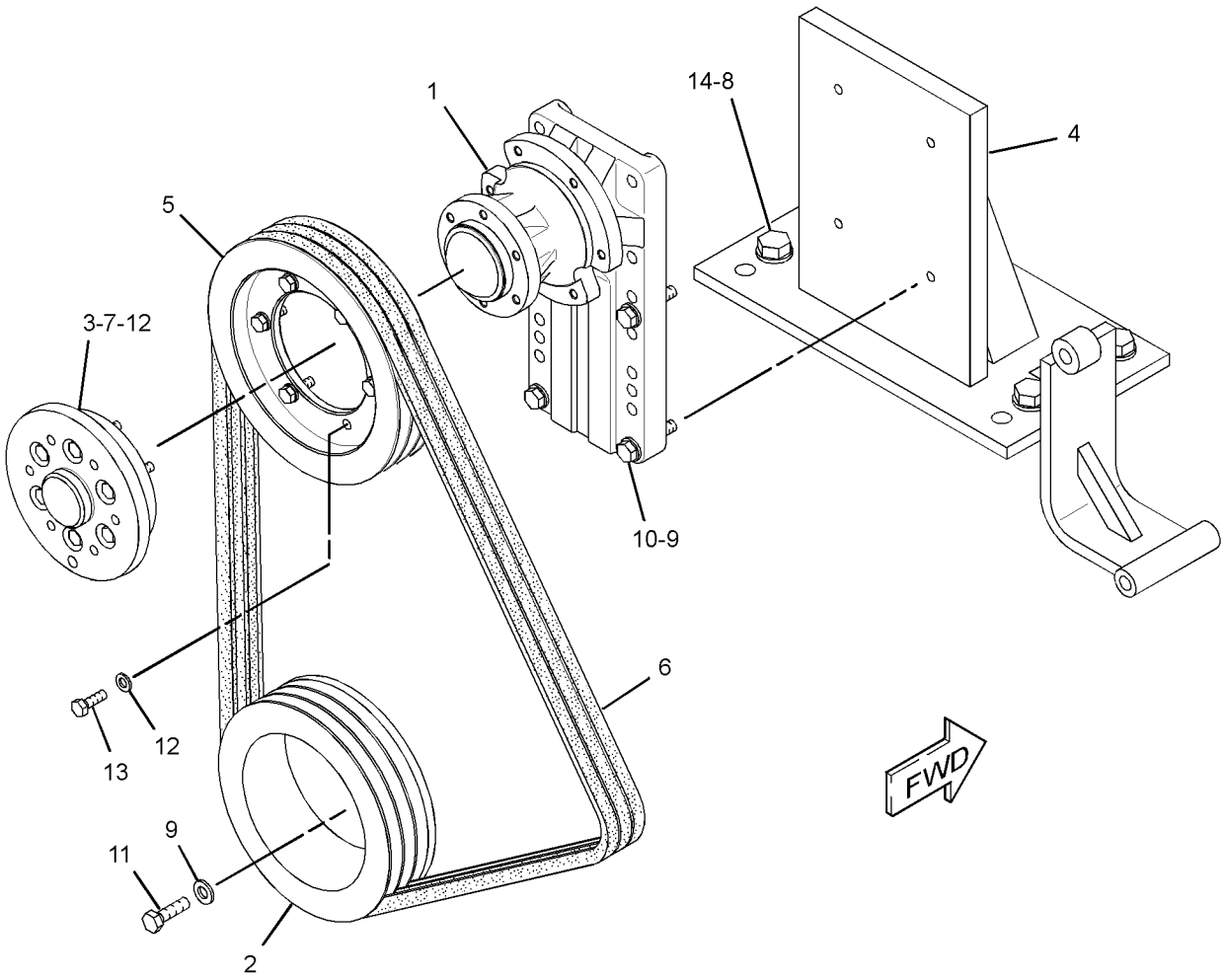

GRAPHIC #1 **<END>** g01686013

BASIC ENGINE

258-8723 FASTENER GP-CYLINDER HEAD

S/N: KHX8814-UP

PART OF 312-0255 ENGINE AR-COMPLETE

SMCS-1100 **i02310961**

NOTE	REF NO	GRAPHIC REF	PART NUMBER	QTY	PART NAME 1 2 3 4 5 6 (PRODUCT LEVEL)	SEE PAGE
	1	1	**229-8844**	3	CLIP	
	2	1	**244-4500**	11	SPRING	
M	3	1	**8T-0100**	11	BOLT (M8X1.25X60-MM)	
	4	1	**9N-0869**	11	WASHER-HARD (8.8X25.5X2-MM THK)	

M-METRIC PART

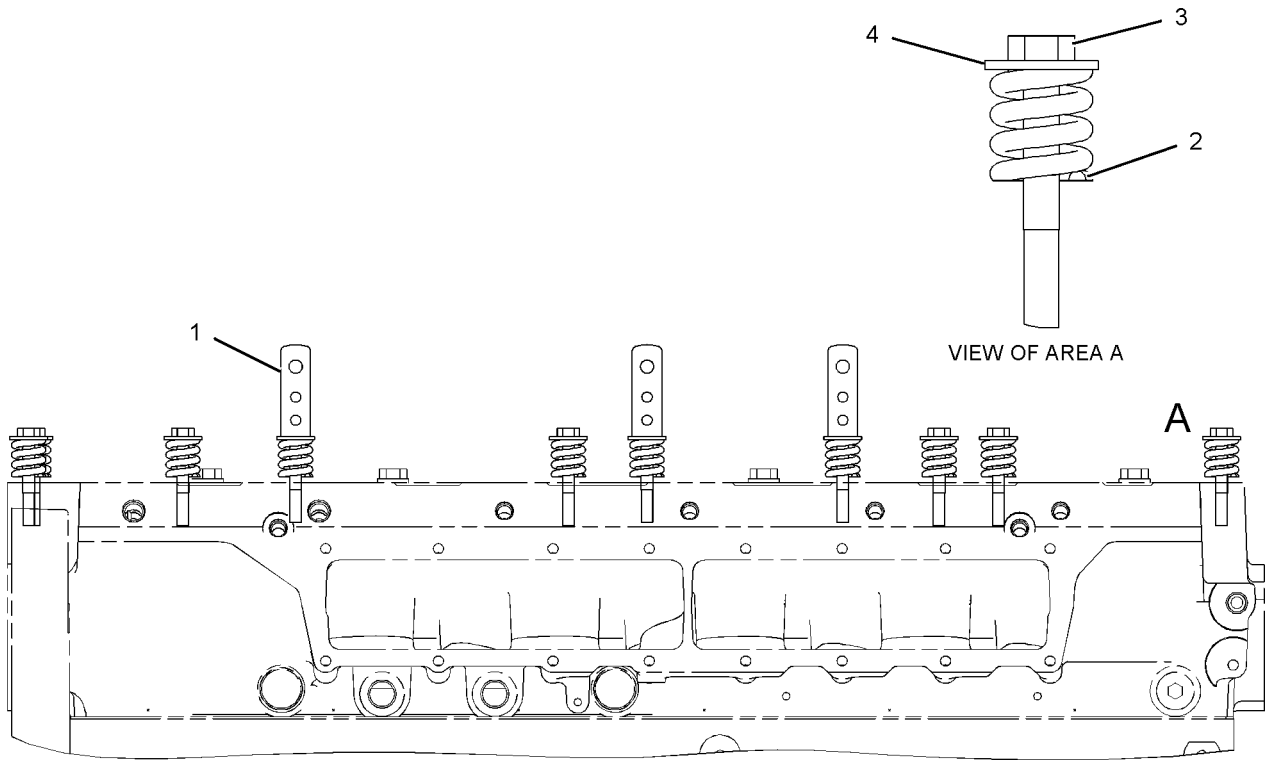

RIGHT SIDE VIEW

GRAPHIC #1 **<END>** g01125046

BASIC ENGINE

322-0246 FASTENER GP-ENGINE

S/N: KHX8814-UP

PART OF 312-0255 ENGINE AR-COMPLETE

SMCS-1000, 7553 **i02981180**

NOTE	REF NO	GRAPHIC REF	PART NUMBER	QTY	PART NAME 1 2 3 4 5 6 (PRODUCT LEVEL)	SEE PAGE
M	1	1	**6V-2317**	4	BOLT (M8X1.25X30-MM)	
M	2	1	**6V-5218**	2	BOLT (M8X1.25X35-MM)	
M	3	1	**6V-8337**	1	BOLT-SOCKET HEAD (M8X1.25X35-MM)	
	4	1	**9M-1974**	7	WASHER-HARD (8.8X16X2-MM THK)	

M-METRIC PART

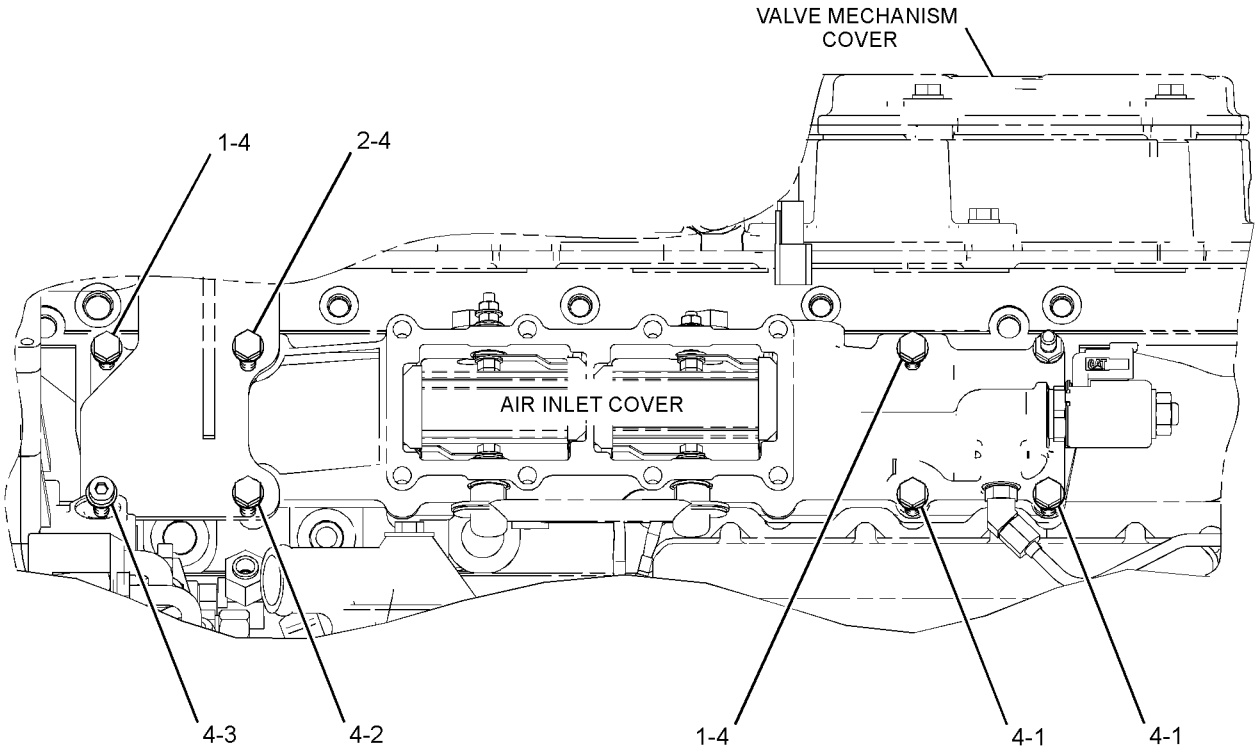

LEFT SIDE VIEW OF ENGINE

GRAPHIC #1 **<END>** g01528516

116-4556 FASTENER GP-FRONT HOUSING

S/N: KHX8814-UP

PART OF 312-0255 ENGINE AR-COMPLETE

SMCS-1151 **i01487429**

NOTE	REF NO	GRAPHIC REF	PART NUMBER	QTY	PART NAME 1 2 3 4 5 6 (PRODUCT LEVEL)	SEE PAGE
M	1	1	**6V-8336**	6	BOLT (M12X1.75X70-MM)	
		1	**5P-8245**	6	WASHER-HARD (13.5X25.5X3-MM THK)	

M-METRIC PART

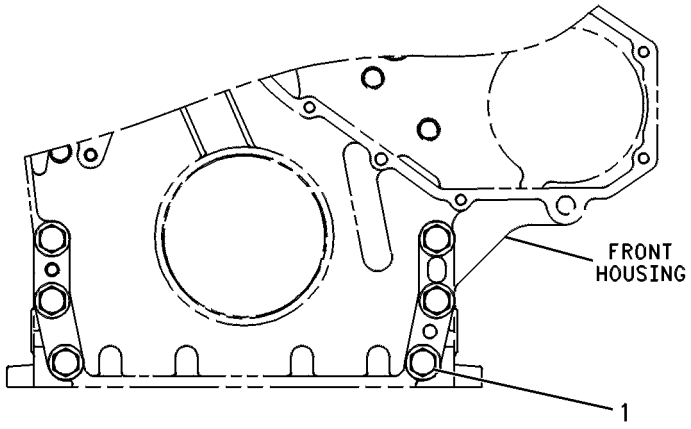

FRONT VIEW

GRAPHIC #1 **<END>** g00244671

BASIC ENGINE

275-8387 FLYWHEEL GP

S/N: KHX8814-UP

PART OF 312-0255 ENGINE AR-COMPLETE

SMCS-1156, 1158 **i03338762**

NOTE	REF NO	GRAPHIC REF	PART NUMBER	QTY	PART NAME 1 2 3 4 5 6 (PRODUCT LEVEL)	SEE PAGE
	1	1	**3E-3213**	1	PIN-SPRING	
M	2	1	**7X-7961**	8	BOLT-SELF-LOCKING (M12X1.75X100-MM)	
	3	1	**311-7210**	1	FLYWHEEL AS	
		1	**7W-5095**	1	GEAR-FLYWHEEL (134-TEETH)	
	4	1	**5P-8245**	8	WASHER-HARD (13.5X25.5X3-MM THK)	

M-METRIC PART

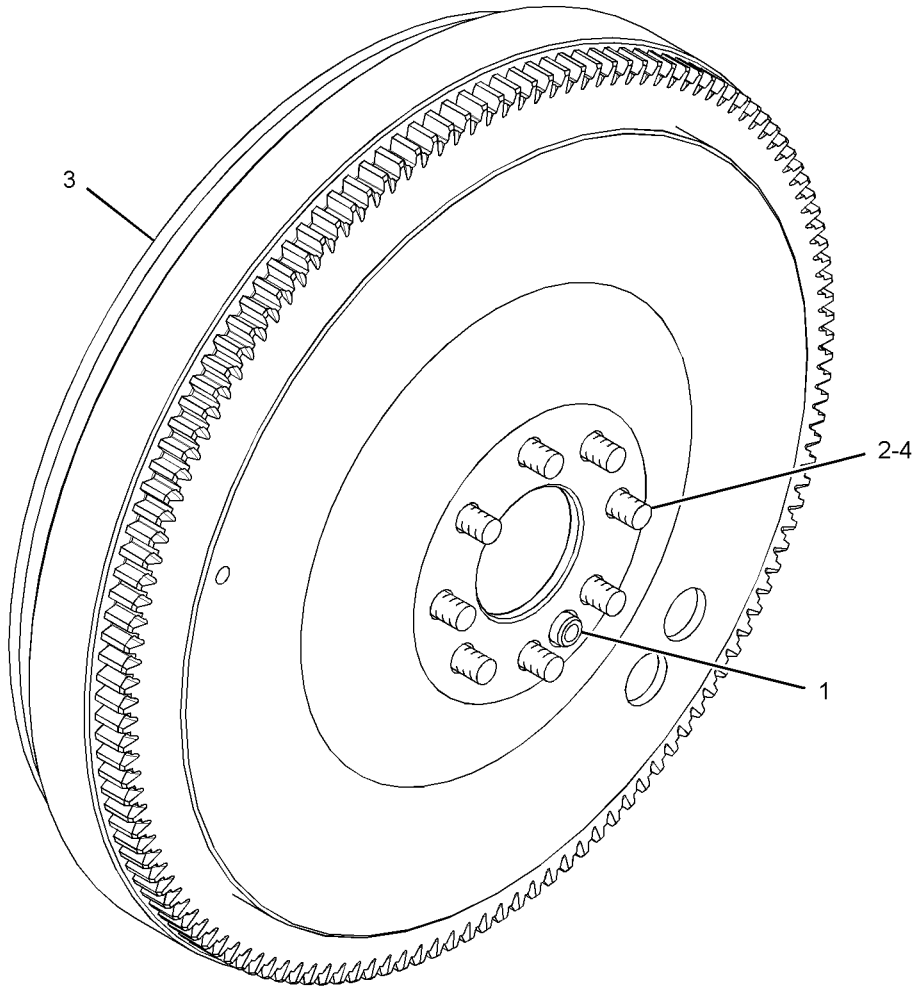

GRAPHIC #1 **<END>** g01717017

BASIC ENGINE

205-1321 GEAR GP-FRONT

S/N: KHX8814-UP

PART OF 312-0254 ENGINE AR-CORE

SMCS-1151, 1162, 1206 **i01696307**

NOTE	REF NO	GRAPHIC REF	PART NUMBER	QTY	PART NAME 1 2 3 4 5 6 (PRODUCT LEVEL)	SEE PAGE
	1	1	**113-6069**	1	PLATE-THRUST	
	2	1	**115-4219**	1	PLATE-RETAINING	
	3	1	**200-4495**	1	SHAFT-IDLER	
	4	1	**205-1320**	1	GEAR AS-IDLER (50 TEETH)	
	4A	1	**115-4072**	1	BEARING	
M	5	1	**136-4183**	1	BOLT-12 POINT HEAD (M10X1.5X30MM)	
M	6	1	**6V-5843**	2	BOLT (M10X1.50X45MM)	

M-METRIC PART

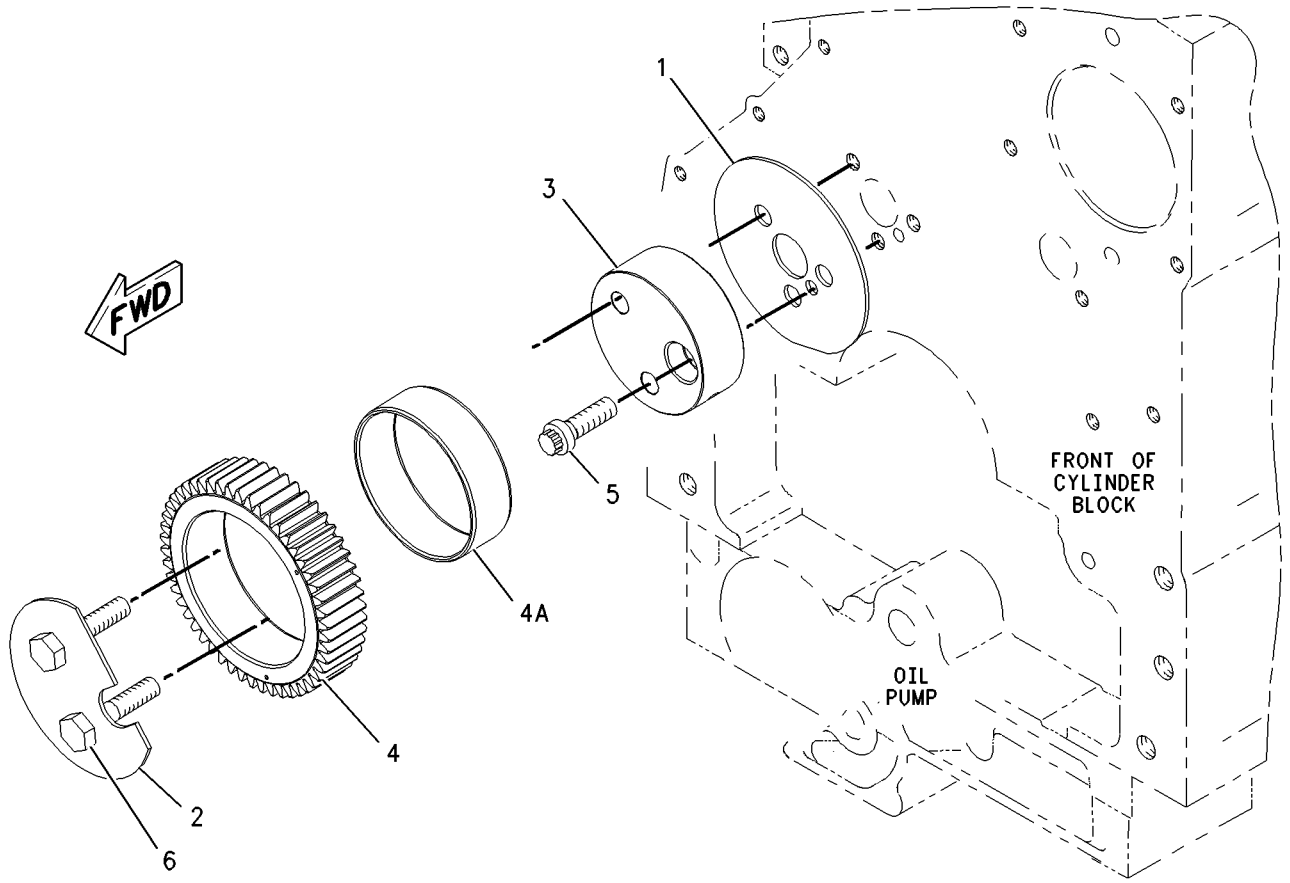

GRAPHIC #1 **<END>** g00873940

197-5210 HOUSING GP-FLYWHEEL

S/N: KHX8814-UP

PART OF 312-0255 ENGINE AR-COMPLETE

SMCS-1157 **i02333440**

NOTE	REF NO	GRAPHIC REF	PART NUMBER	QTY	PART NAME 1 2 3 4 5 6 (PRODUCT LEVEL)	SEE PAGE
	1	1	**5F-0304**	1	PLUG	
	2	1	**100-6551**	1	HOUSING-FLYWHEEL	
	4	1	**2A-1162**	1	GASKET	
	5	1	**3D-2824**	1	SEAL-O-RING	
	6	1	**3J-7354**	1	SEAL-O-RING	
M	7	1	**6V-5842**	2	BOLT (M10X1.5X40-MM)	
M	9	1	**8T-0226**	10	BOLT (M14X2X45-MM)	
	10	1	**9S-4182**	1	PLUG-O-RING	
	11	1	**9S-4183**	1	PLUG-O-RING	
BF		1	**1U-8846**		SEALANT-GASKET	

B-USE AS REQUIRED
F-NOT SHOWN
M-METRIC PART

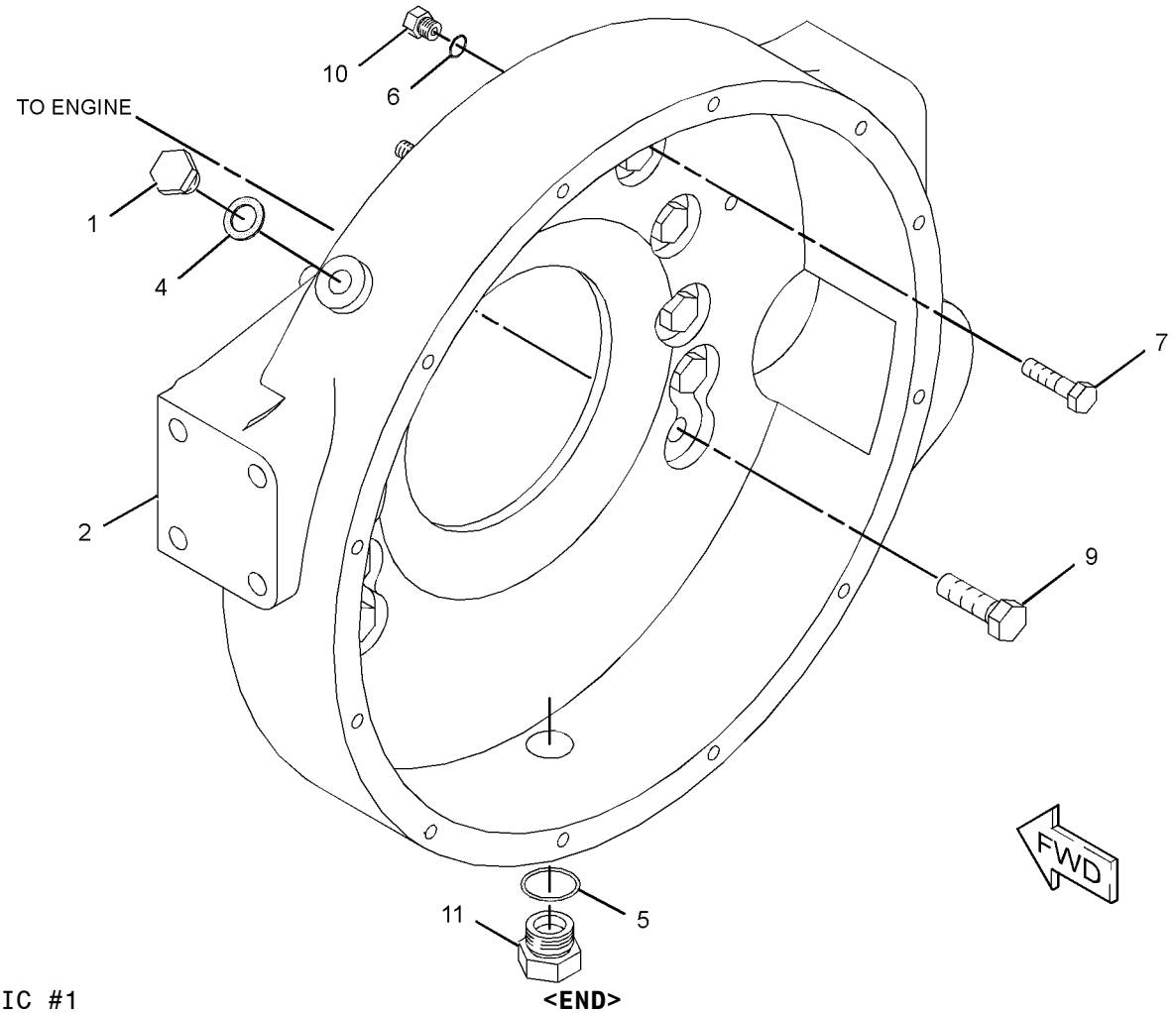

GRAPHIC #1 **<END>** g01170483

BASIC ENGINE

165-4446 HOUSING GP-FRONT

S/N: KHX8814-UP

PART OF 312-0254 ENGINE AR-CORE

SMCS-1151, 1162, 1206 **i02061168**

NOTE	REF NO	GRAPHIC REF	PART NUMBER	QTY	PART NAME 1 2 3 4 5 6 (PRODUCT LEVEL)	SEE PAGE
	1	1	**236-2216**	1	HOUSING-FRONT	
M	2	1	**6V-3918**	4	BOLT (M8X1.25X50-MM)	
M	3	1	**6V-5217**	8	BOLT (M8X1.25X20-MM)	
	4	1	**9M-1974**	12	WASHER-HARD (8.8X16X2-MM THK)	
B	5	1	**1U-8846**		SEALANT-GASKET	

B-USE AS REQUIRED
M-METRIC PART

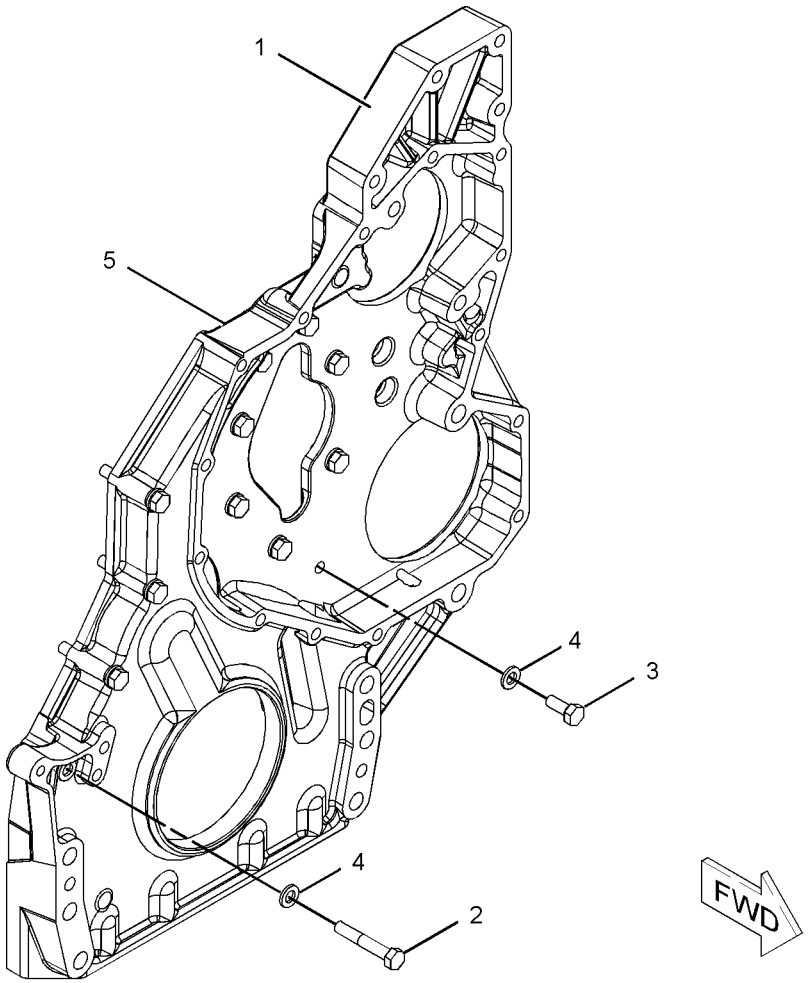

GRAPHIC #1 **<END>** g01060731

139-4081 LIFTER GP-VALVE

S/N: KHX8814-UP

PART OF 232-3717 VALVE MECHANISM GP

SMCS-1209 **i01615435**

NOTE	REF NO	GRAPHIC REF	PART NUMBER	QTY	PART NAME 1 2 3 4 5 6 (PRODUCT LEVEL)	SEE PAGE
	1	1	**139-9476**	1	SHAFT AS-LIFTER	
		1	**2D-6642**	2	BALL	
	2	1	**7E-6794**	4	ARM AS-LIFTER	
	3	1	**139-4084**	2	SPACER	

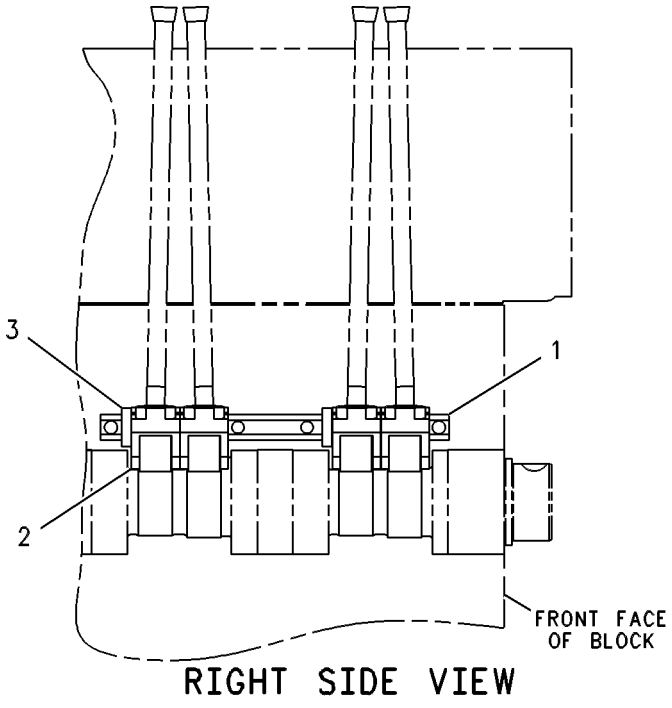

RIGHT SIDE VIEW

GRAPHIC #1 **<END>** g00288708

BASIC ENGINE

237-9822 LIFTING GP-ENGINE

S/N: KHX8814-UP

PART OF 312-0255 ENGINE AR-COMPLETE

SMCS-1122 **i02215501**

NOTE	REF NO	GRAPHIC REF	PART NUMBER	QTY	PART NAME 1 2 3 4 5 6 (PRODUCT LEVEL)	SEE PAGE
	1	1	**154-0896**	1	PLATE-LIFTING	
	2	1	**8T-4121**	4	WASHER-HARD (11X21X2.5-MM THK)	
M	3	1	**8T-4136**	4	BOLT (M10X1.5X25-MM)	

M-METRIC PART

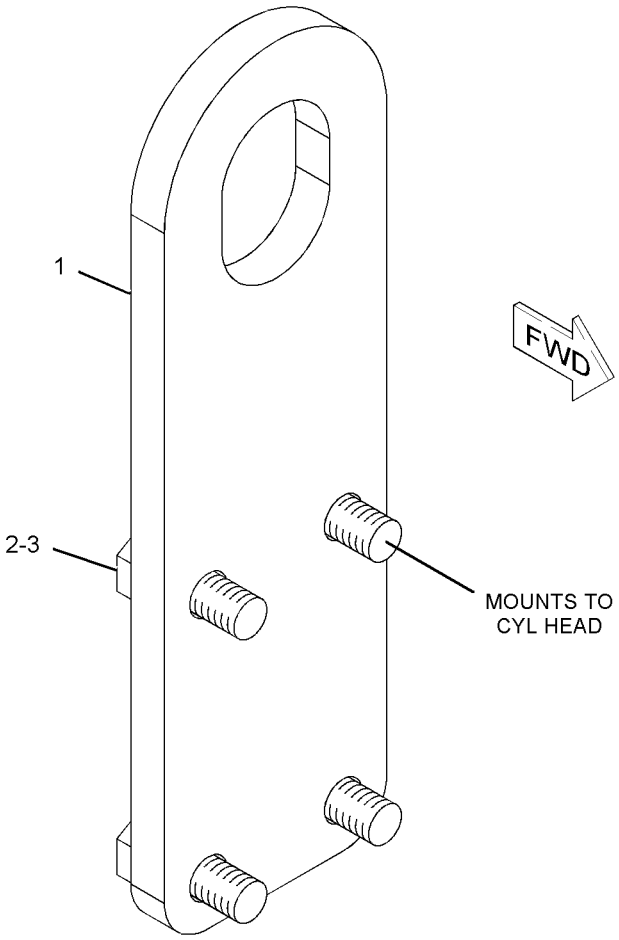

GRAPHIC #1 **<END>** g01118450

311-3542 MOUNTING GP-ENGINE

S/N: KHX8814-UP

PART OF 312-0255 ENGINE AR-COMPLETE

SMCS-1152, 1153, 1154 **i03338921**

NOTE	REF NO	GRAPHIC REF	PART NUMBER	QTY	PART NAME 1 2 3 4 5 6 (PRODUCT LEVEL)	SEE PAGE
M	1	1	**8T-3653**	4	BOLT (M14X2X80-MM)	
	2	1	**180-7344**	2	SUPPORT	
	3	1	**7X-0510**	8	WASHER-HARD (15.5X29X3-MM THK)	
M	4	1	**8C-3425**	4	BOLT (M14X2X35-MM)	

M-METRIC PART

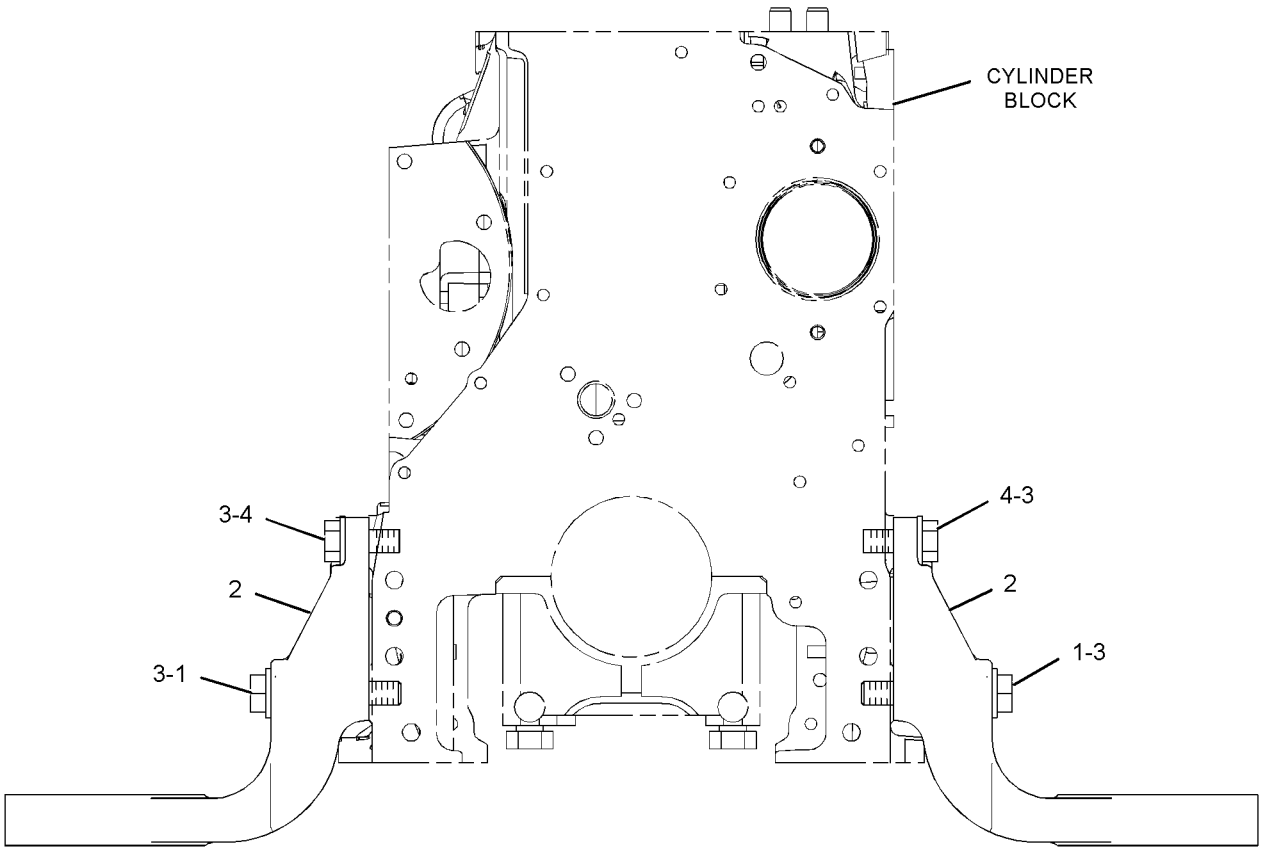

FRONT VIEW OF ENGINE

GRAPHIC #1 **<END>** g01722074

BASIC ENGINE

122-8936 PAN GP-OIL

S/N: KHX8814-UP

PART OF 312-0255 ENGINE AR-COMPLETE

SMCS-1302 **i03338826**

NOTE	REF NO	GRAPHIC REF	PART NUMBER	QTY	PART NAME 1 2 3 4 5 6 (PRODUCT LEVEL)	SEE PAGE
	1	1	**115-4170**	1	PAN AS-OIL (ENGINE)	
	2	1	**217-9946**	36	BOLT AS	
	3	1	**261-3816**	1	GASKET-OIL PAN (ENGINE)	
	4	1	**9S-4191**	1	PLUG-O-RING	
	5	1	**3J-1907**	1	SEAL-O-RING	
B	6	1	**4C-9612**		SEALANT-SILICONE	

B-USE AS REQUIRED

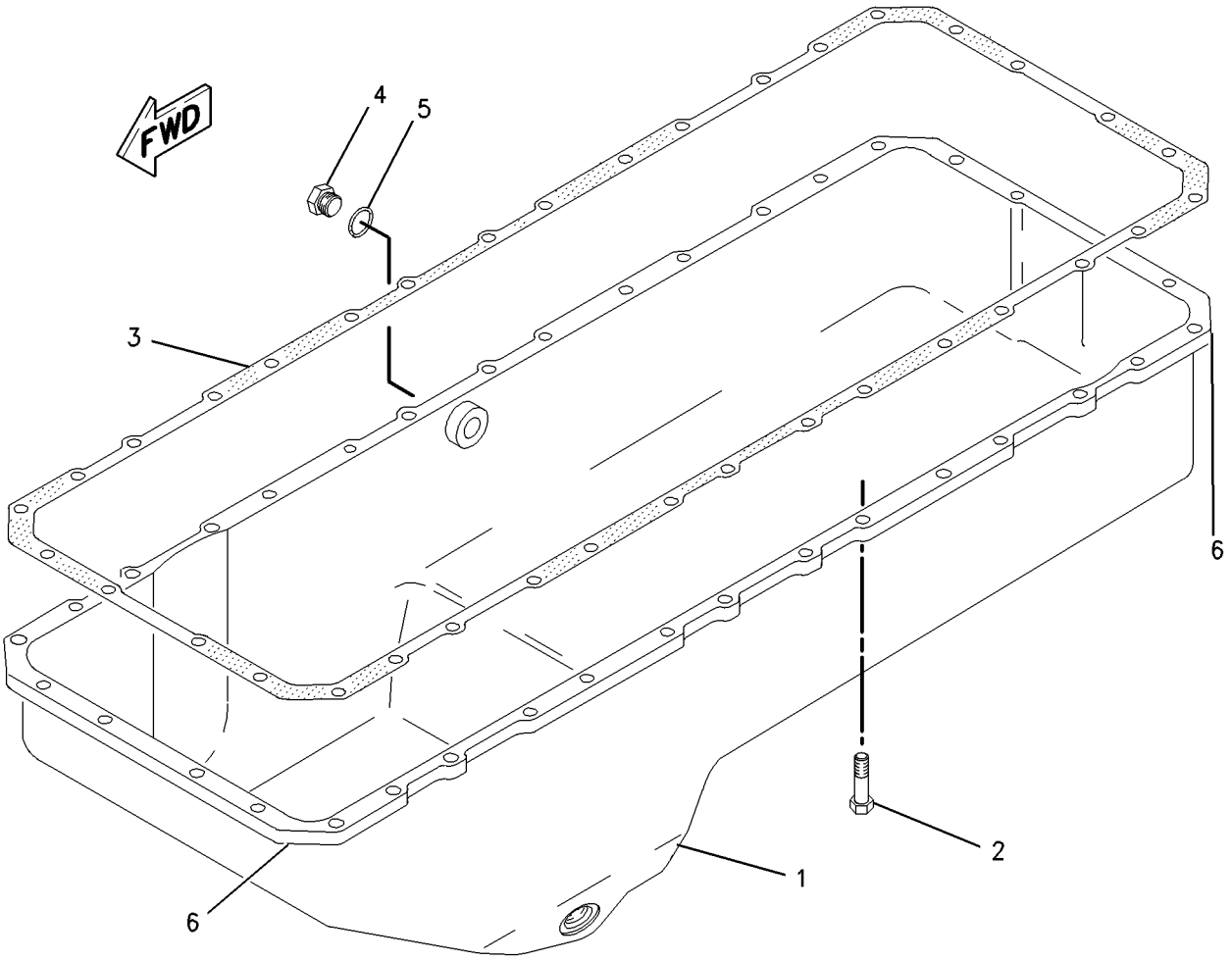

GRAPHIC #1 **<END>** g01005487

212-3652 PISTON & ROD GP

S/N: KHX8814-UP
16.5:1 COMPRESSION RATIO
PART OF 312-0254 ENGINE AR-CORE

SMCS-1225 **i02421065**

NOTE	REF NO	GRAPHIC REF	PART NUMBER	QTY	PART NAME 1 2 3 4 5 6 (PRODUCT LEVEL)	SEE PAGE
R	1	1	**213-3193**	1	ROD AS-CONNECTING (NON-DRILLED)	
	1A	1	**2W-0027**	1	BEARING (EYE END)	
	1B	1	**195-0321**	2	BOLT	
	2	1	**224-6638**	1	BEARING-CONNECTING ROD (STANDARD)	
AB		1	**7C-6976**		BEARING-CONNECTING ROD (0.25-MM US)	
AB		1	**7C-6977**		BEARING-CONNECTING ROD (0.5-MM US)	
	3	1	**238-2706**	1	RING-PISTON-OIL	
	4	1	**197-9353**	1	RING-PISTON (INTERMEDIATE)	
	5	1	**197-9386**	1	RING-PISTON (TOP)	
	6	1	**197-9371**	1	PIN-PISTON	
	7	1	**280-2748**	1	TUBE AS-OIL JET	
	8	1	**238-2720**	1	BODY AS-PISTON	
M	9	1	**6V-3940**	1	BOLT (M8X1.25X25-MM)	
	10	1	**197-9372**	2	RETAINER-PIN	

A-NOT PART OF THIS GROUP
B-USE AS REQUIRED
M-METRIC PART
R-REMFG PART MAY BE AVAILABLE

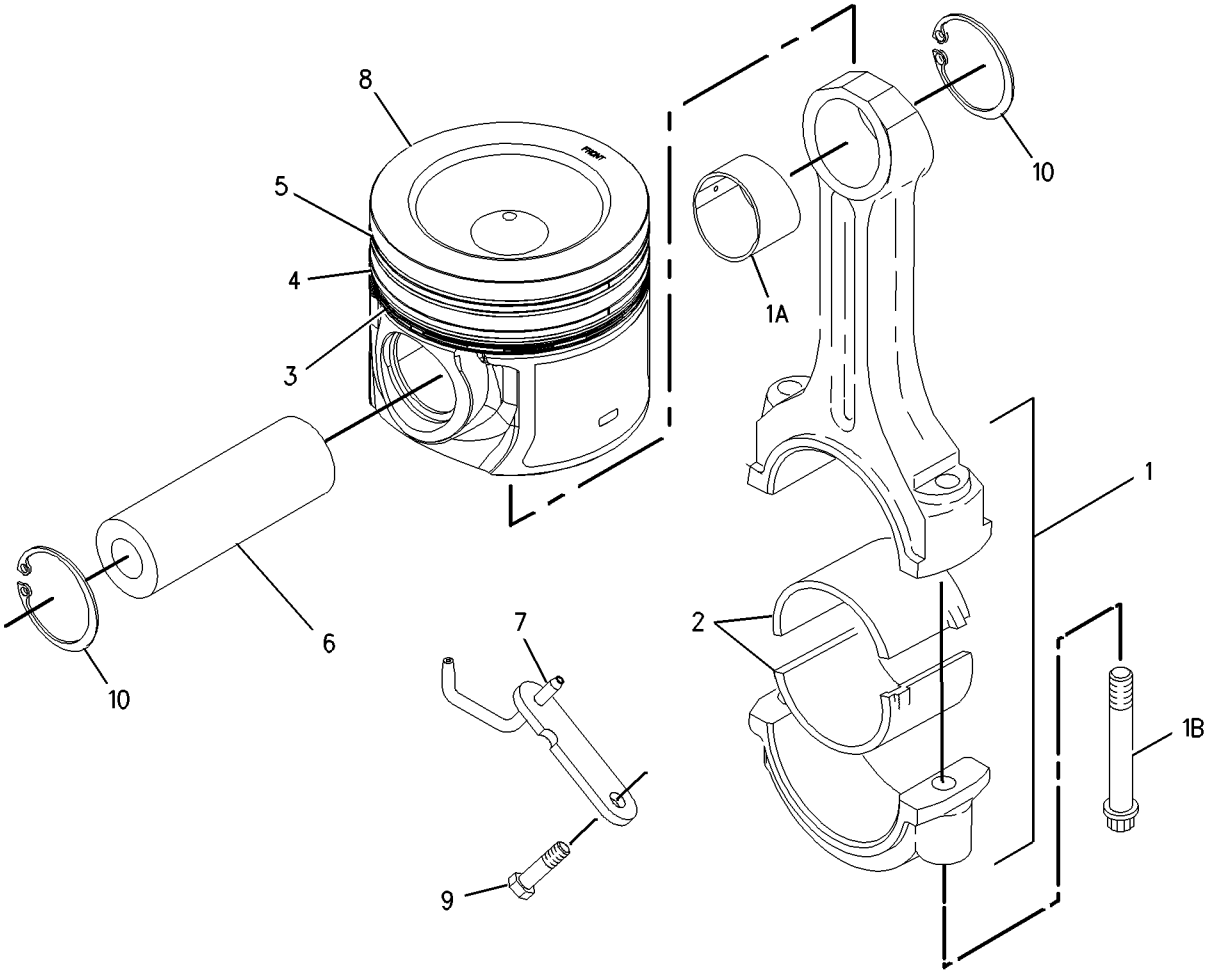

GRAPHIC #1 **<END>** g00903037

159-0303 PLUG GP-CYLINDER BLOCK

S/N: KHX8814-UP

PART OF 312-0255 ENGINE AR-COMPLETE

SMCS-1201 **i01370005**

NOTE	REF NO	GRAPHIC REF	PART NUMBER	QTY	PART NAME 1 2 3 4 5 6 (PRODUCT LEVEL)	SEE PAGE
M	1	1	**8T-0293**	1	BOLT (M12X1.75X20-MM)	
	2	1	**6F-7062**	1	WASHER (12.7X19.05X1.83-MM THK)	
	3	1	**9S-8008**	2	PLUG-O-RING	
	4	1	**3D-2824**	2	SEAL-O-RING	

M-METRIC PART

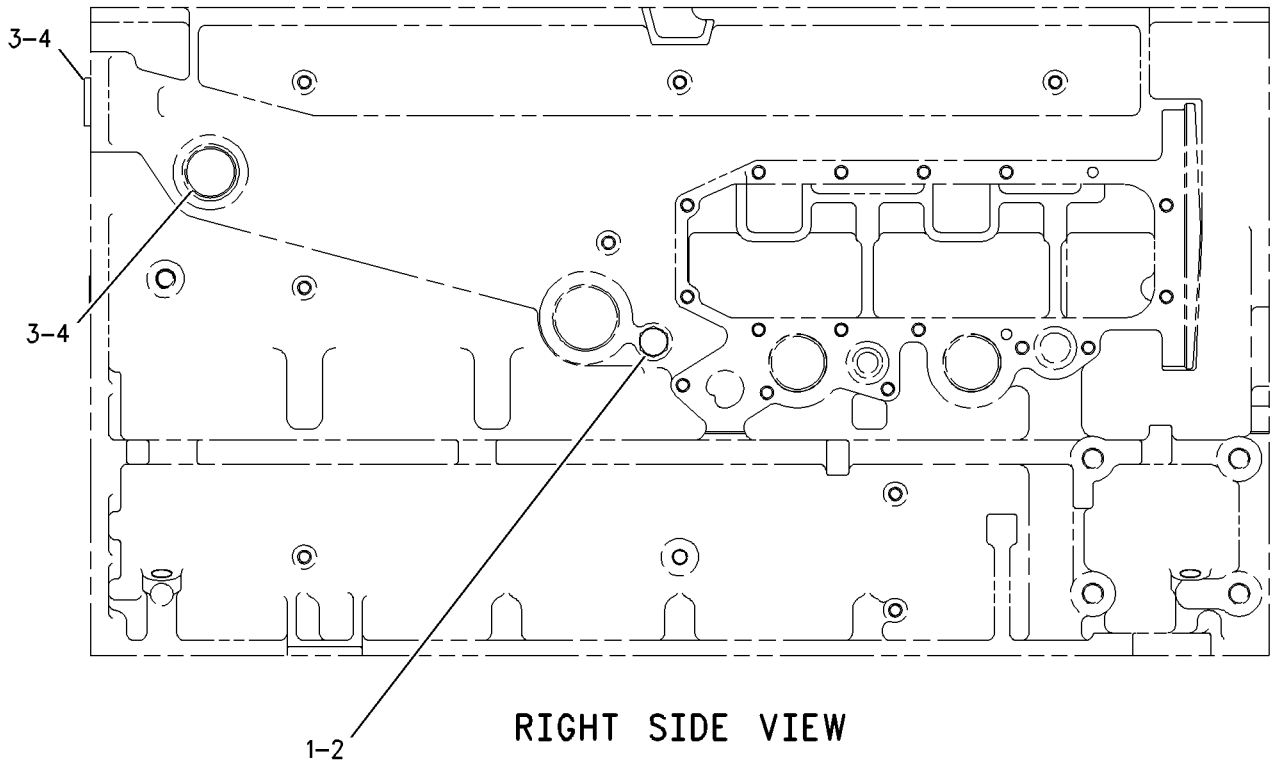

RIGHT SIDE VIEW

GRAPHIC #1 **<END>** g00677138

162-8068 PLUG GP-ENGINE

S/N: KHX8814-UP

PART OF 312-0255 ENGINE AR-COMPLETE

SMCS-1000, 1201 **i02940613**

NOTE	REF NO	GRAPHIC REF	PART NUMBER	QTY	PART NAME 1 2 3 4 5 6 (PRODUCT LEVEL)	SEE PAGE
	1	1	*148-8395*	1	PLUG AS	
		1	**9S-8005**	1	PLUG-O-RING	
		1	**3K-0360**	1	SEAL-O-RING	

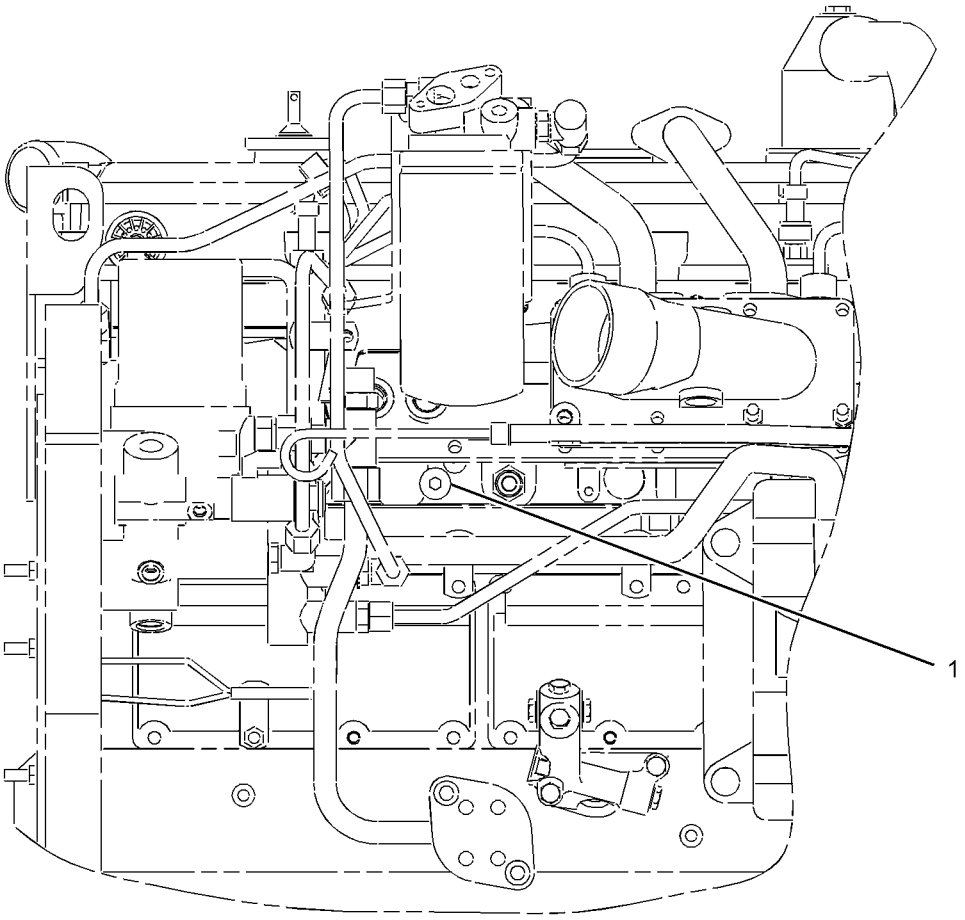

LEFT SIDE VIEW

GRAPHIC #1 **<END>** g01457732

323-8959 PLUG GP-OIL PAN

S/N: KHX8814-UP

PART OF 312-0255 ENGINE AR-COMPLETE

SMCS-1302 **i03339062**

NOTE	REF NO	GRAPHIC REF	PART NUMBER	QTY	PART NAME 1 2 3 4 5 6 (PRODUCT LEVEL)	SEE PAGE
	1	1	*148-8411*	1	PLUG AS	
		1	**3K-0360**	1	SEAL-O-RING	
		1	**9S-4185**	1	PLUG-O-RING	

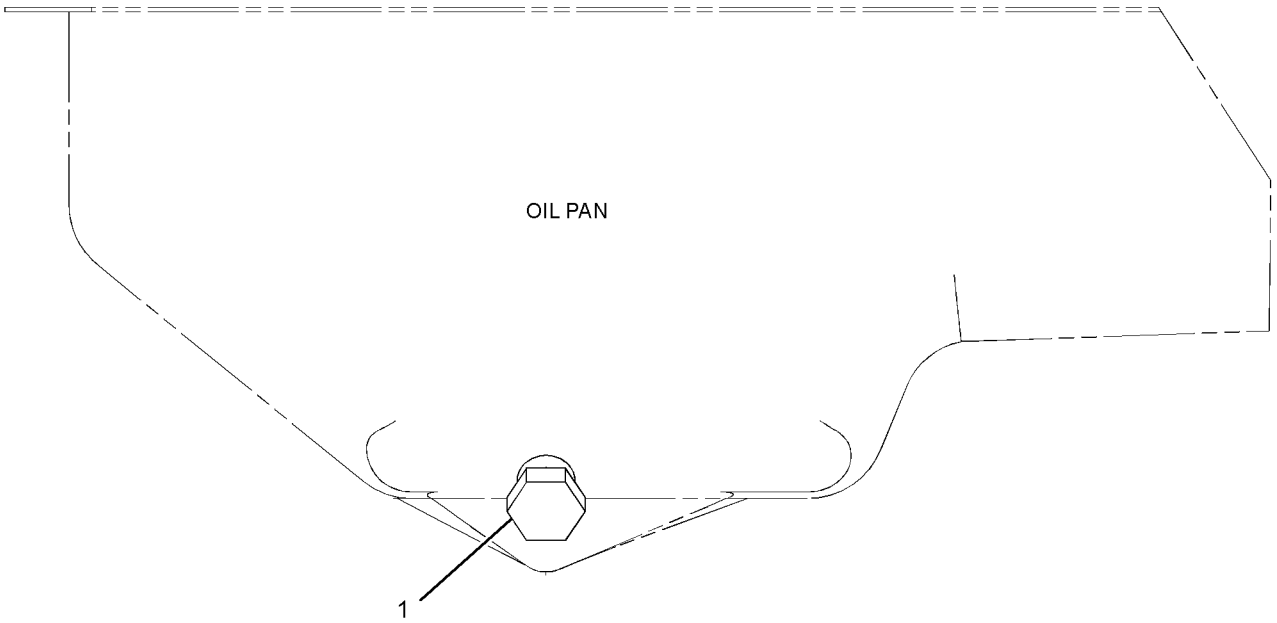

RIGHT SIDE VIEW OF ENGINE

GRAPHIC #1 **<END>** g01721918

7E-7590 SEAL GP-CRANKSHAFT

S/N: KHX8814-UP

PART OF 312-0255 ENGINE AR-COMPLETE

SMCS-1160, 1161 **i02891342**

NOTE	REF NO	GRAPHIC REF	PART NUMBER	QTY	PART NAME 1 2 3 4 5 6 (PRODUCT LEVEL)	SEE PAGE
	1	1	**7E-7589**	1	SEAL GP-CRANKSHAFT (REAR)	
	2	1	**245-7339**	1	SEAL-CRANKSHAFT (FRONT)	

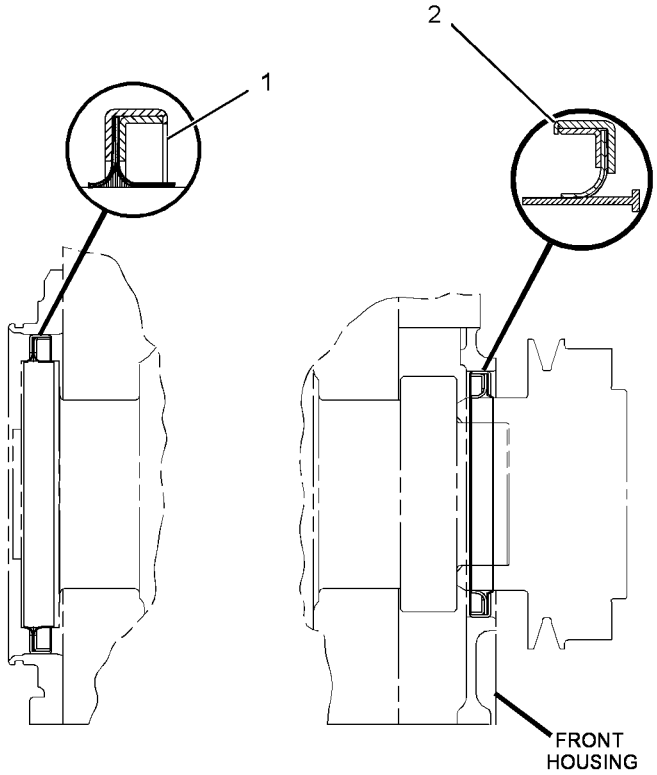

RIGHT SIDE VIEW

GRAPHIC #1 **<END>** g01438665

BASIC ENGINE

232-3717 VALVE MECHANISM GP

S/N: KHX8814-UP

PART OF 312-0254 ENGINE AR-CORE

SMCS-1102 **i02215717**

NOTE	REF NO	GRAPHIC REF	PART NUMBER	QTY	PART NAME 1 2 3 4 5 6 (PRODUCT LEVEL)	SEE PAGE
	1	1	**133-6379**	12	ROD-VALVE PUSH	
	2	1	**219-3309**	6	BRIDGE-VALVE	
Y	3	1	*139-4081*	3	LIFTER GP-VALVE	39
M	4	1	**8T-8442**	12	BOLT-SOCKET HEAD (M6X1X30-MM)	
	5	1	**3E-9412**	6	DOWEL	
Y	6	1	*235-5528*	1	VALVE MECHANISM GP	49
M	7	1	**6V-5696**	11	BOLT (M12X1.75X80-MM)	
	8	1	**9M-1974**	2	WASHER-HARD (8.8X16X2-MM THK)	
	9	1	**3H-7654**	9	WASHER-HARD (13.5X22.5X3-MM THK)	
M	10	1	**8T-0100**	2	BOLT (M8X1.25X60-MM)	
	11	1	**232-1754**	1	CLIP	

M-METRIC PART
Y-SEPARATE ILLUSTRATION

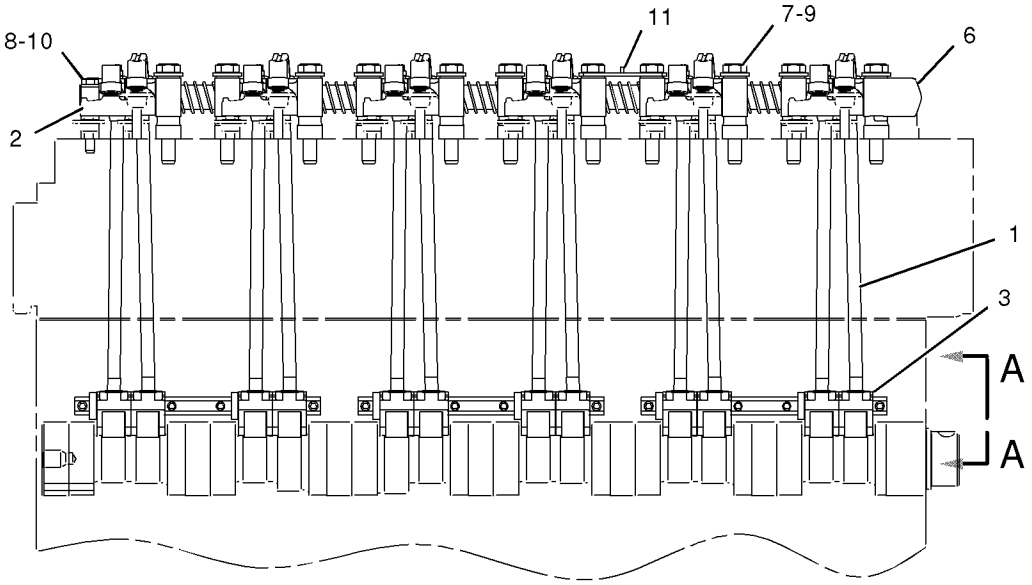

RIGHT SIDE VIEW

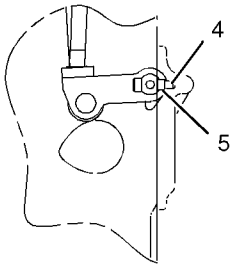

VIEW A-A

GRAPHIC #1

<END>

g01028897

235-5528 VALVE MECHANISM GP

S/N: KHX8814-UP

PART OF 232-3717 VALVE MECHANISM GP

SMCS-1102 **i02215718**

NOTE	REF NO	GRAPHIC REF	PART NUMBER	QTY	PART NAME 1 2 3 4 5 6 (PRODUCT LEVEL)	SEE PAGE
	1	1	**137-6717**	5	SPRING	
	2	1	*222-1185*	6	ROCKER ARM GP (INTAKE)	
					(EACH INCLUDES)	
M	2A	1	**2Y-5829**	1	NUT (M10X1.5-THD)	
M		1	**183-4365**	1	SCREW-ADJUSTMENT (M10X1.15-THD)	
R	2B	1	**153-8467**	1	ROCKER ARM AS	
	2C	1	**173-5549**	1	SEAL-O-RING	
	2D	1	**145-7376**	1	INSERT	
	2E	1	**145-7385**	1	SOCKET	
	3	1	**138-8403**	1	STAND	
	4	1	*222-1186*	6	ROCKER ARM GP (EXHAUST)	
					(EACH INCLUDES)	
M	4A	1	**2Y-5829**	1	NUT (M10X1.5-THD)	
M		1	**183-4365**	1	SCREW-ADJUSTMENT (M10X1.15-THD)	
R	4B	1	**153-8470**	1	ROCKER ARM AS	
	4C	1	**173-5549**	1	SEAL-O-RING	
	4D	1	**145-7376**	1	INSERT	
	4E	1	**145-7385**	1	SOCKET	
	5	1	**235-5527**	10	STAND	
	6	1	**138-8402**	1	STAND (END)	
	7	1	**138-9868**	1	RING-RETAINING	
	8	1	**8H-5244**	1	DOWEL	
	9	1	**138-7198**	1	SHAFT AS	
		1	**5B-1866**	1	PLUG-CUP	

M-METRIC PART
R-REMFG PART MAY BE AVAILABLE

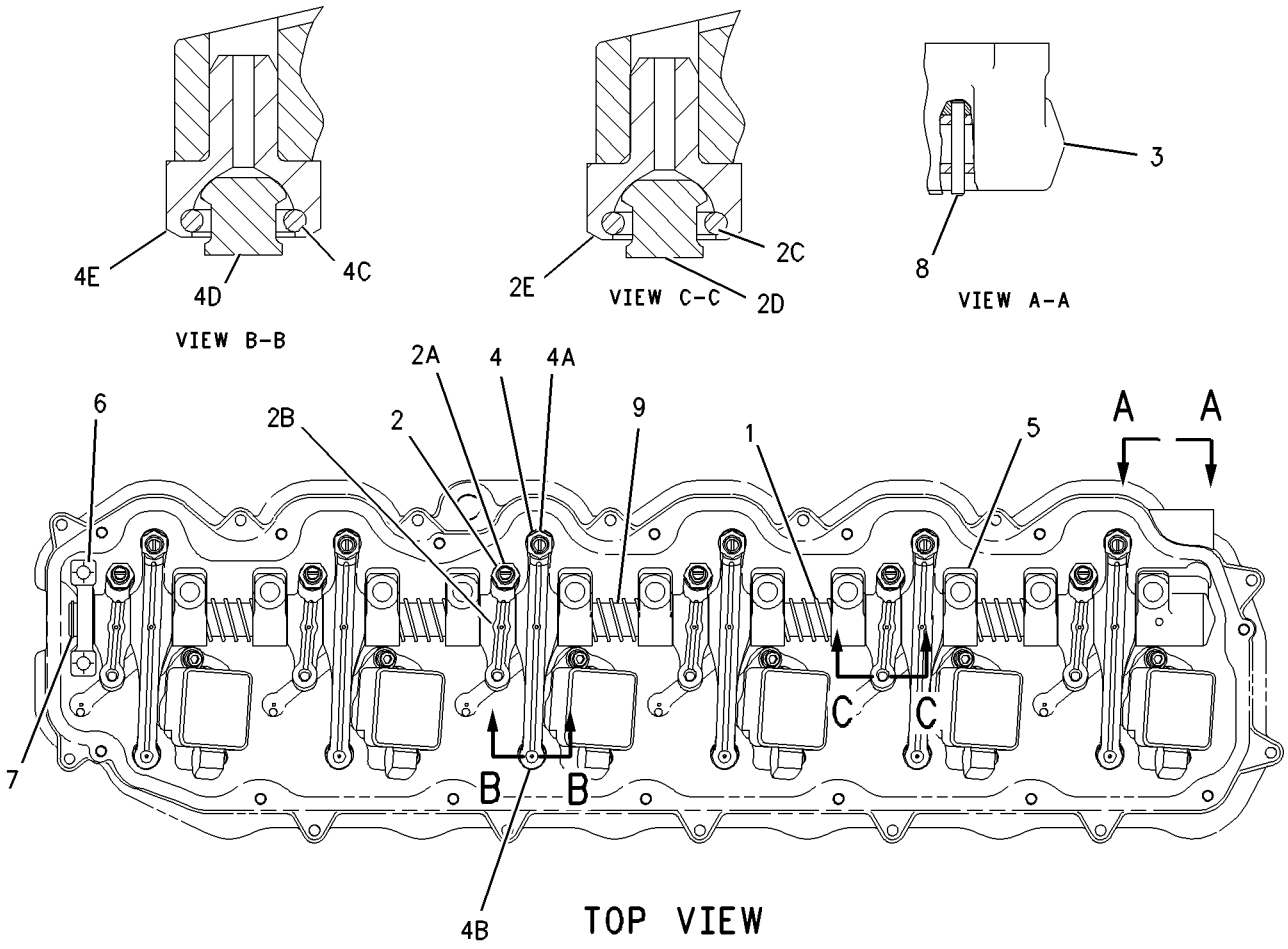

GRAPHIC #1 **<END>** g00901133

191-0523 ADAPTER GP-OIL LINE–ENGINE

S/N: KHX8814-UP

PART OF 191-0461 LINES GP-INJECTOR HYD PUMP

SMCS-1307 **i03363386**

NOTE	REF NO	GRAPHIC REF	PART NUMBER	QTY	PART NAME 1 2 3 4 5 6 (PRODUCT LEVEL)	SEE PAGE
	1	1	**191-0522**	1	ADAPTER	
	2	1	**033-6027**	1	SEAL-O-RING	

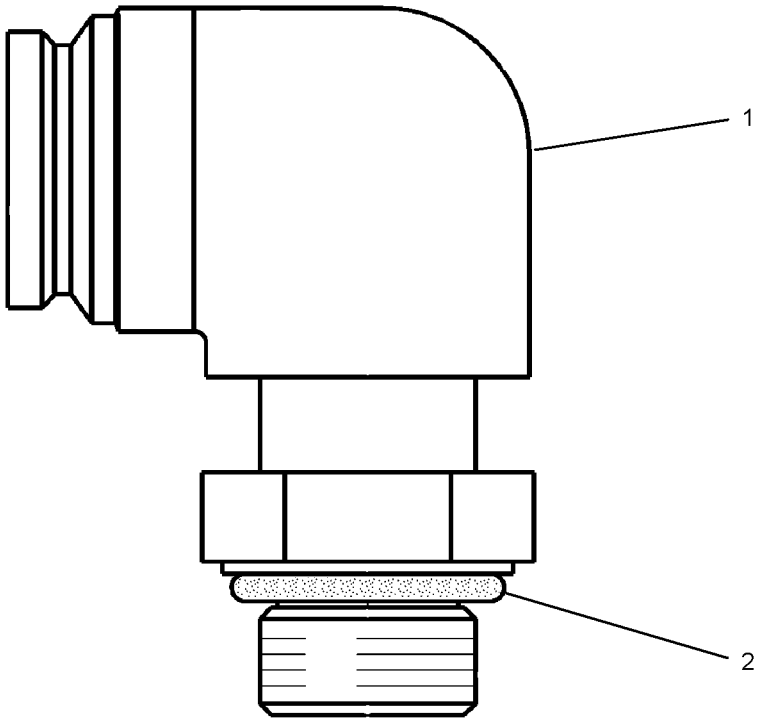

GRAPHIC #1 **<END>** g01735676

LUBRICATION SYSTEM

222-5946 BREATHER GP

S/N: KHX8814-UP

PART OF 312-0255 ENGINE AR-COMPLETE

SMCS-1317 **i02214598**

NOTE	REF NO	GRAPHIC REF	PART NUMBER	QTY	PART NAME 1 2 3 4 5 6 (PRODUCT LEVEL)	SEE PAGE
	1	1	**164-0210**	1	BREATHER AS (CRANKCASE)	
M	2	1	**143-4654**	1	BOLT (M8X1.25X105-MM)	
	3	1	**8H-2046**	1	SEAL-O-RING (BREATHER)	
	4	1	**9N-0869**	1	WASHER-HARD (8.8X25.5X2-MM THK)	

M-METRIC PART

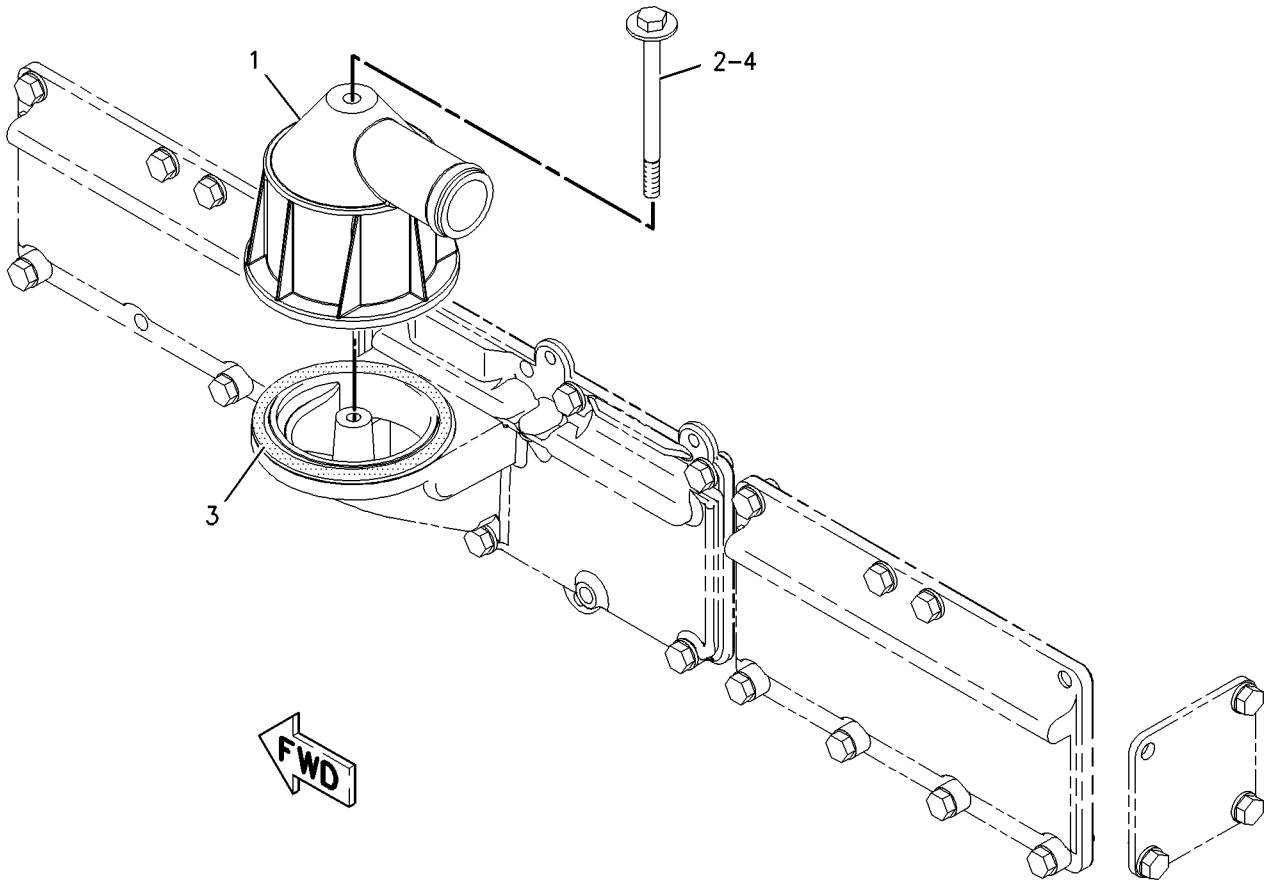

GRAPHIC #1 **<END>** g00947923

323-8936 FILTER GP-ENGINE OIL

S/N: KHX8814-UP

PART OF 312-0255 ENGINE AR-COMPLETE

SMCS-1308 **i03338906**

NOTE	REF NO	GRAPHIC REF	PART NUMBER	QTY	PART NAME 1 2 3 4 5 6 (PRODUCT LEVEL)	SEE PAGE
	1	1	**7C-1493**	2	VALVE AS-BYPASS	
	2	1	**201-9774**	1	BASE AS-OIL FILTER	
	2A	1	**2P-2537**	1	STUD-HOLLOW	
	3	1	**242-3864**	2	SPRING	
	4	1	**300-7933**	1	GASKET	
	5	1	*148-8395*	1	PLUG AS	
	5A	1	**3K-0360**	1	SEAL-O-RING	
	5B	1	**9S-8005**	1	PLUG-O-RING	
	6	1	**1R-1807**	1	FILTER AS-ENGINE OIL (ADVANCED EFFICIENCY)	
	7	1	**2M-9780**	2	SEAL-O-RING	
M	8	1	**5P-8196**	2	PLUG	
M	9	1	**6V-2317**	10	BOLT (M8X1.25X30-MM)	
M	10	1	**8T-0276**	5	BOLT (M8X1.25X45-MM)	
	11	1	**9M-1974**	15	WASHER-HARD (8.8X16X2-MM THK)	

M-METRIC PART

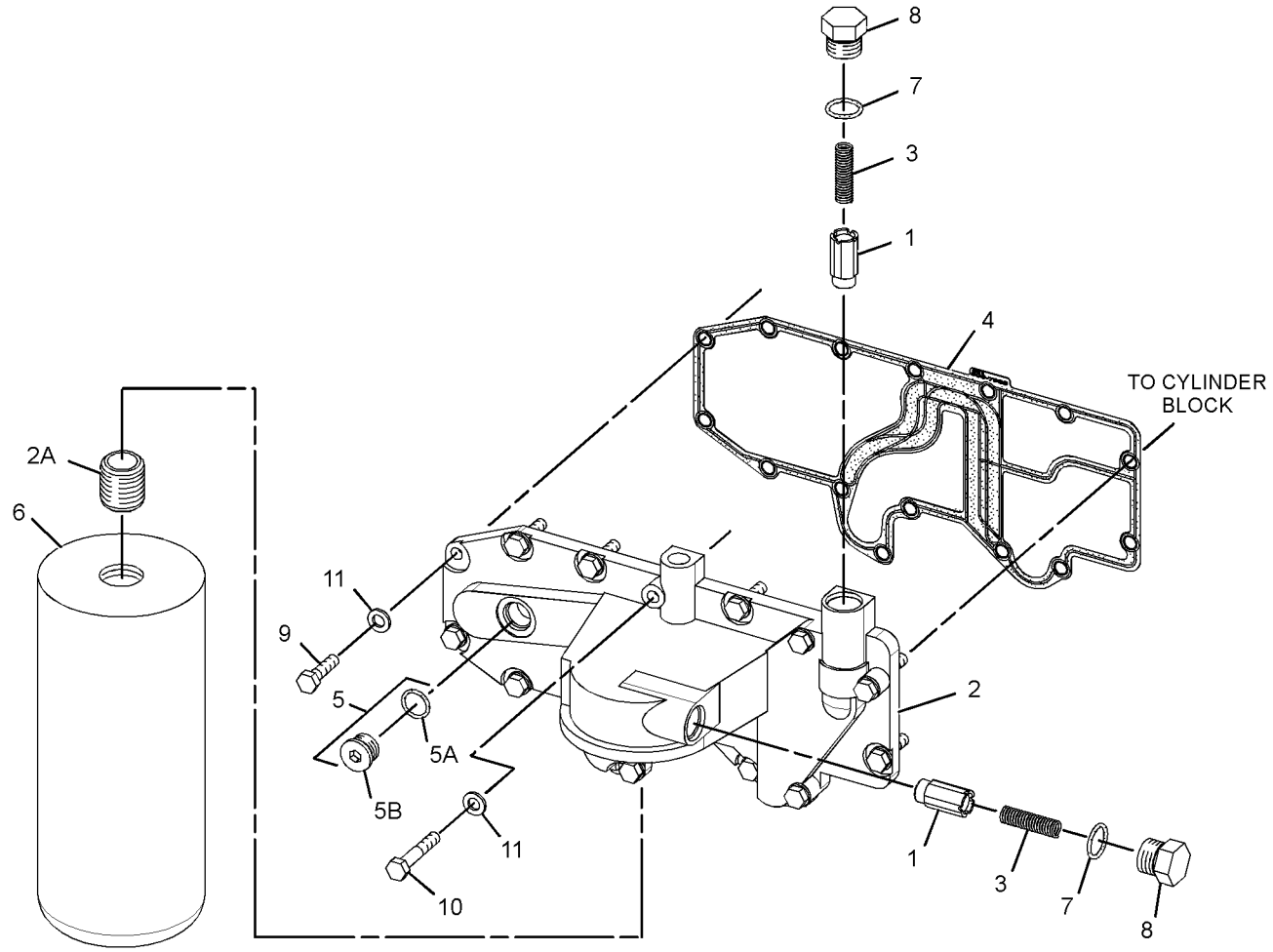

GRAPHIC #1 **<END>** g01721921

LUBRICATION SYSTEM

220-1194 FUMES DISPOSAL GP

S/N: KHX8814-UP

PART OF 312-0255 ENGINE AR-COMPLETE

SMCS-1317 **i02789603**

NOTE	REF NO	GRAPHIC REF	PART NUMBER	QTY	PART NAME 1 2 3 4 5 6 (PRODUCT LEVEL)	SEE PAGE
	1	1	**4P-4369**	1	SPACER (12X19X23.5-MM THK)	
	2	1	**9M-2904**	1	CLAMP-HOSE	
	3	1	**228-8510**	1	HOSE-DISPOSAL (FUMES)	
	4	1	**2S-2053**	1	CLIP	
	5	1	**3E-4352**	1	WASHER-HARD (8.8X20.5X2.5-MM THK)	
	6	1	**162-3148**	1	STUD (M8X1.25X62.75-MM)	

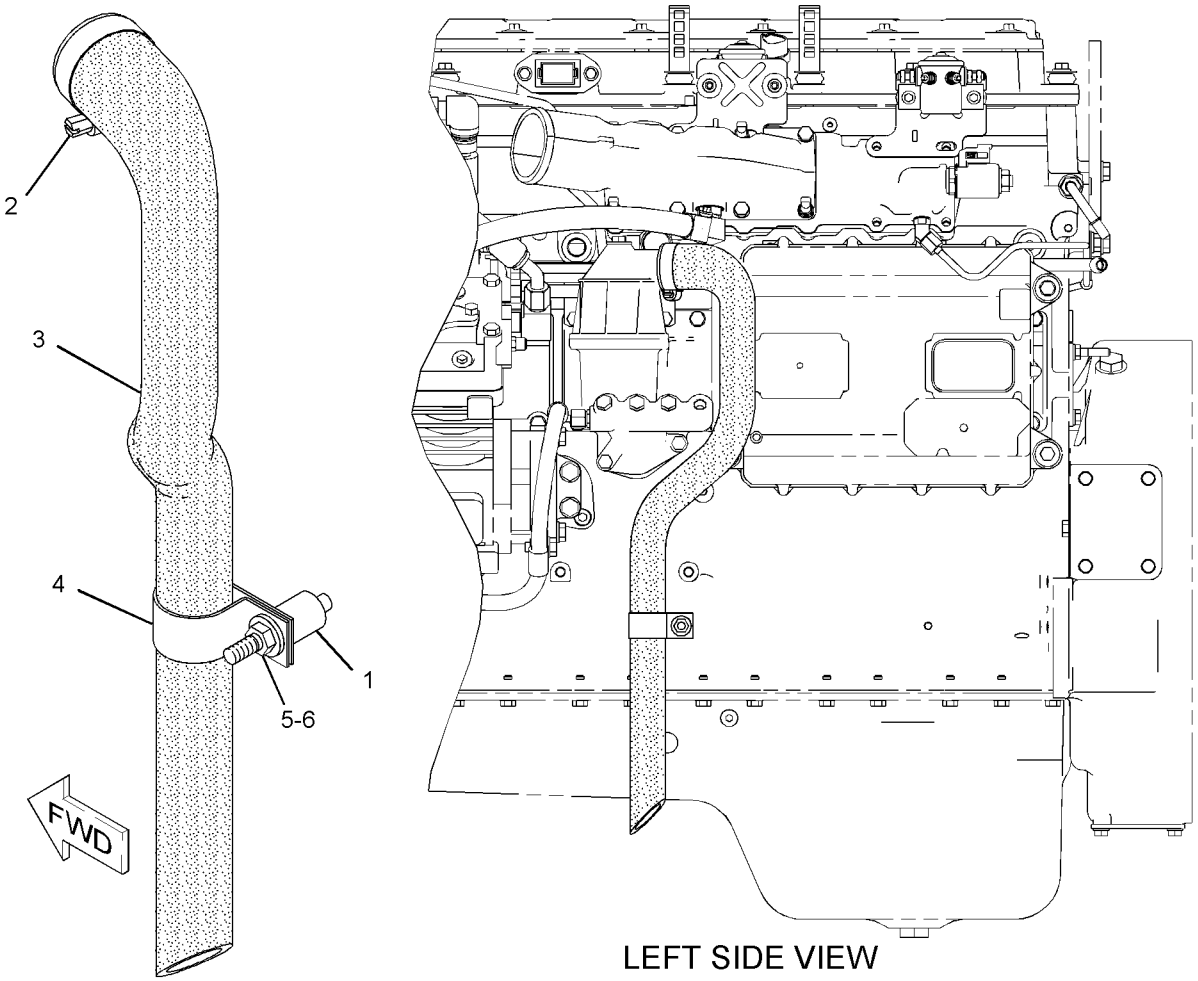

LEFT SIDE VIEW

GRAPHIC #1 **<END>** g01095248

276-3681 GAUGE GP-OIL LEVEL (DIPSTICK)

S/N: KHX8814-UP

PART OF 312-0255 ENGINE AR-COMPLETE

SMCS-1326 **i02791440**

NOTE	REF NO	GRAPHIC REF	PART NUMBER	QTY	PART NAME 1 2 3 4 5 6 (PRODUCT LEVEL)	SEE PAGE
	1	1	**1S-2563**	3	PLUG	
	2	1	**194-5131**	1	CLIP	
	3	1	**276-3674**	1	TUBE AS	
	4	1	**291-2634**	1	GAUGE AS-OIL LEVEL (DIPSTICK) (ENGINE)	
	5	1	**1F-7567**	1	CLIP	
M	6	1	**5P-7970**	1	NUT (M8X1.25-THD)	
M	7	1	**6V-2317**	1	BOLT (M8X1.25X30-MM)	
M	8	1	**6V-5217**	1	BOLT (M8X1.25X20-MM)	
	9	1	**8T-4224**	2	WASHER-HARD (8.8X16X2-MM THK)	

M-METRIC PART

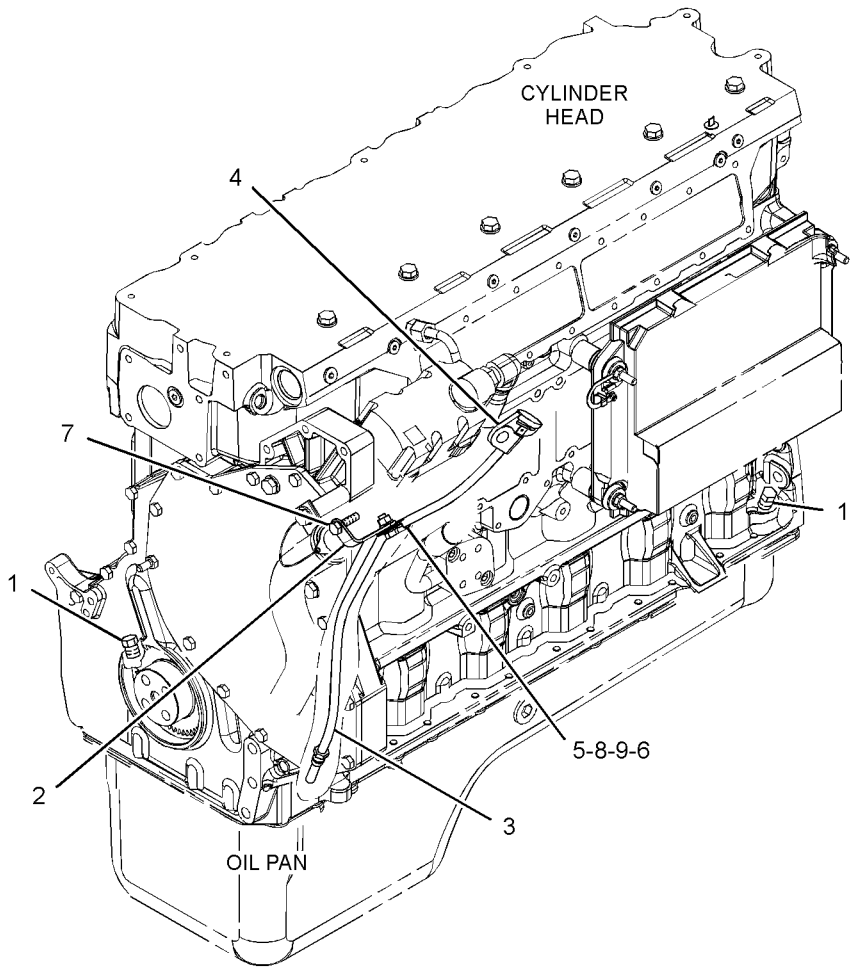

GRAPHIC #1 **<END>** g01319304

LUBRICATION SYSTEM

128-0316 LINES GP-ENGINE OIL

S/N: KHX8814-UP

PART OF 312-0255 ENGINE AR-COMPLETE

SMCS-1307 **i03338829**

NOTE	REF NO	GRAPHIC REF	PART NUMBER	QTY	PART NAME 1 2 3 4 5 6 (PRODUCT LEVEL)	SEE PAGE
	1	1	**9Y-9854**	1	TUBE AS-OIL SUCTION (ENGINE)	
	2	1	**7W-5340**	1	GASKET	
M	3	1	**6V-3940**	4	BOLT (M8X1.25X25-MM)	
	4	1	**9M-1974**	2	WASHER-HARD (8.8X16X2-MM THK)	
	5	1	**4W-2232**	1	ELBOW-OUTLET	
	6	1	**3P-1156**	2	SEAL-O-RING	
M	7	1	**6V-4248**	2	BOLT (M10X1.5X25-MM)	
	8	1	**3E-4353**	2	WASHER-HARD (11X25X3-MM THK)	

M-METRIC PART

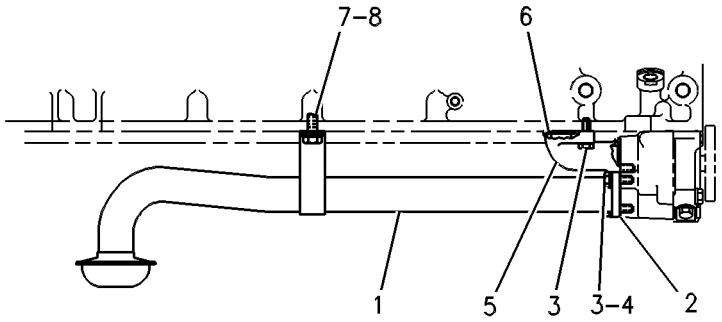

RIGHT SIDE VIEW

GRAPHIC #1 **<END>** g00256385

310-6469 LINES GP-DRAIN

S/N: JBP1-UP

PART OF 274-7941 GENERAL AR

SMCS-1307 **i03246350**

NOTE	REF NO	GRAPHIC REF	PART NUMBER	QTY	PART NAME 1 2 3 4 5 6 (PRODUCT LEVEL)	SEE PAGE
	1	1	**7X-7958**	1	CLAMP-HOSE	
	2	1	**206-4669**	1	VALVE-DRAIN	
	3	1	**212-4174**	1	LOCKWASHER	
I	4	1	**317-8063**	1	HOSE AS	
	5	1	*239-5030*	1	ADAPTER AS	
		1	**3K-0360**	1	SEAL-O-RING	
		1	**9X-2493**	1	ADAPTER	
	6	1	**3K-0360**	1	SEAL-O-RING	
	7	1	**6V-1889**	1	CLIP	
	8	1	**6V-9746**	1	SEAL-O-RING	
	9	1	**7X-7729**	1	WASHER (11X25X3-MM THK)	
	10	1	**8C-6920**	1	ELBOW	
	11	1	**8T-4121**	1	WASHER-HARD (11X21X2.5-MM THK)	
M	12	1	**8T-4137**	1	BOLT (M10X1.5X20-MM)	
E	13	1	**146-7453**		HOSE (13-CM)	

E-ORDER BY THE CENTIMETER
I-REFER TO HYDRAULIC INFORMATION SYSTEM
M-METRIC PART

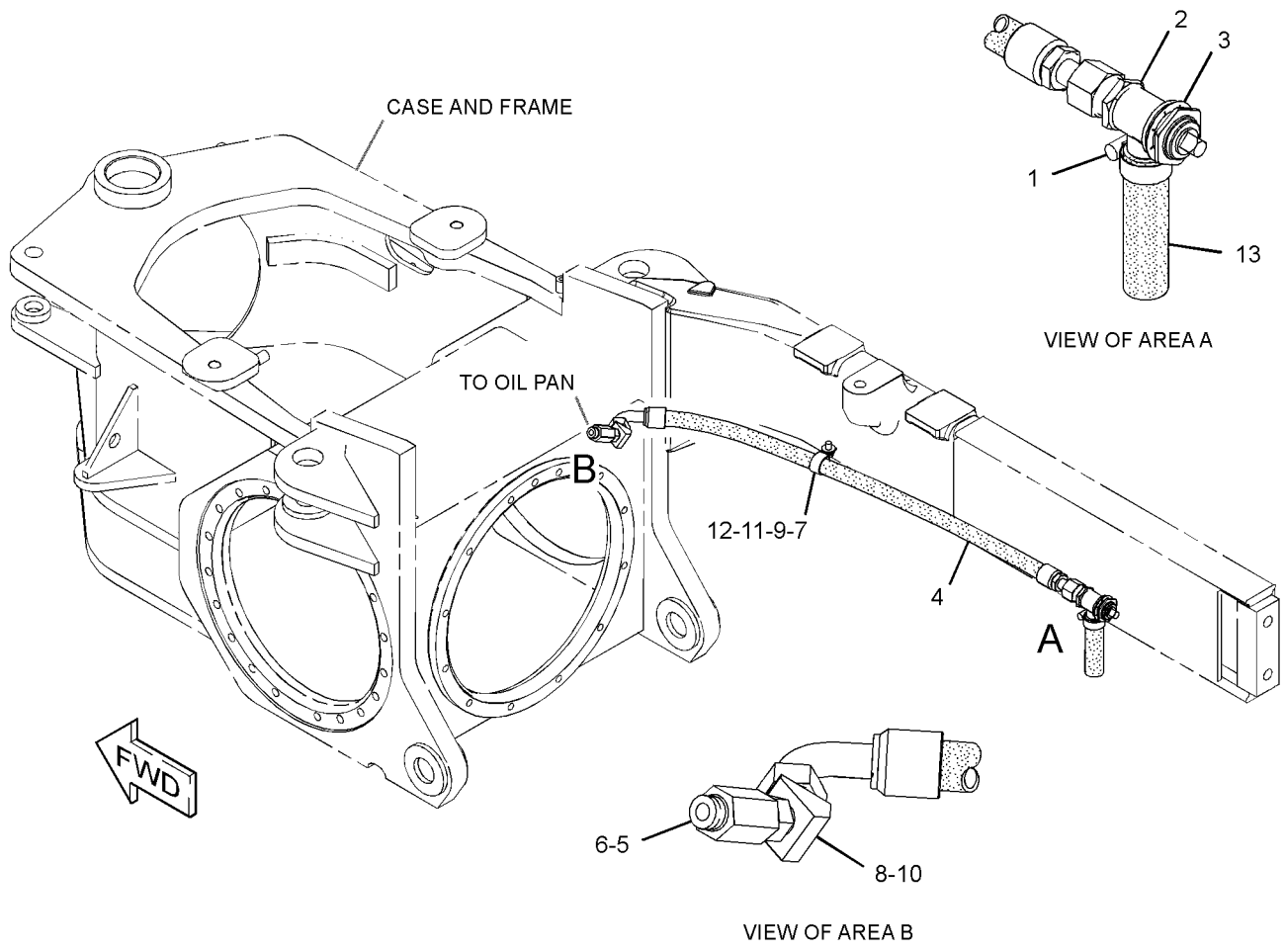

GRAPHIC #1 **<END>** g01705699

LUBRICATION SYSTEM

187-6279 LINES GP-TURBOCHARGER OIL

S/N: KHX8814-UP

PART OF 312-0255 ENGINE AR-COMPLETE

SMCS-1052, 1307 **i02628089**

NOTE	REF NO	GRAPHIC REF	PART NUMBER	QTY	PART NAME 1 2 3 4 5 6 (PRODUCT LEVEL)	SEE PAGE
	1	1	*183-3399*	1	CONNECTOR AS	
		1	**6V-8636**	1	CONNECTOR	
		1	**214-7568**	1	SEAL-O-RING (11.89MM ID)	
		1	**221-3494**	1	SEAL-O-RING (12.83MM OD)	
C	2	1	**246-6036**	1	HOSE	
	3	1	**187-6294**	1	HOSE AS-OIL SUPPLY	
	4	1	*148-8378*	1	ELBOW AS	
		1	**6V-8724**	1	ELBOW	
		1	**3J-1907**	1	SEAL-O-RING (11.89MM ID)	
		1	**6V-8397**	1	SEAL-O-RING (12.83MM OD)	
C	5	1	**197-8419**	1	GASKET (21.82MM ID)	
C	6	1	**210-9246**	1	SEAL-O-RING (32.92MM ID)	
M	7	1	**9X-2099**	2	STUD (M8X1.25X52.75-MM)	
	8	1	**8T-4224**	4	WASHER-HARD (8.8X16X2-MM THK)	
CM	9	1	**7X-2537**	2	BOLT (M8X1.25X35-MM)	
C	10	1	**260-8630**	1	TUBE AS-DRAIN	
C	11	1	**260-8631**	1	TUBE AS-DRAIN	
C	12	1	**269-8788**	2	CLAMP-BAND	
M	13	1	**2Y-5829**	1	NUT (M10X1.5-THD)	
M	14	1	**6V-4248**	1	BOLT (M10X1.5X25-MM)	
	15	1	**6V-5839**	2	WASHER (11X21X2.5-MM THK)	
	16	1	**7C-4354**	1	CLIP	
	17	1	**033-8248**	1	CLIP	

C-CHANGE FROM PREVIOUS TYPE
M-METRIC PART

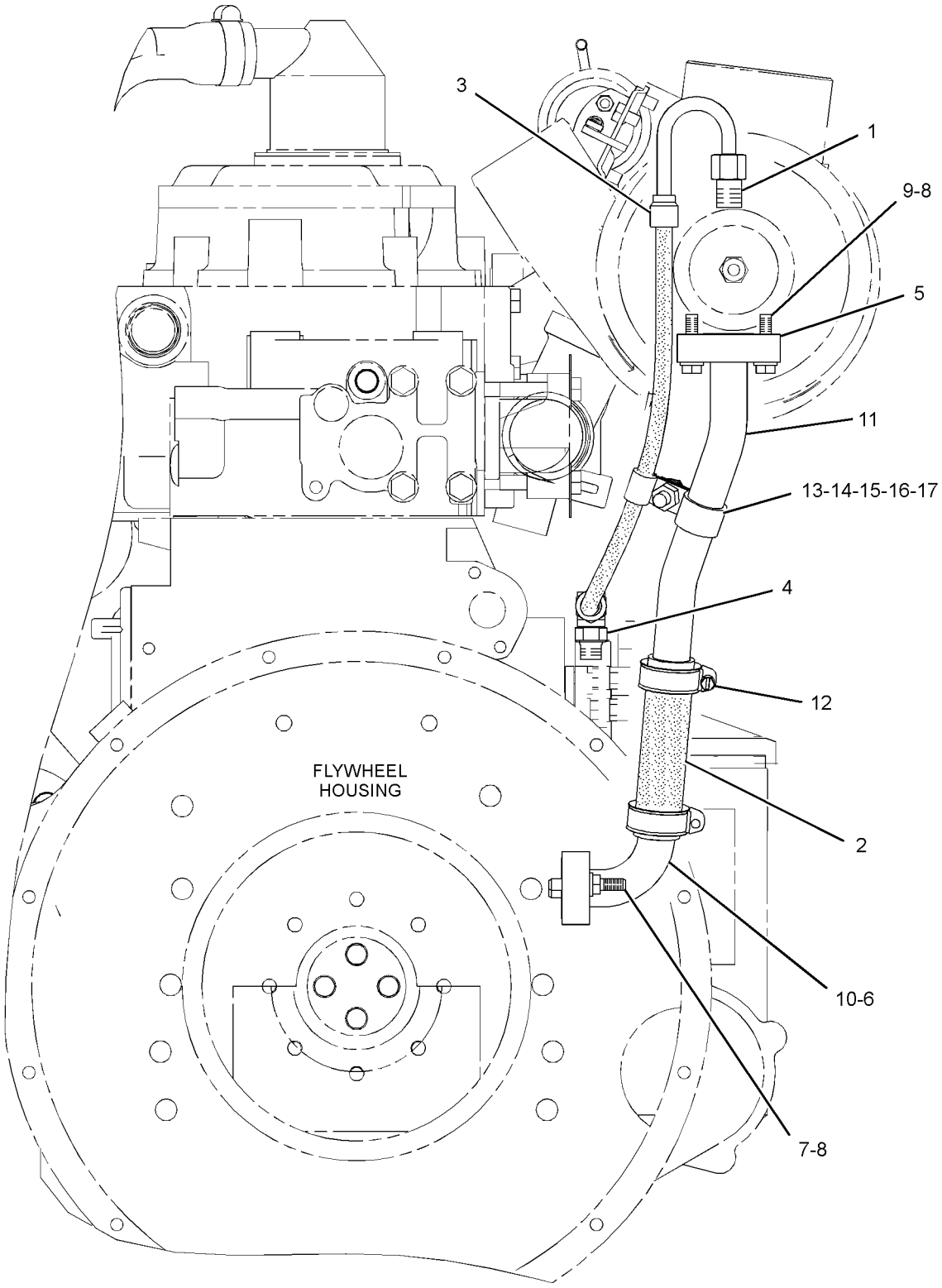

REAR VIEW OF ENGINE

GRAPHIC #1 **<END>** g01319683

LUBRICATION SYSTEM

237-8063 MANIFOLD GP-ENGINE OIL

S/N: KHX8814-UP

PART OF 312-0255 ENGINE AR-COMPLETE

SMCS-1307 **i02789607**

NOTE	REF NO	GRAPHIC REF	PART NUMBER	QTY	PART NAME 1 2 3 4 5 6 (PRODUCT LEVEL)	SEE PAGE
	1	1	**226-8696**	1	MANIFOLD-OIL (ENGINE)	
	2	1	**3J-1907**	4	SEAL-O-RING	
	3	1	**4F-9029**	1	SEAL	
M	4	1	**6V-5219**	2	BOLT (M8X1.25X40-MM)	
	5	1	**9S-4191**	4	PLUG-O-RING	

M-METRIC PART

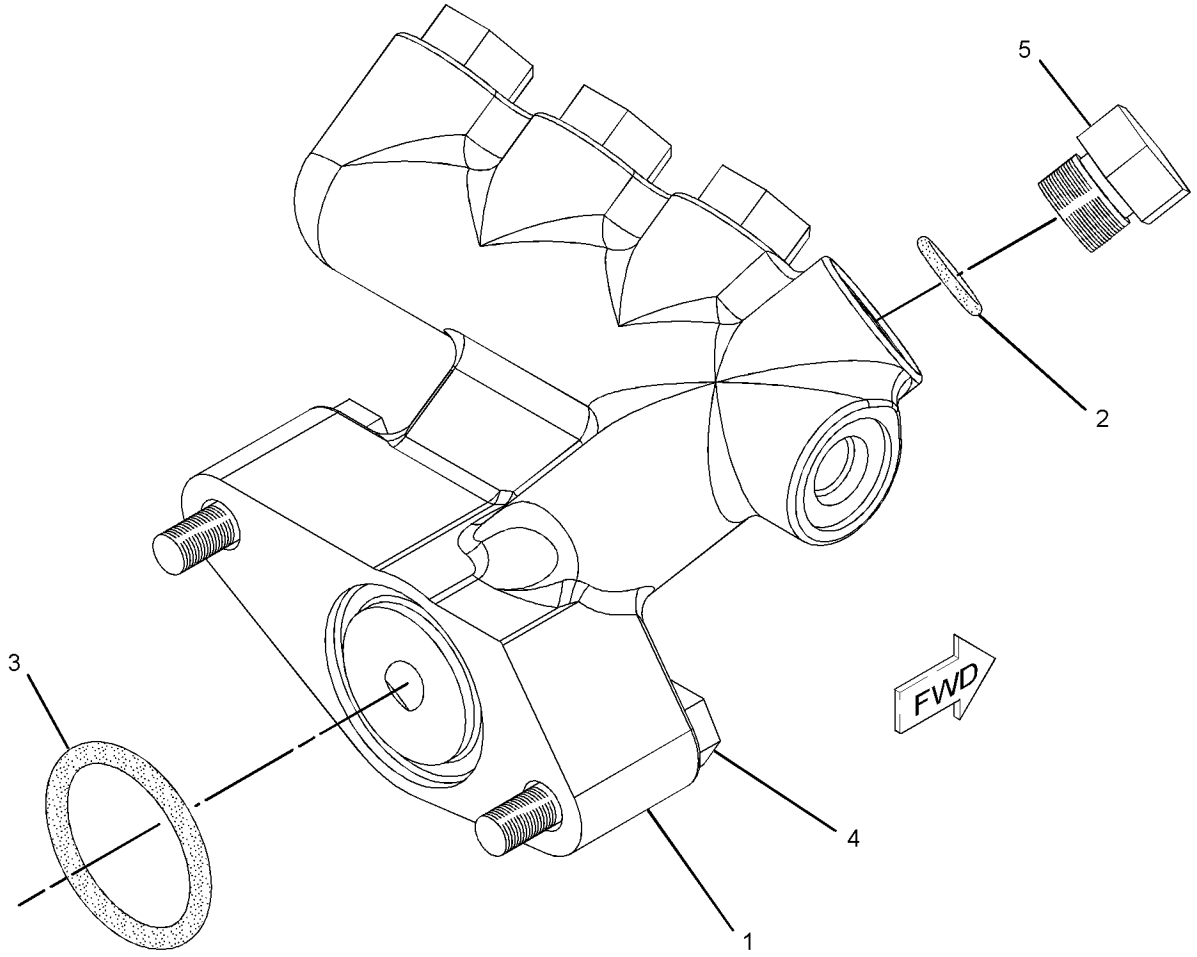

GRAPHIC #1 **<END>** g01099259

200-4497 PUMP GP-ENGINE OIL

S/N: KHX8814-UP

PART OF 212-2270 PUMP GP-ENGINE OIL

SMCS-1304, 1315 **i02120062**

NOTE	REF NO	GRAPHIC REF	PART NUMBER	QTY	PART NAME 1 2 3 4 5 6 (PRODUCT LEVEL)	SEE PAGE
	1	1	**7W-9737**	1	SHAFT	
	2	1	**7W-9738**	1	WASHER (10.5X38X1.6-MM THK)	
	3	1	**7W-9740**	1	GEAR AS-IDLER (43-TEETH)	
	3A	1	**7W-9930**	1	BEARING-SLEEVE	
M	4	1	**9X-2305**	1	BOLT-LOCKING (M10X1.5X50-MM)	
	5	1	**189-8777**	1	PUMP GP-ENGINE OIL	

M-METRIC PART

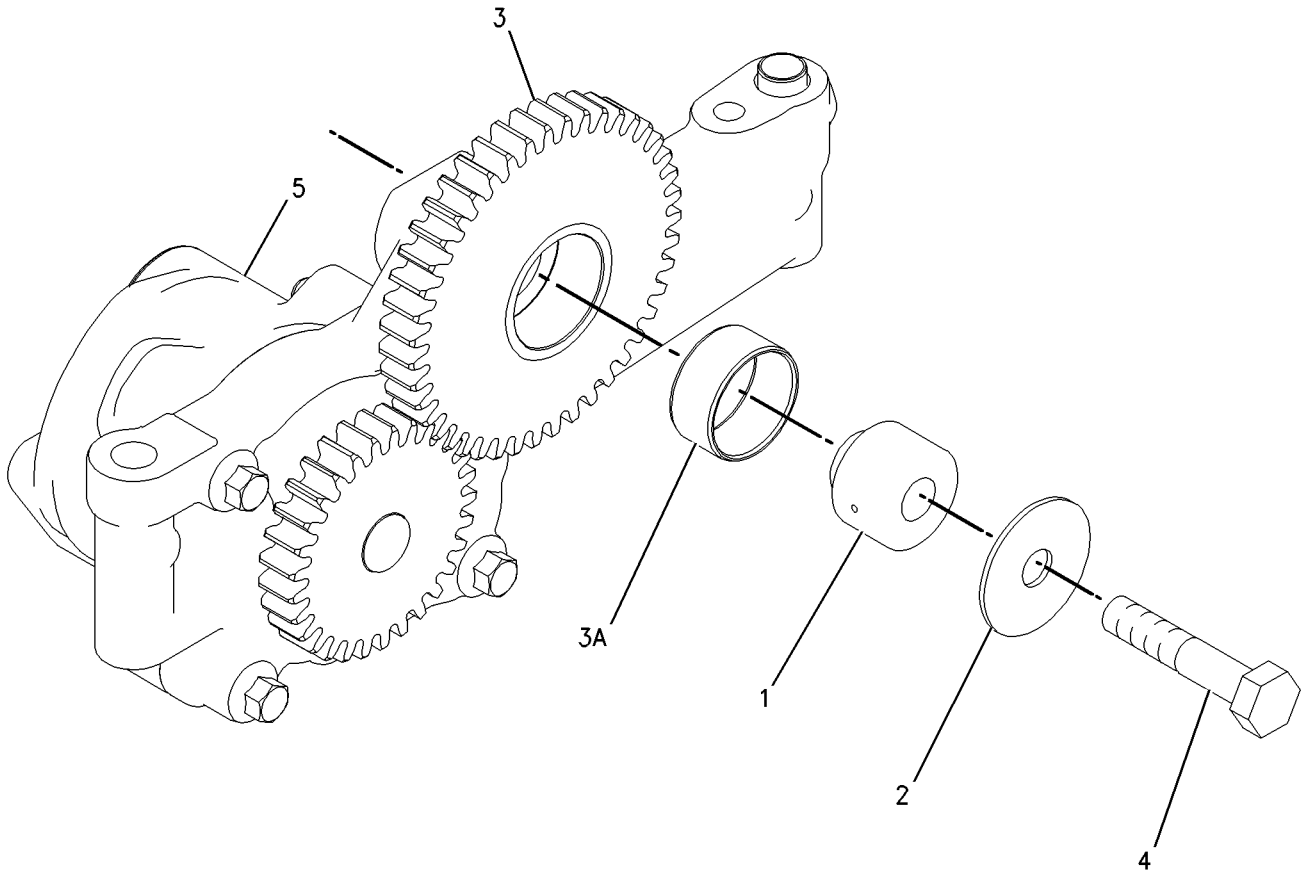

GRAPHIC #1 **<END>** g00775788

LUBRICATION SYSTEM

212-2270 PUMP GP-ENGINE OIL

S/N: KHX8814-UP

PART OF 312-0254 ENGINE AR-CORE

SMCS-1304, 1315 **i02294171**

NOTE	REF NO	GRAPHIC REF	PART NUMBER	QTY	PART NAME 1 2 3 4 5 6 (PRODUCT LEVEL)	SEE PAGE
Y	1	1	**200-4497**	1	PUMP GP-ENGINE OIL	61
M	2	1	**6V-5815**	2	BOLT (M10X1.5X75-MM)	
	3	1	**6V-5839**	2	WASHER (11X21X2.5-MM THK)	

M-METRIC PART
Y-SEPARATE ILLUSTRATION

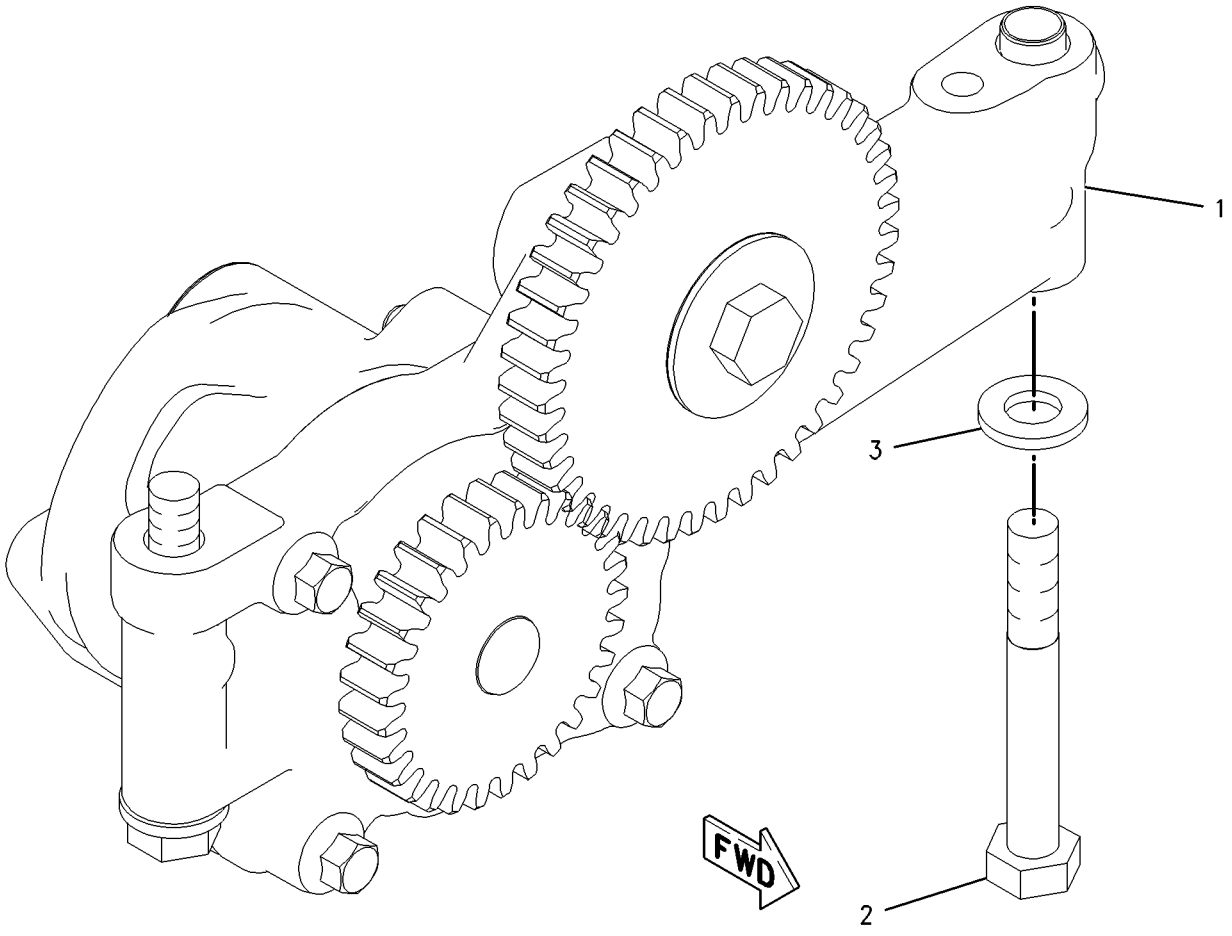

GRAPHIC #1 **<END>** g00849437

117-3643 COOLER GP-ENGINE OIL

S/N: KHX8814-UP

PART OF 312-0254 ENGINE AR-CORE

SMCS-1378 **i02835867**

NOTE	REF NO	GRAPHIC REF	PART NUMBER	QTY	PART NAME 1 2 3 4 5 6 (PRODUCT LEVEL)	SEE PAGE
R	1	1	**267-4743**	1	CORE AS-ENGINE OIL COOLER	
	2	1	**233-7655**	1	GASKET	
	3	1	**3P-1156**	2	SEAL-O-RING	

R-REMFG PART MAY BE AVAILABLE

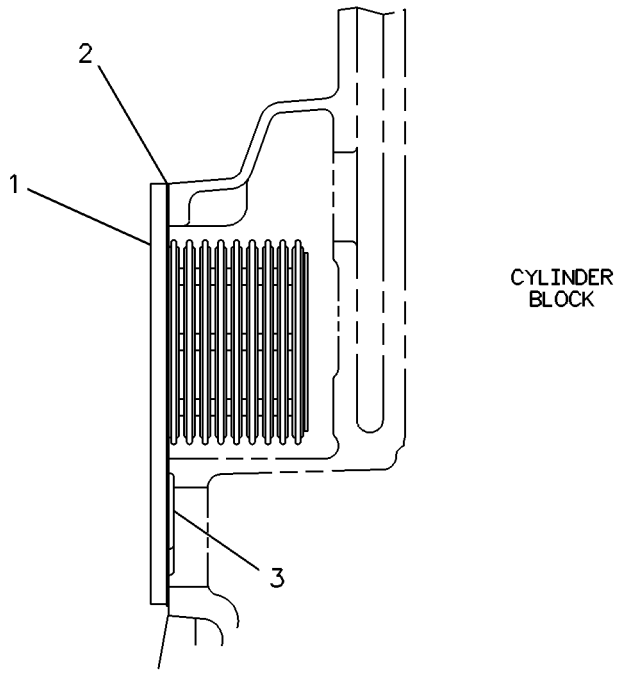

GRAPHIC #1 **<END>** g00117316

310-5881 COOLING AR

S/N: JBP1-UP

PART OF 274-7941 GENERAL AR

SMCS-1350 **i03246252**

NOTE	REF NO	GRAPHIC REF	PART NUMBER	QTY	PART NAME 1 2 3 4 5 6 (PRODUCT LEVEL)	SEE PAGE
Y	1	1	*299-8311*	1	AFTERCOOLER GP-AIR	77
Y	2	1	*310-5882*	1	RADIATOR GP	74

Y-SEPARATE ILLUSTRATION

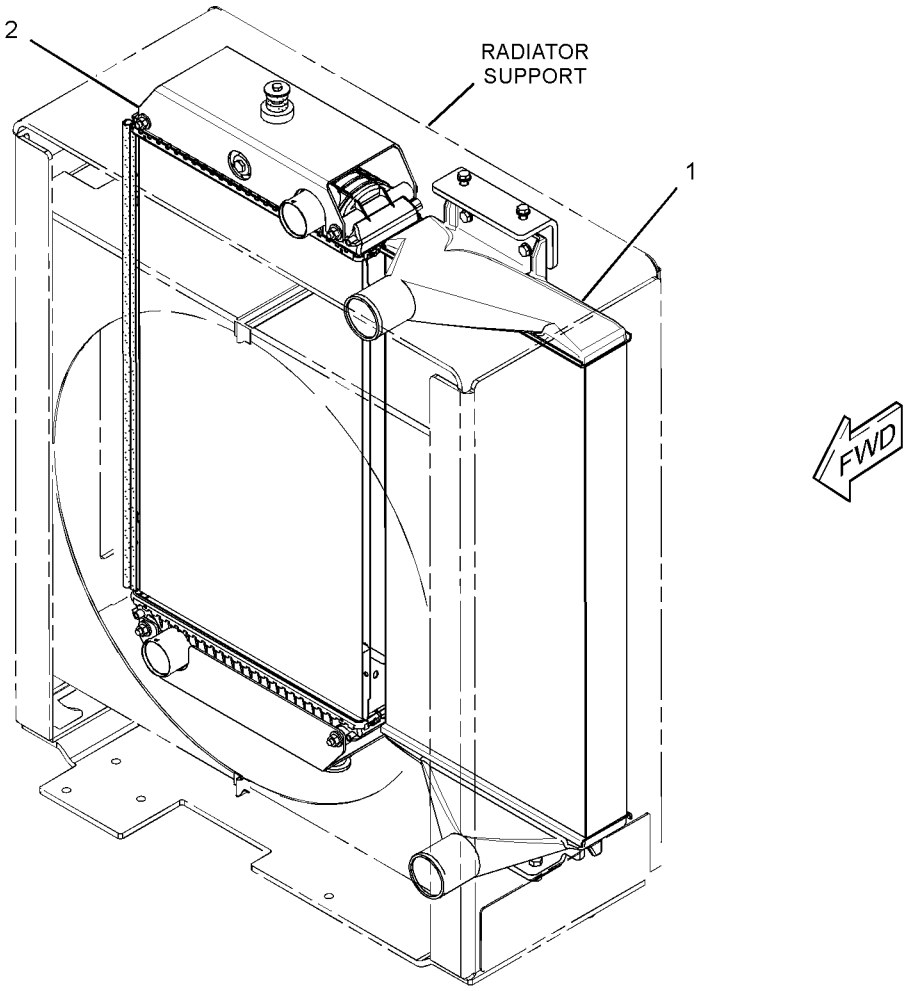

GRAPHIC #1 **<END>** g01691033

COOLING SYSTEM

284-0824 FAN GP–RADIATOR

S/N: JBP1-UP

PART OF 274-7941 GENERAL AR

SMCS-1356 **i03247411**

NOTE	REF NO	GRAPHIC REF	PART NUMBER	QTY	PART NAME 1 2 3 4 5 6 (PRODUCT LEVEL)	SEE PAGE
	1	1	**241-8534**	1	SPIDER AS (8-BLADE)	
	2	1	**8T-4121**	6	WASHER-HARD (11X21X2.5-MM THK)	
M	3	1	**8T-4195**	6	BOLT (M10X1.5X30-MM)	

M-METRIC PART

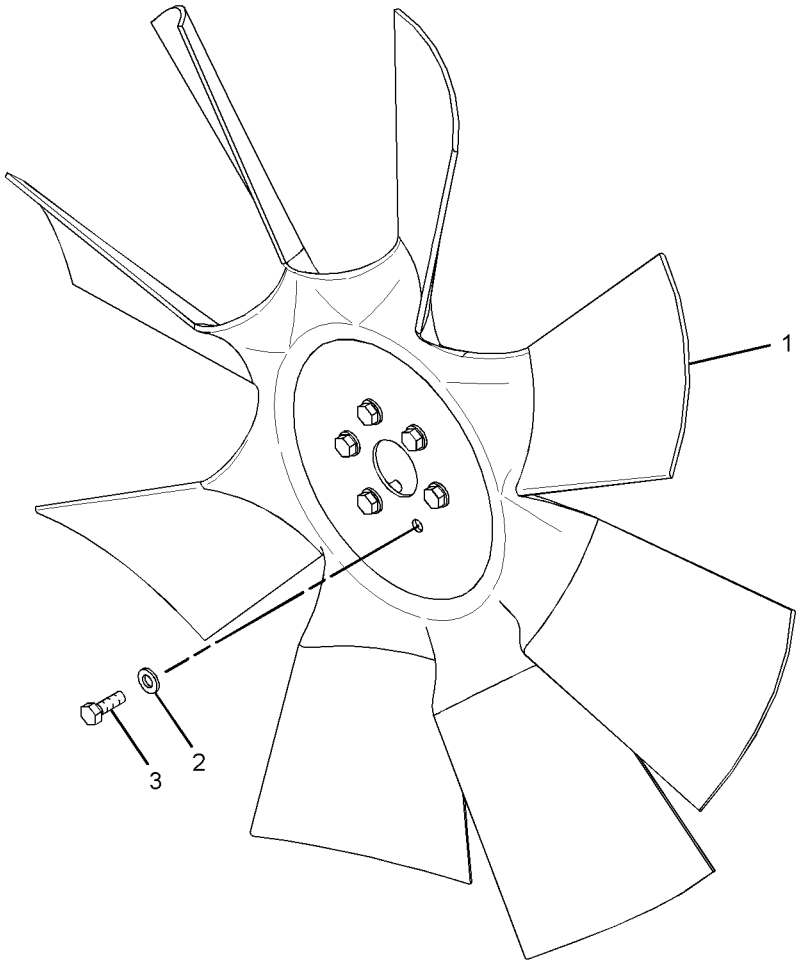

GRAPHIC #1 **<END>** g01687413

COOLING SYSTEM

303-6003 GUARD GP-FAN

S/N: JBP1-UP

PART OF 299-8307 SUPPORT GP-RADIATOR

SMCS-1360 **i03247380**

NOTE	REF NO	GRAPHIC REF	PART NUMBER	QTY	PART NAME 1 2 3 4 5 6 (PRODUCT LEVEL)	SEE PAGE
	1	1	**303-6009**	1	SHROUD AS (UPPER, LH)	
	2	1	**303-6010**	1	SHROUD AS (UPPER, RH)	
	3	1	**303-6011**	1	SHROUD AS (LOWER, RH)	
	4	1	**303-6012**	1	SHROUD AS (LOWER, LH)	
					(EACH SHROUD AS INCLUDES)	
		1	**6V-4604**	3	RIVET-POP	
M		1	**8T-3490**	3	NUT-WELD (M10X1.5-THD)	
	5	1	**303-6037**	2	BRUSH AS	
	6	1	**122-9764**	6	RIVET-POP	
E	7	1	**266-8568**		SEAL-BULK (17-CM EACH)	
E	7A	1	**266-8568**		SEAL-BULK (3.6-CM)	
E	7B	1	**266-8568**		SEAL-BULK (3-CM)	

E-ORDER BY THE CENTIMETER
M-METRIC PART

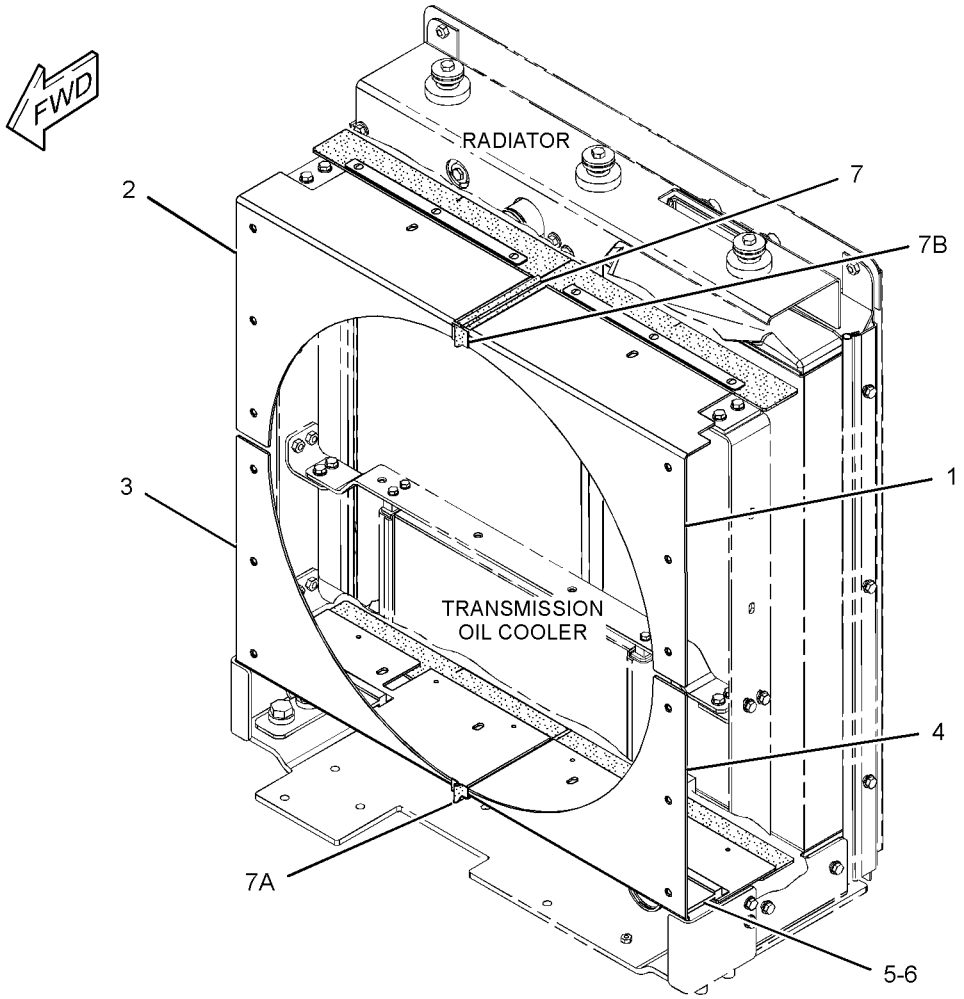

GRAPHIC #1 **<END>** g01696568

COOLING SYSTEM

206-4228 LINES GP-WATER

S/N: KHX8814-UP

PART OF 312-0255 ENGINE AR-COMPLETE

SMCS-1355, 1380, 1393 **i02838599**

NOTE	REF NO	GRAPHIC REF	PART NUMBER	QTY	PART NAME 1 2 3 4 5 6 (PRODUCT LEVEL)	SEE PAGE
	1	1	**7E-0759**	1	HOSE	
	3	1	**115-4223**	2	REGULATOR-WATER TEMPERATURE (97-DEG C)	
	4	1	**126-5466**	1	GASKET	
	5	1	**157-0670**	1	CAP-DUST	
	6	1	**160-5131**	1	PIPE (OUTLET)	
	7	1	*217-9060*	1	VALVE AS-FLUID SAMPLING (ENGINE COOLANT)	
	7A	1	**3J-7354**	1	SEAL-O-RING	
	7B	1	**154-9023**	1	VALVE-SAMPLING	
	8	1	**222-5915**	1	GASKET (TEMPERATURE REGULATOR HOUSING)	
	9	1	**227-5942**	1	HOUSING-WATER REGULATOR	
	10	1	**237-5176**	2	CLAMP-BAND	
	11	1	*148-8395*	1	PLUG AS	
		1	**3K-0360**	1	SEAL-O-RING	
		1	**9S-8005**	1	PLUG-O-RING	
M	12	1	**5P-8347**	2	BOLT (M8X1.25X70-MM)	
	13	1	**5P-9617**	1	ADAPTER	
	14	1	**6V-3250**	1	SEAL-O-RING	
M	15	1	**6V-3940**	6	BOLT (M8X1.25X25-MM)	
M	16	1	**6V-5223**	1	BOLT (M8X1.25X100-MM)	
	17	1	**6V-6609**	3	SEAL-O-RING	
	18	1	**6V-9027**	1	SEAL-O-RING	
	19	1	**9M-1974**	6	WASHER-HARD (8.8X16X2-MM THK)	
	20	1	**9S-4182**	1	PLUG-O-RING	
	21	1	**9S-4185**	3	PLUG-O-RING	

M-METRIC PART

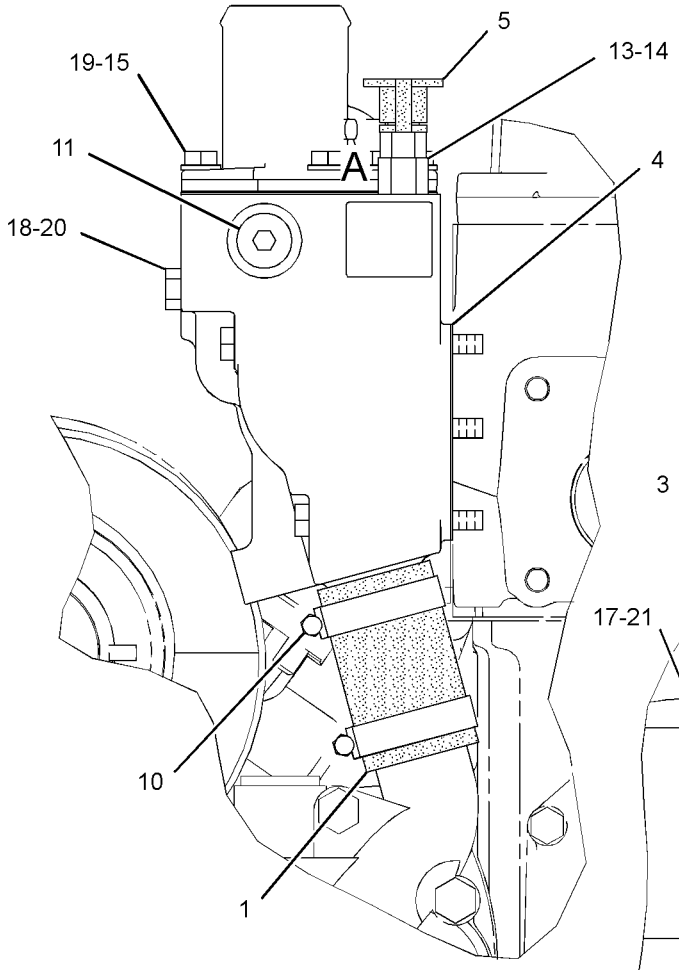

FRONT VIEW OF ENGINE

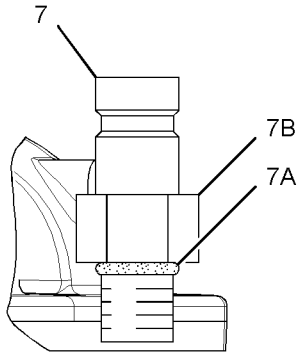

VIEW OF AREA A
(CAP REMOVED FOR CLARITY)

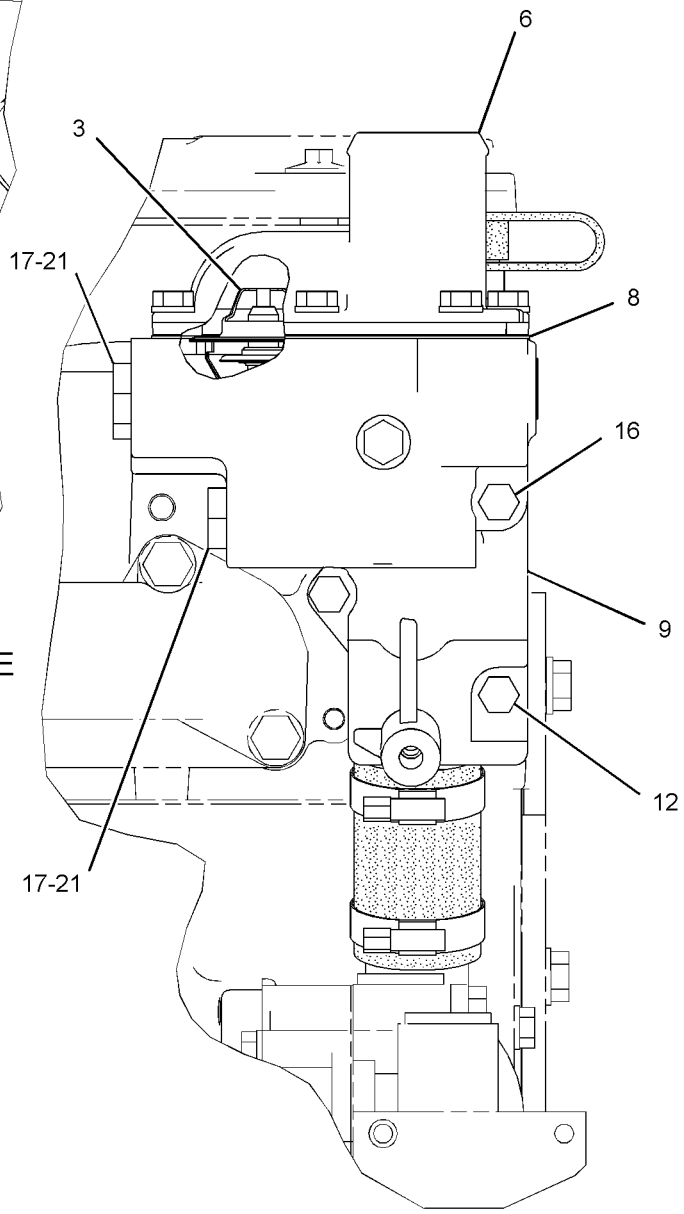

RIGHT SIDE VIEW OF ENGINE

GRAPHIC #1 **<END>** g01430061

COOLING SYSTEM

311-0274 LINES GP-WATER

S/N: JBP1-UP

PART OF 274-7941 GENERAL AR

SMCS-1355, 1380, 1393 **i03432290**

NOTE	REF NO	GRAPHIC REF	PART NUMBER	QTY	PART NAME 1 2 3 4 5 6 (PRODUCT LEVEL)	SEE PAGE
	1	1	**5D-1026**	1	CLAMP-HOSE	
	2	1	**5I-4376**	1	FITTING	
	3	1	**5P-4961**	4	CLAMP-HOSE	
	4	1	**157-0670**	1	CAP-DUST	
	5	1	*164-5562*	1	CONNECTOR AS	
		1	**3J-1907**	1	SEAL-O-RING	
		1	**5P-1046**	1	CONNECTOR	
	6	1	*184-2509*	1	VALVE GP-DRAIN (COOLANT)	
		1	**3K-0360**	1	SEAL-O-RING	
		1	**7E-4761**	1	VALVE-DRAIN	
	7	1	*215-7067*	3	ELBOW AS	
					(EACH INCLUDES)	
		1	**3J-1907**	1	SEAL-O-RING	
		1	**215-7066**	1	ELBOW	
	8	1	**263-6914**	1	HOSE	
	9	1	**265-5007**	1	HOSE	
	10	1	**266-7650**	1	ELBOW	
	11	1	**266-7651**	1	HOSE	
	12	1	**311-3025**	1	TUBE AS	
	13	1	**311-3026**	1	TUBE AS	
	14	1	**328-3496**	1	BRACKET	
	15	1	**154-9025**	1	VALVE-FLUID SAMPLING (COOLANT)	
	16	1	*184-2420*	1	ADAPTER AS	
		1	**3E-7401**	1	ADAPTER	
		1	**6V-8397**	1	SEAL-O-RING	
	17	1	**1P-7009**	1	CLIP	
	18	1	**208-6054**	4	CLAMP	
	19	1	**212-6933**	4	CLAMP	
	20	1	**2S-7010**	1	CLIP	
	21	1	**4D-7388**	1	CLIP	
	22	1	**6K-8178**	1	CLIP	
	23	1	**6V-2235**	1	CLIP	
	24	1	**6V-8367**	1	LOCKWASHER	
	25	1	**6V-9168**	1	NUT (11/16-16-THD)	
	26	1	**7J-8611**	1	ELBOW-PIPE (90-DEG)	
	27	1	**8M-2773**	1	CLIP	
	28	1	**8T-4121**	7	WASHER-HARD (11X21X2.5-MM THK)	
M	29	1	**8T-4133**	1	NUT (M10X1.5-THD)	
M	30	1	**8T-4137**	6	BOLT (M10X1.5X20-MM)	
E	31	1	**5P-0767**		HOSE (18-CM)	
E	32	1	**6V-8523**		HOSE (133.8-CM)	
E	32A	1	**6V-8523**		HOSE (38.2-CM)	

E-ORDER BY THE CENTIMETER
M-METRIC PART

311-0274 **LINES GP-WATER** *(contd.)* **i03432290**

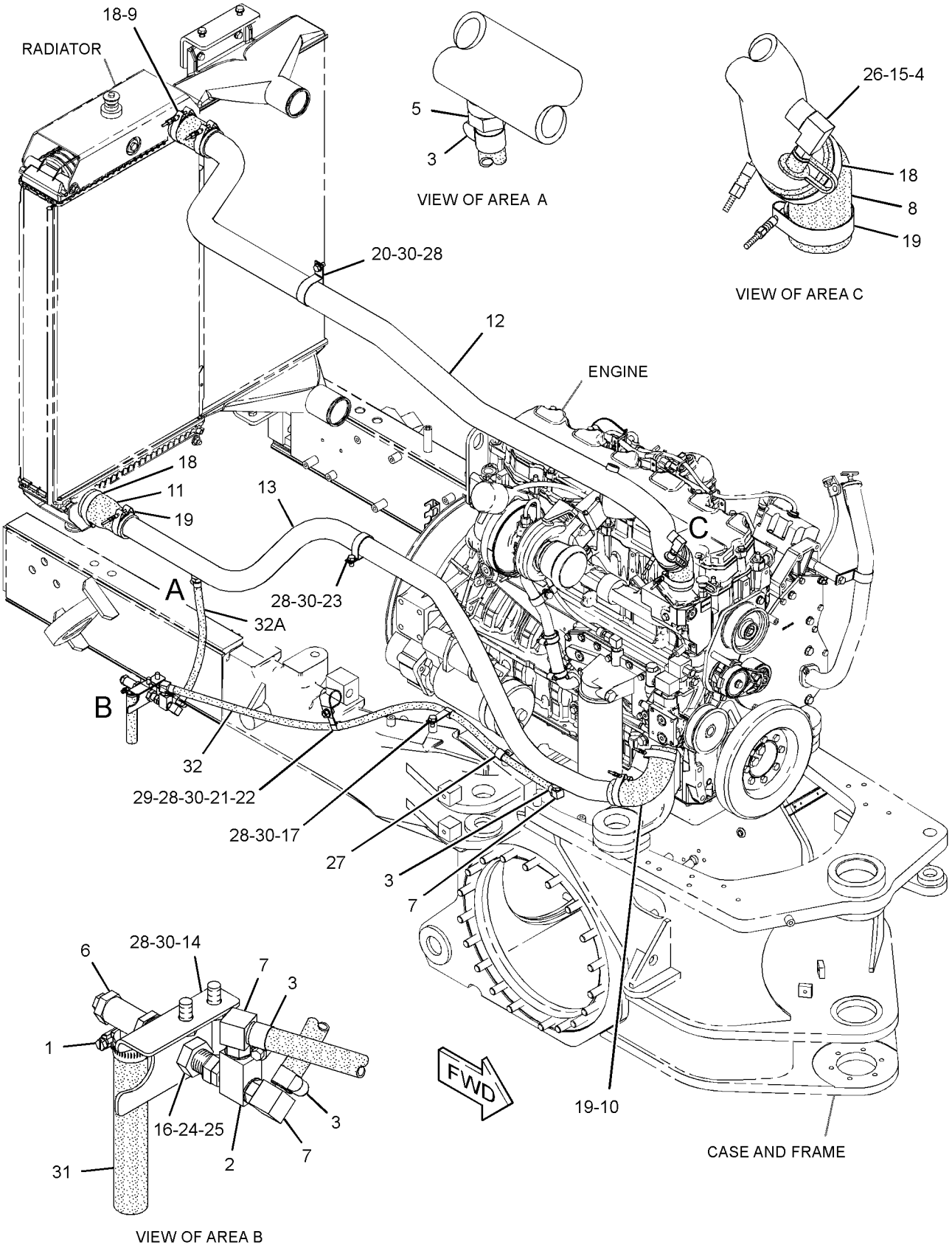

GRAPHIC #1 **<END>** g01710315

236-4413 PUMP GP-WATER*R

S/N: KHX8814-UP

PART OF 318-2076 PUMP GP-WATER

SMCS-1361 **i02871912**

NOTE	REF NO	GRAPHIC REF	PART NUMBER	QTY	PART NAME 1 2 3 4 5 6 (PRODUCT LEVEL)	SEE PAGE
	1	1	**4W-0253**	1	COVER	
	2	1	**4W-7592**	1	GASKET	
R	3	1	**236-4420**	1	PUMP AS-WATER	
		1	**117-3437**	1	PULLEY	
		1	**119-3025**	1	PLUG-FELT	
		1	**129-1170**	1	SHAFT AS	
		1	**147-5088**	1	SEAL AS-WATER PUMP	
		1	**152-3952**	1	IMPELLER-PUMP	
		1	**236-4421**	1	HOUSING-PUMP	
M	4	1	**6V-3918**	4	BOLT (M8X1.25X50-MM)	
	5	1	**9M-1974**	4	WASHER-HARD (8.8X16X2-MM THK)	

M-METRIC PART
R-REMFG PART MAY BE AVAILABLE

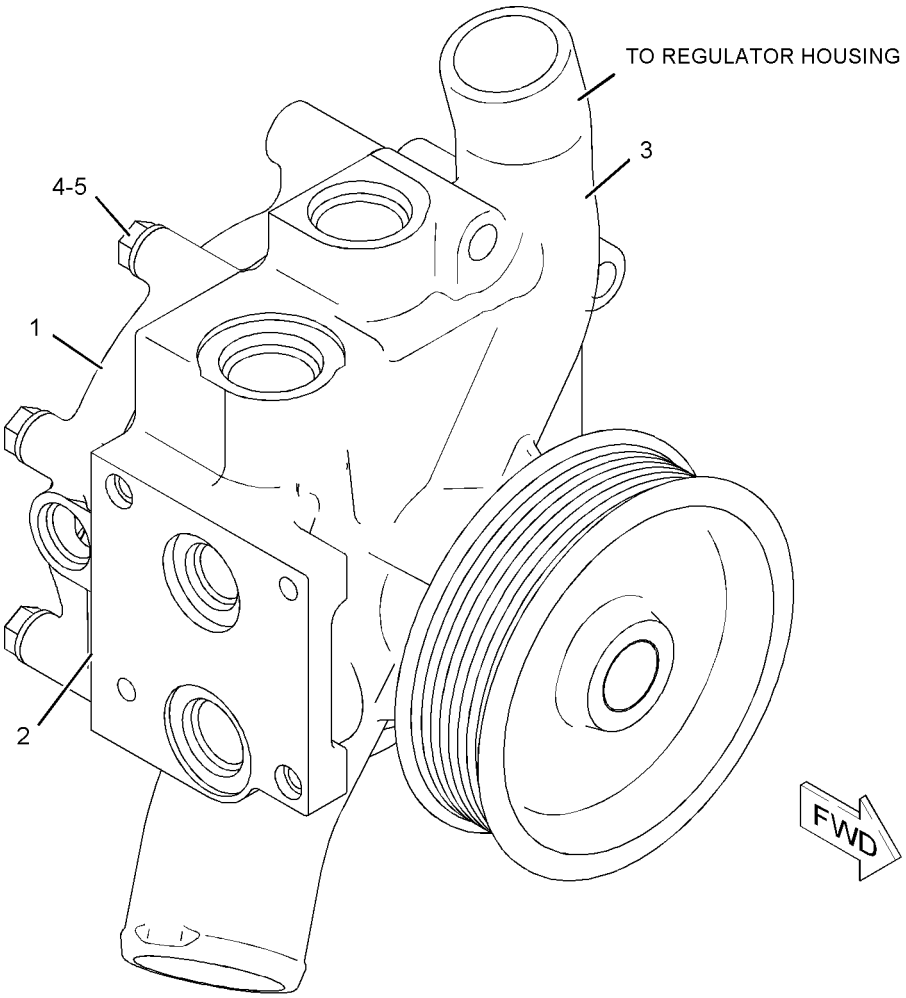

GRAPHIC #1 **<END>** g01040531

COOLING SYSTEM

318-2076 PUMP GP-WATER

S/N: KHX8814-UP

PART OF 312-0255 ENGINE AR-COMPLETE

SMCS-1361 **i03339021**

NOTE	REF NO	GRAPHIC REF	PART NUMBER	QTY	PART NAME 1 2 3 4 5 6 (PRODUCT LEVEL)	SEE PAGE
	1	1	**069-4269**	1	STEM	
YR	2	1	**236-4413**	1	PUMP GP-WATER	71
	3	1	*148-8395*	2	PLUG AS	
					(EACH INCLUDES)	
	3A	1	**3K-0360**	1	SEAL-O-RING	
		1	**9S-8005**	1	PLUG-O-RING	
	4	1	*155-6258*	1	ELBOW AS	
	4A	1	**3D-2824**	1	SEAL-O-RING	
	4B	1	**6V-8398**	1	SEAL-O-RING	
		1	**127-1647**	1	ELBOW	
	5	1	*164-5619*	1	PLUG AS	
	5A	1	**2M-9780**	1	SEAL-O-RING	
		1	**9S-8006**	1	PLUG-O-RING	
	6	1	**2M-4453**	1	SEAL-O-RING	
	7	1	**3D-2824**	1	SEAL-O-RING	
	8	1	**3J-3679**	1	PLUG AS	
	8A	1	**1J-9671**	1	SEAL-O-RING	
		1	**9S-8003**	1	PLUG	
	9	1	**4J-0524**	1	SEAL-O-RING	
M	10	1	**8T-0644**	4	BOLT (M10X1.5X90-MM)	

M-METRIC PART
R-REMFG PART MAY BE AVAILABLE
Y-SEPARATE ILLUSTRATION

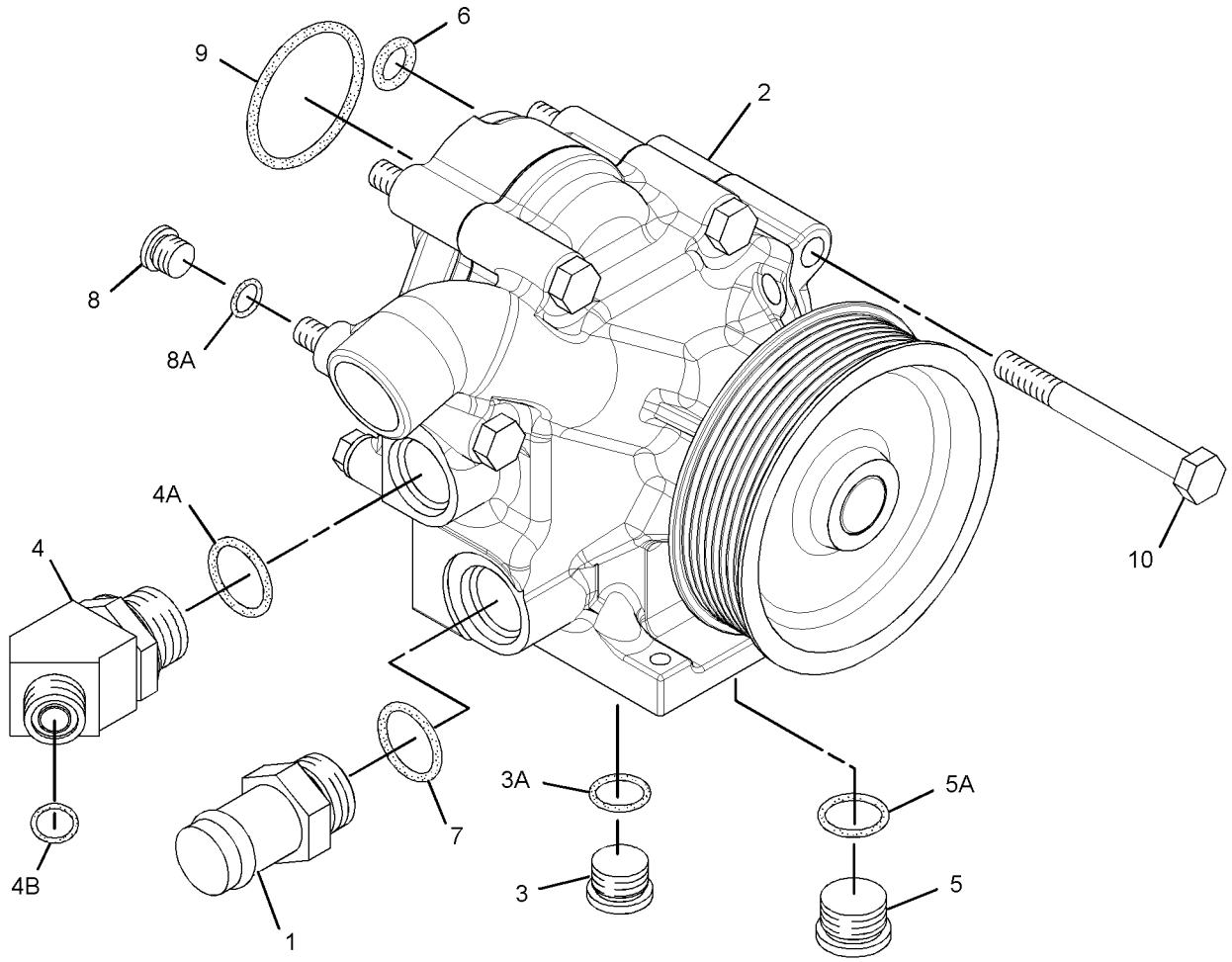

GRAPHIC #1 **<END>** g01722080

COOLING SYSTEM

310-5882 RADIATOR GP

S/N: JBP1-UP

PART OF 310-5881 COOLING AR

SMCS-1353 **i03246384**

NOTE	REF NO	GRAPHIC REF	PART NUMBER	QTY	PART NAME 1 2 3 4 5 6 (PRODUCT LEVEL)	SEE PAGE
	1	1	**6S-6251**	2	MOUNT	
	2	1	**121-3307**	1	MOUNT AS-RESILIENT	
M	3	1	**174-4181**	1	WASHER-HARD (8.5X40X3-MM THK)	
	4	1	**256-5308**	1	CORE AS-RADIATOR	
	5	1	**310-5883**	1	BRACKET AS	
	6	1	**310-5884**	1	BRACKET AS	
	7	1	**3J-5390**	1	PLUG	
M	8	1	**7X-2546**	4	BOLT (M10X1.5X180-MM)	
	9	1	**7X-7729**	8	WASHER (11X25X3-MM THK)	
M	10	1	**8T-4133**	4	NUT (M10X1.5-THD)	
M	11	1	**8T-4194**	2	BOLT (M12X1.75X50-MM)	
	12	1	**8T-4895**	2	WASHER (13.5X50X5-MM THK)	
M	13	1	**8T-6912**	1	BOLT (M8X1.25X50-MM)	
D	14	1	**5P-8309**		SEAL (1.8-M)	

D-ORDER BY THE METER
M-METRIC PART

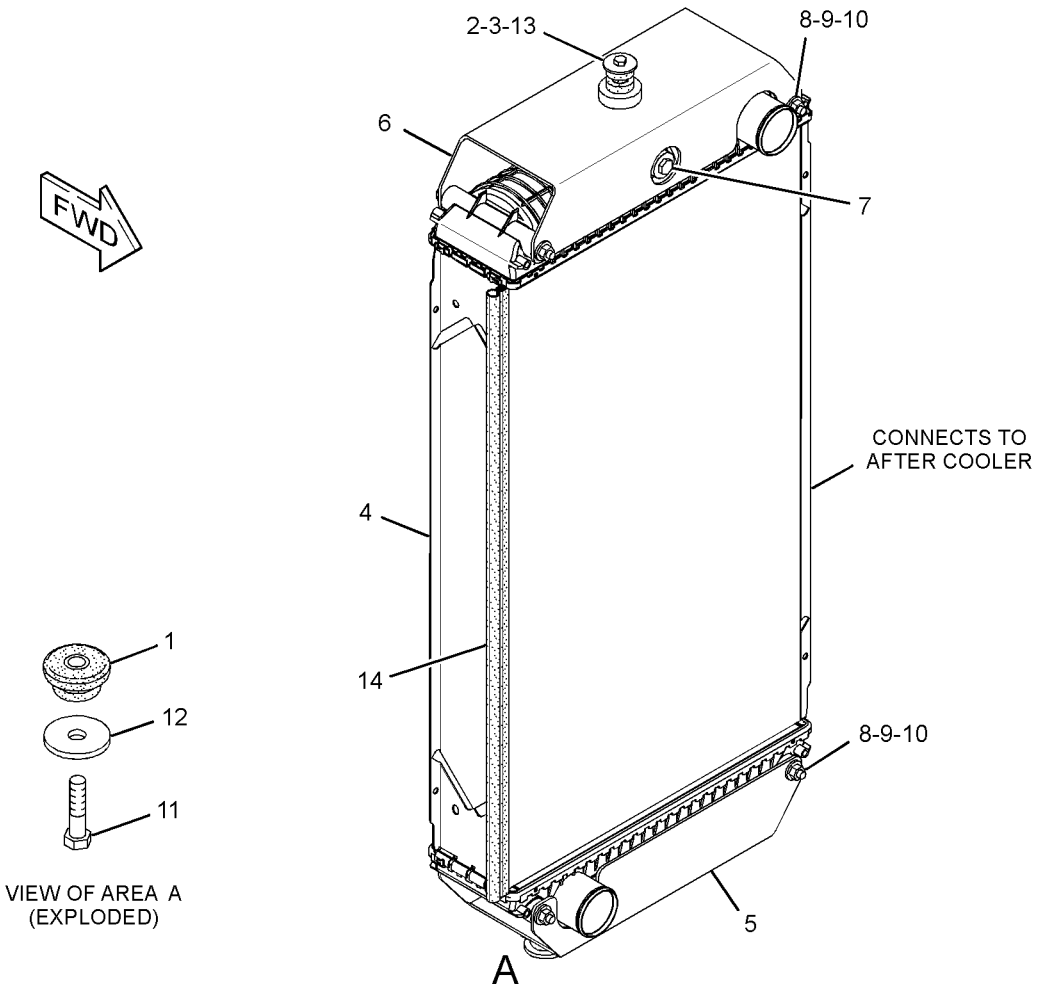

GRAPHIC #1 **<END>** g01661236

COOLING SYSTEM

311-2766 TANK GP-WATER

S/N: JBP1-UP

PART OF 274-7941 GENERAL AR

SMCS-1354, 1377 **i03246390**

NOTE	REF NO	GRAPHIC REF	PART NUMBER	QTY	PART NAME 1 2 3 4 5 6 (PRODUCT LEVEL)	SEE PAGE
	1	1	**6V-1230**	1	ELBOW	
	2	1	**277-4837**	1	TANK GP-COOLANT	
		1	**251-3227**	1	CAP AS-COOLANT TANK	
	3	1	**316-6689**	1	PLATE AS	
	4	1	**317-1529**	1	PLATE	
	5	1	**033-8248**	4	CLIP	
	6	1	**198-4776**	4	WASHER-HARD (8.8X20X8-MM THK)	
	7	1	**198-4777**	2	WASHER-HARD (11X25X10-MM THK)	
	8	1	**1S-0994**	1	CLIP	
	9	1	**3K-0360**	1	SEAL-O-RING	
	10	1	**4D-7388**	1	CLIP	
	11	1	**5D-1026**	2	CLAMP-HOSE	
	12	1	**8T-1117**	2	CLAMP-HOSE	
	13	1	**8T-4121**	10	WASHER-HARD (11X21X2.5-MM THK)	
M	14	1	**8T-4133**	3	NUT (M10X1.5-THD)	
M	15	1	**8T-4137**	6	BOLT (M10X1.5X20-MM)	
M	16	1	**8T-4195**	2	BOLT (M10X1.5X30-MM)	
M	17	1	**8T-4196**	1	BOLT (M10X1.5X35-MM)	
M	18	1	**8T-4908**	4	BOLT (M8X1.25X25-MM)	
E	19	1	**9X-2133**		HOSE (35-CM)	
E	20	1	**5P-1251**		HOSE (75-CM)	
E	21	1	**8C-3681**		HOSE (219-CM)	

E-ORDER BY THE CENTIMETER
M-METRIC PART

311-2766 **TANK GP-WATER** *(contd.)* **i03246390**

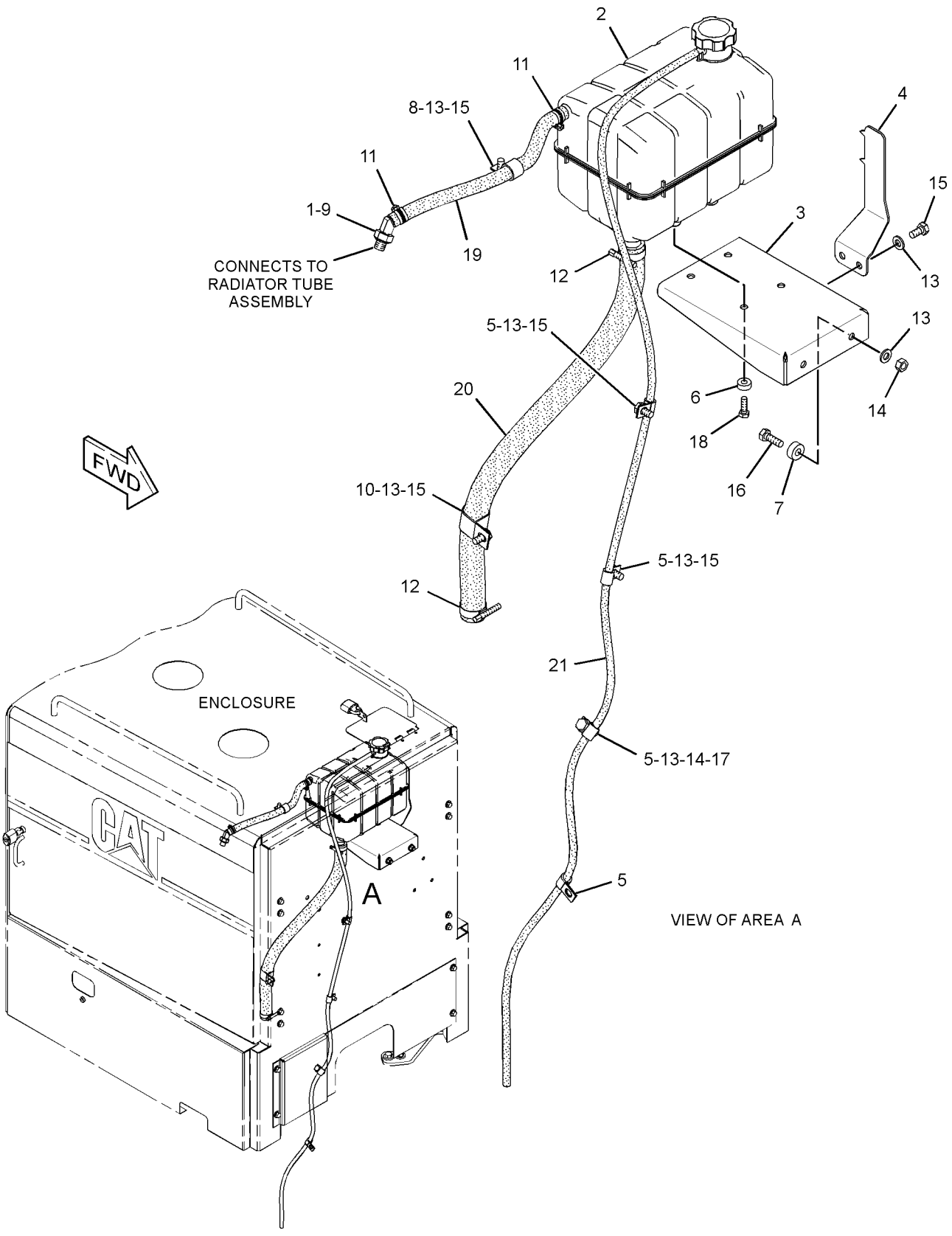

GRAPHIC #1 **<END>** g01689236

AIR INLET AND EXHAUST SYSTEM

299-8311 AFTERCOOLER GP-AIR

S/N: JBP1-UP

PART OF 310-5881 COOLING AR

SMCS-1063, 1064, 1079 **i03242667**

NOTE	REF NO	GRAPHIC REF	PART NUMBER	QTY	PART NAME 1 2 3 4 5 6 (PRODUCT LEVEL)	SEE PAGE
	1	1	**121-3307**	4	MOUNT AS-RESILIENT (RUBBER)	
	2	1	**243-5063**	1	AFTERCOOLER AS	
	3	1	**317-1538**	1	PLATE AS	
	4	1	**317-5601**	1	BRACKET AS	
	5	1	**8T-4121**	6	WASHER-HARD (11X21X2.5-MM THK)	
M	6	1	**8T-4133**	2	NUT (M10X1.5-THD)	
M	7	1	**8T-4196**	4	BOLT (M10X1.5X35-MM)	
	8	1	**8T-4226**	4	WASHER-PLATED (10.5X45X3-MM THK)	
M	9	1	**8T-6466**	4	BOLT (M10X1.5X60-MM)	

M-METRIC PART

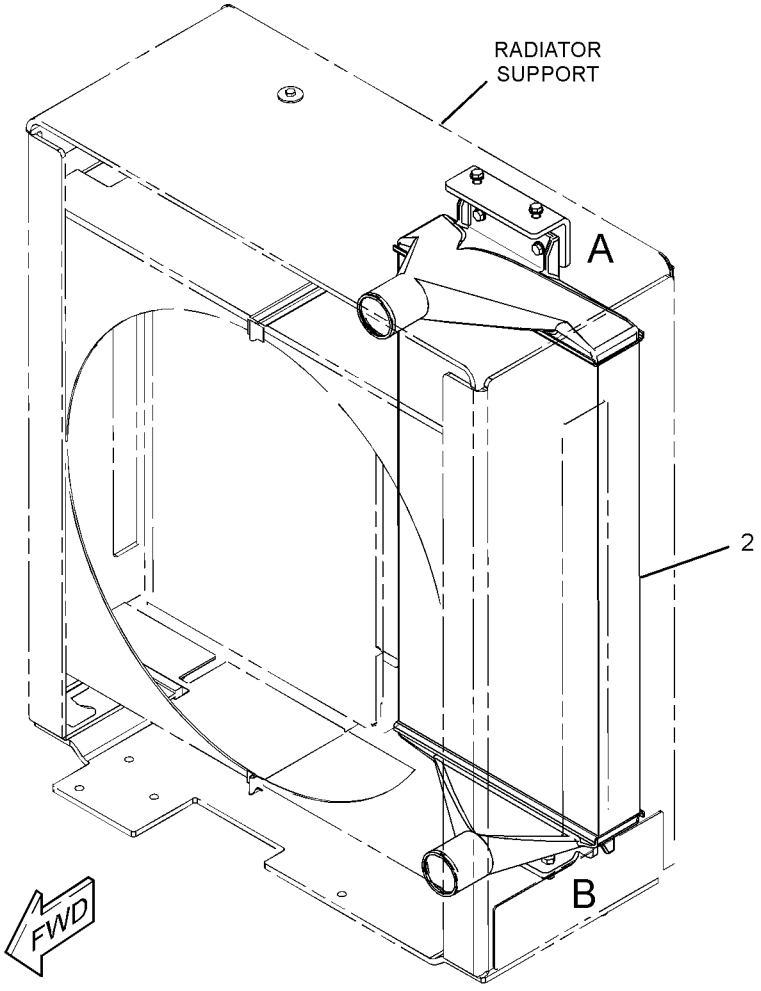

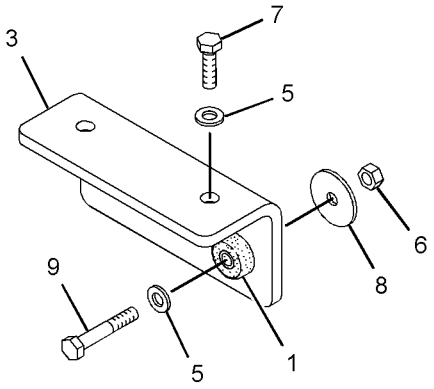

VIEW OF AREA A

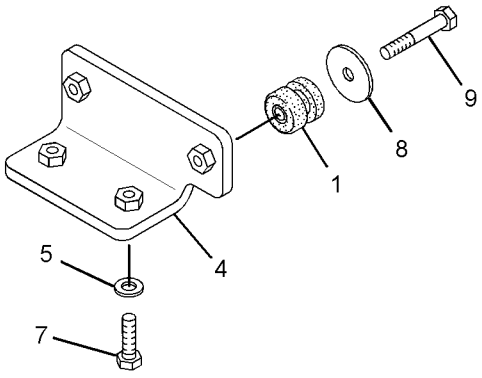

VIEW OF AREA B

GRAPHIC #1 **<END>** g01690853

AIR INLET AND EXHAUST SYSTEM

264-3762 AIR CLEANER GP

S/N: JBP1-UP

PART OF 310-6459 AIR CLEANER GP

SMCS-1051, 1054 **i03245923**

NOTE	REF NO	GRAPHIC REF	PART NUMBER	QTY	PART NAME 1 2 3 4 5 6 (PRODUCT LEVEL)	SEE PAGE
	1	1	**212-5081**	1	COVER AS	
	2	1	**245-6375**	1	FILTER ELEMENT-AIR (PRIMARY)	
	3	1	**245-6376**	1	FILTER ELEMENT AS-AIR (SECONDARY)	
	4	1	**246-4615**	2	BRACKET AS	
	5	1	**247-9730**	1	VALVE AS-CHECK	

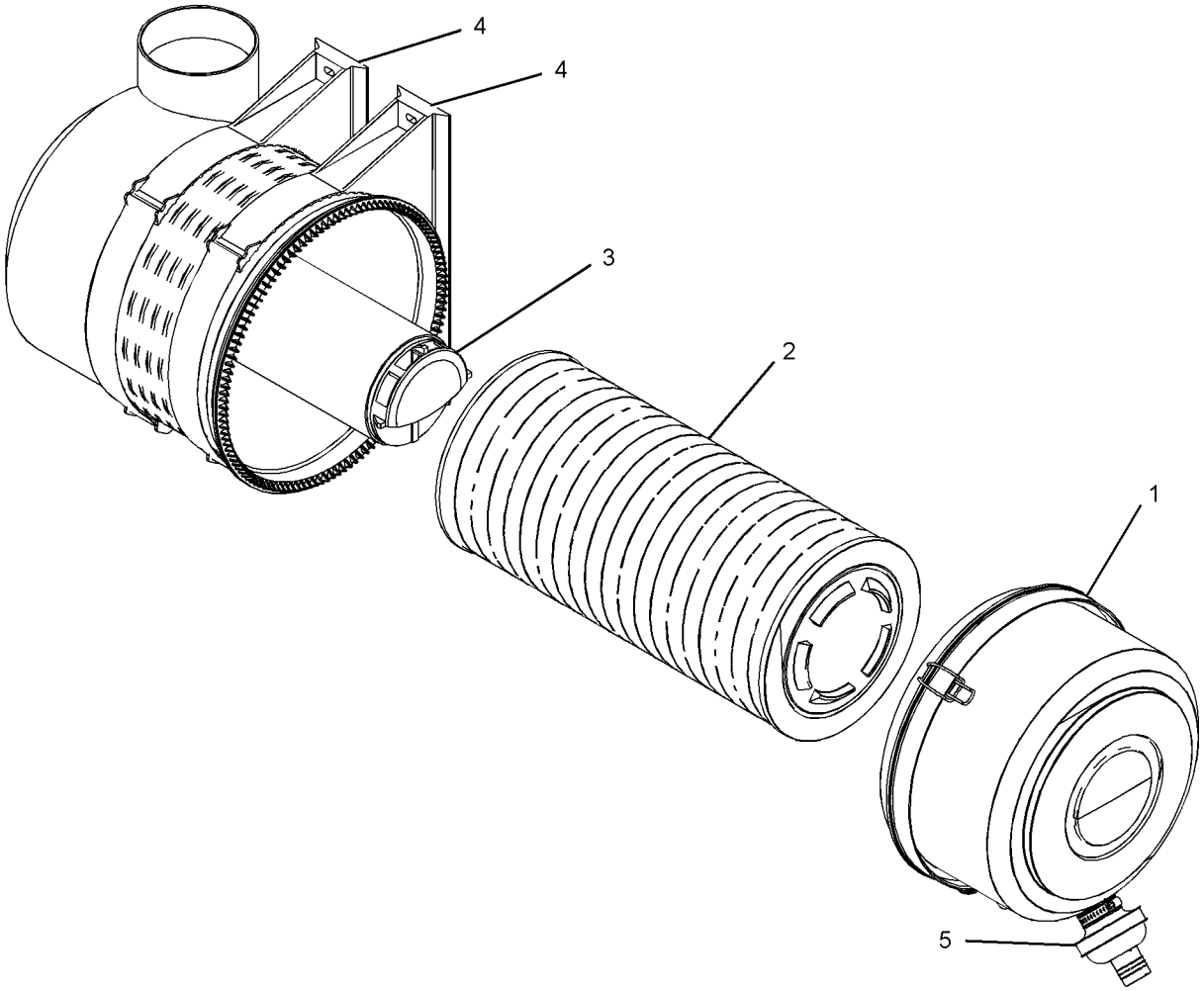

GRAPHIC #1 **<END>** g01691874

AIR INLET AND EXHAUST SYSTEM

310-6459 AIR CLEANER GP

S/N: JBP1-UP

PART OF 274-7941 GENERAL AR

SMCS-1051, 1054 **i03246214**

NOTE	REF NO	GRAPHIC REF	PART NUMBER	QTY	PART NAME 1 2 3 4 5 6 (PRODUCT LEVEL)	SEE PAGE
	1	1	**5P-2230**	2	CLAMP-HOSE	
	2	1	**8N-2694**	1	INDICATOR GP-AIR FILTER CHANGE	
	3	1	**119-6723**	1	FITTING	
	4	1	*150-3058*	1	TEE AS	
		1	**3J-1907**	1	SEAL-O-RING	
		1	**8C-8431**	1	TEE	
	5	1	**246-4611**	1	CAP AS-AIR CLEANER	
	6	1	**250-2984**	1	PIPE-EXTENSION	
Y	7	1	**264-3762**	1	AIR CLEANER GP	78
	8	1	**284-7774**	1	BRACKET	
	9	1	**311-4907**	1	HOSE AS	
I	10	1	**311-4908**	1	HOSE AS	
	11	1	**313-6096**	1	PLATE	
	12	1	**313-9542**	1	HOSE	
M	13	1	**099-3649**	4	BOLT (M8X1.25X40-MM)	
	14	1	*169-5862*	1	ELBOW AS	
		1	**3J-1907**	1	SEAL-O-RING	
		1	**8C-6712**	1	ELBOW	
	15	1	**1S-1014**	1	GROMMET	
	16	1	**219-0314**	1	CLAMP	
	17	1	**220-4125**	1	CLAMP	
	18	1	**224-0807**	1	CLAMP	
	19	1	**3J-7354**	1	SEAL-O-RING	
	20	1	**4D-7794**	1	CLIP	
M	21	1	**5C-2890**	2	NUT (M6X1-THD)	
	22	1	**7L-6326**	1	CLIP	
	23	1	**8T-4121**	6	WASHER-HARD (11X21X2.5-MM THK)	
M	24	1	**8T-4133**	1	NUT (M10X1.5-THD)	
M	25	1	**8T-4136**	1	BOLT (M10X1.5X25-MM)	
M	26	1	**8T-4137**	3	BOLT (M10X1.5X20-MM)	
M	27	1	**8T-4138**	2	BOLT (M6X1X20-MM)	
M	28	1	**8T-4191**	1	BOLT (M10X1.5X16-MM)	
	29	1	**5P-4116**	4	WASHER-HARD (8.8X20.5X2-MM THK)	
	30	1	**9X-8256**	4	WASHER (6.6X12X2-MM THK)	

I-REFER TO HYDRAULIC INFORMATION SYSTEM
M-METRIC PART
Y-SEPARATE ILLUSTRATION

310-6459 **AIR CLEANER GP** *(contd.)* **i03246214**

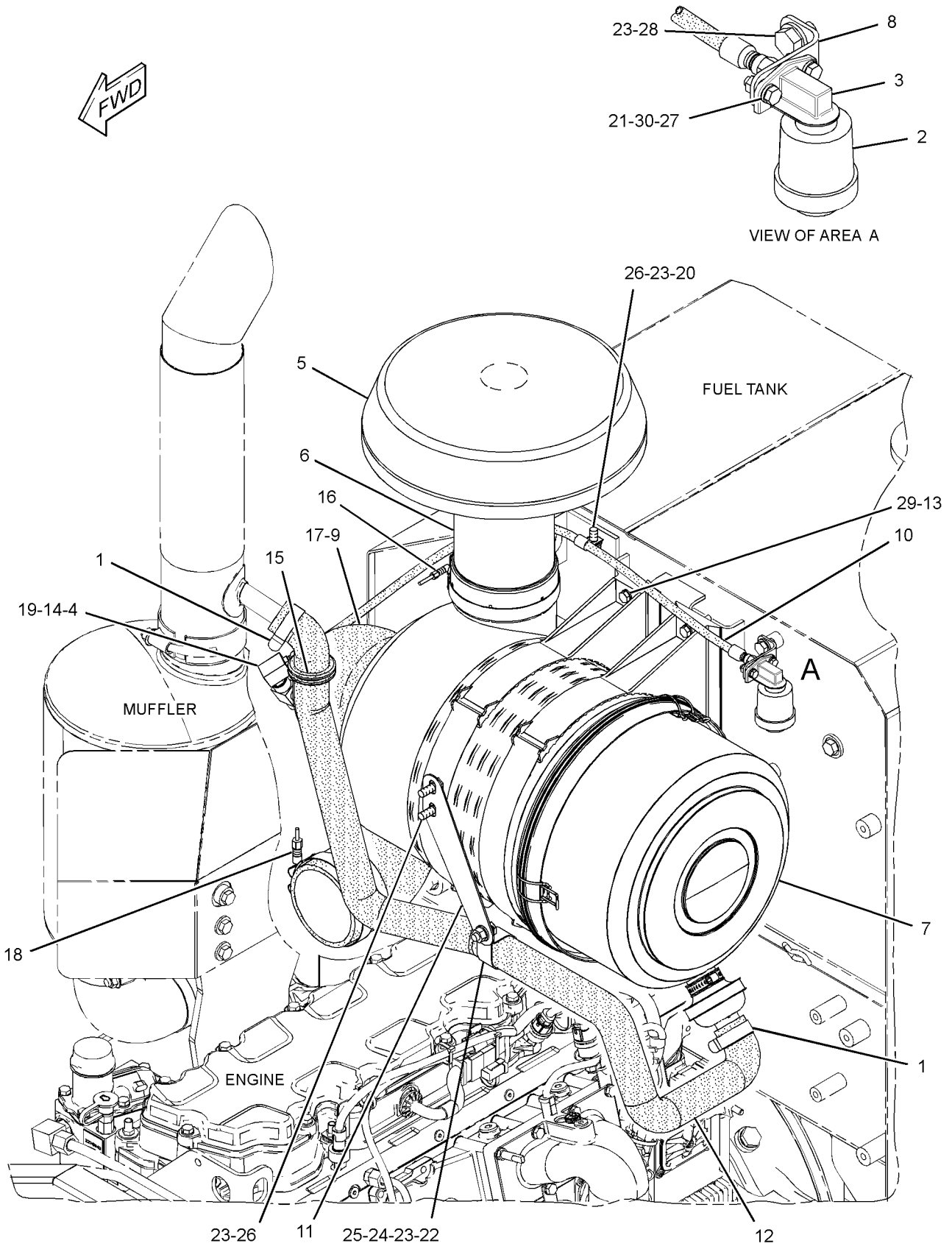

GRAPHIC #1 **<END>** g01752915

AIR INLET AND EXHAUST SYSTEM

153-1794 COVER GP-AIR INLET

S/N: KHX8814-UP

PART OF 312-0255 ENGINE AR-COMPLETE

SMCS-1087 **i02295151**

NOTE	REF NO	GRAPHIC REF	PART NUMBER	QTY	PART NAME 1 2 3 4 5 6 (PRODUCT LEVEL)	SEE PAGE
	1	1	**203-3769**	1	COVER	
B	2	1	**1U-8846**		SEALANT-GASKET	
	3	1	**9S-8005**	2	PLUG-O-RING	
	4	1	**3K-0360**	2	SEAL-O-RING	

B-USE AS REQUIRED

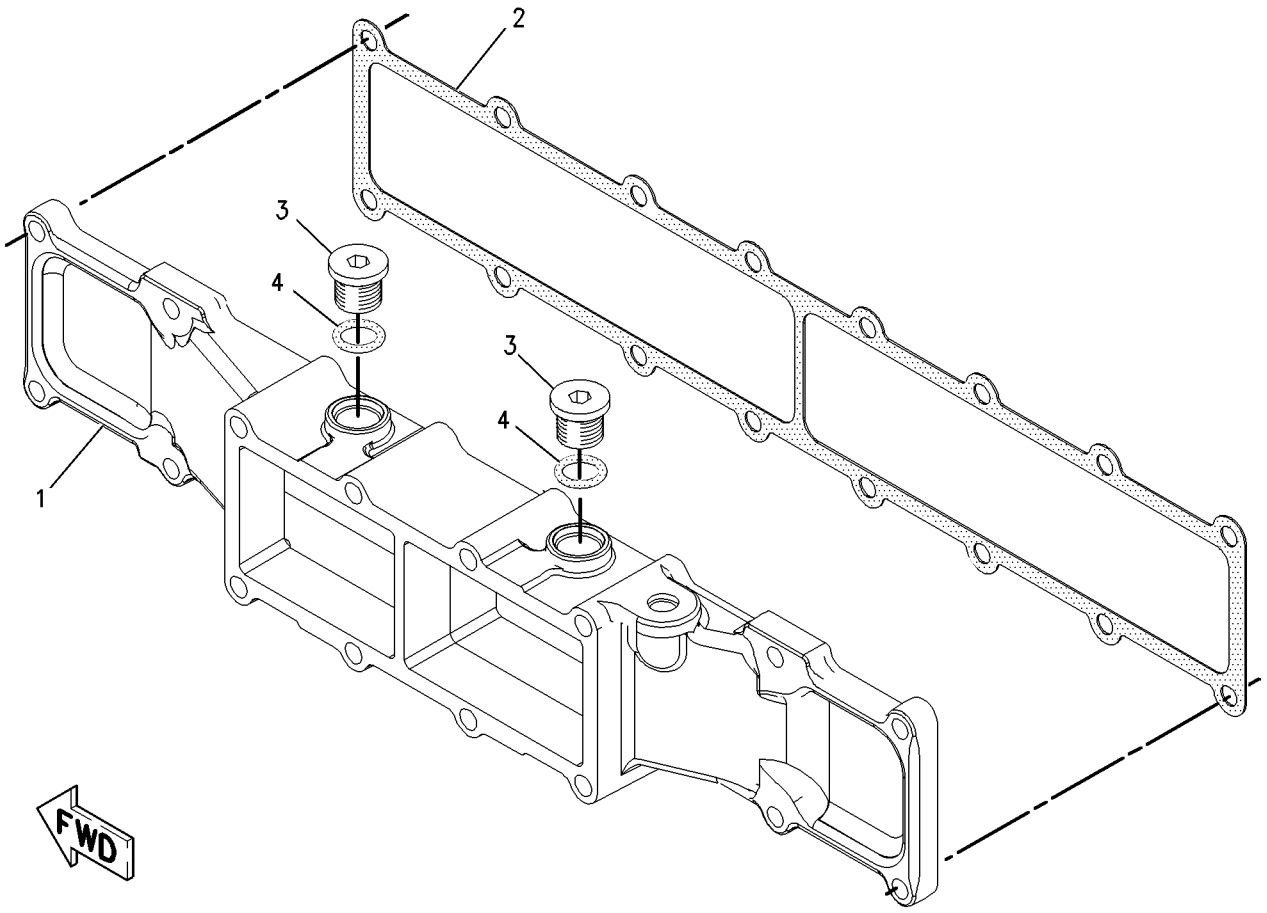

GRAPHIC #1 **<END>** g00826727

AIR INLET AND EXHAUST SYSTEM

322-0245 ELBOW GP-AIR INLET

S/N: KHX8814-UP

PART OF 312-0255 ENGINE AR-COMPLETE

SMCS-1087 **i03438862**

NOTE	REF NO	GRAPHIC REF	PART NUMBER	QTY	PART NAME 1 2 3 4 5 6 (PRODUCT LEVEL)	SEE PAGE
	1	1	**4P-5918**	1	CLIP	
	2	1	**7S-6369**	1	WASHER (0.344X0.75X0.188-IN THK)	
M	3	1	**123-4511**	4	STUD (M8X1.25-THD)	
	4	1	**197-0416**	1	ELBOW	
	5	1	*162-0177*	1	PLUG AS	
	5A	1	**3J-1907**	1	SEAL-O-RING	
	5B	1	**9S-8004**	1	PLUG-O-RING	
M	6	1	**8T-0292**	4	BOLT (M8X1.25X90-MM)	
	7	1	**9M-1974**	7	WASHER-HARD (8.8X16X2-MM THK)	
B	8	1	**1U-8846**	1	SEALANT-GASKET	

B-USE AS REQUIRED
M-METRIC PART

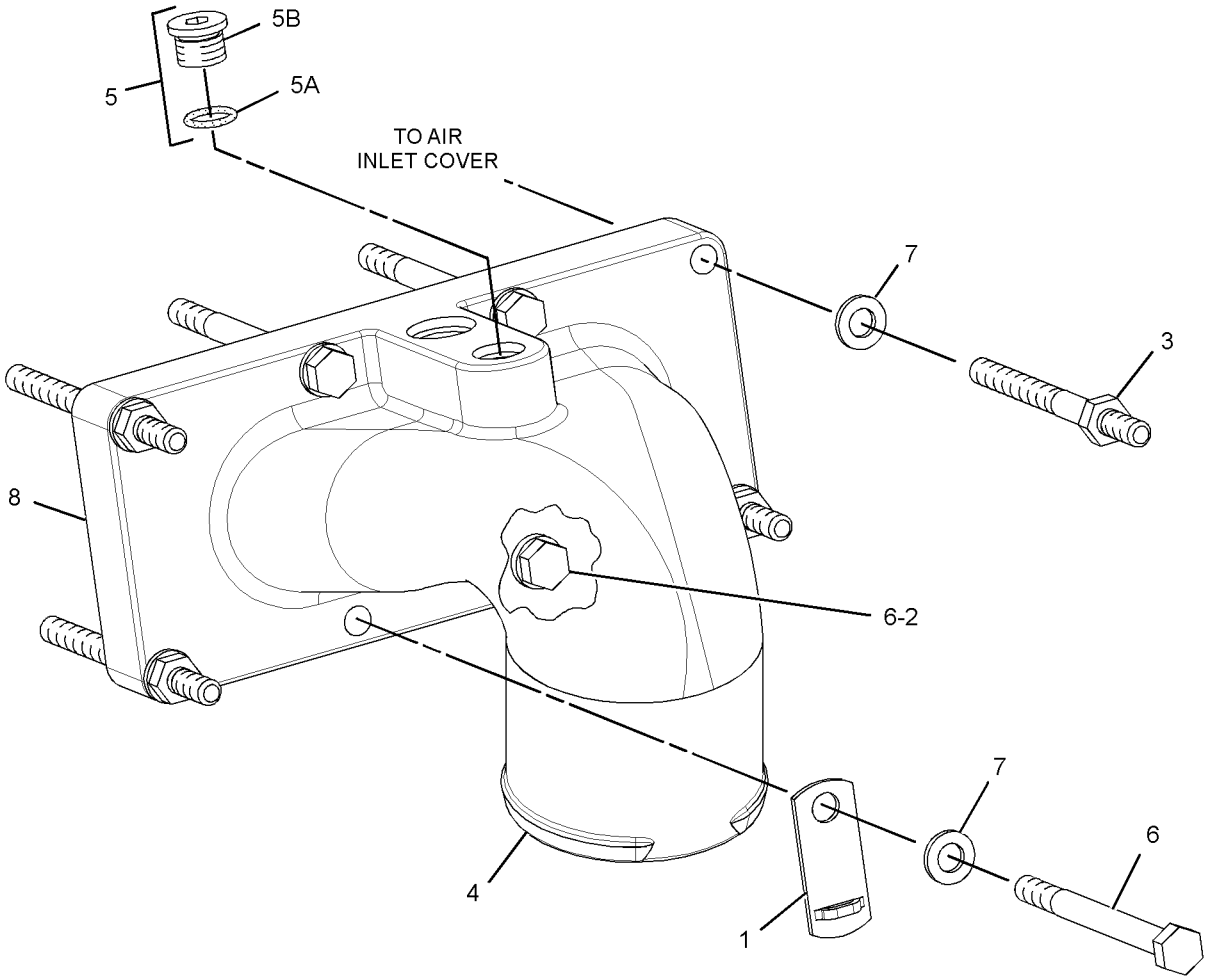

GRAPHIC #1 **<END>** g01721986

AIR INLET AND EXHAUST SYSTEM

311-0864 LINES GP-AIR

S/N: JBP1-UP

PART OF 274-7941 GENERAL AR

SMCS-1071 **i03353921**

NOTE	REF NO	GRAPHIC REF	PART NUMBER	QTY	PART NAME 1 2 3 4 5 6 (PRODUCT LEVEL)	SEE PAGE
	1	1	**177-0581**	2	HOSE	
	2	1	**209-4578**	8	CLAMP	
	3	1	**247-8602**	1	HOSE-ELBOW	
	4	1	**254-6802**	1	HOSE-ELBOW	
	5	1	**311-4959**	1	TUBE	
	6	1	**312-8434**	1	TUBE AS	
	7	1	**313-6098**	1	PLATE AS	
	8	1	**5L-3244**	2	CLIP	
M	9	1	**7X-2552**	3	BOLT (M16X2X30-MM)	
	10	1	**8T-4121**	2	WASHER-HARD (11X21X2.5-MM THK)	
M	11	1	**8T-4136**	1	BOLT (M10X1.5X25-MM)	
M	12	1	**8T-4195**	1	BOLT (M10X1.5X30-MM)	
	13	1	**9X-8257**	3	WASHER (17.5X30X3.5-MM THK)	

M-METRIC PART

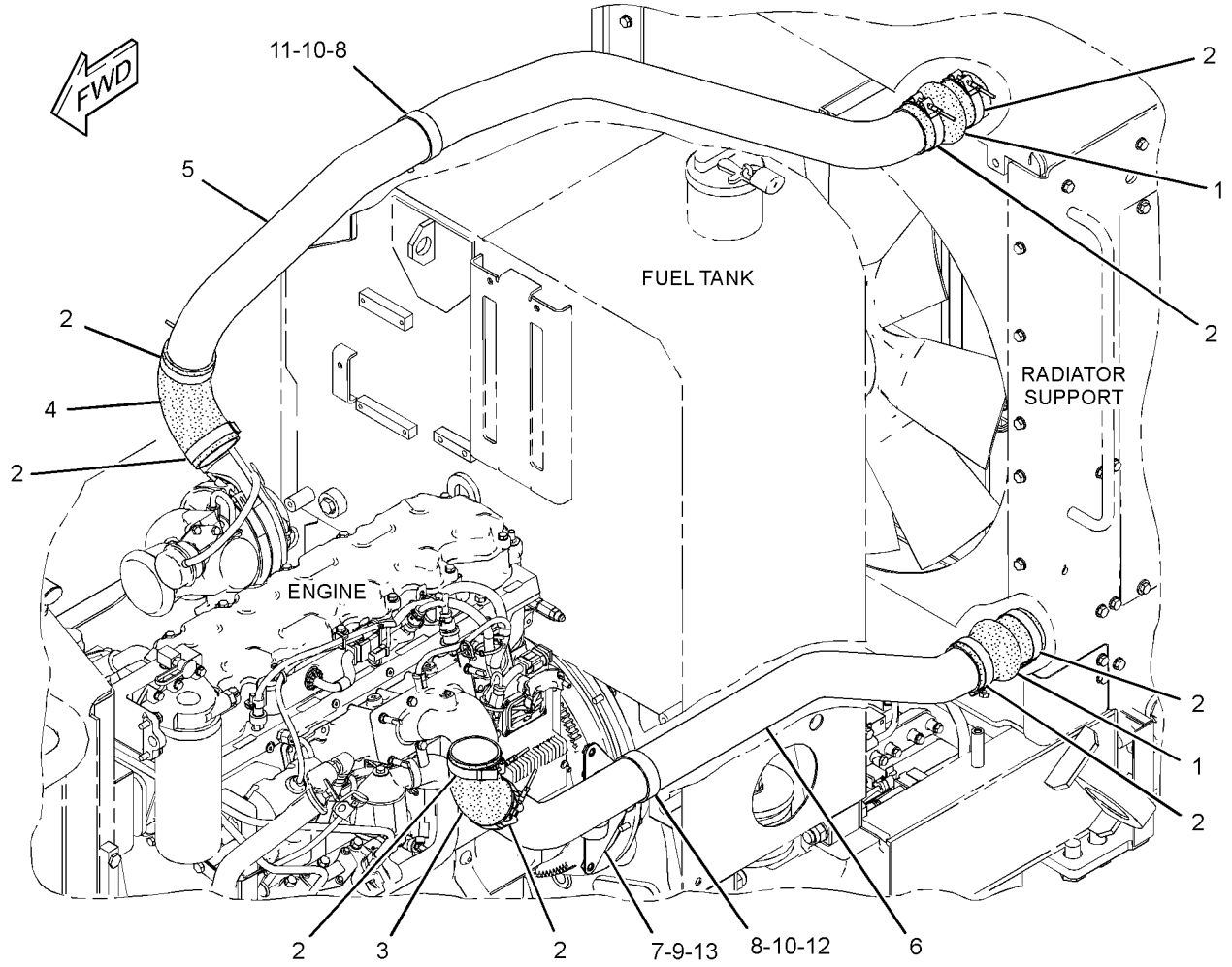

GRAPHIC #1 **<END>** g01704994

AIR INLET AND EXHAUST SYSTEM

183-6845 MANIFOLD GP-EXHAUST

S/N: KHX8814-UP

PART OF 312-0255 ENGINE AR-COMPLETE

SMCS-1059 **i02419842**

NOTE	REF NO	GRAPHIC REF	PART NUMBER	QTY	PART NAME 1 2 3 4 5 6 (PRODUCT LEVEL)	SEE PAGE
M	1	1	**8T-7044**	4	STUD-TAPERLOCK (M10X1.5X40-MM)	
	2	1	**272-1956**	6	GASKET	
M	3	1	**172-6298**	8	BOLT-FLANGE HEAD (M10)	
	4	1	**183-6854**	1	MANIFOLD-EXHAUST (CENTER)	
	5	1	**183-6856**	2	MANIFOLD-EXHAUST (END)	
	6	1	**189-8772**	8	SPACER (11X16X35-MM THK)	
	7	1	**203-3768**	4	SPACER (11X16X60-MM THK)	
	8	1	**210-7722**	4	BOLT-FLANGE HEAD (M10)	

M-METRIC PART

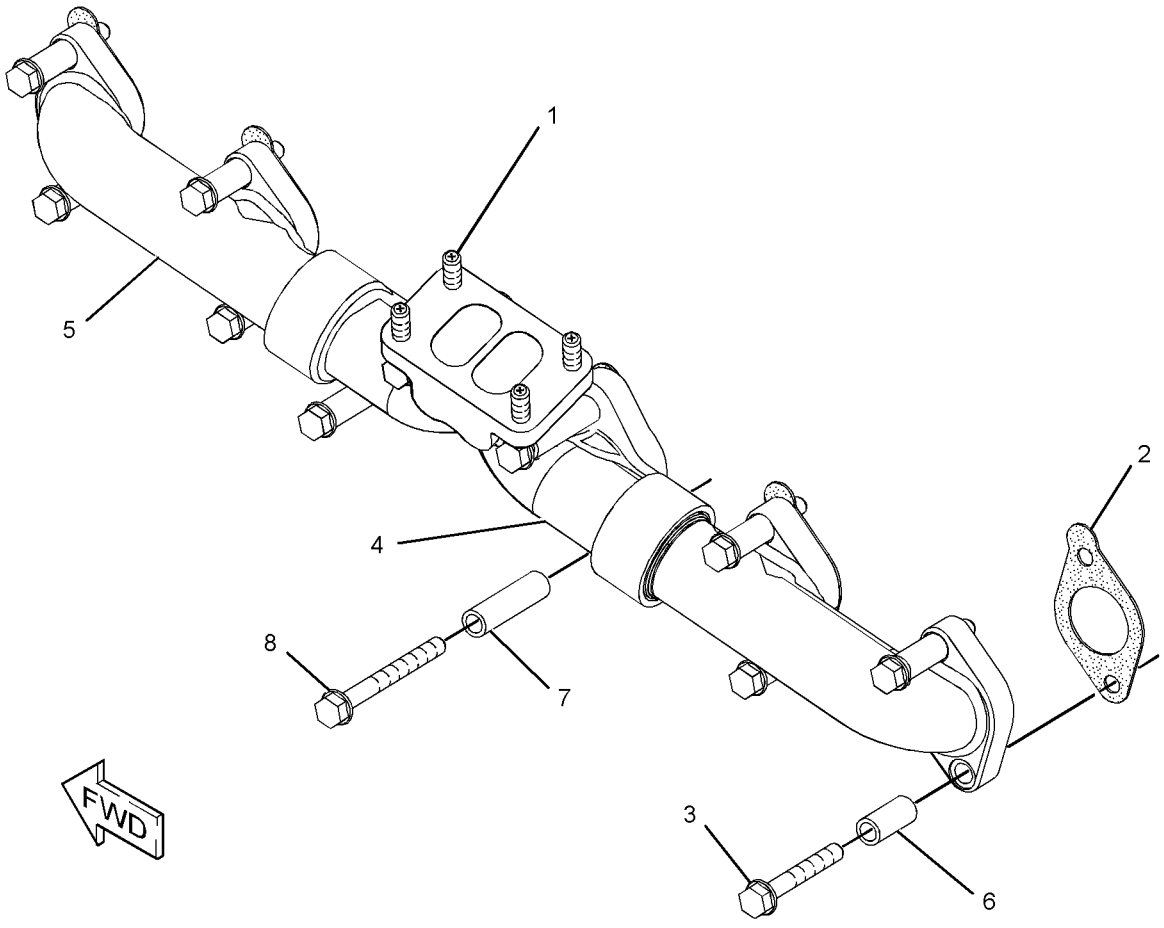

GRAPHIC #1 **<END>** g01211596

AIR INLET AND EXHAUST SYSTEM

310-6472 MUFFLER GP

S/N: JBP1-UP

PART OF 274-7941 GENERAL AR

SMCS-1062 **i03246366**

NOTE	REF NO	GRAPHIC REF	PART NUMBER	QTY	PART NAME 1 2 3 4 5 6 (PRODUCT LEVEL)	SEE PAGE
	1	1	**1W-2431**	1	CLAMP-BAND	
	2	1	**312-3542**	1	TUBE AS	
M	3	1	**8T-4195**	5	BOLT (M10X1.5X30-MM)	
M	4	1	**8T-4196**	2	BOLT (M10X1.5X35-MM)	
	5	1	**317-2757**	1	PLATE	
	6	1	**317-2792**	1	PLATE AS	
	7	1	**317-3758**	1	PLATE AS	
	8	1	**198-4777**	7	WASHER-HARD (11X25X10-MM THK)	
	9	1	**8T-4121**	6	WASHER-HARD (11X21X2.5-MM THK)	
M	10	1	**8T-4136**	4	BOLT (M10X1.5X25-MM)	
M	11	1	**8T-4191**	2	BOLT (M10X1.5X16-MM)	

M-METRIC PART

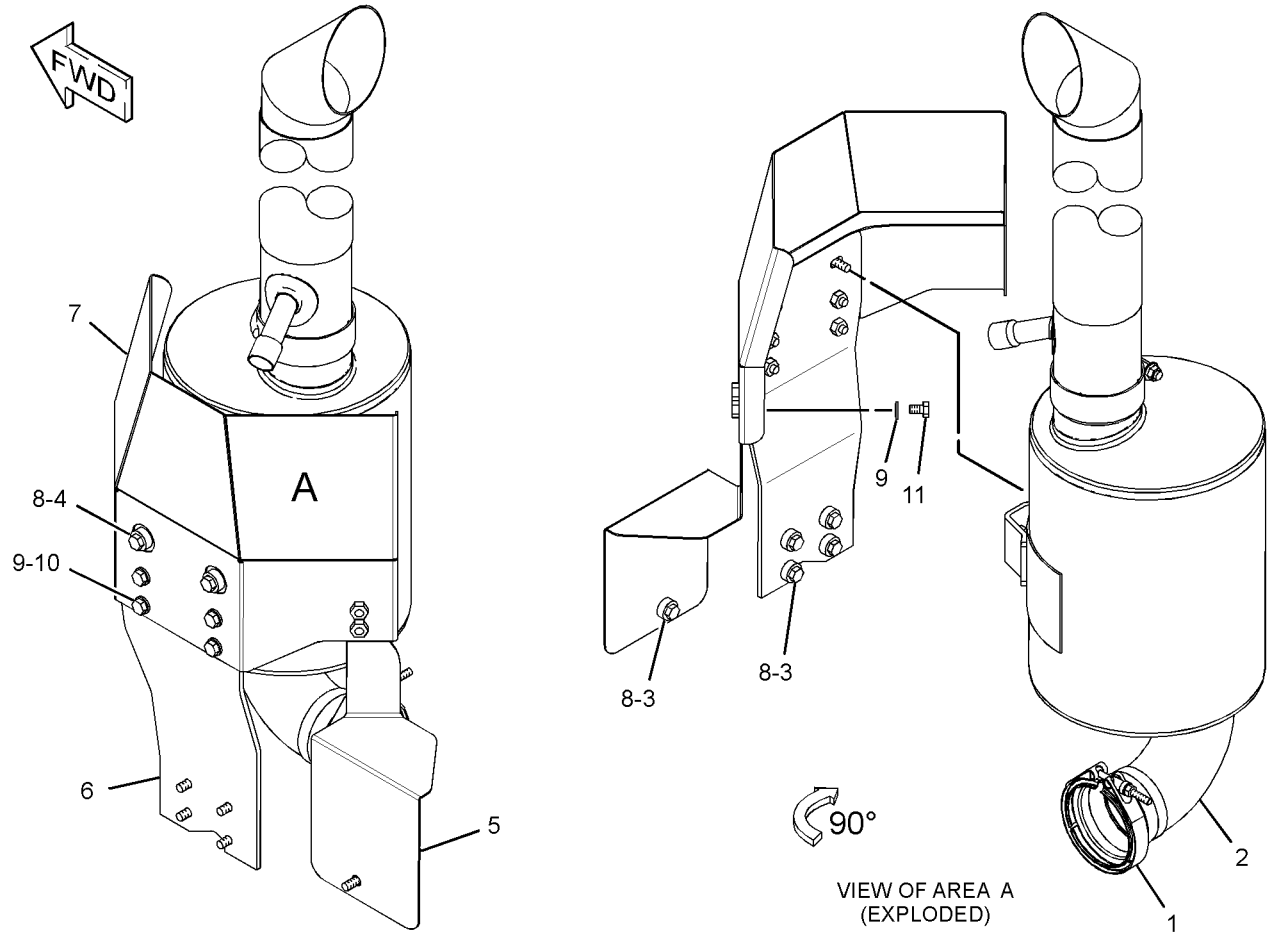

GRAPHIC #1 **<END>** g01692635

AIR INLET AND EXHAUST SYSTEM

250-0841 TURBOCHARGER GP*R

S/N: KHX8814-UP

PART OF 258-2403 TURBOCHARGER GP

SMCS-1052, 1053 **i03432285**

NOTE	REF NO	GRAPHIC REF	PART NUMBER	QTY	PART NAME 1 2 3 4 5 6 (PRODUCT LEVEL)	SEE PAGE
	1	1	**137-1602**	1	CLAMP AS (TURBINE)	
		1	**7M-9918**	1	LOCKNUT (1/4-28-THD)	
	2	1	**158-6072**	1	CLAMP AS (COMPRESSOR)	
	3	1	**161-6963**	2	CLAMP	
	4	1	**261-9287**	1	CARTRIDGE GP-TURBOCHARGER	
	5	1	**5P-4536**	1	ELBOW	
E	6	1	**242-3360**		HOSE (44-CM)	

E-ORDER BY THE CENTIMETER

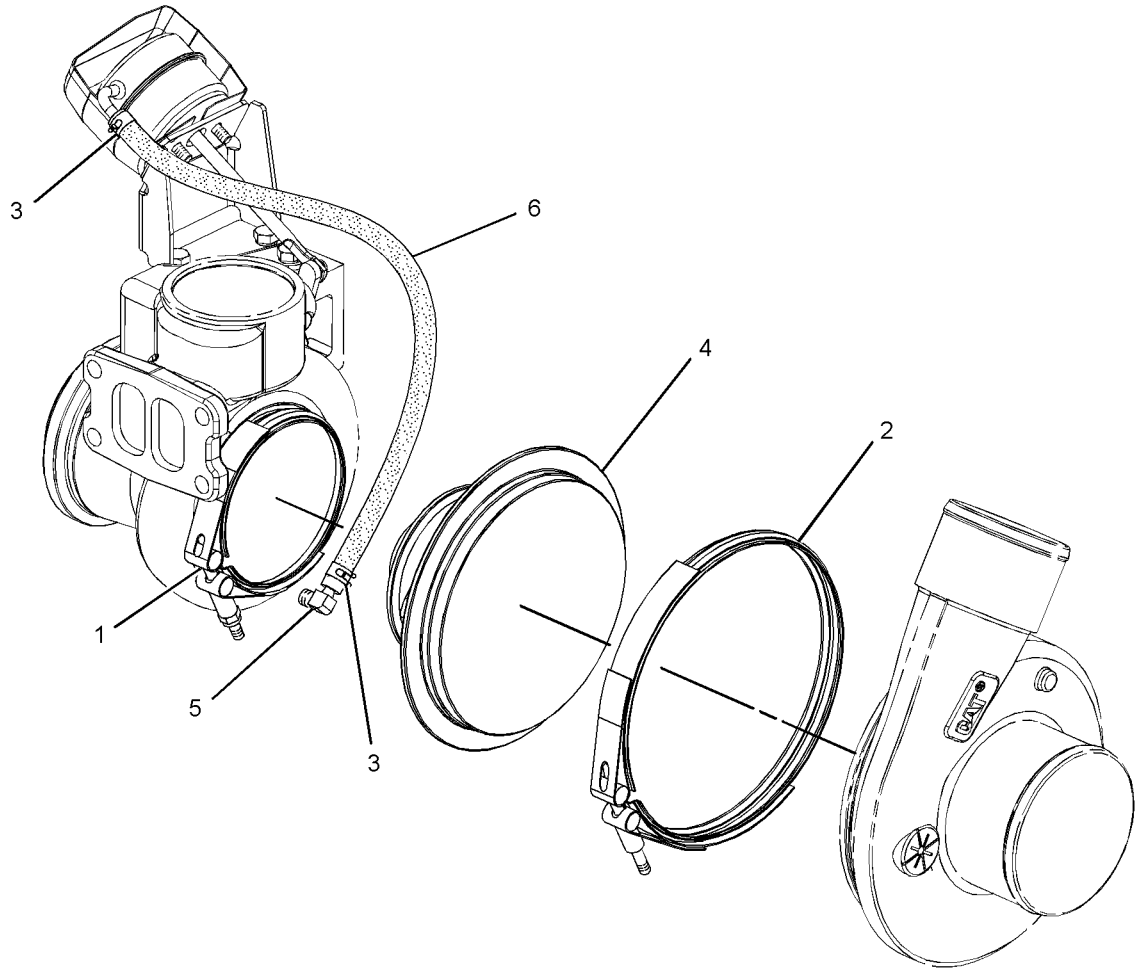

GRAPHIC #1 **<END>** g01370583

AIR INLET AND EXHAUST SYSTEM

258-2403 TURBOCHARGER GP

S/N: KHX8814-UP

PART OF 312-0254 ENGINE AR-CORE

SMCS-1052, 1053 **i03013756**

NOTE	REF NO	GRAPHIC REF	PART NUMBER	QTY	PART NAME 1 2 3 4 5 6 (PRODUCT LEVEL)	SEE PAGE
	1	1	**7C-7431**	1	GASKET	
Y	2	1	**250-0841**	1	TURBOCHARGER GP	86
M	3	1	**3E-8017**	4	LOCKNUT (M10X1.5-THD)	

M-METRIC PART
Y-SEPARATE ILLUSTRATION

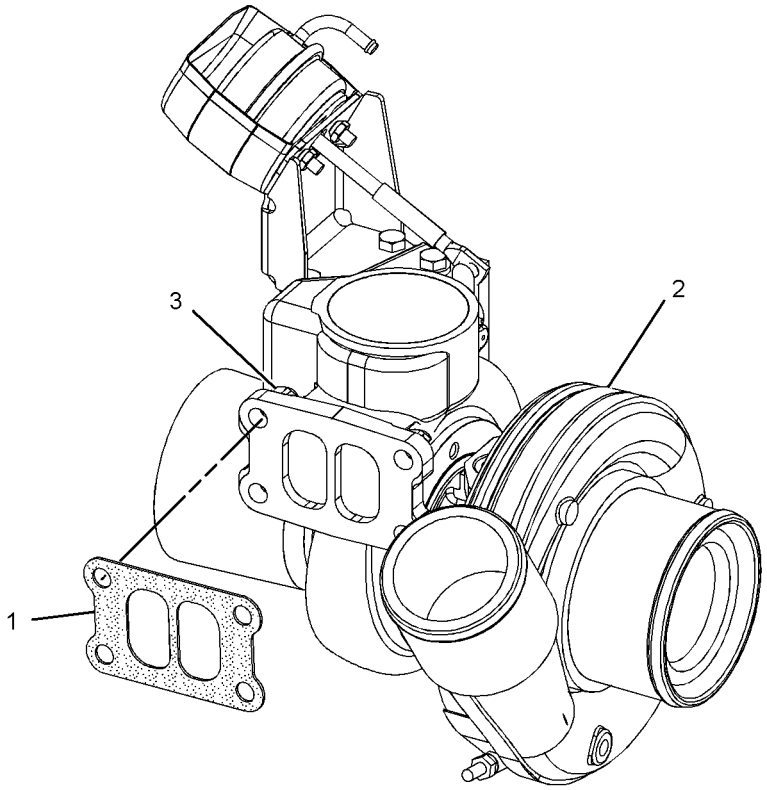

GRAPHIC #1 **<END>** g01118532

FUEL SYSTEM

282-2472 CONTROL GP-GOVERNOR

S/N: JBP1-UP

PART OF 274-7941 GENERAL AR

SMCS-1265, 1276 **i03247386**

NOTE	REF NO	GRAPHIC REF	PART NUMBER	QTY	PART NAME 1 2 3 4 5 6 (PRODUCT LEVEL)	SEE PAGE
	1	1	**2L-6267**	1	LOCKNUT (3/8-24-THD)	
B	2	1	**2N-9421**	2	SPRING-DISC	
	3	1	**4D-4064**	1	ROD END (3/8-24-THD, FEMALE)	
	4	1	**5P-9209**	2	BEARING AS-NEEDLE	
	5	1	**7F-0192**	1	BOLT (3/8-16X2-IN)	
	6	1	**7V-0446**	1	CLIP	
	7	1	**8X-3261**	1	LEVER	
	8	1	**116-5710**	1	GROMMET	
	9	1	**130-5300**	1	CLIP	
	10	1	**141-6343**	1	SPRING	
	11	1	**161-7062**	1	HOUSING	
	12	1	**162-8218**	1	GASKET	
	13	1	**162-8219**	1	COVER	
	14	1	**168-8683**	1	SHAFT	
	15	1	**169-0921**	1	ROD END (INTERNAL THREAD)	
	16	1	**169-0922**	1	ROD	
	17	1	**172-0165**	1	SHAFT	
	18	1	**172-4211**	1	SPACER (10.5X22X50.8-MM THK)	
	19	1	**206-3599**	1	LEVER	
	20	1	**206-3600**	1	LEVER	
	21	1	**207-4927**	1	PEDAL-GOVERNOR CONTROL	
Y	22	1	**266-1467**	1	SENSOR GP-POSITION (ROTARY) (GOVERNOR, BRAKE PEDAL)	167
	23	1	**009-0008**	1	SETSCREW-SOCKET (3/8-16X0.5-IN)	
	24	1	**129-3173**	1	BOLT-12 POINT HEAD (3/8-16X1.25-IN)	
M	25	1	**142-0485**	1	NUT (M10X1.15-THD)	
	26	1	**1B-0676**	1	PIN	
	27	1	**1B-8704**	3	KEY-WOODRUFF	
	28	1	**272-3089**	1	BOLT (M10X1.5X90-MM)	
	29	1	**5P-1075**	2	WASHER-HARD (10.2X22.5X3-MM THK)	
	30	1	**5P-1076**	1	WASHER-HARD (13.5X30X4-MM THK)	
M	31	1	**6V-2313**	2	BOLT (M5X0.8X30-MM)	
	32	1	**6V-8801**	2	NUT (3/8-16-THD)	
	33	1	**8T-0328**	2	WASHER-HARD (5.5X10X1-MM THK)	
	34	1	**8T-4121**	3	WASHER-HARD (11X21X2.5-MM THK)	
M	35	1	**8T-4133**	2	NUT (M10X1.5-THD)	
M	36	1	**8T-4136**	3	BOLT (M10X1.5X25-MM)	
M	37	1	**8T-4182**	2	BOLT (M10X1.5X45-MM)	
M	38	1	**8T-4196**	2	BOLT (M10X1.5X35-MM)	
	39	1	**8T-4226**	1	WASHER-PLATED (10.5X45X3-MM THK)	

B-USE AS REQUIRED
M-METRIC PART
Y-SEPARATE ILLUSTRATION

282-2472 **CONTROL GP-GOVERNOR** *(contd.)* **i03247386**

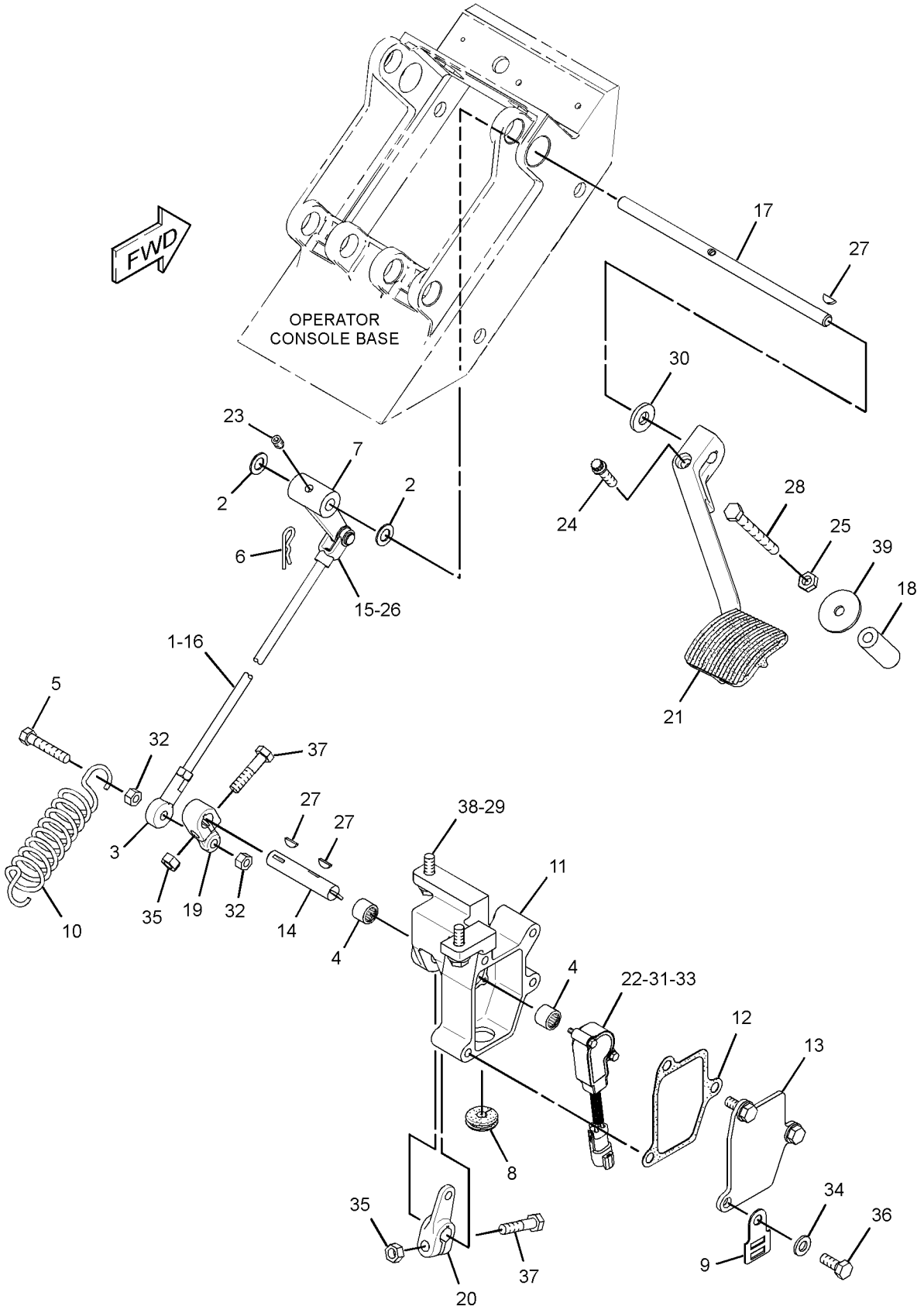

GRAPHIC #1 **<END>** g01705276

174-9570 FILTER GP-WATER SEP & FUEL

S/N: JBP1-UP

PART OF 190-8977 PUMP GP-FUEL PRM & WATER SEP

SMCS-1261, 1263 **i03181922**

NOTE	REF NO	GRAPHIC REF	PART NUMBER	QTY	PART NAME 1 2 3 4 5 6 (PRODUCT LEVEL)	SEE PAGE
	1	1	**326-1644**	1	FILTER AS-WATER SEP & FUEL (PRIMARY)	
	1A	1	**220-8678**	1	SEAL-RING (FUEL, WATER SEPARATOR)	
	2	1	**270-5320**	1	BOWL AS (FUEL, WATER SEPARATOR)	

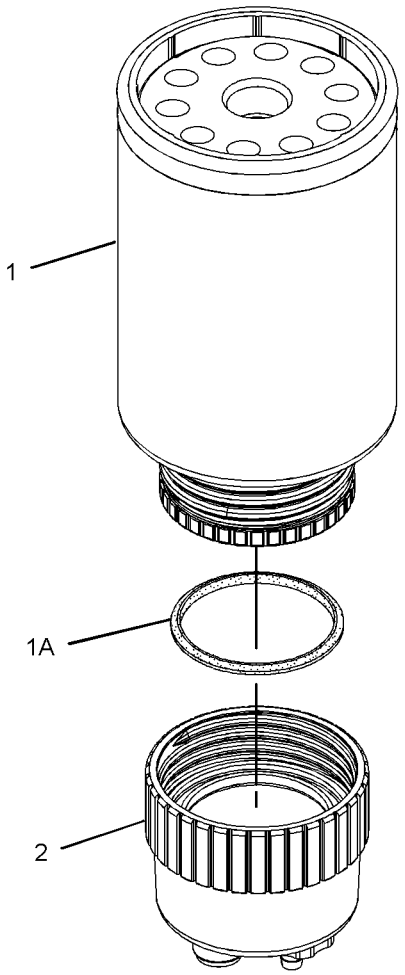

GRAPHIC #1 **<END>** g01179858

328-2585 INJECTOR GP-FUEL*R

S/N: KHX8814-UP

PART OF 268-1839 PUMP GP-FUEL INJECTION

SMCS-1251, 1254, 1290, 1713 **i03293520**

NOTE	REF NO	GRAPHIC REF	PART NUMBER	QTY	PART NAME 1 2 3 4 5 6 (PRODUCT LEVEL)	SEE PAGE
	1	1	**149-5240**	1	RING-BACKUP	
	2	1	*263-8218*	1	INJECTOR GP-FUEL	
	3	1	**293-0730**	1	RING-BACKUP	
	4	1	**109-3207**	1	SEAL-O-RING	
	5	1	**148-2903**	2	SEAL-O-RING (FUEL SYSTEM)	

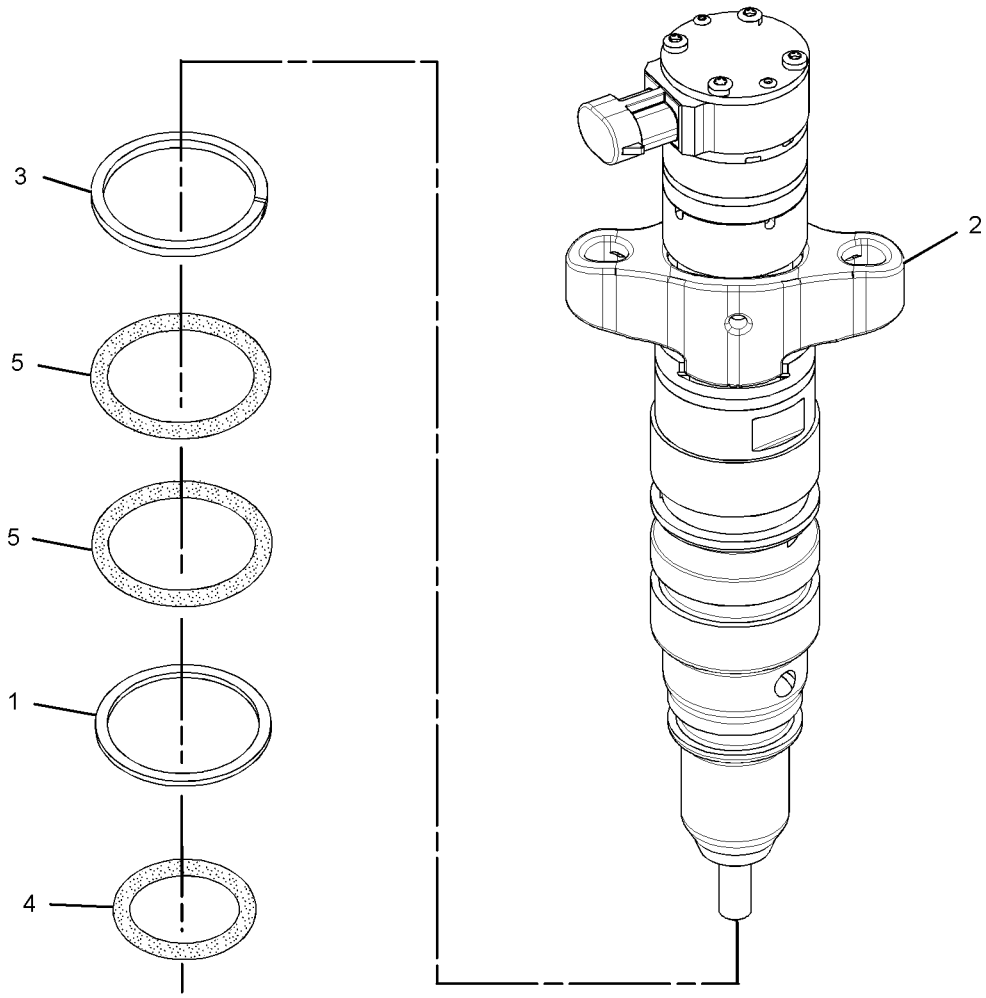

GRAPHIC #1 **<END>** g01684557

FUEL SYSTEM

311-2770 LINES GP-FUEL

S/N: JBP1-UP

PART OF 274-7941 GENERAL AR

SMCS-1274 **i03432224**

NOTE	REF NO	GRAPHIC REF	PART NUMBER	QTY	PART NAME 1 2 3 4 5 6 (PRODUCT LEVEL)	SEE PAGE
	1	1	**3S-2093**	1	STRAP-CABLE	
	2	1	**8T-9655**	6	MOUNT-ISOLATION	
I	3	1	**170-0271**	1	HOSE AS	
	4	1	*171-6729*	1	VALVE GP-SHUTOFF (MANUAL) (FUEL)	
		1	**3K-0360**	1	SEAL-O-RING	
		1	**8T-0081**	1	VALVE-BALL	
	5	1	*173-7223*	1	ADAPTER AS	
		1	**3J-1907**	1	SEAL-O-RING	
		1	**3J-7354**	1	SEAL-O-RING	
		1	**9X-0261**	1	ADAPTER	
Y	6	1	**190-8977**	1	PUMP GP-FUEL PRM & WATER SEP	99
	7	1	**191-1782**	1	SPACER (8.5X12.7X38.2-MM THK)	
	8	1	**191-1783**	2	SPACER (8.5X12.7X87.3-MM THK)	
	9	1	**213-0064**	1	BASE AS	
		1	**9S-4167**	1	STUD-HOLLOW (1-14X1.47-IN)	
Y	10	1	*234-5013*	1	SENSOR GP-TEMPERATURE	178
	11	1	*268-1531*	1	ELBOW AS	
		1	**2M-9780**	1	SEAL-O-RING	
		1	**268-1530**	1	ELBOW	
	12	1	**274-6719**	1	SENSOR GP-PRESSURE (FUEL FILTER)	
Y	13	1	**275-1253**	1	SWITCH GP-PRESSURE (FUEL FILTER)	191
I	14	1	*311-7049*	1	HOSE AS	
I	15	1	**311-8756**	1	HOSE AS	
	16	1	**316-4351**	1	PLATE AS	
	17	1	**317-1533**	1	TUBE AS	
	18	1	**030-7962**	1	ELBOW	
	19	1	**033-8248**	1	CLIP	
	20	1	*148-8307*	1	ADAPTER AS	
		1	**3J-1907**	1	SEAL-O-RING	
		1	**5P-8874**	1	ADAPTER	
	21	1	*148-8336*	1	CONNECTOR AS	
		1	**3J-1907**	1	SEAL-O-RING	
		1	**6V-8397**	1	SEAL-O-RING	
		1	**6V-8636**	1	CONNECTOR	
	22	1	*148-8345*	2	CONNECTOR AS	
					(EACH INCLUDES)	
		1	**2M-9780**	1	SEAL-O-RING	
		1	**6V-8398**	1	SEAL-O-RING	
		1	**6V-8638**	1	CONNECTOR	
	23	1	*148-8364*	2	ELBOW AS	
					(EACH INCLUDES)	
		1	**3K-0360**	1	SEAL-O-RING	
		1	**6V-8398**	1	SEAL-O-RING	
		1	**6V-8625**	1	ELBOW	
	24	1	*148-8365*	1	ELBOW AS	
		1	**3J-1907**	1	SEAL-O-RING	
		1	**6V-8398**	1	SEAL-O-RING	
		1	**8T-6876**	1	ELBOW	
	25	1	*164-5570*	1	UNION AS	
		1	**6V-8397**	2	SEAL-O-RING	
		1	**6V-8730**	1	UNION (FACE SEAL)	
	26	1	*164-5619*	2	PLUG AS	
					(EACH INCLUDES)	
		1	**2M-9780**	1	SEAL-O-RING	
		1	**9S-8006**	1	PLUG-O-RING	

311-2770 **LINES GP-FUEL** ***(contd.)*** **i03432224**

NOTE	REF NO	GRAPHIC REF	PART NUMBER	QTY	PART NAME 1 2 3 4 5 6 (PRODUCT LEVEL)	SEE PAGE
	27	1	*183-3406*	2	PLUG AS	
					(EACH INCLUDES)	
		1	**214-7568**	1	SEAL-O-RING	
		1	**9S-4191**	1	PLUG-O-RING	
I	28	1	**192-1298**	1	HOSE AS	
	29	1	**198-4777**	4	WASHER-HARD (11X25X10-MM THK)	
	30	1	*239-5030*	1	ADAPTER AS	
		1	**3K-0360**	1	SEAL-O-RING	
		1	**9X-2493**	1	ADAPTER	
	31	1	*260-9171*	1	CONNECTOR AS	
		1	**3J-1907**	1	SEAL-O-RING	
		1	**6V-8397**	1	SEAL-O-RING	
		1	**8T-9041**	1	CONNECTOR	
	32	1	**1F-7567**	1	CLIP	
	33	1	**1R-0762**	1	FILTER-FUEL (ADVANCED EFFICIENCY)	
	34	1	**3J-1907**	1	SEAL-O-RING	
	35	1	**5P-4116**	1	WASHER-HARD (8.8X20.5X2-MM THK)	
	36	1	**5P-7462**	1	CLIP (SLOT)	
	37	1	**5P-7463**	1	CLIP (TAB)	
	38	1	**5P-7464**	1	CLIP (SLOT)	
	39	1	**5P-7465**	1	CLIP (TAB)	
	40	1	**6V-0683**	1	GROMMET	
	41	1	**6V-1249**	1	GROMMET	
	42	1	**6V-8397**	1	SEAL-O-RING	
	43	1	**6V-8724**	1	ELBOW	
M	44	1	**7X-2539**	2	BOLT (M8X1.25X110-MM)	
	45	1	**8T-4121**	5	WASHER-HARD (11X21X2.5-MM THK)	
M	46	1	**8T-4137**	1	BOLT (M10X1.5X20-MM)	
M	47	1	**8T-4139**	2	BOLT (M12X1.75X30-MM)	
M	48	1	**8T-4196**	8	BOLT (M10X1.5X35-MM)	
M	49	1	**8T-4200**	1	BOLT (M8X1.25X16-MM)	
	50	1	**8T-4223**	2	WASHER-HARD (13.5X25.5X3-MM THK)	
M	51	1	**8T-6869**	1	BOLT (M8X1.25X60-MM)	
	52	1	**9N-0869**	6	WASHER-HARD (8.8X25.5X2-MM THK)	
E	53	1	**8C-6959**		HOSE (135-CM)	

E-ORDER BY THE CENTIMETER
I-REFER TO HYDRAULIC INFORMATION SYSTEM
M-METRIC PART
Y-SEPARATE ILLUSTRATION

311-2770 **LINES GP-FUEL** *(contd.)* **i03432224**

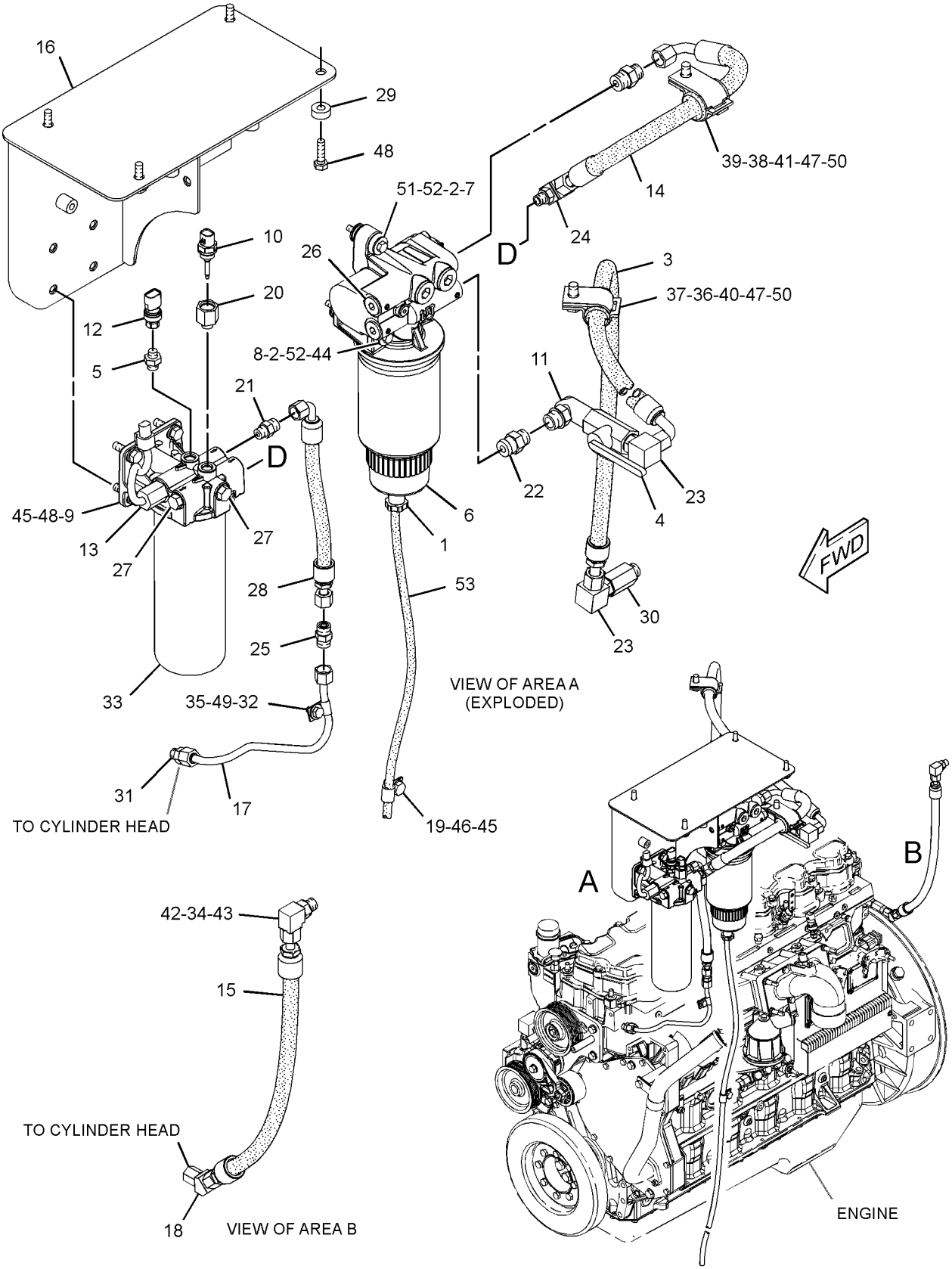

GRAPHIC #1 **<END>** g01714377

FUEL SYSTEM

313-3967 LINES GP-FUEL

S/N: KHX8814-UP

PART OF 312-0255 ENGINE AR-COMPLETE

SMCS-1274 **i03435841**

NOTE	REF NO	GRAPHIC REF	PART NUMBER	QTY	PART NAME 1 2 3 4 5 6 (PRODUCT LEVEL)	SEE PAGE
	1	1	**164-6867**	2	CONNECTOR AS	
					(EACH INCLUDES)	
		1	**2R-6806**	1	CONNECTOR-O-RING	
		1	**3J-1907**	1	SEAL-O-RING	
Y	2	1	*232-0343*	1	REGULATOR GP-FUEL PRESSURE	100
	3	1	*162-0177*	1	PLUG AS	
		1	**3J-1907**	1	SEAL-O-RING	
		1	**9S-8004**	1	PLUG-O-RING	

Y-SEPARATE ILLUSTRATION

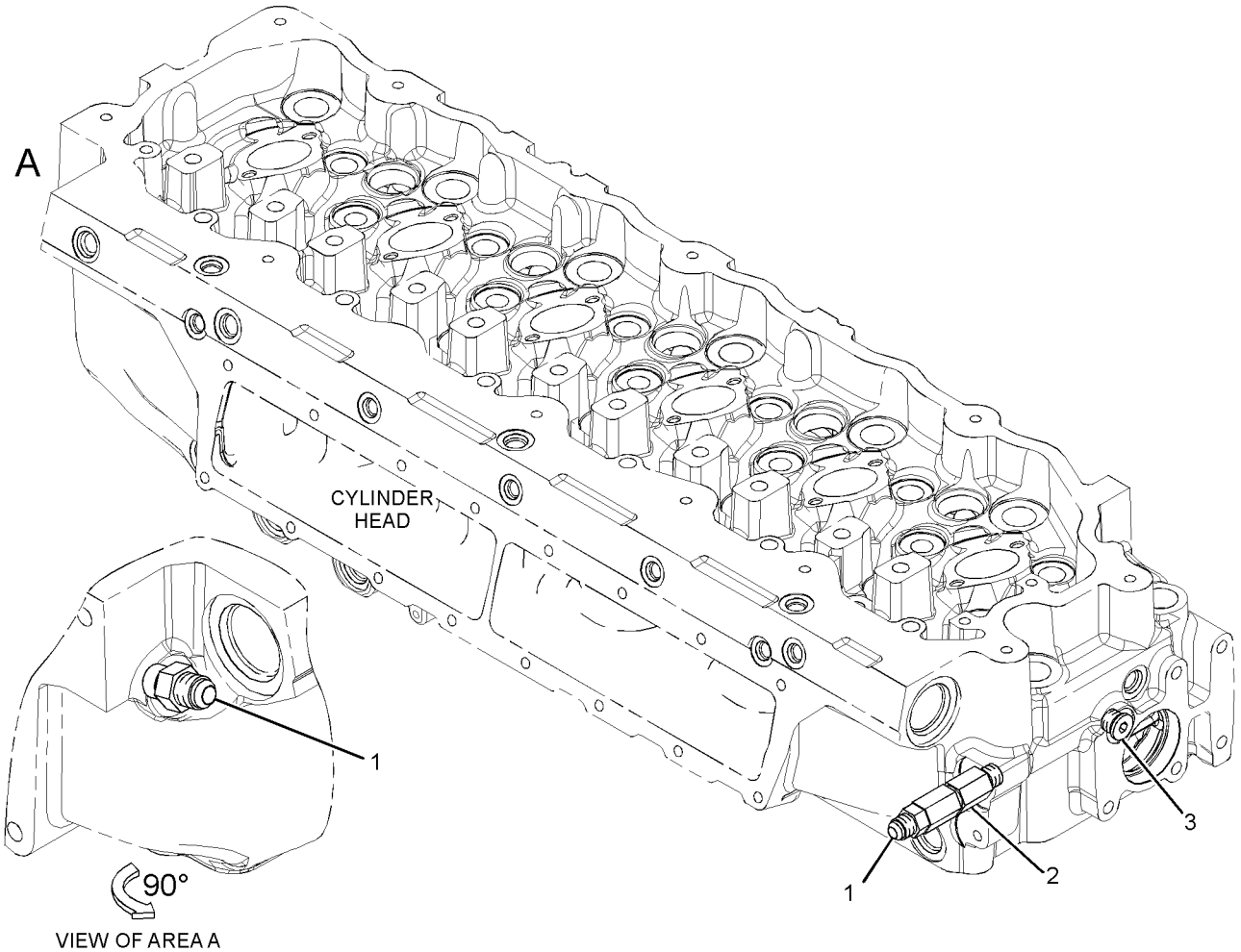

GRAPHIC #1 **<END>** g01717142

FUEL SYSTEM

191-0461 LINES GP-INJECTOR HYD PUMP

S/N: KHX8814-UP

PART OF 312-0254 ENGINE AR-CORE

SMCS-1714 **i02215817**

NOTE	REF NO	GRAPHIC REF	PART NUMBER	QTY	PART NAME 1 2 3 4 5 6 (PRODUCT LEVEL)	SEE PAGE
	1	1	*183-3399*	2	CONNECTOR AS	
					(EACH INCLUDES)	
		1	**6V-8636**	1	CONNECTOR	
		1	**214-7568**	1	SEAL-O-RING	
		1	**221-3494**	1	SEAL-O-RING	
Y	2	1	*191-0523*	1	ADAPTER GP-OIL LINE	51
	3	1	**205-1280**	1	HOSE AS	
	4	1	**212-3706**	1	TUBE AS	
	5	1	**3V-2431**	2	WASHER (10.2X16X2-MM THK)	
	6	1	**4F-9653**	1	SEAL-O-RING	
M	7	1	**8T-1159**	2	BOLT-SOCKET HEAD (M10X1.5X25-MM)	

M-METRIC PART
Y-SEPARATE ILLUSTRATION

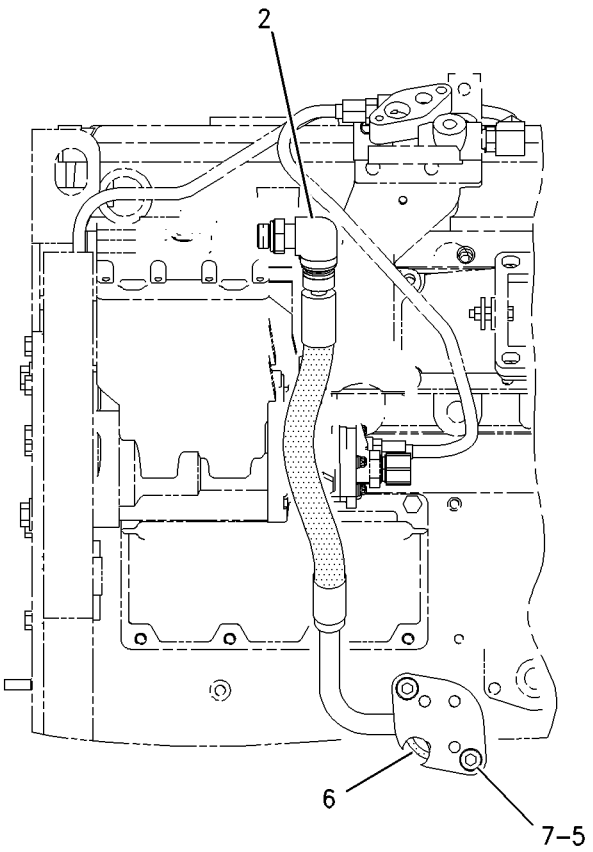

LEFT SIDE VIEW

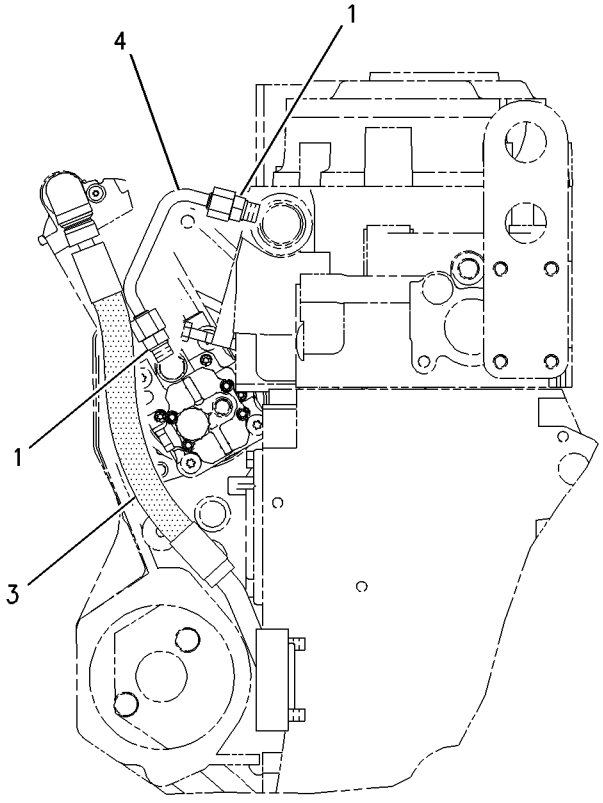

REAR VIEW

GRAPHIC #1 **<END>** g00881566

254-0095 PUMP & MTG GP-UNIT INJ HYD

S/N: KHX8814-UP

PART OF 312-0254 ENGINE AR-CORE

SMCS-1714 **i02791863**

NOTE	REF NO	GRAPHIC REF	PART NUMBER	QTY	PART NAME 1 2 3 4 5 6 (PRODUCT LEVEL)	SEE PAGE
	1	1	**214-7568**	2	SEAL-O-RING	
	2	1	**227-5904**	1	SEAL-O-RING (UNIT INJECTION HYD PUMP)	
	3	1	**304-0607**	1	PUMP GP-UNIT INJECTOR HYD	
	4	1	**3E-9412**	1	DOWEL	
	5	1	**6V-5839**	2	WASHER (11X21X2.5-MM THK)	
M	6	1	**6V-7981**	2	BOLT (M10X1.5X70-MM)	
	7	1	**9S-8004**	2	PLUG-O-RING	

M-METRIC PART

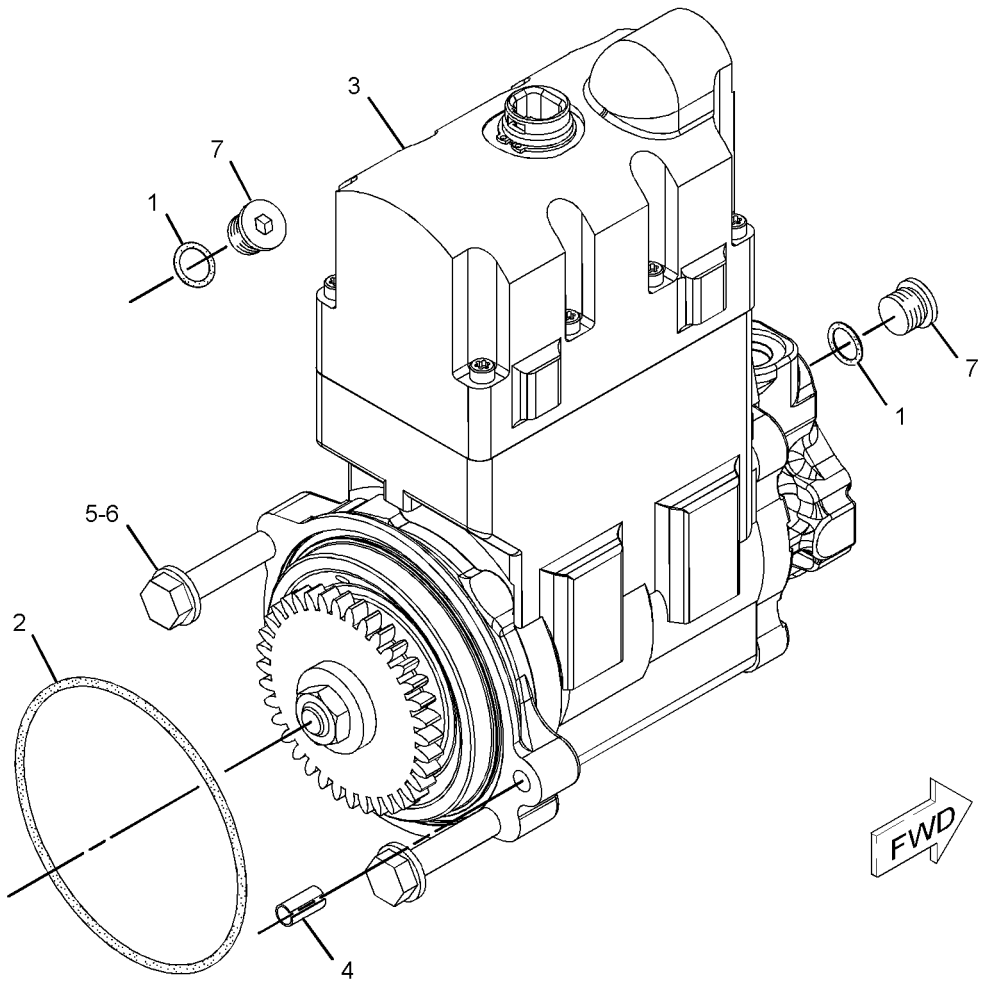

GRAPHIC #1 **<END>** g01108902

FUEL SYSTEM

268-1839 PUMP GP-FUEL INJECTION

S/N: KHX8814-UP

PART OF 312-0254 ENGINE AR-CORE

SMCS-1251, 1290 **i03293388**

NOTE	REF NO	GRAPHIC REF	PART NUMBER	QTY	PART NAME 1 2 3 4 5 6 (PRODUCT LEVEL)	SEE PAGE
	1	1	**235-9651**	2	BOLT-SOCKET HEAD (M8X1.25X65-MM)	
YR	2	1	**328-2585**	1	INJECTOR GP-FUEL	91

R-REMFG PART MAY BE AVAILABLE
Y-SEPARATE ILLUSTRATION

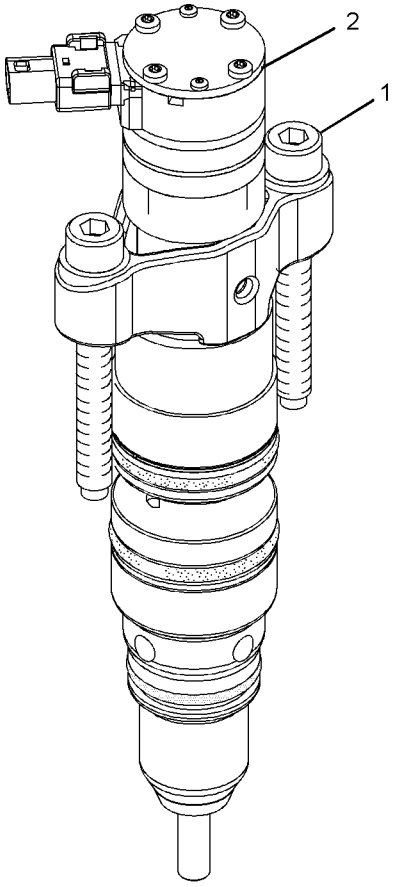

ISOMETRIC VIEW

GRAPHIC #1

<END>

g01038652

190-8977 PUMP GP-FUEL PRM & WATER SEP

S/N: JBP1-UP

PART OF 311-2770 LINES GP-FUEL

SMCS-1258, 1261, 1263 **i01934929**

NOTE	REF NO	GRAPHIC REF	PART NUMBER	QTY	PART NAME 1 2 3 4 5 6 (PRODUCT LEVEL)	SEE PAGE
Y	1	1	*174-9570*	1	FILTER GP-WATER SEP & FUEL (PRIMARY)	90
	2	1	**190-8970**	1	BASE AS (FUEL PRIMING PUMP)	

Y-SEPARATE ILLUSTRATION

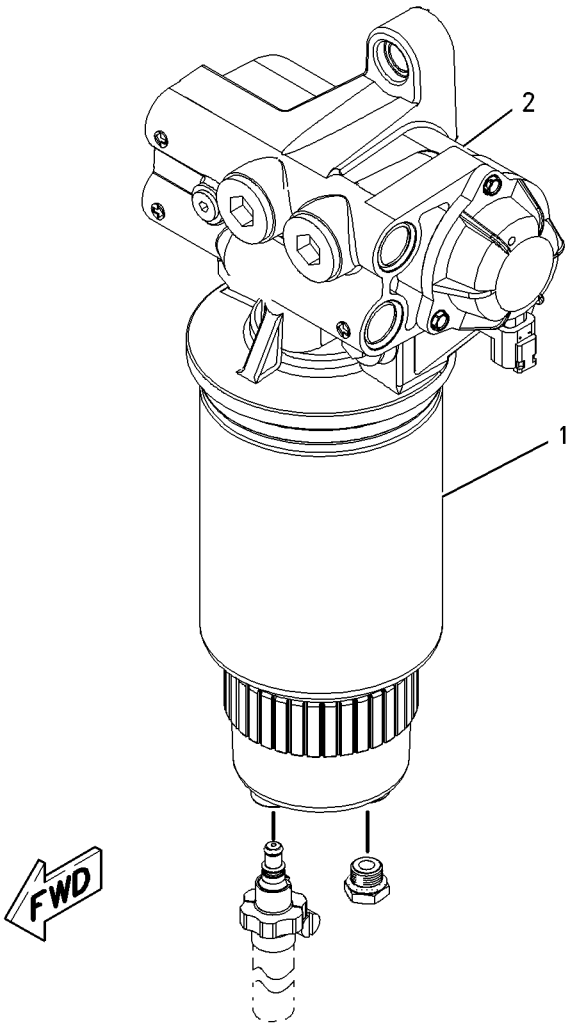

GRAPHIC #1 **<END>** g00904493

FUEL SYSTEM

232-0343 REGULATOR GP-FUEL PRESSURE

S/N: KHX8814-UP

PART OF 313-3967 LINES GP-FUEL

SMCS-1715 **i02676270**

NOTE	REF NO	GRAPHIC REF	PART NUMBER	QTY	PART NAME 1 2 3 4 5 6 (PRODUCT LEVEL)	SEE PAGE
	1	1	**6V-5049**	1	SEAL-O-RING	
	2	1	**294-8620**	1	REGULATOR AS (FUEL PRESSURE)	

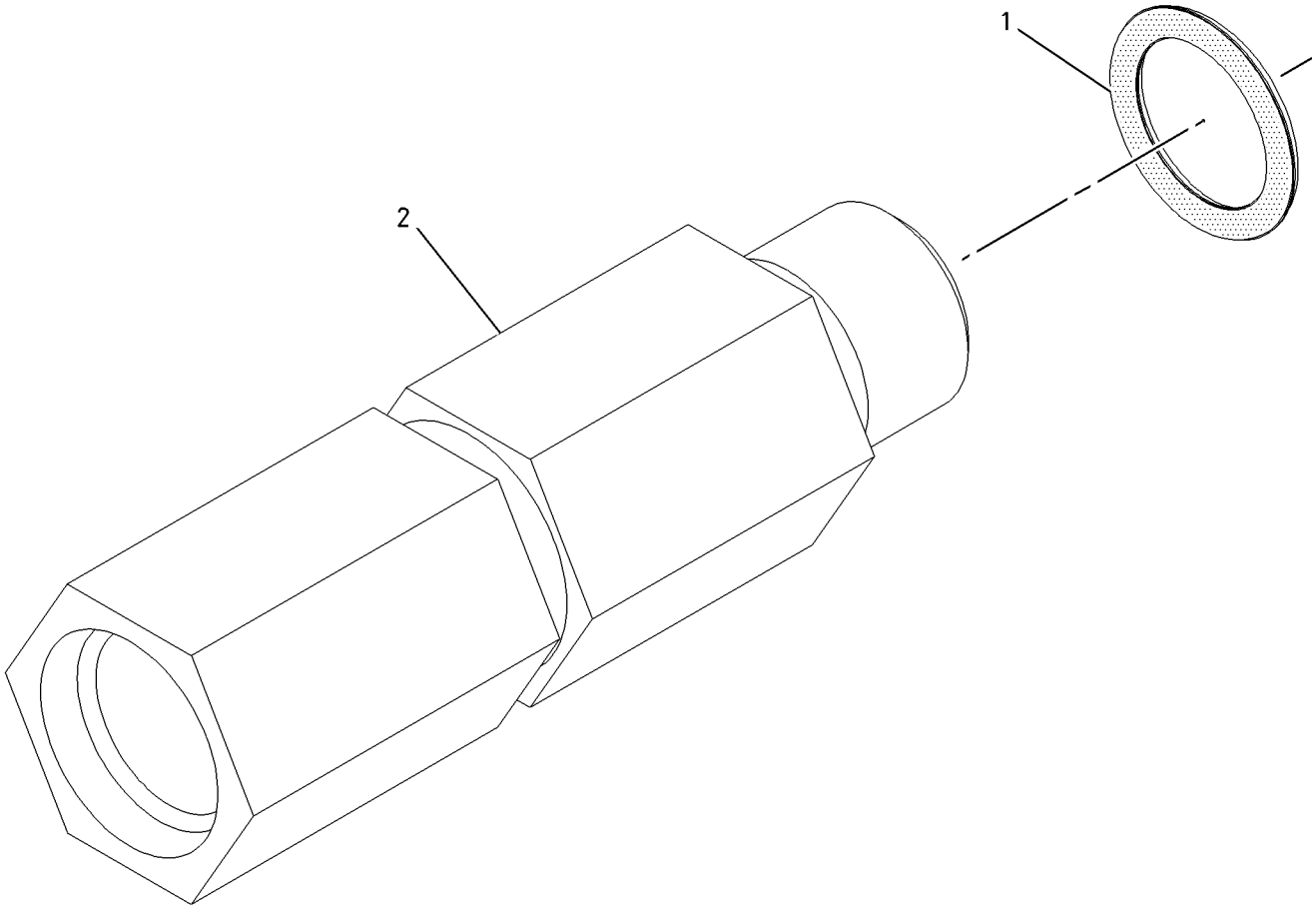

GRAPHIC #1 **<END>** g01004480

FUEL SYSTEM

276-3918 TANK GP-FUEL

S/N: JBP1-UP

PART OF 274-7941 GENERAL AR

SMCS-1273 **i03257504**

NOTE	REF NO	GRAPHIC REF	PART NUMBER	QTY	PART NAME 1 2 3 4 5 6 (PRODUCT LEVEL)	SEE PAGE
	1	1	**246-2641**	1	PADLOCK GP	
		1	**5P-8500**	1	KEY	
	2	1	**7X-7700**	1	CAP AS-FILLER (FUEL TANK)	
		1	**9X-2205**	1	KIT-CAP FILTER (FUEL TANK)	
		1	**9X-8600**	1	SEAL-O-RING	
	3	1	**9P-7121**	1	STRAINER-FUEL	
	4	1	**006-6586**	1	CONNECTOR-HOSE	
	5	1	**277-0460**	1	TANK AS-FUEL	
	6	1	**1H-8306**	1	SCREW-PURGE (1/2-20X1.625-IN)	
	7	1	**5D-1026**	1	CLAMP-HOSE	
M	8	1	**6V-7688**	4	LOCKNUT (M20X2.5-THD)	
M	9	1	**7X-2566**	4	BOLT (M20X2.5X110-MM)	
	10	1	**8T-4123**	8	WASHER (22X35X3.5-MM THK)	
E	11	1	**5P-0721**		HOSE (60-CM)	

E-ORDER BY THE CENTIMETER
M-METRIC PART

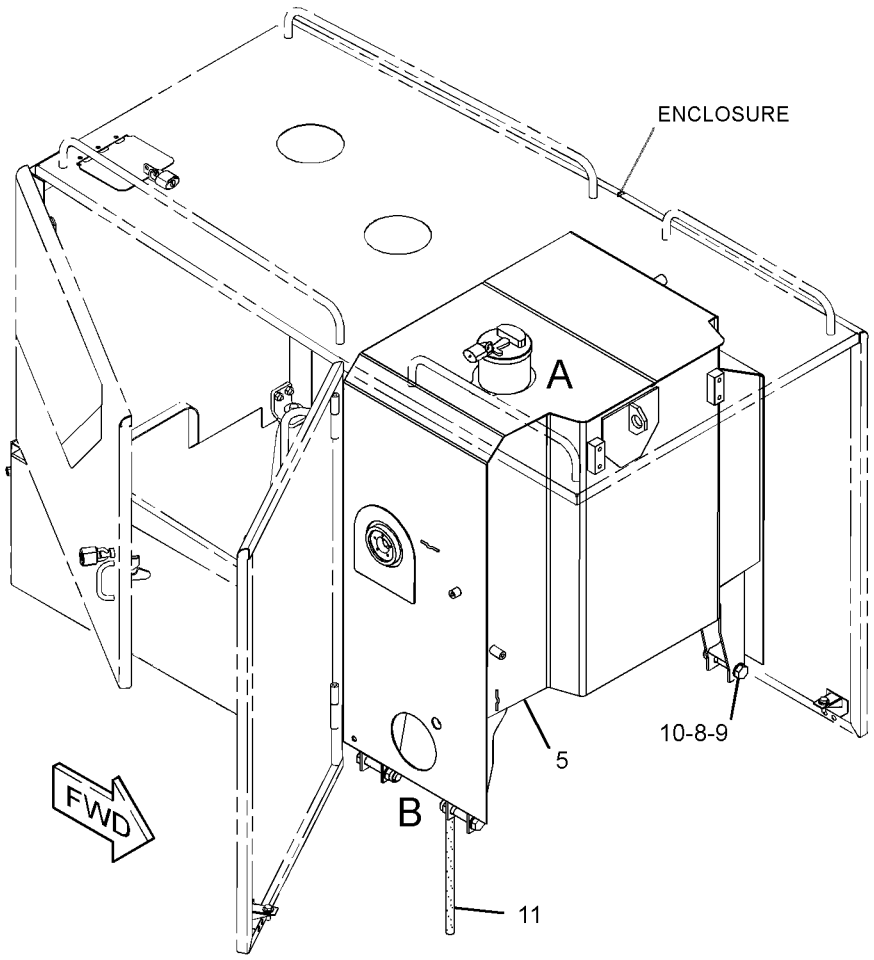

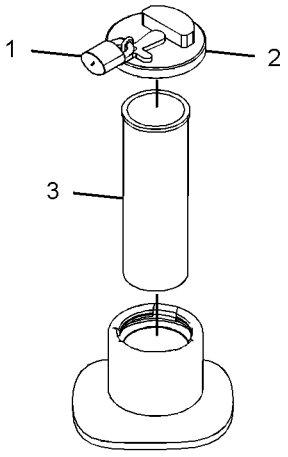

VIEW OF AREA A
(EXPLODED)

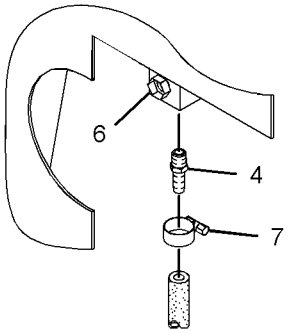

VIEW OF AREA B
(EXPLODED)

GRAPHIC #1 **<END>** g01757039

3E-6328 ALARM GP

S/N: JBP1-UP
24-VOLT
PART OF 284-5346 WIRING GP-CONSOLE

SMCS-7400, 7402, 7407 **i02942905**

NOTE	REF NO	GRAPHIC REF	PART NUMBER	QTY	PART NAME 1 2 3 4 5 6 (PRODUCT LEVEL)	SEE PAGE
	1	1	**102-8802**	1	KIT-RECEPTACLE (2-PIN)	
					(INCLUDES RECEPTACLE AS & WEDGE)	
	2	1	**186-3735**	2	PIN-CONNECTOR (16-GA TO 18-GA)	

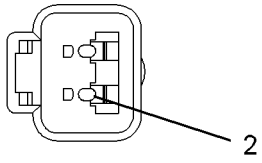

VIEW A–A

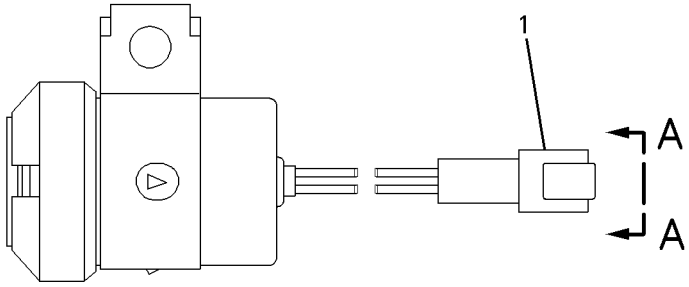

GRAPHIC #1 **<END>** g00697818

312-0970 ALTERNATOR AR-CHARGING

S/N: JBP1-UP
24-V, 95-AMPERE
AN ATTACHMENT

SMCS-1405 **i03432221**

NOTE	PART NUMBER	QTY	PART NAME 1 2 3 4 5 6 (PRODUCT LEVEL)	SEE PAGE
Y	*263-3982*	1	ALTERNATOR GP-CHARGING	109
	312-0377	1	CABLE AS	
D	**6V-2369**		WIRE (4-GA, BLACK) (1-M)	
	9G-4343	1	TERMINAL (4-GA) (FOR 1/4-IN SCREW)	
	9G-4336	1	TERMINAL-RING	
	1P-0810	1	TAPE-ELECTRICAL	
	312-0378	1	CABLE AS	
D	**6V-2369**		WIRE (4-GA, BLACK) (1.1-M)	
	8T-8827	1	BOOT	
	9G-4343	2	TERMINAL (4-GA) (FOR 1/4-IN SCREW)	
	135-2543	1	BOOT	
	1P-0810	1	TAPE-ELECTRICAL	

D-ORDER BY THE METER
Y-SEPARATE ILLUSTRATION

<END>

ELECTRICAL AND STARTING SYSTEM

6N-9294 ALTERNATOR GP-CHARGING*R

S/N: JBP1-UP
24-VOLT, 35-AMP
PART OF 253-4006 ALTERNATOR GP-CHARGING

SMCS-1405 **i01597772**

NOTE	REF NO	GRAPHIC REF	PART NUMBER	QTY	PART NAME 1 2 3 4 5 6 (PRODUCT LEVEL)	SEE PAGE
	1	1	**7N-9024**	4	BOLT (M10X24X63.5-MM)	
	2	1	**187-2034**	1	NUT-FLANGE (5/8-18-THD)	
	4	1	**3E-5454**	1	FAN-ALTERNATOR	
	5	1	**7N-7810**	1	FRAME AS-DRIVE END	
	6	1	**7N-7805**	1	HOUSING	
	7	1	**6V-2202**	1	BALL BEARING	
	8	1	**9S-2437**	3	SCREW-TAPPING (10-24X19.05-MM)	
	9	1	**7N-7809**	1	PLATE	
	10	1	**5P-6920**	1	BEARING-ROLLER	
	11	1	**030-9612**	5	SCREW-FORMING (10-24X0.5-IN)	
	12	1	**7N-7806**	1	COIL AS-FIELD	
	13	1	**7N-7800**	1	ROTOR AS	
	14	1	**7N-7804**	1	STATOR AS	
	15	1	**9L-2137**	1	RETAINER AS	
	16	1	**7X-3353**	4	SCREW-HEX HEAD (10X24X19.05-MM)	
	17	1	**7N-7795**	1	COLLAR	
	18	1	**9S-2544**	2	SCREW-HEX HEAD (8-32X11.13-MM)	
	19	1	**9L-2140**	1	PLATE	
	20	1	**9L-2139**	1	WASHER-FELT (1.31X1.68X0.125-IN THK)	
	21	1	**6V-8377**	4	NUT (8-32 THD)	
	22	1	**8T-0328**	6	WASHER-HARD (5.5X10X1-MM THK)	
	23	1	**6N-1872**	2	SCREW AS (8-32X1.25-IN)	
	24	1	**9B-7233**	6	LOCKWASHER	
	25	1	**8F-1434**	4	LOCKWASHER	
	26	1	**7N-9023**	2	SCREW AS (8-32X26.9-MM)	
	27	1	**3T-6354**	1	REGULATOR AS-VOLTAGE (24-VOLT)	
	28	1	**1H-3244**	1	LOCKWASHER	
	29	1	**7N-7811**	1	CONNECTOR	
	30	1	**6V-8187**	1	NUT (1/4-28-THD)	
	31	1	**112-9119**	1	DIODE AS-ALTERNATOR	
	32	1	**8T-4205**	1	WASHER-HARD (7.2X14.5X2-MM THK)	
	33	1	**206-4202**	1	RECTIFIER AS	
	34	1	**7N-9021**	1	SCREW AS (8-32X1.34-IN)	
	35	1	**7N-7796**	1	BUSHING-TERMINAL	
	36	1	**7N-7802**	1	CAPACITOR AS	
	37	1	**7N-7801**	1	CONNECTOR	
	38	1	**7N-7798**	1	CONNECTOR	
	39	1	**9L-6770**	1	CAP-DUST	
					AVAILABLE REPAIR KIT(S):	
			7N-7807	1	KIT-OUTPUT TERMINAL (OUTPUT)	
					(INCLUDES INSULATOR, SCREW, WASHERS, LOCKWASHER, NUT & ADAPTER)	
			7N-7808	1	KIT-RELAY TERMINAL (ALTERNATOR)	
					(INCLUDES STUD, BUSHINGS, WASHERS & NUT AS)	

6N-9294 **ALTERNATOR GP-CHARGING** *(contd.)* **i01597772**

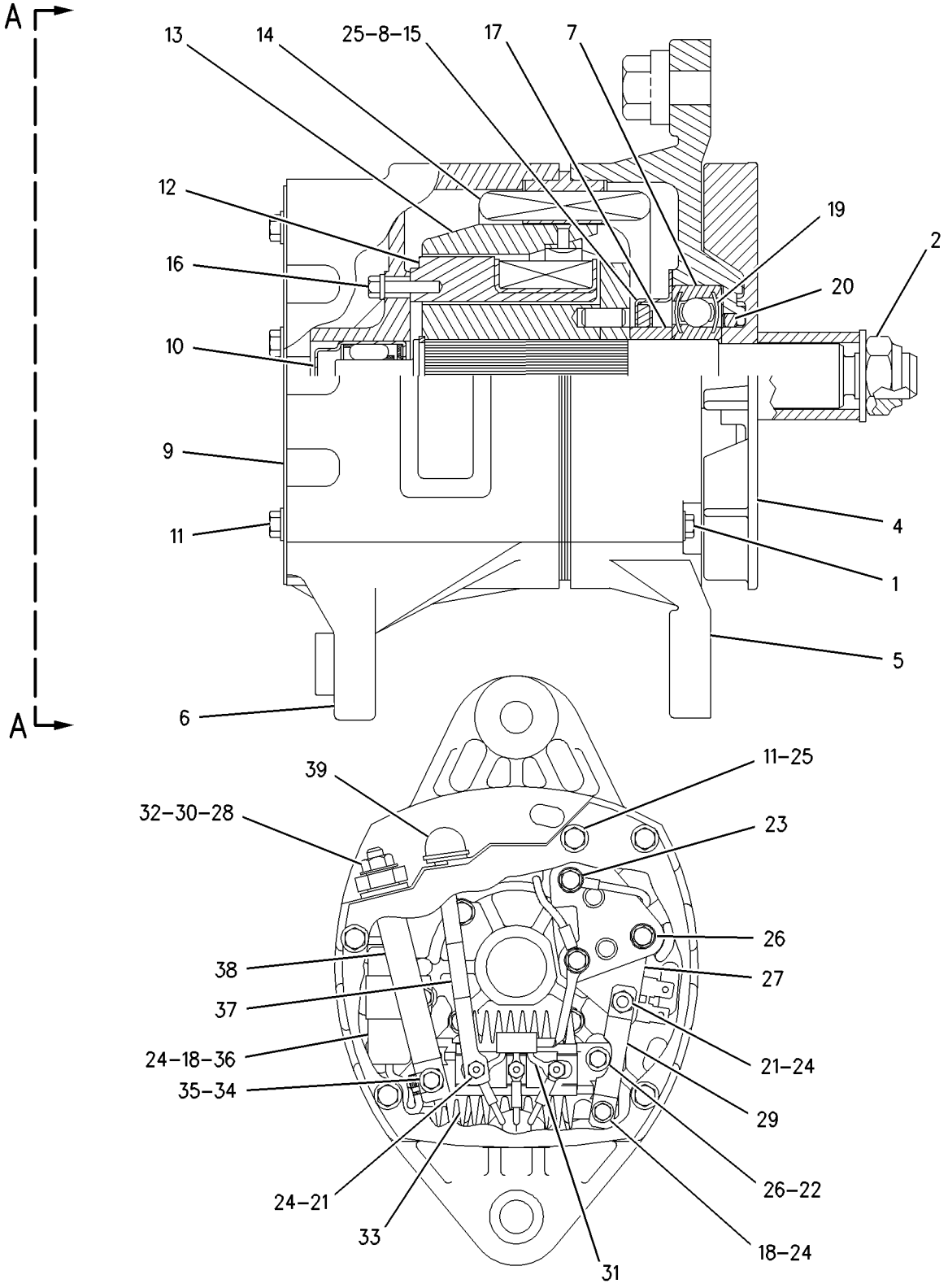

VIEW A-A

GRAPHIC #1 **<END>** g00810638

197-8820 ALTERNATOR GP-CHARGING*R

S/N: JBP1-UP
24 VOLT, 95 AMP
PART OF 263-3982 ALTERNATOR GP-CHARGING
AN ATTACHMENT

SMCS-1405 **i02469493**

NOTE	REF NO	GRAPHIC REF	PART NUMBER	QTY	PART NAME 1 2 3 4 5 6 (PRODUCT LEVEL)	SEE PAGE
	1	1	**185-2653**	1	FRAME	
	2	1	**5S-7349**	1	BOLT (1/4-20X0.5-IN)	
	3	1	**185-2639**	1	FAN AS	
	4	1	**1H-3244**	1	LOCKWASHER	
	5	1	**185-2645**	1	FRAME	
	6	1	**2K-4821**	1	LOCKNUT (5/8-18-THD)	
	7	1	**5P-8247**	1	WASHER-HARD (17X32X3.5-MM THK)	
	8	1	**185-2651**	1	COVER	
	9	1	**8T-4205**	1	WASHER-HARD (7.2X14.5X2-MM THK)	
	10	1	**185-2647**	1	GROMMET	
	11	1	**9L-6770**	1	CAP-DUST (ALTERNATOR AC TAP)	
	12	1	**205-0626**	1	STATOR AS-ALTERNATOR	
	13	1	**185-2638**	2	COLLAR	
	14	1	**185-2654**	1	PLATE	
	15	1	**185-2650**	1	ROTOR AS	
	16	1	**185-2644**	1	COIL AS	
	17	1	**185-2648**	1	REGULATOR AS-VOLTAGE (24-VOLT)	
	18	1	**6V-8189**	1	NUT (5/16-18-THD)	
	19	1	**8T-4224**	1	WASHER-HARD (8.8X16X2-MM THK)	
	20	1	**3F-9556**	1	LOCKWASHER	
					AVAILABLE REPAIR KIT(S):	
			185-2655		KIT-BEARING (ALTERNATOR)	
					(INCLUDES 2 BEARINGS)	
			199-8436		KIT-TERMINAL (ALTERNATOR)	
					(INCLUDES HOLDER AS, PLATE, INSULATOR, PIN, BOLTS, GROMMET, & NUT	
			199-7891		KIT-TERMINAL (ALTERNATOR)	
					(INCLUDES INSULATORS, WASHERS, & NUTS)	
			185-2658		KIT-HARDWARE (ALTERNATOR)	
					(INCLUDES BOLTS)	

197-8820 **ALTERNATOR GP-CHARGING** *(contd.)* **i02469493**

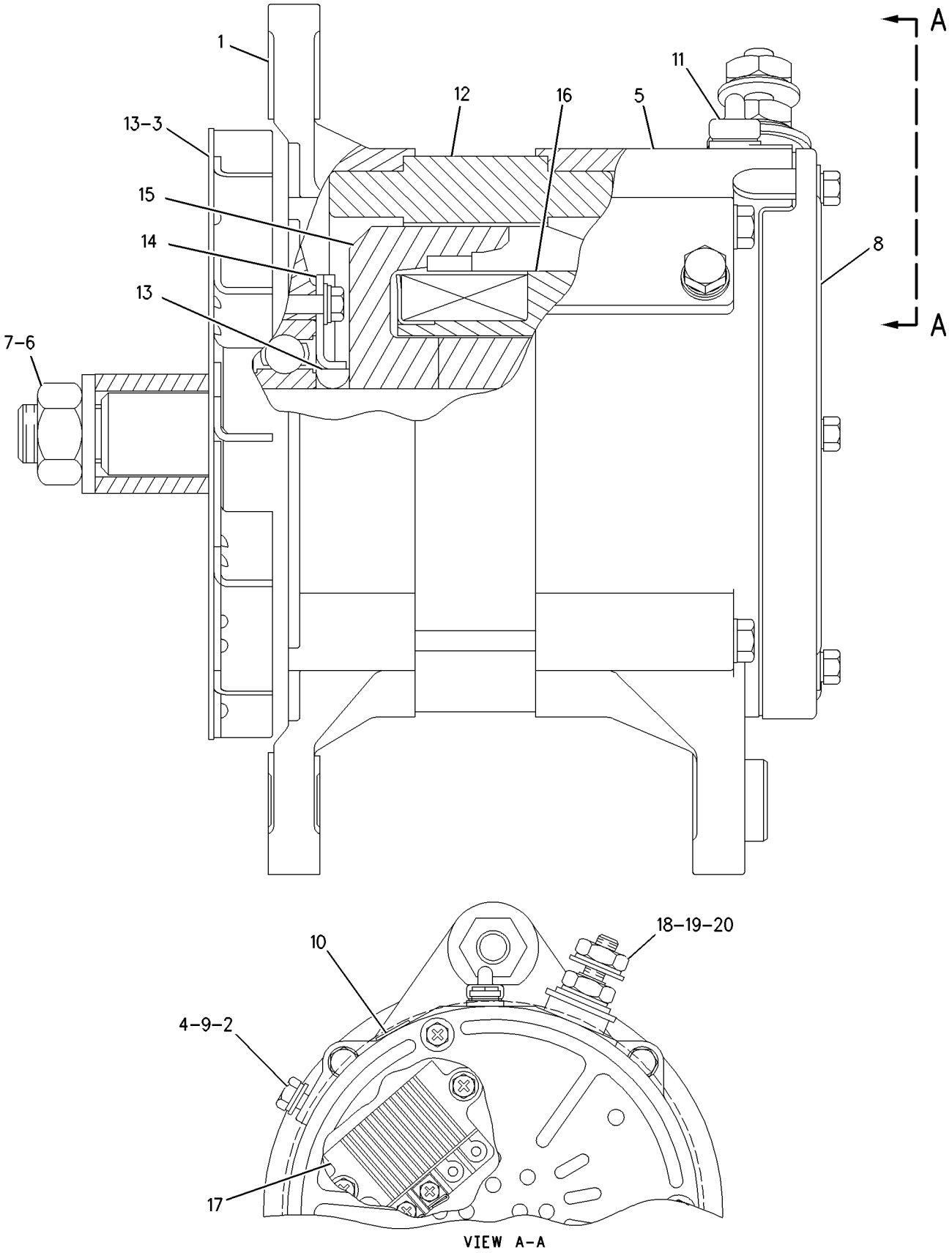

GRAPHIC #1 **<END>** g00873198

ELECTRICAL AND STARTING SYSTEM

253-4006 ALTERNATOR GP-CHARGING

S/N: JBP1-UP
24-VOLT, 35-AMPERE
PART OF 274-7941 GENERAL AR

SMCS-1405 **i03260044**

NOTE	REF NO	GRAPHIC REF	PART NUMBER	QTY	PART NAME 1 2 3 4 5 6 (PRODUCT LEVEL)	SEE PAGE
	1	1	**8S-5383**	1	BLOCK	
	2	1	**8X-1805**	1	PULLEY	
	3	1	**9S-1240**	1	BRACKET AS	
		1	**1F-0748**	1	NUT-WELD (1/2-13-THD)	
	4	1	**4S-5780**	1	ROD	
	5	1	**5P-1076**	1	WASHER-HARD (13.5X30X4-MM THK)	
YR	6	1	**6N-9294**	1	ALTERNATOR GP-CHARGING	104
	7	1	**6V-8188**	1	NUT (1/2-13-THD)	
	8	1	**7X-0325**	1	BOLT (1/2-13X2.5-IN)	
	9	1	**7X-0339**	1	BOLT (1/2-13X6.25-IN)	
	10	1	**7X-0346**	1	BOLT (5/8-11X2-IN)	
	11	1	**7X-0448**	2	NUT (5/8-11-THD)	
	12	1	**8T-4122**	1	WASHER-HARD (17X32X3.5-MM THK)	
	13	1	**8T-4223**	2	WASHER-HARD (13.5X25.5X3-MM THK)	

R-REMFG PART MAY BE AVAILABLE
Y-SEPARATE ILLUSTRATION

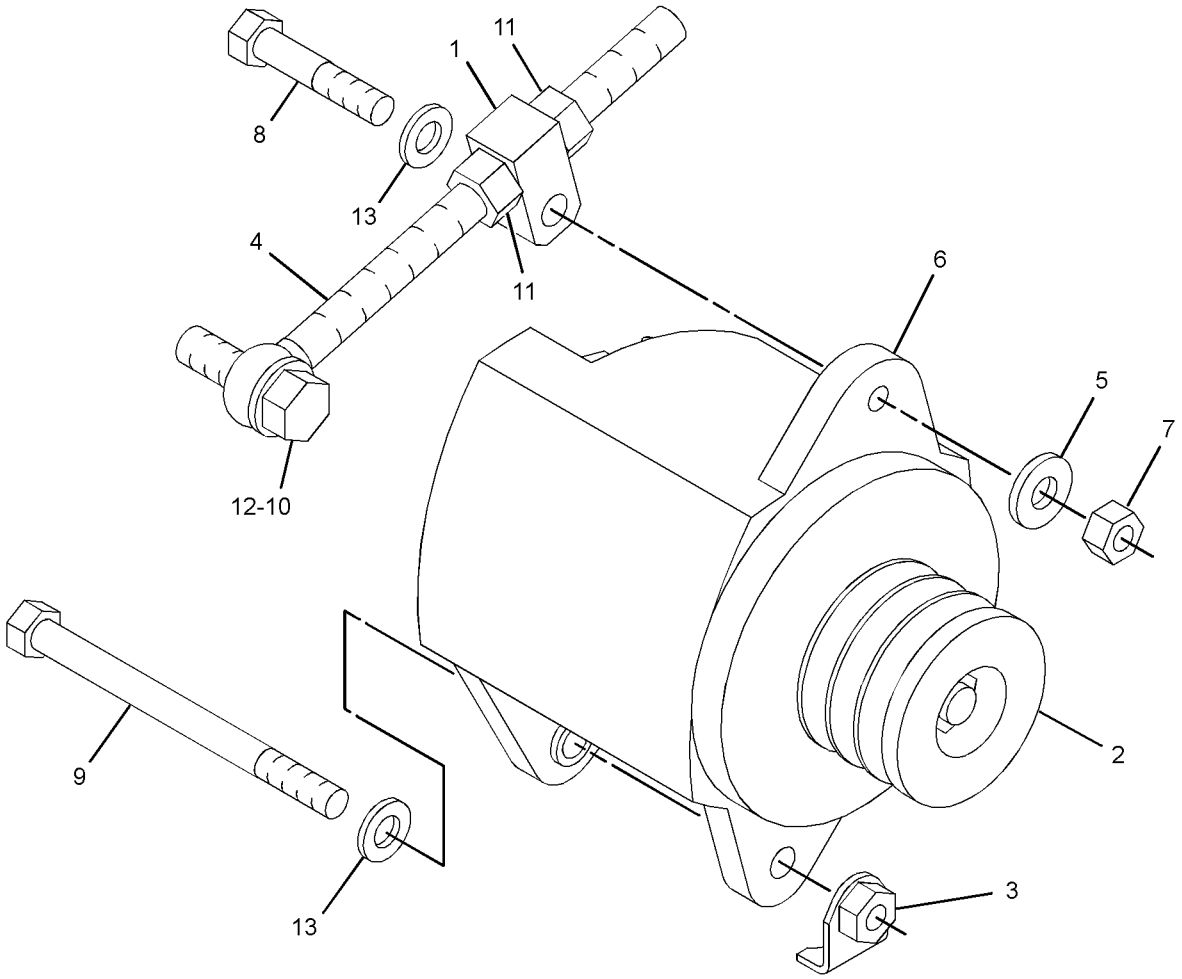

GRAPHIC #1 **<END>** g01687535

263-3982 ALTERNATOR GP-CHARGING

S/N: JBP1-UP
PART OF 312-0970 ALTERNATOR AR-CHARGING
AN ATTACHMENT

SMCS-1405 **i03310900**

NOTE	REF NO	GRAPHIC REF	PART NUMBER	QTY	PART NAME 1 2 3 4 5 6 (PRODUCT LEVEL)	SEE PAGE
YR	1	1	**197-8820**	1	ALTERNATOR GP-CHARGING (24-VOLT, 95-AMPERE)	106

R-REMFG PART MAY BE AVAILABLE
Y-SEPARATE ILLUSTRATION

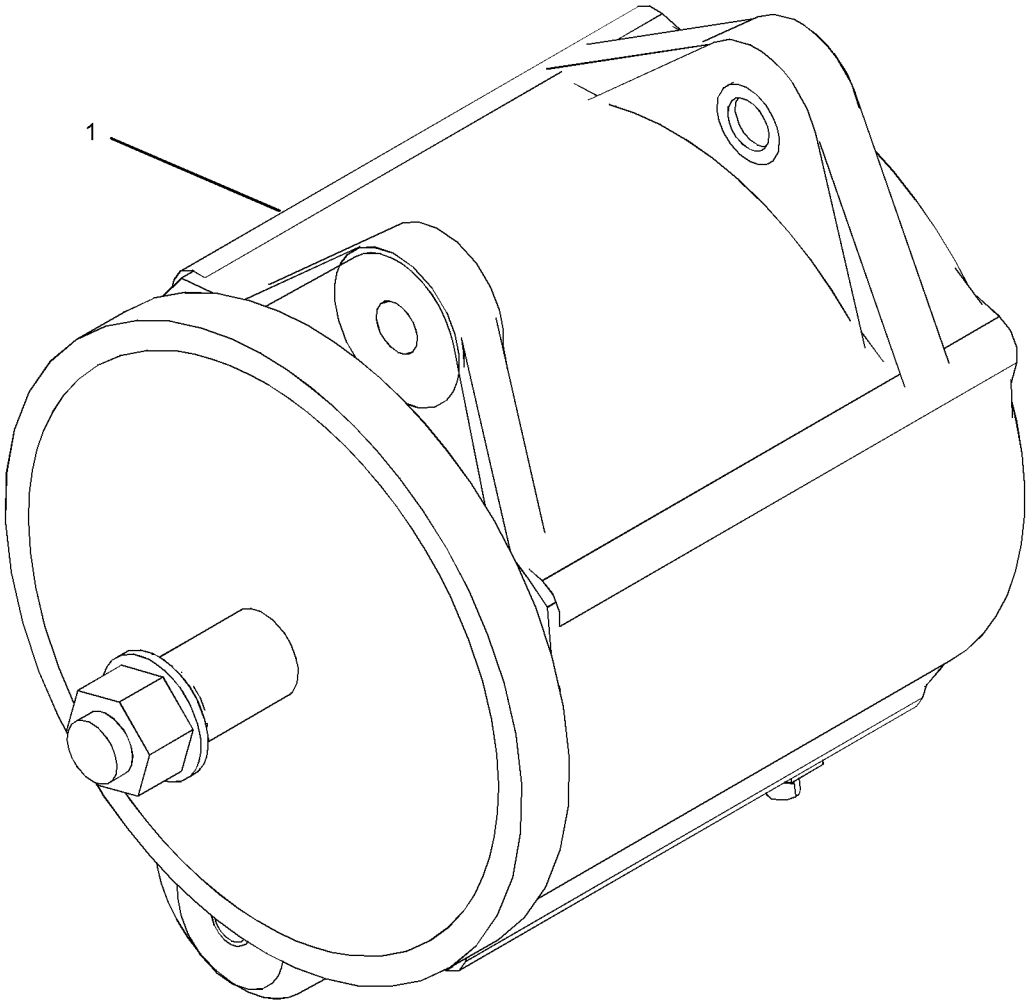

GRAPHIC #1 **<END>** g01700397

ELECTRICAL AND STARTING SYSTEM

284-5358 BATTERY & WIRING GP

S/N: JBP1-UP

AN ATTACHMENT

SMCS-1401, 1402, 1408 **i03258525**

NOTE	REF NO	GRAPHIC REF	PART NUMBER	QTY	PART NAME 1 2 3 4 5 6 (PRODUCT LEVEL)	SEE PAGE
M	1	1	**8T-4191**	1	BOLT (M10X1.5X16-MM)	
	2	1	**153-5710**	2	BATTERY (12-VOLT, MAINTENANCE FREE)	
	3	1	**295-1138**	1	HOLD-DOWN AS	
	4	1	**300-6496**	1	CABLE AS	
		1	**9G-0003**	1	COVER-TERMINAL (BLACK)	
		1	**9G-0004**	1	COVER-TERMINAL (RED)	
		1	**8C-5917**	1	TERMINAL AS-BATTERY (POSITIVE)	
		1	**8T-9757**	1	TERMINAL AS-BATTERY (NEGATIVE)	
E		1	**159-8049**		CABLE (00-GA, RED) (12-CM)	
	5	1	**305-0038**	1	CABLE AS	
		1	**1S-7252**	1	TERMINAL-CABLE (00-GA, 3/8-IN BOLT)	
		1	**7N-5274**	1	COVER-TERMINAL (BLACK)	
		1	**9G-8909**	1	COVER-TERMINAL (BLACK)	
		1	**3S-6050**	1	TERMINAL AS-BATTERY (NEGATIVE)	
		1	**1M-6119**	1	BOLT (5/16-18X1.375-IN)	
		1	**1M-6120**	1	NUT (5/16-18-THD)	
E		1	**159-8050**		CABLE (00-GA, BLACK) (306-CM)	
	6	1	**2V-1771**	3	GROMMET	
	7	1	**6D-4246**	3	CLIP	
	8	1	**8T-4121**	3	WASHER-HARD (11X21X2.5-MM THK)	
M	9	1	**8T-4137**	2	BOLT (M10X1.5X20-MM)	

E-ORDER BY THE CENTIMETER
M-METRIC PART

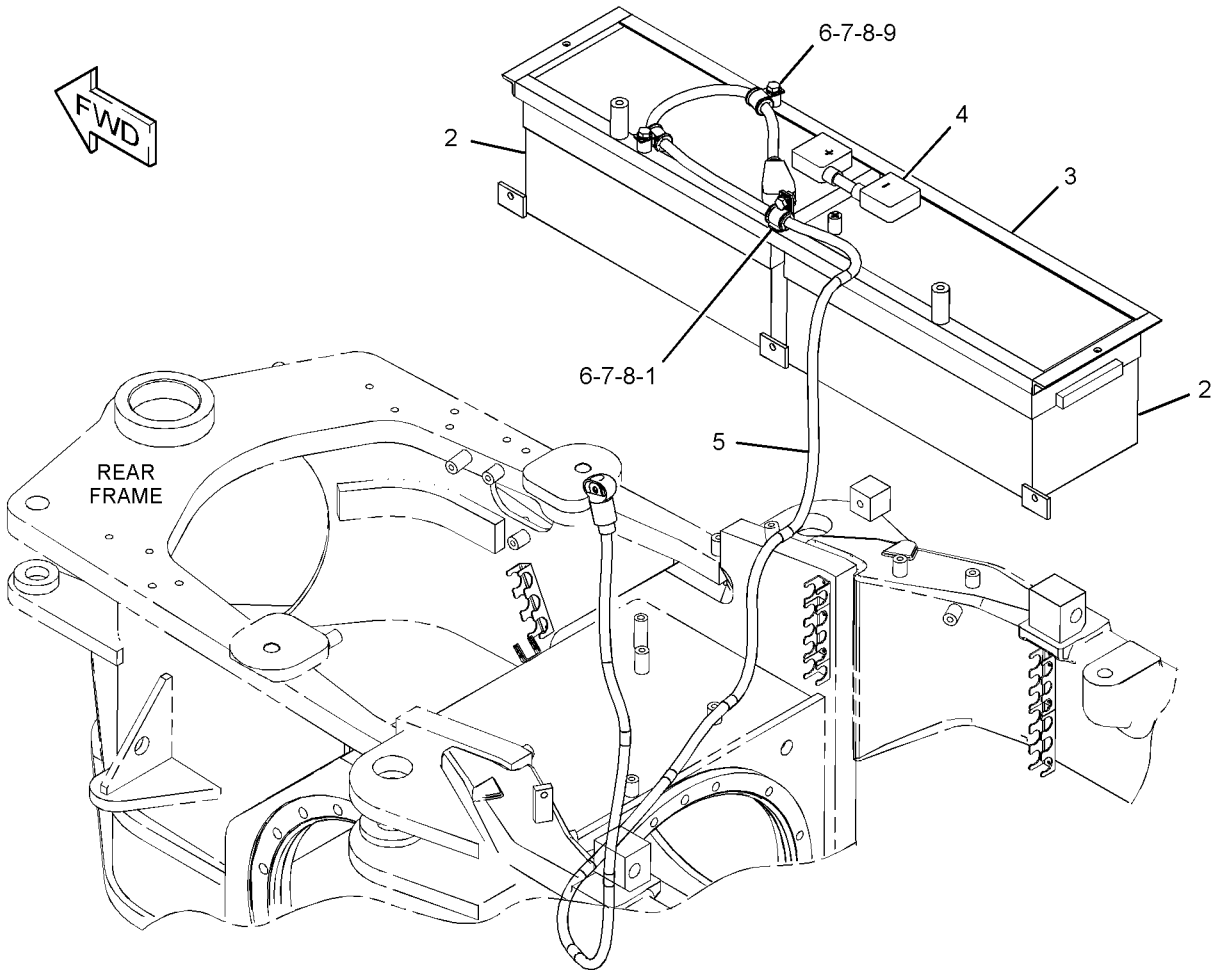

GRAPHIC #1 **<END>** g01670915

ELECTRICAL AND STARTING SYSTEM

284-5359 BATTERY & WIRING GP–HEAVY DUTY

S/N: JBP1-UP

AN ATTACHMENT

SMCS-1401, 1402, 1408 **i03258488**

NOTE	REF NO	GRAPHIC REF	PART NUMBER	QTY	PART NAME 1 2 3 4 5 6 (PRODUCT LEVEL)	SEE PAGE
M	1	1	**8T-4191**	1	BOLT (M10X1.5X16-MM)	
	2	1	**153-5700**	2	BATTERY (12-VOLT, MAINTENANCE FREE)	
	3	1	**295-1138**	1	HOLD-DOWN AS	
	4	1	**300-6496**	1	CABLE AS	
	5	1	**305-0038**	1	CABLE AS	
	6	1	**2V-1771**	3	GROMMET	
	7	1	**6D-4246**	3	CLIP	
	8	1	**8T-4121**	3	WASHER-HARD (11X21X2.5-MM THK)	
M	9	1	**8T-4137**	2	BOLT (M10X1.5X20-MM)	

M-METRIC PART

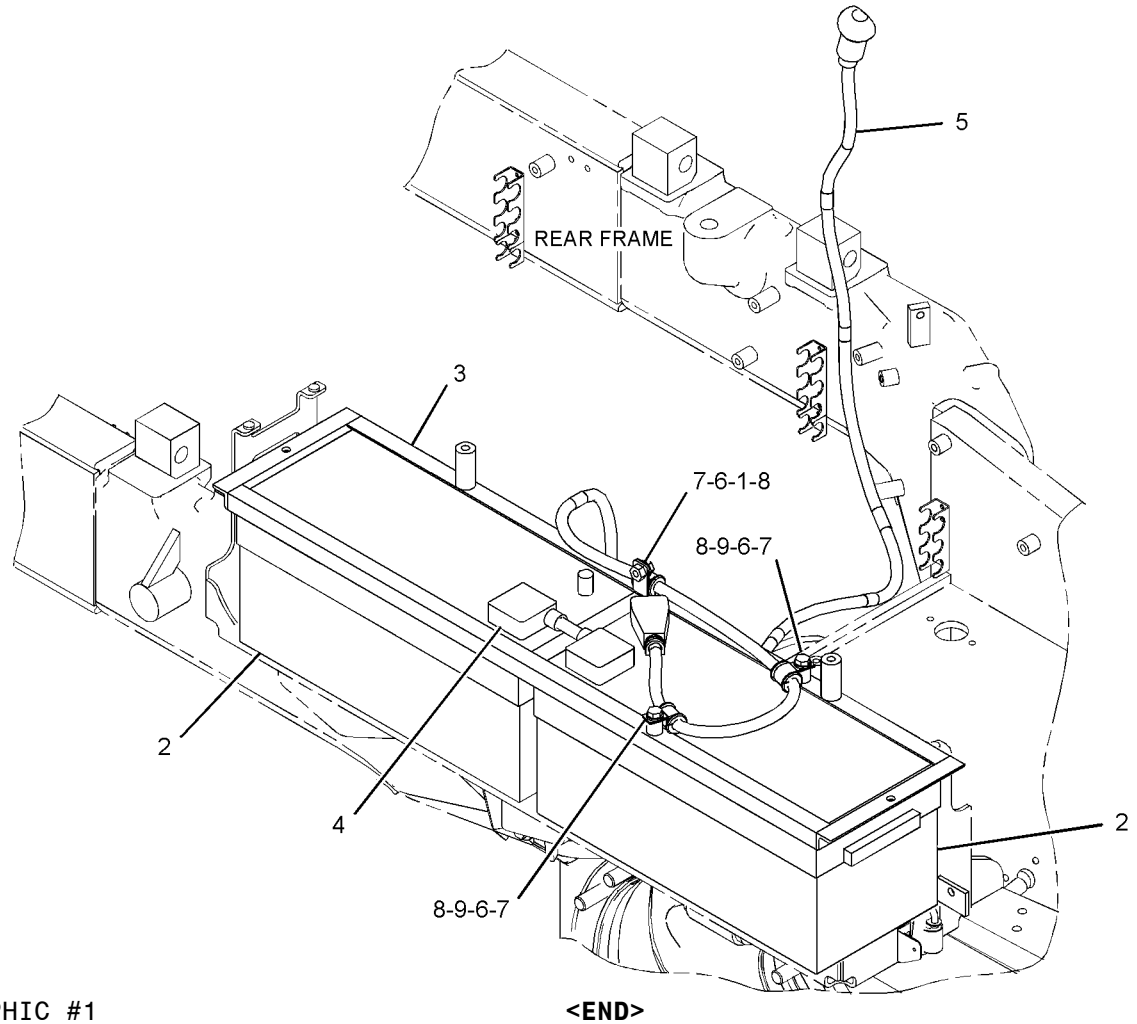

GRAPHIC #1 **<END>** g01753413

ELECTRICAL AND STARTING SYSTEM

298-5592 BATTERY & WIRING GP—HEAVY DUTY

S/N: JBP1-UP
PART OF 304-9957 BATTERY & WIRING GP
AN ATTACHMENT

SMCS-1401, 1402, 1408 **i03316106**

NOTE	REF NO	GRAPHIC REF	PART NUMBER	QTY	PART NAME 1 2 3 4 5 6 (PRODUCT LEVEL)	SEE PAGE
	1	1	**108-2949**	2	ROD	
	2	1	**153-5710**	2	BATTERY (12-VOLT, MAINTENANCE FREE)	
	3	1	**301-6664**	1	BRACKET	
	4	1	**308-9112**	2	HOLD-DOWN AS	
	5	1	**308-9113**	1	CABLE AS	
		1	**1M-6119**	1	BOLT (5/16-18X1.375-IN)	
		1	**1M-6120**	1	NUT (5/16-18-THD)	
		1	**1M-6119**	1	BOLT (5/16-18X1.375-IN)	
		1	**1M-6120**	1	NUT (5/16-18-THD)	
		1	**9G-0003**	1	COVER-TERMINAL (BLACK)	
		1	**8L-8413**	1	STRAP-CABLE	
		1	**9G-0004**	1	COVER-TERMINAL (RED)	
		1	**8L-8413**	1	STRAP-CABLE	
E		1	**159-8049**		CABLE (00-GA, RED) (264-CM)	
E		1	**1P-0810**		TAPE-ELECTRICAL (45-CM)	
	6	1	**308-9114**	1	CABLE AS	
		1	**1S-7252**	1	TERMINAL-CABLE (00-GA, 3/8-IN BOLT)	
		1	**7N-5274**	1	COVER-TERMINAL (BLACK)	
		1	**8L-8413**	1	STRAP-CABLE	
		1	**9G-8909**	1	COVER-TERMINAL (BLACK)	
E		1	**159-8050**		CABLE (00-GA, BLACK) (70-CM)	
E		1	**1P-0810**		TAPE-ELECTRICAL (5-CM)	
	7	1	**311-1513**	1	CABLE AS	
		1	**8N-1725**	1	COVER-TERMINAL (RED)	
		1	**8L-8413**	1	STRAP-CABLE	
		1	**1M-6119**	1	BOLT (5/16-18X1.375-IN)	
		1	**1M-6120**	1	NUT (5/16-18-THD)	
		1	**194-4046**	1	COVER-TERMINAL (00-GA, POSITIVE, RED)	
		1	**8L-8413**	1	STRAP-CABLE	
		1	**208-4617**	1	TERMINAL-RING (00-GA, 90-DEG)	
		1	**159-8049**		CABLE (00-GA, RED) (99-CM)	
E		1	**1P-0810**		TAPE-ELECTRICAL (10-CM)	
	8	1	**326-3121**	1	BRACKET AS	
	9	1	**2V-1771**	3	GROMMET	
	10	1	**6D-4246**	2	CLIP	
	11	1	**8S-0948**	1	CLIP	
M	12	1	**8T-0389**	2	LOCKNUT (M10X1.5-THD)	
	13	1	**8T-4121**	8	WASHER-HARD (11X21X2.5-MM THK)	
M	14	1	**8T-4133**	3	NUT (M10X1.5-THD)	
M	15	1	**8T-4137**	2	BOLT (M10X1.5X20-MM)	
M	16	1	**8T-4195**	1	BOLT (M10X1.5X30-MM)	

E-ORDER BY THE CENTIMETER
M-METRIC PART

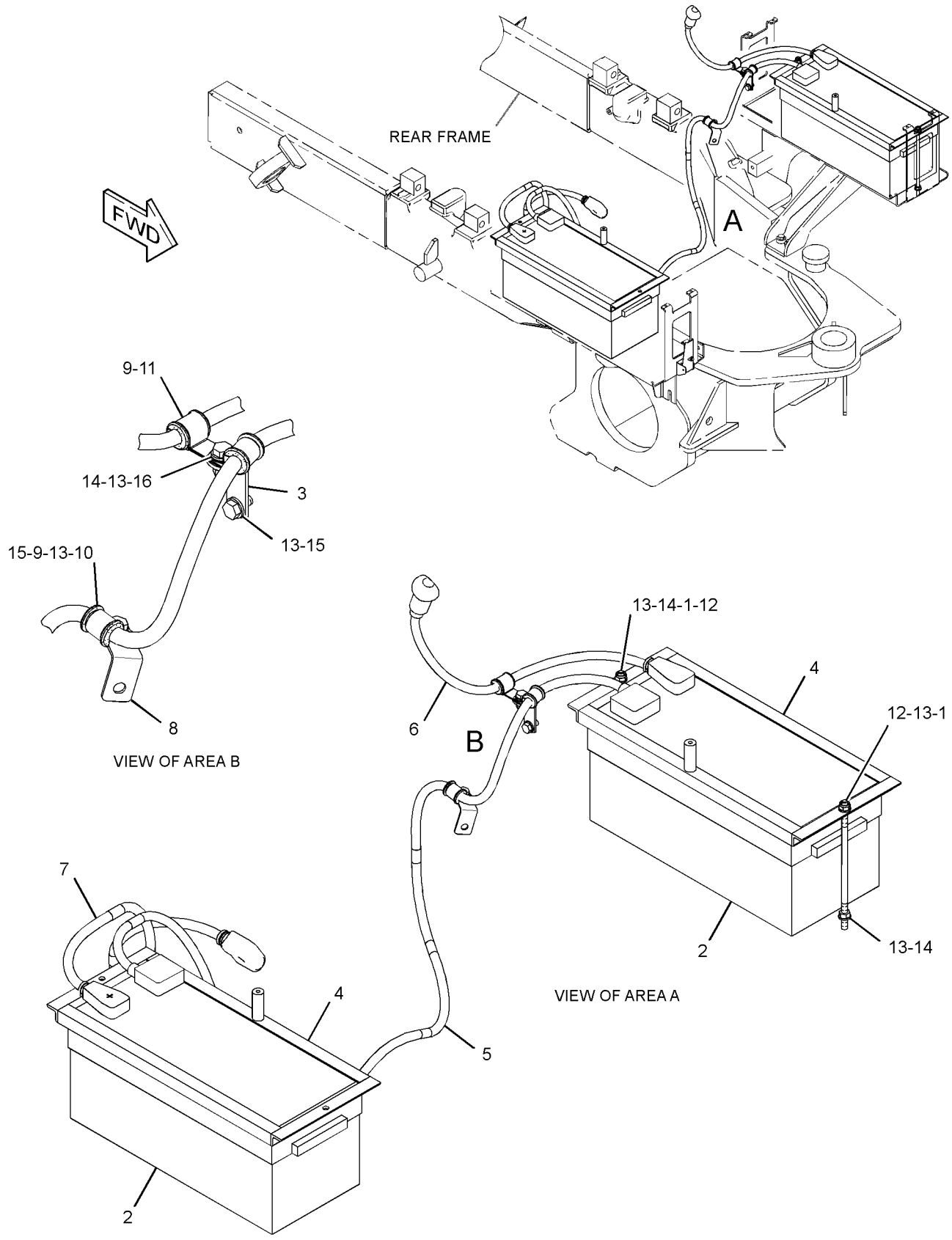

GRAPHIC #1 **<END>** g01757458

304-9957 BATTERY & WIRING GP–HEAVY DUTY

S/N: JBP1-UP

AN ATTACHMENT

SMCS-1401, 1402, 1408 **i03316084**

NOTE	REF NO	GRAPHIC REF	PART NUMBER	QTY	PART NAME 1 2 3 4 5 6 (PRODUCT LEVEL)	SEE PAGE
Y	1	1	*298-3520*	1	SUPPORT GP-BATTERY	336
	2	1	**298-5315**	1	PLATE AS	
Y	3	1	*298-5592*	1	BATTERY & WIRING GP	113
	4	1	**7X-7729**	3	WASHER (11X25X3-MM THK)	
M	5	1	**8T-4136**	3	BOLT (M10X1.5X25-MM)	

M-METRIC PART
Y-SEPARATE ILLUSTRATION

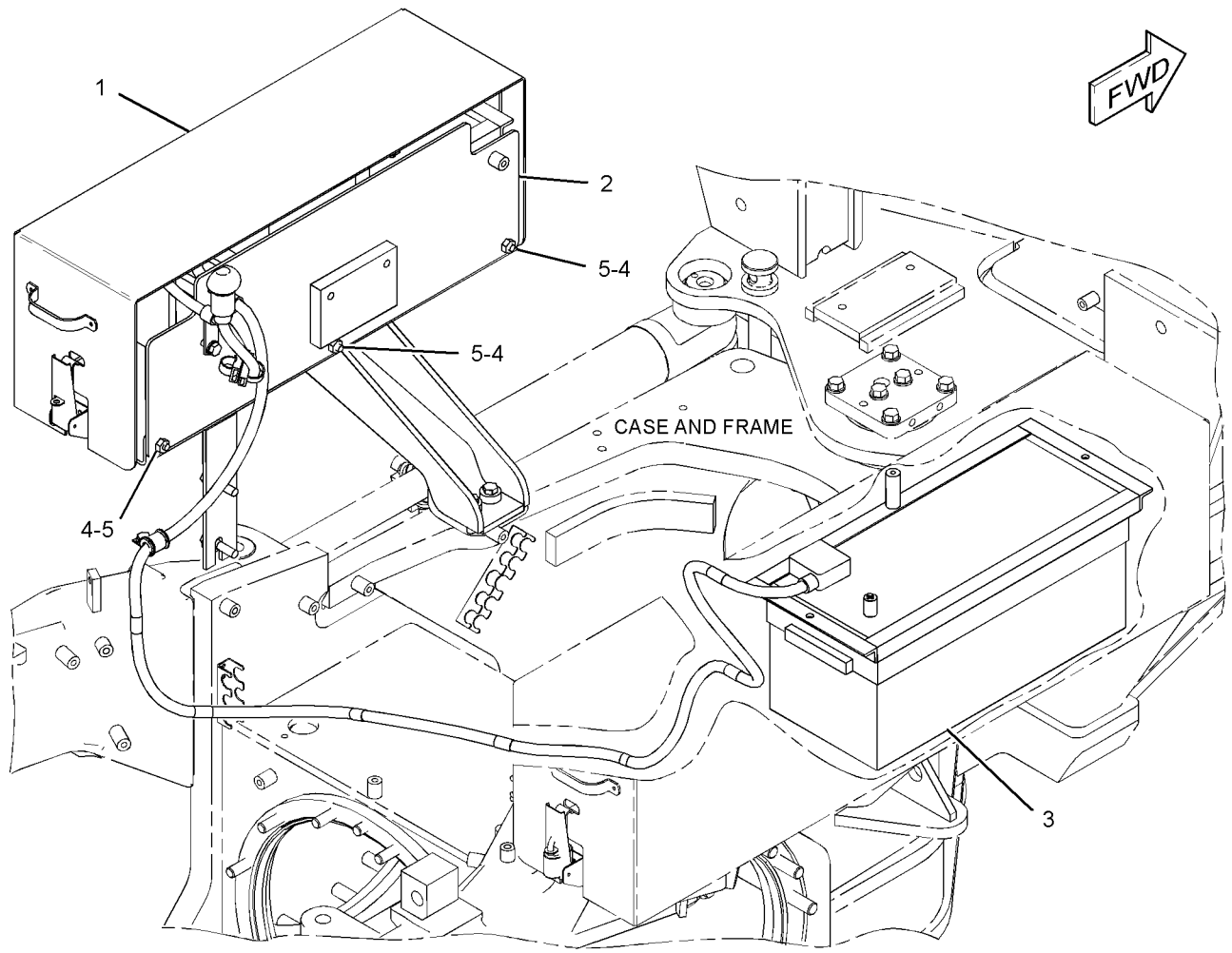

GRAPHIC #1 **<END>** g01757253

ELECTRICAL AND STARTING SYSTEM

311-0795 BATTERY & WIRING GP

S/N: JBP1-UP

PART OF 274-7941 GENERAL AR

SMCS-1401, 1402, 1408 **i03246394**

NOTE	REF NO	GRAPHIC REF	PART NUMBER	QTY	PART NAME 1 2 3 4 5 6 (PRODUCT LEVEL)	SEE PAGE
	1	1	**8W-8528**	3	SLEEVE	
	2	1	**9G-9154**	3	CLIP	
	3	1	**102-8704**	2	PLATE AS	
	4	1	**102-8705**	1	PLATE	
	5	1	**108-2949**	2	ROD	
	6	1	**177-2215**	1	STRAP-DUAL CLAMP	
	7	1	**294-9621**	1	CABLE AS	
		1	**8T-8827**	1	BOOT	
		1	**135-2543**	1	BOOT	
B		1	**1P-0810**		TAPE-ELECTRICAL	
		1	**9G-4343**	1	TERMINAL (4-GA)	
D		1	**6V-2369**		WIRE (4-GA, BLACK) (1-M)	
	8	1	**294-9622**	1	CABLE AS	
B		1	**1P-0810**		TAPE-ELECTRICAL	
		1	**9G-4343**	1	TERMINAL (4-GA)	
		1	**9G-4336**	1	TERMINAL-RING	
D		1	**6V-2369**		WIRE (4-GA, BLACK) (0.8-M)	
	9	1	**295-1139**	1	HOLD-DOWN AS	
	10	1	**297-8049**	2	GROMMET	
	11	1	**300-6152**	1	CABLE AS	
		1	**9G-0003**	1	COVER-TERMINAL (BLACK)	
		1	**9G-0004**	1	COVER-TERMINAL (RED)	
		1	**8C-5917**	1	TERMINAL AS-BATTERY (POSITIVE)	
		1	**8T-9757**	1	TERMINAL AS-BATTERY (NEGATIVE)	
E		1	**159-8049**		CABLE (00-GA, RED) (9-CM)	
	12	1	**301-6664**	1	BRACKET	
	13	1	**311-6573**	1	BRACKET AS	
	14	1	**312-0379**	1	BRACKET AS	
	15	1	**314-7946**	1	BRACKET AS	
	16	1	**317-3164**	1	CABLE AS	
D		1	**5P-5689**		WIRE (8-GA, BLACK) (1-M)	
		1	**2L-8050**	1	TERMINAL-RING (6-GA, 1/4-IN)	
					—OR—	
		1	**2L-8058**	1	TERMINAL-RING (8-GA, 1/4-IN)	
BD		1	**1P-0810**		TAPE-ELECTRICAL (1-M)	
	17	1	**317-3165**	1	CABLE AS	
		1	**135-2543**	1	BOOT	
BD		1	**1P-0810**		TAPE-ELECTRICAL (0.1-M)	
		1	**9G-4343**	1	TERMINAL (4-GA)	
		1	**9G-4344**	1	TERMINAL (4-GA)	
D		1	**6V-2369**		WIRE (4-GA, BLACK) (0.8-M)	
	18	1	**317-3166**	1	CABLE AS	
		1	**208-4617**	1	TERMINAL-RING (00-GA, 90-DEG)	
		1	**6V-2722**	1	TUBE-HEAT SHRINK (25.4-MM DIA)	
E		1	**159-8049**		CABLE (00-GA, RED) (96-CM)	
		1	**8N-1725**	1	COVER-TERMINAL (RED)	
		1	**194-4046**	1	COVER-TERMINAL (00-GA, POSITIVE, RED)	
BD		1	**1P-0810**		TAPE-ELECTRICAL (0.1-M)	
		1	**3S-6049**	1	TERMINAL AS-BATTERY (POSITIVE)	
	19	1	**317-3168**	1	CABLE AS	
E		1	**159-8050**		CABLE (00-GA, BLACK) (47-CM)	
D		1	**1P-0810**		TAPE-ELECTRICAL (0.1-M)	
		1	**1S-7251**	2	TERMINAL-CABLE (00-GA, 1/2-IN BOLT)	
D		1	**6V-2722**		TUBE-HEAT SHRINK (25.4-MM DIA) (0.1-M)	
	20	1	**318-2063**	1	CABLE AS	
		1	**1S-7252**	1	TERMINAL-CABLE (00-GA, 3/8-IN BOLT)	

311-0795 **BATTERY & WIRING GP** *(contd.)* **i03246394**

NOTE	REF NO	GRAPHIC REF	PART NUMBER	QTY	PART NAME 1 2 3 4 5 6 (PRODUCT LEVEL)	SEE PAGE
D		1	**6V-2722**		TUBE-HEAT SHRINK (25.4-MM DIA) (0.1-M)	
E		1	**159-8050**		CABLE (00-GA, BLACK) (291-CM)	
		1	**7N-5274**	1	COVER-TERMINAL (BLACK)	
		1	**9G-8909**	1	COVER-TERMINAL (BLACK)	
BD		1	**1P-0810**		TAPE-ELECTRICAL (0.3-M)	
		1	**3S-6050**	1	TERMINAL AS-BATTERY (NEGATIVE)	
	21	1	**318-2064**	1	CABLE AS	
E		1	**159-8050**		CABLE (00-GA, BLACK) (60-CM)	
BD		1	**1P-0810**		TAPE-ELECTRICAL (0.1-M)	
		1	**1S-7252**	2	TERMINAL-CABLE (00-GA, 3/8-IN BOLT)	
D		1	**6V-2722**		TUBE-HEAT SHRINK (25.4-MM DIA) (0.1-M)	
	22	1	**206-6410**	2	CLAMP-HALF	
	23	1	**1P-7009**	1	CLIP	
	24	1	**2V-1771**	13	GROMMET	
	25	1	**3S-8664**	3	CLIP	
	26	1	**3T-5760**	2	BATTERY (12-VOLT, MAINTENANCE FREE, WET)	
		1	**123-1373**	6	CAP AS-FILLER (BATTERY)	
	27	1	**5P-4295**	3	CLIP	
	28	1	**6D-4246**	11	CLIP	
	29	1	**6K-8178**	1	CLIP	
	30	1	**6V-8188**	1	NUT (1/2-13-THD)	
	31	1	**6W-6672**	2	SPACER (10.5X20X38-MM THK)	
	32	1	**7K-1181**	4	STRAP-CABLE	
	33	1	**8S-0948**	3	CLIP	
M	34	1	**8T-0389**	2	LOCKNUT (M10X1.5-THD)	
	35	1	**8T-4121**	27	WASHER-HARD (11X21X2.5-MM THK)	
M	36	1	**8T-4133**	3	NUT (M10X1.5-THD)	
M	37	1	**8T-4136**	1	BOLT (M10X1.5X25-MM)	
M	38	1	**8T-4137**	17	BOLT (M10X1.5X20-MM)	
M	39	1	**8T-4179**	1	BOLT (M12X1.75X20-MM)	
M	40	1	**8T-4195**	2	BOLT (M10X1.5X30-MM)	
M	41	1	**8T-4198**	1	BOLT (M10X1.5X100-MM)	
	42	1	**8T-4223**	2	WASHER-HARD (13.5X25.5X3-MM THK)	
M	43	1	**8T-6466**	1	BOLT (M10X1.5X60-MM)	
	44	1	**8W-8909**	7	SLEEVE	

B-USE AS REQUIRED
D-ORDER BY THE METER
E-ORDER BY THE CENTIMETER
M-METRIC PART

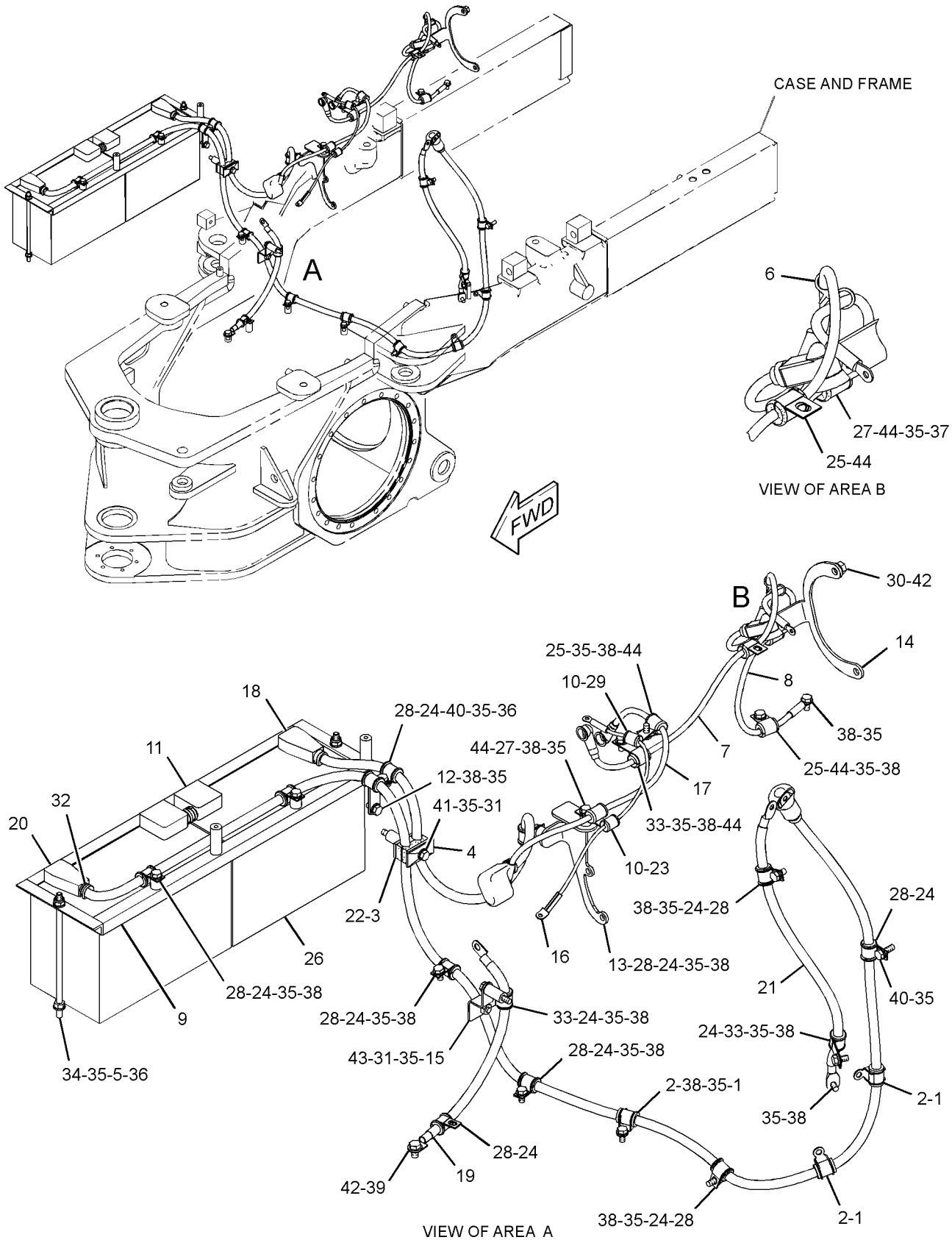

GRAPHIC #1 **<END>** g01709873

246-9345 CONTROL & MTG GP-ENGINE ELEK

S/N: KHX8814-UP

PART OF 312-0255 ENGINE AR-COMPLETE

SMCS-1901 **i02320629**

NOTE	REF NO	GRAPHIC REF	PART NUMBER	QTY	PART NAME 1 2 3 4 5 6 (PRODUCT LEVEL)	SEE PAGE
	1	1	**8T-9655**	8	MOUNT-ISOLATION	
	2	1	**101-3128**	4	SPACER-SPECIAL	
M	3	1	**143-9392**	4	STUD (M8X1.25-THD)	
	4	1	**255-5284**	1	CONTROL GP-UNPROGRAMMED (ENGINE)	
	6	1	**244-3168**	1	BRACKET AS	
	7	1	**233-0891**	1	BRACKET AS	
	8	1	**9M-1974**	4	WASHER-HARD (8.8X16X2-MM THK)	
	9	1	**9N-0869**	4	WASHER-HARD (8.8X25.5X2-MM THK)	

M-METRIC PART

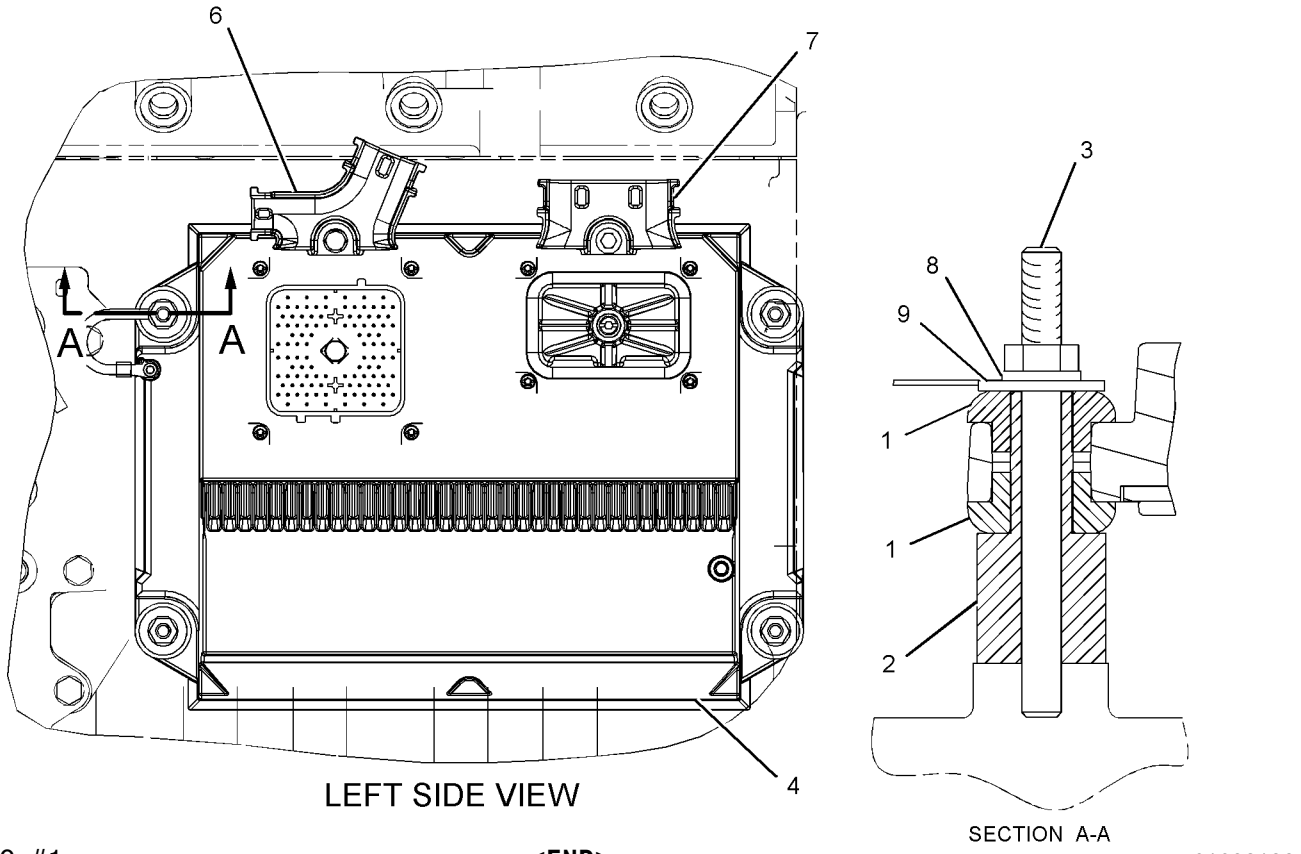

GRAPHIC #1 **<END>** g01093182

ELECTRICAL AND STARTING SYSTEM

177-4493 CONTROL GP-POWER TRAIN

S/N: JBP1-UP

PART OF 284-5343 WIRING GP-FRONT

SMCS-4808, 7610 **i01310536**

NOTE	REF NO	GRAPHIC REF	PART NUMBER	QTY	PART NAME 1 2 3 4 5 6 (PRODUCT LEVEL)	SEE PAGE
Y	1	1	**172-9389**	1	CONTROL GP-UNPROGRAMMED (POWER TRAIN)	121

Y-SEPARATE ILLUSTRATION

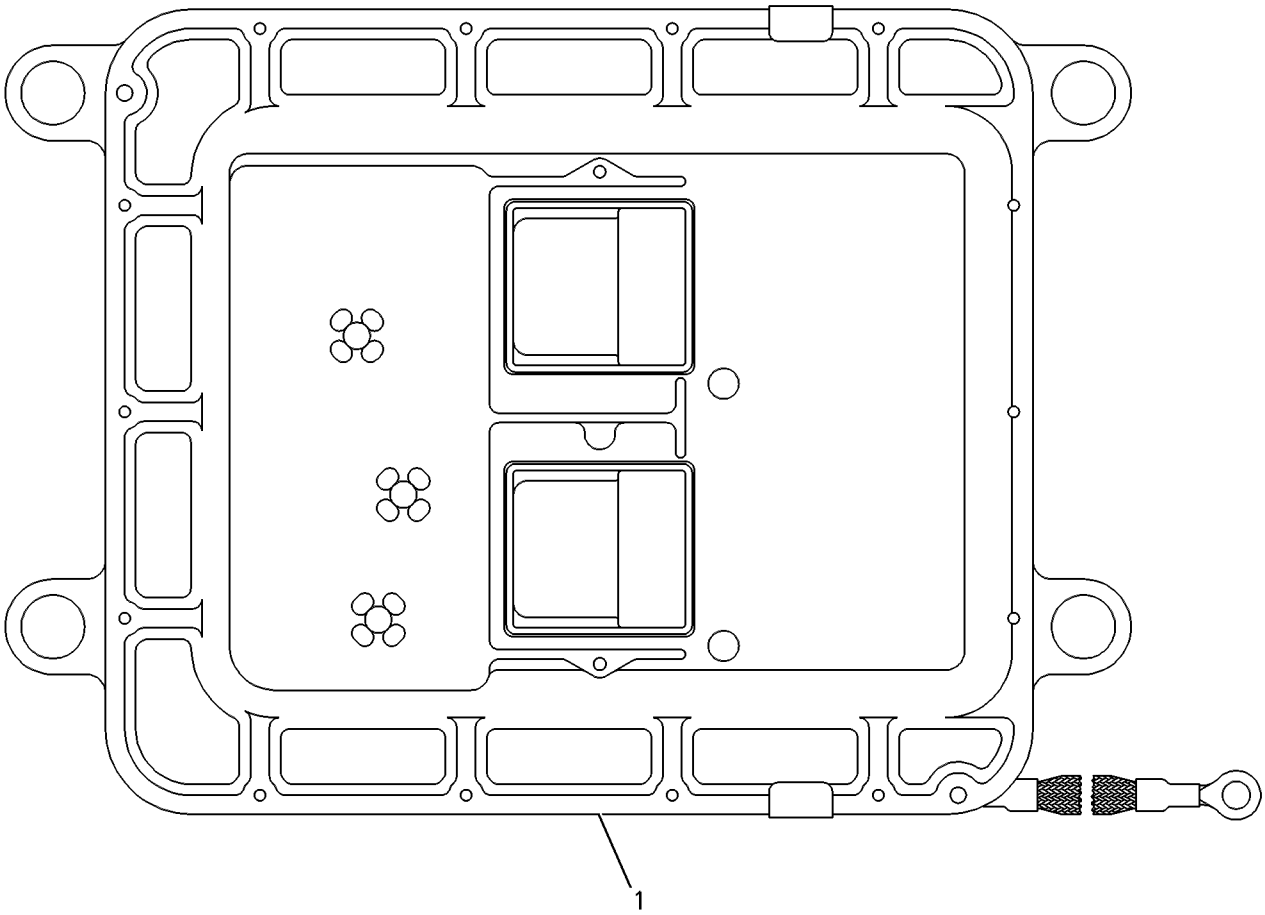

GRAPHIC #1 **<END>** g00415185

172-9389 CONTROL GP-UNPROGRAMMED*R

S/N: JBP1-UP

PART OF 177-4493 CONTROL GP-POWER TRAIN

SMCS-7610 **i02941930**

NOTE	REF NO	GRAPHIC REF	PART NUMBER	QTY	PART NAME 1 2 3 4 5 6 (PRODUCT LEVEL)	SEE PAGE
	1	1	**7X-6315**	1	STRAP AS-GROUND	
	2	1	**101-0852**	1	SCREW-PAN HEAD (NO 8X3/8-IN)	
M	3	1	**6V-6703**	2	KIT-RETAINING BOLT (ELECTRONIC CONTROL MODULE)	
					(EACH INCLUDES BOLT, RING, AND SEALS)	
	4	1	**134-4126**	1	WASHER (4.52X8.28X0.76-MM THK)	

M-METRIC PART

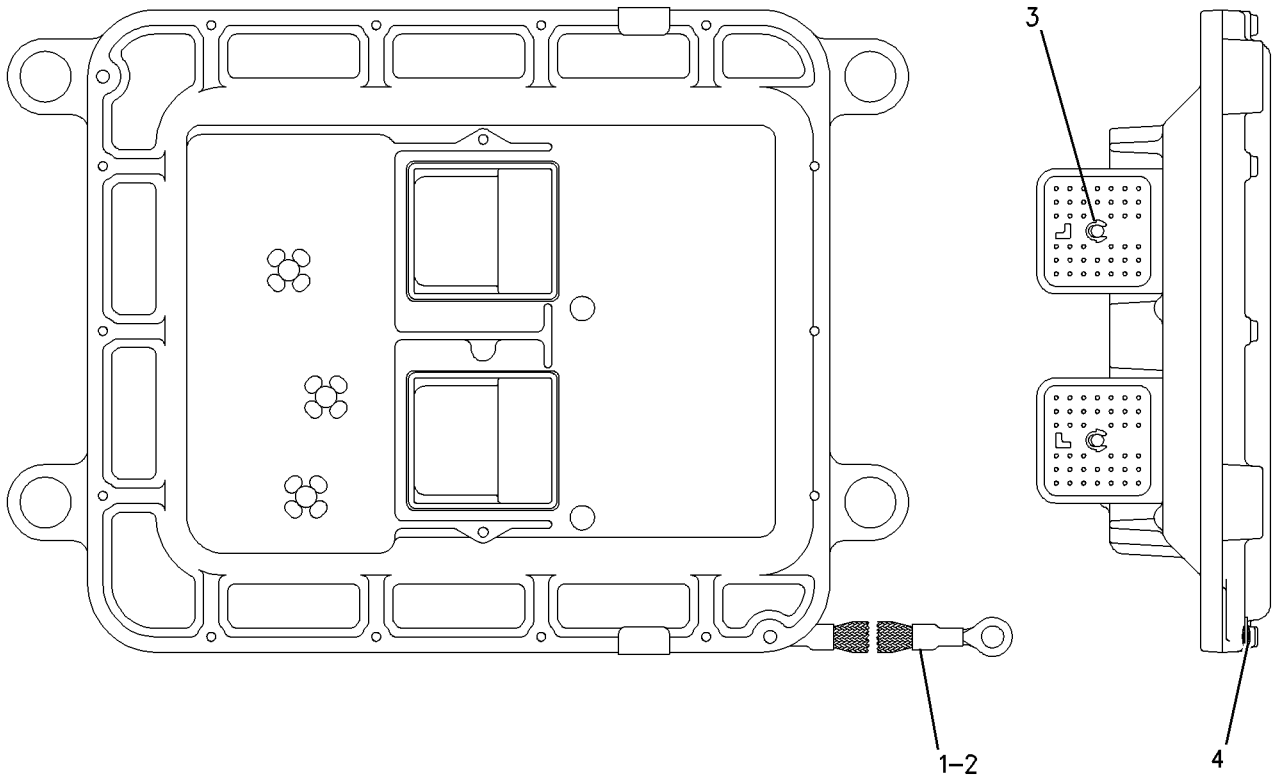

GRAPHIC #1 **<END>** g00951290

286-4328 CONVERTER AR-ELECTRICAL—HIGH PROFILE

S/N: JBP1-UP
12-VOLT
AN ATTACHMENT

SMCS-1421 **i03261402**

NOTE	PART NUMBER	QTY	PART NAME 1 2 3 4 5 6 (PRODUCT LEVEL)	SEE PAGE
Y	*171-7186*	1	ACCESSORY GP-CAB (15-AMPERE)	620
Y	*180-4643*	1	CONVERTER GP-ELECTRICAL (12-VOLT)	123
Y-SEPARATE ILLUSTRATION				

<END>

286-4329 CONVERTER AR-ELECTRICAL—LOW PROFILE

S/N: JBP1-UP
12-VOLT POWER PORT
AN ATTACHMENT

SMCS-1421 **i03261763**

NOTE	PART NUMBER	QTY	PART NAME 1 2 3 4 5 6 (PRODUCT LEVEL)	SEE PAGE
Y	*171-7185*	1	ACCESSORY GP-CAB (5-AMPERE)	619
Y	*180-4643*	1	CONVERTER GP-ELECTRICAL (12-VOLT)	123
Y-SEPARATE ILLUSTRATION				

<END>

180-4643 CONVERTER GP-ELECTRICAL

S/N: JBP1-UP
12-VOLT
PART OF 286-4328, 286-4329 CONVERTER AR-ELECTRICAL
AN ATTACHMENT

SMCS-1421 **i01936021**

NOTE	REF NO	GRAPHIC REF	PART NUMBER	QTY	PART NAME 1 2 3 4 5 6 (PRODUCT LEVEL)	SEE PAGE
	1	1	**9W-1442**	1	FUSE (10-AMPERE) (POWER CONVERTER)	
	2	1	**205-4285**	1	CONVERTER GP-ELECTRICAL (24-VOLT TO 12-VOLT)	
	3	1	**208-7782**	1	PLATE AS	
	4	1	**096-6166**	2	WASHER-HARD (4.5X9X1-MM THK)	
	5	1	**8T-2501**	2	BOLT (3/8-16X2-IN)	
M	6	1	**8T-0285**	2	SCREW-MACHINE (M4X0.7X12-MM)	
	7	1	**8T-4896**	2	WASHER-HARD (10.2X18.5X2.5-MM THK)	
	8	1	**8X-1853**	2	SPACER (13.1X15.9X30.4-MM THK)	

M-METRIC PART

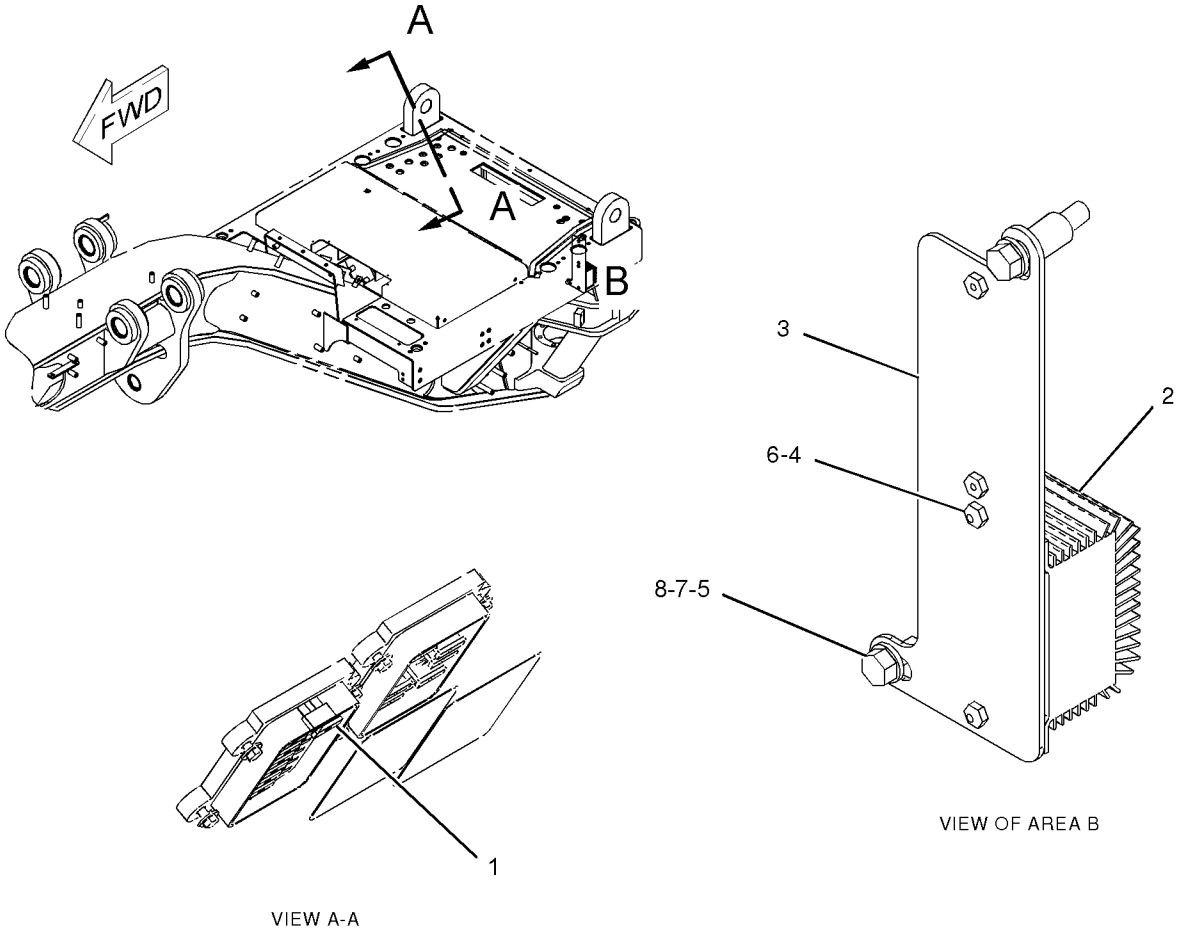

GRAPHIC #1 **<END>** g01010434

286-4330 CONVERTER GP-ELECTRICAL–RADIO

S/N: JBP1-UP
PART OF 295-7991 INSTALLATION AR-RADIO
AN ATTACHMENT

SMCS-1421 **i03256013**

NOTE	REF NO	GRAPHIC REF	PART NUMBER	QTY	PART NAME 1 2 3 4 5 6 (PRODUCT LEVEL)	SEE PAGE
	1	1	**8X-1853**	2	SPACER (13.1X15.9X30.4-MM THK)	
	2	1	**9W-1442**	1	FUSE (10-AMPERE)	
	3	1	**205-4285**	1	CONVERTER GP-ELECTRICAL (24-VOLT TO 12-VOLT)	
	4	1	**208-7782**	1	PLATE AS	
	5	1	**096-6166**	2	WASHER-HARD (4.5X9X1-MM THK)	
M	6	1	**8T-0285**	2	SCREW-MACHINE (M4X0.7X12-MM)	
	7	1	**8T-2501**	2	BOLT (3/8-16X2-IN)	
	8	1	**8T-4896**	2	WASHER-HARD (10.2X18.5X2.5-MM THK)	

M-METRIC PART

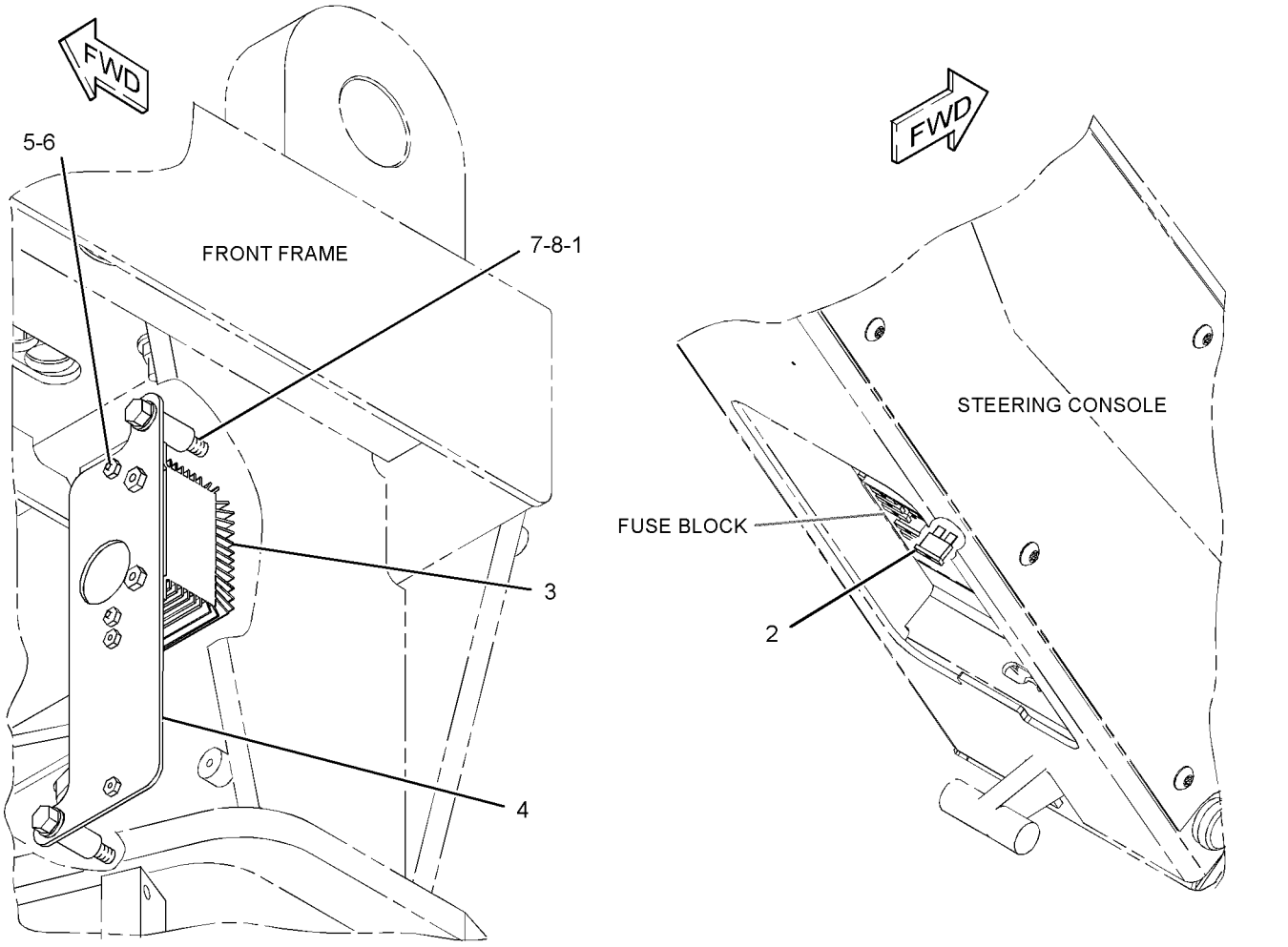

GRAPHIC #1 **<END>** g01689522

286-4331 CONVERTER GP-ELECTRICAL–RADIO

S/N: JBP1-UP

AN ATTACHMENT

SMCS-1421 **i03261420**

NOTE	REF NO	GRAPHIC REF	PART NUMBER	QTY	PART NAME 1 2 3 4 5 6 (PRODUCT LEVEL)	SEE PAGE
	1	1	**9W-1441**	1	FUSE (15-AMPERE)	
	2	1	**239-3902**	1	CONVERTER-ELECTRICAL (24-VOLT TO 12-VOLT)	
	3	1	**317-2835**	1	HARNESS AS-SWITCH	
	4	1	**317-2836**	1	PLATE AS	
	5	1	**317-2837**	1	PLATE AS	
	6	1	**6V-8801**	1	NUT (3/8-16-THD)	
	7	1	**7K-1181**	4	STRAP-CABLE	
	8	1	**8T-4121**	2	WASHER-HARD (11X21X2.5-MM THK)	
M	9	1	**8T-4137**	2	BOLT (M10X1.5X20-MM)	
	10	1	**8T-4896**	1	WASHER-HARD (10.2X18.5X2.5-MM THK)	
M	11	1	**9X-2042**	2	SCREW-TRUSS HEAD (M6X1X12-MM)	
E	12	1	**7X-7877**		STRIP-EDGING (106-CM)	

E-ORDER BY THE CENTIMETER
M-METRIC PART

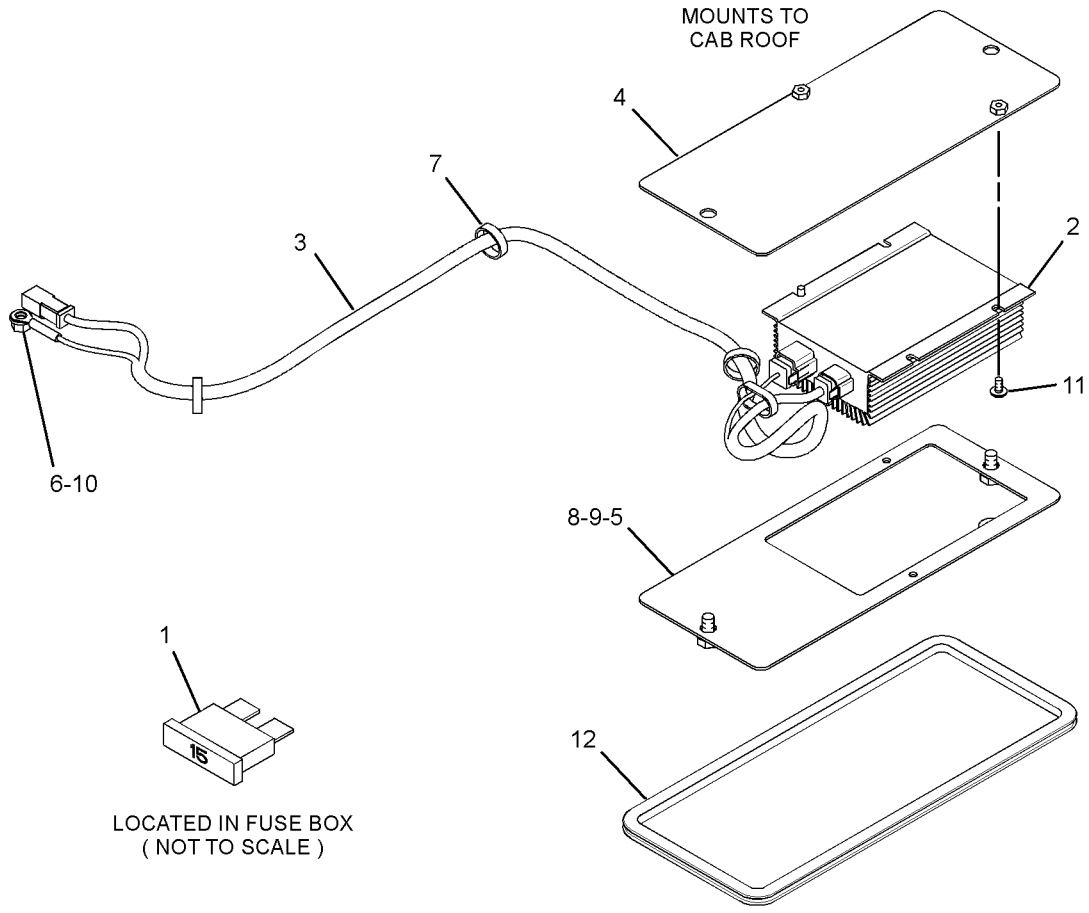

GRAPHIC #1 **<END>** g01673193

262-1421 ELECTRONICS GP-COMMUNICATION–
PRODUCT LINK 300
S/N: JBP1-UP
PART OF 302-5429 INSTALLATION AR-COMMUNICATION
AN ATTACHMENT

SMCS-7606, 7610, 7620 **i03183460**

NOTE	PART NUMBER	QTY	PART NAME 1 2 3 4 5 6 (PRODUCT LEVEL)	SEE PAGE
	330-3409	1	SOFTWARE GP-COMMUNICATION (PRODUCT LINK 300)	
			-OR-	
	330-3410	1	SERVICE GP-COMMUNICATION (PRODUCT LINK 300)	
			(OPTIONAL SERVICE REPLACEMENT)(INCLUDES CONTROL GP & SOFTWARE)	

<END>

253-2697 ELECTRONICS GP-IMPLEMENT
S/N: JBP1-UP
PART OF 297-8448 GRADE CONTROL AR
AN ATTACHMENT

SMCS-5701, 7610, 7620 **i03359962**

NOTE	PART NUMBER	QTY	PART NAME 1 2 3 4 5 6 (PRODUCT LEVEL)	SEE PAGE
	314-7803	1	SOFTWARE GP-IMPLEMENT	
			-OR-	
	335-2383	1	SERVICE GP-IMPLEMENT	
			(OPTIONAL SERVICE REPLACEMENT)	
			(INCLUDES CONTROL GP & SOFTWARE)	

<END>

291-5475 ELECTRONICS GP-POWER TRAIN
S/N: JBP1-UP
PART OF 295-8278 AUTOSHIFT AR
AN ATTACHMENT

SMCS-4800, 4808, 7610, 7620 **i03377411**

NOTE	PART NUMBER	QTY	PART NAME 1 2 3 4 5 6 (PRODUCT LEVEL)	SEE PAGE
	291-1400	1	SOFTWARE GP-POWER TRAIN	
			-OR-	
	291-1401	1	SERVICE GP-POWER TRAIN	
			(OPTIONAL SERVICE REPLACEMENT)(INCLUDES CONTROL GP & SOFTWARE)	

<END>

297-8448 GRADE CONTROL AR

S/N: JBP1-UP

AN ATTACHMENT

SMCS-7220 **i03253062**

NOTE	REF NO	GRAPHIC REF	PART NUMBER	QTY	PART NAME 1 2 3 4 5 6 (PRODUCT LEVEL)	SEE PAGE
	1	1	**3S-2093**	6	STRAP-CABLE	
Y	2	1	*126-6933*	1	GUARD GP-PLATFORM (ACCUGRADE)	324
	3	1	**152-6824**	1	KNOB AS (BLADE LIFT, RH)	
		1	**8T-8737**	1	PLUG-SEAL	
		1	**102-8804**	1	KIT-RECEPTACLE (4-PIN)	
					(INCLUDES RECEPTACLE AS & WEDGE)	
		1	**186-3735**	3	PIN-CONNECTOR (16-GA TO 18-GA)	
	4	1	**152-6825**	1	KNOB AS (BLADE LIFT, LH)	
		1	**8T-8737**	1	PLUG-SEAL	
		1	**102-8804**	1	KIT-RECEPTACLE (4-PIN)	
					(INCLUDES RECEPTACLE AS & WEDGE)	
		1	**186-3735**	3	PIN-CONNECTOR (16-GA TO 18-GA)	
	5	1	**246-6561**	1	KNOB AS (RH) (ARTICULATION)	
		1	**102-8804**	1	KIT-RECEPTACLE (4-PIN)	
					(INCLUDES RECEPTACLE AS & WEDGE)	
		1	**186-3735**	4	PIN-CONNECTOR (16-GA TO 18-GA)	
	6	1	**246-6562**	1	KNOB AS (LH) (BLADE LIFT, LOWER)	
		1	**102-8804**	1	KIT-RECEPTACLE (4-PIN)	
					(INCLUDES RECEPTACLE AS & WEDGE)	
		1	**186-3735**	4	PIN-CONNECTOR (16-GA TO 18-GA)	
Y	7	1	*247-6449*	1	MOUNTING GP-GRADE CONTROL (DRAWBAR)	160
Y	8	1	*252-5709*	1	WIRING GP-GRADE CONTROL (CAB, INDICATOR LAMP)	214
Y	9	1	*254-5960*	1	MOUNTING GP-GRADE CONTROL (CIRCLE)	161
Y	10	1	*294-3542*	1	WIRING GP-CHASSIS	215
Y	11	1	*297-8449*	1	BOSS GP-FRAME (ACCUGRADE)	310
	12	1	**130-5300**	4	CLIP	
	13	1	**1V-7368**	2	SPACER (0.364X0.54X1.06-IN THK)	
	15	1	**8T-4896**	2	WASHER-HARD (10.2X18.5X2.5-MM THK)	
M	16	1	**9X-2480**	2	BOLT (M6X1X45-MM)	
FY			*253-2697*	1	ELECTRONICS GP-IMPLEMENT (GRADE CONTROL)	126

F-NOT SHOWN
M-METRIC PART
Y-SEPARATE ILLUSTRATION

297-8448 **GRADE CONTROL AR** *(contd.)* **i03253062**

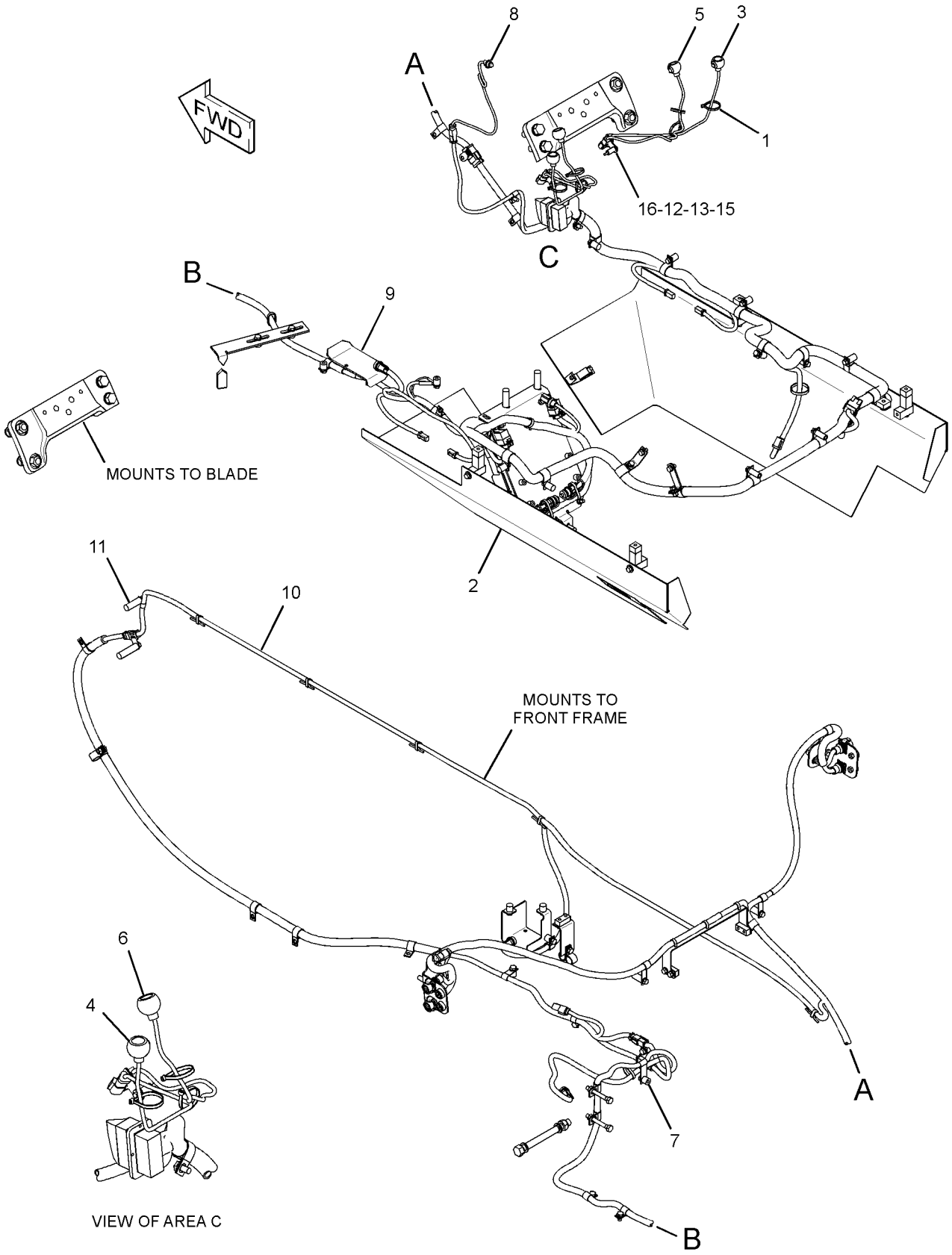

GRAPHIC #1 **<END>** g01783393

ELECTRICAL AND STARTING SYSTEM

297-6867 GROUND GP-ELECTRICAL

S/N: KHX8814-UP

PART OF 312-0255 ENGINE AR-COMPLETE

SMCS-1405, 1453 **i02789819**

NOTE	REF NO	GRAPHIC REF	PART NUMBER	QTY	PART NAME 1 2 3 4 5 6 (PRODUCT LEVEL)	SEE PAGE
M	1	1	**5C-7261**	1	NUT (M8X1.25-THD)	
	2	1	**8T-4224**	2	WASHER-HARD (8.8X16X2-MM THK)	

M-METRIC PART

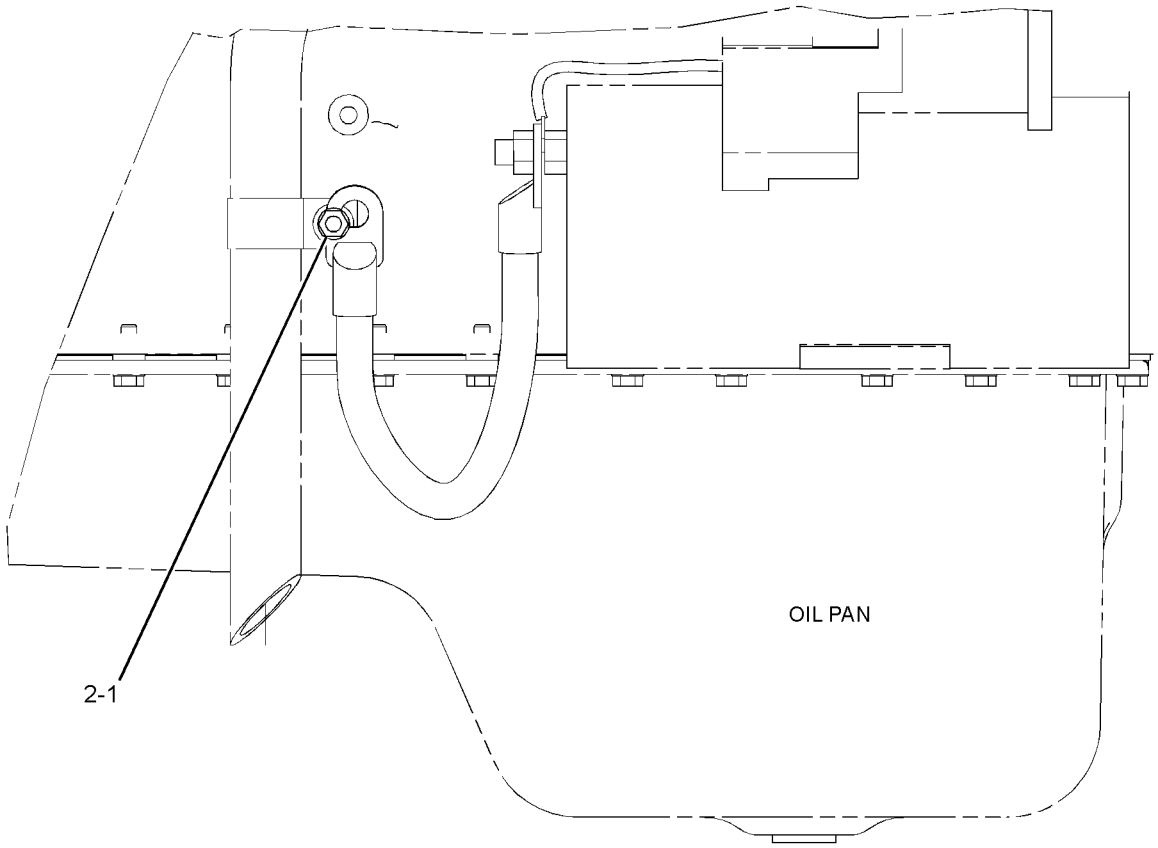

LEFT SIDE VIEW OF ENGINE

GRAPHIC #1 **<END>** g01352470

302-5429 INSTALLATION AR-COMMUNICATION–
PRODUCT LINK 321SR
S/N: JBP1-UP
AN ATTACHMENT

SMCS-7606 **i03258941**

NOTE	REF NO	GRAPHIC REF	PART NUMBER	QTY	PART NAME 1 2 3 4 5 6 (PRODUCT LEVEL)	SEE PAGE
	1	1	**256-6803**	1	HARNESS AS-RADIO (PRODUCT LINK)	
	2	1	**256-6804**	1	HARNESS AS-CONTROL (PRODUCT LINK)	
	3	1	**257-9363**	1	HARNESS AS-RADIO (PRODUCT LINK)	
Y	4	1	*262-1421*	1	ELECTRONICS GP-COMMUNICATION (PRODUCT LINK 300)	126
	5	1	*263-8948*	1	ANTENNA AS	
		1	**223-4296**	1	ANTENNA (WHIP)	
Y	6	1	**263-9088**	1	RADIO GP-COMMUNICATION (PRODUCT LINK 121SR)	163
Y	7	1	*302-5428*	1	INSTALLATION GP-COMMUNICATION (PRODUCT LINK 121SR)	131

Y-SEPARATE ILLUSTRATION

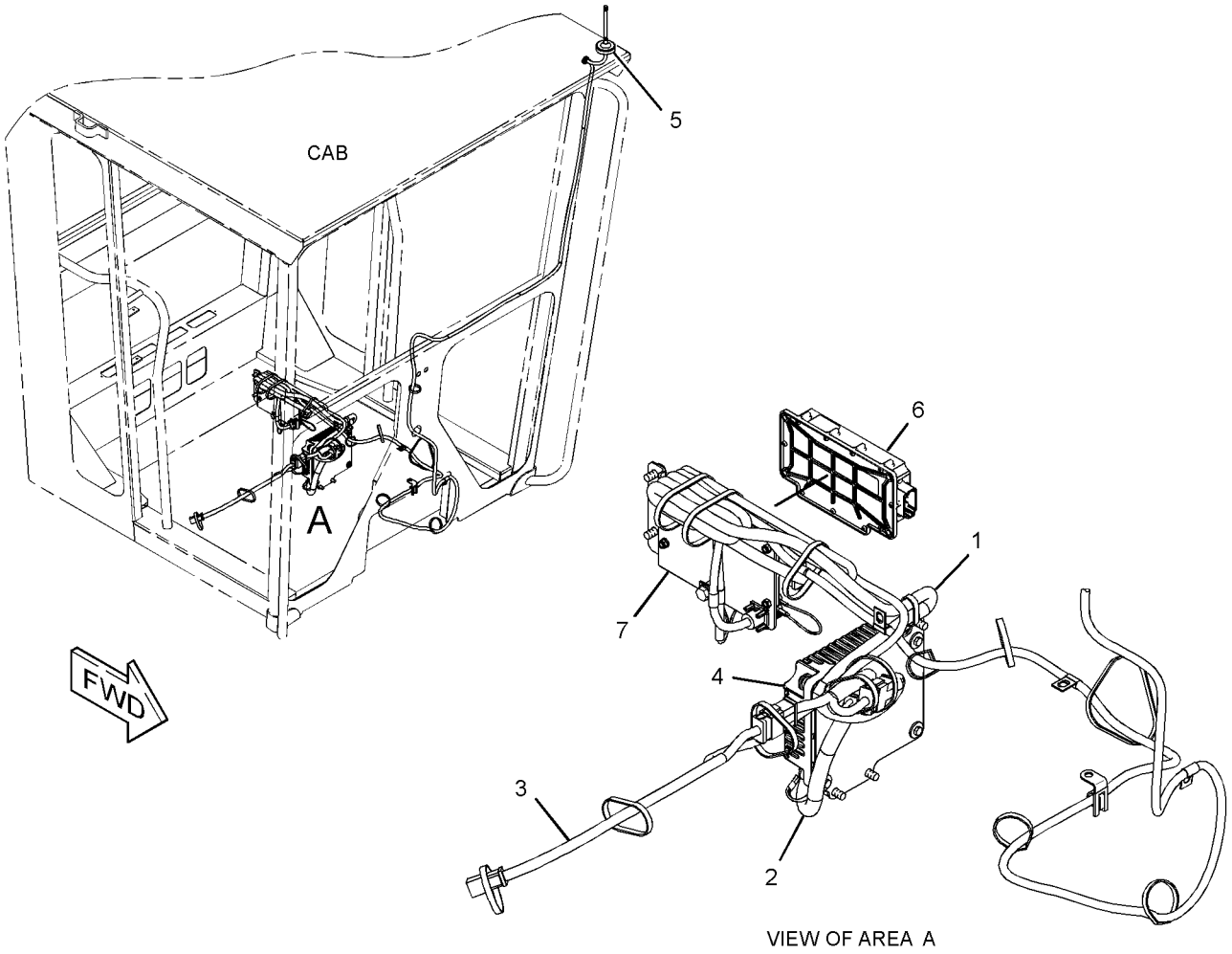

VIEW OF AREA A

GRAPHIC #1 **<END>** g01784959

302-5428 INSTALLATION GP-COMMUNICATION—PRODUCT LINK

S/N: JBP1-UP

PART OF 302-5429 INSTALLATION AR-COMMUNICATION

AN ATTACHMENT

SMCS-7606 **i03258960**

NOTE	REF NO	GRAPHIC REF	PART NUMBER	QTY	PART NAME 1 2 3 4 5 6 (PRODUCT LEVEL)	SEE PAGE
	1	1	**8C-5608**	4	SPACER (6.5X9.5X25.4-MM THK)	
	2	1	**090-8247**	1	BLOCK	
	3	1	**103-5304**	1	PLATE	
	4	1	**302-5210**	1	PLATE	
	5	1	**302-5211**	1	PLATE	
	6	1	**302-5212**	1	PLATE	
M	7	1	**129-3178**	8	LOCKNUT (M6X1-THD)	
	8	1	**174-5907**	3	CLIP	
	9	1	**5M-3062**	1	BOLT (3/8-16X0.75-IN)	
	10	1	**5S-4246**	4	LOCKWASHER	
M	11	1	**6V-8950**	4	NUT (M2.5X0.45-THD)	
M	12	1	**6V-9326**	4	SCREW-MACHINE (M2.5X0.45X10-MM)	
	13	1	**7K-1181**	10	STRAP-CABLE	
	14	1	**7T-1099**	2	LINK	
	15	1	**8J-1256**	1	CLIP	
	16	1	**8M-2770**	1	CLIP	
	17	1	**8T-4121**	10	WASHER-HARD (11X21X2.5-MM THK)	
M	18	1	**8T-4137**	10	BOLT (M10X1.5X20-MM)	
M	19	1	**8T-4138**	4	BOLT (M6X1X20-MM)	
	20	1	**8T-4896**	1	WASHER-HARD (10.2X18.5X2.5-MM THK)	
M	21	1	**9R-2613**	2	BOSS-WELD (M10X1.5X25-MM)	
M	22	1	**9R-2672**	3	BOSS (M10X1.5X20-MM)	
M	23	1	**9X-2480**	4	BOLT (M6X1X45-MM)	
	24	1	**9X-6165**	12	WASHER (6.5X22X2.5-MM THK)	
	25	1	**9X-8256**	8	WASHER (6.6X12X2-MM THK)	
	26	1	**9X-9896**	8	MOUNT (ISOLATION)	

M-METRIC PART

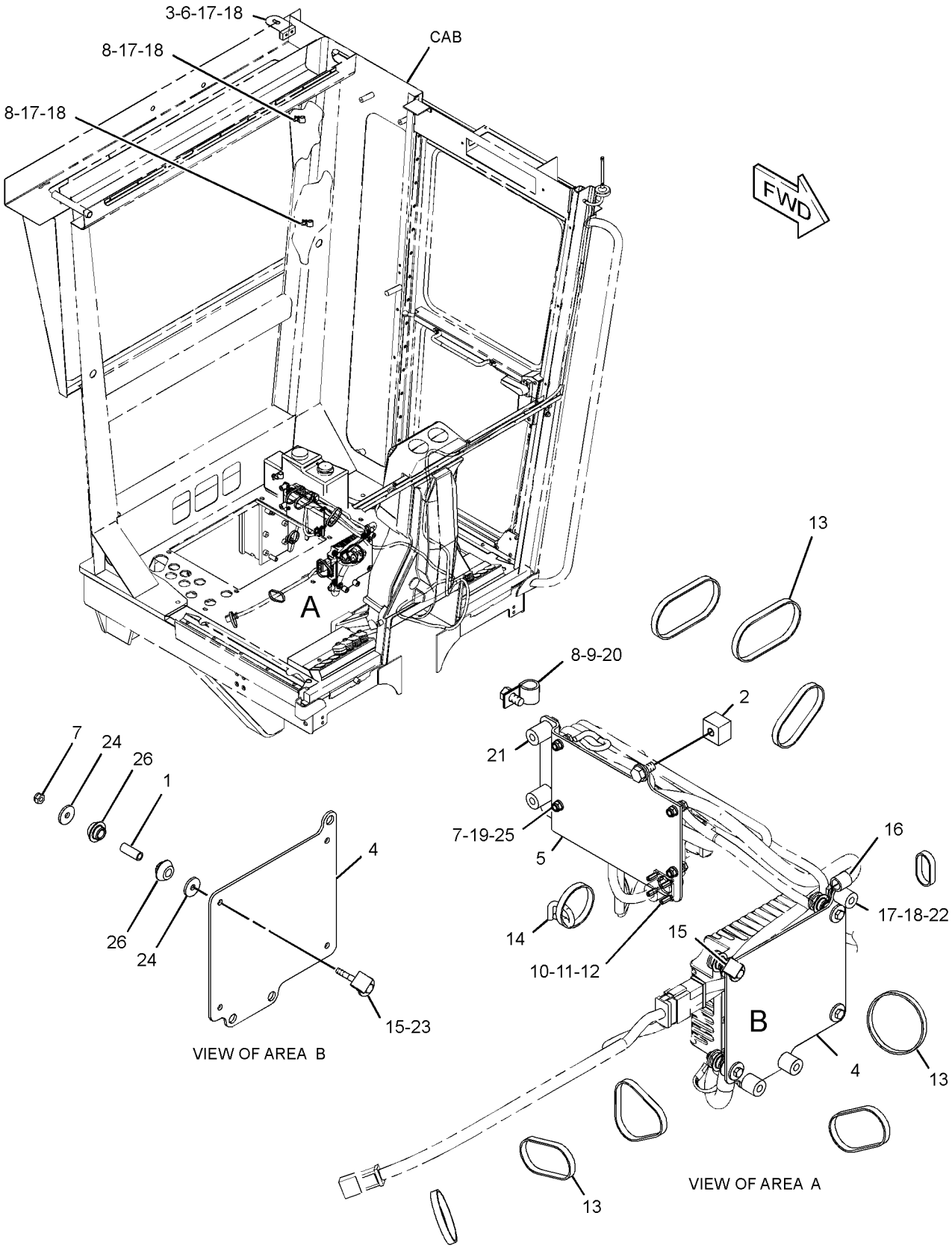

GRAPHIC #1 **<END>** g01697993

171-5672 LAMP GP

S/N: JBP1-UP
24-VOLT
PART OF 284-5394 LIGHTING GP-BACKUP
AN ATTACHMENT

SMCS-1429 **i03341367**

NOTE	REF NO	GRAPHIC REF	PART NUMBER	QTY	PART NAME 1 2 3 4 5 6 (PRODUCT LEVEL)	SEE PAGE
	1	1	**9X-3068**	1	LENS-CLEAR	
	2	1	**9X-4493**	1	LAMP (24-VOLT, 21-WATT)	
	3	1	**186-3735**	2	PIN-CONNECTOR (16-GA TO 18-GA)	
	4	1	**102-8802**	1	KIT-RECEPTACLE (2-PIN)	
					(INCLUDES RECEPTACLE AS & WEDGE)	
					PARTS SHOWN IN GRAPHIC(S) WITHOUT A REFERENCE NUMBER ARE NOT SERVICED SEPARATELY	

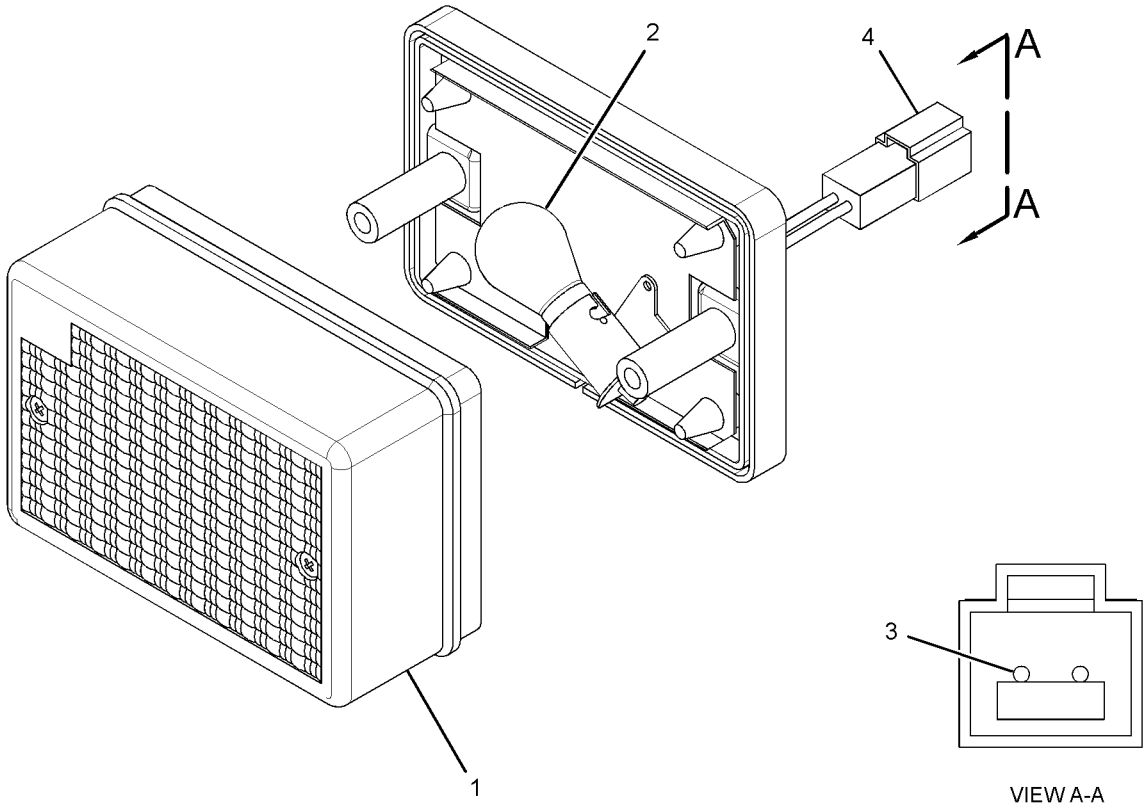

GRAPHIC #1 **<END>** g01676744

3E-6389 LAMP GP-DOME

S/N: JBP1-UP
24-VOLT, WITH SWITCH
PART OF 285-3361 WIRING GP-CAB
AN ATTACHMENT

SMCS-1433 **i02942903**

NOTE	REF NO	GRAPHIC REF	PART NUMBER	QTY	PART NAME 1 2 3 4 5 6 (PRODUCT LEVEL)	SEE PAGE
	1	1	**7N-9943**	1	LAMP (24-VOLT) (DOME)	
	2	1	**102-8803**	1	KIT-RECEPTACLE (3-PIN)	
					(INCLUDES RECEPTACLE AS & WEDGE)	
	3	1	**186-3735**	3	PIN-CONNECTOR (16-GA TO 18-GA)	
	4	1	**7T-0020**	1	LENS-DOME LAMP	

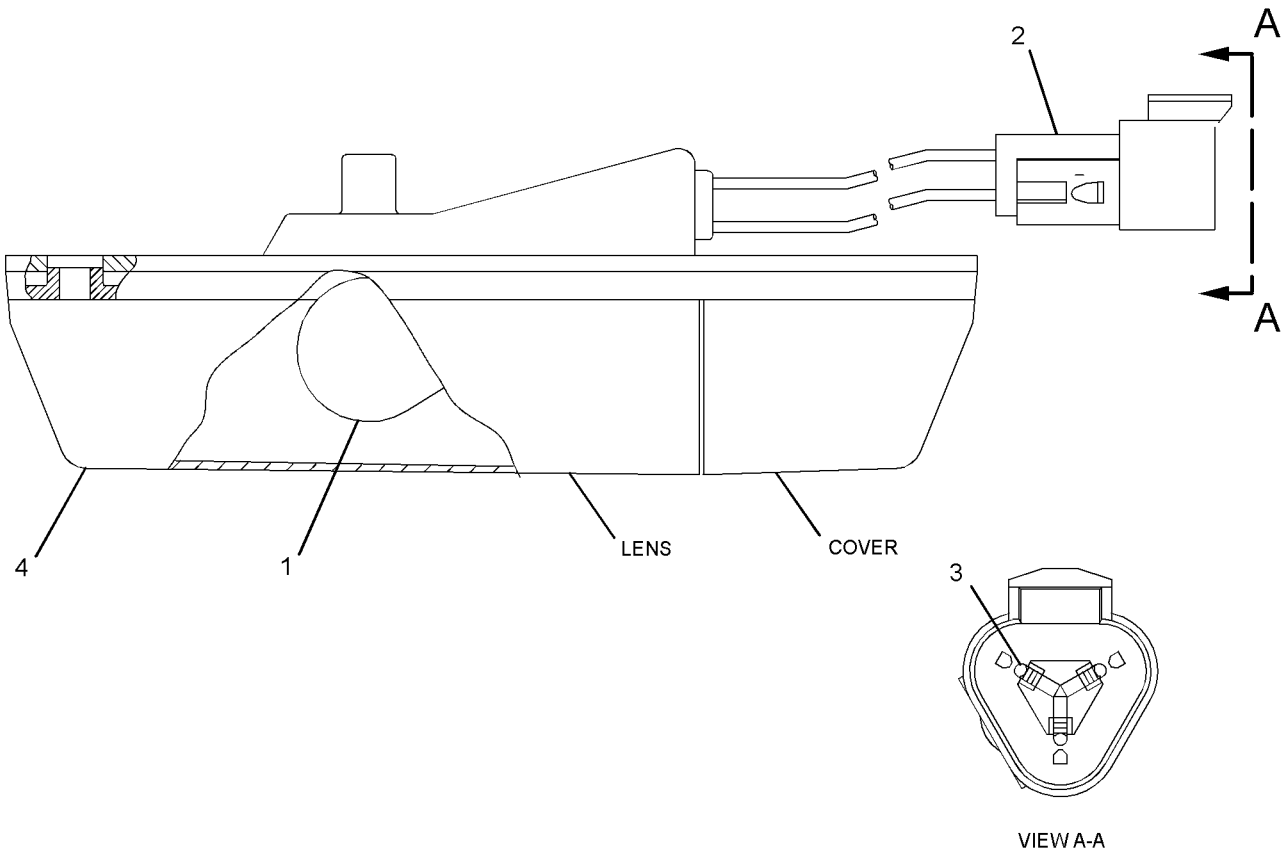

GRAPHIC #1 **<END>** g01270113

234-4323 LAMP GP-FLOOD

S/N: JBP1-UP
24-VOLT
PART OF 284-5354, 284-5362, 284-5376, 284-5377 LIGHTING GP-FLOOD, 284-5353 LIGHTING GP-ROADING
AN ATTACHMENT

SMCS-1434 **i02648056**

NOTE	REF NO	GRAPHIC REF	PART NUMBER	QTY	PART NAME 1 2 3 4 5 6 (PRODUCT LEVEL)	SEE PAGE
	1	1	**9X-3463**	1	LAMP-HALOGEN (24-VOLT, 65-WATT)	
	2	1	**9X-4244**	2	SCREW-SPECIAL	
	3	1	**202-6614**	1	LENS AS	
	4	1	**234-7730**	1	BODY AS	
	5	1	**164-7556**	1	BRACKET (LAMP RETAINING)	
M	6	1	**8T-0389**	1	LOCKNUT (M10X1.5-THD)	
	7	1	**234-7731**	1	BRACKET AS	
	8	1	**8T-4121**	1	WASHER-HARD (11X21X2.5-MM THK)	

M-METRIC PART

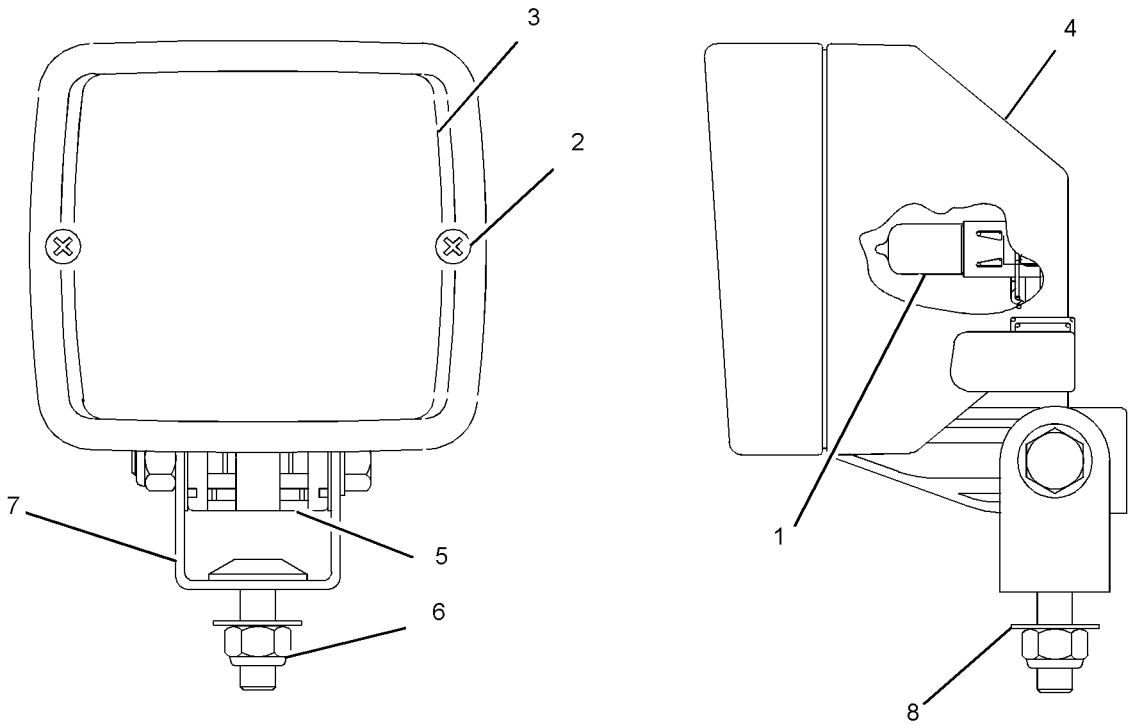

GRAPHIC #1 **<END>** g01329130

234-4324 LAMP GP-FLOOD

S/N: JBP1-UP
PART OF 284-5353 LIGHTING GP-ROADING
AN ATTACHMENT

SMCS-1434 **i02549180**

NOTE	REF NO	GRAPHIC REF	PART NUMBER	QTY	PART NAME 1 2 3 4 5 6 (PRODUCT LEVEL)	SEE PAGE
	1	1	**9X-3463**	1	LAMP-HALOGEN (24-VOLT, 65-WATT)	
	2	1	**9X-4244**	2	SCREW-SPECIAL	
	3	1	**202-6611**	1	LENS AS	
	4	1	**234-7730**	1	BODY AS	
	5	1	**164-7556**	1	BRACKET (LAMP RETAINING)	
M	6	1	**8T-0389**	1	LOCKNUT (M10X1.5-THD)	
	7	1	**234-7731**	1	BRACKET AS	
	8	1	**8T-4121**	1	WASHER-HARD (11X21X2.5-MM THK)	

M-METRIC PART

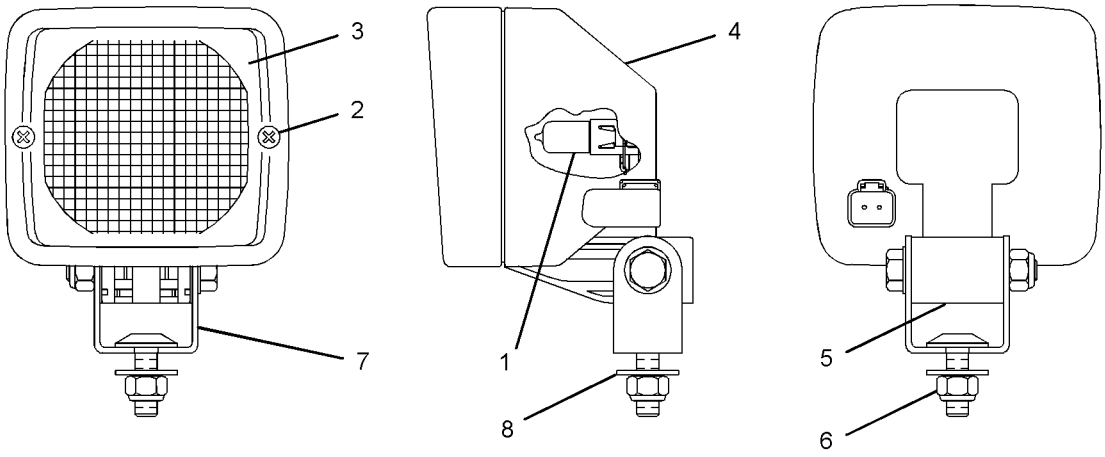

GRAPHIC #1 **<END>** g01276050

234-4325 LAMP GP-FLOOD

S/N: JBP1-UP
24-VOLT
PART OF 284-5376 LIGHTING GP-FLOOD, 284-5355 LIGHTING GP-ROADING AN ATTACHMENT

SMCS-1434 **i02648057**

NOTE	REF NO	GRAPHIC REF	PART NUMBER	QTY	PART NAME 1 2 3 4 5 6 (PRODUCT LEVEL)	SEE PAGE
	1	1	**9X-3463**	1	LAMP-HALOGEN (24-VOLT, 65-WATT)	
M	2	1	**8T-0389**	1	LOCKNUT (M10X1.5-THD)	
	3	1	**9X-4244**	2	SCREW-SPECIAL	
	4	1	**202-6614**	1	LENS AS	
	5	1	**234-7730**	1	BODY AS	
	6	1	**164-7556**	1	BRACKET (LAMP RETAINING)	
	7	1	**234-7731**	1	BRACKET AS	
	8	1	**8T-4121**	1	WASHER-HARD (11X21X2.5-MM THK)	

M-METRIC PART

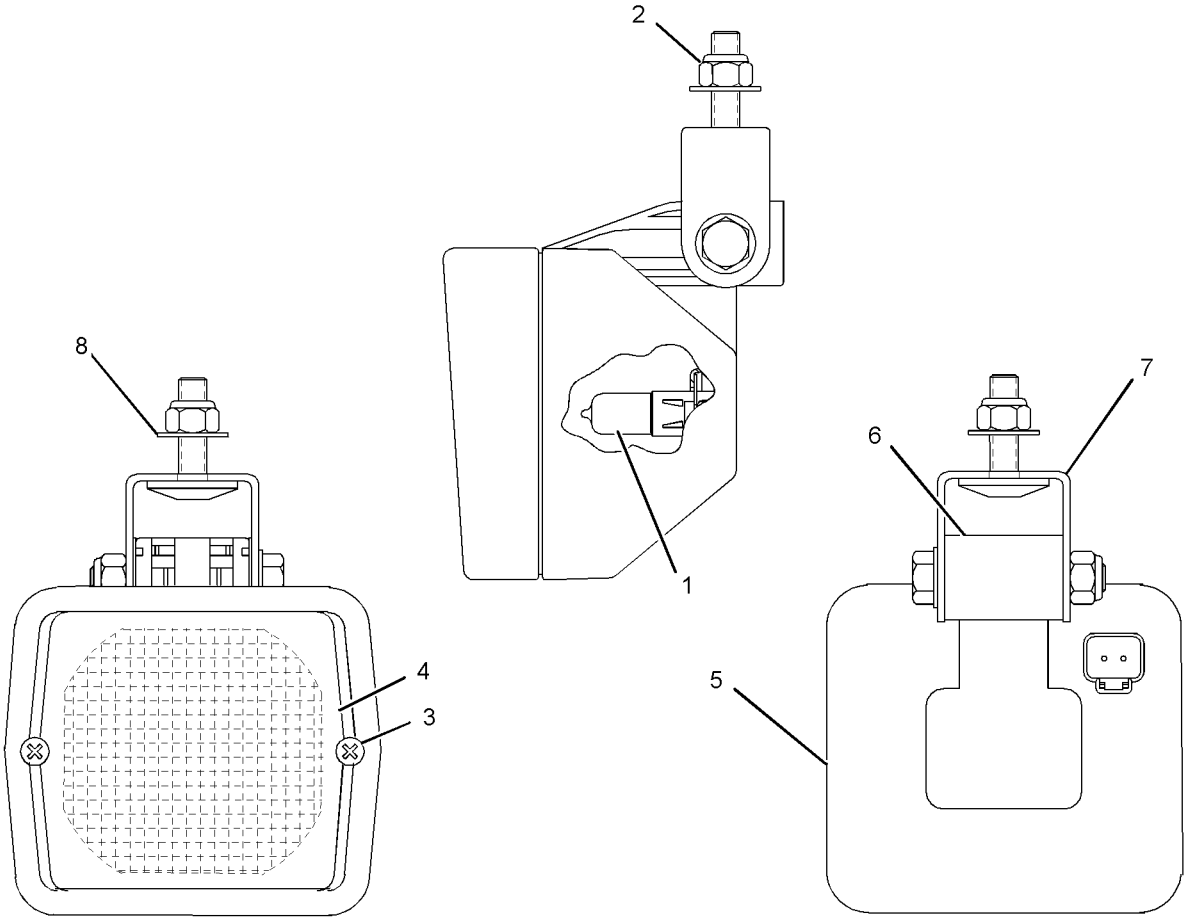

GRAPHIC #1 **<END>** g01329238

234-4326 LAMP GP-FLOOD

S/N: JBP1-UP
24-VOLT
PART OF 284-5355 LIGHTING GP-ROADING
AN ATTACHMENT

SMCS-1434 **i02549179**

NOTE	REF NO	GRAPHIC REF	PART NUMBER	QTY	PART NAME 1 2 3 4 5 6 (PRODUCT LEVEL)	SEE PAGE
	1	1	**9X-3463**	1	LAMP-HALOGEN (24-VOLT, 65-WATT)	
M	2	1	**8T-0389**	1	LOCKNUT (M10X1.5-THD)	
	3	1	**9X-4244**	2	SCREW-SPECIAL	
	4	1	**202-6611**	1	LENS AS	
	5	1	**234-7730**	1	BODY AS	
	6	1	**164-7556**	1	BRACKET (LAMP RETAINING)	
	7	1	**234-7731**	1	BRACKET AS	
	8	1	**8T-4121**	1	WASHER-HARD (11X21X2.5-MM THK)	

M-METRIC PART

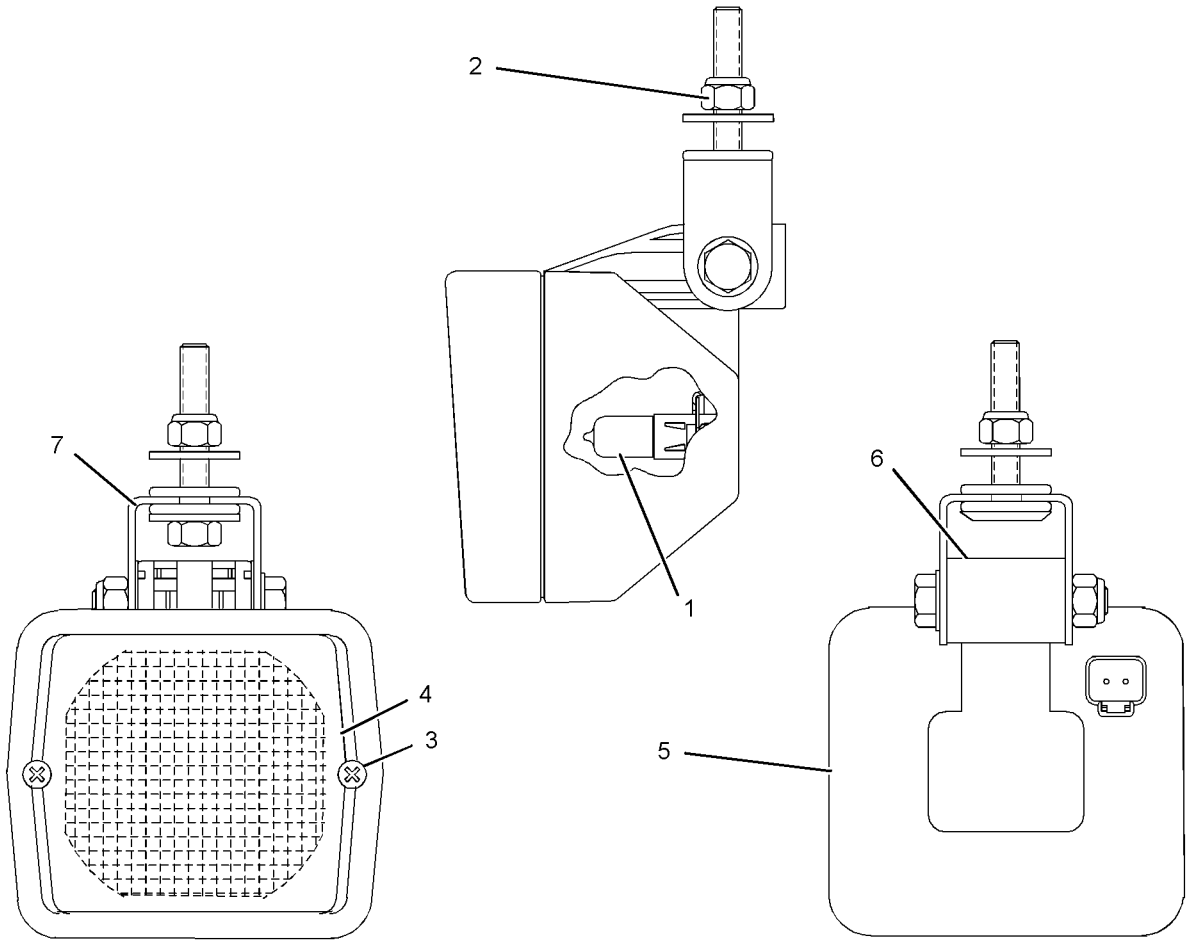

GRAPHIC #1 **<END>** g01276026

135-0426 LAMP GP-SIGNAL–STOP, TAIL

S/N: JBP1-UP
24 VOLT
PART OF 284-5348 WIRING GP-REAR

SMCS-1430 **i02443767**

NOTE	REF NO	GRAPHIC REF	PART NUMBER	QTY	PART NAME 1 2 3 4 5 6 (PRODUCT LEVEL)	SEE PAGE
	1	1	**102-8803**	1	KIT-RECEPTACLE (3-PIN)	
					(INCLUDES RECEPTACLE AS & WEDGE)	
	2	1	**186-3735**	3	PIN-CONNECTOR (16-GA TO 18-GA)	

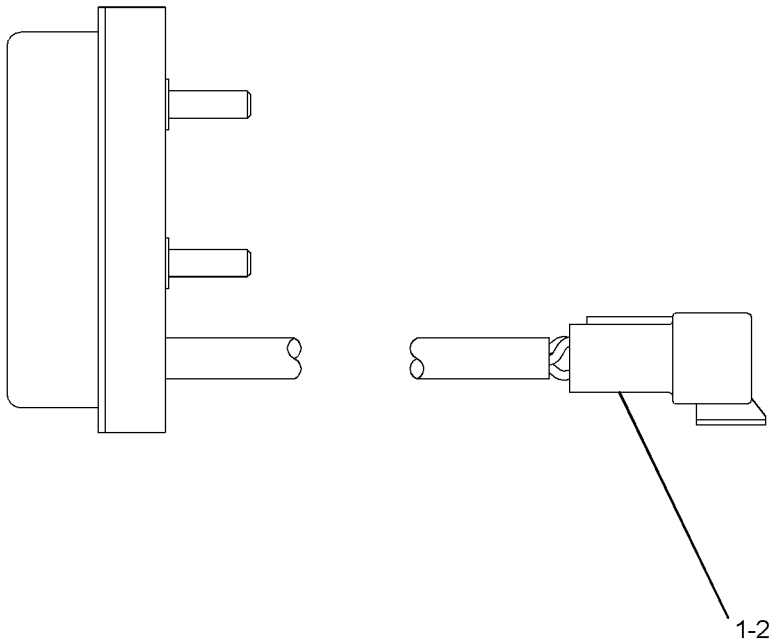

GRAPHIC #1 **<END>** g01213248

135-0427 LAMP GP-SIGNAL–PARK, TURN

S/N: JBP1-UP
PART OF 284-5353, 284-5355 LIGHTING GP-ROADING
AN ATTACHMENT

SMCS-1430 **i02526811**

NOTE	REF NO	GRAPHIC REF	PART NUMBER	QTY	PART NAME 1 2 3 4 5 6 (PRODUCT LEVEL)	SEE PAGE
	1	1	**102-8803**	1	KIT-RECEPTACLE (3-PIN)	
					(INCLUDES RECEPTACLE AS & WEDGE)	
	2	1	**186-3735**	3	PIN-CONNECTOR (16-GA TO 18-GA)	

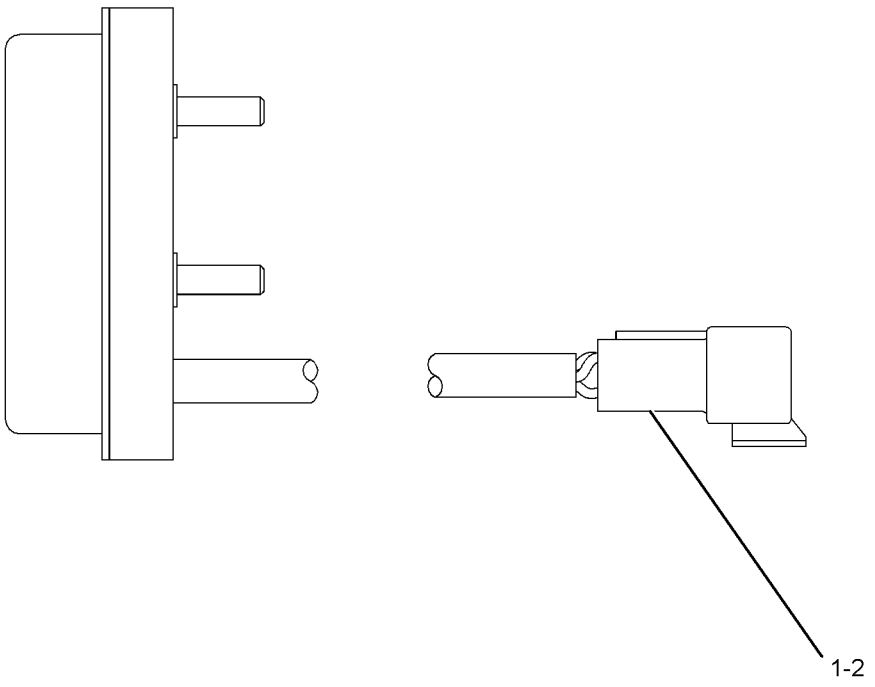

GRAPHIC #1 **<END>** g01273007

199-3368 LAMP GP-SIGNAL–TURN

S/N: JBP1-UP
24-VOLT
PART OF 284-5363 LIGHTING GP-SIGNAL
AN ATTACHMENT

SMCS-1430 **i03432182**

NOTE	REF NO	GRAPHIC REF	PART NUMBER	QTY	PART NAME 1 2 3 4 5 6 (PRODUCT LEVEL)	SEE PAGE
	1	1	**102-8802**	1	KIT-RECEPTACLE (2-PIN)	
					(INCLUDES RECEPTACLE AS & WEDGE)	
	2	1	**186-3735**	2	PIN-CONNECTOR (16-GA TO 18-GA)	

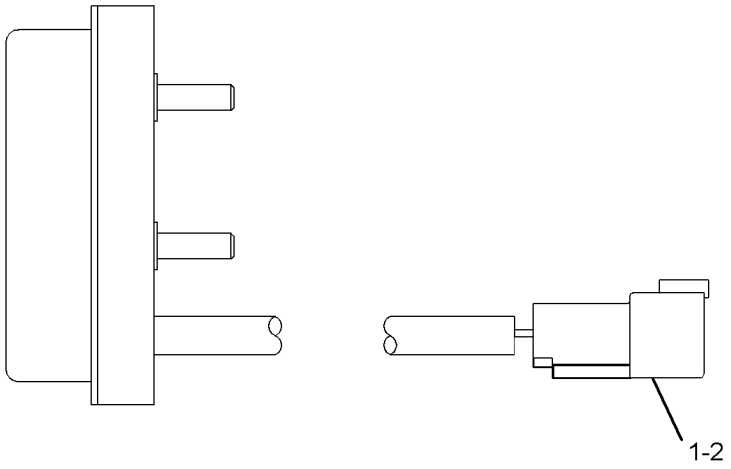

GRAPHIC #1 **<END>** g01217868

235-3937 LAMP GP-WARNING BEACON—ROTATING

S/N: JBP1-UP
24-VOLT. AMBER
PART OF 284-5357 LIGHTING GP-WARNING, 286-4430 LIGHTING GP-WARNING BEACON
AN ATTACHMENT

SMCS-1431 **i02585409**

NOTE	REF NO	GRAPHIC REF	PART NUMBER	QTY	PART NAME 1 2 3 4 5 6 (PRODUCT LEVEL)	SEE PAGE
	1	1	**272-9800**	1	LENS (AMBER)	
	2	1	**9X-7849**	1	LAMP (24-VOLT, 70-WATT)	
	3	1	**9X-8139**	1	BELT-DRIVE	
M	5	1	**6V-8225**	3	NUT (M6X1-THD)	
	6	1	**5P-0537**	3	WASHER-HARD (7.2X14.5X2-MM THK)	
	7	1	**102-8802**	1	KIT-RECEPTACLE (2-PIN)	
					(INCLUDES RECEPTACLE AS & WEDGE)	
	9	1	**186-3735**	2	PIN-CONNECTOR (16-GA TO 18-GA)	

M-METRIC PART

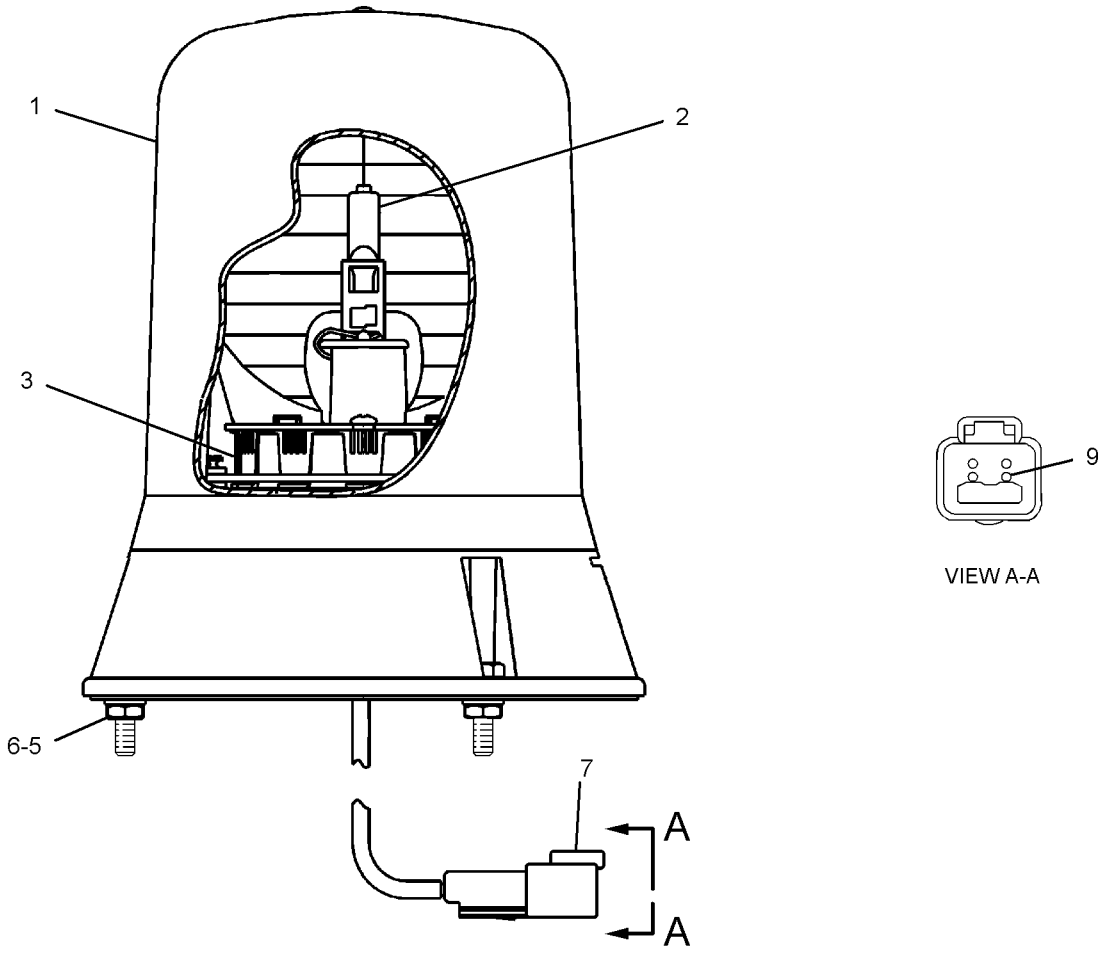

GRAPHIC #1 **<END>** g01199570

294-8547 LIGHTING AR-FLOOD

S/N: JBP1-UP
AN ATTACHMENT

SMCS-1434 **i03258646**

NOTE	PART NUMBER	QTY	PART NAME 1 2 3 4 5 6 (PRODUCT LEVEL)	SEE PAGE
Y	*284-5376*	1	LIGHTING GP-FLOOD	149
Y	*284-5362*	1	LIGHTING GP-FLOOD (RIPPER)	148

Y-SEPARATE ILLUSTRATION

<END>

294-8544 LIGHTING AR-ROADING

S/N: JBP1-UP
AN ATTACHMENT

SMCS-1408, 1429 **i03278662**

NOTE	PART NUMBER	QTY	PART NAME 1 2 3 4 5 6 (PRODUCT LEVEL)	SEE PAGE
Y	*284-5355*	1	LIGHTING GP-ROADING	154
Y	*284-5363*	1	LIGHTING GP-SIGNAL	155
Y	*294-8641*	1	SWITCH GP-LIGHT	189

Y-SEPARATE ILLUSTRATION

<END>

294-8545 LIGHTING AR-ROADING

S/N: JBP1-UP
AN ATTACHMENT

SMCS-1408, 1429 **i03254680**

NOTE	PART NUMBER	QTY	PART NAME 1 2 3 4 5 6 (PRODUCT LEVEL)	SEE PAGE
Y	*284-5355*	1	LIGHTING GP-ROADING	154
Y	*284-5354*	1	LIGHTING GP-FLOOD	146
Y	*284-5363*	1	LIGHTING GP-SIGNAL	155
Y	*294-8641*	1	SWITCH GP-LIGHT	189

Y-SEPARATE ILLUSTRATION

<END>

294-8546 LIGHTING AR-ROADING

S/N: JBP1-UP
AN ATTACHMENT

SMCS-1408, 1429 **i03259140**

NOTE	PART NUMBER	QTY	PART NAME 1 2 3 4 5 6 (PRODUCT LEVEL)	SEE PAGE
Y	*284-5353*	1	LIGHTING GP-ROADING	152
Y	*284-5363*	1	LIGHTING GP-SIGNAL	155

Y-SEPARATE ILLUSTRATION

<END>

ELECTRICAL AND STARTING SYSTEM

284-5394 LIGHTING GP-BACKUP

S/N: JBP1-UP
AN ATTACHMENT

SMCS-1408 **i03261480**

NOTE	REF NO	GRAPHIC REF	PART NUMBER	QTY	PART NAME 1 2 3 4 5 6 (PRODUCT LEVEL)	SEE PAGE
	1	1	**3E-5239**	1	RELAY AS (24-VOLT) (BACKUP LIGHT)	
	2	1	**213-9100**	1	ALARM GP (BACKUP)	
		1	**102-8802**	1	KIT-RECEPTACLE (2-PIN)	
					(INCLUDES RECEPTACLE AS & WEDGE)	
D		1	**5P-5623**		WIRE-ELECTRICAL (16-GA, BLACK) (0.4-M EACH)	
		1	**186-3735**		PIN-CONNECTOR (16-GA TO 18-GA)	
E		1	**9X-1813**		SLEEVE (29-CM)	
	3	1	**304-5794**	1	BRACKET AS	
	4	1	**304-5795**	1	COVER	
	5	1	**130-5300**	3	CLIP	
Y	6	1	**171-5672**	2	LAMP GP (ENGINE COMPARTMENT LIGHTS)	133
M	7	1	**5C-2890**	6	NUT (M6X1-THD)	
	8	1	**7K-1181**	1	STRAP-CABLE	
	9	1	**7X-7729**	2	WASHER (11X25X3-MM THK)	
	10	1	**8T-4121**	4	WASHER-HARD (11X21X2.5-MM THK)	
M	11	1	**8T-4133**	2	NUT (M10X1.5-THD)	
M	12	1	**8T-4137**	2	BOLT (M10X1.5X20-MM)	
	13	1	**8T-4224**	6	WASHER-HARD (8.8X16X2-MM THK)	
M	14	1	**8T-4970**	1	BOLT (M6X1X14-MM)	
	15	1	**9X-8256**	1	WASHER (6.6X12X2-MM THK)	

D-ORDER BY THE METER
E-ORDER BY THE CENTIMETER
M-METRIC PART
Y-SEPARATE ILLUSTRATION

284-5394 **LIGHTING GP-BACKUP** *(contd.)* **i03261480**

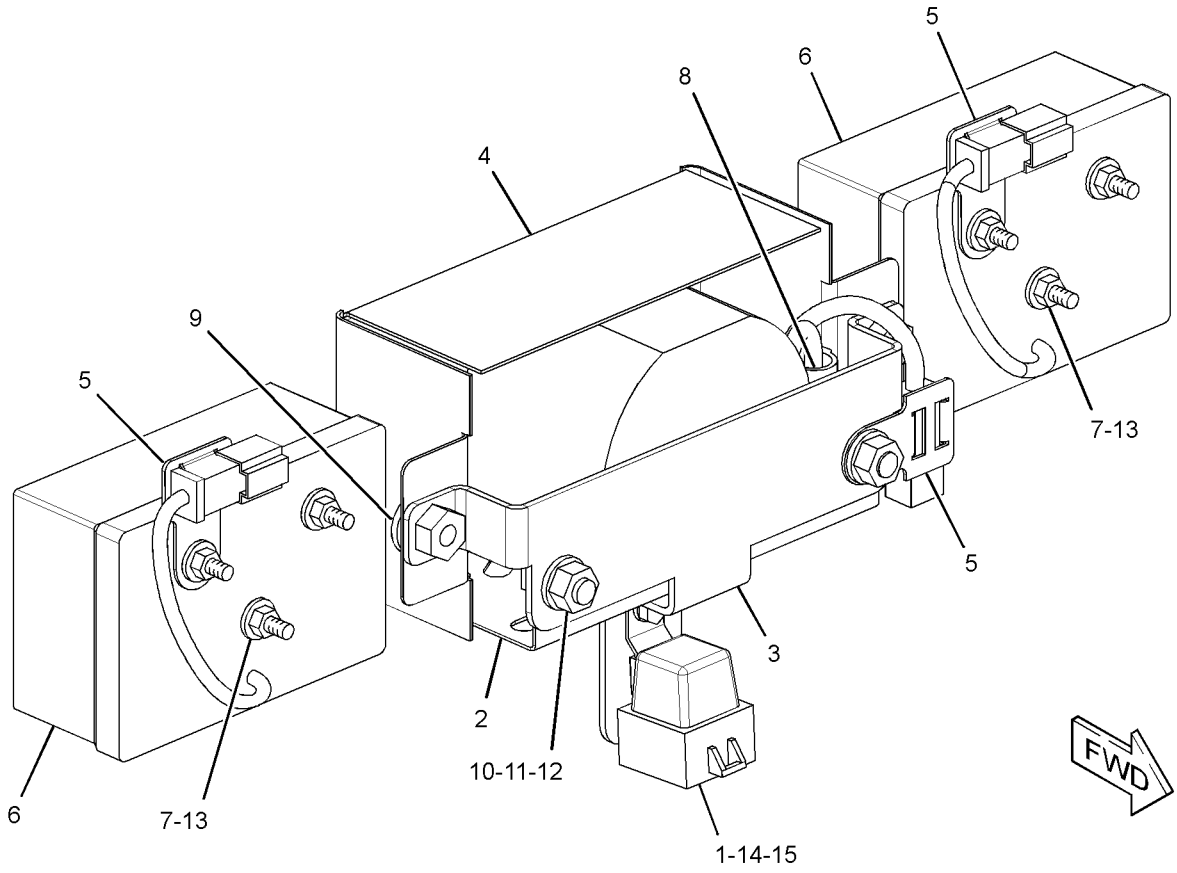

GRAPHIC #1 **<END>** g01683013

284-5354 LIGHTING GP-FLOOD–RIPPER

S/N: JBP1-UP
PART OF 294-8545 LIGHTING AR-ROADING
AN ATTACHMENT

SMCS-1434 **i03432180**

NOTE	REF NO	GRAPHIC REF	PART NUMBER	QTY	PART NAME 1 2 3 4 5 6 (PRODUCT LEVEL)	SEE PAGE
	1	1	**2G-0617**	2	CLAMP	
	2	1	**2G-0659**	2	BRACKET	
	3	1	**2G-0988**	2	CAP	
	4	1	**3K-9520**	3	GROMMET	
	5	1	**3S-2093**	4	STRAP-CABLE	
	6	1	**9W-1442**	1	FUSE (10-AMPERE)	
	7	1	**137-9410**	2	CLAMP	
	8	1	**179-1549**	1	TUBE	
	9	1	**179-1550**	2	CLAMP	
Y	10	1	**234-4323**	2	LAMP GP-FLOOD (24-VOLT)	135
	11	1	**336-0959**	1	HARNESS AS-LIGHTING	
	12	1	**336-0960**	1	HARNESS AS-FRONT LIGHTING	
	13	1	*123-5847*	1	SWITCH AS-ROCKER (24-VOLT) (AUXILIARY BACKUP LIGHTS)	
		1	**3E-8782**	1	ACTUATOR-ROCKER	
		1	**3E-8825**	1	LAMP (24-VOLT)	
		1	**3E-8766**	1	SWITCH AS (24-VOLT) (AUXILIARY BACKUP LIGHTS)	
	14	1	**5M-3062**	1	BOLT (3/8-16X0.75-IN)	
	15	1	**8M-2770**	2	CLIP	
	16	1	**8T-4121**	4	WASHER-HARD (11X21X2.5-MM THK)	
M	17	1	**8T-4133**	2	NUT (M10X1.5-THD)	
M	18	1	**8T-4136**	2	BOLT (M10X1.5X25-MM)	
	19	1	**8T-4223**	4	WASHER-HARD (13.5X25.5X3-MM THK)	
M	20	1	**8T-4244**	4	NUT (M12X1.75-THD)	
	21	1	**8T-4896**	1	WASHER-HARD (10.2X18.5X2.5-MM THK)	
M	22	1	**8T-5412**	4	BOLT (M12X1.75X140-MM)	
	23	1	**9M-8406**	2	CLIP	
E	24	1	**235-4765**		SEAL (4-CM)	

E-ORDER BY THE CENTIMETER
M-METRIC PART
Y-SEPARATE ILLUSTRATION

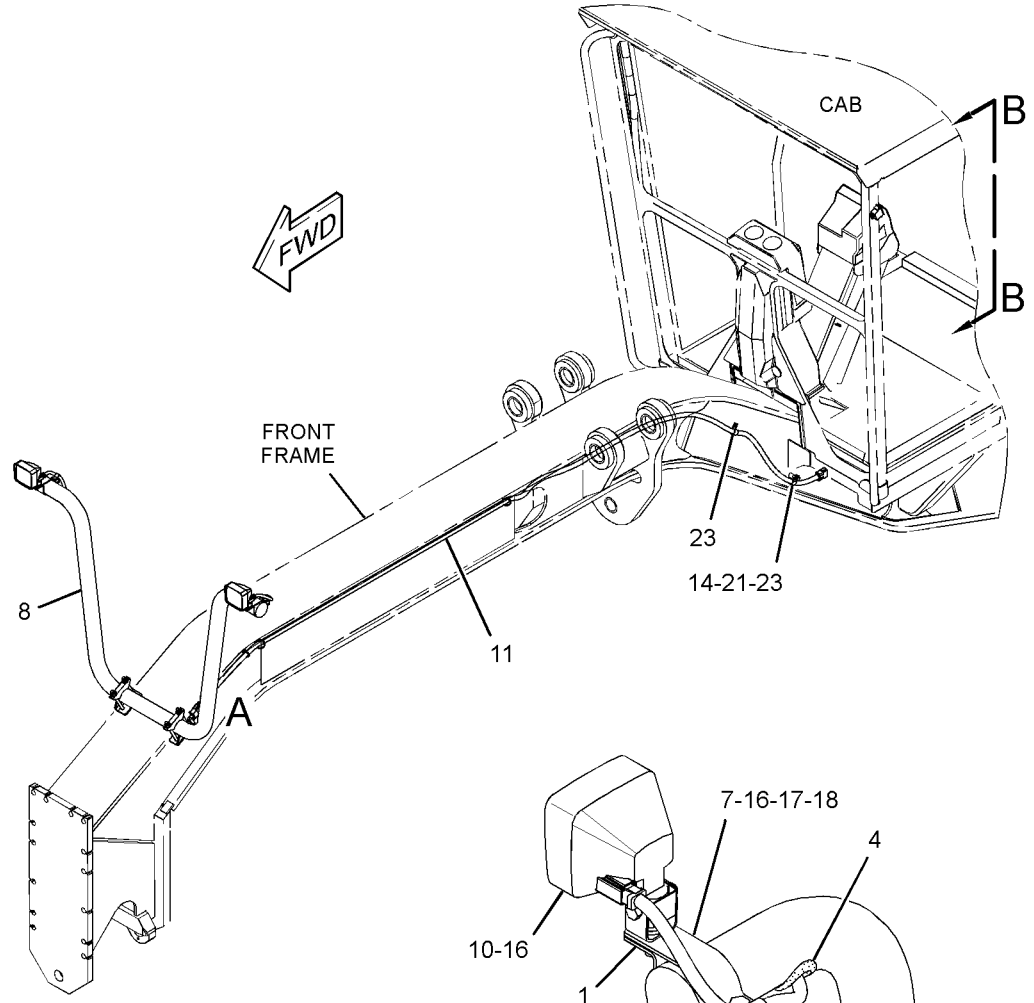

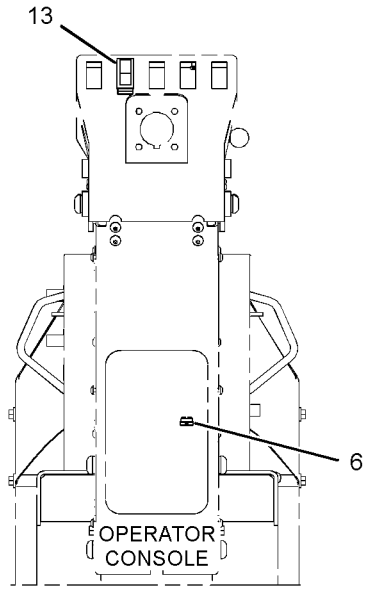

VIEW B-B

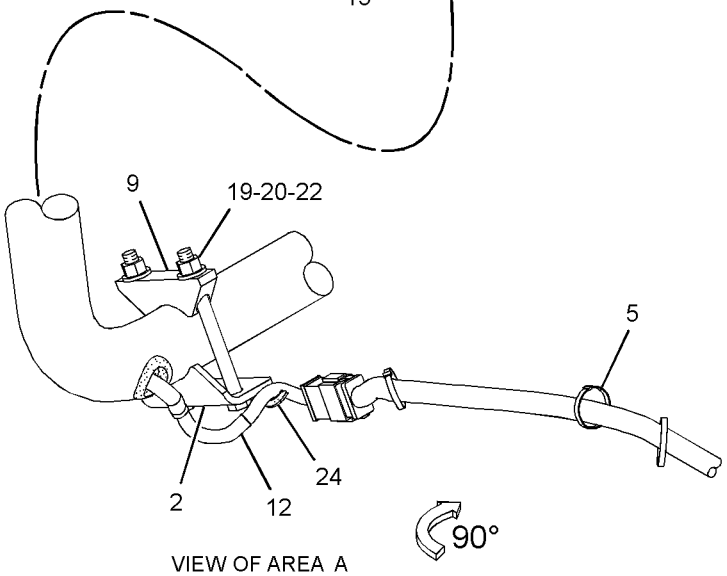

VIEW OF AREA A

GRAPHIC #1 **<END>** g01695116

284-5362 LIGHTING GP-FLOOD

S/N: JBP1-UP
PART OF 294-8547 LIGHTING AR-FLOOD
AN ATTACHMENT

SMCS-1434 **i03258690**

NOTE	REF NO	GRAPHIC REF	PART NUMBER	QTY	PART NAME 1 2 3 4 5 6 (PRODUCT LEVEL)	SEE PAGE
	1	1	**9X-9365**	2	BRACKET	
Y	2	1	**234-4323**	2	LAMP GP-FLOOD (24-VOLT)	135
	3	1	**304-5880**	1	HARNESS AS-REAR LIGHTING	
	4	1	**6V-3265**	2	CLIP	
	5	1	**7G-7053**	2	GROMMET	
	6	1	**7K-1181**	9	STRAP-CABLE	
M	7	1	**8T-4195**	2	BOLT (M10X1.5X30-MM)	

M-METRIC PART
Y-SEPARATE ILLUSTRATION

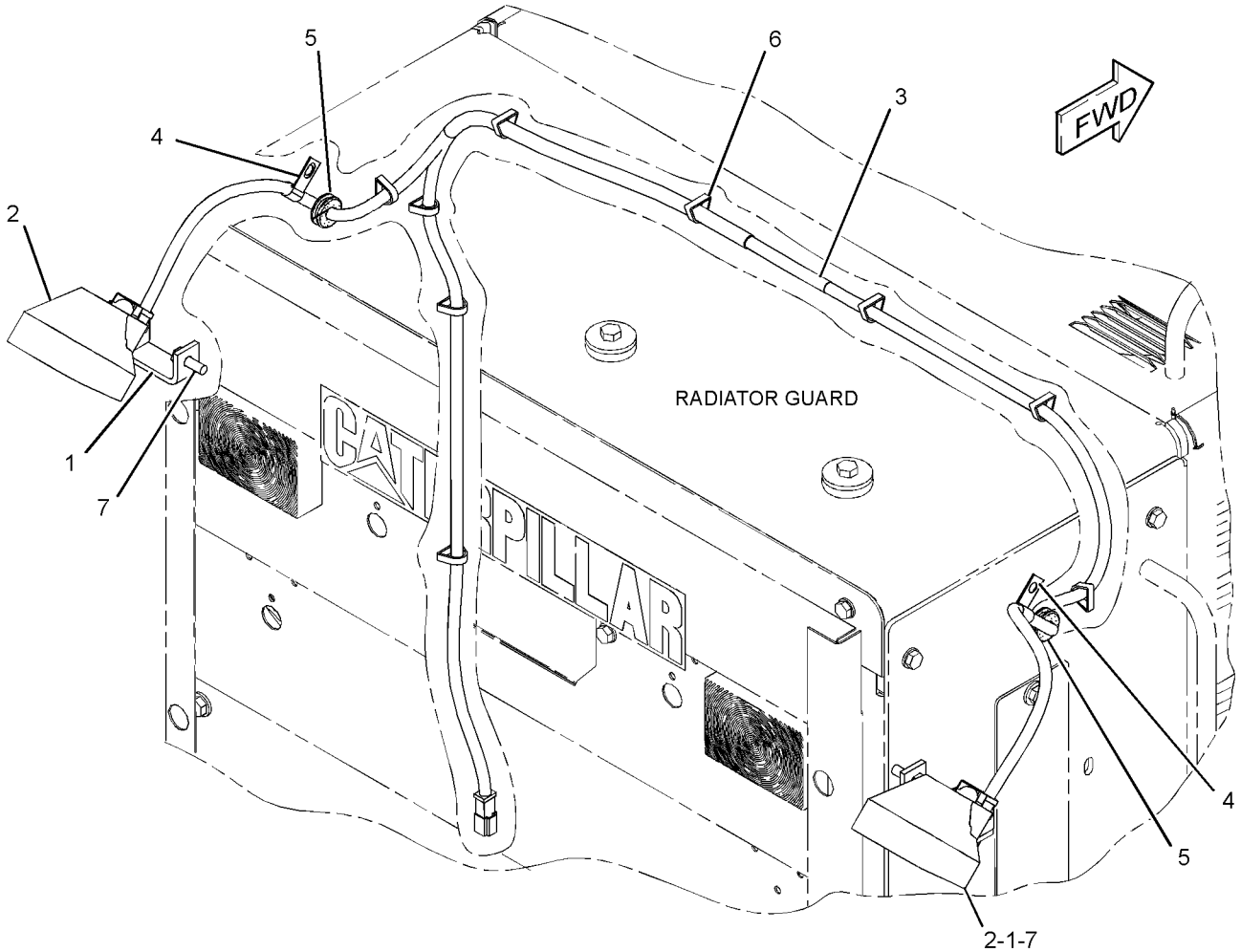

GRAPHIC #1 **<END>** g01755335

284-5376 LIGHTING GP-FLOOD—FRONT FRAME

S/N: JBP1-UP

PART OF 294-8547 LIGHTING AR-FLOOD

AN ATTACHMENT

SMCS-1434 **i03258421**

NOTE	REF NO	GRAPHIC REF	PART NUMBER	QTY	PART NAME 1 2 3 4 5 6 (PRODUCT LEVEL)	SEE PAGE
	1	1	**9L-1566**	2	SUPPORT	
	2	1	**9W-1441**	1	FUSE (15-AMPERE)	
	3	1	**9W-1442**	1	FUSE (10-AMPERE)	
	4	1	*9X-9632*	1	SWITCH AS-ROCKER (24-VOLT, SEALED, ILLUMINATED)	
		1	**3E-8772**	1	SWITCH-ROCKER (WORK LIGHTS)	
		1	**3E-8815**	1	ACTUATOR-ROCKER	
		1	**3E-8825**	2	LAMP (24-VOLT)	
Y	5	1	**234-4325**	2	LAMP GP-FLOOD (24-VOLT)	137
	6	1	**335-8402**	1	HARNESS AS-SOLENOID	
	7	1	**033-8248**	6	CLIP	
	8	1	**147-0385**	1	CLIP	
Y	9	1	**234-4323**	2	LAMP GP-FLOOD (24-VOLT)	135
	10	1	**5P-8167**	3	BOLT (3/8-16X0.625-IN)	
	11	1	**5S-7379**	2	BOLT (3/8-16X0.875-IN)	
	12	1	**7K-1181**	2	STRAP-CABLE	
	13	1	**8T-4121**	6	WASHER-HARD (11X21X2.5-MM THK)	
M	14	1	**8T-4133**	2	NUT (M10X1.5-THD)	
	15	1	**8T-4896**	3	WASHER-HARD (10.2X18.5X2.5-MM THK)	

M-METRIC PART
Y-SEPARATE ILLUSTRATION

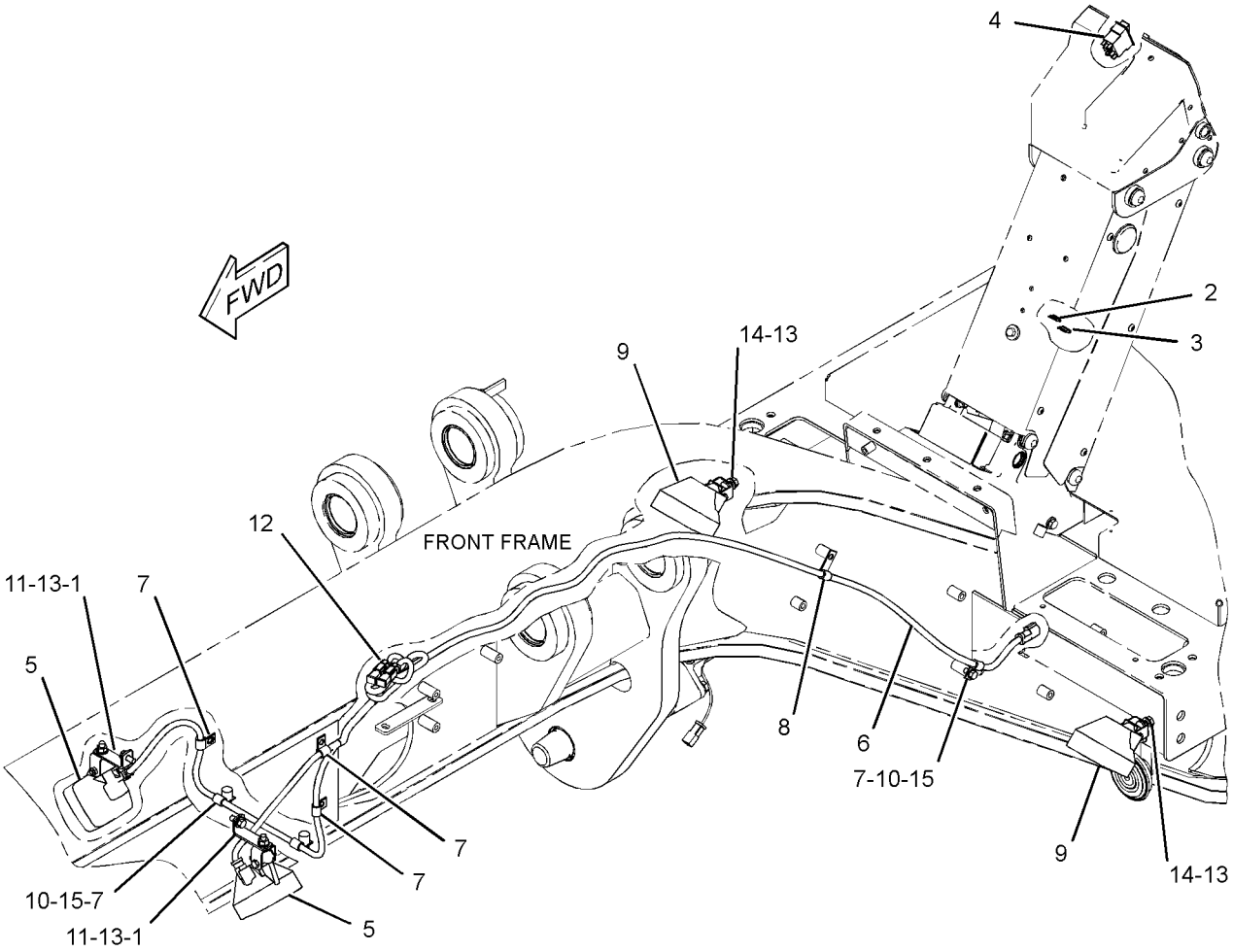

GRAPHIC #1 **<END>** g01754313

284-5377 LIGHTING GP-FLOOD—SNOW WING

S/N: JBP1-UP

AN ATTACHMENT

SMCS-1434 **i03432142**

NOTE	REF NO	GRAPHIC REF	PART NUMBER	QTY	PART NAME 1 2 3 4 5 6 (PRODUCT LEVEL)	SEE PAGE
	1	1	**3E-0109**	5	PLUG (ROCKER SWITCH)	
	2	1	**3S-2093**	2	STRAP-CABLE	
	3	1	**9L-1566**	1	SUPPORT	
	4	1	**9W-1442**	1	FUSE (10-AMPERE)	
	5	1	**116-5710**	1	GROMMET	
	6	1	**145-3350**	1	PLATE	
	7	1	**153-2147**	1	PLATE	
	8	1	**168-8243**	1	HARNESS AS-PANEL (SWITCH)	
	9	1	**336-4099**	1	HARNESS AS-FRONT LIGHTING	
	10	1	**172-6556**	1	PANEL	
	11	1	**188-3862**	1	BRACKET AS	
Y	12	1	**234-4323**	1	LAMP GP-FLOOD (24-VOLT)	135
	13	1	*123-5847*	1	SWITCH AS-ROCKER (24-VOLT) (FLOODLIGHT, RH)	
		1	**3E-8766**	1	SWITCH AS (24-VOLT) (FLOODLIGHT, RH)	
		1	**3E-8782**	1	ACTUATOR-ROCKER	
		1	**3E-8825**	1	LAMP (24-VOLT)	
	14	1	**5P-8525**	1	GROMMET	
	15	1	**8T-4121**	1	WASHER-HARD (11X21X2.5-MM THK)	
M	16	1	**9X-2043**	6	SCREW-TRUSS HEAD (M6X1X14-MM)	

M-METRIC PART
Y-SEPARATE ILLUSTRATION

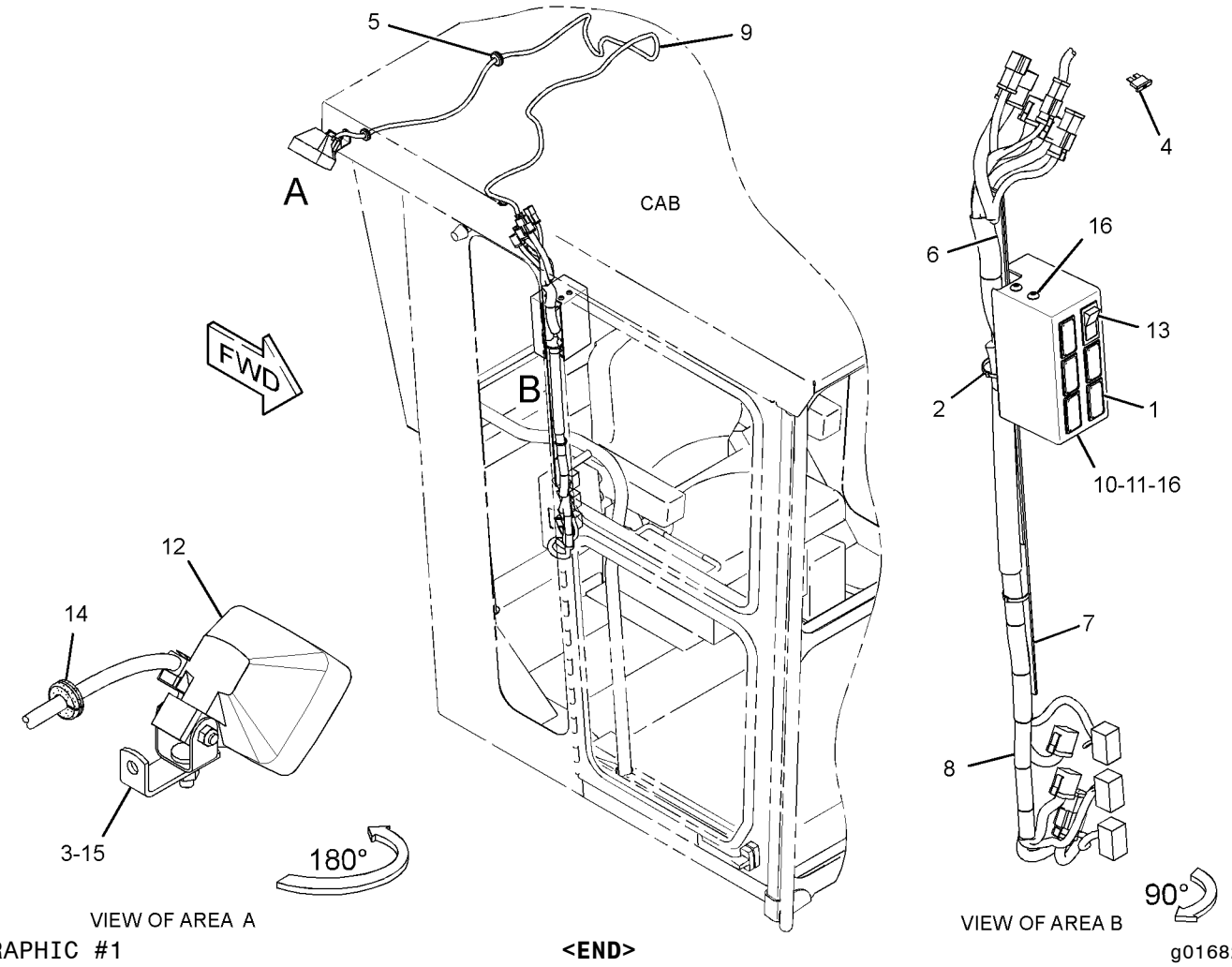

GRAPHIC #1 **<END>** g01682333

ELECTRICAL AND STARTING SYSTEM

284-5353 LIGHTING GP-ROADING

S/N: JBP1-UP
PART OF 294-8546 LIGHTING AR-ROADING
AN ATTACHMENT

SMCS-1429 **i03432040**

NOTE	REF NO	GRAPHIC REF	PART NUMBER	QTY	PART NAME 1 2 3 4 5 6 (PRODUCT LEVEL)	SEE PAGE
	1	1	**2G-0617**	4	CLAMP	
	2	1	**2G-0659**	2	BRACKET	
	3	1	**2G-0988**	2	CAP	
	4	1	**3K-9520**	3	GROMMET	
	5	1	**5T-9313**	1	TUBE	
	6	1	**8X-5153**	1	FILM-FACE (TURN SIGNAL, HAZARD)	
	7	1	**8X-5154**	1	FILM-FACE (HEADLIGHTS HIGH, LOW BEAM)	
	8	1	**9W-1441**	1	FUSE (15-AMPERE)	
	9	1	**9W-1442**	1	FUSE (10-AMPERE)	
	10	1	**103-1592**	2	PLATE	
	11	1	**108-0358**	1	FLASHER AS (24-VOLT)	
Y	12	1	**135-0427**	2	LAMP GP-SIGNAL (24-VOLT, PARK, TURN)	140
	13	1	**137-9410**	4	CLAMP	
	14	1	**173-3064**	1	SWITCH GP-ROTARY (TURN SIGNAL, HAZARD)	
		1	**5L-7200**	1	SCREW (8-32X0.375-IN)	
		1	**9B-7233**	1	LOCKWASHER	
	15	1	**179-1550**	2	CLAMP	
Y	16	1	**234-4323**	2	LAMP GP-FLOOD (24-VOLT)	135
Y	17	1	**234-4324**	2	LAMP GP-FLOOD (24-VOLT)	136
	18	1	**336-0959**	1	HARNESS AS-LIGHTING	
	19	1	**336-0961**	1	HARNESS AS-LIGHTING	
	20	1	**103-5678**	1	SWITCH AS-ROTARY	
		1	**5L-7200**	1	SCREW (8-32X0.375-IN)	
		1	**9B-7233**	1	LOCKWASHER	
	21	1	**130-5300**	2	CLIP	
	22	1	*3E-9317*	1	SWITCH AS-ROCKER (24-VOLT) (HEADLIGHTS, TAIL LIGHTS)	
		1	**3E-8772**	1	SWITCH-ROCKER (HEADLIGHTS, TAIL LIGHTS)	
		1	**3E-8825**	2	LAMP (24-VOLT) (HEADLIGHTS, TAIL LIGHTS)	
		1	**3E-9326**	1	ACTUATOR-ROCKER	
	23	1	**4D-7794**	4	CLIP	
	24	1	**4K-8864**	2	CLIP	
	25	1	**4L-6454**	4	BOLT (3/8-16X1-IN)	
M	26	1	**5C-2890**	8	NUT (M6X1-THD)	
	27	1	**5M-3062**	1	BOLT (3/8-16X0.75-IN)	
	28	1	**6V-8801**	4	NUT (3/8-16-THD)	
	29	1	**7K-1181**	4	STRAP-CABLE	
	30	1	**8T-4205**	8	WASHER-HARD (7.2X14.5X2-MM THK)	
	31	1	**8T-4223**	4	WASHER-HARD (13.5X25.5X3-MM THK)	
M	32	1	**8T-4244**	4	NUT (M12X1.75-THD)	
	33	1	**8T-4896**	5	WASHER-HARD (10.2X18.5X2.5-MM THK)	
M	34	1	**8T-5412**	4	BOLT (M12X1.75X140-MM)	
	35	1	**8X-6296**	2	LEVER	
M	36	1	**9X-2043**	2	SCREW-TRUSS HEAD (M6X1X14-MM)	

M-METRIC PART
Y-SEPARATE ILLUSTRATION

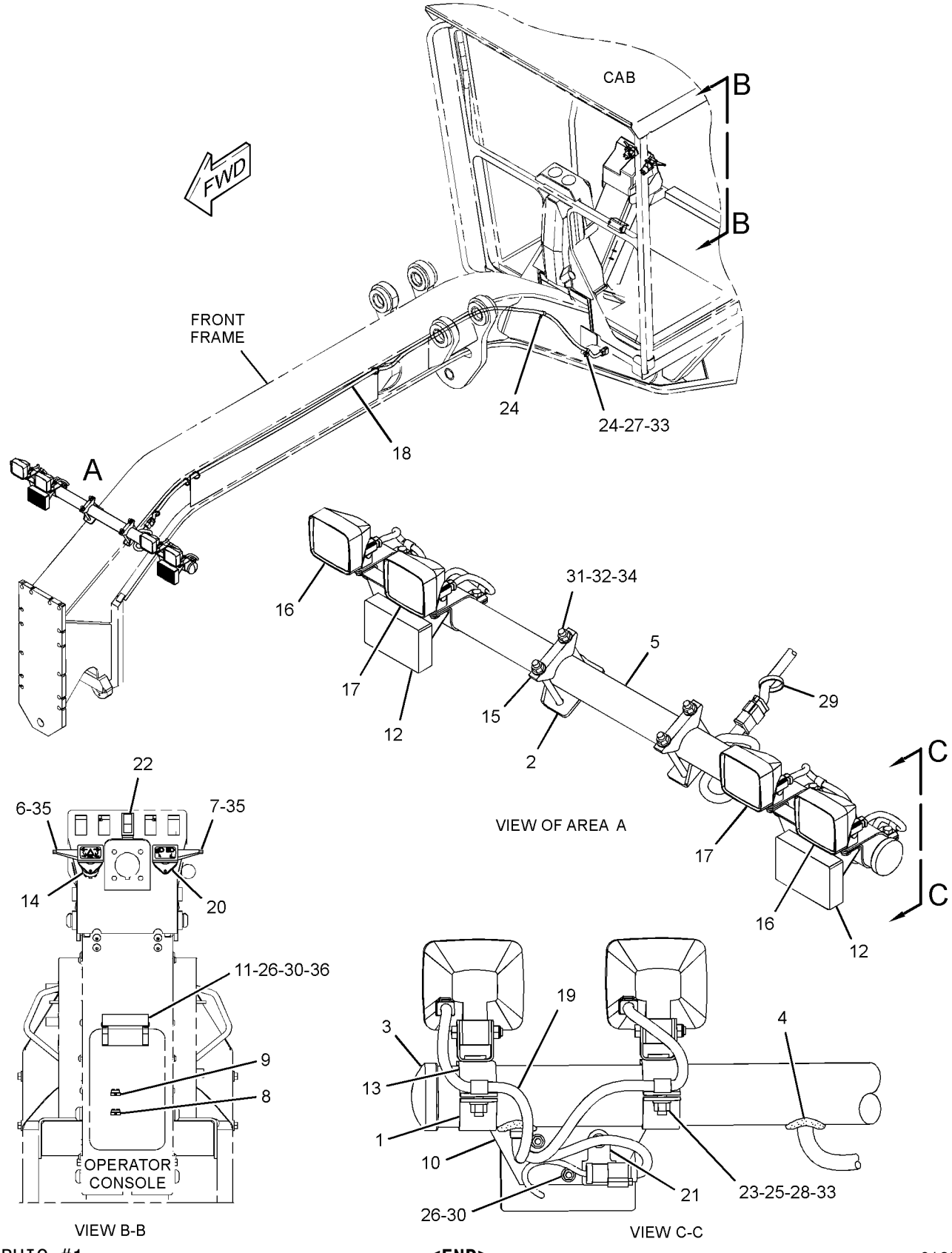

GRAPHIC #1

<END>

g01687683

284-5355 LIGHTING GP-ROADING—FRONT

S/N: JBP1-UP
PART OF 294-8544, 294-8545 LIGHTING AR-ROADING
AN ATTACHMENT

SMCS-1429 **i03254700**

NOTE	REF NO	GRAPHIC REF	PART NUMBER	QTY	PART NAME 1 2 3 4 5 6 (PRODUCT LEVEL)	SEE PAGE
Y	1	1	**135-0427**	1	LAMP GP-SIGNAL (24-VOLT, PARK, TURN) (LH)	140
Y	1A	1	**135-0427**	1	LAMP GP-SIGNAL (24-VOLT, PARK, TURN) (RH)	140
	2	1	**193-7416**	2	PLATE AS	
Y	3	1	**234-4325**	1	LAMP GP-FLOOD (24-VOLT) (LOW BEAM, LH)	137
Y	3A	1	**234-4325**	1	LAMP GP-FLOOD (24-VOLT) (LOW BEAM, RH)	137
Y	4	1	**234-4326**	1	LAMP GP-FLOOD (24-VOLT) (HIGH BEAM, LH)	138
Y	4A	1	**234-4326**	1	LAMP GP-FLOOD (24-VOLT) (HIGH BEAM, RH)	138
	5	1	**130-5300**	2	CLIP	
M	6	1	**5C-2890**	6	NUT (M6X1-THD)	
	7	1	**8T-4121**	8	WASHER-HARD (11X21X2.5-MM THK)	
M	8	1	**8T-4137**	4	BOLT (M10X1.5X20-MM)	
	9	1	**8T-4205**	6	WASHER-HARD (7.2X14.5X2-MM THK)	
	10	1	**9D-3768**	2	GROMMET	
	11	1	**9G-1307**	2	GROMMET	

M-METRIC PART
Y-SEPARATE ILLUSTRATION

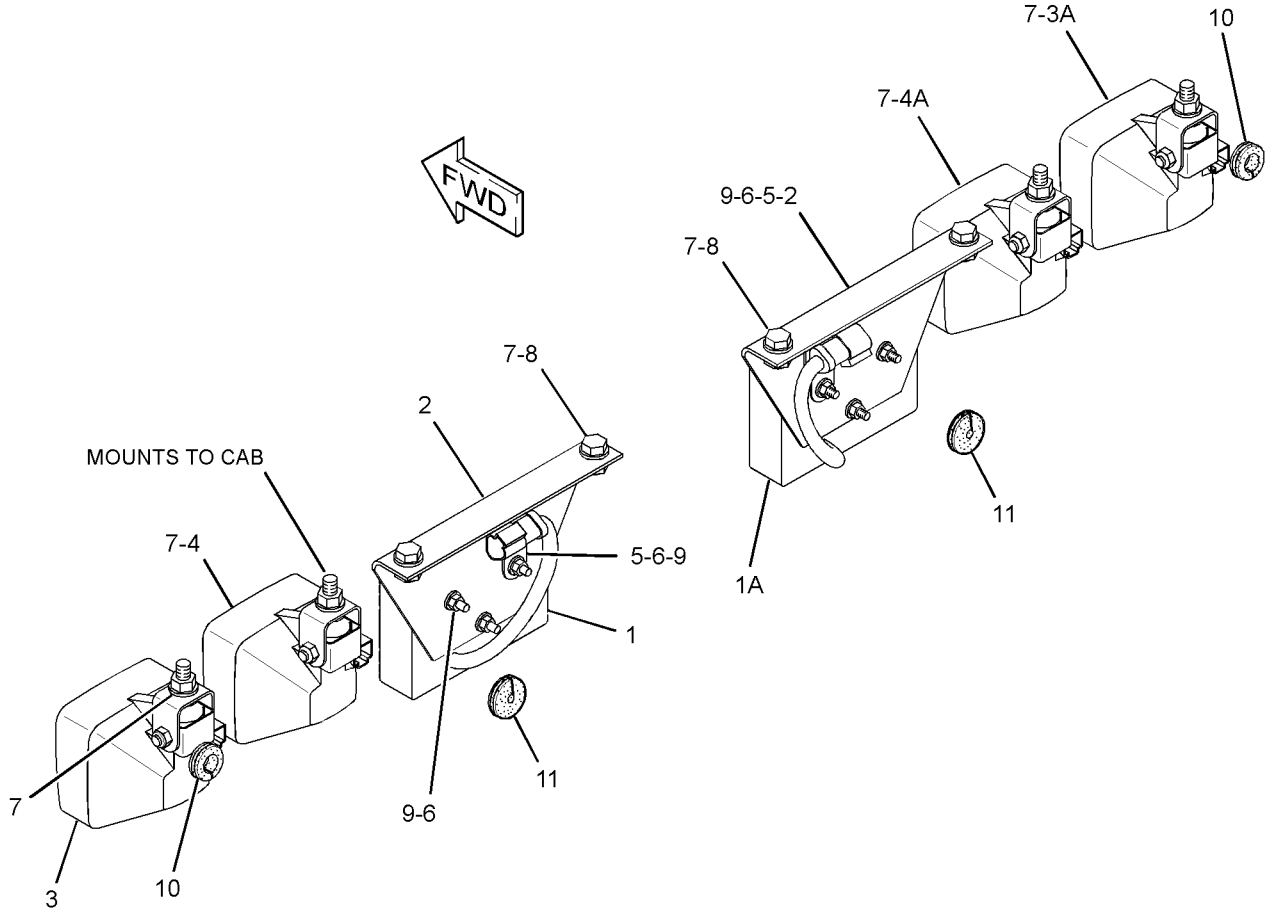

GRAPHIC #1 **<END>** g01703493

284-5363 LIGHTING GP-SIGNAL–REAR TURN

S/N: JBP1-UP

PART OF 294-8544, 294-8545, 294-8546 LIGHTING AR-ROADING AN ATTACHMENT

SMCS-1430 **i03254704**

NOTE	REF NO	GRAPHIC REF	PART NUMBER	QTY	PART NAME 1 2 3 4 5 6 (PRODUCT LEVEL)	SEE PAGE
	1	1	**130-5300**	2	CLIP	
Y	2	1	**199-3368**	1	LAMP GP-SIGNAL (24-VOLT, TURN) (LH)	141
Y	2A	1	**199-3368**	1	LAMP GP-SIGNAL (24-VOLT, TURN) (RH)	141
M	3	1	**5C-2890**	6	NUT (M6X1-THD)	
	4	1	**8T-4205**	6	WASHER-HARD (7.2X14.5X2-MM THK)	

M-METRIC PART
Y-SEPARATE ILLUSTRATION

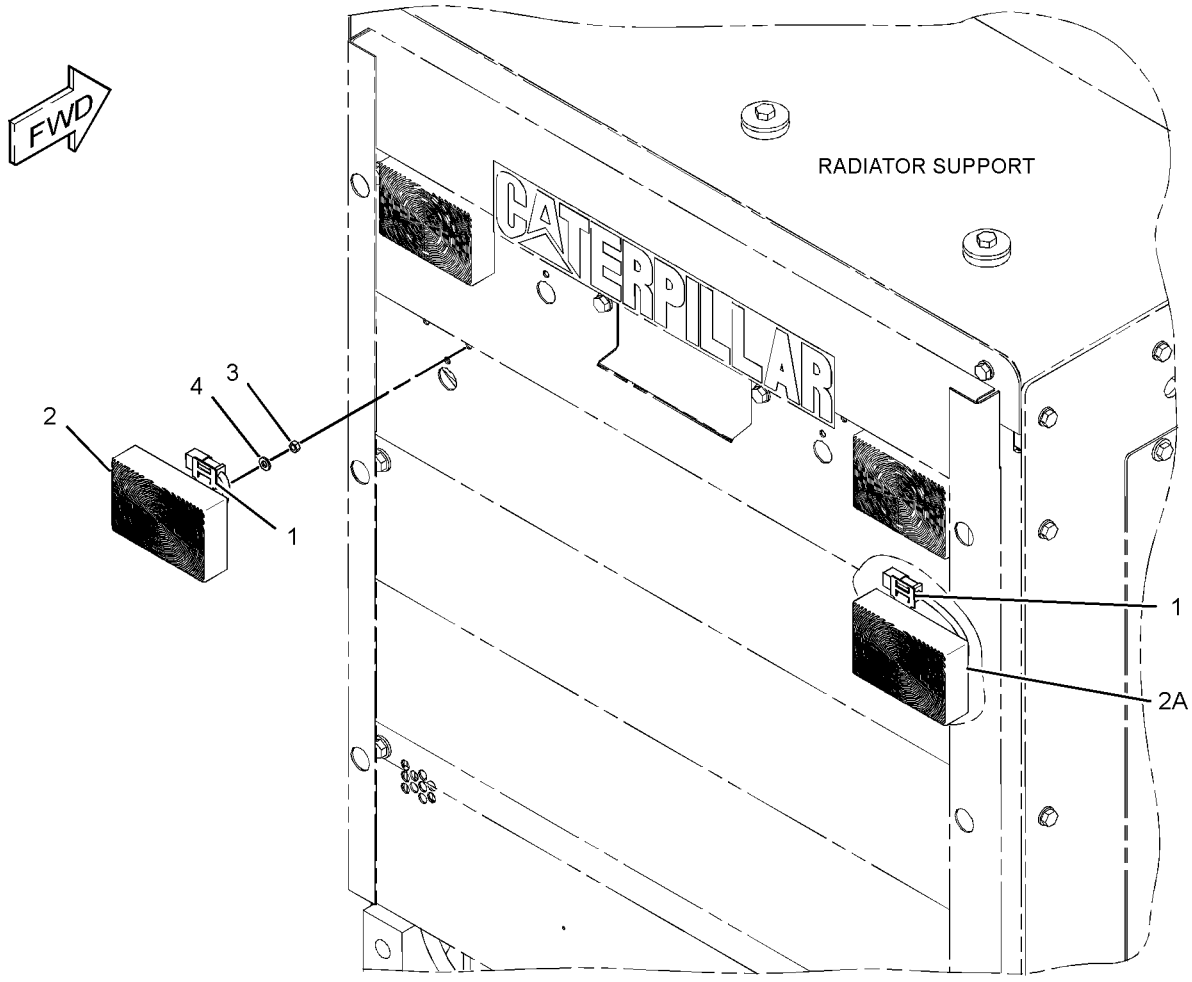

GRAPHIC #1 **<END>** g01705434

ELECTRICAL AND STARTING SYSTEM

284-5357 LIGHTING GP-WARNING

S/N: JBP1-UP
AN ATTACHMENT

SMCS-1429, 1431 **i03258413**

NOTE	REF NO	GRAPHIC REF	PART NUMBER	QTY	PART NAME 1 2 3 4 5 6 (PRODUCT LEVEL)	SEE PAGE
	1	1	**3S-2093**	1	STRAP-CABLE	
	2	1	**9W-1442**	1	FUSE (10-AMPERE)	
	3	1	**107-4932**	1	PLATE AS	
Y	4	1	**235-3937**	1	LAMP GP-WARNING BEACON (24-VOLT, AMBER)	142
	5	1	**130-5300**	1	CLIP	
	6	1	**5P-8525**	1	GROMMET	
	7	1	**8T-4121**	2	WASHER-HARD (11X21X2.5-MM THK)	
M	8	1	**8T-4136**	2	BOLT (M10X1.5X25-MM)	
	9	1	*9X-9639*	1	SWITCH AS-ROCKER (24-VOLT) (WARNING BEACON)	
		1	**3E-8822**	1	ACTUATOR-ROCKER	
		1	**3E-8825**	1	LAMP (24-VOLT)	
		1	**102-9862**	1	SWITCH AS	

M-METRIC PART
Y-SEPARATE ILLUSTRATION

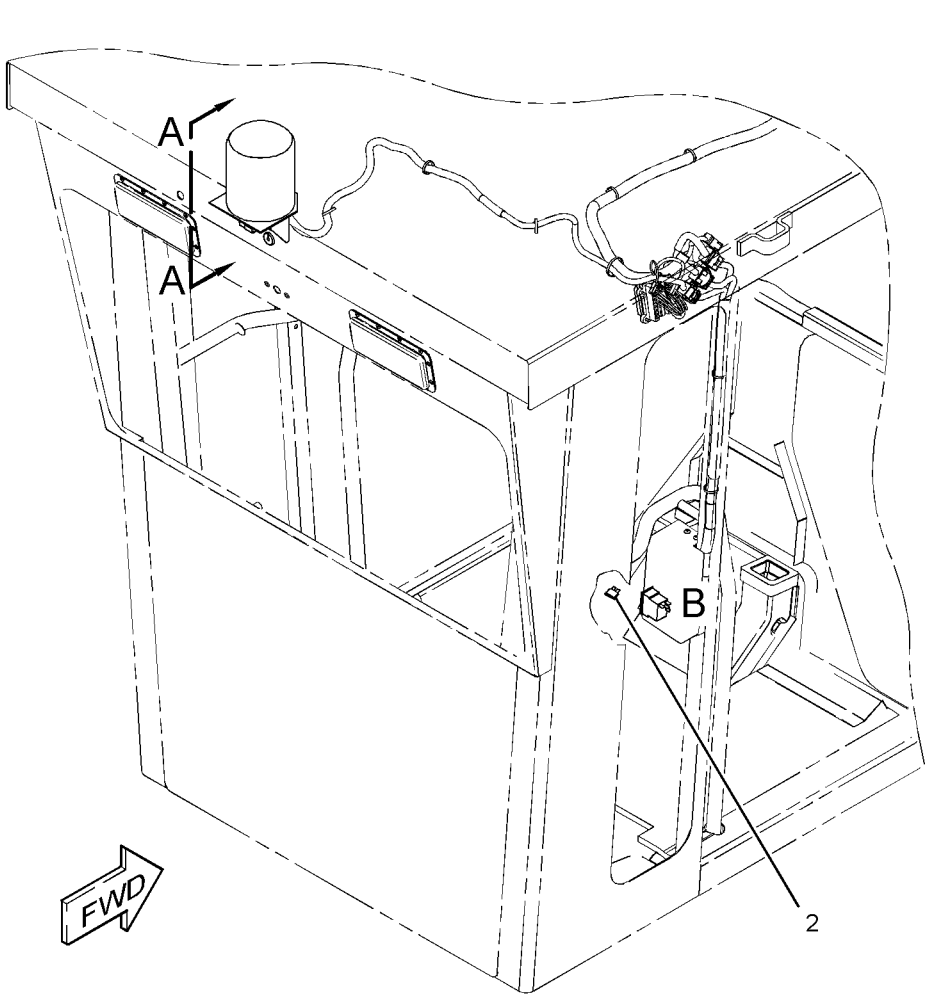

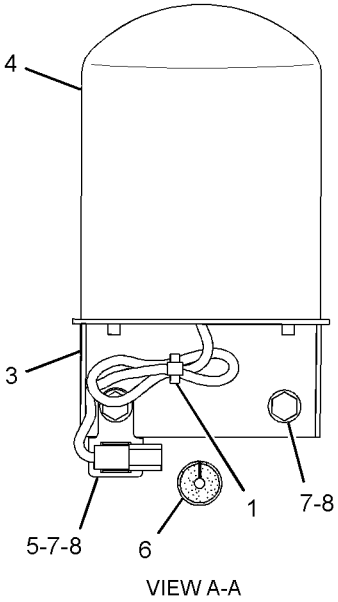

VIEW A-A

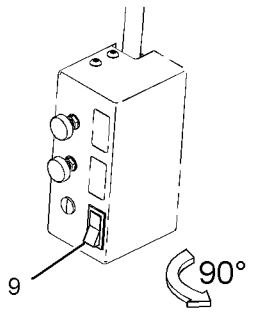

VIEW OF AREA B

GRAPHIC #1 **<END>** g01686573

286-4430 LIGHTING GP-WARNING BEACON

S/N: JBP1-UP
AN ATTACHMENT

SMCS-1431 **i03432022**

NOTE	REF NO	GRAPHIC REF	PART NUMBER	QTY	PART NAME 1 2 3 4 5 6 (PRODUCT LEVEL)	SEE PAGE
	1	1	**3S-2093**	6	STRAP-CABLE	
	2	1	**9W-1442**	1	FUSE (10-AMPERE)	
	3	1	**107-4932**	1	PLATE AS	
	4	1	**336-2259**	1	HARNESS AS-FRONT LIGHTING	
	5	1	**173-1885**	1	COVER	
Y	6	1	**235-3937**	1	LAMP GP-WARNING BEACON (24-VOLT, AMBER)	142
	7	1	**115-3070**	1	CLIP AS-CONNECT (4-PIN)	
		1	**8C-3334**	1	RIVET-TUBULAR	
	8	1	**130-5300**	1	CLIP	
	9	1	**5P-8525**	1	GROMMET	
	10	1	**8T-4121**	2	WASHER-HARD (11X21X2.5-MM THK)	
M	11	1	**8T-4136**	2	BOLT (M10X1.5X25-MM)	
	12	1	**9D-8508**	1	GROMMET	
M	13	1	**9X-2043**	2	SCREW-TRUSS HEAD (M6X1X14-MM)	
	14	1	*9X-9639*	1	SWITCH AS-ROCKER (24-VOLT) (WARNING BEACON)	
		1	**3E-8822**	1	ACTUATOR-ROCKER	
		1	**3E-8825**	1	LAMP (24-VOLT)	
		1	**102-9862**	1	SWITCH AS	

M-METRIC PART
Y-SEPARATE ILLUSTRATION

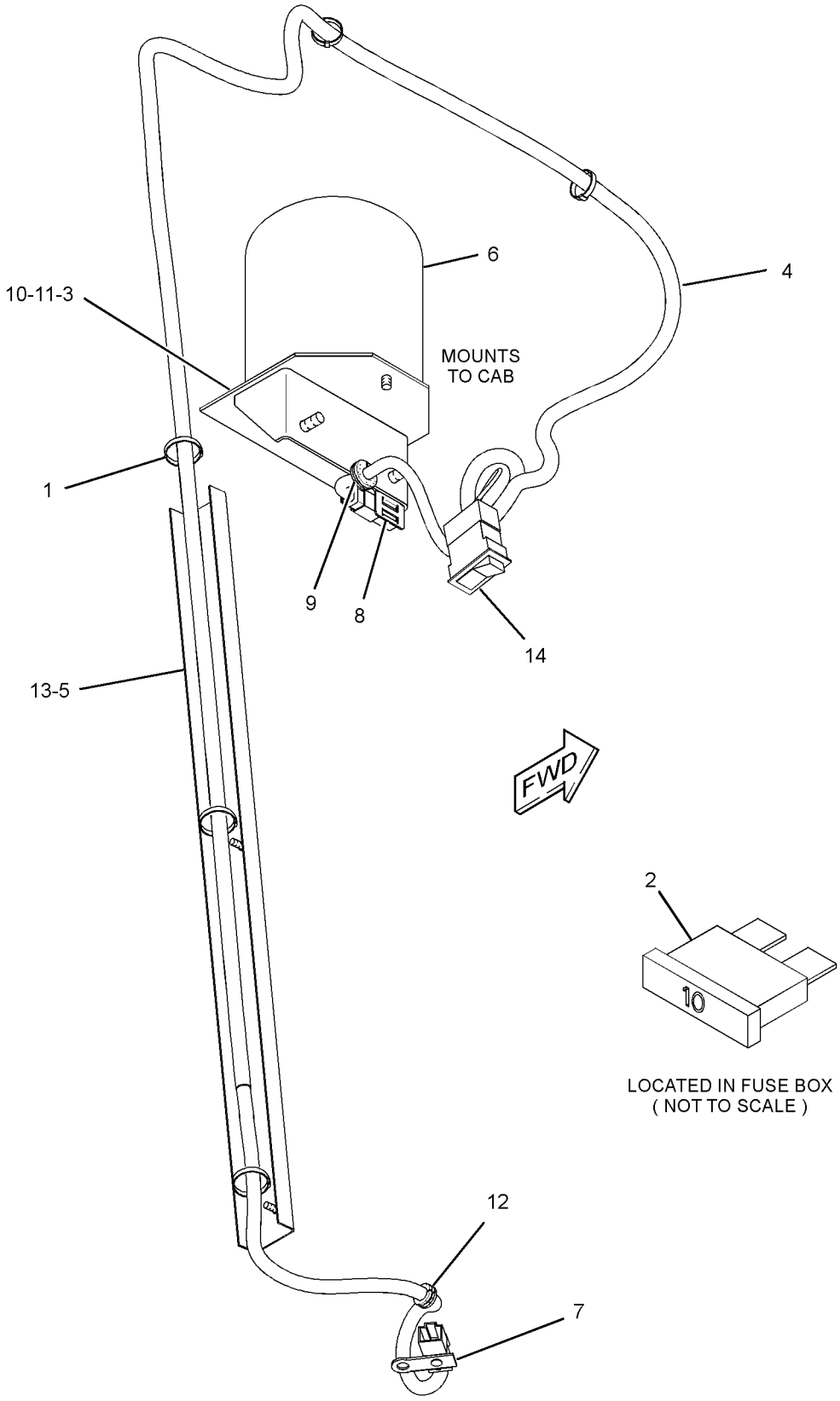

GRAPHIC #1 **<END>** g01673474

170-5335 MOTOR GP-ELECTRIC—CIRCULATING FAN

S/N: JBP1-UP
24-VOLT
PART OF 170-4820, 170-5334 FAN GP-CIRCULATING
AN ATTACHMENT

SMCS-5927 **i02463158**

NOTE	REF NO	GRAPHIC REF	PART NUMBER	QTY	PART NAME 1 2 3 4 5 6 (PRODUCT LEVEL)	SEE PAGE
	1	1	**102-8802**	1	KIT-RECEPTACLE (2-PIN)	
					(INCLUDES RECEPTACLE AS & WEDGE)	
	2	1	**9W-0852**	2	PIN-CONNECTOR (14-GA)	

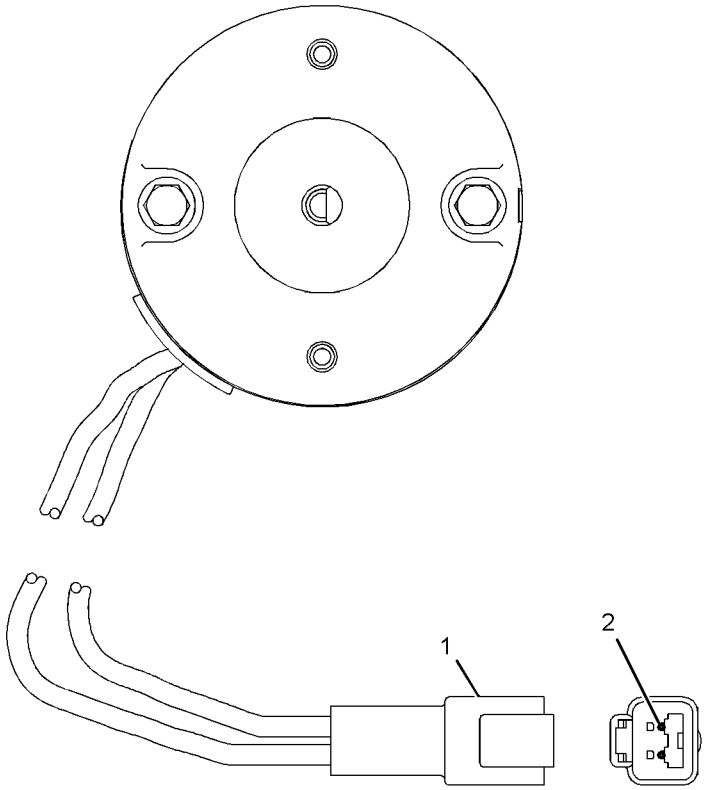

GRAPHIC #1 **<END>** g01240075

ELECTRICAL AND STARTING SYSTEM

247-6449 MOUNTING GP-GRADE CONTROL

S/N: JBP1-UP
PART OF 297-8448 GRADE CONTROL AR
AN ATTACHMENT

SMCS-7220 **i02389804**

NOTE	PART NUMBER	QTY	PART NAME 1 2 3 4 5 6 (PRODUCT LEVEL)	SEE PAGE
	269-9322	1	DRAWBAR AS	
	8X-7951	1	DRAWBAR & YOKE AS	
	5T-6775	2	REINFORCEMENT	
	8F-9836	12	BOSS (3/8-16-THD)	
	8X-7956	1	SHAFT AS	

<END>

254-5960 MOUNTING GP-GRADE CONTROL

S/N: JBP1-UP
PART OF 297-8448 GRADE CONTROL AR
AN ATTACHMENT

SMCS-7220 **i02457278**

NOTE	REF NO	GRAPHIC REF	PART NUMBER	QTY	PART NAME 1 2 3 4 5 6 (PRODUCT LEVEL)	SEE PAGE
	1	1	**187-7738**	2	WASHER-HARD (21X36.5X3.5-MM THK)	
	2	1	**236-1927**	1	BRACKET AS	
	3	1	**251-2382**	1	BOSS	
M	4	1	**9C-8895**	1	BOSS-TAPPED (M10X1.5-THD)	
Y	5	1	**153-9360**	1	CIRCLE GP	588

M-METRIC PART
Y-SEPARATE ILLUSTRATION

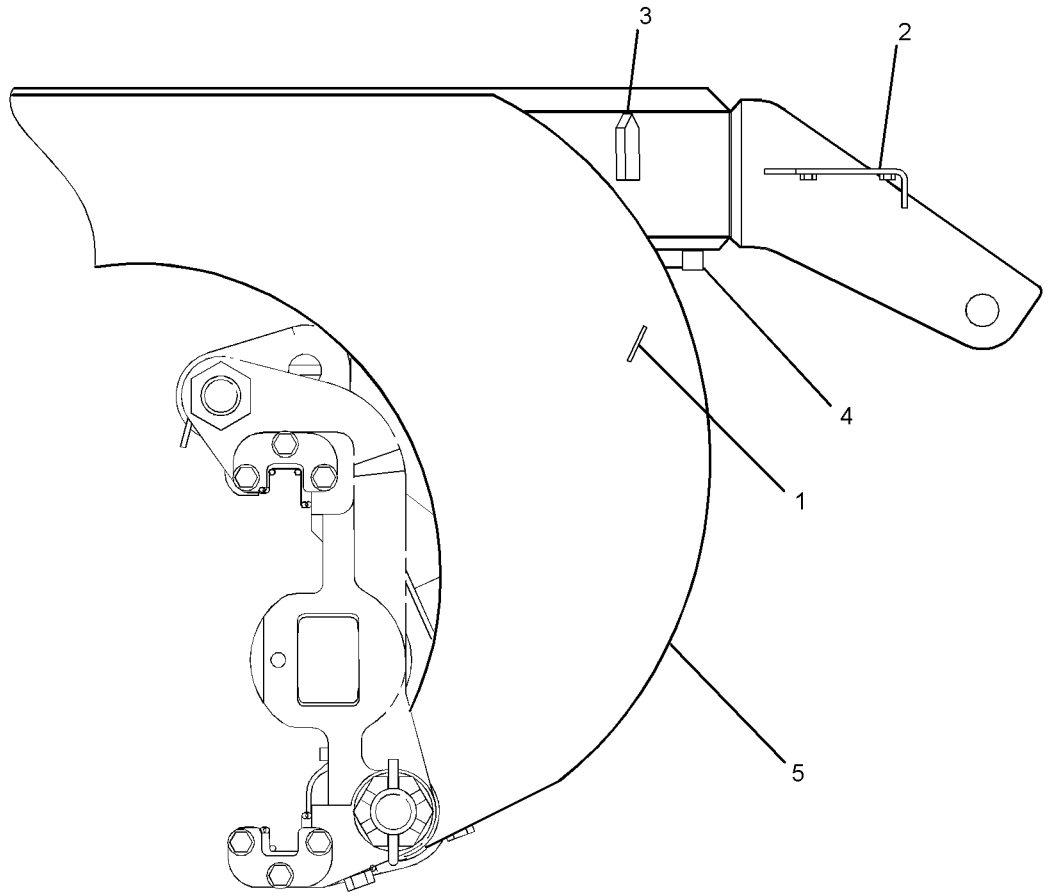

LEFT SIDE VIEW

GRAPHIC #1 **<END>** g01241625

235-8200 PLUG GP-CONNECTOR–
ENGINE HARNESS, PROTECTIVE COVER
S/N: KHX8814-UP
PART OF 312-0255 ENGINE AR-COMPLETE

SMCS-1403, 1408 **i02951921**

NOTE	REF NO	GRAPHIC REF	PART NUMBER	QTY	PART NAME 1 2 3 4 5 6 (PRODUCT LEVEL)	SEE PAGE
	1	1	**246-9353**	1	PLUG AS	
	1A	1	**8T-8737**	8	PLUG-SEAL	
	1B	1	**102-8806**	1	KIT-RECEPTACLE (8-PIN)	
					(INCLUDES RECEPTACLE AS & WEDGE)	
	2	1	**3S-2093**	1	STRAP-CABLE	

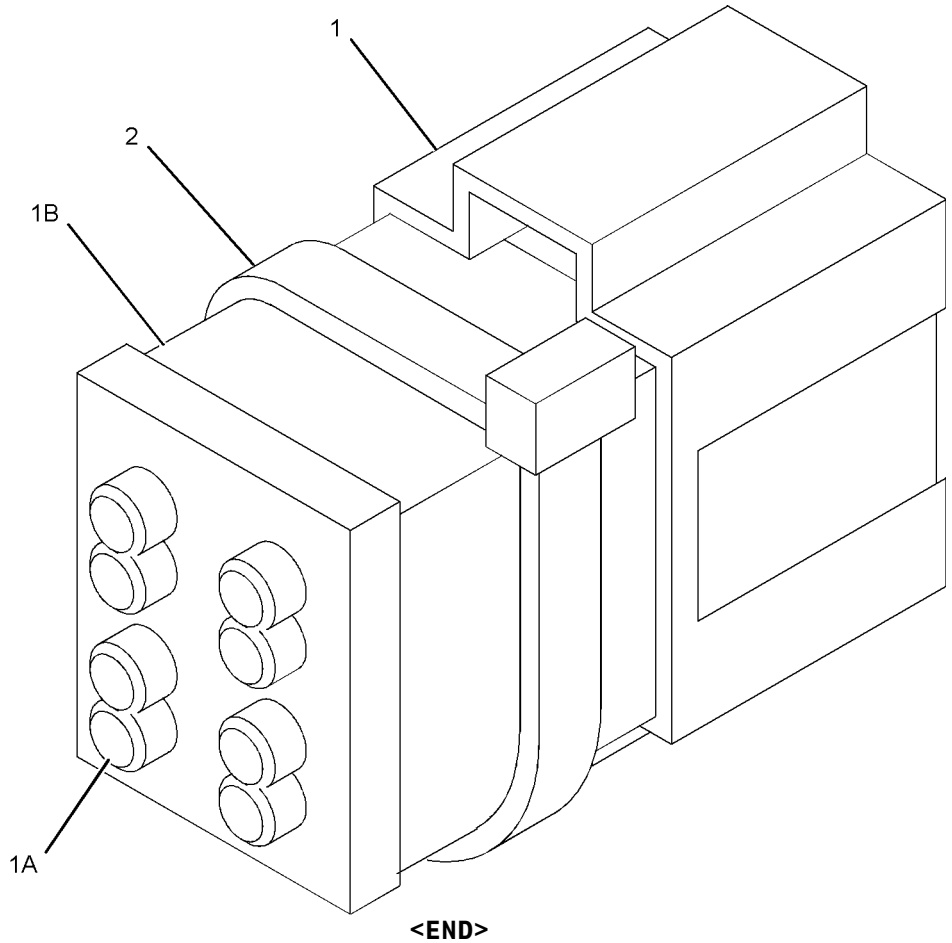

GRAPHIC #1 **<END>** g01105455

263-9088 RADIO GP-COMMUNICATION–PRODUCT LINK 121SR

S/N: JBP1-UP

PART OF 302-5429 INSTALLATION AR-COMMUNICATION

AN ATTACHMENT

SMCS-733T **i03194501**

NOTE	PART NUMBER	QTY	PART NAME 1 2 3 4 5 6 (PRODUCT LEVEL)	SEE PAGE
	330-3408	1	SOFTWARE GP-COMMUNICATION (PRODUCT LINK 121SR)	

<END>

ELECTRICAL AND STARTING SYSTEM

297-5355 SENSOR GP-ENGINE

S/N: KHX8814-UP

PART OF 312-0255 ENGINE AR-COMPLETE

SMCS-1052, 1087, 1439, 1906, 1912, 1917, 1923, 1924, 1925 **i02789817**

NOTE	REF NO	GRAPHIC REF	PART NUMBER	QTY	PART NAME 1 2 3 4 5 6 (PRODUCT LEVEL)	SEE PAGE
	1	1	**9X-0262**	1	ADAPTER	
	2	1	**9X-8403**	1	ELBOW	
Y	3	1	*197-8393*	1	SENSOR GP-PRESSURE (ATMOSPHERIC)	169
Y	4	1	*197-8394*	1	SENSOR GP-PRESSURE (ENGINE OIL)	170
Y	5	1	*210-1747*	1	SENSOR GP-PRESSURE (BOOST)	171
Y	6	1	*236-6220*	1	SENSOR GP-PRESSURE (RAIL)	173
Y	7	1	*236-6221*	1	SENSOR GP-SPEED (ENGINE TIMING)	175
Y	8	1	*274-7395*	1	SENSOR GP-TEMPERATURE (AIR INLET MANIFOLD)	179
Y	9	1	*274-7396*	1	SENSOR GP-TEMPERATURE (ENGINE COOLANT)	180
	10	1	*169-5861*	1	PLUG AS	
		1	**3K-8460**	1	PLUG	
		1	**5P-7814**	1	SEAL-O-RING	
	11	1	*183-3406*	1	PLUG AS	
		1	**6V-5049**	1	SEAL-O-RING	
		1	**9S-4191**	1	PLUG-O-RING	
	12	1	*183-7263*	1	PLUG AS	
		1	**3J-7354**	1	SEAL-O-RING	
		1	**9S-8002**	1	PLUG-O-RING	
	13	1	**3E-4352**	1	WASHER-HARD (8.8X20.5X2.5-MM THK)	
M	14	1	**6V-3940**	1	BOLT (M8X1.25X25-MM)	
	15	1	**6V-5048**	2	SEAL-O-RING	
	16	1	**6V-5049**	1	SEAL-O-RING	
	17	1	**8T-2353**	1	ADAPTER	

M-METRIC PART
Y-SEPARATE ILLUSTRATION

297-5355 **SENSOR GP-ENGINE** *(contd.)* **i02789817**

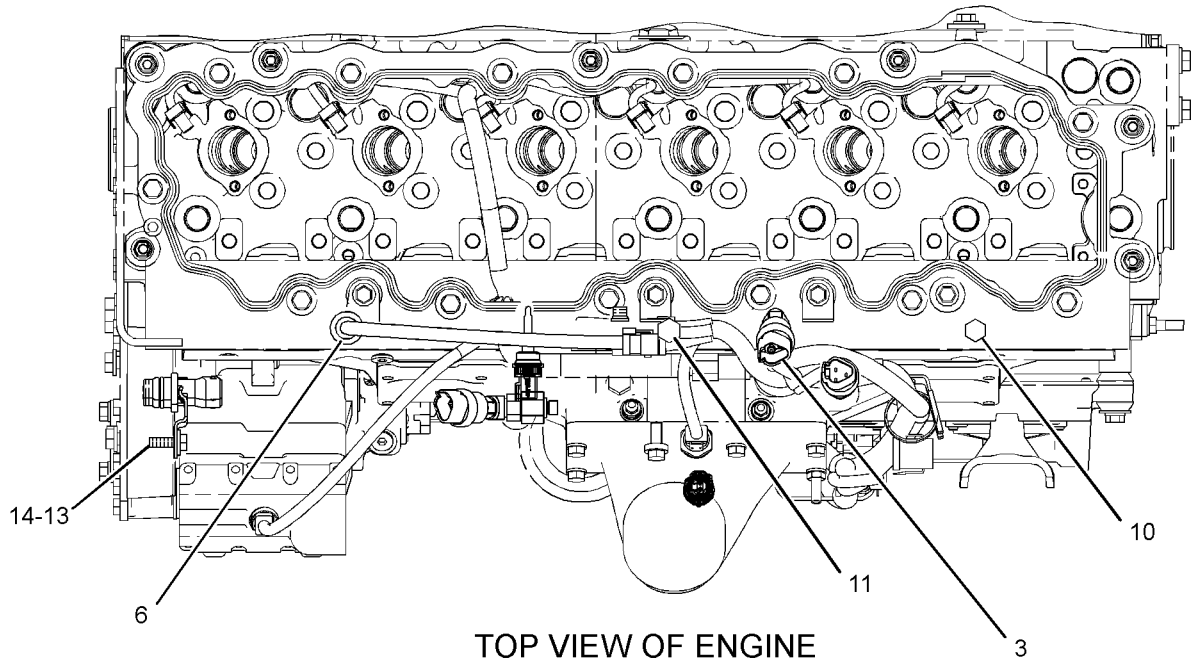

TOP VIEW OF ENGINE

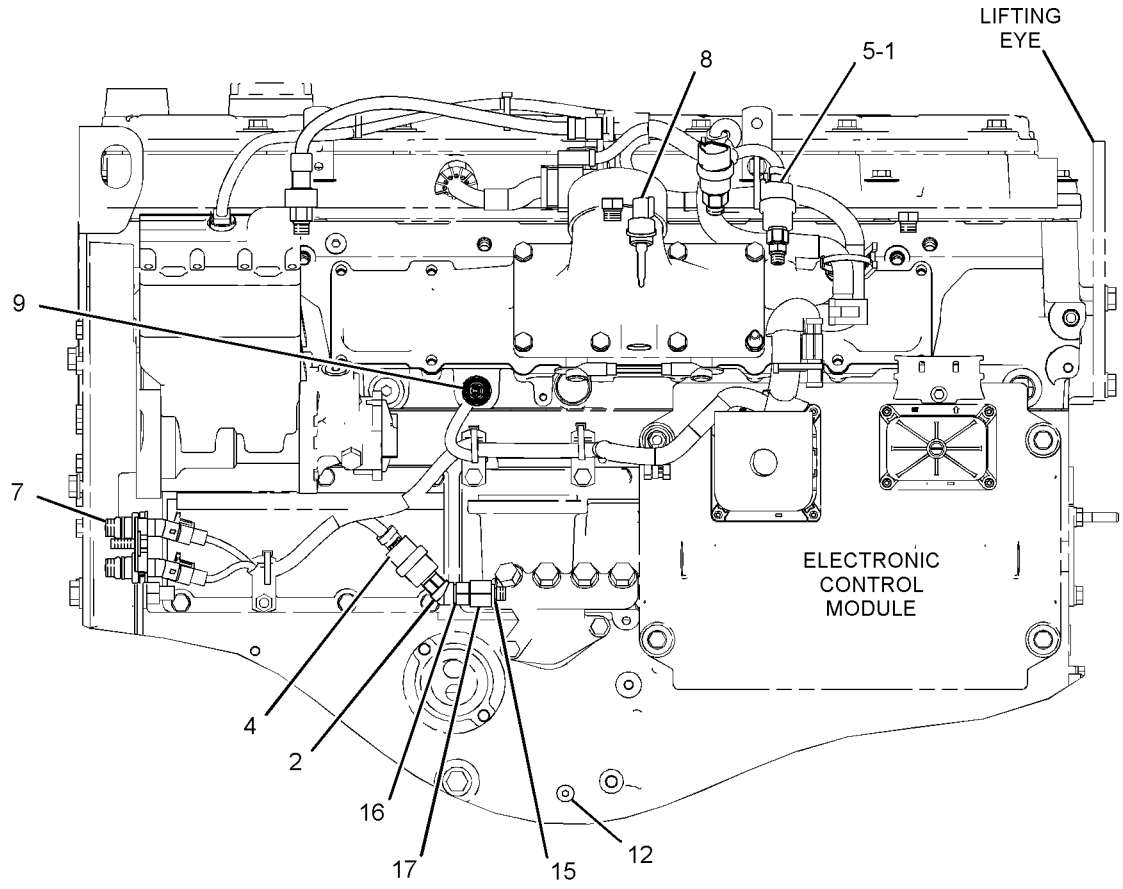

LEFT SIDE VIEW OF ENGINE

GRAPHIC #1 **<END>** g01335124

214-4863 SENSOR GP-POSITION

S/N: JBP1-UP
ROTARY
PART OF 282-2473 CONTROL GP-CLUTCH

SMCS-1408, 3168, 3175, 4269, 4809 **i01898168**

NOTE	REF NO	GRAPHIC REF	PART NUMBER	QTY	PART NAME 1 2 3 4 5 6 (PRODUCT LEVEL)	SEE PAGE
	1	1	**102-8803**	1	KIT-RECEPTACLE (3-PIN)	
					(INCLUDES RECEPTACLE AS & WEDGE)	
	2	1	**186-3735**	1	PIN-CONNECTOR (16-GA TO 18-GA)	
	3	1	**3E-3371**	1	WEDGE-RECEPTACLE LOCK (3-PIN)	

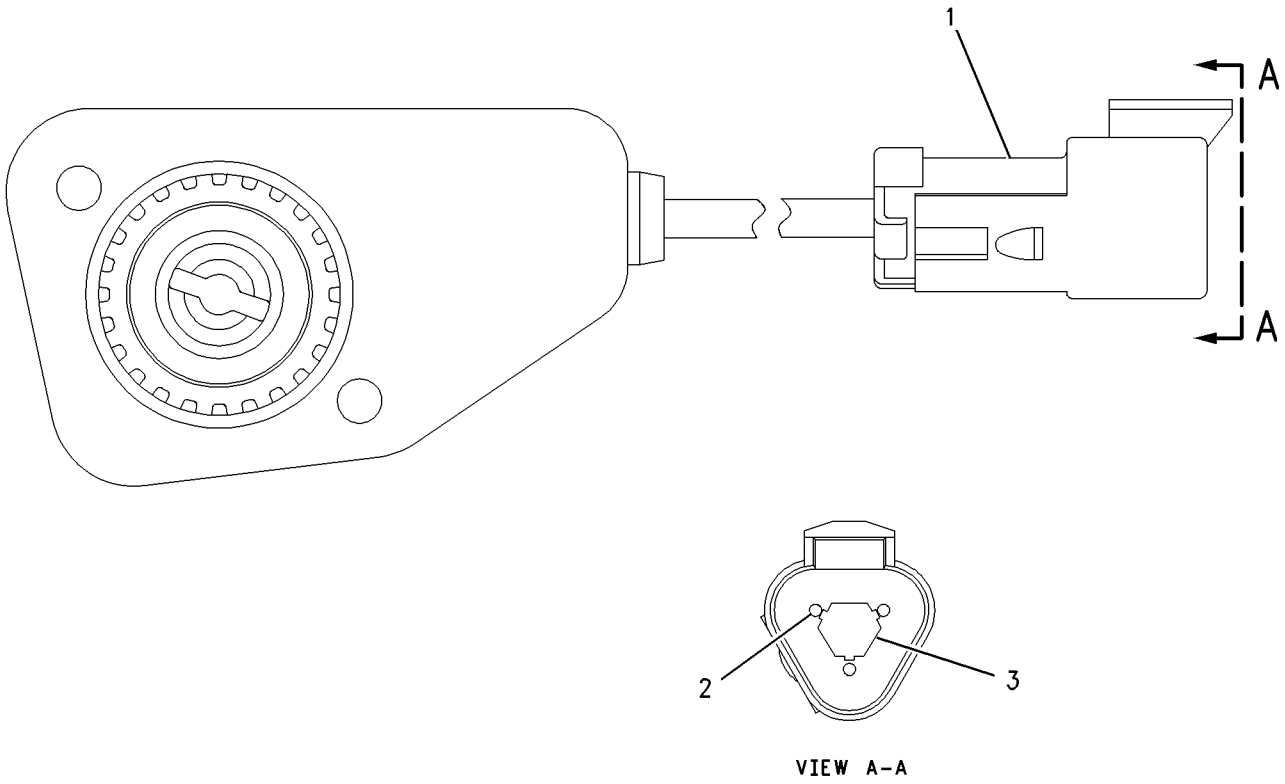

VIEW A-A

GRAPHIC #1 **<END>** g00925281

266-1467 SENSOR GP-POSITION

S/N: JBP1-UP

PART OF 282-2472 CONTROL GP-GOVERNOR

SMCS-1408, 3168, 3175, 4269, 4809 **i02987860**

NOTE	REF NO	GRAPHIC REF	PART NUMBER	QTY	PART NAME 1 2 3 4 5 6 (PRODUCT LEVEL)	SEE PAGE
	1	1	**9X-3401**	3	PIN-CONNECTOR (16-GA TO 18-GA)	
					—OR—	
		1	**126-1767**	3	PIN-CONNECTOR (14-GA)	
	2	1	**102-8803**	1	KIT-RECEPTACLE (3-PIN)	
					(INCLUDES RECEPTACLE AS & WEDGE)	
	3	1	**3E-3371**	1	WEDGE-RECEPTACLE LOCK (3-PIN)	

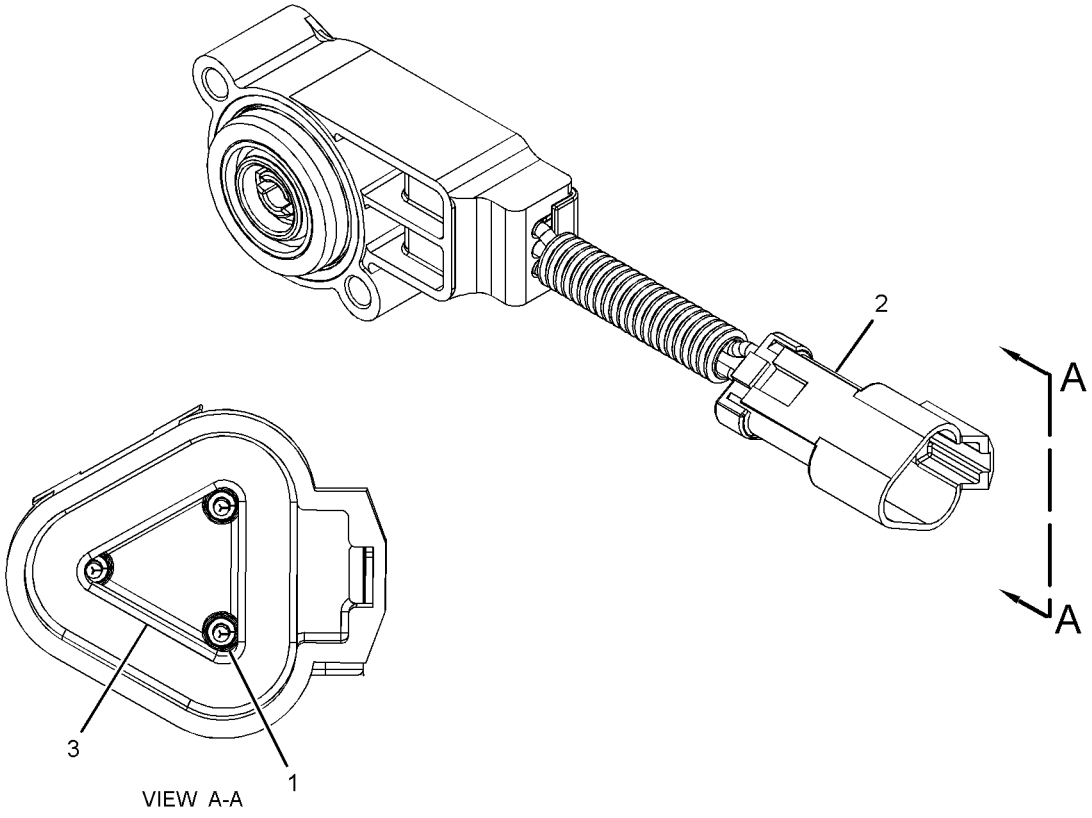

GRAPHIC #1 **<END>** g01514049

194-6722 SENSOR GP-PRESSURE

S/N: JBP1-UP

PART OF 311-0802 WIRING GP-AUXILIARY

SMCS-1052, 1058, 1439, 1718, 1917, 1923, 1924, 1925 **i03435061**

NOTE	REF NO	GRAPHIC REF	PART NUMBER	QTY	PART NAME 1 2 3 4 5 6 (PRODUCT LEVEL)	SEE PAGE
E	1	1	**9X-1813**		SLEEVE (34-CM)	
	2	1	**155-2260**	1	KIT-CONNECTING PLUG (3-PIN)	
					(INCLUDES PLUG AS, WEDGE & INTERFACE SEAL)	
	3	1	**180-9340**	3	SOCKET-CONNECTOR	

E-ORDER BY THE CENTIMETER

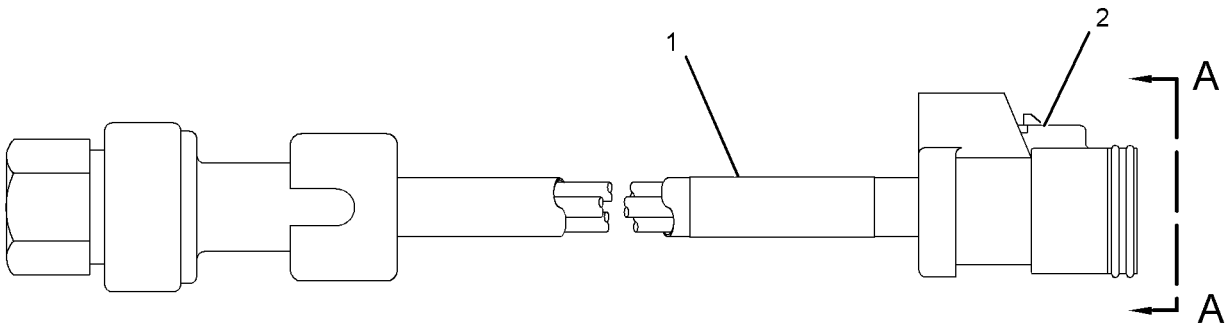

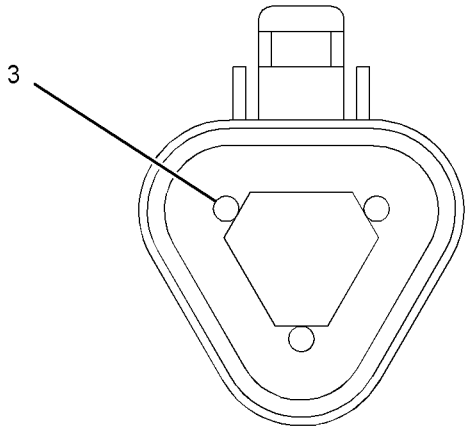

VIEW A-A

GRAPHIC #1 **<END>** g01381175

197-8393 SENSOR GP-PRESSURE

S/N: KHX8814-UP

PART OF 297-5355 SENSOR GP-ENGINE

SMCS-1052, 1058, 1439, 1718, 1917, 1923, 1924, 1925 **i01855744**

NOTE	REF NO	GRAPHIC REF	PART NUMBER	QTY	PART NAME 1 2 3 4 5 6 (PRODUCT LEVEL)	SEE PAGE
	1	1	**161-1703**	1	SENSOR GP-PRESSURE	
	2	1	**6V-5049**	1	SEAL-O-RING	

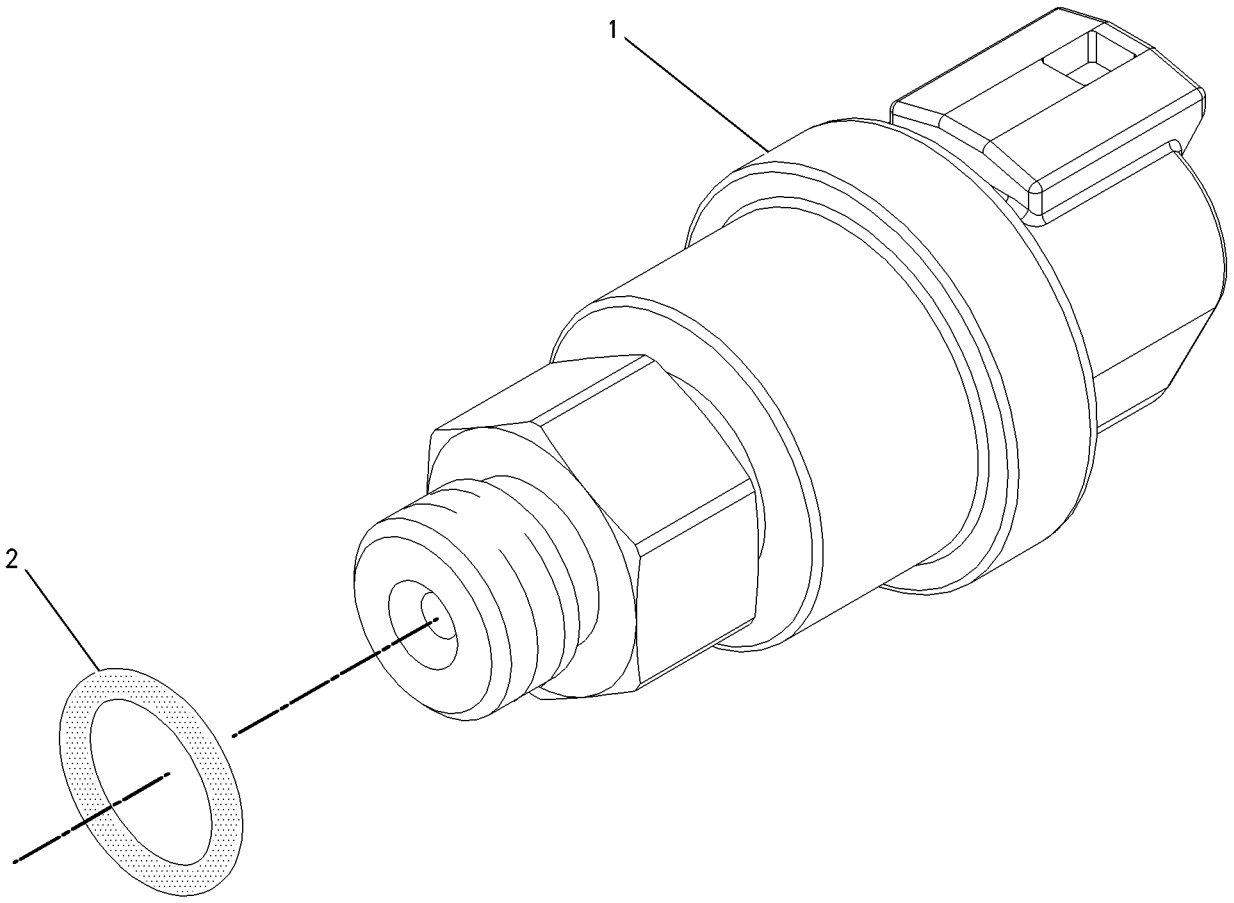

GRAPHIC #1 **<END>** g00855973

197-8394 SENSOR GP-PRESSURE

S/N: KHX8814-UP
ENGINE OIL
PART OF 297-5355 SENSOR GP-ENGINE

SMCS-1052, 1058, 1439, 1718, 1917, 1923, 1924, 1925 **i01855745**

NOTE	REF NO	GRAPHIC REF	PART NUMBER	QTY	PART NAME 1 2 3 4 5 6 (PRODUCT LEVEL)	SEE PAGE
	1	1	**161-1705**	1	SENSOR AS-PRESSURE	
	2	1	**6V-5048**	1	SEAL-O-RING	

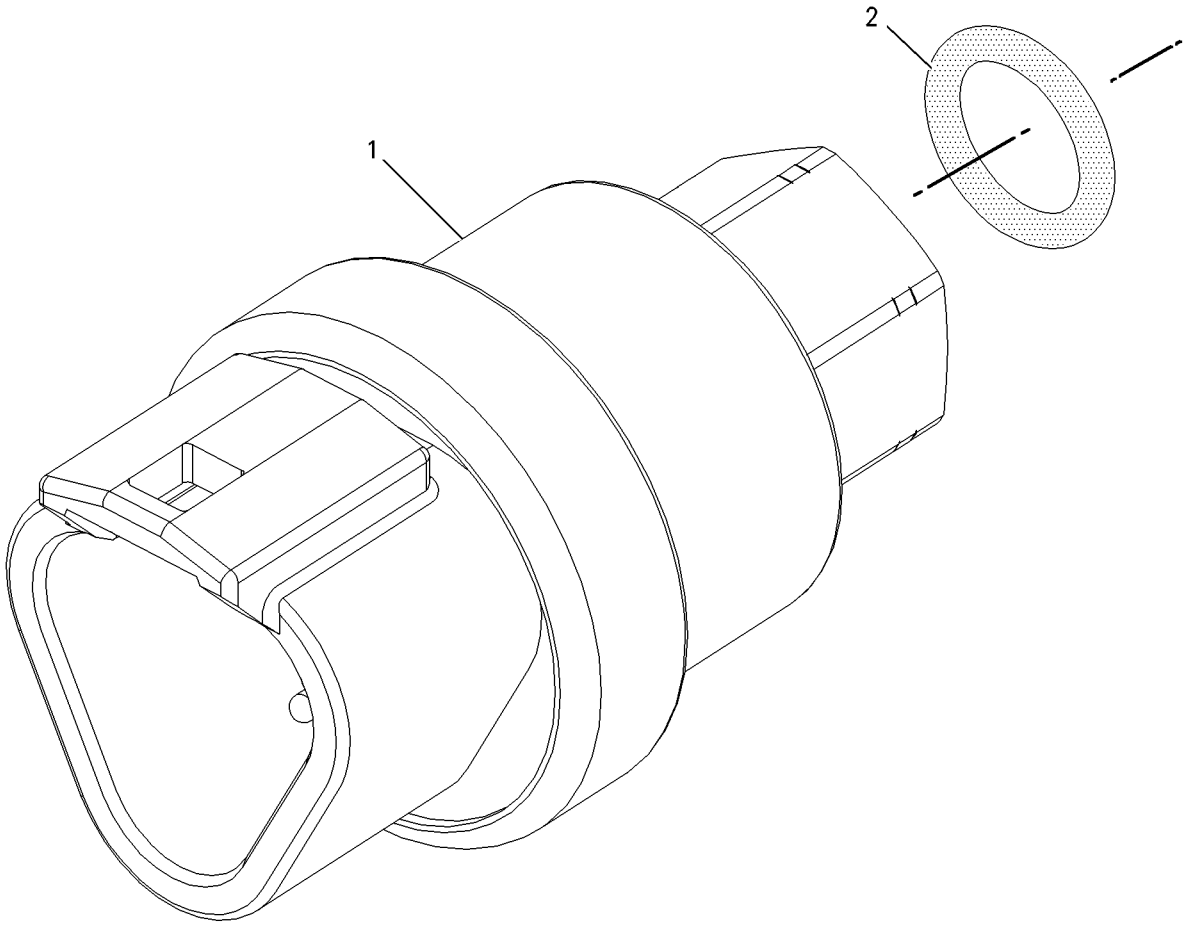

GRAPHIC #1 **<END>** g00856107

210-1747 SENSOR GP-PRESSURE

S/N: KHX8814-UP

PART OF 297-5355 SENSOR GP-ENGINE

SMCS-1052, 1058, 1439, 1718, 1917, 1923, 1924, 1925 **i02147083**

NOTE	REF NO	GRAPHIC REF	PART NUMBER	QTY	PART NAME 1 2 3 4 5 6 (PRODUCT LEVEL)	SEE PAGE
	1	1	**161-1704**	1	SENSOR GP-PRESSURE	
	2	1	**6V-5048**	1	SEAL-O-RING	

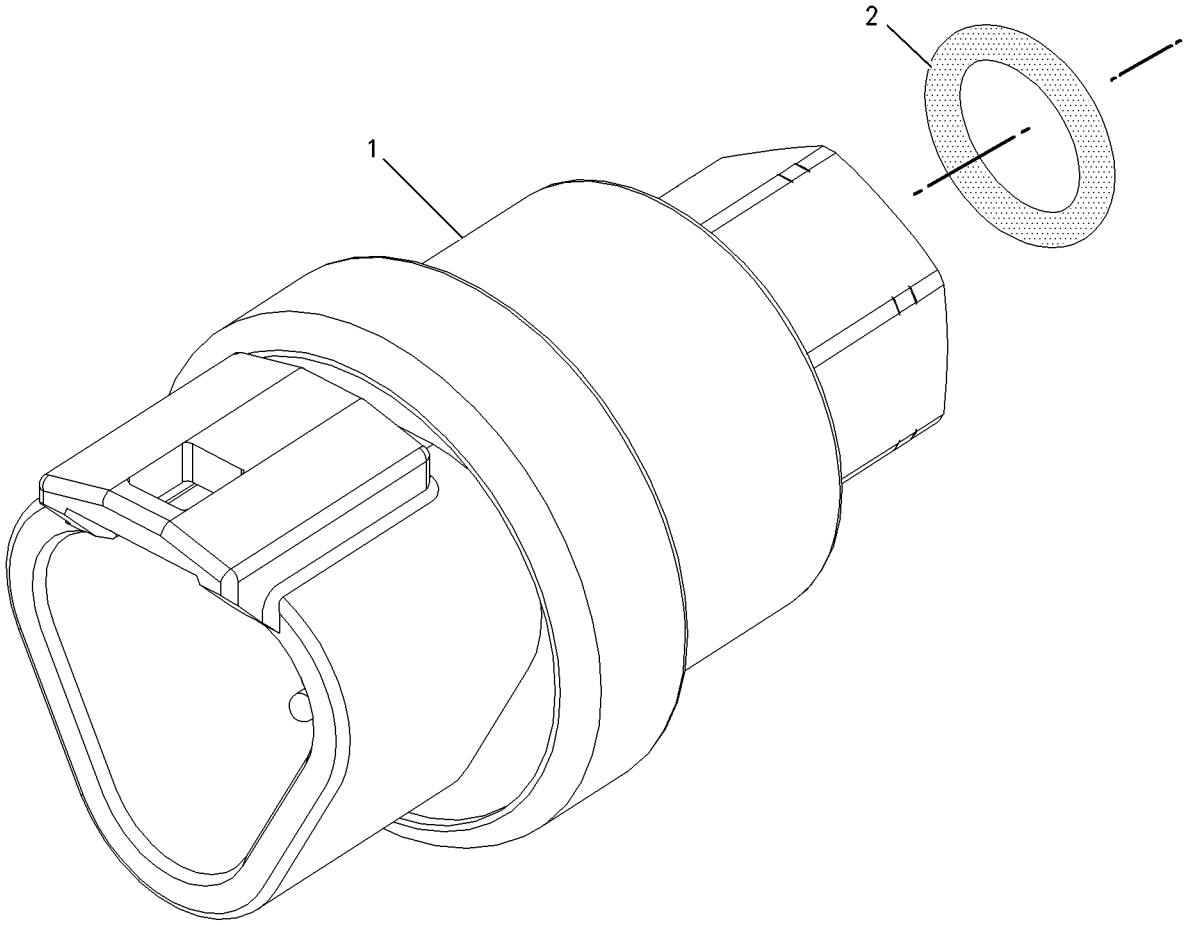

GRAPHIC #1 **<END>** g00856107

224-4536 SENSOR GP-PRESSURE

S/N: KHX8814-UP

PART OF 236-6220 SENSOR GP-PRESSURE

SMCS-1052, 1058, 1439, 1718, 1917, 1923, 1924, 1925 **i03172043**

NOTE	REF NO	GRAPHIC REF	PART NUMBER	QTY	PART NAME 1 2 3 4 5 6 (PRODUCT LEVEL)	SEE PAGE
BE	1	1	**9X-1813**		SLEEVE	
	2	1	**155-2260**	1	KIT-CONNECTING PLUG (3-PIN)	
					(INCLUDES PLUG AS, WEDGE, & INTERFACE SEAL)	
	3	1	**194-5226**	1	WIRE AS-HARNESS (16-GA TO 18-GA)	
					—OR—	
		1	**194-5227**	1	WIRE AS-HARNESS (14-GA WIRE)	
	4	1	**155-2276**	1	WEDGE-PLUG LOCK (3-PIN)	

B-USE AS REQUIRED
E-ORDER BY THE CENTIMETER

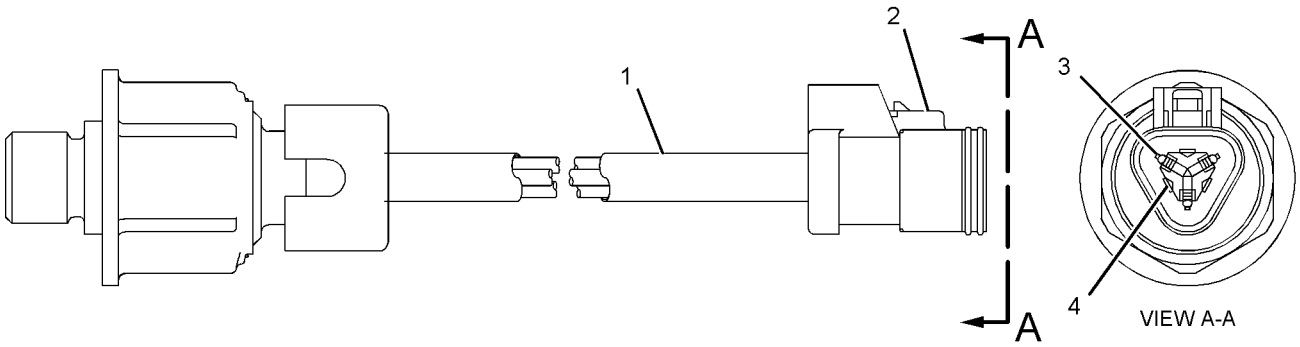

GRAPHIC #1 **<END>** g01040301

236-6220 SENSOR GP-PRESSURE

S/N: KHX8814-UP

PART OF 297-5355 SENSOR GP-ENGINE

SMCS-1052, 1058, 1439, 1718, 1917, 1923, 1924, 1925 **i02835983**

NOTE	REF NO	GRAPHIC REF	PART NUMBER	QTY	PART NAME 1 2 3 4 5 6 (PRODUCT LEVEL)	SEE PAGE
	1	1	**214-7567**	1	SEAL-O-RING	
Y	2	1	**224-4536**	1	SENSOR GP-PRESSURE	172

Y-SEPARATE ILLUSTRATION

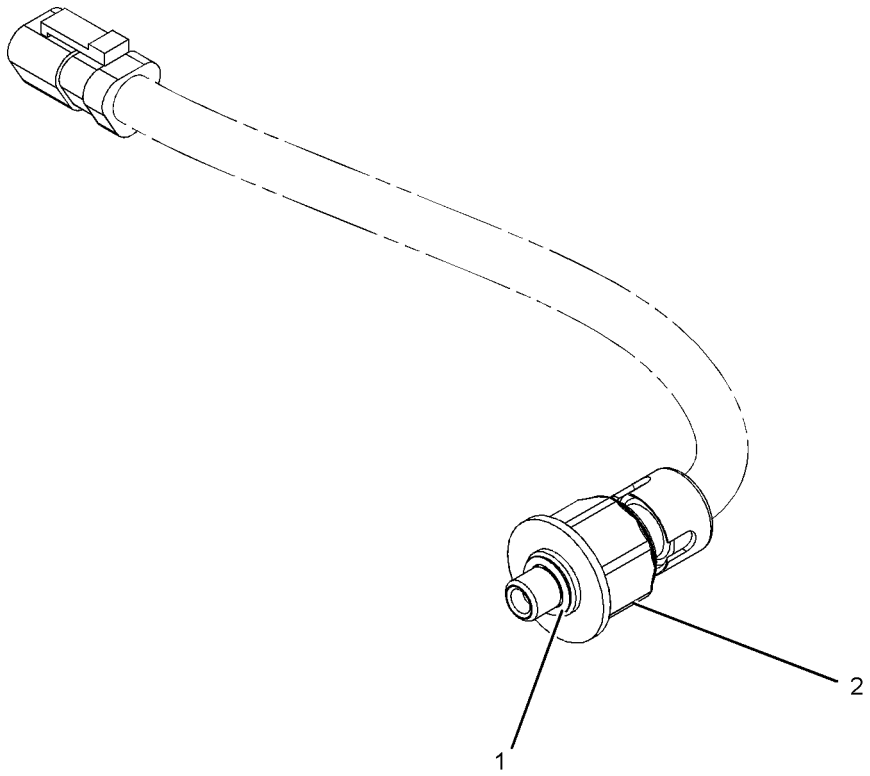

GRAPHIC #1 **<END>** g01054528

193-2550 SENSOR GP-SPEED

S/N: JBP1-UP

PART OF 311-0794 WIRING GP-REAR

SMCS-1439, 1907, 1912, 3141, 3175, 4803 **i02919909**

NOTE	REF NO	GRAPHIC REF	PART NUMBER	QTY	PART NAME 1 2 3 4 5 6 (PRODUCT LEVEL)	SEE PAGE
	1	1	**171-5349**	1	STRAP-MARKER	
	2	1	**102-8802**	1	KIT-RECEPTACLE (2-PIN)	
					(INCLUDES RECEPTACLE AS & WEDGE)	
	3	1	**9X-3401**	2	PIN-CONNECTOR (16-GA TO 18-GA)	
E	4	1	**9X-1813**		SLEEVE (14-CM)	

E-ORDER BY THE CENTIMETER

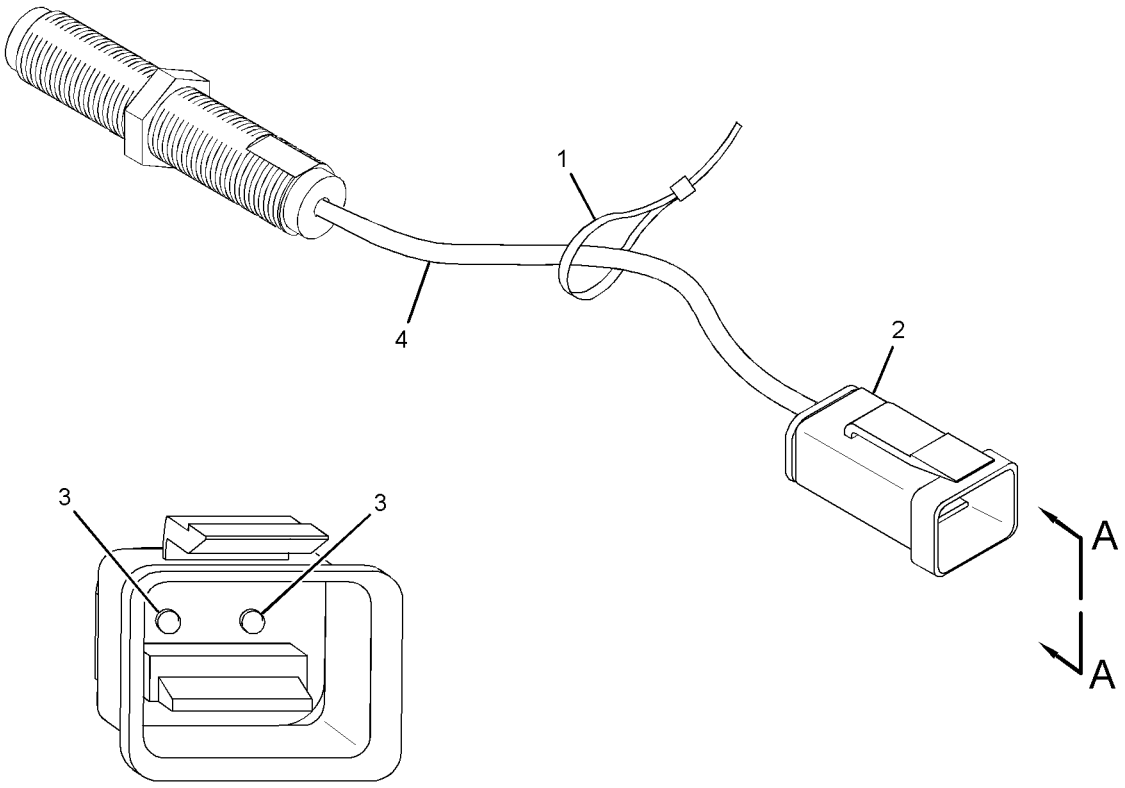

VIEW A-A

GRAPHIC #1 **<END>** g01454055

236-6221 SENSOR GP-SPEED

S/N: KHX8814-UP
ENGINE SPEED
PART OF 297-5355 SENSOR GP-ENGINE

SMCS-1439, 1907, 1912, 3141, 3175, 4803 **i02421726**

NOTE	REF NO	GRAPHIC REF	PART NUMBER	QTY	PART NAME 1 2 3 4 5 6 (PRODUCT LEVEL)	SEE PAGE
	1	1	**203-3940**	2	SEAL-O-RING	
	2	1	**245-4630**	1	SENSOR GP-SPEED	

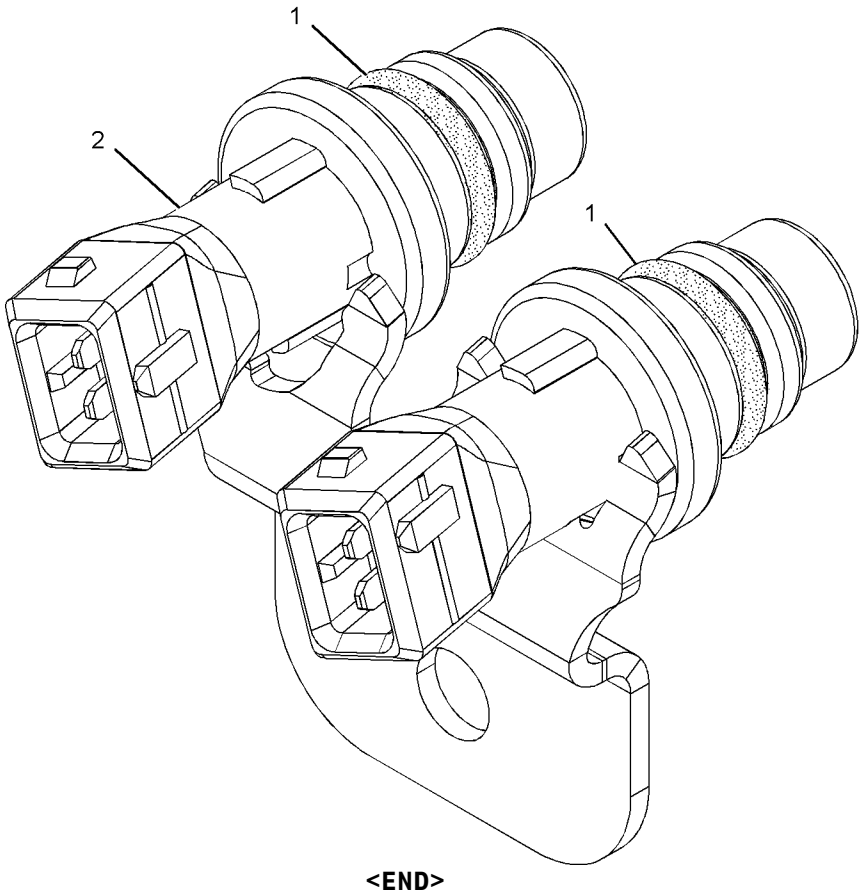

GRAPHIC #1 **<END>** g01013894

290-5792 SENSOR GP-SPEED

S/N: DPK1-UP

PART OF 277-6433 CASE & PARTS GP-PLANETARY

SMCS-1439, 1907, 1912, 3141, 3175, 4803 **i02836788**

NOTE	REF NO	GRAPHIC REF	PART NUMBER	QTY	PART NAME 1 2 3 4 5 6 (PRODUCT LEVEL)	SEE PAGE
	1	1	**171-5349**	1	STRAP-MARKER	
	2	1	**102-8802**	1	KIT-RECEPTACLE (2-PIN)	
					(INCLUDES RECEPTACLE AS & WEDGE)	
	3	1	**186-3735**	2	PIN-CONNECTOR (16-GA TO 18-GA)	
E	4	1	**9X-1813**		SLEEVE (14-CM)	

E-ORDER BY THE CENTIMETER

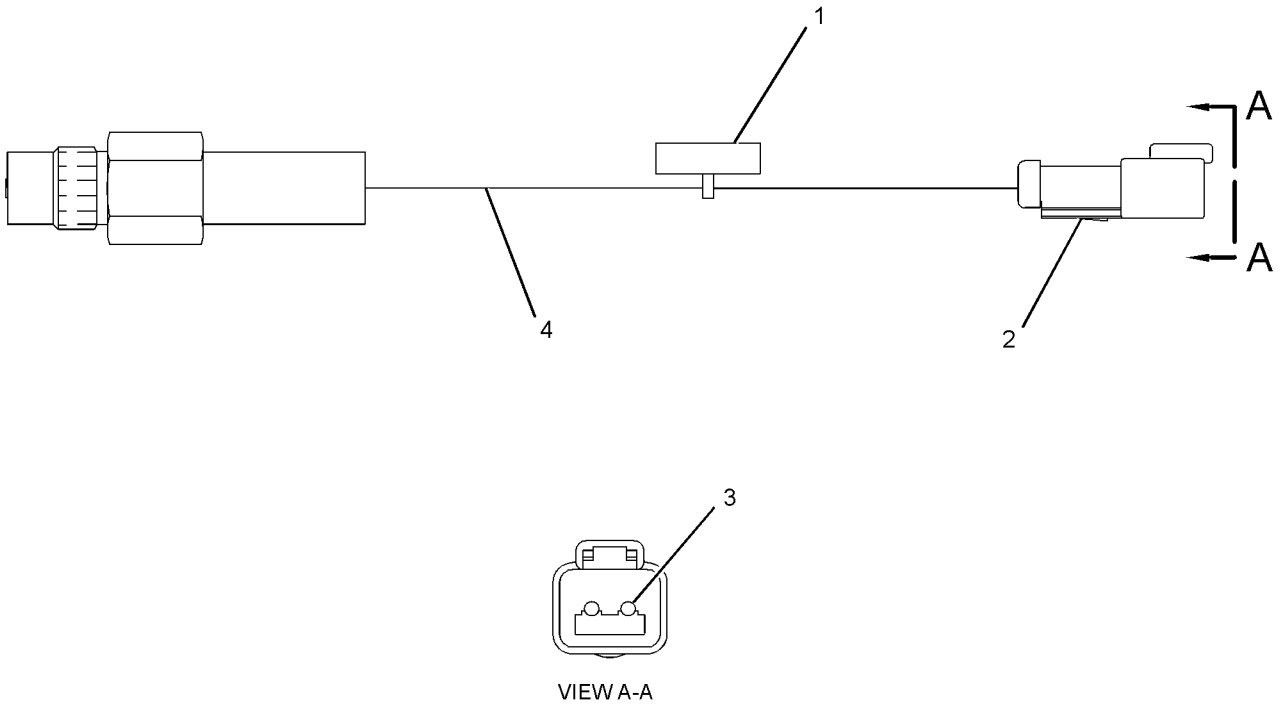

GRAPHIC #1 **<END>** g01409880

3E-8700 SENSOR GP-TEMPERATURE

S/N: DPK1-UP

PART OF 277-6433 CASE & PARTS GP-PLANETARY

SMCS-1087, 1439, 1906, 1919, 1921, 1922, 1928, 1929, 192T, 1932, 301T, 3194, 3290, 429T, 509T, 7344

i02865269

NOTE	REF NO	GRAPHIC REF	PART NUMBER	QTY	PART NAME 1 2 3 4 5 6 (PRODUCT LEVEL)	SEE PAGE
	1	1	**8T-8730**	3	SOCKET-CONNECTOR (16-GA TO 18-GA)	
	2	1	**102-8813**	1	SEAL	
	3	1	**102-8808**	1	KIT-CONNECTING PLUG (3-PIN)	
BE	4	1	**9X-1813**		SLEEVE	
	5	1	**3E-3368**	1	WEDGE-PLUG LOCK (3-PIN)	

B-USE AS REQUIRED
E-ORDER BY THE CENTIMETER

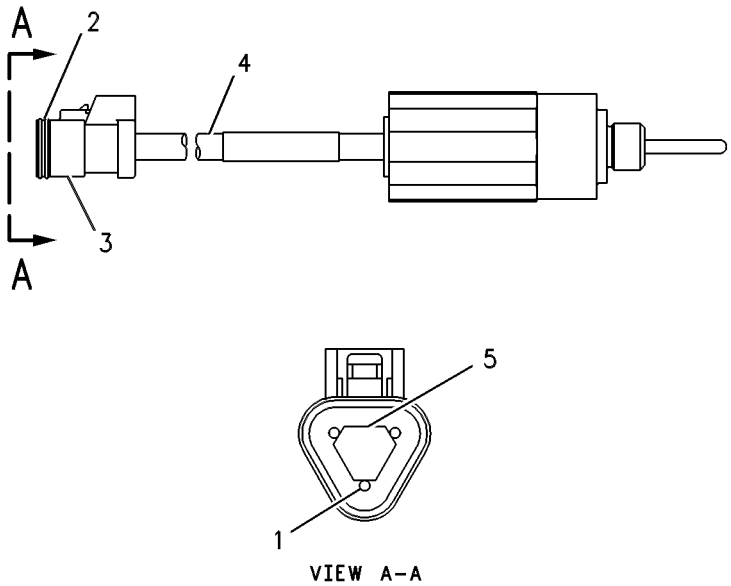

VIEW A-A

GRAPHIC #1

<END>

g00248316

234-5013 SENSOR GP-TEMPERATURE

S/N: JBP1-UP
AMPSEAL CONNECTOR
PART OF 311-2770 LINES GP-FUEL

SMCS-1087, 1439, 1906, 1919, 1921, 1922, 1928, 1929, 192T, 1932, 301T, 3194, 3290, 429T, 509T, 7344 **i02434804**

NOTE	REF NO	GRAPHIC REF	PART NUMBER	QTY	PART NAME 1 2 3 4 5 6 (PRODUCT LEVEL)	SEE PAGE
	1	1	**256-6453**	1	SENSOR AS-TEMPERATURE	
	2	1	**8L-2786**	1	SEAL-O-RING	

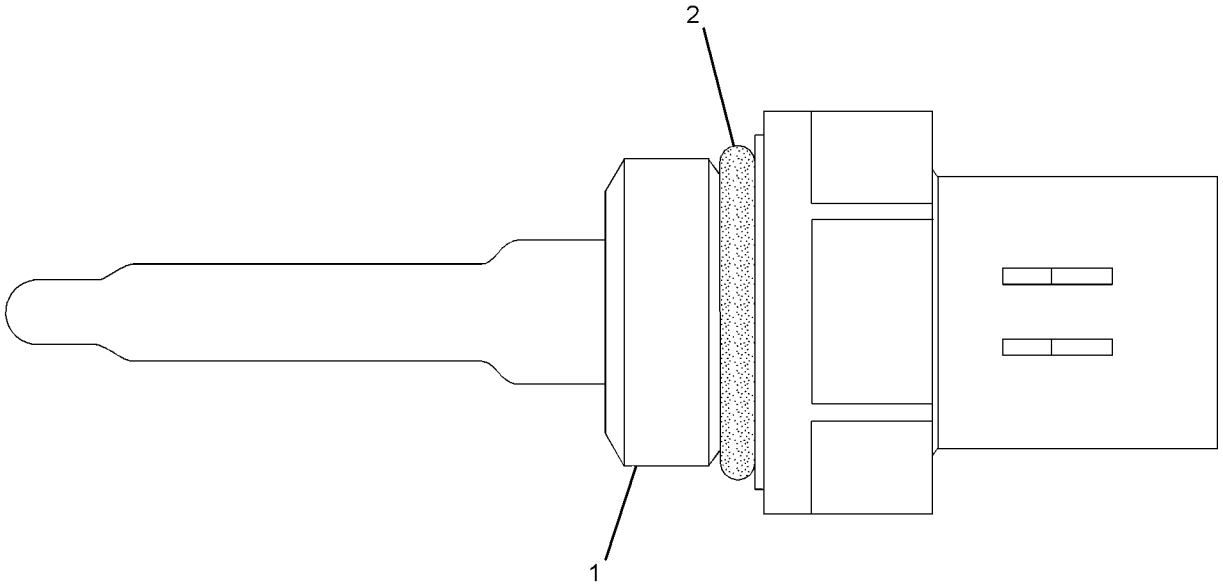

GRAPHIC #1 **<END>** g01164268

274-7395 SENSOR GP-TEMPERATURE

S/N: KHX8814-UP

PART OF 297-5355 SENSOR GP-ENGINE

SMCS-1087, 1439, 1906, 1919, 1921, 1922, 1928, 1929, 192T, 1932, 301T, 3194, 3290, 429T, 509T, 7344

i03435385

NOTE	REF NO	GRAPHIC REF	PART NUMBER	QTY	PART NAME 1 2 3 4 5 6 (PRODUCT LEVEL)	SEE PAGE
	1	1	**264-4297**	1	SENSOR GP-TEMPERATURE	
		1	**137-6645**	1	PAD	
	2	1	**8L-2786**	1	SEAL-O-RING	

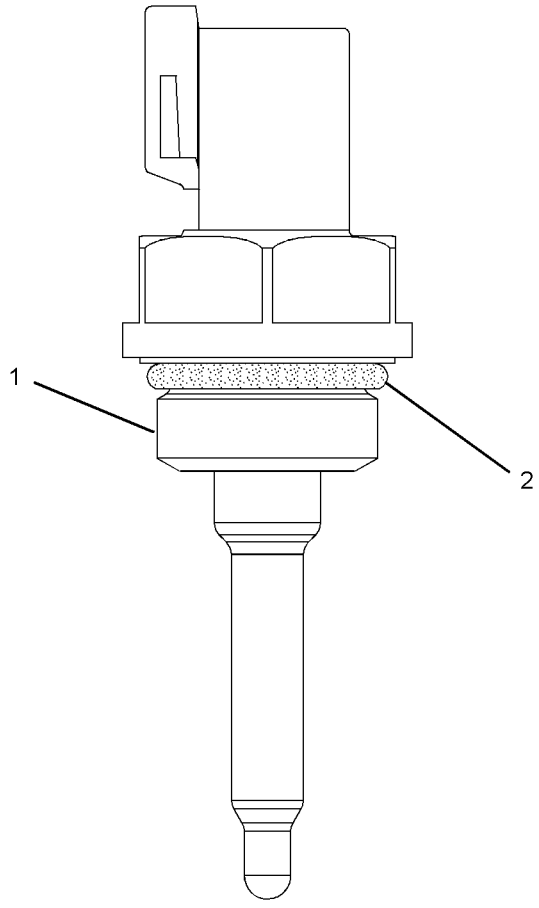

GRAPHIC #1

<END>

g01353734

274-7396 SENSOR GP-TEMPERATURE

S/N: KHX8814-UP

PART OF 297-5355 SENSOR GP-ENGINE

SMCS-1087, 1439, 1906, 1919, 1921, 1922, 1928, 1929, 192T, 1932, 301T, 3194, 3290, 429T, 509T, 7344 **i03435390**

NOTE	REF NO	GRAPHIC REF	PART NUMBER	QTY	PART NAME 1 2 3 4 5 6 (PRODUCT LEVEL)	SEE PAGE
	1	1	**264-4297**	1	SENSOR GP-TEMPERATURE	
		1	**137-6645**	1	PAD	
	2	1	**6V-6609**	1	SEAL-O-RING	

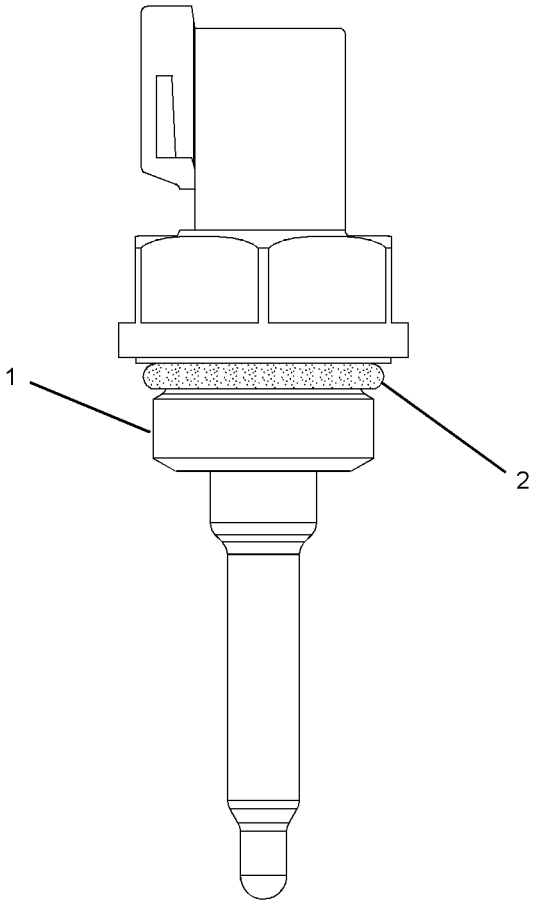

GRAPHIC #1 **<END>** g01353734

320-1340 STARTING AID AR-ETHER

S/N: JBP1-UP

AN ATTACHMENT

SMCS-1456 **i03251920**

NOTE	REF NO	GRAPHIC REF	PART NUMBER	QTY	PART NAME 1 2 3 4 5 6 (PRODUCT LEVEL)	SEE PAGE
Y	1	1	*311-0801*	1	WIRING GP-ETHER STARTING AID	209
Y	2	1	*311-2771*	1	STARTING AID GP-ETHER	182

Y-SEPARATE ILLUSTRATION

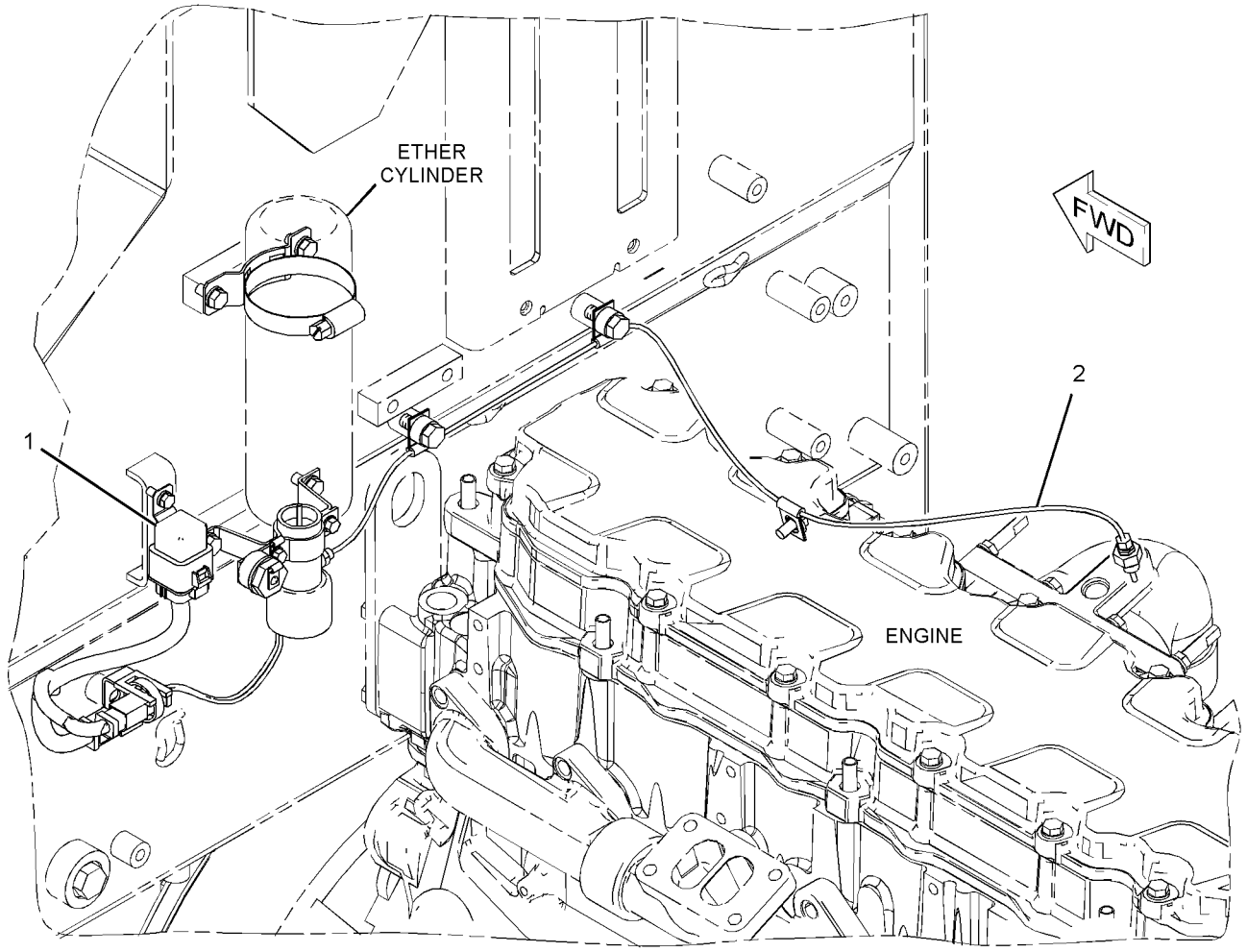

GRAPHIC #1 **<END>** g01691993

ELECTRICAL AND STARTING SYSTEM

311-2771 STARTING AID GP-ETHER

S/N: JBP1-UP
PART OF 320-1340 STARTING AID AR-ETHER
AN ATTACHMENT

SMCS-1456 **i03251801**

NOTE	REF NO	GRAPHIC REF	PART NUMBER	QTY	PART NAME 1 2 3 4 5 6 (PRODUCT LEVEL)	SEE PAGE
	1	1	**7N-2059**	1	CLAMP AS	
Y	2	1	**239-1134**	1	VALVE GP-ETHER STARTING (24-VOLT)	194
	3	1	**241-4194**	1	FITTING AS (CONTROL)	
	4	1	**258-0733**	1	ATOMIZER AS	
		1	**236-4545**	1	NUT-SLEEVE (5/16-24-THD)	
	5	1	**124-2528**	2	SPACER (11X20X10-MM THK)	
	6	1	**3J-1907**	1	SEAL-O-RING	
	7	1	**3Y-2888**	1	CONNECTOR	
	8	1	**5P-4116**	1	WASHER-HARD (8.8X20.5X2-MM THK)	
	9	1	**6V-2686**	3	CLIP	
M	10	1	**8T-4136**	2	BOLT (M10X1.5X25-MM)	
M	11	1	**8T-4200**	5	BOLT (M8X1.25X16-MM)	
	12	1	**8T-4224**	4	WASHER-HARD (8.8X16X2-MM THK)	
J	13	1	**5P-5630**		TUBE (9-DM)	
A			**275-3634**	1	CYLINDER AS-ETHER (U.S.)	
					(MUST BE PROCURED LOCALLY FROM YOUR CATERPILLAR DEALER)	

A-NOT PART OF THIS GROUP
J-ORDER BY THE DECIMETER
M-METRIC PART
Y-SEPARATE ILLUSTRATION

311-2771 **STARTING AID GP-ETHER** *(contd.)* **i03251801**

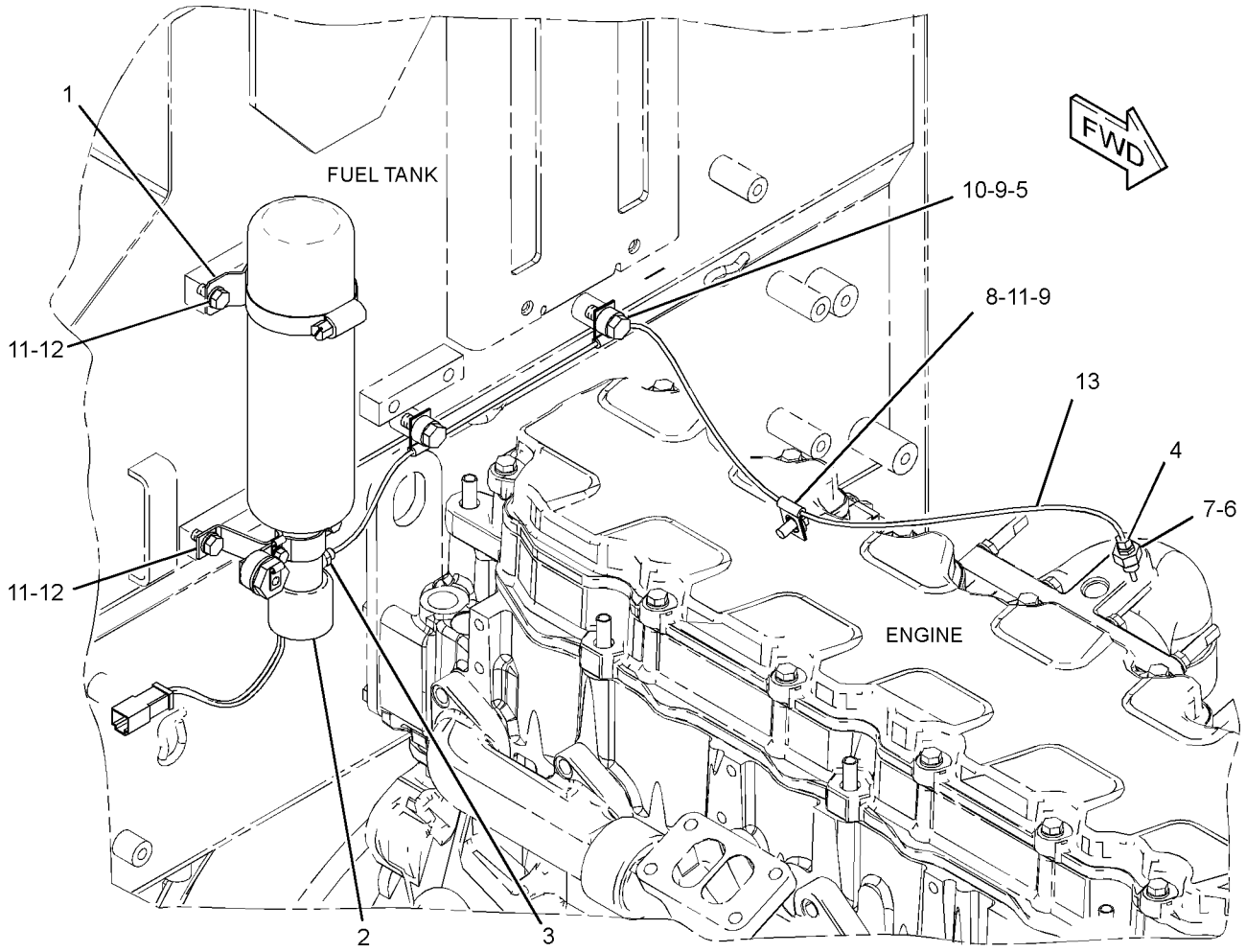

GRAPHIC #1 **<END>** g01731999

111-4275 STARTING MOTOR GP-ELECTRIC

S/N: KHX8814-UP
24 VOLT
PART OF 312-0255 ENGINE AR-COMPLETE

SMCS-1453 **i01635526**

NOTE	REF NO	GRAPHIC REF	PART NUMBER	QTY	PART NAME 1 2 3 4 5 6 (PRODUCT LEVEL)	SEE PAGE
M	1	1	**118-9573**	3	BOLT-12 POINT HEAD (M10X1.15-THD)	
CYR	2	1	**207-1517**	1	STARTING MOTOR GP-ELECTRIC	185
	3	1	**3K-3257**	1	GASKET	
M	4	1	**8T-4191**	1	BOLT (M10X1.5X16-MM)	
	5	1	**8Y-9603**	1	CABLE AS-STARTING MOTOR	
		1	**1S-7251**	1	TERMINAL-CABLE (00-GA, 1/2-IN BOLT)	
		1	**1S-7252**	1	TERMINAL-CABLE (00-GA, 3/8-IN BOLT)	
E		1	**5P-0747**		CABLE (00-GA, BLACK) (28CM)	
	6	1	**8T-4121**	4	WASHER-HARD (11X21X2.5-MM THK)	

C-CHANGE FROM PREVIOUS TYPE
E-ORDER BY THE CENTIMETER
M-METRIC PART
R-REMFG PART MAY BE AVAILABLE
Y-SEPARATE ILLUSTRATION

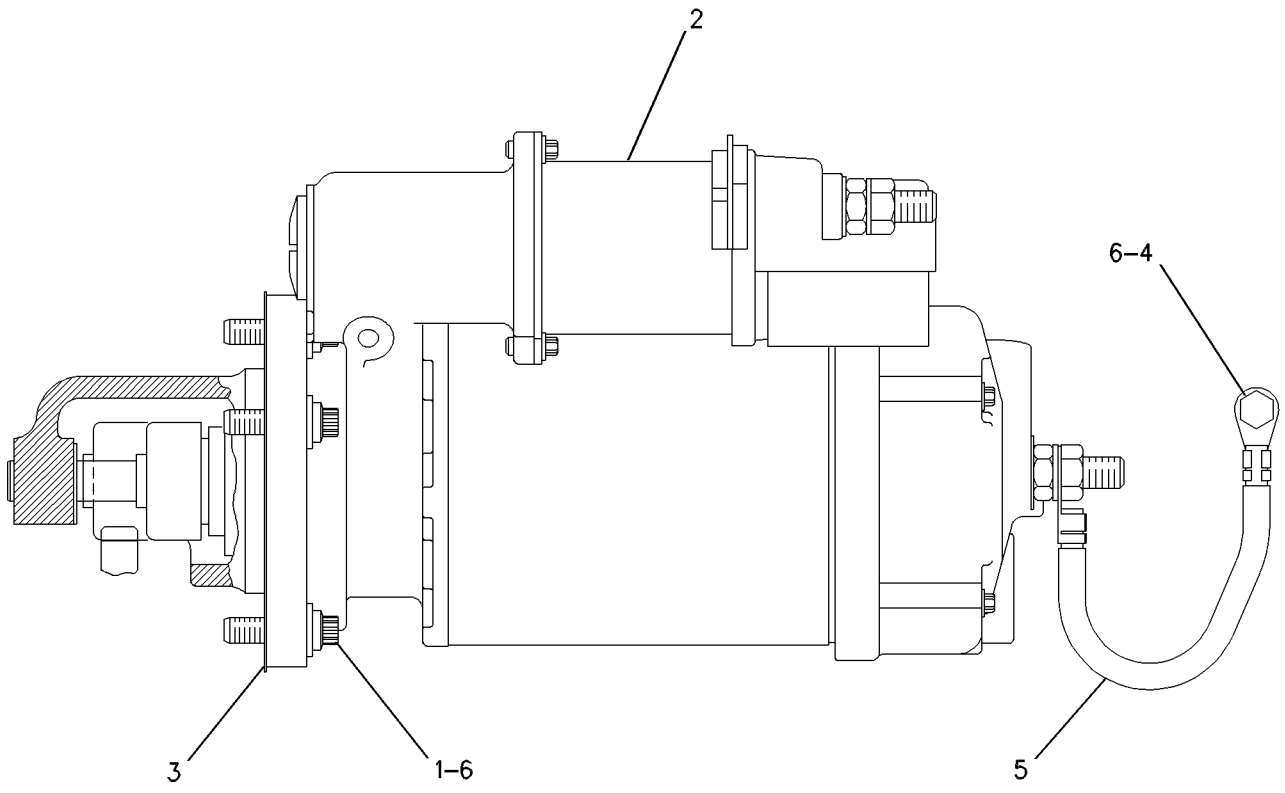

GRAPHIC #1 **<END>** g00613782

ELECTRICAL AND STARTING SYSTEM

207-1517 STARTING MOTOR GP-ELECTRIC*R

S/N: KHX8814-UP
24 VOLT
PART OF 111-4275 STARTING MOTOR GP-ELECTRIC

SMCS-1453 **i02946769**

NOTE	REF NO	GRAPHIC REF	PART NUMBER	QTY	PART NAME 1 2 3 4 5 6 (PRODUCT LEVEL)	SEE PAGE
	1	1	**8T-9884**	1	KIT-INSULATOR (STARTING MOTOR)	
					(INCLUDES INSULATORS & BUSHING)	
	2	1	**106-7149**	1	HOUSING AS	
	3	1	**102-9863**	1	TERMINAL AS	
	4	1	**6V-8188**	4	NUT (1/2-13-THD)	
	5	1	**7X-0562**	4	WASHER-HARD (13.5X19X0.8-MM THK)	
	6	1	**3E-7853**	1	TERMINAL	
	7	1	**9X-4821**	1	PLATE AS	
	8	1	**3E-7852**	1	COIL-STARTING MOTOR	
	9	1	**7T-3454**	1	INSULATOR	
	10	1	**9X-4271**	1	CONNECTOR	
	11	1	**7T-3451**	1	KIT-INSULATOR (TERMINAL)	
	12	1	**8T-8569**	1	INSULATOR-TERMINAL	
	13	1	**5S-7349**	4	BOLT (1/4-20X0.5-IN)	
	14	1	**8T-4205**	4	WASHER-HARD (7.2X14.5X2-MM THK)	
	15	1	**7X-1950**	4	SHOE-POLE	
	16	1	**3E-7861**	1	KIT-LEVER (STARTING MOTOR)	
					(INCLUDES LEVER AS, SHAFT AS, GASKET, O-RINGS, RING & NUT)	
	17	1	**3R-8797**	8	SCREW & WASHER AS (3/8-24X0.72-IN)	
	18	1	**3E-7855**	1	ARMATURE AS-STARTER (24-VOLT)	
	19	1	**7X-1952**	1	HOUSING AS-LEVER	
	20	1	**4M-1831**	1	PLUG-LEVER HOUSING	
	21	1	**7L-2894**	1	GASKET	
	22	1	**036-9823**	5	BOLT (1/4-28X1-IN)	
	23	1	**3E-7857**	1	DRIVE AS-STARTING MOTOR	
	24	1	**3E-7858**	1	HOUSING AS	
	25	1	**7X-3373**	6	BOLT (5/16-18X0.88-IN)	
	26	1	**206-8784**	1	KIT-SOLENOID (STARTING MOTOR)	
					(INCLUDES SOLENOID AS, BOLT, CONNECTORS, NUT & NUT AS)	
	27	1	**6V-8378**	2	NUT (10-32-THD)	
	28	1	**8F-1434**	1	LOCKWASHER	
	29	1	**8T-0328**	2	WASHER-HARD (5.5X10X1-MM THK)	
	30	1	**9X-4824**	1	COVER-STARTING MOTOR	
	31	1	**9X-4825**	1	KIT-BRUSH (STARTING MOTOR)	
					(INCLUDES O-RING, SCREWS, BRUSHES, AND SPRINGS)	
					AVAILABLE REPAIR KIT(S):	
			3E-7860	1	KIT-BUSHING (STARTING MOTOR)	
					(INCLUDES BUSHINGS, PLUGS, CUPS, SEAL, NUT, O-RINGS, GASKET, SPACER, WASHERS & SCREW ASSEMBLIES)	

207-1517 **STARTING MOTOR GP-ELECTRIC** *(contd.)* **i02946769**

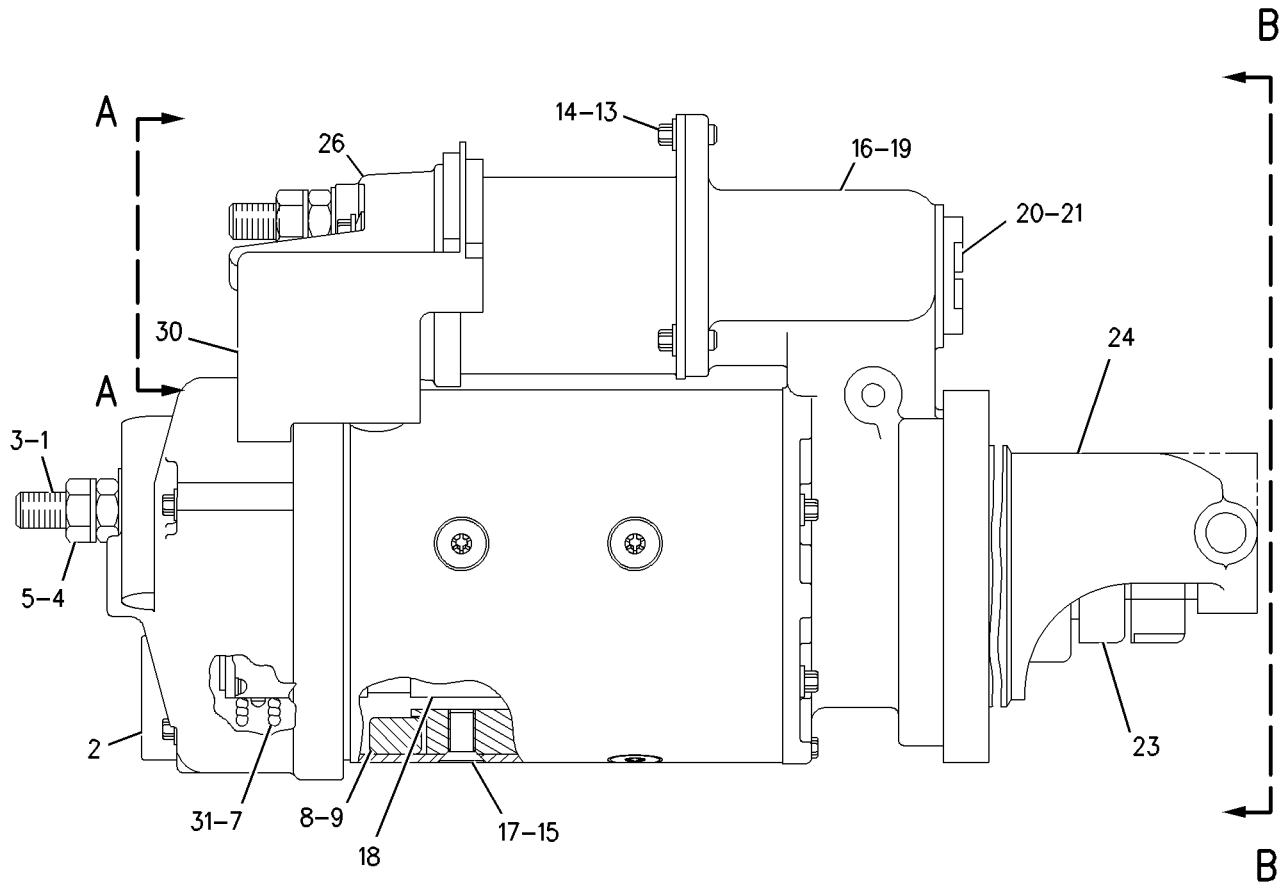

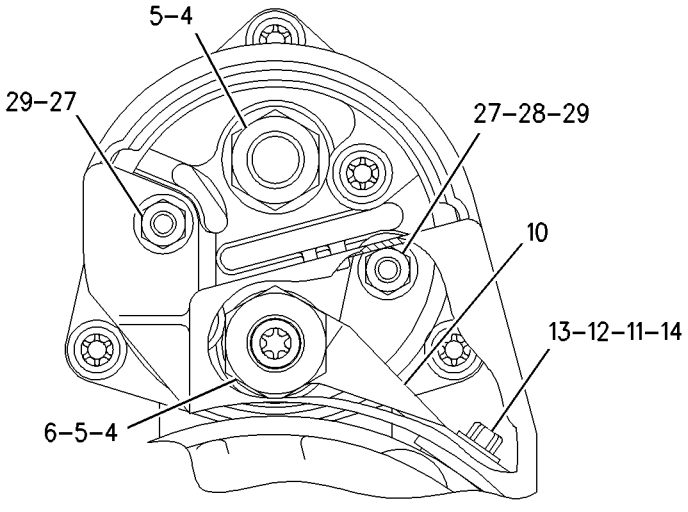

VIEW A-A

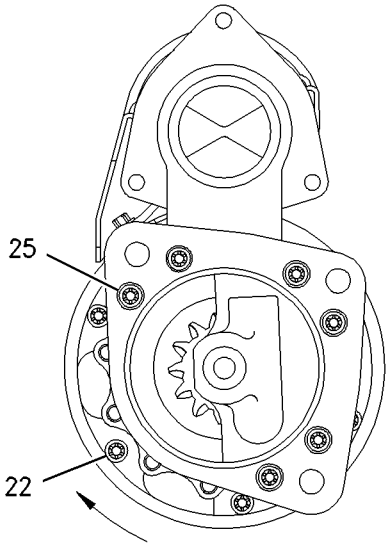

VIEW B-B

GRAPHIC #1 **<END>** g00839695

164-7577 SWITCH GP-BYPASS

S/N: JBP1-UP

PART OF 238-1029 BASE GP-OIL FILTER

SMCS-1408, 1435 **i02891455**

NOTE	REF NO	GRAPHIC REF	PART NUMBER	QTY	PART NAME 1 2 3 4 5 6 (PRODUCT LEVEL)	SEE PAGE
BE	1	1	**9X-1813**		SLEEVE	
	2	1	**102-8802**	1	KIT-RECEPTACLE (2-PIN)	
					(INCLUDES RECEPTACLE AS & WEDGE)	
	3	1	**186-3735**	2	PIN-CONNECTOR (16-GA TO 18-GA)	
	4	1	**3E-3365**	1	WEDGE-RECEPTACLE LOCK (2-PIN)	
	5	1	**3D-2824**	1	SEAL-O-RING	
Z	6	1		1	SWITCH AS	

B-USE AS REQUIRED
E-ORDER BY THE CENTIMETER
Z-NOT SERVICED SEPARATELY

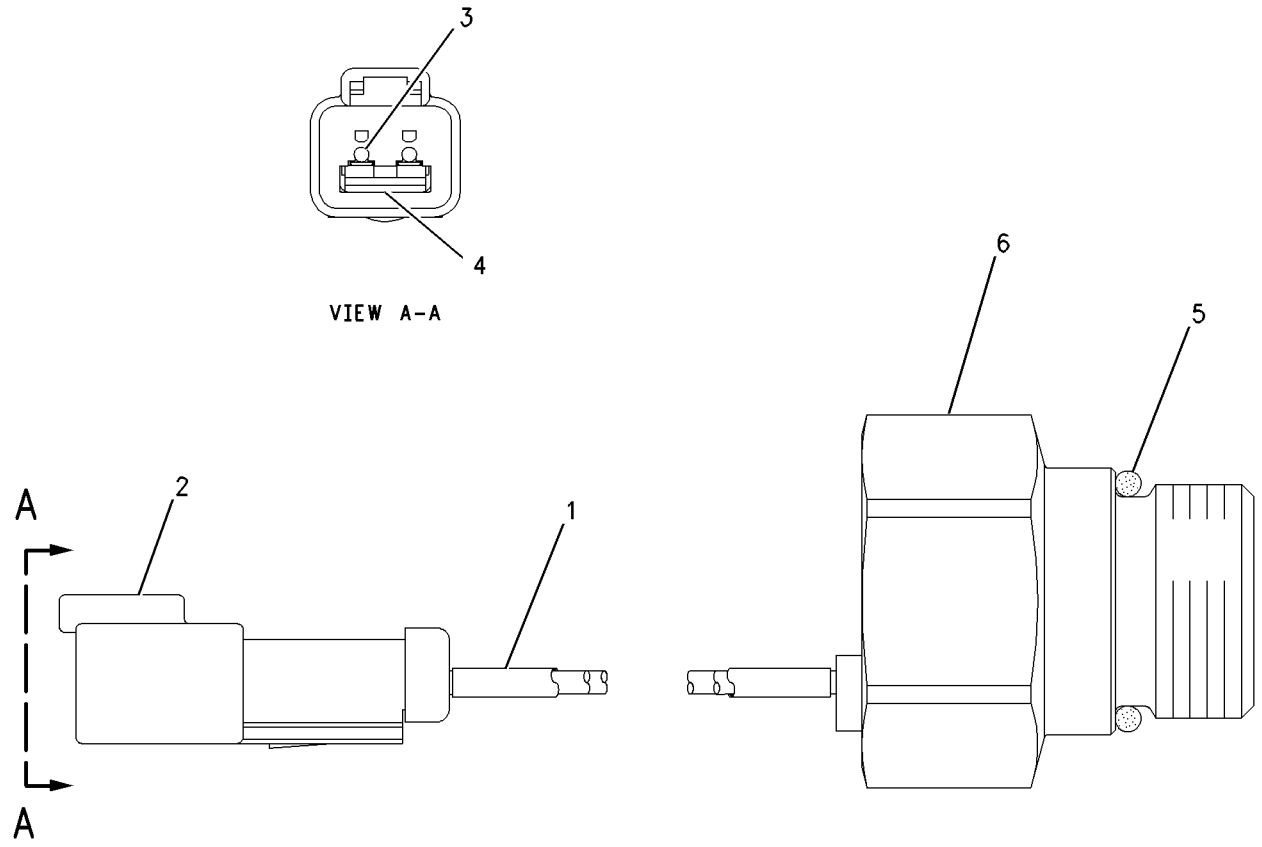

GRAPHIC #1 **<END>** g00750019

7N-0718 SWITCH GP-DISCONNECT–BATTERY

S/N: JBP1-UP

PART OF 311-0802 WIRING GP-AUXILIARY

SMCS-1411 **i02587657**

NOTE	REF NO	GRAPHIC REF	PART NUMBER	QTY	PART NAME 1 2 3 4 5 6 (PRODUCT LEVEL)	SEE PAGE
	1	1	**8H-5306**	1	KEY (BATTERY DISCONNECT)	
	2	1	**8H-5303**	1	NUT (3/4-16-THD)	
	3	1	**2H-3922**	2	LOCKWASHER	
	4	1	**9F-5644**	2	LOCKWASHER	
	5	1	**6F-7045**	2	NUT-FULL (3/8-24-THD)	

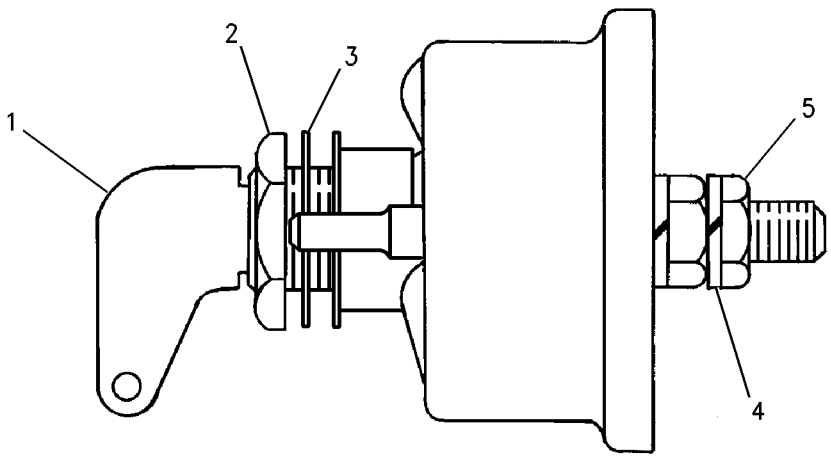

GRAPHIC #1 **<END>** g00715584

294-8641 SWITCH GP-LIGHT

S/N: JBP1-UP
PART OF 294-8544, 294-8545 LIGHTING AR-ROADING
AN ATTACHMENT

SMCS-1429, 1430, 7332 **i03254728**

NOTE	REF NO	GRAPHIC REF	PART NUMBER	QTY	PART NAME 1 2 3 4 5 6 (PRODUCT LEVEL)	SEE PAGE
	1	1	**8X-5153**	1	FILM-FACE (TURN SIGNAL, HAZARD)	
	2	1	**8X-5154**	1	FILM-FACE (HEADLIGHTS HIGH, LOW BEAM)	
	3	1	**9W-1442**	1	FUSE (10-AMPERE)	
	4	1	**9W-1441**	1	FUSE (15-AMPERE)	
	5	1	**108-0358**	1	FLASHER AS (24-VOLT)	
	6	1	**173-3064**	1	SWITCH GP-ROTARY (TURN SIGNAL, HAZARD)	
		1	**5L-7200**	1	SCREW (8-32X0.375-IN)	
		1	**9B-7233**	1	LOCKWASHER	
	7	1	**103-5678**	1	SWITCH AS-ROTARY	
		1	**5L-7200**	1	SCREW (8-32X0.375-IN)	
		1	**9B-7233**	1	LOCKWASHER	
	8	1	*3E-9317*	1	SWITCH AS-ROCKER (24-VOLT)	
		1	**3E-8772**	1	SWITCH-ROCKER (AIR CONDITIONER, HEATER)	
		1	**3E-8825**	1	LAMP (24-VOLT)	
		1	**3E-9326**	1	ACTUATOR-ROCKER	
M	9	1	**5C-2890**	2	NUT (M6X1-THD)	
	10	1	**8T-4205**	2	WASHER-HARD (7.2X14.5X2-MM THK)	
	11	1	**8X-6296**	2	LEVER	
M	12	1	**9X-2043**	2	SCREW-TRUSS HEAD (M6X1X14-MM)	

M-METRIC PART

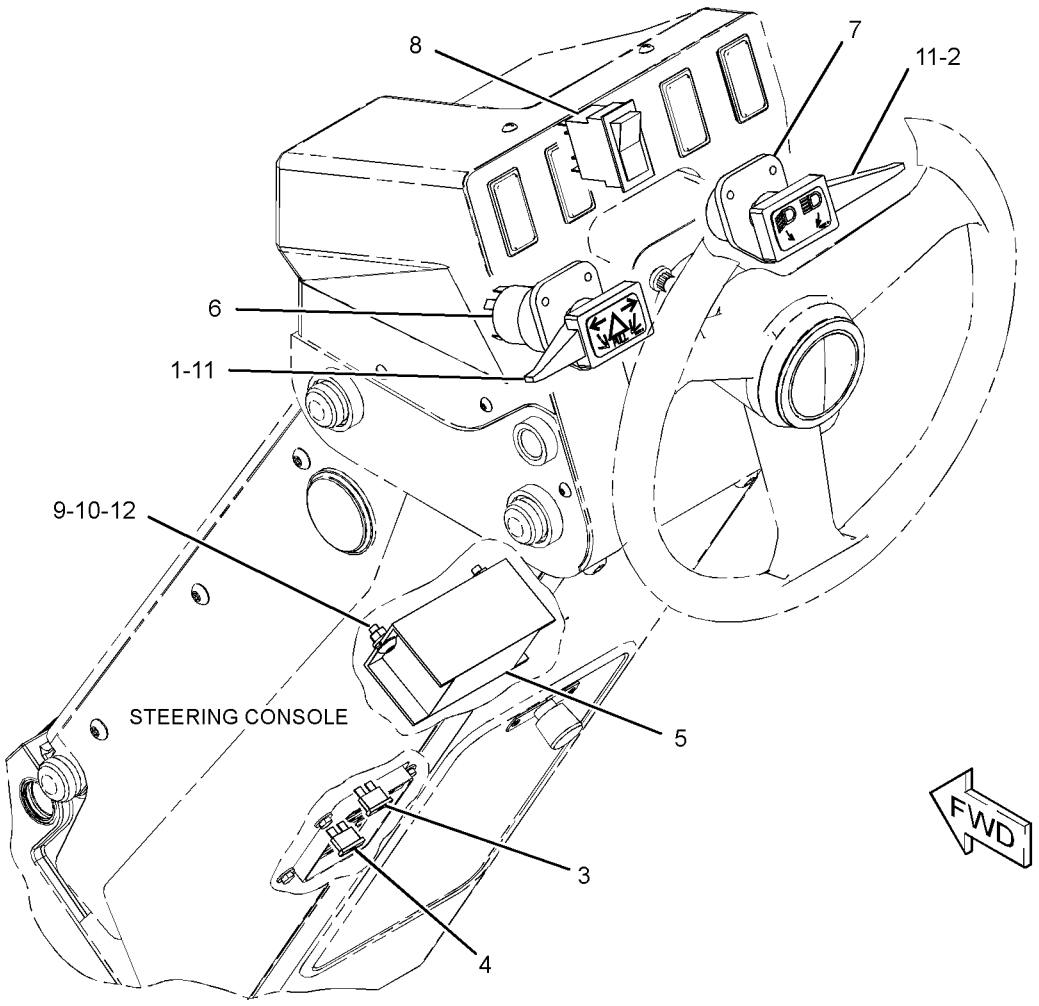

GRAPHIC #1 **<END>** g01697573

241-8368 SWITCH GP-MAGNETIC

S/N: JBP1-UP
24-VOLT
PART OF 311-0802 WIRING GP-AUXILIARY

SMCS-7499 **i02290099**

NOTE	REF NO	GRAPHIC REF	PART NUMBER	QTY	PART NAME 1 2 3 4 5 6 (PRODUCT LEVEL)	SEE PAGE
	1	1	**155-2270**	1	KIT-CONNECTING PLUG (2-PIN)	
					(INCLUDES PLUG AS, WEDGE & INTERFACE SEAL)	
	2	1	**4F-2294**	2	NUT-JAM (5/16-24-THD)	
	3	1	**186-3736**	2	SOCKET-CONNECTOR (16-GA TO 18-GA)	

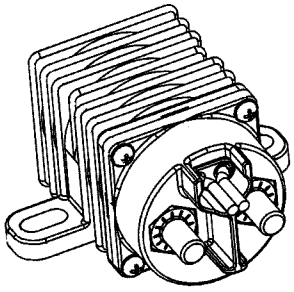

ISOMETRIC VIEW

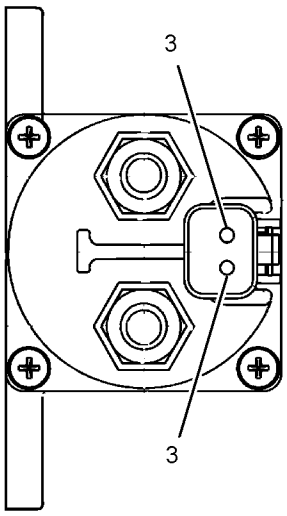

VIEW A-A

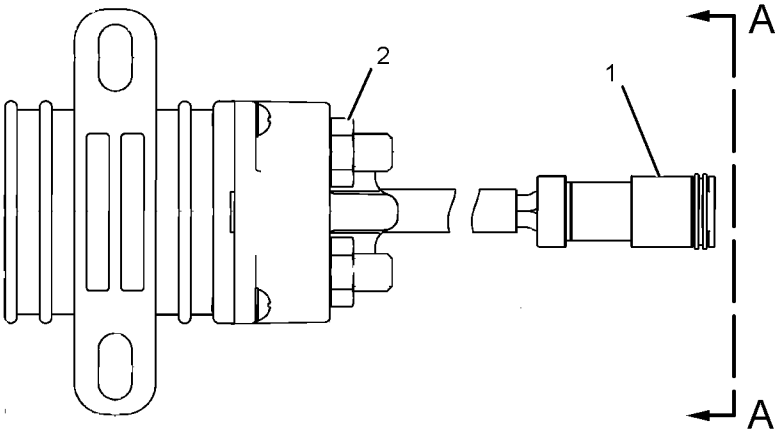

GRAPHIC #1 **<END>** g01077362

275-1253 SWITCH GP-PRESSURE–FUEL FILTER–DIFFERENTIAL

S/N: JBP1-UP

PART OF 311-2770 LINES GP-FUEL

SMCS-1435 **i02434807**

NOTE	REF NO	GRAPHIC REF	PART NUMBER	QTY	PART NAME 1 2 3 4 5 6 (PRODUCT LEVEL)	SEE PAGE
	1	1	**230-4011**	1	PLUG AS-CONNECTOR (2-PIN)	
E	2	1	**9X-1813**		SLEEVE (14-CM)	
	3	1	**6V-4589**	1	SEAL-O-RING	
	4	1	**7L-9061**	1	SEAL-O-RING	
	5	1	**144-1636**	2	PIN-CONNECTOR (14-GA TO 18-GA)	

E-ORDER BY THE CENTIMETER

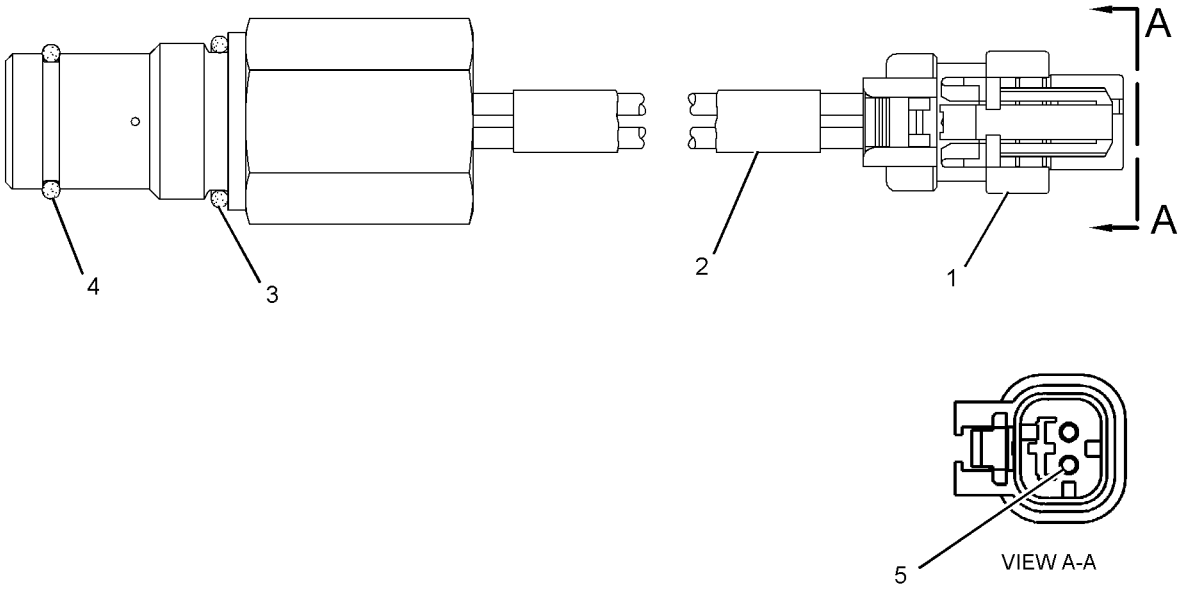

GRAPHIC #1 **<END>** g01238534

275-7741 SWITCH GP-WIPER–INTERMITTENT

S/N: JBP1-UP

PART OF 275-7764 SWITCH GP-WIPER, 286-4823 WIPER GP-WINDOW

AN ATTACHMENT

SMCS-7305, 7332 **i02992478**

NOTE	REF NO	GRAPHIC REF	PART NUMBER	QTY	PART NAME 1 2 3 4 5 6 (PRODUCT LEVEL)	SEE PAGE
	1	1	**6V-8369**	1	NUT (7/16-28-THD)	
	2	1	**2H-3920**	1	LOCKWASHER	
	3	1	**8T-8737**	2	PLUG-SEAL	
	4	1	**186-3735**	6	PIN-CONNECTOR (16-GA TO 18-GA)	
	5	1	**102-8806**	1	KIT-RECEPTACLE (8-PIN)	
					(INCLUDES RECEPTACLE AS & WEDGE)	

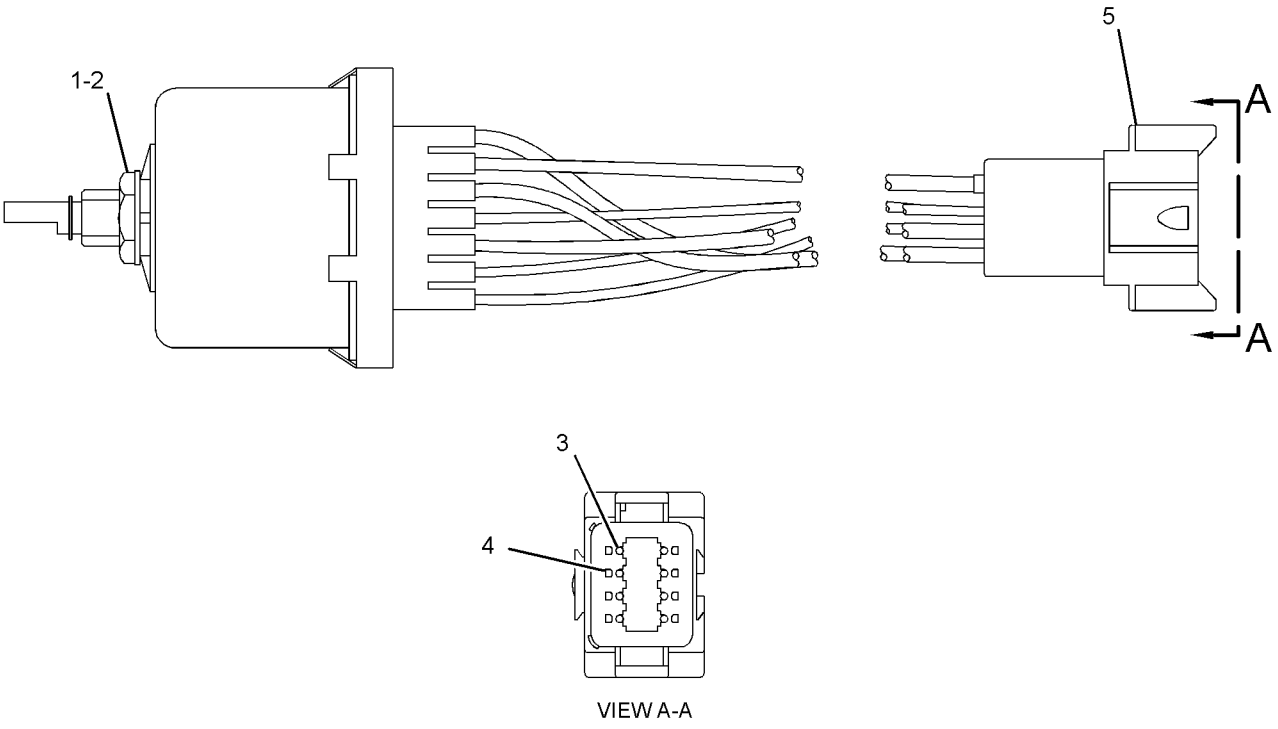

GRAPHIC #1 **<END>** g01445891

275-7764 SWITCH GP-WIPER–INTERMITTENT

S/N: JBP1-UP
24-VOLT
PART OF 286-4825 WIPER GP-WINDOW
AN ATTACHMENT

SMCS-7305, 7332 **i02978860**

NOTE	REF NO	GRAPHIC REF	PART NUMBER	QTY	PART NAME 1 2 3 4 5 6 (PRODUCT LEVEL)	SEE PAGE
Y	1	1	**275-7741**	1	SWITCH GP-WIPER (24-VOLT, INTERMITTENT)	192
	2	1	**7T-9302**	1	KNOB AS-WIPER SWITCH	
		1	**014-0816**	1	SETSCREW (8-32X0.5-IN)	

Y-SEPARATE ILLUSTRATION

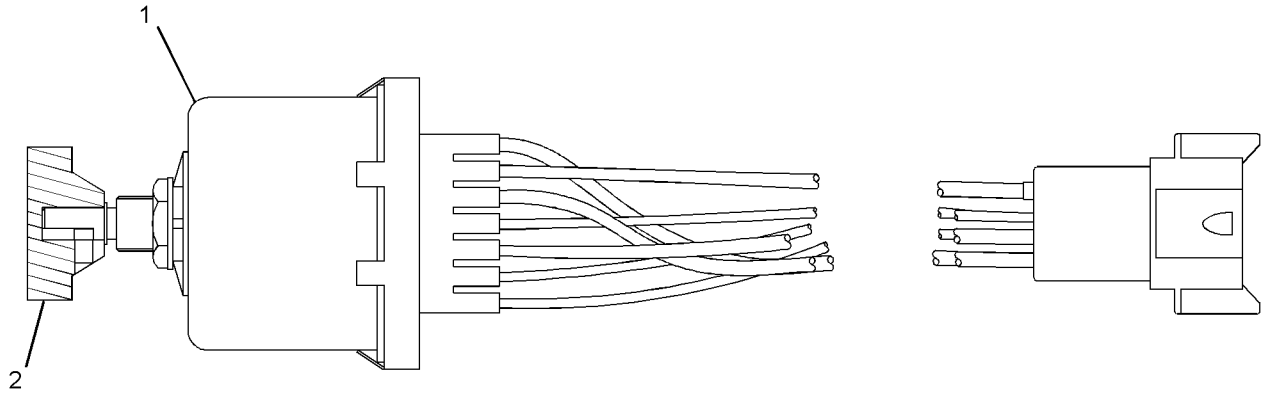

GRAPHIC #1 **<END>** g01516002

239-1134 VALVE GP-ETHER STARTING

S/N: JBP1-UP
24-VOLT
PART OF 311-2771 STARTING AID GP-ETHER
AN ATTACHMENT

SMCS-1456 **i03435882**

NOTE	REF NO	GRAPHIC REF	PART NUMBER	QTY	PART NAME 1 2 3 4 5 6 (PRODUCT LEVEL)	SEE PAGE
	1	1	**7N-9801**	1	GASKET	
	2	1	**102-8802**	1	KIT-RECEPTACLE (2-PIN)	
					(INCLUDES RECEPTACLE AS & WEDGE)	
	3	1	**186-3735**	2	PIN-CONNECTOR (16-GA TO 18-GA)	

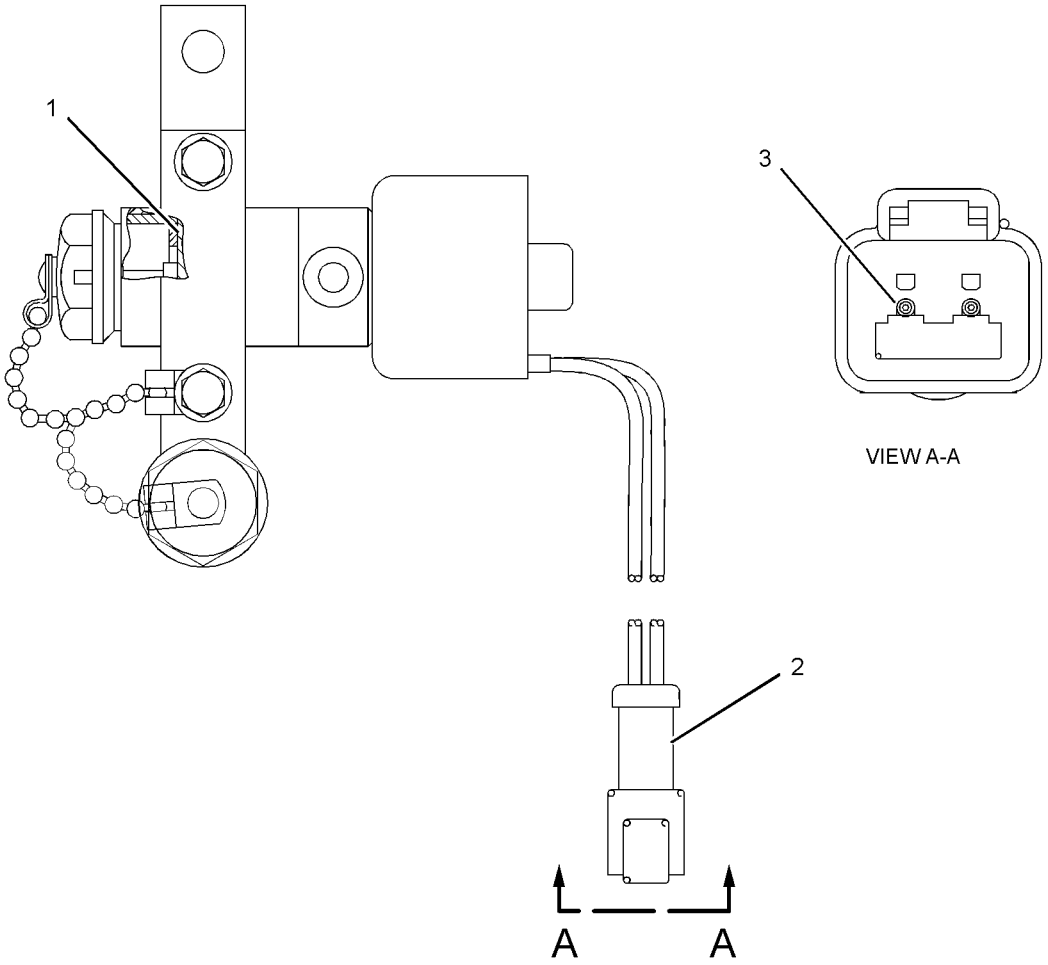

GRAPHIC #1 **<END>** g01375620

311-0803 WIRING GP-AIR CONDITIONER

S/N: JBP1-UP
PART OF 311-2751 AIR CONDITIONER AR
AN ATTACHMENT

SMCS-1408 **i03258803**

NOTE	REF NO	GRAPHIC REF	PART NUMBER	QTY	PART NAME 1 2 3 4 5 6 (PRODUCT LEVEL)	SEE PAGE
	1	1	**169-7443**	1	TIMER AS-ON DELAY (24-VOLT) (AIR CONDITIONER)	
		1	**102-8804**	1	KIT-RECEPTACLE (4-PIN)	
					(INCLUDES RECEPTACLE AS & WEDGE)	
		1	**186-3735**	4	PIN-CONNECTOR (16-GA TO 18-GA)	
	2	1	**313-7755**	1	HARNESS AS-HEATER & AIR COND	
	3	1	**317-8382**	1	BRACKET AS	
	4	1	**334-1429**	1	SHIELD	
	5	1	**334-1431**	1	BRACKET AS	
M		1	**9R-2613**	2	BOSS-WELD (M10X1.5X25-MM)	
	6	1	**125-8797**	1	CLIP	
	7	1	**130-5300**	4	CLIP	
	8	1	**4P-7581**	2	CLIP	
	9	1	**5P-1076**	2	WASHER-HARD (13.5X30X4-MM THK)	
	10	1	**7D-1553**	1	CLIP	
	11	1	**7K-1181**	3	STRAP-CABLE	
M	12	1	**7X-7478**	2	BOLT-LOCKING (M12X1.75X35-MM)	
	13	1	**8M-2770**	3	CLIP	
	14	1	**8T-4121**	7	WASHER-HARD (11X21X2.5-MM THK)	
M	15	1	**8T-4133**	1	NUT (M10X1.5-THD)	
M	16	1	**8T-4137**	6	BOLT (M10X1.5X20-MM)	

M-METRIC PART

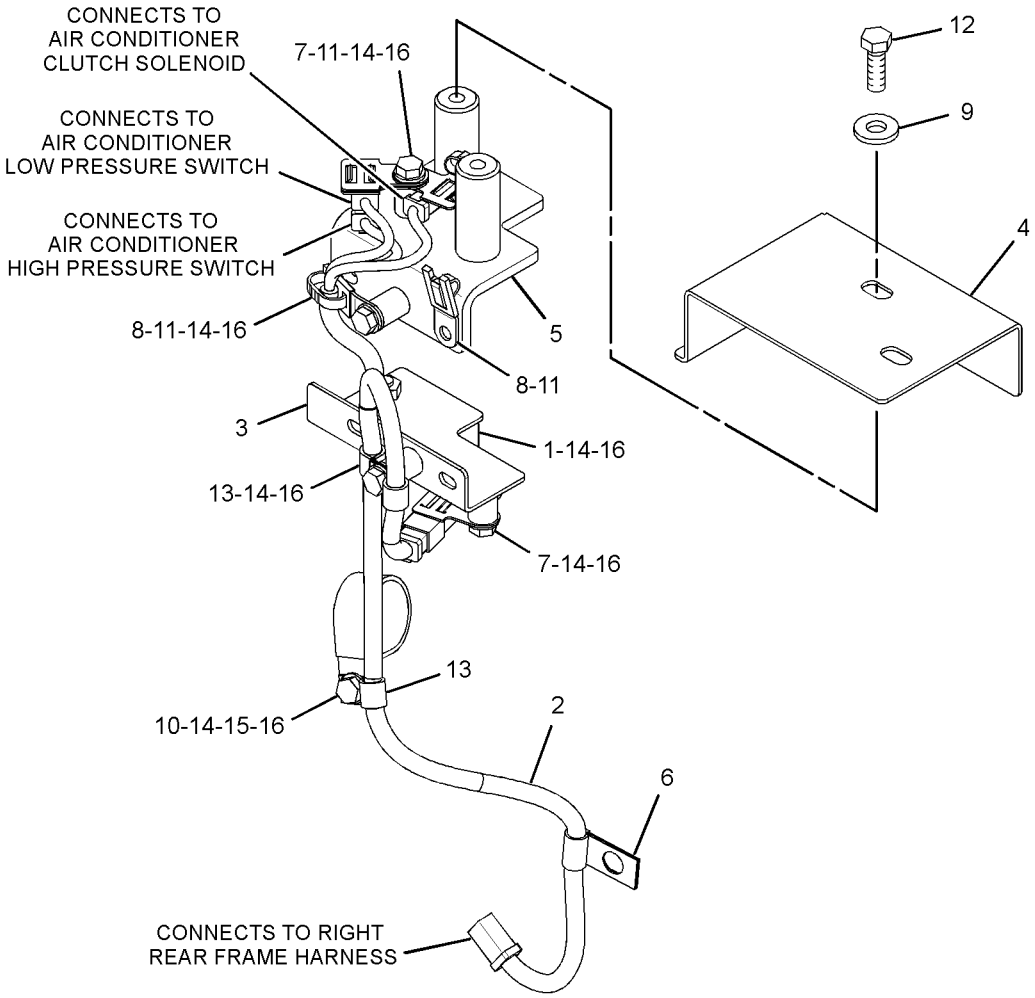

GRAPHIC #1 **<END>** g01677157

311-0802 WIRING GP-AUXILIARY—FUEL TANK

S/N: JBP1-UP

PART OF 274-7941 GENERAL AR

SMCS-1408 **i03246388**

NOTE	REF NO	GRAPHIC REF	PART NUMBER	QTY	PART NAME 1 2 3 4 5 6 (PRODUCT LEVEL)	SEE PAGE
	1	2	**4S-5719**	1	SPACER (10.31X25X12.7-MM THK)	
	2	2	**6V-4283**	1	PLATE-IDENTIFICATION (ALTERNATOR)	
	3	2	**6V-7555**	1	STRAP-CABLE	
Y	4	2	**7N-0718**	1	SWITCH GP-DISCONNECT (BATTERY)	188
		2	**2H-3922**	2	LOCKWASHER	
		2	**6F-7045**	2	NUT-FULL (3/8-24-THD)	
		2	**8H-5303**	1	NUT (3/4-16-THD)	
		2	**8H-5306**	1	KEY (BATTERY DISCONNECT)	
		2	**9F-5644**	2	LOCKWASHER	
	5	2	**9C-5344**	1	SPACER (10.5X20X18-MM THK)	
	6	2	**9G-2758**	1	LOCKOUT AS-SWITCH	
	7	2	**118-3534**	1	SWITCH GP-MAGNETIC (24-VOLT)	
	8	2	**135-2543**	1	BOOT	
	9	2	**171-2212**	2	CIRCUIT BREAKER AS (105-AMPERE)	
	10	2	**186-3223**	1	PLATE AS	
	11	2	**189-0108**	1	PLATE	
Y	12	2	**194-6722**	1	SENSOR GP-PRESSURE (ATMOSPHERIC AIR)	168
	13	2	**204-8000**	1	MOUNT (TIE WRAP)	
Y	14	2	**241-8368**	1	SWITCH GP-MAGNETIC (24-VOLT)	190
	15	2	**289-9354**	1	CABLE AS	
		2	**6V-2369**	1	WIRE (4-GA, BLACK)	
		2	**9G-4343**	1	TERMINAL (4-GA)	
		2	**5P-3454**	1	TERMINAL (4-GA)	
		2	**135-2543**	2	BOOT	
	16	2	**289-9355**	1	CABLE AS	
		2	**5P-5689**	1	WIRE (8-GA, BLACK)	
		2	**131-1488**	2	TERMINAL AS (6-GA TO 8-GA)	
					(EACH INCLUDES)	
		2	**6H-3586**	1	TERMINAL (6-GA TO 8-GA)	
E		2	**119-3662**		TUBE-HEAT SHRINK (10.85-MM DIA) (4-CM)	
	17	2	**311-9296**	1	HARNESS AS-FUEL TANK	
	18	2	**335-0806**	1	BRACKET AS	
	19	2	**124-9633**	1	CLIP	
	20	1,2	**130-5300**	5	CLIP	
	21	2	**132-5789**	1	CLIP	
	22	1	**332-7657**	1	SENDER AS-FUEL LEVEL	
	23	2	**3J-1907**	1	SEAL-O-RING	
	24	2	**4D-7794**	1	CLIP	
M	25	1	**5C-9553**	5	BOLT (M6X1X16-MM)	
	26	2	**5L-4507**	4	SCREW-MACHINE (10-32X0.875-IN)	
M	27	2	**6V-7357**	1	BOLT (M6X1X25-MM)	
	28	2	**6V-7699**	4	WASHER-HARD (5.5X13X1.6-MM THK)	
	29	2	**7K-1181**	11	STRAP-CABLE	
	30	1,2	**8T-4121**	8	WASHER-HARD (11X21X2.5-MM THK)	
M	31	2	**8T-4133**	1	NUT (M10X1.5-THD)	
M	32	2	**8T-4136**	2	BOLT (M10X1.5X25-MM)	
M	33	1,2	**8T-4137**	3	BOLT (M10X1.5X20-MM)	
M	34	2	**8T-4138**	3	BOLT (M6X1X20-MM)	
M	35	2	**8T-4196**	2	BOLT (M10X1.5X35-MM)	
	36	1	**8T-4205**	5	WASHER-HARD (7.2X14.5X2-MM THK)	
	37	2	**9X-8256**	4	WASHER (6.6X12X2-MM THK)	
	38	1	**1U-8846**	1	SEALANT-GASKET	

E-ORDER BY THE CENTIMETER
M-METRIC PART
Y-SEPARATE ILLUSTRATION

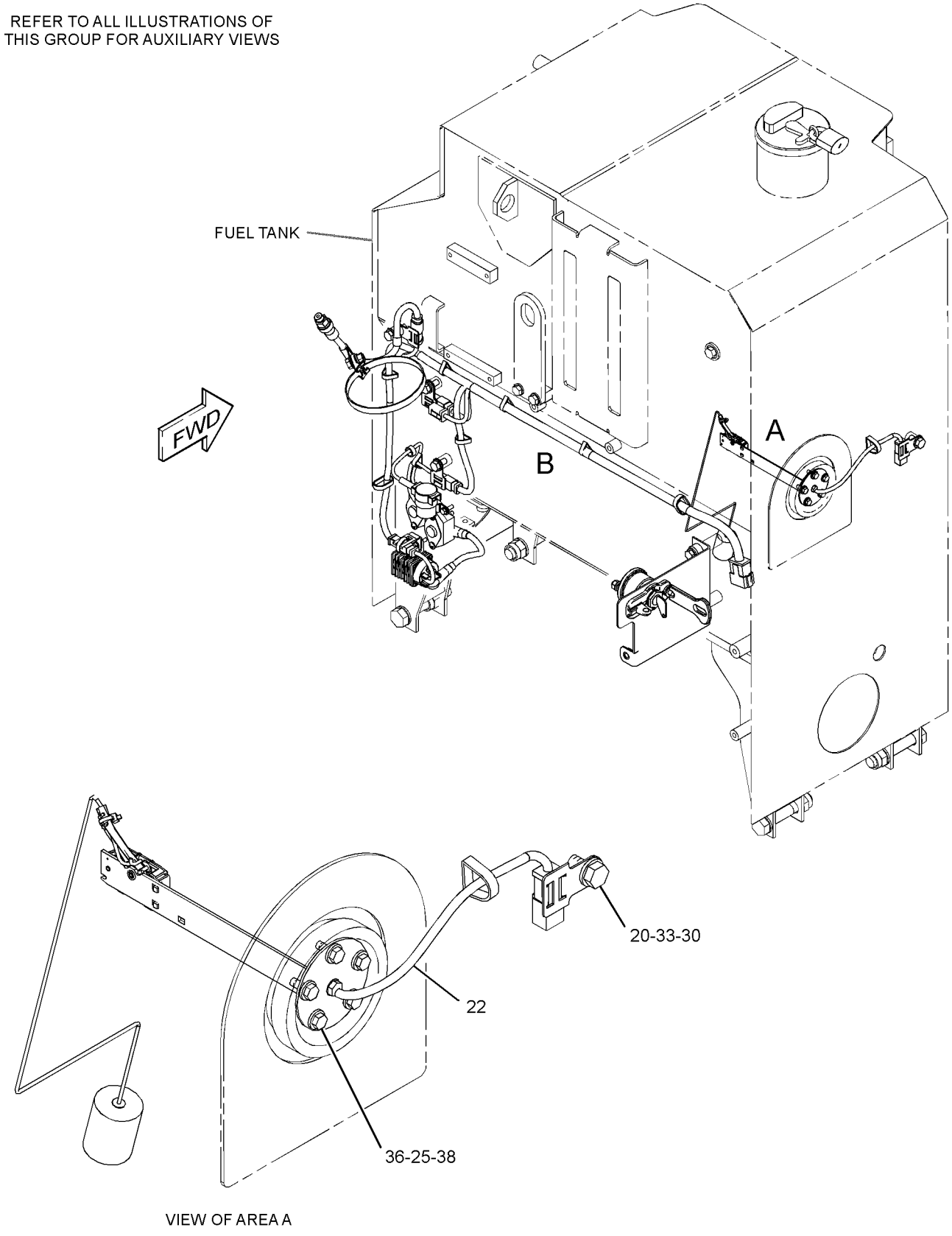

GRAPHIC #1 g01758311

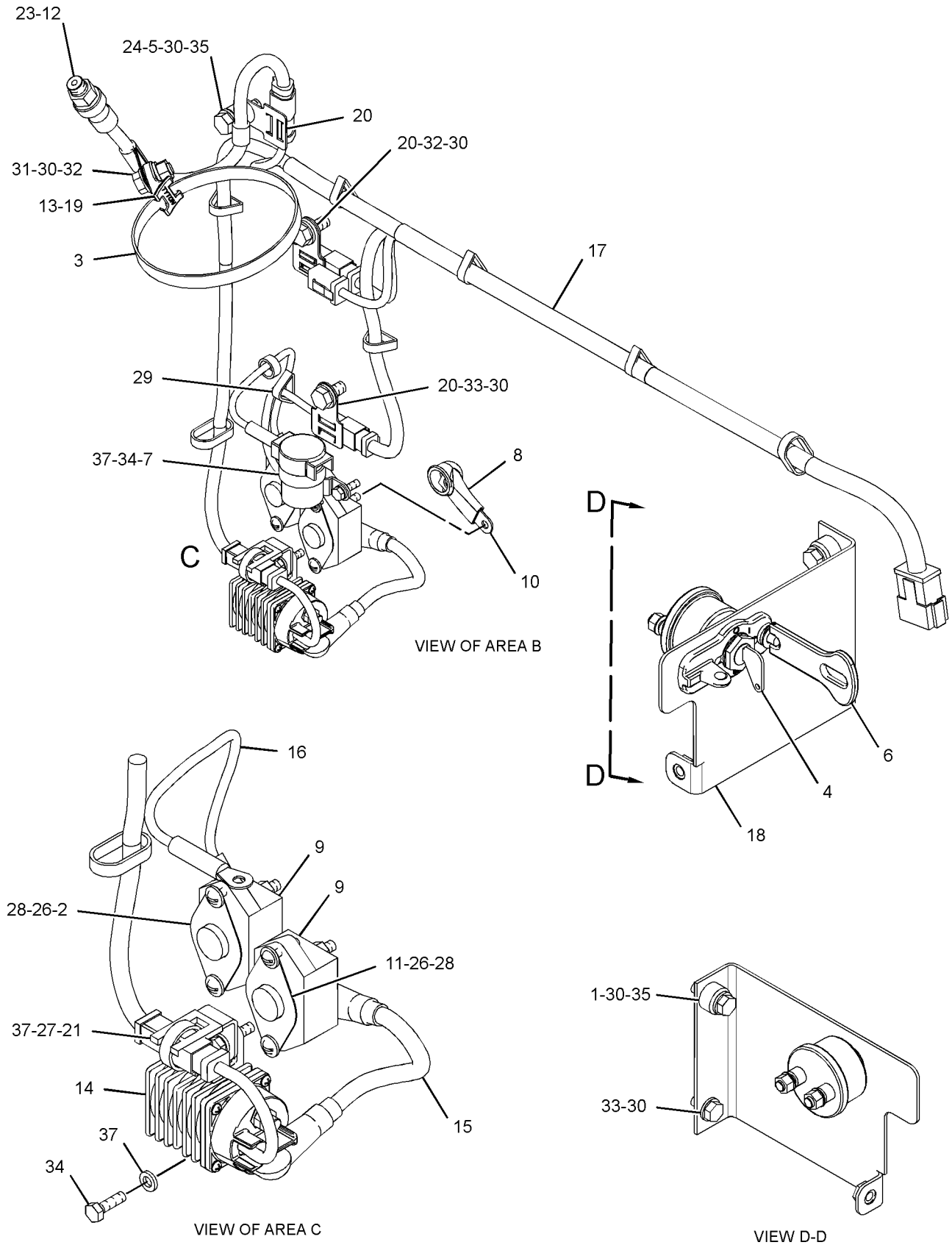

GRAPHIC #2 **<END>** g01758312

284-5352 WIRING GP-BLADE CUSHION

S/N: JBP1-UP
PART OF 285-4154 ACCUMULATOR AR-BLADE CUSHION
AN ATTACHMENT

SMCS-1408 **i03432001**

NOTE	REF NO	GRAPHIC REF	PART NUMBER	QTY	PART NAME 1 2 3 4 5 6 (PRODUCT LEVEL)	SEE PAGE
	1	1	**335-8402**	1	HARNESS AS-SOLENOID	
	2	1	**033-8248**	2	CLIP	
	3	1	**130-5300**	2	CLIP	
	4	1	**147-0385**	1	CLIP	
	5	1	**4L-6459**	2	BOLT (3/8-16X2.5-IN)	
	6	1	**5P-8167**	1	BOLT (3/8-16X0.625-IN)	
	7	1	**6V-8801**	2	NUT (3/8-16-THD)	
	8	1	**7K-1181**	2	STRAP-CABLE	
	9	1	**8T-4896**	5	WASHER-HARD (10.2X18.5X2.5-MM THK)	
	10	1	*9X-9629*	1	SWITCH AS-ROCKER (24-VOLT) (BLADE CUSHION)	
		1	**3E-8763**	1	SWITCH AS	
		1	**3E-8812**	1	ACTUATOR-ROCKER	
		1	**3E-8825**	1	LAMP (24-VOLT)	

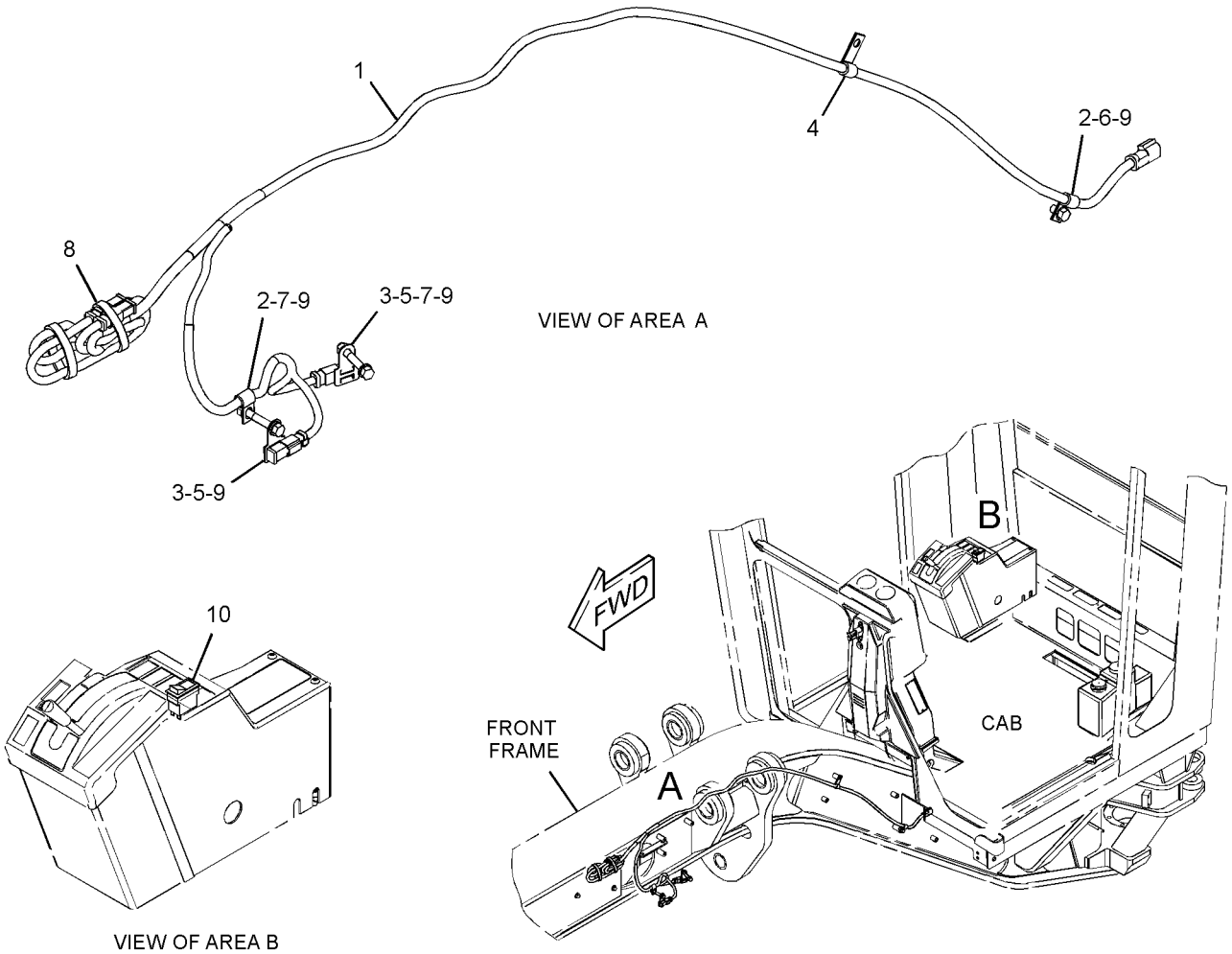

GRAPHIC #1

<END>

g01681934

284-5356 WIRING GP-CAB—MACHINE IMMOBILIZER

S/N: JBP1-UP

AN ATTACHMENT

SMCS-1408, 7301 **i03258721**

NOTE	REF NO	GRAPHIC REF	PART NUMBER	QTY	PART NAME 1 2 3 4 5 6 (PRODUCT LEVEL)	SEE PAGE
	1	1	**3S-2093**	1	STRAP-CABLE	
	2	1	**5M-3724**	1	BRACKET	
	3	1	**290-3979**	1	HARNESS AS-SWITCH	
	4	1	**115-3070**	1	CLIP AS-CONNECT (4-PIN)	
	5	1	**3E-5239**	1	RELAY AS (24-VOLT)	
	6	1	**4P-7581**	1	CLIP	
M	7	1	**5C-2890**	1	NUT (M6X1-THD)	
M	8	1	**5C-9553**	1	BOLT (M6X1X16-MM)	
M	9	1	**7X-2536**	1	BOLT (M8X1.25X14-MM)	
	10	1	**8T-4205**	2	WASHER-HARD (7.2X14.5X2-MM THK)	
	11	1	**8T-4224**	1	WASHER-HARD (8.8X16X2-MM THK)	

M-METRIC PART

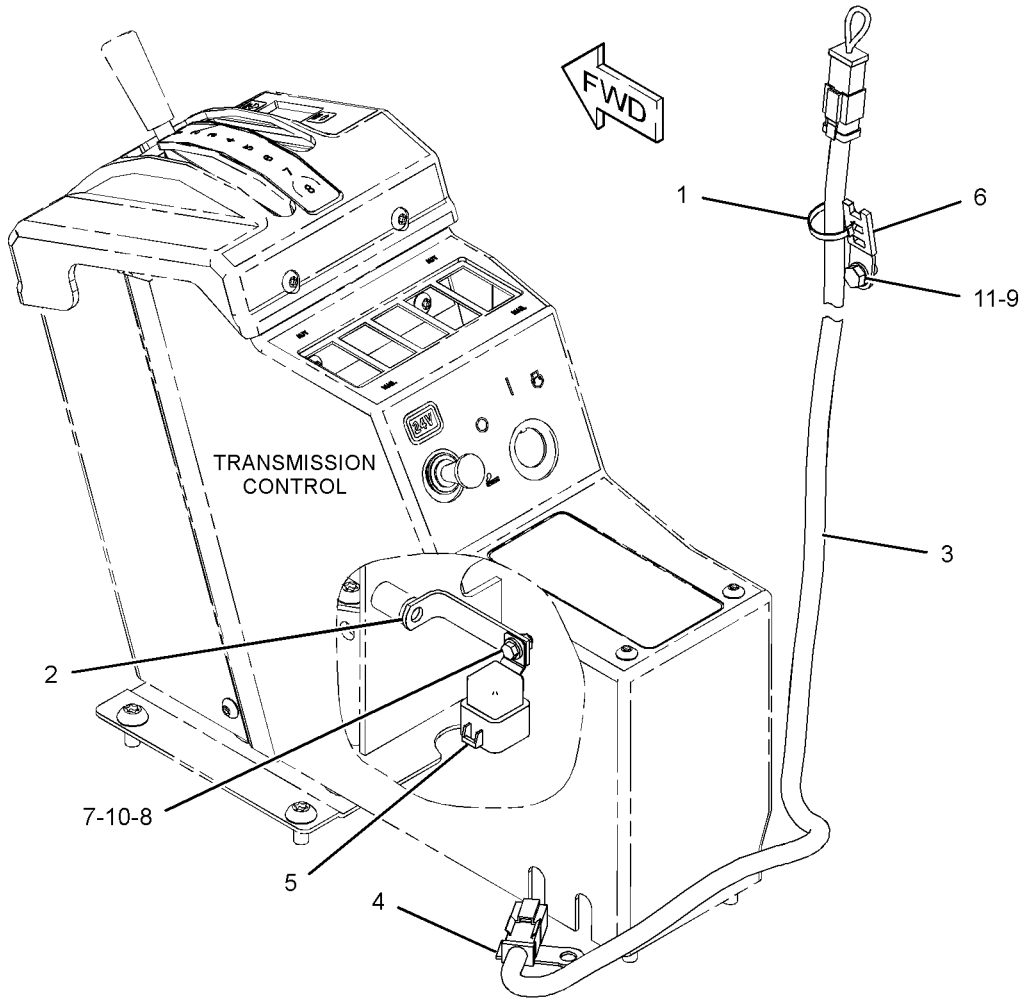

GRAPHIC #1 **<END>** g01678928

ELECTRICAL AND STARTING SYSTEM

285-3361 WIRING GP-CAB

S/N: JBP1-UP
PART OF 320-0342 ROPS AR
AN ATTACHMENT

SMCS-1408, 7301 **i03251670**

NOTE	REF NO	GRAPHIC REF	PART NUMBER	QTY	PART NAME 1 2 3 4 5 6 (PRODUCT LEVEL)	SEE PAGE
	1	2	**3E-0109**	3	PLUG (ROCKER SWITCH)	
Y	2	2	**3E-6389**	1	LAMP GP-DOME (24-VOLT)	134
	3	1,2	**3S-2093**	23	STRAP-CABLE	
	4	2	**6V-6578**	2	RIVET-BLIND	
	5	2	**7T-9302**	2	KNOB AS-WIPER SWITCH	
		2	**014-0816**	1	SETSCREW (8-32X0.5-IN)	
	6	2	**9W-1441**	1	FUSE (15-AMPERE)	
	7	2	**112-6174**	2	SWITCH AS-ROTARY (WIPER, WASHER) (FRONT)	
					(EACH INCLUDES)	
		2	**2H-3920**	1	LOCKWASHER	
		2	**3E-3389**	1	WEDGE-RECEPTACLE LOCK	
		2	**6V-8369**	1	NUT (7/16-28-THD)	
		2	**186-3735**	6	PIN-CONNECTOR (16-GA TO 18-GA)	
		2	**8T-8737**	2	PLUG-SEAL	
		2	**102-8806**	1	KIT-RECEPTACLE (8-PIN)	
					(INCLUDES RECEPTACLE AS & WEDGE)	
	8	2	**131-5171**	1	CLIP	
	9	2	**160-6382**	1	GROMMET	
	10	1	**167-7504**	1	HARNESS AS-CAB (SWITCH PANEL)	
	11	1	**167-7505**	1	HARNESS AS-CAB (REAR)	
	12	1	**168-8248**	1	HARNESS AS-CAB (FRONT)	
	13	2	**169-8938**	1	PLATE AS	
	14	2	**172-6555**	1	PANEL	
	15	2	**172-8641**	1	PLATE	
	16	2	**172-9316**	1	FILM-FUSE (PANEL ACTION LAMPS)	
	17	2	**096-6166**	3	WASHER-HARD (4.5X9X1-MM THK)	
M	18	2	**5C-8312**	3	NUT (M4X0.7-THD)	
	19	2	**6V-5645**	4	SCREW-MACHINE (10-32X0.87-IN)	
	20	2	**6V-8801**	1	NUT (3/8-16-THD)	
	21	2	**8T-4896**	1	WASHER-HARD (10.2X18.5X2.5-MM THK)	
M	22	2	**9X-1046**	3	SCREW (M4X0.7X18-MM)	
M	23	2	**9X-2042**	4	SCREW-TRUSS HEAD (M6X1X12-MM)	
E	24	2	**7X-7877**		STRIP-EDGING (10-CM)	

E-ORDER BY THE CENTIMETER
M-METRIC PART
Y-SEPARATE ILLUSTRATION

285-3361 **WIRING GP-CAB** ***(contd.)*** **i03251670**

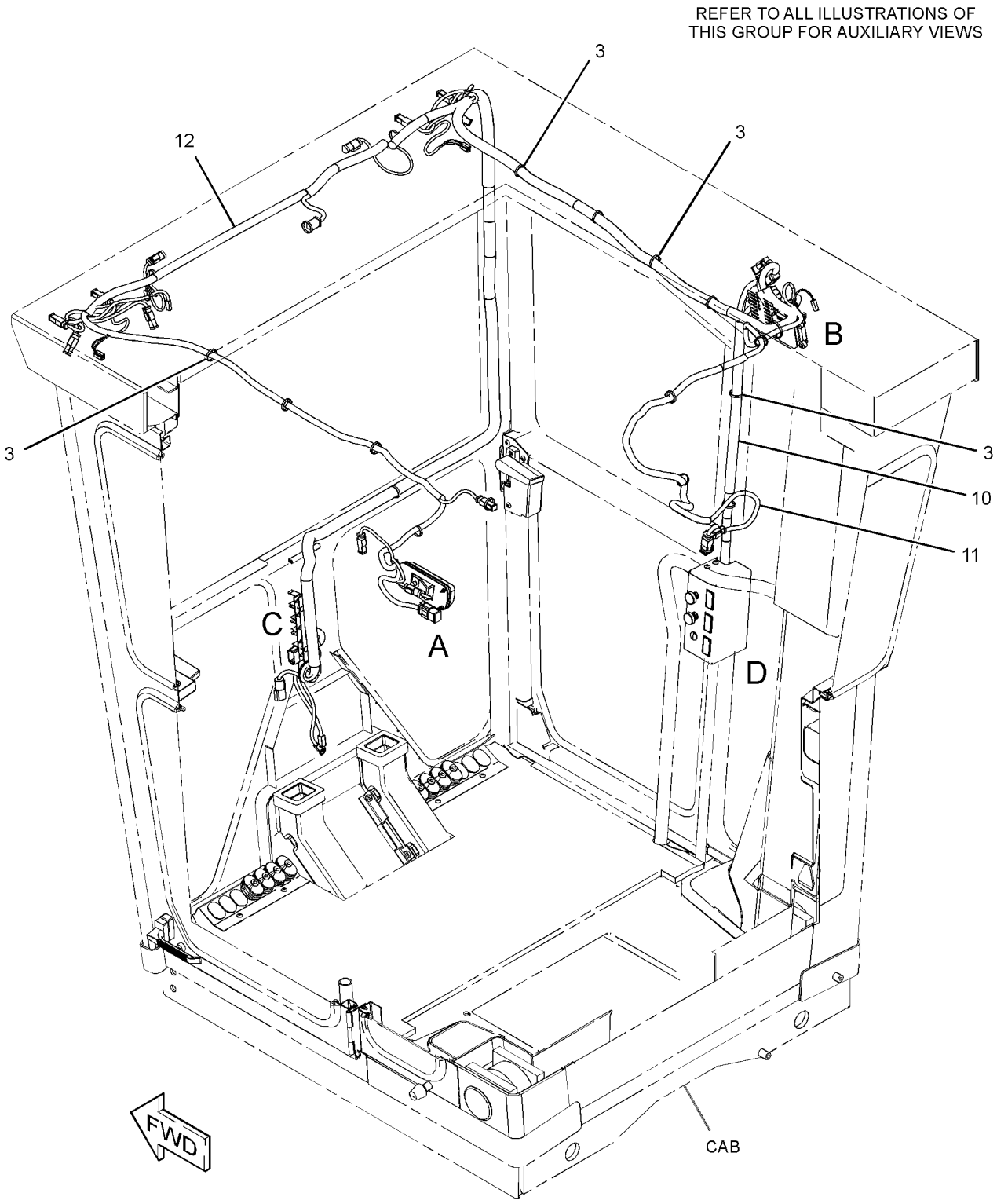

GRAPHIC #1 g01708016

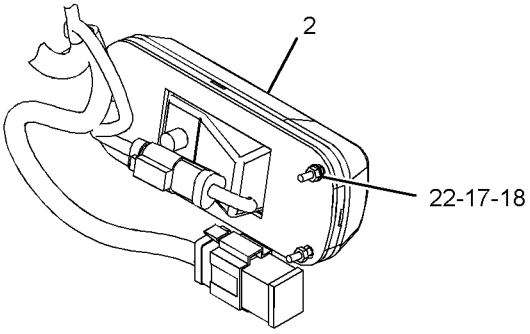

VIEW OF AREA A

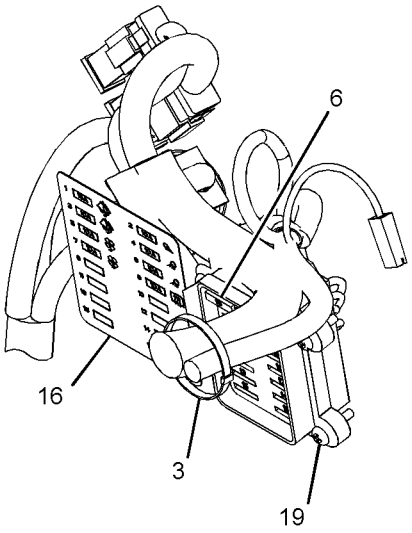

VIEW OF AREA B
(FUSE PANEL COVER REMOVED FOR CLARITY)

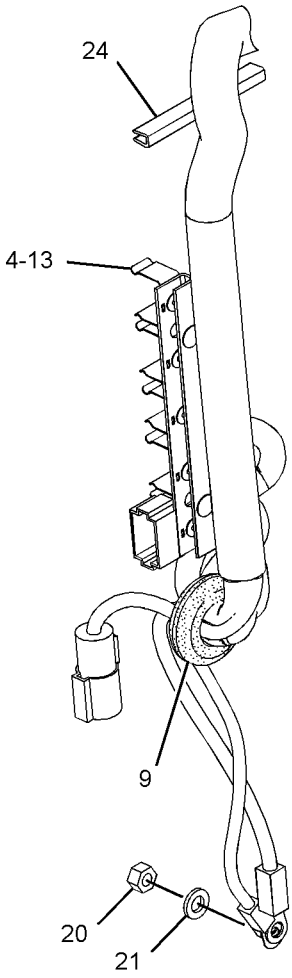

VIEW OF AREA C

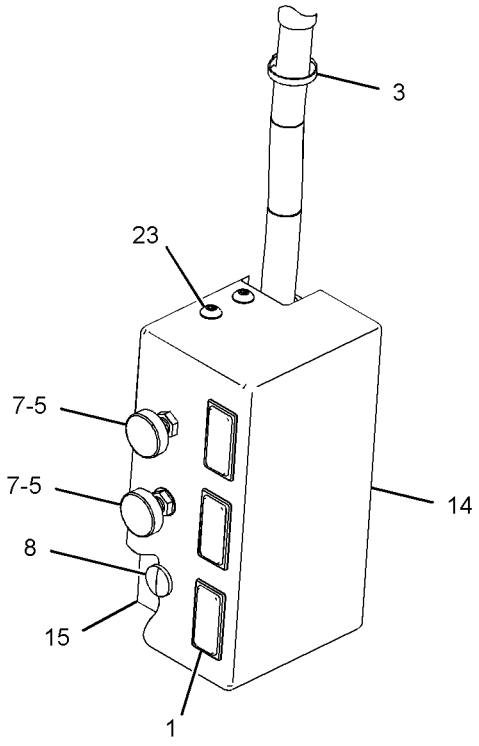

VIEW OF AREA D

GRAPHIC #2 **<END>** g01708015

284-5346 WIRING GP-CONSOLE

S/N: JBP1-UP

PART OF 274-7941 GENERAL AR

SMCS-1408 **i03431980**

NOTE	REF NO	GRAPHIC REF	PART NUMBER	QTY	PART NAME 1 2 3 4 5 6 (PRODUCT LEVEL)	SEE PAGE
	1	1	**3E-0109**	4	PLUG (ROCKER SWITCH)	
Y	2	1	**3E-6328**	1	ALARM GP (24-VOLT) (ACTION)	102
	3	1	**3S-2093**	4	STRAP-CABLE	
	4	1	**5M-3724**	1	BRACKET	
	5	1	**7N-5876**	1	LAMP (24-VOLT, 5.6-WATT)	
	6	1	**8C-6354**	1	CAP-RECEPTACLE	
	7	1	**110-7887**	1	SWITCH AS-START (KEY)	
		1	**7T-6799**	1	NUT-MOUNTING (1-32-THD)	
		1	**102-8804**	1	KIT-RECEPTACLE (4-PIN)	
					(INCLUDES RECEPTACLE AS & WEDGE)	
		1	**186-3735**	4	PIN-CONNECTOR (16-GA TO 18-GA)	
	9	1	**169-5414**	3	CLIP	
	10	1	*183-2151*	1	SWITCH AS-ROCKER (24-VOLT) (THROTTLE HOLD MODE)	
		1	**3E-8825**	2	LAMP (24-VOLT)	
		1	**183-2136**	1	ACTUATOR-ROCKER	
		1	**196-7268**	1	SWITCH AS (THROTTLE HOLD MODE)	
	11	1	**185-2197**	1	SWITCH AS-ROCKER (THROTTLE LOCK SET, RESET)	
	12	1	**335-1894**	1	HARNESS AS-CONSOLE	
	13	1	**335-1895**	1	HARNESS AS-CONSOLE	
	14	1	**130-5300**	1	CLIP	
	15	1	**2V-8259**	2	GROMMET	
	16	1	**3E-5239**	1	RELAY AS (24-VOLT)	
	17	1	**4D-7794**	1	CLIP	
	18	1	**4L-6454**	1	BOLT (3/8-16X1-IN)	
	19	1	**4P-7581**	1	CLIP	
M	20	1	**5C-2890**	1	NUT (M6X1-THD)	
M	21	1	**5C-9553**	2	BOLT (M6X1X16-MM)	
	22	1	**5M-3062**	2	BOLT (3/8-16X0.75-IN)	
	23	1	**5S-4246**	4	LOCKWASHER	
	24	1	**6B-4540**	4	NUT (4-40-THD)	
	25	1	**6V-2480**	4	SCREW (4-40X0.5-IN)	
	26	1	**6V-8801**	1	NUT (3/8-16-THD)	
	27	1	**7C-4354**	1	CLIP	
	28	1	**7G-7053**	1	GROMMET	
	29	1	**7X-4743**	1	GROMMET	
	30	1	**8T-4121**	1	WASHER-HARD (11X21X2.5-MM THK)	
M	31	1	**8T-4137**	2	BOLT (M10X1.5X20-MM)	
	32	1	**8T-4896**	5	WASHER-HARD (10.2X18.5X2.5-MM THK)	
	33	1	**9X-8256**	2	WASHER (6.6X12X2-MM THK)	
	34	1	*9X-9634*	1	SWITCH AS-ROCKER (CENTERSHIFT PIN)	
		1	**3E-8817**	1	ACTUATOR-ROCKER	
		1	**3E-8825**	1	LAMP (24-VOLT)	
		1	**3E-9327**	1	SWITCH AS (CENTERSHIFT PIN)	
	35	1	**9R-2620**	1	PLUG	

M-METRIC PART
Y-SEPARATE ILLUSTRATION

284-5346 **WIRING GP-CONSOLE** *(contd.)* **i03431980**

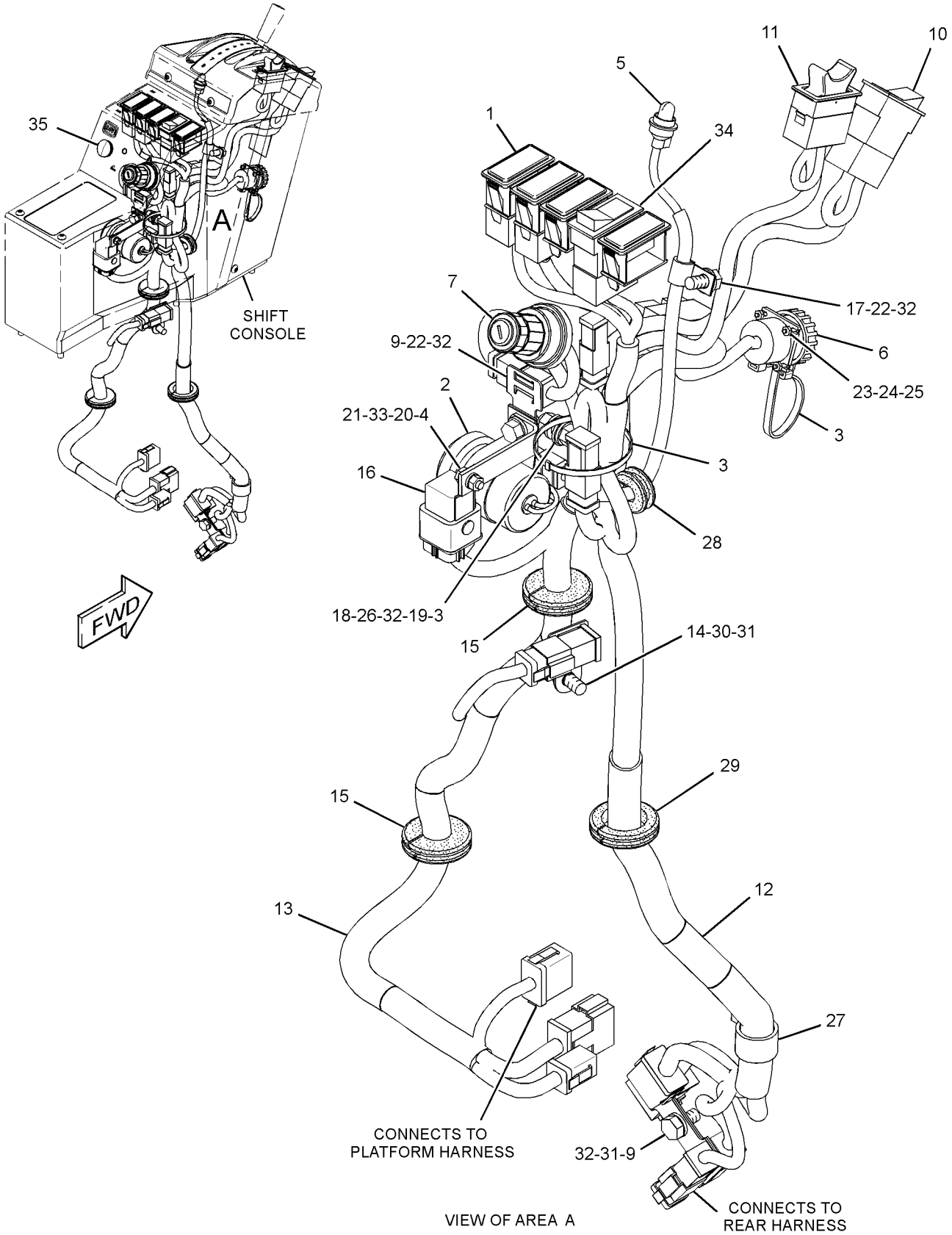

GRAPHIC #1 **<END>** g01754234

198-2714 WIRING GP-ENGINE

S/N: KHX8814-UP

PART OF 312-0255 ENGINE AR-COMPLETE

SMCS-1408 **i02953264**

NOTE	REF NO	GRAPHIC REF	PART NUMBER	QTY	PART NAME 1 2 3 4 5 6 (PRODUCT LEVEL)	SEE PAGE
	1	1	**3S-2093**	18	STRAP-CABLE	
	2	1	**4P-5918**	1	CLIP	
	3	1	**105-1797**	7	MOUNT	
	4	1	**198-2713**	1	HARNESS AS-ENGINE (ELECTRONIC CONTROL MODULE)	
	5	1	**206-1345**	2	STRAP-CABLE	
	6	1	**222-5917**	1	HARNESS AS-ENGINE (FUEL INJECTION)	
	7	1	**4P-8134**	1	CLIP	
M	8	1	**6V-2317**	1	BOLT (M8X1.25X30-MM)	
	9	1	**9M-1974**	1	WASHER-HARD (8.8X16X2-MM THK)	

M-METRIC PART

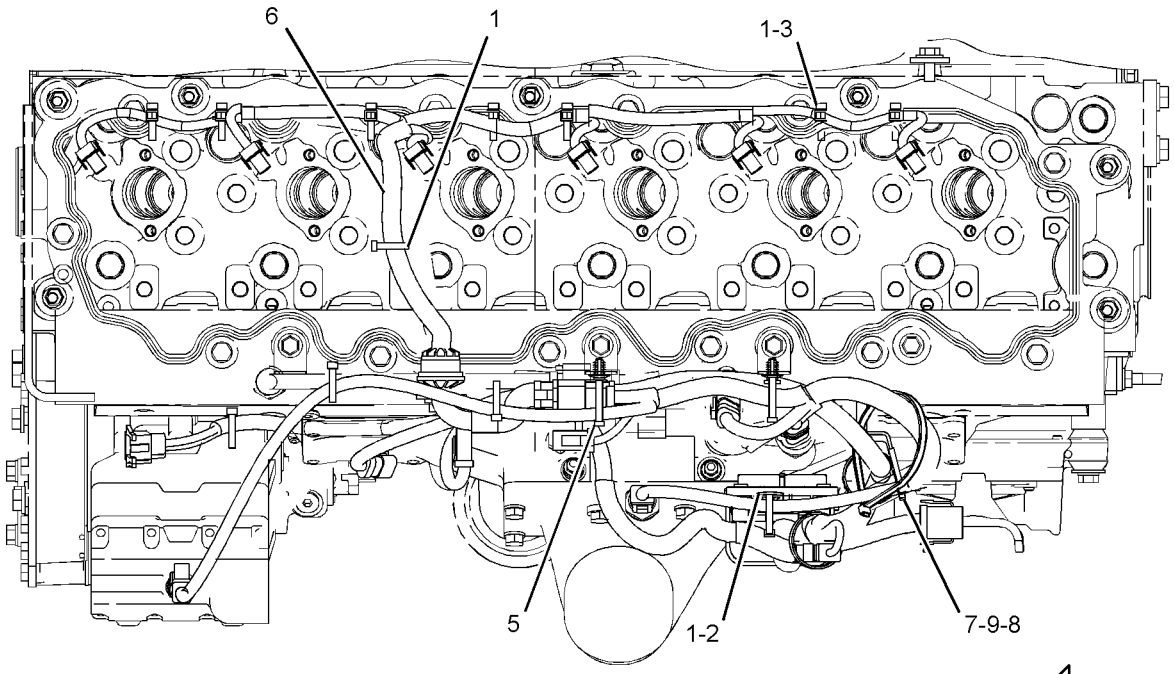

TOP VIEW

FWD

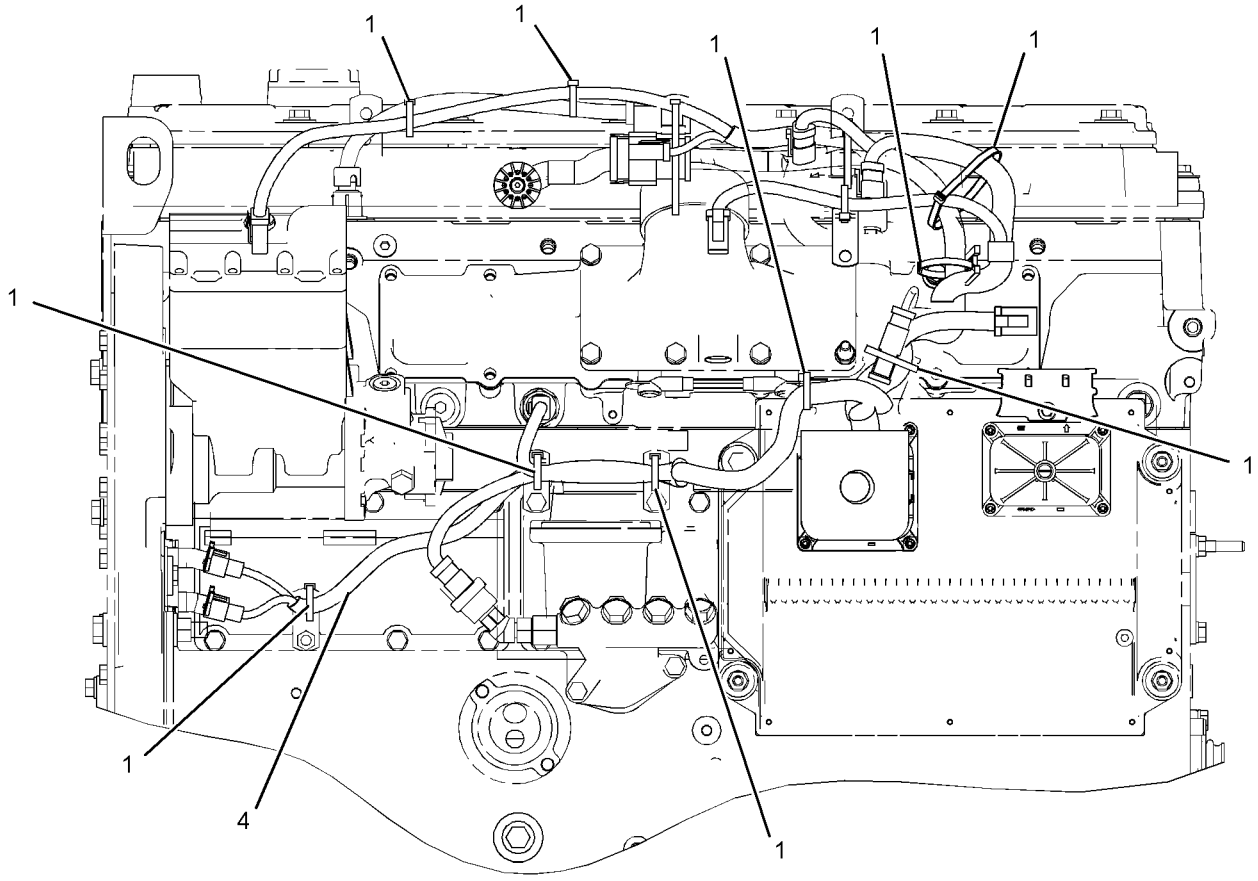

LEFT SIDE VIEW

GRAPHIC #1

<END>

g01175334

311-0801 WIRING GP-ETHER STARTING AID

S/N: JBP1-UP
PART OF 320-1340 STARTING AID AR-ETHER
AN ATTACHMENT

SMCS-1408 **i03251663**

NOTE	REF NO	GRAPHIC REF	PART NUMBER	QTY	PART NAME 1 2 3 4 5 6 (PRODUCT LEVEL)	SEE PAGE
	1	1	**334-6872**	1	HARNESS AS-STARTING AID	
	2	1	**132-5789**	1	CLIP	
	3	1	**3E-5239**	1	RELAY AS (24-VOLT) (ETHER STARTING AID)	
M	4	1	**5C-9553**	1	BOLT (M6X1X16-MM)	
	5	1	**7K-1181**	1	STRAP-CABLE	
	6	1	**9X-8256**	1	WASHER (6.6X12X2-MM THK)	

M-METRIC PART

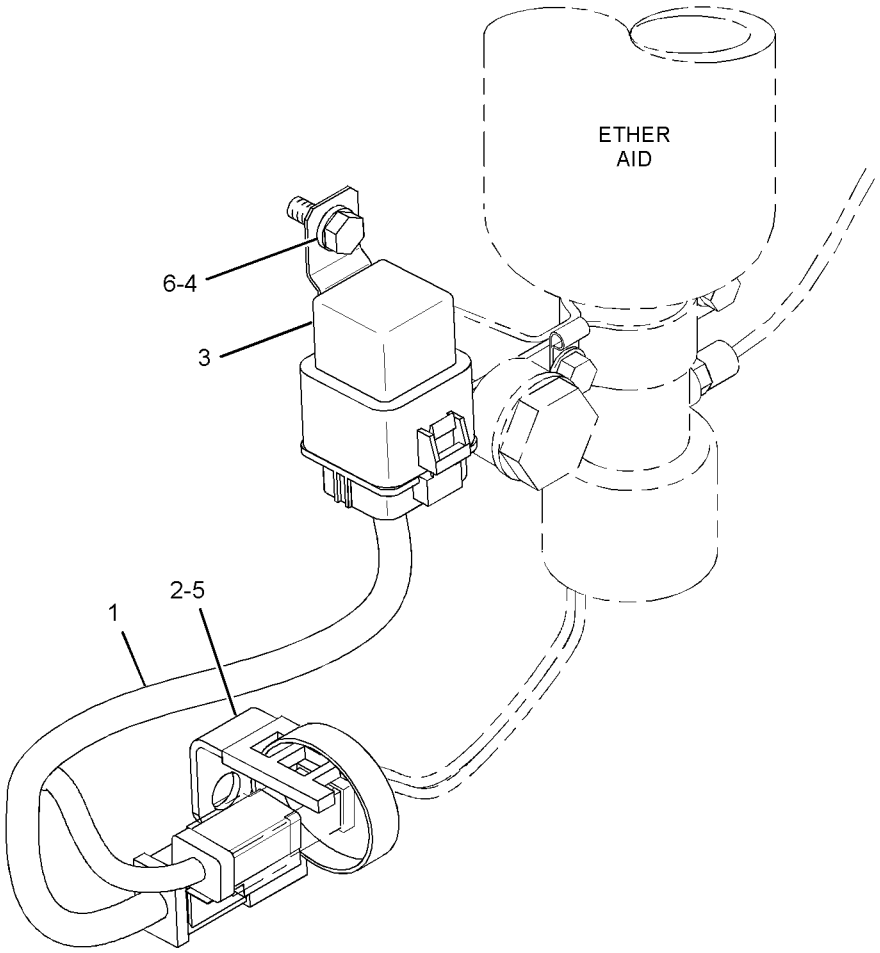

GRAPHIC #1 **<END>** g01703353

ELECTRICAL AND STARTING SYSTEM

284-5343 WIRING GP-FRONT

S/N: JBP1-UP

PART OF 274-7941 GENERAL AR

SMCS-1408 **i03247447**

NOTE	REF NO	GRAPHIC REF	PART NUMBER	QTY	PART NAME 1 2 3 4 5 6 (PRODUCT LEVEL)	SEE PAGE
	1	1	**1S-2342**	1	STRAP AS-GROUND	
	2	2	**3E-2026**	1	SWITCH AS-PRESSURE (STOP LIGHT)	
		2	**102-8802**	1	KIT-RECEPTACLE (2-PIN)	
					(INCLUDES RECEPTACLE AS & WEDGE)	
		2	**186-3735**	2	PIN-CONNECTOR (16-GA TO 18-GA)	
	3	2	**3E-3636**	1	SWITCH AS-BALL (CENTERSHIFT INDICATOR)	
		2	**186-3735**	4	PIN-CONNECTOR (16-GA TO 18-GA)	
		2	**102-8804**	1	KIT-RECEPTACLE (4-PIN)	
					(INCLUDES RECEPTACLE AS & WEDGE)	
	4	2	**6I-1418**	4	SPACER (8.2X12.7X28.7-MM THK)	
	5	2	**8T-9655**	8	MOUNT-ISOLATION	
	6	2	**9L-1566**	2	SUPPORT	
	7	1	**9L-6331**	1	BRACKET	
	8	2	**114-9281**	2	SWITCH AS-PRESSURE (AIR BRAKE)	
					(EACH INCLUDES)	
		2	**102-8802**	1	KIT-RECEPTACLE (2-PIN)	
					(INCLUDES RECEPTACLE AS & WEDGE)	
		2	**186-3735**	2	PIN-CONNECTOR (16-GA TO 18-GA)	
	9	1,2	**169-5414**	5	CLIP	
Y	10	2	**177-4493**	1	CONTROL GP-POWER TRAIN	120
	11	2	**297-1140**	1	SWITCH AS-PRESSURE (PARKING BRAKE)	
		2	**102-8802**	1	KIT-RECEPTACLE (2-PIN)	
					(INCLUDES RECEPTACLE AS & WEDGE)	
		2	**186-3735**	2	PIN-CONNECTOR (16-GA TO 18-GA)	
	12	2	**320-8203**	1	PLATE AS	
	13	1	**334-9745**	1	HARNESS AS-PLATFORM	
	14	2	**096-6166**	4	WASHER-HARD (4.5X9X1-MM THK)	
	15	1,2	**130-5300**	6	CLIP	
	16	2	**174-5907**	2	CLIP	
	17	2	**3J-1907**	1	SEAL-O-RING	
	18	1,2	**4D-7388**	4	CLIP	
	19	1,2	**4D-7794**	8	CLIP	
	20	1	**4K-8864**	1	CLIP	
	21	1	**4L-6454**	1	BOLT (3/8-16X1-IN)	
	22	1,2	**4P-8134**	2	CLIP	
	23	1,2	**5M-3062**	4	BOLT (3/8-16X0.75-IN)	
	24	1	**6D-4246**	1	CLIP	
	25	2	**6D-4636**	1	CLIP	
	26	1	**6V-1889**	1	CLIP	
	27	1,2	**6V-3265**	6	CLIP	
	28	2	**7X-0613**	4	WASHER-HARD (8.8X25.5X5-MM THK)	
	29	1	**6V-8801**	1	NUT (3/8-16-THD)	
	30	1	**7C-4354**	1	CLIP	
	31	1,2	**7K-1181**	19	STRAP-CABLE	
	32	2	**7N-3718**	1	CLIP	
M	33	2	**7X-0818**	4	BOLT (M8X1.25X45-MM)	
B	34	2	**8F-1974**	10	SHIM (0.13-MM THK)	
	35	2	**8M-2770**	1	CLIP	
	36	1	**8M-2773**	1	CLIP	
	37	1,2	**8T-4121**	33	WASHER-HARD (11X21X2.5-MM THK)	
M	38	1,2	**8T-4133**	4	NUT (M10X1.5-THD)	
M	39	2	**8T-4136**	2	BOLT (M10X1.5X25-MM)	
M	40	1,2	**8T-4137**	24	BOLT (M10X1.5X20-MM)	
M	41	1,2	**8T-4195**	3	BOLT (M10X1.5X30-MM)	
M	42	2	**8T-4647**	4	SCREW-MACHINE (M4X0.7X20-MM)	
	43	1,2	**8T-4896**	6	WASHER-HARD (10.2X18.5X2.5-MM THK)	

284-5343 **WIRING GP-FRONT** ***(contd.)*** **i03247447**

B-USE AS REQUIRED
M-METRIC PART
Y-SEPARATE ILLUSTRATION

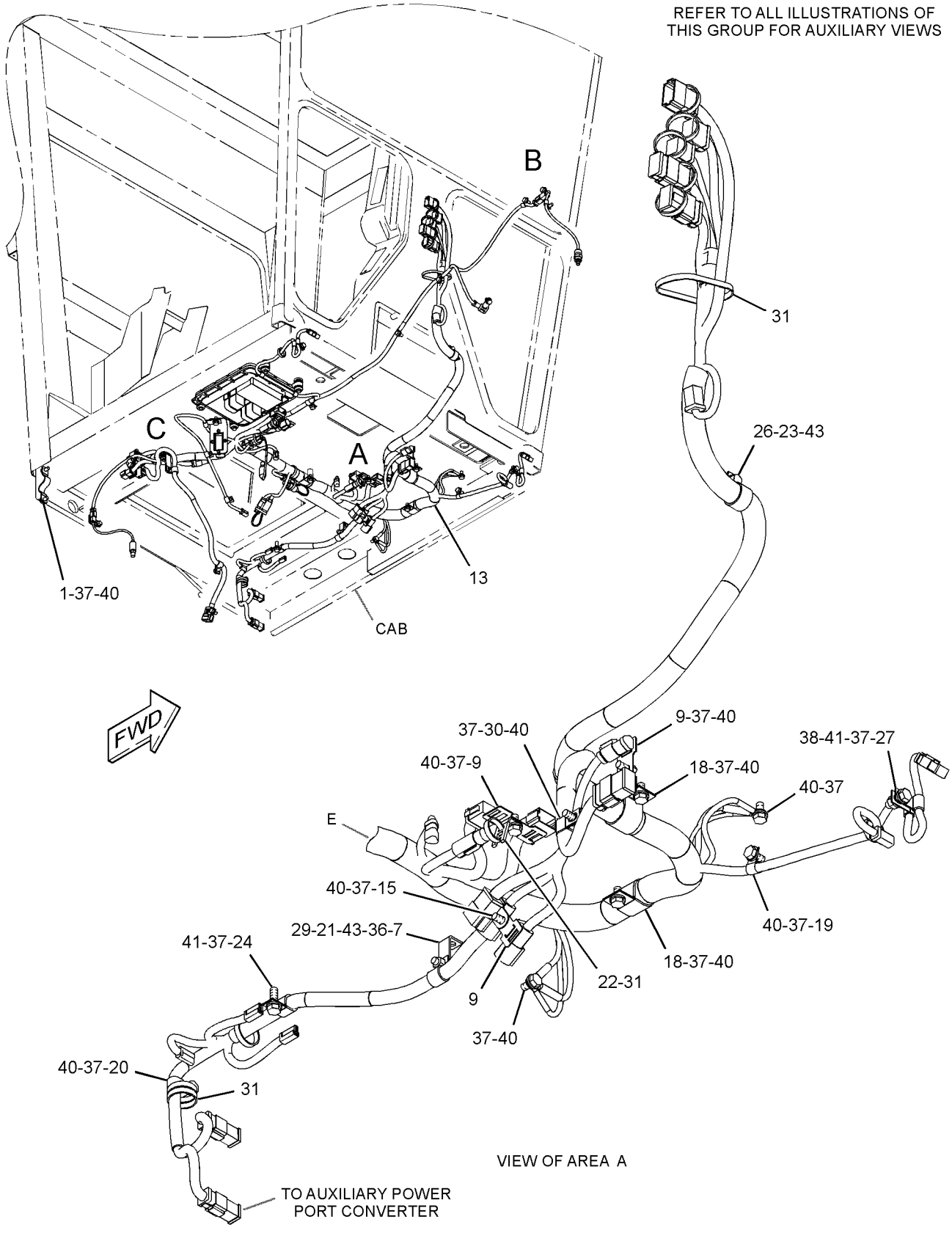

GRAPHIC #1

g01712254

284-5343 **WIRING GP-FRONT** *(contd.)* **i03247447**

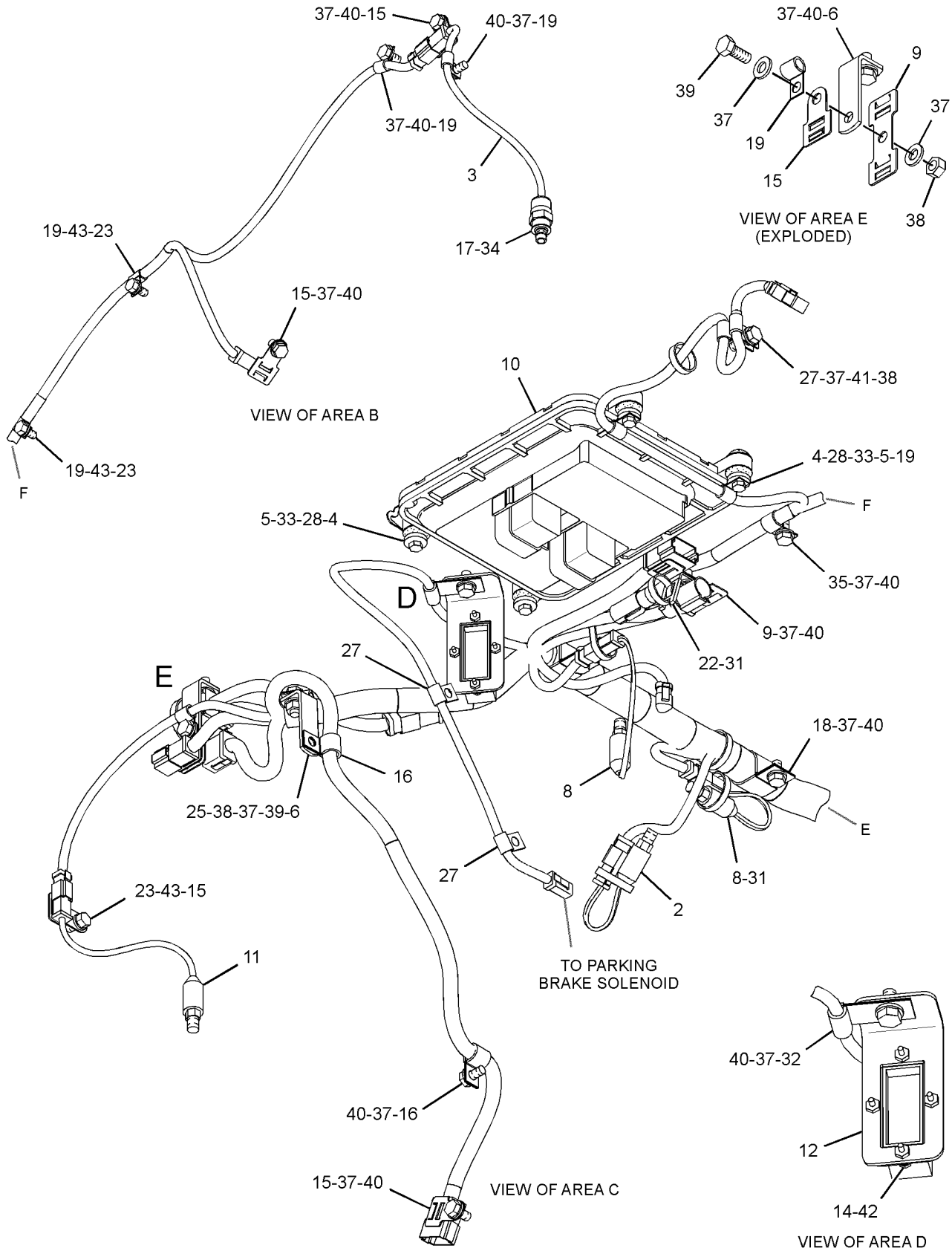

GRAPHIC #2 **<END>** g01712255

252-5709 WIRING GP-GRADE CONTROL–CAB, INDICATOR LAMP

S/N: JBP1-UP
PART OF 297-8448 GRADE CONTROL AR
AN ATTACHMENT

SMCS-1408 **i02397347**

NOTE	REF NO	GRAPHIC REF	PART NUMBER	QTY	PART NAME 1 2 3 4 5 6 (PRODUCT LEVEL)	SEE PAGE
	1	1	**115-1748**	1	LAMP (24-VOLT, 3-WATT)	
	2	1	**247-6457**	1	WIRING AS	

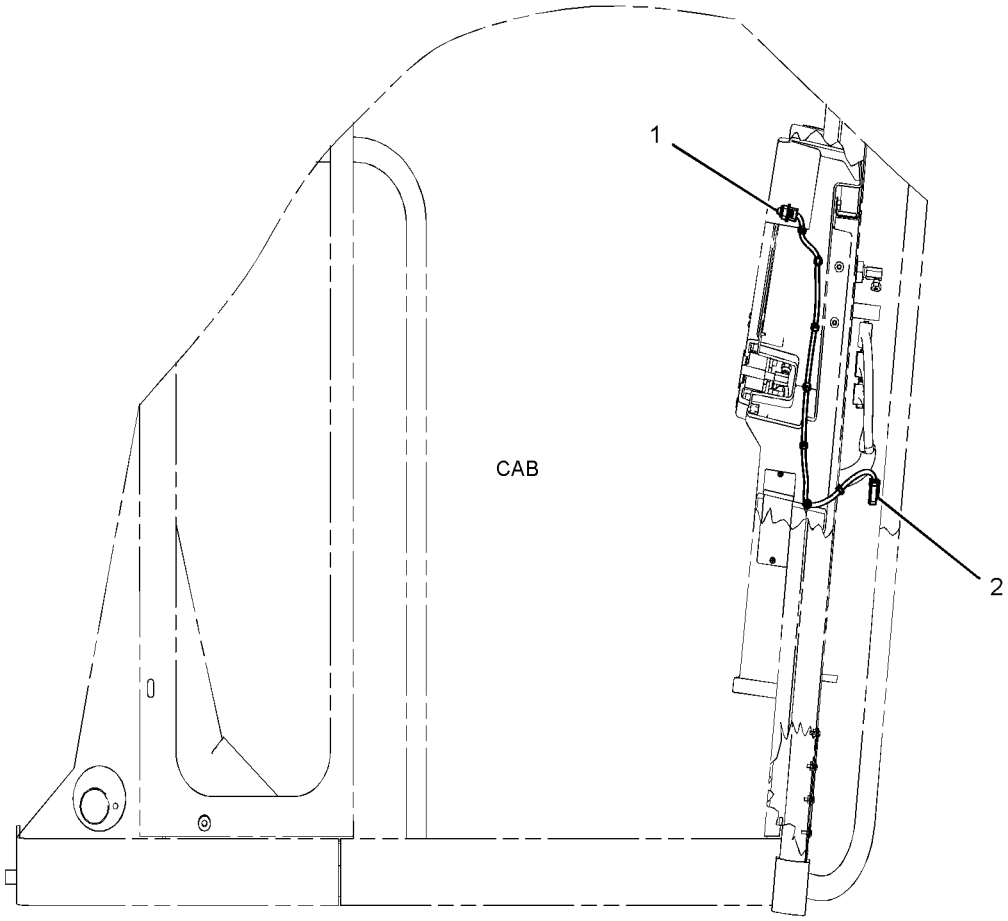

RIGHT SIDE VIEW

GRAPHIC #1 **<END>** g01239581

294-3542 WIRING GP-CHASSIS–ACCUGRADE

S/N: JBP1-UP
PART OF 297-8448 GRADE CONTROL AR
AN ATTACHMENT

SMCS-1408 **i03266020**

NOTE	REF NO	GRAPHIC REF	PART NUMBER	QTY	PART NAME 1 2 3 4 5 6 (PRODUCT LEVEL)	SEE PAGE
	1	1	**6D-3033**	16	SCREW-SOCKET HEAD (4-40X0.5-IN)	
	2	1	**8T-9655**	8	MOUNT-ISOLATION	
	3	1	**9L-1566**	2	SUPPORT	
	4	1	**132-8487**	4	NUT-RING	
	5	1	**169-5414**	1	CLIP	
	6	1	**236-2356**	1	HARNESS AS-SENSOR (ANGLE)	
	7	1	**236-8826**	4	BOSS (1-1/8-18X0.708-IN)	
	8	1	**243-3250**	1	HARNESS AS-SENSOR (ROTATION)	
	9	1	**244-5880**	1	BRACKET	
	10	1	**251-2383**	1	BRACKET	
Y	11	1	*260-7647*	1	APPLICATION GP-POWER TRAIN	228
	12	1	**288-5508**	1	BRACKET AS (LH)	
	13	1	**288-5509**	1	BRACKET AS (RH)	
	14	1	**336-9456**	1	HARNESS AS-CHASSIS	
	15	1	**313-4670**	1	BRACKET AS	
M		1	**8T-3612**	2	NUT-WELD (M8X1.25-THD)	
		1	**7T-1099**	1	LINK	
M		1	**6V-9632**	2	NUT-WELD (M6X1-THD)	
	16	1	**323-0327**	1	HARNESS AS	
	17	1	**323-5592**	1	HARNESS AS	
	18	1	**324-3364**	1	PLATE	
	19	1	**324-3366**	1	PLATE AS	
	20	1	**327-0560**	1	BRACKET	
	21	1	**327-0561**	1	BRACKET	
	22	1	**331-1102**	1	BRACKET AS	
	23	1	**033-8248**	1	CLIP	
	24	1	**067-2551**	1	CLIP	
	25	1	**111-4871**	2	RELAY (24-VOLT)	
	26	1	**130-5300**	4	CLIP	
	27	1	**147-0385**	2	CLIP	
	28	1	**174-9692**	4	SPACER (20.5X35X16-MM THK)	
M	29	1	**188-9644**	4	SCREW-FLAT HEAD (M8X1.25X25-MM)	
	30	1	**1J-6762**	4	BOLT-PLOW (3/4-10X3-IN)	
	31	1	**1K-6870**	1	LOCKNUT (3/4-10-THD)	
	32	1	**1P-7009**	2	CLIP	
	33	1	**6V-8182**	4	NUT (3/4-10-THD)	
	34	1	**2Y-3812**	1	CLIP	
	35	1	**3P-2404**	1	CLIP	
	36	1	**4D-7794**	1	CLIP	
	37	1	**4K-8302**	2	CLIP	
	38	1	**4K-8864**	1	CLIP	
	39	1	**4S-1962**	6	CLIP	
M	40	1	**5C-7261**	2	NUT (M8X1.25-THD)	
M	41	1	**5C-9553**	2	BOLT (M6X1X16-MM)	
	42	1	**5M-3062**	28	BOLT (3/8-16X0.75-IN)	
	43	1	**5P-4135**	1	BOLT (3/4-10X8-IN)	
	44	1	**5P-9085**	1	CLIP	
	45	1	**5S-7379**	2	BOLT (3/8-16X0.875-IN)	
	46	1	**6D-4244**	8	CLIP	
	47	1	**6K-8178**	1	CLIP	
	48	1	**6V-1889**	7	CLIP	
	49	1	**6V-8801**	2	NUT (3/8-16-THD)	
	50	1	**7K-1181**	18	STRAP-CABLE	
	51	1	**7X-0550**	8	WASHER-HARD (13.5X32X5-MM THK)	
	52	1	**7X-0579**	8	WASHER-HARD (8.8X25.5X2-MM THK)	

294-3542 **WIRING GP-CHASSIS** *(contd.)* **i03266020**

NOTE	REF NO	GRAPHIC REF	PART NUMBER	QTY	PART NAME 1 2 3 4 5 6 (PRODUCT LEVEL)	SEE PAGE
	53	1	**7X-0619**	4	WASHER-HARD (20X30X2.5-MM THK)	
M	54	1	**7Y-0589**	2	BOLT (M12X1.75X90-MM)	
	55	1	**8C-6857**	4	BOLT (3/4-10X2.75-IN)	
	56	1	**8M-2773**	4	CLIP	
	57	1	**8T-4121**	18	WASHER-HARD (11X21X2.5-MM THK)	
	58	1	**8T-4123**	4	WASHER (22X35X3.5-MM THK)	
M	59	1	**8T-4133**	1	NUT (M10X1.5-THD)	
M	60	1	**8T-4137**	14	BOLT (M10X1.5X20-MM)	
M	61	1	**8T-4191**	3	BOLT (M10X1.5X16-MM)	
	62	1	**8T-4223**	2	WASHER-HARD (13.5X25.5X3-MM THK)	
	63	1	**8T-4224**	4	WASHER-HARD (8.8X16X2-MM THK)	
M	64	1	**8T-4244**	2	NUT (M12X1.75-THD)	
	65	1	**8T-4835**	4	BOLT (1/2-13X2-IN)	
	66	1	**8T-4896**	32	WASHER-HARD (10.2X18.5X2.5-MM THK)	
M	67	1	**8T-6869**	4	BOLT (M8X1.25X60-MM)	
	68	1	**8T-9658**	4	SPACER (8.2X12.7X25.4-MM THK)	
	69	1	**9M-8406**	4	CLIP	
	70	1	**9X-8256**	2	WASHER (6.6X12X2-MM THK)	

M-METRIC PART
Y-SEPARATE ILLUSTRATION

294-3542 **WIRING GP-CHASSIS** *(contd.)* **i03266020**

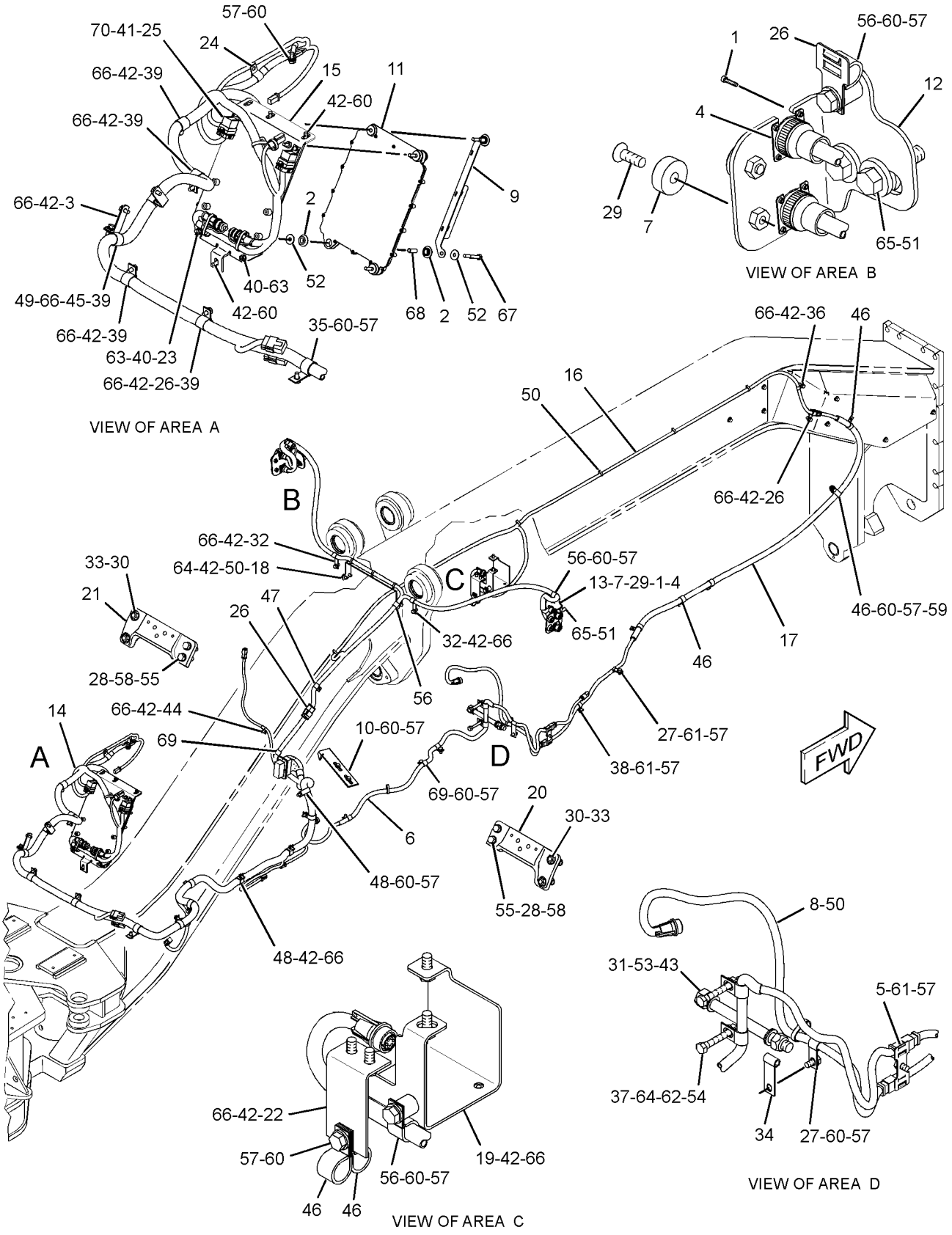

GRAPHIC #1 **<END>** g01716922

295-1090 WIRING GP-POWER RECEPTACLE–CIGARETTE LIGHTER

S/N: JBP1-UP

AN ATTACHMENT

SMCS-1408, 1463 **i03258799**

NOTE	REF NO	GRAPHIC REF	PART NUMBER	QTY	PART NAME 1 2 3 4 5 6 (PRODUCT LEVEL)	SEE PAGE
	1	1	**9W-1442**	1	FUSE (10-AMPERE)	
	2	1	**295-3849**	1	HARNESS AS-STARTING AID	
	3	1	**6T-1999**	1	HOUSING AS	
	4	1	**8N-2353**	1	KNOB AS-LIGHTER	

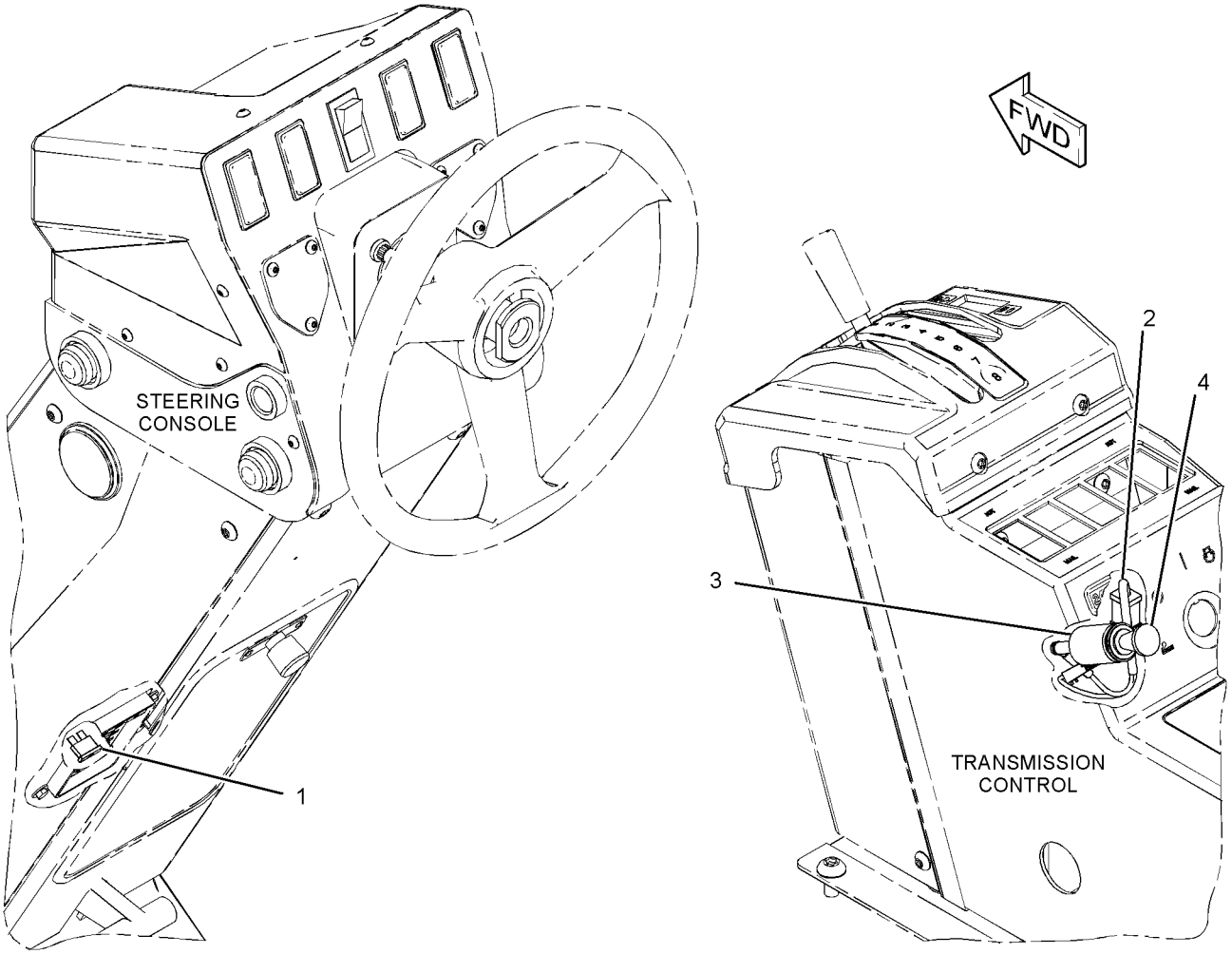

GRAPHIC #1 **<END>** g01678414

284-5348 WIRING GP-REAR

S/N: JBP1-UP

PART OF 274-7941 GENERAL AR

SMCS-1408 **i03247434**

NOTE	REF NO	GRAPHIC REF	PART NUMBER	QTY	PART NAME 1 2 3 4 5 6 (PRODUCT LEVEL)	SEE PAGE
	1	1	**334-7633**	1	HARNESS AS-CHASSIS	
	2	1	**130-5300**	2	CLIP	
Y	3	1	**135-0426**	2	LAMP GP-SIGNAL (24-VOLT, STOP, TAIL)	139
M	4	1	**5C-2890**	6	NUT (M6X1-THD)	
	5	1	**7K-1181**	9	STRAP-CABLE	
	6	1	**8T-4224**	6	WASHER-HARD (8.8X16X2-MM THK)	

M-METRIC PART
Y-SEPARATE ILLUSTRATION

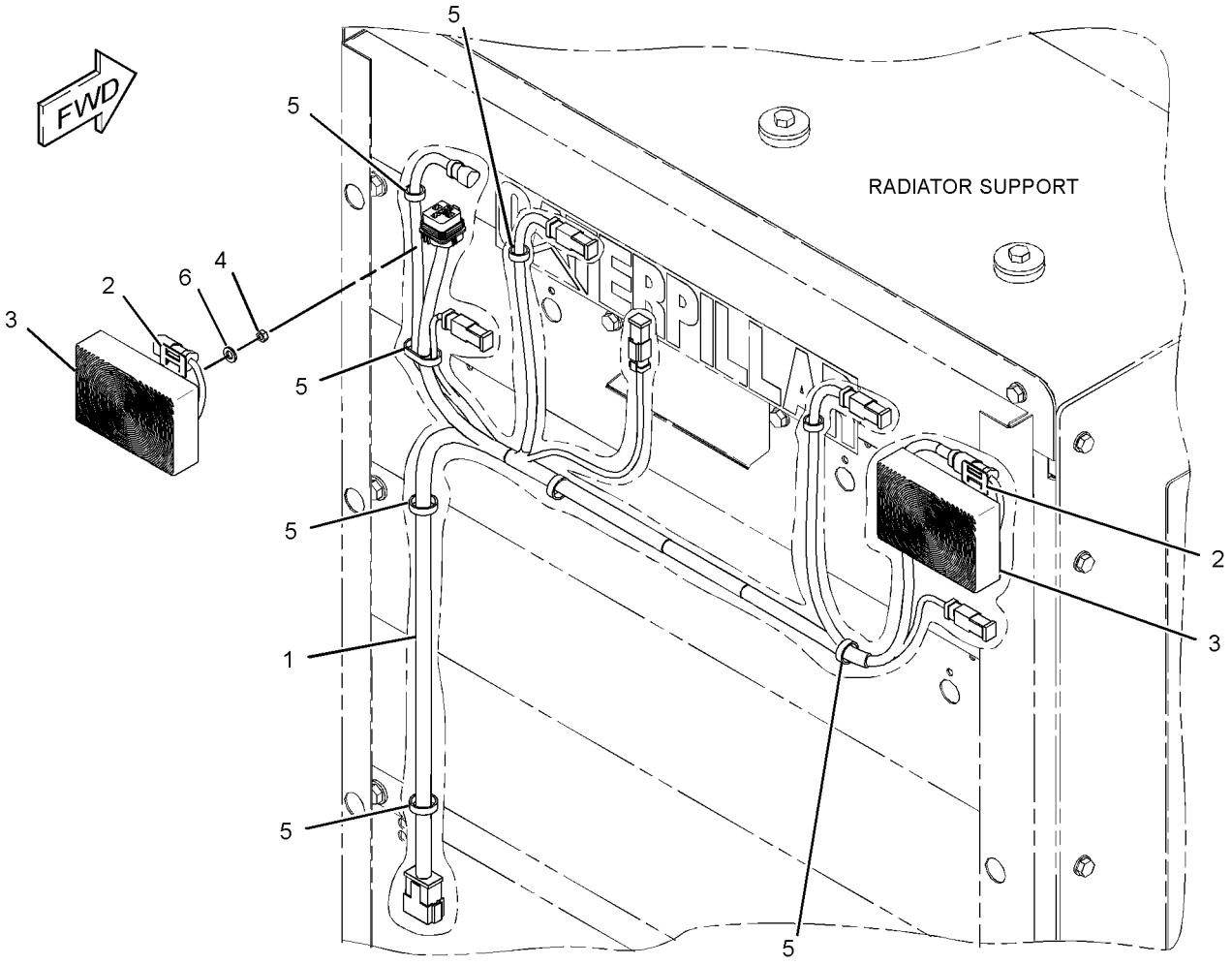

GRAPHIC #1 **<END>** g01708342

ELECTRICAL AND STARTING SYSTEM

311-0794 WIRING GP-REAR

S/N: JBP1-UP

PART OF 274-7941 GENERAL AR

SMCS-1408 **i03246410**

NOTE	REF NO	GRAPHIC REF	PART NUMBER	QTY	PART NAME 1 2 3 4 5 6 (PRODUCT LEVEL)	SEE PAGE
	1	1	**3E-5239**	1	RELAY AS (24-VOLT) (FUEL PRIMING)	
	2	1	**7G-1060**	1	STRAP AS-GROUND	
	3	2	**7W-9943**	1	SENDER-TEMPERATURE	
		2	**4B-4274**	1	WASHER (5.5X13X1.2-MM THK)	
		2	**6V-8378**	1	NUT (10-32-THD)	
		2	**8F-1434**	1	LOCKWASHER	
	4	2	**8W-8527**	1	SLEEVE	
	5	3	**123-3688**	1	PLATE AS	
		3	**7L-0811**	1	DOWEL	
	6	3	**123-3689**	1	PLATE AS	
		3	**9D-1541**	1	STUD	
	7	3	**123-3692**	1	ARM	
	8	3	**123-3695**	1	PLATE	
	9	2	**139-2116**	1	SWITCH AS-TOGGLE (ENGINE SHUTDOWN)	
		2	**6T-3631**	2	NUT-HEX (15/32-32-THD)	
		2	**6T-3632**	1	LOCKWASHER	
		2	**6T-3633**	1	RING-LOCKING	
		2	**186-3735**	3	PIN-CONNECTOR (16-GA TO 18-GA)	
		2	**102-8803**	1	KIT-RECEPTACLE (3-PIN)	
					(INCLUDES RECEPTACLE AS & WEDGE)	
	10	2	**177-2215**	3	STRAP-DUAL CLAMP	
	11	3	**187-1008**	1	SENDER AS-POSITION (ARTICULATION)	
		3	**102-8802**	1	KIT-RECEPTACLE (2-PIN)	
					(INCLUDES RECEPTACLE AS & WEDGE)	
E		3	**9X-1813**		SLEEVE (15-CM)	
		3	**186-3735**	2	PIN-CONNECTOR (16-GA TO 18-GA)	
	12	2	**308-0291**	1	HARNESS AS-SENSOR (TRANSMISSION SPEED)	
	13	2	**308-6403**	1	BRACKET AS	
	14	2	**322-7341**	1	BRACKET AS	
	15	3	**326-3120**	1	BRACKET AS	
	16	1	**334-0575**	1	HARNESS AS-TRANSMISSION	
	17	1	**334-0576**	1	HARNESS AS-REAR CHASSIS (RELAY)	
	18	1	**334-0577**	1	HARNESS AS-SENSOR (ENGINE)	
	19	1	**334-0578**	1	HARNESS AS-REAR CHASSIS (TAIL)	
	20	2	**109-0361**	1	FILM-INSTRUCTION (ENGINE SHUTDOWN)	
	21	1,2,3	**130-5300**	8	CLIP	
	22	1,2	**132-5789**	3	CLIP	
	23	2	**133-3260**	1	SPACER (11X19X10-MM THK)	
	24	2	**134-2540**	1	RECEPTACLE AS (3-PIN)	
	25	2	**147-0385**	1	CLIP	
	26	2	**172-6833**	1	CLIP (LOOP)	
Y	27	2	**193-2550**	1	SENSOR GP-SPEED (MAGNETIC, HIGH OUTPUT)	174
	28	2	**1V-1984**	1	CLIP	
	29	2	**277-1873**	1	CLIP	
	30	2	**3E-5169**	1	GUARD-SWITCH	
	31	2	**2A-1162**	1	GASKET	
	32	1,2,3	**4D-7794**	10	CLIP	
	33	2	**4D-8123**	1	CLIP	
	34	2	**4K-8864**	4	CLIP	
	35	1	**4S-1936**	1	CLIP	
	36	2	**4S-1962**	2	CLIP	
	37	2,3	**4S-4455**	4	CLIP	
	38	2,3	**5P-8167**	3	BOLT (3/8-16X0.625-IN)	
	39	2	**5P-9085**	1	CLIP	
	40	1	**6D-3479**	4	CLIP	
	41	2	**6D-4244**	4	CLIP	

311-0794 **WIRING GP-REAR** ***(contd.)*** **i03246410**

NOTE	REF NO	GRAPHIC REF	PART NUMBER	QTY	PART NAME 1 2 3 4 5 6 (PRODUCT LEVEL)	SEE PAGE
	42	2,3	**6D-4246**	4	CLIP	
	43	2	**6D-4636**	1	CLIP	
	44	3	**6V-1889**	1	CLIP	
	45	2	**6V-3265**	4	CLIP	
	46	3	**6V-6893**	3	BOLT (6-32X0.375-IN)	
	47	3	**6V-8801**	1	NUT (3/8-16-THD)	
M	48	1	**130-2792**	1	SCREW (M6X1X16-MM)	
	49	2	**7C-4354**	2	CLIP	
	50	2	**7D-7233**	1	CLIP	
	51	1,2	**7K-1181**	21	STRAP-CABLE	
	52	2,3	**7N-3718**	1	CLIP	
	53	2	**8D-9671**	1	CLIP	
	54	2	**8M-2773**	1	CLIP	
	55	1,2,3	**8T-4121**	57	WASHER-HARD (11X21X2.5-MM THK)	
M	56	2,3	**8T-4133**	4	NUT (M10X1.5-THD)	
M	57	1,2,3	**8T-4137**	53	BOLT (M10X1.5X20-MM)	
M	58	2	**8T-4195**	1	BOLT (M10X1.5X30-MM)	
	59	3	**8T-4205**	2	WASHER-HARD (7.2X14.5X2-MM THK)	
	60	3	**8T-4226**	1	WASHER-PLATED (10.5X45X3-MM THK)	
	61	3	**8T-4896**	2	WASHER-HARD (10.2X18.5X2.5-MM THK)	
	62	3	**8T-9364**	2	BOLT (1/4-20X0.625-IN)	
	63	2	**8W-8909**	1	SLEEVE	
	64	2,3	**8X-5489**	4	SLEEVE	
	65	3	**9M-4972**	3	CLIP	
	66	1	**9X-8256**	1	WASHER (6.6X12X2-MM THK)	

E-ORDER BY THE CENTIMETER
M-METRIC PART
Y-SEPARATE ILLUSTRATION

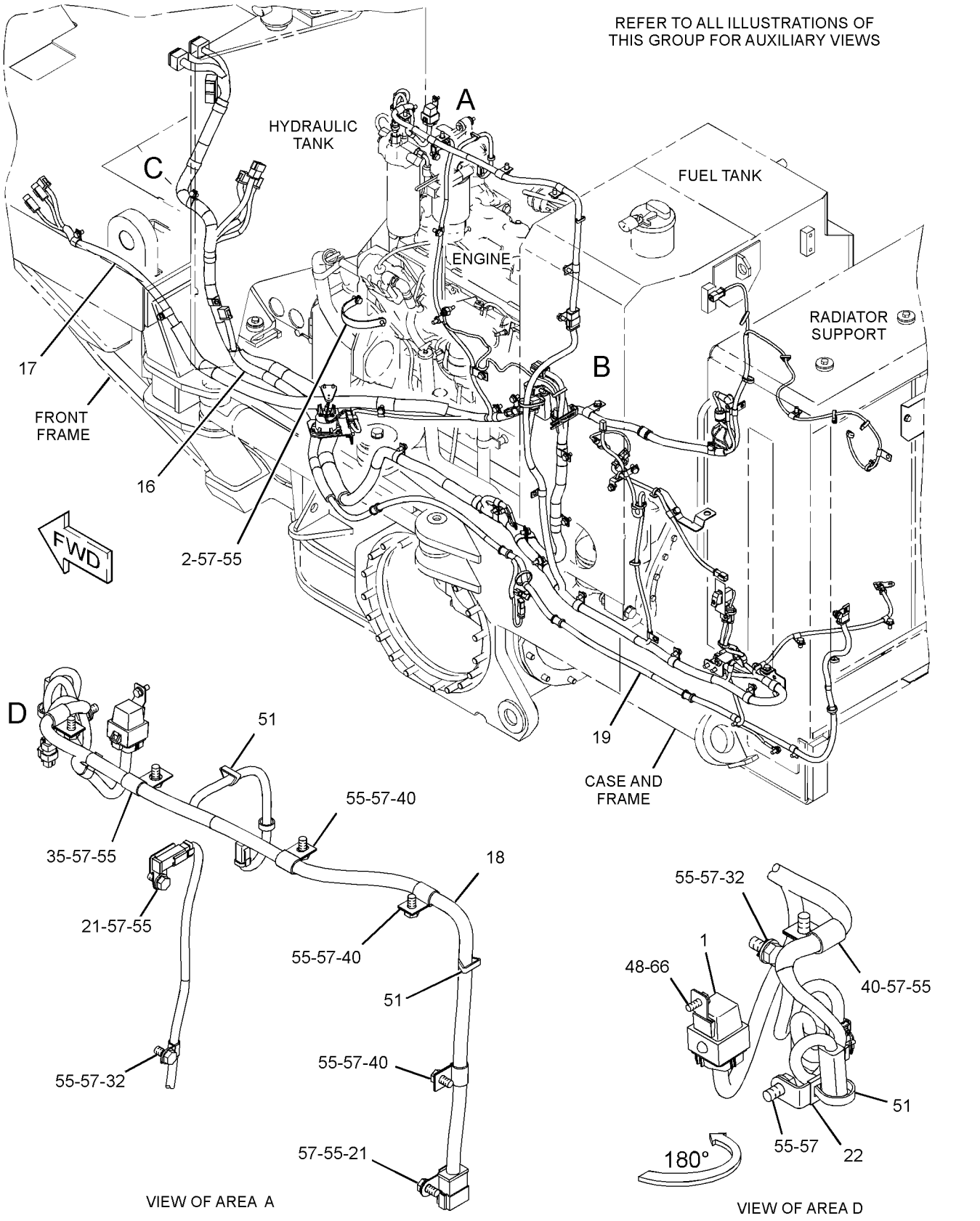

GRAPHIC #1 g01711953

311-0794 **WIRING GP-REAR** *(contd.)* **i03246410**

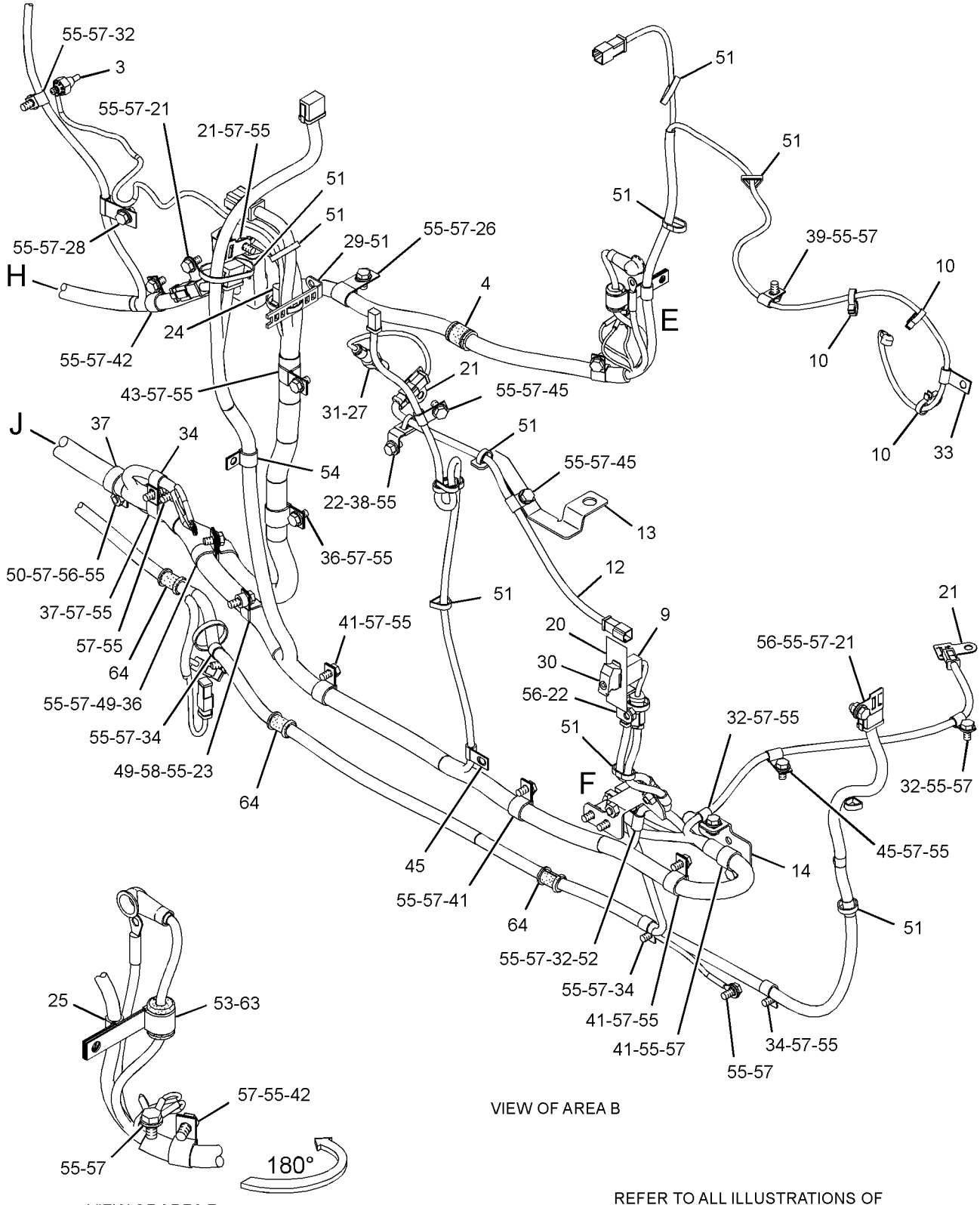

GRAPHIC #2 g01711954

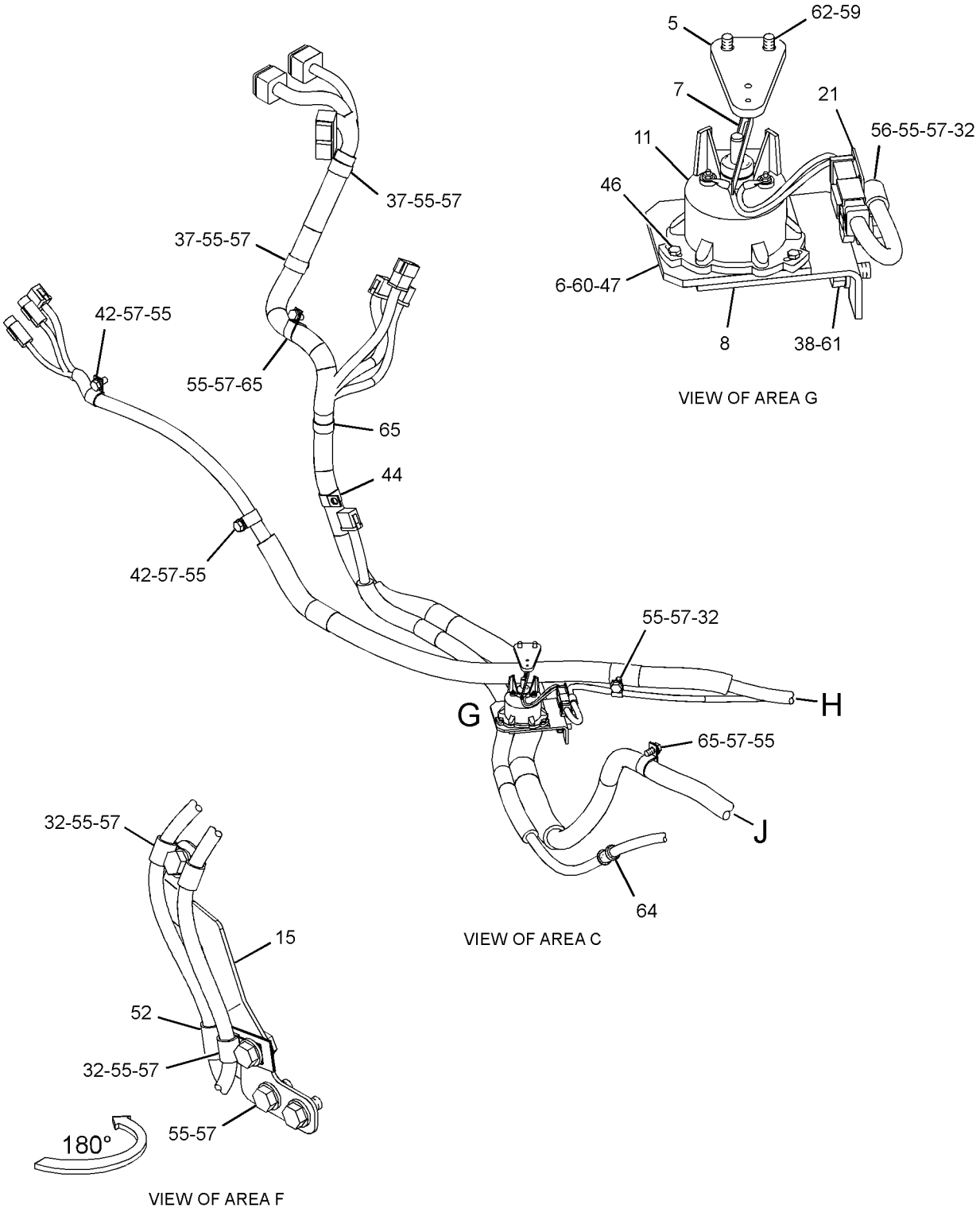

GRAPHIC #3 **<END>** g01711955

ELECTRICAL AND STARTING SYSTEM

284-5347 WIRING GP-STEERING CONSOLE

S/N: JBP1-UP

PART OF 274-7941 GENERAL AR

SMCS-4334 **i03378002**

NOTE	REF NO	GRAPHIC REF	PART NUMBER	QTY	PART NAME 1 2 3 4 5 6 (PRODUCT LEVEL)	SEE PAGE
	1	1	**3E-0109**	5	PLUG (ROCKER SWITCH)	
	2	1	**3E-6477**	2	RELAY AS (24-VOLT)	
	3	1	**3S-2093**	7	STRAP-CABLE	
	4	1	**9W-1441**	2	FUSE (15-AMPERE)	
	5	1	**9W-1442**	9	FUSE (10-AMPERE)	
	6	1	*112-6175*	2	SWITCH AS-LIMIT	
					(EACH INCLUDES)	
		1	**6V-8376**	3	SCREW-MACHINE (8-32X0.25-IN)	
		1	**9B-7233**	3	LOCKWASHER	
	7	1	*161-3932*	1	METER GP-SERVICE	
M		1	**5C-8312**	2	NUT (M4X0.7-THD)	
		1	**9B-7233**	2	LOCKWASHER	
		1	**096-6166**	2	WASHER-HARD (4.5X9X1-MM THK)	
	8	1	**180-4028**	2	BRACKET	
	9	1	**180-7033**	1	COVER	
	10	1	**228-5009**	4	CLIP	
	11	1	**338-8423**	1	HARNESS AS-CONSOLE	
	12	1	**295-1834**	1	FILM-IDENTIFICATION (FUSE BOX)	
	13	1	**295-1835**	1	FILM-IDENTIFICATION (FUSE BOX)	
	14	1	**130-5300**	1	CLIP	
M	15	1	**151-4957**	4	BOLT-SOCKET HEAD (M3X0.5X25-MM)	
M	16	1	**174-8131**	2	SCREW-TRUSS HEAD (M4X0.7X12-MM)	
	17	1	**1H-3244**	2	LOCKWASHER	
M	18	1	**3C-6969**	4	NUT (M3X0.5-THD)	
	19	1	*3E-9319*	1	SWITCH AS-ROCKER	
		1	**3E-8763**	1	SWITCH AS (TAIL LIGHTS)	
		1	**3E-8825**	1	LAMP (24-VOLT)	
		1	**3E-9323**	1	ACTUATOR-ROCKER	
	20	1	**3L-8187**	4	LOCKWASHER	
	21	1	**4B-1281**	1	SCREW-MACHINE (1/4-20X0.625-IN)	
	22	1	**4B-4274**	16	WASHER (5.5X13X1.2-MM THK)	
	23	1	**4D-1212**	1	GROMMET	
M	24	1	**5C-2890**	3	NUT (M6X1-THD)	
M	25	1	**5C-8312**	2	NUT (M4X0.7-THD)	
M	26	1	**5C-9553**	2	BOLT (M6X1X16-MM)	
	27	1	**5P-4115**	1	WASHER-HARD (7.2X19X2-MM THK)	
	28	1	**6D-4244**	2	CLIP	
	29	1	**6V-8185**	1	NUT (1/4-20-THD)	
	30	1	**8C-7508**	2	LOCKWASHER	
	31	1	**8L-6521**	8	BOLT (10-32X0.5-IN)	
M	32	1	**8T-4971**	1	BOLT (M6X1X30-MM)	
	33	1	**9P-2553**	1	SPACER (6.83X10.28X11-MM THK)	
M	34	1	**9X-1046**	6	SCREW (M4X0.7X18-MM)	
M	35	1	**9X-2042**	1	SCREW-TRUSS HEAD (M6X1X12-MM)	
	36	1	**9X-8256**	6	WASHER (6.6X12X2-MM THK)	

M-METRIC PART

284-5347 **WIRING GP-STEERING CONSOLE** *(contd.)* **i03378002**

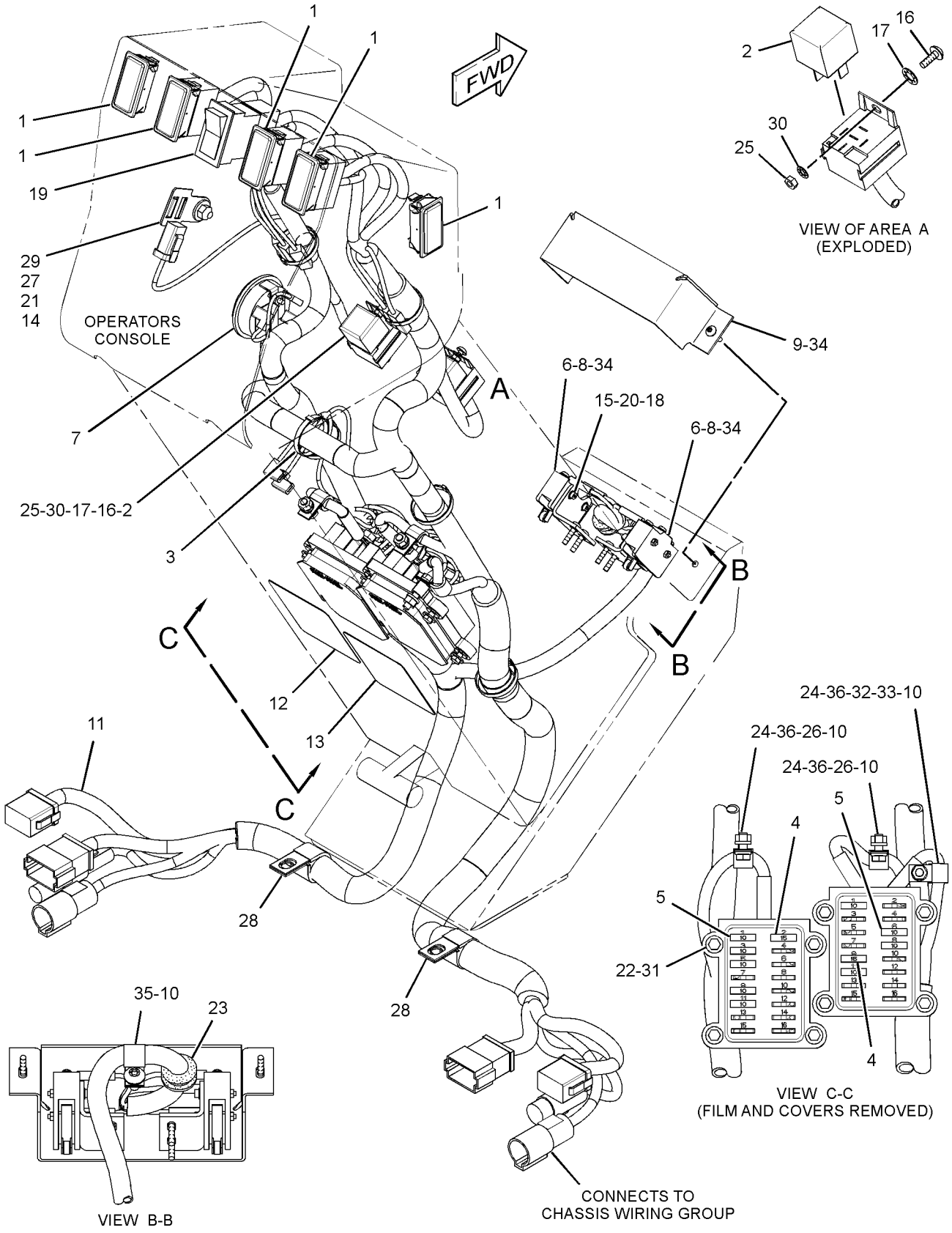

GRAPHIC #1 **<END>** g01753515

180-9324 WIRING GP-TRANSMISSION

S/N: DPK1-UP

PART OF 281-3165 CONTROL GP-TRANSMISSION HYD

SMCS-3104 **i02502591**

NOTE	REF NO	GRAPHIC REF	PART NUMBER	QTY	PART NAME 1 2 3 4 5 6 (PRODUCT LEVEL)	SEE PAGE
	1	1	**213-9842**	1	HARNESS AS-TRANSMISSION	
		1	**102-8801**	1	KIT-RECEPTACLE (12-PIN)	
					(INCLUDES RECEPTACLE AS & WEDGE)	
		1	**155-2270**	8	KIT-CONNECTING PLUG (2-PIN)	
					(EACH INCLUDES PLUG AS, WEDGE, & INTERFACE SEAL)	
	2	1	**207-6034**	1	PLATE AS	
	3	1	**205-8847**	1	PLATE AS	
	4	1	**3S-2093**	7	STRAP-CABLE	
	5	1	**205-8839**	1	CLIP AS	
M	6	1	**8T-0639**	1	BOLT (M6X1X12-MM)	

M-METRIC PART

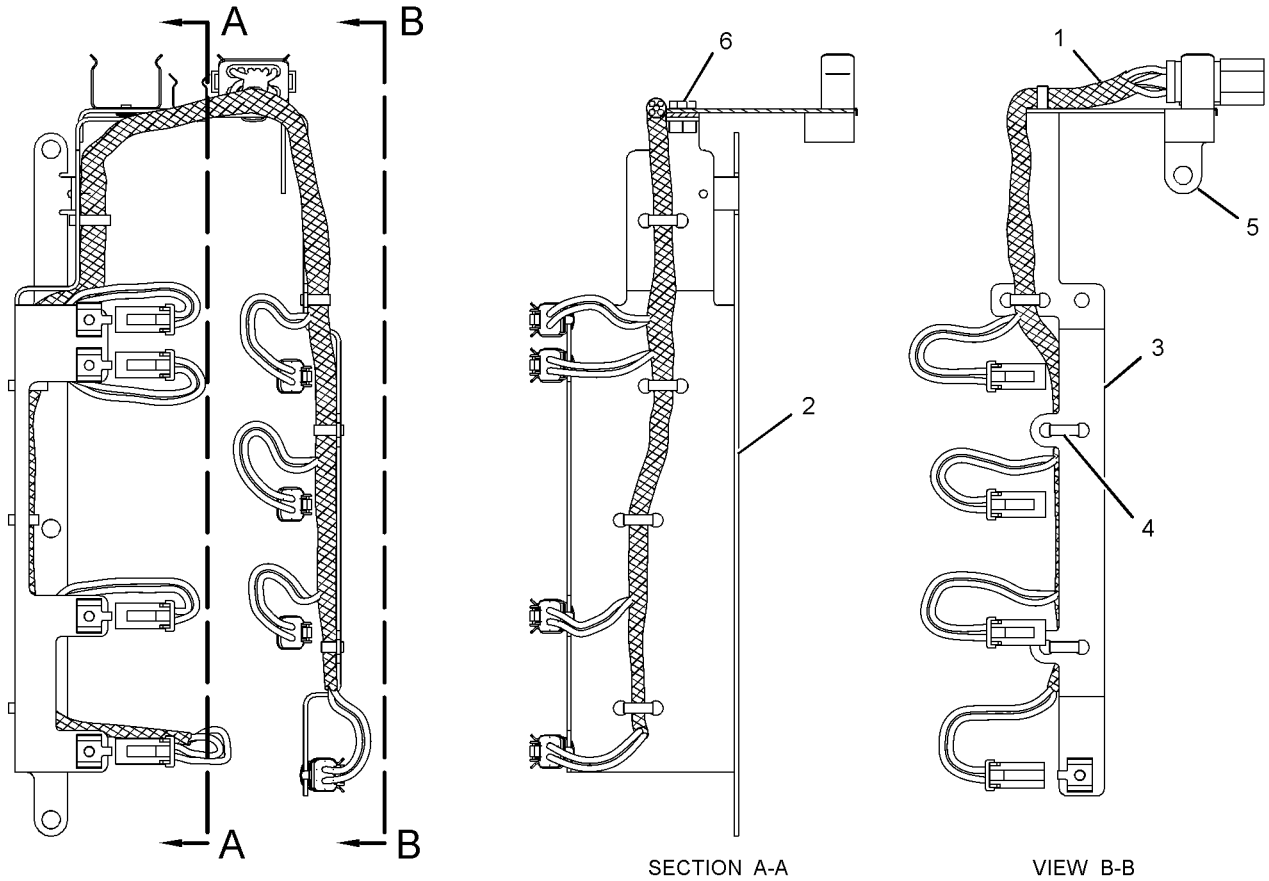

SECTION A-A VIEW B-B

GRAPHIC #1 **<END>** g01256130

260-7647 APPLICATION GP-POWER TRAIN

S/N: JBP1-UP
PART OF 294-3542 WIRING GP-GRADE CONTROL
AN ATTACHMENT

i03193466

NOTE	PART NUMBER	QTY	PART NAME 1 2 3 4 5 6 (PRODUCT LEVEL)	SEE PAGE
R	**304-5687**	1	CONTROL GP-UNPROGRAMMED (POWER TRAIN)	
R-REMFG PART MAY BE AVAILABLE				

<END>

295-8278 AUTOSHIFT AR

S/N: JBP1-UP
AN ATTACHMENT

SMCS-3168 **i03431941**

NOTE	PART NUMBER	QTY	PART NAME 1 2 3 4 5 6 (PRODUCT LEVEL)	SEE PAGE
Y	*291-5475*	1	ELECTRONICS GP-POWER TRAIN	126
	102-9861	1	SWITCH AS-ROCKER (AUTOSHIFT)	
	3E-8763	1	SWITCH AS (AUTOSHIFT ON, OFF)	
	3E-8784	1	ACTUATOR-ROCKER	
	3E-8825	1	LAMP (24-VOLT)	
Y-SEPARATE ILLUSTRATION				

<END>

238-1029 BASE GP-OIL FILTER

S/N: JBP1-UP

PART OF 313-5233 FILTER GP-OIL

SMCS-3004, 3067 **i02943079**

NOTE	REF NO	GRAPHIC REF	PART NUMBER	QTY	PART NAME 1 2 3 4 5 6 (PRODUCT LEVEL)	SEE PAGE
	1	1	**3T-9549**	1	ADAPTER	
	2	1	**7G-4998**	1	SPOOL-BYPASS	
	3	1	**7M-1297**	1	SPRING	
	4	1	**133-2198**	1	SPRING	
Y	5	1	**164-7577**	1	SWITCH GP-BYPASS (POWER TRAIN OIL FILTER)	187
	7	1	**2S-4078**	1	SEAL-O-RING	
	8	1	**3D-2824**	1	SEAL-O-RING	
	9	1	**9S-8008**	1	PLUG-O-RING	
					PARTS SHOWN IN GRAPHIC(S) WITHOUT A REFERENCE NUMBER ARE NOT SERVICED SEPARATELY	

Y-SEPARATE ILLUSTRATION

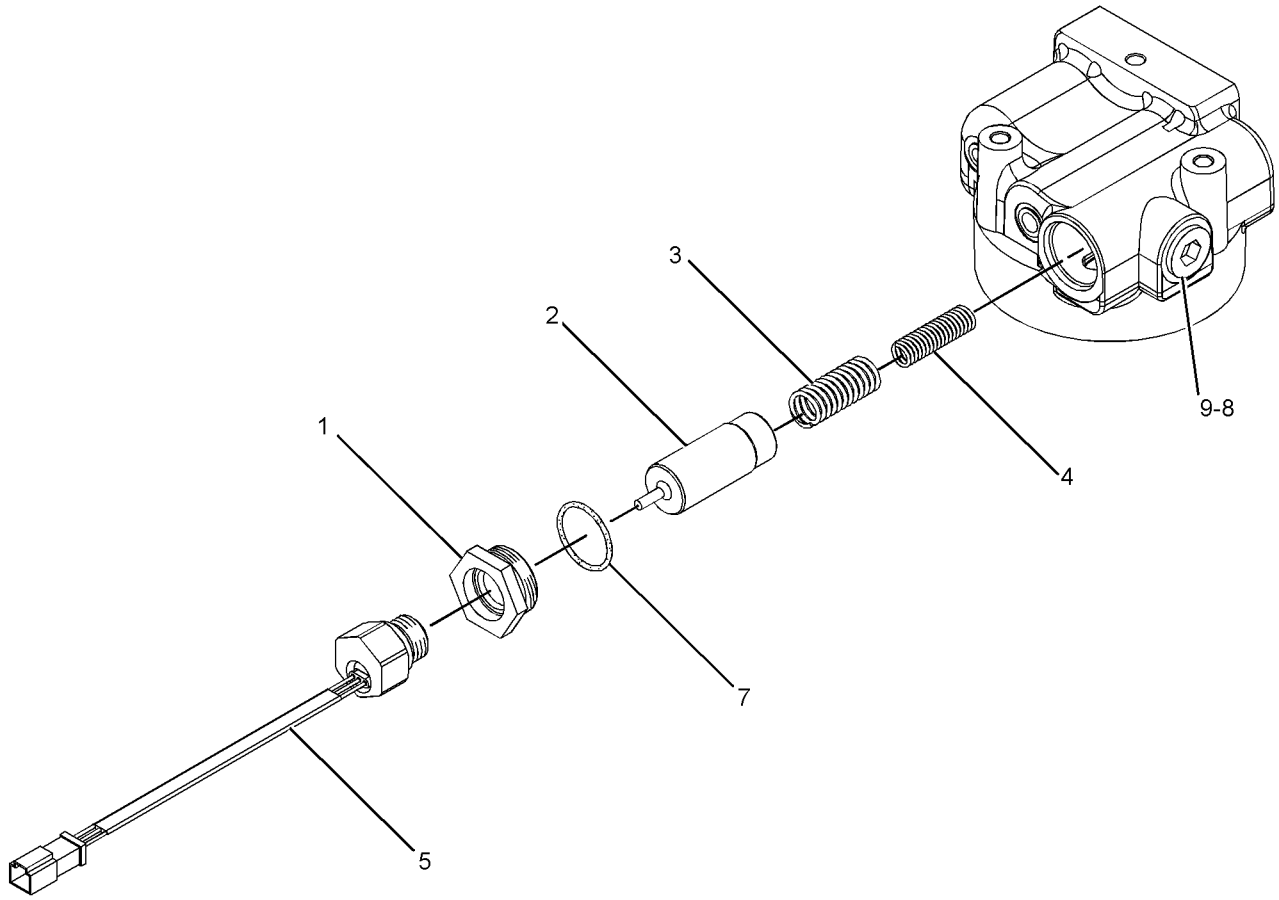

GRAPHIC #1 **<END>** g01366115

POWER TRAIN

277-6433 CASE & PARTS GP-PLANETARY

S/N: DPK1-UP

PART OF 275-6546 TRANSMISSION AR

SMCS-3030, 3064, 3160 **i03304315**

NOTE	REF NO	GRAPHIC REF	PART NUMBER	QTY	PART NAME 1 2 3 4 5 6 (PRODUCT LEVEL)	SEE PAGE
	1	1	**277-6430**	1	CASE AS-TRANSMISSION	
		1	**7T-6496**	7	PLUG	
		1	**8M-6521**	2	DOWEL	
	2	1	**277-6432**	1	COVER AS-TRANSMISSION	
		1	**7T-6496**	1	PLUG	
M	3	1	**6V-1820**	37	BOLT (M10X1.5X30-MM)	
M	4	1	**8T-5436**	2	BOLT (M10X1.5X130-MM)	
	5	1,2	*148-8395*	4	PLUG AS	
					(EACH INCLUDES)	
		1,2	**9S-8005**	1	PLUG-O-RING	
		1,2	**3K-0360**	1	SEAL-O-RING	
	6	2	**3K-0360**	2	SEAL-O-RING	
	7	1	**2J-0157**	1	SEAL-O-RING	
B	8	2	**1U-8846**		SEALANT-GASKET	
	9	1	**8T-6765**	1	PLUG-PIPE	
	10	1	**5M-6200**	1	SEAL-O-RING	
	11	1	**8E-1133**	1	TUBE AS	
	12	1	**6L-1650**	1	SEAL-O-RING	
M	13	1,2,3	**6V-5217**	15	BOLT (M8X1.25X20-MM)	
	14	1,2,3	**5P-3863**	5	SEAL-O-RING	
	15	1,2,3	**9W-1454**	5	COVER	
	16	1	**8S-9129**	1	FILTER-MAGNETIC (TRANSMISSION)	
	17	1	**8S-9130**	1	SCREEN-SUCTION (TRANSMISSION)	
	18	3	**4M-6108**	2	RACE-BEARING OUTER	
	19	1	**148-1925**	2	VALVE-RELIEF	
	20	1	**9X-4609**	2	SEAL-O-RING	
	21	3	**9W-7038**	1	RING-SNAP	
M	22	3	**6V-3940**	4	BOLT (M8X1.25X25-MM)	
	23	3	**6Y-9763**	1	GEAR AS (38-TEETH)	
		3	**6Y-1007**	1	GEAR (38-TEETH)	
		3	**4K-8603**	1	PLUG-CUP	
	24	3	**2S-3029**	1	BALL BEARING	
	25	3	**9W-6465**	1	RETAINER-BEARING	
	26	2	*164-5619*	6	PLUG AS	
					(EACH INCLUDES)	
		2	**9S-8006**	1	PLUG-O-RING	
		2	**2M-9780**	1	SEAL-O-RING	
	28	2	*162-0177*	1	PLUG AS	
		2	**9S-8004**	1	PLUG-O-RING	
		2	**3J-1907**	1	SEAL-O-RING	
	29	1	**3J-1907**	1	SEAL-O-RING	
	30	1,2	**8T-4121**	10	WASHER-HARD (11X21X2.5-MM THK)	
	31	2	**190-1684**	1	PLATE AS	
M	32	2	**6V-8212**	1	BOLT (M10X1.5X16-MM)	
	33	2	*197-4977*	1	PLUG AS	
		2	**5P-4483**	1	PLUG-O-RING	
		2	**7M-8485**	1	SEAL-O-RING	
M	35	2	**6V-7981**	5	BOLT (M10X1.5X70-MM)	
M	36	2	**6V-4248**	7	BOLT (M10X1.5X25-MM)	
	39	2,3	**6I-8642**	4	RACE-BEARING OUTER	
	40	3	**5P-3924**	2	RACE-BEARING OUTER	
	41	3	**9M-2042**	1	RACE-BEARING OUTER	
	42	3	**2H-6489**	1	RACE-BEARING OUTER	
	43	2	**226-6621**	1	HARNESS AS-SENSOR (SPEED)	
	44	2	**191-9256**	2	CLIP	
M	45	1,2	**8T-4137**	4	BOLT (M10X1.5X20-MM)	

277-6433 **CASE & PARTS GP-PLANETARY** *(contd.)* **i03304315**

NOTE	REF NO	GRAPHIC REF	PART NUMBER	QTY	PART NAME 1 2 3 4 5 6 (PRODUCT LEVEL)	SEE PAGE
	46	2	**6V-1720**	1	PLATE-SERIAL NUMBER (TRANSMISSION)	
Y	47	2	**290-5792**	2	SENSOR GP-SPEED (TRANSMISSION OUTPUT)	176
	48	2	**201-0387**	1	CLIP AS	
M	49	2	**8T-4133**	1	NUT (M10X1.5-THD)	
	50	2	**143-5373**	1	GUARD AS	
	51	1	**5P-9299**	1	CLIP	
Y	52	1	**3E-8700**	1	SENSOR GP-TEMPERATURE (TRANSMISSION OIL)	177
	53	1	**4P-7581**	1	CLIP	
	54	1	*164-4180*	3	PLUG AS	
					(EACH INCLUDES)	
		1	**9S-4181**	1	PLUG-O-RING	
		1	**7M-8485**	1	SEAL-O-RING	
	55	1	**1B-5174**	1	PLUG-PIPE	
	56	2	**113-7745**	1	PLATE AS	
	57	1	**7K-1181**	1	STRAP-CABLE	
	58	2	**145-8039**	3	LOCK	
	59	1	**130-5300**	1	CLIP	
	60	3	**278-0642**	1	SEAL-LIP TYPE	

B-USE AS REQUIRED
M-METRIC PART
Y-SEPARATE ILLUSTRATION

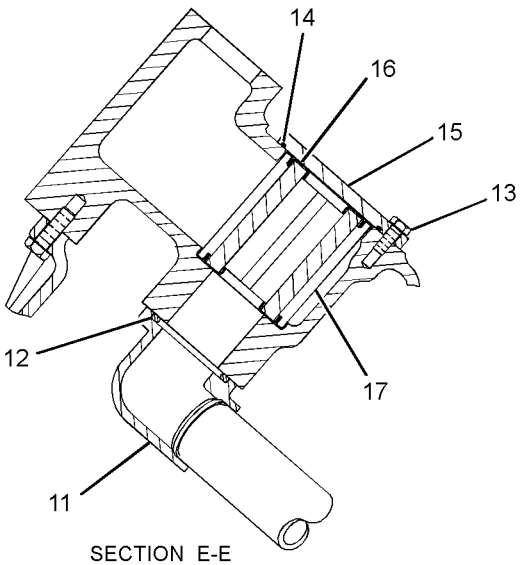

SECTION E-E

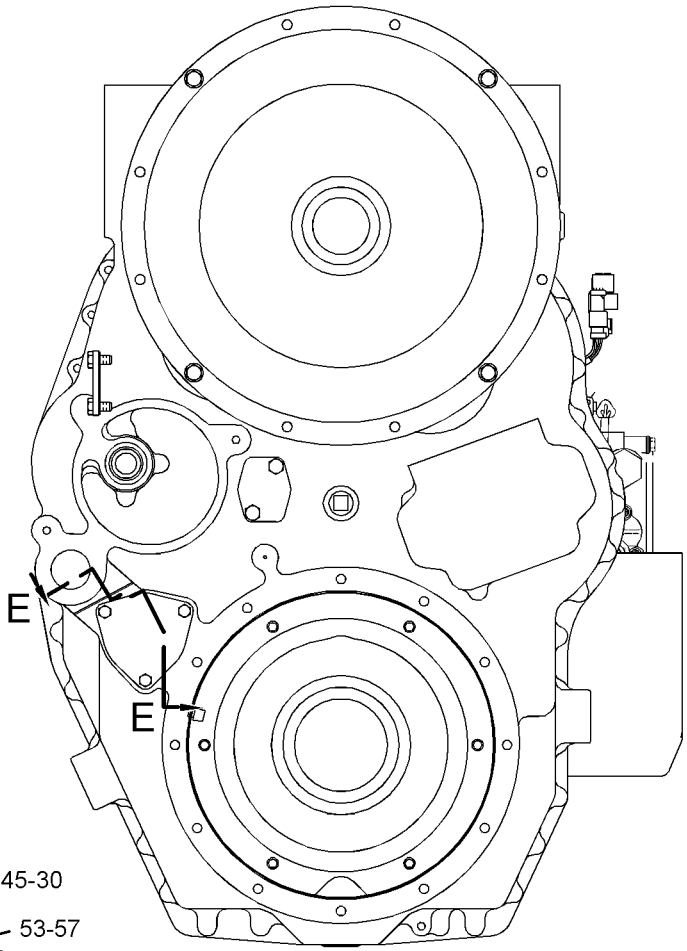

FRONT VIEW

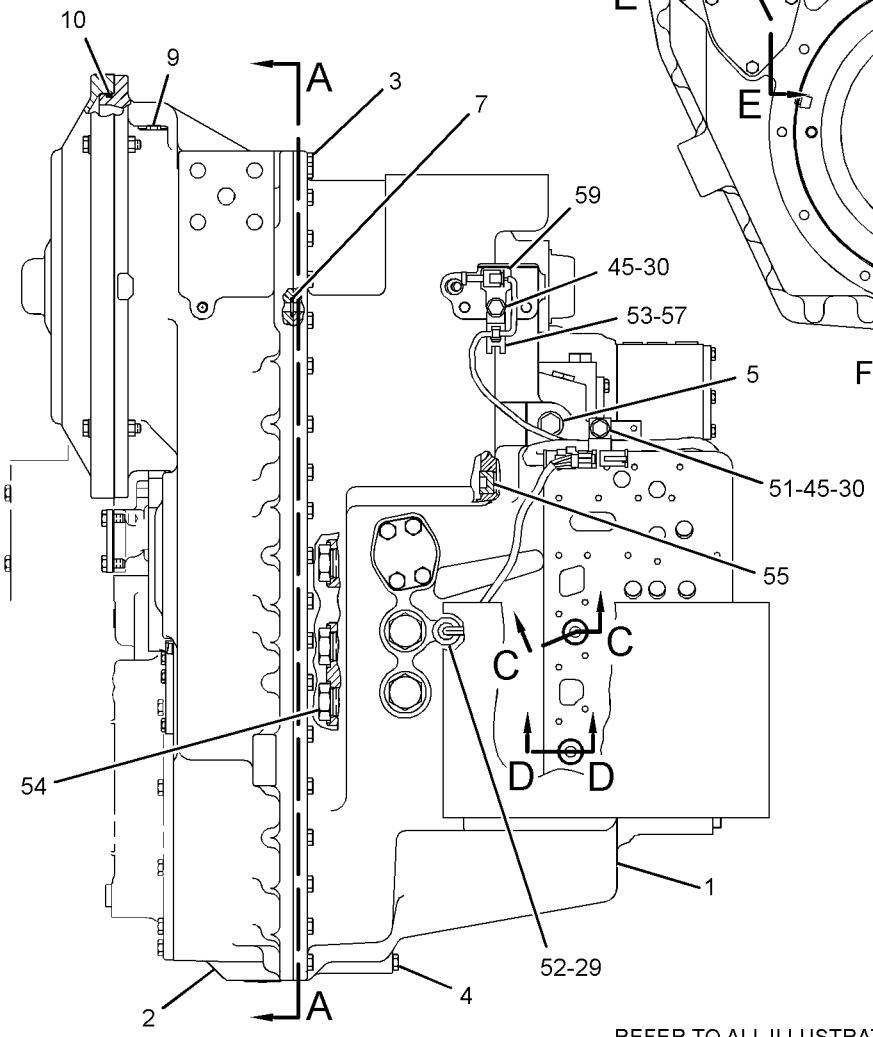

LEFT SIDE VIEW

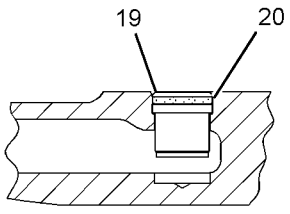

SECTION C-C

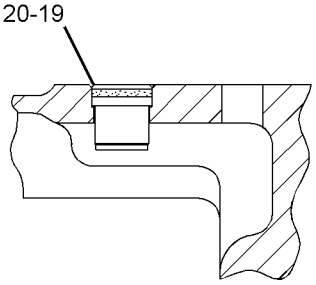

SECTION D-D

REFER TO ALL ILLUSTRATIONS OF THIS GROUP FOR AUXILIARY VIEWS

GRAPHIC #1

g01772113

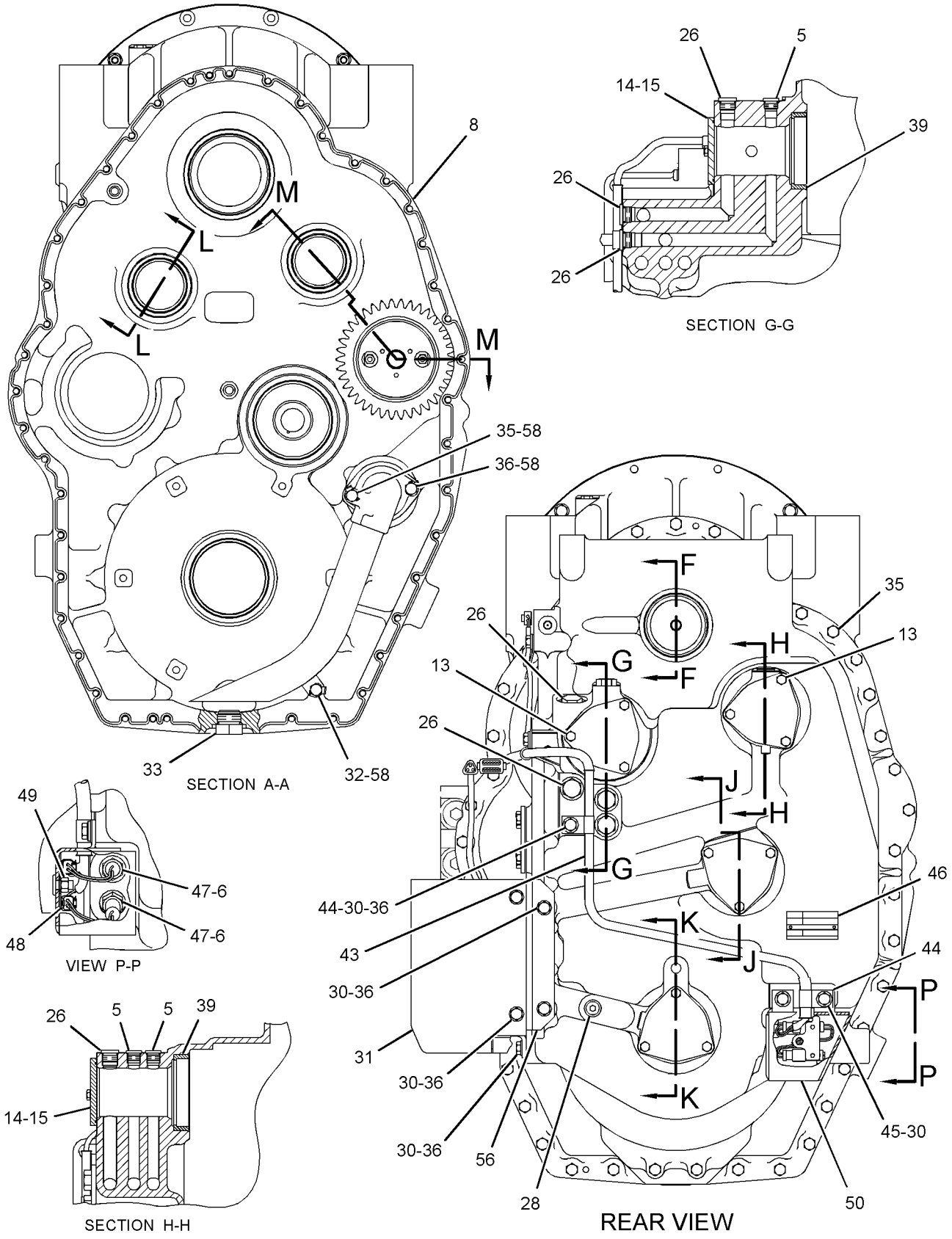

GRAPHIC #2

g01789333

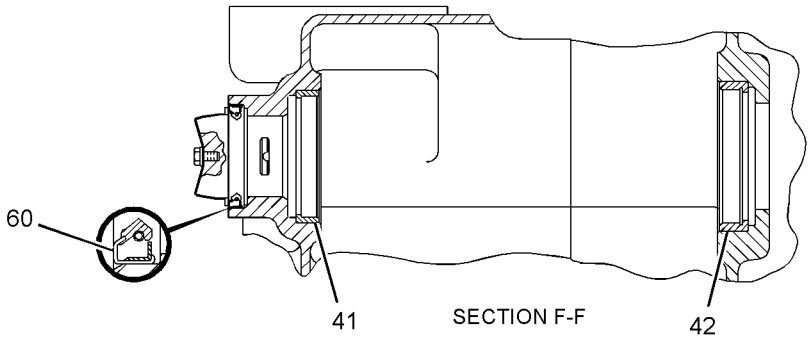

SECTION F-F

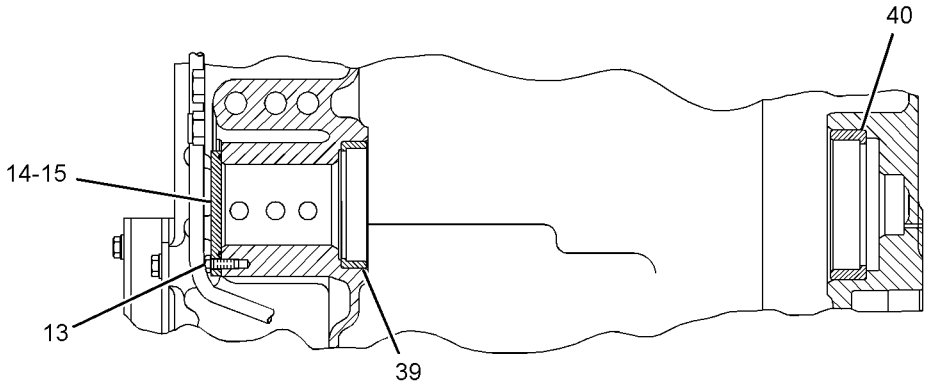

SECTION J-J

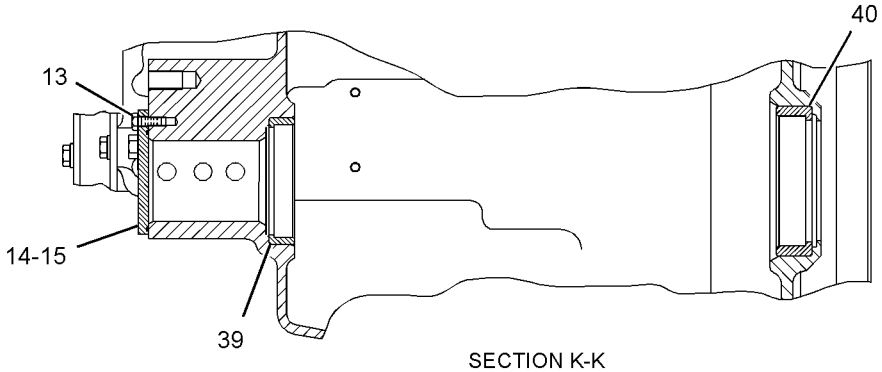

SECTION K-K

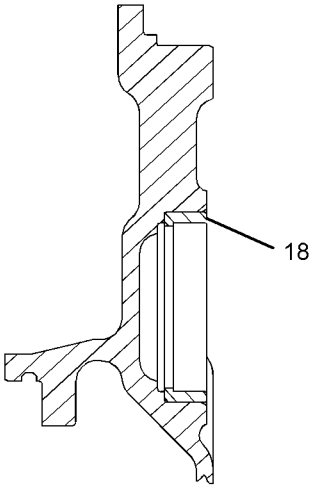

SECTION L-L

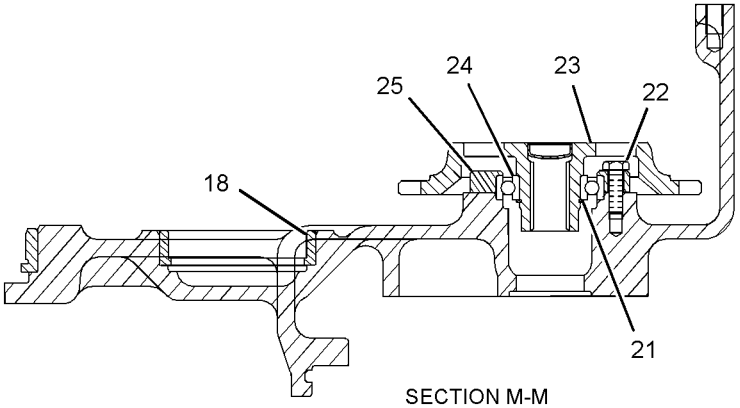

SECTION M-M

GRAPHIC #3 **<END>** g01772115

8W-5513 CHAIN GP-DRIVE

S/N: JBP1-UP

PART OF 274-7941 GENERAL AR

SMCS-3261, 4063 **i00135826**

NOTE	REF NO	GRAPHIC REF	PART NUMBER	QTY	PART NAME 1 2 3 4 5 6 (PRODUCT LEVEL)	SEE PAGE
	1	1	**8X-2926**	4	CHAIN GP	
					(EACH INCLUDES)	
	2	1	**6G-1631**	1	LINK-CONNECTING	

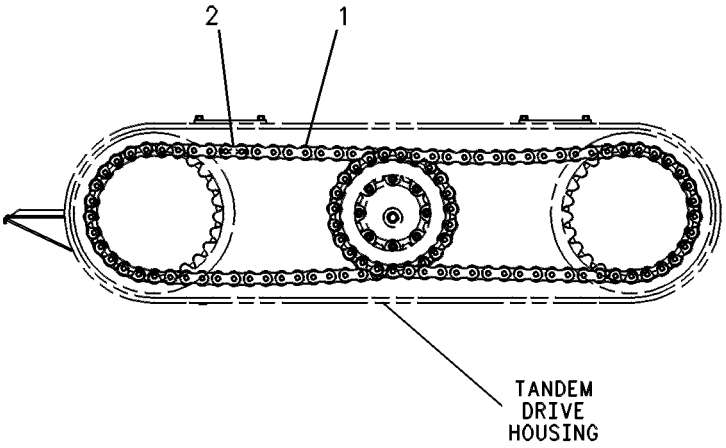

GRAPHIC #1 **<END>** g00108600

6Y-2305 CLUTCH GP-TRANSMISSION

S/N: DPK1-UP

PART OF 275-6546 TRANSMISSION AR

SMCS-3063, 3155, 3170 **i02204715**

NOTE	REF NO	GRAPHIC REF	PART NUMBER	QTY	PART NAME 1 2 3 4 5 6 (PRODUCT LEVEL)	SEE PAGE
	1	1,2	**6Y-1878**	1	SHAFT AS (64-TEETH)	
	2	1,2	**6Y-1001**	1	GEAR (71-TEETH)	
	3	1,2	**8E-1909**	1	GEAR AS (54-TEETH)	
	4	1,2	**6Y-1895**	1	BEARING-SLEEVE	
	5	1,2	**3B-8921**	1	BEARING-INNER	
	6	1,2	**6Y-8285**	1	RING-SEAL	
	7	1,2	**7T-4897**	2	DISC-THRUST	
	8	1,2	**6Y-1891**	1	HUB AS	
	9	1,2	**8E-5734**	2	RING-SEAL EXTENSION	
	10	1,2	**6Y-1887**	2	PISTON	
	11	1,2	**5H-8985**	1	PIN-SPRING	
	12	1,2	**6I-8912**	10	DISC-FRICTION	
	13	1,2	**110-7723**	8	PLATE-CLUTCH	
	14	1,2	**6Y-2312**	1	HUB AS	
	15	1,2	**8E-1910**	1	GEAR AS (79-TEETH)	
	16	1,2	**6Y-2419**	1	BEARING-SLEEVE	
	17	1,2	**6I-8641**	1	RACE & BEARING	
	18	1,2	**7G-4822**	3	RING-SEAL	
M	19	1,2	**6V-1819**	2	BOLT (M10X1.5X100-MM)	
	20	1,2	**6Y-2425**	1	CARRIER-SEAL	
	21	1,2	**8F-3469**	3	SEAL-O-RING	
	22	1,2	**8E-8319**	4	DISC-THRUST	
	23	1,2	**6Y-1115**	4	RING-HALF	
	24	1,2	**6Y-1114**	2	LOCKWASHER	
	25	1,2	**9W-9905**	4	RING-LOCK	
	26	1,2	**102-5881**	2	SPRING-WAVE	
	27	1,2	**8E-5742**	2	RING-SEAL	
	28	1,2	**6Y-0983**	1	GEAR (32-TEETH) (32-TEETH)	

M-METRIC PART

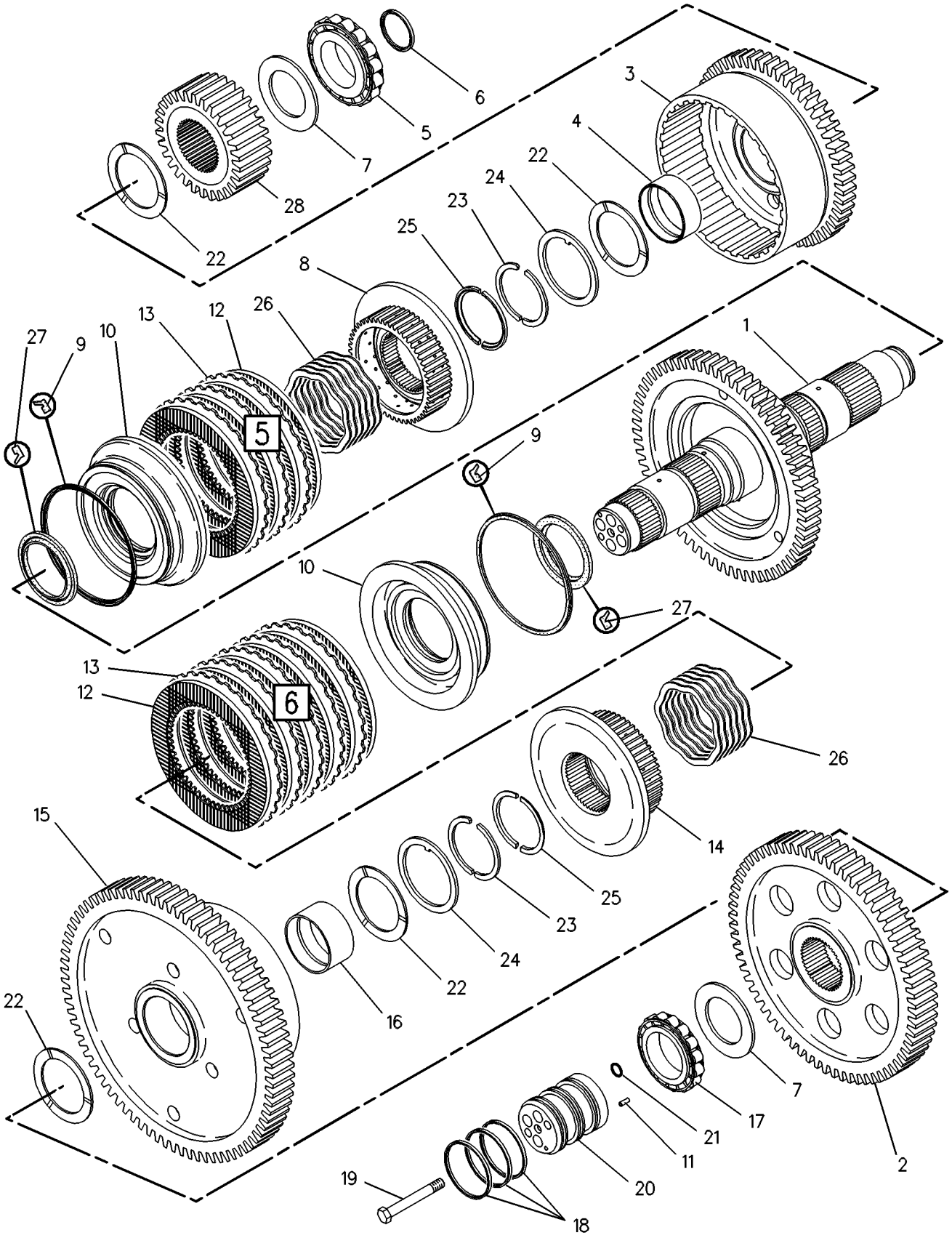

GRAPHIC #1 g00108910

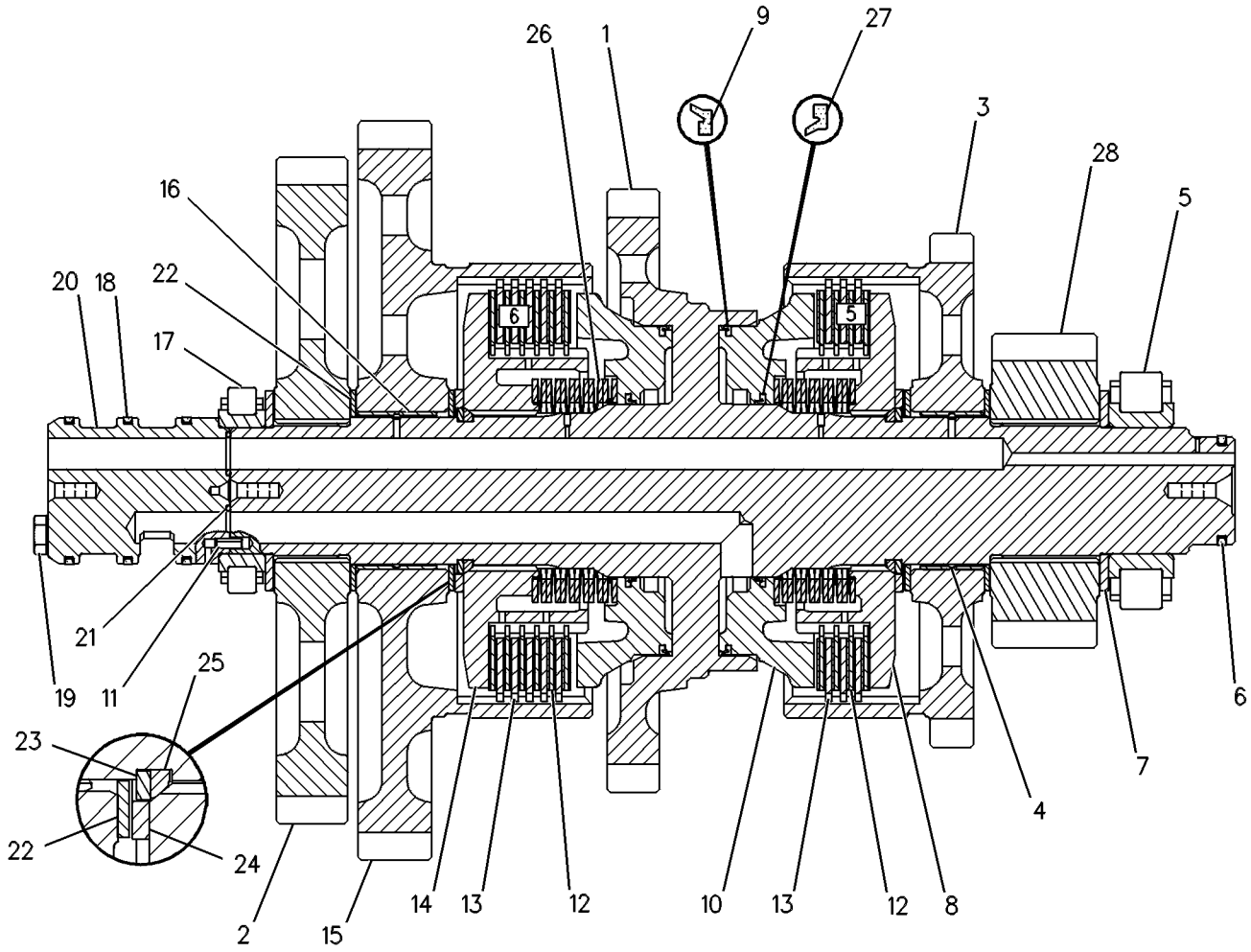

GRAPHIC #2 **<END>** g00108594

8E-9317 CLUTCH GP-TRANSMISSION—HIGH, LOW

S/N: DPK1-UP

PART OF 275-6546 TRANSMISSION AR

SMCS-3063, 3155, 3170 **i02826364**

NOTE	REF NO	GRAPHIC REF	PART NUMBER	QTY	PART NAME 1 2 3 4 5 6 (PRODUCT LEVEL)	SEE PAGE
	1	1	**307-6260**	1	SHAFT AS	
	2	1	**8M-4295**	15	SPRING	
	3	1	**6Y-2428**	1	PISTON	
	4	1	**6Y-1890**	1	RING-RETAINING	
	5	1	**9W-9905**	4	RING-LOCK	
	6	1	**6Y-1114**	2	LOCKWASHER	
	7	1	**6Y-1115**	4	RING-HALF	
	8	1	**8E-8319**	4	DISC-THRUST	
	9	1	**7T-4897**	1	DISC-THRUST	
	10	1	**3B-8921**	1	BEARING-INNER	
	11	1	**8E-1911**	1	GEAR AS (82-TEETH)	
	12	1	**9W-6467**	2	BEARING-SLEEVE	
	13	1	**6Y-7981**	7	DISC-FRICTION	
	14	1	**3P-0337**	8	PLATE-CLUTCH	
	15	1	**8E-5736**	2	RING-SEAL EXTENSION	
	16	1	**6Y-2429**	1	PISTON-BALANCE	
	17	1	**102-5881**	1	SPRING-WAVE	
	18	1	**8E-5742**	2	RING-SEAL	
	19	1	**8E-5734**	1	RING-SEAL EXTENSION	
C	20	1	**6I-9502**	5	PLATE-CLUTCH	
	21	1	**6I-8912**	6	DISC-FRICTION	
C	22	1	**132-9637**	1	GEAR AS (43-TEETH)	
	23	1	**9W-6467**	2	BEARING-SLEEVE	
	24	1	**131-3919**	1	BEARING-ROLLER	
	25	1	**6Y-2425**	1	CARRIER-SEAL	
M	26	1	**6V-1819**	2	BOLT (M10X1.5X100-MM)	
	27	1	**7G-4822**	3	RING-SEAL	
	28	1	**8F-3469**	3	SEAL-O-RING	
	29	1	**6Y-2312**	1	HUB AS	
	30	1	**5H-8985**	1	PIN-SPRING	
	31	1	**6Y-1887**	1	PISTON	
	32	1	**218-3339**	1	HUB AS	
	33	1	**8E-1161**	1	ROTOR	

C-CHANGE FROM PREVIOUS TYPE
M-METRIC PART

8E-9317 **CLUTCH GP-TRANSMISSION** *(contd.)* **i02826364**

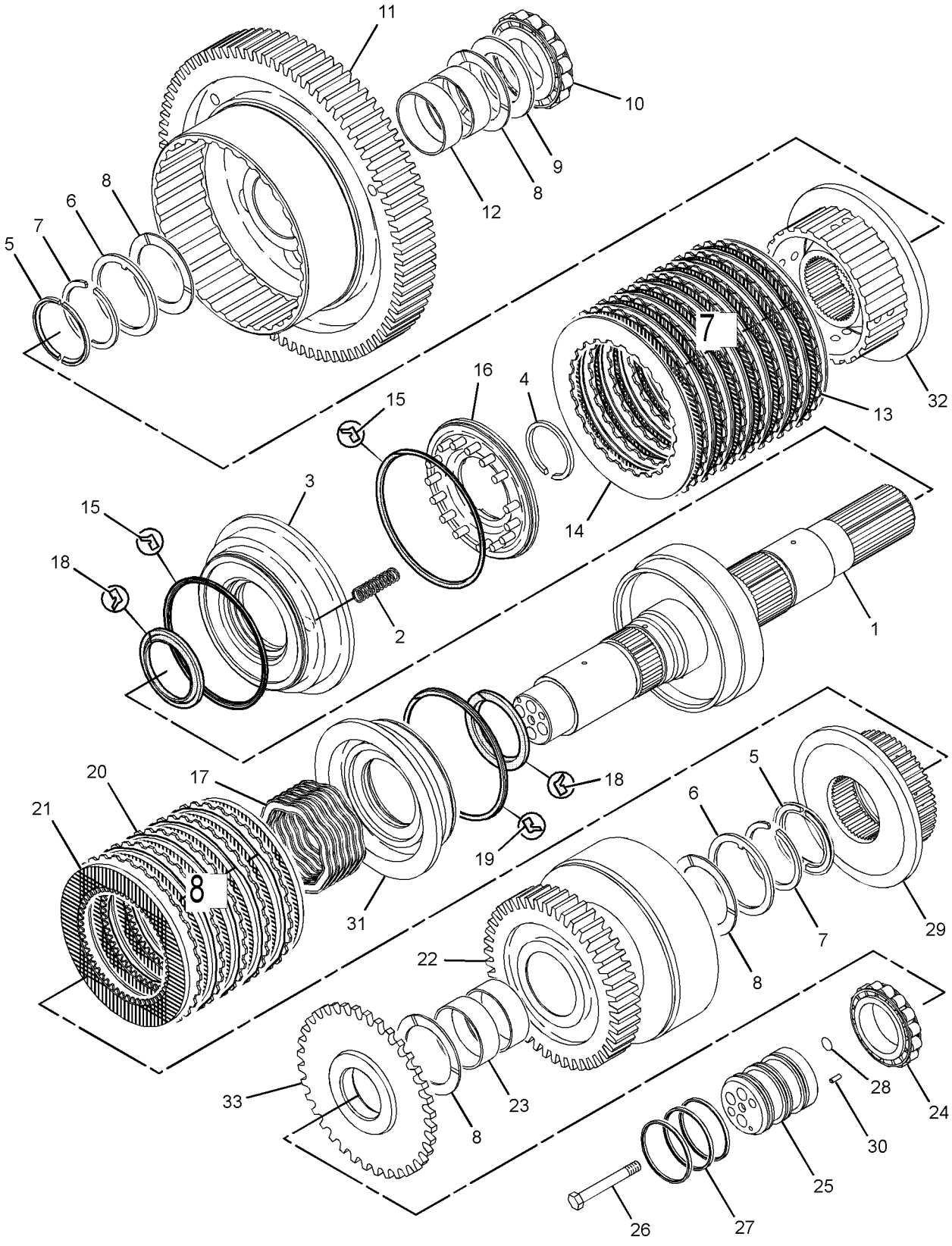

GRAPHIC #1 **<END>** g01424719

235-2412 CLUTCH GP-TRANSMISSION—FORWARD

S/N: DPK1-UP

PART OF 275-6546 TRANSMISSION AR

SMCS-3063, 3155, 3170 **i02774944**

NOTE	REF NO	GRAPHIC REF	PART NUMBER	QTY	PART NAME 1 2 3 4 5 6 (PRODUCT LEVEL)	SEE PAGE
	1	1	**6I-8911**	5	DISC-FRICTION	
	2	1	**6I-8912**	6	DISC-FRICTION	
	3	1	**6I-9502**	6	PLATE-CLUTCH	
	4	1	**6Y-1115**	4	RING-HALF	
	5	1	**6Y-1116**	1	GEAR AS (43-TEETH)	
	6	1	**6Y-1119**	1	CARRIER-SEAL	
	7	1	**7G-4822**	3	RING-SEAL	
	8	1	**7T-4897**	2	DISC-THRUST	
	9	1	**8E-5742**	2	RING-SEAL	
	10	1	**8E-8319**	4	DISC-THRUST	
	11	1	**8F-3469**	4	SEAL-O-RING	
	12	1	**9U-8815**	2	SPRING	
	13	1	**9U-9995**	6	PLATE-CLUTCH	
	14	1	**9W-2029**	1	RACE-THRUST BEARING	
	15	1	**9W-9371**	2	RING-SEAL	
	16	1	**9W-9905**	4	RING-LOCK	
	17	1	**108-5751**	2	DISC-FRICTION	
	18	1	**132-9625**	1	GEAR AS (50-TEETH)	
	19	1	**159-0308**	2	PISTON	
	20	1	**159-0927**	1	DISC-FRICTION	
	21	1	**161-6713**	2	PLATE-LOCK	
	22	1	**171-7091**	1	SHAFT AS	
	23	1	**247-8629**	2	VALVE AS	
	24	1	**247-9711**	2	HUB AS	
	25	1	**2K-1738**	1	BEARING-INNER	
	26	1	**4M-6107**	1	BEARING-INNER	
M	27	1	**5C-7423**	4	SCREW (M6X1X16-MM)	
	28	1	**5H-8985**	1	PIN-SPRING	
M	29	1	**6V-1819**	2	BOLT (M10X1.5X100-MM)	
	30	1	**8E-1263**	2	BEARING-ROLLER	

M-METRIC PART

235-2412 **CLUTCH GP-TRANSMISSION** *(contd.)* **i02774944**

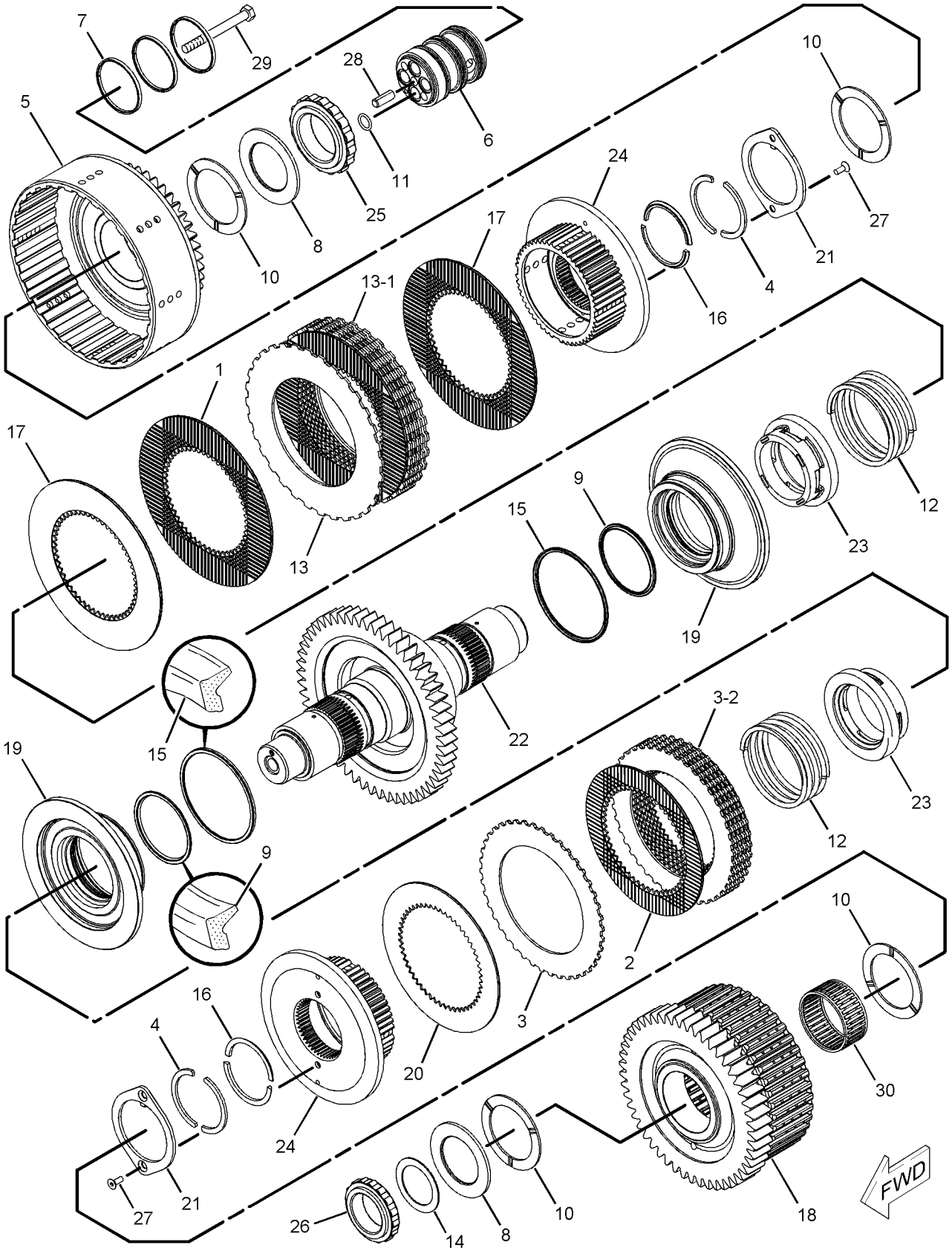

GRAPHIC #1 **<END>** g01137840

235-2413 CLUTCH GP-TRANSMISSION–REVERSE, SECOND

S/N: DPK1-UP

PART OF 275-6546 TRANSMISSION AR

SMCS-3063, 3155, 3170 **i02774946**

NOTE	REF NO	GRAPHIC REF	PART NUMBER	QTY	PART NAME 1 2 3 4 5 6 (PRODUCT LEVEL)	SEE PAGE
	1	1	**131-3919**	1	BEARING-ROLLER	
	2	1	**4M-6107**	1	BEARING-INNER	
	3	1	**8E-1263**	1	BEARING-ROLLER	
	4	1	**6I-8912**	10	DISC-FRICTION	
	5	1	**6I-9502**	9	PLATE-CLUTCH	
	6	1	**6Y-0976**	1	GEAR (29-TEETH)	
	7	1	**6Y-1114**	1	LOCKWASHER	
	8	1	**6Y-1115**	4	RING-HALF	
	9	1	**6Y-1119**	1	CARRIER-SEAL	
	10	1	**6Y-1887**	1	PISTON	
	11	1	**6Y-1888**	1	PLATE-CLUTCH	
	12	1	**6Y-1891**	1	HUB AS	
	13	1	**6Y-2307**	1	SPACER (61X82.55X43.88-MM THK)	
	14	1	**7G-4822**	3	RING-SEAL	
	15	1	**7T-4897**	1	DISC-THRUST	
	16	1	**8E-5734**	1	RING-SEAL EXTENSION	
	17	1	**8E-5742**	2	RING-SEAL	
	18	1	**8E-8319**	4	DISC-THRUST	
	19	1	**8F-3469**	4	SEAL-O-RING	
	20	1	**9U-8815**	1	SPRING	
	21	1	**9W-2029**	1	RACE-THRUST BEARING	
	22	1	**9W-9371**	1	RING-SEAL	
	23	1	**9W-9905**	4	RING-LOCK	
	24	1	**102-5881**	1	SPRING-WAVE	
	25	1	**132-9628**	1	GEAR AS (44-TEETH)	
		1	**6Y-1895**	1	BEARING-SLEEVE	
	26	1	**159-0308**	1	PISTON	
	27	1	**159-0927**	1	DISC-FRICTION	
	28	1	**161-6713**	1	PLATE-LOCK	
	29	1	**171-7095**	1	SHAFT AS	
	30	1	**247-8629**	1	VALVE AS	
	31	1	**247-9711**	1	HUB AS	
	32	1	**248-2886**	1	GEAR AS (46-TEETH)	
M	33	1	**5C-7423**	2	SCREW (M6X1X16-MM)	
	34	1	**5H-8985**	1	PIN-SPRING	
M	35	1	**6V-1819**	2	BOLT (M10X1.5X100-MM)	

M-METRIC PART

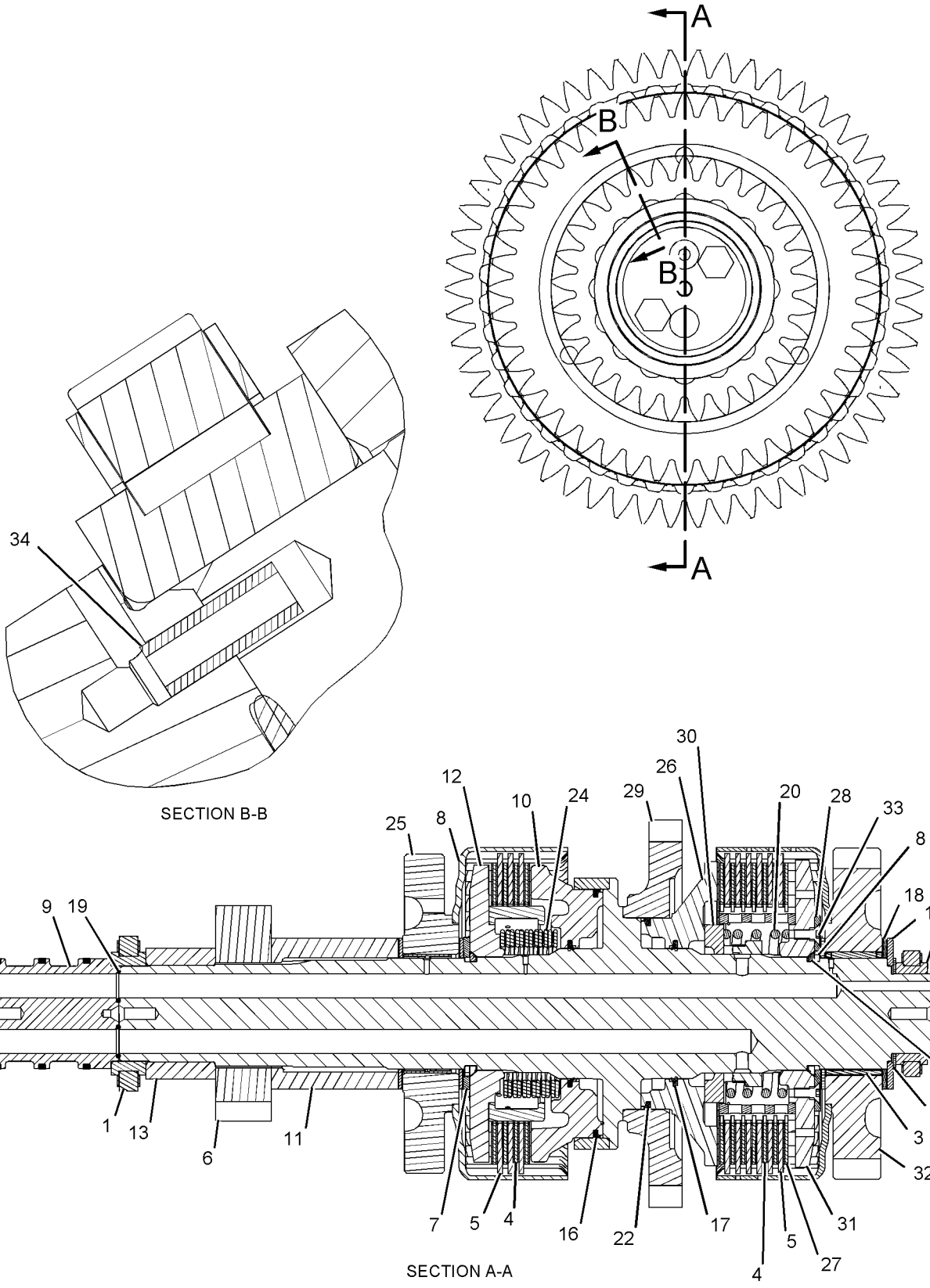

GRAPHIC #1 **<END>** g01132487

316-8363 CONTROL GP-DIFFERENTIAL LOCK

S/N: JBP1-UP
PART OF 316-8469 DIFFERENTIAL AR
AN ATTACHMENT

SMCS-3264 **i03252061**

NOTE	REF NO	GRAPHIC REF	PART NUMBER	QTY	PART NAME 1 2 3 4 5 6 (PRODUCT LEVEL)	SEE PAGE
	1	1	**6D-0580**	1	TUBE	
	2	1	**6V-0852**	1	CAP-DUST	
I	3	1	**7T-1159**	1	HOSE AS	
	4	1	*164-5567*	1	COUPLER AS-QUICK DISCONNECT (MALE)	
		1	**6V-3965**	1	FITTING (QUICK DISCONNECT)	
		1	**214-7568**	1	SEAL-O-RING	
	5	1	**165-9928**	1	PLATE	
Y	6	1	**174-3705**	1	VALVE & MTG GP-DIFF LOCK	274
	7	1	*180-9933*	1	ADAPTER GP (90-DEG)	
		1	**135-9941**	1	ADAPTER	
		1	**3J-7354**	1	SEAL-O-RING	
I	8	1	**313-6976**	1	HOSE AS	
I	9	1	**313-6977**	1	HOSE AS	
	10	1	**130-5300**	1	CLIP	
	11	1	**139-2119**	1	SWITCH AS-ROCKER (DIFFERENTIAL LOCK)	
	12	1	*148-8316*	1	CONNECTOR AS	
		1	**3J-7354**	1	SEAL-O-RING	
		1	**4J-5477**	1	SEAL-O-RING	
		1	**6V-8647**	1	CONNECTOR	
	13	1	*148-8369*	1	ELBOW AS	
		1	**3J-7354**	1	SEAL-O-RING	
		1	**4J-5477**	1	SEAL-O-RING	
		1	**6V-8628**	1	ELBOW	
	14	1	*156-4281*	1	TEE AS	
		1	**3J-7354**	1	SEAL-O-RING	
		1	**6V-8397**	2	SEAL-O-RING	
		1	**7X-0838**	1	TEE-O-RING	
	15	1	**4J-2506**	2	SEAL-O-RING	
	16	1	**4P-8134**	1	CLIP	
	17	1	**8M-2773**	1	CLIP	
	18	1	**8M-4438**	2	SEAL-O-RING	
	19	1	**8T-2501**	2	BOLT (3/8-16X2-IN)	
	20	1	**8T-4121**	2	WASHER-HARD (11X21X2.5-MM THK)	
M	21	1	**8T-4133**	1	NUT (M10X1.5-THD)	
M	22	1	**8T-4137**	1	BOLT (M10X1.5X20-MM)	
	23	1	**8T-4896**	2	WASHER-HARD (10.2X18.5X2.5-MM THK)	
	24	1	**9M-8406**	1	CLIP	
	25	1	**9X-6772**	1	STRAP-CABLE	

I-REFER TO HYDRAULIC INFORMATION SYSTEM
M-METRIC PART
Y-SEPARATE ILLUSTRATION

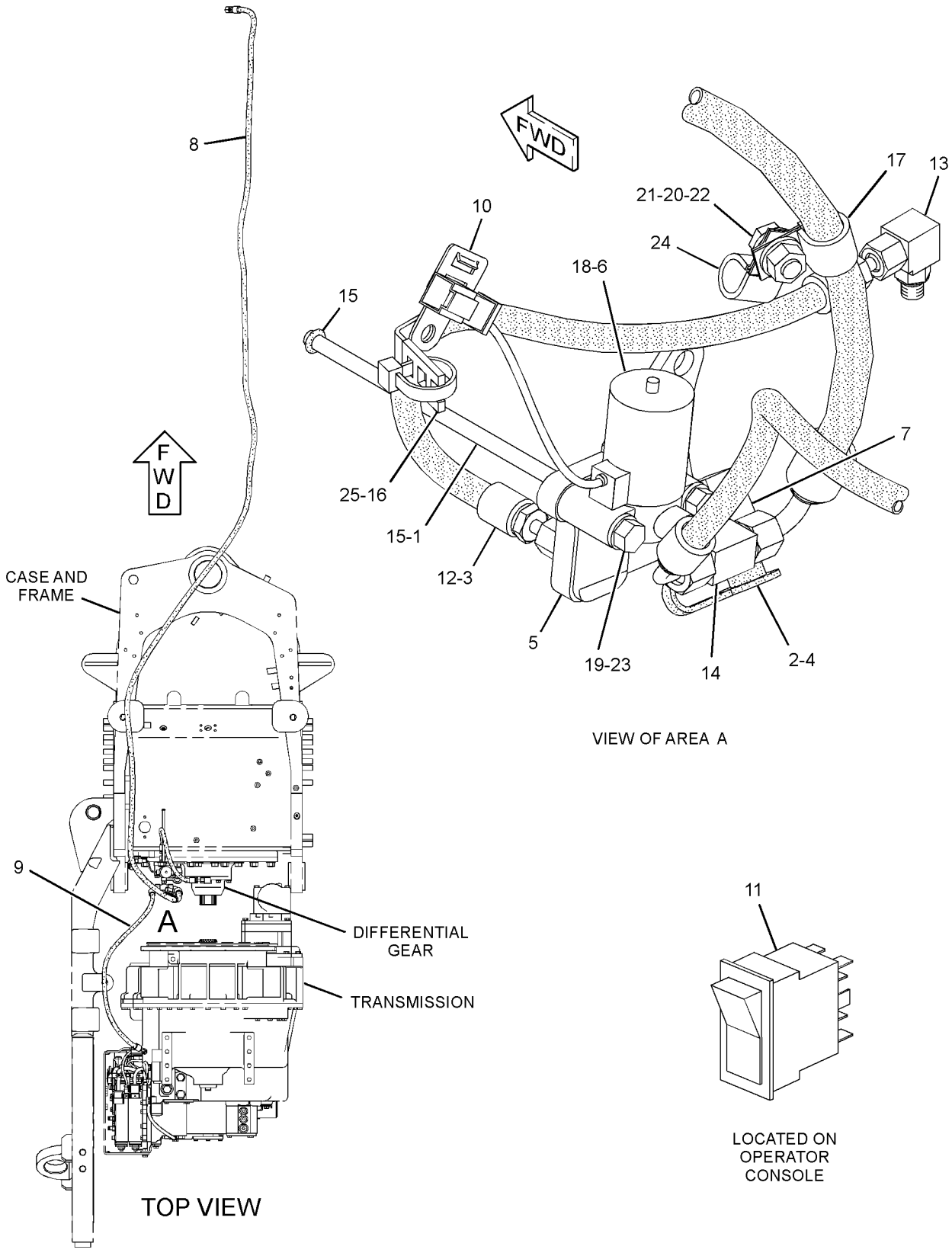

GRAPHIC #1 **<END>** g01693973

281-3165 CONTROL GP-TRANSMISSION HYD

S/N: DPK1-UP

PART OF 275-6546 TRANSMISSION AR

SMCS-3073, 3167 **i02490493**

NOTE	REF NO	GRAPHIC REF	PART NUMBER	QTY	PART NAME 1 2 3 4 5 6 (PRODUCT LEVEL)	SEE PAGE
Y	1	1	**281-3163**	1	VALVE GP-TRANSMISSION CONTROL	283
M	2	1	**6V-3918**	5	BOLT (M8X1.25X50-MM)	
	3	1	**9P-9150**	66	WASHER (8.25X18X0.84-MM THK)	
	4	1	**1T-0738**	31	WASHER (8.4X19X1.83-MM THK)	
M	5	1	**8C-4984**	14	BOLT (M8X1.25X150-MM)	
M	6	1	**3E-8005**	14	BOLT (M8X1.25X160-MM)	
	7	1	**4S-5879**	1	SEAL-O-RING	
Y	8	1	*180-9324*	1	WIRING GP-TRANSMISSION	227
M	9	1	**8T-0639**	2	BOLT (M6X1X12-MM)	
M	10	1	**6V-5217**	3	BOLT (M8X1.25X20-MM)	
	11	1	**198-7657**	1	BLOCK	

M-METRIC PART
Y-SEPARATE ILLUSTRATION

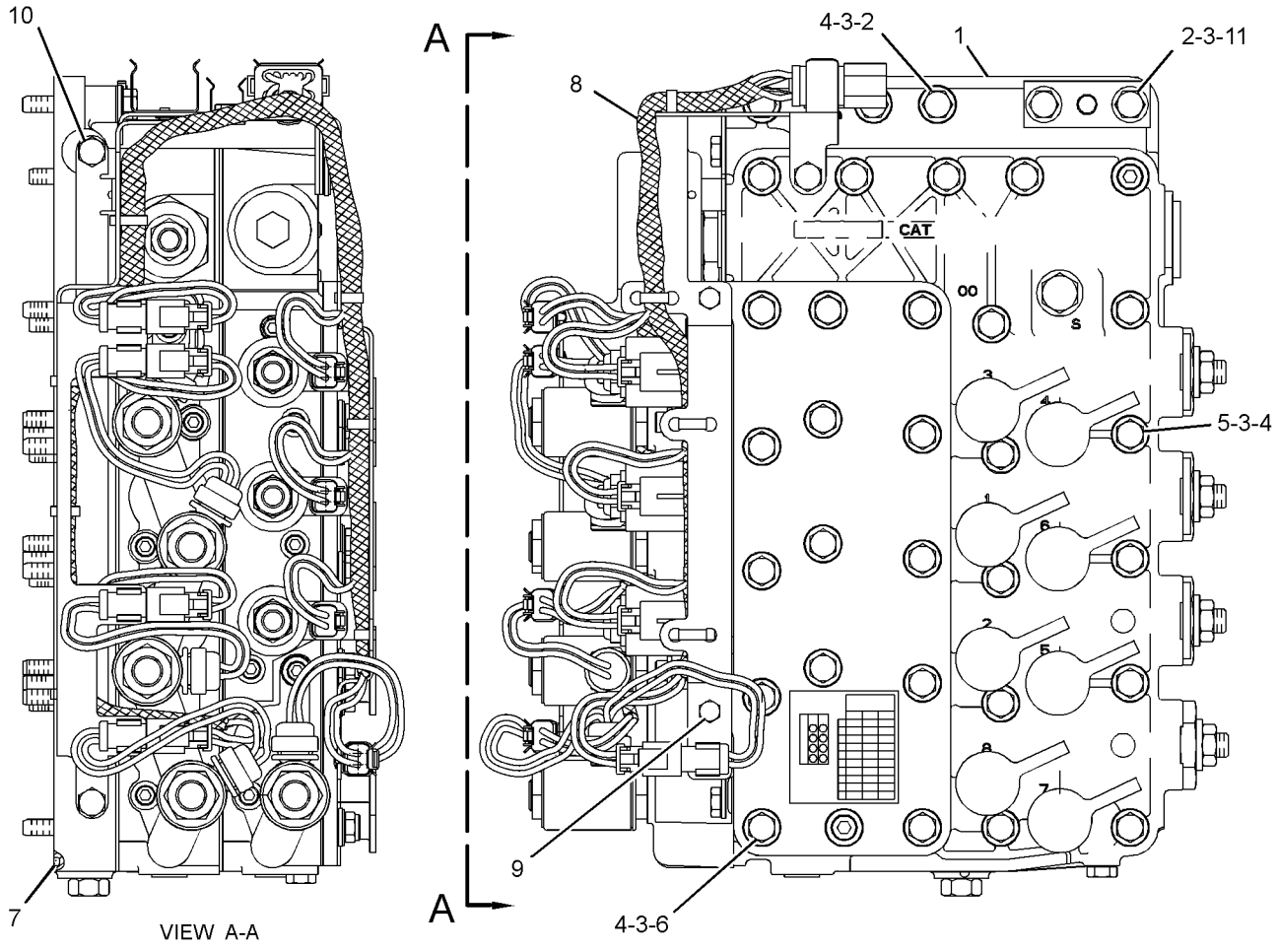

GRAPHIC #1 **<END>** g01254682

281-5641 COOLER GP-TRANSMISSION OIL

S/N: JBP1-UP

PART OF 274-7941 GENERAL AR

SMCS-1375 **i03247481**

NOTE	REF NO	GRAPHIC REF	PART NUMBER	QTY	PART NAME 1 2 3 4 5 6 (PRODUCT LEVEL)	SEE PAGE
	1	1	**242-7417**	1	CORE AS-HYDRAULIC OIL COOLER	
	2	1	**293-4277**	4	BRACKET AS	
	3	1	**303-6008**	2	BRACKET AS	
	4	1	*241-6185*	2	PLUG AS	
					(EACH INCLUDES)	
		1	**3D-2824**	1	SEAL-O-RING	
		1	**5P-9436**	1	PLUG-THREADED O-RING	
	5	1	**8T-4121**	24	WASHER-HARD (11X21X2.5-MM THK)	
M	6	1	**8T-4133**	8	NUT (M10X1.5-THD)	
M	7	1	**8T-4189**	8	BOLT (M8X1.25X20-MM)	
M	8	1	**8T-4195**	16	BOLT (M10X1.5X30-MM)	
	9	1	**8T-4224**	8	WASHER-HARD (8.8X16X2-MM THK)	

M-METRIC PART

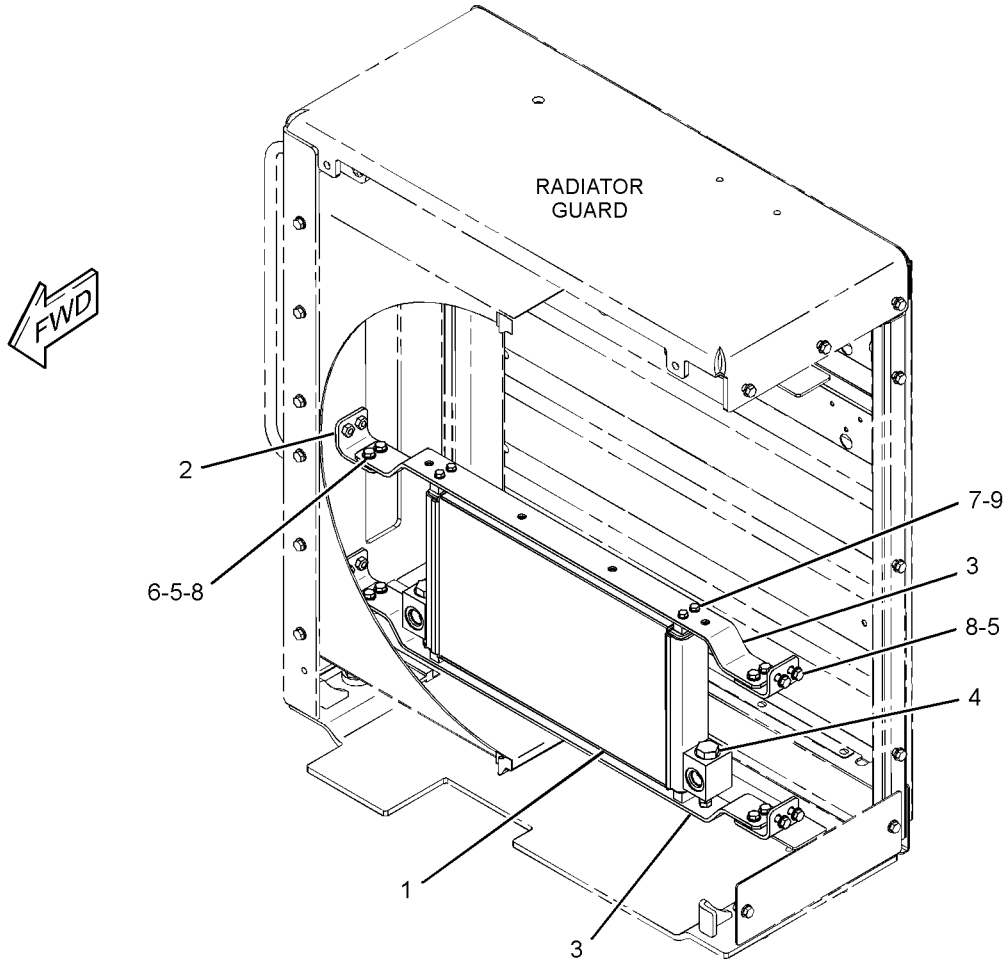

GRAPHIC #1 **<END>** g01699678

337-3357 COUPLING GP-TORSIONAL

S/N: JBP1-UP

PART OF 274-7941 GENERAL AR

SMCS-3252, 3279 **i03316061**

NOTE	REF NO	GRAPHIC REF	PART NUMBER	QTY	PART NAME 1 2 3 4 5 6 (PRODUCT LEVEL)	SEE PAGE
	1	1	**283-1099**	1	COUPLING AS	
M	2	1	**266-4360**	12	BOLT (M10X1.5X30-MM)	
	3	1	**6V-5839**	12	WASHER (11X21X2.5-MM THK)	

M-METRIC PART

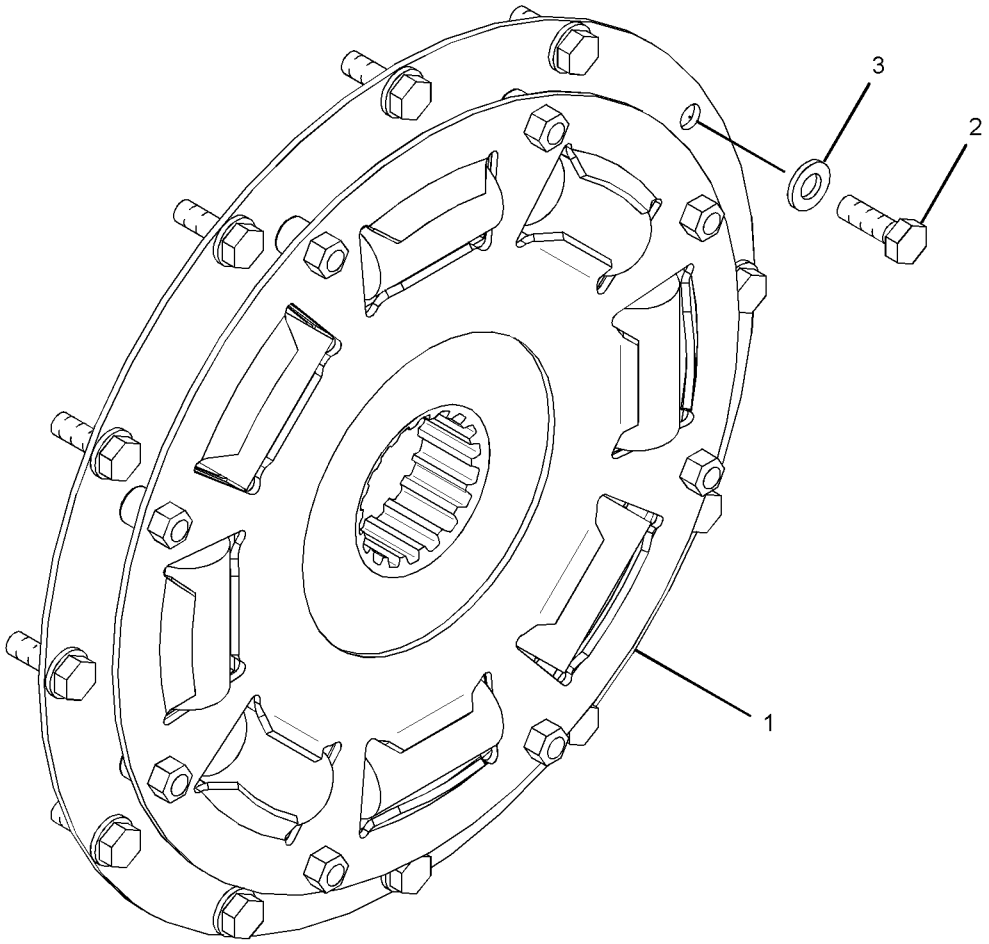

GRAPHIC #1 **<END>** g01769594

POWER TRAIN

8W-5430 DIFFERENTIAL & BEVEL GEAR GP

S/N: JBP1-UP
PART OF 316-8469 DIFFERENTIAL AR
AN ATTACHMENT

SMCS-3256, 3258 **i02204763**

NOTE	REF NO	GRAPHIC REF	PART NUMBER	QTY	PART NAME 1 2 3 4 5 6 (PRODUCT LEVEL)	SEE PAGE
	1	1	**5D-9844**	1	BOLT-LOCKING (3/8-16X2-IN)	
	2	1	**5P-8247**	20	WASHER-HARD (17X32X3.5-MM THK)	
	3	1	**034-3557**	5	BOLT-LOCKING (3/8-16X1.125-IN)	
	4	1	**5M-2894**	8	WASHER-HARD (10.2X18.5X2.5-MM THK)	
	5	1	**2K-5109**	1	GASKET	
	6	1	**8W-5279**	1	RETAINER	
	7	1	**123-4003**	1	SEAL-LIP TYPE	
	8	1	**8T-8883**	1	SEAL-O-RING	
	9	1	**5P-5813**	1	LOCKNUT-BEARING	
	10	1	**9B-0143**	1	LOCKNUT	
	11	1	**7D-8347**	1	WASHER-TAB	
	12	1	**8X-2534**	1	HOUSING	
	13	1	**5L-2031**	1	CUP-BEARING	
	14	1	**5L-2030**	1	CONE-BEARING	
	15	1	**9X-8880**	8	BOLT (5/8-11X2-IN)	
	16	1	**2K-5106**	1	SHIM (2.54-MM THK)	
	17	1	**4K-0367**	12	NUT-FULL (5/8-11-THD)	
	18	1	**4H-6520**	1	SEAL-O-RING	
	19	1	**1J-4757**	1	CONE-BEARING	
	20	1	**1J-2860**	1	CUP-BEARING	
	21	1	**8D-8197**	1	CAGE	
	22	1	**6G-4703**		NUT (5 1/4-12-THD)	
	23	1	**126-2729**	1	CONE-SPECIAL TAPERED	
	24	1	**5P-2503**	1	CUP	
	25	1	**6F-0698**	1	DOWEL	
	26	1	**8D-9784**	2	LOCK	
	27	1	**030-8535**	2	BOLT-LOCKING (3/8-16X0.875-IN)	
C	28	1	**154-2687**	1	CARRIER AS	
	29	1	**0S-1756**	4	BOLT (3/4-10X4.25-IN)	
	30	1	**5P-8248**	4	WASHER-HARD (20X36.5X3.5-MM THK)	
	31	1	**4D-5292**	1	RING-RETAINING	
	32	1	**1P-2662**	1	CONE-BEARING	
	33	1	**1P-2636**	1	CUP-BEARING	
	34	1	**6G-4701**	1	NUT (4 1/4-12-THD)	
	35	1	**8X-2308**	1	CAGE AS	
		1	**2D-6642**	1	BALL	
	36	1	**2H-5001**		SEAL-O-RING	
	37	1	**8W-5111**	1	SLEEVE	
	38	1	**169-1548**	1	SHAFT-PINION	
	40	1	**9G-2991**	2	RING-SEAL	
CY	42	1	**154-2688**	1	DIFFERENTIAL GP	253

C-CHANGE FROM PREVIOUS TYPE
Y-SEPARATE ILLUSTRATION

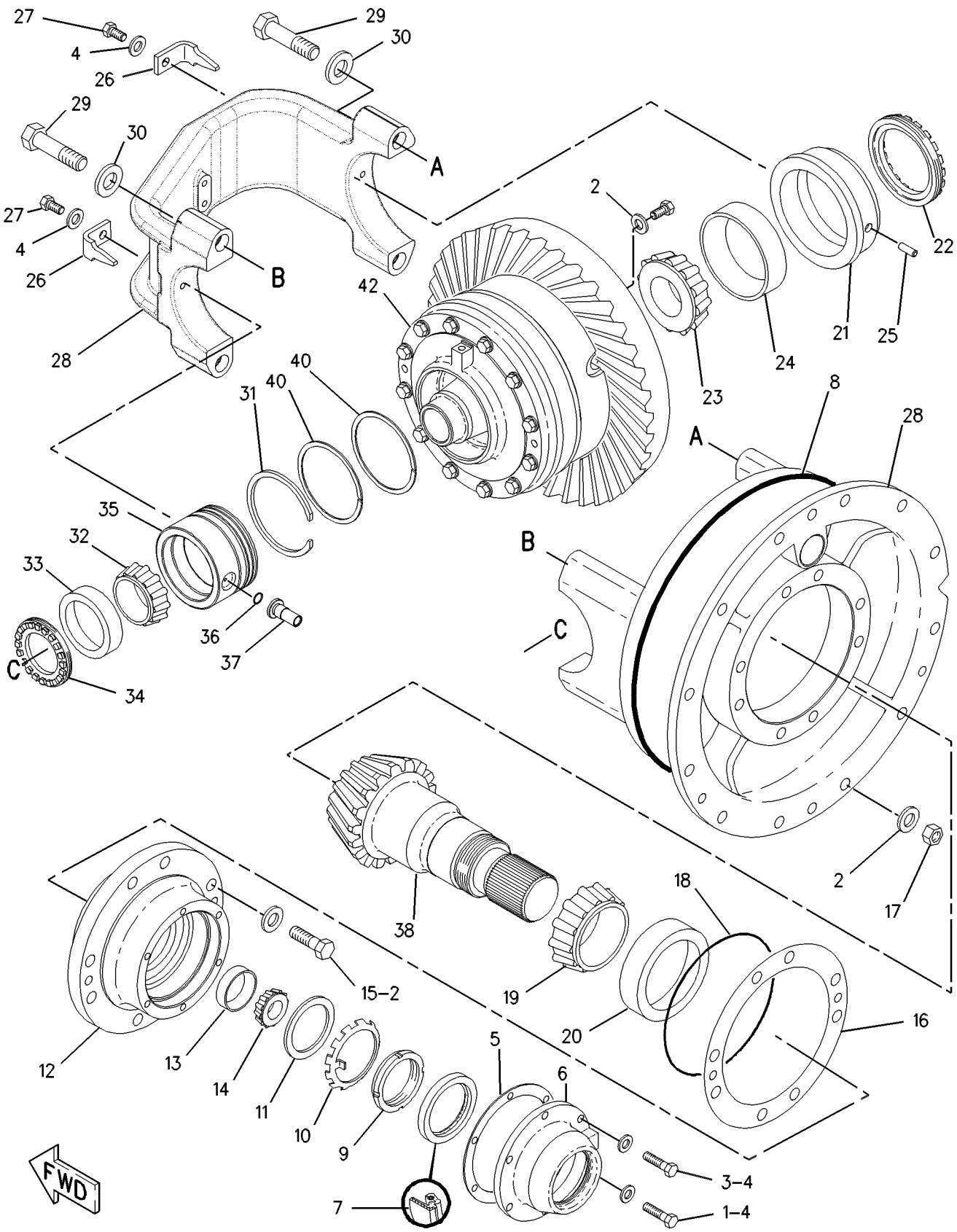

GRAPHIC #1 **<END>** g00635014

316-8469 DIFFERENTIAL AR

S/N: JBP1-UP

AN ATTACHMENT

SMCS-3264, 3266, 3270 **i03255277**

NOTE	REF NO	GRAPHIC REF	PART NUMBER	QTY	PART NAME 1 2 3 4 5 6 (PRODUCT LEVEL)	SEE PAGE
Y	1	1	*8W-5430*	1	DIFFERENTIAL & BEVEL GEAR GP	250
Y	2	1	*316-8363*	1	CONTROL GP-DIFFERENTIAL LOCK	245
	3	1	**8T-4121**	1	WASHER-HARD (11X21X2.5-MM THK)	
M	4	1	**8T-4137**	1	BOLT (M10X1.5X20-MM)	

M-METRIC PART
Y-SEPARATE ILLUSTRATION

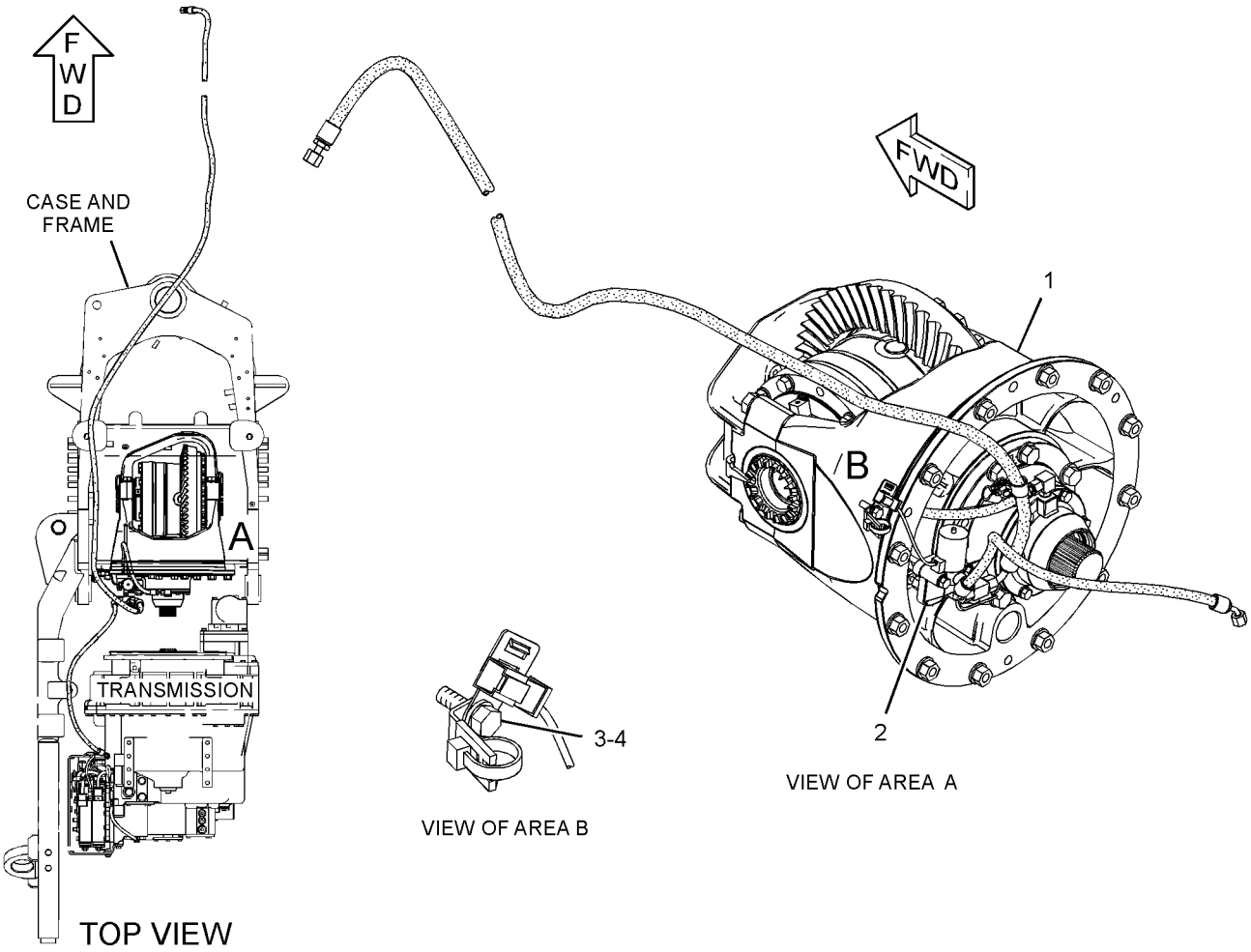

GRAPHIC #1 **<END>** g01702805

154-2688 DIFFERENTIAL GP

S/N: JBP1-UP

PART OF 8W-5430 DIFFERENTIAL & BEVEL GEAR GP

AN ATTACHMENT

SMCS-3258 **i02580119**

NOTE	REF NO	GRAPHIC REF	PART NUMBER	QTY	PART NAME 1 2 3 4 5 6 (PRODUCT LEVEL)	SEE PAGE
	1	1	**8D-4291**	1	PISTON	
	2	1	**7D-8225**	1	SEAL-RING	
	3	1	**7D-8226**	1	SEAL-RING	
	4	1	**6Y-7954**	7	DISC-FRICTION	
	5	1	**169-1549**	1	GEAR-BEVEL (54-TEETH)	
	6	1	**8X-2528**	1	HOUSING AS	
	6A	1	**2D-6642**	1	BALL	
	6C	1	**3D-6509**	2	DOWEL	
	7	1	**8X-4641**	4	SPACER-THRUST	
	8	1	**155-2283**	4	PINION AS (14-TEETH)	
					(EACH INCLUDES)	
	8A	1	**174-6819**	1	BEARING-SLEEVE	
	9	1	**154-2692**	1	HOUSING AS	
	9A	1	**3D-6509**	2	DOWEL	
	10	1	**8D-4064**	2	WASHER-THRUST	
	11	1	**109-4582**	1	GEAR-BEVEL (24-TEETH)	
	12	1	**109-4583**	1	GEAR-BEVEL (24-TEETH)	
	13	1	**8D-4282**	1	DISC (DIFFERENTIAL LOCK CLUTCH)	
	14	1	**7D-8185**	8	DISC (DIFFERENTIAL LOCK CLUTCH)	
	15	1	**2B-0947**	12	BOLT (1/2-13X2.25-IN)	
	16	1	**5P-8245**	12	WASHER-HARD (13.5X25.5X3-MM THK)	
	17	1	**5P-8247**	24	WASHER-HARD (17X32X3.5-MM THK)	
	18	1	**5B-0841**	24	BOLT (5/8-18X1.75-IN)	
	19	1	**154-2689**	1	SPIDER	

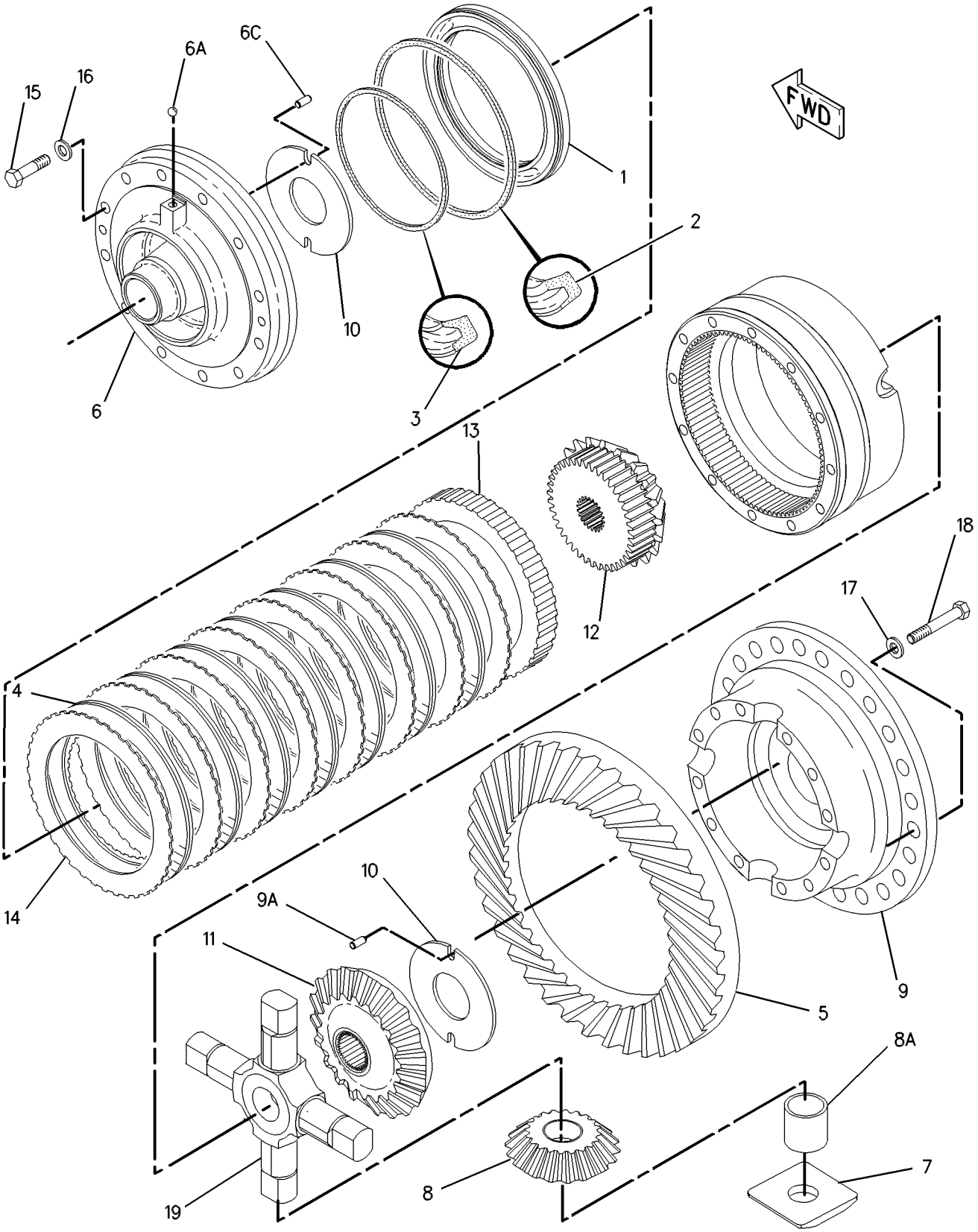

GRAPHIC #1 **<END>** g00597332

202-7593 FINAL DRIVE GP

S/N: JBP1-UP

PART OF 274-7941 GENERAL AR

SMCS-4050 **i02639219**

NOTE	REF NO	GRAPHIC REF	PART NUMBER	QTY	PART NAME 1 2 3 4 5 6 (PRODUCT LEVEL)	SEE PAGE
	1	1	**1P-4694**	2	CONE-BEARING	
	2	1	**5P-3490**	2	CONE-BEARING	
	3	1	**1P-4693**	4	CUP-BEARING	
	4	1	**1S-9110**	12	ROLLER AS	
	5	1	**5T-7129**	2	HOUSING	
	6	1	**6G-3206**	4	WASHER-THRUST (131.75X154.79X1.6-MM THK)	
B	7	1	**6G-3212**	2	SHIM PACK (INCLUDES 10-SHIMS)	
	8	1	**7D-0035**	8	PLATE	
	9	1	**7D-7889**	2	GEAR-RING	
	10	1	**8D-3540**	2	NUT (3 1/4-12-THD)	
	11	1	**8D-3591**	2	CARRIER-PLANETARY	
	12	1	**8D-3885**	2	WASHER (50.8X107.95X6.35-MM THK)	
	13	1	**8S-9092**	32	BOLT (5/8-11X2.25-IN)	
	14	1	**8W-2308**	6	SHAFT-PLANETARY	
	15	1	**8W-4141**	2	LOCK	
	16	1	**8X-8377**	12	WASHER (47.57X82.55X2.92-MM THK)	
	17	1	**102-2370**	2	SPROCKET (23-TEETH)	
	18	1	**102-2371**	2	SPROCKET (23-TEETH)	
	19	1	**129-2381**	6	GEAR-PLANETARY (26-TEETH)	
	20	1	**191-5973**	2	SHAFT-SUN GEAR (18-TEETH)	
	21	1	**200-7931**	2	HOUSING	
M	22	1	**202-6473**	48	BOLT (M16X2X60-MM)	
	23	1	**218-4406**	4	RING-WEAR	
	24	1	**236-7724**	2	RETAINER	
	25	1	**265-9125**	6	RETAINER	
	26	1	**030-8535**	18	BOLT-LOCKING (3/8-16X0.875-IN)	
	27	1	**198-4768**	48	WASHER-HARD (17.5X32X8-MM THK)	
	28	1	**2J-3506**	38	NUT-FULL (3/4-10-THD)	
	29	1	**4D-3704**	32	WASHER-HARD (17X30X5-MM THK)	
	30	1	**5D-0353**	12	BOLT-LOCKING (3/8-16X1-IN)	
	31	1	**5M-2894**	30	WASHER-HARD (10.2X18.5X2.5-MM THK)	
	32	1	**5P-8248**	38	WASHER-HARD (20X36.5X3.5-MM THK)	
	33	1	**5P-9147**	2	SEAL-O-RING	
	34	1	**282-4350**	2	SEAL-LIP TYPE	
	35	1	**7S-4571**	2	SEAL-O-RING	
	36	1	**8D-3886**	2	RING-RETAINING	
	37	1	**8D-3902**	2	SEAL-LIP TYPE	
	38	1	**8W-4142**	2	SHAFT-DRIVE	
	39	1	**9F-2247**	2	PLUG-PIPE	

B-USE AS REQUIRED
M-METRIC PART

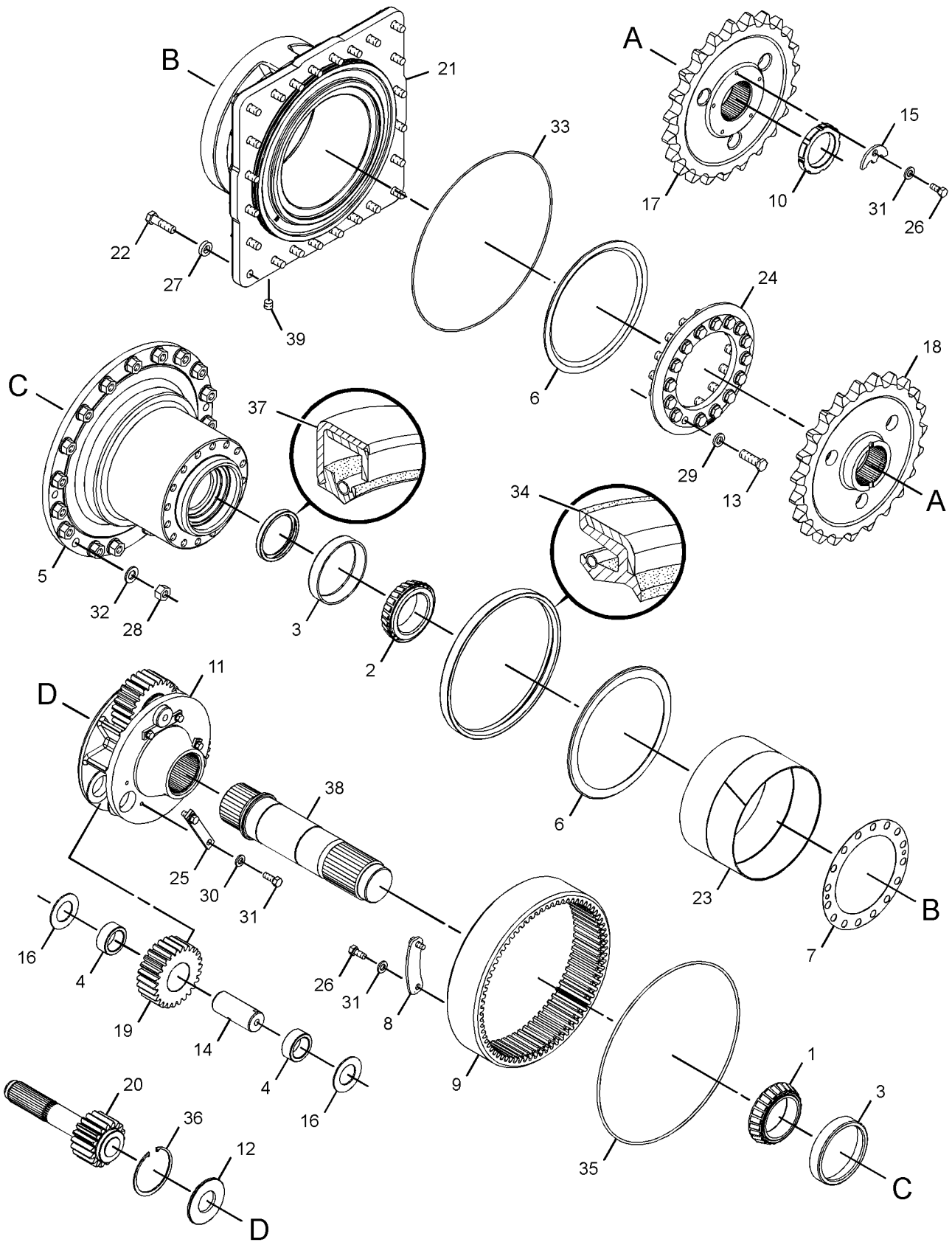

GRAPHIC #1 **<END>** g01297299

315-4118 FILLER GP-POWER TRAIN OIL

S/N: JBP1-UP

PART OF 274-7941 GENERAL AR

SMCS-3005, 3081, 7513 **i03246274**

NOTE	REF NO	GRAPHIC REF	PART NUMBER	QTY	PART NAME 1 2 3 4 5 6 (PRODUCT LEVEL)	SEE PAGE
	1	1	**7J-8611**	1	ELBOW-PIPE (90-DEG)	
	2	1	**9G-5127**	1	BREATHER (POWER TRAIN OIL FILLER)	
	3	1	**8T-4896**	2	WASHER-HARD (10.2X18.5X2.5-MM THK)	
	4	1	**315-6148**	1	GAUGE AS-OIL LEVEL (DIPSTICK) (POWER TRAIN OIL)	
	5	1	**5D-0353**	2	BOLT-LOCKING (3/8-16X1-IN)	
	6	1	**8B-1615**	1	GASKET	
					PARTS SHOWN IN GRAPHIC(S) WITHOUT A REFERENCE NUMBER ARE NOT SERVICED SEPARATELY	

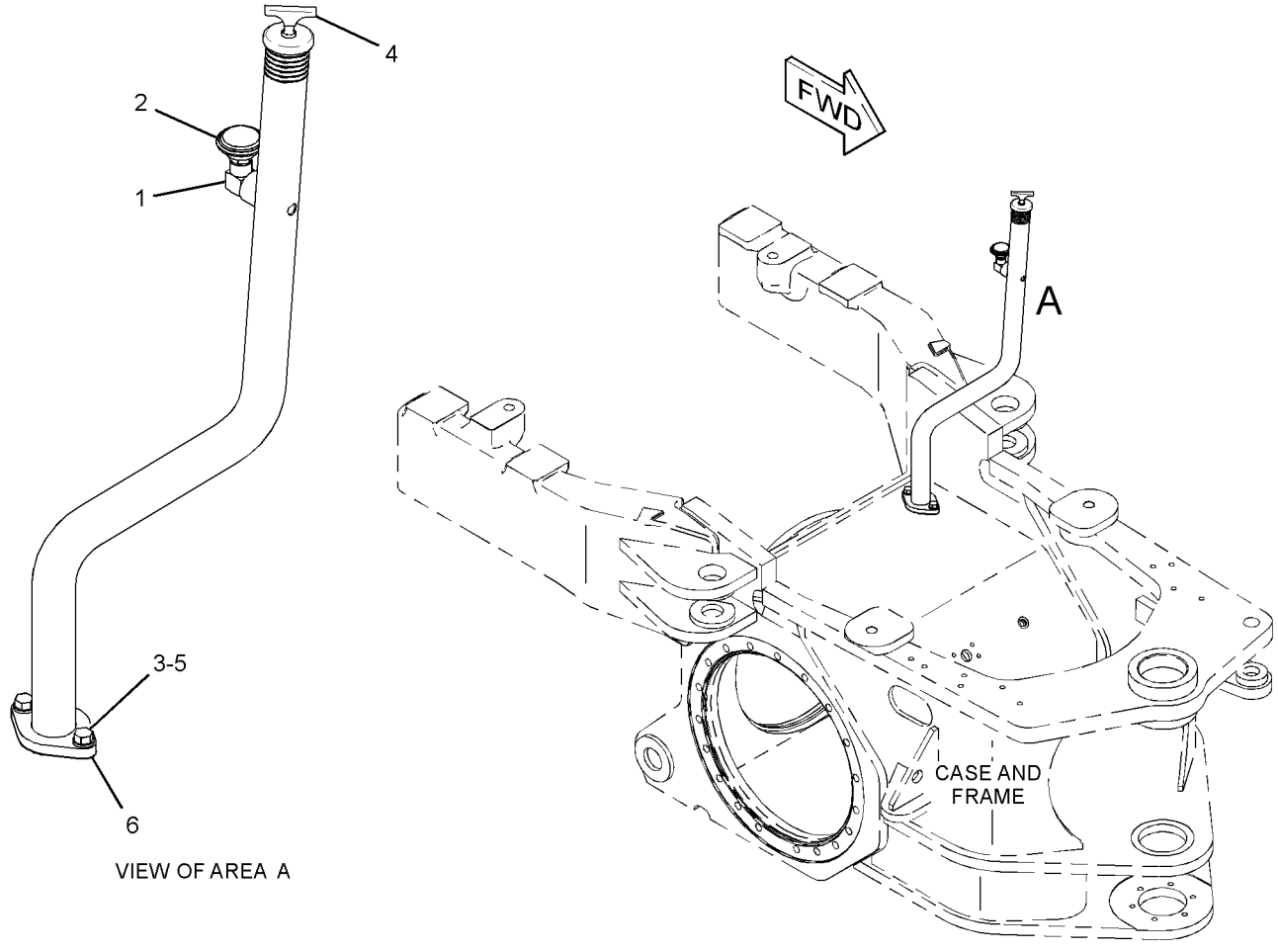

GRAPHIC #1 **<END>** g01690113

313-5233 FILTER GP-OIL

S/N: JBP1-UP

PART OF 315-5378 LINES GP-TRANSMISSION OIL

SMCS-3004, 3067 **i03431963**

NOTE	REF NO	GRAPHIC REF	PART NUMBER	QTY	PART NAME 1 2 3 4 5 6 (PRODUCT LEVEL)	SEE PAGE
	1	1	**1R-1809**	1	FILTER ELEMENT-OIL (ULTRA HIGH EFFICIENCY) (TRANSMISSION)	
	1A	1	**130-0229**	1	SEAL-O-RING	
Y	2	1	**238-1029**	1	BASE GP-OIL FILTER (TRANSMISSION)	229
	3	1	*244-3712*	1	PLUG AS	
		1	**9S-4191**	1	PLUG-O-RING	
		1	**214-7568**	1	SEAL-O-RING	
	4	1	**321-5967**	1	HOUSING GP-FILTER	
		1	**3J-1907**	1	SEAL-O-RING	
		1	**9S-8004**	1	PLUG-O-RING	
	5	1	*155-3624*	1	PLUG AS	
		1	**3J-7354**	1	SEAL-O-RING	
		1	**9S-4182**	1	PLUG-O-RING	

Y-SEPARATE ILLUSTRATION

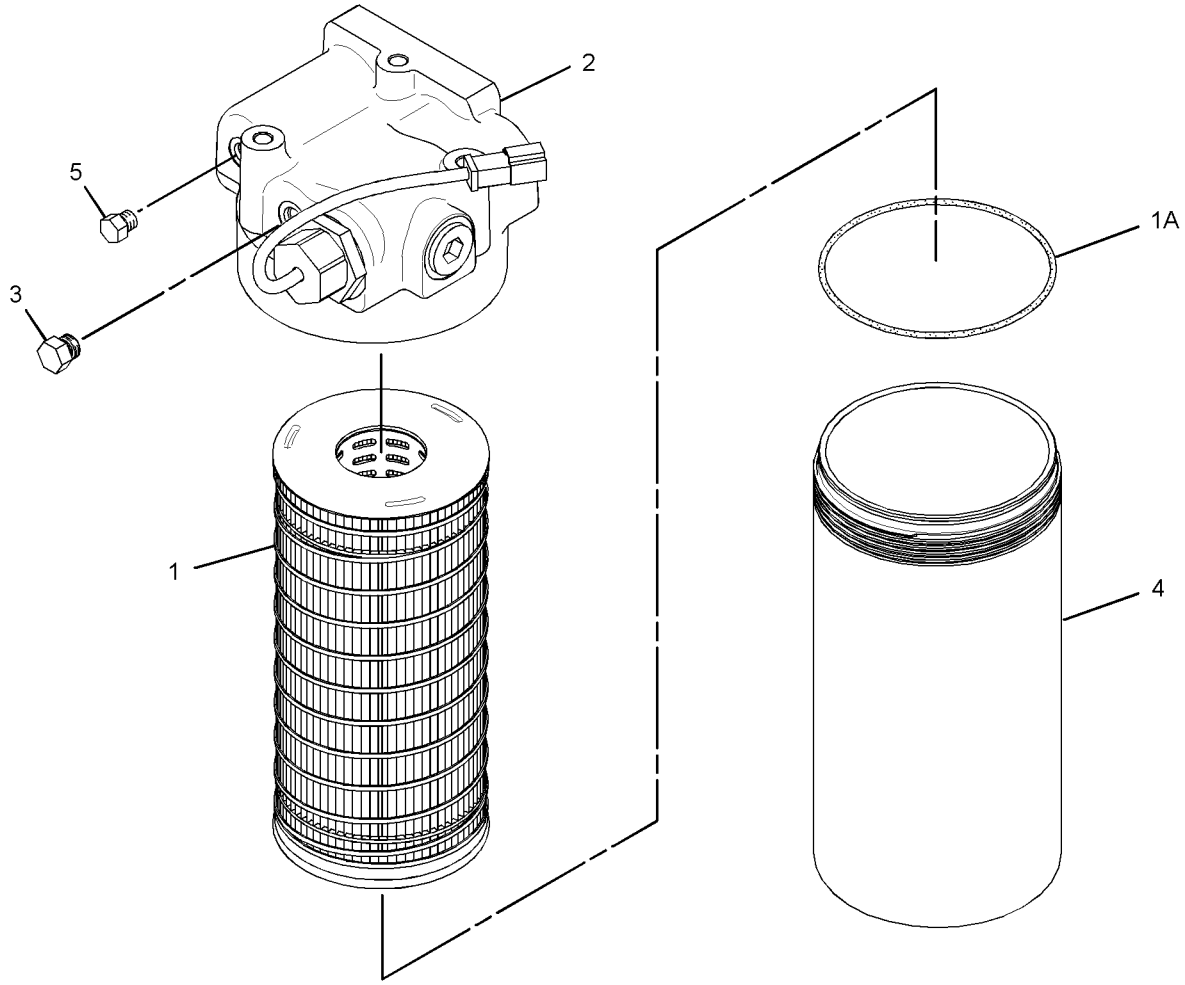

GRAPHIC #1 **<END>** g01702773

115-0632 GEAR GP-BEVEL & PINION

S/N: JBP1-UP

PART OF 274-7941 GENERAL AR

SMCS-3254, 3256 **i02327843**

NOTE	REF NO	GRAPHIC REF	PART NUMBER	QTY	PART NAME 1 2 3 4 5 6 (PRODUCT LEVEL)	SEE PAGE
	1	1	**154-2687**	1	CARRIER AS	
	2	1	**0S-1756**	4	BOLT (3/4-10X4.25-IN)	
	3	1	**5P-8248**	4	WASHER-HARD (20X36.5X3.5-MM THK)	
B	4	1	**2K-5106**	1	SHIM (2.54-MM THK)	
	5	1	**4H-6520**	1	SEAL-O-RING	
	6	1	**1J-2860**	1	CUP-BEARING	
	7	1	**1J-4757**	1	CONE-BEARING	
	8	1	**8X-2534**	1	HOUSING	
	9	1	**7D-8347**	1	WASHER-TAB	
	10	1	**9B-0143**	1	LOCK-NUT	
	11	1	**5P-5813**	1	LOCKNUT-BEARING	
	12	1	**9S-4182**	1	PLUG-O RING	
	13	1	**123-4003**	1	SEAL-LIP TYPE	
	14	1	**8W-5279**	1	RETAINER	
	15	1	**5L-2031**	1	CUP-BEARING	
	16	1	**5L-2030**	1	CONE-BEARING	
	17	1	**2K-5109**	1	GASKET	
	18	1	**9X-8880**	8	BOLT (5/8-11X2-IN)	
	19	1	**8T-8883**	1	SEAL-O-RING	
	20	1	**115-0634**	1	PLUG	
	21	1	**110-6078**	1	CAGE	
	22	1	**6G-4701**	1	NUT (4 1/4-12-THD)	
	23	1	**1P-2636**	1	CUP-BEARING	
	24	1	**1P-2662**	1	CONE-BEARING	
	25	1	**8D-9784**	2	LOCK	
	26	1	**5M-2894**	8	WASHER-HARD (10.2X18.5X2.5-MM THK)	
	27	1	**030-8535**	2	BOLT-LOCKING (3/8-16X0.875-IN)	
	28	1	**115-0633**	1	HOUSING	
	29	1	**5B-0841**	24	BOLT (5/8-18X1.75-IN)	
	30	1	**5P-2503**	1	CUP	
	31	1	**126-2729**	1	CONE-SPECIAL TAPERED	
	32	1	**6G-4703**	1	NUT (5 1/4-12-THD)	
	33	1	**8D-8197**	1	CAGE	
	34	1	**6F-0698**	1	DOWEL	
	35	1	**034-3557**	5	BOLT-LOCKING (3/8-16X1.125-IN)	
	36	1	**5D-9844**	1	BOLT-LOCKING (3/8-16X2-IN)	
	37	1	**3J-7354**	1	SEAL-O-RING	
	38	1	**5P-8247**	44	WASHER-HARD (17X32X3.5-MM THK)	
	39	1	**4K-0367**	12	NUT-FULL (5/8-11-THD)	
	40	1	**169-1548**	1	SHAFT-PINION	
	41	1	**169-1549**	1	GEAR-BEVEL (54-TEETH)	

B-USE AS REQUIRED

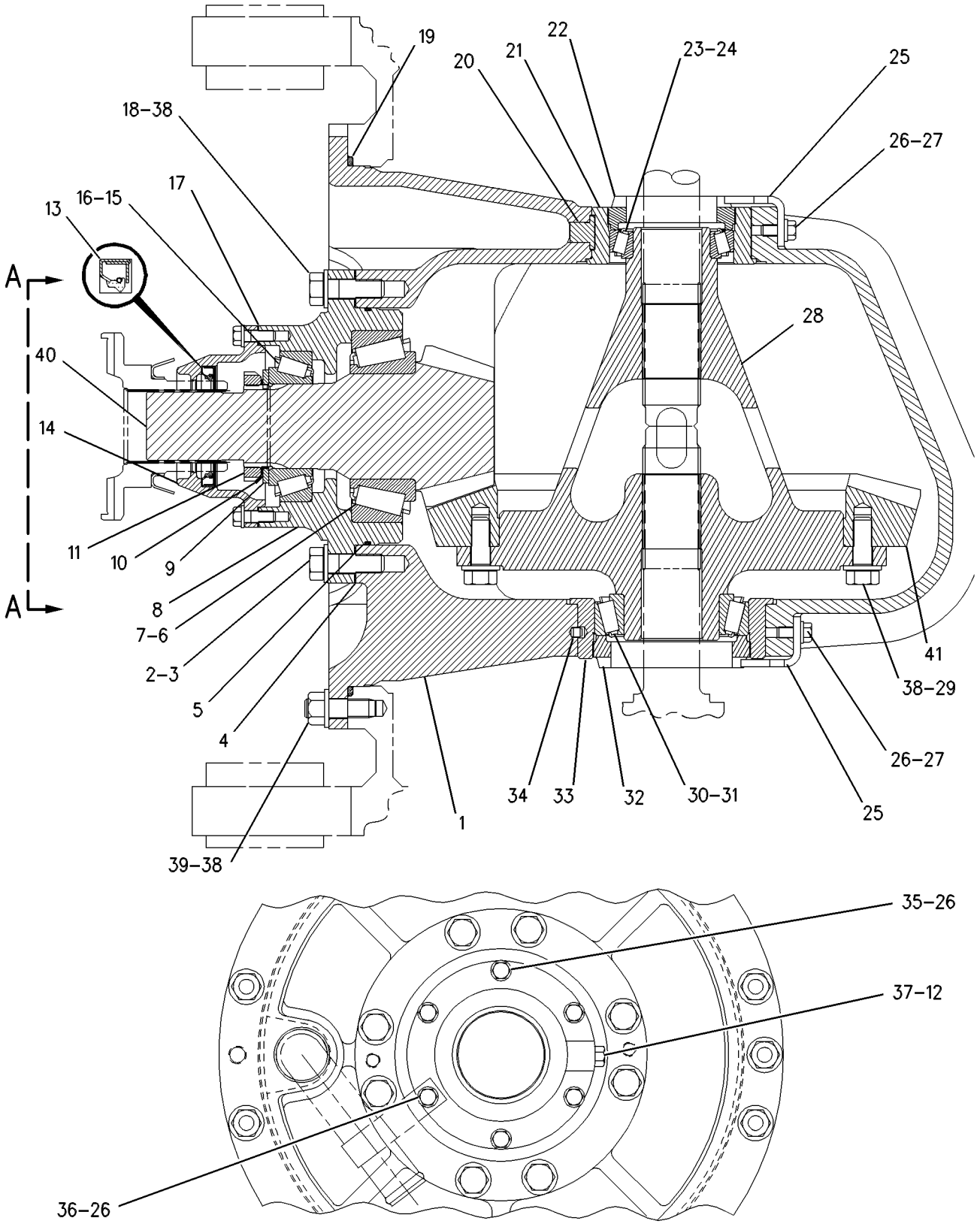

VIEW A-A

GRAPHIC #1 **<END>** g00398582

315-5378 LINES GP-TRANSMISSION OIL

S/N: JBP1-UP

PART OF 274-7941 GENERAL AR

SMCS-3154 **i03431914**

NOTE	REF NO	GRAPHIC REF	PART NUMBER	QTY	PART NAME 1 2 3 4 5 6 (PRODUCT LEVEL)	SEE PAGE
	1	1	**1R-1809**	1	FILTER ELEMENT-OIL (ULTRA HIGH EFFICIENCY) (TRANSMISSION)	
		1	**130-0229**	1	SEAL-O-RING	
	2	1	**5D-1026**	2	CLAMP-HOSE	
	3	1	**8T-4983**	2	CLAMP-HOSE	
	4	1	**8X-5121**	1	TUBE	
	5	1	**8X-8916**	1	PLATE	
	6	1	**9C-5344**	1	SPACER (10.5X20X18-MM THK)	
	7	1	**005-7898**	2	CONNECTOR-HOSE	
	8	1	**113-9048**	1	BAFFLE	
	9	1	**118-0424**	1	ADAPTER	
	10	1	*164-5567*	1	COUPLER AS-QUICK DISCONNECT	
		1	**6V-3965**	1	FITTING (QUICK DISCONNECT)	
		1	**214-7568**	1	SEAL-O-RING	
	11	1	**178-3695**	1	ADAPTER	
	12	1	*244-3712*	1	PLUG AS	
		1	**9S-4191**	1	PLUG-O-RING	
		1	**214-7568**	1	SEAL-O-RING	
I	13	1	**266-6793**	1	HOSE AS	
	14	1	**285-6570**	1	TUBE AS	
I	15	1	**293-4285**	1	HOSE AS	
I	16	1	**303-6032**	1	HOSE AS	
Y	17	1	*313-5233*	1	FILTER GP-OIL (BYPASS)	258
I	18	1	**315-5668**	1	HOSE AS	
	19	1	**315-9792**	1	TUBE AS	
I	20	1	**316-6688**	1	HOSE AS	
	21	1	**000-7246**	1	ELBOW	
	22	1	*148-8327*	2	CONNECTOR AS	
					(EACH INCLUDES)	
		1	**3D-2824**	1	SEAL-O-RING	
		1	**6V-8637**	1	CONNECTOR	
		1	**6V-9746**	1	SEAL-O-RING	
	23	1	*148-8335*	2	CONNECTOR AS	
					(EACH INCLUDES)	
		1	**5K-9090**	1	SEAL-O-RING	
		1	**6V-8635**	1	CONNECTOR	
		1	**7M-8485**	1	SEAL-O-RING	
	24	1	*148-8339*	1	CONNECTOR AS	
		1	**6V-8716**	1	CONNECTOR	
		1	**6V-9746**	1	SEAL-O-RING	
		1	**7M-8485**	1	SEAL-O-RING	
	25	1	*148-8357*	1	ELBOW AS	
		1	**5K-9090**	1	SEAL-O-RING	
		1	**6V-9008**	1	ELBOW	
		1	**7M-8485**	1	SEAL-O-RING	
	26	1	**189-8772**	1	SPACER (11X16X35-MM THK)	
	27	1	**1L-0509**	2	BOLT (3/8-16X0.74-IN)	
	28	1	**1P-4577**	6	FLANGE-HALF	
	29	1	**1P-4578**	2	FLANGE-HALF	
	30	1	**4F-7389**	2	SEAL-O-RING	
	31	1	**4J-0520**	5	SEAL-O-RING	
	32	1	**4J-0522**	1	SEAL-O-RING	
	33	1	**5K-9090**	1	SEAL-O-RING	
	34	1	**5P-1075**	1	WASHER-HARD (10.2X22.5X3-MM THK)	
	35	1	**5P-9938**	4	BOLT-LOCKING (3/8-16X1.375-IN)	
	36	1	**6V-1889**	4	CLIP	

315-5378 LINES GP-TRANSMISSION OIL *(contd.)* i03431914

NOTE	REF NO	GRAPHIC REF	PART NUMBER	QTY	PART NAME 1 2 3 4 5 6 (PRODUCT LEVEL)	SEE PAGE
	37	1	**6V-9746**	1	SEAL-O-RING	
	38	1	**7X-0342**	1	BOLT (5/8-11X0.75-IN)	
M	39	1	**7X-2552**	2	BOLT (M16X2X30-MM)	
	40	1	**8C-3447**	1	CAP-DUST	
	41	1	**8M-2769**	2	CLIP	
	42	1	**8T-4121**	19	WASHER-HARD (11X21X2.5-MM THK)	
M	43	1	**8T-4196**	7	BOLT (M10X1.5X35-MM)	
	44	1	**8T-4224**	3	WASHER-HARD (8.8X16X2-MM THK)	
	45	1	**8T-4896**	2	WASHER-HARD (10.2X18.5X2.5-MM THK)	
M	46	1	**8T-4908**	3	BOLT (M8X1.25X25-MM)	
M	47	1	**8T-6466**	9	BOLT (M10X1.5X60-MM)	
	48	1	**9C-9467**	1	CLIP	
	49	1	**9X-8257**	2	WASHER (17.5X30X3.5-MM THK)	
	50	1	**8X-7317**	1	HOSE	
E	51	1	**5P-0765**		HOSE (46-CM)	

E-ORDER BY THE CENTIMETER
I-REFER TO HYDRAULIC INFORMATION SYSTEM
M-METRIC PART
Y-SEPARATE ILLUSTRATION

315-5378 **LINES GP-TRANSMISSION OIL** ***(contd.)*** **i03431914**

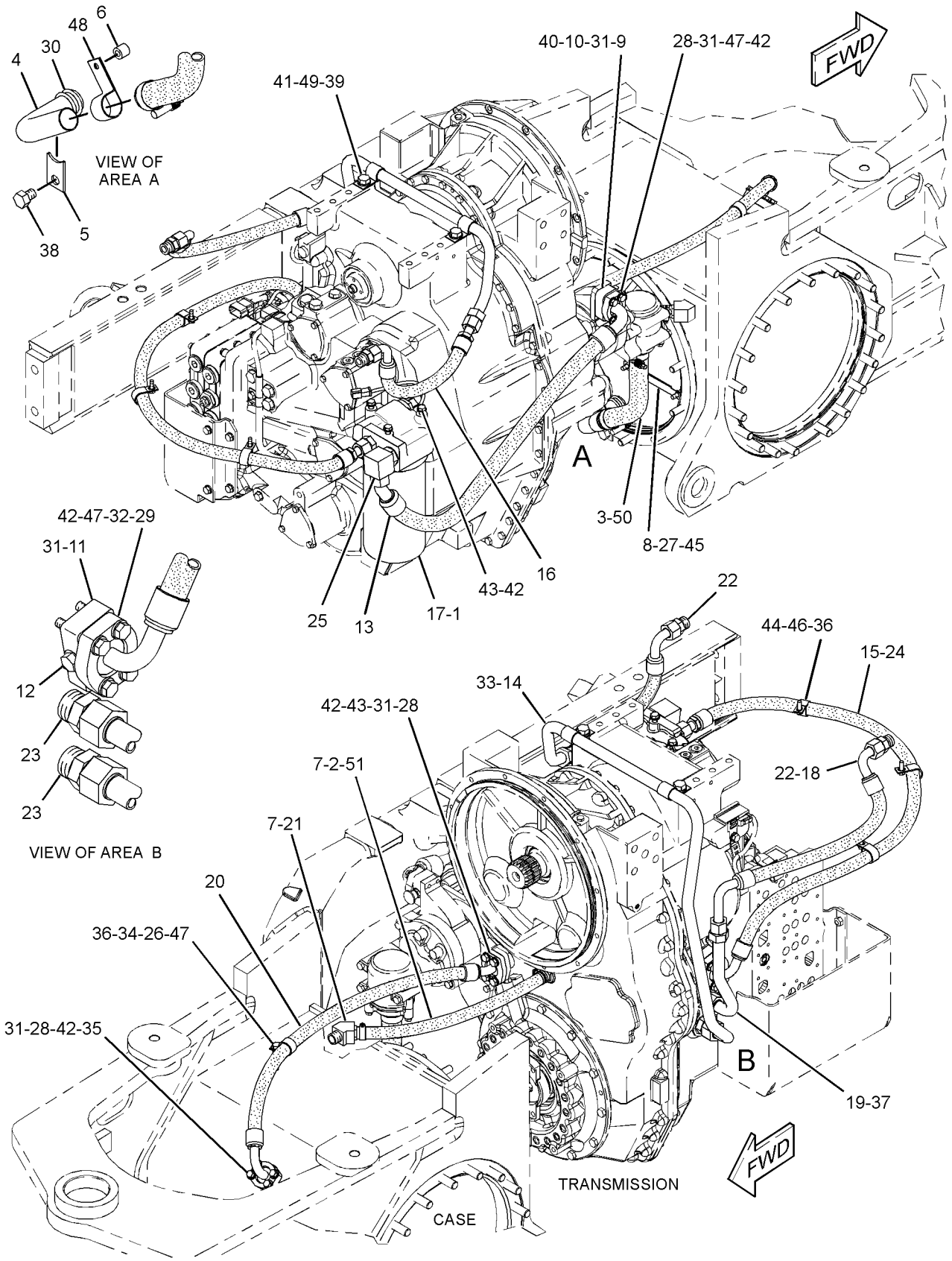

GRAPHIC #1 **<END>** g01712720

142-6203 MOUNTING GP-WHEEL

S/N: JBP1-UP

PART OF 274-7941 GENERAL AR

SMCS-4201 **i03431912**

NOTE	PART NUMBER	QTY	PART NAME 1 2 3 4 5 6 (PRODUCT LEVEL)	SEE PAGE
	0S-1973	60	BOLT (7/8-9X2-IN)	
	4M-6953	60	WASHER-HARD (24X38X3.5-MM THK)	

<END>

299-8294 PROTECTION GP-XMSN OIL FILLER

S/N: JBP1-UP
AN ATTACHMENT

SMCS-3005, 7315 **i03256002**

NOTE	REF NO	GRAPHIC REF	PART NUMBER	QTY	PART NAME 1 2 3 4 5 6 (PRODUCT LEVEL)	SEE PAGE
	1	1	**2P-2717**	1	HASP	
	2	1	**4B-4314**	1	RIVET	
	3	1	**246-2641**	1	PADLOCK GP	
		1	**5P-8500**	1	KEY	
	4	1	*299-8299*	1	PROTECTION GP-XMSN OIL FILLER	
	4A	1	**4B-4314**	1	RIVET	
	4B	1	**299-8295**	1	HASP	
	4C	1	**299-8296**	1	HASP	
	5	1	*299-8300*	1	PROTECTION GP-OIL LEVEL GAUGE	
	5A	1	**4B-4314**	1	RIVET	
	5B	1	**299-8297**	1	HASP	
	5C	1	**299-8298**	1	HASP	

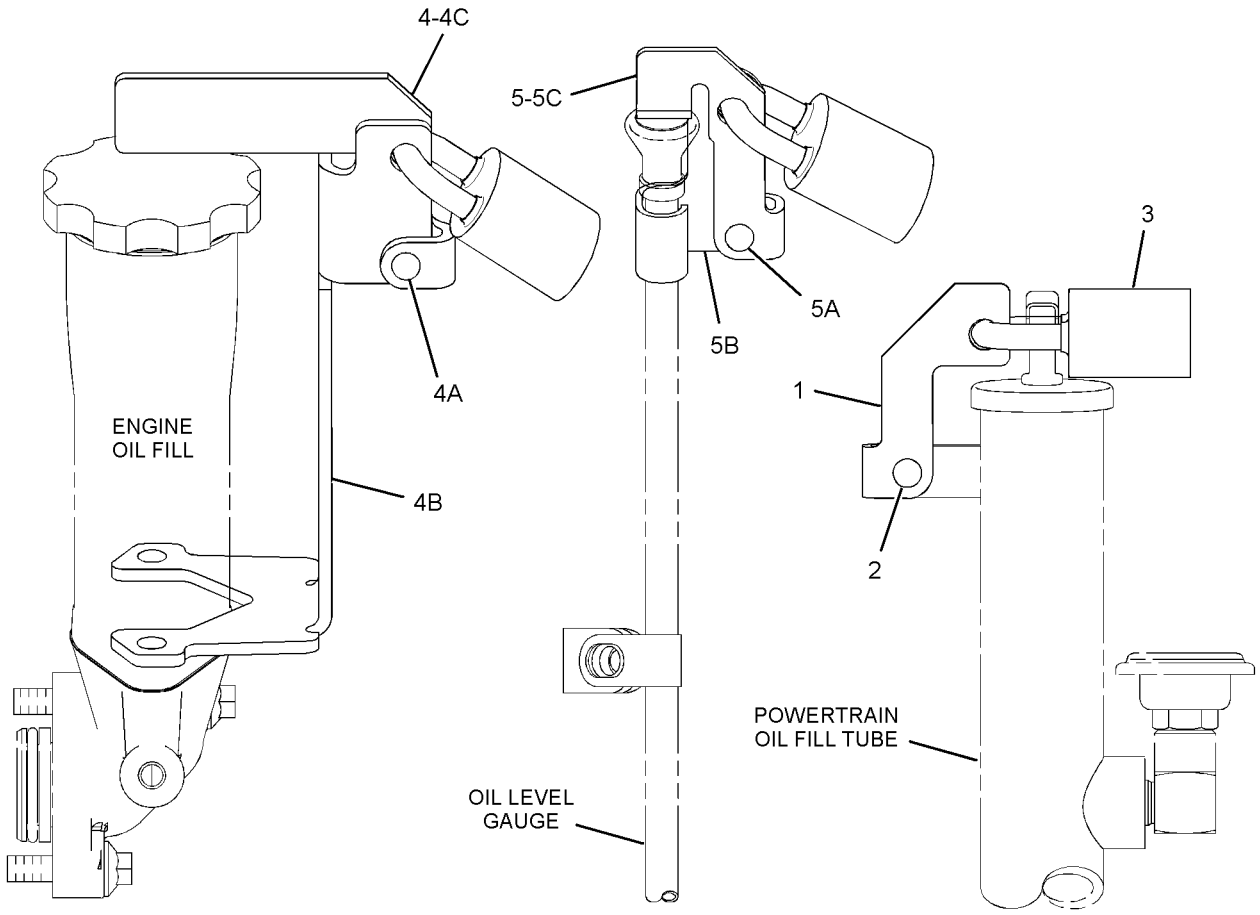

GRAPHIC #1 **<END>** g01783420

6Y-8764 PUMP GP-GEAR*R

S/N: DPK1-UP
2-SECTION
PART OF 6Y-8765 PUMP GP-GEAR

SMCS-3066, 3115, 3203, 5073 **i03159027**

NOTE	REF NO	GRAPHIC REF	PART NUMBER	QTY	PART NAME 1 2 3 4 5 6 (PRODUCT LEVEL)	SEE PAGE
	1	1	**9N-4163**	1	COVER AS-PUMP	
	2	1	**1M-3780**	2	BEARING-SLEEVE	
	3	1	**9N-4162**	1	GEAR AS-OIL PUMP (12-TEETH)	
		1	**2B-9373**	1	KEY-WOODRUFF	
	4	1	**9N-4159**	1	BODY AS-OIL PUMP	
	5	1	**1M-3780**	2	BEARING-SLEEVE	
	6	1	**5S-4385**	1	BODY AS-OIL PUMP	
		1	**8M-8489**	4	DOWEL	
	7	1	**9N-4158**	2	GEAR (8-TEETH)	
	8	1	**2B-9373**	1	KEY-WOODRUFF	
	9	1	**2D-8009**	3	SEAL-O-RING	
	10	1	**3S-0004**	6	WASHER (0.406X0.728X0.09-IN THK)	
M	11	1	**8T-5030**	2	BOLT (M10X1.5X120-MM)	
	12	1	**6Y-5010**	8	WASHER (10.16X19X0.84-MM THK)	
M	13	1	**8C-2926**	4	BOLT (M10X1.5X140-MM)	
	14	1	**9N-4161**	1	GEAR AS-OIL PUMP (12-TEETH)	
		1	**2B-9373**	1	KEY-WOODRUFF	
	15	1	**9N-4156**	1	MANIFOLD AS-PUMP	
		1	**8M-8489**	2	DOWEL	

M-METRIC PART

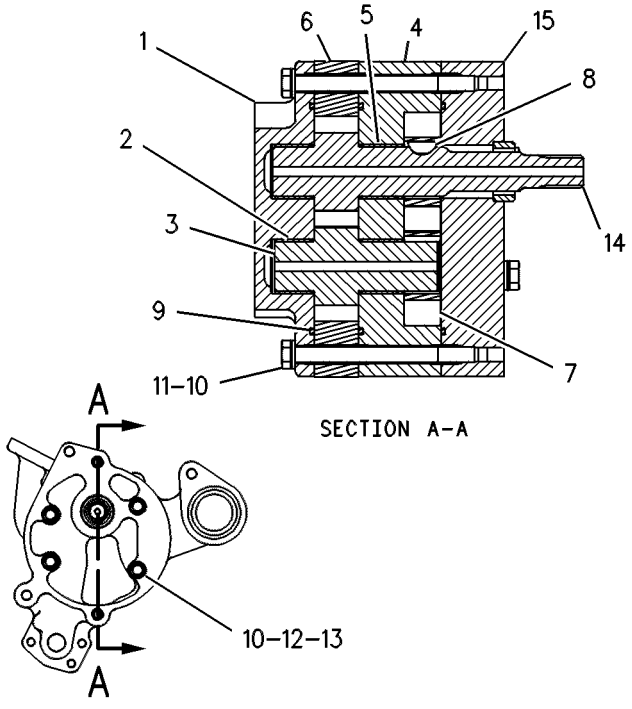

GRAPHIC #1 **<END>** g00108548

6Y-8765 PUMP GP-GEAR

S/N: DPK1-UP
2-SECTION
PART OF 275-6546 TRANSMISSION AR

SMCS-3066, 3115, 3203, 5073 **i02588346**

NOTE	REF NO	GRAPHIC REF	PART NUMBER	QTY	PART NAME 1 2 3 4 5 6 (PRODUCT LEVEL)	SEE PAGE
YR	1	1	**6Y-8764**	1	PUMP GP-GEAR (TRANSMISSION)	266
	2	1	**4F-7952**	1	SEAL-O-RING	
	3	1	**7F-8268**	1	SEAL-O-RING	
M	4	1	**6V-1820**	3	BOLT (M10X1.5X30-MM)	

M-METRIC PART
R-REMFG PART MAY BE AVAILABLE
Y-SEPARATE ILLUSTRATION

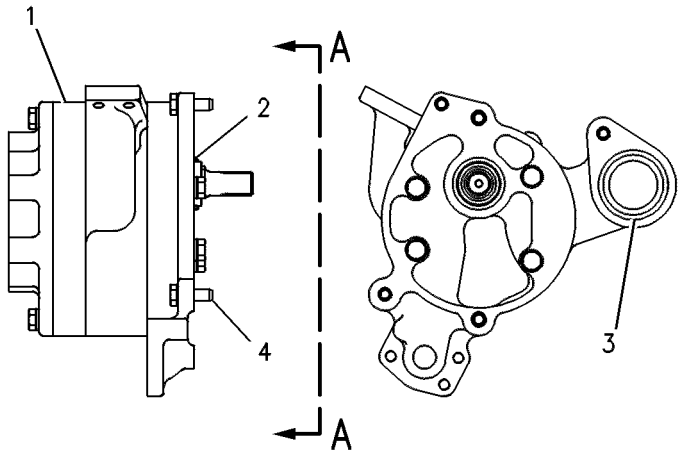

VIEW A-A

GRAPHIC #1 **<END>** g00108547

9W-5134 SCREEN GP-MAGNETIC–TRANSMISSION

S/N: DPK1-UP

PART OF 275-6546 TRANSMISSION AR

SMCS-3067 **i01623693**

NOTE	REF NO	GRAPHIC REF	PART NUMBER	QTY	PART NAME 1 2 3 4 5 6 (PRODUCT LEVEL)	SEE PAGE
	1	1	**6Y-3861**	1	COVER AS	
	2	1	**6Y-3860**	1	HOUSING-FILTER	
	3	1	**8S-9130**	1	SCREEN-SUCTION (TRANSMISSION)	
	4	1	**8S-9129**	1	FILTER-MAGNETIC (TRANSMISSION)	
	5	1	**5P-3863**	1	SEAL-O-RING	
M	6	1	**6V-5219**	3	BOLT (M8X1.25X40-MM)	
	7	1	**5F-8000**	1	SEAL-O-RING	
M	8	1	**8T-0355**	3	BOLT (M10X1.5X110-MM)	

M-METRIC PART

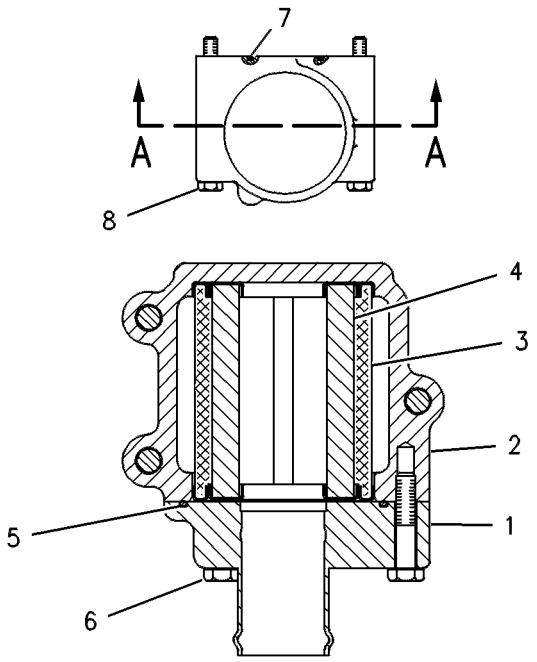

VIEW A–A

GRAPHIC #1 **<END>** g00108551

8W-5394 SHAFT GP-DRIVE–TRANSMISSION

S/N: JBP1-UP

PART OF 274-7941 GENERAL AR

SMCS-3253 **i03359940**

NOTE	REF NO	GRAPHIC REF	PART NUMBER	QTY	PART NAME 1 2 3 4 5 6 (PRODUCT LEVEL)	SEE PAGE
Y	1	1	**8X-5005**	1	UNIVERSAL JOINT GP	273
	2	1	**8W-1592**	1	YOKE AS	
		1	**3K-0986**	1	PLUG	
	3	1	**3K-0196**	1	GUARD	
	4	1	**0S-1604**	4	BOLT (1/2-20X2.5-IN)	
	5	1	**5P-7213**	4	WASHER-HARD (13.5X20.5X2-MM THK)	
	6	1	**6B-6684**	4	NUT-FULL (1/2-20-THD)	
	7	1	**6V-1911**	4	BOLT-LOCKING (1/2-20-THD)	

Y-SEPARATE ILLUSTRATION

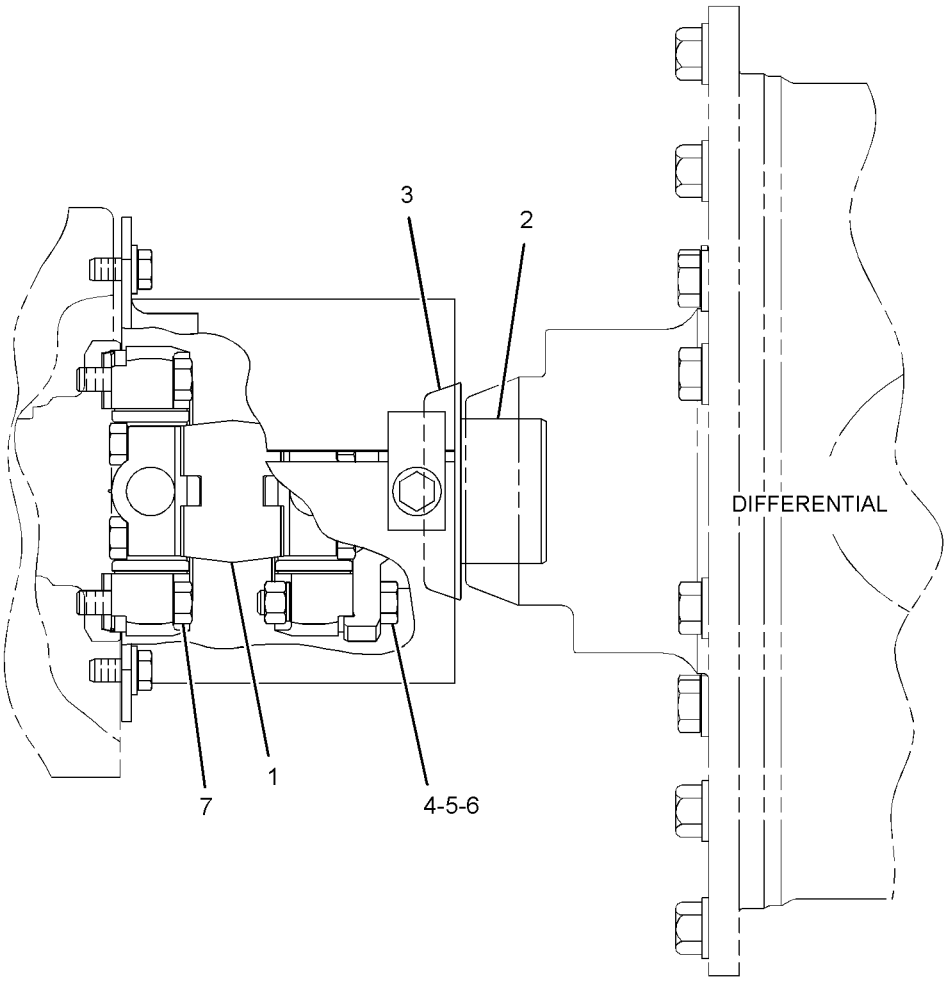

GRAPHIC #1 **<END>** g01786217

6Y-2300 SHAFT GP-INPUT

S/N: DPK1-UP

PART OF 275-6546 TRANSMISSION AR

SMCS-3063 **i00134456**

NOTE	REF NO	GRAPHIC REF	PART NUMBER	QTY	PART NAME 1 2 3 4 5 6 (PRODUCT LEVEL)	SEE PAGE
	1	1	**6Y-1870**	1	SHAFT AS-INPUT	
	2	1	**0L-1026**	1	PLUG-CUP	
	3	1	**6Y-0591**	1	GEAR (45 TEETH)	
	4	1	**6Y-0590**	1	GEAR (38 TEETH)	
	5	1	**2H-6490**	1	BEARING-INNER	
	6	1	**1M-4095**	1	BEARING-INNER	
	7	1	**3T-4377**	2	SEAL-RING	

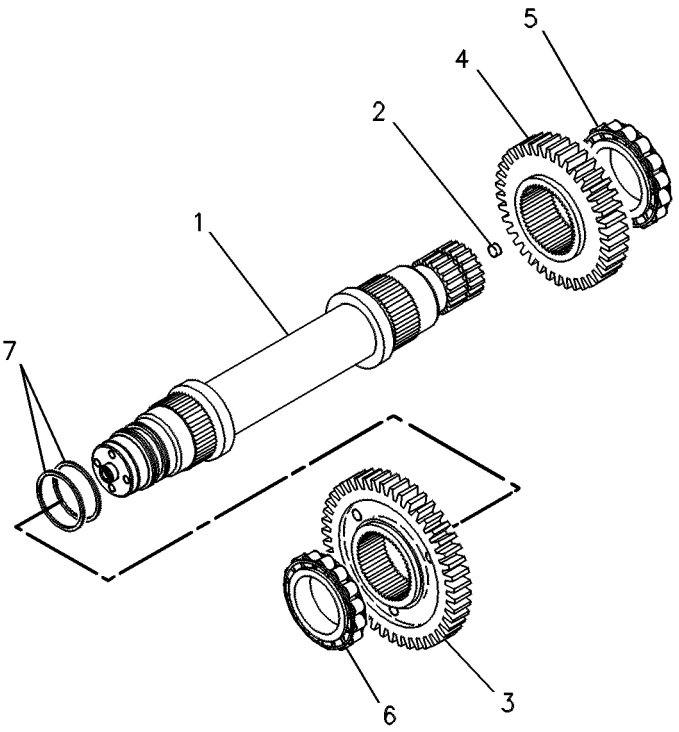

GRAPHIC #1 **<END>** g00108544

POWER TRAIN

190-1689 TANDEM & COVER GP

S/N: JBP1-UP

PART OF 274-7941 GENERAL AR

SMCS-4062, 4064 **i02230131**

NOTE	REF NO	GRAPHIC REF	PART NUMBER	QTY	PART NAME 1 2 3 4 5 6 (PRODUCT LEVEL)	SEE PAGE
	2	1	**2A-6938**	2	COVER	
	3	1	**2B-3147**	8	GASKET	
	4	1	**2B-3148**	6	COVER	
	5	1	**3D-2981**	4	GASKET	
	6	1	**8T-6468**	48	BOLT (1/2-13X1-IN)	
	8	1	**190-1693**	1	HOUSING AS-TANDEM DRIVE (RH)	
	9	1	**190-1694**	1	HOUSING AS-TANDEM DRIVE (LH)	
	10	1	**2G-9791**	2	GASKET	
	11	1	**2M-9780**	2	SEAL-O-RING	
	12	1	**3J-5389**	4	PLUG	
	13	1	**3K-0360**	2	SEAL-O-RING	
	14	1	**5P-8245**	32	WASHER-HARD (13.5X25.5X3-MM THK)	
	16	1	**6E-5047**	2	PLUG	
	17	1	**7D-6567**	4	COVER	
	18	1	**9S-4190**	2	PLUG-O-RING	
	19	1	**248-1377**	2	COVER AS	
					(EACH INCLUDES)	
		1	**4H-6112**	1	BREATHER (TANDEM)	
		1	**002-6453**	1	ELBOW	
		1	**6B-5072**	1	BUSHING-REDUCING	

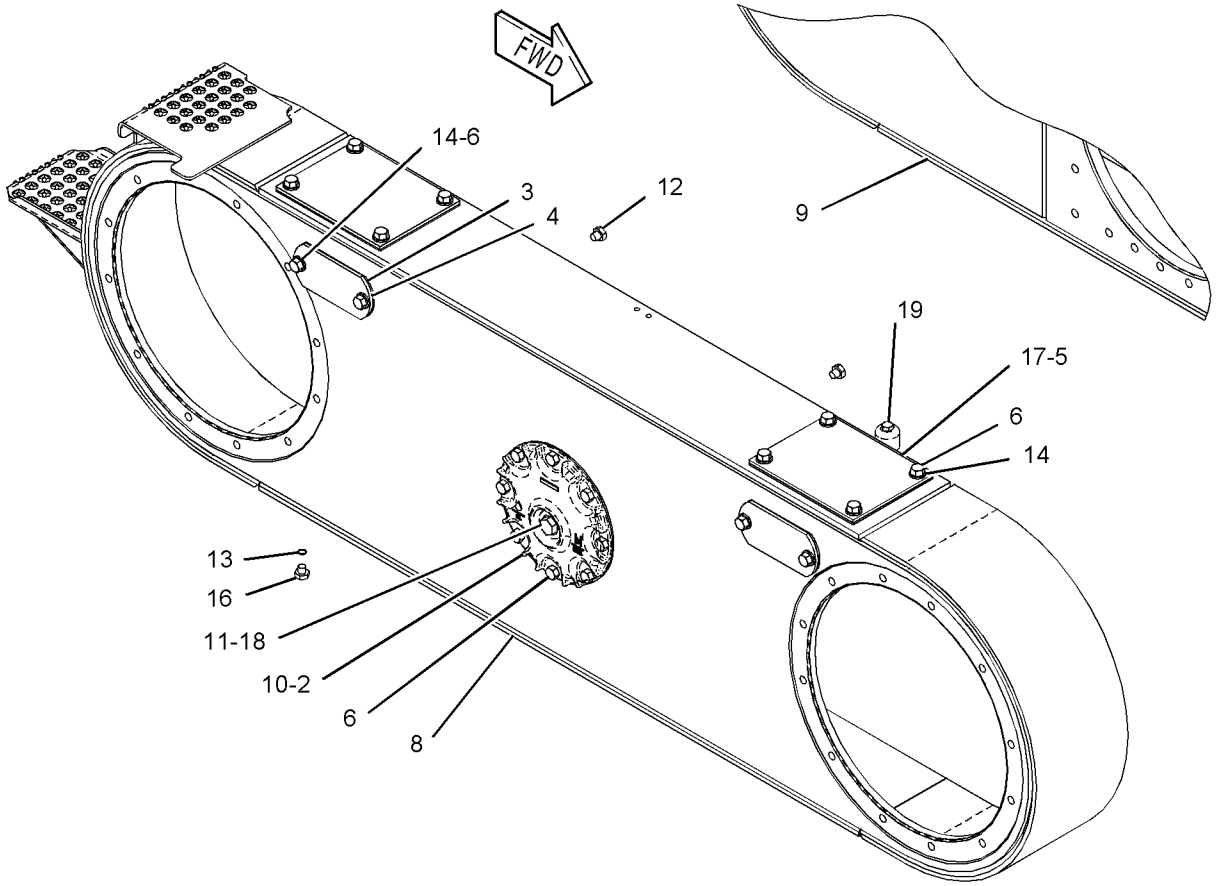

GRAPHIC #1 **<END>** g01084913

POWER TRAIN

275-6546 TRANSMISSION AR

S/N: DPK1-UP

PART OF 274-7941 GENERAL AR

SMCS-3030 **i03346878**

NOTE	REF NO	GRAPHIC REF	PART NUMBER	QTY	PART NAME 1 2 3 4 5 6 (PRODUCT LEVEL)	SEE PAGE
Y	1	1	*6Y-2300*	1	SHAFT GP-INPUT	270
Y	2	1	*235-2412*	1	CLUTCH GP-TRANSMISSION (FORWARD)	241
Y	3	1	*235-2413*	1	CLUTCH GP-TRANSMISSION (REVERSE, 2ND)	243
Y	4	1	*6Y-2305*	1	CLUTCH GP-TRANSMISSION (1ST, 3RD)	236
Y	5	1	*8E-9317*	1	CLUTCH GP-TRANSMISSION (HIGH, LOW)	239
Y	6	1	*277-6433*	1	CASE & PARTS GP-PLANETARY	230
Y	7	1	*9W-5132*	1	BRAKE GP-PARKING	341
Y	8	1	*9W-5134*	1	SCREEN GP-MAGNETIC (TRANSMISSION)	268
Y	9	1	*6Y-8765*	1	PUMP GP-GEAR	267
Y	10	1	*281-3165*	1	CONTROL GP-TRANSMISSION HYD	247

Y-SEPARATE ILLUSTRATION

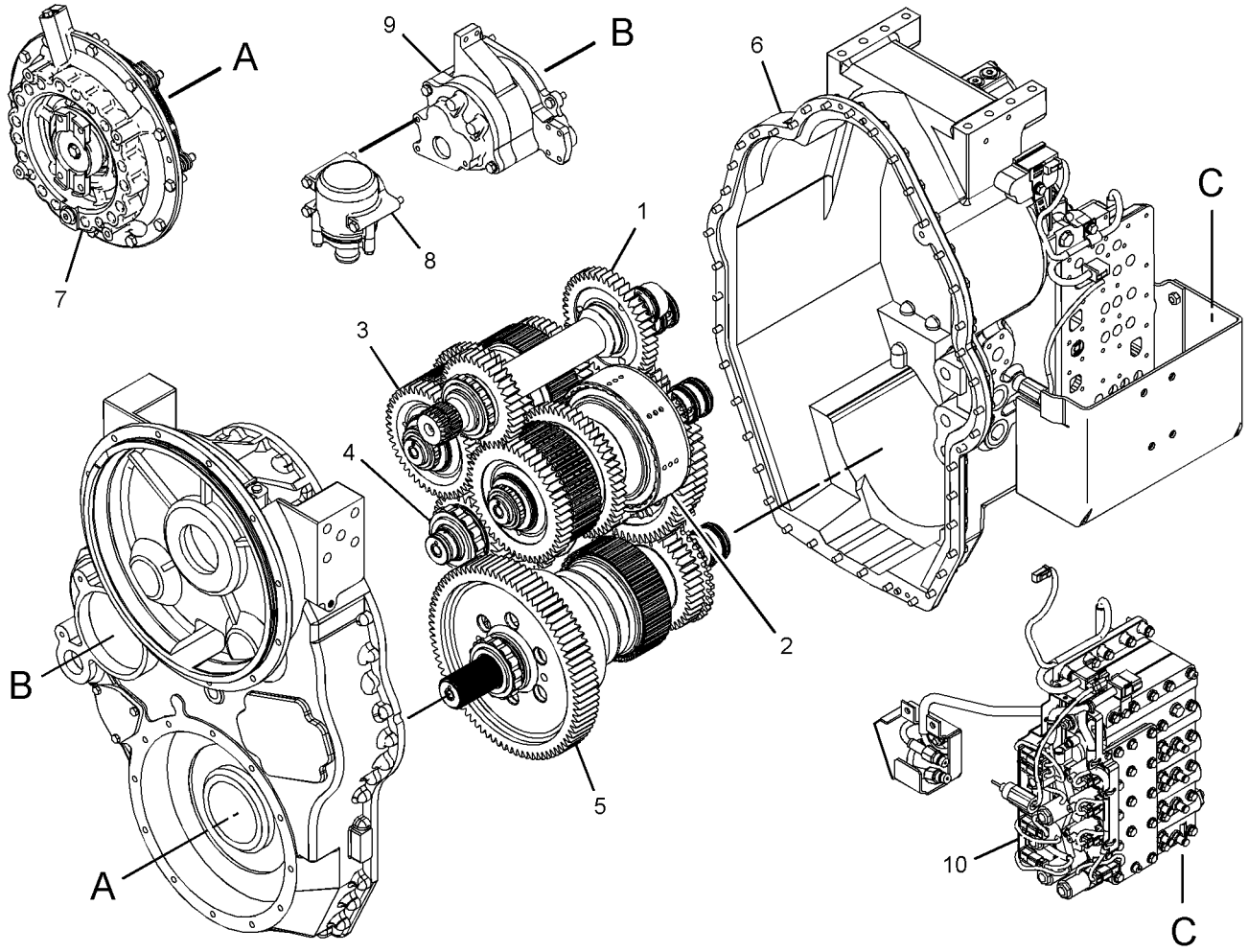

GRAPHIC #1 **<END>** g01775398

8X-5005 UNIVERSAL JOINT GP

S/N: JBP1-UP

PART OF 8W-5394 SHAFT GP-DRIVE

SMCS-3251, 3253 **i00135798**

NOTE	REF NO	GRAPHIC REF	PART NUMBER	QTY	PART NAME 1 2 3 4 5 6 (PRODUCT LEVEL)	SEE PAGE
	1	1	**3D-6689**	1	YOKE-COUPLING	
	2	1	**9P-0356**	2	SPIDER & BEARING AS	
	3	1	**0S-1579**	8	BOLT (1/2-20X2IN)	

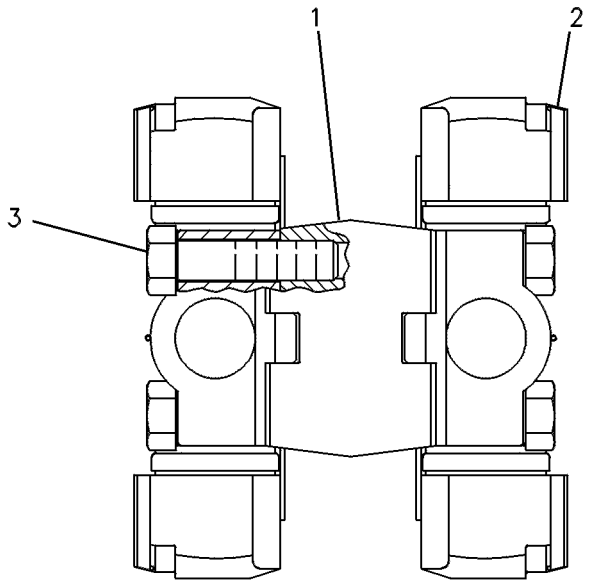

GRAPHIC #1 **<END>** g00108575

174-3705 VALVE & MTG GP-DIFF LOCK

S/N: JBP1-UP
PART OF 316-8363 CONTROL GP-DIFFERENTIAL LOCK
AN ATTACHMENT

SMCS-3272 **i03182460**

NOTE	REF NO	GRAPHIC REF	PART NUMBER	QTY	PART NAME 1 2 3 4 5 6 (PRODUCT LEVEL)	SEE PAGE
	1	1	**6G-5979**	1	KIT-SEAL (DIFFERENTIAL LOCK)	
					(INCLUDES O-RINGS)	
Y	2	1	**154-3064**	1	VALVE GP-SOLENOID (DIFFERENTIAL LOCK)	281
	3	1	**148-2516**	1	MANIFOLD	

Y-SEPARATE ILLUSTRATION

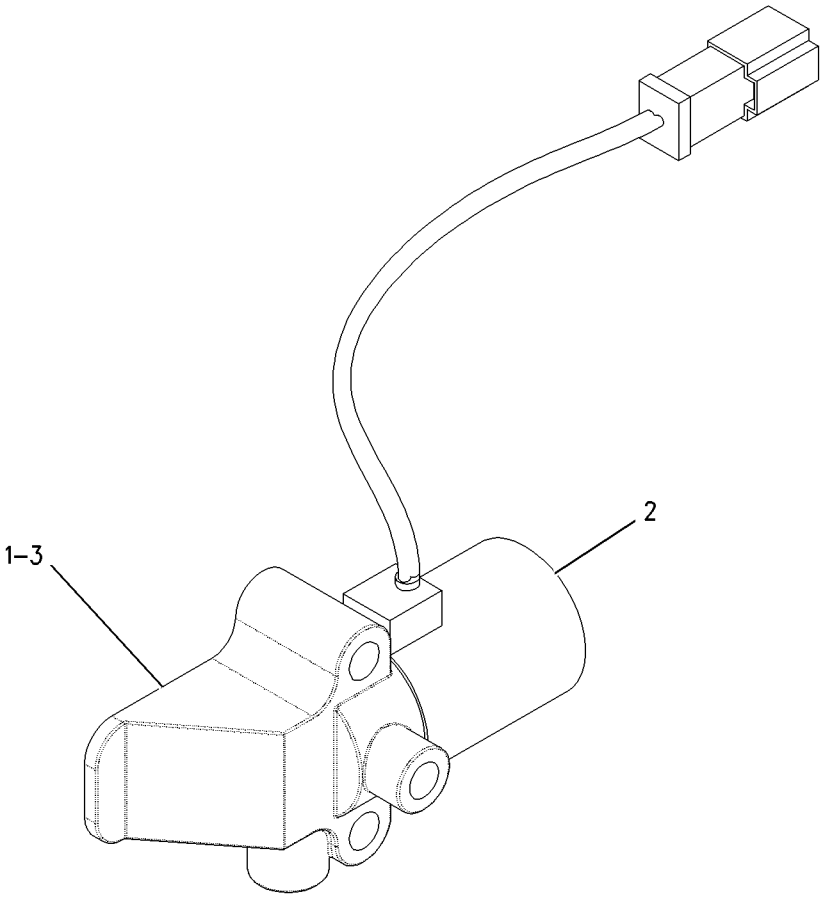

GRAPHIC #1 **<END>** g00806911

184-1130 VALVE GP-SELECTOR & PRESS CONT

S/N: DPK1-UP

PART OF 281-3163 VALVE GP-TRANSMISSION CONTROL

SMCS-3083 **i02832244**

NOTE	REF NO	GRAPHIC REF	PART NUMBER	QTY	PART NAME 1 2 3 4 5 6 (PRODUCT LEVEL)	SEE PAGE
	1	1	**154-6309**	1	BODY	
M	2	1	**6V-5683**	5	BOLT (M6X1X16-MM)	
	4	1	**3D-4245**	1	SEAL-O-RING	
	6	1	**8E-9894**	1	SPOOL	
	7	1	**9U-8068**	1	SLUG	
	8	1	**9U-9282**	1	SPRING	
	9	1	**9U-9316**	1	SPRING	
	10	1	**108-6523**	1	ADJUSTER AS	
		1	**4K-2039**	1	SEAL-O-RING	
		1	**7M-8485**	1	SEAL-O-RING	
		1	**8T-4223**	1	WASHER-HARD (13.5X25.5X3-MM THK)	
		1	**9U-8069**	1	PLUG	
M		1	**095-1207**	1	NUT (M12X1.75-THD)	
		1	**101-9754**	1	SCREW-ADJUSTMENT (M12X1.75X18-MM)	
	11	1	*309-1877*	1	ORIFICE AS	
		1	**5F-9144**	1	SEAL-O-RING	
		1	**9U-8620**	1	ORIFICE	
	12	1	**9U-8067**	1	RETAINER	
	13	1	**8E-9895**	1	PISTON-LOAD	
	14	1	**9W-7412**	1	SPRING	
	15	1	**4J-2506**	1	SEAL-O-RING	
	16	1	**6F-4855**	1	SEAL-O-RING	
B	17	1	**5J-1036**	4	SHIM (0.8-MM THK)	
	18	1	**8E-9896**	1	PISTON-SELECTOR	
	19	1	**179-1298**	3	SPACER	
	20	1	**7T-0570**	1	SPRING	
B	21	1	**4M-1751**	2	SPACER (15.09X0.4-MM THK)	
Y	23	1	**186-1526**	1	VALVE GP-SOLENOID (24-VOLT) (SELECTOR & PRESSURE RANGE)	282
	25	1	*309-2995*	1	PLUG AS	
		1	**4J-7533**	1	SEAL-O-RING	
		1	**9G-7132**	1	PLUG-ORIFICE	
	26	1	*162-0177*	1	PLUG AS	
		1	**3J-1907**	1	SEAL-O-RING	
		1	**9S-8004**	1	PLUG-O-RING	
	28	1	**180-9327**	1	MANIFOLD	
	30	1	**3K-6116**	1	WASHER (0.266X0.47X0.031-IN THK)	
M	31	1	**8T-8442**	1	BOLT-SOCKET HEAD (M6X1X30-MM)	
	32	1	**5P-0537**	6	WASHER-HARD (7.2X14.5X2-MM THK)	
	33	1	**9X-7384**	3	SEAL-O-RING	
	34	1	**175-3893**	1	VALVE GP-SOLENOID (PROPN SOL FOR CL PACK 1)	
	34A	1	**175-3893**	1	VALVE GP-SOLENOID (PROPN SOL FOR CL PACK 2)	
	34B	1	**175-3893**	1	VALVE GP-SOLENOID (PROPN SOL FOR CL PACK 3)	
					(EACH VALVE GP INCLUDES)	
		1	**226-9622**	1	COIL AS (24-VOLT)	
		1	**164-2108**	1	WASHER (13.03X25.4X2.38-MM THK)	
		1	**167-9524**	1	NUT-SELF-LOCKING (1/2-28-THD)	
	35	1	**183-6774**	1	PLATE	
M	36	1	**8C-6965**	1	BOLT-SOCKET HEAD (M6X1X45-MM)	
	37	1	**154-7172**	1	SPOOL	
	38	1	*309-2996*	5	PLUG AS	
					(EACH INCLUDES)	
		1	**6Y-4638**	1	PLUG-HEX SOCKET (1-5/16-12-THD)	
		1	**7M-8485**	1	SEAL-O-RING	
	39	1	**183-6775**	3	SPOOL AS	
					(EACH INCLUDES)	

184-1130 VALVE GP-SELECTOR & PRESS CONT *(contd.)* i02832244

NOTE	REF NO	GRAPHIC REF	PART NUMBER	QTY	PART NAME 1 2 3 4 5 6 (PRODUCT LEVEL)	SEE PAGE
		1	**167-0566**	1	CARTRIDGE	
	40	1	**154-7175**	3	SLUG	
	41	1	**154-7176**	3	SPRING	
	42	1	**154-7177**	3	SPRING	

B-USE AS REQUIRED
M-METRIC PART
Y-SEPARATE ILLUSTRATION

184-1130 **VALVE GP-SELECTOR & PRESS CONT** *(contd.)* **i02832244**

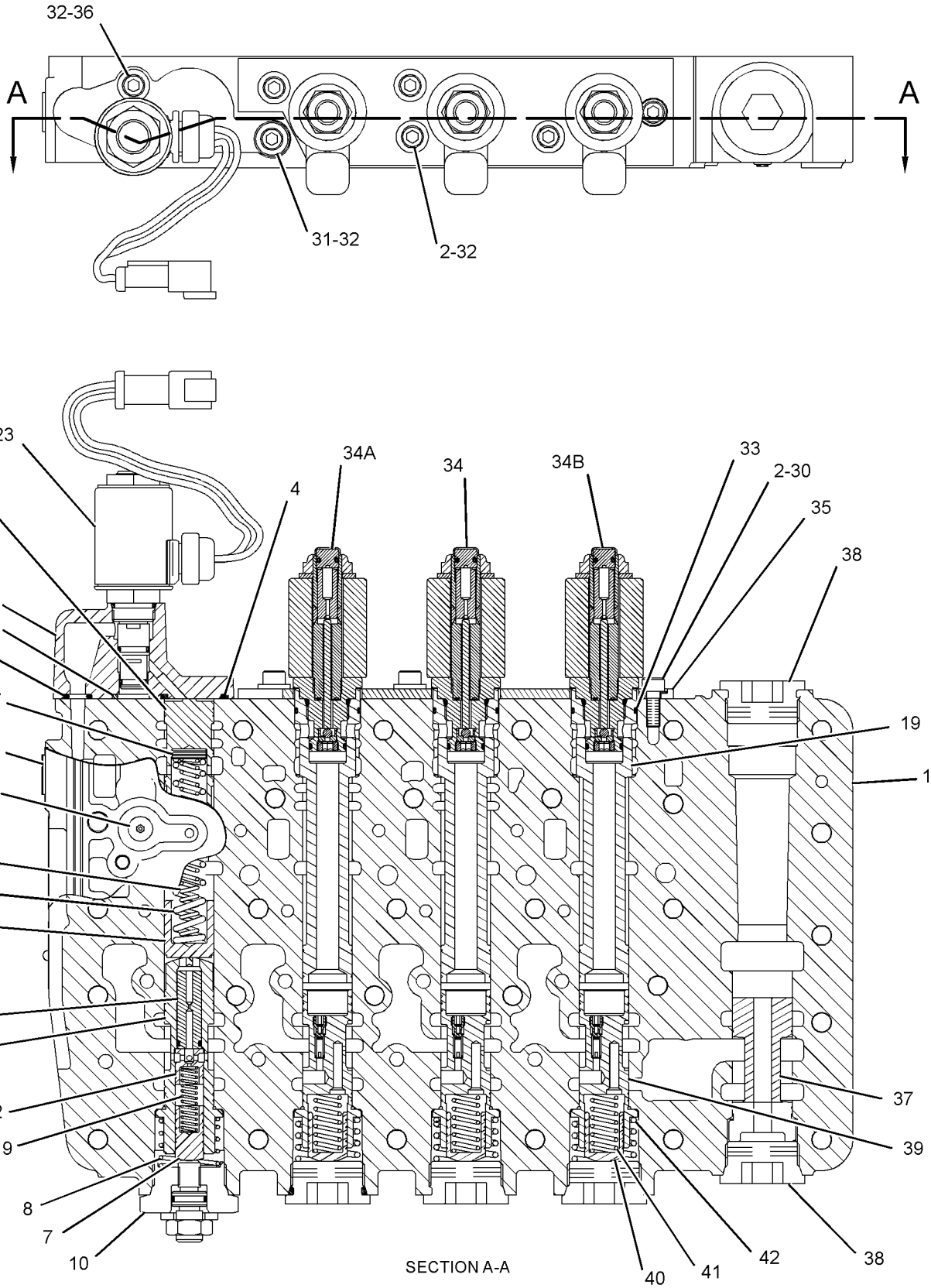

GRAPHIC #1 **<END>** g01415135

POWER TRAIN

281-3160 VALVE GP-SELECTOR & PRESS CONT

S/N: DPK1-UP

PART OF 281-3163 VALVE GP-TRANSMISSION CONTROL

SMCS-3083 **i02840144**

NOTE	REF NO	GRAPHIC REF	PART NUMBER	QTY	PART NAME 1 2 3 4 5 6 (PRODUCT LEVEL)	SEE PAGE
	1	1	**161-7055**	1	BODY	
	2	1	*309-1876*	2	ORIFICE AS	
					(EACH INCLUDES)	
		1	**5F-9144**	1	SEAL-O-RING	
		1	**8E-7714**	1	ORIFICE	
	4	1	**8E-9894**	4	SPOOL	
	5	1	**9U-8068**	4	SLUG	
	6	1	**9U-9316**	4	SPRING	
	7	1	**9U-9282**	4	SPRING	
	9	1	**9U-8067**	4	RETAINER	
	10	1	**8E-9895**	4	PISTON-LOAD	
	11	1	**4J-2506**	1	SEAL-O-RING	
	12	1	**6F-4855**	4	SEAL-O-RING	
	13	1	**8E-9896**	4	PISTON-SELECTOR	
B	14	1	**4M-1751**	4	SPACER (15.09X0.4-MM THK)	
B	15	1	**5J-1036**	15	SHIM (0.8-MM THK)	
	16	1	**3D-4245**	4	SEAL-O-RING	
	17	1	**9W-7410**	1	SPRING	
	18	1	**7T-0570**	3	SPRING	
	19	1	**8E-1143**	1	SLUG	
	20	1	**9U-8668**	1	SPOOL AS	
		1	**3D-8317**	1	RING-RETAINING	
		1	**4B-9880**	1	BALL	
		1	**4M-2381**	1	SPRING	
		1	**8E-9893**	1	SPOOL-RELIEF	
		1	**9U-8669**	1	RETAINER	
	21	1	**9U-9595**	1	SPRING	
	22	1	**9N-4500**	1	SPRING	
	23	1	**9N-4498**	1	SPRING	
	24	1	**8E-9897**	1	SPOOL	
	25	1	**9W-0898**	1	SLUG	
	27	1	**8E-6570**	1	MANIFOLD	
Y	28	1	**186-1526**	4	VALVE GP-SOLENOID (24-VOLT) (SPEED, RANGE, TRANSMISSION)	282
M	31	1	**8C-6965**	4	BOLT-SOCKET HEAD (M6X1X45-MM)	
	32	1	**5P-0537**	5	WASHER-HARD (7.2X14.5X2-MM THK)	
M	33	1	**8T-8442**	1	BOLT-SOCKET HEAD (M6X1X30-MM)	
	34	1	*309-1877*	1	ORIFICE AS	
		1	**5F-9144**	1	SEAL-O-RING	
		1	**9U-8620**	1	ORIFICE	
	35	1	*309-2995*	4	PLUG AS	
					(EACH INCLUDES)	
		1	**4J-7533**	1	SEAL-O-RING	
		1	**9G-7132**	1	PLUG-ORIFICE	
	37	1	*183-7263*	1	PLUG AS	
		1	**3J-7354**	1	SEAL-O-RING	
		1	**9S-8002**	1	PLUG-O-RING	
	38	1	*162-0177*	1	PLUG AS	
		1	**3J-1907**	1	SEAL-O-RING	
		1	**9S-8004**	1	PLUG-O-RING	
	40	1	**108-6523**	5	ADJUSTER AS	
					(EACH INCLUDES)	
		1	**4K-2039**	1	SEAL-O-RING	
		1	**7M-8485**	1	SEAL-O-RING	
		1	**8T-4223**	1	WASHER-HARD (13.5X25.5X3-MM THK)	
		1	**9U-8069**	1	PLUG	

281-3160 VALVE GP-SELECTOR & PRESS CONT *(contd.)* i02840144

NOTE	REF NO	GRAPHIC REF	PART NUMBER	QTY	PART NAME 1 2 3 4 5 6 (PRODUCT LEVEL)	SEE PAGE
M		1	**095-1207**	1	NUT (M12X1.75-THD)	
		1	**101-9754**	1	SCREW-ADJUSTMENT (M12X1.75X18-MM)	
	41	1	*309-2996*	1	PLUG AS	
		1	**6Y-4638**	1	PLUG-HEX SOCKET (1-5/16-12-THD)	
		1	**7M-8485**	1	SEAL-O-RING	
	42	1	*309-1878*	1	ORIFICE AS	
		1	**5F-9144**	1	SEAL-O-RING	
		1	**8E-7713**	1	ORIFICE	
	43	1	**9W-7412**	3	SPRING	
	44	1	**7G-5453**	1	SPRING	
	45	1	**108-3129**	1	STOP	

B-USE AS REQUIRED
M-METRIC PART
Y-SEPARATE ILLUSTRATION

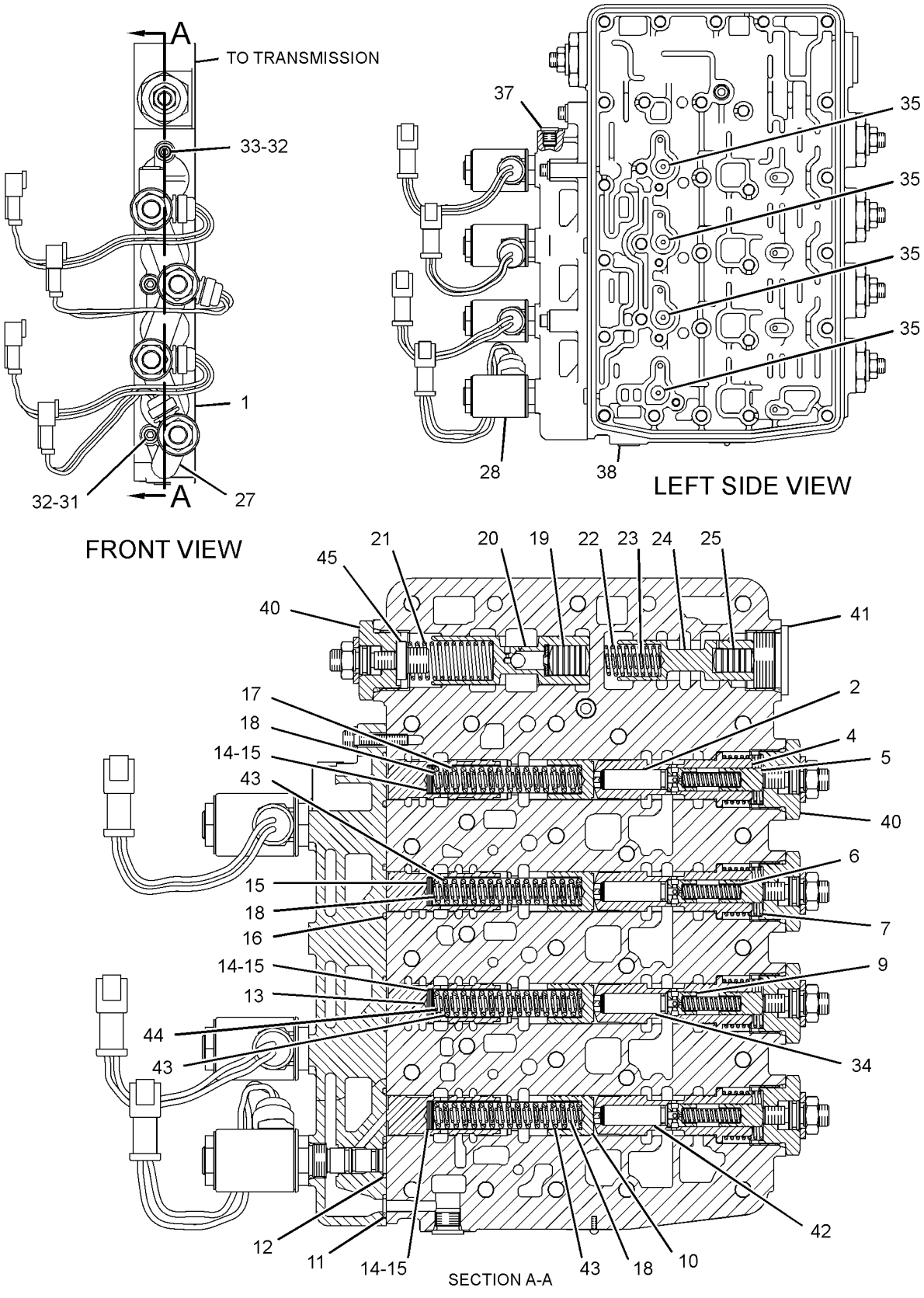

GRAPHIC #1 **<END>** g01419350

154-3064 VALVE GP-SOLENOID

S/N: JBP1-UP
PART OF 174-3705 VALVE & MTG GP-DIFF LOCK
AN ATTACHMENT

SMCS-5479 **i02204767**

NOTE	REF NO	GRAPHIC REF	PART NUMBER	QTY	PART NAME 1 2 3 4 5 6 (PRODUCT LEVEL)	SEE PAGE
	1	1	**8C-9987**	1	WASHER (8.3X28X2.5-MM THK)	
	2	1	**111-0343**	1	LOCKNUT (5/16-18-THD)	
	3	1	**142-0350**	1	CARTRIDGE AS	
		1	**8C-9987**	1	WASHER (8.3X28X2.5-MM THK)	
		1	**111-0343**	1	LOCKNUT (5/16-18-THD)	
	4	1	**189-0189**	1	COIL AS	
		1	**1S-9593**	2	STRAP-CABLE	
		1	**102-8802**	1	KIT-RECEPTACLE (2-PIN)	
					(INCLUDES RECEPTACLE AS & WEDGE)	
		1	**3E-3365**	1	WEDGE-RECEPTACLE LOCK (2-PIN)	
		1	**186-3735**	2	PIN-CONNECTOR (16-GA TO 18-GA)	
					AVAILABLE REPAIR KIT(S):	
			6G-5979	1	KIT-SEAL (DIFFERENTIAL LOCK VALVE)	

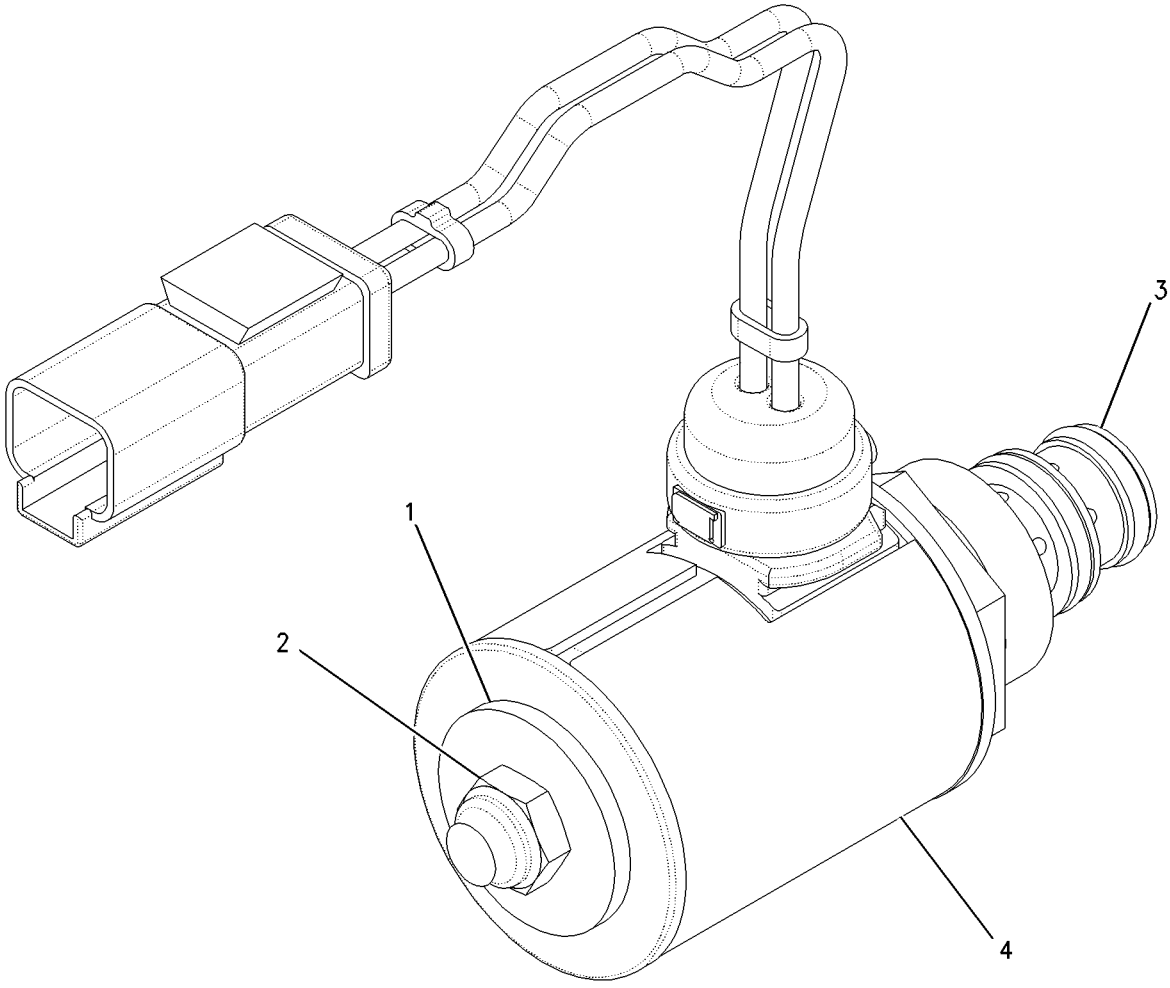

GRAPHIC #1 **<END>** g00877963

186-1526 VALVE GP-SOLENOID

S/N: DPK1-UP

PART OF 184-1130, 281-3160 VALVE GP-SELECTOR & PRESS CONT

SMCS-5479 **i03195180**

NOTE	REF NO	GRAPHIC REF	PART NUMBER	QTY	PART NAME 1 2 3 4 5 6 (PRODUCT LEVEL)	SEE PAGE
	1	1	**104-3947**	1	LOCKNUT (5/8-11-THD)	
J	2	1	**234-6666**	1	CARTRIDGE AS-VALVE	
	3	1	**301-3118**	1	COIL AS	
	3A	1	**1S-9593**	2	STRAP-CABLE	
	3B	1	**102-8802**	1	KIT-RECEPTACLE (2-PIN)	
					(INCLUDES RECEPTACLE AS & WEDGE)	
	3C	1	**186-3735**	2	PIN-CONNECTOR (16-GA TO 18-GA)	
					AVAILABLE REPAIR KIT(S):	
J			**7T-4515**	1	KIT-SEAL (TRANSMISSION SOLENOID)	
					(INCLUDES SEAL-O-RINGS)	

J-KIT MARKED J SERVICES PART MARKED J

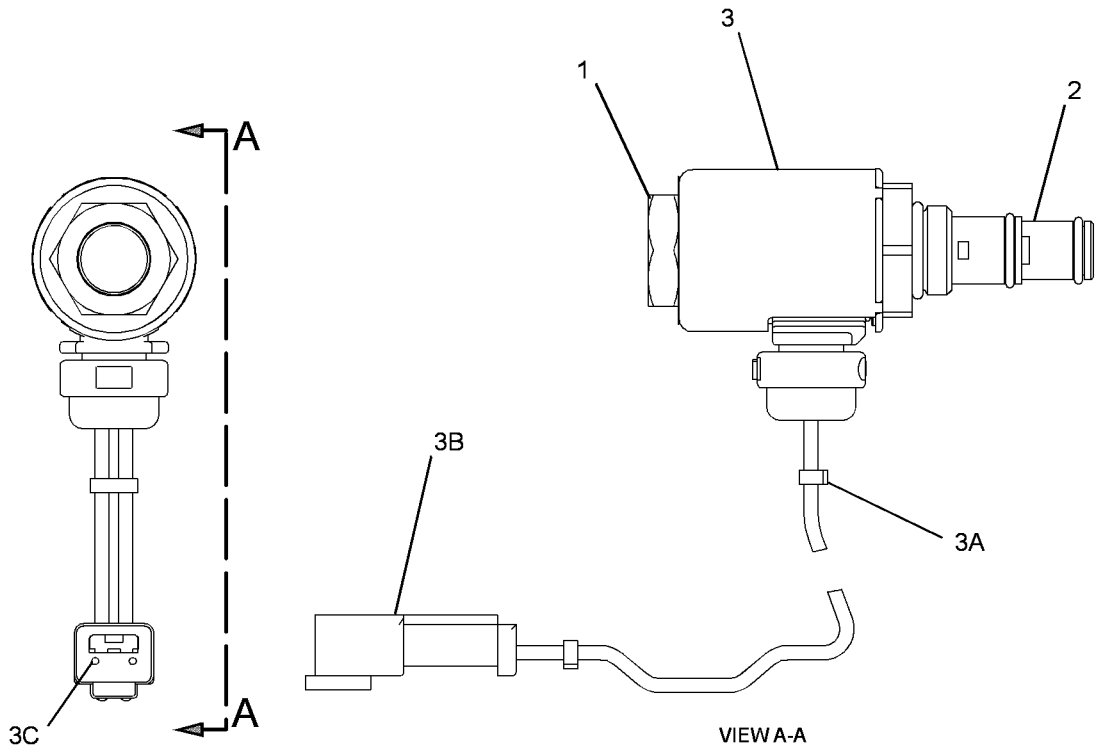

GRAPHIC #1 **<END>** g01628276

281-3163 VALVE GP-TRANSMISSION CONTROL

S/N: DPK1-UP

PART OF 281-3165 CONTROL GP-TRANSMISSION HYD

SMCS-3073 **i02840282**

NOTE	REF NO	GRAPHIC REF	PART NUMBER	QTY	PART NAME 1 2 3 4 5 6 (PRODUCT LEVEL)	SEE PAGE
Y	1	1	**184-1130**	1	VALVE GP-SELECTOR & PRESS CONT (DIRECTION, RANGE, TRANSMISSION)	275
	2	1	**154-6306**	1	PLATE	
Y	3	1	**281-3160**	1	VALVE GP-SELECTOR & PRESS CONT (SPEED, RANGE, TRANSMISSION)	278
	4	1	**110-5161**	1	MANIFOLD	
	5	1	**154-6307**	1	PLATE	
	6	1	**8E-9474**	1	COVER	
	7	1	*164-5567*	8	COUPLER AS-QUICK DISCONNECT	
					(EACH INCLUDES)	
		1	**3J-1907**	1	SEAL-O-RING	
		1	**6V-3965**	1	FITTING (QUICK DISCONNECT)	
	8	1	*148-8407*	2	PLUG AS	
					(EACH INCLUDES)	
		1	**3J-1907**	1	SEAL-O-RING	
		1	**9S-4191**	1	PLUG-O-RING	
	9	1	**6V-0852**	8	CAP-DUST	
	11	1	**1T-0738**	2	WASHER (8.4X19X1.83-MM THK)	
	12	1	**9P-9150**	4	WASHER (8.25X18X0.84-MM THK)	
M	13	1	**3E-8006**	2	BOLT (M8X1.25X130-MM)	
	15	1	**9L-9068**	6	DOWEL	
	16	1	**8F-6230**	1	SEAL-O-RING	
	17	1	**4D-6695**	4	SEAL-O-RING	
	18	1	**142-1767**	1	POPPET	
	19	1	**4D-1322**	1	RING-RETAINING	
	20	1	**6Y-2584**	1	RETAINER	
	21	1	**3J-6956**	1	SPRING	
	22	1	**6I-9395**	1	SCREEN (TRANSMISSION CONTROL VALVE)	
M	23	1	**6V-5217**	1	BOLT (M8X1.25X20-MM)	

M-METRIC PART
Y-SEPARATE ILLUSTRATION

281-3163 VALVE GP-TRANSMISSION CONTROL *(contd.)* i02840282

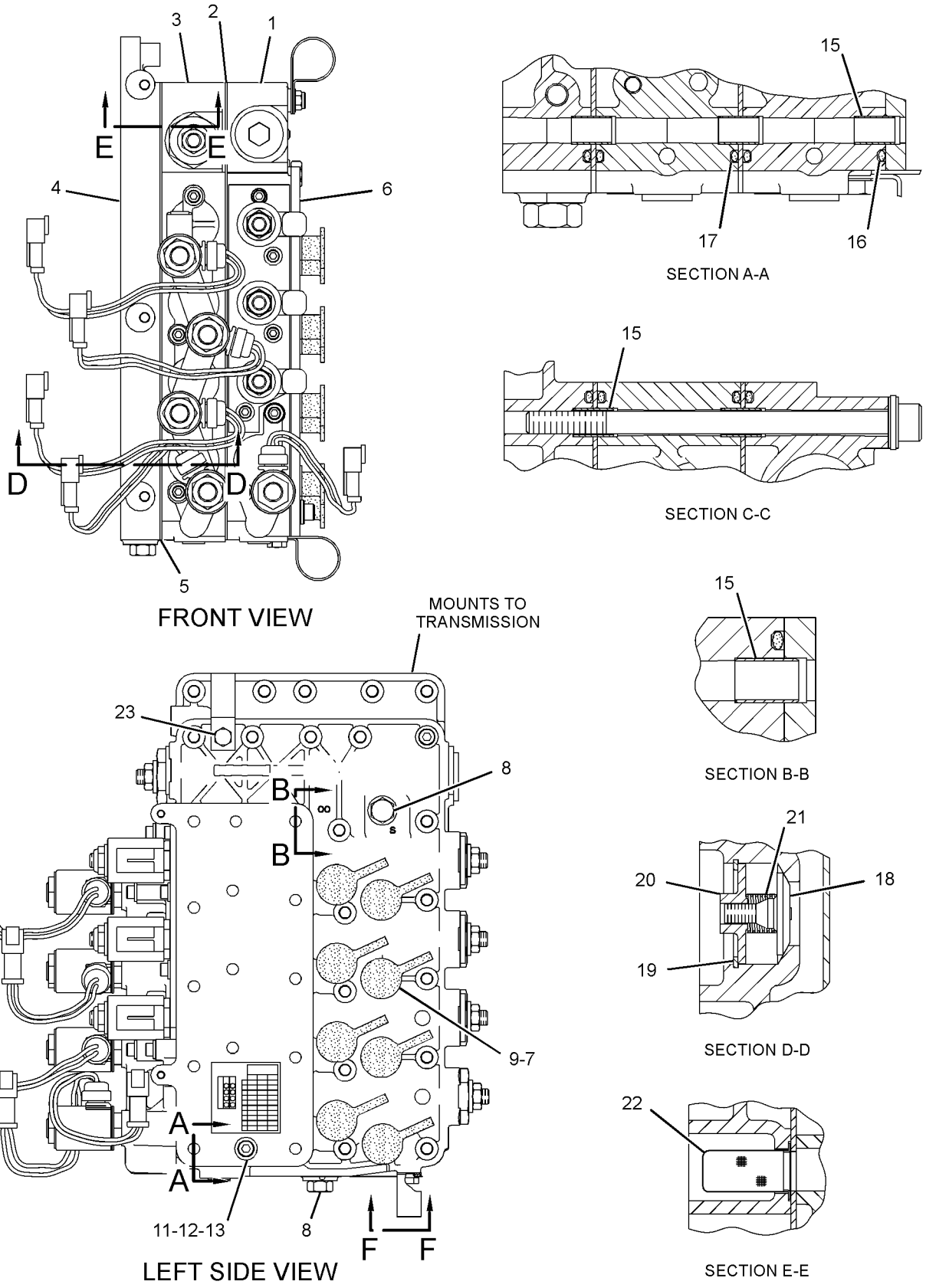

GRAPHIC #1 **<END>** g01419381

142-6448 WHEEL & TIRE AR

S/N: JBP1-UP
AN ATTACHMENT

SMCS-4200 **i00758986**

NOTE	PART NUMBER	QTY	PART NAME 1 2 3 4 5 6 (PRODUCT LEVEL)	SEE PAGE
Y	*142-6300*	6	WHEEL & TIRE GP	289
Y-SEPARATE ILLUSTRATION				

<END>

142-6449 WHEEL & TIRE AR

S/N: JBP1-UP
AN ATTACHMENT

SMCS-4200 **i00759108**

NOTE	PART NUMBER	QTY	PART NAME 1 2 3 4 5 6 (PRODUCT LEVEL)	SEE PAGE
Y	*142-6301*	6	WHEEL & TIRE GP	290
Y-SEPARATE ILLUSTRATION				

<END>

142-6454 WHEEL & TIRE AR

S/N: JBP1-UP
AN ATTACHMENT

SMCS-4200 **i00758826**

NOTE	PART NUMBER	QTY	PART NAME 1 2 3 4 5 6 (PRODUCT LEVEL)	SEE PAGE
Y	*142-6306*	6	WHEEL & TIRE GP	290
Y-SEPARATE ILLUSTRATION				

<END>

142-6455 WHEEL & TIRE AR

S/N: JBP1-UP
AN ATTACHMENT

SMCS-4200 **i00758972**

NOTE	PART NUMBER	QTY	PART NAME 1 2 3 4 5 6 (PRODUCT LEVEL)	SEE PAGE
Y	*142-6307*	6	WHEEL & TIRE GP	291
Y-SEPARATE ILLUSTRATION				

<END>

142-6457 WHEEL & TIRE AR

S/N: JBP1-UP
AN ATTACHMENT

SMCS-4200 **i00758987**

NOTE	PART NUMBER	QTY	PART NAME 1 2 3 4 5 6 (PRODUCT LEVEL)	SEE PAGE
Y	*142-6309*	6	WHEEL & TIRE GP	291
Y-SEPARATE ILLUSTRATION				

<END>

142-6458 WHEEL & TIRE AR

S/N: JBP1-UP
AN ATTACHMENT

SMCS-4200 **i00759110**

NOTE	PART NUMBER	QTY	PART NAME 1 2 3 4 5 6 (PRODUCT LEVEL)	SEE PAGE
Y	*142-6310*	6	WHEEL & TIRE GP	292

Y-SEPARATE ILLUSTRATION

<END>

142-6463 WHEEL & TIRE AR

S/N: JBP1-UP
AN ATTACHMENT

SMCS-4200 **i00758971**

NOTE	PART NUMBER	QTY	PART NAME 1 2 3 4 5 6 (PRODUCT LEVEL)	SEE PAGE
Y	*142-6315*	6	WHEEL & TIRE GP	292

Y-SEPARATE ILLUSTRATION

<END>

142-6464 WHEEL & TIRE AR

S/N: JBP1-UP
AN ATTACHMENT

SMCS-4200 **i00758982**

NOTE	PART NUMBER	QTY	PART NAME 1 2 3 4 5 6 (PRODUCT LEVEL)	SEE PAGE
Y	*142-6316*	6	WHEEL & TIRE GP	293

Y-SEPARATE ILLUSTRATION

<END>

151-0364 WHEEL & TIRE AR

S/N: JBP1-UP
AN ATTACHMENT

SMCS-4200 **i00759127**

NOTE	PART NUMBER	QTY	PART NAME 1 2 3 4 5 6 (PRODUCT LEVEL)	SEE PAGE
Y	*142-6353*	6	WHEEL & TIRE GP	293

Y-SEPARATE ILLUSTRATION

<END>

151-0366 WHEEL & TIRE AR

S/N: JBP1-UP
AN ATTACHMENT

SMCS-4200 **i00759349**

NOTE	PART NUMBER	QTY	PART NAME 1 2 3 4 5 6 (PRODUCT LEVEL)	SEE PAGE
Y	*142-6363*	6	WHEEL & TIRE GP	295

Y-SEPARATE ILLUSTRATION

<END>

151-0368 WHEEL & TIRE AR

S/N: JBP1-UP
AN ATTACHMENT

SMCS-4200 **i00759354**

NOTE	PART NUMBER	QTY	PART NAME 1 2 3 4 5 6 (PRODUCT LEVEL)	SEE PAGE
Y	*142-6371*	6	WHEEL & TIRE GP	296

Y-SEPARATE ILLUSTRATION

<END>

151-0371 WHEEL & TIRE AR

S/N: JBP1-UP
AN ATTACHMENT

SMCS-4200 **i00759269**

NOTE	PART NUMBER	QTY	PART NAME 1 2 3 4 5 6 (PRODUCT LEVEL)	SEE PAGE
Y	*142-6354*	6	WHEEL & TIRE GP	294

Y-SEPARATE ILLUSTRATION

<END>

151-0380 WHEEL & TIRE AR

S/N: JBP1-UP
AN ATTACHMENT

SMCS-4200 **i00759275**

NOTE	PART NUMBER	QTY	PART NAME 1 2 3 4 5 6 (PRODUCT LEVEL)	SEE PAGE
Y	*142-6364*	6	WHEEL & TIRE GP	295

Y-SEPARATE ILLUSTRATION

<END>

151-0382 WHEEL & TIRE AR

S/N: JBP1-UP
AN ATTACHMENT

SMCS-4200 **i00760334**

NOTE	PART NUMBER	QTY	PART NAME 1 2 3 4 5 6 (PRODUCT LEVEL)	SEE PAGE
Y	*142-6374*	6	WHEEL & TIRE GP	296

Y-SEPARATE ILLUSTRATION

<END>

151-0388 WHEEL & TIRE AR

S/N: JBP1-UP
AN ATTACHMENT

SMCS-4200 **i00760579**

NOTE	PART NUMBER	QTY	PART NAME 1 2 3 4 5 6 (PRODUCT LEVEL)	SEE PAGE
Y	*142-6357*	6	WHEEL & TIRE GP	294

Y-SEPARATE ILLUSTRATION

<END>

151-0389 WHEEL & TIRE AR

S/N: JBP1-UP

AN ATTACHMENT

SMCS-4200 **i00760599**

NOTE	PART NUMBER	QTY	PART NAME 1 2 3 4 5 6 (PRODUCT LEVEL)	SEE PAGE
Y	*142-6375*	6	WHEEL & TIRE GP	297

Y-SEPARATE ILLUSTRATION

<END>

174-2304 WHEEL & TIRE AR

S/N: JBP1-UP

AN ATTACHMENT

SMCS-4200 **i01680354**

NOTE	PART NUMBER	QTY	PART NAME 1 2 3 4 5 6 (PRODUCT LEVEL)	SEE PAGE
Y	*173-7813*	6	WHEEL & TIRE GP	297

Y-SEPARATE ILLUSTRATION

<END>

252-0679 WHEEL & TIRE AR

S/N: JBP1-UP

AN ATTACHMENT

SMCS-4200 **i02783324**

NOTE	PART NUMBER	QTY	PART NAME 1 2 3 4 5 6 (PRODUCT LEVEL)	SEE PAGE
Y	*252-0678*	6	WHEEL & TIRE GP	297

Y-SEPARATE ILLUSTRATION

<END>

252-0731 WHEEL & TIRE AR

S/N: JBP1-UP

AN ATTACHMENT

SMCS-4200 **i02784689**

NOTE	PART NUMBER	QTY	PART NAME 1 2 3 4 5 6 (PRODUCT LEVEL)	SEE PAGE
Y	*252-0730*	6	WHEEL & TIRE GP	298

Y-SEPARATE ILLUSTRATION

<END>

252-0753 WHEEL & TIRE AR

S/N: JBP1-UP

AN ATTACHMENT

SMCS-4200 **i02784880**

NOTE	PART NUMBER	QTY	PART NAME 1 2 3 4 5 6 (PRODUCT LEVEL)	SEE PAGE
Y	*252-0752*	6	WHEEL & TIRE GP	298

Y-SEPARATE ILLUSTRATION

<END>

252-7948 WHEEL & TIRE AR

S/N: JBP1-UP
AN ATTACHMENT

SMCS-4200 **i02811275**

NOTE	PART NUMBER	QTY	PART NAME 1 2 3 4 5 6 (PRODUCT LEVEL)	SEE PAGE
Y	*252-7947*	6	WHEEL & TIRE GP	298
Y-SEPARATE ILLUSTRATION				

<END>

254-7963 WHEEL & TIRE AR

S/N: JBP1-UP
AN ATTACHMENT

SMCS-4200 **i02793987**

NOTE	PART NUMBER	QTY	PART NAME 1 2 3 4 5 6 (PRODUCT LEVEL)	SEE PAGE
Y	*254-7947*	6	WHEEL & TIRE GP	298
Y-SEPARATE ILLUSTRATION				

<END>

254-7964 WHEEL & TIRE AR

S/N: JBP1-UP
AN ATTACHMENT

SMCS-4200 **i02787646**

NOTE	PART NUMBER	QTY	PART NAME 1 2 3 4 5 6 (PRODUCT LEVEL)	SEE PAGE
Y	*254-7948*	6	WHEEL & TIRE GP	299
Y-SEPARATE ILLUSTRATION				

<END>

142-6300 WHEEL & TIRE GP

S/N: JBP1-UP
(14X24)
PART OF 142-6448 WHEEL & TIRE AR
AN ATTACHMENT

SMCS-4200 **i02205249**

NOTE	PART NUMBER	QTY	PART NAME 1 2 3 4 5 6 (PRODUCT LEVEL)	SEE PAGE
	123-3420	1	RIM AS	
	142-6171	1	TIRE (14-24)	
	2D-2511	1	VALVE GP-TIRE	
	9K-7951	1	CAP-VALVE (STEM)	
	6F-3930	1	CORE-VALVE	
	7D-5252	1	SPUD AS	
	2D-2508	1	GROMMET	
	2D-2509	1	LOCKNUT (11/16-16-THD)	
	2D-2507	1	SPUD	

<END>

142-6301 WHEEL & TIRE GP

S/N: JBP1-UP
PART OF 142-6449 WHEEL & TIRE AR
AN ATTACHMENT

SMCS-4200 **i02205296**

NOTE	PART NUMBER	QTY	PART NAME 1 2 3 4 5 6 (PRODUCT LEVEL)	SEE PAGE
Y	*142-6226*	1	WHEEL GP	300
	2D-2565	1	SEAL-O-RING	
	142-6171	1	TIRE (14-24)	
	110-4213	1	VALVE GP-TIRE	
	7D-5252	1	SPUD AS	
	2D-2508	1	GROMMET	
	2D-2509	1	LOCKNUT (11/16-16-THD)	
	110-4214	1	STEM AS	
	9K-7951	1	CAP-VALVE (STEM)	
	6F-3930	1	CORE-VALVE	

Y-SEPARATE ILLUSTRATION

<END>

142-6306 WHEEL & TIRE GP

S/N: JBP1-UP
(14X24)
PART OF 142-6454 WHEEL & TIRE AR
AN ATTACHMENT

SMCS-4200 **i02205305**

NOTE	PART NUMBER	QTY	PART NAME 1 2 3 4 5 6 (PRODUCT LEVEL)	SEE PAGE
	123-3420	1	RIM AS	
	142-6173	1	TIRE (14-24)	
	2D-2511	1	VALVE GP-TIRE	
	9K-7951	1	CAP-VALVE (STEM)	
	6F-3930	1	CORE-VALVE	
	7D-5252	1	SPUD AS	
	2D-2508	1	GROMMET	
	2D-2509	1	LOCKNUT (11/16-16-THD)	
	2D-2507	1	SPUD	

<END>

142-6307 WHEEL & TIRE GP

S/N: JBP1-UP
PART OF 142-6455 WHEEL & TIRE AR
AN ATTACHMENT

SMCS-4200 **i02205306**

NOTE	PART NUMBER	QTY	PART NAME 1 2 3 4 5 6 (PRODUCT LEVEL)	SEE PAGE
Y	*142-6226*	1	WHEEL GP	300
	2D-2565	1	SEAL-O-RING	
	142-6173	1	TIRE (14-24)	
	110-4213	1	VALVE GP-TIRE	
	7D-5252	1	SPUD AS	
	2D-2508	1	GROMMET	
	2D-2509	1	LOCKNUT (11/16-16-THD)	
	110-4214	1	STEM AS	
	6F-3930	1	CORE-VALVE	
	9K-7951	1	CAP-VALVE (STEM)	

Y-SEPARATE ILLUSTRATION

<END>

142-6309 WHEEL & TIRE GP

S/N: JBP1-UP
(14X24)
PART OF 142-6457 WHEEL & TIRE AR
AN ATTACHMENT

SMCS-4200 **i02205309**

NOTE	PART NUMBER	QTY	PART NAME 1 2 3 4 5 6 (PRODUCT LEVEL)	SEE PAGE
	123-3420	1	RIM AS	
	142-6174	1	TIRE (14-24)	
	2D-2511	1	VALVE GP-TIRE	
	9K-7951	1	CAP-VALVE (STEM)	
	6F-3930	1	CORE-VALVE	
	7D-5252	1	SPUD AS	
	2D-2508	1	GROMMET	
	2D-2509	1	LOCKNUT (11/16-16-THD)	
	2D-2507	1	SPUD	

<END>

142-6310 WHEEL & TIRE GP

S/N: JBP1-UP
PART OF 142-6458 WHEEL & TIRE AR
AN ATTACHMENT

SMCS-4200 **i02205321**

NOTE	PART NUMBER	QTY	PART NAME 1 2 3 4 5 6 (PRODUCT LEVEL)	SEE PAGE
Y	*142-6226*	1	WHEEL GP	300
	142-6174	1	TIRE (14-24)	
	2D-2565	1	SEAL-O-RING	
	110-4213	1	VALVE GP-TIRE	
	7D-5252	1	SPUD AS	
	2D-2508	1	GROMMET	
	2D-2509	1	LOCKNUT (11/16-16-THD)	
	110-4214	1	STEM AS	
	9K-7951	1	CAP-VALVE (STEM)	
	6F-3930	1	CORE-VALVE	

Y-SEPARATE ILLUSTRATION

<END>

142-6315 WHEEL & TIRE GP

S/N: JBP1-UP
(14X24)
PART OF 142-6463 WHEEL & TIRE AR
AN ATTACHMENT

SMCS-4200 **i02205330**

NOTE	PART NUMBER	QTY	PART NAME 1 2 3 4 5 6 (PRODUCT LEVEL)	SEE PAGE
	123-3420	1	RIM AS	
	112-9813	1	TIRE (14-R24)	
	2D-2511	1	VALVE GP-TIRE	
	9K-7951	1	CAP-VALVE (STEM)	
	6F-3930	1	CORE-VALVE	
	7D-5252	1	SPUD AS	
	2D-2508	1	GROMMET	
	2D-2509	1	LOCKNUT (11/16-16-THD)	
	2D-2507	1	SPUD	

<END>

142-6316 WHEEL & TIRE GP

S/N: JBP1-UP
PART OF 142-6464 WHEEL & TIRE AR
AN ATTACHMENT

SMCS-4200 **i02205331**

NOTE	PART NUMBER	QTY	PART NAME 1 2 3 4 5 6 (PRODUCT LEVEL)	SEE PAGE
Y	*142-6226*	1	WHEEL GP	300
	2D-2565	1	SEAL-O-RING	
	112-9813	1	TIRE (14-R24)	
	110-4213	1	VALVE GP-TIRE	
	7D-5252	1	SPUD AS	
	2D-2508	1	GROMMET	
	2D-2509	1	LOCKNUT (11/16-16-THD)	
	110-4214	1	STEM AS	
	6F-3930	1	CORE-VALVE	
	9K-7951	1	CAP-VALVE (STEM)	

Y-SEPARATE ILLUSTRATION

<END>

142-6353 WHEEL & TIRE GP

S/N: JBP1-UP
(17.5X25)
PART OF 151-0364 WHEEL & TIRE AR
AN ATTACHMENT

SMCS-4200 **i02468962**

NOTE	PART NUMBER	QTY	PART NAME 1 2 3 4 5 6 (PRODUCT LEVEL)	SEE PAGE
	8X-1160	1	RIM AS (13X25)	
	128-5450	1	TIRE (17.5-25)	
	2G-6595	1	VALVE GP-TIRE (TIRE INFLATION)	
	9K-7951	1	CAP-VALVE (STEM)	
	6F-3930	1	CORE-VALVE	
	7D-5252	1	SPUD AS	
	2D-2507	1	SPUD	
	2D-2508	1	GROMMET	
	2D-2509	1	LOCKNUT (11/16-16-THD)	

<END>

142-6354 WHEEL & TIRE GP

S/N: JBP1-UP
(17.5X25)
PART OF 151-0371 WHEEL & TIRE AR
AN ATTACHMENT

SMCS-4200 **i02205436**

NOTE	PART NUMBER	QTY	PART NAME 1 2 3 4 5 6 (PRODUCT LEVEL)	SEE PAGE
	8X-1160	1	RIM AS (13X25)	
	142-6183	1	TIRE (17.5-25)	
	2G-6595	1	VALVE GP-TIRE	
	9K-7951	1	CAP-VALVE (STEM)	
	6F-3930	1	CORE-VALVE	
	7D-5252	1	SPUD AS	
	2D-2508	1	GROMMET	
	2D-2509	1	LOCKNUT (11/16-16-THD)	
	2D-2507	1	SPUD	

<END>

142-6357 WHEEL & TIRE GP

S/N: JBP1-UP
PART OF 151-0388 WHEEL & TIRE AR
AN ATTACHMENT

SMCS-4200 **i02525538**

NOTE	PART NUMBER	QTY	PART NAME 1 2 3 4 5 6 (PRODUCT LEVEL)	SEE PAGE
Y	*142-6229*	1	WHEEL GP	301
	4K-4879	1	SEAL-O-RING	
	142-6183	1	TIRE (17.5-25)	
	2G-6595	1	VALVE GP-TIRE (TIRE INFLATION)	
	9K-7951	1	CAP-VALVE (STEM)	
	6F-3930	1	CORE-VALVE	
	7D-5252	1	SPUD AS	
	2D-2508	1	GROMMET	
	2D-2509	1	LOCKNUT (11/16-16-THD)	
	2D-2507	1	SPUD	

Y-SEPARATE ILLUSTRATION

<END>

142-6363 WHEEL & TIRE GP

S/N: JBP1-UP
(17.5X25)
PART OF 151-0366 WHEEL & TIRE AR
AN ATTACHMENT

SMCS-4200 **i01755167**

NOTE	PART NUMBER	QTY	PART NAME 1 2 3 4 5 6 (PRODUCT LEVEL)	SEE PAGE
	8X-1160	1	RIM AS (13X25)	
	6C-3246	1	TIRE (17.5-R25)	
	2G-6595	1	VALVE GP-TIRE	
	6F-3930	1	CORE-VALVE	
	9K-7951	1	CAP-VALVE (STEM)	
	7D-5252	1	SPUD AS	
	2D-2507	1	SPUD	
	2D-2508	1	GROMMET	
	2D-2509	1	LOCKNUT (11/16-16-THD)	

<END>

142-6364 WHEEL & TIRE GP

S/N: JBP1-UP
PART OF 151-0380 WHEEL & TIRE AR
AN ATTACHMENT

SMCS-4200 **i02525536**

NOTE	PART NUMBER	QTY	PART NAME 1 2 3 4 5 6 (PRODUCT LEVEL)	SEE PAGE
Y	*142-6229*	1	WHEEL GP	301
	4K-4879	1	SEAL-O-RING	
	6C-3246	1	TIRE (17.5-R25)	
	2G-6595	1	VALVE GP-TIRE (TIRE INFLATION)	
	6F-3930	1	CORE-VALVE	
	9K-7951	1	CAP-VALVE (STEM)	
	7D-5252	1	SPUD AS	
	2D-2507	1	SPUD	
	2D-2508	1	GROMMET	
	2D-2509	1	LOCKNUT (11/16-16-THD)	

Y-SEPARATE ILLUSTRATION

<END>

142-6371 WHEEL & TIRE GP

S/N: JBP1-UP
(17.5X25)
PART OF 151-0368 WHEEL & TIRE AR
AN ATTACHMENT

SMCS-4200 **i02469284**

NOTE	PART NUMBER	QTY	PART NAME 1 2 3 4 5 6 (PRODUCT LEVEL)	SEE PAGE
	8X-1160	1	RIM AS (13X25)	
	128-5451	1	TIRE (17.5-25)	
	2G-6595	1	VALVE GP-TIRE	
	9K-7951	1	CAP-VALVE (STEM)	
	6F-3930	1	CORE-VALVE	
	7D-5252	1	SPUD AS	
	2D-2508	1	GROMMET	
	2D-2509	1	LOCKNUT (11/16-16-THD)	
	2D-2507	1	SPUD	

<END>

142-6374 WHEEL & TIRE GP

S/N: JBP1-UP
PART OF 151-0382 WHEEL & TIRE AR
AN ATTACHMENT

SMCS-4200 **i02510300**

NOTE	PART NUMBER	QTY	PART NAME 1 2 3 4 5 6 (PRODUCT LEVEL)	SEE PAGE
Y	*142-6229*	1	WHEEL GP	301
	4K-4879	1	SEAL-O-RING	
	128-5451	1	TIRE (17.5-25)	
	2G-6595	1	VALVE GP-TIRE	
	9K-7951	1	CAP-VALVE (STEM)	
	6F-3930	1	CORE-VALVE	
	7D-5252	1	SPUD AS	
	2D-2507	1	SPUD	
	2D-2508	1	GROMMET	
	2D-2509	1	LOCKNUT (11/16-16-THD)	

Y-SEPARATE ILLUSTRATION

<END>

142-6375 WHEEL & TIRE GP

S/N: JBP1-UP
PART OF 151-0389 WHEEL & TIRE AR
AN ATTACHMENT

SMCS-4200 **i02510299**

NOTE	PART NUMBER	QTY	PART NAME 1 2 3 4 5 6 (PRODUCT LEVEL)	SEE PAGE
Y	*142-6229*	1	WHEEL GP	301
	4K-4879	1	SEAL-O-RING	
	142-6186	1	TIRE (17.5-25)	
	2G-6595	1	VALVE GP-TIRE	
	9K-7951	1	CAP-VALVE (STEM)	
	6F-3930	1	CORE-VALVE	
	7D-5252	1	SPUD AS	
	2D-2507	1	SPUD	
	2D-2508	1	GROMMET	
	2D-2509	1	LOCKNUT (11/16-16-THD)	

Y-SEPARATE ILLUSTRATION

<END>

173-7813 WHEEL & TIRE GP

S/N: JBP1-UP
PART OF 174-2304 WHEEL & TIRE AR
AN ATTACHMENT

SMCS-4200 **i02205568**

NOTE	PART NUMBER	QTY	PART NAME 1 2 3 4 5 6 (PRODUCT LEVEL)	SEE PAGE
Y	*142-6226*	1	WHEEL GP	300
	2D-2565	1	SEAL-O-RING	
	173-7830	1	TIRE (14-R24)	
	110-4213	1	VALVE GP-TIRE	
	110-4214	1	STEM AS	
	6F-3930	1	CORE-VALVE	
	9K-7951	1	CAP-VALVE (STEM)	
	7D-5252	1	SPUD AS	
	2D-2508	1	GROMMET	
	2D-2509	1	LOCKNUT (11/16-16-THD)	

Y-SEPARATE ILLUSTRATION

<END>

252-0678 WHEEL & TIRE GP

S/N: JBP1-UP
PART OF 252-0679 WHEEL & TIRE AR
AN ATTACHMENT

SMCS-4200 **i02783317**

NOTE	PART NUMBER	QTY	PART NAME 1 2 3 4 5 6 (PRODUCT LEVEL)	SEE PAGE
Y	*252-0108*	1	WHEEL GP	305
	112-9813	1	TIRE (14-R24)	

Y-SEPARATE ILLUSTRATION

<END>

POWER TRAIN

252-0730 WHEEL & TIRE GP

S/N: JBP1-UP
PART OF 252-0731 WHEEL & TIRE AR
AN ATTACHMENT

SMCS-4200 **i02784687**

NOTE	PART NUMBER	QTY	PART NAME 1 2 3 4 5 6 (PRODUCT LEVEL)	SEE PAGE
Y	*252-0112*	1	WHEEL GP	306
	142-6183	1	TIRE (17.5-25)	

Y-SEPARATE ILLUSTRATION

<END>

252-0752 WHEEL & TIRE GP

S/N: JBP1-UP
PART OF 252-0753 WHEEL & TIRE AR
AN ATTACHMENT

SMCS-4200 **i02784882**

NOTE	PART NUMBER	QTY	PART NAME 1 2 3 4 5 6 (PRODUCT LEVEL)	SEE PAGE
Y	*252-0112*	1	WHEEL GP	306
	142-6186	1	TIRE (17.5-25)	

Y-SEPARATE ILLUSTRATION

<END>

252-7947 WHEEL & TIRE GP

S/N: JBP1-UP
PART OF 252-7948 WHEEL & TIRE AR
AN ATTACHMENT

SMCS-4200 **i02785102**

NOTE	PART NUMBER	QTY	PART NAME 1 2 3 4 5 6 (PRODUCT LEVEL)	SEE PAGE
Y	*252-0106*	1	WHEEL GP	305
	142-6174	1	TIRE (14-24)	

Y-SEPARATE ILLUSTRATION

<END>

254-7947 WHEEL & TIRE GP

S/N: JBP1-UP
PART OF 254-7963 WHEEL & TIRE AR
AN ATTACHMENT

SMCS-4200 **i02793942**

NOTE	PART NUMBER	QTY	PART NAME 1 2 3 4 5 6 (PRODUCT LEVEL)	SEE PAGE
Y	*252-0111*	1	WHEEL GP	306
	142-6182	1	TIRE (17.5-25)	

Y-SEPARATE ILLUSTRATION

<END>

254-7948 WHEEL & TIRE GP

S/N: JBP1-UP
PART OF 254-7964 WHEEL & TIRE AR
AN ATTACHMENT

SMCS-4200 **i02787563**

NOTE	PART NUMBER	QTY	PART NAME 1 2 3 4 5 6 (PRODUCT LEVEL)	SEE PAGE
Y	*252-0111*	1	WHEEL GP	306
	142-6183	1	TIRE (17.5-25)	

Y-SEPARATE ILLUSTRATION

<END>

142-6303 WHEEL AR

S/N: JBP1-UP
AN ATTACHMENT

SMCS-4208 **i00761194**

NOTE	PART NUMBER	QTY	PART NAME 1 2 3 4 5 6 (PRODUCT LEVEL)	SEE PAGE
Y	*142-6172*	6	WHEEL GP	300

Y-SEPARATE ILLUSTRATION

<END>

142-6305 WHEEL AR

S/N: JBP1-UP
AN ATTACHMENT

SMCS-4208 **i02588546**

NOTE	PART NUMBER	QTY	PART NAME 1 2 3 4 5 6 (PRODUCT LEVEL)	SEE PAGE
Y	*142-6304*	6	WHEEL GP	301

Y-SEPARATE ILLUSTRATION

<END>

148-2405 WHEEL AR

S/N: JBP1-UP
AN ATTACHMENT

SMCS-4208 **i01880496**

NOTE	PART NUMBER	QTY	PART NAME 1 2 3 4 5 6 (PRODUCT LEVEL)	SEE PAGE
Y	*148-2404*	6	WHEEL GP	301

Y-SEPARATE ILLUSTRATION

<END>

148-2409 WHEEL AR

S/N: JBP1-UP
AN ATTACHMENT

SMCS-4208 **i02588550**

NOTE	PART NUMBER	QTY	PART NAME 1 2 3 4 5 6 (PRODUCT LEVEL)	SEE PAGE
Y	*148-2408*	6	WHEEL GP	302

Y-SEPARATE ILLUSTRATION

<END>

142-6172 WHEEL GP

S/N: JBP1-UP
(9X24)
PART OF 142-6303 WHEEL AR
AN ATTACHMENT

SMCS-4006, 4201, 4208 **i02205609**

NOTE	PART NUMBER	QTY	PART NAME 1 2 3 4 5 6 (PRODUCT LEVEL)	SEE PAGE
	123-3420	1	RIM AS	
	2D-2511	1	VALVE GP-TIRE	
	9K-7951	1	CAP-VALVE (STEM)	
	6F-3930	1	CORE-VALVE	
	7D-5252	1	SPUD AS	
	2D-2508	1	GROMMET	
	2D-2509	1	LOCKNUT (11/16-16-THD)	
	2D-2507	1	SPUD	

<END>

142-6226 WHEEL GP

S/N: JBP1-UP
(10X24)
PART OF 142-6301, 142-6307, 142-6310, 142-6316, 173-7813 WHEEL & TIRE GP, 142-6304 WHEEL GP
AN ATTACHMENT

SMCS-4006, 4201, 4208 **i02830940**

NOTE	PART NUMBER	QTY	PART NAME 1 2 3 4 5 6 (PRODUCT LEVEL)	SEE PAGE
	8W-9566	1	FLANGE AS	
	290-1507	1	RIM AS (10X24)	
	2D-2654	1	RING-LOCK	

<END>

142-6229 WHEEL GP

S/N: JBP1-UP
(14X25)
PART OF 142-6357, 142-6364, 142-6374, 142-6375 WHEEL & TIRE GP, 148-2408 WHEEL GP
AN ATTACHMENT

SMCS-4006, 4201, 4208 **i02863873**

NOTE	PART NUMBER	QTY	PART NAME 1 2 3 4 5 6 (PRODUCT LEVEL)	SEE PAGE
	8W-9594	1	FLANGE AS	
	289-9725	1	RIM AS (14-25)	
	4K-4881	1	RING-LOCK	

<END>

142-6304 WHEEL GP

S/N: JBP1-UP
PART OF 142-6305 WHEEL AR
AN ATTACHMENT

SMCS-4006, 4201, 4208 **i03079300**

NOTE	PART NUMBER	QTY	PART NAME 1 2 3 4 5 6 (PRODUCT LEVEL)	SEE PAGE
Y	*142-6226*	1	WHEEL GP	300
	2D-2565	1	SEAL-O-RING	
	110-4213	1	VALVE GP-TIRE	
	7D-5252	1	SPUD AS	
	2D-2508	1	GROMMET	
	2D-2509	1	LOCKNUT (11/16-16-THD)	
	110-4214	1	STEM AS	
	6F-3930	1	CORE-VALVE	
	9K-7951	1	CAP-VALVE (STEM)	

Y-SEPARATE ILLUSTRATION

<END>

148-2404 WHEEL GP—BAREFOOT

S/N: JBP1-UP
(13X25)
PART OF 148-2405 WHEEL AR
AN ATTACHMENT

SMCS-4006, 4201, 4208 **i01755146**

NOTE	PART NUMBER	QTY	PART NAME 1 2 3 4 5 6 (PRODUCT LEVEL)	SEE PAGE
	8X-1160	1	RIM AS (13X25)	
	2G-6595	1	VALVE GP-TIRE (TIRE INFLATION)	
	9K-7951	1	CAP-VALVE (STEM)	
	6F-3930	1	CORE-VALVE	
	7D-5252	1	SPUD AS	
	2D-2508	1	GROMMET	
	2D-2509	1	LOCKNUT (11/16-16-THD)	
	2D-2507	1	SPUD	

<END>

148-2408 WHEEL GP

S/N: JBP1-UP
PART OF 148-2409 WHEEL AR
AN ATTACHMENT

SMCS-4006, 4201, 4208 **i03078966**

NOTE	PART NUMBER	QTY	PART NAME 1 2 3 4 5 6 (PRODUCT LEVEL)	SEE PAGE
Y	*142-6229*	1	WHEEL GP	301
	4K-4879	1	SEAL-O-RING	
	2G-6595	1	VALVE GP-TIRE (TIRE INFLATION)	
	9K-7951	1	CAP-VALVE (STEM)	
	6F-3930	1	CORE-VALVE	
	7D-5252	1	SPUD AS	
	2D-2508	1	GROMMET	
	2D-2509	1	LOCKNUT (11/16-16-THD)	
	2D-2507	1	SPUD	

Y-SEPARATE ILLUSTRATION

<END>

252-0102 WHEEL GP

S/N: JBP1-UP
(10X24)
PART OF 252-0108 WHEEL GP
AN ATTACHMENT

SMCS-4006, 4201, 4208 **i02781649**

NOTE	REF NO	GRAPHIC REF	PART NUMBER	QTY	PART NAME 1 2 3 4 5 6 (PRODUCT LEVEL)	SEE PAGE
	1	1	**2D-2654**	1	RING-LOCK	
	2	1	**8W-9566**	1	FLANGE AS	
	3	1	**290-1505**	1	RIM AS	

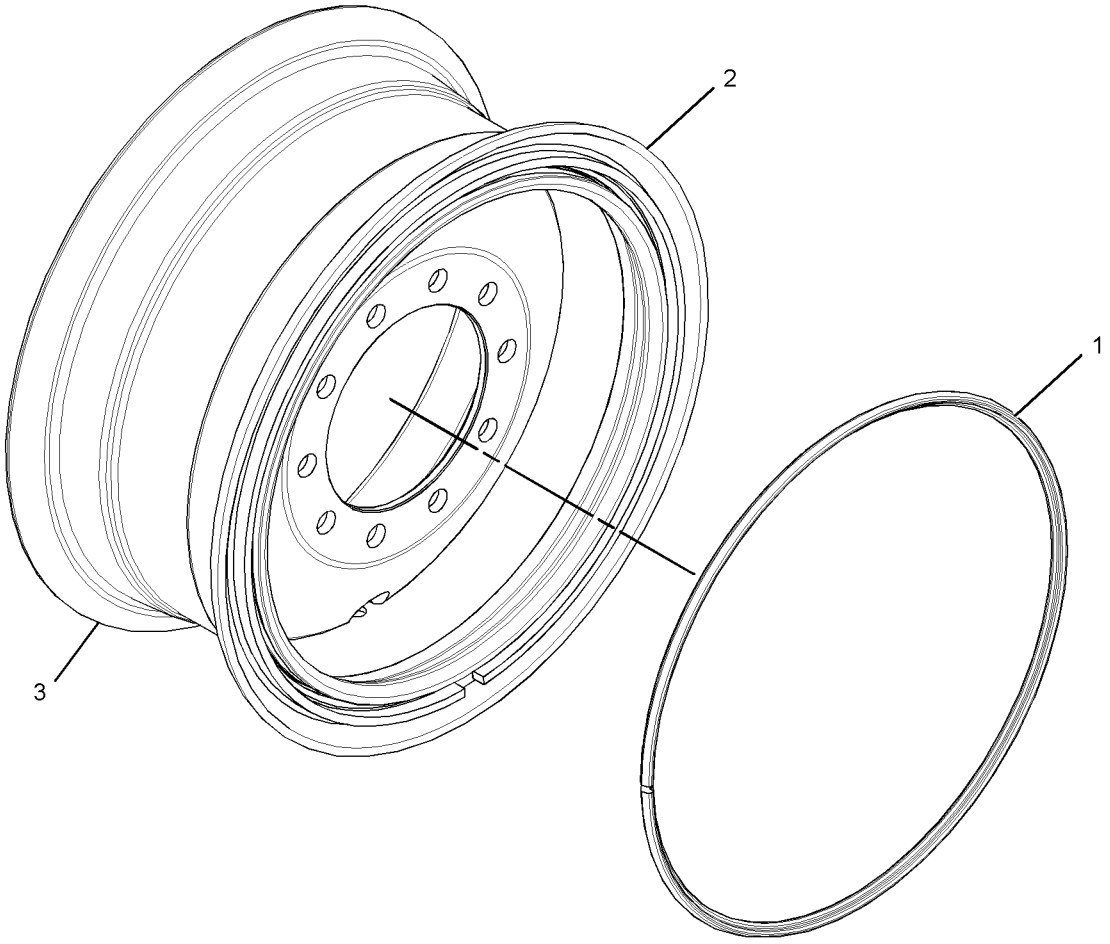

GRAPHIC #1 **<END>** g01393131

252-0104 WHEEL GP

S/N: JBP1-UP
(14X25)
PART OF 252-0112 WHEEL GP
AN ATTACHMENT

SMCS-4006, 4201, 4208 **i02781823**

NOTE	REF NO	GRAPHIC REF	PART NUMBER	QTY	PART NAME 1 2 3 4 5 6 (PRODUCT LEVEL)	SEE PAGE
	1	1	**4K-4881**	1	RING-LOCK	
	2	1	**8W-9594**	1	FLANGE AS	
	3	1	**289-9726**	1	RIM AS	

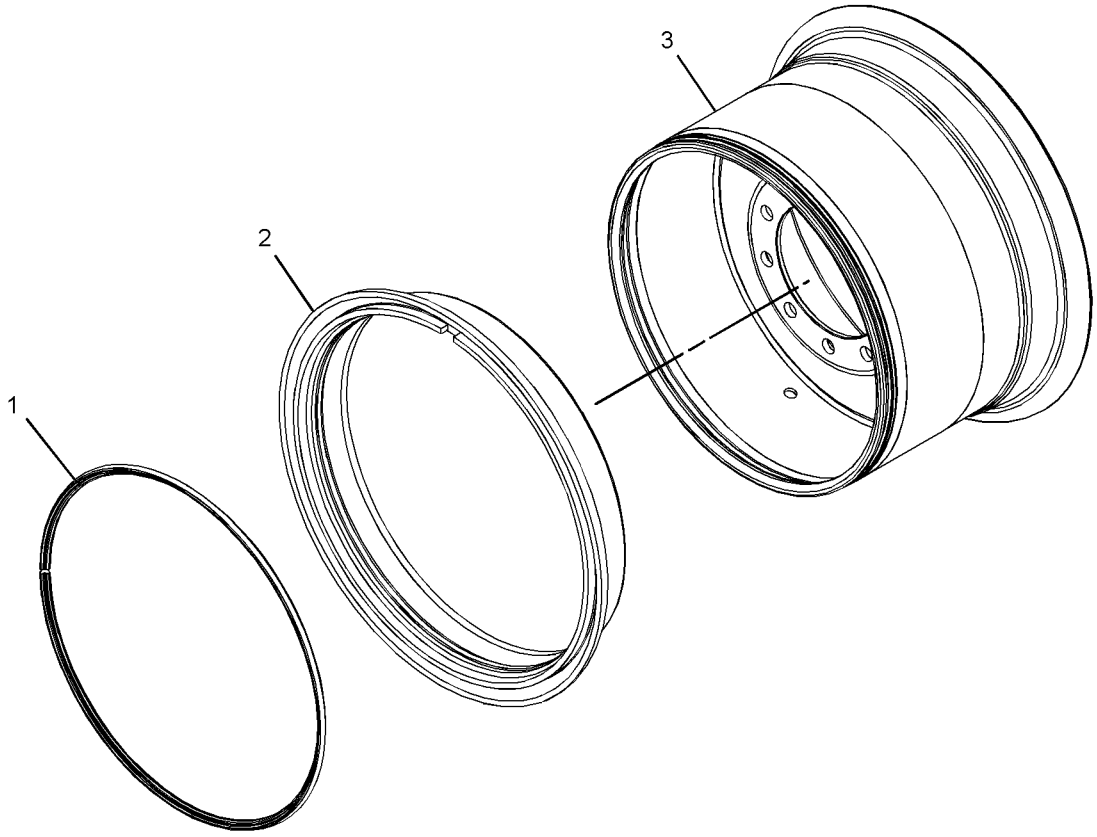

GRAPHIC #1 **<END>** g01392485

252-0106 WHEEL GP

S/N: JBP1-UP
(9X24)
PART OF 252-7947 WHEEL & TIRE GP
AN ATTACHMENT

SMCS-4006, 4201, 4208 **i02781471**

NOTE	PART NUMBER	QTY	PART NAME 1 2 3 4 5 6 (PRODUCT LEVEL)	SEE PAGE
	252-0098	1	RIM AS	
	2D-2511	1	VALVE GP-TIRE (BASIC)	
	3D-2239	1	VALVE AS-TIRE (TIRE INFLATION)	
	6F-3930	1	CORE-VALVE	
	9K-7951	1	CAP-VALVE (STEM)	
	7D-5252	1	SPUD AS	
	2D-2507	1	SPUD	
	2D-2508	1	GROMMET	
	2D-2509	1	LOCKNUT (11/16-16-THD)	

<END>

252-0108 WHEEL GP

S/N: JBP1-UP
PART OF 252-0678 WHEEL & TIRE GP
AN ATTACHMENT

SMCS-4006, 4201, 4208 **i02781628**

NOTE	PART NUMBER	QTY	PART NAME 1 2 3 4 5 6 (PRODUCT LEVEL)	SEE PAGE
Y	*252-0102*	1	WHEEL GP	303
	2D-2565	1	SEAL-O-RING	
	110-4213	1	VALVE GP-TIRE (TIRE INFLATION)	
	7D-5252	1	SPUD AS	
	2D-2507	1	SPUD	
	2D-2508	1	GROMMET	
	2D-2509	1	LOCKNUT (11/16-16-THD)	
	110-4214	1	STEM AS	
	6F-3930	1	CORE-VALVE	
	9K-7951	1	CAP-VALVE (STEM)	

Y-SEPARATE ILLUSTRATION

<END>

252-0111 WHEEL GP

S/N: JBP1-UP
(13X25)
PART OF 254-7947, 254-7948 WHEEL & TIRE GP
AN ATTACHMENT

SMCS-4006, 4201, 4208 **i02781762**

NOTE	PART NUMBER	QTY	PART NAME 1 2 3 4 5 6 (PRODUCT LEVEL)	SEE PAGE
	252-0100	1	RIM AS	
	2G-6595	1	VALVE GP-TIRE (TIRE INFLATION)	
	6F-3930	1	CORE-VALVE	
	9K-7951	1	CAP-VALVE (STEM)	
	7D-5252	1	SPUD AS	
	2D-2507	1	SPUD	
	2D-2508	1	GROMMET	
	2D-2509	1	LOCKNUT (11/16-16-THD)	

<END>

252-0112 WHEEL GP

S/N: JBP1-UP
PART OF 252-0730, 252-0752 WHEEL & TIRE GP
AN ATTACHMENT

SMCS-4006, 4201, 4208 **i02781820**

NOTE	PART NUMBER	QTY	PART NAME 1 2 3 4 5 6 (PRODUCT LEVEL)	SEE PAGE
Y	*252-0104*	1	WHEEL GP	304
	4K-4879	1	SEAL-O-RING	
	2G-6595	1	VALVE GP-TIRE (TIRE INFLATION)	
	6F-3930	1	CORE-VALVE	
	9K-7951	1	CAP-VALVE (STEM)	
	7D-5252	1	SPUD AS	
	2D-2507	1	SPUD	
	2D-2508	1	GROMMET	
	2D-2509	1	LOCKNUT (11/16-16-THD)	

Y-SEPARATE ILLUSTRATION

<END>

FRAME AND BODY

134-1080 AXLE GP-FRONT

S/N: JBP1-UP

PART OF 274-7941 GENERAL AR

SMCS-4305, 4313, 5225 **i03177581**

NOTE	REF NO	GRAPHIC REF	PART NUMBER	QTY	PART NAME 1 2 3 4 5 6 (PRODUCT LEVEL)	SEE PAGE
R	1	1	**5K-5288**	2	SEAL GP-DUO-CONE	
					(EACH INCLUDES)	
		1	**5K-5129**	2	RING-SEALING	
	2	1	**2G-8626**	2	WASHER-THRUST (2.02X3.63X0.16-IN THK)	
	3	1	**3B-8489**	7	FITTING-GREASE (WHEEL LEAN CYLINDER)	
	4	1	**4D-3704**	2	WASHER-HARD (17X30X5-MM THK)	
	5	1	**2G-8615**	4	WASHER-THRUST (2.015X3.625X0.11-IN THK)	
	6	1	**2G-8742**	2	WASHER-HARD (20X65X5-MM THK)	
	7	1	**2H-3740**	4	BOLT (3/4-16X1.25-IN)	
	8	1	**2G-8741**	4	RING-METAL SEAL	
	9	1	**2G-8777**	4	SEAL	
	10	1	**9M-2092**	4	SEAL-O-RING	
	11	1	**8W-5293**	4	PIN	
	12	1	**8W-4652**	1	HOUSING-SPINDLE	
	13	1	**8W-4653**	1	HOUSING-SPINDLE	
	14	1	**8D-2811**	2	WASHER (1.25X1.94X0.032-IN THK)	
	15	1	**2G-8633**	2	PIN	
	16	1	**1D-4627**	2	BOLT (7/8-9X3-IN)	
	17	1	**2J-3505**	2	NUT-FULL (7/8-9-THD)	
	18	1	**7X-7731**	2	PLUG-PIPE	
	19	1	**5P-8842**	8	SEAL-LIP TYPE	
	20	1	**3B-8489**	4	FITTING-GREASE (STEERING CYLINDER)	
	21	1	**5P-1075**	4	WASHER-HARD (10.2X22.5X3-MM THK)	
	22	1	**5S-7379**	4	BOLT (3/8-16X0.875-IN)	
	23	1	**2G-8768**	4	WASHER (10.5X53.8X3-MM THK)	
	24	1	**103-9125**	1	BAR AS	
		1	**2G-8624**	2	BEARING-SLEEVE	
	25	1	**5P-8890**	2	SEAL-LIP TYPE	
	26	1	**030-0060**	2	CUP-BEARING	
	27	1	**030-0061**	2	CONE-BEARING	
	28	1	**7D-8637**	2	CUP-BEARING	
	29	1	**7D-8636**	2	CONE-BEARING	
	30	1	**3B-4618**	2	PIN-COTTER	
	31	1	**7D-8643**	2	RETAINER	
B	32	1	**2G-3865**	6	SHIM (0.127-MM THK)	
	33	1	**0V-0375**	6	BOLT (1/2-13X3.25-IN)	
	34	1	**9D-9797**	2	LOCK	
	35	1	**5T-0906**	2	COVER	
	36	1	**2J-8163**	2	SEAL-O-RING	
	37	1	**5D-0353**	4	BOLT-LOCKING (3/8-16X1-IN)	
	38	1	**0S-1585**	1	BOLT (1/2-13X1.5-IN)	
	39	1	**7D-1649**	1	WASHER-HARD (13.5X32X5-MM THK)	
	40	1	**5P-8843**	2	SEAL-LIP TYPE	
B	41	1	**2G-5673**	2	WASHER (2.031X4X0.06-IN THK)	
	42	1	**9G-5211**	1	SPACER (12.95X19.05X9-MM THK)	
	43	1	**130-3595**	1	PIN AS	
	44	1	**147-3400**	2	SPINDLE	
	45	1	**0S-1592**	2	BOLT (5/8-11X1.25-IN)	
	46	1	**2G-5667**	2	RETAINER	
CY	47	1	*131-3740*	1	LINK GP-STEERING	334
	48	1	**134-1081**	1	AXLE AS-FRONT	
	49	1	**2G-8631**	4	BEARING-SLEEVE	
	50	1	**131-4428**	2	BEARING-SLEEVE	
	51	1	**8X-3434**	1	ARM AS-LEANING (LH)	
	52	1	**146-1842**	1	BEARING-SLEEVE	
	53	1	**146-1843**	1	BEARING-SLEEVE	

134-1080 **AXLE GP-FRONT** *(contd.)* **i03177581**

NOTE	REF NO	GRAPHIC REF	PART NUMBER	QTY	PART NAME 1 2 3 4 5 6 (PRODUCT LEVEL)	SEE PAGE
	54	1	**8W-6476**	1	PIN	
	56	1	**8X-3435**	1	ARM AS-LEANING (RH)	
	57	1	**146-1842**	1	BEARING-SLEEVE	
	58	1	**146-1843**	1	BEARING-SLEEVE	
	59	1	**8W-6497**	1	PIN	
	61	1	**9D-3523**	1	WASHER (2.062X4X0.188-MM THK)	

B-USE AS REQUIRED
C-CHANGE FROM PREVIOUS TYPE
R-REMFG PART MAY BE AVAILABLE
Y-SEPARATE ILLUSTRATION

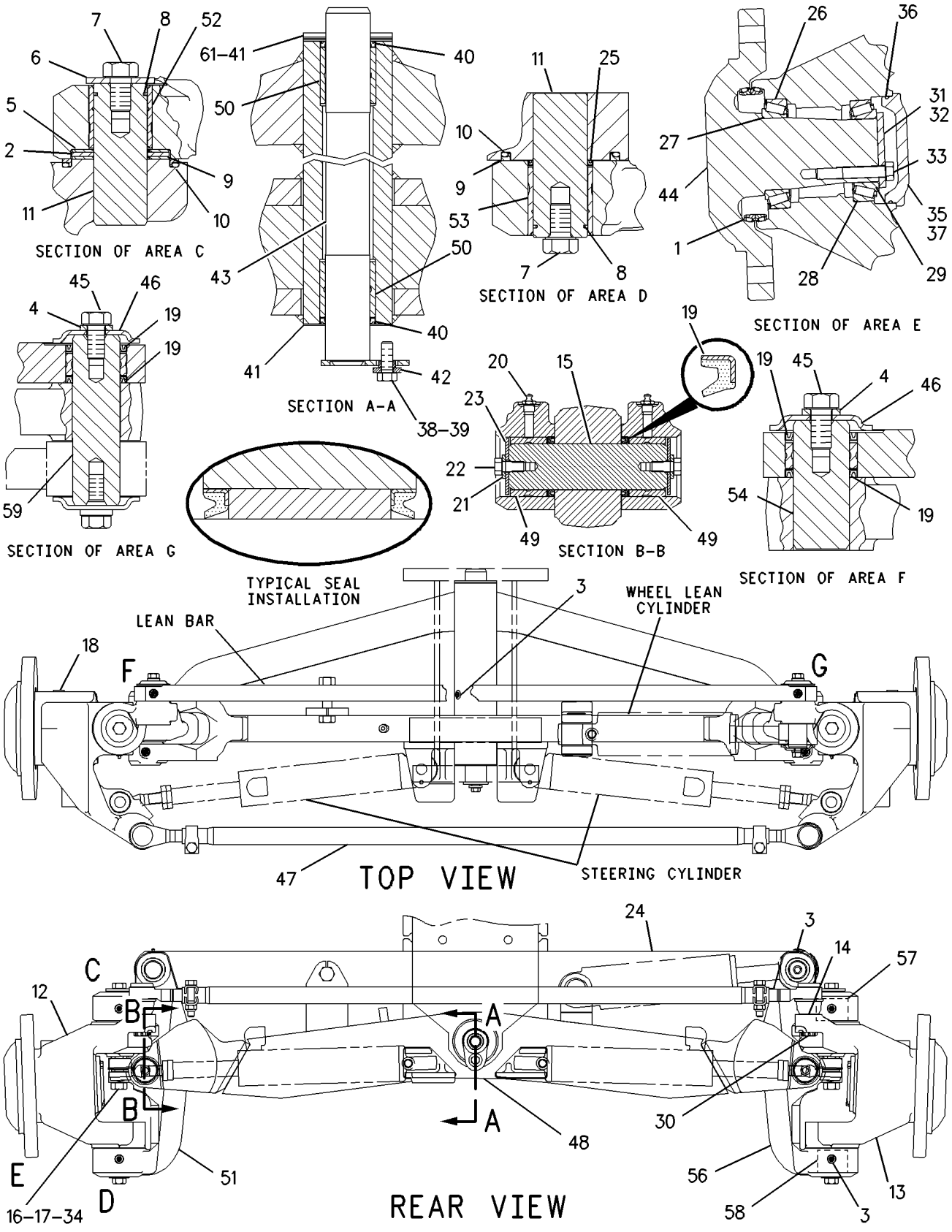

GRAPHIC #1 **<END>** g00885270

FRAME AND BODY

297-8449 BOSS GP-FRAME

S/N: JBP1-UP
PART OF 297-8448 GRADE CONTROL AR
AN ATTACHMENT

SMCS-7051 **i03349981**

NOTE	REF NO	GRAPHIC REF	PART NUMBER	QTY	PART NAME 1 2 3 4 5 6 (PRODUCT LEVEL)	SEE PAGE
	1	1	**5D-9629**	5	ROD	
	2	1	**1F-5339**	4	LUG (3/8-16-THD)	
	3	1	**3G-9190**	3	PLATE	
	4	1	**4D-8128**	2	COUPLING	
	5	1	**8X-5147**	1	BLOCK	
	6	1	**9D-5196**	1	BOSS (3/8-16X3.06-IN)	
	7	1	**9D-5567**	3	BOSS (3/8-16X2.44-IN)	
	8	1	**9D-5659**	6	BOSS (3/8-16X1.19-IN)	
	9	1	**9D-6164**	2	BOSS (3/8-16X1.44-IN)	
	10	1	**8D-3508**	1	BOSS (3/8-16X1-IN)	

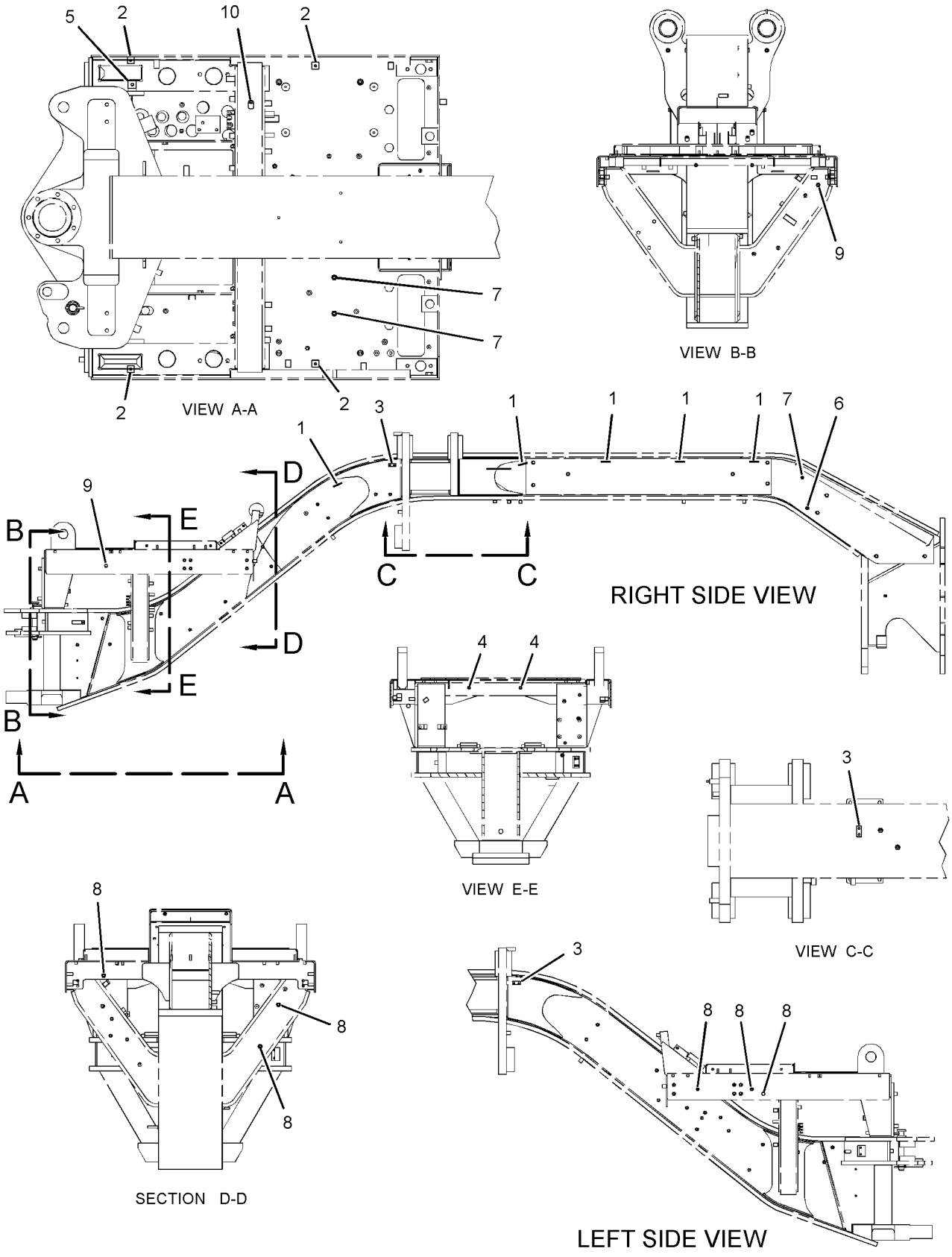

GRAPHIC #1 **<END>** g01768173

295-8090 BOX GP-BATTERY

S/N: JBP1-UP

PART OF 274-7941 GENERAL AR

SMCS-7257 **i03432322**

NOTE	REF NO	GRAPHIC REF	PART NUMBER	QTY	PART NAME 1 2 3 4 5 6 (PRODUCT LEVEL)	SEE PAGE
	1	1	**246-2641**	2	PADLOCK GP	
					(EACH INCLUDES)	
		1	**5P-8500**	1	KEY	
	2	1	**143-4792**	4	BUMPER	
	3	1	**295-8089**	1	SUPPORT AS	
	4	1	**295-8091**	1	COVER AS	
	5	1	**198-4778**	4	WASHER-HARD (13.5X30X12-MM THK)	
M	6	1	**8T-4194**	4	BOLT (M12X1.75X50-MM)	

M-METRIC PART

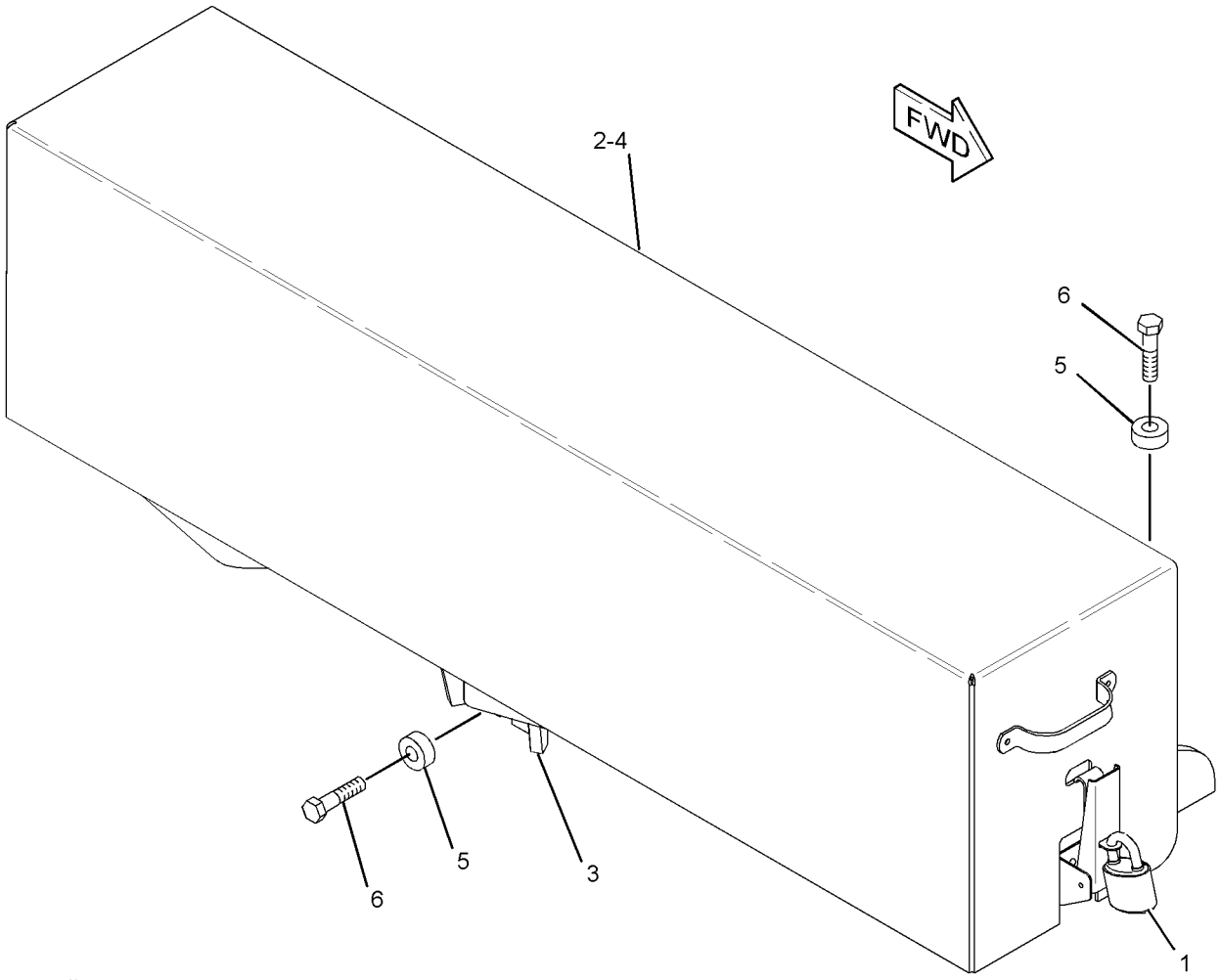

GRAPHIC #1 **<END>** g01701793

FRAME AND BODY

283-7190 BUMPER GP-REAR

S/N: JBP1-UP
AN ATTACHMENT

SMCS-7156 **i03258504**

NOTE	REF NO	GRAPHIC REF	PART NUMBER	QTY	PART NAME 1 2 3 4 5 6 (PRODUCT LEVEL)	SEE PAGE
	1	1	**291-6693**	1	BUMPER AS-TOW	
M	2	1	**7X-2575**	8	BOLT (M24X3X60-MM)	
	3	1	**8T-5361**	8	WASHER-HARD (28X49X5-MM THK)	

M-METRIC PART

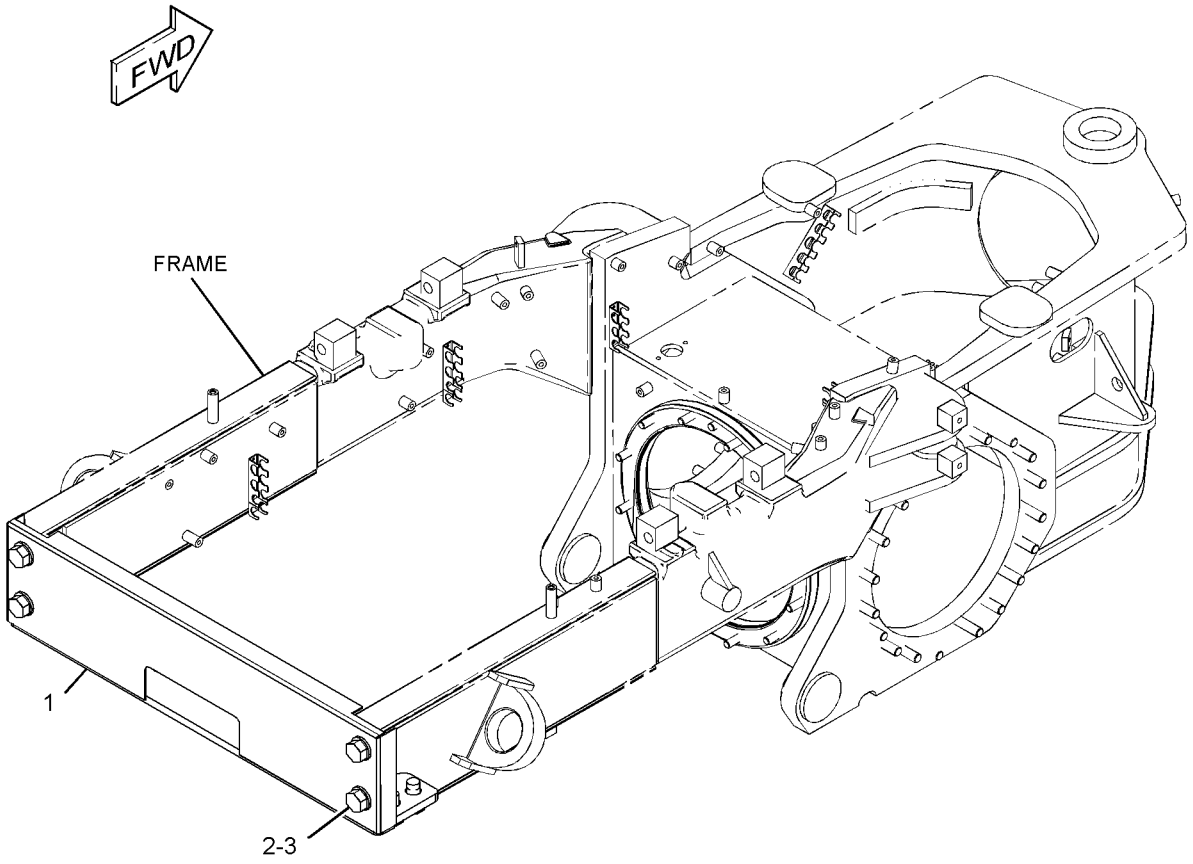

GRAPHIC #1 **<END>** g01667374

FRAME AND BODY

284-5378 BUMPER GP-REAR

S/N: JBP1-UP

PART OF 274-7941 GENERAL AR

SMCS-7156 **i03260160**

NOTE	REF NO	GRAPHIC REF	PART NUMBER	QTY	PART NAME 1 2 3 4 5 6 (PRODUCT LEVEL)	SEE PAGE
	1	1	**284-5379**	1	BUMPER AS	
M	2	1	**7X-2575**	6	BOLT (M24X3X60-MM)	
	3	1	**8T-5361**	6	WASHER-HARD (28X49X5-MM THK)	

M-METRIC PART

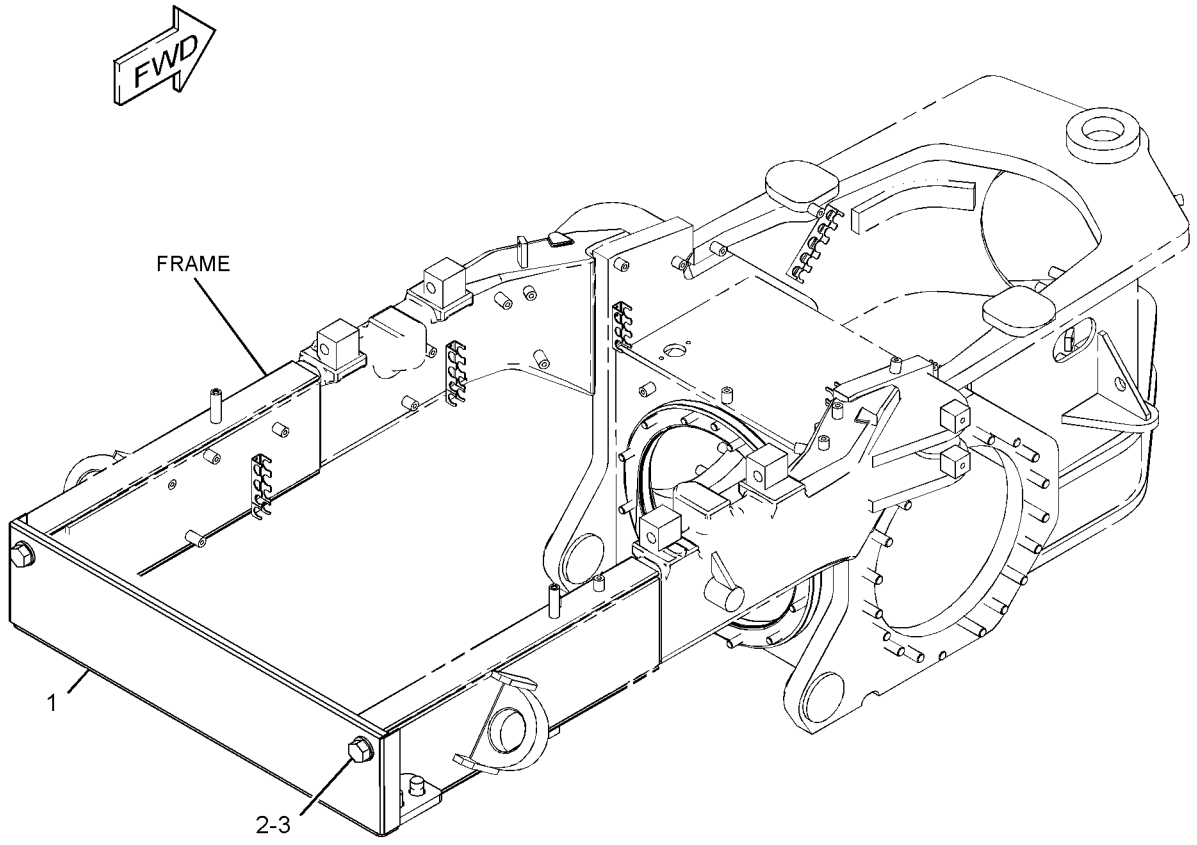

GRAPHIC #1 **<END>** g01667394

FRAME AND BODY

311-8138 CASE & FRAME GP

S/N: JBP1-UP

PART OF 274-7941 GENERAL AR

SMCS-7051 **i03246239**

NOTE	REF NO	GRAPHIC REF	PART NUMBER	QTY	PART NAME 1 2 3 4 5 6 (PRODUCT LEVEL)	SEE PAGE
	1	1	**2A-3398**	1	GASKET	
	2	1	**8M-3837**	1	PLUG-MAGNETIC (DRAIN)	
	3	1	**311-8139**	1	CASE & FRAME AS	
	4	1	**2D-5238**	12	STUD-TAPERLOCK (5/8-11X2.5-IN)	
	5	1	**2R-1600**	38	STUD-TAPERLOCK	
	6	1	**4D-8148**	1	DOWEL	

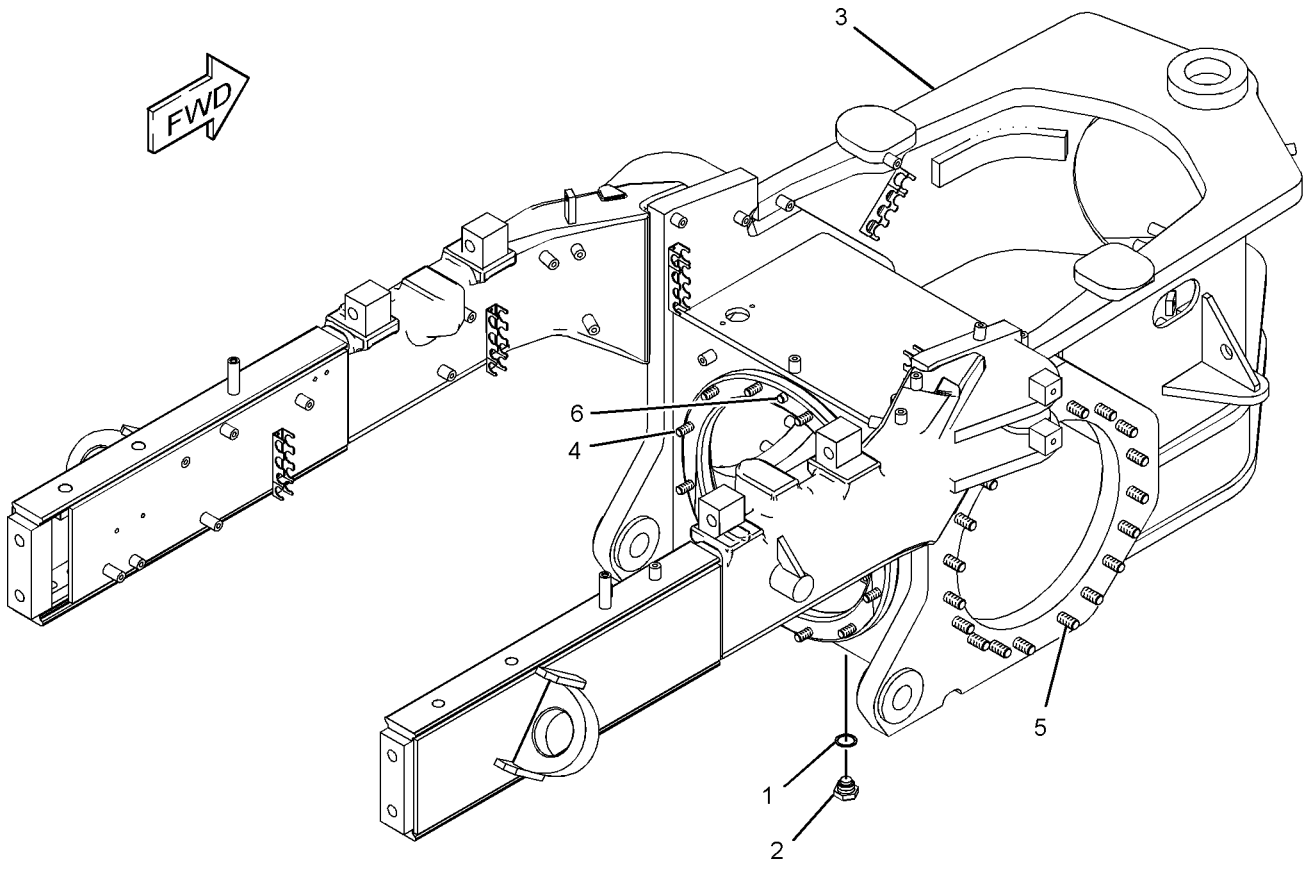

GRAPHIC #1 **<END>** g01667033

FRAME AND BODY

311-2741 ENCLOSURE GP-ENGINE

S/N: JBP1-UP

PART OF 274-7941 GENERAL AR

SMCS-7263 **i03246273**

NOTE	REF NO	GRAPHIC REF	PART NUMBER	QTY	PART NAME 1 2 3 4 5 6 (PRODUCT LEVEL)	SEE PAGE
	1	1	**3T-5763**	2	BUMPER	
	2	1,2	**7I-4959**	4	PLATE	
	3	2	**7I-4979**	2	HINGE AS	
	4	1	**7I-4981**	2	HINGE AS	
	5	2	**7X-1387**	4	WASHER (10.26X22.22X1.9-MM THK)	
	6	2	**8D-3786**	4	MOUNTING	
	7	2	**113-8457**	2	ROD	
	8	2	**134-0165**	6	WASHER (13.8X45X3-MM THK)	
	9	1	**177-4118**	2	HANDRAIL	
	10	1	**177-4119**	2	HANDRAIL	
	11	1	**177-4120**	2	HANDHOLD	
J	12	1	**275-0572**	1	LATCH AS	
	13	1	**294-2382**	2	LATCH AS	
	14	2	**294-4619**	1	PANEL AS (LH)	
	15	1	**294-4621**	1	PANEL AS (RH)	
	16	1	**295-3839**	2	PAWL	
	17	2	**295-6180**	1	PLATE AS	
	18	1	**295-6224**	1	PLATE AS	
	19	1	**296-1252**	2	HINGE AS (LH)	
	20	2	**304-6573**	2	PLATE	
	21	2	**304-7252**	2	BRACKET AS	
	22	2	**304-7415**	2	HINGE AS (RH)	
	23	2	**304-7417**	2	PLATE AS	
	24	1,2	**304-7418**	8	PLATE AS	
	25	2	**304-7419**	2	PLATE AS	
	26	1	**312-8319**	1	HOOD AS	
	27	1	**312-8526**	1	DOOR AS-ACCESS (RH)	
	28	2	**312-8528**	1	DOOR AS-ACCESS (LH)	
	29	2	**312-8529**	1	BRACKET AS (RH)	
	30	1	**312-8530**	1	BRACKET AS (LH)	
		1	**4K-9097**	1	NUT-WELD (5/16-18-THD)	
	31	1	**313-2484**	1	DASH AS	
	32	2	**313-4374**	2	BRACKET	
	33	1	**314-5093**	1	BRACKET AS (RH)	
	34	1	**314-5094**	1	BRACKET AS (LH)	
	35	1	**316-5743**	1	COVER AS	
	36	1	**317-7250**	1	CAM-LATCH	
	37	2	**3B-4615**	4	PIN-COTTER	
	38	1	**3V-0613**	6	BUMPER	
M	39	1	**5C-9553**	3	BOLT (M6X1X16-MM)	
	40	2	**5P-8439**	2	GROMMET	
	41	1	**6V-8189**	2	NUT (5/16-18-THD)	
	42	2	**7X-0550**	4	WASHER-HARD (13.5X32X5-MM THK)	
	43	1,2	**7X-7729**	69	WASHER (11X25X3-MM THK)	
	44	2	**8T-2561**	4	WASHER-HARD (10.5X28.5X5-MM THK)	
M	45	2	**8T-4133**	2	NUT (M10X1.5-THD)	
M	46	1,2	**8T-4136**	57	BOLT (M10X1.5X25-MM)	
M	47	1,2	**8T-4137**	4	BOLT (M10X1.5X20-MM)	
M	48	2	**8T-4139**	2	BOLT (M12X1.75X30-MM)	
M	49	2	**8T-4183**	4	BOLT (M12X1.75X40-MM)	
M	50	2	**8T-4195**	10	BOLT (M10X1.5X30-MM)	
	51	2	**8T-4223**	2	WASHER-HARD (13.5X25.5X3-MM THK)	
	52	1	**8T-4224**	2	WASHER-HARD (8.8X16X2-MM THK)	
M	53	2	**8T-4910**	4	BOLT (M12X1.75X60-MM)	
	54	2	**8X-5155**	2	PLATE	
	55	1	**9X-8256**	3	WASHER (6.6X12X2-MM THK)	

J-REQUIRES CORPORATE KEY
M-METRIC PART

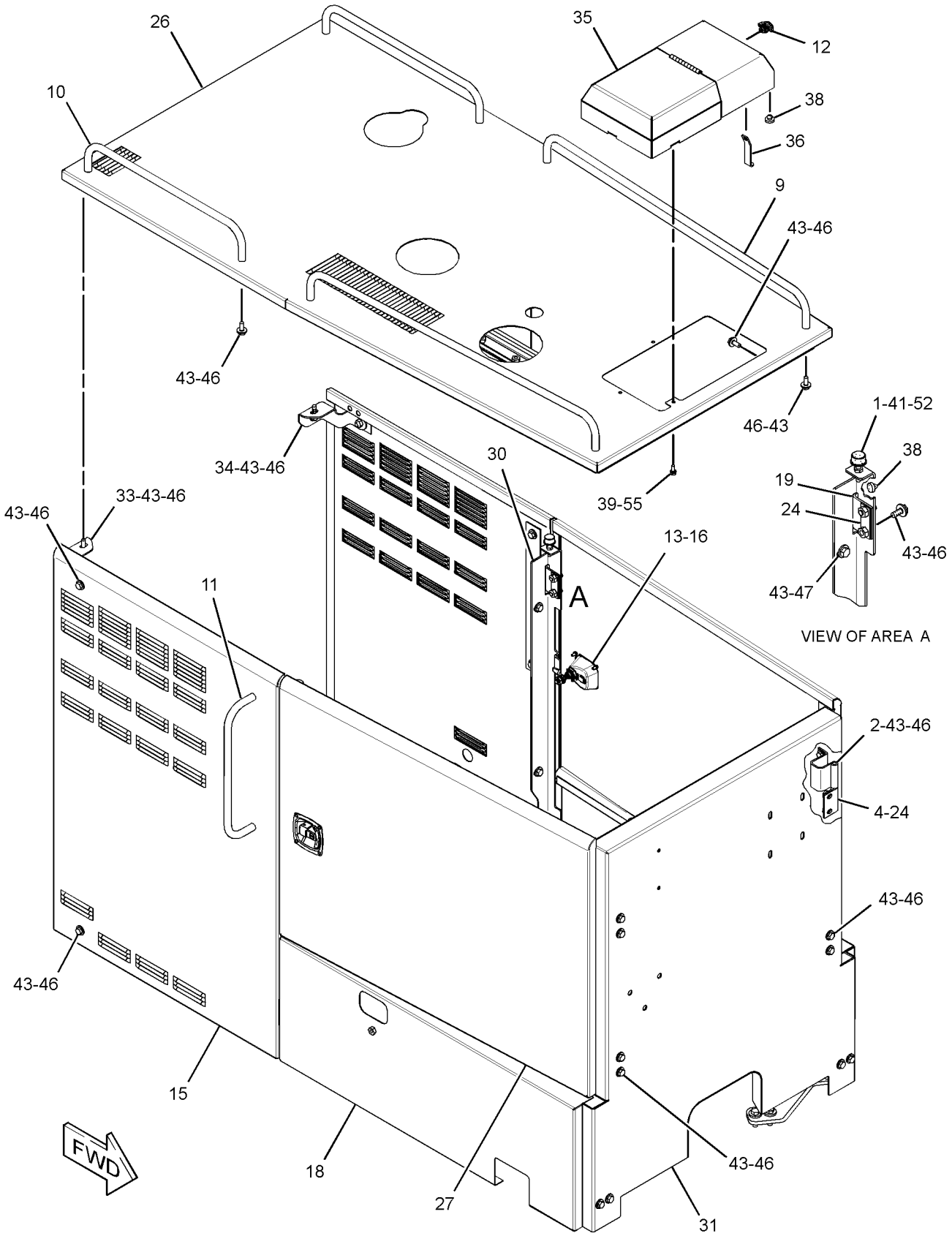

GRAPHIC #1

g01660313

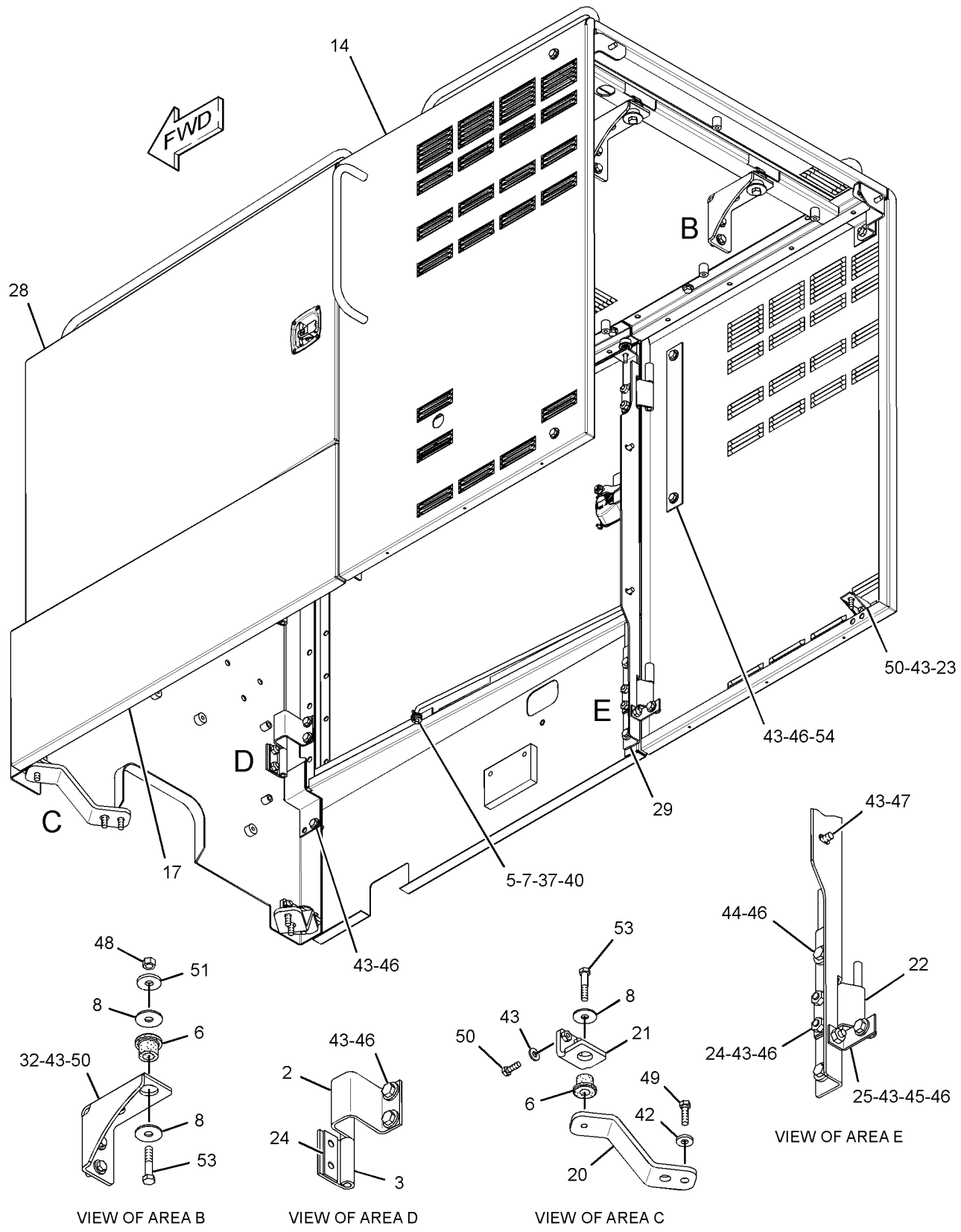

GRAPHIC #2 **<END>** g01660314

FRAME AND BODY

282-2496 FRAME GP-FRONT

S/N: JBP1-UP

PART OF 274-7941 GENERAL AR

SMCS-7050, 7051 **i03298088**

NOTE	REF NO	GRAPHIC REF	PART NUMBER	QTY	PART NAME 1 2 3 4 5 6 (PRODUCT LEVEL)	SEE PAGE
	1	1	**8D-3791**	1	PIN	
	2	1	**9D-6584**	1	SEAL-LIP TYPE	
	3	1	**9D-6589**	8	SEAL-LIP TYPE	
	4	1	**9D-9257**	1	PIN	
	5	1	**111-3945**	2	PLATE	
	6	1	**144-2161**	1	PLATE	
	7	1	**145-5968**	1	COVER (RH)	
	8	1	**145-5969**	1	COVER (LH)	
	9	1	**191-5293**	1	INSULATION	
	10	1	**282-2332**	1	FRAME AS	
	11	1	**283-0644**	1	PLATE AS	
	12	1	**5M-3062**	20	BOLT (3/8-16X0.75-IN)	
	13	1	**5P-1075**	27	WASHER-HARD (10.2X22.5X3-MM THK)	
	14	1	**5P-8167**	3	BOLT (3/8-16X0.625-IN)	
	15	1	**6K-4076**	1	BEARING-SLEEVE	
	16	1	**8D-9159**	4	BEARING-SLEEVE	
	17	1	**8T-4896**	16	WASHER-HARD (10.2X18.5X2.5-MM THK)	
	18	1	**9D-3311**	1	BEARING-SLEEVE	
M	19	1	**9X-2125**	7	BOLT-LOCKING (M10X1.5X25-MM)	
D	20	1	**5P-5969**		SEAL (0.05-M)(EACH)	
D	20A	1	**5P-5969**		SEAL (0.94-M)	
B	21	1	**146-9739**		TAPE	

B-USE AS REQUIRED
D-ORDER BY THE METER
M-METRIC PART

282-2496 **FRAME GP-FRONT** *(contd.)* **i03298088**

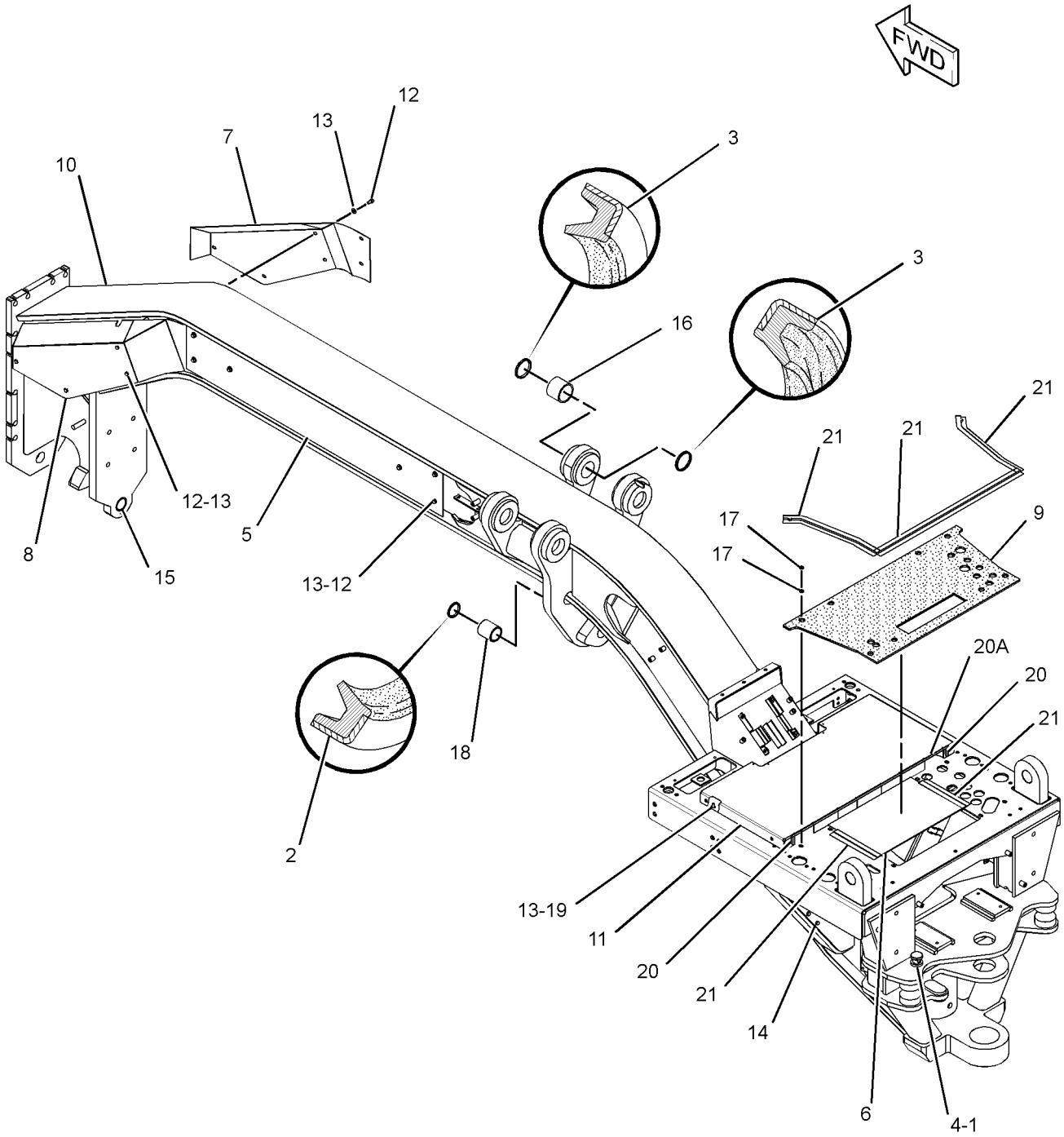

GRAPHIC #1 **<END>** g01684413

FRAME AND BODY

334-5760 GUARD GP-BOTTOM

S/N: JBP1-UP
AN ATTACHMENT

SMCS-7153 **i03400520**

NOTE	REF NO	GRAPHIC REF	PART NUMBER	QTY	PART NAME 1 2 3 4 5 6 (PRODUCT LEVEL)	SEE PAGE
	1	1	**7D-7496**	2	PIN AS	
	2	1	**8W-6626**	2	CAP	
	3	1	**8W-6627**	1	SUPPORT AS	
		1	**1F-0750**	3	NUT-WELD (3/8-16-THD)	
	4	1	**8W-8412**	1	GUARD AS	
	5	1	**3B-7740**	2	NIPPLE-PIPE	
	6	1	**8K-0530**	2	PIN-CABLE SOCKET	
M	7	1	**8T-4183**	8	BOLT (M12X1.75X40-MM)	
	8	1	**8T-4223**	8	WASHER-HARD (13.5X25.5X3-MM THK)	
	9	1	**8T-5439**	4	WASHER-HARD (21.5X45X6-MM THK)	
M	10	1	**8T-6430**	4	BOLT (M20X2.5X50-MM)	

M-METRIC PART

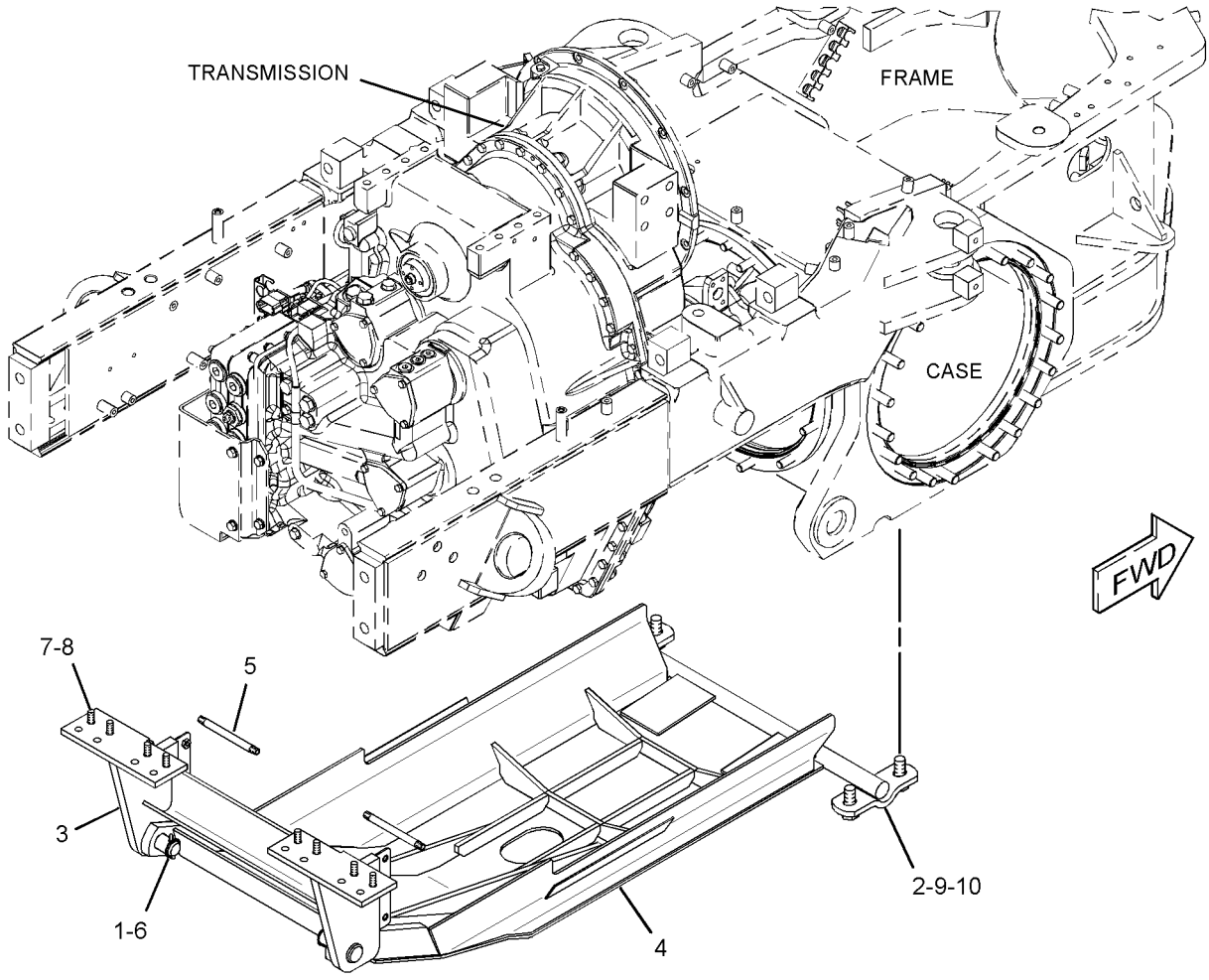

GRAPHIC #1 **<END>** g01768816

298-8895 GUARD GP-DRIVE SHAFT

S/N: JBP1-UP

PART OF 274-7941 GENERAL AR

SMCS-7153 **i03247369**

NOTE	REF NO	GRAPHIC REF	PART NUMBER	QTY	PART NAME 1 2 3 4 5 6 (PRODUCT LEVEL)	SEE PAGE
	1	1	**298-8898**	1	GUARD AS	
	2	1	**299-8249**	1	GUARD AS	
	3	1	**299-8251**	1	GUARD	
	4	1	**301-9593**	1	GUARD AS	
	5	1	**5C-6565**	4	BOLT (1/2-13X1.125-IN)	
	6	1	**5P-1075**	2	WASHER-HARD (10.2X22.5X3-MM THK)	
	7	1	**5S-7379**	2	BOLT (3/8-16X0.875-IN)	
	8	1	**8T-4121**	2	WASHER-HARD (11X21X2.5-MM THK)	
M	9	1	**8T-4136**	2	BOLT (M10X1.5X25-MM)	
M	10	1	**8T-4192**	4	BOLT (M12X1.75X25-MM)	
	11	1	**8T-4223**	4	WASHER-HARD (13.5X25.5X3-MM THK)	
	12	1	**8T-7971**	4	WASHER-HARD (13.5X25.5X5-MM THK)	

M-METRIC PART

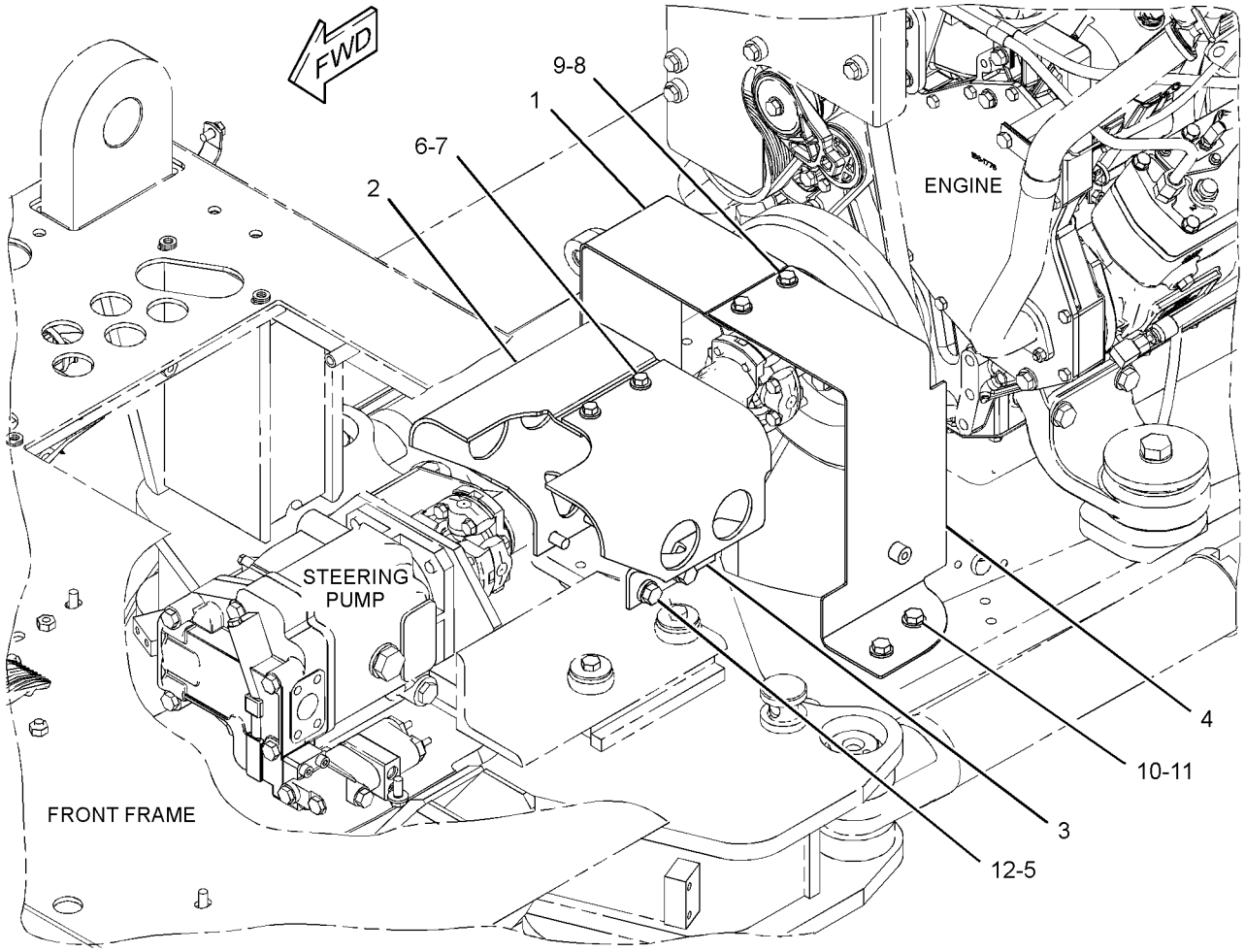

GRAPHIC #1 **<END>** g01696877

FRAME AND BODY

126-6933 GUARD GP-PLATFORM–ACCUGRADE

S/N: JBP1-UP

PART OF 297-8448 GRADE CONTROL AR

AN ATTACHMENT

SMCS-7150, 7253 **i02230061**

NOTE	REF NO	GRAPHIC REF	PART NUMBER	QTY	PART NAME 1 2 3 4 5 6 (PRODUCT LEVEL)	SEE PAGE
	1	1	**4T-8050**	1	SPACER (11X19X57-MM THK)	
	2	1,2	**129-5049**	4	BRACKET AS	
	3	2	**224-5912**	1	BRACKET	
	4	1	**226-1240**	2	FILM-WARNING (CRUSH HAZARD, STAY BACK, INTL)	
	5	2	**231-5251**	1	BRACKET	
C	6	1	**245-3930**	1	COVER (RH)	
C	7	1	**245-3933**	1	COVER (LH)	
	8	1,2	**1F-5339**	4	LUG (3/8-16-THD)	
	9	1,2	**5M-3062**	4	BOLT (3/8-16X0.75-IN)	
	10	1,2	**5P-1075**	12	WASHER-HARD (10.2X22.5X3-MM THK)	
	11	1,2	**5S-7382**	2	BOLT (3/8-16X1.375-IN)	
	12	2	**6V-1889**	1	CLIP	
	13	1,2	**6V-8801**	2	NUT (3/8-16-THD)	
	14	1,2	**8T-8915**	5	BOLT (3/8-16X3.25-IN)	

C-CHANGE FROM PREVIOUS TYPE

REFER TO ALL ILLUSTRATIONS OF THIS GROUP FOR AUXILIARY VIEWS

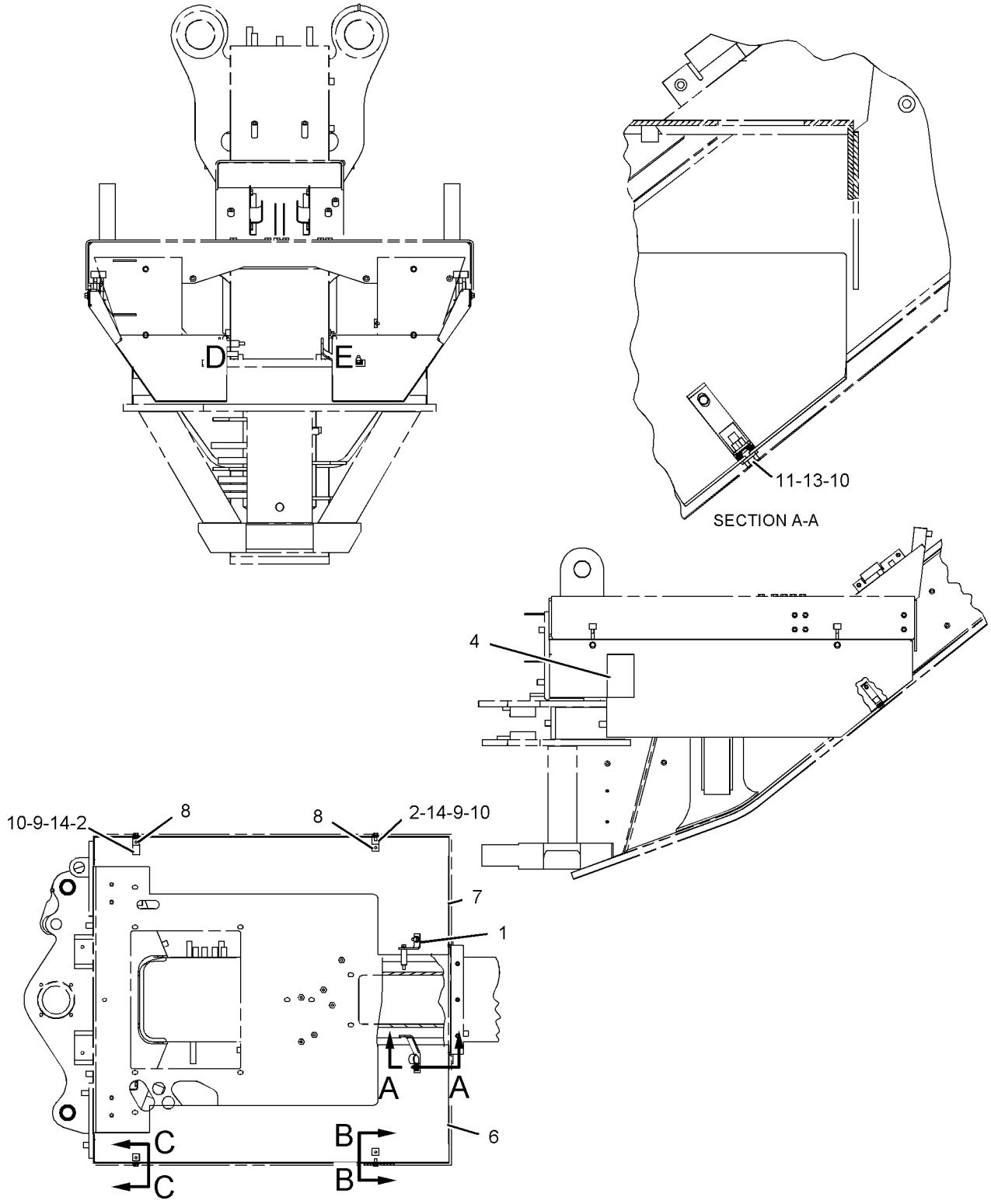

GRAPHIC #1

g01119645

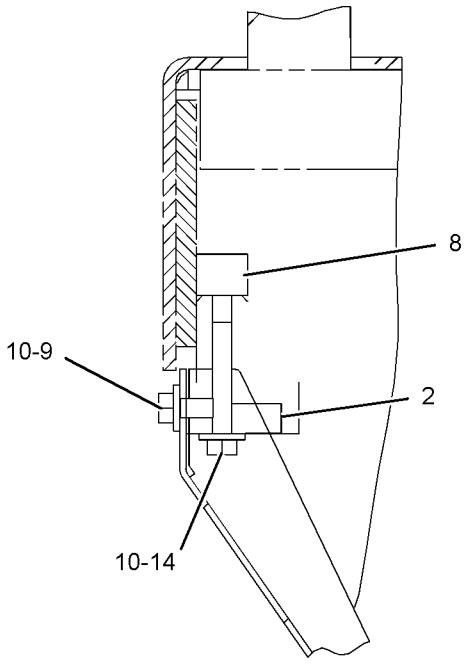

SECTION C-C

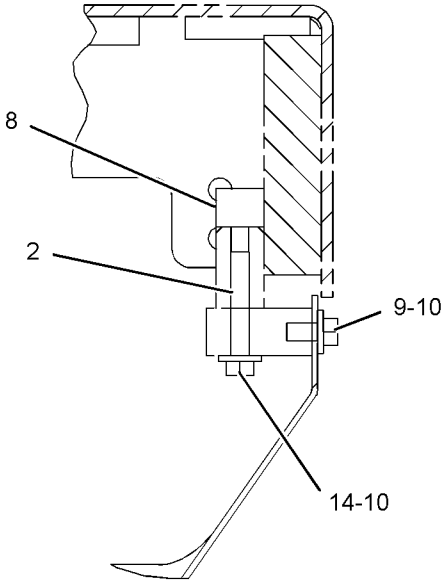

SECTION B-B

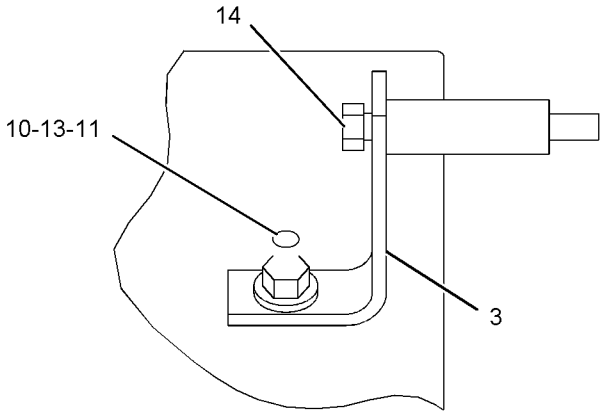

VIEW OF AREA E

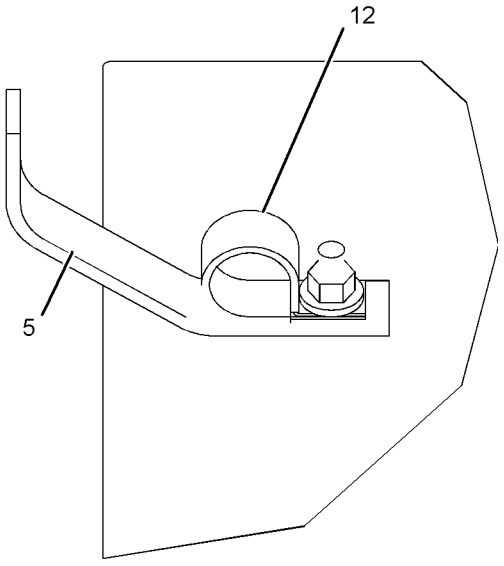

VIEW OF AREA D

GRAPHIC #2 **<END>** g01119647

282-2469 GUARD GP-PLATFORM

S/N: JBP1-UP

PART OF 274-7941 GENERAL AR

SMCS-7150, 7253 **i03247405**

NOTE	REF NO	GRAPHIC REF	PART NUMBER	QTY	PART NAME 1 2 3 4 5 6 (PRODUCT LEVEL)	SEE PAGE
	1	1	**8W-3902**	1	SUPPORT AS	
	2	1	**8X-2913**	2	COVER AS	
					(EACH INCLUDES)	
M		1	**6V-9632**	2	NUT-WELD (M6X1-THD)	
	3	1	**8X-6419**	1	FLOOR MAT	
	4	1	**8X-6475**	2	PLATE	
	5	1	**8X-8505**	2	PLATE	
	6	1	**8X-9464**	2	STEP AS	
	7	1	**135-3894**	1	PIPE AS	
	8	1	**160-6382**	1	GROMMET	
	9	1	**169-5414**	1	CLIP	
	10	1	**198-8588**	1	PANEL	
	11	1	**200-3967**	1	PANEL AS	
	12	1	**115-3072**	1	CLIP AS-CONNECTOR (8-PIN)	
	13	1	**3P-3839**	1	GROMMET	
	14	1	**5P-1075**	7	WASHER-HARD (10.2X22.5X3-MM THK)	
	15	1	**5P-4115**	4	WASHER-HARD (7.2X19X2-MM THK)	
	16	1	**5P-9085**	2	CLIP	
	17	1	**6V-2687**	4	SCREW-PAN HEAD (10-24X1-IN)	
	18	1	**8T-4121**	2	WASHER-HARD (11X21X2.5-MM THK)	
M	19	1	**8T-4137**	2	BOLT (M10X1.5X20-MM)	
M	20	1	**8T-4138**	4	BOLT (M6X1X20-MM)	
M	21	1	**8T-4176**	4	BOLT (M12X1.75X90-MM)	
M	22	1	**8T-4183**	8	BOLT (M12X1.75X40-MM)	
	23	1	**8T-4223**	16	WASHER-HARD (13.5X25.5X3-MM THK)	
M	24	1	**8T-4244**	4	NUT (M12X1.75-THD)	
M	25	1	**9X-2043**	12	SCREW-TRUSS HEAD (M6X1X14-MM)	
M	26	1	**9X-2125**	7	BOLT-LOCKING (M10X1.5X25-MM)	

M-METRIC PART

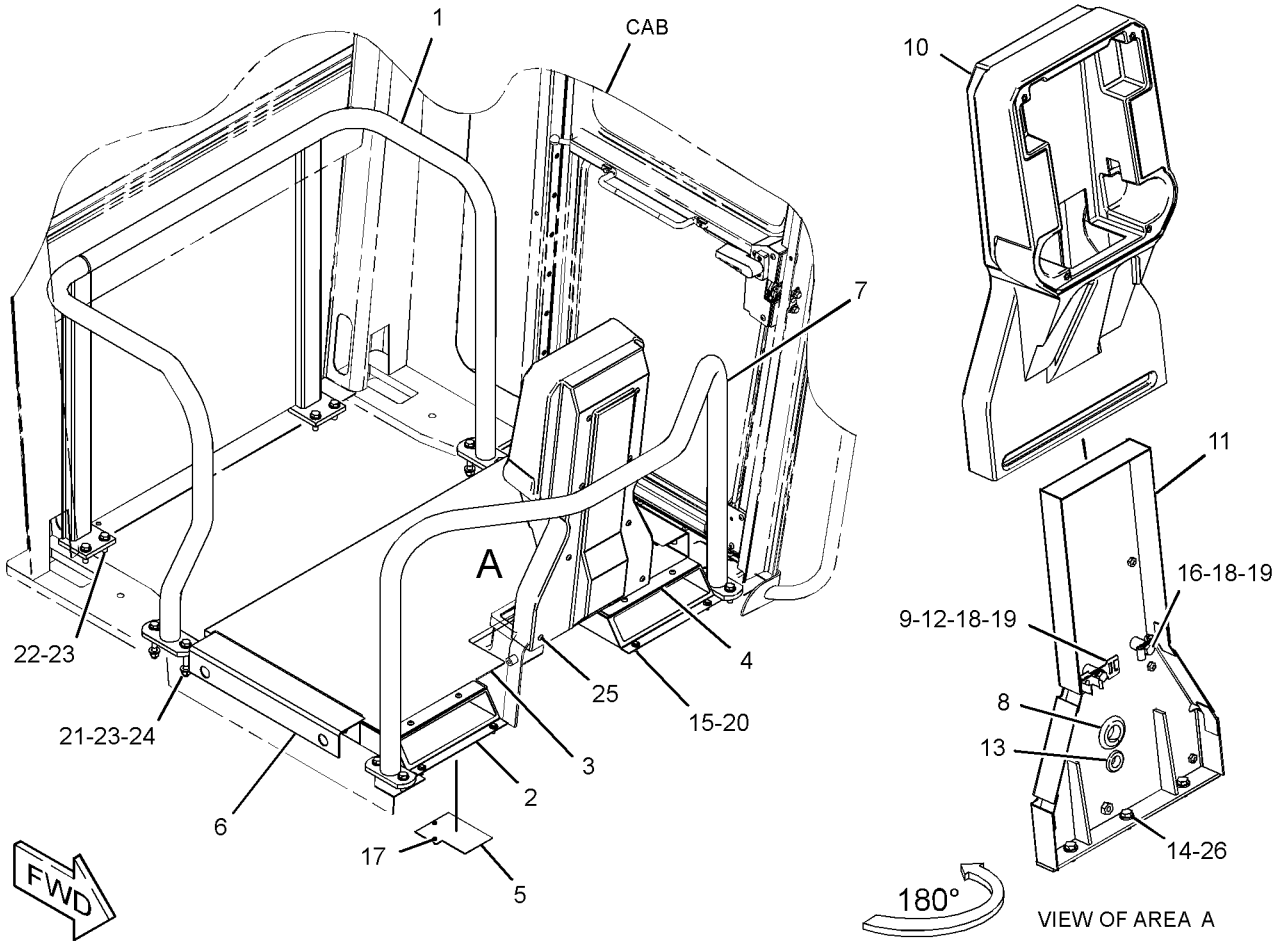

GRAPHIC #1 **<END>** g01700178

290-1148 GUARD GP-PLATFORM

S/N: JBP1-UP
PART OF 284-5400 ROPS AR
AN ATTACHMENT

SMCS-7150, 7253 **i03261504**

NOTE	REF NO	GRAPHIC REF	PART NUMBER	QTY	PART NAME 1 2 3 4 5 6 (PRODUCT LEVEL)	SEE PAGE
	1	1	**8X-2226**	2	PLATE	
	2	1	**8X-2913**	2	COVER AS	
					(EACH INCLUDES)	
M		1	**6V-9632**	2	NUT-WELD (M6X1-THD)	
	3	1	**8X-6475**	2	PLATE	
	4	1	**8X-8505**	2	PLATE	
	5	1	**124-8949**	1	FLOOR MAT	
	6	1	**160-6382**	1	GROMMET	
	7	1	**169-5414**	1	CLIP	
	8	1	**198-8588**	1	PANEL	
	9	1	**200-3967**	1	PANEL AS	
	10	1	**115-3072**	1	CLIP AS-CONNECTOR (8-PIN)	
	11	1	**3P-3839**	1	GROMMET	
	12	1	**5P-1075**	3	WASHER-HARD (10.2X22.5X3-MM THK)	
	13	1	**5P-4115**	4	WASHER-HARD (7.2X19X2-MM THK)	
	14	1	**5P-9085**	2	CLIP	
	15	1	**6V-2687**	4	SCREW-PAN HEAD (10-24X1-IN)	
M	16	1	**6V-7732**	3	BOLT (M10X1.5X25-MM)	
M	17	1	**6V-8214**	4	BOLT (M6X1X20-MM)	
	18	1	**8T-4121**	2	WASHER-HARD (11X21X2.5-MM THK)	
M	19	1	**8T-4137**	2	BOLT (M10X1.5X20-MM)	
M	20	1	**9X-2043**	22	SCREW-TRUSS HEAD (M6X1X14-MM)	

M-METRIC PART

290-1148 **GUARD GP-PLATFORM** *(contd.)* **i03261504**

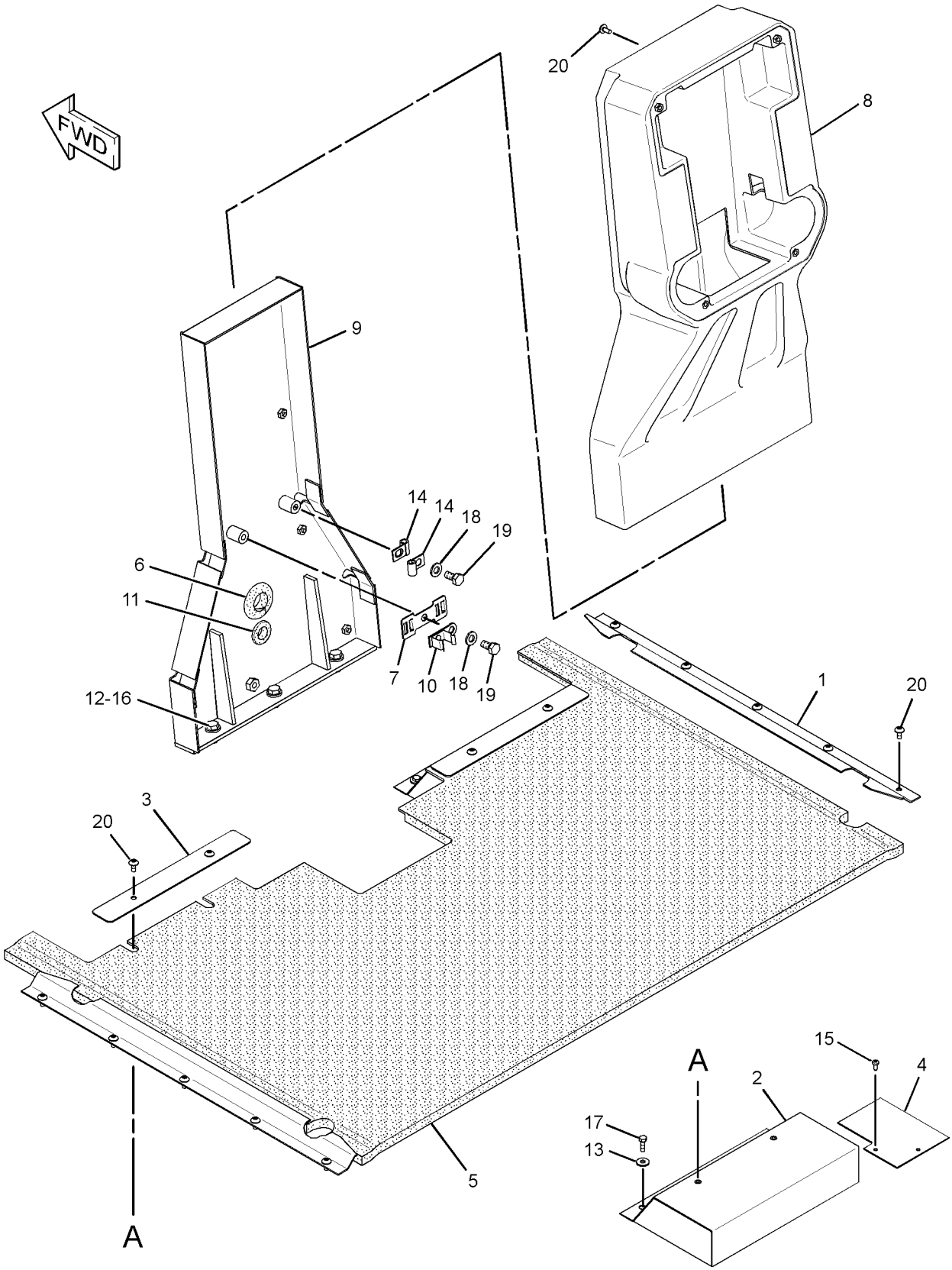

GRAPHIC #1 **<END>** g01671593

106-4884 HITCH GP-ARTICULATING

S/N: JBP1-UP

PART OF 274-7941 GENERAL AR

SMCS-7057, 7100 **i00652991**

NOTE	REF NO	GRAPHIC REF	PART NUMBER	QTY	PART NAME 1 2 3 4 5 6 (PRODUCT LEVEL)	SEE PAGE
	1	1	**4K-8659**	1	BEARING-SLEEVE	
	2	1	**4K-7463**	2	SEAL-LIP TYPE	
	3	1	**0S-1587**	2	BOLT (1/2-13X1.75-IN)	
	4	1	**5P-8245**	19	WASHER-HARD (13.5X25.5X3-MM THK)	
	5	1	**6G-0417**	1	COVER	
	6	1	**1A-1460**	4	BOLT (1/2-13X2-IN)	
	7	1	**2V-4331**	1	COLLAR	
	8	1	**5K-0984**	1	BEARING-SLEEVE	
	9	1	**124-3240**	1	PIN	
	10	1	**5K-0871**	1	PIN-LOWER	
	11	1	**5K-0987**	1	SPACER	
B	12	1	**5K-0988**	1	SHIM PACK (INCLUDES 35-SHIMS)	
	13	1	**5K-0985**	1	BEARING AS-ROLLER	
B	14	1	**4K-7464**	1	SHIM PACK (INCLUDES 19-SHIMS)	
	15	1	**0S-1585**	6	BOLT (1/2-13X1.5-IN)	
	16	1	**0S-1589**	4	BOLT (5/8-11X1.75-IN)	
	17	1	**5P-8247**	4	WASHER-HARD (17X32X3.5-MM THK)	
	18	1	**4V-0015**	1	PLATE-LOCK	
	19	1	**4K-6781**	1	SPACER	
	20	1	**5K-0991**	1	CAP-LOWER	
	21	1	**5K-0983**	2	SEAL-LIP TYPE	
	22	1	**5K-0989**	1	CAP-UPPER	
	23	1	**1D-4569**	7	BOLT (1/2-13X4.25-IN)	

B-USE AS REQUIRED

106-4884 **HITCH GP-ARTICULATING** *(contd.)* **i00652991**

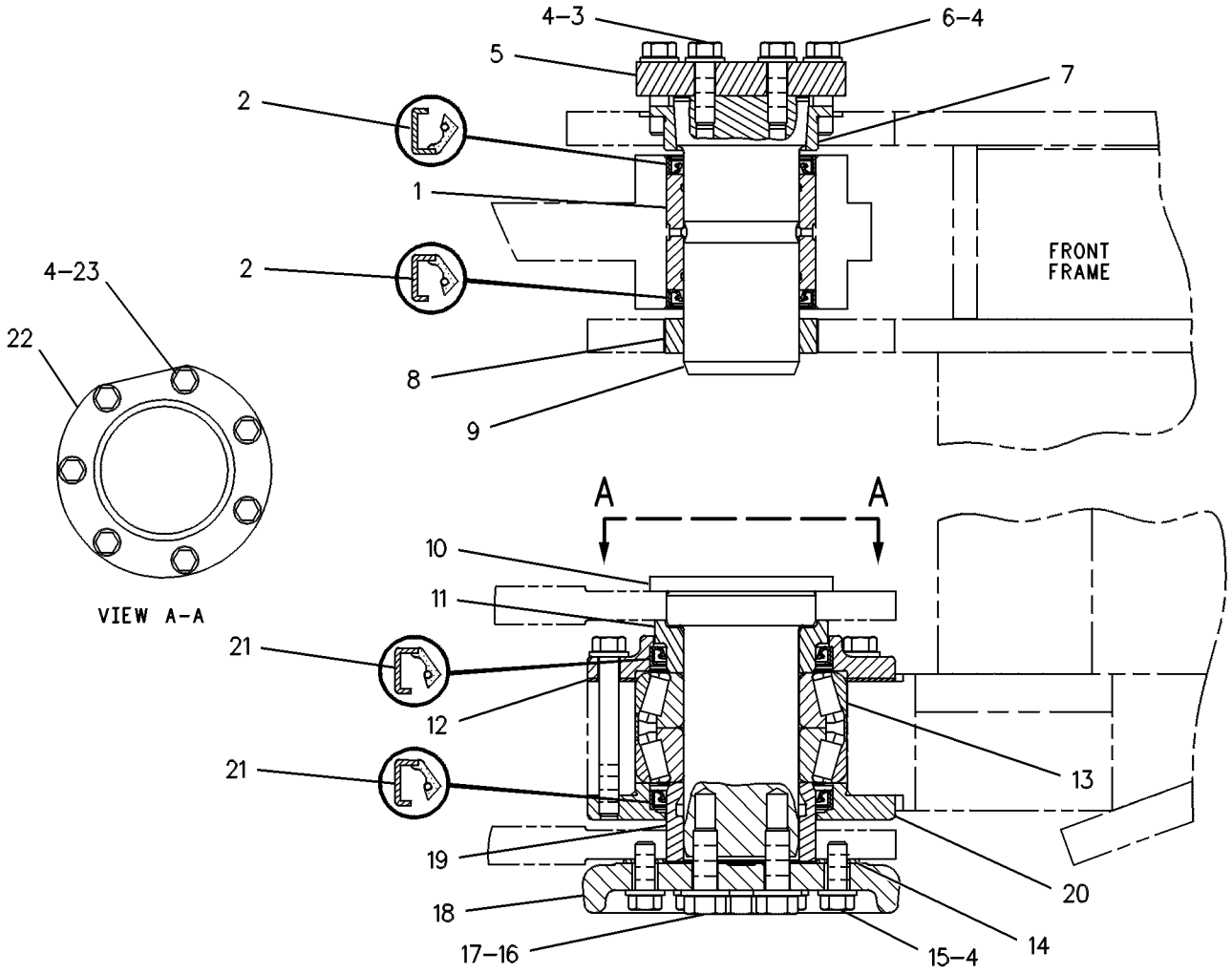

GRAPHIC #1 **<END>** g00108584

FRAME AND BODY

7I-4610 LINES GP-GREASE

S/N: JBP1-UP

PART OF 274-7941 GENERAL AR

SMCS-7510 **i01456162**

NOTE	REF NO	GRAPHIC REF	PART NUMBER	QTY	PART NAME 1 2 3 4 5 6 (PRODUCT LEVEL)	SEE PAGE
	1	1	**3B-7733**	1	FITTING	
	2	1	**3B-6769**	2	ELBOW	
	3	1	**3B-8489**	2	FITTING-GREASE (ARTICULATION HITCH)	
	4	1	**4D-7794**	1	CLIP	
	5	1	**5H-7826**	1	NIPPLE-PIPE	
I	6	1	**3G-6659**	2	HOSE AS	

I-REFER TO HYDRAULIC INFORMATION SYSTEM

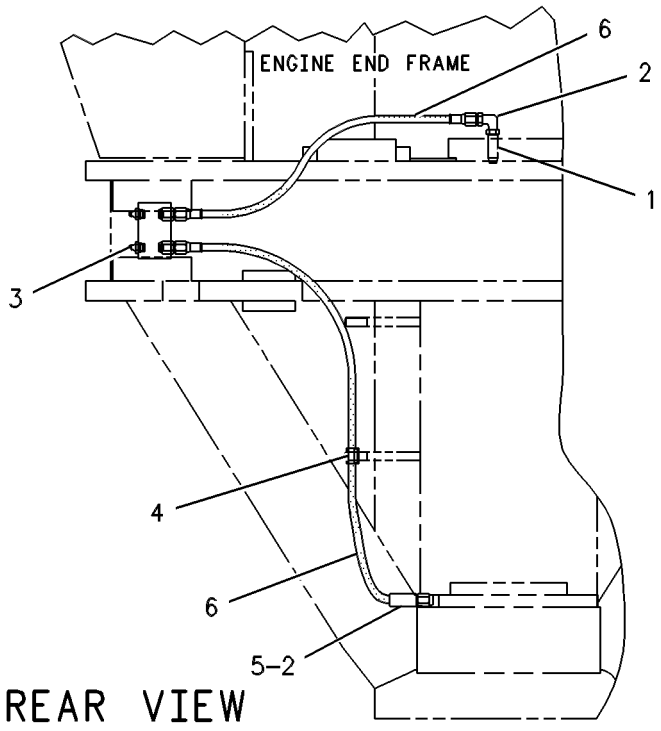

GRAPHIC #1 **<END>** g00109092

131-3740 LINK GP-STEERING

S/N: JBP1-UP

PART OF 134-1080 AXLE GP-FRONT

SMCS-4305 **i00136164**

NOTE	REF NO	GRAPHIC REF	PART NUMBER	QTY	PART NAME 1 2 3 4 5 6 (PRODUCT LEVEL)	SEE PAGE
	1	1	**131-3739**	1	TIE ROD	
	2	1	**131-3738**	1	TIE ROD GP (LH THREAD, RH)	
		1	**2F-8057**	1	NUT-SLOTTED	
		1	**132-1143**	1	SEAL-BOOT	
	3	1	**131-3737**	1	TIE ROD GP (RH THREAD, LH)	
		1	**2F-8057**	1	NUT-SLOTTED	
		1	**132-1143**	1	SEAL-BOOT	
	4	1	**132-1144**	2	CLAMP	
	5	1	**1B-4367**	2	BOLT (5/8-11X3-IN)	
	6	1	**3K-2889**	2	LOCKNUT (5/8-11-THD)	

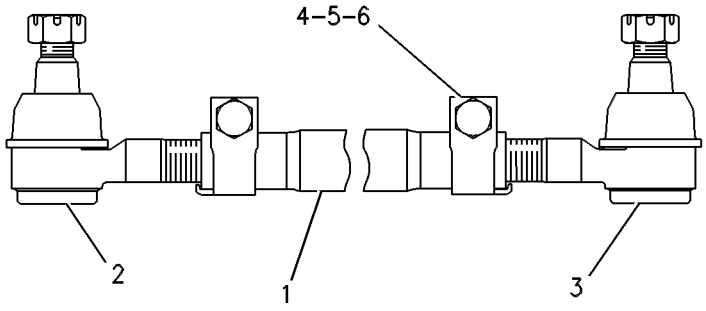

GRAPHIC #1 **<END>** g00109239

FRAME AND BODY

295-2933 STEP GP

S/N: JBP1-UP

PART OF 274-7941 GENERAL AR

SMCS-7254 **i03247345**

NOTE	REF NO	GRAPHIC REF	PART NUMBER	QTY	PART NAME 1 2 3 4 5 6 (PRODUCT LEVEL)	SEE PAGE
	1	1	**4V-9804**	8	PLATE	
	2	1	**4V-9809**	2	STEP AS	
					(EACH INCLUDES)	
		1	**4V-9803**	2	PLATE	
	3	1	**8X-1032**	4	SUPPORT-STEP (RUBBER)	
	4	1	**123-3698**	2	PLATE	
	5	1	**123-3699**	2	PLATE	
	6	1	**198-7379**	2	STEP AS	
					(EACH INCLUDES)	
		1	**4V-9803**	2	PLATE	
	7	1	**198-7380**	2	STEP AS	
					(EACH INCLUDES)	
		1	**4V-9803**	2	PLATE	
	8	1	**1D-4689**	24	BOLT (1/2-13X1.75-IN)	
	9	1	**1K-6872**	24	LOCKNUT (1/2-13-THD)	
	10	1	**5P-1076**	8	WASHER-HARD (13.5X30X4-MM THK)	
M	11	1	**8T-4183**	8	BOLT (M12X1.75X40-MM)	
	12	1	**8T-4223**	24	WASHER-HARD (13.5X25.5X3-MM THK)	

M-METRIC PART

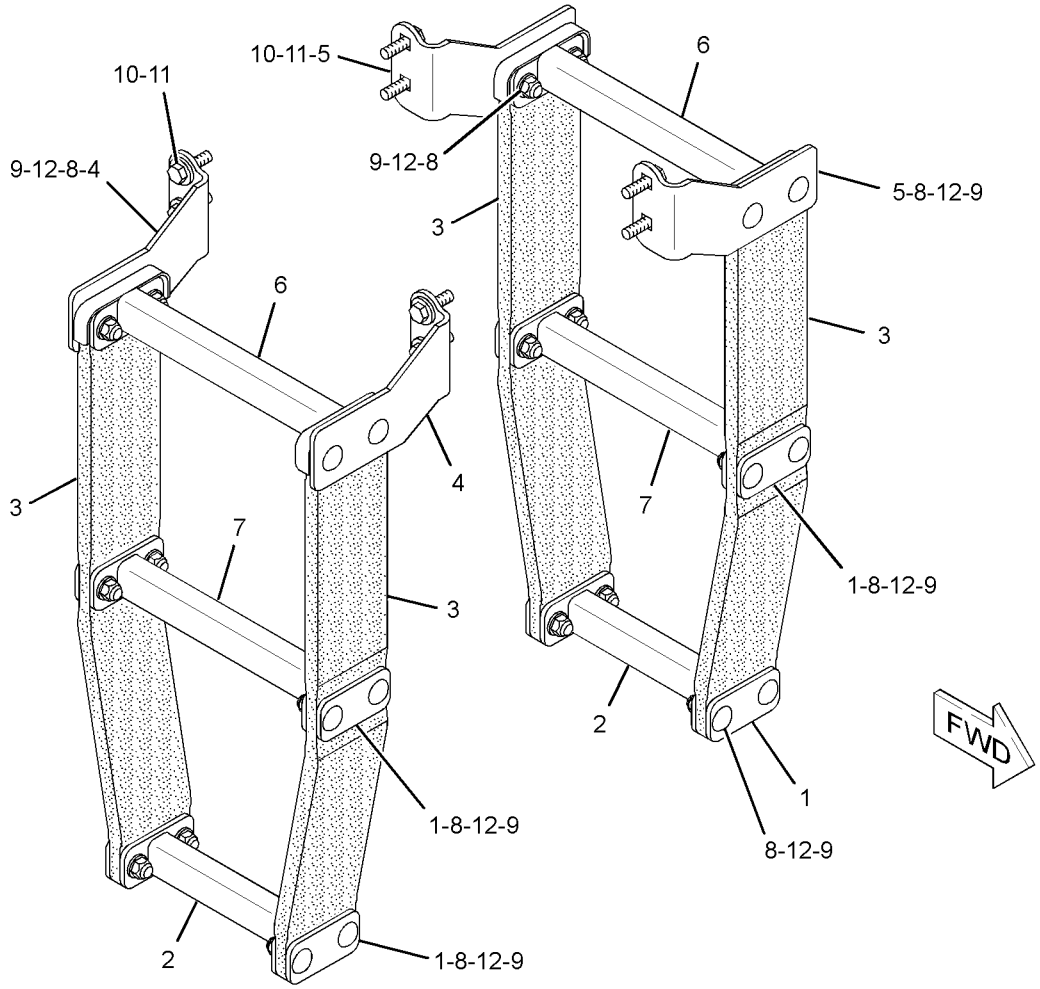

GRAPHIC #1 **<END>** g01708139

298-3520 SUPPORT GP-BATTERY

S/N: JBP1-UP
PART OF 304-9957 BATTERY & WIRING GP
AN ATTACHMENT

SMCS-7257 **i03316103**

NOTE	REF NO	GRAPHIC REF	PART NUMBER	QTY	PART NAME 1 2 3 4 5 6 (PRODUCT LEVEL)	SEE PAGE
	1	1	**246-2641**	1	PADLOCK GP	
		1	**5P-8500**	1	KEY	
	2	1	**143-4792**	4	BUMPER	
	3	1	**298-3523**	1	COVER AS	
		1	**6F-7013**	2	HANDLE	
	4	1	**298-3529**	1	SUPPORT AS	
M		1	**8T-3490**	4	NUT-WELD (M10X1.5-THD)	
		1	**034-7044**	6	RIVET	
		1	**161-4423**	2	LATCH AS	
	5	1	**198-4778**	4	WASHER-HARD (13.5X30X12-MM THK)	
M	6	1	**6V-5684**	2	BOLT (M12X1.75X45-MM)	
M	7	1	**6V-7673**	2	BOLT (M12X1.75X50-MM)	

M-METRIC PART

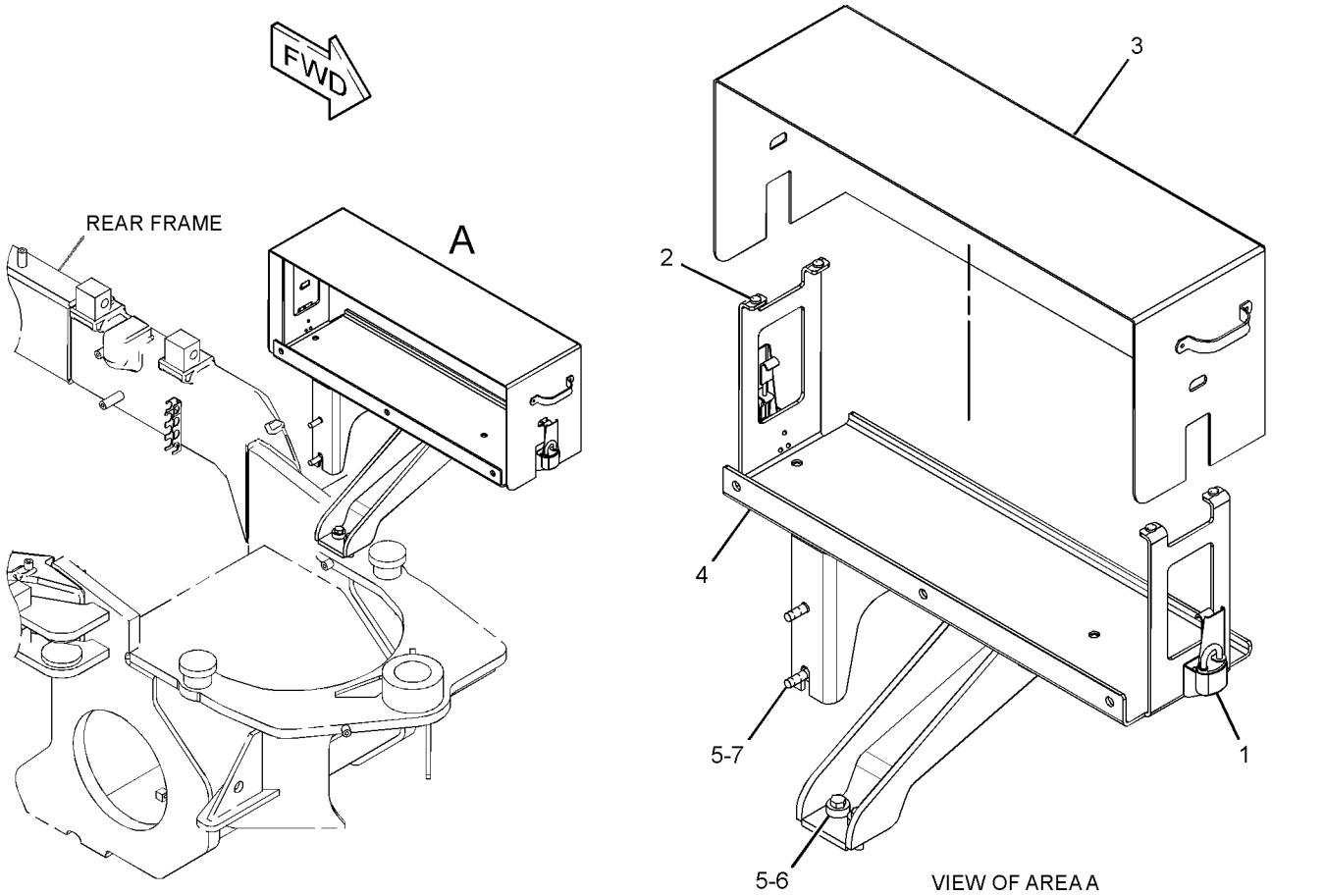

GRAPHIC #1 **<END>** g01758753

299-8307 SUPPORT GP-RADIATOR

S/N: JBP1-UP

PART OF 274-7941 GENERAL AR

SMCS-1353 **i03247342**

NOTE	REF NO	GRAPHIC REF	PART NUMBER	QTY	PART NAME 1 2 3 4 5 6 (PRODUCT LEVEL)	SEE PAGE
	1	1	**274-1704**	2	HANDHOLD	
	2	1	**299-8306**	1	BRACKET AS	
	3	1	**299-8318**	1	PLATE AS	
	4	1	**299-9478**	2	PLATE	
	5	1	**303-5996**	1	BRACKET AS	
	6	1	**303-5998**	1	BRACKET AS	
	7	1	**303-5999**	1	SUPPORT AS	
Y	8	1	*303-6003*	1	GUARD GP-FAN	66
	9	1	**303-6013**	1	BRACKET	
	10	1	**303-6014**	1	PLATE AS	
	11	1	**303-6015**	1	PLATE AS	
	12	1	**303-6017**	1	BRACKET AS	
	13	1	**303-6036**	1	PLATE AS	
	14	1	**317-1534**	1	PLATE AS	
		1	**5D-9629**	1	ROD	
		1	**6V-4604**	5	RIVET-POP	
	15	1	**317-1537**	2	PLATE	
	16	1	**320-0924**	1	PLATE	
	17	1	**198-4782**	4	WASHER-HARD (26X47X12-MM THK)	
M	18	1	**7X-2575**	4	BOLT (M24X3X60-MM)	
	19	1	**7X-7729**	8	WASHER (11X25X3-MM THK)	
	20	1	**8T-4121**	58	WASHER-HARD (11X21X2.5-MM THK)	
M	21	1	**8T-4136**	39	BOLT (M10X1.5X25-MM)	
M	22	1	**8T-4137**	16	BOLT (M10X1.5X20-MM)	
M	23	1	**8T-4195**	10	BOLT (M10X1.5X30-MM)	
M	24	1	**8T-4196**	1	BOLT (M10X1.5X35-MM)	
	25	1	**9D-3767**	1	PLUG-BUTTON	
D	26	1	**5P-8309**		SEAL (1.04-M EACH)	

D-ORDER BY THE METER
M-METRIC PART
Y-SEPARATE ILLUSTRATION

299-8307 **SUPPORT GP-RADIATOR** *(contd.)* **i03247342**

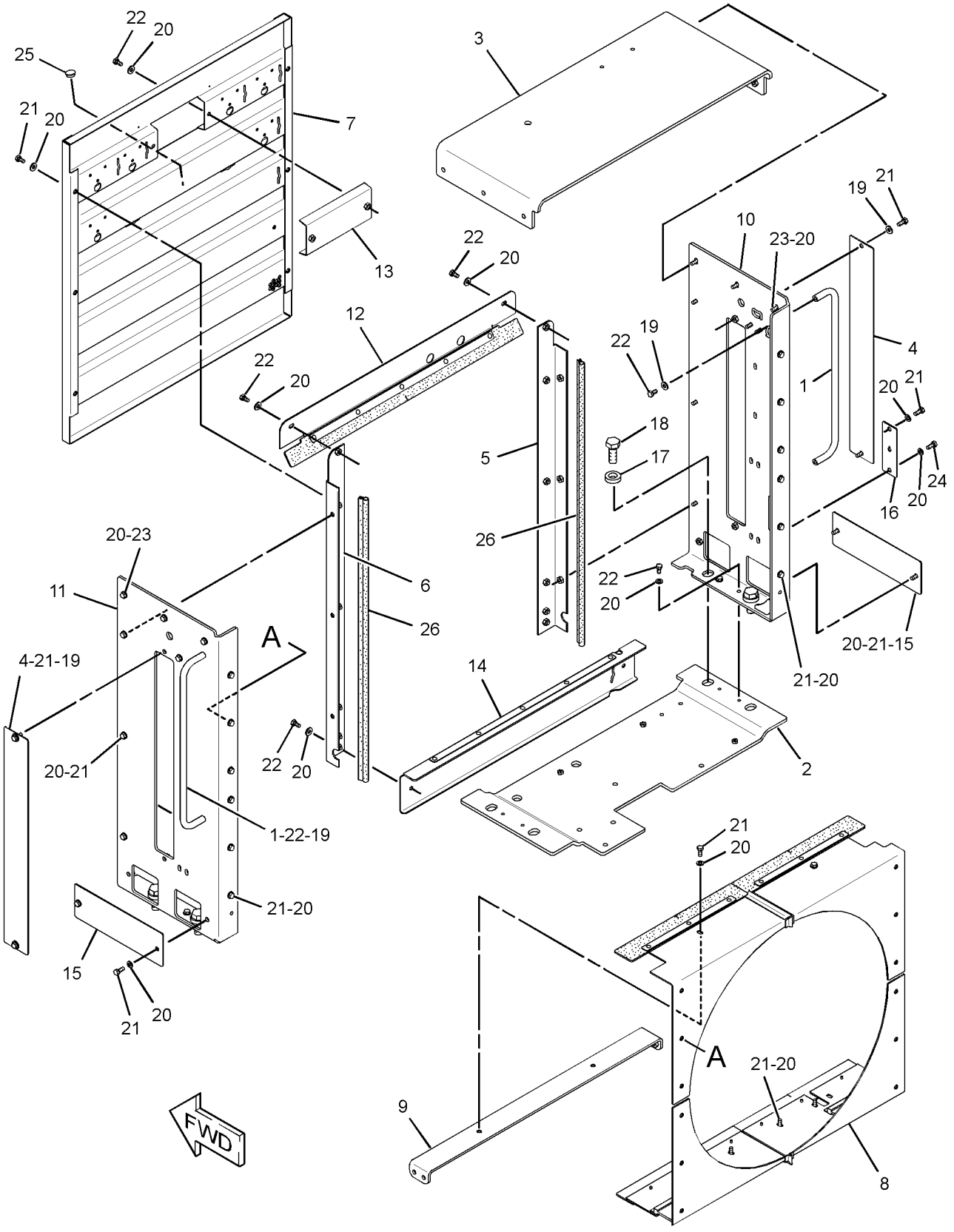

GRAPHIC #1 **<END>** g01769516

215-3005 AIR DRYER GP

S/N: JBP1-UP
PART OF 311-2739 DRYER & LINES GP-AIR
AN ATTACHMENT

SMCS-4285 **i02306471**

NOTE	REF NO	GRAPHIC REF	PART NUMBER	QTY	PART NAME 1 2 3 4 5 6 (PRODUCT LEVEL)	SEE PAGE
	1	1	**203-2390**	1	VALVE	
	2	1	**203-2391**	1	VALVE AS	
	3	1	**203-2423**	1	ELEMENT-HEATING (AIR DRYER)	
	4	1	**203-2389**	1	CARTRIDGE-DESICCANT (AIR DRYER)	
	5	1	**218-2971**	1	VALVE GP-PURGE (AIR DRYER)	

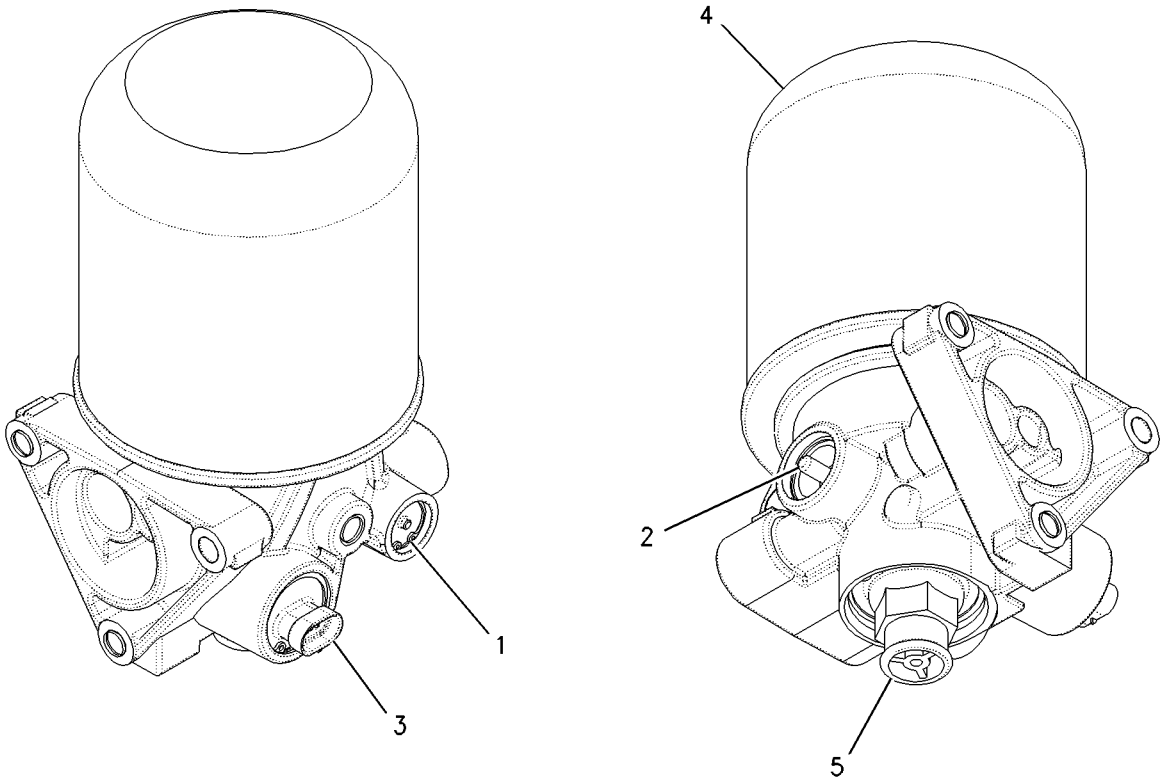

GRAPHIC #1 **<END>** g00945969

BRAKING SYSTEM

311-2737 AIR DRYER GP

S/N: JBP1-UP

AN ATTACHMENT

SMCS-4285 **i03251482**

NOTE	REF NO	GRAPHIC REF	PART NUMBER	QTY	PART NAME 1 2 3 4 5 6 (PRODUCT LEVEL)	SEE PAGE
	1	1	**9W-1442**	1	FUSE (10-AMPERE)	
	2	1	**300-1377**	1	HARNESS AS-WIRING	
Y	3	1	*311-2738*	1	DRYER & LINES GP-AIR	351

Y-SEPARATE ILLUSTRATION

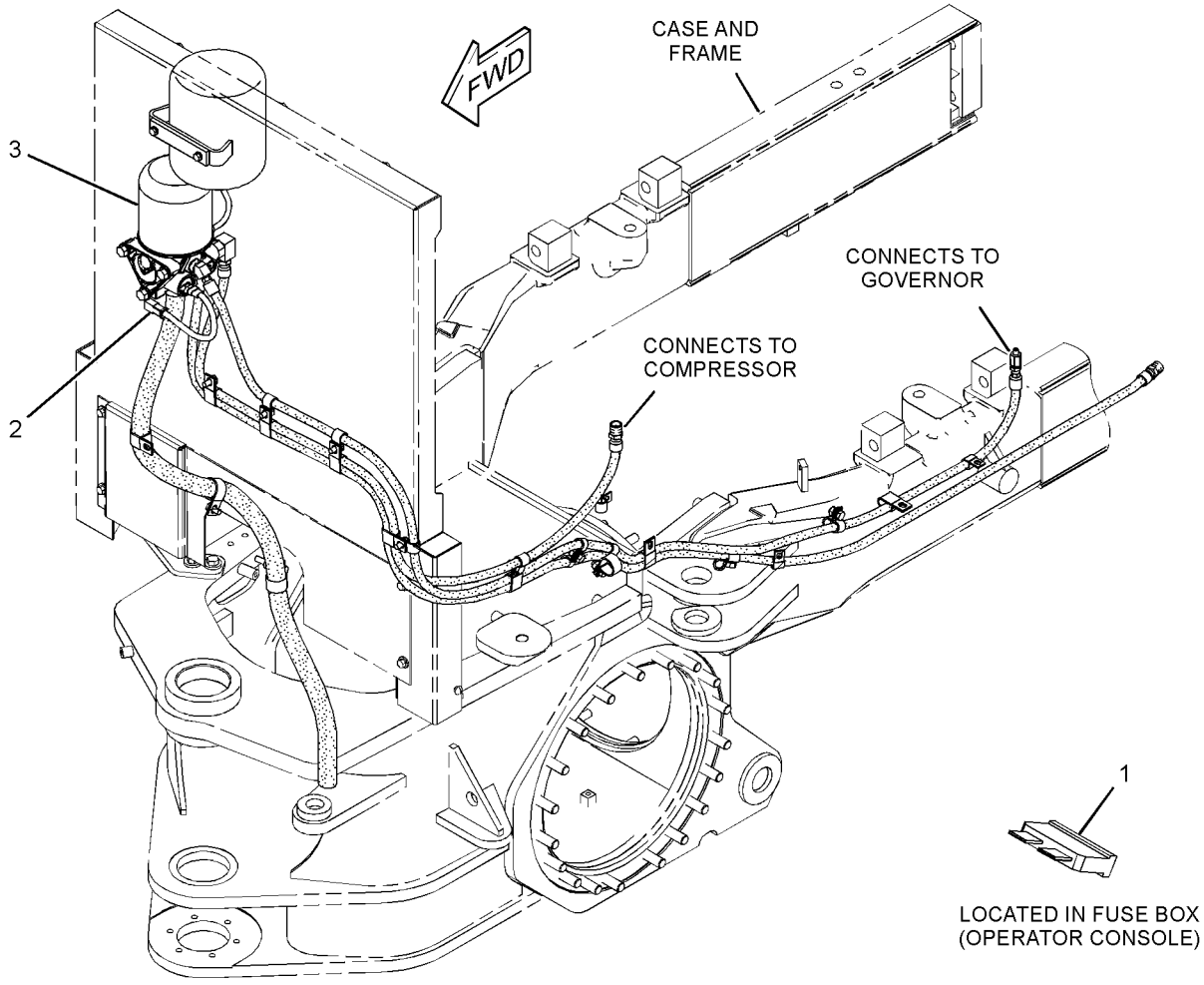

GRAPHIC #1 **<END>** g01689793

9W-5132 BRAKE GP-PARKING

S/N: DPK1-UP

PART OF 275-6546 TRANSMISSION AR

SMCS-3077, 4267 **i02024329**

NOTE	REF NO	GRAPHIC REF	PART NUMBER	QTY	PART NAME 1 2 3 4 5 6 (PRODUCT LEVEL)	SEE PAGE
M	1	1	**6V-5842**	6	BOLT (M10X1.5X40-MM)	
	2	1	**6V-5839**	6	WASHER (11X21X2.5-MM THK)	
	3	1	**6Y-3849**	1	HUB-CLUTCH	
	4	1	**9M-4335**	6	DOWEL-REACTION	
	5	1	**5J-1086**	1	SEAL-O-RING	
	6	1	**6Y-3850**	1	HOUSING-BRAKE	
	7	1	**4S-5838**	1	RETAINER	
M	8	1	**8T-0372**	1	BOLT (M12X1.75X90-MM)	
	9	1	**4F-7390**	1	SEAL-O-RING	
	10	1	**1P-7521**	1	YOKE	
	11	1	**203-5957**	1	SEAL	
	12	1	**9W-4431**	20	SPRING	
	13	1	**9W-4430**	20	SPRING	
M	14	1	**6V-3668**	12	BOLT (M12X1.75X30-MM)	
	15	1	**7G-0437**	6	PLATE-CLUTCH	
	16	1	**6Y-5352**	5	DISC-FRICTION	
	17	1	**2J-6274**	1	SEAL-O-RING	
	18	1	**9S-4182**	1	PLUG-O-RING	
	19	1	**3J-7354**	1	SEAL-O-RING	
	20	1	**203-5958**	1	SEAL	
	21	1	**9W-4452**	1	PISTON	
	22	1	**9W-4453**	1	PISTON	
	23	1	**4H-9105**	1	SEAL-O-RING	
	24	1	**6Y-3852**	1	PLUG	
	25	1	**9N-6152**	1	PLUG	
	26	1	**2M-9780**	1	SEAL-O-RING	
	27	1	**9X-7743**	1	SEAL-LIP TYPE	

M-METRIC PART

9W-5132 **BRAKE GP-PARKING** *(contd.)* **i02024329**

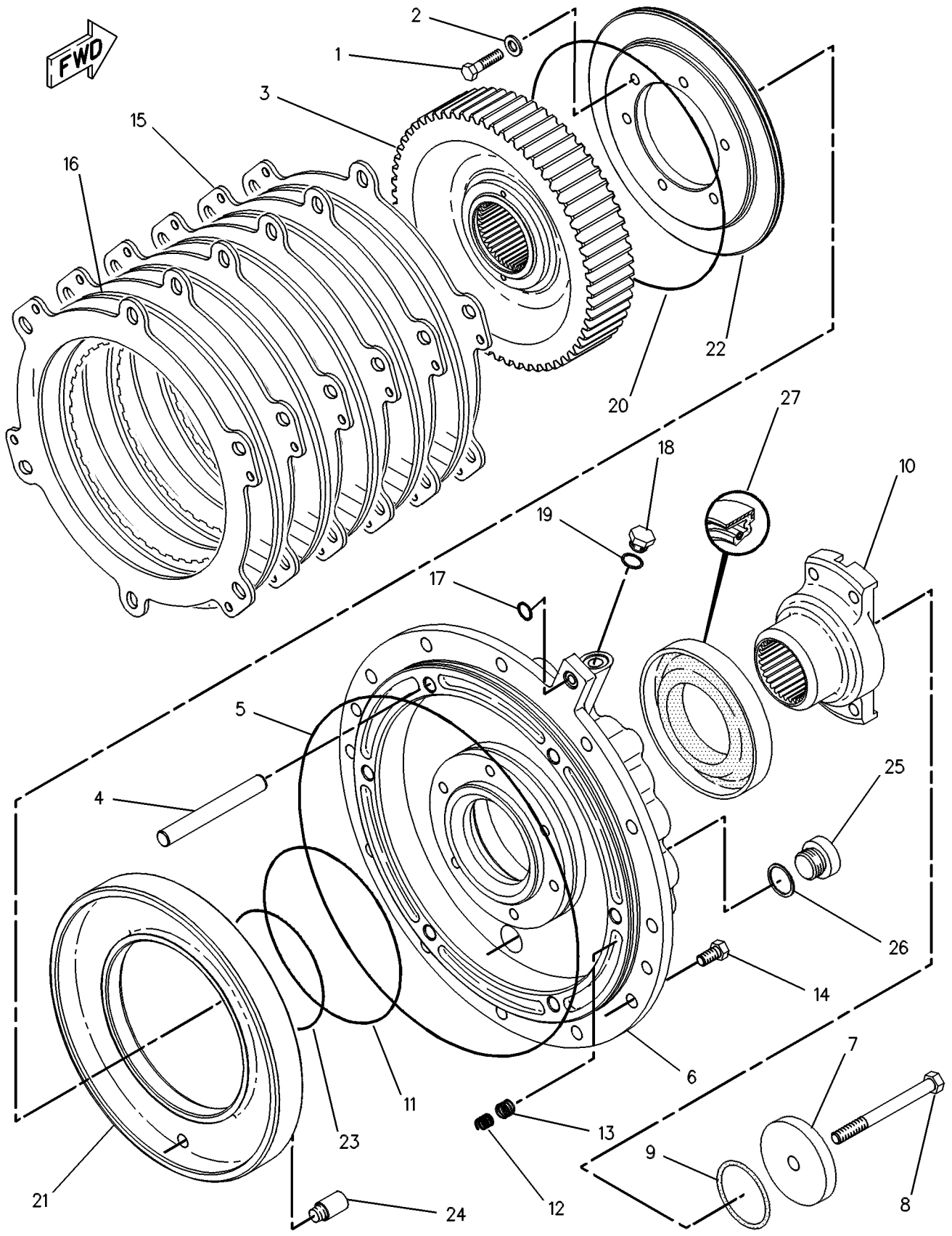

GRAPHIC #1 **<END>** g00108550

8W-4265 BRAKE GP-SERVICE

S/N: JBP1-UP

PART OF 274-7941 GENERAL AR

SMCS-4251 **i03431821**

NOTE	REF NO	GRAPHIC REF	PART NUMBER	QTY	PART NAME 1 2 3 4 5 6 (PRODUCT LEVEL)	SEE PAGE
	1	1	**147-3310**	4	SPINDLE-WHEEL	
	2	1	**8X-2896**	4	HOUSING	
B	3	1	**7D-8439**	20	SHIM (0.007-IN THK)	
B		1	**7D-8441**	28	SHIM (0.005-IN THK)	
B		1	**9D-7047**	8	SHIM (0.02-MM THK)	
	4	1	**9D-3075**	4	RETAINER	
	5	1	**5P-9118**	12	BOLT-LOCKING (5/8-11X2.5-IN)	
	6	1	**102-1692**	4	SPROCKET (25-TEETH)	
	7	1	**8X-2898**	4	COVER	
	8	1	**8T-6472**	40	BOLT-LOCKING (5/8-11X2.5-IN)	
		1	**0S-1566**	16	BOLT (5/8-11X1.5-IN)	
	9	1	**4D-3704**	64	WASHER-HARD (17X30X5-MM THK)	
	10	1	**5P-8244**	24	WASHER-HARD (12X22.5X2.5-MM THK)	
	11	1	**9J-5498**	24	SPRING	
	12	1	**7D-8437**	4	CONE-BEARING	
	13	1	**1P-4693**	8	CUP-BEARING	
	14	1	**2P-3628**	8	SEAL-O-RING	
	15	1	**7D-8434**	40	DISC	
	16	1	**6Y-7916**	36	DISC-FRICTION	
	17	1	**6G-0905**	24	BOLT (7/16-14X4.37-IN)	
	18	1	**4B-7270**	4	CONE-BEARING	
	19	1	**9W-6645**	4	SEAL GP-DUO-CONE	
					(EACH INCLUDES)	
	20	1	**5K-5129**	2	RING-SEALING	
	21	1	**2G-6337**	4	HUB-BRAKE	
	22	1	**6G-3378**	4	PISTON	
	23	1	**4D-5497**	4	SEAL-D-RING	
	24	1	**3J-5390**	4	PLUG	
	25	1	**7D-8436**	4	SEAL-D-RING	
	26	1	**8T-6473**	8	BOLT-LOCKING (5/8-11X2.75-IN)	

B-USE AS REQUIRED

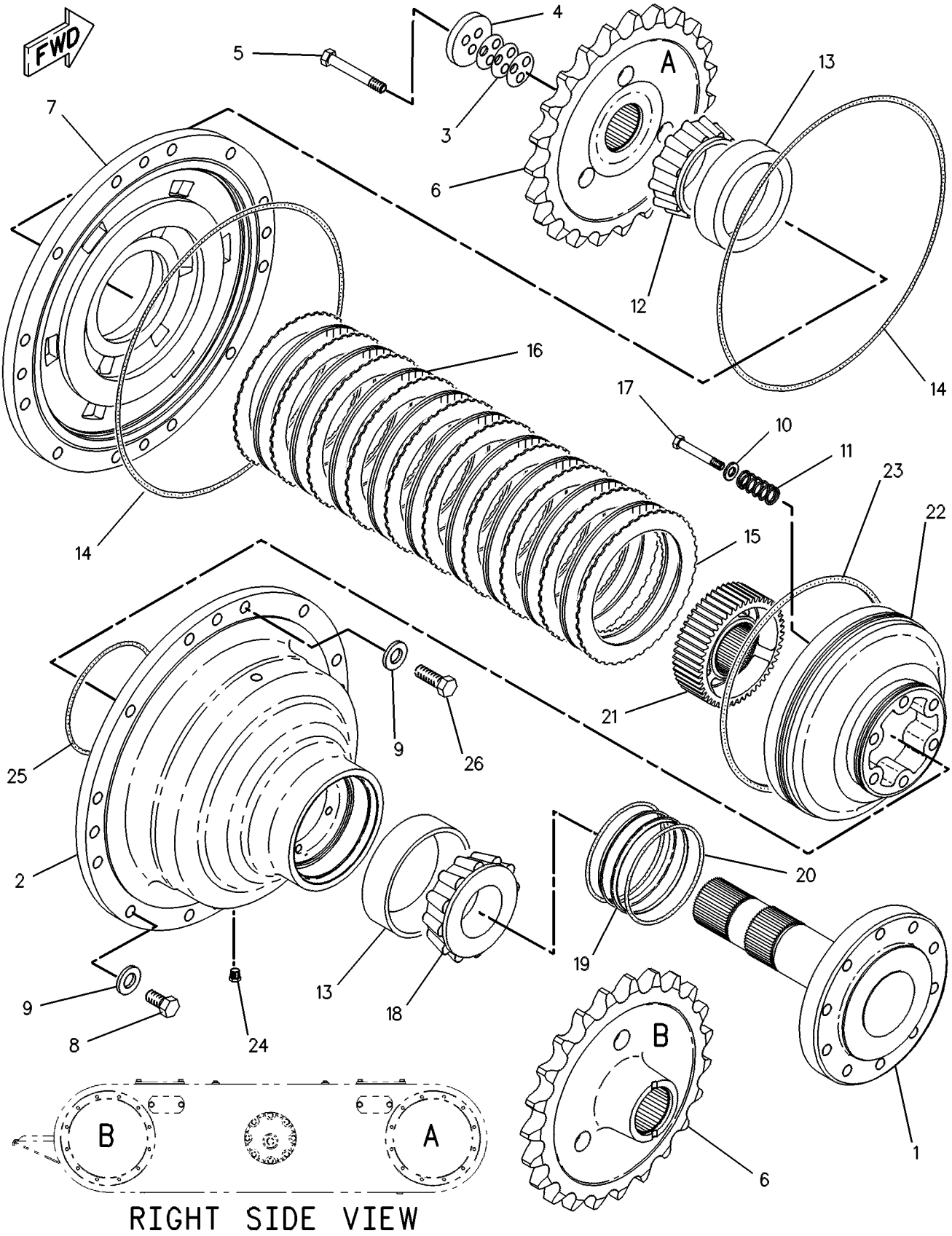

GRAPHIC #1 **<END>** g00108602

284-5771 CONTROL GP-PARKING BRAKE

S/N: JBP1-UP

PART OF 274-7941 GENERAL AR

SMCS-4282, 4284 **i03431660**

NOTE	REF NO	GRAPHIC REF	PART NUMBER	QTY	PART NAME 1 2 3 4 5 6 (PRODUCT LEVEL)	SEE PAGE
	1	1	**3B-8822**	1	ELBOW	
I	2	1	**4S-7529**	1	HOSE AS	
	3	1	**4S-7606**	2	ELBOW	
	4	1	**5K-2408**	2	FITTING	
	5	1	**5T-8285**	1	JUNCTION BLOCK	
	6	1	**6D-1432**	1	VALVE-CHECK (PARKING BRAKE)	
	7	1	**7X-4736**	1	GROMMET	
	8	1	**8W-8528**	2	SLEEVE	
	9	1	**8X-5160**	1	GROMMET	
I	10	1	**112-4834**	1	HOSE AS	
Y	11	1	**185-0008**	1	VALVE GP-SOLENOID (PARKING BRAKE)	357
	12	1	**253-4347**	1	VALVE AS-AIR (PARKING BRAKE)	
		1	**1H-1023**	1	SEAL-O-RING	
		1	**6H-9691**	1	SEAL-O-RING	
	13	1	**316-6819**	1	PLATE	
I	14	1	**317-7375**	1	HOSE AS	
	15	1	**130-5300**	1	CLIP	
	16	1	**3D-8884**	1	ELBOW	
	17	1	**4D-6585**	1	ELBOW-PIPE	
	18	1	**4H-6147**	1	CONNECTOR (PIPE)	
	19	1	**4K-8864**	1	CLIP	
	20	1	**5H-4778**	2	ELBOW	
	21	1	**5K-1094**	1	LOCKWASHER	
	22	1	**5M-3062**	1	BOLT (3/8-16X0.75-IN)	
	23	1	**5M-6213**	2	PLUG-PIPE	
	24	1	**5P-1075**	1	WASHER-HARD (10.2X22.5X3-MM THK)	
	25	1	**6V-8801**	1	NUT (3/8-16-THD)	
	26	1	**8G-1815**	1	PLATE	
	27	1	**8T-2501**	2	BOLT (3/8-16X2-IN)	
	28	1	**8T-4121**	5	WASHER-HARD (11X21X2.5-MM THK)	
M	29	1	**8T-4133**	2	NUT (M10X1.5-THD)	
M	30	1	**8T-4136**	1	BOLT (M10X1.5X25-MM)	
M	31	1	**8T-4137**	2	BOLT (M10X1.5X20-MM)	
	32	1	**8T-4896**	3	WASHER-HARD (10.2X18.5X2.5-MM THK)	
	33	1	**9M-8406**	3	CLIP	

I-REFER TO HYDRAULIC INFORMATION SYSTEM
M-METRIC PART
Y-SEPARATE ILLUSTRATION

284-5771 **CONTROL GP-PARKING BRAKE** *(contd.)* **i03431660**

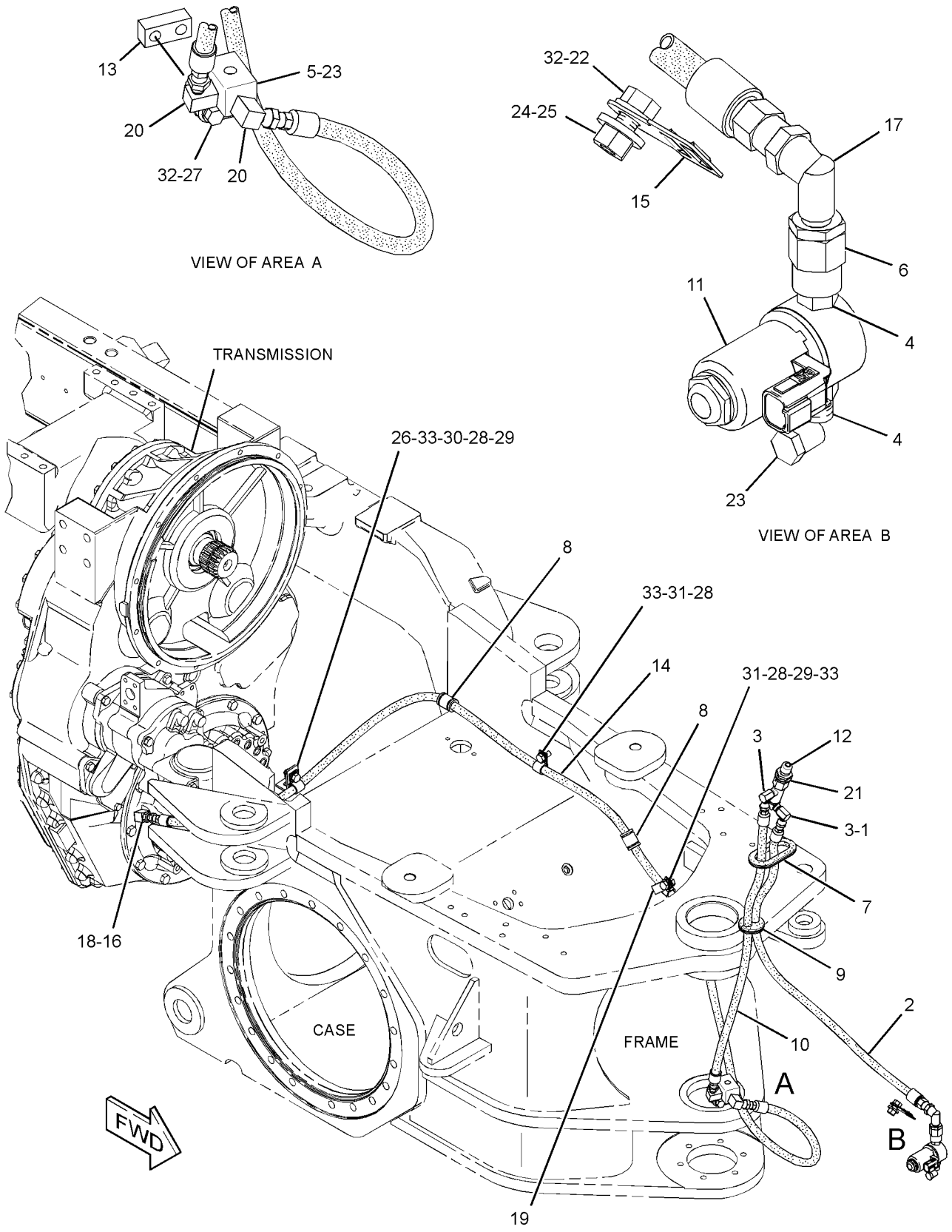

GRAPHIC #1 **<END>** g01696958

BRAKING SYSTEM

283-3499 CONTROL GP-SERVICE BRAKE

S/N: JBP1-UP

PART OF 274-7941 GENERAL AR

SMCS-4265, 4269 **i03431640**

NOTE	REF NO	GRAPHIC REF	PART NUMBER	QTY	PART NAME 1 2 3 4 5 6 (PRODUCT LEVEL)	SEE PAGE
	1	2	**1F-4622**	2	BEARING AS-NEEDLE	
	2	2	**2D-0193**	1	CONNECTOR-PIPE	
	3	2	**2D-7325**	1	TEE-PIPE	
	4	1,2	**2L-3331**	5	CONNECTOR-PIPE	
	5	2	**3S-2713**	1	NUT-FULL (3/8-24-THD)	
	6	1	**3T-0050**	2	CLIP	
	7	1	**5K-9238**	4	CONNECTOR	
	8	1	**5T-8285**	1	JUNCTION BLOCK	
	9	1	**6K-6826**	4	ELBOW (45-DEG)	
I	10	1	**6M-9537**	1	HOSE AS	
	11	2	**6W-5817**	1	SPRING	
	12	2	**7V-0446**	2	CLIP	
	13	1	**8D-7026**	4	GUARD	
	14	2	**8L-6005**	3	TEE-PIPE	
	15	1	**8W-8527**	14	SLEEVE	
	16	1	**8W-8903**	2	CLIP	
Y	17	2	*8X-2650*	1	VALVE GP-AIR CONTROL (SERVICE BRAKE)	735
	18	2	**8X-2680**	1	BRACKET AS	
	19	1	**8X-7603**	2	HOSE AS	
	20	1	**9G-8140**	1	SPACER (10.5X25X15-MM THK)	
	21	2	**9J-8783**	1	SHIM (0.508-MM THK)	
	22	1	**9S-1302**	2	WASHER (27X44.45X2.5-MM THK)	
	23	1	**9S-7706**	2	ELBOW-FLARED	
	24	1	**9X-8606**	8	CLIP	
	25	1	**110-3326**	1	PLATE AS	
		1	**3S-0391**	1	BOSS (3/8-16-THD)	
	26	1	**153-2446**	1	BRACKET	
	27	2	**169-0921**	1	ROD END (INTERNAL THREAD)	
	28	2	**172-4211**	1	SPACER (10.5X22X50.8-MM THK)	
	29	1	**176-2945**	2	FITTING-BULKHEAD	
	30	2	**177-1713**	1	ROD	
	31	2	**180-4027**	1	CAM	
	32	2	**180-7147**	1	LEVER	
	33	2	**185-1122**	1	BRACKET	
	34	1	**198-5438**	2	BLOCK	
	35	1	**198-5439**	1	TUBE AS	
	36	1	**198-5440**	1	TUBE AS	
	37	1	**203-3337**	1	TUBE AS	
	38	1	**203-3340**	1	TUBE AS	
	39	1	**203-3341**	1	TUBE AS	
	40	1	**203-3342**	1	TUBE AS	
	41	2	**207-4924**	1	PEDAL-BRAKE	
	42	1	**301-6395**	1	HOSE AS	
	43	1	**301-6398**	1	HOSE AS	
	44	1	**307-6241**	2	BLOCK-CLAMP	
	45	1	**307-6242**	2	BLOCK-CLAMP	
	46	1	**307-6243**	4	BLOCK-CLAMP	
	47	1	**307-7500**	2	BLOCK-CLAMP	
	48	1	**307-7501**	1	PLATE AS	
	49	1	**307-7502**	1	PLATE	
	50	1	**313-4181**	1	BRACKET AS	
	51	1	**316-8381**	1	HOSE AS	
	52	2	**129-3173**	1	BOLT-12 POINT HEAD (3/8-16X1.25-IN)	
	53	2	**1B-0676**	1	PIN	
	54	2	**1H-7724**	3	BUSHING-REDUCER	
	55	2	**1L-2279**	1	ELBOW	

283-3499 **CONTROL GP-SERVICE BRAKE** *(contd.)* **i03431640**

NOTE	REF NO	GRAPHIC REF	PART NUMBER	QTY	PART NAME 1 2 3 4 5 6 (PRODUCT LEVEL)	SEE PAGE
	56	1	**1S-0994**	1	CLIP	
	57	1	**242-9245**	2	HOSE AS	
	58	1	**302-3908**	1	SPACER (11X20X30-MM THK)	
	59	2	**3B-7721**	1	BUSHING-REDUCER	
	60	1	**3D-8913**	2	ELBOW	
	61	1	**3K-6060**	4	LOCKNUT (3/8-16-THD)	
	62	2	**3K-8280**	1	PIN-CLEVIS	
	63	1	**3S-8664**	5	CLIP	
	64	2	**4B-6060**	1	SETSCREW-SOCKET (1/4-20X0.375-IN)	
	65	2	**4D-0577**	1	ELBOW	
	66	1,2	**4D-0582**	4	ELBOW	
I	67	1	**4D-6885**	1	HOSE AS	
	68	1	**4D-7388**	1	CLIP	
	69	1	**4D-7735**	1	CLIP	
	70	2	**4J-8922**	1	ROD END	
	71	2	**4M-6425**	1	BOLT (5/16-18X1-IN)	
M	72	2	**5C-2890**	3	NUT (M6X1-THD)	
	73	1	**5H-4778**	1	ELBOW	
	74	1	**5M-3062**	1	BOLT (3/8-16X0.75-IN)	
	75	1	**5M-6213**	1	PLUG-PIPE	
	76	1	**6V-1228**	1	CLIP	
	77	2	**6V-4245**	1	ELBOW	
M	78	2	**6V-7357**	1	BOLT (M6X1X25-MM)	
	79	2	**6V-8189**	3	NUT (5/16-18-THD)	
	80	1	**6V-8801**	2	NUT (3/8-16-THD)	
	81	2	**6V-8918**	2	BOLT (5/16-18X1.25-IN)	
	82	1,2	**7M-7410**	6	PLUG-PIPE	
	83	2	**7X-7729**	2	WASHER (11X25X3-MM THK)	
	84	1	**8T-4121**	22	WASHER-HARD (11X21X2.5-MM THK)	
M	85	1,2	**8T-4133**	9	NUT (M10X1.5-THD)	
M	86	2	**8T-4136**	2	BOLT (M10X1.5X25-MM)	
M	87	1	**8T-4137**	11	BOLT (M10X1.5X20-MM)	
M	88	2	**8T-4178**	1	BOLT (M10X1.5X90-MM)	
M	89	1	**8T-4185**	1	BOLT (M10X1.5X50-MM)	
M	90	1	**8T-4186**	2	BOLT (M10X1.5X40-MM)	
	91	2	**8T-4224**	5	WASHER-HARD (8.8X16X2-MM THK)	
	92	2	**8T-4226**	1	WASHER-PLATED (10.5X45X3-MM THK)	
	93	1,2	**8T-4896**	13	WASHER-HARD (10.2X18.5X2.5-MM THK)	
	94	1	**8T-9056**	4	BOLT (3/8-16X1.25-IN)	
	95	1	**8X-8450**	1	PLATE	
	96	1	**9B-7237**	1	BOLT (3/8-16X1.25-IN)	
	97	1	**9X-8250**	1	CLIP	
	98	2	**9X-8256**	1	WASHER (6.6X12X2-MM THK)	
E	99	1	**5P-0767**		HOSE (82-CM)	

E-ORDER BY THE CENTIMETER
I-REFER TO HYDRAULIC INFORMATION SYSTEM
M-METRIC PART
Y-SEPARATE ILLUSTRATION

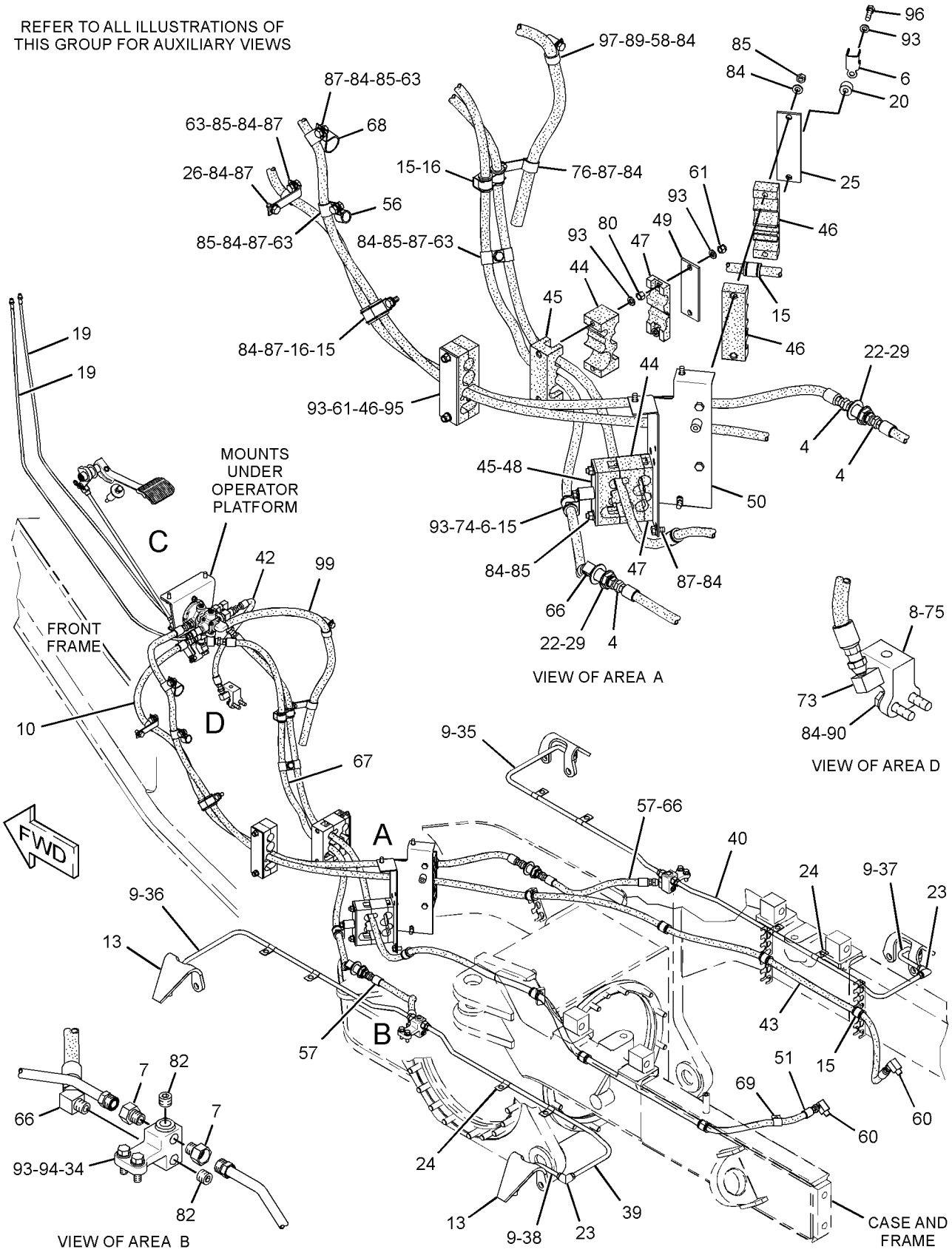

GRAPHIC #1

g01710518

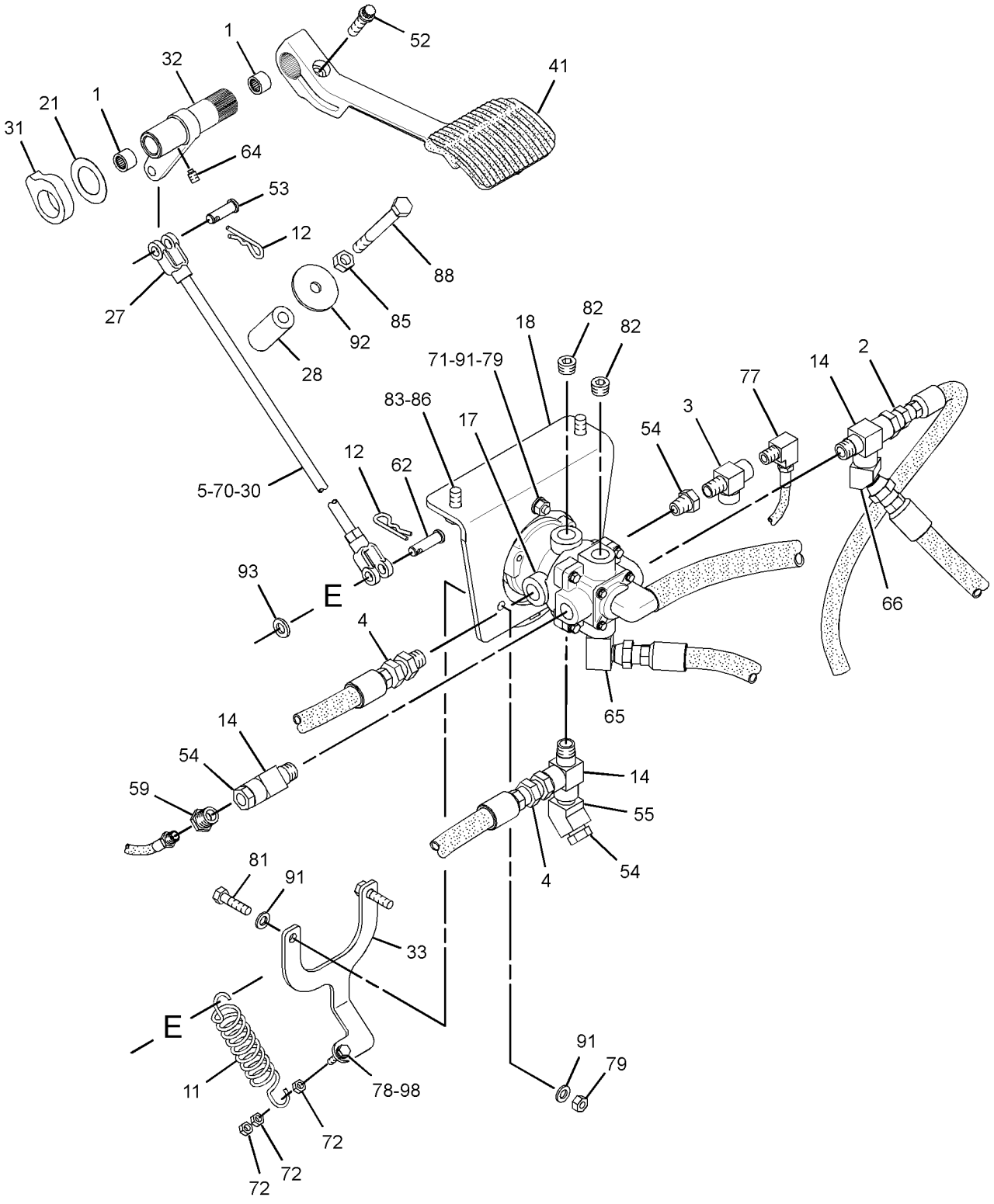

VIEW OF AREA C

GRAPHIC #2 **<END>** g01710519

311-2738 DRYER & LINES GP-AIR

S/N: JBP1-UP
PART OF 311-2737 AIR DRYER GP
AN ATTACHMENT

SMCS-4285 **i03251623**

NOTE	REF NO	GRAPHIC REF	PART NUMBER	QTY	PART NAME 1 2 3 4 5 6 (PRODUCT LEVEL)	SEE PAGE
Y	1	1	*311-2739*	1	DRYER & LINES GP-AIR	352
	2	1	**311-2743**	1	HOSE AS	
	3	1	**174-5907**	1	CLIP	
	4	1	**9M-8406**	1	CLIP	
Y-SEPARATE ILLUSTRATION						

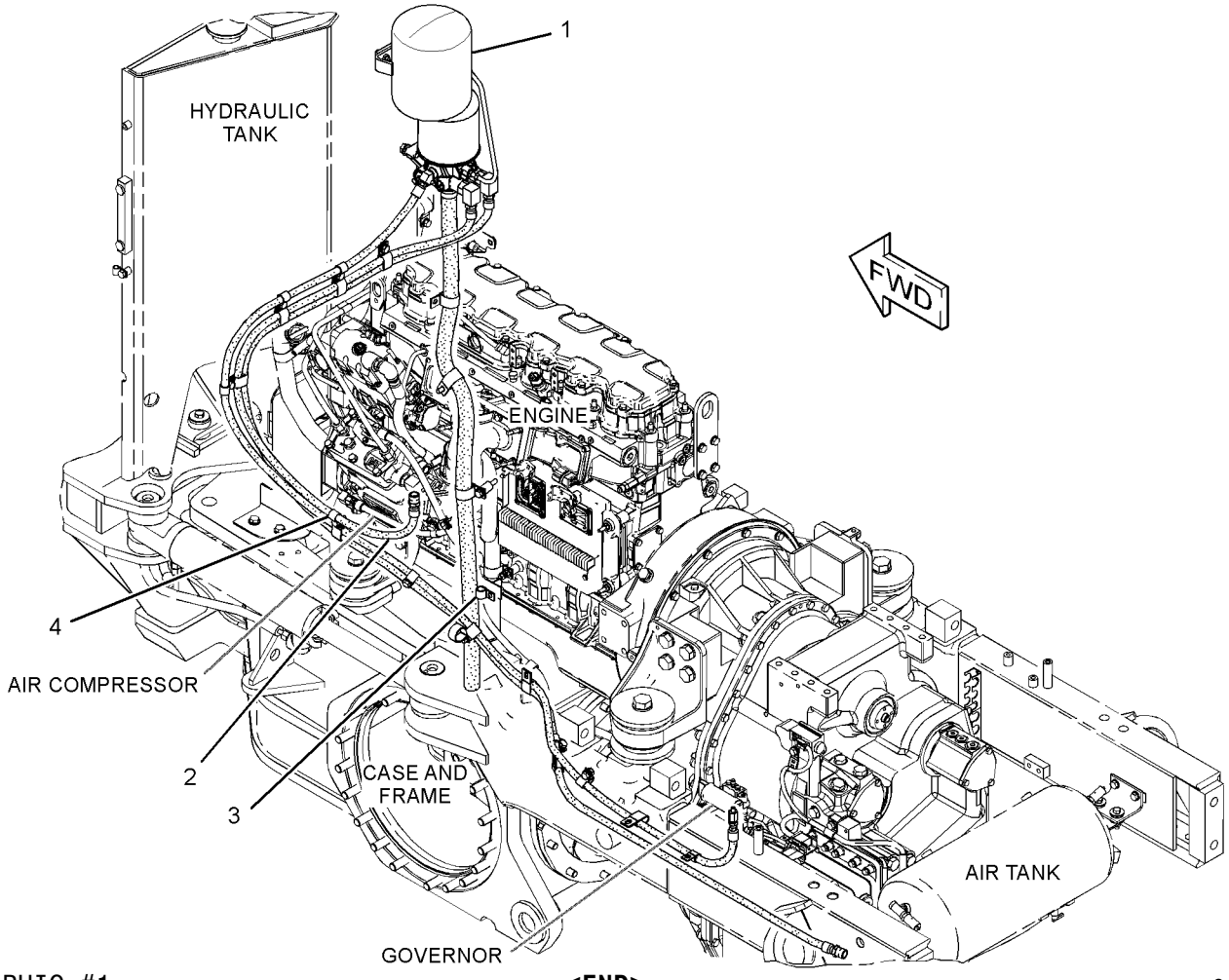

GRAPHIC #1 **<END>** g01690053

BRAKING SYSTEM

311-2739 DRYER & LINES GP-AIR

S/N: JBP1-UP

PART OF 311-2738 DRYER & LINES GP-AIR

AN ATTACHMENT

SMCS-4285 **i03251621**

NOTE	REF NO	GRAPHIC REF	PART NUMBER	QTY	PART NAME 1 2 3 4 5 6 (PRODUCT LEVEL)	SEE PAGE
	1	1	**2S-3440**	1	CLAMP-HOSE	
	2	1	**5P-4401**	1	CONNECTOR-AIR BRAKE	
	3	1	**5P-4424**	1	ELBOW-AIR BRAKE	
	4	1	**6V-2610**	1	FITTING	
	5	1	**191-3645**	1	RESERVOIR	
Y	6	1	**215-3005**	1	AIR DRYER GP	339
	7	1	**260-9133**	1	PLATE	
	8	1	**301-3170**	1	TUBE	
	9	1	**313-2207**	1	HOSE AS	
I	10	1	**313-2208**	1	HOSE AS	
	11	1	**174-5907**	1	CLIP	
	12	1	**302-3908**	1	SPACER (11X20X30-MM THK)	
	13	1	**3B-6772**	1	ELBOW-STREET	
	14	1	**3J-5390**	1	PLUG	
	15	1	**4S-4455**	1	CLIP	
	16	1	**5C-6565**	3	BOLT (1/2-13X1.125-IN)	
	17	1	**5K-8451**	8	CLIP	
	18	1	**5P-7854**	3	CLIP	
	19	1	**6L-5652**	2	ADAPTER	
	20	1	**7D-0215**	1	CONNECTOR-PIPE	
	21	1	**8T-4121**	16	WASHER-HARD (11X21X2.5-MM THK)	
M	22	1	**8T-4133**	5	NUT (M10X1.5-THD)	
M	23	1	**8T-4136**	2	BOLT (M10X1.5X25-MM)	
M	24	1	**8T-4137**	8	BOLT (M10X1.5X20-MM)	
	25	1	**8T-4223**	3	WASHER-HARD (13.5X25.5X3-MM THK)	
	26	1	**8T-4224**	2	WASHER-HARD (8.8X16X2-MM THK)	
M	27	1	**8T-6466**	1	BOLT (M10X1.5X60-MM)	
M	28	1	**8T-7547**	2	BOLT (M8X1.25X30-MM)	
	29	1	**9L-3560**	2	ELBOW	
	30	1	**9M-8406**	10	CLIP	
E	31	1	**8I-1362**		HOSE (131-CM)	

E-ORDER BY THE CENTIMETER
I-REFER TO HYDRAULIC INFORMATION SYSTEM
M-METRIC PART
Y-SEPARATE ILLUSTRATION

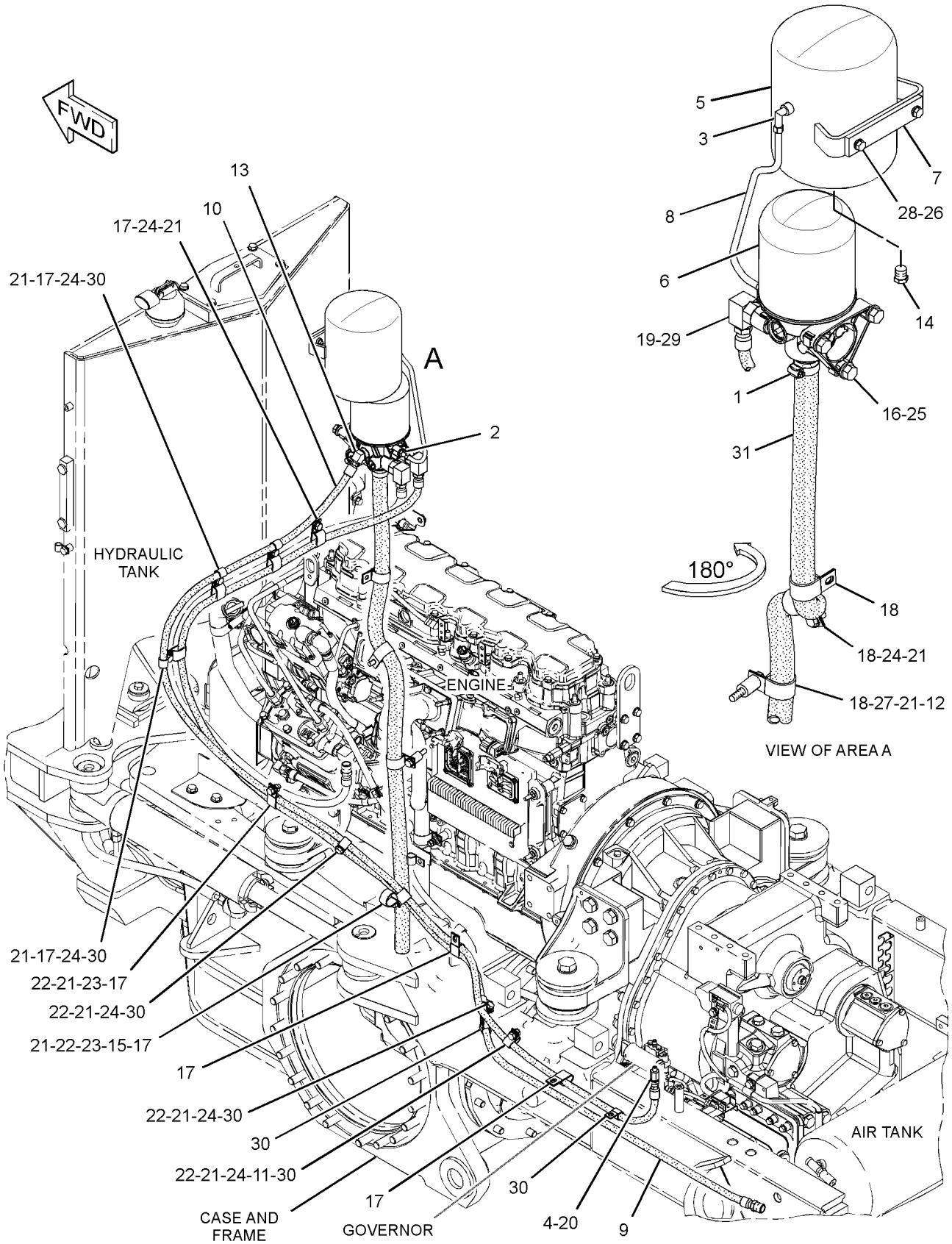

GRAPHIC #1 **<END>** g01690054

BRAKING SYSTEM

314-9370 TANK GP-AIR

S/N: JBP1-UP

PART OF 274-7941 GENERAL AR

SMCS-4272 **i03246383**

NOTE	REF NO	GRAPHIC REF	PART NUMBER	QTY	PART NAME 1 2 3 4 5 6 (PRODUCT LEVEL)	SEE PAGE
	1	1	**1P-7115**	4	GROMMET AS	
	2	1	**1W-7534**	1	ELBOW	
	3	1	**2G-1034**	2	VALVE-AIR RELIEF	
	4	1	**2H-9091**	1	CONNECTOR-PIPE	
	5	1	**2R-1922**	1	CONNECTOR	
	6	1	**3D-7587**	1	ELBOW	
	7	1	**4P-7048**	1	BRACKET	
	8	1	**5F-5434**	1	VALVE AS-VENT	
	9	1	**6A-3591**	1	TEE-PIPE	
	10	1	**8M-3368**	2	VALVE-CHECK	
	11	1	**8W-7915**	2	SHIM (2-MM THK)	
	12	1	**8W-8496**	2	PLATE	
	13	1	**8W-8528**	2	SLEEVE	
	14	1	**8W-8575**	1	RESERVOIR	
	15	1	**9D-6663**	2	VALVE-DRAIN	
	16	1	**9M-4594**	1	SPACER (0.406X0.875X0.75-IN THK)	
	17	1	**004-5933**	1	TEE-PIPE	
J	18	1	**205-7187**	1	GOVERNOR AS (AIR COMPRESSOR)	
	19	1	**292-4772**	1	PLATE-SUPPORT	
	20	1	**314-9368**	1	HOSE AS	
I	21	1	**314-9369**	1	HOSE AS	
	22	1	**334-5268**	1	HOSE AS	
	23	1	**334-5270**	1	HOSE AS	
	24	1	**002-6453**	2	ELBOW	
	25	1	**067-3045**	1	CLIP	
	26	1	**205-7299**	3	CLIP	
	27	1	**2M-9780**	1	SEAL-O-RING	
	28	1	**3D-8913**	2	ELBOW	
	29	1	**4D-0577**	1	ELBOW	
	30	1	**4D-2560**	1	CONNECTOR-PIPE	
	31	1	**4D-7388**	1	CLIP	
	32	1	**4D-7733**	1	CLIP	
	33	1	**4H-6147**	1	CONNECTOR (PIPE)	
	34	1	**4K-8864**	2	CLIP	
	35	1	**4S-1936**	2	CLIP	
	36	1	**4S-7606**	2	ELBOW	
	37	1	**5K-8451**	1	CLIP	
	38	1	**5P-8998**	2	FITTING	
	39	1	**5S-7383**	4	BOLT (3/8-16X1.75-IN)	
M	40	1	**6V-8225**	2	NUT (M6X1-THD)	
	41	1	**6V-8801**	4	NUT (3/8-16-THD)	
	42	1	**7D-4903**	1	ADAPTER	
	43	1	**7D-7233**	1	CLIP	
	44	1	**7F-9311**	4	FITTING	
	45	1	**7X-0578**	8	WASHER-HARD (10.2X32X2.5-MM THK)	
	46	1	**7X-7729**	4	WASHER (11X25X3-MM THK)	
	47	1	**8T-4121**	17	WASHER-HARD (11X21X2.5-MM THK)	
M	48	1	**8T-4133**	7	NUT (M10X1.5-THD)	
M	49	1	**8T-4136**	12	BOLT (M10X1.5X25-MM)	
M	50	1	**8T-4182**	1	BOLT (M10X1.5X45-MM)	
M	51	1	**8T-4195**	1	BOLT (M10X1.5X30-MM)	
	52	1	**8T-4896**	4	WASHER-HARD (10.2X18.5X2.5-MM THK)	
	53	1	**8T-6757**	4	PLUG-PIPE	
M	54	1	**8U-5746**	2	BOLT (M6X1X75-MM)	
	55	1	**9M-8406**	4	CLIP	
	56	1	**9X-8256**	4	WASHER (6.6X12X2-MM THK)	

314-9370 **TANK GP-AIR** *(contd.)* **i03246383**

NOTE	REF NO	GRAPHIC REF	PART NUMBER	QTY	PART NAME 1 2 3 4 5 6 (PRODUCT LEVEL)	SEE PAGE
					AVAILABLE REPAIR KIT(S):	
J			**9M-0402**	1	KIT-GOVERNOR OVERHAUL (AIR COMPRESSOR)	
					(INCLUDES GROMMETS, FILTERS, SPRING & VALVE)	

I-REFER TO HYDRAULIC INFORMATION SYSTEM
J-KIT MARKED J SERVICES PARTS MARKED J
M-METRIC PART

314-9370 **TANK GP-AIR** *(contd.)* **i03246383**

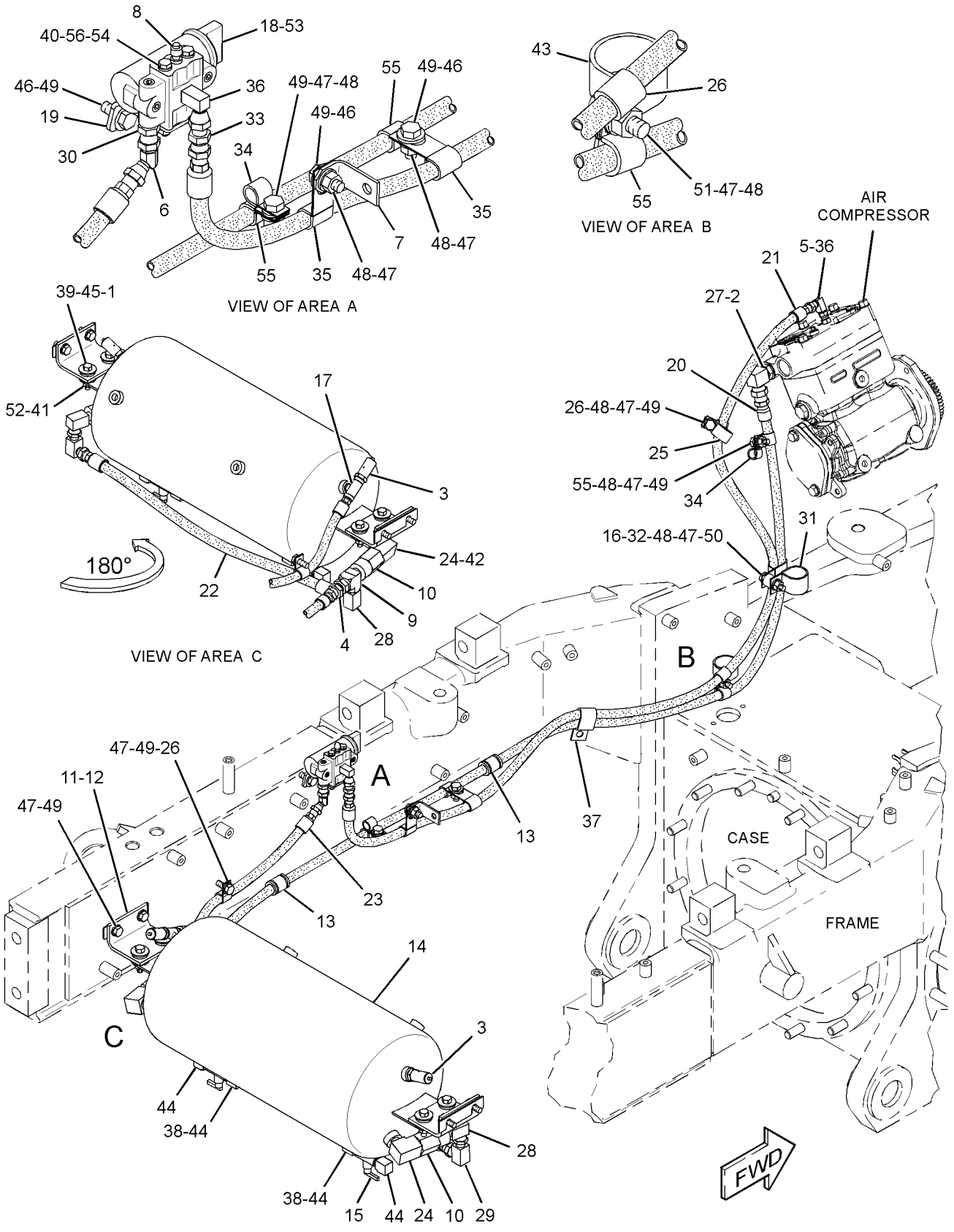

GRAPHIC #1 **<END>** g01696414

185-0008 VALVE GP-SOLENOID

S/N: JBP1-UP
24 VDC
PART OF 284-5771 CONTROL GP-PARKING BRAKE

SMCS-5479 **i03252107**

NOTE	REF NO	GRAPHIC REF	PART NUMBER	QTY	PART NAME 1 2 3 4 5 6 (PRODUCT LEVEL)	SEE PAGE
	1	1	**156-5970**	1	NUT (1/2-20-THD)	
	2	1	**164-2108**	1	WASHER (13.03X25.4X2.38-MM THK)	
	3	1	**314-7646**	1	COIL AS	

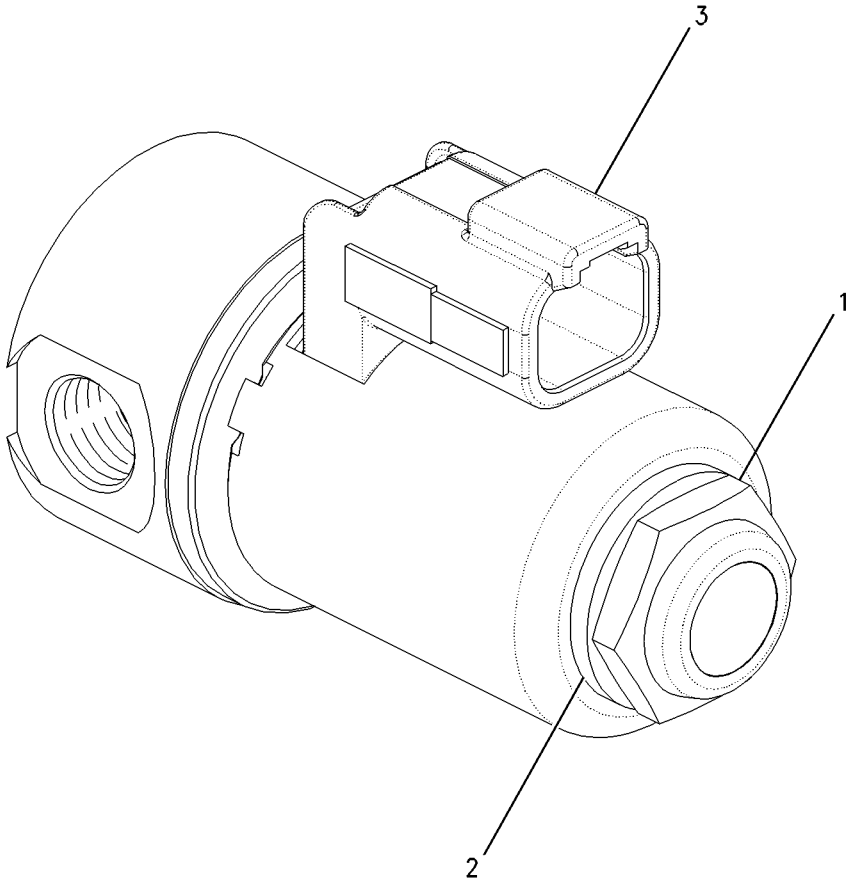

GRAPHIC #1 **<END>** g00925213

162-7451 ACCUMULATOR & MTG GP-HYDRAULIC–
BLADE CUSHION
S/N: JBP1-UP
PART OF 285-4154 ACCUMULATOR AR-BLADE CUSHION
AN ATTACHMENT

SMCS-5077 **i02863917**

NOTE	REF NO	GRAPHIC REF	PART NUMBER	QTY	PART NAME 1 2 3 4 5 6 (PRODUCT LEVEL)	SEE PAGE
	1	1	**4N-5091**	2	SPACER (0.53X1X3.375-IN THK)	
	2	1	**162-7449**	2	CLAMP	
Y	3	1	*162-7450*	2	ACCUMULATOR GP-HYDRAULIC (BLADE CUSHION) (CHARGED)	360
	4	1	**168-8758**	1	PLATE AS	
	5	1	**2M-4779**	3	STUD-TAPERLOCK (3/8-16X0.177-IN)	
	6	1	**6V-8801**	3	NUT (3/8-16-THD)	
	7	1	**7X-0333**	2	BOLT (1/2-13X4.75-IN)	
	8	1	**8T-4223**	2	WASHER-HARD (13.5X25.5X3-MM THK)	
	9	1	**8T-4896**	3	WASHER-HARD (10.2X18.5X2.5-MM THK)	

Y-SEPARATE ILLUSTRATION

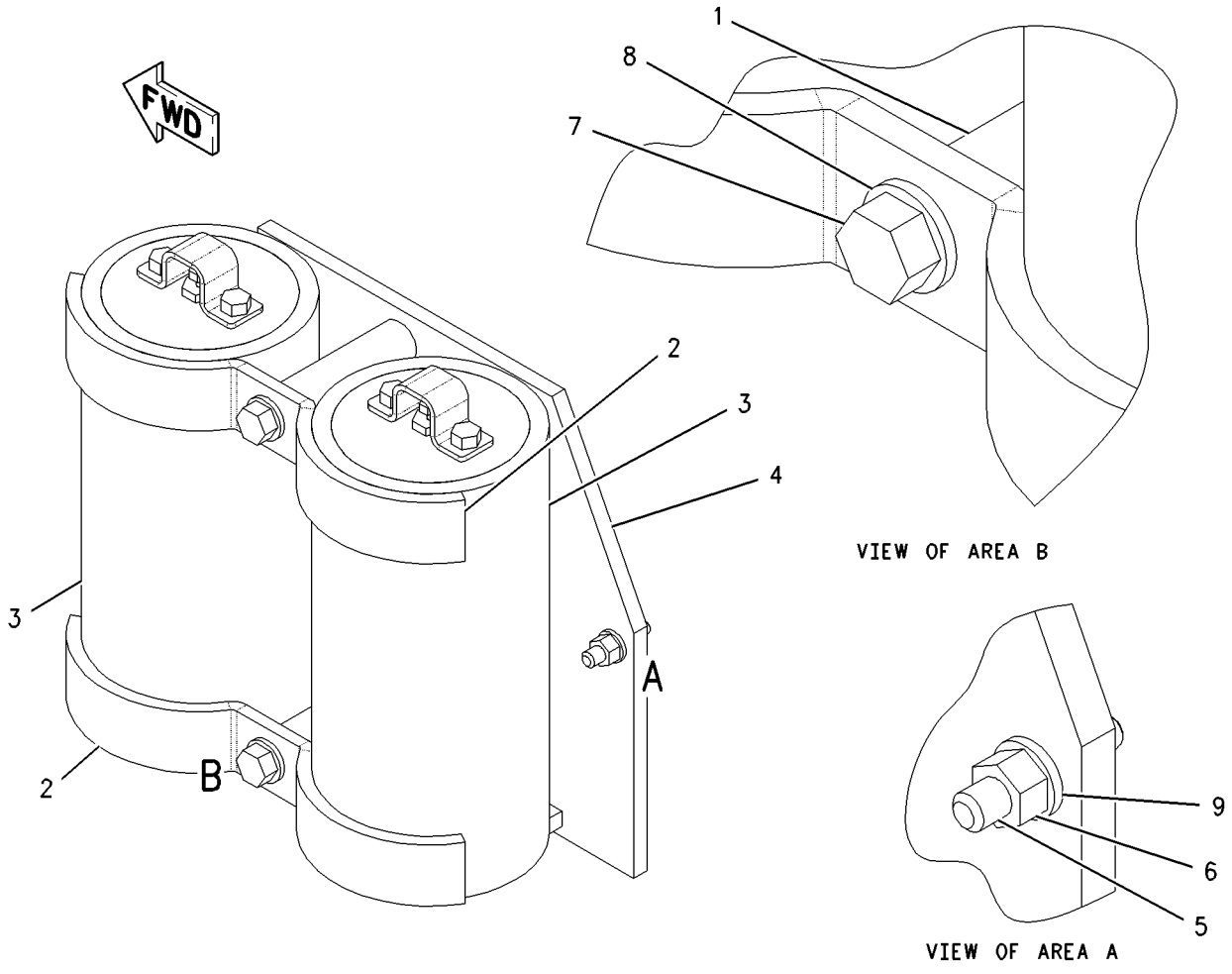

GRAPHIC #1 **<END>** g00788552

HYDRAULIC SYSTEM

285-4154 ACCUMULATOR AR-BLADE CUSHION

S/N: JBP1-UP

AN ATTACHMENT

SMCS-5077, 5081 **i03261211**

NOTE	PART NUMBER	QTY	PART NAME 1 2 3 4 5 6 (PRODUCT LEVEL)	SEE PAGE
Y	*162-7451*	1	ACCUMULATOR & MTG GP-HYDRAULIC (BLADE CUSHION)	358
Y	*166-3336*	1	LINES GP-ACCUMULATOR	389
Y	*284-5352*	1	WIRING GP-BLADE CUSHION	200

Y-SEPARATE ILLUSTRATION

<END>

HYDRAULIC SYSTEM

162-7450 ACCUMULATOR GP-HYDRAULIC—CHARGED

S/N: JBP1-UP
PART OF 162-7451 ACCUMULATOR & MTG GP-HYDRAULIC
AN ATTACHMENT

SMCS-5077 **i02863919**

NOTE	REF NO	GRAPHIC REF	PART NUMBER	QTY	PART NAME 1 2 3 4 5 6 (PRODUCT LEVEL)	SEE PAGE
	1	1	**135-7123**	1	PISTON	
	2	1	**170-0493**	1	KIT-SEAL (HYDRAULIC ACCUMULATOR)	
	3	1	**188-9390**	1	VALVE AS	
		1	**6M-5062**	1	SEAL-O-RING	
		1	**190-3850**	1	CORE	
	4	1	**111-9110**	1	PROTECTOR-GAS VALVE	
	5	1	**1J-9671**	1	SEAL-O-RING	
	6	1	**5M-3062**	2	BOLT (3/8-16X0.75-IN)	
	7	1	**170-0503**	1	FILM-WARNING (ACCUM, HIGH PRESS, READ OMM)	

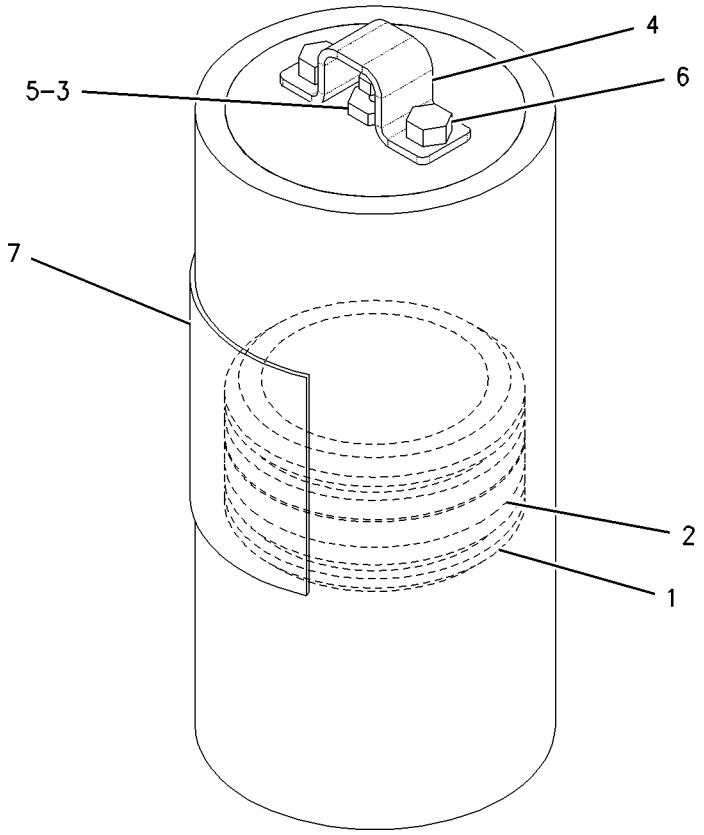

GRAPHIC #1 **<END>** g00789082

HYDRAULIC SYSTEM

331-1499 CONTROL AR-HYDRAULIC—RIPPER

S/N: JBP1-UP
AN ATTACHMENT

SMCS-5050 **i03431565**

NOTE	PART NUMBER	QTY	PART NAME 1 2 3 4 5 6 (PRODUCT LEVEL)	SEE PAGE
Y	*302-7139*	1	LINES GP-RIPPER	414
Y	*138-7599*	1	VALVE & LINKAGE GP (5-BANK, RH, LH)	460

Y-SEPARATE ILLUSTRATION

<END>

331-1501 CONTROL AR-HYDRAULIC—DOZER, PLOW, RIPPER

S/N: JBP1-UP
AN ATTACHMENT

SMCS-5050 **i03431566**

NOTE	PART NUMBER	QTY	PART NAME 1 2 3 4 5 6 (PRODUCT LEVEL)	SEE PAGE
Y	*302-7139*	1	LINES GP-RIPPER	414
Y	*115-0812*	1	VALVE & LINKAGE GP (5-BANK, RH, LH)	453

Y-SEPARATE ILLUSTRATION

<END>

331-1503 CONTROL AR-HYDRAULIC—RIPPER

S/N: JBP1-UP
AN ATTACHMENT

SMCS-5050 **i03431567**

NOTE	PART NUMBER	QTY	PART NAME 1 2 3 4 5 6 (PRODUCT LEVEL)	SEE PAGE
Y	*302-7139*	1	LINES GP-RIPPER	414
Y	*115-0808*	1	VALVE & LINKAGE GP (4-BANK, RH; 5-BANK, LH)	447

Y-SEPARATE ILLUSTRATION

<END>

331-1506 CONTROL AR-HYDRAULIC—RIPPER

S/N: JBP1-UP
AN ATTACHMENT

SMCS-5050 **i03431568**

NOTE	PART NUMBER	QTY	PART NAME 1 2 3 4 5 6 (PRODUCT LEVEL)	SEE PAGE
Y	*302-7139*	1	LINES GP-RIPPER	414
Y	*130-7603*	1	VALVE & LINKAGE GP (4-BANK, RH, LH)	458

Y-SEPARATE ILLUSTRATION

<END>

HYDRAULIC SYSTEM

331-1507 CONTROL AR-HYDRAULIC—RIPPER

S/N: JBP1-UP

AN ATTACHMENT

SMCS-5050 **i03431500**

NOTE	PART NUMBER	QTY	PART NAME 1 2 3 4 5 6 (PRODUCT LEVEL)	SEE PAGE
Y	*302-7139*	1	LINES GP-RIPPER	414
Y	*112-6818*	1	VALVE & LINKAGE GP (4-BANK, RH; 3-BANK, LH)	443

Y-SEPARATE ILLUSTRATION

<END>

335-1875 CONTROL AR-HYDRAULIC—RIPPER

S/N: JBP1-UP

AN ATTACHMENT

SMCS-5050 **i03247297**

NOTE	PART NUMBER	QTY	PART NAME 1 2 3 4 5 6 (PRODUCT LEVEL)	SEE PAGE
Y	*302-7139*	1	LINES GP-RIPPER	414
Y	*331-1510*	1	VALVE & LINKAGE GP	480

Y-SEPARATE ILLUSTRATION

<END>

HYDRAULIC SYSTEM

140-8129 CYLINDER & MTG GP-ARTICULATION

S/N: JBP1-UP

PART OF 274-7941 GENERAL AR

SMCS-5265 **i00134742**

NOTE	REF NO	GRAPHIC REF	PART NUMBER	QTY	PART NAME 1 2 3 4 5 6 (PRODUCT LEVEL)	SEE PAGE
	1	1	**7X-0346**	2	BOLT (5/8-11X2-IN)	
	2	1	**8T-4122**	4	WASHER-HARD (17X32X3.5-MM THK)	
	3	1	**7K-6117**	4	WASHER (0.656X2.5X0.5-IN THK)	
	4	1	**8D-4766**	4	PIN-CYLINDER	
	5	1	**8D-7086**	4	BEARING	
B	6	1	**2K-0420**	12	WASHER (1.766X3.5X0.032-IN THK)	
	7	1	**7K-9202**	8	SEAL-LIP TYPE	
Y	8	1	**137-6792**	1	CYLINDER GP-ARTICULATION (LH)	373
	9	1	**8T-6871**	2	BOLT (5/8-11X2.5-IN)	
Y	10	1	**137-6790**	1	CYLINDER GP-ARTICULATION (RH)	372

B-USE AS REQUIRED
Y-SEPARATE ILLUSTRATION

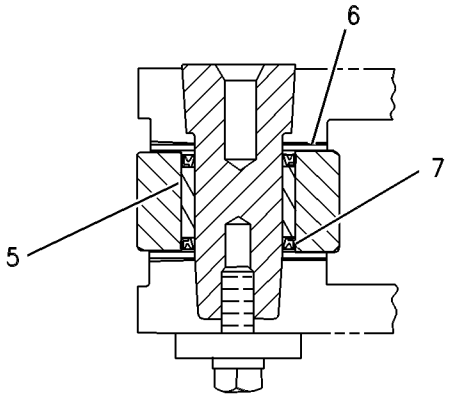

SECTION A-A

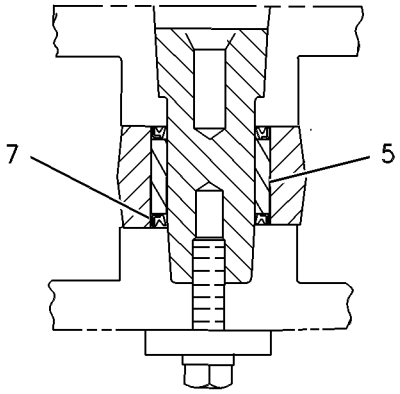

SECTION B-B

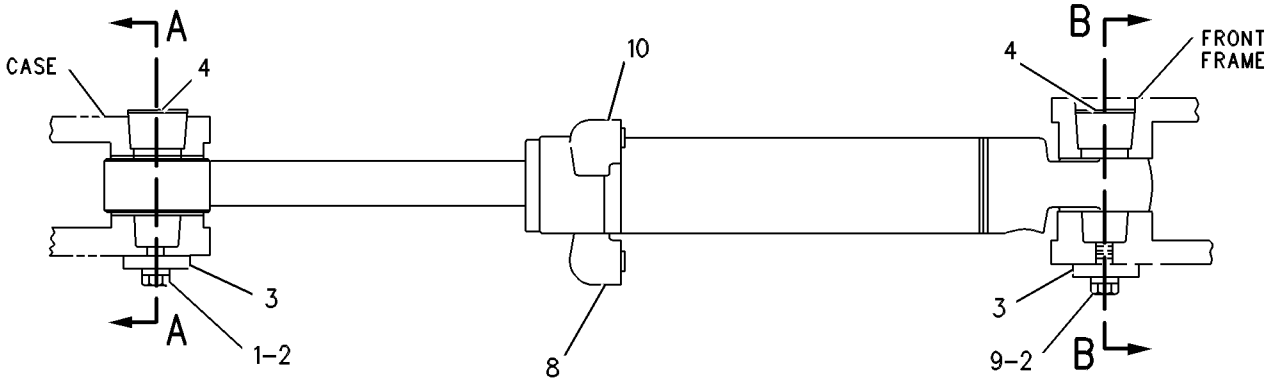

GRAPHIC #1 **<END>** g00109656

HYDRAULIC SYSTEM

8X-1947 CYLINDER & MTG GP-BLADE LIFT

S/N: JBP1-UP

PART OF 274-7941 GENERAL AR

SMCS-5102 **i03178142**

NOTE	REF NO	GRAPHIC REF	PART NUMBER	QTY	PART NAME 1 2 3 4 5 6 (PRODUCT LEVEL)	SEE PAGE
CY	1	1	**132-4929**	2	CYLINDER GP-LIFT (BLADE)	377
	2	1	**0S-1573**	8	BOLT (1/2-13X4-IN)	
	3	1	**2M-0849**	8	WASHER-HARD (13.5X25.5X5-MM THK)	
	4	1	**1D-4628**	4	BOLT (7/8-9X3.25-IN)	
	5	1	**5P-8249**	4	WASHER-HARD (24X41.5X4-MM THK)	
	7	1	**8W-2842**	4	CAP AS	
					(EACH INCLUDES)	
		1	**8D-7996**	1	BEARING-SLEEVE	
	8	1	**8X-4741**	4	INSERT	
B	9	1	**2G-9103**	8	SHIM (0.5-MM THK)	
	10	1	**3B-8485**	2	FITTING-GREASE (BLADE LIFT)	
	11	1	**2G-9098**	2	CAP	

QUANTITIES SHOWN ARE THOSE REQUIRED FOR BOTH LH AND RH SIDES
B-USE AS REQUIRED
C-CHANGE FROM PREVIOUS TYPE
Y-SEPARATE ILLUSTRATION

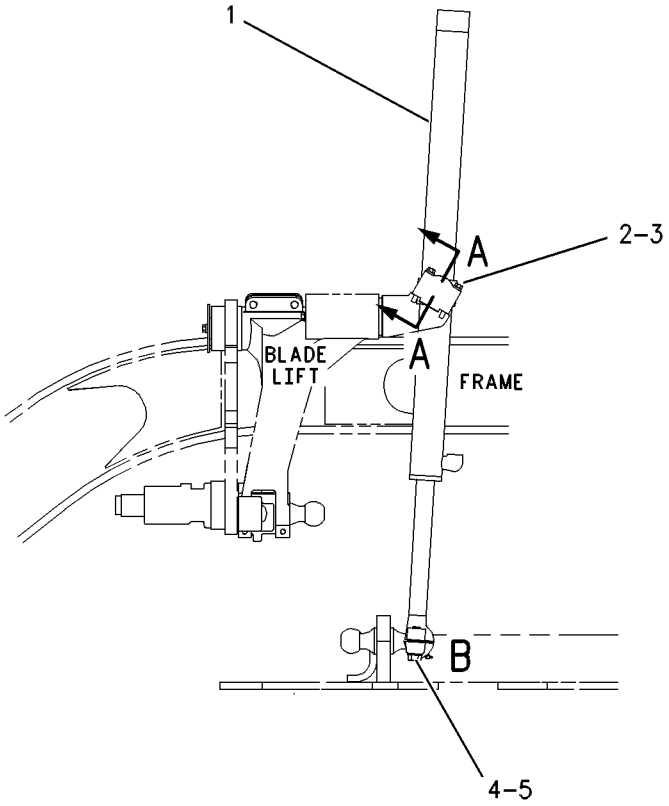

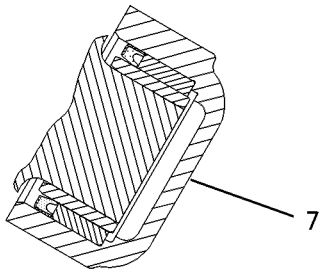

SECTION A-A

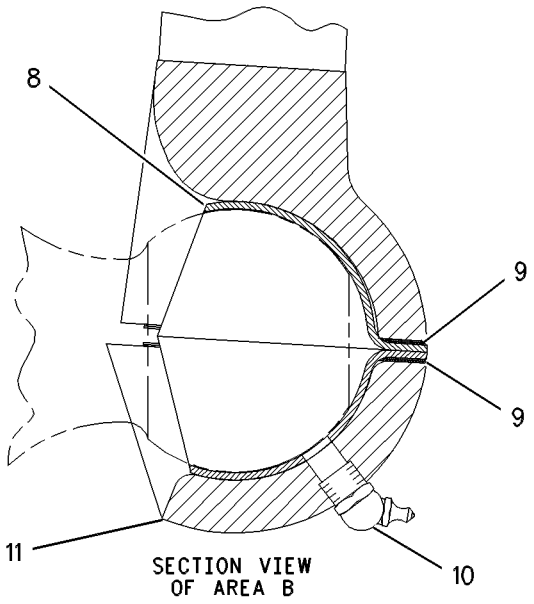

SECTION VIEW OF AREA B

GRAPHIC #1 **<END>** g00544601

8X-1943 CYLINDER & MTG GP-BLADE TIP

S/N: JBP1-UP

PART OF 124-9779, 329-3825, 329-3827 BLADE & TIP AR-POWER

AN ATTACHMENT

SMCS-5106 **i03178160**

NOTE	REF NO	GRAPHIC REF	PART NUMBER	QTY	PART NAME 1 2 3 4 5 6 (PRODUCT LEVEL)	SEE PAGE
	1	1	**3B-5329**	1	PIN-COTTER	
	2	1	**8D-7678**	1	PIN	
CY	3	1	**131-7191**	1	CYLINDER GP-HYDRAULIC (BLADE TIP)	376
	4	1	**2G-3967**	2	SPACER (1.266X3X0.781-IN)	
	5	1	**5K-5552**	1	BOLT-LOCKING (3/8-16X3-IN)	
	6	1	**8D-6687**	1	PIN	
	7	1	**8F-4102**	2	PLATE-SEAL	

C-CHANGE FROM PREVIOUS TYPE
Y-SEPARATE ILLUSTRATION

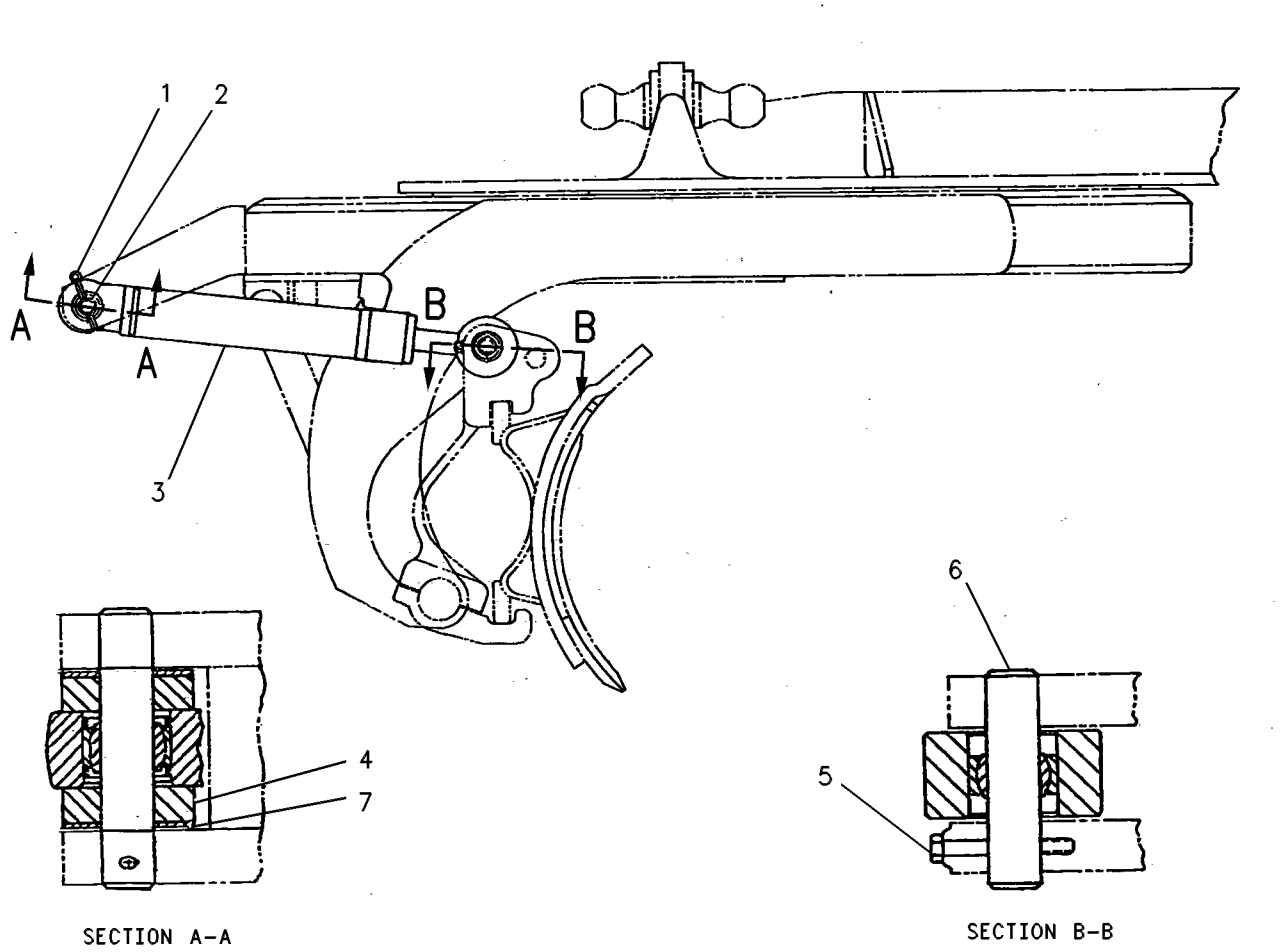

GRAPHIC #1 **<END>** g00108521

HYDRAULIC SYSTEM

8X-1944 CYLINDER & MTG GP-CENTERSHIFT

S/N: JBP1-UP

PART OF 274-7941 GENERAL AR

SMCS-5223 **i03438900**

NOTE	REF NO	GRAPHIC REF	PART NUMBER	QTY	PART NAME 1 2 3 4 5 6 (PRODUCT LEVEL)	SEE PAGE
Y	1	1	**6E-1343**	1	CYLINDER GP-CENTERSHIFT	374
	2	1	**2G-9098**	2	CAP	
	3	1	**3B-8485**	2	FITTING-GREASE (CENTERSHIFT CYLINDER SOCKET)	
B	4	1	**2G-9103**	8	SHIM (0.5-MM THK)	
	5	1	**8X-4741**	4	INSERT	
	6	1	**1D-4628**	4	BOLT (7/8-9X3.25-IN)	
	7	1	**5P-8249**	4	WASHER-HARD (24X41.5X4-MM THK)	

B-USE AS REQUIRED
Y-SEPARATE ILLUSTRATION

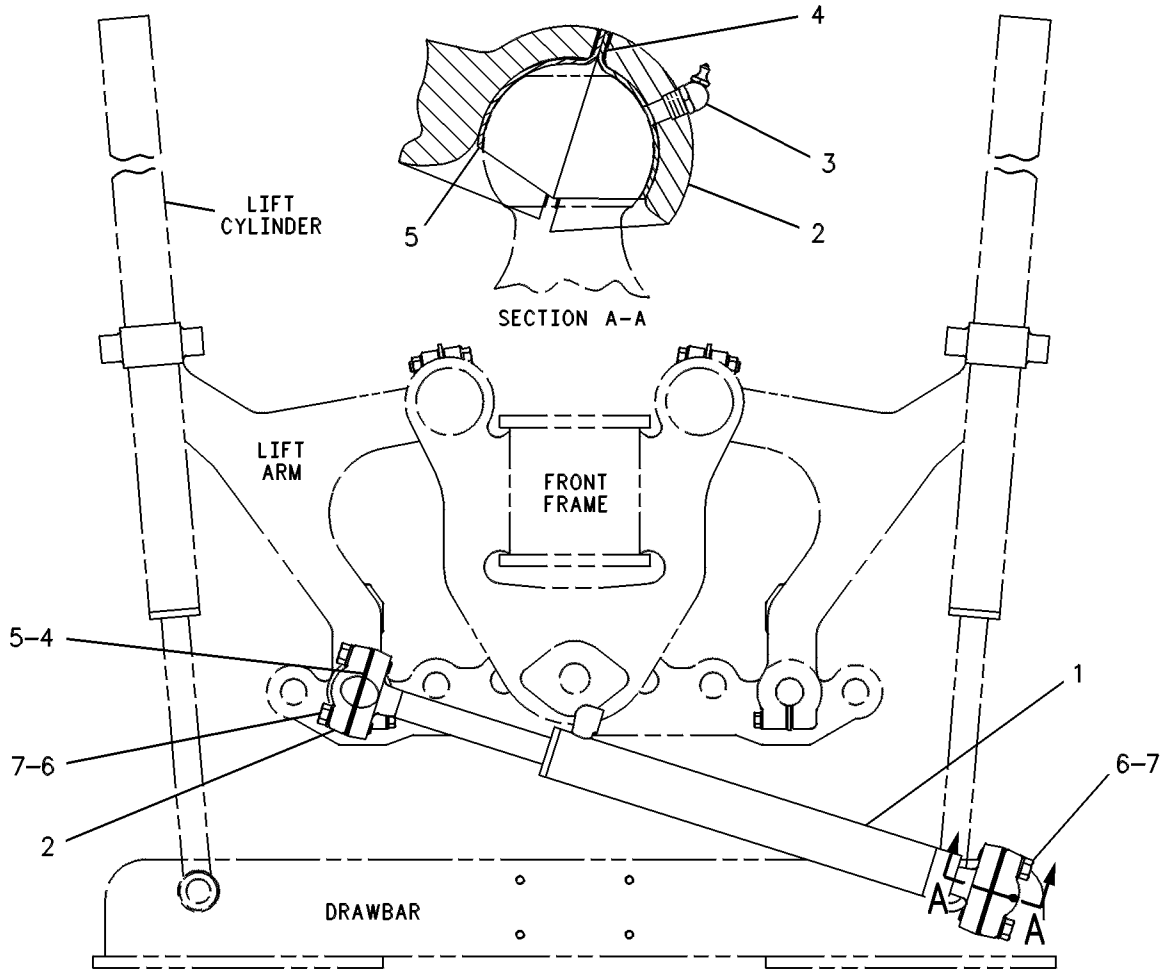

GRAPHIC #1 **<END>** g00108522

8W-2913 CYLINDER & MTG GP-SCARIFIER

S/N: JBP1-UP
PART OF 108-1104 SCARIFIER AR
AN ATTACHMENT

SMCS-5213, 6165 **i03301191**

NOTE	REF NO	GRAPHIC REF	PART NUMBER	QTY	PART NAME 1 2 3 4 5 6 (PRODUCT LEVEL)	SEE PAGE
	1	1	**7K-9202**	4	SEAL-LIP TYPE	
	2	1	**8D-7086**	2	BEARING	
Y	3	1	**165-2510**	1	CYLINDER GP-SCARIFIER	379
	4	1	**6G-7187**	2	LOCK	
	5	1	**8D-7225**	2	PIN	
	6	1	**5P-2228**	4	BOLT (1/2-13X1-IN)	
	7	1	**8T-4223**	4	WASHER-HARD (13.5X25.5X3-MM THK)	

Y-SEPARATE ILLUSTRATION

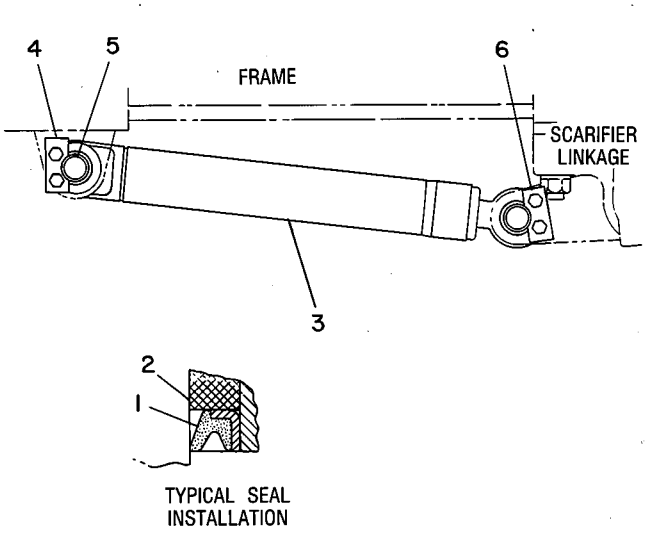

GRAPHIC #1 **<END>** g00108274

HYDRAULIC SYSTEM

112-7463 CYLINDER & MTG GP-SIDESHIFT

S/N: JBP1-UP

PART OF 124-9779, 329-3825, 329-3827 BLADE & TIP AR-POWER, 117-3200 BLADE AR AN ATTACHMENT

SMCS-5229 **i02252903**

NOTE	REF NO	GRAPHIC REF	PART NUMBER	QTY	PART NAME 1 2 3 4 5 6 (PRODUCT LEVEL)	SEE PAGE
	1	1	**6H-0211**	2	WASHER (1.563X2.75X0.06-IN THK)	
	2	1	**5T-5295**	1	PIN	
	3	1	**1B-2886**	1	BOLT (1/2-13X3.75-IN)	
	5	1	**1K-6872**	1	LOCKNUT (1/2-13-THD)	
	6	1	**3B-4647**	1	PIN-COTTER	
	7	1	**5T-8417**	1	PIN	
	8	1	**112-7462**	1	BRACKET	
	9	1	**2A-1538**	4	BOLT (3/4-10X2.25-IN)	
	10	1	**5P-8248**	4	WASHER-HARD (20X36.5X3.5-MM THK)	
Y	11	1	**112-5575**	1	CYLINDER GP-SIDESHIFT	380

Y-SEPARATE ILLUSTRATION

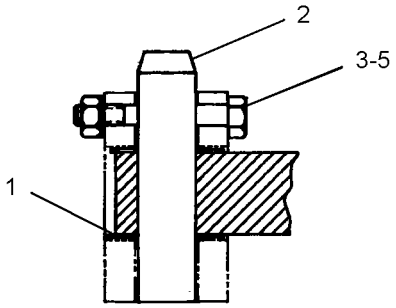

SECTION A-A

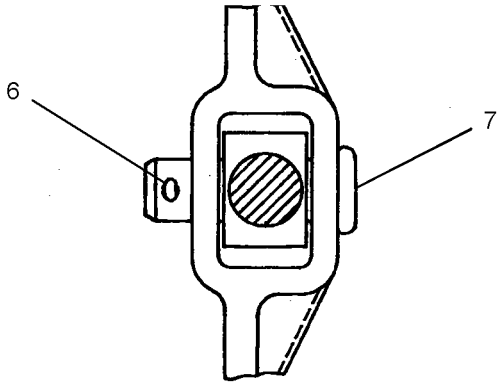

SECTION B-B

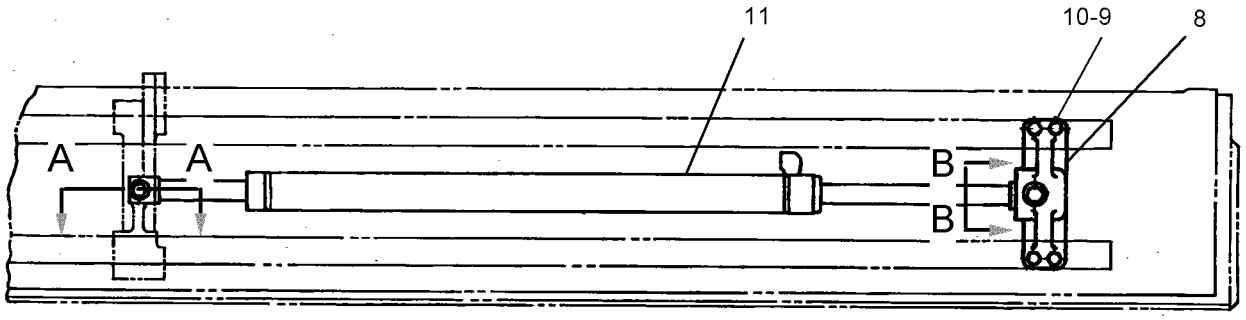

GRAPHIC #1 **<END>** g01131607

HYDRAULIC SYSTEM

8W-2290 CYLINDER & MTG GP-STEERING

S/N: JBP1-UP

PART OF 274-7941 GENERAL AR

SMCS-4303 **i02202916**

NOTE	REF NO	GRAPHIC REF	PART NUMBER	QTY	PART NAME 1 2 3 4 5 6 (PRODUCT LEVEL)	SEE PAGE
	1	1	**2H-3786**	2	NUT-JAM (1-14-THD)	
	2	1	**8D-2429**	2	PIN AS	
	3	1	**8D-2638**	4	SPACER (1.016X1.25X0.39-IN THK)	
Y	4	1	**130-9041**	1	CYLINDER GP-STEERING (LH)	381
Y	5	1	**130-9042**	1	CYLINDER GP-STEERING (RH)	382
	6	1	**131-3736**	2	TIE ROD GP (STEERING)	
					(EACH INCLUDES)	
		1	**2F-8057**	1	NUT-SLOTTED	
		1	**132-1143**	1	SEAL-BOOT	
	7	1	**3B-4618**	2	PIN-COTTER	
	8	1	**5S-7379**	2	BOLT (3/8-16X0.875-IN)	
	9	1	**8D-2811**	2	WASHER (1.25X1.94X0.032-IN THK)	
	10	1	**8T-4896**	2	WASHER-HARD (10.2X18.5X2.5-MM THK)	

Y-SEPARATE ILLUSTRATION

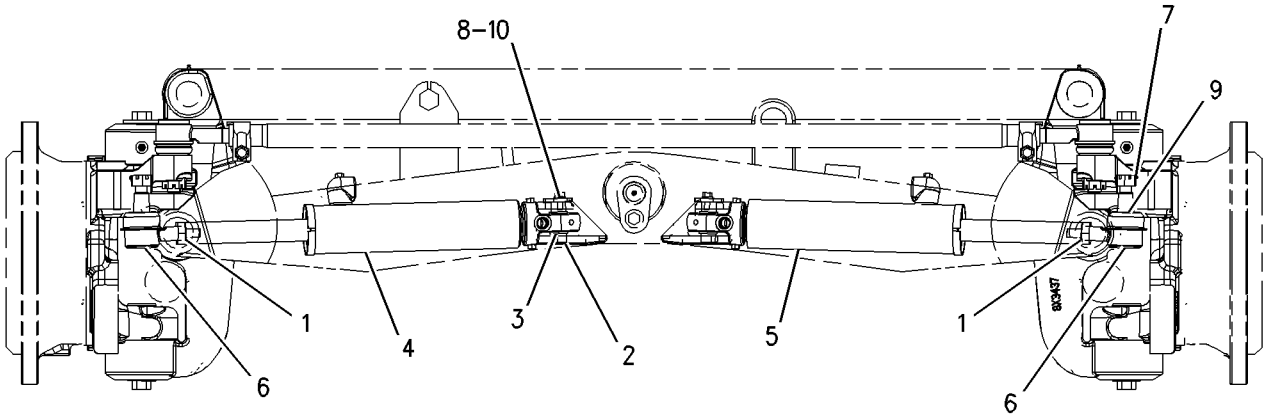

GRAPHIC #1 **<END>** g00743415

8W-2737 CYLINDER & MTG GP-WHEEL LEAN

S/N: JBP1-UP

PART OF 274-7941 GENERAL AR

SMCS-5211 **i01458451**

NOTE	REF NO	GRAPHIC REF	PART NUMBER	QTY	PART NAME 1 2 3 4 5 6 (PRODUCT LEVEL)	SEE PAGE
	1	1	**6H-1717**	2	BOLT (1/2-13X1.125-IN)	
		1	**5P-8245**	2	WASHER-HARD (13.5X25.5X3-MM THK)	
	2	1	**3B-8489**	2	FITTING-GREASE (WHEEL LEAN)	
	3	1	**2G-8609**	1	PIN	
	4	1	**6G-7187**	1	LOCK	
Y	5	1	**121-9242**	1	CYLINDER GP-WHEEL LEAN	383
	6	1	**2G-5667**	1	RETAINER	
	7	1	**0S-1592**	1	BOLT (5/8-11X1.25-IN)	
		1	**4D-3704**	1	WASHER-HARD (17X30X5-MM THK)	
	8	1	**5P-8842**	4	SEAL-LIP TYPE	

Y-SEPARATE ILLUSTRATION

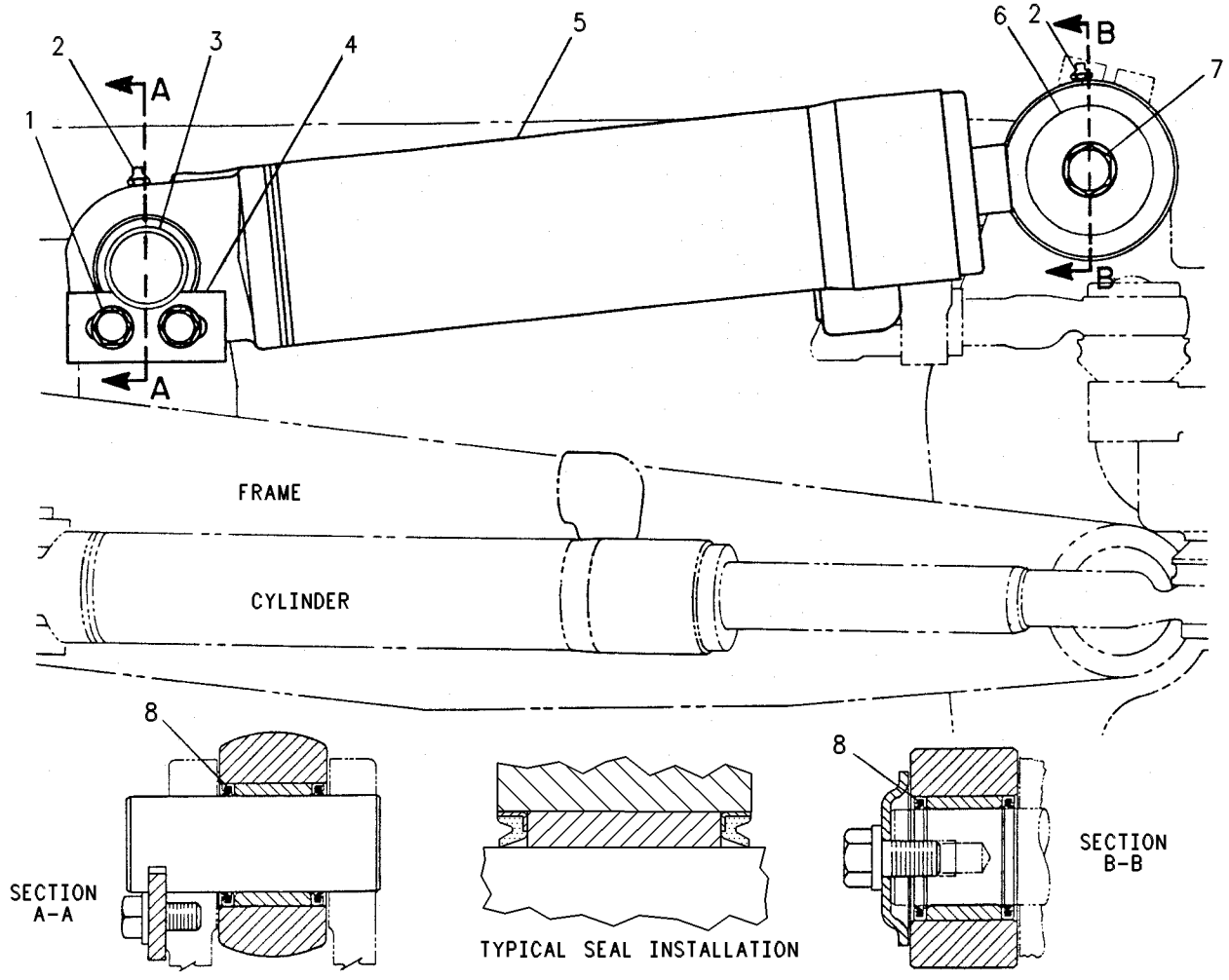

GRAPHIC #1 **<END>** g00108800

137-6790 CYLINDER GP-ARTICULATION

S/N: JBP1-UP
82.6-MM (3.25-IN) BORE X 284.3-MM (11.19-IN) STROKE
PART OF 140-8129 CYLINDER & MTG GP-ARTICULATION

SMCS-5265 **i03432527**

NOTE	REF NO	GRAPHIC REF	PART NUMBER	QTY	PART NAME 1 2 3 4 5 6 (PRODUCT LEVEL)	SEE PAGE
	1	1	**137-6793**	1	CYLINDER AS	
M	2	1	**173-9683**	1	BOLT (M30X3.5X90-MM)	
	3	1	**9X-8399**	1	WASHER (33X56X6-MM THK)	
	4	1	**137-8130**	1	PISTON	
	5	1	**175-7897**	1	SEAL-O-RING	
	6	1	**6J-1381**	1	RING-BACKUP	
	7	1	**6E-0123**	1	HEAD	
	8	1	**137-6794**	1	ROD AS	
	9	1	**227-1143**	1	SEAL-WIPER	
	10	1	**167-2302**	1	SEAL-U-CUP	
	11	1	**167-2192**	1	SEAL AS-BUFFER	
	12	1	**4T-6779**	1	RING	
	13	1	**6J-0793**	1	SEAL AS	
		1	**6J-0790**	1	SEAL	
		1	**6J-0789**	1	RING-EXPANDER	
	14	1	**8J-6371**	1	RING-WEAR	

M-METRIC PART

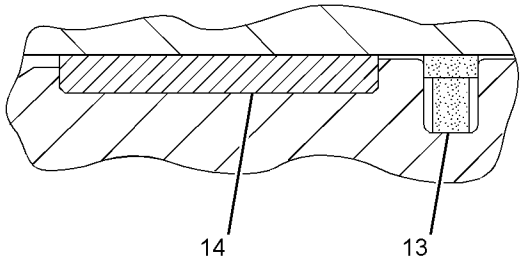

VIEW OF AREA A

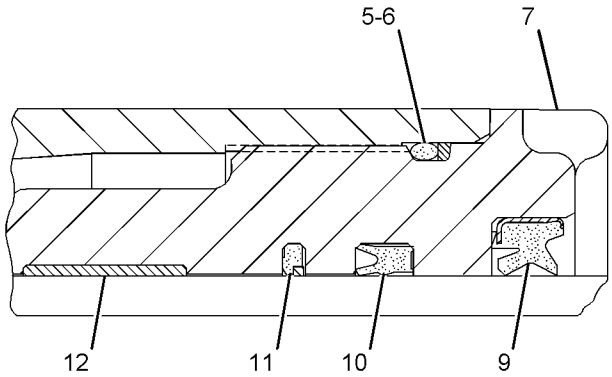

VIEW OF AREA B

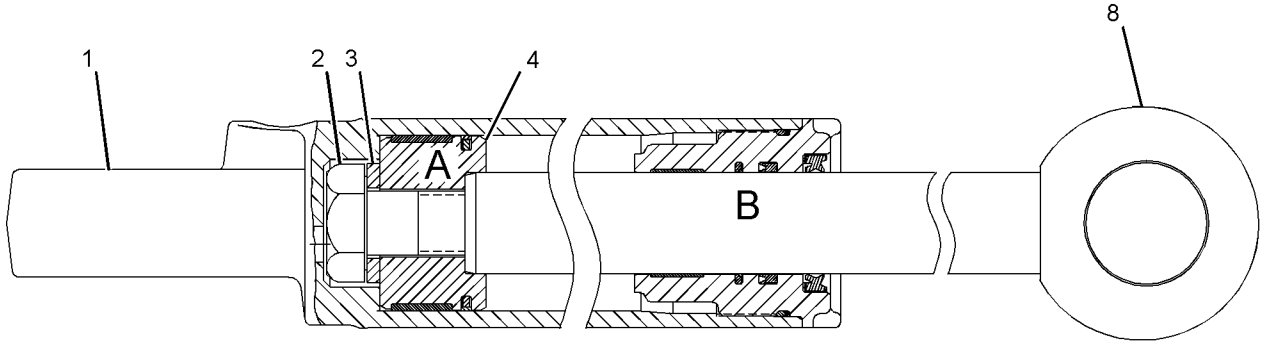

GRAPHIC #1

<END>

g01100258

137-6792 CYLINDER GP-ARTICULATION–LH

S/N: JBP1-UP
82.6-MM (3.25-IN) BORE X 284.3-MM (11.19-IN) STROKE
PART OF 140-8129 CYLINDER & MTG GP-ARTICULATION

SMCS-5265 **i02108884**

NOTE	REF NO	GRAPHIC REF	PART NUMBER	QTY	PART NAME 1 2 3 4 5 6 (PRODUCT LEVEL)	SEE PAGE
	1	1	**137-6791**	1	CYLINDER AS	
M	2	1	**173-9683**	1	BOLT (M30X3.5X90-MM)	
	3	1	**9X-8399**	1	WASHER (33X56X6-MM THK)	
	4	1	**137-8130**	1	PISTON	
	5	1	**175-7897**	1	SEAL-O-RING	
	6	1	**6J-1381**	1	RING-BACKUP	
	7	1	**6E-0123**	1	HEAD	
	8	1	**137-6794**	1	ROD AS	
	9	1	**227-1143**	1	SEAL-WIPER	
	10	1	**167-2302**	1	SEAL-U-CUP	
	11	1	**167-2192**	1	SEAL AS-BUFFER	
	12	1	**4T-6779**	1	RING	
	13	1	**6J-0793**	1	SEAL AS	
		1	**6J-0789**	1	RING-EXPANDER	
		1	**6J-0790**	1	SEAL	
	14	1	**8J-6371**	1	RING-WEAR	

M-METRIC PART

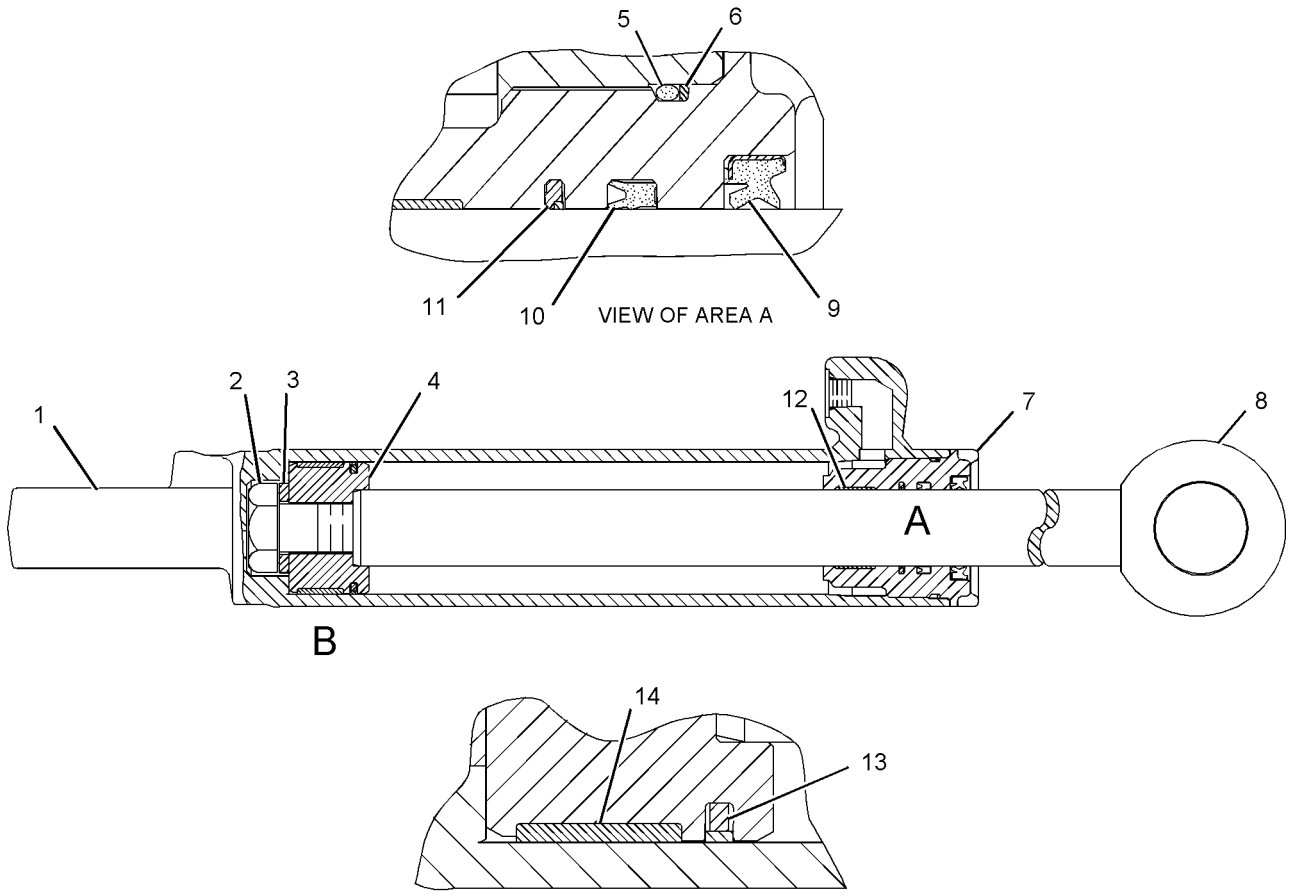

GRAPHIC #1

<END>

g01098593

HYDRAULIC SYSTEM

6E-1343 CYLINDER GP-CENTERSHIFT

S/N: JBP1-UP
76.2-MM (3-IN) BORE X 630-MM (2.35-IN) STROKE
PART OF 8X-1944 CYLINDER & MTG GP-CENTERSHIFT

SMCS-5223 **i02108899**

NOTE	REF NO	GRAPHIC REF	PART NUMBER	QTY	PART NAME 1 2 3 4 5 6 (PRODUCT LEVEL)	SEE PAGE
	1	1	**6E-1344**	1	CYLINDER AS	
M	2	1	**173-9683**	1	BOLT (M30X3.5X90-MM)	
	3	1	**3S-7023**	1	WASHER (34X57X6-MM THK)	
	4	1	**6E-1131**	1	PISTON	
	5	1	**6E-1346**	1	ROD AS	
J	6	1	**175-7896**	1	SEAL-O-RING	
J	7	1	**6J-5731**	1	RING-BACKUP	
	8	1	**148-2593**	1	HEAD	
J	9	1	**6J-5733**	1	RING-WEAR	
J	10	1	**6J-1972**	1	SEAL AS	
J	11	1	**229-9382**	1	SEAL-WIPER	
J	12	1	**167-2304**	1	SEAL-U-CUP	
J	13	1	**167-2195**	1	SEAL AS-BUFFER	
J	14	1	**4T-5613**	1	RING-WEAR	
					AVAILABLE REPAIR KIT(S):	
J			**238-4462**	1	KIT-SEAL	
					(INCLUDES SEALS AND RINGS)	

J-KIT MARKED J INCLUDES PARTS MARKED J
M-METRIC PART

6E-1343 CYLINDER GP-CENTERSHIFT *(contd.)* i02108899

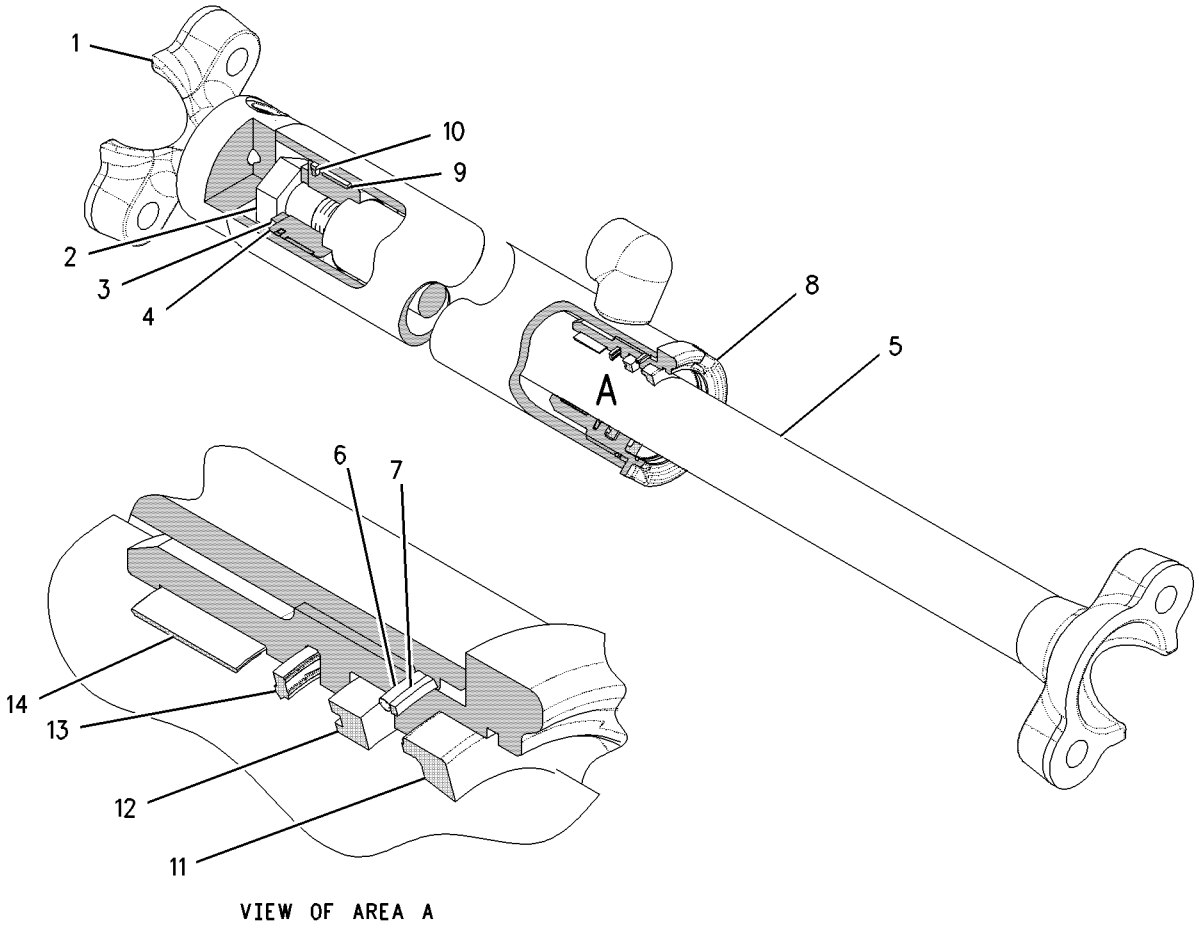

VIEW OF AREA A

GRAPHIC #1 **<END>** g00762040

HYDRAULIC SYSTEM

131-7191 CYLINDER GP-HYDRAULIC

S/N: JBP1-UP
69.85-MM (2.75-IN) BORE X 307-MM (12.09-IN) STROKE
PART OF 8X-1943 CYLINDER & MTG GP-BLADE TIP
AN ATTACHMENT

SMCS-7562 **i02108889**

NOTE	REF NO	GRAPHIC REF	PART NUMBER	QTY	PART NAME 1 2 3 4 5 6 (PRODUCT LEVEL)	SEE PAGE
	1	1	**131-7194**	1	CYLINDER AS	
		1	**2D-8652**	1	BEARING	
M	2	1	**173-9685**	1	BOLT (M20X2.5X70-MM)	
	3	1	**8T-3282**	1	WASHER-HARD (22X35X3.5-MM THK)	
J	4	1	**5J-7010**	1	SEAL AS	
J	5	1	**8J-0112**	1	RING-WEAR	
	6	1	**9T-2457**	1	PISTON	
J	7	1	**175-7895**	1	SEAL-O-RING	
J	8	1	**4J-9225**	1	RING-BACKUP	
	9	1	**6E-4940**	1	HEAD	
	10	1	**131-7195**	1	ROD AS	
		1	**2D-8652**	1	BEARING	
J	11	1	**4T-6780**	1	RING-WEAR	
J	12	1	**167-2186**	1	SEAL AS-BUFFER	
J	13	1	**167-2294**	1	SEAL-U-CUP	
J	14	1	**226-8202**	1	SEAL-WIPER	
					AVAILABLE REPAIR KIT(S):	
AJ			**185-6596**	1	KIT-SEAL	
					(INCLUDES SEALS & RINGS)	

A-NOT PART OF THIS GROUP
J-KIT MARKED J INCLUDES PARTS MARKED J
M-METRIC PART

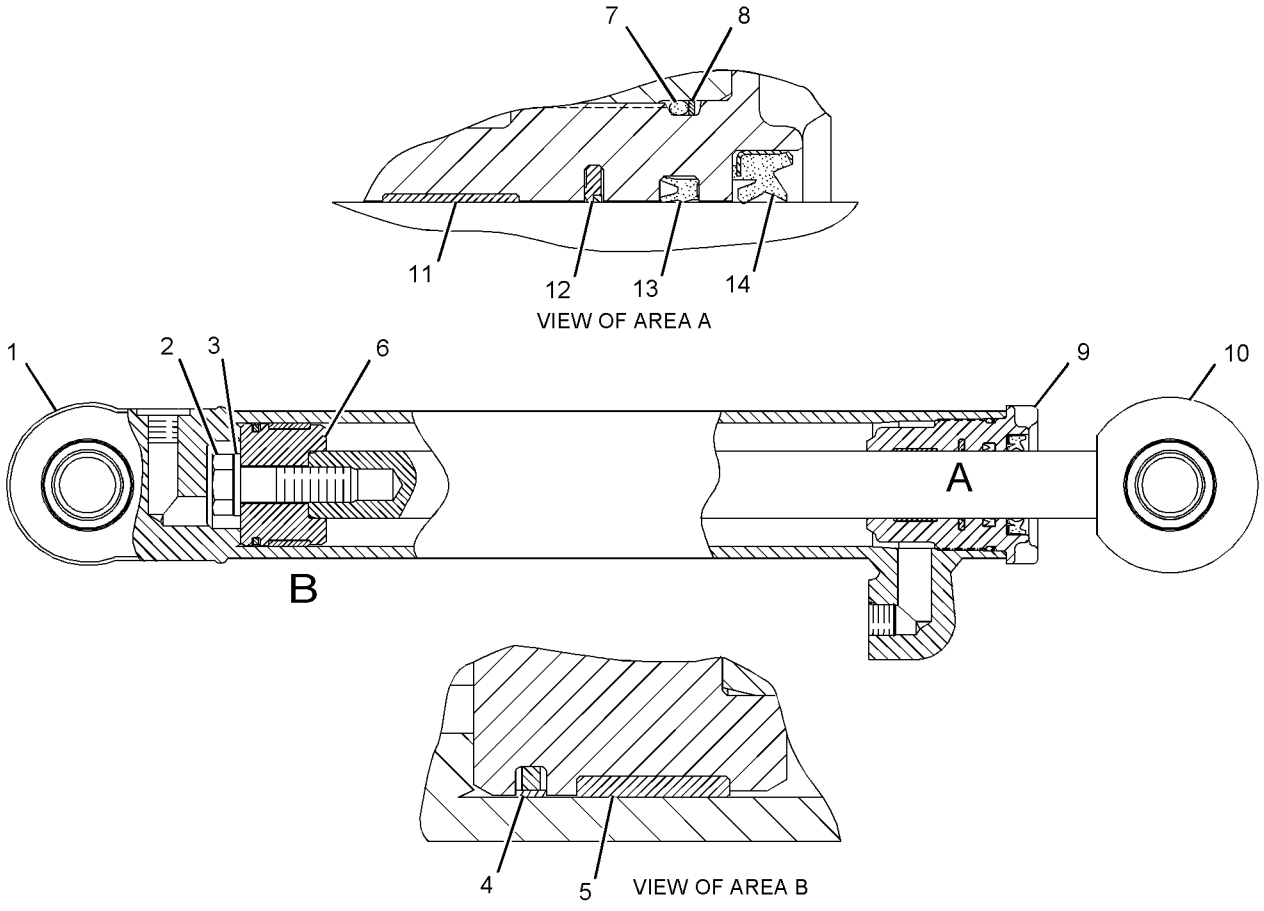

GRAPHIC #1 **<END>** g01097877

132-4929 CYLINDER GP-LIFT–BLADE

S/N: JBP1-UP
76.2-MM (3-IN) BORE X 1245-MM (49.02-IN) STROKE
PART OF 8X-1947 CYLINDER & MTG GP-BLADE LIFT

SMCS-5102 **i02108887**

NOTE	REF NO	GRAPHIC REF	PART NUMBER	QTY	PART NAME 1 2 3 4 5 6 (PRODUCT LEVEL)	SEE PAGE
R	1	1	**132-4928**	1	CYLINDER AS	
		1	**8J-6384**	2	BEARING-SLEEVE	
M	2	1	**173-9683**	1	BOLT (M30X3.5X90-MM)	
	3	1	**3S-7023**	1	WASHER (34X57X6-MM THK)	
	4	1	**6J-1972**	1	SEAL AS	
	5	1	**6J-5733**	1	RING-WEAR	
	6	1	**6E-1131**	1	PISTON	
	7	1	**175-7896**	1	SEAL-O-RING	
	8	1	**6J-5731**	1	RING-BACKUP	
	9	1	**148-2593**	1	HEAD	
R	10	1	**123-3793**	1	ROD AS	
	11	1	**229-9382**	1	SEAL-WIPER	
	12	1	**167-2304**	1	SEAL-U-CUP	
	13	1	**167-2195**	1	SEAL AS-BUFFER	
	14	1	**4T-5613**	1	RING-WEAR	

M-METRIC PART
R-REMFG PART MAY BE AVAILABLE

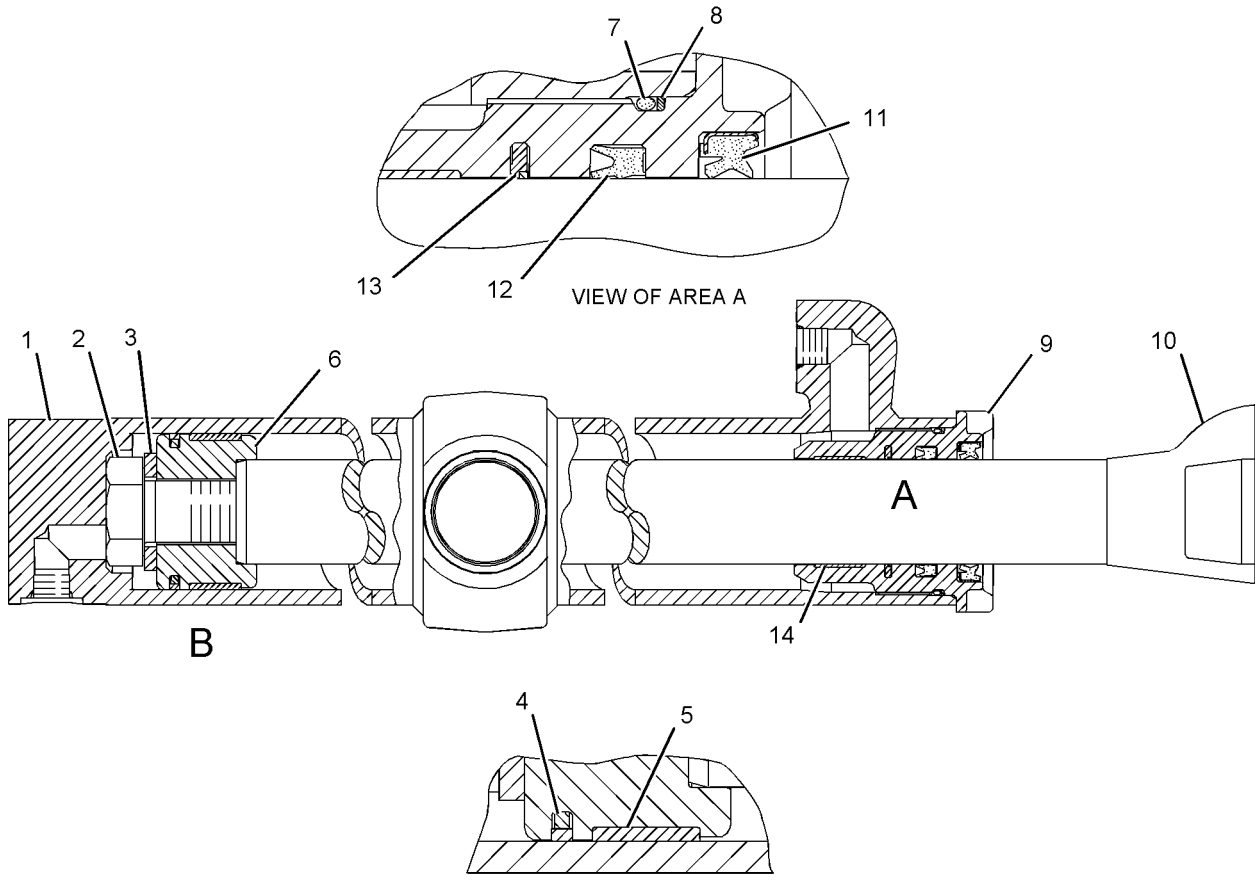

GRAPHIC #1

<END>

g01098705

HYDRAULIC SYSTEM

113-7754 CYLINDER GP-RIPPER

S/N: JBP1-UP
101.6-MM (4-IN)BORE X 482.6-MM (19-IN) STROKE
PART OF 285-4183 RIPPER AR
AN ATTACHMENT

SMCS-5352, 5356 **i01988942**

NOTE	REF NO	GRAPHIC REF	PART NUMBER	QTY	PART NAME 1 2 3 4 5 6 (PRODUCT LEVEL)	SEE PAGE
R	1	1	**113-7755**	1	CYLINDER AS	
	1A	1	**8J-9911**	2	BEARING-SLEEVE	
	1B	1	**9T-8958**	1	TRUNNION	
M	2	1	**173-9683**	1	BOLT (M30X3.5X90-MM)	
	3	1	**3S-7023**	1	WASHER (34X57X6-MM THK)	
	4	1	**5J-5402**	1	SEAL AS	
	5	1	**6J-2797**	1	RING-WEAR	
	6	1	**9T-3133**	1	PISTON	
R	7	1	**113-7756**	1	ROD AS	
	7A	1	**8J-9910**	1	BEARING-SLEEVE	
	8	1	**175-7900**	1	SEAL-O-RING	
	9	1	**2K-6830**	1	RING-BACKUP	
	10	1	**6E-0775**	1	HEAD	
	11	1	**4T-5613**	1	RING-WEAR	
	12	1	**167-2195**	1	SEAL AS-BUFFER	
	13	1	**167-2304**	1	SEAL-U-CUP	
	14	1	**229-9382**	1	SEAL-WIPER	

M-METRIC PART
R-REMFG PART MAY BE AVAILABLE

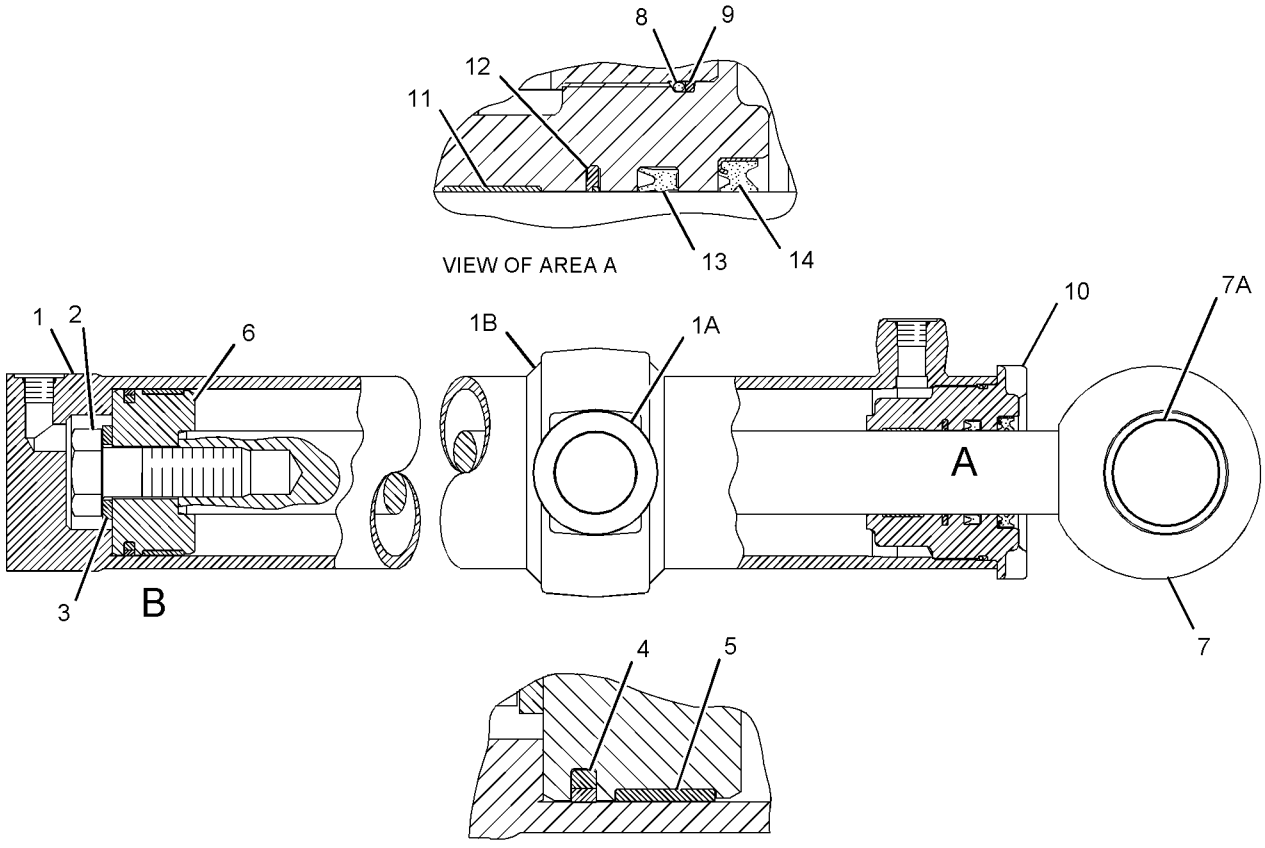

GRAPHIC #1 g01069015

<END>

165-2510 CYLINDER GP-SCARIFIER

S/N: JBP1-UP
76.2-MM (3-IN) BORE X 406.5-MM (16-IN) STROKE
PART OF 8W-2913 CYLINDER & MTG GP-SCARIFIER
AN ATTACHMENT

SMCS-5213 **i01963757**

NOTE	REF NO	GRAPHIC REF	PART NUMBER	QTY	PART NAME 1 2 3 4 5 6 (PRODUCT LEVEL)	SEE PAGE
	1	1	**9T-4211**	1	PISTON	
	2	1	**168-9108**	1	CYLINDER AS	
	3	1	**168-9110**	1	ROD AS	
	4	1	**184-9843**	1	HEAD	
J	5	1	**167-2190**	1	SEAL AS-BUFFER	
J	6	1	**167-2300**	1	SEAL-U-CUP	
J	7	1	**231-3539**	1	SEAL-WIPER	
M	8	1	**173-9779**	1	BOLT (M24X3X80-MM)	
J	9	1	**175-7896**	1	SEAL-O-RING	
J	10	1	**4T-6907**	1	RING-WEAR	
J	11	1	**6J-1972**	1	SEAL AS	
J	12	1	**6J-5731**	1	RING-BACKUP	
J	13	1	**6J-5733**	1	RING-WEAR	
	14	1	**6V-8237**	1	WASHER (26X44X4-MM THK)	
					AVAILABLE REPAIR KIT(S):	
AJ			**185-7025**	1	KIT-SEAL	
					(INCLUDES SEAL-O-RING)	

A-NOT PART OF THIS GROUP
J-KIT MARKED J INCLUDES PARTS MARKED J
M-METRIC PART

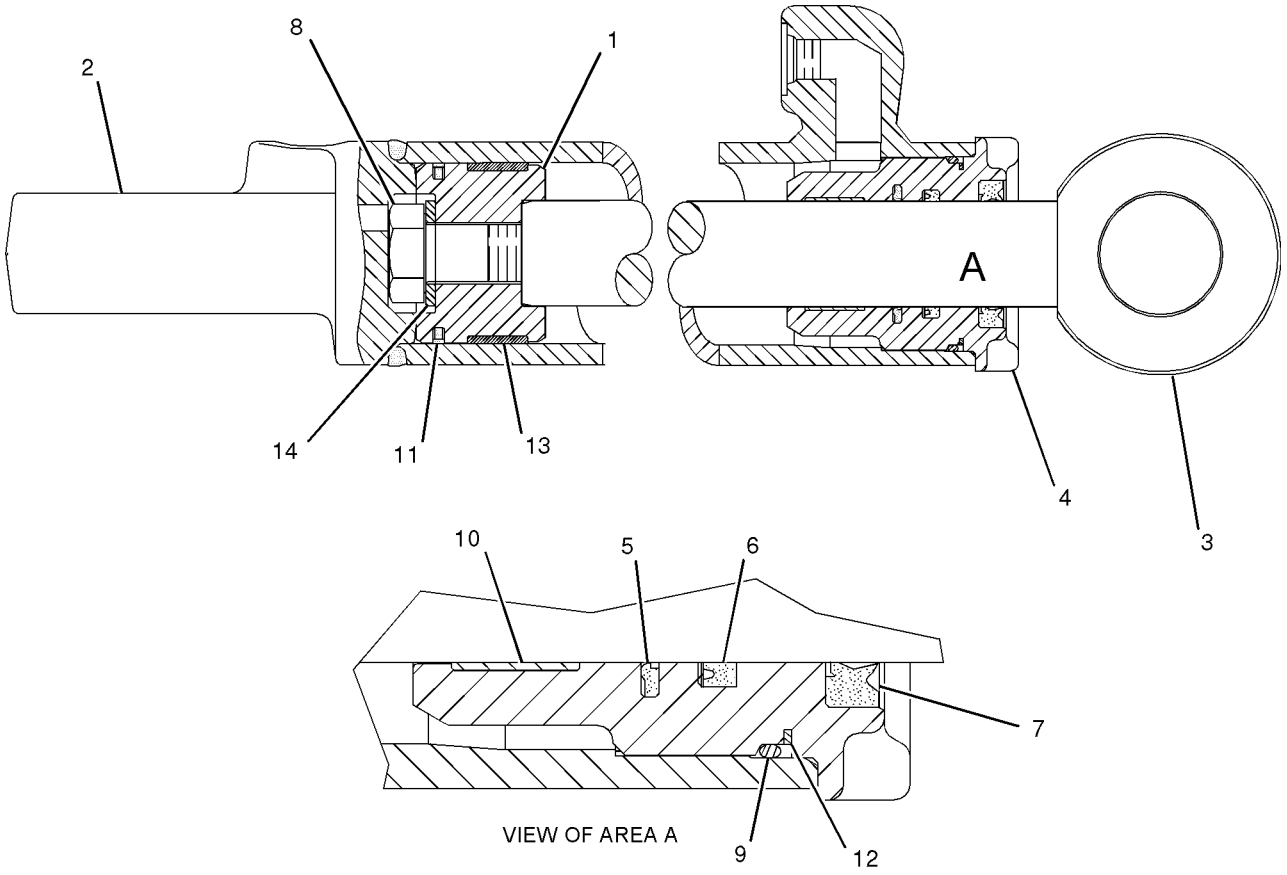

GRAPHIC #1 **<END>** g01045248

HYDRAULIC SYSTEM

112-5575 CYLINDER GP-SIDESHIFT

S/N: JBP1-UP
76.2-MM (3-IN) BORE X 1185-MM (46.66-IN) STROKE
PART OF 112-7463 CYLINDER & MTG GP-SIDESHIFT
AN ATTACHMENT

SMCS-5229 **i02503930**

NOTE	REF NO	GRAPHIC REF	PART NUMBER	QTY	PART NAME 1 2 3 4 5 6 (PRODUCT LEVEL)	SEE PAGE
R	1	1	**9T-2482**	1	CYLINDER AS	
M	2	1	**8T-0667**	1	BOLT (M24X3X100-MM)	
	3	1	**150-1280**	1	WASHER-HARD (26X44X22-MM THK)	
	4	1	**9T-4211**	1	PISTON	
	5	1	**175-7896**	1	SEAL-O-RING	
	6	1	**6J-5731**	1	RING-BACKUP	
R	7	1	**112-9035**	1	ROD AS	
	8	1	**184-9843**	1	HEAD	
	9	1	**231-3539**	1	SEAL-WIPER	
	10	1	**167-2300**	1	SEAL-U-CUP	
	11	1	**167-2190**	1	SEAL AS-BUFFER	
	12	1	**4T-6907**	1	RING-WEAR	
	13	1	**6J-5733**	1	RING-WEAR	
	14	1	**6J-1972**	1	SEAL AS	

M-METRIC PART
R-REMFG PART MAY BE AVAILABLE

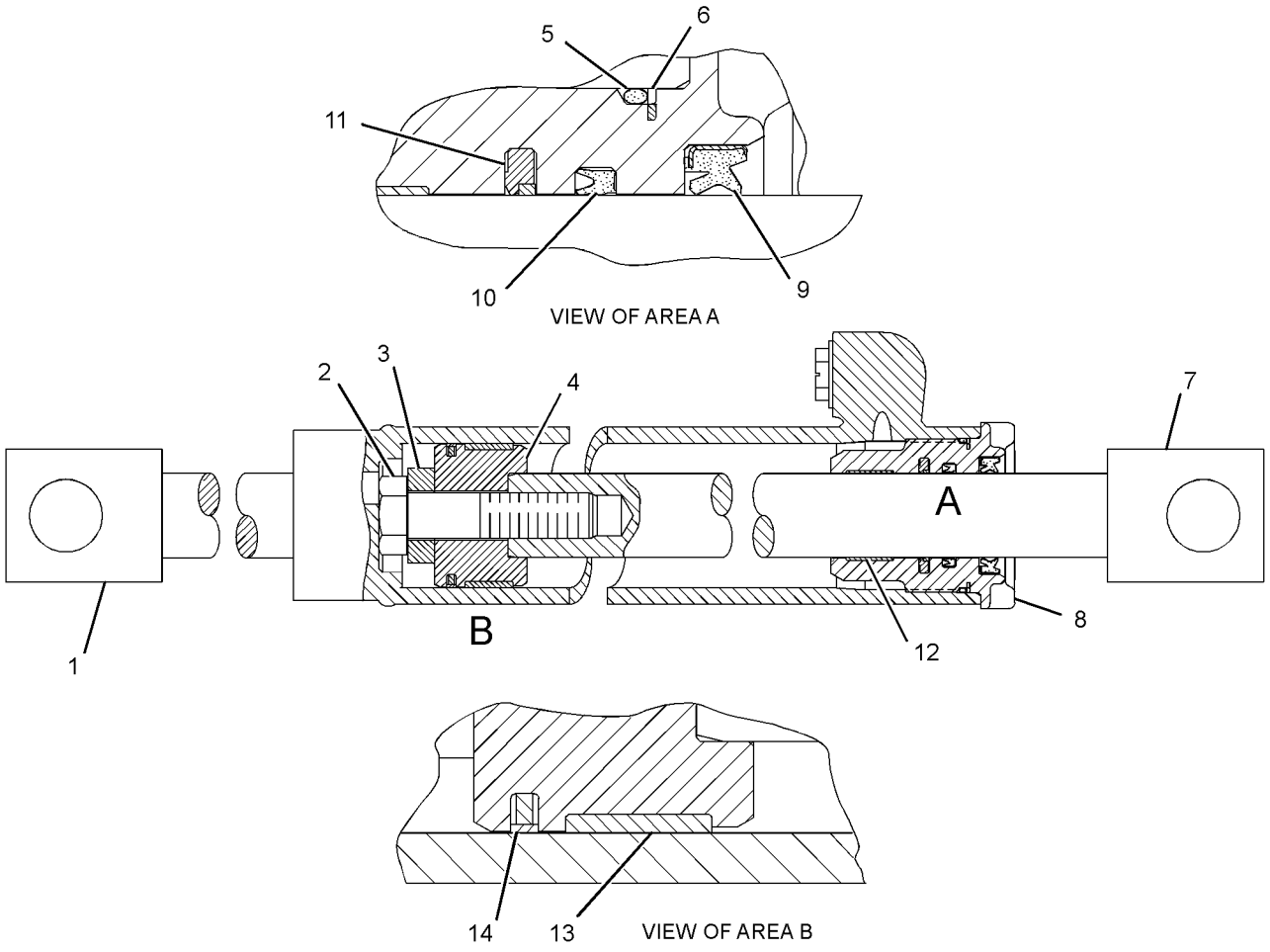

GRAPHIC #1 **<END>** g01259478

130-9041 CYLINDER GP-STEERING–LH

S/N: JBP1-UP
57.15-MM (2.25-IN) BORE X 267-MM (10.51-IN) STROKE
PART OF 8W-2290 CYLINDER & MTG GP-STEERING

SMCS-4303 **i02097612**

NOTE	REF NO	GRAPHIC REF	PART NUMBER	QTY	PART NAME 1 2 3 4 5 6 (PRODUCT LEVEL)	SEE PAGE
	1	1	**9T-2388**	1	PISTON	
R	2	1	**130-9044**	1	CYLINDER AS (LH)	
		1	**148-2592**	1	BOSS AS	
		1	**1N-5999**	1	PLUG-O-RING	
		1	**7J-0204**	1	SEAL-O-RING	
	3	1	**154-6579**	1	ROD	
	4	1	*162-6448*	2	PLUG AS	
					(EACH INCLUDES)	
		1	**1N-5999**	1	PLUG-O-RING	
		1	**7J-0204**	1	SEAL-O-RING	
	5	1	**167-2186**	1	SEAL AS-BUFFER	
	6	1	**167-2294**	1	SEAL-U-CUP	
M	7	1	**173-9685**	1	BOLT (M20X2.5X70-MM)	
	8	1	**175-7895**	1	SEAL-O-RING	
	9	1	**1U-3998**	1	SEAL AS	
	10	1	**226-8202**	1	SEAL-WIPER	
	11	1	**4J-9225**	1	RING-BACKUP	
	12	1	**7H-2423**	1	RING-WEAR	
	13	1	**8T-3282**	1	WASHER-HARD (22X35X3.5-MM THK)	
	14	1	**9T-3727**	1	HEAD	

M-METRIC PART
R-REMFG PART MAY BE AVAILABLE

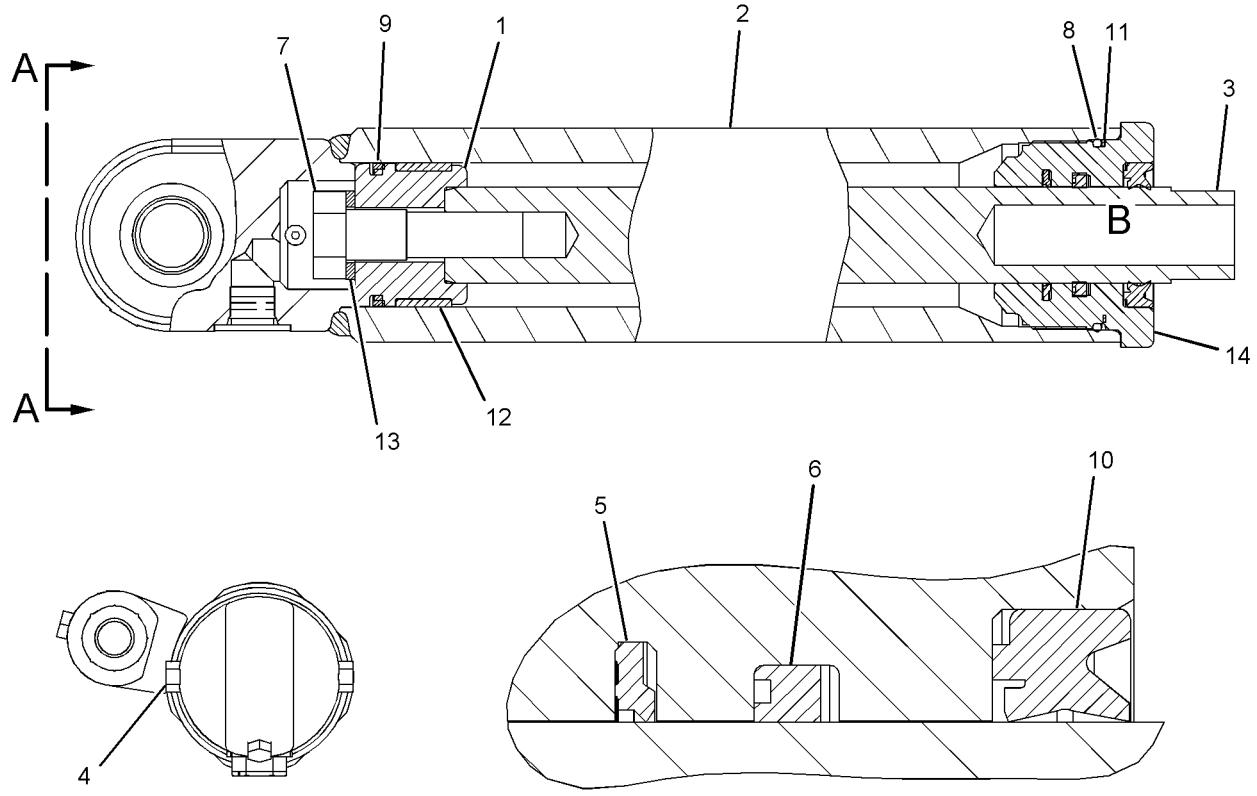

VIEW A-A

VIEW OF AREA B

GRAPHIC #1

<END>

g01069447

HYDRAULIC SYSTEM

130-9042 CYLINDER GP-STEERING—RH

S/N: JBP1-UP
57.15-MM (2.25-IN) BORE X 267-MM (10.51-IN) STROKE
PART OF 8W-2290 CYLINDER & MTG GP-STEERING

SMCS-4303 **i01961840**

NOTE	REF NO	GRAPHIC REF	PART NUMBER	QTY	PART NAME 1 2 3 4 5 6 (PRODUCT LEVEL)	SEE PAGE
	1	1	**9T-2388**	1	PISTON	
	2	1	**130-9045**	1	CYLINDER AS (RH)	
		1	**1N-5999**	1	PLUG-O-RING	
		1	**7J-0204**	1	SEAL-O-RING	
		1	**142-0308**	1	ELBOW	
		1	**005-8639**	1	BEARING-ALIGNING	
	3	1	**154-6579**	1	ROD	
	4	1	**167-2186**	1	SEAL AS-BUFFER	
	5	1	**167-2294**	1	SEAL-U-CUP	
	6	1	**226-8202**	1	SEAL-WIPER	
M	7	1	**173-9685**	1	BOLT (M20X2.5X70-MM)	
	8	1	**175-7895**	1	SEAL-O-RING	
	9	1	*162-6448*	2	PLUG AS	
					(EACH INCLUDES)	
		1	**1N-5999**	1	PLUG-O-RING	
		1	**7J-0204**	1	SEAL-O-RING	
	10	1	**1U-3998**	1	SEAL AS	
	11	1	**4J-9225**	1	RING-BACKUP	
	12	1	**7H-2423**	1	RING-WEAR	
	14	1	**8T-3282**	1	WASHER-HARD (22X35X3.5-MM THK)	
	15	1	**9T-3727**	1	HEAD	

M-METRIC PART

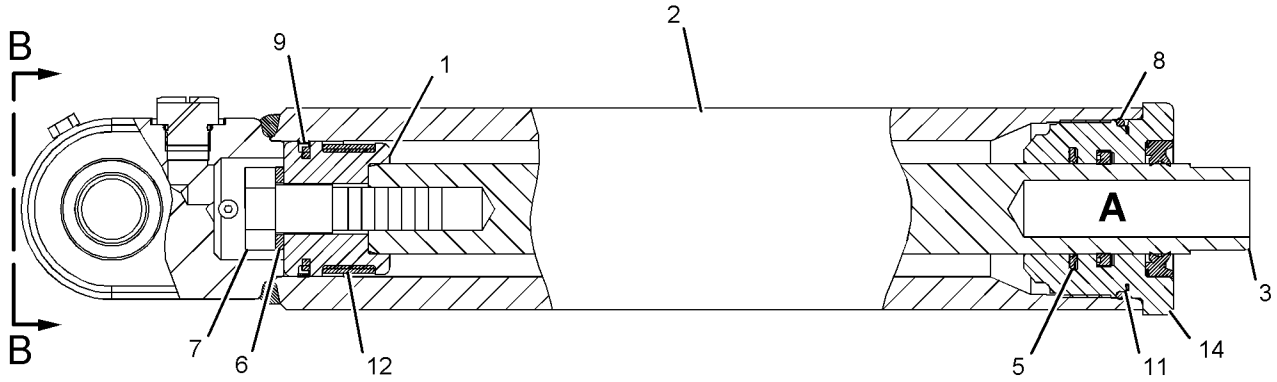

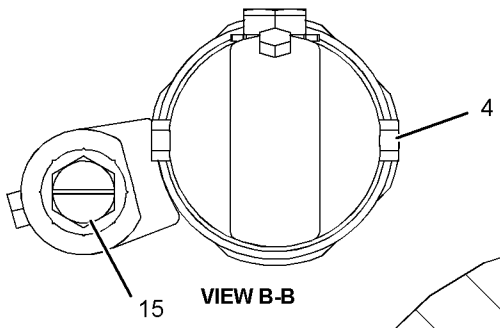

VIEW B-B

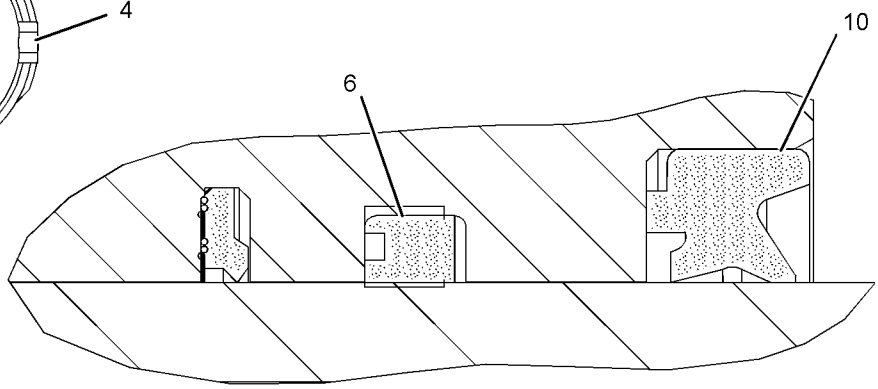

VIEW OF AREA A

GRAPHIC #1 **<END>** g01083880

121-9242 CYLINDER GP-WHEEL LEAN

S/N: JBP1-UP
88.9-MM (3.5-IN) BORE X 149-MM (5.87-IN) STROKE
PART OF 8W-2737 CYLINDER & MTG GP-WHEEL LEAN

SMCS-5211 **i02108923**

NOTE	REF NO	GRAPHIC REF	PART NUMBER	QTY	PART NAME 1 2 3 4 5 6 (PRODUCT LEVEL)	SEE PAGE
	1	1	**123-1076**	1	CYLINDER AS	
M	2	1	**173-9683**	1	BOLT (M30X3.5X90-MM)	
	3	1	**9X-8399**	1	WASHER (33X56X6-MM THK)	
	4	1	**4T-8054**	1	SEAL AS	
	5	1	**7J-9885**	1	RING-WEAR	
	6	1	**9T-9040**	1	PISTON	
	7	1	**175-7898**	1	SEAL-O-RING	
	8	1	**4J-9224**	1	RING-BACKUP	
	9	1	**6E-4974**	1	HEAD	
	10	1	**121-9245**	1	ROD AS	
		1	**2G-8631**	1	BEARING-SLEEVE	
	11	1	**229-9382**	1	SEAL-WIPER	
	12	1	**167-2304**	1	SEAL-U-CUP	
	13	1	**167-2195**	1	SEAL AS-BUFFER	
	14	1	**4T-5613**	1	RING-WEAR	

M-METRIC PART

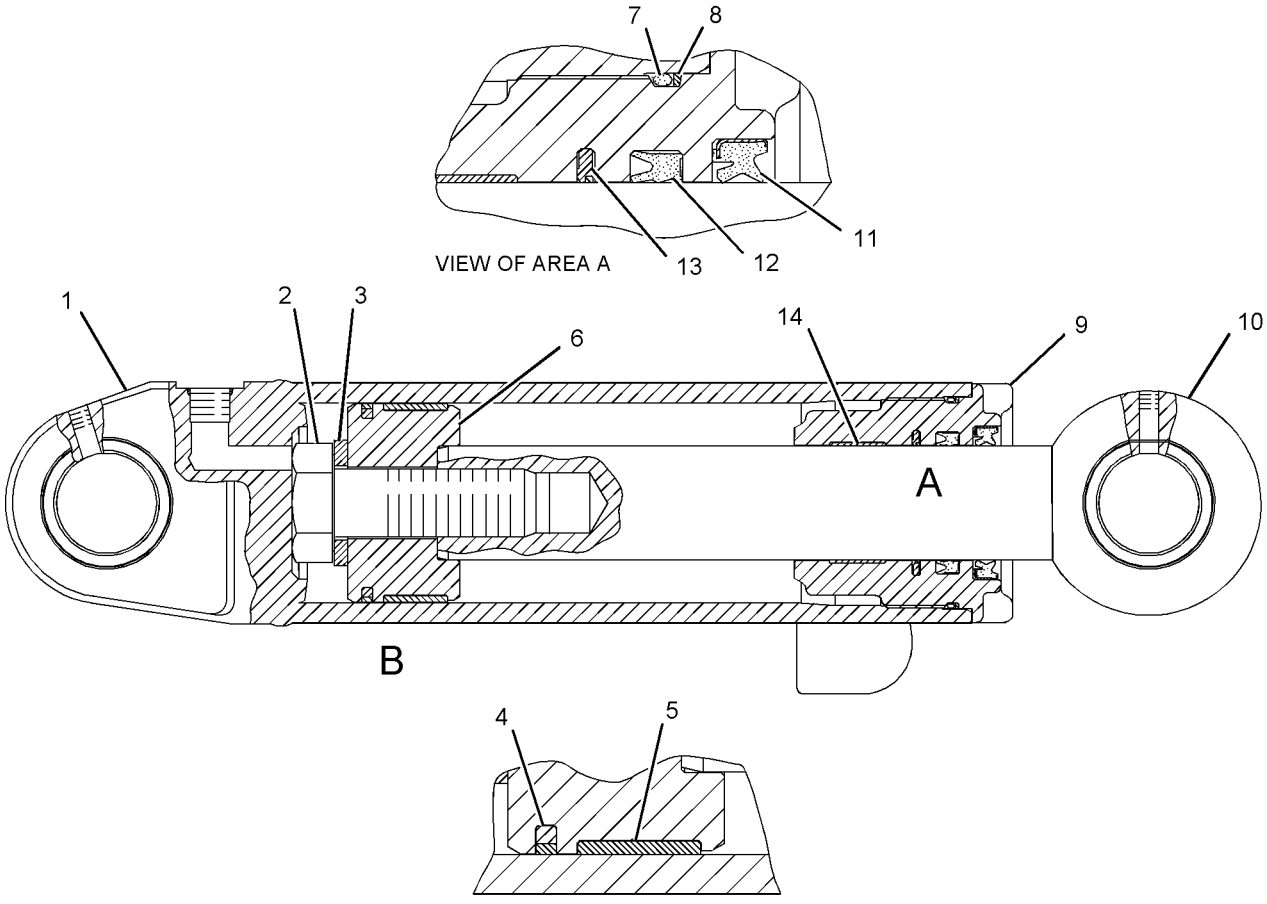

GRAPHIC #1

<END>

g01098821

108-4916 DETENT GP-CONTROL VALVE–PLOW, BULLDOZER LIFT

S/N: JBP1-UP

PART OF 107-0547, 6E-3031, 6E-3037 VALVE GP-CONTROL

AN ATTACHMENT

SMCS-5051 **i00131376**

NOTE	REF NO	GRAPHIC REF	PART NUMBER	QTY	PART NAME 1 2 3 4 5 6 (PRODUCT LEVEL)	SEE PAGE
	1	1	**101-1974**	1	RETAINER	
	2	1	**101-1975**	1	RETAINER	
	3	1	**102-7423**	1	SPRING	
	4	1	**5B-9318**	6	BALL	

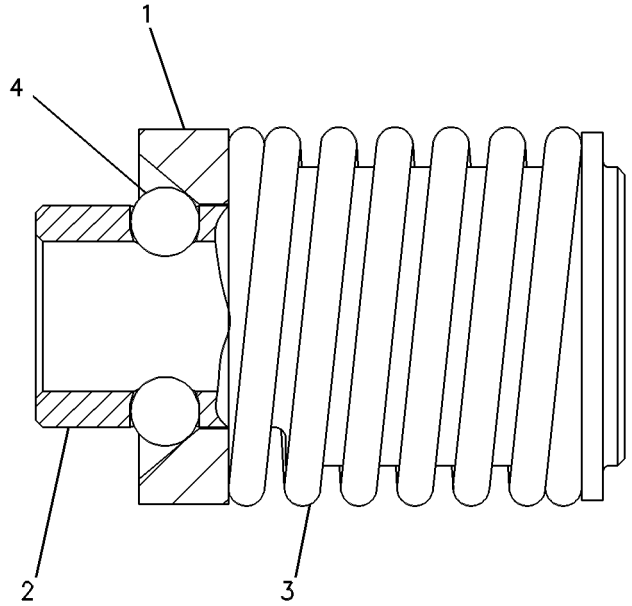

GRAPHIC #1 **<END>** g00108519

HYDRAULIC SYSTEM

5T-0570 DRIVE GP-CIRCLE

S/N: JBP1-UP

PART OF 274-7941 GENERAL AR

SMCS-5207 **i03193261**

NOTE	REF NO	GRAPHIC REF	PART NUMBER	QTY	PART NAME 1 2 3 4 5 6 (PRODUCT LEVEL)	SEE PAGE
CY	1	1	**105-3196**	1	MOTOR GP-GEROTOR (CIRCLE DRIVE)	425
	2	1	**1B-4046**	2	CONE-BEARING	
	3	1	**1B-4038**	2	CUP-BEARING	
	4	1	**1B-5174**	1	PLUG-PIPE	
	5	1	**312-0782**	1	WORM-CIRCLE DRIVE	
	6	1	**1H-7339**	1	SEAL-O-RING	
	7	1	**9D-1491**	1	COUPLING	
	8	1	**4H-6996**	1	PIN-SPRING	
	9	1	**2G-6695**	1	BRACKET	
B	10	1	**7D-8983**	10	SHIM (0.005-IN THK)	
B	11	1	**7D-8984**	6	SHIM (0.007-IN THK)	
	12	1	**2H-9247**	1	SEAL-O-RING	
	13	1	**6G-5548**	1	SPACER (69.5X89X0.8-MM THK)	
B	14	1	**307-1959**	2	SHIM (0.13-MM THK)	
R	15	1	**5K-5288**	1	SEAL GP-DUO-CONE	
	15A	1	**5K-5129**	2	RING-SEALING	
B	16	1	**307-1960**	1	SHIM (0.25-MM THK)	
	17	1	**6G-5538**	1	COVER	
	18	1	**6H-1717**	5	BOLT (1/2-13X1.125-IN)	
	19	1	**5P-8245**	16	WASHER-HARD (13.5X25.5X3-MM THK)	
	20	1	**2B-7410**	1	PLUG-PIPE	
	21	1	**8T-0336**	1	FITTING-PRESSURE RELIEF	
	22	1	**5K-8454**	3	BOLT (1/2-13X1.12-IN)	
	23	1	**6G-5534**	1	COVER AS	
		1	**6G-5537**	1	BEARING	
C	24	1	**1F-7958**	4	NUT-FULL (1/2-13-THD)	
	25	1	**5H-4909**	1	SEAL-O-RING	
	26	1	**6G-5539**	1	GASKET	
	27	1	**307-1961**	1	PLATE	
	28	1	**6G-5533**	1	GEAR-WORM (36-TEETH)	
C	29	1	**9X-8887**	2	BOLT (3/4-10X3-IN)	
	30	1	**7M-2360**	2	WASHER (19.8X41X9.5-MM THK)	
	31	1	**8D-7425**	2	WASHER-THRUST (2.8X4.25X0.12-MM THK)	
	32	1	**307-1958**	1	SHAFT-PINION DRIVE	
	33	1	**4F-9653**	1	SEAL-O-RING	
	34	1	**5P-8248**	4	WASHER-HARD (20X36.5X3.5-MM THK)	
	35	1	**2J-3506**	4	NUT-FULL (3/4-10-THD)	
	36	1	**8D-7424**	1	SPACER (48X81X6-MM THK)	
	37	1	**8D-7423**	1	WASHER-SPECIAL (1.906X3.19X1.6-MM THK)	
	38	1	**1A-1415**	1	NUT (23/4X17/8-THD)	
	39	1	**261-8553**	1	PINION-CIRCLE DRIVE	
	40	1	**6G-1908**	1	HOUSING AS-DRIVE	
	40A	1	**2D-8154**	4	STUD-TAPERLOCK (1/2-13X2.36-IN)	
	40B	1	**8D-7426**	1	BEARING-SLEEVE	
	40C	1	**7D-3504**	4	STUD-TAPERLOCK (3/4-10X3.39-IN)	
		1	**8D-9804**	1	HOUSING-DRIVE	
	41	1	**6G-5542**	2	SPACER (119.2X178X9.3-MM THK)	
	42	1	**0S-1585**	4	BOLT (1/2-13X1.5-IN)	
	43	1	**6Y-7953**	6	DISC-FRICTION (2.87MM .112IN THK)	
	44	1	**2G-0478**	5	DISC-FRICTION (1.52MM THK)	
	45	1	**6G-6122**	1	SPRING-DISC	
	46	1	**5S-7379**	4	BOLT (3/8-16X0.875-IN)	
	47	1	**8T-4896**	4	WASHER-HARD (10.2X18.5X2.5-MM THK)	
	48	1	**8D-5054**	3	WASHER-HARD (17X30X3-MM THK)	
M	49	1	**6V-5686**	3	BOLT (M16X2X50-MM)	
B	50	1	**307-1962**	12	SHIM (0.5-MM THK)	

B-USE AS REQUIRED
C-CHANGE FROM PREVIOUS TYPE
M-METRIC PART
R-REMFG PART MAY BE AVAILABLE
Y-SEPARATE ILLUSTRATION

5T-0570 DRIVE GP-CIRCLE *(contd.)* **i03193261**

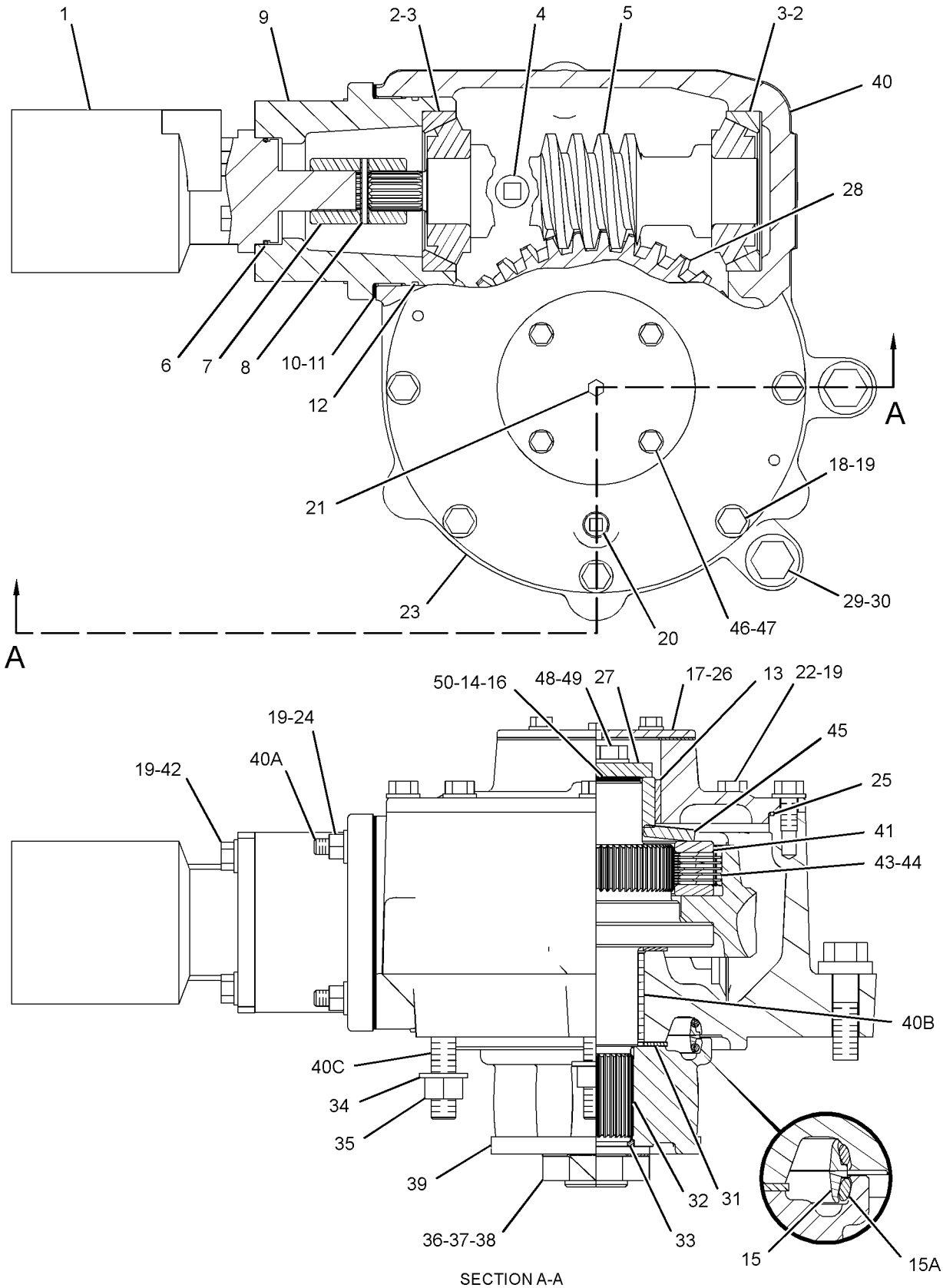

SECTION A-A

GRAPHIC #1 **<END>** g01615296

8W-7030 GUARD GP-CYLINDER

S/N: JBP1-UP
PART OF 117-3200 BLADE AR
AN ATTACHMENT

SMCS-7164 **i00834868**

NOTE	REF NO	GRAPHIC REF	PART NUMBER	QTY	PART NAME 1 2 3 4 5 6 (PRODUCT LEVEL)	SEE PAGE
	1	1	**8W-5227**	1	GUARD AS	
C	2	1	**7X-0334**	4	BOLT (1/2-13X5-IN)	
C	3	1	**105-2080**	2	BRACKET AS	
					(EACH INCLUDES)	
		1	**1F-0748**	2	NUT-WELD (1/2-13-THD)	
C	4	1	**7D-1649**	4	WASHER-HARD (13.5X32X5-MM THK)	
C	5	1	**102-4139**	4	SPACER (18.85X26.67X78-MM THK)	

C-CHANGE FROM PREVIOUS TYPE

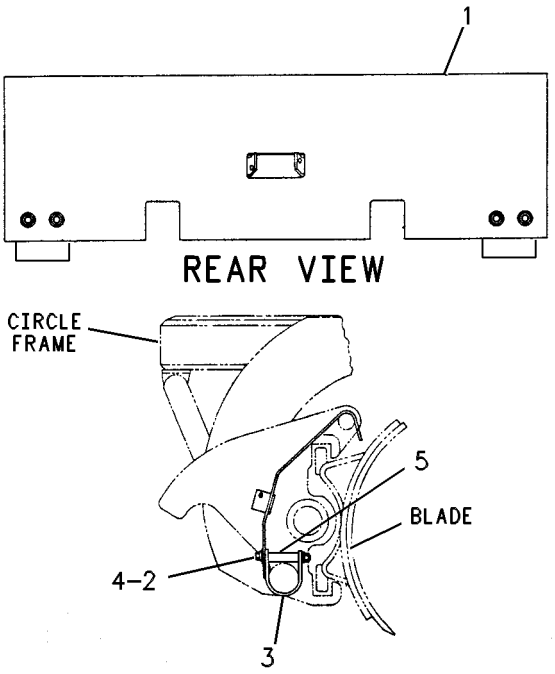

GRAPHIC #1 **<END>** g00109186

HYDRAULIC SYSTEM

166-3336 LINES GP-ACCUMULATOR

S/N: JBP1-UP

PART OF 285-4154 ACCUMULATOR AR-BLADE CUSHION

AN ATTACHMENT

SMCS-5057 **i01680380**

NOTE	REF NO	GRAPHIC REF	PART NUMBER	QTY	PART NAME 1 2 3 4 5 6 (PRODUCT LEVEL)	SEE PAGE
	1	1	**9D-0953**	1	SPACER (0.406X0.75X0.88-IN THK)	
I	2	1	**108-0706**	1	HOSE AS	
Y	3	1	**112-2240**	2	MANIFOLD GP-CONTROL (BLADE CUSHION)	421
I	4	1	**134-0744**	1	HOSE AS	
I	5	1	**134-0746**	1	HOSE AS	
I	6	1	**151-9849**	1	HOSE AS	
	7	1	*171-6466*	2	UNION AS	
					(EACH INCLUDES)	
		1	**5P-9810**	1	UNION	
		1	**3D-2824**	2	SEAL-O-RING	
	8	1	*148-8328*	2	CONNECTOR AS	
					(EACH INCLUDES)	
		1	**6V-8633**	1	CONNECTOR	
		1	**3D-2824**	1	SEAL-O-RING	
		1	**6V-8398**	1	SEAL-O-RING	
	9	1	*148-8370*	1	ELBOW AS	
		1	**6V-9851**	1	ELBOW	
		1	**6V-8398**	1	SEAL-O-RING	
	10	1	*148-8444*	2	TEE AS-SWIVEL	
					(EACH INCLUDES)	
		1	**6V-9837**	1	TEE-SWIVEL	
		1	**6V-8398**	2	SEAL-O-RING	
	11	1	**6D-4244**	2	CLIP	
	12	1	**7X-0289**	1	BOLT (3/8-16X1.875-IN)	
	13	1	**8T-4896**	1	WASHER-HARD (10.2X18.5X2.5-MM THK)	

I-REFER TO HYDRAULIC INFORMATION SYSTEM
Y-SEPARATE ILLUSTRATION

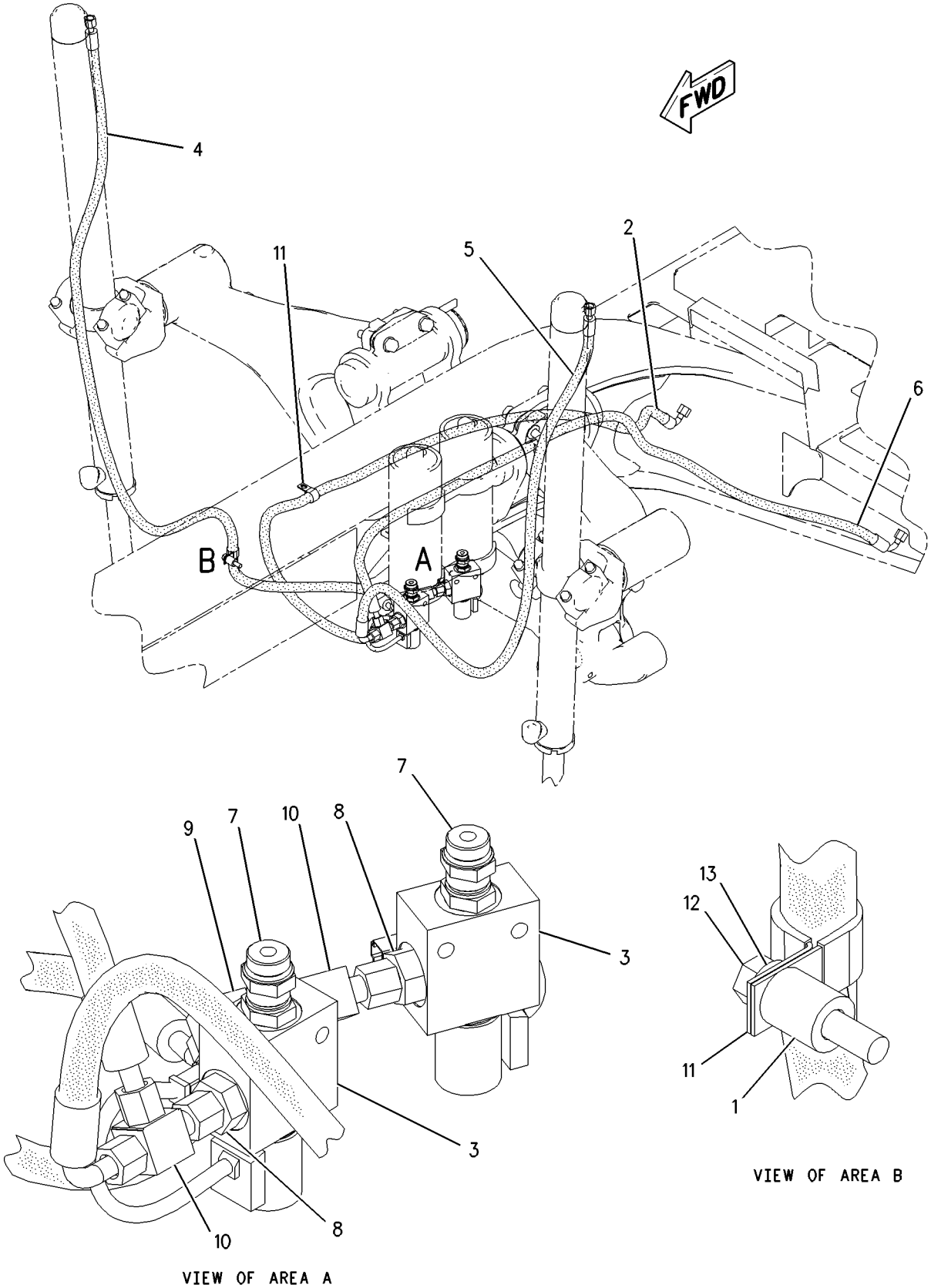

GRAPHIC #1 **<END>** g00889359

HYDRAULIC SYSTEM

8X-6070 LINES GP-HYDRAULIC—SCARIFIER

S/N: JBP1-UP
PART OF 108-1104 SCARIFIER AR
AN ATTACHMENT

SMCS-5057 **i01459260**

NOTE	REF NO	GRAPHIC REF	PART NUMBER	QTY	PART NAME 1 2 3 4 5 6 (PRODUCT LEVEL)	SEE PAGE
	1	1	**2B-0941**	1	SPACER (10.5X19X19-MM THK)	
	2	1	**4J-5468**	1	CLAMP	
I	3	1	**112-3199**	1	HOSE AS	
I	4	1	**112-3200**	1	HOSE AS	
	5	1	*164-5605*	1	CONNECTOR AS	
		1	**3K-0360**	1	SEAL-O-RING	
		1	**6V-8397**	1	SEAL-O-RING	
		1	**8T-0076**		CONNECTOR	
	6	1	*148-8318*	2	CONNECTOR AS	
					(EACH INCLUDES)	
		1	**3K-0360**	1	SEAL-O-RING	
		1	**6V-8397**	1	SEAL-O-RING	
		1	**6V-8634**	1	CONNECTOR	
	7	1	*148-8374*	1	ELBOW AS	
		1	**3K-0360**	1	SEAL-O-RING	
		1	**6V-8397**	1	SEAL-O-RING	
		1	**6V-8723**	1	ELBOW	
	8	1	**6D-4247**	1	CLIP	
	9	1	**7X-0289**	1	BOLT (3/8-16X1.875-IN)	
	10	1	**8T-4896**	1	WASHER-HARD (10.2X18.5X2.5-MM THK)	

I-REFER TO HYDRAULIC INFORMATION SYSTEM

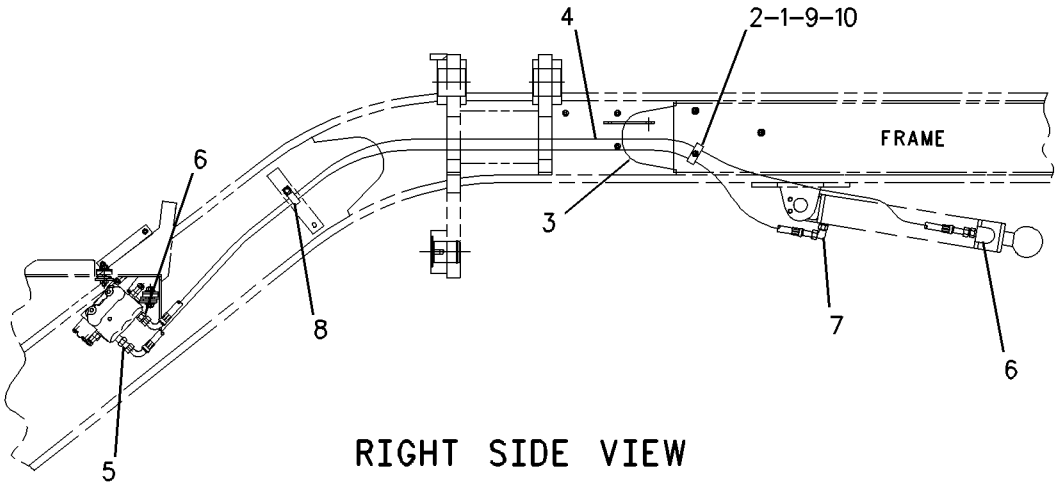

RIGHT SIDE VIEW

GRAPHIC #1 **<END>** g00633579

HYDRAULIC SYSTEM

106-4787 LINES GP-HYDRAULIC–LH

S/N: JBP1-UP
4 CIRCUITS
PART OF 124-9779, 329-3825, 329-3827 BLADE & TIP AR-POWER
AN ATTACHMENT

SMCS-5057 **i02425824**

NOTE	REF NO	GRAPHIC REF	PART NUMBER	QTY	PART NAME 1 2 3 4 5 6 (PRODUCT LEVEL)	SEE PAGE
	1	1	**135-0451**	1	PLATE	
	4	1,2	**5S-7379**	6	BOLT (3/8-16X0.875-IN)	
	5	1,2	**8T-4896**	20	WASHER-HARD (10.2X18.5X2.5-MM THK)	
	6	1	**135-0452**	2	PLATE	
	7	1	**5D-2645**	3	CLAMP	
	8	1,2	**9D-0953**	4	SPACER (0.406X0.75X0.88-IN THK)	
	9	1	**108-1610**	4	CLAMP	
	10	1,2	**2B-0941**	3	SPACER (10.5X19X19-MM THK)	
	11	1	**8T-7008**	1	BOLT (3/8-16X3-IN)	
	13	1	**8T-1687**	2	CONNECTOR	
	14	1,2	**3K-0360**	22	SEAL-O-RING	
	15	1,2	**6V-8398**	6	SEAL-O-RING	
I	16	1	**107-8149**	2	HOSE AS	
	17	2	**2M-9780**	2	SEAL-O-RING	
	18	2	**6V-8624**	2	ELBOW	
	19	1	**6V-8639**	1	CONNECTOR	
	20	1,2	**6V-8634**	8	CONNECTOR	
	21	1,2	**6V-8397**	18	SEAL-O-RING	
I	22	1	**107-8143**	2	HOSE AS	
	23	1,2	**6V-9876**	6	ELBOW	
	24	1,2	**6V-8723**	3	ELBOW (90-DEG)	
I	25	1	**9R-1183**	1	HOSE AS	
I	26	1	**5T-9986**	1	HOSE AS	
	27	1,2	**1S-0994**	8	CLIP	
	28	1	**8T-0076**	1	CONNECTOR	
I	29	1	**107-8144**	2	HOSE AS	
	30	2	**4J-5468**	6	CLAMP	
CY	31	1	**260-6502**	1	SWIVEL GP (CIRCLE DRIVE)	432
CM	32	1	**8T-4648**	4	BOLT (M12X1.75X70-MM)	
	33	1	**8T-4223**	4	WASHER-HARD (13.5X25.5X3-MM THK)	
	34	1	**2A-7081**	1	GUIDE AS-HOSE	
M		1	**8T-3490**	2	NUT-WELD (M10X1.5-THD)	
	35	1	**8D-9092**	1	PIN	
	36	1	**8T-4994**	2	WASHER-HARD (20X36.5X3.5-MM THK)	
	37	1	**3B-4628**	2	PIN-COTTER	
I	38	2	**8W-4194**	1	HOSE AS	
I	39	2	**8W-4193**	1	HOSE AS	
	40	2	**8T-2502**	2	BOLT (3/8-16X1.125-IN)	
	42	1,2	**6V-8801**	6	NUT (3/8-16-THD)	
I	43	1	**134-0747**	1	HOSE AS	
	44	1	**6V-8625**	1	ELBOW	
	45	1	**2G-5493**	1	CLAMP	
	46	1	**2H-9889**	1	BOLT (3/8-16X2.375-IN)	
	47	1	**7W-5672**	1	PIPE	
	49	1	**6D-4244**	2	CLIP	
	50	1	**9B-7237**	1	BOLT (3/8-16X1.25-IN)	
I	51	1	**107-8150**	1	HOSE AS	
D	52	1	**5P-5931**		SEAL (0.45-M EACH)	
	53	2	**5S-7383**	3	BOLT (3/8-16X1.75-IN)	
	54	1	**8T-2501**	2	BOLT (3/8-16X2-IN)	
B	55	1	**8T-1296**	4	WASHER (10.5X19X3.5-MM THK)	

B-USE AS REQUIRED
C-CHANGE FROM PREVIOUS TYPE
D-ORDER BY THE METER
I-REFER TO HYDRAULIC INFORMATION SYSTEM
M-METRIC PART
Y-SEPARATE ILLUSTRATION

REFER TO ALL ILLUSTRATIONS OF
THIS GROUP FOR AUXILIARY VIEWS

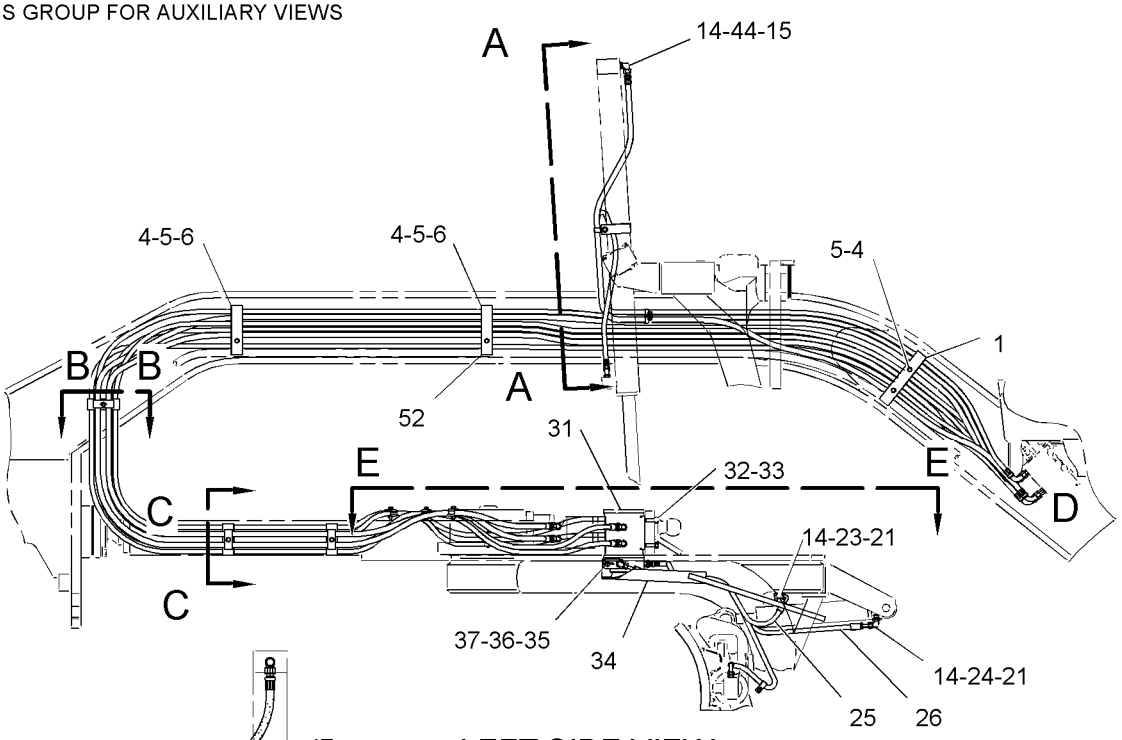

LEFT SIDE VIEW

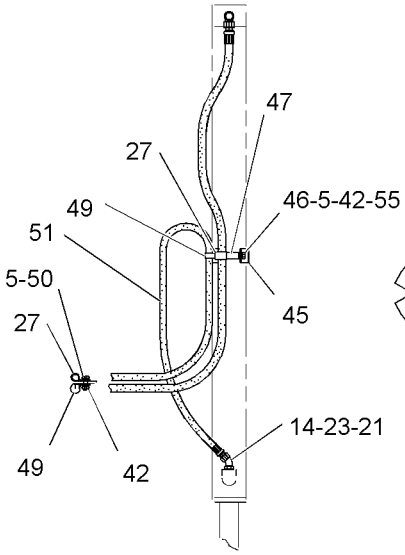

SECTION A-A

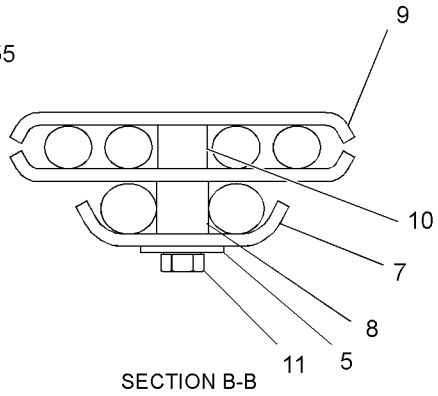

SECTION B-B

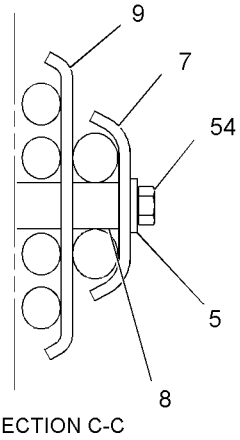

SECTION C-C

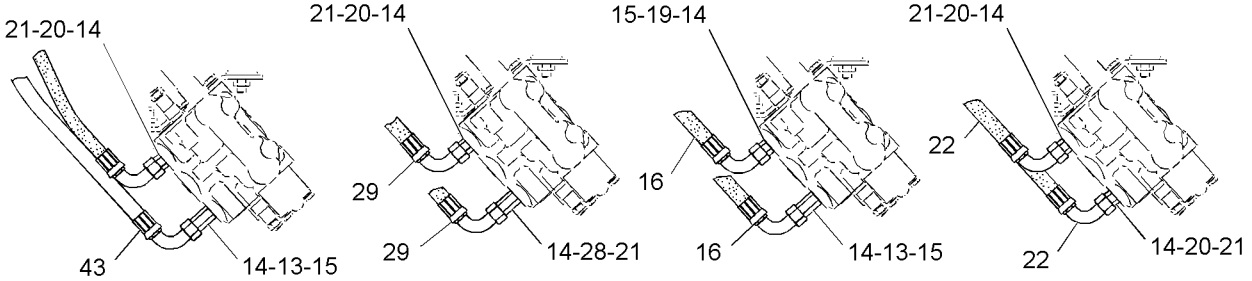

VIEW OF AREA D (FOURTH VALVE FROM FRAME)
VIEW OF AREA D (THIRD VALVE FROM FRAME)
VIEW OF AREA D (SECOND VALVE FROM FRAME)
VIEW OF AREA D (FIRST VALVE FROM FRAME)

GRAPHIC #1 g01213196

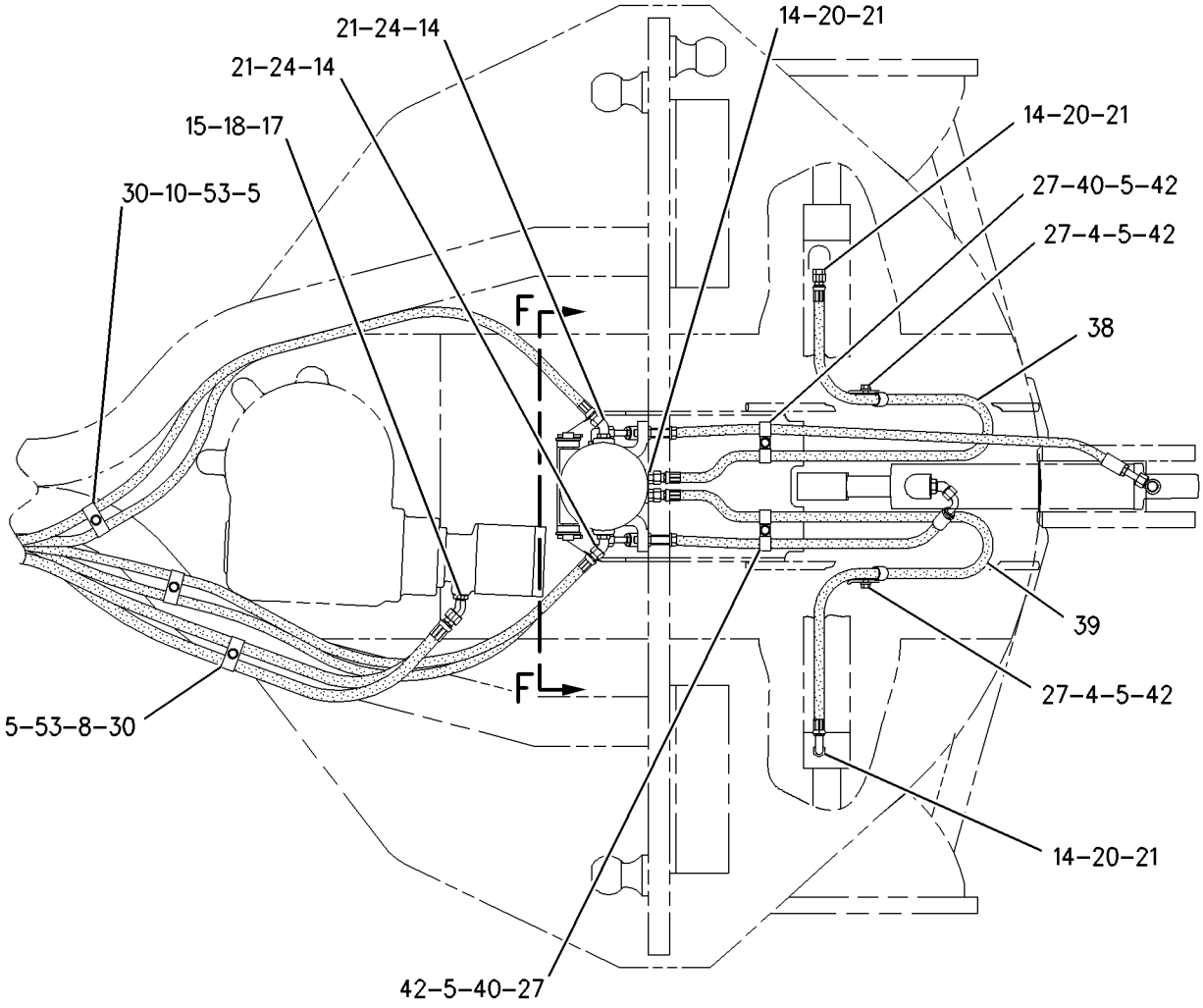

SECTION E-E

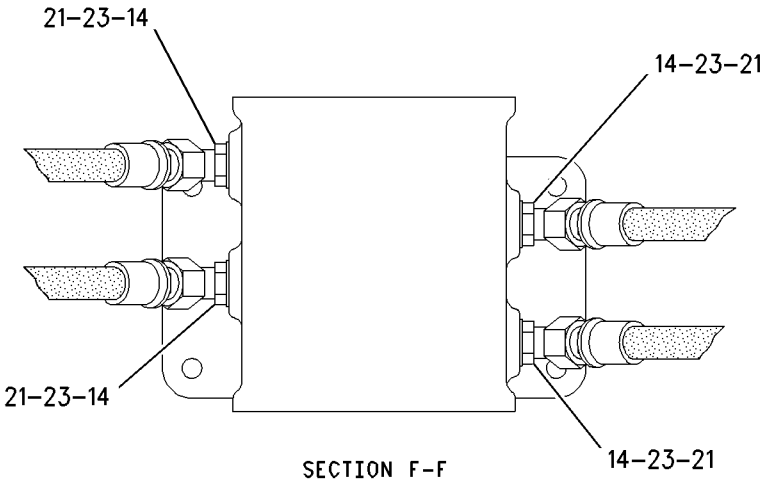

SECTION F-F

GRAPHIC #2 **<END>** g00911811

HYDRAULIC SYSTEM

110-2985 LINES GP-HYDRAULIC–RH

S/N: JBP1-UP
4 CIRCUITS
PART OF 274-7941 GENERAL AR

SMCS-5057 **i01627388**

NOTE	REF NO	GRAPHIC REF	PART NUMBER	QTY	PART NAME 1 2 3 4 5 6 (PRODUCT LEVEL)	SEE PAGE
	1	2	**6V-8723**	4	ELBOW	
	2	1,2	**3K-0360**	18	SEAL-O-RING	
	3	2	**6V-9836**	2	TEE-SWIVEL	
I	4	2	**107-8141**	1	HOSE AS	
I	5	2	**107-8142**	1	HOSE AS	
I	6	2	**107-8140**	1	HOSE AS	
I	7	2	**8W-0220**	1	HOSE AS	
I	8	2	**107-8148**	1	HOSE AS	
I	9	2	**107-8147**	1	HOSE AS	
	10	2	**8T-1683**	2	ELBOW	
	11	1,2	**6V-8397**	20	SEAL-O-RING	
	12	1,2	**6V-8634**	4	CONNECTOR	
I	13	2	**134-0747**	1	HOSE AS	
I	14	2	**107-8150**	1	HOSE AS	
	15	2	**8T-1687**	1	CONNECTOR	
	16	2	**6V-8398**	2	SEAL-O-RING	
	17	2	**100-4336**	1	CLIP	
	18	2	**4L-6454**	1	BOLT (3/8-16X1-IN)	
	19	1	**108-1610**	2	CLAMP	
	20	1	**7X-0289**	1	BOLT (3/8-16X1.875-IN)	
	21	1,2	**8T-4896**	19	WASHER-HARD (10.2X18.5X2.5-MM THK)	
	22	1	**135-0453**	1	PLATE	
	25	1,2	**5S-7379**	9	BOLT (3/8-16X0.875-IN)	
	26	1	**135-0450**	2	PLATE	
	27	1	**5D-2645**	2	CLAMP	
	29	1	**8T-0076**	3	CONNECTOR	
	30	1	**5D-4988**	4	CLAMP	
	31	1	**2B-0941**	4	SPACER (10.5X19X19-MM THK)	
	32	1	**7X-0288**	1	BOLT (3/8-16X1.625-IN)	
	33	2	**4J-5468**	3	CLAMP	
	34	2	**2G-5493**	1	CLAMP	
	35	2	**9R-8870**	1	BLOCK	
	36	2	**5P-0599**	1	CLAMP-BAND	
	37	1,2	**6V-9876**	3	ELBOW	
	38	2	**6V-8625**	1	ELBOW	
	39	2	**2H-9889**	1	BOLT (3/8-16X2.375-IN)	
	40	2	**7W-5672**	1	PIPE	
	42	1,2	**1S-0994**	6	CLIP	
	43	2	**6V-8801**	3	NUT (3/8-16-THD)	
	44	2	**9B-7237**	1	BOLT (3/8-16X1.25-IN)	
	45	1,2	**6D-4244**	2	CLIP	
I	46	2	**8W-0302**	1	HOSE AS	
I	47	2	**110-3003**	1	HOSE AS	
BD	48	2	**5P-0810**		SEAL	
	49	2	**3S-2093**	1	STRAP-CABLE	
	50	2	**5S-7383**	1	BOLT (3/8-16X1.75-IN)	
	51	2	**8T-2501**	1	BOLT (3/8-16X2-IN)	
B	52	2	**8T-1296**	4	WASHER (10.5X19X3.5-MM THK)	

B-USE AS REQUIRED
D-ORDER BY THE METER
I-REFER TO HYDRAULIC INFORMATION SYSTEM

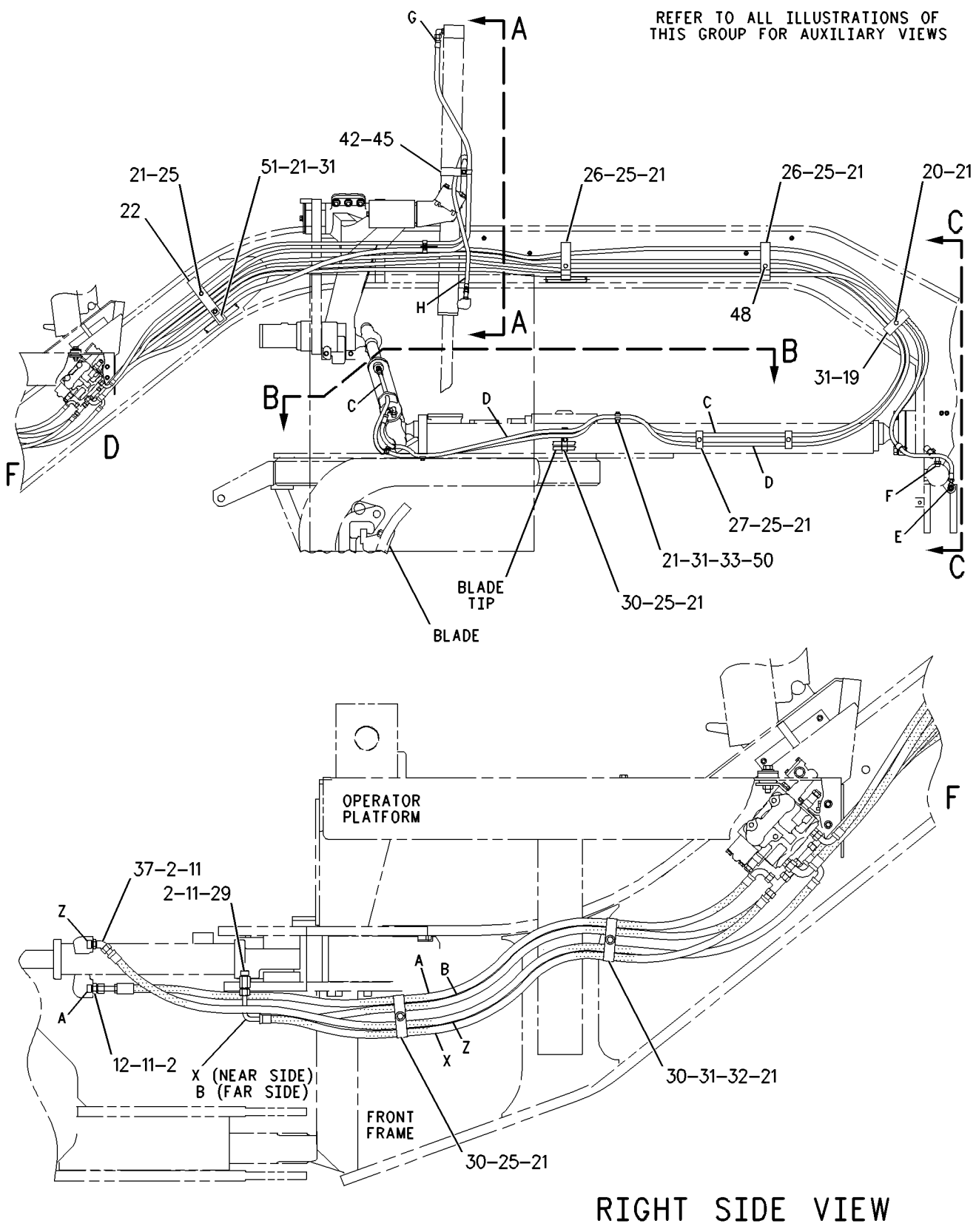

GRAPHIC #1 g00636996

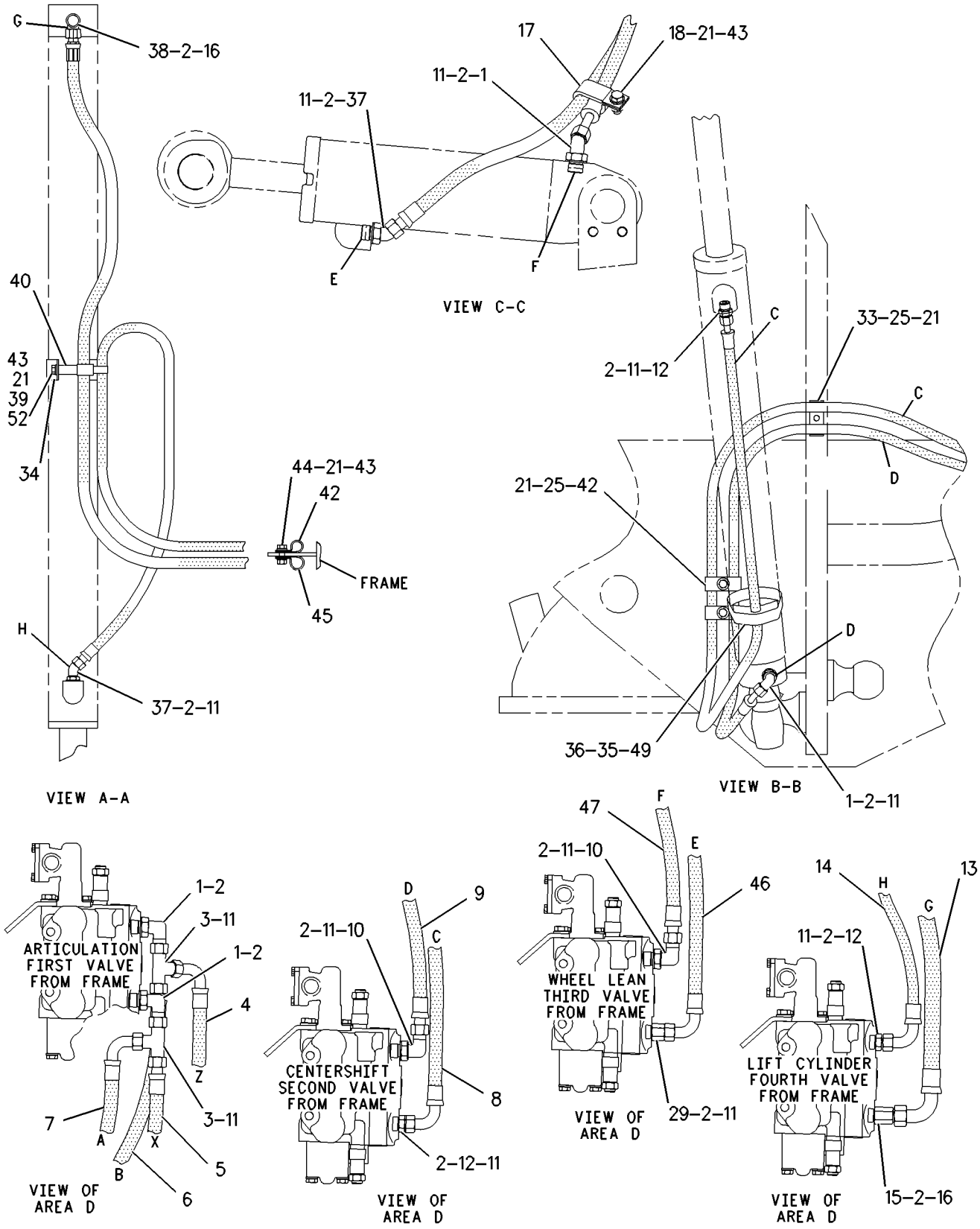

GRAPHIC #2 **<END>** g00843637

HYDRAULIC SYSTEM

114-0025 LINES GP-HYDRAULIC–BULLDOZER LIFT, PLOW, LH

S/N: JBP1-UP
1-CIRCUIT
AN ATTACHMENT

SMCS-5057 **i02585616**

NOTE	REF NO	GRAPHIC REF	PART NUMBER	QTY	PART NAME 1 2 3 4 5 6 (PRODUCT LEVEL)	SEE PAGE
I	1	1	**114-0027**	2	HOSE AS	
	2	1	*164-5605*	1	CONNECTOR AS	
		1	**8T-0076**	1	CONNECTOR	
		1	**3K-0360**	1	SEAL-O-RING	
		1	**6V-8397**	1	SEAL-O-RING	
	3	1	*148-8318*	1	CONNECTOR AS	
		1	**6V-8634**	1	CONNECTOR	
		1	**3K-0360**	1	SEAL-O-RING	
		1	**6V-8397**	1	SEAL-O-RING	

I-REFER TO HYDRAULIC INFORMATION SYSTEM

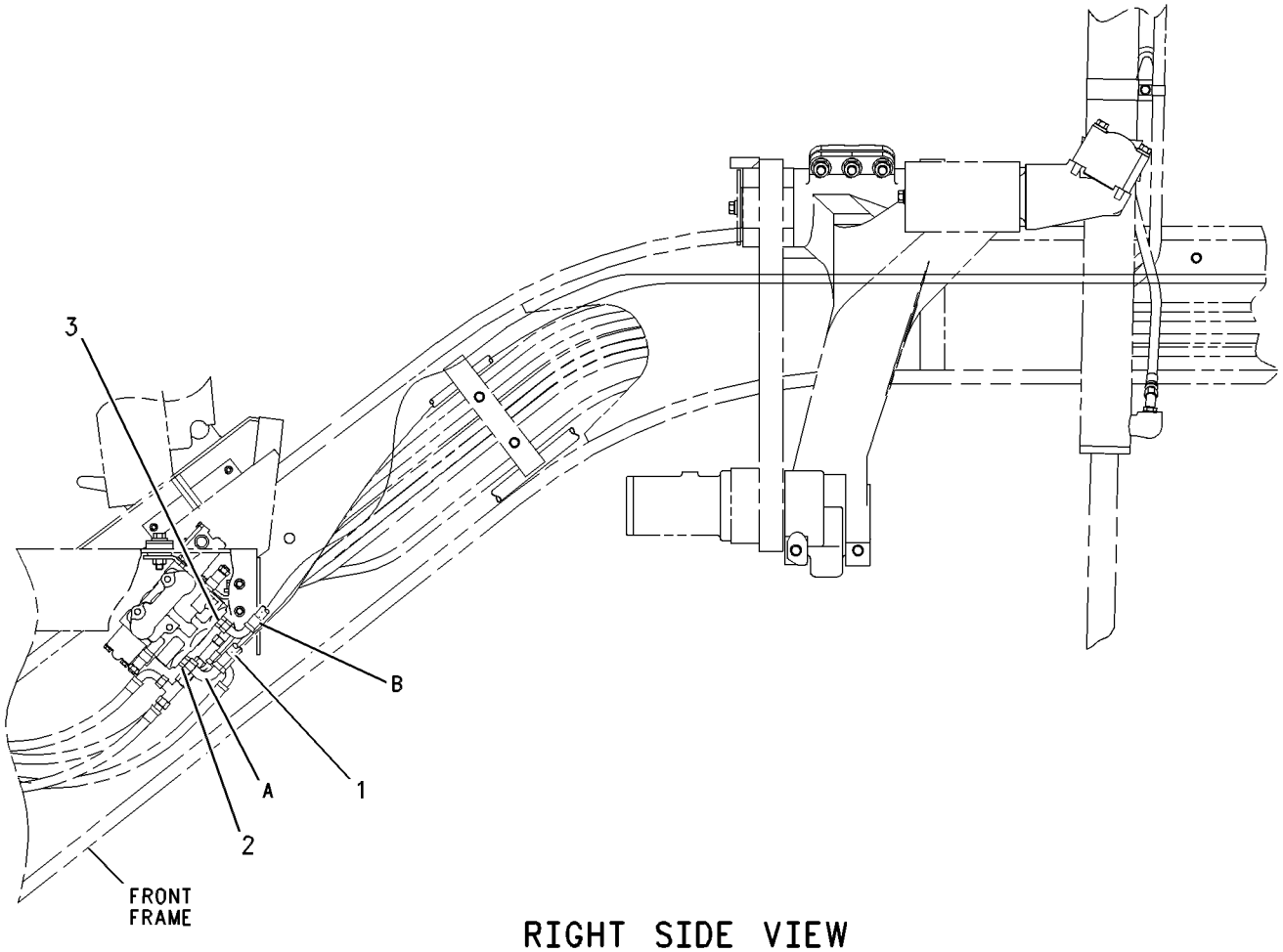

RIGHT SIDE VIEW

GRAPHIC #1 **<END>** g00636139

115-8078 LINES GP-HYDRAULIC–
LH BLADE LIFT, CIRCLE DRIVE
S/N: JBP1-UP
2-CIRCUITS
PART OF 274-7941 GENERAL AR

SMCS-5057 **i00607050**

NOTE	REF NO	GRAPHIC REF	PART NUMBER	QTY	PART NAME 1 2 3 4 5 6 (PRODUCT LEVEL)	SEE PAGE
	1	1	**7X-0289**	4	BOLT (3/8-16X1.875-IN)	
	2	1	**135-0452**	2	PLATE	
	3	1	**5S-7379**	4	BOLT (3/8-16X0.875-IN)	
	4	1	**8T-4896**	12	WASHER-HARD (10.2X18.5X2.5-MM THK)	
	5	1	**135-0451**	1	PLATE	
	6	1	**9D-0953**	4	SPACER (0.406X0.75X0.88-IN THK)	
	7	2	**8T-1687**	2	CONNECTOR	
	8	1,2	**3K-0360**	6	SEAL-O-RING	
	9	1,2	**6V-8398**	6	SEAL-O-RING	
I	10	2	**107-8149**	2	HOSE AS	
	11	2	**2M-9780**	2	SEAL-O-RING	
	12	2	**6V-8624**	2	ELBOW	
	13	2	**6V-8639**	1	CONNECTOR	
	14	2	**6V-8634**	1	CONNECTOR	
	15	1	**6V-8397**	2	SEAL-O-RING	
	16	1	**6V-9876**	1	ELBOW	
	17	1	**1S-0994**	2	CLIP	
	18	1	**4J-5468**	8	CLAMP	
	19	1	**6V-8801**	2	NUT (3/8-16-THD)	
I	20	2	**134-0747**	1	HOSE AS	
	21	1	**6V-8625**	1	ELBOW	
	22	1	**2G-5493**	1	CLAMP	
	23	1	**2H-9889**	1	BOLT (3/8-16X2.375-IN)	
	24	1	**7W-5672**	1	PIPE	
	25	1	**8T-1296**	4	WASHER (10.5X19X3.5-MM THK)	
	26	1	**6D-4244**	2	CLIP	
	27	1	**9B-7237**	1	BOLT (3/8-16X1.25-IN)	
I	28	2	**107-8150**	1	HOSE AS	

I-REFER TO HYDRAULIC INFORMATION SYSTEM

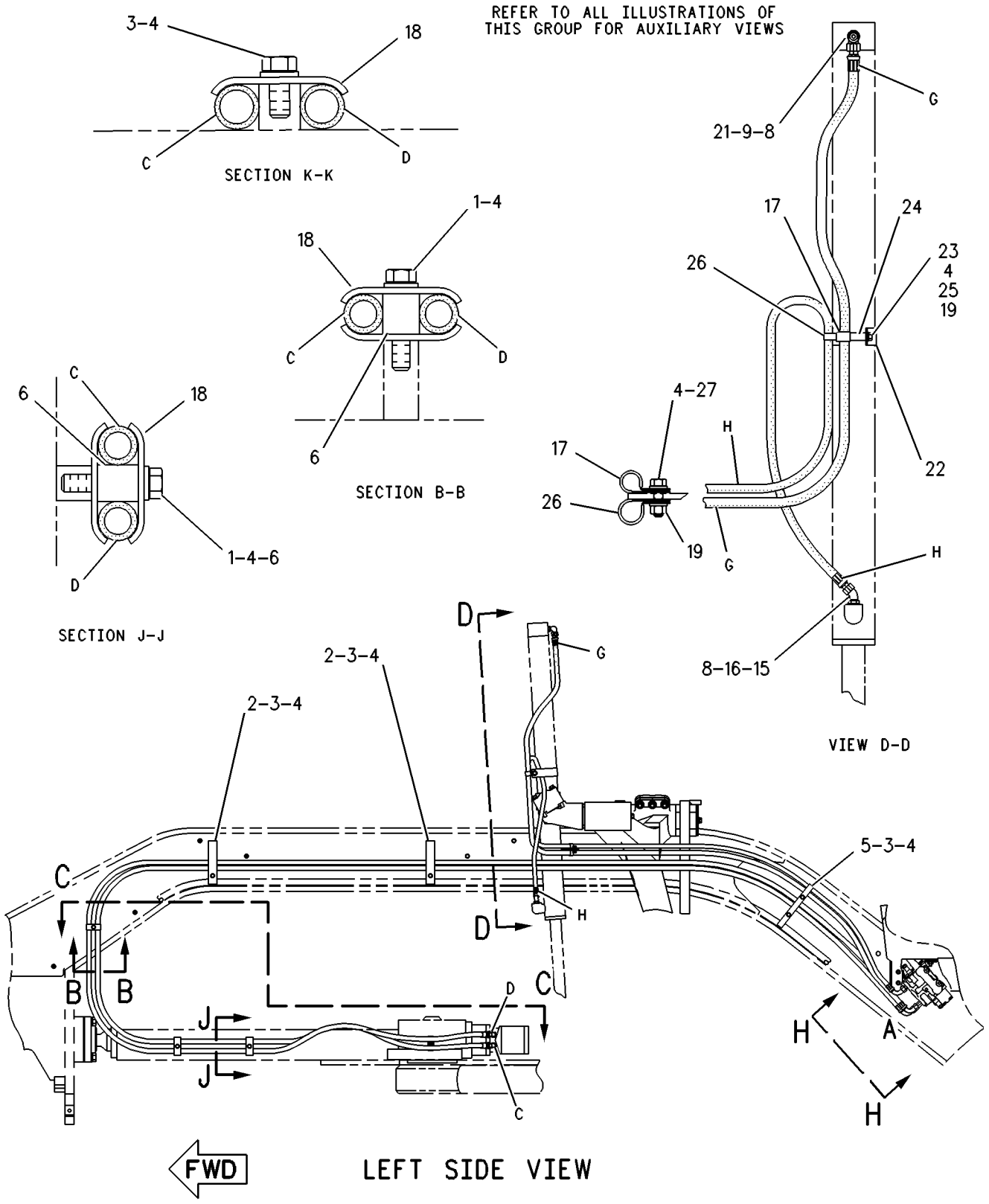

GRAPHIC #1 g00276405

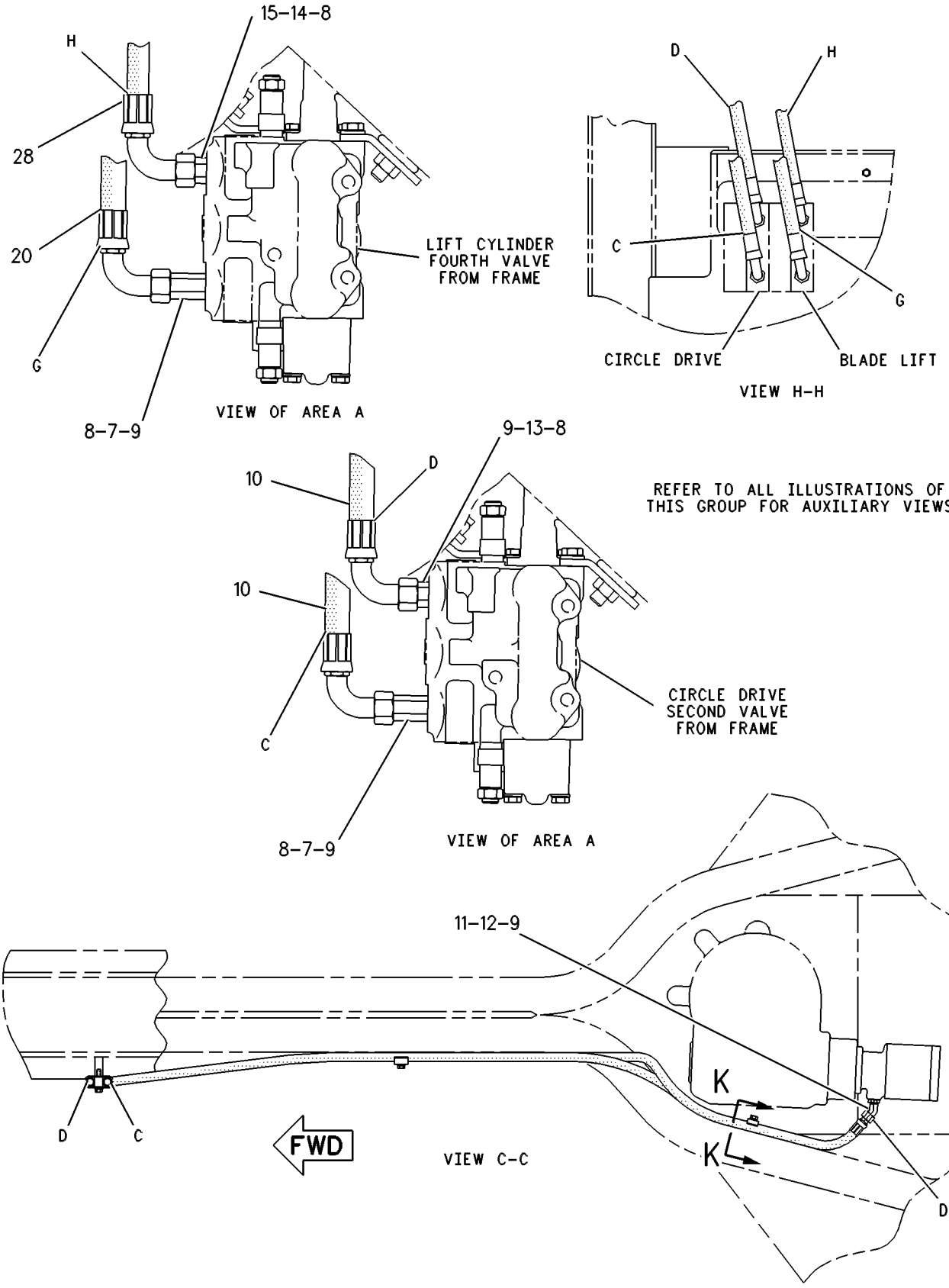

GRAPHIC #2 **<END>** g00109151

HYDRAULIC SYSTEM

117-3855 LINES GP-HYDRAULIC–LH

S/N: JBP1-UP
3-CIRCUITS
PART OF 117-3200 BLADE AR
AN ATTACHMENT

SMCS-5057 **i02425827**

NOTE	REF NO	GRAPHIC REF	PART NUMBER	QTY	PART NAME 1 2 3 4 5 6 (PRODUCT LEVEL)	SEE PAGE
	1	1	**135-0451**	1	PLATE	
	2	1	**5S-7383**	2	BOLT (3/8-16X1.75-IN)	
D	3	1	**5P-5931**		SEAL (0.1-M)	
	4	1,2	**5S-7379**	6	BOLT (3/8-16X0.875-IN)	
	5	1,2	**8T-4896**	19	WASHER-HARD (10.2X18.5X2.5-MM THK)	
	6	1	**135-0452**	2	PLATE	
	7	1	**5D-2645**	3	CLAMP	
	8	1	**9D-0953**	4	SPACER (0.406X0.75X0.88-IN THK)	
	9	1	**2B-0941**	2	SPACER (10.5X19X19-MM THK)	
	10	1	**8T-7008**	1	BOLT (3/8-16X3-IN)	
	11	1	**8T-2501**	2	BOLT (3/8-16X2-IN)	
	12	2	**8T-1687**	2	CONNECTOR	
	13	1,2	**3K-0360**	14	SEAL-O-RING	
	14	1,2	**6V-8398**	6	SEAL-O-RING	
I	15	2	**107-8149**	2	HOSE AS	
	16	2	**2M-9780**	2	SEAL-O-RING	
	17	2	**6V-8624**	2	ELBOW	
	18	2	**6V-8639**	1	CONNECTOR	
	19	2	**6V-8634**	6	CONNECTOR	
	20	1,2	**6V-8397**	10	SEAL-O-RING	
	21	1	**6V-9876**	3	ELBOW	
	22	1,2	**1S-0994**	6	CLIP	
	23	2	**8T-0076**	1	CONNECTOR	
I	24	2	**107-8144**	2	HOSE AS	
	25	1	**4J-5468**	8	CLAMP	
CY	26	1	**260-6502**	1	SWIVEL GP (CIRCLE DRIVE)	432
M	27	1	**8T-4648**	4	BOLT (M12X1.75X70-MM)	
	28	1	**8T-4223**	4	WASHER-HARD (13.5X25.5X3-MM THK)	
	29	1	**2A-7081**	1	GUIDE AS-HOSE	
	30	1	**8D-9092**	1	PIN	
	31	1	**8T-4994**	2	WASHER-HARD (20X36.5X3.5-MM THK)	
	32	1	**3B-4628**	2	PIN-COTTER	
I	33	2	**8W-4194**	1	HOSE AS	
I	34	2	**8W-4193**	1	HOSE AS	
	35	2	**8T-2502**	2	BOLT (3/8-16X1.125-IN)	
I	36	2	**107-8150**	1	HOSE AS	
	37	1,2	**6V-8801**	6	NUT (3/8-16-THD)	
I	38	2	**134-0747**	1	HOSE AS	
	39	1	**6V-8625**	1	ELBOW	
	40	1	**2G-5493**	1	CLAMP	
	41	1	**2H-9889**	1	BOLT (3/8-16X2.375-IN)	
	42	1	**7W-5672**	1	PIPE	
	43	1	**8T-1296**	4	WASHER (10.5X19X3.5-MM THK)	
	44	1	**6D-4244**	2	CLIP	
	45	1	**9B-7237**	1	BOLT (3/8-16X1.25-IN)	

C-CHANGE FROM PREVIOUS TYPE
D-ORDER BY THE METER
I-REFER TO HYDRAULIC INFORMATION SYSTEM
M-METRIC PART
Y-SEPARATE ILLUSTRATION

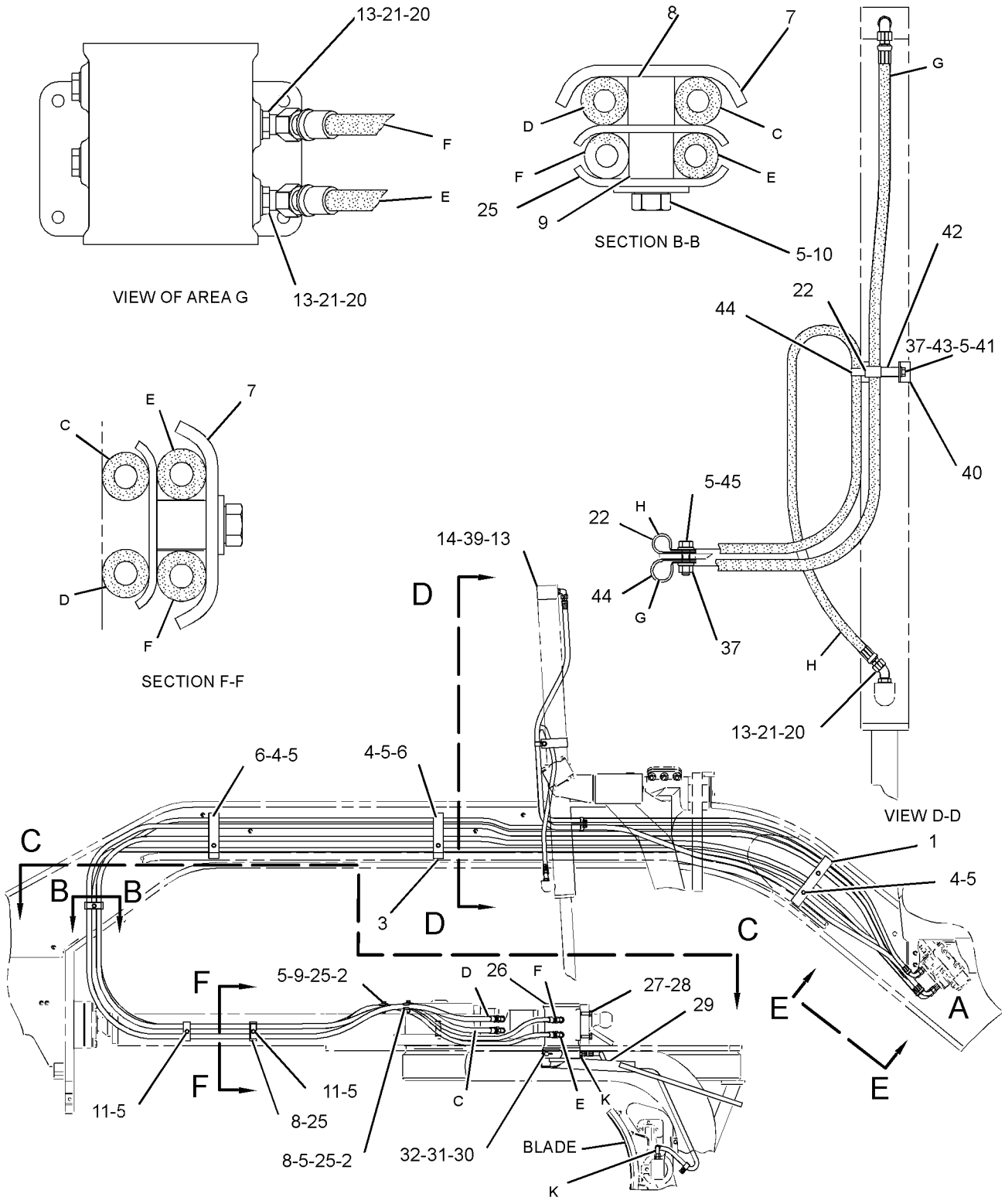

LEFT SIDE VIEW

REFER TO ALL ILLUSTRATIONS OF
THIS GROUP FOR AUXILIARY VIEWS

GRAPHIC #1

g01224224

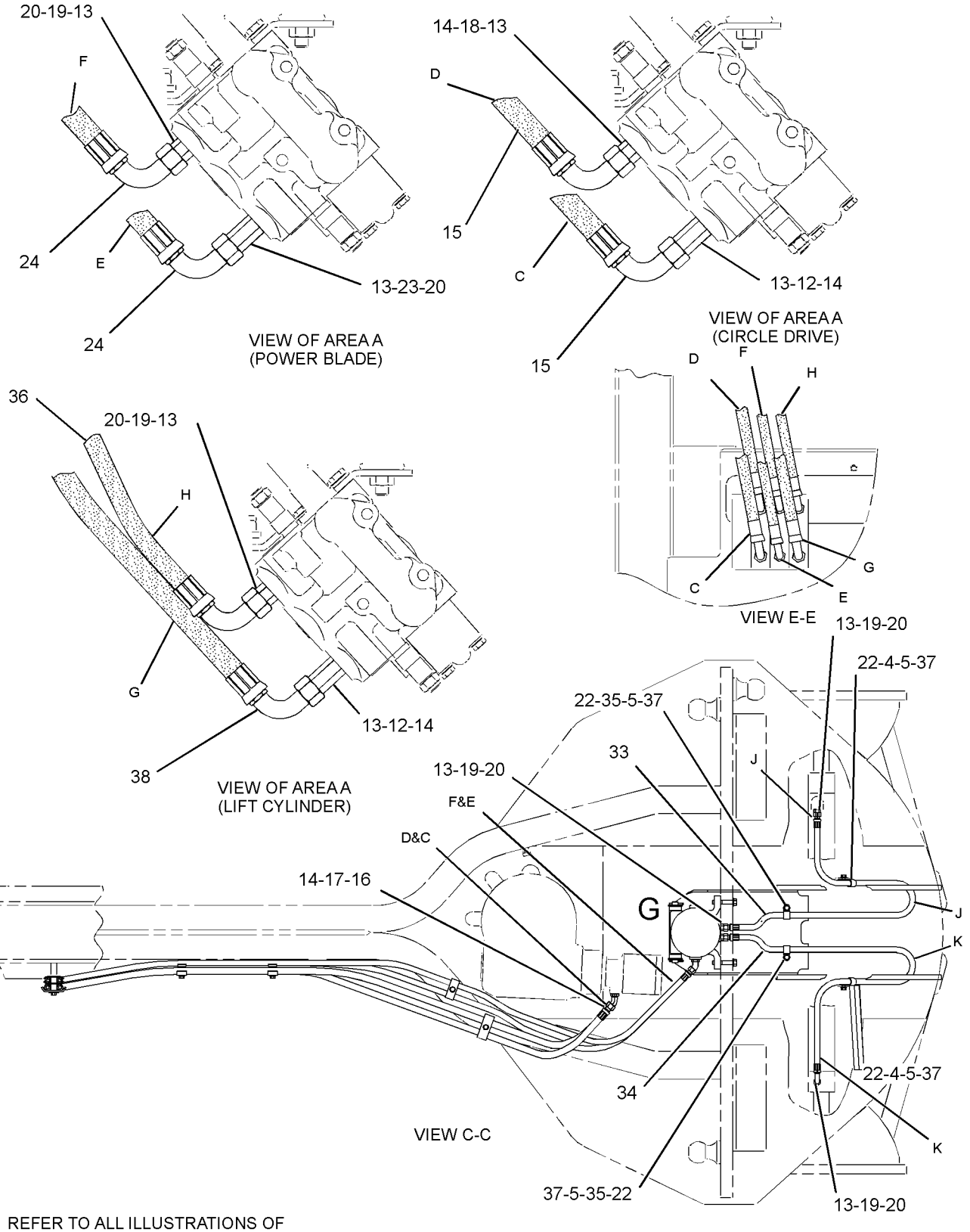

REFER TO ALL ILLUSTRATIONS OF
THIS GROUP FOR AUXILIARY VIEWS

GRAPHIC #2 **<END>** g01224233

293-0648 LINES GP-HYDRAULIC—CENTERSHIFT LOCK

S/N: JBP1-UP

PART OF 274-7941 GENERAL AR

SMCS-5057 **i03378041**

NOTE	REF NO	GRAPHIC REF	PART NUMBER	QTY	PART NAME 1 2 3 4 5 6 (PRODUCT LEVEL)	SEE PAGE
	1	1	**8W-8527**	2	SLEEVE	
	2	1	**9G-9154**	1	CLIP	
I	3	1	**148-7027**	1	HOSE AS	
I	4	1	**178-9961**	1	HOSE AS	
	5	1	**300-6203**	1	PLATE	
I	6	1	**310-8005**	1	HOSE AS	
	7	1	*148-8336*	3	CONNECTOR AS	
					(EACH INCLUDES)	
		1	**3J-1907**	1	SEAL-O-RING	
		1	**6V-8397**	1	SEAL-O-RING	
		1	**6V-8636**	1	CONNECTOR	
	8	1	*148-8367*	2	ELBOW AS	
					(EACH INCLUDES)	
		1	**6V-8397**	1	SEAL-O-RING	
		1	**6V-9850**	1	ELBOW	
	9	1	*148-8368*	1	ELBOW AS	
		1	**3J-1907**	1	SEAL-O-RING	
		1	**4J-5477**	1	SEAL-O-RING	
		1	**6V-8627**	1	ELBOW	
	10	1	*148-8377*	1	ELBOW AS	
		1	**6V-8397**	2	SEAL-O-RING	
		1	**6V-8980**	1	ELBOW	
	11	1	*148-8378*	2	ELBOW AS	
					(EACH INCLUDES)	
		1	**3J-1907**	1	SEAL-O-RING	
		1	**6V-8397**	1	SEAL-O-RING	
		1	**6V-8724**	1	ELBOW	
	12	1	**174-5907**	1	CLIP	
I	13	1	**178-9962**	1	HOSE AS	
	14	1	**3S-8664**	1	CLIP	
	15	1	**4D-7733**	7	CLIP	
	16	1	**4K-8864**	2	CLIP	
	17	1	**4S-1962**	1	CLIP	
	18	1	**4S-4455**	1	CLIP	
	19	1	**7X-0619**	2	WASHER-HARD (20X30X2.5-MM THK)	
	20	1	**6V-9168**	1	NUT (11/16-16-THD)	
	21	1	**8T-4121**	11	WASHER-HARD (11X21X2.5-MM THK)	
M	22	1	**8T-4133**	3	NUT (M10X1.5-THD)	
M	23	1	**8T-4136**	2	BOLT (M10X1.5X25-MM)	
M	24	1	**8T-4137**	6	BOLT (M10X1.5X20-MM)	
	25	1	**8X-5489**	1	SLEEVE	

I-REFER TO HYDRAULIC INFORMATION SYSTEM
M-METRIC PART

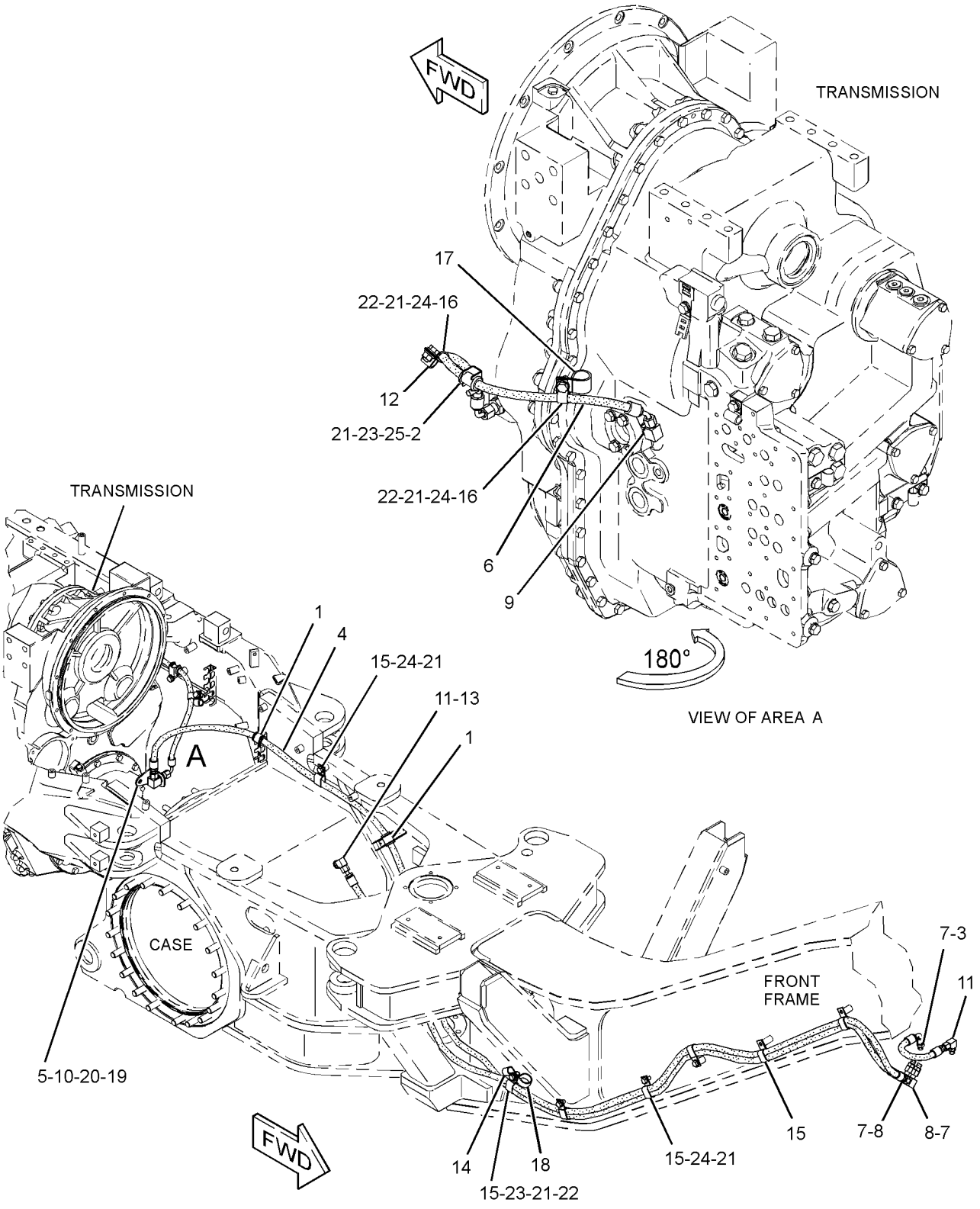

GRAPHIC #1 **<END>** g01714284

HYDRAULIC SYSTEM

299-5544 LINES GP-PUMP

S/N: JBP1-UP

PART OF 274-7941 GENERAL AR

SMCS-5057 **i03247377**

NOTE	REF NO	GRAPHIC REF	PART NUMBER	QTY	PART NAME 1 2 3 4 5 6 (PRODUCT LEVEL)	SEE PAGE
	1	2	**5P-4868**	4	CLAMP-HOSE	
	2	2	**6E-1926**	1	ADAPTER	
I	3	2	**6R-7669**	1	HOSE AS	
	4	2	**6V-0852**	1	CAP-DUST	
	5	2	**7K-1181**	1	STRAP-CABLE	
	6	2	**5P-1295**	1	HOSE	
Y	7	2	**9T-5957**	1	VALVE GP-COMBINATION	531
	8	2	**102-3659**	1	ELBOW	
	9	2	**104-4286**	1	TUBE	
	10	2	**156-4000**	1	HOSE	
	11	2	*165-7014*	1	TEE AS	
		2	**3J-1907**	1	SEAL-O-RING	
		2	**4J-5477**	1	SEAL-O-RING	
		2	**8C-3309**	1	TEE	
I	12	2	**175-3644**	1	HOSE AS	
I	13	2	**246-2822**	1	HOSE AS	
I	14	2	**246-4561**	1	HOSE AS	
I	15	2	**249-1054**	1	HOSE AS	
I	16	2	**318-8124**	1	HOSE AS	
I	17	2	**117-9683**	1	HOSE AS	
	18	2	*148-8316*	2	CONNECTOR AS	
					(EACH INCLUDES)	
		2	**3J-7354**	1	SEAL-O-RING	
		2	**4J-5477**	1	SEAL-O-RING	
		2	**6V-8647**	1	CONNECTOR	
	19	2	*148-8323*	1	CONNECTOR AS	
		2	**2S-4078**	1	SEAL-O-RING	
		2	**5K-9090**	1	SEAL-O-RING	
		2	**6V-9875**	1	CONNECTOR	
	20	2	*148-8327*	1	CONNECTOR AS	
		2	**3D-2824**	1	SEAL-O-RING	
		2	**6V-8637**	1	CONNECTOR	
		2	**6V-9746**	1	SEAL-O-RING	
	21	2	*148-8347*	5	ELBOW AS	
					(EACH INCLUDES)	
		2	**3D-2824**	1	SEAL-O-RING	
		2	**6V-9007**	1	ELBOW	
		2	**6V-9746**	1	SEAL-O-RING	
	22	2	*148-8364*	1	ELBOW AS	
		2	**3K-0360**	1	SEAL-O-RING	
		2	**6V-8398**	1	SEAL-O-RING	
		2	**6V-8625**	1	ELBOW	
	23	2	*148-8368*	2	ELBOW AS	
					(EACH INCLUDES)	
		2	**3J-1907**	1	SEAL-O-RING	
		2	**4J-5477**	1	SEAL-O-RING	
		2	**6V-8627**	1	ELBOW	
	24	2	*148-8381*	1	ELBOW AS	
		2	**3D-2824**	1	SEAL-O-RING	
		2	**6V-8398**	1	SEAL-O-RING	
		2	**8T-5429**	1	ELBOW	
	25	2	**149-7738**	2	CLIP	
	26	2	*150-5968*	1	TEE AS	
		2	**4J-5477**	2	SEAL-O-RING	
		2	**6V-9835**	1	TEE-SWIVEL	

299-5544 **LINES GP-PUMP** *(contd.)* **i03247377**

NOTE	REF NO	GRAPHIC REF	PART NUMBER	QTY	PART NAME 1 2 3 4 5 6 (PRODUCT LEVEL)	SEE PAGE
	27	2	*153-6237*	2	ELBOW AS	
					(EACH INCLUDES)	
		2	**3D-2824**	1	SEAL-O-RING	
		2	**6V-9004**	1	ELBOW	
		2	**6V-9746**	1	SEAL-O-RING	
	28	2	**174-5907**	2	CLIP	
I	29	2	**192-7238**	1	HOSE AS	
	30	2	**1H-8720**	1	SEAL-O-RING	
I	31	2	**301-2322**	1	HOSE AS	
	32	2	**3J-1907**	1	SEAL-O-RING	
	33	2	**4J-0521**	2	SEAL-O-RING	
	34	2	**6K-8178**	1	CLIP	
	35	2	**6V-3965**	1	FITTING (QUICK DISCONNECT)	
M	36	2	**6V-5696**	1	BOLT (M12X1.75X80-MM)	
M	37	2	**8T-0646**	3	BOLT (M12X1.75X110-MM)	
M	38	2	**8T-3957**	1	BOLT-SOCKET HEAD (M12X1.75X30-MM)	
	39	2	**8T-4121**	5	WASHER-HARD (11X21X2.5-MM THK)	
M	40	2	**8T-4133**	2	NUT (M10X1.5-THD)	
M	41	2	**8T-4136**	2	BOLT (M10X1.5X25-MM)	
M	42	2	**8T-4137**	1	BOLT (M10X1.5X20-MM)	
	43	2	**8T-4223**	8	WASHER-HARD (13.5X25.5X3-MM THK)	
M	44	2	**8T-4956**	4	BOLT (M12X1.75X35-MM)	
	45	2	**9M-4972**	1	CLIP	

I-REFER TO HYDRAULIC INFORMATION SYSTEM
M-METRIC PART
Y-SEPARATE ILLUSTRATION

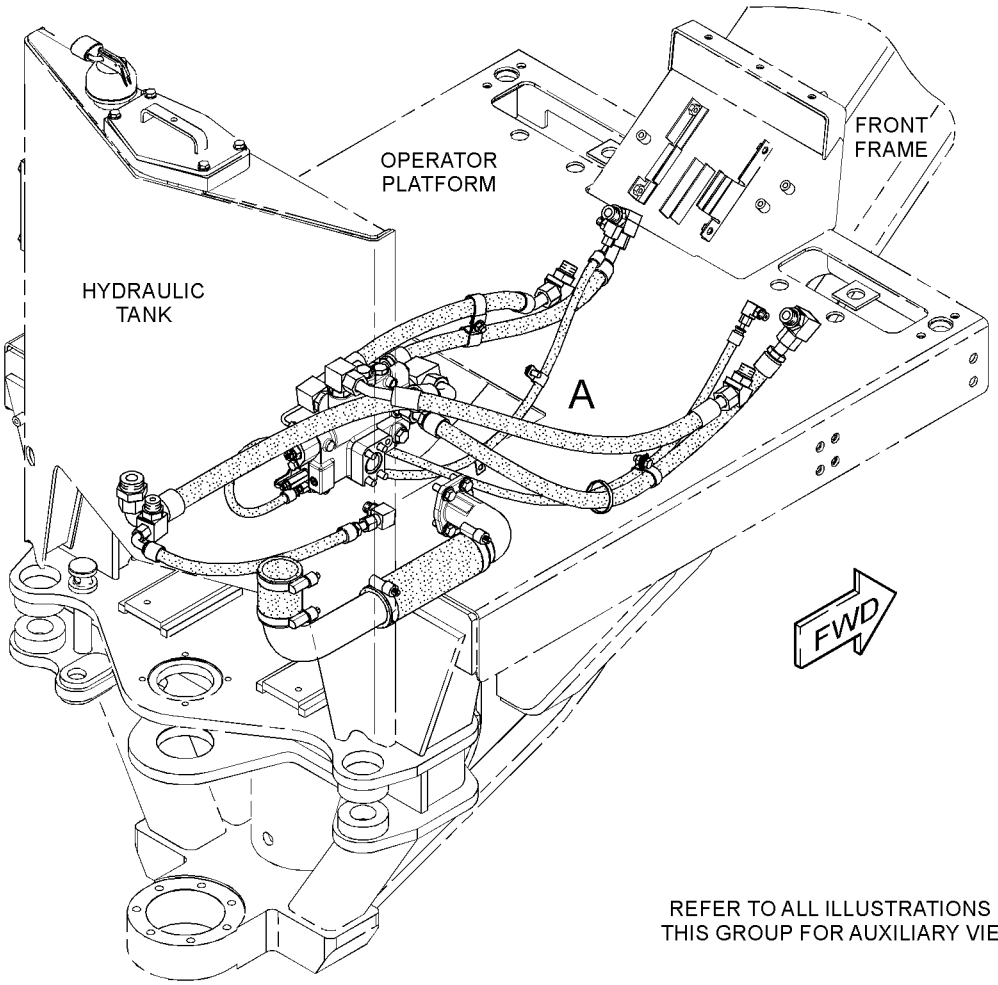

GRAPHIC #1 g01702797

299-5544 **LINES GP-PUMP** *(contd.)* **i03247377**

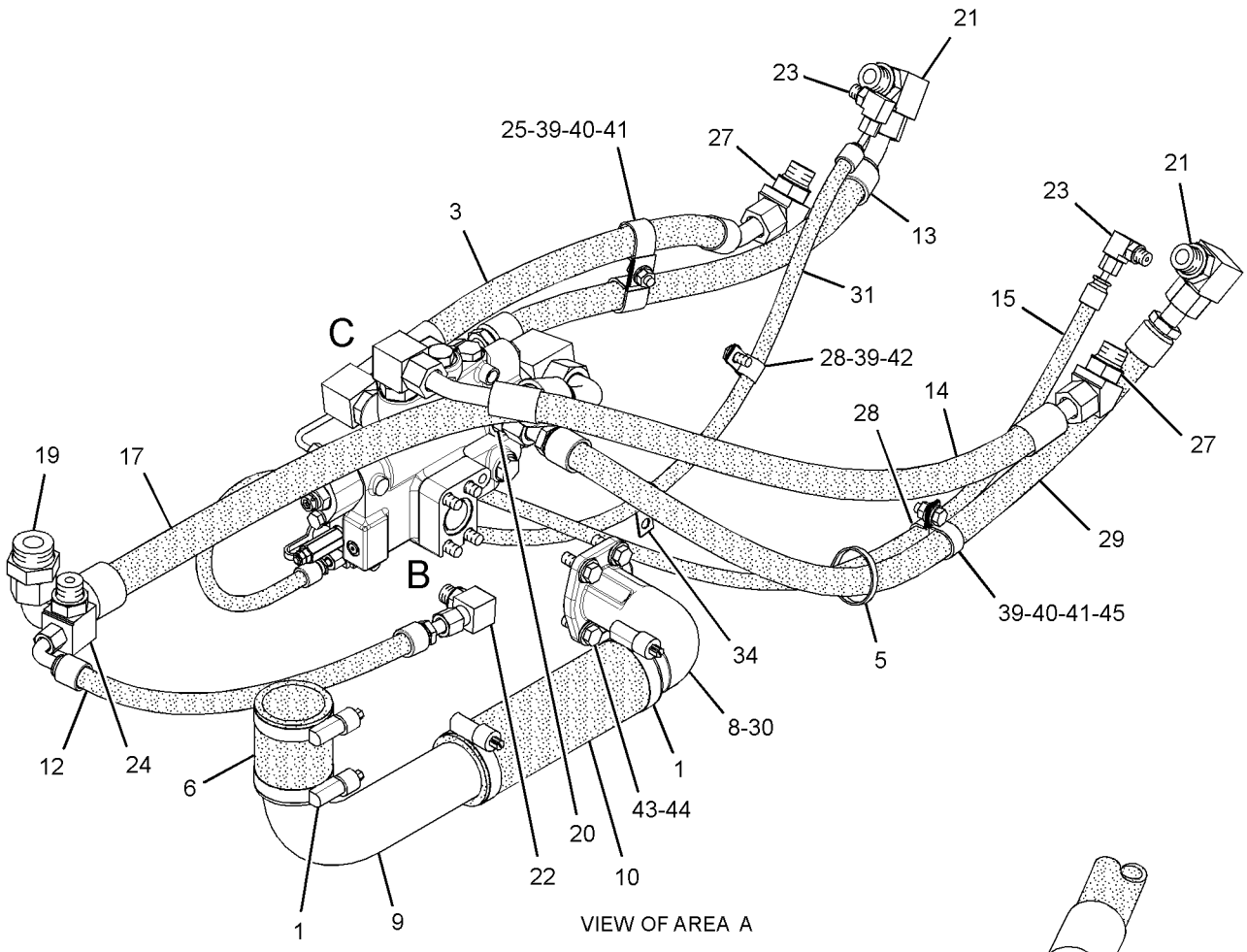

VIEW OF AREA A

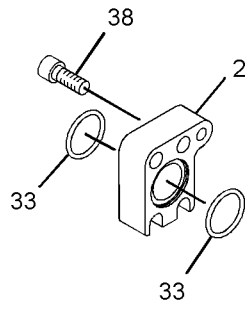

VIEW OF AREA B
(EXPLODED)

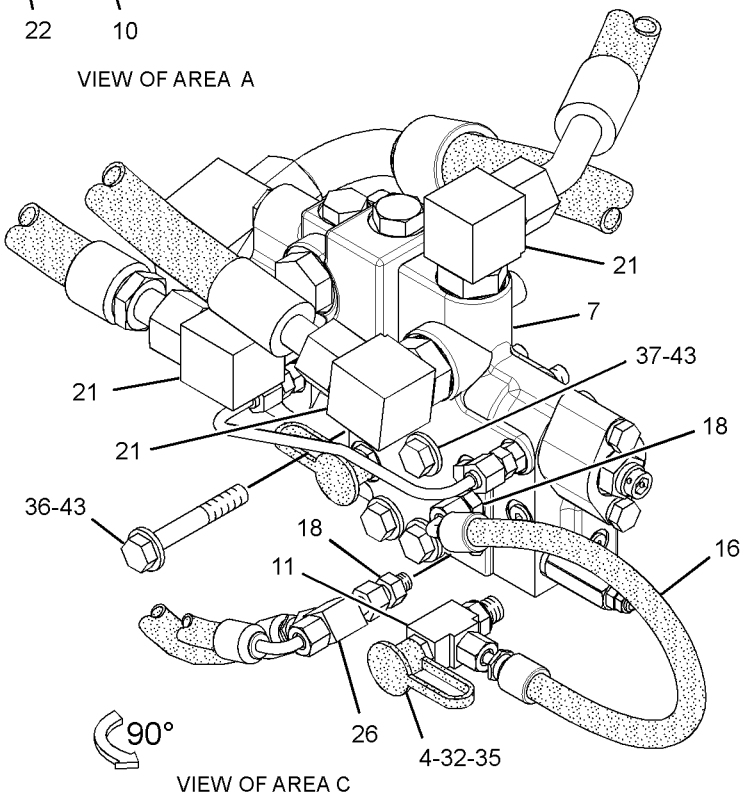

VIEW OF AREA C

GRAPHIC #2 **<END>** g01702804

HYDRAULIC SYSTEM

174-2339 LINES GP-RIPPER

S/N: JBP1-UP
PART OF 285-4183 RIPPER AR
AN ATTACHMENT

SMCS-5057 **i02524935**

NOTE	REF NO	GRAPHIC REF	PART NUMBER	QTY	PART NAME 1 2 3 4 5 6 (PRODUCT LEVEL)	SEE PAGE
I	1	1	**3T-6848**	1	HOSE AS	
I	2	1	**7I-5412**	1	HOSE AS	
	3	1	*148-8374*	2	ELBOW AS	
					(EACH INCLUDES)	
		1	**6V-8723**	1	ELBOW	
		1	**3K-0360**	1	SEAL-O-RING	
		1	**6V-8397**	1	SEAL-O-RING	
	4	1	**1S-3618**	1	CLIP	
	5	1	**4D-2886**	1	CLIP	
	6	1	**4L-6454**	1	BOLT (3/8-16X1-IN)	
	7	1	**5P-1075**	2	WASHER-HARD (10.2X22.5X3-MM THK)	
	8	1	**6V-8801**	1	NUT (3/8-16-THD)	

I-REFER TO HYDRAULIC INFORMATION SYSTEM

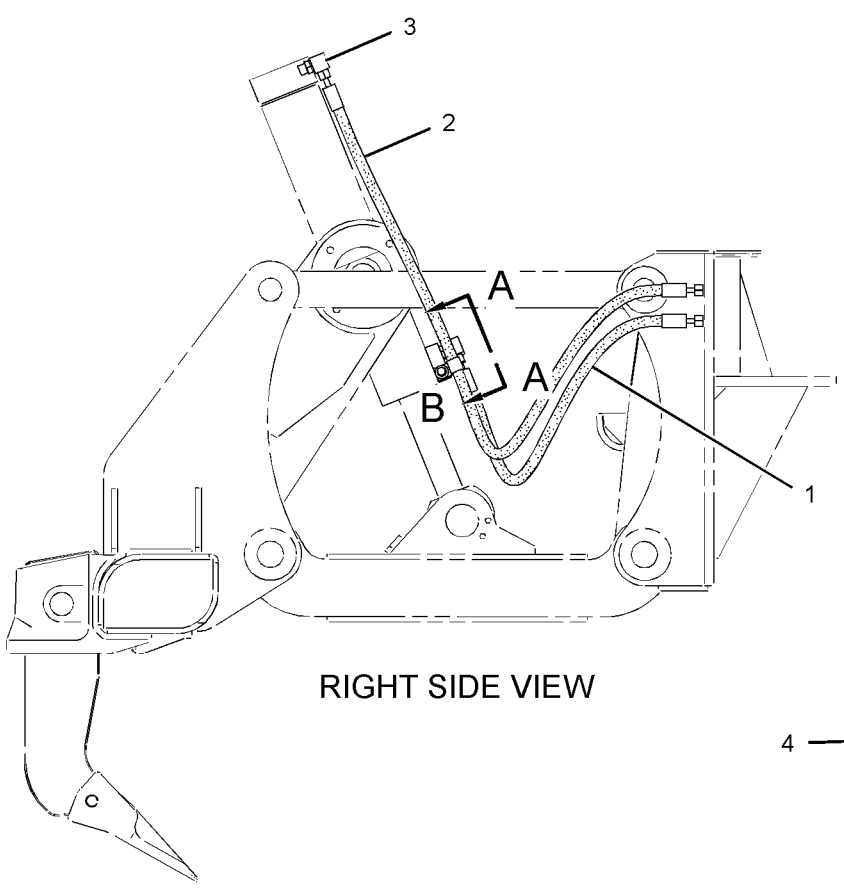

RIGHT SIDE VIEW

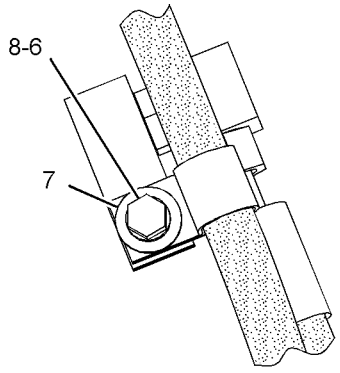

VIEW OF AREA B

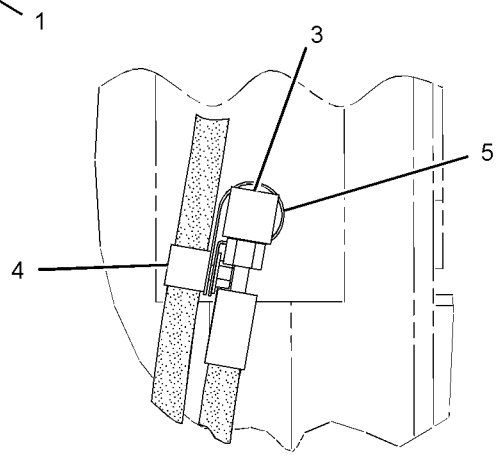

VIEW A-A

GRAPHIC #1 **<END>** g01277149

HYDRAULIC SYSTEM

302-7139 LINES GP-RIPPER

S/N: JBP1-UP

PART OF 331-1499, 331-1501, 331-1503, 331-1506, 331-1507, 335-1875 CONTROL

AR-HYDRAULIC

AN ATTACHMENT

SMCS-5057 **i03247354**

NOTE	REF NO	GRAPHIC REF	PART NUMBER	QTY	PART NAME 1 2 3 4 5 6 (PRODUCT LEVEL)	SEE PAGE
	1	1	**8W-8527**	8	SLEEVE	
	2	1	**100-4336**	1	CLIP	
I	3	1	**112-3837**	2	HOSE AS	
	4	1	*148-8374*	1	ELBOW AS	
		1	**3K-0360**	1	SEAL-O-RING	
		1	**6V-8397**	1	SEAL-O-RING	
		1	**6V-8723**	1	ELBOW	
	5	1	*148-8377*	2	ELBOW AS	
					(EACH INCLUDES)	
		1	**6V-8397**	2	SEAL-O-RING	
		1	**6V-8980**	1	ELBOW	
	6	1	*148-8383*	1	ELBOW AS	
		1	**3K-0360**	1	SEAL-O-RING	
		1	**6V-8397**	1	SEAL-O-RING	
		1	**8T-1683**	1	ELBOW	
	7	1	**1S-0994**	2	CLIP	
	8	1	**6D-4247**	1	CLIP	
	9	1	**6V-9168**	2	NUT (11/16-16-THD)	
	10	1	**8T-4121**	3	WASHER-HARD (11X21X2.5-MM THK)	
M	11	1	**8T-4137**	2	BOLT (M10X1.5X20-MM)	
M	12	1	**8T-4186**	1	BOLT (M10X1.5X40-MM)	

I-REFER TO HYDRAULIC INFORMATION SYSTEM
M-METRIC PART

302-7139 **LINES GP-RIPPER** *(contd.)* **i03247354**

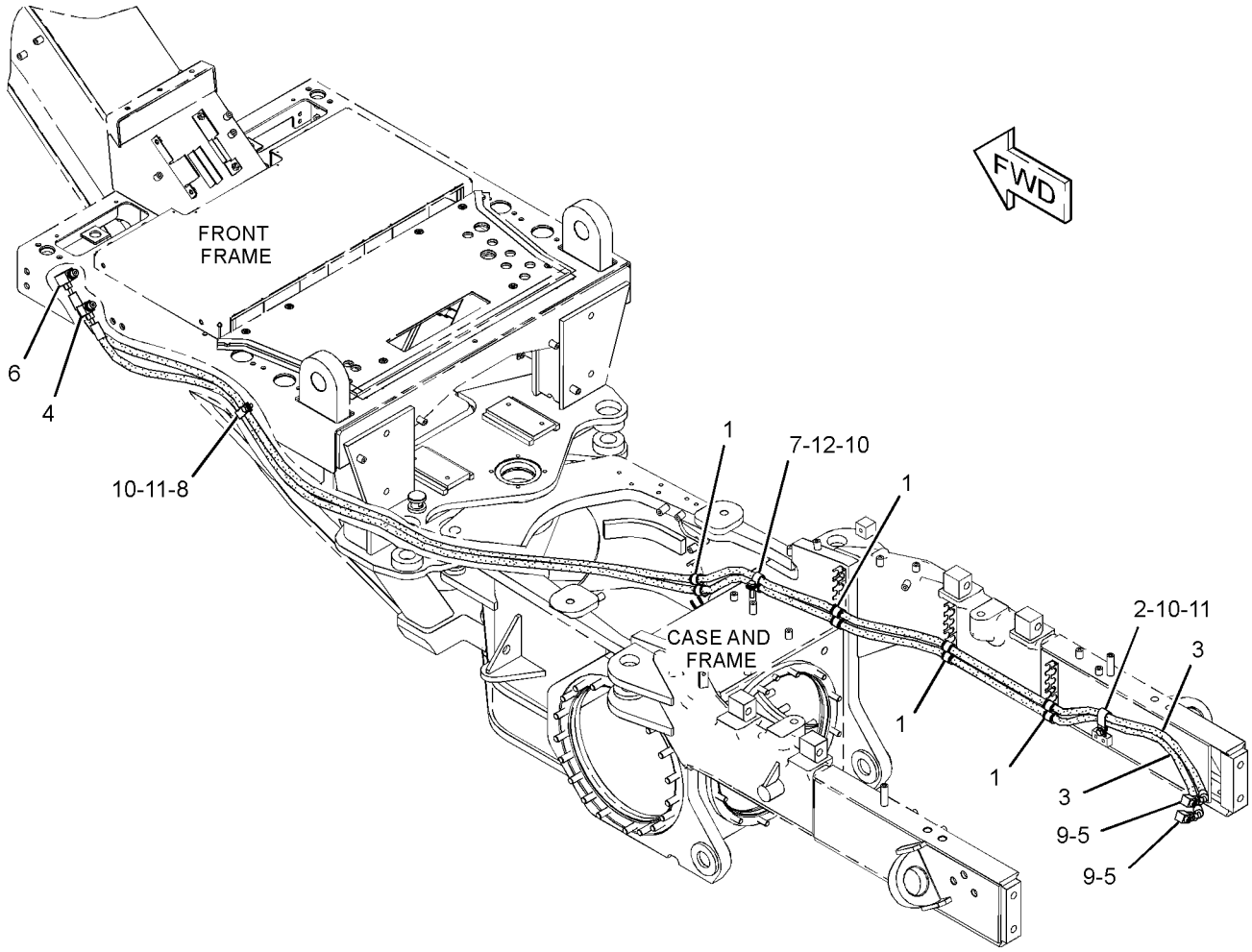

GRAPHIC #1 **<END>** g01705702

HYDRAULIC SYSTEM

301-4376 LINES GP-STEERING

S/N: JBP1-UP

PART OF 274-7941 GENERAL AR

SMCS-4304 **i03246405**

NOTE	REF NO	GRAPHIC REF	PART NUMBER	QTY	PART NAME 1 2 3 4 5 6 (PRODUCT LEVEL)	SEE PAGE
	1	2	**3S-2093**	2	STRAP-CABLE	
	2	2	**4J-5468**	2	CLAMP	
I	3	2	**5T-9903**	1	HOSE AS	
I	4	2	**8W-0225**	1	HOSE AS	
	5	2	**9D-0953**	1	SPACER (0.406X0.75X0.88-IN THK)	
I	6	1	**108-0714**	2	HOSE AS	
	7	2	**108-1610**	2	CLAMP	
I	8	2	**113-0981**	1	HOSE AS	
	9	2	**136-6330**	1	SEAL	
	10	2	**136-6331**	2	SEAL	
I	11	2	**150-4868**	1	HOSE AS	
	12	2	*164-5586*	1	TEE AS	
		2	**6V-8398**	1	SEAL-O-RING	
		2	**7X-0871**	1	TEE	
	13	2	*164-5590*	1	VALVE AS-FLUID SAMPLING	
		2	**3J-7354**	1	SEAL-O-RING	
		2	**8C-3446**	1	VALVE-FLUID SAMPLING	
	14	2	*171-6467*	4	UNION AS	
					(EACH INCLUDES)	
		2	**6V-8398**	1	SEAL-O-RING	
		2	**6V-9746**	1	SEAL-O-RING	
		2	**8T-5082**	1	UNION	
I	15	2	**301-4378**	1	HOSE AS	
I	16	2	**301-4380**	1	HOSE AS	
	17	2	**091-8792**	1	CLIP	
	18	2	*148-8316*	2	CONNECTOR AS	
					(EACH INCLUDES)	
		2	**3J-7354**	1	SEAL-O-RING	
		2	**4J-5477**	1	SEAL-O-RING	
		2	**6V-8647**	1	CONNECTOR	
	19	2	*148-8340*	6	CONNECTOR AS	
					(EACH INCLUDES)	
		2	**3K-0360**	1	SEAL-O-RING	
		2	**6V-8398**	1	SEAL-O-RING	
		2	**6V-8639**	1	CONNECTOR	
	20	2	*148-8351*	1	ELBOW AS	
		2	**4J-5477**	1	SEAL-O-RING	
		2	**6V-9849**	1	ELBOW	
	21	2	*148-8354*	1	ELBOW AS	
		2	**3K-0360**	1	SEAL-O-RING	
		2	**6V-8398**	1	SEAL-O-RING	
		2	**6V-9002**	1	ELBOW	
	22	2	*148-8364*	3	ELBOW AS	
					(EACH INCLUDES)	
		2	**3K-0360**	1	SEAL-O-RING	
		2	**6V-8398**	1	SEAL-O-RING	
		2	**6V-8625**	1	ELBOW	
	23	2	*148-8444*	2	TEE AS-SWIVEL	
					(EACH INCLUDES)	
		2	**6V-8398**	2	SEAL-O-RING	
		2	**6V-9837**	1	TEE-SWIVEL	
	24	2	*169-5862*	1	ELBOW AS	
		2	**3J-1907**	1	SEAL-O-RING	
		2	**8C-6712**	1	ELBOW	
I	25	2	**301-4379**	1	HOSE AS	
I	26	2	**4E-2392**	1	HOSE AS	

301-4376 **LINES GP-STEERING** *(contd.)* **i03246405**

NOTE	REF NO	GRAPHIC REF	PART NUMBER	QTY	PART NAME 1 2 3 4 5 6 (PRODUCT LEVEL)	SEE PAGE
	27	2	**4L-6454**	2	BOLT (3/8-16X1-IN)	
	28	2	**5P-1075**	2	WASHER-HARD (10.2X22.5X3-MM THK)	
	29	2	**5P-7854**	4	CLIP	
	30	2	**6D-4244**	15	CLIP	
	31	2	**6K-8178**	1	CLIP	
	32	2	**6V-8801**	2	NUT (3/8-16-THD)	
I	33	2	**7I-5405**	1	HOSE AS	
	34	2	**7X-0289**	1	BOLT (3/8-16X1.875-IN)	
	35	2	**8C-3451**	1	CAP-DUST	
	36	2	**8T-4121**	14	WASHER-HARD (11X21X2.5-MM THK)	
M	37	2	**8T-4133**	3	NUT (M10X1.5-THD)	
M	38	2	**8T-4136**	6	BOLT (M10X1.5X25-MM)	
M	39	2	**8T-4137**	5	BOLT (M10X1.5X20-MM)	
	40	2	**8T-4896**	3	WASHER-HARD (10.2X18.5X2.5-MM THK)	
	41	2	**9M-4972**	1	CLIP	
	42	2	**9X-8250**	2	CLIP	

I-REFER TO HYDRAULIC INFORMATION SYSTEM
M-METRIC PART

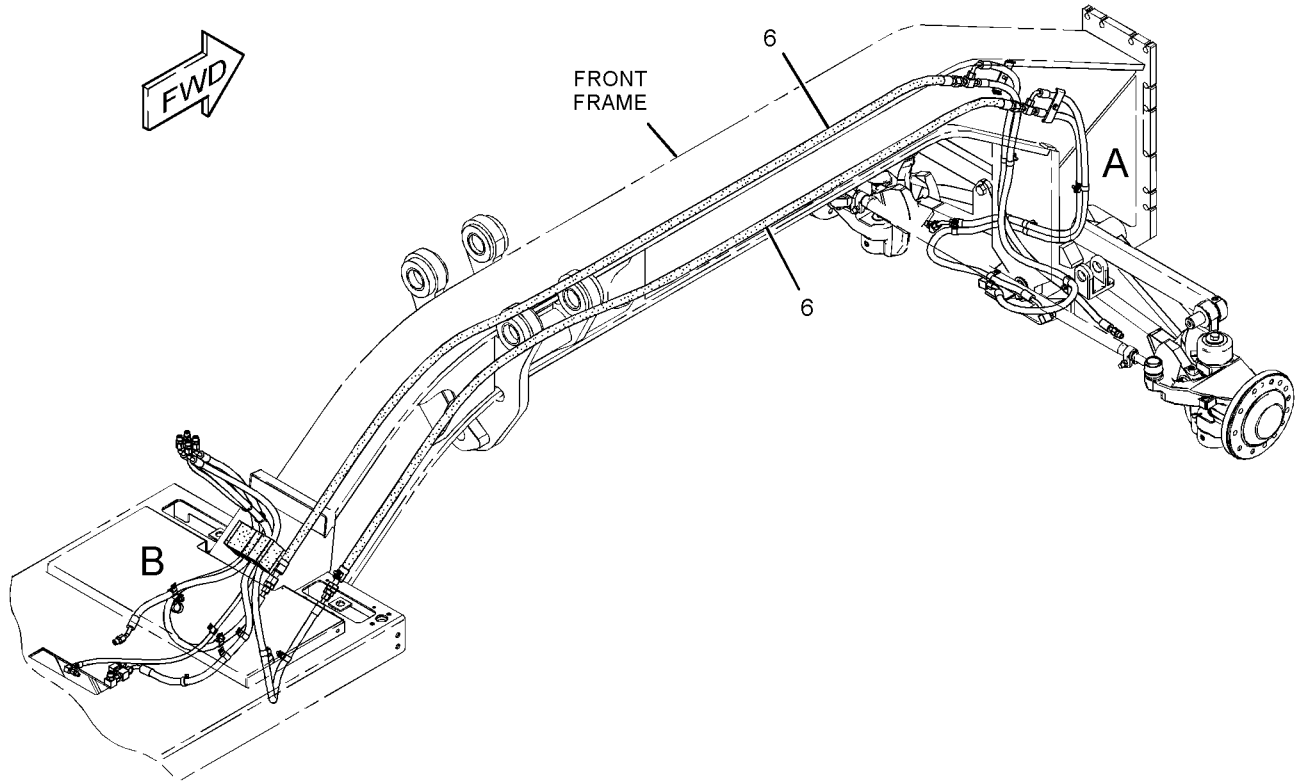

REFER TO ALL ILLUSTRATIONS OF
THIS GROUP FOR AUXILIARY VIEWS

GRAPHIC #1 g01663313

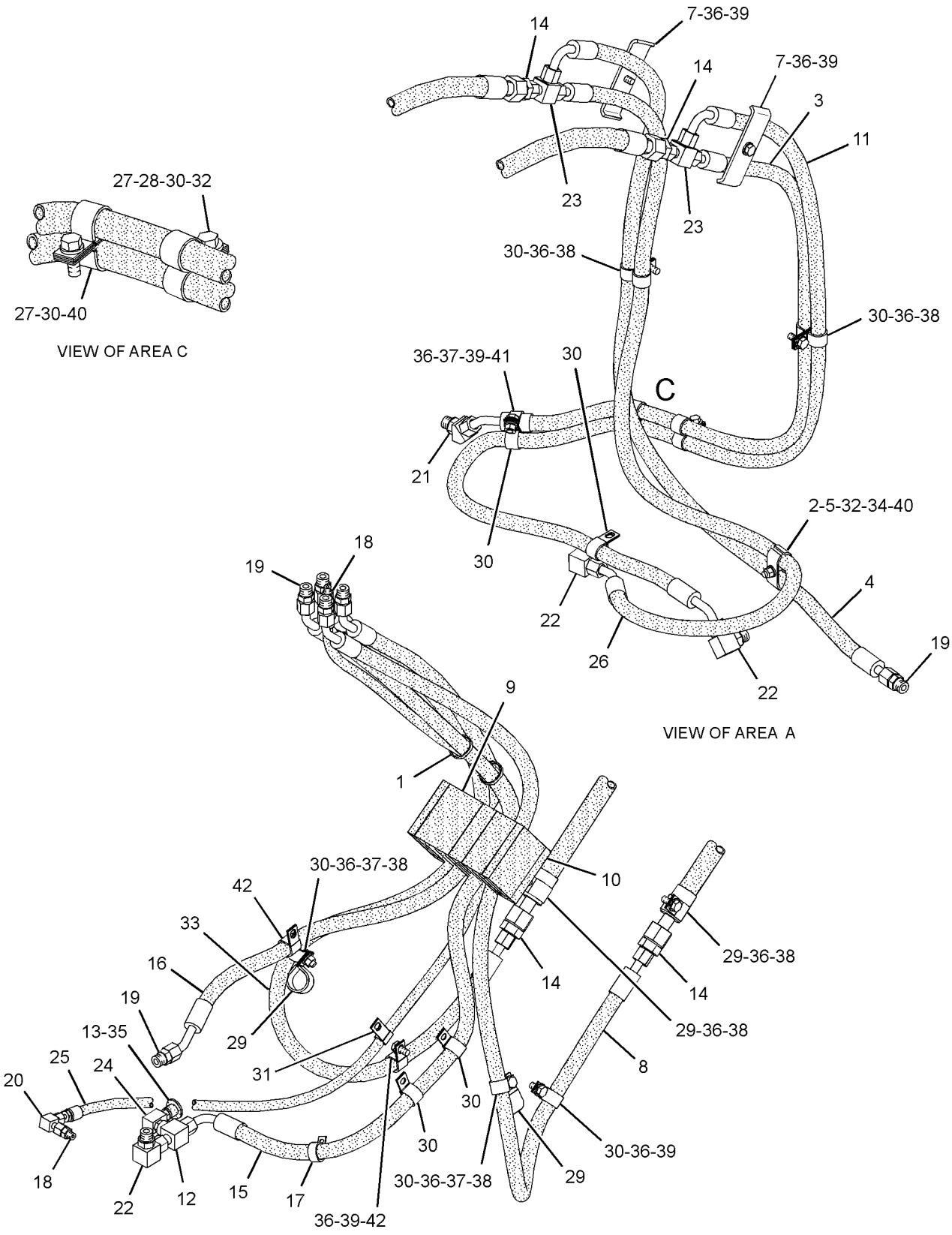

GRAPHIC #2 **<END>** g01663355

HYDRAULIC SYSTEM

164-8462 LOCK GP-CENTERSHIFT

S/N: JBP1-UP

PART OF 274-7941 GENERAL AR

SMCS-5221 **i03291816**

NOTE	REF NO	GRAPHIC REF	PART NUMBER	QTY	PART NAME 1 2 3 4 5 6 (PRODUCT LEVEL)	SEE PAGE
	1	1	**2H-3931**	1	SEAL-O-RING	
	2	1	**4T-8054**	1	SEAL AS	
	3	1	**8X-3749**	1	PISTON	
	4	1	**9D-6584**	1	SEAL-LIP TYPE	
	5	1	**297-6979**	1	CYLINDER	
	6	1	**115-0541**	1	PIN	
	7	1	**142-5787**	1	CAP	
Y	8	1	**152-8346**	1	VALVE GP-SOLENOID (CENTERSHIFT LOCK)	579
	9	1	**167-2307**	1	SEAL-U-CUP	
	10	1	**7X-0346**	1	BOLT (5/8-11X2-IN)	
	11	1	**8T-4122**	1	WASHER-HARD (17X32X3.5-MM THK)	
	12	1	**8T-4223**	2	WASHER-HARD (13.5X25.5X3-MM THK)	
	13	1	**8T-8917**	2	BOLT (1/2-13X1.25-IN)	
	14	1	**7X-0350**	2	BOLT (5/8-11X3.5-IN)	
	15	1	**198-4780**	2	WASHER-HARD (17.5X32X8-MM THK)	

Y-SEPARATE ILLUSTRATION

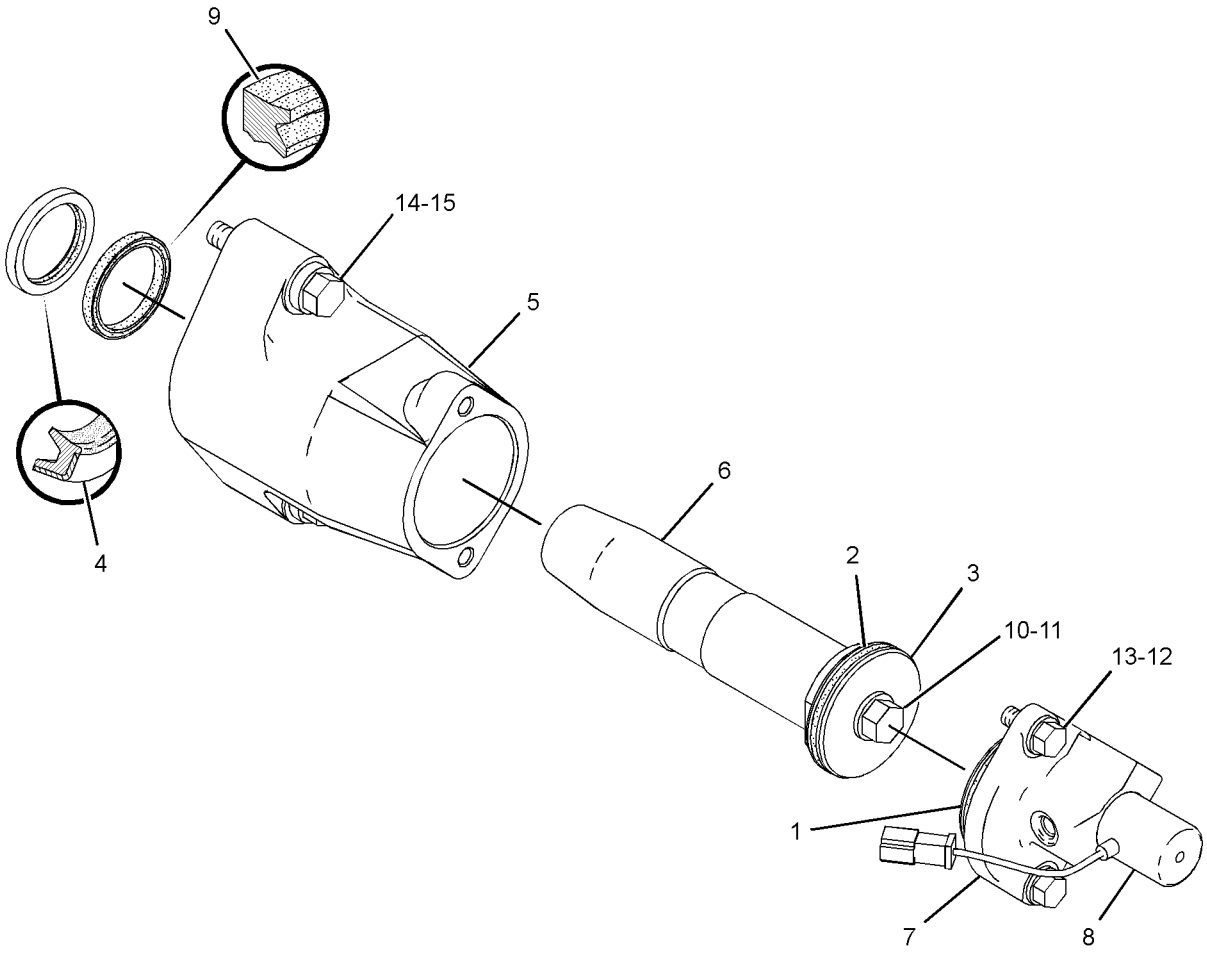

GRAPHIC #1 **<END>** g01702853

112-2240 MANIFOLD GP-CONTROL

S/N: JBP1-UP
PART OF 166-3336 LINES GP-ACCUMULATOR
AN ATTACHMENT

SMCS-5051, 5069, 5264, 5467, 5479 **i02591821**

NOTE	REF NO	GRAPHIC REF	PART NUMBER	QTY	PART NAME 1 2 3 4 5 6 (PRODUCT LEVEL)	SEE PAGE
Y	1	1	**149-2610**	1	VALVE GP-SOLENOID (24-VOLT) (BLADE CUSHION)	578
	2	1	**8C-6162**	1	MANIFOLD	

Y-SEPARATE ILLUSTRATION

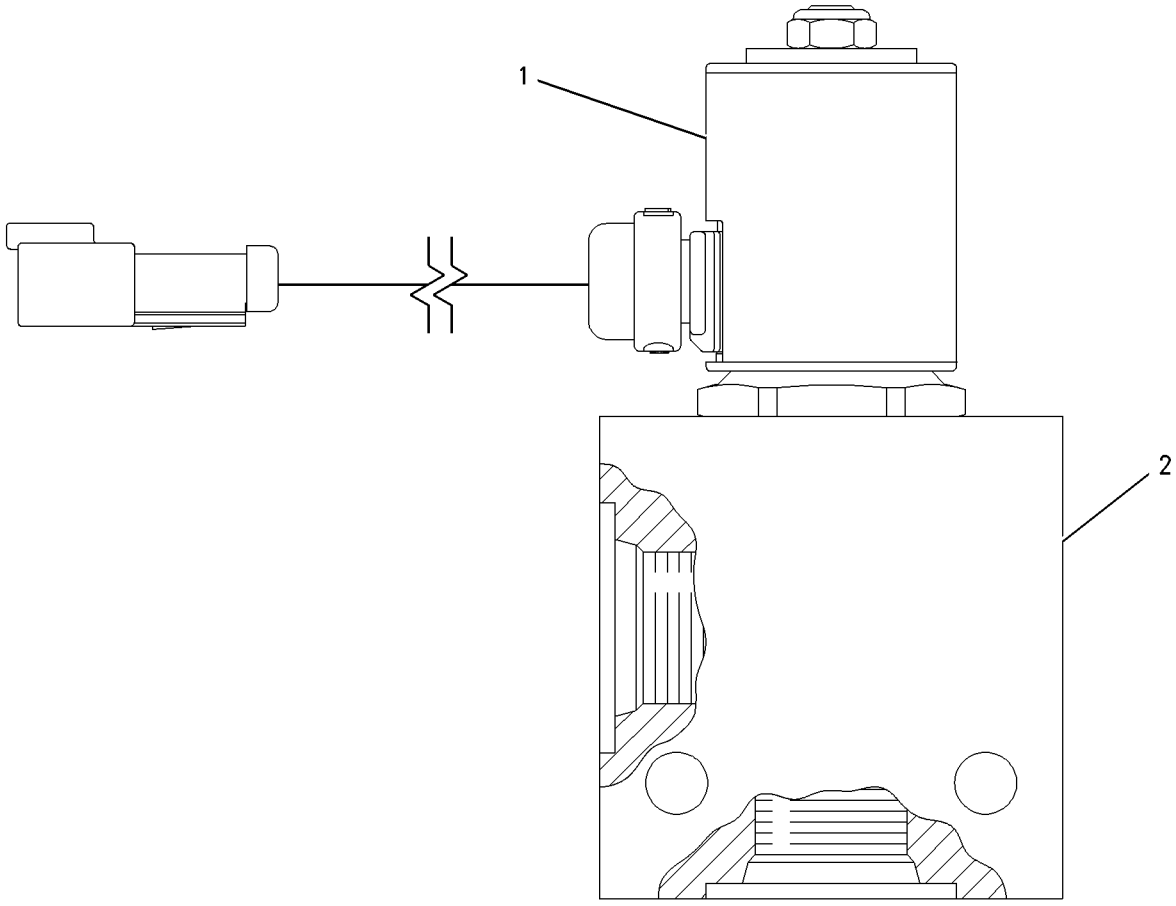

GRAPHIC #1 **<END>** g00995443

HYDRAULIC SYSTEM

239-9893 MANIFOLD GP-VALVE–LH

S/N: JBP1-UP

PART OF 250-0543 VALVE GP-BANK 4, 250-0550, 262-7291 VALVE GP-BANK 5, 250-0567 VALVE GP-BANK 6, 263-6435 VALVE GP-BANK 7 AN ATTACHMENT

SMCS-5264 **i02453962**

NOTE	REF NO	GRAPHIC REF	PART NUMBER	QTY	PART NAME 1 2 3 4 5 6 (PRODUCT LEVEL)	SEE PAGE
J	1	1	**284-0815**	1	VALVE GP-CHECK E	
	2	1	**249-3251**	1	VALVE GP-CONTROL	
	3	1	**275-9638**	1	VALVE GP-CONTROL	
	4	1	**8C-6512**	4	BOLT-SOCKET HEAD (10-24X2-IN)	
	5	1	**241-5889**	1	VALVE GP-SHUTTLE	
	6	1	**266-1600**	1	VALVE GP-SOLENOID & MANIFOLD	
	7	1	**266-1599**	1	VALVE GP-SOLENOID & MANIFOLD	
	8	1	**9S-8003**	1	PLUG (HEX)	
	9	1	**3J-7354**	1	SEAL-O-RING	
	10	1	**9S-8001**	12	PLUG-O-RING (STRAIGHT THREAD O-RING)	
	11	1	**4J-7533**	12	SEAL-O-RING	
					AVAILABLE REPAIR KIT(S):	
J			**284-3045**	1	KIT-SEAL	

J-(KIT MARKED J SERVICES PARTS MARKED J)

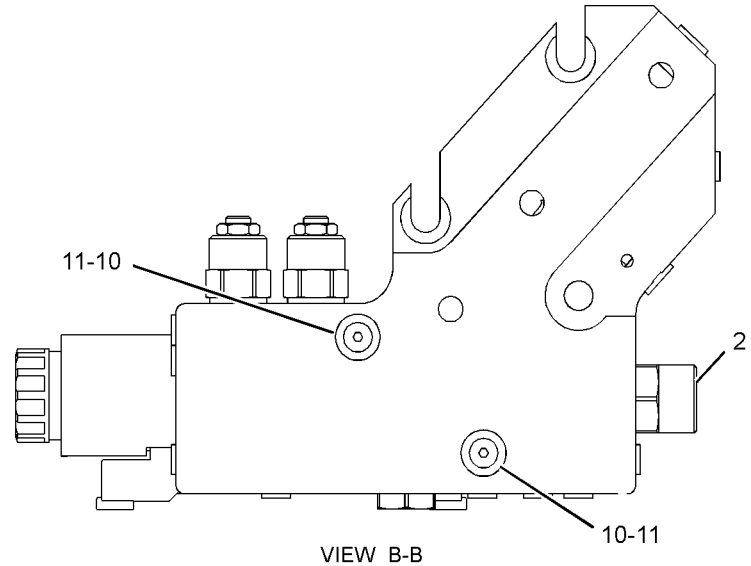

VIEW B-B

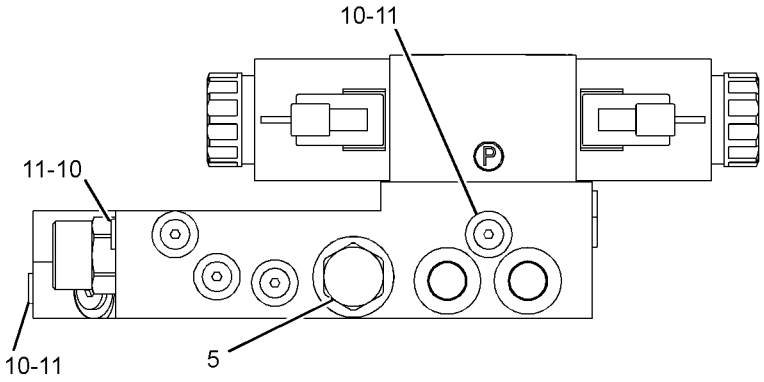

VIEW C-C

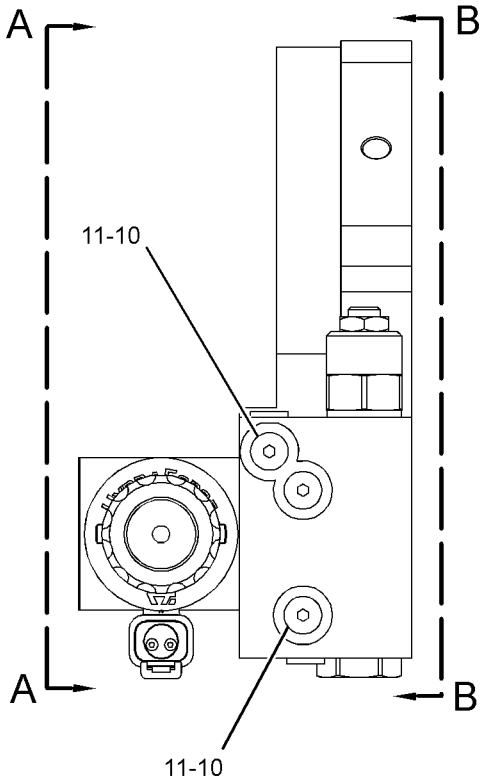

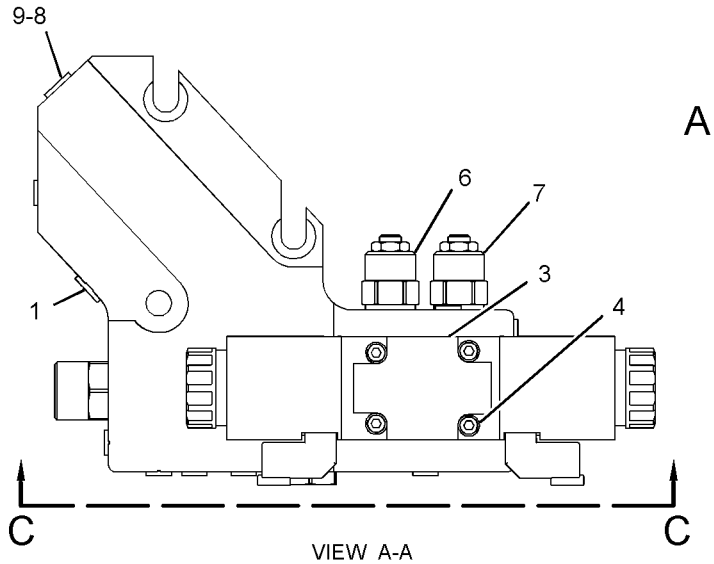

VIEW A-A

GRAPHIC #1 **<END>** g01249469

HYDRAULIC SYSTEM

239-9894 MANIFOLD GP-VALVE–RH

S/N: JBP1-UP

PART OF 250-0544 VALVE GP-BANK 4, 250-0548 VALVE GP-BANK 5, 250-0565 VALVE GP-BANK 6

AN ATTACHMENT

SMCS-5264 **i02462900**

NOTE	REF NO	GRAPHIC REF	PART NUMBER	QTY	PART NAME 1 2 3 4 5 6 (PRODUCT LEVEL)	SEE PAGE
J	1	1	**284-0815**	1	VALVE GP-CHECK E	
		1	**3J-7354**	1	SEAL-O-RING	
	2	1	**249-3251**	1	VALVE GP-CONTROL	
	3	1	**275-9638**	1	VALVE GP-CONTROL	
	4	1	**8C-6512**	4	BOLT-SOCKET HEAD (10-24X2-IN)	
	5	1	**241-5889**	1	VALVE GP-SHUTTLE	
	6	1	**266-1599**	1	VALVE GP-SOLENOID & MANIFOLD	
	7	1	**266-1598**	1	VALVE GP-COUNTERBALANCE	
	8	1	**9S-8003**	1	PLUG (HEX)	
	9	1	**3J-7354**	1	SEAL-O-RING	
	10	1	**9S-8001**	12	PLUG-O-RING (STRAIGHT THREAD O-RING)	
	11	1	**4J-7533**	12	SEAL-O-RING	
					AVAILABLE REPAIR KIT(S):	
J			**284-3045**	1	KIT-SEAL	

J-KIT MARKED J ICLUDES PARTS MARKED J

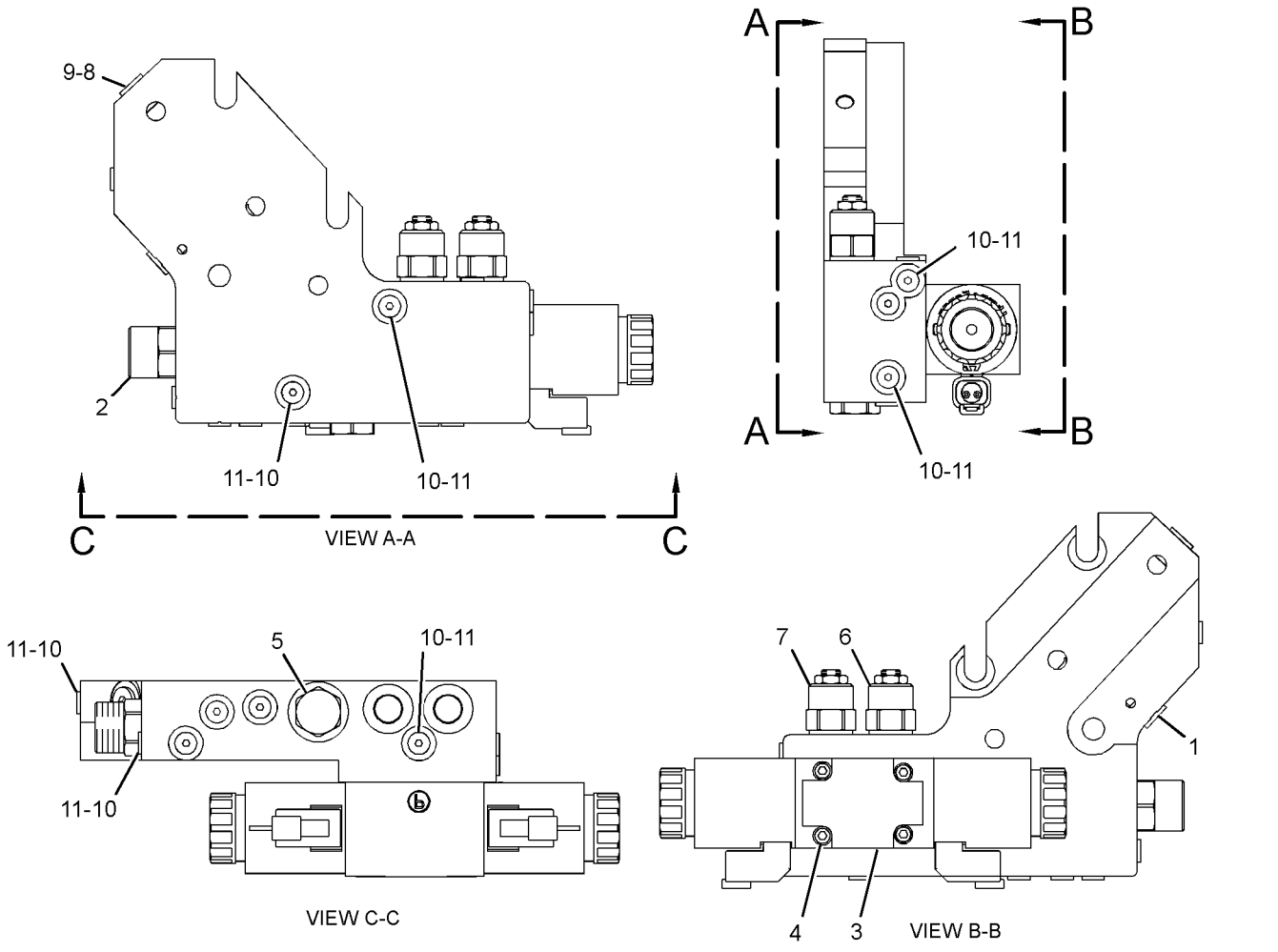

GRAPHIC #1 **<END>** g01249909

HYDRAULIC SYSTEM

105-3196 MOTOR GP-GEROTOR

S/N: JBP1-UP

PART OF 5T-0570 DRIVE GP-CIRCLE

SMCS-5082 **i02205130**

NOTE	REF NO	GRAPHIC REF	PART NUMBER	QTY	PART NAME 1 2 3 4 5 6 (PRODUCT LEVEL)	SEE PAGE
	1	1	**9T-8051**	7	BOLT (3/8-24X4.12-IN)	
	2	1	**9T-8070**	1	HOUSING AS	
	3	1	**6Y-2934**	1	BEARING-ROLLER	
	4	1	**6Y-2933**	2	RING-THRUST	
	5	1	**6Y-2932**	1	BEARING-THRUST	
	6	1	**8T-1698**	1	BEARING AS-NEEDLE	
	7	1	**9T-9071**	1	SHIM	
	8	1	**9T-8058**	1	BACKUP	
	9	1	**9T-8059**	1	SEAL	
	10	1	**9T-8056**	1	SHAFT	
	11	1	**6Y-2935**	1	BEARING	
	12	1	**9T-8053**	5	SEAL	
	13	1	**9T-8054**	1	LINK	
	14	1	**9T-8061**	1	PLATE	
	15	1	**9T-8063**	1	ROTOR SET	
	16	1	**9T-8065**	1	MANIFOLD	
	17	1	**9J-4963**	1	RING	
	18	1	**9T-8069**	1	PLATE AS	
	19	1	**9T-8067**	1	COVER	
					AVAILABLE REPAIR KIT(S):	
			9T-9072	1	KIT-SEAL (MOTOR) (CIRCLE DRIVE)	
					(INCLUDES RING, SHIM, SEALS & GREASE PACK)	

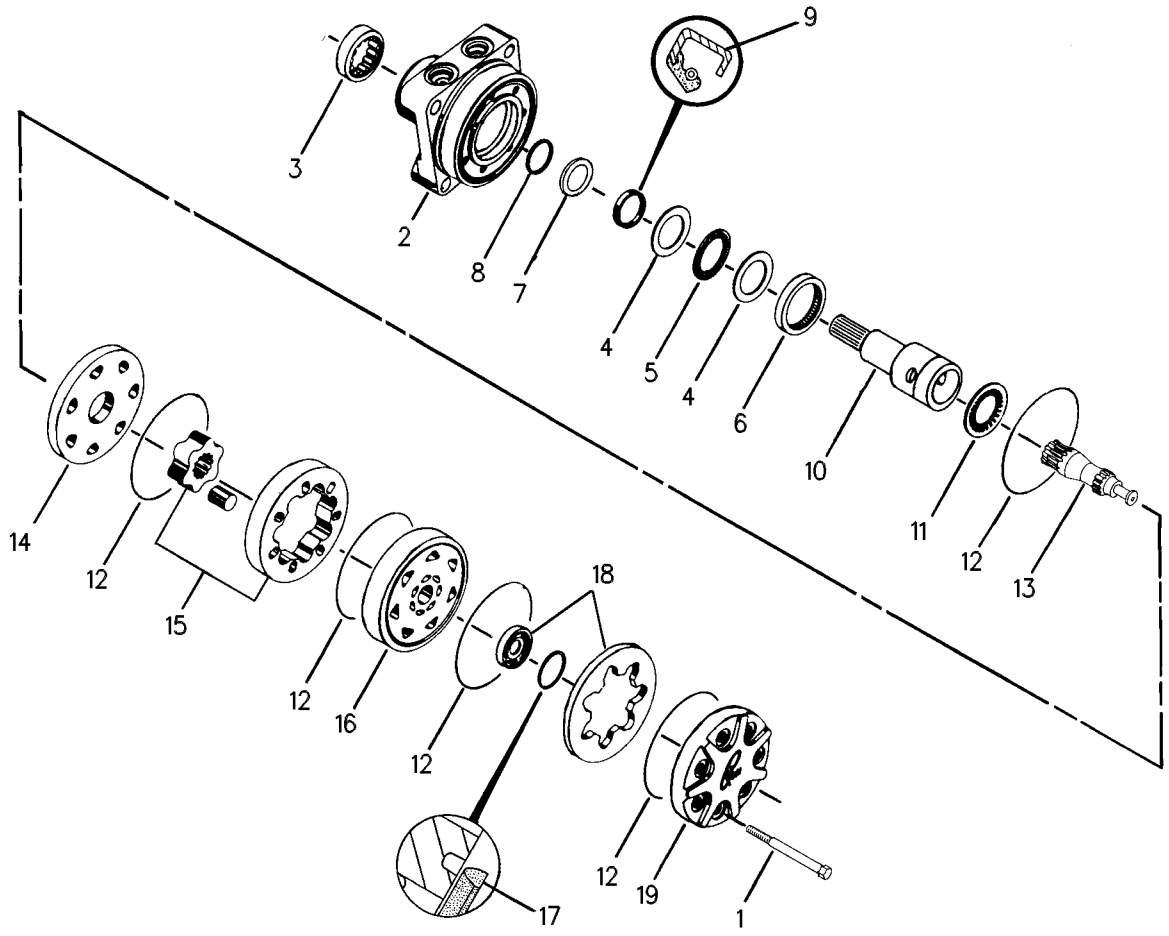

GRAPHIC #1 **<END>** g00108578

HYDRAULIC SYSTEM

299-5543 PUMP & MTG GP-STEERING

S/N: JBP1-UP

PART OF 274-7941 GENERAL AR

SMCS-4306, 4344 **i03247368**

NOTE	REF NO	GRAPHIC REF	PART NUMBER	QTY	PART NAME 1 2 3 4 5 6 (PRODUCT LEVEL)	SEE PAGE
	1	1	**1D-5120**	1	NUT-JAM (3/4-16-THD)	
	2	1	**5R-4787**	4	PLATE	
YR	3	1	**6E-3136**	1	PUMP GP-PISTON	428
	4	1	**112-4159**	4	MOUNTING AS	
	5	1	**1A-5822**	4	BOLT (1/2-13X2.75-IN)	
	6	1	**1B-8737**	1	KEY-WOODRUFF	
	7	1	**299-5545**	1	PLATE AS	
	8	1	**5P-8248**	1	WASHER-HARD (20X36.5X3.5-MM THK)	
	9	1	**6V-8765**	4	WASHER-HARD (15X26X3-MM THK)	
M	10	1	**8C-3425**	4	BOLT (M14X2X35-MM)	
M	11	1	**8T-4910**	6	BOLT (M12X1.75X60-MM)	
	12	1	**8T-7971**	6	WASHER-HARD (13.5X25.5X5-MM THK)	

M-METRIC PART
R-REMFG PART MAY BE AVAILABLE
Y-SEPARATE ILLUSTRATION

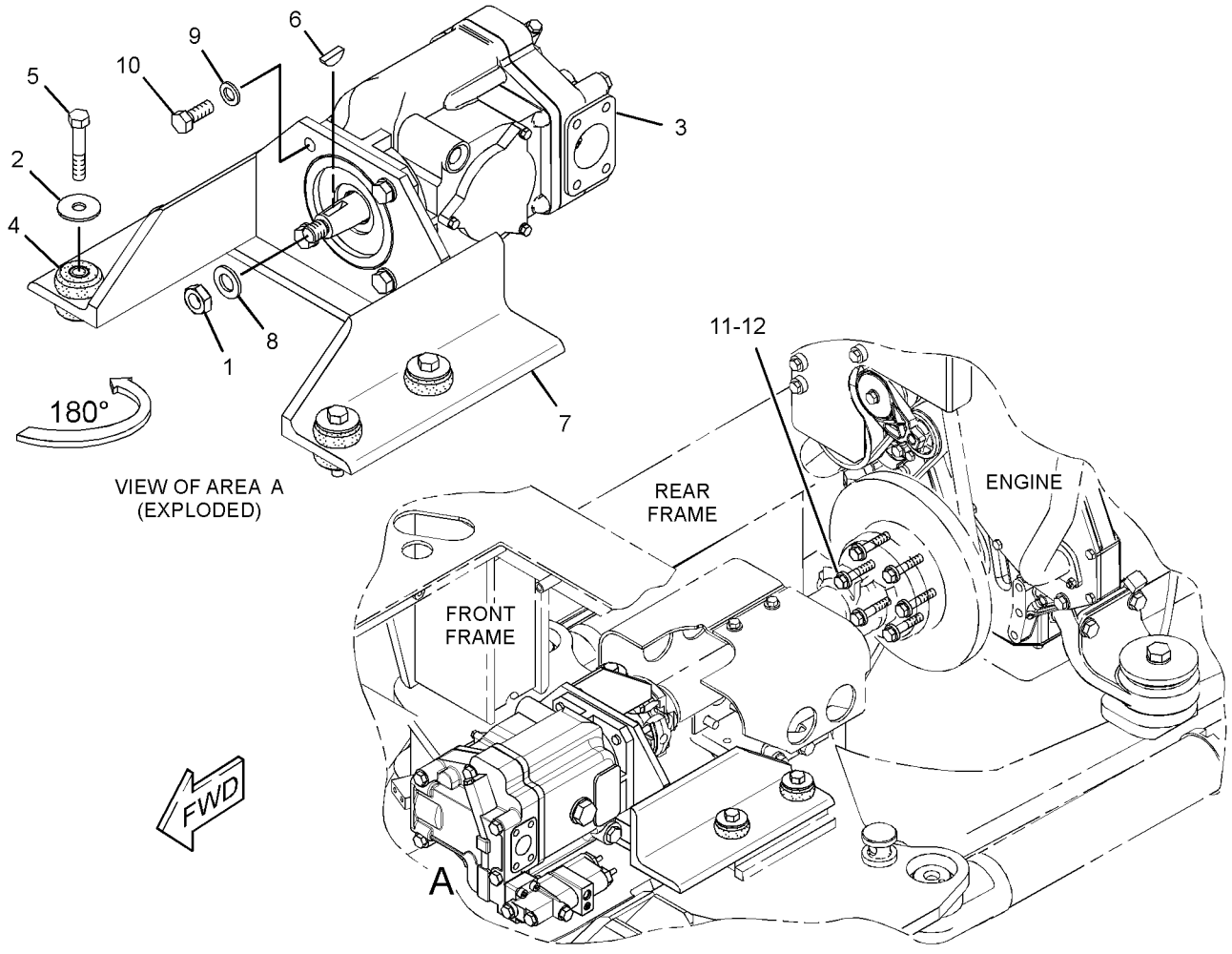

GRAPHIC #1 **<END>** g01698313

HYDRAULIC SYSTEM

6E-3136 PUMP GP-PISTON*R

S/N: JBP1-UP

PART OF 299-5543 PUMP & MTG GP-STEERING

SMCS-5070 **i03432324**

NOTE	REF NO	GRAPHIC REF	PART NUMBER	QTY	PART NAME 1 2 3 4 5 6 (PRODUCT LEVEL)	SEE PAGE
	1	1	**6E-6594**	1	BEARING-SWASH	
	2	1	**6E-4224**	1	PLUG-SWASHPLATE	
	3	1	**033-6036**	1	SEAL-O-RING	
	4	1	**102-2386**	1	HEAD-PUMP	
	5	1	**9T-1699**	1	SPRING	
	6	1	**9T-1710**	1	POPPET	
	7	1	**9T-1636**	1	SEAT	
	8	1	**6E-6596**	1	COVER-TRUNNION	
	9	1	**6V-3834**	1	SEAL-O-RING	
M	10	1	**3E-4302**	2	SCREW-FLAT HEAD (M4X0.7X10-MM)	
M	11	1	**6V-8214**	3	BOLT (M6X1X20-MM)	
	12	1	**6E-6597**	1	BEARING-SWASH	
M	13	1	**6V-7673**	2	BOLT (M12X1.75X50-MM)	
M	14	1	**8T-0372**	4	BOLT (M12X1.75X90-MM)	
Y	15	1	**104-3122**	1	VALVE GP-PUMP CONTROL (PRESSURE, FLOW COMPENSATOR)	567
	16	1	**109-3204**	3	SEAL-O-RING	
M	17	1	**6V-8337**	4	BOLT-SOCKET HEAD (M8X1.25X35-MM)	
	18	1	**095-0888**	2	PIN-SPRING	
	19	1	**102-2385**	1	SHAFT-PUMP	
	20	1	**102-2384**	1	HOUSING-PUMP	
	21	1	**006-8663**	1	RING	
	22	1	**8T-4750**	1	SEAL-LIP TYPE	
	23	1	**6E-6599**	1	KIT-BIAS PISTON	
					(INCLUDES SPRING,ROD,PISTON,SEAL)	
	24	1	**6E-6600**	1	SPRING-BIAS	
Y	25	1	**6E-6571**	1	ROTATING GP-PUMP (STEERING)	430
	26	1	**6E-6601**	1	GASKET	
	27	1	**7L-9061**	2	SEAL-O-RING	
	28	1	**3E-7417**	2	PLUG	
	29	1	**8T-7876**	2	SEAL-O-RING	
	30	1	**9T-1633**	1	PLATE	
B	31	1	**9T-2197**	1	SHIM PACK (INCLUDES 17-SHIMS)	
	32	1	**1P-6872**	1	CUP-BEARING	
	33	1	**004-9040**	1	CONE-BEARING	
	34	1	**9T-1652**	1	PIN	
	35	1	**6E-6602**	1	KIT-PISTON CONTROL	
					(INCLUDES ROD,PISTON,SEAL)	
	36	1	**167-1802**	1	SWASHPLATE GP	
		1	**167-1801**	2	STOP-SWASHPLATE	
		1	**1H-3937**	2	PIN	
	37	1	**7T-8273**	1	CUP-BEARING	
	38	1	**7T-8272**	1	CONE-BEARING	
	39	1	**3K-0360**	1	SEAL-O-RING	
	40	1	**9S-4185**	1	PLUG-O-RING	
	41	1	**104-3124**	1	SHIELD	

B-USE AS REQUIRED
M-METRIC PART
Y-SEPARATE ILLUSTRATION

6E-3136 PUMP GP-PISTON *(contd.)* **i03432324**

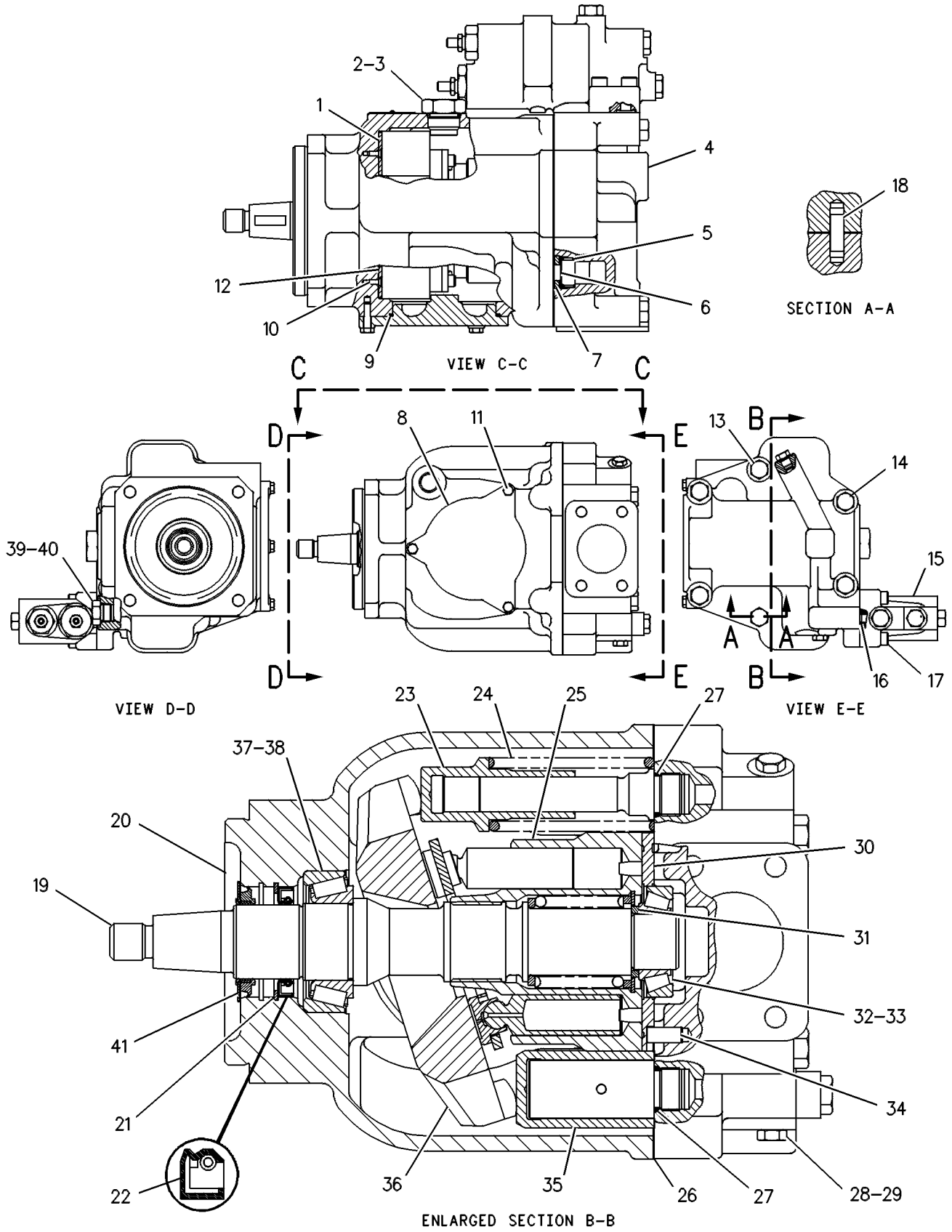

GRAPHIC #1 **<END>** g00108685

HYDRAULIC SYSTEM

6E-6571 ROTATING GP-PUMP

S/N: JBP1-UP

PART OF 6E-3136 PUMP GP-PISTON

SMCS-5070 **i00131155**

NOTE	REF NO	GRAPHIC REF	PART NUMBER	QTY	PART NAME 1 2 3 4 5 6 (PRODUCT LEVEL)	SEE PAGE
	1	1	**6E-6604**	2	PLATE-SPACER	
	2	1	**6E-6605**	2	PLATE-LIMITER	
M	3	1	**3T-0849**	4	BOLT-SOCKET HEAD (M6X1X25-MM)	
	4	1	**9T-7755**	1	SPRING	
	5	1	**009-2069**	1	RING	
	6	1	**9T-7754**	1	GUIDE-OUTER	
	7	1	**9T-7757**	1	BARREL	
	8	1	**9T-7756**	1	GUIDE-INNER	
	9	1	**9T-7759**	1	PLATE-RETAINING	
	10	1	**9T-7761**	9	PISTON	

M-METRIC PART

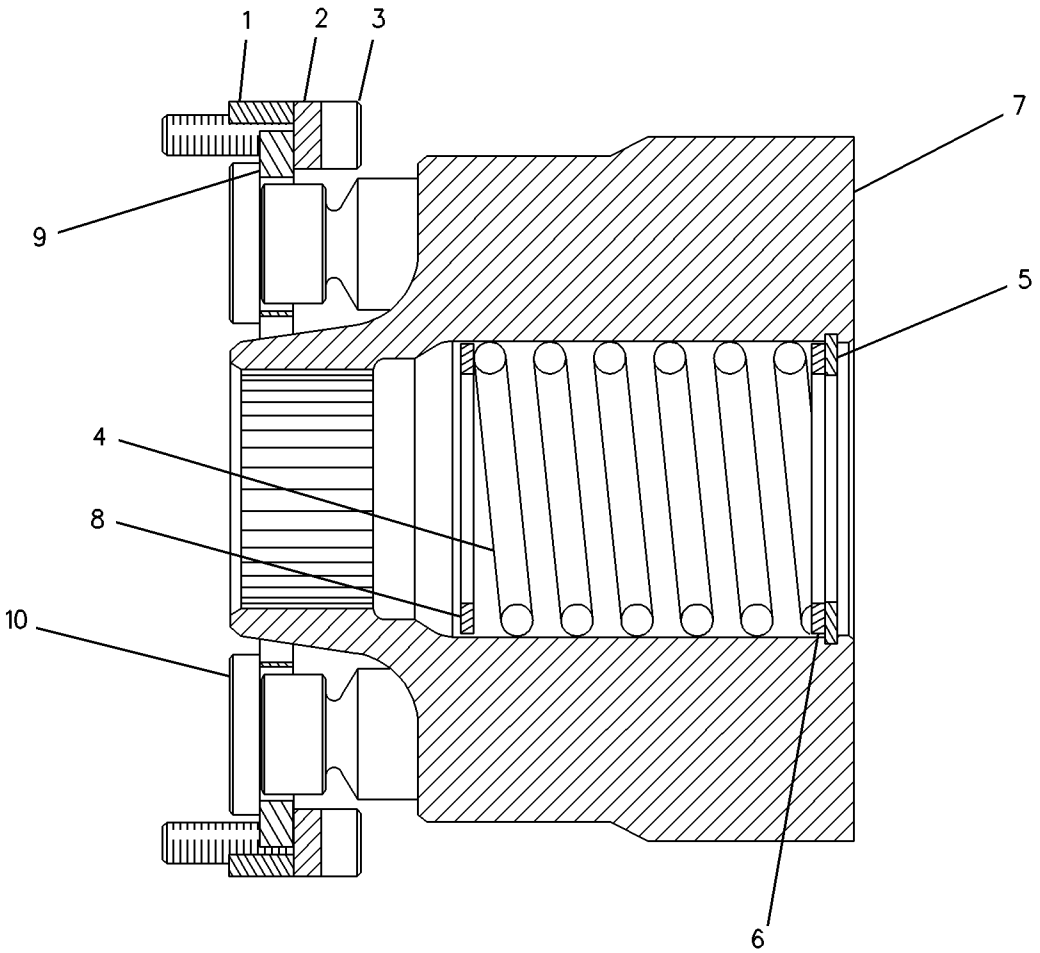

GRAPHIC #1 **<END>** g00083480

HYDRAULIC SYSTEM

311-0514 SHAFT GP-PUMP DRIVE

S/N: JBP1-UP

PART OF 274-7941 GENERAL AR

SMCS-3108 **i03246375**

NOTE	REF NO	GRAPHIC REF	PART NUMBER	QTY	PART NAME 1 2 3 4 5 6 (PRODUCT LEVEL)	SEE PAGE
	1	1	**7D-9267**	1	YOKE	
	2	1	**299-7700**	1	SLIP JOINT GP	
		1	**0L-0478**	8	BOLT (3/8-24X1.75-IN)	
		1	**5T-1362**	2	SPIDER & BEARING AS	
		1	**300-2688**	1	SHAFT AS-DRIVE	
	3	1	**0L-0478**	4	BOLT (3/8-24X1.75-IN)	
	4	1	**0S-1571**	4	BOLT (3/8-16X1.75-IN)	

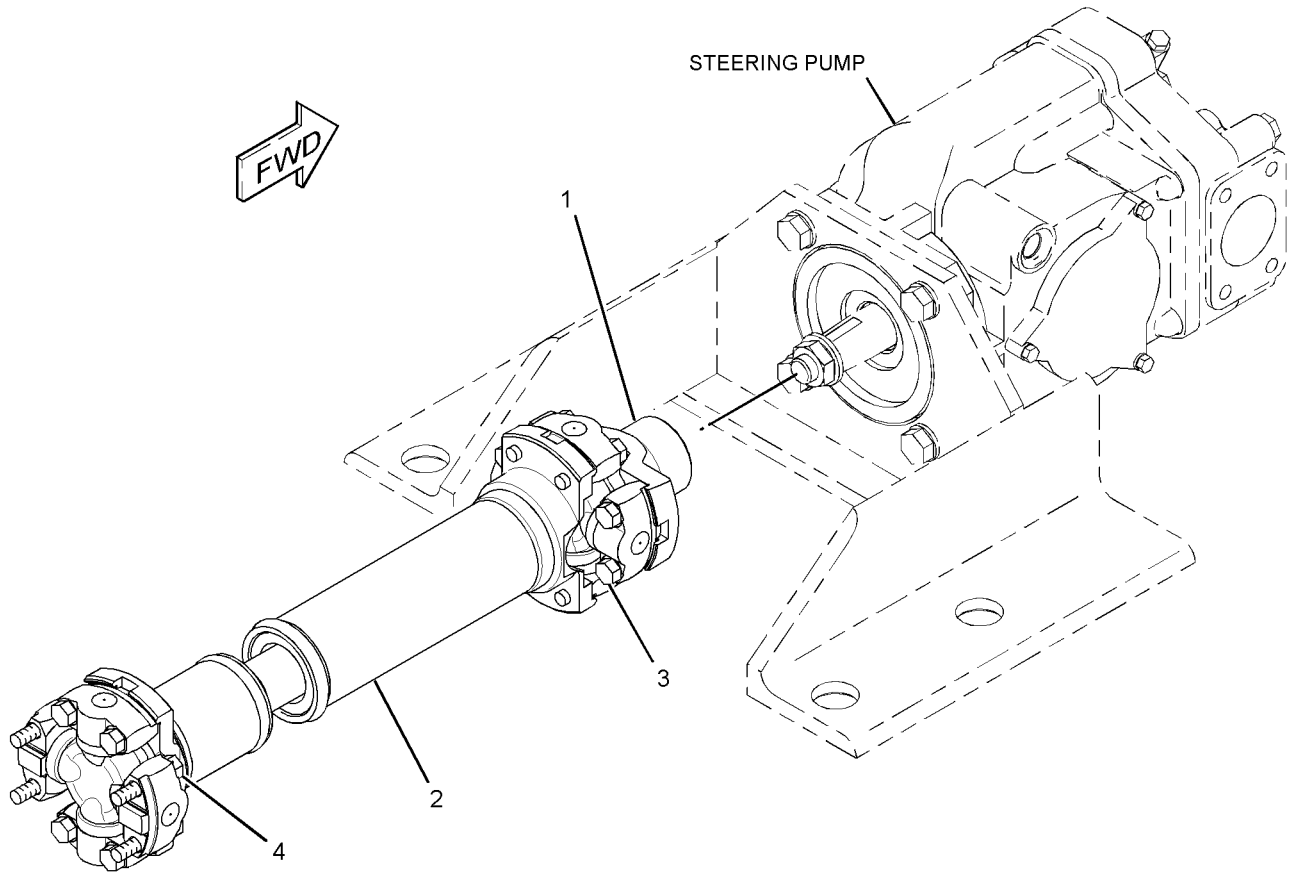

GRAPHIC #1 **<END>** g01703018

HYDRAULIC SYSTEM

260-6502 SWIVEL GP—CIRCLE DRIVE

S/N: JBP1-UP

PART OF 106-4787, 117-3855 LINES GP-HYDRAULIC

AN ATTACHMENT

SMCS-5060 **i02322216**

NOTE	REF NO	GRAPHIC REF	PART NUMBER	QTY	PART NAME 1 2 3 4 5 6 (PRODUCT LEVEL)	SEE PAGE
B	1	1	**5J-1246**	6	SHIM (0.13-MM THK)	
	2	1	**8J-2331**	7	SEAL	
	3	1	**173-1008**	1	ROTOR	
	4	1	**173-1009**	1	RETAINER	
	5	1	**223-0580**	1	COVER	
	7	1	**260-6501**	1	BODY	
	8	1	**173-1007**	2	SEAL	
	9	1	**1P-3700**	4	SEAL-RECTANGULAR	
	10	1	**2H-3928**	7	SEAL-O-RING	
	11	1	**4J-9964**	2	SEAL	
	12	1	**5P-2566**	6	BOLT (1/2-13X1.5-IN)	
	13	1	**8T-4223**	4	WASHER-HARD (13.5X25.5X3-MM THK)	

B-USE AS REQUIRED

260-6502 SWIVEL GP *(contd.)* **i02322216**

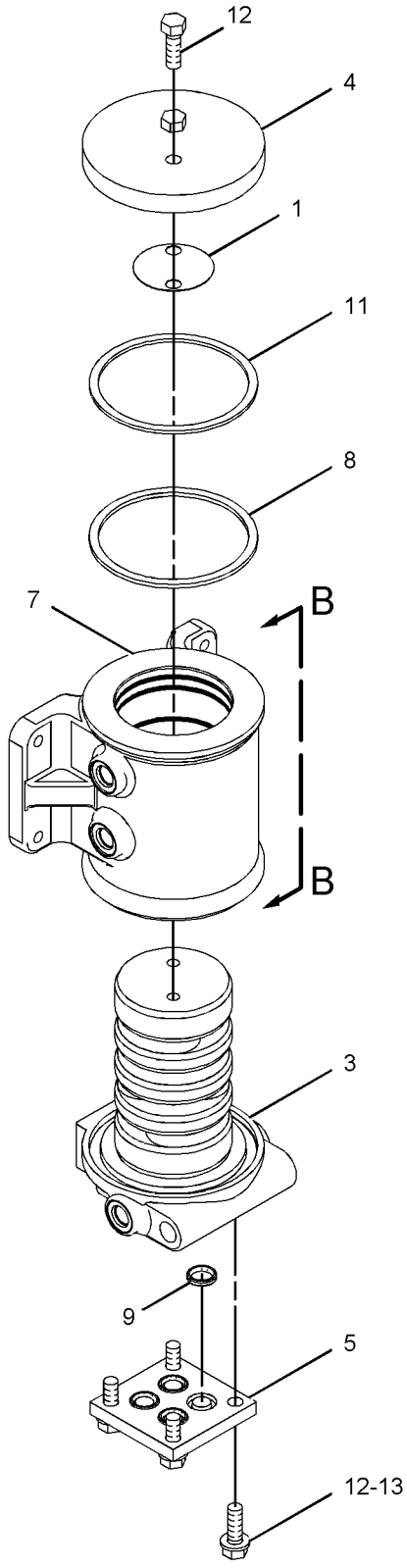

VIEW OF AREA A

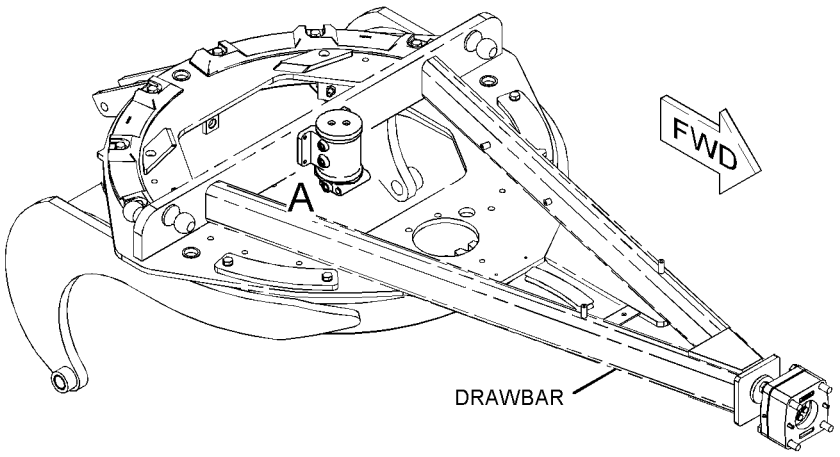

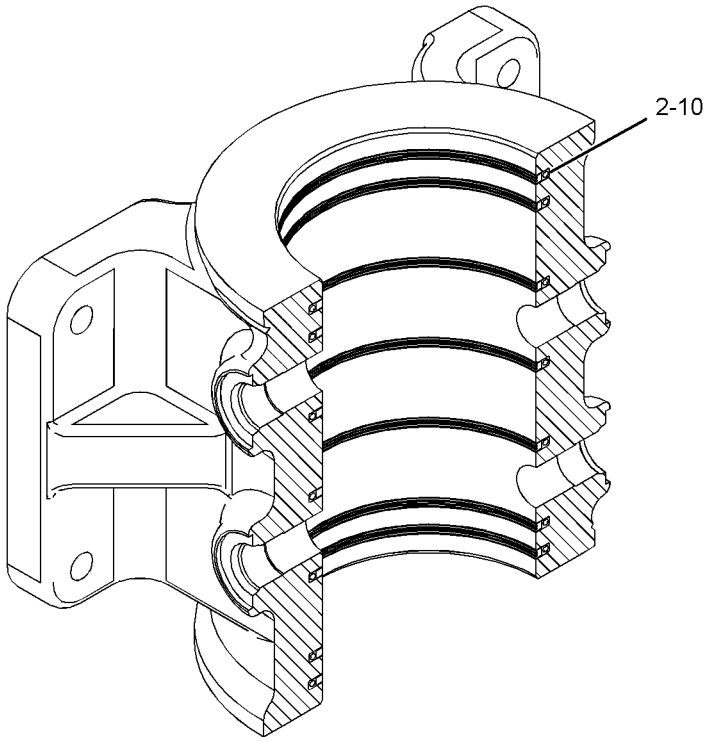

SECTION B-B

GRAPHIC #1 **<END>** g01142114

HYDRAULIC SYSTEM

214-1984 TANK & FILTER GP-HYDRAULIC

S/N: JBP1-UP

PART OF 214-1983 TANK & MTG GP-HYDRAULIC

SMCS-4332, 5056, 5068 **i02938304**

NOTE	REF NO	GRAPHIC REF	PART NUMBER	QTY	PART NAME 1 2 3 4 5 6 (PRODUCT LEVEL)	SEE PAGE
	1	1	**4B-2913**	1	PIN-CLEVIS	
	2	1	**1R-0774**	1	FILTER ELEMENT AS-OIL (ADVANCED EFFICIENCY)	
	3	1	**2S-5100**	1	VALVE AS-MANUAL (HYDRAULIC TANK)	
	4	1	**3F-1547**	1	SEAL-O-RING	
	6	1	**4M-6921**	1	WASHER-SPRING	
	7	1	**5D-1911**	1	COVER-HYDRAULIC CAP	
	8	1	**226-2871**	1	ROD	
	9	1	**9J-1979**	1	RETAINER AS	
	12	1	**9J-3047**	1	STRAINER (HYDRAULIC)	
	13	1	**9M-7394**	1	LEVER	
	14	1	**141-9661**	1	SPACER (20X128X6-MM THK)	
	15	1	**226-2870**	1	CAP AS (HYDRAULIC TANK)	
	16	1	**214-1982**	1	TANK AS	
	17	1	**217-2661**	1	GAUGE-SIGHT (HYDRAULIC)	
	18	1	**086-0507**	1	PIN	
	19	1	**1L-5072**	1	DOWEL	
	20	1	**2D-4202**	1	PLATE	
	21	1	**2J-7761**	1	RING-RETAINING	
	22	1	**3K-6060**	1	LOCKNUT (3/8-16-THD)	
	23	1	**3G-0361**	1	GASKET (HYDRAULIC TANK FILL CAP)	
	25	1	**7D-1195**	1	SEAL-O-RING	
	26	1	**7H-1447**	1	CAP-FILLER (HYDRAULIC TANK)	
	27	1	**8T-2275**	1	BALL	
	28	1	**8T-4121**	4	WASHER-HARD (11X21X2.5-MM THK)	
M	29	1	**8T-4195**	4	BOLT (M10X1.5X30-MM)	
	30	1	**9H-6454**	1	GASKET	
	31	1	**3B-4610**	1	PIN-COTTER	

M-METRIC PART

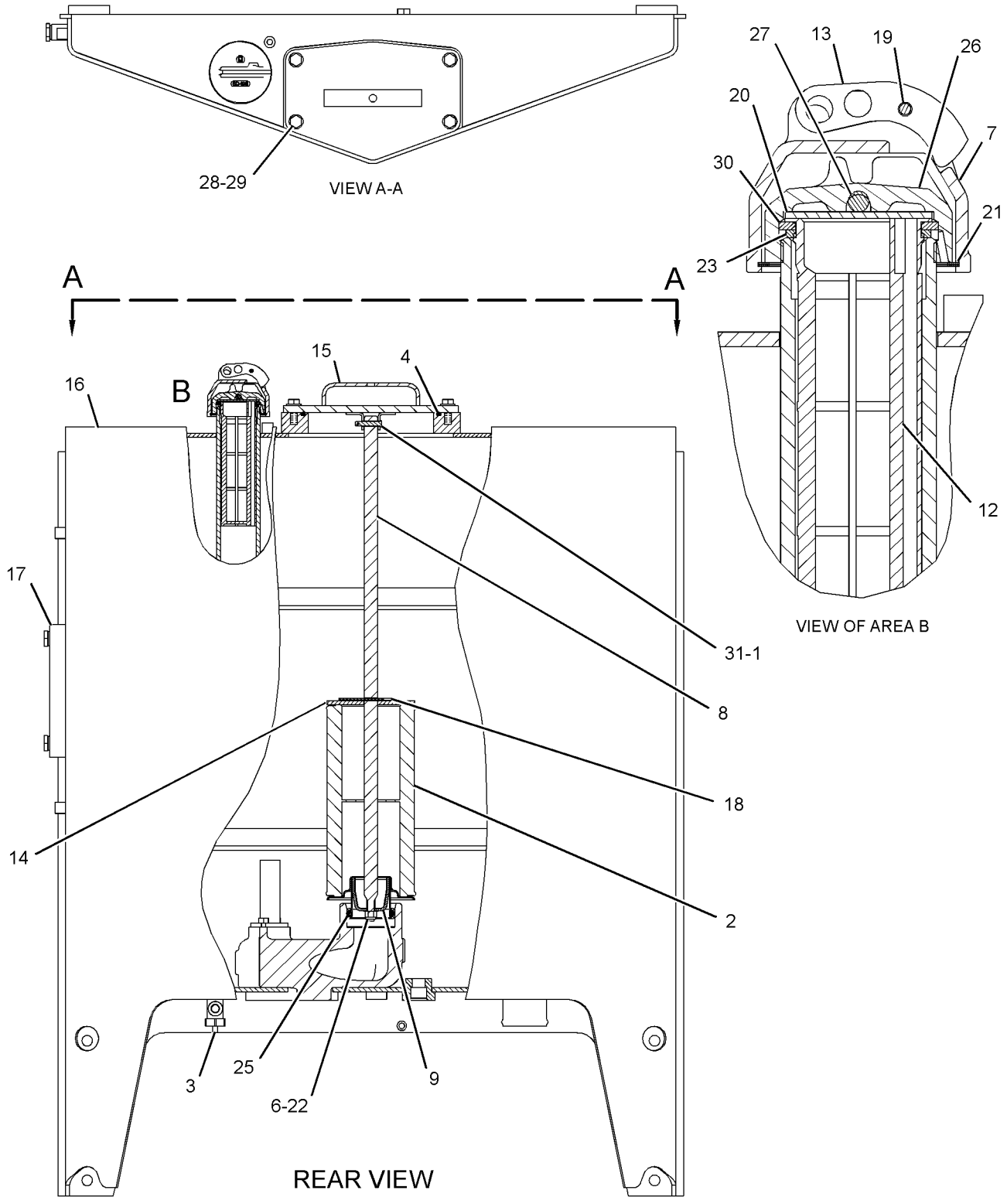

GRAPHIC #1 **<END>** g01514468

HYDRAULIC SYSTEM

214-1983 TANK & MTG GP-HYDRAULIC

S/N: JBP1-UP

PART OF 274-7941 GENERAL AR

SMCS-4332, 5056, 5068 **i01707184**

NOTE	REF NO	GRAPHIC REF	PART NUMBER	QTY	PART NAME 1 2 3 4 5 6 (PRODUCT LEVEL)	SEE PAGE
Y	1	1	*214-1984*	1	TANK & FILTER GP-HYDRAULIC	434
	2	1	**4D-7794**	3	CLIP	
	3	1	**5P-8502**	1	PADLOCK GP	
		1	**5P-8500**	1	KEY	
		1	**8Y-6364**	1	SLEEVE	
	4	1	**7X-0325**	4	BOLT (1/2-13X2.5-IN)	
	5	1	**8T-4121**	3	WASHER-HARD (11X21X2.5-MM THK)	
M	6	1	**8T-4191**	3	BOLT (M10X1.5X16-MM)	
	7	1	**8T-4223**	4	WASHER-HARD (13.5X25.5X3-MM THK)	

M-METRIC PART
Y-SEPARATE ILLUSTRATION

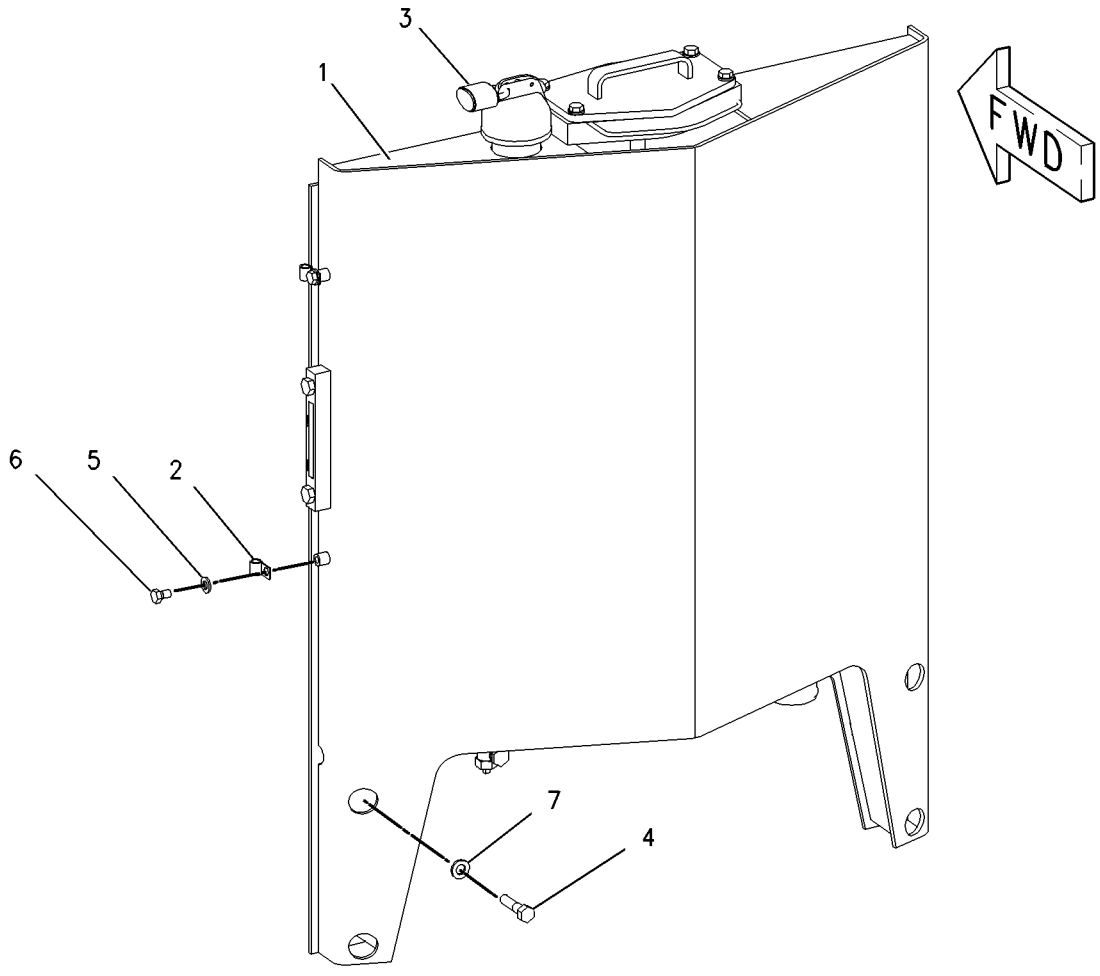

GRAPHIC #1 **<END>** g00894365

HYDRAULIC SYSTEM

112-6795 VALVE & LINKAGE GP—4-BANK, RH; 2-BANK, LH

S/N: JBP1-UP

PART OF 274-7941 GENERAL AR

SMCS-5051, 5063 **i01367556**

NOTE	REF NO	GRAPHIC REF	PART NUMBER	QTY	PART NAME 1 2 3 4 5 6 (PRODUCT LEVEL)	SEE PAGE
Y	1	1	**124-3325**	1	VALVE GP-BANK 4 (RH)	509
Y	2	1	**104-8672**	1	VALVE GP-BANK 2 (LH)	503
	3	1	**8X-5498**	2	RETAINER	
	4	1	**101-2457**	1	LEVER (ARTICULATION)	
	5	1	**8D-5634**	1	LEVER (CENTER SHIFT)	
	6	1	**6V-8186**	12	NUT-FULL (5/16-24-THD)	
		1	**7H-3641**	12	END-ROD (5/16-24-THD)	
		1	**8X-4276**	6	ROD	
	7	1	**8D-5633**	1	LEVER (WHEEL LEAN)	
	8	1	**8D-8852**	2	SPACER (0.78X1.5X1.344-IN THK)	
	9	1	**137-4515**	2	BUSHING	
	10	1	**8D-5640**	10	BEARING	
B	11	1	**8D-5636**	4	SHIM (0.254-MM THK)	
B	12	1	**8D-5637**	4	SHIM (0.762-MM THK)	
	13	1	**6L-1962**	6	NUT-JAM (3/8-24-THD)	
	14	1	**8T-9043**	12	BOLT (5/16-18X0.875-IN)	
	15	1	**3F-9556**	12	LOCKWASHER	
	16	1	**9B-7237**	2	BOLT (3/8-16X1.25-IN)	
	17	1	**8D-5641**	8	BEARING	
	18	1	**2G-6757**	1	KNOB-BLADE LIFT (LH)	
M	19	1	**8T-4136**	4	BOLT (M10X1.5X25-MM)	
	20	1	**8D-5632**	1	LEVER (BLADE LIFT-RH)	
	21	1	**2G-6751**	1	KNOB-CIRCLE DRIVE	
	22	1	**2G-6748**	1	KNOB-BLADE LIFT (RH)	
	23	1	**2G-6756**	1	KNOB-WHEEL LEAN	
	24	1	**2G-6752**	1	KNOB-ARTICULATION	
	25	1	**2G-6755**	1	KNOB-CENTERSHIFT	
	26	1	**5P-1075**	2	WASHER-HARD (10.2X22.5X3-MM THK)	
	27	1	**9M-1853**	6	MOUNTING	
	28	1	**5P-1076**	6	WASHER-HARD (13.5X30X4-MM THK)	
	29	1	**104-7740**	1	PLATE AS (LH)	
		1	**1F-0748**	2	NUT-WELD (1/2-13-THD)	
	30	1	**104-7419**	1	PLATE AS (RH)	
		1	**1F-0748**	2	NUT-WELD (1/2-13-THD)	
	31	1	**104-7429**	2	PLATE	
	32	1	**137-4516**	1	SHAFT	
	33	1	**8T-4121**	8	WASHER-HARD (11X21X2.5-MM THK)	
	34	1	**6B-0933**	4	SPACER (10.31X19.05X6.35-MM THK)	
	35	1	**5P-2424**	6	BOLT (1/2-13X2.25-IN)	
	36	1	**6V-8188**	2	NUT (1/2-13-THD)	
M	37	1	**8T-4195**	4	BOLT (M10X1.5X30-MM)	
	38	1	**8F-6437**	6	WASHER (13.5X50.8X4.76-MM THK)	
	39	1	**8D-5632**	1	LEVER (CIRCLE DRIVE)	
	40	1	**8D-5634**	1	LEVER (BLADE LIFT-LH)	

B-USE AS REQUIRED
M-METRIC PART
Y-SEPARATE ILLUSTRATION

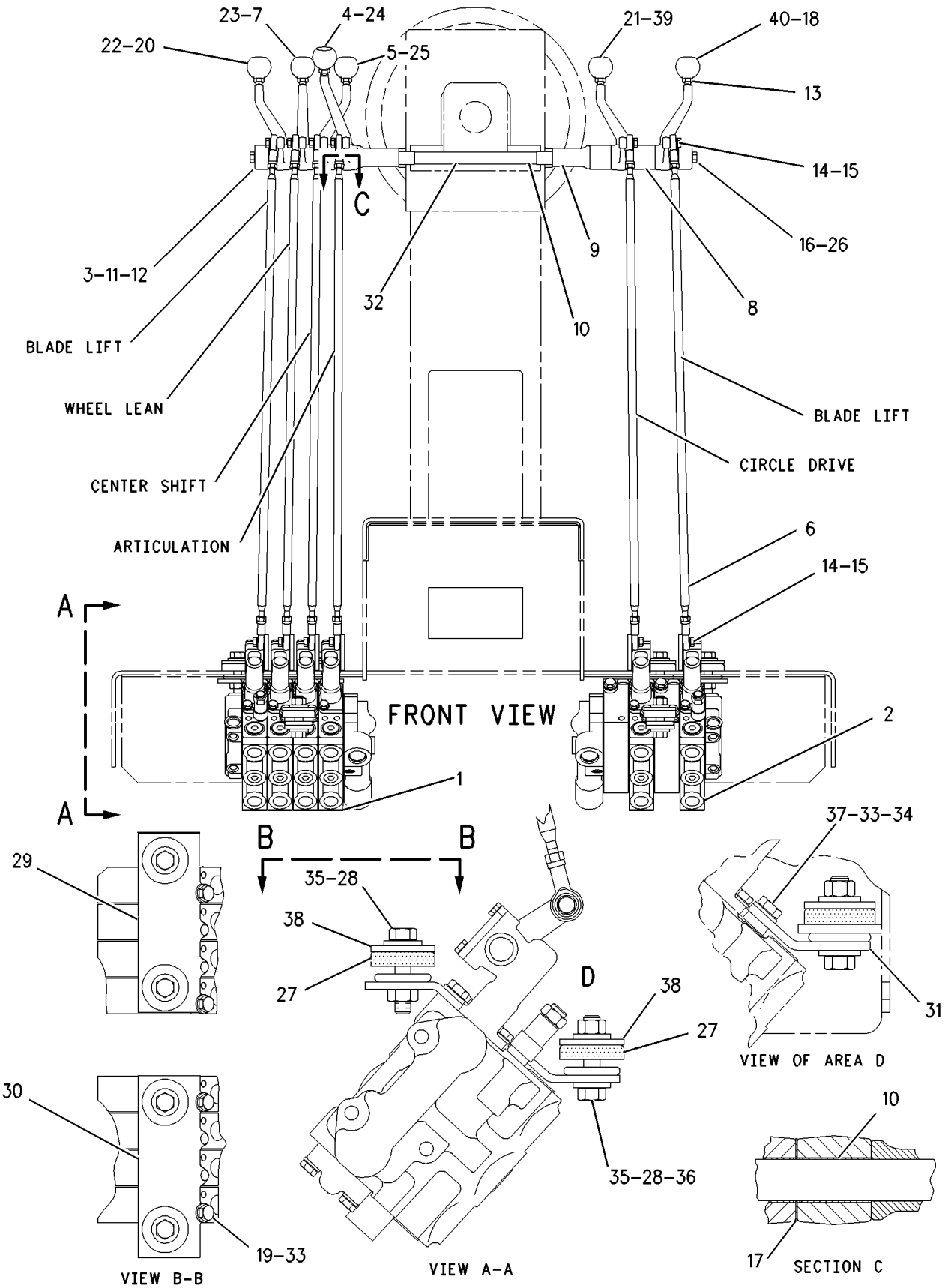

GRAPHIC #1 **<END>** g00721488

HYDRAULIC SYSTEM

112-6799 VALVE & LINKAGE GP—4-BANK, RH; 3-BANK, LH

S/N: JBP1-UP

AN ATTACHMENT

SMCS-5051, 5063 **i01367571**

NOTE	REF NO	GRAPHIC REF	PART NUMBER	QTY	PART NAME 1 2 3 4 5 6 (PRODUCT LEVEL)	SEE PAGE
Y	1	1	**124-3325**	1	VALVE GP-BANK 4 (RH)	509
Y	2	1	**104-8673**	1	VALVE GP-BANK 3 (LH)	504
	3	1	**8X-5498**	2	RETAINER	
	4	1	**101-2457**	1	LEVER (ARTICULATION)	
	5	1	**8D-5634**	1	LEVER (CENTER SHIFT)	
	6	1	**6V-8186**	14	NUT-FULL (5/16-24-THD)	
		1	**7H-3641**	14	END-ROD (5/16-24-THD)	
		1	**8X-4276**	7	ROD	
	7	1	**8D-5633**	1	LEVER (WHEEL LEAN)	
	8	1	**8D-8852**	1	SPACER (0.78X1.5X1.344-IN THK)	
	9	1	**137-4515**	2	BUSHING	
	10	1	**8D-5640**	10	BEARING	
B	11	1	**8D-5636**	4	SHIM (0.254-MM THK)	
B	12	1	**8D-5637**	4	SHIM (0.762-MM THK)	
	13	1	**6L-1962**	8	NUT-JAM (3/8-24-THD)	
	14	1	**8T-9043**	14	BOLT (5/16-18X0.875-IN)	
	15	1	**3F-9556**	14	LOCKWASHER	
	16	1	**9B-7237**	2	BOLT (3/8-16X1.25-IN)	
	17	1	**8D-5641**	8	BEARING	
	18	1	**2G-6757**	1	KNOB-BLADE LIFT (LH)	
M	19	1	**8T-4136**	4	BOLT (M10X1.5X25-MM)	
	20	1	**2G-6749**	1	KNOB-SIDESHIFT	
	21	1	**8D-5632**	1	LEVER (BLADE LIFT-RH)	
	22	1	**2G-6751**	1	KNOB-CIRCLE DRIVE	
	23	1	**2G-6748**	1	KNOB-BLADE LIFT	
	24	1	**2G-6756**	1	KNOB-WHEEL LEAN (RH)	
	25	1	**2G-6752**	1	KNOB-ARTICULATION	
	26	1	**2G-6755**	1	KNOB-CENTERSHIFT	
	27	1	**5P-1075**	2	WASHER-HARD (10.2X22.5X3-MM THK)	
	28	1	**9M-1853**	6	MOUNTING	
	29	1	**5P-1076**	6	WASHER-HARD (13.5X30X4-MM THK)	
	30	1	**104-7740**	1	PLATE AS (LH)	
		1	**1F-0748**	2	NUT-WELD (1/2-13-THD)	
	31	1	**104-7419**	1	PLATE AS (RH)	
		1	**1F-0748**	2	NUT-WELD (1/2-13-THD)	
	32	1	**104-7429**	2	PLATE	
	33	1	**137-4516**	1	SHAFT	
	34	1	**8T-4121**	8	WASHER-HARD (11X21X2.5-MM THK)	
	35	1	**6B-0933**	4	SPACER (10.31X19.05X6.35-MM THK)	
	36	1	**5P-2424**	6	BOLT (1/2-13X2.25-IN)	
	37	1	**6V-8188**	2	NUT (1/2-13-THD)	
M	38	1	**8T-4195**	4	BOLT (M10X1.5X30-MM)	
	39	1	**8F-6437**	6	WASHER (13.5X50.8X4.76-MM THK)	
	40	1	**8D-5633**	1	LEVER (SIDE SHIFT)	
	41	1	**8D-5632**	1	LEVER (CIRCLE DRIVE)	
	42	1	**8D-5634**	1	LEVER (BLADE LIFT-LH)	

B-USE AS REQUIRED
M-METRIC PART
Y-SEPARATE ILLUSTRATION

112-6799 **VALVE & LINKAGE GP** *(contd.)* **i01367571**

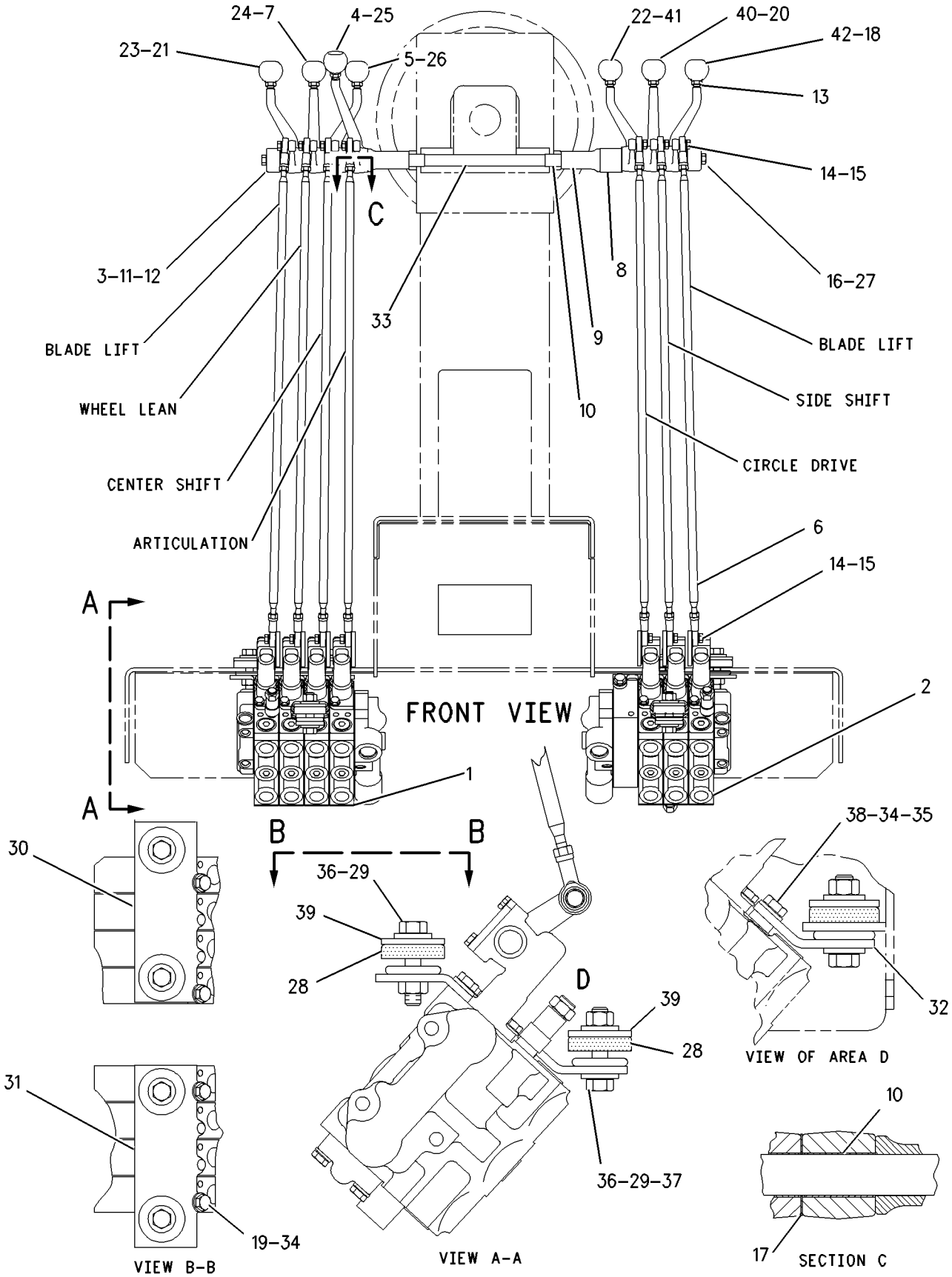

GRAPHIC #1 **<END>** g00721500

HYDRAULIC SYSTEM

112-6804 VALVE & LINKAGE GP—4-BANK, RH; 3-BANK, LH

S/N: JBP1-UP

AN ATTACHMENT

SMCS-5051, 5063 **i01367580**

NOTE	REF NO	GRAPHIC REF	PART NUMBER	QTY	PART NAME 1 2 3 4 5 6 (PRODUCT LEVEL)	SEE PAGE
Y	1	1	**124-3325**	1	VALVE GP-BANK 4 (RH)	509
Y	2	1	**112-2580**	1	VALVE GP-BANK 3 (LH)	505
	3	1	**8X-5499**	2	RETAINER	
	4	1	**101-2457**	1	LEVER (ARTICULATION)	
	5	1	**8D-5634**	1	LEVER (CENTER SHIFT)	
	6	1	**6V-8186**	14	NUT-FULL (5/16-24-THD)	
		1	**7H-3641**	14	END-ROD (5/16-24-THD)	
		1	**8X-4276**	7	ROD	
	7	1	**8D-5633**	1	LEVER (WHEEL LEAN)	
	8	1	**8D-8852**	2	SPACER (0.78X1.5X1.344-IN THK)	
	9	1	**137-4515**	2	BUSHING	
	10	1	**8D-5640**	11	BEARING	
B	11	1	**8D-5636**	4	SHIM (0.254-MM THK)	
B	12	1	**8D-5637**	4	SHIM (0.762-MM THK)	
	13	1	**6L-1962**	7	NUT-JAM (3/8-24-THD)	
	14	1	**8T-9043**	14	BOLT (5/16-18X0.875-IN)	
	15	1	**3F-9556**	14	LOCKWASHER	
	16	1	**9B-7237**	2	BOLT (3/8-16X1.25-IN)	
	17	1	**8D-5641**	9	BEARING	
	18	1	**2G-6757**	1	KNOB-BLADE LIFT	
M	19	1	**8T-4136**	4	BOLT (M10X1.5X25-MM)	
	20	1	**8D-5632**	1	LEVER (BLADE LIFT-RH)	
	21	1	**2G-6751**	1	KNOB-CIRCLE DRIVE	
	22	1	**2G-6748**	1	KNOB-BLADE LIFT (RH)	
	23	1	**2G-6756**	1	KNOB-WHEEL LEAN	
	24	1	**2G-6752**	1	KNOB-ARTICULATION	
	25	1	**2G-6755**	1	KNOB-CENTERSHIFT	
	26	1	**5P-1075**	2	WASHER-HARD (10.2X22.5X3-MM THK)	
	27	1	**9M-1853**	6	MOUNTING	
	28	1	**5P-1076**	6	WASHER-HARD (13.5X30X4-MM THK)	
	29	1	**104-7740**	1	PLATE AS (LH)	
		1	**1F-0748**	2	NUT-WELD (1/2-13-THD)	
	30	1	**104-7419**	1	PLATE AS (RH)	
		1	**1F-0748**	2	NUT-WELD (1/2-13-THD)	
	31	1	**104-7429**	2	PLATE	
	32	1	**137-4516**	1	SHAFT	
	33	1	**8T-4121**	8	WASHER-HARD (11X21X2.5-MM THK)	
	34	1	**6B-0933**	4	SPACER (10.31X19.05X6.35-MM THK)	
	35	1	**5P-2424**	6	BOLT (1/2-13X2.25-IN)	
	36	1	**6V-8188**	2	NUT (1/2-13-THD)	
M	37	1	**8T-4195**	4	BOLT (M10X1.5X30-MM)	
	38	1	**2G-6753**	1	KNOB-SCARIFIER	
	39	1	**8F-6437**	6	WASHER (13.5X50.8X4.76-MM THK)	
	40	1	**101-2457**	1	LEVER (SCARIFER)	
	41	1	**8D-5634**	1	LEVER (BLADE LIFT-LH)	
	42	1	**8D-5632**	1	LEVER (CIRCLE DRIVE)	

B-USE AS REQUIRED
M-METRIC PART
Y-SEPARATE ILLUSTRATION

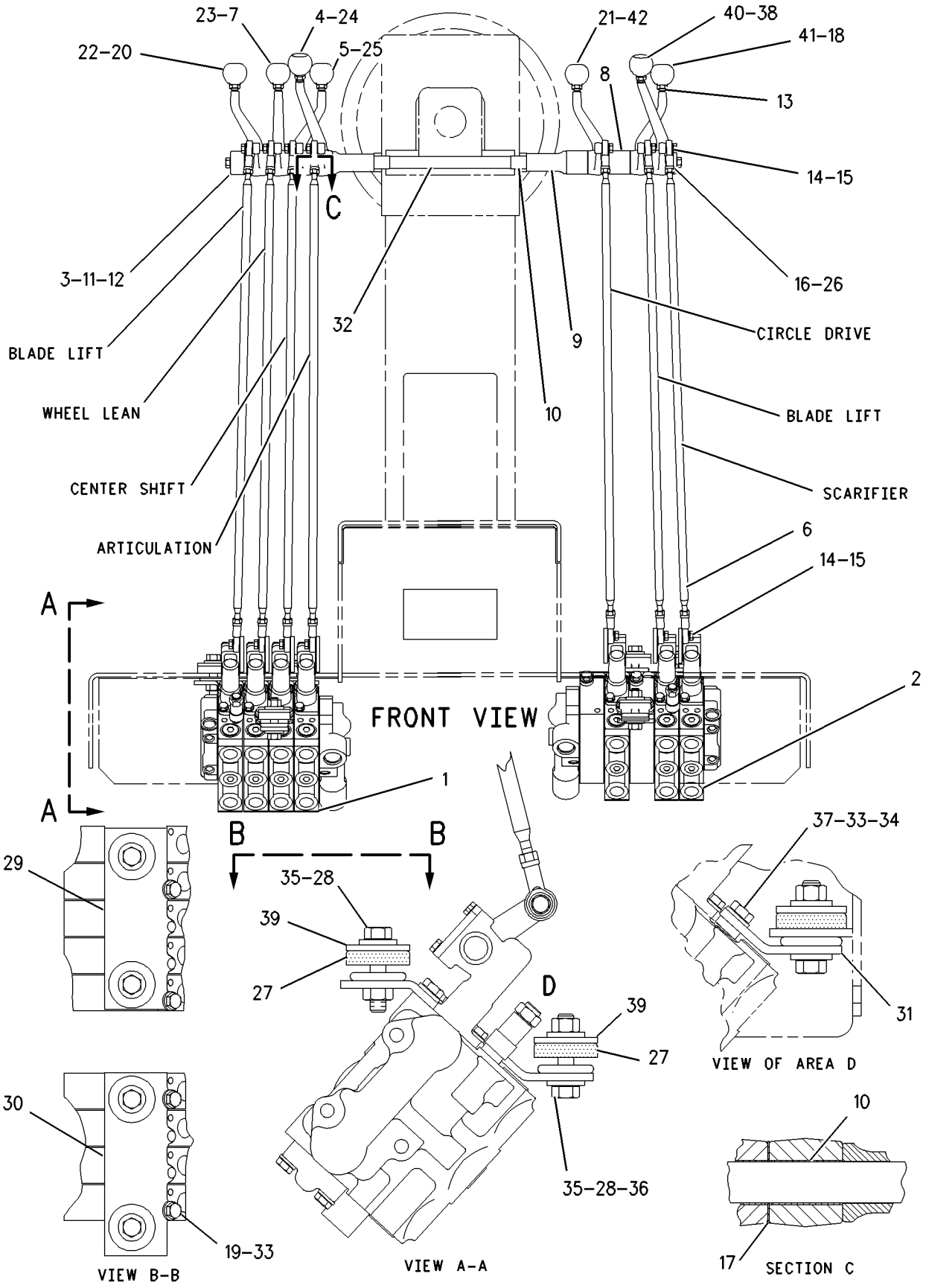

GRAPHIC #1 **<END>** g00721513

112-6818 VALVE & LINKAGE GP—4-BANK, RH; 3-BANK, LH

S/N: JBP1-UP

PART OF 331-1507 CONTROL AR-HYDRAULIC

AN ATTACHMENT

SMCS-5051, 5063 **i01047715**

NOTE	REF NO	GRAPHIC REF	PART NUMBER	QTY	PART NAME 1 2 3 4 5 6 (PRODUCT LEVEL)	SEE PAGE
Y	1	1	**124-3325**	1	VALVE GP-BANK 4 (RH)	509
Y	2	1	**112-2581**	1	VALVE GP-BANK 3 (LH)	506
	3	1	**8X-5499**	2	RETAINER	
	4	1	**101-2457**	1	LEVER (RIPPER)	
	5	1	**8D-5634**	1	LEVER (LH BLADE LIFT)	
	6	1	**8X-4276**	7	ROD	
	7	1	**6V-8186**	2	NUT-FULL (5/16-24-THD)	
	8	1	**7H-3641**	2	END-ROD (5/16-24-THD)	
	9	1	**137-4515**	2	BUSHING	
	10	1	**8D-5640**	11	BEARING	
B	11	1	**8D-5636**	4	SHIM (0.254-MM THK)	
B	12	1	**8D-5637**	4	SHIM (0.762-MM THK)	
	13	1	**6L-1962**	7	NUT-JAM (3/8-24-THD)	
	14	1	**8T-9043**	14	BOLT (5/16-18X0.875-IN)	
	15	1	**3F-9556**	14	LOCKWASHER	
	16	1	**9B-7237**	2	BOLT (3/8-16X1.25-IN)	
	17	1	**8D-5641**	9	BEARING	
	18	1	**2G-6757**	1	KNOB-BLADE LIFT (LH)	
M	19	1	**8T-4136**	4	BOLT (M10X1.5X25-MM)	
	20	1	**8D-5632**	1	LEVER (CIRCLE DRIVE)	
	21	1	**2G-6751**	1	KNOB-CIRCLE DRIVE	
	22	1	**2G-6748**	1	KNOB-BLADE LIFT (RH)	
	23	1	**2G-6756**	1	KNOB-WHEEL LEAN	
	24	1	**2G-6752**	1	KNOB-ARTICULATION	
	25	1	**2G-6755**	1	KNOB-CENTERSHIFT	
	26	1	**5P-1075**	2	WASHER-HARD (10.2X22.5X3-MM THK)	
	27	1	**9M-1853**	6	MOUNTING	
	28	1	**5P-1076**	6	WASHER-HARD (13.5X30X4-MM THK)	
	29	1	**104-7740**	1	PLATE AS (LH)	
	30	1	**104-7419**	1	PLATE AS (RH)	
					(EACH PLATE AS INCLUDES)	
		1	**1F-0748**	2	NUT-WELD (1/2-13-THD)	
	31	1	**104-7429**	2	PLATE	
	32	1	**137-4516**	1	SHAFT	
	33	1	**2G-6740**	1	KNOB-RIPPER	
	34	1	**6B-0933**	4	SPACER (10.31X19.05X6.35-MM THK)	
	35	1	**5P-2424**	6	BOLT (1/2-13X2.25-IN)	
	36	1	**6V-8188**	2	NUT (1/2-13-THD)	
M	37	1	**8T-4195**	4	BOLT (M10X1.5X30-MM)	
	38	1	**8T-4121**	8	WASHER-HARD (11X21X2.5-MM THK)	
	39	1	**8F-6437**	6	WASHER (13.5X50.8X4.76-MM THK)	
	40	1	**8D-5633**	1	LEVER (WHEEL LEAN)	
	41	1	**8D-8852**	2	SPACER (0.78X1.5X1.344-IN THK)	
	42	1	**101-2457**	1	LEVER (ARTICULATION)	
	43	1	**8D-5634**	1	LEVER (CENTER SHIFT)	
	44	1	**8D-5632**	1	LEVER (RH BLADE LIFT)	

B-USE AS REQUIRED
M-METRIC PART
Y-SEPARATE ILLUSTRATION

112-6818 **VALVE & LINKAGE GP** *(contd.)* **i01047715**

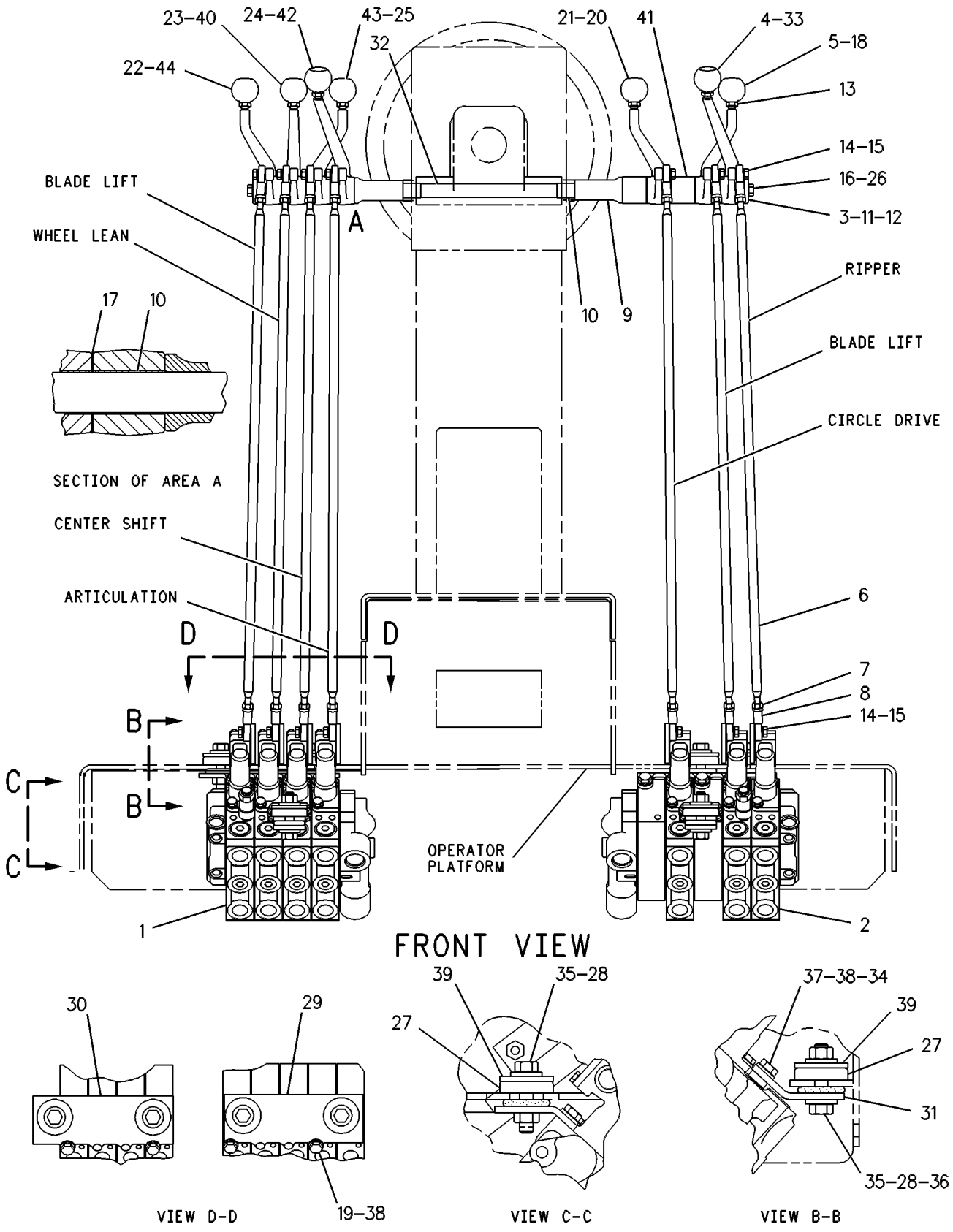

GRAPHIC #1 **<END>** g00286442

HYDRAULIC SYSTEM

115-0804 VALVE & LINKAGE GP—4-BANK, RH; 5-BANK, LH

S/N: JBP1-UP

AN ATTACHMENT

SMCS-5051, 5063 **i01367583**

NOTE	REF NO	GRAPHIC REF	PART NUMBER	QTY	PART NAME 1 2 3 4 5 6 (PRODUCT LEVEL)	SEE PAGE
Y	1	1	**124-3325**	1	VALVE GP-BANK 4 (RH)	509
Y	2	1	**124-3328**	1	VALVE GP-BANK 5 (LH)	519
	3	1	**8X-5499**	2	RETAINER	
	4	1	**101-2457**	1	LEVER (ARTICULATION)	
	5	1	**8D-5634**	1	LEVER (CENTER SHIFT)	
	6	1	**6V-8186**	18	NUT-FULL (5/16-24-THD)	
		1	**7H-3641**	18	END-ROD (5/16-24-THD)	
		1	**8X-4276**	9	ROD	
	7	1	**8D-5633**	1	LEVER (WHEEL LEAN)	
	8	1	**101-2458**	1	LEVER (BLADE TIP)	
	9	1	**137-4515**	2	BUSHING	
	10	1	**8D-5640**	11	BEARING	
B	11	1	**8D-5636**	4	SHIM (0.254-MM THK)	
B	12	1	**8D-5637**	4	SHIM (0.762-MM THK)	
	13	1	**6L-1962**	9	NUT-JAM (3/8-24-THD)	
	14	1	**8T-9043**	18	BOLT (5/16-18X0.875-IN)	
	15	1	**3F-9556**	18	LOCKWASHER	
	16	1	**9B-7237**	2	BOLT (3/8-16X1.25-IN)	
	17	1	**8D-5641**	9	BEARING	
	18	1	**2G-6757**	1	KNOB-BLADE LIFT (LH)	
M	19	1	**8T-4136**	4	BOLT (M10X1.5X25-MM)	
	20	1	**2G-6749**	1	KNOB-SIDESHIFT	
	21	1	**2G-6747**	1	KNOB-BLADE TIP	
	22	1	**8D-5632**	1	LEVER (BLADE LIFT-RH)	
	23	1	**2G-6751**	1	KNOB-CIRCLE DRIVE	
	24	1	**2G-6748**	1	KNOB-BLADE LIFT (RH)	
	25	1	**2G-6756**	1	KNOB-WHEEL LEAN	
	26	1	**2G-6752**	1	KNOB-ARTICULATION	
	27	1	**2G-6755**	1	KNOB-CENTERSHIFT	
	28	1	**5P-1075**	2	WASHER-HARD (10.2X22.5X3-MM THK)	
	29	1	**9M-1853**	6	MOUNTING	
	30	1	**5P-1076**	6	WASHER-HARD (13.5X30X4-MM THK)	
	31	1	**104-7740**	1	PLATE AS (LH)	
		1	**1F-0748**	2	NUT-WELD (1/2-13-THD)	
	32	1	**104-7419**	1	PLATE AS (RH)	
		1	**1F-0748**	2	NUT-WELD (1/2-13-THD)	
	33	1	**104-7429**	2	PLATE	
	34	1	**137-4516**	1	SHAFT	
	35	1	**8T-4121**	8	WASHER-HARD (11X21X2.5-MM THK)	
	36	1	**6B-0933**	4	SPACER (10.31X19.05X6.35-MM THK)	
	37	1	**5P-2424**	6	BOLT (1/2-13X2.25-IN)	
	38	1	**6V-8188**	2	NUT (1/2-13-THD)	
M	39	1	**8T-4195**	4	BOLT (M10X1.5X30-MM)	
	40	1	**2G-6753**	1	KNOB-SCARIFIER	
	41	1	**8F-6437**	6	WASHER (13.5X50.8X4.76-MM THK)	
	42	1	**101-2457**	1	LEVER (SCARIFIER)	
	43	1	**8D-5634**	1	LEVER (BLADE LIFT-LH)	
	44	1	**8D-5633**	1	LEVER (SIDE SHIFT)	
	45	1	**8D-5632**	1	LEVER (CIRCLE DRIVE)	

B-USE AS REQUIRED
M-METRIC PART
Y-SEPARATE ILLUSTRATION

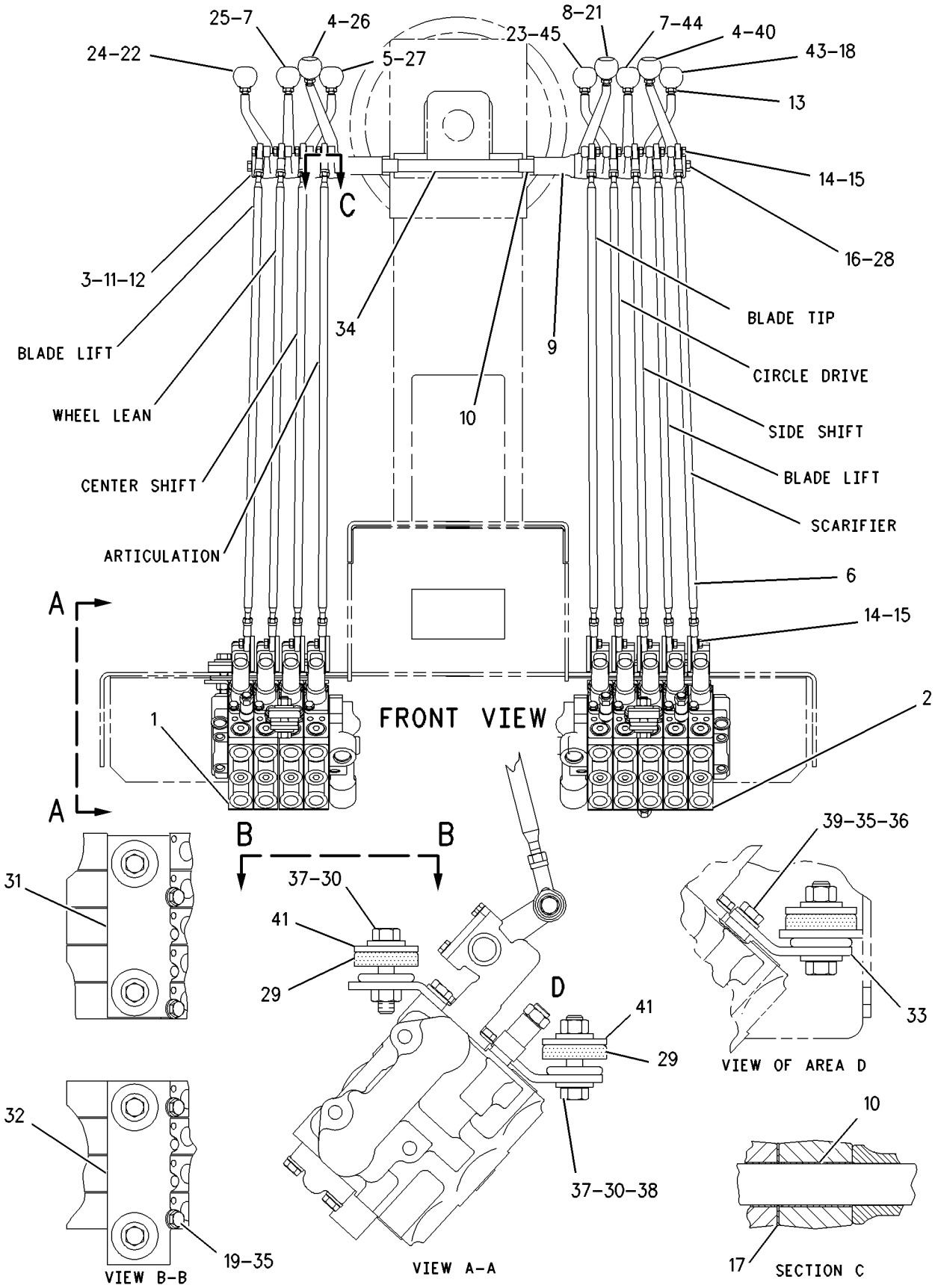

GRAPHIC #1

<END>

g00721517

115-0808 VALVE & LINKAGE GP—4-BANK, RH; 5-BANK, LH

S/N: JBP1-UP
RIPPER
PART OF 331-1503 CONTROL AR-HYDRAULIC
AN ATTACHMENT

SMCS-5051, 5063 **i01367586**

NOTE	REF NO	GRAPHIC REF	PART NUMBER	QTY	PART NAME 1 2 3 4 5 6 (PRODUCT LEVEL)	SEE PAGE
Y	1	1	**124-3325**	1	VALVE GP-BANK 4 (RH)	509
Y	2	1	**124-3329**	1	VALVE GP-BANK 5 (LH)	520
	3	1	**8X-5499**	2	RETAINER	
	4	1	**101-2457**	1	LEVER (ARTICULATION)	
	5	1	**8D-5634**	1	LEVER (CENTER SHIFT)	
	6	1	**6V-8186**	18	NUT-FULL (5/16-24-THD)	
		1	**7H-3641**	18	END-ROD (5/16-24-THD)	
		1	**8X-4276**	9	ROD	
	7	1	**8D-5633**	1	LEVER (WHEEL LEAN)	
	8	1	**101-2458**	1	LEVER (BLADE TIP)	
	9	1	**137-4515**	2	BUSHING	
	10	1	**8D-5640**	11	BEARING	
B	11	1	**8D-5636**	4	SHIM (0.254-MM THK)	
B	12	1	**8D-5637**	4	SHIM (0.762-MM THK)	
	13	1	**6L-1962**	9	NUT-JAM (3/8-24-THD)	
	14	1	**8T-9043**	18	BOLT (5/16-18X0.875-IN)	
	15	1	**3F-9556**	18	LOCKWASHER	
	16	1	**9B-7237**	2	BOLT (3/8-16X1.25-IN)	
	17	1	**8D-5641**	9	BEARING	
	18	1	**2G-6757**	1	KNOB-BLADE LIFT (LH)	
M	19	1	**8T-4136**	4	BOLT (M10X1.5X25-MM)	
	20	1	**2G-6749**	1	KNOB-SIDESHIFT	
	21	1	**2G-6747**	1	KNOB-BLADE TIP	
	22	1	**8D-5632**	1	LEVER (BLADE LIFT-RH)	
	23	1	**2G-6751**	1	KNOB-CIRCLE DRIVE	
	24	1	**2G-6748**	1	KNOB-BLADE LIFT (RH)	
	25	1	**2G-6756**	1	KNOB-WHEEL LEAN	
	26	1	**2G-6752**	1	KNOB-ARTICULATION	
	27	1	**2G-6755**	1	KNOB-CENTERSHIFT	
	28	1	**5P-1075**	2	WASHER-HARD (10.2X22.5X3-MM THK)	
	29	1	**9M-1853**	6	MOUNTING	
	30	1	**5P-1076**	6	WASHER-HARD (13.5X30X4-MM THK)	
	31	1	**104-7740**	1	PLATE AS (LH)	
		1	**1F-0748**	2	NUT-WELD (1/2-13-THD)	
	32	1	**104-7419**	1	PLATE AS (RH)	
		1	**1F-0748**	2	NUT-WELD (1/2-13-THD)	
	33	1	**104-7429**	2	PLATE	
	34	1	**137-4516**	1	SHAFT	
	35	1	**2G-6740**	1	KNOB-RIPPER	
	36	1	**6B-0933**	4	SPACER (10.31X19.05X6.35-MM THK)	
	37	1	**5P-2424**	6	BOLT (1/2-13X2.25-IN)	
	38	1	**6V-8188**	2	NUT (1/2-13-THD)	
M	39	1	**8T-4195**	4	BOLT (M10X1.5X30-MM)	
	40	1	**8T-4121**	8	WASHER-HARD (11X21X2.5-MM THK)	
	41	1	**8F-6437**	6	WASHER (13.5X50.8X4.76-MM THK)	
	42	1	**8D-5632**	1	LEVER (CIRCLE DRIVE)	
	43	1	**8D-5633**	1	LEVER (SIDE SHIFT)	
	44	1	**101-2457**	1	LEVER (RIPPER)	
	45	1	**8D-5634**	1	LEVER (BLADE LIFT-LH)	

B-USE AS REQUIRED
M-METRIC PART
Y-SEPARATE ILLUSTRATION

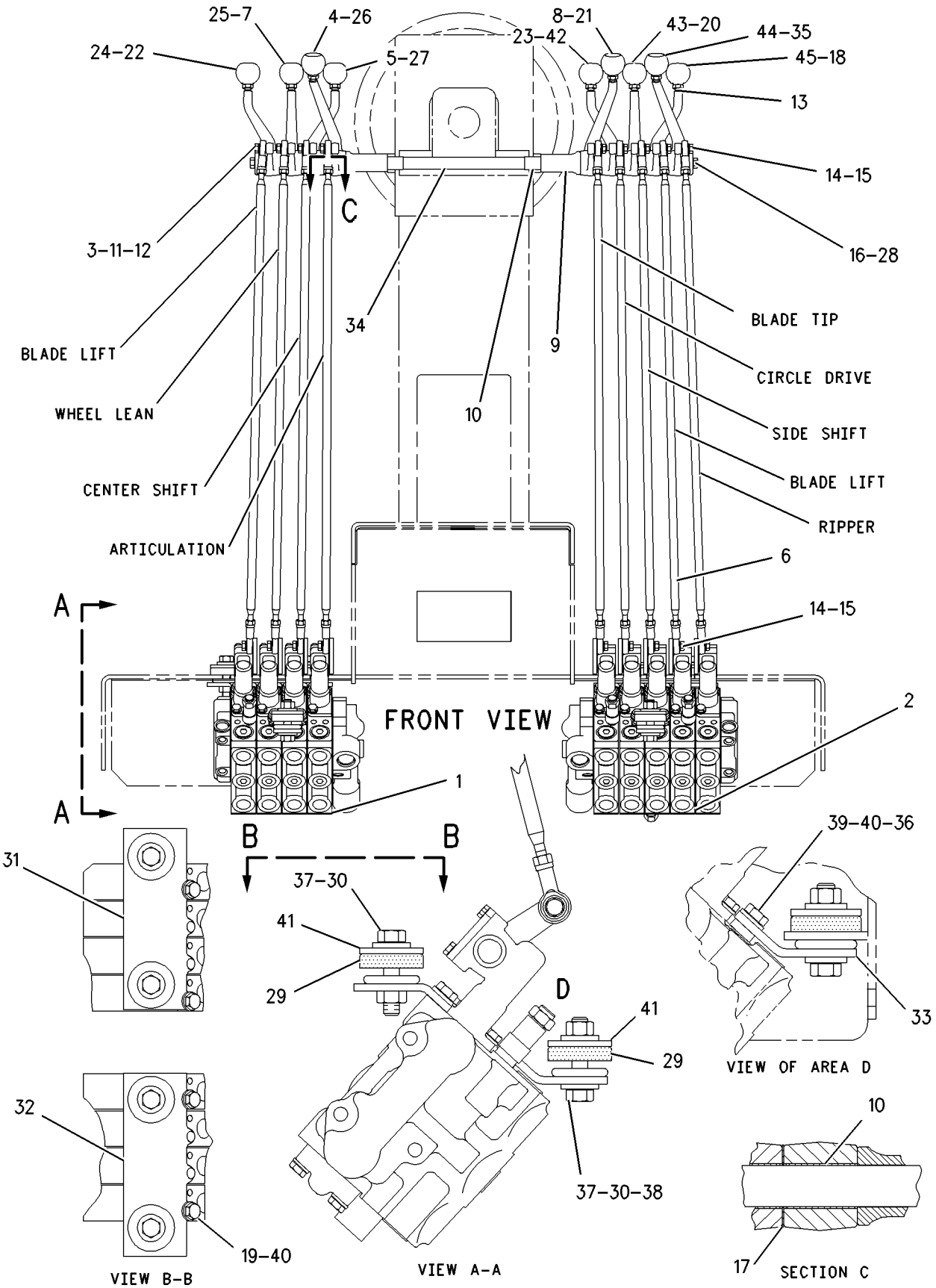

GRAPHIC #1

<END>

g00721567

HYDRAULIC SYSTEM

115-0810 VALVE & LINKAGE GP—5-BANK, RH, LH

S/N: JBP1-UP
AN ATTACHMENT

SMCS-5051, 5063 **i01367587**

NOTE	REF NO	GRAPHIC REF	PART NUMBER	QTY	PART NAME 1 2 3 4 5 6 (PRODUCT LEVEL)	SEE PAGE
	1	1	**8X-5499**	2	RETAINER	
	2	1	**101-2457**	1	LEVER (ARTICULATION)	
	3	1	**8D-5634**	1	LEVER (CENTER SHIFT)	
	4	1	**4L-6459**	1	BOLT (3/8-16X2.5-IN)	
	5	1	**8W-0456**	1	SHAFT	
	6	1	**6V-8186**	20	NUT-FULL (5/16-24-THD)	
		1	**7H-3641**	20	END-ROD (5/16-24-THD)	
		1	**8X-4276**	10	ROD	
	7	1	**8D-5633**	1	LEVER (WHEEL LEAN)	
	8	1	**101-2458**	1	LEVER (PLOW & BULLDOZER LIFT)	
	9	1	**137-4515**	2	BUSHING	
	10	1	**8D-5640**	12	BEARING	
B	11	1	**8D-5636**	4	SHIM (0.254-MM THK)	
B	12	1	**8D-5637**	4	SHIM (0.762-MM THK)	
	13	1	**6L-1962**	10	NUT-JAM (3/8-24-THD)	
	14	1	**8T-9043**	20	BOLT (5/16-18X0.875-IN)	
	15	1	**3F-9556**	20	LOCKWASHER	
	16	1	**9B-7237**	1	BOLT (3/8-16X1.25-IN)	
	17	1	**8D-5641**	10	BEARING	
	18	1	**2G-6757**	1	KNOB-BLADE LIFT (LH)	
M	19	1	**8T-4136**	4	BOLT (M10X1.5X25-MM)	
	20	1	**2G-6749**	1	KNOB-SIDESHIFT	
	21	1	**2G-6747**	1	KNOB-BLADE TIP	
	22	1	**8D-5632**	1	LEVER (BLADE LIFT-RH)	
	23	1	**2G-6751**	1	KNOB-CIRCLE DRIVE	
	24	1	**2G-6748**	1	KNOB-BLADE LIFT (RH)	
	25	1	**2G-6756**	1	KNOB-WHEEL LEAN	
	26	1	**2G-6752**	1	KNOB-ARTICULATION	
	27	1	**2G-6755**	1	KNOB-CENTERSHIFT	
	28	1	**5P-1075**	2	WASHER-HARD (10.2X22.5X3-MM THK)	
	29	1	**9M-1853**	6	MOUNTING	
	30	1	**5P-1076**	6	WASHER-HARD (13.5X30X4-MM THK)	
	31	1	**104-7740**	1	PLATE AS (LH)	
		1	**1F-0748**	2	NUT-WELD (1/2-13-THD)	
	32	1	**104-7419**	1	PLATE AS (RH)	
		1	**1F-0748**	2	NUT-WELD (1/2-13-THD)	
	33	1	**104-7429**	2	PLATE	
	34	1	**137-4516**	1	SHAFT	
	35	1	**2G-6753**	1	KNOB-SCARIFIER	
	36	1	**2G-6754**	1	KNOB (DOZER LIFT, PLOW)	
	37	1	**6V-8188**	2	NUT (1/2-13-THD)	
M	38	1	**8T-4195**	4	BOLT (M10X1.5X30-MM)	
	39	1	**8T-4121**	8	WASHER-HARD (11X21X2.5-MM THK)	
	40	1	**6B-0933**	4	SPACER (10.31X19.05X6.35-MM THK)	
	41	1	**8F-6437**	6	WASHER (13.5X50.8X4.76-MM THK)	
	42	1	**5P-2424**	6	BOLT (1/2-13X2.25-IN)	
Y	43	1	**124-3326**	1	VALVE GP-BANK 5 (RH)	518
Y	44	1	**124-3328**	1	VALVE GP-BANK 5 (LH)	519
	45	1	**101-2457**	1	LEVER (SCARIFIER)	
	46	1	**8D-5634**	1	LEVER (BLADE LIFT-LH)	
	47	1	**8D-5633**	1	LEVER (SIDE SHIFT)	
	48	1	**101-2458**	1	LEVER (BLADE TIP)	
	49	1	**8D-5632**	1	LEVER (CENTER SHIFT)	

B-USE AS REQUIRED
M-METRIC PART
Y-SEPARATE ILLUSTRATION

115-0810 **VALVE & LINKAGE GP** *(contd.)* **i01367587**

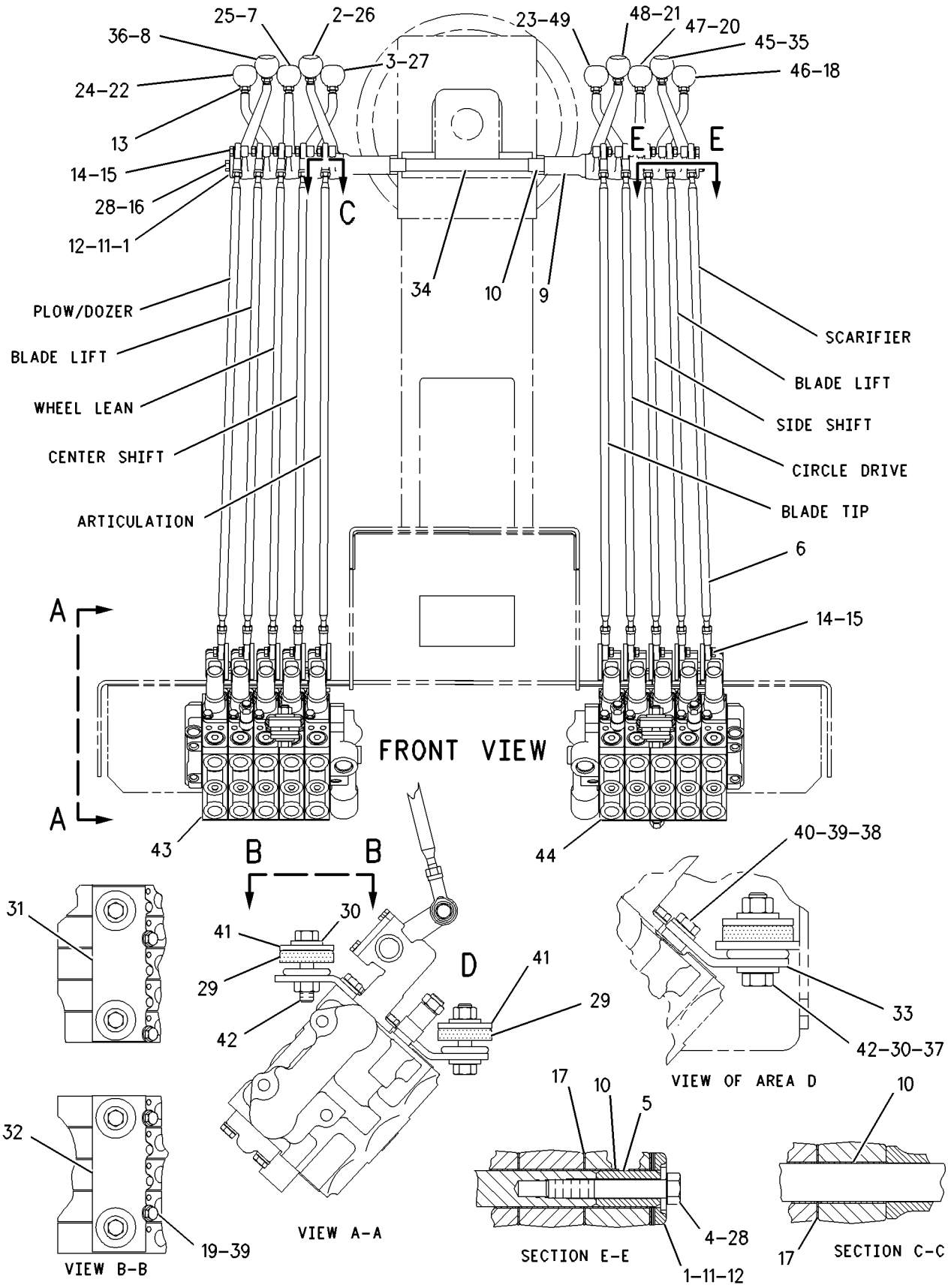

GRAPHIC #1 **<END>** g00721598

115-0811 VALVE & LINKAGE GP—4-BANK, RH; 4-BANK, LH

S/N: JBP1-UP

AN ATTACHMENT

SMCS-5051, 5063 **i01367591**

NOTE	REF NO	GRAPHIC REF	PART NUMBER	QTY	PART NAME 1 2 3 4 5 6 (PRODUCT LEVEL)	SEE PAGE
Y	1	1	**124-3325**	1	VALVE GP-BANK 4 (RH)	509
Y	2	1	**124-3327**	1	VALVE GP-BANK 4 (LH)	510
	3	1	**8X-5498**	2	RETAINER	
	4	1	**101-2457**	1	LEVER (ARTICULATION)	
	5	1	**8D-5634**	1	LEVER (CENTER SHIFT)	
	6	1	**6V-8186**	16	NUT-FULL (5/16-24-THD)	
		1	**7H-3641**	16	END-ROD (5/16-24-THD)	
		1	**8X-4276**	8	ROD	
	7	1	**8D-5633**	1	LEVER (WHEEL LEAN)	
	8	1	**101-2458**	1	LEVER (BLADE TIP)	
	9	1	**137-4515**	2	BUSHING	
	10	1	**8D-5640**	10	BEARING	
B	11	1	**8D-5636**	4	SHIM (0.254-MM THK)	
B	12	1	**8D-5637**	4	SHIM (0.762-MM THK)	
	13	1	**6L-1962**	8	NUT-JAM (3/8-24-THD)	
	14	1	**8T-9043**	16	BOLT (5/16-18X0.875-IN)	
	15	1	**3F-9556**	16	LOCKWASHER	
	16	1	**9B-7237**	2	BOLT (3/8-16X1.25-IN)	
	17	1	**8D-5641**	8	BEARING	
	18	1	**2G-6757**	1	KNOB-BLADE LIFT (LH)	
M	19	1	**8T-4136**	4	BOLT (M10X1.5X25-MM)	
	20	1	**2G-6749**	1	KNOB-SIDESHIFT	
	21	1	**2G-6747**	1	KNOB-BLADE TIP	
	22	1	**8D-5632**	1	LEVER (BLADE LIFT-RH)	
	23	1	**2G-6751**	1	KNOB-CIRCLE DRIVE	
	24	1	**2G-6748**	1	KNOB-BLADE LIFT (RH)	
	25	1	**2G-6756**	1	KNOB-WHEEL LEAN	
	26	1	**2G-6752**	1	KNOB-ARTICULATION	
	27	1	**2G-6755**	1	KNOB-CENTERSHIFT	
	28	1	**5P-1075**	2	WASHER-HARD (10.2X22.5X3-MM THK)	
	29	1	**9M-1853**	6	MOUNTING	
	30	1	**5P-1076**	6	WASHER-HARD (13.5X30X4-MM THK)	
	31	1	**104-7740**	1	PLATE AS (LH)	
		1	**1F-0748**	2	NUT-WELD (1/2-13-THD)	
	32	1	**104-7419**	1	PLATE AS (RH)	
		1	**1F-0748**	2	NUT-WELD (1/2-13-THD)	
	33	1	**104-7429**	2	PLATE	
	34	1	**137-4516**	1	SHAFT	
	35	1	**8T-4121**	8	WASHER-HARD (11X21X2.5-MM THK)	
	36	1	**6B-0933**	4	SPACER (10.31X19.05X6.35-MM THK)	
	37	1	**5P-2424**	6	BOLT (1/2-13X2.25-IN)	
	38	1	**6V-8188**	2	NUT (1/2-13-THD)	
M	39	1	**8T-4195**	4	BOLT (M10X1.5X30-MM)	
	40	1	**8F-6437**	6	WASHER (13.5X50.8X4.76-MM THK)	
	41	1	**8D-5634**	1	LEVER (BLADE LIFT-LH)	
	42	1	**8D-5633**	1	LEVER (SIDE SHIFT)	
	43	1	**8D-5632**	1	LEVER (CIRCLE DRIVE)	

B-USE AS REQUIRED
M-METRIC PART
Y-SEPARATE ILLUSTRATION

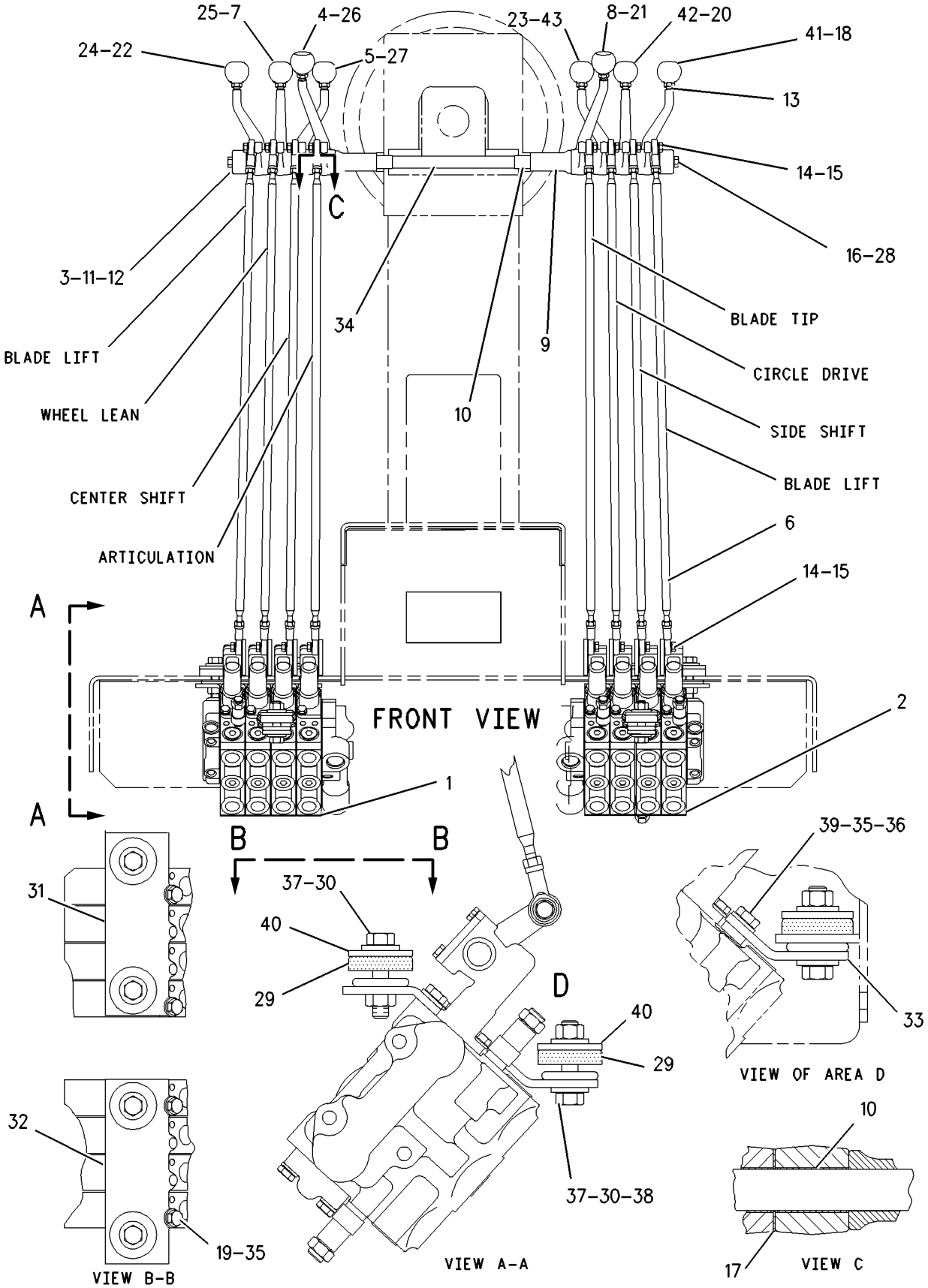

GRAPHIC #1 **<END>** g00721733

HYDRAULIC SYSTEM

115-0812 VALVE & LINKAGE GP—5-BANK, RH, LH

S/N: JBP1-UP

PART OF 331-1501 CONTROL AR-HYDRAULIC

AN ATTACHMENT

SMCS-5051, 5063 **i01367594**

NOTE	REF NO	GRAPHIC REF	PART NUMBER	QTY	PART NAME 1 2 3 4 5 6 (PRODUCT LEVEL)	SEE PAGE
	1	1	**8X-5499**	2	RETAINER	
	2	1	**101-2457**	1	LEVER (ARTICULATION)	
	3	1	**8D-5634**	1	LEVER (CENTER SHIFT)	
	4	1	**4L-6459**	1	BOLT (3/8-16X2.5-IN)	
	5	1	**8W-0456**	1	SHAFT	
	6	1	**6V-8186**	20	NUT-FULL (5/16-24-THD)	
		1	**7H-3641**	20	END-ROD (5/16-24-THD)	
		1	**8X-4276**	10	ROD	
	7	1	**8D-5633**	1	LEVER (WHEEL LEAN)	
	8	1	**101-2458**	1	LEVER (PLOW & BULLDOZER LIFT)	
	9	1	**137-4515**	2	BUSHING	
	10	1	**8D-5640**	12	BEARING	
B	11	1	**8D-5636**	4	SHIM (0.254-MM THK)	
B	12	1	**8D-5637**	4	SHIM (0.762-MM THK)	
	13	1	**6L-1962**	10	NUT-JAM (3/8-24-THD)	
	14	1	**8T-9043**	20	BOLT (5/16-18X0.875-IN)	
	15	1	**3F-9556**	20	LOCKWASHER	
	16	1	**9B-7237**	1	BOLT (3/8-16X1.25-IN)	
	17	1	**8D-5641**	10	BEARING	
	18	1	**2G-6757**	1	KNOB-BLADE LIFT (LH)	
M	19	1	**8T-4136**	4	BOLT (M10X1.5X25-MM)	
	20	1	**2G-6749**	1	KNOB-SIDESHIFT	
	21	1	**2G-6747**	1	KNOB-BLADE TIP	
	22	1	**8D-5632**	1	LEVER (BLADE LIFT-RH)	
	23	1	**2G-6751**	1	KNOB-CIRCLE DRIVE	
	24	1	**2G-6748**	1	KNOB-BLADE LIFT (RH)	
	25	1	**2G-6756**	1	KNOB-WHEEL LEAN	
	26	1	**2G-6752**	1	KNOB-ARTICULATION	
	27	1	**2G-6755**	1	KNOB-CENTERSHIFT	
	28	1	**5P-1075**	2	WASHER-HARD (10.2X22.5X3-MM THK)	
	29	1	**9M-1853**	6	MOUNTING	
	30	1	**5P-1076**	6	WASHER-HARD (13.5X30X4-MM THK)	
	31	1	**104-7740**	1	PLATE AS (LH)	
		1	**1F-0748**	2	NUT-WELD (1/2-13-THD)	
	32	1	**104-7419**	1	PLATE AS (RH)	
		1	**1F-0748**	2	NUT-WELD (1/2-13-THD)	
	33	1	**104-7429**	2	PLATE	
	34	1	**137-4516**	1	SHAFT	
	35	1	**2G-6740**	1	KNOB-RIPPER	
	36	1	**2G-6754**	1	KNOB (DOZER LIFT, PLOW)	
	37	1	**6V-8188**	2	NUT (1/2-13-THD)	
M	38	1	**8T-4195**	4	BOLT (M10X1.5X30-MM)	
	39	1	**8F-6437**	6	WASHER (13.5X50.8X4.76-MM THK)	
	40	1	**5P-2424**	6	BOLT (1/2-13X2.25-IN)	
	41	1	**6B-0933**	4	SPACER (10.31X19.05X6.35-MM THK)	
	42	1	**8T-4121**	8	WASHER-HARD (11X21X2.5-MM THK)	
Y	43	1	**124-3326**	1	VALVE GP-BANK 5 (RH)	518
Y	44	1	**124-3329**	1	VALVE GP-BANK 5 (LH)	520
	45	1	**8D-5632**	1	LEVER (CIRCLE DRIVE)	
	46	1	**101-2458**	1	LEVER (BLADE TIP)	
	47	1	**8D-5633**	1	LEVER (SIDE SHIFT)	
	48	1	**101-2457**	1	LEVER (RIPPER)	
	49	1	**8D-5634**	1	LEVER (BLADE LIFT-LH)	

B-USE AS REQUIRED
M-METRIC PART
Y-SEPARATE ILLUSTRATION

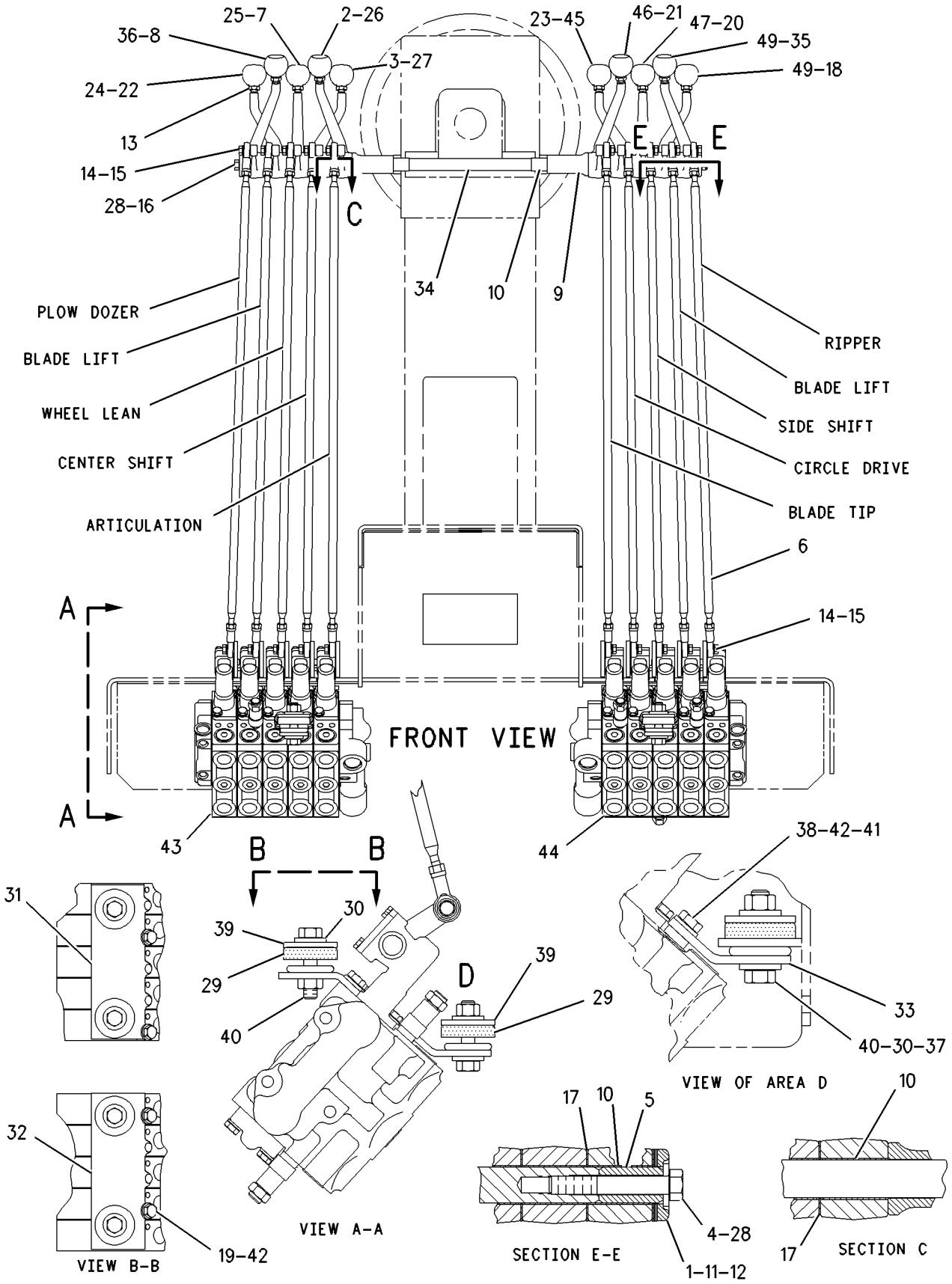

GRAPHIC #1 **<END>** g00721778

HYDRAULIC SYSTEM

130-0464 VALVE & LINKAGE GP–4-BANK, RH, LH

S/N: JBP1-UP

AN ATTACHMENT

SMCS-5051, 5063 **i03179101**

NOTE	REF NO	GRAPHIC REF	PART NUMBER	QTY	PART NAME 1 2 3 4 5 6 (PRODUCT LEVEL)	SEE PAGE
Y	1	1	**124-3325**	1	VALVE GP-BANK 4 (RH)	509
Y	2	1	**130-7754**	1	VALVE GP-BANK 4 (LH)	511
	3	1	**8X-5499**	2	RETAINER	
	4	1	**101-2457**	1	LEVER (ARTICULATION)	
	5	1	**8D-5634**	1	LEVER (CENTER SHIFT)	
	6	1	**8X-4276**	8	ROD	
		1	**6V-8186**	2	NUT-FULL (5/16-24-THD)	
		1	**7H-3641**	2	END-ROD (5/16-24-THD)	
	7	1	**8D-5633**	1	LEVER (WHEEL LEAN)	
	8	1	**8D-8852**	1	SPACER (0.78X1.5X1.344-IN THK)	
	9	1	**137-4515**	2	BUSHING	
	10	1	**8D-5640**	11	BEARING	
B	11	1	**8D-5636**	4	SHIM (0.254-MM THK)	
B	12	1	**8D-5637**	4	SHIM (0.762-MM THK)	
	13	1	**6L-1962**	8	NUT-JAM (3/8-24-THD)	
	14	1	**8T-9043**	16	BOLT (5/16-18X0.875-IN)	
	15	1	**3F-9556**	16	LOCKWASHER	
	16	1	**9B-7237**	2	BOLT (3/8-16X1.25-IN)	
	17	1	**8D-5641**	9	BEARING	
	18	1	**2G-6757**	1	KNOB-BLADE LIFT (LH)	
M	19	1	**8T-4136**	4	BOLT (M10X1.5X25-MM)	
	20	1	**2G-6749**	1	KNOB-SIDESHIFT	
	21	1	**8D-5632**	1	LEVER (BLADE LIFT)	
	22	1	**2G-6751**	1	KNOB-CIRCLE DRIVE	
	23	1	**2G-6748**	1	KNOB-BLADE LIFT (RH)	
	24	1	**2G-6756**	1	KNOB-WHEEL LEAN	
	25	1	**2G-6752**	1	KNOB-ARTICULATION	
	26	1	**2G-6755**	1	KNOB-CENTERSHIFT	
	27	1	**5P-1075**	2	WASHER-HARD (10.2X22.5X3-MM THK)	
	28	1	**9M-1853**	6	MOUNTING	
	29	1	**5P-1076**	6	WASHER-HARD (13.5X30X4-MM THK)	
	30	1	**104-7740**	1	PLATE AS (LH)	
		1	**1F-0748**	2	NUT-WELD (1/2-13-THD)	
	31	1	**104-7419**	1	PLATE AS (RH)	
		1	**1F-0748**	2	NUT-WELD (1/2-13-THD)	
	32	1	**104-7429**	2	PLATE	
	33	1	**137-4516**	1	SHAFT	
	34	1	**8T-4121**	8	WASHER-HARD (11X21X2.5-MM THK)	
	35	1	**6B-0933**	4	SPACER (10.31X19.05X6.35-MM THK)	
	36	1	**5P-2424**	6	BOLT (1/2-13X2.25-IN)	
	37	1	**6V-8188**	2	NUT (1/2-13-THD)	
M	38	1	**8T-4195**	4	BOLT (M10X1.5X30-MM)	
	39	1	**2G-6753**	1	KNOB-SCARIFIER	
	40	1	**8F-6437**	6	WASHER (13.5X50.8X4.76-MM THK)	
	41	1	**101-2457**	1	LEVER (SCARIFER)	
	42	1	**8D-5634**	1	LEVER (BLADE LIFT)	
	43	1	**8D-5633**	1	LEVER (SIDE SHIFT)	
	44	1	**8D-5632**	1	LEVER (CIRCLE DRIVE)	

B-USE AS REQUIRED
M-METRIC PART
Y-SEPARATE ILLUSTRATION

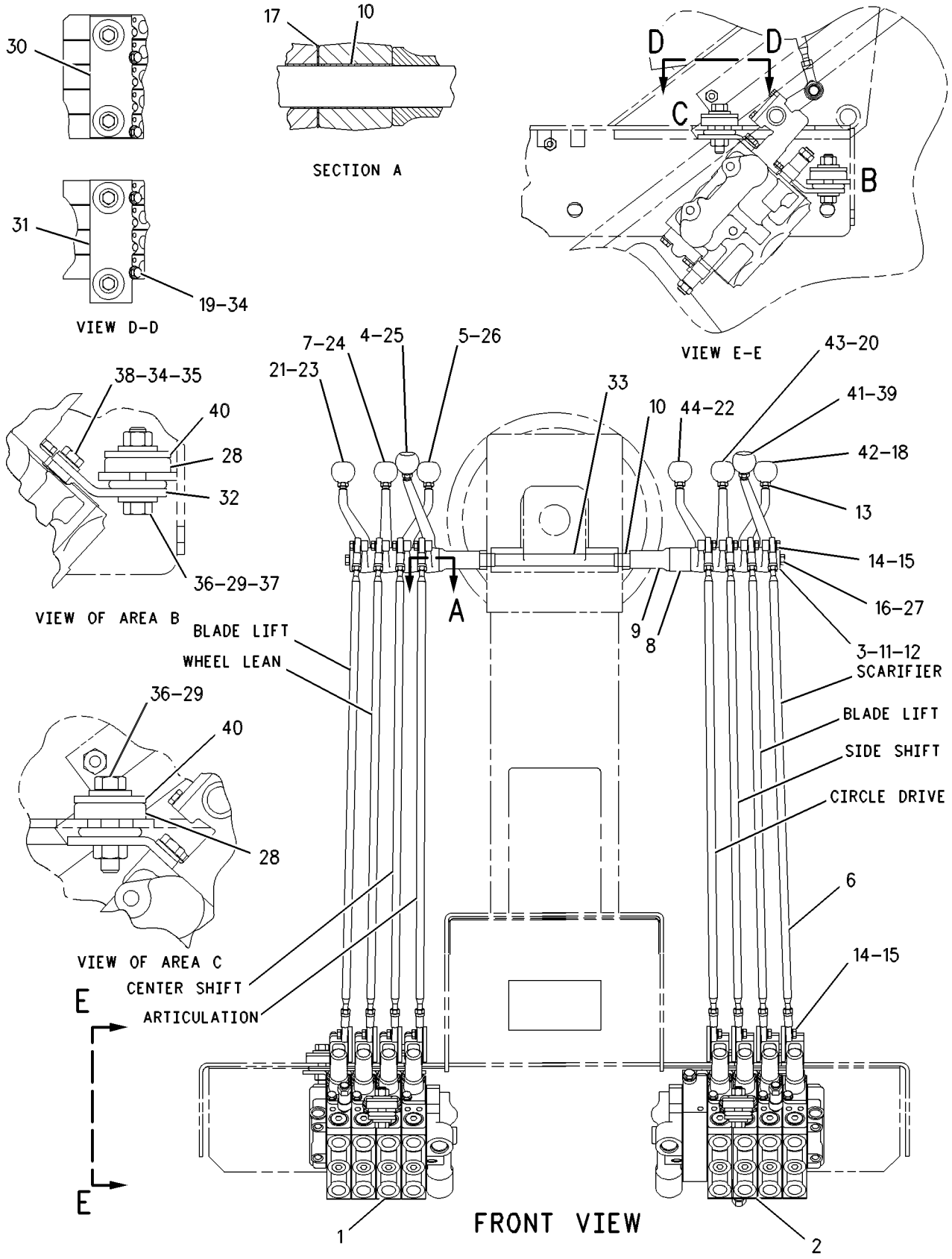

GRAPHIC #1 **<END>** g00543092

HYDRAULIC SYSTEM

130-7603 VALVE & LINKAGE GP–4-BANK, RH, LH

S/N: JBP1-UP
PART OF 331-1506 CONTROL AR-HYDRAULIC
AN ATTACHMENT

SMCS-5051, 5063 **i01047889**

NOTE	REF NO	GRAPHIC REF	PART NUMBER	QTY	PART NAME 1 2 3 4 5 6 (PRODUCT LEVEL)	SEE PAGE
Y	1	1	**124-3325**	1	VALVE GP-BANK 4 (RH)	509
Y	2	1	**130-7755**	1	VALVE GP-BANK 4 (LH)	512
	3	1	**8X-5499**	2	RETAINER	
	4	1	**101-2457**	1	LEVER (ARTICULATION)	
	5	1	**8D-5634**	1	LEVER (CENTER SHIFT)	
	6	1	**8X-4276**	8	ROD	
		1	**6V-8186**	16	NUT-FULL (5/16-24-THD)	
		1	**7H-3641**	16	END-ROD (5/16-24-THD)	
	7	1	**8D-5633**	1	LEVER (WHEEL LEAN)	
	8	1	**8D-8852**	1	SPACER (0.78X1.5X1.344-IN THK)	
	9	1	**137-4515**	2	BUSHING	
	10	1	**8D-5640**	11	BEARING	
B	11	1	**8D-5636**	4	SHIM (0.254-MM THK)	
B	12	1	**8D-5637**	4	SHIM (0.762-MM THK)	
	13	1	**6L-1962**	8	NUT-JAM (3/8-24-THD)	
	14	1	**8T-9043**	16	BOLT (5/16-18X0.875-IN)	
	15	1	**3F-9556**	16	LOCKWASHER	
	16	1	**9B-7237**	2	BOLT (3/8-16X1.25-IN)	
	17	1	**8D-5641**	9	BEARING	
	18	1	**2G-6757**	1	KNOB-BLADE LIFT (LH)	
M	19	1	**8T-4136**	4	BOLT (M10X1.5X25-MM)	
	20	1	**2G-6749**	1	KNOB-SIDESHIFT	
	21	1	**8D-5632**	1	LEVER (BLADE LIFT)	
	22	1	**2G-6751**	1	KNOB-CIRCLE DRIVE	
	23	1	**2G-6748**	1	KNOB-BLADE LIFT (RH)	
	24	1	**2G-6756**	1	KNOB-WHEEL LEAN	
	25	1	**2G-6752**	1	KNOB-ARTICULATION	
	26	1	**2G-6755**	1	KNOB-CENTERSHIFT	
	27	1	**5P-1075**	2	WASHER-HARD (10.2X22.5X3-MM THK)	
	28	1	**9M-1853**	6	MOUNTING	
	29	1	**5P-1076**	6	WASHER-HARD (13.5X30X4-MM THK)	
	30	1	**104-7740**	1	PLATE AS (LH)	
		1	**1F-0748**	2	NUT-WELD (1/2-13-THD)	
	31	1	**104-7419**	1	PLATE AS (RH)	
		1	**1F-0748**	2	NUT-WELD (1/2-13-THD)	
	32	1	**104-7429**	2	PLATE	
	33	1	**137-4516**	1	SHAFT	
	34	1	**2G-6740**	1	KNOB-RIPPER	
	35	1	**6B-0933**	4	SPACER (10.31X19.05X6.35-MM THK)	
	36	1	**5P-2424**	6	BOLT (1/2-13X2.25-IN)	
	37	1	**6V-8188**	2	NUT (1/2-13-THD)	
M	38	1	**8T-4195**	4	BOLT (M10X1.5X30-MM)	
	39	1	**8T-4121**	8	WASHER-HARD (11X21X2.5-MM THK)	
	40	1	**8F-6437**	6	WASHER (13.5X50.8X4.76-MM THK)	
	41	1	**101-2457**	1	LEVER (RIPPER)	
	42	1	**8D-5634**	1	LEVER (BLADE LIFT)	
	43	1	**8D-5633**	1	LEVER (SIDE SHIFT)	
	44	1	**8D-5632**	1	LEVER (CIRCLE DRIVE)	

B-USE AS REQUIRED
M-METRIC PART
Y-SEPARATE ILLUSTRATION

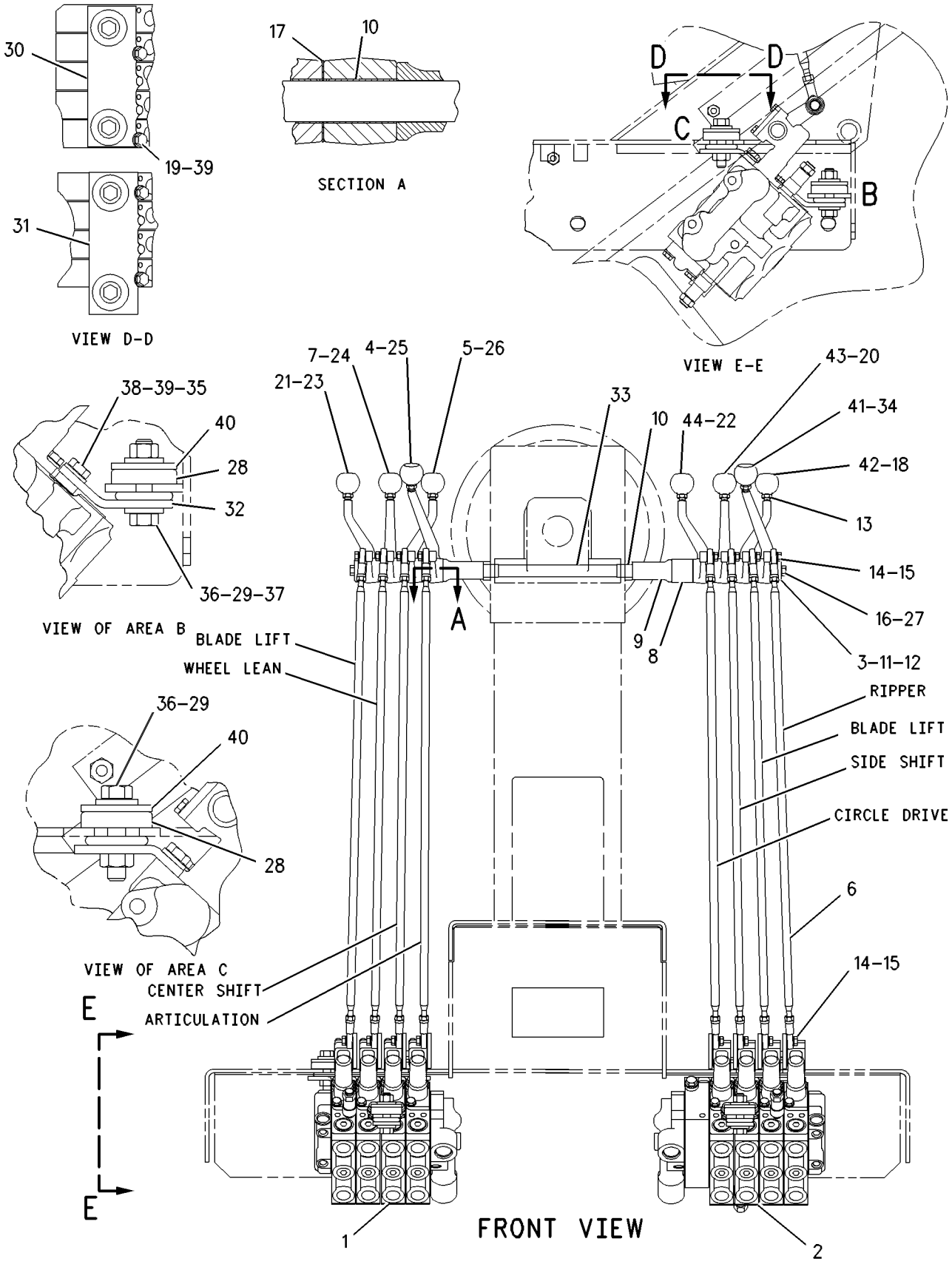

GRAPHIC #1 **<END>** g00543096

HYDRAULIC SYSTEM

138-7599 VALVE & LINKAGE GP—5-BANK, RH, LH

S/N: JBP1-UP

PART OF 331-1499 CONTROL AR-HYDRAULIC

AN ATTACHMENT

SMCS-5051, 5063 **i03434243**

NOTE	REF NO	GRAPHIC REF	PART NUMBER	QTY	PART NAME 1 2 3 4 5 6 (PRODUCT LEVEL)	SEE PAGE
	1	1	**8X-5499**	2	RETAINER	
	2	1	**101-2457**	1	LEVER (RIPPER)	
	2A	1	**101-2457**	1	LEVER (ARTICULATION)	
	3	1	**8D-5634**	1	LEVER (BLADE LIFT, LH)	
	3A	1	**8D-5634**	1	LEVER (CENTER SHIFT)	
	4	1	**4L-6459**	1	BOLT (3/8-16X2.5-IN)	
	5	1	**8W-0456**	1	SHAFT	
	6	1	*8X-4277*	10	ROD AS	
					(EACH INCLUDES)	
		1	**6V-8186**	1	NUT-FULL (5/16-24-THD)	
		1	**7H-3641**	1	END-ROD (5/16-24-THD)	
		1	**8L-8598**	1	ROD END	
		1	**146-0705**	1	ROD	
	7	1	**8D-5633**	1	LEVER (SIDE SHIFT)	
	7A	1	**8D-5633**	1	LEVER (WHEEL LEAN)	
	8	1	**101-2458**	1	LEVER (BLADE TIP)	
	8A	1	**101-2458**	1	LEVER (SCARIFIER)	
	9	1	**137-4515**	2	BUSHING	
	10	1	**8D-5640**	12	BEARING	
B	11	1	**8D-5636**	4	SHIM (0.254-MM THK)	
B	12	1	**8D-5637**	4	SHIM (0.762-MM THK)	
	13	1	**6L-1962**	10	NUT-JAM (3/8-24-THD)	
	14	1	**8T-9043**	20	BOLT (5/16-18X0.875-IN)	
	15	1	**3F-9556**	20	LOCKWASHER	
	16	1	**9B-7237**	1	BOLT (3/8-16X1.25-IN)	
	17	1	**8D-5641**	10	BEARING	
	18	1	**2G-6757**	1	KNOB-BLADE LIFT	
M	19	1	**8T-4136**	4	BOLT (M10X1.5X25-MM)	
	20	1	**2G-6749**	1	KNOB-SIDESHIFT	
	21	1	**2G-6747**	1	KNOB-BLADE TIP	
	22	1	**8D-5632**	1	LEVER (CIRCLE DRIVE)	
	22A	1	**8D-5632**	1	LEVER (BLADE LIFT, RH)	
	23	1	**2G-6751**	1	KNOB-CIRCLE DRIVE	
	24	1	**2G-6748**	1	KNOB-BLADE LIFT	
	25	1	**2G-6756**	1	KNOB-WHEEL LEAN	
	26	1	**2G-6752**	1	KNOB-ARTICULATION	
	27	1	**2G-6755**	1	KNOB-CENTERSHIFT	
	28	1	**5P-1075**	2	WASHER-HARD (10.2X22.5X3-MM THK)	
	29	1	**9M-1853**	6	MOUNTING	
	30	1	**5P-1076**	6	WASHER-HARD (13.5X30X4-MM THK)	
	31	1	**104-7740**	1	PLATE AS (LH)	
	32	1	**104-7419**	1	PLATE AS (RH)	
					(EACH PLATE AS INCLUDES)	
		1	**1F-0748**	2	NUT-WELD (1/2-13-THD)	
	33	1	**104-7429**	2	PLATE	
	34	1	**137-4516**	1	SHAFT	
	35	1	**2G-6740**	1	KNOB-RIPPER	
	36	1	**2G-6753**	1	KNOB-SCARIFIER	
	37	1	**6V-8188**	2	NUT (1/2-13-THD)	
M	38	1	**8T-4195**	4	BOLT (M10X1.5X30-MM)	
	39	1	**8F-6437**	6	WASHER (13.5X50.8X4.76-MM THK)	
	40	1	**5P-2424**	6	BOLT (1/2-13X2.25-IN)	
	41	1	**6B-0933**	4	SPACER (10.31X19.05X6.35-MM THK)	
	42	1	**8T-4121**	8	WASHER-HARD (11X21X2.5-MM THK)	
Y	44	1	**124-3329**	1	VALVE GP-BANK 5 (LH)	520

138-7599 **VALVE & LINKAGE GP** *(contd.)* **i03434243**

B-USE AS REQUIRED
M-METRIC PART
Y-SEPARATE ILLUSTRATION

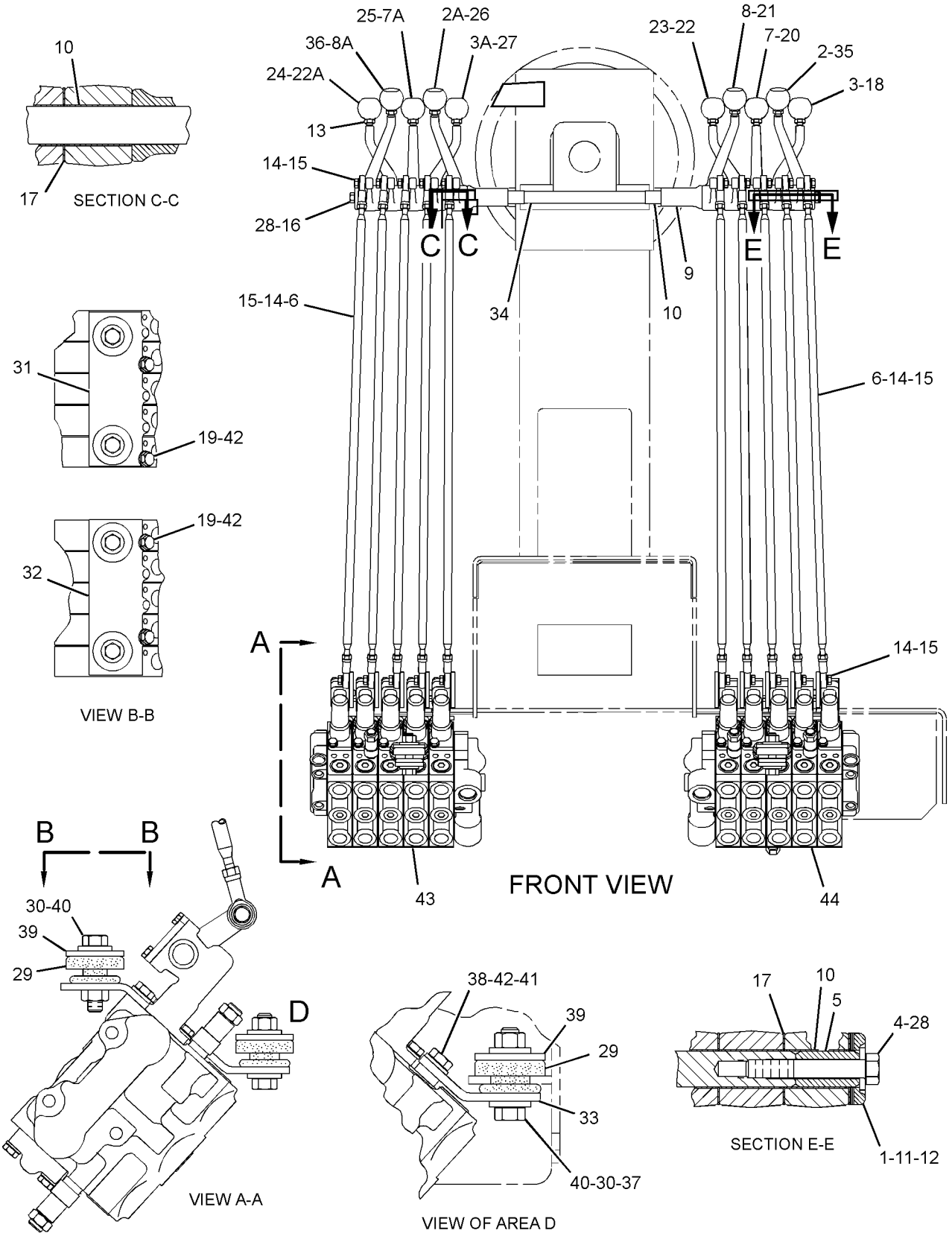

GRAPHIC #1 **<END>** g01694533

HYDRAULIC SYSTEM

315-5329 VALVE & LINKAGE GP–6-BANK, RH, LH

S/N: JBP1-UP
AN ATTACHMENT

SMCS-5051, 5063 **i03438943**

NOTE	REF NO	GRAPHIC REF	PART NUMBER	QTY	PART NAME 1 2 3 4 5 6 (PRODUCT LEVEL)	SEE PAGE
Y	1	1	**115-1008**	1	VALVE GP-BANK 6 (RH)	526
Y	2	1	**104-8648**	1	VALVE GP-BANK 6 (LH)	525
	3	1	**8X-5499**	2	RETAINER	
	4	1	**101-2457**	2	LEVER (WHEEL LEAN)	
	5	1	**8D-5634**	2	LEVER (CENTER SHIFT)	
	6	1	**8X-4276**	12	ROD	
		1	**6V-8186**	24	NUT-FULL (5/16-24-THD)	
		1	**7H-3641**	24	END-ROD (5/16-24-THD)	
	7	1	**8D-5633**	2	LEVER (WHEEL LEAN)	
	8	1	**101-2458**	2	LEVER (PLOW DOZER)	
	9	1	**8D-5640**	14	BEARING	
B	10	1	**8D-5636**	4	SHIM (0.254-MM THK)	
B	11	1	**8D-5637**	4	SHIM (0.762-MM THK)	
	12	1	**6L-1962**	12	NUT-JAM (3/8-24-THD)	
	13	1	**8T-9043**	24	BOLT (5/16-18X0.875-IN)	
	14	1	**3F-9556**	24	LOCKWASHER	
	15	1	**8D-5641**	12	BEARING	
	16	1	**2G-6757**	1	KNOB-BLADE LIFT	
M	17	1	**8T-4136**	4	BOLT (M10X1.5X25-MM)	
	18	1	**2G-6749**	1	KNOB-SIDESHIFT	
	19	1	**2G-6747**	1	KNOB-BLADE TIP	
	20	1	**8D-5632**	2	LEVER	
	21	1	**2G-6751**	1	KNOB-CIRCLE DRIVE	
	22	1	**2G-6748**	1	KNOB-BLADE LIFT	
	23	1	**2G-6756**	1	KNOB-WHEEL LEAN	
	24	1	**2G-6752**	1	KNOB-ARTICULATION	
	25	1	**2G-6755**	1	KNOB-CENTERSHIFT	
	26	1	**5P-1075**	2	WASHER-HARD (10.2X22.5X3-MM THK)	
	27	1	**9M-1853**	6	MOUNTING	
	28	1	**5P-1076**	6	WASHER-HARD (13.5X30X4-MM THK)	
	29	1	**104-7740**	1	PLATE AS (LH)	
		1	**1F-0748**	2	NUT-WELD (1/2-13-THD)	
	30	1	**104-7419**	1	PLATE AS (RH)	
		1	**1F-0748**	2	NUT-WELD (1/2-13-THD)	
	31	1	**8T-4121**	8	WASHER-HARD (11X21X2.5-MM THK)	
	32	1	**104-7429**	2	PLATE	
	33	1	**137-4516**	1	SHAFT	
	34	1	**2G-7108**	1	KNOB-WING TILT	
	35	1	**2G-6754**	1	KNOB (BULLDOZER LIFT, PLOW)	
	36	1	**103-1597**	2	LEVER (DOZER ANGLE)	
	37	1	**2G-7107**	1	KNOB-WING LIFT	
	38	1	**137-4515**	2	BUSHING	
	39	1	**6B-0933**	4	SPACER (10.31X19.05X6.35-MM THK)	
	40	1	**5P-2424**	6	BOLT (1/2-13X2.25-IN)	
	41	1	**6V-8188**	2	NUT (1/2-13-THD)	
	42	1	**8F-6437**	6	WASHER (13.5X50.8X4.76-MM THK)	
	43	1	**8W-0456**	3	SHAFT	
	44	1	**4L-6459**	1	BOLT (3/8-16X2.5-IN)	
M	45	1	**8T-4195**	4	BOLT (M10X1.5X30-MM)	
	46	1	**7X-0291**	1	BOLT (3/8-16X3.75-IN)	
	47	1	**117-0472**	1	KNOB (PLOW, BULLDOZER ANGLE)	

B-USE AS REQUIRED
M-METRIC PART
Y-SEPARATE ILLUSTRATION

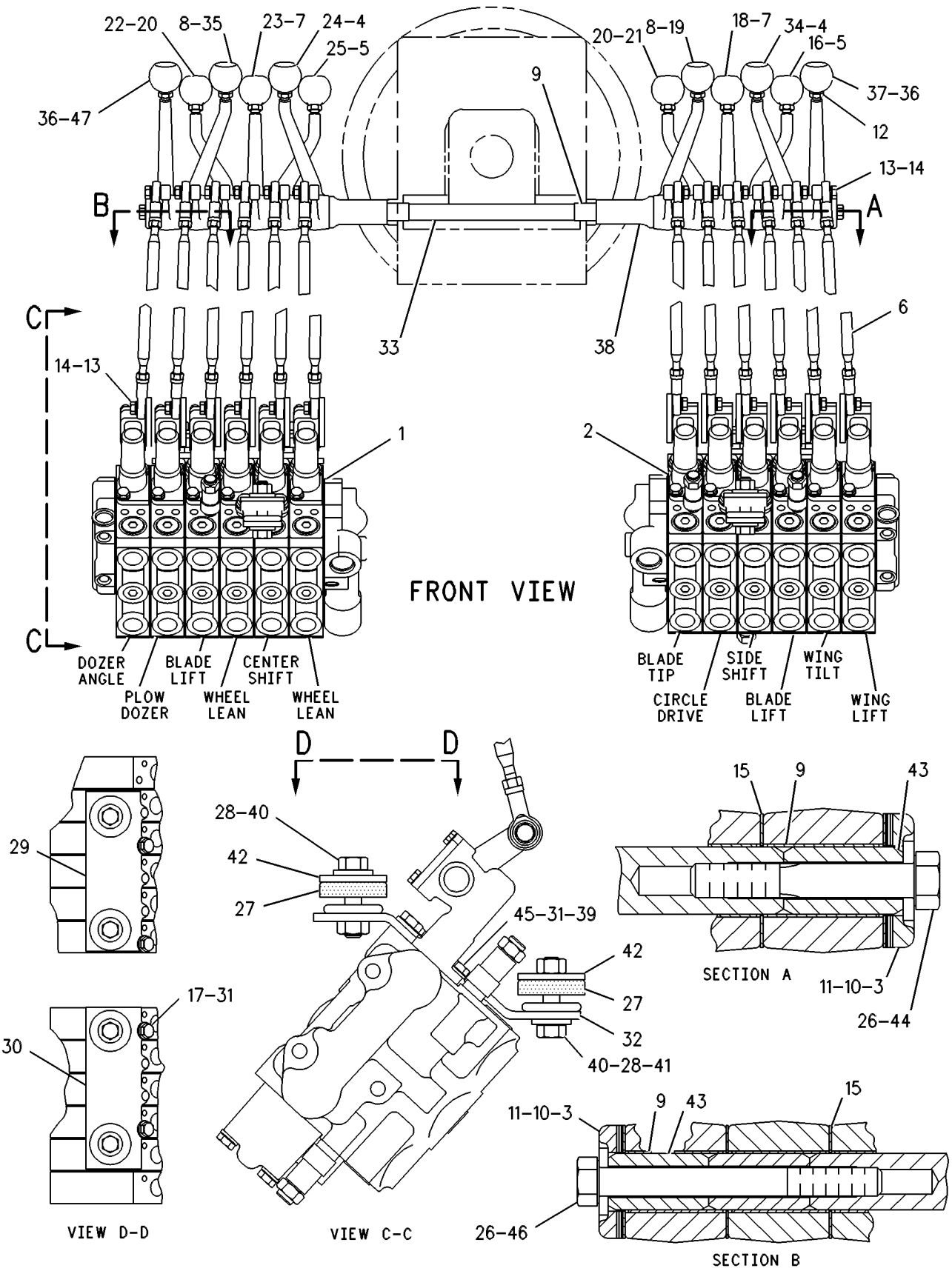

GRAPHIC #1 **<END>** g00109649

HYDRAULIC SYSTEM

315-5330 VALVE & LINKAGE GP—5-BANK, RH; 4-BANK, LH

S/N: JBP1-UP

AN ATTACHMENT

SMCS-5051, 5063 **i03255958**

NOTE	REF NO	GRAPHIC REF	PART NUMBER	QTY	PART NAME 1 2 3 4 5 6 (PRODUCT LEVEL)	SEE PAGE
Y	1	1	**6E-3032**	1	VALVE GP-BANK 4 (RH)	507
Y	2	1	**104-8645**	1	VALVE GP-BANK 5 (LH)	515
	3	1	**8X-5499**	2	RETAINER	
	4	1	**101-2457**	1	LEVER	
	5	1	**8D-5634**	2	LEVER	
	6	1	**8X-4276**	9	ROD	
		1	**6V-8186**	18	NUT-FULL (5/16-24-THD)	
		1	**7H-3641**	18	END-ROD (5/16-24-THD)	
	7	1	**8D-5633**	2	LEVER	
	8	1	**101-2458**	2	LEVER	
	9	1	**137-4515**	2	BUSHING	
	10	1	**8D-5640**	11	BEARING	
B	11	1	**8D-5636**	4	SHIM (0.254-MM THK)	
B	12	1	**8D-5637**	4	SHIM (0.762-MM THK)	
	13	1	**6L-1962**	9	NUT-JAM (3/8-24-THD)	
	14	1	**8T-9043**	18	BOLT (5/16-18X0.875-IN)	
	15	1	**3F-9556**	18	LOCKWASHER	
	16	1	**9B-7237**	2	BOLT (3/8-16X1.25-IN)	
	17	1	**8D-5641**	9	BEARING	
	18	1	**2G-6757**	1	KNOB-BLADE LIFT	
M	19	1	**8T-4136**	4	BOLT (M10X1.5X25-MM)	
	20	1	**2G-6749**	1	KNOB-SIDESHIFT	
	21	1	**2G-6747**	1	KNOB-BLADE TIP	
	22	1	**8D-5632**	2	LEVER	
	23	1	**2G-6751**	1	KNOB-CIRCLE DRIVE	
	24	1	**2G-6748**	1	KNOB-BLADE LIFT	
	25	1	**2G-6756**	1	KNOB-WHEEL LEAN	
	26	1	**2G-6752**	1	KNOB-ARTICULATION	
	27	1	**2G-6755**	1	KNOB-CENTERSHIFT	
	28	1	**5P-1075**	2	WASHER-HARD (10.2X22.5X3-MM THK)	
	29	1	**9M-1853**	6	MOUNTING	
	30	1	**5P-1076**	6	WASHER-HARD (13.5X30X4-MM THK)	
	31	1	**104-7740**	1	PLATE AS (LH)	
		1	**1F-0748**	2	NUT-WELD (1/2-13-THD)	
	32	1	**104-7419**	1	PLATE AS (RH)	
		1	**1F-0748**	2	NUT-WELD (1/2-13-THD)	
	33	1	**104-7429**	2	PLATE	
	34	1	**137-4516**	1	SHAFT	
	35	1	**2G-6754**	1	KNOB (BULLDOZER LIFT, PLOW)	
	36	1	**6V-8188**	2	NUT (1/2-13-THD)	
M	37	1	**8T-4195**	4	BOLT (M10X1.5X30-MM)	
	38	1	**8T-4121**	8	WASHER-HARD (11X21X2.5-MM THK)	
	39	1	**6B-0933**	4	SPACER (10.31X19.05X6.35-MM THK)	
	40	1	**8F-6437**	6	WASHER (13.5X50.8X4.76-MM THK)	
	41	1	**5P-2424**	6	BOLT (1/2-13X2.25-IN)	

B-USE AS REQUIRED
M-METRIC PART
Y-SEPARATE ILLUSTRATION

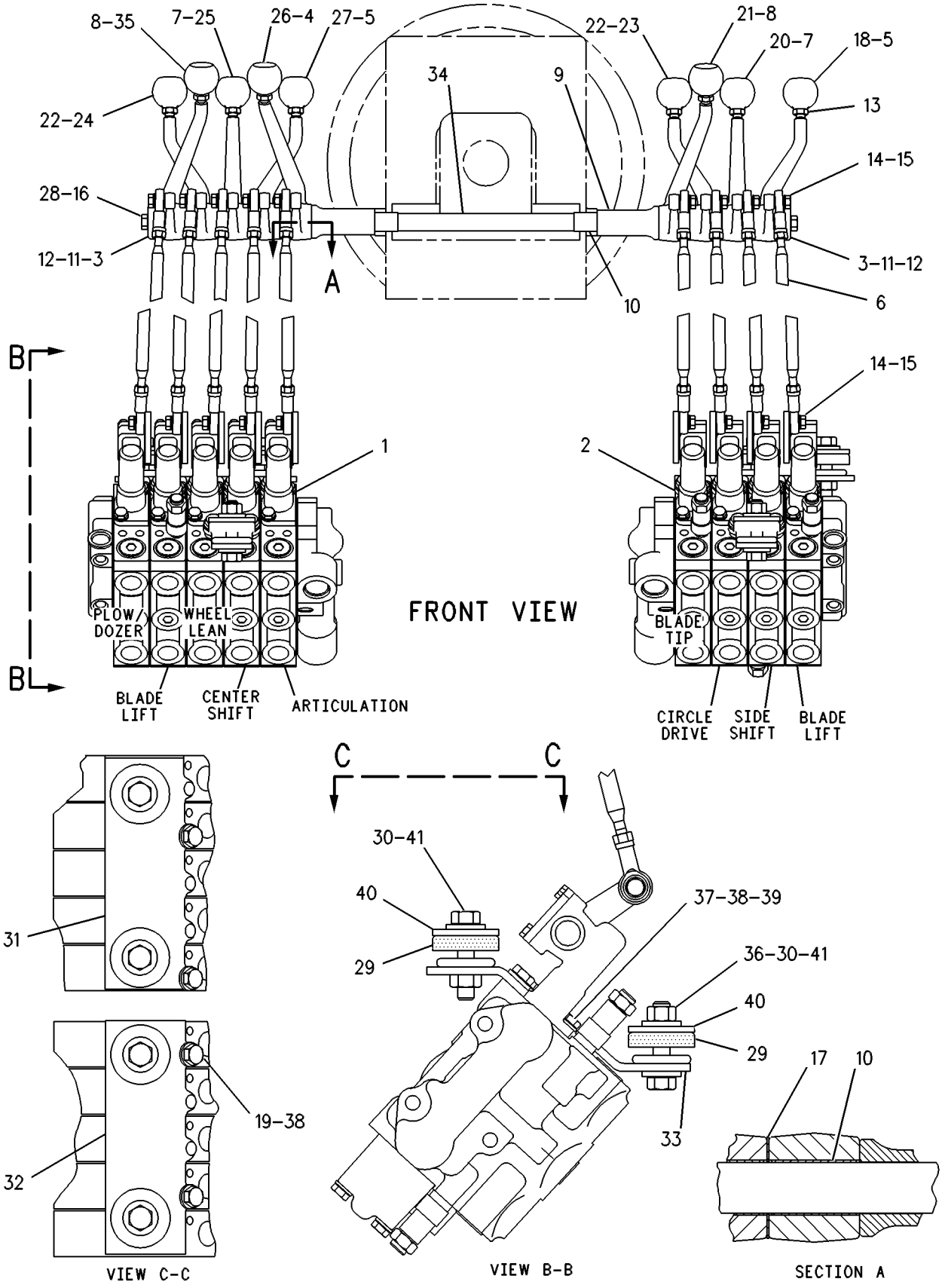

GRAPHIC #1 **<END>** g00109685

HYDRAULIC SYSTEM

315-5331 VALVE & LINKAGE GP

S/N: JBP1-UP

AN ATTACHMENT

SMCS-5051, 5063 **i03248080**

NOTE	REF NO	GRAPHIC REF	PART NUMBER	QTY	PART NAME 1 2 3 4 5 6 (PRODUCT LEVEL)	SEE PAGE
Y	1	1	**104-8671**	1	VALVE GP-BANK 5 (RH)	517
Y	2	1	**104-8646**	1	VALVE GP-BANK 5 (LH)	516
	3	1	**8X-5499**	2	RETAINER	
	4	1	**101-2457**	1	LEVER (SCARIFIER)	
	4A	1	**101-2457**	1	LEVER (ARTICULATION)	
	5	1	**8D-5634**	1	LEVER (BLADE LIFT)	
	5A	1	**8D-5634**	1	LEVER (CENTER SHIFT)	
	6	1	**4L-6459**	1	BOLT (3/8-16X2.5-IN)	
	7	1	**8W-0456**	1	SHAFT	
	8	1	**8X-4277**	10	ROD AS	
					(EACH INCLUDES)	
		1	**146-0705**	1	ROD	
		1	**6V-8186**	1	NUT-FULL (5/16-24-THD)	
		1	**7H-3641**	1	END-ROD (5/16-24-THD) (RH)	
		1	**8L-8598**	1	ROD END	
	9	1	**8D-5633**	1	LEVER (SIDE SHIFT)	
	9A	1	**8D-5633**	1	LEVER (WHEEL LEAN)	
	10	1	**101-2458**	1	LEVER (BLADE TIP)	
	10A	1	**101-2458**	1	LEVER (PLOW/DOZER)	
	11	1	**137-4515**	2	BUSHING	
	12	1	**8D-5640**	12	BEARING	
B	13	1	**8D-5636**	4	SHIM (0.254-MM THK)	
B	14	1	**8D-5637**	4	SHIM (0.762-MM THK)	
	15	1	**6L-1962**	10	NUT-JAM (3/8-24-THD)	
	16	1	**8T-9043**	20	BOLT (5/16-18X0.875-IN)	
	17	1	**3F-9556**	20	LOCKWASHER	
	18	1	**9B-7237**	1	BOLT (3/8-16X1.25-IN)	
	19	1	**8D-5641**	10	BEARING	
	20	1	**2G-6757**	1	KNOB-BLADE LIFT (LH)	
M	21	1	**8T-4136**	4	BOLT (M10X1.5X25-MM)	
	22	1	**2G-6749**	1	KNOB-SIDESHIFT	
	23	1	**2G-6747**	1	KNOB-BLADE TIP	
	24	1	**8D-5632**	1	LEVER (CIRCLE DRIVE)	
	24A	1	**8D-5632**	1	LEVER (BLADE LIFT)	
	25	1	**2G-6751**	1	KNOB-CIRCLE DRIVE	
	26	1	**2G-6748**	1	KNOB-BLADE LIFT (RH)	
	27	1	**2G-6756**	1	KNOB-WHEEL LEAN	
	28	1	**2G-6752**	1	KNOB-ARTICULATION	
	29	1	**2G-6755**	1	KNOB-CENTERSHIFT	
	30	1	**5P-1075**	2	WASHER-HARD (10.2X22.5X3-MM THK)	
	31	1	**9M-1853**	6	MOUNTING	
	32	1	**8T-4121**	8	WASHER-HARD (11X21X2.5-MM THK)	
M	33	1	**8T-4195**	4	BOLT (M10X1.5X30-MM)	
	34	1	**6V-8188**	2	NUT (1/2-13-THD)	
	35	1	**5P-2424**	6	BOLT (1/2-13X2.25-IN)	
	36	1	**5P-1076**	6	WASHER-HARD (13.5X30X4-MM THK)	
	37	1	**6B-0933**	4	SPACER (10.31X19.05X6.35-MM THK)	
	38	1	**104-7740**	1	PLATE AS (LH)	
	39	1	**104-7419**	1	PLATE AS (RH)	
					EACH PLATE AS INCLUDES	
	40	1	**1F-0748**	2	NUT-WELD (1/2-13-THD)	
	41	1	**2G-6753**	1	KNOB-SCARIFIER	
	42	1	**137-4516**	1	SHAFT	
	43	1	**104-7429**	2	PLATE	
	44	1	**8F-6437**	6	WASHER (13.5X50.8X4.76-MM THK)	
	45	1	**2G-6754**	1	KNOB (BULLDOZER LIFT, PLOW)	

315-5331 **VALVE & LINKAGE GP** *(contd.)* **i03248080**

B-USE AS REQUIRED
M-METRIC PART
Y-SEPARATE ILLUSTRATION

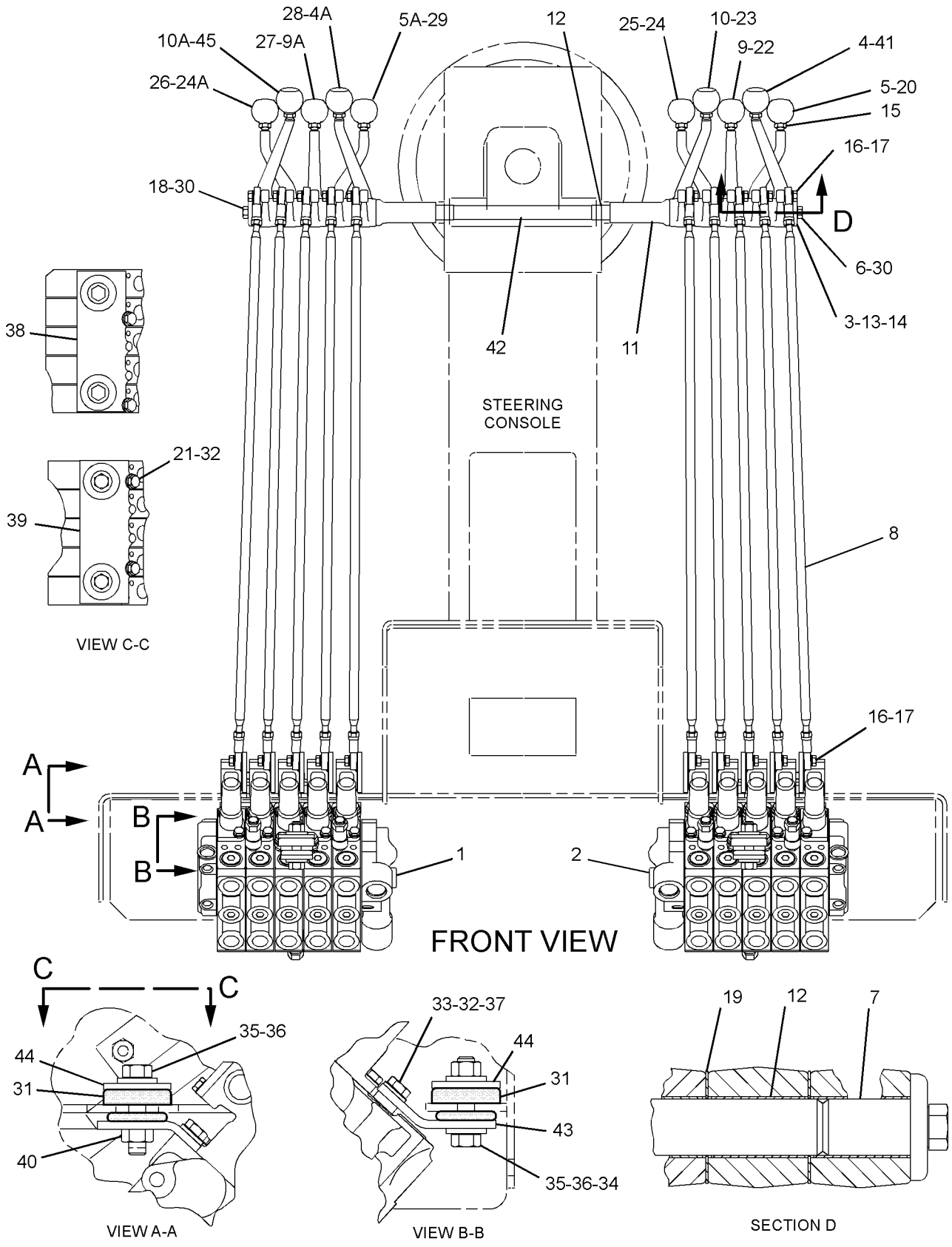

GRAPHIC #1 **<END>** g01701713

HYDRAULIC SYSTEM

315-5333 VALVE & LINKAGE GP—5-BANK, RH; 6-BANK, LH

S/N: JBP1-UP

AN ATTACHMENT

SMCS-5051, 5063 **i03434986**

NOTE	REF NO	GRAPHIC REF	PART NUMBER	QTY	PART NAME 1 2 3 4 5 6 (PRODUCT LEVEL)	SEE PAGE
Y	1	1	**104-8671**	1	VALVE GP-BANK 5 (RH)	517
Y	2	1	**104-8648**	1	VALVE GP-BANK 6 (LH)	525
	3	1	**8X-5499**	2	RETAINER	
	4	1	**101-2457**	2	LEVER	
	5	1	**8D-5634**	2	LEVER	
	6	1	*8X-4277*	11	ROD AS	
					(EACH INCLUDES)	
		1	**6V-8186**	1	NUT-FULL (5/16-24-THD)	
		1	**7H-3641**	1	END-ROD (5/16-24-THD)	
		1	**8L-8598**	1	ROD END	
		1	**146-0705**	1	ROD	
	9	1	**8D-5633**	2	LEVER	
	10	1	**101-2458**	2	LEVER	
	11	1	**4L-6459**	2	BOLT (3/8-16X2.5-IN)	
	12	1	**8D-5640**	13	BEARING	
B	13	1	**8D-5636**	4	SHIM (0.254-MM THK)	
B	14	1	**8D-5637**	4	SHIM (0.762-MM THK)	
	15	1	**6L-1962**	11	NUT-JAM (3/8-24-THD)	
	16	1	**8T-9043**	22	BOLT (5/16-18X0.875-IN)	
	17	1	**3F-9556**	22	LOCKWASHER	
M	18	1	**8T-4195**	4	BOLT (M10X1.5X30-MM)	
	19	1	**8D-5641**	11	BEARING	
	20	1	**2G-7108**	1	KNOB-WING TILT	
M	21	1	**8T-4136**	4	BOLT (M10X1.5X25-MM)	
	22	1	**2G-6749**	1	KNOB-SIDESHIFT	
	23	1	**2G-6747**	1	KNOB-BLADE TIP	
	24	1	**8D-5632**	2	LEVER	
	25	1	**2G-6751**	1	KNOB-CIRCLE DRIVE	
	26	1	**2G-6748**	1	KNOB-BLADE LIFT	
	27	1	**2G-6756**	1	KNOB-WHEEL LEAN	
	28	1	**2G-6752**	1	KNOB-ARTICULATION	
	29	1	**2G-6755**	1	KNOB-CENTERSHIFT	
	30	1	**5P-1075**	2	WASHER-HARD (10.2X22.5X3-MM THK)	
	31	1	**9M-1853**	6	MOUNTING	
	32	1	**8W-0456**	2	SHAFT	
	33	1	**8F-6437**	6	WASHER (13.5X50.8X4.76-MM THK)	
	34	1	**6V-8188**	2	NUT (1/2-13-THD)	
	35	1	**5P-2424**	6	BOLT (1/2-13X2.25-IN)	
	36	1	**5P-1076**	6	WASHER-HARD (13.5X30X4-MM THK)	
	37	1	**6B-0933**	4	SPACER (10.31X19.05X6.35-MM THK)	
	38	1	**104-7740**	1	PLATE AS (LH)	
					(EACH PLATE AS INCLUDES)	
		1	**1F-0748**	2	NUT-WELD (1/2-13-THD)	
	39	1	**104-7419**	1	PLATE AS (RH)	
	41	1	**137-4515**	2	BUSHING	
	42	1	**2G-7107**	1	KNOB-WING LIFT	
	43	1	**104-7429**	2	PLATE	
	44	1	**137-4516**	1	SHAFT	
	45	1	**2G-6757**	1	KNOB-BLADE LIFT	
	46	1	**2G-6754**	1	KNOB (BULLDOZER LIFT, PLOW)	
	47	1	**103-1597**	1	LEVER	
	48	1	**8T-4121**	8	WASHER-HARD (11X21X2.5-MM THK)	

315-5333 **VALVE & LINKAGE GP** *(contd.)* **i03434986**

B-USE AS REQUIRED
M-METRIC PART
Y-SEPARATE ILLUSTRATION

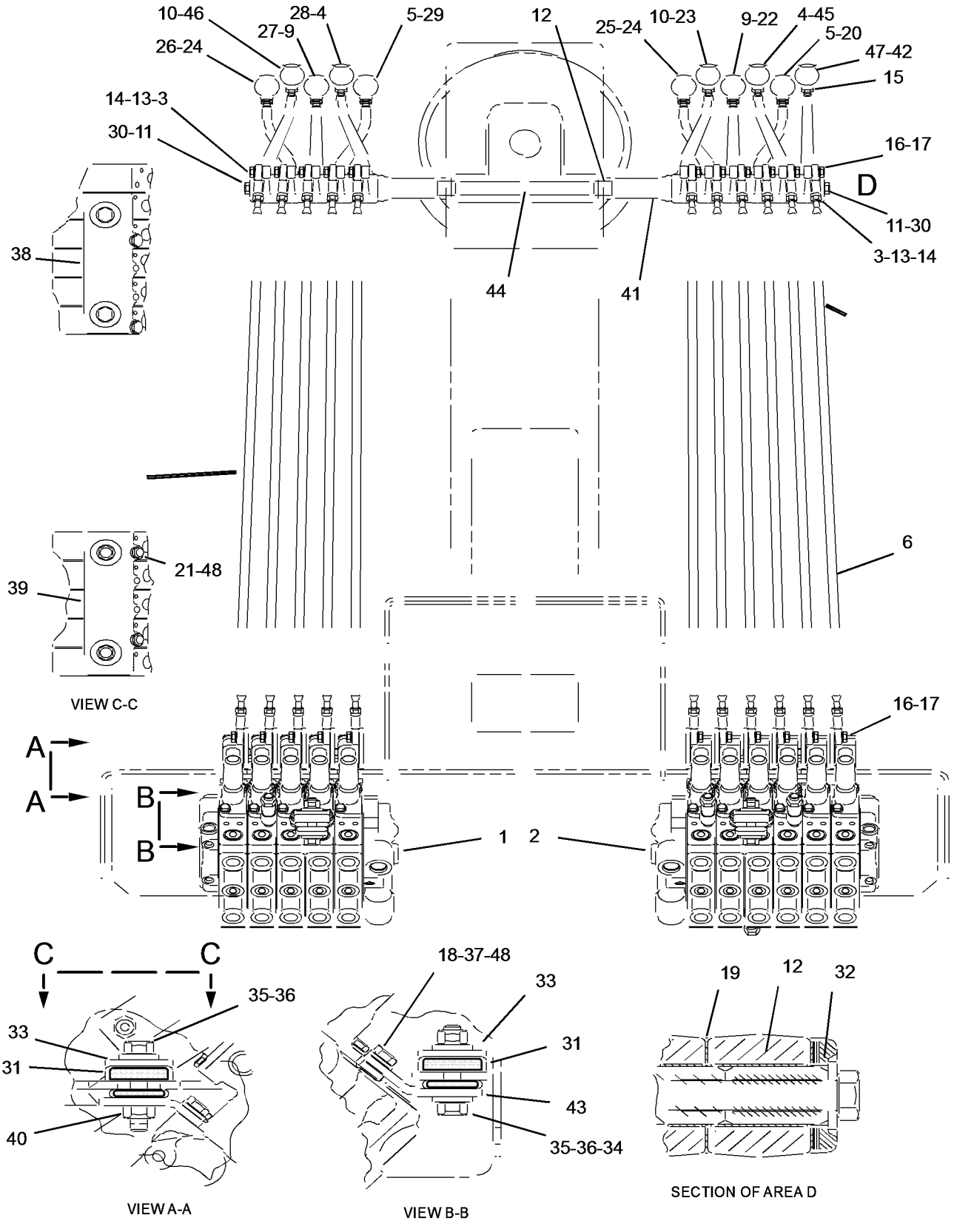

GRAPHIC #1 **<END>** g01785653

HYDRAULIC SYSTEM

315-5334 VALVE & LINKAGE GP—4-BANK, RH; 5-BANK, LH

S/N: JBP1-UP

AN ATTACHMENT

SMCS-5051, 5063 **i03248121**

NOTE	REF NO	GRAPHIC REF	PART NUMBER	QTY	PART NAME 1 2 3 4 5 6 (PRODUCT LEVEL)	SEE PAGE
Y	1	1	**6E-3032**	1	VALVE GP-BANK 4 (RH)	507
Y	2	1	**104-8646**	1	VALVE GP-BANK 5 (LH)	516
	3	1	**8X-5499**	2	RETAINER	
	4	1	**101-2457**	1	LEVER (SCARIFIER)	
	4A	1	**101-2457**	1	LEVER (ARTICULATION)	
	5	1	**8D-5634**	1	LEVER (BLADE LIFT, LH)	
	5A	1	**8D-5634**	1	LEVER (CENTERSHIFT)	
	6	1	*8X-4277*	9	ROD AS	
					(EACH INCLUDES)	
		1	**146-0705**	1	ROD	
		1	**8L-8598**	1	ROD END	
		1	**6V-8186**	1	NUT-FULL (5/16-24-THD)	
		1	**7H-3641**	1	END-ROD (5/16-24-THD)	
	7	1	**8D-5633**	1	LEVER (SIDESHIFT)	
	7A	1	**8D-5633**	1	LEVER (WHEEL LEAN)	
	8	1	**101-2458**	1	LEVER (BLADE TIP)	
	9	1	**137-4515**	2	BUSHING	
	10	1	**8D-5640**	11	BEARING	
B	11	1	**8D-5636**	4	SHIM (0.254-MM THK)	
B	12	1	**8D-5637**	4	SHIM (0.762-MM THK)	
	13	1	**6L-1962**	9	NUT-JAM (3/8-24-THD)	
	14	1	**8T-9043**	18	BOLT (5/16-18X0.875-IN)	
	15	1	**3F-9556**	18	LOCKWASHER	
	16	1	**9B-7237**	2	BOLT (3/8-16X1.25-IN)	
	17	1	**8D-5641**	9	BEARING	
	18	1	**2G-6757**	1	KNOB-BLADE LIFT (LH)	
M	19	1	**8T-4136**	4	BOLT (M10X1.5X25-MM)	
	20	1	**2G-6749**	1	KNOB-SIDESHIFT	
	21	1	**2G-6747**	1	KNOB-BLADE TIP	
	22	1	**8D-5632**	1	LEVER (CIRCLE DRIVE)	
	22A	1	**8D-5632**	1	LEVER (BLADE LIFT, RH)	
	23	1	**2G-6751**	1	KNOB-CIRCLE DRIVE	
	24	1	**2G-6748**	1	KNOB-BLADE LIFT (RH)	
	25	1	**2G-6756**	1	KNOB-WHEEL LEAN	
	26	1	**2G-6752**	1	KNOB-ARTICULATION	
	27	1	**2G-6755**	1	KNOB-CENTERSHIFT	
	28	1	**5P-1075**	2	WASHER-HARD (10.2X22.5X3-MM THK)	
	29	1	**9M-1853**	6	MOUNTING	
	30	1	**8T-4121**	8	WASHER-HARD (11X21X2.5-MM THK)	
M	31	1	**8T-4195**	4	BOLT (M10X1.5X30-MM)	
	32	1	**6V-8188**	2	NUT (1/2-13-THD)	
	33	1	**5P-2424**	6	BOLT (1/2-13X2.25-IN)	
	34	1	**5P-1076**	6	WASHER-HARD (13.5X30X4-MM THK)	
	35	1	**6B-0933**	4	SPACER (10.31X19.05X6.35-MM THK)	
	36	1	**104-7740**	1	PLATE AS (LH)	
		1	**1F-0748**	2	NUT-WELD (1/2-13-THD)	
	37	1	**104-7419**	1	PLATE AS (RH)	
		1	**1F-0748**	2	NUT-WELD (1/2-13-THD)	
	38	1	**2G-6753**	1	KNOB-SCARIFIER	
	39	1	**137-4516**	1	SHAFT	
	40	1	**104-7429**	2	PLATE	
	41	1	**8F-6437**	6	WASHER (13.5X50.8X4.76-MM THK)	

B-USE AS REQUIRED
M-METRIC PART
Y-SEPARATE ILLUSTRATION

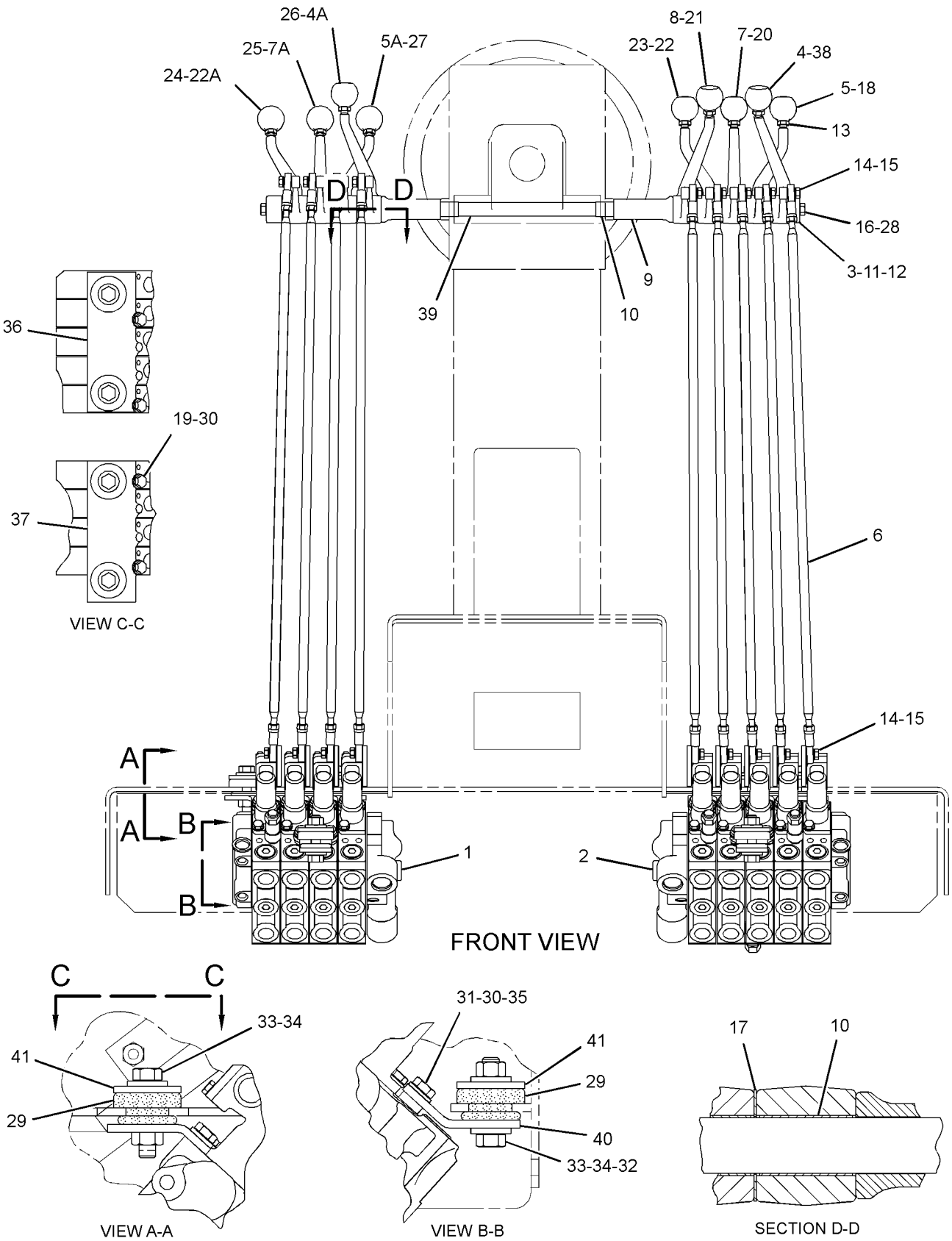

GRAPHIC #1

<END>

g01768713

HYDRAULIC SYSTEM

315-5335 VALVE & LINKAGE GP—4-BANK, RH, LH

S/N: JBP1-UP

AN ATTACHMENT

SMCS-5051, 5063 **i03255446**

NOTE	REF NO	GRAPHIC REF	PART NUMBER	QTY	PART NAME 1 2 3 4 5 6 (PRODUCT LEVEL)	SEE PAGE
Y	1	1	**6E-3032**	1	VALVE GP-BANK 4 (RH)	507
Y	2	1	**6E-3038**	1	VALVE GP-BANK 4 (LH)	508
	3	1	**8X-5498**	2	RETAINER	
	4	1	**101-2457**	1	LEVER	
	5	1	**8D-5634**	2	LEVER	
	8	1	*8X-4277*	8	ROD AS	
					(EACH INCLUDES)	
		1	**6V-8186**	1	NUT-FULL (5/16-24-THD)	
		1	**7H-3641**	1	END-ROD (5/16-24-THD)	
		1	**8L-8598**	1	ROD END	
		1	**146-0705**	1	ROD	
	9	1	**8D-5633**	2	LEVER	
	10	1	**101-2458**	1	LEVER	
	11	1	**137-4515**	2	BUSHING	
	12	1	**8D-5640**	10	BEARING	
B	13	1	**8D-5636**	4	SHIM (0.254-MM THK)	
B	14	1	**8D-5637**	4	SHIM (0.762-MM THK)	
	15	1	**6L-1962**	8	NUT-JAM (3/8-24-THD)	
	16	1	**8T-9043**	16	BOLT (5/16-18X0.875-IN)	
	17	1	**3F-9556**	16	LOCKWASHER	
	18	1	**9B-7237**	2	BOLT (3/8-16X1.25-IN)	
	19	1	**8D-5641**	8	BEARING	
	20	1	**2G-6757**	1	KNOB-BLADE LIFT (LH)	
M	21	1	**8T-4136**	4	BOLT (M10X1.5X25-MM)	
	22	1	**2G-6749**	1	KNOB-SIDESHIFT	
	23	1	**2G-6747**	1	KNOB-BLADE TIP	
	24	1	**8D-5632**	2	LEVER	
	25	1	**2G-6751**	1	KNOB-CIRCLE DRIVE	
	26	1	**2G-6748**	1	KNOB-BLADE LIFT (RH)	
	27	1	**2G-6756**	1	KNOB-WHEEL LEAN	
	28	1	**2G-6752**	1	KNOB-ARTICULATION	
	29	1	**2G-6755**	1	KNOB-CENTERSHIFT	
	30	1	**5P-1075**	2	WASHER-HARD (10.2X22.5X3-MM THK)	
	31	1	**9M-1853**	6	MOUNTING	
	36	1	**5P-1076**	6	WASHER-HARD (13.5X30X4-MM THK)	
	38	1	**104-7740**	1	PLATE AS (LH)	
					(EACH PLATE AS INCLUDES)	
		1	**1F-0748**	2	NUT-WELD (1/2-13-THD)	
	39	1	**104-7419**	1	PLATE AS (RH)	
	43	1	**104-7429**	2	PLATE	
	44	1	**137-4516**	1	SHAFT	
	45	1	**8T-4121**	8	WASHER-HARD (11X21X2.5-MM THK)	
	46	1	**6B-0933**	4	SPACER (10.31X19.05X6.35-MM THK)	
	47	1	**5P-2424**	6	BOLT (1/2-13X2.25-IN)	
	48	1	**6V-8188**	2	NUT (1/2-13-THD)	
M	49	1	**8T-4195**	4	BOLT (M10X1.5X30-MM)	
	50	1	**8F-6437**	6	WASHER (13.5X50.8X4.76-MM THK)	

B-USE AS REQUIRED
M-METRIC PART
Y-SEPARATE ILLUSTRATION

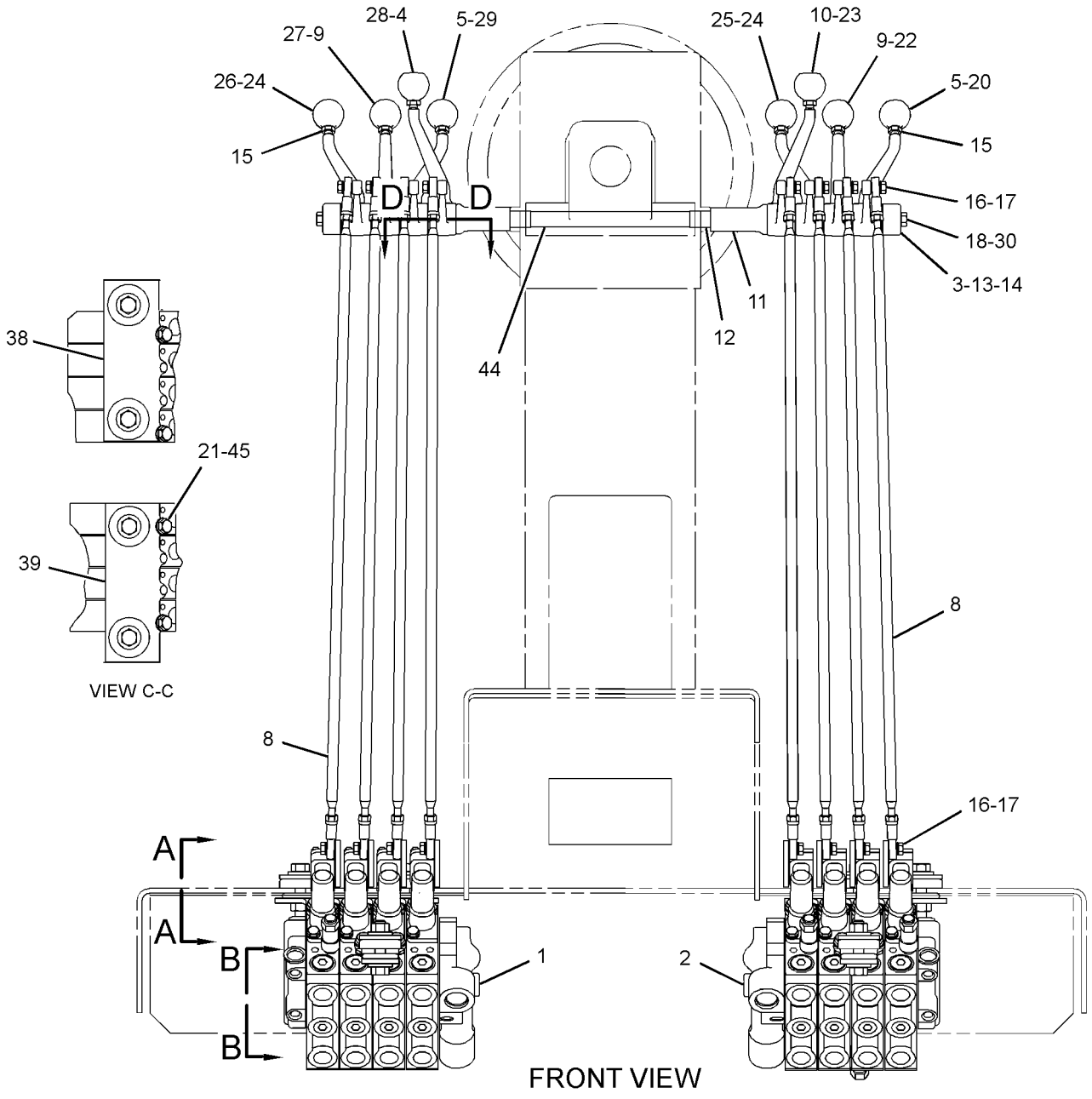

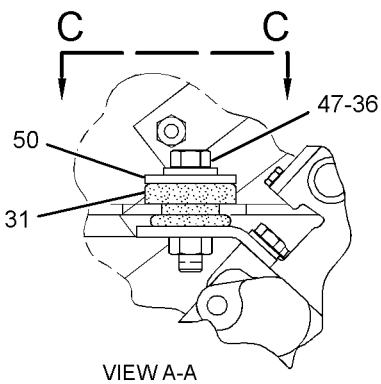

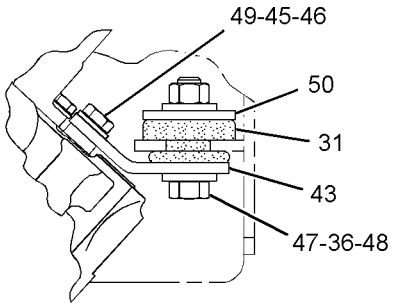

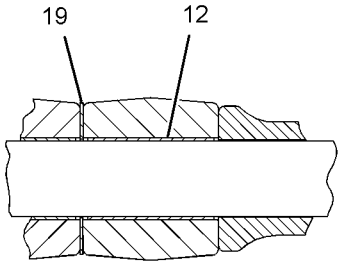

GRAPHIC #1

<END>

g01773074

HYDRAULIC SYSTEM

315-5336 VALVE & LINKAGE GP—5-BANK, RH; 7-BANK, LH

S/N: JBP1-UP

AN ATTACHMENT

SMCS-5051, 5063 **i03255934**

NOTE	REF NO	GRAPHIC REF	PART NUMBER	QTY	PART NAME 1 2 3 4 5 6 (PRODUCT LEVEL)	SEE PAGE
Y	1	1	**104-8671**	1	VALVE GP-BANK 5 (RH)	517
Y	2	1	**104-8647**	1	VALVE GP-BANK 7 (LH)	529
	3	1	**8X-5499**	2	RETAINER	
	4	1	**101-2457**	2	LEVER	
	5	1	**8D-5634**	2	LEVER	
	6	1	**2G-7107**	1	KNOB-WING LIFT	
	8	1	*8X-4277*	12	ROD AS	
					(EACH INCLUDES)	
		1	**6V-8186**	1	NUT-FULL (5/16-24-THD)	
		1	**7H-3641**	1	END-ROD (5/16-24-THD)	
		1	**8L-8598**	1	ROD END	
		1	**146-0705**	1	ROD	
	9	1	**8D-5633**	2	LEVER	
	10	1	**101-2458**	3	LEVER	
	11	1	**137-4515**	2	BUSHING	
	12	1	**8D-5640**	14	BEARING	
B	13	1	**8D-5636**	4	SHIM (0.254-MM THK)	
B	14	1	**8D-5637**	4	SHIM (0.762-MM THK)	
	15	1	**6L-1962**	12	NUT-JAM (3/8-24-THD)	
	16	1	**8T-9043**	24	BOLT (5/16-18X0.875-IN)	
	17	1	**3F-9556**	24	LOCKWASHER	
	18	1	**4L-6459**	1	BOLT (3/8-16X2.5-IN)	
	19	1	**8D-5641**	12	BEARING	
	20	1	**2G-6757**	1	KNOB-BLADE LIFT	
M	21	1	**8T-4136**	4	BOLT (M10X1.5X25-MM)	
	22	1	**2G-6749**	1	KNOB-SIDESHIFT	
	23	1	**2G-6747**	1	KNOB-BLADE TIP	
	24	1	**8D-5632**	2	LEVER	
	25	1	**2G-6751**	1	KNOB-CIRCLE DRIVE	
	26	1	**2G-6748**	1	KNOB-BLADE LIFT	
	27	1	**2G-6756**	1	KNOB-WHEEL LEAN	
	28	1	**2G-6752**	1	KNOB-ARTICULATION	
	29	1	**2G-6755**	1	KNOB-CENTERSHIFT	
	30	1	**5P-1075**	2	WASHER-HARD (10.2X22.5X3-MM THK)	
	31	1	**9M-1853**	6	MOUNTING	
	36	1	**5P-1076**	6	WASHER-HARD (13.5X30X4-MM THK)	
	38	1	**104-7740**	1	PLATE AS (LH)	
					(EACH PLATE AS INCLUDES)	
		1	**1F-0748**	2	NUT-WELD (1/2-13-THD)	
	39	1	**104-7419**	1	PLATE AS (RH)	
	43	1	**104-7429**	2	PLATE	
	44	1	**137-4516**	1	SHAFT	
	45	1	**8T-4121**	8	WASHER-HARD (11X21X2.5-MM THK)	
	46	1	**6B-0933**	4	SPACER (10.31X19.05X6.35-MM THK)	
	47	1	**5P-2424**	6	BOLT (1/2-13X2.25-IN)	
	48	1	**6V-8188**	2	NUT (1/2-13-THD)	
M	49	1	**8T-4195**	4	BOLT (M10X1.5X30-MM)	
	50	1	**2G-6754**	1	KNOB (BULLDOZER LIFT, PLOW)	
	51	1	**2G-6753**	1	KNOB-SCARIFIER	
	52	1	**103-1597**	1	LEVER	
	53	1	**2G-7108**	1	KNOB-WING TILT	
	54	1	**7X-0291**	1	BOLT (3/8-16X3.75-IN)	
	55	1	**8W-0456**	3	SHAFT	
	56	1	**8F-6437**	6	WASHER (13.5X50.8X4.76-MM THK)	

B-USE AS REQUIRED
M-METRIC PART
Y-SEPARATE ILLUSTRATION

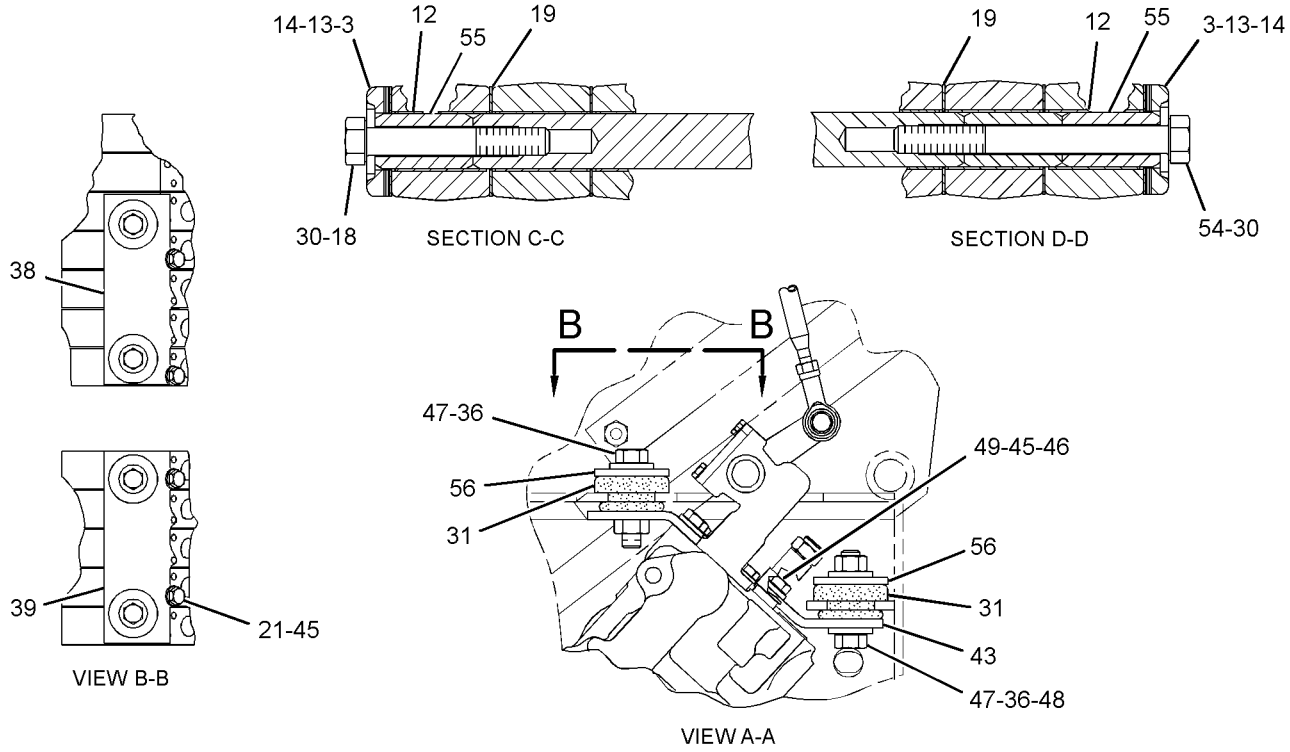

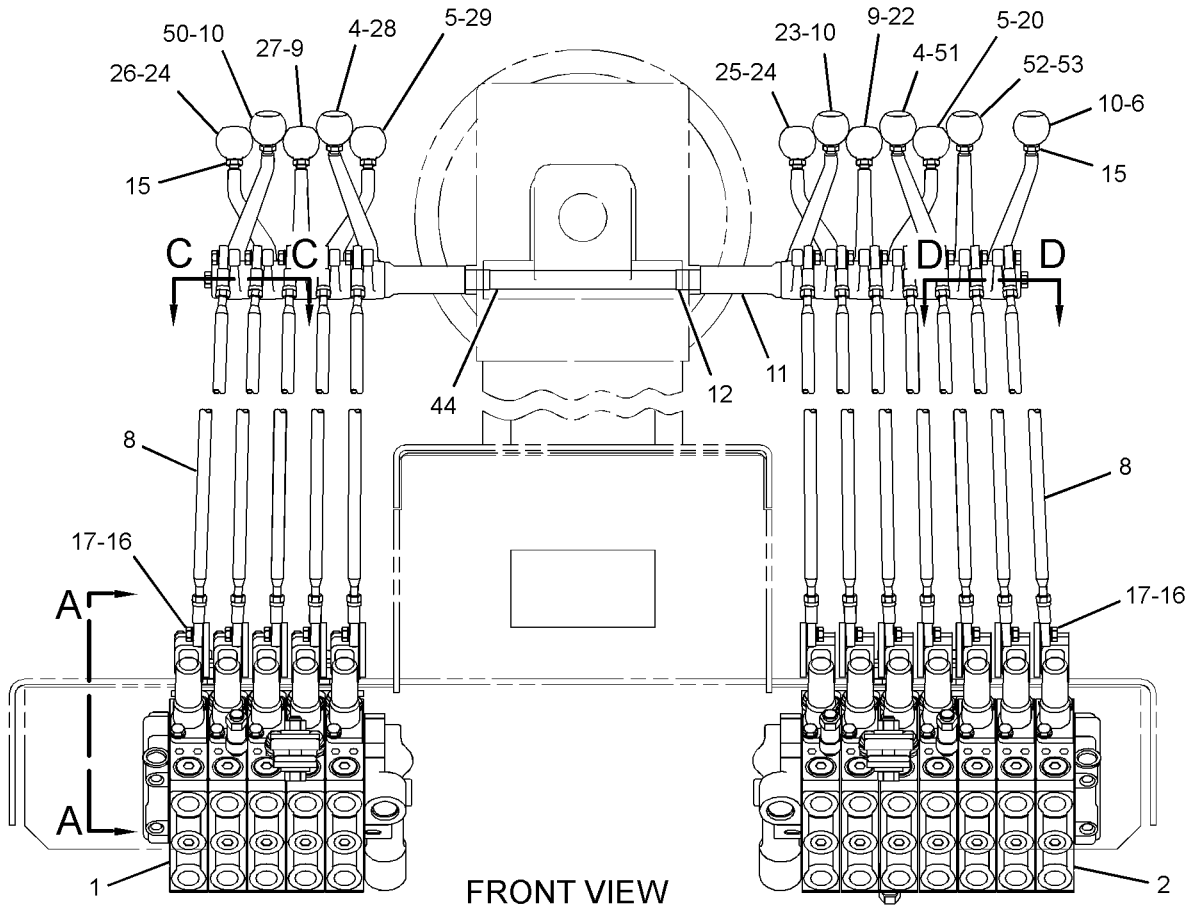

GRAPHIC #1

<END>

g01766633

HYDRAULIC SYSTEM

331-1509 VALVE & LINKAGE GP—4-BANK, RH; 5-BANK, LH

S/N: JBP1-UP

AN ATTACHMENT

SMCS-5051, 5063 **i03350421**

NOTE	REF NO	GRAPHIC REF	PART NUMBER	QTY	PART NAME 1 2 3 4 5 6 (PRODUCT LEVEL)	SEE PAGE
	1	1	**3F-9556**	18	LOCKWASHER	
	2	2	**6B-0933**	4	SPACER (10.31X19.05X6.35-MM THK)	
	3	1	**6L-1962**	9	NUT-JAM (3/8-24-THD)	
	4	1	**8D-5632**	1	LEVER (BLADE LIFT, RH)	
	4A	1	**8D-5632**	1	LEVER (CIRCLE DRIVE)	
	5	1	**8D-5633**	1	LEVER (WHEEL LEAN)	
	5A	1	**8D-5633**	1	LEVER (SIDESHIFT)	
	6	1	**8D-5634**	1	LEVER (CENTERSHIFT)	
	6A	1	**8D-5634**	1	LEVER (BLADE LIFT, LH)	
B	7	2	**8D-5636**	4	SHIM (0.254-MM THK)	
B	8	2	**8D-5637**	4	SHIM (0.762-MM THK)	
	9	1,2	**8D-5640**	11	BEARING	
	10	2	**8D-5641**	9	BEARING	
	11	1	**8X-4277**	9	ROD AS	
					(EACH INCLUDES)	
		1	**6V-8186**	2	NUT-FULL (5/16-24-THD)	
		1	**7H-3641**	1	END-ROD (5/16-24-THD)	
		1	**8L-8598**	1	ROD END	
		1	**146-0705**	1	ROD	
	12	2	**8X-5499**	2	RETAINER	
	13	2	**9M-1853**	6	MOUNTING	
	14	1	**101-2457**	2	LEVER (ARTICULATION)	
	15	1	**101-2458**	1	LEVER (BLADE TIP)	
	16	2	**104-7419**	1	PLATE AS (RH)	
		2	**1F-0748**	2	NUT-WELD (1/2-13-THD)	
	17	2	**104-7429**	2	PLATE	
	18	2	**104-7740**	1	PLATE AS (LH)	
		2	**1F-0748**	2	NUT-WELD (1/2-13-THD)	
	19	1	**137-4515**	2	BUSHING	
	20	1	**137-4516**	1	SHAFT	
	21	2	*164-5608*	2	CONNECTOR AS	
					(EACH INCLUDES)	
		2	**3K-0360**	1	SEAL-O-RING	
		2	**6V-8398**	1	SEAL-O-RING	
		2	**8T-1687**	1	CONNECTOR	
	22	1	**244-2585**	1	TUBE AS	
	23	1	**244-2589**	1	TUBE AS	
	24	1	**244-2592**	1	TUBE AS	
	25	1	**244-2596**	1	TUBE AS	
Y	26	1	**250-0544**	1	VALVE GP-BANK 4 (RH)	514
	27	2	*148-8318*	2	CONNECTOR AS	
					(EACH INCLUDES)	
		2	**6V-8634**	1	CONNECTOR	
		2	**3K-0360**	1	SEAL-O-RING	
		2	**6V-8397**	1	SEAL-O-RING	
	28	2	**153-1818**	1	ELBOW	
	29	2	*206-5123*	2	TEE AS	
					(EACH INCLUDES)	
		2	**206-5122**	1	TEE	
		2	**6V-8397**	1	SEAL-O-RING	
		2	**6V-8398**	1	SEAL-O-RING	
Y	30	1	**262-7291**	1	VALVE GP-BANK 5 (LH)	524
	31	1	**2G-6747**	1	KNOB-BLADE TIP	
	32	1	**2G-6748**	1	KNOB-BLADE LIFT (RH)	
	33	1	**2G-6749**	1	KNOB-SIDESHIFT	
	34	1	**2G-6751**	1	KNOB-CIRCLE DRIVE	

331-1509 **VALVE & LINKAGE GP** *(contd.)* **i03350421**

NOTE	REF NO	GRAPHIC REF	PART NUMBER	QTY	PART NAME 1 2 3 4 5 6 (PRODUCT LEVEL)	SEE PAGE
	35	1	**2G-6752**	1	KNOB-ARTICULATION	
	36	1	**2G-6753**	1	KNOB-SCARIFIER	
	37	1	**2G-6755**	1	KNOB-CENTERSHIFT	
	38	1	**2G-6756**	1	KNOB-WHEEL LEAN	
	39	1	**2G-6757**	1	KNOB-BLADE LIFT (LH)	
	40	2	**3J-1907**	4	SEAL-O-RING	
	41	2	**5P-1075**	2	WASHER-HARD (10.2X22.5X3-MM THK)	
	42	2	**5P-1076**	6	WASHER-HARD (13.5X30X4-MM THK)	
	43	2	**5P-2424**	6	BOLT (1/2-13X2.25-IN)	
	44	2	**6V-8188**	2	NUT (1/2-13-THD)	
	45	1,2	**6V-8397**	8	SEAL-O-RING	
	46	2	**6V-9836**	2	TEE-SWIVEL	
	47	2	**8F-6437**	6	WASHER (13.5X50.8X4.76-MM THK)	
	48	2	**8T-4121**	8	WASHER-HARD (11X21X2.5-MM THK)	
M	49	2	**8T-4136**	4	BOLT (M10X1.5X25-MM)	
M	50	2	**8T-4195**	4	BOLT (M10X1.5X30-MM)	
	51	2	**8T-9041**	3	CONNECTOR	
	52	1	**8T-9043**	18	BOLT (5/16-18X0.875-IN)	
	53	2	**9B-7237**	2	BOLT (3/8-16X1.25-IN)	

B-USE AS REQUIRED
M-METRIC PART
Y-SEPARATE ILLUSTRATION

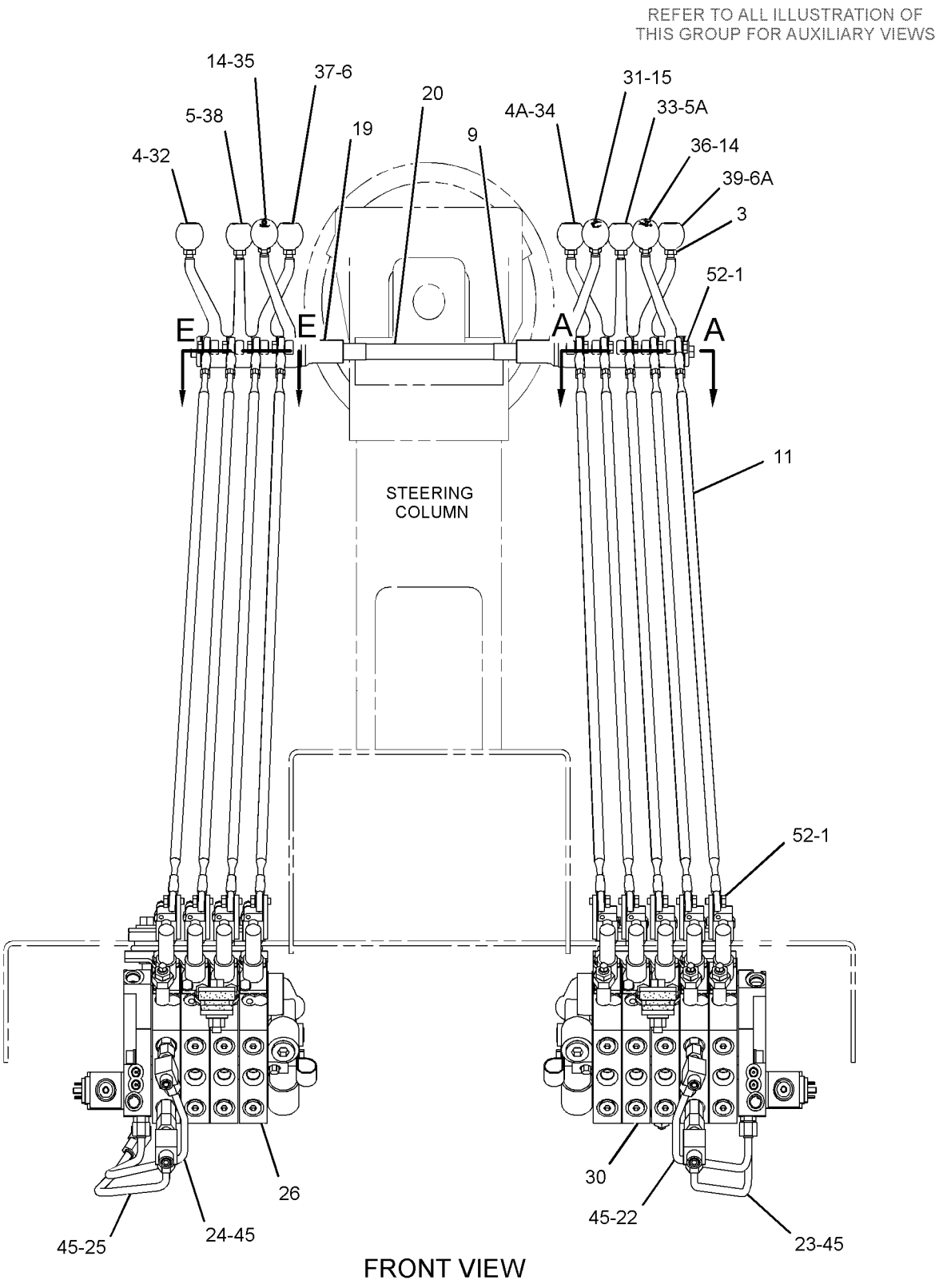

GRAPHIC #1

g01256592

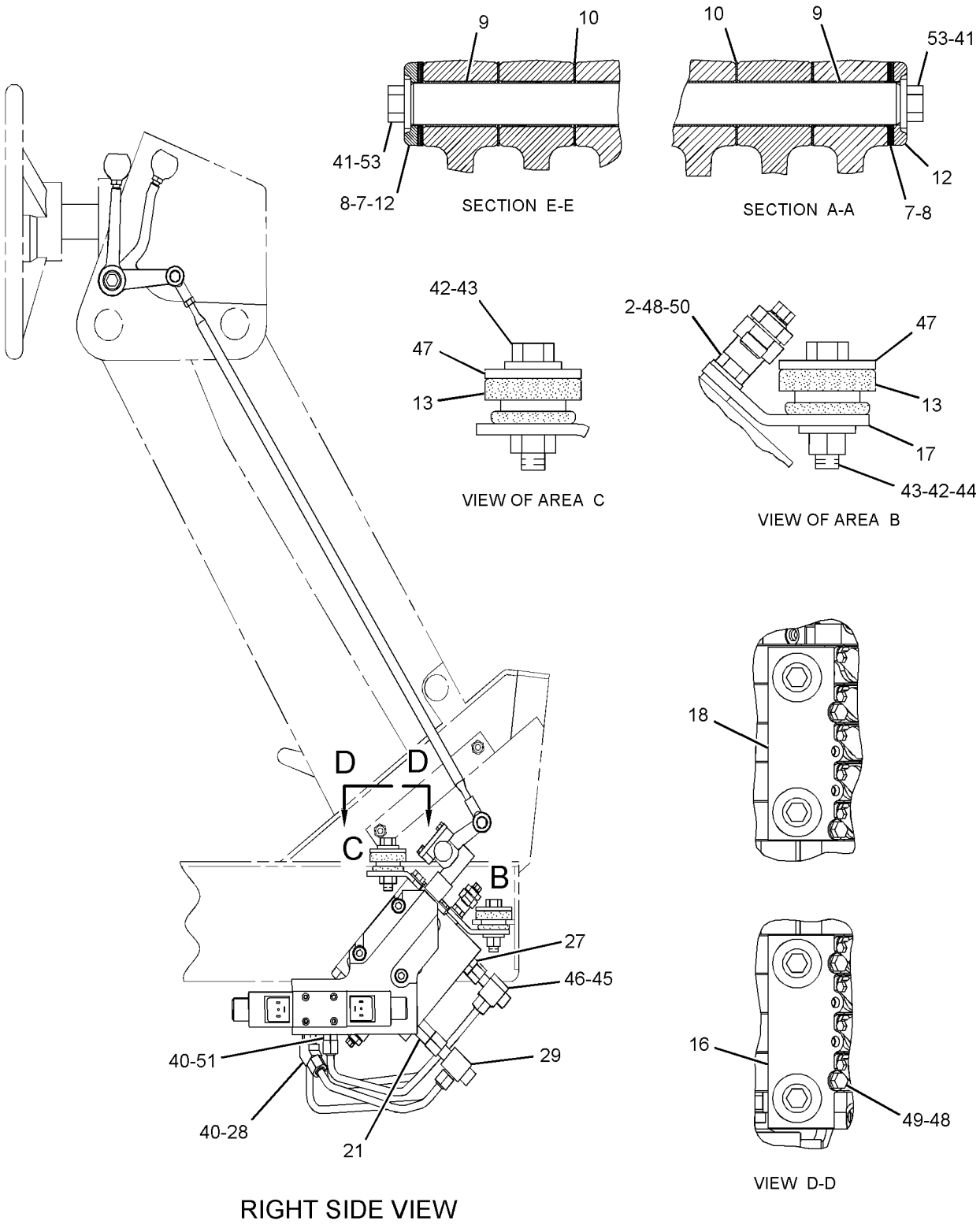

GRAPHIC #2 **<END>** g01256593

HYDRAULIC SYSTEM

331-1510 VALVE & LINKAGE GP—4-BANK, RH; 5-BANK, LH

S/N: JBP1-UP

PART OF 335-1875 CONTROL AR-HYDRAULIC

AN ATTACHMENT

SMCS-5051, 5063 **i03254821**

NOTE	REF NO	GRAPHIC REF	PART NUMBER	QTY	PART NAME 1 2 3 4 5 6 (PRODUCT LEVEL)	SEE PAGE
	1	1	**3F-9556**	18	LOCKWASHER	
	2	1	**6B-0933**	4	SPACER (10.31X19.05X6.35-MM THK)	
	3	1	**6L-1962**	9	NUT-JAM (3/8-24-THD)	
	4	1	**8D-5632**	1	LEVER (CIRCLE DRIVE)	
	4A	1	**8D-5632**	1	LEVER (BLADE LIFT, RH)	
	5	1	**8D-5633**	1	LEVER (SIDESHIFT)	
	5A	1	**8D-5633**	1	LEVER (WHEEL LEAN)	
	6	1	**8D-5634**	1	LEVER (BLADE LIFT, LH)	
	6A	1	**8D-5634**	1	LEVER (CENTERSHIFT)	
B	7	1	**8D-5636**	4	SHIM (0.254-MM THK)	
B	8	1	**8D-5637**	4	SHIM (0.762-MM THK)	
	9	1	**8D-5640**	11	BEARING	
	10	1	**8D-5641**	9	BEARING	
	11	1	**8X-4277**	9	ROD AS	
					(EACH INCLUDES)	
		1	**6V-8186**	1	NUT-FULL (5/16-24-THD)	
		1	**7H-3641**	1	END-ROD (5/16-24-THD)	
		1	**8L-8598**	1	ROD END	
		1	**146-0705**	1	ROD	
	12	1	**8X-5499**	2	RETAINER	
	13	1	**9M-1853**	6	MOUNTING	
	14	1	**101-2457**	1	LEVER (RIPPER)	
	14A	1	**101-2457**	1	LEVER (ARTICULATION)	
	15	1	**101-2458**	1	LEVER (BLADE TIP)	
	16	1	**104-7419**	1	PLATE AS (RH)	
		1	**1F-0748**	2	NUT-WELD (1/2-13-THD)	
	17	1	**104-7429**	2	PLATE	
	18	1	**104-7740**	1	PLATE AS (LH)	
		1	**1F-0748**	2	NUT-WELD (1/2-13-THD)	
	19	1	**137-4515**	2	BUSHING	
	20	1	**137-4516**	1	SHAFT	
	21	1	*164-5608*	2	CONNECTOR AS	
					(EACH INCLUDES)	
		1	**8T-1687**	1	CONNECTOR	
		1	**3K-0360**	1	SEAL-O-RING	
		1	**6V-8398**	1	SEAL-O-RING	
	22	1	**244-2585**	1	TUBE AS	
	23	1	**244-2589**	1	TUBE AS	
	24	1	**244-2592**	1	TUBE AS	
	25	1	**244-2596**	1	TUBE AS	
Y	26	1	**250-0544**	1	VALVE GP-BANK 4 (RH)	514
Y	27	1	**250-0550**	1	VALVE GP-BANK 5 (LH)	522
	28	1	*148-8318*	2	CONNECTOR AS	
					(EACH INCLUDES)	
		1	**6V-8634**	1	CONNECTOR	
		1	**3K-0360**	1	SEAL-O-RING	
		1	**6V-8397**	1	SEAL-O-RING	
	29	1	**153-1818**	1	ELBOW	
	30	1	*206-5123*	2	TEE AS	
					(EACH INCLUDES)	
		1	**6V-8397**	1	SEAL-O-RING	
		1	**6V-8398**	1	SEAL-O-RING	
	31	1	**2G-6740**	1	KNOB-RIPPER	
	32	1	**2G-6747**	1	KNOB-BLADE TIP	
	33	1	**2G-6748**	1	KNOB-BLADE LIFT (RH)	

331-1510 VALVE & LINKAGE GP *(contd.)* i03254821

NOTE	REF NO	GRAPHIC REF	PART NUMBER	QTY	PART NAME 1 2 3 4 5 6 (PRODUCT LEVEL)	SEE PAGE
	34	1	**2G-6749**	1	KNOB-SIDESHIFT	
	35	1	**2G-6751**	1	KNOB-CIRCLE DRIVE	
	36	1	**2G-6752**	1	KNOB-ARTICULATION	
	37	1	**2G-6755**	1	KNOB-CENTERSHIFT	
	38	1	**2G-6756**	1	KNOB-WHEEL LEAN	
	39	1	**2G-6757**	1	KNOB-BLADE LIFT (LH)	
	40	1	**3J-1907**	4	SEAL-O-RING	
	41	1	**5P-1075**	2	WASHER-HARD (10.2X22.5X3-MM THK)	
	42	1	**5P-1076**	6	WASHER-HARD (13.5X30X4-MM THK)	
	43	1	**5P-2424**	6	BOLT (1/2-13X2.25-IN)	
	44	1	**6V-8188**	2	NUT (1/2-13-THD)	
	45	1	**6V-8397**	8	SEAL-O-RING	
	46	1	**6V-9836**	2	TEE-SWIVEL	
	47	1	**8F-6437**	6	WASHER (13.5X50.8X4.76-MM THK)	
	48	1	**8T-4121**	8	WASHER-HARD (11X21X2.5-MM THK)	
M	49	1	**8T-4136**	4	BOLT (M10X1.5X25-MM)	
M	50	1	**8T-4195**	4	BOLT (M10X1.5X30-MM)	
	51	1	**8T-9041**	3	CONNECTOR	
	52	1	**8T-9043**	18	BOLT (5/16-18X0.875-IN)	
	53	1	**9B-7237**	2	BOLT (3/8-16X1.25-IN)	

B-USE AS REQUIRED
M-METRIC PART
Y-SEPARATE ILLUSTRATION

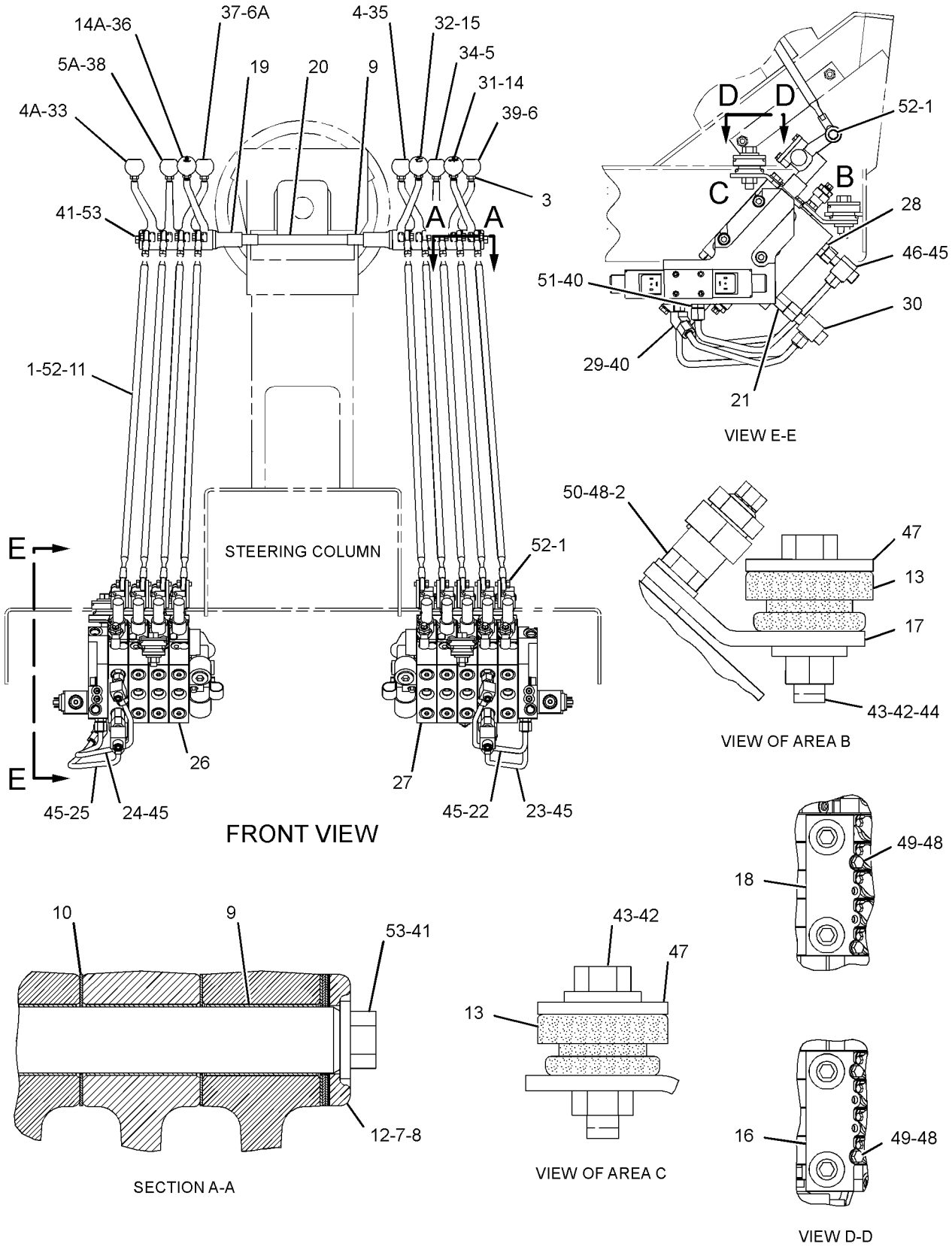

GRAPHIC #1 **<END>** g01710734

HYDRAULIC SYSTEM

331-1512 VALVE & LINKAGE GP–6-BANK, RH, LH

S/N: JBP1-UP
AN ATTACHMENT

SMCS-5051, 5063 **i03350506**

NOTE	REF NO	GRAPHIC REF	PART NUMBER	QTY	PART NAME 1 2 3 4 5 6 (PRODUCT LEVEL)	SEE PAGE
	1	1	**3F-9556**	24	LOCKWASHER	
	2	2	**6B-0933**	4	SPACER (10.31X19.05X6.35-MM THK)	
	3	1	**6L-1962**	12	NUT-JAM (3/8-24-THD)	
	4	1	**8D-5632**	1	LEVER (CIRCLE DRIVE)	
	4A	1	**8D-5632**	1	LEVER (BLADE LIFT, RH)	
	5	1	**8D-5633**	1	LEVER (SIDESHIFT)	
	5A	1	**8D-5633**	1	LEVER (WHEEL LEAN)	
	6	1	**8D-5634**	1	LEVER (BLADE LIFT, LH)	
	6A	1	**8D-5634**	1	LEVER (CENTERSHIFT)	
B	7	2	**8D-5636**	4	SHIM (0.254-MM THK)	
B	8	2	**8D-5637**	4	SHIM (0.762-MM THK)	
	9	1,2	**8D-5640**	14	BEARING	
	10	2	**8D-5641**	12	BEARING	
	11	1	**8X-4277**	12	ROD AS	
					(EACH INCLUDES)	
		1	**146-0705**	1	ROD	
		1	**6V-8186**	1	NUT-FULL (5/16-24-THD)	
		1	**7H-3641**	1	END-ROD (5/16-24-THD)	
		1	**8L-8598**	1	ROD END	
	12	2	**8X-5499**	2	RETAINER	
	13	2	**9M-1853**	6	MOUNTING	
	14	1	**101-2457**	1	LEVER (WING TILT)	
	14A	1	**101-2457**	1	LEVER (ARTICULATION)	
	15	1	**101-2458**	1	LEVER (BLADE TIP)	
	15A	1	**101-2458**	1	LEVER (PLOW, DOZER)	
	16	1	**103-1597**	1	LEVER (WING LIFT)	
	16A	1	**103-1597**	1	LEVER (PLOW, BULLDOZER ANGLE)	
	17	2	**104-7419**	1	PLATE AS (RH)	
		2	**1F-0748**	2	NUT-WELD (1/2-13-THD)	
	18	2	**104-7429**	2	PLATE	
	19	2	**104-7740**	1	PLATE AS (LH)	
		2	**1F-0748**	2	NUT-WELD (1/2-13-THD)	
	20	1	**137-4515**	2	BUSHING	
	21	1	**137-4517**	1	SHAFT	
	22	2	*164-5608*	2	CONNECTOR AS	
					(EACH INCLUDES)	
		2	**8T-1687**	1	CONNECTOR	
		2	**3K-0360**	1	SEAL-O-RING	
		2	**6V-8398**	1	SEAL-O-RING	
	23	1	**244-2586**	1	TUBE AS	
	24	1	**244-2590**	1	TUBE AS	
	25	1	**244-2594**	1	TUBE AS	
	26	1	**244-2598**	1	TUBE AS	
Y	27	1	**250-0565**	1	VALVE GP-BANK 6 (RH)	527
Y	28	1	**250-0567**	1	VALVE GP-BANK 6 (LH)	528
	29	1	**117-0472**	1	KNOB (PLOW, BULLDOZER ANGLE)	
	30	2	*148-8318*	2	CONNECTOR AS	
					(EACH INCLUDES)	
		2	**6V-8634**	1	CONNECTOR	
		2	**3K-0360**	1	SEAL-O-RING	
		2	**6V-8397**	1	SEAL-O-RING	
	31	2	*206-5123*	2	TEE AS	
					(EACH INCLUDES)	
		2	**206-5122**	1	TEE	
		2	**6V-8397**	1	SEAL-O-RING	
		2	**6V-8398**	1	SEAL-O-RING	

331-1512 VALVE & LINKAGE GP *(contd.)* i03350506

NOTE	REF NO	GRAPHIC REF	PART NUMBER	QTY	PART NAME 1 2 3 4 5 6 (PRODUCT LEVEL)	SEE PAGE
	32	1	**2G-6747**	1	KNOB-BLADE TIP	
	33	1	**2G-6748**	1	KNOB-BLADE LIFT (RH)	
	34	1	**2G-6749**	1	KNOB-SIDESHIFT	
	35	1	**2G-6751**	1	KNOB-CIRCLE DRIVE	
	36	1	**2G-6752**	1	KNOB-ARTICULATION	
	37	1	**2G-6754**	1	KNOB (BULLDOZER LIFT, PLOW)	
	38	1	**2G-6755**	1	KNOB-CENTERSHIFT	
	39	1	**2G-6756**	1	KNOB-WHEEL LEAN	
	40	1	**2G-6757**	1	KNOB-BLADE LIFT (LH)	
	41	1	**2G-7107**	1	KNOB-WING LIFT	
	42	1	**2G-7108**	1	KNOB-WING TILT	
	43	2	**3J-1907**	4	SEAL-O-RING	
	44	2	**5P-1075**	2	WASHER-HARD (10.2X22.5X3-MM THK)	
	45	2	**5P-1076**	6	WASHER-HARD (13.5X30X4-MM THK)	
	46	2	**5P-2424**	6	BOLT (1/2-13X2.25-IN)	
	47	2	**6V-8188**	2	NUT (1/2-13-THD)	
	48	1,2	**6V-8397**	8	SEAL-O-RING	
	49	2	**6V-9836**	2	TEE-SWIVEL	
	50	2	**8F-6437**	6	WASHER (13.5X50.8X4.76-MM THK)	
	51	2	**8T-4121**	8	WASHER-HARD (11X21X2.5-MM THK)	
M	52	2	**8T-4136**	4	BOLT (M10X1.5X25-MM)	
M	53	2	**8T-4195**	4	BOLT (M10X1.5X30-MM)	
	54	2	**8T-9041**	4	CONNECTOR	
	55	1	**8T-9043**	24	BOLT (5/16-18X0.875-IN)	
	56	2	**9B-7237**	2	BOLT (3/8-16X1.25-IN)	

B-USE AS REQUIRED
M-METRIC PART
Y-SEPARATE ILLUSTRATION

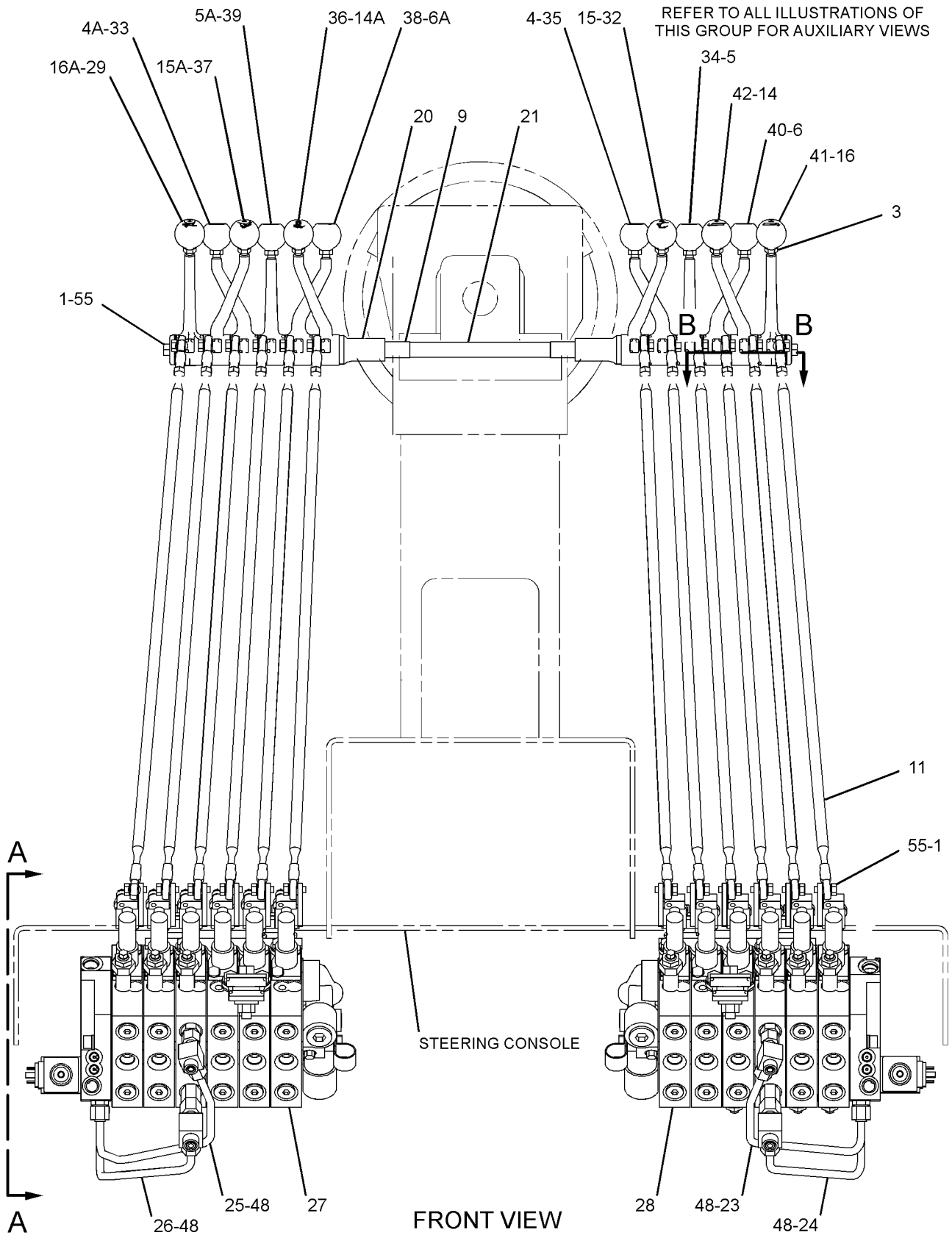

GRAPHIC #1

g01137775

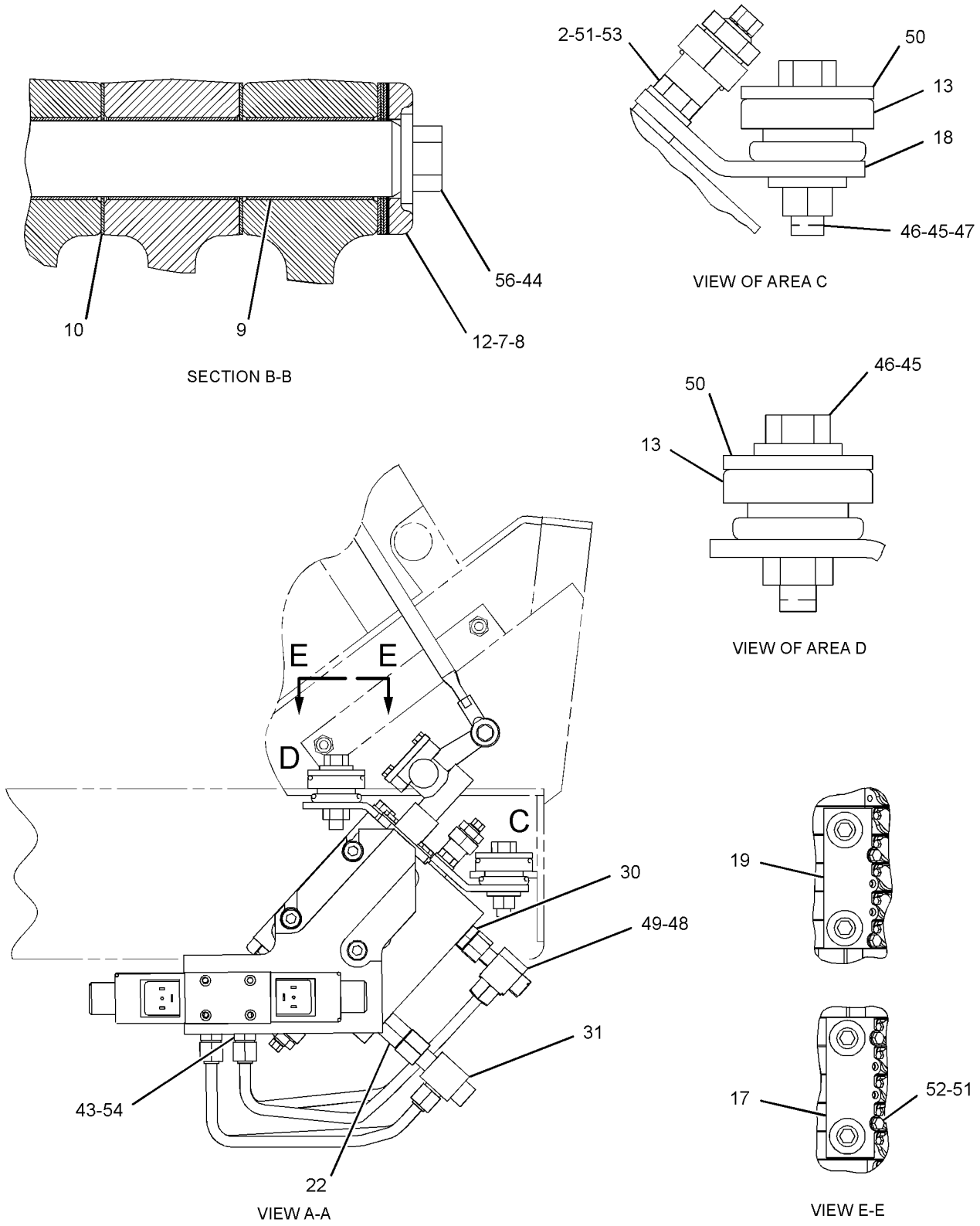

GRAPHIC #2 **<END>** g01137776

HYDRAULIC SYSTEM

331-1514 VALVE & LINKAGE GP—5-BANK, RH, LH

S/N: JBP1-UP
AN ATTACHMENT

SMCS-5051, 5063 **i03266521**

NOTE	REF NO	GRAPHIC REF	PART NUMBER	QTY	PART NAME 1 2 3 4 5 6 (PRODUCT LEVEL)	SEE PAGE
	1	1	**3F-9556**	20	LOCKWASHER	
	2	2	**6B-0933**	4	SPACER (10.31X19.05X6.35-MM THK)	
	3	1	**6L-1962**	10	NUT-JAM (3/8-24-THD)	
	4	1	**8D-5632**	1	LEVER (CIRCLE DRIVE)	
	4A	1	**8D-5632**	1	LEVER (BLADE LIFT, RH)	
	5	1	**8D-5633**	1	LEVER (SIDE SHIFT)	
	5A	1	**8D-5633**	1	LEVER (WHEEL LEAN)	
	6	1	**8D-5634**	1	LEVER (BLADE LIFT, LH)	
	6A	1	**8D-5634**	1	LEVER (CENTERSHIFT)	
B	7	1	**8D-5636**	4	SHIM (0.254-MM THK)	
B	8	1	**8D-5637**	4	SHIM (0.762-MM THK)	
	9	1	**8D-5640**	12	BEARING	
	10	1	**8D-5641**	10	BEARING	
	11	1	**8W-0456**	1	SHAFT	
	12	1	**8X-4277**	10	ROD AS	
					(EACH INCLUDES)	
		1	**6V-8186**	1	NUT-FULL (5/16-24-THD)	
		1	**7H-3641**	1	END-ROD (5/16-24-THD)	
		1	**8L-8598**	1	ROD END	
		1	**146-0705**	1	ROD	
	13	1	**8X-5499**	2	RETAINER	
	14	2	**9M-1853**	6	MOUNTING	
	15	1	**101-2457**	1	LEVER (SCARIFIER)	
	15A	1	**101-2457**	1	LEVER (ARTICULATION)	
	16	1	**101-2458**	1	LEVER (BLADE TIP)	
	16A	1	**101-2458**	1	LEVER (DOZER, PLOW)	
	17	2	**104-7419**	1	PLATE AS (RH)	
		2	**1F-0748**	2	NUT-WELD (1/2-13-THD)	
	18	2	**104-7429**	2	PLATE	
	19	2	**104-7740**	1	PLATE AS (LH)	
		2	**1F-0748**	2	NUT-WELD (1/2-13-THD)	
	20	1	**137-4515**	2	BUSHING	
	21	1	**137-4516**	1	SHAFT	
	22	2	*164-5608*	2	CONNECTOR AS	
					(EACH INCLUDES)	
		2	**8T-1687**	1	CONNECTOR	
		2	**3K-0360**	1	SEAL-O-RING	
		2	**6V-8398**	1	SEAL-O-RING	
	23	1	**244-2585**	1	TUBE AS	
	24	1	**244-2589**	1	TUBE AS	
	25	1	**244-2593**	1	TUBE AS	
	26	1	**244-2597**	1	TUBE AS	
Y	27	1	**250-0548**	1	VALVE GP-BANK 5 (RH)	521
	28	2	*148-8318*	2	CONNECTOR AS	
					(EACH INCLUDES)	
		2	**6V-8634**	1	CONNECTOR	
		2	**3K-0360**	1	SEAL-O-RING	
		2	**6V-8397**	1	SEAL-O-RING	
	29	2	*206-5123*	2	TEE AS	
					(EACH INCLUDES)	
		2	**206-5122**		TEE	
		2	**6V-8397**	1	SEAL-O-RING	
		2	**6V-8398**	1	SEAL-O-RING	
Y	30	1	**262-7291**	1	VALVE GP-BANK 5 (LH)	524
	31	1	**2G-6747**	1	KNOB-BLADE TIP	
	32	1	**2G-6748**	1	KNOB-BLADE LIFT	

331-1514 VALVE & LINKAGE GP *(contd.)* i03266521

NOTE	REF NO	GRAPHIC REF	PART NUMBER	QTY	PART NAME 1 2 3 4 5 6 (PRODUCT LEVEL)	SEE PAGE
	33	1	**2G-6749**	1	KNOB-SIDESHIFT	
	34	1	**2G-6751**	1	KNOB-CIRCLE DRIVE	
	35	1	**2G-6752**	1	KNOB-ARTICULATION	
	36	1	**2G-6753**	1	KNOB-SCARIFIER	
	37	1	**2G-6754**	1	KNOB (BULLDOZER LIFT, PLOW)	
	38	1	**2G-6755**	1	KNOB-CENTERSHIFT	
	39	1	**2G-6756**	1	KNOB-WHEEL LEAN	
	40	1	**2G-6757**	1	KNOB-BLADE LIFT (LH)	
	41	2	**3J-1907**	4	SEAL-O-RING	
	42	1	**4L-6459**	1	BOLT (3/8-16X2.5-IN)	
	43	1	**5P-1075**	2	WASHER-HARD (10.2X22.5X3-MM THK)	
	44	2	**5P-1076**	6	WASHER-HARD (13.5X30X4-MM THK)	
	45	2	**5P-2424**	6	BOLT (1/2-13X2.25-IN)	
	46	2	**6V-8188**	2	NUT (1/2-13-THD)	
	47	1,2	**6V-8397**	8	SEAL-O-RING	
	48	2	**6V-9836**	2	TEE-SWIVEL	
	49	2	**8F-6437**	6	WASHER (13.5X50.8X4.76-MM THK)	
	50	2	**8T-4121**	8	WASHER-HARD (11X21X2.5-MM THK)	
M	51	2	**8T-4136**	4	BOLT (M10X1.5X25-MM)	
M	52	2	**8T-4195**	4	BOLT (M10X1.5X30-MM)	
	53	2	**8T-9041**	4	CONNECTOR	
	54	1	**8T-9043**	20	BOLT (5/16-18X0.875-IN)	
	55	1	**9B-7237**	1	BOLT (3/8-16X1.25-IN)	

B-USE AS REQUIRED
M-METRIC PART
Y-SEPARATE ILLUSTRATION

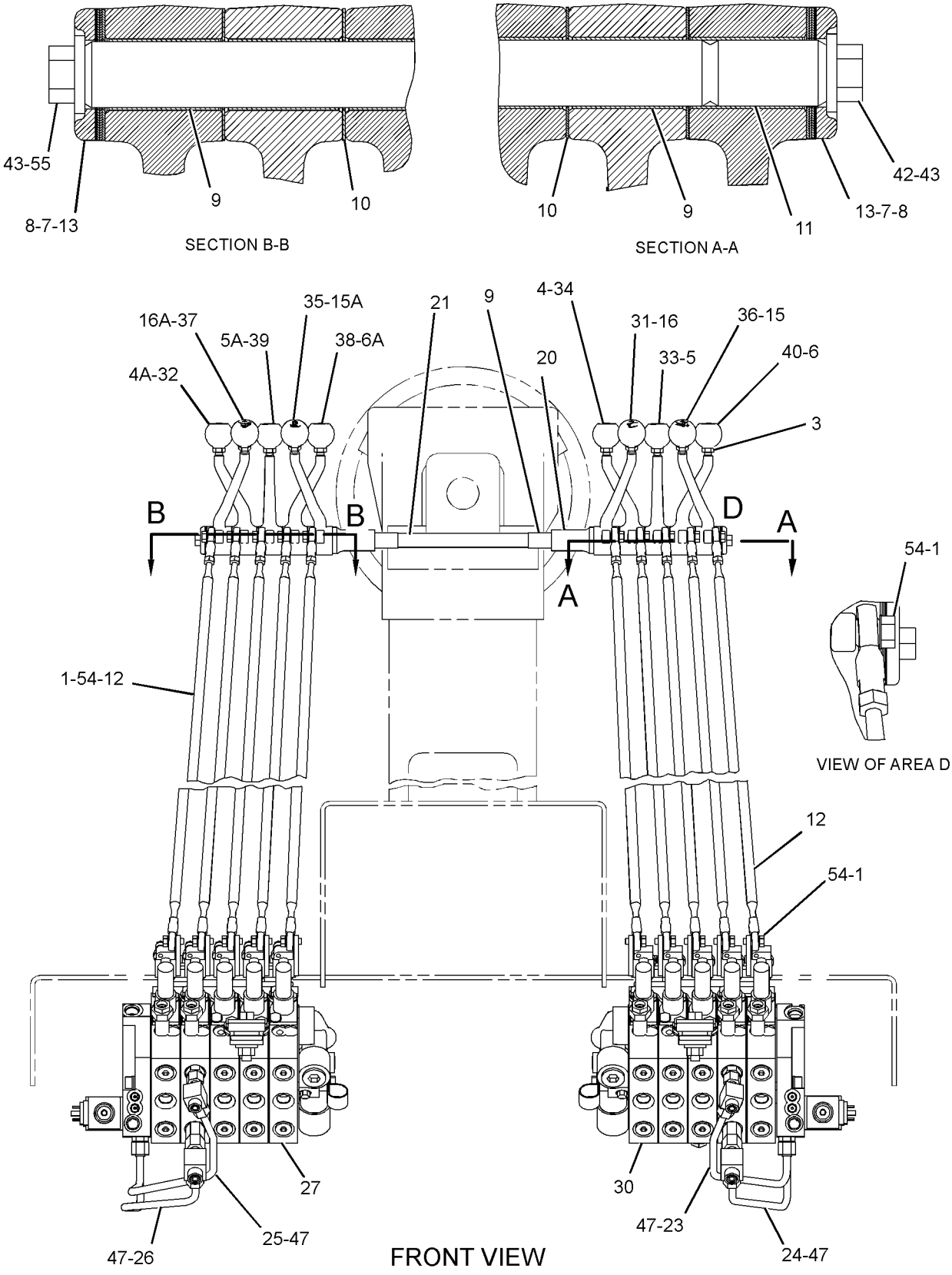

GRAPHIC #1 g01710933

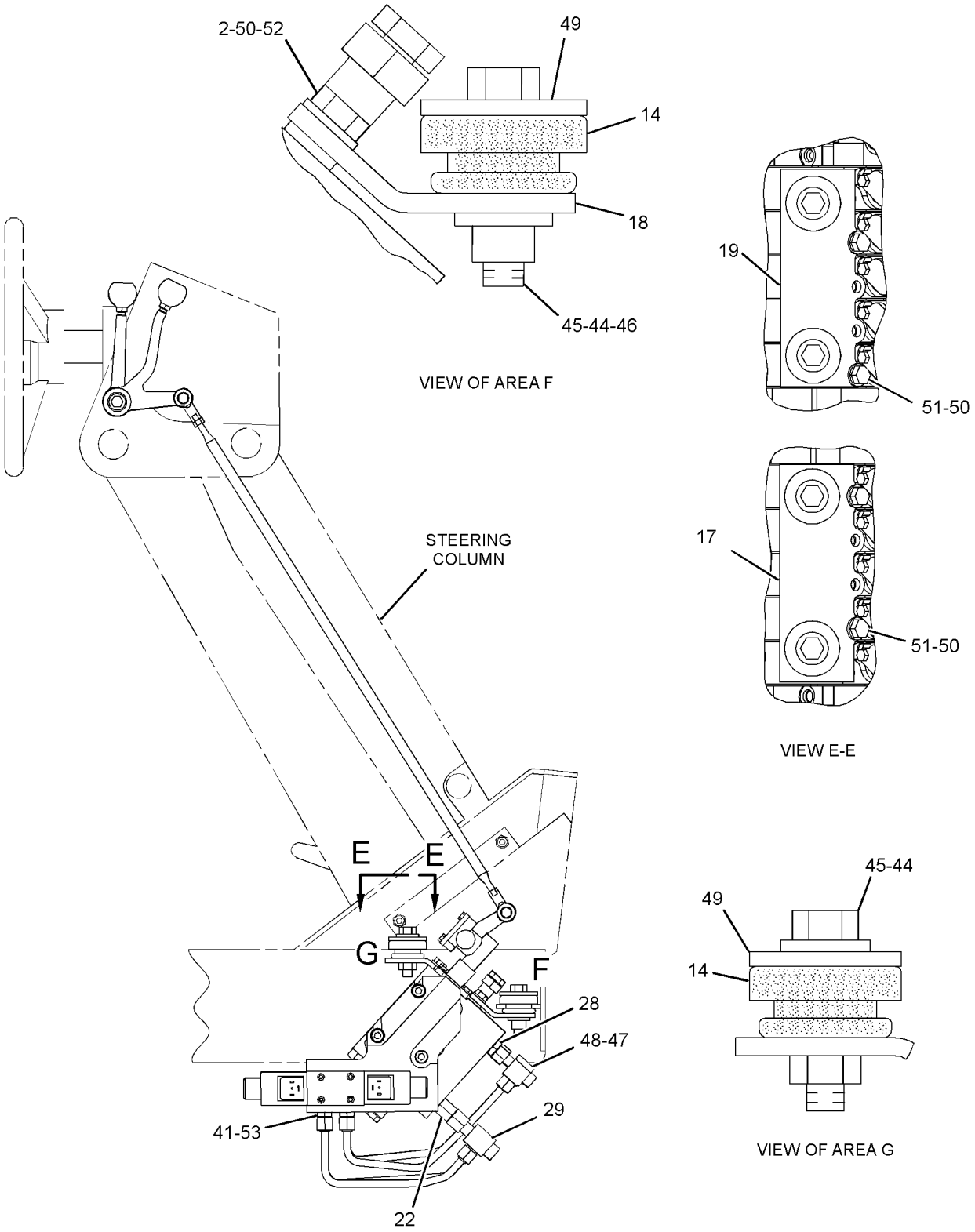

RIGHT SIDE VIEW

GRAPHIC #2 **<END>** g01710936

HYDRAULIC SYSTEM

331-1515 VALVE & LINKAGE GP—5-BANK, RH; 7-BANK, LH

S/N: JBP1-UP

AN ATTACHMENT

SMCS-5051, 5063 **i03266305**

NOTE	REF NO	GRAPHIC REF	PART NUMBER	QTY	PART NAME 1 2 3 4 5 6 (PRODUCT LEVEL)	SEE PAGE
	1	1,2	**3F-9556**	24	LOCKWASHER	
	2	2	**6B-0933**	4	SPACER (10.31X19.05X6.35-MM THK)	
	3	1	**6L-1962**	12	NUT-JAM (3/8-24-THD)	
	4	1	**8D-5632**	1	LEVER (CIRCLE DRIVE)	
	4A	1	**8D-5632**	1	LEVER (BLADE LIFT, RH)	
	5	1	**8D-5633**	1	LEVER (SIDESHIFT)	
	5A	1	**8D-5633**	1	LEVER (WHEEL LEAN)	
	6	1	**8D-5634**	1	LEVER (BLADE LIFT, LH)	
	6A	1	**8D-5634**	1	LEVER (CENTERSHIFT)	
B	7	1	**8D-5636**	4	SHIM (0.254-MM THK)	
B	8	1	**8D-5637**	4	SHIM (0.762-MM THK)	
	9	1	**8D-5640**	14	BEARING	
	10	1	**8D-5641**	12	BEARING	
	11	1	**8W-0456**	3	SHAFT	
	12	1	*8X-4277*	12	ROD AS	
					(EACH INCLUDES)	
		1	**6V-8186**	1	NUT-FULL (5/16-24-THD)	
		1	**7H-3641**	1	END-ROD (5/16-24-THD)	
		1	**8L-8598**	1	ROD END	
		1	**146-0705**	1	ROD	
	13	1	**8X-5499**	2	RETAINER	
	14	2	**9M-1853**	6	MOUNTING	
	15	1	**101-2457**	1	LEVER (SCARIFIER)	
	15A	1	**101-2457**	1	LEVER (ARTICULATION)	
	16	1	**101-2458**	1	LEVER (WING LIFT)	
	16A	1	**101-2458**	1	LEVER (BLADE TIP)	
	16B	1	**101-2458**	1	LEVER (DOZER, PLOW)	
	17	1	**103-1597**	1	LEVER (WING TILT)	
	18	2	**104-7419**	1	PLATE AS (RH)	
		2	**1F-0748**	2	NUT-WELD (1/2-13-THD)	
	19	2	**104-7429**	2	PLATE	
	20	2	**104-7740**	1	PLATE AS (LH)	
		2	**1F-0748**	2	NUT-WELD (1/2-13-THD)	
	21	1	**137-4515**	2	BUSHING	
	22	1	**137-4516**	1	SHAFT	
	23	2	*164-5608*	2	CONNECTOR AS	
					(EACH INCLUDES)	
		2	**3K-0360**	1	SEAL-O-RING	
		2	**6V-8398**	1	SEAL-O-RING	
		2	**8T-1687**	1	CONNECTOR	
	24	1	**244-2587**	1	TUBE AS	
	25	1	**244-2591**	1	TUBE AS	
	26	1	**244-2593**	1	TUBE AS	
	27	1	**244-2597**	1	TUBE AS	
Y	28	1	**250-0548**	1	VALVE GP-BANK 5 (RH)	521
	29	2	*148-8318*	2	CONNECTOR AS	
					(EACH INCLUDES)	
		2	**3K-0360**	1	SEAL-O-RING	
		2	**6V-8397**	1	SEAL-O-RING	
		2	**6V-8634**	1	CONNECTOR	
	30	2	*206-5123*	2	TEE AS	
					(EACH INCLUDES)	
		2	**6V-8397**	1	SEAL-O-RING	
		2	**6V-8398**	1	SEAL-O-RING	
		2	**206-5122**	1	TEE	
Y	31	1	**263-6435**	1	VALVE GP-BANK 7 (LH)	530

331-1515 VALVE & LINKAGE GP *(contd.)* i03266305

NOTE	REF NO	GRAPHIC REF	PART NUMBER	QTY	PART NAME 1 2 3 4 5 6 (PRODUCT LEVEL)	SEE PAGE
	32	1	**2G-6747**	1	KNOB-BLADE TIP	
	33	1	**2G-6748**	1	KNOB-BLADE LIFT	
	34	1	**2G-6749**	1	KNOB-SIDESHIFT	
	35	1	**2G-6751**	1	KNOB-CIRCLE DRIVE	
	36	1	**2G-6752**	1	KNOB-ARTICULATION	
	37	1	**2G-6753**	1	KNOB-SCARIFIER	
	38	1	**2G-6754**	1	KNOB (BULLDOZER LIFT, PLOW)	
	39	1	**2G-6755**	1	KNOB-CENTERSHIFT	
	40	1	**2G-6756**	1	KNOB-WHEEL LEAN	
	41	1	**2G-6757**	1	KNOB-BLADE LIFT	
	42	1	**2G-7107**	1	KNOB-WING LIFT	
	43	1	**2G-7108**	1	KNOB-WING TILT	
	44	2	**3J-1907**	4	SEAL-O-RING	
	45	1	**4L-6459**	1	BOLT (3/8-16X2.5-IN)	
	46	1	**5P-1075**	2	WASHER-HARD (10.2X22.5X3-MM THK)	
	47	2	**5P-1076**	6	WASHER-HARD (13.5X30X4-MM THK)	
	48	2	**5P-2424**	6	BOLT (1/2-13X2.25-IN)	
	49	2	**6V-8188**	2	NUT (1/2-13-THD)	
	50	1,2	**6V-8397**	8	SEAL-O-RING	
	51	2	**6V-9836**	2	TEE-SWIVEL	
	52	1	**7X-0291**	1	BOLT (3/8-16X3.75-IN)	
	53	2	**8F-6437**	6	WASHER (13.5X50.8X4.76-MM THK)	
	54	2	**8T-4121**	8	WASHER-HARD (11X21X2.5-MM THK)	
M	55	2	**8T-4136**	4	BOLT (M10X1.5X25-MM)	
M	56	2	**8T-4195**	4	BOLT (M10X1.5X30-MM)	
	57	2	**8T-9041**	4	CONNECTOR	
	58	1,2	**8T-9043**	24	BOLT (5/16-18X0.875-IN)	

B-USE AS REQUIRED
M-METRIC PART
Y-SEPARATE ILLUSTRATION

REFER TO ALL ILLUSTRATIONS OF
THIS GROUP FOR AUXILIARY VIEWS

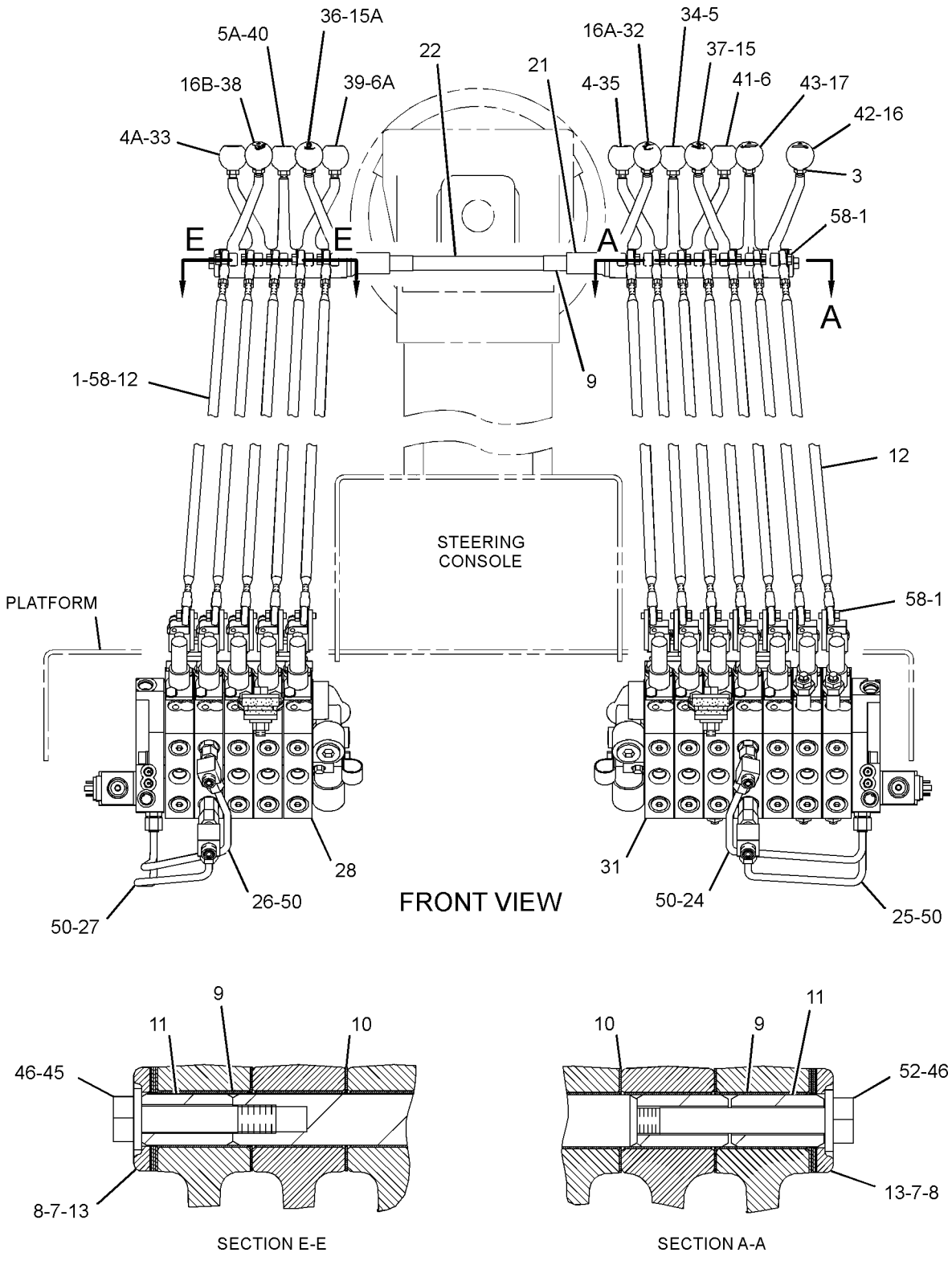

GRAPHIC #1

g01712641

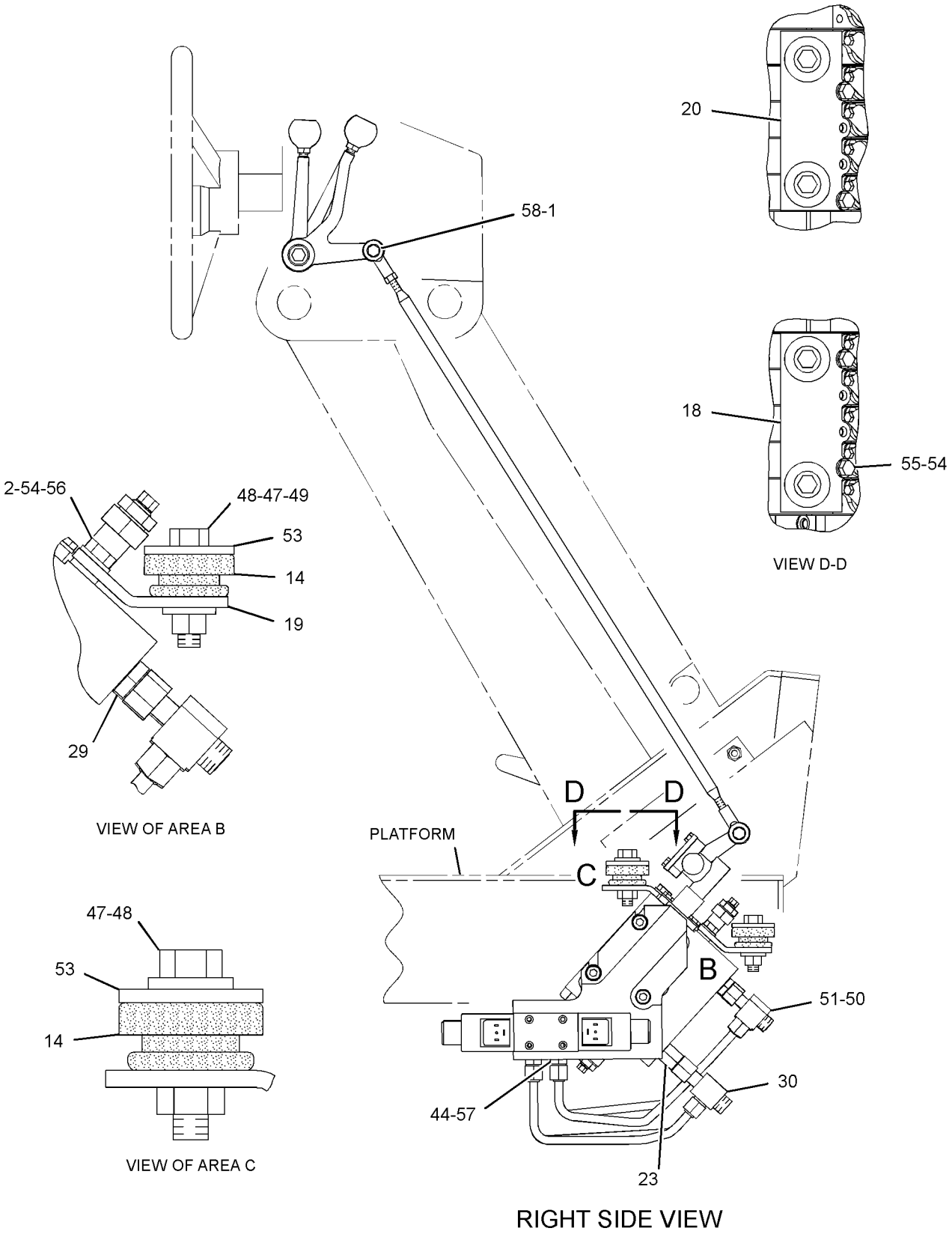

GRAPHIC #2 **<END>** g01242109

HYDRAULIC SYSTEM

331-1516 VALVE & LINKAGE GP—5-BANK, RH; 6-BANK, LH

S/N: JBP1-UP

AN ATTACHMENT

SMCS-5051, 5063 **i03266502**

NOTE	REF NO	GRAPHIC REF	PART NUMBER	QTY	PART NAME 1 2 3 4 5 6 (PRODUCT LEVEL)	SEE PAGE
	1	1	**3F-9556**	22	LOCKWASHER	
	2	2	**6B-0933**	4	SPACER (10.31X19.05X6.35-MM THK)	
	3	1	**6L-1962**	11	NUT-JAM (3/8-24-THD)	
	4	1	**8D-5632**	1	LEVER (CIRCLE DRIVE)	
	4A	1	**8D-5632**	1	LEVER (BLADE LIFT, RH)	
	5	1	**8D-5633**	1	LEVER (SIDESHIFT)	
	5A	1	**8D-5633**	1	LEVER (WHEEL LEAN)	
	6	1	**8D-5634**	1	LEVER (BLADE LIFT, LH)	
	6A	1	**8D-5634**	1	LEVER (CENTERSHIFT)	
B	7	1	**8D-5636**	4	SHIM (0.254-MM THK)	
B	8	1	**8D-5637**	4	SHIM (0.762-MM THK)	
	9	1	**8D-5640**	13	BEARING	
	10	1	**8D-5641**	11	BEARING	
	11	1	**8W-0456**	2	SHAFT	
	12	1	*8X-4277*	11	ROD AS	
					(EACH INCLUDES)	
		1	**8L-8598**	1	ROD END	
		1	**6V-8186**	1	NUT-FULL (5/16-24-THD)	
		1	**7H-3641**	1	END-ROD (5/16-24-THD)	
		1	**146-0705**	1	ROD	
	13	1	**8X-5499**	2	RETAINER	
	14	2	**9M-1853**	6	MOUNTING	
	15	1	**101-2457**	1	LEVER (WING TILT)	
	15A	1	**101-2457**	1	LEVER (ARTICULATION)	
	16	1	**101-2458**	1	LEVER (BLADE TIP)	
	16A	1	**101-2458**	1	LEVER (PLOW, DOZER)	
	17	1	**103-1597**	1	LEVER (WING LIFT)	
	18	2	**104-7419**	1	PLATE AS (RH)	
		2	**1F-0748**	2	NUT-WELD (1/2-13-THD)	
	19	2	**104-7429**	2	PLATE	
	20	2	**104-7740**	1	PLATE AS (LH)	
		2	**1F-0748**	2	NUT-WELD (1/2-13-THD)	
	21	1	**137-4515**	2	BUSHING	
	22	1	**137-4516**	1	SHAFT	
	23	2	*164-5608*	2	CONNECTOR AS	
					(EACH INCLUDES)	
		2	**8T-1687**	1	CONNECTOR	
		2	**6V-8398**	1	SEAL-O-RING	
		2	**3K-0360**	1	SEAL-O-RING	
	24	1	**244-2586**	1	TUBE AS	
	25	1	**244-2590**	1	TUBE AS	
	26	1	**244-2593**	1	TUBE AS	
	27	1	**244-2597**	1	TUBE AS	
Y	28	1	**250-0548**	1	VALVE GP-BANK 5 (RH)	521
Y	29	1	**250-0567**	1	VALVE GP-BANK 6 (LH)	528
	30	2	*148-8318*	2	CONNECTOR AS	
					(EACH INCLUDES)	
		2	**6V-8634**	1	CONNECTOR	
		2	**3K-0360**	1	SEAL-O-RING	
		2	**6V-8397**	1	SEAL-O-RING	
	31	2	*206-5123*	2	TEE AS	
					(EACH INCLUDES)	
		2	**206-5122**	1	TEE	
		2	**6V-8397**	1	SEAL-O-RING	
		2	**6V-8398**	1	SEAL-O-RING	
	32	1	**2G-6747**	1	KNOB-BLADE TIP	

331-1516 VALVE & LINKAGE GP *(contd.)* i03266502

NOTE	REF NO	GRAPHIC REF	PART NUMBER	QTY	PART NAME 1 2 3 4 5 6 (PRODUCT LEVEL)	SEE PAGE
	33	1	**2G-6748**	1	KNOB-BLADE LIFT (RH)	
	34	1	**2G-6749**	1	KNOB-SIDESHIFT	
	35	1	**2G-6751**	1	KNOB-CIRCLE DRIVE	
	36	1	**2G-6752**	1	KNOB-ARTICULATION	
	37	1	**2G-6754**	1	KNOB (BULLDOZER LIFT, PLOW)	
	38	1	**2G-6755**	1	KNOB-CENTERSHIFT	
	39	1	**2G-6756**	1	KNOB-WHEEL LEAN	
	40	1	**2G-6757**	1	KNOB-BLADE LIFT (LH)	
	41	1	**2G-7107**	1	KNOB-WING LIFT	
	42	1	**2G-7108**	1	KNOB-WING TILT	
	43	2	**3J-1907**	4	SEAL-O-RING	
	44	1	**4L-6459**	2	BOLT (3/8-16X2.5-IN)	
	45	1	**5P-1075**	2	WASHER-HARD (10.2X22.5X3-MM THK)	
	46	2	**5P-1076**	6	WASHER-HARD (13.5X30X4-MM THK)	
	47	2	**5P-2424**	6	BOLT (1/2-13X2.25-IN)	
	48	2	**6V-8188**	2	NUT (1/2-13-THD)	
	49	1,2	**6V-8397**	8	SEAL-O-RING	
	50	2	**6V-9836**	2	TEE-SWIVEL	
	51	2	**8F-6437**	6	WASHER (13.5X50.8X4.76-MM THK)	
	52	2	**8T-4121**	8	WASHER-HARD (11X21X2.5-MM THK)	
M	53	2	**8T-4136**	4	BOLT (M10X1.5X25-MM)	
M	54	2	**8T-4195**	4	BOLT (M10X1.5X30-MM)	
	55	2	**8T-9041**	4	CONNECTOR	
	56	1	**8T-9043**	22	BOLT (5/16-18X0.875-IN)	

B-USE AS REQUIRED
M-METRIC PART
Y-SEPARATE ILLUSTRATION

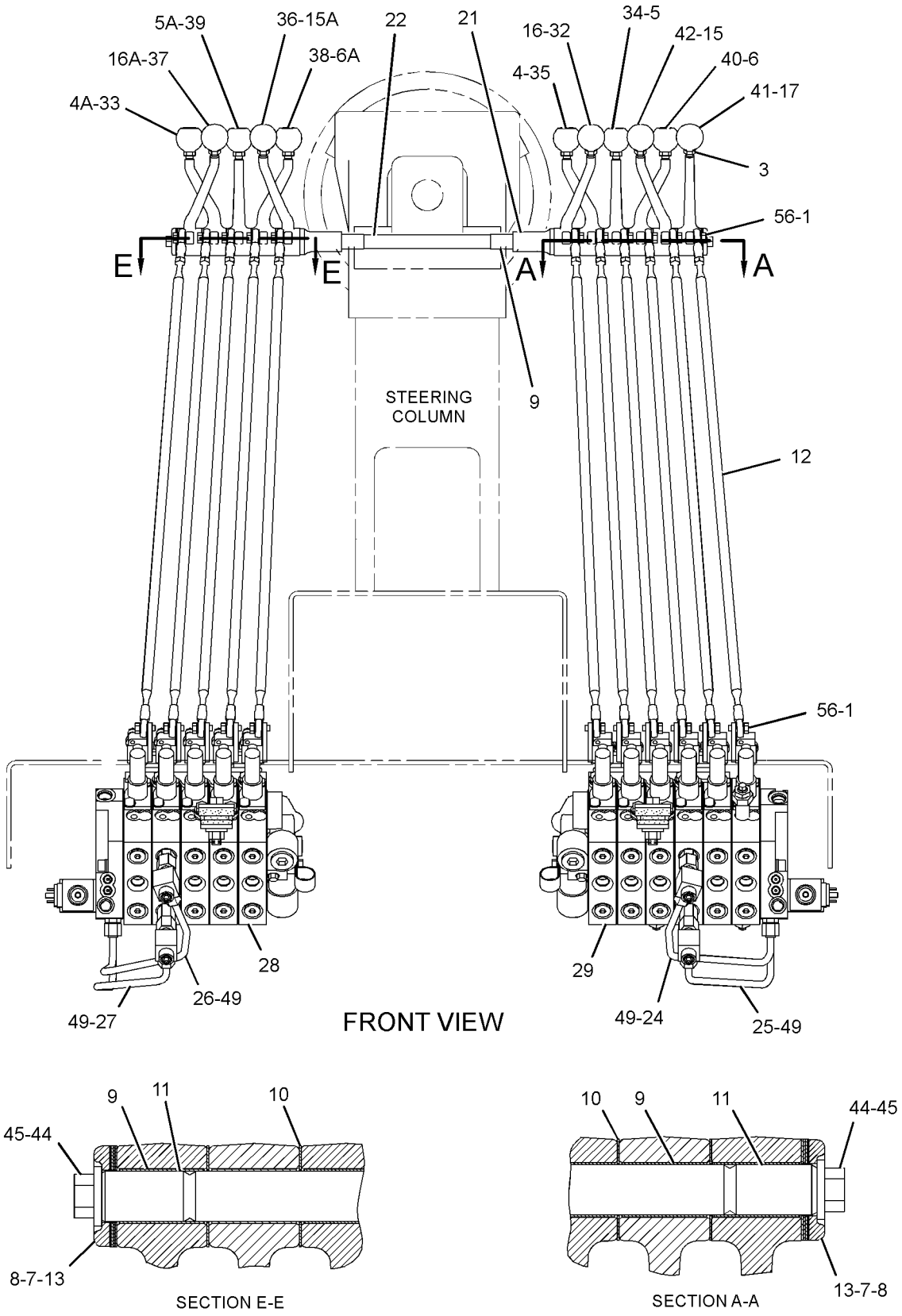

GRAPHIC #1 g01258802

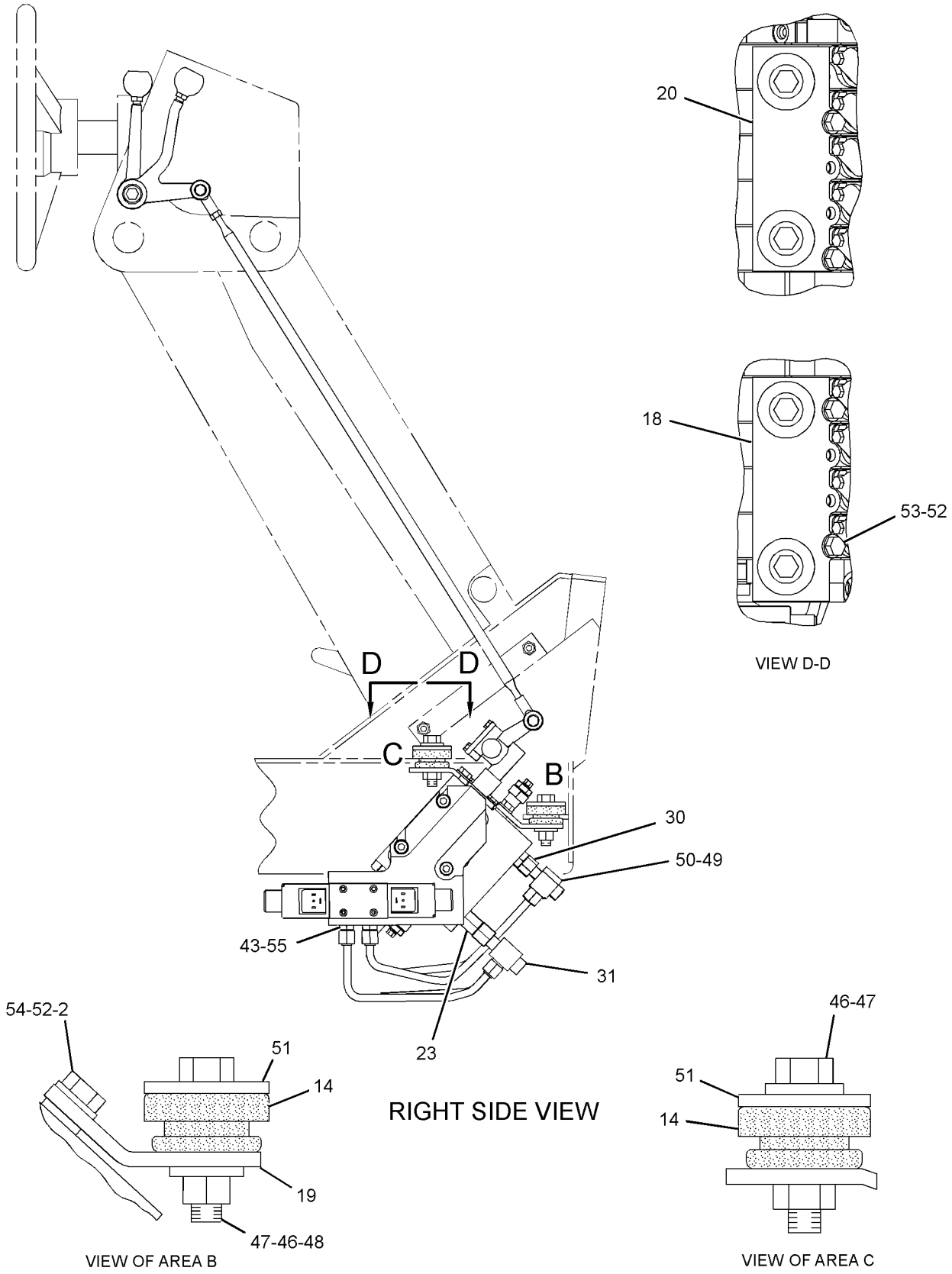

GRAPHIC #2 **<END>** g01258809

HYDRAULIC SYSTEM

331-1517 VALVE & LINKAGE GP—4-BANK, RH, LH

S/N: JBP1-UP
AN ATTACHMENT

SMCS-5051, 5063 **i03255882**

NOTE	REF NO	GRAPHIC REF	PART NUMBER	QTY	PART NAME 1 2 3 4 5 6 (PRODUCT LEVEL)	SEE PAGE
	1	1	**3F-9556**	16	LOCKWASHER	
	2	2	**6B-0933**	4	SPACER (10.31X19.05X6.35-MM THK)	
	3	1	**6L-1962**	8	NUT-JAM (3/8-24-THD)	
	4	1	**8D-5632**	1	LEVER (BLADE LIFT, RH)	
	4A	1	**8D-5632**	1	LEVER (CIRCLE DRIVE)	
	5	1	**8D-5633**	1	LEVER (WHEEL LEAN)	
	5A	1	**8D-5633**	1	LEVER (SIDESHIFT)	
	6	1	**8D-5634**	1	LEVER (CENTERSHIFT)	
	6A	1	**8D-5634**	1	LEVER (BLADE LIFT, LH)	
B	7	1	**8D-5636**	4	SHIM (0.254-MM THK)	
B	8	1	**8D-5637**	4	SHIM (0.762-MM THK)	
	9	1	**8D-5640**	10	BEARING	
	10	1	**8D-5641**	8	BEARING	
	11	1	*8X-4277*	8	ROD AS	
					(EACH INCLUDES)	
		1	**6V-8186**	1	NUT-FULL (5/16-24-THD)	
		1	**7H-3641**	1	END-ROD (5/16-24-THD)	
		1	**8L-8598**	1	ROD END	
		1	**146-0705**	1	ROD	
	12	1	**8X-5498**	2	RETAINER	
	13	2	**9M-1853**	6	MOUNTING	
	14	1	**101-2457**	1	LEVER	
	15	1	**101-2458**	1	LEVER	
	16	2	**104-7419**	1	PLATE AS (RH)	
		2	**1F-0748**	2	NUT-WELD (1/2-13-THD)	
	17	2	**104-7429**	2	PLATE	
	18	2	**104-7740**	1	PLATE AS (LH)	
		2	**1F-0748**	2	NUT-WELD (1/2-13-THD)	
	19	1	**137-4515**	2	BUSHING	
	20	1	**137-4516**	1	SHAFT	
	21	2	*164-5608*	2	CONNECTOR AS	
					(EACH INCLUDES)	
		2	**3K-0360**	1	SEAL-O-RING	
		2	**6V-8398**	1	SEAL-O-RING	
		2	**8T-1687**	1	CONNECTOR	
	22	1	**244-2584**	1	TUBE AS	
	23	1	**244-2588**	1	TUBE AS	
	24	1	**244-2592**	1	TUBE AS	
	25	1	**244-2596**	1	TUBE AS	
Y	26	1	**250-0543**	1	VALVE GP-BANK 4 (LH)	513
Y	27	1	**250-0544**	1	VALVE GP-BANK 4 (RH)	514
	28	2	*148-8318*	2	CONNECTOR AS	
					(EACH INCLUDES)	
		2	**3K-0360**	1	SEAL-O-RING	
		2	**6V-8397**	1	SEAL-O-RING	
		2	**6V-8634**	1	CONNECTOR	
	29	2	**153-1818**	1	ELBOW	
	30	2	*206-5123*	4	TEE AS	
					(EACH INCLUDES)	
		2	**6V-8397**	1	SEAL-O-RING	
		2	**6V-8398**	1	SEAL-O-RING	
		2	**206-5122**	1	TEE	
	31	1	**2G-6747**	1	KNOB-BLADE TIP	
	32	1	**2G-6748**	1	KNOB-BLADE LIFT	
	33	1	**2G-6749**	1	KNOB-SIDESHIFT	
	34	1	**2G-6751**	1	KNOB-CIRCLE DRIVE	

331-1517 VALVE & LINKAGE GP *(contd.)* i03255882

NOTE	REF NO	GRAPHIC REF	PART NUMBER	QTY	PART NAME 1 2 3 4 5 6 (PRODUCT LEVEL)	SEE PAGE
	35	1	**2G-6752**	1	KNOB-ARTICULATION	
	36	1	**2G-6755**	1	KNOB-CENTERSHIFT	
	37	1	**2G-6756**	1	KNOB-WHEEL LEAN	
	38	1	**2G-6757**	1	KNOB-BLADE LIFT	
	39	2	**3J-1907**	4	SEAL-O-RING	
	40	1	**5P-1075**	2	WASHER-HARD (10.2X22.5X3-MM THK)	
	41	2	**5P-1076**	6	WASHER-HARD (13.5X30X4-MM THK)	
	42	2	**5P-2424**	6	BOLT (1/2-13X2.25-IN)	
	43	2	**6V-8188**	2	NUT (1/2-13-THD)	
	44	1,2	**6V-8397**	8	SEAL-O-RING	
	45	2	**6V-9836**	2	TEE-SWIVEL	
	46	2	**8F-6437**	6	WASHER (13.5X50.8X4.76-MM THK)	
	47	2	**8T-4121**	8	WASHER-HARD (11X21X2.5-MM THK)	
M	48	2	**8T-4136**	4	BOLT (M10X1.5X25-MM)	
M	49	2	**8T-4195**	4	BOLT (M10X1.5X30-MM)	
	50	2	**8T-9041**	3	CONNECTOR	
	51	1	**8T-9043**	16	BOLT (5/16-18X0.875-IN)	
	52	1	**9B-7237**	2	BOLT (3/8-16X1.25-IN)	

B-USE AS REQUIRED
M-METRIC PART
Y-SEPARATE ILLUSTRATION

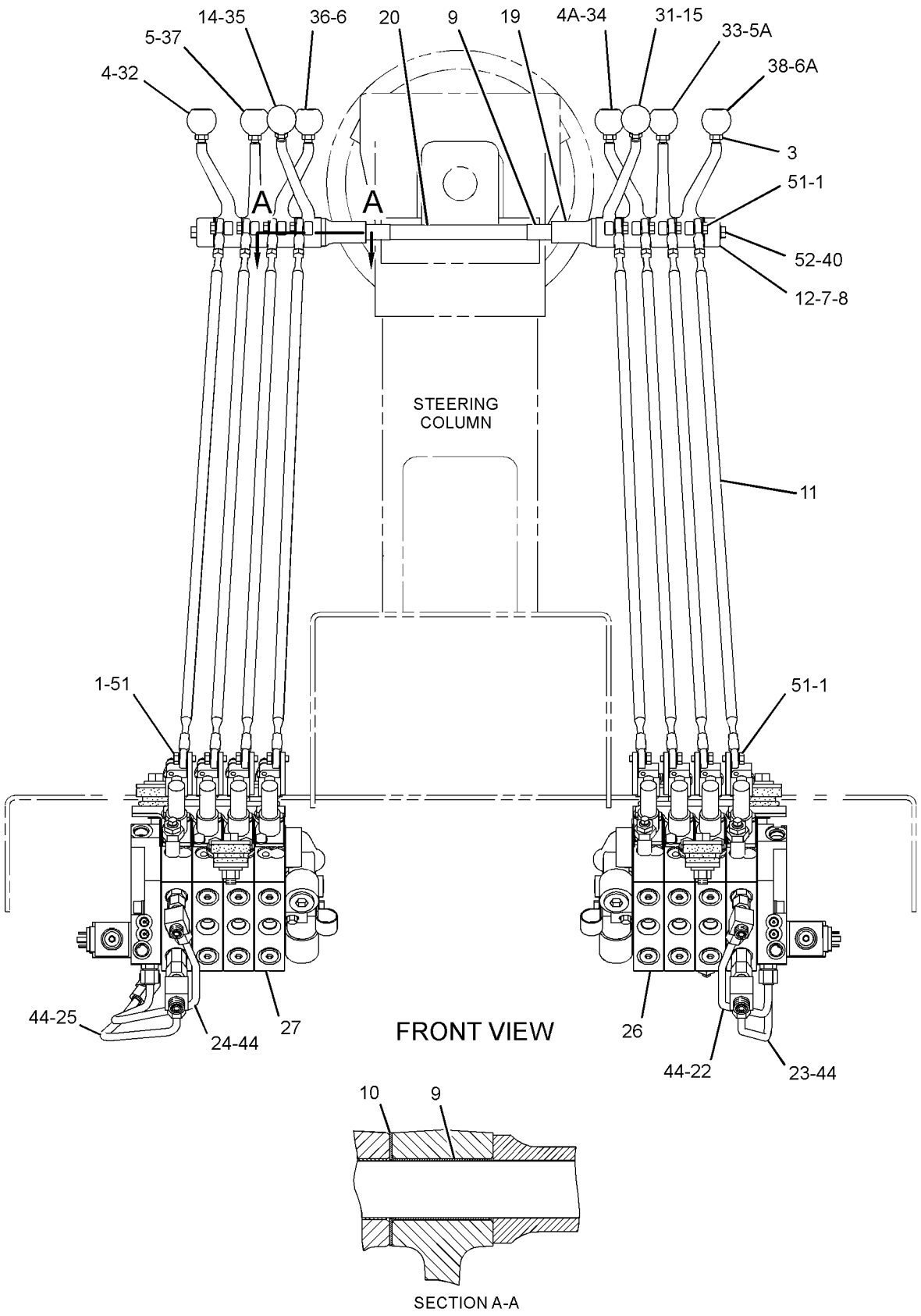

GRAPHIC #1

g01259648

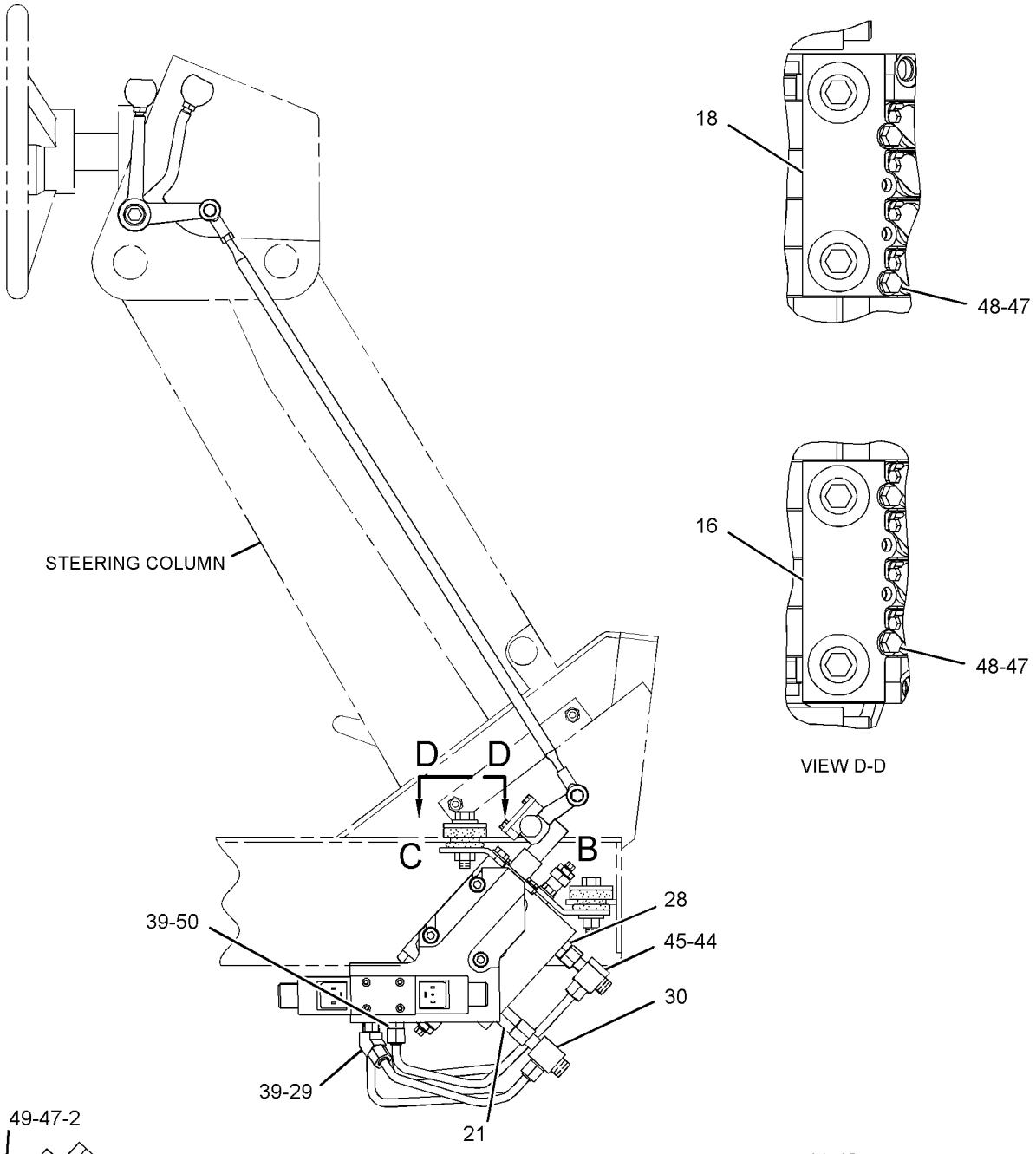

GRAPHIC #2 **<END>** g01259647

104-8672 VALVE GP-BANK 2–LH

S/N: JBP1-UP

PART OF 112-6795 VALVE & LINKAGE GP

SMCS-5051 **i00857865**

NOTE	REF NO	GRAPHIC REF	PART NUMBER	QTY	PART NAME 1 2 3 4 5 6 (PRODUCT LEVEL)	SEE PAGE
M	1	1	**7X-2546**	2	BOLT (M10X1.5X180-MM)	
M	2	1	**137-6720**	1	BOLT (M10X1.5X160-MM)	
	3	1	**102-8385**	1	MANIFOLD	
	4	1	**101-0509**	5	SEAL-INTEGRAL	
Y	5	1	**124-2883**	1	VALVE GP-CONTROL (BLADE LIFT)	557
	6	1	**111-9321**	2	SPACER	
Y	7	1	**6E-3035**	1	VALVE GP-CONTROL (CIRCLE DRIVE)	543
	8	1	**101-9346**	1	COVER	
M	9	1	**8T-4186**	3	BOLT (M10X1.5X40-MM)	
	10	1	**4J-7533**	1	SEAL-O-RING	
	11	1	**9S-4180**	1	PLUG	

M-METRIC PART
Y-SEPARATE ILLUSTRATION

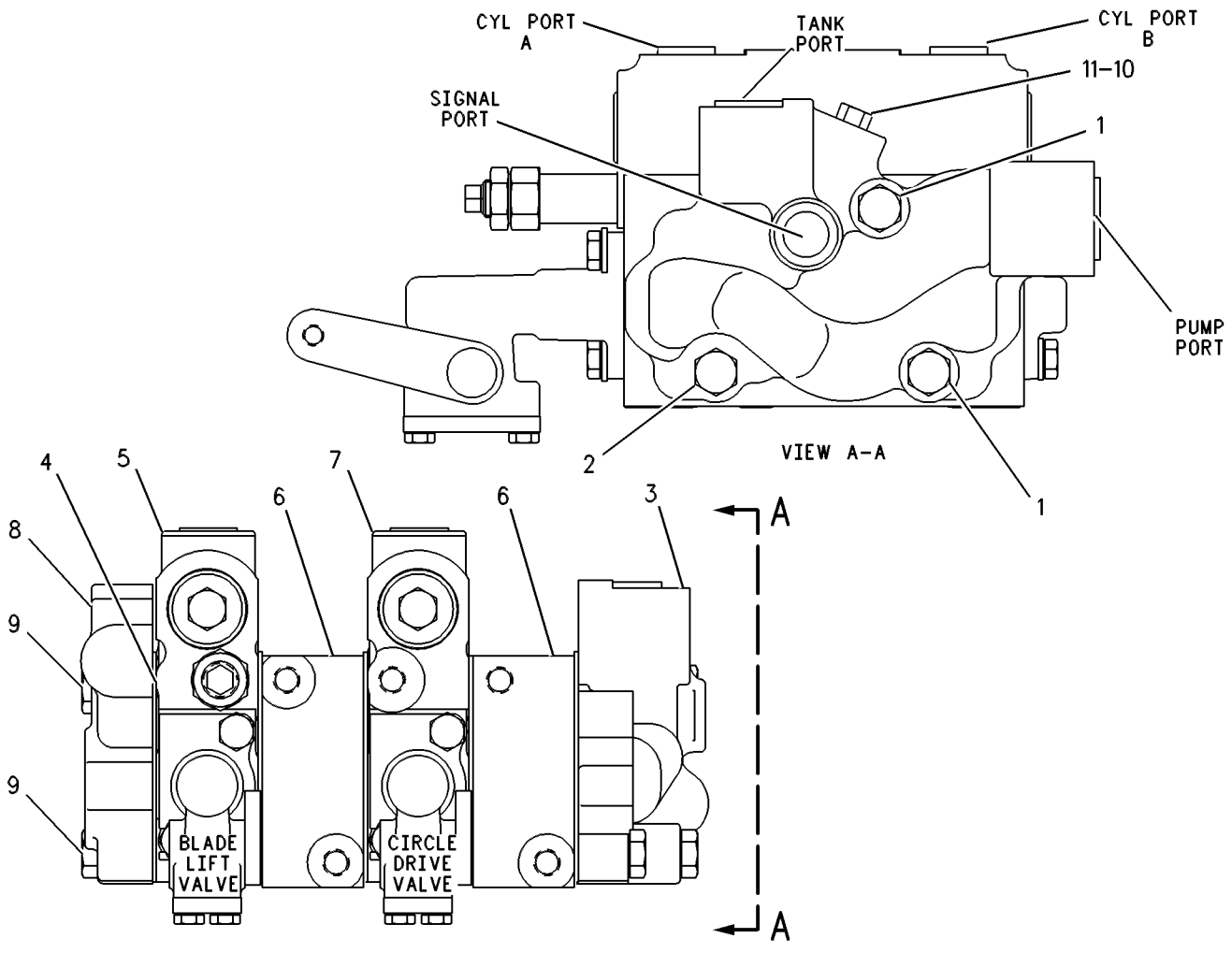

GRAPHIC #1 **<END>** g00272765

HYDRAULIC SYSTEM

104-8673 VALVE GP-BANK 3–LH

S/N: JBP1-UP
PART OF 112-6799 VALVE & LINKAGE GP
AN ATTACHMENT

SMCS-5051 **i00857866**

NOTE	REF NO	GRAPHIC REF	PART NUMBER	QTY	PART NAME 1 2 3 4 5 6 (PRODUCT LEVEL)	SEE PAGE
M	1	1	**7X-2546**	2	BOLT (M10X1.5X180-MM)	
M	2	1	**137-6720**	1	BOLT (M10X1.5X160-MM)	
	3	1	**102-8385**	1	MANIFOLD	
	4	1	**101-0509**	5	SEAL-INTEGRAL	
Y	5	1	**124-2883**	1	VALVE GP-CONTROL (BLADE LIFT)	557
Y	6	1	**6E-3036**	1	VALVE GP-CONTROL (SIDESHIFT)	545
Y	7	1	**6E-3035**	1	VALVE GP-CONTROL (CIRCLE DRIVE)	543
	8	1	**111-9321**	1	SPACER	
	9	1	**101-9346**	1	COVER	
M	10	1	**8T-4186**	3	BOLT (M10X1.5X40-MM)	
	11	1	**4J-7533**	1	SEAL-O-RING	
	12	1	**9S-4180**	1	PLUG	

M-METRIC PART
Y-SEPARATE ILLUSTRATION

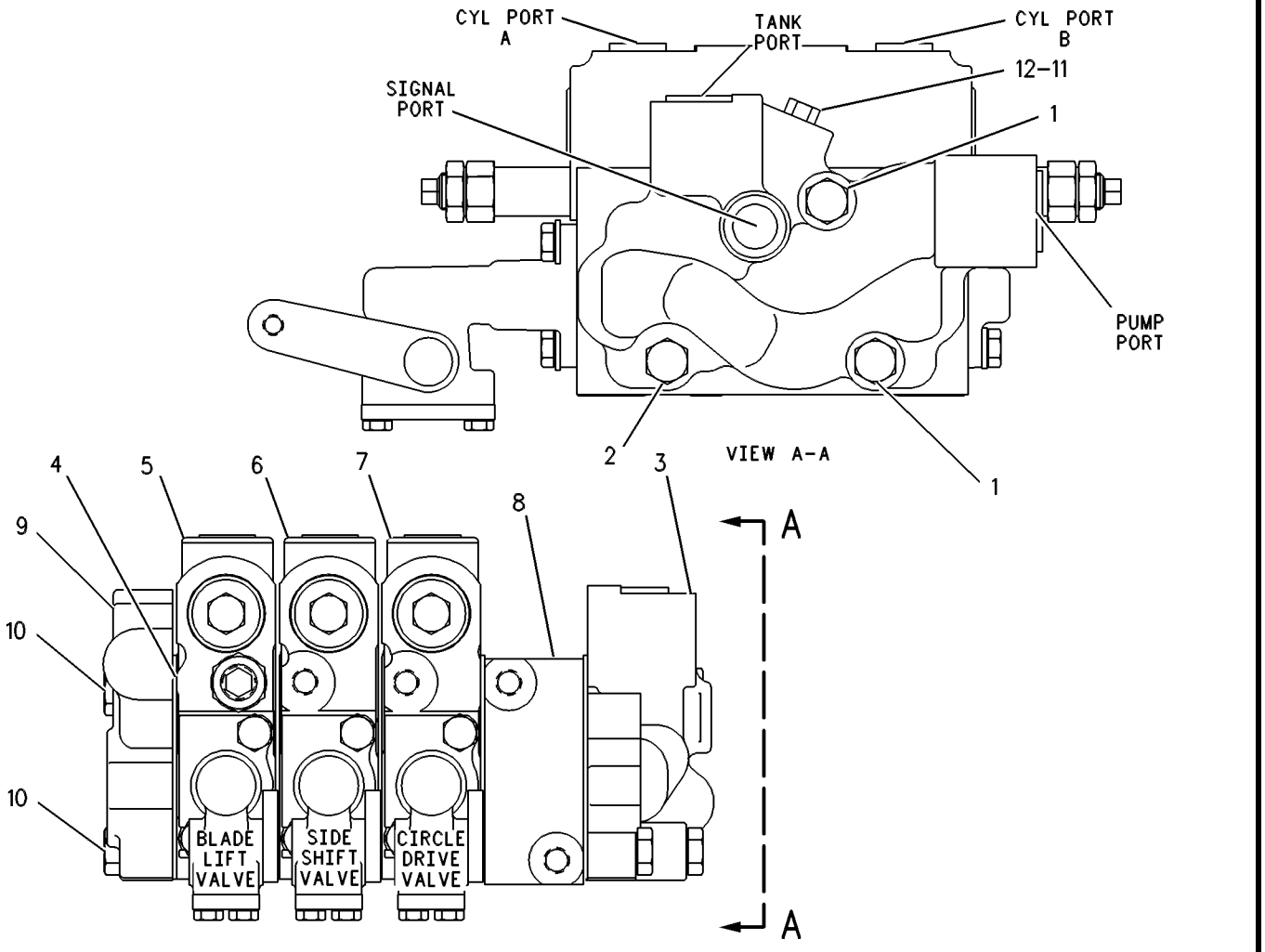

GRAPHIC #1 **<END>** g00272766

HYDRAULIC SYSTEM

112-2580 VALVE GP-BANK 3–LH

S/N: JBP1-UP
PART OF 112-6804 VALVE & LINKAGE GP
AN ATTACHMENT

SMCS-5051 **i03179202**

NOTE	REF NO	GRAPHIC REF	PART NUMBER	QTY	PART NAME 1 2 3 4 5 6 (PRODUCT LEVEL)	SEE PAGE
M	1	1	**7X-2546**	2	BOLT (M10X1.5X180-MM)	
M	2	1	**137-6720**	1	BOLT (M10X1.5X160-MM)	
	3	1	**102-8385**	1	MANIFOLD	
	4	1	**101-0509**	6	SEAL-INTEGRAL	
	5	1	**111-9321**	2	SPACER	
Y	6	1	**6E-3035**	1	VALVE GP-CONTROL (CIRCLE DRIVE)	543
Y	7	1	**124-2883**	1	VALVE GP-CONTROL (BLADE LIFT)	557
Y	8	1	**107-0543**	1	VALVE GP-CONTROL (SCARIFIER)	549
	9	1	**101-9346**	1	COVER	
M	10	1	**137-6719**	3	BOLT (M10X1.5X80-MM)	
	11	1	**9S-4180**	1	PLUG	
	12	1	**4J-7533**	1	SEAL-O-RING	

M-METRIC PART
Y-SEPARATE ILLUSTRATION

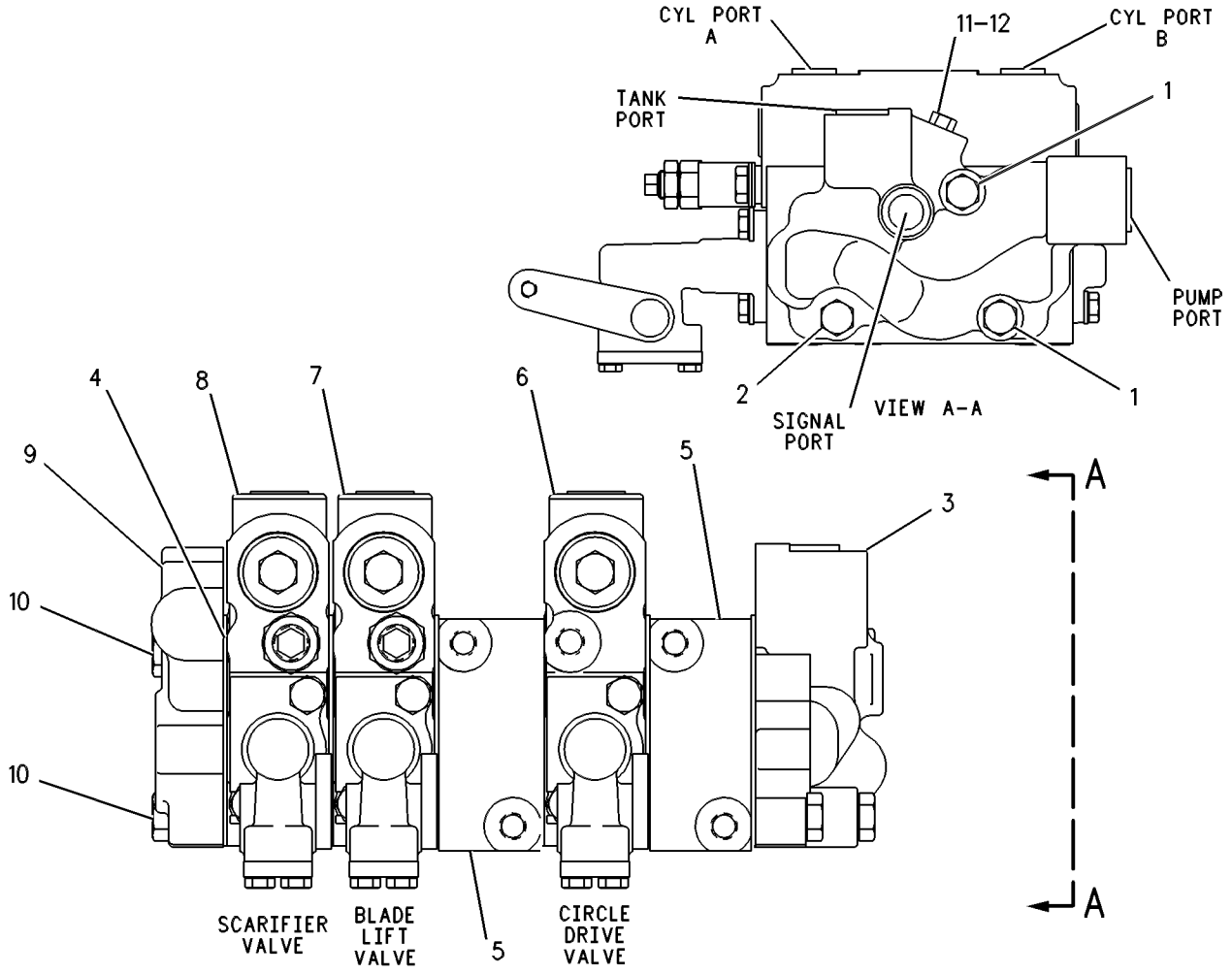

GRAPHIC #1 **<END>** g00272277

112-2581 VALVE GP-BANK 3–LH

S/N: JBP1-UP
PART OF 112-6818 VALVE & LINKAGE GP
AN ATTACHMENT

SMCS-5051 **i00857868**

NOTE	REF NO	GRAPHIC REF	PART NUMBER	QTY	PART NAME 1 2 3 4 5 6 (PRODUCT LEVEL)	SEE PAGE
M	1	1	**7X-2546**	2	BOLT (M10X1.5X180-MM)	
M	2	1	**137-6720**	1	BOLT (M10X1.5X160-MM)	
	3	1	**102-8385**	1	MANIFOLD	
	4	1	**101-0509**	6	SEAL-INTEGRAL	
	5	1	**111-9321**	2	SPACER	
Y	6	1	**6E-3035**	1	VALVE GP-CONTROL (CIRCLE DRIVE)	543
Y	7	1	**124-2883**	1	VALVE GP-CONTROL (BLADE LIFT)	557
Y	8	1	**107-0545**	1	VALVE GP-CONTROL (RIPPER)	551
	9	1	**101-9346**	1	COVER	
	10	1	**9S-4180**	1	PLUG	
	11	1	**4J-7533**	1	SEAL-O-RING	
M	12	1	**137-6719**	3	BOLT (M10X1.5X80-MM)	

M-METRIC PART
Y-SEPARATE ILLUSTRATION

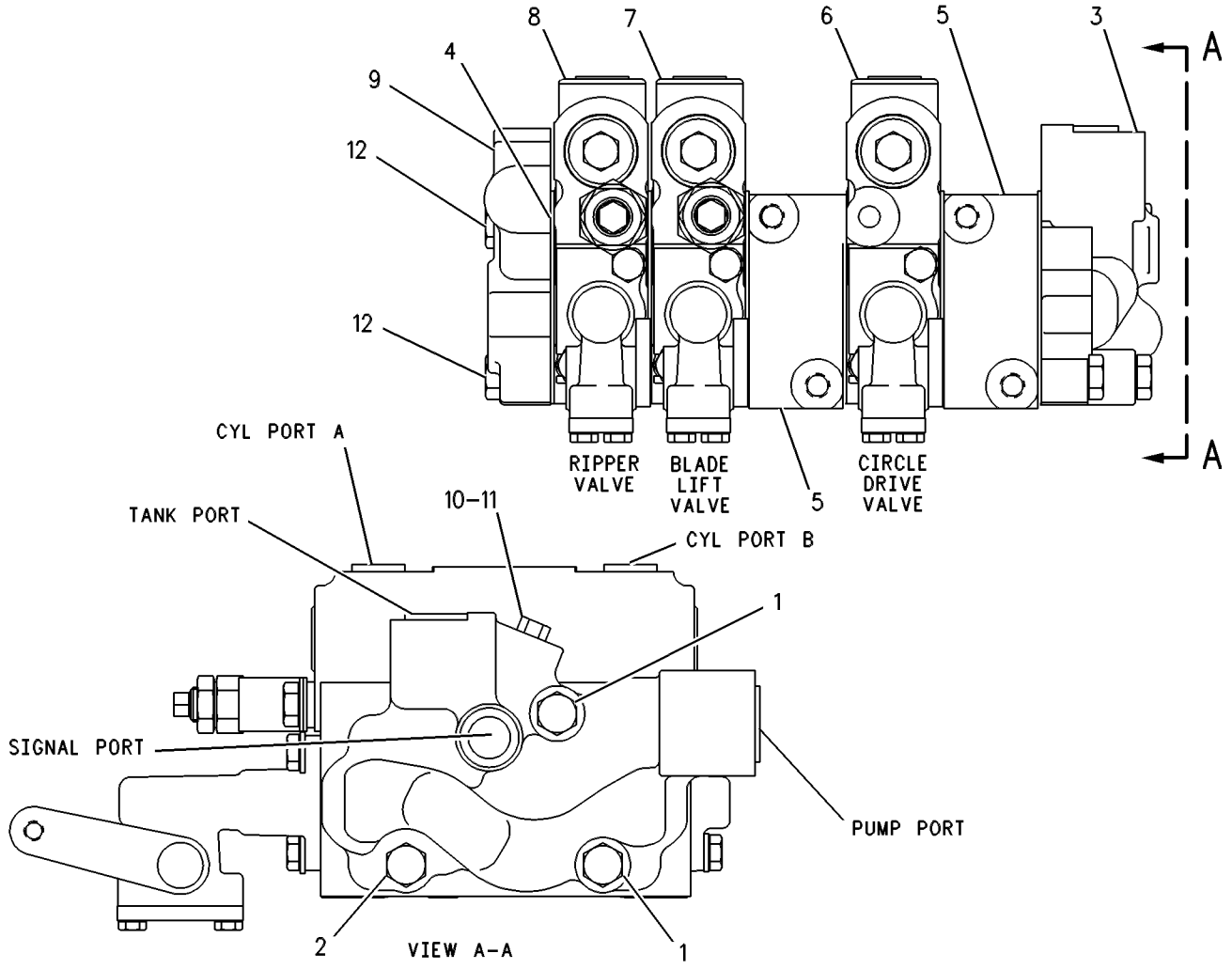

GRAPHIC #1 **<END>** g00272273

HYDRAULIC SYSTEM

6E-3032 VALVE GP-BANK 4—RH

S/N: JBP1-UP

PART OF 315-5330, 315-5334, 315-5335 VALVE & LINKAGE GP

AN ATTACHMENT

SMCS-5051 **i02591865**

NOTE	REF NO	GRAPHIC REF	PART NUMBER	QTY	PART NAME 1 2 3 4 5 6 (PRODUCT LEVEL)	SEE PAGE
M	1	1	**7X-2546**	2	BOLT (M10X1.5X180-MM)	
M	2	1	**137-6720**	1	BOLT (M10X1.5X160-MM)	
	3	1	**102-6238**	1	MANIFOLD	
	4	1	**101-0509**	5	SEAL-INTEGRAL	
Y	5	1	**6E-3028**	1	VALVE GP-CONTROL (ARTICULATION)	533
Y	6	1	**6E-3029**	1	VALVE GP-CONTROL (CENTERSHIFT)	535
Y	7	1	**6E-3030**	1	VALVE GP-CONTROL (WHEEL LEAN)	537
Y	8	1	**6E-3031**	1	VALVE GP-CONTROL (BLADE LIFT)	539
	9	1	**101-9346**	1	COVER	
M	10	1	**8T-4186**	3	BOLT (M10X1.5X40-MM)	
	12	1	*222-4737*	1	PLUG AS	
		1	**9S-4180**	1	PLUG	
		1	**4J-7533**	1	SEAL-O-RING	

M-METRIC PART
Y-SEPARATE ILLUSTRATION

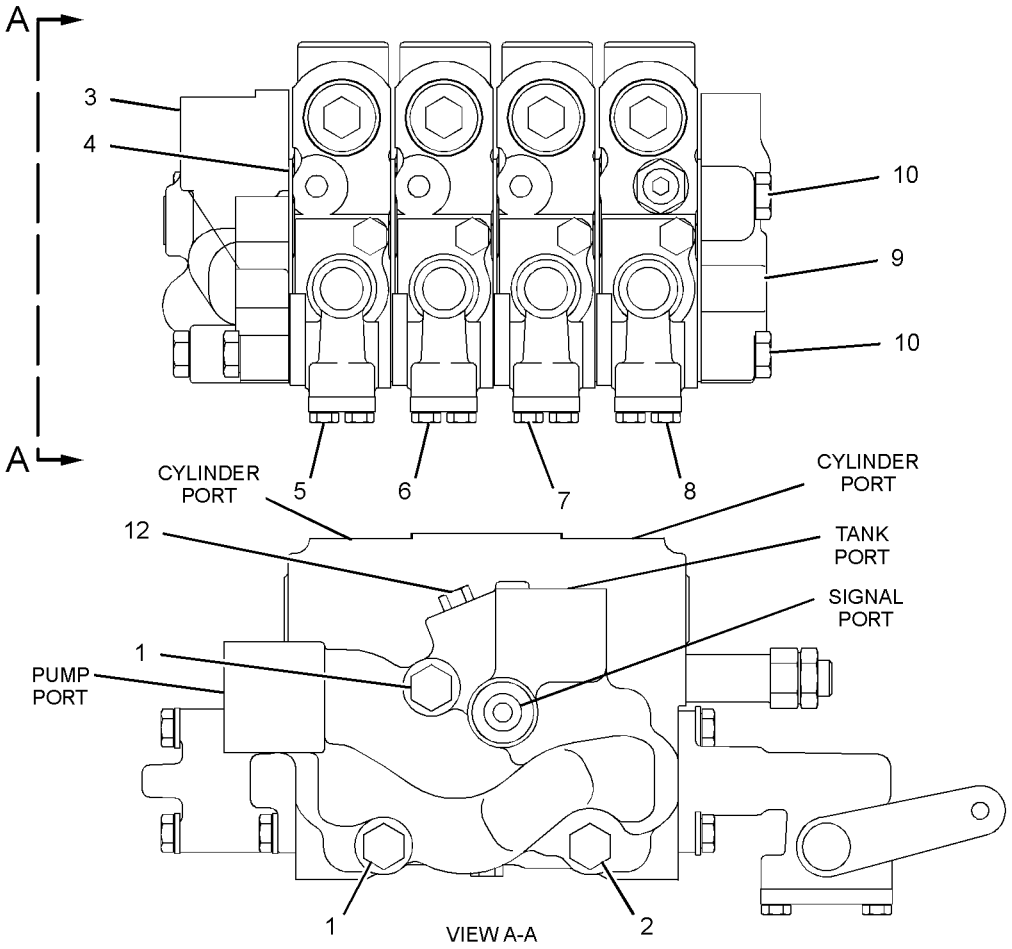

GRAPHIC #1 **<END>** g01297498

HYDRAULIC SYSTEM

6E-3038 VALVE GP-BANK 4–LH

S/N: JBP1-UP
PART OF 315-5335 VALVE & LINKAGE GP
AN ATTACHMENT

SMCS-5051 **i01862273**

NOTE	REF NO	GRAPHIC REF	PART NUMBER	QTY	PART NAME 1 2 3 4 5 6 (PRODUCT LEVEL)	SEE PAGE
M	1	1	**7X-2546**	2	BOLT (M10X1.5X180-MM)	
M	2	1	**137-6720**	1	BOLT (M10X1.5X160-MM)	
	3	1	**102-8385**	1	MANIFOLD	
	4	1	**101-0509**	5	SEAL-INTEGRAL	
Y	5	1	**6E-3037**	1	VALVE GP-CONTROL (BLADE LIFT)	547
Y	6	1	**6E-3036**	1	VALVE GP-CONTROL (SIDESHIFT)	545
Y	7	1	**6E-3035**	1	VALVE GP-CONTROL (CIRCLE DRIVE)	543
Y	8	1	**6E-3034**	1	VALVE GP-CONTROL (BLADE TIP)	541
	9	1	**101-9346**	1	COVER	
M	10	1	**8T-4186**	3	BOLT (M10X1.5X40-MM)	
	11	1	**4J-7533**	1	SEAL-O-RING	
	12	1	**9S-4180**	1	PLUG	

M-METRIC PART
Y-SEPARATE ILLUSTRATION

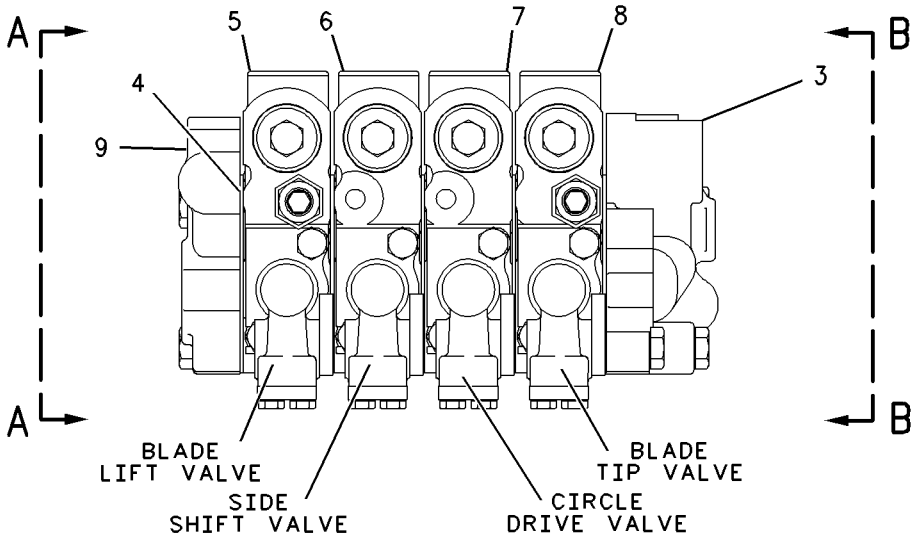

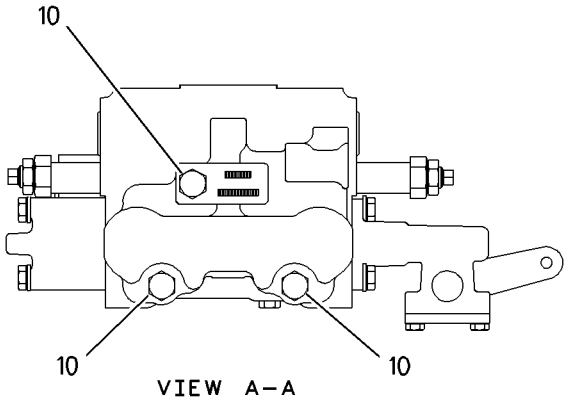

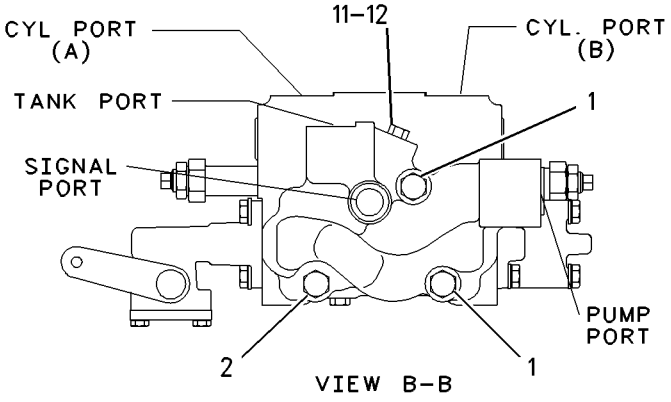

GRAPHIC #1 **<END>** g00898688

124-3325 VALVE GP-BANK 4–RH

S/N: JBP1-UP

PART OF 112-6795, 112-6799, 112-6804, 112-6818, 115-0804, 115-0808, 115-0811, 130-0464, 130-7603 VALVE & LINKAGE GP

ALSO AN ATTACHMENT

SMCS-5051 **i03179249**

NOTE	REF NO	GRAPHIC REF	PART NUMBER	QTY	PART NAME 1 2 3 4 5 6 (PRODUCT LEVEL)	SEE PAGE
M	1	1	**7X-2546**	2	BOLT (M10X1.5X180-MM)	
M	2	1	**137-6720**	1	BOLT (M10X1.5X160-MM)	
	3	1	**102-6238**	1	MANIFOLD	
	4	1	**101-0509**	5	SEAL-INTEGRAL	
Y	5	1	**6E-3028**	1	VALVE GP-CONTROL (ARTICULATION)	533
Y	6	1	**6E-3029**	1	VALVE GP-CONTROL (CENTERSHIFT)	535
Y	7	1	**6E-3030**	1	VALVE GP-CONTROL (WHEEL LEAN)	537
Y	8	1	**124-2884**	1	VALVE GP-CONTROL (BLADE LIFT)	559
	9	1	**101-9346**	1	COVER	
M	10	1	**8T-4186**	3	BOLT (M10X1.5X40-MM)	
	11	1	*222-4737*	1	PLUG AS	
		1	**9S-4180**	1	PLUG	
		1	**4J-7533**	1	SEAL-O-RING	

M-METRIC PART
Y-SEPARATE ILLUSTRATION

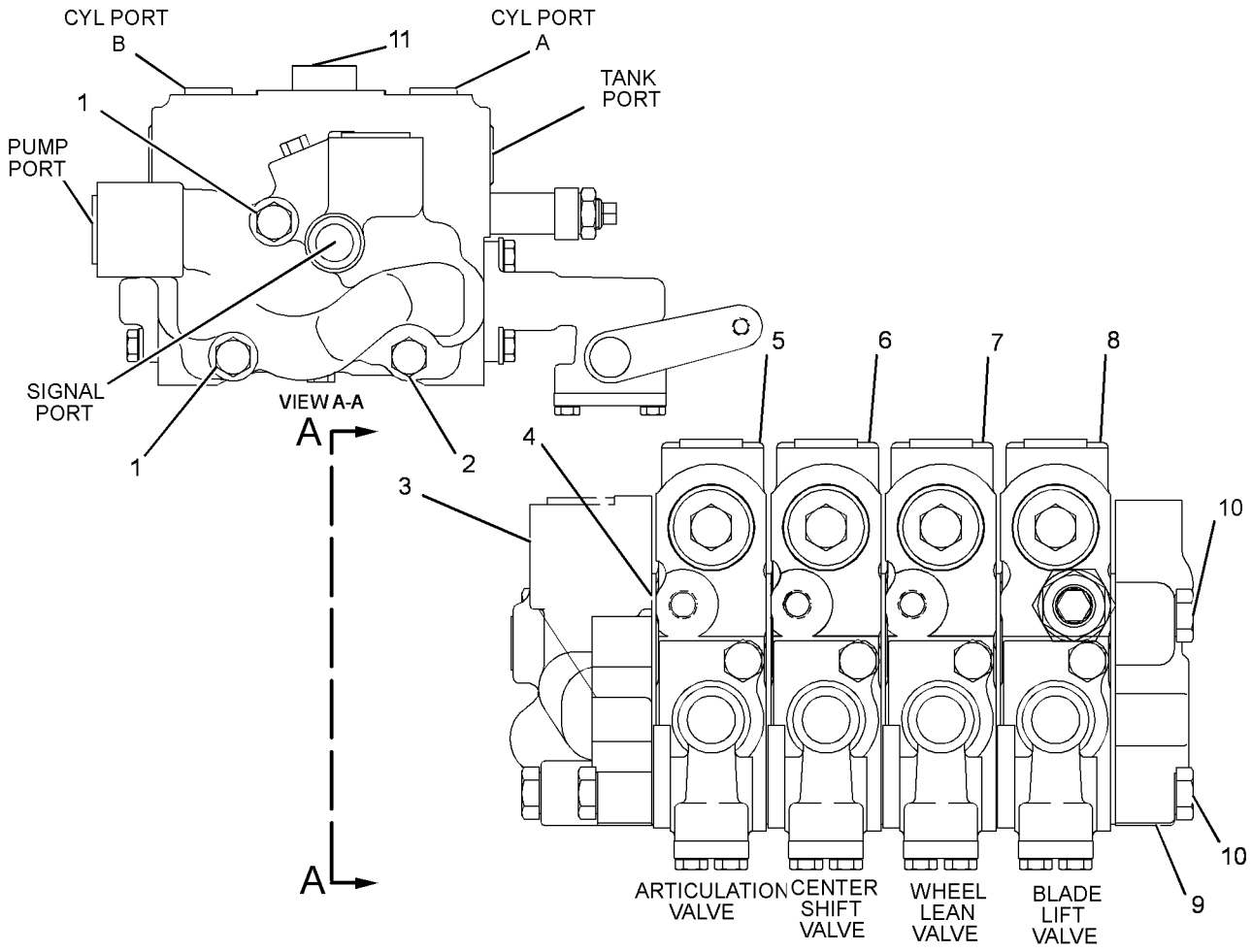

GRAPHIC #1 **<END>** g01625215

HYDRAULIC SYSTEM

124-3327 VALVE GP-BANK 4–LH

S/N: JBP1-UP
PART OF 115-0811 VALVE & LINKAGE GP
AN ATTACHMENT

SMCS-5051 **i01044945**

NOTE	REF NO	GRAPHIC REF	PART NUMBER	QTY	PART NAME 1 2 3 4 5 6 (PRODUCT LEVEL)	SEE PAGE
M	1	1	**7X-2546**	2	BOLT (M10X1.5X180-MM)	
M	2	1	**137-6720**	1	BOLT (M10X1.5X160-MM)	
	3	1	**102-8385**	1	MANIFOLD	
	4	1	**101-0509**	5	SEAL-INTEGRAL	
Y	5	1	**124-2883**	1	VALVE GP-CONTROL (BLADE LIFT)	557
Y	6	1	**6E-3036**	1	VALVE GP-CONTROL (SIDESHIFT)	545
Y	7	1	**6E-3035**	1	VALVE GP-CONTROL (CIRCLE DRIVE)	543
Y	8	1	**6E-3034**	1	VALVE GP-CONTROL (BLADE TIP)	541
	9	1	**101-9346**	1	COVER	
M	10	1	**8T-4186**	3	BOLT (M10X1.5X40-MM)	
	11	1	**4J-7533**	1	SEAL-O-RING	
	12	1	**9S-4180**	1	PLUG	

M-METRIC PART
Y-SEPARATE ILLUSTRATION

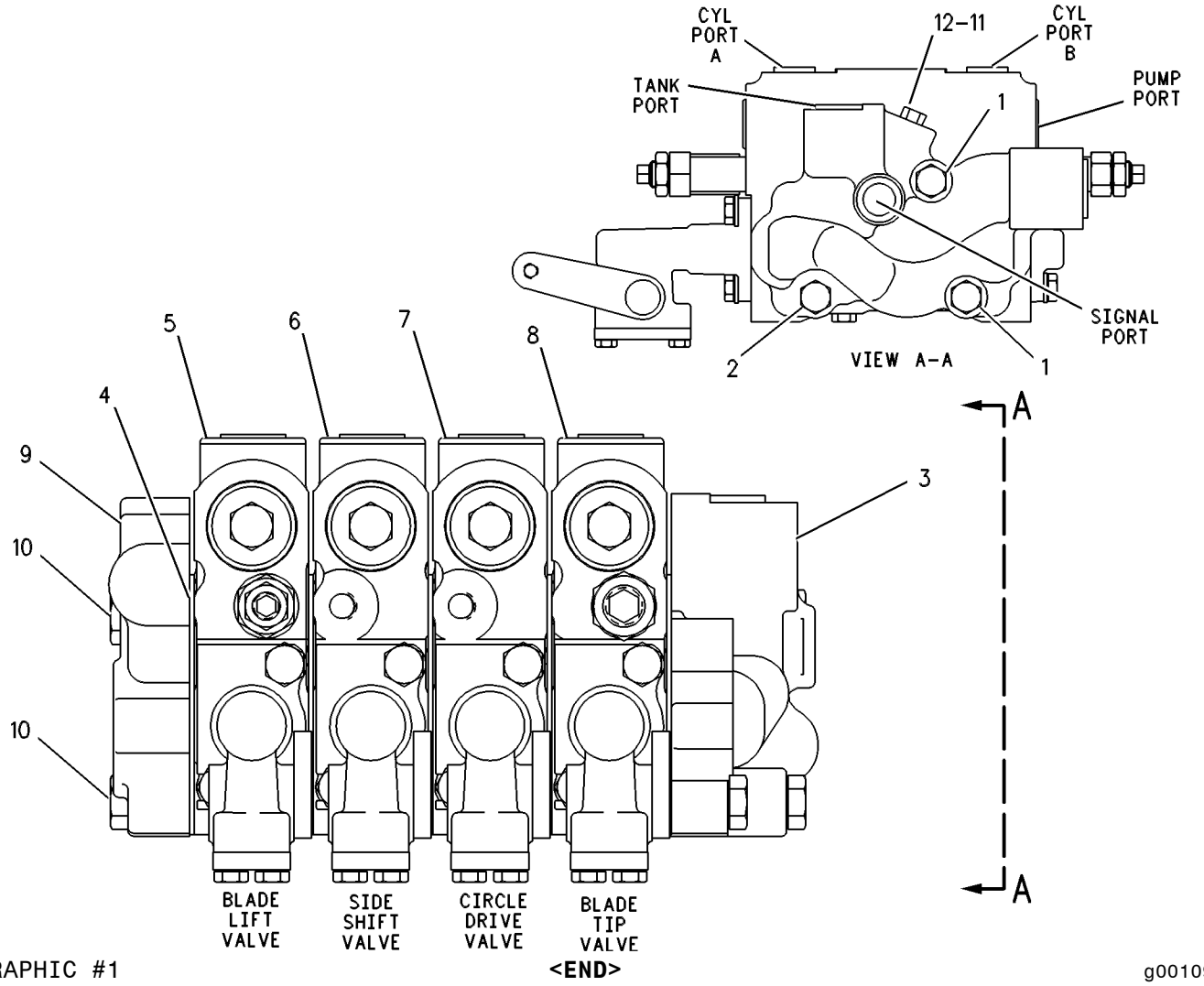

GRAPHIC #1 **<END>** g00109153

HYDRAULIC SYSTEM

130-7754 VALVE GP-BANK 4–LH

S/N: JBP1-UP
PART OF 130-0464 VALVE & LINKAGE GP
AN ATTACHMENT

SMCS-5051 **i03179206**

NOTE	REF NO	GRAPHIC REF	PART NUMBER	QTY	PART NAME 1 2 3 4 5 6 (PRODUCT LEVEL)	SEE PAGE
M	1	1	**7X-2546**	2	BOLT (M10X1.5X180-MM)	
M	2	1	**137-6720**	1	BOLT (M10X1.5X160-MM)	
	3	1	**102-8385**	1	MANIFOLD	
	4	1	**101-0509**	6	SEAL-INTEGRAL	
	5	1	**111-9321**	1	SPACER	
Y	6	1	**6E-3035**	1	VALVE GP-CONTROL (CIRCLE DRIVE)	543
Y	7	1	**6E-3036**	1	VALVE GP-CONTROL (SIDESHIFT)	545
Y	8	1	**124-2883**	1	VALVE GP-CONTROL (BLADE LIFT)	557
Y	9	1	**107-0543**	1	VALVE GP-CONTROL (SCARIFIER)	549
	10	1	**101-9346**	1	COVER	
M	11	1	**137-6719**	1	BOLT (M10X1.5X80-MM)	
	12	1	**9S-4180**	1	PLUG	
	13	1	**4J-7533**	1	SEAL-O-RING	

M-METRIC PART
Y-SEPARATE ILLUSTRATION

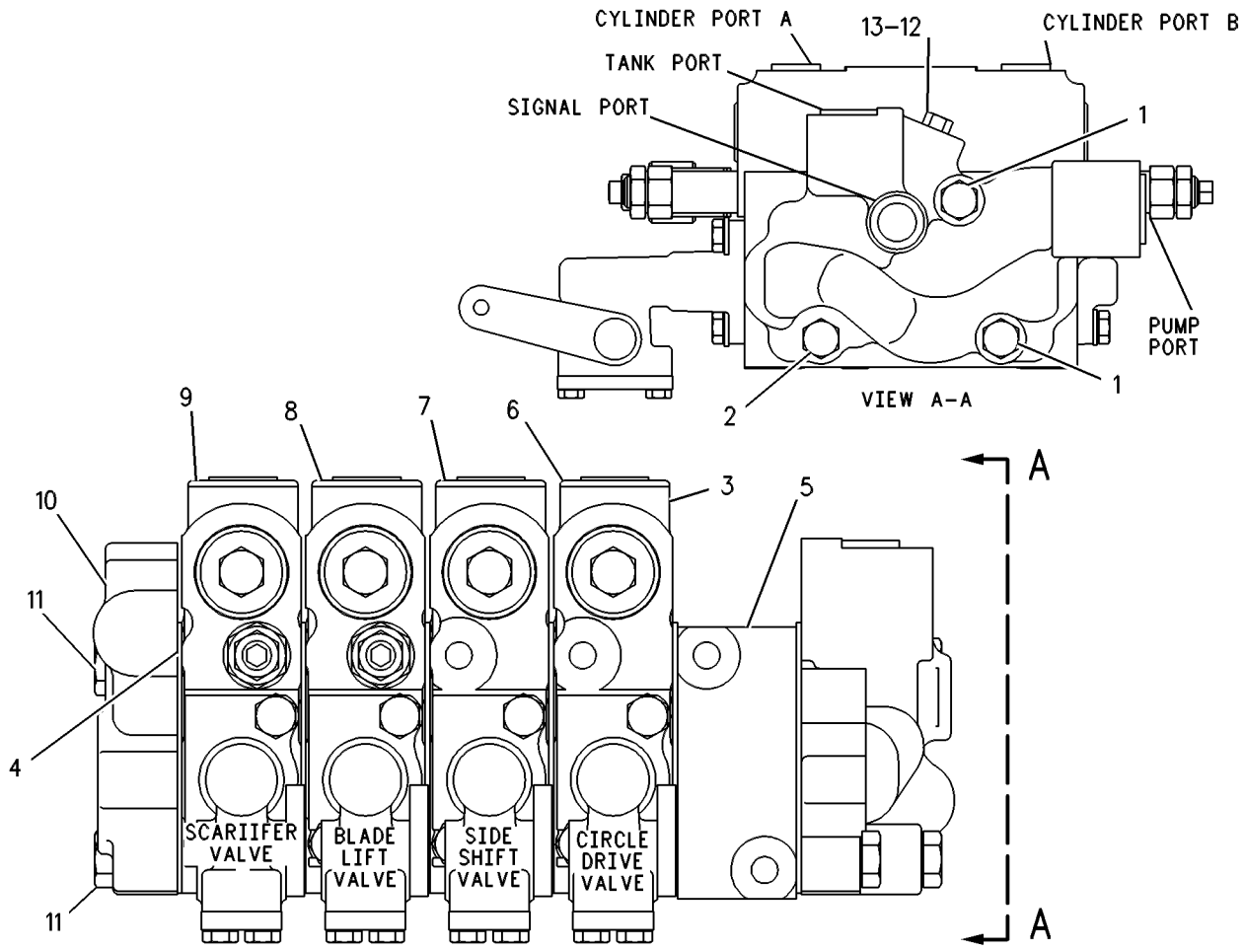

GRAPHIC #1 **<END>** g00109316

HYDRAULIC SYSTEM

130-7755 VALVE GP-BANK 4–LH

S/N: JBP1-UP
PART OF 130-7603 VALVE & LINKAGE GP
AN ATTACHMENT

SMCS-5051 **i00158976**

NOTE	REF NO	GRAPHIC REF	PART NUMBER	QTY	PART NAME 1 2 3 4 5 6 (PRODUCT LEVEL)	SEE PAGE
M	1	1	**7X-2546**	2	BOLT (M10X1.5X180-MM)	
M	2	1	**137-6720**	1	BOLT (M10X1.5X160-MM)	
	3	1	**102-8385**	1	MANIFOLD	
	4	1	**101-0509**	6	SEAL-INTEGRAL	
	5	1	**111-9321**	1	SPACER	
Y	6	1	**6E-3035**	1	VALVE GP-CONTROL (CIRCLE DRIVE)	543
Y	7	1	**6E-3036**	1	VALVE GP-CONTROL (SIDESHIFT)	545
Y	8	1	**124-2883**	1	VALVE GP-CONTROL (BLADE LIFT)	557
Y	9	1	**107-0545**	1	VALVE GP-CONTROL (RIPPER)	551
	10	1	**101-9346**	1	COVER	
	11	1	**9S-4180**	1	PLUG	
	12	1	**4J-7533**	1	SEAL-O-RING	
M	13	1	**137-6719**	3	BOLT (M10X1.5X80-MM)	

M-METRIC PART
Y-SEPARATE ILLUSTRATION

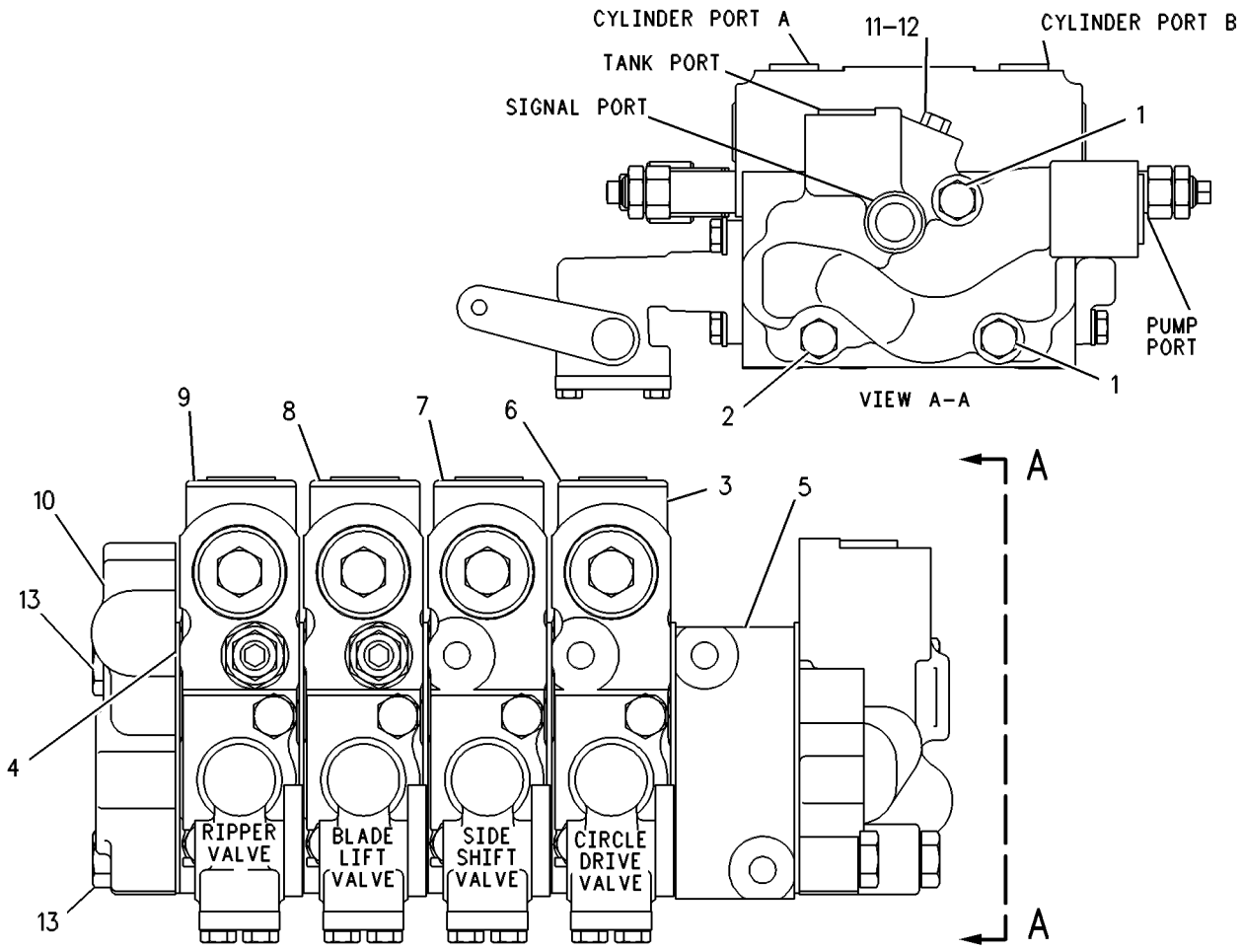

GRAPHIC #1 **<END>** g00109314

250-0543 VALVE GP-BANK 4–LH

S/N: JBP1-UP
PART OF 331-1517 VALVE & LINKAGE GP
AN ATTACHMENT

SMCS-5051 **i03255863**

NOTE	REF NO	GRAPHIC REF	PART NUMBER	QTY	PART NAME 1 2 3 4 5 6 (PRODUCT LEVEL)	SEE PAGE
Y	1	1	**6E-3034**	1	VALVE GP-CONTROL (BLADE TIP)	541
Y	2	1	**6E-3035**	1	VALVE GP-CONTROL (CIRCLE DRIVE)	543
Y	3	1	**6E-3036**	1	VALVE GP-CONTROL (SIDESHIFT)	545
Y	4	1	**6E-3037**	1	VALVE GP-CONTROL (BLADE LIFT)	547
	5	1	**101-0509**	5	SEAL-INTEGRAL	
	6	1	**102-8385**	1	MANIFOLD	
	7	1	*222-4737*	1	PLUG AS	
		1	**9S-4180**	1	PLUG	
		1	**4J-7533**	1	SEAL-O-RING	
Y	8	1	**239-9893**	1	MANIFOLD GP-VALVE (LH)	422
	9	1	**8T-4896**	1	WASHER-HARD (10.2X18.5X2.5-MM THK)	
M	10	1	**137-6720**	1	BOLT (M10X1.5X160-MM)	
	11	1	*148-8409*	1	PLUG AS	
		1	**9S-8008**	1	PLUG-O-RING	
		1	**3D-2824**	1	SEAL-O-RING	
	12	1	**3K-6113**	3	WASHER-HARD (12X18.5X3-MM THK)	
M	13	1	**7X-2546**	2	BOLT (M10X1.5X180-MM)	
M	14	1	**8T-4186**	3	BOLT (M10X1.5X40-MM)	

M-METRIC PART
Y-SEPARATE ILLUSTRATION

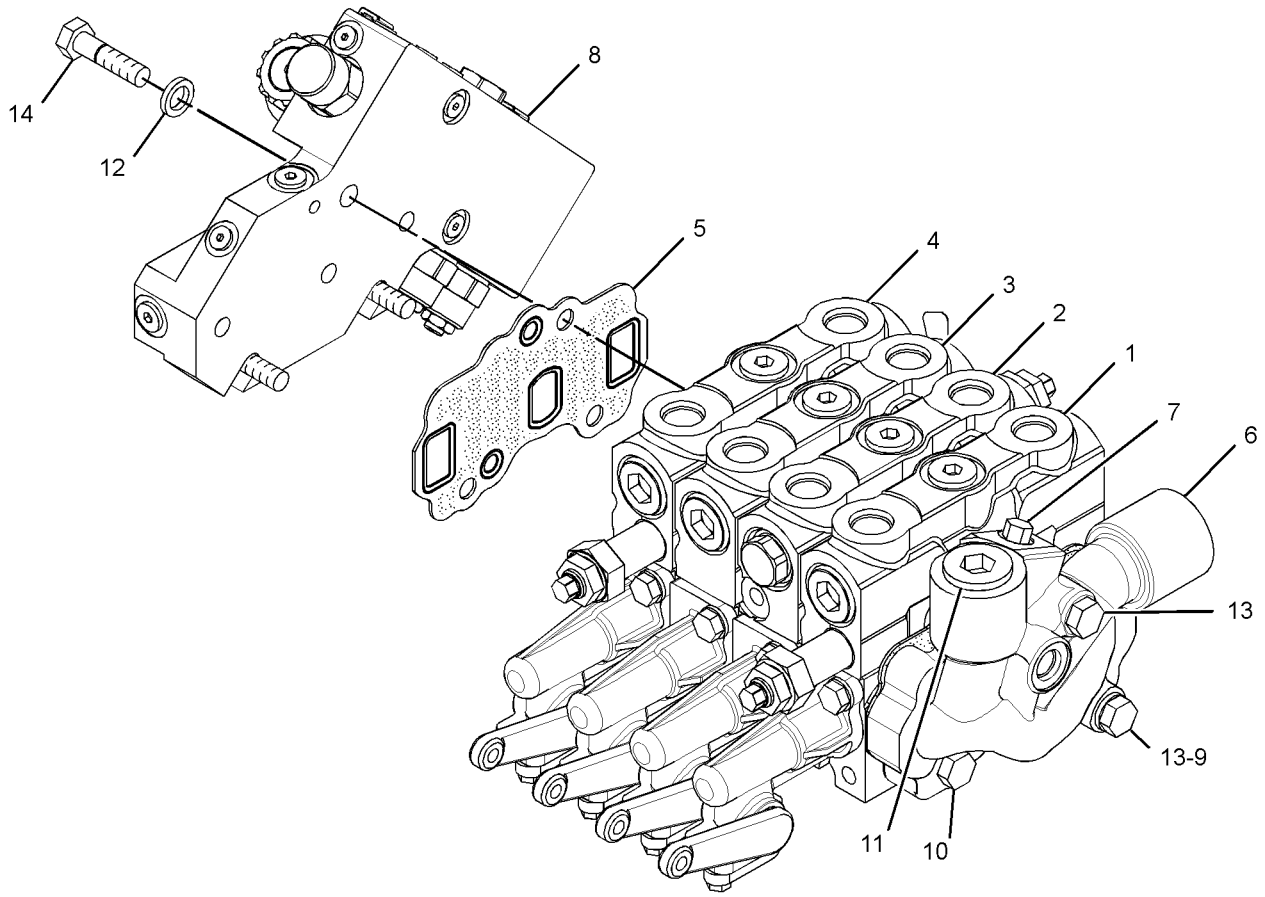

GRAPHIC #1 **<END>** g01692836

HYDRAULIC SYSTEM

250-0544 VALVE GP-BANK 4–RH

S/N: JBP1-UP

PART OF 331-1509, 331-1510, 331-1517 VALVE & LINKAGE GP

AN ATTACHMENT

SMCS-5051 **i03255862**

NOTE	REF NO	GRAPHIC REF	PART NUMBER	QTY	PART NAME 1 2 3 4 5 6 (PRODUCT LEVEL)	SEE PAGE
Y	1	1	**6E-3028**	1	VALVE GP-CONTROL (ARTICULATION)	533
Y	2	1	**6E-3029**	1	VALVE GP-CONTROL (CENTERSHIFT)	535
Y	3	1	**6E-3030**	1	VALVE GP-CONTROL (WHEEL LEAN)	537
Y	4	1	**6E-3031**	1	VALVE GP-CONTROL (BLADE LIFT)	539
	5	1	**101-0509**	5	SEAL-INTEGRAL	
	6	1	*222-4737*	1	PLUG AS	
		1	**4J-7533**	1	SEAL-O-RING	
		1	**9S-4180**	1	PLUG	
Y	7	1	**239-9894**	1	MANIFOLD GP-VALVE (RH)	424
	8	1	**8T-4896**	1	WASHER-HARD (10.2X18.5X2.5-MM THK)	
	9	1	**102-6238**	1	MANIFOLD	
M	10	1	**137-6720**	1	BOLT (M10X1.5X160-MM)	
	11	1	**3K-6113**	3	WASHER-HARD (12X18.5X3-MM THK)	
M	12	1	**7X-2546**	2	BOLT (M10X1.5X180-MM)	
M	13	1	**8T-4186**	3	BOLT (M10X1.5X40-MM)	

M-METRIC PART
Y-SEPARATE ILLUSTRATION

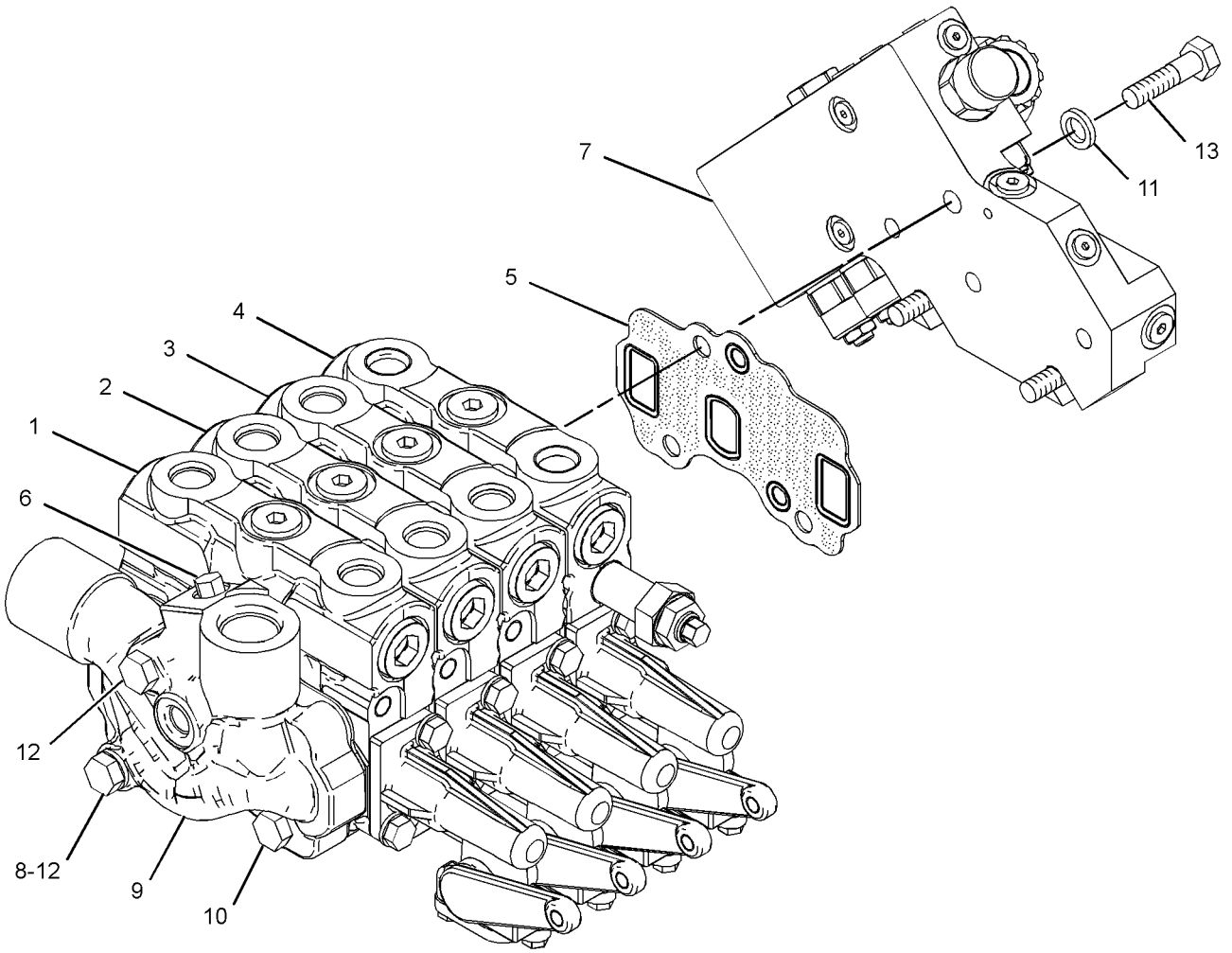

GRAPHIC #1 **<END>** g01693095

104-8645 VALVE GP-BANK 5–LH

S/N: JBP1-UP
PART OF 315-5330 VALVE & LINKAGE GP
AN ATTACHMENT

SMCS-5051 **i02591872**

NOTE	REF NO	GRAPHIC REF	PART NUMBER	QTY	PART NAME 1 2 3 4 5 6 (PRODUCT LEVEL)	SEE PAGE
M	1	1	**7X-2546**	2	BOLT (M10X1.5X180-MM)	
M	2	1	**137-6720**	1	BOLT (M10X1.5X160-MM)	
	3	1	**102-8385**	1	MANIFOLD	
	4	1	**101-0509**	6	SEAL-INTEGRAL	
Y	5	1	**6E-3034**	1	VALVE GP-CONTROL (BLADE TIP)	541
Y	6	1	**6E-3035**	1	VALVE GP-CONTROL (CIRCLE DRIVE)	543
Y	7	1	**6E-3036**	1	VALVE GP-CONTROL (SIDESHIFT)	545
Y	8	1	**6E-3037**	1	VALVE GP-CONTROL (BLADE LIFT)	547
Y	9	1	**107-0545**	1	VALVE GP-CONTROL (RIPPER)	551
	10	1	**101-9346**	1	COVER	
M	12	1	**137-6719**	3	BOLT (M10X1.5X80-MM)	
	13	1	*222-4737*	1	PLUG AS	
		1	**9S-4180**	1	PLUG	
		1	**4J-7533**	1	SEAL-O-RING	

M-METRIC PART
Y-SEPARATE ILLUSTRATION

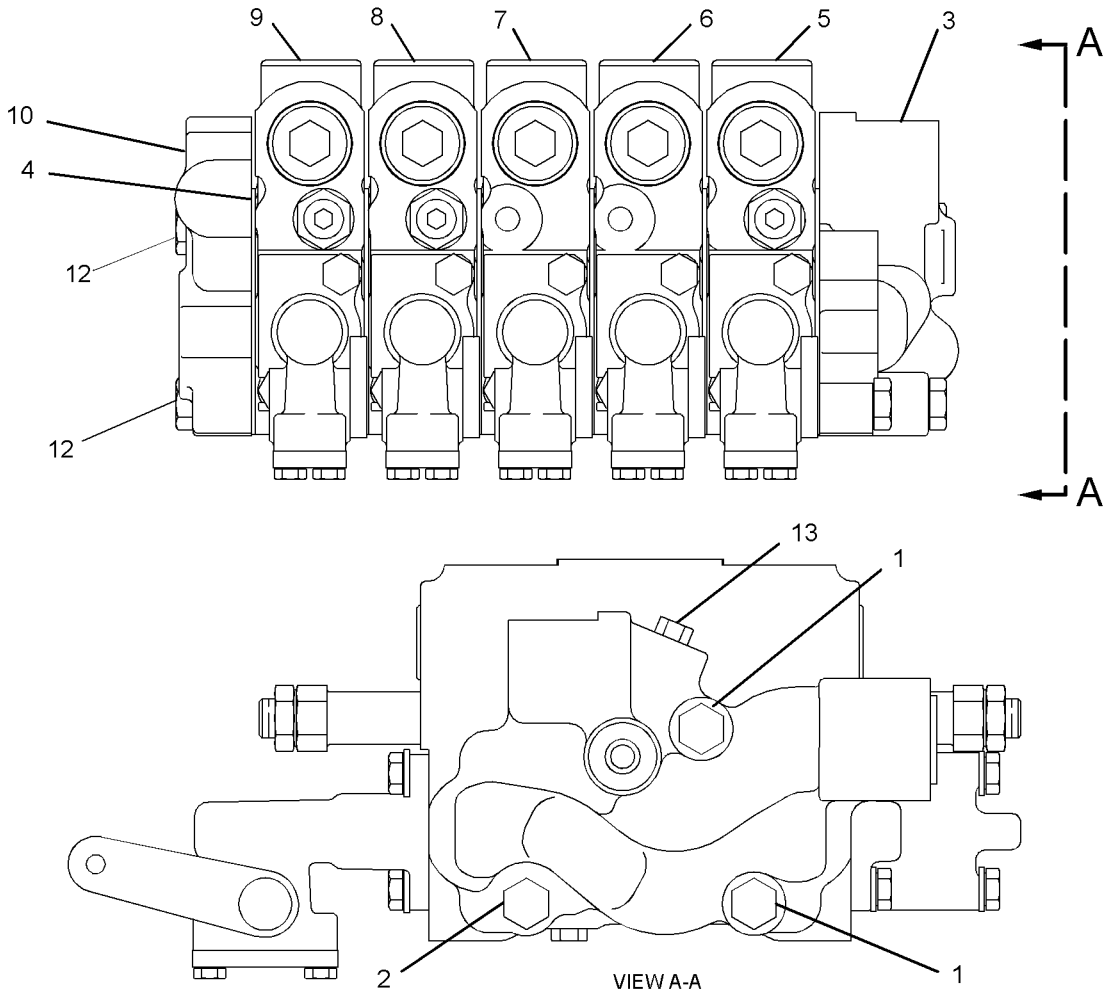

GRAPHIC #1 **<END>** g01297516

HYDRAULIC SYSTEM

104-8646 VALVE GP-BANK 5–LH

S/N: JBP1-UP
PART OF 315-5331, 315-5334 VALVE & LINKAGE GP
AN ATTACHMENT

SMCS-5051 **i03435154**

NOTE	REF NO	GRAPHIC REF	PART NUMBER	QTY	PART NAME 1 2 3 4 5 6 (PRODUCT LEVEL)	SEE PAGE
M	1	1	**7X-2546**	2	BOLT (M10X1.5X180-MM)	
M	2	1	**137-6720**	1	BOLT (M10X1.5X160-MM)	
	3	1	**102-8385**	1	MANIFOLD	
	4	1	**101-0509**	6	SEAL-INTEGRAL	
Y	5	1	**6E-3034**	1	VALVE GP-CONTROL (BLADE TIP)	541
Y	6	1	**6E-3035**	1	VALVE GP-CONTROL (CIRCLE DRIVE)	543
Y	7	1	**6E-3036**	1	VALVE GP-CONTROL (SIDESHIFT)	545
Y	8	1	**6E-3037**	1	VALVE GP-CONTROL (BLADE LIFT)	547
Y	9	1	**107-0543**	1	VALVE GP-CONTROL (SCARIFIER)	549
	10	1	**101-9346**	1	COVER	
	12	1	**222-4737**	1	PLUG AS	
		1	**9S-4180**	1	PLUG	
		1	**4J-7533**	1	SEAL-O-RING	
M	13	1	**137-6719**	3	BOLT (M10X1.5X80-MM)	

M-METRIC PART
Y-SEPARATE ILLUSTRATION

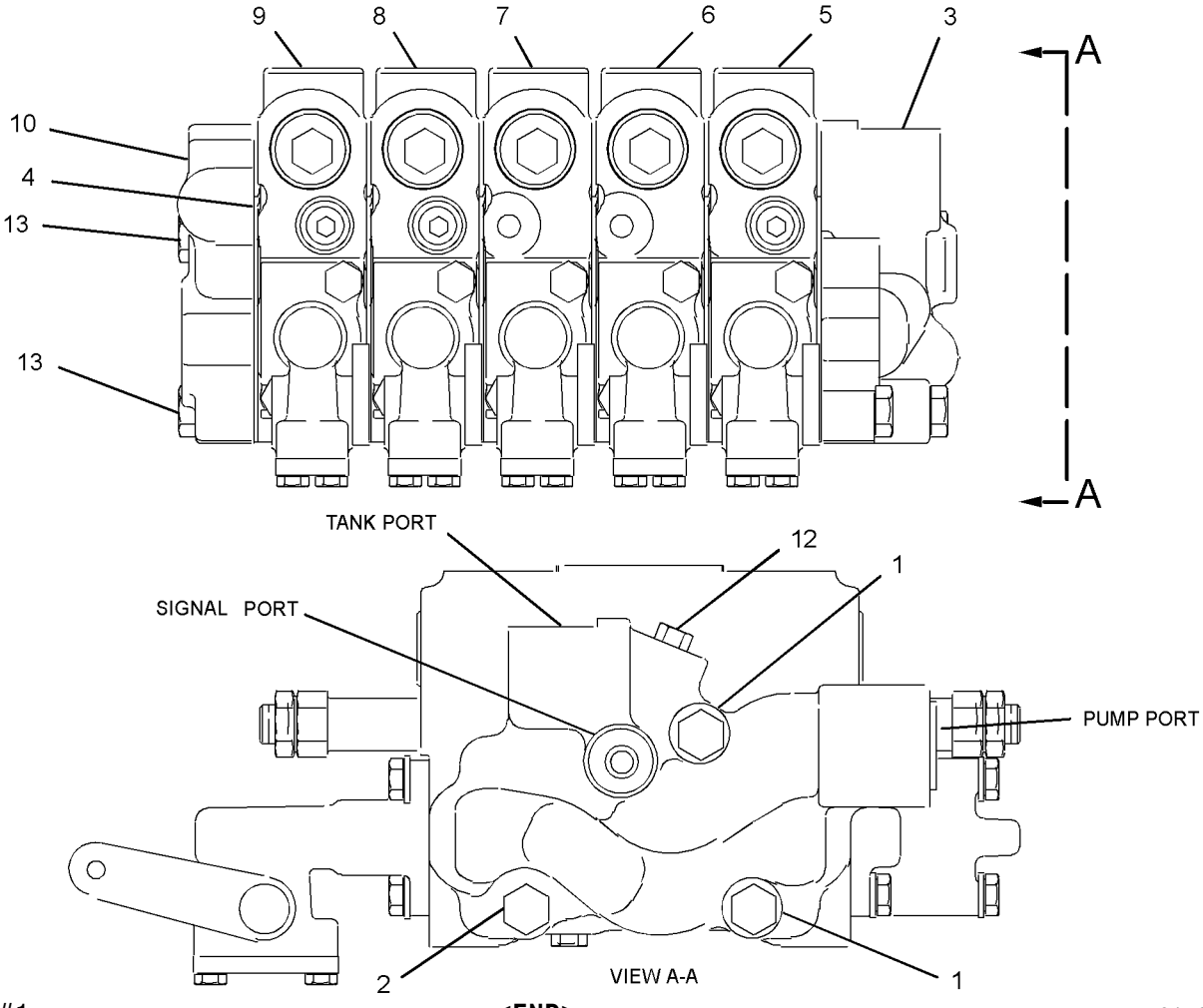

GRAPHIC #1 **<END>** g01785793

104-8671 VALVE GP-BANK 5–RH

S/N: JBP1-UP

PART OF 315-5331, 315-5333, 315-5336 VALVE & LINKAGE GP

AN ATTACHMENT

SMCS-5051 **i02592713**

NOTE	REF NO	GRAPHIC REF	PART NUMBER	QTY	PART NAME 1 2 3 4 5 6 (PRODUCT LEVEL)	SEE PAGE
M	1	1	**7X-2546**	2	BOLT (M10X1.5X180-MM)	
M	2	1	**137-6720**	1	BOLT (M10X1.5X160-MM)	
	3	1	**102-6238**	1	MANIFOLD	
	4	1	**101-0509**	6	SEAL-INTEGRAL	
Y	5	1	**6E-3028**	1	VALVE GP-CONTROL (ARTICULATION)	533
Y	6	1	**6E-3029**	1	VALVE GP-CONTROL (CENTERSHIFT)	535
Y	7	1	**6E-3030**	1	VALVE GP-CONTROL (WHEEL LEAN)	537
Y	8	1	**6E-3031**	1	VALVE GP-CONTROL (BLADE LIFT)	539
Y	9	1	**107-0547**	1	VALVE GP-CONTROL (DOZER LIFT, PLOW)	553
	10	1	**101-9346**	1	COVER	
M	11	1	**137-6719**	3	BOLT (M10X1.5X80-MM)	
	13	1	*222-4737*	1	PLUG AS	
		1	**4J-7533**	1	SEAL-O-RING	
		1	**9S-4180**	1	PLUG	

M-METRIC PART
Y-SEPARATE ILLUSTRATION

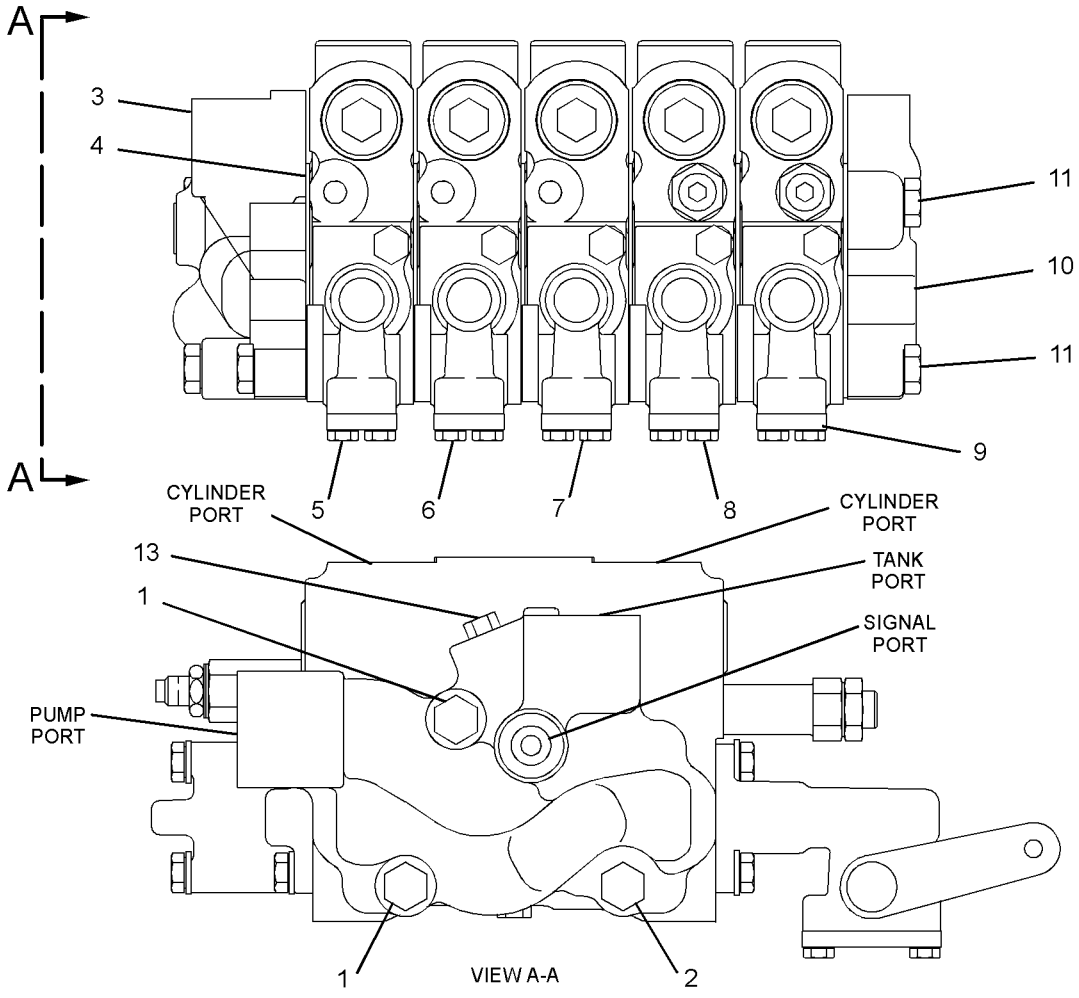

GRAPHIC #1

<END>

g01297602

HYDRAULIC SYSTEM

124-3326 VALVE GP-BANK 5–RH

S/N: JBP1-UP
PART OF 115-0810, 115-0812 VALVE & LINKAGE GP
AN ATTACHMENT

SMCS-5051 **i03435261**

NOTE	REF NO	GRAPHIC REF	PART NUMBER	QTY	PART NAME 1 2 3 4 5 6 (PRODUCT LEVEL)	SEE PAGE
M	1	1	**7X-2546**	2	BOLT (M10X1.5X180-MM)	
M	2	1	**137-6720**	1	BOLT (M10X1.5X160-MM)	
	3	1	**102-6238**	1	MANIFOLD	
	4	1	**101-0509**	6	SEAL-INTEGRAL	
Y	5	1	**6E-3028**	1	VALVE GP-CONTROL (ARTICULATION)	533
Y	6	1	**6E-3029**	1	VALVE GP-CONTROL (CENTERSHIFT)	535
Y	7	1	**6E-3030**	1	VALVE GP-CONTROL (WHEEL LEAN)	537
Y	8	1	**124-2884**	1	VALVE GP-CONTROL (BLADE LIFT)	559
Y	9	1	**124-2885**	1	VALVE GP-CONTROL (BULLDOZER LIFT, PLOW)	561
	10	1	**101-9346**	1	COVER	
M	11	1	**137-6719**	3	BOLT (M10X1.5X80-MM)	
	12	1	**4J-7533**	1	SEAL-O-RING	
	13	1	**9S-4180**	1	PLUG	

M-METRIC PART
Y-SEPARATE ILLUSTRATION

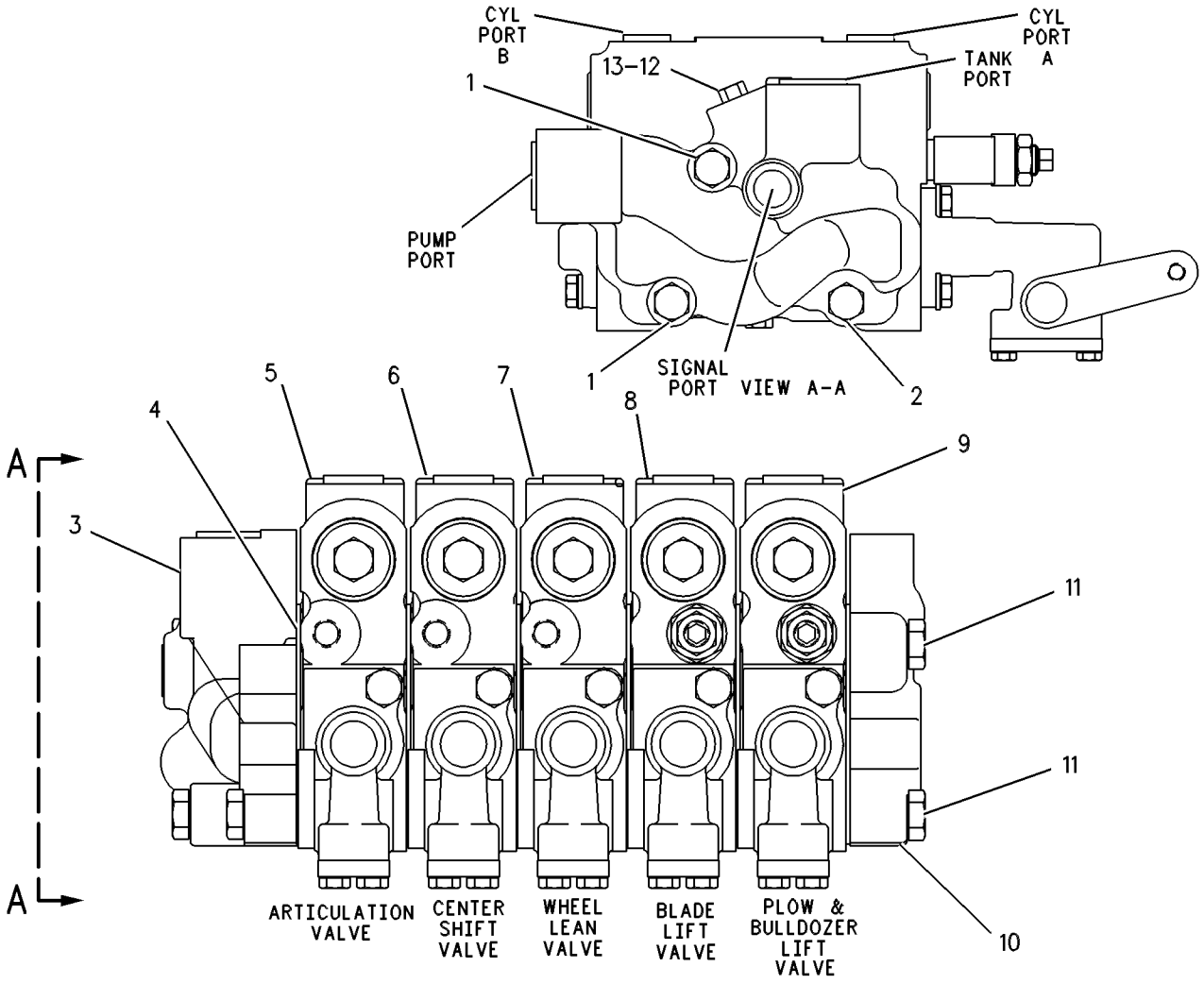

GRAPHIC #1 **<END>** g00109160

124-3328 VALVE GP-BANK 5–LH

S/N: JBP1-UP
PART OF 115-0804, 115-0810 VALVE & LINKAGE GP
AN ATTACHMENT

SMCS-5051 **i03179224**

NOTE	REF NO	GRAPHIC REF	PART NUMBER	QTY	PART NAME 1 2 3 4 5 6 (PRODUCT LEVEL)	SEE PAGE
M	1	1	**7X-2546**	2	BOLT (M10X1.5X180-MM)	
M	2	1	**137-6720**	1	BOLT (M10X1.5X160-MM)	
	3	1	**102-8385**	1	MANIFOLD	
	4	1	**101-0509**	6	SEAL-INTEGRAL	
Y	5	1	**6E-3034**	1	VALVE GP-CONTROL (BLADE TIP)	541
Y	6	1	**6E-3035**	1	VALVE GP-CONTROL (CIRCLE DRIVE)	543
Y	7	1	**6E-3036**	1	VALVE GP-CONTROL (SIDESHIFT)	545
Y	8	1	**124-2883**	1	VALVE GP-CONTROL (BLADE LIFT)	557
Y	9	1	**107-0543**	1	VALVE GP-CONTROL (SCARIFIER)	549
	10	1	**101-9346**	1	COVER	
M	11	1	**137-6719**	3	BOLT (M10X1.5X80-MM)	
	12	1	**9S-4180**	1	PLUG	
	13	1	**4J-7533**	1	SEAL-O-RING	

M-METRIC PART
Y-SEPARATE ILLUSTRATION

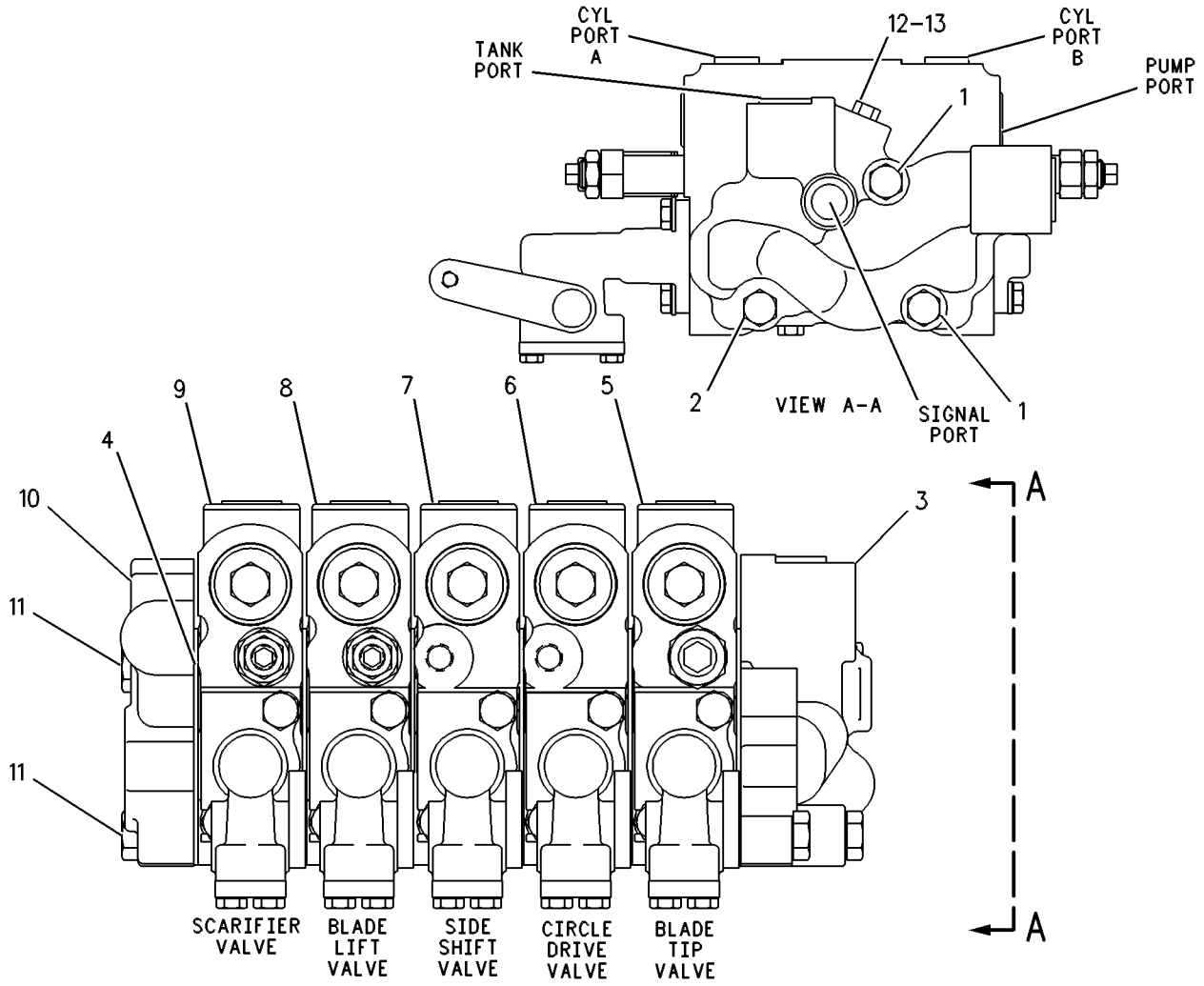

GRAPHIC #1 **<END>** g00252767

HYDRAULIC SYSTEM

124-3329 VALVE GP-BANK 5–LH

S/N: JBP1-UP

PART OF 115-0808, 115-0812, 138-7599 VALVE & LINKAGE GP

AN ATTACHMENT

SMCS-5051 **i00857872**

NOTE	REF NO	GRAPHIC REF	PART NUMBER	QTY	PART NAME 1 2 3 4 5 6 (PRODUCT LEVEL)	SEE PAGE
M	1	1	**7X-2546**	2	BOLT (M10X1.5X180-MM)	
M	2	1	**137-6720**	1	BOLT (M10X1.5X160-MM)	
	3	1	**102-8385**	1	MANIFOLD	
	4	1	**101-0509**	6	SEAL-INTEGRAL	
Y	5	1	**6E-3034**	1	VALVE GP-CONTROL (BLADE TIP)	541
Y	6	1	**6E-3035**	1	VALVE GP-CONTROL (CIRCLE DRIVE)	543
Y	7	1	**6E-3036**	1	VALVE GP-CONTROL (SIDESHIFT)	545
Y	8	1	**124-2883**	1	VALVE GP-CONTROL (BLADE LIFT)	557
Y	9	1	**107-0545**	1	VALVE GP-CONTROL (RIPPER)	551
	10	1	**101-9346**	1	COVER	
	11	1	**9S-4180**	1	PLUG	
	12	1	**4J-7533**	1	SEAL-O-RING	
M	13	1	**137-6719**	3	BOLT (M10X1.5X80-MM)	

M-METRIC PART
Y-SEPARATE ILLUSTRATION

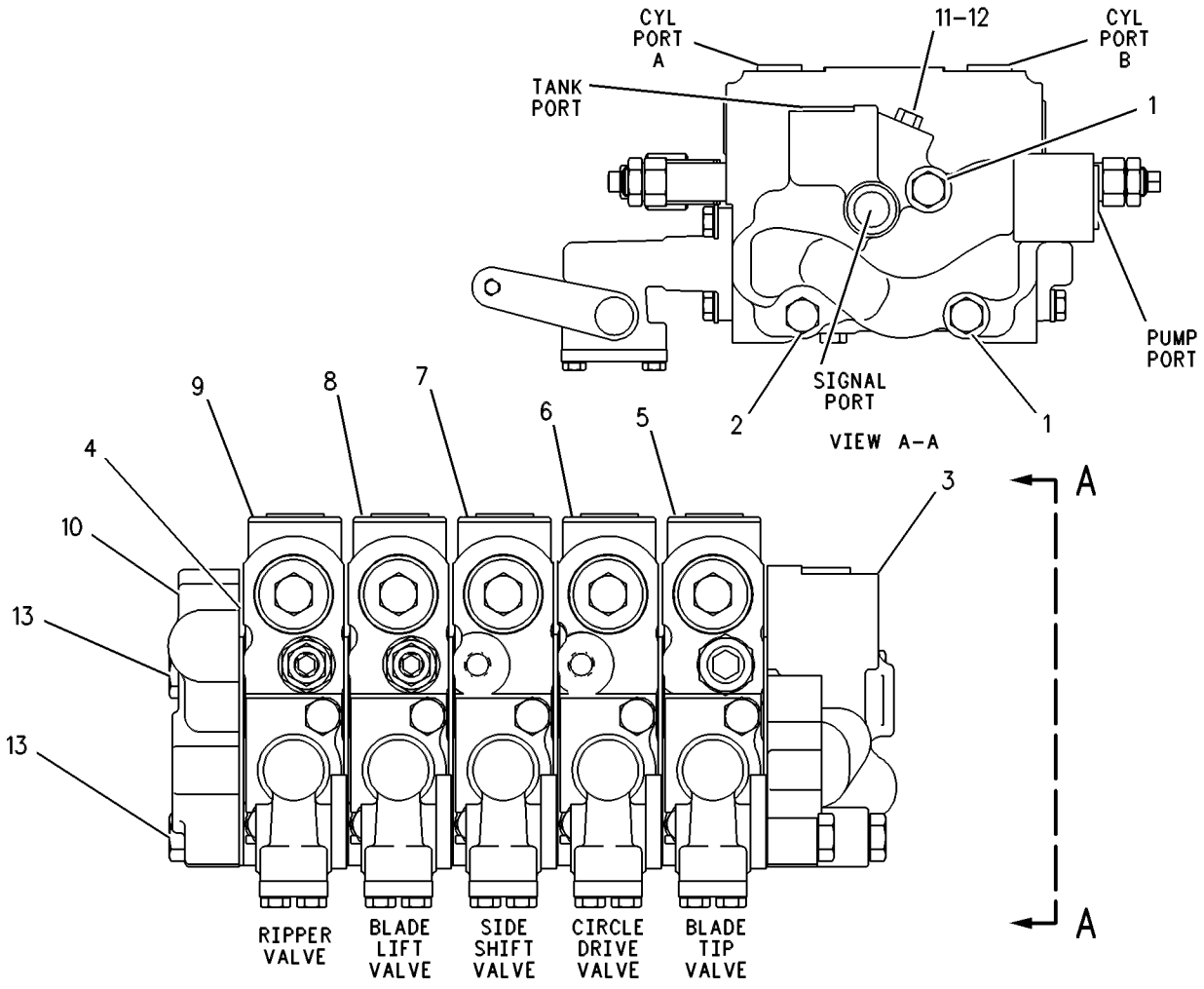

GRAPHIC #1 **<END>** g00252814

250-0548 VALVE GP-BANK 5–RH

S/N: JBP1-UP

PART OF 331-1514, 331-1515, 331-1516 VALVE & LINKAGE GP

AN ATTACHMENT

SMCS-5051 **i03435300**

NOTE	REF NO	GRAPHIC REF	PART NUMBER	QTY	PART NAME 1 2 3 4 5 6 (PRODUCT LEVEL)	SEE PAGE
Y	1	1	**6E-3028**	1	VALVE GP-CONTROL (ARTICULATION)	533
Y	2	1	**6E-3029**	1	VALVE GP-CONTROL (CENTERSHIFT)	535
Y	3	1	**6E-3030**	1	VALVE GP-CONTROL (WHEEL LEAN)	537
Y	4	1	**6E-3031**	1	VALVE GP-CONTROL (BLADE LIFT)	539
	5	1	**101-0509**	6	SEAL-INTEGRAL	
	6	1	**102-6238**	1	MANIFOLD	
Y	7	1	**107-0547**	1	VALVE GP-CONTROL (BULLDOZER LIFT, PLOW)	553
Y	8	1	**239-9894**	1	MANIFOLD GP-VALVE (RH)	424
M	10	1	**137-6719**	3	BOLT (M10X1.5X80-MM)	
M	11	1	**137-6720**	1	BOLT (M10X1.5X160-MM)	
	12	1	*222-4737*	1	PLUG AS	
		1	**9S-4180**	1	PLUG	
		1	**4J-7533**	1	SEAL-O-RING	
	13	1	**3K-6113**	3	WASHER-HARD (12X18.5X3-MM THK)	
M	14	1	**7X-2546**	2	BOLT (M10X1.5X180-MM)	
	15	1	**8T-4896**	1	WASHER-HARD (10.2X18.5X2.5-MM THK)	

M-METRIC PART
Y-SEPARATE ILLUSTRATION

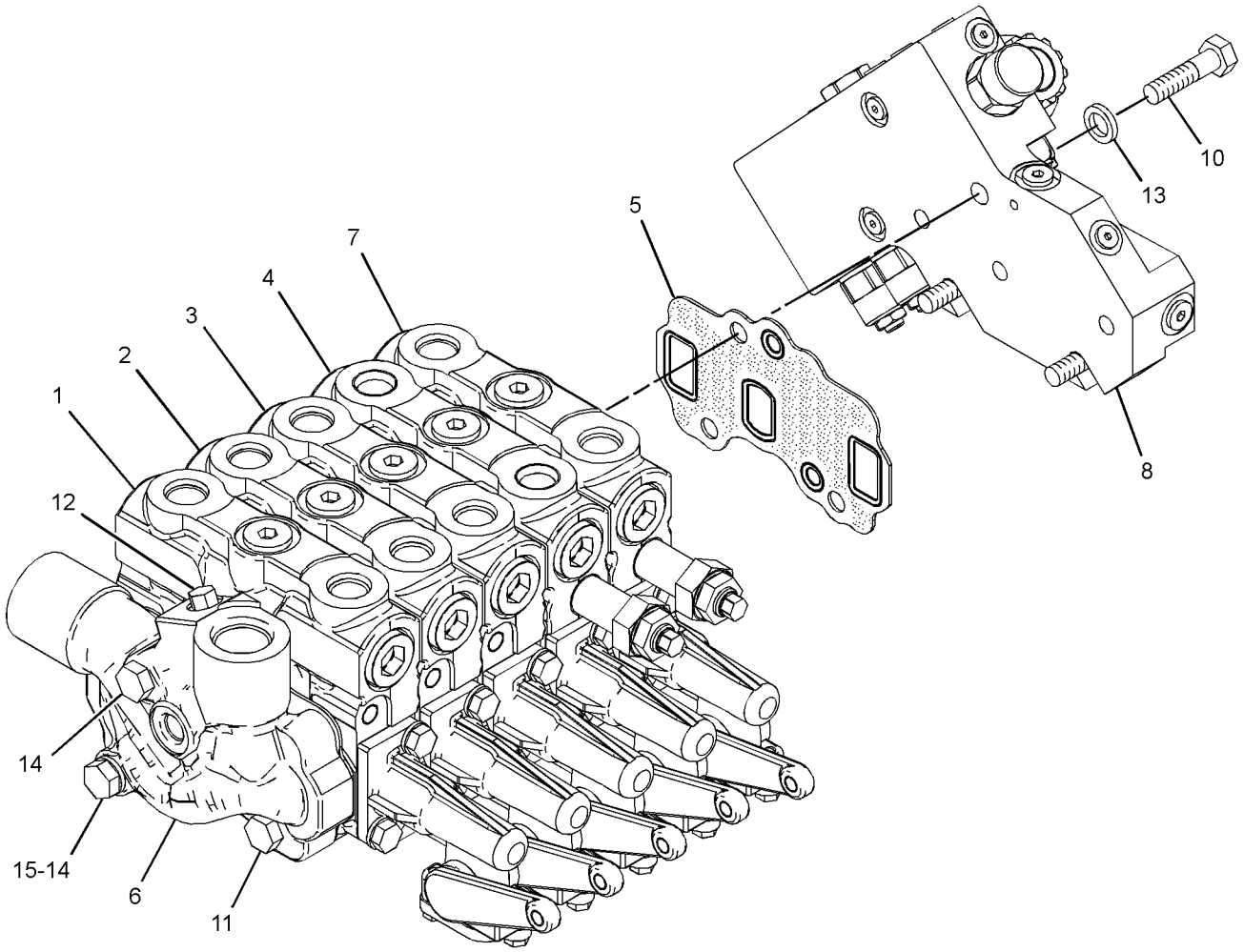

GRAPHIC #1 **<END>** g01693239

HYDRAULIC SYSTEM

250-0550 VALVE GP-BANK 5—LH

S/N: JBP1-UP
PART OF 331-1510 VALVE & LINKAGE GP
AN ATTACHMENT

SMCS-5051 **i03303145**

NOTE	REF NO	GRAPHIC REF	PART NUMBER	QTY	PART NAME 1 2 3 4 5 6 (PRODUCT LEVEL)	SEE PAGE
Y	1	1	**6E-3034**	1	VALVE GP-CONTROL (BLADE TIP)	541
Y	2	1	**6E-3035**	1	VALVE GP-CONTROL (CIRCLE DRIVE)	543
Y	3	1	**6E-3036**	1	VALVE GP-CONTROL (SIDESHIFT)	545
Y	4	1	**6E-3037**	1	VALVE GP-CONTROL (BLADE LIFT)	547
	5	1	**101-0509**	6	SEAL-INTEGRAL	
	6	1	**102-8385**	1	MANIFOLD	
Y	7	1	**107-0545**	1	VALVE GP-CONTROL (RIPPER)	551
	8	1	*222-4737*	1	PLUG AS	
		1	**9S-4180**	1	PLUG	
		1	**4J-7533**	1	SEAL-O-RING	
Y	9	1	**239-9893**	1	MANIFOLD GP-VALVE (LH)	422
	10	1	**8T-4896**	1	WASHER-HARD (10.2X18.5X2.5-MM THK)	
M	11	1	**137-6719**	3	BOLT (M10X1.5X80-MM)	
M	12	1	**137-6720**	1	BOLT (M10X1.5X160-MM)	
	13	1	**3K-6113**	3	WASHER-HARD (12X18.5X3-MM THK)	
M	14	1	**7X-2546**	2	BOLT (M10X1.5X180-MM)	

M-METRIC PART
Y-SEPARATE ILLUSTRATION

250-0550 VALVE GP-BANK 5 *(contd.)* **i03303145**

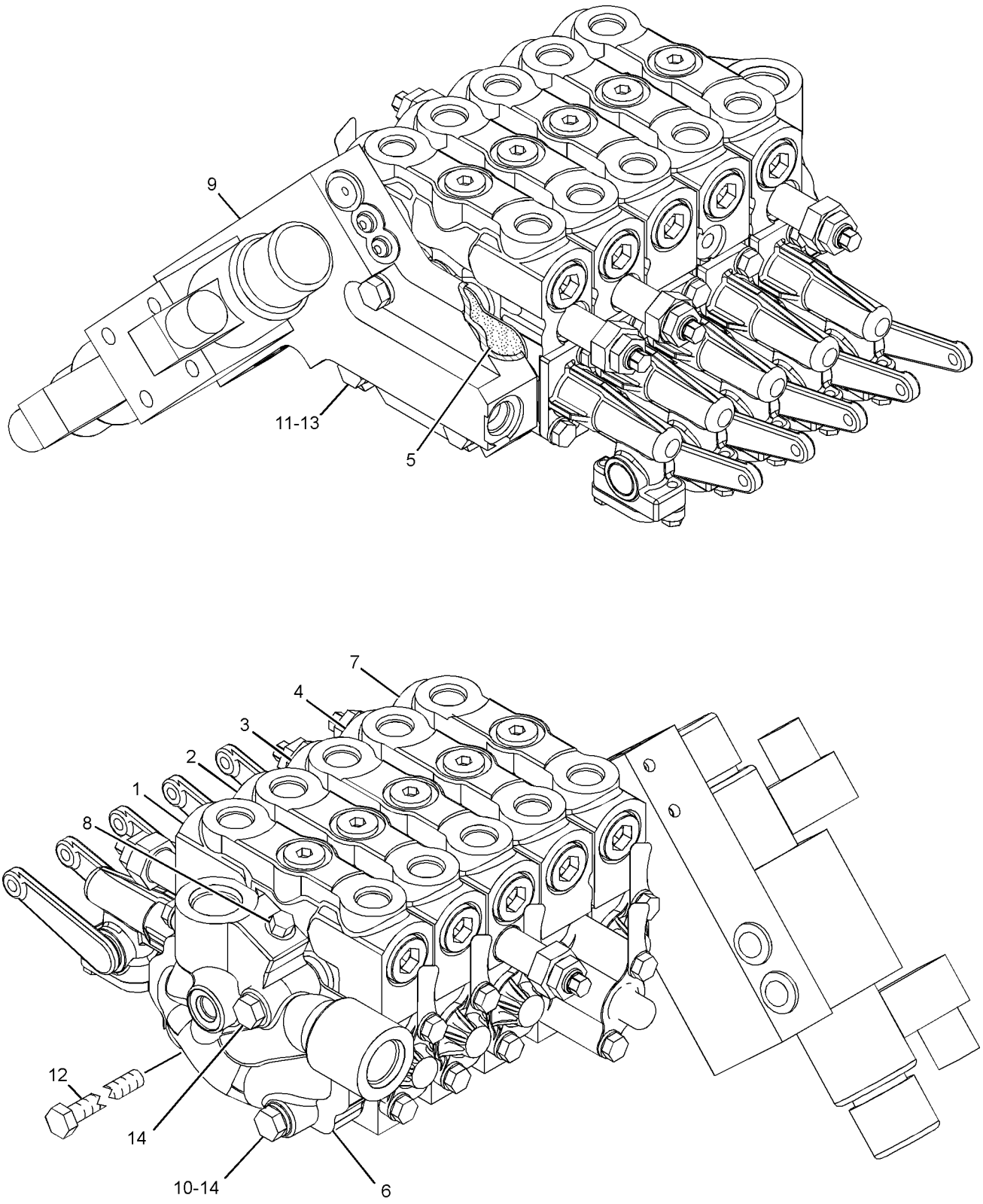

GRAPHIC #1 **<END>** g01700405

HYDRAULIC SYSTEM

262-7291 VALVE GP-BANK 5—LH

S/N: JBP1-UP
PART OF 331-1509, 331-1514 VALVE & LINKAGE GP
AN ATTACHMENT

SMCS-5051 **i03266524**

NOTE	REF NO	GRAPHIC REF	PART NUMBER	QTY	PART NAME 1 2 3 4 5 6 (PRODUCT LEVEL)	SEE PAGE
Y	1	1	**6E-3034**	1	VALVE GP-CONTROL (BLADE TIP)	541
Y	2	1	**6E-3035**	1	VALVE GP-CONTROL (CIRCLE DRIVE)	543
Y	3	1	**6E-3036**	1	VALVE GP-CONTROL (SIDESHIFT)	545
Y	4	1	**6E-3037**	1	VALVE GP-CONTROL (BLADE LIFT)	547
	5	1	**101-0509**	6	SEAL-INTEGRAL	
	6	1	**102-8385**	1	MANIFOLD	
Y	7	1	**107-0543**	1	VALVE GP-CONTROL (SCARIFIER)	549
Y	8	1	**239-9893**	1	MANIFOLD GP-VALVE (LH)	422
M	10	1	**137-6719**	3	BOLT (M10X1.5X80-MM)	
M	11	1	**137-6720**	1	BOLT (M10X1.5X160-MM)	
	12	1	*222-4737*	1	PLUG AS	
		1	**9S-4180**	1	PLUG	
		1	**4J-7533**	1	SEAL-O-RING	
	13	1	**3K-6113**	3	WASHER-HARD (12X18.5X3-MM THK)	
M	14	1	**7X-2546**	2	BOLT (M10X1.5X180-MM)	
	15	1	**8T-4896**	1	WASHER-HARD (10.2X18.5X2.5-MM THK)	

M-METRIC PART
Y-SEPARATE ILLUSTRATION

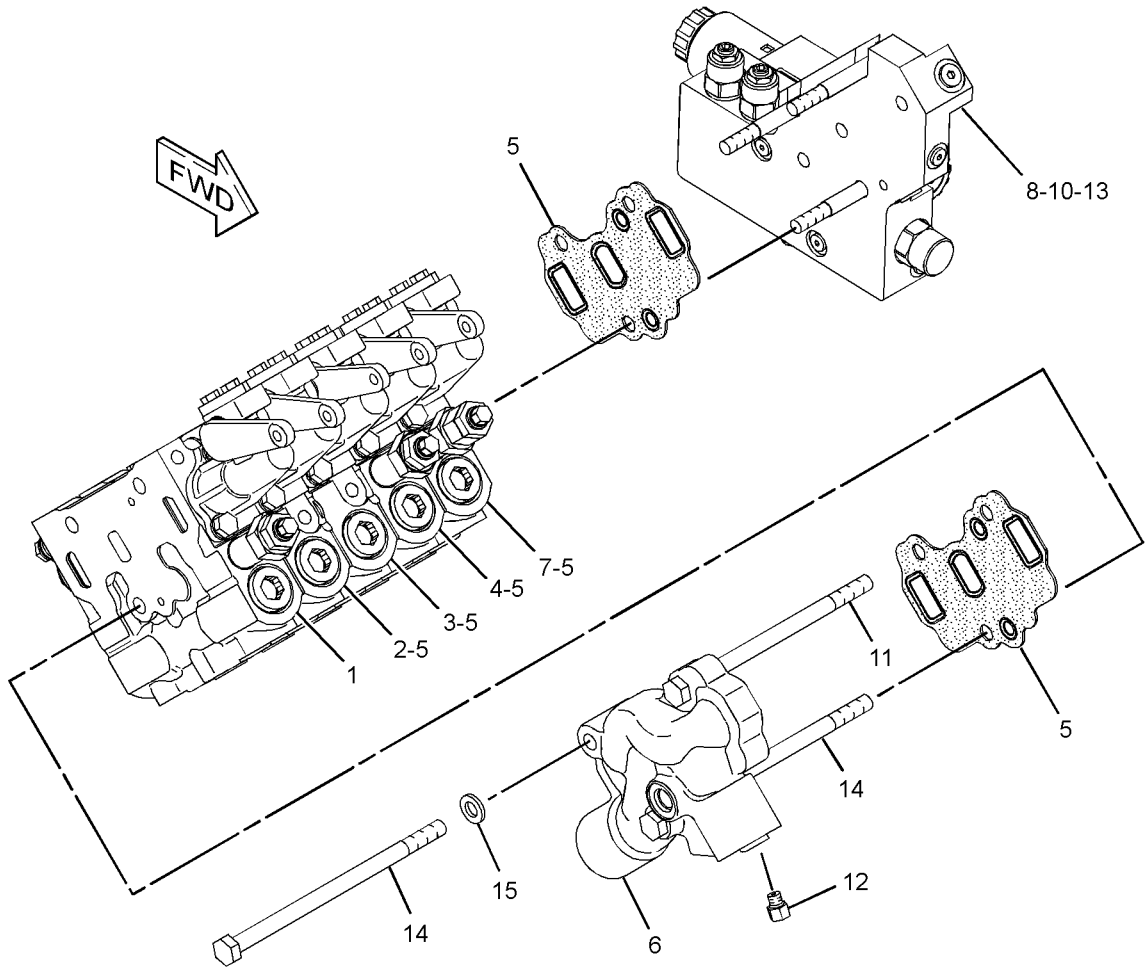

GRAPHIC #1 **<END>** g01770576

104-8648 VALVE GP-BANK 6–LH

S/N: JBP1-UP
PART OF 315-5329, 315-5333 VALVE & LINKAGE GP
AN ATTACHMENT

SMCS-5051 **i03435320**

NOTE	REF NO	GRAPHIC REF	PART NUMBER	QTY	PART NAME 1 2 3 4 5 6 (PRODUCT LEVEL)	SEE PAGE
M	1	1	**7X-2546**	2	BOLT (M10X1.5X180-MM)	
CM	2	1	**137-6720**	1	BOLT (M10X1.5X160-MM)	
	3	1	**102-8385**	1	MANIFOLD	
	4	1	**101-0509**	7	SEAL-INTEGRAL	
Y	5	1	**6E-3034**	1	VALVE GP-CONTROL (BLADE TIP)	541
Y	6	1	**6E-3035**	1	VALVE GP-CONTROL (CIRCLE DRIVE)	543
Y	7	1	**6E-3036**	1	VALVE GP-CONTROL (SIDESHIFT)	545
Y	8	1	**6E-3037**	1	VALVE GP-CONTROL (BLADE LIFT)	547
YC	9	1	**137-8104**	1	VALVE GP-CONTROL (WING TILT)	563
YC	10	1	**137-8106**	1	VALVE GP-CONTROL (WING LIFT)	565
	11	1	**101-9346**	1	COVER	
	12	1	**9S-4180**	1	PLUG	
	13	1	**4J-7533**	1	SEAL-O-RING	

C-CHANGE FROM PREVIOUS TYPE
M-METRIC PART
Y-SEPARATE ILLUSTRATION

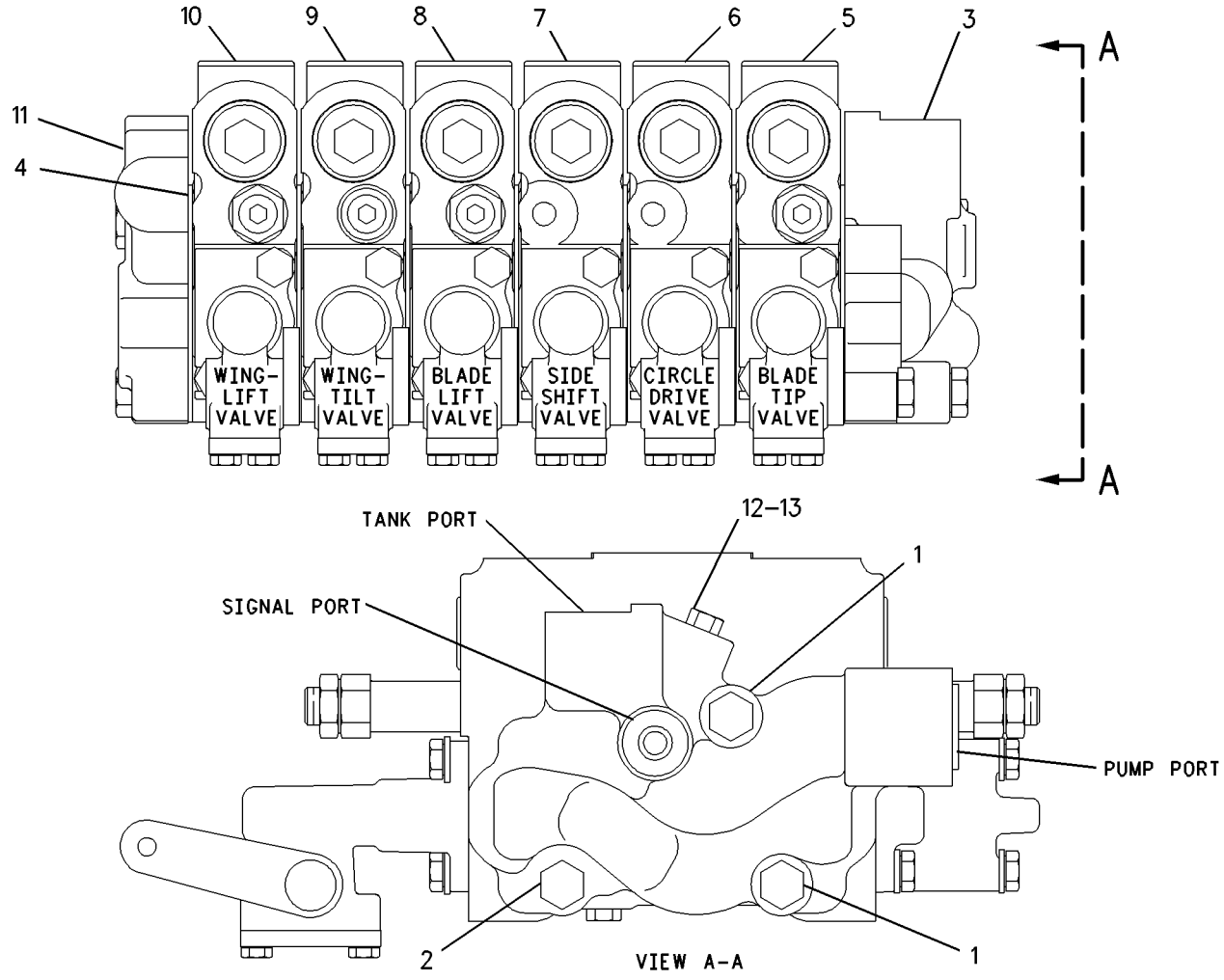

GRAPHIC #1 **<END>** g00637810

HYDRAULIC SYSTEM

115-1008 VALVE GP-BANK 6–RH

S/N: JBP1-UP
PART OF 315-5329 VALVE & LINKAGE GP
AN ATTACHMENT

SMCS-5051 **i03435321**

NOTE	REF NO	GRAPHIC REF	PART NUMBER	QTY	PART NAME 1 2 3 4 5 6 (PRODUCT LEVEL)	SEE PAGE
M	1	1	**7X-2546**	2	BOLT (M10X1.5X180-MM)	
M	2	1	**137-6720**	1	BOLT (M10X1.5X160-MM)	
	3	1	**102-6238**	1	MANIFOLD	
	4	1	**101-0509**	7	SEAL-INTEGRAL	
Y	5	1	**6E-3028**	1	VALVE GP-CONTROL (ARTICULATION)	533
Y	6	1	**6E-3029**	1	VALVE GP-CONTROL (CENTERSHIFT)	535
Y	7	1	**6E-3030**	1	VALVE GP-CONTROL (WHEEL LEAN)	537
Y	8	1	**6E-3031**	1	VALVE GP-CONTROL (BLADE LIFT)	539
Y	9	1	**107-0547**	1	VALVE GP-CONTROL (BULLDOZER LIFT, PLOW)	553
	10	1	**101-9346**	1	COVER	
M	11	1	**134-8221**	3	BOLT (M10X1.5X120-MM)	
	12	1	**9S-4180**	1	PLUG	
	13	1	**4J-7533**	1	SEAL-O-RING	
Y	14	1	**115-1007**	1	VALVE GP-CONTROL (BULLDOZER ANGLE, PLOW)	555

M-METRIC PART
Y-SEPARATE ILLUSTRATION

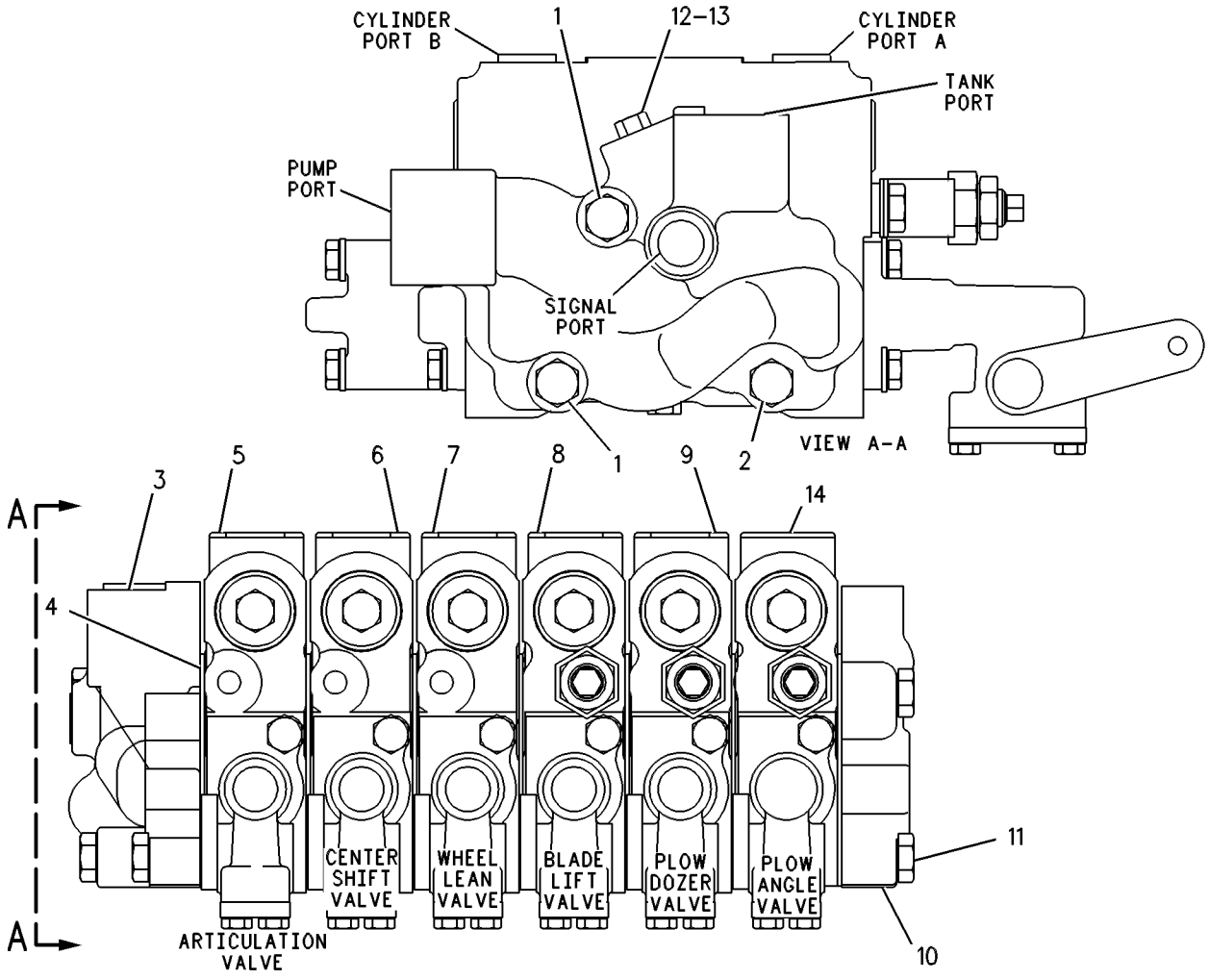

GRAPHIC #1 **<END>** g00108825

250-0565 VALVE GP-BANK 6–RH

S/N: JBP1-UP
PART OF 331-1512 VALVE & LINKAGE GP
AN ATTACHMENT

SMCS-5051 **i03378241**

NOTE	REF NO	GRAPHIC REF	PART NUMBER	QTY	PART NAME 1 2 3 4 5 6 (PRODUCT LEVEL)	SEE PAGE
Y	1	1	**6E-3028**	1	VALVE GP-CONTROL (ARTICULATION)	533
Y	2	1	**6E-3029**	1	VALVE GP-CONTROL (CENTERSHIFT)	535
Y	3	1	**6E-3030**	1	VALVE GP-CONTROL (WHEEL LEAN)	537
Y	4	1	**6E-3031**	1	VALVE GP-CONTROL (BLADE LIFT)	539
	5	1	**101-0509**	7	SEAL-INTEGRAL	
	6	1	**102-6238**	1	MANIFOLD	
Y	7	1	**107-0547**	1	VALVE GP-CONTROL (PLOW, BULLDOZER LIFT)	553
Y	8	1	**115-1007**	1	VALVE GP-CONTROL (BULLDOZER ANGLE, PLOW) (PLOW, BULLDOZER ANGLE)	555
Y	9	1	**239-9894**	1	MANIFOLD GP-VALVE (RH)	424
M	11	1	**134-8221**	3	BOLT (M10X1.5X120-MM)	
M	12	1	**137-6720**	1	BOLT (M10X1.5X160-MM)	
	13	1	*222-4737*	1	PLUG AS	
		1	**9S-4180**	1	PLUG	
		1	**4J-7533**	1	SEAL-O-RING	
	14	1	**3K-6113**	3	WASHER-HARD (12X18.5X3-MM THK)	
M	15	1	**7X-2546**	2	BOLT (M10X1.5X180-MM)	
	16	1	**8T-4896**	1	WASHER-HARD (10.2X18.5X2.5-MM THK)	

M-METRIC PART
Y-SEPARATE ILLUSTRATION

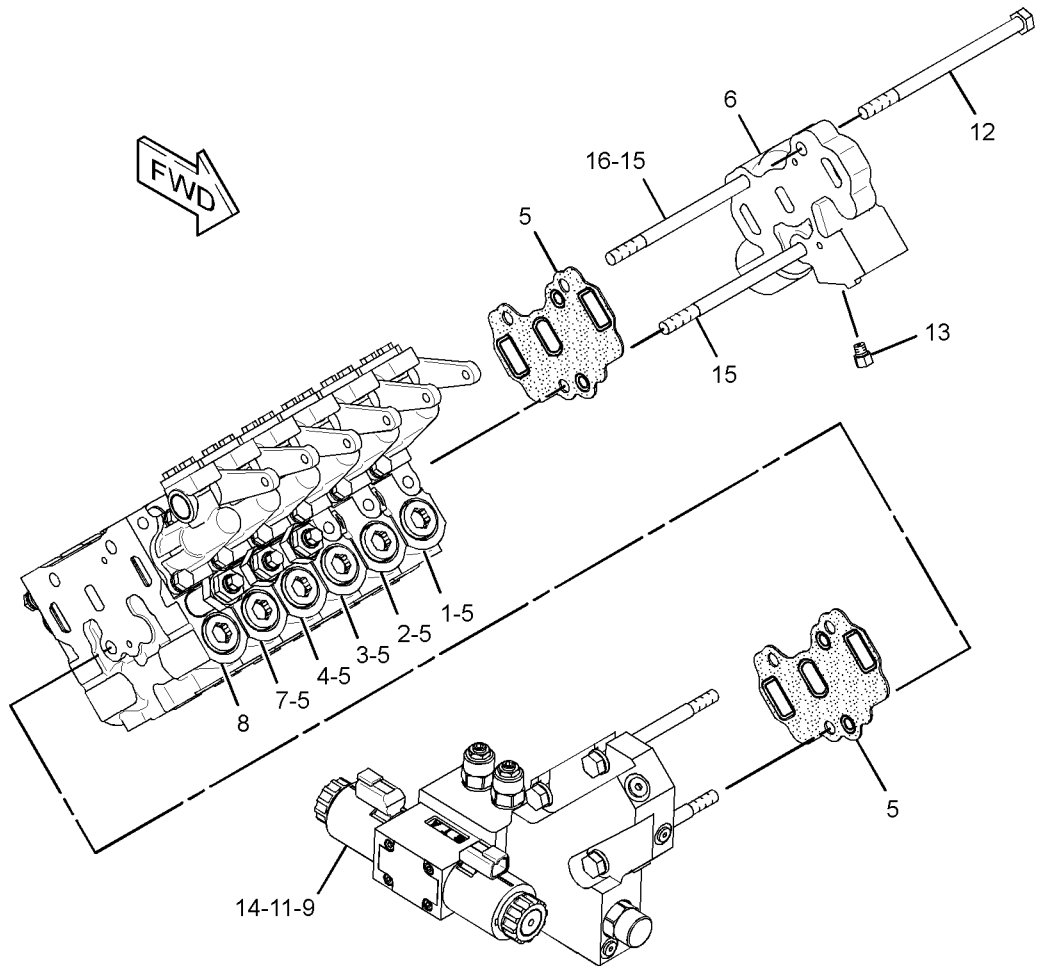

GRAPHIC #1 **<END>** g01770571

HYDRAULIC SYSTEM

250-0567 VALVE GP-BANK 6–LH

S/N: JBP1-UP
PART OF 331-1512, 331-1516 VALVE & LINKAGE GP
AN ATTACHMENT

SMCS-5051 **i03266504**

NOTE	REF NO	GRAPHIC REF	PART NUMBER	QTY	PART NAME 1 2 3 4 5 6 (PRODUCT LEVEL)	SEE PAGE
Y	1	1	**6E-3034**	1	VALVE GP-CONTROL (BLADE TIP)	541
Y	2	1	**6E-3035**	1	VALVE GP-CONTROL (CIRCLE DRIVE)	543
Y	3	1	**6E-3036**	1	VALVE GP-CONTROL (SIDESHIFT)	545
Y	4	1	**6E-3037**	1	VALVE GP-CONTROL (BLADE LIFT)	547
	5	1	**101-0509**	7	SEAL-INTEGRAL	
	6	1	**102-8385**	1	MANIFOLD	
Y	7	1	**137-8104**	1	VALVE GP-CONTROL (WING TILT)	563
Y	8	1	**137-8106**	1	VALVE GP-CONTROL (WING LIFT)	565
Y	9	1	**239-9893**	1	MANIFOLD GP-VALVE (LH)	422
M	11	1	**134-8221**	3	BOLT (M10X1.5X120-MM)	
M	12	1	**137-6720**	1	BOLT (M10X1.5X160-MM)	
	13	1	*222-4737*	1	PLUG AS	
		1	**9S-4180**	1	PLUG	
		1	**4J-7533**	1	SEAL-O-RING	
M	14	1	**7X-2546**	2	BOLT (M10X1.5X180-MM)	
	15	1	**3K-6113**	3	WASHER-HARD (12X18.5X3-MM THK)	
	16	1	**8T-4896**	1	WASHER-HARD (10.2X18.5X2.5-MM THK)	

M-METRIC PART
Y-SEPARATE ILLUSTRATION

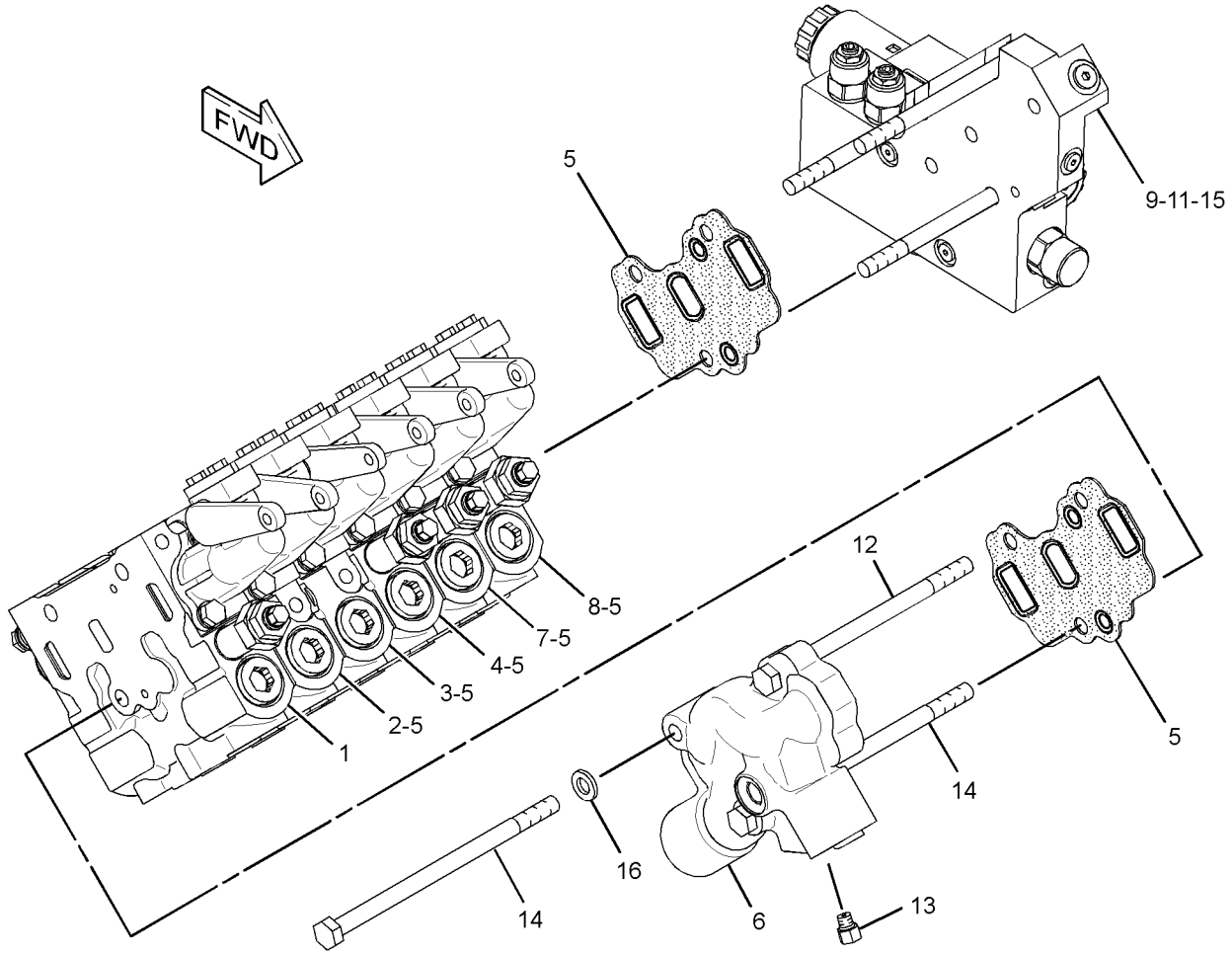

GRAPHIC #1 **<END>** g01776874

104-8647 VALVE GP-BANK 7–LH

S/N: JBP1-UP
PART OF 315-5336 VALVE & LINKAGE GP
AN ATTACHMENT

SMCS-5051 **i02592689**

NOTE	REF NO	GRAPHIC REF	PART NUMBER	QTY	PART NAME 1 2 3 4 5 6 (PRODUCT LEVEL)	SEE PAGE
M	1	1	**7X-2546**	2	BOLT (M10X1.5X180-MM)	
CM	2	1	**137-6720**	4	BOLT (M10X1.5X160-MM)	
	3	1	**102-8385**	1	MANIFOLD	
	4	1	**101-0509**	8	SEAL-INTEGRAL	
Y	5	1	**6E-3034**	1	VALVE GP-CONTROL (BLADE TIP)	541
Y	6	1	**6E-3035**	1	VALVE GP-CONTROL (CIRCLE DRIVE)	543
Y	7	1	**6E-3036**	1	VALVE GP-CONTROL (SIDESHIFT)	545
Y	8	1	**6E-3037**	1	VALVE GP-CONTROL (BLADE LIFT)	547
Y	9	1	**107-0543**	1	VALVE GP-CONTROL (SCARIFIER)	549
YC	10	1	**137-8104**	1	VALVE GP-CONTROL (WING TILT)	563
YC	11	1	**137-8106**	1	VALVE GP-CONTROL (WING LIFT)	565
	12	1	**101-9346**	1	COVER	
	13	1	**4J-7533**	1	SEAL-O-RING	
	14	1	**9S-4180**	1	PLUG	

C-CHANGE FROM PREVIOUS TYPE
M-METRIC PART
Y-SEPARATE ILLUSTRATION

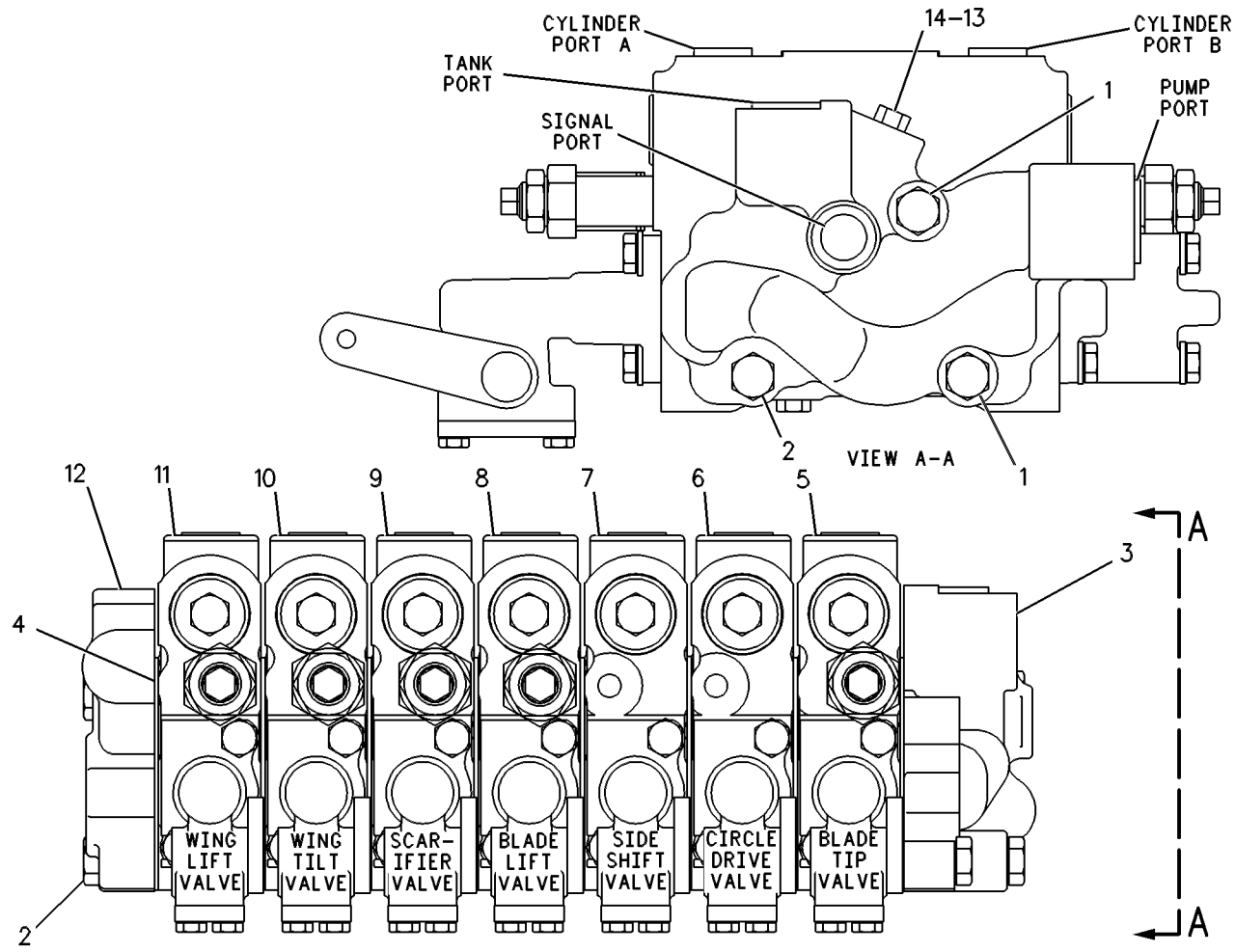

GRAPHIC #1 **<END>** g00273400

HYDRAULIC SYSTEM

263-6435 VALVE GP-BANK 7–LH

S/N: JBP1-UP
PART OF 331-1515 VALVE & LINKAGE GP
AN ATTACHMENT

SMCS-5051 **i03266503**

NOTE	REF NO	GRAPHIC REF	PART NUMBER	QTY	PART NAME 1 2 3 4 5 6 (PRODUCT LEVEL)	SEE PAGE
Y	1	1	**6E-3034**	1	VALVE GP-CONTROL (BLADE TIP)	541
Y	2	1	**6E-3035**	1	VALVE GP-CONTROL (CIRCLE DRIVE)	543
Y	3	1	**6E-3036**	1	VALVE GP-CONTROL (SIDESHIFT)	545
Y	4	1	**6E-3037**	1	VALVE GP-CONTROL (BLADE LIFT)	547
	5	1	**101-0509**	8	SEAL-INTEGRAL	
	6	1	**102-8385**	1	MANIFOLD	
Y	7	1	**107-0543**	1	VALVE GP-CONTROL (SCARIFIER)	549
Y	8	1	**137-8104**	1	VALVE GP-CONTROL (WING TILT)	563
Y	9	1	**137-8106**	1	VALVE GP-CONTROL (WING LIFT)	565
	10	1	*222-4737*	1	PLUG AS	
		1	**4J-7533**	1	SEAL-O-RING	
		1	**9S-4180**	1	PLUG	
Y	11	1	**239-9893**	1	MANIFOLD GP-VALVE (LH)	422
M	13	1	**137-6720**	4	BOLT (M10X1.5X160-MM)	
	14	1	**3K-6113**	3	WASHER-HARD (12X18.5X3-MM THK)	
M	15	1	**7X-2546**	2	BOLT (M10X1.5X180-MM)	
	16	1	**8T-4896**	1	WASHER-HARD (10.2X18.5X2.5-MM THK)	

M-METRIC PART
Y-SEPARATE ILLUSTRATION

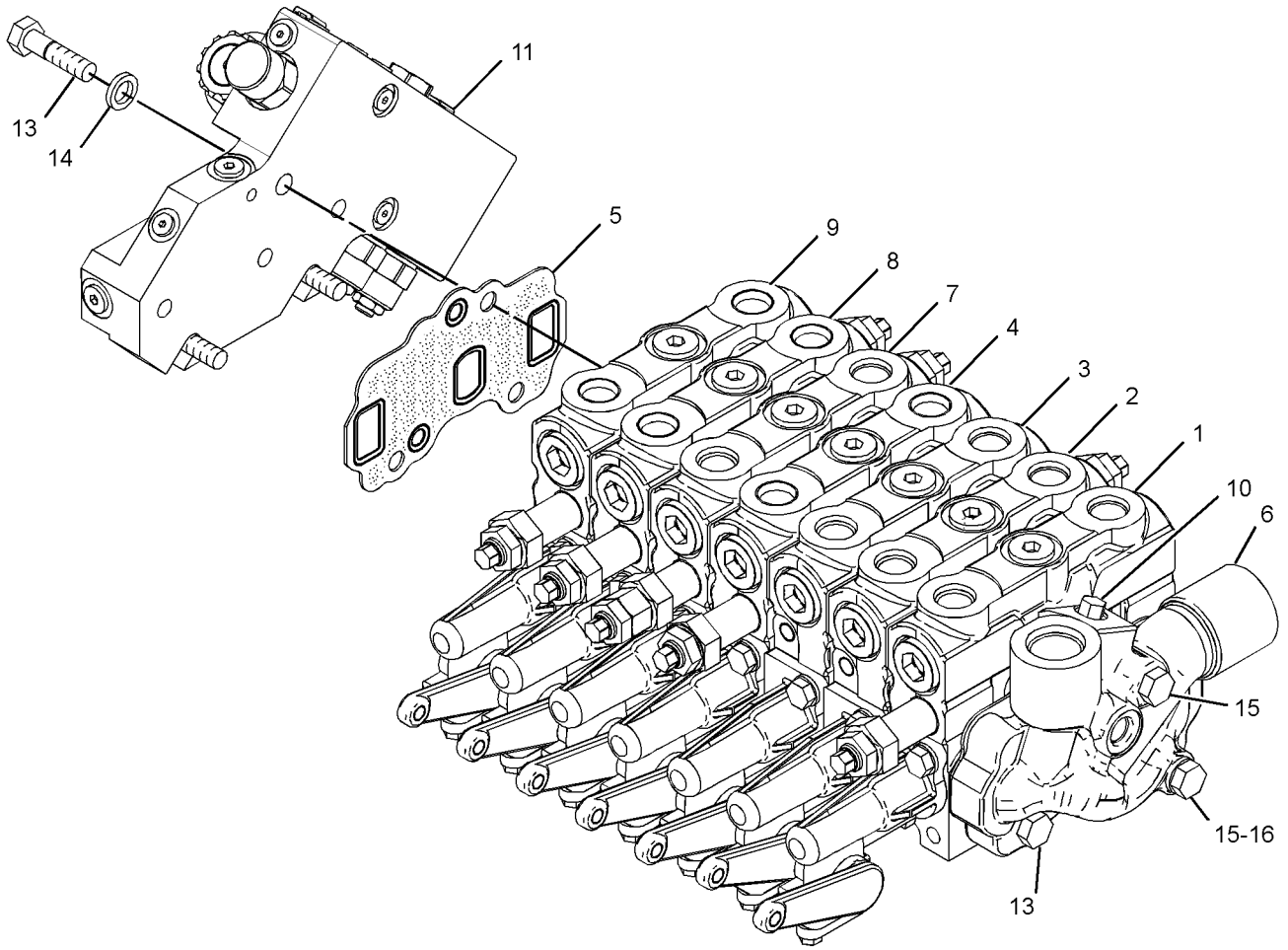

GRAPHIC #1 **<END>** g01693417

HYDRAULIC SYSTEM

9T-5957 VALVE GP-COMBINATION

S/N: JBP1-UP

PART OF 299-5544 LINES GP-PUMP

SMCS-5064 **i02592376**

NOTE	REF NO	GRAPHIC REF	PART NUMBER	QTY	PART NAME 1 2 3 4 5 6 (PRODUCT LEVEL)	SEE PAGE
C	1	1	**9T-5935**	1	BODY	
Y	2	1	**100-6021**	1	VALVE GP-RELIEF (STEERING)	572
	3	1	*3J-3679*	1	PLUG AS	
		1	**1J-9671**	1	SEAL-O-RING	
		1	**9S-8003**	1	PLUG	
	4	1	**3T-8236**	1	SPRING	
M	5	1	**6V-5230**	2	BOLT (M10X1.5X60-MM)	
	6	1	**6V-3965**	1	FITTING (QUICK DISCONNECT)	
	7	1	**3J-1907**	1	SEAL-O-RING	
	8	1	**6V-8647**	2	CONNECTOR	
	9	1	**3J-7354**	2	SEAL-O-RING	
	10	1	**6E-1923**	1	TUBE AS	
	11	1	**4J-5477**	2	SEAL-O-RING	
Y	12	1	**4T-4935**	1	VALVE GP-RELIEF (MAIN)	569
	13	1	**8T-8987**	1	ELBOW	
	14	1	**2M-9780**	1	SEAL-O-RING	
	15	1	**1H-0337**	1	VALVE	
	16	1	**9F-6705**	1	SPRING	
	17	1	**9S-4189**	1	PLUG	
	18	1	**6E-1924**	1	SPRING (OUTER)	
	19	1	**6E-1925**	1	SPRING (INNER)	
	20	1	**5M-2057**	1	SEAL-O-RING	
	21	1	**8M-3175**	2	WASHER-HARD (10.2X16X3-MM THK)	
	22	1	**6V-0852**	1	CAP-DUST	
Y	23	1	**6E-4703**	1	VALVE GP-RELIEF (IMPLEMENT SIGNAL)	571
C	24	1	**3K-0360**	1	SEAL-O-RING	
	25	1	**173-3993**	2	PLUG AS	
					(EACH INCLUDES)	
		1	**4J-7533**	1	SEAL-O-RING	
		1	**9S-8001**	1	PLUG-O-RING	
Y	27	1	**4T-1860**	1	VALVE GP-SHUTTLE (SIGNAL)	577
	30	1	**2S-4078**	1	SEAL-O-RING	
	31	1	*3R-2437*	1	PLUG AS	
		1	**4K-1388**	1	SEAL-O-RING	
		1	**9S-8009**	1	PLUG-O-RING	
C	32	1	**6V-8398**	1	SEAL-O-RING	
C	33	1	**7X-4776**	2	RING-BACKUP	
	34	1	*183-7263*	1	PLUG AS	
		1	**3J-7354**	1	SEAL-O-RING	
		1	**9S-8002**	1	PLUG-O-RING	
CY	35	1	**131-8350**	1	VALVE GP-PURGE (IMPLEMENT SIGNAL)	568
C	36	1	**3P-9498**	1	PLUG-ORIFICE	
C	37	1	**9T-5934**	1	VALVE	
C	38	1	**8J-6815**	2	PLUG-ORIFICE	
	39	1	*148-8408*	3	PLUG AS	
					(EACH INCLUDES)	
		1	**9S-4183**	1	PLUG-O-RING	
		1	**3D-2824**	1	SEAL-O-RING	

C-CHANGE FROM PREVIOUS TYPE
M-METRIC PART
Y-SEPARATE ILLUSTRATION

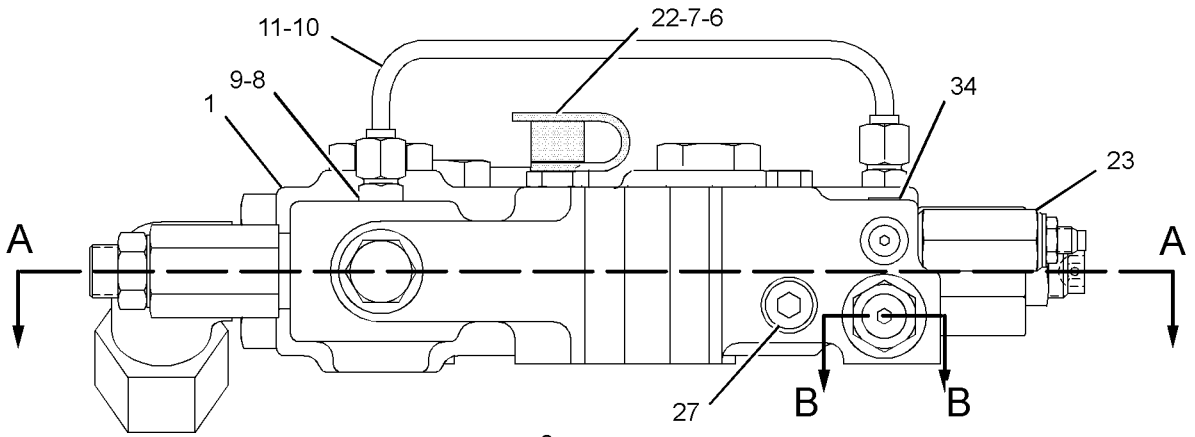

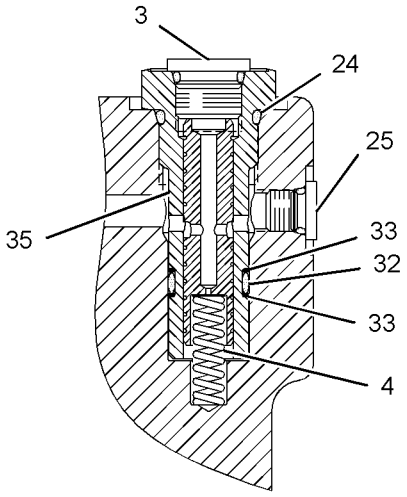

SECTION B-B

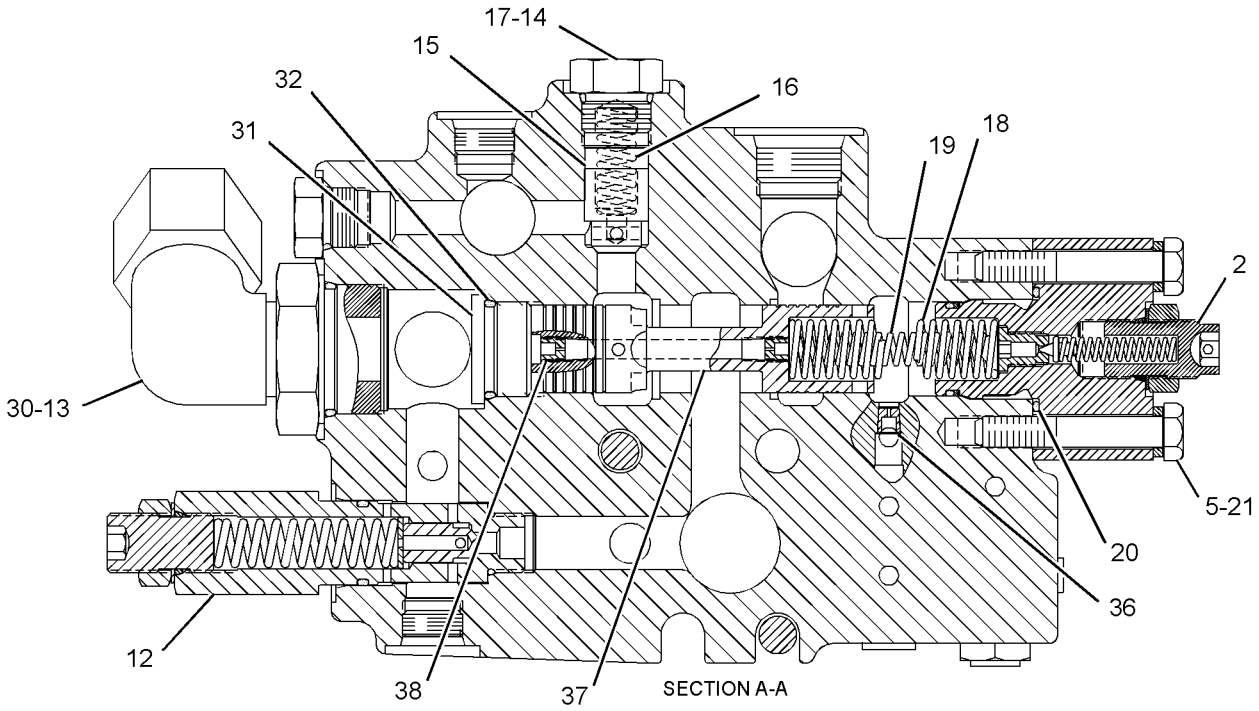

SECTION A-A

GRAPHIC #1 **<END>** g01297579

HYDRAULIC SYSTEM

6E-3028 VALVE GP-CONTROL–ARTICULATION

S/N: JBP1-UP

PART OF 124-3325, 250-0544, 6E-3032 VALVE GP-BANK 4, 104-8671, 124-3326, 250-0548 VALVE GP-BANK 5, 115-1008, 250-0565 VALVE GP-BANK 6 ALSO AN ATTACHMENT

SMCS-5051 **i03372403**

NOTE	REF NO	GRAPHIC REF	PART NUMBER	QTY	PART NAME 1 2 3 4 5 6 (PRODUCT LEVEL)	SEE PAGE
	1	1	**6E-3044**	1	BODY	
	2	1	**101-1148**	1	STEM	
	3	1	**101-1978**	1	COVER	
	4	1	**2K-8199**	2	SEAL-O-RING	
M	5	1	**8T-4189**	4	BOLT (M8X1.25X20-MM)	
	6	1	**8T-4224**	4	WASHER-HARD (8.8X16X2-MM THK)	
	7	1	**101-1984**	1	BODY	
	8	1	**102-7412**	1	SPRING	
	9	1	**101-1973**	4	RETAINER	
	10	1	**101-1971**	1	LEVER	
	11	1	**101-1970**	1	LEVER AS	
C	12	1	**325-6423**	2	VALVE GP-CHECK	
					(EACH INCLUDES)	
		1	**3K-0360**	1	SEAL-O-RING	
		1	**7J-9933**	1	SEAL-O-RING	
	13	1	**101-1983**	2	RING-BACKUP	
	14	1	**101-2480**	1	COVER	
	15	1	**4D-9986**	1	SEAL-O-RING	
M	16	1	**8T-4138**	2	BOLT (M6X1X20-MM)	
	17	1	**5B-9318**	1	BALL	
	18	1	**6E-3007**	1	SPRING	
	19	1	**6E-4502**	1	PLUG	
	20	1	**4J-7533**	1	SEAL-O-RING	
	21	1	**6E-3019**	1	VALVE	
	22	1	**6E-5153**	1	SPRING	
	23	1	**108-2187**	1	PLUG-PIPE	
	24	1	**106-3659**	1	PISTON	
	26	1	**111-8233**	1	SPRING	
	27	1	*148-8395*	1	PLUG AS	
		1	**9S-8005**	1	PLUG-O-RING	
		1	**3K-0360**	1	SEAL-O-RING	
	28	1	**8M-4437**	2	SEAL-O-RING	

C-CHANGE FROM PREVIOUS TYPE
M-METRIC PART

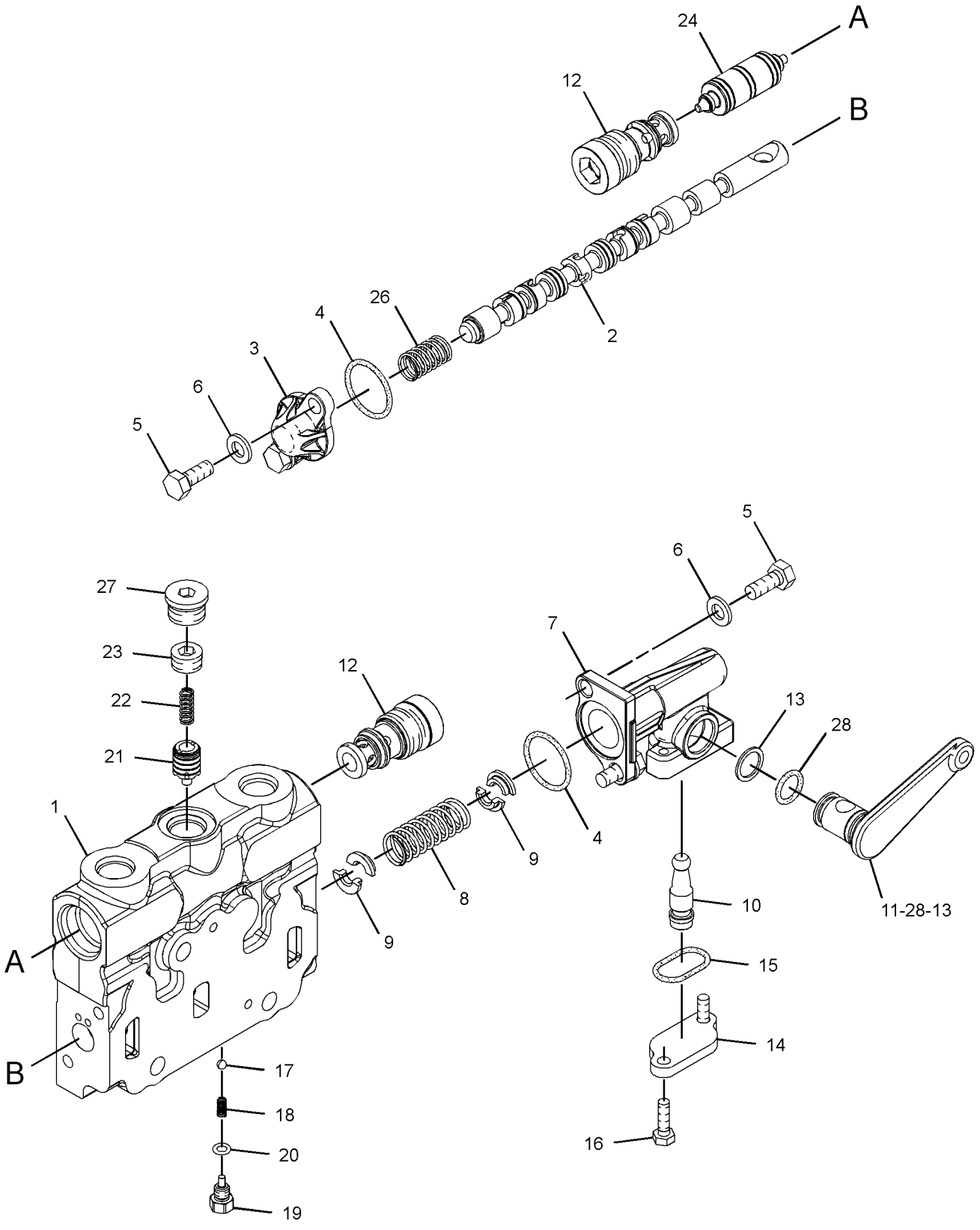

GRAPHIC #1 **<END>** g01748193

6E-3029 VALVE GP-CONTROL—CENTERSHIFT

S/N: JBP1-UP

PART OF 124-3325, 250-0544, 6E-3032 VALVE GP-BANK 4, 104-8671, 124-3326, 250-0548 VALVE GP-BANK 5, 115-1008, 250-0565 VALVE GP-BANK 6 ALSO AN ATTACHMENT

SMCS-5051 **i03372660**

NOTE	REF NO	GRAPHIC REF	PART NUMBER	QTY	PART NAME 1 2 3 4 5 6 (PRODUCT LEVEL)	SEE PAGE
	1	1	**4D-9986**	1	SEAL-O-RING	
	2	1	**6E-3007**	1	SPRING	
	3	1	**6E-3019**	1	VALVE (COMPENSATOR)	
	4	1	**6E-3044**	1	BODY	
	5	1	**6E-4502**	1	PLUG	
	6	1	**6E-5153**	1	SPRING	
	7	1	**101-1970**	1	LEVER AS	
	8	1	**101-1971**	1	LEVER	
	9	1	**101-1973**	4	RETAINER	
	10	1	**101-1978**	1	COVER	
	11	1	**101-1984**	1	BODY	
	12	1	**101-2480**	1	COVER	
	13	1	**102-7412**	1	SPRING	
	14	1	**106-3659**	1	PISTON	
	15	1	**101-1149**	1	STEM	
	17	1	**111-8233**	1	SPRING	
C	18	1	**325-6423**	2	VALVE GP-CHECK	
					(EACH INCLUDES)	
		1	**3K-0360**	1	SEAL-O-RING	
		1	**7J-9933**	1	SEAL-O-RING	
	19	1	**101-1983**	2	RING-BACKUP	
	20	1	**108-2187**	1	PLUG-PIPE	
C	21	1	*148-8395*	1	PLUG AS	
		1	**9S-8005**	1	PLUG-O-RING	
		1	**3K-0360**	1	SEAL-O-RING	
	22	1	**2K-8199**	2	SEAL-O-RING	
	23	1	**4J-7533**	1	SEAL-O-RING	
	24	1	**5B-9318**	1	BALL	
	25	1	**8M-4437**	2	SEAL-O-RING	
M	26	1	**8T-4138**	2	BOLT (M6X1X20-MM)	
M	27	1	**8T-4189**	4	BOLT (M8X1.25X20-MM)	
	28	1	**8T-4224**	4	WASHER-HARD (8.8X16X2-MM THK)	

C-CHANGE FROM PREVIOUS TYPE
M-METRIC PART

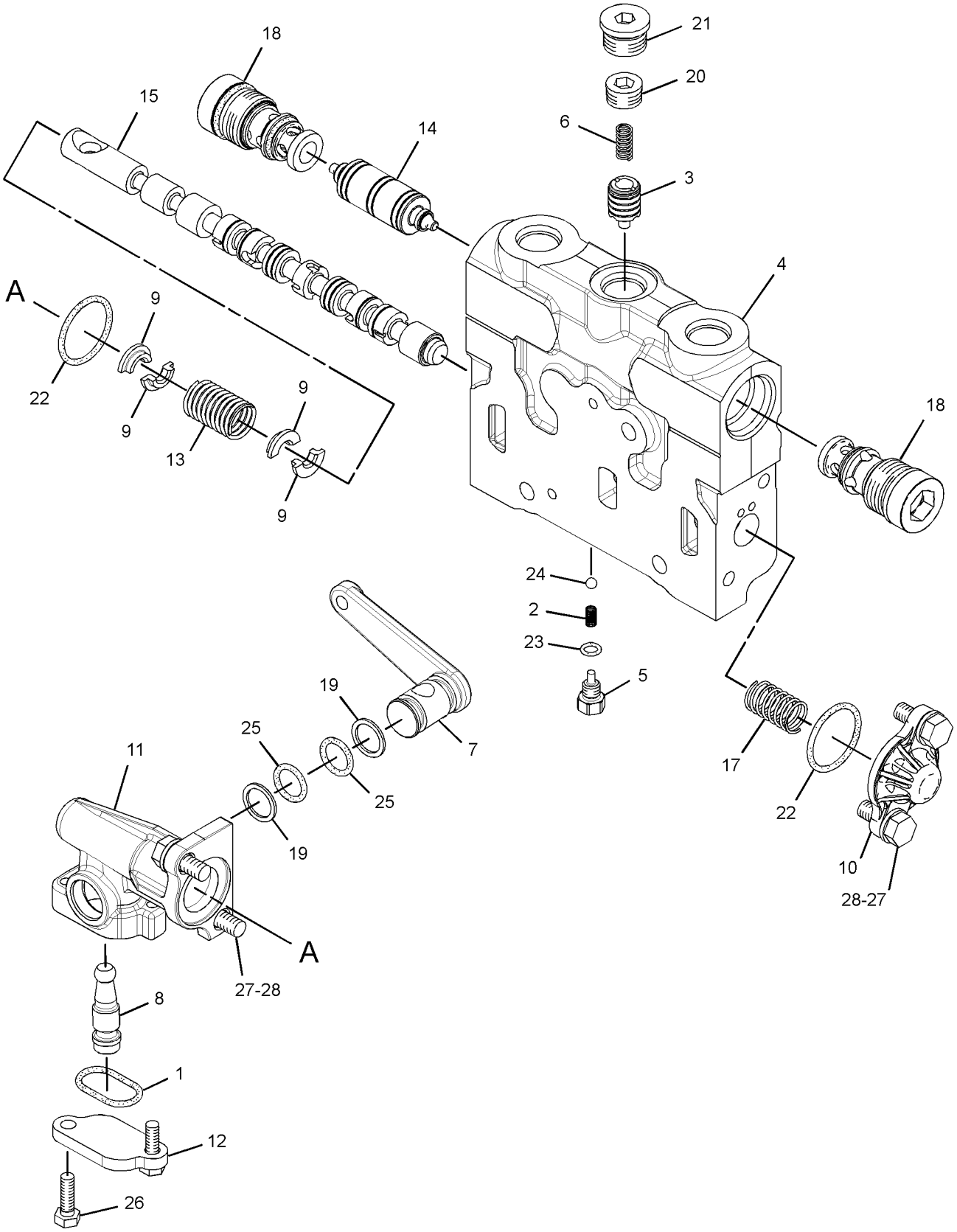

GRAPHIC #1 **<END>** g01688982

HYDRAULIC SYSTEM

6E-3030 VALVE GP-CONTROL—WHEEL LEAN

S/N: JBP1-UP

PART OF 124-3325, 250-0544, 6E-3032 VALVE GP-BANK 4, 104-8671, 124-3326, 250-0548 VALVE GP-BANK 5, 115-1008, 250-0565 VALVE GP-BANK 6 ALSO AN ATTACHMENT

SMCS-5051 **i03372783**

NOTE	REF NO	GRAPHIC REF	PART NUMBER	QTY	PART NAME 1 2 3 4 5 6 (PRODUCT LEVEL)	SEE PAGE
	1	1	**4D-9986**	1	SEAL-O-RING	
	2	1	**6E-3007**	1	SPRING	
	3	1	**6E-3019**	1	VALVE	
	4	1	**6E-3044**	1	BODY	
	5	1	**6E-4502**	1	PLUG	
	6	1	**6E-5153**	1	SPRING	
	7	1	**101-1154**	1	STEM	
	8	1	**101-1970**	1	LEVER AS	
	9	1	**101-1971**	1	LEVER	
	10	1	**101-1973**	4	RETAINER	
	11	1	**101-1978**	1	COVER	
	12	1	**101-1984**	1	BODY	
	13	1	**101-2480**	1	COVER	
	14	1	**102-7412**	1	SPRING	
	15	1	**106-3659**	1	PISTON	
	17	1	**111-8233**	1	SPRING	
C	18	1	**325-6423**	2	VALVE GP-CHECK	
					(EACH INCLUDES)	
		1	**3K-0360**	1	SEAL-O-RING	
		1	**7J-9933**	1	SEAL-O-RING	
	19	1	**101-1983**	2	RING-BACKUP	
	20	1	**108-2187**	1	PLUG-PIPE	
	21	1	*148-8395*	1	PLUG AS	
		1	**9S-8005**	1	PLUG-O-RING	
		1	**3K-0360**	1	SEAL-O-RING	
	22	1	**203-3940**	2	SEAL-O-RING	
	23	1	**2K-8199**	2	SEAL-O-RING	
	24	1	**4J-7533**	1	SEAL-O-RING	
	25	1	**5B-9318**	1	BALL	
M	26	1	**8T-4138**	2	BOLT (M6X1X20-MM)	
M	27	1	**8T-4189**	4	BOLT (M8X1.25X20-MM)	
	28	1	**8T-4224**	4	WASHER-HARD (8.8X16X2-MM THK)	

C-CHANGE FROM PREVIOUS TYPE
M-METRIC PART

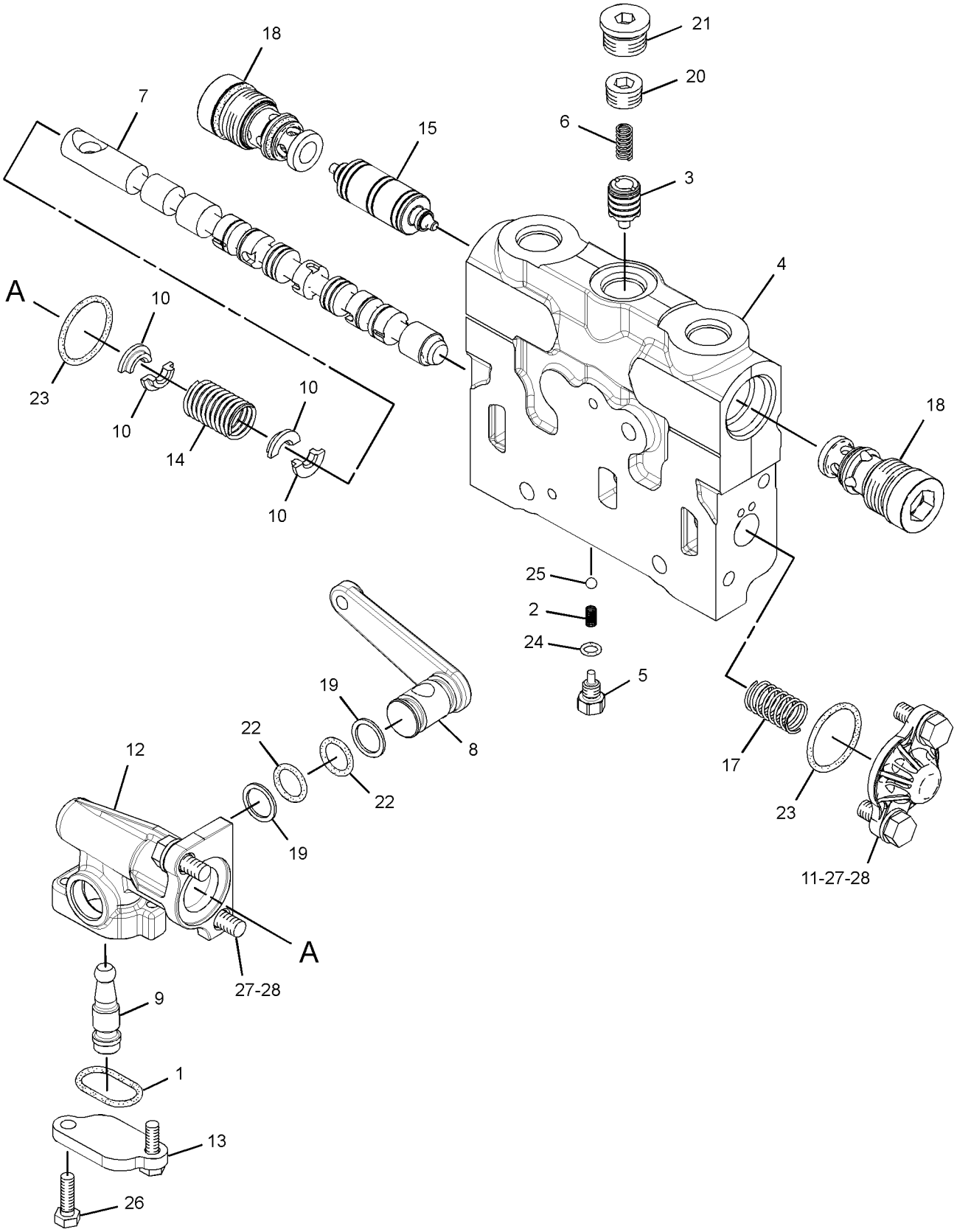

GRAPHIC #1 **<END>** g01668515

HYDRAULIC SYSTEM

6E-3031 VALVE GP-CONTROL—BLADE LIFT

S/N: JBP1-UP

PART OF 250-0544, 6E-3032 VALVE GP-BANK 4, 104-8671, 250-0548 VALVE GP-BANK 5, 115-1008, 250-0565 VALVE GP-BANK 6 AN ATTACHMENT

SMCS-5051 **i03373022**

NOTE	REF NO	GRAPHIC REF	PART NUMBER	QTY	PART NAME 1 2 3 4 5 6 (PRODUCT LEVEL)	SEE PAGE
	1	1	**6E-3043**	1	BODY	
	2	1	**221-3676**	1	STEM	
	3	1	**101-1980**	1	HOUSING	
Y	4	1	**108-4916**	1	DETENT GP-CONTROL VALVE (BLADE LIFT)	384
	5	1	**5B-9318**	1	BALL	
M	6	1	**8T-6869**	2	BOLT (M8X1.25X60-MM)	
	7	1	**2K-8199**	2	SEAL-O-RING	
M	8	1	**8T-4189**	2	BOLT (M8X1.25X20-MM)	
	9	1	**8T-4224**	4	WASHER-HARD (8.8X16X2-MM THK)	
	10	1	**101-1984**	1	BODY	
	11	1	**102-7412**	1	SPRING	
	12	1	**101-1973**	4	RETAINER	
	13	1	**101-1971**	1	LEVER	
	14	1	**101-1970**	1	LEVER AS	
C	15	1	**325-6423**	2	VALVE GP-CHECK	
					(EACH INCLUDES)	
		1	**3K-0360**	1	SEAL-O-RING	
		1	**7J-9933**	1	SEAL-O-RING	
	16	1	**101-1983**	2	RING-BACKUP	
	17	1	**4D-9986**	1	SEAL-O-RING	
	18	1	**101-2480**	1	COVER	
M	19	1	**8T-4138**	2	BOLT (M6X1X20-MM)	
	20	1	**6E-3007**	1	SPRING	
	21	1	**6E-4502**	1	PLUG	
	22	1	**4J-7533**	1	SEAL-O-RING	
	23	1	**6E-3019**	1	VALVE	
	24	1	**6E-5153**	1	SPRING	
	25	1	**108-2187**	1	PLUG-PIPE	
	26	1	**106-3660**	2	PISTON	
Y	27	1	**222-7774**	1	VALVE GP-RELIEF (BLADE LIFT)	576
	29	1	**111-8234**	1	SPRING	
					SPRING MUST HAVE LIGHT BLUE STRIPE	
	30	1	*148-8395*	1	PLUG AS	
		1	**9S-8005**	1	PLUG-O-RING	
		1	**3K-0360**	1	SEAL-O-RING	
	31	1	**203-3940**	2	SEAL-O-RING	

C-CHANGE FROM PREVIOUS TYPE
M-METRIC PART
Y-SEPARATE ILLUSTRATION

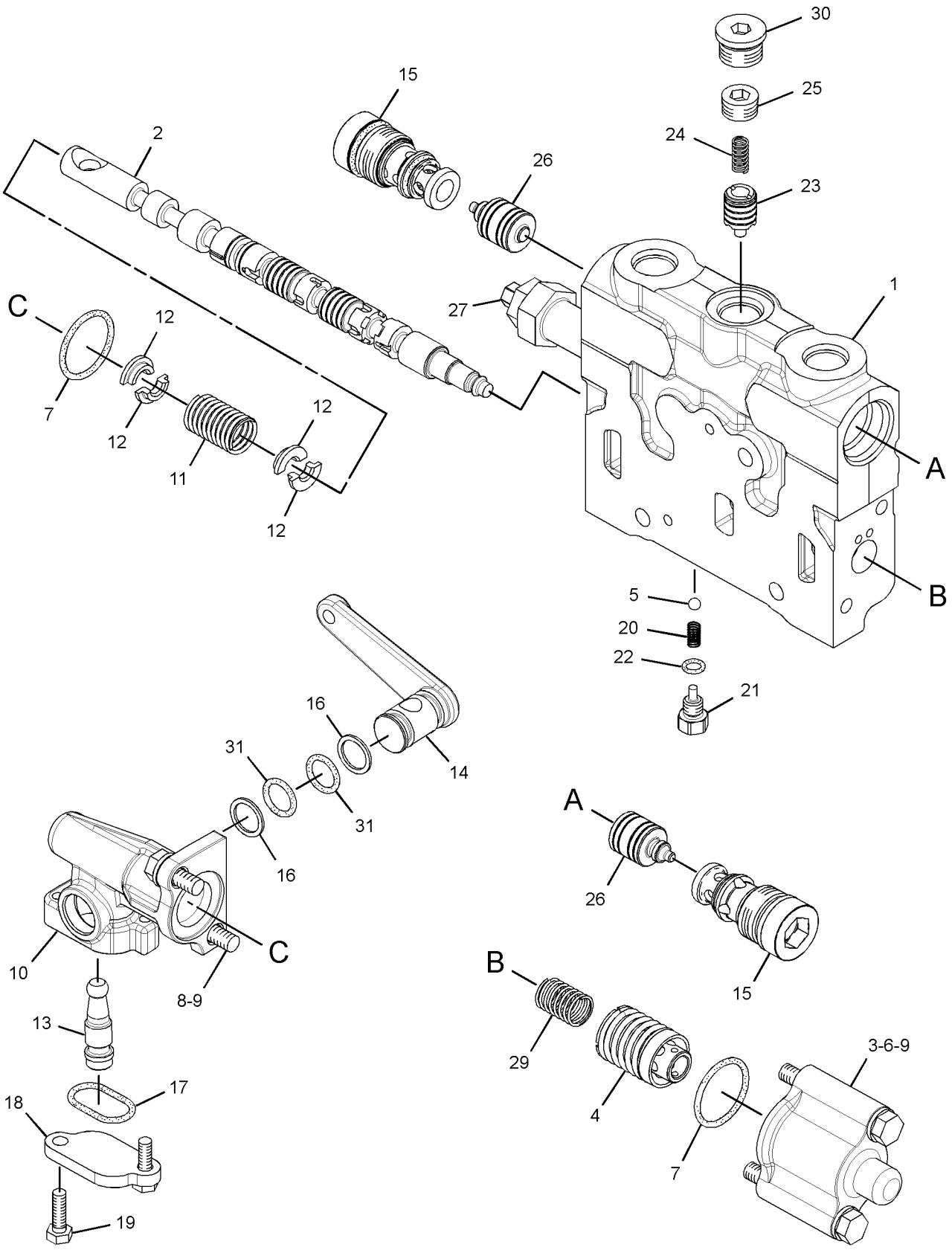

GRAPHIC #1 **<END>** g01668513

6E-3034 VALVE GP-CONTROL—BLADE TIP

S/N: JBP1-UP

PART OF 124-3327, 250-0543, 6E-3038 VALVE GP-BANK 4, 104-8645, 104-8646, 124-3328, 124-3329, 250-0550, 262-7291 VALVE GP-BANK 5, 104-8648, 250-0567 VALVE GP-BANK 6, 104-8647, 263-6435 VALVE GP-BANK 7 AN ATTACHMENT

SMCS-5051 **i02585289**

NOTE	REF NO	GRAPHIC REF	PART NUMBER	QTY	PART NAME 1 2 3 4 5 6 (PRODUCT LEVEL)	SEE PAGE
	1	1	**6E-4599**	1	BODY	
	2	1	**101-1155**	1	STEM	
	3	1	**101-1978**	1	COVER	
	4	1	**2K-8199**	2	SEAL-O-RING	
M	5	1	**8T-4189**	4	BOLT (M8X1.25X20-MM)	
	6	1	**8T-4224**	4	WASHER-HARD (8.8X16X2-MM THK)	
	7	1	**101-1984**	1	BODY	
	8	1	**7J-9933**	2	SEAL-O-RING	
CY	9	1	**139-8472**	1	VALVE GP-RELIEF (BLADE TIP)	574
	11	1	**102-7412**	1	SPRING	
	12	1	**101-1973**	4	RETAINER	
	13	1	**101-1971**	1	LEVER	
	14	1	**101-1982**	1	LEVER AS	
	15	1	**8M-4437**	2	SEAL-O-RING	
	16	1	**101-1983**	2	RING-BACKUP	
	17	1	**4D-9986**	1	SEAL-O-RING	
	18	1	**101-2480**	1	COVER	
M	19	1	**8T-4138**	2	BOLT (M6X1X20-MM)	
	20	1	**5B-9318**	1	BALL	
	21	1	**6E-3007**	1	SPRING	
	22	1	**6E-4502**	1	PLUG	
	23	1	**4J-7533**	1	SEAL-O-RING	
	24	1	**6E-3019**	1	VALVE	
	25	1	**6E-5153**	1	SPRING	
	26	1	**108-2187**	1	PLUG-PIPE	
	27	1	**9J-0403**	2	SPRING	
	28	1	**9J-0404**	2	PLUG	
	29	1	*148-8395*	1	PLUG AS	
		1	**9S-8005**	1	PLUG-O-RING (HEX HEAD)	
		1	**3K-0360**	1	SEAL-O-RING	
	30	1	**3K-0360**	2	SEAL-O-RING	
C	31	1	**106-3659**	1	PISTON	
	32	1	**6E-3013**	2	SEAT	
	33	1	**106-3658**	2	VALVE	
	34	1	**111-8233**	1	SPRING	

C-CHANGE FROM PREVIOUS TYPE
M-METRIC PART
Y-SEPARATE ILLUSTRATION

6E-3034 VALVE GP-CONTROL *(contd.)* i02585289

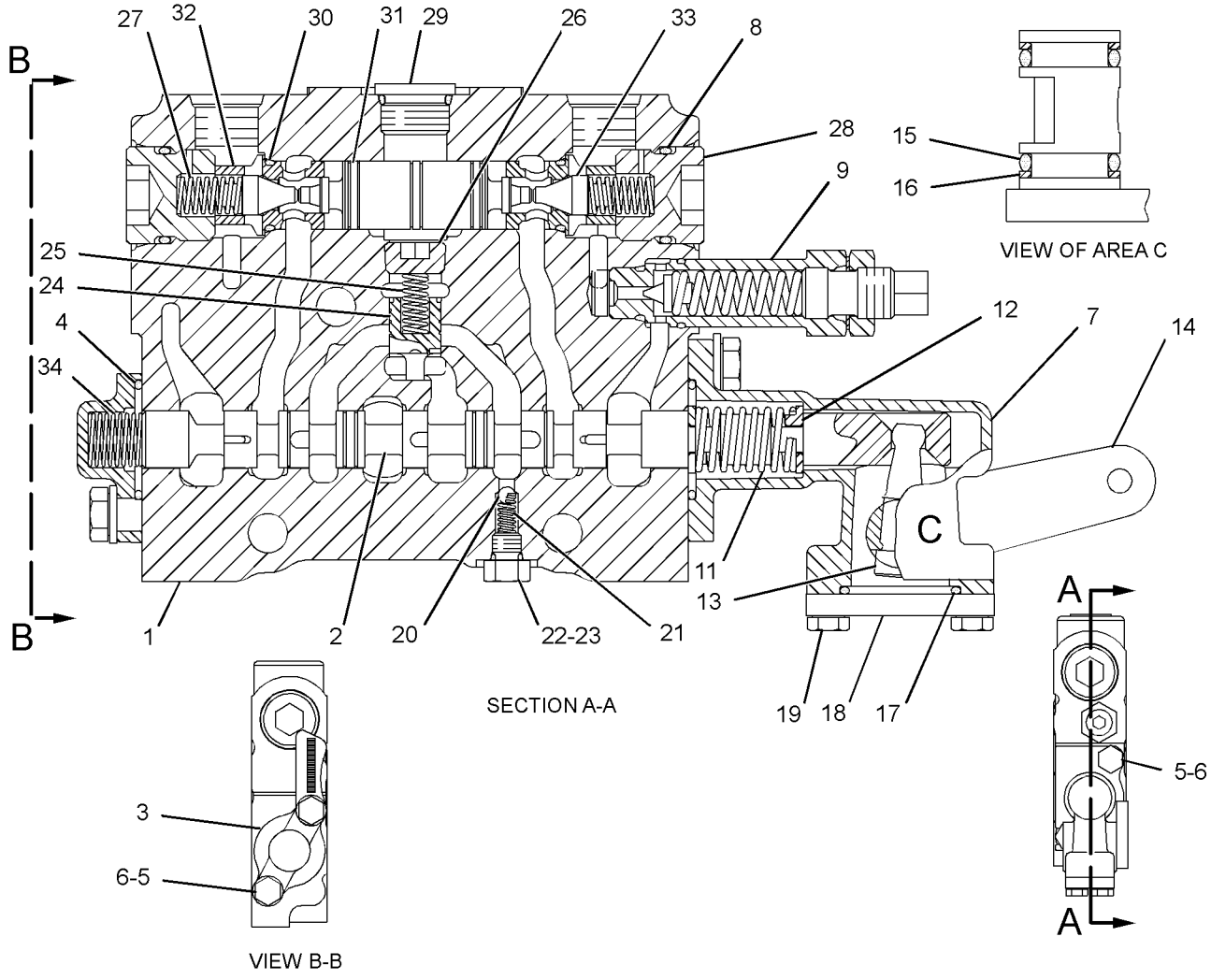

GRAPHIC #1 **<END>** g01294323

HYDRAULIC SYSTEM

6E-3035 VALVE GP-CONTROL—CIRCLE DRIVE

S/N: JBP1-UP

PART OF 104-8672 VALVE GP-BANK 2, 104-8673, 112-2580, 112-2581 VALVE GP-BANK 3, 124-3327, 130-7754, 130-7755, 250-0543, 6E-3038 VALVE GP-BANK 4, 104-8645, 104-8646, 124-3328, 124-3329, 250-0550, 262-7291 VALVE GP-BANK 5, 104-8648, 250-0567 VALVE GP-BANK 6, 104-8647, 263-6435 VALVE GP-BANK 7 ALSO AN ATTACHMENT

SMCS-5051 **i03179442**

NOTE	REF NO	GRAPHIC REF	PART NUMBER	QTY	PART NAME 1 2 3 4 5 6 (PRODUCT LEVEL)	SEE PAGE
	1	1	**6E-3044**	1	BODY	
	2	1	**148-7906**	1	STEM	
	3	1	**101-1978**	1	COVER	
	4	1	**2K-8199**	2	SEAL-O-RING	
M	5	1	**8T-4189**	4	BOLT (M8X1.25X20-MM)	
	6	1	**8T-4224**	4	WASHER-HARD (8.8X16X2-MM THK)	
	7	1	**101-1984**	1	BODY	
	8	1	**102-7412**	1	SPRING	
	9	1	**101-1973**	4	RETAINER	
	10	1	**101-1971**	1	LEVER	
	11	1	**101-1982**	1	LEVER AS	
	12	1	**8M-4437**	2	SEAL-O-RING	
	13	1	**101-1983**	2	RING-BACKUP	
	14	1	**4D-9986**	1	SEAL-O-RING	
	15	1	**101-2480**	1	COVER	
M	16	1	**8T-4138**	2	BOLT (M6X1X20-MM)	
	17	1	**5B-9318**	1	BALL	
	18	1	**6E-3007**	1	SPRING	
	19	1	**6E-4502**	1	PLUG	
	20	1	**4J-7533**	1	SEAL-O-RING	
	21	1	**6E-3019**	1	VALVE	
	22	1	**6E-5153**	1	SPRING	
	23	1	**108-2187**	1	PLUG-PIPE	
	24	1	*148-8395*	1	PLUG AS	
		1	**9S-8005**	1	PLUG-O-RING	
		1	**3K-0360**	1	SEAL-O-RING	
	25	1	**3K-0360**	2	SEAL-O-RING	
	26	1	**106-3659**	1	PISTON	
	27	1	**6E-3013**	2	SEAT	
	28	1	**106-3658**	2	VALVE	
	29	1	**9J-0403**	2	SPRING	
	30	1	**9J-0404**	2	PLUG	
	31	1	**7J-9933**	2	SEAL-O-RING	
	32	1	**111-8233**	1	SPRING	

M-METRIC PART

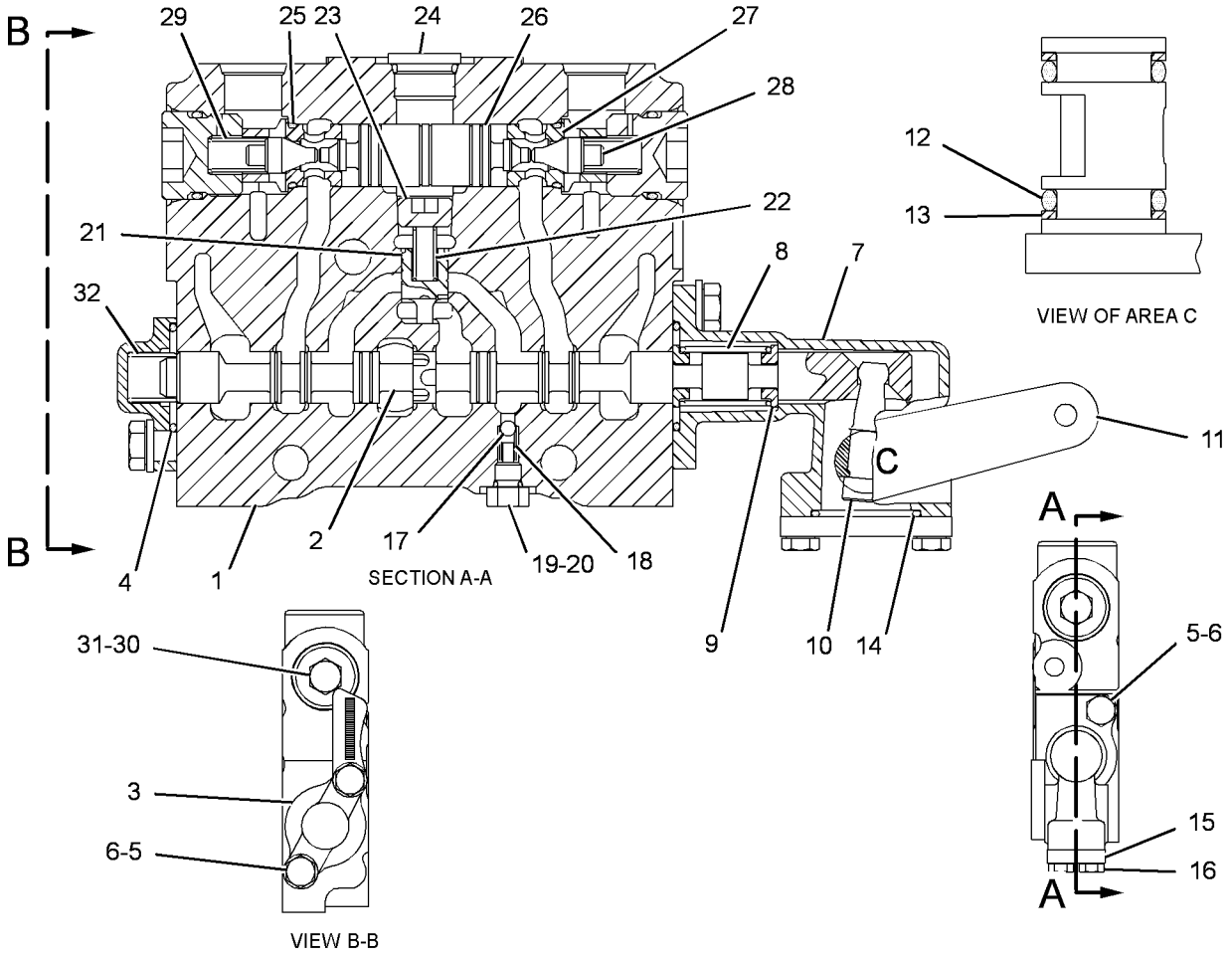

GRAPHIC #1 **<END>** g01625258

HYDRAULIC SYSTEM

6E-3036 VALVE GP-CONTROL—SIDESHIFT

S/N: JBP1-UP

PART OF 104-8673 VALVE GP-BANK 3, 124-3327, 130-7754, 130-7755, 250-0543, 6E-3038 VALVE GP-BANK 4, 104-8645, 104-8646, 124-3328, 124-3329, 250-0550, 262-7291 VALVE GP-BANK 5, 104-8648, 250-0567 VALVE GP-BANK 6, 104-8647, 263-6435 VALVE GP-BANK 7

AN ATTACHMENT

SMCS-5051 **i03399721**

NOTE	REF NO	GRAPHIC REF	PART NUMBER	QTY	PART NAME 1 2 3 4 5 6 (PRODUCT LEVEL)	SEE PAGE
	1	1	**4D-9986**	1	SEAL-O-RING	
	2	1	**6E-3007**	1	SPRING	
	3	1	**6E-3019**	1	VALVE	
	4	1	**6E-3058**	1	BODY	
	5	1	**6E-4502**	1	PLUG	
	6	1	**6E-5153**	1	SPRING	
	7	1	**101-1971**	1	LEVER	
	8	1	**101-1973**	4	RETAINER	
	9	1	**101-1978**	1	COVER	
	10	1	**101-1982**	1	LEVER AS	
	11	1	**101-1984**	1	BODY	
	12	1	**101-2480**	1	COVER	
	13	1	**102-4577**	1	STEM	
	14	1	**102-7412**	1	SPRING	
	15	1	**106-3659**	1	PISTON	
	17	1	**111-8233**	1	SPRING	
Y	18	1	**139-8472**	1	VALVE GP-RELIEF	574
C	19	1	**325-6423**	2	VALVE GP-CHECK	
					(EACH INCLUDES)	
		1	**3K-0360**	1	SEAL-O-RING	
		1	**7J-9933**	1	SEAL-O-RING	
	20	1	**101-1983**	2	RING-BACKUP	
	21	1	**108-2187**	1	PLUG-PIPE	
	22	1	*148-8395*	1	PLUG AS	
		1	**9S-8005**	1	PLUG-O-RING	
		1	**3K-0360**	1	SEAL-O-RING	
	23	1	**2K-8199**	2	SEAL-O-RING	
	24	1	**4J-7533**	1	SEAL-O-RING	
	25	1	**5B-9318**	1	BALL	
	26	1	**8M-4437**	2	SEAL-O-RING	
M	27	1	**8T-4138**	2	BOLT (M6X1X20-MM)	
M	28	1	**8T-4189**	4	BOLT (M8X1.25X20-MM)	
	29	1	**8T-4224**	4	WASHER-HARD (8.8X16X2-MM THK)	

C-CHANGE FROM PREVIOUS TYPE
M-METRIC PART
Y-SEPARATE ILLUSTRATION

6E-3036 VALVE GP-CONTROL *(contd.)* i03399721

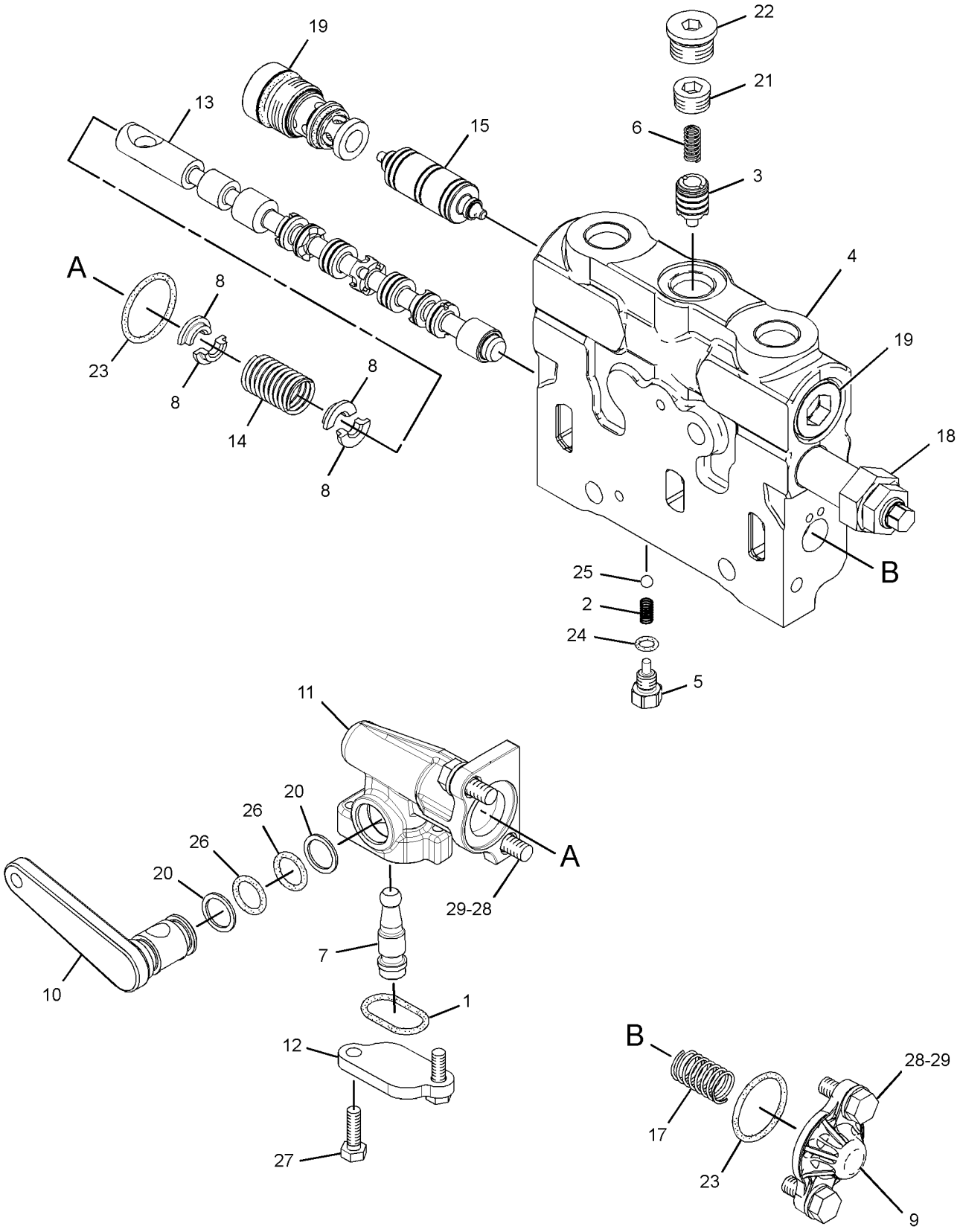

GRAPHIC #1 **<END>** g01771833

HYDRAULIC SYSTEM

6E-3037 VALVE GP-CONTROL–BLADE LIFT

S/N: JBP1-UP

PART OF 250-0543, 6E-3038 VALVE GP-BANK 4, 104-8645, 104-8646, 250-0550, 262-7291 VALVE GP-BANK 5, 104-8648, 250-0567 VALVE GP-BANK 6, 104-8647, 263-6435 VALVE GP-BANK 7

AN ATTACHMENT

SMCS-5051 **i02872563**

NOTE	REF NO	GRAPHIC REF	PART NUMBER	QTY	PART NAME 1 2 3 4 5 6 (PRODUCT LEVEL)	SEE PAGE
	1	1	**6E-3043**	1	BODY	
	2	1	**221-3676**	1	STEM	
	3	1	**101-1980**	1	HOUSING	
	5	1	**5B-9318**	1	BALL	
M	6	1	**8T-6869**	2	BOLT (M8X1.25X60-MM)	
	7	1	**2K-8199**	2	SEAL-O-RING	
M	8	1	**8T-4189**	2	BOLT (M8X1.25X20-MM)	
	9	1	**8T-4224**	4	WASHER-HARD (8.8X16X2-MM THK)	
	10	1	**101-1984**	1	BODY	
	11	1	**102-7412**	1	SPRING	
	12	1	**101-1973**	4	RETAINER	
	13	1	**101-1971**	1	LEVER	
	14	1	**101-1982**	1	LEVER AS	
	15	1	**8M-4437**	2	SEAL-O-RING	
	16	1	**101-1983**	2	RING-BACKUP	
	17	1	**4D-9986**	1	SEAL-O-RING	
	18	1	**101-2480**	1	COVER	
M	19	1	**8T-4138**	2	BOLT (M6X1X20-MM)	
	20	1	**6E-3007**	1	SPRING	
	21	1	**6E-4502**	1	PLUG	
	22	1	**4J-7533**	1	SEAL-O-RING	
	23	1	**6E-3019**	1	VALVE	
	24	1	**6E-5153**	1	SPRING	
	25	1	**108-2187**	1	PLUG-PIPE	
	26	1	*148-8395*	1	PLUG AS	
		1	**3K-0360**	1	SEAL-O-RING	
		1	**9S-8005**	1	PLUG-O-RING	
	27	1	**3K-0360**	2	SEAL-O-RING	
	28	1	**106-3660**	2	PISTON	
	29	1	**229-5010**	2	VALVE GP-CHECK	
	31	1	**9J-0403**	2	SPRING	
	32	1	**9J-0404**	2	PLUG	
	33	1	**7J-9933**	2	SEAL-O-RING	
CY	34	1	**222-7774**	1	VALVE GP-RELIEF (BLADE LIFT)	576
Y	36	1	**108-4916**	1	DETENT GP-CONTROL VALVE (BLADE LIFT)	384
	37	1	**111-8234**	1	SPRING	

C-CHANGE FROM PREVIOUS TYPE
M-METRIC PART
Y-SEPARATE ILLUSTRATION

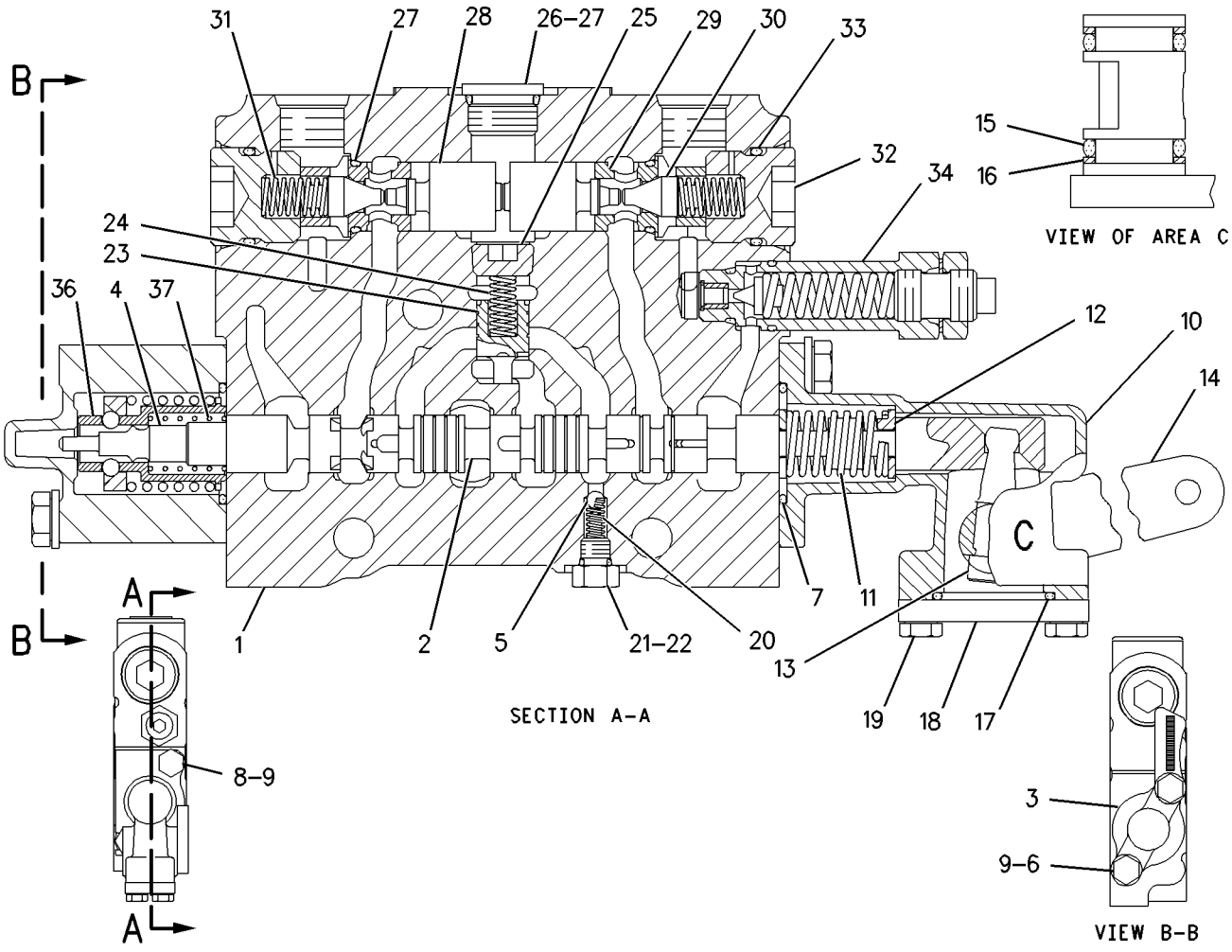

GRAPHIC #1 **<END>** g00922337

107-0543 VALVE GP-CONTROL–SCARIFIER

S/N: JBP1-UP

PART OF 112-2580 VALVE GP-BANK 3, 130-7754 VALVE GP-BANK 4, 104-8646, 124-3328, 262-7291 VALVE GP-BANK 5, 104-8647, 263-6435 VALVE GP-BANK 7 AN ATTACHMENT

SMCS-5051 **i03418922**

NOTE	REF NO	GRAPHIC REF	PART NUMBER	QTY	PART NAME 1 2 3 4 5 6 (PRODUCT LEVEL)	SEE PAGE
	1	1	**4D-9986**	1	SEAL-O-RING	
	2	1	**6E-3007**	1	SPRING	
	3	1	**6E-3019**	1	VALVE	
	4	1	**6E-4502**	1	PLUG	
	5	1	**6E-4599**	1	BODY	
	6	1	**6E-5153**	1	SPRING	
	7	1	**101-1148**	1	STEM	
	8	1	**101-1971**	1	LEVER	
	9	1	**101-1973**	4	RETAINER	
	10	1	**101-1978**	1	COVER	
	11	1	**101-1982**	1	LEVER AS	
	12	1	**101-1984**	1	BODY	
	13	1	**101-2480**	1	COVER	
	14	1	**102-7412**	1	SPRING	
	15	1	**106-3659**	1	PISTON	
	17	1	**111-8233**	1	SPRING	
C	18	1	**325-6423**	2	VALVE GP-CHECK	
					(EACH INCLUDES)	
		1	**3K-0360**	1	SEAL-O-RING	
		1	**7J-9933**	1	SEAL-O-RING	
	19	1	**101-1983**	2	RING-BACKUP	
	20	1	**108-2187**	1	PLUG-PIPE	
	21	1	*148-8395*	1	PLUG AS	
		1	**9S-8005**	1	PLUG-O-RING	
		1	**3K-0360**	1	SEAL-O-RING	
	22	1	**263-9657**	1	VALVE GP-RELIEF	
		1	**3J-1907**	1	SEAL-O-RING	
		1	**4D-2297**	1	SEAL-O-RING	
	23	1	**2K-8199**	2	SEAL-O-RING	
	24	1	**4J-7533**	1	SEAL-O-RING	
	25	1	**5B-9318**	1	BALL	
	26	1	**8M-4437**	2	SEAL-O-RING	
M	27	1	**8T-4138**	2	BOLT (M6X1X20-MM)	
M	28	1	**8T-4189**	4	BOLT (M8X1.25X20-MM)	
	29	1	**8T-4224**	4	WASHER-HARD (8.8X16X2-MM THK)	

C-CHANGE FROM PREVIOUS TYPE
M-METRIC PART

107-0543 **VALVE GP-CONTROL** *(contd.)* **i03418922**

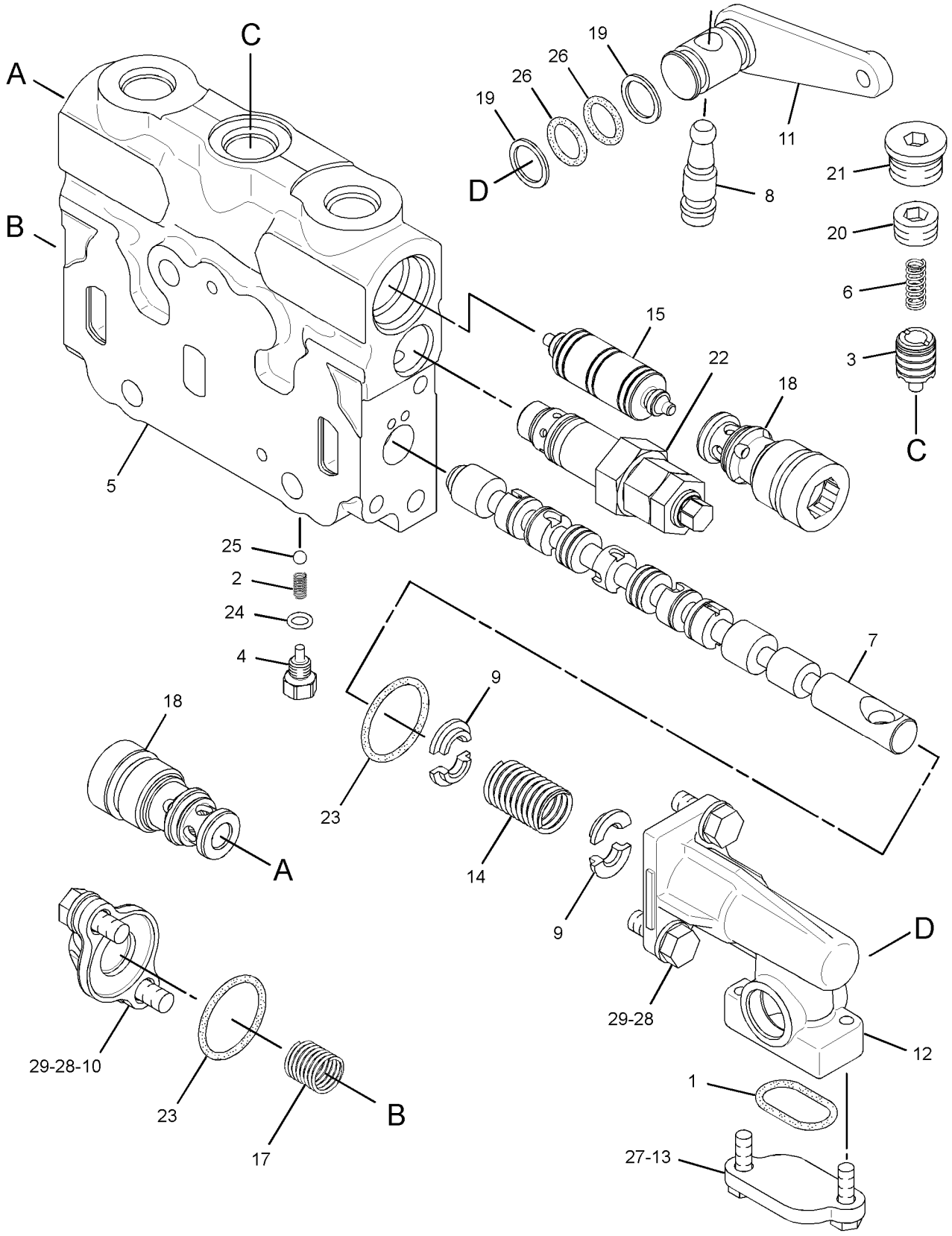

GRAPHIC #1 **<END>** g01674494

HYDRAULIC SYSTEM

107-0545 VALVE GP-CONTROL–RIPPER

S/N: JBP1-UP

PART OF 112-2581 VALVE GP-BANK 3, 130-7755 VALVE GP-BANK 4, 104-8645, 124-3329, 250-0550 VALVE GP-BANK 5

AN ATTACHMENT

SMCS-5051 **i03338460**

NOTE	REF NO	GRAPHIC REF	PART NUMBER	QTY	PART NAME 1 2 3 4 5 6 (PRODUCT LEVEL)	SEE PAGE
	1	1	**6E-4599**	1	BODY	
	2	1	**101-1148**	1	STEM	
	3	1	**101-1978**	1	COVER	
	4	1	**2K-8199**	2	SEAL-O-RING	
M	5	1	**8T-4189**	4	BOLT (M8X1.25X20-MM)	
	6	1	**8T-4224**	4	WASHER-HARD (8.8X16X2-MM THK)	
	7	1	**101-1984**	1	BODY	
C	8	1	**325-6423**	2	VALVE GP-CHECK	
					(EACH INCLUDES)	
		1	**3K-0360**	1	SEAL-O-RING	
		1	**7J-9933**	1	SEAL-O-RING	
Y	9	1	**139-8472**	1	VALVE GP-RELIEF (RIPPER)	574
	11	1	**102-7412**	1	SPRING	
	12	1	**101-1973**	4	RETAINER	
	13	1	**101-1971**	1	LEVER	
	14	1	**101-1982**	1	LEVER AS	
C	15	1	**8M-4437**	2	SEAL-O-RING	
	16	1	**101-1983**	2	RING-BACKUP	
	17	1	**4D-9986**	1	SEAL-O-RING	
	18	1	**101-2480**	1	COVER	
M	19	1	**8T-4138**	2	BOLT (M6X1X20-MM)	
	20	1	**5B-9318**	1	BALL	
	21	1	**6E-3007**	1	SPRING	
	22	1	**6E-4502**	1	PLUG	
	23	1	**4J-7533**	1	SEAL-O-RING	
	24	1	**6E-3019**	1	VALVE	
	25	1	**6E-5153**	1	SPRING	
	26	1	**108-2187**	1	PLUG-PIPE	
	29	1	*148-8395*	1	PLUG AS	
		1	**3K-0360**	1	SEAL-O-RING	
		1	**9S-8005**	1	PLUG-O-RING	
	31	1	**106-3659**	1	PISTON	
	34	1	**111-8233**	1	SPRING	

C-CHANGE FROM PREVIOUS TYPE
M-METRIC PART
Y-SEPARATE ILLUSTRATION

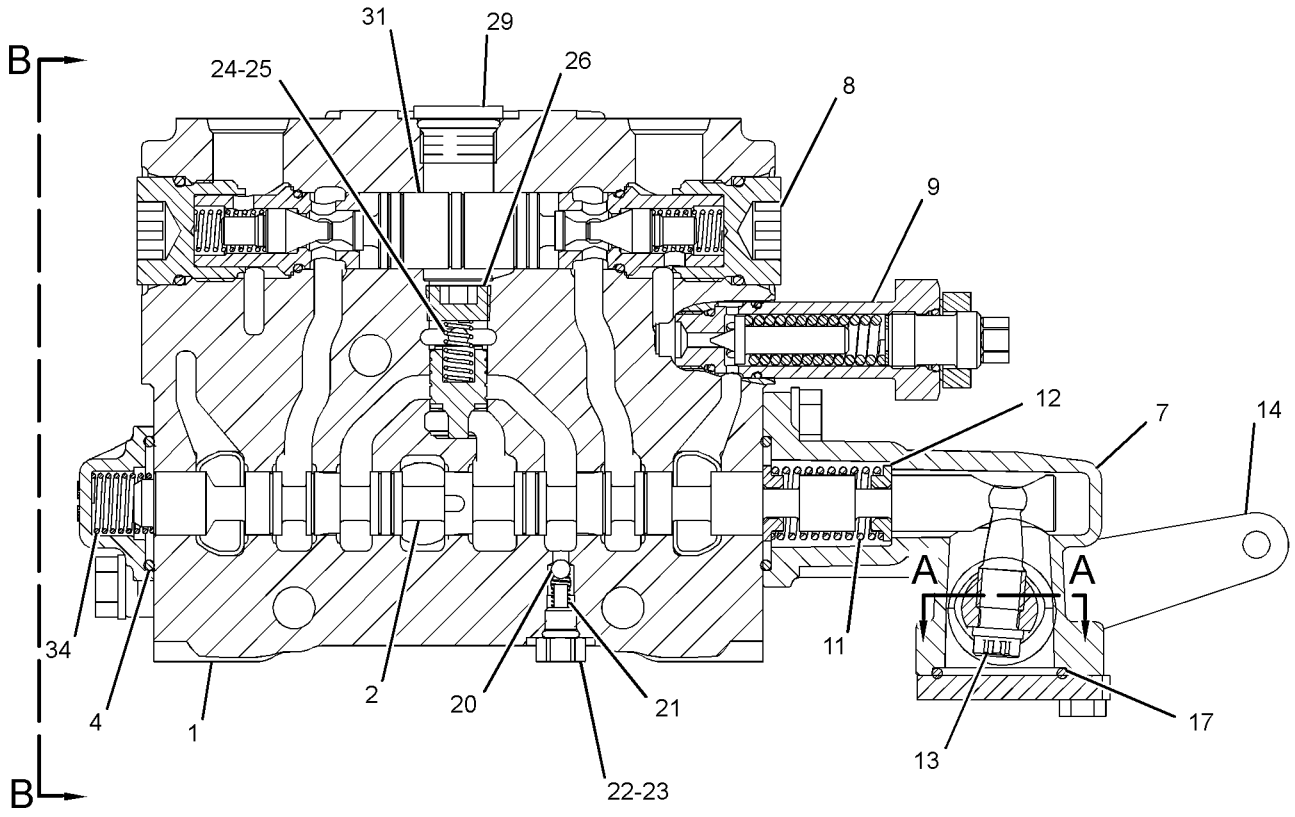

SECTION C-C

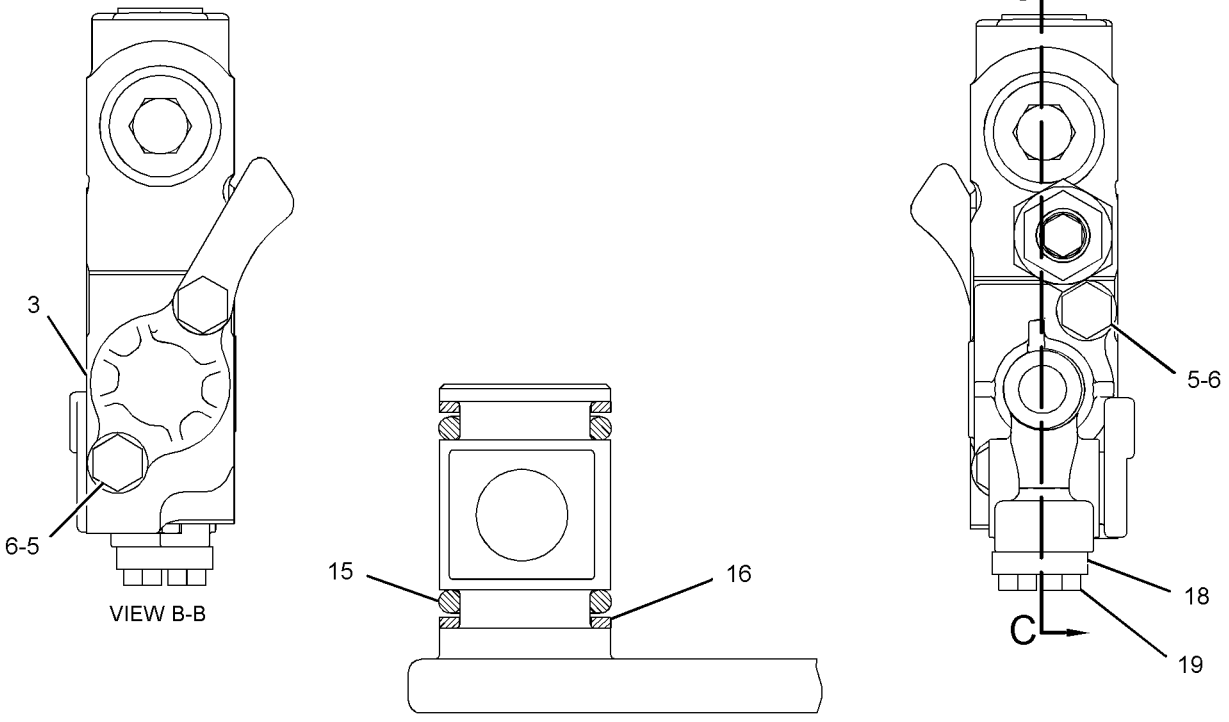

VIEW B-B

SECTION A-A

GRAPHIC #1 **<END>** g01619681

107-0547 VALVE GP-CONTROL—DOZER LIFT, PLOW

S/N: JBP1-UP

PART OF 104-8671, 250-0548 VALVE GP-BANK 5, 115-1008, 250-0565 VALVE GP-BANK 6

AN ATTACHMENT

SMCS-5051 **i03247361**

NOTE	REF NO	GRAPHIC REF	PART NUMBER	QTY	PART NAME 1 2 3 4 5 6 (PRODUCT LEVEL)	SEE PAGE
	1	1	**6E-3059**	1	BODY	
	2	1	**221-3678**	1	STEM	
	3	1	**101-1980**	1	HOUSING	
Y	4	1	**108-4916**	1	DETENT GP-CONTROL VALVE (PLOW, BULLDOZER LIFT)	384
	5	1	**5B-9318**	1	BALL	
M	6	1	**8T-6869**	2	BOLT (M8X1.25X60-MM)	
	7	1	**2K-8199**	2	SEAL-O-RING	
M	8	1	**8T-4189**	2	BOLT (M8X1.25X20-MM)	
	9	1	**8T-4224**	4	WASHER-HARD (8.8X16X2-MM THK)	
	10	1	**101-1984**	1	BODY	
	11	1	**102-7412**	1	SPRING	
	12	1	**101-1973**	4	RETAINER	
	13	1	**101-1971**	1	LEVER	
	14	1	**101-1970**	1	LEVER AS	
	15	1	**8M-4437**	2	SEAL-O-RING	
	16	1	**101-1983**	2	RING-BACKUP	
	17	1	**4D-9986**	1	SEAL-O-RING	
	18	1	**101-2480**	1	COVER	
M	19	1	**8T-4138**	2	BOLT (M6X1X20-MM)	
	20	1	**6E-3007**	1	SPRING	
	21	1	**6E-4502**	1	PLUG	
	22	1	**4J-7533**	1	SEAL-O-RING	
	23	1	**6E-3019**	1	VALVE	
	24	1	**6E-5153**	1	SPRING	
	25	1	**108-2187**	1	PLUG-PIPE	
	26	1	*148-8395*	1	PLUG AS	
		1	**9S-8005**	1	PLUG-O-RING	
		1	**3K-0360**	1	SEAL-O-RING	
	27	1	**106-3660**	2	PISTON	
Y	28	1	**222-7774**	1	VALVE GP-RELIEF (PLOW, BULLDOZER LIFT)	576
	30	1	**111-8234**	1	SPRING	
C	31	1	**229-5010**	2	VALVE GP-CHECK (EACH INCLUDES)	
		1	**3K-0360**	1	SEAL-O-RING	
		1	**7J-9933**	1	SEAL-O-RING	

C-CHANGE FROM PREVIOUS TYPE
M-METRIC PART
Y-SEPARATE ILLUSTRATION

107-0547 VALVE GP-CONTROL *(contd.)* i03247361

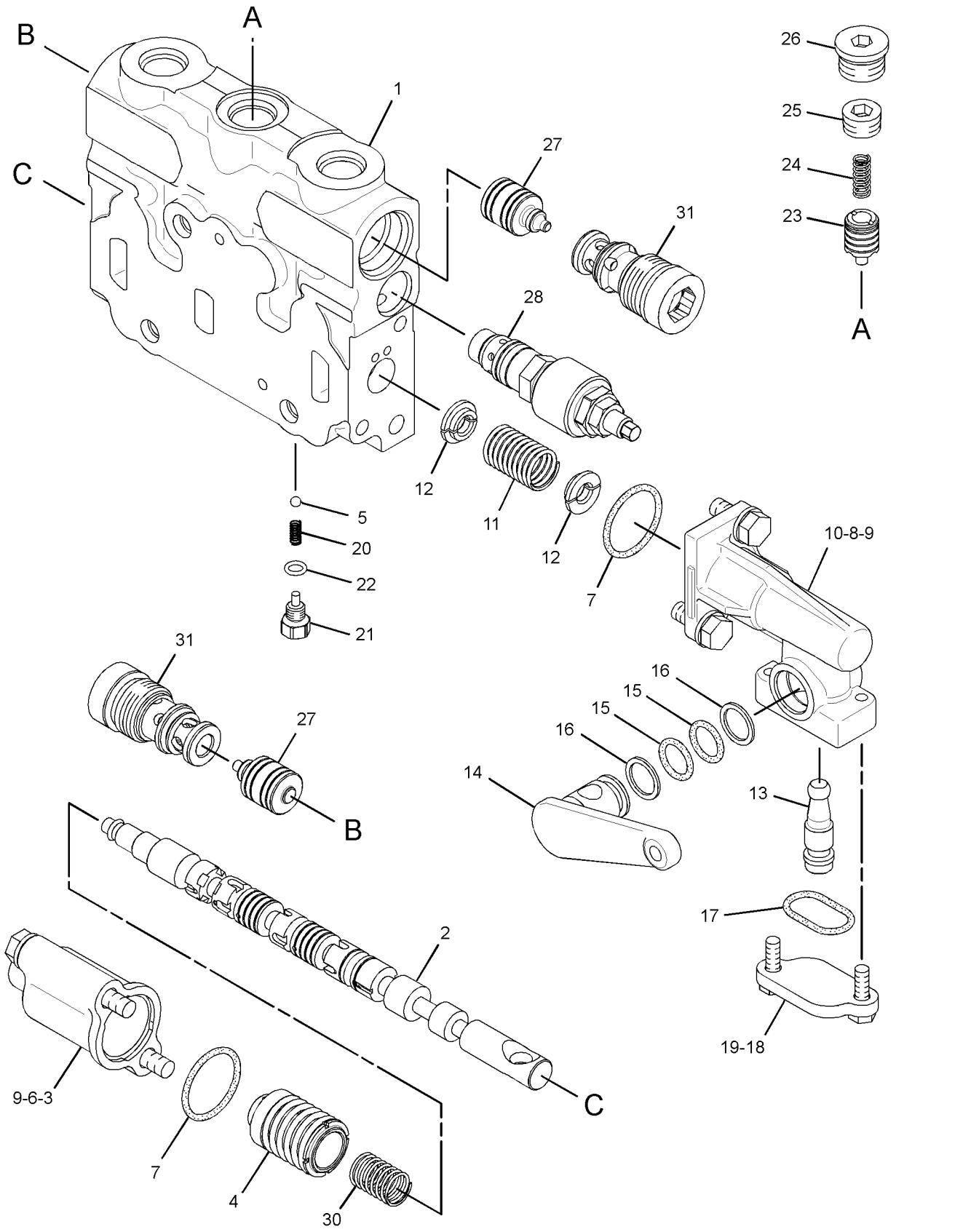

GRAPHIC #1 **<END>** g01641733

HYDRAULIC SYSTEM

115-1007 VALVE GP-CONTROL—BULLDOZER ANGLE, PLOW, RH

S/N: JBP1-UP

PART OF 115-1008, 250-0565 VALVE GP-BANK 6

AN ATTACHMENT

SMCS-5051 **i03361400**

NOTE	REF NO	GRAPHIC REF	PART NUMBER	QTY	PART NAME 1 2 3 4 5 6 (PRODUCT LEVEL)	SEE PAGE
	1	1	**4D-9986**	1	SEAL-O-RING	
	2	1	**6E-3007**	1	SPRING	
	3	1	**6E-3019**	1	VALVE	
	4	1	**6E-4502**	1	PLUG	
	5	1	**6E-4599**	1	BODY	
	6	1	**6E-5153**	1	SPRING	
	7	1	**101-1970**	1	LEVER AS	
	8	1	**101-1971**	1	LEVER	
	9	1	**101-1973**	4	RETAINER	
	10	1	**101-1978**	1	COVER	
	11	1	**101-1984**	1	BODY	
	12	1	**101-2480**	1	COVER	
	13	1	**102-4578**	1	STEM	
	14	1	**102-7412**	1	SPRING	
	15	1	**106-3659**	1	PISTON	
	16	1	**111-8233**	1	SPRING	
Y	18	1	**139-8472**	1	VALVE GP-RELIEF (BULLDOZER ANGLE, PLOW)	574
C	19	1	**325-6423**	2	VALVE GP-CHECK	
					(EACH INCLUDES)	
		1	**3K-0360**	1	SEAL-O-RING	
		1	**7J-9933**	1	SEAL-O-RING	
	20	1	**101-1983**	2	RING-BACKUP	
	21	1	**108-2187**	1	PLUG-PIPE	
C	22	1	*148-8395*	1	PLUG AS	
		1	**9S-8005**	1	PLUG-O-RING	
		1	**3K-0360**	1	SEAL-O-RING	
	23	1	**2K-8199**	2	SEAL-O-RING	
	24	1	**4J-7533**	1	SEAL-O-RING	
	25	1	**5B-9318**	1	BALL	
	26	1	**8M-4437**	2	SEAL-O-RING	
M	27	1	**8T-4138**	2	BOLT (M6X1X20-MM)	
M	28	1	**8T-4189**	4	BOLT (M8X1.25X20-MM)	
	29	1	**8T-4224**	4	WASHER-HARD (8.8X16X2-MM THK)	

C-CHANGE FROM PREVIOUS TYPE
M-METRIC PART
Y-SEPARATE ILLUSTRATION

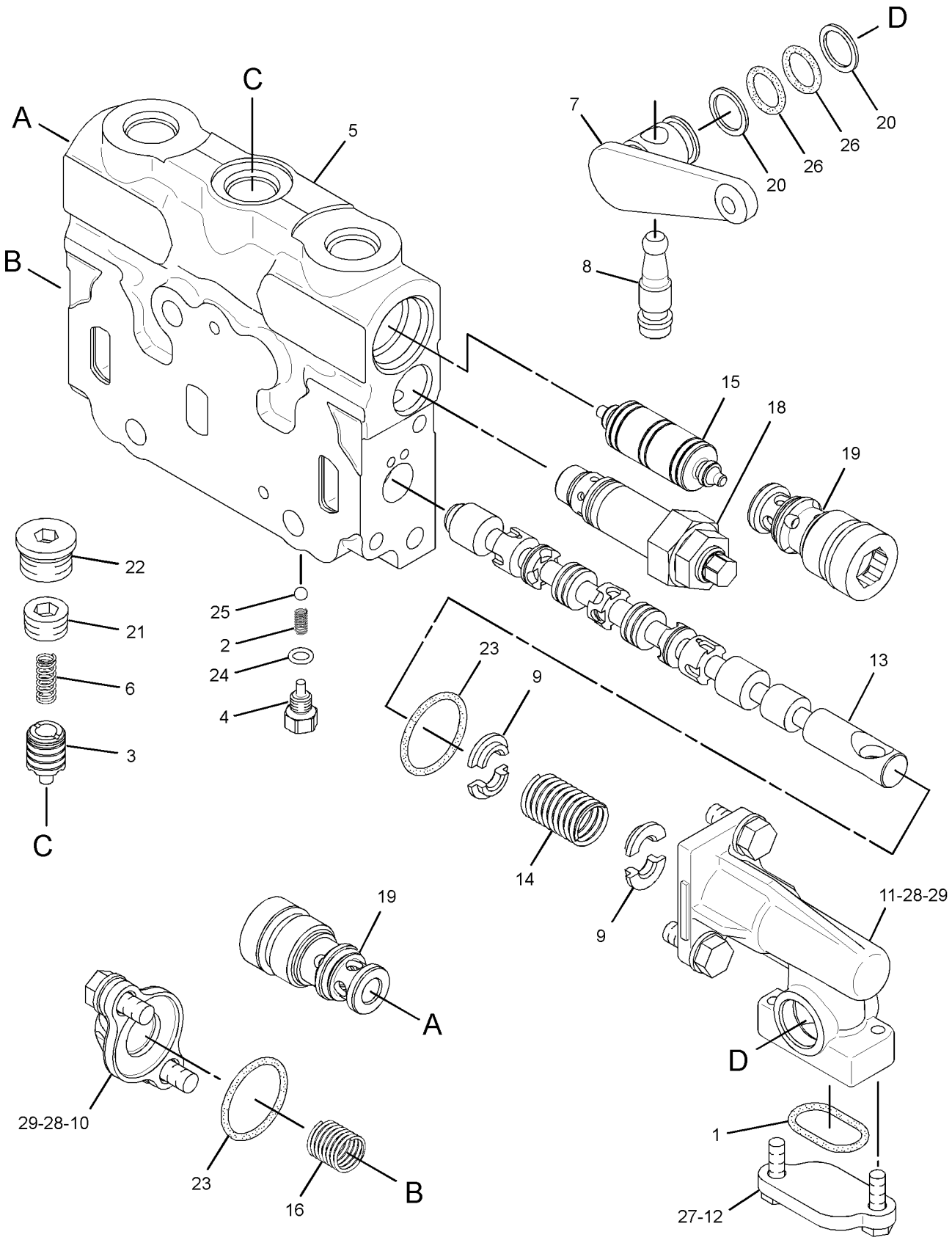

GRAPHIC #1 **<END>** g01735253

124-2883 VALVE GP-CONTROL—BLADE LIFT

S/N: JBP1-UP

PART OF 104-8672 VALVE GP-BANK 2, 104-8673, 112-2580, 112-2581 VALVE GP-BANK 3, 124-3327, 130-7754, 130-7755 VALVE GP-BANK 4, 124-3328, 124-3329 VALVE GP-BANK 5

ALSO AN ATTACHMENT

SMCS-5051 **i03179677**

NOTE	REF NO	GRAPHIC REF	PART NUMBER	QTY	PART NAME 1 2 3 4 5 6 (PRODUCT LEVEL)	SEE PAGE
	1	1	**111-8233**	1	SPRING	
	2	1	**124-1840**	1	STEM-BLADE LIFT	
	3	1	**101-1978**	1	COVER	
	4	1	**2K-8199**	2	SEAL-O-RING	
M	5	1	**8T-4189**	4	BOLT (M8X1.25X20-MM)	
	6	1	**8T-4224**	4	WASHER-HARD (8.8X16X2-MM THK)	
	7	1	**106-3658**	2	VALVE	
	8	1	**7J-9933**	2	SEAL-O-RING	
Y	9	1	*6E-3033*	1	VALVE GP-RELIEF (BLADE LIFT)	570
	10	1	**124-3385**	1	PISTON	
	11	1	**102-7412**	1	SPRING	
	12	1	**101-1973**	4	RETAINER	
	13	1	**101-1971**	1	LEVER	
	14	1	**101-1982**	1	LEVER AS	
	15	1	**8M-4437**	2	SEAL-O-RING	
	16	1	**101-1983**	2	RING-BACKUP	
	17	1	**4D-9986**	1	SEAL-O-RING	
	18	1	**101-2480**	1	COVER	
M	19	1	**8T-4138**	2	BOLT (M6X1X20-MM)	
	20	1	**5B-9318**	1	BALL	
	21	1	**6E-3007**	1	SPRING	
	22	1	**6E-4502**	1	PLUG	
	23	1	**4J-7533**	1	SEAL-O-RING	
	24	1	**3K-0360**	3	SEAL-O-RING	
	25	1	**6E-5153**	1	SPRING	
	26	1	**108-2187**	1	PLUG-PIPE	
	27	1	**9J-0403**	2	SPRING	
	28	1	**9J-0404**	2	PLUG	
	29	1	**9S-8005**	1	PLUG-O-RING	

M-METRIC PART
Y-SEPARATE ILLUSTRATION

124-2883 VALVE GP-CONTROL *(contd.)* i03179677

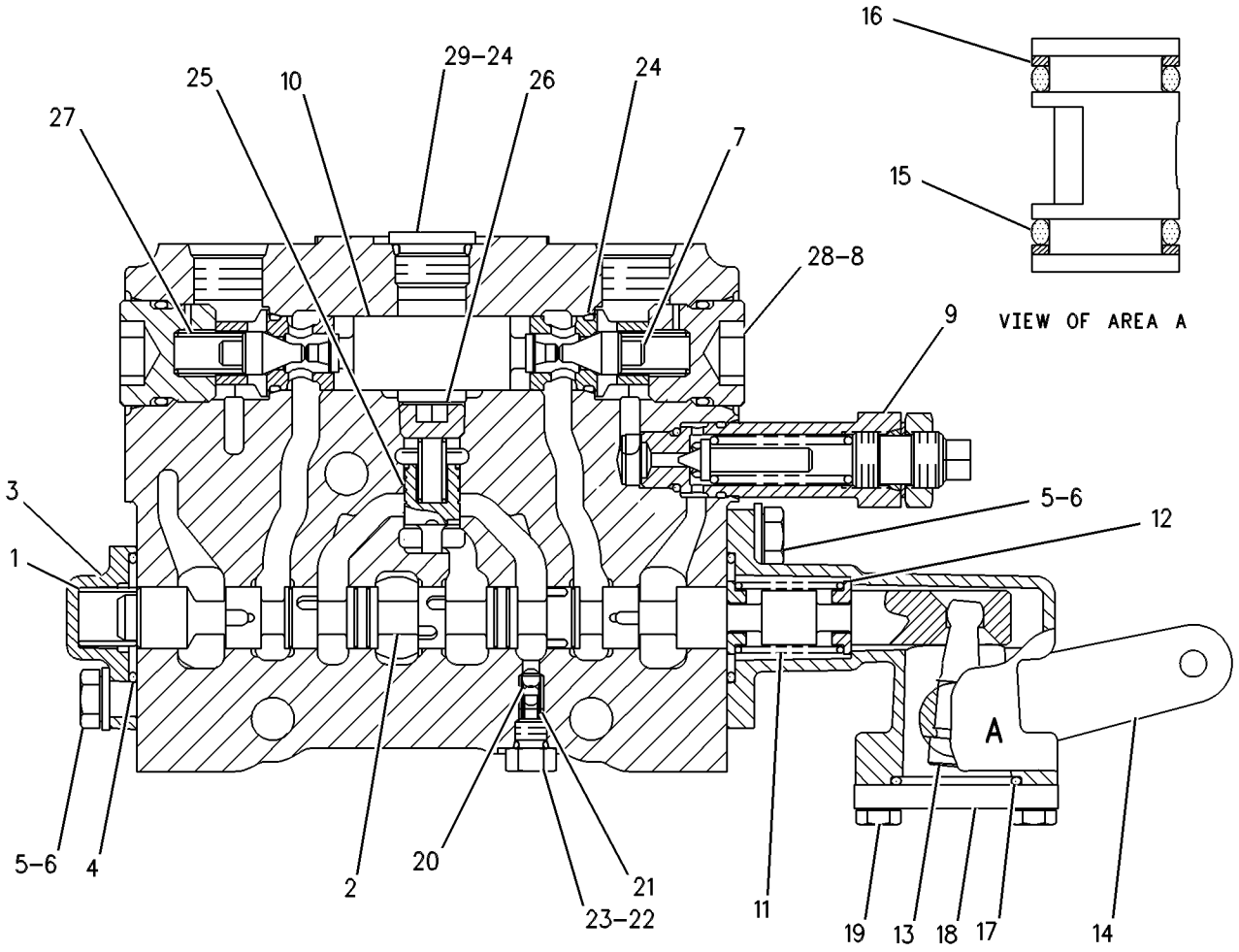

GRAPHIC #1 **<END>** g00109193

124-2884 VALVE GP-CONTROL–BLADE LIFT

S/N: JBP1-UP

PART OF 124-3325 VALVE GP-BANK 4, 124-3326 VALVE GP-BANK 5

ALSO AN ATTACHMENT

SMCS-5051 **i03179703**

NOTE	REF NO	GRAPHIC REF	PART NUMBER	QTY	PART NAME 1 2 3 4 5 6 (PRODUCT LEVEL)	SEE PAGE
	1	1	**111-8233**	1	SPRING	
	2	1	**124-1840**	1	STEM-BLADE LIFT	
	3	1	**101-1978**	1	COVER	
	4	1	**2K-8199**	2	SEAL-O-RING	
M	5	1	**8T-4189**	4	BOLT (M8X1.25X20-MM)	
	6	1	**8T-4224**	4	WASHER-HARD (8.8X16X2-MM THK)	
	7	1	**106-3658**	2	VALVE	
	8	1	**7J-9933**	2	SEAL-O-RING	
YC	9	1	**139-8474**	1	VALVE GP-RELIEF (BLADE LIFT)	575
C	10	1	**124-3385**	1	PISTON	
	11	1	**102-7412**	1	SPRING	
	12	1	**101-1973**	4	RETAINER	
	13	1	**101-1971**	1	LEVER	
	14	1	**101-1970**	1	LEVER AS	
	15	1	**8M-4437**	2	SEAL-O-RING	
	16	1	**101-1983**	2	RING-BACKUP	
	17	1	**4D-9986**	1	SEAL-O-RING	
	18	1	**101-2480**	1	COVER	
M	19	1	**8T-4138**	2	BOLT (M6X1X20-MM)	
	20	1	**5B-9318**	1	BALL	
	21	1	**6E-3007**	1	SPRING	
	22	1	**6E-4502**	1	PLUG	
	23	1	**4J-7533**	1	SEAL-O-RING	
	24	1	**3K-0360**	3	SEAL-O-RING	
	25	1	**6E-5153**	1	SPRING	
	26	1	**108-2187**	1	PLUG-PIPE	
	27	1	**9J-0403**	2	SPRING	
	28	1	**9J-0404**	2	PLUG	
	29	1	**9S-8005**	1	PLUG-O-RING	

C-CHANGE FROM PREVIOUS TYPE
M-METRIC PART
Y-SEPARATE ILLUSTRATION

124-2884 VALVE GP-CONTROL *(contd.)* i03179703

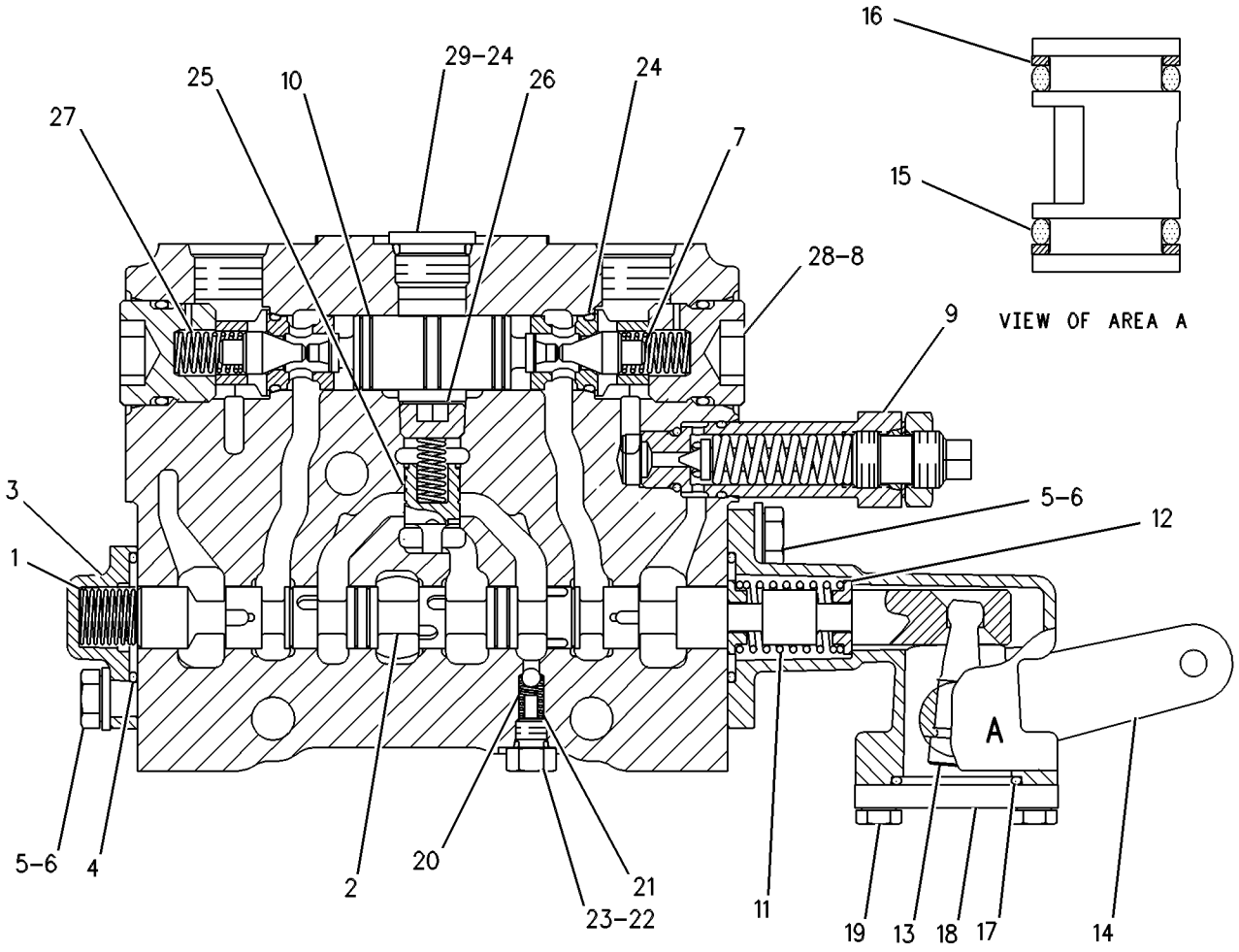

GRAPHIC #1 **<END>** g00273297

HYDRAULIC SYSTEM

124-2885 VALVE GP-CONTROL—BULLDOZER LIFT, PLOW

S/N: JBP1-UP

PART OF 124-3326 VALVE GP-BANK 5

AN ATTACHMENT

SMCS-5051 **i03179700**

NOTE	REF NO	GRAPHIC REF	PART NUMBER	QTY	PART NAME 1 2 3 4 5 6 (PRODUCT LEVEL)	SEE PAGE
	1	1	**6E-4599**	1	BODY	
	2	1	**124-1839**	1	STEM	
	3	1	**101-1978**	1	COVER	
	4	1	**2K-8199**	2	SEAL-O-RING	
M	5	1	**8T-4189**	4	BOLT (M8X1.25X20-MM)	
	6	1	**8T-4224**	4	WASHER-HARD (8.8X16X2-MM THK)	
	7	1	**101-1984**	1	BODY	
	8	1	**7J-9933**	2	SEAL-O-RING	
	9	1	**111-8233**	1	SPRING	
Y	10	1	*6E-3033*	1	VALVE GP-RELIEF (BULLDOZER LIFT, PLOW)	570
	11	1	**102-7412**	1	SPRING	
	12	1	**101-1973**	4	RETAINER	
	13	1	**101-1971**	1	LEVER	
	14	1	**101-1970**	1	LEVER AS	
	15	1	**8M-4437**	2	SEAL-O-RING	
	16	1	**101-1983**	2	RING-BACKUP	
	17	1	**4D-9986**	1	SEAL-O-RING	
	18	1	**101-2480**	1	COVER	
M	19	1	**8T-4138**	2	BOLT (M6X1X20-MM)	
	20	1	**5B-9318**	1	BALL	
	21	1	**6E-3007**	1	SPRING	
	22	1	**6E-4502**	1	PLUG	
	23	1	**4J-7533**	1	SEAL-O-RING	
	24	1	**6E-3019**	1	VALVE	
	25	1	**6E-5153**	1	SPRING	
	26	1	**108-2187**	1	PLUG-PIPE	
	27	1	**9J-0403**	2	SPRING	
	28	1	**9J-0404**	2	PLUG	
	29	1	**9S-8005**	1	PLUG-O-RING	
	30	1	**3K-0360**	3	SEAL-O-RING	
	31	1	**124-3385**	1	PISTON	
	32	1	**6E-3013**	2	SEAT	
	33	1	**106-3658**	2	VALVE	

M-METRIC PART
Y-SEPARATE ILLUSTRATION

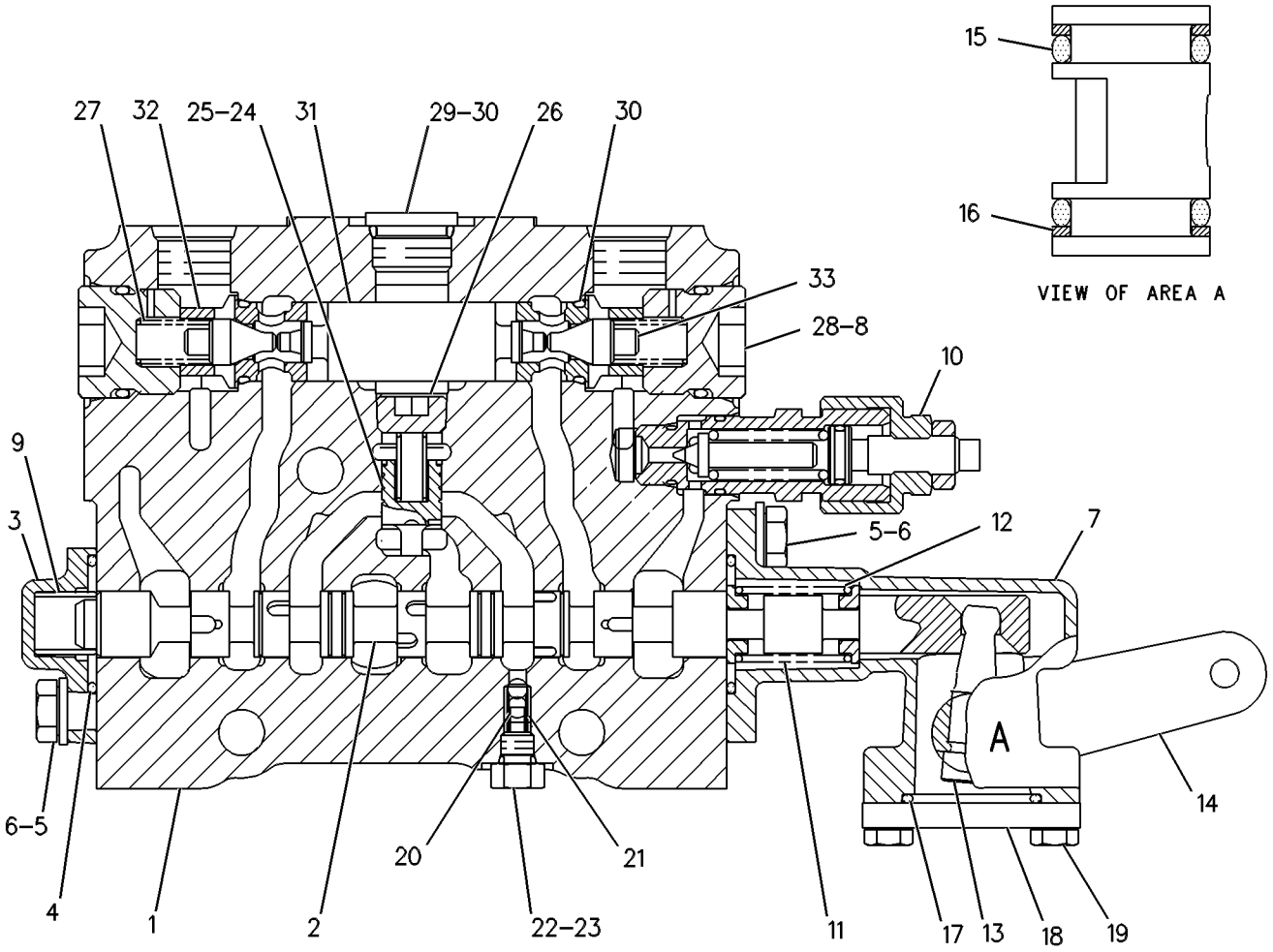

GRAPHIC #1 **<END>** g00108897

HYDRAULIC SYSTEM

137-8104 VALVE GP-CONTROL—WING TILT

S/N: JBP1-UP

PART OF 104-8648, 250-0567 VALVE GP-BANK 6, 104-8647, 263-6435 VALVE GP-BANK 7

AN ATTACHMENT

SMCS-5051 **i03435363**

NOTE	REF NO	GRAPHIC REF	PART NUMBER	QTY	PART NAME 1 2 3 4 5 6 (PRODUCT LEVEL)	SEE PAGE
	1	1	**111-8233**	1	SPRING	
	2	1	**102-4577**	1	STEM	
	3	1	**101-1978**	1	COVER	
	4	1	**2K-8199**	2	SEAL-O-RING	
M	5	1	**8T-4189**	4	BOLT (M8X1.25X20-MM)	
	6	1	**8T-4224**	4	WASHER-HARD (8.8X16X2-MM THK)	
	7	1	**101-1984**	1	BODY	
	8	1	**7J-9933**	2	SEAL-O-RING	
	9	1	**106-3659**	1	PISTON	
	10	1	**4D-2297**	1	SEAL-O-RING	
	11	1	**102-7412**	1	SPRING	
	12	1	**101-1973**	4	RETAINER	
	13	1	**101-1971**	1	LEVER	
	14	1	**101-1982**	1	LEVER AS	
	15	1	**8M-4437**	2	SEAL-O-RING	
	16	1	**101-1983**	2	RING-BACKUP	
	17	1	**4D-9986**	1	SEAL-O-RING	
	18	1	**101-2480**	1	COVER	
M	19	1	**8T-4138**	2	BOLT (M6X1X20-MM)	
	20	1	**5B-9318**	1	BALL	
	21	1	**6E-3007**	1	SPRING	
	22	1	**6E-4502**	1	PLUG	
	23	1	**4J-7533**	1	SEAL-O-RING	
	24	1	**6E-3019**	1	VALVE	
	25	1	**6E-5153**	1	SPRING	
	26	1	**108-2187**	1	PLUG-PIPE	
	27	1	**9J-0404**	2	PLUG	
	28	1	**9S-8005**	1	PLUG-O-RING	
	29	1	**3K-0360**	1	SEAL-O-RING	
Y	30	1	**139-8472**	2	VALVE GP-RELIEF (WING TILT)	574
	31	1	**6E-3013**	2	SEAT	

M-METRIC PART
Y-SEPARATE ILLUSTRATION

137-8104 VALVE GP-CONTROL *(contd.)* **i03435363**

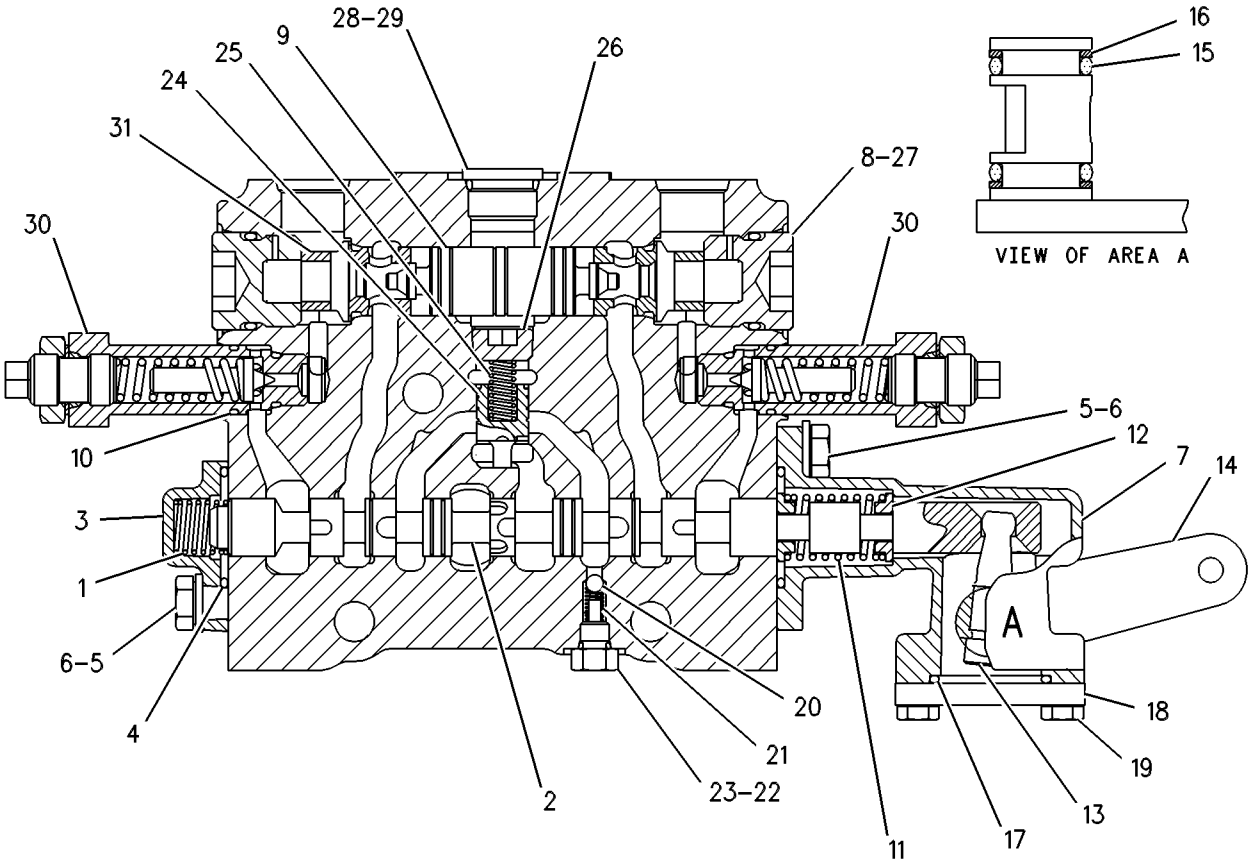

GRAPHIC #1 **<END>** g00109738

HYDRAULIC SYSTEM

137-8106 VALVE GP-CONTROL—WING LIFT

S/N: JBP1-UP

PART OF 104-8648, 250-0567 VALVE GP-BANK 6, 104-8647, 263-6435 VALVE GP-BANK 7

AN ATTACHMENT

SMCS-5051 **i03431540**

NOTE	REF NO	GRAPHIC REF	PART NUMBER	QTY	PART NAME 1 2 3 4 5 6 (PRODUCT LEVEL)	SEE PAGE
	1	1	**137-8107**	1	BODY	
	2	1	**102-4578**	1	STEM	
	3	1	**101-1978**	1	COVER	
	4	1	**2K-8199**	2	SEAL-O-RING	
M	5	1	**8T-4189**	4	BOLT (M8X1.25X20-MM)	
	6	1	**8T-4224**	4	WASHER-HARD (8.8X16X2-MM THK)	
	7	1	**101-1984**	1	BODY	
	8	1	**106-3659**	1	PISTON	
	10	1	**102-7412**	1	SPRING	
	11	1	**101-1973**	4	RETAINER	
	12	1	**101-1971**	1	LEVER	
	13	1	**101-1982**	1	LEVER AS	
	14	1	**6E-5153**	1	SPRING	
	15	1	**101-1983**	2	RING-BACKUP	
	16	1	**4D-9986**	1	SEAL-O-RING	
	17	1	**101-2480**	1	COVER	
M	18	1	**8T-4138**	2	BOLT (M6X1X20-MM)	
	19	1	**5B-9318**	1	BALL	
	20	1	**6E-3007**	1	SPRING	
	21	1	**6E-4502**	1	PLUG	
	22	1	**4J-7533**	1	SEAL-O-RING	
	23	1	**6E-3019**	1	VALVE	
	24	1	**108-2187**	1	PLUG-PIPE	
	25	1	**8M-4437**	2	SEAL-O-RING	
Y	26	1	**139-8472**	2	VALVE GP-RELIEF (WING LIFT)	574
	27	1	**111-8233**	1	SPRING	
C	28	1	**325-6423**	2	VALVE GP-CHECK	
					(EACH INCLUDES)	
		1	**3K-0360**	1	SEAL-O-RING	
		1	**7J-9933**	1	SEAL-O-RING	
C	29	1	*148-8395*	1	PLUG AS	
		1	**3K-0360**	1	SEAL-O-RING	
		1	**9S-8005**	1	PLUG-O-RING	

C-CHANGE FROM PREVIOUS TYPE
M-METRIC PART
Y-SEPARATE ILLUSTRATION

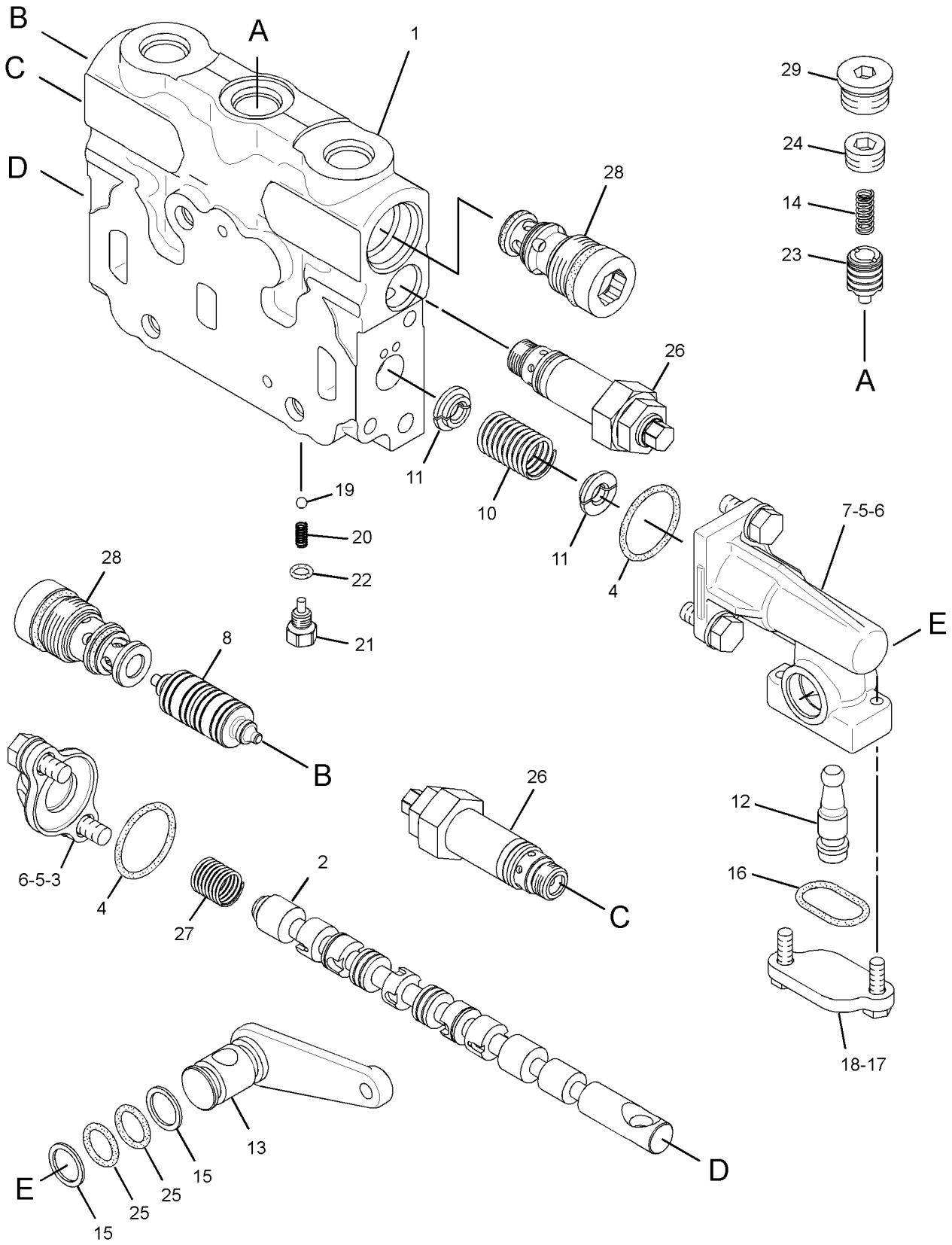

GRAPHIC #1 **<END>** g01642373

104-3122 VALVE GP-PUMP CONTROL

S/N: JBP1-UP

PART OF 6E-3136 PUMP GP-PISTON

SMCS-5455 **i02844881**

NOTE	REF NO	GRAPHIC REF	PART NUMBER	QTY	PART NAME 1 2 3 4 5 6 (PRODUCT LEVEL)	SEE PAGE
	1	1	**108-4814**	1	BODY-COMPENSATOR	
	2	1	**9S-4191**	1	PLUG-O-RING	
	3	1	**3J-1907**	3	SEAL-O-RING	
	4	1	**9T-2186**	2	PLUG	
	5	1	**6E-4230**	2	GUIDE-SPRING	
	6	1	**6E-4228**	1	SPRING	
	7	1	**6E-6140**	1	PLUG-COMPENSATOR	
	8	1	**033-6036**	1	SEAL-O-RING	
	9	1	**6E-6141**	2	LOCKNUT-SEALING	
M	10	1	**129-7632**	2	SETSCREW-SOCKET (M8X1.25X45-MM)	
	11	1	**6E-6142**	1	PLUG-MARGIN	
	12	1	**033-6027**	1	SEAL-O-RING	
	13	1	**9T-7750**	1	SPRING	
	14	1	**108-4816**	1	PIN-SPRING STOP	
	15	1	**9T-1857**	2	GUIDE	
	16	1	**6E-6420**	1	VALVE-NEEDLE	
	17	1	**6E-6419**	1	RING	
	18	1	**9X-7680**	1	SEAL-O-RING	

M-METRIC PART

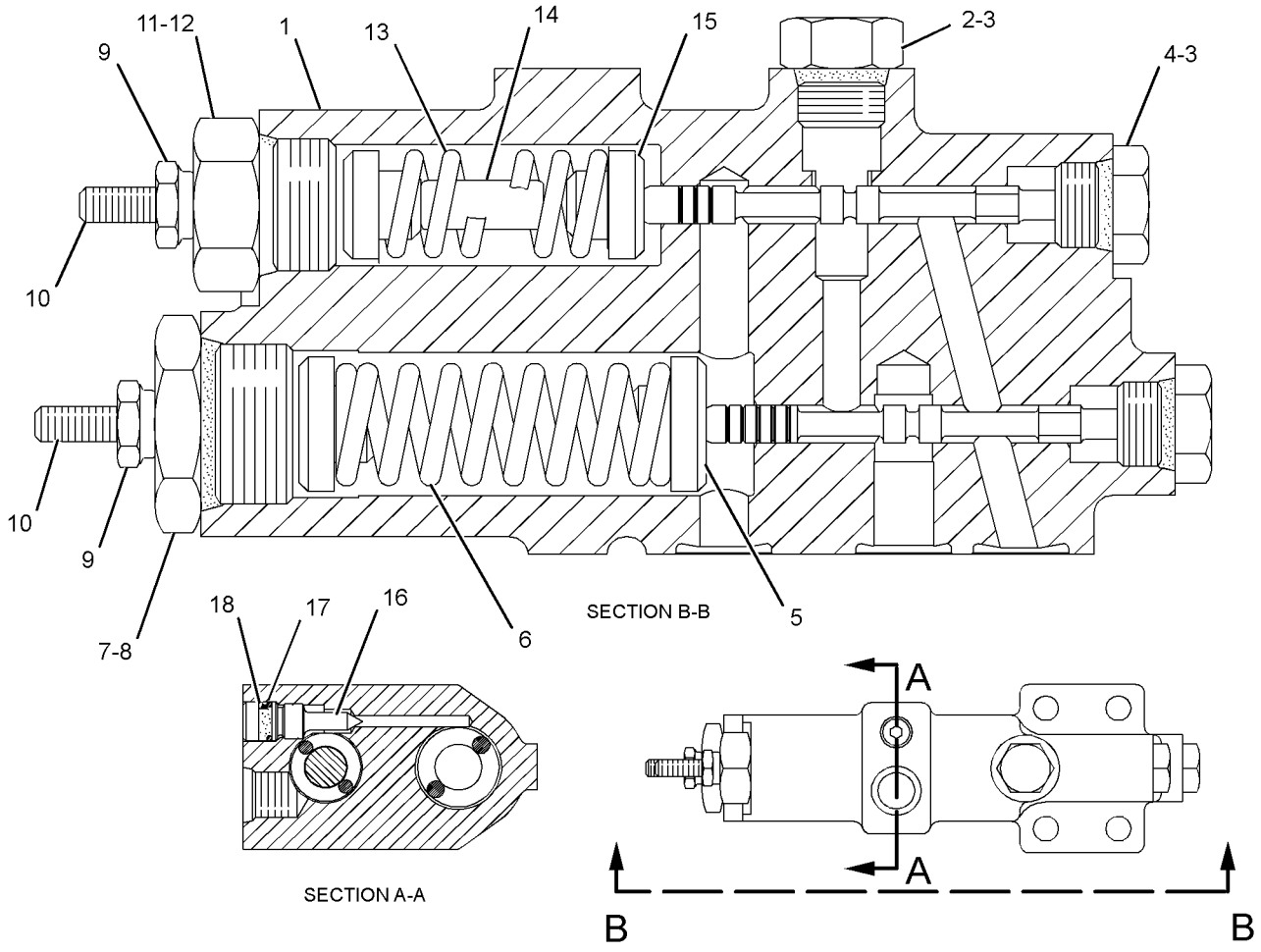

GRAPHIC #1 **<END>** g01419150

HYDRAULIC SYSTEM

131-8350 VALVE GP-PURGE

S/N: JBP1-UP

PART OF 9T-5957 VALVE GP-COMBINATION

SMCS-4293 **i00139150**

NOTE	REF NO	GRAPHIC REF	PART NUMBER	QTY	PART NAME 1 2 3 4 5 6 (PRODUCT LEVEL)	SEE PAGE
	1	1	**109-1144**	1	VALVE	
	2	1	**130-5770**	1	SLEEVE	

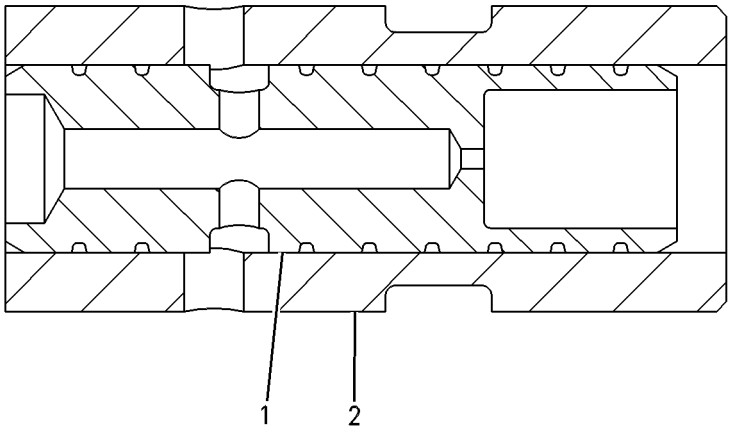

GRAPHIC #1 **<END>** g00087876

4T-4935 VALVE GP-RELIEF

S/N: JBP1-UP

PART OF 9T-5957 VALVE GP-COMBINATION

SMCS-4322, 5069, 5072, 5117 **i00131002**

NOTE	REF NO	GRAPHIC REF	PART NUMBER	QTY	PART NAME 1 2 3 4 5 6 (PRODUCT LEVEL)	SEE PAGE
	1	1	**6E-1835**	1	RETAINER AS	
	2	1	**9X-6395**	1	NUT (3/4-16-THD)	
	3	1	**7J-9933**	1	SEAL-O-RING	
	4	1	**4T-7571**	1	PLATE	
	5	1	**6J-6439**	1	VALVE-POPPET	
	6	1	**3K-0360**	2	SEAL-O-RING	
	7	1	**4T-4942**	1	SPRING	

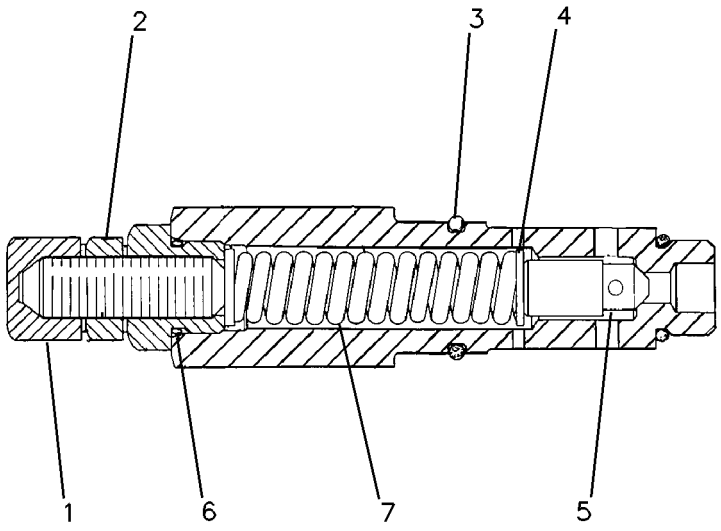

GRAPHIC #1 **<END>** g00082648

HYDRAULIC SYSTEM

6E-3033 VALVE GP-RELIEF

S/N: JBP1-UP
PART OF 124-2883, 124-2885 VALVE GP-CONTROL
ALSO AN ATTACHMENT

SMCS-4322, 5069, 5072, 5117 **i01862903**

NOTE	PART NUMBER	QTY	PART NAME 1 2 3 4 5 6 (PRODUCT LEVEL)	SEE PAGE
Y	*106-7390*	1	VALVE GP-RELIEF (HYDRAULIC)	573
			—OR—	
	6E-4704	1	VALVE GP-RELIEF (HYDRAULIC)	
	3G-3726	1	NUT (3/8-40-THD)	
	3J-1907	1	SEAL-O-RING	
	4D-2297	1	SEAL-O-RING	

Y-SEPARATE ILLUSTRATION

<END>

6E-4703 VALVE GP-RELIEF

S/N: JBP1-UP

PART OF 9T-5957 VALVE GP-COMBINATION

SMCS-4322, 5069, 5072, 5117 **i00131105**

NOTE	REF NO	GRAPHIC REF	PART NUMBER	QTY	PART NAME 1 2 3 4 5 6 (PRODUCT LEVEL)	SEE PAGE
	1	1	**4D-2297**	1	SEAL-O-RING	
	2	1	**3J-1907**	1	SEAL-O-RING	
	3	1	**3G-3726**	1	NUT (3/8-40-THD)	

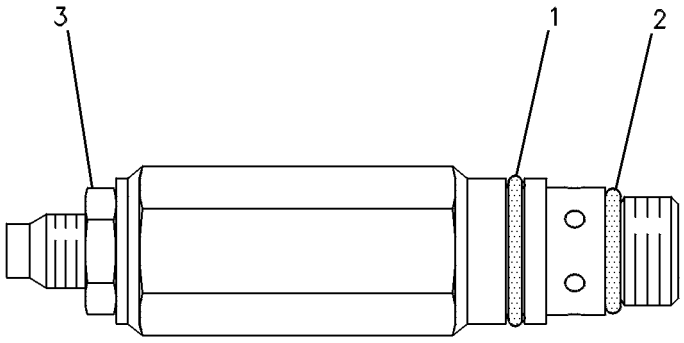

GRAPHIC #1 **<END>** g00084814

HYDRAULIC SYSTEM

100-6021 VALVE GP-RELIEF

S/N: JBP1-UP

PART OF 9T-5957 VALVE GP-COMBINATION

SMCS-4322, 5069, 5072, 5117 **i01853030**

NOTE	REF NO	GRAPHIC REF	PART NUMBER	QTY	PART NAME 1 2 3 4 5 6 (PRODUCT LEVEL)	SEE PAGE
	1	1	**4T-1700**	1	SPRING	
	2	1	**4T-4509**	1	SEAT	
	3	1	**4T-5074**	1	RING-BACKUP	
	4	1	**6E-5200**	1	RETAINER AS	
	5	1	**123-6661**	1	HOUSING	
	6	1	**108-5157**	1	VALVE	
	7	1	**3J-7354**	1	SEAL-O-RING	
	8	1	**3K-0360**	1	SEAL-O-RING	
	9	1	**6V-5556**	1	SEAL-O-RING	
	10	1	**9X-6395**	1	NUT (3/4-16-THD)	

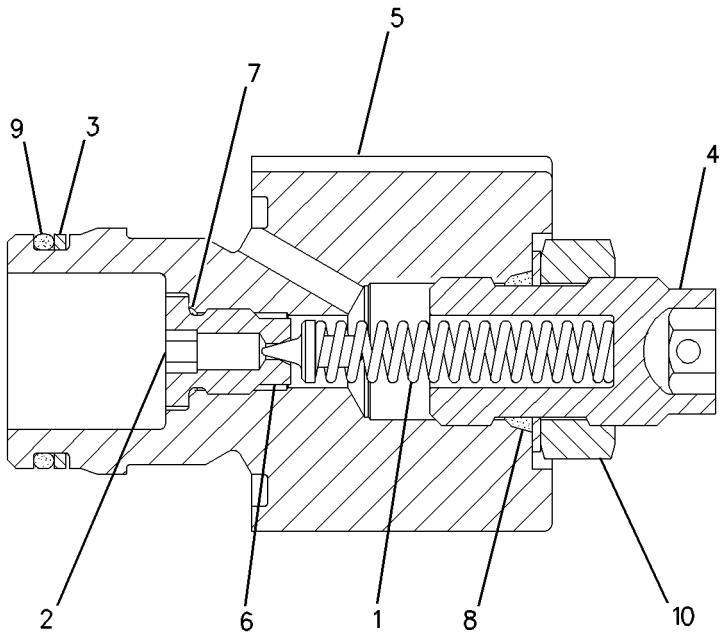

GRAPHIC #1 **<END>** g00949717

106-7390 VALVE GP-RELIEF

S/N: JBP1-UP
PART OF 6E-3033 VALVE GP-RELIEF
FIELD REPLACEMENT ORDER 6E-3033—PAGE 570
ALSO AN ATTACHMENT

SMCS-4322, 5069, 5072, 5117 **i01197997**

NOTE	REF NO	GRAPHIC REF	PART NUMBER	QTY	PART NAME 1 2 3 4 5 6 (PRODUCT LEVEL)	SEE PAGE
	1	1	**114-6635**	1	RETAINER AS	
	2	1	**2P-1279**	1	LOCKNUT (9/16-18-THD)	
	3	1	**3J-1907**	2	SEAL-O-RING	
	4	1	**2J-6089**	1	SPRING	
	6	1	**111-5754**	1	VALVE	
	7	1	**4D-2297**	1	SEAL-O-RING	

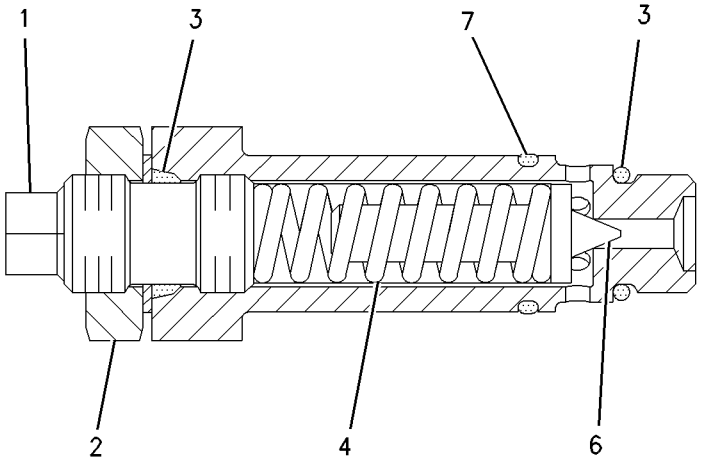

GRAPHIC #1 **<END>** g00638990

139-8472 VALVE GP-RELIEF

S/N: JBP1-UP
PART OF 107-0545, 115-1007, 137-8104, 137-8106, 6E-3034, 6E-3036 VALVE GP-CONTROL AN ATTACHMENT

SMCS-4322, 5069, 5072, 5117 **i01048867**

NOTE	REF NO	GRAPHIC REF	PART NUMBER	QTY	PART NAME 1 2 3 4 5 6 (PRODUCT LEVEL)	SEE PAGE
	1	1	**114-6635**	1	RETAINER AS	
	2	1	**2P-1279**	1	LOCKNUT (9/16-18-THD)	
	3	1	**3J-1907**	2	SEAL-O-RING	
	4	1	**2J-6089**	1	SPRING	
	5	1	**6E-3006**	1	BODY	
	6	1	**131-8777**	1	VALVE	
	7	1	**4D-2297**	1	SEAL-O-RING	
	8	1	**2A-3211**	1	WASHER (5.5X12.3X0.8-MM THK)	

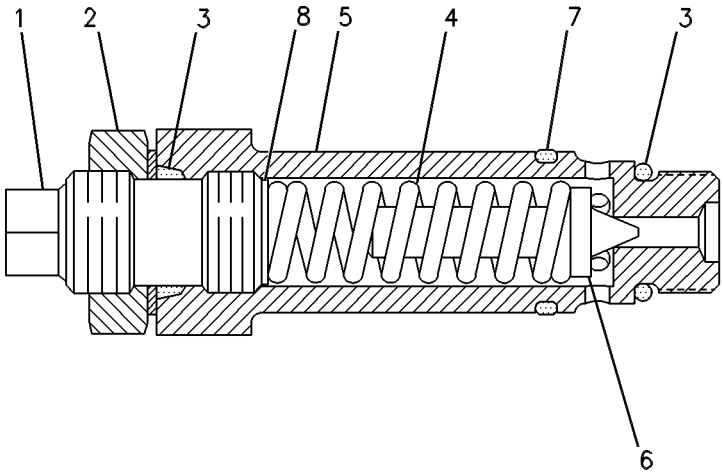

GRAPHIC #1 **<END>** g00109400

139-8474 VALVE GP-RELIEF

S/N: JBP1-UP
PART OF 124-2884 VALVE GP-CONTROL
ALSO AN ATTACHMENT

SMCS-4322, 5069, 5072, 5117 **i00606809**

NOTE	REF NO	GRAPHIC REF	PART NUMBER	QTY	PART NAME 1 2 3 4 5 6 (PRODUCT LEVEL)	SEE PAGE
	1	1	**114-6635**	1	RETAINER AS	
	2	1	**2P-1279**	1	LOCKNUT (9/16-18-THD)	
	3	1	**3J-1907**	2	SEAL-O-RING	
	4	1	**2J-6089**	1	SPRING	
	5	1	**2A-3211**	1	WASHER (5.5X12.3X0.8-MM THK)	
	6	1	**131-8777**	1	VALVE	
	7	1	**4D-2297**	1	SEAL-O-RING	

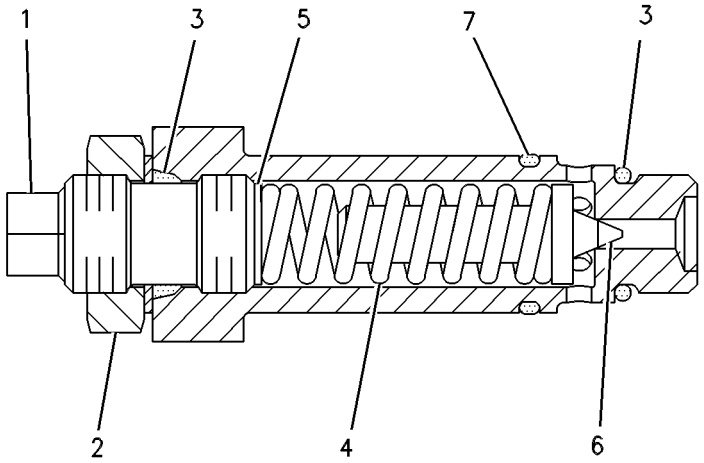

GRAPHIC #1 **<END>** g00089282

HYDRAULIC SYSTEM

222-7774 VALVE GP-RELIEF

S/N: JBP1-UP

PART OF 107-0547, 6E-3031, 6E-3037 VALVE GP-CONTROL

AN ATTACHMENT

SMCS-4322, 5069, 5072, 5117 **i03435404**

NOTE	REF NO	GRAPHIC REF	PART NUMBER	QTY	PART NAME 1 2 3 4 5 6 (PRODUCT LEVEL)	SEE PAGE
	1	1	**2J-6089**	1	SPRING	
	2	1	**114-6635**	1	RETAINER AS	
	3	1	**131-8777**	1	VALVE	
	5	1	**2A-3211**	1	WASHER (5.5X12.3X0.8-MM THK)	
	6	1	**2P-1279**	1	LOCKNUT (9/16-18-THD)	
	7	1	**3J-1907**	2	SEAL-O-RING	
	8	1	**4D-2297**	1	SEAL-O-RING	

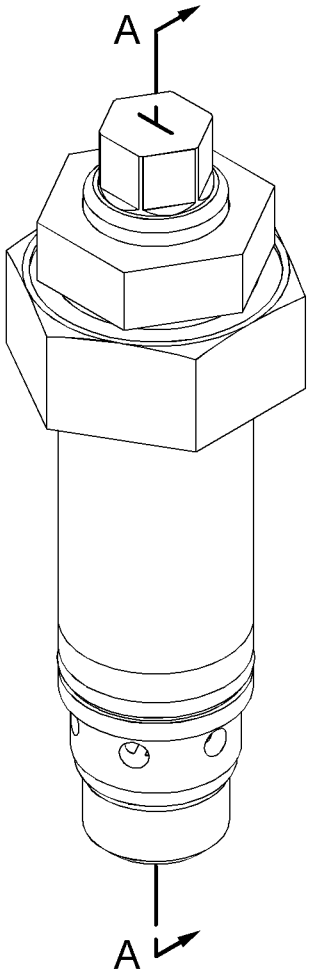

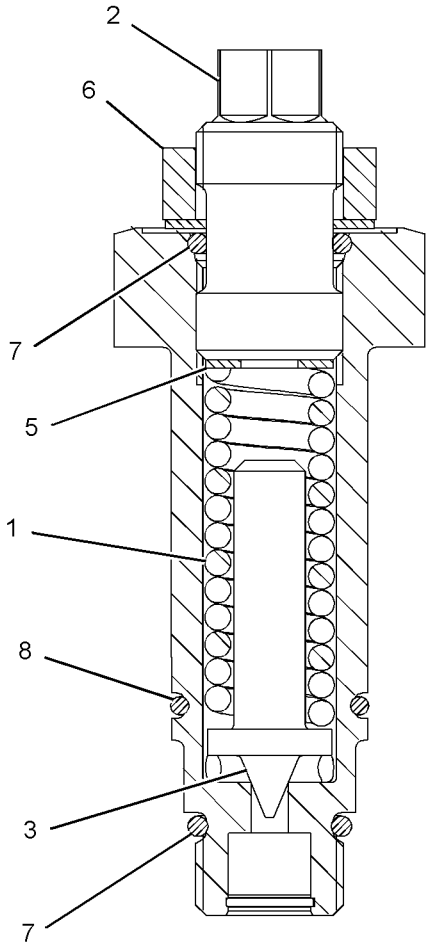

SECTION A-A

GRAPHIC #1 **<END>** g01785893

HYDRAULIC SYSTEM

4T-1860 VALVE GP-SHUTTLE

S/N: JBP1-UP

PART OF 9T-5957 VALVE GP-COMBINATION

SMCS-5079 **i02400665**

NOTE	REF NO	GRAPHIC REF	PART NUMBER	QTY	PART NAME 1 2 3 4 5 6 (PRODUCT LEVEL)	SEE PAGE
Z	1	1		1	SEAT	
	2	1	**1M-6718**	1	BALL	
Z	3	1		1	VALVE	
	4	1	**6V-5324**	1	SEAL-O-RING	
	5	1	**147-6603**	1	SEAL-O-RING	
	6	1	**3J-1907**	1	SEAL-O-RING	
	7	1	**147-6604**	2	RING-BACKUP	
	8	1	**147-6605**	2	RING-BACKUP	

Z-NOT SERVICED SEPARATELY

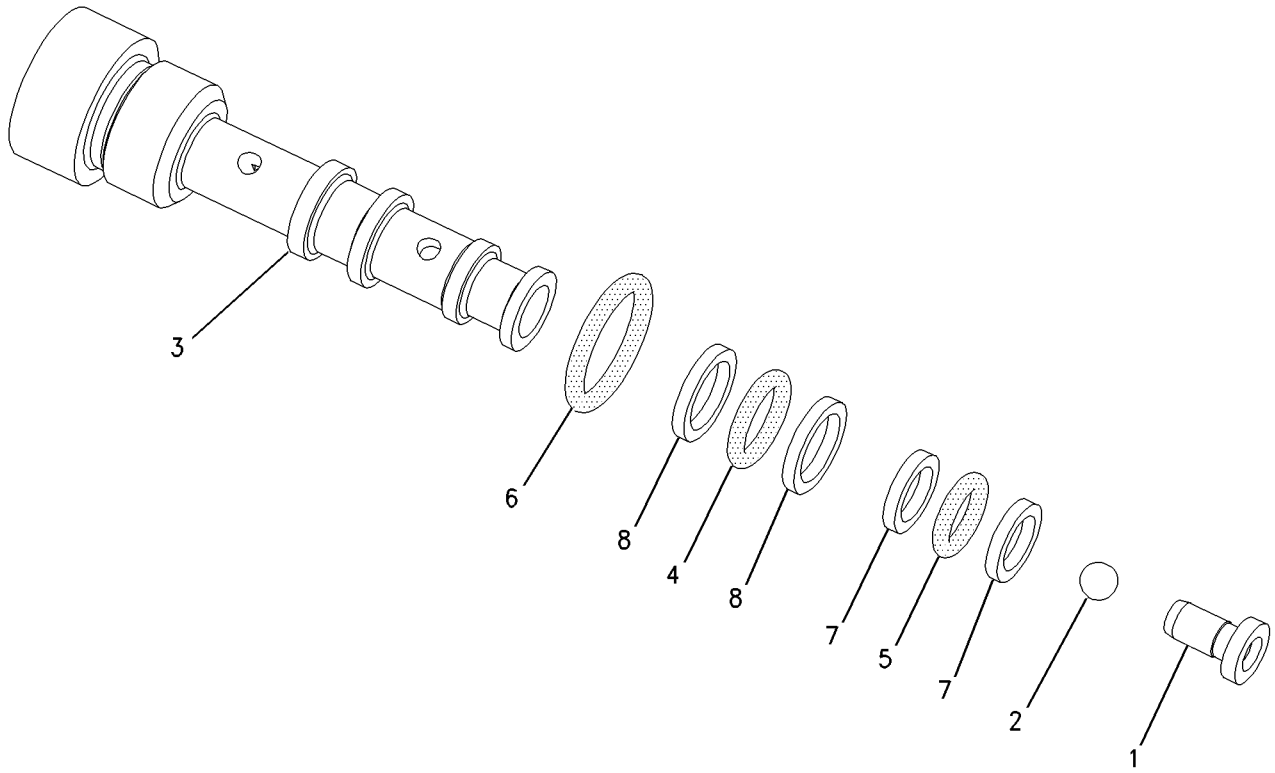

GRAPHIC #1 **<END>** g00775006

HYDRAULIC SYSTEM

149-2610 VALVE GP-SOLENOID

S/N: JBP1-UP
24 VOLT
PART OF 112-2240 MANIFOLD GP-CONTROL
AN ATTACHMENT

SMCS-5479 **i01755293**

NOTE	REF NO	GRAPHIC REF	PART NUMBER	QTY	PART NAME 1 2 3 4 5 6 (PRODUCT LEVEL)	SEE PAGE
	1	1	**149-2611**	1	CARTRIDGE AS	
		1	**8C-9987**	1	WASHER (8.3X28X2.5-MM THK)	
	2	1	**111-0343**	1	LOCKNUT (5/16-18-THD)	
	3	1	**141-6787**	1	COIL AS	
		1	**1S-9593**	2	STRAP-CABLE	
		1	**3E-3365**	1	WEDGE-RECEPTACLE LOCK (2-PIN)	
		1	**186-3735**	2	PIN-CONNECTOR (16-GA TO 18-GA)	
		1	**102-8802**	2	KIT-RECEPTACLE (2-PIN)	
					(INCLUDES RECEPTACLE AS AND WEDGE)	
	4	1	**8C-9987**	1	WASHER (8.3X28X2.5-MM THK)	
		1	**111-0343**	1	LOCKNUT (5/16-18-THD)	
					AVAILABLE REPAIR KIT(S):	
			3G-8175	1	KIT-SEAL	
					(INCLUDES O-RINGS & BACK-UP RINGS)	

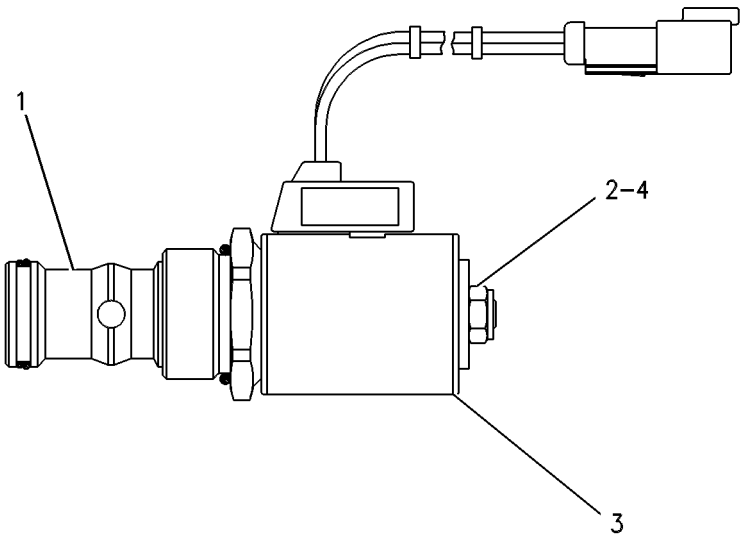

GRAPHIC #1 **<END>** g00308949

152-8346 VALVE GP-SOLENOID

S/N: JBP1-UP
24-VOLT
PART OF 164-8462 LOCK GP-CENTERSHIFT

SMCS-5479 **i01861563**

NOTE	REF NO	GRAPHIC REF	PART NUMBER	QTY	PART NAME 1 2 3 4 5 6 (PRODUCT LEVEL)	SEE PAGE
	1	1	**141-6787**	1	COIL AS	
	2	1	**102-8802**	1	KIT-RECEPTACLE (2-PIN)	
					(INCLUDES RECEPTACLE AS AND WEDGE)	
	3	1	**3E-3365**	1	WEDGE-RECEPTACLE LOCK (2-PIN)	
	4	1	**8T-8729**	2	PIN-CONNECTOR	
	5	1	**1S-9593**	2	STRAP-CABLE	
	6	1	**152-8352**	1	SPOOL AS-VALVE	
	7	1	**111-0343**	1	LOCKNUT (5/16-18-THD)	
	8	1	**8C-9987**	1	WASHER (8.3X28X2.5-MM THK)	
					AVAILABLE REPAIR KIT(S):	
			109-3036	1	KIT-SEAL	
					(INCLUDES SEALS & RINGS)	

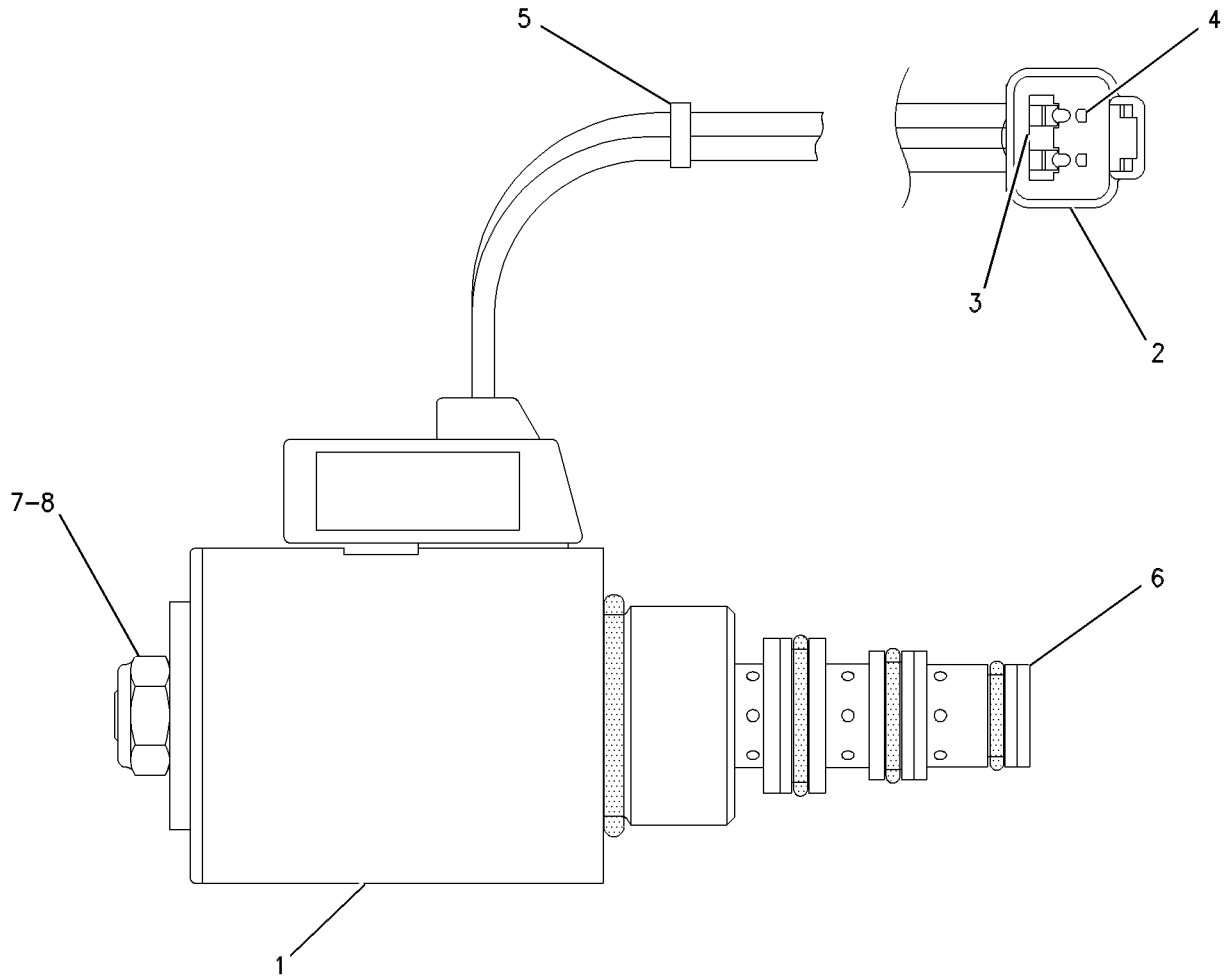

GRAPHIC #1 **<END>** g00482067

110-5339 CIRCLE GP

S/N: JBP1-UP
PART OF 124-9779 BLADE & TIP AR-POWER
AN ATTACHMENT

SMCS-6152, 6154, 6155 **i02205351**

NOTE	REF NO	GRAPHIC REF	PART NUMBER	QTY	PART NAME 1 2 3 4 5 6 (PRODUCT LEVEL)	SEE PAGE
	1	1	**1D-0503**	2	WASHER (45.25X76.2X6.35-MM THK)	
BC	2	1	**2G-3219**	4	SHIM (0.8-MM THK)	
BC	3	1	**2G-3221**	4	SHIM (1.6-MM THK)	
B	4	1	**2K-0419**	4	WASHER (0.766X3.5X0.065-IN THK)	
B	5	1	**5D-6644**	10	SHIM (0.762-MM THK)	
	6	1	**5T-8366**	4	STRIP-WEAR	
	7	1	**8W-1749**	10	PLATE	
	8	1	**102-4139**	8	SPACER (18.85X26.67X78-MM THK)	
Y	9	1	**110-8078**	1	CIRCLE GP	582
	10	1	**112-1269**	1	SHAFT	
	11	1	**112-1271**	1	BAR-SPREADER	
	12	1	**112-5060**	1	BRACKET AS	
		1	**104-8655**	1	BEARING-SLEEVE	
	13	1	**112-5061**	1	BRACKET AS	
		1	**104-8655**	1	BEARING-SLEEVE	
C	14	1	**159-8127**	1	BRACKET AS	
	14A	1	**9X-8883**	2	BOLT (5/8-11X2.75-IN)	
	14B	1	**5P-8247**	4	WASHER-HARD (17X32X3.5-MM THK)	
	14C	1	**9X-8881**	2	BOLT (5/8-11X2.25-IN)	
	14D	1	**9D-8285**	1	CAP	
C	15	1	**163-4720**	1	GUARD	
C	16	1	**163-4721**	1	GUARD	
BC	17	1	**163-6074**	2	SHIM (0.381-MM THK)	
C	18	1	**178-1685**	1	STRIP-WEAR	
B	19	1	**178-1686**	1	SHIM (0.8-MM THK)	
B	20	1	**178-1688**	1	SHIM (1.8-MM THK)	
B	21	1	**178-8455**	1	SHIM (0.4-MM THK)	
	22	1	**105-2080**	4	BRACKET AS	
					(EACH INCLUDES)	
	22A	1	**1F-0748**	2	NUT-WELD (1/2-13-THD)	
C	23	1	**2B-2673**	2	NUT (1-3/4-5-THD)	
	24	1	**3B-5320**	2	PIN-COTTER	
	25	1	**5P-8245**	30	WASHER-HARD (13.5X25.5X3-MM THK)	
	26	1	**6H-1717**	30	BOLT (1/2-13X1.125-IN)	
	27	1	**7X-0334**	8	BOLT (1/2-13X5-IN)	
BC	28	1	**7X-0452**	4	NUT-FULL (1-1/2-6-THD)	
	29	1	**7X-0550**	8	WASHER-HARD (13.5X32X5-MM THK)	

B-USE AS REQUIRED
C-CHANGE FROM PREVIOUS TYPE
Y-SEPARATE ILLUSTRATION

110-5339 **CIRCLE GP** *(contd.)* **i02205351**

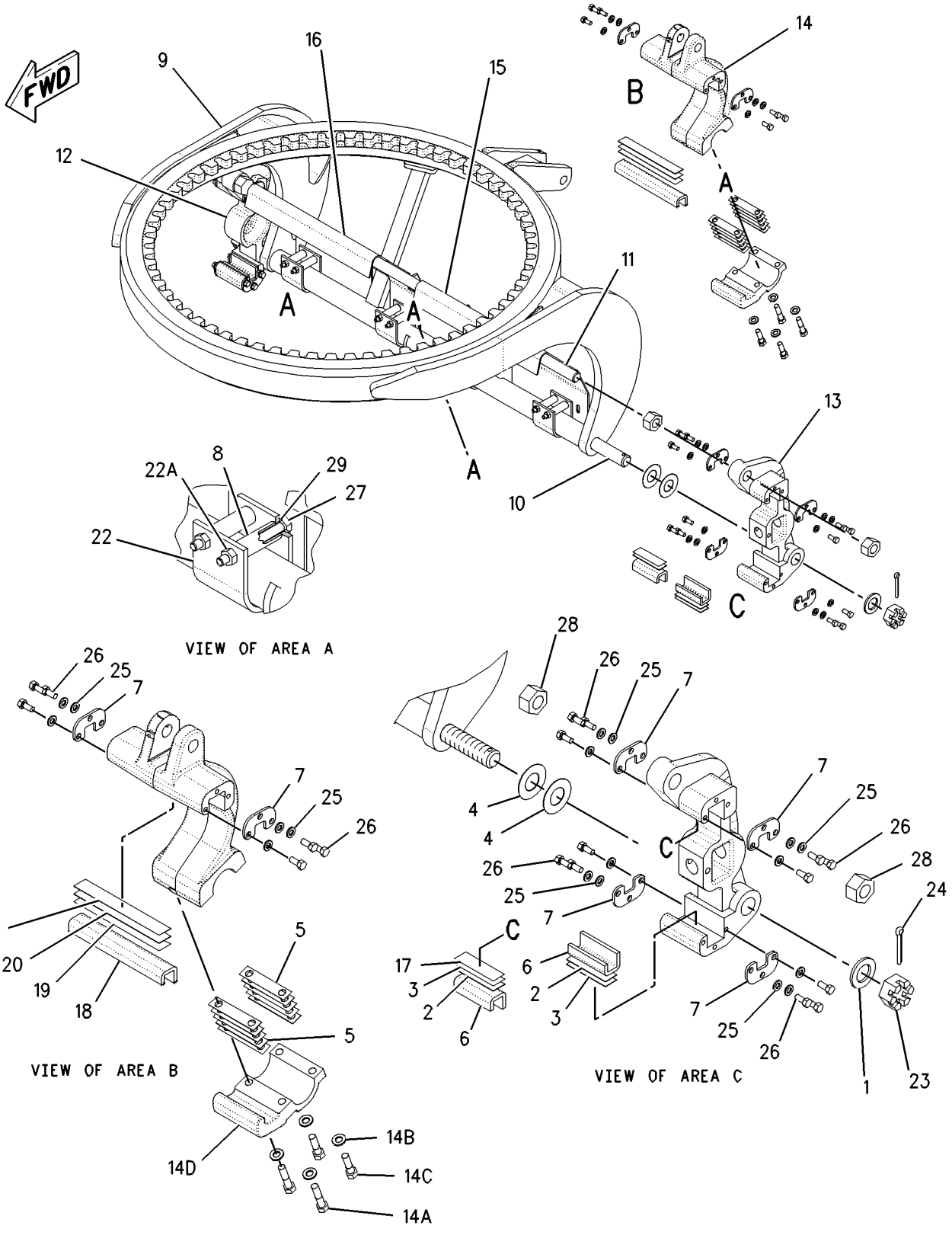

GRAPHIC #1 **<END>** g00791617

IMPLEMENTS

110-8078 CIRCLE GP

S/N: JBP1-UP
PART OF 110-5339 CIRCLE GP
AN ATTACHMENT

SMCS-6152, 6154, 6155 **i02200408**

NOTE	REF NO	GRAPHIC REF	PART NUMBER	QTY	PART NAME 1 2 3 4 5 6 (PRODUCT LEVEL)	SEE PAGE
	1	1	**127-8879**	1	BRACE	
Z	2	1		2	BLOCK	
	3	1	**6G-2946**	2	STOP	
Z	4	1		2	PLATE	
Z	5	1		1	CIRCLE	
	6	1	**110-8087**	1	PLATE	
	7	1	**110-8088**	1	PLATE	
Z	8	1		2	BLOCK	
Z	9	1		1	PLATE AS	
Z	10	1		2	PLATE	
Z	11	1		2	PLATE	
Z	12	1		1	BEAM-BLADE	
Z	13	1		1	BEAM-BLADE	
	14	1	**149-1044**		PLATE-LH	
	15	1	**149-1045**	1	PLATE-RH	
AF			**5T-4267**	1	SEGMENT-CIRCLE	
					(4 TEETH-SERVICE REPAIR FOR WORN OR DAMAGED TEETH)	

A-NOT PART OF THIS GROUP
F-NOT SHOWN
Z-NOT SERVICED SEPARATELY

110-8078 CIRCLE GP *(contd.)* **i02200408**

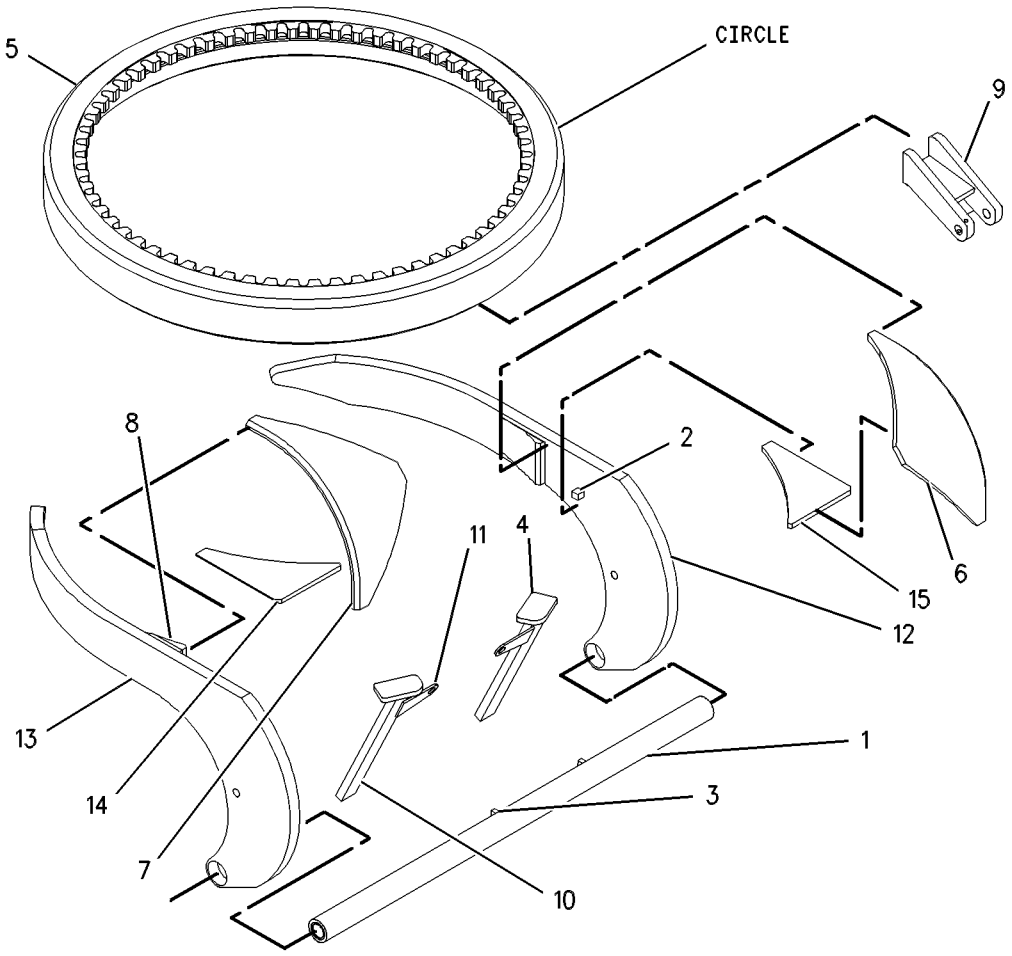

GRAPHIC #1 **<END>** g00566155

IMPLEMENTS

112-7486 CIRCLE GP

S/N: JBP1-UP
PART OF 329-3825, 329-3827 BLADE & TIP AR-POWER
AN ATTACHMENT

SMCS-6152, 6154, 6155 **i02291588**

NOTE	REF NO	GRAPHIC REF	PART NUMBER	QTY	PART NAME 1 2 3 4 5 6 (PRODUCT LEVEL)	SEE PAGE
	1	1	**1D-0503**	2	WASHER (45.25X76.2X6.35-MM THK)	
B	2	1	**2G-3219**	4	SHIM (0.8-MM THK)	
B	3	1	**2G-3221**	4	SHIM (1.6-MM THK)	
	4	1	**2K-0419**	4	WASHER (0.766X3.5X0.065-IN THK)	
	5	1	**5D-6644**	10	SHIM (0.762-MM THK)	
	6	1	**5T-8366**	4	STRIP-WEAR	
	7	1	**8D-5949**	1	BAR-SPREADER	
	8	1	**8W-1749**	10	PLATE	
B	9	1	**102-4139**	8	SPACER (18.85X26.67X78-MM THK)	
	10	1	**112-5060**	1	BRACKET AS	
		1	**104-8655**	1	BEARING-SLEEVE	
	11	1	**112-5061**	1	BRACKET AS	
		1	**104-8655**	1	BEARING-SLEEVE	
C	12	1	**153-3580**	1	SHAFT	
CY	13	1	**153-9360**	1	CIRCLE GP	588
	14	1	**159-8127**	1	BRACKET AS	
	14A	1	**9X-8881**	2	BOLT (5/8-11X2.25-IN)	
	14B	1	**5P-8247**	4	WASHER-HARD (17X32X3.5-MM THK)	
	14C	1	**9X-8883**	2	BOLT (5/8-11X2.75-IN)	
	15	1	**163-4720**	1	GUARD	
	16	1	**163-4721**	1	GUARD	
B	17	1	**163-6074**	2	SHIM (0.381-MM THK)	
	18	1	**178-1685**	1	STRIP-WEAR	
B	19	1	**178-1686**	1	SHIM (0.8-MM THK)	
B	20	1	**178-1688**	1	SHIM (1.8-MM THK)	
B	21	1	**178-8455**	1	SHIM (0.4-MM THK)	
	22	1	**105-2080**	4	BRACKET AS	
					(EACH INCLUDES)	
	22A	1	**1F-0748**	2	NUT-WELD (1/2-13-THD)	
	23	1	**2B-2673**	2	NUT (1-3/4-5-THD) (1 3/4-5 THD)	
	24	1	**3B-5320**	2	PIN-COTTER	
	25	1	**5P-8245**	30	WASHER-HARD (13.5X25.5X3-MM THK)	
	26	1	**6H-1717**	30	BOLT (1/2-13X1.125-IN)	
	27	1	**7X-0334**	8	BOLT (1/2-13X5-IN)	
	28	1	**7X-0452**	4	NUT-FULL (1-1/2-6-THD)	
	29	1	**7X-0550**	8	WASHER-HARD (13.5X32X5-MM THK)	
	30	1	**2A-7089**	2	BEARING-SLEEVE	

B-USE AS REQUIRED
C-CHANGE FROM PREVIOUS TYPE
Y-SEPARATE ILLUSTRATION

112-7486 **CIRCLE GP** *(contd.)* **i02291588**

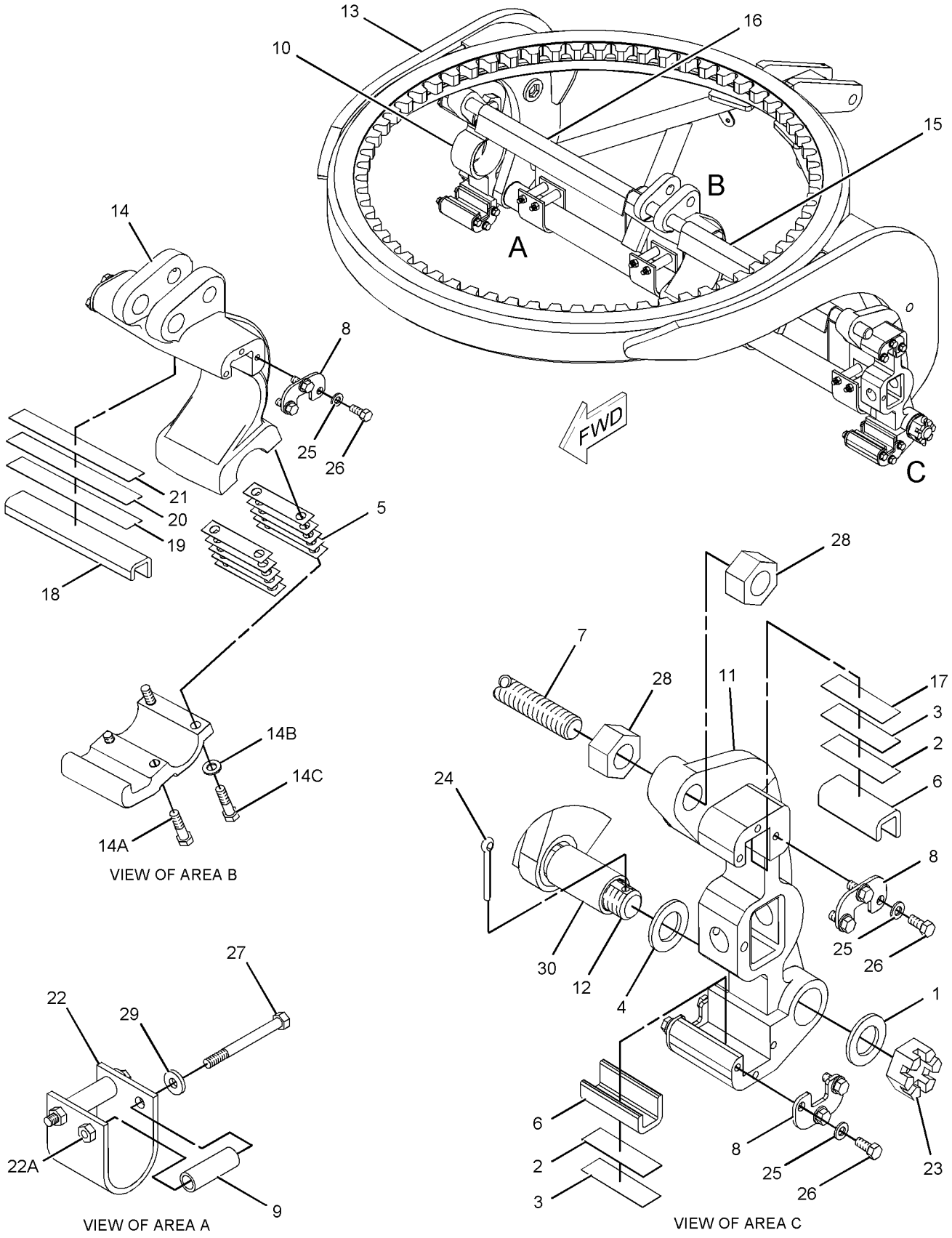

VIEW OF AREA B

VIEW OF AREA A

VIEW OF AREA C

GRAPHIC #1 **<END>** g01149615

IMPLEMENTS

113-9426 CIRCLE GP

S/N: JBP1-UP

PART OF 274-7941 GENERAL AR

SMCS-6152, 6154, 6155 **i00636971**

NOTE	REF NO	GRAPHIC REF	PART NUMBER	QTY	PART NAME 1 2 3 4 5 6 (PRODUCT LEVEL)	SEE PAGE
	1	1	**6G-9429**	1	BRACKET-RAIL	
	2	1	**113-9427**	1	CIRCLE AS	
		1	**6G-2946**	2	STOP	
		1	**7B-5037**	2	LOCK-BOLT	
		1	**110-8087**	1	PLATE	
		1	**110-8088**	1	PLATE	
		1	**114-3663**	1	BEAM-BLADE-RH	
		1	**114-3664**	1	BEAM-BLADE-LH	
		1	**132-1338**	1	BRACE AS	
		1	**2A-7089**	2	BEARING-SLEEVE	
	3	1	**6G-9428**	1	BRACKET-RAIL	
	4	1	**6K-3632**	2	LOCKNUT (1-8 THD)	
	5	1	**112-1269**	1	SHAFT	
	6	1	**5D-0398**	1	PIN	
	7	1	**7B-2499**	1	RING-SNAP	
	8	1	**5D-0399**	1	PLUNGER AS	
		1	**3K-2527**	1	BAR	
	9	1	**1D-0503**	2	WASHER (1/4IN THK)	
	10	1	**3B-5320**	2	COTTER	
	11	1	**2B-2673**	2	NUT	
B	12	1	**2K-0419**	4	WASHER (.065IN THK)	
	13	1	**1D-4643**	2	BOLT (1-8X5.50IN)	
	14	1	**8D-5467**	2	WASHER-NOTCHED (SLOTTED HOLE)	
	15	1	**5D-5206**	2	WASHER-NOTCHED (ROUND HOLE)	

B-USE AS REQUIRED

113-9426 **CIRCLE GP** *(contd.)* **i00636971**

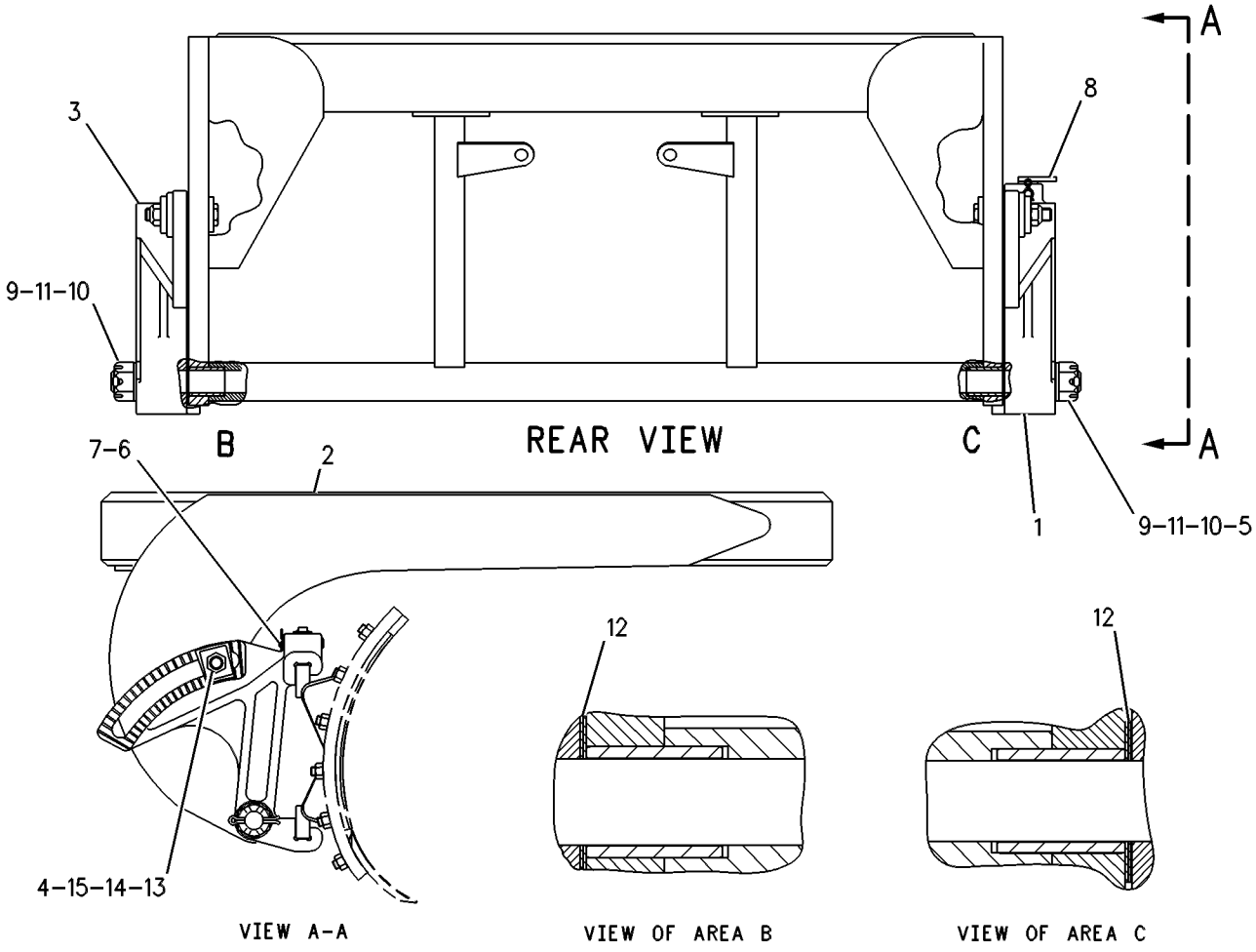

GRAPHIC #1 **<END>** g00109368

IMPLEMENTS

153-9360 CIRCLE GP

S/N: JBP1-UP

PART OF 112-7486 CIRCLE GP, 254-5960 MOUNTING GP-GRADE CONTROL

AN ATTACHMENT

SMCS-6152, 6154, 6155 **i02075546**

NOTE	REF NO	GRAPHIC REF	PART NUMBER	QTY	PART NAME 1 2 3 4 5 6 (PRODUCT LEVEL)	SEE PAGE
	1	1	**2G-3971**	1	BRACKET AS	
	2	1	**4D-4375**	2	LUG	
	3	1	**5T-3889**	1	BRACE	
	4	1	**5T-3890**	1	BRACE	
	5	1	**6G-2946**	2	STOP	
	7	1	**8D-9882**	2	BLOCK-FILLER	
	8	1	**8D-9886**	1	BRACE	
	9	1	**8D-9887**	1	BRACE	
	11	1	**132-1340**	1	BRACE AS	
		1	**2A-7089**	2	BEARING-SLEEVE	
	12	1	**147-6143**	1	PLATE-LH	
	13	1	**147-6144**	1	PLATE-RH	
	14	1	**153-0185**	1	BEAM-BLADE	
	15	1	**153-0187**	1	BEAM-BLADE	
AF		1	**5T-4267**		SEGMENT-CIRCLE	
					(4 TEETH) SERVICE REPAIR FOR WORN OR DAMAGED TEETH	

A-NOT PART OF THIS GROUP
F-NOT SHOWN

153-9360 CIRCLE GP *(contd.)* **i02075546**

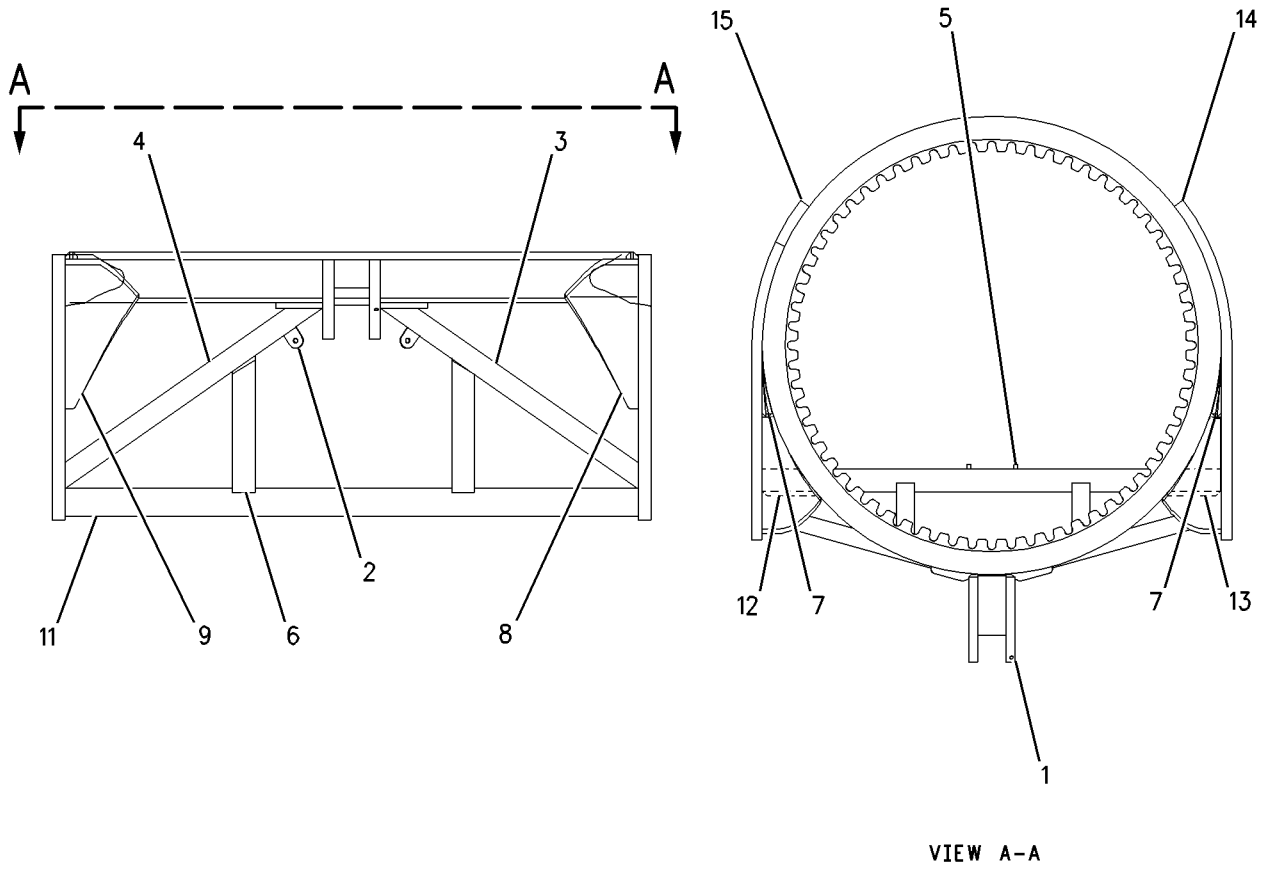

VIEW A-A

GRAPHIC #1 **<END>** g00665278

IMPLEMENTS

8X-1960 DRAWBAR GP

S/N: JBP1-UP

PART OF 274-7941 GENERAL AR

SMCS-6153 **i03298033**

NOTE	REF NO	GRAPHIC REF	PART NUMBER	QTY	PART NAME 1 2 3 4 5 6 (PRODUCT LEVEL)	SEE PAGE
	1	1	**9S-1322**	4	BOLT (7/8-9X6-IN)	
B	2	1	**6G-1915**	36	SHIM (0.25-MM THK)	
	3	1	**8X-7951**	1	DRAWBAR & YOKE AS	
	3A	1	**5T-6775**	2	REINFORCEMENT	
	3B	1	**178-3086**	3	STUD-BALL	
	3C	1	**8X-7956**	1	SHAFT AS	
	3D	1	**8F-9836**	12	BOSS (3/8-16-THD)	
	3E	1	**123-7707**	2	PLATE	
	4	1	**6G-5442**	1	BALL	
	5	1	**8X-8406**	1	CAP	
B	6	1	**8X-8409**	4	SHIM (0.8-MM THK)	
B	7	1	**8X-8408**	6	SHIM (0.25-MM THK)	
	8	1	**8X-8407**	1	ADAPTER	
	9	1	**5P-8291**	5	BOLT (3/4-16X2-IN)	
	10	1	**2H-3764**	2	BOLT-SOCKET HEAD (1/4-20X1.5-IN)	
	11	1	**9H-1031**	4	WASHER-HARD (24X41.5X6-MM THK)	
	12	1	**3B-8489**	1	FITTING-GREASE (DRAWBAR)	
	13	1	**319-2228**	6	SHOE-CIRCLE GUIDE	
	14	1	**4B-3604**	12	SETSCREW-SQUARE HEAD (3/4-10X2.5-IN)	
	15	1	**1D-5119**	12	NUT (3/4-10-THD)	
B	16	1	**6G-1914**	54	SHIM (0.76-MM THK)	
	17	1	**128-9654**	11	STRIP-WEAR	
	18	1	**333-0960**	6	STRIP-WEAR	
	19	1	**5P-6652**	18	WASHER (20X44.5X6-MM THK)	
	20	1	**3B-6753**	18	BOLT (3/4-10X4.75-IN)	
B	21	1	**153-7383**	1	SHIM (0.12-MM THK)	

B-USE AS REQUIRED

8X-1960 **DRAWBAR GP** *(contd.)* **i03298033**

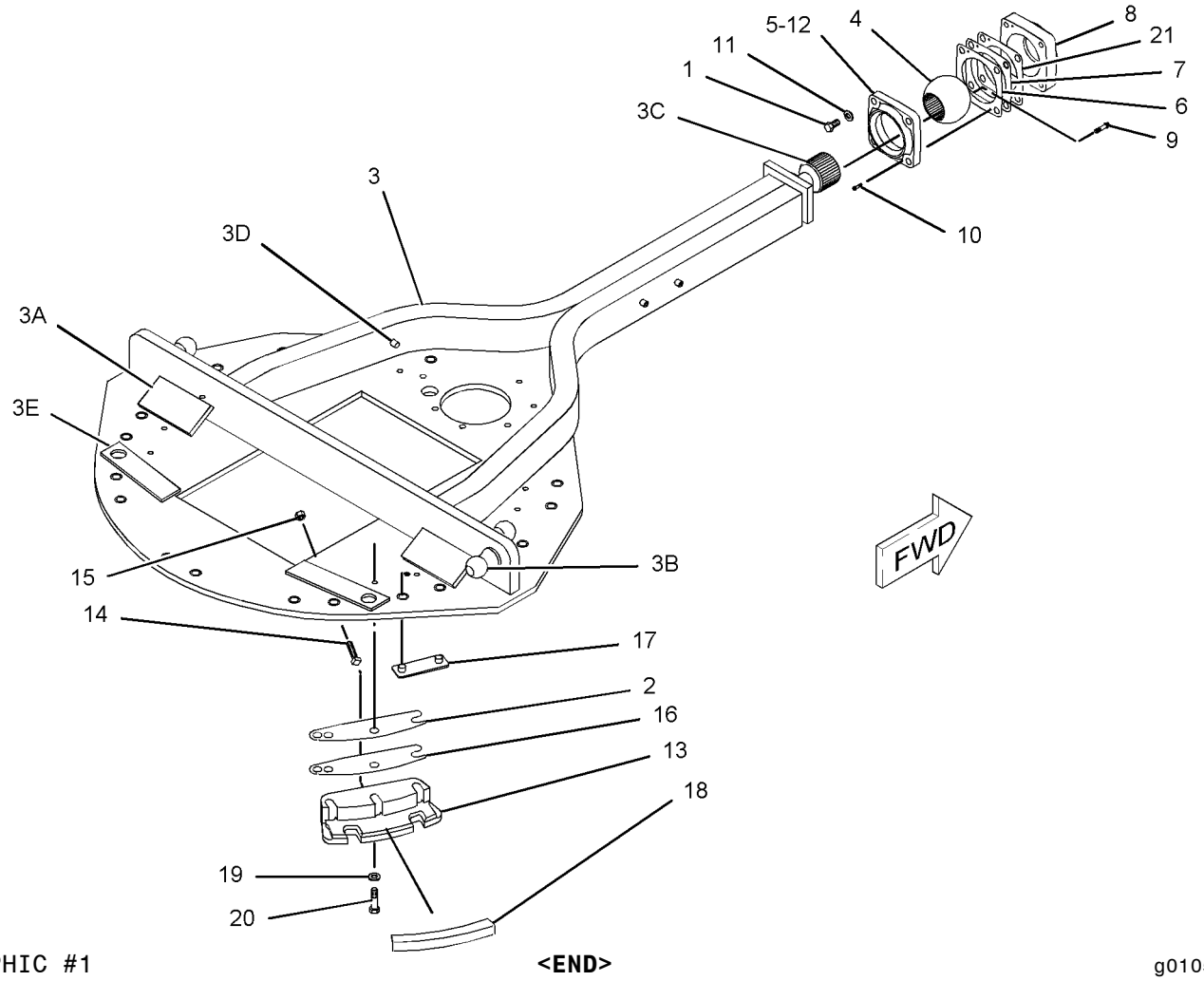

GRAPHIC #1 **<END>** g01050407

336-1559 PLATE GP-PUSH

S/N: JBP1-UP
AN ATTACHMENT

SMCS-6077 **i03247459**

NOTE	REF NO	GRAPHIC REF	PART NUMBER	QTY	PART NAME 1 2 3 4 5 6 (PRODUCT LEVEL)	SEE PAGE
	1	1	**112-5853**	1	PLATE	
M	2	1	**166-1880**	8	BOLT (M20X2.5X75-MM)	
	3	1	**336-1561**	1	PLATE AS-PUSH	
		1	**5J-7333**	2	HOOK	
	4	1	**336-1963**	1	PLATE AS	
M		1	**8T-3490**	4	NUT-WELD (M10X1.5-THD)	
	5	1	**336-1964**	1	BRACKET AS	
	6	1	**283-1578**	8	WASHER-HARD (22X45X10-MM THK)	
	7	1	**8T-4121**	8	WASHER-HARD (11X21X2.5-MM THK)	
M	8	1	**8T-4136**	2	BOLT (M10X1.5X25-MM)	
M	9	1	**8T-4137**	6	BOLT (M10X1.5X20-MM)	
M	10	1	**8T-4139**	2	BOLT (M12X1.75X30-MM)	
	11	1	**8T-4223**	2	WASHER-HARD (13.5X25.5X3-MM THK)	
D	12	1	**5P-5923**		SEAL (0.4-M)	

D-ORDER BY THE METER
M-METRIC PART

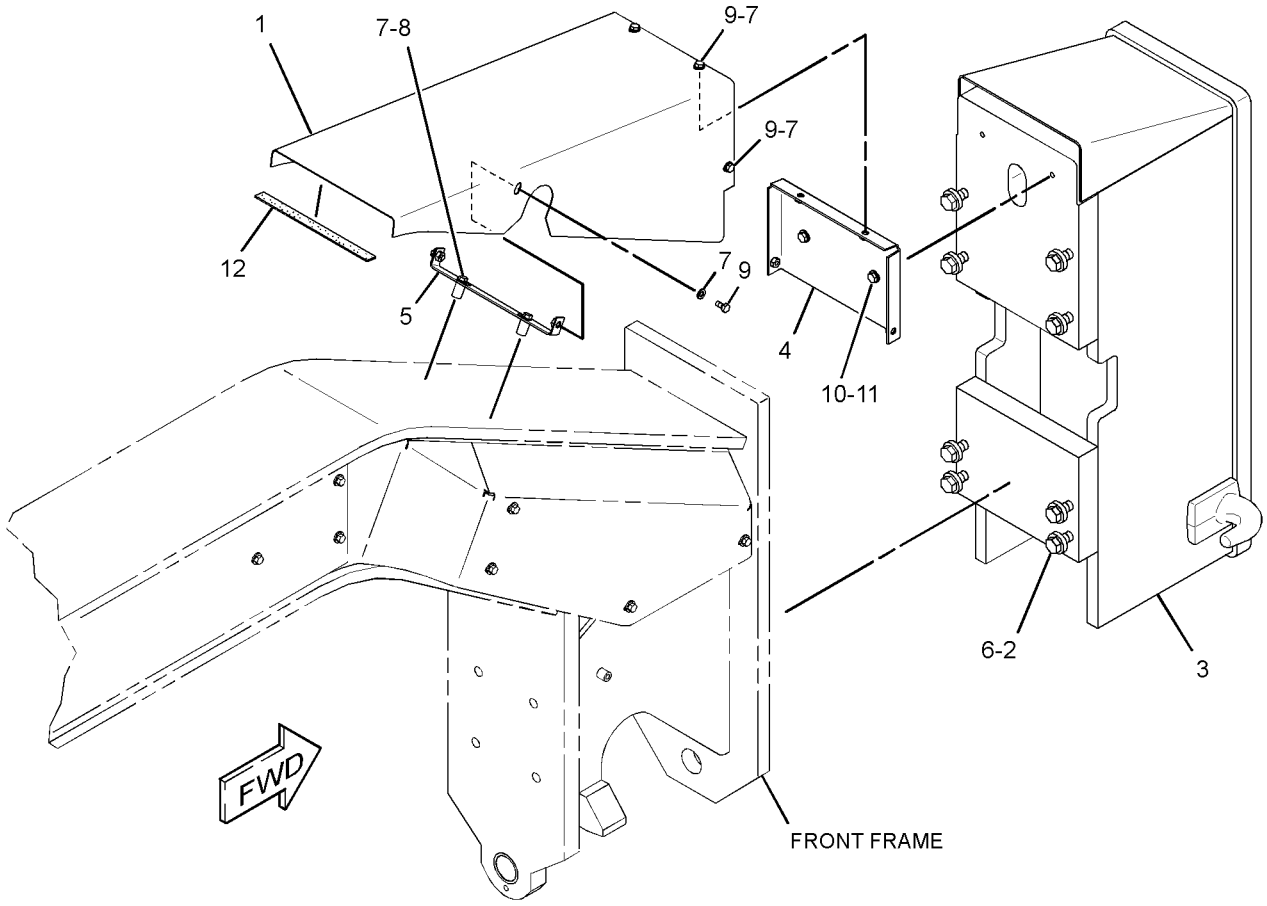

GRAPHIC #1 **<END>** g01696614

WORK TOOLS

130-5667 BAR GP-LINK

S/N: JBP1-UP

AN ATTACHMENT

SMCS-6151 **i00606649**

NOTE	PART NUMBER	QTY	PART NAME 1 2 3 4 5 6 (PRODUCT LEVEL)	SEE PAGE
	8X-5109	1	BAR AS	
	8X-5108	2	BEARING-SLEEVE	
	124-5826	5	CONTROL AR-GOVERNOR	
	9X-8355	1	FILM-IDENTIFICATION (BLADE CENTERSHIFT)	

<END>

WORK TOOLS

107-3398 BIT GP-END

S/N: JBP1-UP

AN ATTACHMENT

SMCS-6804 **i03287221**

NOTE	REF NO	GRAPHIC REF	PART NUMBER	QTY	PART NAME 1 2 3 4 5 6 (PRODUCT LEVEL)	SEE PAGE
	1	1	**6Y-2805**	2	BIT-END	
	2	1	**1J-6762**	10	BOLT-PLOW (3/4-10X3-IN)	
	3	1	**5F-8933**	6	BOLT-PLOW (3/4-10X3.75-IN)	

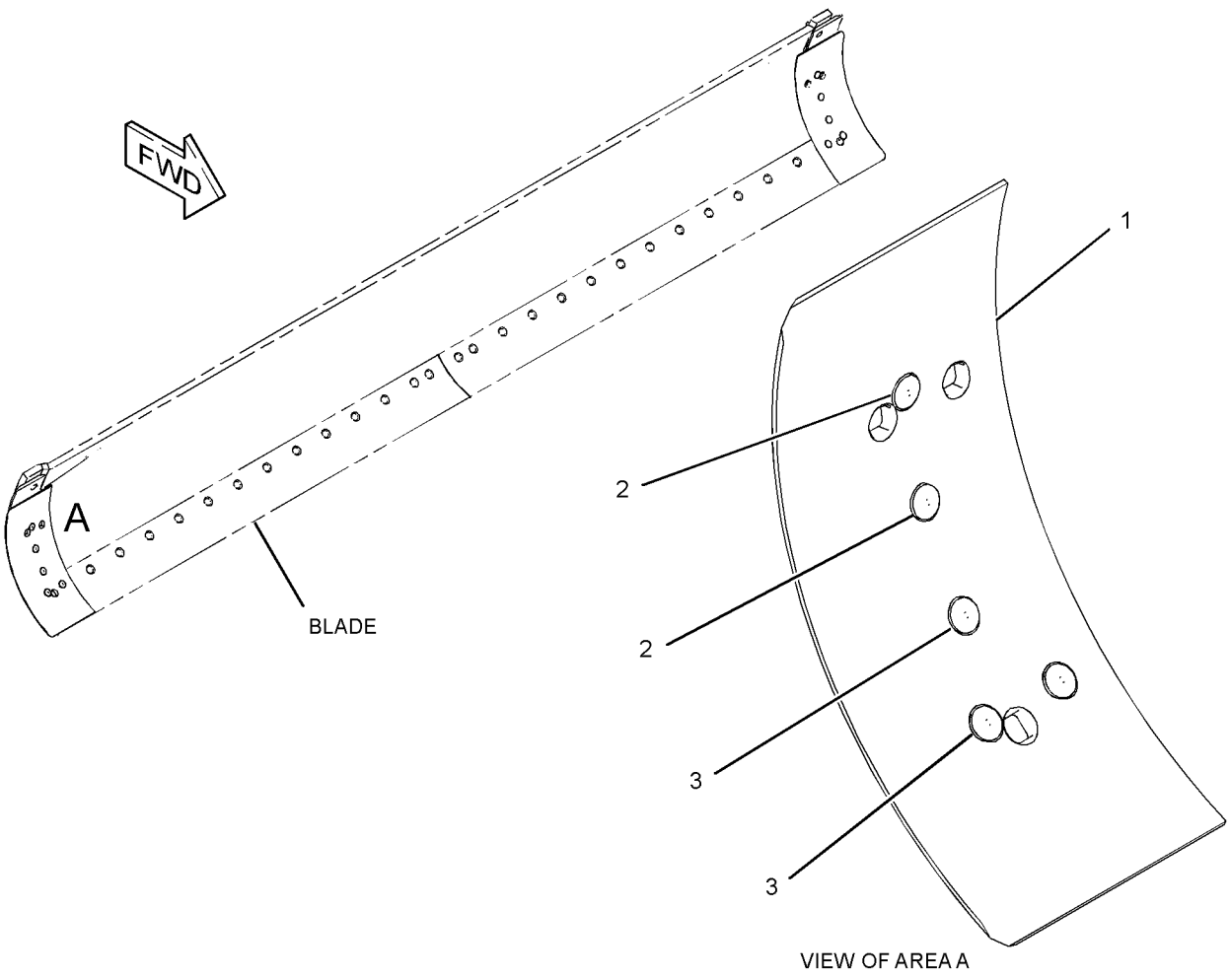

GRAPHIC #1 **<END>** g01682214

124-9779 BLADE & TIP AR-POWER

S/N: JBP1-UP

AN ATTACHMENT

SMCS-6151 **i00134559**

NOTE	PART NUMBER	QTY	PART NAME 1 2 3 4 5 6 (PRODUCT LEVEL)	SEE PAGE
Y	*125-4640*	1	BLADE GP	598
Y	*110-5339*	1	CIRCLE GP	580
Y	*8X-1943*	1	CYLINDER & MTG GP-BLADE TIP	365
Y	*112-7463*	1	CYLINDER & MTG GP-SIDESHIFT	368
Y	*106-4787*	1	LINES GP-HYDRAULIC	393
Y-SEPARATE ILLUSTRATION				

<END>

329-3825 BLADE & TIP AR-POWER

S/N: JBP1-UP

CANNOT BE USED WITH 124-9779—PAGE 595, 329-3827—PAGE 595, 117-3200—PAGE 596

AN ATTACHMENT

SMCS-6151 **i03310488**

NOTE	PART NUMBER	QTY	PART NAME 1 2 3 4 5 6 (PRODUCT LEVEL)	SEE PAGE
Y	*320-9924*	1	BLADE GP	600
Y	*112-7486*	1	CIRCLE GP	584
Y	*8X-1943*	1	CYLINDER & MTG GP-BLADE TIP	365
Y	*112-7463*	1	CYLINDER & MTG GP-SIDESHIFT	368
Y	*106-4787*	1	LINES GP-HYDRAULIC	393
Y-SEPARATE ILLUSTRATION				

<END>

329-3827 BLADE & TIP AR-POWER

S/N: JBP1-UP

CANNOT BE USED WITH 124-9779—PAGE 595, 329-3825—PAGE 595, 117-3200—PAGE 596

AN ATTACHMENT

SMCS-6151 **i03288504**

NOTE	PART NUMBER	QTY	PART NAME 1 2 3 4 5 6 (PRODUCT LEVEL)	SEE PAGE
Y	*320-7431*	1	BLADE GP	599
Y	*112-7486*	1	CIRCLE GP	584
Y	*8X-1943*	1	CYLINDER & MTG GP-BLADE TIP	365
Y	*112-7463*	1	CYLINDER & MTG GP-SIDESHIFT	368
Y	*106-4787*	1	LINES GP-HYDRAULIC (LH)	393
Y-SEPARATE ILLUSTRATION				

<END>

WORK TOOLS

117-3200 BLADE AR

S/N: JBP1-UP

14-FT

AN ATTACHMENT

SMCS-6151 **i00135818**

NOTE	PART NUMBER	QTY	PART NAME 1 2 3 4 5 6 (PRODUCT LEVEL)	SEE PAGE
Y	*125-4640*	1	BLADE GP	598
Y	*124-9653*	1	BRACKET GP-BLADE	601
Y	*112-7463*	1	CYLINDER & MTG GP-SIDESHIFT	368
Y	**8W-7030**	1	GUARD GP-CYLINDER	388
Y	*117-3855*	1	LINES GP-HYDRAULIC	404

Y-SEPARATE ILLUSTRATION

<END>

WORK TOOLS

124-9773 BLADE GP

S/N: JBP1-UP
14-FT
PART OF 274-7941 GENERAL AR

SMCS-6151 **i00134537**

NOTE	REF NO	GRAPHIC REF	PART NUMBER	QTY	PART NAME 1 2 3 4 5 6 (PRODUCT LEVEL)	SEE PAGE
	1	1	**124-9772**	1	MOLDBOARD AS	
	2	1	**8E-5529**	2	BIT-END	
	3	1	**2J-3506**	40	NUT-FULL (3/4-10-THD)	
	4	1	**5J-4773**	40	BOLT-PLOW (3/4-10X2.5-IN)	
	5	1	**7D-1158**	2	EDGE-CUTTING	

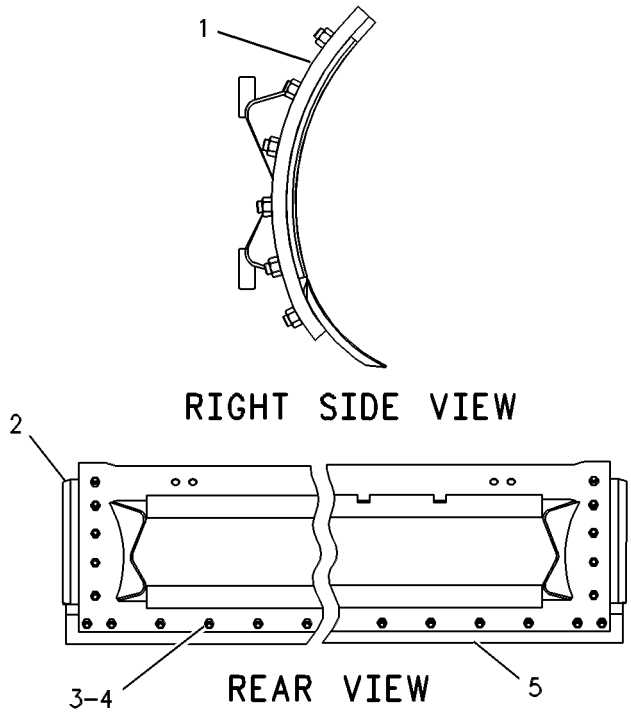

GRAPHIC #1 **<END>** g00109366

WORK TOOLS

125-4640 BLADE GP

S/N: JBP1-UP
14-FT
PART OF 124-9779 BLADE & TIP AR-POWER, 117-3200 BLADE AR
AN ATTACHMENT

SMCS-6151 **i00134580**

NOTE	REF NO	GRAPHIC REF	PART NUMBER	QTY	PART NAME 1 2 3 4 5 6 (PRODUCT LEVEL)	SEE PAGE
	1	1	**8W-7324**	1	MOLDBOARD AS	
		1	**112-1814**	1	RAIL-MOLDBOARD	
	2	1	**8E-5529**	2	BIT-END	
	3	1	**2J-3506**	40	NUT-FULL (3/4-10-THD)	
	4	1	**5J-4773**	40	BOLT-PLOW (3/4-10X2.5-IN)	
	5	1	**7D-1158**	2	EDGE-CUTTING	

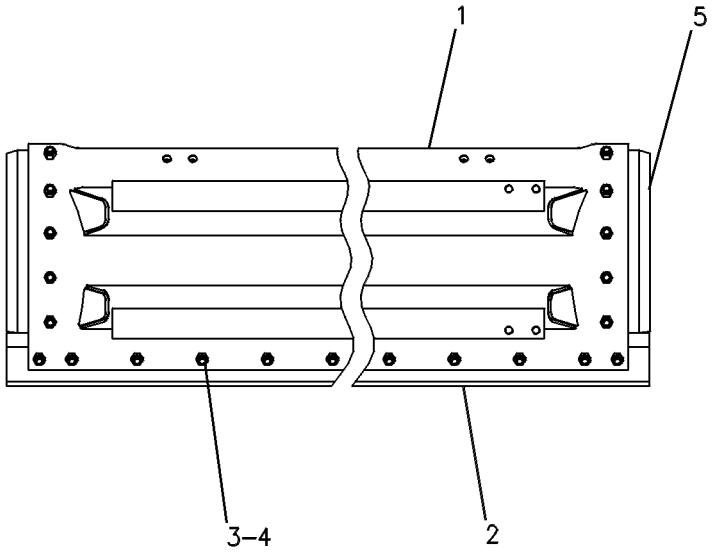

GRAPHIC #1 **<END>** g00108660

WORK TOOLS

320-7431 BLADE GP

S/N: JBP1-UP
14-FT
PART OF 329-3827 BLADE & TIP AR-POWER
AN ATTACHMENT

SMCS-6151 **i03288501**

NOTE	REF NO	GRAPHIC REF	PART NUMBER	QTY	PART NAME 1 2 3 4 5 6 (PRODUCT LEVEL)	SEE PAGE
	1	1	**9J-3658**	2	EDGE-CUTTING	
	2	1	**320-2746**	1	MOLDBOARD AS	
		1	**112-1814**	2	RAIL-MOLDBOARD	
	3	1	**2J-3506**	40	NUT-FULL (3/4-10-THD)	
	4	1	**5J-4773**	40	BOLT-PLOW (3/4-10X2.5-IN)	
	5	1	**8E-5529**	2	BIT-END	

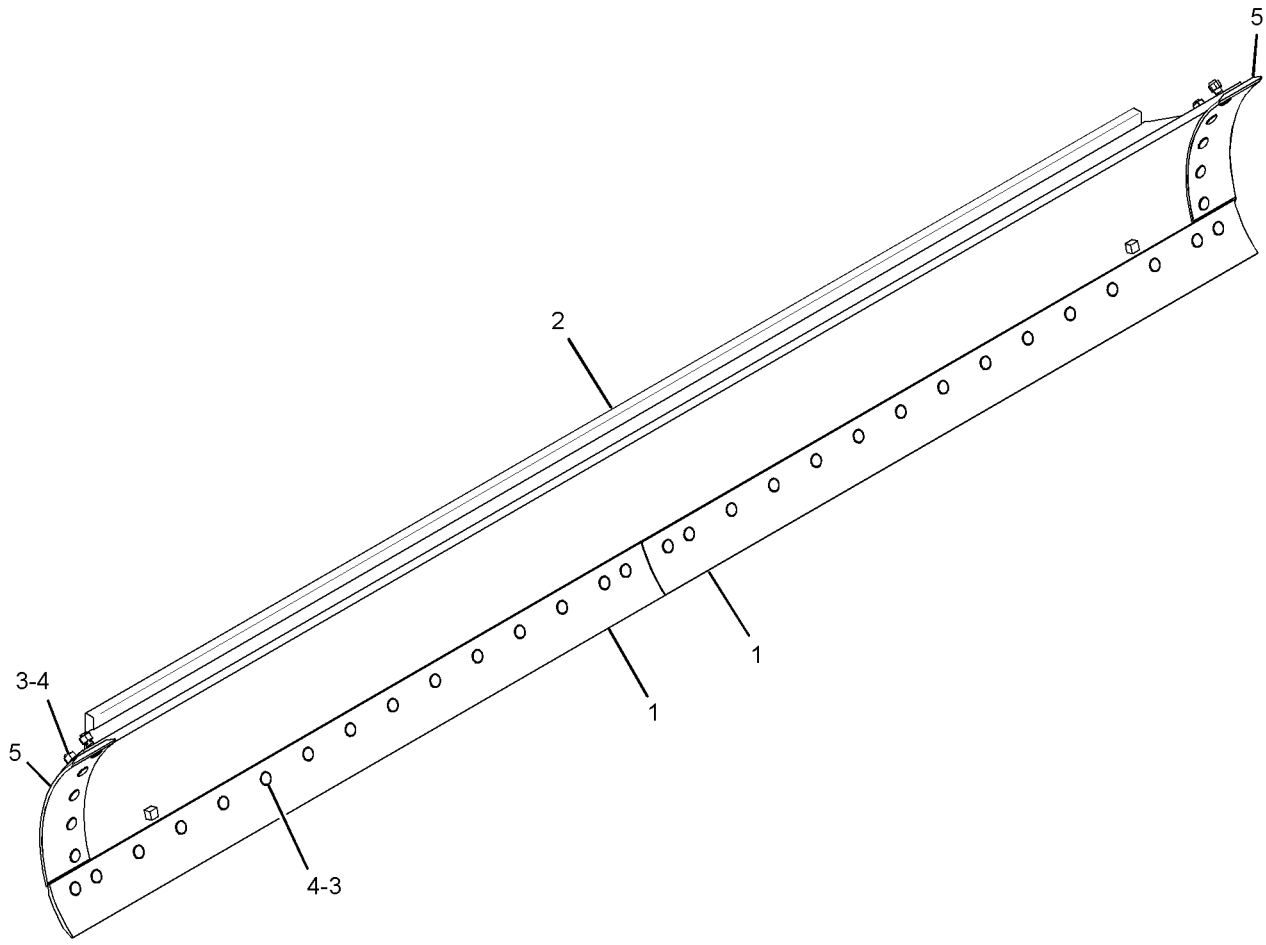

GRAPHIC #1 **<END>** g01698113

WORK TOOLS

320-9924 BLADE GP

S/N: JBP1-UP
12-FT
PART OF 329-3825 BLADE & TIP AR-POWER
AN ATTACHMENT

SMCS-6151 **i03257564**

NOTE	REF NO	GRAPHIC REF	PART NUMBER	QTY	PART NAME 1 2 3 4 5 6 (PRODUCT LEVEL)	SEE PAGE
	1	1	**9J-3657**	2	EDGE-CUTTING	
	2	1	**320-2749**	1	MOLDBOARD AS	
		1	**112-1813**	1	RAIL-MOLDBOARD	
	3	1	**2J-3506**	36	NUT-FULL (3/4-10-THD)	
	4	1	**5J-4773**	36	BOLT-PLOW (3/4-10X2.5-IN)	
	5	1	**8E-5529**	2	BIT-END	

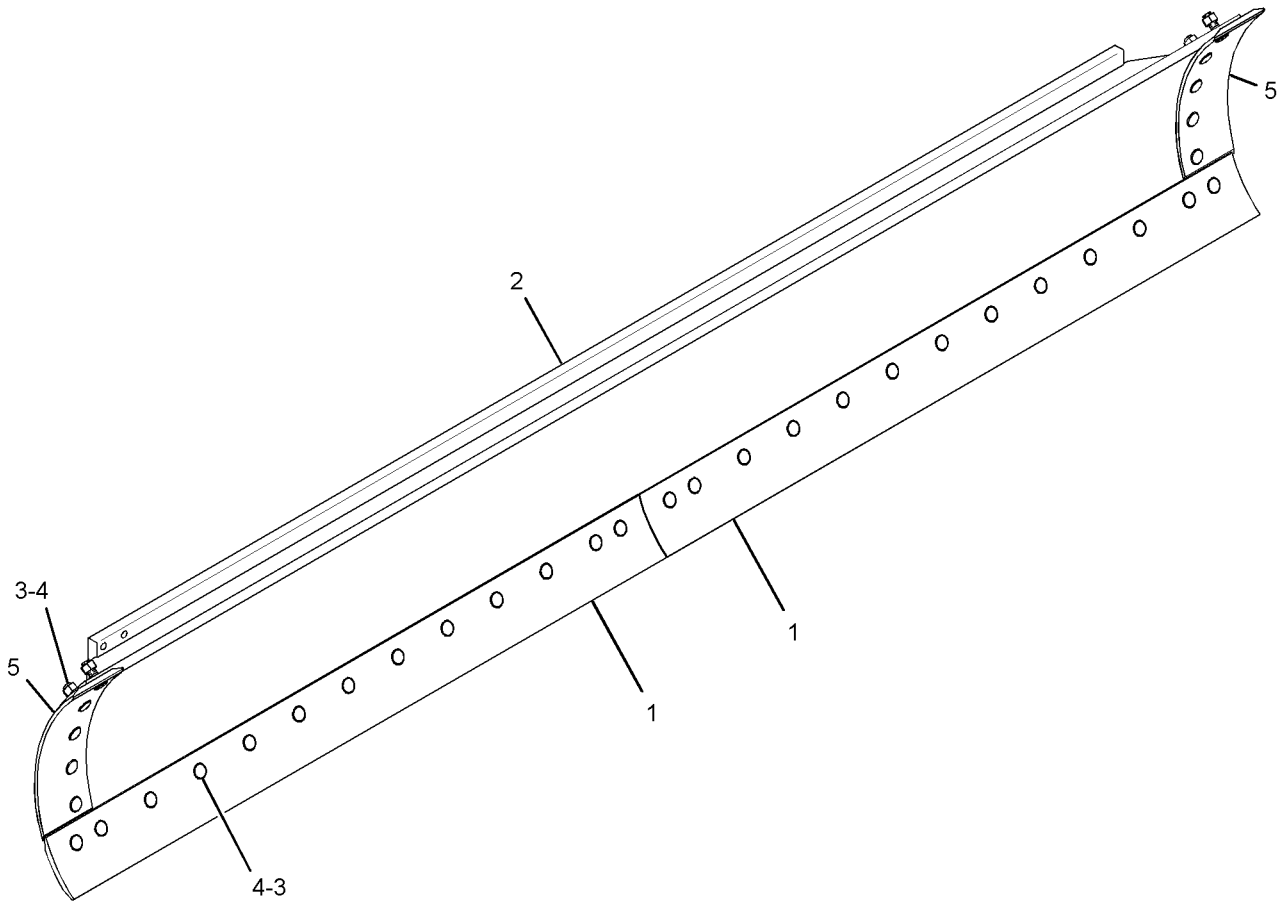

GRAPHIC #1 **<END>** g01698078

124-9653 BRACKET GP-BLADE

S/N: JBP1-UP
PART OF 117-3200 BLADE AR
AN ATTACHMENT

SMCS-6151 **i00135856**

NOTE	REF NO	GRAPHIC REF	PART NUMBER	QTY	PART NAME 1 2 3 4 5 6 (PRODUCT LEVEL)	SEE PAGE
	1	1	**7X-0452**	4	NUT-FULL (1-1/2-6-THD)	
	2	1	**2G-3219**	4	SHIM (0.8-MM THK)	
	3	1	**8W-1753**	1	BRACKET-RAIL	
	4	1	**2K-0419**	4	WASHER (3/4X3.5X0.065-IN THK)	
	5	1	**2G-3221**	4	SHIM (1.6-MM THK)	
	6	1	**5P-8245**	24	WASHER-HARD (13.5X25.5X3-MM THK)	
	7	1	**6H-1717**	24	BOLT (1/2-13X1.125-IN)	
	8	1	**8W-1749**	8	PLATE	
	9	1	**5T-8366**	4	STRIP-WEAR	
	10	1	**112-1271**	1	BAR-SPREADER	
	11	1	**8W-1752**	1	BRACKET-RAIL	

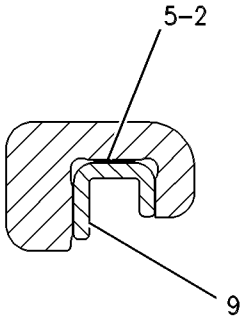

SECTION A

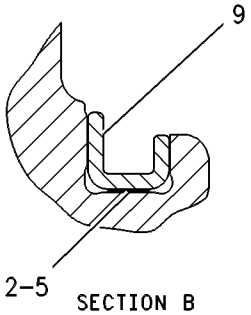

SECTION B

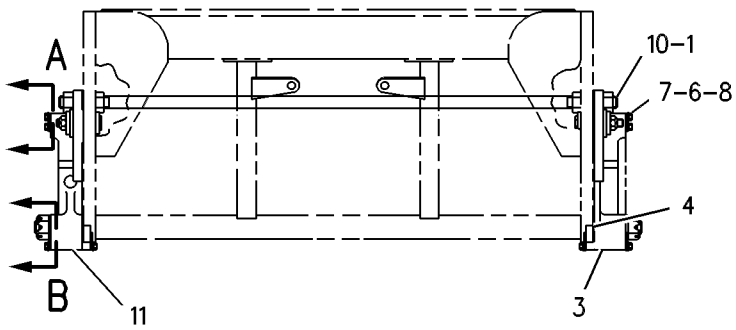

REAR VIEW

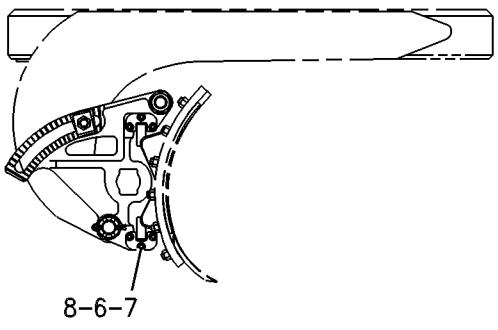

RIGHT SIDE VIEW

GRAPHIC #1 **<END>** g00109374

WORK TOOLS

116-0379 BRACKET GP-SCARIFIER

S/N: JBP1-UP
PART OF 108-1104 SCARIFIER AR
AN ATTACHMENT

SMCS-6162 **i01066613**

NOTE	REF NO	GRAPHIC REF	PART NUMBER	QTY	PART NAME 1 2 3 4 5 6 (PRODUCT LEVEL)	SEE PAGE
	1	1	**8W-0684**	1	BRACKET AS	
	2	1	**8W-0681**	1	PLATE	

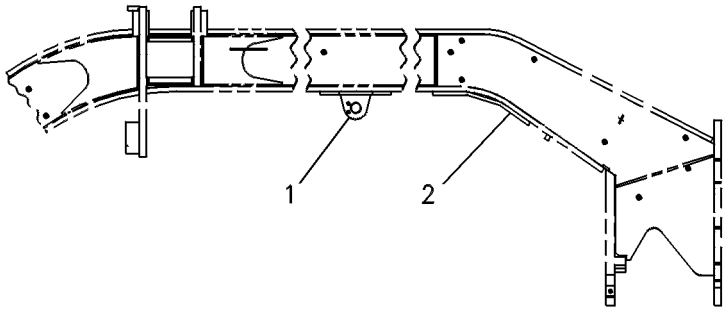

GRAPHIC #1 **<END>** g00108689

WORK TOOLS

282-0506 EDGE GP-CUTTING

S/N: JBP1-UP
14-FT
AN ATTACHMENT

SMCS-6801 **i03258796**

NOTE	REF NO	GRAPHIC REF	PART NUMBER	QTY	PART NAME 1 2 3 4 5 6 (PRODUCT LEVEL)	SEE PAGE
	1	1	**7D-1577**	2	EDGE-CUTTING	

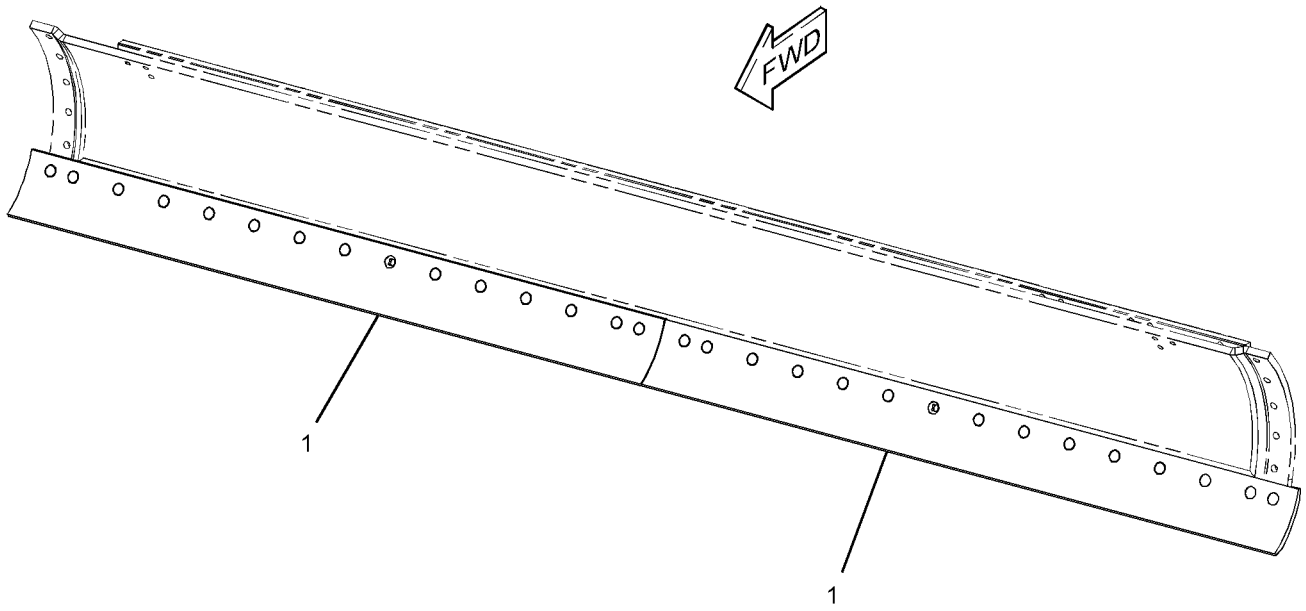

GRAPHIC #1 **<END>** g01667376

WORK TOOLS

110-5326 EXTENSION GP-BLADE—RH

S/N: JBP1-UP
2-FT
AN ATTACHMENT

SMCS-6173 **i01230874**

NOTE	REF NO	GRAPHIC REF	PART NUMBER	QTY	PART NAME 1 2 3 4 5 6 (PRODUCT LEVEL)	SEE PAGE
	1	1	**5J-4773**	6	BOLT-PLOW (3/4-10X2.5-IN)	
	2	1	**2J-3506**	16	NUT-FULL (3/4-10-THD)	
	3	1	**176-5639**	1	PLATE AS	
	4	1	**5F-8933**	10	BOLT-PLOW (3/4-10X3.75-IN)	
	5	1	**110-5336**	1	ANGLE AS	
	6	1	**110-5334**	3	SPACER (3-MM THK)	
	7	1	**3G-2165**	1	EDGE-CUTTING	
	8	1	**133-7523**	1	EXTENSION-RH	
	9	1	**9X-8885**	2	BOLT (3/4-10X2.25-IN)	
	10	1	**2S-0115**	2	WASHER-HARD (20X36.5X5-MM THK)	
B	11	1	**176-5642**	1	SPACER (2-MM THK)	
B	12	1	**176-5643**	2	SPACER (1-MM THK)	

B-USE AS REQUIRED

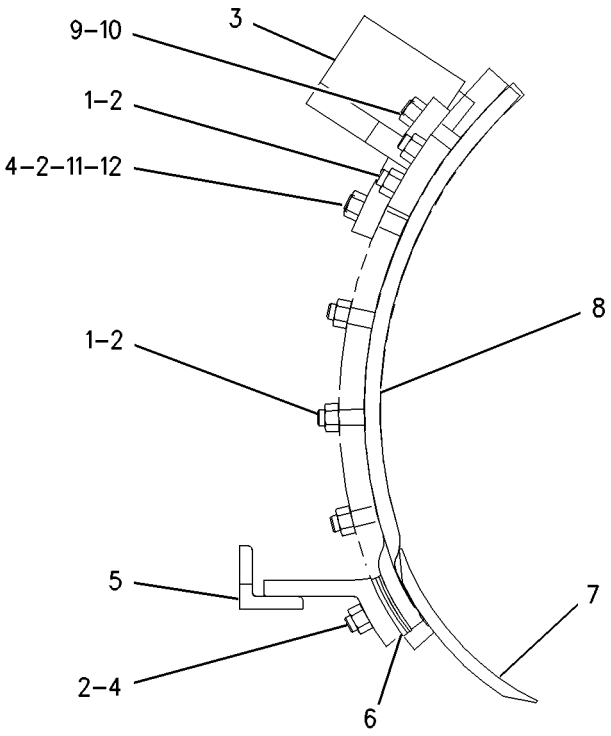

GRAPHIC #1 **<END>** g00638547

WORK TOOLS

110-5327 EXTENSION GP-BLADE–LH

S/N: JBP1-UP
2-FT
AN ATTACHMENT

SMCS-6173 **i01230922**

NOTE	REF NO	GRAPHIC REF	PART NUMBER	QTY	PART NAME 1 2 3 4 5 6 (PRODUCT LEVEL)	SEE PAGE
	1	1	**133-7524**	1	EXTENSION-LH	
	2	1	**3G-2165**	1	EDGE-CUTTING	
	3	1	**176-5638**	1	PLATE AS	
	4	1	**110-5334**	3	SPACER (3-MM THK)	
	5	1	**110-5335**	1	ANGLE AS	
	6	1	**5F-8933**	10	BOLT-PLOW (3/4-10X3.75-IN)	
	7	1	**2J-3506**	16	NUT-FULL (3/4-10-THD)	
	8	1	**5J-4773**	6	BOLT-PLOW (3/4-10X2.5-IN)	
	9	1	**9X-8885**	2	BOLT (3/4-10X2.25-IN)	
	10	1	**2S-0115**	2	WASHER-HARD (20X36.5X5-MM THK)	
B	11	1	**176-5642**	1	SPACER (2-MM THK)	
B	12	1	**176-5643**	2	SPACER (1-MM THK)	

B-USE AS REQUIRED

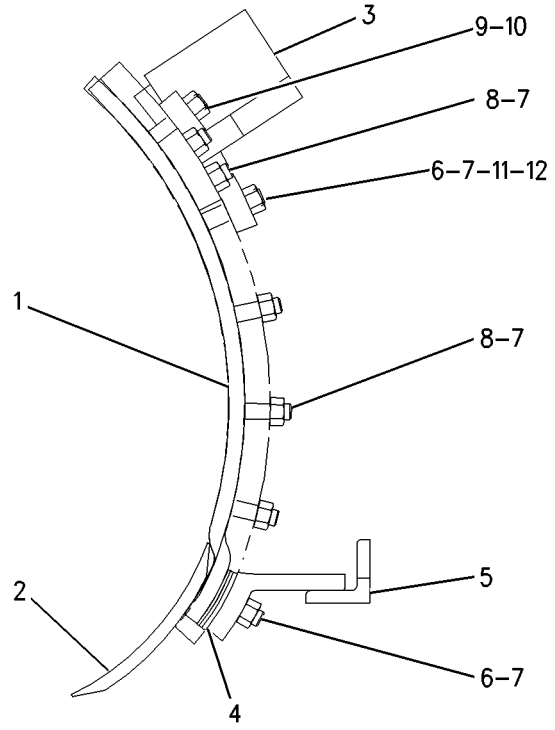

GRAPHIC #1 **<END>** g00638560

WORK TOOLS

125-0290 LIFT GP-BLADE

S/N: JBP1-UP

PART OF 274-7941 GENERAL AR

SMCS-6151 **i00130969**

NOTE	REF NO	GRAPHIC REF	PART NUMBER	QTY	PART NAME 1 2 3 4 5 6 (PRODUCT LEVEL)	SEE PAGE
	1	1	**8T-4223**	4	WASHER-HARD (13.5X25.5X3-MM THK)	
	2	1	**8T-8919**	4	BOLT (1/2-13X1.75-IN)	
	3	1	**7D-8891**	2	RETAINER	
	4	1	**8X-3616**	1	ARM AS (RH)	
	5	1	**7D-8889**	1	BEARING (76.35-MM ID)	
	6	1	**8D-8168**	1	BEARING (63.65-MM ID)	
	7	1	**2J-3506**	6	NUT-FULL (3/4-10-THD)	
		1	**3B-6753**	6	BOLT (3/4-10X4.75-IN)	
	8	1	**5P-8248**	16	WASHER-HARD (20X36.5X3.5-MM THK)	
	9	1	**8X-5106**	1	STUD-BALL	
	10	1	**8D-4332**	2	PIN	
	11	1	**8X-5110**	2	YOKE AS	
					(EACH INCLUDES)	
		1	**2G-8233**	1	RING	
	12	1	**2M-0849**	1	WASHER-HARD (13.5X25.5X5-MM THK)	
		1	**9S-1366**	1	BOLT (1/2-13X2.5-IN)	
	13	1	**125-0289**	1	BAR AS	
	14	1	**8X-5108**	2	BEARING-SLEEVE	
	15	1	**124-5836**	3	BUSHING	
	16	1	**0S-1756**	4	BOLT (3/4-10X4.25-IN)	
	17	1	**9D-3583**	2	LOCK	
	18	1	**7H-2444**	2	SEAL	
	19	1	**7D-8878**	4	WASHER-THRUST	
	20	1	**7D-8877**	2	WASHER-THRUST	
B	21	1	**7D-8879**	8	SHIM (0.127-MM THK)	
B	22	1	**7D-8881**	6	SHIM (0.254-MM THK)	
B	23	1	**7D-8882**	2	SHIM (0.508-MM THK)	
	24	1	**7D-8875**	4	WASHER-THRUST	
	25	1	**5F-0149**	2	SEAL-O-RING	
	26	1	**7D-8883**	2	SEAL	
	27	1	**8X-5107**	1	PIN	
	28	1	**3P-1461**	4	SEAL-LIP TYPE	
	29	1	**7D-8876**	2	WASHER-THRUST	
	30	1	**8X-5111**	2	LOCK	
	31	1	**7D-8884**	2	SEAL	
	32	1	**8X-3615**	1	ARM AS (LH)	
		1	**8D-8168**	1	BEARING (63.65-MM ID)	
		1	**7D-8889**	1	BEARING (76.35-MM ID)	
	33	1	**124-0435**	1	PLATE	
B	34	1	**8D-4336**	2	WASHER-THRUST (3.02X5.75X0.08-MM THK)	
B	35	1	**123-8187**	2	WASHER-THRUST (76.6X146X1-MM THK) (.100 THK)	

B-USE AS REQUIRED

125-0290 **LIFT GP-BLADE** *(contd.)* **i00130969**

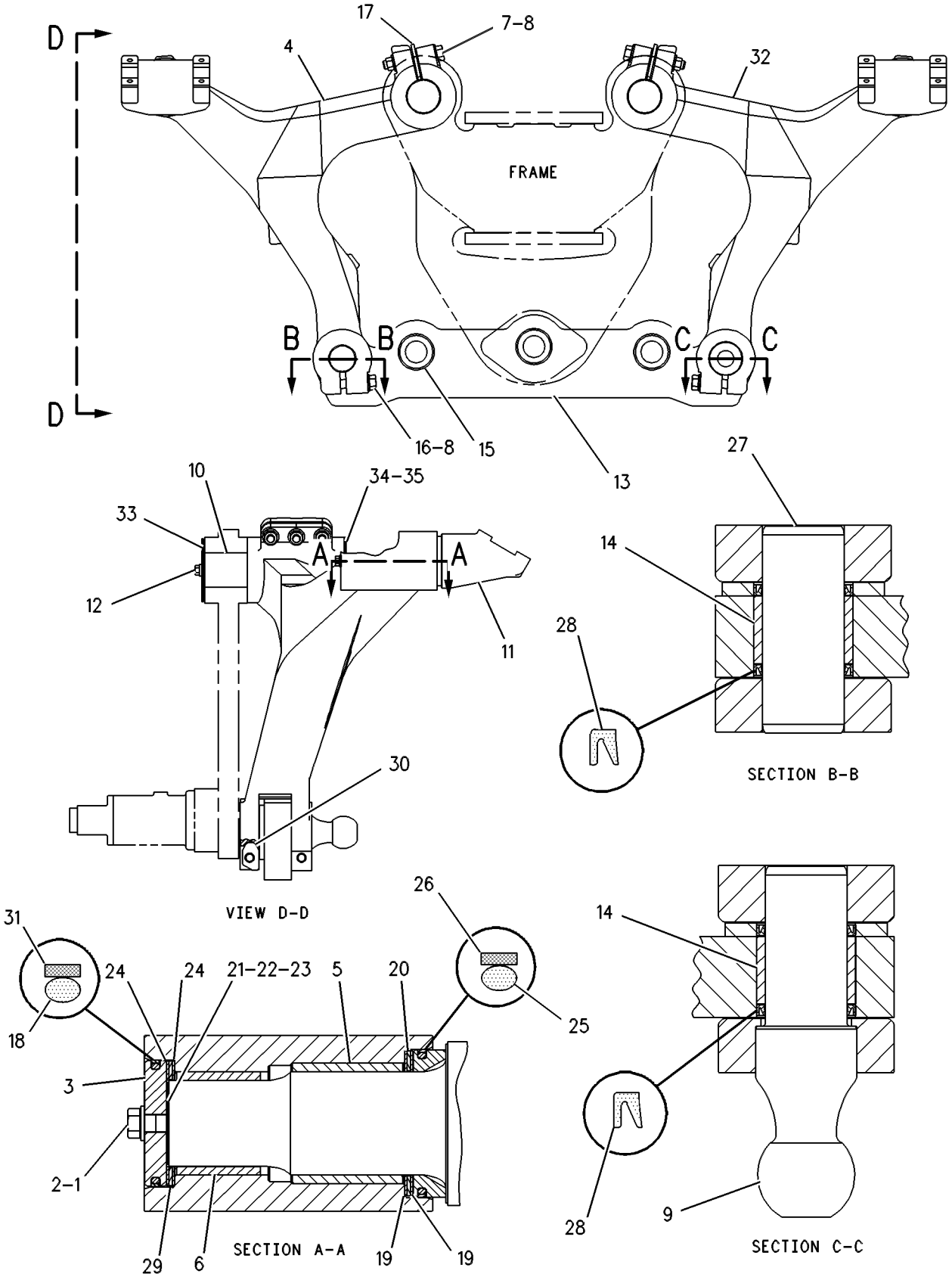

GRAPHIC #1 **<END>** g00109310

WORK TOOLS

289-7597 MOUNTING GP-RIPPER

S/N: JBP1-UP
PART OF 285-4183 RIPPER AR
AN ATTACHMENT

SMCS-6324 **i03265589**

NOTE	REF NO	GRAPHIC REF	PART NUMBER	QTY	PART NAME 1 2 3 4 5 6 (PRODUCT LEVEL)	SEE PAGE
	1	1	**3W-7254**	2	SPACER (47X80X20-MM THK)	
	2	1	**3W-7256**	2	SPACER (47X80X16-MM THK)	
	3	1	**6P-5647**	2	BOSS	
	4	1	**8E-6130**	2	LINK AS	
	5	1	**104-4523**	2	CAM AS	
	6	1	**333-1963**	1	PLATE AS	
	7	1	**109-6776**	2	PIN	
M	8	1	**129-3180**	2	LOCKNUT (M12X1.75-THD)	
	9	1	**267-3506**	10	WASHER-HARD (26X44X4-MM THK)	
M	10	1	**7X-2543**	2	BOLT (M10X1.5X120-MM)	
M	11	1	**8T-0389**	4	LOCKNUT (M10X1.5-THD)	
M	12	1	**8T-5041**	2	BOLT (M12X1.75X120-MM)	
M	13	1	**8T-6685**	2	BOLT (M10X1.5X110-MM)	
	14	1	**9W-7469**	2	PIN	
	15	1	**9W-7470**	2	PIN	
M	16	1	**9X-2615**	10	BOLT (M24X3X60-MM)	

M-METRIC PART

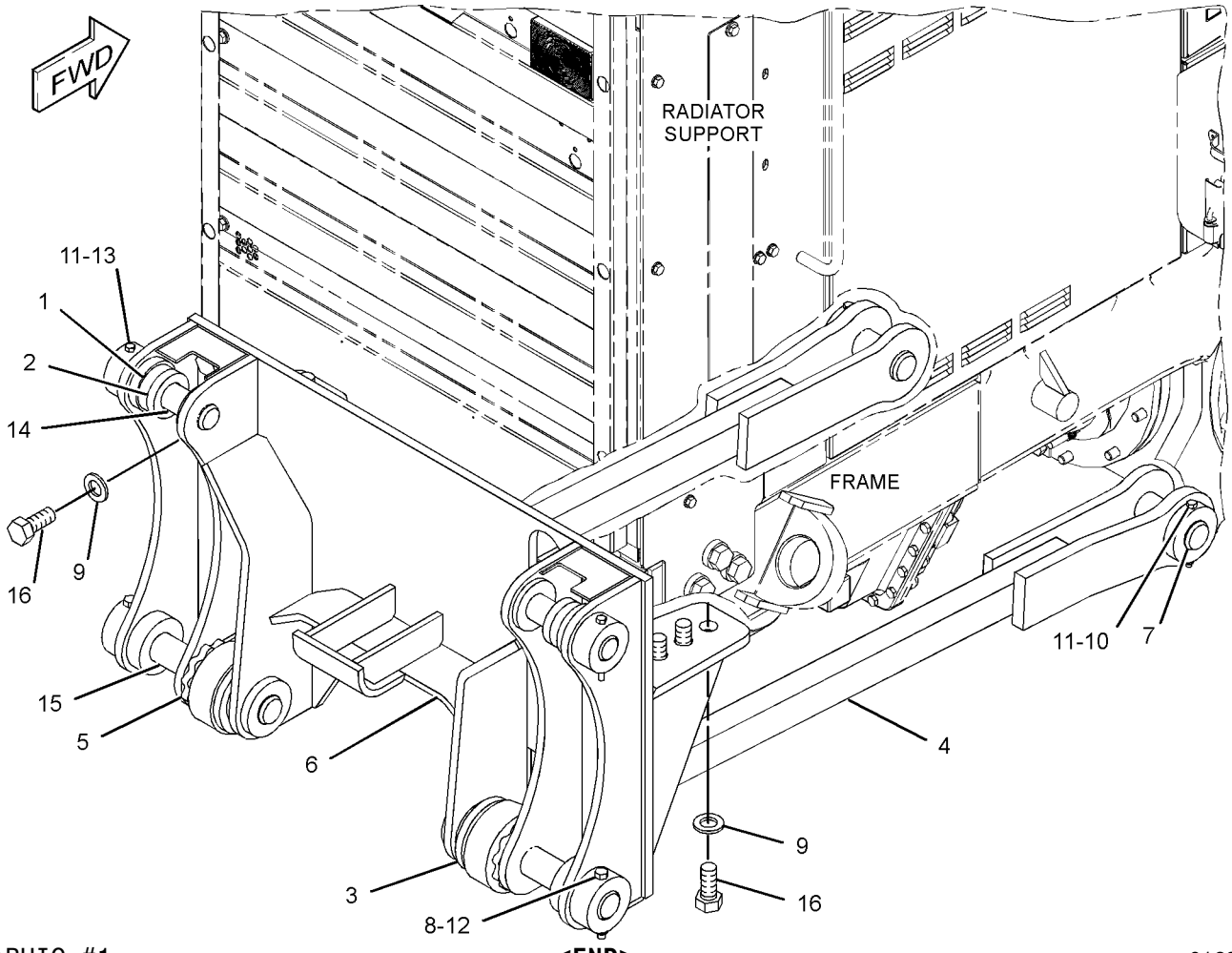

GRAPHIC #1 **<END>** g01698813

WORK TOOLS

285-4183 RIPPER AR

S/N: JBP1-UP

AN ATTACHMENT

SMCS-6325 **i03274161**

NOTE	REF NO	GRAPHIC REF	PART NUMBER	QTY	PART NAME 1 2 3 4 5 6 (PRODUCT LEVEL)	SEE PAGE
Y	1	1	*8J-7024*	1	RIPPER GP	610
Y	2	1	**113-7754**	1	CYLINDER GP-RIPPER	378
Y	3	1	*174-2339*	1	LINES GP-RIPPER	413
Y	4	1	*289-7597*	1	MOUNTING GP-RIPPER	608

Y-SEPARATE ILLUSTRATION

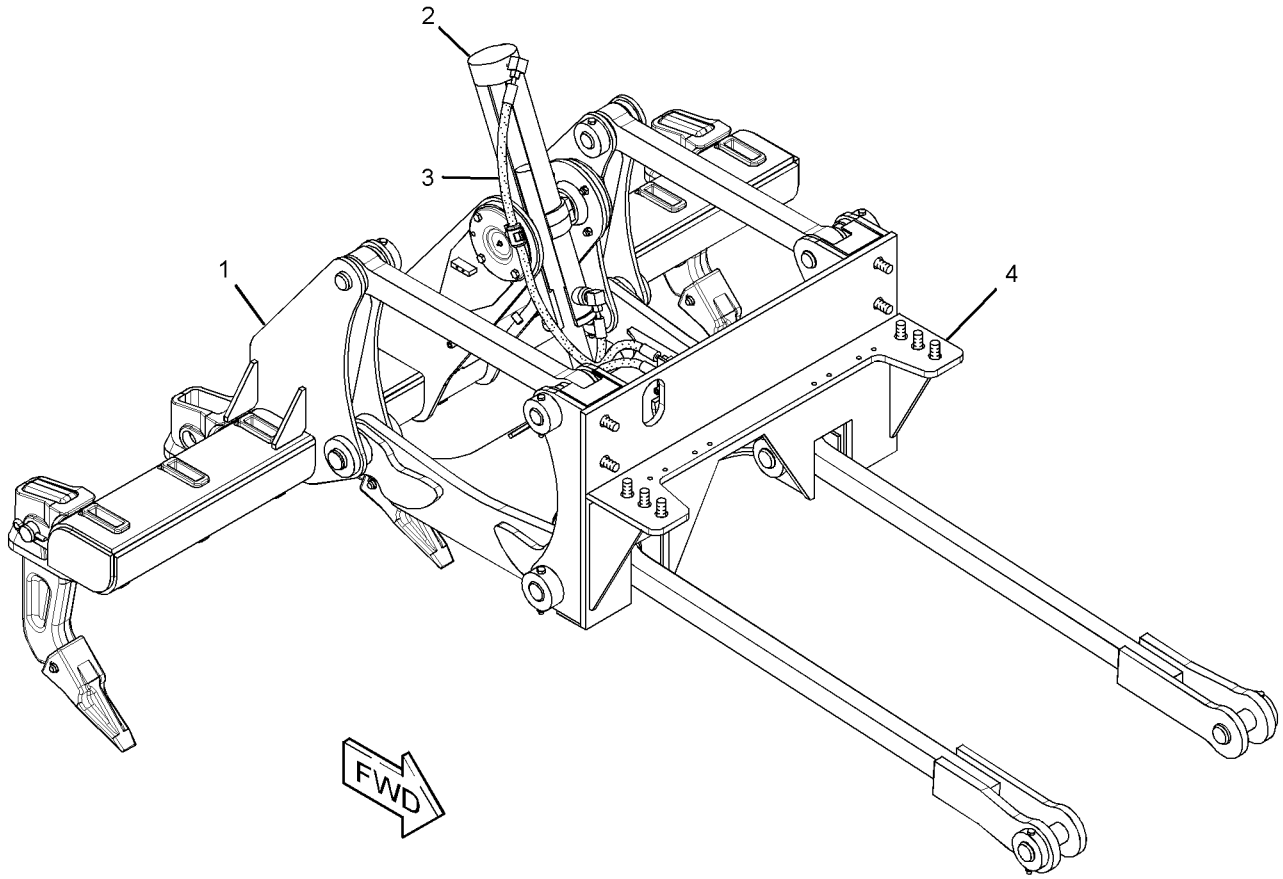

GRAPHIC #1 **<END>** g01683334

WORK TOOLS

8J-7024 RIPPER GP

S/N: JBP1-UP
3-TEETH
PART OF 285-4183 RIPPER AR
AN ATTACHMENT

SMCS-6325 **i03117515**

NOTE	REF NO	GRAPHIC REF	PART NUMBER	QTY	PART NAME 1 2 3 4 5 6 (PRODUCT LEVEL)	SEE PAGE
	2	1	**2K-0120**	1	PIN	
	3	1	**2K-0703**	1	BAR	
	4	1	**3B-8489**	3	FITTING-GREASE (RIPPER CYLINDER BEARING)	
	5	1	**4K-3004**	2	BEARING-TRUNNION SUPPLEMENTARY	
	6	1	**4K-3150**	2	PIN	
	7	1	**190-5386**	2	FILM-REFLECTOR (ROUND RED REFLECTIVE)	
Y	8	1	*8J-1434*	3	TOOTH GP-RIPPER	617
	9	1	**9J-0096**	2	LINK AS-UPPER	
					(EACH INCLUDES)	
	9A	1	**3G-2581**	2	BEARING	
	10	1	**9W-3155**	1	CARRIAGE AS	
	11	1	**187-0953**	1	LINK AS-LOWER	
	11A	1	**3G-2579**	4	BEARING	
	12	1	**1K-6872**	10	LOCKNUT (1/2-13-THD)	
	13	1	**2D-0626**	8	SEAL	
	14	1	**2K-4973**	2	LOCKNUT (3/8-16-THD)	
	15	1	**5P-2228**	2	BOLT (1/2-13X1-IN)	
	16	1	**5P-2424**	8	BOLT (1/2-13X2.25-IN)	
	17	1	**7K-9203**	8	SEAL-LIP TYPE	
	18	1	**7X-0333**	2	BOLT (1/2-13X4.75-IN)	
	19	1	**8J-7008**	2	PIN	
	20	1	**8T-9378**	2	BOLT (3/8-16X4-IN)	

Y-SEPARATE ILLUSTRATION

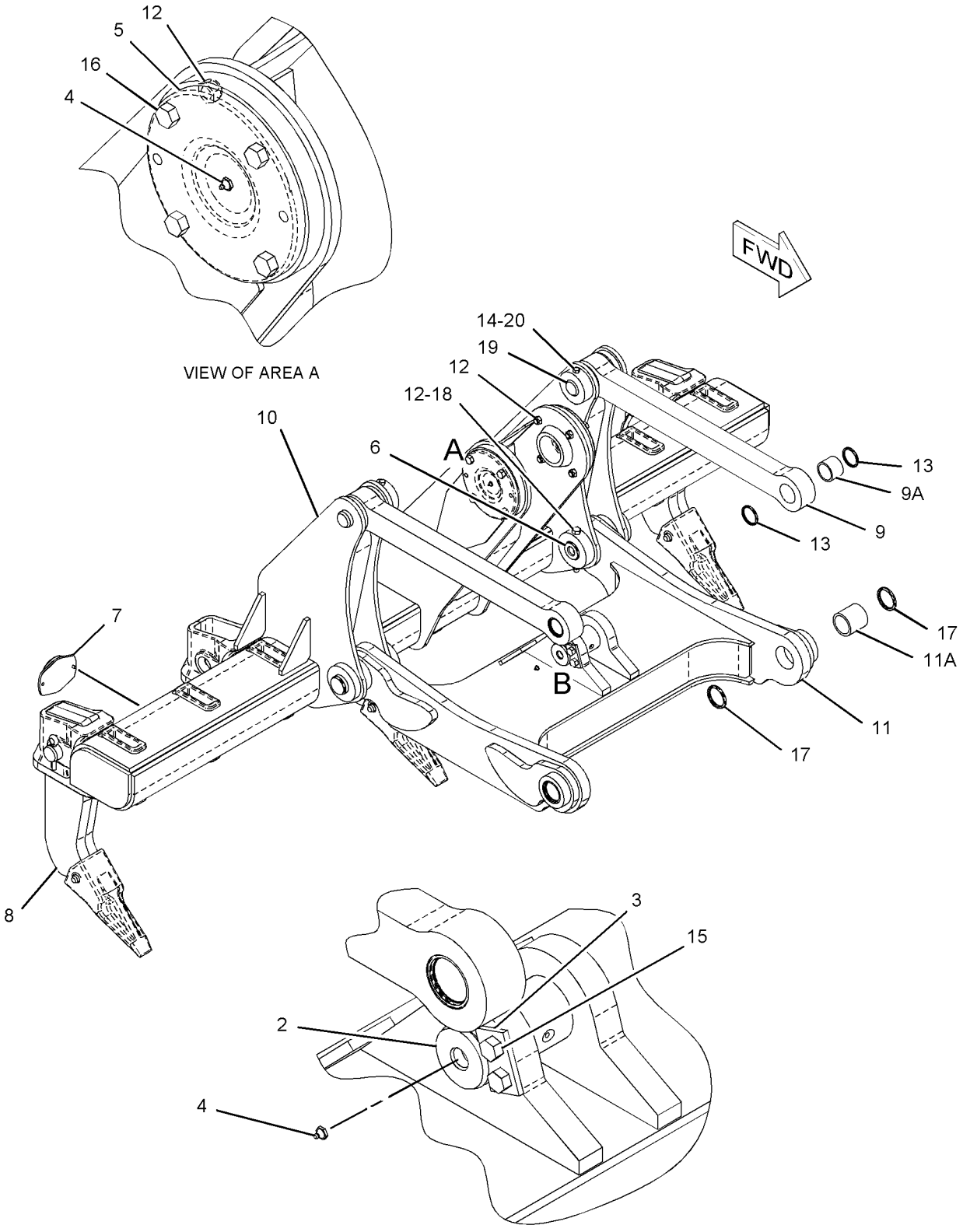

GRAPHIC #1

<END>

g01068995

WORK TOOLS

108-1104 SCARIFIER AR—VEE TYPE

S/N: JBP1-UP

AN ATTACHMENT

SMCS-6162, 6325, 6811 **i02592949**

NOTE	PART NUMBER	QTY	PART NAME 1 2 3 4 5 6 (PRODUCT LEVEL)	SEE PAGE
Y	*116-0379*	1	BRACKET GP-SCARIFIER	602
Y	*8W-2913*	1	CYLINDER & MTG GP-SCARIFIER	367
Y	*8X-6070*	1	LINES GP-HYDRAULIC (SCARIFIER)	391
Y	*8X-6080*	1	SCARIFIER GP (VEE TYPE)	613

Y-SEPARATE ILLUSTRATION

<END>

WORK TOOLS

8X-6080 SCARIFIER GP

S/N: JBP1-UP
PART OF 108-1104 SCARIFIER AR
AN ATTACHMENT

SMCS-6162, 6325, 6811 **i03291680**

NOTE	REF NO	GRAPHIC REF	PART NUMBER	QTY	PART NAME 1 2 3 4 5 6 (PRODUCT LEVEL)	SEE PAGE
	1	1	**1A-0224**	2	BOLT (7/8-14X3.5-IN)	
	2	1	**1B-4208**	2	NUT-FULL (7/8-14-THD)	
	3	1	**2G-4332**	1	BLOCK AS-SCARIFIER	
		1	**7D-8825**	11	SPACER	
		1	**7D-8826**	11	SPACER	
	4	1	**2H-3746**	4	BOLT (1-14X5-IN)	
	5	1	**2K-7471**	4	LOCKNUT (1-14-THD)	
	6	2	**3B-8489**	4	FITTING-GREASE	
	7	1	**3D-4904**	4	LOCKNUT (1-1/8-12-THD)	
	8	2	**4D-6086**	2	KEY	
	9	1	**5B-0577**	2	COLLAR	
	10	1	**5D-8159**	2	PIN AS	
	11	1	**5K-1458**	11	GROMMET	
	12	1	**5K-1459**	11	LOCK PIN	
	13	1	**6B-3260**	1	TOOL	
	14	2	**6F-6992**	4	CAP-BALL SOCKET	
	15	2	**6Y-5230**	11	TOOTH-SCARIFIER	
	16	1	**7D-2196**	2	SLEEVE AS-LINK	
					(EACH INCLUDES)	
		1	**7D-2136**	1	SOCKET-BALL	
B	17	2	**7F-1327**	32	SHIM (0.03-IN THK)	
	18	2	**8D-1268**	2	ARM AS-LIFT	
					(EACH INCLUDES)	
		2	**7D-8245**	1	STUD-BALL	
	19	1	**8H-4040**	4	BOLT (1-1/8-12X4.5-IN)	
	20	1	**8W-0663**	2	BRACKET AS	
					(EACH INCLUDES)	
		1	**3B-8489**	1	FITTING-GREASE	
		1	**107-8374**	2	BEARING	
	21	1	**8X-6075**	1	BOLSTER AS	
	22	1	**9D-5516**	2	LINK AS-LIFT	
					(EACH INCLUDES)	
		1	**7D-2135**	1	SOCKET-BALL	
	23	1	**107-8375**	1	SHAFT AS	
	24	1	**118-7880**	1	DRAWBAR AS	
	24A	1	**8W-5597**	1	STUD-BALL	
	24B	1	**2G-7728**	2	COLLAR	
	25	1	**118-7881**	1	DRAWBAR AS	
	25A	1	**8W-5597**	1	STUD-BALL	
	25B	1	**2G-7728**	2	COLLAR	
	26	2	**195-7218**	11	SHANK	
B	27	1	**198-9811**	4	SPACER (83X145X3-MM THK)	
B	28	1	**198-9812**	2	SPACER (83X145X2-MM THK)	
	29	2	**1A-8063**	8	BOLT (3/4-10X2.5-IN)	
	30	1	**1D-4612**	4	BOLT (3/4-10X4-IN)	
	31	2	**1F-7958**	2	NUT-FULL (1/2-13-THD)	
	32	1	**330-6877**	1	SHAFT	
	33	1	**2J-3506**	4	NUT-FULL (3/4-10-THD)	
	34	1	**3S-1349**	4	WASHER-HARD (31X52.5X6-MM THK)	
	35	1	**5D-8161**	2	PIN	
	36	2	**5P-8245**	2	WASHER-HARD (13.5X25.5X3-MM THK)	
	37	2	**5P-8248**	8	WASHER-HARD (20X36.5X3.5-MM THK)	
	38	1	**5P-8250**	8	WASHER (28X49X5-MM THK)	
	39	2	**6K-0545**	4	LOCKNUT (7/8X19-THD)	
	40	2	**7X-0390**	4	BOLT (7/8-9X5-IN)	

8X-6080 **SCARIFIER GP** *(contd.)* **i03291680**

NOTE	REF NO	GRAPHIC REF	PART NUMBER	QTY	PART NAME 1 2 3 4 5 6 (PRODUCT LEVEL)	SEE PAGE
	41	2	**8C-6913**	4	WASHER-HARD (24X41.5X4-MM THK)	
	42	1	**8X-3663**	8	WASHER (20X45X12-MM THK)	
	43	1	**9X-8875**	2	BOLT (1/2-13X3.5-IN)	
B-USE AS REQUIRED						

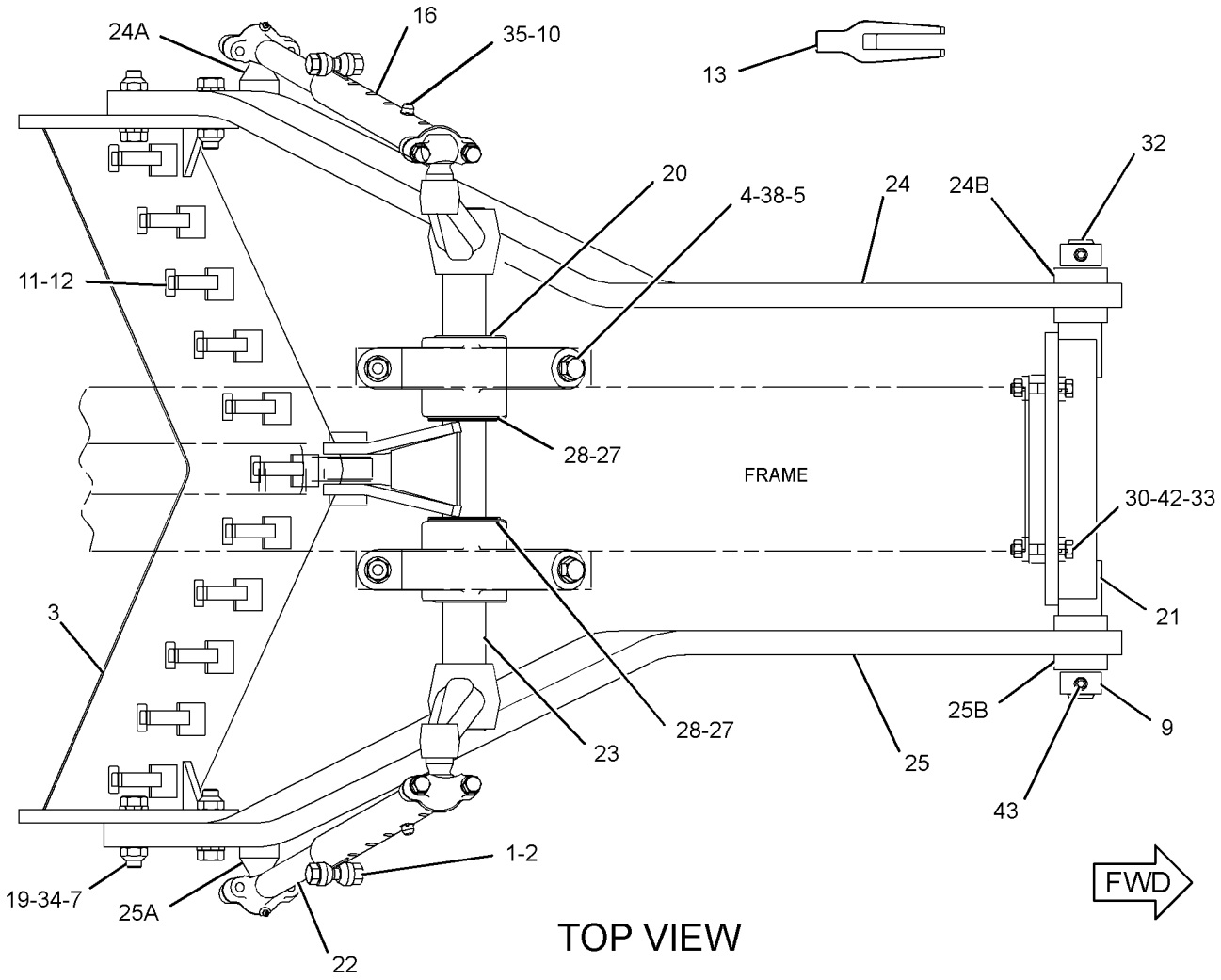

GRAPHIC #1 g01403760

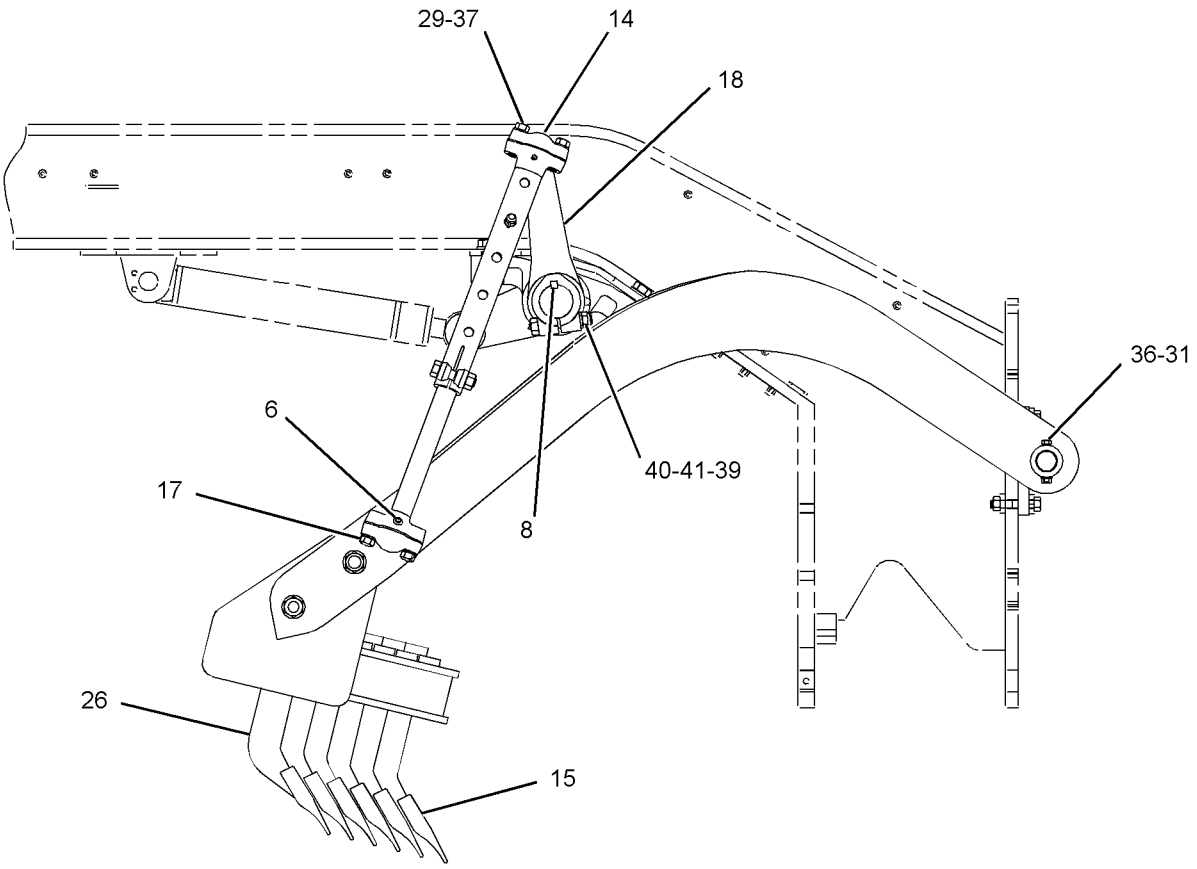

RIGHT SIDE VIEW

GRAPHIC #2 **<END>** g01403762

8J-1434 TOOTH GP-RIPPER

S/N: JBP1-UP
PART OF 8J-7024 RIPPER GP
AN ATTACHMENT

SMCS-6808 **i02761493**

NOTE	REF NO	GRAPHIC REF	PART NUMBER	QTY	PART NAME 1 2 3 4 5 6 (PRODUCT LEVEL)	SEE PAGE
	1	1	**3B-5325**	2	PIN-COTTER	
	2	1	**2K-6413**	1	PIN	
	3	1	**9J-6586**	1	SHANK	
	4	1	**136-8308**	1	PIN	
	5	1	**6Y-0309**	1	TIP-RIPPER (PENETRATION)	
	6	1	**114-0359**	1	RETAINER AS	

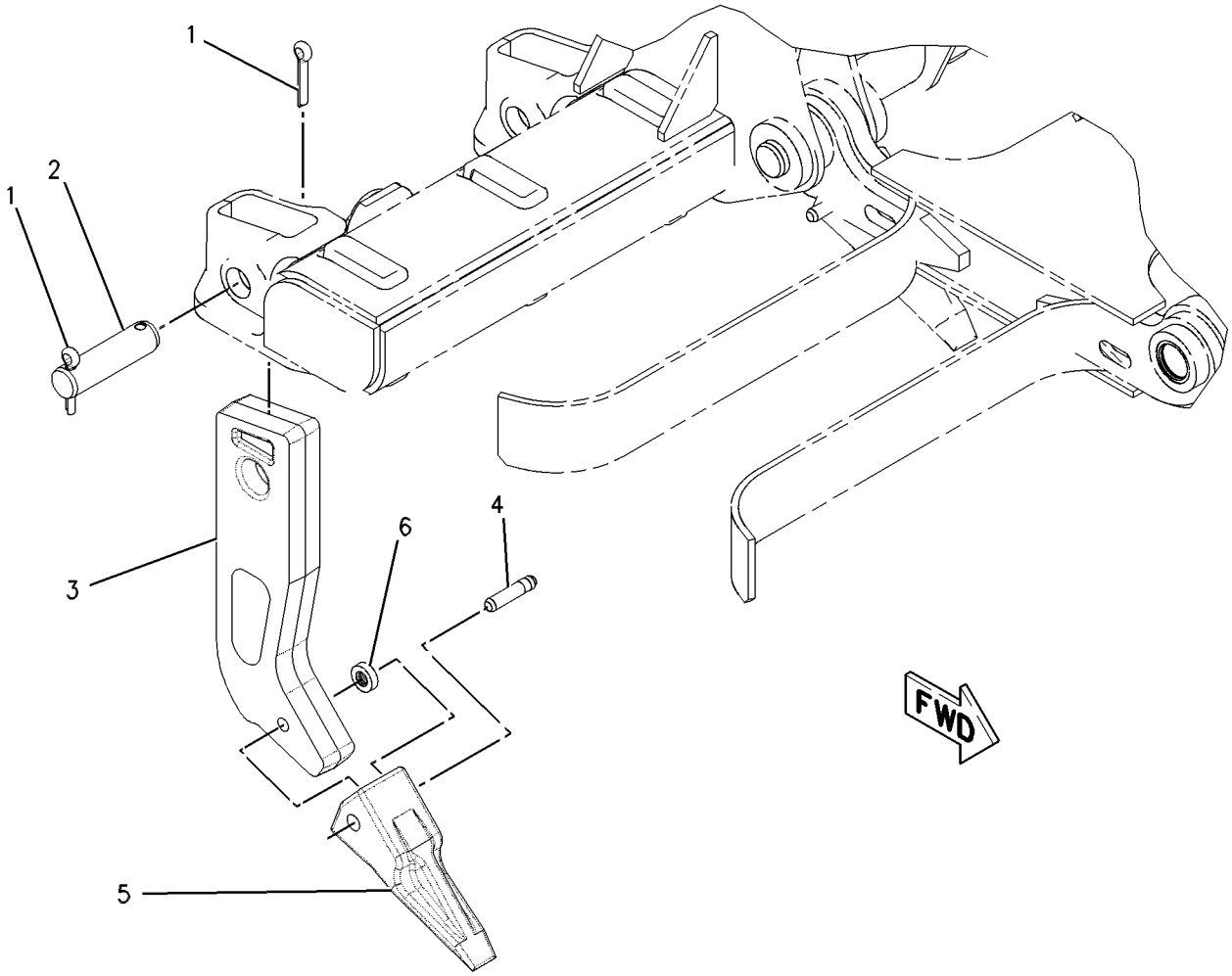

GRAPHIC #1 **<END>** g00632727

WORK TOOLS

4K-3330 TOOTH GP-SCARIFIER

S/N: JBP1-UP
9 TEETH
AN ATTACHMENT

SMCS-6807 **i01723061**

NOTE	REF NO	GRAPHIC REF	PART NUMBER	QTY	PART NAME 1 2 3 4 5 6 (PRODUCT LEVEL)	SEE PAGE
	1	1	**5K-1459**	9	LOCK PIN	
	2	1	**5K-1458**	9	GROMMET	
	3	1	**195-7218**	9	SHANK	
	4	1	**6Y-5230**	9	TOOTH-SCARIFIER	
F			**6B-3260**	1	TOOL	

F-NOT SHOWN

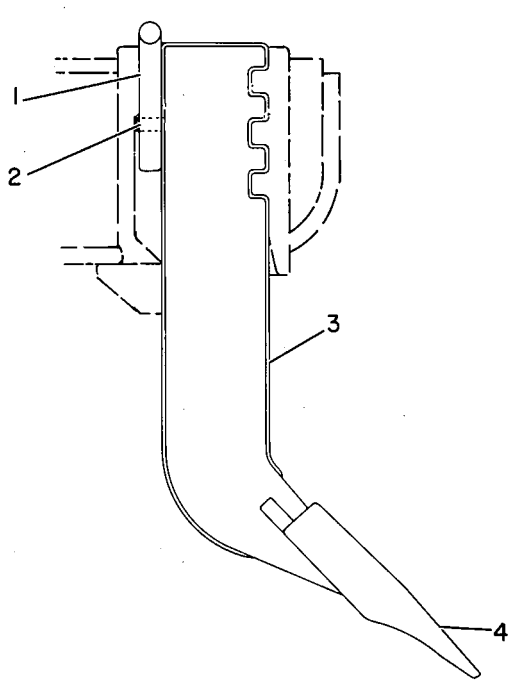

GRAPHIC #1 **<END>** g00108148

171-7185 ACCESSORY GP-CAB–LOW PROFILE

S/N: JBP1-UP
12-VOLT
PART OF 286-4329 CONVERTER AR-ELECTRICAL
AN ATTACHMENT

SMCS-1408, 1421 **i01683341**

NOTE	REF NO	GRAPHIC REF	PART NUMBER	QTY	PART NAME 1 2 3 4 5 6 (PRODUCT LEVEL)	SEE PAGE
	1	1	**117-2311**	1	RECEPTACLE AS-POWER (12-VOLT)	
	2	1	**138-7065**	1	PLATE	
	3	1	**169-3264**	1	HARNESS AS-CAB	
		1	**102-8802**	1	KIT-RECEPTACLE (2-PIN) (12V POWER PORT)	
M	4	1	**129-3178**	2	LOCKNUT (M6X1-THD)	
	5	1	**6P-0205**	2	SPACER (0.269X0.405X0.656-IN THK)	
	6	1	**9X-8256**	2	WASHER (6.6X12X2-MM THK)	

M-METRIC PART

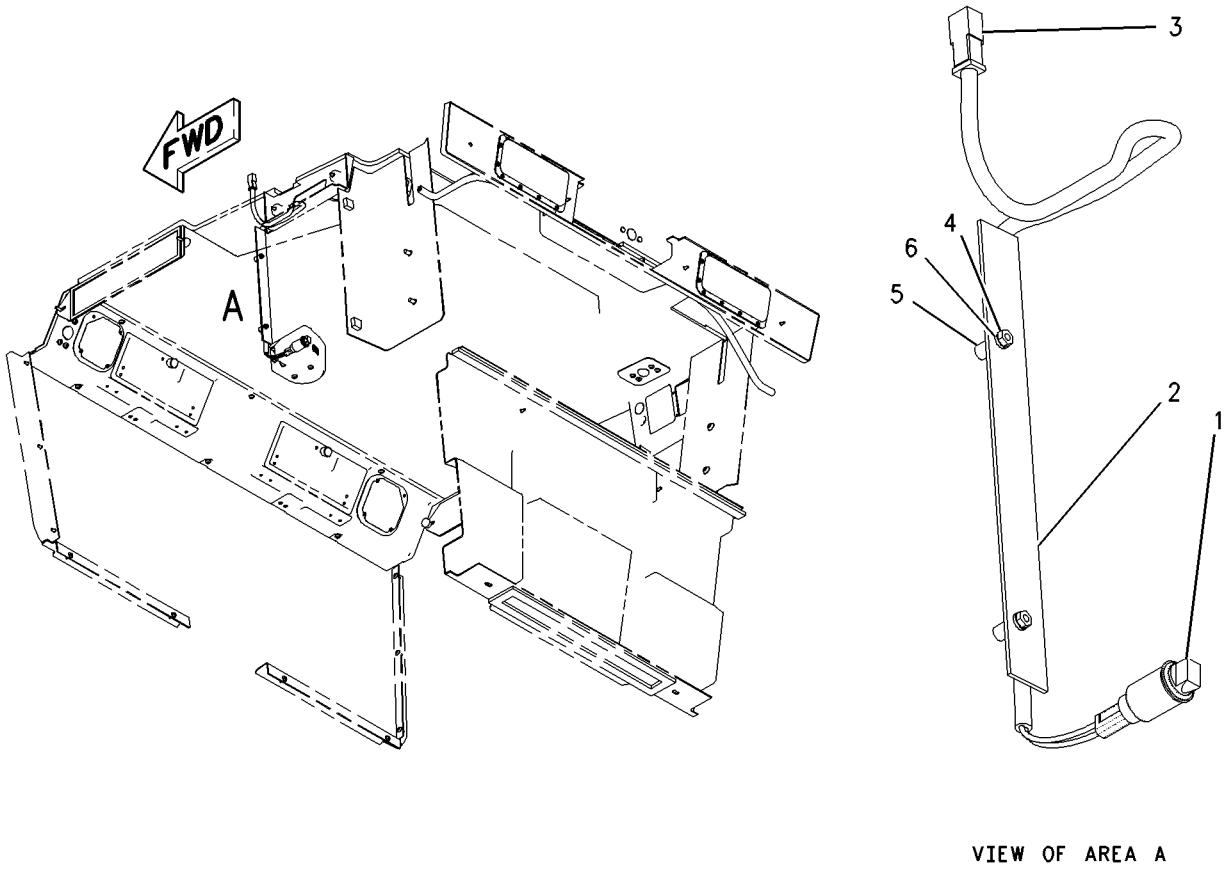

GRAPHIC #1 **<END>** g00808417

OPERATOR STATION

171-7186 ACCESSORY GP-CAB—HIGH PROFILE

S/N: JBP1-UP
12-VOLT
PART OF 286-4328 CONVERTER AR-ELECTRICAL
AN ATTACHMENT

SMCS-1408, 1421 **i01689402**

NOTE	REF NO	GRAPHIC REF	PART NUMBER	QTY	PART NAME 1 2 3 4 5 6 (PRODUCT LEVEL)	SEE PAGE
	1	1	**117-2311**	1	RECEPTACLE AS-POWER (12-VOLT)	
	2	1	**169-3264**	1	HARNESS AS-CAB	
		1	**102-8802**	1	KIT-RECEPTACLE (2-PIN) (12V POWER PORT)	
					(INCLUDES RECEPTACLE AS & WEDGE)	
M	3	1	**129-3178**	2	LOCKNUT (M6X1-THD)	
	4	1	**139-1153**	1	PLATE	
	5	1	**6P-0205**	2	SPACER (0.269X0.405X0.656-IN THK)	
	6	1	**9X-8256**	2	WASHER (6.6X12X2-MM THK)	

M-METRIC PART

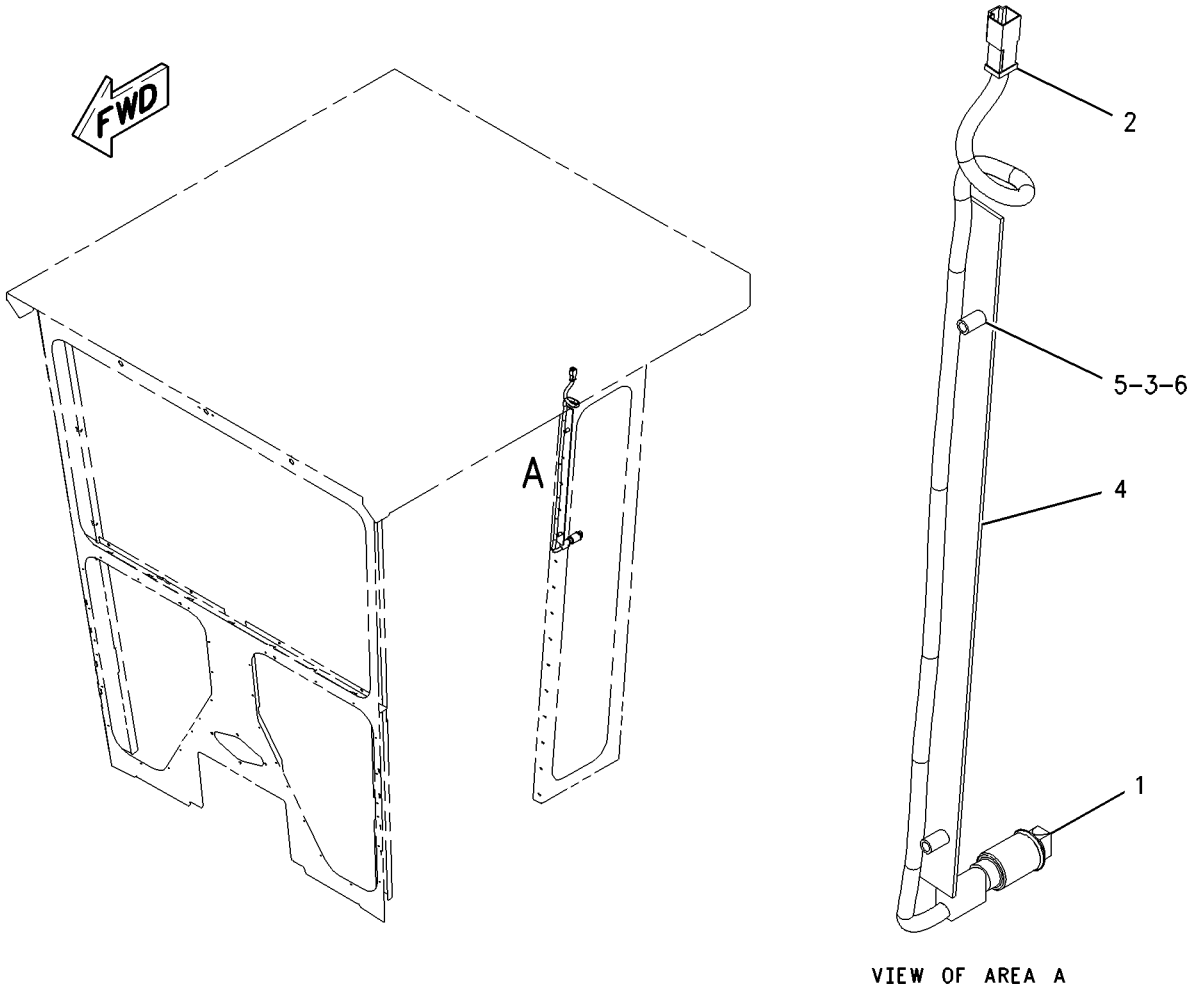

VIEW OF AREA A

GRAPHIC #1 **<END>** g00890902

OPERATOR STATION

116-2779 ADJUSTER GP-SEAT

S/N: JBP1-UP

PART OF 8Y-6851, 8Y-6852 SEAT GP-STATIC

AN ATTACHMENT

SMCS-7321 **i02847571**

NOTE	REF NO	GRAPHIC REF	PART NUMBER	QTY	PART NAME 1 2 3 4 5 6 (PRODUCT LEVEL)	SEE PAGE
	1	1	**9C-5347**	4	BOLT	
	2	1	**9V-7943**	2	SPRING	
	3	1	**116-2327**	1	SUPPORT AS	
	4	1	**9C-2177**	1	CAP	
	5	1	**6W-0590**	1	LEVER (SEAT ADJUST)	
	6	1	**3J-5696**	1	PIPE	
	7	1	**4V-7890**	1	SPRING	
	8	1	**6W-0111**	2	LINK	
	9	1	**2L-5893**	1	PIN-SPRING	
	10	1	**4V-7891**	1	LATCH AS	
	11	1	**5B-6172**	8	WASHER (9.7X19X0.8-MM THK)	
	12	1	**2K-4973**	8	LOCKNUT (3/8-16-THD)	
	13	1	**9V-3043**	1	LINK AS	
	14	1	**6W-0108**	1	LINK AS	
	15	1	**116-2016**	1	ANGLE AS (LH)	
	16	1	**116-2015**	1	ANGLE AS (RH)	
	17	1	**6W-1885**	1	CHANNEL AS	
		1	**9V-7440**	4	NUT-WELD	
	18	1	**5M-3062**	4	BOLT (3/8-16X0.75-IN)	

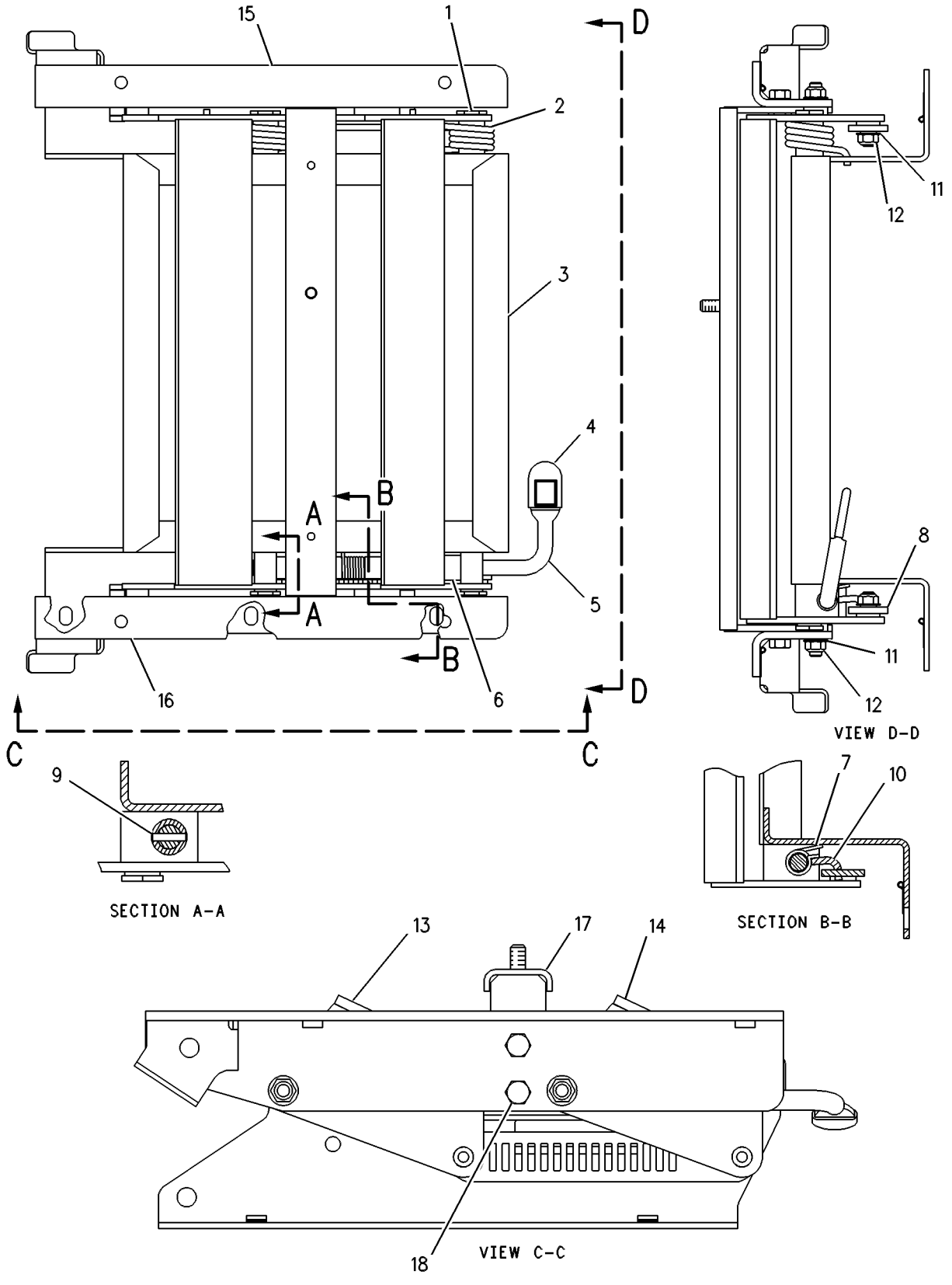

GRAPHIC #1 **<END>** g00108773

OPERATOR STATION

125-9854 ADJUSTER GP-SEAT

S/N: JBP1-UP

PART OF 125-9856 SEAT GP-STATIC

SMCS-7321 **i03438960**

NOTE	REF NO	GRAPHIC REF	PART NUMBER	QTY	PART NAME 1 2 3 4 5 6 (PRODUCT LEVEL)	SEE PAGE
	1	1	**125-9853**	1	BASE AS	
	2	1	**6W-1497**	1	SUPPORT AS	
	3	1	**6W-1496**	1	SUPPORT AS	
	4	1	**6W-1888**	1	SHEET	
	5	1	**6W-2371**	1	PLATE AS	
	6	1	**6W-3628**	2	CABLE	
	7	1	**8T-9381**	2	BOLT (7/16-20X1-IN)	
	8	1	**8S-4790**	4	SPACER (6.35-MM THK)	
	9	1	**4B-5272**	4	WASHER (12.7X31.7X2-MM THK)	
	10	1	**8R-4519**	4	LOCKNUT	
	11	1	**5V-5262**	2	BOLT-SHOULDER (7/16-20X1.26-IN)	
	12	1	**4L-6454**	4	BOLT (3/8-16X1-IN)	
	13	1	**5M-2894**	4	WASHER-HARD (10.2X18.5X2.5-MM THK)	

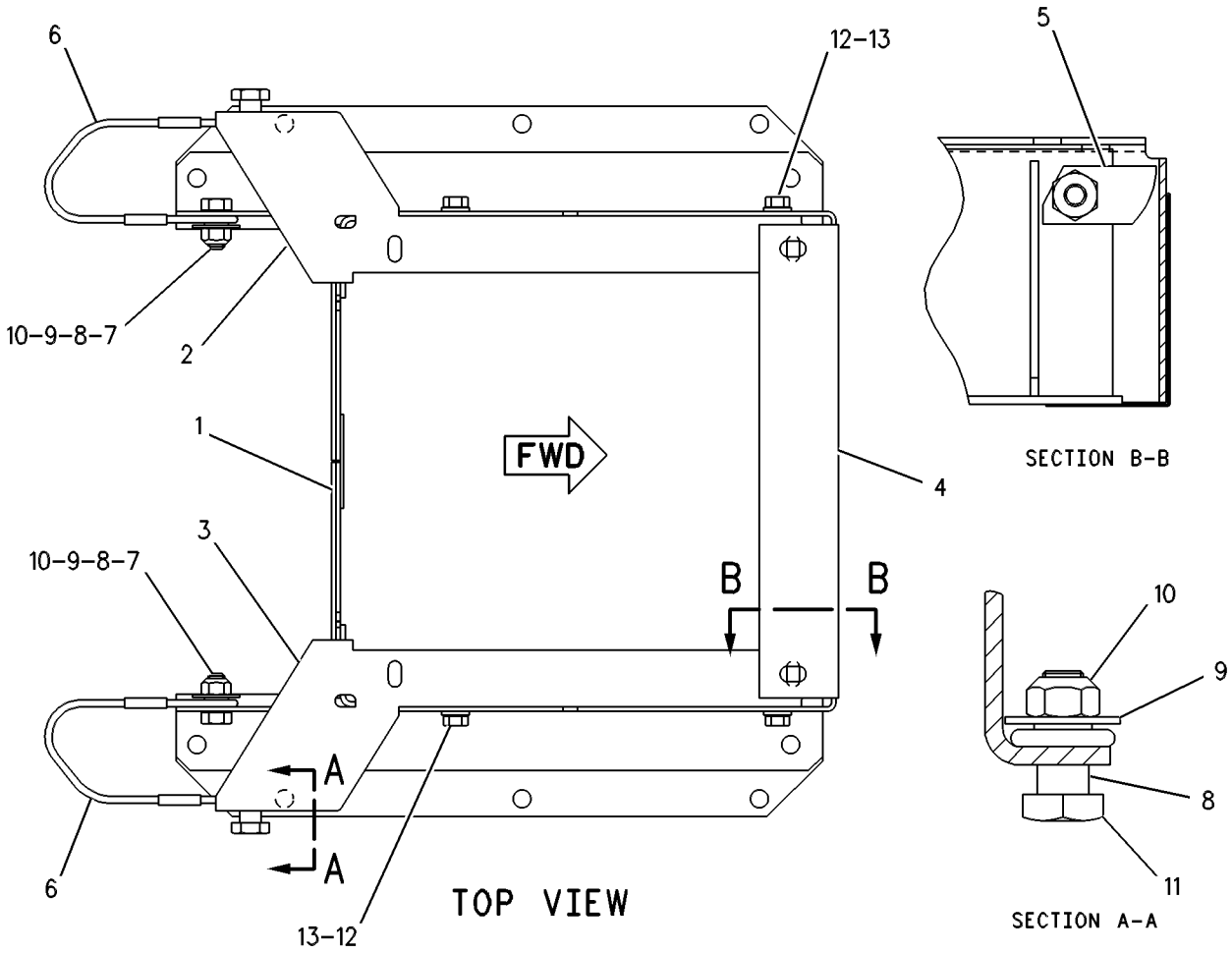

GRAPHIC #1 **<END>** g00109161

OPERATOR STATION

173-1028 ADJUSTER GP-SEAT

S/N: JBP1-UP
PART OF 301-4174 SEAT GP
AN ATTACHMENT

SMCS-7321 **i01437574**

NOTE	REF NO	GRAPHIC REF	PART NUMBER	QTY	PART NAME 1 2 3 4 5 6 (PRODUCT LEVEL)	SEE PAGE
	1	1	**4V-8256**	4	SPRING	
	2	1	**117-4486**	1	ANCHOR	
	3	1	**117-4492**	1	ROD	
	4	1	**132-0338**	2	WASHER-PLASTIC (13X31.7X0.8-MM THK)	
	5	1	**136-1544**	1	LATCH AS-LH	
	6	1	**143-1288**	1	LOCKNUT-FLANGE (3/8-16-THD)	
	7	1	**156-5545**	1	LATCH AS-RH	
	8	1	**164-4531**	1	ROD	
	9	1	**9M-1974**	1	WASHER-HARD (8.8X16X2-MM THK)	
	10	1	**170-1114**	1	HANDLE (SLIDE ADJUSTMENT)	
	11	1	**170-1115**	1	HANDLE (TILT ADJUSTMENT)	
	12	1	**172-4001**	1	BRACKET	
	13	1	**1D-4675**	1	BOLT-CARRIAGE (3/8-16X0.75-IN)	
	14	1	**2K-4973**	2	LOCKNUT (3/8-16-THD)	
	15	1	**7L-8170**	1	NUT-FULL (5/16-18-THD)	
	16	1	**7X-0608**	2	WASHER-HARD (10.2X16X2-MM THK)	
	17	1	**170-1112**	1	PLATE AS	

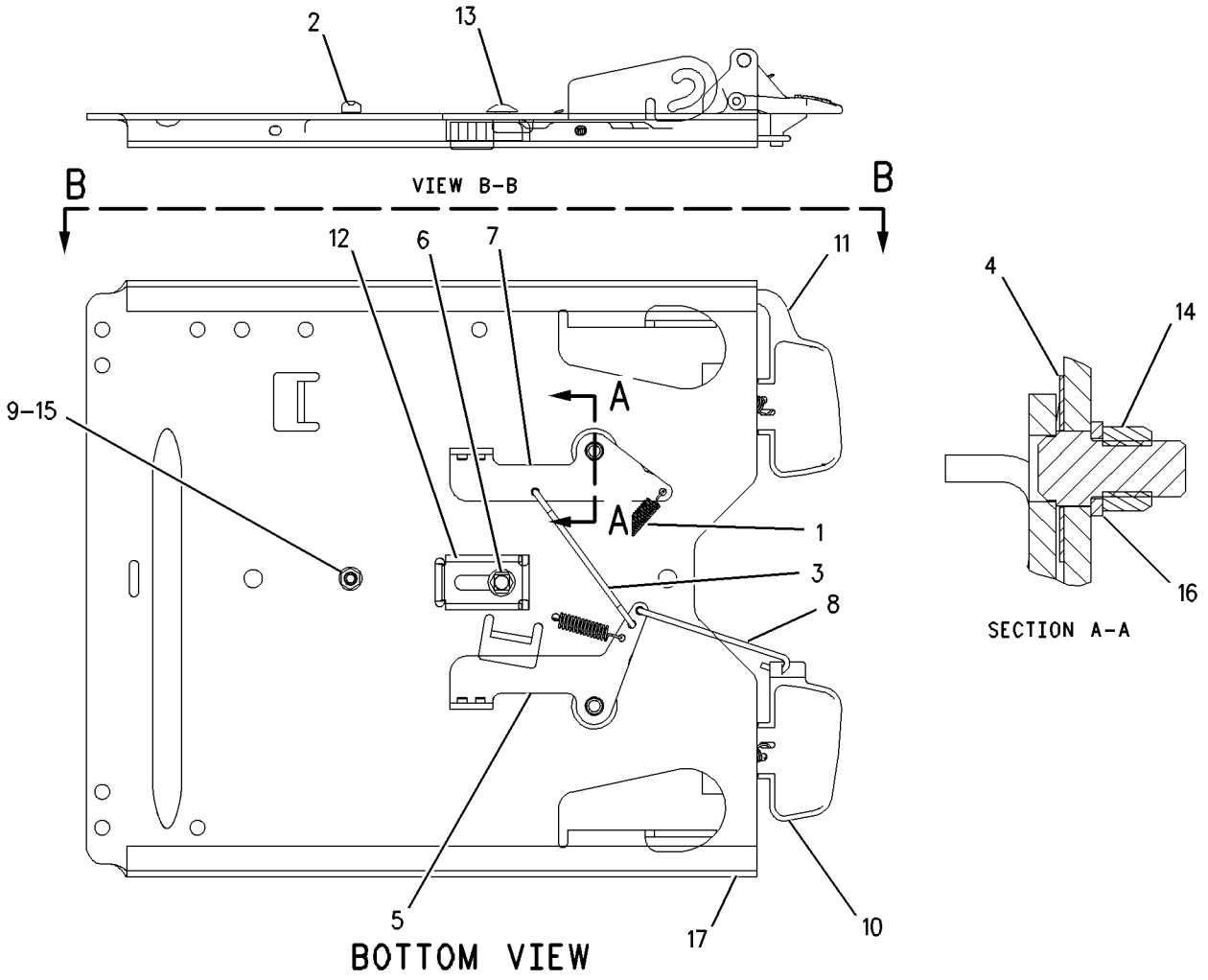

GRAPHIC #1 **<END>** g00686297

OPERATOR STATION

308-5633 AIR CONDITIONER & HEATER GP

S/N: JBP1-UP

PART OF 289-7545 AIR CONDITIONER GP

AN ATTACHMENT

SMCS-7304, 7320 **i03258804**

NOTE	REF NO	GRAPHIC REF	PART NUMBER	QTY	PART NAME 1 2 3 4 5 6 (PRODUCT LEVEL)	SEE PAGE
	1	1	**2P-4339**	1	NUT-JAM (7/16-28-THD)	
	2	1	**2V-0099**	1	KNOB-CONTROL (FAN SPEED)	
	2A	1	**2V-0099**	1	KNOB-CONTROL (TEMPERATURE CONTROL)	
	3	2	**3E-0400**	2	BLOWER AS	
					(EACH INCLUDES)	
		2	**037-4838**	1	CLAMP	
	4	1	**3E-3890**	1	FILM-CONTROL (AIR CONDITIONER, HEATER)	
	5	1	**3E-5464**	1	THERMOSTAT (CAB AIR) (REFRIGERANT)	
	6	2	**3S-2093**	2	STRAP-CABLE	
	7	2	**3T-3197**	1	GROMMET	
	8	2	**3T-3198**	1	GROMMET	
	9	1	**5P-7803**	2	PLUG-BUTTON	
	10	1	**6P-3236**	1	SWITCH AS-ROTARY (FAN SPEED)	
		1	**6V-8362**	5	SCREW-MACHINE (8-32X0.31-IN)	
		1	**9B-7233**	5	LOCKWASHER	
	11	1	**6T-5345**	1	BUSHING-TERMINAL	
	12	2	**6T-6708**	2	WASHER (7X28.6X4.1-MM THK)	
	13	1	**7G-4824**	1	STRAP	
	14	1	**8C-3756**	1	FILM-IDENTIFICATION (AIR CONDITIONER)	
	15	2	**8C-4586**	2	CLAMP	
	16	1	**8D-1429**	1	LAMP (24-VOLT)	
	17	1	**8E-7791**	1	STRAP	
	18	2	**8P-5141**	2	PLATE-ORIFICE	
	19	1	**8X-5536**	1	COVER	
	20	1	**8X-5538**	1	COVER AS	
M		1	**8T-3490**	4	NUT-WELD (M10X1.5-THD)	
	21	1	**8X-5540**	1	COVER	
	22	1	**8Y-6388**	4	LOUVER AS-VENT	
	23	2	**9G-1950**	1	RESISTOR	
	24	2	**9X-2185**	4	SCREW (8-15X0.44-IN)	
	25	2	**9X-2488**	4	CLAMP-HOSE	
	26	2	**9X-9653**	1	COIL AS-EVAPORATOR	
	27	1	**110-6393**	1	PLATE-INSTRUCTION (AIR CONDITIONER)	
	28	1	**123-4618**	1	COVER	
	29	1	**123-4701**	1	SEAL	
	30	2	**124-1431**	1	BRACKET	
	31	2	**124-1432**	1	HOUSING AS	
		2	**7T-1099**	1	LINK	
		2	**8P-5141**	2	PLATE-ORIFICE	
	32	2	**124-3137**	1	BRACKET	
	33	2	**124-3138**	1	SEAL	
	34	1	**124-9006**	1	SHAFT	
	35	2	**124-9007**	1	SHAFT AS	
		2	**4L-5966**	2	SETSCREW (NO 10X0.19-IN)	
	36	1	**125-0438**	1	GASKET	
	37	2	**129-4935**	1	SEAL	
	38	2	**142-4940**	1	PLATE AS	
	39	1	**174-4492**	1	COVER	
	40	2	**174-4971**	1	SUPPORT AS	
M		2	**3E-4304**	6	INSERT-THREADED (M6X1-THD)	
	41	1	**174-6353**	1	PLATE	
	42	1	**176-5507**	1	PAD	
	43	2	**177-7858**	1	HARNESS AS-HEATER & AIR COND	
	44	1	**191-0027**	1	PAD	
	45	2	**204-4376**	1	CAP-PROTECTIVE	

308-5633 AIR CONDITIONER & HEATER GP *(contd.)* i03258804

NOTE	REF NO	GRAPHIC REF	PART NUMBER	QTY	PART NAME 1 2 3 4 5 6 (PRODUCT LEVEL)	SEE PAGE
	46	2	**238-0415**	1	VALVE AS-WATER	
	47	2	**238-0417**	1	CORE AS-HEATER	
	48	2	**248-6772**	4	SCREW-MACHINE (8-16X7.75-IN)	
	49	1	**255-6261**	2	PLATE	
I	50	2	**308-5632**	1	HOSE AS	
I	51	2	**313-6224**	1	HOSE AS	
	52	2	**316-1927**	1	MOTOR AS-BLOWER (24-VOLT, A/C, HEATER)	
		2	**9W-0852**	2	PIN-CONNECTOR (14-GA)	
		2	**102-8802**	1	KIT-RECEPTACLE (2-PIN)	
					(INCLUDES RECEPTACLE AS & WEDGE)	
	53	1	**104-2091**	8	SCREW-FLAT HEAD (NO 6X0.5-IN)	
M	54	2	**129-3178**	4	LOCKNUT (M6X1-THD)	
	55	2	**130-5300**	1	CLIP	
M	56	2	**141-9784**	1	BOLT (M6X1X190-MM)	
	57	1	**3B-4501**	2	LOCKWASHER	
	58	1	**3H-2900**	1	GROMMET	
	59	1	**3S-9557**	8	SCREW-PAN HEAD (4-40X0.5-IN)	
	60	2	**4M-6582**	1	SEAL-O-RING	
M	61	2	**5C-2890**	7	NUT (M6X1-THD)	
	62	1,2	**5P-1075**	13	WASHER-HARD (10.2X22.5X3-MM THK)	
	63	2	**5P-9135**	1	GROMMET	
	64	2	**6V-1668**	2	WASHER (6.5X29.1X3-MM THK)	
M	65	2	**6V-7728**	1	BOLT (M6X1X45-MM)	
	66	1,2	**6V-8801**	13	NUT (3/8-16-THD)	
	67	1	**7T-9793**	2	VALVE-CHECK (EVAPORATOR DRAIN)	
	68	1	**7X-0591**	2	WASHER-HARD (17X29X3-MM THK)	
M	69	2	**8T-4171**	2	BOLT (M6X1X12-MM)	
	70	2	**8T-4205**	15	WASHER-HARD (7.2X14.5X2-MM THK)	
	71	1	**8T-6631**	2	SCREW-MACHINE (8-32X0.5-IN)	
	72	2	**9M-8406**	1	CLIP	
M	73	1	**9X-2040**	4	SCREW-TRUSS HEAD (M10X1.5X25-MM)	
M	74	1	**9X-2041**	5	SCREW-TRUSS HEAD (M10X1.5X20-MM)	
M	75	1	**9X-2045**	6	SCREW-TRUSS HEAD (M6X1X20-MM)	
	76	2	**9X-7381**	1	SEAL-O-RING	
	77	2	**9X-7382**	1	SEAL-O-RING	
E	78	2	**136-1953**		HOSE (17-CM EACH)	
J	79	2	**5P-0878**		SEAL (2-DM)	
D	80	2	**5P-5637**		SEAL (0.2-M)	
D	80A	2	**5P-5637**		SEAL (0.1-M)	
D	80B	2	**5P-5637**		SEAL (0.9-M)	
D	80C	2	**5P-5637**		SEAL (0.8-M)	
D	80D	2	**5P-5637**		SEAL (0.5-M EACH)	
D	80E	2	**5P-5637**		SEAL (0.2-M)	
D	80F	2	**5P-5637**		SEAL (0.4-M)	
E	81	2	**9X-2126**		SEAL (20.5-CM)	
E	81A	2	**9X-2126**		SEAL (28.5-CM)	
J	82	1	**5P-6129**		TUBE (9-DM EACH)	

D-ORDER BY THE METER
E-ORDER BY THE CENTIMETER
I-REFER TO HYDRAULIC INFORMATION SYSTEM
J-ORDER BY THE DECIMETER
M-METRIC PART

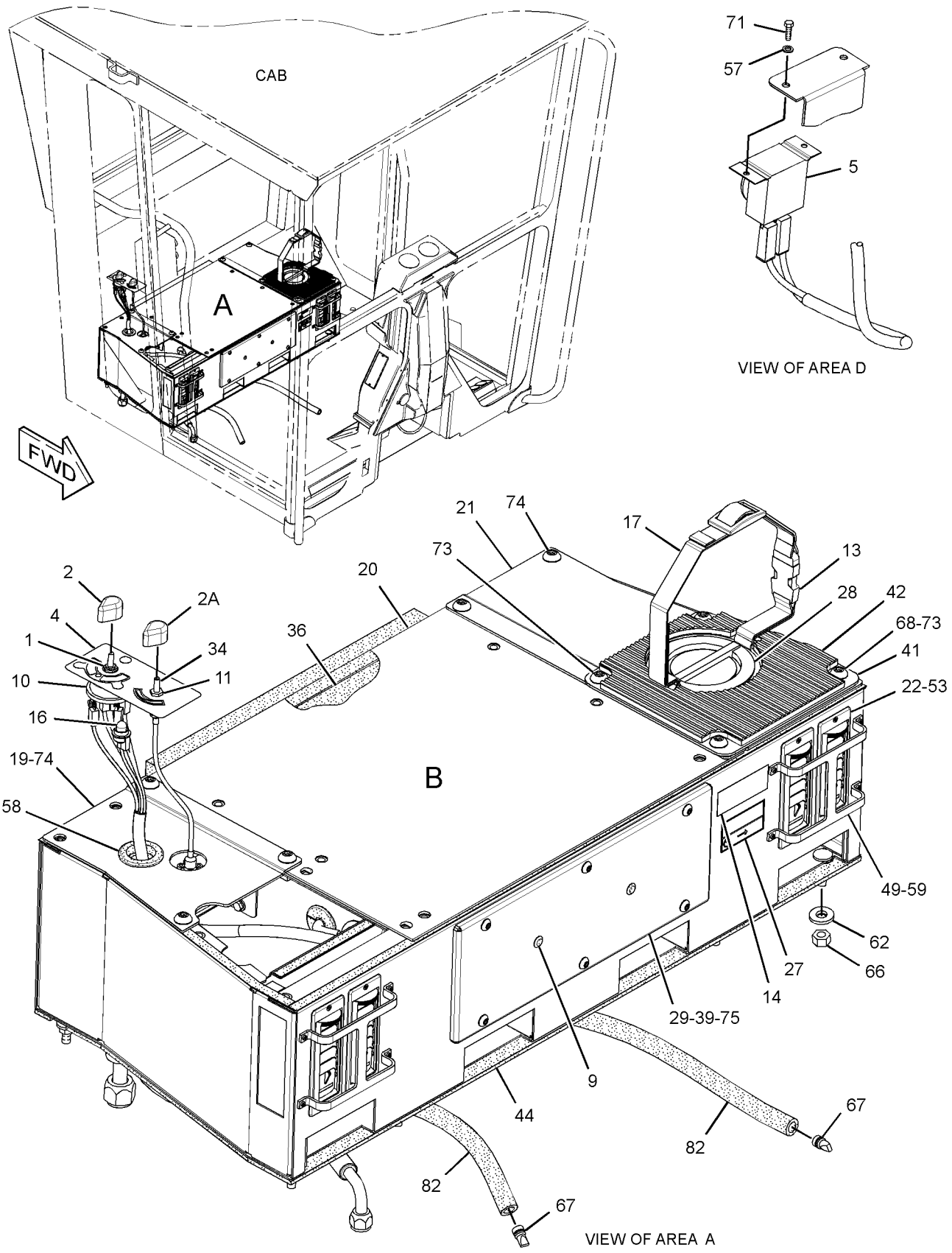

GRAPHIC #1

g01676295

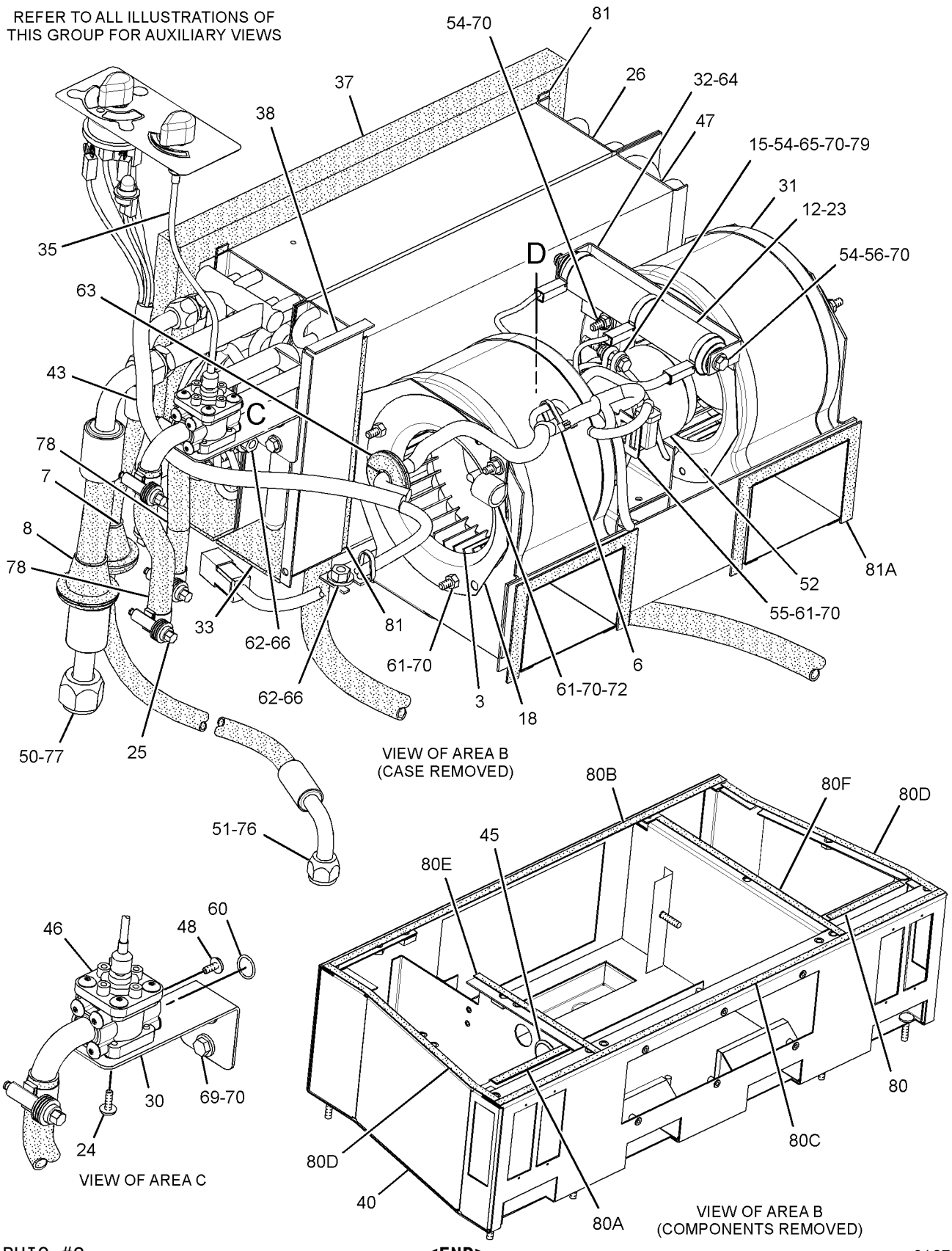

GRAPHIC #2

<END>

g01676313

OPERATOR STATION

311-2751 AIR CONDITIONER AR

S/N: JBP1-UP

AN ATTACHMENT

SMCS-7320 **i03258341**

NOTE	REF NO	GRAPHIC REF	PART NUMBER	QTY	PART NAME 1 2 3 4 5 6 (PRODUCT LEVEL)	SEE PAGE
Y	1	1	*7I-5015*	1	DUCT GP (AIR CONDITIONER, HEATER)	654
Y	2	1	**8X-2925**	1	FILTER GP-CAB AIR	660
Y	3	1	*177-7891*	1	DUCT & CONTROL GP (A/C, HEATER DISTRIBUTOR)	653
Y	4	1	*289-7545*	1	AIR CONDITIONER GP	630
Y	5	1	*295-4431*	1	CONDENSER & MTG GP-REFRIGERANT	637
Y	6	1	*311-0803*	1	WIRING GP-AIR CONDITIONER	195
Y	7	1	*311-2772*	1	LINES GP-AIR CONDITIONER	683
Y	8	1	*311-2773*	1	LINES GP-HEATER	685
Y	9	1	*311-2800*	1	COMPRESSOR GP-REFRIGERANT	636
	10	1	**335-6210**	1	FILM-INSTRUCTION (BELT ROUTING)	

Y-SEPARATE ILLUSTRATION

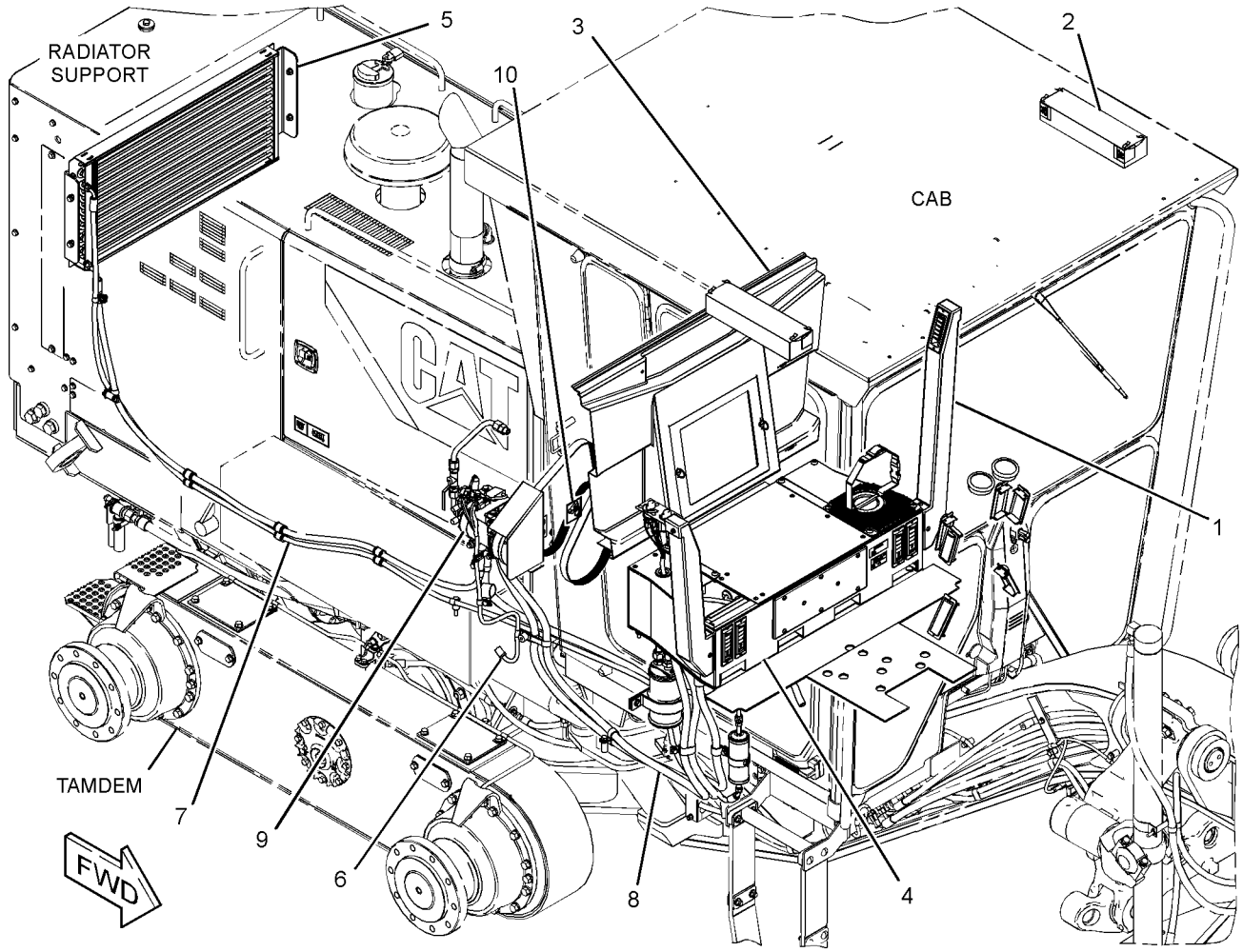

GRAPHIC #1 **<END>** g01669494

OPERATOR STATION

289-7545 AIR CONDITIONER GP

S/N: JBP1-UP
PART OF 311-2751 AIR CONDITIONER AR
AN ATTACHMENT

SMCS-7320 **i03258366**

NOTE	PART NUMBER	QTY	PART NAME 1 2 3 4 5 6 (PRODUCT LEVEL)	SEE PAGE
Y	**308-5633**	1	AIR CONDITIONER & HEATER GP	625
	5M-3062	1	BOLT (3/8-16X0.75-IN)	
	5D-1026	2	CLAMP-HOSE	
	8M-2773	2	CLIP	
	123-0872	1	PAD	
	191-5236	1	PAD	
	8T-4896	1	WASHER-HARD (10.2X18.5X2.5-MM THK)	

Y-SEPARATE ILLUSTRATION

<END>

OPERATOR STATION

202-7666 ARMREST GP–RH

S/N: JBP1-UP
PART OF 175-1504 SEAT GP
AN ATTACHMENT

SMCS-7307 **i02947634**

NOTE	REF NO	GRAPHIC REF	PART NUMBER	QTY	PART NAME 1 2 3 4 5 6 (PRODUCT LEVEL)	SEE PAGE
	1	1	**143-1288**	1	LOCKNUT-FLANGE (3/8-16-THD)	
	2	1	**166-9914**	1	BRACKET AS	
	3	1	**219-2000**	1	PAD AS	
		1	**1F-0750**	1	NUT-WELD (3/8-16-THD)	
	4	1	**294-5042**	2	SPACER (11.1X19.5X9.67-MM THK)	
	5	1	**2K-4973**	1	LOCKNUT (3/8-16-THD)	
	6	1	**2K-6061**	1	SCREW-MACHINE (3/8-16X1.5-IN)	
	7	1	**4L-6454**	1	BOLT (3/8-16X1-IN)	
	8	1	**5S-7383**	1	BOLT (3/8-16X1.75-IN)	
	9	1	**8T-4121**	1	WASHER-HARD (11X21X2.5-MM THK)	

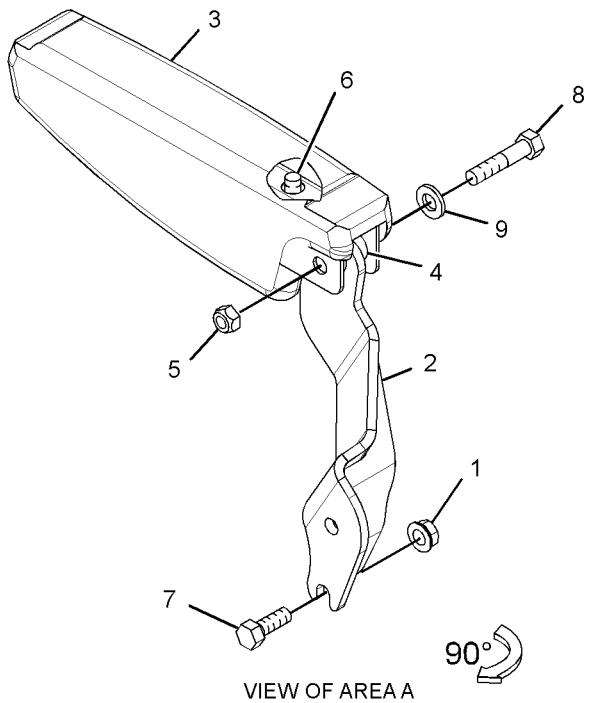

VIEW OF AREA A
(EXPLODED)

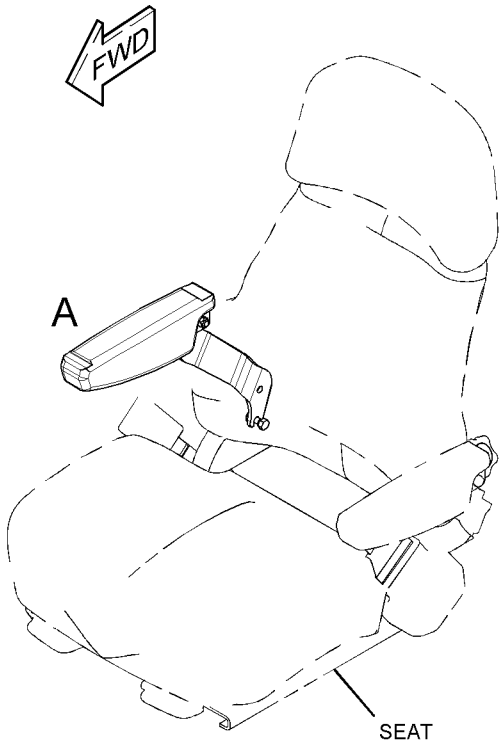

GRAPHIC #1 **<END>** g01487833

OPERATOR STATION

202-7668 ARMREST GP–LH

S/N: JBP1-UP
PART OF 175-1504 SEAT GP
AN ATTACHMENT

SMCS-7307 **i02947633**

NOTE	REF NO	GRAPHIC REF	PART NUMBER	QTY	PART NAME 1 2 3 4 5 6 (PRODUCT LEVEL)	SEE PAGE
	1	1	**143-1288**	1	LOCKNUT-FLANGE (3/8-16-THD)	
	2	1	**166-9913**	1	BRACKET AS	
	3	1	**219-2000**	1	PAD AS	
		1	**1F-0750**	1	NUT-WELD (3/8-16-THD)	
	4	1	**294-5042**	2	SPACER (11.1X19.5X9.67-MM THK)	
	5	1	**2K-4973**	1	LOCKNUT (3/8-16-THD)	
	6	1	**2K-6061**	1	SCREW-MACHINE (3/8-16X1.5-IN)	
	7	1	**4L-6454**	1	BOLT (3/8-16X1-IN)	
	8	1	**5S-7383**	1	BOLT (3/8-16X1.75-IN)	
	9	1	**8T-4121**	1	WASHER-HARD (11X21X2.5-MM THK)	

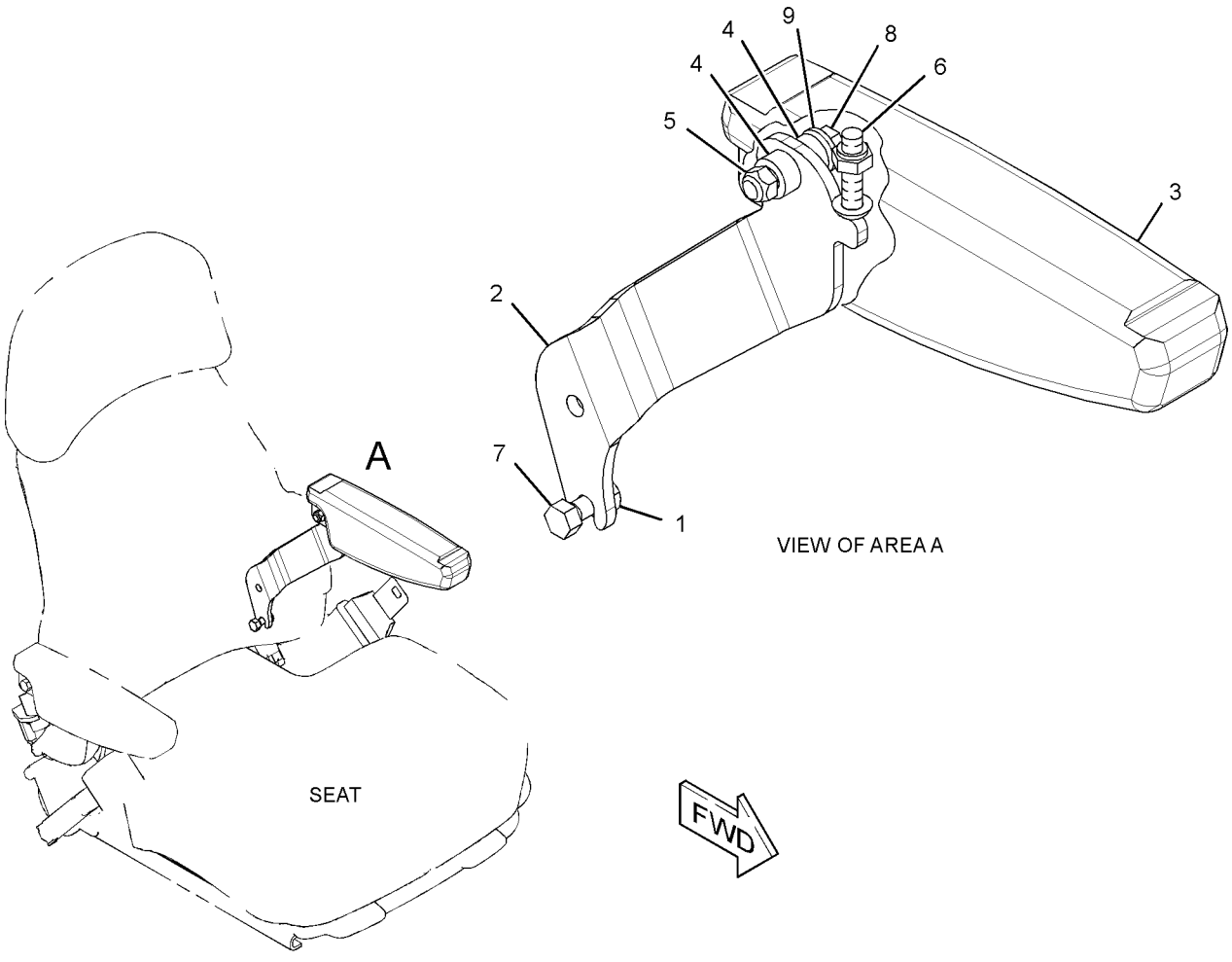

GRAPHIC #1 **<END>** g01487758

OPERATOR STATION

290-1126 CAB AR—NON-ROPS

S/N: JBP1-UP

AN ATTACHMENT

SMCS-7301 **i03435506**

NOTE	REF NO	GRAPHIC REF	PART NUMBER	QTY	PART NAME 1 2 3 4 5 6 (PRODUCT LEVEL)	SEE PAGE
Y	1	1	**8X-2795**	1	MIRROR GP-REAR VIEW (DUAL INSIDE)	688
Y	2	1	*8X-8940*	1	SEAT GP-STATIC (CLOTH)	723
Y	3	1	*125-4342*	1	WASHER GP-WINDOW (FRONT)	739
Y	4	1	*172-5378*	1	INSULATION GP-WEATHER (COLD WEATHER)	676
Y	5	1	*286-7853*	1	PANEL GP-INSTRUMENT	699
Y	6	1	*290-1127*	1	CAB GP (HIGH PROFILE)	634

Y-SEPARATE ILLUSTRATION

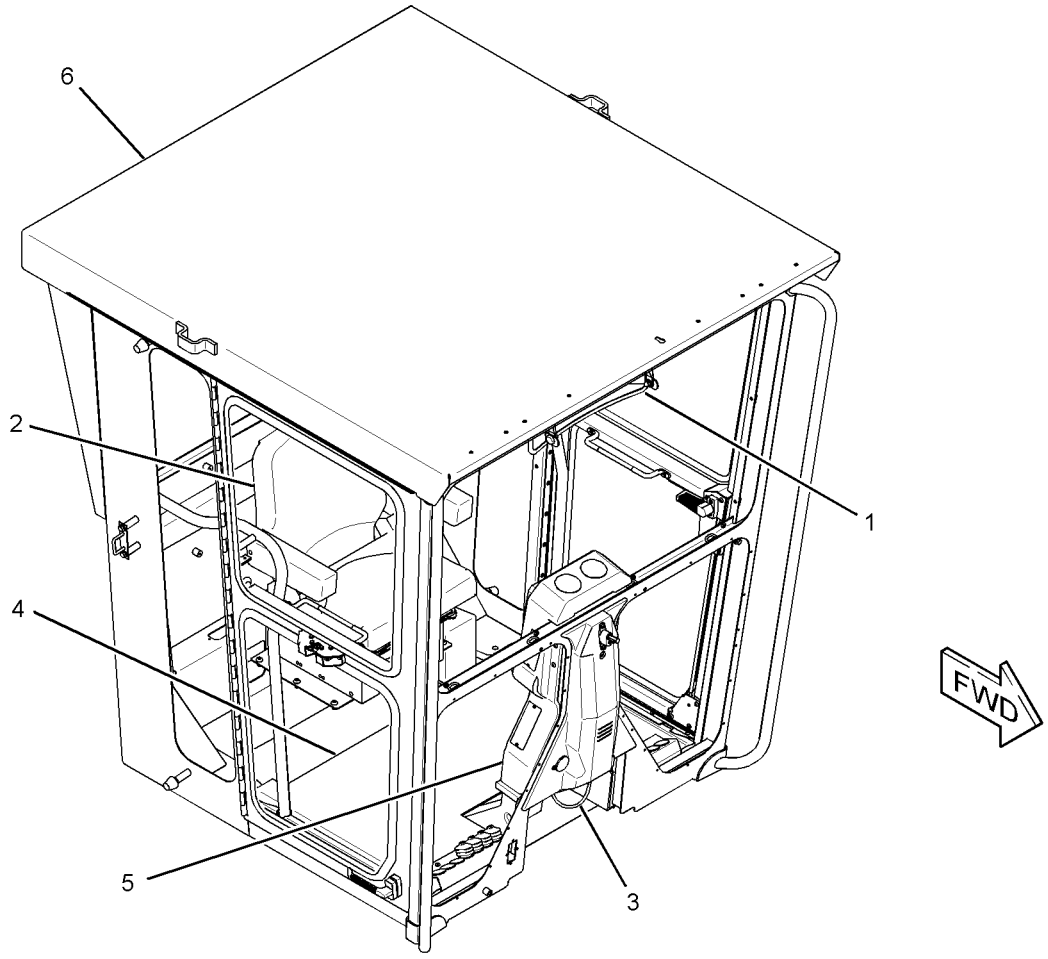

GRAPHIC #1 **<END>** g01672933

OPERATOR STATION

290-1127 CAB GP—HIGH PROFILE

S/N: JBP1-UP
PART OF 290-1126 CAB AR
AN ATTACHMENT

SMCS-7301 **i03251963**

NOTE	REF NO	GRAPHIC REF	PART NUMBER	QTY	PART NAME 1 2 3 4 5 6 (PRODUCT LEVEL)	SEE PAGE
Y	1	1	*8X-4413*	1	DOOR GP-CAB	651
	2	1	**211-4908**	1	CAB AS (NON-ROPS)	

Y-SEPARATE ILLUSTRATION

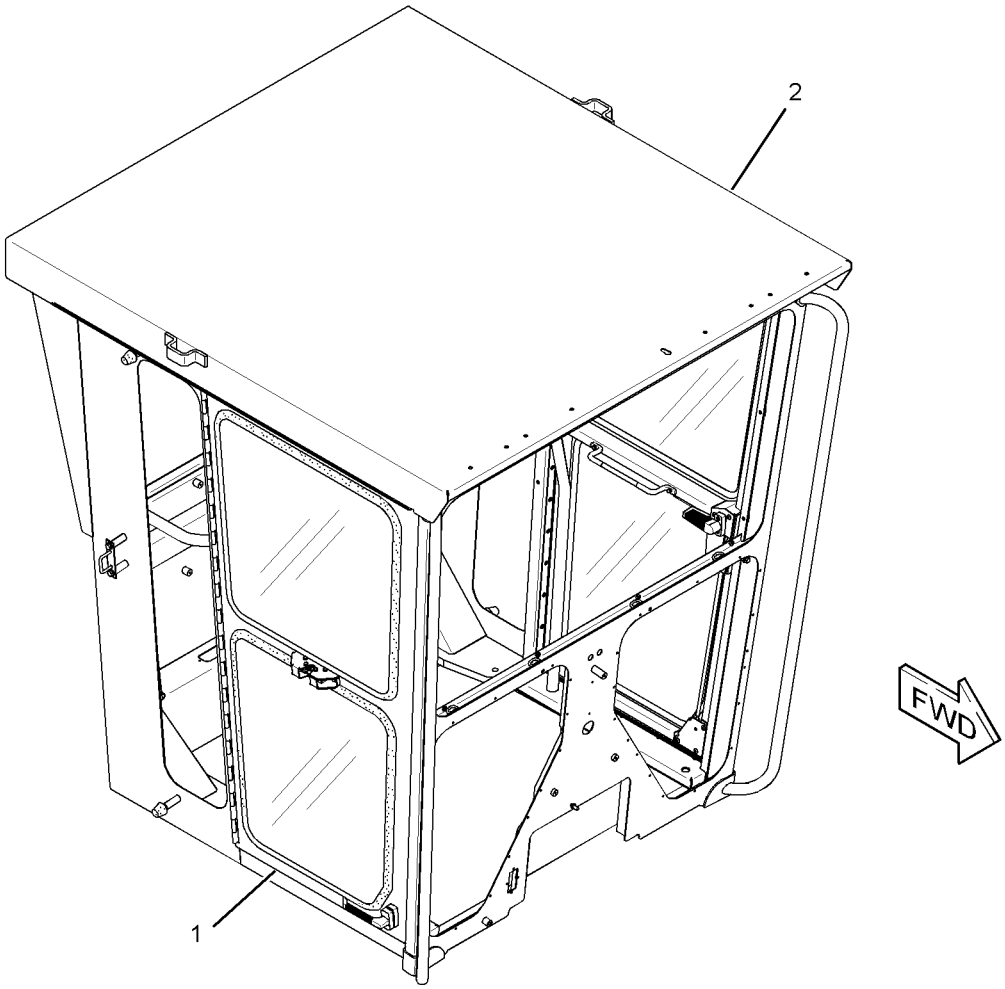

GRAPHIC #1 **<END>** g01676373

163-0872 COMPRESSOR GP-REFRIGERANT

S/N: JBP1-UP

PART OF 311-2800 COMPRESSOR GP-REFRIGERANT

AN ATTACHMENT

SMCS-1802 **i02997522**

NOTE	REF NO	GRAPHIC REF	PART NUMBER	QTY	PART NAME 1 2 3 4 5 6 (PRODUCT LEVEL)	SEE PAGE
	1	1	**126-1767**	2	PIN-CONNECTOR (14-GA)	
	2	1	**102-8802**	1	KIT-RECEPTACLE (2-PIN)	
					(INCLUDES RECEPTACLE AS AND WEDGE)	
	3	1	**314-4018**	1	VALVE AS (REFRIGERANT COMPRESSOR)	
	4	1	**7T-4532**	1	PLUG AS	
	5	1	**9X-7385**	2	SEAL-O-RING	

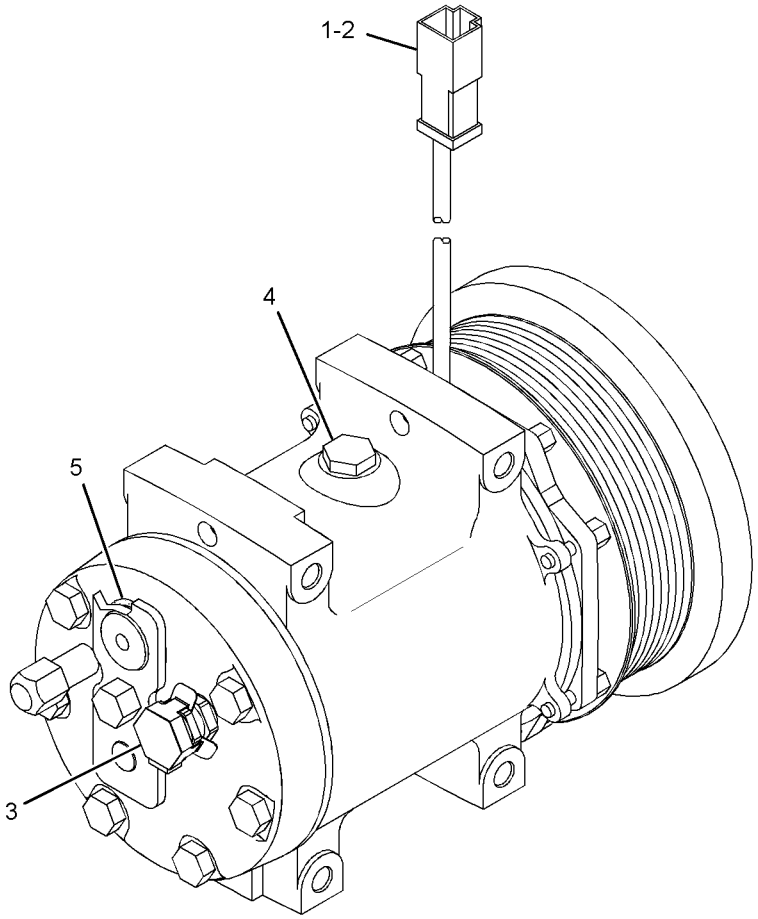

GRAPHIC #1 **<END>** g01524106

OPERATOR STATION

311-2800 COMPRESSOR GP-REFRIGERANT

S/N: JBP1-UP
PART OF 311-2751 AIR CONDITIONER AR
AN ATTACHMENT

SMCS-1802 **i03305847**

NOTE	REF NO	GRAPHIC REF	PART NUMBER	QTY	PART NAME 1 2 3 4 5 6 (PRODUCT LEVEL)	SEE PAGE
	1	1	**7W-3872**	2	SLEEVE	
Y	2	1	**163-0872**	1	COMPRESSOR GP-REFRIGERANT	635
	3	1	**266-6026**	1	SUPPORT	
	4	1	**316-4272**	1	GUARD	
	5	1	**291-4051**	1	BELT-SERPENTINE	
	6	1	**198-4776**	4	WASHER-HARD (8.8X20X8-MM THK)	
	7	1	**335-6210**	1	FILM-INSTRUCTION (BELT ROUTING)	
	8	1	**5P-4116**	1	WASHER-HARD (8.8X20.5X2-MM THK)	
M	9	1	**7X-2537**	4	BOLT (M8X1.25X35-MM)	
M	10	1	**7X-2538**	2	BOLT (M8X1.25X100-MM)	
M	11	1	**7X-2539**	2	BOLT (M8X1.25X110-MM)	
	12	1	**8T-4224**	4	WASHER-HARD (8.8X16X2-MM THK)	

M-METRIC PART
Y-SEPARATE ILLUSTRATION

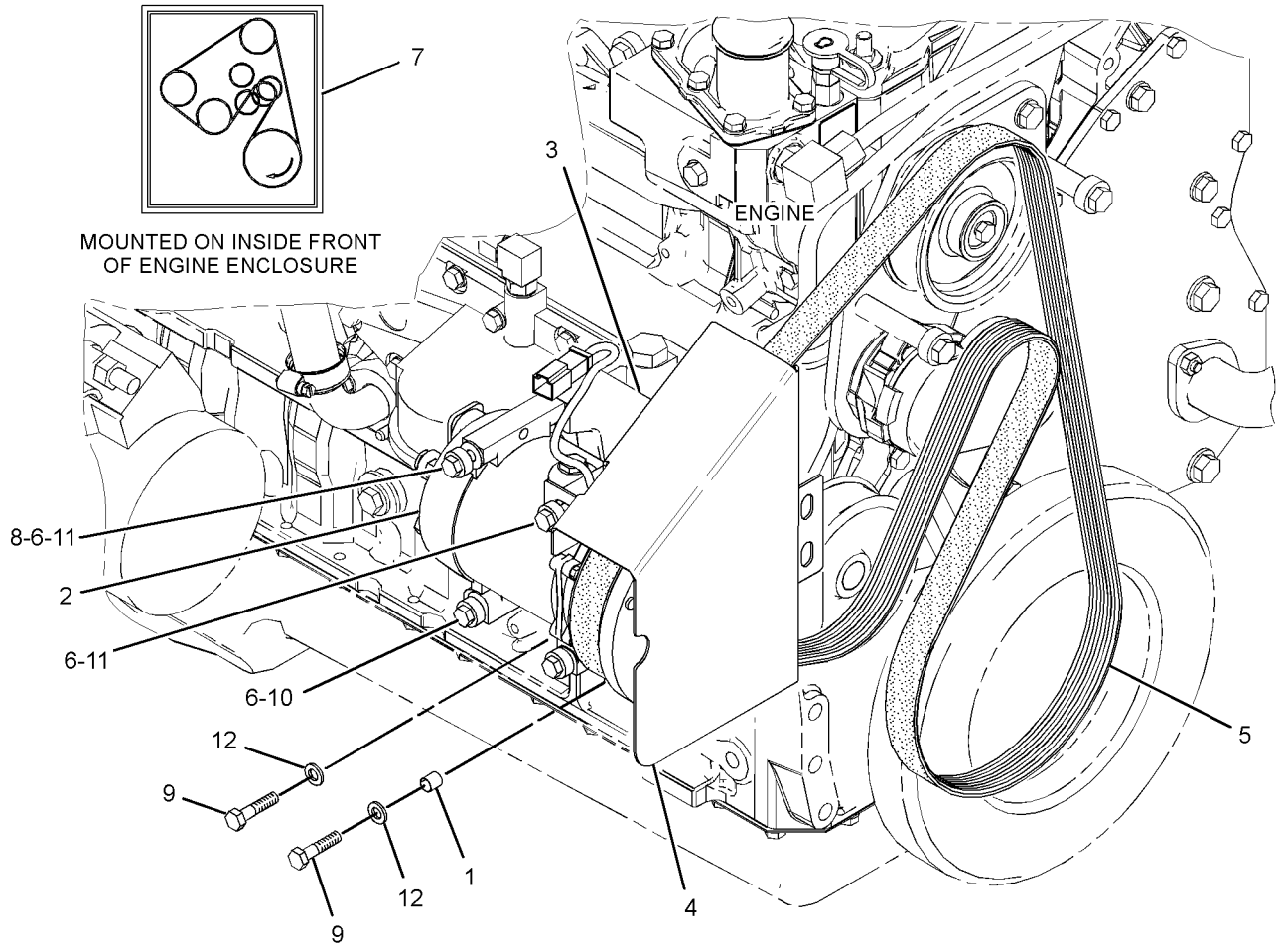

GRAPHIC #1 **<END>** g01701553

295-4431 CONDENSER & MTG GP-REFRIGERANT

S/N: JBP1-UP
PART OF 311-2751 AIR CONDITIONER AR
AN ATTACHMENT

SMCS-1805 **i03258484**

NOTE	REF NO	GRAPHIC REF	PART NUMBER	QTY	PART NAME 1 2 3 4 5 6 (PRODUCT LEVEL)	SEE PAGE
	1	1	**251-0982**	1	CORE AS-CONDENSER (REFRIGERANT)	
	2	1	**293-4500**	1	BRACKET	
	3	1	**303-6034**	1	BRACKET	
	4	1	**8T-4121**	16	WASHER-HARD (11X21X2.5-MM THK)	
M	5	1	**8T-4133**	8	NUT (M10X1.5-THD)	
M	6	1	**8T-4136**	4	BOLT (M10X1.5X25-MM)	
M	7	1	**8T-4195**	4	BOLT (M10X1.5X30-MM)	

M-METRIC PART

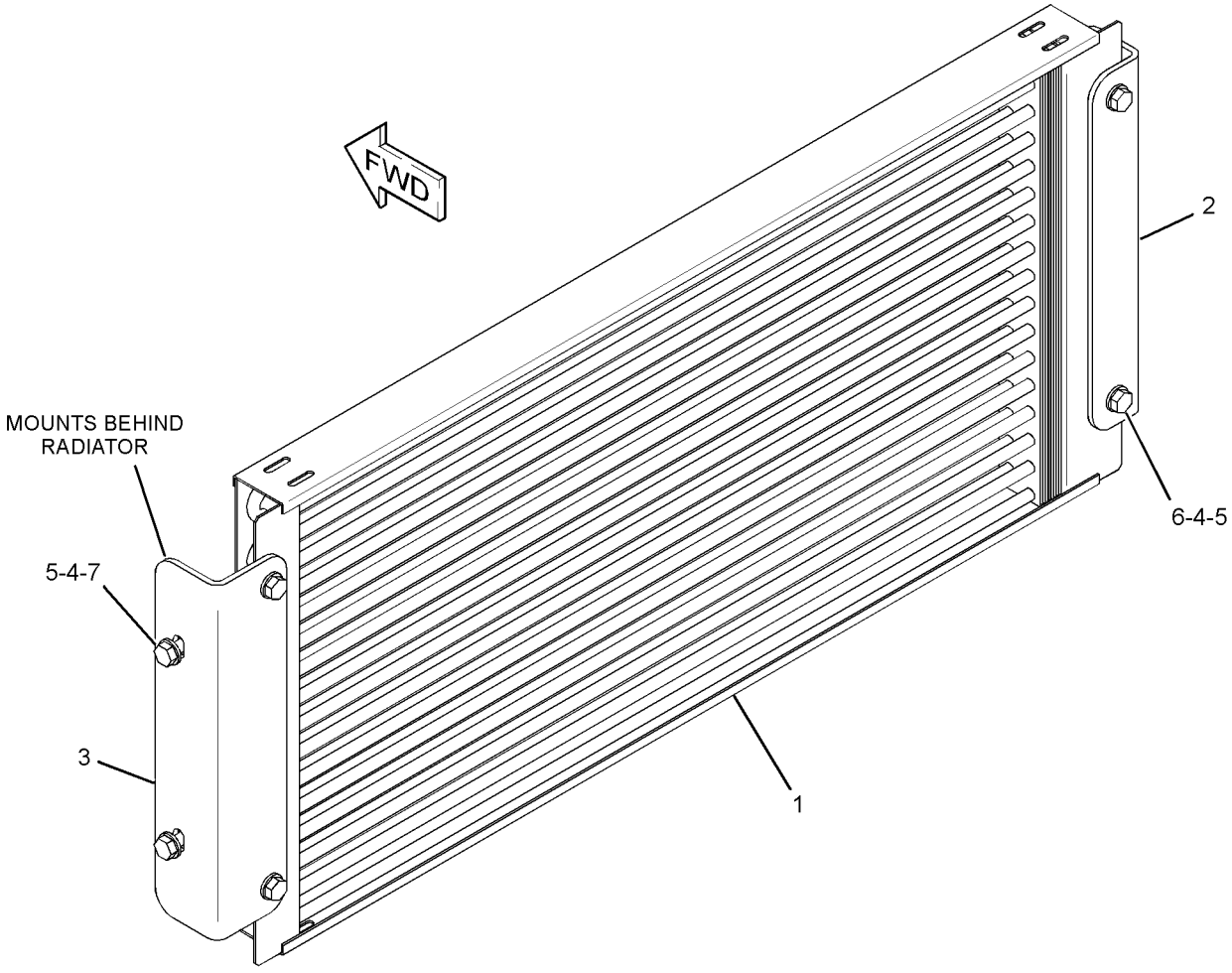

GRAPHIC #1 **<END>** g01673584

OPERATOR STATION

282-2475 CONSOLE GP-OPERATOR

S/N: JBP1-UP

PART OF 274-7941 GENERAL AR

SMCS-5258 **i03247296**

NOTE	REF NO	GRAPHIC REF	PART NUMBER	QTY	PART NAME 1 2 3 4 5 6 (PRODUCT LEVEL)	SEE PAGE
	1	1	**2G-8572**	8	WASHER-SPECIAL (10X27.81X2.54-MM THK)	
	2	1	**2G-8573**	8	CAP	
	3	1	**3Y-2806**	1	SPRING	
	4	1	**6G-2914**	1	LATCH	
	5	1	**6G-8814**	2	BRACKET	
	6	1	**6L-1962**	1	NUT-JAM (3/8-24-THD)	
	7	1	**6V-8183**	1	NUT-FULL (3/8-24-THD)	
	8	1	**7I-4890**	1	PLATE AS	
	9	1	**8C-3442**	1	SPRING-COIL	
	10	1	**8D-7960**	2	PLATE	
	11	1	**8L-7905**	2	RIVET-POP	
M	12	1	**8T-9006**	2	BOLT-SOCKET HEAD (M3X0.5X20-MM)	
	13	1	**8X-1904**	1	SPACER (20X35X26-MM THK)	
	14	1	**8X-1908**	1	PANEL	
	15	1	**8X-1913**	6	SPACER (10.5X32X19.5-MM THK)	
	16	1	**8X-1914**	1	SHAFT	
	17	1	**8X-1921**	1	HOOD	
	18	1	**8X-2160**	1	LEVER (STEERING WHEEL TILT CONTROL)	
	19	1	**8X-2161**	1	LEVER (STEERING COLUMN TILT)	
	20	1	**8X-2893**	10	NUT (M4X0.7-THD)	
	21	1	**8X-3951**	1	PANEL	
	22	1	**8X-3965**	1	RATCHET	
	23	1	**8X-5123**	1	RETAINER	
	24	1	**031-2666**	1	ROD	
	25	1	**110-6241**	1	BRACKET	
	26	1	**123-1201**	1	PLATE	
	27	1	**177-7448**	1	CHANNEL AS	
	28	1	**206-4097**	8	FASTENER	
	29	1	**206-9651**	1	PLATE	
	30	1	**236-0737**	1	CYLINDER	
	31	1	**030-8535**	1	BOLT-LOCKING (3/8-16X0.875-IN)	
	32	1	**034-1994**	1	PIN	
	33	1	**096-6166**	6	WASHER-HARD (4.5X9X1-MM THK)	
M	34	1	**174-8131**	16	SCREW-TRUSS HEAD (M4X0.7X12-MM)	
	35	1	**183-1425**	1	BASE	
	36	1	**204-6488**	1	CHANNEL AS	
	37	1	**2A-7184**	2	PLATE	
	38	1	**2K-5830**	2	BEARING AS-NEEDLE	
	39	1	**2K-7979**	13	BEARING-SLEEVE	
	40	1	**3E-9865**	1	LOCKNUT (1/4-20-THD)	
	41	1	**3F-7514**	4	PIN	
	42	1	**3K-6060**	6	LOCKNUT (3/8-16-THD)	
	43	1	**4B-4314**	1	RIVET	
M	44	1	**5C-8312**	6	NUT (M4X0.7-THD)	
	45	1	**5M-8500**	1	KNOB	
	46	1	**5P-1075**	8	WASHER-HARD (10.2X22.5X3-MM THK)	
	47	1	**5P-8167**	2	BOLT (3/8-16X0.625-IN)	
	48	1	**5S-7383**	6	BOLT (3/8-16X1.75-IN)	
	49	1	**6J-0488**	4	SCREW-BUTTON HEAD (3/8-16X0.875-IN)	
	50	1	**8D-5641**	14	BEARING	
	51	1	**8T-1174**	4	SEAL-LIP TYPE	
	52	1	**8T-2561**	11	WASHER-HARD (10.5X28.5X5-MM THK)	
M	53	1	**8T-4133**	1	NUT (M10X1.5-THD)	
M	54	1	**8T-4196**	4	BOLT (M10X1.5X35-MM)	
	55	1	**8X-1907**	1	SHAFT	
	56	1	**8X-1911**	1	PANEL	

282-2475 **CONSOLE GP-OPERATOR** *(contd.)* **i03247296**

NOTE	REF NO	GRAPHIC REF	PART NUMBER	QTY	PART NAME 1 2 3 4 5 6 (PRODUCT LEVEL)	SEE PAGE
	57	1	**8X-3789**	1	PANEL	
	58	1	**9M-5590**	1	BALL	
M	59	1	**9X-2042**	12	SCREW-TRUSS HEAD (M6X1X12-MM)	
D	60	1	**5P-5639**		SEAL (0.4-M)	
D	61	1	**5P-5637**		SEAL (1.2-M)	

D-ORDER BY THE METER
M-METRIC PART

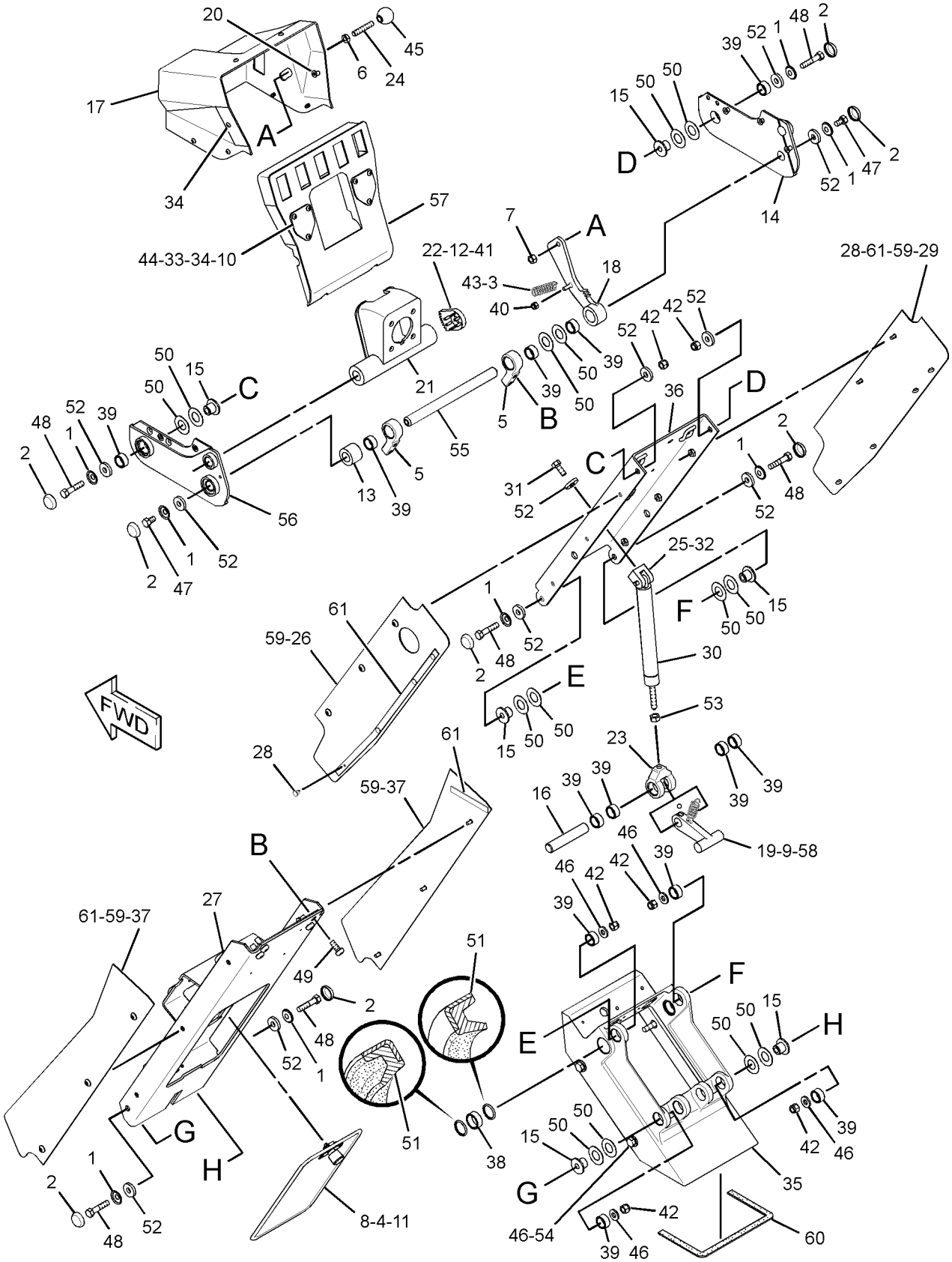

GRAPHIC #1 **<END>** g01694257

OPERATOR STATION

282-2473 CONTROL GP-CLUTCH

S/N: JBP1-UP

PART OF 274-7941 GENERAL AR

SMCS-5157 **i03247392**

NOTE	REF NO	GRAPHIC REF	PART NUMBER	QTY	PART NAME 1 2 3 4 5 6 (PRODUCT LEVEL)	SEE PAGE
	1	1	**1F-4622**	2	BEARING AS-NEEDLE	
	2	1	**5P-9209**	2	BEARING AS-NEEDLE	
	3	1	**7V-0446**	2	CLIP	
	4	1	**9J-8783**	1	SHIM (0.508-MM THK)	
	5	1	**116-5710**	1	GROMMET	
	6	1	**130-5300**	1	CLIP	
	7	1	**149-2065**	1	SPRING	
	8	1	**161-7062**	1	HOUSING	
	9	1	**161-7063**	1	SHAFT	
	10	1	**162-8218**	1	GASKET	
	11	1	**162-8219**	1	COVER	
	12	1	**169-0921**	1	ROD END (INTERNAL THREAD)	
	13	1	**169-0922**	1	ROD	
	14	1	**172-4211**	1	SPACER (10.5X22X50.8-MM THK)	
	15	1	**180-4027**	1	CAM	
	16	1	**180-7147**	1	LEVER	
	17	1	**190-3043**	1	BRACKET AS	
	18	1	**206-3599**	1	LEVER	
	19	1	**207-4922**	1	PEDAL-CLUTCH	
Y	20	1	**214-4863**	1	SENSOR GP-POSITION (ROTARY) (CLUTCH CONTROL)	166
	21	1	**129-3173**	1	BOLT-12 POINT HEAD (3/8-16X1.25-IN)	
M	22	1	**142-0485**	1	NUT (M10X1.15-THD)	
	23	1	**1B-0676**	1	PIN	
	24	1	**1B-8704**	1	KEY-WOODRUFF	
	25	1	**272-3089**	1	BOLT (M10X1.5X90-MM)	
	26	1	**3H-8538**	1	PIN	
	27	1	**3S-2713**	1	NUT-FULL (3/8-24-THD)	
	28	1	**4B-6060**	1	SETSCREW-SOCKET (1/4-20X0.375-IN)	
	29	1	**4J-8922**	1	ROD END	
	30	1	**5P-1075**	2	WASHER-HARD (10.2X22.5X3-MM THK)	
	31	1	**6V-0894**	1	SEAL-O-RING	
M	32	1	**6V-2313**	2	BOLT (M5X0.8X30-MM)	
	33	1	**8T-0328**	2	WASHER-HARD (5.5X10X1-MM THK)	
	34	1	**8T-4121**	5	WASHER-HARD (11X21X2.5-MM THK)	
M	35	1	**8T-4133**	1	NUT (M10X1.5-THD)	
M	36	1	**8T-4136**	3	BOLT (M10X1.5X25-MM)	
M	37	1	**8T-4182**	1	BOLT (M10X1.5X45-MM)	
M	38	1	**8T-4195**	2	BOLT (M10X1.5X30-MM)	
M	39	1	**8T-4196**	2	BOLT (M10X1.5X35-MM)	
	40	1	**8T-4226**	1	WASHER-PLATED (10.5X45X3-MM THK)	
	41	1	**8T-4896**	1	WASHER-HARD (10.2X18.5X2.5-MM THK)	

M-METRIC PART
Y-SEPARATE ILLUSTRATION

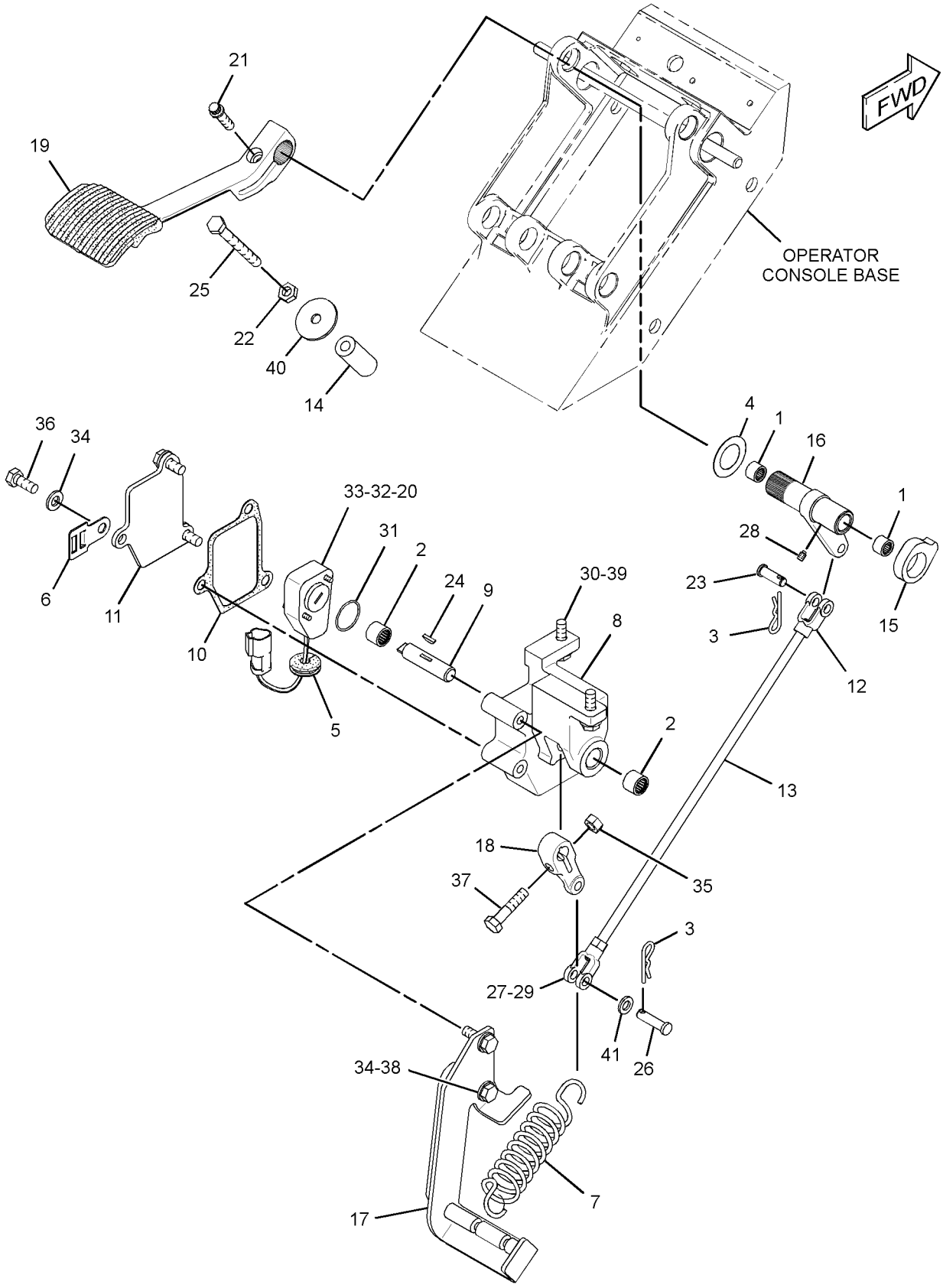

GRAPHIC #1 **<END>** g01706436

OPERATOR STATION

7I-4718 CONTROL GP-STEERING

S/N: JBP1-UP

PART OF 274-7941 GENERAL AR

SMCS-4309, 4310, 4338, 4343 **i02237701**

NOTE	REF NO	GRAPHIC REF	PART NUMBER	QTY	PART NAME 1 2 3 4 5 6 (PRODUCT LEVEL)	SEE PAGE
CJ	1	1	**222-3769**	1	PUMP GP-METERING (HMU)	
	2	1	**092-3200**	1	STEERING WHEEL	
	3	1	**144-6695**	1	NUT (13/16-20-THD)	
M	4	1	**118-9573**	4	BOLT-12 POINT HEAD (M10X1.15-THD)	
					AVAILABLE REPAIR KIT(S):	
J			**257-8471**	1	KIT-SEAL (HMU STEERING PUMP)	
					(INCLUDES SEALS & INSTALLATION TOOL)	

C-CHANGE FROM PREVIOUS TYPE
J-KIT MARKED J SERVICES PART MARKED J
M-METRIC PART

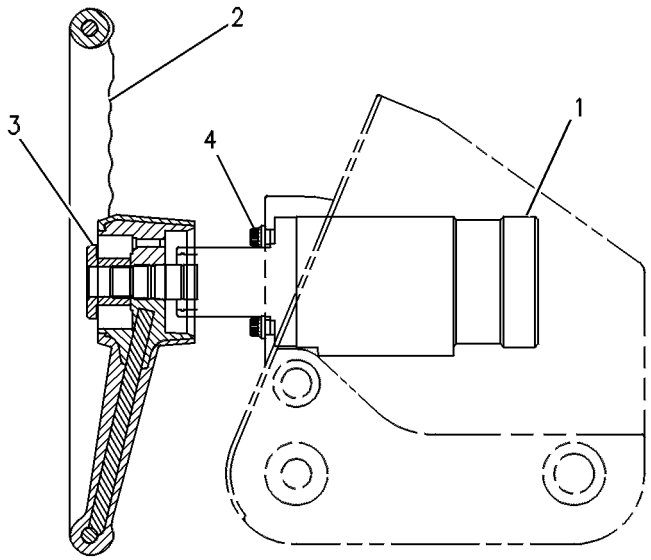

GRAPHIC #1 **<END>** g00108618

OPERATOR STATION

167-9002 CONTROL GP-TRANSMISSION

S/N: JBP1-UP

PART OF 274-7941 GENERAL AR

SMCS-3065 **i03438962**

NOTE	REF NO	GRAPHIC REF	PART NUMBER	QTY	PART NAME 1 2 3 4 5 6 (PRODUCT LEVEL)	SEE PAGE
	1	1	**7M-0706**	1	KNOB (TRANSMISSION DIRECTION, SPEED)	
	2	1	**8X-4879**	2	BRACKET AS	
					(EACH INCLUDES)	
M		1	**6V-9632**	1	NUT-WELD (M6X1-THD)	
	3	1	**8X-8096**	1	FILM-COVER (BLACK BACKGROUND)	
	4	1	**143-9290**	1	PLATE AS	
	5	1	**169-2621**	1	GATE AS	
	6	1	**169-3380**	1	PLATE AS	
C	7	1	**253-4019**	1	CONTROL GP-TRANSMISSION	
	8	1	**171-2122**	1	COVER	
	9	1	**172-7105**	1	FILM-PANEL (TRANSMISSION, PARKING BRAKE)	
	10	1	**172-7106**	1	FILM-PANEL (SPEED CONTROL)	
	11	1	**185-2274**	1	FILM-INFORMATION (ENGINE, HIGH IDLE, HOLD)	
	12	1	**185-2287**	1	FILM-INFORMATION (ENGINE, LOW IDLE, HOLD)	
	13	1	**187-0491**	1	COVER	
M	14	1	**9X-2041**	10	SCREW-TRUSS HEAD (M10X1.5X20-MM)	
M	15	1	**9X-2042**	2	SCREW-TRUSS HEAD (M6X1X12-MM)	
M	16	1	**9X-2043**	10	SCREW-TRUSS HEAD (M6X1X14-MM)	
M	17	1	**9X-2045**	4	SCREW-TRUSS HEAD (M6X1X20-MM)	

C-CHANGE FROM PREVIOUS TYPE
M-METRIC PART

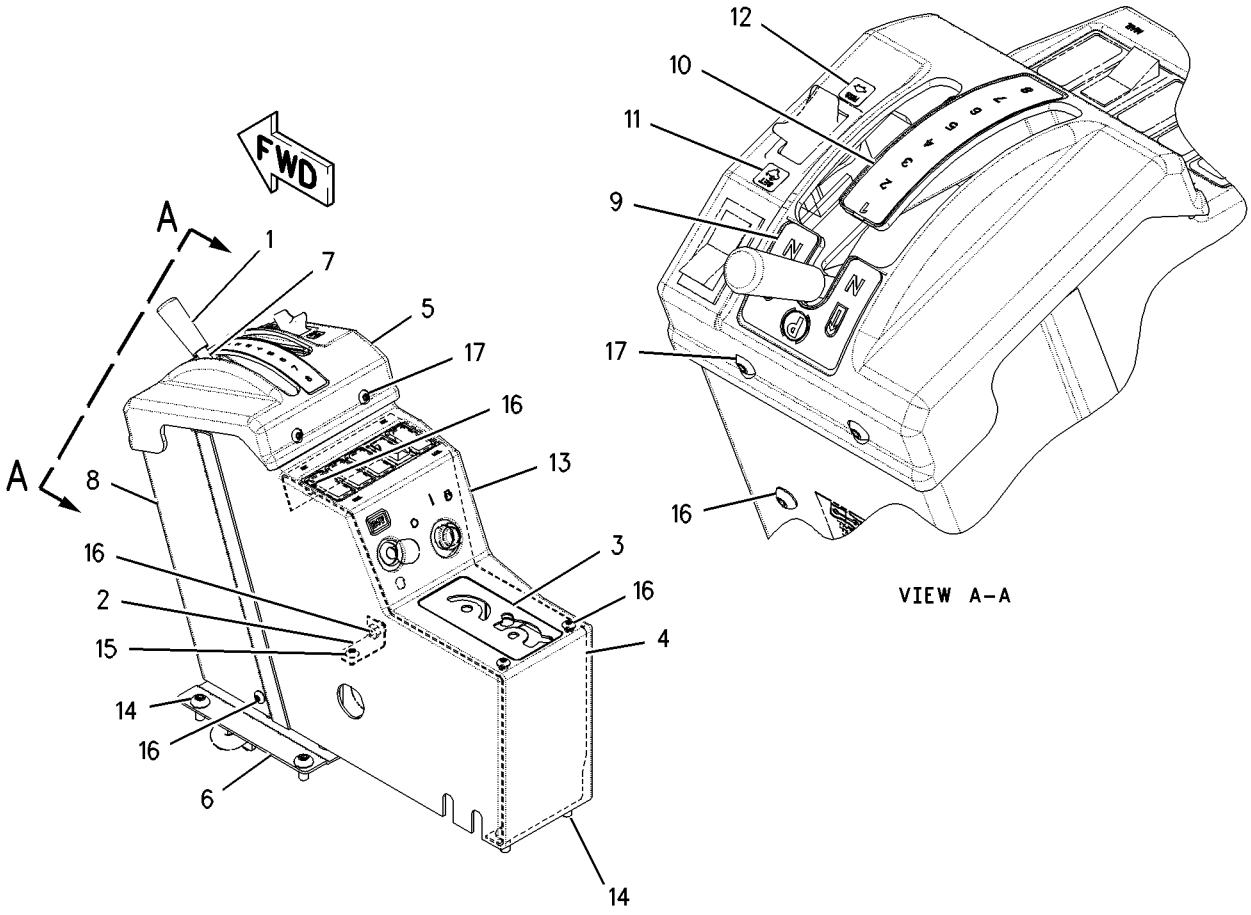

GRAPHIC #1 **<END>** g00882073

OPERATOR STATION

8X-4317 DOOR GP-CAB—HIGH PROFILE—RH

S/N: JBP1-UP

PART OF 8X-4413 DOOR GP-CAB

AN ATTACHMENT

SMCS-7308 **i02158613**

NOTE	REF NO	GRAPHIC REF	PART NUMBER	QTY	PART NAME 1 2 3 4 5 6 (PRODUCT LEVEL)	SEE PAGE
	1	1	**199-2677**	1	LINK (RELEASE)	
	2	1	**1H-3338**	1	LOCKWASHER	
	3	1	**5T-7486**	1	RETAINER-SPRING	
	4	2	**6D-6581**	16	RIVET-POP	
	5	1	**6V-2773**	2	PLUG	
	6	1	**6V-7636**	4	PIN AS-SPRING	
	7	2	**8X-3806**	1	HINGE	
	8	1	**8X-4243**	1	COVER (RH)	
	9	1	**8X-4262**	1	COVER (RH)	
	10	1	**8X-3938**	1	GLASS (UPPER)	
	11	1	**8X-4448**	1	GLASS (LOWER)	
	12	1	**8Y-4398**	1	LINK-CONNECTING	
	13	1	**8Y-4400**	1	LATCH AS-DOOR	
	14	1	**8Y-4401**	1	HANDLE AS (INSIDE)	
	15	2	**8Y-4619**	1	HANDLE AS (OUTSIDE)	
	16	1	**8Y-4620**	1	LINK-CONNECTING	
J	17	2	**8Y-4801**	1	LOCK AS-CYLINDER	
		2	**226-0295**	1	LOCK AS	
		2	**226-0342**	1	CAM	
M	18	1,2	**9X-2546**	4	BOLT (M6X1X20-MM)	
	19	2	**107-9641**	1	PLATE AS	
	20	2	**108-5950**	1	LATCH AS-RH	
	21	1	**108-5952**	1	LINK (RH)	
	22	1	**114-9190**	1	SEAL	
	23	1	**128-0037**	1	KNOB-BALL	
	24	1	**199-2712**	1	HANDLE	
	25	1	**199-2739**	1	DOOR AS (RH) (HIGH PROFILE)	
M		1	**6V-9632**	8	NUT-WELD (M6X1-THD)	
M		1	**8T-3490**	2	NUT-WELD (M10X1.5-THD)	
	26	2	**8T-4121**	2	WASHER-HARD (11X21X2.5-MM THK)	
M	27	2	**8T-4137**	2	BOLT (M10X1.5X20-MM)	
M	28	1	**8T-4181**	6	BOLT (M6X1X20-MM)	
M	29	1	**8X-4245**	1	BOSS (M6X1X18-MM)	
M	30	1	**9X-2042**	7	SCREW-TRUSS HEAD (M6X1X12-MM)	
	31	1	**9X-8256**	2	WASHER (6.6X12X2-MM THK)	
BD	32	1	**5P-5678**		SEAL	
M	33	2	**9X-2045**	4	SCREW-TRUSS HEAD (M6X1X20-MM)	

B-USE AS REQUIRED
D-ORDER BY THE METER
J-REQUIRES 5P8500 KEY
M-METRIC PART

8X-4317 DOOR GP-CAB *(contd.)* **i02158613**

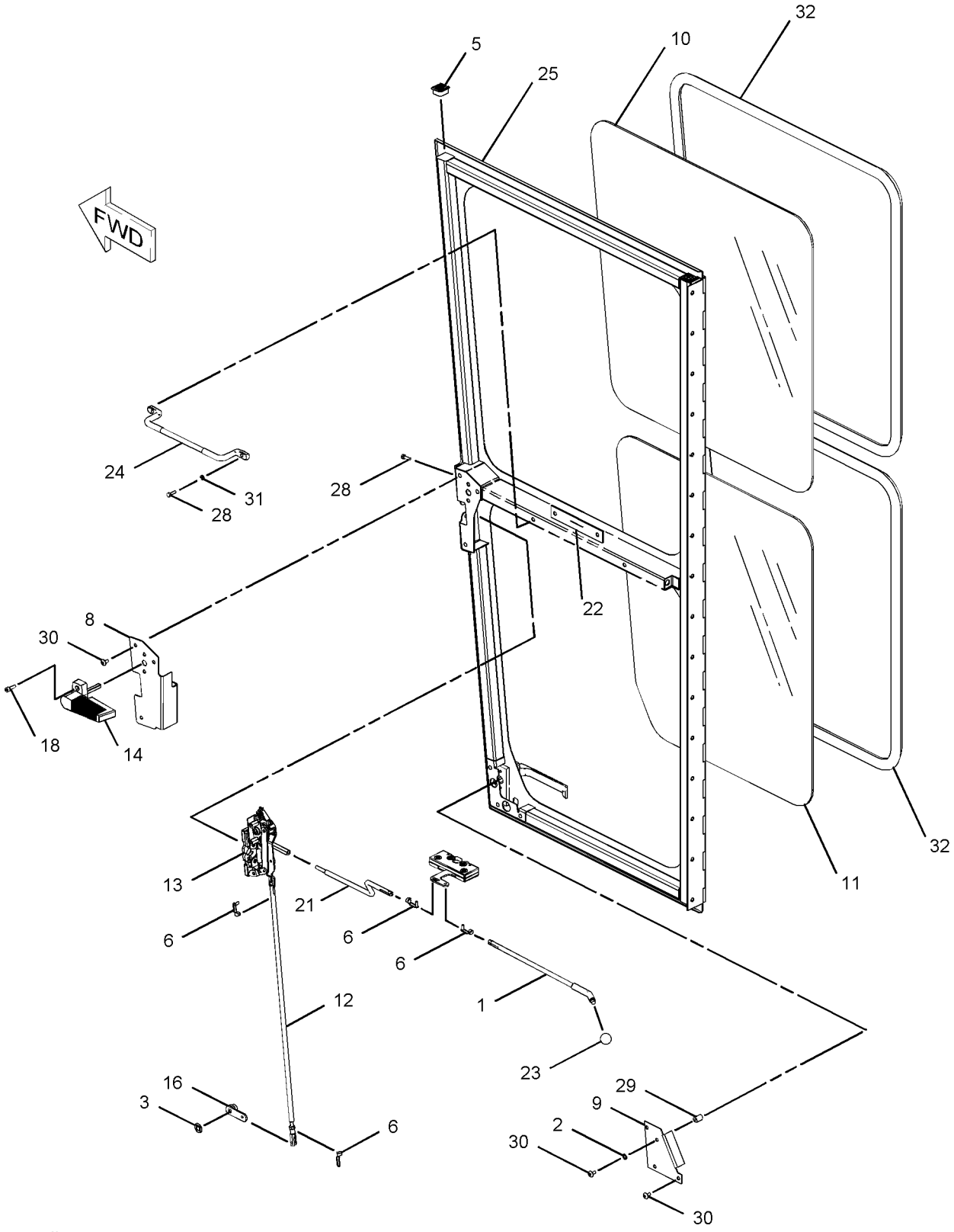

GRAPHIC #1 g01071777

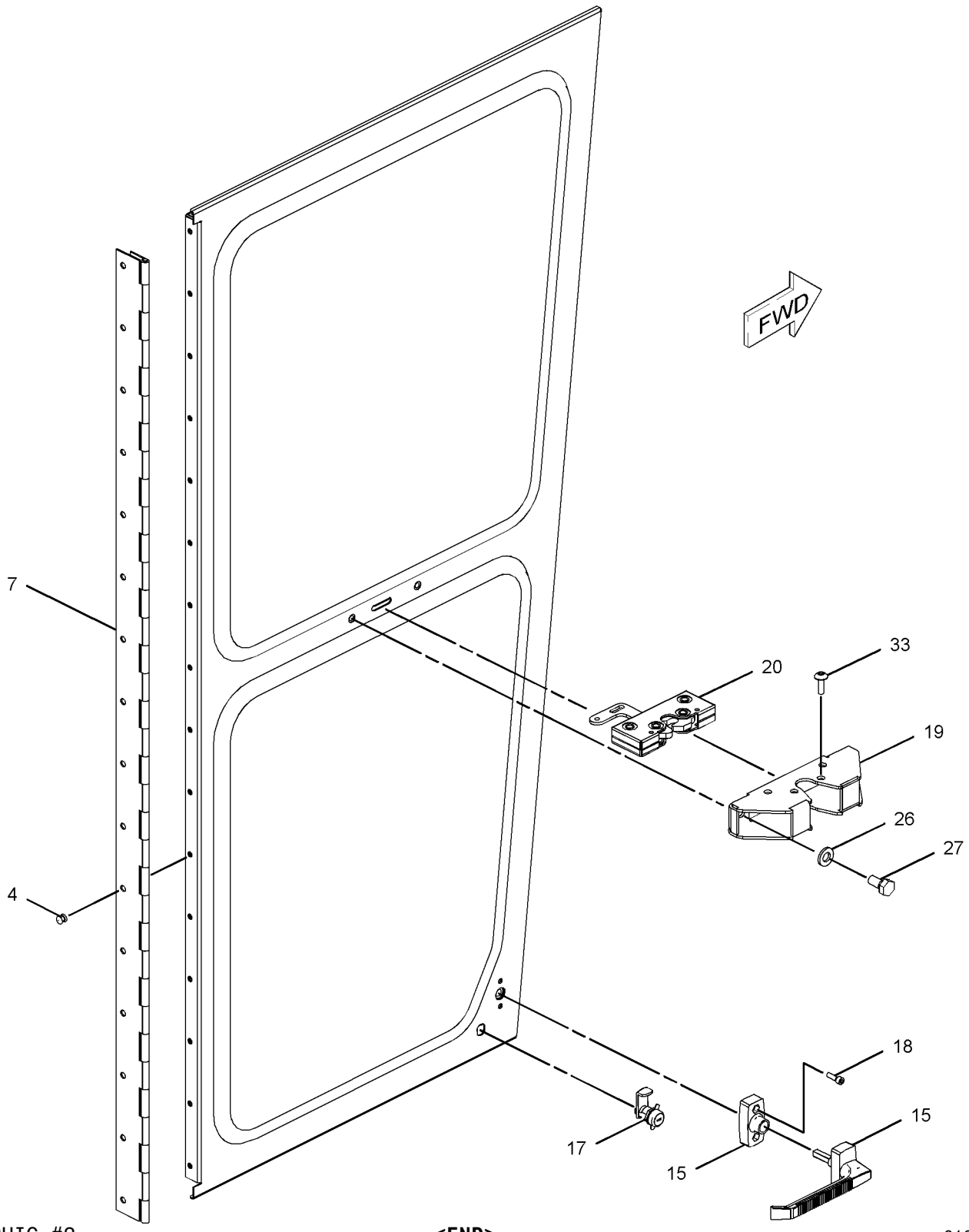

GRAPHIC #2 **<END>** g01071781

OPERATOR STATION

8X-4318 DOOR GP-CAB—HIGH PROFILE—LH

S/N: JBP1-UP
PART OF 8X-4413 DOOR GP-CAB
AN ATTACHMENT

SMCS-7308 **i02158611**

NOTE	REF NO	GRAPHIC REF	PART NUMBER	QTY	PART NAME 1 2 3 4 5 6 (PRODUCT LEVEL)	SEE PAGE
	1	1	**199-2677**	1	LINK (RELEASE)	
	2	1	**1H-3338**	1	LOCKWASHER	
	3	1	**5T-7486**	1	RETAINER-SPRING	
	4	1	**6D-6581**	16	RIVET-POP	
	5	1	**6V-2773**	2	PLUG	
	6	1	**6V-7636**	4	PIN AS-SPRING	
	7	1	**8X-3806**	1	HINGE	
	8	1	**8X-4244**	1	COVER (LH)	
	9	1	**8X-4263**	1	COVER (LH)	
	10	1	**8X-3938**	1	GLASS (UPPER)	
	11	1	**8X-4448**	1	GLASS (LOWER)	
	12	1	**8Y-4398**	1	LINK-CONNECTING	
	13	1	**8Y-4399**	1	LATCH AS-DOOR	
	14	1	**8Y-4401**	1	HANDLE AS (INSIDE)	
	15	1	**8Y-4619**	1	HANDLE AS (OUTSIDE)	
	16	1	**8Y-4620**	1	LINK-CONNECTING	
J	17	1	**8Y-4801**	1	LOCK AS-CYLINDER	
		1	**226-0295**	1	LOCK AS	
		1	**226-0342**	1	CAM	
M	18	1	**9X-2546**	4	BOLT (M6X1X20-MM)	
	19	1	**107-9641**	1	PLATE AS	
	20	1	**108-5949**	1	LATCH AS-LH	
	21	1	**108-5951**	1	LINK (LH)	
	22	1	**114-9190**	1	SEAL	
	23	1	**128-0037**	1	KNOB-BALL	
	24	1	**199-2712**	1	HANDLE	
	25	1	**199-2740**	1	DOOR AS (LH) (HIGH PROFILE)	
	26	1	**8T-4121**	2	WASHER-HARD (11X21X2.5-MM THK)	
M	27	1	**8T-4137**	2	BOLT (M10X1.5X20-MM)	
M	28	1	**8T-4181**	6	BOLT (M6X1X20-MM)	
M	29	1	**8X-4245**	1	BOSS (M6X1X18-MM)	
M	30	1	**9X-2042**	7	SCREW-TRUSS HEAD (M6X1X12-MM)	
M	31	1	**9X-2045**	4	SCREW-TRUSS HEAD (M6X1X20-MM)	
	32	1	**9X-8256**	2	WASHER (6.6X12X2-MM THK)	
BD	33	1	**5P-5768**		SEAL	

B-USE AS REQUIRED
D-ORDER BY THE METER
J-REQUIRES 5P8500 KEY
M-METRIC PART

8X-4318 DOOR GP-CAB *(contd.)* i02158611

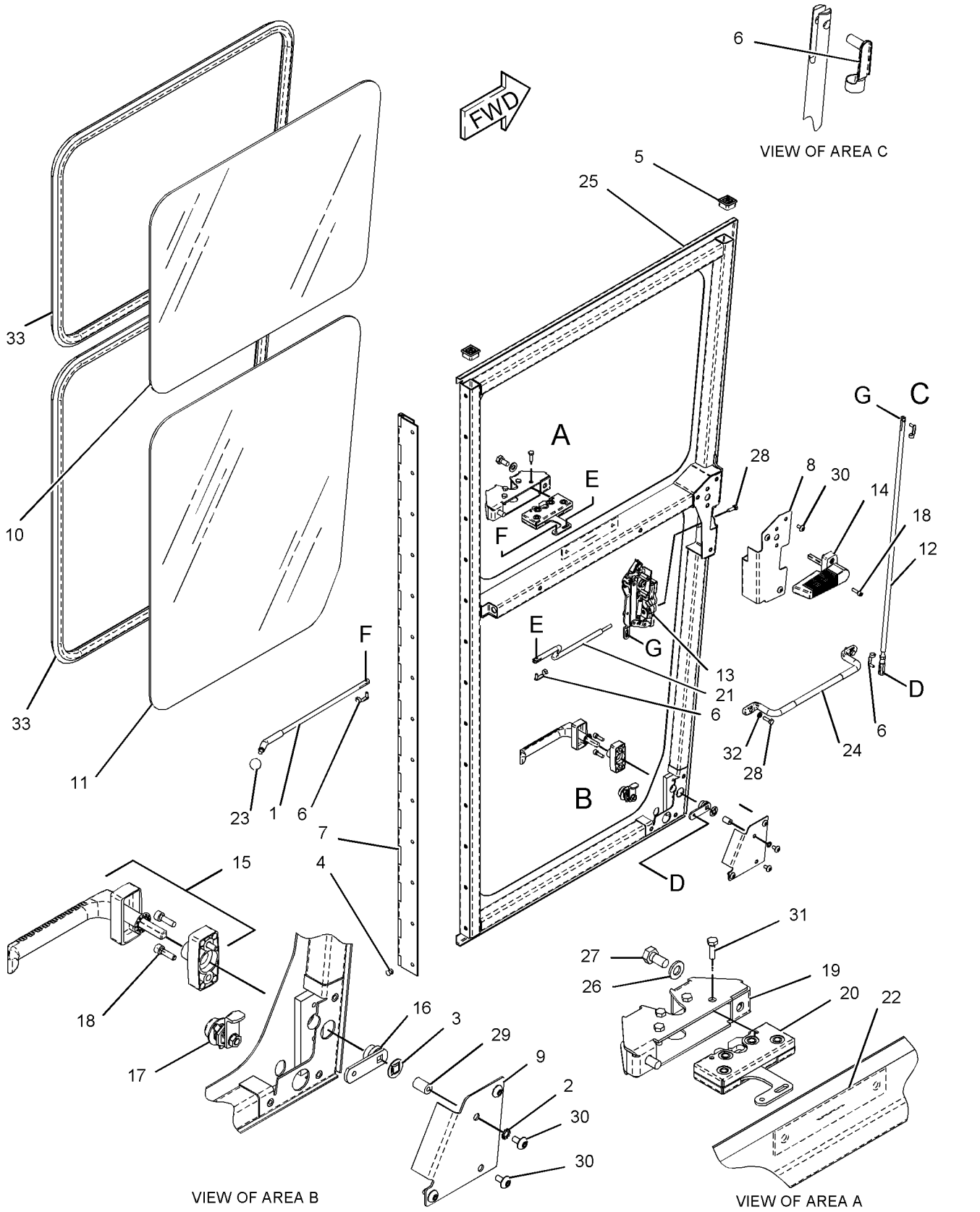

GRAPHIC #1

<END>

g01097693

OPERATOR STATION

8X-4413 DOOR GP-CAB

S/N: JBP1-UP
PART OF 290-1127 CAB GP, 290-0349 ROPS GP
AN ATTACHMENT

SMCS-7308 **i02895745**

NOTE	REF NO	GRAPHIC REF	PART NUMBER	QTY	PART NAME 1 2 3 4 5 6 (PRODUCT LEVEL)	SEE PAGE
	1	1	**6V-5158**	2	STRIKER AS-BODY	
Y	2	1	**8X-4317**	1	DOOR GP-CAB (RH)	646
Y	3	1	**8X-4318**	1	DOOR GP-CAB (LH)	649
	4	1	**106-6553**	4	BUMPER-CONICAL	
	5	1	**107-6813**	2	PLATE AS	
	6	1	**124-8843**	2	PLATE AS	
	7	1	**126-4966**	2	PLATE	
M	8	1	**129-3178**	32	LOCKNUT (M6X1-THD)	
M	9	1	**138-4054**	5	SCREW-FLAT HEAD (M6X1X45-MM)	
	10	1	**5M-3062**	4	BOLT (3/8-16X0.75-IN)	
	11	1	**5P-1075**	4	WASHER-HARD (10.2X22.5X3-MM THK)	
B	12	1	**7X-0605**	8	WASHER-HARD (13X28X1.6-MM THK)	
M	13	1	**8C-8454**	27	SCREW-MACHINE (M6X1X20-MM)	
	14	1	**8T-4121**	4	WASHER-HARD (11X21X2.5-MM THK)	
M	15	1	**8T-4133**	4	NUT (M10X1.5-THD)	
M	16	1	**8T-4195**	4	BOLT (M10X1.5X30-MM)	
M	17	1	**9X-2045**	4	SCREW-TRUSS HEAD (M6X1X20-MM)	
	18	1	**9X-8256**	32	WASHER (6.6X12X2-MM THK)	
D	19	1	**5P-5969**		SEAL (1.6-M EACH)	
E	20	1	**122-2228**		SEAL (172-CM EACH)	
E	21	1	**178-8894**		SEAL (335-CM EACH)	

B-USE AS REQUIRED
D-ORDER BY THE METER
E-ORDER BY THE CENTIMETER
M-METRIC PART
Y-SEPARATE ILLUSTRATION

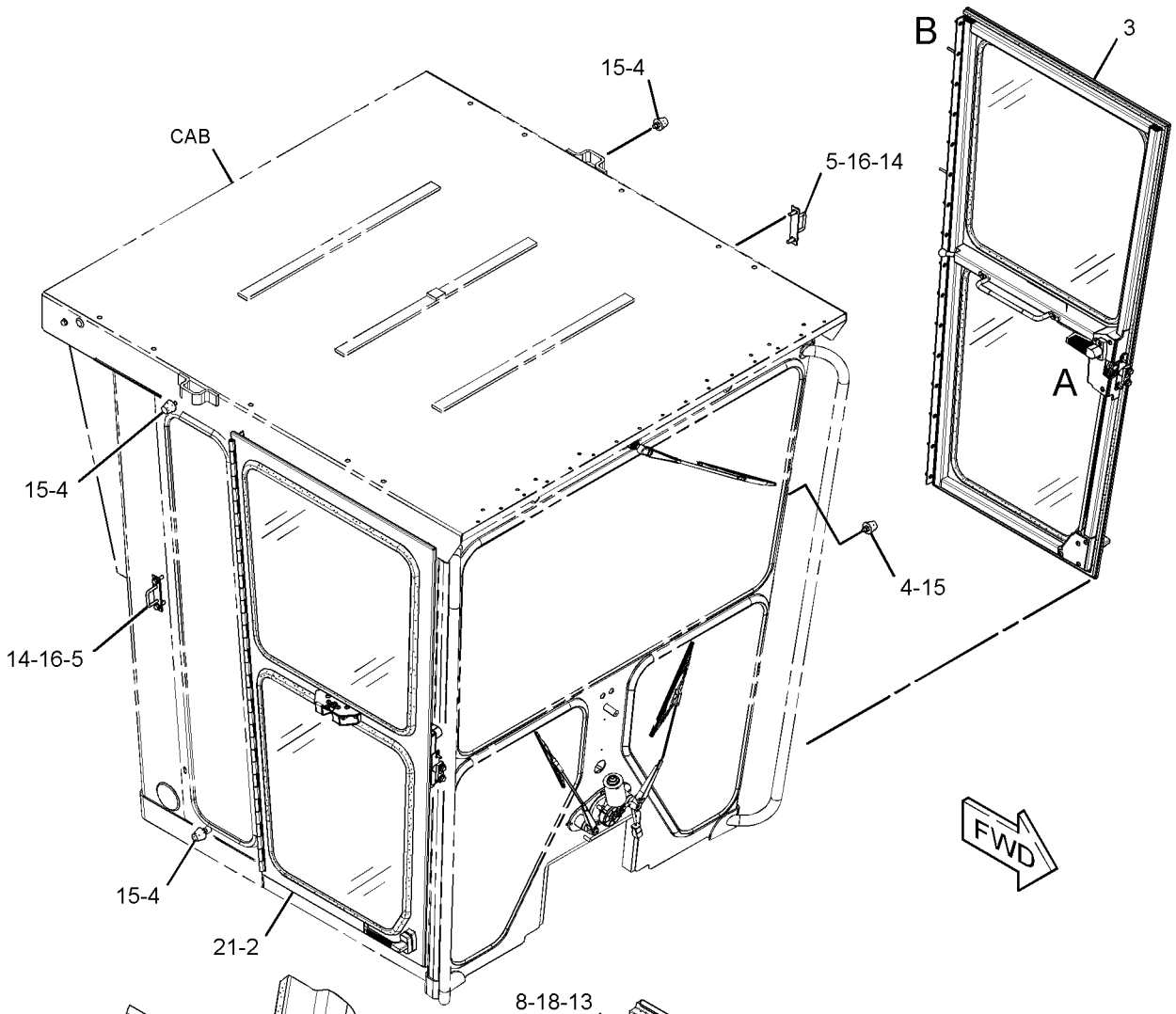

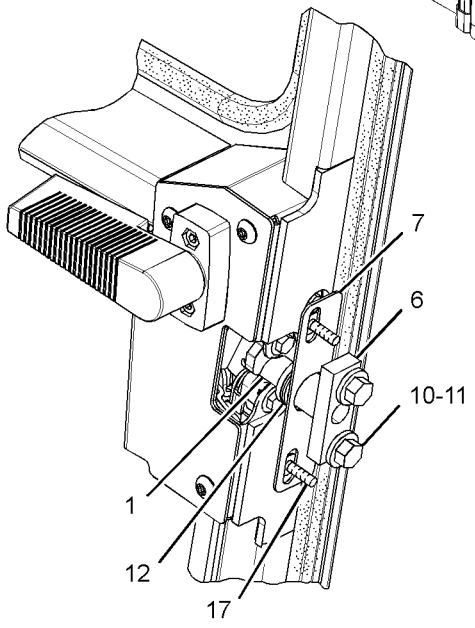

VIEW OF AREA A

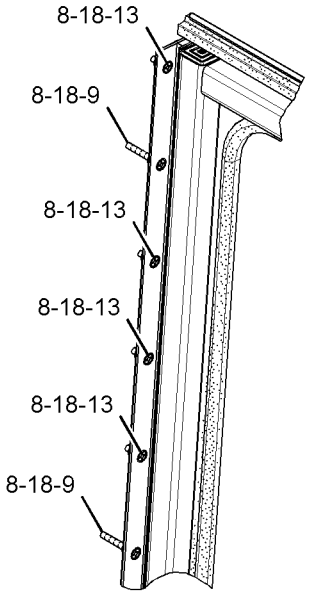

VIEW OF AREA B

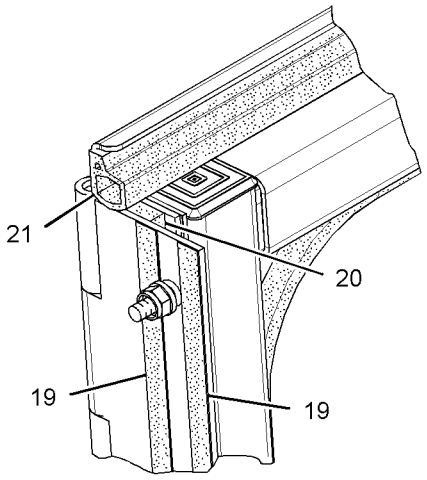

VIEW OF AREA B



GRAPHIC #1

<END>

g01563178

OPERATOR STATION

177-7891 DUCT & CONTROL GP–A/C, HEATER DISTRIBUTOR

S/N: JBP1-UP

PART OF 311-2751 AIR CONDITIONER AR

AN ATTACHMENT

SMCS-7337, 734D **i01679811**

NOTE	REF NO	GRAPHIC REF	PART NUMBER	QTY	PART NAME 1 2 3 4 5 6 (PRODUCT LEVEL)	SEE PAGE
	1	1	**8Y-6388**	6	LOUVER AS-VENT	
	2	1	**139-3595**	1	PANEL AS	
		1	**7K-4201**	2	NUT-SPEED	
		1	**8S-7566**	4	RIVET-POP	
	3	1	**164-8474**	2	LOUVER AS-VENT	
M	4	1	**9X-2043**	2	SCREW-TRUSS HEAD (M6X1X14-MM)	

M-METRIC PART

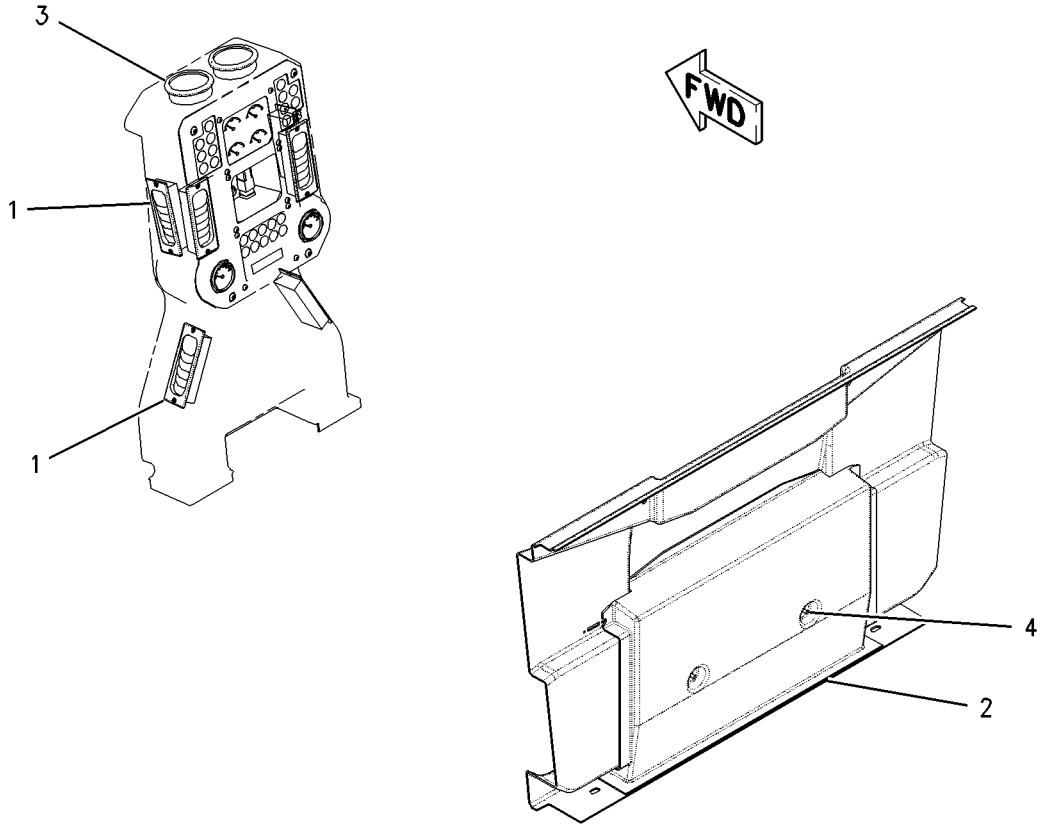

GRAPHIC #1 **<END>** g00796998

OPERATOR STATION

7I-5015 DUCT GP—AIR CONDITIONER, HEATER

S/N: JBP1-UP
PART OF 311-2751 AIR CONDITIONER AR
AN ATTACHMENT

SMCS-734D **i00135943**

NOTE	REF NO	GRAPHIC REF	PART NUMBER	QTY	PART NAME 1 2 3 4 5 6 (PRODUCT LEVEL)	SEE PAGE
	1	1	**104-2091**	8	SCREW-FLAT HEAD (NO 6X0.5-IN)	
	2	1	**106-4496**	6	BRACKET AS	
					(EACH INCLUDES)	
M	3	1	**6V-9632**	1	NUT-WELD (M6X1-THD)	
	4	1	**8X-5102**	2	SEAL	
	5	1	**8Y-6388**	4	LOUVER AS-VENT	
	6	1	**122-8155**	1	DUCT	
	7	1	**122-8154**	1	DUCT	
M	8	1	**9X-2043**	8	SCREW-TRUSS HEAD (M6X1X14-MM)	
	9	1	**8T-4205**	2	WASHER-HARD (7.2X14.5X2-MM THK)	
M	10	1	**5C-2890**	2	NUT (M6X1-THD)	

M-METRIC PART

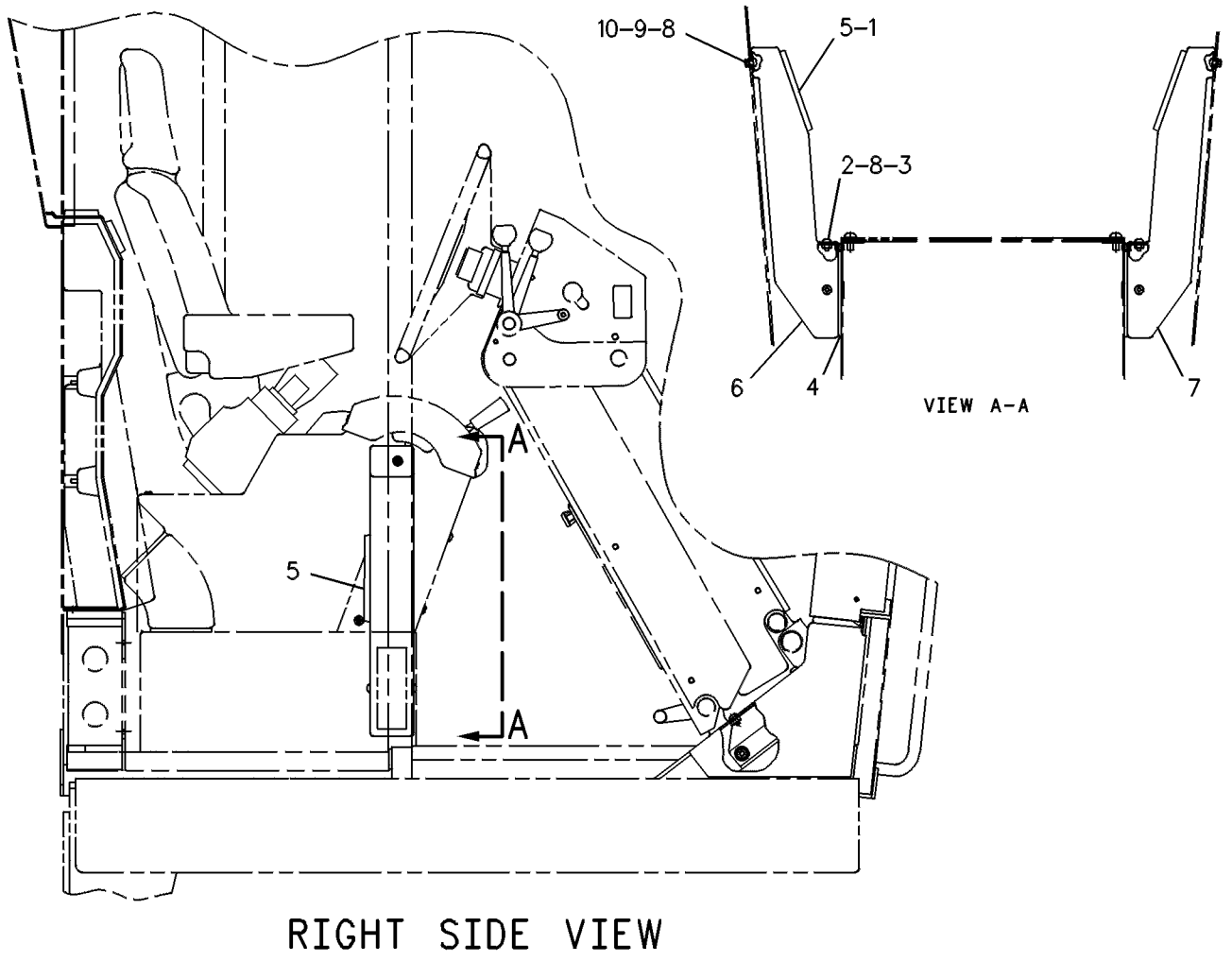

RIGHT SIDE VIEW

GRAPHIC #1 **<END>** g00108768

OPERATOR STATION

170-4820 FAN GP-CIRCULATING

S/N: JBP1-UP
24 VOLT
PART OF 286-4416 FAN GP-CIRCULATING
AN ATTACHMENT

SMCS-7316 **i02863989**

NOTE	REF NO	GRAPHIC REF	PART NUMBER	QTY	PART NAME 1 2 3 4 5 6 (PRODUCT LEVEL)	SEE PAGE
	1	1	**1M-1230**	2	NUT & LOCK AS (10-32-THD)	
	2	1	**3D-8747**	1	BRACKET	
	3	1	**3D-8748**	1	FAN AS (4-BLADE)	
	4	1	**3D-8749**	1	GUARD	
	5	1	**3T-6774**	1	GROMMET	
	6	1	**9X-9689**	1	BASE-FAN	
Y	7	1	**170-5335**	1	MOTOR GP-ELECTRIC (24-VOLT) (CIRCULATING FAN)	159
	8	1	**1B-2713**	1	BOLT (1/4-20X1.75-IN)	
	9	1	**2D-6235**	1	LOCKNUT (1/4-20-THD)	
	10	1	**3D-8752**	1	LOCKNUT (5/16-24-THD)	
	11	1	**5P-0537**	4	WASHER-HARD (7.2X14.5X2-MM THK)	
	12	1	**6G-5987**	1	BRACKET	
	13	1	**7L-8316**	1	SETSCREW-SOCKET (10-32X2.54-IN)	
	14	1	**7T-0582**	1	BOLT	
	15	1	**9M-1974**	2	WASHER-HARD (8.8X16X2-MM THK)	

Y-SEPARATE ILLUSTRATION

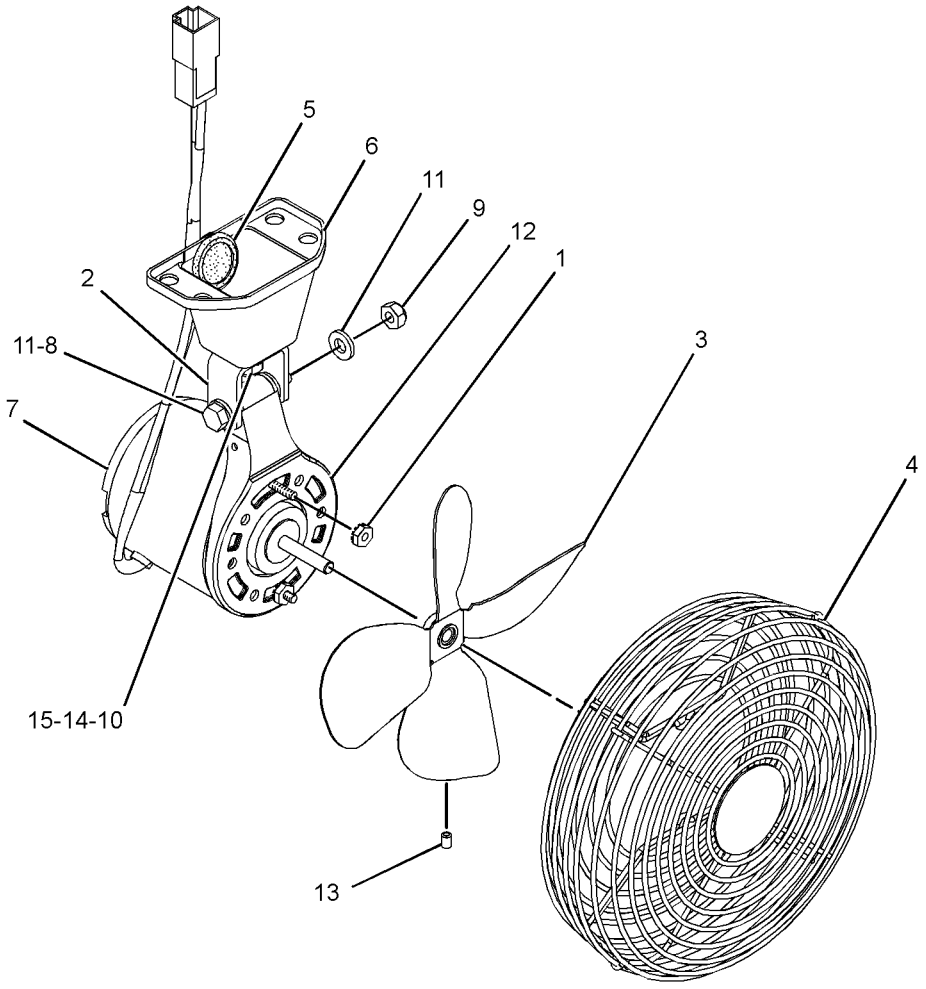

GRAPHIC #1 **<END>** g01256496

OPERATOR STATION

170-5334 FAN GP-CIRCULATING—FRONT

S/N: JBP1-UP
24 VOLT
PART OF 286-4415 FAN GP-CIRCULATING
AN ATTACHMENT

SMCS-7316 **i02838760**

NOTE	REF NO	GRAPHIC REF	PART NUMBER	QTY	PART NAME 1 2 3 4 5 6 (PRODUCT LEVEL)	SEE PAGE
	1	1	**3D-8747**	1	BRACKET	
	2	1	**3D-8748**	1	FAN AS (4-BLADE)	
	3	1	**3D-8749**	1	GUARD	
	4	1	**3T-6774**	1	GROMMET	
	5	1	**9X-9689**	1	BASE-FAN	
	6	1	**135-1979**	1	BRACKET	
Y	7	1	**170-5335**	1	MOTOR GP-ELECTRIC (24-VOLT) (CIRCULATING FAN)	159
	8	1	**031-4155**	1	LOCKNUT (5/16-18-THD)	
	9	1	**1B-2713**	1	BOLT (1/4-20X1.75-IN)	
	10	1	**1M-1230**	2	NUT & LOCK AS (10-32-THD)	
	11	1	**2D-6235**	1	LOCKNUT (1/4-20-THD)	
	12	1	**3D-8752**	1	LOCKNUT (5/16-24-THD)	
	13	1	**4M-0061**	1	BOLT (5/16-18X0.75-IN)	
	14	1	**5P-0537**	4	WASHER-HARD (7.2X14.5X2-MM THK)	
	15	1	**6G-5987**	1	BRACKET	
	16	1	**7L-8316**	1	SETSCREW-SOCKET (10-32X2.54-IN)	
	17	1	**7T-0582**	1	BOLT	
	18	1	**9M-1974**	3	WASHER-HARD (8.8X16X2-MM THK)	
	19	1	**9T-5241**	2	WASHER (9.53X18X1-MM THK)	

Y-SEPARATE ILLUSTRATION

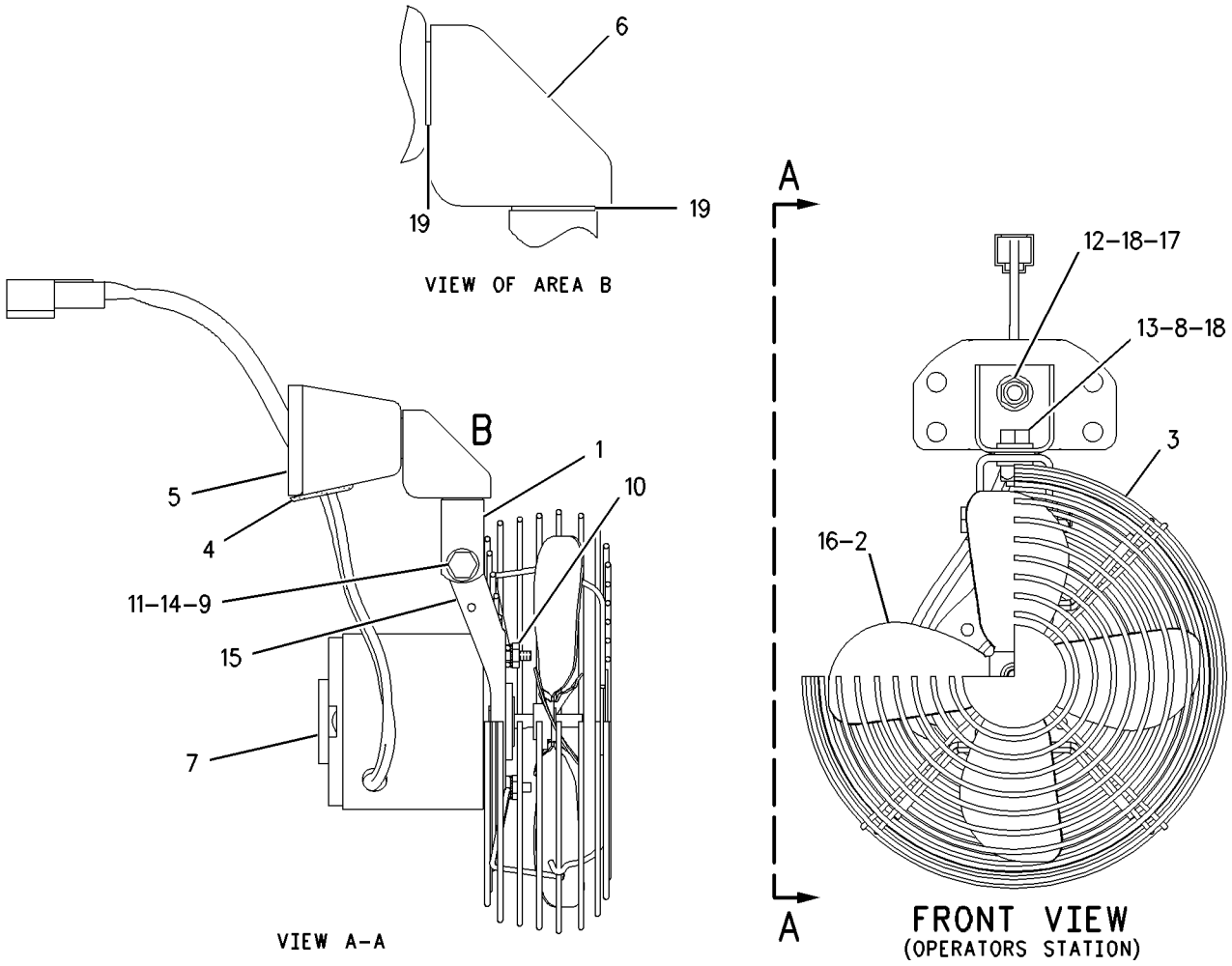

GRAPHIC #1 **<END>** g00761361

OPERATOR STATION

286-4415 FAN GP-CIRCULATING—FRONT DEFROSTER

S/N: JBP1-UP

AN ATTACHMENT

SMCS-7316 **i03435549**

NOTE	REF NO	GRAPHIC REF	PART NUMBER	QTY	PART NAME 1 2 3 4 5 6 (PRODUCT LEVEL)	SEE PAGE
	1	1	**7T-4003**	1	RESISTOR	
	2	1	**9W-1442**	1	FUSE (10-AMPERE)	
Y	3	1	**170-5334**	1	FAN GP-CIRCULATING	656
M	4	1	**9X-1046**	2	SCREW (M4X0.7X18-MM)	
	5	1	*9X-9638*	1	SWITCH AS-ROCKER (24-VOLT, SEALED, ILLUMINATED)	
		1	**3E-9330**	1	SWITCH AS (CIRCULATING FAN)	
		1	**3E-8821**	1	ACTUATOR-ROCKER	
		1	**3E-8825**	1	LAMP (24-VOLT)	

M-METRIC PART
Y-SEPARATE ILLUSTRATION

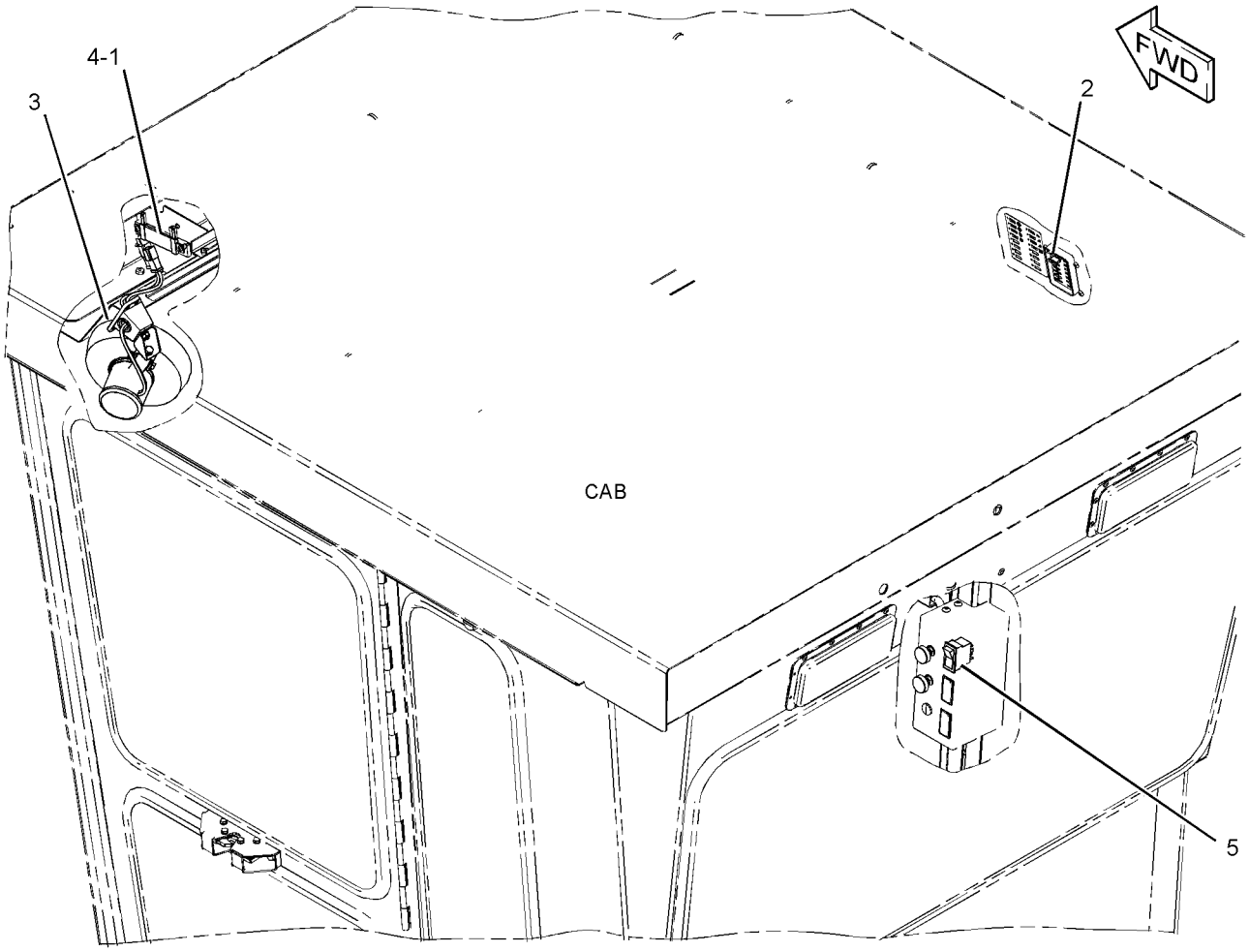

GRAPHIC #1 **<END>** g01671553

OPERATOR STATION

286-4416 FAN GP-CIRCULATING—DEFROSTER, REAR

S/N: JBP1-UP

AN ATTACHMENT

SMCS-7316 **i03259463**

NOTE	REF NO	GRAPHIC REF	PART NUMBER	QTY	PART NAME 1 2 3 4 5 6 (PRODUCT LEVEL)	SEE PAGE
	1	1	**7T-4003**	1	RESISTOR	
	2	1	**9W-1442**	1	FUSE (10-AMPERE)	
Y	3	1	**170-4820**	1	FAN GP-CIRCULATING (REAR)	655
	4	1	**5P-8525**	1	GROMMET	
M	5	1	**9X-1046**	2	SCREW (M4X0.7X18-MM)	
M	6	1	**9X-2045**	4	SCREW-TRUSS HEAD (M6X1X20-MM)	
	7	1	*9X-9638*	1	SWITCH AS-ROCKER (24-VOLT, SEALED, ILLUMINATED)	
		1	**3E-8821**	1	ACTUATOR-ROCKER	
		1	**3E-8825**	1	LAMP (24-VOLT)	
		1	**3E-9330**	1	SWITCH AS (CIRCULATING FAN)	

M-METRIC PART
Y-SEPARATE ILLUSTRATION

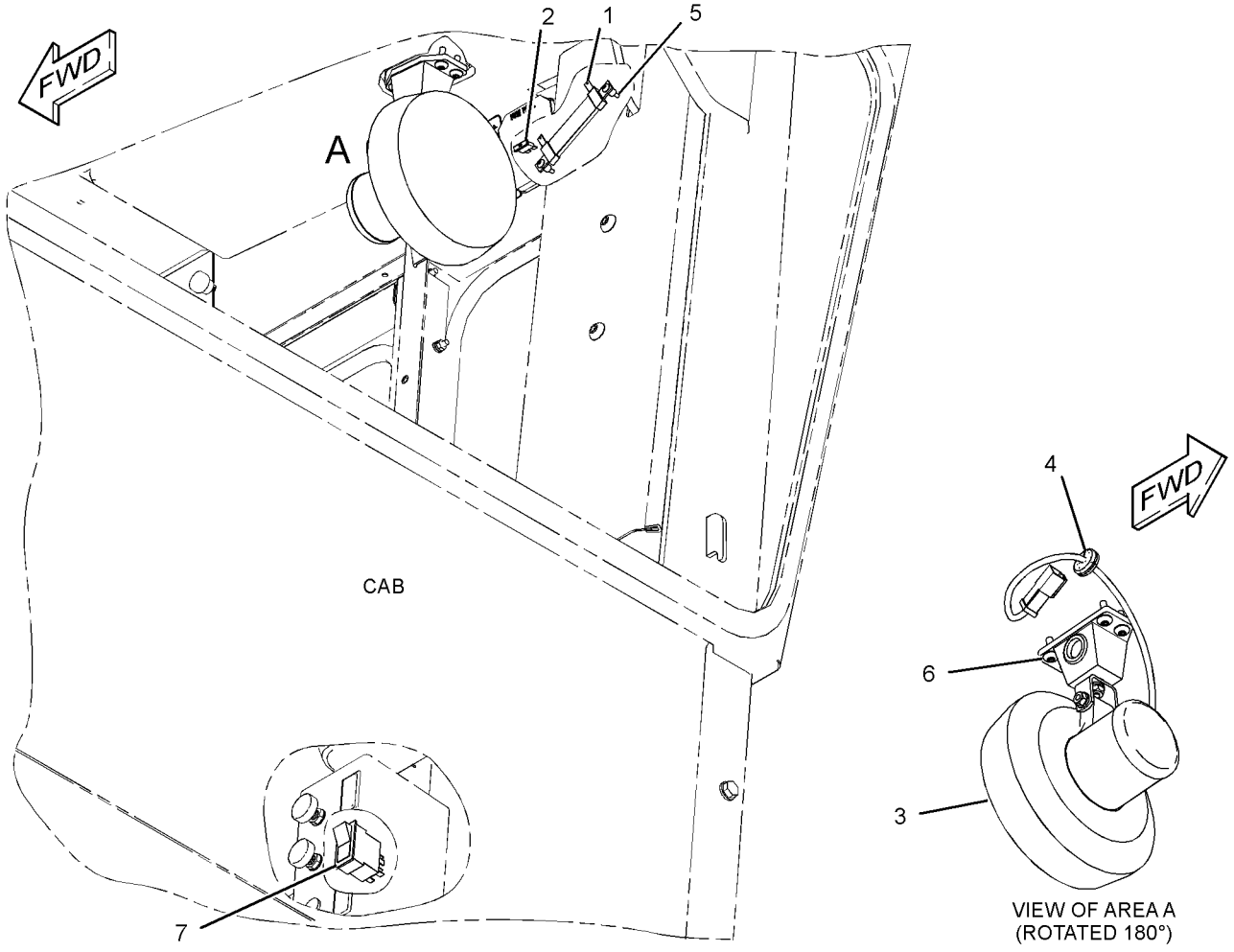

GRAPHIC #1 **<END>** g01754113

OPERATOR STATION

8X-2925 FILTER GP-CAB AIR

S/N: JBP1-UP
PART OF 311-2751 AIR CONDITIONER AR
AN ATTACHMENT

SMCS-7342 **i02200120**

NOTE	REF NO	GRAPHIC REF	PART NUMBER	QTY	PART NAME 1 2 3 4 5 6 (PRODUCT LEVEL)	SEE PAGE
	1	1	**7T-7358**	1	FILTER ELEMENT AS-CAB AIR (CAB)	
	2	1	**9X-8122**	1	PLATE AS	
		1	**7K-4199**	2	THUMBSCREW	
		1	**8R-1778**	1	COVER-FILTER	
		1	**131-5492**	2	RETAINER-CAPTIVE	
	3	1	**112-9555**	4	SPRING-FILTER	
	4	1	*231-4487*	2	FILTER ELEMENT AS-CAB AIR	
					(EACH INCLUDES)	
		1	**231-4486**	1	FILTER ELEMENT AS-CAB AIR (CAB)	
		1	**232-1732**	1	FILTER ELEMENT AS-CAB AIR (CAB)	

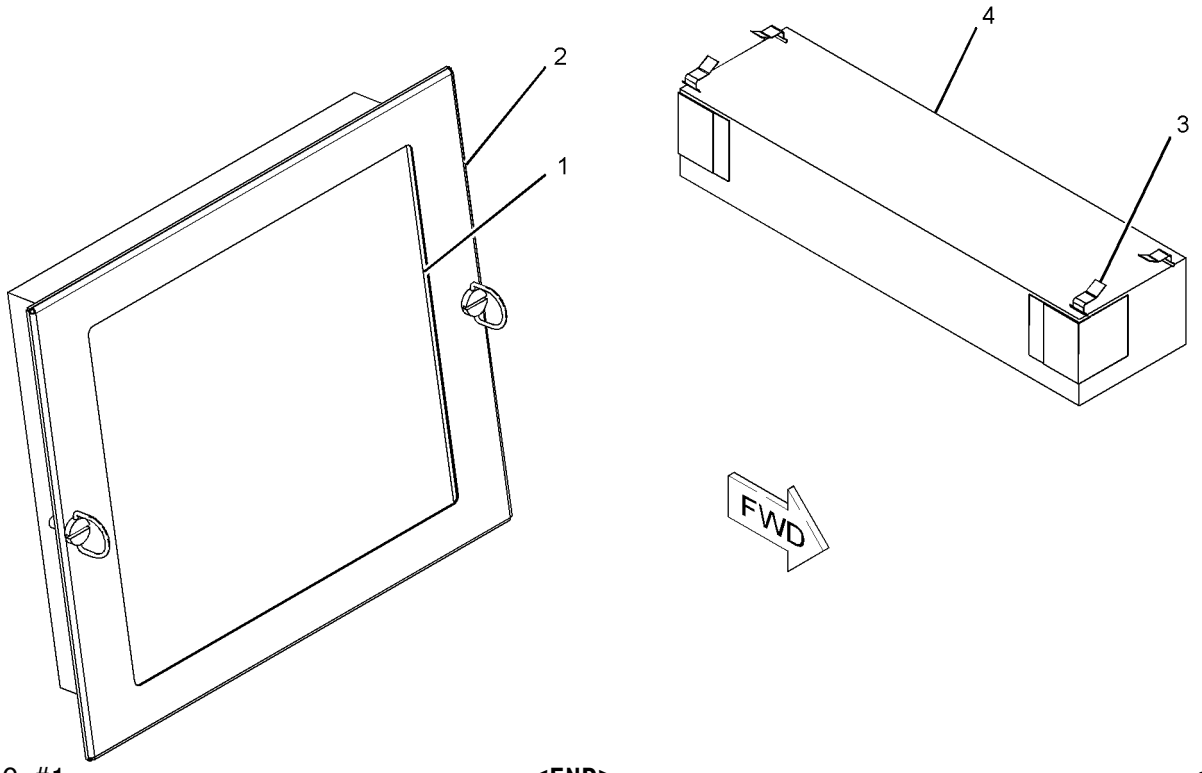

GRAPHIC #1 **<END>** g01070812

OPERATOR STATION

173-5360 HEATER & MTG GP-CAB

S/N: JBP1-UP

PART OF 311-2753 HEATER AR-CAB

AN ATTACHMENT

SMCS-7304 **i02592140**

NOTE	PART NUMBER	QTY	PART NAME 1 2 3 4 5 6 (PRODUCT LEVEL)	SEE PAGE
Y	*174-4547*	1	HEATER GP-CAB (LIGHT-DUTY)	663
	9W-1441	1	FUSE (15-AMPERE) (HEATER)	

Y-SEPARATE ILLUSTRATION

<END>

OPERATOR STATION

311-2753 HEATER AR-CAB

S/N: JBP1-UP

AN ATTACHMENT

SMCS-7304 **i03258429**

NOTE	REF NO	GRAPHIC REF	PART NUMBER	QTY	PART NAME 1 2 3 4 5 6 (PRODUCT LEVEL)	SEE PAGE
Y	1	1	*178-8603*	1	LOUVER GP-CAB	687
Y	2	1	*311-2773*	1	LINES GP-HEATER	685
Y	3	1	*173-5360*	1	HEATER & MTG GP-CAB	661

Y-SEPARATE ILLUSTRATION

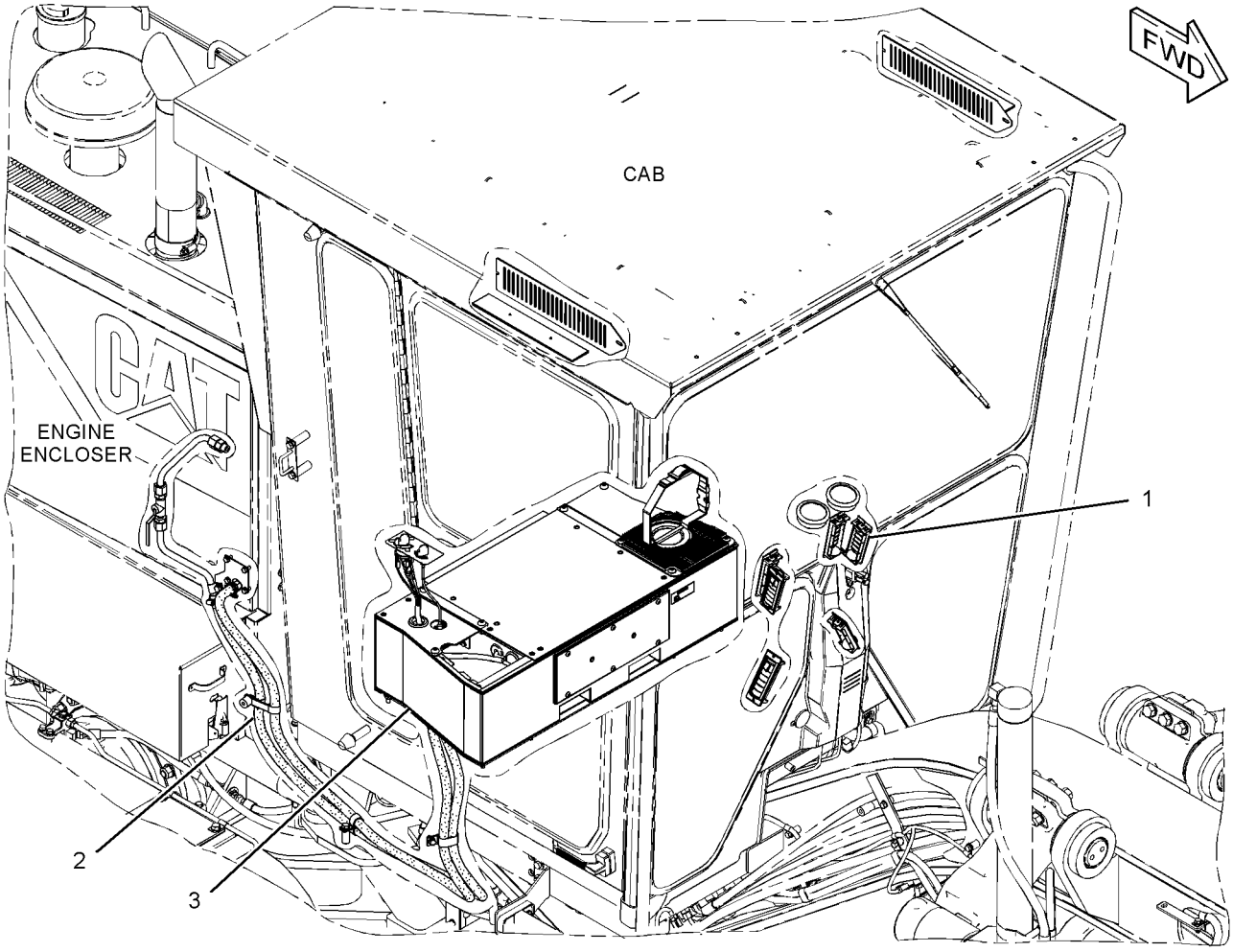

GRAPHIC #1 **<END>** g01671013

OPERATOR STATION

174-4547 HEATER GP-CAB—LIGHT DUTY

S/N: JBP1-UP

PART OF 173-5360 HEATER & MTG GP-CAB

AN ATTACHMENT

SMCS-7304 **i03288481**

NOTE	REF NO	GRAPHIC REF	PART NUMBER	QTY	PART NAME 1 2 3 4 5 6 (PRODUCT LEVEL)	SEE PAGE
	1	2	**2P-4339**	1	NUT-JAM (7/16-28-THD)	
	2	2	**2V-0099**	1	KNOB-CONTROL (FAN SPEED)	
	2A	2	**2V-0099**	1	KNOB-CONTROL (TEMPERATURE)	
	3	2	**3E-0400**	2	BLOWER AS	
	4	2	**3E-3890**	1	FILM-CONTROL (FAN SPEED, TEMPERATURE)	
	5	2	**3H-2900**	1	GROMMET	
	6	1	**3S-2093**	1	STRAP-CABLE	
	7	1	**5P-7803**	2	PLUG-BUTTON	
	8	2	**5P-9135**	1	GROMMET	
	9	2	**6P-3236**	1	SWITCH AS-ROTARY (FAN SPEED)	
		2	**6V-8362**	5	SCREW-MACHINE (8-32X0.31-IN)	
		2	**9B-7233**	5	LOCKWASHER	
	10	2	**6T-5345**	1	BUSHING-TERMINAL	
	11	2	**6T-6708**	2	WASHER (7X28.6X4.1-MM THK)	
	12	1	**7G-4824**	1	STRAP	
	13	1	**8C-3756**	1	FILM-IDENTIFICATION (HEATER)	
	14	2	**8C-4586**	2	CLAMP	
	15	1	**8D-1429**	1	LAMP (24-VOLT)	
	16	1	**8E-7791**	1	STRAP	
	17	1	**8P-5141**	2	PLATE-ORIFICE	
	18	2	**8X-5536**	1	COVER	
	19	1	**8X-5538**	1	COVER AS	
M		1	**8T-3490**	4	NUT-WELD (M10X1.5-THD)	
	20	1	**8X-5540**	1	COVER	
	21	2	**9G-1950**	1	RESISTOR	
M	22	1,2	**9X-2041**	5	SCREW-TRUSS HEAD (M10X1.5X20-MM)	
	23	2	**9X-2185**	4	SCREW (8-15X0.44-IN)	
	24	2	**9X-2488**	4	CLAMP-HOSE	
	25	1	**123-4618**	1	COVER	
	26	1	**123-4701**	1	SEAL	
	27	2	**124-1431**	1	BRACKET	
	28	1	**124-1432**	1	HOUSING AS	
		1	**7T-1099**	1	LINK	
		1	**8P-5141**	2	PLATE-ORIFICE	
	29	2	**124-3137**	1	BRACKET	
	30	1	**124-3138**	1	SEAL	
	31	2	**124-9006**	1	SHAFT	
	32	2	**124-9007**	1	SHAFT AS	
		2	**4L-5966**	2	SETSCREW (NO 10X0.19-IN)	
	33	1	**125-0439**	1	GASKET	
	34	1	**125-0442**	1	PLATE	
	35	2	**129-4935**	1	SEAL	
	36	2	**130-5300**	1	CLIP	
	37	1	**142-4940**	1	PLATE AS	
	38	2	**316-1927**	1	MOTOR AS-BLOWER (24-VOLT, A/C, HEATER)	
		2	**9W-0852**	2	PIN-CONNECTOR (14-GA)	
		2	**102-8802**	1	KIT-RECEPTACLE (2-PIN)	
					(INCLUDES RECEPTACLE AS & WEDGE)	
	39	1	**174-4492**	1	COVER	
	40	1	**174-6051**	1	SUPPORT AS	
	41	1	**174-6353**	1	PLATE	
	42	1	**176-5507**	1	PAD	
	43	1	**177-7858**	1	HARNESS AS-HEATER & AIR COND	
		1	**155-2270**	1	KIT-CONNECTING PLUG (2-PIN)	
					(INCLUDES PLUG AS & WEDGE)	

174-4547 **HEATER GP-CAB** *(contd.)* **i03288481**

NOTE	REF NO	GRAPHIC REF	PART NUMBER	QTY	PART NAME 1 2 3 4 5 6 (PRODUCT LEVEL)	SEE PAGE
		1	**102-8805**	1	KIT-RECEPTACLE (6-PIN)	
					(INCLUDES RECEPTACLE AS & WEDGE)	
	44	1	**191-0027**	1	PAD	
	45	2	**204-4376**	1	CAP-PROTECTIVE	
	46	1	**238-0415**	1	VALVE AS-WATER	
	47	1	**238-0417**	1	CORE AS-HEATER	
	48	1	**248-6772**	4	SCREW-MACHINE (8-16X7.75-IN)	
M	49	2	**129-3178**	4	LOCKNUT (M6X1-THD)	
M	50	2	**141-9784**	1	BOLT (M6X1X190-MM)	
	51	1	**4M-6582**	1	SEAL-O-RING	
M	52	1,2	**5C-2890**	7	NUT (M6X1-THD)	
	53	1	**5P-1075**	13	WASHER-HARD (10.2X22.5X3-MM THK)	
	54	2	**6V-1668**	2	WASHER (6.5X29.1X3-MM THK)	
M	55	2	**6V-7728**	1	BOLT (M6X1X45-MM)	
	56	1	**6V-8801**	13	NUT (3/8-16-THD)	
	57	2	**7X-0591**	2	WASHER-HARD (17X29X3-MM THK)	
M	58	2	**8T-4171**	2	BOLT (M6X1X12-MM)	
	59	1,2	**8T-4205**	15	WASHER-HARD (7.2X14.5X2-MM THK)	
	60	1	**9M-8406**	1	CLIP	
M	61	1	**9X-2040**	4	SCREW-TRUSS HEAD (M10X1.5X25-MM)	
M	62	1	**9X-2045**	6	SCREW-TRUSS HEAD (M6X1X20-MM)	
E	63	2	**136-1953**		HOSE (17-CM EACH)	
D	64	2	**5P-5905**		SEAL (0.1-M EACH)	
E	65	1	**9X-2126**		SEAL (33-CM)	
D	66	1	**5P-5637**		SEAL (0.9-M EACH)	
D	66A	1	**5P-5637**		SEAL (0.4-M EACH)	
D	66B	1	**5P-5637**		SEAL (0.2-M)	
D	66C	2	**5P-5637**		SEAL (0.3-M EACH)	

D-ORDER BY THE METER
E-ORDER BY THE CENTIMETER
M-METRIC PART

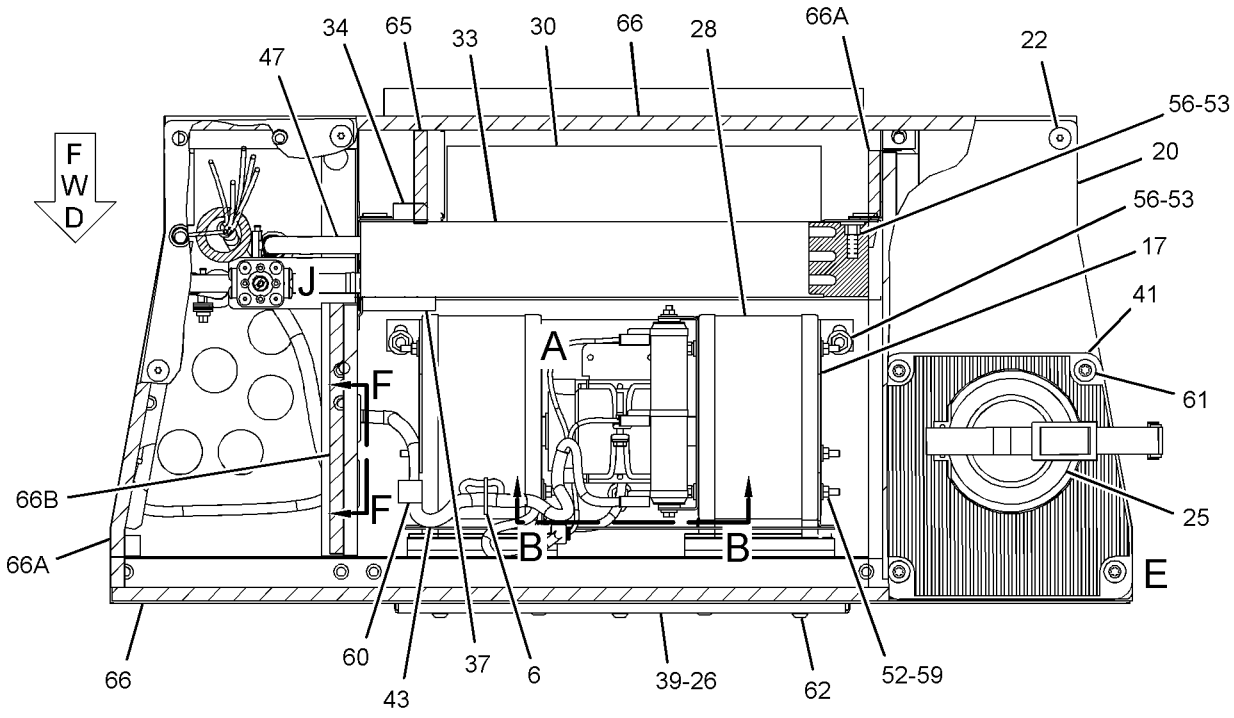

TOP VIEW

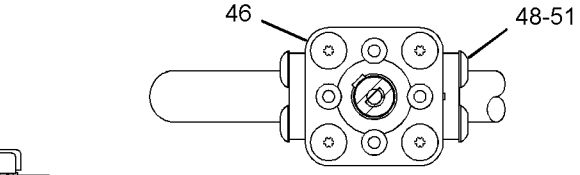

VIEW OF AREA J

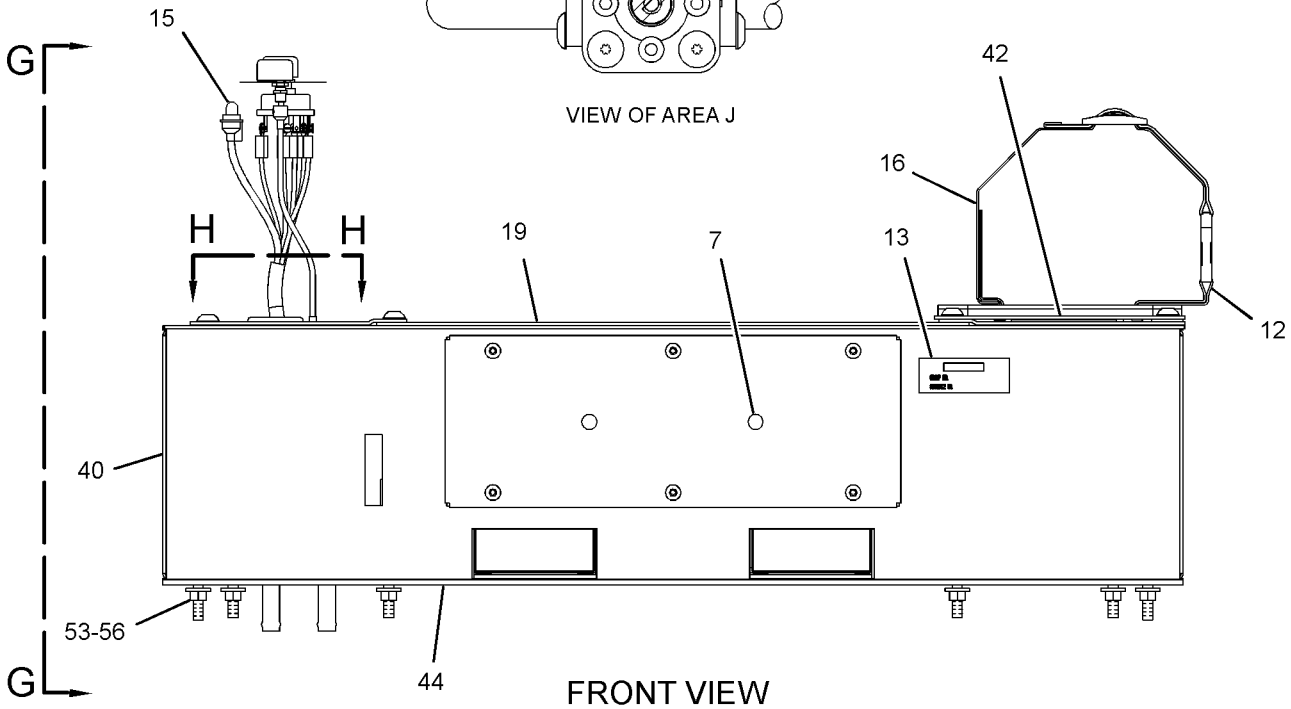

FRONT VIEW

REFER TO ALL ILLUSTRATIONS OF THIS GROUP FOR AUXILIARY VIEWS

GRAPHIC #1

g01758114

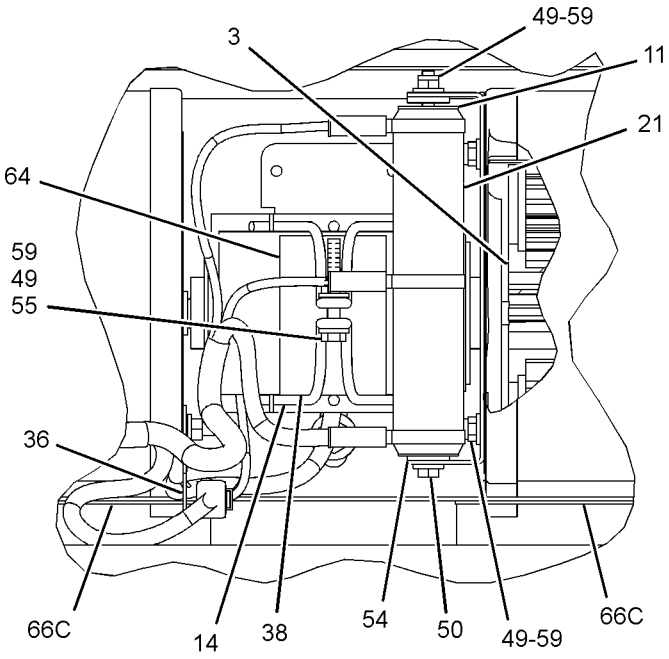

VIEW OF AREA A

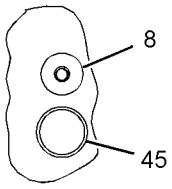

SECTION F-F

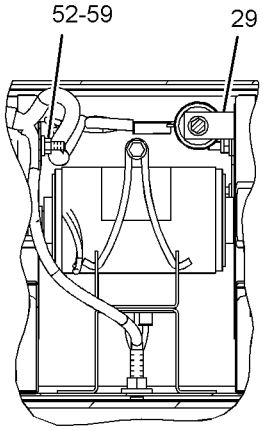

SECTION B-B

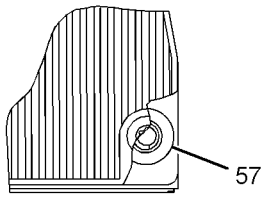

VIEW OF AREA E

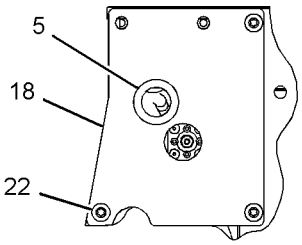

SECTION H-H

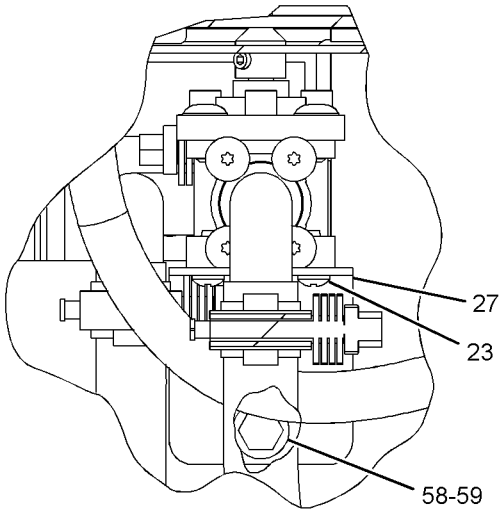

VIEW OF AREA C

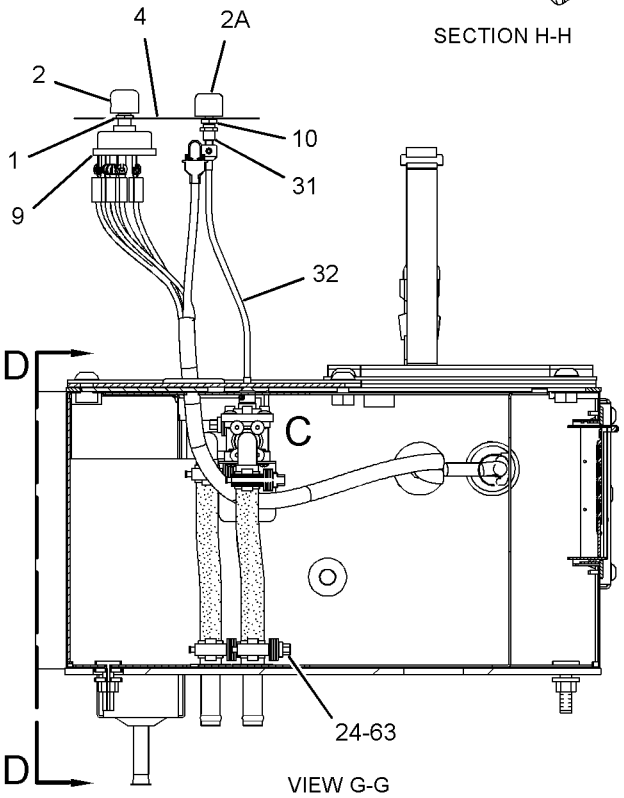

VIEW G-G

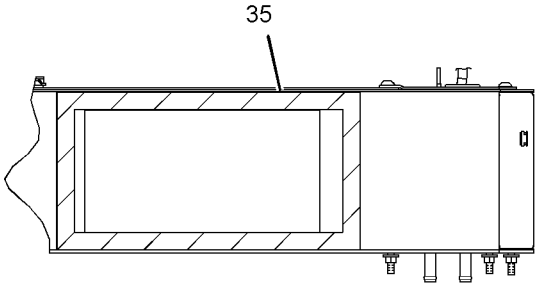

SECTION D-D

GRAPHIC #2 **<END>** g01758115

OPERATOR STATION

295-4371 HORN GP-ELECTRIC

S/N: JBP1-UP

PART OF 274-7941 GENERAL AR

SMCS-7402 **i03260122**

NOTE	REF NO	GRAPHIC REF	PART NUMBER	QTY	PART NAME 1 2 3 4 5 6 (PRODUCT LEVEL)	SEE PAGE
	1	1	**3G-1701**	1	SPRING	
	2	1	**5T-4030**	1	BRACKET	
	3	1	**7I-4696**	1	RETAINER	
	4	1	**7I-4698**	1	RING	
	5	1	**7I-4699**	1	INSULATOR	
	6	1	**009-4184**	4	SPRING-HORN	
	7	1	**009-4185**	4	BRUSH-HORN	
	8	1	**091-9071**	1	SEAL-HORN BUTTON	
	9	1	**098-7467**	1	BUTTON	
	10	1	**163-1201**	1	HORN AS (24-VOLT, LOW TONE)	
	11	1	**169-3145**	1	WIRE AS	
	12	1	**179-4814**	3	PIN	
	13	1	**8T-4121**	2	WASHER-HARD (11X21X2.5-MM THK)	
M	14	1	**8T-4133**	1	NUT (M10X1.5-THD)	
M	15	1	**8T-4195**	1	BOLT (M10X1.5X30-MM)	

M-METRIC PART

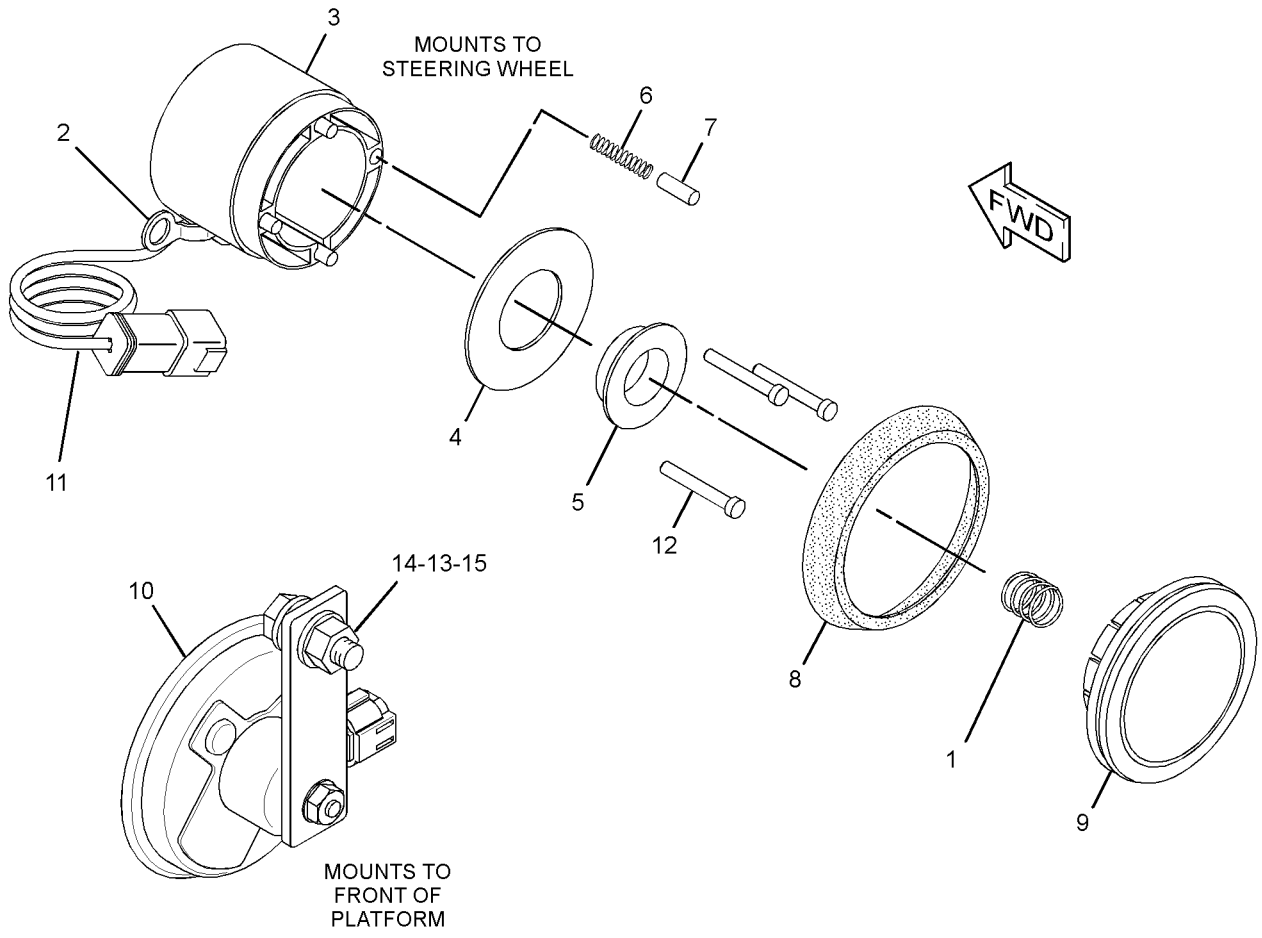

GRAPHIC #1 **<END>** g01685675

OPERATOR STATION

113-5808 HOUSING GP-SEAT SUSPENSION

S/N: JBP1-UP
PART OF 302-7458 SUSPENSION GP-SEAT
AN ATTACHMENT

SMCS-7321, 7324 **i03435560**

NOTE	REF NO	GRAPHIC REF	PART NUMBER	QTY	PART NAME 1 2 3 4 5 6 (PRODUCT LEVEL)	SEE PAGE
	1	1	**119-5026**	1	SCREW-PAN HEAD (10-16X0.63-IN)	
	2	1	**113-5807**	1	KNOB (SLIDE)	
	3	1	**113-5806**	1	ROD	
	4	1	**161-5967**	1	SHAFT	
	5	1	**8Y-6066**	1	SPRING	
	6	1	**8Y-6069**	1	ADJUSTER AS	
	7	1	**8Y-6068**	1	NUT (3/8X16-THD)	
	8	1	**113-5801**	1	HOUSING AS	
	9	1	**8Y-6047**	2	PIN	
	10	1	**2M-7819**	4	RING-RETAINING	
	11	1	**8Y-6041**	1	ARM AS	
	12	1	**8Y-6045**	1	CAM	
	13	1	**8Y-6046**	1	PIN	
	14	1	**5V-0770**	2	BOLT-CARRIAGE (1/4-20X0.74-IN)	
	15	1	**2D-6235**	2	LOCKNUT (1/4-20-THD)	
	16	1	**8S-7803**	4	RING-RETAINING	
	17	1	**7M-7219**	1	BEARING-THRUST	
	18	1	**4N-2927**	2	RACE-THRUST BEARING	
	19	1	**095-0878**	1	PIN-SPRING	
	20	1	**5P-8445**	4	RING-RETAINING	
	21	1	**4B-5059**	6	WASHER (15X29.5X2.5-MM THK)	
	22	1	**8Y-6060**	2	ROLLER	
	23	1	**1Y-7927**	1	PIN	
	24	1	**7V-5191**	2	SPACER (28X10X7.1-MM THK)	
	25	1	**5D-4822**	2	RING-RETAINING	
	26	1	**8Y-6062**	1	LINK-ACTUATOR	
	27	1	**8Y-6063**	1	LINK-ACTUATOR	
	28	1	**8Y-6064**	2	ROLLER-SLIDER	
	29	1	**113-5805**	1	KEY	
	30	1	**131-5167**	1	KNOB AS-ADJUSTMENT	
		1	**4V-7875**	1	HANDLE	
		1	**4V-7877**	1	SPRING	
		1	**6V-3259**	1	PIN-SPRING	
		1	**149-7226**	1	SCREW-PAN HEAD (10-16X0.625-IN)	
	31	1	**131-4242**	1	BOLT (3/8-16X5.18-IN) (SPECIAL)	
	32	1	**8Y-6067**	1	SPACER (10.54-MM THK)	
	33	1	**3D-2975**	2	RING-RETAINING	
	34	1	**8L-8413**	2	STRAP-CABLE	
					AVAILABLE REPAIR KIT(S):	
			100-5179	1	KIT-BUMPER (WEIGHT ADJUSTMENT)	
					(INCLUDES BUMPERS)	
			8Y-6860	1	KIT-SPRING (HEIGHT ADJUSTMENT)	
					(INCLUDES SPRINGS, SPACERS, BUSHING-GUIDES, & ROD HEIGHT ADJUSTERS)	
			8Y-6859	1	KIT-SPRING	
					(INCLUDES RING-RETAININGS, SPRINGS, & BUSHINGS)	
			108-4086	1	KIT-FOLLOWER	
					(INCLUDES PIN & FOLLOWER-CAM)	
			100-3224	1	KIT-INDICATOR (WEIGHT ADJUSTMENT)	
					(INCLUDES STRAP-CABLES, TAPE-INDICATOR, & GUIDE)	
			108-4087	1	KIT-FOLLOWER	
					(INCLUDES PIN & FOLLOWER-CAM)	

113-5808 **HOUSING GP-SEAT SUSPENSION** *(contd.)* **i03435560**

NOTE	REF NO	GRAPHIC REF	PART NUMBER	QTY	PART NAME 1 2 3 4 5 6 (PRODUCT LEVEL)	SEE PAGE
			108-4103	1	KIT-BEARING	
					(INCLUDES ROLLER ASSEMBLIES)	

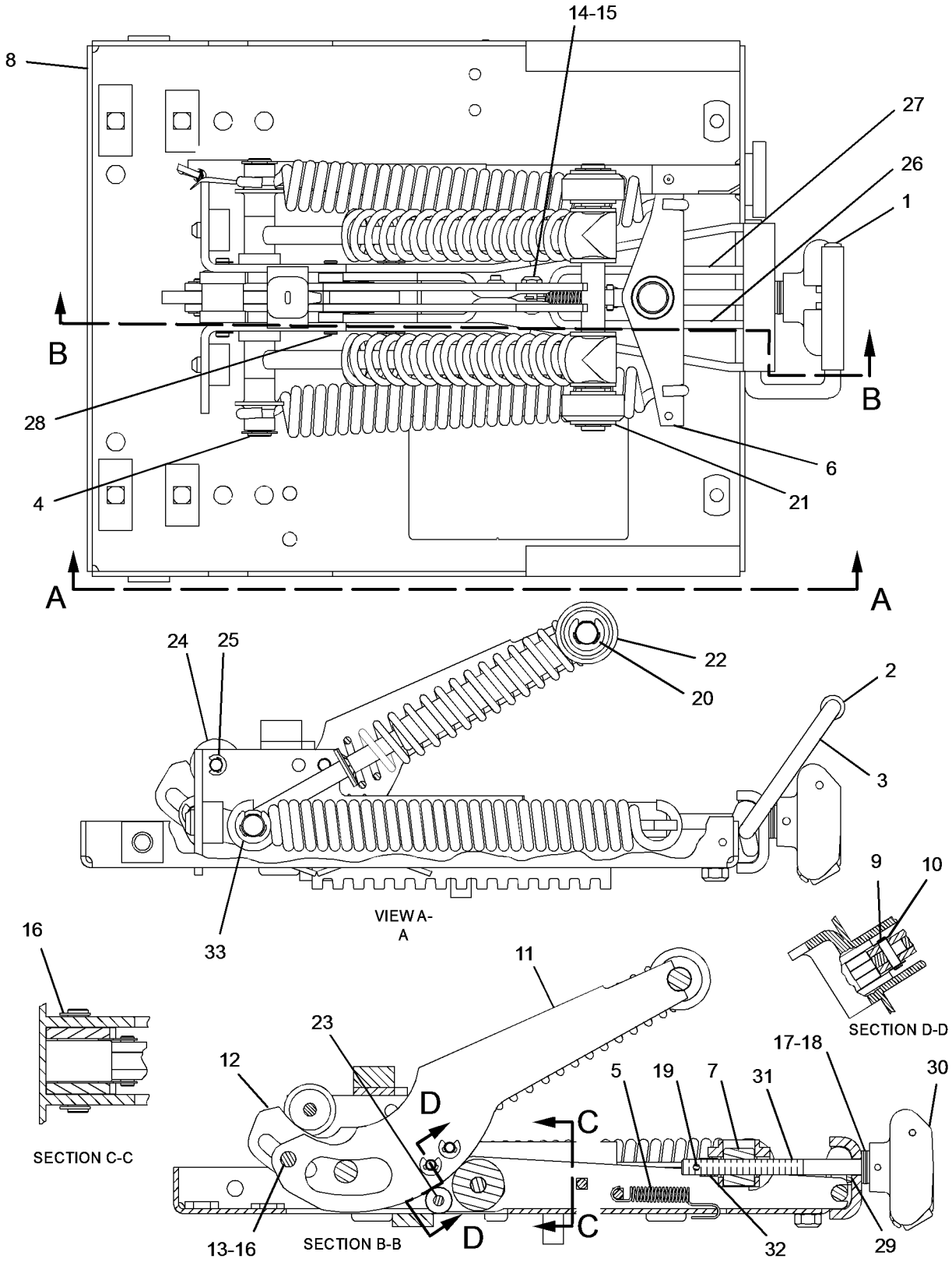

GRAPHIC #1 **<END>** g01786054

OPERATOR STATION

315-5327 INDICATOR GP-LEVEL

S/N: JBP1-UP

AN ATTACHMENT

SMCS-7857 **i03251675**

NOTE	REF NO	GRAPHIC REF	PART NUMBER	QTY	PART NAME 1 2 3 4 5 6 (PRODUCT LEVEL)	SEE PAGE
	1	1	**224-3969**	1	INDICATOR-LEVEL (TEMPERATURE)	

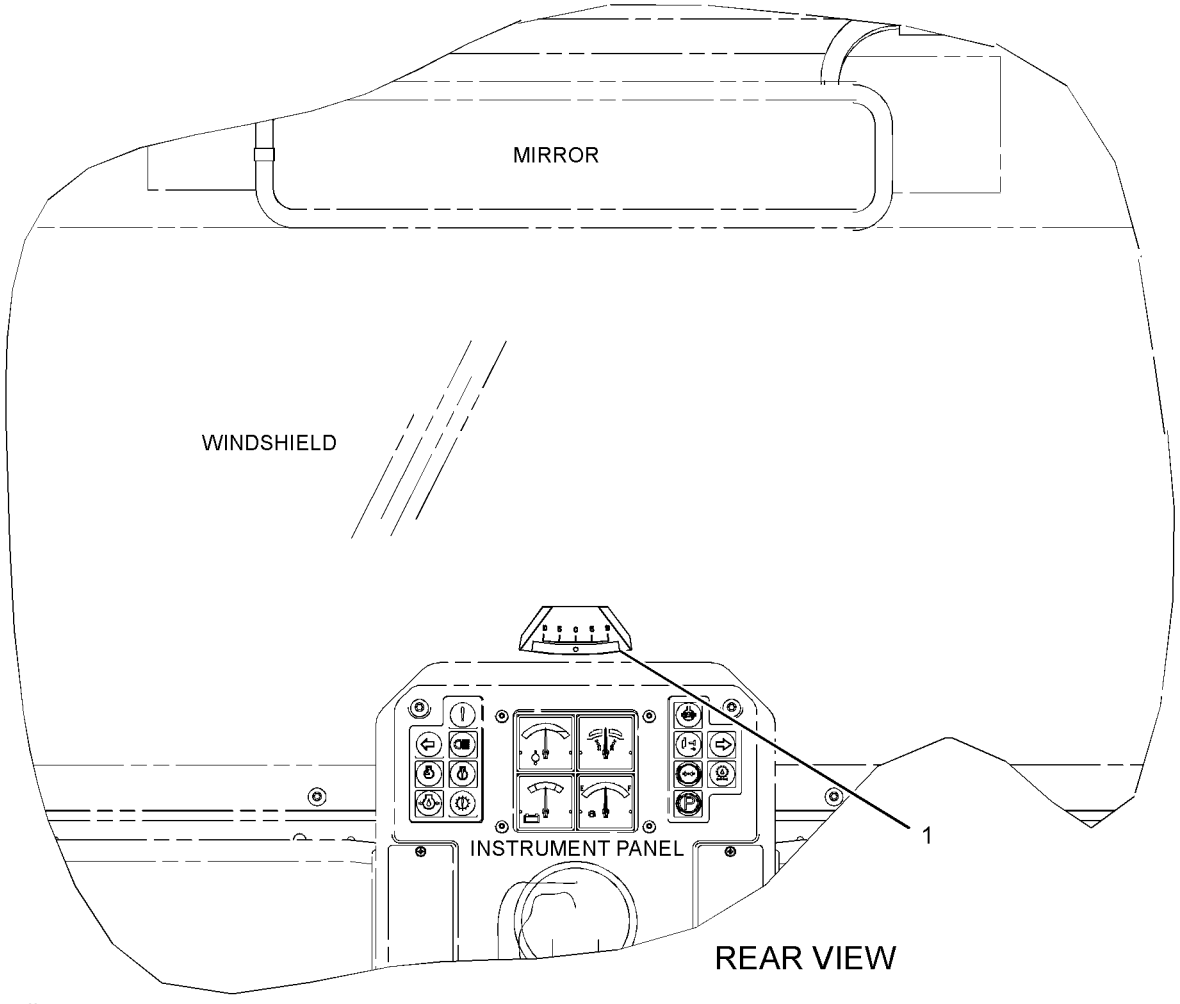

GRAPHIC #1 **<END>** g01702033

OPERATOR STATION

295-7991 INSTALLATION AR-RADIO

S/N: JBP1-UP

AN ATTACHMENT

SMCS-7338 **i03255290**

NOTE	PART NUMBER	QTY	PART NAME 1 2 3 4 5 6 (PRODUCT LEVEL)	SEE PAGE
Y	*286-4330*	1	CONVERTER GP-ELECTRICAL	124
Y	*293-6529*	1	INSTALLATION GP-RADIO	673

Y-SEPARATE ILLUSTRATION

<END>

OPERATOR STATION

293-6529 INSTALLATION GP-RADIO

S/N: JBP1-UP

PART OF 295-7991 INSTALLATION AR-RADIO

AN ATTACHMENT

SMCS-7338 **i03255428**

NOTE	REF NO	GRAPHIC REF	PART NUMBER	QTY	PART NAME 1 2 3 4 5 6 (PRODUCT LEVEL)	SEE PAGE
	1	1	**2A-6684**	1	BRACKET	
	2	1	**2G-8767**	1	WASHER (10.5X60X3-MM THK)	
	3	1	**3S-2093**	1	STRAP-CABLE	
	4	1	**6T-7695**	2	SPEAKER AS-RADIO	
	5	1	**8X-9884**	1	BRACKET AS	
	6	1	**9U-8263**	1	COVER	
	7	1	**9W-3072**	1	ANTENNA AS	
	8	1	**293-7533**	1	CABLE AS	
	9	1	**5P-8525**	1	GROMMET	
	10	1	**6V-5834**	3	SCREW-HEAD (10-14X0.75-IN)	
	11	1	**8T-4121**	2	WASHER-HARD (11X21X2.5-MM THK)	
M	12	1	**8T-4137**	2	BOLT (M10X1.5X20-MM)	

M-METRIC PART

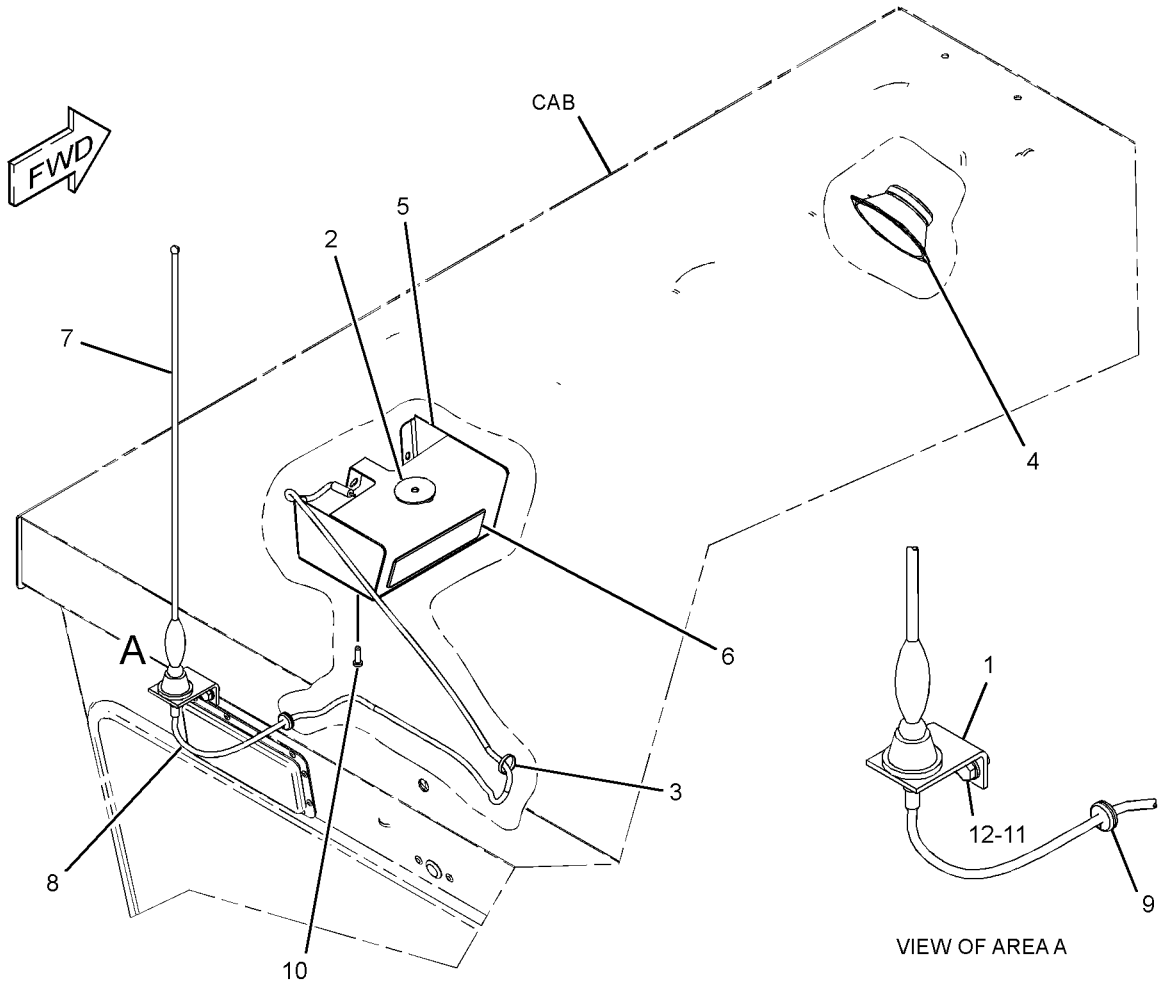

GRAPHIC #1 **<END>** g01687773

OPERATOR STATION

339-5313 INSTALLATION GP-RADIO—NON-ROPS

S/N: JBP1-UP

AN ATTACHMENT

SMCS-7338 **i03346545**

NOTE	REF NO	GRAPHIC REF	PART NUMBER	QTY	PART NAME 1 2 3 4 5 6 (PRODUCT LEVEL)	SEE PAGE
	1	1	**2A-6684**	1	BRACKET	
	2	1	**3S-2093**	4	STRAP-CABLE	
	3	1	**6T-7695**	2	SPEAKER AS-RADIO	
	4	1	**8E-1118**	1	ANTENNA AS	
	5	1	**8X-1853**	2	SPACER (13.1X15.9X30.4-MM THK)	
	6	1	**9U-8263**	1	COVER	
	7	1	**9W-3073**	1	CABLE AS-COAXIAL	
	8	1	**101-3055**	2	COVER-SPEAKER	
	9	1	**200-8623**	8	NUT-RETAINER	
	10	1	**205-4285**	1	CONVERTER GP-ELECTRICAL (24-VOLT TO 12-VOLT)	
	11	1	**208-7782**	1	PLATE AS	
	12	1	**258-7286**	1	PANEL AS-CAB (HIGH PROFILE)	
	13	1	**339-6124**	1	BRACKET AS	
	14	1	**096-6166**	2	WASHER-HARD (4.5X9X1-MM THK)	
	15	1	**103-9425**	8	SCREW-MACHINE (8-32X1-IN)	
M	16	1	**170-5632**	2	BOLT (M4X0.7X16-MM)	
	17	1	**5P-8525**	1	GROMMET	
	18	1	**8T-2501**	2	BOLT (3/8-16X2-IN)	
	19	1	**8T-4121**	2	WASHER-HARD (11X21X2.5-MM THK)	
M	20	1	**8T-4137**	2	BOLT (M10X1.5X20-MM)	
	21	1	**8T-4896**	2	WASHER-HARD (10.2X18.5X2.5-MM THK)	
M	22	1	**9X-2043**	1	SCREW-TRUSS HEAD (M6X1X14-MM)	

M-METRIC PART

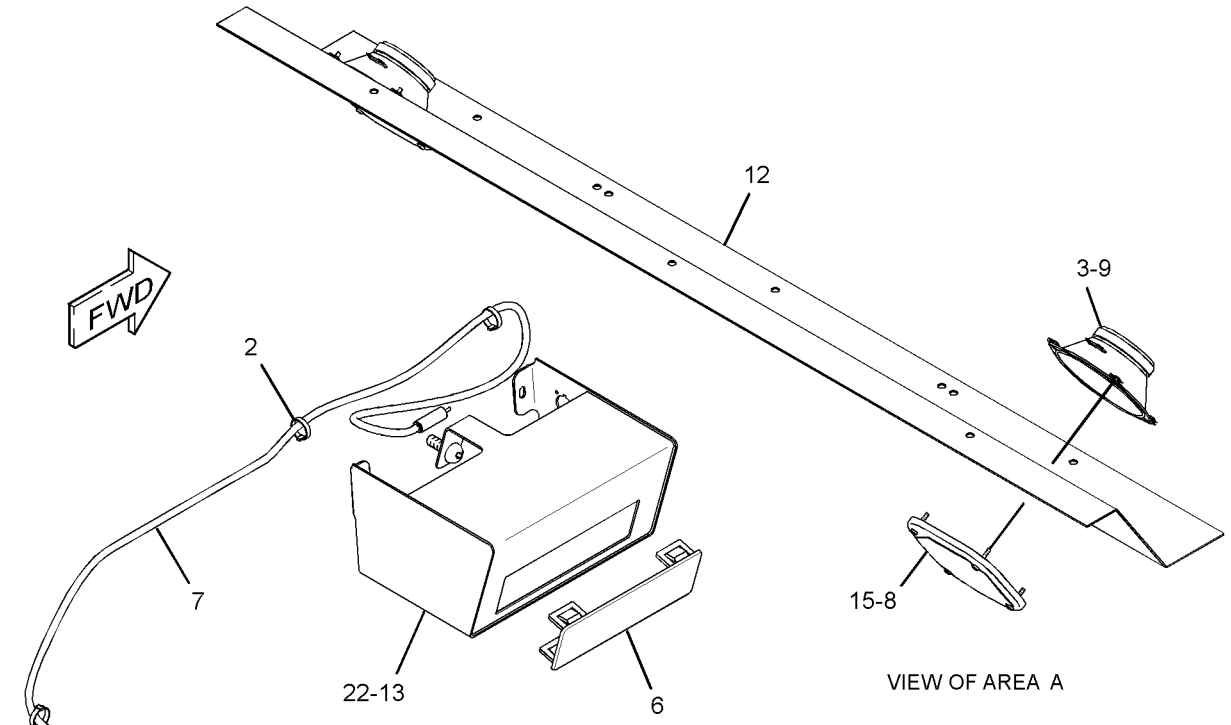

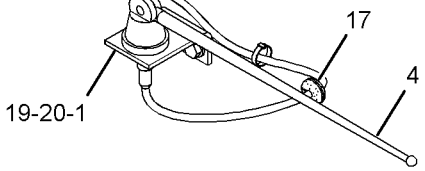

VIEW OF AREA B

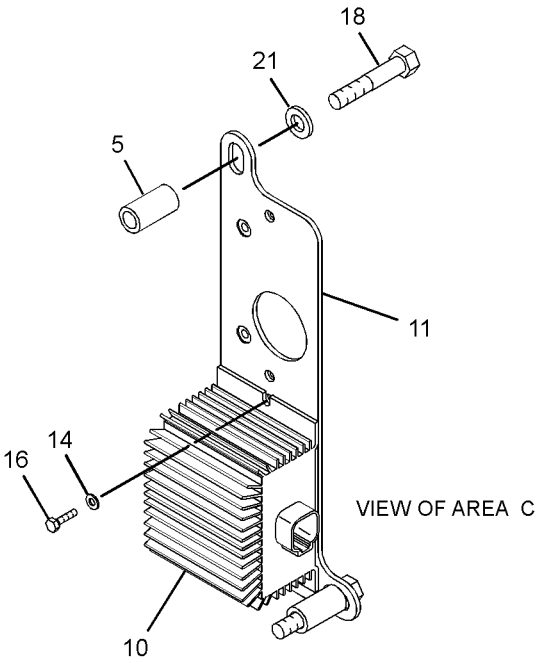

VIEW OF AREA C

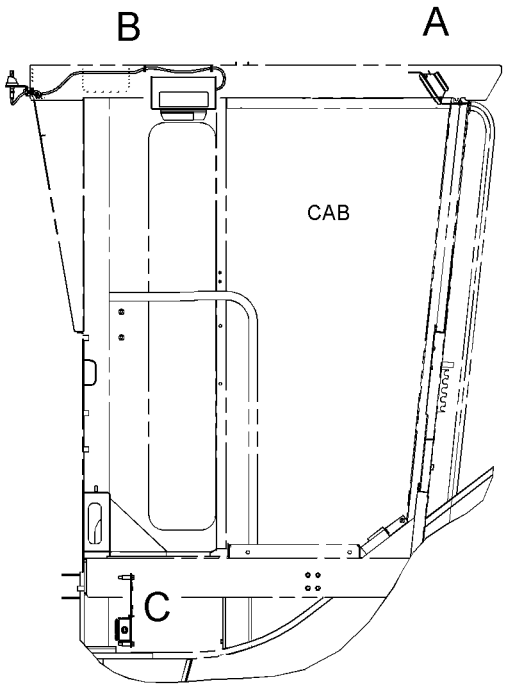

RIGHT SIDE VIEW

GRAPHIC #1 **<END>** g01758393

OPERATOR STATION

172-5378 INSULATION GP-WEATHER—COLD WEATHER

S/N: JBP1-UP
PART OF 290-1126 CAB AR, 320-0342 ROPS AR
AN ATTACHMENT

SMCS-7329 **i03435582**

NOTE	REF NO	GRAPHIC REF	PART NUMBER	QTY	PART NAME 1 2 3 4 5 6 (PRODUCT LEVEL)	SEE PAGE
	1	1	**8X-2226**	2	PLATE	
	2	1	**8X-2913**	2	COVER AS	
					(EACH INCLUDES)	
M		1	**6V-9632**	2	NUT-WELD (M6X1-THD)	
B	3	1	**8X-8055**	6	PLUG	
	4	1	**8X-8351**	2	PLATE AS	
	5	1	**8W-6061**	1	FLOOR MAT (CAB)	
	6	1	**171-6165**	2	DUCT	
	7	1	**178-4190**	2	SEAL	
	8	1	**179-2138**	2	SEAL	
	9	1	**179-2139**	1	FOAM (RH)	
	10	1	**179-2140**	1	FOAM (LH)	
	11	1	**4M-5281**	4	BOLT (1/4-20X0.75-IN)	
	12	1	**5P-4115**	4	WASHER-HARD (7.2X19X2-MM THK)	
M	13	1	**9X-2043**	14	SCREW-TRUSS HEAD (M6X1X14-MM)	
BD	14	1	**5P-6882**		SEAL	
BD	15	1	**5P-5969**		SEAL	
	16	1	**112-9164**	8	BOOT	

B-USE AS REQUIRED
D-ORDER BY THE METER
M-METRIC PART

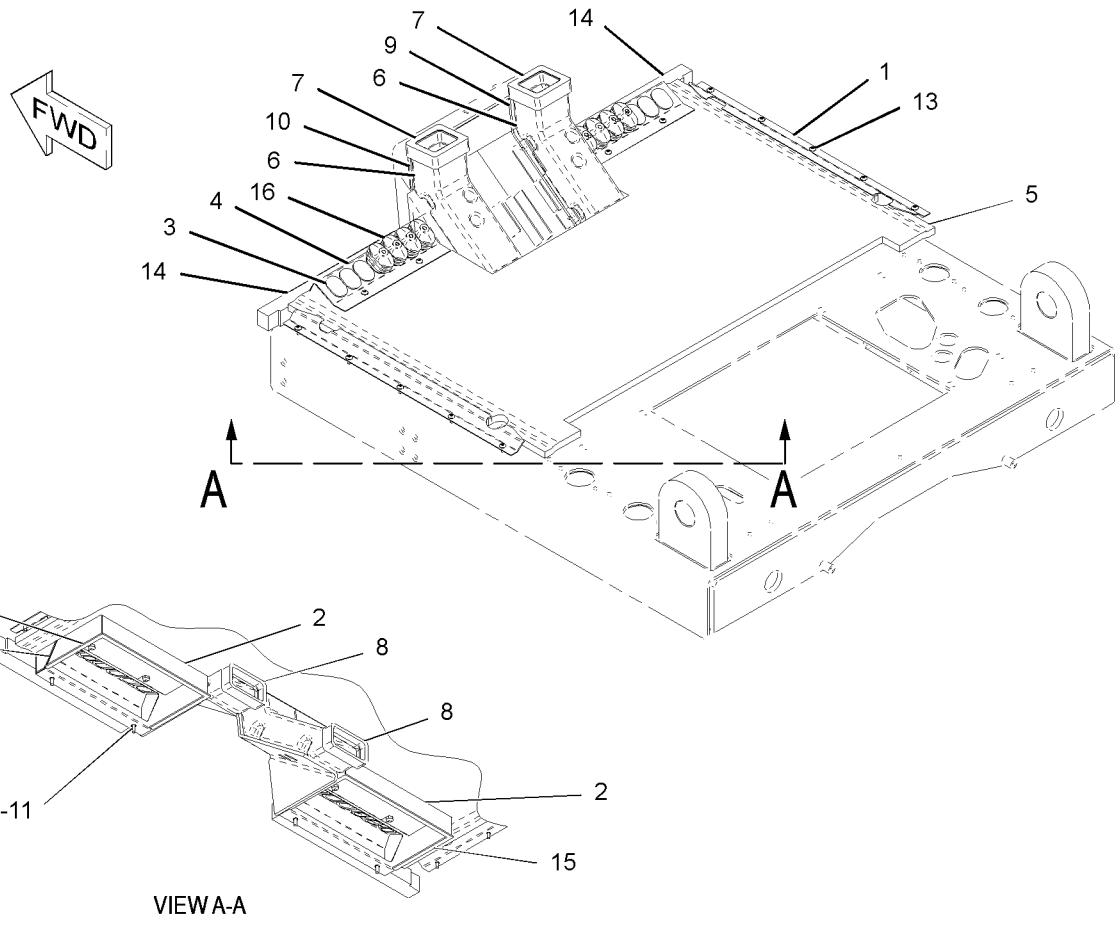

VIEW A-A

GRAPHIC #1 **<END>** g01786093

OPERATOR STATION

177-8781 LINER GP-CAB—ENCLOSED —HIGH PROFILE

S/N: JBP1-UP
PART OF 320-0342 ROPS AR
AN ATTACHMENT

SMCS-7329 **i02578239**

NOTE	REF NO	GRAPHIC REF	PART NUMBER	QTY	PART NAME 1 2 3 4 5 6 (PRODUCT LEVEL)	SEE PAGE
	1	2	**2G-8572**	2	WASHER-SPECIAL (10X27.81X2.54-MM THK)	
	2	2	**2G-8573**	2	CAP	
	3	2	**2G-8767**	1	WASHER (10.5X60X3-MM THK)	
	4	2	**3G-3265**	24	RIVET	
	5	3	**5P-5454**	1	ASHTRAY	
	6	3	**5P-5824**	1	HOLDER	
	7	2	**5P-7803**	2	PLUG-BUTTON	
	8	1	**6G-2395**	2	DOOR GP (AIR VENTED)	
	9	1	**6G-2396**	2	GASKET	
	10	1	**6G-2751**	4	HINGE	
	11	1	**6G-2914**	2	LATCH	
	12	3	**6K-3273**	4	RIVET-POP	
	13	1	**6P-0205**	3	SPACER (0.269X0.405X0.656-IN THK)	
	14	1,2	**6V-3928**	7	PLUG-BUTTON	
	15	2	**6V-8928**	1	HOOK-COAT	
	16	3	**7G-4824**	1	STRAP	
	17	3	**8E-7791**	1	STRAP	
	18	2	**8F-0492**	1	SPACER (0.531X1.125X0.625-IN THK)	
	19	2	**8T-5401**	2	PLUG-BUTTON	
	20	2	**8X-5414**	1	PLATE	
	21	1	**8X-6999**	1	INSULATION	
	22	1	**8X-7845**	2	COVER	
	23	3	**9N-1995**	20	RIVET-POP	
	24	3	**101-3055**	2	COVER-SPEAKER	
	25	1	**107-5014**	4	KNOB (AIR FILTER)	
	26	3	**109-2804**	2	DOOR	
	27	2	**115-6807**	1	PLATE	
	28	1	**115-9923**	1	COVER	
	29	1	**118-2558**	1	PANEL	
	30	3	**122-8795**	2	PLATE	
	31	3	**137-6783**	1	HOLDER	
	32	3	**137-8065**	1	COVER	
	33	3	**138-7026**	1	PLATE	
	34	3	**138-9910**	1	PLATE AS	
	35	1	**139-1118**	1	PLATE	
	36	1	**139-3593**	1	PANEL	
	37	2	**144-4107**	2	FASTENER	
	38	1	**172-1239**	1	COVER (RH)	
	39	1	**174-4140**	1	PANEL	
	40	1	**179-2176**	1	COVER	
	41	1	**179-2179**	1	PLATE AS	
	42	1	**197-8611**	1	COVER (RH)	
	43	1	**197-8624**	1	COVER (LH)	
	44	2	**197-8629**	1	COVER (RH)	
	45	2	**197-8630**	1	COVER (LH)	
	46	2	**200-8623**	8	NUT-RETAINER	
	47	3	**103-9425**	8	SCREW-MACHINE (8-32X1-IN)	
M	48	1	**129-3178**	3	LOCKNUT (M6X1-THD)	
	49	3	**131-6009**	2	PIN	
	50	3	**5P-4115**	2	WASHER-HARD (7.2X19X2-MM THK)	
	51	3	**6V-0292**	1	PLUG	
	52	1	**8T-4121**	1	WASHER-HARD (11X21X2.5-MM THK)	
M	53	2	**8T-4182**	2	BOLT (M10X1.5X45-MM)	
M	54	1	**8T-4195**	1	BOLT (M10X1.5X30-MM)	
	55	3	**9R-2620**	1	PLUG	

177-8781 **LINER GP-CAB** *(contd.)* **i02578239**

NOTE	REF NO	GRAPHIC REF	PART NUMBER	QTY	PART NAME 1 2 3 4 5 6 (PRODUCT LEVEL)	SEE PAGE
M	56	2	**9X-2041**	4	SCREW-TRUSS HEAD (M10X1.5X20-MM)	
M	57	1,3	**9X-2043**	29	SCREW-TRUSS HEAD (M6X1X14-MM)	
M	58	1,2,3	**9X-2045**	6	SCREW-TRUSS HEAD (M6X1X20-MM)	
M	59	3	**9X-2046**	4	SCREW-TRUSS HEAD (M6X1X35-MM)	
	60	1	**9X-8256**	3	WASHER (6.6X12X2-MM THK)	
D	61	2	**8T-3426**		CHANNEL-TRIM (1.4-M)	
D	61A	2	**8T-3426**		CHANNEL-TRIM (0.8-M EACH)	
D	62	1	**6V-0505**		SEAL (1.4-M)	
D	62A	2	**6V-0505**		SEAL (0.03-M EACH)	
D	63	1	**5P-5969**		SEAL (1.0-M)	
D	63A	1	**5P-5969**		SEAL (0.8-M EACH)	
D	64	2	**6V-5163**		SEAL	
M	65	1	**9X-2042**	4	SCREW-TRUSS HEAD (M6X1X12-MM)	
	66	2	**8T-4896**	1	WASHER-HARD (10.2X18.5X2.5-MM THK)	

D-ORDER BY THE METER
M-METRIC PART

177-8781 **LINER GP-CAB** *(contd.)* **i02578239**

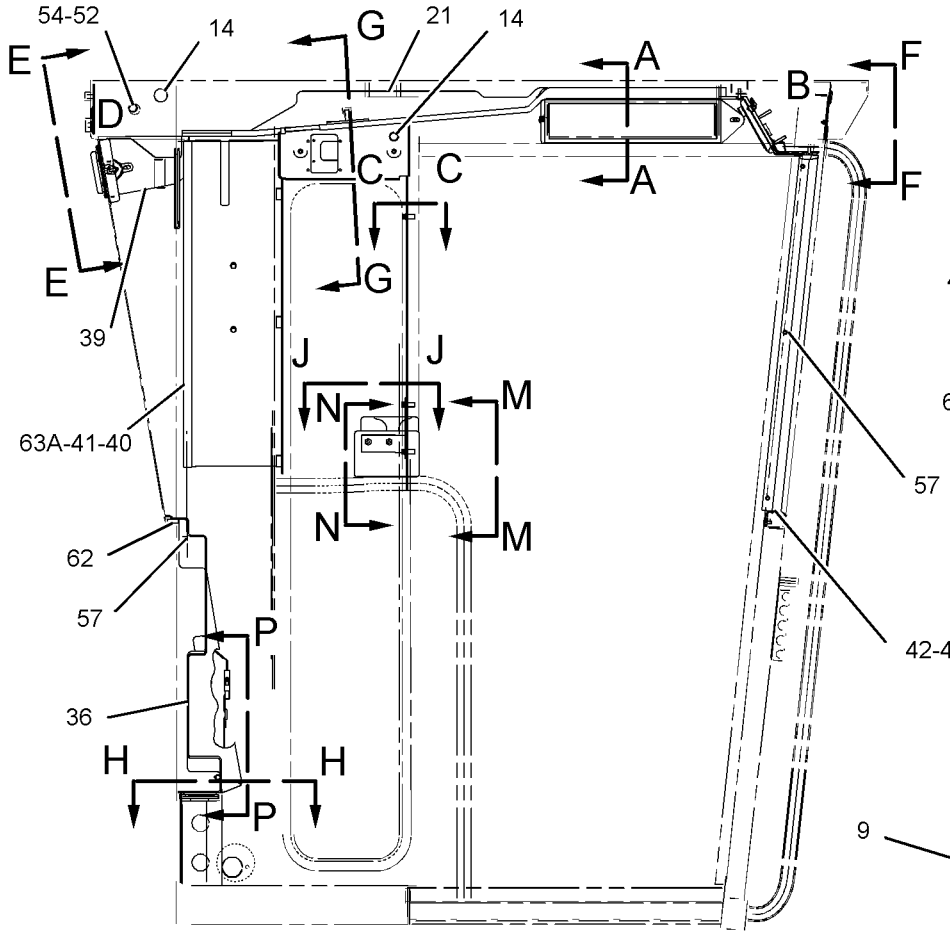

RIGHT SIDE VIEW

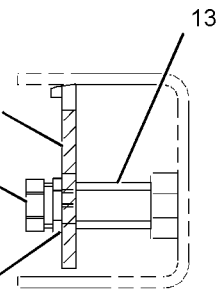

SECTION C-C

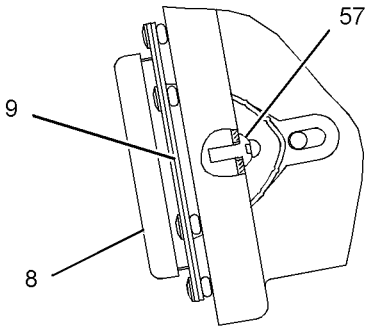

VIEW OF AREA D

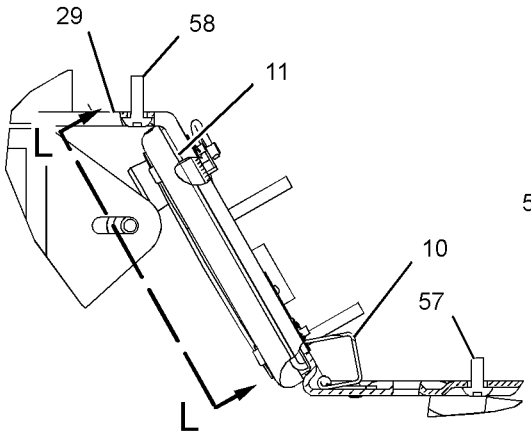

VIEW OF AREA B

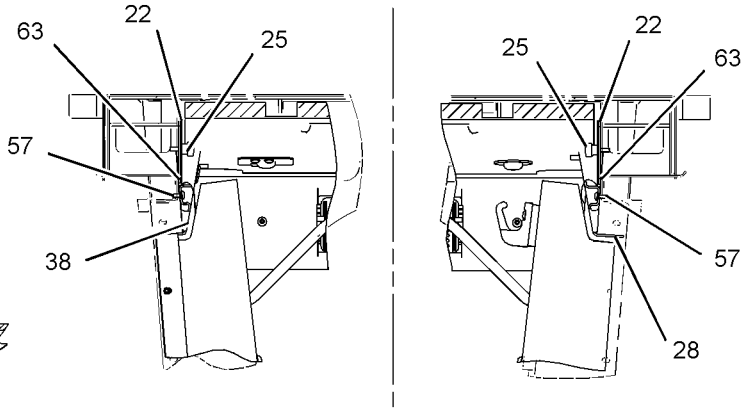

SECTION A-A

GRAPHIC #1 g01294607

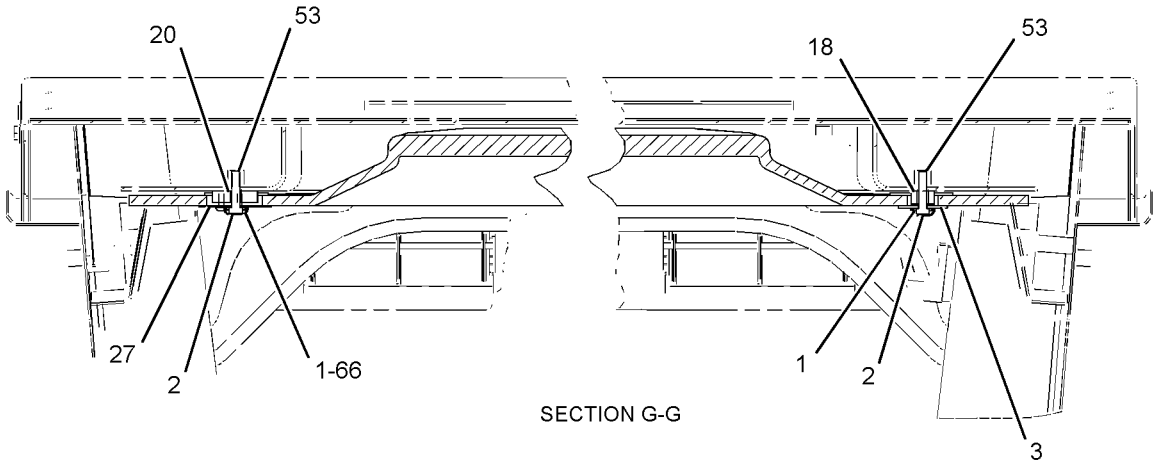

SECTION G-G

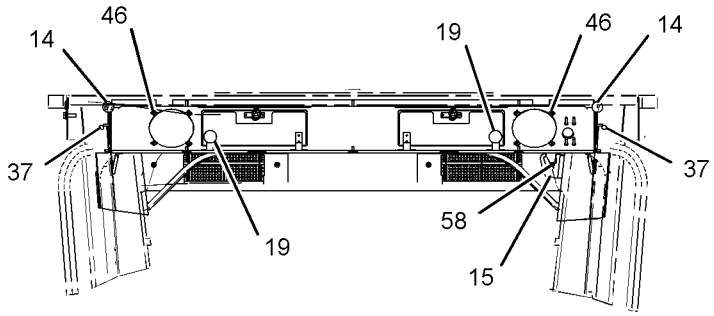

VIEW F-F

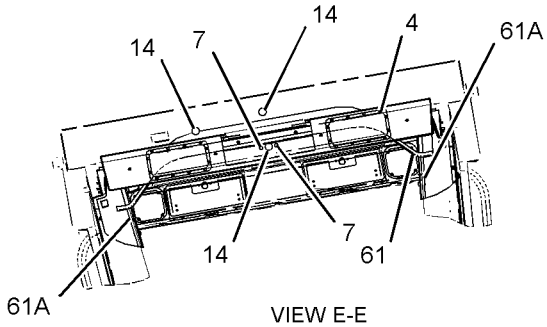

VIEW E-E

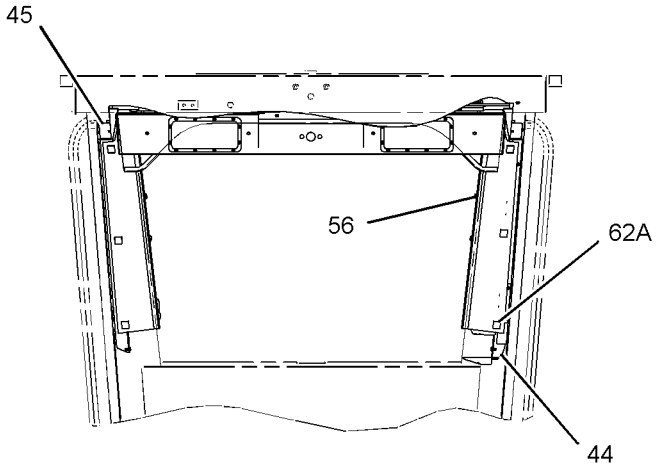

REAR VIEW

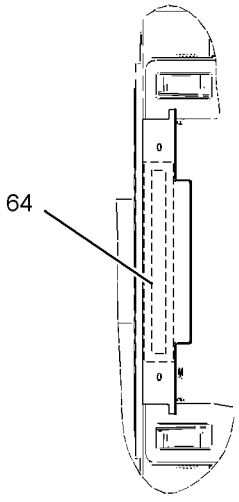

SECTION H-H

GRAPHIC #2

g01293386

REFER TO ALL ILLUSTRATIONS OF
THIS GROUP FOR AUXILIARY VIEWS

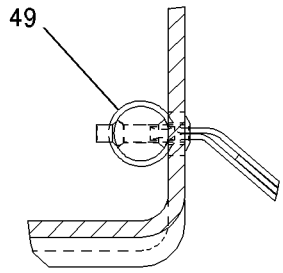

VIEW K-K

VIEW L-L

VIEW P-P

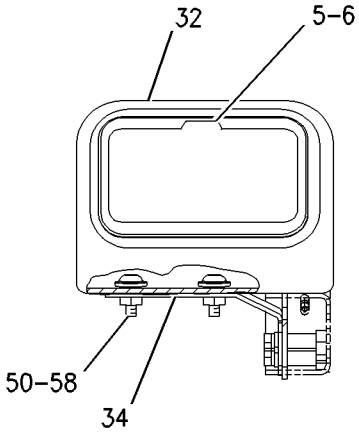

SECTION J-J

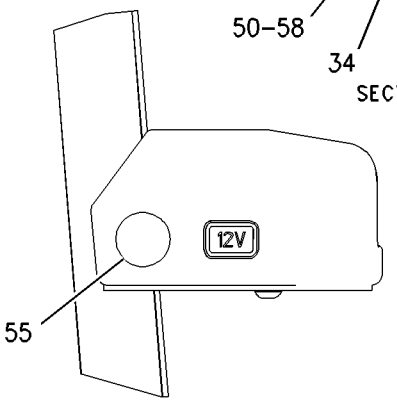

SECTION N-N

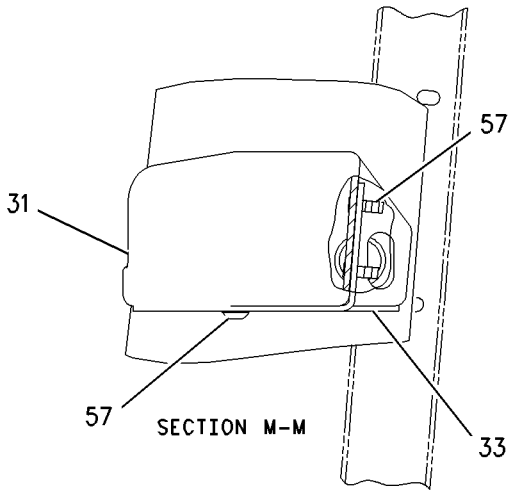

SECTION M-M

GRAPHIC #3 **<END>** g00846122

OPERATOR STATION

311-2772 LINES GP-AIR CONDITIONER

S/N: JBP1-UP

PART OF 311-2751 AIR CONDITIONER AR

AN ATTACHMENT

SMCS-1808, 7320 **i03400504**

NOTE	REF NO	GRAPHIC REF	PART NUMBER	QTY	PART NAME 1 2 3 4 5 6 (PRODUCT LEVEL)	SEE PAGE
	1	1	**1P-6356**	1	PLATE	
	2	1	**8W-8527**	3	SLEEVE	
	3	1	**8W-8528**	3	SLEEVE	
	4	1	**9G-7101**	1	SPACER (10.5X20X30-MM THK)	
	5	1	**114-5333**	1	SWITCH AS-PRESSURE (REFRIGERANT, HIGH, LOW)	
		1	**102-8802**	1	KIT-RECEPTACLE (2-PIN)	
					(INCLUDES RECEPTACLE AS & WEDGE)	
		1	**186-3735**	2	PIN-CONNECTOR (16-GA TO 18-GA)	
E		1	**9X-1386**		SLEEVE (25-CM)	
	6	1	**149-6371**	1	SWITCH AS-PRESSURE (REFRIGERANT, LOW SIDE)	
		1	**102-8802**	1	KIT-RECEPTACLE (2-PIN)	
					(INCLUDES RECEPTACLE AS & WEDGE)	
		1	**186-3735**	2	PIN-CONNECTOR (16-GA TO 18-GA)	
	7	1	**217-7742**	1	GROMMET	
	8	1	**257-3227**	1	RECEIVER-REFRIGERANT DRYER	
		1	**189-1707**	1	ORIFICE AS-AIR CONDITIONER	
	9	1	**274-5909**	1	ACCUMULATOR-REFRIGERANT	
I	10	1	**313-4127**	1	HOSE AS	
	11	1	**313-4131**	1	TUBE AS	
	12	1	**313-4132**	1	TUBE AS	
I	13	1	**313-5530**	1	HOSE AS	
I	14	1	**333-8326**	1	HOSE AS	
	15	1	**067-2551**	1	CLIP	
M	16	1	**085-8091**	1	BOLT (M10X1.5X55-MM)	
	17	1	**132-7551**	1	SPACER (11X19X6-MM THK)	
	18	1	**4B-0418**	1	CLIP	
	19	1	**4B-9302**	1	CLIP	
	20	1	**4D-7735**	1	CLIP	
	21	1	**4K-8864**	3	CLIP	
	22	1	**4L-6454**	1	BOLT (3/8-16X1-IN)	
	23	1	**4S-1962**	1	CLIP	
	24	1	**5P-1075**	3	WASHER-HARD (10.2X22.5X3-MM THK)	
	25	1	**7X-7910**	1	CLIP	
	26	1	**7X-7911**	1	CLIP	
	27	1	**8M-2773**	1	CLIP	
	28	1	**8S-6109**	1	CLIP (SLOT)	
	29	1	**8S-6110**	1	CLIP (TAB)	
	30	1	**8T-4121**	7	WASHER-HARD (11X21X2.5-MM THK)	
M	31	1	**8T-4133**	3	NUT (M10X1.5-THD)	
M	32	1	**8T-4136**	1	BOLT (M10X1.5X25-MM)	
M	33	1	**8T-4195**	1	BOLT (M10X1.5X30-MM)	
M	34	1	**8T-6466**	1	BOLT (M10X1.5X60-MM)	
	35	1	**9B-7237**	1	BOLT (3/8-16X1.25-IN)	
	36	1	**9X-7380**	1	SEAL-O-RING	
	37	1	**9X-7381**	4	SEAL-O-RING	
	38	1	**9X-7382**	1	SEAL-O-RING	
	39	1	**9X-7383**	1	SEAL-O-RING	
	40	1	**9X-7385**	2	SEAL-O-RING	
	41	1	**2K-5232**	1	SPACER (0.406X0.75X1.81-IN THK)	
M	42	1	**8T-5005**	1	BOLT (M10X1.5X70-MM)	

E-ORDER BY THE CENTIMETER
I-REFER TO HYDRAULIC INFORMATION SYSTEM
M-METRIC PART

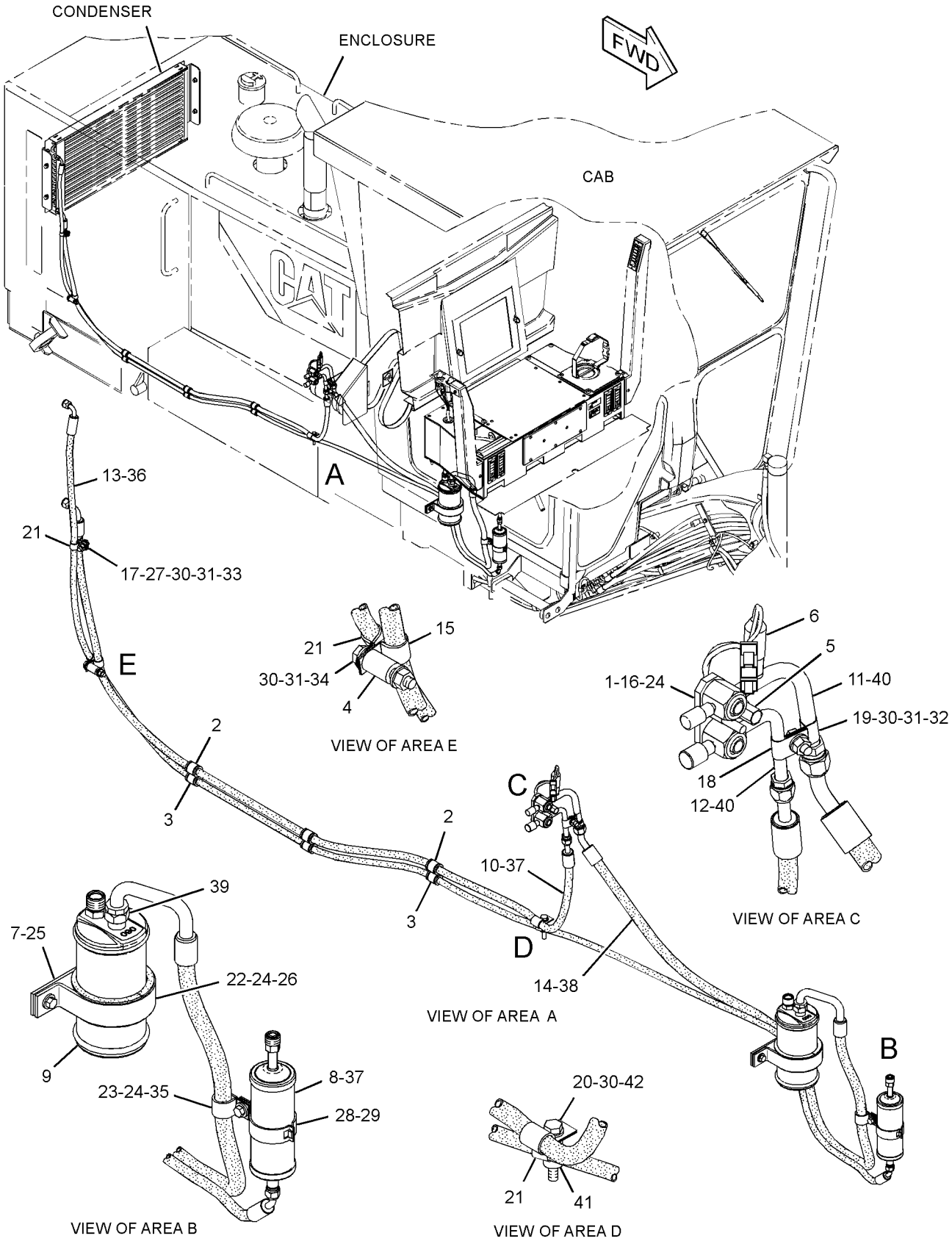

GRAPHIC #1

<END>

g01768793

OPERATOR STATION

311-2773 LINES GP-HEATER

S/N: JBP1-UP

PART OF 311-2751 AIR CONDITIONER AR, 311-2753 HEATER AR-CAB

CANNOT BE USED WITH 108-1105 SCARIFIER AR

AN ATTACHMENT

SMCS-1812, 7304 **i03412780**

NOTE	REF NO	GRAPHIC REF	PART NUMBER	QTY	PART NAME 1 2 3 4 5 6 (PRODUCT LEVEL)	SEE PAGE
	1	1	**2H-1743**	1	CLIP	
	2	1	**5D-1026**	4	CLAMP-HOSE	
	3	1	*161-9916*	1	ADAPTER AS	
		1	**2M-9780**	1	SEAL-O-RING	
		1	**6V-7420**	1	ADAPTER	
	4	1	*170-0967*	1	ELBOW AS	
		1	**3K-0360**	1	SEAL-O-RING	
		1	**5P-4906**	1	ELBOW	
	5	1	**313-6546**	1	TUBE AS	
	6	1	**313-6547**	1	TUBE AS	
	7	1	*150-3037*	1	ELBOW AS	
		1	**3K-0360**	1	SEAL-O-RING	
		1	**7J-9108**	1	SEAL-O-RING	
		1	**8T-2530**	1	ELBOW	
	8	1	*208-0423*	2	CONNECTOR AS	
					(EACH INCLUDES)	
		1	**136-7226**	1	SEAL-O-RING	
		1	**150-7158**	1	CONNECTOR	
	9	1	**223-5916**	1	VALVE AS-MANUAL	
	10	1	**3S-8665**	1	CLIP	
	11	1	**5M-3062**	1	BOLT (3/8-16X0.75-IN)	
	12	1	**6D-1641**	1	CLIP	
	13	1	**8D-9671**	1	CLIP	
	14	1	**8T-4121**	1	WASHER-HARD (11X21X2.5-MM THK)	
M	15	1	**8T-4136**	1	BOLT (M10X1.5X25-MM)	
	16	1	**8T-4896**	1	WASHER-HARD (10.2X18.5X2.5-MM THK)	
E	18	1	**5P-0767**		HOSE (223-CM)	
E	18A	1	**5P-0767**		HOSE (228-CM)	

E-ORDER BY THE CENTIMETER
M-METRIC PART

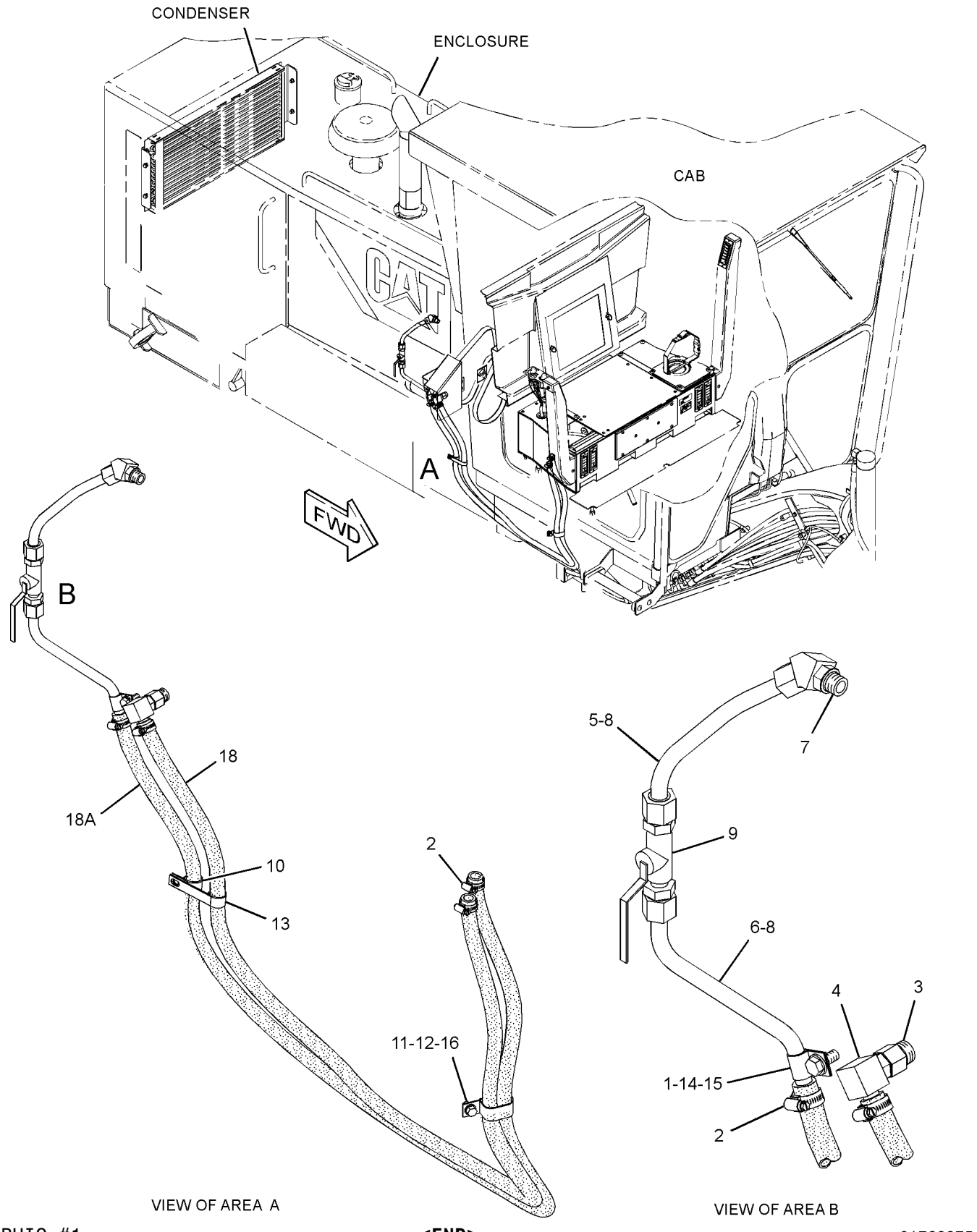

GRAPHIC #1

<END>

g01768875

OPERATOR STATION

178-8603 LOUVER GP-CAB

S/N: JBP1-UP
PART OF 311-2753 HEATER AR-CAB
AN ATTACHMENT

SMCS-7301 **i01778669**

NOTE	REF NO	GRAPHIC REF	PART NUMBER	QTY	PART NAME 1 2 3 4 5 6 (PRODUCT LEVEL)	SEE PAGE
	1	1	**8Y-6388**	6	LOUVER AS-VENT	
	2	1	**164-8474**	2	LOUVER AS-VENT	
	3	1	**126-1135**	2	PLATE	
	4	1	**126-1136**	2	PLATE	
	5	1	**6V-2687**	4	SCREW-PAN HEAD (10-24X1-IN)	
BD	6	1	**5P-5969**		SEAL	

B-USE AS REQUIRED
D-ORDER BY THE METER

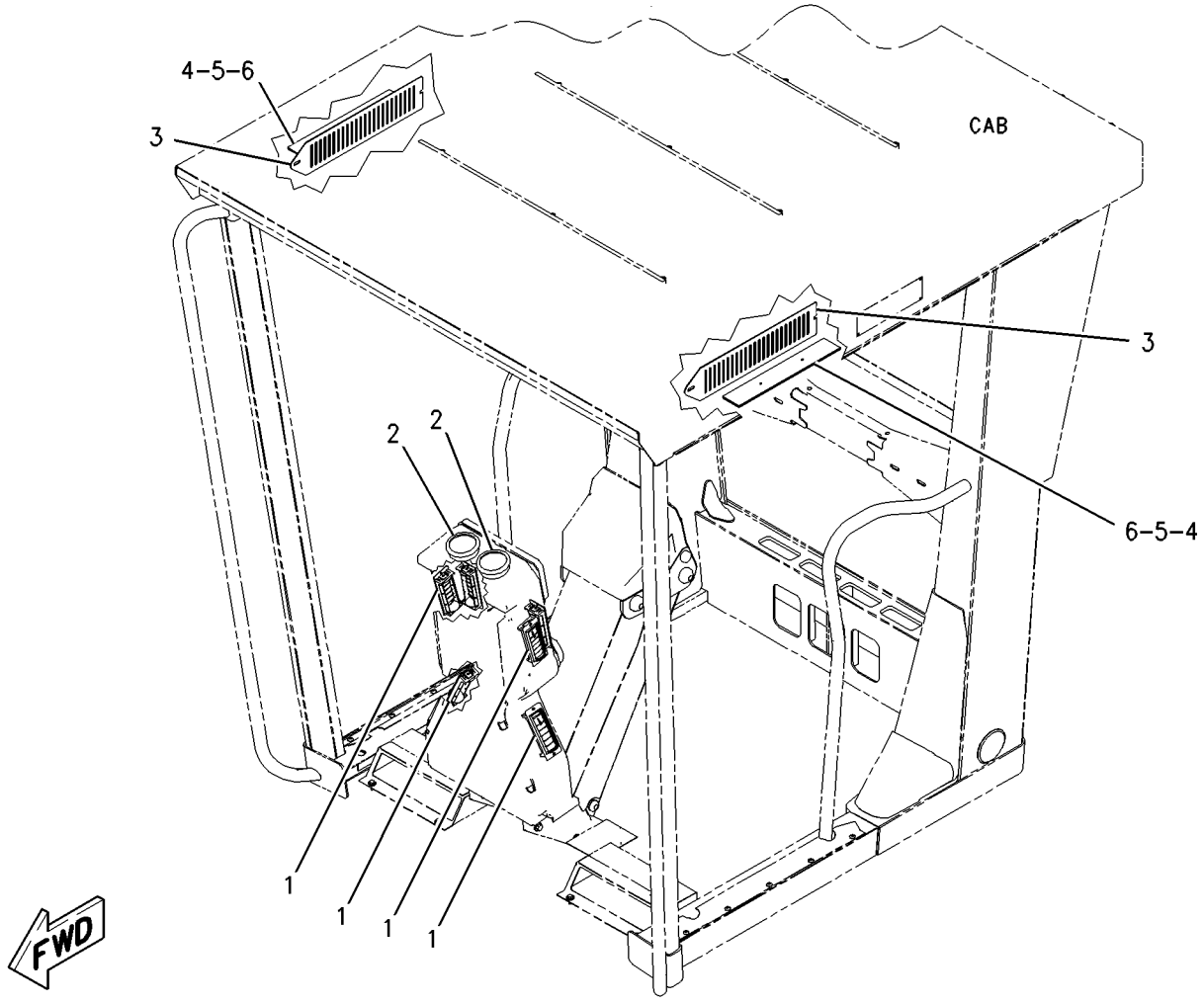

GRAPHIC #1 **<END>** g00940703

OPERATOR STATION

8X-2795 MIRROR GP-REAR VIEW—DUAL INSIDE

S/N: JBP1-UP

PART OF 290-1126 CAB AR, 284-5397 ROPS GP

AN ATTACHMENT

SMCS-7319 **i02585443**

NOTE	REF NO	GRAPHIC REF	PART NUMBER	QTY	PART NAME 1 2 3 4 5 6 (PRODUCT LEVEL)	SEE PAGE
	1	1	**8Y-4512**	1	MIRROR	
	2	1	**2G-8241**	2	CLAMP	
M	3	1	**9X-2046**	4	SCREW-TRUSS HEAD (M6X1X35-MM)	
	4	1	**2G-8572**	2	WASHER-SPECIAL (10X27.81X2.54-MM THK)	
	5	1	**2G-8573**	2	CAP	
	6	1	**2G-8242**	2	ARM	
	7	1	**5P-1075**	2	WASHER-HARD (10.2X22.5X3-MM THK)	
	8	1	**8H-1728**	2	NUT-ACORN (3/8-16-THD)	
	9	1	**5S-7379**	2	BOLT (3/8-16X0.875-IN)	
	10	1	**1P-2378**	2	CAP	

M-METRIC PART

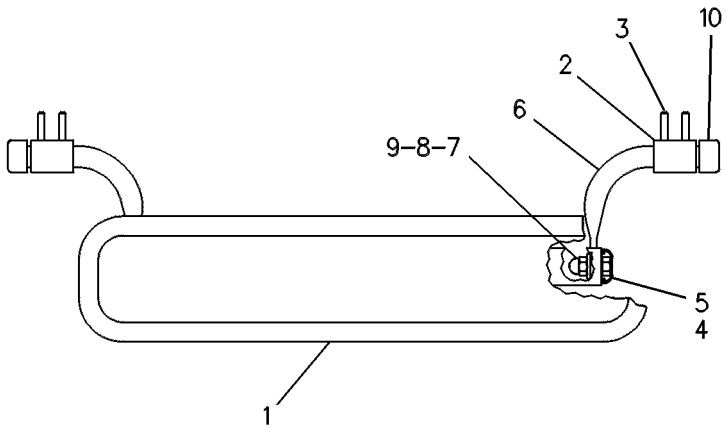

GRAPHIC #1 **<END>** g00084778

123-4358 MIRROR GP-REAR VIEW—EXTERIOR, HEATED

S/N: JBP1-UP

AN ATTACHMENT

SMCS-7319 **i00130904**

NOTE	REF NO	GRAPHIC REF	PART NUMBER	QTY	PART NAME 1 2 3 4 5 6 (PRODUCT LEVEL)	SEE PAGE
M	1	1	**8T-4133**	8	NUT (M10X1.5-THD)	
M	2	1	**8T-4137**	8	BOLT (M10X1.5X20-MM)	
	3	1	**8T-4121**	24	WASHER-HARD (11X21X2.5-MM THK)	
	4	1	**6G-8831**	4	CLAMP	
	5	1	**5P-6871**	2	MIRROR	
	6	1	**113-8218**	2	ARM	
	7	1	**123-4586**	4	BLOCK	
	8	1	**123-4587**	4	BRACKET	
M	9	1	**8T-4182**	8	BOLT (M10X1.5X45-MM)	
M	10	1	**8T-4195**	4	BOLT (M10X1.5X30-MM)	
M	11	1	**6V-7744**	4	LOCKNUT (M10X1.5-THD)	
	12	1	**9C-5928**	4	SPACER (10X19X5.15-MM THK)	

M-METRIC PART

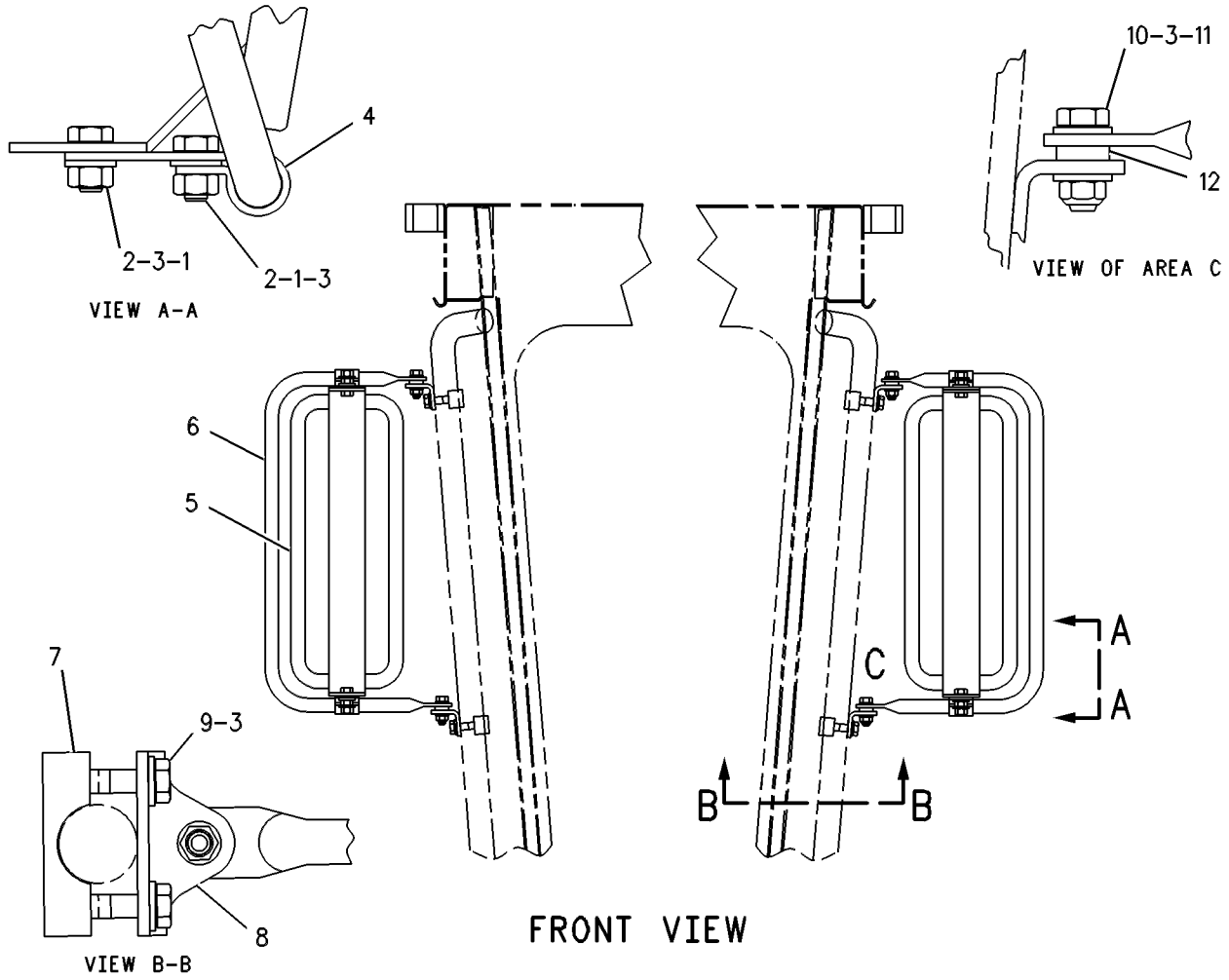

GRAPHIC #1 **<END>** g00109253

OPERATOR STATION

197-2066 MIRROR GP-REAR VIEW—DUAL INTERIOR

S/N: JBP1-UP
EUROPEAN MARKET
AN ATTACHMENT

SMCS-7319 **i02304669**

NOTE	REF NO	GRAPHIC REF	PART NUMBER	QTY	PART NAME 1 2 3 4 5 6 (PRODUCT LEVEL)	SEE PAGE
	1	1	**1P-2378**	4	CAP	
	2	1	**2G-8241**	2	CLAMP	
	3	1	**232-6114**	2	MIRROR AS (RH, LH)	
					(EACH INCLUDES)	
		1	**203-0780**	1	MIRROR	
M	4	1	**9X-2046**	4	SCREW-TRUSS HEAD (M6X1X35-MM)	

M-METRIC PART

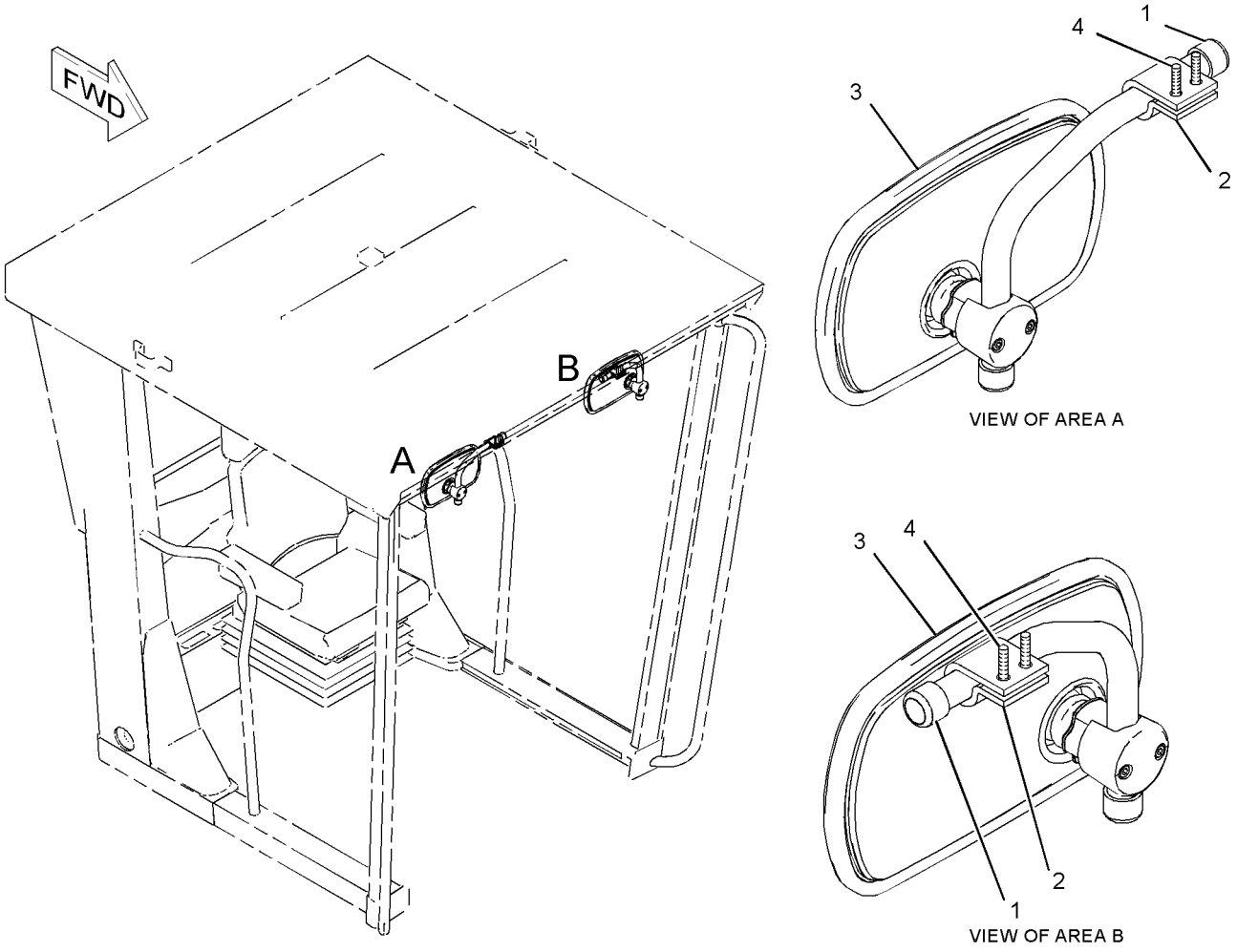

GRAPHIC #1 **<END>** g01118616

OPERATOR STATION

286-4798 MIRROR GP-REAR VIEW—HEATED

S/N: JBP1-UP

AN ATTACHMENT

SMCS-7319 **i03274183**

NOTE	REF NO	GRAPHIC REF	PART NUMBER	QTY	PART NAME 1 2 3 4 5 6 (PRODUCT LEVEL)	SEE PAGE
	1	1	**3E-0109**	5	PLUG (ROCKER SWITCH)	
B	2	1	**3S-2093**	8	STRAP-CABLE	
	3	1	**9W-1442**	1	FUSE (10-AMPERE)	
	4	1	**113-8218**	2	ARM	
	5	1	**123-4586**	4	BLOCK	
	6	1	**123-4587**	4	BRACKET	
	7	1	**145-3350**	1	PLATE	
	8	1	**153-2147**	1	PLATE	
	9	1	**168-8243**	1	HARNESS AS-PANEL	
	10	1	**172-6556**	1	PANEL	
	11	1	**188-3862**	1	BRACKET AS	
	12	1	**202-8649**	2	MIRROR AS (HEATED)	
					(EACH INCLUDES)	
		1	**102-8802**	1	KIT-RECEPTACLE (2-PIN)	
					(INCLUDES RECEPTACLE AS & WEDGE)	
		1	**186-3735**	2	PIN-CONNECTOR (16-GA TO 18-GA)	
		1	**200-1173**	1	MIRROR AS	
	13	1	*123-5858*	1	SWITCH AS-ROCKER	
		1	**3E-8766**	1	SWITCH AS (24-VOLT) (HEATED MIRRORS)	
		1	**3E-8825**	1	LAMP (24-VOLT)	
		1	**123-5857**	1	ACTUATOR-ROCKER	
	14	1	**130-5300**	2	CLIP	
	15	1	**6G-8831**	4	CLAMP	
M	16	1	**6V-7744**	4	LOCKNUT (M10X1.5-THD)	
	17	1	**8T-4121**	27	WASHER-HARD (11X21X2.5-MM THK)	
M	18	1	**8T-4133**	8	NUT (M10X1.5-THD)	
M	19	1	**8T-4137**	8	BOLT (M10X1.5X20-MM)	
M	20	1	**8T-4182**	8	BOLT (M10X1.5X45-MM)	
M	21	1	**8T-4186**	4	BOLT (M10X1.5X40-MM)	
M	22	1	**8T-4191**	2	BOLT (M10X1.5X16-MM)	
	23	1	**9C-5928**	8	SPACER (10X19X5.15-MM THK)	
	24	1	**9D-3768**	2	GROMMET	
M	25	1	**9X-2043**	6	SCREW-TRUSS HEAD (M6X1X14-MM)	

B-USE AS REQUIRED
M-METRIC PART

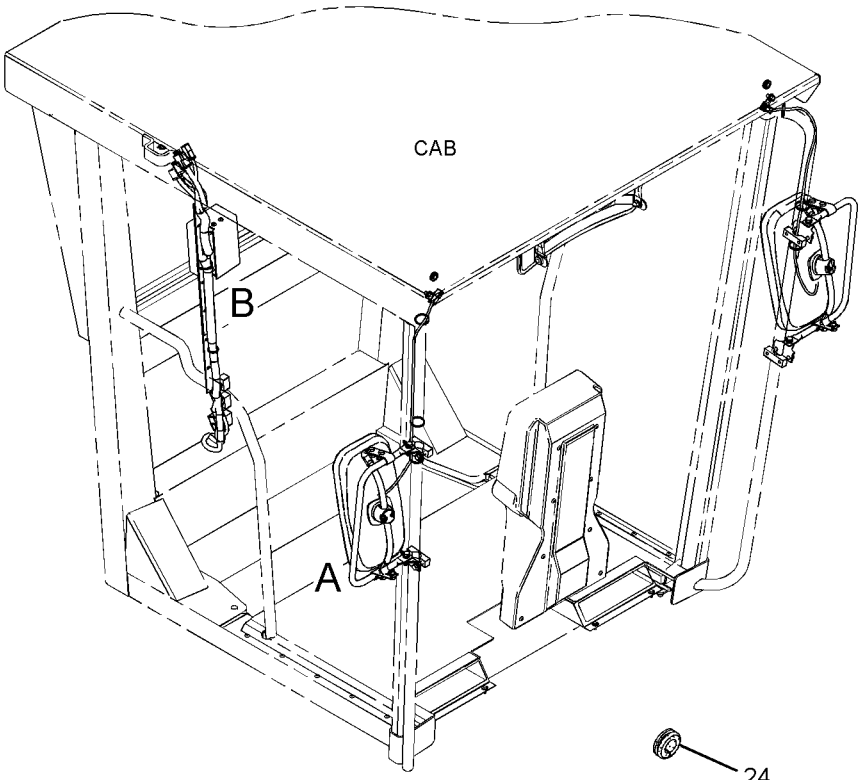



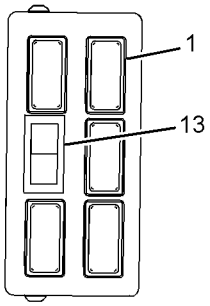

VIEW C-C

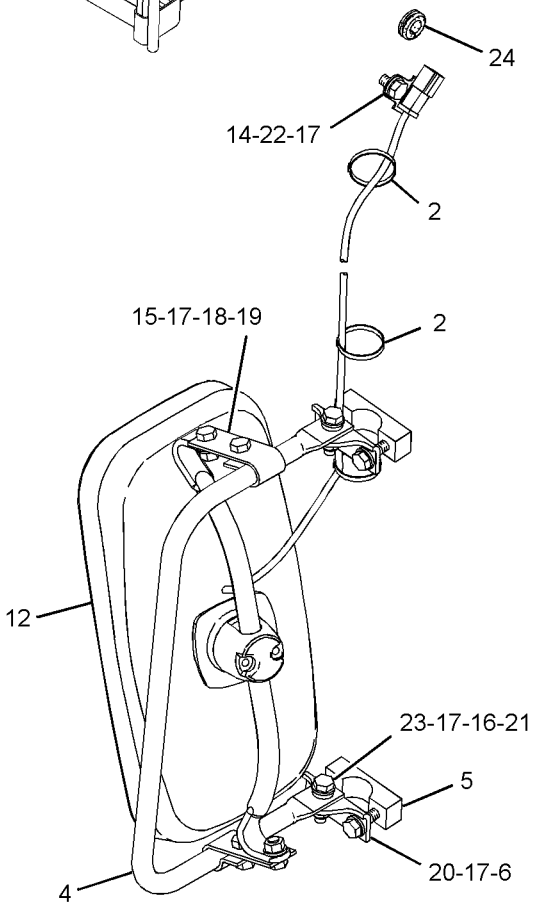

VIEW OF AREA A

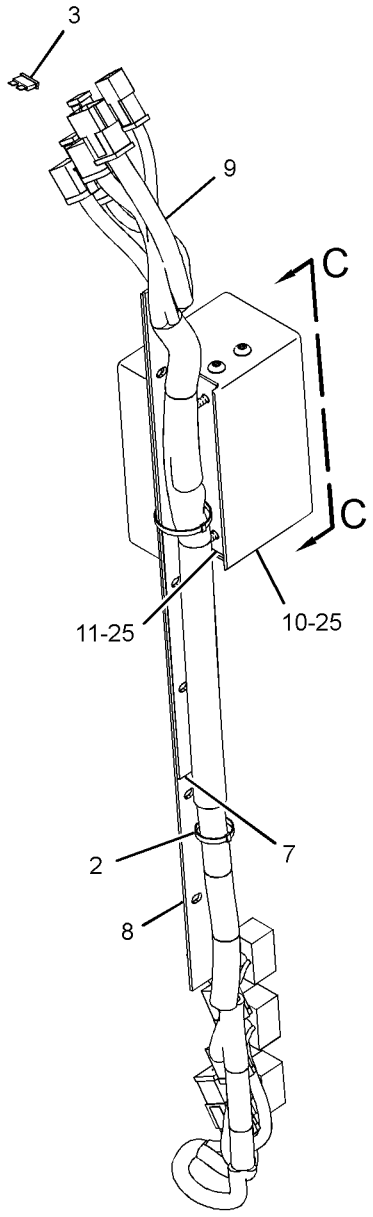

VIEW OF AREA B

GRAPHIC #1 **<END>** g01762653

OPERATOR STATION

287-3260 MODULE GP-QUAD GAUGE

S/N: JBP1-UP
24-VOLT
PART OF 286-7853, 316-5237, 316-5238 PANEL GP-INSTRUMENT
ALSO AN ATTACHMENT

SMCS-7451, 7490 **i03246295**

NOTE	REF NO	GRAPHIC REF	PART NUMBER	QTY	PART NAME 1 2 3 4 5 6 (PRODUCT LEVEL)	SEE PAGE
	1	1	**9X-4284**	1	INDICATOR AS-COOLANT TEMP	
	2	1	**180-3833**	1	VOLTMETER GP	
	3	1	**180-3834**	1	INDICATOR AS-ARTICULATION	
	4	1	**180-3836**	1	INDICATOR AS-FUEL LEVEL	
	5	1	**186-3735**	6	PIN-CONNECTOR (16-GA TO 18-GA)	
	6	1	**102-8805**	1	KIT-RECEPTACLE (6-PIN)	
					(INCLUDES RECEPTACLE AS & WEDGE)	
F			**8M-6176**	2	LAMP (12-VOLT)	
					AVAILABLE REPAIR KIT(S):	
			116-4686	1	KIT-GAUGE CLUSTER BEZEL (QUAD GAUGE MODULE)	
					(INCLUDES BEZEL AS, PIPE, SEAL & SCREWS)	

F-NOT SHOWN

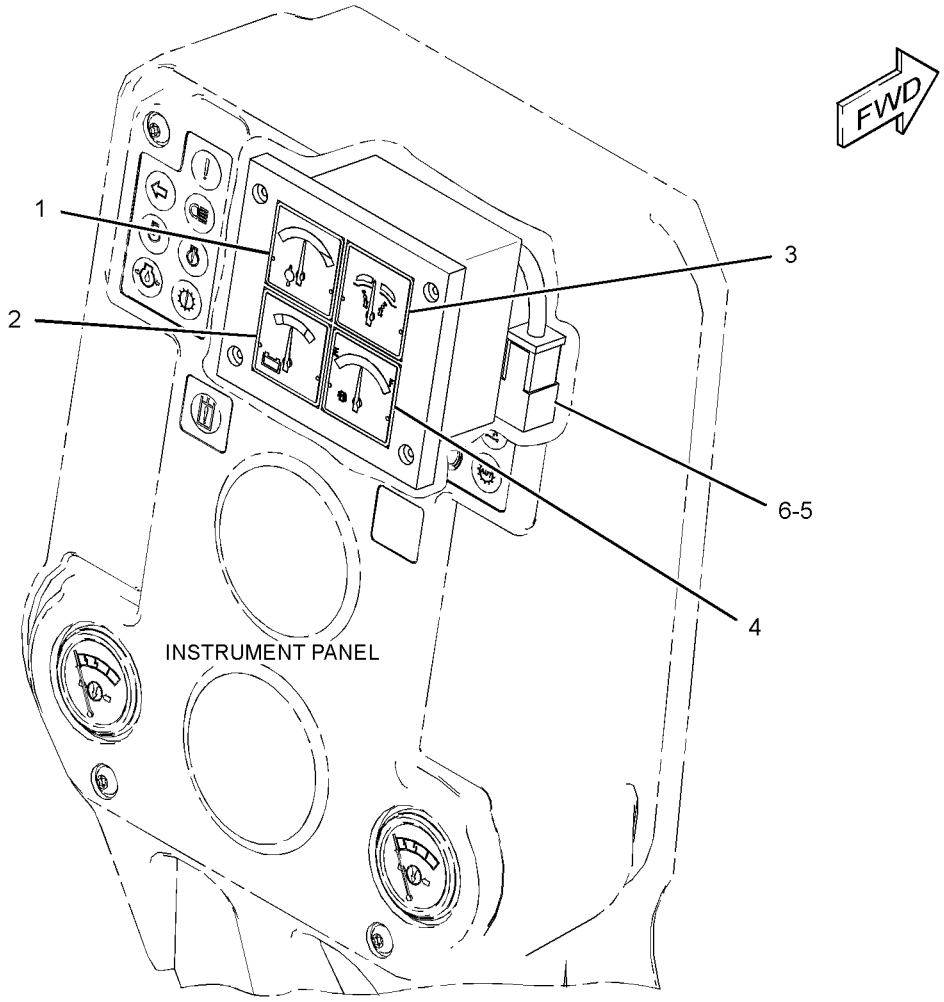

GRAPHIC #1

<END>

g01701214

OPERATOR STATION

293-4153 MODULE GP-SPEEDOMETER & TACH

S/N: JBP1-UP

AN ATTACHMENT

SMCS-7451, 7462, 7463, 7490 **i03346896**

NOTE	REF NO	GRAPHIC REF	PART NUMBER	QTY	PART NAME 1 2 3 4 5 6 (PRODUCT LEVEL)	SEE PAGE
	1	1	**274-8068**	1	MODULE GP-INTERFACE	
	2	1	**287-3259**	1	INDICATOR (SPEED)	
		1	**4B-2043**	2	NUT (8-32-THD)	
		1	**9B-7233**	2	LOCKWASHER	
	3	1	**293-4495**	1	PLATE	
	4	1	**335-8961**	1	HARNESS AS-WIRING	
	5	1	**288-5736**	1	INDICATOR (ENGINE RPM)	
		1	**4B-2043**	2	NUT (8-32-THD)	
		1	**9B-7233**	2	LOCKWASHER	
	6	1	**4B-4863**	2	WASHER (4.7X11X1.2-MM THK)	
M	7	1	**5C-8312**	2	NUT (M4X0.7-THD)	
M	8	1	**6V-9493**	2	SCREW-MACHINE (M4X0.7X45-MM)	
	9	1	**7K-1181**	1	STRAP-CABLE	

M-METRIC PART

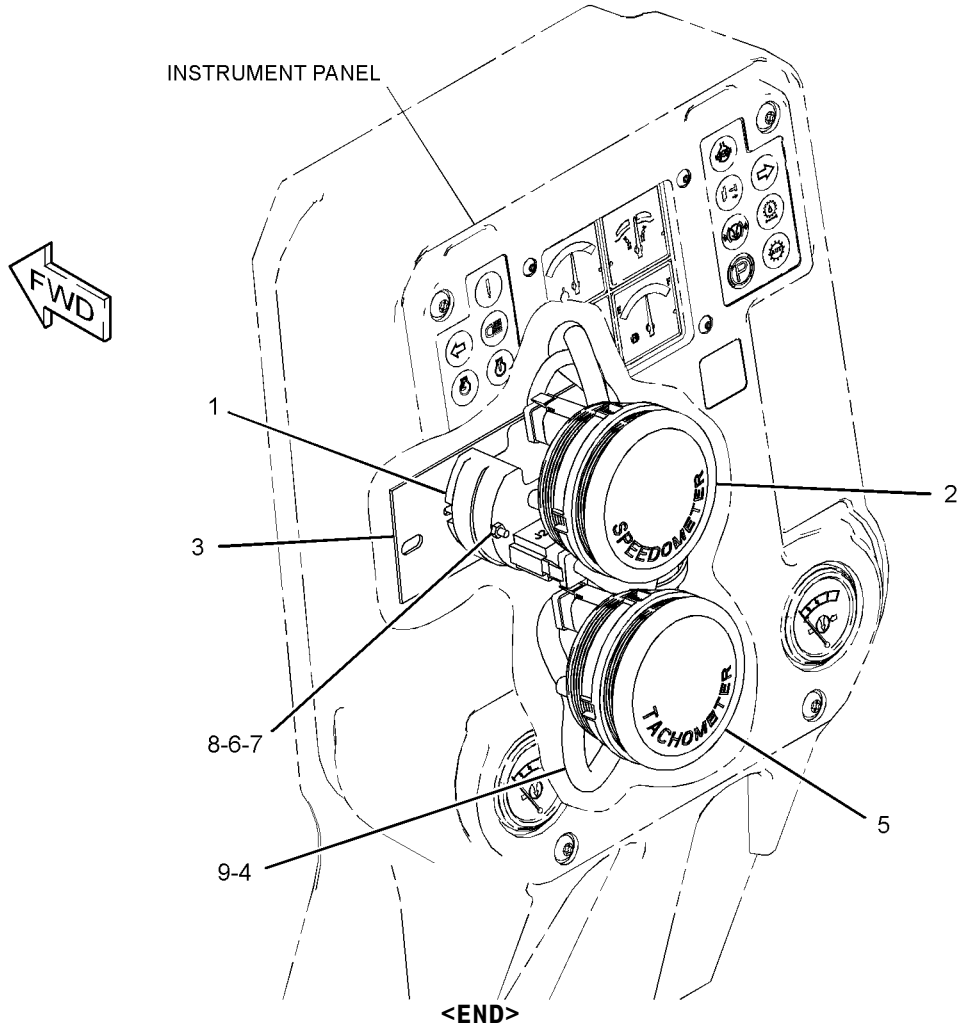

GRAPHIC #1

<END>

g01756375

OPERATOR STATION

2A-6985 MOUNTING GP-ROPS

S/N: JBP1-UP
PART OF 320-0342 ROPS AR
AN ATTACHMENT

SMCS-7266 **i01938112**

NOTE	REF NO	GRAPHIC REF	PART NUMBER	QTY	PART NAME 1 2 3 4 5 6 (PRODUCT LEVEL)	SEE PAGE
	1	1	**3E-4048**	2	CAP-PLUG	
	2	1	**103-5515**	1	PAD-RH	
	3	1	**103-5516**	1	PAD-LH	
	4	1	**103-4953**	4	MOUNTING	
	5	1	**7X-0375**	4	BOLT (3/4-10X5-IN)	
	6	1	**8X-0674**	4	WASHER (22X100X10-MM THK)	
	7	1	**3V-9244**	2	WASHER (16.5X50X5-MM THK)	
	8	1	**4K-0367**	2	NUT-FULL (5/8-11-THD)	
	9	1	**7X-0354**	2	BOLT (5/8-11X4.5-IN)	
	10	1	**8T-4122**	4	WASHER-HARD (17X32X3.5-MM THK)	
	11	1	**8X-6131**	2	SEAL	
	12	1	**164-2465**	2	PAD	
	13	1	**9D-1589**	2	MOUNTING	
	14	1	**2G-7098**	2	PAD	
	15	1	**2G-7097**	1	PAD	
	16	1	**103-4771**	2	PIN AS	
	17	1	**030-8535**	2	BOLT-LOCKING (3/8-16XO.875-IN)	
	18	1	**8T-4896**	2	WASHER-HARD (10.2X18.5X2.5-MM THK)	
B	19	1	**166-1999**	2	SHIM (2.28-MM THK)	
BE	20	1	**123-6806**		SEAL (87-CM)	
B	21	1	**166-1997**	2	SHIM (1.2-MM THK)	

B-USE AS REQUIRED
E-ORDER BY THE CENTIMETER

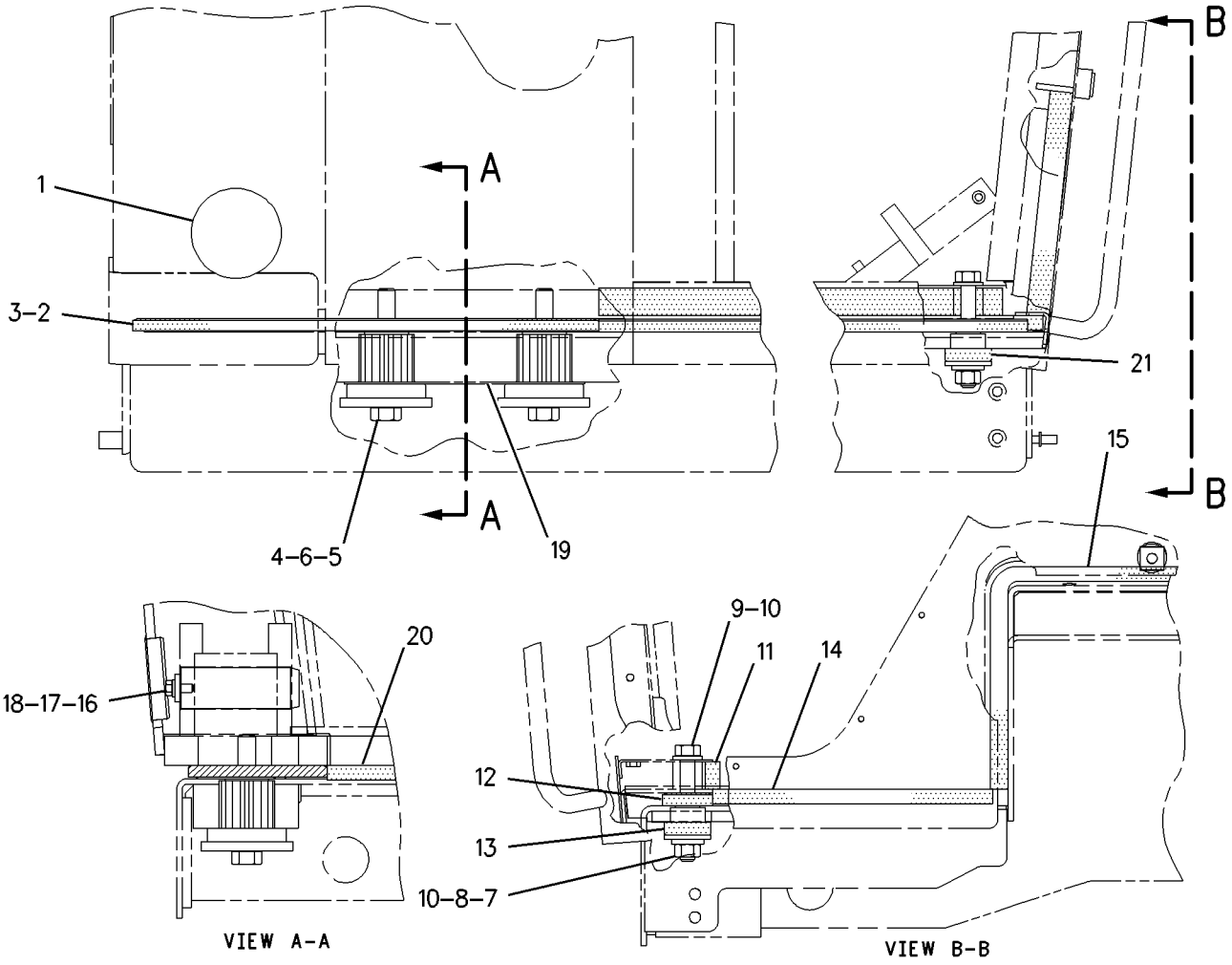

GRAPHIC #1 **<END>** g00752004

OPERATOR STATION

301-4173 PAN GP-BACKREST

S/N: JBP1-UP
PART OF 301-4174 SEAT GP
AN ATTACHMENT

SMCS-7312 **i02947678**

NOTE	REF NO	GRAPHIC REF	PART NUMBER	QTY	PART NAME 1 2 3 4 5 6 (PRODUCT LEVEL)	SEE PAGE
	1	1	**164-4883**	1	KNOB-LUMBAR	
	2	1	**250-4628**	3	PLUG	
	3	1	**292-6099**	1	CUSHION AS-BACK	
	4	1	*299-2277*	1	PAN GP-BACKREST	
		1	**4K-9429**	2	RIVET-POP	
		1	**136-1543**	1	PLATE AS-LUMBAR	
		1	**261-5694**	1	PAN AS-BACKREST	
	5	1	**5P-0537**	2	WASHER-HARD (7.2X14.5X2-MM THK)	
	6	1	**6V-8969**	2	SCREW-BUTTON HEAD (1/4-20X0.5-IN)	
	7	1	**8T-7566**	1	PIN-SPRING	

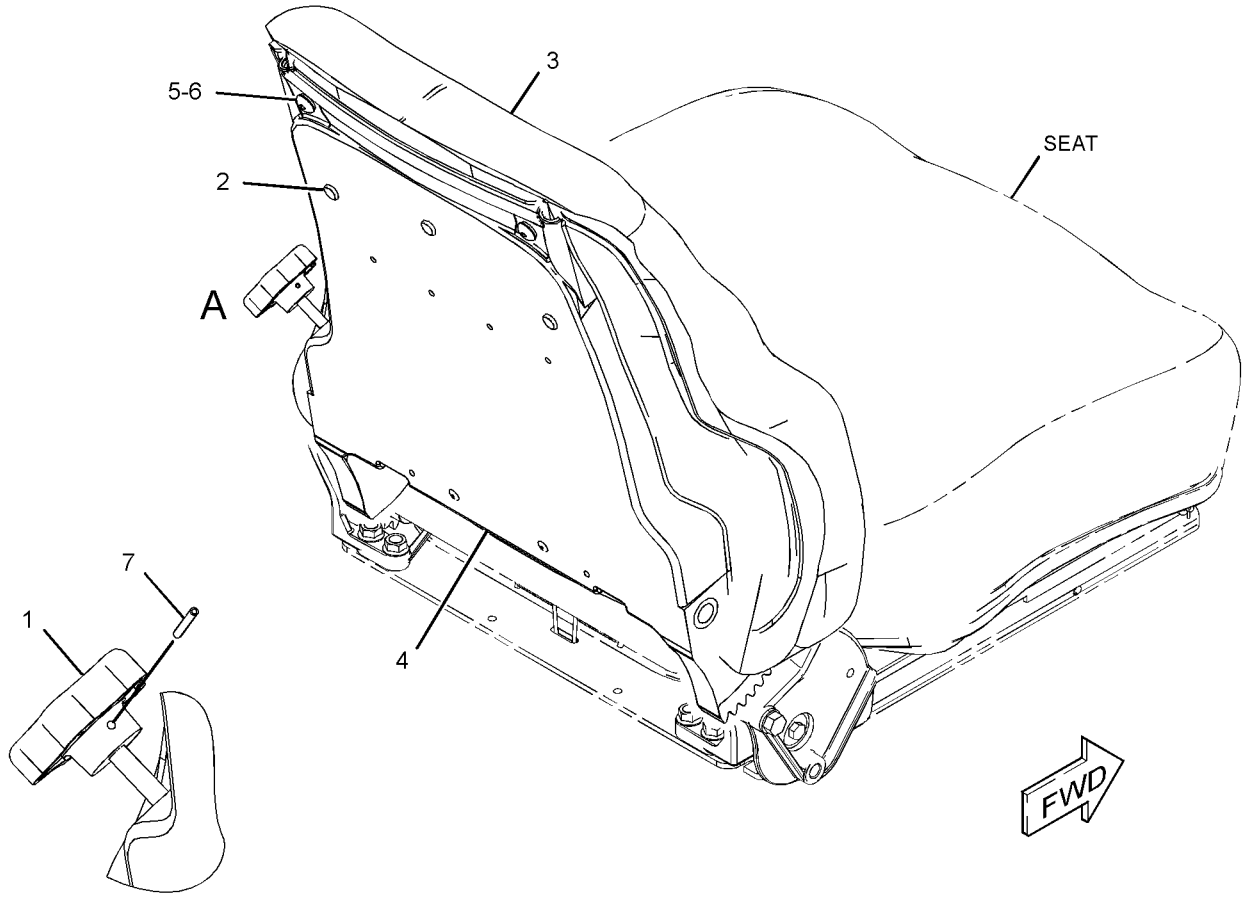

VIEW OF AREA A

GRAPHIC #1 **<END>** g01417150

OPERATOR STATION

8X-2385 PANEL GP-CAB—HIGH PROFILE

S/N: JBP1-UP
PART OF 320-0342 ROPS AR
AN ATTACHMENT

SMCS-7301 **i02585483**

NOTE	REF NO	GRAPHIC REF	PART NUMBER	QTY	PART NAME 1 2 3 4 5 6 (PRODUCT LEVEL)	SEE PAGE
	1	1	**115-6806**	2	GLASS (SIDE)	
	2	1	**8X-2228**	1	GLASS-FRONT	
D	3	1	**5P-5768**		SEAL (11.9-M)	
	4	1	**102-9372**	1	GLASS (REAR)	
	5	1	**149-3409**	2	GLASS	
E	6	1	**3E-9413**		SEAL (963-CM)	
	7	1	**166-2830**	1	FILM (SUNSHADE-CATERPILLAR)	

D-ORDER BY THE METER
E-ORDER BY THE CENTIMETER

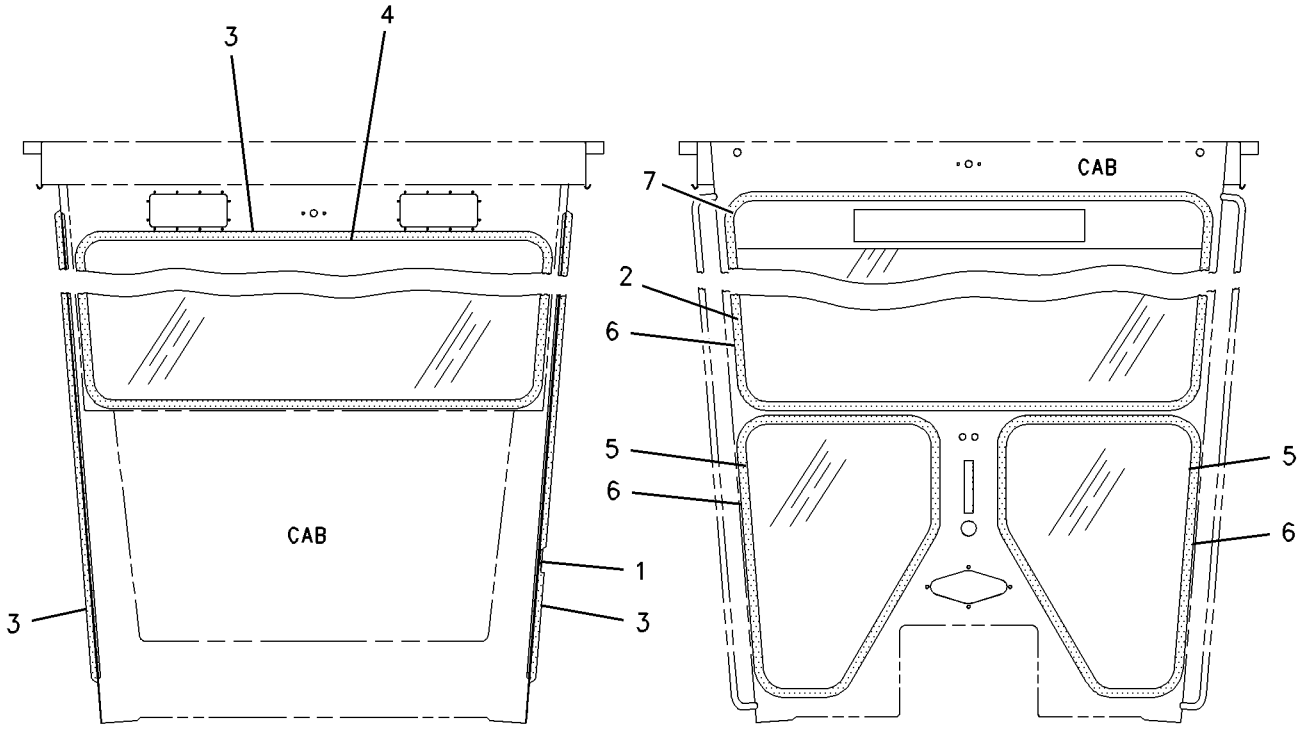

REAR VIEW FRONT VIEW

GRAPHIC #1 **<END>** g00693201

OPERATOR STATION

286-7853 PANEL GP-INSTRUMENT

S/N: JBP1-UP
PART OF 290-1126 CAB AR
AN ATTACHMENT

SMCS-7450, 7451 **i03255188**

NOTE	REF NO	GRAPHIC REF	PART NUMBER	QTY	PART NAME 1 2 3 4 5 6 (PRODUCT LEVEL)	SEE PAGE
	1	1	**5D-0269**	2	ELBOW	
	2	1	**5K-7577**	2	HOSE AS	
	3	1	**9M-8662**	2	COUPLING	
	4	1	**107-1983**	4	LAMP (24-VOLT)	
	5	1	**115-1748**	10	LAMP (24-VOLT, 3-WATT)	
	6	1	**117-9966**	2	PLUG	
	7	1	**122-7045**	6	COVER	
	8	1	**122-8146**	2	PLATE AS	
					(EACH INCLUDES)	
M		1	**6V-9632**	2	NUT-WELD (M6X1-THD)	
	9	1	**196-4150**	1	PANEL	
	10	1	**202-1138**	4	ELBOW	
	11	1	**285-3585**	1	HARNESS AS-CONTROL	
Y	12	1	**287-3260**	1	MODULE GP-QUAD GAUGE	693
	14	1	**288-5756**	1	FILM-PANEL (LH)	
	15	1	**288-5757**	1	FILM-PANEL (RH)	
	17	1	**304-6958**	2	GAUGE GP-AIR PRESSURE	
					(EACH INCLUDES)	
		1	**4B-2049**	2	NUT (10-32-THD)	
		1	**8F-1434**	2	LOCKWASHER	
	18	1	**096-6166**	4	WASHER-HARD (4.5X9X1-MM THK)	
	19	1	**104-2091**	12	SCREW-FLAT HEAD (NO 6X0.5-IN)	
	20	1	**134-2540**	1	RECEPTACLE AS (3-PIN)	
M	21	1	**213-7315**	4	SCREW-TRUSS HEAD (M4X0.7X25-MM)	
	22	1	**2H-3922**	2	LOCKWASHER	
	23	1	**310-1640**	1	FILM-IDENTIFICATION (HYDRAULIC SYSTEM MALFUNCTION)	
M	25	1	**3E-8020**	10	SCREW-TRUSS HEAD (M6X1X25-MM)	
M	26	1	**5C-8312**	4	NUT (M4X0.7-THD)	
	27	1	**9S-4968**	4	SLEEVE	
M	28	1	**9X-2043**	4	SCREW-TRUSS HEAD (M6X1X14-MM)	

M-METRIC PART
Y-SEPARATE ILLUSTRATION

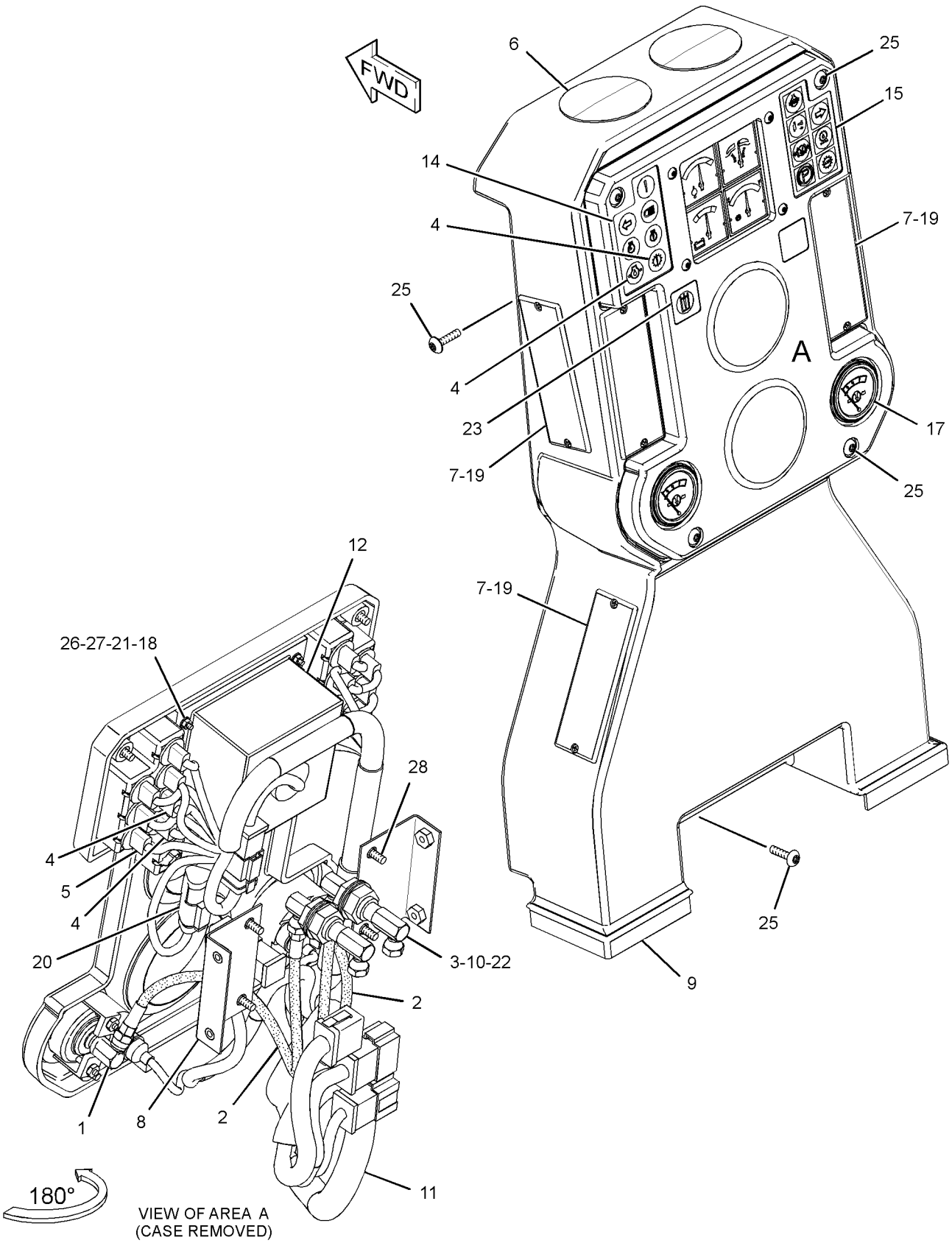

GRAPHIC #1 **<END>** g01786053

OPERATOR STATION

316-5237 PANEL GP-INSTRUMENT—FRONT CONSOLE

S/N: JBP1-UP
PART OF 320-0342 ROPS AR
AN ATTACHMENT

SMCS-7450, 7451 **i03434760**

NOTE	REF NO	GRAPHIC REF	PART NUMBER	QTY	PART NAME 1 2 3 4 5 6 (PRODUCT LEVEL)	SEE PAGE
	1	1	**5D-0269**	2	ELBOW	
	2	1	**5K-7577**	2	HOSE AS	
	3	1	**9M-8662**	2	COUPLING	
	4	1	**107-1983**	4	LAMP (24-VOLT)	
	5	1	**115-1748**	11	LAMP (24-VOLT, 3-WATT)	
	6	1	**117-9966**	2	PLUG	
	7	1	**122-7045**	6	COVER	
	8	1	**122-8146**	2	PLATE AS	
					(EACH INCLUDES)	
M		1	**6V-9632**	2	NUT-WELD (M6X1-THD)	
	9	1	**196-4150**	1	PANEL	
	10	1	**202-1138**	4	ELBOW	
Y	11	1	**287-3260**	1	MODULE GP-QUAD GAUGE	693
	13	1	**288-5756**	1	FILM-PANEL (LH) (INSTRUMENT CLUSTER)	
	14	1	**288-5757**	1	FILM-PANEL (RH) (INSTRUMENT CLUSTER)	
	16	1	**304-6958**	2	GAUGE GP-AIR PRESSURE (BRAKE)	
					(EACH INCLUDES)	
		1	**4B-2049**	2	NUT (10-32-THD)	
		1	**8F-1434**	2	LOCKWASHER	
	17	1	**335-9387**	1	HARNESS AS-PANEL	
	18	1	**096-6166**	4	WASHER-HARD (4.5X9X1-MM THK)	
	19	1	**104-2091**	12	SCREW-FLAT HEAD (NO 6X0.5-IN)	
	20	1	**134-2540**	1	RECEPTACLE AS (3-PIN)	
M	22	1	**213-7315**	4	SCREW-TRUSS HEAD (M4X0.7X25-MM)	
	23	1	**2H-3922**	2	LOCKWASHER	
	24	1	**310-1640**	1	FILM-IDENTIFICATION (HYDRAULIC SYSTEM MALFUNCTION) (INSTRUMENT CLUSTER)	
	25	1	**310-3568**	1	FILM-CONSOLE (BLANK) (INSTRUMENT CLUSTER)	
M	26	1	**3E-8020**	10	SCREW-TRUSS HEAD (M6X1X25-MM)	
M	27	1	**5C-8312**	4	NUT (M4X0.7-THD)	
	28	1	**9S-4968**	4	SLEEVE	
M	29	1	**9X-2043**	4	SCREW-TRUSS HEAD (M6X1X14-MM)	

M-METRIC PART
Y-SEPARATE ILLUSTRATION

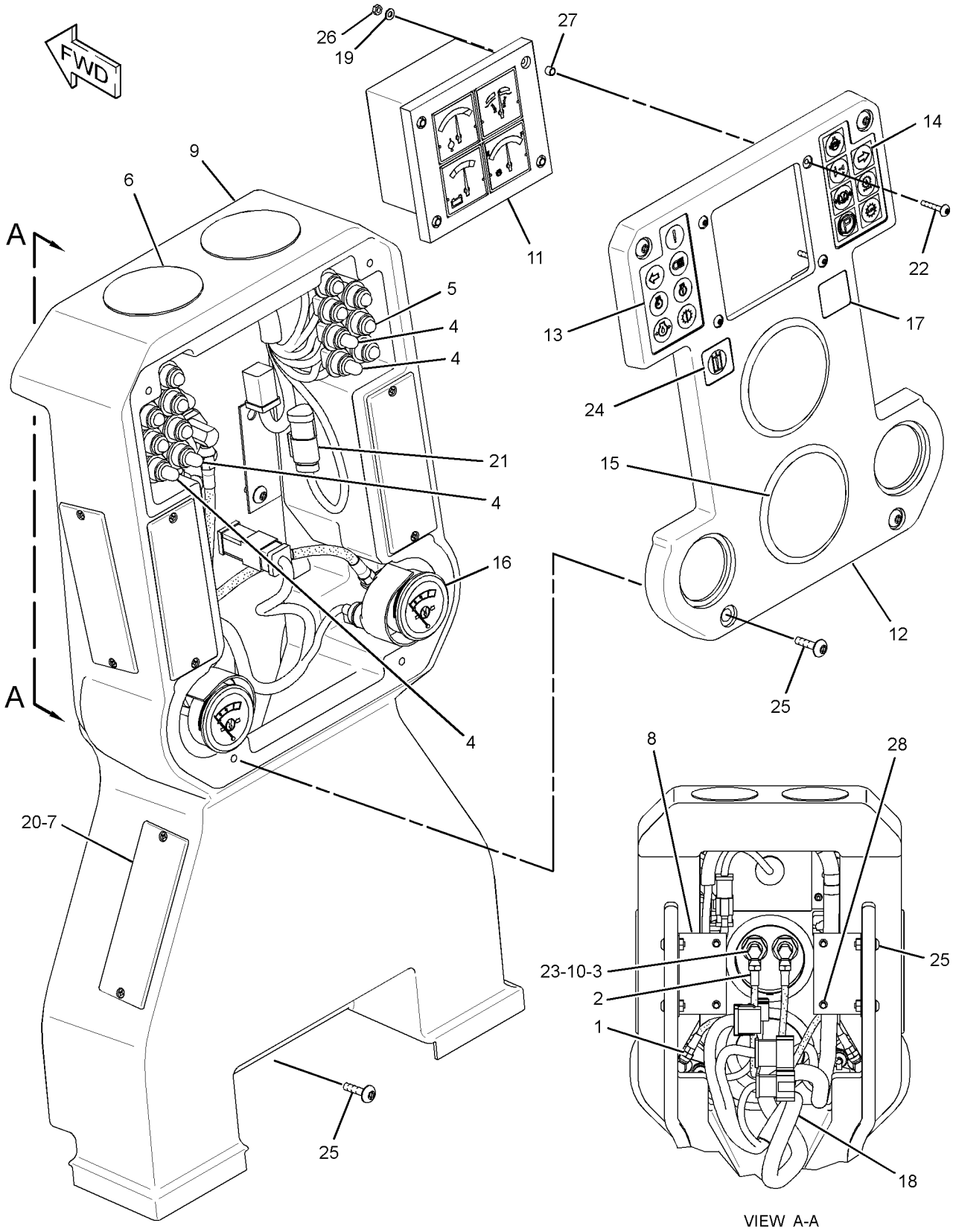

GRAPHIC #1 **<END>** g01786073

OPERATOR STATION

316-5238 PANEL GP-INSTRUMENT

S/N: JBP1-UP

PART OF 274-7941 GENERAL AR

SMCS-7450, 7451 **i03246370**

NOTE	REF NO	GRAPHIC REF	PART NUMBER	QTY	PART NAME 1 2 3 4 5 6 (PRODUCT LEVEL)	SEE PAGE
	1	1	**5D-0269**	2	ELBOW	
	2	1	**107-1983**	4	LAMP (24-VOLT)	
		1	**163-6508**	1	LAMP-LED (24-VOLT, WHITE)	
	3	1	**115-1748**	10	LAMP (24-VOLT, 3-WATT)	
		1	**163-6508**	1	LAMP-LED (24-VOLT, WHITE)	
Y	4	1	**287-3260**	1	MODULE GP-QUAD GAUGE	693
	9	1	**304-6958**	2	GAUGE GP-AIR PRESSURE	
		1	**4B-2049**	2	NUT (10-32-THD)	
		1	**8F-1434**	2	LOCKWASHER	
	11	1	**335-9387**	1	HARNESS AS-PANEL	
	12	1	**096-6166**	4	WASHER-HARD (4.5X9X1-MM THK)	
	13	1	**134-2540**	1	RECEPTACLE AS (3-PIN)	
M	14	1	**213-7315**	4	SCREW-TRUSS HEAD (M4X0.7X25-MM)	
M	16	1	**3E-8020**	4	SCREW-TRUSS HEAD (M6X1X25-MM)	
M	17	1	**5C-8312**	4	NUT (M4X0.7-THD)	
	18	1	**9S-4968**	4	SLEEVE	

M-METRIC PART
Y-SEPARATE ILLUSTRATION

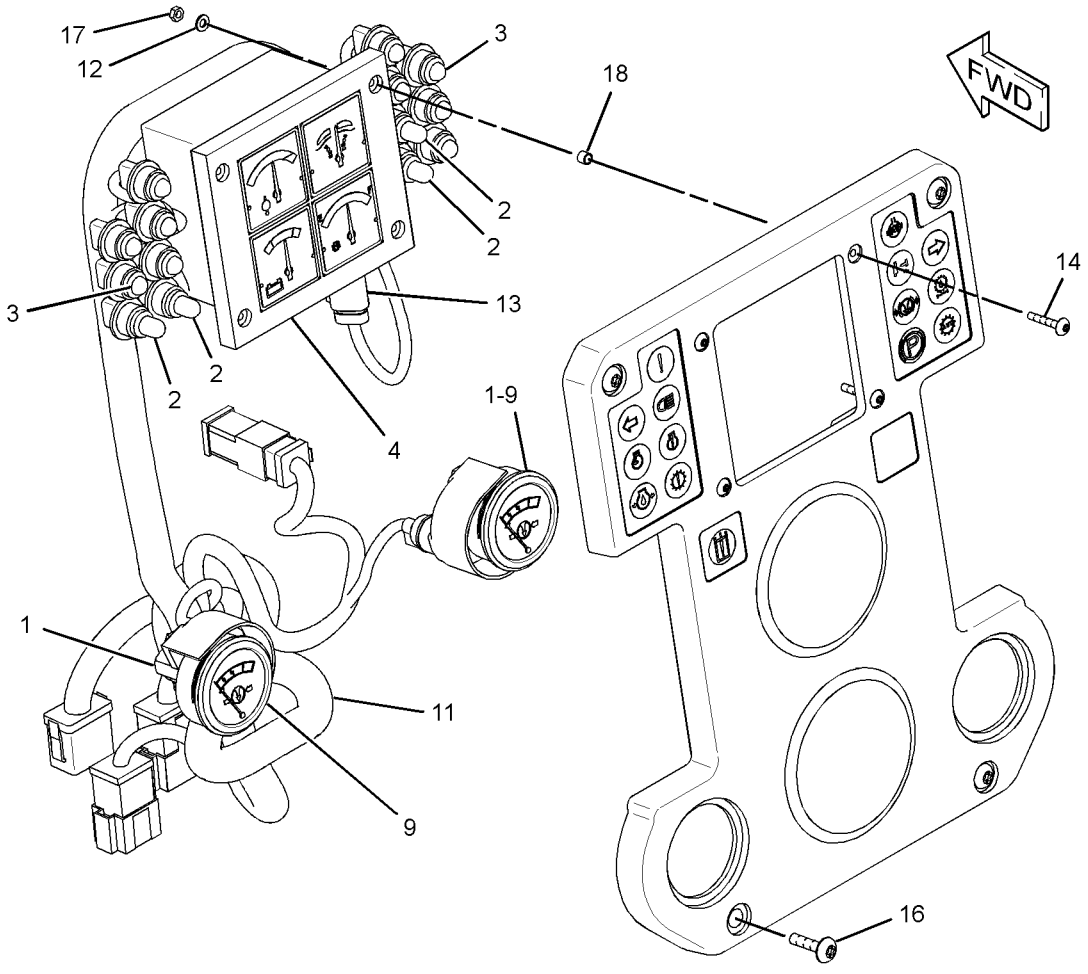

GRAPHIC #1 **<END>** g01689776

OPERATOR STATION

210-2270 RECLINER GP-SEAT

S/N: JBP1-UP
PART OF 301-4174 SEAT GP
AN ATTACHMENT

SMCS-7312 **i02733467**

NOTE	REF NO	GRAPHIC REF	PART NUMBER	QTY	PART NAME 1 2 3 4 5 6 (PRODUCT LEVEL)	SEE PAGE
	1	1	**177-1862**	1	BRACKET (SEAT BELT)	
	2	1	**210-2262**	1	BRACKET AS	
	3	1	**210-2263**	1	BRACKET AS	
	4	1	**210-2266**	1	GEAR-LOCK (14-TEETH)	
	5	1	**293-2911**	1	SHAFT AS	
		1	**2L-5893**	2	PIN-SPRING	
		1	**170-8590**	1	SPRING	
	6	1	**217-7933**	1	LATCH	
	7	1	**236-5197**	1	SPRING	
	8	1	**031-0214**	1	BOLT-LOCKING (1/4-20X0.5-IN)	
	9	1	**101-2867**	1	WASHER-HARD (7.2X25X2-MM THK)	
	10	1	**4M-6425**	1	BOLT (5/16-18X1-IN)	
	11	1	**5M-2894**	1	WASHER-HARD (10.2X18.5X2.5-MM THK)	
	12	1	**5S-7383**	1	BOLT (3/8-16X1.75-IN)	
	13	1	**8T-4224**	1	WASHER-HARD (8.8X16X2-MM THK)	

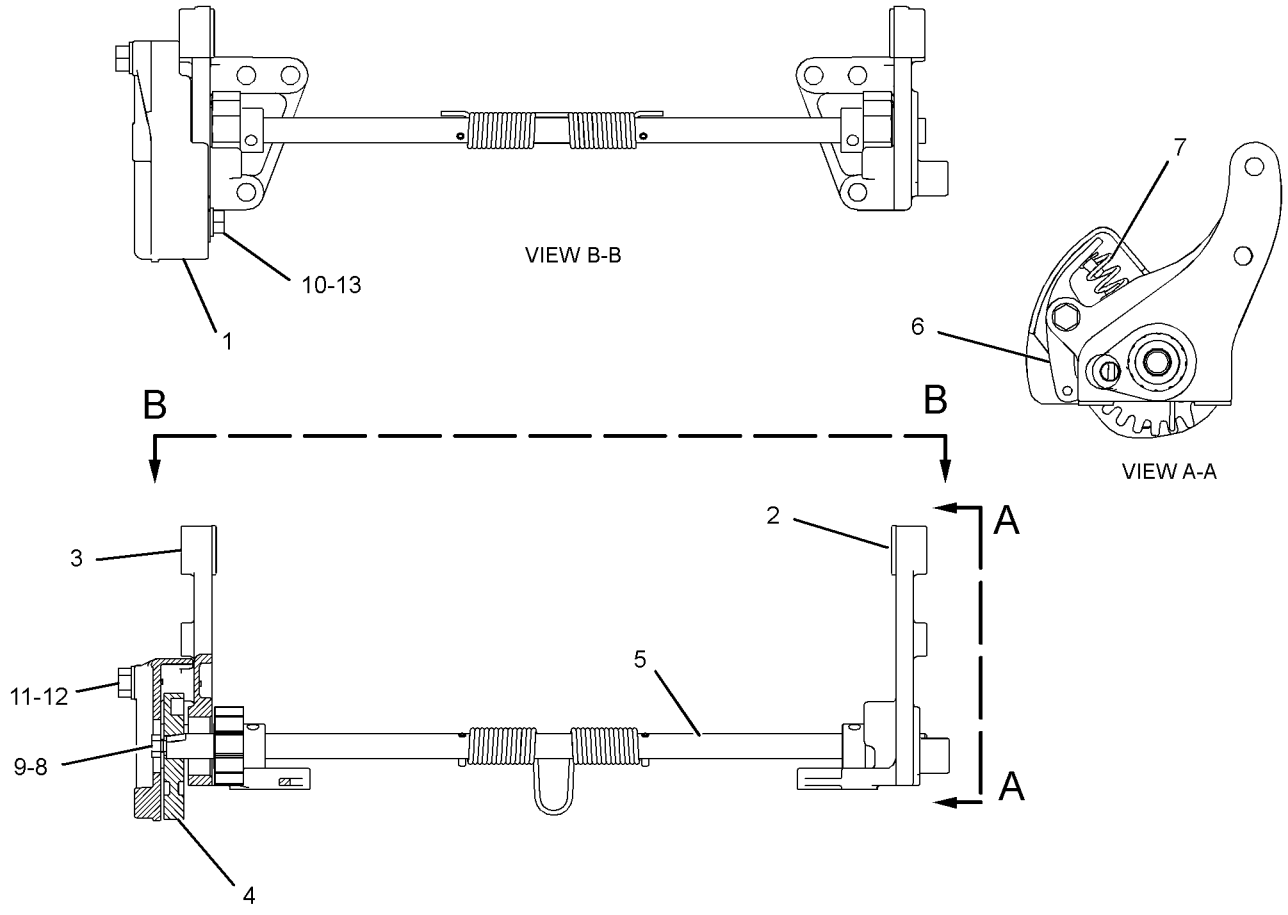

GRAPHIC #1 **<END>** g01296294

OPERATOR STATION

284-5400 ROPS AR—HIGH PROFILE

S/N: JBP1-UP

AN ATTACHMENT

SMCS-7177, 7323 **i03261422**

NOTE	REF NO	GRAPHIC REF	PART NUMBER	QTY	PART NAME 1 2 3 4 5 6 (PRODUCT LEVEL)	SEE PAGE
Y	1	1	*284-5397*	1	ROPS GP	708
Y	2	1	*290-1148*	1	GUARD GP-PLATFORM	329

Y-SEPARATE ILLUSTRATION

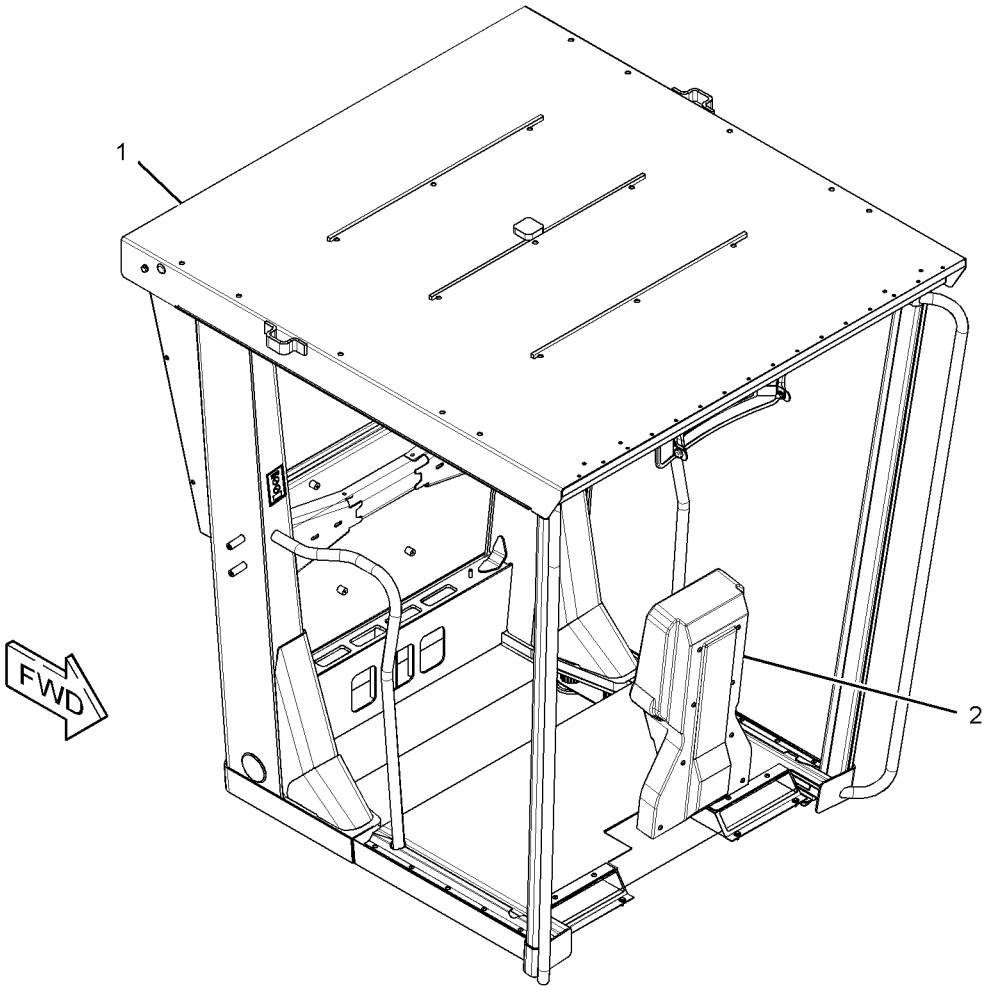

GRAPHIC #1 **<END>** g01664733

OPERATOR STATION

320-0342 ROPS AR-ENCLOSED—HIGH PROFILE

S/N: JBP1-UP

AN ATTACHMENT

SMCS-7177, 7323 **i03434850**

NOTE	REF NO	GRAPHIC REF	PART NUMBER	QTY	PART NAME 1 2 3 4 5 6 (PRODUCT LEVEL)	SEE PAGE
Y	1	1	*2A-6985*	1	MOUNTING GP-ROPS (ENCLOSED)	695
Y	2	1	*8X-2385*	1	PANEL GP-CAB (HIGH PROFILE)	698
Y	3	1	*8X-9675*	1	WASHER GP-WINDOW (FRONT)	736
Y	4	1	*172-5378*	1	INSULATION GP-WEATHER (COLD WEATHER)	676
Y	5	1	*172-6831*	1	WIPER GP-WINDOW (FRONT)	751
Y	6	1	*177-8781*	1	LINER GP-CAB (HIGH PROFILE) (ENCLOSED)	678
	7	1	*180-4656*	1	PLATE GP-CERTIFICATION	
		1	**156-6312**	1	PLATE-WARNING (ROPS, FOPS, OPS, READ OMM)	
		1	**4B-4158**	4	SCREW-DRIVE (NO 4X1/4-IN)	
	8	1	**219-0302**	2	FILM-WARNING (NO WELD, NO DRILL, READ OMM)	
Y	9	1	*285-3361*	1	WIRING GP-CAB	202
Y	10	1	*290-0349*	1	ROPS GP-ENCLOSED	709
Y	11	1	*316-5237*	1	PANEL GP-INSTRUMENT	701

Y-SEPARATE ILLUSTRATION

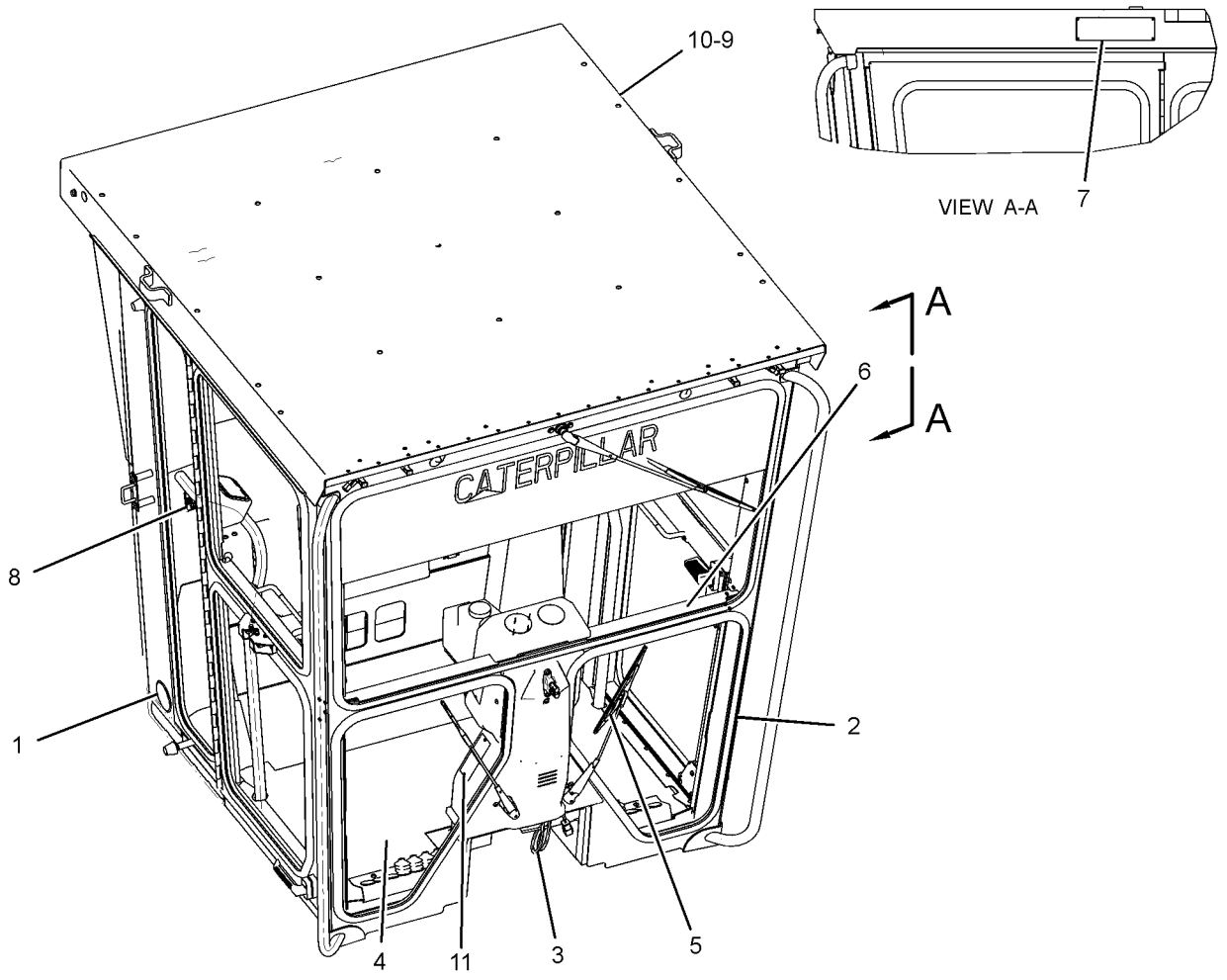

GRAPHIC #1 **<END>** g01781893

OPERATOR STATION

117-4698 ROPS GP—HIGH PROFILE

S/N: JBP1-UP
PART OF 284-5397 ROPS GP
AN ATTACHMENT

SMCS-7177, 7323 **i03096184**

NOTE	PART NUMBER	QTY	PART NAME 1 2 3 4 5 6 (PRODUCT LEVEL)	SEE PAGE
	180-4656	1	PLATE GP-CERTIFICATION	
	4B-4158	4	SCREW-DRIVE (NO 4X1/4-IN)	
	156-6312	1	PLATE-WARNING (ROPS, FOPS, OPS, READ OMM)	

<END>

173-6756 ROPS GP—HIGH PROFILE

S/N: JBP1-UP
PART OF 290-0349 ROPS GP
AN ATTACHMENT

SMCS-7177, 7323 **i03192986**

NOTE	PART NUMBER	QTY	PART NAME 1 2 3 4 5 6 (PRODUCT LEVEL)	SEE PAGE
	180-4656	1	PLATE GP-CERTIFICATION	
	156-6312	1	PLATE-WARNING (ROPS, FOPS, OPS, READ OMM)	
			(ON LH SIDE OF ROOF PANEL)	
	4B-4158	4	SCREW-DRIVE (NO 4X1/4-IN)	

<END>

OPERATOR STATION

284-5397 ROPS GP—HIGH PROFILE

S/N: JBP1-UP
PART OF 284-5400 ROPS AR
AN ATTACHMENT

SMCS-7177, 7323 **i03261440**

NOTE	PART NUMBER	QTY	PART NAME 1 2 3 4 5 6 (PRODUCT LEVEL)	SEE PAGE
Y	**8X-2795**	1	MIRROR GP-REAR VIEW	688
Y	**117-4698**	1	ROPS GP	707
	7X-0354	2	BOLT (5/8-11X4.5-IN)	
	7X-0375	4	BOLT (3/4-10X5-IN)	
M	**8T-4195**	1	BOLT (M10X1.5X30-MM)	
	030-8535	2	BOLT-LOCKING (3/8-16X0.875-IN)	
	3E-4048	2	CAP-PLUG	
	6G-2395	2	DOOR GP (AIR VENTED)	
			(EACH INCLUDES)	
	6G-7222	2	ROLLER	
	159-3759	2	FILM-INSTRUCTION (DO NOT DRILL, WELD ROPS)	
	6G-2396	2	GASKET	
	102-9372	1	GLASS (REAR)	
	9D-1589	2	MOUNTING	
	103-4953	4	MOUNTING	
	4K-0367	2	NUT-FULL (5/8-11-THD)	
	164-2465	2	PAD	
	103-5516	1	PAD-LH	
	103-5515	1	PAD-RH	
	103-4771	2	PIN AS	
	180-4656	1	PLATE GP-CERTIFICATION (ROPS, FOPS, OPS, READ OMM)	
	156-6312	1	PLATE-WARNING (ROPS, FOPS, OPS, READ OMM)	
	4B-4158	4	SCREW-DRIVE (NO 4X1/4-IN)	
	5P-7803	2	PLUG-BUTTON	
	6V-3928	4	PLUG-BUTTON	
	3G-3265	24	RIVET	
D	**5P-5768**		SEAL (4.3-M)	
B	**166-1997**	2	SHIM (1.2-MM THK)	
B	**166-1999**	2	SHIM (2.28-MM THK)	
	3V-9244	2	WASHER (16.5X50X5-MM THK)	
	8X-0674	4	WASHER (22X100X10-MM THK)	
	8T-4121	1	WASHER-HARD (11X21X2.5-MM THK)	
	8T-4122	4	WASHER-HARD (17X32X3.5-MM THK)	
	8T-4896	2	WASHER-HARD (10.2X18.5X2.5-MM THK)	

B-USE AS REQUIRED
D-ORDER BY THE METER
M-METRIC PART
Y-SEPARATE ILLUSTRATION

<END>

OPERATOR STATION

290-0349 ROPS GP-ENCLOSED

S/N: JBP1-UP
PART OF 320-0342 ROPS AR
AN ATTACHMENT

SMCS-7177, 7323 **i03254891**

NOTE	REF NO	GRAPHIC REF	PART NUMBER	QTY	PART NAME 1 2 3 4 5 6 (PRODUCT LEVEL)	SEE PAGE
Y	1	1	*8X-4413*	1	DOOR GP-CAB	651
Y	2	1	**173-6756**	1	ROPS GP	707

Y-SEPARATE ILLUSTRATION

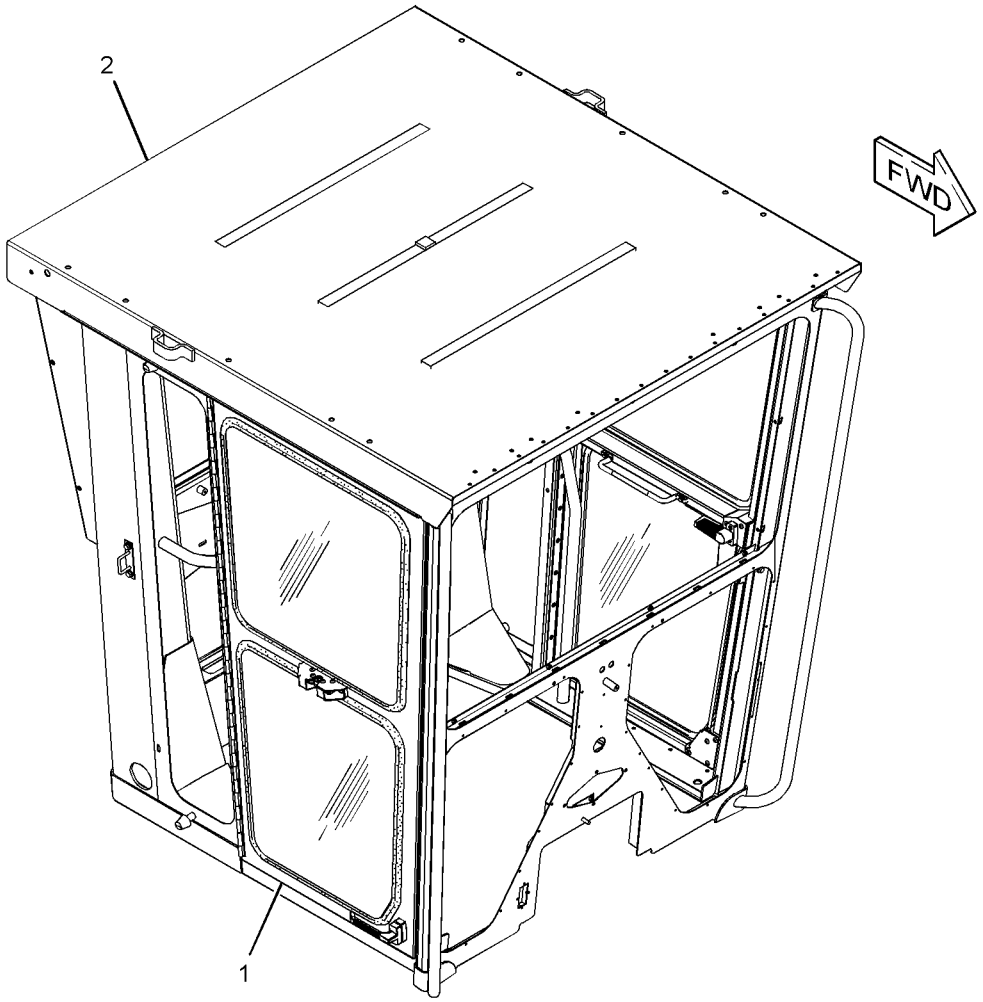

GRAPHIC #1 **<END>** g01763834

OPERATOR STATION

139-4612 SCREEN GP-SUN

S/N: JBP1-UP
AN ATTACHMENT

SMCS-7165 **i02200406**

NOTE	REF NO	GRAPHIC REF	PART NUMBER	QTY	PART NAME 1 2 3 4 5 6 (PRODUCT LEVEL)	SEE PAGE
BJ	1	1	**6V-5164**		SEAL	
	2	1	**137-5503**	1	SCREEN GP-SUN	
	3	1	**139-4605**	1	PLATE AS	
M		1	**6V-9632**	4	NUT-WELD (M6X1-THD)	
M	4	1	**5C-9553**	4	BOLT (M6X1X16-MM)	
	5	1	**9X-8256**	4	WASHER (6.6X12X2-MM THK)	

B-USE AS REQUIRED
J-SOLD BY THE DECIMETER
M-METRIC PART

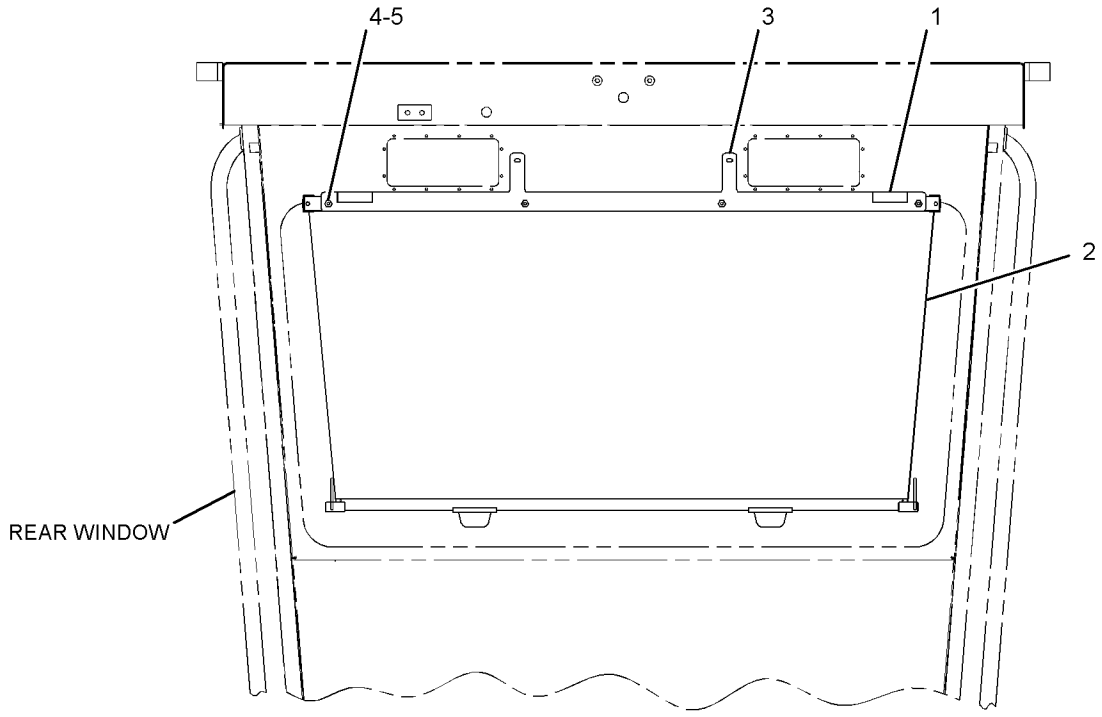

REAR VIEW

GRAPHIC #1 **<END>** g01070840

116-1965 SEAT BELT GP–RETRACTABLE

S/N: JBP1-UP

PART OF 126-2747 SEAT GP, 8X-8940 SEAT GP-STATIC

AN ATTACHMENT

SMCS-7327 **i03182243**

NOTE	REF NO	GRAPHIC REF	PART NUMBER	QTY	PART NAME 1 2 3 4 5 6 (PRODUCT LEVEL)	SEE PAGE
	1	1	**1A-4350**	1	BOLT (7/16-20X1.75-IN)	
	2	1	**4D-6432**	1	LOCKNUT (7/16-20-THD)	
	3	1	**8S-0934**	2	LOCKNUT-FLANGE (7/16-20-THD)	
	4	1	**8T-9381**	1	BOLT (7/16-20X1-IN)	

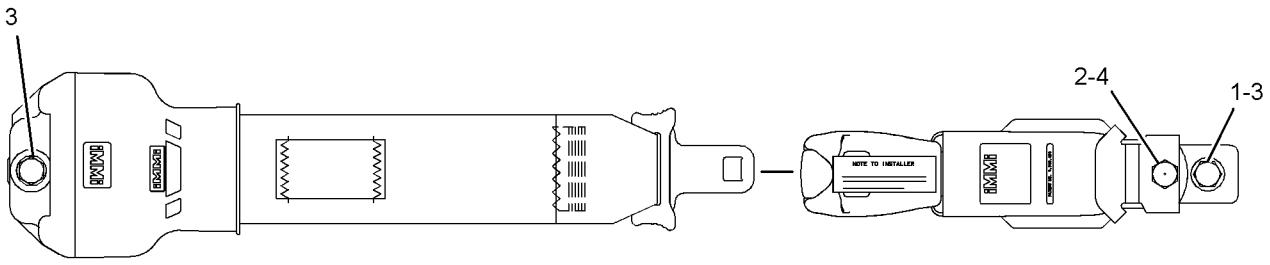

GRAPHIC #1 **<END>** g01286454

OPERATOR STATION

222-0345 SEAT BELT GP–RETRACTABLE

S/N: JBP1-UP
PART OF 175-1504 SEAT GP
AN ATTACHMENT

SMCS-7327 **i02947636**

NOTE	REF NO	GRAPHIC REF	PART NUMBER	QTY	PART NAME 1 2 3 4 5 6 (PRODUCT LEVEL)	SEE PAGE
					(NO SERVICED PARTS)	

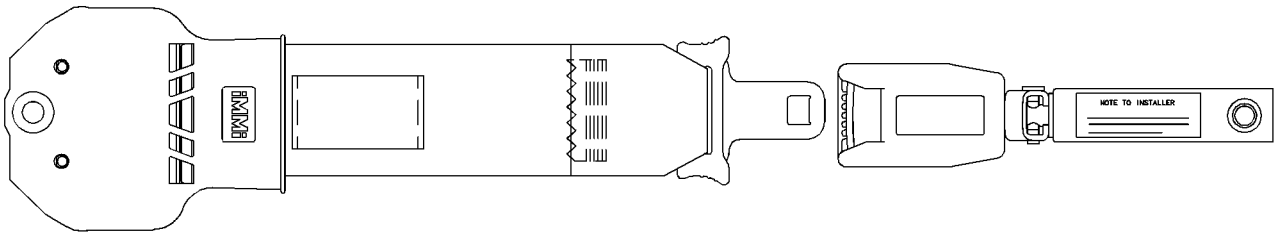

GRAPHIC #1 **<END>** g01196135

OPERATOR STATION

8Y-3912 SEAT GP–CLOTH

S/N: JBP1-UP
PART OF 8Y-6851 SEAT GP-STATIC
AN ATTACHMENT

SMCS-7312 **i02845630**

NOTE	REF NO	GRAPHIC REF	PART NUMBER	QTY	PART NAME 1 2 3 4 5 6 (PRODUCT LEVEL)	SEE PAGE
BE	1	1	**7X-7877**		STRIP-EDGING	
	2	1	**8Y-3913**	1	CUSHION AS-SEAT	
	3	1	**9C-5324**	1	CUSHION AS-BACK	
	4	1	**6W-1895**	1	BAR	
	5	1	**6W-1890**	1	BAR AS	
	6	1	**9C-1587**	1	LEVER	
	7	1	**9X-6624**	4	BOLT	
	8	1	**033-4843**	4	NUT (5/16-18-THD)	
	9	1	**6W-9693**	2	ADJUSTER AS	
	10	1	**6W-2373**	1	SPRING	
	11	1	**119-0036**	4	SCREW-FLAT HEAD (5/16-18X0.875-IN)	
	12	1	**9V-7437**	1	SHELL AS	
	13	1	**9S-2544**	4	SCREW-HEX HEAD (8-32X11.13-MM)	
	14	1	**6W-5757**	1	CLIP	
	15	1	**6W-3309**	1	HOLDER	
	16	1	**8T-7565**	7	RIVET-POP	
	17	1	**5P-7957**	1	LANYARD (SEAT)	
	18	1	**6W-5740**	1	CAP	
	19	1	**5B-6172**	4	WASHER (9.7X19X0.8-MM THK)	
	20	1	**7X-7739**	4	WASHER (9.7X25.4 X4-MM THK)	

B-USE AS REQUIRED
E-ORDER BY THE CENTIMETER

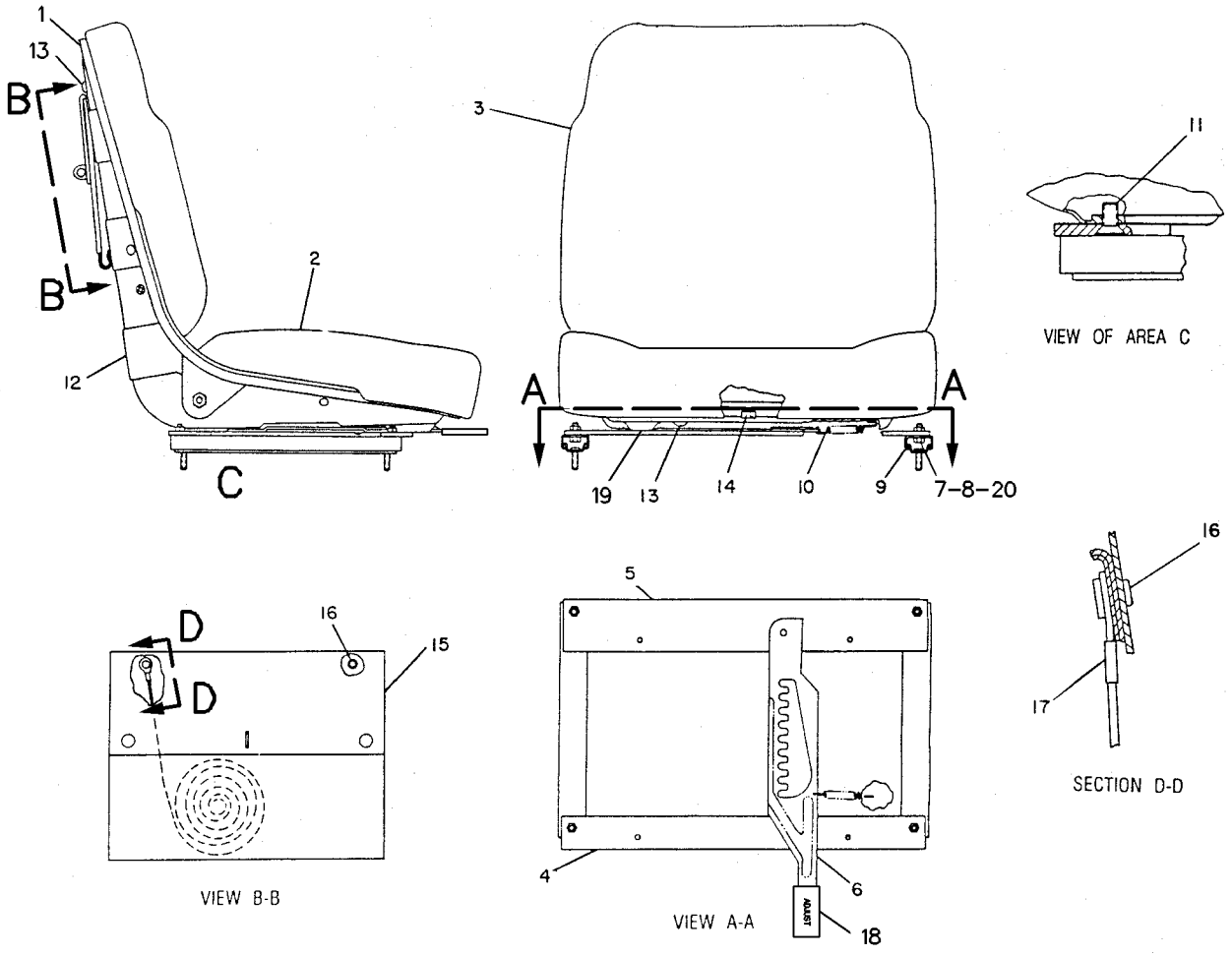

GRAPHIC #1 **<END>** g00108400

OPERATOR STATION

8Y-4005 SEAT GP—VINYL

S/N: JBP1-UP
PART OF 8Y-6852 SEAT GP-STATIC
AN ATTACHMENT

SMCS-7312 **i02845646**

NOTE	REF NO	GRAPHIC REF	PART NUMBER	QTY	PART NAME 1 2 3 4 5 6 (PRODUCT LEVEL)	SEE PAGE
BE	1	1	**7X-7877**		STRIP-EDGING	
	2	1	**8R-2057**	1	CUSHION AS-SEAT	
	3	1	**8R-2054**	1	CUSHION AS-BACK	
	4	1	**6W-1895**	1	BAR	
	5	1	**6W-1890**	1	BAR AS	
	6	1	**9C-1587**	1	LEVER	
	7	1	**8T-9043**	4	BOLT (5/16-18X0.875-IN)	
	8	1	**033-4843**	4	NUT (5/16-18-THD)	
	9	1	**6W-9693**	2	ADJUSTER AS	
	10	1	**6W-2373**	1	SPRING	
	11	1	**119-0036**	4	SCREW-FLAT HEAD (5/16-18X0.875-IN)	
	12	1	**9V-7437**	1	SHELL AS	
	13	1	**9S-2544**	4	SCREW-HEX HEAD (8-32X11.13-MM)	
	14	1	**6W-5757**	1	CLIP	
	15	1	**6W-3309**	1	HOLDER	
	16	1	**8T-7565**	7	RIVET-POP	
	17	1	**5P-7957**	1	LANYARD	
	18	1	**6W-5740**	1	CAP	
	19	1	**5B-6172**	4	WASHER (9.7X19X0.8-MM THK)	
	20	1	**7X-7739**	4	WASHER (9.7X25.4 X4-MM THK)	

B-USE AS REQUIRED
E-ORDER BY THE CENTIMETER

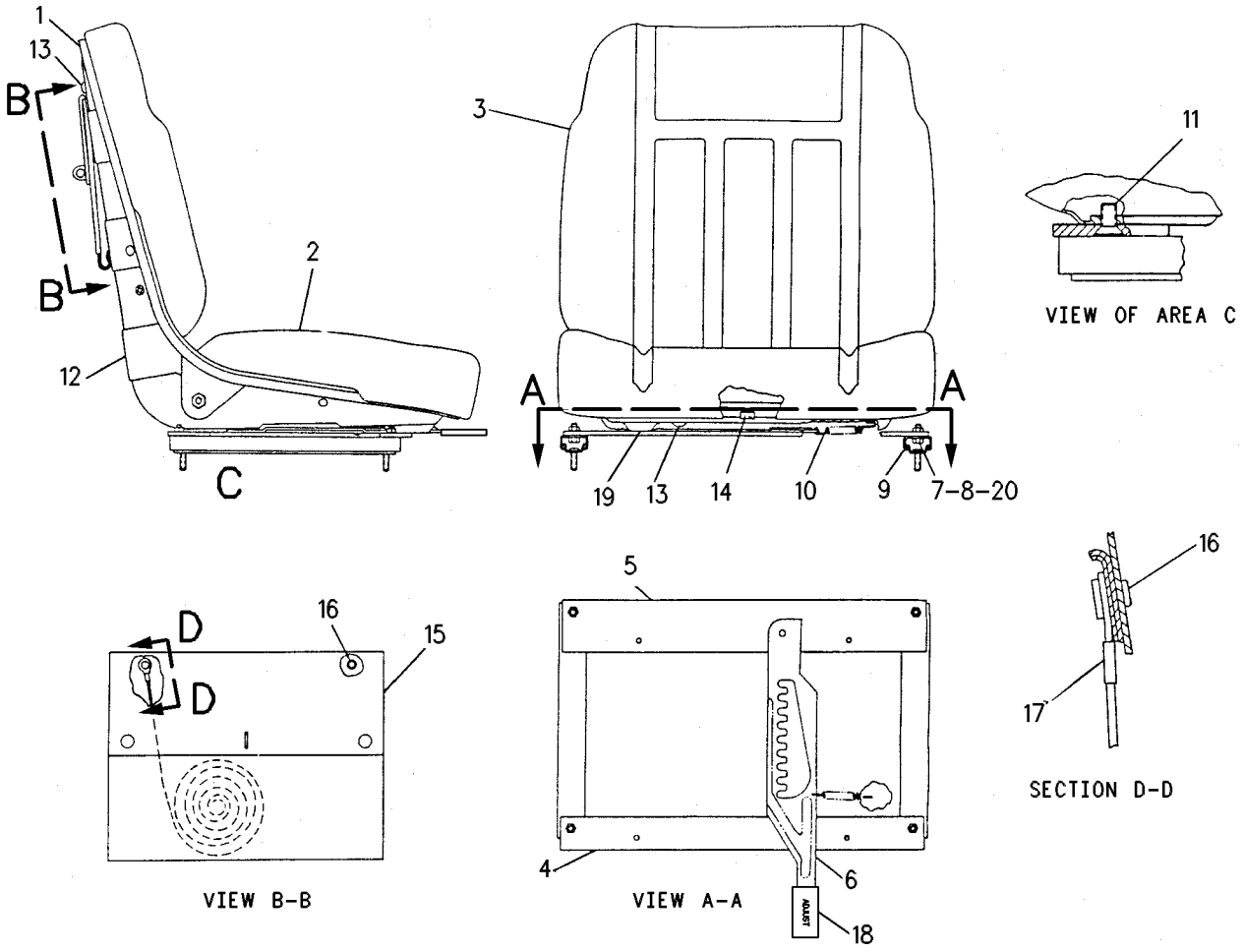

GRAPHIC #1 **<END>** g00109668

OPERATOR STATION

113-4254 SEAT GP–VINYL

S/N: JBP1-UP

PART OF 274-7941 GENERAL AR

SMCS-7312 **i01047988**

NOTE	PART NUMBER	QTY	PART NAME 1 2 3 4 5 6 (PRODUCT LEVEL)	SEE PAGE
	5P-8502	1	PADLOCK GP	
A	**5P-8500**	1	KEY	
A	**8Y-6364**	1	SLEEVE	
M	**9X-2041**	6	SCREW-TRUSS HEAD (M10X1.5X20-MM)	
	8Y-4030	1	SEAT BELT GP	
Y	*125-9856*	1	SEAT GP-STATIC	728

A-NOT PART OF THIS GROUP
M-METRIC PART
Y-SEPARATE ILLUSTRATION

<END>

OPERATOR STATION

125-9855 SEAT GP

S/N: JBP1-UP

PART OF 125-9856 SEAT GP-STATIC

SMCS-7312 **i00131050**

NOTE	REF NO	GRAPHIC REF	PART NUMBER	QTY	PART NAME 1 2 3 4 5 6 (PRODUCT LEVEL)	SEE PAGE
	1	1	**6W-5757**	1	CLIP	
	2	1	**1F-1599**	2	RIVET-HEAD	
	3	1	**9V-8788**	1	ROD	
	4	1	**8V-3208**	1	LEVER	
	5	1	**8R-2054**	1	CUSHION AS-BACK	
	6	1	**8R-2057**	1	CUSHION AS-SEAT	
	7	1	**033-4121**	4	BOLT (5/16-18X0.625-IN)	
	8	1	**9V-7437**	1	SHELL AS	
		1	**9V-7440**	4	NUT-WELD	
BE	9	1	**7X-7877**		STRIP-EDGING	
	10	1	**9S-2544**	4	SCREW-HEX HEAD (8-32X11.13-MM)	
	11	1	**6W-3309**	1	HOLDER	
	12	1	**8T-7565**	7	RIVET-POP	
	13	1	**5P-7957**	1	LANYARD	
	14	1	**9V-8789**	2	ADJUSTER AS	

B-USE AS REQUIRED
E-ORDER BY THE CENTIMETER

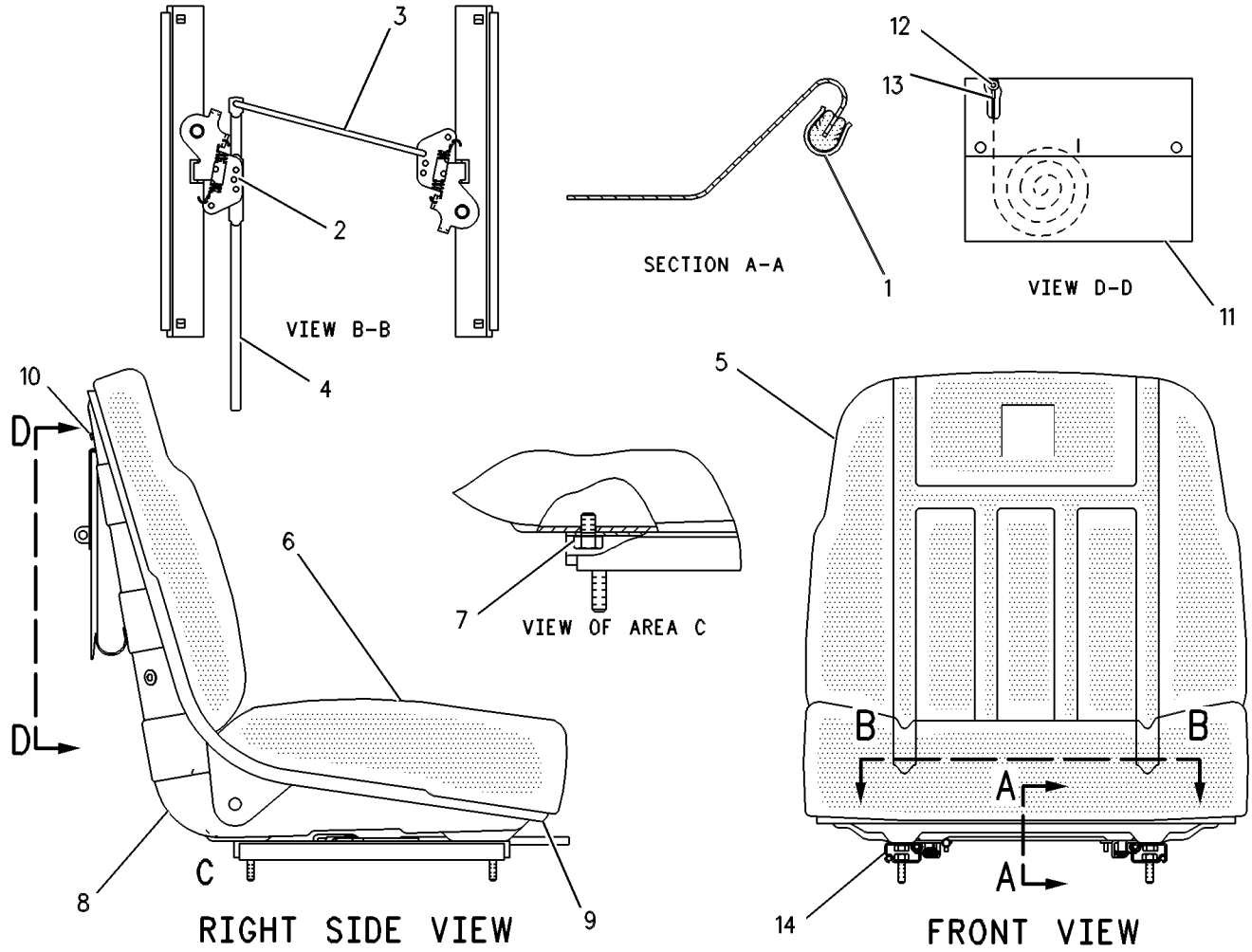

GRAPHIC #1 **<END>** g00109164

OPERATOR STATION

126-2747 SEAT GP–VINYL

S/N: JBP1-UP

AN ATTACHMENT

SMCS-7312 **i01047991**

NOTE	PART NUMBER	QTY	PART NAME 1 2 3 4 5 6 (PRODUCT LEVEL)	SEE PAGE
	5P-8502	1	PADLOCK GP	
A	**5P-8500**	1	KEY	
A	**8Y-6364**	1	SLEEVE	
M	**9X-2041**	6	SCREW-TRUSS HEAD (M10X1.5X20-MM)	
Y	**116-1965**	1	SEAT BELT GP	711
Y	**8Y-6852**	1	SEAT GP-STATIC	726

A-NOT PART OF THIS GROUP
M-METRIC PART
Y-SEPARATE ILLUSTRATION

<END>

OPERATOR STATION

175-1504 SEAT GP–CLOTH

S/N: JBP1-UP
PART OF 302-8814 SEAT GP-SUSPENSION
AN ATTACHMENT

SMCS-7312 **i02947579**

NOTE	REF NO	GRAPHIC REF	PART NUMBER	QTY	PART NAME 1 2 3 4 5 6 (PRODUCT LEVEL)	SEE PAGE
	1	1	**173-3084**	1	EXTENSION GP-BACKREST	
	2	1	**177-4937**	1	SPACER (11.7X19.8X20.3-MM THK)	
Y	3	1	**202-7666**	1	ARMREST GP (RH)	631
Y	4	1	**202-7668**	1	ARMREST GP (LH)	632
Y	5	1	**222-0345**	1	SEAT BELT GP (RETRACTABLE)	712
Y	6	1	**301-4174**	1	SEAT GP (CLOTH)	721
	7	1	**0T-0244**	1	BOLT (7/16-20X1.25-IN)	
	8	1	**205-6388**	1	BOLT (7/16-20X1.75-IN)	

Y-SEPARATE ILLUSTRATION

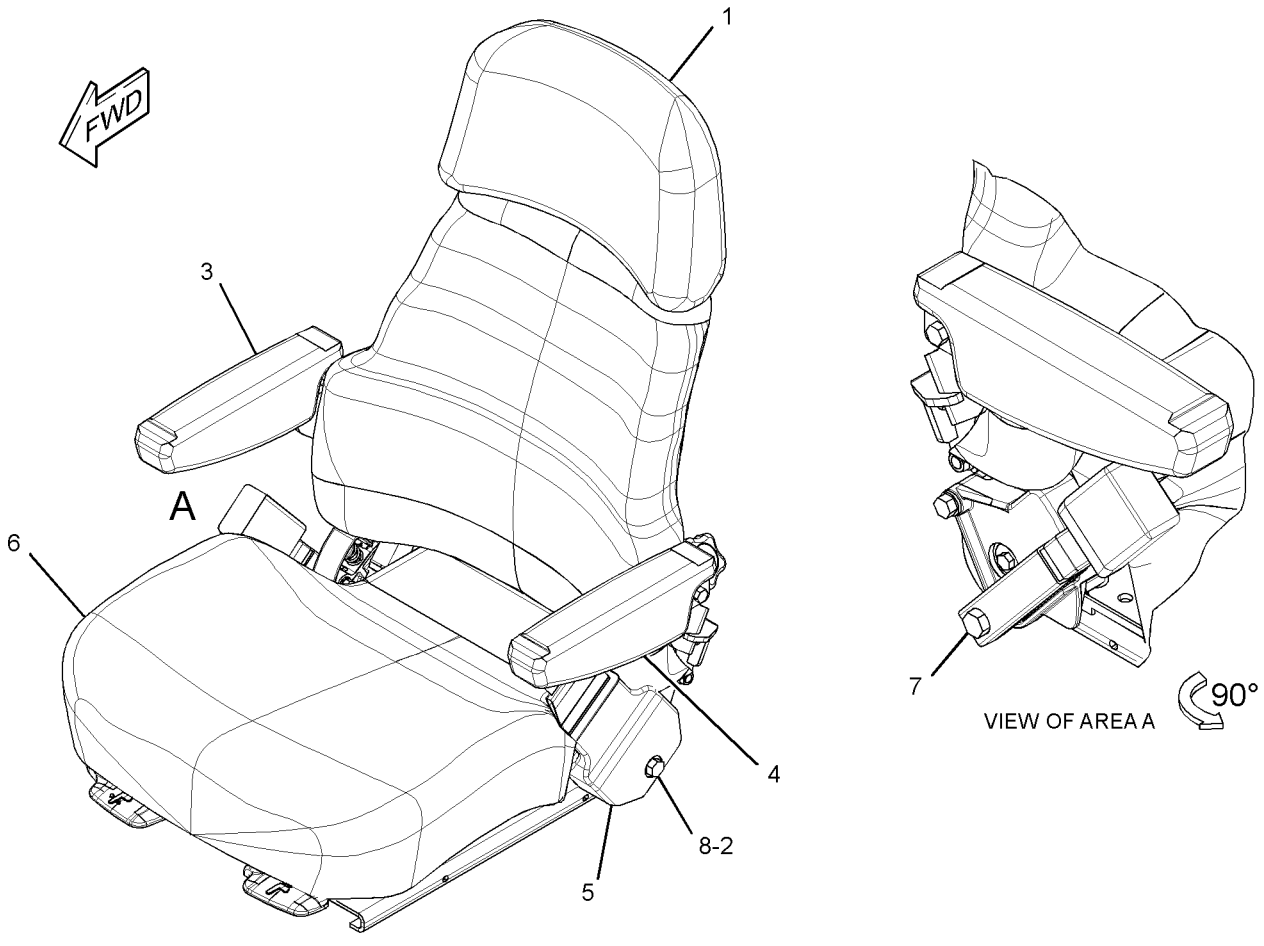

GRAPHIC #1 **<END>** g01415163

OPERATOR STATION

301-4174 SEAT GP–CLOTH

S/N: JBP1-UP
PART OF 175-1504 SEAT GP
AN ATTACHMENT

SMCS-7312 **i02947637**

NOTE	REF NO	GRAPHIC REF	PART NUMBER	QTY	PART NAME 1 2 3 4 5 6 (PRODUCT LEVEL)	SEE PAGE
	1	1	**143-1288**	8	LOCKNUT-FLANGE (3/8-16-THD)	
	2	1	**171-1230**	6	SCREW-BUTTON HEAD (3/8-16X1-IN)	
	3	1	**171-6682**	1	BAR	
	4	1	**172-2416**	2	PIN	
	5	1	**172-6581**	1	PAN AS	
		1	**6K-3273**	5	RIVET-POP	
		1	**169-1025**	1	CUSHION AS	
Y	6	1	*173-1028*	1	ADJUSTER GP-SEAT	624
	7	1	**177-1863**	2	BOLT-PIVOT (3/8-16X2.89-IN)	
	8	1	**184-2298**	1	ROD	
	9	1	**184-2299**	4	WASHER (7X25.4X2.54-MM THK)	
Y	10	1	*210-2270*	1	RECLINER GP-SEAT	704
	11	1	**294-5042**	2	SPACER (11.1X19.5X9.67-MM THK)	
Y	12	1	*301-4173*	1	PAN GP-BACKREST	697
	13	1	**095-0843**	2	PIN-COTTER	
	14	1	**5V-1496**	2	RETAINER	
	15	1	**6V-7646**	2	WASHER-HARD (7.2X25X2-MM THK)	
	16	1	**8T-0328**	1	WASHER-HARD (5.5X10X1-MM THK)	
	17	1	**8T-4205**	1	WASHER-HARD (7.2X14.5X2-MM THK)	

Y-SEPARATE ILLUSTRATION

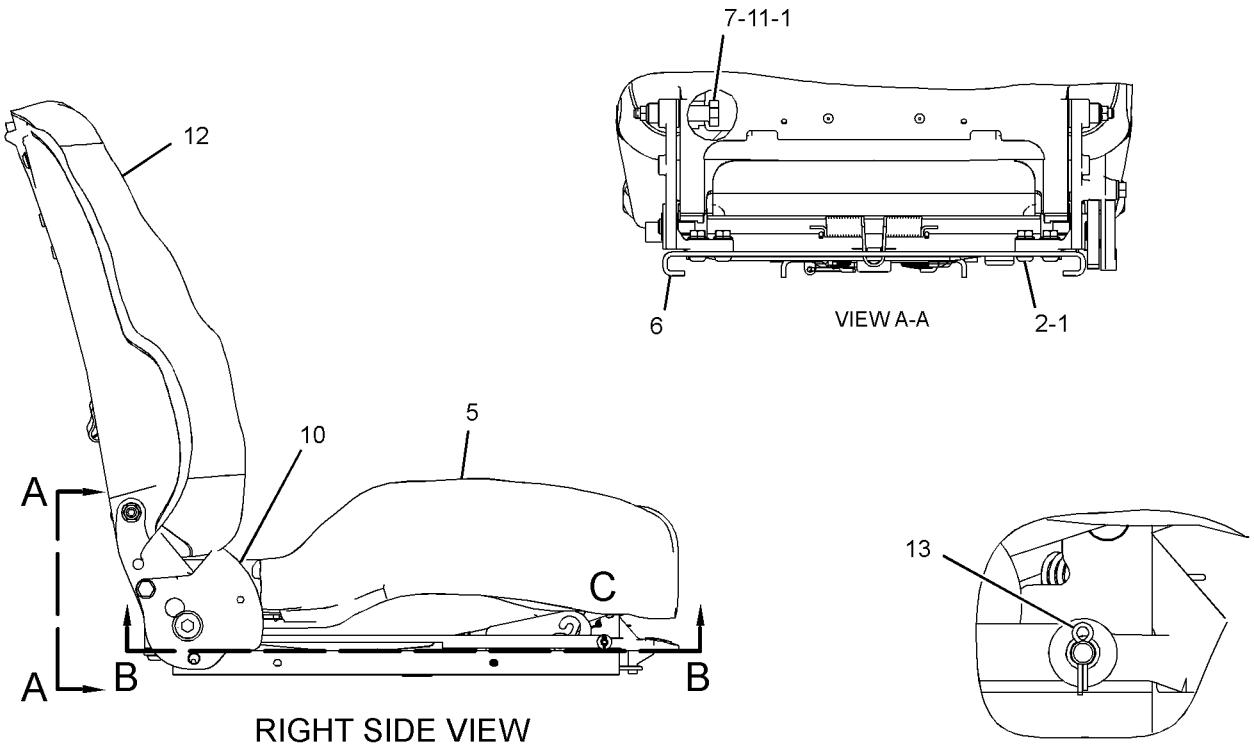

GRAPHIC #1 **<END>** g01416932

OPERATOR STATION

8X-8940 SEAT GP-STATIC—CLOTH

S/N: JBP1-UP
PART OF 290-1126 CAB AR
AN ATTACHMENT

SMCS-7312 **i03182143**

NOTE	PART NUMBER	QTY	PART NAME 1 2 3 4 5 6 (PRODUCT LEVEL)	SEE PAGE
Y	**116-1965**	1	SEAT BELT GP (RETRACTABLE)	711
Y	**8Y-6851**	1	SEAT GP-STATIC (CLOTH)	724
M	**9X-2041**	1	SCREW-TRUSS HEAD (M10X1.5X20-MM)	

M-METRIC PART
Y-SEPARATE ILLUSTRATION

<END>

OPERATOR STATION

8Y-6851 SEAT GP-STATIC—CLOTH

S/N: JBP1-UP

PART OF 8X-8940 SEAT GP-STATIC

AN ATTACHMENT

SMCS-7312 **i03182145**

NOTE	REF NO	GRAPHIC REF	PART NUMBER	QTY	PART NAME 1 2 3 4 5 6 (PRODUCT LEVEL)	SEE PAGE
Y	1	1	**116-2779**	1	ADJUSTER GP-SEAT	621
Y	2	1	**8Y-3912**	1	SEAT GP (CLOTH)	713
	3	1	**9L-9814**	4	LOCKNUT	
	4	1	**8S-4790**	2	SPACER (6.35-MM THK)	
	5	1	**119-6194**	1	BOOT AS	
	6	1	**089-7968**	2	WASHER (13X27.5X2.5-MM THK)	
	7	1	**8R-4519**	2	LOCKNUT	
	8	1	**6W-3628**	2	CABLE	
	9	1	**5M-2894**	4	WASHER-HARD (10.2X18.5X2.5-MM THK)	
	10	1	**9V-7446**	1	ARMREST AS (RH)	
		1	**2K-4973**	1	LOCKNUT (3/8-16-THD)	
		1	**2K-6061**	1	SCREW-MACHINE (3/8-16X1.5-IN)	
		1	**5S-7383**	1	BOLT (3/8-16X1.75-IN)	
		1	**8Y-6277**	2	SPACER (10.5X28.6X10-MM THK)	
		1	**9V-7447**	1	PAD AS	
		1	**1F-0750**	1	NUT-WELD (3/8-16-THD)	
		1	**9V-7453**	1	BRACKET	
	11	1	**9V-7454**	1	ARMREST AS (LH)	
		1	**2K-4973**	1	LOCKNUT (3/8-16-THD)	
		1	**2K-6061**	1	SCREW-MACHINE (3/8-16X1.5-IN)	
		1	**5S-7383**	1	BOLT (3/8-16X1.75-IN)	
		1	**8Y-6277**	2	SPACER (10.5X28.6X10-MM THK)	
		1	**9V-7447**	1	PAD AS	
		1	**1F-0750**	1	NUT-WELD (3/8-16-THD)	
		1	**9V-7458**	1	BRACKET	
	12	1	**8T-9381**	2	BOLT (7/16-20X1-IN)	
	13	1	**9X-8276**	4	BOLT	

Y-SEPARATE ILLUSTRATION

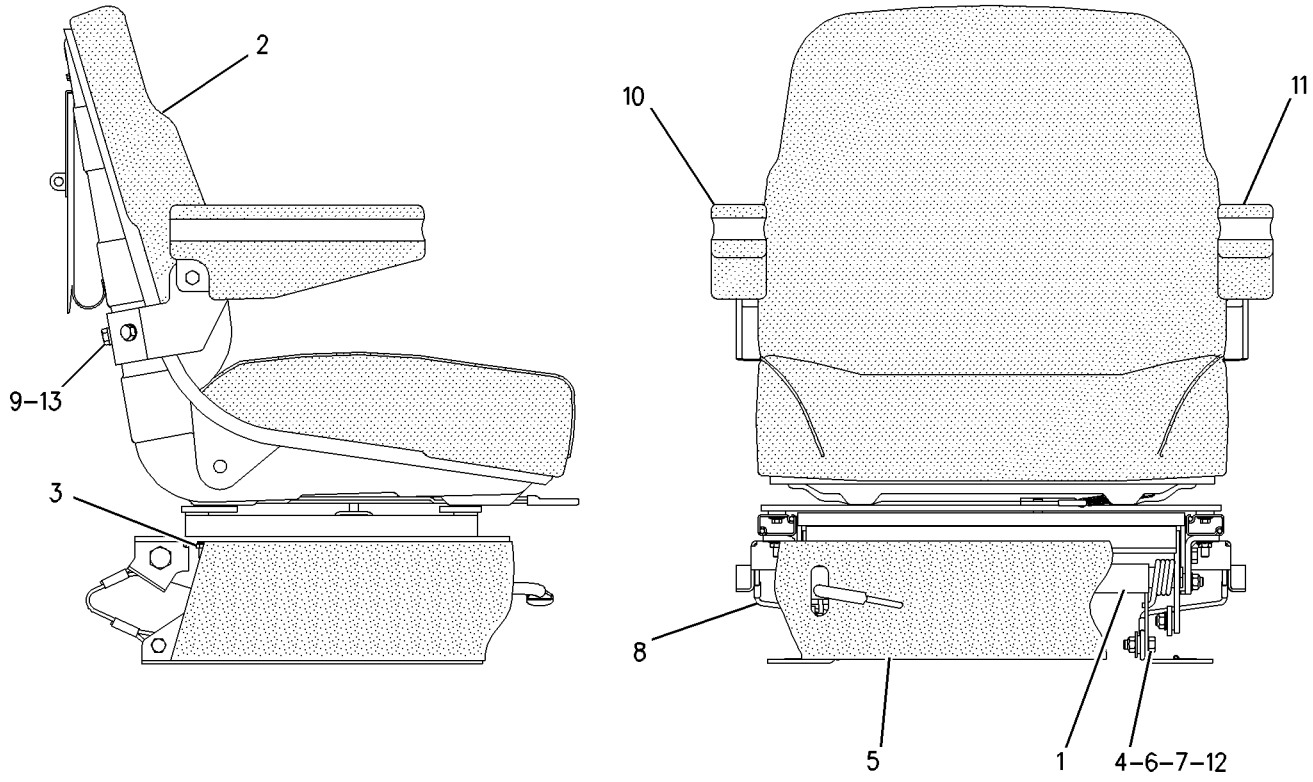

GRAPHIC #1 **<END>** g00898784

OPERATOR STATION

8Y-6852 SEAT GP-STATIC—VINYL

S/N: JBP1-UP
PART OF 126-2747 SEAT GP
AN ATTACHMENT

SMCS-7312 **i03182148**

NOTE	REF NO	GRAPHIC REF	PART NUMBER	QTY	PART NAME 1 2 3 4 5 6 (PRODUCT LEVEL)	SEE PAGE
Y	1	1	**116-2779**	1	ADJUSTER GP-SEAT (VINYL)	621
Y	2	1	**8Y-4005**	1	SEAT GP (VINYL)	715
	3	1	**9L-9814**	4	LOCKNUT	
	4	1	**8S-4790**	2	SPACER (6.35-MM THK)	
	5	1	**119-6194**	1	BOOT AS	
	6	1	**089-7968**	2	WASHER (13X27.5X2.5-MM THK)	
	7	1	**8R-4519**	2	LOCKNUT	
	8	1	**6W-3628**	2	CABLE	
	9	1	**5M-2894**	4	WASHER-HARD (10.2X18.5X2.5-MM THK)	
	10	1	**9V-7446**	1	ARMREST AS (RH)	
		1	**2K-4973**	1	LOCKNUT (3/8-16-THD)	
		1	**2K-6061**	1	SCREW-MACHINE (3/8-16X1.5-IN)	
		1	**5S-7383**	1	BOLT (3/8-16X1.75-IN)	
		1	**8Y-6277**	2	SPACER (10.5X28.6X10-MM THK)	
		1	**9V-7447**	1	PAD AS	
		1	**1F-0750**	1	NUT-WELD (3/8-16-THD)	
		1	**9V-7453**	1	BRACKET	
	11	1	**9V-7454**	1	ARMREST AS (LH)	
		1	**2K-4973**	1	LOCKNUT (3/8-16-THD)	
		1	**2K-6061**	1	SCREW-MACHINE (3/8-16X1.5-IN)	
		1	**5S-7383**	1	BOLT (3/8-16X1.75-IN)	
		1	**8Y-6277**	2	SPACER (10.5X28.6X10-MM THK)	
		1	**9V-7447**	1	PAD AS	
		1	**1F-0750**	1	NUT-WELD (3/8-16-THD)	
		1	**9V-7458**	1	BRACKET	
	12	1	**8T-9381**	2	BOLT (7/16-20X1-IN)	
	13	1	**9X-8276**	4	BOLT	

Y-SEPARATE ILLUSTRATION

8Y-6852 SEAT GP-STATIC *(contd.)* **i03182148**

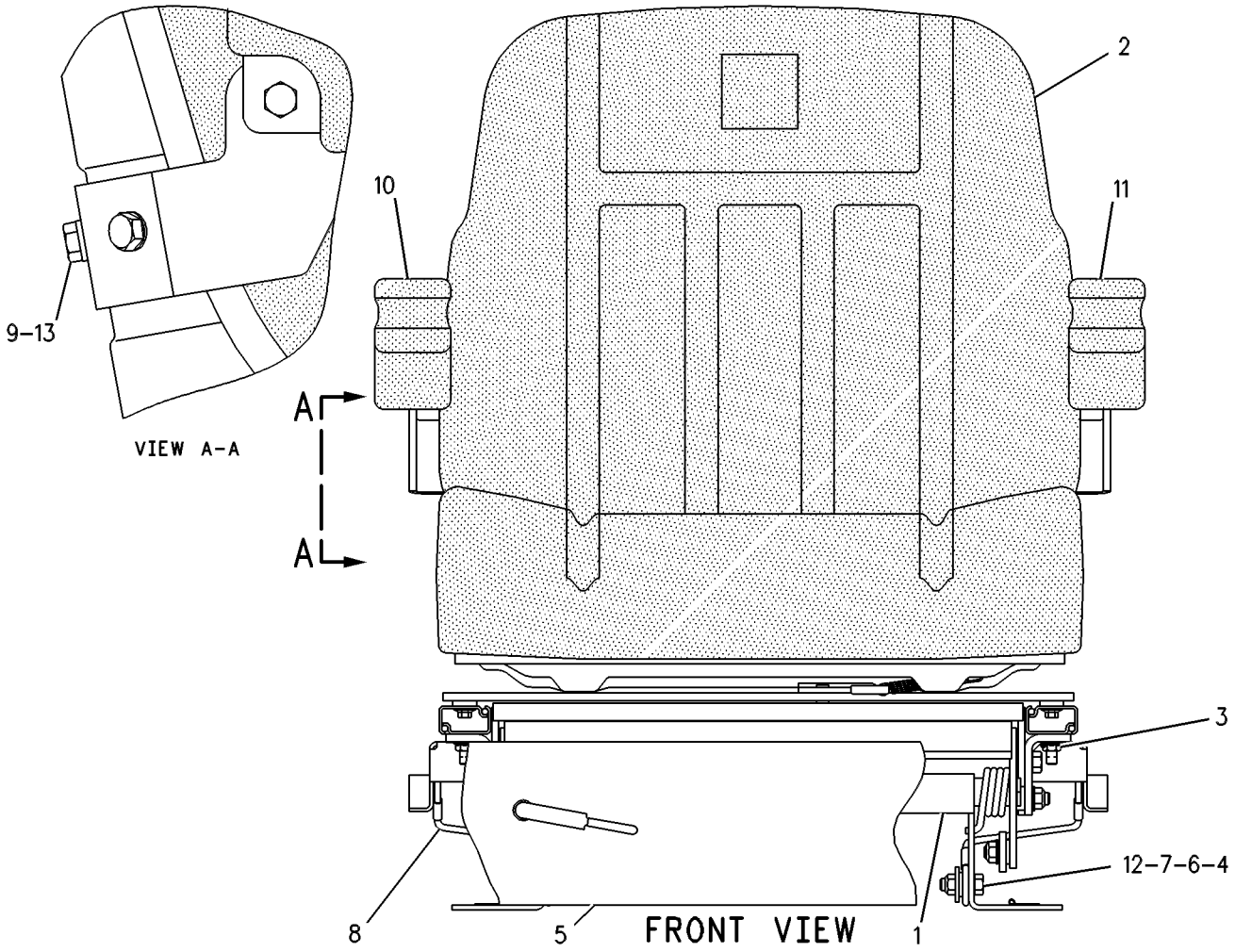

GRAPHIC #1 **<END>** g00109321

OPERATOR STATION

125-9856 SEAT GP-STATIC

S/N: JBP1-UP

PART OF 113-4254 SEAT GP

SMCS-7312 **i00131056**

NOTE	REF NO	GRAPHIC REF	PART NUMBER	QTY	PART NAME 1 2 3 4 5 6 (PRODUCT LEVEL)	SEE PAGE
Y	1	1	**125-9855**	1	SEAT GP	718
Y	2	1	**125-9854**	1	ADJUSTER GP-SEAT	623
	3	1	**031-4155**	4	LOCKNUT (5/16-18 THD)	
	4	1	**8T-4224**	4	WASHER-HARD (2MM THK)	

Y-SEPARATE ILLUSTRATION

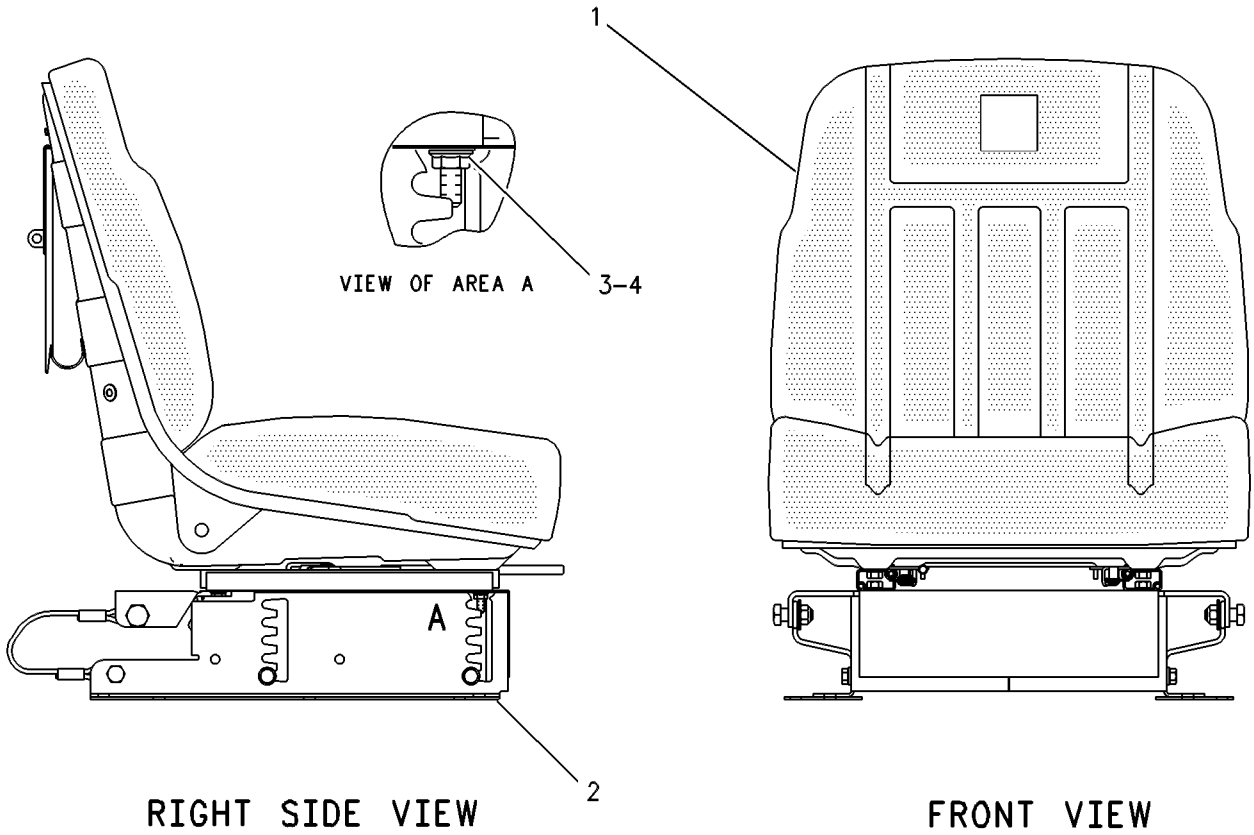

GRAPHIC #1 **<END>** g00109154

OPERATOR STATION

302-8814 SEAT GP-SUSPENSION—CLOTH

S/N: JBP1-UP

PART OF 322-8548 SEAT GP-SUSPENSION

AN ATTACHMENT

SMCS-7312 **i02946650**

NOTE	REF NO	GRAPHIC REF	PART NUMBER	QTY	PART NAME 1 2 3 4 5 6 (PRODUCT LEVEL)	SEE PAGE
J	1	1	**161-9289**	4	BLOCK-SLIDER	
J	2	1	**173-5787**	4	SETSCREW (1/4-20-THD)	
Y	3	1	**175-1504**	1	SEAT GP (CLOTH)	720
J	4	1	**203-7703**	2	WASHER-HARD (10.2X22.22X2.38-MM THK)	
Y	5	1	**302-7458**	1	SUSPENSION GP-SEAT	733
J	6	1	**4F-4879**	1	BOLT (3/8-16X0.5-IN)	
					AVAILABLE REPAIR KIT(S):	
J			**173-7035**	1	KIT-SLIDER BLOCK (SUSPENSION SEAT)	
					(INCLUDES BOLT, BLOCK-SLIDERS, SETSCREWS, & WASHERS)	

J-(KIT MARKED J SERVICES PART(S) MARKED J)
Y-SEPARATE ILLUSTRATION

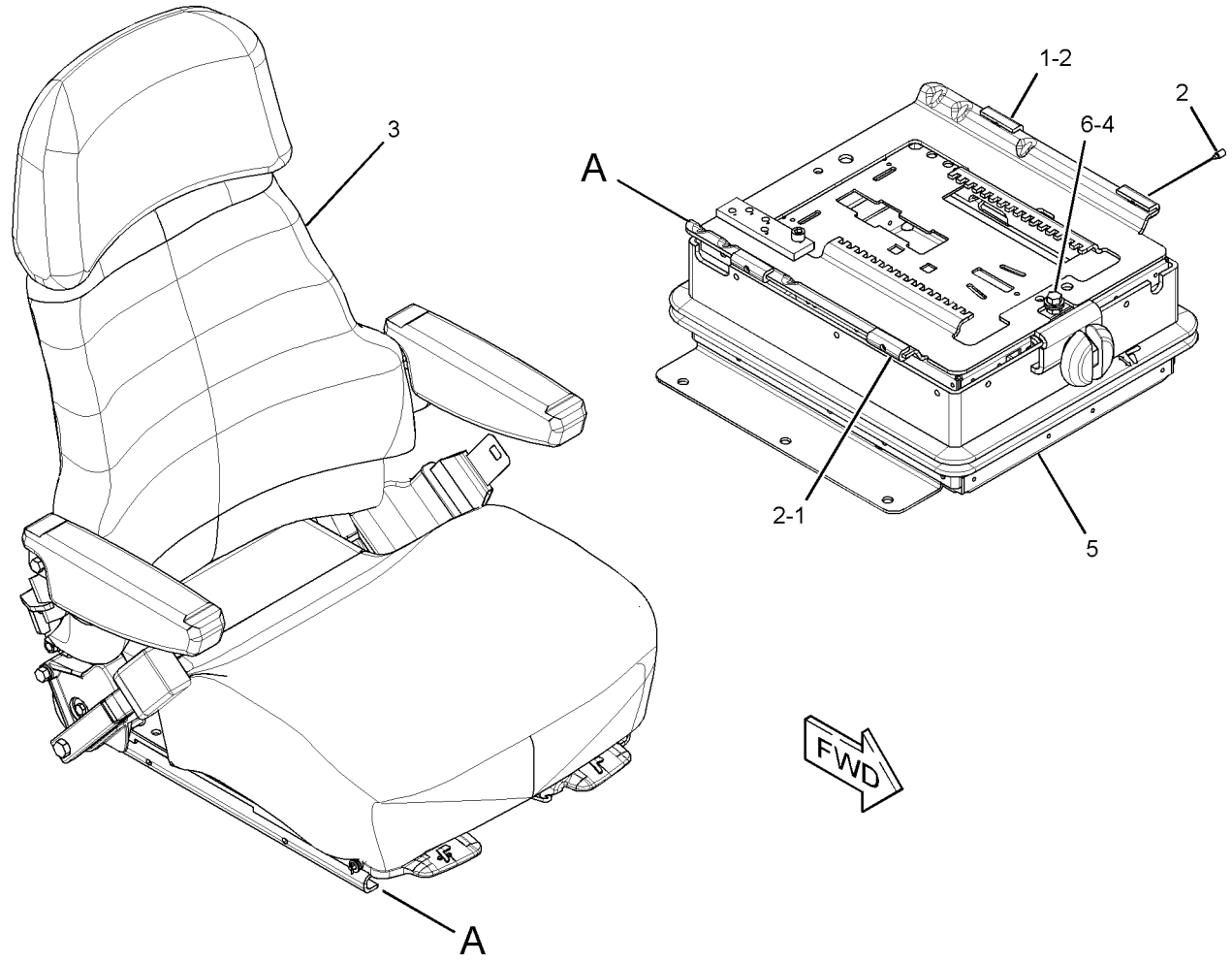

GRAPHIC #1 **<END>** g01451371

OPERATOR STATION

322-8548 SEAT GP-SUSPENSION—CLOTH

S/N: JBP1-UP

AN ATTACHMENT

SMCS-7312 **i03258802**

NOTE	REF NO	GRAPHIC REF	PART NUMBER	QTY	PART NAME 1 2 3 4 5 6 (PRODUCT LEVEL)	SEE PAGE
	1	1	**5P-7957**	1	LANYARD	
	2	1	**9M-5732**	4	RIVET-POP	
	3	1	**173-2052**	1	RETAINER	
	4	1	**178-7907**	1	HOLDER	
Y	5	1	**302-8814**	1	SEAT GP-SUSPENSION	729
	6	1	**4B-4863**	4	WASHER (4.7X11X1.2-MM THK)	
M	7	1	**9X-2041**	6	SCREW-TRUSS HEAD (M10X1.5X20-MM)	

M-METRIC PART
Y-SEPARATE ILLUSTRATION

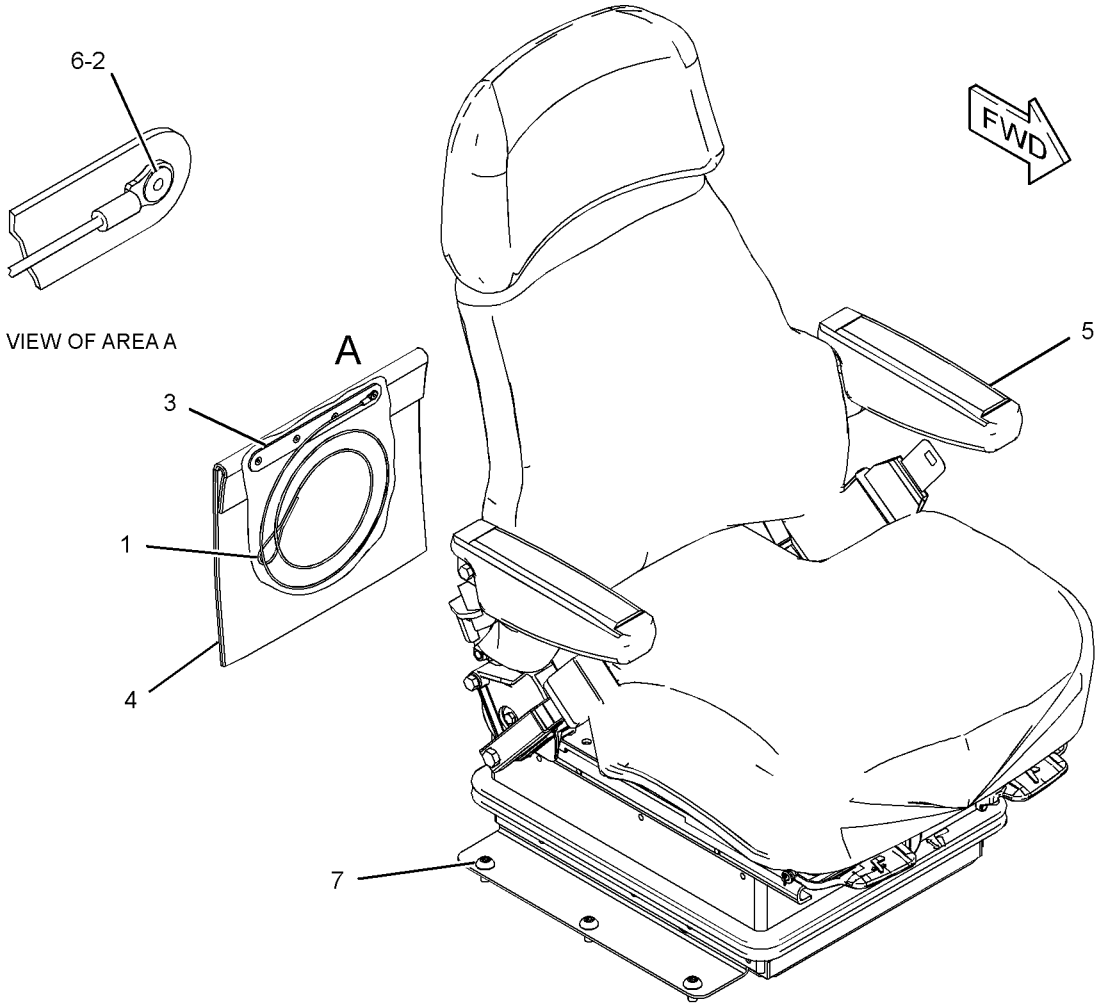

GRAPHIC #1 **<END>** g01662814

OPERATOR STATION

174-4546 SUPPORT GP-SEAT

S/N: JBP1-UP

PART OF 274-7941 GENERAL AR

SMCS-7321 **i01674709**

NOTE	REF NO	GRAPHIC REF	PART NUMBER	QTY	PART NAME 1 2 3 4 5 6 (PRODUCT LEVEL)	SEE PAGE
	1	1	**5P-7803**	2	PLUG-BUTTON	
	2	1	**7G-4824**	1	STRAP	
	4	1	**8E-7791**	1	STRAP	
	5	1	**8X-5536**	1	COVER	
	6	1	**8X-5538**	1	COVER AS	
M		1	**8T-3490**	4	NUT-WELD (M10X1.5-THD)	
	7	1	**8X-5540**	1	COVER	
	8	1	**123-4618**	1	COVER	
	9	1	**123-4701**	1	SEAL	
	10	1	**174-4492**	1	COVER	
	11	1	**174-6051**	1	SUPPORT AS	
		1	**5P-1075**	8	WASHER-HARD (10.2X22.5X3-MM THK)	
M		1	**6V-9632**	6	NUT-WELD (M6X1-THD)	
M		1	**8T-3490**	13	NUT-WELD (M10X1.5-THD)	
M		1	**9T-6001**	2	BOSS (M10X1.5-THD)	
		1	**123-8408**	2	TUBE AS	
	12	1	**174-6353**	1	PLATE	
	13	1	**176-5507**	1	PAD	
	14	1	**191-0027**	1	PAD	
	15	1	**5P-1075**	8	WASHER-HARD (10.2X22.5X3-MM THK)	
	16	1	**6V-8801**	8	NUT (3/8-16-THD)	
	17	1	**7X-0591**	2	WASHER-HARD (17X29X3-MM THK)	
M	18	1	**9X-2040**	4	SCREW-TRUSS HEAD (M10X1.5X25-MM)	
M	19	1	**9X-2041**	5	SCREW-TRUSS HEAD (M10X1.5X20-MM)	
M	20	1	**9X-2045**	6	SCREW-TRUSS HEAD (M6X1X20-MM)	

M-METRIC PART

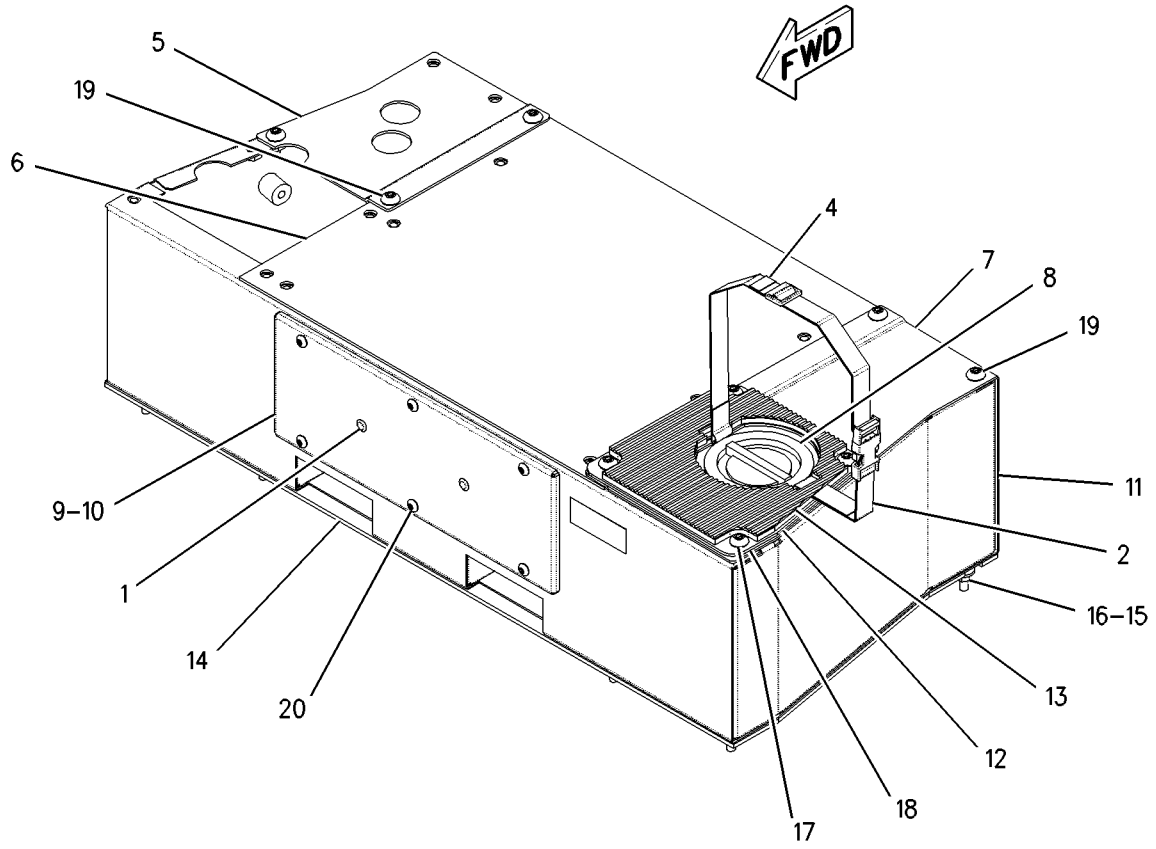

GRAPHIC #1 **<END>** g00865561

OPERATOR STATION

302-7458 SUSPENSION GP-SEAT

S/N: JBP1-UP

PART OF 302-8814 SEAT GP-SUSPENSION

AN ATTACHMENT

SMCS-7324 **i02947098**

NOTE	REF NO	GRAPHIC REF	PART NUMBER	QTY	PART NAME 1 2 3 4 5 6 (PRODUCT LEVEL)	SEE PAGE
	1	1	**2K-4973**	2	LOCKNUT (3/8-16-THD)	
	2	1	**4V-7884**	2	BEARING	
	3	1	**4V-8577**	4	BEARING	
	4	1	**5V-1497**	1	RETAINER	
	5	1	**124-0507**	1	ABSORBER AS-SHOCK	
	6	1	**8Y-6012**	1	ARM AS-SUSPENSION	
Y	7	1	**113-5808**	1	HOUSING GP-SEAT SUSPENSION	668
	8	1	**8Y-6024**	2	SHAFT AS	
J	9	1	**101-0003**	20	FASTENER	
J	10	1	**166-6781**	6	FASTENER	
J	11	1	**163-1146**	3	FASTENER	
	12	1	**145-0326**	1	FILM-INSTRUCTION (SEAT ADJUSTMENT)	
	13	1	**169-7380**	1	BOLT-SOCKET HEAD (3/8-16X0.375-IN)	
J	14	1	**197-7689**	3	FASTENER	
					AVAILABLE REPAIR KIT(S):	
J			**8Y-5944**	1	KIT-SUSPENSION BOOT (SEAT)	
					(INCLUDES BOOT, RETAINERS, & FASTENERS)	
			101-4194	1	BELT-TETHER (SUSPENSION SEAT)	
					(INCLUDES BELTS)	
			101-4195	1	KIT-SUSPENSION ROLLER (SUSPENSION SEAT)	
					(INCLUDES ROLLERS)	

J-(KIT MARKED J SERVICES PART(S) MARKED J)
Y-SEPARATE ILLUSTRATION

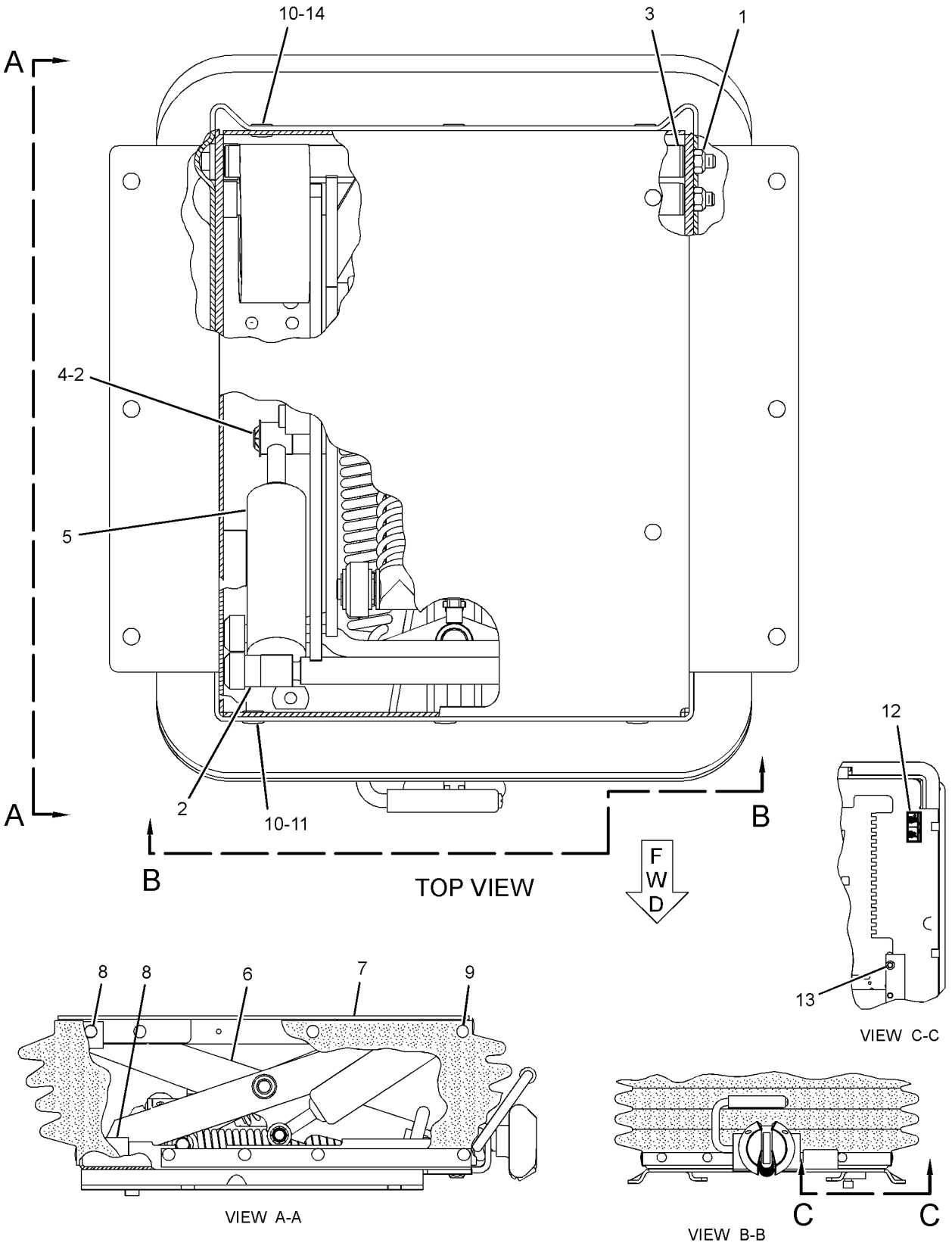

GRAPHIC #1 **<END>** g01453634

OPERATOR STATION

8X-2650 VALVE GP-AIR CONTROL

S/N: JBP1-UP

PART OF 283-3499 CONTROL GP-SERVICE BRAKE

SMCS-3123, 3272, 4265, 4282, 5506 **i02200392**

NOTE	REF NO	GRAPHIC REF	PART NUMBER	QTY	PART NAME 1 2 3 4 5 6 (PRODUCT LEVEL)	SEE PAGE
	1	1	**8X-2646**	1	LEVER AS	
	2	1	**9D-8121**	1	ROLLER	
	3	1	**3B-4607**	1	PIN-COTTER	
		1	**7B-9323**	1	PIN	
	4	1	**5D-3636**	1	BOOT	
	5	1	**2R-0719**	1	PLUNGER	
	6	1	**125-5321**	3	BOLT	
	7	1	**2R-0694**	1	PLATE-BRAKE VALVE	
	8	1	**2R-0724**	1	BUTTON-STOP	
	9	1	**2D-6006**	1	PIN	
	10	1	**3B-4610**	1	PIN-COTTER	
J	11	1	**8W-5651**	1	VALVE GP-CONTROL (AIR)	
		1	**5D-0768**	1	SPRING	
					AVAILABLE REPAIR KIT(S):	
J			**2G-6285**	1	KIT-AIR CONTROL VALVE	
					(INCLUDES SPRINGS, INLET & EXHAUST VALVES,O-RINGS, BOOT,SCREW,	
					LOCKNUT & FILTER)	

J-KIT MARKED J IS AVAILABLE FOR PART MARKED J

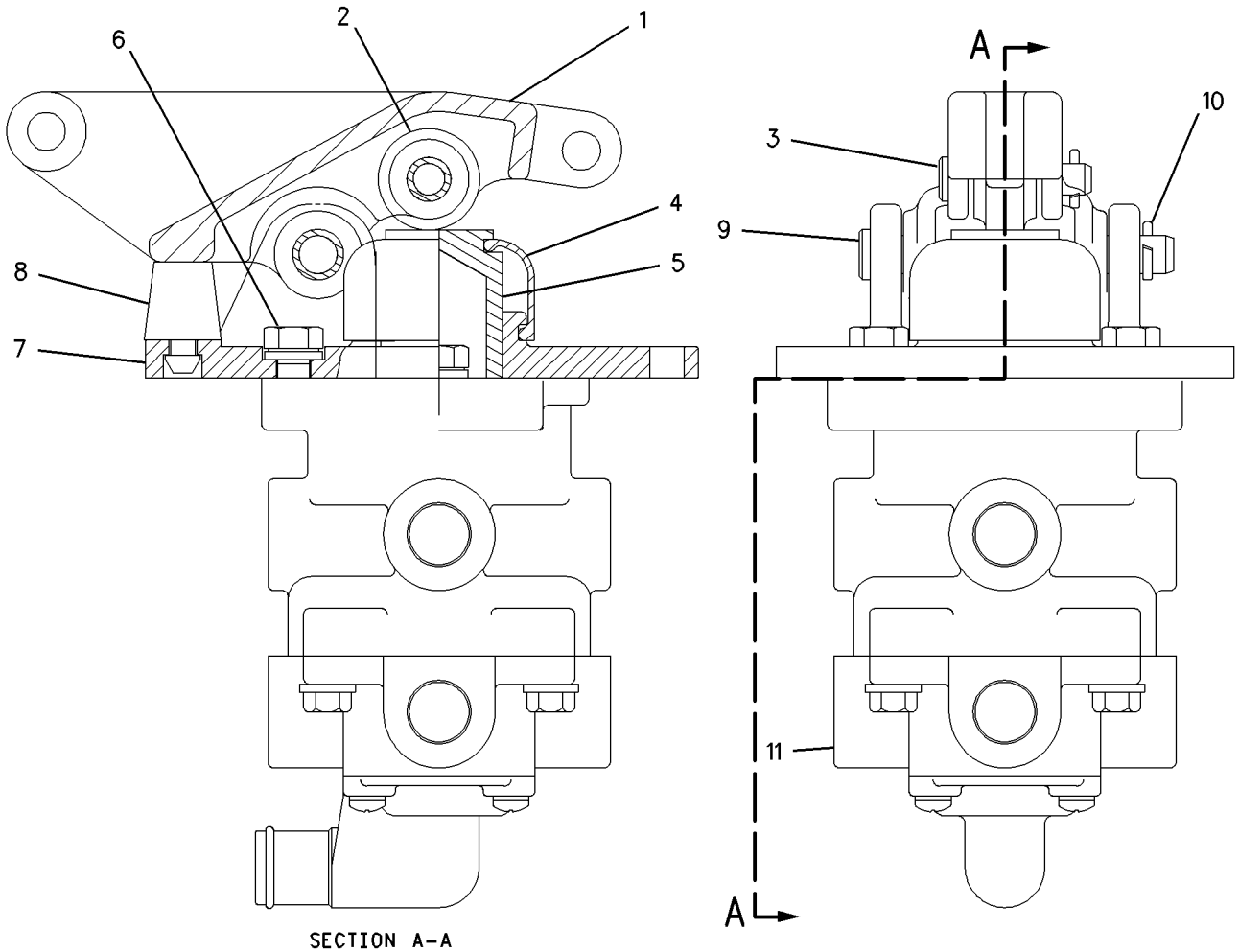

SECTION A-A

GRAPHIC #1 **<END>** g00688575

OPERATOR STATION

8X-9675 WASHER GP-WINDOW—FRONT

S/N: JBP1-UP
PART OF 320-0342 ROPS AR
AN ATTACHMENT

SMCS-7306 **i01193188**

NOTE	REF NO	GRAPHIC REF	PART NUMBER	QTY	PART NAME 1 2 3 4 5 6 (PRODUCT LEVEL)	SEE PAGE
BE	1	1	**144-0195**		HOSE	
	2	1	**8W-0935**	1	GASKET	
	3	1	**8W-0934**	1	BRACKET	
	4	1	**9P-2369**	1	JET AS-WASHER	
		1	**8Y-4408**	1	NOZZLE AS-JET	
	5	1	**8T-2901**	1	NOZZLE AS	
		1	**8Y-4409**	1	NOZZLE AS-JET	
M	7	1	**5C-2890**	2	NUT (M6X1-THD)	
	8	1	**5P-4115**	2	WASHER-HARD (7.2X19X2-MM THK)	
	9	1	**3S-2093**	3	STRAP-CABLE	
	10	1	**102-3645**	1	COVER	
M	11	1	**9X-2045**	5	SCREW-TRUSS HEAD (M6X1X20-MM)	
	12	1	**4D-7388**	2	CLIP	
	13	1	**5M-3062**	1	BOLT (3/8-16X0.75-IN)	
	14	1	**8T-4896**	2	WASHER-HARD (10.2X18.5X2.5-MM THK)	
	15	1	**7T-8891**	2	PUMP AS-WASHER	
	16	1	**8X-9405**	1	RESERVOIR AS	
	17	1	**8X-5280**	2	CONNECTOR	
	18	1	**6W-5698**	2	GROMMET	
	19	1	**7T-1961**	1	CAP	
	20	1	**8X-1135**	1	GASKET	
	21	1	**8X-9349**	1	PAD	
	22	1	**107-4865**	1	PAD	
	24	1	**4L-6454**	1	BOLT (3/8-16X1-IN)	
	25	1	**6V-8801**	1	NUT (3/8-16-THD)	
	26	1	**7G-4326**	1	PLATE	

B-USE AS REQUIRED
E-ORDER BY THE CENTIMETER
M-METRIC PART

8X-9675 **WASHER GP-WINDOW** *(contd.)* **i01193188**

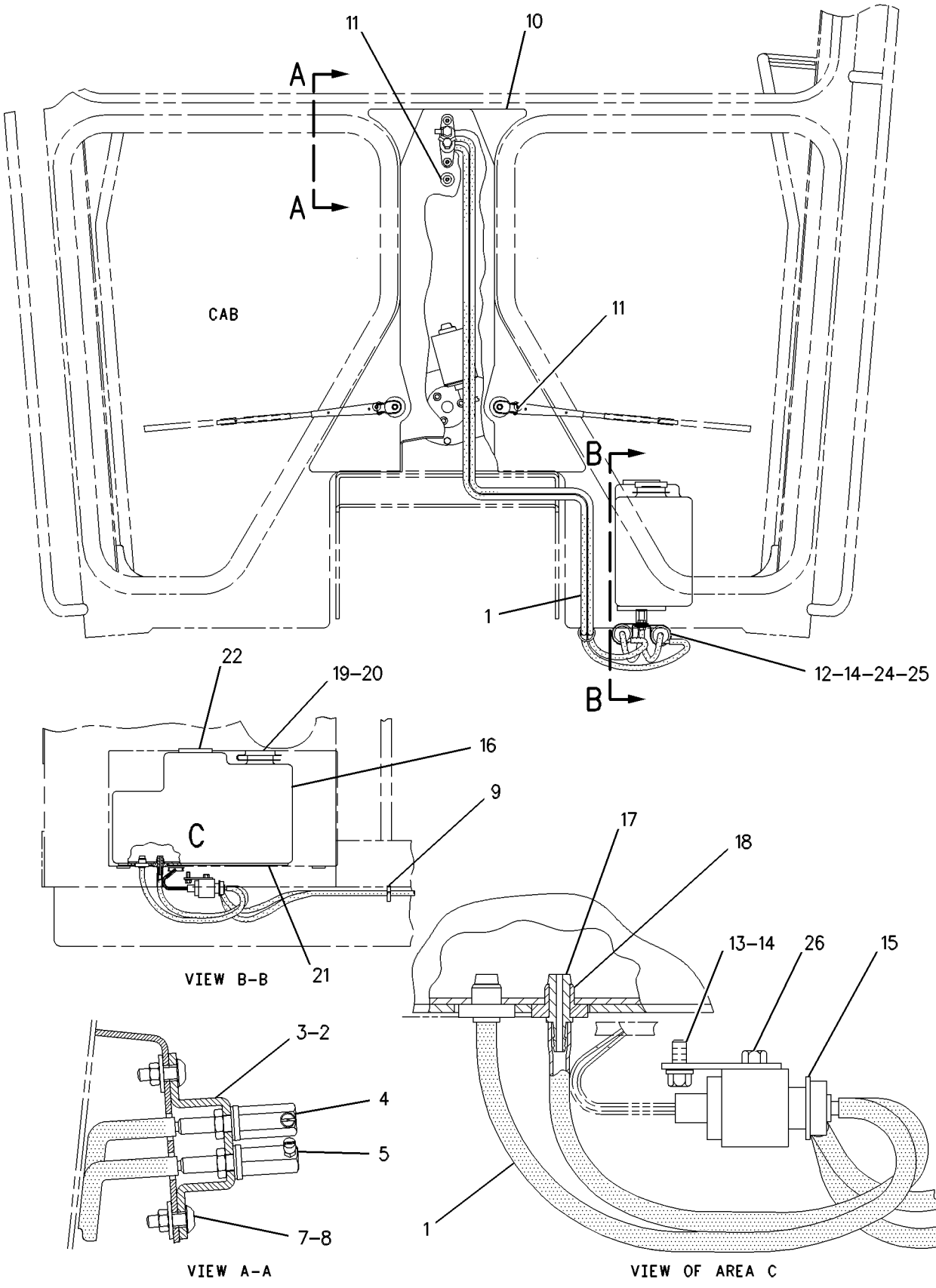

GRAPHIC #1 **<END>** g00638869

OPERATOR STATION

8X-9680 WASHER GP-WINDOW—REAR

S/N: JBP1-UP
PART OF 298-2426 WIPER AR-WINDOW
AN ATTACHMENT

SMCS-7306 **i02380619**

NOTE	REF NO	GRAPHIC REF	PART NUMBER	QTY	PART NAME 1 2 3 4 5 6 (PRODUCT LEVEL)	SEE PAGE
	1	1	**3V-3816**	1	NOZZLE AS	
	2	1	**7T-8891**	1	PUMP AS-WASHER	
	3	1	**4D-7388**	1	CLIP	
	4	1	**4D-7794**	4	CLIP	
	5	1	**5P-8167**	2	BOLT (3/8-16X0.625-IN)	
	6	1	**6K-9632**	1	TEE	
	7	1	**8T-4121**	3	WASHER-HARD (11X21X2.5-MM THK)	
M	8	1	**8T-4191**	3	BOLT (M10X1.5X16-MM)	
	9	1	**8T-4896**	2	WASHER-HARD (10.2X18.5X2.5-MM THK)	
E	10	1	**144-0195**		HOSE (188-CM)	
E	10A	1	**144-0195**		HOSE (20-CM)	
E	10B	1	**144-0195**		HOSE (10-CM)	

E-ORDER BY THE CENTIMETER
M-METRIC PART

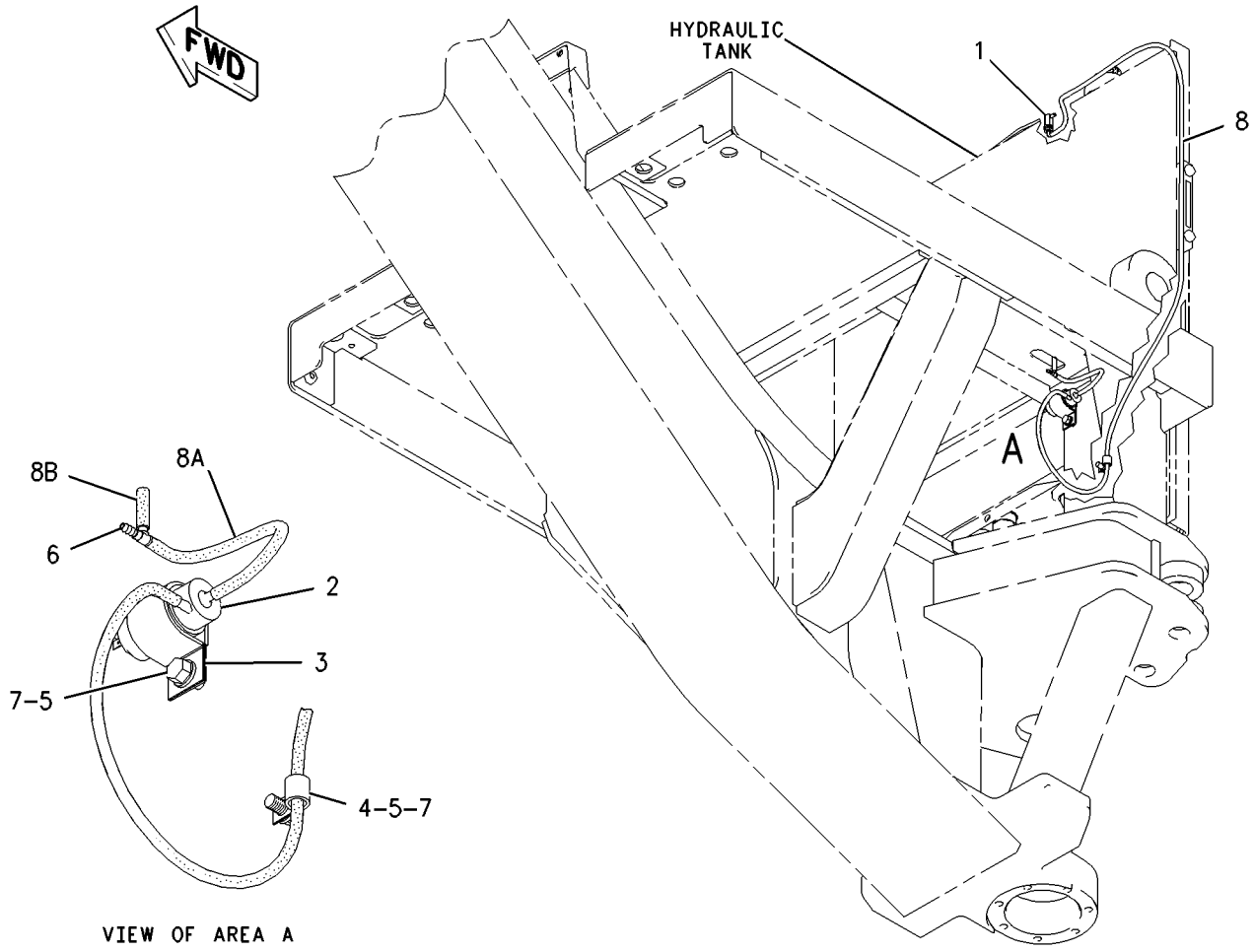

GRAPHIC #1 **<END>** g00898012

OPERATOR STATION

125-4342 WASHER GP-WINDOW—FRONT

S/N: JBP1-UP
PART OF 290-1126 CAB AR
AN ATTACHMENT

SMCS-7306 **i01193196**

NOTE	REF NO	GRAPHIC REF	PART NUMBER	QTY	PART NAME 1 2 3 4 5 6 (PRODUCT LEVEL)	SEE PAGE
	1	1	**8X-9405**	1	RESERVOIR AS	
		1	**6W-5698**	2	GROMMET	
		1	**7T-1961**	1	CAP	
		1	**8X-1135**	1	GASKET	
		1	**8X-5280**	2	CONNECTOR	
		1	**8X-9349**	1	PAD (RECTANGULAR)	
		1	**107-4865**	1	PAD (ROUND)	
	2	1	**8W-0935**	1	GASKET	
	3	1	**8W-0934**	1	BRACKET	
	4	1	**9P-2369**	1	JET AS-WASHER	
		1	**8Y-4408**	1	NOZZLE AS-JET	
M	5	1	**9X-2042**	2	SCREW-TRUSS HEAD (M6X1X12-MM)	
M	6	1	**5C-2890**	2	NUT (M6X1-THD)	
	7	1	**5P-4115**	2	WASHER-HARD (7.2X19X2-MM THK)	
	8	1	**3S-2093**	3	STRAP-CABLE	
	9	1	**102-3645**	1	COVER	
M	10	1	**9X-2045**	3	SCREW-TRUSS HEAD (M6X1X20-MM)	
	11	1	**4D-7388**	1	CLIP	
	12	1	**5M-3062**	1	BOLT (3/8-16X0.75-IN)	
	13	1	**6K-9632**	1	TEE	
	14	1	**7T-8891**	1	PUMP AS-WASHER	
BE	15	1	**144-0195**		HOSE	
	16	1	**6V-6467**	2	PLUG	
	17	1	**8T-4896**	2	WASHER-HARD (10.2X18.5X2.5-MM THK)	

B-USE AS REQUIRED
E-ORDER BY THE CENTIMETER
M-METRIC PART

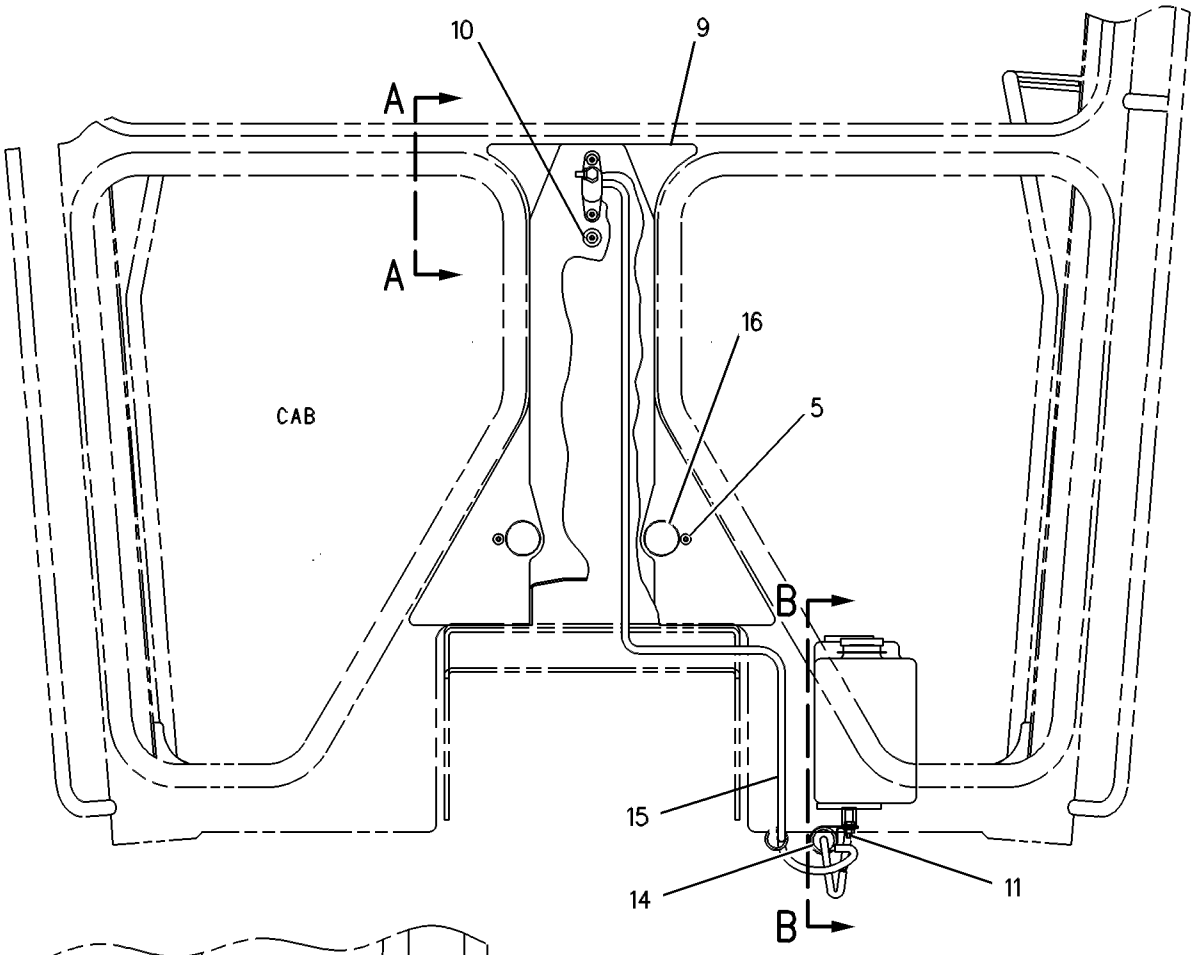

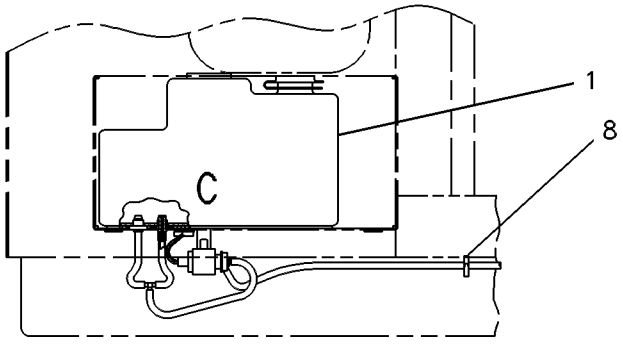

VIEW B-B

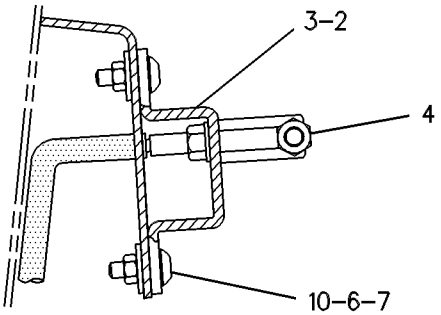

VIEW A-A

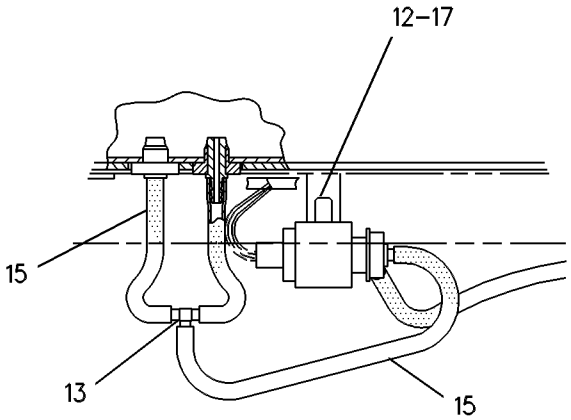

VIEW OF AREA C

GRAPHIC #1 **<END>** g00286150

OPERATOR STATION

134-8232 WINDOW GP-CAB–SIDE SLIDING–HIGH PROFILE

S/N: JBP1-UP
PART OF 139-6129 WINDOW GP-CAB
AN ATTACHMENT

SMCS-7310 **i02205497**

NOTE	REF NO	GRAPHIC REF	PART NUMBER	QTY	PART NAME 1 2 3 4 5 6 (PRODUCT LEVEL)	SEE PAGE
	1	1	**5M-9695**	4	SCREW (6-32X0.312-IN)	
	2	1	**5P-7162**	2	SCREW-MACHINE (10-32X0.5-IN)	
	3	1	**8C-6738**	2	SCREW-PAN HEAD (6-20X1-IN)	
	4	1	**9X-6019**	4	SCREW-LOCK (6-32-THD)	
	5	1	**104-5958**	2	NUT (10X32-MM)	
	6	1	**109-0146**	2	STOP-SLIDE	
	7	1	**139-9132**	1	LATCH AS	
	8	1	**139-9138**	1	GLASS-SLIDING	
	9	1	**139-9134**	1	POST-CENTER	
	10	1	**139-9135**	1	GLASS-FIXED	
	11	1	**139-9137**	1	CATCH	
BE	12	1	**8Y-6981**		SEAL	
BE	13	1	**139-9136**		SEAL-WEATHER	
BD	14	1	**5P-5627**		SEAL	
BE	15	1	**8Y-6982**		SEAL	

B-USE AS REQUIRED
D-ORDER BY THE METER
E-ORDER BY THE CENTIMETER

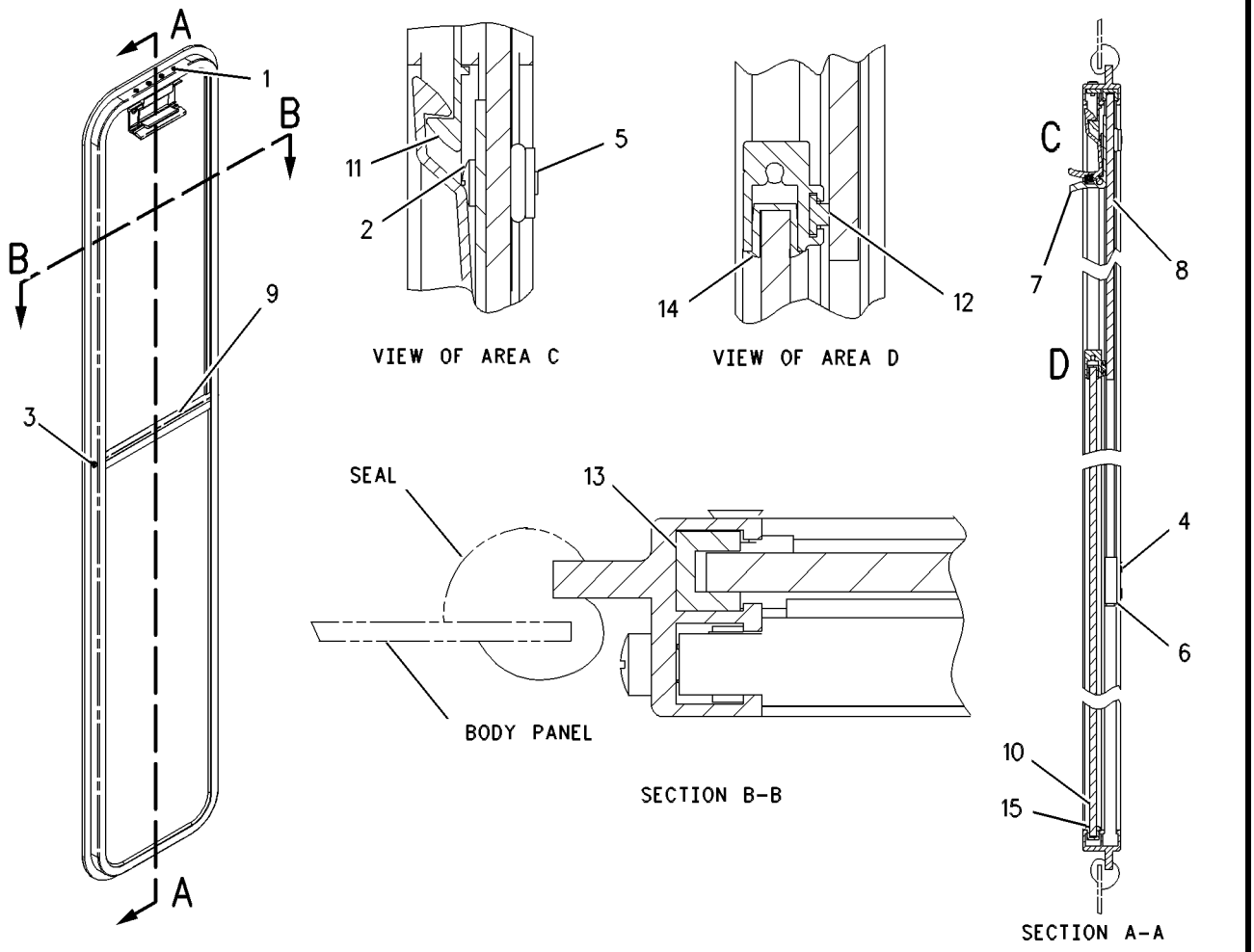

GRAPHIC #1 **<END>** g00545825

OPERATOR STATION

134-8233 WINDOW GP-CAB—SIDE SLIDING—LOW PROFILE

S/N: JBP1-UP
PART OF 139-6128 WINDOW GP-CAB
AN ATTACHMENT

SMCS-7310 **i02205498**

NOTE	REF NO	GRAPHIC REF	PART NUMBER	QTY	PART NAME 1 2 3 4 5 6 (PRODUCT LEVEL)	SEE PAGE
	1	1	**5M-9695**	4	SCREW (6-32X0.312-IN)	
	2	1	**5P-7162**	2	SCREW-MACHINE (10-32X0.5-IN)	
	3	1	**8C-6738**	2	SCREW-PAN HEAD (6-20X1-IN)	
	4	1	**9X-6019**	4	SCREW-LOCK (6-32-THD)	
	5	1	**104-5958**	2	NUT (10X32-MM)	
	6	1	**109-0146**	2	STOP-SLIDE	
	7	1	**139-9132**	1	LATCH AS	
	8	1	**139-9133**	1	GLASS-SLIDING	
	9	1	**139-9134**	1	POST-CENTER	
	10	1	**139-9135**	1	GLASS-FIXED	
	11	1	**139-9137**	1	CATCH	
BE	12	1	**8Y-6981**		SEAL	
BE	13	1	**139-9136**		SEAL-WEATHER	
BD	14	1	**5P-5627**		SEAL	
BE	15	1	**8Y-6982**		SEAL	

B-USE AS REQUIRED
D-ORDER BY THE METER
E-ORDER BY THE CENTIMETER

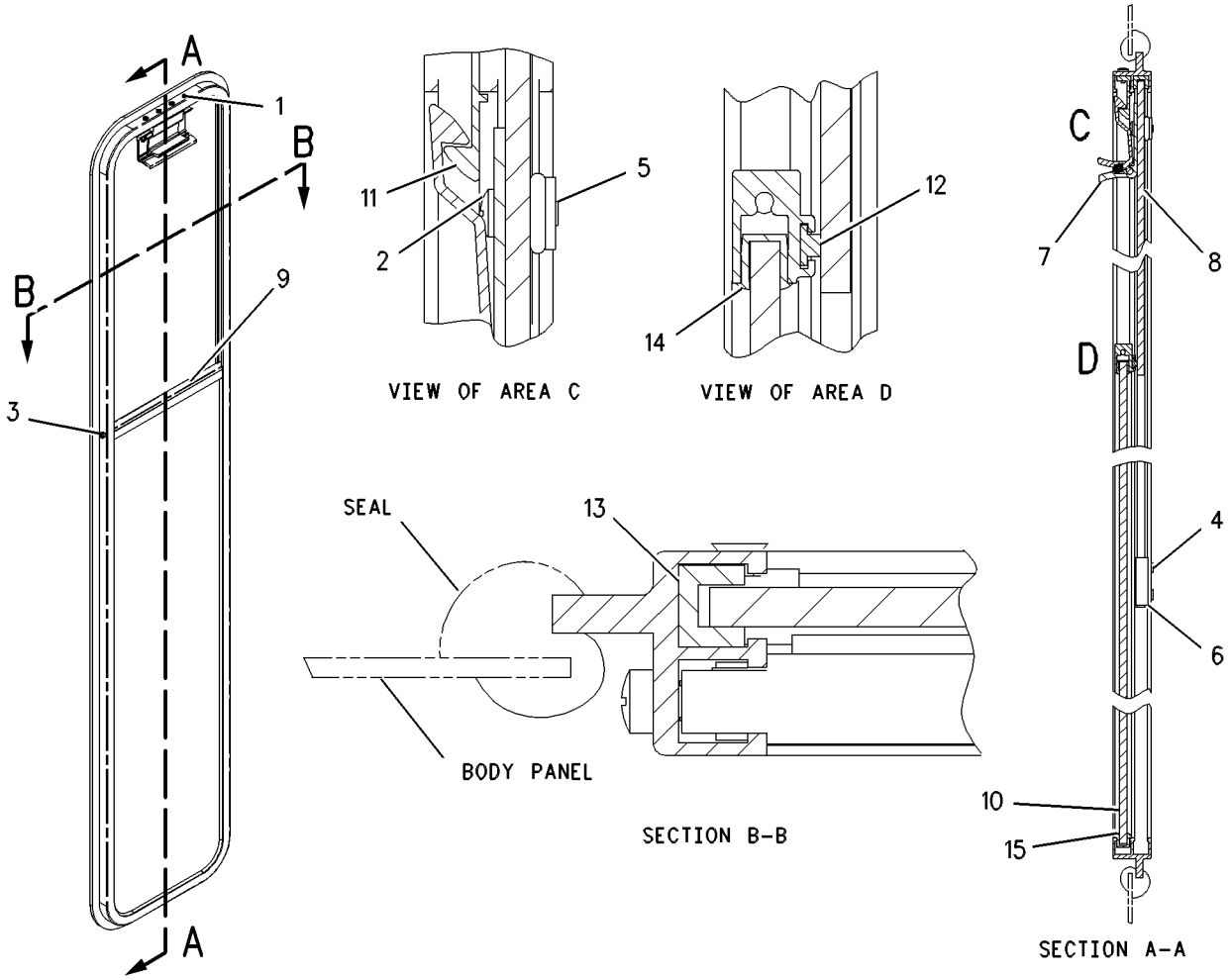

GRAPHIC #1 **<END>** g00548221

139-6128 WINDOW GP-CAB—SIDE SLIDING—LOW PROFILE

S/N: JBP1-UP

AN ATTACHMENT

SMCS-7310 **i02864083**

NOTE	REF NO	GRAPHIC REF	PART NUMBER	QTY	PART NAME 1 2 3 4 5 6 (PRODUCT LEVEL)	SEE PAGE
Y	1	1	**134-8233**	2	WINDOW GP-CAB (LOW PROFILE)	742

Y-SEPARATE ILLUSTRATION

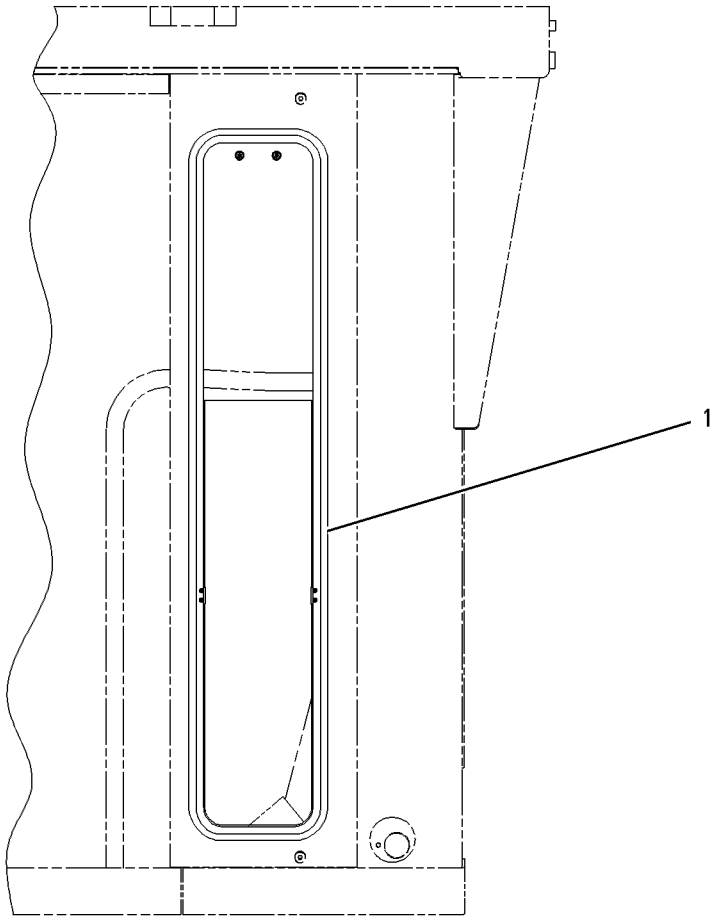

GRAPHIC #1 **<END>** g00301642

OPERATOR STATION

139-6129 WINDOW GP-CAB—SIDE SLIDING HIGH PROFILE

S/N: JBP1-UP

AN ATTACHMENT

SMCS-7310 **i03182166**

NOTE	REF NO	GRAPHIC REF	PART NUMBER	QTY	PART NAME 1 2 3 4 5 6 (PRODUCT LEVEL)	SEE PAGE
Y	1	1	**134-8232**	2	WINDOW GP-CAB (SIDE SLIDING HIGH PROFILE)	741

Y-SEPARATE ILLUSTRATION

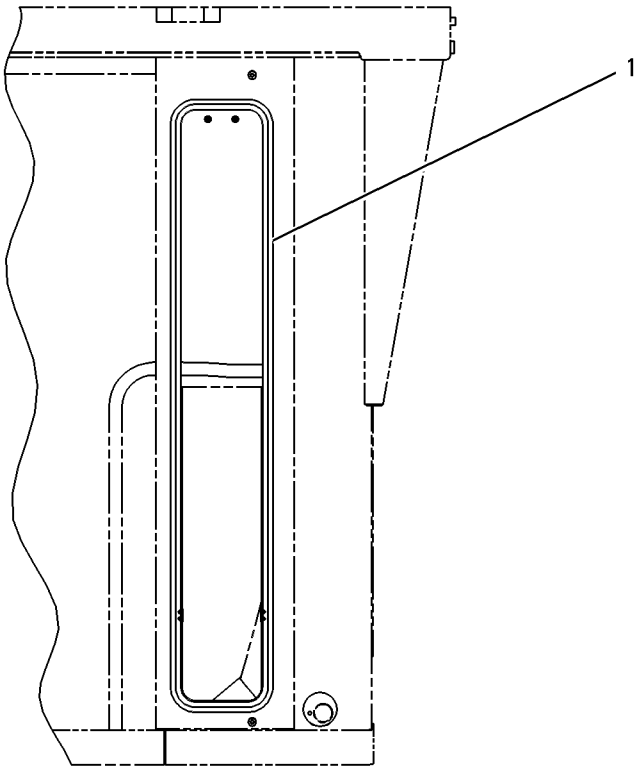

LEFT SIDE VIEW

GRAPHIC #1 **<END>** g00301585

OPERATOR STATION

150-5106 WINDOW GP-CAB–RH

S/N: JBP1-UP
PART OF 126-0961 WINDOW GP-VENT
AN ATTACHMENT

SMCS-7310 **i02592720**

NOTE	REF NO	GRAPHIC REF	PART NUMBER	QTY	PART NAME 1 2 3 4 5 6 (PRODUCT LEVEL)	SEE PAGE
J	1	1	**5T-1958**	1	IDLER AS	
		1	**5T-3144**	1	PIVOT AS-IDLER	
	2	1	**1H-3340**	12	BOLT (M10X24X25.4-MM)	
	3	1	**8W-1028**	1	HINGE AS	
	4	1	**126-1167**	1	BOLT (3/8-24X5.375-IN)	
	5	1	**126-0228**	1	CATCH-STOP	
	6	1	**5T-1969**	1	HANDLE	
	7	1	**1H-8456**	2	SCREW-MACHINE (10-24X0.884-IN)	
BD	8	1	**5T-5994**		SEAL	
	9	1	**150-5105**	1	GLASS	
	10	1	**126-1539**	1	HANDLE-PULL	
	11	1	**5T-1964**	1	SEAL	
	13	1	**126-0208**	1	SPACER (10.31X17.45X50.8-MM THK)	
	14	1	**126-0209**	1	PLATE	
	15	1	**126-0210**	1	PLATE	
	16	1	**5T-1972**	14	INSERT-SCREW (10-24-THD)	
M	17	1	**8T-0352**	3	BOLT (M5X0.8X45-MM)	
	18	1	**8T-0328**	6	WASHER-HARD (5.5X10X1-MM THK)	
M	19	1	**7Y-5226**	3	NUT (M5X0.8-THD)	
					AVAILABLE REPAIR KIT(S):	
J			**5T-3146**	1	KIT-IDLER HOUSING-RH (WINDOW)	
					(INCLUDES HOUSING, BEARING, & WASHER)	

B-USE AS REQUIRED
D-ORDER BY THE METER
J-KIT MARKED J SERVICES PARTS MARKED J
M-METRIC PART

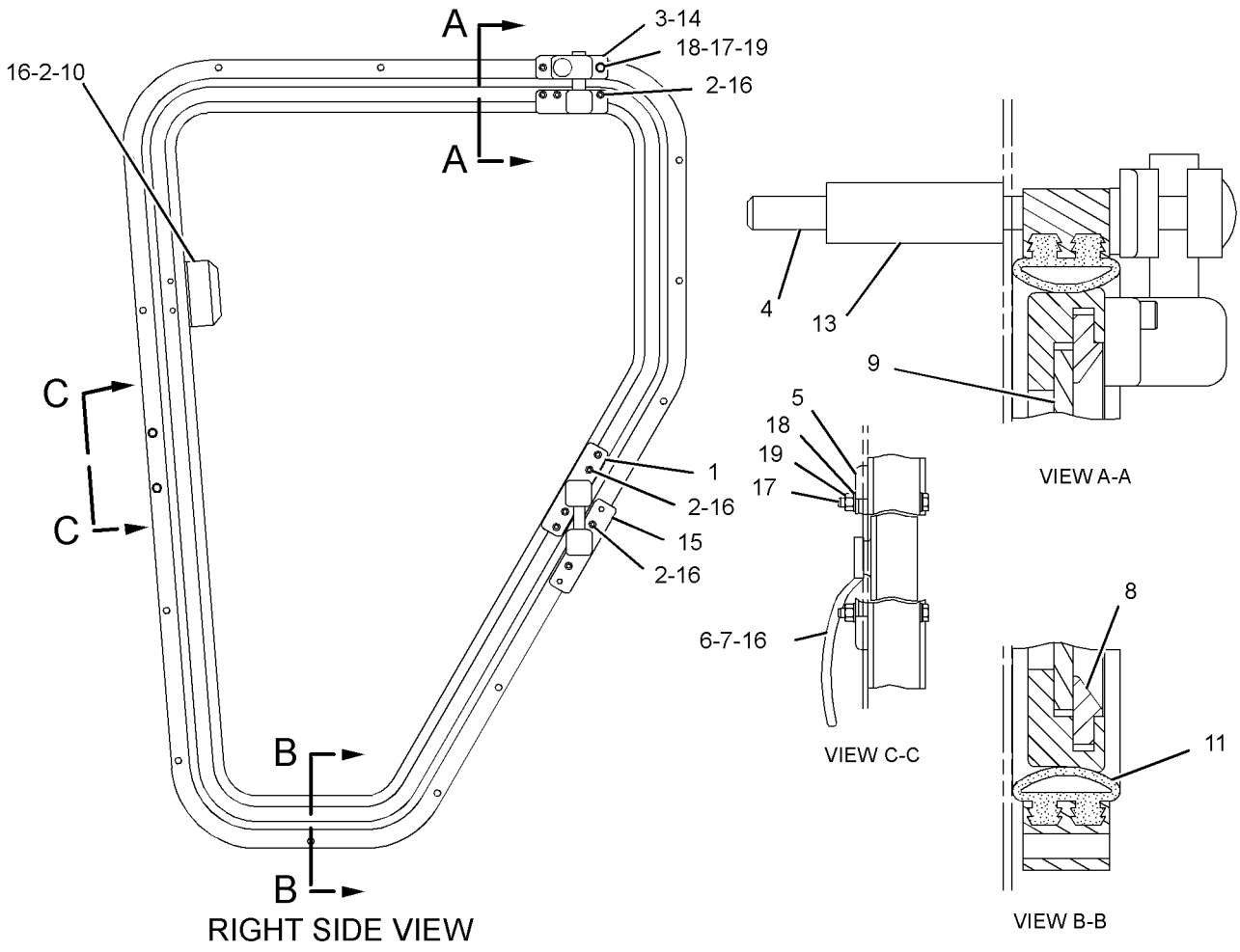

GRAPHIC #1 **<END>** g01297610

OPERATOR STATION

150-5107 WINDOW GP-CAB—LH

S/N: JBP1-UP
PART OF 126-0961 WINDOW GP-VENT
AN ATTACHMENT

SMCS-7310 **i02592731**

NOTE	REF NO	GRAPHIC REF	PART NUMBER	QTY	PART NAME 1 2 3 4 5 6 (PRODUCT LEVEL)	SEE PAGE
J	1	1	**5T-1959**	1	IDLER AS	
		1	**5T-3145**	1	PIVOT AS-IDLER	
	2	1	**1H-3340**	12	BOLT (M10X24X25.4-MM)	
	3	1	**8W-1029**	1	HINGE AS	
	4	1	**126-1167**	1	BOLT (3/8-24X5.375-IN)	
	5	1	**126-0228**	1	CATCH-STOP	
	6	1	**6G-2959**	1	HANDLE	
	7	1	**1H-8456**	2	SCREW-MACHINE (10-24X0.884-IN)	
	8	1	**5T-5994**	1	SEAL	
	9	1	**150-5105**	1	GLASS	
	10	1	**126-1539**	1	HANDLE-PULL	
	11	1	**5T-1964**	1	SEAL	
	13	1	**126-0208**	1	SPACER (10.31X17.45X50.8-MM THK)	
	14	1	**126-0209**	1	PLATE	
	15	1	**126-0210**	1	PLATE	
	16	1	**5T-1972**	14	INSERT-SCREW (10-24-THD)	
M	17	1	**8T-0352**	3	BOLT (M5X0.8X45-MM)	
	18	1	**8T-0328**	6	WASHER-HARD (5.5X10X1-MM THK)	
M	19	1	**7Y-5226**	3	NUT (M5X0.8-THD)	
					AVAILABLE REPAIR KIT(S):	
J			**5T-3147**	1	KIT-IDLER HOUSING-LH (WINDOW)	
					(INCLUDES HOUSING, BEARING, & WASHER)	

J-KIT MARKED J SERVICES PART MARKED J
M-METRIC PART

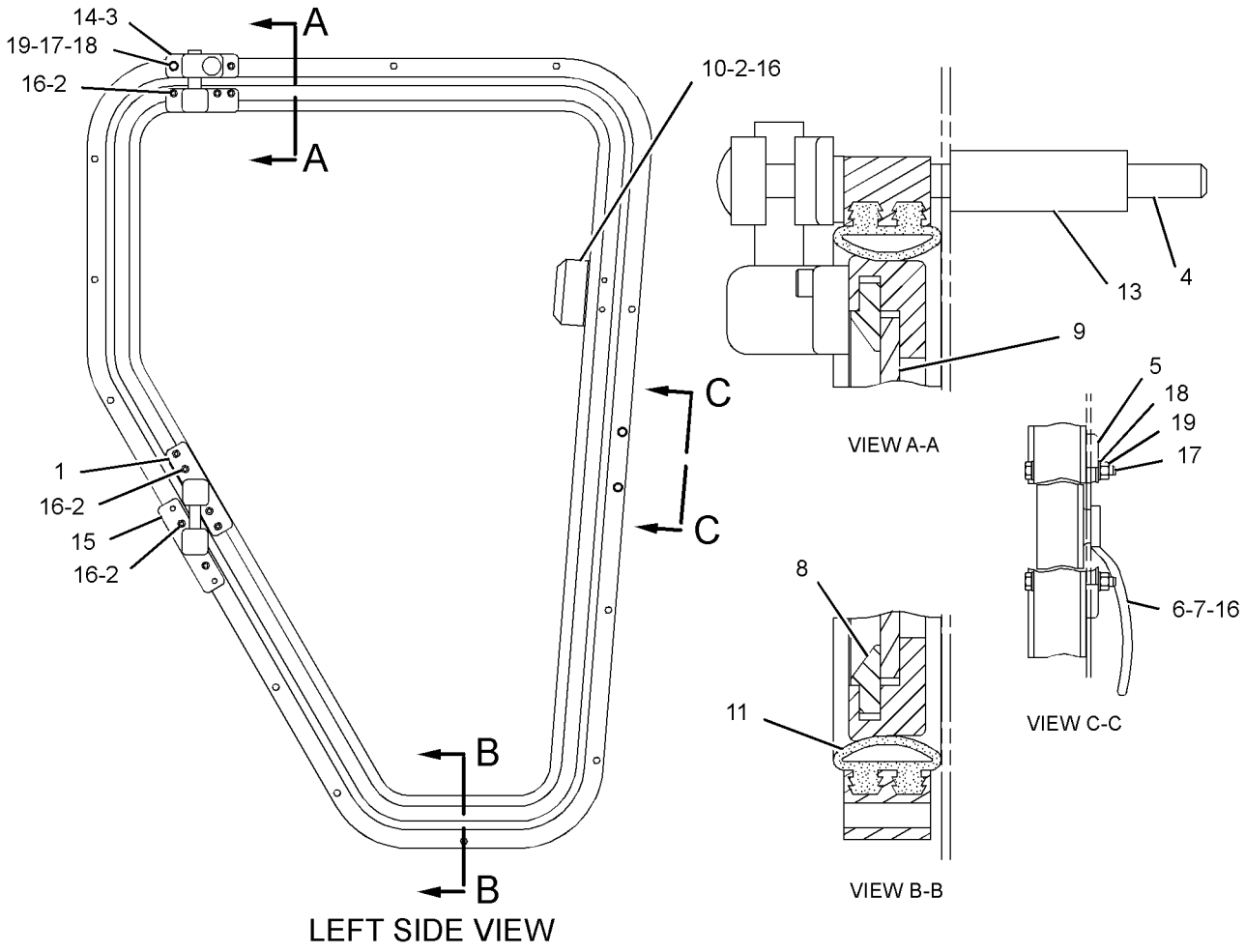

GRAPHIC #1 **<END>** g01297612

OPERATOR STATION

126-0961 WINDOW GP-VENT–CAB

S/N: JBP1-UP
AN ATTACHMENT

SMCS-7310 **i02205608**

NOTE	REF NO	GRAPHIC REF	PART NUMBER	QTY	PART NAME 1 2 3 4 5 6 (PRODUCT LEVEL)	SEE PAGE
CY	1	1	**150-5106**	1	WINDOW GP-CAB (RH)	745
CY	2	1	**150-5107**	1	WINDOW GP-CAB (LH)	747
	3	1	**5T-3093**	2	HANDLE	
BD	4	1	**5P-5969**		SEAL	
M	5	1	**8T-0352**	4	BOLT (M5X0.8X45-MM)	
	6	1	**8T-0328**	56	WASHER-HARD (5.5X10X1-MM THK)	
M	7	1	**7Y-5226**	28	NUT (M5X0.8-THD)	
M	8	1	**8T-0335**	24	BOLT (M5X0.8X40-MM)	
	9	1	**6V-8255**	2	BLADE AS-WIPER (255-MM)	

B-USE AS REQUIRED
C-CHANGE FROM PREVIOUS TYPE
D-ORDER BY THE METER
M-METRIC PART
Y-SEPARATE ILLUSTRATION

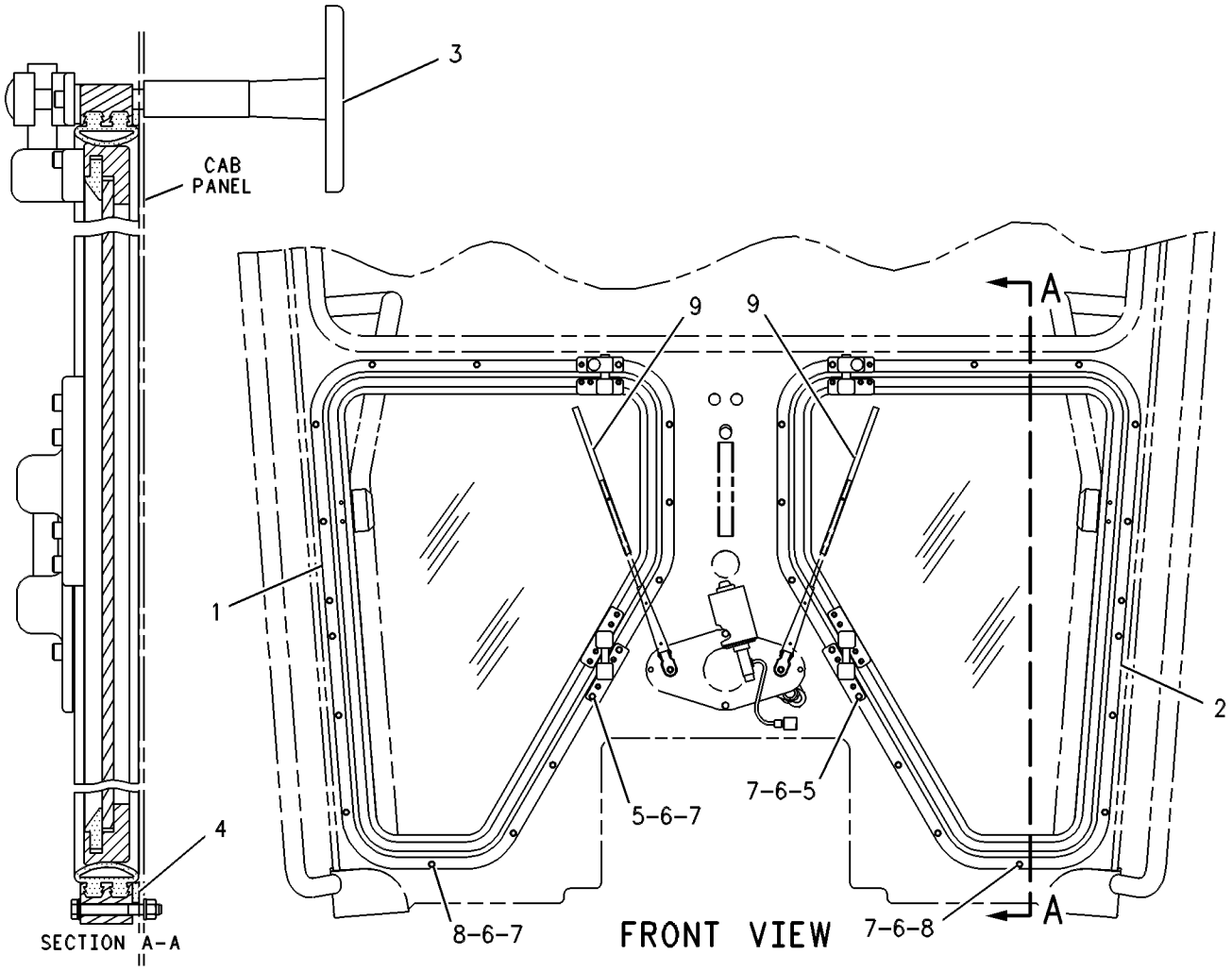

GRAPHIC #1 **<END>** g00108855

OPERATOR STATION

298-2426 WIPER AR-WINDOW—REAR

S/N: JBP1-UP
HIGH PROFILE
FOR USE WITH ENCLOSED CAB HIGH PROFILE
AN ATTACHMENT

SMCS-7305, 7306 **i03251442**

NOTE	REF NO	GRAPHIC REF	PART NUMBER	QTY	PART NAME 1 2 3 4 5 6 (PRODUCT LEVEL)	SEE PAGE
Y	1	1	*8X-9680*	1	WASHER GP-WINDOW (REAR)	738
Y	2	1	*286-4823*	1	WIPER GP-WINDOW (HIGH PROFILE)	753
					PARTS SHOWN IN GRAPHIC(S) WITHOUT A REFERENCE NUMBER ARE NOT SERVICED SEPARATELY	

Y-SEPARATE ILLUSTRATION

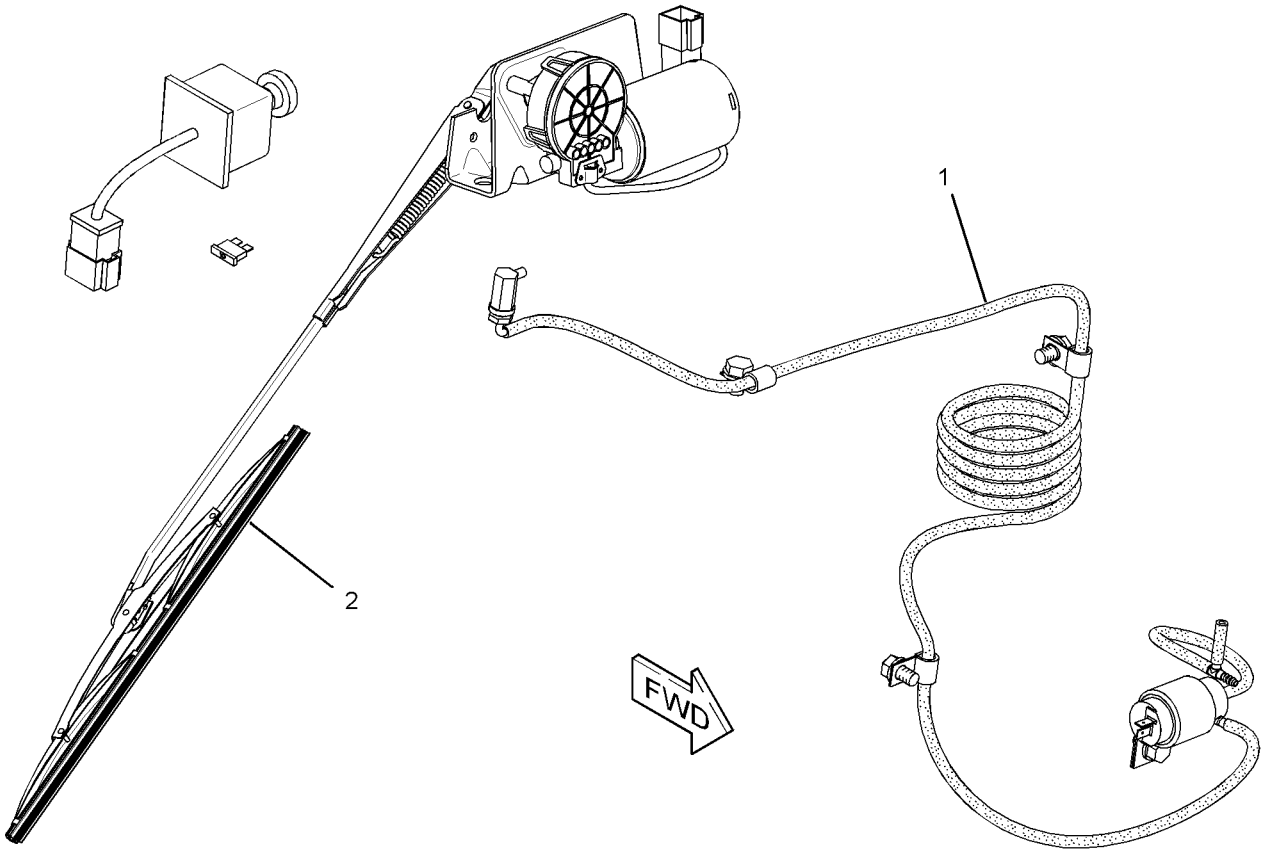

GRAPHIC #1 **<END>** g01685233

OPERATOR STATION

172-6831 WIPER GP-WINDOW—FRONT—HIGH PROFILE

S/N: JBP1-UP
PART OF 320-0342 ROPS AR
AN ATTACHMENT

SMCS-7305 **i02558327**

NOTE	REF NO	GRAPHIC REF	PART NUMBER	QTY	PART NAME 1 2 3 4 5 6 (PRODUCT LEVEL)	SEE PAGE
	1	1	**2A-6926**	1	LEVER AS	
	2	1	**2A-6928**	1	LINK	
	3	1	**2A-6929**	1	LINK	
C	4	1	**135-0611**	1	MOTOR GP-WINDOW WIPER (24-VOLT, 2-SPEED) (FRONT, LOWER)	
		1	**8T-8737**	1	PLUG-SEAL	
		1	**186-3735**	5	PIN-CONNECTOR (16-GA TO 18-GA)	
		1	**102-8805**	1	KIT-RECEPTACLE (6-PIN)	
					(INCLUDES RECEPTACLE AS & WEDGE)	
B	5	1	**4B-4283**	2	WASHER (20.6X37.5X3.5-MM THK)	
	6	1	**6V-5853**	1	BLADE AS-WIPER (450-MM) (FRONT)	
	7	1	**6V-6888**	1	WASHER-SPRING	
M	8	1	**6V-6889**	1	NUT (M8X1.25-THD)	
	9	1	**6V-8259**	1	ARM AS-WIPER (UPPER)	
	10	1	**8X-2556**	1	FLANGE	
	11	1	**8X-2663**	1	GASKET	
C	12	1	**203-1124**	1	MOTOR GP-WINDOW WIPER (24-VOLT) (FRONT UPPER)	
		1	**3F-9556**	1	LOCKWASHER	
M		1	**5C-7261**	1	NUT (M8X1.25-THD)	
		1	**135-0611**	1	MOTOR GP-WINDOW WIPER (24-VOLT, 2-SPEED)	
		1	**8T-8737**	1	PLUG-SEAL	
		1	**186-3735**	5	PIN-CONNECTOR (16-GA TO 18-GA)	
		1	**102-8805**	1	KIT-RECEPTACLE (6-PIN)	
					(INCLUDES RECEPTACLE AS & WEDGE)	
		1	**206-5823**	1	CAP	
	13	1	**123-4354**	2	ARM-WINDOW WIPER (LOWER)	
	14	1	**123-4355**	2	BLADE AS-WIPER (300-MM) (FRONT, LOWER)	
	15	1	**125-7003**	1	SHAFT AS	
		1	**3F-9556**	1	LOCKWASHER	
M		1	**5C-7261**	1	NUT (M8X1.25-THD)	
		1	**206-5823**	1	CAP	
	16	1	**125-7004**	1	SHAFT AS	
		1	**3F-9556**	1	LOCKWASHER	
M		1	**5C-7261**	1	NUT (M8X1.25-THD)	
		1	**206-5823**	1	CAP	
M	17	1	**5C-7423**	3	SCREW (M6X1X16-MM)	
	18	1	**5P-4115**	2	WASHER-HARD (7.2X19X2-MM THK)	
CM	19	1	**8T-4171**	2	BOLT (M6X1X12-MM)	
M	20	1	**8T-4138**	2	BOLT (M6X1X20-MM)	

B-USE AS REQUIRED
C-CHANGE FROM PREVIOUS TYPE
M-METRIC PART

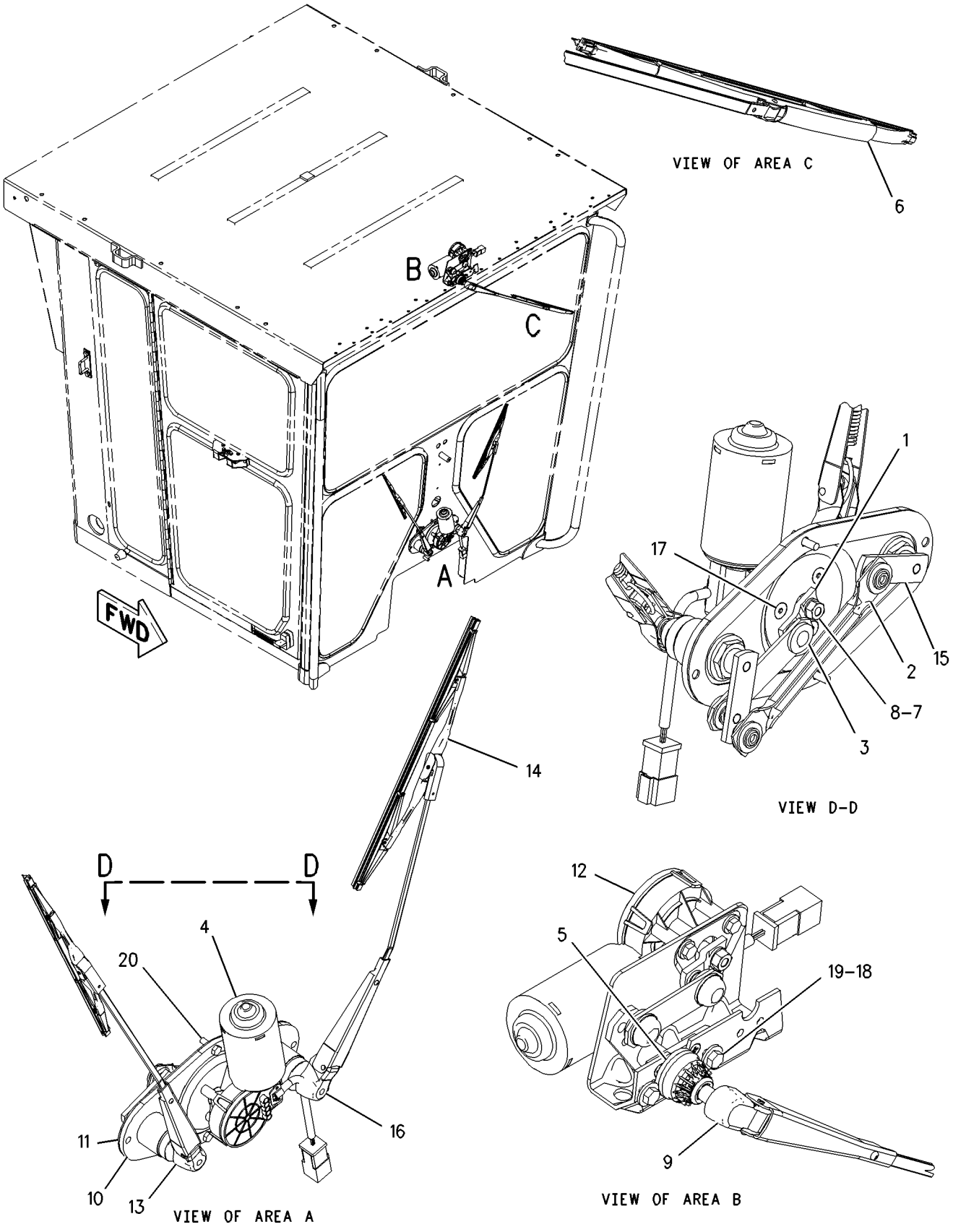

GRAPHIC #1 **<END>** g00913478

OPERATOR STATION

286-4823 WIPER GP-WINDOW–REAR

S/N: JBP1-UP
HIGH PROFILE
PART OF 298-2426 WIPER AR-WINDOW
AN ATTACHMENT

SMCS-7305 **i03251443**

NOTE	REF NO	GRAPHIC REF	PART NUMBER	QTY	PART NAME 1 2 3 4 5 6 (PRODUCT LEVEL)	SEE PAGE
B	1	1	**4B-4283**	2	WASHER (20.6X37.5X3.5-MM THK)	
	2	1	**6V-5853**	1	BLADE AS-WIPER (450-MM)	
	3	1	**6V-8258**	1	ARM AS-WIPER	
	4	1	**9W-1442**	1	FUSE (10-AMPERE)	
	5	1	**110-7885**	1	KNOB AS-WIPER SWITCH	
		1	**014-0816**	1	SETSCREW (8-32X0.5-IN)	
	6	1	**203-1124**	1	MOTOR GP-WINDOW WIPER (24-VOLT) (REAR)	
		1	**3F-9556**	1	LOCKWASHER	
M		1	**5C-7261**	1	NUT (M8X1.25-THD)	
		1	**135-0611**	1	MOTOR GP-WINDOW WIPER (24-VOLT, 2-SPEED) (REAR)	
		1	**8T-8737**	1	PLUG-SEAL	
		1	**186-3735**	5	PIN-CONNECTOR (16-GA TO 18-GA)	
		1	**102-8805**	1	KIT-RECEPTACLE (6-PIN)	
					(INCLUDES RECEPTACLE AS & WEDGE)	
		1	**206-5823**	1	CAP	
Y	7	1	**275-7741**	1	SWITCH GP-WIPER (24-VOLT, INTERMITTENT) (REAR)	192
	8	1	**5P-4115**	2	WASHER-HARD (7.2X19X2-MM THK)	
M	9	1	**8T-4171**	2	BOLT (M6X1X12-MM)	

B-USE AS REQUIRED
M-METRIC PART
Y-SEPARATE ILLUSTRATION

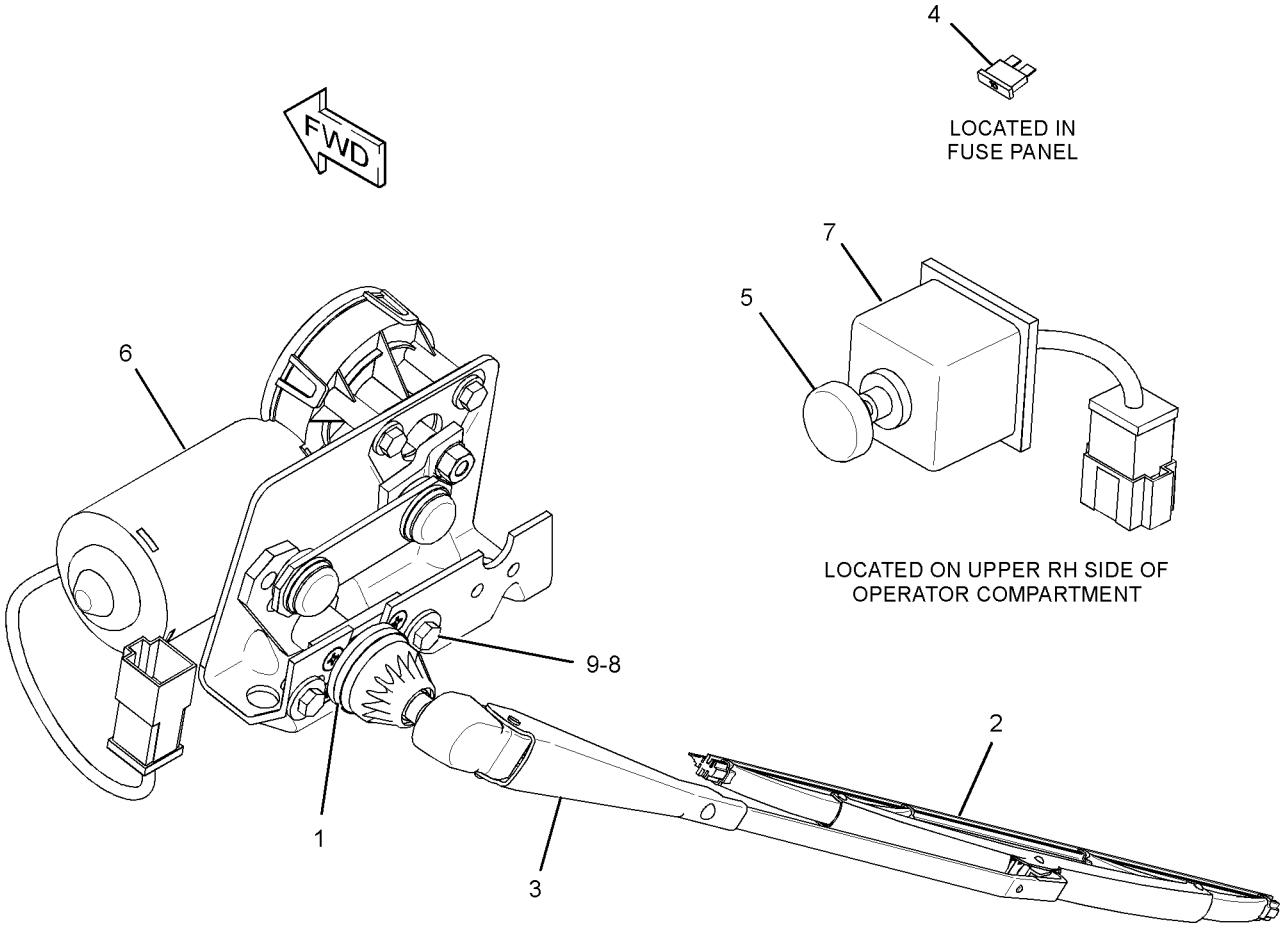

GRAPHIC #1 **<END>** g01694314

OPERATOR STATION

286-4825 WIPER GP-WINDOW—FRONT

S/N: JBP1-UP
AN ATTACHMENT

SMCS-7305 **i03261487**

NOTE	REF NO	GRAPHIC REF	PART NUMBER	QTY	PART NAME 1 2 3 4 5 6 (PRODUCT LEVEL)	SEE PAGE
Y	1	1	**275-7764**	2	SWITCH GP-WIPER (24-VOLT, INTERMITTENT) (FRONT WIPER)	193

Y-SEPARATE ILLUSTRATION

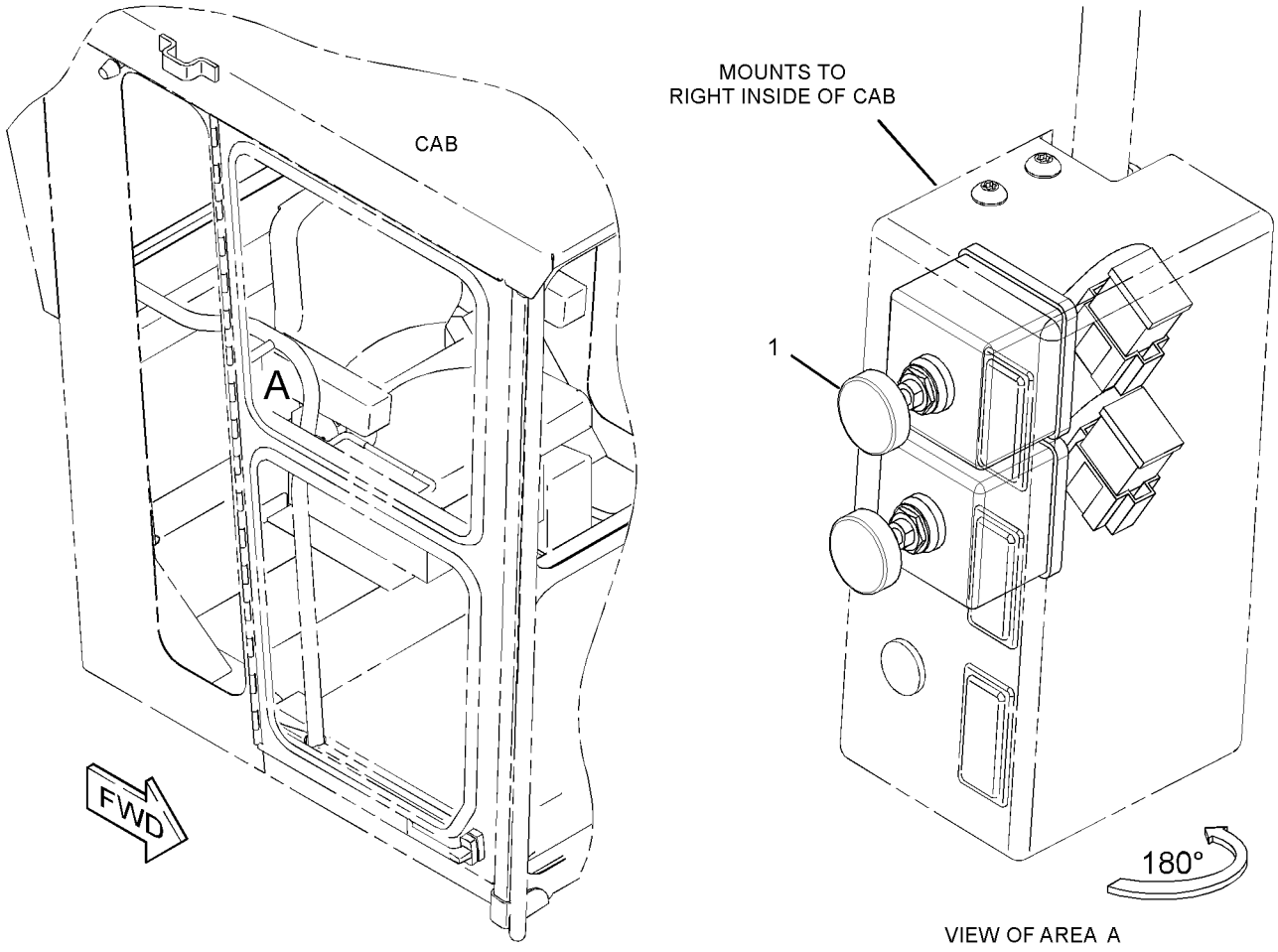

GRAPHIC #1 **<END>** g01681013

SERVICE EQUIPMENT AND SUPPLIES

111-1719 BOX GP-TOOL

S/N: JBP1-UP

PART OF 274-7941 GENERAL AR

SMCS-7259 **i01449464**

NOTE	REF NO	GRAPHIC REF	PART NUMBER	QTY	PART NAME 1 2 3 4 5 6 (PRODUCT LEVEL)	SEE PAGE
	1	1	**129-7249**	1	TOOL BOX	
	2	1	**5P-8502**	1	PADLOCK GP (TOOL BOX)	
A		1	**5P-8500**	1	KEY (TOOL BOX)	
A		1	**8Y-6364**	1	SLEEVE	
	3	1	**5K-9107**	4	BOLT-LOCKING (3/8-16X0.75-IN)	
	4	1	**5P-1075**	4	WASHER-HARD (10.2X22.5X3-MM THK)	

A-NOT PART OF THIS GROUP

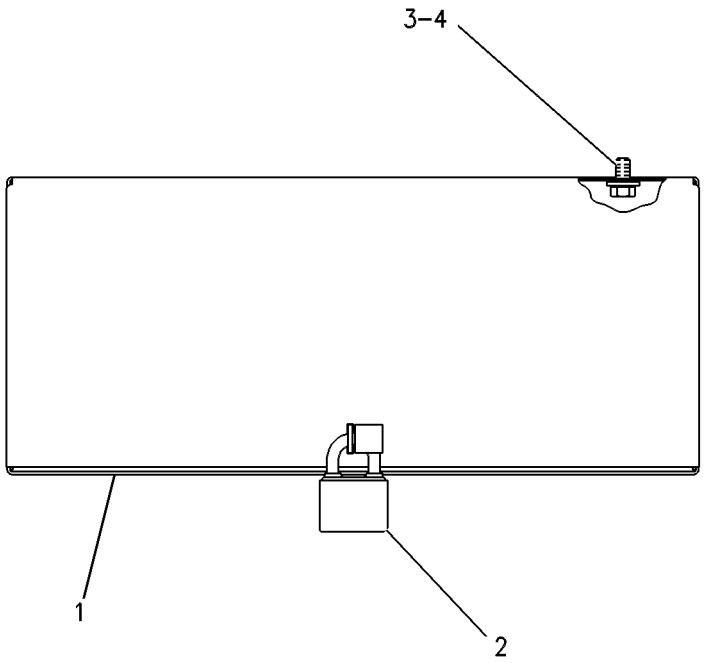

GRAPHIC #1 **<END>** g00109173

SERVICE EQUIPMENT AND SUPPLIES

302-4193 FILM GP

S/N: JBP1-UP

PART OF 302-4196 PLATE & FILM GP

SMCS-0375, 7000, 7405, 7557 **i03257492**

NOTE	REF NO	GRAPHIC REF	PART NUMBER	QTY	PART NAME 1 2 3 4 5 6 (PRODUCT LEVEL)	SEE PAGE
	1	1	**253-0861**	2	FILM-INFORMATION (CAT POWER, ACERT TECHNOLOGY)	
	2	1	**280-1480**	1	FILM-IDENTIFICATION (CATERPILLAR)	
	3	1	**296-6764**	1	FILM-IDENTIFICATION (CAT, RH)	
	4	1	**296-6765**	1	FILM-IDENTIFICATION (CAT, LH)	
	5	1	**296-6771**	2	FILM-IDENTIFICATION (VHP 200)	
	6	1	**302-1333**	2	FILM-IDENTIFICATION (160K)	

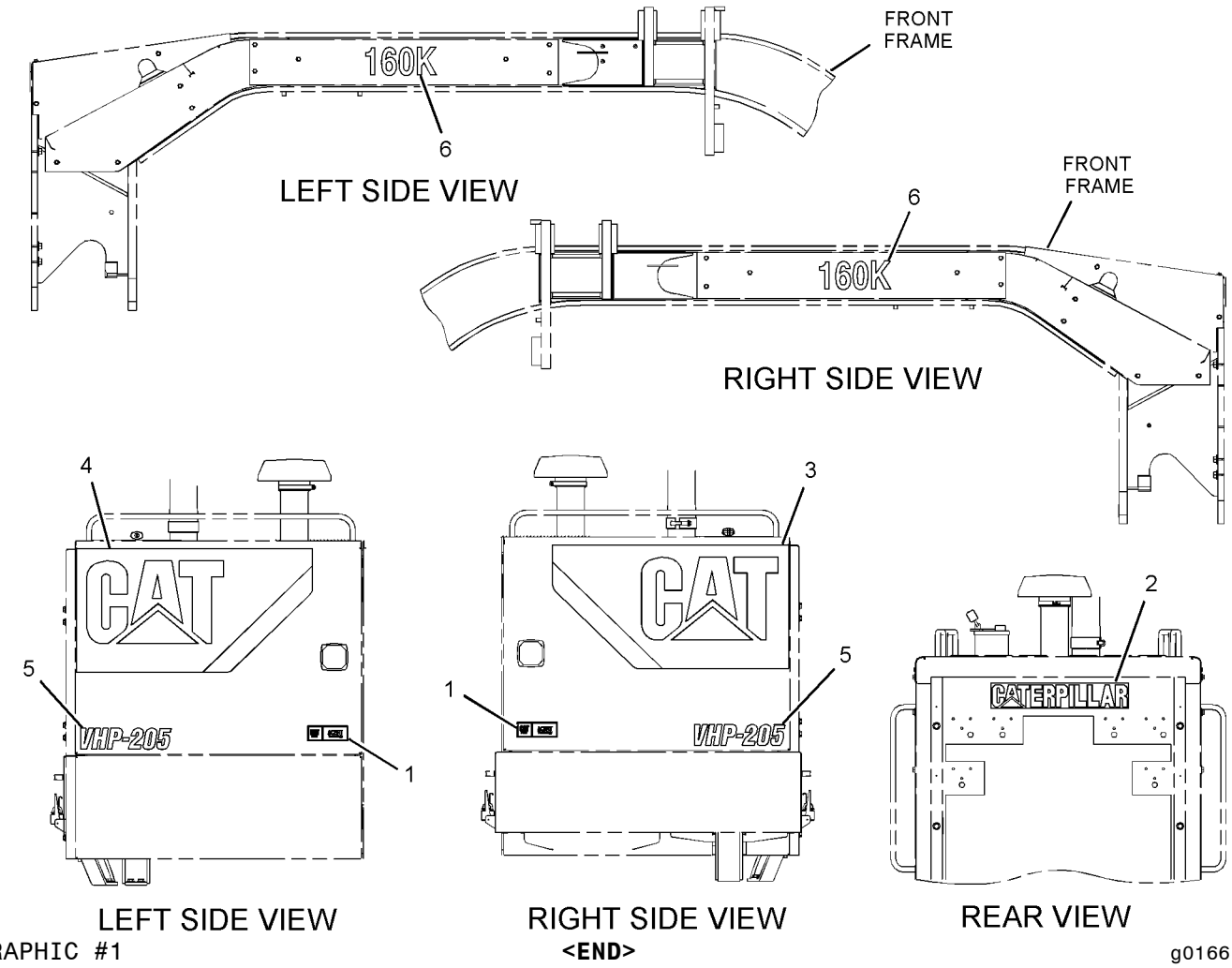

GRAPHIC #1

<END>

g01661233

SERVICE EQUIPMENT AND SUPPLIES

8F-9866 GREASE GUN GP

S/N: JBP1-UP
PART OF 211-0617 TOOL GP-HAND
AN ATTACHMENT

SMCS-0646 **i01440821**

NOTE	REF NO	GRAPHIC REF	PART NUMBER	QTY	PART NAME 1 2 3 4 5 6 (PRODUCT LEVEL)	SEE PAGE
C	1	1	**190-1669**	1	HOSE AS	
	2	1	**9F-2637**	1	FITTING	
C	3	1	**190-1668**	1	COUPLER-GREASE	

C-CHANGE FROM PREVIOUS TYPE

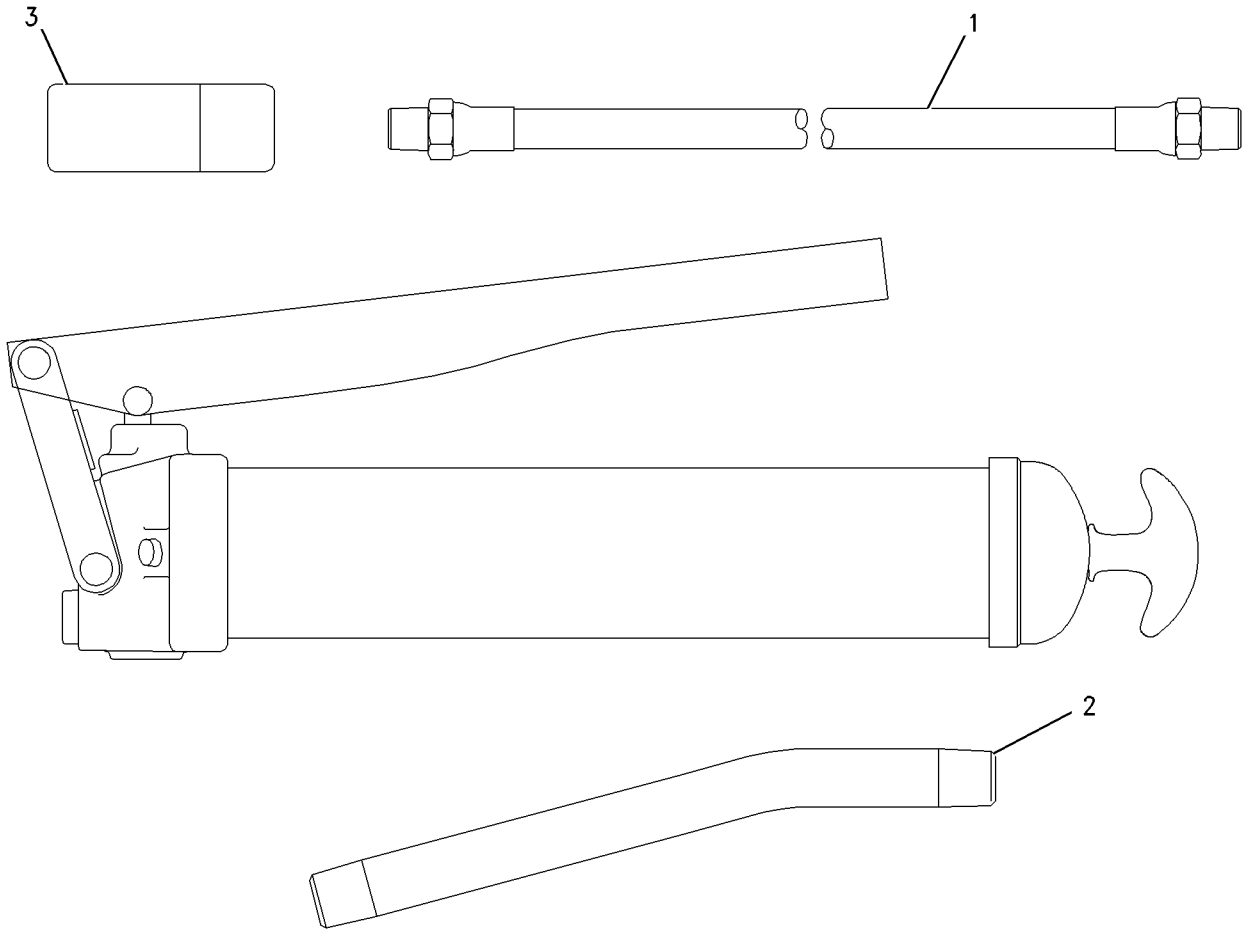

GRAPHIC #1 **<END>** g00752624

SERVICE EQUIPMENT AND SUPPLIES

302-4196 PLATE & FILM GP

S/N: JBP1-UP

PART OF 274-7941 GENERAL AR

SMCS-7405, 7557, 7620 **i03429100**

NOTE	PART NUMBER	QTY	PART NAME 1 2 3 4 5 6 (PRODUCT LEVEL)	SEE PAGE
Y	*302-4193*	1	FILM GP	757
A	**4W-1413**	1	PLATE-SERIAL NUMBER (ENGINE)	
			(INSTALL ON LOWER RH SIDE OF CYLINDER BLOCK)	
	225-4150	1	PLATE-SERVICE INFORMATION (MACHINE)	
			(ON PIN PLATE)	
	189-5804	2	FILM (EAME)	
			(1 ON COVER OF CONTROL GP-GOVERNOR)	
			(1 ON MAIN FRAME BELOW OF THE PLATE SERIAL)	
	220-3634	1	FILM (DRAIN, ENGINE COOLANT)	
			(ON ENGINE COOLANT DRAIN VALVE)	
	5P-1174	1	FILM-IDENTIFICATION (TRANSMISSION OIL FILL CAP)	
			(ON XMSN OIL FILLER CAP)	
	5P-1175	1	FILM-IDENTIFICATION (ENGINE OIL FILL)	
			(ON ENGINE OIL FILLER CAP)	
	8C-5897	1	FILM-IDENTIFICATION (SIGHT GAUGE)	
			(ON THE HYDRAULIC TANK ABOVE THE SIGHT GAGE)	
	125-2209	1	FILM-IDENTIFICATION (BLADE CENTERSHIFT)	
			(ON RH BLADE LIFT PIN)	
	134-7258	1	FILM-INFORMATION (EXTENDED LIFE COOLANT,READ OMM)	
			(ON TOP OF RADIATOR SUPPORT NEAR RADIATOR FILL)	
	202-9824	1	FILM-INFORMATION (BRAZIL)	
			(THE CPL INFORMATION PLATE NEAR OF THE PIN PLATE)	
	248-5245	2	FILM-INFORMATION (LIFT EYE, TIE-DOWN LOCATION)	
			(CENTERING ON OUTSIDE OF RH & LH REAR FRAME RAILS TO THE REAR OF THE LIFTING EYES)	
	252-2157	2	FILM-INFORMATION (TIE-DOWN)	
			(TOWARD FRONT OF LH AND RH SIDE OF AXLE TUBE IN BOLSTER)	
	309-8773	1	FILM-INFORMATION (FLUID LEVEL)	
			(ON WATER TANK BRACKET)	
	331-3892	1	FILM-INSTRUCTION (WASHER FILL)	
			(ON COVER FOR WINDOW WASHER FLUID BOTTLE WHEN ATTACHMENT ROPS ARE USED)	
	252-2156	2	FILM-INSTRUCTION (LIFT EYE LOCATION)	
			(ON OUTBOARD SIDE OF RH & LH BLADE LIFT ARMS)	
	9X-6340	1	FILM-INSTRUCTION (ENGINE OIL)	
			(ON THE POWERTRAIN OIL FILLER)	
	254-6136	2	FILM-INSTRUCTION (AIR TANK, DRAIN)	
			(ON BOTH BRAKE AIR TANK WATER CONDENSATION DRAIN VALVES)	
	224-0554	3	FILM-WARNING (UNIVERSAL, READ OMM, INTL)	
			(1-ON REAR OF OPERATOR STEERING CONSOLE)	
			(2-ON FRONT OF OPERATOR CONSOLE,IF THE MACHINE EQUIPPED WITH CAB, LOCATE ON THE TOP SPEAKER PANEL)	
	225-0312	2	FILM-WARNING (JUMP START, READ OMM)	
			(ON SIDE OF RH ENCLOUSERE SIDE PANEL)	
	226-1240	2	FILM-WARNING (CRUSH HAZARD, STAY BACK, INTL)	

302-4196 **PLATE & FILM GP** *(contd.)* **i03429100**

NOTE	PART NUMBER	QTY	PART NAME 1 2 3 4 5 6 (PRODUCT LEVEL)	SEE PAGE
			(CENTERING ON OUTSIDE OF RH & LH REAR FRAME RAILS TO THE LIFTING EYES)	
	226-1274	1	FILM-WARNING (CRUSH HAZARD, READ OMM, INTL)	
			(ON LEFT SIDE OF ENGINE DASH-NEAR BOTTOM)	
	281-0547	4	FILM-WARNING (FAN, READ OMM)	
			(2 ON RH & LH FAN SIDE PANELS)(2 ON BOTH SIDES OF THE FUEL TANK NEAR THE BOTTOM)	
	249-8575	1	FILM-WARNING (NO DRILL, WELD, READ OMM)	
			(ON RH SIDE OF FRONT FRAME BEHIND LIFT CYL BRACKET)	
	221-8045	1	FILM-WARNING (SEAT BELT, INTERNATIONAL)	
			(ON RIGHT HAND B-POST)	
	230-4477	1	FILM-WARNING (NO STEP)	
			(ON BATTERY BOX)	
	225-4257	1	FILM-WARNING (HOT FLUID UNDER PRESS, INTL)	
			(ON THE WATER FILL TANK COVER)	
	1G-1883	23	CAP-GREASE	

A-NOT PART OF THIS GROUP
Y-SEPARATE ILLUSTRATION

<END>

211-0617 TOOL GP-HAND

S/N: JBP1-UP
AN ATTACHMENT

SMCS-0600 **i03292567**

NOTE	PART NUMBER	QTY	PART NAME 1 2 3 4 5 6 (PRODUCT LEVEL)	SEE PAGE
Y	**8F-9866**	1	GREASE GUN GP	758
	8H-8581	1	GAUGE GP-FEELER	
	1P-0545	1	GAUGE GP-PRESSURE	
	185-3630	1	WRENCH AS-STRAP	
	1P-0551	1	PIN-SPRING	
	2P-8253	1	STRAP	
	6H-7378	2	RING-RETAINING	
	5F-4764	1	BAR-PRY	
	212-8144	1	SOCKET-SPECIAL	
	212-8145	1	SOCKET-SPECIAL	

Y-SEPARATE ILLUSTRATION

<END>

PART NUMBER INDEX

Part	Page
0	
0L-0478	431
0L-1026	270
0S-1566	343
0S-1571	431
0S-1573	364
0S-1579	273
0S-1585	307
	331
	385
0S-1587	331
0S-1589	331
0S-1592	307
	371
0S-1604	269
0S-1756	250
	259
	606
0S-1973	264
0T-0244	720
0V-0375	307
1	
1A-0224	613
1A-1415	385
1A-1460	331
1A-4350	711
1A-5822	427
1A-8063	613
1B-0676	88
	347
	641
1B-2713	655
	656
1B-2886	368
1B-3057	7
1B-4038	385
1B-4046	385
1B-4208	613
1B-4367	334
1B-5174	231
	385
1B-8704	88
	641
1B-8705	11
	18
1B-8737	427
1D-0503	580
	584
	586
1D-4569	331
1D-4612	613
1D-4627	307
1D-4628	364
	366
1D-4643	586
1D-4675	624
1D-4689	335
1D-5119	590
1D-5120	427
1F-0748	108
	388
1F-0750	322
	631
	632
	724
	726
1F-1599	718
1F-4622	347
	641
1F-5339	310
	324
1F-7567	55
	93
1F-7958	385
	613
1G-1883	760
1H-0337	531
1H-1023	345
1H-3244	104
	106
	225
1H-3338	646
	649
1H-3340	745
	747
1H-3937	428
1H-7339	385
1H-7724	347
1H-8306	101
1H-8456	745
	747
1H-8720	410
1J-2860	250
	259
1J-4757	250
	259
1J-6762	215
	594
	437
	439
	441
	443
	445
	447
	449
	451
	453
	456
	458
	460
	462
	464
	466
	468
	470
	472
	474
	476
	480
	483
	487
	491
	495
	499
	580
	584
1J-9671	72
	360
	531
1K-6870	215
1K-6872	335
	368
	610
1L-0509	261
1L-2279	347
1L-5072	434
1M-1230	655
	656
1M-3780	266
1M-4095	270
1M-6119	110
	113
1M-6120	110
	113
1M-6718	577
1N-5999	26
	381
	382
1P-0545	760
1P-0551	760
1P-0810	103
	113
	116
	117
1P-2378	688
	690
1P-2636	250
	259
1P-2662	250
	259
1P-3700	432
1P-4577	261
1P-4578	261
1P-4693	255
	343
1P-4694	255
1P-6356	683
1P-6872	428
1P-7009	69
	117
	215
1P-7115	354
1P-7521	341
1R-0762	93
1R-0774	434
1R-1807	53
1R-1809	258
	261
1S-0994	75
	348
	393
	397
	401
	404
	414
1S-1014	79
1S-2342	210
1S-2563	55
1S-3618	413
1S-7251	116
	184
1S-7252	110
	113
	116
	117
	184
1S-9110	255
1S-9593	281
	282
	578
	579
1T-0738	247
	283
1U-3998	381
	382
1U-8846	13
	37
	38
	81
	82
	197
	230
1V-1984	220
1V-7368	127
1W-2431	85
1W-2715	25
1W-7534	354
1W-8407	20
1Y-7927	668
2	
2A-1162	37
	220
2A-1538	368
2A-3211	574
	575
	576
2A-3398	315
2A-4429	25
2A-6684	673
	674
2A-6926	751
2A-6928	751
2A-6929	751
2A-6938	271
2A-6985	►695
	706
2A-7081	393
	404
2A-7089	584
	586
	588
2A-7184	638
2B-0941	391
	393
	397
	404
2B-0947	253
2B-2673	580
	584
	586
2B-3147	271
2B-3148	271
2B-7410	385

► **PRIMARY REFERENCE**

PART NUMBER INDEX

Part	Page	Part	Page	Part	Page	Part	Page
2B-9373	266		668		476		456
2D-0193	347	2D-6642	39		480		458
2D-0626	610		250		484		460
2D-2507	289		253		487		462
	290	2D-7325	347		492		464
	291	2D-8009	266		495		466
	292	2D-8154	385		499		468
	293	2D-8652	376	2G-6748	437		470
	294	2F-8057	334		439		472
	295		370		441		474
	296	2G-0478	385		443		476
	297	2G-0617	146		445		481
	300		152		447		484
	301	2G-0659	146		449		488
	302		152		451		492
	305	2G-0988	146		453		496
	306		152		456		499
2D-2508	289	2G-1034	354		458	2G-6752	437
	290	2G-3219	580		460		439
	291		584		462		441
	292		601		464		443
	293	2G-3221	580		466		445
	294		584		468		447
	295		601		470		449
	296	2G-3865	307		472		451
	297	2G-3967	365		474		453
	300	2G-3971	588		476		456
	301	2G-4332	613		480		458
	302	2G-5493	393		484		460
	305		397		487		462
	306		401		492		464
2D-2509	289		404		496		466
	290	2G-5667	307		499		468
	291		371	2G-6749	439		470
	292	2G-5673	307		445		472
	293	2G-6285	735		447		474
	294	2G-6337	343		449		477
	295	2G-6595	293		451		481
	296		294		453		484
	297		295		456		488
	300		296		458		492
	301		297		460		496
	302		301		462		500
	305		302		464	2G-6753	441
	306		306		466		445
2D-2511	289	2G-6695	385		468		449
	290	2G-6740	443		470		456
	291		447		472		460
	292		453		474		466
	300		458		476		470
	305		460		481		474
2D-2565	290		480		484		477
	291	2G-6747	445		488		488
	292		447		492		492
	293		449		496	2G-6754	449
	297		451		499		453
	301		453	2G-6751	437		462
	305		460		439		464
2D-2654	300		462		441		466
	303		464		443		468
2D-4202	434		466		445		474
2D-5238	315		468		447		484
2D-6006	735		470		449		488
2D-6235	655		472		451		492
	656		474		453		496

PART NUMBER INDEX

Part	Page	Part	Page	Part	Page	Part	Page
2G-6755	437		464		699		537
	439		466		701		539
	441		468	2H-3928	432		541
	443		470	2H-3931	420		543
	445		472	2H-5001	250		545
	447		474	2H-6489	230		547
	449		477	2H-6490	270		549
	451		481	2H-9091	354		551
	453		484	2H-9247	385		553
	456		488	2H-9889	393		555
	458		492		397		557
	460		496		401		559
	462		500		404		561
	464	2G-7097	695	2J-0157	230		563
	466	2G-7098	695	2J-3505	307		565
	468	2G-7107	462	2J-3506	255	2L-3331	347
	470		468		385	2L-5893	621
	472		474		597		704
	474		484		598	2L-6267	88
	477		492		599	2L-8050	116
	481		496		600	2L-8058	116
	484	2G-7108	462		604	2M-0849	364
	488		468		605		606
	492		474		606	2M-4453	72
	496		484		613	2M-4779	358
	500		492	2J-6089	573	2M-6471	22
2G-6756	437		496		574	2M-7819	668
	439	2G-7728	613		575	2M-9780	7
	441	2G-8233	606		576		22
	443	2G-8241	688	2J-6274	341		26
	445		690	2J-7761	434		53
	447	2G-8242	688	2J-8163	307		72
	449	2G-8572	638	2K-0120	610		92
	451		678	2K-0419	580		230
	453		688		584		271
	456	2G-8573	638		586		341
	458		678		601		354
	460		688	2K-0420	363		393
	462	2G-8609	371	2K-0703	610		401
	464	2G-8615	307	2K-1738	241		404
	466	2G-8624	307	2K-4821	106		531
	468	2G-8626	307	2K-4973	610		685
	470	2G-8631	307		621	2N-9421	88
	472		383		624	2P-1279	573
	474	2G-8633	307		631		574
	477	2G-8741	307		632		575
	481	2G-8742	307		724		576
	484	2G-8767	673		726	2P-2537	53
	488		678		733	2P-2717	265
	492	2G-8768	307	2K-5106	250	2P-3628	343
	496	2G-8777	307		259	2P-4339	625
	500	2G-9098	364	2K-5109	250		663
2G-6757	437		366		259	2P-4358	9
	439	2G-9103	364	2K-5232	683	2P-8253	760
	441		366	2K-5830	638	2R-0694	735
	443	2G-9791	271	2K-6061	631	2R-0719	735
	445	2H-1743	685		632	2R-0724	735
	447	2H-3740	307		724	2R-1600	315
	449	2H-3746	613		726	2R-1922	354
	451	2H-3764	590	2K-6413	617	2R-6806	95
	453	2H-3786	370	2K-6830	378	2S-0115	604
	456	2H-3920	192	2K-7471	613		605
	458		202	2K-7979	638	2S-2053	54
	460	2H-3922	188	2K-8199	533	2S-3029	230
	462		197		535	2S-3440	352

► **PRIMARY REFERENCE**

PART NUMBER INDEX

Part	Page
2S-4078	229
	409
	531
2S-5100	434
2S-7010	69
2T-2991	7
2V-0099	625
	663
2V-1771	110
	112
	113
	117
2V-4331	331
2V-8259	205
2W-0027	43
2W-6544	13
2W-6546	12
2W-7213	22
2W-7381	28
2W-8147	18
2Y-3812	215
2Y-5829	49
	58
3	
3B-4501	626
3B-4607	735
3B-4610	434
	735
3B-4615	316
3B-4618	307
	370
3B-4628	393
	404
3B-4647	368
3B-5320	580
	584
	586
3B-5325	617
3B-5329	365
3B-6753	590
	606
3B-6769	333
3B-6772	352
3B-7721	348
3B-7733	333
3B-7740	322
3B-8485	364
	366
3B-8489	307
	333
	371
	590
	610
	613
3B-8822	345
3B-8921	236
	239
3C-6969	225
3D-2239	305
3D-2824	7
	37
	44
	72
	187
	229
	248
	261
	389
	409
	410
	513
	531
3D-2975	668
3D-2981	271
3D-4245	275
	278
3D-4904	613
3D-6509	253
3D-6689	273
3D-7587	354
3D-8317	278
3D-8747	655
	656
3D-8748	655
	656
3D-8749	655
	656
3D-8752	655
	656
3D-8884	345
3D-8913	348
	354
3E-0109	151
	202
	205
	225
	691
3E-0400	625
	663
3E-2026	210
3E-3213	35
3E-3365	187
	281
	578
	579
3E-3368	177
3E-3371	166
	167
3E-3389	202
3E-3636	210
3E-3890	625
	663
3E-4048	695
	708
3E-4302	428
3E-4304	625
3E-4352	54
	164
3E-4353	56
3E-5169	220
3E-5239	144
	201
	205
	209
	220
3E-5454	104
3E-5464	625
3E-6328	▶102
	205
3E-6389	▶134
	202
3E-6477	225
3E-7401	69
3E-7417	428
3E-7852	185
3E-7853	185
3E-7855	185
3E-7857	185
3E-7858	185
3E-7860	185
3E-7861	185
3E-8005	247
3E-8006	283
3E-8017	87
3E-8020	699
	701
	703
3E-8700	▶177
	231
3E-8763	200
	225
	228
3E-8766	146
	151
	691
3E-8772	149
	152
	189
3E-8782	146
	151
3E-8784	228
3E-8812	200
3E-8815	149
3E-8817	205
3E-8821	658
	659
3E-8822	156
	157
3E-8825	146
	149
	151
	152
	156
	157
	189
	200
	205
	225
	228
	658
	659
	691
3E-9317	152
	189
3E-9319	225
3E-9323	225
3E-9326	152
	189
3E-9327	205
3E-9330	658
	659
3E-9412	48
	97
3E-9413	698
3E-9865	638
3F-1547	434
3F-7514	638
3F-9556	106
	437
	439
	441
	443
	445
	447
	449
	451
	453
	456
	458
	460
	462
	464
	466
	468
	470
	472
	474
	476
	480
	483
	487
	491
	495
	499
	751
	753
3G-0361	434
3G-1701	667
3G-2165	604
	605
3G-2579	610
3G-2581	610
3G-3265	678
	708
3G-3726	570
	571
3G-6659	333
3G-8175	578
3G-9190	310
3H-2900	626
	663
3H-5552	22
3H-7654	48
3H-8538	641
3J-1907	7
	9
	26
	42
	58
	60
	69
	79
	82
	92
	93
	95
	182

▶ **PRIMARY REFERENCE**

PART NUMBER INDEX

Part	Page	Part	Page	Part	Page	Part	Page
	197		92	3P-1156	56	3W-7254	608
	210		93		63	3W-7256	608
	230		230	3P-1461	606	3Y-2806	638
	258		271	3P-2404	215	3Y-2888	182
	275		391	3P-3839	327		
	278		393		329		
	283		397	3P-9498	531	**4**	
	407		400	3R-2437	531		
	409		401	3R-8797	185	4B-0418	683
	410		404	3S-0004	266	4B-1281	225
	416		409	3S-0391	347	4B-2043	694
	477		413	3S-1349	613	4B-2049	699
	481		414	3S-2093	92		701
	484		416		127		703
	488		428		146	4B-2913	434
	492		476		151	4B-3604	590
	496		480		156	4B-4158	706
	500		483		157		707
	531		487		162		708
	549		491		201	4B-4274	220
	567		495		202		225
	570		499		205	4B-4283	751
	571		531		207		753
	573		533		225	4B-4314	265
	574		535		227		638
	575		537		397	4B-4863	694
	576		539		416		730
	577		541		625	4B-5059	668
3J-3679	72		543		663	4B-5272	623
	531		545		673	4B-6060	348
3J-5389	271		547		674		641
3J-5390	74		549		691	4B-7270	343
	343		551		736	4B-9302	683
	352		553		739	4B-9880	278
3J-5696	621		555	3S-2713	347	4C-9612	12
3J-6956	283		557		641		42
3J-7354	7		559	3S-6049	116	4D-0577	348
	37		561	3S-6050	110		354
	67		563		117	4D-0582	348
	79		565	3S-7023	374	4D-1212	225
	92		569		377	4D-1322	283
	164		572		378	4D-2297	549
	245		685	3S-8664	117		563
	258	3K-0986	269		348		570
	259	3K-2527	586		407		571
	278	3K-2889	334	3S-8665	685		573
	341	3K-3257	184	3S-9557	626		574
	409	3K-6060	348	3T-0050	347		575
	416		434	3T-0849	430		576
	422		638	3T-3197	625	4D-2560	354
	424	3K-6113	513	3T-3198	625	4D-2886	413
	531		514	3T-4377	270	4D-3704	255
	572		521	3T-5760	117		307
3K-0196	269		522	3T-5763	316		343
3K-0360	7		524	3T-6354	104		371
	9		527	3T-6774	655	4D-4064	88
	45		528		656	4D-4375	588
	46		530	3T-6848	413	4D-5292	250
	53	3K-6116	275	3T-8236	531	4D-5497	343
	57	3K-8280	348	3T-9549	229	4D-6086	613
	67	3K-8460	164	3V-0613	316	4D-6432	711
	69	3K-9520	146	3V-2431	96	4D-6585	345
	72		152	3V-3816	738	4D-6695	283
	75	3L-8187	225	3V-9244	695	4D-6885	348
	81	3P-0337	239		708	4D-7388	69

► **PRIMARY REFERENCE**

PART NUMBER INDEX

Part	Page
	75
	210
	348
	354
	736
	738
	739
4D-7733	354
	407
4D-7735	348
	683
4D-7794	79
	152
	197
	205
	210
	215
	220
	333
	436
	738
4D-8123	220
4D-8128	310
4D-8148	315
4D-9986	533
	535
	537
	539
	541
	543
	545
	547
	549
	551
	553
	555
	557
	559
	561
	563
	565
4E-2392	416
4F-2294	190
4F-4879	729
4F-5695	24
4F-7389	261
4F-7390	341
4F-7952	267
4F-9029	60
4F-9653	96
	385
4H-6112	271
4H-6147	345
	354
4H-6520	250
	259
4H-6996	385
4H-9105	341
4J-0520	261
4J-0521	410
4J-0522	261
4J-0524	72
4J-2506	245
	275
	278
4J-5468	391
	393
	397
	401
	404
	416
4J-5477	7
	245
	407
	409
	416
	531
4J-7533	275
	278
	422
	424
	503
	504
	505
	506
	507
	508
	509
	510
	511
	512
	513
	514
	515
	516
	517
	518
	519
	520
	521
	522
	524
	525
	526
	527
	528
	529
	530
	531
	533
	535
	537
	539
	541
	543
	545
	547
	549
	551
	553
	555
	557
	559
	561
	563
	565
4J-8922	348
	641
4J-9224	383
4J-9225	376
	381
	382
4J-9964	432
4K-0367	250
	259
	695
	708
4K-1388	7
	531
4K-2039	275
	278
4K-3004	610
4K-3150	610
4K-3330	▶618
4K-4879	294
	295
	296
	297
	302
	306
4K-4881	301
	304
4K-6781	331
4K-7463	331
4K-7464	331
4K-8302	215
4K-8603	230
4K-8659	331
4K-8864	152
	210
	215
	220
	345
	354
	407
	683
4K-9097	316
4K-9429	697
4L-5966	625
	663
4L-6454	152
	205
	210
	397
	413
	417
	623
	631
	632
	683
	736
4L-6459	200
	449
	453
	460
	462
	466
	468
	474
	488
	492
	496
4M-0061	656
4M-1751	275
	278
4M-1831	185
4M-2381	278
4M-5281	676
4M-6107	241
	243
4M-6108	230
4M-6425	348
	704
4M-6582	626
	664
4M-6921	434
4M-6953	264
4N-2927	668
4N-5091	358
4P-4369	54
4P-5918	13
	82
	207
4P-7048	354
4P-7581	195
	201
	205
	231
4P-8134	207
	210
	245
4S-1936	220
	354
4S-1962	215
	220
	407
	683
4S-4455	220
	352
	407
4S-5719	197
4S-5780	108
4S-5838	341
4S-5879	247
4S-7529	345
4S-7606	345
	354
4T-1700	572
4T-1860	531
	▶577
4T-4509	572
4T-4935	531
	▶569
4T-4942	569
4T-5074	572
4T-5613	374
	377
	378
	383
4T-6779	372
	373
4T-6780	376
4T-6907	379
	380
4T-7571	569
4T-8050	324
4T-8054	383
	420
4V-0015	331
4V-7875	668

▶ **PRIMARY REFERENCE**

PART NUMBER INDEX

Part	Page	Part	Page	Part	Page	Part	Page
4V-7877	668		739		604	5M-2894	250
4V-7884	733	5C-6565	323		605		255
4V-7890	621		352	5F-9144	275		259
4V-7891	621	5C-7261	13		278		623
4V-8256	624		15		279		704
4V-8577	733		129	5H-4778	345		724
4V-9803	335		215		348		726
4V-9804	335		751	5H-4909	385	5M-3062	131
4V-9809	335		753	5H-7826	333		146
4W-0253	71	5C-7423	241	5H-8985	236		152
4W-1203	30		243		239		205
4W-1204	30		751		241		210
4W-1413	759	5C-8312	202		243		215
4W-2026	14		225	5I-4376	69		320
4W-2042	30		638	5J-1036	275		324
4W-2232	56		694		278		345
4W-3462	3		699	5J-1086	341		348
	▶12		701	5J-1246	432		360
4W-7592	71		703	5J-4773	597		621
4Y-9652	13	5C-9553	197		598		630
			201		599		651
			205		600		685
5			209		604		736
			215		605		739
5A-3604	9		225	5J-5402	378	5M-3724	201
5B-0577	613		316	5J-7010	376		205
5B-0841	253		710	5J-7333	592	5M-6200	230
	259	5D-0269	699	5K-0871	331	5M-6213	345
5B-1866	49		701	5K-0983	331		348
5B-6172	621		703	5K-0984	331	5M-8500	638
	713	5D-0353	255	5K-0985	331	5M-9695	741
	715		257	5K-0987	331		742
5B-9318	384		307	5K-0988	331	5P-0537	142
	533	5D-0398	586	5K-0989	331		275
	535	5D-0399	586	5K-0991	331		278
	537	5D-0768	735	5K-1094	345		655
	539	5D-1026	69	5K-1458	613		656
	541		75		618		697
	543		101	5K-1459	613	5P-0599	397
	545		261		618	5P-0721	101
	547		630	5K-2408	345	5P-0747	184
	549		685	5K-5129	307	5P-0765	262
	551	5D-1911	434		343	5P-0767	69
	553	5D-2645	393		385		348
	555		397	5K-5288	307		685
	557		404		385	5P-0810	397
	559	5D-3636	735	5K-5552	365	5P-0878	626
	561	5D-4822	668	5K-7577	699	5P-1046	69
	563	5D-4988	397		701	5P-1075	88
	565	5D-5206	586	5K-8451	352		261
5C-2890	79	5D-6644	580		354		307
	144		584	5K-8454	385		320
	152	5D-8159	613	5K-9090	261		323
	154	5D-8161	613		409		324
	155	5D-9629	310	5K-9107	756		327
	189		337	5K-9238	347		329
	201	5D-9844	250	5L-2030	250		345
	205		259		259		413
	219	5E-8769	9	5L-2031	250		417
	225	5F-0149	606		259		437
	348	5F-0304	37	5L-3244	83		439
	626	5F-4764	760	5L-4507	197		441
	654	5F-5434	354	5L-7200	152		443
	664	5F-8000	268		189		445
	736	5F-8933	594	5M-2057	531		447

▶ **PRIMARY REFERENCE**

PART NUMBER INDEX

Part	Page	Part	Page	Part	Page	Part	Page
	449	5P-2230	79		639		584
	451	5P-2424	437		664		601
	453		439	5P-5639	639		613
	456		441	5P-5678	646	5P-8247	21
	458		443	5P-5689	116		106
	460		445		197		250
	462		447	5P-5768	649		253
	464		449		698		259
	466		451		708		331
	468		453	5P-5813	250		580
	470		456		259		584
	472		458	5P-5824	678	5P-8248	250
	474		460	5P-5905	664		255
	477		462	5P-5923	592		259
	481		464	5P-5931	393		368
	484		466		404		385
	488		468	5P-5969	320		427
	492		470		651		606
	496		472		676		613
	500		474		679	5P-8249	364
	626		477		687		366
	638		481		749	5P-8250	613
	641		484	5P-6129	626	5P-8291	590
	651		488	5P-6652	590	5P-8309	74
	664		492	5P-6871	689		337
	683		496	5P-6882	676	5P-8347	67
	688		500	5P-6920	104	5P-8439	316
	731		610	5P-7162	741	5P-8445	668
	756	5P-2503	250		742	5P-8500	2
5P-1076	88		259	5P-7213	269		101
	108	5P-2566	432	5P-7462	93		265
	195	5P-3454	197	5P-7463	93		312
	335	5P-3490	255	5P-7464	93		336
	437	5P-3863	230	5P-7465	93		436
	439		268	5P-7803	625		717
	441	5P-3924	230		663		719
	443	5P-4115	225		678		756
	445		327		708	5P-8502	436
	447		329		731		717
	449		676	5P-7814	164		719
	451		678	5P-7854	352		756
	453		736		417	5P-8525	151
	456		739	5P-7957	713		156
	458		751		715		157
	460		753		718		659
	462	5P-4116	29		730		673
	464		79	5P-7958	2		674
	466		93	5P-7970	55	5P-8842	307
	468		182	5P-8167	149		371
	470		636		200	5P-8843	307
	472	5P-4135	215		220	5P-8874	92
	474	5P-4295	117		320	5P-8890	307
	477	5P-4401	352		638	5P-8998	354
	481	5P-4424	352		738	5P-9085	215
	484	5P-4483	230	5P-8196	53		220
	488	5P-4536	86	5P-8244	343		327
	492	5P-4868	409	5P-8245	14		329
	496	5P-4906	685		34	5P-9118	343
	500	5P-4961	69		35	5P-9135	626
5P-1174	759	5P-5454	678		253		663
5P-1175	759	5P-5623	144		271	5P-9147	255
5P-1251	75	5P-5627	741		331	5P-9209	88
5P-1295	409		742		371		641
5P-2228	367	5P-5630	182		385	5P-9299	231
	610	5P-5637	626		580	5P-9436	248

PART NUMBER INDEX

Part	Page
5P-9617	67
5P-9810	389
5P-9938	261
5R-4787	427
5S-4246	131
	205
5S-4385	266
5S-7349	106
	185
5S-7379	149
	215
	307
	323
	370
	385
	393
	397
	401
	404
	688
5S-7382	324
5S-7383	354
	393
	397
	404
	631
	632
	638
	704
	724
	726
5S-9062	30
5T-0570	1
	▶385
5T-0906	307
5T-1362	431
5T-1958	745
5T-1959	747
5T-1964	745
	747
5T-1969	745
5T-1972	745
	747
5T-3093	749
5T-3144	745
5T-3145	747
5T-3146	745
5T-3147	747
5T-3889	588
5T-3890	588
5T-4030	667
5T-4267	582
	588
5T-5295	368
5T-5994	745
	747
5T-6775	160
	590
5T-7129	255
5T-7486	646
	649
5T-8285	345
	347
5T-8366	580
	584
5T-8417	368
5T-9313	152
5T-9903	416
5T-9986	393
5V-0770	668
5V-1496	721
5V-1497	733
5V-5262	623
6A-3591	354
6B-0933	437
	439
	441
	443
	445
	447
	449
	451
	453
	456
	458
	460
	462
	464
	466
	468
	470
	472
	474
	476
	480
	483
	487
	491
	495
	499
6B-3260	613
	618
6B-4540	205
6B-5072	271
6B-6684	269
6C-3246	295
6D-0580	245
6D-1004	9
6D-1432	345
6D-1641	685
6D-3033	215
6D-3479	220
6D-4244	215
	220
	225
	389
	393
	397
	401
	404
	417
6D-4246	110
	112
	113
	117
	210
	221
6D-4247	391
	414
6D-4636	210
	221
6D-6581	646
	649
6D-7889	9
6E-0123	372
	373
6E-0775	378
6E-1131	374
	377
6E-1343	366
	▶374
6E-1344	374
6E-1346	374
6E-1835	569
6E-1923	531
6E-1924	531
6E-1925	531
6E-1926	409
6E-3006	574
6E-3007	533
	535
	537
	539
	541
	543
	545
	547
	549
	551
	553
	555
	557
	559
	561
	563
	565
6E-3013	541
	543
	561
	563
6E-3019	533
	535
	537
	539
	541
	543
	545
	547
	549
	551
	553
	555
	561
	563
	565
6E-3028	507
	509
	514
	517
	518
	521
	526
	527
	▶533
6E-3029	507
	509
	514
	517
	518
	521
	526
	527
	▶535
6E-3030	507
	509
	514
	517
	518
	521
	526
	527
	▶537
6E-3031	507
	514
	517
	521
	526
	527
	▶539
6E-3032	464
	470
	472
	▶507
6E-3033	557
	561
	▶570
6E-3034	508
	510
	513
	515
	516
	519
	520
	522
	524
	525
	528
	529
	530
	▶541
6E-3035	503
	504
	505
	506
	508
	510
	511
	512
	513
	515
	516
	519
	520
	522
	524

6

▶ **PRIMARY REFERENCE**

PART NUMBER INDEX

Part	Page
	525
	528
	529
	530
	▶543
6E-3036	504
	508
	510
	511
	512
	513
	515
	516
	519
	520
	522
	524
	525
	528
	529
	530
	▶545
6E-3037	508
	513
	515
	516
	522
	524
	525
	528
	529
	530
	▶547
6E-3038	472
	▶508
6E-3043	539
	547
6E-3044	533
	535
	537
	543
6E-3058	545
6E-3059	553
6E-3136	427
	▶428
6E-4224	428
6E-4228	567
6E-4230	567
6E-4502	533
	535
	537
	539
	541
	543
	545
	547
	549
	551
	553
	555
	557
	559
	561
	563
	565
6E-4599	541
	549
	551
	555
	561
6E-4703	531
	▶571
6E-4704	570
6E-4940	376
6E-4974	383
6E-5047	271
6E-5153	533
	535
	537
	539
	541
	543
	545
	547
	549
	551
	553
	555
	557
	559
	561
	563
	565
6E-5200	572
6E-6140	567
6E-6141	567
6E-6142	567
6E-6419	567
6E-6420	567
6E-6571	428
	▶430
6E-6594	428
6E-6596	428
6E-6597	428
6E-6599	428
6E-6600	428
6E-6601	428
6E-6602	428
6E-6604	430
6E-6605	430
6F-0698	250
	259
6F-3930	289
	290
	291
	292
	293
	294
	295
	296
	297
	300
	301
	302
	305
	306
6F-4855	275
	278
6F-6992	613
6F-7013	336
6F-7045	188
	197
6F-7062	44
6G-0417	331
6G-0905	343
6G-1631	235
6G-1908	385
6G-1914	590
6G-1915	590
6G-2395	678
	708
6G-2396	678
	708
6G-2751	678
6G-2914	638
	678
6G-2946	582
	586
	588
6G-2959	747
6G-3206	255
6G-3212	255
6G-3378	343
6G-4701	250
	259
6G-4703	250
	259
6G-5442	590
6G-5533	385
6G-5534	385
6G-5537	385
6G-5538	385
6G-5539	385
6G-5542	385
6G-5548	385
6G-5979	274
	281
6G-5987	655
	656
6G-6122	385
6G-7187	367
	371
6G-7222	708
6G-8814	638
6G-8831	689
	691
6G-9428	586
6G-9429	586
6H-0211	368
6H-1717	371
	385
	580
	584
	601
6H-3586	197
6H-7378	760
6H-9691	345
6I-1418	210
6I-8641	236
6I-8642	230
6I-8911	241
6I-8912	236
	239
	241
	243
6I-9395	283
6I-9502	239
	241
	243
6J-0488	638
6J-0789	372
	373
6J-0790	372
	373
6J-0793	372
	373
6J-1381	372
	373
6J-1972	374
	377
	379
	380
6J-2797	378
6J-5731	374
	377
	379
	380
6J-5733	374
	377
	379
	380
6J-6439	569
6K-0545	613
6K-3273	678
	721
6K-3632	586
6K-4076	320
6K-6826	347
6K-8178	69
	117
	215
	410
	417
6K-9632	738
	739
6L-1650	230
6L-1962	437
	439
	441
	443
	445
	447
	449
	451
	453
	456
	458
	460
	462
	464
	466
	468
	470
	472
	474
	476
	480
	483
	487
	491

▶ **PRIMARY REFERENCE**

PART NUMBER INDEX

Part	Page	Part	Page	Part	Page	Part	Page
	495		207	6V-5219	60		447
	499	6V-2369	103		268		449
	638		116	6V-5223	67		451
6L-5652	352		197	6V-5230	531		453
6M-5062	360	6V-2480	205	6V-5324	577		456
6M-9537	347	6V-2610	352	6V-5556	572		458
6N-1872	104	6V-2686	182	6V-5645	202		460
6N-9294	▶104	6V-2687	327	6V-5683	275		462
	108		329	6V-5684	336		464
6P-0205	619		687	6V-5686	385		466
	620	6V-2722	116	6V-5696	14		468
	678		117		48		470
6P-3236	625	6V-2773	646		410		472
	663		649	6V-5698	13		474
6P-5647	608	6V-3250	67	6V-5815	62		476
6R-7669	409	6V-3259	668	6V-5834	673		480
6S-6251	74	6V-3265	148	6V-5839	9		483
6T-1999	218		210		15		487
6T-3631	220		221		27		491
6T-3632	220	6V-3538	12		58		495
6T-3633	220		20		62		499
6T-5345	625	6V-3668	341		97	6V-8187	104
	663	6V-3834	428		249	6V-8188	108
6T-6708	625	6V-3918	38		341		117
	663		71	6V-5842	37		185
6T-7695	673		247		341		437
	674	6V-3928	678	6V-5843	36		439
6V-0292	678		708	6V-5853	751		441
6V-0505	679	6V-3940	11		753		443
6V-0683	93		12	6V-6467	739		445
6V-0852	245		43	6V-6578	202		447
	283		56	6V-6609	67		449
	409		67		180		451
	531		164	6V-6703	121		453
6V-0894	641		230	6V-6888	751		456
6V-1228	348	6V-3965	245	6V-6889	751		458
6V-1230	75		261	6V-6893	221		460
6V-1249	93		283	6V-7357	197		462
6V-1668	626		410		348		464
	664		531	6V-7420	685		466
6V-1720	231	6V-4245	348	6V-7555	197		468
6V-1819	236	6V-4248	56	6V-7636	646		470
	239		58		649		472
	241		230	6V-7646	721		474
	243	6V-4249	28	6V-7673	336		477
6V-1820	9	6V-4283	197		428		481
	230	6V-4589	191	6V-7688	101		484
	267	6V-4604	66	6V-7699	197		488
6V-1889	57		337	6V-7728	626		492
	210	6V-5048	26		664		496
	215		164	6V-7732	329		500
	221		170	6V-7744	689	6V-8189	106
	261		171		691		316
	324	6V-5049	100	6V-7981	97		348
6V-1911	269		164		230	6V-8212	230
6V-1970	2		169	6V-8004	30	6V-8214	329
6V-2202	104	6V-5158	651	6V-8149	14		428
6V-2235	69	6V-5163	679	6V-8182	215	6V-8225	142
6V-2313	88	6V-5164	710	6V-8183	638		354
	641	6V-5217	38	6V-8185	225	6V-8237	379
6V-2317	13		55	6V-8186	437	6V-8255	749
	15		230		439	6V-8258	753
	33		247		441	6V-8259	751
	53		283		443	6V-8336	34
	55	6V-5218	33		445	6V-8337	33

▶ **PRIMARY REFERENCE**

PART NUMBER INDEX

Part	Page
	428
6V-8362	625
	663
6V-8367	69
6V-8369	192
	202
6V-8376	225
6V-8377	104
6V-8378	185
	220
6V-8397	58
	69
	92
	93
	245
	391
	393
	397
	400
	401
	404
	407
	413
	414
	476
	477
	480
	481
	483
	484
	487
	488
	491
	492
	495
	496
	499
	500
6V-8398	7
	72
	92
	389
	393
	397
	401
	404
	409
	416
	476
	480
	483
	487
	491
	495
	499
	531
6V-8523	69
6V-8624	393
	401
	404
6V-8625	7
	92
	393
	397
	401
	404
6V-8627	7
	407
	409
6V-8628	7
	245
6V-8633	389
6V-8634	391
	393
	397
	400
	401
	404
	476
	480
	483
	487
	491
	495
	499
	501
6V-8635	261
6V-8636	58
	92
	96
	407
6V-8637	261
	409
6V-8638	92
6V-8639	7
	393
	401
	404
	416
6V-8647	245
	409
	416
	531
6V-8716	261
6V-8723	391
	393
	397
	413
	414
6V-8724	58
	93
	407
6V-8730	92
6V-8765	427
6V-8801	88
	125
	152
	200
	202
	205
	210
	215
	221
	324
	345
	348
	354
	358
	393
	397
	401
	404
	409
	416
	476
	480
	483
	487
	491
	495
	499
	531
6V-8918	348
6V-8928	678
6V-8950	131
6V-8969	697
6V-8980	407
	414
6V-9002	416
6V-9004	410
6V-9007	7
	409
6V-9008	261
6V-9027	67
6V-9168	69
	407
	414
6V-9326	131
6V-9493	694
6V-9632	215
	327
	329
	644
	646
	654
	676
	699
	701
	710
	731
6V-9746	7
	57
	261
	262
	409
	410
	416
6V-9748	30
6V-9835	409
6V-9836	397
	477
	481
	484
	488
	492
	496
	500
6V-9837	389
	416
6V-9849	416
6V-9850	407
6V-9851	389
6V-9875	409
6V-9876	393
	397
	401
	404
6W-0108	621
	397
	401
	404
	413
	417
	626
	664
	731
	736
	678
	131
	697
	407
	414
	416
	410
	7
	409
	261
	67
	69
	407
	414
	131
	694
	215
	327
	329
	644
	646
	654
	676
	699
	701
	710
	731
	7
	57
	261
	262
	409
	410
	416
	30
	409
	397
	477
	481
	484
	488
	492
	496
	500
	389
	416
	416
	407
	389
	409
	393
	397
	401
	404
	621
6W-0111	621
6W-0590	621
6W-1496	623
6W-1497	623
6W-1885	621
6W-1888	623
6W-1890	713
	715
6W-1895	713
	715
6W-2371	623
6W-2373	713
	715
6W-3309	713
	715
	718
6W-3628	623
	724
	726
6W-5698	736
	739
6W-5740	713
	715
6W-5757	713
	715
	718
6W-5817	347
6W-6672	117
6W-9693	713
	715
6Y-0309	617
6Y-0590	270
6Y-0591	270
6Y-0976	243
6Y-0983	236
6Y-1001	236
6Y-1007	230
6Y-1114	236
	239
	243
6Y-1115	236
	239
	241
	243
6Y-1116	241
6Y-1119	241
	243
6Y-1870	270
6Y-1878	236
6Y-1887	236
	239
	243
6Y-1888	243
6Y-1890	239
6Y-1891	236
	243
6Y-1895	236
	243
6Y-2300	▶270
	272
6Y-2305	▶236
	272
6Y-2307	243
6Y-2312	236
	239

▶ **PRIMARY REFERENCE**

PART NUMBER INDEX

Part	Page
6Y-2419	236
6Y-2425	236
	239
6Y-2428	239
6Y-2429	239
6Y-2584	283
6Y-2805	594
6Y-2932	425
6Y-2933	425
6Y-2934	425
6Y-2935	425
6Y-3849	341
6Y-3850	341
6Y-3852	341
6Y-3860	268
6Y-3861	268
6Y-4638	275
	279
6Y-5010	266
6Y-5230	613
	618
6Y-5352	341
6Y-7916	343
6Y-7953	385
6Y-7954	253
6Y-7981	239
6Y-8285	236
6Y-8764	▶266
	267
6Y-8765	▶267
	272
6Y-9763	230
6Y-9960	5

7

Part	Page
7B-2499	586
7B-5037	586
7B-9323	735
7C-1493	53
7C-4354	58
	205
	210
	221
7C-6976	43
7C-6977	43
7C-7431	87
7C-7980	18
7C-8365	▶30
	31
7C-8366	30
7C-8369	30
7C-8370	30
7C-8634	30
7D-0035	255
7D-0215	352
7D-1158	597
	598
7D-1195	434
7D-1553	195
7D-1577	603
7D-1649	307
	388
7D-2135	613
7D-2136	613
7D-2196	613
7D-3504	385
7D-4903	354
7D-5252	289
	290
	291
	292
	293
	294
	295
	296
	297
	300
	301
	302
	305
	306
7D-6567	271
7D-7233	221
	354
7D-7496	322
7D-7889	255
7D-8185	253
7D-8225	253
7D-8226	253
7D-8245	613
7D-8347	250
	259
7D-8434	343
7D-8436	343
7D-8437	343
7D-8439	343
7D-8441	343
7D-8636	307
7D-8637	307
7D-8643	307
7D-8825	613
7D-8826	613
7D-8875	606
7D-8876	606
7D-8877	606
7D-8878	606
7D-8879	606
7D-8881	606
7D-8882	606
7D-8883	606
7D-8884	606
7D-8889	606
7D-8891	606
7D-8983	385
7D-8984	385
7D-9267	431
7E-0759	67
7E-2968	21
7E-4761	69
7E-6794	39
7E-7589	47
7E-7590	3
	▶47
7E-7779	25
7F-0192	88
7F-1327	613
7F-8268	267
7F-9311	354
7G-0437	341
7G-1060	220
7G-4326	736
7G-4822	236
	239
	241
	243
7G-4824	625
	663
	678
	731
7G-4998	229
7G-5453	279
7G-7053	148
	205
7H-1447	434
7H-2423	381
	382
7H-2444	606
7H-3641	437
	439
	441
	443
	445
	447
	449
	451
	453
	456
	458
	460
	462
	464
	466
	468
	470
	472
	474
	476
	480
	483
	487
	491
	495
	499
7I-4610	1
	▶333
7I-4696	667
7I-4698	667
7I-4699	667
7I-4718	1
	▶643
7I-4890	638
7I-4959	316
7I-4979	316
7I-4981	316
7I-5015	629
	▶654
7I-5405	417
7I-5412	413
7J-0204	26
	381
	382
7J-8611	69
	257
7J-9108	685
7J-9885	383
7J-9933	533
	535
	537
	539
	541
	543
	545
	547
	549
	551
	553
	555
	557
	559
	561
	563
	565
	569
7K-1181	117
	125
	131
	144
	148
	149
	152
	195
	197
	200
	209
	210
	215
	219
	221
	231
	409
	694
7K-4199	660
7K-4201	653
7K-6117	363
7K-9202	363
	367
7K-9203	610
7L-0811	220
7L-2894	185
7L-6326	79
7L-8170	624
7L-8316	655
	656
7L-9061	191
	428
7M-0706	644
7M-1297	229
7M-2360	385
7M-7219	668
7M-7410	348
7M-8485	230
	231
	261
	275
	278
	279
7M-9918	86
7N-0718	▶188

▶ **PRIMARY REFERENCE**

PART NUMBER INDEX

Part	Page
	197
7N-2059	182
7N-3718	210
	221
7N-5274	110
	113
	117
7N-5683	20
7N-5876	205
7N-7795	104
7N-7796	104
7N-7798	104
7N-7800	104
7N-7801	104
7N-7802	104
7N-7804	104
7N-7805	104
7N-7806	104
7N-7807	104
7N-7808	104
7N-7809	104
7N-7810	104
7N-7811	104
7N-9021	104
7N-9023	104
7N-9024	104
7N-9801	194
7N-9943	134
7S-4571	255
7S-6369	82
7T-0020	134
7T-0570	275
	278
7T-0582	655
	656
7T-1099	131
	215
	625
	663
7T-1159	245
7T-1961	736
	739
7T-3451	185
7T-3454	185
7T-4003	658
	659
7T-4515	282
7T-4532	635
7T-4897	236
	239
	241
	243
7T-6496	230
7T-6799	205
7T-7358	660
7T-8272	428
7T-8273	428
7T-8891	736
	738
	739
7T-9302	193
	202
7T-9793	626
7V-0446	88
	347
	641
7V-5191	668
7W-3872	13
	636
7W-5095	35
7W-5340	56
7W-5672	393
	397
	401
	404
7W-9737	61
7W-9738	61
7W-9740	61
7W-9930	61
7W-9943	220
7X-0288	397
7X-0289	389
	391
	397
	401
	417
7X-0291	462
	474
	492
7X-0325	108
	436
7X-0333	358
	610
7X-0334	388
	580
	584
7X-0339	108
7X-0342	262
7X-0346	108
	363
	420
7X-0350	420
7X-0354	695
	708
7X-0375	695
	708
7X-0390	613
7X-0448	108
7X-0452	580
	584
	601
7X-0510	41
7X-0550	215
	316
	580
	584
7X-0562	185
7X-0578	354
7X-0579	215
7X-0591	626
	664
	731
7X-0605	651
7X-0608	624
7X-0613	210
7X-0619	216
	407
7X-0818	31
	210
7X-0838	245
7X-0871	416
7X-1387	316
7X-1950	185
7X-1952	185
7X-2536	201
7X-2537	58
	636
7X-2538	636
7X-2539	93
	636
7X-2543	608
7X-2546	74
	503
	504
	505
	506
	507
	508
	509
	510
	511
	512
	513
	514
	515
	516
	517
	518
	519
	520
	521
	522
	524
	525
	526
	527
	528
	529
	530
7X-2552	83
	262
7X-2553	31
7X-2566	101
7X-2575	313
	314
	337
7X-3353	104
7X-3373	185
7X-4736	345
7X-4743	205
7X-4776	531
7X-6315	121
7X-7478	195
7X-7700	101
7X-7729	57
	74
	115
	144
	316
	337
	348
	354
7X-7731	307
7X-7739	713
	715
7X-7877	125
	202
	713
	715
	718
7X-7910	683
7X-7911	683
7X-7958	57
7X-7961	35
7Y-0589	216
7Y-5226	745
	747
	749

8

Part	Page
8B-1615	257
8C-0563	24
8C-2926	266
8C-3290	5
8C-3309	409
8C-3334	157
8C-3425	41
	427
8C-3442	638
8C-3446	416
8C-3447	262
8C-3451	417
8C-3681	75
8C-3756	625
	663
8C-4586	625
	663
8C-4984	247
8C-5608	131
8C-5897	759
8C-5917	110
	116
8C-6162	421
8C-6354	205
8C-6512	422
	424
8C-6712	79
	416
8C-6738	741
	742
8C-6857	216
8C-6913	614
8C-6920	57
8C-6959	93
8C-6965	275
	278
8C-7508	225
8C-8431	79
8C-8454	651
8C-9987	281
	578
	579
8D-1268	613
8D-1429	625
	663
8D-2429	370
8D-2638	370
8D-2811	307

PART NUMBER INDEX

Part	Page	Part	Page	Part	Page	Part	Page
	370		487		456		487
8D-3508	310		491		458		491
8D-3540	255		495		460		495
8D-3591	255		499		462		499
8D-3786	316	8D-5634	437		464		638
8D-3791	320		439		466	8D-5949	584
8D-3885	255		441		468	8D-6687	365
8D-3886	255		443		470	8D-7026	347
8D-3902	255		445		472	8D-7086	363
8D-4064	253		447		474		367
8D-4282	253		449		476	8D-7225	367
8D-4291	253		451		480	8D-7423	385
8D-4332	606		453		483	8D-7424	385
8D-4336	606		456		487	8D-7425	385
8D-4766	363		458		491	8D-7426	385
8D-5054	385		460		495	8D-7678	365
8D-5467	586		462		499	8D-7960	638
8D-5632	437		464	8D-5640	437	8D-7996	364
	439		466		439	8D-8168	606
	441		468		441	8D-8197	250
	443		470		443		259
	445		472		445	8D-8852	437
	447		474		447		439
	449		476		449		441
	451		480		451		443
	453		483		453		456
	456		487		456		458
	458		491		458	8D-9092	393
	460		495		460		404
	462		499		462	8D-9159	320
	464	8D-5636	437		464	8D-9671	221
	466		439		466		685
	468		441		468	8D-9784	250
	470		443		470		259
	472		445		472	8D-9804	385
	474		447		474	8D-9882	588
	476		449		476	8D-9886	588
	480		451		480	8D-9887	588
	483		453		483	8E-1118	674
	487		456		487	8E-1133	230
	491		458		491	8E-1143	278
	495		460		495	8E-1161	239
	499		462		499	8E-1263	241
8D-5633	437		464	8D-5641	437		243
	439		466		439	8E-1909	236
	441		468		441	8E-1910	236
	443		470		443	8E-1911	239
	445		472		445	8E-5529	597
	447		474		447		598
	449		476		449		599
	451		480		451		600
	453		483		453	8E-5734	236
	456		487		456		239
	458		491		458		243
	460		495		460	8E-5736	239
	462		499		462	8E-5742	236
	464	8D-5637	437		464		239
	466		439		466		241
	468		441		468		243
	470		443		470	8E-6130	608
	472		445		472	8E-6570	278
	474		447		474	8E-7713	279
	476		449		476	8E-7714	278
	480		451		480	8E-7791	625
	483		453		483		663

► **PRIMARY REFERENCE**

PART NUMBER INDEX

Part	Page
	678
	731
8E-8319	236
	239
	241
	243
8E-9317	▶239
	272
8E-9474	283
8E-9893	278
8E-9894	275
	278
8E-9895	275
	278
8E-9896	275
	278
8E-9897	278
8F-0492	678
8F-1434	104
	185
	220
	699
	701
	703
8F-1974	210
8F-3469	236
	239
	241
	243
8F-4102	365
8F-6230	283
8F-6437	437
	439
	441
	443
	445
	447
	449
	451
	453
	456
	458
	460
	462
	464
	466
	468
	470
	472
	474
	476
	477
	481
	484
	488
	492
	496
	500
8F-9836	160
	590
8F-9866	▶758
	760
8G-1815	345
8H-1728	688
8H-2046	52
8H-4040	613
8H-5244	49
8H-5303	188
	197
8H-5306	188
	197
8H-8581	760
8I-1362	352
8J-0112	376
8J-1256	131
8J-1434	610
	▶617
8J-2331	432
8J-6371	372
	373
8J-6384	377
8J-6815	531
8J-7008	610
8J-7024	609
	▶610
8J-9910	378
8J-9911	378
8K-0530	322
8L-2786	178
	179
8L-6005	347
8L-6521	225
8L-7905	638
8L-8413	113
	668
8L-8598	460
	466
	468
	470
	472
	474
	476
	480
	483
	487
	491
	495
	499
8M-2769	262
8M-2770	131
	146
	195
	210
8M-2773	69
	210
	216
	221
	245
	630
	683
8M-3175	531
8M-3368	354
8M-3837	315
8M-4295	239
8M-4437	533
	535
	541
	543
	545
	547
	549
	551
	553
	555
	557
	559
	561
	563
	565
8M-4438	245
8M-5860	24
8M-6176	693
8M-6521	230
8M-8489	266
8N-1725	113
	116
8N-2353	218
8N-2694	79
8P-5141	625
	663
8R-1778	660
8R-2054	715
	718
8R-2057	715
	718
8R-4519	623
	724
	726
8S-0934	711
8S-0948	113
	117
8S-4790	623
	724
	726
8S-5383	108
8S-6109	683
8S-6110	683
8S-7566	653
8S-7803	668
8S-9092	255
8S-9129	230
	268
8S-9130	230
	268
8T-0076	391
	393
	397
	400
	404
8T-0081	92
8T-0100	15
	32
	48
8T-0226	37
8T-0276	53
8T-0285	123
	124
8T-0292	82
8T-0293	44
8T-0328	88
	104
	185
	641
	721
	745
	747
	749
8T-0335	749
8T-0336	385
8T-0352	745
	747
	749
8T-0355	268
8T-0372	341
	428
8T-0389	113
	117
	135
	136
	137
	138
	608
8T-0639	227
	247
8T-0643	15
8T-0644	72
8T-0646	410
8T-0667	380
8T-1117	75
8T-1159	96
8T-1174	638
8T-1296	393
	397
	401
	404
8T-1683	397
	414
8T-1687	393
	397
	401
	404
	476
	480
	483
	487
	491
	495
	499
8T-1698	425
8T-2275	434
8T-2353	164
8T-2501	123
	124
	245
	345
	393
	397
	404
	674
8T-2502	393
	404
8T-2530	685
8T-2561	316
	638
8T-2901	736
8T-3282	27
	376
	381
	382
8T-3426	679
8T-3490	66

▶ **PRIMARY REFERENCE**

PART NUMBER INDEX

Part	Page	Part	Page	Part	Page	Part	Page
	336		414		146		468
	393		417		149		470
	592		434		195		472
	625		436		197		474
	646		437		210		477
	663		439		216		481
	731		441		221		484
8T-3612	215		443		231		488
8T-3653	41		445		245		492
8T-3666	28		447		248		496
8T-3957	410		449		316		500
8T-4121	5		451		345		592
	7		453		348		637
	29		456		352		641
	31		458		354		683
	40		460		407		685
	57		462		410	8T-4137	57
	65		464		417		69
	69		466		637		75
	75		468		638		79
	77		470		641		93
	79		472		651		110
	83		474		667		112
	85		477		683		113
	88		481		689		117
	93		484		691		125
	110		488	8T-4136	5		131
	112		492		40		144
	113		496		79		154
	117		500		83		195
	125		592		85		197
	131		631		88		205
	135		632		115		210
	136		637		117		216
	137		641		146		221
	138		646		156		230
	144		649		157		245
	146		651		182		252
	149		667		197		316
	151		673		210		327
	154		674		316		329
	156		678		323		337
	157		683		337		345
	184		685		345		348
	195		689		348		352
	197		691		352		407
	205		708		354		410
	210		738		407		414
	216	8T-4122	108		410		417
	221		363		417		592
	230		420		437		646
	245		695		439		649
	248		708		441		673
	252	8T-4123	5		443		674
	262		101		445		689
	323		216		447		691
	327	8T-4133	69		449	8T-4138	79
	329		74		451		131
	337		75		453		197
	345		77		456		327
	348		79		458		533
	352		88		460		535
	354		113		462		537
	407		117		464		539
	410		144		466		541

► **PRIMARY REFERENCE**

PART NUMBER INDEX

Part	Page
	543
	545
	547
	549
	551
	553
	555
	557
	559
	561
	563
	565
	751
8T-4139	93
	316
	592
8T-4167	5
8T-4171	626
	664
	751
	753
8T-4172	29
8T-4176	327
8T-4178	348
8T-4179	117
8T-4181	646
	649
8T-4182	88
	354
	641
	678
	689
	691
8T-4183	316
	322
	327
	335
8T-4185	7
	31
	348
8T-4186	348
	414
	503
	504
	507
	508
	509
	510
	513
	514
	691
8T-4189	248
	533
	535
	537
	539
	541
	543
	545
	547
	549
	551
	553
	555
	557
8T-4191	79
	85
	110
	112
	184
	216
	436
	691
	738
8T-4192	323
8T-4194	74
	312
8T-4195	65
	75
	83
	85
	113
	117
	148
	210
	221
	248
	316
	337
	354
	434
	437
	439
	441
	443
	445
	447
	449
	451
	453
	456
	458
	460
	462
	464
	466
	468
	470
	472
	474
	477
	481
	484
	488
	492
	496
	500
	637
	641
	651
	667
	678
	683
	689
	708
8T-4196	5
	29
	31
	75
	77
	85
	88
	93
	197
	262
	337
	638
	641
8T-4198	117
8T-4200	93
	182
8T-4205	104
	106
	152
	154
	155
	185
	189
	197
	201
	221
	626
	654
	664
	721
8T-4223	7
	93
	108
	117
	146
	152
	216
	275
	278
	316
	322
	323
	327
	335
	352
	358
	367
	393
	404
	410
	420
	432
	436
	592
	606
8T-4224	9
	15
	16
	31
	55
	58
	106
	129
	144
	182
	201
	216
	219
	248
	262
	316
	348
	352
	533
	535
	537
	539
	541
	543
	545
	547
	549
	551
	553
	555
	557
	559
	561
	563
	565
	636
	704
	728
8T-4226	77
	88
	221
	348
	641
8T-4244	146
	152
	216
	327
8T-4647	210
8T-4648	393
	404
8T-4750	428
8T-4835	216
8T-4895	74
8T-4896	123
	124
	125
	127
	131
	146
	149
	152
	200
	202
	205
	210
	216
	221
	245
	257
	262
	320
	345
	348
	354
	358
	370

PART NUMBER INDEX

Part	Page	Part	Page	Part	Page	Part	Page
	385	8T-6868	7		468	8W-3902	327
	389	8T-6869	93		470	8W-4141	255
	391		216		472	8W-4142	255
	393		539		474	8W-4193	393
	397		547		477		404
	401		553		481	8W-4194	393
	404	8T-6871	363		484		404
	417	8T-6876	92		488	8W-4265	1
	513	8T-6912	74		492		▶343
	514	8T-7008	393		496	8W-4652	307
	521		404		500	8W-4653	307
	522	8T-7044	84		715	8W-5111	250
	524	8T-7547	352	8T-9056	348	8W-5227	388
	527	8T-7565	713	8T-9364	221	8W-5279	250
	528		715	8T-9378	610		259
	530		718	8T-9381	623	8W-5293	307
	630	8T-7566	697		711	8W-5394	2
	641	8T-7876	428		724		▶269
	674	8T-7950	27		726	8W-5430	▶250
	679	8T-7971	323	8T-9655	92		252
	685		427		119	8W-5513	1
	695	8T-8442	48		210		▶235
	708		275		215	8W-5597	613
	736		278	8T-9658	216	8W-5651	735
	738	8T-8569	185	8T-9757	110	8W-6061	676
	739	8T-8729	579		116	8W-6476	308
8T-4908	5	8T-8730	177	8T-9884	185	8W-6497	308
	31	8T-8737	127	8U-5746	354	8W-6626	322
	75		162	8V-3208	718	8W-6627	322
	262		192	8W-0220	397	8W-7030	▶388
8T-4910	316		202	8W-0225	416		596
	427		751	8W-0302	397	8W-7324	598
8T-4956	410		753	8W-0456	449	8W-7915	354
8T-4970	144	8T-8827	103		453	8W-8412	322
8T-4971	225		116		460	8W-8496	354
8T-4983	261	8T-8883	250		462	8W-8527	220
8T-4994	393		259		466		347
	404	8T-8915	324		468		407
8T-5005	683	8T-8917	420		474		414
8T-5030	266	8T-8919	606		487		683
8T-5041	608	8T-8987	531		491	8W-8528	116
8T-5082	416	8T-9006	638		495		345
8T-5361	313	8T-9041	93	8W-0663	613		354
	314		477	8W-0681	602		683
8T-5401	678		481	8W-0684	602	8W-8575	354
8T-5412	146		484	8W-0934	736	8W-8903	347
	152		488		739	8W-8909	117
8T-5429	409		492	8W-0935	736		221
8T-5436	230		496		739	8W-9566	300
8T-5439	322		500	8W-1028	745		303
8T-6381	5	8T-9043	437	8W-1029	747	8W-9594	301
8T-6430	5		439	8W-1592	269		304
	322		441	8W-1749	580	8X-0674	695
8T-6466	77		443		584		708
	117		445		601	8X-1032	335
	262		447	8W-1752	601	8X-1135	736
	352		449	8W-1753	601		739
	683		451	8W-2290	1	8X-1160	293
8T-6468	271		453		▶370		294
8T-6472	343		456	8W-2308	255		295
8T-6473	343		458	8W-2737	1		296
8T-6631	626		460		▶371		301
8T-6685	608		462	8W-2842	364	8X-1805	108
8T-6757	354		464	8W-2913	▶367	8X-1853	123
8T-6765	230		466		612		124

▶ **PRIMARY REFERENCE**

PART NUMBER INDEX

Part	Page
	674
8X-1904	638
8X-1907	638
8X-1908	638
8X-1911	638
8X-1913	638
8X-1914	638
8X-1921	638
8X-1943	▶365
	595
8X-1944	1
	▶366
8X-1947	1
	▶364
8X-1960	1
	▶590
8X-2160	638
8X-2161	638
8X-2226	329
	676
8X-2228	698
8X-2308	250
8X-2385	▶698
	706
8X-2528	253
8X-2534	250
	259
8X-2556	751
8X-2646	735
8X-2650	347
	▶735
8X-2663	751
8X-2680	347
8X-2795	633
	▶688
	708
8X-2893	638
8X-2896	343
8X-2898	343
8X-2913	327
	329
	676
8X-2925	629
	▶660
8X-2926	235
8X-3261	88
8X-3434	307
8X-3435	308
8X-3615	606
8X-3616	606
8X-3663	614
8X-3749	420
8X-3789	639
8X-3806	646
	649
8X-3938	646
	649
8X-3951	638
8X-3965	638
8X-4243	646
8X-4244	649
8X-4245	646
	649
8X-4262	646
8X-4263	649
8X-4276	437
	439
	441
	443
	445
	447
	449
	451
	453
	456
	458
	462
	464
8X-4277	460
	466
	468
	470
	472
	474
	476
	480
	483
	487
	491
	495
	499
8X-4317	▶646
	651
8X-4318	▶649
	651
8X-4413	634
	▶651
	709
8X-4448	646
	649
8X-4641	253
8X-4741	364
	366
8X-4879	644
8X-5005	269
	▶273
8X-5102	654
8X-5106	606
8X-5107	606
8X-5108	593
	606
8X-5109	593
8X-5110	606
8X-5111	606
8X-5121	261
8X-5123	638
8X-5147	310
8X-5153	152
	189
8X-5154	152
	189
8X-5155	316
8X-5160	345
8X-5280	736
	739
8X-5414	678
8X-5489	221
	407
8X-5498	437
	439
	451
	472
	499
8X-5499	441
	443
	445
	447
	449
	453
	456
	458
	460
	462
	464
	466
	468
	470
	474
	476
	480
	483
	487
	491
	495
8X-5536	625
	663
	731
8X-5538	625
	663
	731
8X-5540	625
	663
	731
8X-6070	▶391
	612
8X-6075	613
8X-6080	612
	▶613
8X-6131	695
8X-6296	152
	189
8X-6419	327
8X-6475	327
	329
8X-6999	678
8X-7317	262
8X-7603	347
8X-7845	678
8X-7951	160
	590
8X-7956	160
	590
8X-8055	676
8X-8096	644
8X-8351	676
8X-8377	255
8X-8406	590
8X-8407	590
8X-8408	590
8X-8409	590
8X-8450	348
8X-8505	327
	329
8X-8916	261
8X-8940	633
8X-9349	736
	739
8X-9405	736
	739
8X-9464	327
8X-9675	706
	▶736
8X-9680	▶738
	750
8X-9884	673
8Y-3912	▶713
	724
8Y-3913	713
8Y-4005	▶715
	726
8Y-4030	717
8Y-4398	646
	649
8Y-4399	649
8Y-4400	646
8Y-4401	646
	649
8Y-4408	736
	739
8Y-4409	736
8Y-4512	688
8Y-4619	646
	649
8Y-4620	646
	649
8Y-4801	646
	649
8Y-5944	733
8Y-6012	733
8Y-6024	733
8Y-6041	668
8Y-6045	668
8Y-6046	668
8Y-6047	668
8Y-6060	668
8Y-6062	668
8Y-6063	668
8Y-6064	668
8Y-6066	668
8Y-6067	668
8Y-6068	668
8Y-6069	668
8Y-6277	724
	726
8Y-6364	436
	717
	719
	756
8Y-6388	625
	653
	654
	687
8Y-6851	723
	▶724
8Y-6852	719
	▶726
8Y-6859	668
8Y-6860	668
8Y-6981	741

▶ **PRIMARY REFERENCE**

PART NUMBER INDEX

Part	Page	Part	Page	Part	Page	Part	Page
	742	9D-3311	320		547		487
8Y-6982	741	9D-3523	308		557		491
	742	9D-3583	606		559		495
8Y-9603	184	9D-3767	337		561		499
		9D-3768	154		563	9M-1974	12
			691	9J-1979	434		13
9		9D-5196	310	9J-3047	434		33
		9D-5516	613	9J-3657	600		38
9B-0143	250	9D-5567	310	9J-3658	599		48
	259	9D-5659	310	9J-4963	425		53
9B-7233	104	9D-6164	310	9J-5498	343		56
	152	9D-6584	320	9J-6586	617		67
	189		420	9J-8783	347		71
	225	9D-6589	320		641		82
	625	9D-6663	354	9K-7951	289		119
	663	9D-7047	343		290		207
	694	9D-8121	735		291		624
9B-7237	348	9D-8285	580		292		655
	393	9D-8508	157		293		656
	397	9D-9257	320		294	9M-2042	230
	401	9D-9797	307		295	9M-2092	307
	404	9F-2247	255		296	9M-2904	54
	437	9F-2637	758		297	9M-4335	341
	439	9F-5644	188		300	9M-4594	354
	441		197		301	9M-4972	221
	443	9F-6705	531		302		410
	445	9G-0003	110		305		417
	447		113		306	9M-5590	639
	449		116	9L-1566	149	9M-5732	730
	451	9G-0004	110		151	9M-7394	434
	453		113		210	9M-8406	146
	456		116		215		216
	458	9G-1307	154	9L-2137	104		245
	460	9G-1950	625	9L-2139	104		345
	464		663	9L-2140	104		351
	466	9G-2758	197	9L-3560	352		352
	470	9G-2991	250	9L-6331	210		354
	472	9G-4336	103	9L-6770	104		626
	477		116		106		664
	481	9G-4343	103	9L-9068	283	9M-8662	699
	484		116	9L-9814	724		701
	488		197		726	9N-0869	32
	500	9G-4344	116	9M-0402	355		52
	683	9G-5127	257	9M-1853	437		93
9C-1587	713	9G-5211	307		439		119
	715	9G-7101	683		441	9N-1995	678
9C-2177	621	9G-7132	275		443	9N-4156	266
9C-5324	713		278		445	9N-4158	266
9C-5344	197	9G-8140	347		447	9N-4159	266
	261	9G-8909	110		449	9N-4161	266
9C-5347	621		113		451	9N-4162	266
9C-5928	689		117		453	9N-4163	266
	691	9G-9154	116		456	9N-4498	278
9C-8895	161		407		458	9N-4500	278
9C-9467	262	9H-1031	590		460	9N-6152	341
9D-0953	389	9H-6454	434		462	9P-0356	273
	393	9J-0096	610		464	9P-2369	736
	401	9J-0403	541		466		739
	404		543		468	9P-2553	225
	416		547		470	9P-7121	101
9D-1491	385		557		472	9P-9150	247
9D-1541	220		559		474		283
9D-1589	695		561		476	9R-1183	393
	708	9J-0404	541		480	9R-2613	131
9D-3075	343		543		483		195

► **PRIMARY REFERENCE**

PART NUMBER INDEX

Part	Page
9R-2620	205
	678
9R-2672	131
9R-8870	397
9S-1240	108
9S-1302	347
9S-1322	590
9S-1366	606
9S-2437	104
9S-2544	104
	713
	715
	718
9S-4167	92
9S-4180	503
	504
	505
	506
	507
	508
	509
	510
	511
	512
	513
	514
	515
	516
	517
	518
	519
	520
	521
	522
	524
	525
	526
	527
	528
	529
	530
9S-4181	231
9S-4182	37
	67
	258
	259
	341
9S-4183	37
	531
9S-4185	9
	46
	67
	428
9S-4189	531
9S-4190	271
9S-4191	9
	42
	60
	93
	164
	258
	261
	283
	567
9S-4968	699
	701
	703
9S-7706	347
9S-8001	422
	424
	531
9S-8002	26
	164
	278
	531
9S-8003	72
	422
	424
	531
9S-8004	26
	82
	95
	97
	230
	258
	275
	278
9S-8005	45
	53
	67
	72
	81
	230
	533
	535
	537
	539
	541
	543
	545
	547
	549
	551
	553
	555
	557
	559
	561
	563
	565
9S-8006	22
	26
	72
	92
	230
9S-8008	44
	229
	513
9S-8009	531
9S-9334	24
	26
9T-1633	428
9T-1636	428
9T-1652	428
9T-1699	428
9T-1710	428
9T-1857	567
9T-2186	567
9T-2197	428
9T-2388	381
	382
9T-2457	376
9T-2482	380
9T-3133	378
9T-3727	381
	382
9T-4211	379
	380
9T-5241	656
9T-5934	531
9T-5935	531
9T-5957	409
	▶531
9T-6001	731
9T-7750	567
9T-7754	430
9T-7755	430
9T-7756	430
9T-7757	430
9T-7759	430
9T-7761	430
9T-8051	425
9T-8053	425
9T-8054	425
9T-8056	425
9T-8058	425
9T-8059	425
9T-8061	425
9T-8063	425
9T-8065	425
9T-8067	425
9T-8069	425
9T-8070	425
9T-8958	378
9T-9040	383
9T-9071	425
9T-9072	425
9U-8067	275
	278
9U-8068	275
	278
9U-8069	275
	278
9U-8263	673
	674
9U-8620	275
	278
9U-8668	278
9U-8669	278
9U-8815	241
	243
9U-9282	275
	278
9U-9316	275
	278
9U-9595	278
9U-9995	241
9V-3043	621
9V-7437	713
	715
	718
9V-7440	621
	718
9V-7446	724
	726
9V-7447	724
	726
9V-7453	724
	726
9V-7454	724
	726
9V-7458	724
	726
9V-7943	621
9V-8788	718
9V-8789	718
9W-0852	159
	626
9W-0898	278
9W-1441	125
	149
	152
	189
	202
	225
	661
9W-1442	123
	124
	146
	149
	151
	152
	156
	157
	189
	218
	225
	340
	658
	659
	691
	753
9W-1454	230
9W-2029	241
	243
9W-3072	673
9W-3073	674
9W-3155	610
9W-4430	341
9W-4431	341
9W-4452	341
9W-4453	341
9W-5132	272
	▶341
9W-5134	▶268
	272
9W-6465	230
9W-6467	239
9W-6582	5
9W-6584	5
9W-6645	343
9W-7038	230
9W-7385	5
9W-7388	5
9W-7410	278
9W-7412	275
	279
9W-7469	608
9W-7470	608

▶ **PRIMARY REFERENCE**

PART NUMBER INDEX

Part	Page
9W-9371	241
	243
9W-9905	236
	239
	241
	243
9W-9920	5
9X-0261	92
9X-0262	164
9X-1046	202
	225
	658
	659
9X-1386	683
9X-1813	144
	168
	172
	174
	176
	177
	187
	191
	220
9X-2040	626
	664
	731
9X-2041	626
	644
	663
	679
	717
	719
	723
	730
	731
9X-2042	125
	202
	225
	639
	644
	646
	649
	679
	739
9X-2043	151
	152
	157
	189
	327
	329
	644
	653
	654
	674
	676
	679
	691
	699
	701
9X-2045	626
	644
	646
	649
	651
	659
	664
	679
	731
	736
	739
9X-2046	679
	688
	690
9X-2099	15
	58
9X-2125	320
	327
9X-2126	626
	664
9X-2133	75
9X-2185	625
	663
9X-2205	101
9X-2305	61
9X-2480	127
	131
9X-2488	625
	663
9X-2493	57
	93
9X-2546	646
	649
9X-2615	608
9X-3068	133
9X-3401	167
	174
9X-3463	135
	136
	137
	138
9X-4244	135
	136
	137
	138
9X-4271	185
9X-4284	693
9X-4493	133
9X-4609	230
9X-4821	185
9X-4824	185
9X-4825	185
9X-6019	741
	742
9X-6165	131
9X-6340	759
9X-6395	569
	572
9X-6624	713
9X-6772	245
9X-7380	683
9X-7381	626
	683
9X-7382	626
	683
9X-7383	683
9X-7384	275
9X-7385	635
	683
9X-7680	567
9X-7712	24
	26
9X-7743	341
9X-7849	142
9X-8122	660
9X-8139	142
9X-8250	348
	417
9X-8256	79
	131
	144
	197
	205
	209
	216
	221
	225
	316
	348
	354
	619
	620
	646
	649
	651
	679
	710
9X-8257	31
	83
	262
9X-8276	724
	726
9X-8355	593
9X-8399	372
	373
	383
9X-8403	164
9X-8600	101
9X-8606	347
9X-8875	614
9X-8880	250
	259
9X-8881	580
	584
9X-8883	580
	584
9X-8885	604
	605
9X-8887	385
9X-8916	21
9X-9365	148
9X-9629	200
9X-9632	149
9X-9634	205
9X-9638	658
	659
9X-9639	156
	157
9X-9653	625
9X-9689	655
	656
9X-9896	131
9Y-9854	56

0

Part	Page
000-7246	261
002-3448	15
002-6453	271
	354
004-5933	354
004-9040	428
005-7898	261
005-8639	382
006-6586	101
006-8663	428
009-0008	88
009-2069	430
009-4184	667
009-4185	667
014-0816	193
	202
	753
030-0060	307
030-0061	307
030-7962	92
030-8535	250
	255
	259
	638
	695
	708
030-9612	104
031-0214	704
031-2666	638
031-4155	656
	728
033-4121	718
033-4843	713
	715
033-6027	51
	567
033-6036	428
	567
033-8248	58
	75
	92
	149
	200
	215
034-1994	638
034-3557	250
	259
034-7044	336
036-9823	185
037-4838	625
061-9455	15
067-2551	215
	683
067-3045	354
069-4269	72
085-8091	683
086-0507	434
089-7968	724
	726
090-8247	131
091-8792	416
091-9071	667
092-3200	643

► **PRIMARY REFERENCE**

PART NUMBER INDEX

Part	Page
095-0843	721
095-0878	668
095-0888	428
095-1207	275
	279
096-6166	123
	124
	202
	210
	225
	638
	674
	699
	701
	703
098-7467	667
099-3649	16
	79
1	
100-3224	668
100-4336	397
	414
100-5179	668
100-6021	531
	▶572
100-6551	37
101-0003	733
101-0509	503
	504
	505
	506
	507
	508
	509
	510
	511
	512
	513
	514
	515
	516
	517
	518
	519
	520
	521
	522
	524
	525
	526
	527
	528
	529
	530
101-0852	121
101-1148	533
	549
	551
101-1149	535
101-1154	537
101-1155	541
101-1970	533
	535
	537
	539
	541
	543
	545
	547
	549
	551
	553
	555
	557
	559
	561
	563
	565
101-1971	533
	535
	537
	539
	541
	543
	545
	547
	549
	551
	553
	555
	557
	559
	561
	563
	565
101-1973	533
	535
	537
	539
	541
	543
	545
	547
	549
	551
	553
	555
	557
	559
	561
	563
	565
101-1974	384
101-1975	384
101-1978	533
	535
	537
	541
	543
	545
	549
	551
	555
	557
	559
	561
	563
	565
101-1980	539
	547
	553
101-1982	541
	543
	545
	547
	549
	551
	553
	555
	557
	559
	561
	563
	565
101-1983	533
	535
	537
	539
	541
	543
	545
	547
	549
	551
	553
	555
	557
	559
101-1984	533
	535
	537
	539
	541
	543
	545
	547
	549
	551
	553
	555
	561
	563
	565
101-2457	437
	439
	441
	443
	445
	447
	449
	451
	453
	456
	458
	460
	462
	464
	466
	468
	470
	472
	474
	476
	480
	483
	487
	491
	495
	499
101-2458	445
	447
	449
	451
	453
	460
	462
	464
	466
	468
	470
	472
	474
	476
	480
	483
	487
	491
	495
	499
101-2480	533
	535
	537
	539
	541
	543
	545
	547
	549
	551
	553
	555
	557
	559
	561
	563
	565
101-2867	704
101-3055	674
	678
101-3128	119
101-4194	733
101-4195	733
101-9346	503
	504
	505
	506
	507
	508
	509
	510
	511
	512
	515
	516
	517
	518
	519
	520
	525
	526
	529
101-9754	275
	279
102-1692	343
102-2370	255
102-2371	255
102-2384	428

▶ **PRIMARY REFERENCE**

PART NUMBER INDEX

Part	Page
102-2385	428
102-2386	428
102-3645	736
	739
102-3659	409
102-4139	388
	580
	584
102-4577	545
	563
102-4578	555
	565
102-5881	236
	239
	243
102-6238	507
	509
	514
	517
	518
	521
	526
	527
102-7412	533
	535
	537
	539
	541
	543
	545
	547
	549
	551
	553
	555
	557
	559
	561
	563
	565
102-7423	384
102-8385	503
	504
	505
	506
	508
	510
	511
	512
	513
	515
	516
	519
	520
	522
	524
	525
	528
	529
	530
102-8704	116
102-8705	116
102-8801	227
102-8802	102
	133
102-8803	134
	139
	140
	166
	167
	220
102-8804	127
	195
	205
	210
102-8805	664
	693
	751
	753
102-8806	162
	192
	202
102-8808	177
102-8813	177
102-9372	698
	708
102-9861	228
102-9862	156
	157
102-9863	185
103-1592	152
103-1597	462
	468
	474
	483
	491
	495
103-4771	695
	708
103-4953	695
	708
103-5304	131
103-5515	695
	708
103-5516	695
	708
103-5678	152
	189
103-9125	307
	141
	142
	144
	159
	174
	176
	187
	194
	210
	220
	281
	282
	578
	579
	619
	620
	626
	635
	663
	683
	691
	694
	695
	696
	697
	698
	699
	700
	701
	702
	703
	704
	705
	706
	707
	708
103-9425	674
	678
104-2091	626
	654
	699
	701
104-3122	428
	▶567
104-3124	428
104-3947	282
104-4286	409
104-4523	608
104-5958	741
	742
104-7419	437
	439
	441
	443
	445
	447
	449
	451
	453
	456
	458
	460
	462
	464
	466
	468
	470
	472
	474
	476
	480
	483
	487
	491
	495
	499
104-7429	437
	439
	441
	443
	445
	447
	449
	451
	453
	456
	458
	460
	462
	464
	466
	468
	470
	472
	474
	476
	480
	483
	487
	491
	495
	499
104-7740	437
	439
	441
	443
	445
	447
	449
	451
	453
	456
	458
	460
	462
	464
104-8645	464
	▶515
104-8646	466
	470
	▶516
104-8647	474
	▶529
104-8648	462
	468
	▶525
104-8655	580
	584
104-8671	466
	468
	474
	▶517
104-8672	437
	▶503
104-8673	439
	▶504
105-1797	207
105-2080	388
	580
	584
105-3196	385
	▶425
106-3658	541
	543
	557
	559
	561
106-3659	533
	535
	537
	541
	543
	545
	549

▶ **PRIMARY REFERENCE**

PART NUMBER INDEX

Part	Page
	551
	555
	563
	565
106-3660	539
	547
	553
106-4496	654
106-4787	▶393
	595
106-4884	1
	▶331
106-6553	651
106-7149	185
106-7390	570
	▶573
107-0543	505
	511
	516
	519
	524
	529
	530
	▶549
107-0545	506
	512
	515
	520
	522
	▶551
107-0547	517
	521
	526
	527
	▶553
107-1983	699
	701
	703
107-3398	▶594
107-4865	736
	739
107-4932	156
	157
107-5014	678
107-6813	651
107-7694	11
107-7708	18
107-8140	397
107-8141	397
107-8142	397
107-8143	393
107-8144	393
	404
107-8147	397
107-8148	397
107-8149	393
	401
	404
107-8150	393
	397
	401
	404
107-8374	613
107-8375	613
107-9579	31
107-9641	646
	649
108-0358	152
	189
108-0706	389
108-0714	416
108-1104	▶612
108-1610	393
	397
	416
108-2187	533
	535
	537
	539
	541
	543
	545
	547
	549
	551
	553
	555
	557
	559
	561
	563
	565
108-2949	113
	116
108-3129	279
108-3612	15
108-4086	668
108-4087	668
108-4103	669
108-4814	567
108-4816	567
108-4916	▶384
	539
	547
	553
108-5157	572
108-5751	241
108-5949	649
108-5950	646
108-5951	649
108-5952	646
108-6523	275
	278
109-0146	741
	742
109-0361	220
109-1144	568
109-2804	678
109-3036	579
109-3204	428
109-3207	91
109-4582	253
109-4583	253
109-6776	608
110-2985	1
	▶397
110-3003	397
110-3326	347
110-4213	290
	291
	292
	293
	297
	301
	305
110-4214	290
	291
	292
	293
	297
	301
	305
110-5161	283
110-5326	▶604
110-5327	▶605
110-5334	604
	605
110-5335	605
110-5336	604
110-5339	▶580
	595
110-6078	259
110-6241	638
110-6393	625
110-7618	13
110-7723	236
110-7885	753
110-7887	205
110-8078	580
	▶582
110-8087	582
	586
110-8088	582
	586
111-0343	281
	578
	579
111-1719	1
	▶756
111-3945	320
111-4275	3
	▶184
111-4871	215
111-5754	573
111-8233	533
	535
	537
	541
	543
	545
	549
	551
	555
	557
	559
	561
	563
	565
111-8234	539
	547
	553
111-9110	360
111-9321	503
	504
	505
	506
	511
	512
112-1269	580
	586
112-1271	580
	601
112-1813	600
112-1814	598
	599
112-2240	389
	▶421
112-2580	441
	▶505
112-2581	443
	▶506
112-3199	391
112-3200	391
112-3837	414
112-4159	427
112-4834	345
112-5060	580
	584
112-5061	580
	584
112-5575	368
	▶380
112-5853	592
112-6174	202
112-6175	225
112-6795	2
	▶437
112-6799	▶439
112-6804	▶441
112-6818	362
	▶443
112-7462	368
112-7463	▶368
	595
	596
112-7486	▶584
	595
112-9035	380
112-9119	104
112-9164	676
112-9555	660
112-9813	292
	293
	297
113-0981	416
113-4254	2
	▶717
113-5801	668
113-5805	668
113-5806	668
113-5807	668
113-5808	▶668
	733
113-6069	36
113-7745	231
113-7754	▶378
	609
113-7755	378
113-7756	378
113-8218	689

▶ **PRIMARY REFERENCE**

PART NUMBER INDEX

Part	Page	Part	Page	Part	Page	Part	Page
	691		▶34	123-3689	220		445
113-8457	316	116-4686	693	123-3692	220		447
113-9048	261	116-5710	88	123-3695	220		451
113-9426	1		151	123-3698	335		456
	▶586		641	123-3699	335		458
113-9427	586	117-0472	462	123-3793	377		▶509
114-0025	▶400		483	123-4003	250	124-3326	449
114-0027	400	117-2311	619		259		453
114-0359	617		620	123-4354	751		▶518
114-3663	586	117-3200	▶596	123-4355	751	124-3327	451
114-3664	586	117-3437	71	123-4358	▶689		▶510
114-5333	683	117-3643	4	123-4511	82	124-3328	445
114-6635	573		▶63	123-4586	689		449
	574	117-3855	▶404		691		▶519
	575		596	123-4587	689	124-3329	447
	576	117-4486	624		691		453
114-9190	646	117-4492	624	123-4618	625		460
	649	117-4698	▶707		663		▶520
114-9281	210		708		731	124-3385	557
115-0541	420	117-9683	409	123-4701	625		559
115-0632	1	117-9966	699		663		561
	▶259		701		731	124-5826	593
115-0633	259	118-0424	261	123-5847	146	124-5836	606
115-0634	259	118-1727	3		151	124-7792	29
115-0804	▶445		▶14	123-5857	691	124-8843	651
115-0808	361	118-2558	678	123-5858	691	124-8949	329
	▶447	118-3534	197	123-6661	572	124-9006	625
115-0810	▶449	118-7880	613	123-6806	695		663
115-0811	▶451	118-7881	613	123-7707	590	124-9007	625
115-0812	361	118-9573	184	123-8187	606		663
	▶453		643	123-8408	731	124-9633	197
115-1007	526	119-0036	713	124-0435	606	124-9653	596
	527		715	124-0507	733		▶601
	▶555	119-3025	71	124-1431	625	124-9772	597
115-1008	462	119-3662	197		663	124-9773	1
	▶526	119-5026	668	124-1432	625		▶597
115-1748	214	119-6194	724		663	124-9779	▶595
	699		726	124-1839	561	125-0289	606
	701	119-6723	79	124-1840	557	125-0290	1
	703	121-3307	74		559		▶606
115-3070	157		77	124-2528	182	125-0438	625
	201	121-9242	371	124-2883	503	125-0439	663
115-3072	327		▶383		504	125-0442	663
	329	121-9245	383		505	125-2209	759
115-4072	36	122-2228	651		506	125-4342	633
115-4170	42	122-7045	699		510		▶739
115-4219	36		701		511	125-4640	595
115-4223	67	122-8146	699		512		596
115-6806	698		701		519		▶598
115-6807	678	122-8154	654		520	125-5321	735
115-8078	1	122-8155	654		▶557	125-7003	751
	▶401	122-8795	678	124-2884	509	125-7004	751
115-9923	678	122-8936	3		518	125-8797	195
116-0379	▶602		▶42		▶559	125-9853	623
	612	122-9764	66	124-2885	518	125-9854	▶623
116-1965	▶711	123-0872	630		▶561		728
	719	123-1076	383	124-3137	625	125-9855	▶718
	723	123-1201	638		663		728
116-2015	621	123-1373	117	124-3138	625	125-9856	717
116-2016	621	123-3420	289		663		▶728
116-2327	621		290	124-3240	331	126-0208	745
116-2779	▶621		291	124-3325	437		747
	724		292		439	126-0209	745
	726		300		441		747
116-4556	3	123-3688	220		443	126-0210	745

▶ **PRIMARY REFERENCE**

PART NUMBER INDEX

Part	Page
	747
126-0228	745
	747
126-0961	▶749
126-1135	687
126-1136	687
126-1167	745
	747
126-1539	745
	747
126-1757	15
126-1767	167
	635
126-2729	250
	259
126-2747	▶719
126-4966	651
126-5466	67
126-6933	127
	▶324
127-1647	7
	72
127-8879	582
128-0037	646
	649
128-0316	3
	▶56
128-5450	293
128-5451	296
128-9654	590
129-1170	71
129-2381	255
129-3173	88
	347
	641
129-3178	131
	619
	620
	626
	651
	664
	678
129-3180	608
129-4935	625
	663
129-5049	324
129-7249	756
129-7632	567
130-0229	258
	261
130-0464	▶456
130-2792	221
130-3595	307
130-5300	88
	127
	144
	152
	154
	155
	156
	157
	195
	197
	200
	205
	210
	215
	219
	220
	225
	231
	245
	345
	626
	641
	663
	691
130-5667	▶593
130-5770	568
130-7603	361
	▶458
130-7754	456
	▶511
130-7755	458
	▶512
130-9041	370
	▶381
130-9042	370
	▶382
130-9044	381
130-9045	382
131-1488	197
131-3736	370
131-3737	334
131-3738	334
131-3739	334
131-3740	307
	▶334
131-3919	239
	243
131-4242	668
131-4428	307
131-5167	668
131-5171	202
131-5492	660
131-6009	678
131-7191	365
	▶376
131-7194	376
131-7195	376
131-8350	531
	▶568
131-8777	574
	575
	576
132-0338	624
132-1143	334
	370
132-1144	334
132-1338	586
132-1340	588
132-4928	377
132-4929	364
	▶377
132-5789	197
	209
	220
132-7551	683
132-8487	215
132-9625	241
132-9628	243
132-9637	239
133-2198	229
133-3260	220
133-4995	27
133-6379	48
133-7523	604
133-7524	605
134-0165	316
134-0744	389
134-0746	389
134-0747	393
	397
	401
	404
134-1080	1
	▶307
134-1081	307
134-2540	220
	699
	701
	703
134-4126	121
134-4483	25
134-7258	759
134-8221	526
	527
	528
134-8232	▶741
	744
134-8233	▶742
	743
135-0426	▶139
	219
135-0427	▶140
	152
	154
135-0450	397
135-0451	393
	401
	404
135-0452	393
	401
	404
135-0453	397
135-0611	751
	753
135-1979	656
135-2543	103
	116
	197
135-3894	327
135-7123	360
135-9819	7
	14
135-9941	245
136-0822	15
136-1543	697
136-1544	624
136-1953	626
	664
136-4183	36
136-6330	416
136-6331	416
136-7226	685
136-8308	617
137-1602	86
137-4515	437
	439
	441
	443
	445
	447
	449
	451
	453
	456
	458
	460
	462
	464
	466
	468
	470
	472
	474
	476
	480
	483
	487
	491
	495
	499
137-4516	437
	439
	441
	443
	445
	447
	449
	451
	453
	456
	458
	460
	462
	464
	466
	468
	470
	472
	474
	476
	480
	483
	487
	491
	495
	499
137-4517	483
137-5503	710
137-6645	179
	180
137-6715	25
137-6717	49
137-6718	25
137-6719	505
	506
	511
	512
	515

▶ **PRIMARY REFERENCE**

PART NUMBER INDEX

Part	Page	Part	Page	Part	Page	Part	Page
	516	138-7599	361	142-6174	291	142-6458	▶286
	517		▶460		292	142-6463	▶286
	518	138-8402	49		298	142-6464	▶286
	519	138-8403	49	142-6182	298	142-7289	27
	520	138-9868	49	142-6183	294	143-1288	624
	521	138-9910	678		298		631
	522	139-1118	678		299		632
	524	139-1153	620	142-6186	297		721
137-6720	503	139-2116	220		298	143-4654	52
	504	139-2119	245	142-6203	2	143-4792	312
	505	139-3593	678		▶264		336
	506	139-3595	653	142-6226	290	143-5373	231
	507	139-4081	▶39		291	143-9290	644
	508		48		292	143-9392	119
	509	139-4084	39		293	144-0195	736
	510	139-4605	710		297		738
	511	139-4612	▶710		▶300		739
	512	139-6128	▶743		301	144-1636	191
	513	139-6129	▶744	142-6229	294	144-2161	320
	514	139-8472	541		295	144-4107	678
	515		545		296	144-6695	643
	516		551		297	145-0162	18
	517		555		▶301	145-0164	18
	518		563		302	145-0168	18
	519		565	142-6300	285	145-0170	18
	520		▶574		▶289	145-0326	733
	521	139-8474	559	142-6301	285	145-1849	7
	522		▶575		▶290	145-2901	29
	524	139-9132	741	142-6303	▶299	145-3350	151
	525		742	142-6304	299		691
	526	139-9133	742		▶301	145-5968	320
	527	139-9134	741	142-6305	▶299	145-5969	320
	528		742	142-6306	285	145-7376	49
	529	139-9135	741		▶290	145-7385	49
	530		742	142-6307	285	145-7390	25
137-6783	678	139-9136	741		▶291	145-8039	231
137-6790	363		742	142-6309	285	146-0705	460
	▶372	139-9137	741		▶291		466
137-6791	373		742	142-6310	286		468
137-6792	363	139-9138	741		▶292		470
	▶373	139-9476	39	142-6315	286		472
137-6793	372	140-6188	25		▶292		474
137-6794	372	140-8129	1	142-6316	286		476
	373		▶363		▶293		480
137-8065	678	140-9670	25	142-6353	286		483
137-8104	525	141-6343	88		▶293		487
	528	141-6787	578	142-6354	287		491
	529		579		▶294		495
	530	141-9661	434	142-6357	287		499
	▶563	141-9784	626		▶294	146-1842	307
137-8106	525		664	142-6363	286		308
	528	142-0308	382		▶295	146-1843	307
	529	142-0350	281	142-6364	287		308
	530	142-0485	88		▶295	146-7453	57
	▶565		641	142-6371	287	146-8121	7
137-8107	565	142-1767	283		▶296	146-9739	320
137-8130	372	142-4940	625	142-6374	287	147-0385	149
	373		663		▶296		200
137-9410	146	142-5787	420	142-6375	288		215
	152	142-6171	289		▶297		220
138-3252	27		290	142-6448	▶285	147-3310	343
138-4054	651	142-6172	299	142-6449	▶285	147-3400	307
138-7026	678		▶300	142-6454	▶285	147-5088	71
138-7065	619	142-6173	290	142-6455	▶285	147-6143	588
138-7198	49		291	142-6457	▶285	147-6144	588

▶ **PRIMARY REFERENCE**

PART NUMBER INDEX

Part	Page
147-6603	577
147-6604	577
147-6605	577
147-8211	25
147-8214	25
147-8218	24
147-8220	25
148-1925	230
148-2404	299
	▶301
148-2405	▶299
148-2408	300
	▶302
148-2409	▶300
148-2516	274
148-2592	381
148-2593	374
	377
148-2903	91
148-7027	407
148-7906	543
148-8307	92
148-8316	245
	409
	416
148-8318	391
	400
	476
	480
	483
	487
	491
	495
	499
148-8323	409
148-8327	261
	409
148-8328	389
148-8335	261
148-8336	92
	407
148-8339	261
148-8340	7
	416
148-8345	92
148-8347	7
	409
148-8351	416
148-8354	416
148-8357	261
148-8364	7
	92
	409
	416
148-8365	92
148-8367	407
148-8368	7
	407
	409
148-8369	7
	245
148-8370	389
148-8374	391
	413
	414
148-8377	407
	414
148-8378	58
	407
148-8381	409
148-8383	414
148-8395	45
	53
	67
	72
	230
	533
	535
	537
	539
	541
	543
	545
	547
	549
	551
	553
	555
	565
148-8407	283
148-8408	531
148-8409	513
148-8411	46
148-8444	389
	416
149-1044	582
149-1045	582
149-2065	641
149-2610	421
	▶578
149-2611	578
149-3409	698
149-5240	91
149-6371	683
149-7226	668
149-7738	409
150-1280	380
150-3037	685
150-3058	79
150-4868	416
150-5105	745
	747
150-5106	▶745
	749
150-5107	▶747
	749
150-5968	409
150-7158	685
151-0364	▶286
151-0366	▶286
151-0368	▶287
151-0371	▶287
151-0380	▶287
151-0382	▶287
151-0388	▶287
151-0389	▶288
151-4957	225
151-9849	389
152-3952	71
152-6824	127
152-6825	127
152-8346	420
	▶579
152-8352	579
153-0185	588
153-0187	588
153-1794	3
	▶81
153-1818	476
	480
	499
153-2147	151
	691
153-2446	347
153-3580	584
153-5700	112
153-5710	110
	113
153-6237	410
153-7383	590
153-8467	49
153-8470	49
153-9360	161
	584
	▶588
154-0896	40
154-2687	250
	259
154-2688	250
	▶253
154-2689	253
154-2692	253
154-3064	274
	▶281
154-6306	283
154-6307	283
154-6309	275
154-6579	381
	382
154-7172	275
154-7175	276
154-7176	276
154-7177	276
154-9023	67
154-9025	69
155-2260	168
	172
155-2270	190
	227
	663
155-2276	172
155-2283	253
155-3624	258
155-6258	7
	72
156-4000	409
156-4281	245
156-5545	624
156-5970	357
156-6312	706
	707
	708
157-0670	67
	69
158-6072	86
159-0286	15
159-0303	3
	▶44
159-0308	241
	243
159-0927	241
	243
159-3759	708
159-8049	110
	113
	116
159-8050	110
	113
	116
	117
159-8127	580
	584
160-5131	67
160-6382	202
	327
	329
161-1703	169
161-1704	171
161-1705	170
161-3932	225
161-4423	336
161-5967	668
161-6713	241
	243
161-6963	86
161-7055	278
161-7062	88
	641
161-7063	641
161-9289	729
161-9916	685
162-0177	82
	95
	230
	275
	278
162-3148	54
162-6448	381
	382
162-7449	358
162-7450	358
	▶360
162-7451	▶358
	359
162-8068	3
	▶45
162-8218	88
	641
162-8219	88
	641
163-0872	▶635
	636
163-1146	733
163-1201	667
163-2478	25
163-4720	580
	584
163-4721	580
	584
163-6074	580

▶ **PRIMARY REFERENCE**

PART NUMBER INDEX

Part	Page	Part	Page	Part	Page	Part	Page
	584		382	170-1114	624	173-5360	▶661
163-6508	703	167-2190	379	170-1115	624		662
164-0210	52		380	170-4820	▶655	173-5549	49
164-2108	275	167-2192	372		659	173-5787	729
	357		373	170-5334	▶656	173-6756	▶707
164-2465	695	167-2195	374		658		709
	708		377	170-5335	▶159	173-7035	729
164-4180	231		378		655	173-7223	92
164-4531	624		383		656	173-7813	288
164-4883	697	167-2294	376	170-5632	674		▶297
164-5562	69		381	170-8590	704	173-7830	297
164-5567	245		382	171-1230	721	173-9683	372
	261	167-2300	379	171-2122	644		373
	283		380	171-2212	197		374
164-5570	92	167-2302	372	171-5349	174		377
164-5586	416		373		176		378
164-5590	416	167-2304	374	171-5672	▶133		383
164-5605	391		377		144	173-9685	376
	400		378	171-6165	676		381
164-5608	476		383	171-6466	389		382
	480	167-2307	420	171-6467	416	173-9779	379
	483	167-7504	202	171-6682	721	174-2304	▶288
	487	167-7505	202	171-6729	92	174-2339	▶413
	491	167-8121	28	171-7091	241		609
	495	167-9002	1	171-7095	243	174-3705	245
	499		▶644	171-7185	122		▶274
164-5619	72	167-9524	275		▶619	174-4140	678
	92	168-8243	151	171-7186	122	174-4181	74
	230		691		▶620	174-4492	625
164-6867	95	168-8248	202	172-0165	88		663
164-7556	135	168-8683	88	172-1239	678		731
	136	168-8758	358	172-2416	721	174-4546	2
	137	168-9108	379	172-4001	624		▶731
	138	168-9110	379	172-4211	88	174-4547	661
164-7577	▶187	169-0921	88		347		▶663
	229		347		641	174-4971	625
164-8462	1		641	172-5378	633	174-5907	131
	▶420	169-0922	88		▶676		210
164-8474	653		641		706		351
	687	169-1025	721	172-6298	84		352
165-2510	367	169-1548	250	172-6555	202		407
	▶379		259	172-6556	151		410
165-4446	4	169-1549	253		691	174-6051	663
	▶38		259	172-6581	721		731
165-4927	7	169-2621	644	172-6831	706	174-6353	625
165-7014	409	169-3145	667		▶751		663
165-9928	245	169-3264	619	172-6833	220		731
166-1776	15		620	172-7105	644	174-6819	253
166-1781	15	169-3380	644	172-7106	644	174-8131	225
166-1880	592	169-5414	205	172-8641	202		638
166-1997	695		210	172-9316	202	174-9529	5
	708		215	172-9367	28	174-9570	▶90
166-1999	695		327	172-9389	120		99
	708		329		▶121	174-9692	215
166-2830	698	169-5861	164	173-1007	432	175-1504	▶720
166-3336	359	169-5862	79	173-1008	432		729
	▶389		416	173-1009	432	175-3644	409
166-6781	733	169-7380	733	173-1028	▶624	175-3893	275
166-9913	632	169-7443	195		721	175-7895	376
166-9914	631	169-8938	202	173-1885	157		381
167-0566	276	170-0271	92	173-2052	730		382
167-1801	428	170-0493	360	173-3064	152	175-7896	374
167-1802	428	170-0503	360		189		377
167-2186	376	170-0967	685	173-3084	720		379
	381	170-1112	624	173-3993	531		380

▶ **PRIMARY REFERENCE**

PART NUMBER INDEX

Part	Page	Part	Page	Part	Page	Part	Page
175-7897	372	180-4028	225	186-3735	102	191-0522	51
	373	180-4643	122		127	191-0523	▶51
175-7898	383		▶123		133		96
175-7900	378	180-4656	706		134	191-1782	92
176-2945	347		707		139	191-1783	92
176-5507	625		708		140	191-3645	352
	663	180-7033	225		141	191-5236	630
	731	180-7147	347		142	191-5293	320
176-5638	605		641		144	191-5973	255
176-5639	604	180-7344	41		166	191-9256	230
176-5642	604	180-9324	▶227		176	192-1298	93
	605		247		187	192-7238	410
176-5643	604	180-9327	275		192	192-7357	5
	605	180-9340	168		194	193-2550	▶174
177-0581	83	180-9933	245		195		220
177-1713	347	183-1425	638		202	193-7416	154
177-1862	704	183-2136	205		205	194-4046	113
177-1863	721	183-2151	205		210		116
177-2215	116	183-3399	58		220	194-5131	55
	220		96		281	194-5226	172
177-4118	316	183-3406	93		282	194-5227	172
177-4119	316		164		578	194-6722	▶168
177-4120	316	183-4365	49		683		197
177-4493	▶120	183-6774	275		691	195-0321	43
	210	183-6775	275		693	195-7218	613
177-4937	720	183-6845	3		751		618
177-7448	638		▶84		753	196-4150	699
177-7858	625	183-6854	84	186-3736	190		701
	663	183-6856	84	187-0491	644	196-7268	205
177-7891	629	183-7263	164	187-0953	610	196-9519	18
	▶653		278	187-1008	220	197-0416	82
177-8781	▶678		531	187-2034	104	197-2066	▶690
	706	184-1130	▶275	187-6279	3	197-4977	230
178-1685	580		283		▶58	197-5210	3
	584	184-2298	721	187-6294	58		▶37
178-1686	580	184-2299	721	187-7738	161	197-7689	733
	584	184-2420	69	188-3862	151	197-8393	164
178-1688	580	184-2509	69		691		▶169
	584	184-9843	379	188-9390	360	197-8394	164
178-3086	590		380	188-9644	215		▶170
178-3695	261	185-0008	345	189-0108	197	197-8419	58
178-4190	676		▶357	189-0189	281	197-8611	678
178-7907	730	185-1122	347	189-1707	683	197-8624	678
178-8455	580	185-2197	205	189-5804	759	197-8629	678
	584	185-2274	644	189-8772	84	197-8630	678
178-8603	662	185-2287	644		261	197-8820	▶106
	▶687	185-2638	106	189-8777	61		109
178-8894	651	185-2639	106	190-1668	758	197-9353	43
178-9961	407	185-2644	106	190-1669	758	197-9371	43
178-9962	407	185-2645	106	190-1684	230	197-9372	43
179-1298	275	185-2647	106	190-1689	2	197-9386	43
179-1549	146	185-2648	106		▶271	198-2713	207
179-1550	146	185-2650	106	190-1693	271	198-2714	3
	152	185-2651	106	190-1694	271		▶207
179-2138	676	185-2653	106	190-3043	641	198-4768	255
179-2139	676	185-2654	106	190-3850	360	198-4776	5
179-2140	676	185-2655	106	190-5386	610		75
179-2176	678	185-2658	106	190-8970	99		636
179-2179	678	185-3630	760	190-8977	92	198-4777	5
179-4814	667	185-6596	376		▶99		75
180-3833	693	185-7025	379	191-0027	625		85
180-3834	693	186-1526	275		664		93
180-3836	693		278		731	198-4778	312
180-4027	347		▶282	191-0461	4		336
	641	186-3223	197		▶96	198-4780	420

▶ **PRIMARY REFERENCE**

PART NUMBER INDEX

Part	Page	Part	Page	Part	Page	Part	Page
198-4782	337	203-3940	175		▶171	219-0302	706
198-5438	347		537	210-2262	704	219-0314	79
198-5439	347		539	210-2263	704	219-2000	631
198-5440	347	203-5957	341	210-2266	704		632
198-7379	335	203-5958	341	210-2270	▶704	219-3309	48
198-7380	335	203-7703	729		721	219-5844	▶24
198-7657	247	204-4376	625	210-3321	13		25
198-8588	327		664	210-5590	4	219-5846	▶25
	329	204-6488	638		▶18		26
198-9811	613	204-8000	197	210-7722	84	219-5847	▶26
198-9812	613	205-0626	106	210-9246	58		27
199-2677	646	205-1280	96	211-0617	▶760	219-5849	4
	649	205-1320	36	211-4908	634		▶27
199-2712	646	205-1321	4	211-9274	5	220-1194	3
	649		▶36	211-9275	5		▶54
199-2739	646	205-4285	123	212-2270	4	220-1209	29
199-2740	649		124		▶62	220-3634	759
199-3368	▶141		674	212-3652	4	220-4125	79
	155	205-6388	720		▶43	220-8678	90
199-4317	9	205-7187	354	212-3706	96	221-3494	58
199-7891	106	205-7299	354	212-4174	57		96
199-8436	106	205-8839	227	212-4288	11	221-3676	539
		205-8847	227	212-4289	4		547
		206-1345	207		▶11	221-3678	553
2		206-3599	88	212-4893	18	221-4482	4
			641	212-5081	78		▶20
200-1173	691	206-3600	88	212-6933	69	221-8045	760
200-3967	327	206-4097	638	212-8144	760	221-9361	9
	329	206-4202	104	212-8145	760	222-0345	▶712
200-4495	36	206-4228	3	213-0064	92		720
200-4497	▶61		▶67	213-3193	43	222-1185	49
	62	206-4669	57	213-7315	699	222-1186	49
200-7931	255	206-5122	476		701	222-3769	643
200-8623	674		483		703	222-4737	507
	678		487	213-9100	144		509
201-0387	231		491	213-9842	227		513
201-9774	53		495	214-1982	434		514
202-1138	699		499	214-1983	2		515
	701	206-5123	476		▶436		516
202-6473	255		480	214-1984	▶434		517
202-6611	136		483		436		521
	138		487	214-4863	▶166		522
202-6614	135		491		641		524
	137		495	214-7567	173		527
202-7593	1		499	214-7568	58		528
	▶255	206-5823	751		93		530
202-7666	▶631		753		96	222-5893	13
	720	206-6410	117		97	222-5915	67
202-7668	▶632	206-8784	185		245	222-5917	207
	720	206-9651	638		258	222-5946	3
202-8649	691	207-1517	184		261		▶52
202-9824	759		▶185	215-3005	▶339	222-7774	539
203-0780	690	207-4922	641		352		547
203-1124	751	207-4924	347	215-7066	69		553
	753	207-4927	88	215-7067	69		▶576
203-2389	339	207-6034	227	216-5586	22	223-0580	432
203-2390	339	208-0423	685	217-2661	434	223-4296	130
203-2391	339	208-4617	113	217-5213	24	223-5916	685
203-2423	339		116	217-7742	683	224-0554	759
203-3337	347	208-6054	69	217-7933	704	224-0807	79
203-3340	347	208-7782	123	217-9060	67	224-3247	11
203-3341	347		124	217-9946	42	224-3969	671
203-3342	347		674	218-2971	339	224-4536	▶172
203-3768	84	209-4578	83	218-3339	239		173
203-3769	81	210-1747	164	218-4406	255	224-5912	324

▶ **PRIMARY REFERENCE**

PART NUMBER INDEX

Part	Page	Part	Page	Part	Page	Part	Page
224-6638	43	234-4324	▶136	239-3902	125	245-6376	78
225-0312	759		152	239-5030	57	245-6796	16
225-4150	759	234-4325	▶137		93	245-7339	47
225-4257	760		149	239-9893	▶422	246-2641	101
225-5222	7		154		513		265
226-0295	646	234-4326	▶138		522		312
	649		154		524		336
226-0342	646	234-5013	92		528	246-2822	409
	649		▶178		530	246-4561	409
226-1240	324	234-6666	282	239-9894	▶424	246-4611	79
	759	234-7730	135		514	246-4615	78
226-1274	760		136		521	246-6036	58
226-2870	434		137		527	246-6561	127
226-2871	434		138	241-4194	182	246-6562	127
226-6621	230	234-7731	135	241-5645	15	246-9345	3
226-8202	376		136	241-5889	422		▶119
	381		137		424	246-9353	162
	382		138	241-6185	248	247-1876	12
226-8696	60	235-2412	▶241	241-8368	▶190	247-6449	127
226-9622	275		272		197		▶160
227-1143	372	235-2413	▶243	241-8534	65	247-6457	214
	373		272	242-3360	86	247-8602	83
227-1200	24	235-3937	▶142	242-3864	53	247-8629	241
227-5480	18		156	242-7417	248		243
227-5904	97		157	242-9245	348	247-9711	241
227-5942	67	235-4765	146	243-3250	215		243
228-3621	28	235-5527	49	243-5063	77	247-9730	78
228-4766	29	235-5528	48	244-2584	499	248-1377	271
228-5009	225		▶49	244-2585	476	248-2886	243
228-8510	54	235-8200	3		480	248-5245	759
229-5010	547		▶162		487	248-6772	626
	553	235-9651	98	244-2586	483		664
229-5153	18	236-0737	638		495	249-1054	409
229-5154	18	236-1927	161	244-2587	491	249-3251	422
229-5155	18	236-2216	38	244-2588	499		424
229-5156	18	236-2356	215	244-2589	476	249-8575	760
229-8841	3	236-4413	▶71		480	250-0543	499
	▶13		72		487		▶513
229-8844	32	236-4420	71	244-2590	483	250-0544	476
229-9382	374	236-4421	71		495		480
	377	236-4545	182	244-2591	491		499
	378	236-5197	704	244-2592	476		▶514
	383	236-6220	164		480	250-0548	487
230-4011	191		▶173		499		491
230-4477	760	236-6221	164	244-2593	487		495
231-3539	379		▶175		491		▶521
	380	236-7724	255		495	250-0550	480
231-4486	660	236-8826	215	244-2594	483		▶522
231-4487	660	237-5176	67	244-2596	476	250-0565	483
231-5251	324	237-8063	3		480		▶527
232-0343	95		▶60		499	250-0567	483
	▶100	237-9822	3	244-2597	487		495
232-1732	660		▶40		491		▶528
232-1754	48	238-0415	626		495	250-0841	▶86
232-3717	4		664	244-2598	483		87
	▶48	238-0417	626	244-3168	119	250-2984	79
232-6114	690		664	244-3712	258	250-4628	697
233-0891	119	238-1029	▶229		261	250-8309	3
233-7655	63		258	244-4486	16		▶28
234-4323	▶135	238-2706	43	244-4500	32	251-0982	637
	146	238-2720	43	244-5880	215	251-2382	161
	148	238-4462	374	245-3930	324	251-2383	215
	149	239-0583	12	245-3933	324	251-3227	75
	151	239-1134	182	245-4630	175	252-0098	305
	152		▶194	245-6375	78	252-0100	306

▶ **PRIMARY REFERENCE**

PART NUMBER INDEX

Part	Page
252-0102	▶303
	305
252-0104	▶304
	306
252-0106	298
	▶305
252-0108	297
	▶305
252-0111	298
	299
	▶306
252-0112	298
	▶306
252-0678	288
	▶297
252-0679	▶288
252-0730	288
	▶298
252-0731	▶288
252-0752	288
	▶298
252-0753	▶288
252-2156	759
252-2157	759
252-5709	127
	▶214
252-7947	289
	▶298
252-7948	▶289
253-0861	757
253-2697	▶126
	127
253-4006	1
	▶108
253-4019	644
253-4347	345
254-0095	4
	▶97
254-5960	127
	▶161
254-6136	759
254-6802	83
254-7947	289
	▶298
254-7948	289
	▶299
254-7963	▶289
254-7964	▶289
255-5284	119
255-6261	626
256-5308	74
256-6453	178
256-6803	130
256-6804	130
257-3227	683
257-8471	643
257-9363	130
258-0733	182
258-2403	4
	▶87
258-7286	674
258-8723	3
	▶32
260-6501	432
260-6502	393
	404
	▶432
260-7647	215
	▶228
260-8630	58
260-8631	58
260-9133	352
260-9171	93
261-3816	42
261-5694	697
261-8553	385
261-9287	86
262-1421	▶126
	130
262-7291	476
	487
	▶524
263-1786	29
263-3774	▶21
	22
263-3982	103
	▶109
263-6435	491
	▶530
263-6914	69
263-8218	91
263-8948	130
263-9088	130
	▶163
263-9657	549
264-3762	▶78
	79
264-4297	179
	180
265-5007	69
265-9125	255
266-1467	88
	▶167
266-1598	424
266-1599	422
	424
266-1600	422
266-4360	249
266-6026	636
266-6793	261
266-7650	69
266-7651	69
266-8568	66
267-3506	608
267-4743	63
267-5212	9
268-1530	92
268-1531	92
268-1839	4
	▶98
269-8788	58
269-9322	160
270-5320	90
271-2417	16
271-8090	9
272-0388	16
272-1956	84
272-3089	88
	641
272-9800	142
274-1704	337
274-5909	683
274-6719	92
274-7395	164
	▶179
274-7396	164
	▶180
274-7941	▶1
274-8068	694
275-0572	316
275-0595	3
	▶15
275-1253	92
	▶191
275-3634	182
275-6546	2
	▶272
275-7741	▶192
	193
275-7764	▶193
	755
275-8387	3
	▶35
275-9638	422
	424
276-3674	55
276-3681	3
	▶55
276-3918	2
	▶101
276-7462	31
277-0460	101
277-1873	220
277-4421	13
277-4837	75
277-6430	230
277-6432	230
277-6433	▶230
	272
278-0642	231
280-1480	757
280-2748	43
281-0547	760
281-3160	▶278
	283
281-3163	247
	▶283
281-3165	▶247
	272
281-5641	1
	▶248
282-0506	▶603
282-2332	320
282-2469	1
	▶327
282-2472	1
	▶88
282-2473	1
	▶641
282-2475	1
	▶638
282-2496	1
	▶320
282-4350	255
283-0644	320
283-1099	249
283-1578	592
283-3499	1
	▶347
283-7190	▶313
284-0815	422
	424
284-0824	1
	▶65
284-3045	422
	424
284-5343	2
	▶210
284-5346	2
	▶205
284-5347	2
	▶225
284-5348	2
	▶219
284-5352	▶200
	359
284-5353	143
	▶152
284-5354	143
	▶146
284-5355	143
	▶154
284-5356	▶201
284-5357	▶156
284-5358	▶110
284-5359	▶112
284-5362	143
	▶148
284-5363	143
	▶155
284-5376	143
	▶149
284-5377	▶151
284-5378	1
	▶314
284-5379	314
284-5394	▶144
284-5397	705
	▶708
284-5400	▶705
284-5771	1
	▶345
284-7774	79
285-3361	▶202
	706
285-3585	699
285-4154	▶359
285-4183	▶609
285-6570	261
285-9066	29
286-4328	▶122
286-4329	▶122
286-4330	▶124
	672
286-4331	▶125
286-4415	▶658
286-4416	▶659
286-4430	▶157
286-4798	▶691

▶ **PRIMARY REFERENCE**

PART NUMBER INDEX

Part	Page
286-4823	750
	▶753
286-4825	▶755
286-7853	633
	▶699
287-1690	9
287-3259	694
287-3260	▶693
	699
	701
	703
288-1347	9
288-5508	215
288-5509	215
288-5736	694
288-5756	699
	701
288-5757	699
	701
289-7545	629
	▶630
289-7597	▶608
	609
289-9354	197
289-9355	197
289-9725	301
289-9726	304
290-0349	706
	▶709
290-1126	▶633
290-1127	633
	▶634
290-1148	▶329
	705
290-1505	303
290-1507	300
290-3979	201
290-5792	▶176
	231
291-1400	126
291-1401	126
291-2634	55
291-4051	636
291-5475	▶126
	228
291-6693	313
292-4772	354
292-6099	697
293-0648	1
	▶407
293-0730	91
293-2911	704
293-4153	▶694
293-4277	248
293-4285	261
293-4495	694
293-4500	637
293-6529	672
	▶673
293-7533	673
294-1136	31
294-2382	316
294-3542	127
	▶215
294-4619	316
294-4621	316
294-5042	631
	632
	721
294-8544	▶143
294-8545	▶143
294-8546	▶143
294-8547	▶143
294-8620	100
294-8641	143
	▶189
294-9621	116
294-9622	116
295-1090	▶218
295-1138	110
	112
295-1139	116
295-1834	225
295-1835	225
295-2933	2
	▶335
295-3839	316
295-3849	218
295-4371	1
	▶667
295-4431	629
	▶637
295-6180	316
295-6224	316
295-7991	▶672
295-8089	312
295-8090	1
	▶312
295-8091	312
295-8278	▶228
296-1252	316
296-6764	757
296-6765	757
296-6771	757
297-1140	210
297-5355	3
	▶164
297-6867	3
	▶129
297-6979	420
297-8049	116
297-8448	▶127
297-8449	127
	▶310
298-2426	▶750
298-3520	115
	▶336
298-3523	336
298-3529	336
298-5315	115
298-5592	▶113
	115
298-8895	1
	▶323
298-8898	323
299-2277	697
299-5543	2
	▶427
299-5544	1
	▶409
299-5545	427
299-7700	431
299-8249	323
299-8251	323
299-8294	▶265
299-8295	265
299-8296	265
299-8297	265
299-8298	265
299-8299	265
299-8300	265
299-8306	337
299-8307	2
	▶337
299-8311	64
	▶77
299-8318	337
299-9478	337
	3
300-1377	340
300-2688	431
300-6152	116
300-6203	407
300-6496	110
	112
300-7933	53
301-2322	410
301-3118	282
301-3170	352
301-4173	▶697
	721
301-4174	720
	▶721
301-4376	1
	▶416
301-4378	416
301-4379	416
301-4380	416
301-6395	347
301-6398	347
301-6664	113
	116
301-9593	323
302-1333	757
302-3908	348
	352
302-4193	▶757
	759
302-4196	2
	▶759
302-5210	131
302-5211	131
302-5212	131
302-5428	130
	▶131
302-5429	▶130
302-7139	361
	362
	▶414
302-7458	729
	▶733
302-8814	▶729
	730
303-5996	337
303-5998	337
303-5999	337
303-6003	▶66
	337
303-6008	248
303-6009	66
303-6010	66
303-6011	66
303-6012	66
303-6013	337
303-6014	337
303-6015	337
303-6017	337
303-6032	261
303-6034	637
303-6036	337
303-6037	66
304-0607	97
304-5687	228
304-5794	144
304-5795	144
304-5880	148
304-6573	316
304-6958	699
	701
	703
304-7252	316
304-7415	316
304-7417	316
304-7418	316
304-7419	316
304-9957	▶115
305-0038	110
	112
305-8141	20
	▶22
307-1735	3
	▶16
307-1738	16
307-1958	385
307-1959	385
307-1960	385
307-1961	385
307-1962	385
307-6192	9
307-6200	9
307-6205	9
307-6209	9
307-6241	347
307-6242	347
307-6243	347
307-6260	239
307-7500	347
307-7501	347
307-7502	347
308-0291	220
308-5632	626
308-5633	▶625
	630
308-6403	220
308-9112	113
308-9113	113
308-9114	113

▶ **PRIMARY REFERENCE**

PART NUMBER INDEX

Part	Page	Part	Page	Part	Page	Part	Page
309-1876	278	311-2800	629	314-5093	316	317-8382	195
309-1877	275		▶636	314-5094	316	318-2063	116
	278	311-3025	69	314-6148	7	318-2064	117
309-1878	279	311-3026	69		▶9	318-2076	3
309-2995	275	311-3542	3	314-7646	357		▶72
	278		▶41	314-7803	126	318-8124	409
309-2996	275	311-4907	79	314-7946	116	318-9471	1
	279	311-4908	79	314-9368	354		▶31
309-8773	759	311-4959	83	314-9369	354	318-9543	31
310-1640	699	311-6573	116	314-9370	2	319-2228	590
	701	311-7049	92		▶354	319-6293	31
310-3568	701	311-7210	35	315-4118	1	320-0342	▶706
310-5881	1	311-8138	1		▶257	320-0924	337
	▶64		▶315	315-4150	7	320-1340	▶181
310-5882	64	311-8139	315	315-5327	▶671	320-2746	599
	▶74	311-8756	92	315-5329	▶462	320-2749	600
310-5883	74	311-9296	197	315-5330	▶464	320-7431	595
310-5884	74	312-0254	3	315-5331	▶466		▶599
310-6437	1		▶4	315-5333	▶468	320-8203	210
	▶5	312-0255	1	315-5334	▶470	320-9924	595
310-6459	1		▶3	315-5335	▶472		▶600
	▶79	312-0377	103	315-5336	▶474	321-5967	258
310-6469	1	312-0378	103	315-5378	1	322-0245	3
	▶57	312-0379	116		▶261		▶82
310-6472	2	312-0782	385	315-5668	261	322-0246	3
	▶85	312-0970	▶103	315-6148	257		▶33
310-8005	407	312-3542	85	315-9792	261	322-7341	220
311-0274	1	312-8319	316	316-1927	626	322-8548	▶730
	▶69	312-8434	83		663	323-0327	215
311-0514	2	312-8526	316	316-4272	636	323-5592	215
	▶431	312-8528	316	316-4351	92	323-8936	3
311-0794	2	312-8529	316	316-4404	29		▶53
	▶220	312-8530	316	316-5237	▶701	323-8959	3
311-0795	1	313-2207	352		706		▶46
	▶116	313-2208	352	316-5238	2	324-3364	215
311-0801	181	313-2484	316		▶703	324-3366	215
	▶209	313-2656	1	316-5743	316	325-6423	533
311-0802	2		▶7	316-6682	5		535
	▶197	313-2762	7	316-6686	5		537
311-0803	▶195	313-3967	3	316-6688	261		539
	629		▶95	316-6689	75		545
311-0864	1	313-4127	683	316-6819	345		549
	▶83	313-4131	683	316-8363	▶245		551
311-1513	113	313-4132	683		252		555
311-2737	▶340	313-4181	347	316-8381	347		565
311-2738	340	313-4374	316	316-8469	▶252	326-1644	90
	▶351	313-4384	3	317-1529	75	326-3120	220
311-2739	351		▶29	317-1533	92	326-3121	113
	▶352	313-4537	5	317-1534	337	327-0560	215
311-2741	1	313-4670	215	317-1537	337	327-0561	215
	▶316	313-4694	4	317-1538	77	328-2585	▶91
311-2743	351	313-5233	▶258	317-2757	85		98
311-2751	▶629		261	317-2792	85	328-3496	69
311-2753	▶662	313-5530	683	317-2835	125	329-3825	▶595
311-2766	2	313-6096	79	317-2836	125	329-3827	▶595
	▶75	313-6098	83	317-2837	125	330-3408	163
311-2770	1	313-6100	7	317-3164	116	330-3409	126
	▶92	313-6224	626	317-3165	116	330-3410	126
311-2771	181	313-6546	685	317-3166	116	330-6877	613
	▶182	313-6547	685	317-3168	116	331-1102	215
311-2772	629	313-6976	245	317-3758	85	331-1499	▶361
	▶683	313-6977	245	317-5601	77	331-1501	▶361
311-2773	629	313-7755	195	317-7250	316	331-1503	▶361
	662	313-9542	79	317-7375	345	331-1506	▶361
	▶685	314-4018	635	317-8063	57	331-1507	▶362

▶ **PRIMARY REFERENCE**

PART NUMBER INDEX

Part	Page	Part	Page	Part	Page	Part	Page
331-1509	▶476						
331-1510	362						
	▶480						
331-1512	▶483						
331-1514	▶487						
331-1515	▶491						
331-1516	▶495						
331-1517	▶499						
331-3892	759						
332-7657	197						
333-0960	590						
333-1963	608						
333-8326	683						
334-0575	220						
334-0576	220						
334-0577	220						
334-0578	220						
334-1429	195						
334-1431	195						
334-5268	354						
334-5270	354						
334-5760	▶322						
334-6872	209						
334-7633	219						
334-9745	210						
335-0806	197						
335-1875	▶362						
335-1894	205						
335-1895	205						
335-2383	126						
335-6210	629						
	636						
335-8402	149						
	200						
335-8961	694						
335-9387	701						
	703						
336-0959	146						
	152						
336-0960	146						
336-0961	152						
336-1559	▶592						
336-1561	592						
336-1963	592						
336-1964	592						
336-2259	157						
336-4099	151						
336-9456	215						
337-3357	1						
	▶249						
338-8423	225						
339-5313	▶674						
339-6124	674						



© 2008 CATERPILLAR
ALL RIGHTS
RESERVED

CAT, CATERPILLAR, THEIR RESPECTIVE LOGOS, “CATERPILLAR YELLOW” AND THE POWER EDGE TRADE DRESS, AS WELL AS CORPORATE AND PRODUCT IDENTITY USED HEREIN, ARE TRADEMARKS OF CATERPILLAR AND MAY NOT BE USED WITHOUT PERMISSION.

PRINTED IN
U.S.A.