FIAT ALLIS

OUTUBRO 1989

RUTHZIL TRATOR COMERCIAL DE PEÇAS LTDA 11 97083-6812 ROLANDO CITRANGULO

16-B

POWER SHIFT

Crawler Tractor

PARTS CATALOG

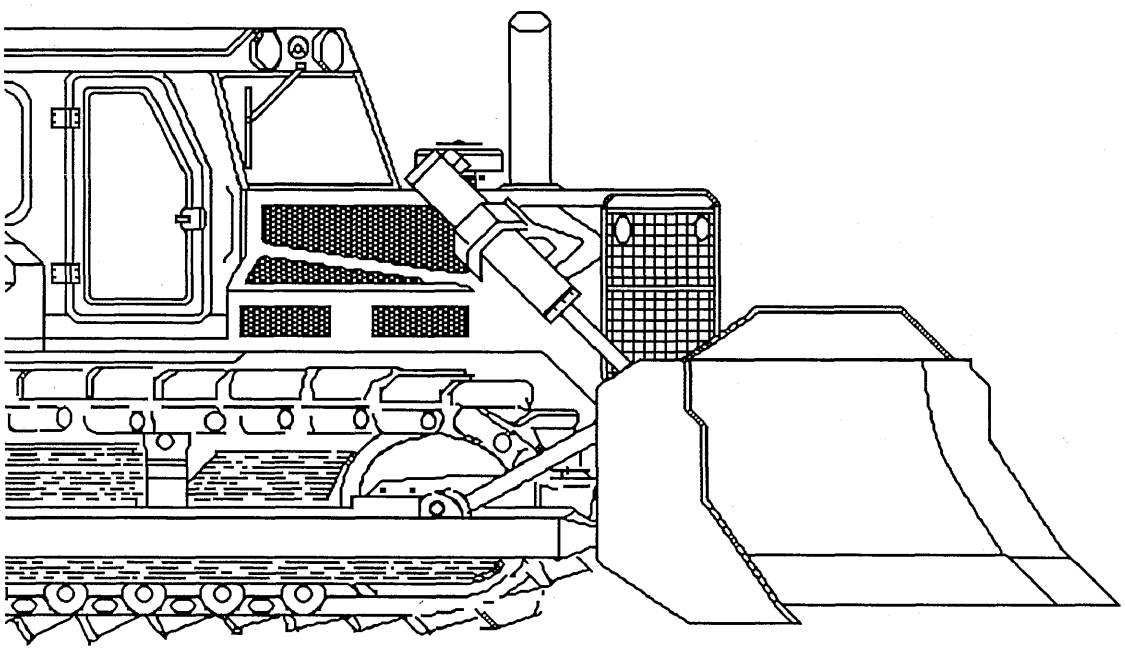

FORM 70696415 ENGLISH
Reprint 10/89

AVOID ACCIDENTS

Most accidents, whether they occur in industry, on the farm, at home or on the highway, are caused by the failure of some individual to follow simple and fundamental safety rules or precautions. For this reason MOST ACCIDENTS CAN BE PREVENTED by recognizing the real cause and doing something about it before the accident occurs.

Regardless of the care used in the design and construction of any type of equipment there are many conditions that cannot be completely safeguarded against without interfering with reasonable accessibility and efficient operation.

A careful operator is the best insurance against an accident. The complete observance of one simple rule would prevent many thousand serious injuries each year.
That rule is:

Never attempt to clean, oil or adjust a machine while it is in motion.

NATIONAL SAFETY COUNCIL

WARNING

On machines having hydraulically, mechanically, and/or cable controlled equipment (such as shovels, loaders, dozers, scrapers, etc.) be certain the equipment is lowered to the ground before servicing, adjusting and/or repairing. If it is necessary to have the hydraulically, mechanically, and/or cable controlled equipment partially or fully raised to gain access to certain items, be sure the equipment is suitably supported by means other than the hydraulic lift cylinders, cable and/or mechanical devices used for controlling the equipment.

Fiatallis is not responsible for any liability arising from any damage resulting from defects caused by parts and/or components not approved by Fiatallis for use in maintaining and/or repairing products manufactured or merchandized by Fiatallis.

In any case, no warranty of any kind is made or shall be imposed with respect to products manufactured or merchandized by Fiatallis when failures are casued by the use of parts and/or components not approved by Fiatallis.

16-B

(POWER SHIFT)
crawler tractor
(Includes Dozers, 16R Ripper
and Hydraulic Systems)

parts catalog

S/N 19S10301 - UP

Form 70696415 English

⚠ WARNING

STUDY THE OPERATION AND MAINTENANCE INSTRUCTION MANUAL THROUGH BEFORE STARTING, OPERATING, MAINTAINING, FUELING OR SERVICING THIS MACHINE.

⚠ The Operation and Maintenance Instruction Manual provides the instructions and procedures for starting, operating, maintaining, fueling, shutdown and servicing that are necessary for properly conducting the procedures for overhaul of the related components outlined in this Service Manual.

⚠ This symbol is your safety alert sign. It means **ATTENTION! BECOME ALERT! YOUR SAFETY IS INVOLVED!**

⚠ Read and heed all safety instructions carrying the signal words **WARNING** and **DANGER.**

⚠ Machine mounted safety signs have been color coded yellow with black borders and lettering for **WARNING** and red with white borders and lettering for **DANGER** points.

FIAT-ALLIS

SUPPLEMENT NO. 1

PARTS CATALOG FORM 70696415

16-B (Power Shift)

(2-76)

ATTENTION: Insert this sheet in the front of publication as record of receipt. Replace or add pages in the publication according to instructions below.

Additional copies of this supplement are available. Please direct your request to *Fiat-Allis Construction Machinery, Inc., Technical Publications Dept., 3000 South 6th Street, Springfield, Illinois, 62710 U.S.A.*

9 (Revised)
10 (No change)

15 (Revised)
16 (Revised)

23 (No change)
24 (Revised)

25 (No change)
26 (Revised)

35 (Revised)
36 (No change)

39 (No change)
40 (Revised)

41 (Revised)
42 (No change)

55 (No change)
55A (Added)

BLANK
56 (Revised)

59 (Revised)
60 (Revised)

61 (Revised)
62 (Revised)

103 (Revised)
104 (Revised)

105 (No change)
105A (Added)

BLANK
106 (No change)

141 (Revised)
142 (No ch[illegible]

143 ([illegible]
144 [illegible]ge)

[illegible]change)
[illegible]evised)

209 (Revised)
210 (Revised)

213 (No change)
214 (Revised)

225 (Revised)
225A (Added)

225B (Added)
226 (No change)

231 (Revised)
232 (Revised)

237 (Revised)
238 (No change)

263 (Revised)
263A (Added)

BLANK
264 (Revised)

264A (Added)
BLANK

265 (Revised)
266 (Revised)

281 (No change)
282 (Revised)

283 (Revised)
284 (Revised)

309 (No change)
310 (Revised)

311 (Revised)
312 (No change)

NOTICE
THESE CHANGES ARE INCLUDED IN THIS COPY

Printed in U.S.A.

IMPORTANT

All parts listed herein, which have no specific usage indicated, are applicable to all models. Those parts which are used only on specific models are so indicated.

Attaching parts such as bolts, nuts, rivets, screws, washers, etc., are indented immediately following the parts which they attach.

Parts indicated with a square (□) are also available in packaged sets. Refer to section titled "PACKAGED PARTS".

The terms "right" and "left" used throughout this parts catalog are determined by facing the direction of forward travel.

INSTRUCTIONS FOR ORDERING PARTS

> At the time this parts catalog was published the listed part numbers were current. It is our policy to constantly improve our machines and therefore, part numbers and design may change. When ordering parts, verify part numbers through your dealer's parts catalog which is up to date with all latest part numbers.

Order parts from the dealer covering the local territory.

ALWAYS GIVE THE MODEL AND SERIAL NUMBER OF MACHINE. IF PARTS ARE FOR AN ASSEMBLY WHICH HAS A MODEL AND/OR SERIAL NUMBER (SUCH AS ENGINE ASSEMBLY, PUMP ASSEMBLY), ALSO INCLUDE THIS INFORMATION.

To obtain parts promptly, give part name and part number.

Give post office address, town, county and state where parts are to be shipped. Also specify whether material is to be shipped by freight, express or parcel post.

Confirm all telephone or telegraph orders in writing.

Parts for standard motor accessories such as generators and starting motors should be ordered from authorized Service Stations maintained by manufacturers of these units throughout the country.

No credit will be allowed on parts unless they are returned to the dealer from whom they were purchased; from there they will be returned, at the customer's expense, to the factory for inspection.

Unless claims for shortages or errors are made immediately upon receipt of goods, they will not be considered.

When broken goods are received, a full description of the damage should be made by the carrier agent on the freight bill. If this description is insisted upon, full damage can always be collected from the transportation company.

No responsibility is assumed for delay or damage to merchandise while in transit. Our responsibility ceases upon delivery of shipment to the transportation company from whom a receipt is received showing that shipment was in good condition when delivered to them; therefore, claims (if any) should be filed with the transportation company

The right is reserved to change the construction or material of any parts where it seems desirable to do so without incurring the obligation of installing such changes on units already delivered.

(Specifications and design subject to change without notice)

ADDITIONAL PUBLICATIONS

Additional publications pertaining to this model and to all other Fiat-Allis products are available through Fiat-Allis dealers. Publications are generally available in several languages. Refer to Service Publications Index Form 70658800 for all such publications; the index is available free from Fiat-Allis.

MODEL IDENTIFICATION

MODEL SYMBOL	ENGINE MODEL	DESCRIPTION
16-B	17000 Mark II (S/N 17------) 6138 LT (S/N 14------)	Diesel engine driven crawler tractor with Power Shift transmission
16HS		Hydraulically-operated; straight moldboard
16HSU		Hydraulically-operated; semi-U-type moldboard
16HU		Hydraulically-operated; full-U-type moldboard
16HA		Hydraulically-operated; angling moldboard
16CSU		Cable-operated; semi-U-type moldboard
16CA		Cable-operated; angling moldboard
16R		Hydraulically-operated Ripper

Cable-control power units are not included herein. Refer to following:

Gar Wood Model 181 (rear-mounted single-drum)
Gar Wood Model 281 (rear-mounted double-drum)

} Order parts from:
The Superior Equipment Company
P.O. Box 769
Bucyrus, OH 44820 U.S.A.

RECORD YOUR SERIAL NUMBERS BELOW

MODEL SERIAL NUMBER_____ ENGINE SERIAL NUMBER_____

SERIAL NUMBER LOCATIONS

TRACTOR SERIAL NO. On steering clutch housing vertically on right hand side of the rear edge. Also on small plate attached to side of transmission control tower.

ENGINE SERIAL NO. On plate attached to the left hand side of cylinder block near the rear end. Also on small plate attached to side of transmission control tower. Effective approximately January 1979, the engine serial numbering system was changed. The old series of numbers began with the prefix #17- with the serial number. The new series of numbers begin with the prefix #14-.

Throughout this book, one must keep in mind that the #14-series numbers follow the #17-series numbers.

The first serial number in the new series begins with #14-01217.

MODEL SERIAL NUMBER

Models are identified by an 8-character combination of letters and numerals.

***SERIAL NUMBERS**, consisting of all 8 characters must always be submitted for positive identification of your machine. This Point Cannot Be Over-emphasized.

TRACTOR MODEL	*SERIAL NO.	
	PRODUCT CODE	UNIT NO.
16-B	19S	10301

(Revised August 1980)

Accessory Drive..... 31
Air Cleaner..... 79,80
Air Cleaner Aspirator..... 83A
Alternator..... 250
Auxiliary Valve Control..... 309
Back-up Alarm..... 239C
Batteries and Cables..... 246
Battery Box..... 249
Battery Box Lock..... 249
Battery Mounting..... 245
Belt, Drive..... 95,96,99
Belt, Safety..... 223,225F,225G
Bevel Gear and Shaft..... 159
Bottom Guards..... 192
Brake Control..... 187
Brake Drum..... 165
Brakes..... 185
Cab..... 259A
Cable Control Units..... 3
Camshaft..... 29
C-Frame and Struts..... 267
Connecting Rod..... 15,16A
Control Valves(Dozer, Ripper, Tilt)..... 301,301A
Cowl..... 219
Crankcase Guard..... 191,192
Crankshaft..... 20
Crankshaft Pulley..... 19,19A
Cylinder Block..... 12
Cylinder Head..... 25
Cylinder and Piping (Dozer)..... 279
Cylinder (Dozer)..... 283
Cylinder (Ripper)..... 292
Cylinder Mounting (Ripper)..... 290
Cylinder Piping (Ripper)..... 294
Cylinder Sleeve..... 12
Drawbar..... 226,227,228
Elements
- Air Cleaner..... 80
- Coolant Filter..... 104,105A
- Engine Oil Filter..... 47,49
- Fuel Filter..... 52,54
- Steering Oil Filter..... 181
- Steering Oil Strainer..... 182
- Transmission Oil Filter..... 149

Engine Breather..... 27
Engine Clutch Oil Return..... 119
Engine Decelerator..... 65
Engine and Mounting..... 11
Engine Priming System..... 84,87
Engine Shut-off Control..... 67,67A,67C
Equalizing Beam..... 189
Exhaust Pipe..... 77,82,83A
Fan..... 91
Fan Guard..... 89
Fan Pulley..... 95
Filter Care Kit 9D, 9E, 9F
Filters
- Coolant..... 104,105A
- Engine Oil..... 47,49
- Fuel..... 52,54
- Fuel Water Separator..... 55A,55B
- Steering Oil..... 181
- Steering Oil Strainer..... 182
- Transmission Oil..... 149

Final Drive
- Housing..... 156
- Intermediate Gears..... 164
- Outboard Bearing and Seal..... 161
- Pinion Shaft..... 165
- Sprocket, Shaft and Gear..... 167

Floor..... 220
Flywheel..... 23
Flywheel Housing..... 22
Front Fenders..... 217
Fuel Filter..... 52,54
Fuel Injection Pump..... 59,59A
Fuel Lines..... 57
Fuel Tank..... 51
Fuel Tank and Seat Guard..... 255
Gauges
- Air Restriction Indicator..... 79
- Ammeter..... 239,239B
- Bevel Gear Comp. Oil Level..... 156
- Engine Oil Level..... 12
- Engine Oil Pressure..... 241
- Engine Temperature..... 239,239B
- Fuel Level..... 51
- Fuel Pressure..... 240
- Hour Meter..... 33,244
- Transmission Oil Level..... 156
- Transmission Pressure..... 242

Governor Control Linkage..... 69
Ground Speed Governor..... 137
Heat Exchangers..... 106
Hood..... 218
Horn..... 239D
Hose Parts..... 6
Hour Meter..... 33,244
Hydraulic Steering Control.... 179,180A
Hydraulic Tank and Control Valve... 297
Hydraulic Tilt..... 270
Hydraulic Tilt Piping..... 273
Hydraulic Track Adjuster..... 202,204
Important..... 1
Injection Nozzles and Lines..... 61,62A
Injection Pump..... 59,59A
Instruments..... 238,239A
Lights
- Dash..... 238,239A
- Head..... 232,233A,233C
- Rear Flood..... 234,236

Lights and Wiring..... 232,233A,233C

(Revised October 1989)

Main Frame..... 190
Main Housing..... 156
Manifolds
  Exhaust..... 76
  Intake..... 71
  Water Inlet..... 106
  Water Outlet..... 102
Model Identification..... 3
Moldboards
  Angling..... 264
  Semi-U..... 262
  Straight..... 260
  U-type..... 263
Moldboard Braces..... 269
Moldboard Struts..... 267
Mounting Frame (Ripper)..... 287
Muffler..... 82
Nozzle Holder Assembly..... 63
Numerical Index..... 315
Oil Cooler..... 106
Oil Filter..... 47,49
Oil Filter Lines (Engine)..... 45
Oil Pan..... 34,35
Oil Pumps and Lines (Engine)..... 37,40
Oil Pump and Lines (Dozer & Ripper) 313
Packaged Parts..... 8
Page-Grid Cross Reference
Painting and Marking..... 230
Piston..... 15,16A
Pull Hook..... 190
Pumps
  Dozer..... 310
  Engine Oil..... 39,39A,42
  Engine Oil Scavenging..... 43
  Engine Primer..... 84,87
  Fuel Injection..... 59,59A
  Push-Start..... 134
  Steering..... 177,177A
  Transmission..... 145
  Water..... 100
Push Beams..... 265
Push Start Piping..... 132,133
Radiator Guard..... 211,215
Radiator Mounting..... 89
Radiator Parts..... 93
Raincap..... 79
Rear Fenders..... 221
Rear Flood Light..... 234,236
Ripper Mounting Frame..... 287
Ripper Tool Bar and Linkage..... 289
ROPS Mounting Brackets..... 252
Roll Over Protection Frame..... 254
Seat..... 223
Sheave Blocks and Cable..... 285
Speed Control Linkage..... 153
Speed Control Piping..... 151
Speed Control Valves..... 141
Starter..... 251
Steering Clutches..... 162
Steering Control..... 179,180A
Steering Control Valve Lines..... 169
Steering Levers and Linkage..... 175
Thermostat..... 102
Throttle Control..... 65
Tilt Cylinder..... 275,276
Timing Gear Housing..... 17,18A
Timing Gears..... 20,29,31
Tool Box..... 249
Tools..... 257
Torque Converter..... 114
Torque Converter Lines..... 111
Track..... 206
Track Carrier Roller..... 201
Track Frame..... 196
Track Idler..... 208
Track Release..... 202,204
Track Roller..... 199,199A
Track Roller Guards..... 195
Transmission
  Assembly..... 123
  Bevel Pinion Shaft..... 130
  Case and Covers..... 125
  Clutch Shafts..... 126
  Input Shaft..... 127
Transmission Guards..... 194
Transmission Oil Lines..... 147
Turbocharger..... 75
Turbocharger Connections..... 73
Universal Joint..... 120
Valve Operating Mechanism..... 29
Valves
  Dozer Control..... 304
  Dozer Tilt Control..... 302
  Exhaust..... 25
  Intake..... 25
  Modulating..... 143
  Pressure Oil Pump Relief..... 37,40
  Push-Start..... 135
  Relief Valve(Dozer, Ripper, Tilt)..... 299
  Ripper Control..... 302
  Speed Control..... 141
  Steering Control..... 170,172
Valve Controls (Dozer)..... 307
Vandalism Prevention Parts..... 259
Water Inlet Manifold..... 106
Water Outlet Manifold..... 102
Water Pump..... 100
Water Pump Drive..... 96,99
Water Separator (Fuel)..... 55A,55B

(Revised April 1981)

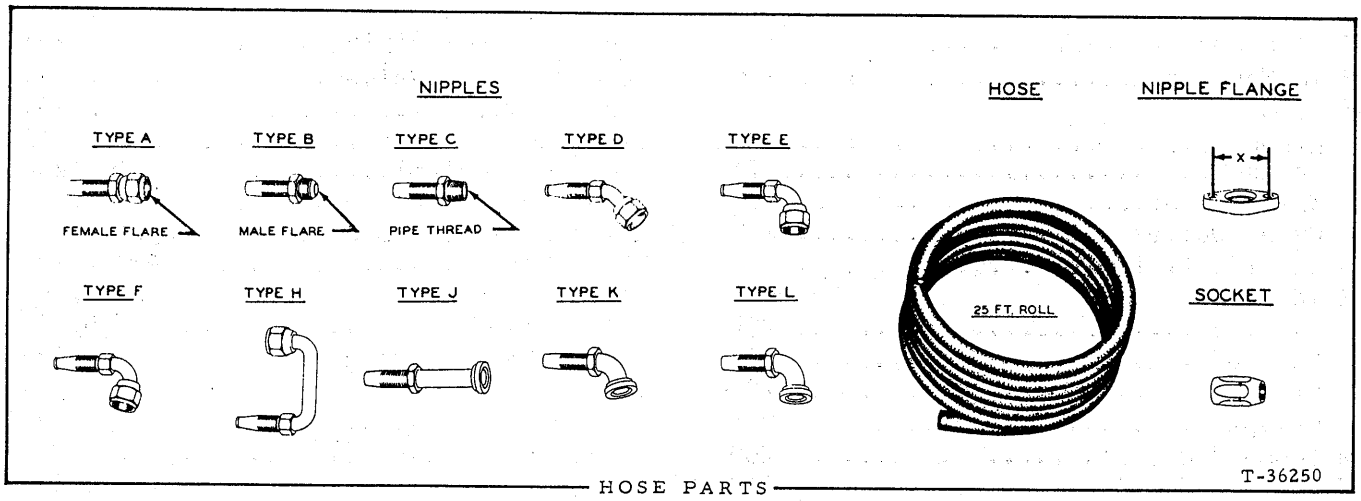

HOSE PARTS

NOTE: Refer to right hand column for identity of interchangeable crimped-type hose (fittings not re-usable). Assembly number shown in left hand column indicates available replacement hose assembly with re-usable components; where no assembly number is listed, hose assembly is not available from factory but may be constructed in the field from data indicated.

HOSE ASSEMBLY NO. (See NOTE)	BULK HOSE (25' roll)	HOSE LENGTH (inches)	NIPPLE (#1 end)			NIPPLE (#2 end)			SOCKET (both ends)	NIPPLE FLANGE		CRIMPED-TYPE HOSE (See NOTE)
			Including SOCKET	NIPPLE only	Type	Including SOCKET	NIPPLE only	Type		Part No.	X Dim	Part No.
	70919156	50-3/4	70920850	70920303	A	70920850	70920303	A	70919076			70638205
	70920222	82	70921033	70921034	A	70921033	70921034	A	70919282			70644759
	70919218	12	70920850	70920303	A	70920865	70919081	E	70919076			70645236
	70919218	62-1/4	70920850	70920303	A	70920865	70919081	E	70919076			70645248
	70919218	44	70920850	70920303	A	70920850	70920303	A	70919076			70645250
	70919196	22-1/4	70920862	70919194	E	70920847	70920301	A	70919143			70646910
	70919155	16	70920857	70919079	B	70920879	70919159	D	70919075			70648231
	70919155	29-1/2	70920849	70920302	A	70920879	70919159	D	70919075			70648501
	70919156	55-1/2	70920851	70921046	A	70920866	70919473	E	70919469			70653905
	70920222	71-3/8	70921033	70921034	A	70922808	70923011	B	70919282			70654081
	70919196	28-1/2	70920855	70919144	B	70920869	70919253	E	70919143			70658319
	70919196	23-1/2	70920862	70919194	E	70920862	70919194	E	70919143			70658320
	70919196	33	70920862	70919194	E	70920869	70919253	E	70919143			70658321
	70920221	28-3/4	70920852	70920344	A	70920852	70920344	A	70919281			70659441
	70920222	56-5/8	70921033	70921034	A	70921033	70921034	A	70919282			70662922
	70919156	27-1/2	70920880	70919254	D	70920880	70919254	D	70919076			70663134
	70919156	25-7/8	70920880	70919254	D	70920880	70919254	D	70919076			70663145
	70919156	12-1/2	70920850	70920303	A	70920865	70919081	E	70919076			70664869
	70919156	19-3/8	70920865	70919081	E	70920865	70919081	E	70919076			70664870
	70919196	72-1/4	70920855	70919144	B	70920869	70919253	E	70919143			70665900
	70920222	85-3/8	70921033	70921034	A	70920868	70920144	E	70919282			70665910
	70919155	43	70920864	70919082	E	70920871	70919157	E	70919075			70665931
	70919156	10-1/4	70920850	70920303	A	70920850	70920303	A	70919076			70666429
	70919196	17-5/8	70920847	70920301	A	70920877	70919207	D	70919143			70666598
	70919156	34-3/4	70920865	70919081	E	70920872	70919158	E	70919076			70666809
	70919156	130-7/8	70920865	70919081	E	70920865	70919081	E	70919076			70666810
	70920222	14-7/8	70921033	70921034	A	70920798	70921495	D	70919282			70666811
	70919156	20-3/4	70920850	70920303	A	70920858	70919080	B	70919076			70667718
	70919156	11	70920858	70919080	B	70920865	70919081	E	70919076			70667719
	70919196	36	70920862	70919194	E	70920847	70920301	A	70919143			70668516
	70920982	55-1/8		70923255	J		70923255	J	70920986			70669726
	70920795	34		70923254	J	70924408	70923259	K	70920973			70669727
	70920982	61-3/8		70923255	J		70923255	J	70920986			70669728
	70920795	36		70923254	J	70924408	70923259	K	70920973			70670357
	70920794	18-3/8	70920944	70920978	A		70923253	J	70920972			70670721
	70920794	28	70924177	70921513	L	70924177	70921513	L	70920972			70670722

(Revised April 1981)

HOSE ASSEMBLY NO. (See NOTE)	BULK HOSE (25' roll)	HOSE LENGTH (inches)	NIPPLE (#1 end)			NIPPLE (#2 end)			SOCKET (both ends)	NIPPLE FLANGE		CRIMPED-TYPE HOSE (See NOTE)
			Including SOCKET	NIPPLE only	Type	Including SOCKET	NIPPLE only	Type		Part No.	X Dim	Part No.
	70920794	79-3/4		70923253	J		70923253	J	70920972			70670723
	70919156	22	70920858	70919080	B	70920865	70919081	E	70919076			70674814
	70919155	18	70920857	70919079	B	70920864	70919082	E	70919075			70674868
	70919156	31-1/2	70920858	70919080	B	70920850	70920303	A	70919076			70696013
	70919156	21-3/4	70920865	70919081	E	70920872	70919158	E	70919076			73117233
	70920222	20-1/2	70921033	70921034	A	70920868	70920144	E	70919282			73117235
	70919156	29	70920858	70919080	B	70920850	70920303	A	70919076			73117377
	70919155	25-1/2	70920857	70919079	B	70920879	70919159	D	70919076			73117378

PACKAGED PARTS

PACKAGE NO.	DESCRIPTION
--------	CLUTCH KIT, over-running (See page 116)
74396408	GASKET KIT, cylinder head

1	70928905	O-RING, water outlet manifold
2	74025781	GASKET, turbocharger mounting
1	74029746	GASKET, front cross-over
8	74254873	WASHER, rocker cover capscrew
8	74255956	SLEEVE, fuel line (rubber)
1	74339532	GASKET, turbocharger oil drain
1	74361551	GASKET, air intake elbow
1	74376520	GASKET, thermostat housing cover
6	74378031	GASKET, nozzle
1	74386137	GASKET, thermostat by-pass tube
12	74387697	GASKET, intake and exhaust manifold
2	74389961	GASKET, cylinder head cover (upper)
1	74391707	GASKET, air inlet
2	74393989	GASKET, cylinder head cover (lower)
1	74395425	GASKET, manifold connecting
2	74396409	GASKET ASSY., cylinder head (Includes instruction sheet)
6	74395709	GASKET, water outlet manifold
1	74395713	GASKET, cover

74396006 GASKET KIT, intermediate, engine cylinder block (Does not include cylinder head or oil pan gaskets)

2	70667252	GASKET, oil drain plug
8	70923379	O-RING, water tubes
1	70923575	O-RING, idler pin
3	70923590	O-RING
8	70923645	O-RING, injection line connectors
2	70923651	O-RING, bonnet tube
2	70923810	O-RING, flywheel housing dowel
1	70923813	O-RING, idler pin gear
5	70923934	O-RING
1	70923935	O-RING, water pump body
1	70923936	O-RING, cam
1	70923950	O-RING
1	70924142	O-RING
12	70925612	O-RING, water inlet manifold
2	74113897	GASKET, regulating valve nut
4	74119937	WASHER, copper
5	74255511	O-RING, heat exchanger and oil filter
2	74255513	O-RING, oil filter
14	74255631	O-RING, oil cooler and oil filter
4	74255665	O-RING, injection pump bracket
2	74255781	O-RING, heat exchanger elbows
1	74255898	RING, sealing, flywheel housing
1	74255904	RING, sealing, flywheel housing
1	74255912	O-RING, flywheel to crankshaft
1	74271289	GASKET, oil pan cover
1	74310257	GASKET, oil filler pipe

(Continued)

(Revised August 1980)

PACKAGE NO.		DESCRIPTION
74396006 (Continued)		GASKET KIT, intermediate, engine cylinder block (Does not include cylinder head or oil pan gaskets)
	1	74336897 RING, sealing, flywheel housing
	1	74361740 GASKET, water pump idler support
	1	74367090 GASKET, tachometer hole nut
	1	74371027 GASKET, gear housing hole cover
	2	74371160 GASKET, heat exchanger
	3	74371345 GASKET, oil lines
	1	74371742 GASKET
	1	74376398 GASKET, water pump
	1	74376603 GASKET, accessory pump
	1	74376609 GASKET, timing gear housing cover
	7	74376749 WASHER, push rod cover capscrew
	2	74377120 GASKET, push rod cover
	2	74378112 GASKET, lower water by-pass tube
	1	74379070 SEAL, oil pan
	1	74385317 GASKET, water manifold
	1	74385320 GASKET, bonnet
	1	74386223 GASKET, heat exchanger bonnet
	1	74386495 GASKET, water and oil manifold, lower
	1	74386856 GASKET, heat exchanger
	1	74387525 GASKET, cover
	1	74389291 GASKET, water and oil manifold, upper
	1	74389635 GASKET
	1	74389676 GASKET, heat exchanger bonnet
	1	74389678 GASKET, heat exchanger adaptor
	3	74389782 GASKET, oil lines
	1	74390432 GASKET, timing hole cover
	4	74393359 GASKET, oil lines
	1	74394673 GASKET, timing hole cover
	1	74396000 GASKET, timing gear housing cover
	1	74394678 GASKET, timing gear housing
	1	74660423 GASKET, oil pump discharge tube
	1	74660492 GASKET, timing gear housing
74393267		GASKET KIT, turbocharger mounting
	1	74310257 GASKET, oil drain elbow
	1	74339532 GASKET, oil drain line
	1	74339533 GASKET, oil supply line flange
	1	74391707 GASKET, air intake elbow
	1	74393466 GASKET, turbocharger to manifold
74394971		OIL PUMP CONVERSION KIT (Includes "ACULOP" pump, piping, and oil pan for engines prior to S/N 17-01756)
	1	70035250 PLUG
	1	70667252 GASKET
	1	70902872 SETSCREW
	2	70911992 WASHER
	34	70912441 LOCKWASHER, 1/2"
	4	70914678 LOCKWASHER, 7/16"
	2	70916313 CAPSCREW, 1/2"NC x 1-3/4"
	8	70916543 LOCKWASHER, internal tooth, 3/8"
	4	70916871 NUT, elastic stop, 5/16"NC

(Continued)

PACKAGED PARTS (Continued)

PACKAGE NO.		DESCRIPTION
74394971 (Continued)		OIL PUMP CONVERSION KIT (Includes "ACULOP" pump, piping, and oil pan for engines prior to S/N 17-01756)
1	70918851	PLUG, pipe, 3/4"NPT
1	70919822	NIPPLE, 1/2"NPT x 3-1/4"
1	70921216	PLUG, 1-5/16"NF (Includes 70921214 O-RING)
2	70921569	CAPSCREW, 7/16"NC x 1-1/4"
4	70922064	CAPSCREW, 12 pt.hd., 1/2"NC x 1"
32	70922220	CAPSCREW, 12 pt.hd., 1/2"NC x 1-1/2"
1	70922420	PLUG, pipe, ctsk., sq.hd., 1-1/2"NPT
4	70923193	CAPSCREW, 3/8"NF x 1-1/4"
4	70924228	CAPSCREW, 3/8"NF x 1-1/2"
1	70924636	PLUG, brass, hex. hd., 1/2"NPT
2	70927044	O-RING
2	70927583	CAPSCREW, 7/16"NC x 1-3/4"
2	70928212	NUT, 7/16"NC
1	74028887	VALVE
1	74362338	PLUG
1	74393341	BRACKET
2	74393359	GASKET
1	74395971	ELBOW
1	74393364	TUBE
2	74393397	CAPSCREW
1	74393599	BRACKET
2	74393600	U-BOLT
2	74393601	SADDLE
1	74393973	GAUGE, oil level
1	74394200	ADAPTER
1	74394957	TUBE
4	74395024	DOWEL
1	74395053	BLOCK
1	74395974	TUBE
1	74395062	BRACKET
1	74396124	PAN, oil
1	74395803	GASKET SET
1	74396859	PUMP, oil
74394054		PISTON AND SLEEVE KIT (Engines prior to #17-03006)
2	74253749	RETAINER, piston pin
1	74385485	O-RING, cylinder sleeve (red)
1	74390175	PIN, piston
1	74391473	SLEEVE, cylinder
1	--------	PISTON
2	74393426	O-RING, sleeve (black)
1	74394053	RING SET, piston
74396647		PISTON AND SLEEVE KIT (Engine #17-03006 and up)
1	74061528	SLEEVE, cylinder } Replace in sets on engines S/N 17-03006 thru 14-02470 with intake valve recess
1	74396638	PISTON ASSY. }

(Revised March 1982)

PACKAGE NO.	DESCRIPTION
--------	SEAL KIT (See page 161 and 209)
70696700	SEAL AND GASKET KIT, transmission

1	70666907	GASKET
1	70654294	GASKET
1	70634271	GASKET
1	71002296	SEAL
1	70691552	GASKET
1	70653919	GASKET
1	70699102	DIAPHRAGM
1	70925310	O-RING
1	70653935	SEAL
2	70924921	O-RING
2	70639567	SEAL
2	70639576	O-RING
1	70638336	SEAL
1	70624706	GASKET
1	70643080	GASKET
1	70643810	GASKET
1	70923594	O-RING
1	70628940	SEAL
1	70642788	GASKET
1	70667252	GASKET
1	70654798	GASKET
2	70629223	GASKET
1	70623971	SEAL

70696701 SEAL AND GASKET KIT, Torque Converter

1	70052168	GASKET
1	70632587	GASKET
1	70632603	O-RING
1	70640636	GASKET
1	70651655	GASKET
1	70658556	GASKET
1	70693957	SEAL
1	70923575	O-RING
1	70923585	O-RING
4	70923664	O-RING
1	70923814	O-RING
1	70923816	O-RING
1	70924828	O-RING
1	73037990	SEAL

73121284 LOOSE PARTS KIT, engine (Used to adapt Model 6138 LT engine to tractors prior to S/N 19S15213 with 17000 MK II engines)

2	70078810	PIN
1	70083778	HANGER
1	70095869	CLIP
1	70158613	LOCKWASHER
3	70628738	PIN

(Continued)

PACKAGE NO.	DESCRIPTION	
73121284	LOOSE PARTS KIT (Continued)	
3	70630636	HOSE
1	70662427	CLAMP
1	70674412	GASKET
1	70677006	WASHER
2	70677008	WASHER
1	70900806	PIN
2	70900942	PIN
3	70900970	PIN
1	70910244	WASHER
1	70910267	NUT
1	70911026	NUT
1	70911028	NUT
1	70911034	NUT
2	70911982	WASHER
2	70917388	SCREW
1	70920582	CAPSCREW
1	70921076	CAPSCREW
12	70921912	CLAMP
1	70922763	CAPSCREW
2	70923016	CAPSCREW
1	70923717	CONNECTOR
1	70924026	ELBOW
2	70926460	WASHER
2	70926673	NUT
1	70927104	CLAMP
1	70927455	CONNECTOR
2	70929059	CAPSCREW
2	70930370	WASHER
1	70930804	ELBOW
2	70933330	CAPSCREW
1	73116453	ROD
1	73116455	PLATE
1	73116480	CABLE
1	73116481	ROD
1	73117231	PUMP ASSEMBLY
1	73117232	TUBE
1	73117233	HOSE
1	73117234	ANGLE
1	73117235	HOSE
1	73117236	TUBE
1	73117280	YOKE
1	73117283	BRACKET
1	73117377	HOSE
1	73117378	HOSE

"FILTER CARE" KIT

MODEL: 16B

250 HOUR KIT

PART NUMBER: 75124710

QUANTITY	PART NUMBER	DESCRIPTION
1	70921349	O'RING OIL PAN DRAIN
1	70667252	GASKET OIL PAN DRAIN
1	70923663	O'RING OIL PAN DRAIN
1	74059343	ELEMENT LUBE OIL
1	74395889	FILTER LUBE OIL

(Added October 1989)

"FILTER CARE" KIT

MODEL: 16B

500 HOUR KIT

PART NUMBER: 75124713

QUANTITY	PART NUMBER	DESCRIPTION
1	70921349	O'RING OIL PAN DRAIN
1	70667252	GASKET OIL PAN DRAIN
1	70923663	O'RING OIL PAN DRAIN
1	74059343	ELEMENT LUBE OIL
1	74395889	FILTER LUBE OIL
1	70923950	O'RING HYDRAULIC FILTER CAP
1	70924153	O'RING HYDRAULIC STRAINER
1	70923581	O'RING HYDRAULIC STRAINER
1	70669434	ELEMENT KIT TRANSMISSION
2	74028945	ELEMENT FUEL
1	74394407	SEPERATOR FUEL FILTER
1	74393504	FILTER ASSEMBLY COOLANT
1	70665859	ELEMENT KIT HYDRAULIC

NOTE: Clean and reuse:
Hydraulic suction filter - 70670698

"FILTER CARE" KIT

MODEL: 16B

1000 HOUR KIT

PART NUMBER: 75124715

QUANTITY	PART NUMBER	DESCRIPTION
1	70921349	O'RING OIL PAN DRAIN
1	70667252	GASKET OIL PAN
1	70923663	O'RING OIL PAN DRAIN
1	74059343	ELEMENT LUBE OIL
1	74395889	FILTER LUBE OIL
1	70923950	O'RING HYDRAULIC STRAINER
1	70924153	O'RING HYDRAULIC STRAINER
1	70923581	O'RING HYDRAULIC STRAINER
1	70669434	ELEMENT KIT TRANSMISSION
2	74028945	ELEMENT FUEL
1	74394407	SEPERATOR FUEL
1	74393504	FILTER ASSEMBLY HYDRAULIC
1	70665859	ELEMENT KIT HYDRAULIC
1	70632062	RING
1	70923587	O'RING
1	70631869	WASHER
1	70632063	O'RING
1	70651385	O'RING STEERING SUCTION
1	75000718	INSTRUCTION SHEET
1	70671839	ELEMENT ASSEMBLY SAFETY
1	70671838	ELELEMT ASSEMBLY PRIMARY
1	70694661	ELEMENT HYDRAULIC

NOTE: Clean and reuse:
Hydraulic suction filter - 70670698
Steering suction strainer - 70661506

(Added October 1989)

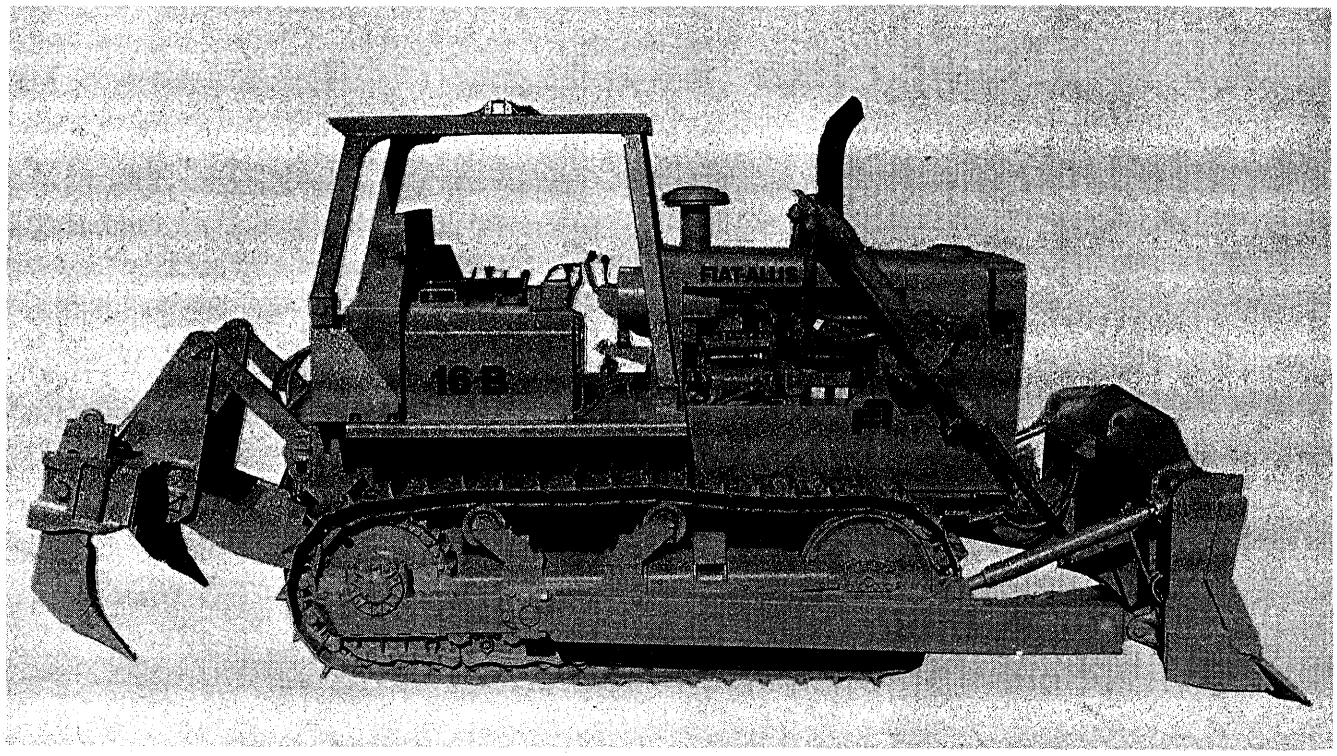

T-79187

16-B (POWER SHIFT) CRAWLER TRACTOR (W/16HS DOZER AND 16R RIPPER)

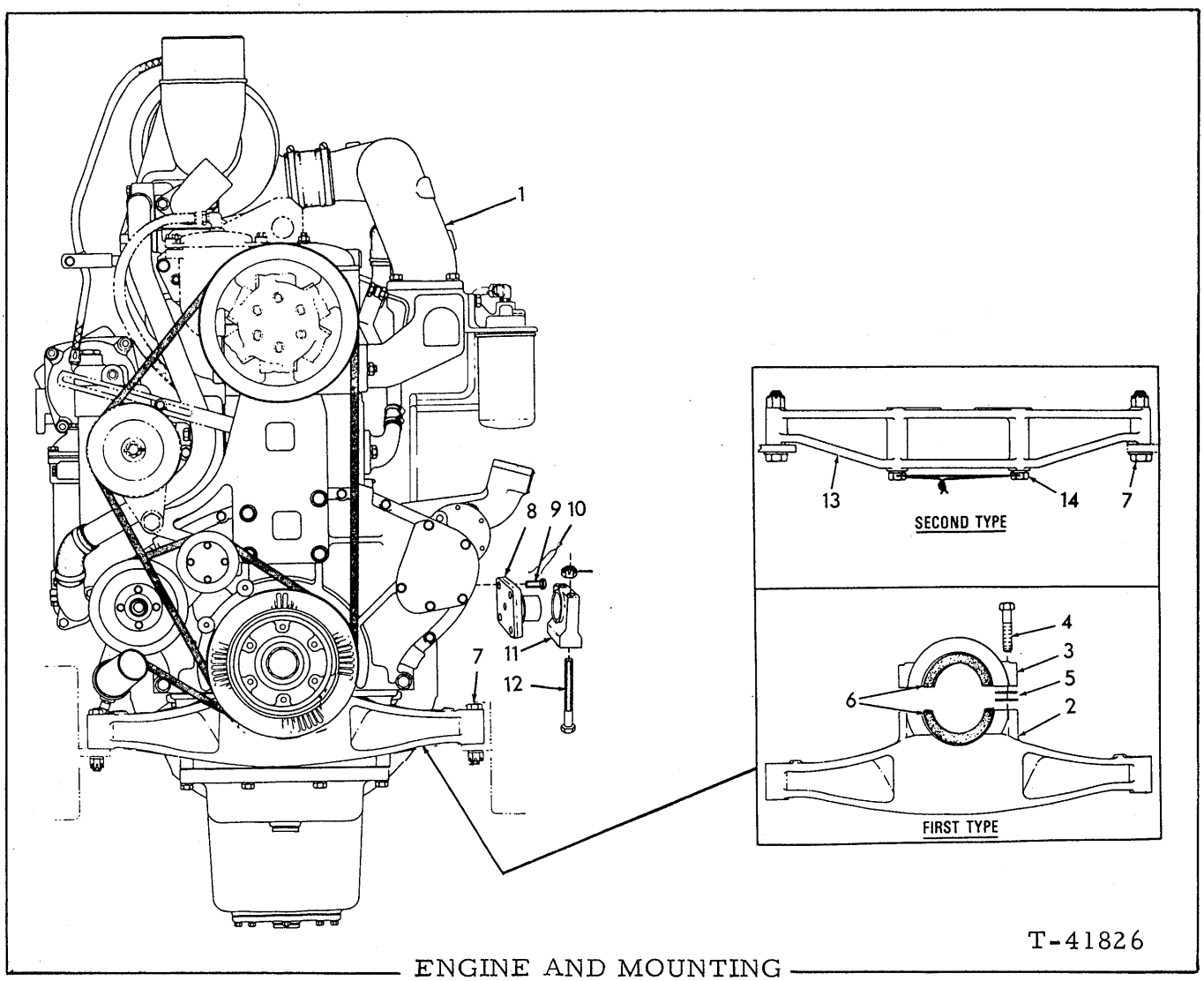

ENGINE AND MOUNTING

ITEM	PART NO.	QTY.	DESCRIPTION
1	73114733	1	ENGINE ASSY. (17000 MK II)(For service replacement order engine 73117256 and Loose Parts Kit 73121284)
	73117256	1	ENGINE ASSY. (6138 LT)
			NOTE: Each engine Assy. includes oil filters, oil cooler, fuel filter and turbocharger, but does not include air cleaner, fan, alternator, starter, muffler or crankcase lubricant.
	73121284	1	□LOOSE PARTS KIT
2	70655510	1	HANGER, front (Includes item 3)(First type)(Tractors prior to S/N 19S15213)(Engines prior to S/N 14-01217)(See item 13)
3	--------	1	CAP (Order item 2)
4	70699299	2	SCREW, Nylok, 1/2"NC x 3" } Used with first
	74372864	2	WASHER } type hanger
5	70916009	14	WASHER, shimming (1/32" thick. Use as required) (Used with first type hanger)

ITEM	PART NO.	QTY.	DESCRIPTION
6	74336491	2	LINER (Used with first type hanger)(See Timing Gear Housing for second type)
7	70670451	2	CAPSCREW, drilled-end, 5/8"NF x 4-1/4"
	70926193	2	WASHER
	70913280	2	NUT, high, slotted, 5/8"
	70900806	2	PIN, cotter, 1/8" x 1"
8	70670457	2	TRUNNION, rear (Tractors prior to unit #12906)
	70682555	2	TRUNNION, rear (Tractors unit #12906 and up)
9	70929086	8	CAPSCREW, drilled-hd., 5/8"NC x 1-1/4"
10	70023633	4	WIRE, locking, 1/16" x 12"
11	70631773	2	BRACKET, rear (Tractors prior to unit #12906)
	70682549	2	BRACKET, rear (Tractors unit #12906 and up)
12	70682224	4	CAPSCREW, drilled-end, 3/4"NF x 6-3/4"
	70673037	4	NUT, high, slotted, 3/4"NF
	70900808	4	PIN, cotter, 1/8" x 1-1/2"
	70926199	8	WASHER, plain
13	70083778	1	HANGER, front (Second type)(Tractor S/N 19S15213 and up)(Engine S/N 14-01217 and up)
14	70933330	2	CAPSCREW, drilled head, 5/8"NC x 5"
	70037000	1	LOCKWIRE

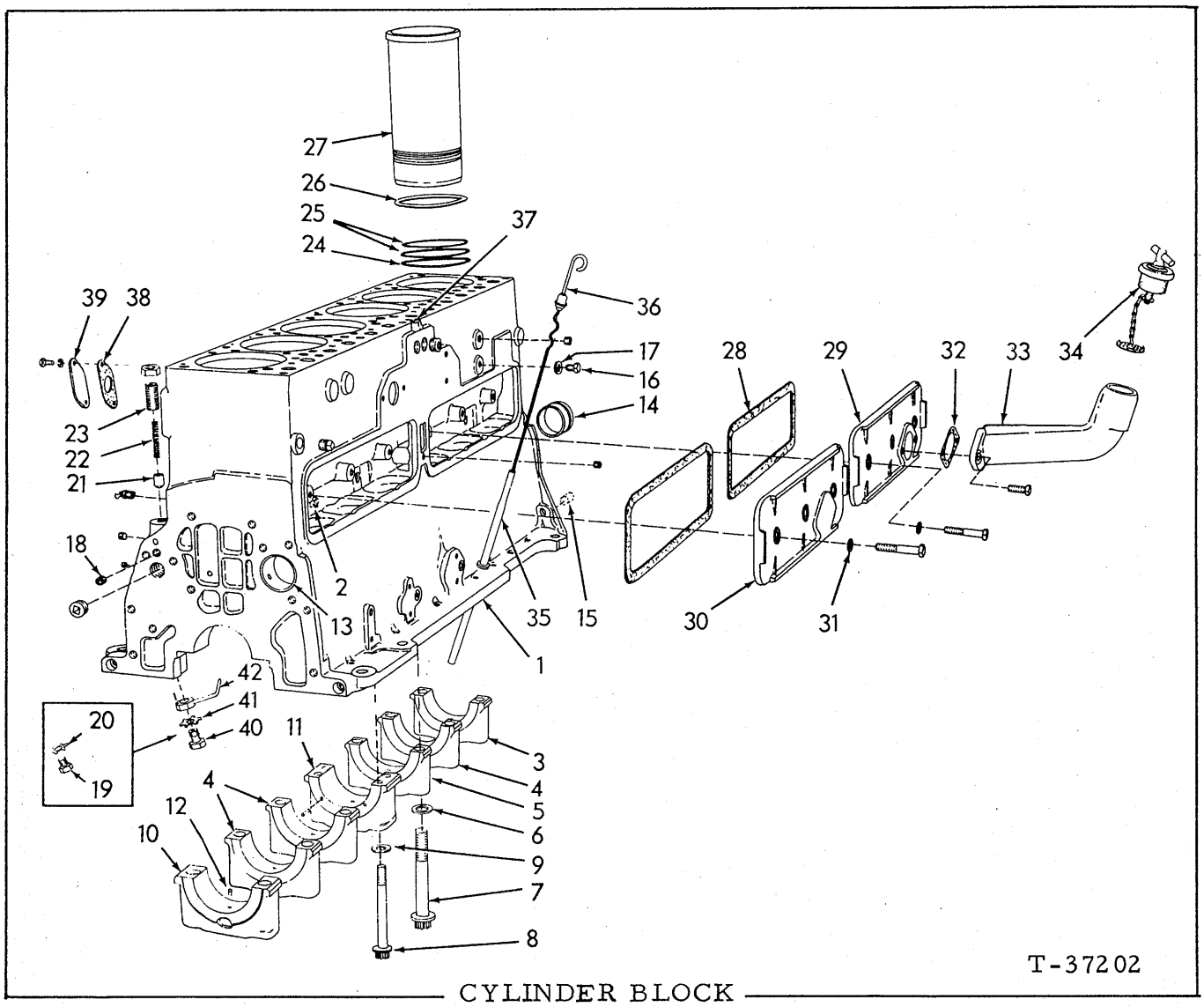

CYLINDER BLOCK

ITEM	PART NO.	QTY.	DESCRIPTION
1	74396088	1	BLOCK ASSY., cylinder (Includes items 2 thru 5, 7, 8, 10 thru 18 and hardware indented below (For first replacement on engines prior to #17-01448 also order 1 Camshaft 74393399)
	74255491	1	PLUG, pipe (Top dect), 1/4"
	70919134	1	PLUG, pipe, hex-hd., 1/8"NPT
	70919840	3	PLUG, pipe, hex-hd., 1/4"NPT
	70919850	4	PLUG, pipe, hex-skt., 1/4"NPT
	70919887	1	PLUG, pipe, hex-skt., 3/8"NPT
	70920416	1	PLUG, pipe, hex-hd., 1/2"NPT
	70917970	2	PLUG, pipe, hex-skt., 1/2"NPT
	70918851	2	PLUG, pipe, hex-skt., 3/4"NPT
	74255363	1	COCK, water drain
	74362338	2	PLUG, oil gauge hole
2	--------	4	DOWEL, valve lifter bracket (See page 29)
3	74395099	1	*CAP, main bearing, rear
4	74395103	4	*CAP, main bearing, intermediate

(Continued)

ITEM	PART NO.	QTY.	DESCRIPTION
5	--------	1	*CAP, main bearing, intermediate (No. 5)(Order 74395103)
6	74389911	12	WASHER, plain, main bearing capscrew (Engines prior to #17-01756)
7	74389924	12	CAPSCREW, main bearing cap (7/8" diam.)(Engines prior to #17-01756)
	74393397	12	CAPSCREW, main bearing cap (7/8" diam.)(Engines #17-01756 and up)
8	74389923	4	CAPSCREW, center main bearing cap (5/8" diam.) (Engines prior to #17-01756)
	74391307	4	CAPSCREW, center main bearing cap (5/8" diam.) (Engines #17-01756 and up)
9	74391160	4	WASHER, center main bearing capscrew (Engines prior to #17-01756)
10	74395101	1	*CAP, main bearing, front
11	74395108	1	*CAP, main bearing, center
	--------	4	PIN, dowel, thrust flange (See Crankshaft)
12	74389292	7	PIN (For stepped bearing cap hole and 1/4" bearing oil hole)(Engines prior to #17-04275)
	74395109	7	PIN (Adapter for steeped bearing cap hole and 3/8" bearing oil hole)
	70919777	7	PIN (For 3/8" bearing cap hole and 3/8" bearing oil hole)(Engine #17-04275 and up)
13	74665306	1	BEARING, camshaft, front
	74660440	2	BEARING, camshaft, intermediate (Engines prior to #17-01448)
	74393373	2	BEARING, camshaft, intermediate (Engines #17-01448 and up)
14	74665306	1	BEARING, camshaft, rear
15	--------	2	PIN, dowel, flywheel housing (See page 22)
16	70919229	3	CAPSCREW, hole plugging (1/2"NC x 1/2")
17	74119937	3	□WASHER, copper
18	74389943	1	RESTRICTOR, oil by-pass (Engines prior to S/N 17-04275)
19	70924822	6	CAPSCREW, plugging, oil gallery (5/8"NC x 1/2") (See NOTE below)
20	74373619	6	LOCKWASHER (See NOTE below)
			NOTE: Items 19 and 20 are for Engines prior to S/N 17-01035 without piston cooling. Engines S/N 17-04671 and up with cooling piston in connecting rod.
21	74500230	1	PISTON, oil pressure regulating valve
22	74660358	1	SPRING, oil pressure regulating valve
23	74389058	1	SCREW, oil pressure regulating valve
	70910847	1	NUT, jam, 3/4"NF
24	74385485	6	O-RING, cylinder sleeve, lower groove (red)
25	74393426	12	O-RING, cylinder sleeve, upper grooves (black)

*Replacement bearing caps are semi-finished and must be line-bored after installing.

(Continued)

ITEM	PART NO.	QTY.	DESCRIPTION	
26	74368204	-	SHIM, cylinder sleeve (.005" thick)	Use as required when machining block
	74368205	-	SHIM, cylinder sleeve (.010" thick)	
	74368206	-	SHIM, cylinder sleeve (.015" thick)	
	74369002	-	SHIM, cylinder sleeve (.020" thick)	
27	74061528	6	□SLEEVE, cylinder (Includes items 24 and 25)	
28	74377120	2	□GASKET, push rod cover	
29	74393854	1	COVER, push rod, rear	
	70916316	3	CAPSCREW, 1/2"NC x 2-1/2"	
30	74393853	1	COVER, push rod, front	
	70916316	2	CAPSCREW, 1/2"NC x 2-1/2"	
	70916317	1	CAPSCREW, 1/2"NC x 2-3/4"	
31	74376749	7	□WASHER, push rod cover capscrew	
32	74310257	1	□GASKET, oil filler pipe	
33	74394952	1	ELBOW, oil filler	
	74379198	2	CAPSCREW, Nylok, 1/2"NC x 1-3/8"	
34	74354492	1	CLOSURE ASSY., oil filler (Serviced only as a unit)	
35	74391378	1	ADAPTER, oil level gauge (Engines prior to #17-01756)	
	74394200	1	ADAPTER, oil level gauge (Engines #17-01756 and up)	
36	74391366	1	GAUGE, oil level (Engines prior to #17-01756)	
	74393973	1	GAUGE, oil level (Engines #17-01756 and up)	
37	70923799	1	SETSCREW	Engine #17-04275 and up
38	74025101	2	GASKET	
39	74024141	2	PLATE	
	70916253	4	CAPSCREW, 7/16"NC x 3/4"	
	70914678	4	LOCKWASHER, 7/16"	
40	74386262	6	SCREW (See NOTE below)	
41	74255186	6	LOCKWASHER (See NOTE below)	
42	74390766	3	JET ASSY. (Includes Pin)(Cylinders 1,2 and 4) (See NOTE below)	
	74390767	3	JET ASSY. (Includes Pin)(See NOTE below)	
	70917448	6	PIN, spring (See NOTE below)	

NOTE: Items 40 thru 42 are for Engines S/N 17-01035 thru 17-04670 with cooling jets in cylinder block.

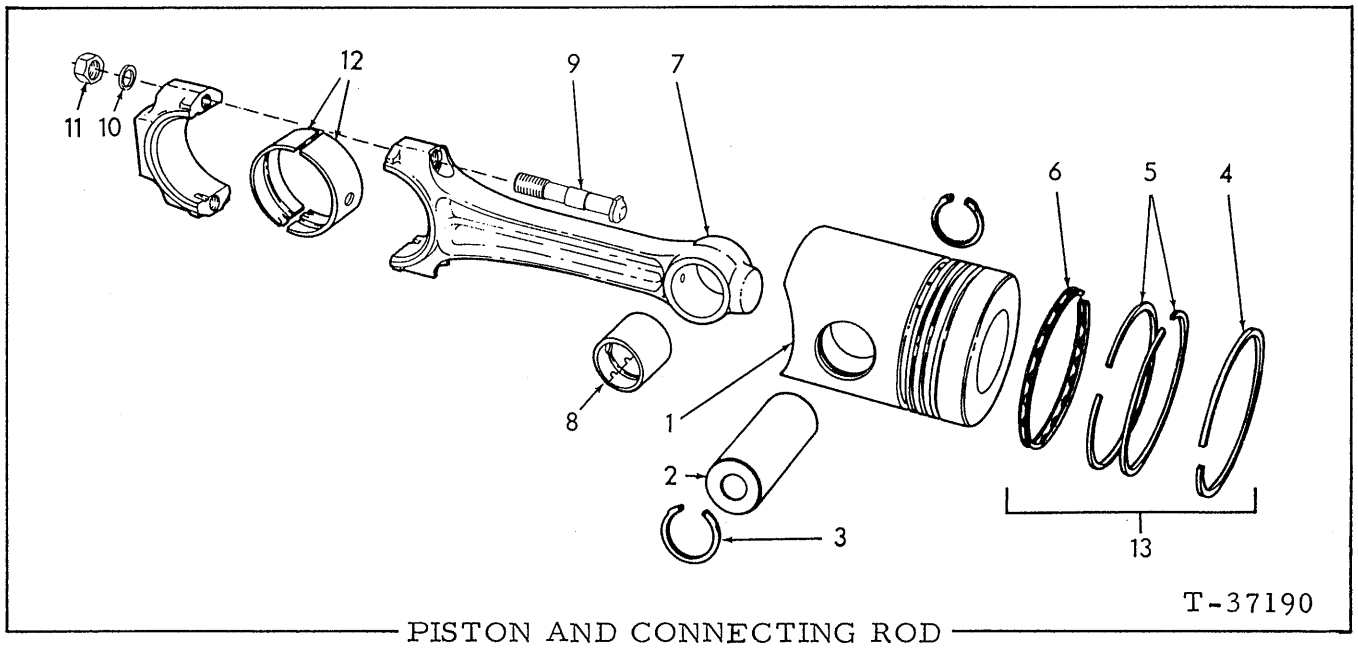

PISTON AND CONNECTING ROD

USAGE: Engines prior to S/N 17-03006

ITEM	PART NO.	QTY.	DESCRIPTION
1	74062037	6	□PISTON (Includes items 2, 3 and 14)
2	74390175	6	PIN (2 inch O.D.)
3	74253749	12	RETAINER
4	--------	6	RING } Order item 13
5	--------	12	RING } Order item 13
6	--------	6	RING } Order item 13
7	74394058	6	ROD ASSY. (Service replacement)(Includes items 8 and 9)(Order Bearing from page 16A)
8	74376986	6	BUSHING
9	74388142	12	BOLT (Prior to engine #17-01675)(Shown)
	74394747	12	CAPSCREW (Engine #17-01675 and up)
10	74388146	12	WASHER } Engines prior to engine # 17-01675)
11	74390011	12	NUT } Engines prior to engine # 17-01675)
12	74394172	12	BEARING, connecting rod (standard size)
	74394221	12	BEARING, connecting rod (.010" undersize)
	74394222	12	BEARING, connecting rod (.020" undersize)
	74394223	12	BEARING, connecting rod (.030" undersize)
	74394224	12	BEARING, connecting rod (.040" undersize)
13	74061967	6	RING SET (One piston only)(Includes items 4 thru 6)

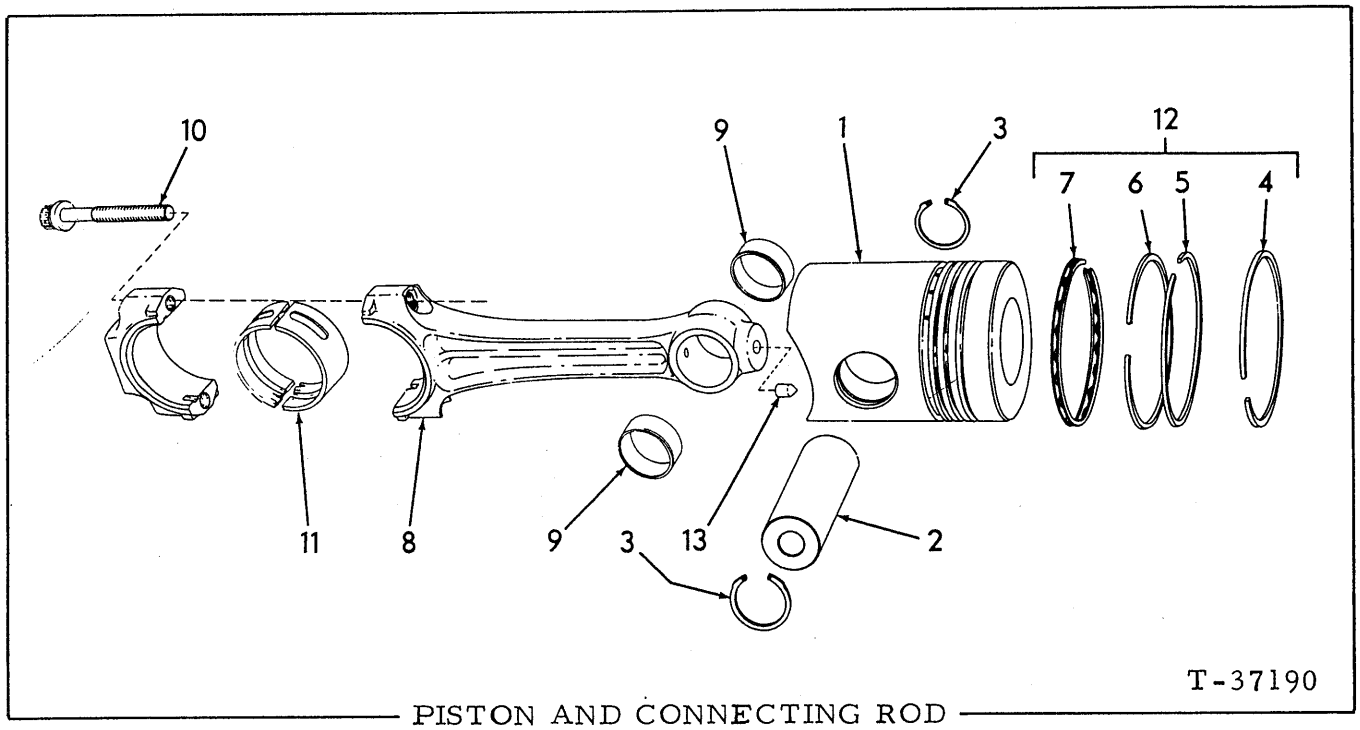

PISTON AND CONNECTING ROD

USAGE: Engine S/N 17-03006 and up; also 6138 LT engines. See page 15 for first and second type.

ITEM	PART NO.	QTY.	DESCRIPTION
1	74396638	6	□PISTON ASSY. (Includes Piston and items 2, 3 and 12) (Stamped 4396594)(Replace in setsin engine S/N 17-03006 thru 14-02470 with intake valve recess)
2	74394212	6	PIN (2-1/4 O.D.)
3	74255943	12	RETAINER
4	--------	6	RING (top groove) } Order item 12
5	--------	6	RING (2nd groove)
6	--------	6	RING (3rd groove)
7	--------	6	RING (4th groove)
8	74396085	6	ROD ASSY. (Service replacement)(Includes items 9, 10 and 13 and instruction sheet)
9	74396367	6	BUSHING KIT
10	74394747	12	CAPSCREW, 12 pt.
11	74396048	12	BEARING (Standard size)
	74396049	12	BEARING (.010" undersize)
	74396050	12	BEARING (.020" undersize)
	74396051	12	BEARING (.030" undersize)
	74396052	12	BEARING (.040" undersize)
12	74061967	6	RING SET (For ONE piston only)(Includes items 4 thru 7)
13	74395683	6	PLUG (Engines prior to S/N 17-04671 without piston cooling, or with cooling jets in cylinder block)
	74630114	6	TIP, spray (engine S/N 17-04671 and up; also 6138 LT engines)
14	74062108	1	KIT, bearing (Standard) } Kit contains 12 bearings
	74062109	1	KIT, bearing (.010" undersize)
	74062110	1	KIT, bearing (.020" undersize)
	74062111	1	KIT, bearing (.030" undersize)
	74062112	1	KIT, bearing (.040" undersize)

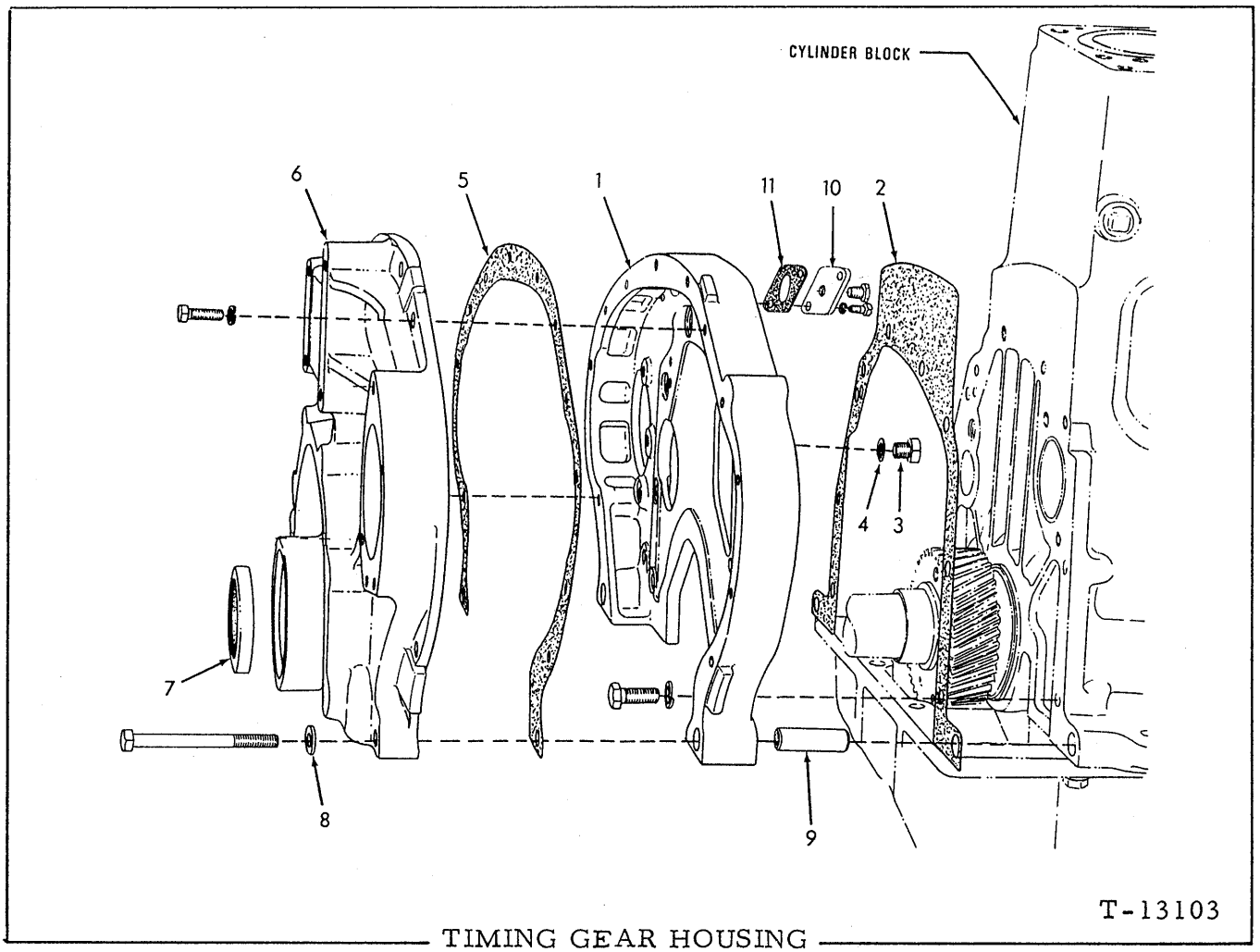

TIMING GEAR HOUSING

USAGE: Tractors prior to S/N 19S15213 with 17000 MK II engines.

ITEM	PART NO.	QTY.	DESCRIPTION
1	74393560	1	HOUSING
	70916311	8	CAPSCREW, 1/2"NC x 1-1/4"
	70904208	8	LOCKWASHER, 1/2"
2	74660492	1	□GASKET, gear housing
3	70919229	1	CAPSCREW, plugging (1/2"NC x 1/2")
4	74119937	1	□GASKET, plugging capscrew
5	74376609	1	□GASKET, gear housing
6	74391911	1	COVER, timing gear housing (Engine prior to #17-01911)
	74395852	1	COVER, timing gear housing (Engine #17-01911 and up)
	70916321	2	CAPSCREW, 1/2"NC x 4-1/2"
	70919224	7	CAPSCREW, 3/8"NC x 1-1/8"
	70904206	7	LOCKWASHER, 3/8"
7	74036340	1	SEAL, oil, crankshaft
8	74371445	2	WASHER, plain, housing cover capscrew
9	74371444	2	DOWEL, hollow, gear housing
10	74390837	1	COVER, gear housing
	70915408	2	CAPSCREW, 3/8"NC x 3/4"
	70904206	2	LOCKWASHER, 3/8"
	70920333	1	PLUG, hex-hd., 3/8"NPT
11	74371027	1	□GASKET, gear housing cover

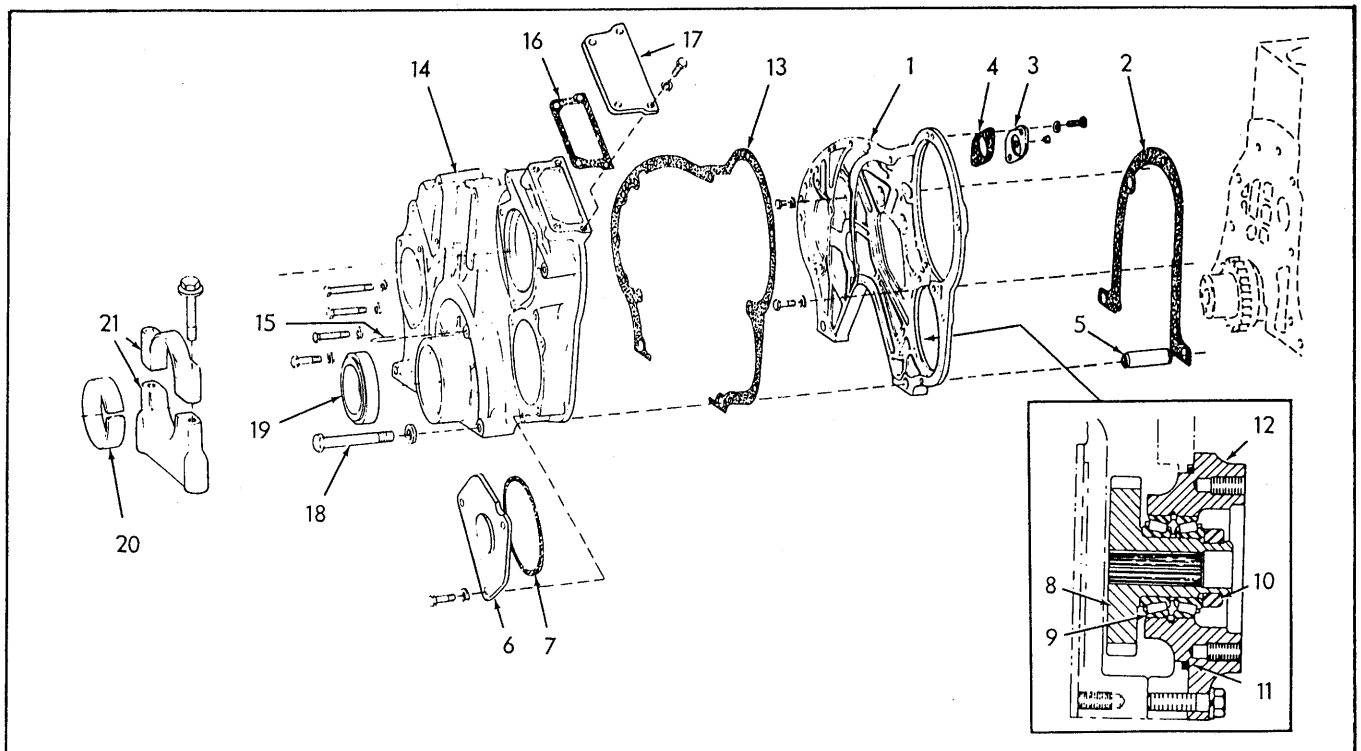

TIMING GEAR HOUSING

USAGE: Tractor S/N 19S15213 and up with 6138 LT engine.

ITEM	PART NO.	QTY.	DESCRIPTION
1	74394675	1	HOUSING, timing gear
	70916311	8	CAPSCREW, 1/2"NC x 1-1/4"
	70912069	2	CAPSCREW, 3/8"NC x 2-1/2"
	70910287	2	LOCKWASHER, 3/8"
2	74395999	1	□GASKET
3	74390837	1	COVER
	70918887	1	PLUG, pipe, hex-skt., 3/8"NPT
	70915408	2	CAPSCREW, 3/8"NC x 3/4"
	70910287	2	LOCKWASHER, 3/8"
4	74371027	1	□GASKET
5	74371444	2	DOWEL
6	74394672	2	COVER
	70930358	1	CAPSCREW, Nylok, 3/8"NC x 7/8"
	70922763	5	CAPSCREW, 3/8"NC x 1"
	70910287	6	LOCKWASHER, 3/8"
7	70923590	2	□O-RING
8	74395510	1	GEAR
9	74357289	1	BEARING
10	74023052	1	NUT
11	70923590	1	□O-RING
12	74396118	1	HOUSING
	70930796	1	CAPSCREW, Nylok, 3/8"NC x 1-1/4"
	70916272	2	CAPSCREW, 3/8"NC x 1-1/4"
	70910287	3	LOCKWASHER, 3/8"
13	74396000	1	□GASKET

(Continued)

TIMING GEAR HOUSING (Continued)

ITEM	PART NO.	QTY.	DESCRIPTION
14	74395998	1	COVER
	70919015	6	CAPSCREW, 3/8"NC x 3-1/2"
	70919224	1	CAPSCREW, 3/8"NC x 1-1/8"
	70922287	1	CAPSCREW, 3/8"NC x 1-3/4"
	70919227	2	CAPSCREW, 3/8"NC x 3-1/4"
	70915990	1	CAPSCREW, 3/8"NC x 2-3/4"
	70910287	9	LOCKWASHER, 3/8"
15	74395997	1	POINTER, timing
16	74394673	1	□GASKET
17	74396168	1	COVER
	70921076	4	CAPSCREW, 3/8"NC x 1-1/4"
	70910287	4	LOCKWASHER, 3/8"
18	70916321	2	CAPSCREW, 1/2"NC x 4-1/2"
	74371445	2	WASHER
19	74062468	1	SEAL
20	74395453	1	LINER
21	74395454	1	SUPPORT
	70924694	2	CAPSCREW, flanged, 1/2"NC x 3"

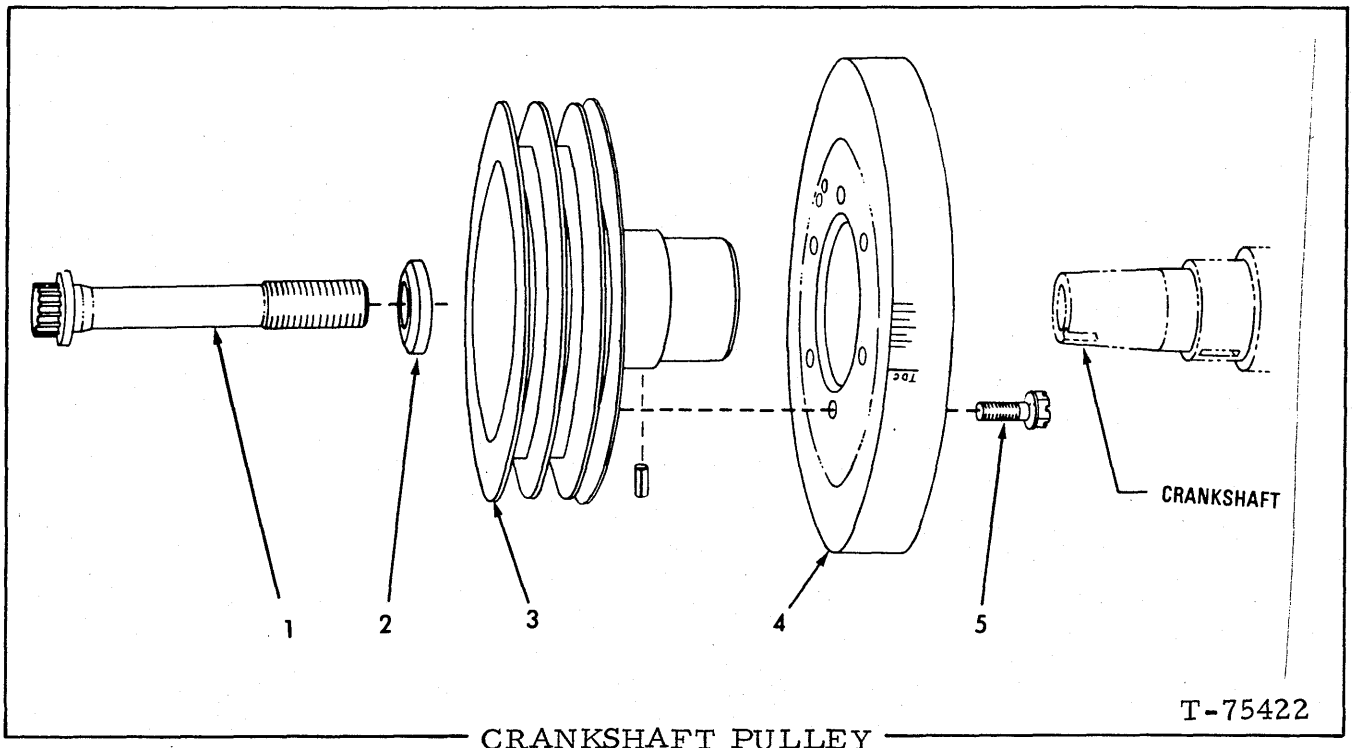

CRANKSHAFT PULLEY

USAGE: 17000 MKII engines

ITEM	PART NO.	QTY.	DESCRIPTION
1	74393435	1	SCREW, 3/4"NC x 7-1/4" (If for first replacement on engines prior to #17-01412 also order item 2)
2	74393436	1	WASHER
3	74395631	1	PULLEY (Includes items 4, 5 and Pin indented below)
	70921839	1	PIN, spring, 5/16" x 1-3/8"
4	74394694	1	DAMPER
5	74391022	6	BOLT
6	74391230	1	KEY (Crankshafts with keyway prior to engine #17-04307)(Not illustrated)

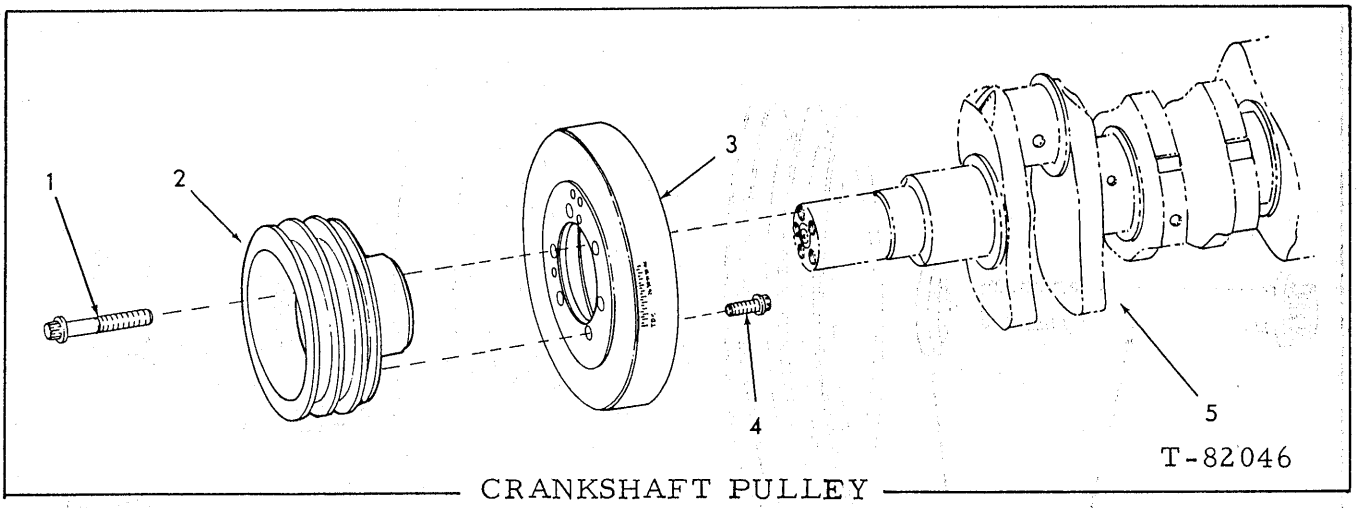

CRANKSHAFT PULLEY

USAGE: 6138 LT engines

ITEM	PART NO.	QTY.	DESCRIPTION
1	74394747	5	CAPSCREW
2	74396196	1	PULLEY
3	74395767	1	DAMPER
4	74391022	6	BOLT
5	--------	1	CRANKSHAFT (See page 20)

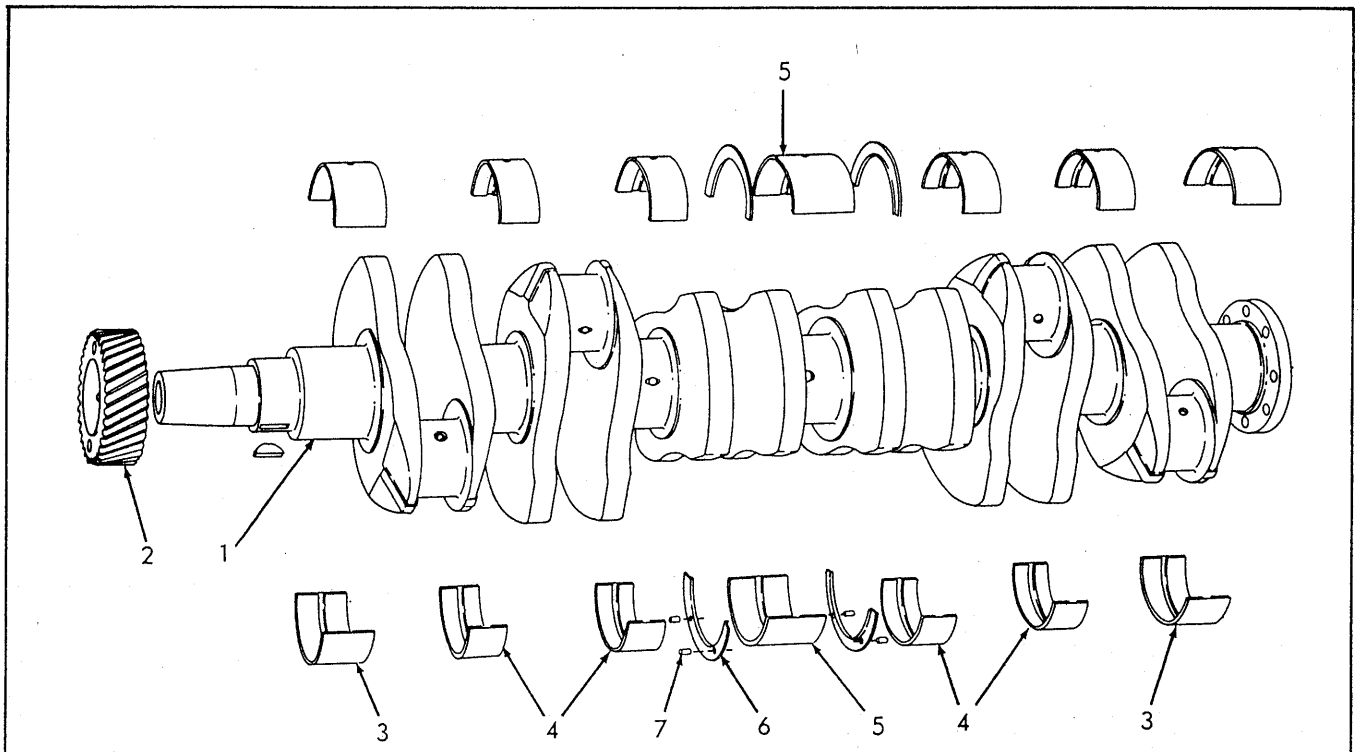

T-37191

CRANKSHAFT

ITEM	PART NO.	QTY.	DESCRIPTION	
1	74396002	1	CRANKSHAFT (Engines prior to S/N 17-04926)(For first replacement prior to S/N 17-04307 also order 1 Key 70905127 and 1 Gear 74396172)	
	74395456	1	CRANKSHAFT (Engine S/N 17-04926 and up; also 6138 LT engines)	
2	74396172	1	GEAR, crankshaft (Engines prior to S/N 17-04926)	
	74396173	1	GEAR, crankshaft (Engines S/N 17-04926 and up; also 6138 LT engines)	
	70905129	1	KEY, #D woodruff, 5/16" x 1-1/4" (Used with keyway)	
	70905127	1	KEY, #B woodruff, 5/16" x 1 (Used with milled slot)	
3	74395905	4	BEARING, front and rear main (standard size)	3/8" oil hole (For first replaceemnt prior to engine #17-04275 also order 1 Pin 74395109 per bearing cap)
	74395908	4	BEARING, front and rear main (010" undersize)	
	74395909	4	BEARING, front and rear main (020" undersize)	
	74395910	4	BEARING, front and rear main (030" undersize)	
	74395911	4	BEARING, front and rear main (.040" undersize)	

(Continued)

ITEM	PART NO.	QTY.	DESCRIPTION	
4	74395906	8	BEARING, intermediate main (standard size)	3/8" oil hole (For first replacement prior to engine #17-04275 also order 1 PIN 74395109 per bearing cap)
	74395912	8	BEARING, intermediate main (.010" undersize)	
	74395913	8	BEARING, intermediate main (.020" undersize)	
	74395914	8	BEARING, intermediate main (.030" undersize)	
	74395915	8	BEARING, intermediate main (.040" undersize)	
5	74395907	2	BEARING, center main (standard size)	3/8" oil hole (For first replacement prior to engine #17-04275 also order 1 PIN 74395109 per bearing cap)
	74395916	2	BEARING, center main (.010" undersize)	
	74395917	2	BEARING, center main (.020" undersize)	
	74395918	2	BEARING, center main (.030" undersize)	
	74395919	2	BEARING, center main) (.040" undersize)	
6	74386359	4	FLANGE, thrust, center main, upper and lower (standard size)	
	74386453	4	FLANGE, thrust, center main, upper and lower (.005" oversize)	
	74386454	4	FLANGE, thrust, center main, upper and lower (.010" oversize)	
	74386455	4	FLANGE, thrust, center main, upper and lower (.015" oversize)	
7	70919347	4	PIN, spring	
8	74062039	1	KIT, bearing (standard size)	3/8" oil hole (For first replacement prior to engine #17-04275 also order 7 PIN 74395109)
	74062040	1	KIT, bearing (.010" undersize)	
	74062041	1	KIT, bearing (.020" undersize)	
	74062042	1	KIT, bearing (.030" undersize)	
	74062043	1	KIT, bearing (.040" undersize)	
			NOTE: Each BEARING KIT listed above consists of BEARINGS for complete crankshaft overhaul.	
9	74061825	1	KIT, flange (standard size)	
	74061826	1	KIT, flange (.005" undersize)	
	74061827	1	KIT, flange (.010" undersize)	
	74061828	1	KIT, flange (.015" undersize)	
			NOTE: Each center main bearing thrust FLANGE KIT listed above consists of 4 FLANGES and 4 PIN 70919347.	

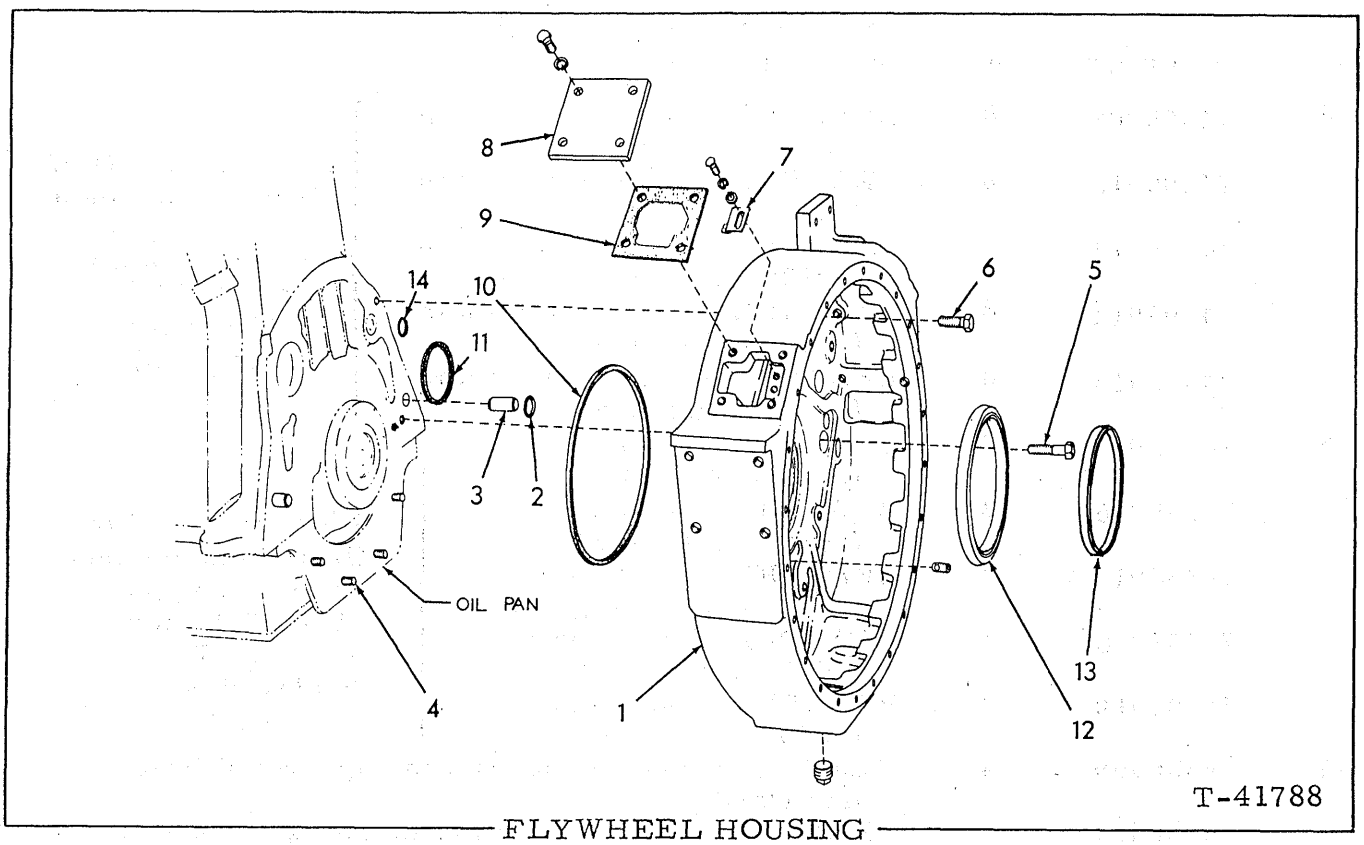

FLYWHEEL HOUSING

ITEM	PART NO.	QTY.	DESCRIPTION
1	74395433	1	HOUSING, flywheel
	70922884	2	SETSCREW, hex-socket, cup-pt., Nylok, 7/16"NC x 1/2"
	70920333	1	PLUG, pipe, 1/2"NPT
2	70923810	2	□O-RING, housing dowel
3	74373716	2	DOWEL, housing to crankcase
4	--------	4	CAPSCREW, (See OIL PAN)
5	70921556	2	CAPSCREW, 1/2"NC x 2"
6	70920574	8	CAPSCREW, 1/2"NC 1-3/8"
7	74386651	1	POINTER, timing
	70916284	2	CAPSCREW, 1/4"NC x 1/2"
	70904204	2	LOCKWASHER, 1/4"
	70911114	2	WASHER, plain, SAE std., 1/4"
8	74395049	1	COVER, timing hole
	70915813	4	CAPSCREW, 5/16"NC x 7/8"
	70904205	4	LOCKWASHER, 5/16"
9	74390432	1	□GASKET, timing hole cover
10	74336897	1	□RING, sealing, housing to crankcase (crankshaft hole)
11	74255904	1	□RING, sealing, housing to crankcase (camshaft hole)
12	74395770	1	SEAL, oil, crankshaft flange (If for Engines prior to #17-02342 also order 1 SLEEVE 74394036)
13	74394036	1	SLEEVE, wear (Engine #17-02342 and up)
14	74255898	1	□RING, sealing, housing to crankcase (oil gallery hole)

(Revised June 1978)

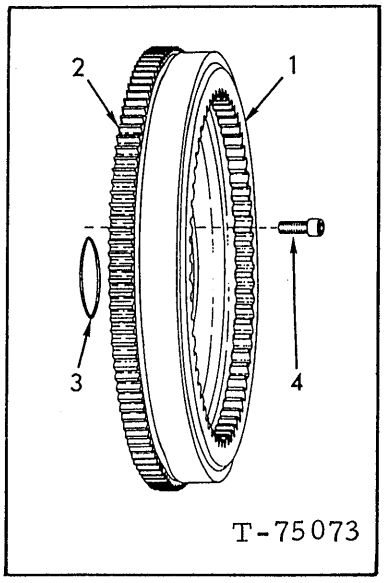

FLYWHEEL

ITEM	PART NO.	QTY.	DESCRIPTION
1	74395963	1	FLYWHEEL ASSY. (Includes item 2)
2	74303694	1	GEAR, ring
3	74255912	1	□O-RING, flywheel to crankshaft
4	74391666	8	CAPSCREW, flywheel

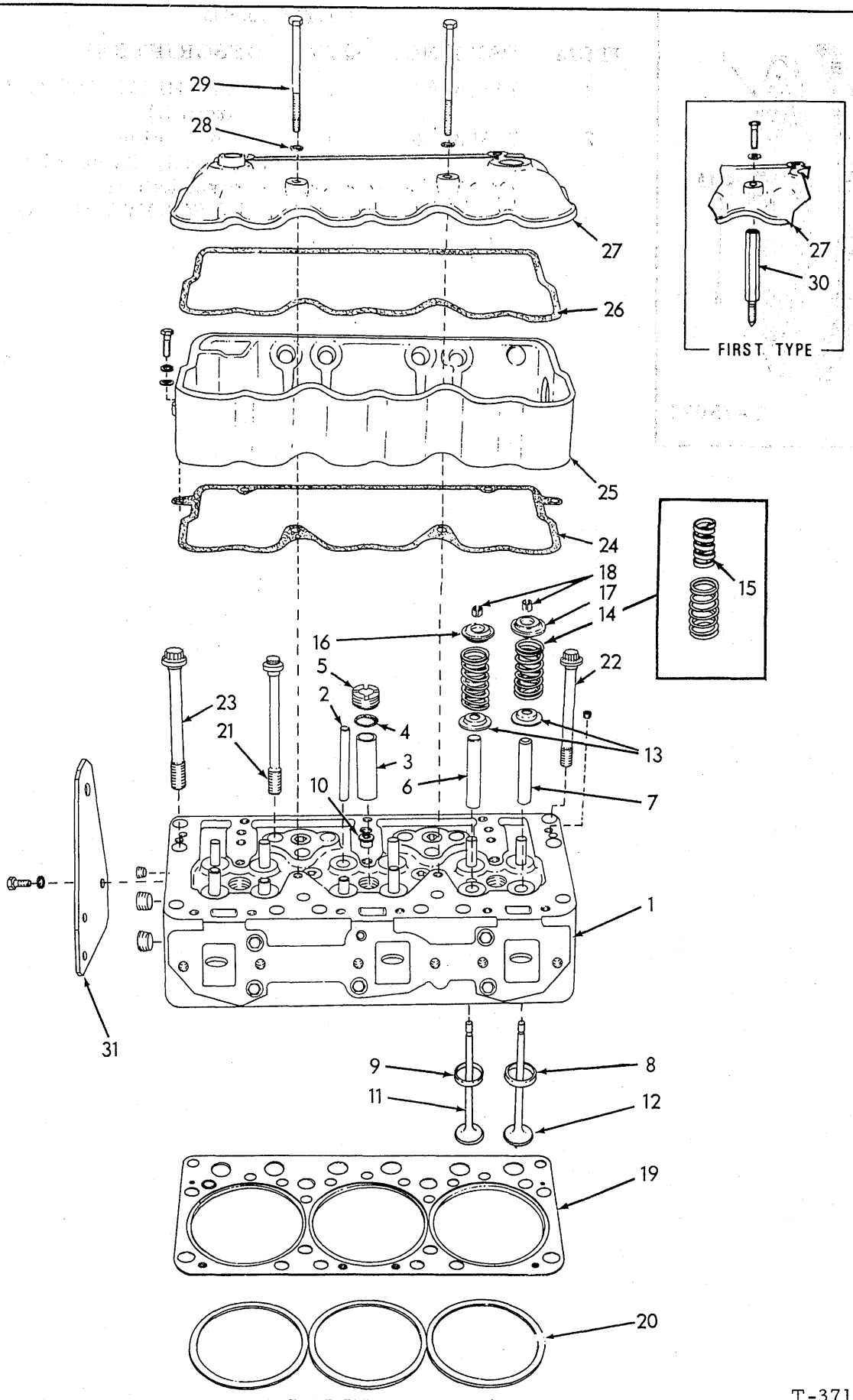

T-37183

CYLINDER HEAD

(Revised February 1976)

CYLINDER HEAD

ITEM	PART NO.	QTY.	DESCRIPTION
1	74394445	2	HEAD ASSY., cylinder (Includes items 2 thru 9 and plugs indented below)(For engines prior to #17-01554 also order 12 of item 16 per head)(For engine #17-02422 and up also order 3 of item 10 per head) (Can be installed singly)
	74255490	8	PLUG, pipe, hex-socket, 1/8"NPT
	74255577	26	PLUG, pipe, hex-socket, 3/4"NPT
	74255491	2	PLUG, pipe, hex-socket, 1/4"NPT
2	74386413	12	PIN, guide, valve bridge
3	74392051	6	SLEEVE, injection nozzle
4	70926672	6	O-RING, injection nozzle sleeve
5	74392052	6	NUT, injection nozzle sleeve
6	74390547	12	GUIDE, intake valve
7	74396560	12	GUIDE, exhaust valve
8	74392053	12	INSERT, exhaust valve seat (standard size)
	74392068	12	INSERT, exhaust valve seat (.005" oversize)
9	74386628	12	INSERT, intake valve seat (standard size)
	74386653	12	INSERT, intake valve seat (.005" oversize)
10	74392576	6	INSERT, cylinder head, injection nozzle (Engines prior to #17-02422)
11	74386790	12	VALVE, intake
12	74392054	12	VALVE, exhaust
13	74389685	24	SEAT, valve spring
14	--------	24	SPRING ASSY(First type)(Includes item 15) (Order 74396664)
	74396664	24	SPRING(Second type with integral damper)
15	--------	24	DAMPER,(Used with first type spring)
16	74389397	24	ROTOCOIL ASSY., intake valve (Serviced only as a unit)(Engine #17-01554 and up)
17	--------	-	RETAINER, exhaust valve spring (Order item 16) (Engines prior to #17-01554)
18	74376497	48	LOCK, valve stem
19	74394609	2	GASKET ASSY., cylinder head (Includes item 20)
20	--------	6	GASKET, cylinder sealing (Order item 19)
21	74391306	26	SCREW, cylinder head (5/8"NC x 7")
22	74391307	2	SCREW, cylinder head (5/8"NC x 6")
23	74393443	8	SCREW, cylinder head (3/4"NC x 7-1/4")
24	74393989	2	□GASKET, lower cover
25	74393625	1	COVER, lower section, front } Engines prior
	74393628	1	COVER, lower section, rear } to #17-03700
	74394928	2	COVER, lower section (Engine #17-03700 and up)
	70916272	4	CAPSCREW, 3/8"NC x 1-1/4"
	70904206	4	LOCKWASHER, 3/8"
	70913544	4	WASHER, plain
26	74389961	2	□GASKET, rocker cover
27	74386901	1	COVER, rocker (front)
	74387726	1	COVER, rocker (rear)
	70914847	1	CAPSCREW, 3/8"NC x 1-1/2" (Engines prior to #17-03364)
	70921405	1	CAPSCREW, 3/8"NC x 6" (Engine #17-03364 and up)
28	74254873	8	□WASHER, sealing, rocker cover capscrew

(Continued)

(Revised April 1981)

ITEM	PART NO.	QTY.	DESCRIPTION	
29	74386421	7	CAPSCREW, rocker cover (3/8"NC x 6-1/8") (Engines prior to #17-04161)	
	70921405	7	CAPSCREW, rocker cover (3/8"NC x 6")(Engine #17-04161 and up)	
30	74389965	1	BOLT, extension, rear lower cover (Engines prior to #17-03364)	
31	74395903	1	BRACKET, lifting (front)	Engine #17-03955 and up
	70916311	3	CAPSCREW, 1/2"NC x 1-1/4"	
	70904208	3	LOCKWASHER, 1/2"	

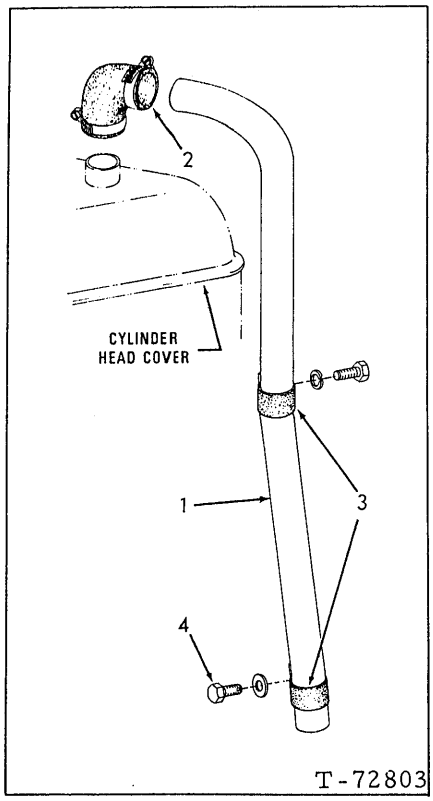

ENGINE BREATHER

ITEM	PART NO.	QTY.	DESCRIPTION
1	74390507	1	TUBE, breather
2	74255351	1	ELBOW, rubber
	70922198	2	CLAMP, hose, 1-9/16" to 2-9/16" diam.
3	74255361	2	CLAMP, tube supporting
4	70916308	1	CAPSCREW, 1/2"NC x 7/8"
	70904208	1	LOCKWASHER, 1/2"
	70910244	1	WASHER, plain, SAE std., 1/2"

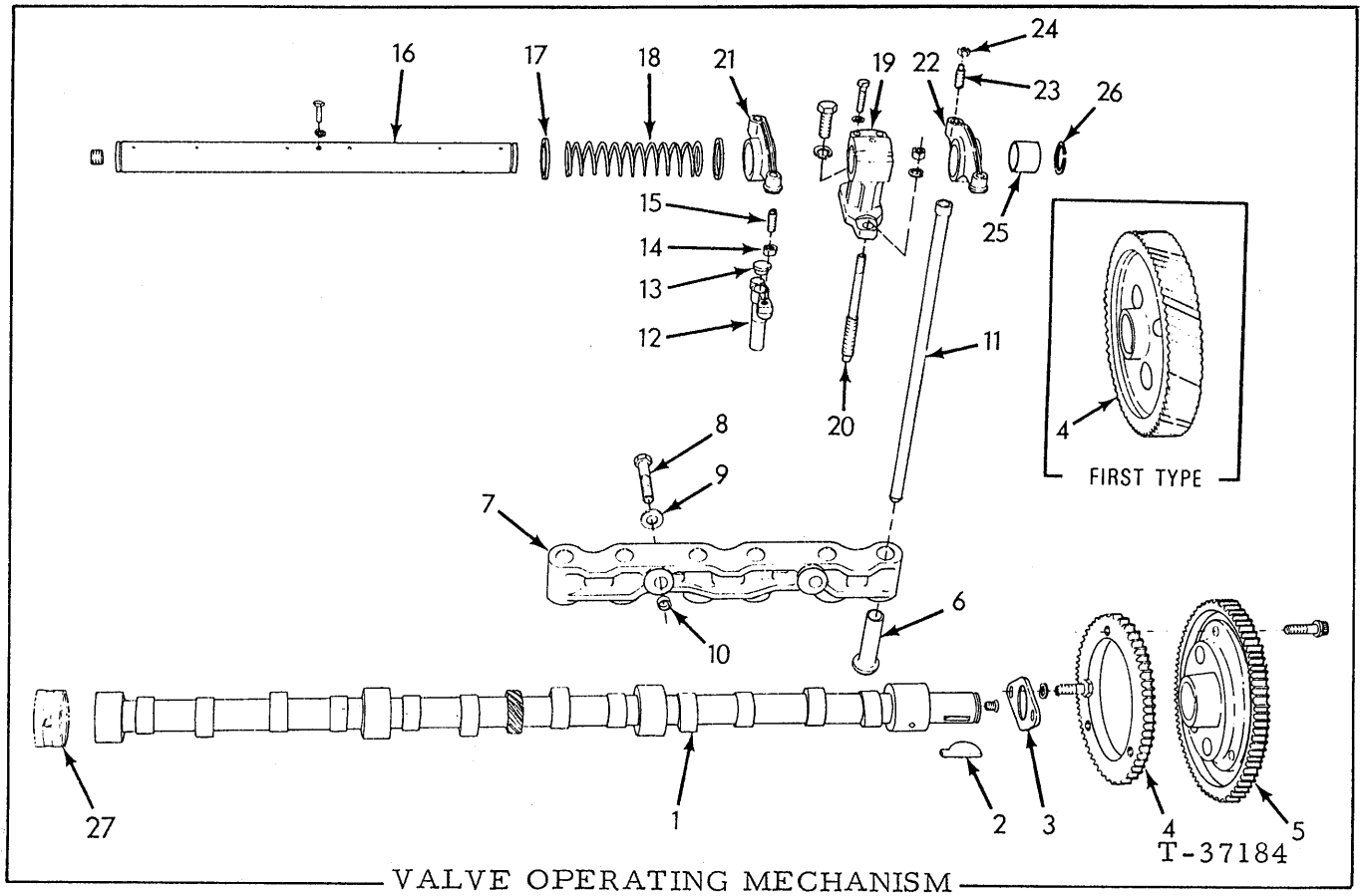

VALVE OPERATING MECHANISM

ITEM	PART NO.	QTY.	DESCRIPTION
1	74393399	1	CAMSHAFT
2	70923738	1	KEY
3	74386776	1	PLATE
	70916311	2	CAPSCREW, 1/2"NC x 1-1/4"
	70912441	2	LOCKWASHER, 1/2"
4	74392183	1	GEAR (17000 MK II engines)
	74394662	1	GEAR
	70922051	3	CAPSCREW, (12-pt., 3/8"NC x 1") } 6138 LT engines
5	74394666	1	GEAR
6	74391845	12	LIFTER
7	74391869	1	BRACKET
	74391870	1	BRACKET
8	70915969	4	CAPSCREW, 1/2"NC x 3"
9	74376277	4	WASHER
10	74303038	4	DOWEL
11	74391849	12	ROD
12	74390270	12	BRIDGE ASSY. (Includes items 13 thru 15)
13	74376538	12	INSERT
14	74516821	12	NUT
15	74390254	12	SCREW
16	74390117	2	SHAFT ASSY. (Includes Plugs indented below)
	70918887	4	PLUG, pipe, hex-socket, 3/8"NPT
	70915406	2	CAPSCREW, 1/4"NC x 3/4"
	70904204	2	LOCKWASHER, 1/4"

(Continued)

VALVE OPERATING MECHANISM (Continued)

ITEM	PART NO.	QTY.	DESCRIPTION
17	74386406	8	RETAINER
18	74386405	4	SPRING
19	74395085	6	BRACKET
	70916311	6	CAPSCREW, 1/2"NC x 1-1/4" (attaching)
	70912441	6	LOCKWASHER, 1/2"
	70915807	12	CAPSCREW, 5/16"NC x 1-1/4" (clamping) (Engines prior to S/N 17-04919)
	70904205	12	LOCKWASHER, 5/16" (Engines prior to S/N 17-04919)
20	74377541	6	STUD
	70910325	6	NUT, 1/2"NC
	70912441	6	LOCKWASHER, 1/2"
21	74390296	4	ARM ASSY., intake valve Nos. 1, 2, 4, 5
	74390297	2	ARM ASSY., exhaust valve Nos. 3, 6
22	74390294	4	ARM ASSY., exhaust valve Nos. 1, 2, 4, 5
	74390295	2	ARM ASSY., intake valve Nos. 3, 6
			NOTE: Each ARM ASSY. listed above includes items 23 thru 25.
23	74336646	12	SCREW
24	74516821	12	NUT
25	74388428	12	BUSHING
26	74253190	4	RING, snap
27	--------	-	BEARING, camshaft (See page 12)

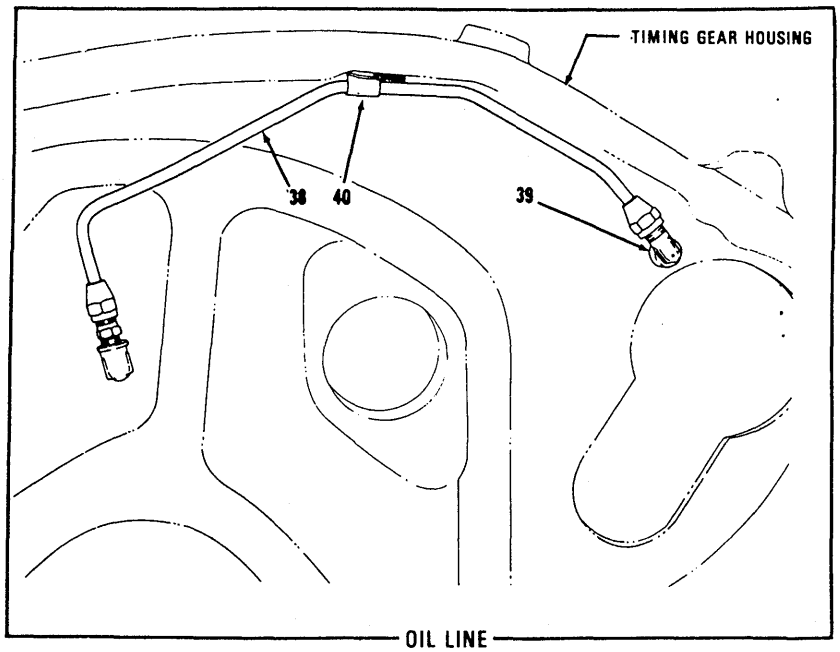

OIL LINE

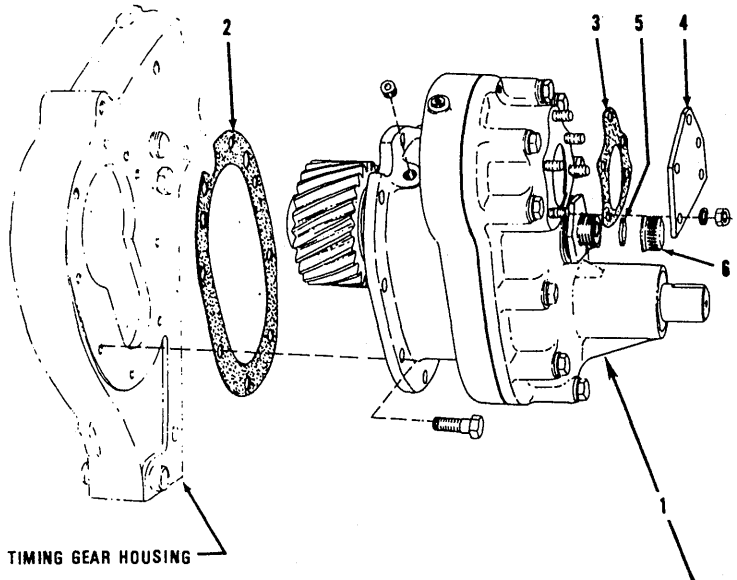

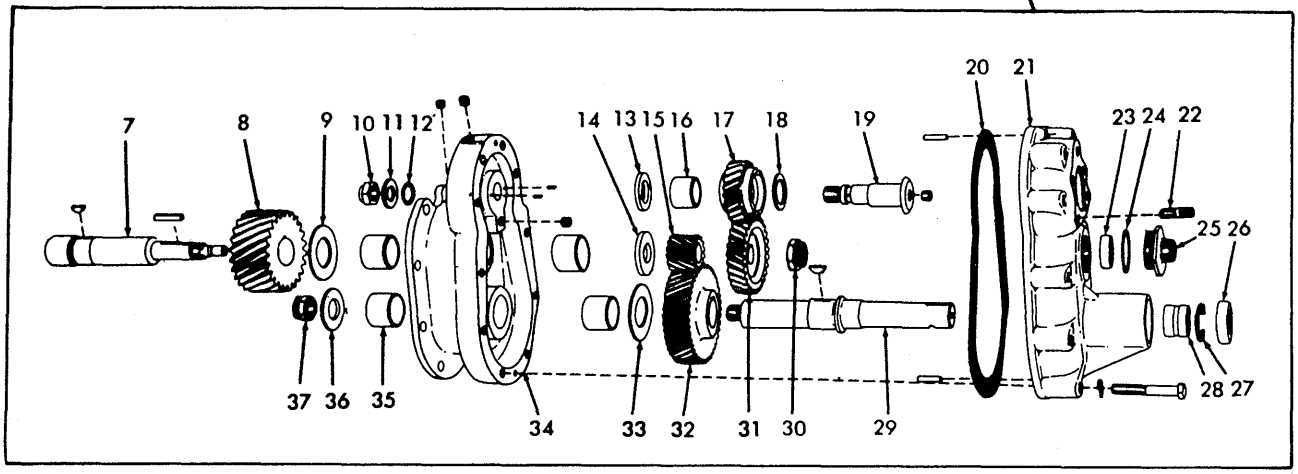

T-39416

ACCESSORY DRIVE

ACCESSORY DRIVE

USAGE: Tractors prior to S/N 19S15213 with 17000 MKII engines.

ITEM	PART NO.	QTY.	DESCRIPTION
1	74391441	1	DRIVE ASSY. (Consists of items 7 thru 37)
	70921520	8	CAPSCREW, Nylok, 3/8"NC x 7/8"
2	74376603	1	☐GASKET, accessory drive to gear housing
3	74386826	1	GASKET, housing cover plate
4	74389593	1	PLATE, housing cover
	70904206	3	LOCKWASHER, 3/8"
	70910123	3	NUT, 3/8"NC
5	74367090	1	☐GASKET, tachometer hole nut
6	74371118	1	NUT, cover tachometer hole
7	74391419	1	SHAFT, upper
	70917409	1	KEY, #9 woodruff, 3/16" x 3/4"
	70905850	1	KEY, straight, 5/16" x 1"
8	74391403	1	GEAR, accessory drive
9	74391412	1	WASHER, thrust, upper shaft, front
10	70911044	1	NUT, 5/8"NF
11	70900703	1	WASHER, auxiliary drive gear shaft
12	70923574	1	O-RING, auxiliary drive gear shaft
13	74376598	1	WASHER, thrust, auxiliary drive gear
	70917014	2	PIN, dowel, 1/8" x 3/8"
14	74391407	1	WASHER, thrust, rear
15	74364404	1	GEAR, upper shaft (14 teeth)
16	74376596	1	BUSHING, auxiliary drive gear
17	74320608	1	GEAR ASSY., auxiliary drive (Includes item 16)
18	74391411	1	PLATE, thrust, auxiliary drive gear
19	74376591	1	SHAFT ASSY., auxiliary drive (Includes PLUG indented below)
	70917673	1	PLUG, pipe, hex-socket, 1/8"NPT
20	74376604	1	GASKET, cover
21	74386711	1	COVER ASSY., housing (Includes item 28)
	70912069	10	CAPSCREW, 3/8"NC x 2-1/2"
	70904206	10	LOCKWASHER, 3/8"
	70917023	2	PIN, dowel, 1/4" x 1"
22	74389599	3	STUD, housing cover
23	74391019	1	SEAL, oil, upper shaft
24	74251601	1	GASKET, tachometer drive adapter

(Continued)

ITEM	PART NO.	QTY.	DESCRIPTION
25	74365627	1	ADAPTER, tachometer drive
26	74386879	1	SEAL, oil, lower shaft
27	74254742	1	RING, snap, bushing retaining
28	74377278	1	BUSHING, housing cover
29	74391475	1	SHAFT, lower
	70917409	1	KEY, #9 woodruff, 3/16" x 3/4"
30	70930805	1	NUT, upper shaft (self-locking)
31	74376590	1	GEAR, driving, fuel transfer pump
32	74391554	1	GEAR, lower shaft (42 teeth)
33	74391412	1	WASHER, thrust, lower shaft, rear
34	74391408	1	HOUSING ASSY. (Includes item 35)
	70917673	4	PLUG, pipe, hex-socket, 1/8"NPT
35	74369746	4	BUSHING, accessory drive housing
36	74364166	1	WASHER, thrust, lower shaft, front
37	70930805	1	NUT, lock, cd. pltd., 3/4"NF
38	74376627	1	TUBE ASSY., lubricating oil (Includes nuts)
	70910141	1	CONNECTOR, flare type, 1/4" tube, 1/8"NPT male
	70917013	1	ELBOW, street, brass, 90°, 1/8"NPT
39	74391885	1	ELBOW, lubricating oil tube
	70917841	1	NIPPLE, pipe, 1/8"NPT x 7/8"
40	74361829	1	CLIP, tube supporting
	74335669	1	CAPSCREW, drilled-hd., 1/4"NC x 1/2"
	70904204	1	LOCKWASHER, 1/4"
	74348691	1	WIRE, locking #18 x 6"

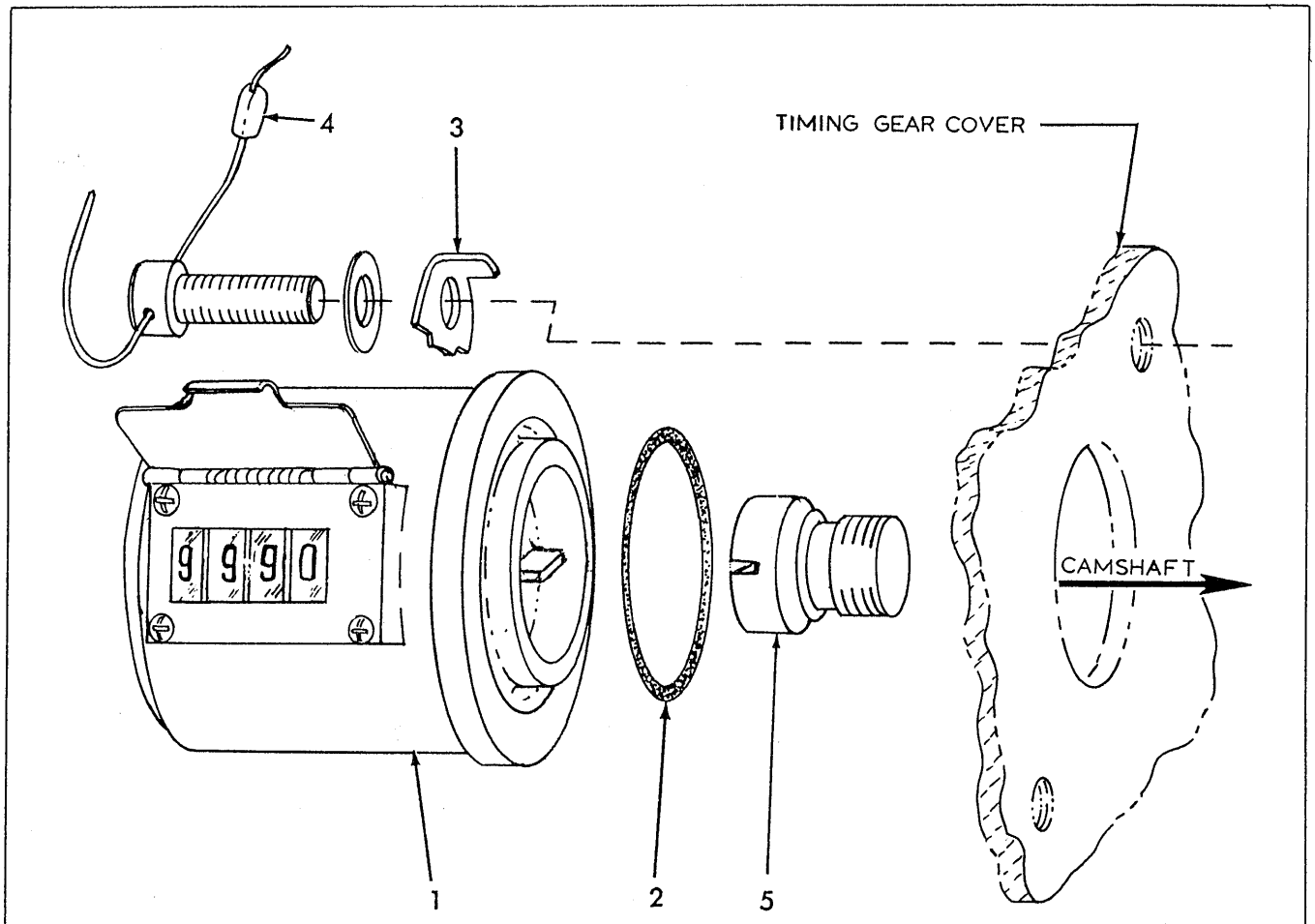

HOUR METER (Mechanical)

USAGE: Standard equipment on engines prior to Serial No. 17-01911

ITEM	PART NO.	QTY.	DESCRIPTION
1	74392190	1	METER ASSY. (Serviced only as a unit)
2	70924137	1	O-RING, meter mounting
3	74359293	2	CLAMP, meter attachment
	74391914	2	SCREW, hex-socket-hd., 1/4"NF x 3/4"
	70904204	2	LOCKWASHER, 1/4"
4	74355843	1	SEAL, anti-tampering
5	74391912	1	PLUG, camshaft (meter driving)

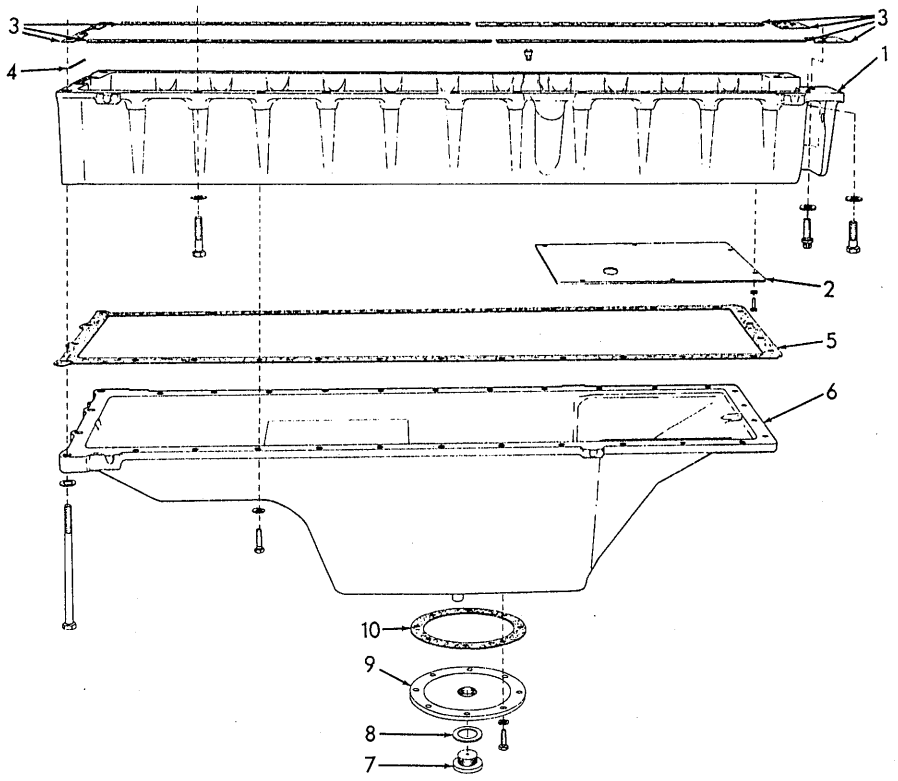

T-39379

OIL PAN

USAGE: Engines prior to serial No. 17-01756

ITEM	PART NO.	QTY.	DESCRIPTION
1	74391646	1	PAN, oil, upper section
	70919840	1	PLUG, pipe, hex-hd., 1/4"NPT
	70916314	23	CAPSCREW, 1/2"NC x 2"
	70915987	1	CAPSCREW, 1/2"NC x 1-1/2"
	70922065	2	SCREW, 12-pt. head, 1/2"NC x 1-1/4"
	70912333	26	WASHER, plain
2	74385796	1	PLATE, oil baffle
	70915343	6	CAPSCREW, 1/4"NC x 5/8"
	70904204	6	LOCKWASHER, 1/4"
3	**74395803**	1	GASKET SET, upper oil pan
4	74379070	1	□SEAL, oil
5	74385781	1	GASKET SET, lower oil pan
6	74391390	1	PAN, oil, lower section
	70914847	26	CAPSCREW, 3/8"NC x 1-1/2"
	70911423	26	WASHER, plain, 3/8"
	70916326	4	CAPSCREW, 1/2"NC x 7-1/2"
	70912333	4	WASHER, plain, 1/2"
7	70035250	1	PLUG, oil drain
8	70667252	1	□GASKET, drain plug
9	74371255	1	PLATE, clean-out hole
	70919224	8	CAPSCREW, 3/8"NC x 1-1/8"
	70904206	8	LOCKWASHER, 3/8"
10	74371289	1	□GASKET, clean-out hole plate

(Revised September 1979)

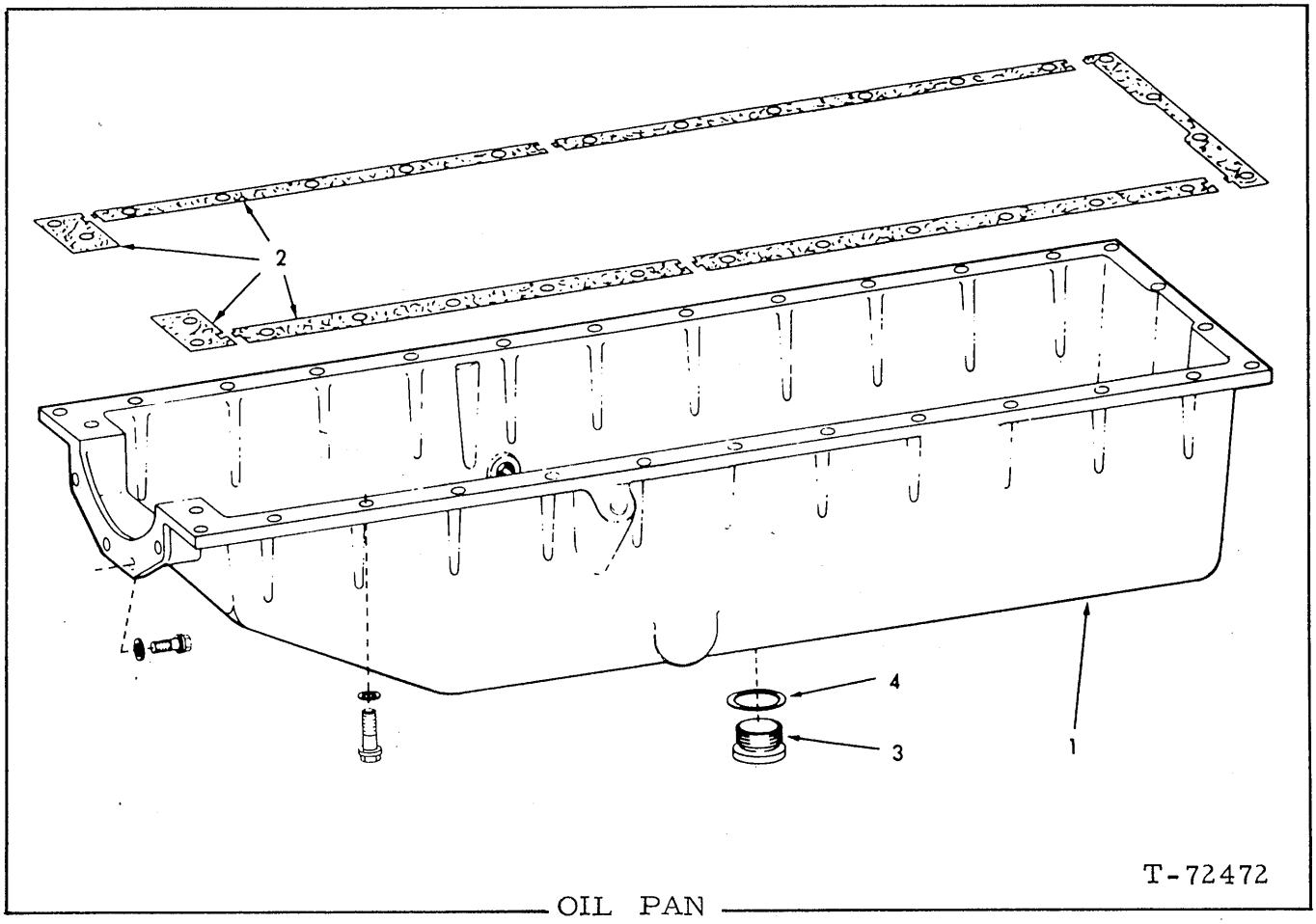

OIL PAN

USAGE: Engines S/N 17-01756 and up; also earlier engines with oil pump conversion kit.

ITEM	PART NO.	QTY.	DESCRIPTION	
1	74396471	1	PAN, (aluminum)	For engines prior to S/N 17-03391 also order 1 Plug 70035250, 1 Gasket 70667252, 1 Plug 70921216, and 1 Plug 74362338
	74396124	1	PAN, (cast iron)	
	70922064	4	CAPSCREW, 12 pt., 1/2"NC x 1"	
	70922220	30	CAPSCREW, 12 pt., 1/2"NC x 1-1/2"	
	70912441	34	LOCKWASHER, 1/2"	
	70924636	1	PLUG, pipe, 1/2"NPT	
	70918851	1	PLUG, pipe, 3/4" NPT	
	74362338	1	PLUG, gauge hole	
	70921216	1	PLUG (Includes O-Ring)	Engine #17-03391 and up
	70921214	1	O-RING	
2	74395803	1	GASKET SET	
3	70035250	2	PLUG, drain	
4	70667252	2	GASKET, drain plug	

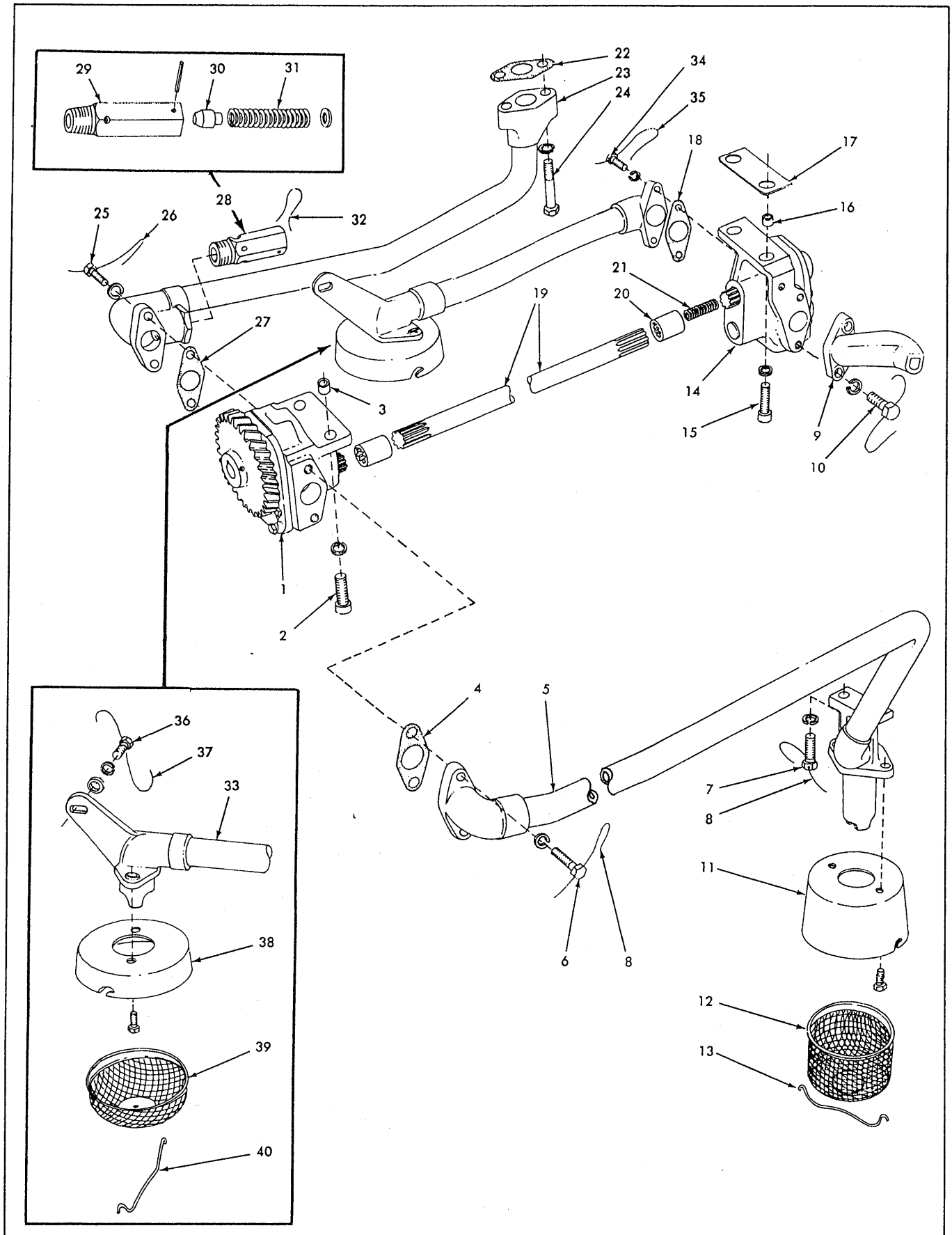
29
30
31
28
32
25
26
22
23
24
34
35
18
17
16
21
19
20
27
3
14
15
9
10
1
2
4
5
7
8
6
8
11
12
13
36
37
33
38
39
40
T-37208

USAGE: Engines prior to S/N 17-01756

ITEM	PART NO.	QTY.	DESCRIPTION
1	--------	1	PUMP ASSY., pressure (See page 42 and NOTE below)
2	70912274	2	CAPSCREW, hex-socket-hd., 7/16"NC x 1-1/2"
	70904207	2	LOCKWASHER, 7/16"
3	74371253	2	DOWEL, hollow, pressure pump
4	74389782	1	□GASKET, pressure pump suction line
5	74390362	1	TUBE, suction, pressure pump
6	74378558	2	CAPSCREW, drilled-hd., 3/8"NC x 1-1/8"
	70904206	2	LOCKWASHER, 3/8"
7	74377201	2	CAPSCREW, drilled-hd., 7/16"NC x 1-1/4"
	70904207	2	LOCKWASHER, 7/16"
8	74509035	2	WIRE, locking, #18 x 10"
9	74388488	1	TUBE, discharge, scavenging pump
10	74335610	2	CAPSCREW, drilled-hd., 3/8"NC x 1"
	70904206	2	LOCKWASHER, 3/8"
	74509035	1	WIRE, locking, #18 x 10"
11	74389732	1	COVER, pressure pump oil screen
	70915813	2	CAPSCREW, 5/16"NC x 7/8"
12	74374127	1	SCREEN, pressure oil pump
13	74376294	1	RETAINER, pressure oil pump screen
14	--------	1	PUMP ASSY., scavenging (See page 43 and NOTE below)
15	70912274	2	CAPSCREW, hex-socket-hd., 7/16"NC x 1-1/2"
	70904207	2	LOCKWASHER, 7/16"
16	74371253	2	DOWEL, hollow, scavenging pump
17	74386384	1	SHIM, scavenging pump
18	74389782	1	□GASKET, scavenging pump suction line
19	74385537	1	SHAFT, scavenging pump drive
20	74385536	2	COUPLING, splined, scavenging pump drive
21	74385715	1	SPRING, pump drive shaft
22	74660423	1	□GASKET, discharge line to block
23	74388261	1	TUBE, pressure pump discharge
24	70916314	2	CAPSCREW, 1/2"NC x 2"
	70904208	2	LOCKWASHER, 1/2"
25	74378558	2	CAPSCREW, drilled-hd., 3/8"NC x 1-1/8"
	70904206	2	LOCKWASHER, 3/8"
26	74509035	1	WIRE, locking, #18 x 10"
27	74389782	1	□GASKET, discharge line to pump
28	74354573	1	VALVE ASSY., pressure relief (Includes items 29 thru 31)
29	--------	1	BODY, pressure relief valve } Not serviced
30	--------	1	PISTON, pressure relief valve } separately

NOTE: Replacements for the original equipment pressure and scavenging pump assemblies (item 1 and 14) are no longer supplied. If replacement of either pump is necessary, install Oil Pump Conversion Kit 74394971. See PACKAGED PARTS.

(Continued)

(Revised April 1980)

ITEM	PART NO.	QTY.	DESCRIPTION
31	74354568	1	SPRING, pressure relief valve
	74359310	1	WASHER, plain
	70916001	1	PIN, roll, 3/16" x 1"
32	74509035	1	WIRE, locking, pressure relief valve
33	74390328	1	TUBE, suction, scavenging pump
34	74335548	2	CAPSCREW, drilled-hd., 3/8"NC x 1-7/8"
35	74509035	1	WIRE, locking, #18 x 10"
36	74377202	1	CAPSCREW, drilled-hd., 5/16"NC x 1"
	70913755	1	WASHER, plain
	70904206	2	LOCKWASHER, 3/8"
	70904205	1	LOCKWASHER, 5/16"
37	74348691	1	WIRE, locking #18 x 6"
38	74348684	1	COVER, scavenging pump screen
	70915813	2	CAPSCREW, 5/16"NC x 7/8"
39	74348683	1	SCREEN, scavenging oil pump
40	74348682	1	RETAINER, scavenging oil pump screen

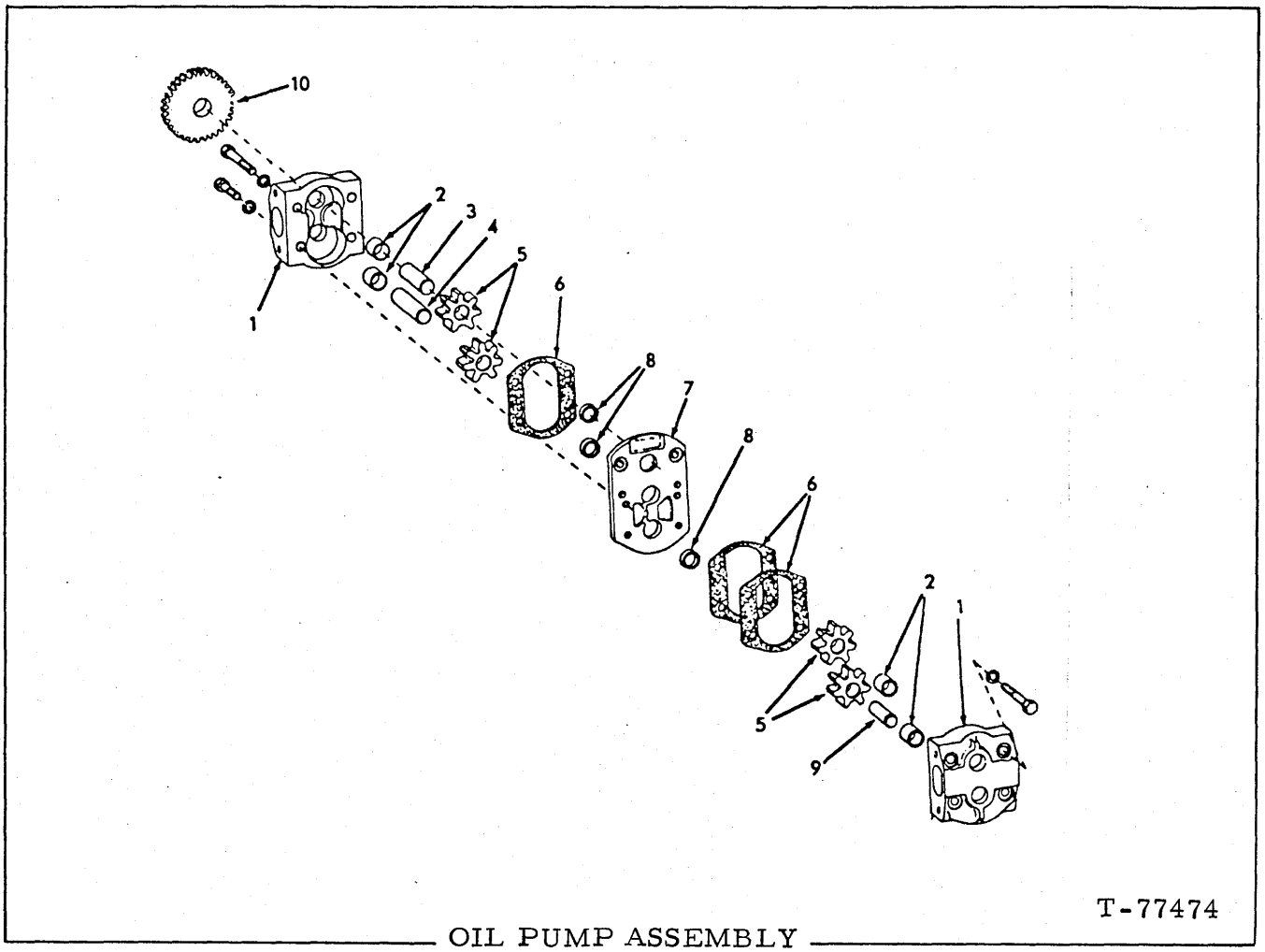

OIL PUMP ASSEMBLY

USAGE: Model 16000 and 17000 Model MK II engines

ITEM	PART NO.	QTY.	DESCRIPTION
-	74396859	1	PUMP ASSY. (Includes items 1 thru 10)
1	74396854	2	BODY ASSY. (Includes item 2)
	70920594	6	CAPSCREW, 7/16"NF x 2"
	70928211	2	CAPSCREW, 7/16"NF x 3-3/4"
	70907863	8	LOCKWASHER, 7/16"
2	74396899	4	BUSHING (Includes instruction sheet)
3	74396107	1	SHAFT
4	74396108	1	SHAFT
5	74007877	4	GEAR
6	74393349	3	GASKET
7	74396855	1	PLATE ASSY. (Includes item 8)
8	74396899	3	BUSHING (Includes instruction sheet)
9	74396109	1	SHAFT
10	74393355	1	GEAR, helical

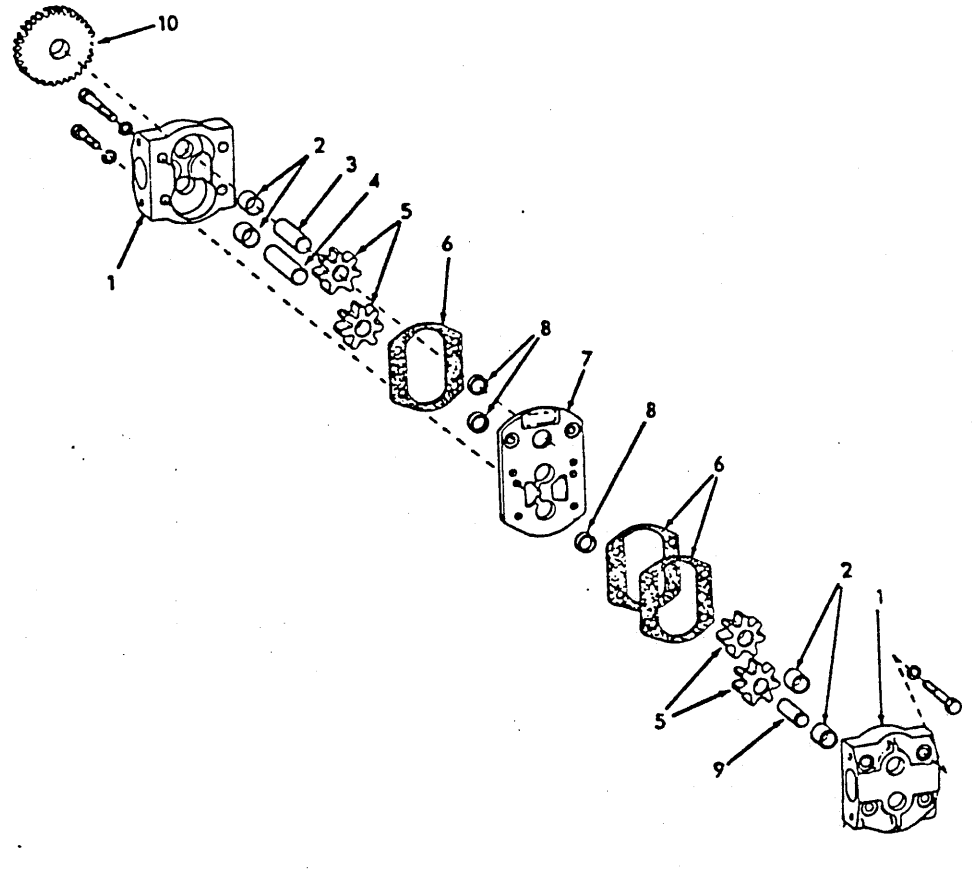

OIL PUMP ASSEMBLY

USAGE: Model 6138 LT engines

ITEM	PART NO.	QTY.	DESCRIPTION
-	74396860	1	PUMP ASSY. (Includes items 1 thru 10)
1	74396854	2	BODY ASSY. (Includes item 2)
	70920594	6	CAPSCREW, 7/16"NF x 2"
	70928211	2	CAPSCREW, 7/16"NF x 3-3/4"
	70907863	8	LOCKWASHER, 7/16"
2	74396899	4	BUSHING (Includes instruction sheet)
3	74396107	1	SHAFT
4	74396108	1	SHAFT
5	74007877	4	GEAR
6	74393349	3	GASKET
7	74396855	1	PLATE ASSY. (Includes item 8)
8	74396899	3	BUSHING (Includes instruction sheet)
9	74396109	1	SHAFT
10	74394667	1	GEAR, spur

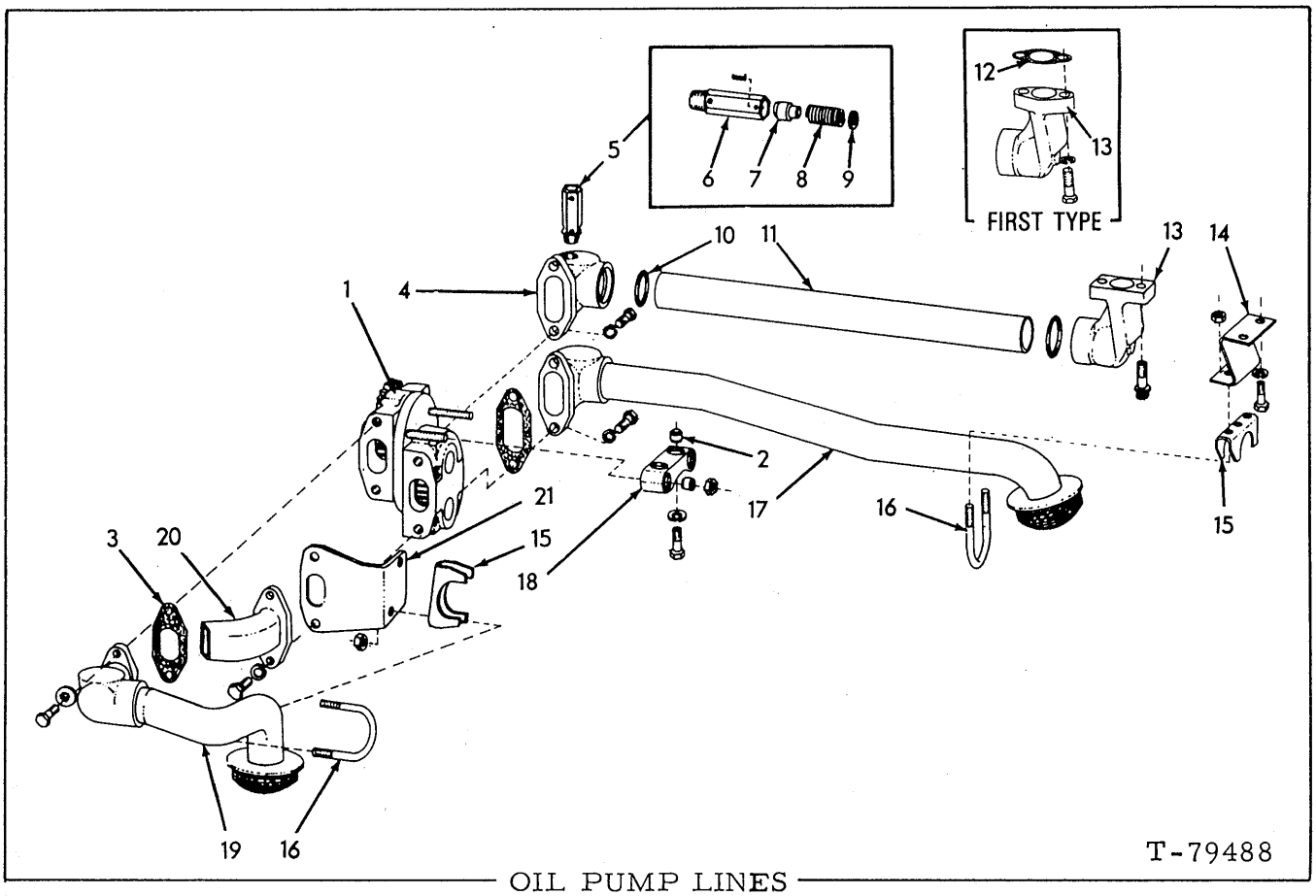

OIL PUMP LINES

USAGE: Engine S/N 17-01756 and up; also 6138 LT engines; earlier engines with one-piece replacement oil pump and flat pan.

ITEM	PART NO.	QTY.	DESCRIPTION
1	--------	1	PUMP ASSY. (See page 39)
	70928212	2	NUT, 7/16"NC
2	74395024	4	DOWEL
3	74393359	4	GASKET (2 less used effective engine #17-03998)
4	74395971	1	ELBOW
	70923193	2	CAPSCREW, 3/8"NF x 1-1/4" (Engine prior to S/N 17-05447)
	70924228	2	CAPSCREW, 3/8"NF x 1-1/2" (Engine S/N 17-05447 and up; also 6138 LT engines)
	70910287	2	LOCKWASHER, 3/8"
5	--------	1	VALVE ASSY. (170 - 180 psi)(Stamped 4320597) (Order 74036462)
	74036462	1	VALVE ASSY. (120 - 130 psi)(Stamped 4028887) (Includes 6 thru 9)
6	--------	1	BODY (Not serviced separately)
	70916001	1	PIN, spring, 3/16" x 1"
7	--------	1	PISTON (Not serviced separately)
8	74354568	1	SPRING (170 - 180 psi)(Use 74028888)
	74028888	1	SPRING (120 - 130 psi)
9	74359310	1	WASHER
10	70927044	2	O-RING
11	74393364	1	TUBE
12	74660423	1	GASKET (Engines prior to #17-03998)

(Continued)

OIL PUMP LINES (Continued)

ITEM	PART NO.	QTY.	DESCRIPTION
13	74393363	1	ELBOW (Engines prior to #17-03998)
	70916313	2	CAPSCREW, 1/2"NC x 1-3/4"
	70904208	2	LOCKWASHER, 1/2"
	74395053	1	ELBOW (Engines #17-03998 and up)
	70922220	2	CAPSCREW, 12-pt., 1/2"NC x 1-1/2"
14	74393599	1	BRACKET
	70927485	2	CAPSCREW, 7/16"NC x 1" (Engines prior to #17-04023)
	70921569	2	CAPSCREW, 7/16"NC x 1-1/4" (Engine #17-04023 and up)
	70914678	2	LOCKWASHER, 7/16"
15	74393601	2	SADDLE } 1 less used prior to engine #17-04023
16	74393600	2	U-BOLT }
	70916871	4	NUT, elastic stop, 5/16"NC
17	74395973	1	TUBE (Includes screen)
	70923193	2	CAPSCREW, 3/8"NF x 1-1/4"
	70910287	2	LOCKWASHER, 3/8"
18	74393341	1	BRACKET
	70927583	2	CAPSCREW, 7/16"NC x 1-3/4"
	70904207	2	LOCKWASHER, 7/16"
	70911992	2	WASHER
19	74395974	1	TUBE (Includes screen)
	70923193	2	CAPSCREW, 3/8"NF x 1-1/4"
	70910287	2	LOCKWASHER, 3/8"
20	74394957	1	ELBOW
	70923193	2	CAPSCREW, 3/8"NF x 1-1/4"
	70910287	2	LOCKWASHER, 3/8"
21	74395062	1	BRACKET (Engines #17-04023 and up)

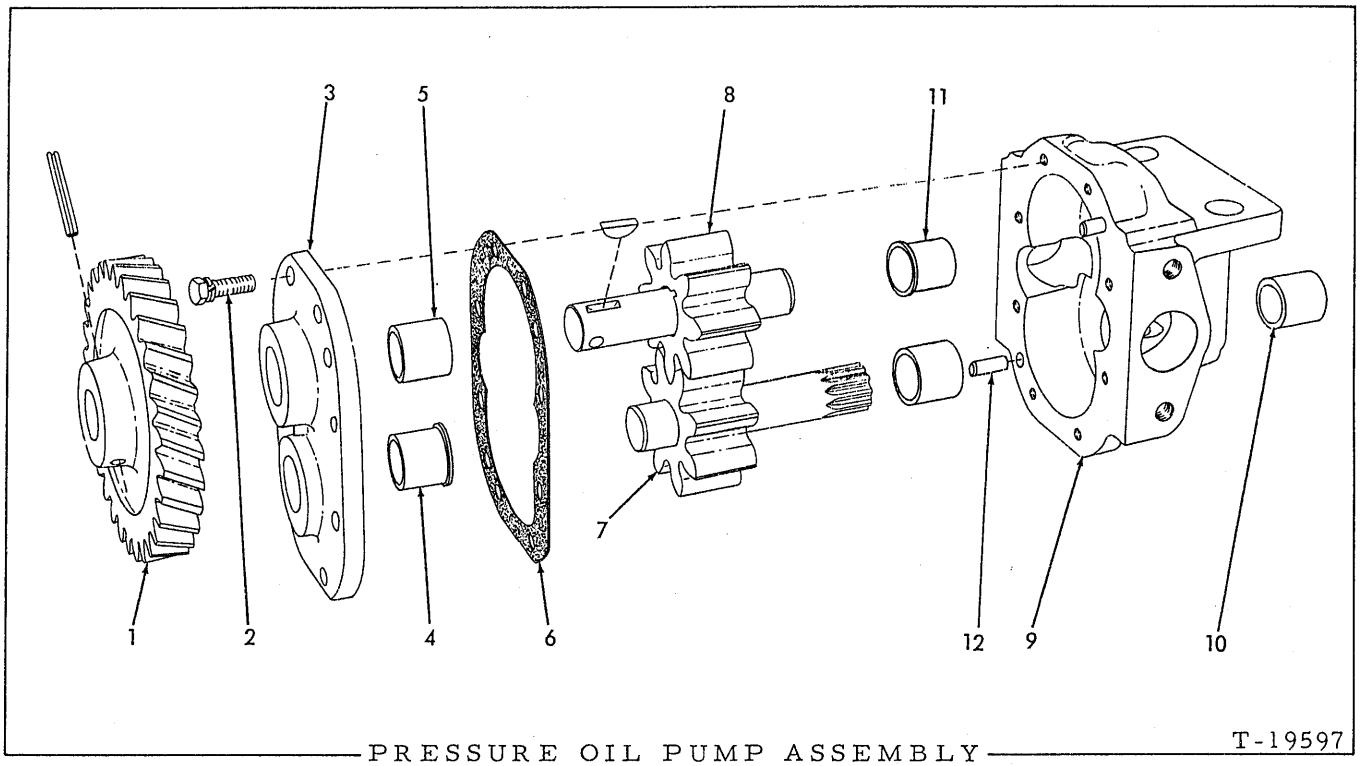

PRESSURE OIL PUMP ASSEMBLY T-19597

USAGE: See page 37

ITEM	PART NO.	QTY.	DESCRIPTION
-	74390252	1	PUMP ASSY., oil, pressure (Consists of items 1 thru 12)
1	74386088	1	GEAR, driving
	70915751	1	PIN, spring, 3/16" x 1-1/2"
	70910224	1	KEY, #6 woodruff, 5/32" x 5/8"
2	70923408	8	CAPSCREW, pump cover (Includes lockwasher)
3	74386077	1	COVER ASSY. (Includes items 4 and 5)
4	74377038	1	BUSHING, pump cover (flanged)
5	74371270	1	BUSHING, pump cover (plain)
6	74386083	1	GASKET, cover
7	74379415	1	SHAFT AND GEAR ASSY., lower
8	74390067	1	SHAFT AND GEAR ASSY., upper
9	74390064	1	BODY ASSY. (Includes items 10 thru 12)
10	74371270	2	BUSHING, pump body (plain)
11	74377039	1	BUSHING, pump body (flanged)
12	70917555	2	PIN, dowel, pump body

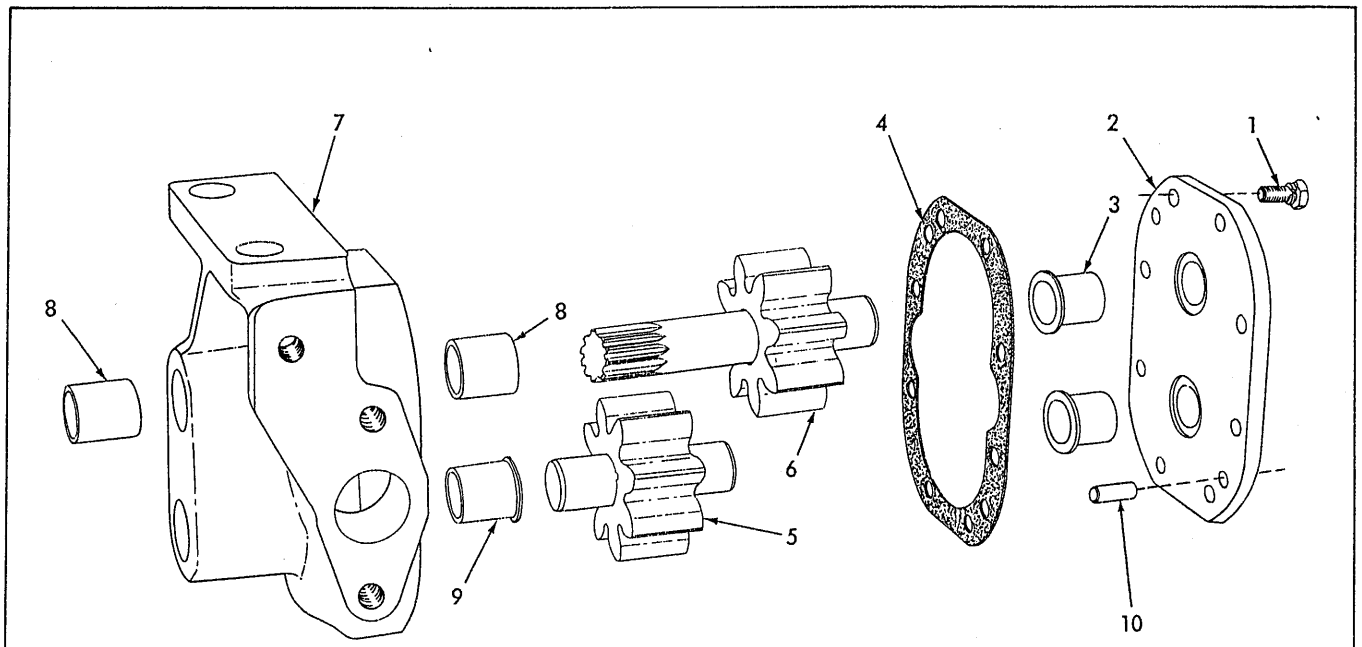

SCAVENGING OIL PUMP ASSEMBLY

USAGE: See page 37

ITEM	PART NO.	QTY.	DESCRIPTION
-	74390098	1	PUMP ASSY., oil, scavenging (consists of items 1 thru 10)
1	70923408	8	CAPSCREW, pump cover
2	74377050	1	COVER ASSY. (Includes item 3)
3	74377039	2	BUSHING, pump cover
4	74371300	1	GASKET, pump cover
5	74377054	1	SHAFT AND GEAR ASSY., lower
6	74379610	1	SHAFT AND GEAR ASSY., upper
7	74390097	1	BODY ASSY. (Includes items 8 thru 10)
8	74371270	2	BUSHING, pump body (plain)
9	74377039	1	BUSHING, pump body (flanged)
10	70917555	2	PIN, dowel, pump body

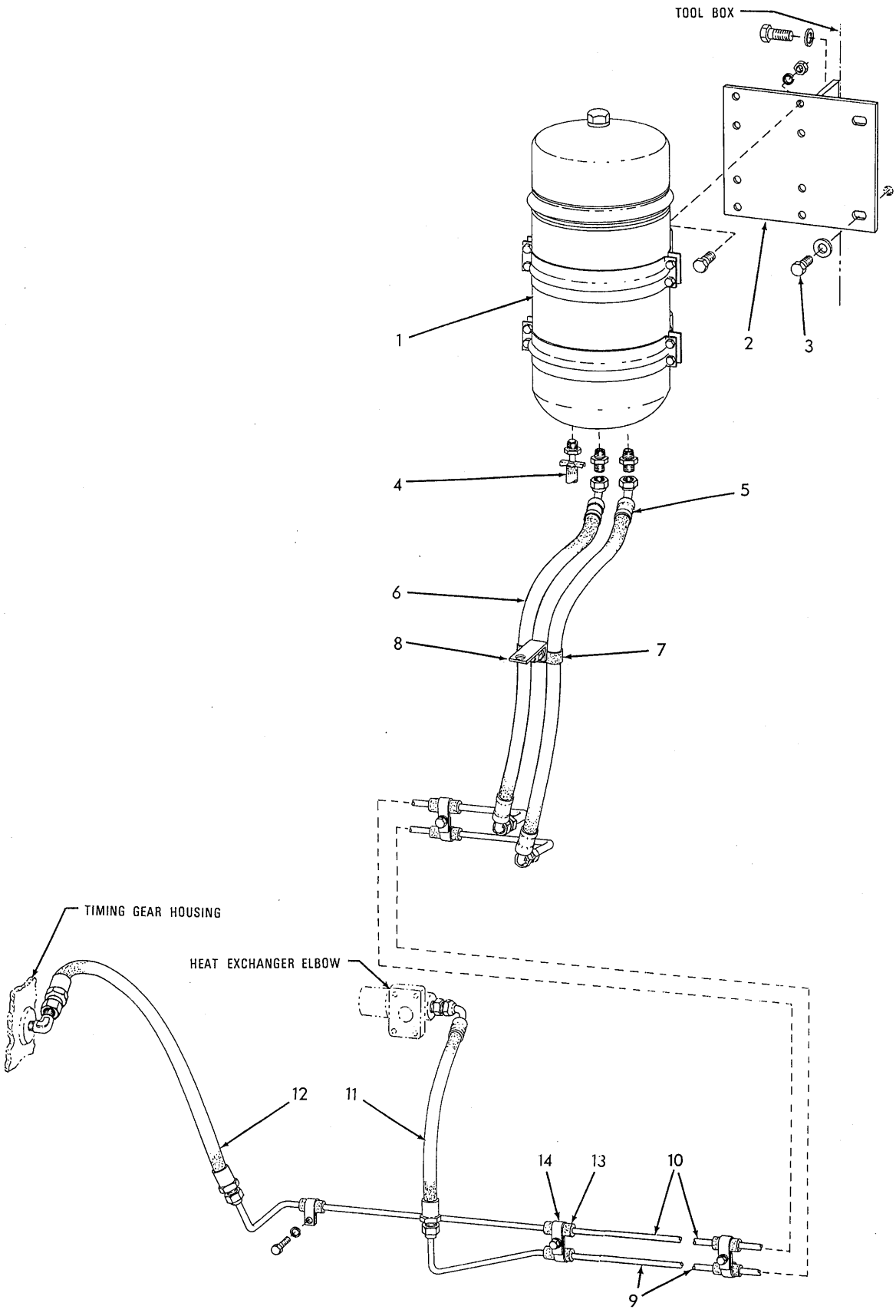

OIL FILTER LINES (By-pass Type)

OIL FILTER LINES
(By-pass Type)

ITEM	PART NO.	QTY.	DESCRIPTION	
1	-------	1	FILTER ASSY. (See page 48)	
	70921566	8	CAPSCREW, 5/16"NC x 1"	Not for units with dozer hydraulics
	70910286	8	LOCKWASHER, 5/16"	
	70911025	8	NUT, 5/16"NC	
	70927612	8	CAPSCREW, 5/16"NC x 5/8"	For units with dozer hydraulics
	70910286	8	LOCKWASHER, 5/16"	
2	70665890	1	BRACKET, mounting	Not used on units equipped with dozer hydraulics
3	70920583	3	CAPSCREW, 1/2"NC x 1-1/2"	
	70677008	3	WASHER, plain	
	70912441	3	LOCKWASHER, 1/2"	
	70911028	3	NUT, 1/2"NC	
4	70667676	1	HOSE, oil drain	
5	70663134	1	HOSE, oil supply line, rear (See HOSE PARTS)	
	70919128	1	CONNECTOR, flare type, 1/2" tube, 1/2"NPT male	
6	70663145	1	HOSE, oil return line, rear (See HOSE PARTS)	
	70919128	1	CONNECTOR, flare type, 1/2" tube, 1/2"NPT male	
7	70622992	2	CLIP, hose supporting	
	70922262	1	CAPSCREW, 3/8"NC x 7/8"	
	70911115	1	WASHER, plain, SAE std., 3/8"	
	70910287	1	LOCKWASHER, 3/8"	
	70911026	1	NUT, 3/8"NC	
8	70633496	1	ANGLE, hose supporting	
9	70663154	1	TUBE ASSY., oil supply (Includes nuts)	
10	70663153	1	TUBE ASSY., oil return (Includes nuts)	
11	70667719	1	HOSE, oil supply line, front (See HOSE PARTS)	
	70919063	1	CONNECTOR, flare type, 1/2" tube, 3/8" NPT male	
12	70667718	1	HOSE, oil return line, front (See HOSE PARTS)	
	70919206	1	ELBOW, flare type, 1/2" tube, 3/8"NPT male	
13	70093752	7	BOOT, tube protecting (rubber)	
14	70097534	7	CLIP, tube supporting	
	70922300	4	CAPSCREW, 3/8"NC x 3/4"	
	70910287	4	LOCKWASHER, 3/8"	
	70911115	4	WASHER, plain, SAE std., 3/8"	

NOTE: See PAINTING AND MARKING for instruction transfers applied to filter.

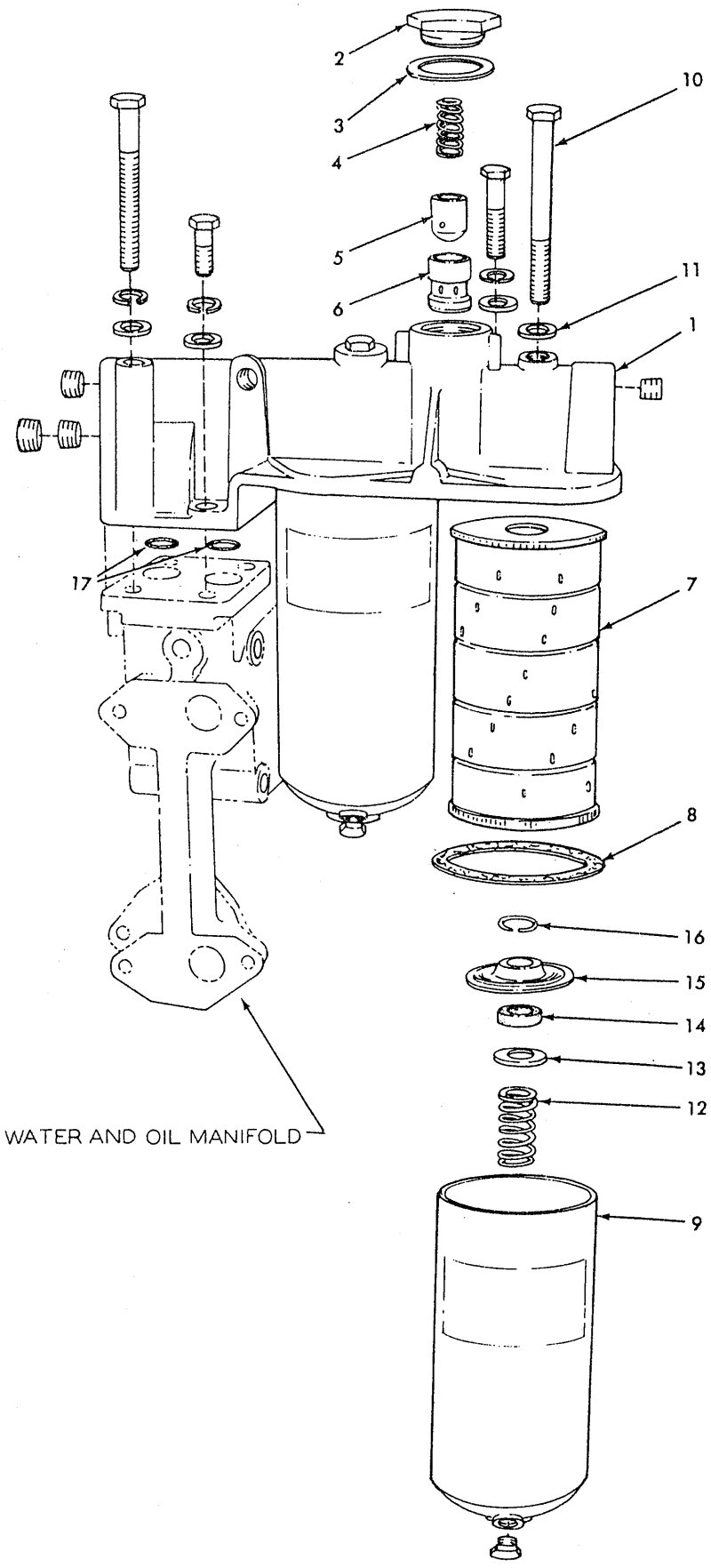

T-70444

OIL FILTER (Full-flow type)

OIL FILTER (Full-flow type)

ITEM	PART NO.	QTY.	DESCRIPTION
1	74395610	1	HEAD ASSY. (Includes PLUGS indented below)
	70918888	3	PLUG, pipe, hex-socket, 1"
	70918697	1	PLUG, pipe, hex-socket, 1-1/4"
	70916317	4	CAPSCREW, 1/2"NC x 2-3/4"
	70916323	2	CAPSCREW, 1/2"NC x 5-1/2"
	70912333	6	WASHER
	70904208	6	LOCKWASHER, 1/2"
2	74388810	1	CAP, by-pass valve
3	74388848	1	GASKET, by-pass valve cap
4	74359656	1	SPRING, by-pass valve
5	74373613	1	PISTON, by-pass valve
6	74388809	1	SLEEVE, by-pass valve piston
7	74395889	2	ELEMENT KIT (Includes item 8)
8	74396318	2	GASKET, filter body
9	74339021	2	BODY
	70918951	2	PLUG, pipe, hex-hd., 3/8"NPT
10	70916324	2	CAPSCREW, 1/2"NC x 6"
11	74376749	2	WASHER, sealing, body retaining capscrew
12	74379268	2	SPRING, element
13	74053410	2	WASHER, element seal
14	74053409	2	SEAL, element
15	74055971	2	ADAPTOR, element
16	74379269	2	RING, snap
17	74255631	2	O-RING, filter to manifold

NOTE: See PAINTING AND MARKING for instruction transfer applied to filter

(Revised September 1979)

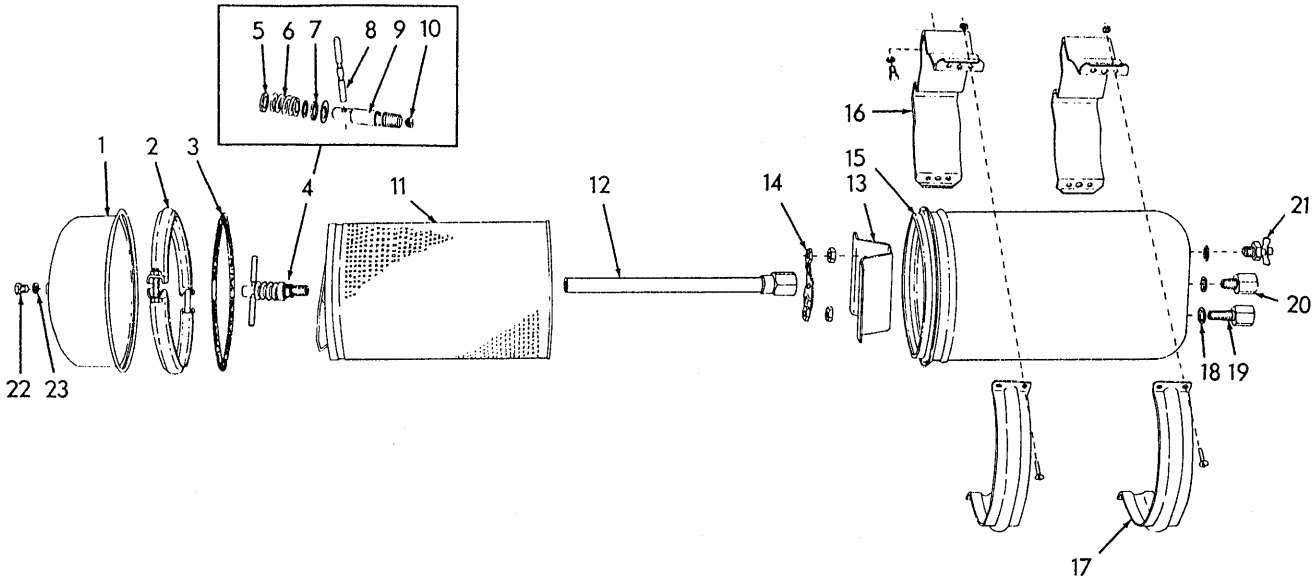

LUBER-FINER DESIGN T-74660

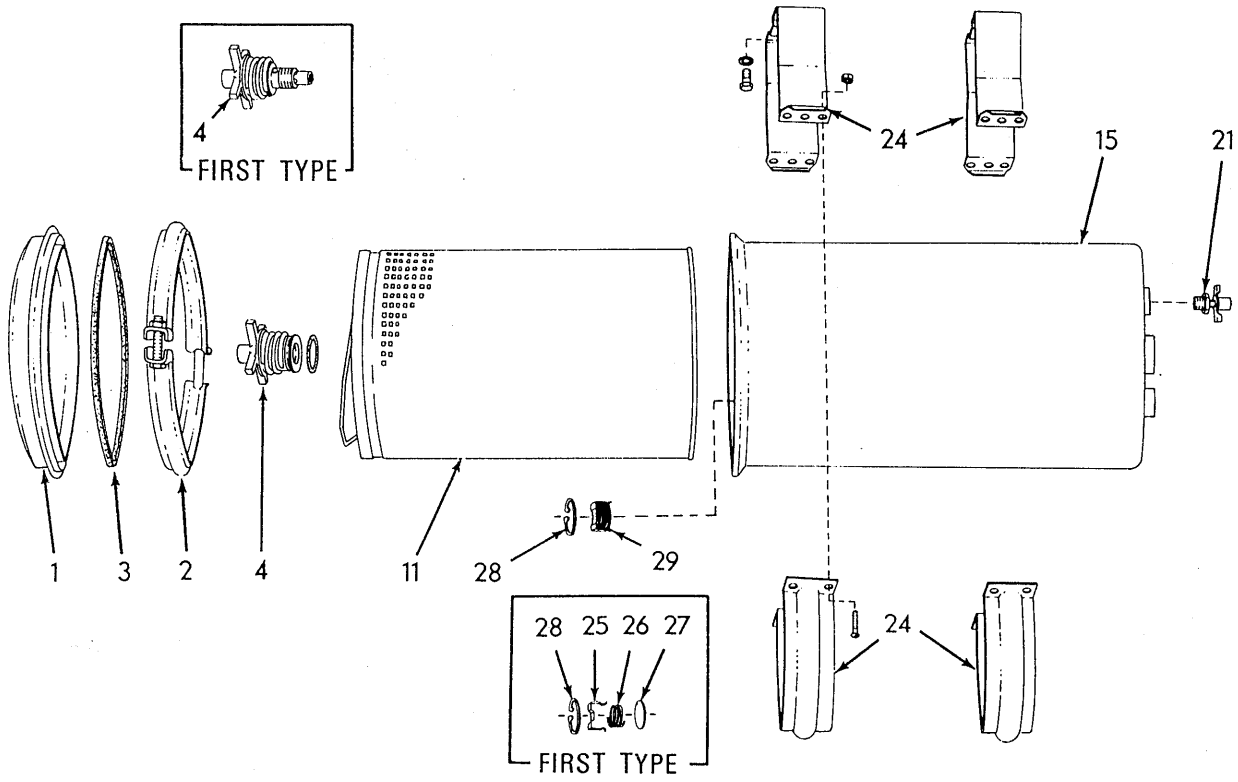

FLEETGUARD DESIGN T-76480

OIL FILTER (By-pass type)

OIL FILTER (By-pass type)

USAGE: See page 45

NOTE: This Filter Assembly is available in two designs, "Fleetguard" and "Luber-Finer". Check which is applicable to your unit and order service parts accordingly.

*Luber-Finer Design
**Fleetguard Design

ITEM	PART NO.	QTY. *	QTY. **	DESCRIPTION	
-	74390593	1	-	FILTER ASSY. (Includes items 1 thru 23)	
-	74390593	-	1	FILTER ASSY. (Includes 1 thru 4, 11, 15, 21, 24 thru 29)	
1	74059262	1	-	COVER	
	74059813	-	1	COVER	
2	70630540	1	-	RING ASSY. (Includes nut and bolt)	
	74059814	-	1	COUPLING ASSY. (Includes hardware. Serviced only as a unit)	
3	70082449	1	-	GASKET	
	73115065	-	1	GASKET	
4	74059266	1	-	HOLD-DOWN ASSY. (Includes items 5 thru 10)	
	74060691	-	1	SUPPORT ASSY. (Male thread post) (First type)	Each includes O-ring. Serviced only as a unit
	74061788	-	1	SUPPORT ASSY. (Female thread post) (Second type)	
5	70082489	3	-	WASHER	
6	70082490	1	-	SPRING	
7	70082487	1	-	SEAL	
8	70082488	1	-	HANDLE	
9	--------	1	-	STUD (Not serviced separately)	
10	74059265	1	-	PLUG	
11	74059343	1	1	ELEMENT	
12	74059264	1	-	TUBE ASSY. (Includes nut)	
13	70096816	1	-	SUPPORT	
	70911049	2	-	NUT, jam, 5/8"NF	
14	70096815	1	-	RETAINER	
15	--------	1	-	HOUSING (Not serviced separately)	
	--------	-	1	SHELL (Female thread post)(First type)(For inital replacement order SHELL 74061785 and SUPPORT ASSY. 74061788)	
	74061785	-	1	SHELL (Male thread post)(Second type)	
16	70082444	2	-	BRACKET	
17	70082443	2	-	BAND	
	70915406	8	-	CAPSCREW, 1/4"NC x 3/4"	
	70911024	8	-	NUT, 1/4"NC	
18	70063891	3	-	GASKET	
19	70063890	1	-	VALVE ASSY. (Includes 1 spring, 1 ring, 1 cup. Serviced only as a unit)	
20	70080758	1	-	VALVE ASSY. (Includes 1 spring, 1 ring, 1 cup. Serviced only as a unit)	
21	74060755	1	-	COCK	
	70229210	-	1	COCK	
22	70084897	1	-	PLUG	

(Continued)

OIL FILTER (By-pass type)(Continued)

ITEM	PART NO.	QTY. *	QTY. **	DESCRIPTION
23	70084899	1	-	WASHER
24	74061786	-	1	BRACKET ASSY. (2-piece, includes hardware. Serviced only as a unit)
25	74059810	-	1	CAGE } Order item 29. First type
26	74059811	-	1	SPRING } Order item 29. First type
27	74059812	-	1	DISC } Order item 29. First type
28	74253555	-	1	RING
29	74061789	-	1	VALVE, check

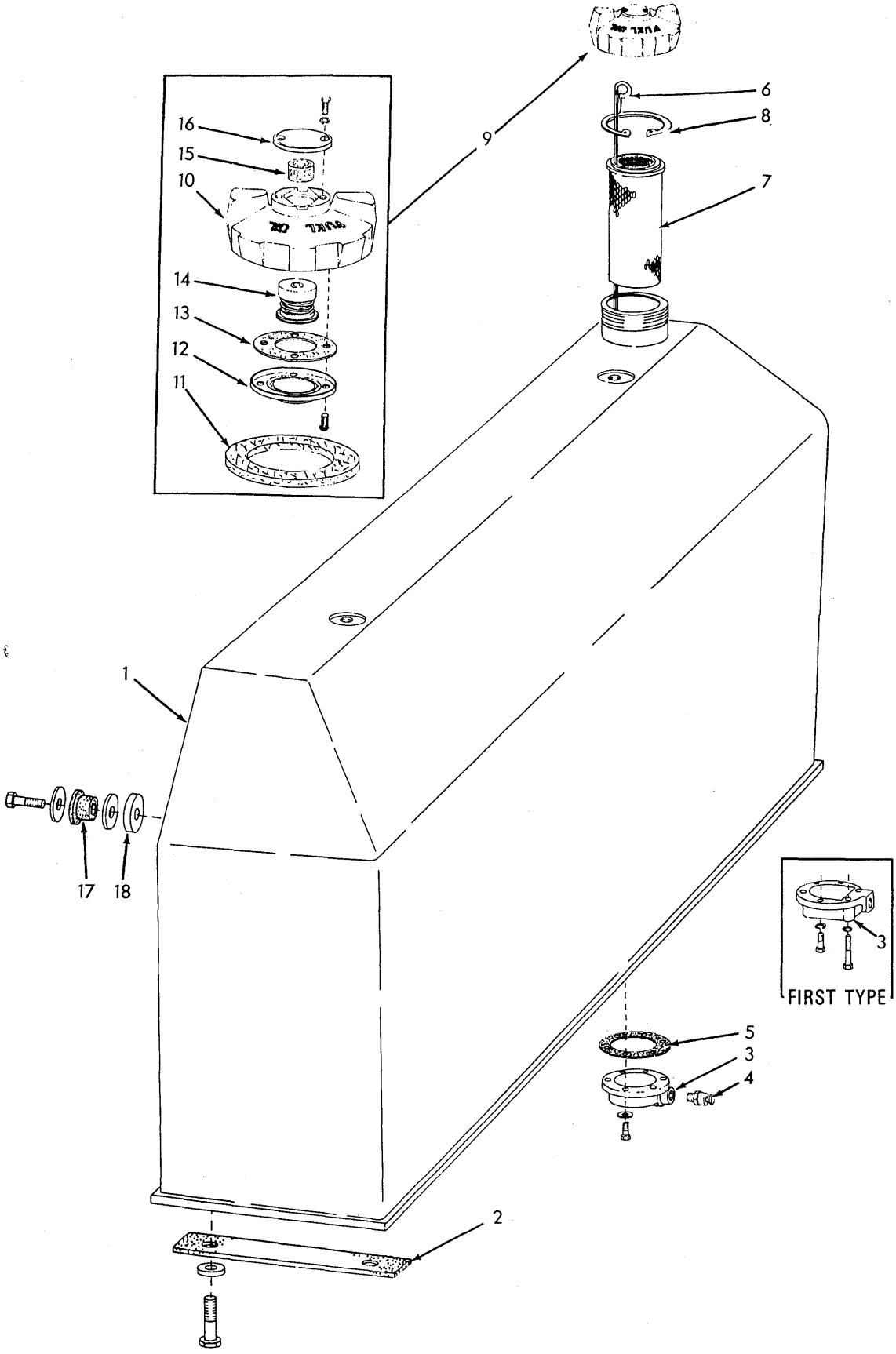

T-75077

FUEL TANK

ITEM	PART NO.	QTY.	DESCRIPTION	
1	70664682	1	TANK, fuel (Includes items with symbol △)	
	70928291	8	CAPSCREW, 3/4"NC x 2-1/2"	
	70677012	8	WASHER	
2	70664887	4	PAD, tank mounting (fabric)	
3	70662132	1	COVER, fuel tank drain	Tractors prior to unit #14812
	70922763	4	CAPSCREW, 3/8"NC x 1"	
	70920995	2	CAPSCREW, 3/8"NC x 2"	
	70910287	6	LOCKWASHER, 3/8"	
	70695807	1	△COVER, fuel tank drain	Tractor unit #14812 and up
	70922262	6	△CAPSCREW, 3/8"NC x 7/8"	
	70930370	6	△WASHER	
4	70633519	1	△COCK, drain	
5	70656227	1	△GASKET, drain cover	
6	70664075	1	GAUGE, fuel level	
7	70650509	1	STRAINER, fuel filler	
8	70654840	1	RING, snap, fuel strainer	
9	70668252	1	△CAP ASSY., fuel tank (Consists of items 10 thru 16)	
10	--------	1	CAP only (Not serviced separately)	
11	70668263	1	GASKET, cap	
12	70668806	1	SEAT, relief valve	
	70926699	4	SCREW, fil-hd., brass, #10-24NC x 3/8"	
13	70668804	1	GASKET, valve seat	
14	70668805	1	VALVE ASSY., relief (Serviced only as a unit)	
15	70664867	1	ELEMENT, air filter	
16	70668262	1	COVER, tank cap	
	70921181	2	SCREW ASSY., #10-24NC x 1/2" (Includes lockwasher)	
17	70642441	4	SNUBBER, vibration	
	70916422	4	CAPSCREW, 1/2"NF x 2-3/4"	
	70929379	8	WASHER	
18	70061528	4	BOSS, spacing	

△Components of item one

(Revised March 1982)

* 70006415

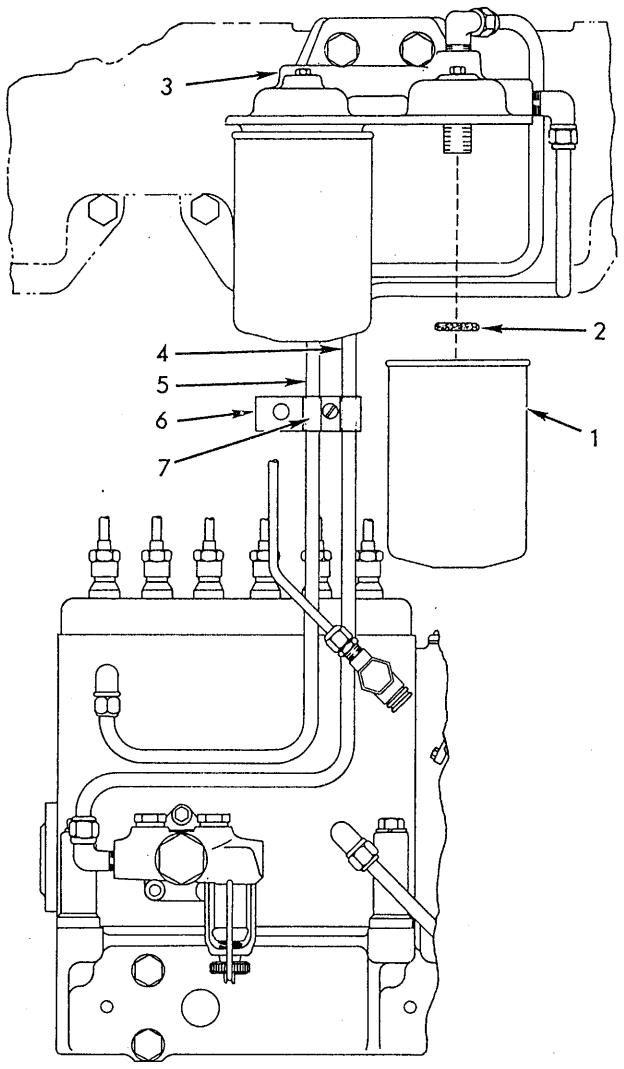

T-75825

FUEL FILTER

USAGE: Engines prior to serial No. 17-01843

ITEM	PART NO.	QTY.	DESCRIPTION
1	74028945	2	ELEMENT, filter (Includes item 2)
2	--------	2	O-RING (Not serviced separately)
3	74392498	1	BASE ASSY., filter (Includes Plug and Inserts not serviced separately; and PLUGS indented below)
	70919134	2	PLUG, pipe, hex-hd., hd., 1/8"NPT
	70919230	2	CAPSCREW, 1/2"NC x 1-3/8"
	70904208	2	LOCKWASHER, 1/2"
	70912007	2	WASHER, plain, 1/2"
4	74392482	1	TUBE ASSY. (Includes SLEEVES and NUTS)
	70917810	2	NUT, Imperial, 3/8" tube
	70917807	2	SLEEVE, Imperial, 3/8" tube (rubber)
	70919005	1	ELBOW, Imperial, 3/8" tube, 3/8"PT (at filter base)
	70920280	1	ELBOW, Imperial, 3/8" tube, 1/4"PT (at transfer pump)

(Continued)

ITEM	PART NO.	QTY.	DESCRIPTION
5	74392486	1	TUBE ASSY. (Includes SLEEVE and NUTS)
	70917810	2	NUT, Imperial, 3/8" tube
	70917807	2	SLEEVE, Imperial, 3/8" tube (rubber)
	70919005	1	ELBOW, Imperial, 3/8" tube, 3/8"PT (at filter base)
	70920280	1	ELBOW, Imperial, 3/8" tube, 1/4"PT (at fuel pump)
6	74392801	1	SUPPORT, clip
7	74394178	1	CLIP
	70912226	1	SCREW, fil. hd., 1/4"NC x 5/8"
	70904204	1	LOCKWASHER, 1/4"
	70910880	1	NUT, 1/4"NC

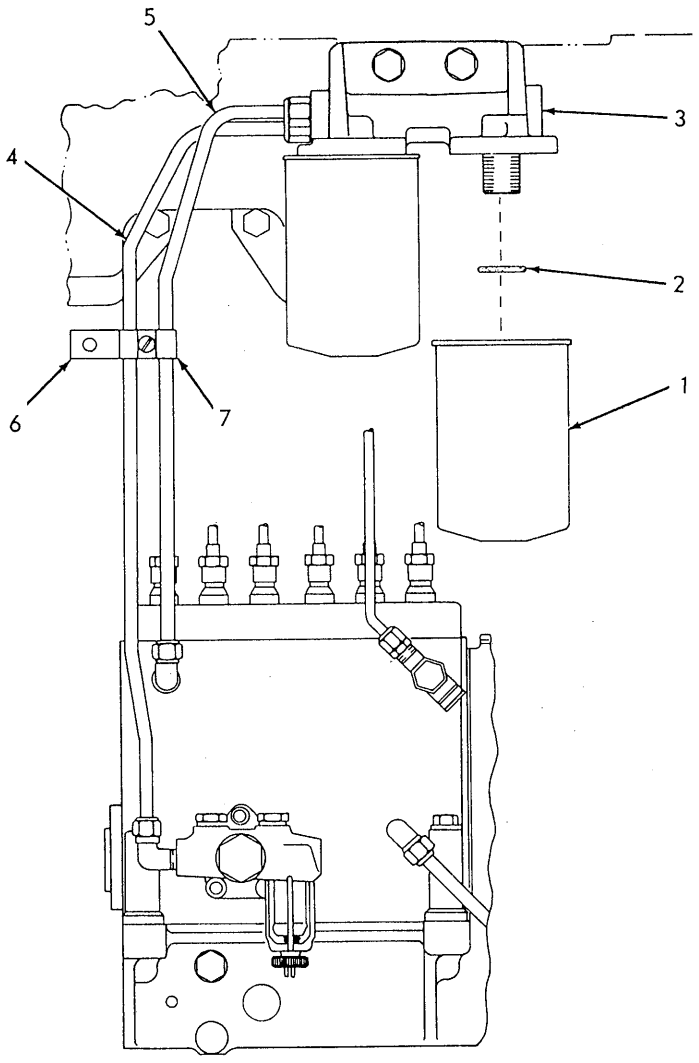

T-78098

FUEL FILTER

USAGE: Engine serial No. 17-01843 - up

ITEM	PART NO.	QTY.	DESCRIPTION
1	74028945	2	ELEMENT, filter (Includes item 2)
2	--------	2	O-RING (Not serviced seperately)
3	74393077	1	BASE ASSY., filter (Includes Inserts not serviced separately)
	70922577	2	PLUG, hex.- hd., 3/8" tube, 9/16" str. thd. (Includes O-RING)
	70921885	2	O-RING, plug
	70915987	2	CAPSCREW, 1/2"NC x 1-1/2"
	70912441	2	LOCKWASHER, 1/2"
	70912007	2	WASHER, plain

(Continued)

ITEM	PART NO.	QTY.	DESCRIPTION
4	74393765	1	TUBE
	70917810	2	NUT, Imperial, 3/8" tube
	70917807	2	SLEEVE, Imperial, 3/8" tube (rubber)
	70920280	1	ELBOW, Imperial, 3/8" tube, 1/4"PT (at transfer pump)
	74359776	1	CONNECTOR, (Includes O-RING)
	70921885	1	O-RING, connector
5	74393764	1	TUBE
	70917810	2	NUT, Imperial, 3/8" tube
	70917807	2	SLEEVE, Imperial, 3/8" tube (rubber)
	70920280	1	ELBOW, Imperial, 3/8" tube, 1/4"PT (at fuel pump)
	74359776	1	CONNECTOR (Includes O-RING)
	70921885	1	O-RING, connector
6	74393090	1	SUPPORT, clip
7	74394178	1	CLIP
	70912226	1	SCREW, fil. hd., 1/4"NC x 5/8"
	70904204	1	LOCKWASHER, 1/4"
	70910880	1	NUT, 1/4"NC

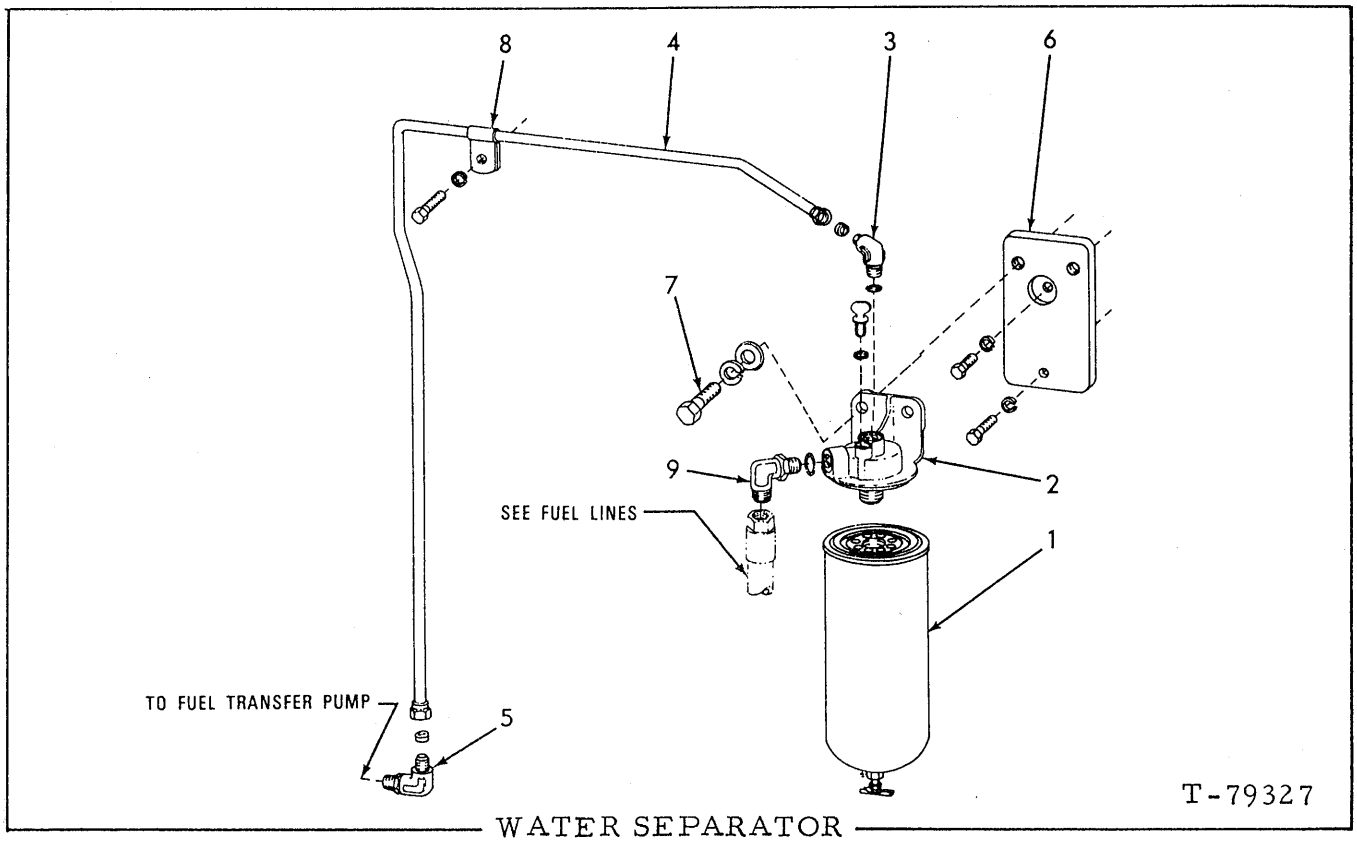

WATER SEPARATOR

USAGE: 17000 MK II engines

ITEM	PART NO.	QTY.	DESCRIPTION
1	74394407	1	FILTER ASSY.
2	74395419	1	BASE ASSY. (Includes insert)(For engines with first type bleeder order 1 Screw 74006998 and 1 Washer 74254873)
	70920612	1	CAPSCREW, 3/8"NF x 1/2" } 1st type bleeder
	74251367	1	WASHER, copper } not illustrated
	74036540	1	SCREW, thumb } 2nd type bleeder
	74254873	1	WASHER }
3	74023721	1	ELBOW ASSY. (Includes 1 O-Ring 70921885)
	70921885	1	O-RING
4	74394624	1	TUBE
	70917807	2	SLEEVE, Imperial, 3/8" tube
	70917810	2	NUT, Imperial, 3/8" tube
5	70920280	1	ELBOW, 3/8" tube, 1/4"NPT
	70930349	1	NUT, locking, 1/4"
6	74394625	1	BRACKET
	70915408	1	CAPSCREW, 3/8"NC x 3/4"
	70916272	1	CAPSCREW, 3/8"NC x 1-1/4"
	70910287	2	LOCKWASHER, 3/8"
7	70916254	2	CAPSCREW, 7/16"NC x 1"
	70914498	2	WASHER, plain, 7/16"
	70914678	2	LOCKWASHER, 7/16"
8	70927384	1	CLAMP
9	70930804	1	ELBOW, adjustable, 90°, flare type, 1/2" tube, 5/8"NF male (Includes O-Ring)
	70921885	1	O-RING

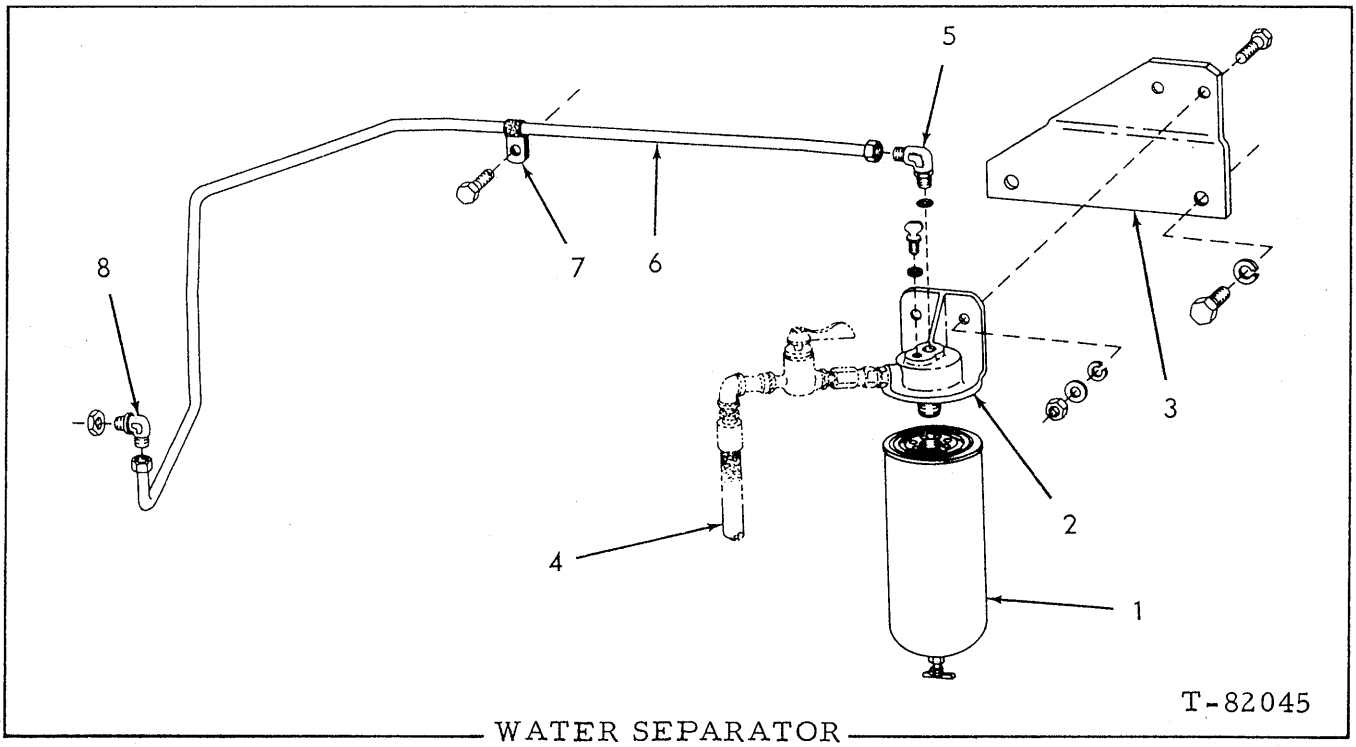

WATER SEPARATOR

USAGE: 6138 LT engines

ITEM	PART NO.	QTY.	DESCRIPTION
1	74394407	1	FILTER ASSY.
2	74395419	1	BASE ASSY. (Includes insert)
	74036540	1	SCREW, thumb
	74254873	1	WASHER
	70916191	2	CAPSCREW, 7/16"NC x 1-1/2"
	70914678	2	LOCKWASHER, 7/16"
	70914498	2	WASHER
	70912201	2	NUT, 7/16"NC
3	74394405	1	BRACKET
	70931244	2	CAPSCREW, Nylok, 1/2"NC x 1-1/4"
	70912441	2	LOCKWASHER, 1/2"
4	--------	1	HOSE (See page 57)
5	74023721	1	ELBOW (Includes O-Ring)
	70921885	1	O-RING
	74395537	1	TUBE
	70917807	2	SLEEVE, Imperial, 3/8" tube
	70917810	2	NUT, Imperial, 3/8" tube
7	70932860	1	CLAMP
	70921865	1	CAPSCREW, Nylok, 1/2"NC x 1"
8	70920280	1	ELBOW, 3/8" tube, 1/4"NPT
	70930349	1	NUT, locking, 1/4"

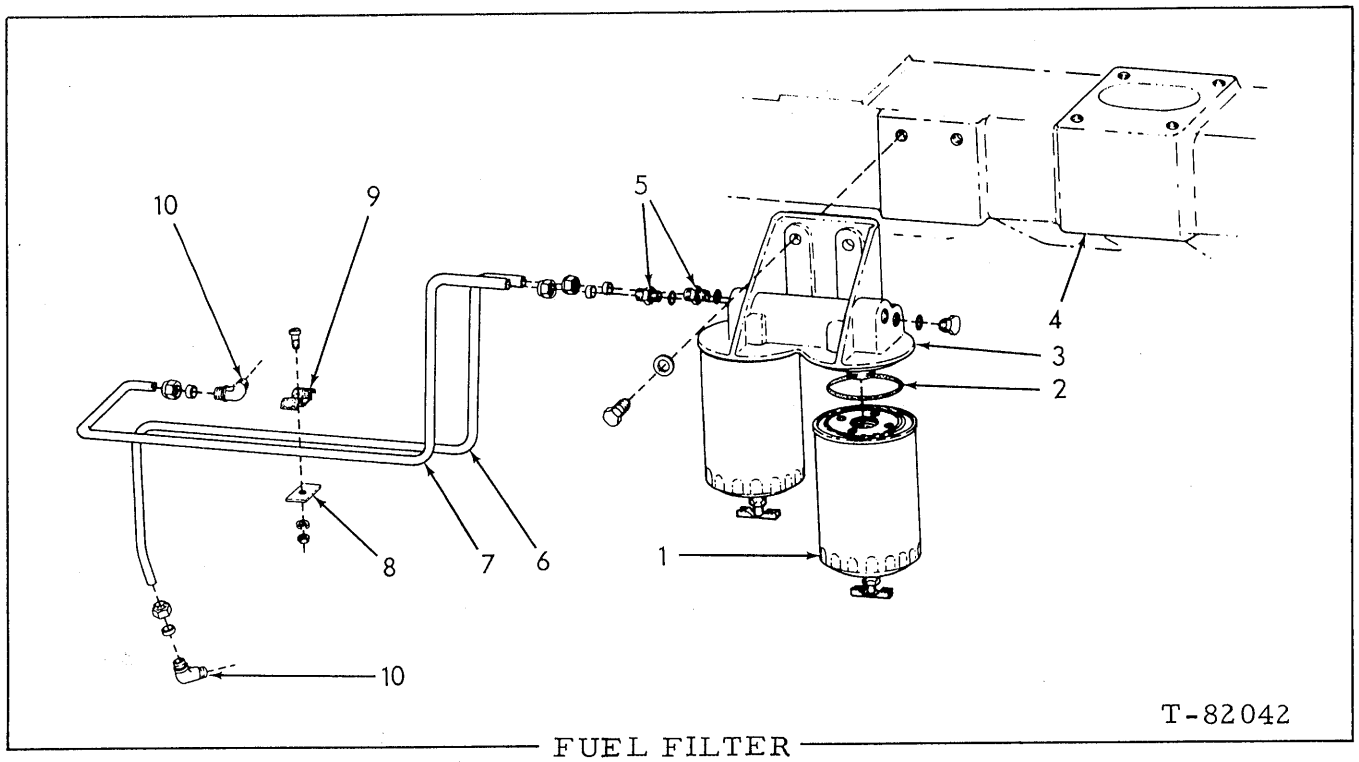

FUEL FILTER

USAGE: 6138 LT engines

ITEM	PART NO.	QTY.	DESCRIPTION
1	74028945	2	ELEMENT (Includes item 2)
2	--------	2	O-RING (Not serviced separately)
3	74393077	1	BASE ASSY. (Includes inserts)
	70922577	2	PLUG, hex-hd., 3/8" tube, 9/16" str. thd. (Includes O-Ring)
	70921885	2	O-RING
	70916311	2	CAPSCREW, 1/2"NC x 1-1/4"
	70912441	2	LOCKWASHER, 1/2"
	70912007	2	WASHER
4	--------	1	MANIFOLD, air intake (See page 71)
5	74359776	2	CONNECTOR (Includes O-Ring)
	70921885	2	O-RING
6	74395549	1	TUBE
	70917807	2	SLEEVE, Imperial, 3/8" tube
	70917810	2	NUT, Imperial, 3/8" tube
7	74396063	1	TUBE
	70917807	2	SLEEVE, Imperial, 3/8" tube
	70917810	2	NUT, Imperial, 3/8" tube
8	74393090	1	PLATE
9	74394178	1	CLIP
	70912226	1	SCREW, machine, 1/4"NC x 5/8"
	70904204	1	LOCKWASHER, 1/4"
	70910880	1	NUT, 1/4"NC
10	70920280	2	ELBOW, Imperial, 3/8" tube, 1/4"NPT

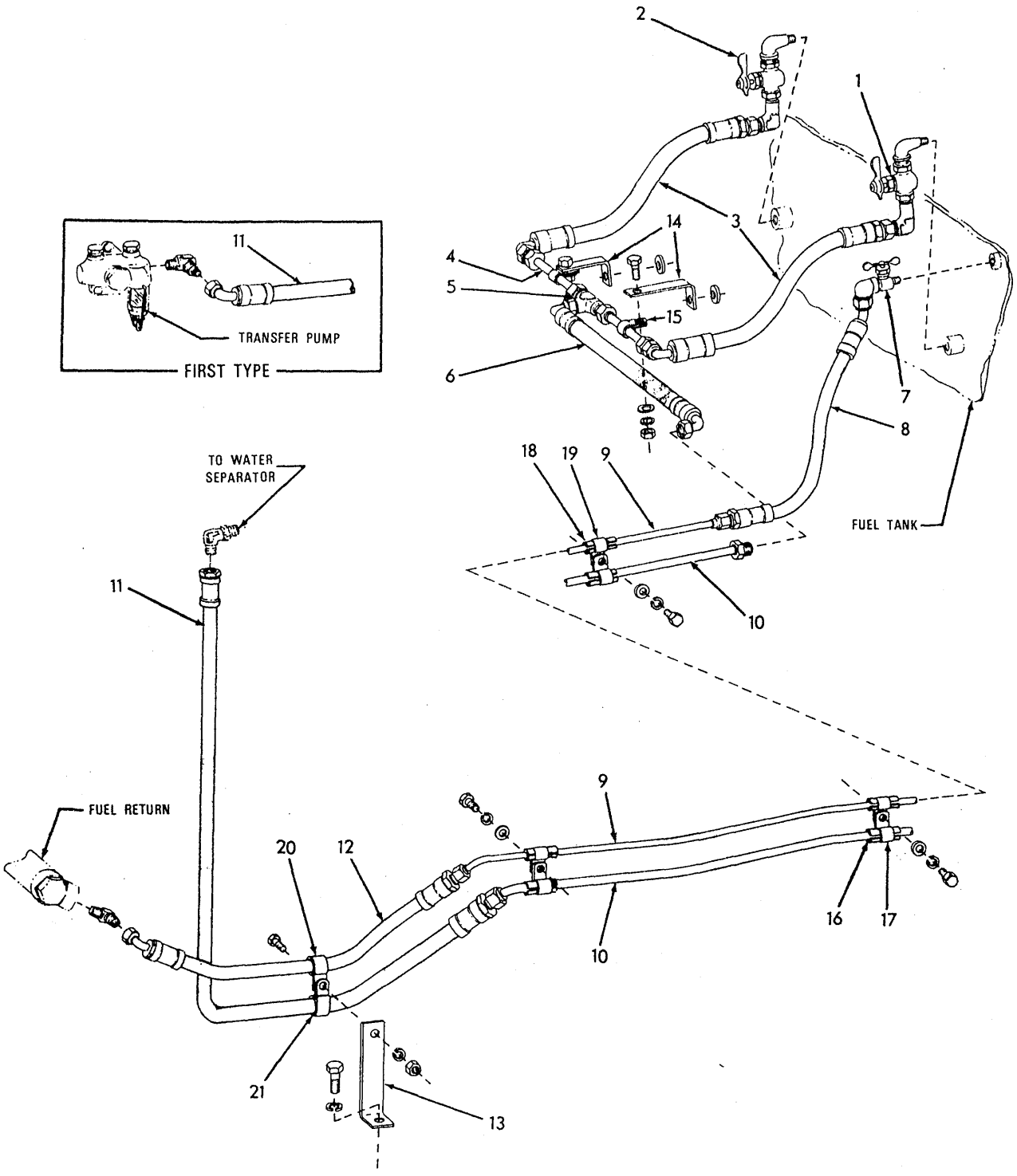

FUEL LINES T-75867

(Revised February 1976)

FUEL LINES

ITEM	PART NO.	QTY.	DESCRIPTION
1	70092727	2	COCK (Includes item 2)
	70901723	2	ELBOW, street, 90°, 3/8"NPT
2	70082189	2	HANDLE
3	70664869	2	HOSE (See HOSE PARTS)
	70923641	2	ELBOW, flare type, 1/2" tube, 3/8"NPT male
4	70664865	2	TUBE ASSY.
5	70921472	1	TEE, union, flare type, 1/2" tube
6	70664870	1	HOSE (See HOSE PARTS)
7	70914378	1	VALVE (1/4"NPT ends)
8	70648231	1	HOSE (See HOSE PARTS)
	70921852	1	ELBOW, flare type, 90°, 3/8" tube, 1/4"NPT female
9	70664880	1	TUBE ASSY. (Includes nuts)
10	70664878	1	TUBE ASSY. (Includes nuts)
11	70674814	1	HOSE (See HOSE PARTS)
	70922872	1	ELBOW, flare type, 90°, 1/2"tube, 1/4"NPT male } Tractors prior to unit #14249
	70696013	1	HOSE (See HOSE PARTS)(Tractor unit #14249 thru #15212)
	73117377	1	HOSE (See HOSE PARTS)(Tractor unit #15213 and up)
12	70674868	1	HOSE (See HOSE PARTS)(Tractors prior to unit #15213)
	73117378	1	HOSE (See HOSE PARTS)(Tractor unit 15213 and up)
	70919135	1	ELBOW, flare type, 90°, 3/8" tube, 1/4"NPT male)(Tractors prior to unit #15213)
	70927455	1	CONNECTOR, flare type, 3/8" tube, 9/16" str. thd.
13	70674799	1	ANGLE
	70920582	1	CAPSCREW, 1/2"NC x 1-1/4"
	70912441	1	LOCKWASHER, 1/2"
14	70096164	2	ANGLE
	70677008	2	WASHER
15	70094527	2	CLIP
	70922763	2	CAPSCREW, 3/8"NC x 1"
	70677006	2	WASHER
	70911026	2	NUT, 3/8"NC
16	70093752	3	BOOT, (1/2" tube)
17	70097534	3	CLIP
	70922262	3	CAPSCREW, 3/8"NC x 7/8"
	70677006	3	WASHER
18	70093751	3	BOOT (3/8" tube)
19	70055234	3	CLIP
20	70094467	1	CLIP
	70922763	1	CAPSCREW, 3/8"NC x 1"
	70677006	1	WASHER
	70911026	1	NUT, 3/8"NC
21	70622992	1	CLIP

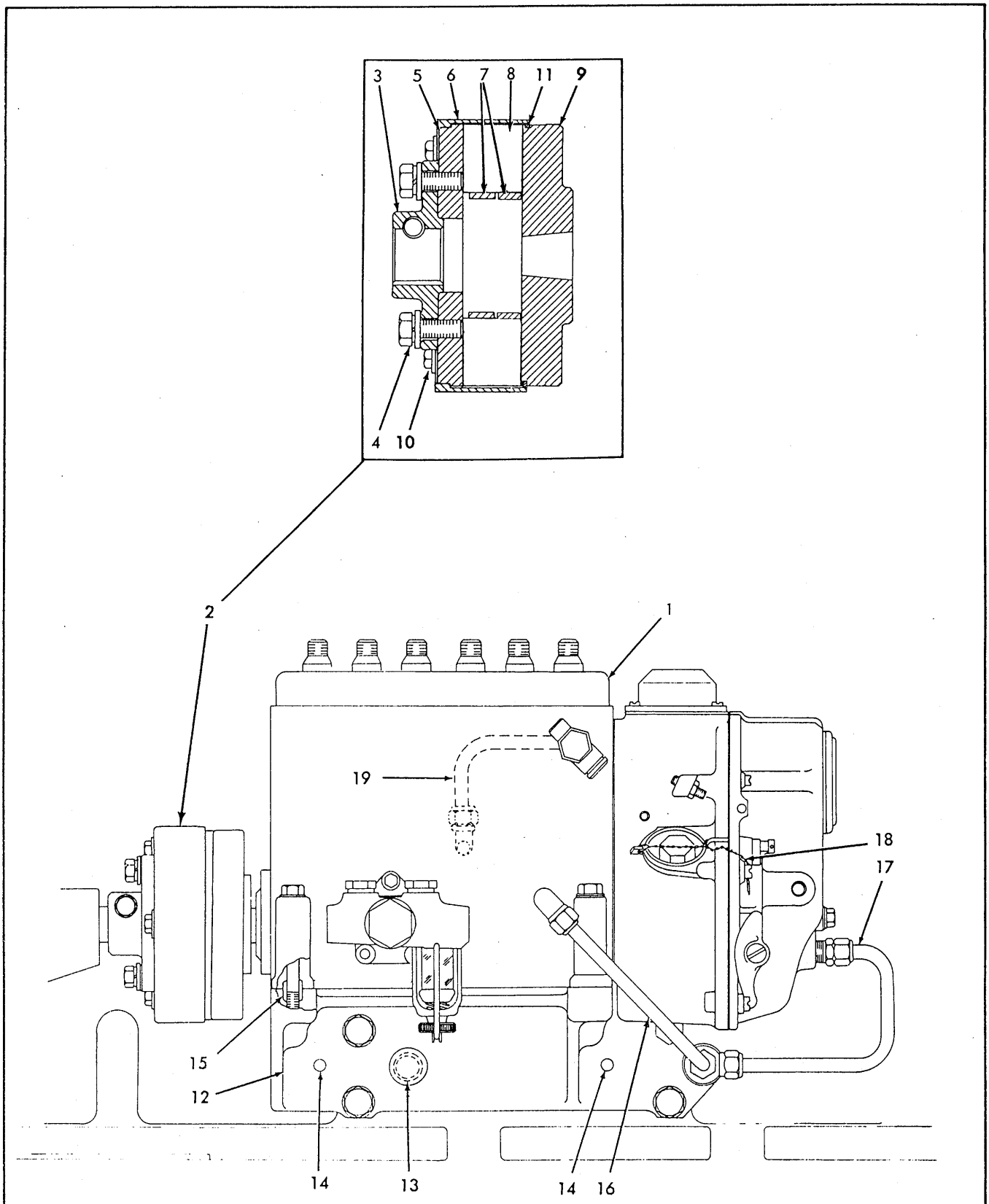

T-75868

FUEL INJECTION PUMP

USAGE: 17000 MKII engines

FUEL INJECTION PUMP

ITEM	PART NO.	QTY.	DESCRIPTION
1	74061638	1	PUMP KIT, injection (Includes item 2)(Service replacement for original factory adjusted PUMP ASSY. 74392775, 74394064 and 74394746)
	70919015	4	CAPSCREW, 3/8"NC x 3-1/2"
	70904206	4	LOCKWASHER, 3/8"
	70913544	4	WASHER, plain, 3/8"
	70905845	1	KEY, woodruff, 1/4" x 7/8"
2	74392350	1	COUPLING (Includes items 3 thru 10)(Engines prior to #17-01953)
	74394009	1	COUPLING (Includes items 3 thru 11)(Engine #17-01953 and up)
3	74394318	1	CLAMP, hub
	70927322	1	CAPSCREW, 3/8"NF x 2" } Clamping
	70910287	1	LOCKWASHER, 3/8" } Clamping
4	70921076	2	CAPSCREW, 3/8"NC x 1-1/4"
	70677006	2	WASHER
5	74060643	1	FLANGE, engine side
6	74061040	1	COVER, flange
7	74060645	2	INSERT
8	74060646	6	INSERT (rubber)
9	74060647	1	HUB, pump side (For COUPLING 74392350)
	74061041	1	HUB, pump side (For COUPLING 74394009)
10	70915343	3	CAPSCREW, 1/4"NC x 5/8"
	70911114	3	WASHER
	70904204	3	LOCKWASHER, 1/4"
11	74061042	1	SHIELD, dust (For COUPLING 74394009 only)
12	--------	1	BRACKET (Engines prior to #17-02668)(Order 74394301 and 2 Dowel 74394302)
	74394301	1	BRACKET (Engine #17-02668 and up)
	70916311	4	CAPSCREW, 1/2"NC x 1-1/4"
	70904208	4	LOCKWASHER, 1/2"
13	74255665	2	□O-RING
14	74253286	2	PIN, dowel
15	74392630	2	DOWEL, hollow (Engines prior to #17-02668)
	74394302	2	DOWEL, hollow (Engine #17-02668 and up)
16	74392402	1	TUBE
	70917810	2	NUT, Imperial, 3/8" tube
	70917807	2	SLEEVE, Imperial, 3/8" tube (rubber)
	70920280	1	ELBOW, Imperial, 3/8" tube, 1/4"NPT (at pump)
	70921841	1	TEE, service, Imperial, 3/8" tube, 1/4"NPT (at bracket)
17	74392439	1	TUBE
	70917810	2	NUT, Imperial, 3/8" tube
	70917807	2	SLEEVE, Imperial, 3/8" tube (rubber)
	70920279	1	CONNECTOR, Imperial, 3/8" tube, 1/4"NPT (at governor)
18	74355843	1	SEAL, anti-tampering
19	74394306	1	TUBE ASSY., lube oil feed (Includes SLEEVES and NUTS)
	70917810	2	NUT, Imperial, 3/8" tube
	70917807	2	SLEEVE, Imperial, 3/8" tube (rubber)
	70920790	1	ELBOW, Imperial, 3/8" tube, 1/8"NPT (at pump)
	70927139	1	ELBOW, Imperial, 3/8" tube, 1/4"NPT female } at block
	70913112	1	NIPPLE, pipe, hex., 1/4" x 1/4" } at block

(Revised August 1980)

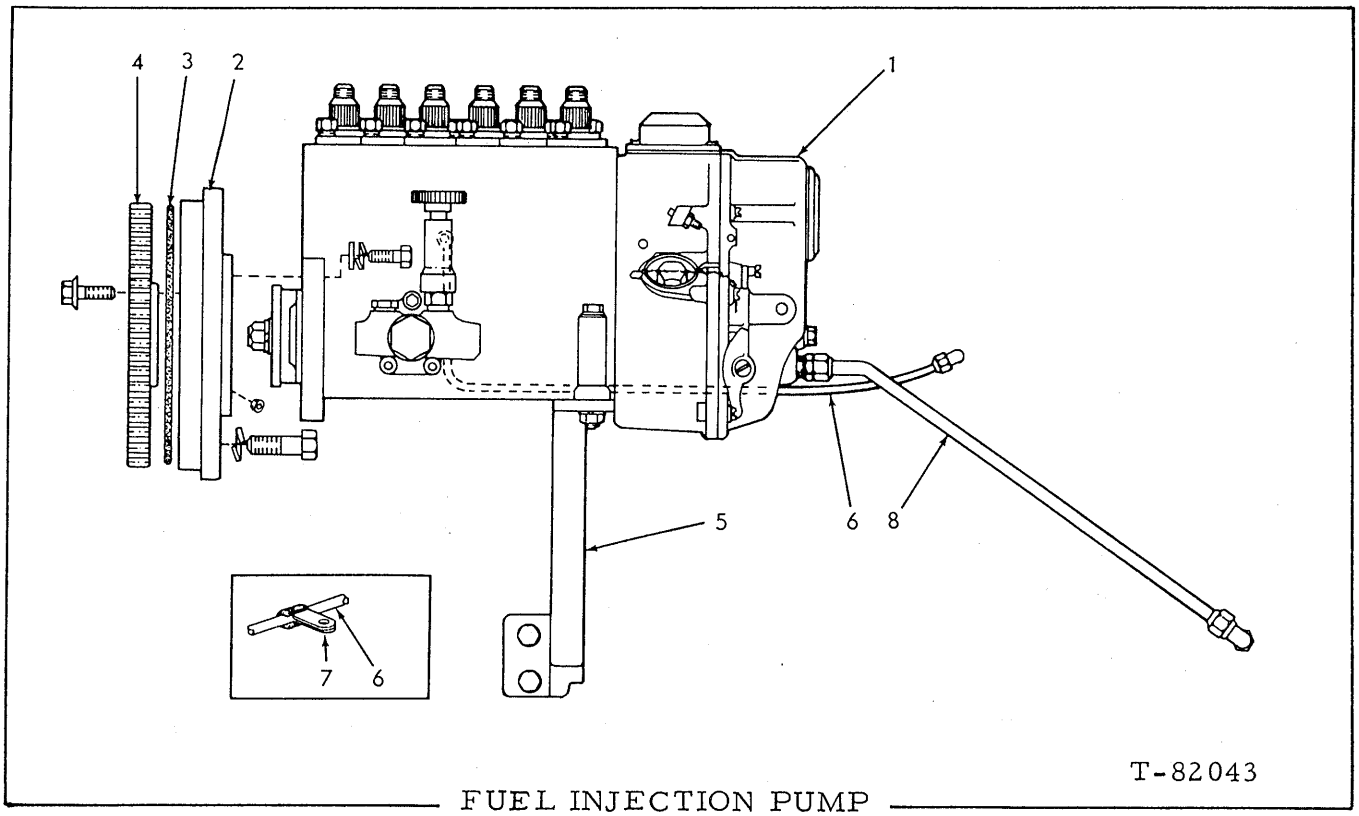

FUEL INJECTION PUMP

USAGE: 6138 LT engine

ITEM	PART NO.	QTY.	DESCRIPTION
1	74396550	1	PUMP KIT, injection (Service replacement for pumps 74395449 and 74396532)
	70914847	4	CAPSCREW, 3/8"NC x 1-1/2"
	70911115	4	WASHER
	70910287	4	LOCKWASHER, 3/8"
2	74396005	1	PLATE, adapter
	70921076	2	CAPSCREW, 3/8"NC x 1-1/4"
	70930796	1	CAPSCREW, Eslok, 3/8"NC x 1-1/4"
	70916272	2	CAPSCREW, 3/8"NC x 1-1/4"
	70910287	3	LOCKWASHER, 3/8"
	70908944	1	PLUG, pipe, ctsk., hex-skt., 1/2"NPT
3	70924142	1	O-RING
4	74395460	1	GEAR
	74255060	3	CAPSCREW
5	74394674	1	BRACKET
	70916276	1	CAPSCREW, 3/8"NC x 4-1/2"
	70919801	1	CAPSCREW, 3/8"NC x 4"
	70911115	2	WASHER
	70910287	2	LOCKWASHER, 3/8"
	70910324	2	NUT, 3/8"NC
	70915987	2	CAPSCREW, 1/2"NC x 1-1/2" } at cylinder
	70912441	2	LOCKWASHER, 1/2" } block

(Continued)

(Revised April 1981)

FUEL INJECTION PUMP (Continued)

ITEM	PART NO.	QTY.	DESCRIPTION
6	74395976	1	TUBE ASSY. (Oil intake)(Includes Sleeves and Nuts)
	70917807	2	SLEEVE, Imperial, 3/8" tube
	70917810	2	NUT, Imperial, 3/8" tube
	70921372	1	CONNECTOR, Imperial, 3/8" tube, 1/8"NPT
	70913112	1	NIPPLE, pipe, 1/4" x 1/4"
	70927139	1	ELBOW, Imperial, 3/8" tube, 1/4"NPT
7	70926917	1	CLAMP
8	74395229	1	TUBE (Oil return)
	70917807	2	SLEEVE, Imperial, 3/8" tube
	70917810	2	NUT, Imperial, 3/8" tube
	70920279	1	CONNECTOR, Imperial, 3/8" tube, 1/4"NPT
	70920280	1	ELBOW, Imperial, 3/8" tube, 1/4"NPT

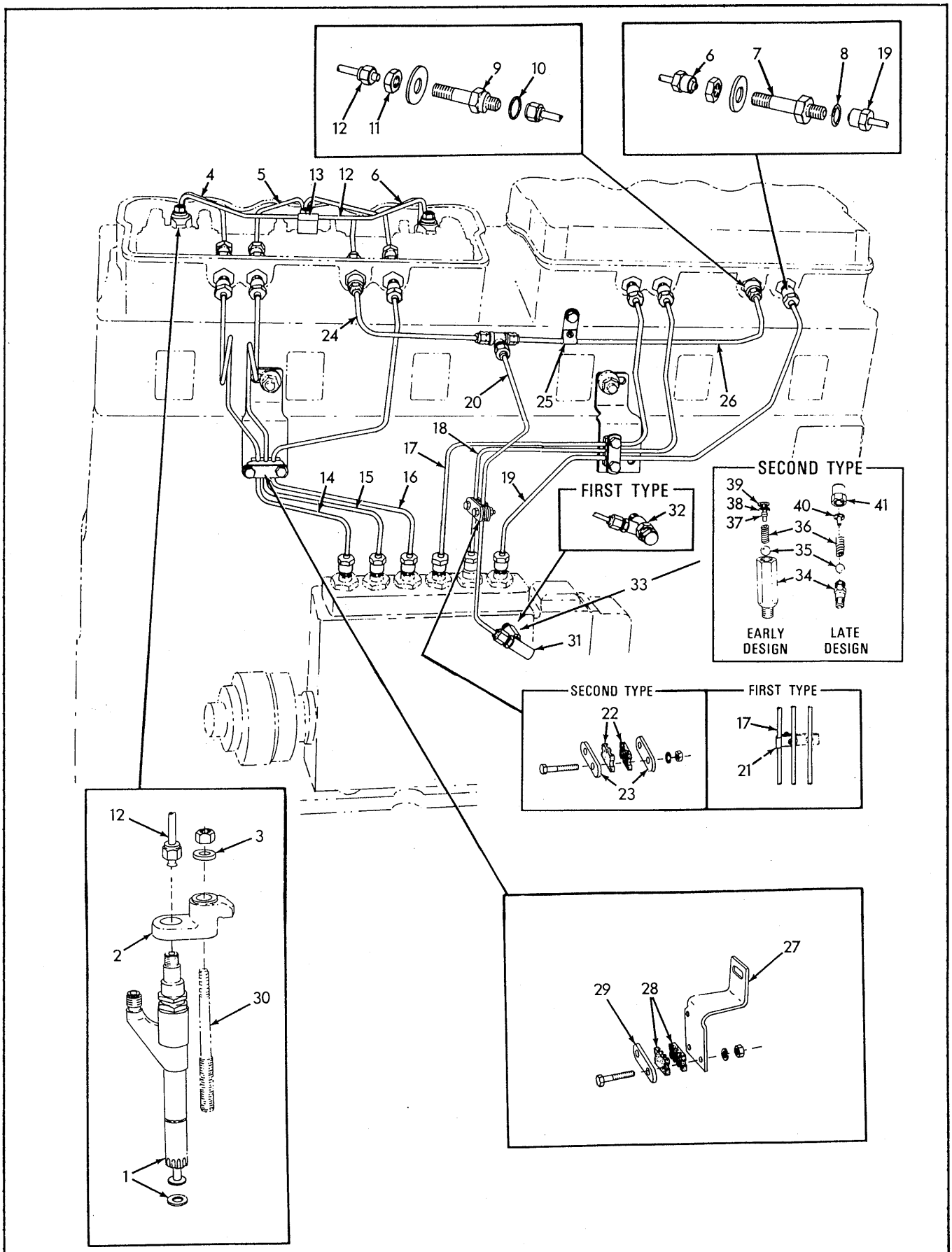

T-75869

INJECTION NOZZLE LINES

(Revised June 1978)

INJECTION NOZZLES LINES

USAGE: 17000 MKII engines

ITEM	PART NO.	QTY.	DESCRIPTION	
1	--------	6	HOLDER ASSY., nozzle (See page 63)	
2	74387385	6	CLAMP, nozzle holder	
	74115287	6	NUT, 3/8"NF	
3	74379572	6	WASHER, nozzle holder clamp	
4	74390093	2	TUBE ASSY., fuel injection, internal (#1 and #4 cylinder)	Each includes nuts
5	74390094	2	TUBE ASSY., fuel injection, internal (#2 and #5 cylinder)	
6	74390095	2	TUBE ASSY., fuel injection, internal (#3 and #6 cylinder)	
7	74386601	6	CONNECTOR, injection line	
	70919303	6	NUT, jam, 9/16"NF	
	70914659	6	WASHER, plain, SAE std., 9/16"	
8	70923645	6	□O-RING, injection line connector	
9	74386602	2	CONNECTOR, fuel return line	
10	70923645	2	□O-RING, return line connector	
11	74377267	2	NUT, return line connector (1/2" - 24)	
	70914659	2	WASHER, plain, SAE std., 9/16" (Engines prior to #17-04657)	
	74396053	2	SPACER (Engine #17-04657 and up)	
12	74393813	2	MANIFOLD ASSY., fuel return (Includes nuts and sleeves)	
	70917809	8	NUT, Imperial, 1/4" tube	Engines prior to #17-04843
	74255956	8	SLEEVE, Imperial, 1/4" tube (rubber)(Viton-high temp.)	
13	74255179	2	CLIP, manifold supporting	
14	74392384	1	TUBE ASSY., fuel injection, external (#1 cylinder)	Each includes nuts
15	74392385	1	TUBE ASSY., fuel injection, external (#2 cylinder)	
16	74392386	1	TUBE ASSY., fuel injection, external (#3 cylinder)	
17	74392387	1	TUBE ASSY., fuel injection, external (#4 cylinder)	
18	74392388	1	TUBE ASSY., fuel injection, external (#5 cylinder)	
19	74392389	1	TUBE ASSY., fuel injection, external (#6 cylinder)	
20	74392445	1	TUBE, fuel return (Engines prior to #17-01843)	Use with item 32
	74394177	1	TUBE, fuel return (Engine #17-01843 thru #17-03711)	
	74396081	1	TUBE, fuel return (Engine #17-03712 and up)(Use with items 33 and 40)	
	70917809	2	NUT, Imperial, 1/4" tube	
	74255956	2	SLEEVE, Imperial, 1/4" tube (rubber)	
	70919797	1	TEE, Imperial, 1/4" tube	
	70919800	1	CONNECTOR, Imperial (Use with item 32)	
	70920242	1	CONNECTOR, Imperial (Use with item 33)	
21	74361829	1	CLAMP, return tube	Engines prior to #17-01843
	70921226	1	SCREW, fil. hd., 1/4"NC x 5/8"	
	70904204	1	LOCKWASHER, 1/4"	
	70910880	1	NUT, 1/4"NC	

(Continued)

(Revised August 1980)

INJECTION NOZZLE LINES (Continued)

ITEM	PART NO.	QTY.	DESCRIPTION	
22	74507358	2	SPACER	
23	74507414	2	PLATE	Engine #17-01843 and up
	70918794	2	SCREW, fil.hd., 1/4"NC x 5/8"	
	70904204	2	LOCKWASHER, 1/4"	
	70910880	2	NUT, 1/4"NC	
24	74392789	1	TUBE, fuel return, front	
	70917809	2	NUT, Imperial, 1/4" tube	
	74255956	2	SLEEVE, Imperial, 1/4" tube (rubber)	
25	74386617	1	CLIP, fuel return tube	
	70901171	1	SCREW, machine, #10-24NC x 3/8"	
	70904203	1	LOCKWASHER, #10	
	70901310	1	NUT, #10-24NC	
	70915408	1	CAPSCREW, 3/8"NC x 3/4"	
	70904206	1	LOCKWASHER, 3/8"	
	70911115	1	WASHER, plain, SAE std., 3/8"	
26	74392788	1	TUBE, fuel return, rear	
	70917809	2	NUT, Imperial, 1/4" tube	
	74255956	2	SLEEVE, Imperial, 1/4" tube (rubber)	
27	74396082	2	BRACKET (Includes spaw washers)	
	70929935	2	WASHER, spaw (Engine S/N 17-04858 and up)	
28	74507359	4	SPACER, injection lines (rubber)	
29	74507415	2	PLATE, clamping, rear injection lines	
	70918794	4	CAPSCREW, 1/4"NC x 1-3/8"	
	70904204	4	LOCKWASHER, 1/4"	
	70910880	4	NUT, 1/4"NC	
30	--------	6	STUD, nozzle holder clamp (See page 29)	
31	70931195	1	TEE (Use with item 33)	
32	74060154	1	VALVE (First type)(See item 20)(Use with tubes 74392445 or 74394177)	
33	74396315	1	VALVE ASSY. (Includes items 34, 35, 36, 40 and 41)	
34	--------	1	BODY (Not serviced separately)	
35	74337022	1	BALL	
36	74337023	1	SPRING	
37	--------	1	STOP (Not serviced. Order item 33)	Early design
38	74255017	1	E-RING	
39	74255020	1	RING, snap	
40	74395855	1	RETAINER	Late design
41	74395935	1	NUT	

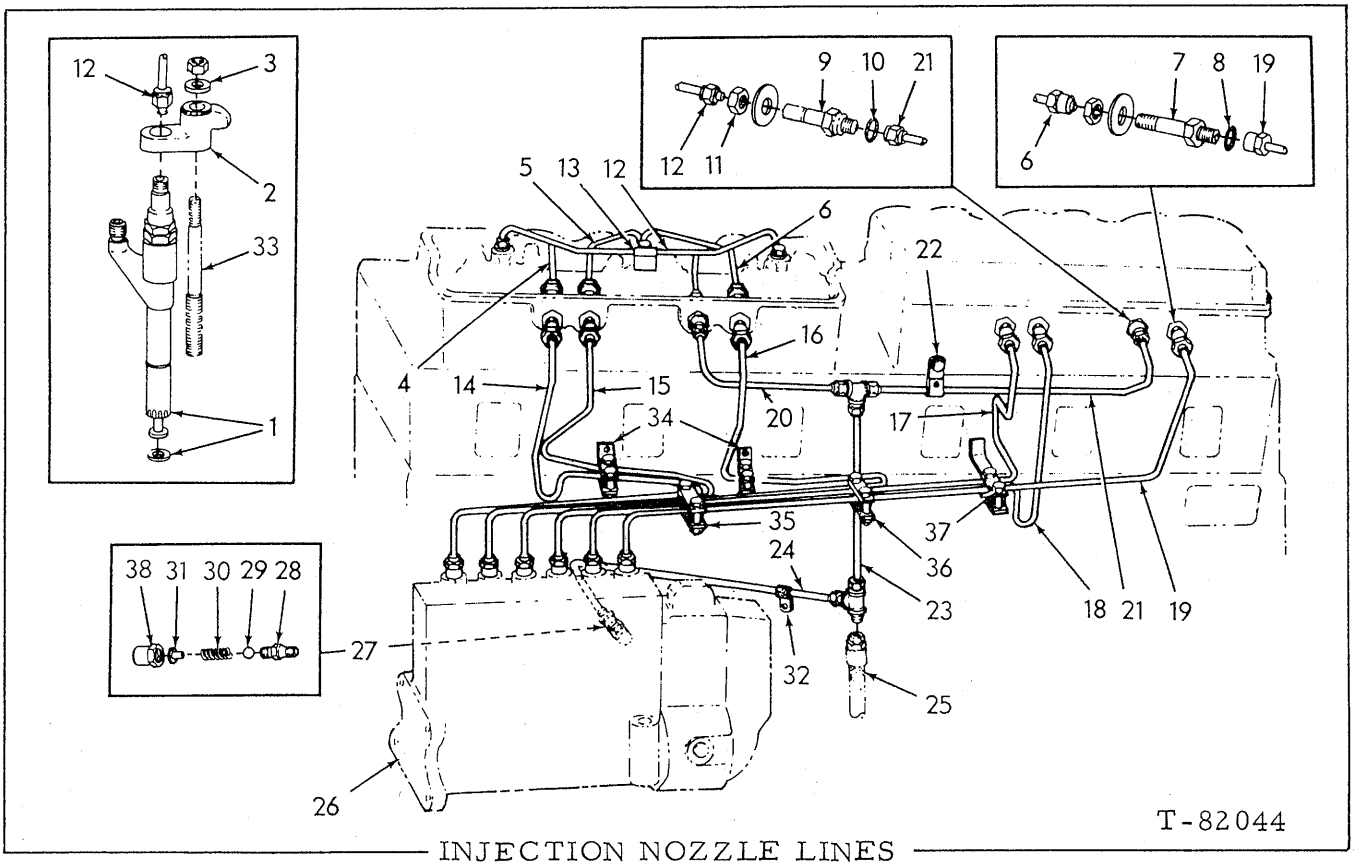

INJECTION NOZZLE LINES

USAGE: 6138 LT engines

ITEM	PART NO.	QTY.	DESCRIPTION	
1	--------	6	HOLDER ASSY., Nozzle (See page 63)	
2	74387385	6	CLAMP	
	74115287	6	NUT, 3/8"NF	
3	74379572	6	WASHER	
4	74390093	2	TUBE ASSY. (#1 and #4 cylinder)	Each includes nuts
5	74390094	2	TUBE ASSY. (#2 and #5 cylinder)	
6	74390095	2	TUBE ASSY. (#3 and #6 cylinder)	
7	74386601	6	CONNECTOR	
	70919303	6	NUT, jam, 9/16"NF	
	70914659	6	WASHER	
8	70923645	6	□O-RING	
9	74386602	2	CONNECTOR	
10	70923645	2	□O-RING	
11	74377267	2	NUT	
	74396053	2	SPACER	
12	74396020	2	MANIFOLD ASSY. (Includes nuts and sleeves)	
	70917809	8	NUT, Imperial, 1/4" tube	
	74255956	8	□SLEEVE, Imperial, 1/4" tube	
13	74255179	2	CLIP	
14	74395541	1	TUBE ASSY. (#1 cylinder)	Each includes nuts
15	74395542	1	TUBE ASSY. (#2 cylinder)	
16	74395543	1	TUBE ASSY. (#3 cylinder)	
17	74396479	1	TUBE ASSY. (#4 cylinder)	
18	74395545	1	TUBE ASSY. (#5 cylinder)	
19	74395546	1	TUBE ASSY. (#6 cylinder)	

(Continued)

(Revised April 1981)

INJECTION NOZZLE LINES (Continued)

ITEM	PART NO.	QTY.	DESCRIPTION
20	74392789	1	TUBE (fuel return, front)
	70917809	2	NUT, Imperial, 1/4" tube
	74255956	2	SLEEVE, Imperial, 1/4" tube
21	74392788	1	TUBE (fuel return, rear)
	70917809	2	NUT, Imperial, 1/4" tube
	74255956	2	SLEEVE, Imperial, 1/4" tube
22	74386617	1	CLIP
	70901171	1	SCREW, machine, #10-24NC x 3/8"
	70904203	1	LOCKWASHER, #10
	70901310	1	NUT, #10-24NC
	70915408	1	CAPSCREW, 3/8"NC x 3/4"
	70910287	1	LOCKWASHER, 3/8"
23	74395227	1	TUBE (fuel return, lower)
	70917809	2	NUT, Imperial, 1/4" tube
	74255956	2	SLEEVE, Imperial, 1/4" tube
	70919797	1	TEE
24	74395690	1	TUBE (pump overflow)
	70917809	2	NUT, Imperial, 1/4" tube
	74255956	2	SLEEVE, Imperial, 1/4" tube
	70921378	1	TEE, Imperial, 1/4" tube, 1/4"NPT
	70920242	1	CONNECTOR, Imperial, 1/4" tube, 1/4"NPT male
25	--------	1	HOSE (See page 57)
26	--------	1	PUMP ASSY., fuel injection (See page 59A)
27	74396752	1	VALVE ASSY., return relief (Includes item 28, 29, 30, 31, and 38)
	70930299	1	WASHER, copper
28	--------	1	BODY (Not serviced separately)
29	74337022	1	BALL
30	--------	1	SPRING (Order item 27)
31	74396754	1	RETAINER
32	74003510	1	CLAMP
33	--------	6	STUD (See page 29)
34	74395878	2	BRACKET
	74507414	2	CLAMP
	74507358	4	SPACER
	70918794	4	CAPSCREW, 1/4"NC x 1-3/8"
	70904204	4	LOCKWASHER, 1/4"
	70910880	4	NUT, 1/4"NC
35	74020725	2	CLAMP
	74020724	2	SPACER
	70918794	2	CAPSCREW, 1/4"NC x 1-3/8"
	70904204	2	LOCKWASHER, 1/4"
	70910880	2	NUT, 1/4"NC
36	74507416	2	CLAMP
	74507360	2	SPACER
	70918794	2	CAPSCREW, 1/4"NC x 1-3/8"
	70904204	2	LOCKWASHER, 1/4"
	70910880	2	NUT, 1/4"NC
37	74396083	1	BRACKET
	74507415	1	CLAMP
	74507359	2	SPACER
	70918794	2	CAPSCREW, 1/4"NC x 1-3/8"
	70904204	2	LOCKWASHER, 1/4"
	70910880	2	NUT, 1/4"NC
38	74395935	1	NUT

(Revised April 1981)

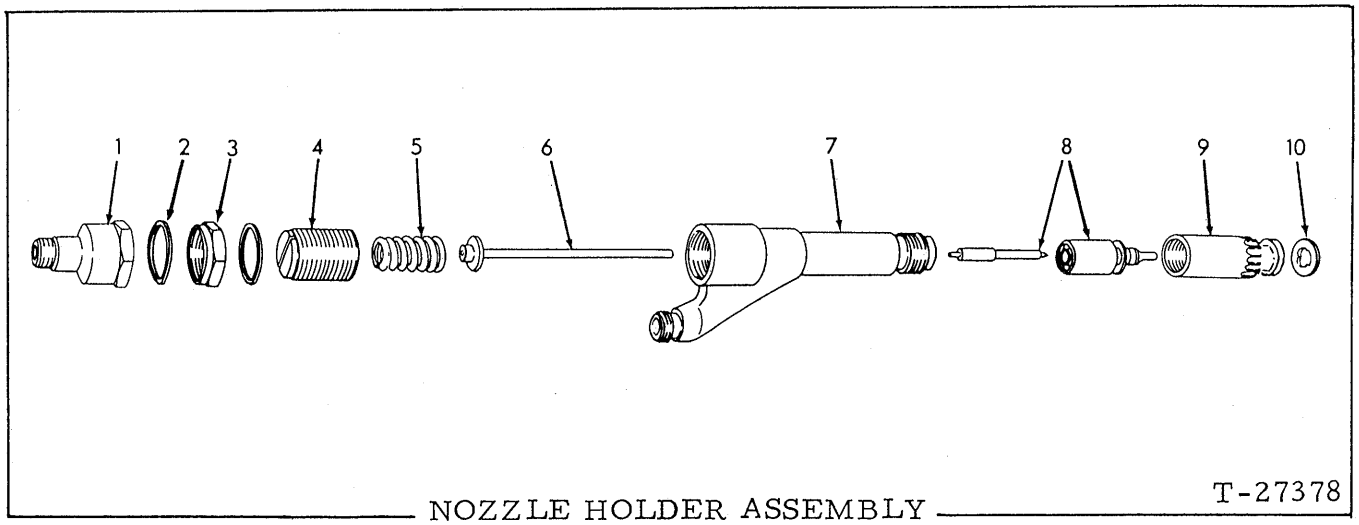

NOZZLE HOLDER ASSEMBLY

USAGE: See page 61 and 62A

*Engines prior to serial No. 17-02422
**Engine serial No. 17-02422 thru 17-04656
***Engine serial No. 17-04657 and up

ITEM	PART NO.	QUANTITY *	**	***	DESCRIPTION	
					NOTE: Quantities are for one (1) Holder Assembly only.	
-	74392304	1	-	-	HOLDER ASSY., (long Sac type)	Not serviced. Order HOLDER ASSY. 74062107 and item 8.
-	74392121	-	1	-	HOLDER ASSY. (short Sac type)	
-	74396059	-	-	1	HOLDER ASSY.	
-	74062107	1	1	1	HOLDER ASSY. (Includes items 1 thru 7 and 9)	
1	74396054	1	1	1	CAP	
2	74511243	2	2	2	GASKET, cap nut	
3	74517266	1	1	1	NUT, locking	
4	74378033	1	1	1	SCREW, adjusting	
5	74380652	1	1	1	SPRING	
6	74391240	1	1	1	SPINDLE	
7	--------	1	1	1	BODY (Not serviced separately)	
8	74392305	1	-	-	NOZZLE ASSY. (long Sac Type)	Each includes item 10
	74390006	-	1	1	NOZZLE ASSY. (short Sac type)	
9	74392057	1	1	1	NUT, nozzle retaining	
10	74378031	1	1	1	□GASKET, nozzle	

(Revised September 1979)

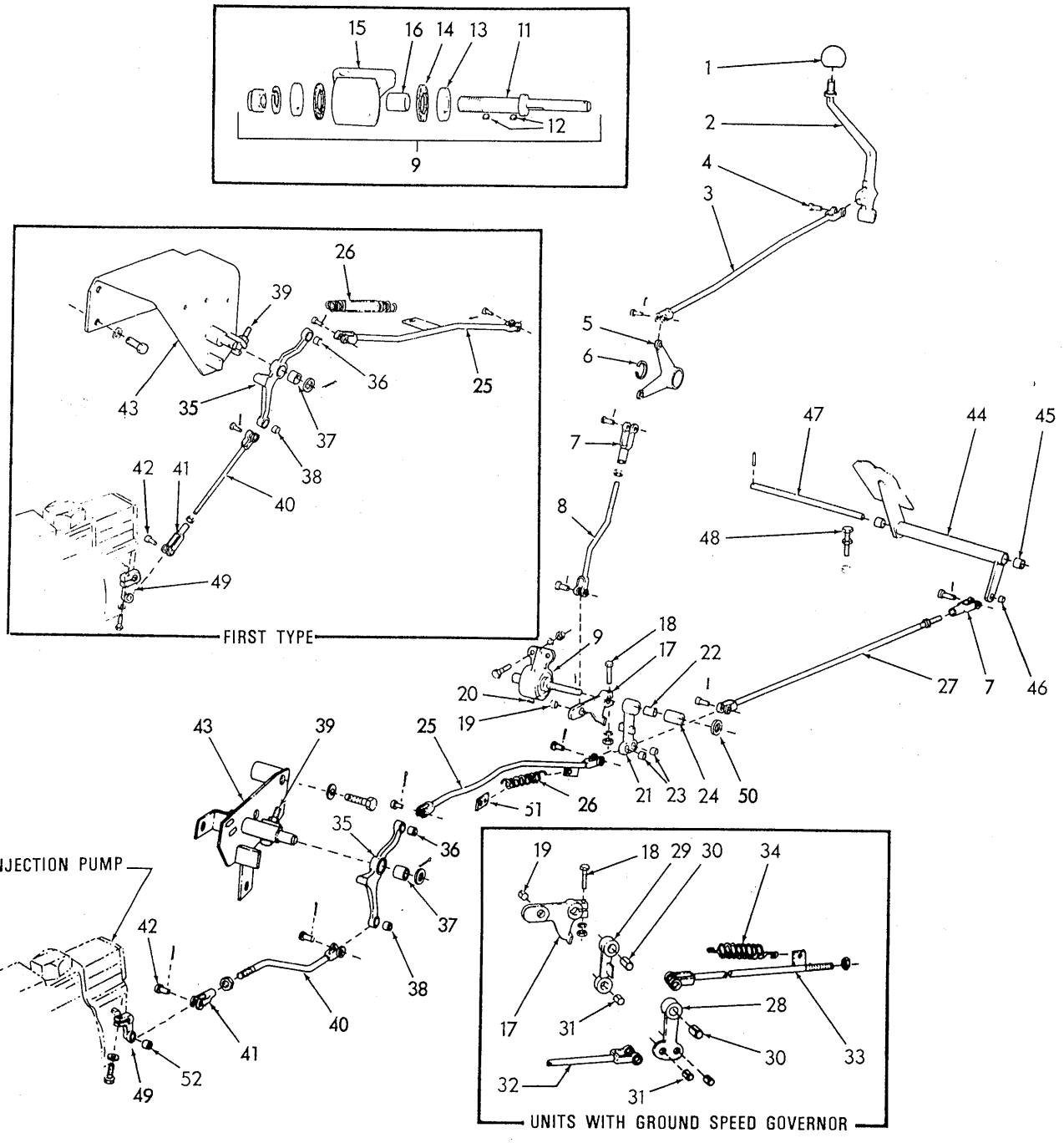
15
16
14
13
11
12
9
1
2
4
3
5
6
7
8
47
44
45
48
18
17
22
9
20
19
27
7
46
25
26
21
23
24
50
51
43
39
35
36
37
38
40
41
42
49
52
INJECTION PUMP
FIRST TYPE
19
18
29
30
34
17
31
28
33
32
UNITS WITH GROUND SPEED GOVERNOR

THROTTLE CONTROL

* Tractors prior to S/N 19S15213
** Tractors S/N 19S15213 and up

ITEM	PART NO.	QTY. *	QTY. **	DESCRIPTION	
1	70090020	1	1	KNOB, operating lever	
2	70631975	1	1	LEVER, operating	
3	70666219	1	1	ROD, upper	
4	70078810	8	8	PIN, yoke, control rod	
	70900942	8	8	PIN, cotter, 3/32" x 5/8"	
5	70081094	1	1	BELLCRANK, upper rod	
6	70052225	1	1	RING, snap, bellcrank retaining	
7	70628736	2	2	YOKE, rod	
8	70656937	1	1	ROD, intermediate, upper	
	70911048	1	1	NUT, jam, 3/8" NF	
9	70631683	1	1	FRICTION ASSY. (Includes items 11 thru 16)	
10	70920583	2	2	CAPSCREW, 1/2" NC x 1-1/2"	
	70912441	2	2	LOCKWASHER, 1/2"	
	70900369	2	2	NUT, 1/2" NC	
	70900806	1	1	PIN, cotter, 1/8" x 1"	
11	70631682	1	1	SHAFT, friction	
	70904369	1	1	LOCKWASHER, 3/4"	
	70916591	1	1	NUT, elastic stop, 3/4" NF	
12	70632716	2	2	KEY, friction washer	
13	70632710	2	2	WASHER, friction	
14	70632747	2	2	DISC, friction	
15	70632766	1	1	HOUSING ASSY., friction (Includes item 16)	
16	70632752	1	1	BUSHING, friction housing	
17	70631494	1	1	LEVER ASSY., friction shaft (Includes item 19)	
18	70920660	1	1	CAPSCREW, 5/16" NC x 1-1/2"	
	70919311	1	1	LOCKWASHER, 5/16"	
	70900366	1	1	NUT, 5/16" NC	
19	70624584	1	1	BUSHING, friction shaft lever	
20	70632756	1	1	KEY, friction shaft lever	
21	70666795	1	1	LEVER ASSY., intermediate lower rod (Includes items 22 and 23)	For units without GROUND SPEED GOVERNOR
22	70631476	1	1	BUSHING, intermediate lower rod lever (Large)	
23	70624584	2	2	BUSHING, intermediate lower rod lever (Small)	
24	70610563	1	1	SPACER, intermediate lower rod lever	
25	70667557	1	-	ROD, intermediate, lower	
	73116453	-	1	ROD, intermediate, lower	
26	70043881	1	1	SPRING, retracting, intermediate rod	
27	70631653	1	1	ROD, decelerator	
	70911048	1	1	NUT, jam, 3/8" NF	
28	70631496	1	1	LEVER ASSY.	For units with GROUND SPEED GOVERNOR
29	70631498	1	1	LEVER ASSY., decelerator rod (Includes items 30 and 31)	
30	70631476	2	2	BUSHING, lever (large)	
31	70624584	3	3	BUSHING, lever (small)	
32	70631650	1	1	ROD, intermediate, lower	
33	70631652	1	1	ROD, decelerator	
	70911048	1	1	NUT, jam, 3/8" NF	
34	70072438	1	1	SPRING, retracting, decelerator rod	

(Continued)

(Revised April 1980)

THROTTLE CONTROL (Continued)

ITEM	PART NO.	QTY. *	QTY. **	DESCRIPTION
35	70674774	1	1	BELLCRANK ASSY., lower rod (Includes items 36, 37 and 38)
36	70624584	1	1	BUSHING, bellcrank (3/8" long)
37	70631476	1	1	BUSHING, bellcrank (7/8" long)
38	70624585	1	1	BUSHING, bellcrank (1/4" long)
39	70634650	1	-	CAPSCREW, lever stop (3/8"NC x 1-1/2")
	70921076	-	1	CAPSCREW, lever stop (3/8"NC x 1-1/4")
	70911034	1	1	NUT, jam, 3/8"NC
40	70674755	1	-	ROD, lower
	73116481	-	1	ROD, lower
	70910267	1	1	NUT, jam, 1/4"NF
41	70628737	1	1	YOKE, lower rod
42	70628738	2	2	PIN, yoke, lower rod
	70900970	2	2	PIN, cotter, 1/16" x 1/2"
43	70665462	1	-	BRACKET, control linkage supporting
	70921175	3	-	CAPSCREW, 1/2"NC x 1"
	70912441	3	-	LOCKWASHER, 1/2"
	73117283	-	1	BRACKET, control linkage supporting
	70920582	-	1	CAPSCREW, 1/2"NC x 1-1/4"
	70929059	-	2	CAPSCREW, Nylok, 1/2"NC x 2-3/4"
	70677008	-	3	WASHER
	70910244	1	1	WASHER, plain, SAE std., 1/2"
	70900806	1	1	PIN, cotter, 1/8" x 1"
44	70643437	1	1	PEDAL ASSY., decelerator (Includes items 45 and 46)
45	70063222	2	2	BUSHING, decelerator pedal (large)
46	70624584	1	1	BUSHING, decelerator pedal (small)
47	70631646	1	1	SHAFT, decelerator pedal
	70918111	1	1	PIN, spring, 1/8" x 1"
48	70921539	1	1	CAPSCREW, pedal stop (1/2"NC x 3-1/2")
	70911035	1	1	NUT, jam, 1/2"NC
49	74393259	1	-	LEVER
	70916277	1	-	CAPSCREW, 5/16"NC x 5/8"
	70904205	1	-	LOCKWASHER, 5/16"
	73117281	-	1	LEVER ASSY. (Includes item 52)
	70922925	-	1	CAPSCREW, 5/16"NC x 3/4"
	70929662	-	1	WASHER, plain, 5/16"
50	70910244	-	1	WASHER, plain, SAE std., 1/2"
51	73116455	-	1	PLATE, spring attaching
52	70624585	-	1	BUSHING

(Revised April 1981)

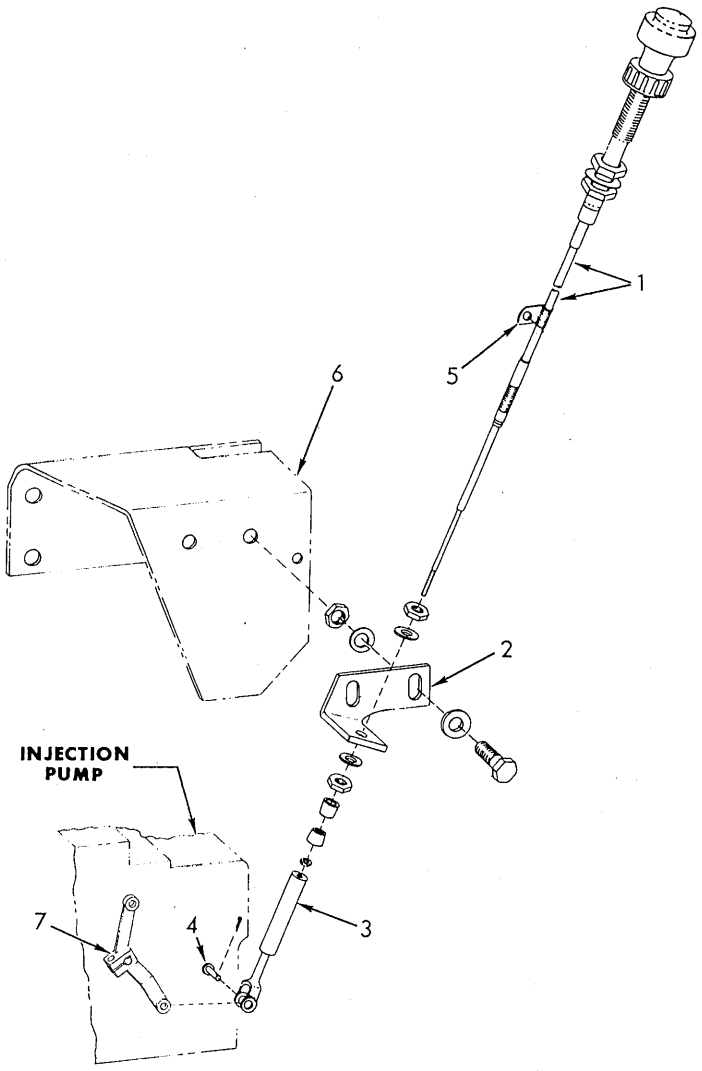

T-75866

ENGINE SHUT-OFF CONTROL

USAGE: Tractors prior to serial No. 19S14886. See page 67A for second type.

ITEM	PART NO.	QTY.	DESCRIPTION	
1	70665458	1	CABLE ASSY., push-pull (Serviced only as a unit)	
2	70674754	1	ANGLE, cable supporting	
	70921076	2	CAPSCREW, 3/8" NC x 1-1/4"	
	70677006	2	WASHER, plain	
	70910287	2	LOCKWASHER, 3/8"	
	70900367	2	NUT, 3/8" NC	
3	70674753	1	ROD, shut-off	
4	70628738	1	PIN, shut-off rod	
	70900970	1	PIN, cotter, 1/16" x 1/2"	
5	70639314	1	CLIP (3/8" diam., 13/32" bolt-hole)	Tractors prior to unit #14249
	70927400	1	CAPSCREW, 3/8" NC x 5/8"	
	70910287	1	LOCKWASHER, 3/8"	
	70927384	1	CLIP (3/8" diam., 17/32" bolt-hole)(Tractor unit #14249 and up)	
6	--------	1	BRACKET (See THROTTLE CONTROL)	
7	74393260	1	LEVER	
	70916277	1	CAPSCREW, 5/16" NC x 5/8"	
	70904205	1	LOCKWASHER, 5/16"	

(Revised April 1980)

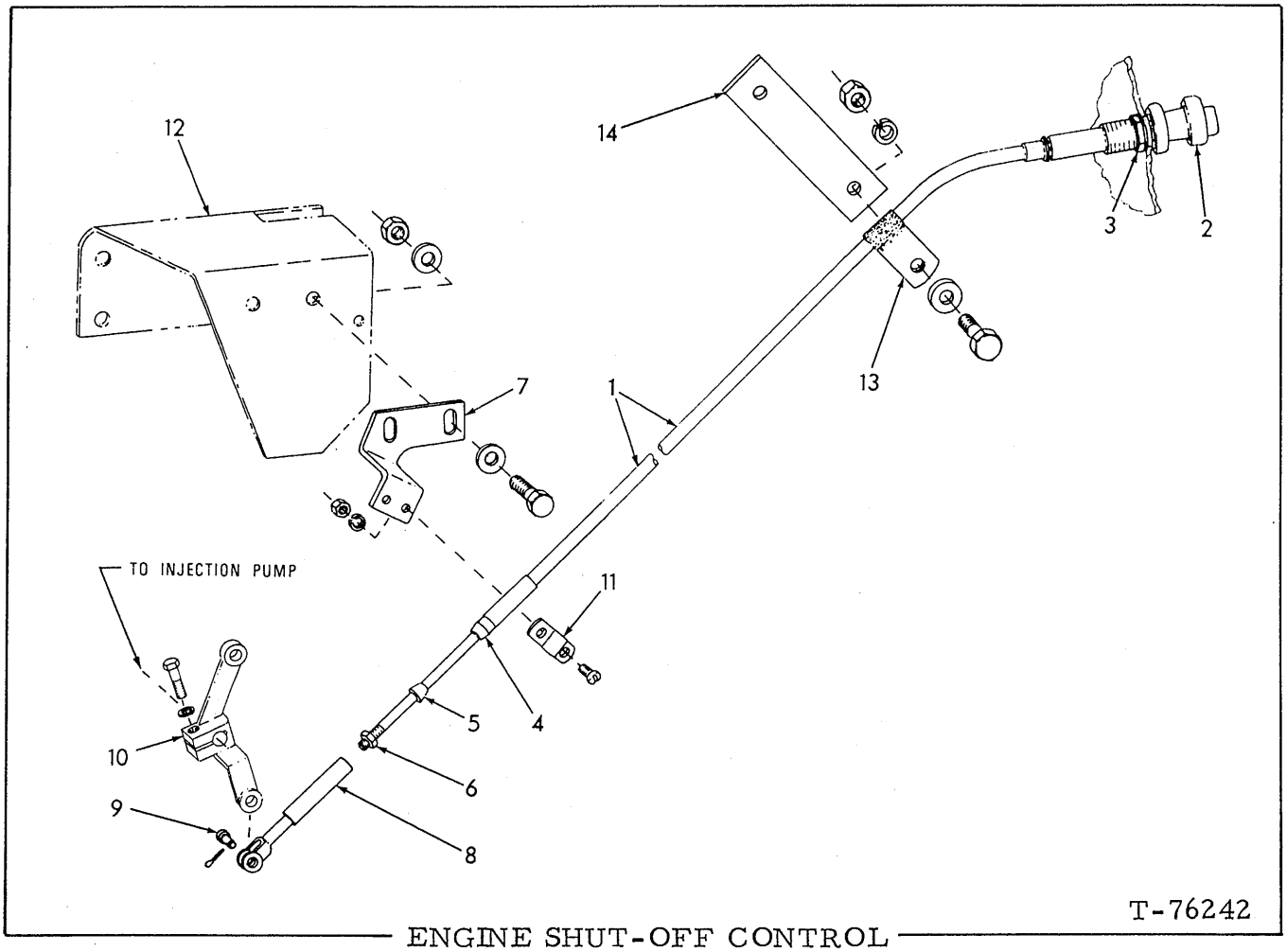

ENGINE SHUT-OFF CONTROL

USAGE: Tractors serial No. 19S14886 thru 19S15212. See page 67C for third type.

ITEM	PART NO.	QTY.	DESCRIPTION
1	73111199	1	CABLE ASSY. (Includes items 2 thru 6)
2	70680931	1	BOOT
3	70680582	2	NUT
	70928455	1	LOCKWASHER, int-tooth, 3/4"
4	70680581	1	SEAL
5	70680580	1	SEAL
6	70917415	1	NUT, jam, #10-32NF
7	73111072	1	ANGLE
	70921076	2	CAPSCREW, 3/8"NC x 1-1/4"
	70677006	2	WASHER
	70930370	2	WASHER
	70900367	2	NUT, 3/8"NC
8	70674753	1	ROD
9	70638738	1	PIN
	70900970	1	PIN, cotter, 1/16" x 1/2"
10	74393260	1	LEVER
	70916277	1	CAPSCREW, 5/16"NC x 5/8"
	70904205	1	LOCKWASHER, 5/16"

(Continued)

(Revised April 1980)

ITEM	PART NO.	QTY.	DESCRIPTION
11	70662427	1	CLAMP
	70917388	2	SCREW, #10-24NC x 3/4"
	70926673	2	NUT, #10-24NC
12	--------	1	BRACKET (See page 65)
13	70927384	1	CLIP
	70922763	1	CAPSCREW, 3/8"NC x 1"
	70677006	1	WASHER
	70910287	1	LOCKWASHER, 3/8"
	70900367	1	NUT, 3/8"NC
14	70644162	1	STRAP

(Added May 1977)

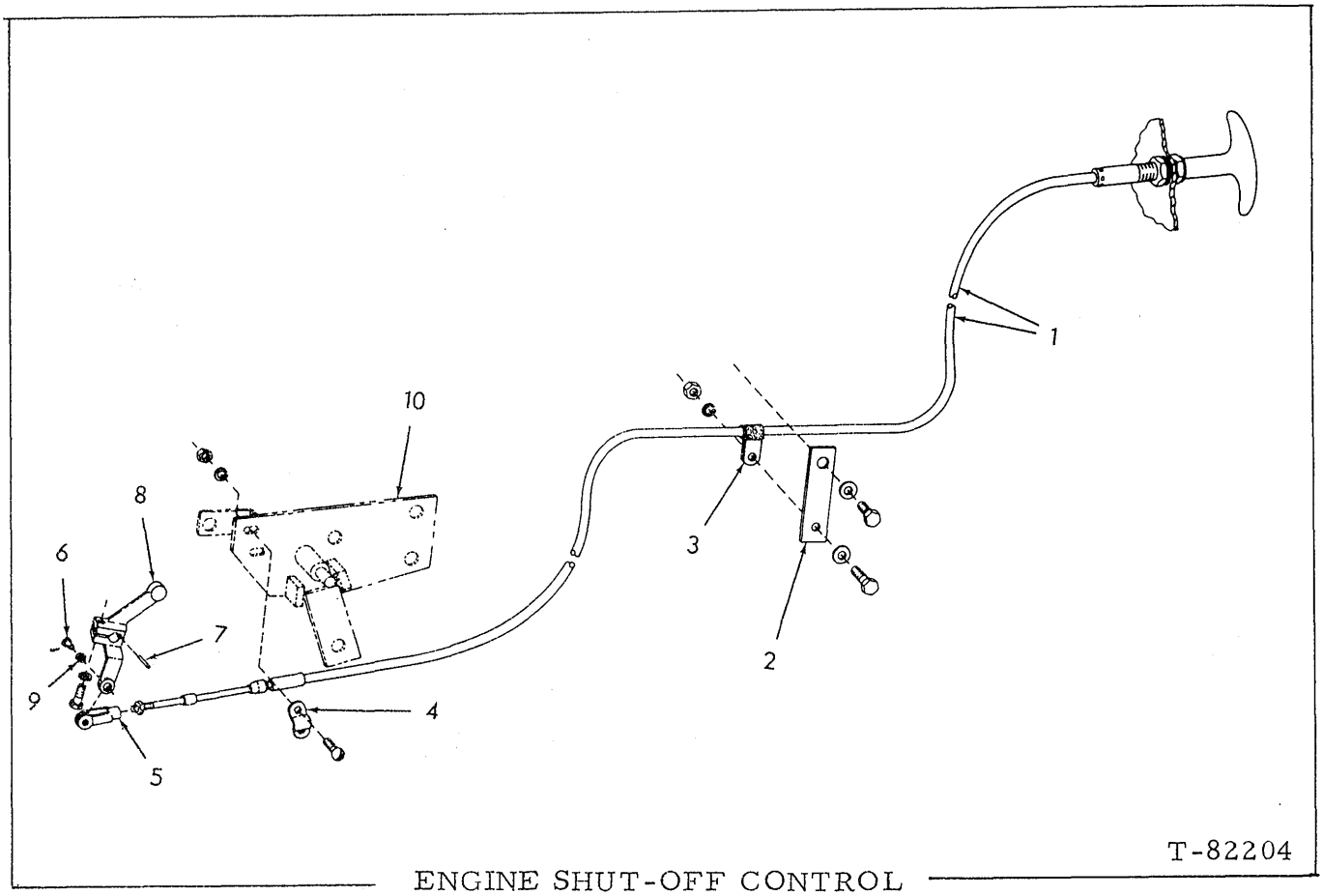

ENGINE SHUT-OFF CONTROL

USAGE: Tractors serial No. 19S15213 and up. See pages 67 and 67A for first and second types.

ITEM	PART NO.	QTY.	DESCRIPTION
1	73116480	1	CABLE ASSY., push-pull (Serviced only as a unit)
2	70644162	1	STRAP
	70922300	1	CAPSCREW, 3/8"NC x 3/4"
	70677006	1	WASHER
3	70927384	1	CLIP
	70922763	1	CAPSCREW, 3/8"NC x 1"
	70677006	1	WASHER
	70910287	1	LOCKWASHER, 3/8"
	70900367	1	NUT, 3/8"NC
4	70662427	1	CLAMP
	70917388	2	SCREW, #10-24NC x 3/4"
	70911982	2	WASHER
	70926673	2	NUT, #10-24NC
5	73117280	1	YOKE
6	70638738	1	PIN
	70900970	1	PIN, cotter, 1/16" x 1/2"
7	73118261	1	KEY
8	73117282	1	LEVER ASSY. (Includes item 9)
	70922925	1	CAPSCREW, 5/16"NC x 3/4"
	70929662	1	WASHER, plain, 5/16"
9	70624585	1	BUSHING
10	--------	1	BRACKET (See page 66)

(Revised April 1980)

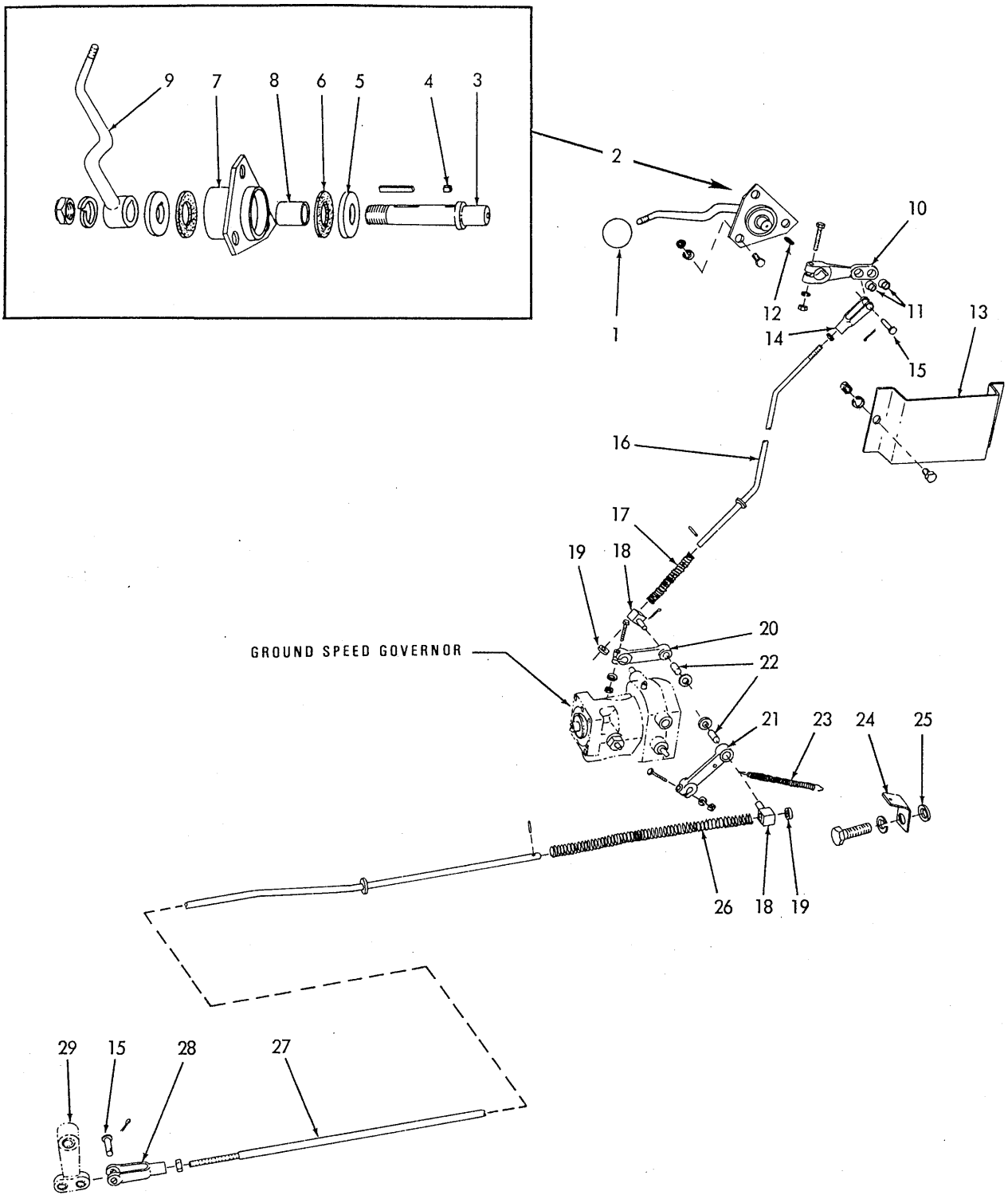

GOVERNOR CONTROL LINKAGE

GOVERNOR CONTROL LINKAGE

USAGE: For units with GROUND SPEED GOVERNOR only

ITEM	PART NO.	QTY.	DESCRIPTION
1	70090020	1	KNOB, friction lever
2	70 665460	1	FRICTION ASSY. (Includes items 3 thru 9)
	70922262	3	CAPSCREW, 3/8"NC x 7/8"
	70910287	3	LOCKWASHER, 3/8"
	70911026	3	NUT, 3/8"NC
3	70632162	1	SHAFT, friction
	70915569	1	KEY, straight, 3/16" x 3/16" x 1-1/8"
	70904369	1	LOCKWASHER, 3/4"
	70914452	1	NUT, elastic stop, 3/4"NF
4	70632716	1	KEY, friction washer
5	70632710	2	WASHER, friction
6	70632747	2	DISC, friction
7	70632771	1	HOUSING ASSY., friction (Includes item 8)
8	70632752	1	BUSHING, friction housing
9	70671012	1	LEVER, friction
10	70640415	1	LEVER ASSY., upper rod (Includes item 11)
	70922286	1	CAPSCREW, 5/16"NC x 1-3/4"
	70910286	1	LOCKWASHER, 5/16"
	70911025	1	NUT, 5/16"NC
11	70624584	2	BUSHING, upper rod lever
12	70632756	1	KEY, upper rod lever
13	70666403	1	SHIELD, protecting
	70922300	2	CAPSCREW, 3/8"NC x 3/4"
	70910287	2	LOCKWASHER, 3/8"
	70911026	2	NUT, 3/8"NC
14	70634074	1	YOKE, intermediate rod
15	70078810	2	PIN, control rod yoke
	70900942	2	PIN, cotter, 3/32" x 5/8"
16	70664816	1	ROD, intermediate
	70911048	1	NUT, jam, 3/8"NF
	70916168	1	PIN, spring, 1/8"x 3/4"
17	70070212	1	SPRING, intermediate rod
18	70628116	2	EYE, swivel, governor lever
	70911115	2	WASHER, plain, SAE std., 3/8"
	70900942	2	PIN, cotter, 3/32" x 5/8"
19	70081672	2	SPACER, control rod
20	70624624	1	LEVER ASSY., governor inner (Includes item 22)
	70912177	1	CAPSCREW, 1/4"NF x 1-1/4"
	70910285	1	LOCKWASHER, 1/4"
	70911040	1	NUT, 1/4"NF

(Continued)

GOVERNOR CONTROL LINKAGE (Continued)

ITEM	PART NO.	QTY.	DESCRIPTION
21	70630331	1	LEVER ASSY., governor, outer, (Includes item 22)
	70912177	1	CAPSCREW, 1/4"NF x 1-1/4"
	70910285	1	LOCKWASHER, 1/4"
	70911040	1	NUT, 1/4"NF
22	70628138	2	BUSHING, governor lever
23	70621614	1	SPRING, retracting governor lever
24	70631657	1	CLIP, spring retaining
	70916028	1	CAPSCREW, 1/2"NF x 1-3/4"
	70912441	1	LOCKWASHER, 1/2"
25	70058614	1	WASHER, plain (For spacing)
26	70088491	1	SPRING, lower rod
27	70665159	1	ROD, lower
	70911048	1	NUT, jam, 3/8"NF
	70916168	1	PIN, spring, 1/8" x 3/4"
28	70628736	1	YOKE, lower rod
29	------	1	LEVER (See THROTTLE CONTROL)

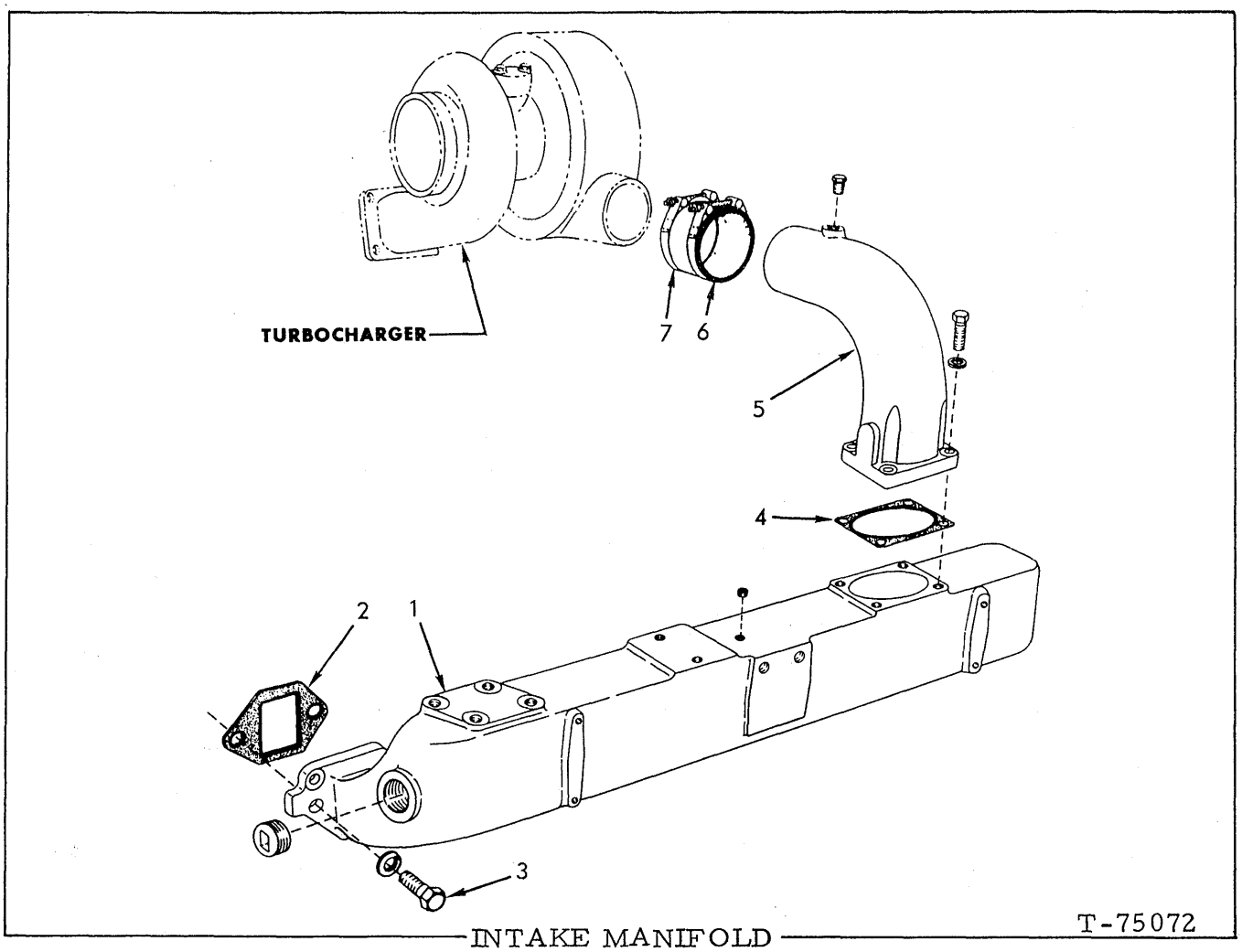

INTAKE MANIFOLD

ITEM	PART NO.	QTY.	DESCRIPTION
1	74393778	1	MANIFOLD, intake (If for engines prior to #17-01953 also order 1 PLUG 70917673)
	70901667	1	PLUG, pipe, ctsk-hd., 1-1/4"NPT
	70917673	1	PLUG, pipe, ctsk-hd., 1/8"NPT (Engines prior to #17-01953)
	70919840	1	PLUG, pipe, 1/4"NPT
2	74387697	6	□GASKET, intake manifold
3	74255895	8	CAPSCREW, manifold attaching (1-1/4" long)(Engines prior to #17-04657)
	74255914	8	CAPSCREW, manifold attaching (1-1/2" long)(4 less used prior to engine #17-04657)
	74255995	4	CAPSCREW, manifold attaching (1-3/4" long)(Engine #17-04657 and up)
	74371107	12	WASHER
4	74391707	1	□GASKET, elbow to manifold
5	74391704	1	ELBOW, air intake
	70919840	1	PLUG, pipe, hex-hd., 1/4"NPT (not used when engine primer is installed)
	70915987	4	CAPSCREW, 1/2"NC x 1-1/2"
	74250723	4	WASHER, plain
6	74388349	1	HOSE, elbow to turbocharger
7	70929416	2	CLAMP, hose

(Revised August 1980)

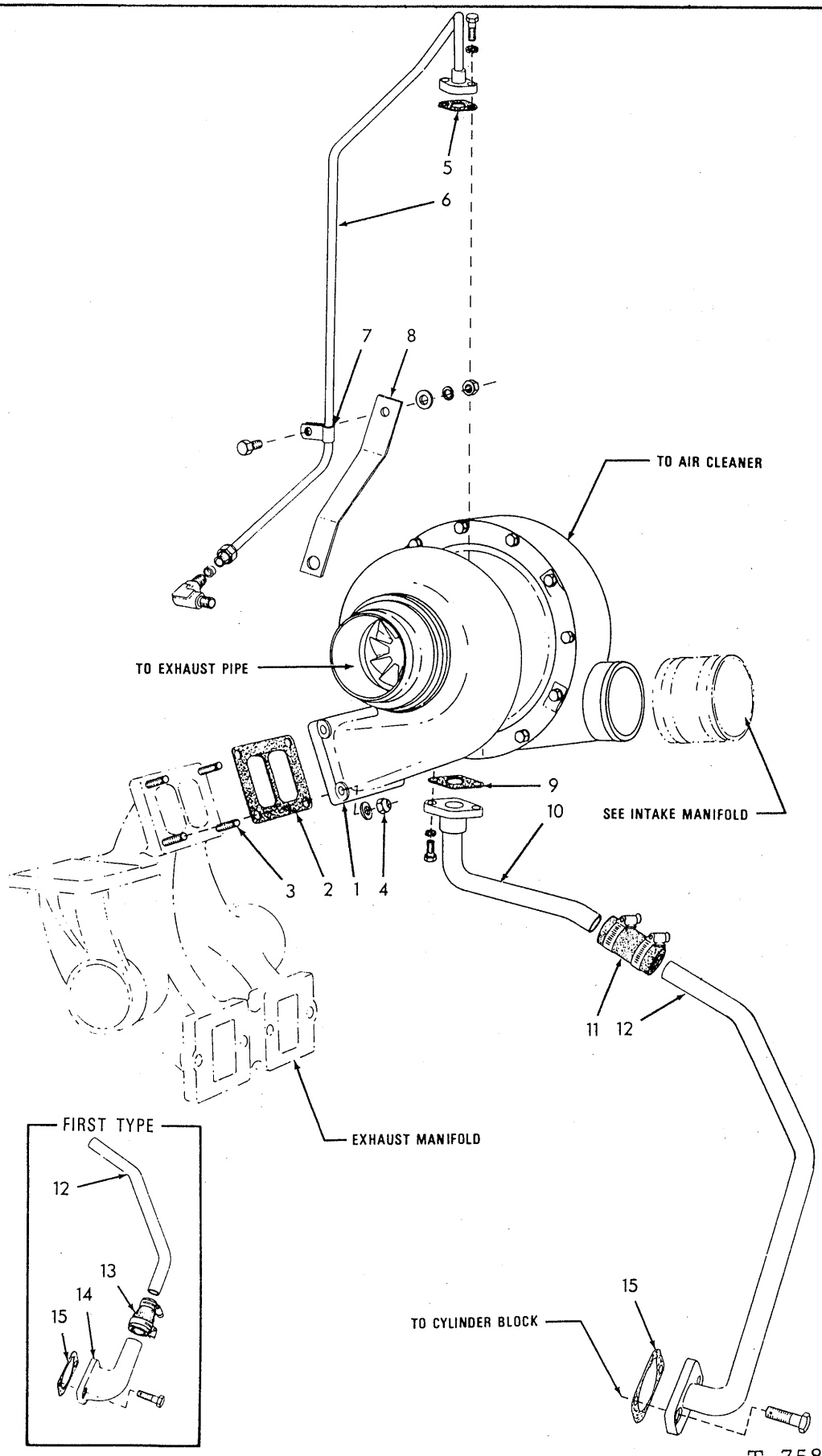

TURBOCHARGER CONNECTIONS

(Revised May 1977)

TURBOCHARGER CONNECTIONS

ITEM	PART NO.	QTY.	DESCRIPTION
1	--------	1	TURBOCHARGER ASSY. (See page 75)
2	74393466	1	□GASKET, turbocharger to manifold
3	74339535	4	STUD, turbocharger attaching
4	74255977	4	NUT
	70913544	4	WASHER
5	74339533	1	□GASKET, oil supply line flange
6	74391346	1	TUBE ASSY., oil supply line (Includes NUT and SLEEVE indented below)
	70917810	1	NUT, Imperial, 3/8" tube
	70917807	1	SLEEVE, Imperial, 3/8" tube
	70919005	1	ELBOW, Imperial, 90°, 3/8" tube, 3/8"NPT male
	70916269	2	CAPSCREW, 3/8"NC x 7/8"
	70904206	2	LOCKWASHER, 3/8"
7	74378298	1	CLAMP, tube
	70915408	1	CAPSCREW, 3/8"NC x 3/4"
	70912007	1	WASHER, plain, 3/8"
	70904206	1	LOCKWASHER, 3/8"
	70910324	1	NUT, 3/8"NC
8	74391634	1	BRACKET, tube clamp
9	74339532	1	□GASKET, oil drain line, upper
10	74395039	1	TUBE, oil drain line, upper
	70916269	2	CAPSCREW, 3/8"NC x 7/8"
	70904206	2	LOCKWASHER, 3/8"
11	74387906	1	HOSE, oil drai n line
	70921911	2	CLAMP, hose
12	74379913	1	TUBE, oil drain line, lower (Engines prior to #17-04339)
	74394990	1	TUBE, oil drain line, lower (Engine #17-04339 and up)
13	74379723	1	ADAPTER, oil drain line } Engines prior to #17-04339
	70921911	1	CLAMP, hose (11/16" to 1-1/4" diam.) } Engines prior to #17-04339
	70921912	1	CLAMP, hose (1-1/16" to 2" diam.) } Engines prior to #17-04339
14	74359972	1	ELBOW, oil drain line (Engines prior to #17-04339)
	70921865	2	CAPSCREW, Nylok, 1/2"NC x 1"
15	74310257	1	□GASKET, oil drain line elbow

(Revised April 1980)

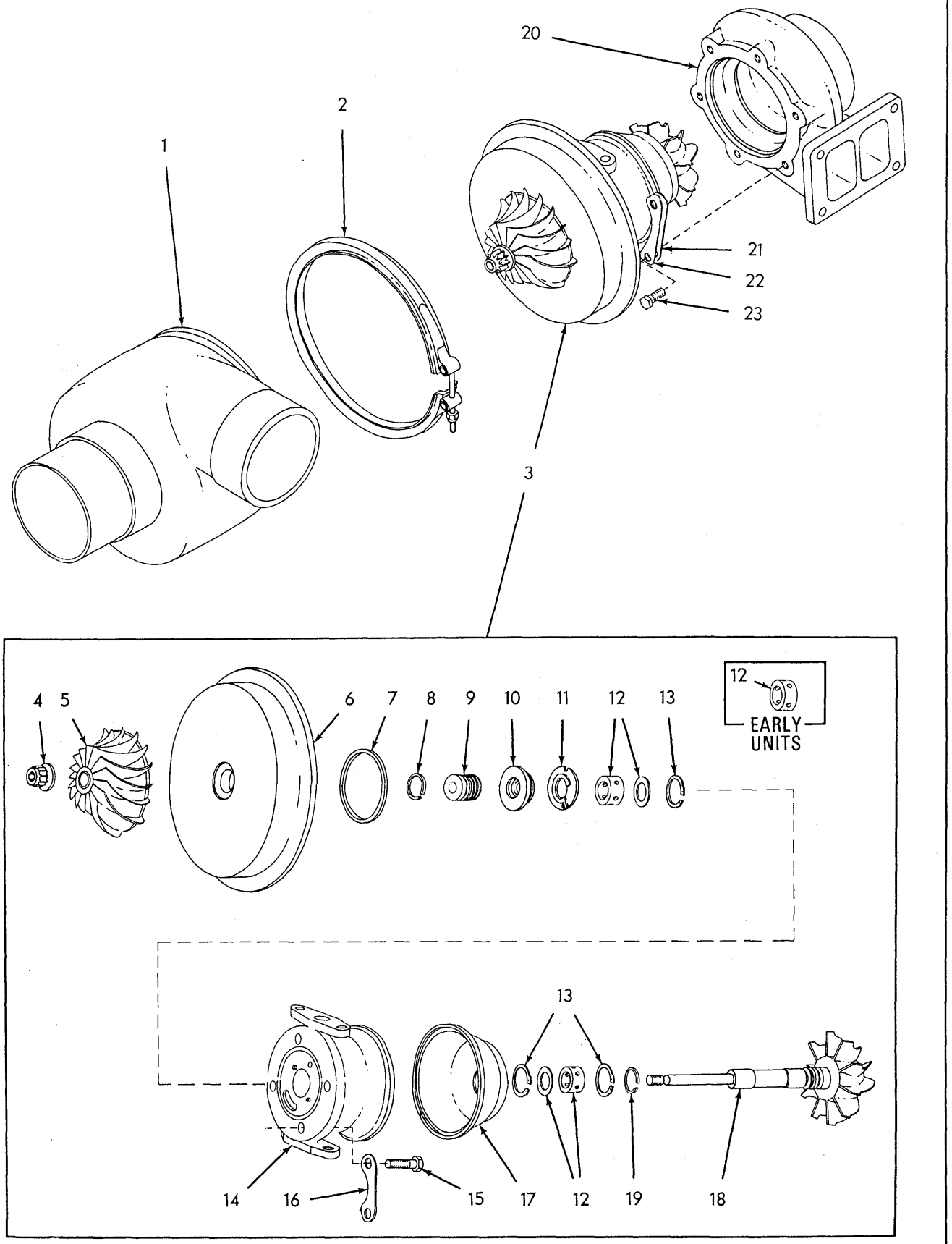

T-70408

TURBOCHARGER ASSEMBLY

(Revised June 1978)

TURBOCHARGER ASSEMBLY

USAGE: See page 73

ITEM	PART NO.	QTY.	DESCRIPTION
-	74392272	1	TURBOCHARGER ASSY. (TE 0673)(Includes items 1 thru 23)
1	74060051	1	HOUSING ASSY., compressor (Includes impeller shroud and locating pin)
2	74060052	1	COUPLING, compressor housing
3	74060053	1	HOUSING ASSY. center (Consists of items 4 thru 19)
4	74056291	1	LOCKNUT, impeller retaining
5	74060056	1	IMPELLER, compressor
6	74059030	1	BACKPLATE ASSY. (Includes thrust washer and orifice pin)
7	74056300	1	RING, end plate sealing
8	74055195	1	RING, sealing, turbine wheel shaft, compressor end
9	74056289	1	SPACER, thrust
10	74059029	1	COLLAR, thrust
11	74056294	1	BEARING, thrust
12	74056295	2	BEARING, turbine wheel (First type)(Order Second type BEARING and WASHER)
	74061213	2	BEARING, turbine wheel } Second type
	74061214	2	WASHER } Second type
13	74056296	3	RING, snap, bearing retaining
14	74060054	1	HOUSING ASSY., center (Includes dowels)
15	74181061	4	BOLT, backplate attaching
16	--------	4	LOCKPLATE, back plate attaching bolt (Early Turbo's)(Order LOCKPLATE 74059992)
	74059992	2	LOCKPLATE, back plate attaching bolt (Late Turbo's)
17	74056293	1	SHROUD, heat, turbine end
18	74060055	1	WHEEL, turbine
19	74060057	1	RING, sealing, turbine wheel shaft, exhaust end
20	74059019	1	HOUSING, turbine
21	74056306	3	PLATE, clamp, center housing
22	74056305	3	LOCKPLATE, clamp plate bolt
23	74056314	6	BOLT, clamp plate (3/8"NC x 5/8")

(Revised April 1980)

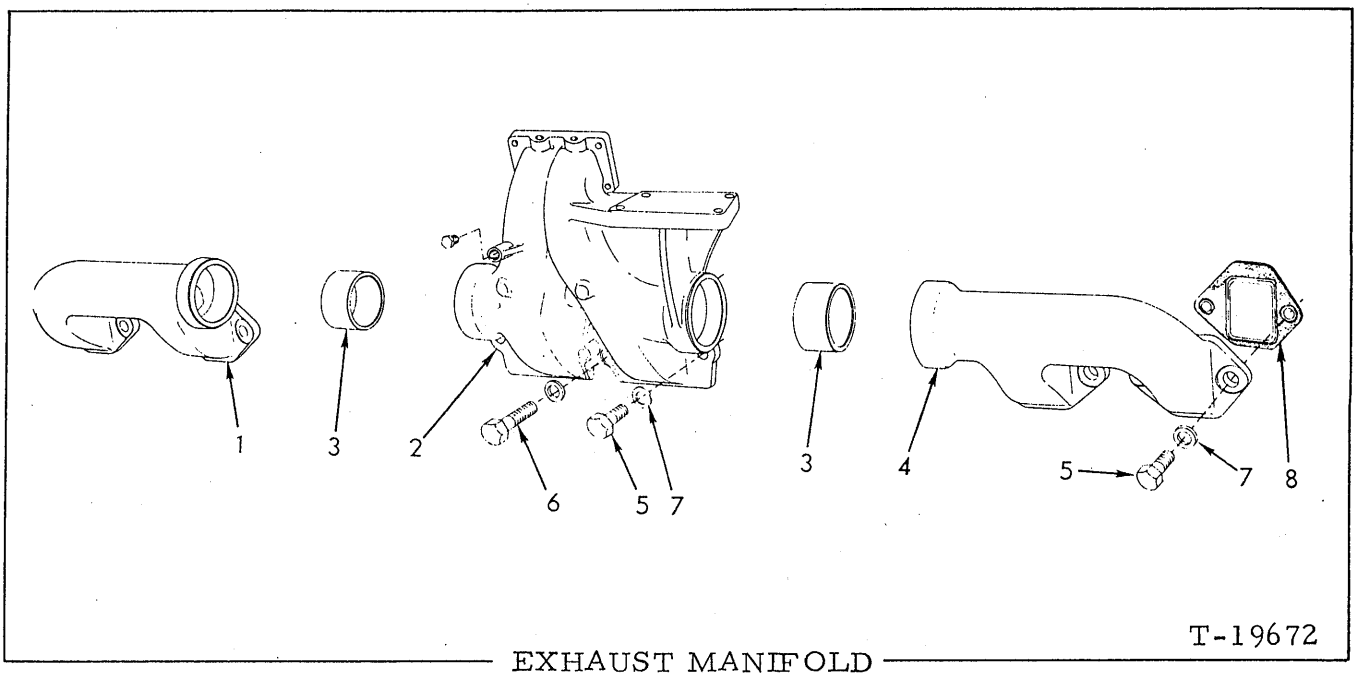

T-19672

EXHAUST MANIFOLD

ITEM	PART NO.	QTY.	DESCRIPTION
1	74395012	1	MANIFOLD, rear section
2	74393548	1	MANIFOLD, exhaust, center section
	70917425	2	PLUG, pipe, hex-hd., brass, 1/4"NPT
3	74391425	2	SLEEVE, connecting (Engines prior to #17-03964)
4	74395011	1	MANIFOLD, front section
5	70915987	10	CAPSCREW, manifold attaching (1-1/2" long)
6	70916317	2	CAPSCREW, manifold attaching (2-3/4" long)
7	74371107	12	WASHER, manifold stud nut
8	74387697	6	□GASKET, manifold

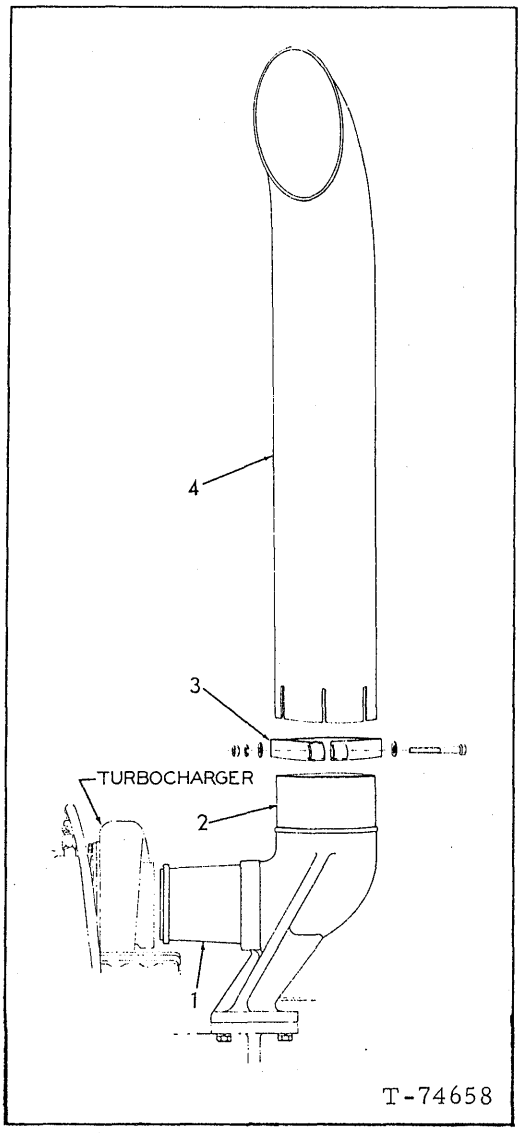

EXHAUST PIPE

USAGE: Standard on tractors prior to serial No. 19S13609
Units without muffler.

ITEM	PART NO.	QTY.	DESCRIPTION
1	74390172	1	DIFFUSER, exhaust
2	74393563	1	ELBOW, exhaust
	70919230	4	CAPSCREW, 1/2"NC x 1-3/8"
	70904208	4	LOCKWASHER, 1/2"
3	70629755	1	CLAMP ASSY., exhaust pipe (Includes hardware)
4	70096055	1	PIPE, exhaust

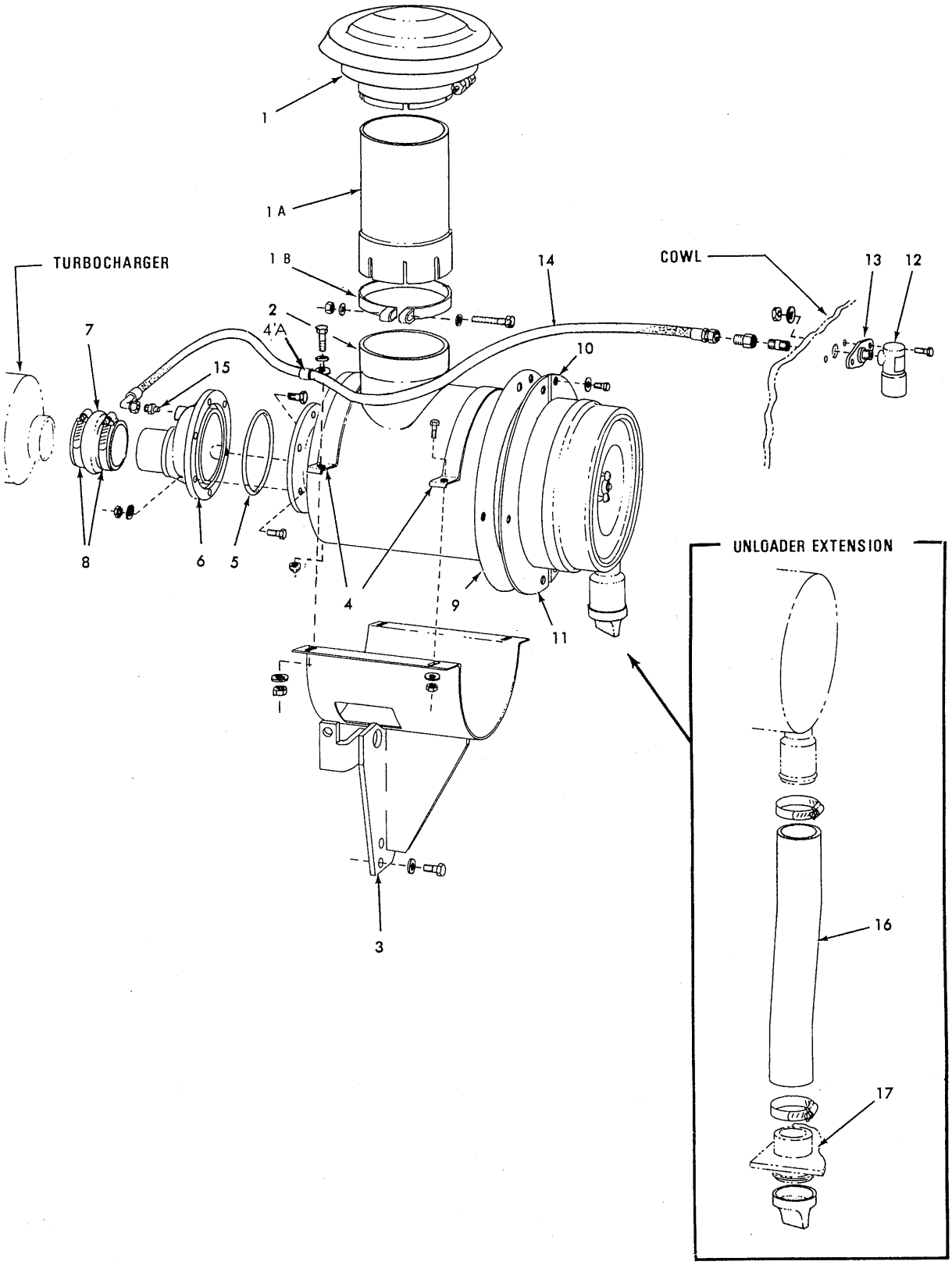

T-75774

AIR CLEANER MOUNTING

AIR CLEANER MOUNTING

ITEM	PART NO.	QTY.	DESCRIPTION
1	70197576	1	CAP, air inlet (Includes mounting clamp)
1A	70658509	1	TUBE, air inlet
1B	70658633	1	CLAMP, air inlet tube
	70922848	1	CAPSCREW, 3/8"NC x 3-1/4"
	70677006	2	WASHER, plain
	70911026	1	NUT, 3/8"NC
2	--------	1	CLEANER ASSY. air (See page 80)
	70912060	1	CAP, pipe, 1/8"NPT
3	70676074	1	BRACKET, mounting (Also serves as engine lifter)
	70920583	3	CAPSCREW, 1/2"NC x 1-1/2"
	70677008	3	WASHER, plain
4	70667123	2	BAND, mounting
	70922287	3	CAPSCREW, 3/8"NC x 1-3/4"
	70677006	5	WASHER, plain
	70918308	4	NUT, elastic stop, 3/8"NC
4A	70927599	1	CLIP, indicator hose
	70920995	1	CAPSCREW, 3/8"NC x 2"
5	70927224	1	O-RING, air intake elbow
6	70658585	1	ELBOW, air intake
	70921076	5	CAPSCREW, 3/8"NC x 1-1/4"
	70922763	1	CAPSCREW, 3/8"NC x 1"
	70677006	5	WASHER, plain
	70911026	5	NUT, 3/8"NC
7	70659034	1	HOSE, air intake elbow
8	70929293	2	CLAMP, intake elbow hose
9	70659814	1	GASKET, cleaner sealing
10	70659566	1	PLATE, sealing gasket
11	70658399	1	PLATE, sealing gasket
	70929024	6	CAPSCREW, 1/4"NC x 7/8"
	70677004	6	WASHER, plain
12	70697589	1	INDICATOR, air restriction (Serviced only as a unit)
13	73045531	1	FLANGE, mounting, air restriction indicator
	70929021	2	CAPSCREW, 1/4"NF x 3/4"
	70677004	2	WASHER, plain
	70911040	2	NUT, 1/4"NF
14	70646910	1	HOSE, restriction indicator (See HOSE PARTS)(Tractors unit #10301 thru #12138 and #13107 and up)
	70668516	1	HOSE, restriction indicator (See HOSE PARTS)(Tractors unit #12139 thru #13106)
	70919174	1	CONNECTOR, flare type, 1/4" tube, 1/8"NPT female
	70904273	1	NIPPLE, pipe, 1/8"NPT
15	70631769	1	FITTING, safety, restriction indicator line
16	70668149	1	HOSE, unloader extension
	70921915	2	CLAMP, hose, 2-13/16" x 3-3/4"
17	--------	1	PLATE (See FLOOR)

Not used on units equipped with special aspirator. See page 83A.

Special Equipment

NOTE: See PAINTING AND MARKING for transfers

(Revised September 1979)

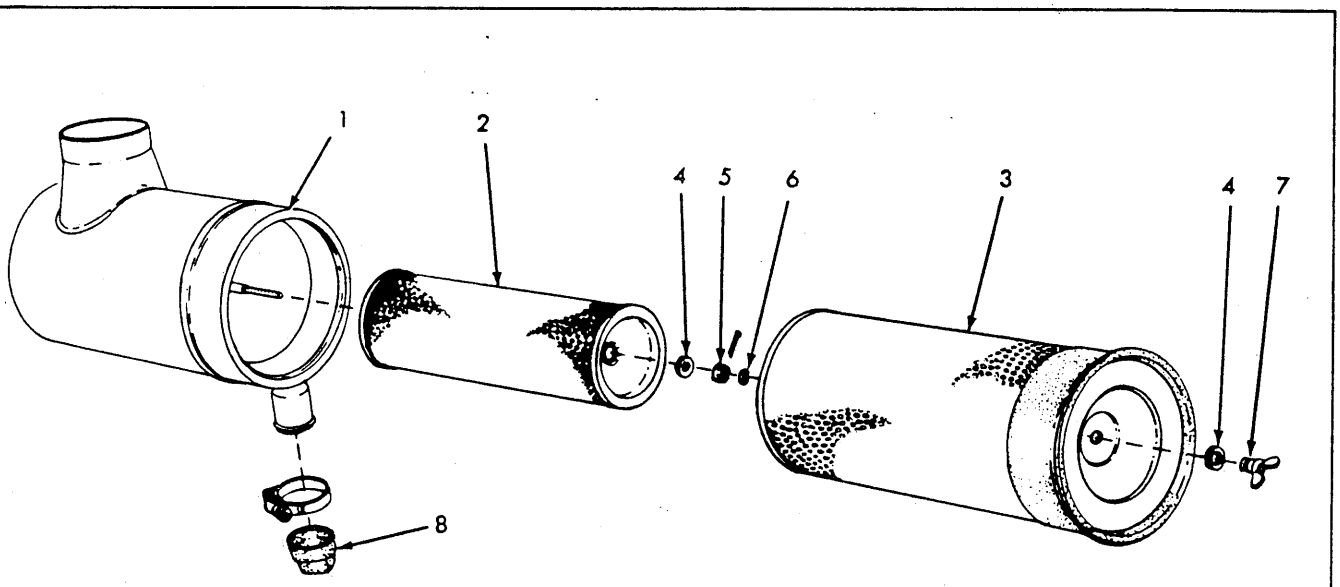

AIR CLEANER ASSEMBLY

USAGE: See page 79

ITEM	PART NO.	QTY.	DESCRIPTION
-	70671809	1	CLEANER ASSY. (Includes items 2 thru 8)
1	--------	1	BODY (Not serviced separately)
2	70671839	1	ELEMENT ASSY., safety (inner)
3	70671838	1	ELEMENT ASSY., safety (outer)
4	70667684	2	GASKET, retaining nut
5	70667683	1	NUT, element retaining (inner)
	70900808	1	PIN, cotter, 1/8" x 1-1/2"
6	70671433	1	CLIP, wing nut retaining
7	70691775	1	NUT, wing, element retaining
8	70197810	1	UNLOADER
	70921915	1	CLAMP, 2-13/16" to 3-3/4" diam (Late units)

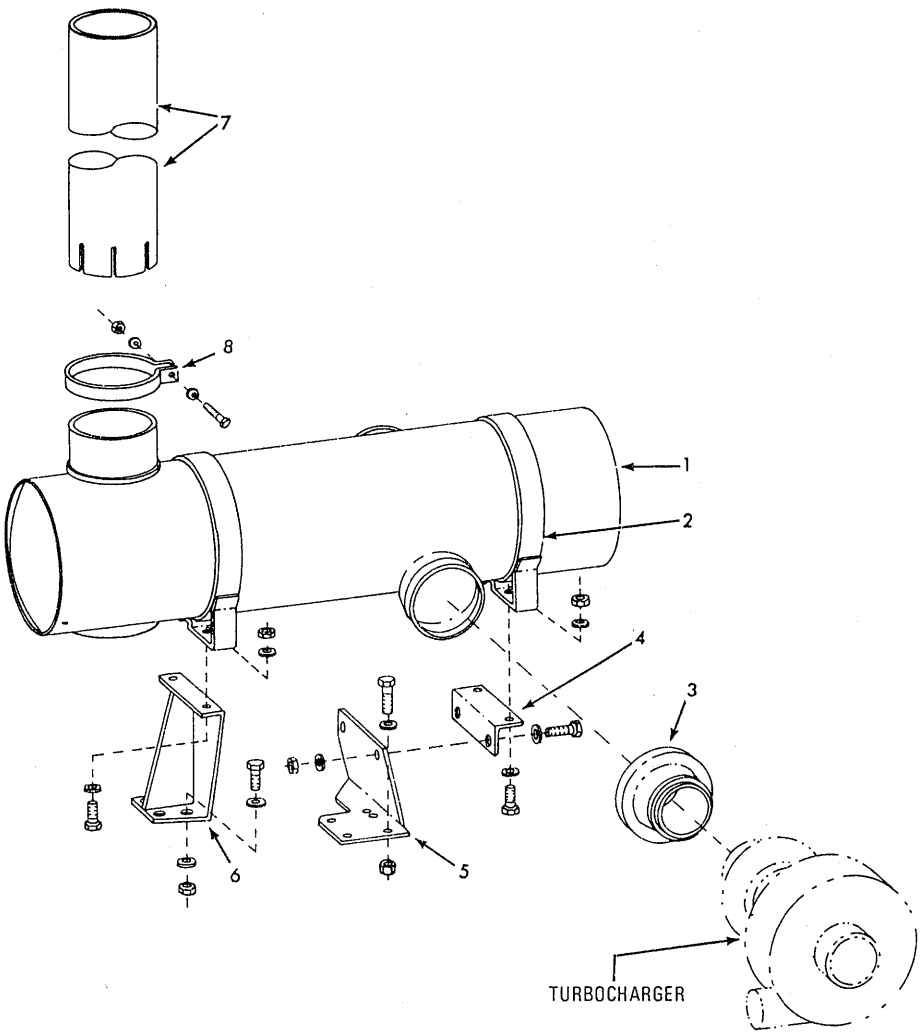

T-79062

MUFFLER

USAGE: Standard on tractors serial No. 19S13609 and up. Optional on earlier units.

ITEM	PART NO.	QTY.	DESCRIPTION
1	70691461	1	MUFFLER
2	70683656	2	CLAMP ASSY. (Includes hardware)
	70921076	4	CAPSCREW, 3/8"NC x 1-1/4"
	70677006	8	WASHER, plain
	70911026	4	NUT, 3/8"NC
3	70691232	1	DIFFUSER
4	70683701	1	ANGLE, muffler support bracket, right
	70920585	2	CAPSCREW, 1/2"NC x 1-3/4"
	70677008	4	WASHER, plain
	70911028	2	NUT, 1/2"NC
5	70683702	1	BRACKET, muffler support, right
	70921556	4	CAPSCREW, 1/2"NC x 2"
	70677008	4	WASHER, plain
	70911028	4	NUT, 1/2"NC

(Continued)

ITEM	PART NO.	QTY.	DESCRIPTION
6	70691546	1	BRACKET, muffler support, left
	70920583	4	CAPSCREW, 1/2"NC x 1-1/2"
	70677008	8	WASHER, plain
7	70656910	1	PIPE, exhaust (See page 83A for units with aspirator)
8	70629755	1	CLAMP, exhaust pipe
	70922848	1	CAPSCREW, 3/8"NC x 3-1/4"
	70044973	2	WASHER, plain
	70904206	1	LOCKWASHER, 3/8"
	70911026	1	NUT, 3/8"NC

(Revised September 1979)

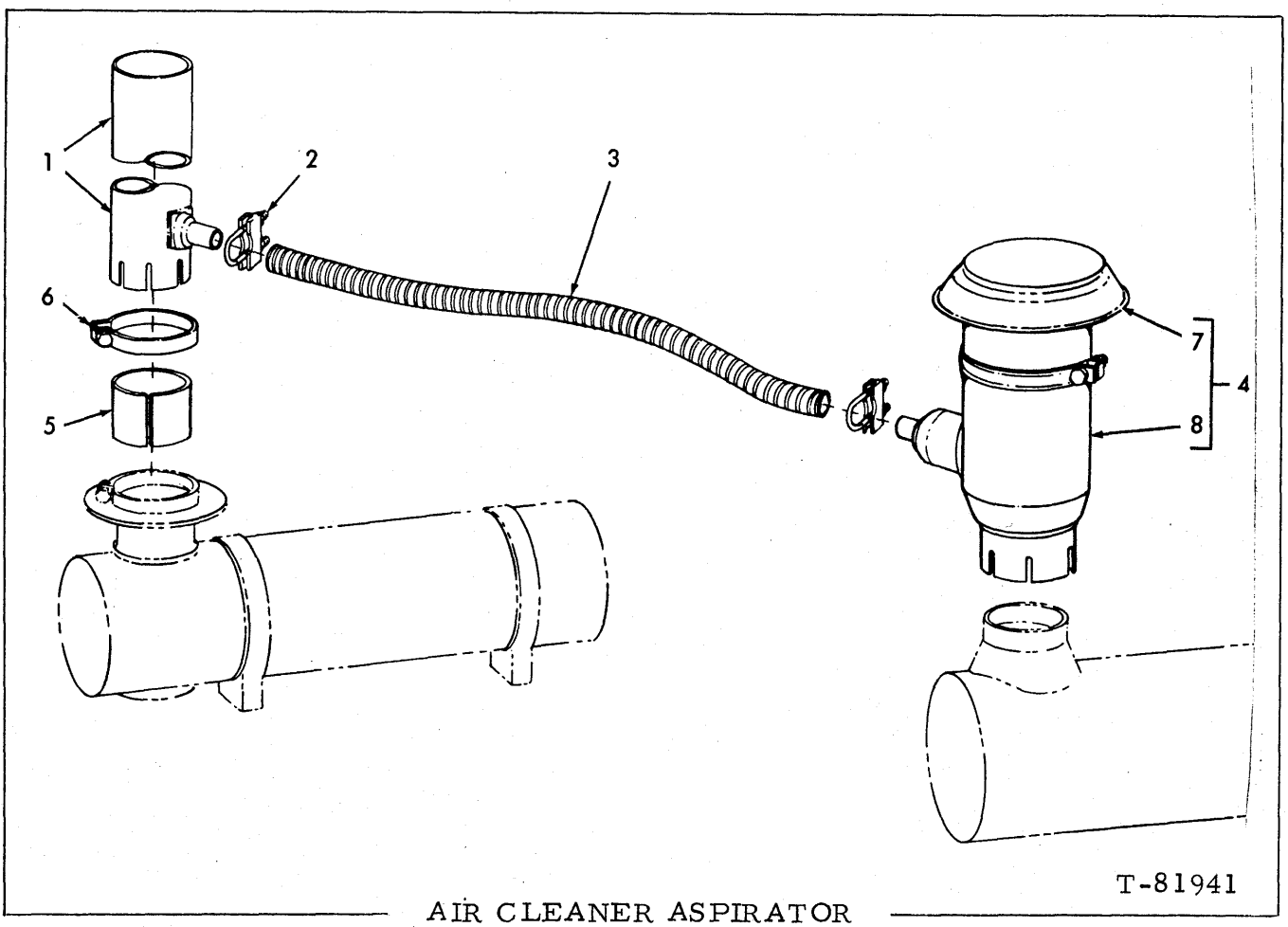

AIR CLEANER ASPIRATOR

USAGE: Special Equipment

ITEM	PART NO.	QTY.	DESCRIPTION
1	73117360	1	EJECTOR ASSY.
2	70929808	2	CLAMP
3	73117359	1	HOSE, metal, flexible
4	73107581	1	PRE-CLEANER ASSY. (Includes items 7 and 8)
5	73113804	1	SLEEVE
6	70629755	1	CLAMP ASSY. (Includes hardware)
7	79027839	1	HOOD
8	73129588	1	BODY AND TUBE ASSY.

(Revised March 1982)

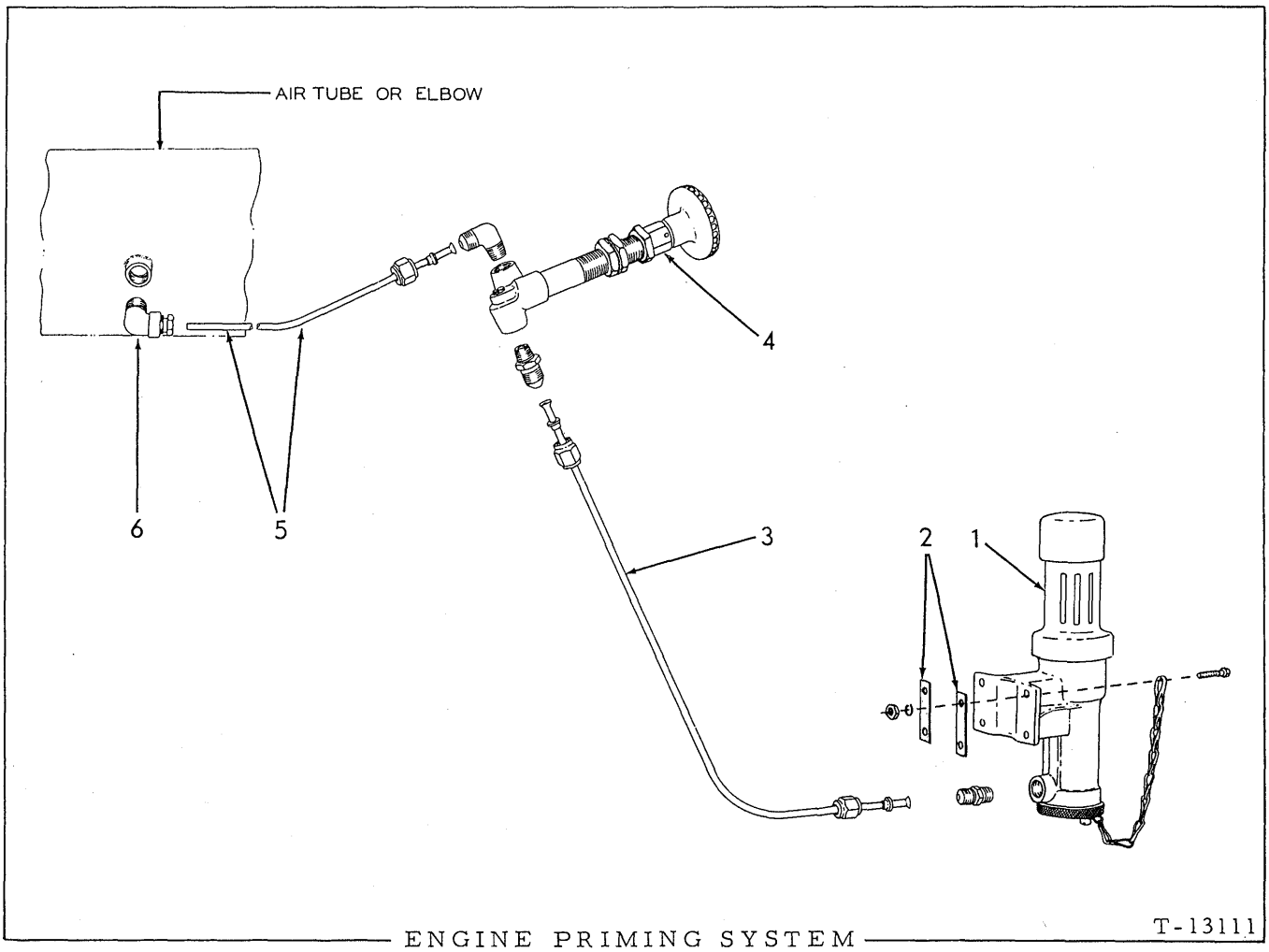

ENGINE PRIMING SYSTEM T-13111

USAGE: Special equipment. Used prior to approximately March 15, 1973

ITEM	PART NO.	QTY.	DESCRIPTION
1	-------	1	DISPENSER ASSY., priming fuel (See page 85)
	70913706	4	CAPSCREW, #10-24NC x 1"
	70904203	4	LOCKWASHER, #10
	70901310	4	NUT, #10-24NC
2	70066261	6	GASKET, dispenser mounting
3	-------	1	TUBE, dispenser to pump (Order item 7)
	70915488	2	NUT, Sealastic, 1/8" tube
	70915486	2	RING, Sealastic, 1/8" tube (Includes ferrule)
	70915556	2	CONNECTOR, Sealastic, 1/8" tube, 1/8"NPT male
4	-------	1	PUMP ASSY. (See page 86)
5	-------	1	TUBE, pump discharge (Order item 7)
	70915488	1	NUT, Sealastic, 1/8" tube
	70915486	1	RING, Sealastic, 1/8" tube (Includes ferrule)
	70915557	1	ELBOW, Sealastic, 1/8" tube, 1/8"NPT male
6	70066517	1	ELBOW ASSY., fuel spray (Includes nozzle, nut and sleeve. Serviced only as a unit)
7	70066253	-	TUBING, copper, 1/8"O.D., 10ft. roll (Use as required) (Not illustrated)

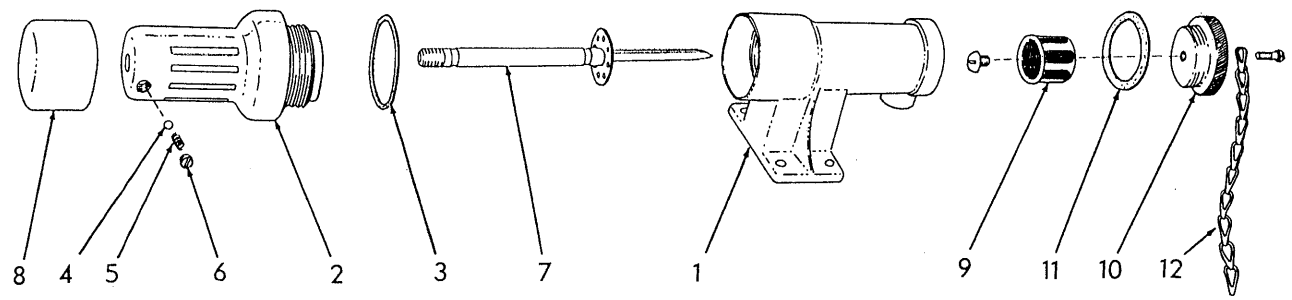

DISPENSER ASSEMBLY T-2211

USAGE: See page 84

ITEM	PART NO.	QTY.	DESCRIPTION
-	70075771	1	DISPENSER ASSY. (Includes items 1 thru 12)
1	70068878	1	BODY, fuel dispenser
2	70068879	1	CHAMBER, fuel dispenser
3	70069164	1	GASKET, fuel dispenser chamber
4	70905357	1	BALL, steel, 3/16" diam.
5	70066251	1	SPRING, plunger locking ball
6	70066252	1	PLUG, retaining, locking ball spring
7	70066255	1	PLUNGER, fuel dispenser
8	70068881	1	KNOB, fuel dispenser plunger
9	70068875	1	STRAINER, fuel dispenser
	70915432	1	SCREW, machine, rd-hd., 1/4"NC x 5/16"
10	70075770	1	PLUG, fuel dispenser strainer
11	70068876	1	GASKET, fuel dispenser strainer plug
12	70075769	1	CHAIN, strainer plug retaining
	70901781	1	SCREW, machine, fil-hd., #10-32NF x 1/2"

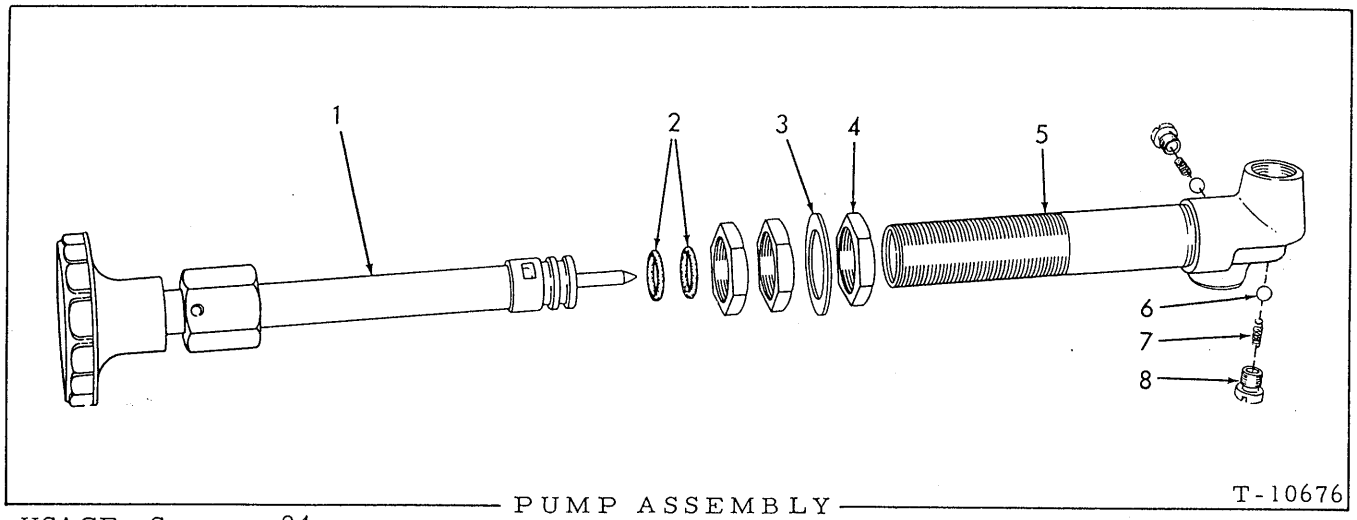

PUMP ASSEMBLY

USAGE: See page 84

ITEM	PART NO.	QTY.	DESCRIPTION
-	70092160	1	PUMP ASSY. (Includes items 1 thru 8)
1	-------	1	PISTON ASSY. (Not serviced separately)
2	70923560	2	O-RING, plunger
3	70066873	1	WASHER, mounting
4	70066872	3	NUT, mounting
5	-------	1	BARREL ASSY. (Not serviced separately)
6	70066876	2	BALL, check valve (5/32" diam.)
7	70066875	2	SPRING, check valve
8	70066874	2	RETAINER, check valve

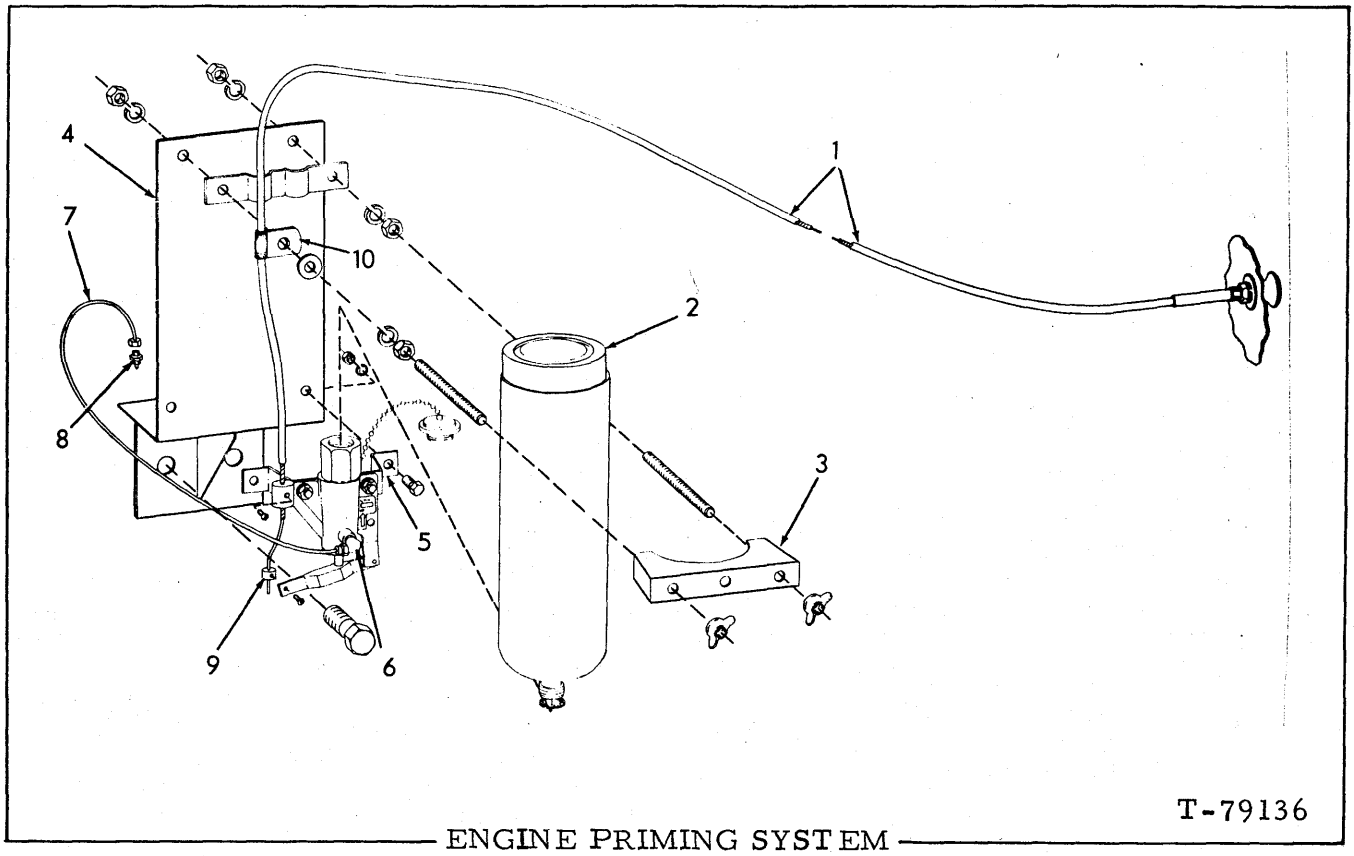

ENGINE PRIMING SYSTEM

USAGE: Special equipment. Effective approximately March 15, 1973

ITEM	PART NO.	QTY.	DESCRIPTION
1	70684988	1	CABLE ASSY., control (Includes lockwasher and mounting nut)
	70917378	2	WASHER, plain, U.S. std., 3/8"
2	73132158	1	KIT, CYLINDER AND GASKET
	73070169	1	GASKET
3	70669359	1	CLAMP ASSY., tank supporting
4	70684979	1	PLATE, tank supporting
	70920583	2	CAPSCREW, 1/2"NC x 1-1/2"
5	70669526	1	BRACKET ASSY., valve
	70906820	1	SCREW, machine. #10-32 x 5/16" (cable attaching)
	70928138	2	CAPSCREW, 1/4"NC x 5/8"
	70910285	2	LOCKWASHER, 1/4"
	70911024	2	NUT, 1/4"NC
6	73052086	1	ELBOW, tube connecting
7	70669053	1	TUBE, valve to jet
	70911841	1	SLEEVE, compression fitting, 1/8" tube
	70912589	1	NUT, compression fitting, 1/8" tube
8	74024482	1	JET, fluid atomizing
9	70253308	1	STOP, cable
	70906820	1	SCREW, machine, #10-32 x 5/16"
10	70639388	1	CLIP, cable supporting
	70910335	1	WASHER, plain, SAE std., 5/16"

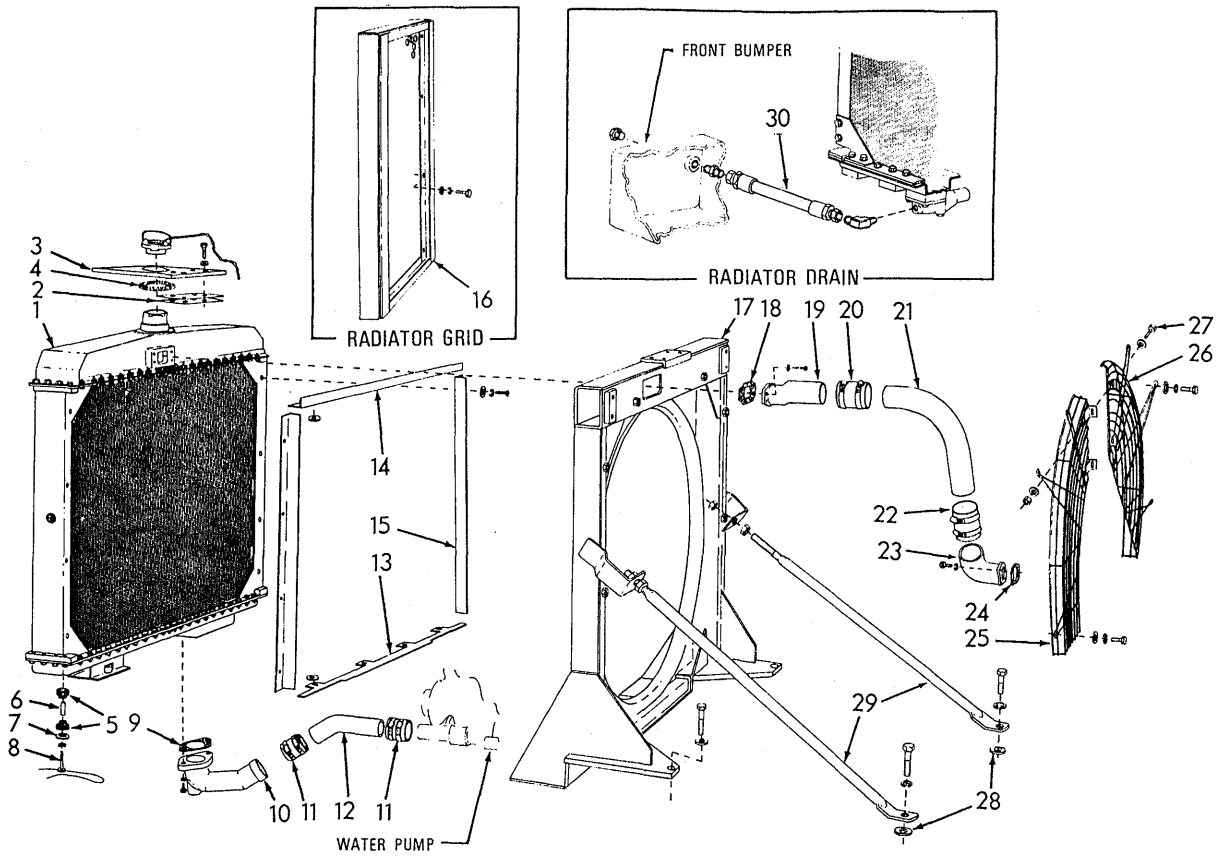

T-75817

RADIATOR MOUNTING

RADIATOR MOUNTING

ITEM	PART NO.	QTY.	DESCRIPTION	
1	---------	1	RADIATOR ASSY. (See page 93)	
2	70660606	2	SHIM, adjusting, support collar (1/32" thick)	Use as required
	70660480	1	SHIM, adjusting, support collar (1/16" thick)	
3	70662034	1	COLLAR, radiator supporting	
	70921556	4	CAPSCREW, 1/2"NC x 2"	
	70677008	4	WASHER	
4	70095575	1	RING, cushion	
5	70061671	12	SNUBBER, vibration, radiator mounting	
6	70061655	6	TUBE, spacing, vibration snubber	
7	70928846	6	WASHER, vibration snubber	
8	70929071	6	CAPSCREW, radiator mounting	
	70023633	2	WIRE, locking, 1/16" x 12"	
9	70052021	1	GASKET, outlet elbow	
10	70662006	1	ELBOW, radiator outlet	
	70921569	2	CAPSCREW, 7/16"NC x 1-1/4"	
	70929154	2	WASHER	
11	70073539	2	HOSE, inlet tube	
	70921914	4	CLAMP, hose, 2-5/16" to 3-1/4" diam.	
12	70662011	1	TUBE, engine inlet	
13	70662060	1	BAFFLE, air, radiator bottom	Not used when special radiator grid is installed
	70677005	4	WASHER	
14	70669780	1	BAFFLE, air, radiator top	
	70677005	4	WASHER	
15	70662028	2	BAFFLE, air, radiator side (Not used when special radiator grid is installed	
	70927373	8	CAPSCREW, 5/16"NC x 7/8"	
	70677005	8	WASHER	
16	70671723	1	GRID, radiator protecting (Special. Used when operating under extreme abrasive conditions)	
	70922843	8	CAPSCREW, 5/16"NC x 1-1/4"	
	70910286	8	LOCKWASHER, 5/16"	
	70092665	8	WASHER, plain, SAE std., 5/16"	
17	70661718	1	SUPPORT, radiator	
	70929071	6	CAPSCREW, 3/8"NC x 2-3/4"	
	70677012	6	WASHER	
	70910287	6	LOCKWASHER, 3/8"	
18	70081614	1	GASKET, radiator inlet	
19	70082608	1	INLET, radiator	
	70922763	4	CAPSCREW, 3/8"NC x 1"	
	70930370	4	WASHER	

(Continued)

RADIATOR MOUNTING (Continued)

ITEM	PART NO.	QTY.	DESCRIPTION	
20	70067884	1	HOSE	
	70921914	2	CLAMP 2-5/16" to 3-1/4" diam.	
21	70083540	1	TUBE	
22	73121205	1	HOSE	
	70921914	2	CLAMP, 2-5/16" to 3-1/4"	
23	70660557	1	ELBOW	
	70927485	2	CAPSCREW, 7/16"NC x 1"	
	70914678	2	LOCKWASHER, 7/16"	
24	74310257	1	GASKET	
25	70668159	1	GUARD (Tractors prior to unit #14630)	
	70692020	1	GUARD (Tractor unit #14630 and up)	
	70922763	3	CAPSCREW, 3/8"NC x 1"	
	70677006	3	WASHER	
26	70668158	1	GUARD (Tractors prior to unit #14630)	
	70692021	1	GUARD (Tractor unit #14630 and up)	
	70922763	3	CAPSCREW, 3/8"NC x 1"	
	70677006	3	WASHER	
27	70921076	2	CAPSCREW, 3/8"NC x 1-1/4"	Tractors prior to unit #14630
	70926180	4	WASHER	
	70915891	2	NUT, elastic stop, 3/8"NC	
	70922763	2	CAPSCREW, 3/8"NC x 1"	Tractor unit #14630 and up
	70677006	2	WASHER	
28	70060689	2	BOSS	
29	70670339	2	BRACE	
	70911046	4	NUT, 7/8"NF	
	70922744	2	CAPSCREW, 3/4"NC x 2-1/2"	
	70928914	2	WASHER, plain	
30	70666429	1	HOSE (See HOSE PARTS)	
	70919063	1	CONNECTOR, flare type, 1/2" tube, 3/8"NPT male	
	70919206	1	ELBOW, flare type, 90°, 1/2" tube, 3/8"NPT male	
	70918951	1	PLUG, pipe, hex-hd., brass, 3/8"NPT	

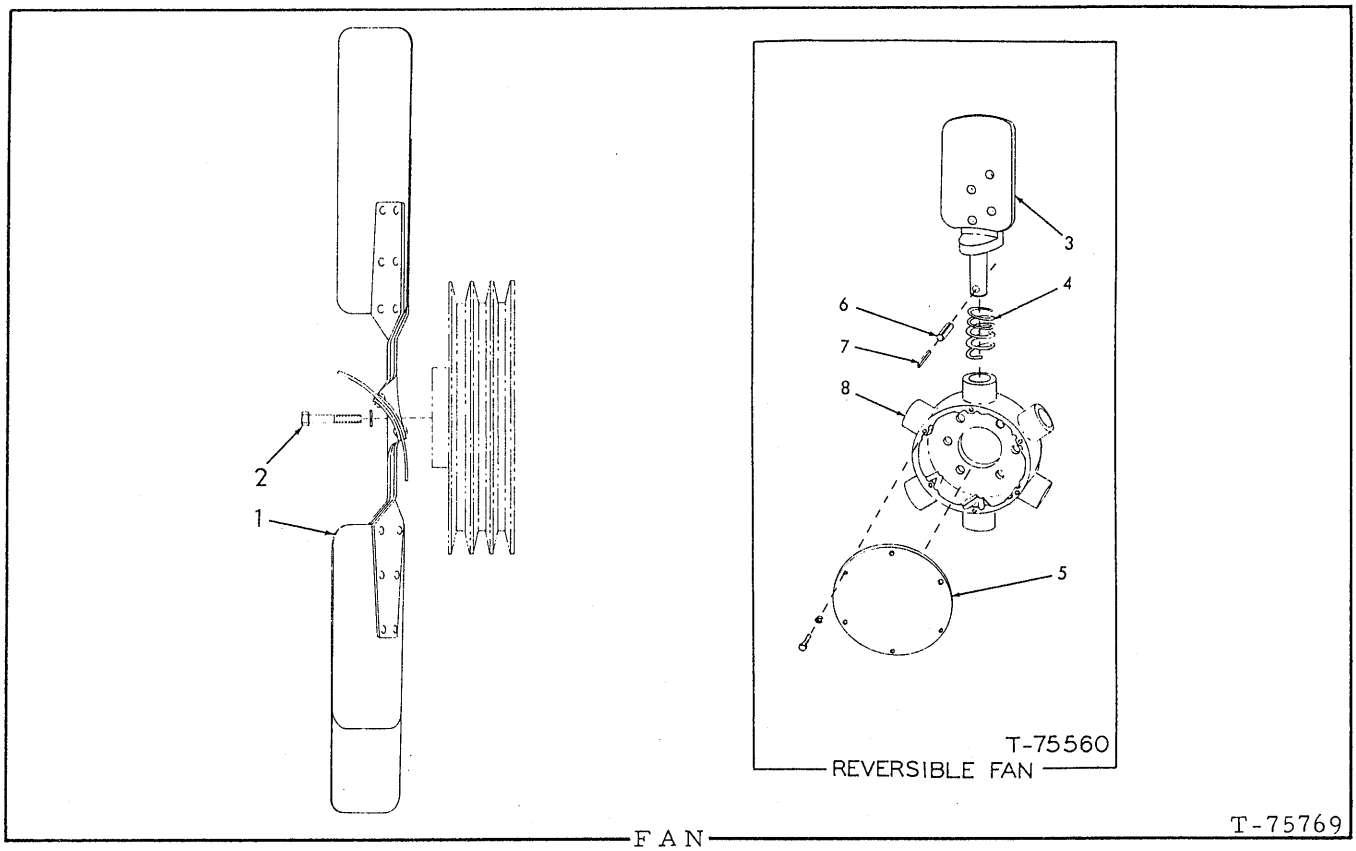

FAN

ITEM	PART NO.	QTY.	DESCRIPTION
			NOTE: See RADIATOR AND MOUNTING for listing of Fan Guard
1	70083524	1	FAN (Push type)(Standard)
	70679362	1	FAN ASSY.. reversible (Includes items 3 thru 8)(Optional)
2	70921076	6	CAPSCREW, 3/8"NC x 1-1/4"
	70910287	6	LOCKWASHER 3/8"
3	-------	6	BLADE (See NOTE below)
4	70668595	6	SPRING
5	70668593	1	COVER, dust
	70926339	6	CAPSCREW, #10-24 x 5/16" (Includes lockwasher)
6	70915917	6	PIN, blade retaining, outer (3/8" O. D.)
7	70920319	6	PIN, blade retaining, inner (7/32" O. D.)
8	-------	1	HUB (See NOTE below)

NOTE: Blade and Hub replacements require precision balancing. Return complete fan to HUBER REVERSIBLE FAN CO., 2103 Hershey Rd., Erie, Pa. 16509.

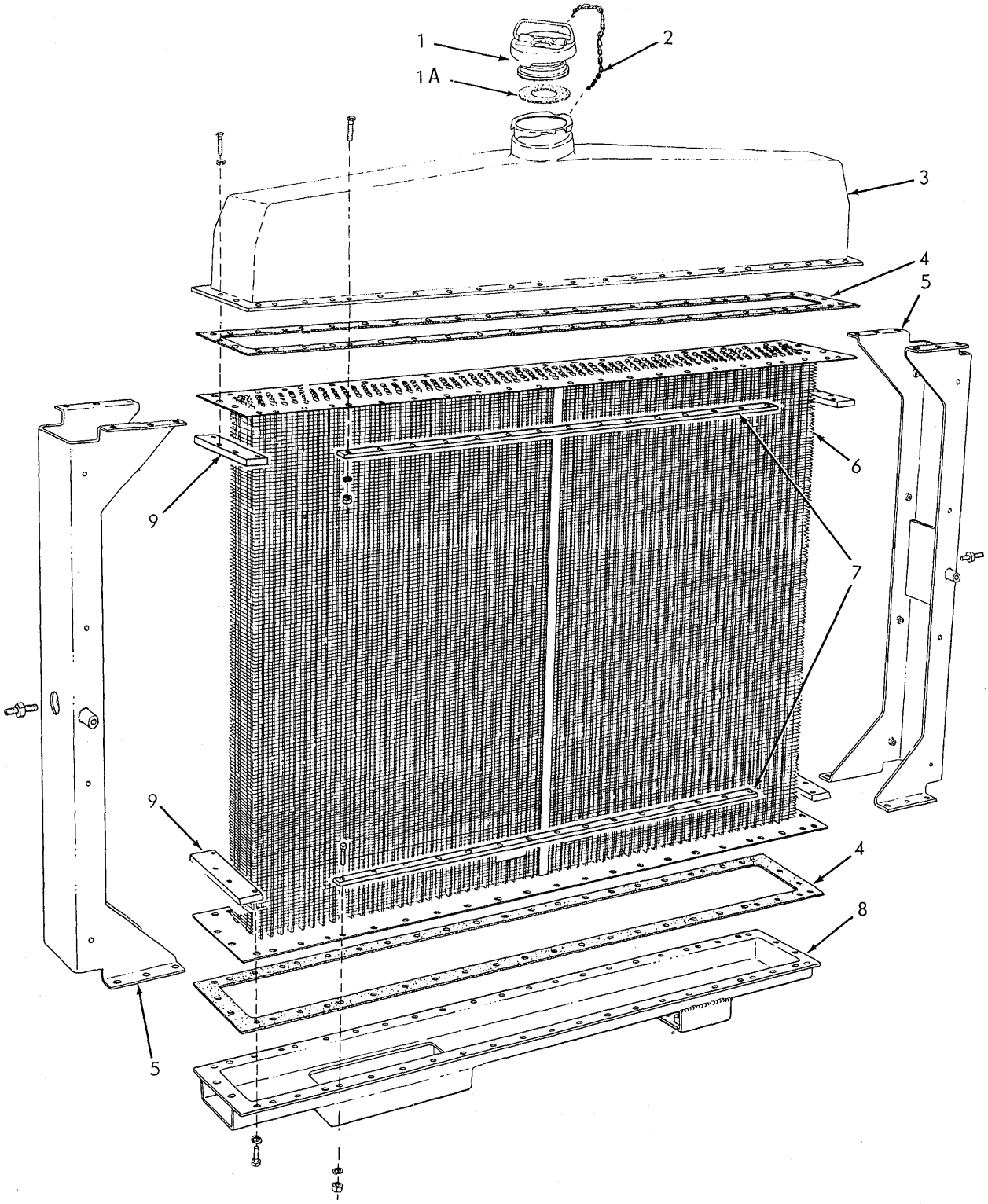

RADIATOR PARTS

T-13135

RADIATOR PARTS

ITEM	PART NO.	QTY.	DESCRIPTION	
-	70673020	1	RADIATOR ASSY. (Standard. copper-finned)	Consists of items 1 thru 9
-	70682552	1	RADIATOR ASSY. (Severe-service. copper-finned. Staggared tubes.)	
-	70671187	1	RADIATOR ASSY. (Special. steel-finned)	
1	70654096	1	CAP ASSY., fillter (Includes item 1A)	
1A	70682843	1	GASKET, cap	
2	70654098	1	CHAIN, filler cap	
3	70655373	1	TANK, top	
	70922843	4	CAPSCREW, 5/16"NC x 1-1/4"	
	70921566	46	CAPSCREW, 5/16"NC x 1"	
	70910286	50	LOCKWASHER, 5/16"	
	70911025	42	NUT, 5/16"NC	
4	70079763	2	GASKET, core	
5	70666659	2	SIDE	
	70915888	2	SETSCREW, slotted-hd., cup-pt., 3/8"NC x 1-3/4"	Tractors prior to unit #10451
	70903584	2	NUT, jam, 3/8"NC	
6	70671695	1	CORE (For RADIATOR ASSY. 70671187)	
	70684123	1	CORE (For RADIATOR ASSY. 70682552)	
	70673019	1	CORE (For RADIATOR ASSY. 70673020)	
7	70074679	4	CLAMP, core flange, center	
8	70643404	1	TANK, bottom	
	70922843	4	CAPSCREW, 5/16"NC x 1-1/4"	
	70921566	46	CAPSCREW, 5/16"NC x 1"	
	70910286	50	LOCKWASHER, 5/16"	
	70911025	42	NUT, 5/16"NC	
9	70079489	4	CLAMP, core flange, end	

(Revised May 1977)

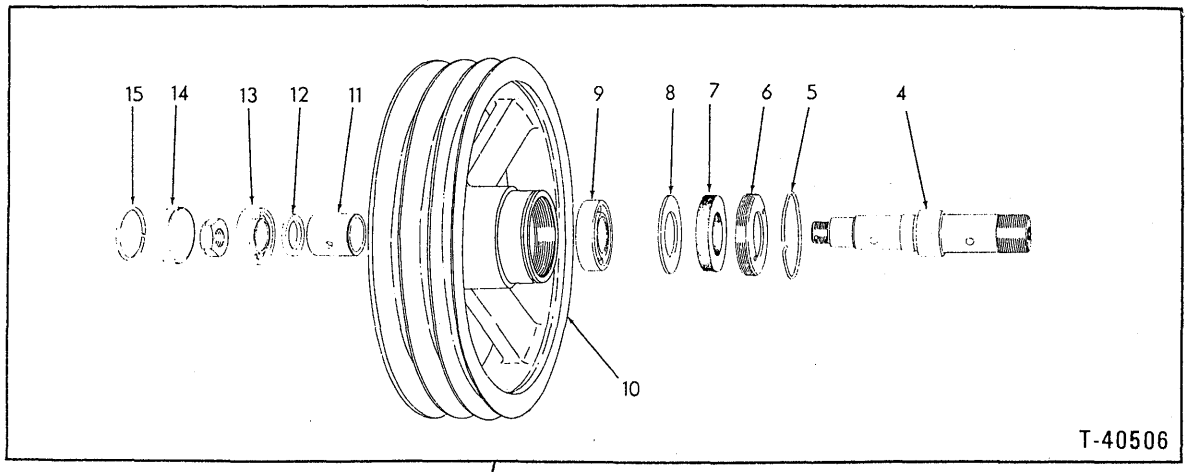

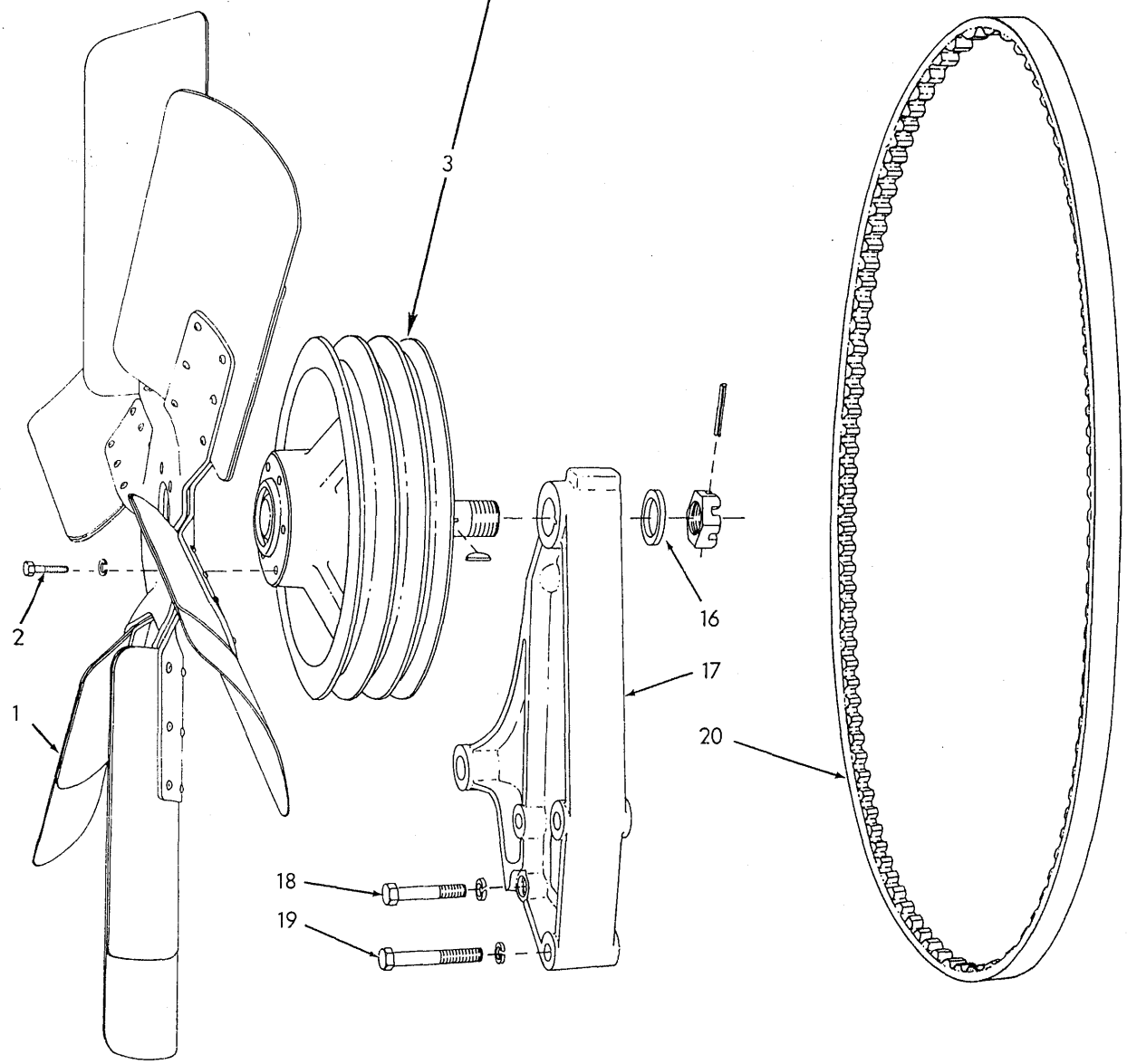

T-75873

FAN PULLEY

FAN PULLEY

ITEM	PART NO.	QTY.	DESCRIPTION
1	-------	1	FAN (See page 91)
2	70921076	6	CAPSCREW, 3/8"NC x 1-1/4"
	70910287	6	LOCKWASHER, 3/8"
3	70676697	1	PULLEY ASSY., fan (Consists of items 4 thru 15)
	70913798	1	NUT, jam, slotted, 1-1/4"NF
	70915692	1	PIN, spring, 1/4" x 1-7/8"
	70905122	1	KEY, #7 woodruff, 1/8" x 3/4"
4	70676698	1	SPINDLE
	70919108	1	NUT, self-locking, 7/8"NF
5	74371707	1	RING, snap, fan pulley
6	74640973	1	RETAINER, spindle sealing washer
7	70052106	1	WASHER, spindle sealing
8	74640975	1	WASHER, retaining, rear bearing
9	70075203	1	BEARING, ball, rear
10	70639237	1	PULLEY
11	70051715	1	SLEEVE, spacing, spindle bearings
12	74640978	1	WASHER, spacing, front bearing
13	74253862	1	BEARING, ball, front
14	70088561	1	CAP, pulley
15	70088560	1	RING, snap, cap retaining
16	70067962	1	WASHER, plain
17	70666758	1	BRACKET, pulley mounting
18	70924864	1	CAPSCREW, 1/2"NC x 2-1/4"
19	70925135	2	CAPSCREW, 1/2"NC x 3-1/4"
	70912441	3	LOCKWASHER, 1/2"
20	70676465	1	BELT SET (Consists of 2 matched belts)

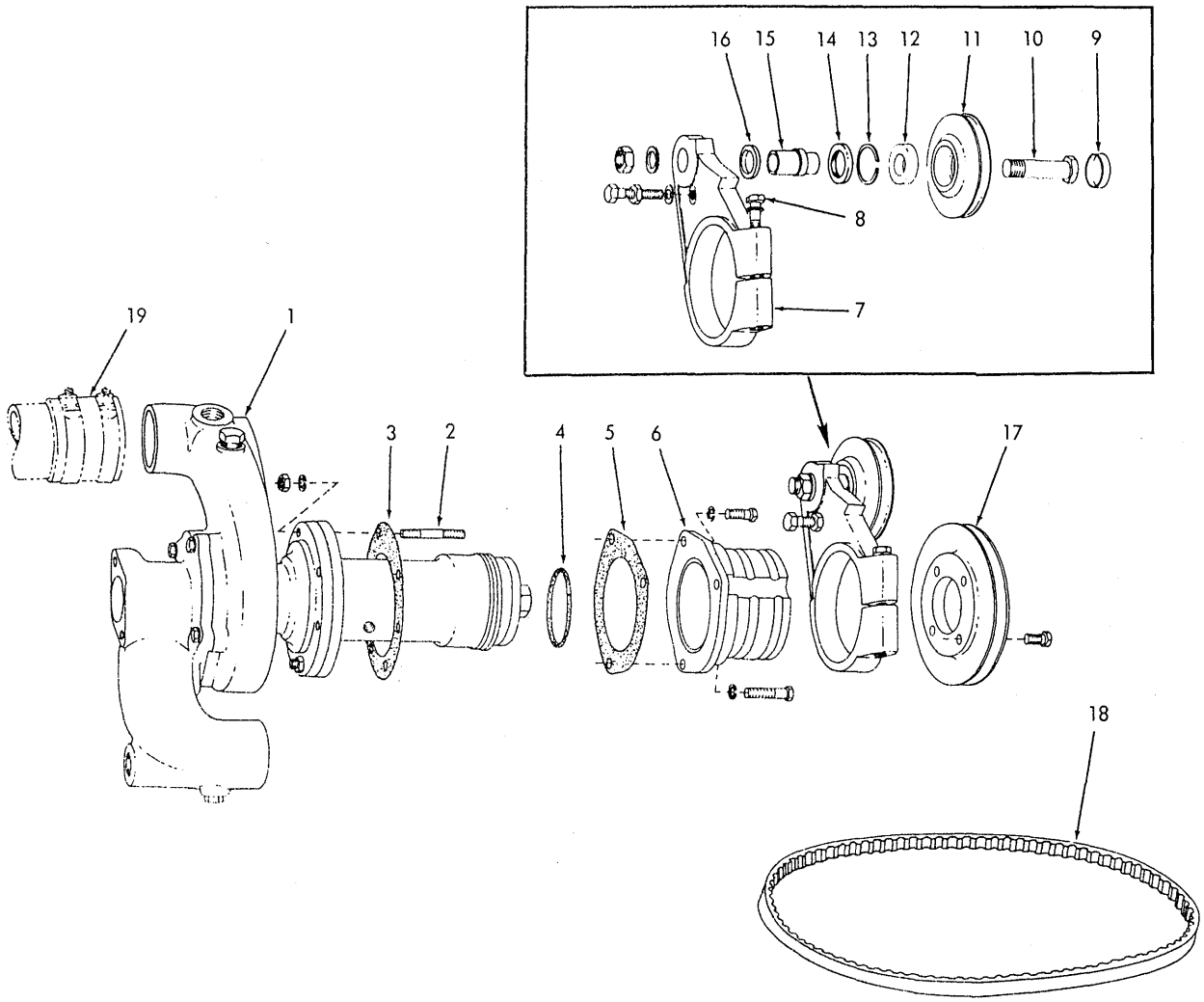

WATER PUMP DRIVE

USAGE: Engine prior to serial No. 17-01772 excluding Nos. 17-01253 thru 17-01302

ITEM	PART NO.	QTY.	DESCRIPTION
1	--------	1	PUMP ASSY., water (See page 100)
2	74513810	5	STUD, attaching } Early units
	70904206	5	LOCKWASHER, 3/8" } Early units
	70910123	5	NUT, 3/8"NF } Early units
	70922211	5	CAPSCREW, nylok, 3/8"NC x 1-1/4" (Late units)
3	74376398	1	□GASKET, pump mounting
4	70923935	1	□O-RING, pump body
5	74361740	1	□GASKET, idler support

(Continued)

(Revised April 1980)

ITEM	PART NO.	QTY.	DESCRIPTION
6	74386855	1	SUPPORT, belt tightening idler
	70919224	1	CAPSCREW, 3/8"NC x 1-1/8"
	70912069	2	CAPSCREW, 3/8"NC x 2-1/2"
	70904206	3	LOCKWASHER, 3/8"
7	74390120	1	BRACKET, idler
	70916314	1	CAPSCREW, 1/2"NC x 2"
	70910510	1	NUT, jam, 1/2"NC
	70904208	1	LOCKWASHER, 1/2"
8	70924863	1	SCREW, bracket clamping (1/2"NC x 3-3/4")
9	74255110	1	CAP, idler pulley
10	74390655	1	BOLT, idler pulley
	70910175	1	NUT, 3/4"NF
	70927382	1	WASHER, plain
11	74391650	1	PULLEY, idler
12	74391154	1	BEARING, ball, idler pulley
13	70927801	1	RING, snap, idler pulley
14	74255839	1	SEAL, oil, idler pulley
15	74390992	1	SHAFT, idler pulley
16	74391687	1	SPACER, idler shaft
17	74391593	1	PULLEY, idler
	74752002	4	BOLT (self-locking, 3/8"NF x 1/2")
18	74391351	1	BELT, pump driving
19	--------	1	HOSE (See WATER INLET MANIFOLD)

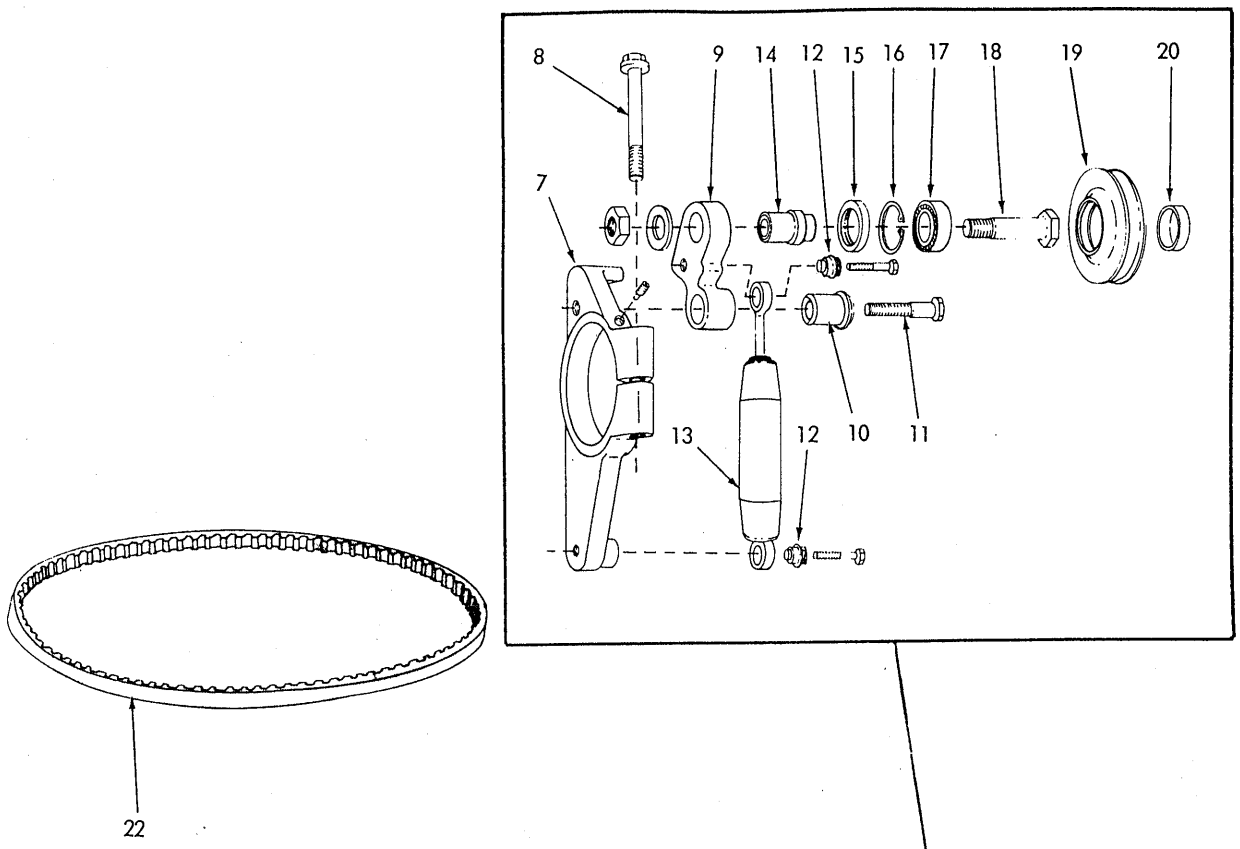

T-75043

WATER PUMP DRIVE

(Revised August 1980)

WATER PUMP DRIVE

USAGE: Engines S/N 17-01253 thru 17-01302; also 17-01772 and up; also 6138 LT engines.

ITEM	PART NO.	QTY.	DESCRIPTION
1	--------	1	PUMP ASSY., water (See page 100)
2	74513810	5	STUD, attaching
	70904206	5	LOCKWASHER, 3/8"
	70910123	5	NUT, 3/8"NF
3	74376398	1	GASKET, pump mounting
4	70923935	1	O-RING, pump body
5	74361740	1	□GASKET, idler support (17000 engine)(Not illustrated)
	70923950	1	□O-RING (6138 LT engines)
6	74391003	1	SUPPORT (1700 engines)
	74395112	1	SUPPORT (6138 LT engines)
	70919224	1	CAPSCREW, 3/8"NC x 1-1/8"
	70912069	2	CAPSCREW, 3/8"NC x 2-1/2" (17000 engines)
	70919227	2	CAPSCREW, 3/8"NC x 3-1/4" (6138 LT engines)
	70910287	3	LOCKWASHER, 3/8"
7	74391950	1	BRACKET, idler mounting
	70913683	1	SETSCREW, hex-socket, dog-pt., 3/8"NC x 1"
8	70924863	1	SCREW, bracket clamping
9	74391949	1	ARM ASSY., idler (Includes item 10)
10	74391933	1	BUSHING, idler arm pivot (flex-type)
11	74391955	1	CAPSCREW, idler arm retaining
12	74391934	2	BUSHING, damper mounting (flex-type)
13	74391938	1	DAMPER ASSY. (Includes item 12)
	70919225	2	CAPSCREW, 3/8"NC x 1-3/8"
14	74390992	1	SHAFT, idler pulley
15	74255839	1	SEAL, oil, idler pulley
16	70927801	1	RING, snap, idler pulley
17	74391154	1	BEARING, ball, idler pulley
18	74390655	1	BOLT, idler pulley
	70910847	1	NUT, jam, 3/4"NF
	70923421	1	WASHER, plain
19	74390995	1	PULLEY, idler
20	74255110	1	CAP, idler pulley
21	74391593	1	PULLEY, idler
	74752002	4	BOLT, (self-locking, 3/8"NF x 1/2")
22	74391351	1	BELT, pump driving
23	--------	1	HOSE (See WATER INLET MANIFOLD AND HEAT EXCHANGER)

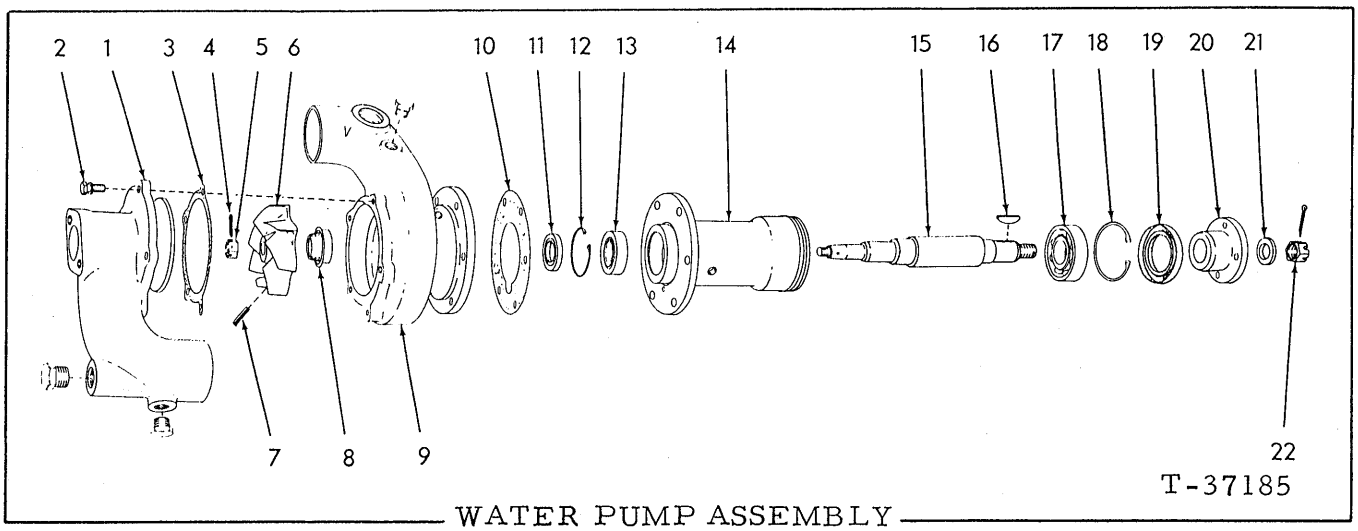

WATER PUMP ASSEMBLY

USAGE: Engines prior to S/N 17-01537

ITEM	PART NO.	QTY.	DESCRIPTION
-	74387607	1	PUMP ASSY. (Includes items 1 thru 22)(Order 74396371)
1	74375682	1	COVER, pump inlet
	70920333	1	PLUG, pipe, hex-hd., 3/8"NPT
	70920416	1	PLUG, pipe, hex-hd., 1/2"NPT
	70923325	4	CAPSCREW, 5/16"NC x 7/8"
	70917356	4	LOCKWASHER, 5/16"
3	74372421	1	GASKET, pump inlet cover
4	74041097	1	PIN, cotter, impeller retaining nut
5	74375686	1	NUT, impeller retaining
6	74389359	1	IMPELLER ASSY. (Includes ceramic insert)
7	74375694	1	PIN, impeller retaining
8	74386862	1	SEAL ASSY. (Serviced only as a unit)
9	74387609	1	BODY, pump
	70920333	1	PLUG, pipe, hex-hd., 3/8"NPT
10	74387051	1	GASKET, pump body
11	74387605	1	SEAL, oil, rear end
12	70927801	1	RING, snap, rear bearing
13	74255338	1	BEARING, roller (rear)
14	74387050	1	SLEEVE, extension
15	--------	1	SHAFT (Order 1-shaft 74393325 and 1 kit 74396372)
16	74660677	1	KEY, pump shaft
17	73007474	1	BEARING, ball (front)
18	70927803	1	RING, snap, front bearing
19	74254948	1	SEAL, oil, front end
20	74386924	1	HUB, drive
21	74375691	1	WASHER, hub retaining
22	70912331	1	NUT, slotted, 3/4"NF
	70900808	1	PIN, cotter, 1/8" x 1-1/2"

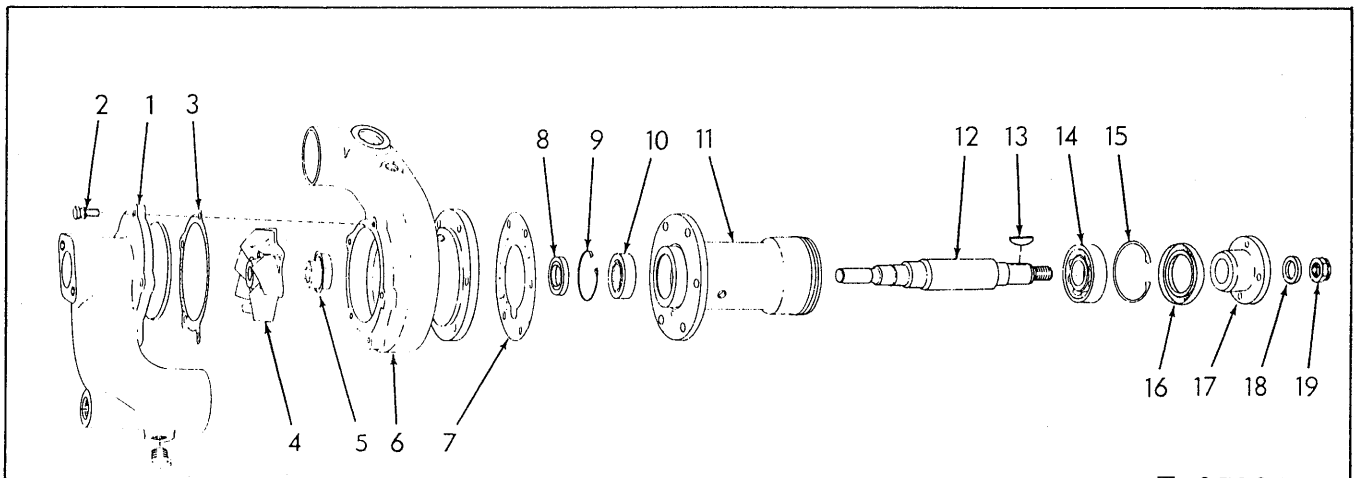

WATER PUMP ASSEMBLY

USAGE: Engine S/N 17-01537 and up. Also 6138 LT engines.

ITEM	PART NO.	QTY.	DESCRIPTION
-	74396371	1	PUMP ASSY. (Includes items 1 thru 19)
1	74375682	1	COVER
	70920333	1	PLUG, pipe, hex-hd., 3/8"NPT
2	70923325	4	CAPSCREW, 5/16"NC x 7/8"
	70917356	4	LOCKWASHER, 5/16"
3	74372421	1	GASKET
4	--------	1	IMPELLER ASSY. (Includes ceramic insert)(Order item 20)
5	--------		SEAL ASSY. (Engines prior to S/N 17-05080) Order item 20)
	74396349	1	SEAL ASSY. (Engine S/N 17-05080 and up)(Component of item 20)
6	74387609	1	BODY
7	74387051	1	GASKET
8	74387605	1	SEAL
9	70927801	1	RING
10	74255338	1	BEARING
11	74387050	1	SLEEVE
12	74393325	1	SHAFT
13	74660677	1	KEY
14	73007474	1	BEARING
15	70927803	1	RING
16	74256022	1	SEAL
17	74386924	1	HUB
18	74375691	1	WASHER
19	70918182	1	NUT, self-locking, 3/4"NF (plated)
20	74396372	1	IMPELLER AND SEAL KIT (Includes items 4, 5 and Instruction sheet)

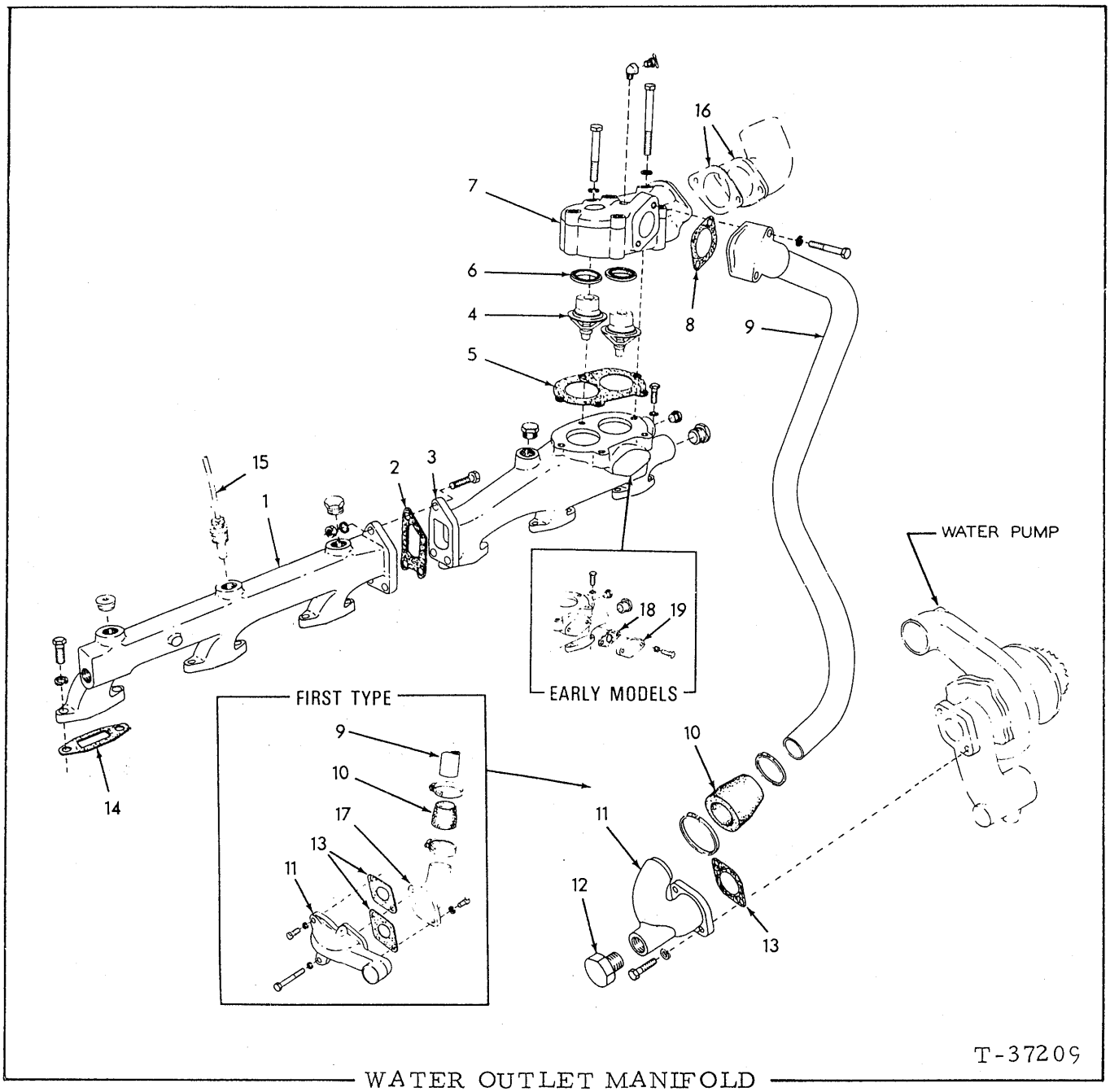

WATER OUTLET MANIFOLD

ITEM	PART NO.	QTY.	DESCRIPTION
1	74393615	1	MANIFOLD, rear (Also order 1 PLUG 70924636) (Engines prior to #17-01877)
	74394959	1	MANIFOLD, rear (Engines #17-01877 and up)
	70920416	1	PLUG, pipe, hex-hd., 1/2"NPT
	70919224	6	CAPSCREW, 3/8"NC x 1-1/8"
	70919226	3	CAPSCREW, 3/8"NC x 1-5/8"
	70904206	9	LOCKWASHER, 3/8"
	70910324	3	NUT, 3/8"NC
	70917970	1	PLUG, pipe, hex-socket, 1/2"NPT
	70924636	1	PLUG, pipe, 1/2"NPT
2	74395425	1	□GASKET, manifold connecting

(Continued)

(Revised April 1980)

WATER OUTLET MANIFOLD (Continued)

ITEM	PART NO.	QTY.	DESCRIPTION	
3	--------	1	MANIFOLD (Engines prior to #17-03557)(Order 1 MANIFOLD 74394668, 1 COVER 74313015, 1 GASKET 74362458, 2 CAPSCREW 70915408, 2 LOCKWASHER 70904206, 1 BUSHING 70920779, 1 BUSHING 70920774, 1 PLUG 70920333 and 2 PLUG 70921073)	
	74394627	1	MANIFOLD (Engine #17-03557 and up)	
	70919840	1	PLUG, pipe, hex-hd., 1/4"NPT	
	70920416	1	PLUG, pipe, hex-hd., 1/2"NPT	
	70920525	1	PLUG, pipe, hex-hd., 3/4"NPT	
	70919224	6	CAPSCREW, 3/8"NC x 1-1/8"	
	70904206	6	LOCKWASHER, 3/8"	
4	74354537	2	THERMOSTAT	
5	74376520	1	GASKET	
6	74317554	2	SEAL	
7	74389036	1	COVER ASSY. (Includes item 6)	
	70918374	1	ELBOW, street, brass, 90°, 1/4"NPT	Engines prior to #17-03955
	70912415	1	COCK, T-handle, 1/4"NPT (For venting air)	Engines prior to #17-03955
	70918395	4	CAPSCREW, 7/16"NC x 3-1/4"	
	70918740	1	CAPSCREW, 7/16"NC x 4"	
	70904207	5	LOCKWASHER, 7/16"	
8	74386137	1	GASKET	
9	74386835	1	TUBE (Engines prior to #17-04095)	
	74394615	1	TUBE (Engines #17-04095 and up)	
	70916274	2	CAPSCREW, 3/8"NC x 2-1/4"	
	70904206	2	LOCKWASHER, 3/8"	
10	74394772	1	ELBOW (Engines prior to #17-04095)	
	74396370	1	ELBOW (Engines #17-04095 and up)	
	70922198	2	CLAMP, hose, 1-9/16" to 2-9/16" diam.	
11	74386779	1	FLANGE (Engines prior to #17-04095)	
	74396115	1	ELBOW (Engines #17-04095 and up)	
	70916271	2	CAPSCREW, 3/8"NC x 1"	
	70904206	2	LOCKWASHER, 3/8"	
12	70920525	1	PLUG	
13	74378112	1	□GASKET	
14	74395709	6	□GASKET	
15	--------	-	GAUGE (See page 239)	
16	--------	-	ELBOW AND GASKET (See page 89)	
17	74386881	1	ELBOW	
	70916271	2	CAPSCREW, 3/8"NC x 1"	
	70904206	2	LOCKWASHER, 3/8"	
18	74362458	1	GASKET	Engines prior to #17-04095
19	74313015	1	COVER	Engines prior to #17-04095
	70915408	2	CAPSCREW, 3/8"NC x 3/4"	Engines prior to #17-04095
	70904206	2	LOCKWASHER, 3/8"	Engines prior to #17-04095

(Revised April 1981)

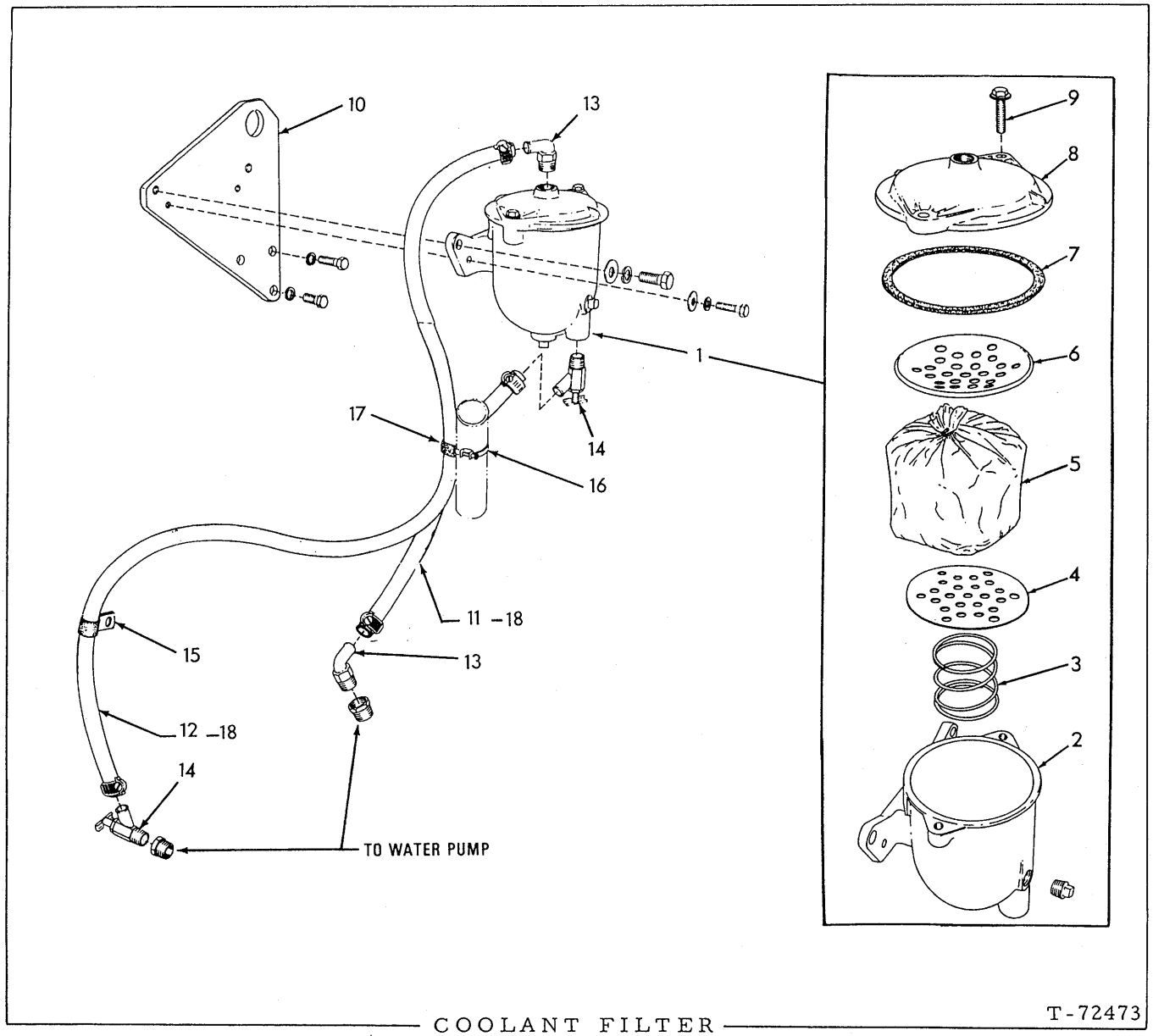

T-72473

COOLANT FILTER

USAGE: Engines prior to Serial No. 17-03955. See page 105A for second type.

ITEM	PART NO.	QTY.	DESCRIPTION
1	74359248	1	FILTER ASSY., water (Consists of items 2 thru 9. Has All-purpose element)
	70920582	2	CAPSCREW, 1/2"NC x 1-1/4"
	70912441	2	LOCKWASHER, 1/2"
	70921422	2	CAPSCREW, 5/16"NC x 1-1/8"
	70901165	2	WASHER, plain, U.S. std., 5/16"
	70910286	2	LOCKWASHER, 5/16"
2	74055031	1	BODY, filter
	70920131	2	PLUG, pipe, 3/8"NPT
3	74054569	1	SPRING, filter element
4	74054568	1	PLATE, filter element, lower

(Continued)

(Revised April 1980)

ITEM	PART NO.	QTY.	DESCRIPTION
	74059380	1	ELEMENT KIT, filter (Includes items 4, 6 and 7)(Chromate-type. For use with "Dowtherm" 209)
5	74059979	1	ELEMENT KIT, filter (Includes items 4, and 7)(Original equipment. All-purpose, recommended for use with plain water as well as most types of permanent and non-permanent anti-freeze except "Dowtherm" 209)
6	74055034	1	PLATE, filter element, upper
7	74054566	1	GASKET, filter cover
8	74055032	1	COVER, filter
9	74055033	2	BOLT ASSY., filter cover (Includes washer)
10	74392626	1	BRACKET, filter mounting
	70916311	3	CAPSCREW, 1/2"NC x 1-1/4"
	70904208	3	LOCKWASHER, 1/2"
11	-------	1	HOSE, water pump to filter (14-1/2" long. Order item 18)
	70921911	2	CLAMP, hose, 11/16" to 1-1/4" diam.
12	-------	1	HOSE, filter to water pump (56" long. Order item 18)
	70921911	2	CLAMP, hose, 11/16" to 1-1/4" diam.
13	74255286	2	ELBOW, water hose (90°, 5/8" nipple, 3/8"NPT)
	74142263	1	BUSHING, pipe reducing, 1"NPT to 3/8"NPT
14	74255287	2	VALVE, water shut-off (5/8" nipple, 3/8"NPT)
	70904271	1	BUSHING, pipe, reducing, 1/2"NPT to 3/8"NPT
15	74255770	1	CLAMP, water inlet hose
16	70919789	1	CLAMP, hose binding
17	74388574	1	SLEEVE, hose binding clamp (plastic)
18	70920722	1	HOSE, rubber, 5/8"I.D., 25 ft. roll (Use as required)

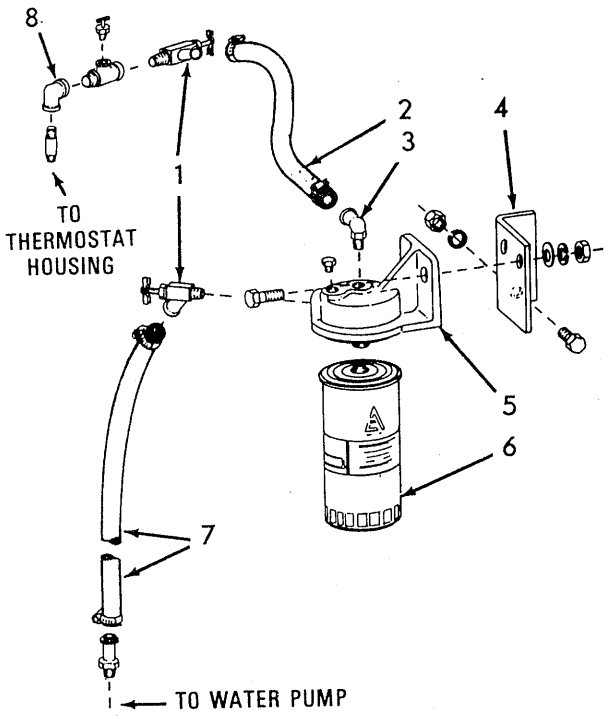

COOLANT FILTER

USAGE: Engine S/N 17-03955 and up. See page 104 for first type.

ITEM	PART NO.	QTY.	DESCRIPTION
1	74255287	2	VALVE, shut-off
2	--------	1	HOSE, 5/8"I. D. (Order 13" of 70920722)(See NOTE)
	70921911	2	CLAMP, 11/16" to 1-1/4" diam.
3	74255286	1	ELBOW, 3/8"NPT
4	74394434	1	BRACKET
	70916197	2	CAPSCREW, 7/16"NC x 1-1/4"
	70904207	2	LOCKWASHER, 7/16"
	70912201	2	NUT, 7/16"NC
5	74393427	1	HEAD ASSY. (Includes plug indented below)
	70919134	1	PLUG, 1/8"NPT
	70916197	2	CAPSCREW, 7/16"NC x 1-1/4"
	70910919	2	WASHER
	70904207	2	LOCKWASHER, 7/16"
	70912201	2	NUT, 7/16"NC
6	74393504	1	FILTER (Original equipment, all purpose, recommended for use with most types of permanent and non-permanent anti-freeze as well as with plain water (except "Dowtherm" 209)
	74393505	1	FILTER (Chromate type, for use with "Dowtherm" 209 anti-freeze)
7	--------	1	HOSE, 5/8"I. D. (Order 23-1/2" of 70920722)(See NOTE)
	70921911	2	CLAMP, 11/16" to 1-1/4" diam.
	70925238	1	NIPPLE, 5/8"hose, 3/8"NPT
8	70905014	1	ELBOW (90°, pipe reducing, 3/8"NPT to 1/4"NPT)
	70901478	1	NIPPLE, pipe, 1/4"NPT x 7/8"
	70913257	1	TEE, service, 3/8"NPT
	70916873	1	COCK, 3/8"NPT (air venting)

NOTE: Factory provides 25 foot rolls only. Dealer will provide cut length or full roll.

(Revised April 1980)

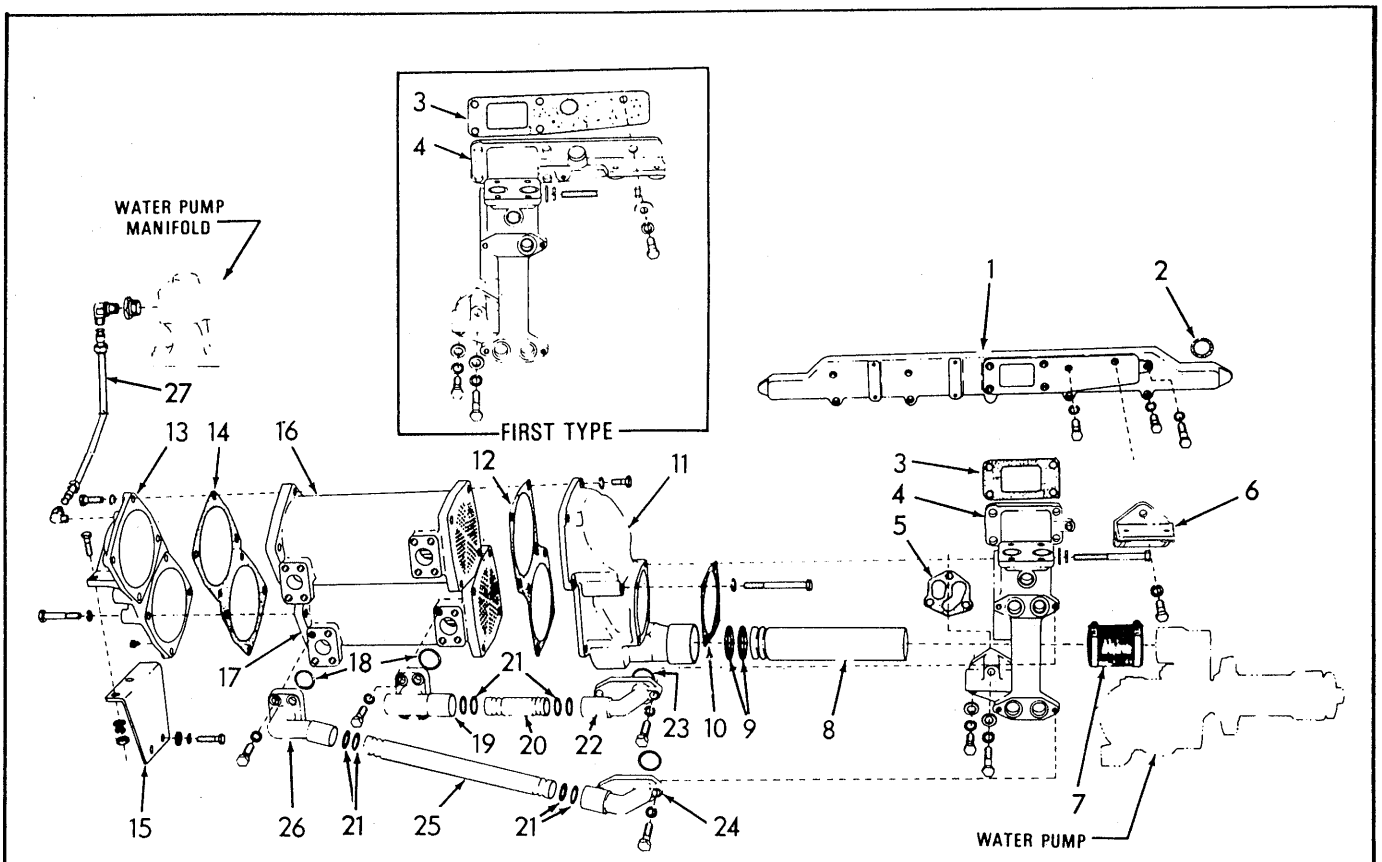

WATER INLET MANIFOLD AND HEAT EXCHANGER T-73033

ITEM	PART NO.	QTY.	DESCRIPTION
1	74395002	1	MANIFOLD, water inlet (Also order 2 PLUG 70931239)
	70919231	4	CAPSCREW, 1/2"NC x 1-7/8"
	70916317	3	CAPSCREW, 1/2"NC x 2-3/4"
	70915969	1	CAPSCREW, 1/2"NC x 3"
	70904208	8	LOCKWASHER, 1/2"
	70931239	2	PLUG, core
2	70925612	12	☐O-RING, water inlet manifold
3	74389291	1	☐GASKET, water and oil manifold (Engines prior to #17-02085)
	74389635	1	GASKET, water and oil manifold (Engines #17-02085 and up)
4	74393591	1	MANIFOLD, water and oil (Engines prior to #17-02085)
	74393702	1	MANIFOLD, water and oil (Engines #17-02085 and up)
	70916311	4	CAPSCREW, 1/2"NC x 1-1/4" (1 additional used prior to engine #17-02085)
	70915987	2	CAPSCREW, 1/2"NC x 1-1/2"
	70916320	1	CAPSCREW, 1/2"NC x 4"
	70904208	7	LOCKWASHER, 1/2"
	70912333	7	WASHER, plain
5	74386495	1	☐GASKET, manifold to block

Engines prior to #17-04275

1 additional used prior to engine #17-02085

(Continued)

ITEM	PART NO.	QTY.	DESCRIPTION
6	74393708	1	BRACKET (Effective Engine #17-02085)
	70915987	1	CAPSCREW, 1/2"NC x 1-1/2" (Engines prior to #17-04275)
	70918683	1	CAPSCREW, 1/2"NC x 1-1/8" (Engines #17-04275 and up)
	70904208	1	LOCKWASHER, 1/2"
7	74662263	1	HOSE, heat exchanger to water pump
	70922199	2	CLAMP, hose
8	74388185	1	TUBE, pump to bonnet
9	70923651	2	□O-RING, bonnet tube
10	74371160	1	□GASKET, heat exchanger adapter
11	74395447	1	ADAPTER, heat exchanger
	70919294	2	CAPSCREW, 1/2"NC x 4-1/4" } To Exchanger
	70915987	6	CAPSCREW, 1/2"NC x 1-1/2" } To Exchanger
	70916320	2	CAPSCREW, 1/2"NC x 4" } To Manifold
	70916322	2	CAPSCREW, 1/2"NC x 5" } To Manifold
	70912441	12	LOCKWASHER, 1/2"
	70916009	4	WASHER, plain
	74371107	2	WASHER, plain (turbocharger supply line bracket)
12	74389678	1	□GASKET, heat exchanger adapter
13	74388465	1	BONNET(Cast Iron)(Engines prior to #17-03619)
	74394949	1	BONNET (Aluminum)(Engine #17-03619 and up)
	70919840	1	PLUG, pipe, hex-hd., 1/4"NPT
	70916313	4	CAPSCREW, 1/2"NC x 1-3/4" } To Heat Exchanger
	70915969	4	CAPSCREW, 1/2"NC x 3" } To Heat Exchanger
	70904208	8	LOCKWASHER, 1/2" } To Heat Exchanger
	70914847	2	CAPSCREW, 3/8"NC x 1-1/2" } To Supporting Bracket
	70911115	4	WASHER, plain, SAE std., 3/8" } To Supporting Bracket
	70904206	2	LOCKWASHER, 3/8" } To Supporting Bracket
	70910324	2	NUT, 3/8"NC } To Supporting Bracket
14	74389676	1	□GASKET, heat exchanger bonnet
15	74390888	1	BRACKET, supporting, heat exchanger
	70916311	2	CAPSCREW, 1/2"NC x 1-1/4"
	70910244	2	WASHER, plain, SAE std., 1/2"
	70904208	2	LOCKWASHER, 1/2"
16	74394014	1	EXCHANGER, heat, transmission oil
17	74394188	1	EXCHANGER, heat, engine oil
18	74255781	2	□O-RING, heat exchanger elbows
19	74390591	1	ELBOW, heat exchanger discharge
	70916191	4	CAPSCREW, 7/16"NC x 1-1/2"
	70904207	4	LOCKWASHER, 7/16"
20	74390595	1	TUBE, heat exchanger discharge
21	74255631	8	□O-RING, heat exchanger tubes
22	74390592	1	ELBOW, oil manifold, upper
	70919225	1	CAPSCREW, 3/8"NC x 1-3/8"
	70912069	1	CAPSCREW, 3/8"NC x 2-1/2"
	70904206	2	LOCKWASHER, 3/8"

(Continued)

WATER INLET MANIFOLD AND HEAT EXCHANGER (Continued)

ITEM	PART NO.	QTY.	DESCRIPTION
23	74255631	2	□O-RING, oil manifold elbows
24	74390589	1	ELBOW, oil manifold, lower
	70919225	1	CAPSCREW, 3/8"NC x 1-3/8"
	70912069	1	CAPSCREW, 3/8" NC x 2-1/2"
	70904206	2	LOCKWASHER, 3/8"
25	74390594	1	TUBE, heat exchanger intake
26	74390590	1	ELBOW, heat exchanger intake
	70916191	4	CAPSCREW, 7/16"NC x 1-1/2"
	70904207	4	LOCKWASHER, 7/16"
27	74390583	1	TUBE, air bleed
	70917809	2	NUT, imperial, 1/4" tube
	74255956	2	SLEEVE, imperial, 1/4" tube
	70919481	2	ELBOW, imperial, 1/4" tube, 1/4"NPT male
	70901839	1	BUSHING, pipe reducing, 1/2"NPT to 1/4"NPT

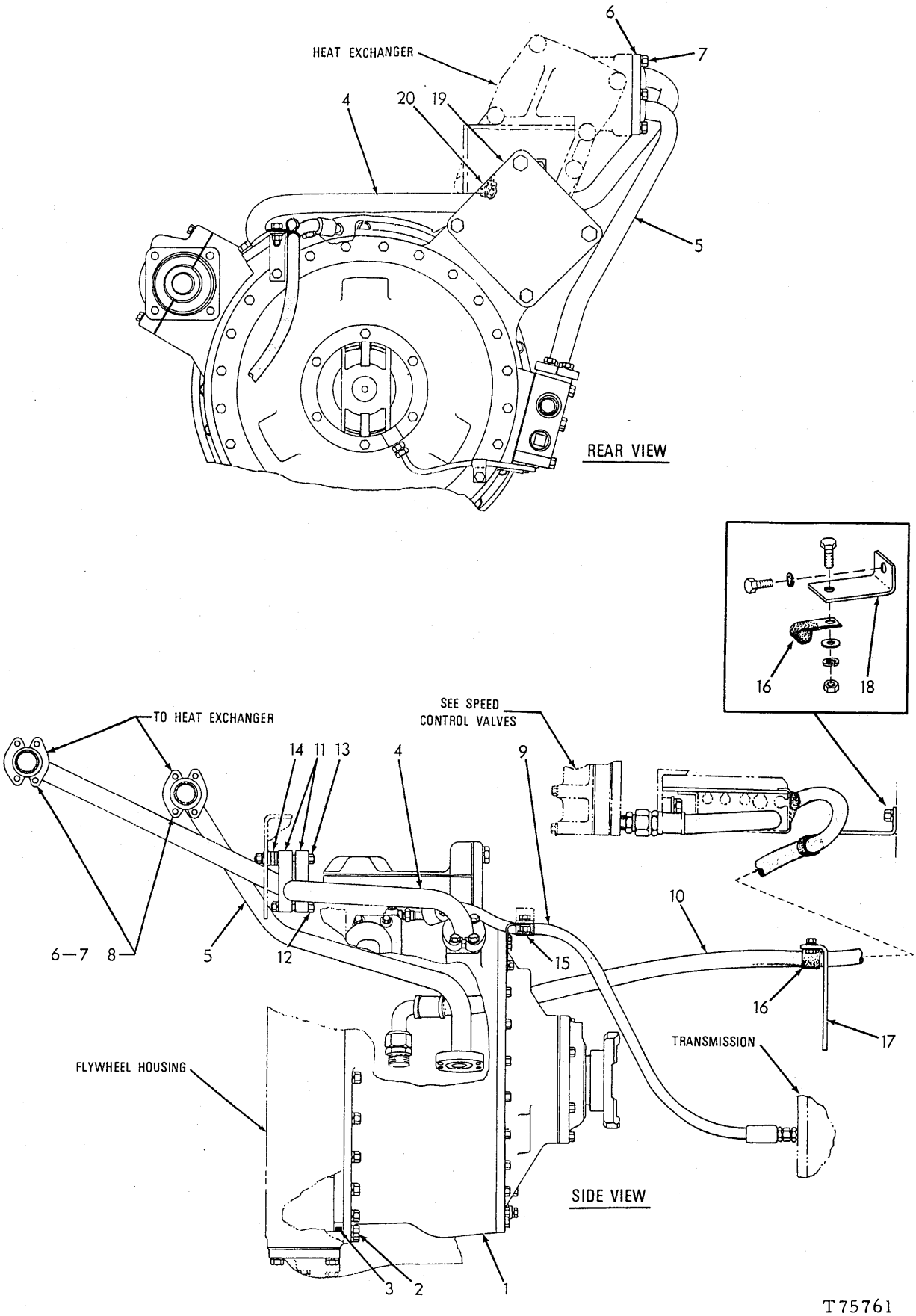

TORQUE CONVERTER LINES

TORQUE CONVERTER LINES

ITEM	PART NO.	QTY.	DESCRIPTION
1	--------	1	CONVERTER ASSY., torque (See page 114)
2	70923192	16	CAPSCREW, 7/16"NC x 1-1/2"
	70904207	17	LOCKWASHER, 7/16"
	70921569	1	CAPSCREW, 7/16" x 1-1/4"
3	70924828	1	□ O-RING, torque converter to flywheel housing
4	70659433	1	TUBE, converter to heat exchanger
5	70659432	1	TUBE, heat exchanger to converter
6	70921117	8	FLANGE, tube attaching (half only)
7	70921569	16	CAPSCREW, 7/16"NC x 1-1/4"
	70914678	16	LOCKWASHER, 7/16"
8	70923664	4	□ O-RING, tube attaching flange
9	70648501	1	HOSE, breather line (See HOSE PARTS)
	70919136	1	ELBOW, flare type, 3/8"tube, 3/8"NPT male
	70919172	1	CONNECTOR, flare type, 3/8" tube, 3/8"NPT male
10	70665910	1	HOSE, speed control valve to torque converter (See HOSE PARTS)
	70919246	1	CONNECTOR, flare type, 1" tube, 3/4"NPT male
	70921228	1	CONNECTOR, flare type, 1"tube, 1-5/16"NF (Includes O-RING)
	70921214	1	O-RING, connector (1-3/8"O. D.)
11	70658514	2	BLOCK, tube supporting
12	70927174	1	CAPSCREW, 3/8"NC x 2-1/2"
13	70924843	1	CAPSCREW, 3/8"NC x 3-1/2"
	70044973	1	WASHER, plain
	70910287	2	LOCKWASHER, 3/8"
	70911026	2	NUT, 3/8"NC
14	70044973	3	WASHER, block spacing (large) — Use as required
	70055914	2	WASHER, block spacing (small) — Use as required
15	70621304	1	CLIP, hose supporting (3/4" diam.)
16	70644457	3	CLIP, hose supporting (1-5/16" diam.)(1 less used on units equipped with PUSH-START PUMP)
	70916311	2	CAPSCREW, 1/2"NC x 1-1/4"
	70910244	2	WASHER, plain
	70904208	2	LOCKWASHER, 1/2"
	70911028	2	NUT, 1/2"NC
17	70653046	1	ANGLE, hose supporting
18	70620604	1	ANGLE, hose supporting
	70921175	1	CAPSCREW, 1/2"NC x 1"
	70912441	1	LOCKWASHER, 1/2"
19	70665934	1	COVER, dozer pump drive — Not used on units with hydraulic dozer
	70921556	4	CAPSCREW, 1/2"NC x 2" — Not used on units with hydraulic dozer
	70912441	4	LOCKWASHER, 1/2" — Not used on units with hydraulic dozer
20	70665933	1	GASKET, cover

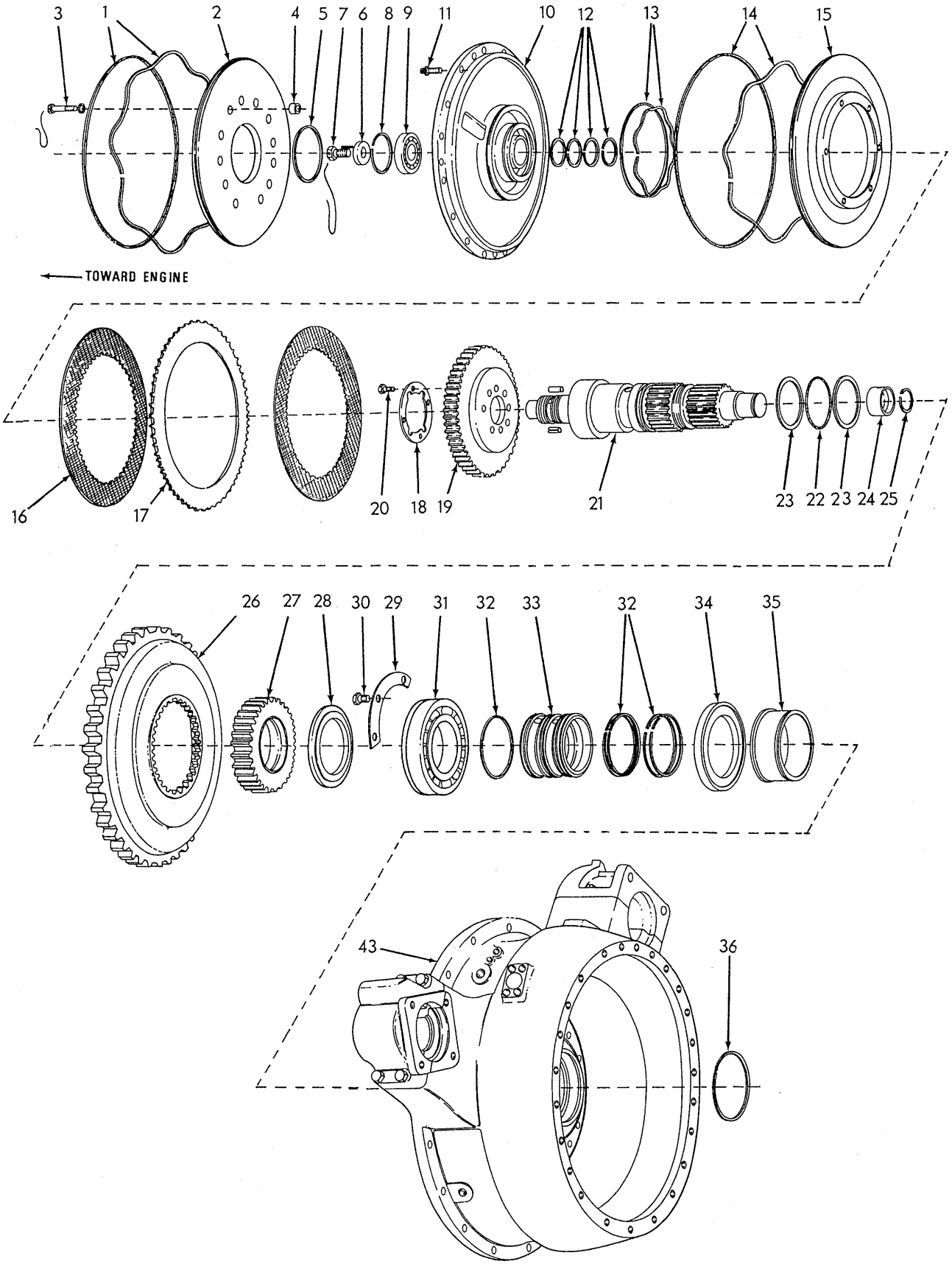

TORQUE CONVERTER ASSEMBLY (Front Section)

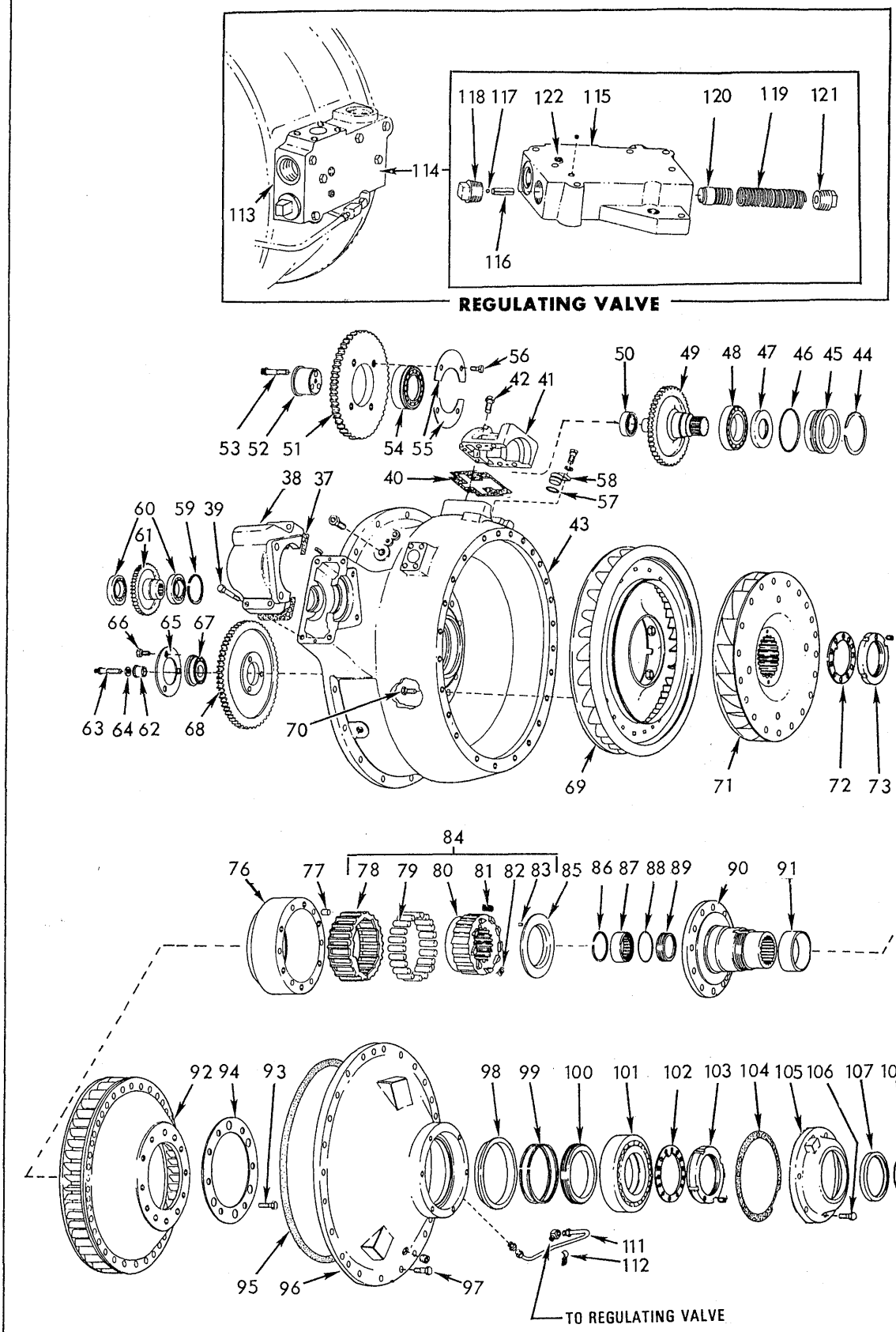

T-73619

TORQUE CONVERTER PARTS (Rear Section)

(Revised May 1977)

TORQUE CONVERTER ASSEMBLY

USAGE: See page 111

ITEM	PART NO.	QTY.	DESCRIPTION
-	70662979	1	CONVERTER ASSY. (Includes items 1 thru 120
1	70662988	1	RING,
	70662993	1	EXPANDER
2	70639563	1	PISTON
3	70927482	12	CAPSCREW, drilled-hd., 3/8"NC x 1-5/8"
	70911115	12	WASHER, plain, SAE std., 3/8"
	70023633	3	WIRE, locking, 1/16" x 12"
4	70639535	12	SPACER
5	70639544	1	RING
6	70639536	1	WASHER
	70919180	1	PIN, spring, 1/8" x 5/8"
7	70927475	1	CAPSCREW, drilled-hd., 1/2"NC x 1-1/2"
	70023633	1	WIRE, locking, 1/16" x 12"
8	73035105	1	RING
9	70097088	1	BEARING
10	70639615	1	CARRIER
11	70922051	16	SCREW, 12-pt. head, 3/8"NC x 1"
12	70642716	4	RING
13	70662989	1	RING
	70662991	1	EXPANDER
14	70662990	1	RING
	70662992	1	EXPANDER
15	70640743	1	PISTON
16	70682971	2	PLATE (bi-metallic)
17	70639523	1	PLATE (steel)
18	70640742	1	WASHER
19	70647404	1	RING
	70922524	4	PIN, spring, 1/2" x 1-1/2"
	74054570	4	PIN, dowel, 7/16" x 1"
20	70650399	4	CAPSCREW, self-locking, 3/8"NF x 7/8"
21	70646985	1	SHAFT
22	70632603	1	□ O-RING
23	70640791	2	RING
24	70632585	1	RACE
25	70632601	1	RING
26	70639527	1	PLATE
27	70640779	1	GEAR ASSY. (Torque Converter prior to Serial No. 257704
	70698911	1	GEAR ASSY. (Torque Converter Serial No. 257704 and up)
28	70639543	1	SPACER
29	70632613	2	WASHER (half only)
30	74254905	6	CAPSCREW, 3/8"NF x 3/4"

Each includes Bushings

(Continued)

ITEM	PART NO.	QTY.	DESCRIPTION
31	70645672	1	BEARING, ball, input shaft
32	70639532	5	RING, sealing (.124" wide)(Used prior to Converter #240233)
	70679753	5	RING, sealing (.120" wide)(Converters #240233 and up)
33	70639524	1	CARRIER, seal ring
34	70639520	1	RING, wear
35	70639522	1	SLEEVE, wear
36	70640784	1	RING, snap, wear sleeve retaining
37	70640783	1	GASKET, transmission pump gear housing
38	--------	-	HOUSING, transmission pump gears (Not serviced. Order item 43)
39	70053616	4	CAPSCREW, 3/8"NC x 1-3/4"
40	70674402	1	GASKET, pump gear housing
41	--------	1	HOUSING, pump gears (Not serviced. Order item 43)
42	70916311	6	CAPSCREW, 1/2"NC x 1-1/4"
43	70674401	1	HOUSING ASSEMBLY (Includes items 34 thru 42)
	70902071	1	BUSHING, pipe reducing, 1"NPT to 3/8"NPT
	70912768	1	PLUG, pipe, 1"NPT
	70909091	3	PLUG, pipe, hex-socket, 3/4"NPT
	73034915	4	PIN, dowel, 3/8" x 5/8"
44	73027756	1	RING, snap, driving gear retainer
45	70638609	1	RETAINER, pump driving gear
46	70923816	1	□ O-RING, driving gear retainer
47	73037990	1	□ SEAL, pump driving gear
48	70054073	1	BEARING, ball, pump driving gear (rear)
49	70674403	1	GEAR, driving, pump
50	70638612	1	BEARING, roller, pump driving gear (front)
51	70638618	1	GEAR, idler, pump
52	70638616	1	SHAFT, pump idler gear (Used prior to Converter #250839)
	70694292	1	SHAFT, pump idler gear (Converters #250839 and up)
53	70644927	3	CAPSCREW, 12-pt. head, 3/8"NC x 2-1/2"
54	70670411	1	BEARING, roller, pump idler gear
55	70638610	2	WASHER, retaining, idler gear bearing
56	70639534	4	CAPSCREW, self-locking, 3/8"NF x 5/8"
57	70923575	1	□ O-RING, hole plug
58	70639955	1	PLUG, hole
	70929846	2	CAPSCREW, 7/16"NC x 7/8"
	70914678	2	LOCKWASHER, 7/16"
59	74053627	1	RING, snap, bearing retaining
60	70067766	2	BEARING, ball, transmission pump driving gear

(Continued)

TORQUE CONVERTER ASSEMBLY (Continued)

ITEM	PART NO.	QTY.	DESCRIPTION	
61	70640778	1	GEAR	
62	70632604	1	SHAFT	
63	70922850	1	SCREW, 12-pt. head, 3/8"NC x 2"	
64	70643763	1	WASHER	
65	70628492	1	RETAINER	
66	70639534	3	CAPSCREW, self-locking, 3/8"NF x 5/8"	
67	70645269	1	BEARING, ball (Includes snap ring)	
68	70632630	1	GEAR	
69	70632624	1	WHEEL ASSY. (Torque converter prior to S/N 255657)	Each serviced only as a unit
	70699915	1	WHEEL ASSY. (Torque Converter S/N 255657 and up)	
70	70923193	10	CAPSCREW, 3/8"NF x 1-1/4"	
71	70639628	1	WHEEL	
72	70632581	1	WASHER	
73	70632582	1	NUT	
	70921401	1	SETSCREW, hex-socket, half-dog-pt., 5/16"NC x 3/4"	
74	70632590	1	RING	
75	70632584	1	BEARING	
76	70632652	1	RACE	
77	70632600	6	PIN, dowel, over-running clutch race	
78	--------	1	CAGE	Order item 84
79	--------	22	ROLLER	
80	--------	1	CAM	
81	--------	2	SPRING	
82	--------	9	SPRING	
83	70634342	1	PIN, driving	
84	70638352	1	CLUTCH KIT (Includes items 78 thru 83)	
85	70632606	1	WASHER	
86	70632588	1	RING	
87	70632591	1	ROLLER ASSY.	
88	70923814	1	□ O-RING	
89	70632620	1	CARRIER	
90	70632635	1	FLANGE	

(Continued)

ITEM	PART NO.	QTY.	DESCRIPTION
91	70632589	1	SLEEVE, wear, turbine wheel flange
92	70632632	1	WHEEL, turbine
93	70923193	6	CAPSCREW, 3/8"NF x 1-1/4"
94	70632595	1	WASHER, dowel pin retaining
95	70632587	1	□GASKET, end plate
96	70632623	1	PLATE ASSY., rear end (Includes item 98)(Tractors prior to unit #10375 excluding EXCEPTIONS listed below)
	70678563	1	PLATE ASSY., rear end (Tractors unit #10375 and up including EXCEPTIONS listed below)
	70909091	1	PLUG, pipe, hex-socket, 3/4"NPT
97	70921076	24	CAPSCREW, 3/8"NC x 1-1/4"
98	70632592	1	SLEEVE, wear, rear end plate (Tractors prior to unit #10375 excluding EXCEPTIONS listed below)
	70678564	1	SLEEVE, wear, rear end plate (Tractors unit #10375 and up including EXCEPTIONS listed below)
99	70640722	2	RING, sealing (.124" wide)(Used prior to Converter #240233)
	70679752	2	RING, sealing (.120" wide)(Converters #240233 and up)
100	70640096	1	CARRIER, seal ring
101	70632583	1	BEARING, ball, turbine wheel flange
102	70624816	1	WASHER, locking, bearing retaining nut
103	70624815	1	NUT, bearing retaining
	70921401	1	SETSCREW, hex-socket, half-dog-pt., 5/16"NC x 3/4"
104	70052168	1	□GASKET, rear bearing retainer
105	70632638	1	RETAINER, rear bearing
106	70921076	6	CAPSCREW, 3/8"NC x 1-1/4"
107	70693957	1	□SEAL, oil, rear end
108	70923585	1	□O-RING, drive shaft yoke
109	70632621	1	SLEEVE, drive shaft yoke
	70914465	1	FITTING, lubricating, straight, 1/8"NPT
110	70638848	1	YOKE ASSY., drive shaft (Includes item 109)
111	70640097	1	TUBE ASSY., rear seal drain (Includes nuts)
	70918116	1	CONNECTOR, inverted flare, 3/8" tube, 3/8"NPT male
	70918115	1	ELBOW, inverted flare, 90°, 3/8" tube, 3/8"NPT male
112	70639314	1	CLIP, tube supporting

EXCEPTIONS: Tractors Serial Nos. 19S10326, 10327, 10330, 10332, 10334, 10335, 10341, 10342, 10349, 10350

(Continued)

ITEM	PART NO.	QTY.	DESCRIPTION
113	70658556	1	□GASKET, regulating valve
114	70658517	1	VALVE ASSY., pressure regulating (Includes items 115 thru 122)
	70921565	1	CAPSCREW, 3/8"NC x 1-1/2"
	70927446	6	CAPSCREW, 3/8"NC x 3"
115	------	1	HOUSING, regulating valve (Not serviced separately)
	70910231	1	PLUG, pipe, hex-socket, 1/8"NPT
116	70918390	1	PIN, piston stop (3/8" x 1-1/4")
117	70915904	1	BALL, steel, 5/16" diam. (Used selectively)
118	70658746	1	PLUG, regulating valve
119	70639551	1	SPRING, regulating valve
120	70659774	1	PISTON, regulating valve
121	70912768	1	PLUG, pipe, 1"NPT
122	70907859	1	PLUG, pipe, hex-socket, 1/4"NPT

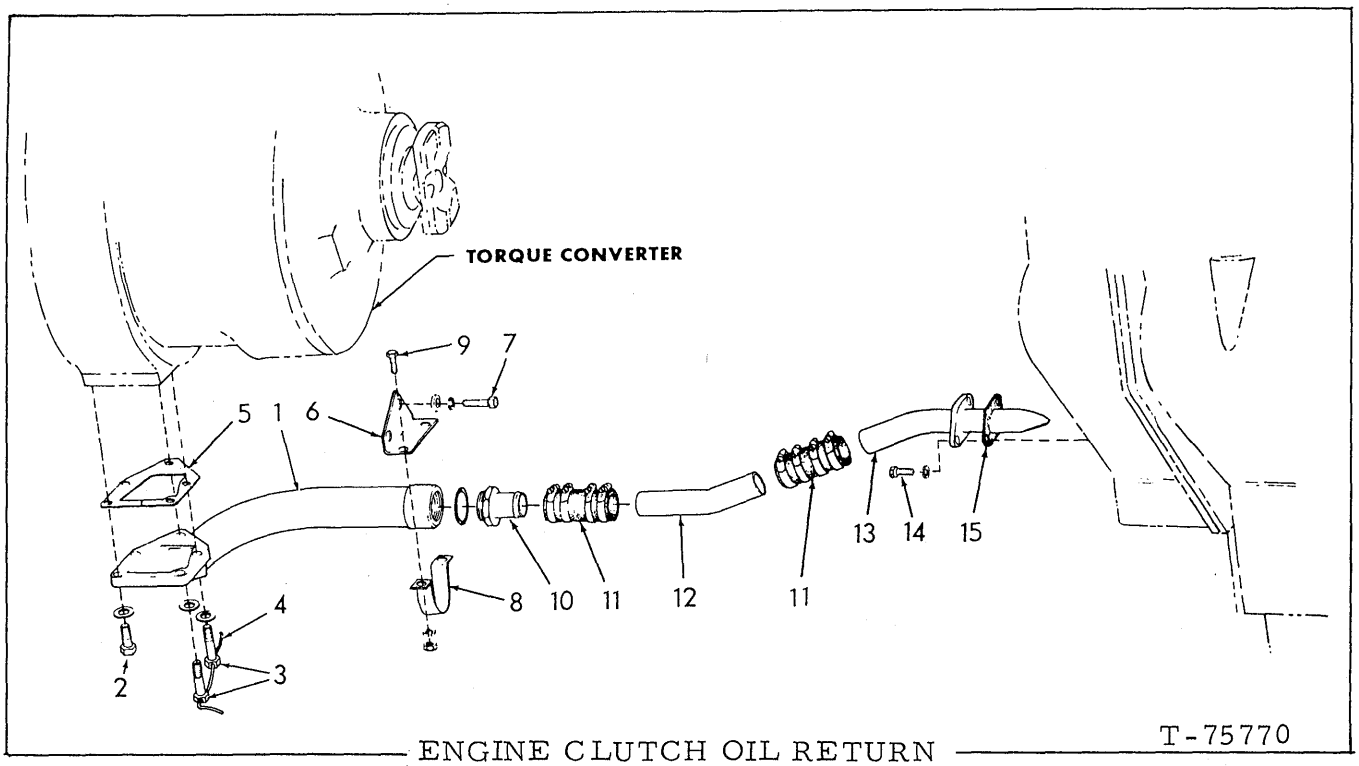

ENGINE CLUTCH OIL RETURN

ITEM	PART NO.	QTY.	DESCRIPTION
1	70651629	1	ELBOW, drain, flywheel housing
2	70920582	3	CAPSCREW, 1/2"NC x 1-1/4"
	70928460	3	WASHER, plain
3	70929074	2	CAPSCREW, drilled-hd., 1/2"NC x 2"
	70928460	2	WASHER
4	70023633	1	WIRE, locking, 1/16" x 12"
5	70640636	1	□GASKET, flywheel housing drain elbow
6	70640667	1	BRACKET, supporting, drain elbow
7	70927225	2	CAPSCREW, 3/8"NC x 1-5/8"
	70910287	2	LOCKWASHER, 3/8"
	70044973	2	WASHER
8	70640664	1	CLAMP, supporting, drain elbow
9	70922262	2	CAPSCREW, 3/8"NC x 7/8"
	70910287	2	LOCKWASHER, 3/8"
	70911026	2	NUT, 3/8"NC
10	70651694	1	ADAPTER, connecting hose (Includes O-ring)
	70921887	1	O-RING, adapter (1-15/16" O.D.)
11	70631788	2	HOSE, connecting tube
	70921913	8	CLAMP, hose, 1-13/16" to 2-3/4" diam.
12	70653806	1	TUBE, connecting
13	70653793	1	TUBE, spill
14	70922763	2	CAPSCREW, 3/8"NC x 1"
	70910287	2	LOCKWASHER, 3/8"
15	70651655	1	□GASKET, spill tube

(Revised April 1980)

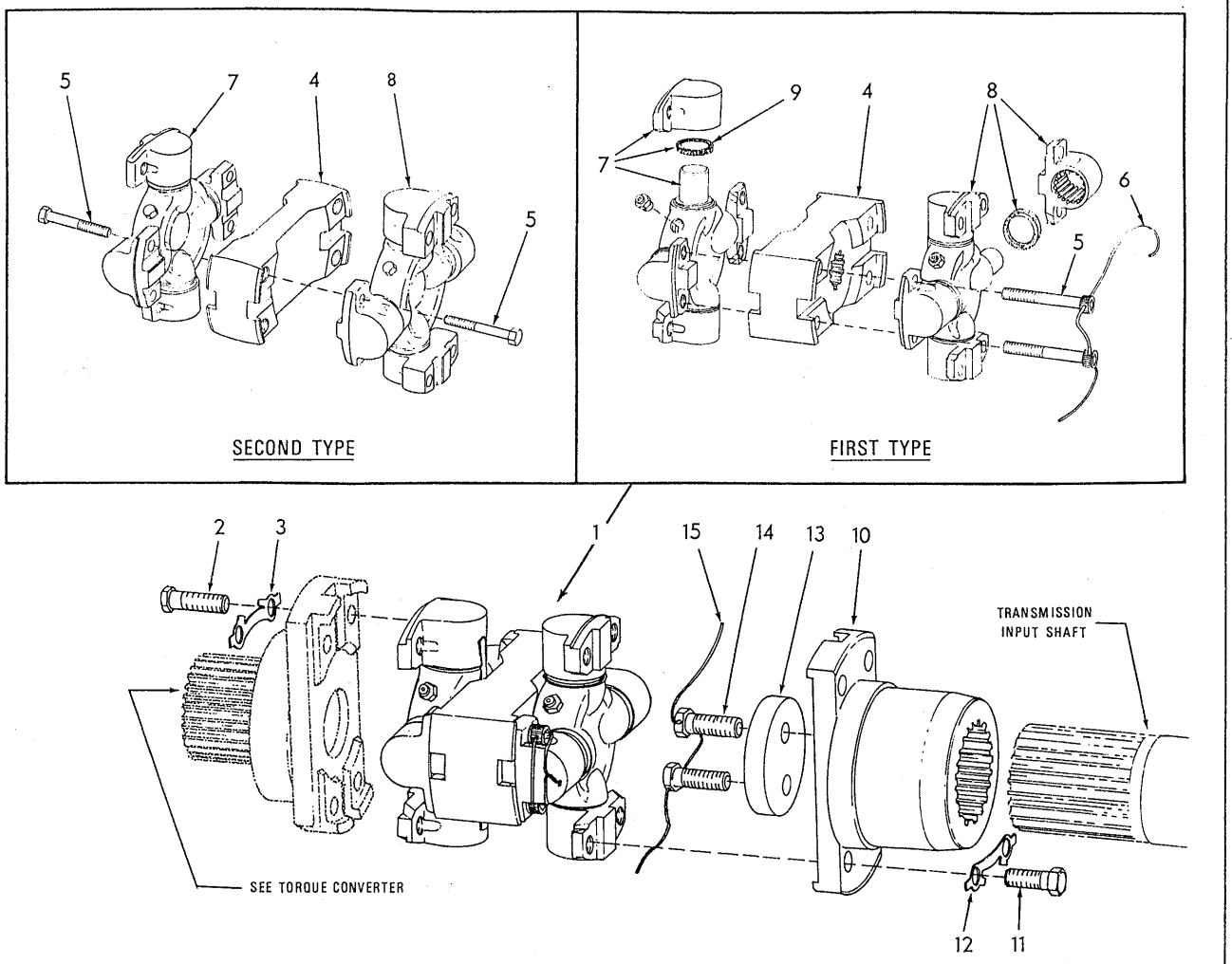

UNIVERSAL JOINT

*Used prior to tractor serial No. 19S12828 excluding 19S12826
**Effective tractor serial No. 19S12828 thru 19S13001 including 19S12826
***Effective tractor serial No. 19S13011 and up

ITEM	PART NO.	QUANITITY *	**	***	DESCRIPTION
1	70627348	1	-	-	JOINT ASSY., universal (Consists of items 4 thru 9)
	70681025	-	1	-	JOINT ASSY., universal (Includes items 4, 5, 7, 8)
	70692672	-	-	1	JOINT ASSY., universal (Includes items 4, 5, 7, 8)
2	70929009	4	4	4	CAPSCREW, drilled-hd., 7/16"NF x 1-1/4"
3	70058741	2	-	-	LOCK, capscrew
4	70629946	1	1	-	COUPLING, center (plain holes)
	70692645	-	-	1	COUPLING, center (tapped holes)

(Continued)

ITEM	PART NO.	QUANITITY *	**	***	DESCRIPTION
5	70629945	4	-	-	CAPSCREW, coupling
	70682573	-	4	-	CAPSCREW, coupling
	70692646	-	-	8	CAPSCREW, coupling
6	70023633	2	-	-	WIRE, locking, 1/16" x 12"
7	70083616	1	-	-	SPIDER ASSY., front (Includes bearings, item 9 and FITTING indented below)(Serviced only as a unit)
	70914687	1	-	-	FITTING, lubricating, straight, 1/4"NF
	70681008	-	1	-	SPIDER ASSY., front (Includes bearings)(Serviced only as a unit)
	70692644	-	-	1	SPIDER ASSY., front (Includes bearings)(Serviced only as a unit)
8	70629943	1	-	-	SPIDER ASSY., rear (Includes bearings, item 9 and FITTING indented below)(Serviced only as a unit)
	70914687	1	-	-	FITTING, lubricating, straight, 1/4"NF
	70681024	-	1	-	SPIDER ASSY., rear (Includes bearings)(Serviced only as a unit)
	70692644	-	-	1	SPIDER ASSY., rear (Includes bearings)(Serviced only as a unit)
9	70084351	8	-	-	WASHER, sealing (cork)
10	70627350	1	1	1	YOKE, rear
11	70058739	4	4	4	CAPSCREW, 7/16"NF x 1-1/16"
12	70058741	2	-	-	LOCK, capscrew
13	70624140	1	1	1	PLATE, yoke retaining
14	70929090	2	2	1	CAPSCREW, drilled-hd., 1/2"NF x 1-1/4"
15	70023633	1	1	1	WIRE, locking, 1/16" x 12"

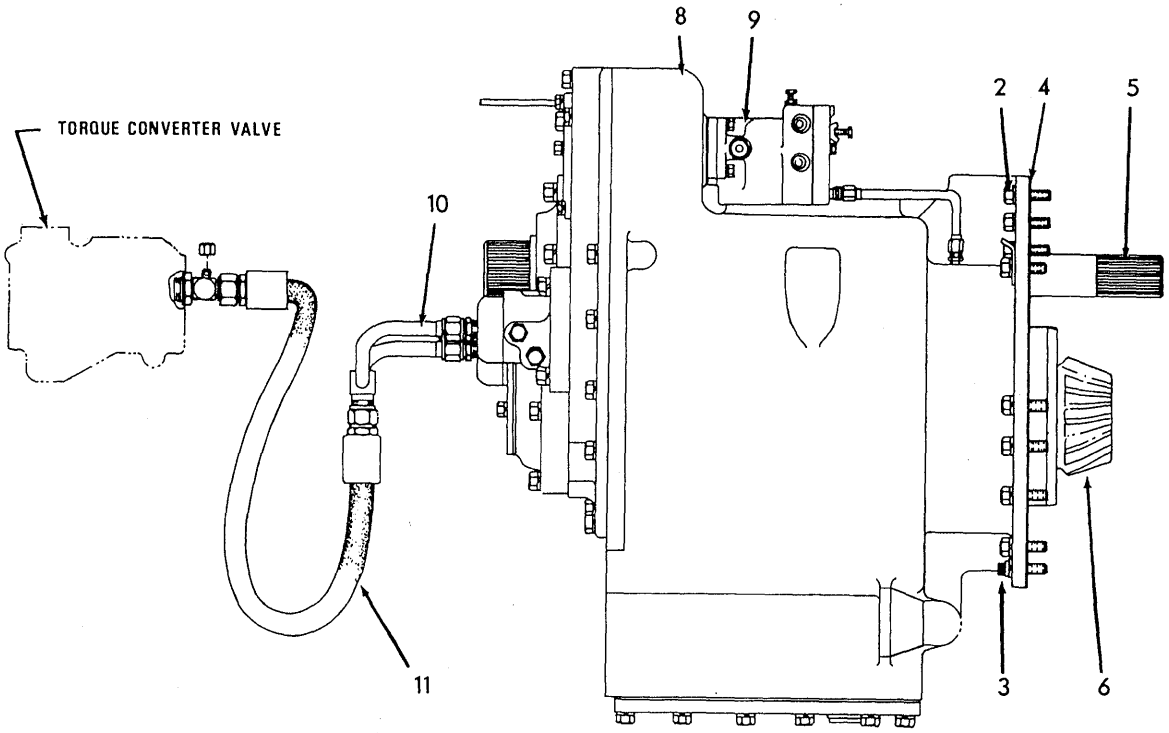

SIDE VIEW

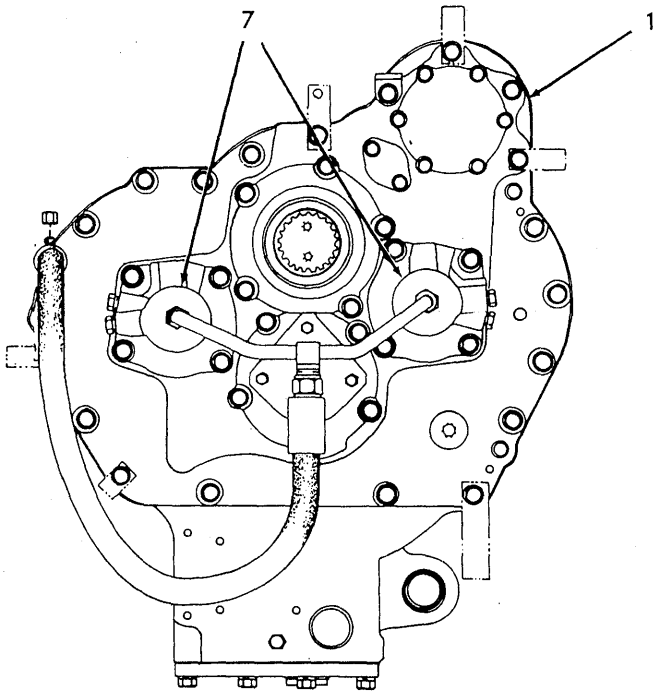

FRONT VIEW

T-73829

TRANSMISSION

ITEM	PART NO.	QTY.	DESCRIPTION
1	70654069	1	TRANSMISSION ASSY. (Includes items 5 thru 8)(Standard) (Tractors prior to unit #12878)
	70684142	1	TRANSMISSION ASSY. (Includes item 5 thru 8)(Standard) (Tractors unit #12878 and up)
	70654070	1	TRANSMISSION ASSY. (Includes items 5 thru 9)(Special)
2	70922726	19	CAPSCREW, 1/2"NF x 1-1/2"
	70912441	19	LOCKWASHER, 1/2"
3	70647563	2	CAPSCREW 12-point, 1/2"NF x 1-1/2"
	70912441	2	LOCKWASHER, 1/2"
4	70654294	1	□GASKET, case to steering clutch housing
5	--------	-	See TRANSMISSION INPUT SHAFT
6	--------	-	See TRANSMISSION BEVEL PINION SHAFT
7	--------	-	See TRANSMISSION CLUTCH SHAFTS
8	--------	-	See TRANSMISSION CASE AND COVERS
9	--------	-	See GROUND SPEED GOVERNOR
10	70659440	1	TUBE ASSY., oil jumper (Includes nuts)
	70919472	2	CONNECTOR, flare type, 5/8" tube, 1/2"NPT male
11	70659441	1	HOSE, oil supply (See HOSE PARTS)
	70658610	1	TEE, oil supply hose (Includes washer, nut and O-RING)
	70921206	1	O-RING, elbow (1-13/16" O.D.)
	70921467	1	CAP, flare type, 1/4" tube (Tractor unit #14886 and up)

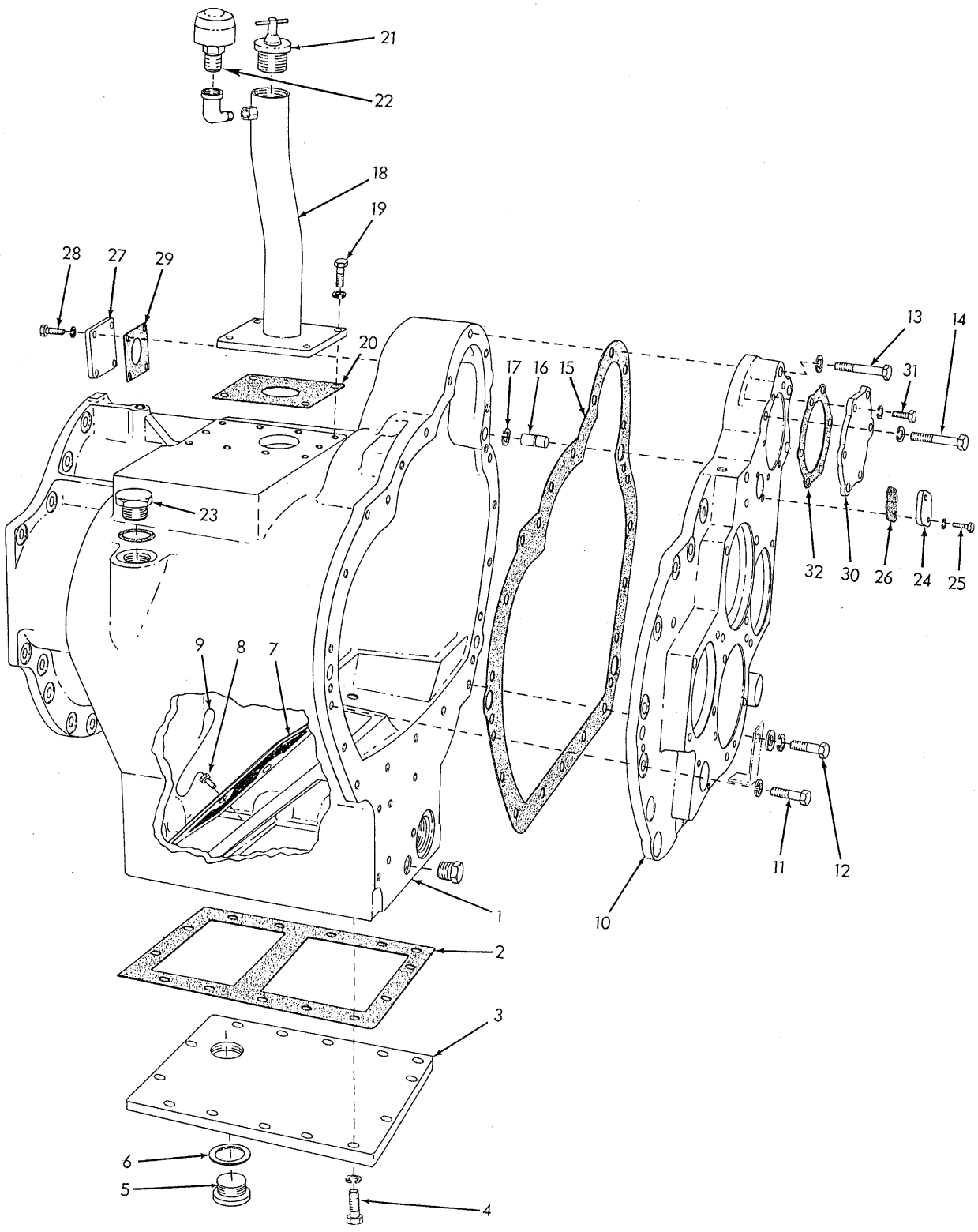

T-75803

TRANSMISSION CASE AND COVERS

TRANSMISSION CASE AND COVERS

ITEM	PART NO.	QTY.	DESCRIPTION
1	70654068	1	CASE, transmission (Tractors prior to unit #14395)
	70696397	1	CASE, transmission (Tractor unit #14395 and up)
	70920525	1	PLUG, pipe, hex-hd., 3/4"NPT (Not used when PUSH-START PUMP is installed)
	70919840	1	PLUG, pipe, hex-hd., 1/4"NPT (Not used when GROUND SPEED GOVERNOR is installed)
2	70642788	1	☐GASKET, bottom cover
3	70642787	1	COVER, bottom
4	70920583	14	CAPSCREW, 1/2"NC x 1-1/2"
	70912441	14	LOCKWASHER, 1/2"
5	70035250	1	PLUG, drain
6	70667252	1	☐GASKET, drain plug
7	70632067	1	SCREEN, oil
8	70928532	2	CAPSCREW, drilled-hd., 3/8"NC x 3/4"
9	70023633	1	WIRE, locking, 1/16" x 12"
10	70653983	1	COVER, front (Tractors prior to unit #14395)
	70696412	1	COVER, front (Tractor unit #14395 and up)
11	70920583	13	CAPSCREW, 1/2"NC x 1-1/2"
12	70920585	3	CAPSCREW, 1/2"NC x 1-3/4"
13	70921598	4	CAPSCREW, 1/2"NC x 3"
14	70925135	1	CAPSCREW, 1/2"NC x 3-1/4"
	70912441	21	LOCKWASHER, 1/2"
	70928188	3	WASHER, plain
15	70654798	1	☐GASKET, front cover
16	70624695	3	PIN, dowel, front cover
17	70623804	3	RING, snap, dowel pin
18	70658654	1	FILLER, oil
19	70921565	4	CAPSCREW, 3/8"NC x 1-1/2"
	70910287	4	LOCKWASHER, 3/8"
20	70666907	1	☐GASKET, oil filler
21	74385253	1	CLOSURE, oil filler
22	70679375	1	BREATHER ASSY. (Serviced only as a unit)
	70919824	1	ELBOW, street, reducing, 90°, 3/4"NPT to 1/2"NPT
23	70921216	1	PLUG, closure (Includes O-RING)
	70921214	1	O-RING, plug (1-3/8" O. D.)
24	70631885	1	COVER, small hole
25	70922763	2	CAPSCREW, 3/8"NC x 1"
	70910287	2	LOCKWASHER, 3/8"
26	70643810	1	☐GASKET, small hole cover
27	70630584	1	COVER, governor mounting hole
28	70921566	4	CAPSCREW, 5/16"NC x 1"
	70910286	4	LOCKWASHER, 5/16"
29	70624706	1	☐GASKET, governor mounting hole cover
30	70643081	1	COVER, large hole
31	70922763	6	CAPSCREW, 3/8"NC x 1"
	70910287	6	LOCKWASHER, 3/8"
32	70643080	1	☐GASKET, large hole cover

Not used on transmission equipped with GROUND SPEED GOVERNOR — Tractors prior to unit #14395

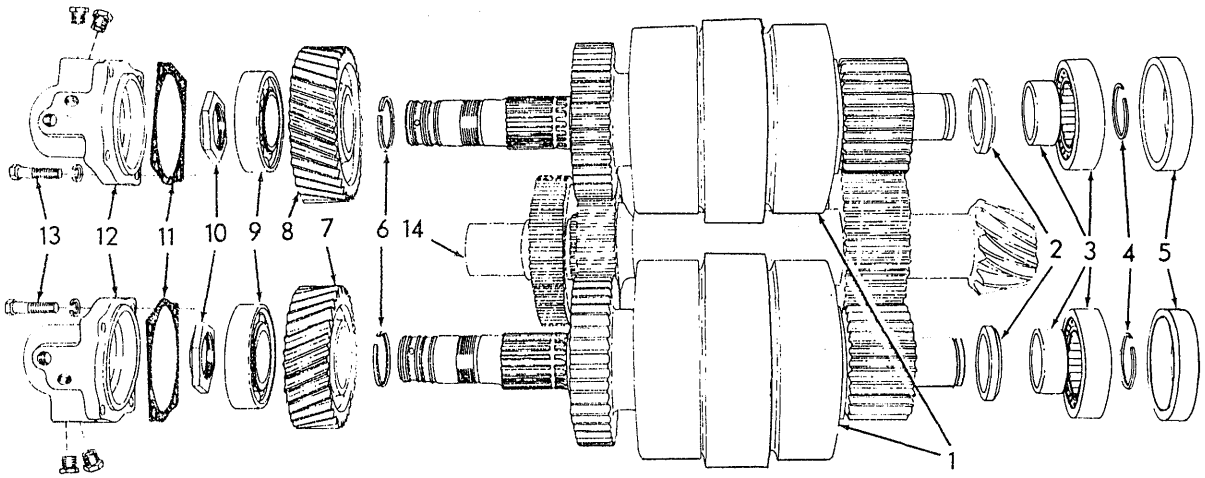

TRANSMISSION CLUTCH SHAFTS

ITEM	PART NO.	QTY.	DESCRIPTION
1	--------	2	CLUTCH AND SHAFT ASSY. (See page 129)
2	70639508	2	SPACER, rear bearing
3	70623963	2	BEARING, roller, rear
4	70050292	2	RING, snap, clutch bearings, rear
5	70632794	2	PLUG, cup, rear bearing (4-3/4" diam.)
6	70623969	2	RING, snap, clutch shaft
7	70639505	1	GEAR, driving, left clutch (33 teeth)
8	70639504	1	GEAR, driving, right clutch (38 teeth)
9	70647972	2	BEARING, ball, front end
10	70639761	2	NUT, clutch shaft
11	70629223	2	□GASKET, oil collector
12	70639502	2	COLLECTOR, oil
	70920333	4	PLUG, pipe, hex-hd., 3/8"NPT
13	70920585	8	CAPSCREW, 1/2"NC x 1-3/4"
	70912441	8	LOCKWASHER, 1/2"
14	--------	-	See TRANSMISSION BEVEL PINION SHAFT

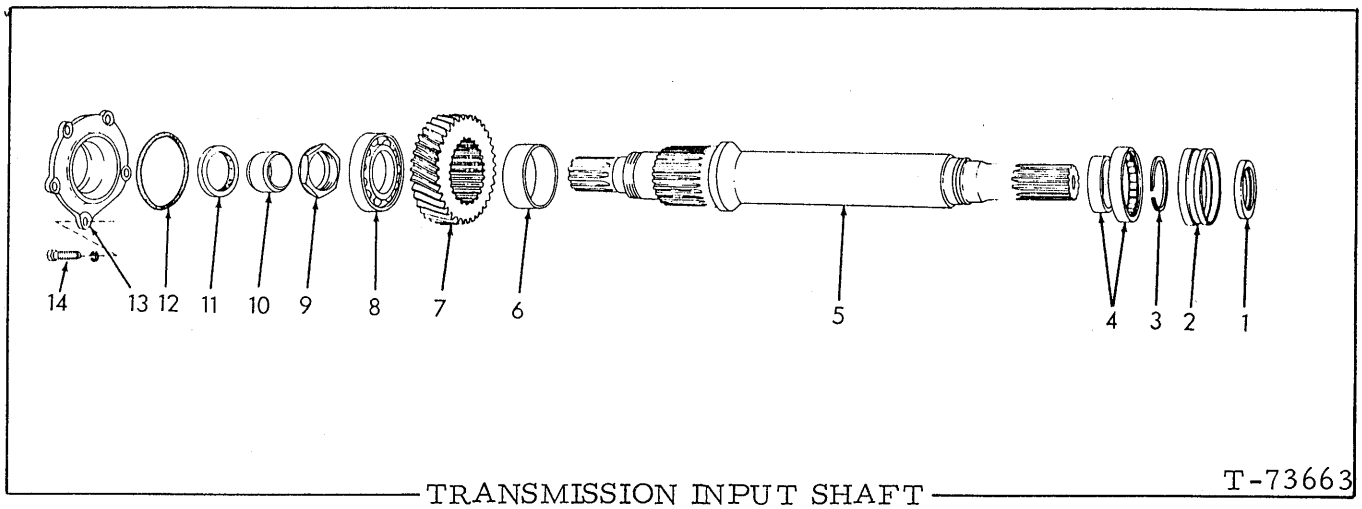

TRANSMISSION INPUT SHAFT — T-73663

ITEM	PART NO.	QTY.	DESCRIPTION
1	70638336	1	□SEAL, oil, rear end
2	70638334	1	RETAINER, rear oil seal
3	70624783	1	RING, snap, shaft
4	70623974	1	BEARING, roller
5	70676213	1	SHAFT (Tractors prior to unit #12878)
	70685535	1	SHAFT (Tractors unit #12878 and up)
6	70624174	1	SPACER, drive gear (Tractors prior to unit #12878)
	70685772	1	SPACER, drive gear (Tractors unit #12878 and up)
7	70623999	1	GEAR, drive (36 teeth)(Tractors prior to unit #12878)
	70685771	1	GEAR, drive (36 teeth)(Tractors unit #12878 and up)
8	70623966	1	BEARING, ball
9	70639762	1	NUT, bearing retaining (Elastic stop)
10	70624139	1	SLEEVE, wear, oil seal
11	70628940	1	□SEAL, oil, front end
12	70923594	1	□O-RING, sealing, retainer
13	70624177	1	RETAINER, front oil seal
14	70920585	5	CAPSCREW, 1/2"NC x 1-3/4"
	70912441	5	LOCKWASHER, 1/2"

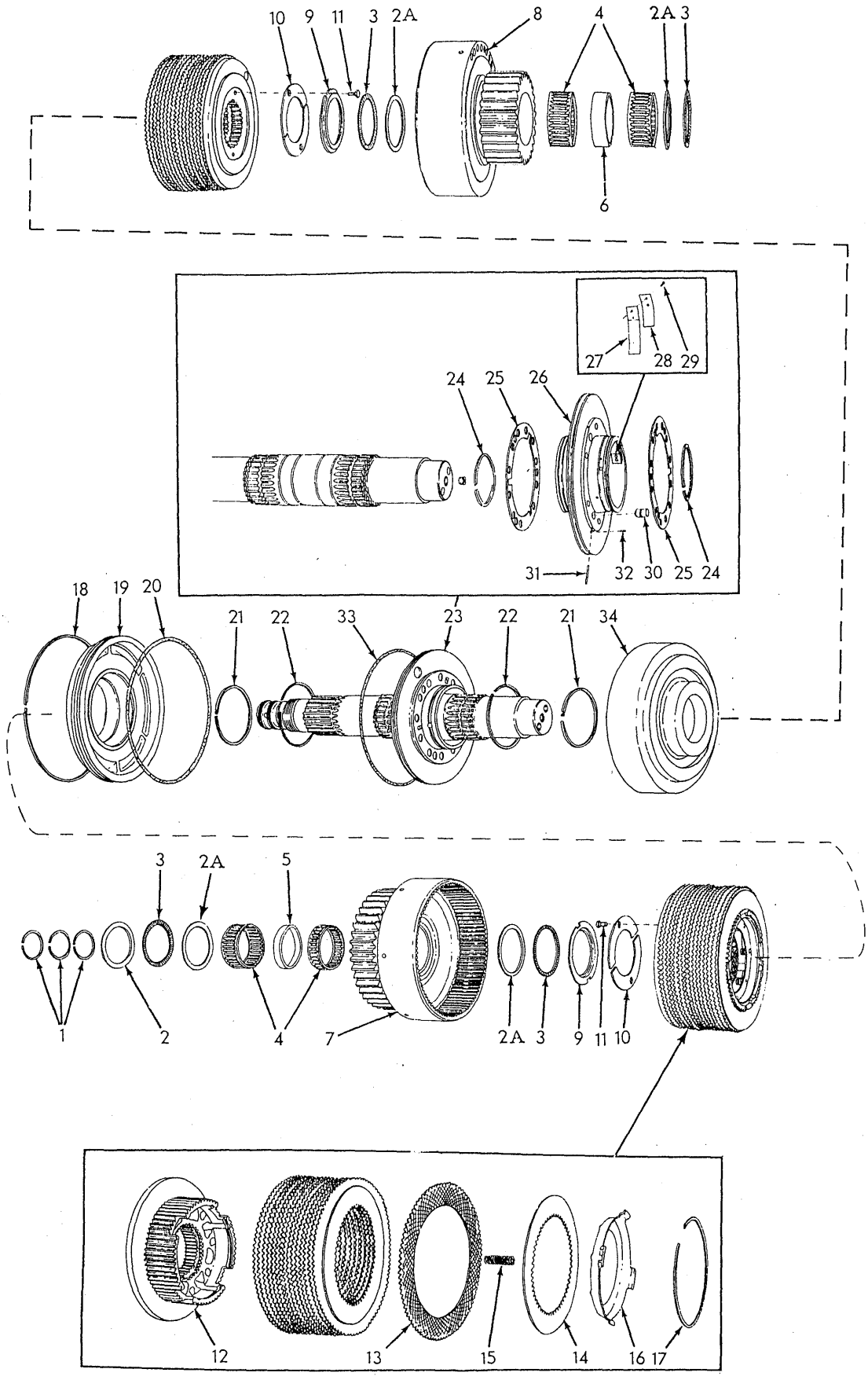

T-73665

CLUTCH AND SHAFT ASSEMBLY

(Revised May 1977)

CLUTCH AND SHAFT ASSEMBLY

USAGE: See page 126

ITEM	PART NO.	QTY.	DESCRIPTION
-	70643561	2	CLUTCH AND SHAFT ASSY. (Consists of items 1 thru 34)
			NOTE: All quantities indicated are for one (1) assy.only
1	70692429	3	RING, shaft sealing, end
2	73037646	5	WASHER (3-15/64" O.D.)(4 less used on second type GEAR AND DRUM items 7 and 8)
2A	70688053	4	WASHER (3-19/64" O.D.)(Effective with second type GEAR AND DRUM items 7 and 8)
3	73037645	4	BEARING, thrust
4	73132220	4	BEARING, roller, clutch gear
5	70639591	1	SPACER, bearing, high speed gear (7/16" wide)
6	70639594	1	SPACER, bearing, low speed gear (13/16" wide)
7	70639622	1	GEAR AND DRUM, high speed (41 teeth)(First type)
	73108960	1	GEAR AND DRUM, high speed (41 teeth)(Second type)
8	70639617	1	GEAR AND DRUM, low speed (26 teeth)(First type)
	73108959	1	GEAR AND DRUM, low speed (26 teeth)(Second type)
9	73037638	2	SPACER, clutch hub
10	70639596	4	RETAINER, clutch hub (half only)
11	73037641	4	CAPSCREW, thin-hd., 5/16"NF x 1/2"
12	70643571	2	HUB, clutch
13	70642113	16	PLATE, friction, outer
14	70642146	8	PLATE, friction, inner (8 additional used on early units)
	70657968	8	PLATE, friction, inner (Flat)(Late units)
15	70189267	16	SPRING, clutch hub
16	70643572	2	RETAINER, clutch hub spring
17	70639572	2	RING, snap, spring retainer
18	70639584	1	RING, snap, actuating piston housing
19	70639597	1	PISTON, clutch actuating
20	70639567	1	☐SEAL, actuating piston
21	73037631	2	RING, shaft sealing, center
22	70639585	2	RING, carrier sealing
23	70642968	1	SHAFT ASSY. (Includes items 24 thru 32)
	70907859	1	PLUG, pipe, hex-socket, 1/4"NPT
24	70052175	2	RING, snap, carrier retaining
25	70639609	2	PLATE, valve
26	70642148	1	CARRIER ASSY. (Includes items 27 thru 29)
27	70642329	2	GUARD, flapper valve
28	70639579	2	VALVE, flapper
29	70639578	6	RIVET, flapper valve guard
30	70639598	6	PISTON, valve actuating
31	73037768	6	PIN, piston stop
32	70922745	6	PIN, retaining, piston stop pin
33	70639576	1	☐O-RING, carrier
34	70639630	1	HOUSING, piston

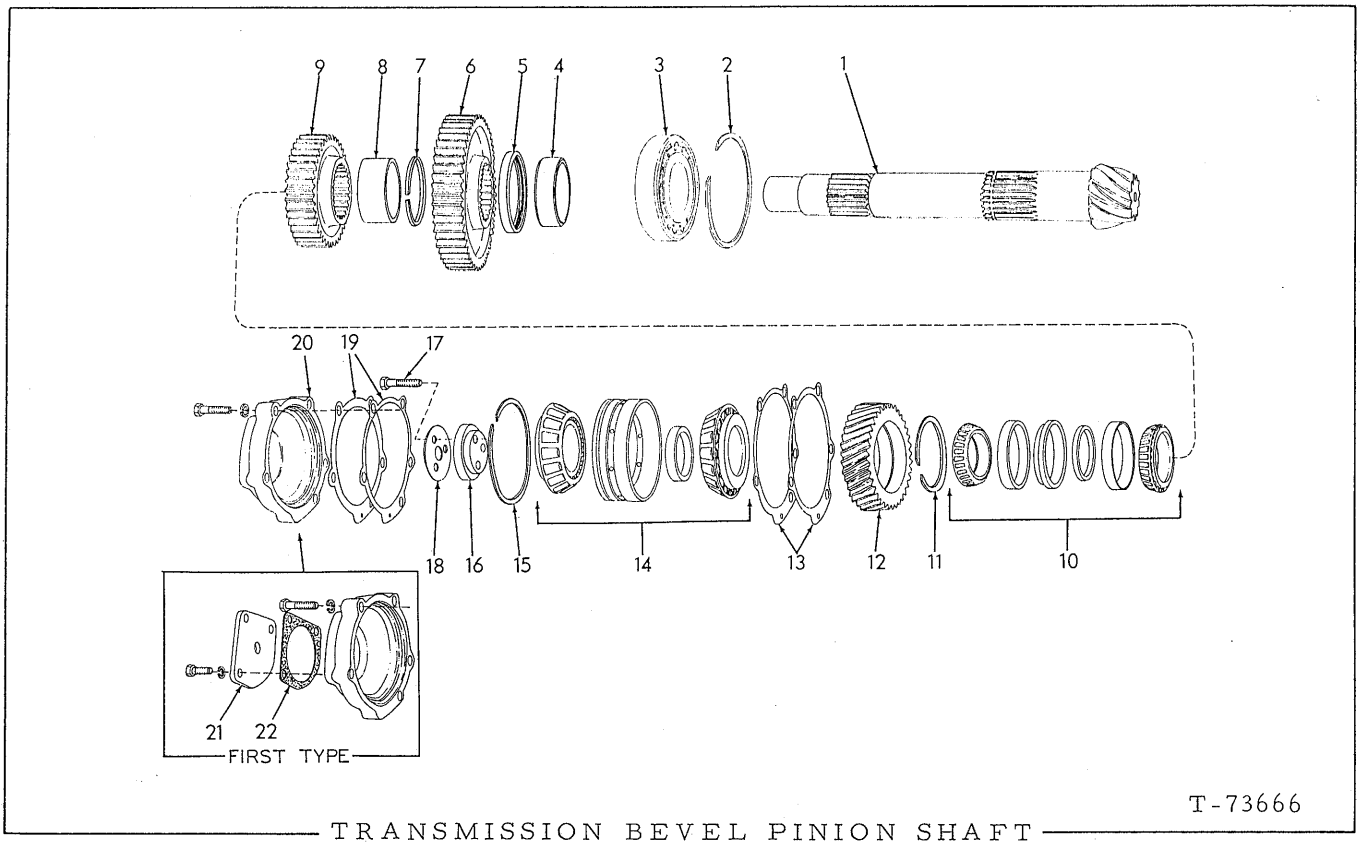

TRANSMISSION BEVEL PINION SHAFT

ITEM	PART NO.	QTY.	DESCRIPTION
1	70653813	1	PINION, bevel (12 teeth)
2	70638335	1	RING, snap, bearing retaining
3	70639655	1	BEARING, roller, rear end
4	70624137	1	SPACER, low speed gear
5	70623971	1	□SEAL, oil
6	70624128	1	GEAR, low speed (54 teeth)
7	70623973	1	RING, snap, gear retaining
8	70624130	1	SPACER, high speed gear
9	70624142	1	GEAR, high speed (39 teeth)
10	70650724	1	BEARING, roller (Consists of 2 roller assemblies, 2 cups and 2 spacers. Serviced only as a unit)
11	70634670	1	RING, snap, idling gear
12	70623968	1	GEAR, idling (36 teeth)
13	70623953	3	SHIM, pinion adjustment (.005" thick) — Use as required
	70623954	7	SHIM, pinion adjustment (.007" thick) — Use as required
	70623955	10	SHIM, pinion adjustment (.010" thick) — Use as required

(Continued)

TRANSMISSION BEVEL PINION SHAFT (Continued)

ITEM	PART NO.	QTY.	DESCRIPTION	
14	70082343	1	BEARING, roller, front end (Consists of 2 roller assemblies, 1 cup and 1 spacer. Serviced only as a unit)	
15	70048705	1	RING, snap, front bearing	
16	70632066	1	WASHER, end (For units with PUSH-START PUMP)	
	70643028	1	WASHER, end (For units without PUSH-START PUMP)	
17	70927522	3	CAPSCREW, 1/2"NF x 1-3/4"	
18	70632166	1	PLATE, capscrew locking	
19	70623956	4	SHIM, bearing retainer (.005" thick)	Use as required
	70623957	3	SHIM, bearing retainer (.007" thick)	
20	70667400	1	RETAINER, front bearing (Standard)	
	70623959	1	RETAINER, front bearing (For service transmission assembly; also for units with PUSH-START PUMP or GROUND SPEED GOVERNOR)	
	70924864	5	CAPSCREW, 1/2"NC x 2-1/4"	
	70912441	5	LOCKWASHER, 1/2"	
21	70643027	1	COVER, front bearing retainer	For service transmission ass'y and units with GROUND SPEED GOVERNOR; not used on units with PUSH-START PUMP
	70922763	3	CAPSCREW, 3/8"NC x 1"	
	70910287	3	LOCKWASHER, 3/8"	
22	70632065	1	GASKET, cover	

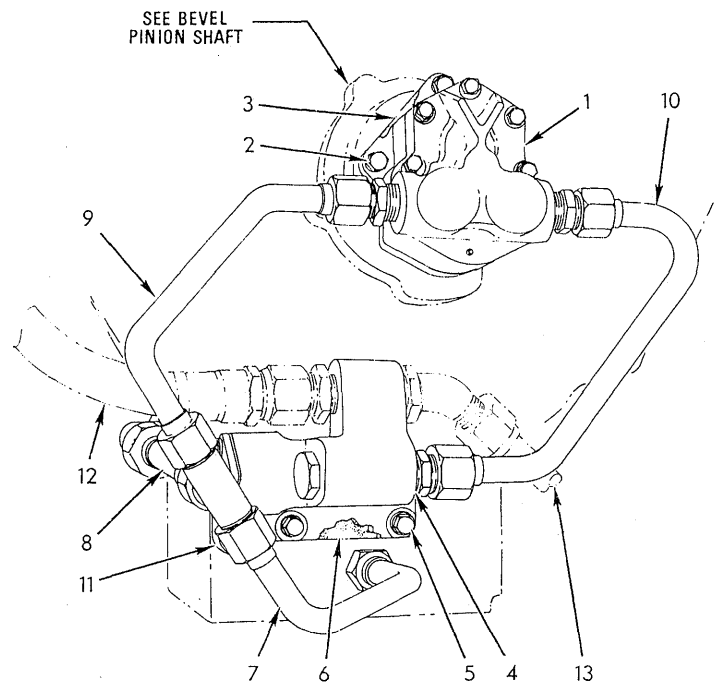

T-75874

PUSH-START PIPING

USAGE: Special equipment on tractors serial No. 19S12837 and up

ITEM	PART NO.	QTY.	DESCRIPTION
1	------	1	PUMP ASSY., (See page 134)
2	70919224	3	CAPSCREW, 3/8"NC x 1-1/8"
	70904206	3	LOCKWASHER, 3/8"
3	70632065	1	GASKET, pump mounting
4	------	1	VALVE ASSY., diverting (See page 135)
	70920525	1	PLUG, pipe, hex-hd., 3/4"NC x 2-1/2"
5	70912069	6	CAPSCREW, 3/8"NC x 2-1/2"
	70904206	6	LOCKWASHER, 3/8"
6	70627347	1	GASKET, diverting valve
7	70653843	1	TUBE ASSY., suction, tee to sump (Includes nuts)
	70919342	1	CONNECTOR, flare type, 3/4" tube, 3/4"NPT male
8	70653840	1	TUBE ASSY., suction tee to spacing plate (Includes nuts)
	70921203	1	ELBOW, adjustable, 90°, flare type, 3/4" tube, 1-1//6"NF (Includes washer, nut and O-RING)
	70921206	1	O-RING, elbow (1-1/8"O. D.)
	70919520	1	TEE, union, flare type, 3/4" tube
9	70653841	1	TUBE ASSEMBLY, suction, pump to tee (Includes nuts)
	70919342	2	CONNECTOR, flare type, 3/4" tube, 3/4"NPT male
10	70653839	1	TUBE ASSY., discharge (Includes nuts)
	70919342	1	CONNECTOR, flare type, 3/4" tube, 3/4"NPT male
11	70642891	1	PLATE, valve spacing
12	------	1	HOSE (See SPEED CONTROL PIPING)
13	------	1	TUBE (See TRANSMISSION OIL PUMP AND FILTER LINES)

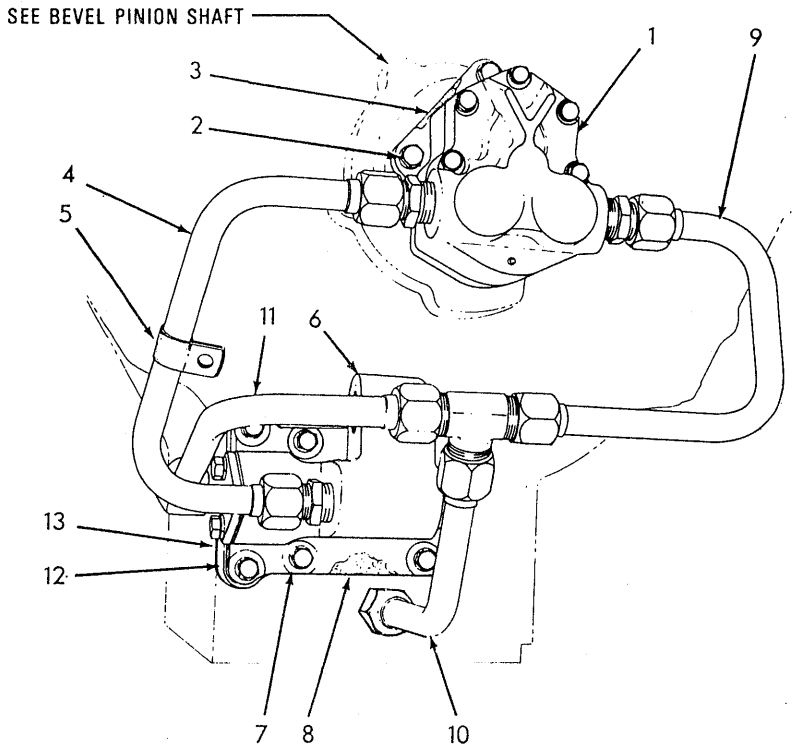

T-39397

PUSH-START PIPING

USAGE: Special Equipment on tractors prior to serial No. 19S12837

ITEM	PART NO.	QTY.	DESCRIPTION
1	-------	1	PUMP ASSY., oil (See page 134)
2	70044249	3	CAPSCREW, 3/8"NC x 1-1/8"
	70904206	3	LOCKWASHER, 3/8"
3	70632065	1	GASKET, pump mounting
4	70642889	1	TUBE ASSY., discharge (Includes nuts)
	70919342	2	CONNECTOR, flare type, 3/4" tube, 3/4"NPT male
5	70094467	1	CLIP, discharge tube
6	-------	1	VALVE ASSY., diverting (See page 135)
	70920525	1	PLUG, pipe, hex-hd., 3/4"NPT
7	70912069	6	CAPSCREW, 3/8"NC x 2-1/2"
	70904206	6	LOCKWASHER, 3/8"
8	70627347	1	GASKET, diverting valve
9	70642887	1	TUBE ASSY., suction, pump to tee (Includes nuts)
	70919342	1	CONNECTOR, flare type, 3/4" tube, 3/4"NPT male
10	70642886	1	TUBE ASSY., suction, tee to sump (Includes nuts)
	70919342	1	CONNECTOR, flare type, 3/4" tube, 3/4"NPT male
	70919520	1	TEE, union, flare type, 3/4" tube
11	70642888	1	TUBE ASSY., suction, tee to spacing plate (Includes nuts)
	70921203	1	ELBOW, adjustable, 90°, flare type, 3/4" tube, 1-1/16"NF (Includes washer, nut and O-RING 70921206)
12	70642891	1	PLATE, valve spacing
13	70627347	1	GASKET, valve spacing plate (Used prior to tractor #6151)

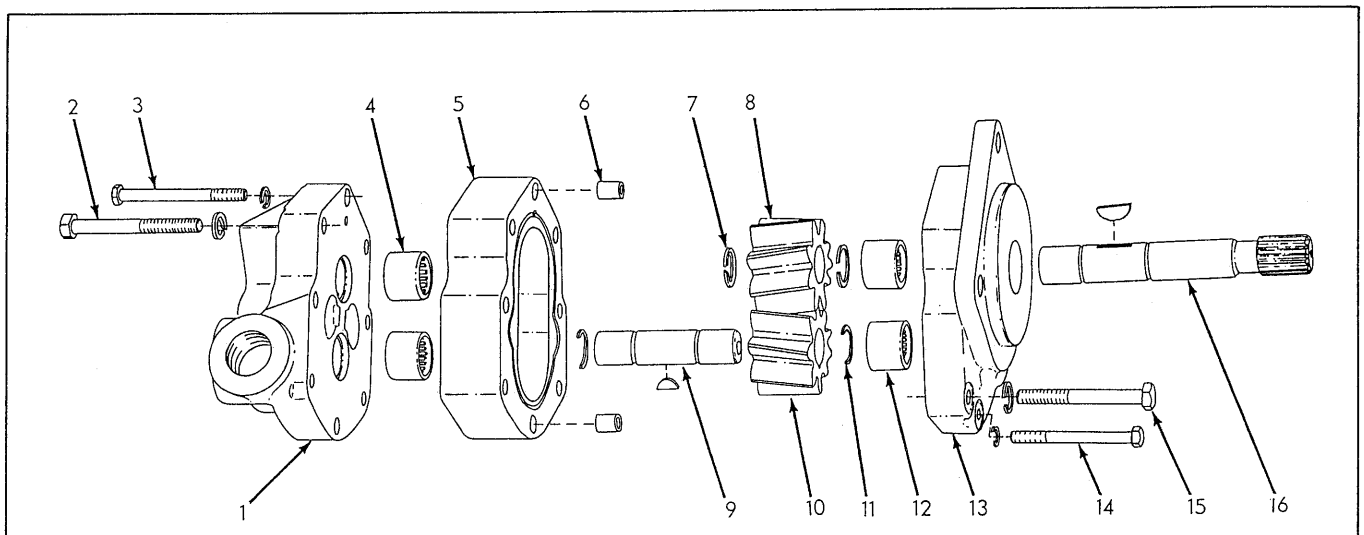

OIL PUMP ASSEMBLY

USAGE: See pages 132 and 133

ITEM	PART NO.	QTY.	DESCRIPTION
-	70630295	1	PUMP ASSY., oil (Consists of items 1 thru 16)
1	70641854	1	COVER ASSY. (Includes item 4)
2	70086546	4	CAPSCREW, 5/16"NC x 2-3/4"
	70904205	4	LOCKWASHER, 5/16"
3	70641564	1	CAPSCREW, 1/4"NC x 2-3/4"
	70904204	1	LOCKWASHER, 1/4"
4	70208253	2	BEARING, needle, rear end
5	73038935	1	PLATE, gear
6	73038937	2	PIN, dowel (hollow)
7	73038933	2	RING, snap, drive shaft
8	73038938	1	GEAR, drive shaft
9	70641839	1	SHAFT, idler gear
	70921396	1	KEY, woodruff, 1/8" x 3/8"
10	70641841	1	GEAR, idler
11	73039013	2	RING, snap, idler shaft
12	208253	2	BEARING, needle, drive end
13	70641855	1	BODY ASSY. (Includes item 12)
14	70611975	1	CAPSCREW, 1/4"NC x 2-1/2"
	70904204	1	LOCKWASHER, 1/4"
15	70033751	2	CAPSCREW, 5/16"NC x 2-1/2"
	70904205	2	LOCKWASHER, 5/16"
16	70641840	1	SHAFT, drive
	70905122	1	KEY, woodruff, 1/8" x 3/4"

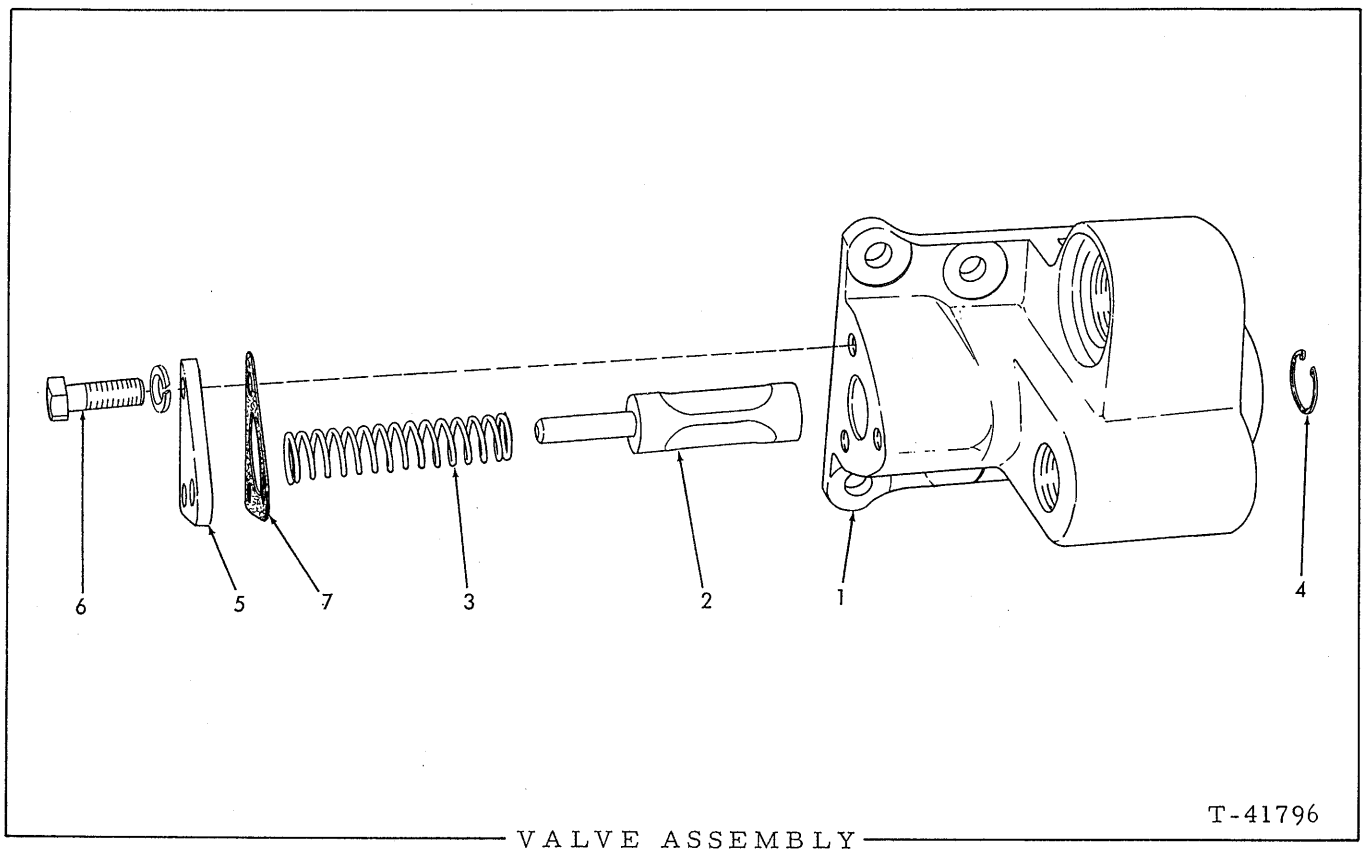

VALVE ASSEMBLY

USAGE: See pages 132 and 133

ITEM	PART NO.	QTY.	DESCRIPTION
-	70628521	1	VALVE ASSY., diverter (Consists of items 1 thru 7)
1	70628065	1	HOUSING
2	70629391	1	SPOOL
3	70035337	1	SPRING
4	70075354	1	RING, snap
5	70629393	1	PLATE, cover
6	70035439	3	CAPSCREW, 3/8"NC x 1"
	70904206	3	LOCKWASHER, 3/8"
7	70629392	1	GASKET, cover plate

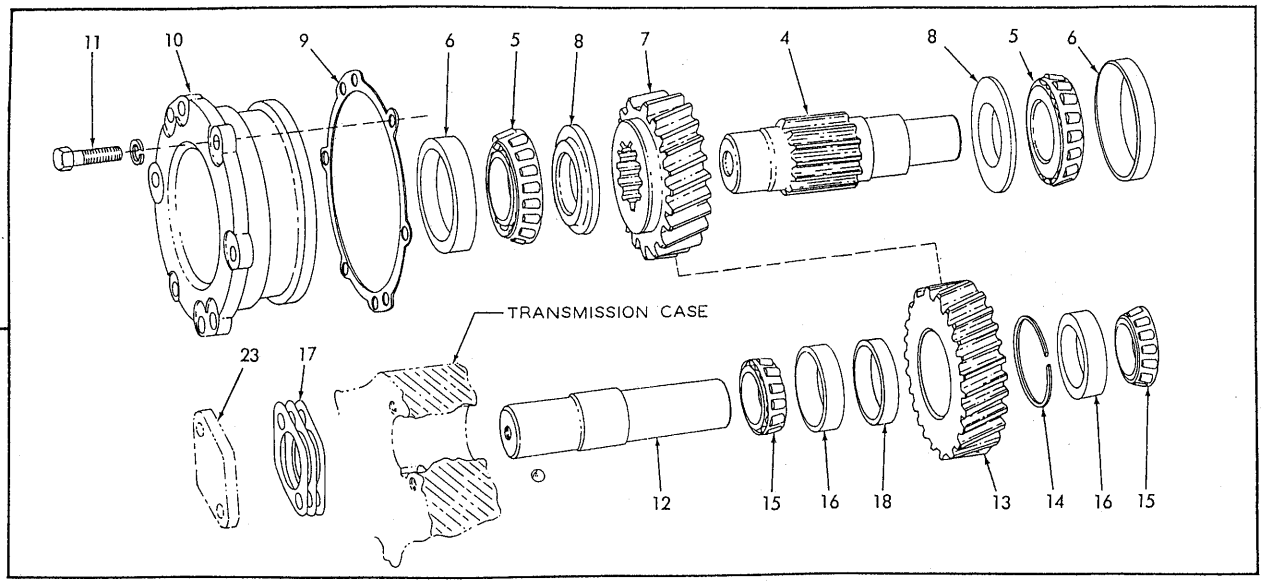
11
10
9
6
5
8
7
4
8
5
6
TRANSMISSION CASE
23
17
12
15
16
18
13
14
16
15

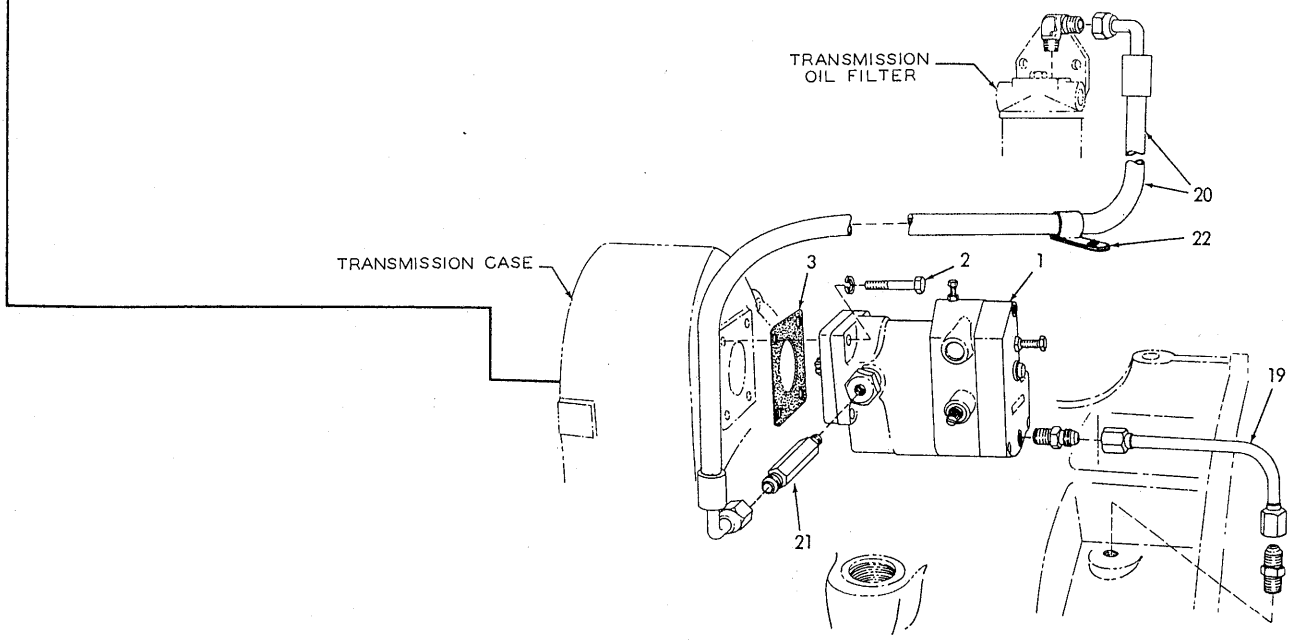
TRANSMISSION
OIL FILTER
20
22
TRANSMISSION CASE
3
2
1
19
21

T-73667

GROUND SPEED GOVERNOR

USAGE: Special equipment

ITEM	PART NO.	QTY.	DESCRIPTION
1	------	1	GOVERNOR ASSY. (See page 139)
2	70046321	4	CAPSCREW, 5/16"NC x 1-1/2"
	70904205	4	LOCKWASHER, 5/16"
3	70624706	1	GASKET, governor mounting
4	70628440	1	SHAFT, governor drive
5	70628442	2	CONE ASSY., drive shaft bearing
6	70209942	2	CUP, drive shaft bearing
7	70628039	1	GEAR, drive (20 teeth)
8	70628443	2	SPACER, drive shaft bearing
9	70623989	5	SHIM, adjustment, drive shaft bearing (.005" thick) — Use as Required
	70623997	5	SHIM, adjustment, drive shaft bearing (.007" thick) — Use as Required
	70623995	5	SHIM, adjustment, drive shaft bearing (.010" thick) — Use as Required
10	70628441	1	RETAINER, drive shaft bearing
11	70044249	6	CAPSCREW, 3/8"NC x 1-1/8"
	70904206	6	LOCKWASHER, 3/8"
12	70628768	1	SHAFT, idler gear
	70905359	1	BALL, steel, 5/16" diam.
13	70628038	1	GEAR, idler (21 teeth)
14	70068173	1	RING, snap, idler gear
15	70336917	2	CONE ASSY., idler gear shaft bearing
16	70336916	2	CUP, idler gear shaft bearing
17	70631888	2	SHIM, adjustment, idler gear shaft bearing (.005" thick) — Use as req'd
	70631887	2	SHIM, adjustment, idler gear shaft bearing (.007" thick) — Use as req'd
	70631886	2	SHIM, adjustment, idler gear shaft bearing (.010" thick) — Use as req'd
18	70628799	1	SPACER, bearing
19	70629312	1	TUBE ASSY., governor to transmission case (Includes nuts)
	70919062	2	CONNECTOR, flare type, 3/8" tube, 1/4"NPT male
20	70665931	1	HOSE, oil supply (See HOSE PARTS)
21	70641314	1	CONNECTOR, flare type, 3/8" tube, 1/8"NPT male
	70919135	1	ELBOW, flare type, 90°, 3/8" tube, 1/4"NPT male
22	70621304	1	CLIP, hose supporting
23	------	-	COVER, idler gear shaft hole (See TRANSMISSION CASE AND COVERS)

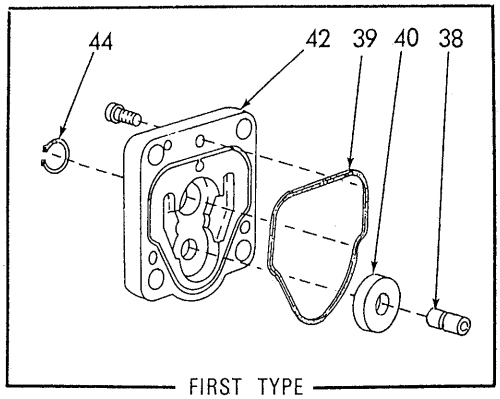

FIRST TYPE

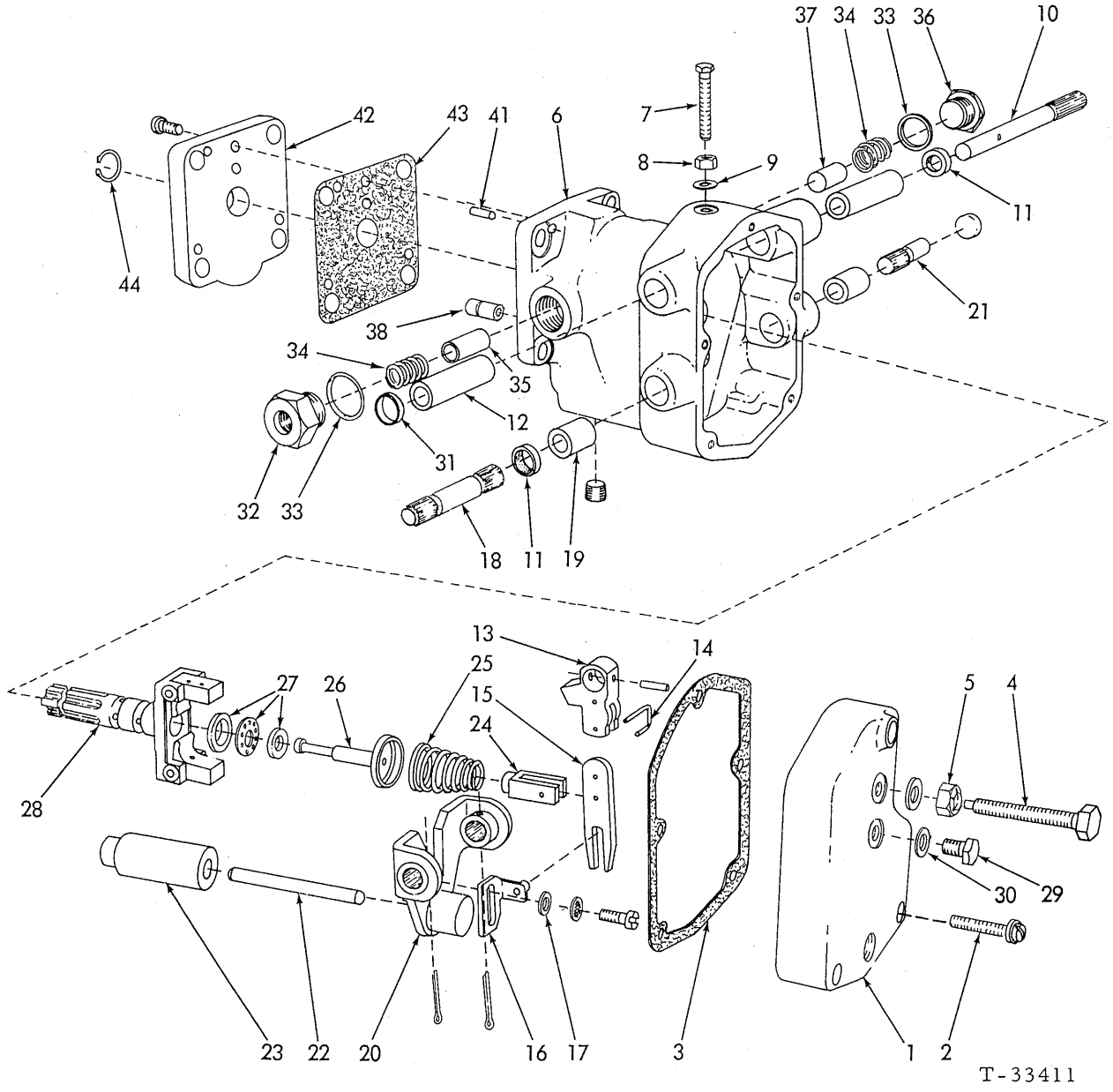

GOVERNOR ASSEMBLY

GOVERNOR ASSEMBLY

USAGE: See page 137

* First type
** Second type

ITEM	PART NO.	QTY. *	QTY. **	DESCRIPTION
-	70638088	1	1	GOVERNOR ASSY. (Consists of items 1 thru 43)
1	70628401	1	-	COVER
	70684701	-	1	COVER
2	70638236	3	3	SCREW ASSEMBLY (Includes lockwasher)
3	70628399	1	1	GASKET, cover to case
4	70629890	1	1	SCREW, low speed adjustment
5	70628378	1	-	NUT, wing, 1/4"NF
	70684699	-	1	NUT, 1/4"NF
	70628402	-	1	WASHER, plain
6	70629909	1	1	CASE ASSEMBLY (Includes items 12, 19 and 38)
	70910231	1	1	PLUG, pipe, hex-socket, 1/8"NPT
7	70628382	1	-	CAPSCREW, high speed adjustment
	74052052	-	1	CAPSCREW, high speed adjustment
8	70628381	1	1	NUT, hex, #10-32NF
9	70631106	1	1	WASHER, high speed adjustment capscrew
10	70629887	1	1	SHAFT, speed control
11	70629898	2	2	SEAL, oil
12	70629900	2	2	BEARING, plain, speed control shaft
13	70629881	1	1	LEVER, speed control
	70919180	1	1	PIN, spring, 1/8" x 5/8"
14	70629879	1	1	PIN, speed control lever
15	70629882	1	1	LEVER, floating
16	70629895	1	1	BRACKET ASSEMBLY, speed droop adjustment (Includes pin)
	70901781	1	-	SCREW, machine, fil-hd., #10-32NF x 1/2"
	70904371	-	1	SCREW, machine, fil-hd., #10-32NF x 3/8"
	74050778	-	1	LOCKWASHER, int-tooth, #10
	70909055	1	-	LOCKWASHER, int-tooth, #10
17	70629901	1	1	WASHER, plain
18	70629886	1	1	SHAFT, terminal
19	70629899	2	2	BEARING, plain, terminal shaft
20	70629894	1	1	LEVER, terminal shaft
	70900801	2	2	PIN, cotter, 3/32" x 3/4"
21	70629885	1	1	SHAFT, stub, terminal shaft lever
22	70629907	1	1	PIN, power piston

(Continued)

ITEM	PART NO.	QTY. *	QTY. **	DESCRIPTION
23	70629884	1	1	PISTON, power
24	70629897	1	1	FORK, ballhead spring
25	70638232	1	1	SPRING, ballhead
26	70629888	1	1	PLUNGER, ballhead
27	70628384	1	1	BEARING, thrust, ballhead plunger
28	70634427	1	1	BALLHEAD ASSEMBLY (Includes weights. Serviced only as a balanced unit)
29	70628403	1	1	CAPSCREW, vent
30	70628402	1	1	WASHER, vent capscrew
31	70629908	2	2	PLUG, cup governor case
32	70629892	1	1	PLUG, oil inlet
33	70629902	2	2	WASHER, oil inlet plug
34	70629904	2	-	SPRING, oil inlet sleeve
35	70629891	1	-	SLEEVE, oil inlet
36	70629893	1	1	PLUG, governor case
37	70629889	1	-	PLUG, oil passage
38	--------	1	1	STUD, locating, base spacer (Not serviced)
39	70628392	1	-	RING, sealing, governor base
40	70628391	1	-	SPACER, governor base
41	70629906	2	-	PIN, dowel (Standard size)
	70684702	-	2	PIN, dowel (Standard size)
	70630578	2	2	PIN, dowel (Oversize)
42	--------	1	-	BASE (Order 1-BASE 70684700, 2-PIN 70684702 and 1-GASKET 70684703)
	70684700	-	1	BASE
	70901223	3	3	SCREW, machine, fil-hd., #12-24NC x 1/2"
43	70684703	-	1	GASKET
44	70628389	1	1	RING, snap, ballhead

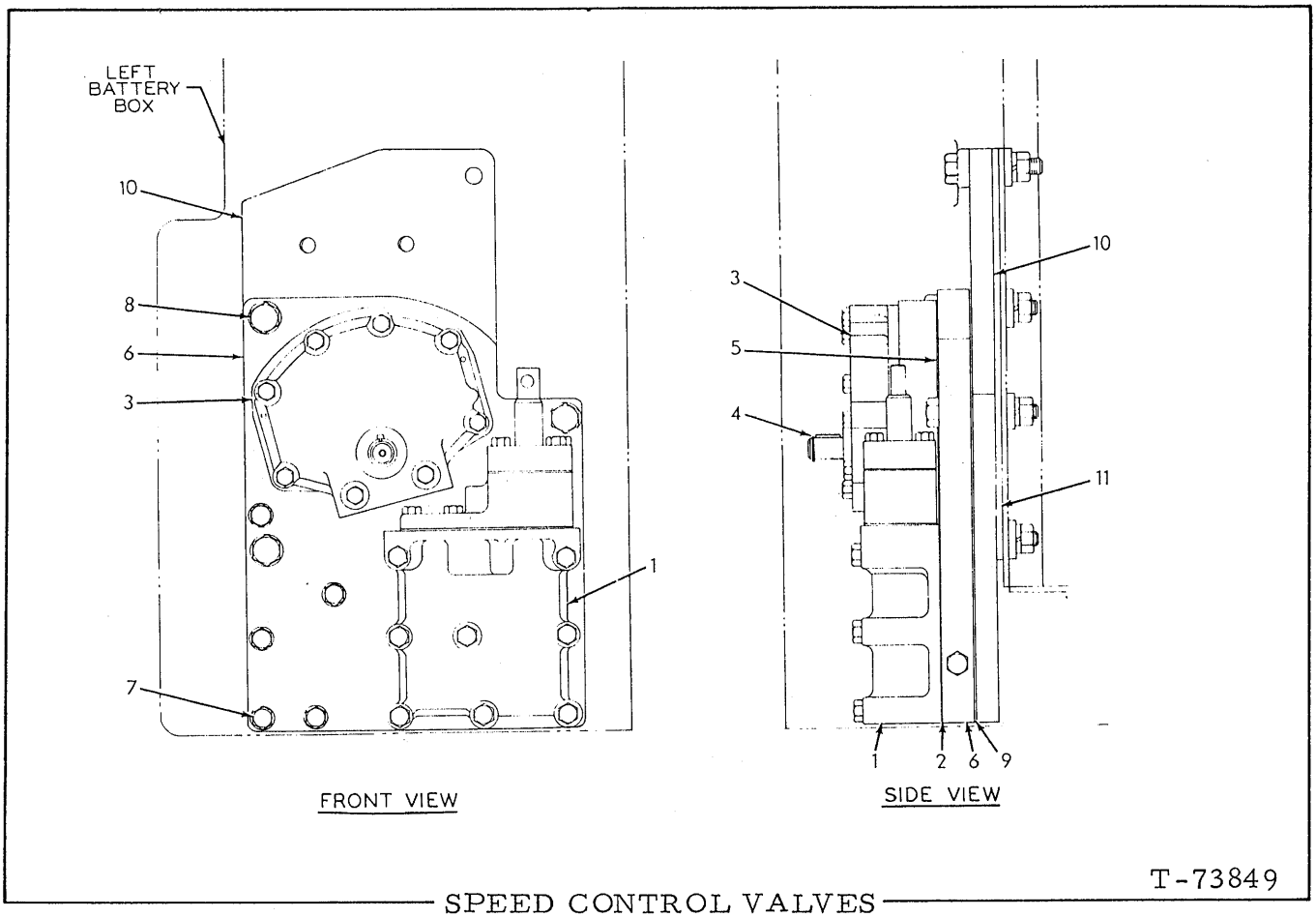

SPEED CONTROL VALVES

ITEM	PART NO.	QTY.	DESCRIPTION
1	--------	1	VALVE ASSY., clutch modulating (See page 143)
	70922849	8	CAPSCREW, 3/8"NC x 4"
	70911115	8	WASHER, plain, SAE std., 3/8"
2	70639903	1	GASKET, modulating valve
3	--------	1	VALVE ASSY., speed control (See page 144)
	70905123	1	KEY, #9 woodruff, 3/16" x 3/4"
	70923941	8	CAPSCREW, 5/16"NC x 4"
4	70639946	1	RING, snap, speed control valve
5	70639882	1	GASKET, speed control valve
6	70639642	1	PLATE, manifold (Tractors prior to unit #14052)
	70696985	1	PLATE, manifold (Tractor unit #14052 and up)
	70651036	1	PLUG, pipe, hex-hd., 1/4"NPT (Tractors prior to unit #14052)
	70901652	1	PLUG, pipe, 1/4"NPT (Tractor unit #14052 and up)
7	70922287	5	CAPSCREW, 3/8"NC x 1-3/4"
	70911115	5	WASHER, plain, SAE std., 3/8"
8	70921598	3	CAPSCREW, 1/2"NC x 3"
	70677008	3	WASHER, plain
	70912441	3	LOCKWASHER, 1/2"
	70911028	3	NUT, 1/2"NC
9	70639950	1	GASKET, manifold plate
10	70639641	1	PLATE, mounting, manifold
	70912267	1	SCREW, hex-socket-hd., 3/8"NC x 1"
11	70662928	1	PLATE, spacing (Tractors prior to unit #13648)
	70677008	4	WASHER, spacing (Tractor unit #13648 and up)

(Revised April 1980)

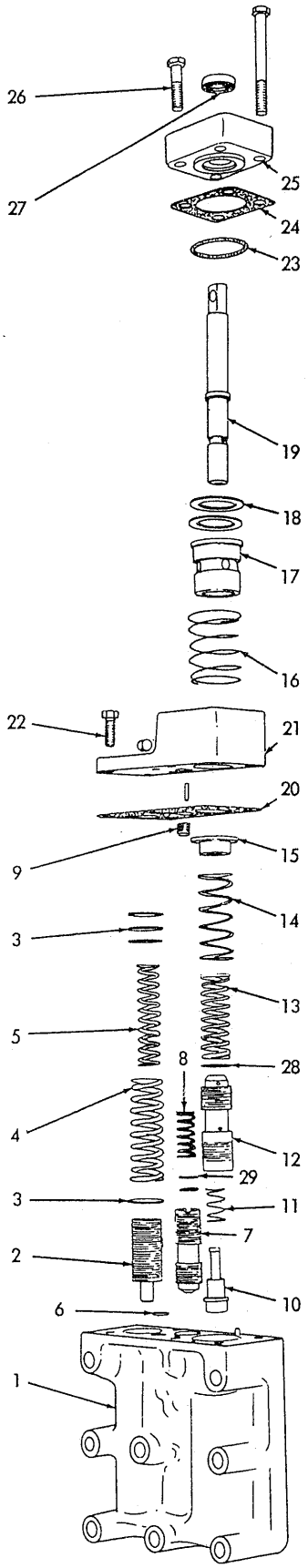

MODULATING VALVE ASSEMBLY

T-41806

MODULATING VALVE ASSEMBLY

USAGE: See page 141

ITEM	PART NO.	QTY.	DESCRIPTION
-	70639614	1	VALVE ASSY. (Tractors prior to unit #14052) } Each consists of items 1 thru 29
-	70696986	1	VALVE ASSY. (Tractor unit # 14052) } Each consists of items 1 thru 29
1	70639970	1	BODY
2	70639920	1	VALVE, pressure relief (Tractors prior to unit #14052)
	70676091	1	VALVE, pressure relief (Tractor unit #14052 and up)
3	73037730	3	SHIM, transmission clutch relief valve (1 additional used prior to tractor unit #14052)
4	70639947	1	SPRING, transmission clutch relief valve (outer)
5	70639948	1	SPRING, transmission clutch relief valve (inner)
6	70639939	1	FILTER, oil
7	70639933	1	PISTON, flow sensing
8	70639949	1	SPRING, flow sensing piston
9	70655636	1	PLUG, orifice
10	70640121	1	PISTON, engine clutch regulating valve
11	70639969	1	SPRING, regulating valve piston
12	70639749	1	VALVE, pressure regulating, engine clutch
13	70644268	1	SPRING, engine clutch regulating valve
14	70640205	1	SPRING, operating plunger piston
15	70639921	1	PISTON, operating plunger
16	70640206	1	SPRING, variable stop sleeve
17	70639929	1	SLEEVE, variable stop
18	70639937	2	SHIM, variable stop sleeve (Use as required)
19	70639763	1	PLUNGER, operating
20	70639638	1	GASKET, lower cover
21	70639907	1	COVER, lower
	70910231	1	PLUG, pipe, 1/8"NPT
	70918547	2	PIN, spring, 1/8" x 1/2"
22	70927373	3	CAPSCREW, 5/16"NC x 7/8"
23	70186266	1	O-RING, upper cover
24	70639924	1	GASKET, upper cover
25	70639639	1	COVER, upper
	70931192	3	CAPSCREW, 5/16"NC x 3"
26	70920660	1	CAPSCREW, 5/16"NC x 1-1/2"
27	70640146	1	SEAL, oil, upper cover
28	70644265	-	SHIM, regulating valve spring (Use as required)
29	70644266	-	WASHER, flow sensing piston spring (Use as required)

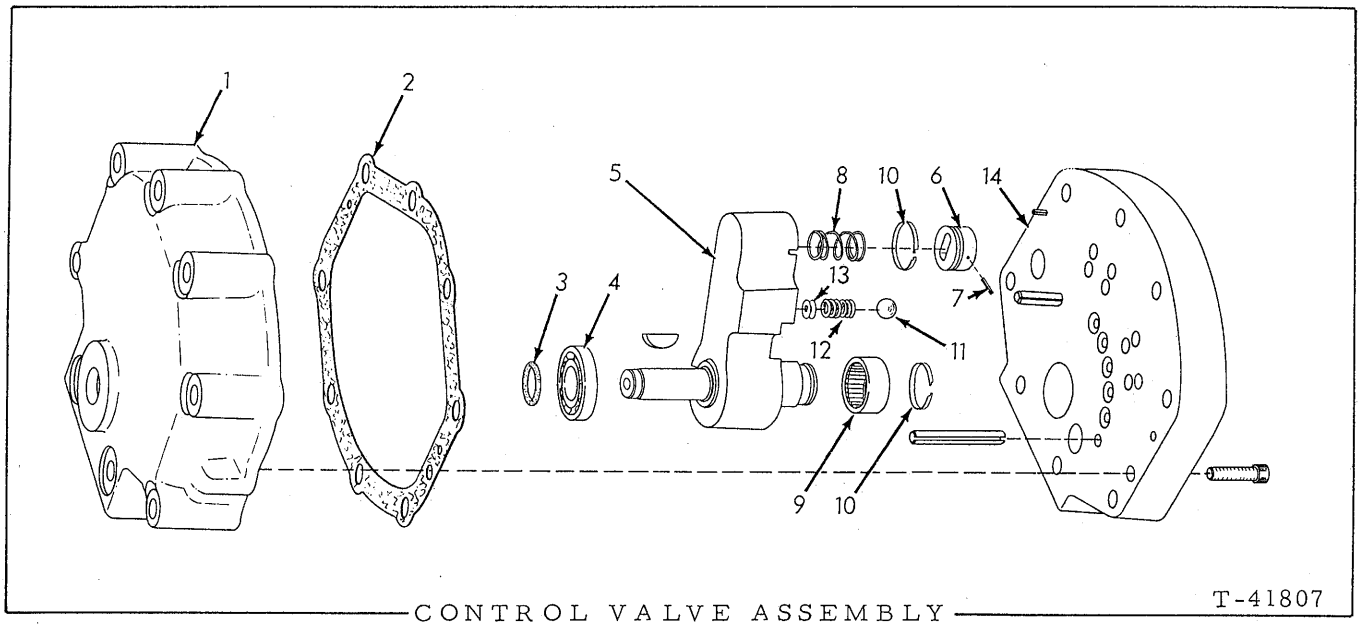

CONTROL VALVE ASSEMBLY

USAGE: See page 141

ITEM	PART NO.	QTY.	DESCRIPTION
-	70639646	1	VALVE ASSY. (Consists of items 1 thru 14)
1	70644277	1	COVER
2	70644276	1	GASKET, cover
3	70186266	1	O-RING, valve shaft
4	70186668	1	BEARING, ball, valve cover
5	70639846	1	SHAFT ASSY. (Includes arm and pin)(See NOTE)
6	70639919	1	WIPER
7	70639976	1	PIN, spring, wiper (1/16" x 1/4")
8	70639969	1	SPRING, wiper
9	70050442	1	BEARING, roller, adapter
10	70637623	2	RING, sealing, valve shaft and wiper
11	70915905	1	BALL, steel, (3/8" diam.)(See NOTE)
12	70642849	1	SPRING, detent ball (See NOTE)
13	70683202	3	SHIM, detent spring (Use as required)
14	70644278	1	ADAPTER
	70918547	2	PIN, spring, 1/8" x 1/2" (dowel)
	70920449	2	PIN, spring, 1/4" x 2" (stop)
	70912262	1	CAPSCREW, hex-socket-hd., 1/4" NC x 1"

NOTE: Valves serial No. 5146 thru No. 5203 were slightly different in design than illustrated. The detent arrangement (items 11 and 12) consisted of a plunger, spring and shims; item 5 Shaft Assy. was also changed. For initial service on any of these parts, order items 5, 10, 11 and 12.

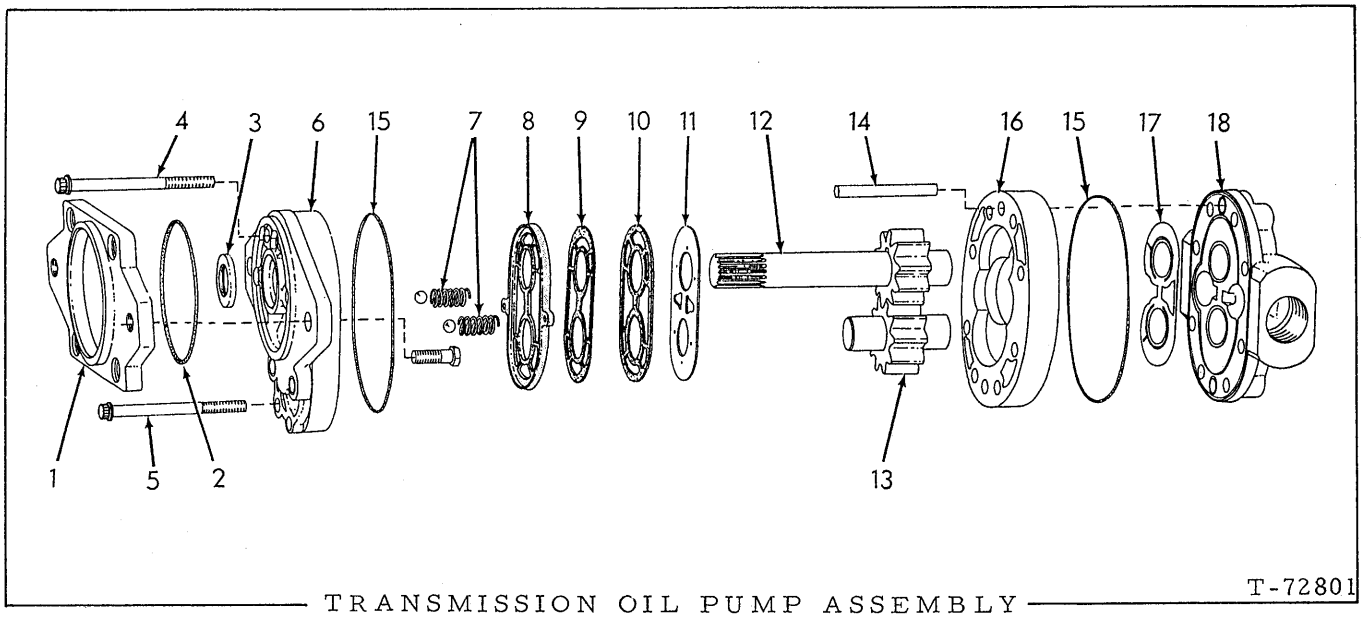

TRANSMISSION OIL PUMP ASSEMBLY

USAGE: See page 147

ITEM	PART NO.	QTY.	DESCRIPTION
-	70662303	1	PUMP ASSY., oil (Consists of items 1 thru 18)
1	70656694	1	ADAPTER
2	70925310	1	☐ O-RING, adapter
3	70653935	1	☐ SEAL, oil
4	70924787	4	SCREW, 12-pt-hd., 3/8"NC x 3-3/4"
5	70924790	4	SCREW, 12-pt-hd., 3/8"NC x 3-1/2"
6	74905633	1	PLATE ASSY., front (Includes bushings)
	70920582	2	CAPSCREW, 1/2"NC x 1-1/4"
7	70653916	2	SPRING, check valve
	70921085	2	BALL, steel, 13/32" diam.
8	71002296	1	☐ SEAL, front diaphragm
9	70669992	1	☐ GASKET, diaphragm (thin)
10	70653919	1	☐ GASKET, diaphragm (thick)
11	70653920	1	☐ DIAPHRAGM, sealing
12	70669997	1	GEAR ASSY., drive (Includes shaft)
13	70669998	1	GEAR ASSY., driven (Includes shaft)
14	70653928	2	PIN, dowel
15	70924921	2	☐ O-RING, center body
16	70689443	1	BODY, center
17	70669996	1	PLATE
18	70669994	1	PLATE ASSY., back (Includes bushings)

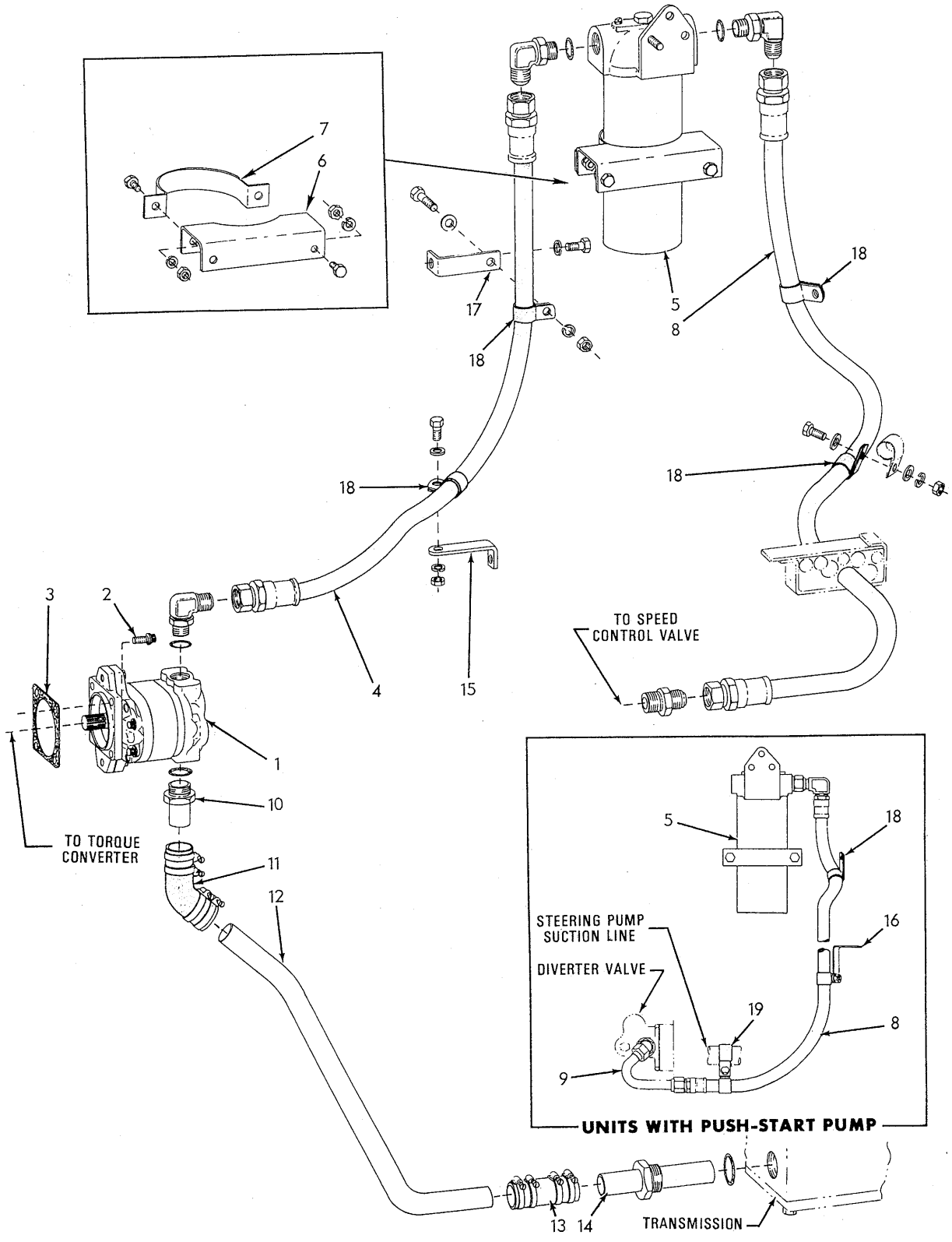

TRANSMISSION OIL PUMP AND FILTER LINES T-75766

TRANSMISSION OIL PUMP AND FILTER LINES

* Units without Push-start Pump (Standard)
** Units with Push-start Pump (Special)

ITEM	PART NO.	QTY. *	QTY. **	DESCRIPTION
1	------	1	1	PUMP ASSY., oil (See page 145)
2	70923980	4	4	SCREW, Nylok, 12-point hd., 1/2"NC x 1"
3	70634271	1	1	□GASKET, pump
4	70662922	1	1	HOSE, pump to filter (See HOSE PARTS)
	70921227	2	2	ELBOW, adjustable, 90°, flare type, 1" tube, 1-5/16"NF (Includes washer, nut and O-RING)
	70921214	2	2	O-RING, elbow (1-3/8"O. D.)
5	------	1	1	FILTER ASSY., oil (See page 149)
	70920582	3	3	CAPSCREW, 1/2"NC x 1-1/4"
	70912441	3	3	LOCKWASHER, 1/2"
6	70673204	1	1	BRACKET, filter supporting
	70922763	2	2	CAPSCREW, 3/8"NC x 7/8"
	70677006	2	2	WASHER
	70911026	2	2	NUT, 3/8"NC (Early units)
7	70673822	1	1	CLAMP, filter supporting
	70922262	2	2	CAPSCREW, 3/8"NC x 7/8"
	70910287	2	2	LOCKWASHER, 3/8"
	70911026	2	2	NUT, 3/8"NC
8	70662922	1	-	HOSE, filter to speed control valve (See HOSE PARTS)
	70921227	1	-	ELBOW, adjustable, 90°, flare type, 1" tube, 1-5/16"NF (Includes washer, nut and O-RING)
	70921214	1	-	O-RING, elbow(1-3/8"O. D.)
	70919246	1	-	CONNECTOR, flare type, 1" tube, 3/4"NPT male
	70654081	-	1	HOSE, filter to diverter valve (See HOSE PARTS)
	70921227	-	1	ELBOW, adjustable, 90°, flare type, 1" tube, 1-5/16"NF (Includes washer, nut and O-RING)
	70921214	-	1	O-RING, elbow (1-3/8"O. D.)
9	70653842	-	1	TUBE ASSY., filter to diverter valve (Includes nuts)
	70921215	-	1	ELBOW, adjustable, 45°, flare type, 1" tube, 1-5/16"NF (Includes washer, nut and O-RING)
	70921214	-	1	O-RING, elbow (1-3/8"O. D.)
10	70656233	1	1	ADAPTER, suction line, upper (Includes O-RING)
	70921235	1	1	O-RING, adapter sealing (1-7/8" O. D..)
11	70631790	1	1	BOOT, suction line
	70921912	4	4	CLAMP, hose, 1-1/16" to 2" diam.
12	70653807	1	1	TUBE, suction line
13	70631788	1	1	HOSE, suction line
	70921912	4	4	CLAMP, hose, 1-1/16" to 2" diam.
14	70641849	1	1	ADAPTER, suction line, lower (Includes O-RING)
	70921887	1	1	O-RING, adapter sealing(1-15/16" O. D.)

(Continued)

ITEM	PART NO.	QTY. *	QTY. **	DESCRIPTION
15	70635124	1	1	ANGLE, hose supporting
16	70631874	-	1	ANGLE, hose supporting
17	70620604	1	1	ANGLE, hose supporting
	70921175	1	1	CAPSCREW, 1/2"NC x 1"
	70912441	1	1	LOCKWASHER, 1/2"
18	70644457	4	4	CLIP, hose supporting
	70916310	3	3	CAPSCREW, 1/2"NC x 1"
	70916311	1	1	CAPSCREW, 1/2"NC x 1-1/4"
	70910244	4	2	WASHER, plain, SAE std., 1/2"
	70904208	4	4	LOCKWASHER, 1/2"
	70911028	3	3	NUT, 1/2"NC
19	70623235	-	1	CLIP, hose supporting
	70916309	-	1	CAPSCREW, 1/2"NC x 3/4"
	70904208	-	1	LOCKWASHER, 1/2"
	70911028	-	1	NUT, 1/2"NC

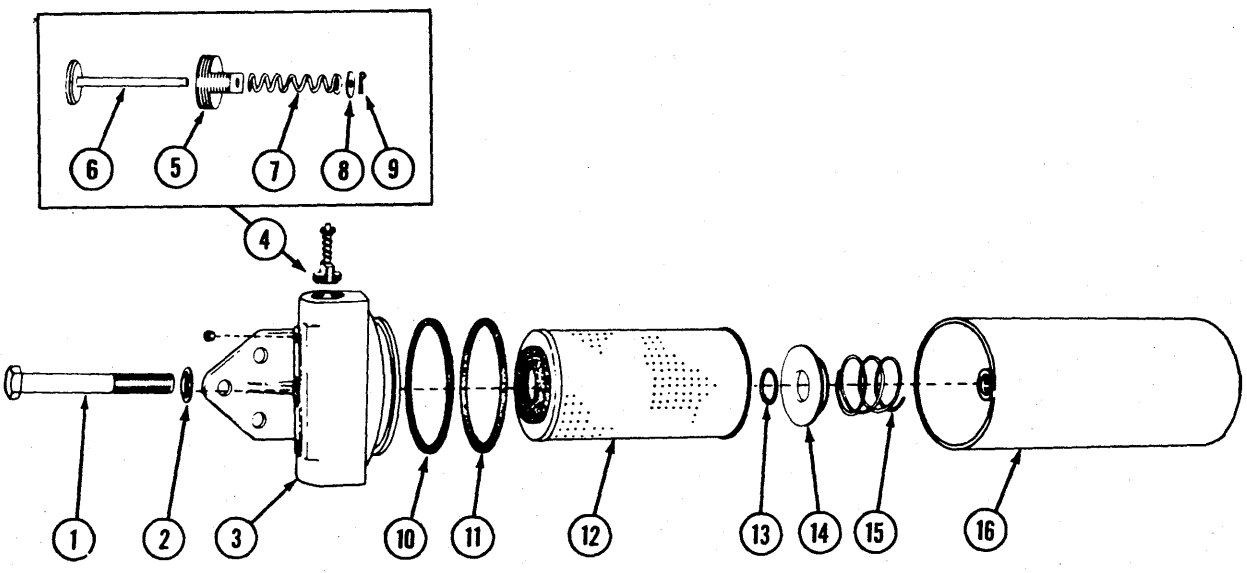

TRANSMISSION OIL FILTER ASSEMBLY

USAGE: See page 147

ITEM	PART NO.	QTY.	DESCRIPTION
-	70676660	1	FILTER ASSY., oil (Consists of items 1 thru 16)
1	70923438	1	CAPSCREW, tank retaining (3/4"NF x 5-1/2")
2	74254971	1	WASHER, tank retaining capscrew
3	70677289	1	HEAD ASSY. (Includes item 4 and plugs indented below)
	70901652	2	PLUG, pipe, 1/4"NPT
4	70661534	1	VALVE ASSY., by-pass (Consists of items 5 thru 9)
5	------	1	HOUSING, by-pass valve (Not serviced separately)
6	------	1	VALVE, by-pass (Not serviced separately)
7	70661268	1	SPRING, by-pass valve
8	70632060	1	WASHER, by-pass valve spring
9	70900970	1	PIN, cotter, 1/16" x 1/2"
10	70646532	1	RING, back-up
11	70923836	1	O-RING, filter head
12	70669434	1	ELEMENT KIT (Includes items 2, 10 and 11)
13	70671616	1	O-RING, element seating plate
14	70641031	1	PLATE, element seating
15	70674798	1	SPRING, element seating plate
16	70671497	1	TANK

(Revised March 1982)

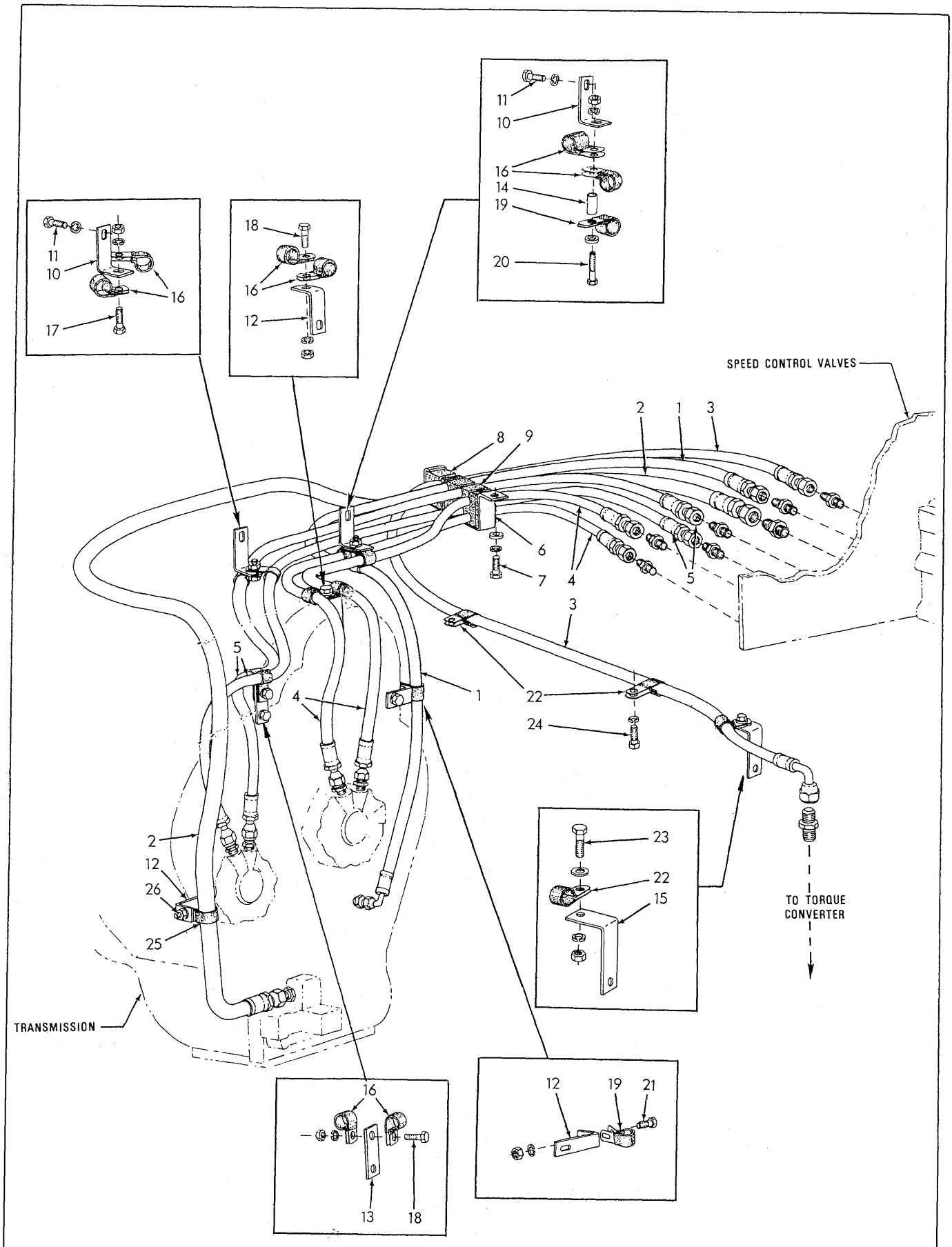

SPEED CONTROL PIPING

SPEED CONTROL PIPING

* Units with Push-start Pump
** Units without Push-start Pump

ITEM	PART NO.	QTY. *	QTY. **	DESCRIPTION
1	70653905	1	1	HOSE, oil return (See HOSE PARTS)
	70919472	1	1	CONNECTOR, flare type, 5/8" tube, 1/2"NPT male
	70921326	1	1	CONNECTOR, flare type, 5/8" tube 7/8"NF male end (Includes O-RING)
	70921205	1	1	O-RING, connector (15/16"O.D.)
2	70644759	1	-	HOSE, diverter valve to control valve (See HOSE PARTS)
	70921228	1	-	CONNECTOR, flare type, 1"tube, 1-5/16"NF (Includes O-RING)
	70921214	1	-	O-RING, connector (1-3/8"O.D.)
	70919246	1	-	CONNECTOR, flare type, 1" tube, 3/4"NPT
3	70645248	1	1	HOSE, engine clutch oil supply (See HOSE PARTS)
	70919063	2	2	CONNECTOR, flare type, 1/2" tube, 3/8"NPT male
4	70645250	2	2	HOSE, clutch control (See HOSE PARTS)
	70919063	4	4	CONNECTOR, flare type, 1/2" tube, 3/8"NPT male
5	70638205	2	2	HOSE, clutch control (See HOSE PARTS)
	70919063	4	4	CONNECTOR, flare type, 1/2" tube, 3/8"NPT male
6	70639756	1	1	CLAMP, hose supporting
7	70922763	1	1	CAPSCREW, 3/8"NC x 1"
	70904206	1	1	LOCKWASHER, 3/8"
	70044973	1	1	WASHER, plain
8	70651774	1	1	BLOCK, hose supporting, rear (rubber)
9	70639620	1	1	BLOCK, hose supporting, front (rubber)
10	70620604	2	2	ANGLE, hose supporting
11	70921175	2	2	CAPSCREW, 1/2"NC x 1"
	70912441	2	2	LOCKWASHER, 1/2"
12	70628243	3	2	ANGLE, hose supporting
	70916313	1	-	CAPSCREW, 1/2"NC x 1-3/4"
	70910244	1	-	WASHER, plain, SAE std., 1/2"
13	70638131	1	1	STRAP, hose supporting
14	70083847	1	1	SPACER, clip
15	70642534	1	1	ANGLE, hose supporting
	70911115	1	1	WASHER, plain, SAE std., 3/8"
16	70094467	8	8	CLIP, hose supporting (3/4" diam., 13/32" bolt-hole)
17	70927354	1	1	CAPSCREW, 3/8"NF x 7/8"
18	70927211	2	2	CAPSCREW, 3/8"NF x 3/4"
	70910287	3	3	LOCKWASHER, 3/8"
	70911041	3	3	NUT, 3/8" NF
19	70643957	2	2	CLIP, hose supporting (1-1/32" diam., 17/32" bolt-hole)
20	70927322	1	1	CAPSCREW, 3/8" NF x 2"
21	70927354	1	1	CAPSCREW, 3/8" NF x 7/8"
	70911115	1	1	WASHER, plain, SAE std., 3/8"
	70910287	2	2	LOCKWASHER, 3/8"
	70911041	2	2	NUT, 3/8" NF

(Continued)

SPEED CONTROL PIPING (Continued)

ITEM	PART NO.	QTY. *	QTY. **	DESCRIPTION
22	70621304	3	3	CLIP, hose supporting (3/4" diam., 17/32" bolt-hole)
23	70922763	1	1	CAPSCREW, 3/8"NC x 1"
	70911115	1	1	WASHER, plain, SAE std., 3/8"
	70910287	1	1	LOCKWASHER, 3/8"
	70911026	1	1	NUT, 3/8"NC
24	70921175	1	1	CAPSCREW, 1/2"NC x 1"
	70912441	1	1	LOCKWASHER, 1/2"
25	70644457	1	-	CLIP, oil supply hose (1-5/16" diam., 17/32" bolt-hole)
26	70922286	1	-	CAPSCREW, 3/8 "NC x 7/8"
	70911115	1	-	WASHER, plain, SAE std., 3/8"
	70904206	1	-	LOCKWASHER, 3/8"
	70911026	1	-	NUT, 3/8"NC

SPEED CONTROL LINKAGE

ITEM	PART NO.	QTY.	DESCRIPTION
1	70655777	1	GUIDE ASSY., control (Includes items 5 and 6)
2	70920582	2	CAPSCREW, 1/2"NC x 1-1/4"
3	70922526	1	CAPSCREW, 1/2"NC x 2-1/2"
4	70677008	2	WASHER
	70912441	3	LOCKWASHER, 1/2"
	70911028	1	NUT, 1/2"NC
5	70639785	1	BUSHING, control guide, front
6	70628157	1	BUSHING, control guide, rear
7	70629709	1	KNOB, speed shift lever
8	70639766	1	LEVER, speed shift
9	70656155	1	PIN, lever pivot
	70911115	2	WASHER
	70900806	2	PIN, cotter, 1/8" x 1"
10	70656159	1	SHAFT, speed shift lever
	70915989	1	PIN, spring, 3/16" x 1-3/8"
11	70639775	1	LEVER, control valve, upper
	70905123	1	KEY, #9 woodruff, 3/16" x 3/4"
12	70927322	1	CAPSCREW, 3/8"NF x 2"
	70910287	1	LOCKWASHER, 3/8"
	70911041	1	NUT, 3/8"NF
13	70639778	1	ROD, control valve
	70911048	2	NUT, jam, 3/8"NF
14	70617932	4	END, rod (female)
15	70927357	4	CAPSCREW, 3/8"NF x 1-3/8"
	70910287	4	LOCKWASHER, 3/8"
	70911041	4	NUT, 3/8"NF
16	70639753	1	LEVER, control valve, lower
17	70923470	1	CAPSCREW, 3/8"NC x 1-1/2"
	70910287	1	LOCKWASHER, 3/8"
	70911026	1	NUT, 3/8"NC
18	70644064	1	BELLCRANK ASSY., speed shift lever (Includes item 19)
19	70637286	2	BUSHING, bellcrank
20	70639790	2	SHAFT, pivot
	70919761	2	PIN, spring, 1/8" x 1-1/4"
21	70640637	1	SPRING, bellcrank
22	70927358	1	CAPSCREW, bellcrank spring (3/8"NF x 2-1/4")
	70911048	2	NUT, jam, 3/8"NF
23	70916272	1	CAPSCREW, bellcrank spring (3/8"NC x 1-1/4")
	70911034	2	NUT, jam, 3/8"NC
24	70639916	1	END, rod (male)
	70911048	1	NUT, jam, 3/8"NF
25	70923193	1	CAPSCREW, 3/8"NF x 1-1/4"
	70910287	1	LOCKWASHER, 3/8"

(Continued)

(Revised May 1977)

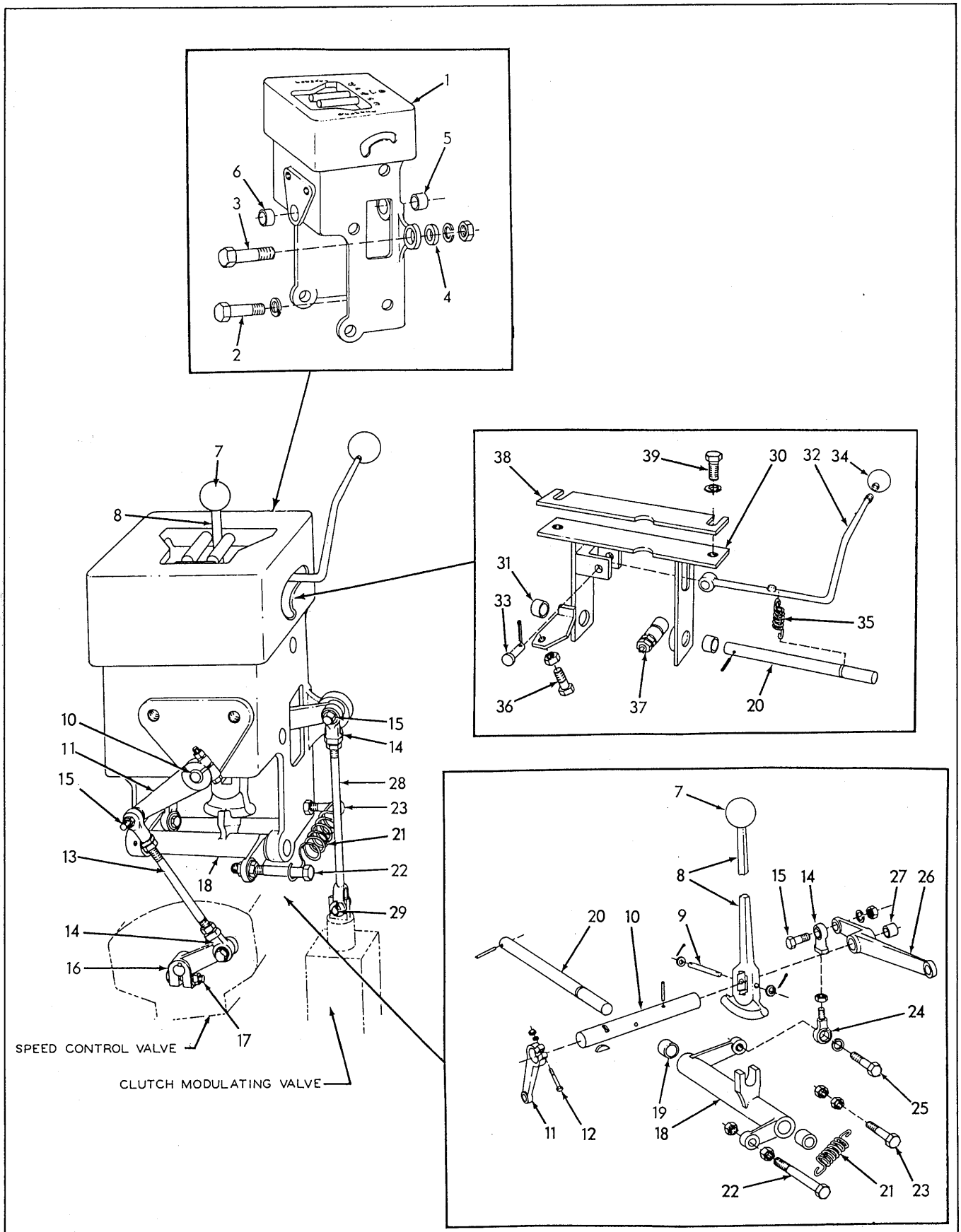

SPEED CONTROL LINKAGE

SPEED CONTROL LINKAGE (Continued)

ITEM	PART NO.	QTY.	DESCRIPTION
26	70639784	1	BELLCRANK ASSY., modulating valve rod (Includes item 27)
27	70628157	1	BUSHING, bellcrank
28	70639779	1	ROD, modulating valve
	70911048	1	NUT, jam, 3/8"NF
29	70078810	1	PIN, modulating valve rod
	70900801	1	PIN, cotter, 3/32" x 3/4"
30	70644065	1	BRACKET ASSY., neutral lock (Includes item 31)
31	70637286	2	BUSHING, neutral lock bracket
32	70662886	1	LEVER, neutral lock
33	70078810	1	PIN, neutral lock lever
	70900801	1	PIN, cotter, 3/32" x 3/4"
34	70632038	1	KNOB, neutral lock lever
35	70641008	1	SPRING, neutral lock lever
36	70923276	1	CAPSCREW, neutral lock bracket (3/8"NF x 1")
	70911048	1	NUT, jam, 3/8"NF
37	70631844	1	SWITCH, safety (Includes mounting nuts)
38	70641979	1	BAR, adjustment, neutral lock bracket
39	70927211	2	CAPSCREW, 3/8"NF x 3/4"
	70911115	2	WASHER, plain, SAE std., 3/8"

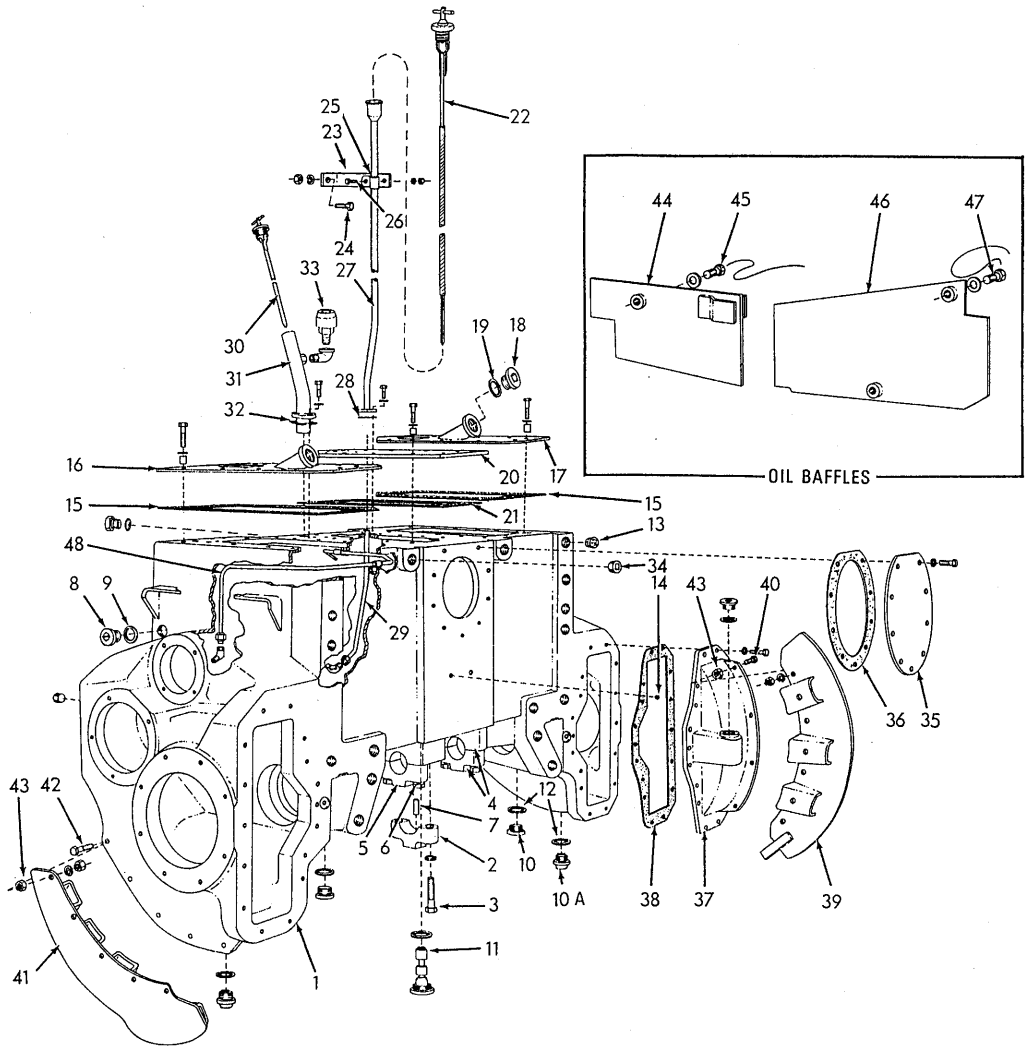

MAIN HOUSING

ITEM	PART NO.	QTY.	DESCRIPTION
1	70651910	1	HOUSING ASSY. (Includes items 2 thru 7)
	70904223	2	PLUG, pipe, ctsk-hd., 1/2"NPT
	70920107	1	PLUG, housing (Includes O-RING)
	70921206	1	O-RING, housing plug
2	70664506	2	CAP, track frame pivot shaft, inner
3	70012762	4	CAPSCREW, 7/8"NF x 3-1/4"
	70905347	4	LOCKWASHER, 7/8"
4	70096212	2	CAP ASSY., track frame pivot shaft, outer (Includes items 5 and 6; also upper block which requires welding to housing)
5	70059783	2	CAP, track frame pivot shaft
6	70012762	4	CAPSCREW, 7/8"NF x 3-1/4"
	70905347	4	LOCKWASHER, 7/8"
7	70664270	2	PIN, dowel, pivot shaft inner cap
8	70050594	2	PLUG, brake pin access hole
9	70050595	2	GASKET, access hole plug

(Continued)

ITEM	PART NO.	QTY.	DESCRIPTION
10	70035250	4	PLUG, filling and drain
10A	70696918	2	PLUG, drain (magnetic)
11	70067543	1	PLUG, drain (magnetic)
12	70667252	7	GASKET, filling and drain plugs
13	70664852	8	CORK, thread protecting (1-1/4" diam.)
14	70664851	2	CORK, thread protecting (5/8" diam.)
15	70666543	2	GASKET, steering clutch compartment covers
16	70666545	1	COVER, steering clutch compartment, left
	70927543	10	CAPSCREW, 1/2"NF x 2-1/4"
	70677008	10	WASHER
	70097413	10	BLOCK, steering clutch compartment
17	70666546	1	COVER, steering clutch compartment, right
	70921543	10	CAPSCREW, 1/2"NF x 2-1/4" (One less used on units equipped with Back-up Alarm)
	70922726	1	CAPSCREW, 1/2"NF x 1-1/2" (Used on units equipped with Back-up Alarm only)
	70677008	10	WASHER
	70097413	10	BLOCK, steering clutch compartment (One less used on units equipped with Back-up Alarm)
18	70651978	2	PLUG, brake adjustment access hole
19	70623144	2	GASKET, access hole plug
20	70666786	1	COVER, bevel gear compartment, top
	70921570	12	CAPSCREW, 1/2" NF x 2-1/2"
	70677008	12	WASHER
	70097413	12	BLOCK, bevel gear compartment
21	70666787	1	GASKET, top cover, bevel gear compartment
22	70674997	1	GAUGE ASSY., oil level, transmission
23	70674799	1	ANGLE, guide supporting
24	70920574	1	CAPSCREW, 1/2"NC x 1-3/8"
	70912441	1	LOCKWASHER, 1/2"
	70911028	1	NUT, 1/2"NC
25	70927309	2	CLAMP, guide supporting
26	70922763	2	CAPSCREW, 3/8"NC x 1"
	70910287	2	LOCKWASHER, 3/8"
	70911026	2	NUT, 3/8"NC
27	70675036	1	GUIDE, transmission oil level gauge
	70922763	2	CAPSCREW, 3/8"NF x 1"
	70910287	2	LOCKWASHER, 3/8"
28	70628951	1	GASKET, guide
29	70658613	1	TUBE ASSY., transmission oil level gauge (lower) (Includes nut)
	70923984	1	ELBOW, flare type, swivel nut, 1/2" tube, 3/8"NPT male
30	70667470	1	GAUGE, oil level, steering clutch housing (Tractors prior to unit #12681)
	70679132	1	GAUGE, oil level, steering clutch housing (Tractor unit #12681 and up)

(Continued)

ITEM	PART NO.	QTY.	DESCRIPTION
31	70667462	1	TUBE, oil filler
	70927173	2	CAPSCREW, 3/8"NF x 1-1/8"
	70910287	2	LOCKWASHER, 3/8"
32	70655875	1	GASKET, oil filler tube
33	70679375	1	BREATHER ASSY., final drive (Serviced only as a unit)
	70919824	1	ELBOW, street, 90°, 3/4"NPT to 1/2"NPT
34	70052979	2	PLUG, thread protecting (socket-hd., 1-1/4"NF)
35	70052977	1	COVER, bevel gear compartment, rear
	70927205	9	CAPSCREW, Nylok, 5/8"NC x 1-1/4"
	70926196	9	WASHER
36	70052976	1	GASKET, rear bevel gear compartment cover
37	70658711	1	COVER, final drive compartment, left side
	70658712	1	COVER, final drive compartment, right side
	70922726	32	CAPSCREW, 1/2"NF x 1-1/2"
	70912441	32	LOCKWASHER, 1/2"
38	70059315	2	GASKET, final drive compartment covers
			NOTE: Items 39 thru 43 are special equipment
39	70646091	1	GUARD, track sprocket, upper left
	70646092	1	GUARD, track sprocket, upper right
40	70929864	8	CAPSCREW, 1/2"NC x 2-1/4"
	70912441	8	LOCKWASHER, 1/2"
	70911028	8	NUT, 1/2"NC
41	70646093	1	GUARD, track sprocket, lower left
	70646094	1	GUARD, track sprocket, lower right
42	70922526	10	CAPSCREW, 1/2"NC x 2-1/2"
	70912441	10	LOCKWASHER, 1/2"
	70911028	10	NUT, 1/2"NC
43	70664414	18	SPACER, track sprocket guards
44	70640083	1	BAFFLE, oil, front section
45	70927483	1	CAPSCREW, drilled-hd., 3/8"NC x 2"
	70023633	1	WIRE, locking, 1/16" x 12"
	70044973	1	WASHER, plain
46	70642305	1	BAFFLE, oil, rear section
47	70927483	2	CAPSCREW, drilled-hd., 3/8"NC x 2"
	70037000	1	WIRE, locking
	70044973	2	WASHER, plain
48	70669031	1	TUBE ASSY., final drive breather, left (Includes nuts)
	70669032	1	TUBE ASSY., final drive breather, right (Includes nuts)
	70919464	2	ELBOW, flare type, 45°, 1/4" tube x 1/8"NPT male
	70640677	4	CLIP, tube supporting
	70915408	4	CAPSCREW, 3/8"NC x 3/4"
	70904206	4	LOCKWASHER, 3/8"
	70911115	4	WASHER, plain, SAE std., 3/8"

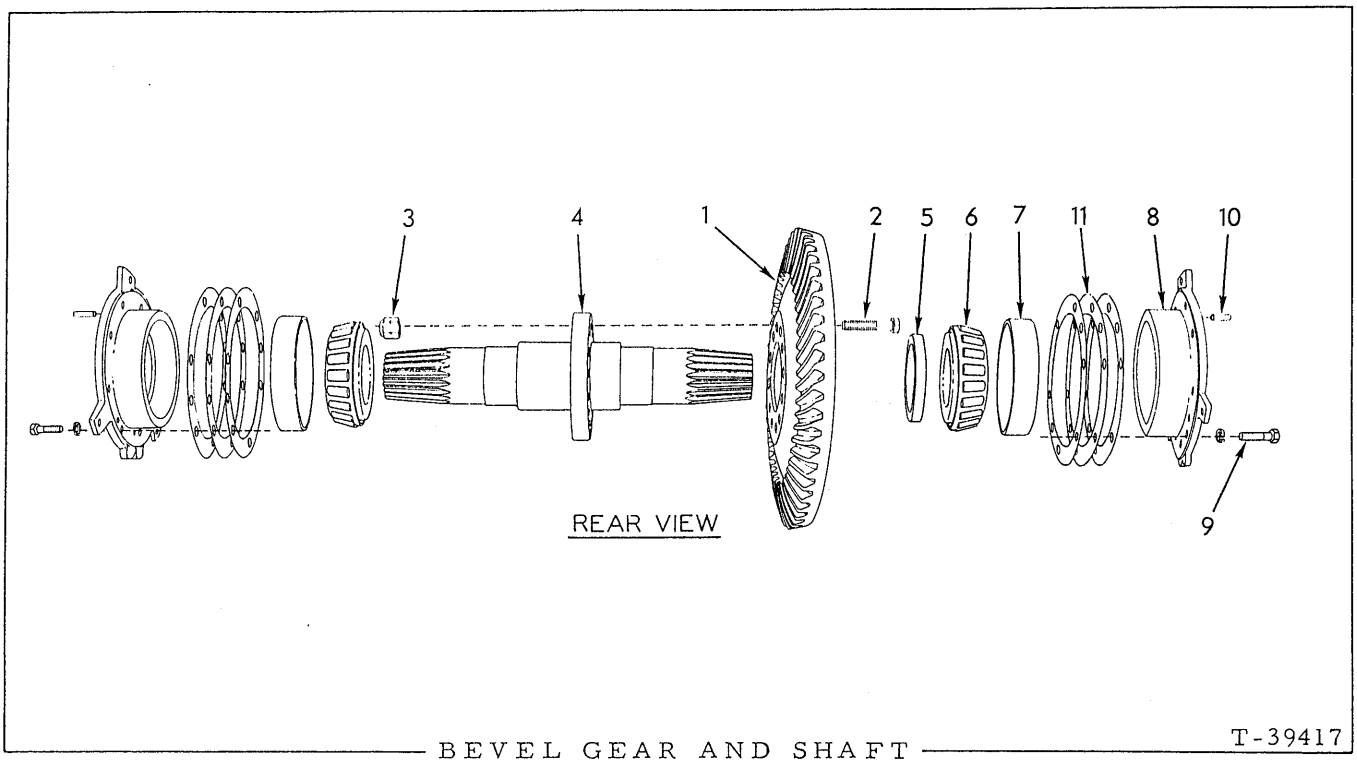

BEVEL GEAR AND SHAFT

ITEM	PART NO.	QTY.	DESCRIPTION
1	70663510	1	GEAR, bevel (43 teeth, left hand spiral)
2	70067680	12	**BOLT, 5/8" NF x 2-3/4"**
3	70645320	12	NUT, elastic stop, 5/8"NF
4	70666514	1	SHAFT, bevel gear (Tractor prior to unit #12686)
	70663507	1	SHAFT, bevel gear (Tractor unit #12686 and up)
5	70663581	1	RING, locking, bevel gear bolts
6	70051630	2	CONE ASSY., shaft bearing
7	70050276	2	CUP, shaft bearing
8	70623930	2	CAGE ASSY., bearing (Includes item 10)
9	70927522	12	CAPSCREW, 1/2"NF x 1-3/4"
	70912441	12	LOCKWASHER, 1/2"
10	70623933	4	PIN, bearing cage
11	70059026	12	SHIM, bearing adjustment (.005" thick. Use as required)
	70059025	10	SHIM, bearing adjustment (.007" thick. Use as required)
	70059024	10	SHIM, bearing adjustment (.010" thick. Use as required)

(Revised September 1979)

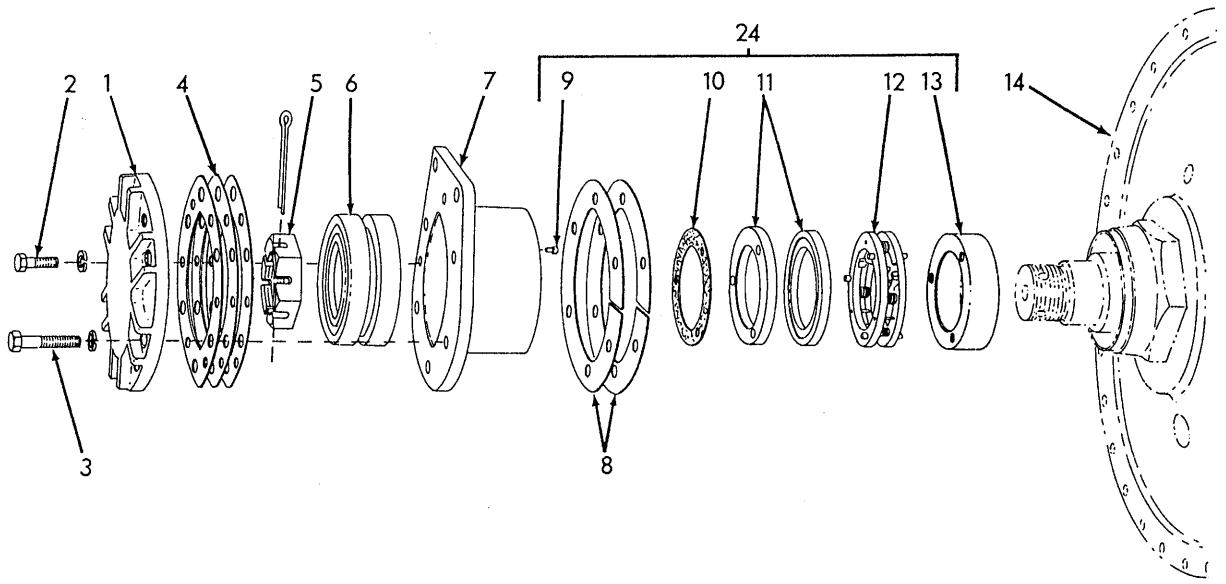

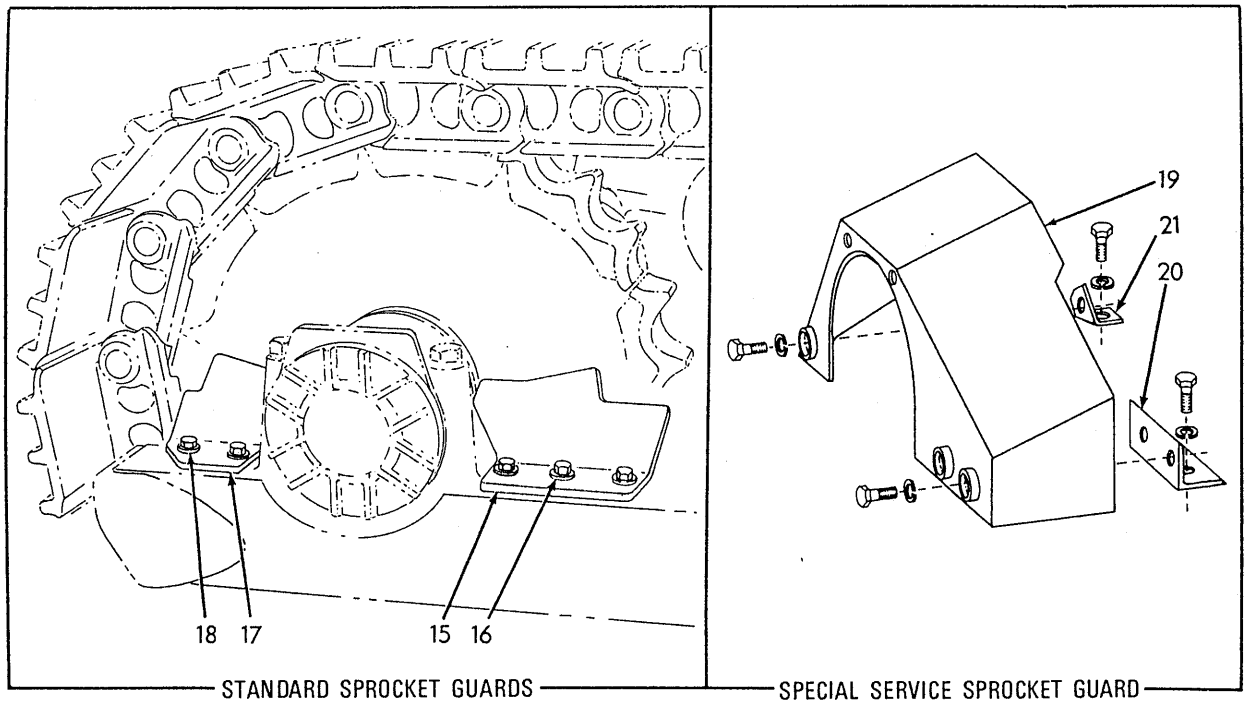

STANDARD SPROCKET GUARDS

SPECIAL SERVICE SPROCKET GUARD

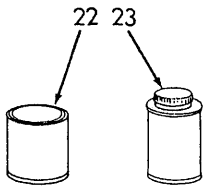

FINAL DRIVE OUTBOARD BEARING AND SEAL T-75716

FINAL DRIVE OUTBOARD BEARING AND SEAL

ITEM	PART NO.	QTY.	DESCRIPTION	
1	70082316	2	CAP, outboard bearing	
2	70927574	6	CAPSCREW, 1/2"NF x 1-3/8"	
	70912441	6	LOCKWASHER, 1/2"	
3	70921597	12	CAPSCREW, 5/8"NC x 3"	
	70912942	12	LOCKWASHER, 5/8"	
4	70082358	4	SHIM, outboard bearing cap (.005" thick)	Use as required
	70082357	4	SHIM, outboard bearing cap (.007" thick)	
	70082356	8	SHIM, outboard bearing cap (.010" thick)	
5	70082311	2	NUT, retaining, outboard bearing	
	70904016	2	PIN, cotter, 3/8" x 4"	
6	70082306	2	BEARING, roller, outboard (Each consists of 1 roller assy. and 2 cups)(Serviced only as a unit)	
7	70082327	2	CAGE, outboard bearing	
8	70069761	12	SHIM, outboard bearing cage (.015" thick. Use as required)	
9	70084432	6	□PIN, locating, seal ring	
10	70082309	2	□GASKET, seal ring	
11	70082303	4	□RING, seal	
12	70082317	2	□FOLLOWER ASSY., seal (Serviced only as a unit)	
13	70082312	2	□BOOT, seal	
14	--------	-	SPROCKET (See SPROCKET, SHAFT AND GEAR)	
15	70671645	1	PLATE, front closure, left side	
	70671646	1	PLATE, front closure, right side	
16	70921411	6	CAPSCREW, 5/8"NC x 1-1/2"	
	70677010	6	WASHER, plain	
17	70671643	1	PLATE, rear closure, left side	
	70671644	1	PLATE, rear closure, right side	
18	70921411	4	CAPSCREW, 5/8"NC x 1-1/2"	
	70677010	4	WASHER, plain	
19	70680987	1	GUARD, sprocket, left	Special For Severe Service Applications
	70680988	1	GUARD, sprocket, right	
	70921535	10	CAPSCREW, 5/8"NC x 1-3/4"	
	70912942	10	LOCKWASHER, 5/8"	
20	70680991	1	ANGLE, guard supporting, left front	
	70680992	1	ANGLE, guard supporting, right front	
	70921535	4	CAPSCREW, 5/8"NC x 1-3/4"	
	70912942	4	LOCKWASHER, 5/8"	
21	70680995	1	ANGLE, guard supporting, left rear	
	70680996	1	ANGLE, guard supporting, right rear	
	70921535	2	CAPSCREW, 5/8"NC x 1-3/4"	
	70912942	2	LOCKWASHER, 5/8"	
22	70033288	-	CEMENT, neoprene, 1/2 pint can	For cementing boots and gaskets
23	70054890	-	SOLVENT, neoprene cement, 1/2 pint can	
24	70091979	2	SEAL KIT, final drive (Includes parts for one (1) side only; items 9 thru 13)	

□Components of item 24

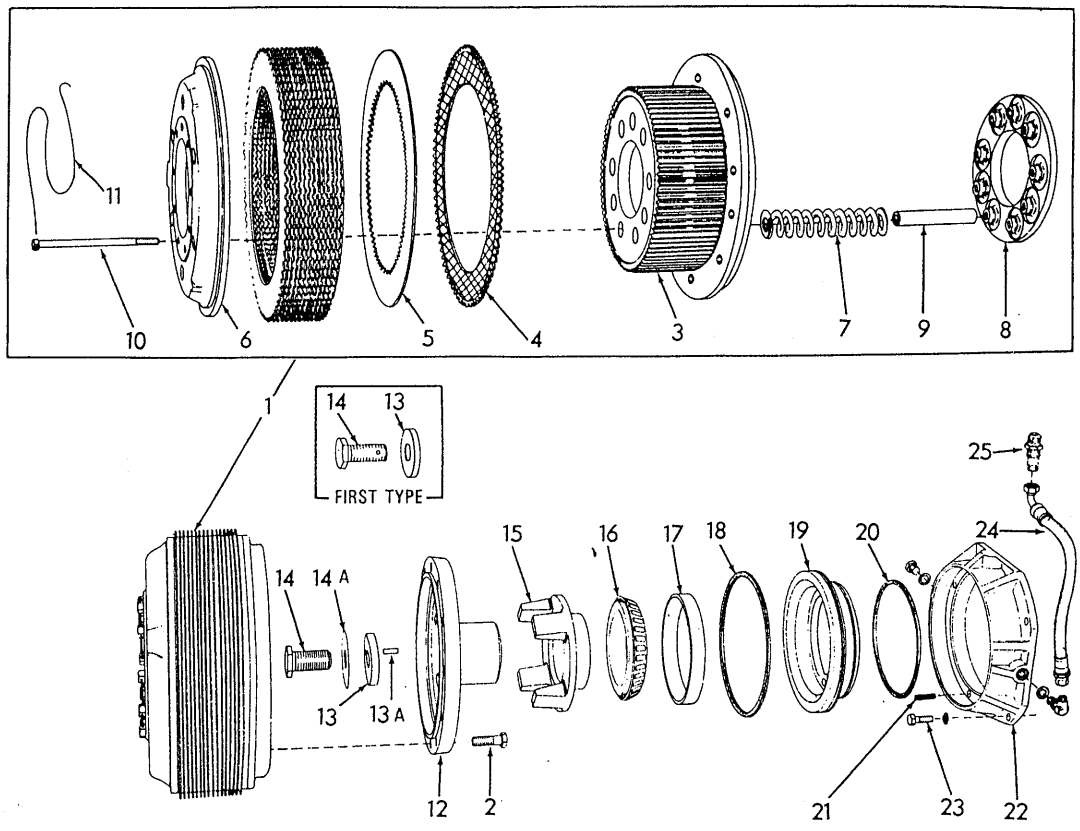

T33464

STEERING CLUTCHES

ITEM	PART NO.	QTY.	DESCRIPTION
1	70623927	2	CLUTCH ASSY. (Consists of items 3 thru 11)
2	70650813	20	BOLT, self-locking, 5/8"NC x 1-7/8"
3	70650622	2	HUB, steering clutch
4	70623877	30	DISC, friction (bimetallic)
5	70623876	32	DISC, friction (steel) (Use as required)
6	70059048	2	PLATE, pressure
7	70623878	18	SPRING, pressure
8	70059035	2	PLATE, throwout
9	70623879	18	SPACER, throwout plate
10	70929079	18	CAPSCREW, plate (drilled-hd., 1/2"NF x 6-1/2")
11	70023756	4	WIRE, locking, 1/16" x 26"
12	70623516	2	HUB, driving
13	70666547	2	WASHER, hub retaining (Tractor prior to unit #12686)
	70663245	2	WASHER ASSY., hub retaining (Includes item 13A) (Tractors unit #12686 and up)

(Continued)

ITEM	PART NO.	QTY.	DESCRIPTION
13A	70035793	2	DOWEL, hub washer (Tractors unit #12686 and up)
14	70663117	2	CAPSCREW, hub retaining (self-locking) (Tractors prior to unit #12686)
	70684479	2	CAPSCREW, hub retaining (Tractors unit #12686 and up)
14A	70684480	2	LOCK, hub retaining capscrew (Tractors unit #12686 and up)
15	70623932	2	SLEEVE, throwout
16	70623007	2	CONE ASSY., clutch throwout bearing
17	70623008	2	CUP, clutch throwout bearing
18	70623003	2	RING, sealing, actuating piston, outer
19	70623929	2	PISTON, actuating
20	70623004	2	RING, sealing, actuating piston, inner
21	70040475	6	SPRING, throwout bearing ring
22	70642448	2	RING, collector
	70921573	2	PLUG, hex-hd., 3/4"NF (Includes O-RING)
	70921349	2	O-RING (13/16"O. D.)
23	70920574	6	CAPSCREW, 1/2"NC x 1-3/8"
	70912441	6	LOCKWASHER, 1/2"
24	70645236	2	HOSE, oil pressure (See HOSE PARTS)
	70921402	2	ELBOW, adjustable, 90°, flare type, 1/2" tube, 3/4"NF (Includes washer, nut and O-RING)
	70921349	2	O-RING (13/16" O. D.)
25	--------	2	UNION, bulkhead (See STEERING CONTROL VALVE AND LINES)

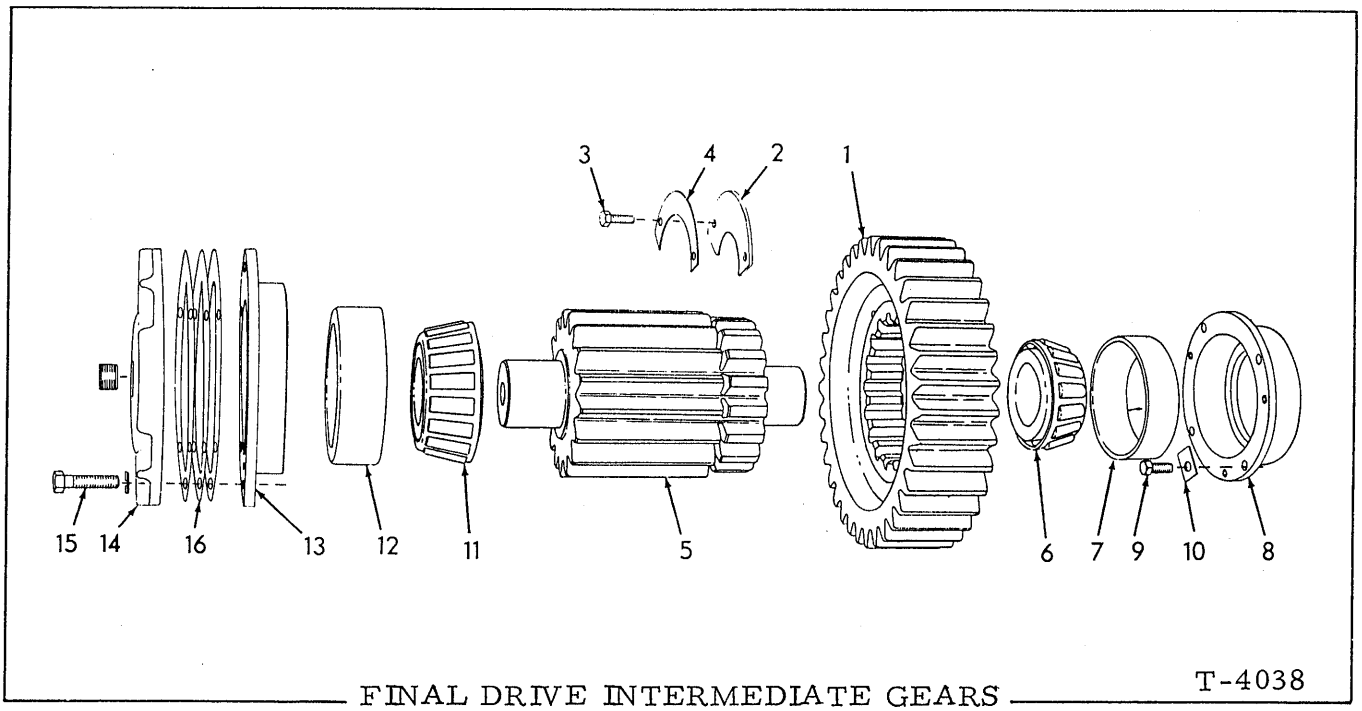

T-4038

FINAL DRIVE INTERMEDIATE GEARS

ITEM	PART NO.	QTY.	DESCRIPTION
1	70651892	2	GEAR (29 teeth)
2	70650477	4	LOCK, gear
3	70922763	8	CAPSCREW, 3/8"NC x 1"
4	70650476	4	LOCK, capscrew
5	70651903	2	PINION (13 teeth)
6	70052071	2	CONE ASSY., inner bearing
7	70052070	2	CUP, inner bearing
8	73111238	2	CAGE, inner bearing cup
9	70922763	8	CAPSCREW, 3/8"NC x 1"
10	70049936	8	LOCK, capscrew
11	70069327	2	CONE ASSY., outer bearing
12	70604398	2	CUP, ,outer bearing
13	70657771	2	CAGE, outer bearing cup
14	70657772	2	RETAINER, outer bearing
	70901666	2	PLUG, pipe, ctsk-hd., 1"NPT
15	70921177	10	CAPSCREW, 5/8"NF x 2-1/4"
	70912942	10	LOCKWASHER, 5/8"
16	70657768	4	SHIM, bearing (.005" thick) } Use as required
	70657769	4	SHIM, bearing (.007" thick) } Use as required
	70657770	12	SHIM, bearing (.010" thick) } Use as required

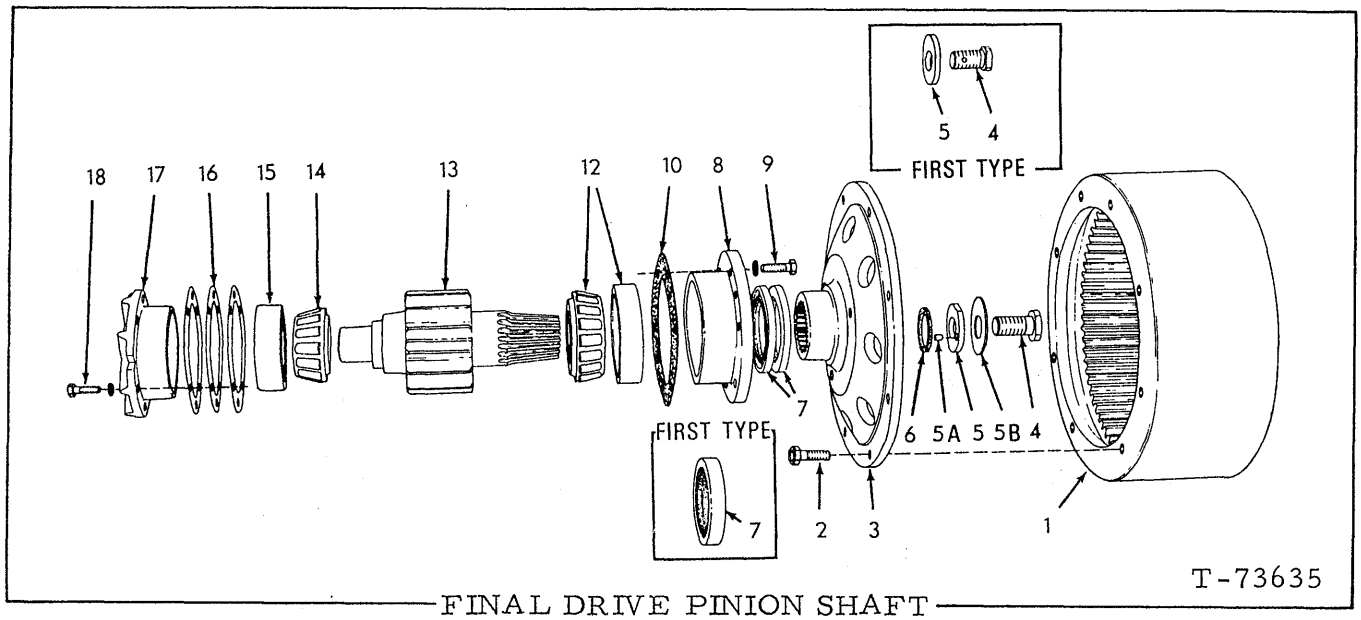

FINAL DRIVE PINION SHAFT

ITEM	PART NO.	QTY.	DESCRIPTION
1	70623928	2	DRUM
2	70650811	16	BOLT, self-locking, 5/8"NC x 1-1/2"
3	70623781	2	HUB
4	70663117	2	CAPSCREW (self-locking)(Tractors prior to unit #12686)
	70684479	2	CAPSCREW (Tractors unit #12686 and up)
5	70666547	2	WASHER (Tractors prior to unit #12686)
	70663245	2	WASHER (Includes item 5A)(Tractors unit #12686 and up)
5A	70035793	2	DOWEL } Tractors unit #12686 and up
5B	70684480	2	LOCK } Tractors unit #12686 and up
6	70623786	2	SEAL
7	70623784	2	SEAL (Tractors prior to unit #14039)
	70695217	4	SEAL (Tractor unit #14039 and up)
8	70623782	2	CAGE
9	70922726	12	CAPSCREW, 1/2"NF x 1-1/2"
	70912441	12	LOCKWASHER, 1/2"
10	70058875	2	GASKET
12	70681367	2	CUP AND CONE ASSY. (Consists of matched Cup and Cone)
13	70666513	2	PINION (12 teeth)(Tractors prior to unit #12686)
	70651110	2	PINION (12 teeth)(Tractors unit #12696 and up)
14	70643276	2	CONE ASSY.
15	70643275	2	CUP
16	70058843	4	SHIM (.005" thick) } Use as required
	70058842	4	SHIM (.007" thick) } Use as required
	70058841	14	SHIM (.010" thick) } Use as required
17	70083792	2	CAGE
18	70922726	8	CAPSCREW, 1/2"NF x 1-1/2"
	70912441	8	LOCKWASHER, 1/2"

(Revised June 1978)

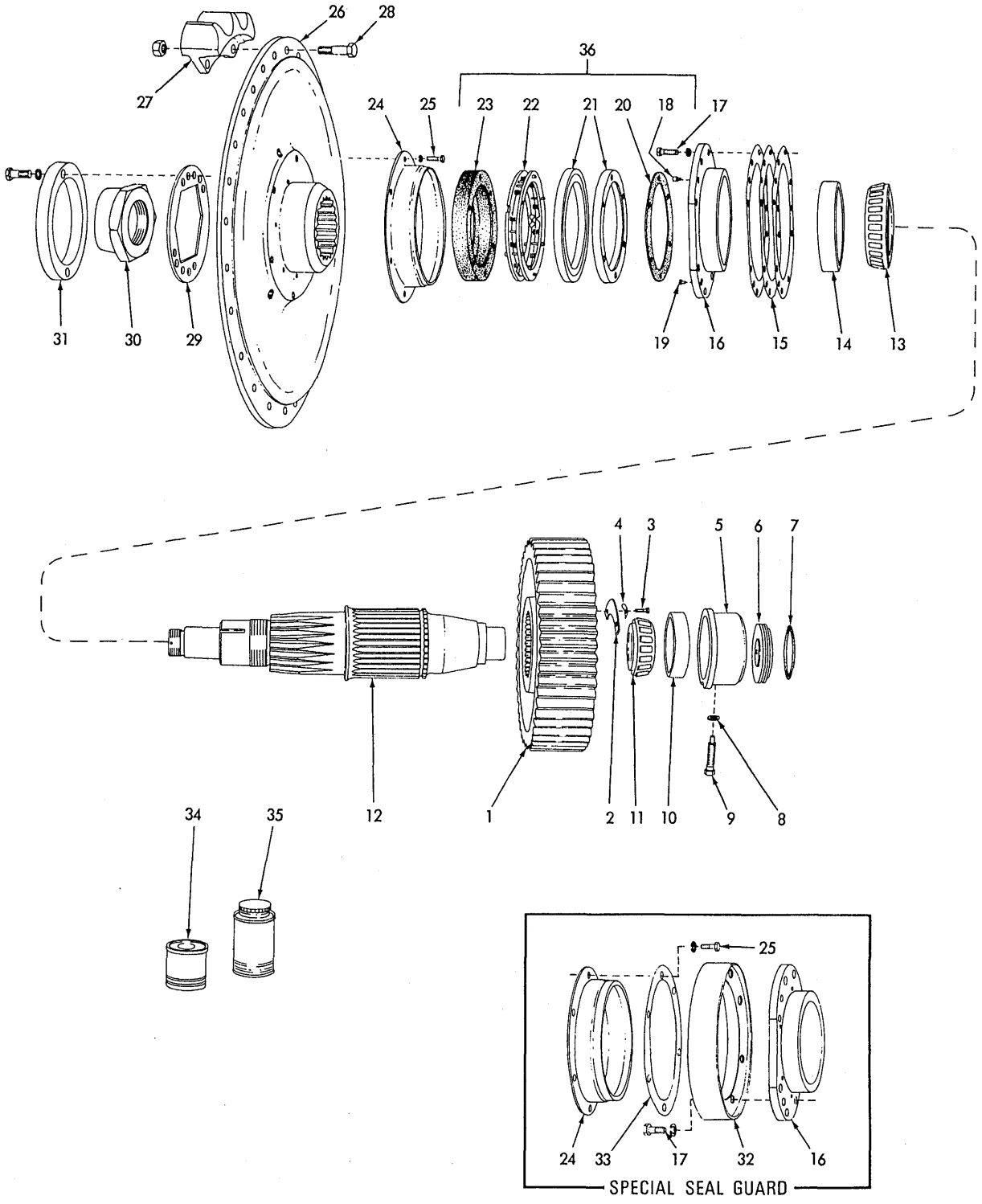

FINAL DRIVE SPROCKET, SHAFT AND GEAR T-75717

FINAL DRIVE SPROCKET, SHAFT AND GEAR

ITEM	PART NO.	QTY.	DESCRIPTION
1	70671622	2	GEAR (41 teeth)
2	70052161	4	LOCK, gear
3	70922763	8	CAPSCREW, 3/8"NC x 1"
4	70052444	8	LOCK, capscrew
5	70067534	2	CAGE, inner bearing
6	70091572	2	COVER, inner bearing
7	70923821	2	O-RING, inner bearing cover
8	70049918	2	WASHER, bearing cage setscrew (copper)
9	70067348	2	SETSCREW, bearing cage (hex-hd., dog-pt., 5/8"NF x 3"
10	70069328	2	CUP, inner bearing
11	70069441	2	CONE ASSY., inner bearing
12	70671212	2	SHAFT, sprocket (Tractors prior to unit #15024)
	73111757	2	SHAFT, sprocket (Tractor unit #15024 and up)
13	70082307	2	CONE ASSY., intermediate bearing
14	70082308	2	CUP, intermediate bearing
15	70067518	4	SHIM, bearing adjustment (.005" thick. Use as required)
	70067519	4	SHIM, bearing adjustment (.007" thick. Use as required)
	70067520	26	SHIM, bearing adjustment (.010" thick. Use as required)
16	70082310	2	CAGE ASSY., intermediate bearing cup (Includes item 18 and 19)
17	70921168	16	CAPSCREW, 5/8"NF x 2"
	70912942	16	LOCKWASHER, 5/8"
18	70084432	6	☐ PIN, locating, seal ring (9/16" long)
19	70080547	6	☐ PIN, locating, seal ring (13/32" long)
20	70082320	2	☐ GASKET, inner seal ring
21	70082322	4	☐ RING, inner seal
22	70669770	2	☐ FOLLOWER ASSY., inner seal (Serviced only as a unit)
23	70082323	2	☐ BOOT, inner seal
24	70082321	2	GUARD, seal
25	70921175	12	CAPSCREW, 1/2"NC x 1"
	70912441	12	LOCKWASHER, 1/2"
26	70671624	2	HUB, sprocket segment (Tractors prior to unit #11515)
	70679538	2	HUB, sprocket segment (Tractors unit #11515 and up)
27	70669330	18	SEGMENT, sprocket (Tractors prior to unit #11515)
	70679520	18	SEGMENT, sprocket (Tractors unit #11515 thru 15193)
	70698856	18	SEGMENT, sprocket (Tractor unit #15194 and up)
28	70097324	54	BOLT, sprocket segment } Tractors prior to unit #11515
	70012767	54	NUT, high, 3/4"NF }
	70679522	54	BOLT, sprocket segment } Tractors unit #11515 and up.
	70679521	54	NUT, 3/4"NF }

☐ Indicates component of item 36

(Continued)

(Revised August 1980)

FINAL DRIVE SPROCKET, SHAFT AND GEAR (Continued)

ITEM	PART NO.	QTY.	DESCRIPTION
29	70082315	2	LOCK, sprocket retaining nut
30	70082318	2	NUT, sprocket retaining
31	70630056	2	RING, nut protecting
	70920583	4	CAPSCREW, 1/2"NC x 1-1/2"
	70912441	4	LOCKWASHER, 1/2"
32	70678677	2	GUARD, seal } Special
33	70678674	2	RING, seal guard } Special
34	70033288	-	CEMENT, neoprene, 1/2 pint can } For cementing boots and gaskets
35	70054890	-	SOLVENT, neoprene cement, 1/2 pint can } For cementing boots and gaskets
36	70091978	2	SEAL KIT, final drive (Includes parts for one (1) side only; item 18 thru 23)

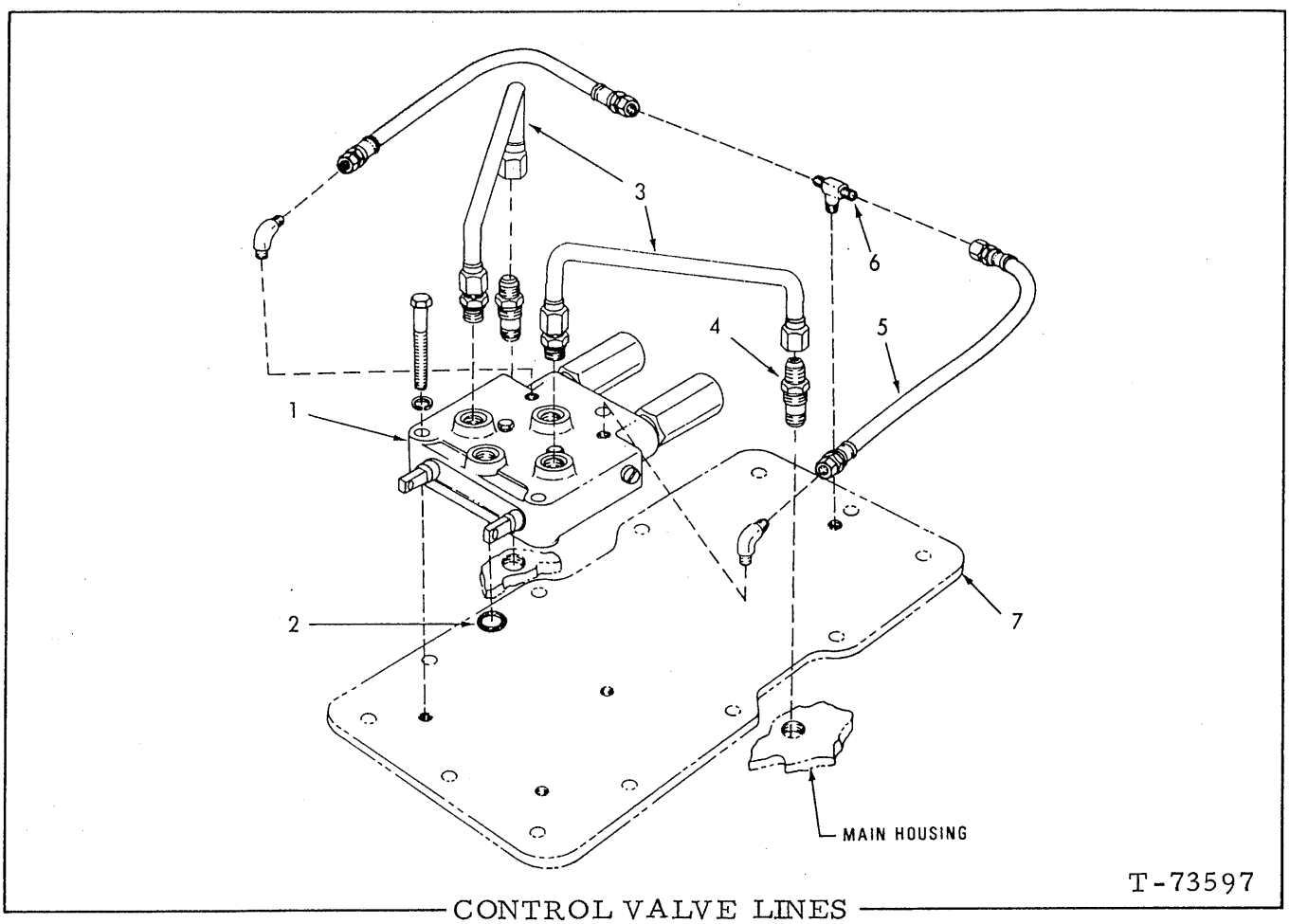

CONTROL VALVE LINES

ITEM	PART NO.	QTY.	DESCRIPTION
1	---------	1	VALVE ASSY., control (See pages 170 and 172)
	70923687	3	CAPSCREW, 3/8"NF x 2-3/4"
	70910287	3	LOCKWASHER, 3/8"
2	70923947	1	O-RING, valve to compartment cover
3	70666804	2	TUBE ASSY., clutch control (Includes nuts)
	70921409	2	CONNECTOR, flare type, 1/2" tube, 3/4"NF male end (Includes O-RING)
	70921349	2	O-RING, connector
4	70669565	2	UNION, bulkhead
5	70646340	2	HOSE, oil return (See HOSE PARTS)
	70919546	2	ELBOW, flare type, 90°, 1/4" tube, 1/4"NPT male
6	70919773	1	TEE, oil return hose (flare type, 1/4" tube, 1/8"NPT male side)
7	--------	-	COVER, bevel gear compartment (See MAIN HOUSING)

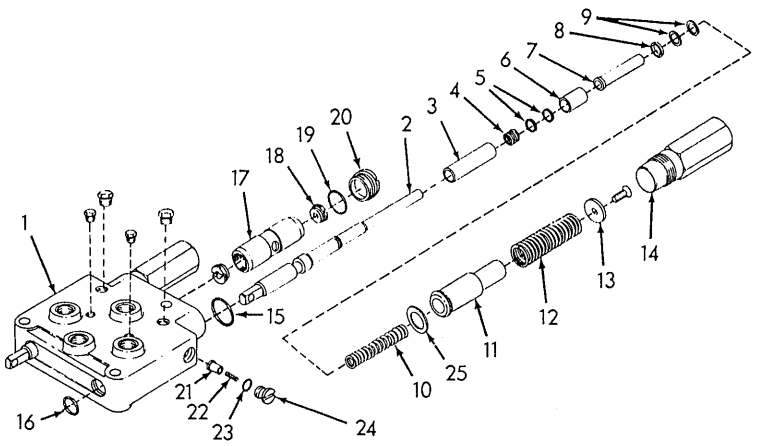

T-72413

CONTROL VALVE ASSEMBLY

USAGE: See page 169. Tractor prior to serial No. 19S12587

ITEM	PART NO.	QTY.	DESCRIPTION	
-	70651739	1	VALVE ASSY., control (Includes item 1 thru 25)	
1	--------	1	BODY (Not serviced separately)	
	70919134	2	PLUG, pipe, hex-hd., 1/8"NPT	
	70919840	2	PLUG, pipe, hex-hd., 1/4"NPT	
2	--------	2	PLUNGER (Not serviced separately)	
3	70651564	2	PISTON, pressure regulating	
4	70651569	4	SPRING, pressure regulating (short)	
5	70651576	-	SHIM, pressure adjustment (.015" thick)	Use as required
	70651577	-	SHIM, pressure adjustment (.005" thick)	
6	70651571	2	SLEEVE, valve plunger (outer)	
7	70651572	2	SLEEVE, valve plunger (inner)	
8	70651573	2	WASHER, valve plunger	
9	70651574	-	SHIM, pressure adjustment (.015" thick)	Use as required
	70651575	-	SHIM, pressure adjustment (.005" thick)	
10	70661676	2	SPRING, pressure regulating (long)	
11	70651565	2	SLEEVE, plunger return spring	
12	70651570	2	SPRING, plunger return	
13	70651567	2	WASHER, end, valve plunger	
	70924989	2	SCREW, machine, flat-hd., 1/4"NF x 7/8"	
14	70651566	2	CAP, valve plunger	
15	70924416	2	O-RING, valve body (large)	
16	70923645	2	O-RING, valve body (small)	
17	--------	1	PLUNGER, flow divider (Not serviced separately)	

(Continued)

CONTROL VALVE ASSEMBLY (Continued)

ITEM	PART NO.	QTY.	DESCRIPTION
18	70660057	2	PLUG, orifice, flow divider plunger
19	70923988	1	O-RING, flow divider plug
20	70654523	1	PLUG ASSY., flow divider (Includes item 19)
21	70656190	2	PLUNGER, relief valve
22	70656192	2	SPRING, relief valve
23	70923663	2	O-RING, relief valve plug
24	70656191	2	PLUG ASSY., relief valve (Includes item 23)
25	70663123	-	SHIM, plunger clearance (Use as required)

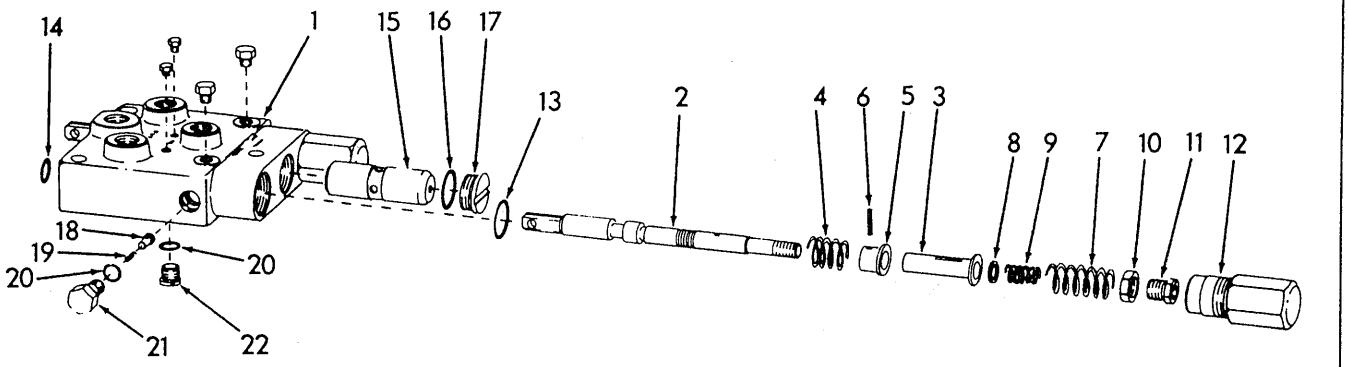

CONTROL VALVE ASSEMBLY

USAGE: See page 169. Tractor serial No. 19S12587 and up

ITEM	PART NO.	QTY.	DESCRIPTION
-	70688101	1	VALVE ASSY., control (Includes items 1 thru 22)
1	-------	1	BODY (Not serviced separately)
	70919134	2	PLUG, pipe, hex-hd., 1/8" NPT
	70919840	2	PLUG, pipe, hex-hd., 1/4" NPT
2	-------	2	PLUNGER (Not serviced separately)
3	70677636	2	SLEEVE, valve plunger
4	70677643	2	SPRING
5	70677637	2	BUSHING
6	70916168	2	PIN, spring, 1/8" x 3/4"
7	70684654	2	SPRING
8	70677641	2	WASHER, spring retaining
9	70677642	2	SPRING
10	70677639	2	NUT, adjusting
11	70677638	2	RETAINER, spring
12	70677634	2	CAP, valve plunger
13	70924416	2	O-RING (large)
14	70923645	2	O-RING (small)

(Continued)

CONTROL VALVE ASSEMBLY (Continued)

ITEM	PART NO.	QTY.	DESCRIPTION
15	-------	1	PLUNGER, flow divider (Not serviced separately)
16	70923988	1	O-RING, flow divider plug
17	70654523	1	PLUG ASSY., flow divider (Includes item 16)
18	70656190	2	PLUNGER, relief valve
19	70656192	2	SPRING, relief valve
20	70923663	3	O-RING, relief valve plug
21	70684864	2	PLUG ASSY., relief valve (Includes item 20)
22	71002154	1	PLUG ASSY. (Includes item 20)

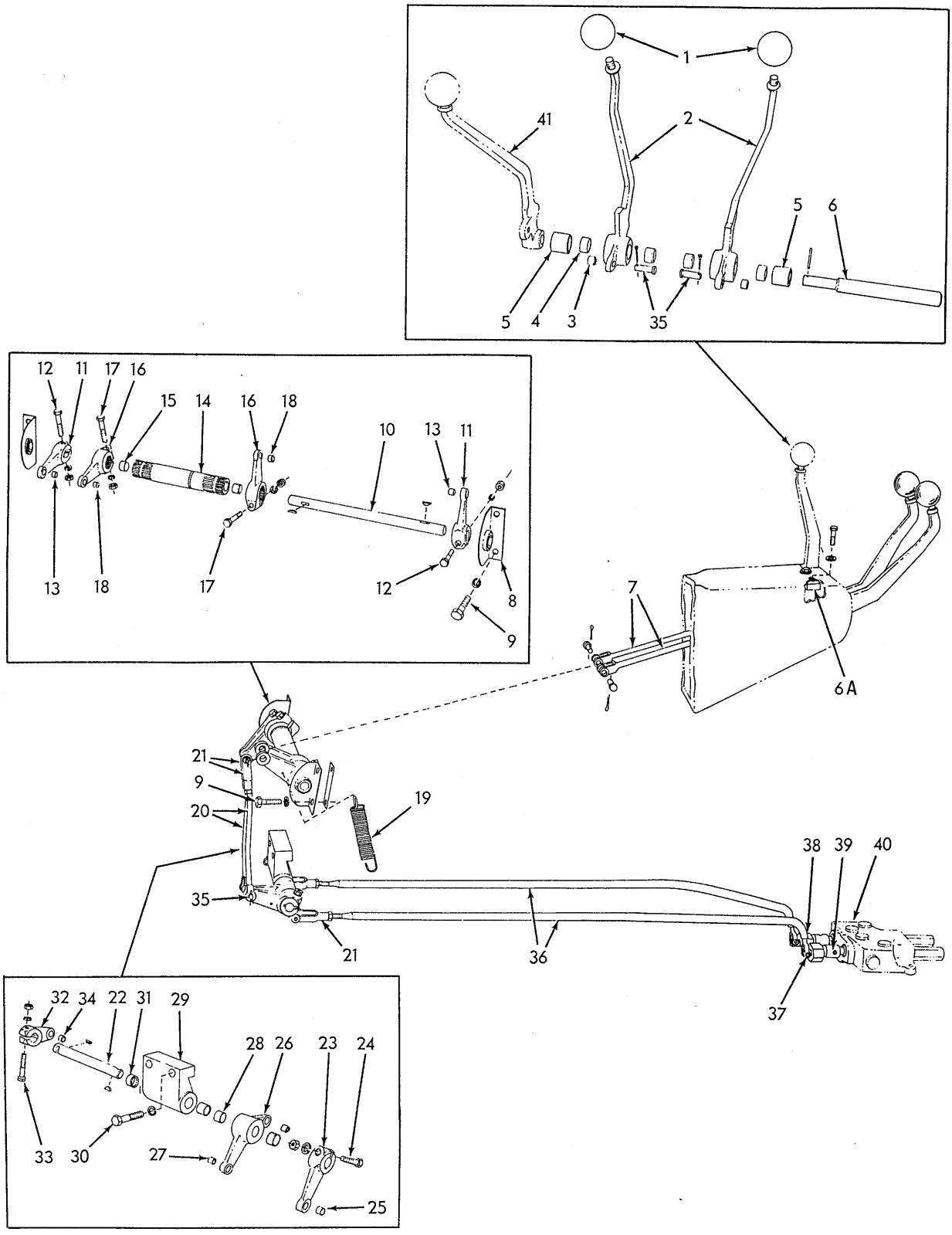

T-75093

STEERING LEVERS AND LINKAGE

STEERING LEVERS AND LINKAGE

ITEM	PART NO.	QTY.	DESCRIPTION
1	70090020	2	KNOB, steering lever
2	70630847	1	LEVER ASSEMBLY, steering, left (Includes items 3 and 4)
	70630848	1	LEVER ASSEMBLY, steering, right (Includes items 3 and 4)
3	70624584	2	BUSHING, steering lever (small)
4	70630795	4	BUSHING, steering lever (large)
5	70075053	2	SPACER, steering levers
6	70666261	1	SHAFT, steering levers
	70915797	1	PIN, spring, 3/16" x 1-1/4"
6A	70662487	1	BLOCK, lever stop
	70922763	2	CAPSCREW, 3/8" x 3/4"
	70677006	2	WASHER, plain
7	70666259	2	ROD, control, upper
8	70654656	2	BEARING ASSEMBLY, upper cross shaft (Includes bushing)
9	70927211	4	CAPSCREW, 3/8"NF x 3/4"
	70910287	4	LOCKWASHER, 3/8"
10	70629717	1	SHAFT, cross, upper
	70905123	2	KEY, #9 woodruff, 3/16" x 3/4"
11	70630837	2	LEVER ASSEMBLY, upper cross shaft (Includes item 13)
12	70920995	2	CAPSCREW, 3/8"NC x 2"
	70910287	2	LOCKWASHER, 3/8"
	70911026	2	NUT, 3/8"NC
13	70624584	2	BUSHING, upper cross shaft lever
14	70648956	1	TUBE ASSEMBLY, torque, upper cross shaft (Includes item 15)
15	70630795	2	BUSHING, torque tube
16	70630841	2	LEVER ASSEMBLY, torque tube (Includes item 18)
17	70920996	2	CAPSCREW, 3/8"NC x 2-1/4"
	70910287	2	LOCKWASHER, 3/8"
	70911026	2	NUT, 3/8"NC
18	70624584	2	BUSHING, torque tube lever
19	70043881	2	SPRING, cross shaft lever
20	70666404	2	ROD, control, vertical
	70911041	2	NUT, 3/8"NF
21	70628736	4	YOKE, control rod
22	70629454	1	SHAFT, cross, lower
	70905123	2	KEY, #9 woodruff, 3/16" x 3/4"
23	70630837	1	LEVER ASSEMBLY, lower cross shaft, left (Includes item 25)
24	70920995	1	CAPSCREW, 3/8"NC x 2"
	70910287	1	LOCKWASHER, 3/8"
	70911026	1	NUT, 3/8"NC

(Continued)

ITEM	PART NO.	QTY.	DESCRIPTION
25	70624584	1	BUSHING, lower cross shaft lever
26	70630852	1	BELLCRANK ASSEMBLY, lower cross shaft (Includes item 27 and 28)
27	70624584	2	BUSHING, lower cross shaft bellcrank (small)
28	70630795	2	BUSHING, lower cross shaft bellcrank (large)
29	70630850	1	BRACKET ASSEMBLY, lower cross shaft (Includes item 31)
30	70915987	2	CAPSCREW, 1/2"NC x 1-1/2"
	70912441	2	LOCKWASHER, 1/2"
31	70630795	2	BUSHING, lower cross shaft bracket
32	70630836	1	LEVER ASSEMBLY, lower cross shaft, right (Includes item 34)
33	70910948	1	CAPSCREW, 3/8"NC x 2"
	70910287	1	LOCKWASHER, 3/8"
	70911026	1	NUT, 3/8"NC
34	70624584	1	BUSHING, lower cross shaft lever
35	70078810	10	PIN, control linkage yokes
	70900801	10	PIN, cotter, 3/32" x 3/4"
36	70666807	1	ROD, control, lower left
	70666808	1	ROD, control, lower right
	70911041	2	NUT, 3/8"NF
37	70627451	2	PIN, lower control rod
	70900801	2	PIN, cotter, 3/32" x 3/4"
38	70656151	2	OVER-TRAVEL ASSEMBLY (Serviced only as a unit)
39	70630833	2	PIN, retaining, over-travel
	70900801	2	PIN, cotter, 3/132" x 3/4"
40	--------	1	VALVE, control (See CONTROL VALVE AND LINES)
41	--------	1	LEVER, throttle (See THROTTLE CONTROL)

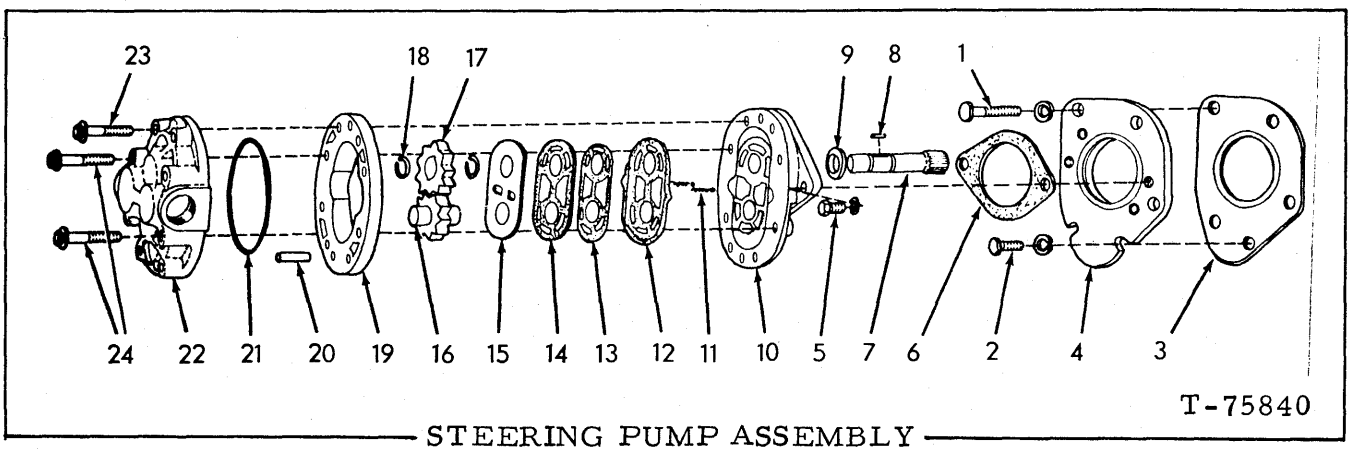

STEERING PUMP ASSEMBLY

USAGE: 17000 MKII engines. See page 179

ITEM	PART NO.	QTY.	DESCRIPTION
-	70666788	1	PUMP ASSY. (Includes items 4 thru 25)
1	70922848	3	CAPSCREW, 3/8"NC x 3-1/4"
	70910287	3	LOCKWASHER, 3/8"
2	70921569	2	CAPSCREW, 7/16"NC x 1-1/4"
	70914678	2	LOCKWASHER, 7/16"
3	74371742	1	GASKET, pump mounting
4	70653932	1	PLATE, adapting
5	70922063	2	CAPSCREW, 7/16"NC x 7/8"
	70914678	2	LOCKWASHER, 7/16"
6	70656179	1	GASKET, front plate
7	70674534	1	SHAFT, drive
8	70685182	1	KEY, pump gear
9	70650677	1	SEAL, oil
10	70653929	1	PLATE ASSY., front (Includes Bushings)
11	70650679	2	SPRING, check valve
	70915903	2	BALL, steel, 7/32" diam.
12	70650673	1	SEAL, front diaphragm
13	70650676	1	GASKET, diaphragm (thin)
14	70650675	1	GASKET, diaphragm (thick)
15	70650674	1	DIAPHRAGM, sealing, front
16	70674535	1	GEAR ASSY., idler (Includes shaft)
17	70674536	1	GEAR, pump
18	70653936	2	RING, snap, pump gear
19	70674533	1	BODY, center (Includes Bushings)
20	70927421	2	PIN, dowel
21	70926216	1	O-RING, rear plate
22	70674532	1	PLATE, rear
23	70935052	4	CAPSCREW, 12 pt., 5/16"NC x 2"
24	70927422	4	SCREW, 12 pt., 5/16"NC x 2-1/2"

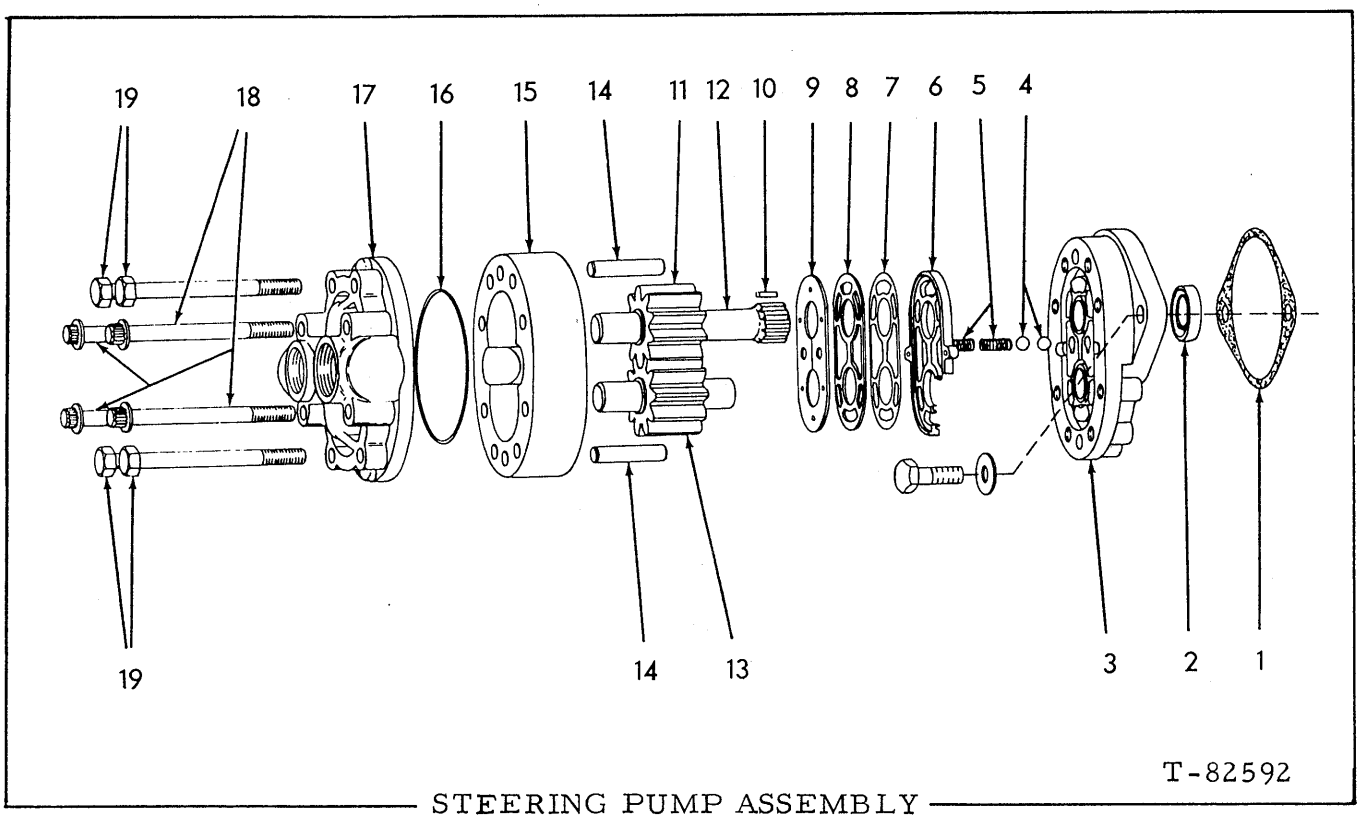

STEERING PUMP ASSEMBLY

USAGE: Tractor S/N 19S15213 and up with 6138 LT engine (See page 180B)

ITEM	PART NO.	QTY.	DESCRIPTION
-	73117231	1	PUMP ASSY. (Includes items 1 thru 19)
	70923016	2	CAPSCREW, 12-pt., 7/16"NC x 1-1/4"
	70930370	2	WASHER
1	70674412	1	GASKET
2	73119464	1	SEAL
3	70677550	1	PLATE
4	70915903	2	BALL, steel, 7/32"
5	70650679	2	SPRING
6	71178407	1	SEAL
7	71178408	1	GASKET
8	70650675	1	GASKET
9	73111871	1	DIAPHRAGM
10	70673454	1	KEY
11	70677555	1	GEAR
	70653936	1	RING, snap
12	73122083	1	SHAFT
13	73122078	1	IDLER GEAR ASSY. (Includes Gear, Shaft and Snap Ring)
14	70929476	2	PIN
15	73122084	1	BODY
16	70933855	1	O-RING
17	70678820	1	PLATE
18	70927422	4	CAPSCREW, 12-pt., 5/16"NC x 2-1/2"
19	70934735	4	CAPSCREW, 12-pt., 5/16"NC x 2-1/4"

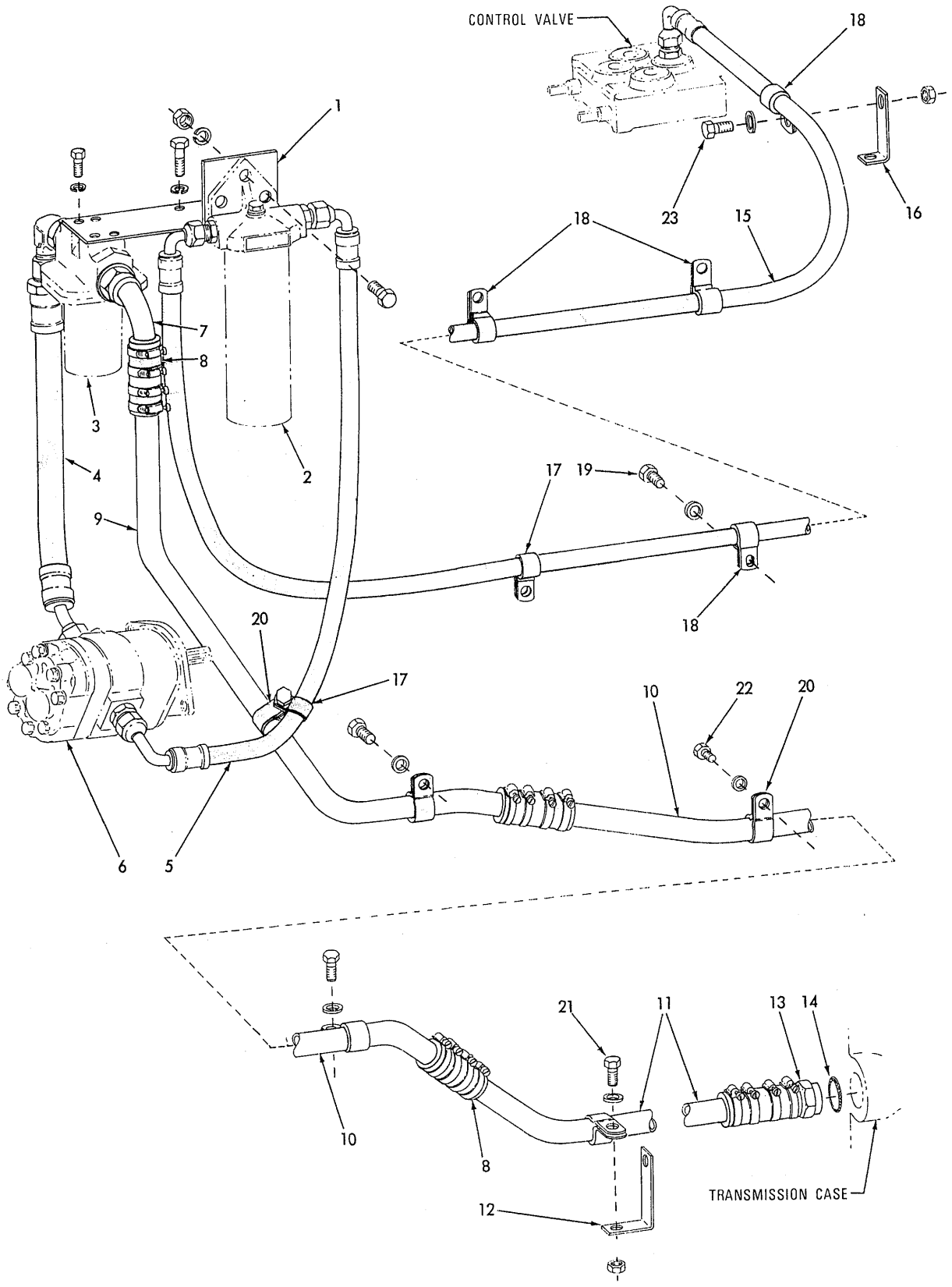

T-75812

HYDRAULIC STEERING CONTROL

HYDRAULIC STEERING CONTROL

USAGE: Tractors prior to S/N 19S15213 with 17000 MKII engine.

ITEM	PART NO.	QTY.	DESCRIPTION
1	70666789	1	BRACKET, filter and strainer supporting
	70921175	4	CAPSCREW, 1/2"NC x 1"
	70912441	4	LOCKWASHER, 1/2"
2	------	1	FILTER ASSY. (See page 181)
	70920583	3	CAPSCREW, 1/2"NC x 1-1/2"
	70912441	3	LOCKWASHER, 1/2"
	70911028	3	NUT, 1/2"NC
3	------	1	STRAINER ASSY. (See page 182)
	70922300	4	CAPSCREW, 3/8"NC x 3/4"
	70910287	4	LOCKWASHER, 3/8"
4	70666811	1	HOSE, strainer to pump (See HOSE PARTS)
	70923174	1	CONNECTOR, flare type, 1" tube, 1-1/16"NF male end (Includes O-RING)
	70921227	1	ELBOW, adjustable, 90°, flare type, 1" tube, 1-5/16"NF male end (Includes washer, nut and O-RING)
	70921206	1	O-RING, connector (1-1/8"O. D.)
	70921214	1	O-RING, elbow (1-3/8"O. D.)
5	70666809	1	HOSE, pump to filter (See HOSE PARTS)
	70923717	1	CONNECTOR, flare type, 1/2" tube, 7/8"NF male end (Includes O-RING)
	70921466	1	CONNECTOR, flare type, 1/2" tube, 3/4"NPT male
	70921205	1	O-RING, connector (15/16"O. D.)
6	------	1	PUMP ASSY. (See page 177)
7	70666745	1	ELBOW, strainer inlet (Includes O-RING)
	70921214	1	O-RING, elbow (1-3/8"O. D.)
8	70630636	4	HOSE, suction line
	70921912	16	CLAMP, hose
9	70666779	1	TUBE, suction line, front
10	70666785	1	TUBE, suction line, intermediate
11	70666778	1	TUBE, suction line, rear
12	70642535	1	ANGLE, tube supporting
13	70666753	1	ADAPTER, suction line
14	70921887	1	O-RING, suction line adapter
15	70666810	1	HOSE, filter to valve (See HOSE PARTS)
	70921466	1	CONNECTOR, flare type, 1/2" tube, 3/4"NPT
	70921409	1	CONNECTOR, flare type, 1/2" tube, 3/4"NF male end (Includes O-RING)
	70921349	1	O-RING, connector (13/16"O. D.)
16	70659175	1	ANGLE, hose supporting
	70922262	1	CAPSCREW, 3/8"NC x 7/8"
	70677006	2	WASHER, plain
	70911026	1	NUT, 3/8"NC

(Continued)

ITEM	PART NO.	QTY.	DESCRIPTION
17	70622992	2	CLIP, hose supporting
18	70644713	4	CLIP, hose supporting
19	70921175	4	CAPSCREW, 1/2"NC x 1"
	70677008	4	WASHER, plain
	70911028	1	NUT, 1/2"NC
20	70095869	5	CLIP, tube supporting
21	70921175	4	CAPSCREW, 1/2"NC x 1"
	70677008	3	WASHER, plain
	70911028	1	NUT, 1/2"NC
22	70922300	1	CAPSCREW, 3/8"NC x 3/4"
	70677006	1	WASHER, plain
23	70922262	1	CAPSCREW, 3/8"NC x 7/8"
	70677006	2	WASHER, plain
	70911026	1	NUT, 3/8"NC

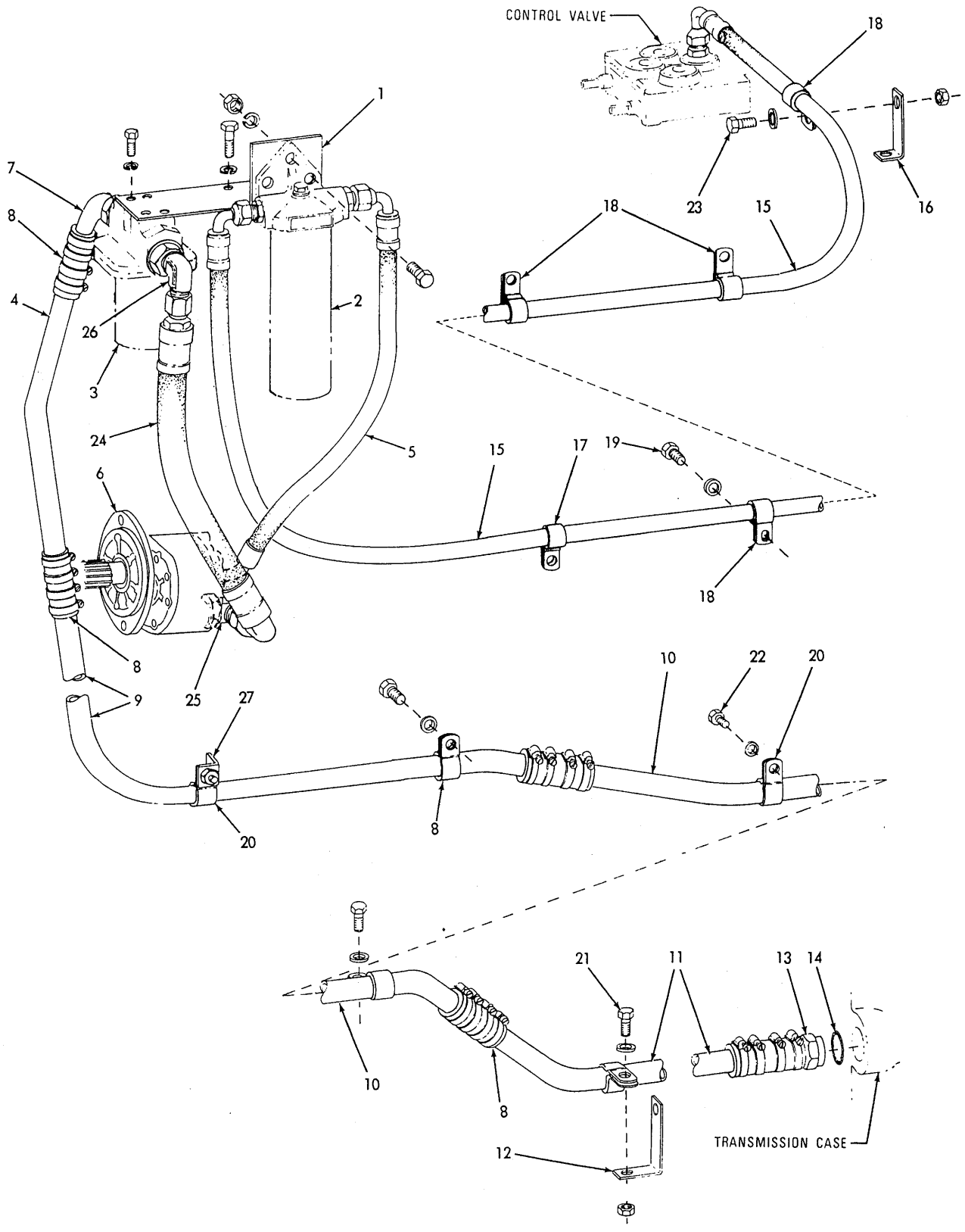

T-75812

HYDRAULIC STEERING CONTROL

180A (Added August 1980)

HYDRAULIC STEERING CONTROL

USAGE: Tractor S/N 19S15213 and up with 6138 LT engine

ITEM	PART NO.	QTY.	DESCRIPTION
1	70666789	1	BRACKET, filter and strainer supporting
	70921175	4	CAPSCREW, 1/2"NC x 1"
	70912441	4	LOCKWASHER, 1/2"
2	--------	1	FILTER ASSY. (See page 181)
	70920583	3	CAPSCREW, 1/2"NC x 1-1/2"
	70912441	3	LOCKWASHER, 1/2"
	70911028	3	NUT, 1/2"NC
3	--------	1	STRAINER ASSY. (See page 182)
	70922300	4	CAPSCREW, 3/8"NC x 3/4"
	70910287	4	LOCKWASHER, 3/8"
4	73117232	1	TUBE
5	73117233	1	HOSE (See HOSE PARTS)
6	--------	1	PUMP ASSY. (See page 177A)
7	70666745	1	ELBOW, strainer inlet (Includes O-Ring)
	70921214	1	O-RING, elbow (1-3/8"O.D.)
8	70630636	5	HOSE, suction line
	70921912	20	CLAMP, hose
9	73117236	1	TUBE
10	70666785	1	TUBE
11	70666778	1	TUBE
12	70642535	1	ANGLE, tube supporting
13	70666753	1	ADAPTER, suction line
14	70921887	1	O-RING, suction line adapter
15	70666810	1	HOSE, filter to valve (See HOSE PARTS)
	70921466	1	CONNECTOR, flare type, 1/2" tube, 3/4"NPT
	70921409	1	CONNECTOR, flare type, 1/2" tube, 3/4"NF male end (Includes O-Ring)
	70921349	1	O-RING, connector (13/16"O.D.)
16	70659175	1	ANGLE, hose supporting
	70922262	1	CAPSCREW, 3/8"NC x 7/8"
	70677006	2	WASHER, plain
	70911026	1	NUT, 3/8"NC
17	70622992	1	CLIP, hose supporting
18	70644713	4	CLIP, hose supporting
19	70921175	3	CAPSCREW, 1/2"NC x 1"
	70677008	3	WASHER, plain
20	70095869	5	CLIP, tube supporting
21	70921175	1	CAPSCREW, 1/2"NC x 1"
	70677008	1	WASHER, plain
	70911028	1	NUT, 1/2"NC
22	70922300	1	CAPSCREW, 3/8"NC x 3/4"
	70677006	1	WASHER, plain
23	70922262	1	CAPSCREW, 3/8"NC x 7/8"
	70677006	2	WASHER, plain
	70911026	1	NUT, 3/8"NC
24	73117235	1	HOSE (See HOSE PARTS)
25	70924026	1	ELBOW, adjustable
26	70921227	1	ELBOW
27	73117234	1	ANGLE
	70922262	1	CAPSCREW, 3/8"NC x 7/8"
	70677006	1	WASHER, plain
	70911026	1	NUT, 3/8"NC

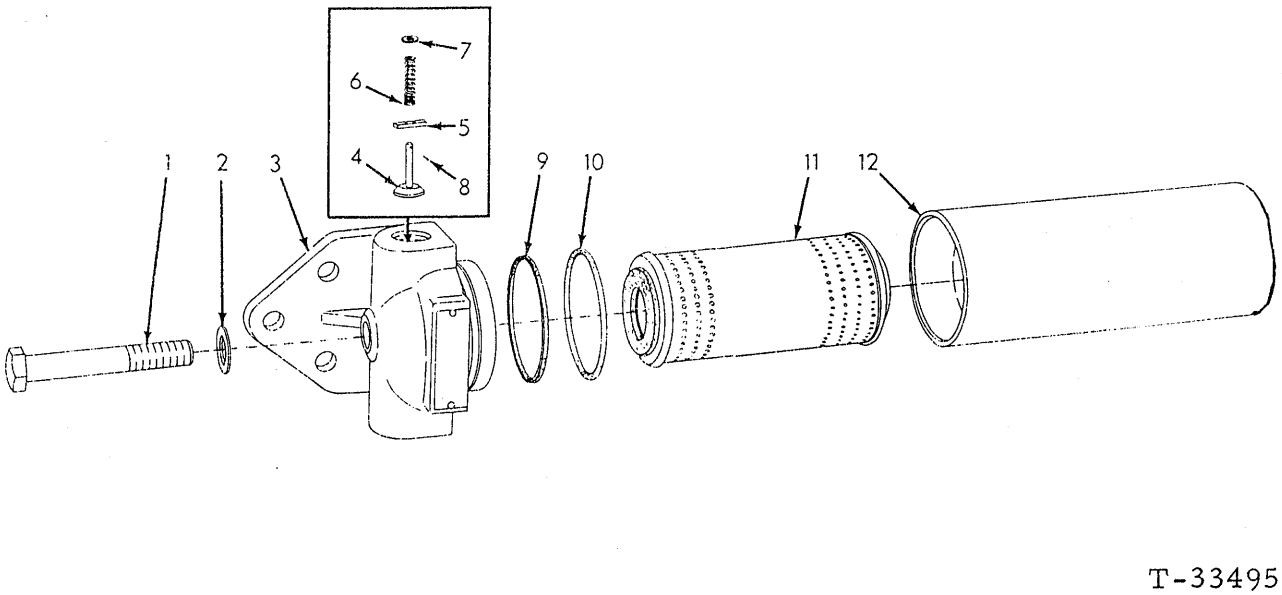

STEERING OIL FILTER ASSEMBLY

USAGE: See page 179 and 180B

ITEM	PART NO.	QTY.	DESCRIPTION
-	70631542	1	FILTER ASSY. (Consists of items 1 thru 12)
1	70925740	1	CAPSCREW, head retaining (5/8"NF x 4"
2	70631869	1	WASHER, head retaining capscrew
3	70631846	1	HEAD
4	70646302	1	VALVE, by-pass
5	70631868	1	SPANNER, by-pass valve
6	70631870	1	SPRING, by-pass valve
7	70632060	1	WASHER, by-pass valve spring
8	70900970	1	PIN, cotter, 1/16" x 1/2"
9	70632062	1	RING, sealing, filter head
10	70632063	1	O-RING, filter head
11	70631828	1	ELEMENT KIT (Includes items 2, 9 and 10)
12	70631872	1	TANK

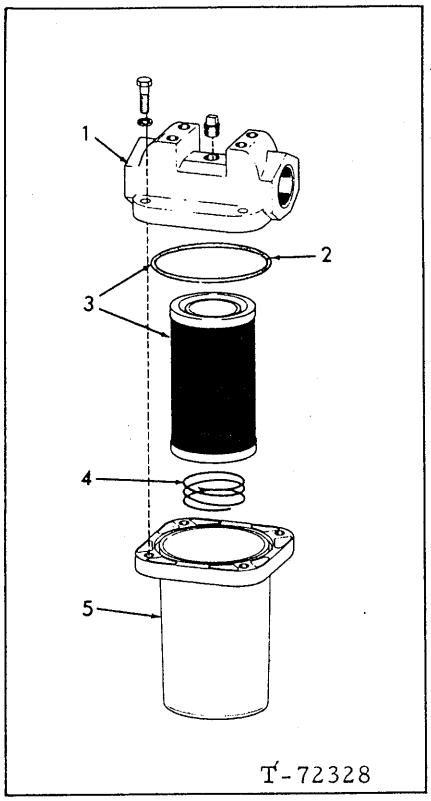

STEERING OIL STRAINER ASSEMBLY

USAGE: See page 179 and 180B

ITEM	PART NO.	QTY.	DESCRIPTION
-	70651388	1	STRAINER ASSY. (Consists of items 1 thru 5)
1	70651387	1	HEAD ASSY. (Includes PLUG indented below)
	70901651	1	PLUG, pipe, 1/8"NPT
	70927401	4	CAPSCREW, 1/4"NC x 1"
	70906958	4	LOCKWASHER, 1/4"
2	70651385	1	O-RING, body
3	70651506	1	ELEMENT KIT (Includes item 2)
4	70651384	1	SPRING, element
5	70651373	1	BODY, oil strainer

(Revised August 1980)

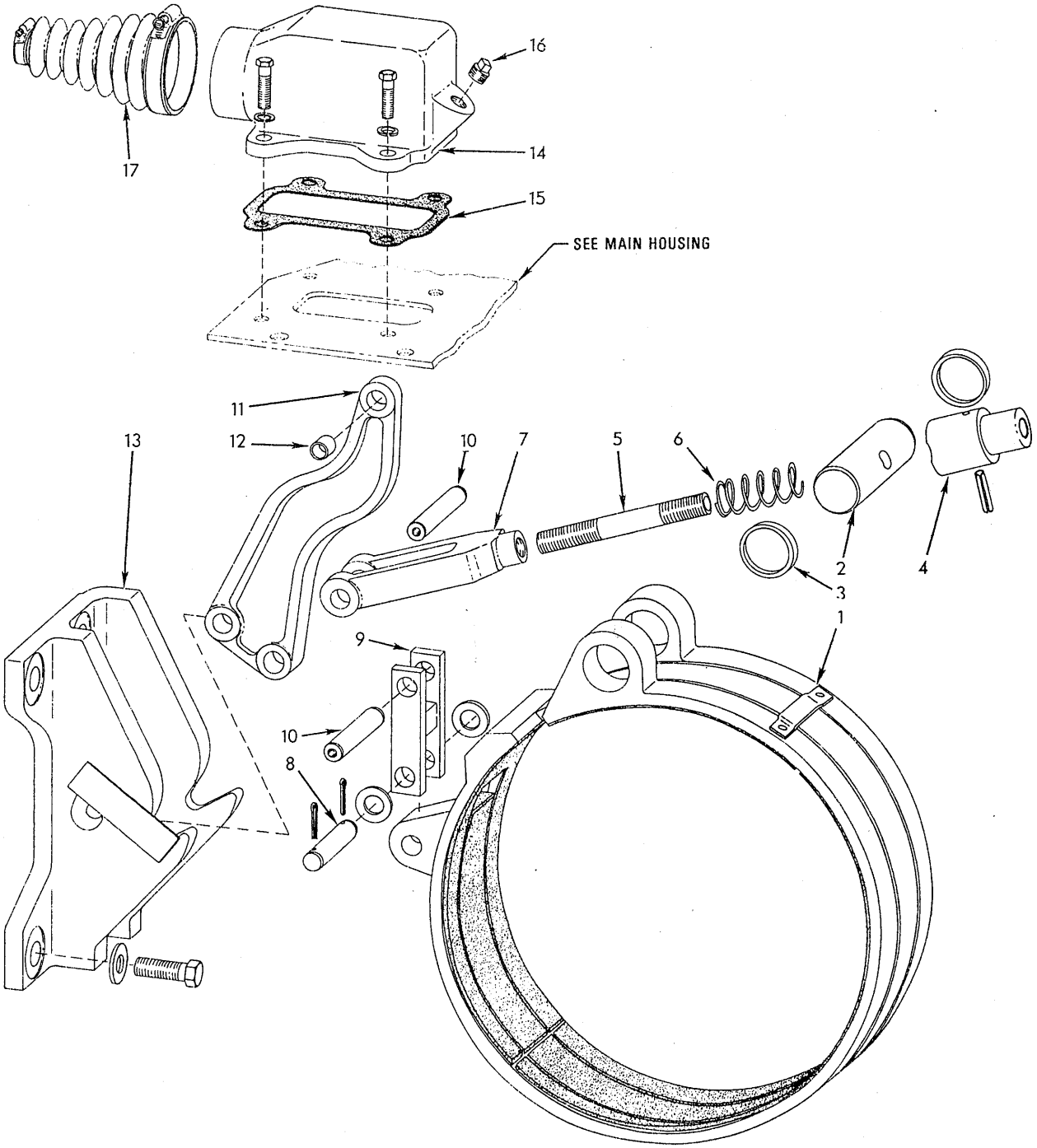

T-75821

BRAKES

ITEM	PART NO.	QTY.	DESCRIPTION
1	70666549	2	BAND (Tractors prior to unit#14959)
	70696333	2	BAND (Tractor unit #14959 and up)
2	70666391	2	PIN
3	70666540	4	SPACER
4	70666536	2	BLOCK
	70921272	2	PIN, spring, 3/16" x 1-3/4"
5	70669218	2	ROD
6	70628234	2	SPRING
7	70666426	2	YOKE
8	70666539	2	PIN
	70900806	4	PIN, cotter, 1/8" x 1"
	70910255	4	WASHER
9	70673761	2	YOKE
10	70666538	4	PIN
11	70664381	2	LEVER ASSY. (Includes item 12)
12	70052669	2	BUSHING
13	70672995	1	BRACKET
	70672996	1	BRACKET
	70927298	8	CAPSCREW, Nylok, 3/4"NF x 2"
	70929188	8	WASHER
14	70648795	2	COVER (If for first replacement on tractors unit #14211 and up, also order item 16)
	70927157	8	CAPSCREW, 3/8"NC x 1-3/8"
	70910287	8	LOCKWASHER, 3/8"
15	70649205	2	GASKET
16	70901653	2	PLUG, pipe, 3/8"NPT
17	70648167	2	BOOT
	70921914	2	CLAMP, 2-5/16" to 3-1/4" diam.
	70921911	2	CLAMP, 11/16" to 1-1/4" diam.

(Revised June 1978)

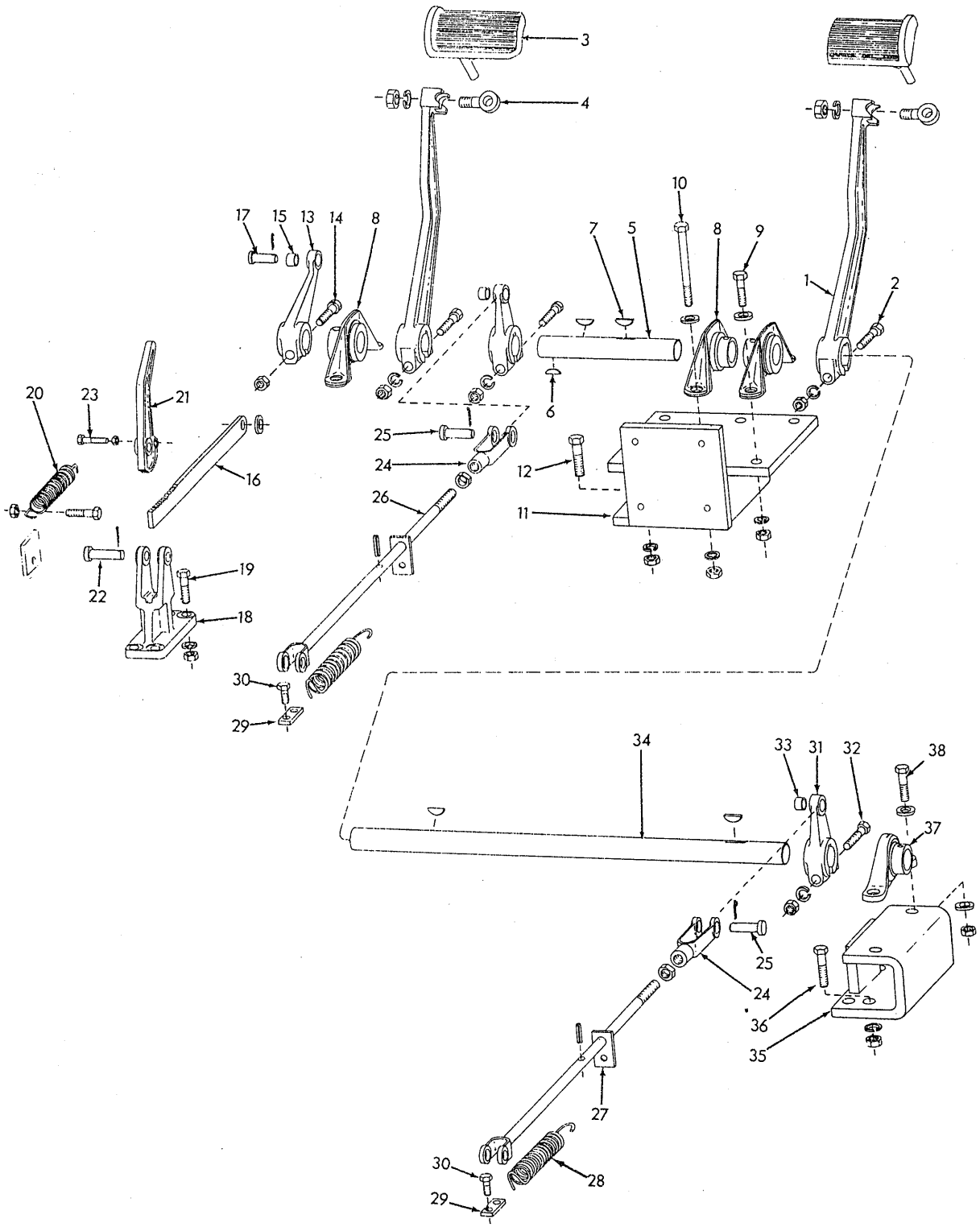

T-75819

BRAKE CONTROL

ITEM	PART NO.	QTY.	DESCRIPTION
1	70643032	2	LEVER, pedal
2	70922510	2	CAPSCREW, 1/2"NC x 2-3/4"
	70912441	2	LOCKWASHER, 1/2"
	70911028	2	NUT, 1/2"NC
3	70623151	2	PAD, pedal
4	70050433	2	EYE-BOLT, pedal pad
	70912942	2	LOCKWASHER, 5/8"
	70911044	2	NUT, 5/8"NF
5	70666534	1	SHAFT, left pedal
6	70052747	1	KEY, pedal shaft
7	70631883	4	KEY, pedal shafts
8	70650026	3	BEARING, pedal shafts
9	70920585	5	CAPSCREW, 1/2"NC x 1-3/4"
10	70921122	1	CAPSCREW, 1/2"NC x 5"
	70677008	6	WASHER, plain
	70912441	6	LOCKWASHER, 1/2"
	70911028	6	NUT, 1/2"NC
11	70655707	1	BRACKET, pedal shaft, left
12	70924864	3	CAPSCREW, 1/2"NC x 2-1/4"
	70912441	3	LOCKWASHER, 1/2"
	70911028	3	NUT, 1/2"NC
13	70631525	1	LEVER ASSY., parking brake (Includes item 15)
14	70922526	1	CAPSCREW, 1/2"NC x 2-1/2"
	70911028	1	NUT, 1/2"NC
15	70049988	1	BUSHING, parking brake lever
16	70666533	1	BAR, parking brake
17	70049993	1	PIN, parking brake bar
	70928188	1	WASHER, plain
	70900806	1	PIN, cotter, 1/8" x 1"
18	70650053	1	BRACKET, parking brake
19	70920585	4	CAPSCREW, 1/2"NC x 1-3/4"
	70912441	4	LOCKWASHER, 1/2"
	70911028	4	NUT, 1/2"NC
20	70043881	1	SPRING, parking brake
	70921565	1	CAPSCREW, 3/8"NC x 1-1/2"
	70911026	1	NUT, 3/8"NC
21	70672650	1	LOCK, parking brake
22	70033074	1	PIN, parking brake lock
	70900806	1	PIN, cotter, 1/8" x 1"
23	70923124	1	CAPSCREW, parking brake lock
	70911025	1	NUT, 5/16"NC
24	**70628730**	2	YOKE, brake rod

(Continued)

(Revised September 1979)

ITEM	PART NO.	QTY.	DESCRIPTION
25	70052671	4	PIN, brake rod
	70900806	4	PIN cotter, 1/8" x 1"
26	70677487	2	ROD, brake
	70911049	2	NUT, jam, 5/8"NF
	70916937	2	PIN, spring, 1/4" x 1-1/4"
27	70677482	2	PLATE, pedal retracting spring
28	70658737	2	SPRING, pedal retracting
29	70666485	2	STRIP, pedal retracting spring
30	70928798	2	CAPSCREW, 3/8"NC x 3/4"
31	70654767	2	LEVER ASSY., pedal shaft (Includes item 33)
32	70922510	2	CAPSCREW, 1/2"NC x 2-3/4"
	70912441	2	LOCKWASHER, 1/2"
	70911028	2	NUT, 1/2"NC
33	70052669	2	BUSHING, shaft lever
34	70666535	1	SHAFT, right pedal
35	70655702	1	BRACKET, pedal shaft, right
36	70924864	3	CAPSCREW, 1/2"NC x 2-1/4"
	70912441	3	LOCKWASHER, 1/2"
	70911028	3	NUT, 1/2"NC
37	70655958	1	BEARING, pedal shaft
38	70921556	2	CAPSCREW, 1/2"NC x 2"
	70677008	4	WASHER, plain
	70911028	2	NUT, 1/2"NC

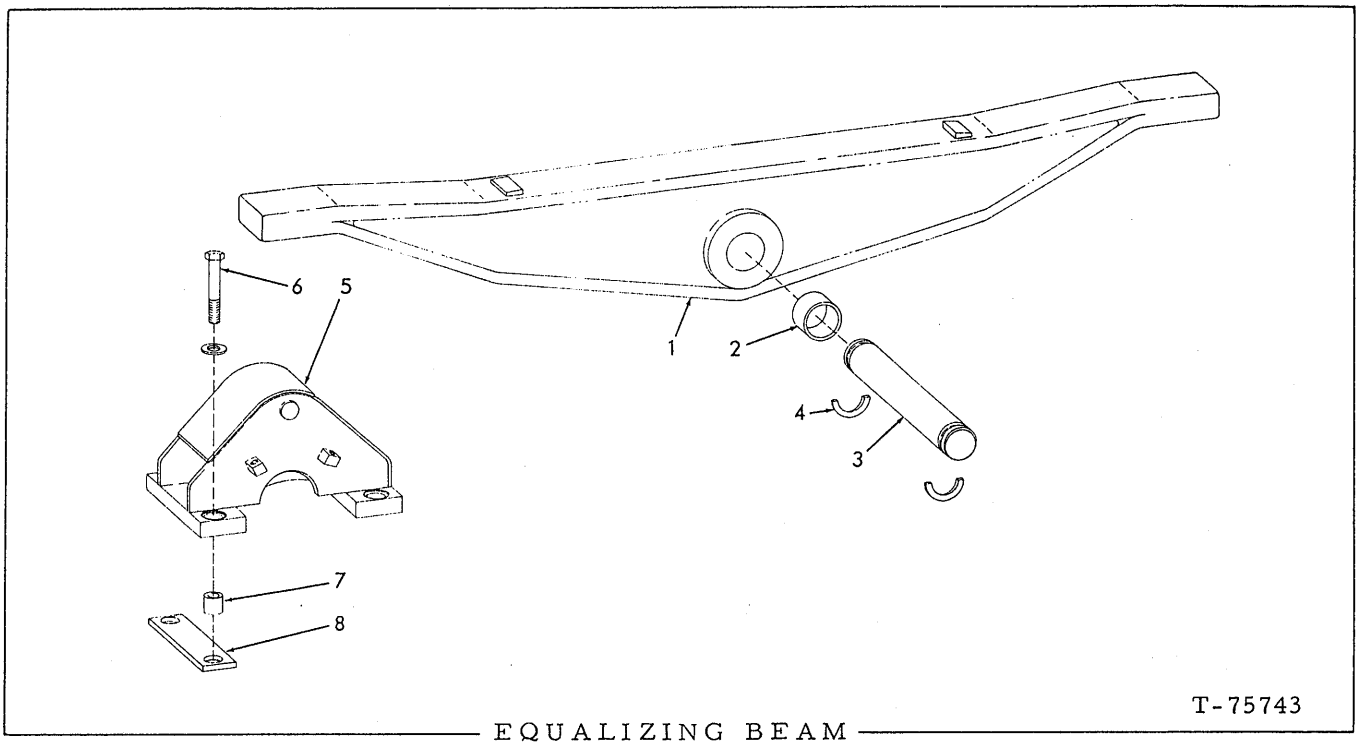

EQUALIZING BEAM

ITEM	PART NO.	QTY.	DESCRIPTION
1	70664921	1	BEAM ASSY. (Includes item 2)
2	70056166	2	BUSHING, beam pivot
3	70630502	1	PIN, beam pivot
4	70630503	2	RING, retaining, pivot pin
5	70664345	2	BRACKET, shock pad
6	70930481	8	CAPSCREW, 7/8"NF x 5-1/4"
	70676652	8	WASHER, plain
7	70664356	8	BUSHING, bracket spacing
8	70664278	4	PAD, shock (rubber)

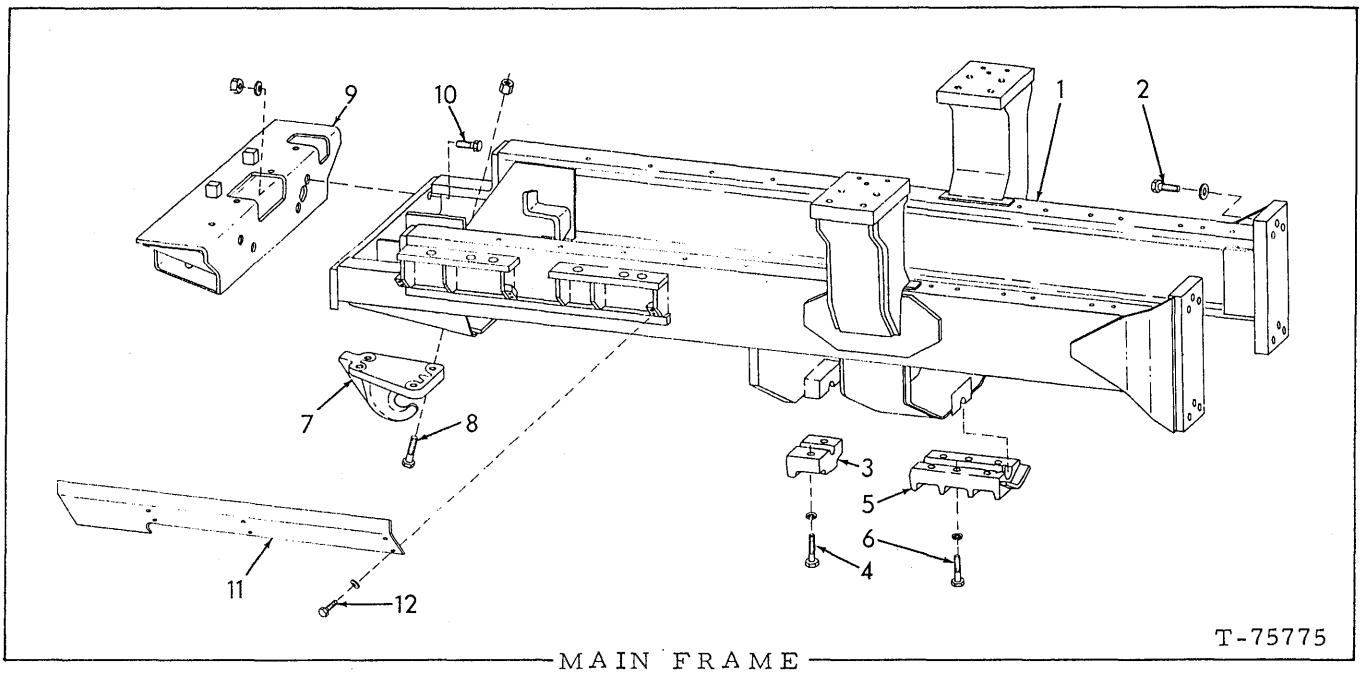

MAIN FRAME

ITEM	PART NO.	QTY.	DESCRIPTION	
1	70669301	1	FRAME ASSY., main (Includes items 3 thru 6) (Tractors prior to unit #12156, excluding #12151 and #12154)	
	70683235	1	FRAME ASSY., main (Includes items 3 thru 6)(Tractors unit #12156 and up, including #12151 and #12154)	
2	70924678	12	CAPSCREW, 1"NF x 3-1/4"	
	70678072	12	WASHER, plain	
3	70638968	1	CAP, equalizing beam pivot, front	
4	70925810	2	CAPSCREW, 1"NF x 3-1/2"	
	70914728	2	LOCKWASHER, 1"	
5	70642767	1	CAP, equalizing beam pivot, rear	
6	70925810	6	CAPSCREW, 1"NF x 3-1/2"	
	70914728	6	LOCKWASHER, 1"	
7	70040503	1	HOOK, front pull	Special equipment on tractors prior to unit #12651
8	70012762	4	CAPSCREW, 7/8"NF x 3-1/4"	
	70070400	2	NUT, high, 7/8"NF	
9	70661714	1	BUMPER, front (Tractors prior to unit #11503	Not used with front-mounted allied equipment
	70678235	1	BUMPER, front (Tractors unit #11503 and up	
10	70927015	4	CAPSCREW, 1"NC x 3"	
	70928452	4	WASHER, plain	
	70911032	4	NUT, 1"NC	
11	70662089	1	PLATE, closure, left	
	70662090	1	PLATE, closure, right	
12	70920582	12	CAPSCREW, 1/2"NC x 1-1/4"	
	70677008	12	WASHER, plain	

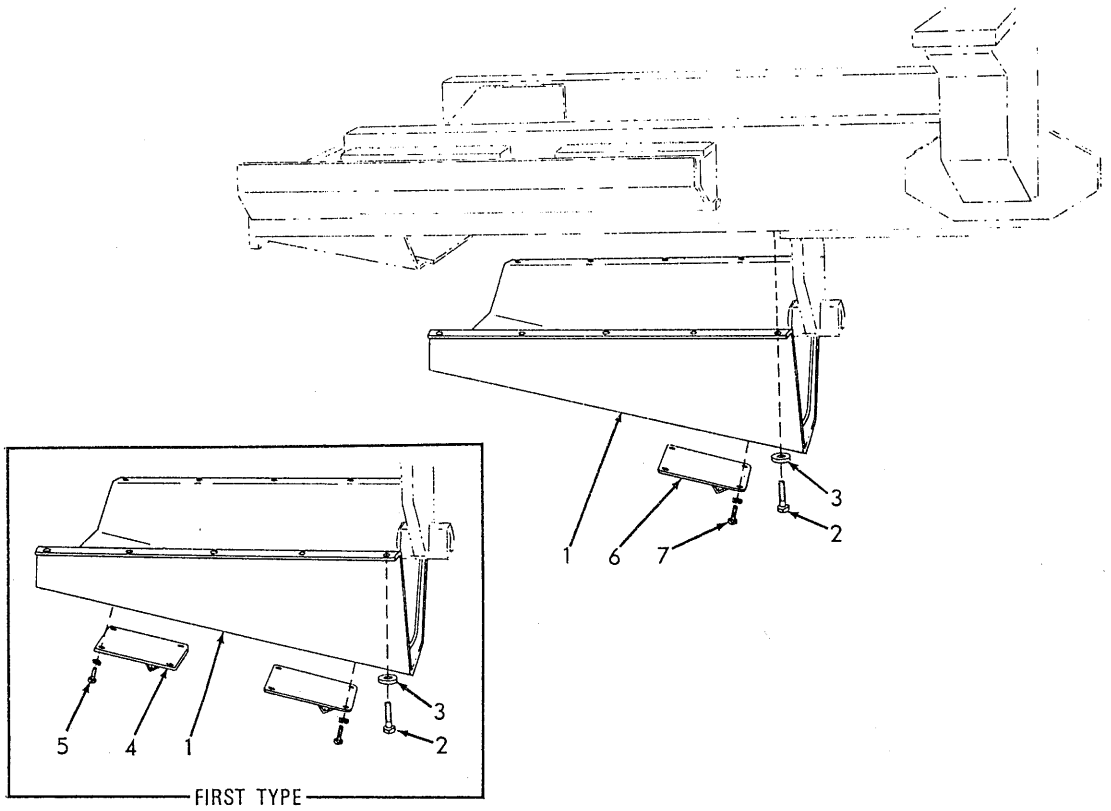

CRANKCASE GUARD

USAGE: Special equipment

ITEM	PART NO.	QTY.	DESCRIPTION	
1	70642713	1	GUARD ASSY., crankcase (Includes items 4 and 5)(Used prior approx. to November 12, 1973)	
	70683878	1	GUARD ASSY., crankcase (Includes items 6 and 7)(Effective approx. November 12, 1973)	
2	70921172	6	CAPSCREW, 5/8"NC x 2-1/4"	
	70921266	4	CAPSCREW, 5/8"NC x 3-1/4" (Rear position)	
3	70677010	10	WASHER, plain	
4	70091662	2	COVER, drain hole	Used prior to approx. November 12, 1973
5	70927353	8	CAPSCREW, 1/2"NF x 1-1/4"	
	70912441	8	LOCKWASHER, 1/2"	
6	70642743	1	PLATE, drain hole	Effective approx. November 12, 1973
7	70927353	4	CAPSCREW, 1/2"NF x 1-1/4"	
	70912441	4	LOCKWASHER, 1/2"	

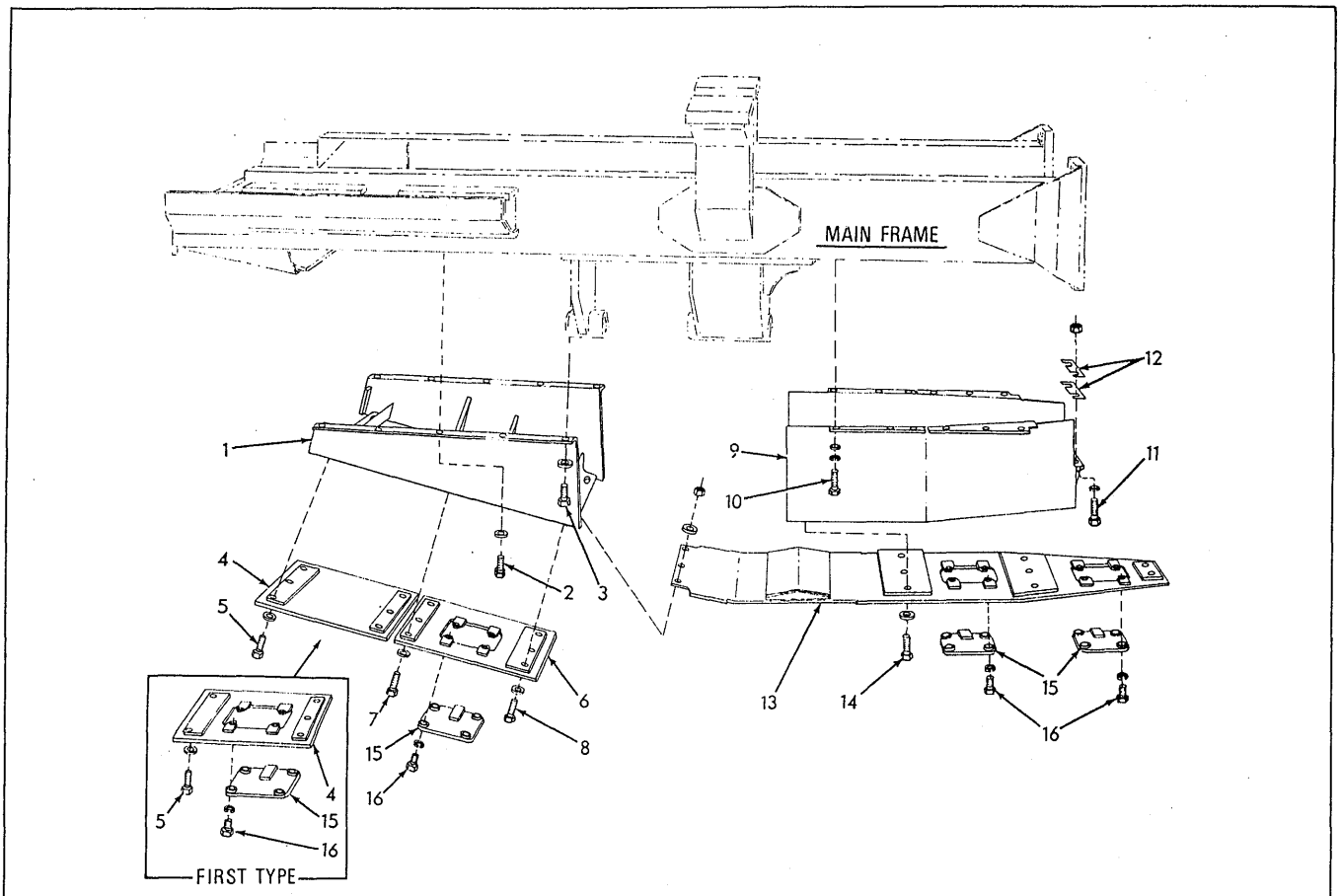

BOTTOM GUARDS

USAGE: Special equipment. For tractors engaged in logging operations

ITEM	PART NO.	QTY.	DESCRIPTION
1	70646192	1	FRAME, front
2	70921403	6	CAPSCREW, 5/8"NC x 2"
3	70921266	4	CAPSCREW, 5/8"NC x 3-1/4"
	70677010	10	WASHER, plain
4	70646162	1	PLATE ASSY., bottom, front section (Includes items 15 and 16) (Used prior to approximately January 18, 1974)
4	70683833	1	PLATE ASSY., bottom, front section (Effective approximately January 18, 1974)
5	70924149	6	CAPSCREW, 3/4"NF x 2-1/4"
	70677012	6	WASHER, plain
6	70646155	1	PLATE ASSY., bottom, center section (Includes items 15 and 16)
7	70924149	3	CAPSCREW, 3/4"NF x 2-1/4"
	70677012	3	WASHER, plain
8	70922789	3	CAPSCREW, 3/4"NC x 3"
	70677012	3	WASHER, plain
	70900820	3	WASHER, plain, U.S. Std., 3/4"
	70911030	3	NUT, 3/4"NC
9	70646157	1	FRAME, rear
10	70921266	12	CAPSCREW, 5/8"NC x 3-1/4"
	70677010	12	WASHER, plain
11	70922789	2	CAPSCREW, 3/4"NC x 3"
	70677012	2	WASHER, plain
	70911030	2	NUT, 3/4"NC

(Continued)

ITEM	PART NO.	QTY.	DESCRIPTION	
12	70631959	3	SHIM, rear frame (1/16" thick)	Use as required
	70631960	2	SHIM, rear frame (1/8" thick)	
13	70664968	1	PLATE ASSY., bottom, rear section (Includes items 15 and 16)	
14	70924149	8	CAPSCREW, 3/4"NF x 2-1/4"	
	70677012	8	WASHER, plain	
15	70646108	3	COVER, access holes (One additional used prior to approximately January 18, 1974)	
16	70916310	16	CAPSCREW, 1/2"NC x 1"	
	70904208	16	LOCKWASHER, 1/2"	

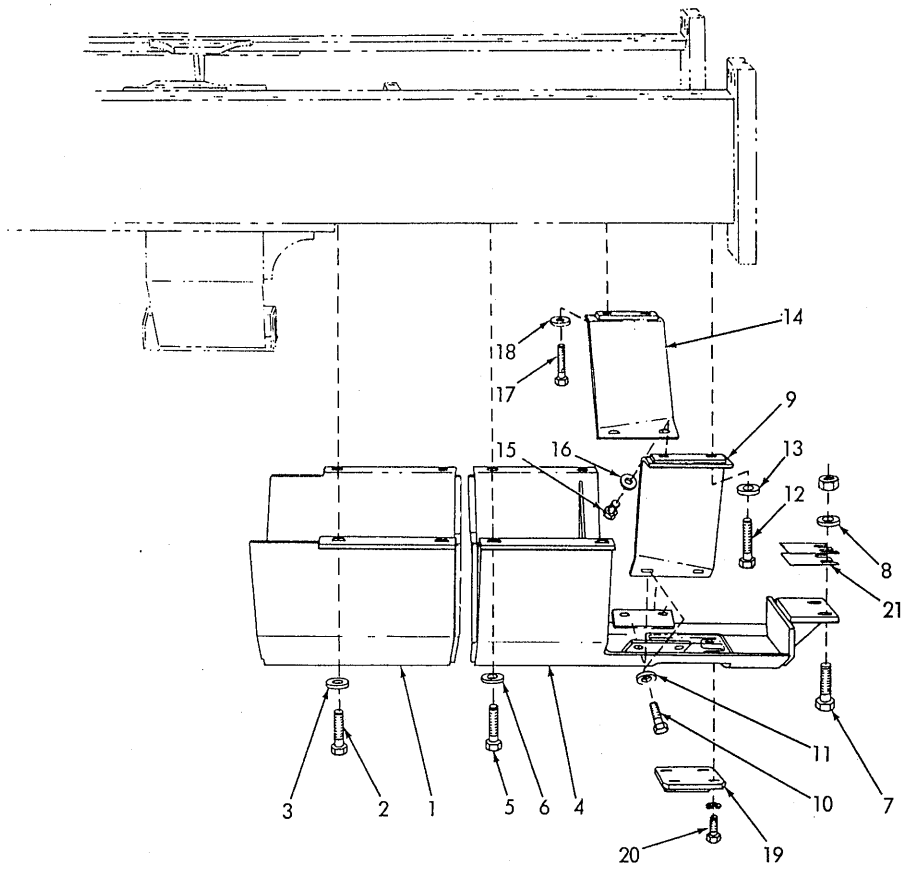

TRANSMISSION GUARDS

USAGE: Special equipment

ITEM	PART NO.	QTY.	DESCRIPTION
1	70642709	1	GUARD, transmission, front section
2	70921266	4	CAPSCREW, 5/8"NC x 3-1/4"
3	70677010	4	WASHER, plain
4	70642705	1	GUARD, transmission, rear section
5	70921266	4	CAPSCREW, 5/8"NC x 3-1/4"
6	70677010	4	WASHER, plain
7	70922744	2	CAPSCREW, 3/4"NC x 2-1/2"
8	70677012	2	WASHER, plain
	70911030	2	NUT, 3/4"NC
9	70642719	1	GUARD, transmission, left side
10	70927574	2	CAPSCREW, 1/2"NF x 1-3/8"
11	70677008	2	WASHER, plain
12	70921266	2	CAPSCREW, 5/8"NC x 3-1/4"
13	70677010	2	WASHER, plain
14	70642720	1	GUARD, transmission, right side
15	70927574	2	CAPSCREW, 1/2"NF x 1-3/8"
16	70677008	2	WASHER, plain
17	70921266	2	CAPSCREW, 5/8"NC x 3-1/4"
18	70677010	2	WASHER, plain
19	70633717	1	COVER, transmission oil drain
20	70920582	4	CAPSCREW, 1/2"NC x 1-1/4"
	70912441	4	LOCKWASHER, 1/2"
21	70631959	1	SHIM, rear guard (1/16" thick) } Use as required
	70631960	2	SHIM, rear guard (1/8" thick) } Use as required

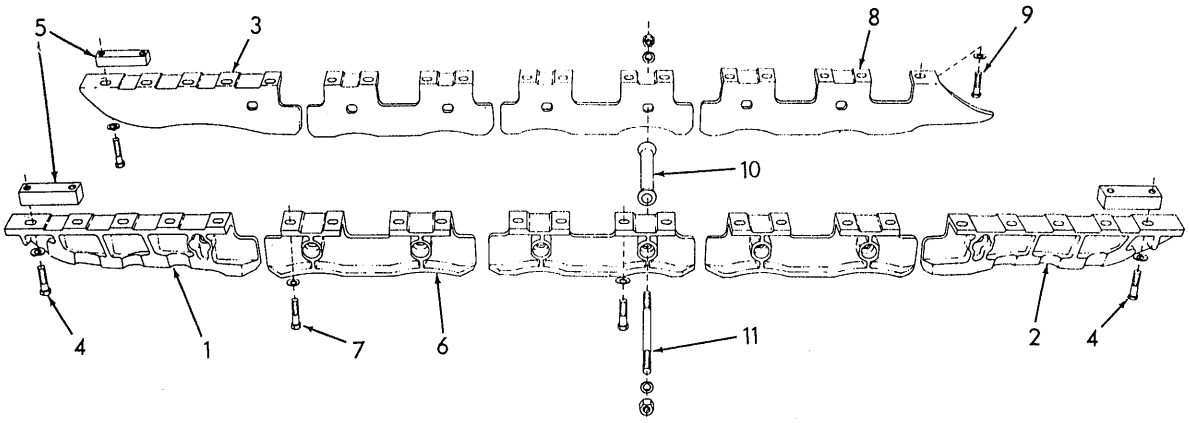

T-75776

TRACK ROLLER GUARDS

USAGE: Special equipment

* Partial guarding
** Full guarding

ITEM	PART NO.	QTY. *	QTY. **	DESCRIPTION
1	70649107	1	1	GUARD, outer, front section, left side
	70649108	1	1	GUARD, outer, front section, right side
2	70649108	1	1	GUARD, outer, rear section, left side
	70649107	1	1	GUARD, outer, rear section, right side
3	70649108	1	1	GUARD, inner, front section, left side
	70649107	1	1	GUARD, inner, front section, right side
4	70926380	30	30	CAPSCREW, guard attaching (3/4"NF x 3-1/2")
	70677012	30	30	WASHER, plain
5	70632323	12	12	BLOCK, tapped, end guard attachment
6	70661229	-	10	GUARD, intermediate section
7	70926380	-	40	CAPSCREW, 3/4"NF x 3-1/2"
	70677012	-	40	WASHER, plain
8	70661927	-	1	GUARD, rear inner section, left side
	70661928	-	1	GUARD, rear inner section, right side
9	70926380	-	10	CAPSCREW, 3/4"NF x 3-1/2"
	70677012	-	10	WASHER, plain
10	70082915	2	14	SPACER, guard bracing
11	70655193	2	14	ROD, guard bracing (7/8"NF x 14-3/8")
	70676122	4	28	WASHER
	70911046	4	28	NUT, 7/8"NF

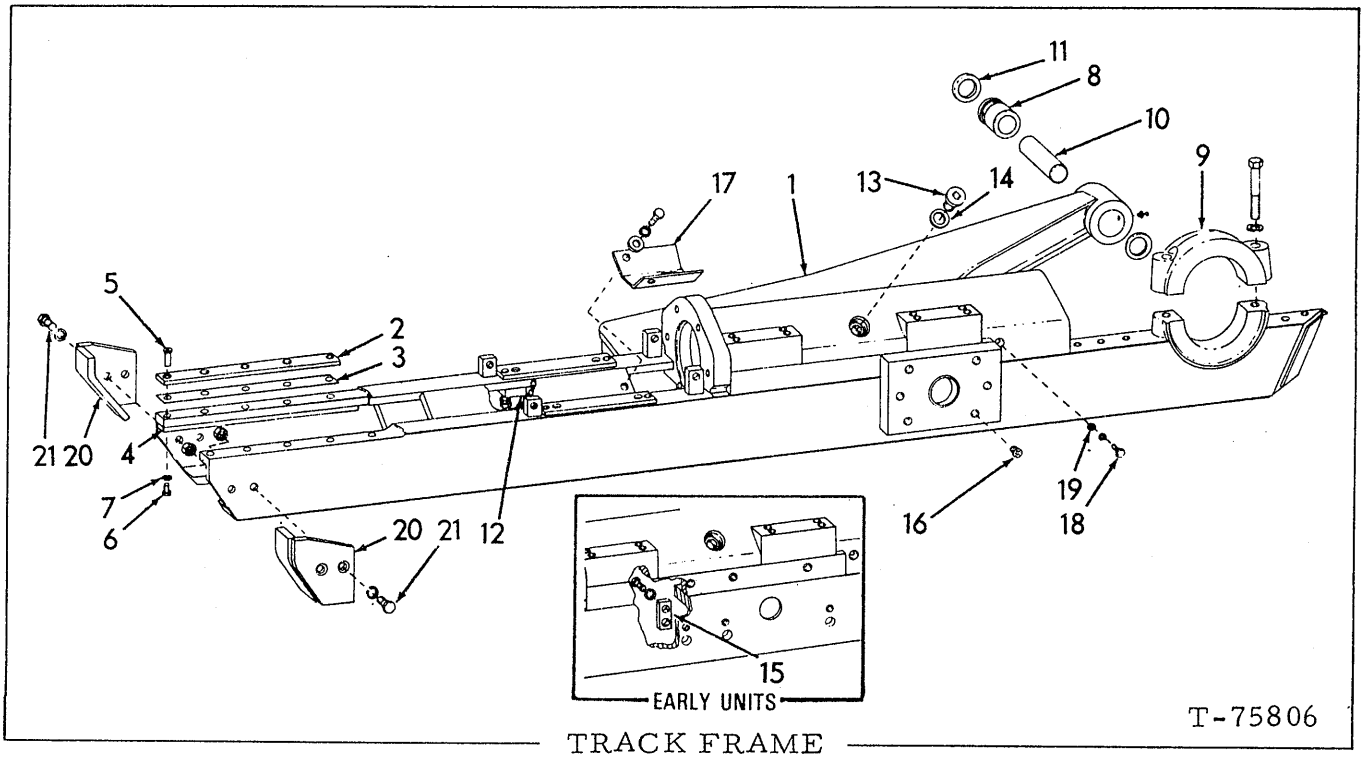

TRACK FRAME

ITEM	PART NO.	QTY.	DESCRIPTION
1	70661627	1	FRAME ASSY., left (Tractors prior to unit #12112. Order 1 FRAME ASSY. 70678971 and 1 SERVICE KIT 70680119)
	70678971	1	FRAME ASSY., left (Tractors unit #12112 thru #13184 including #13187)
	70690393	1	FRAME ASSY., left (Tractors unit #13185 thru #14926 excluding #13187)
	70696977	1	FRAME ASSY., left (Tractors unit #14927 and up)
	70661628	1	FRAME ASSY., right (Tractors prior to unit #12112. Order 1 FRAME ASSY. 70678972 and 1 SERVICE KIT 70680120)
	70678972	1	FRAME ASSY., right (Tractors unit #12112 thru #13184 including #13187)
	70690394	1	FRAME ASSY., right (Tractors unit #13185 thru #14926 excluding #13187)
	70696978	1	FRAME ASSY., right (Tractors unit #14927 and up)
	70914465	2	FITTING, lubricating, straight, 1/8"NPT
			NOTE: Each Frame Assy. listed above includes items 8 and 9
2	70639021	4	BAR, slide, track idler, upper
3	70637701	4	SHIM, slide bar (.014" thick) } Use as required. Trac-
	70632580	8	SHIM, slide bar (.028" thick) } tors prior to S/N19S13870)
4	70631031	4	BAR, slide, track idler, lower
5	70631034	20	DOWEL, tapped, slide bar retaining
6	70923276	20	CAPSCREW, 3/8"NF x 1"
7	70647080	20	WASHER
8	70664512	2	BUSHING, pivot shaft (5-3/8" long)

(Continued)

(Revised May 1977)

ITEM	PART NO.	QTY.	DESCRIPTION	
9	70069810	2	CAP, sprocket shaft bearing	
	70928175	4	CAPSCREW, 1-1/4"NF x 6"	
	70914730	4	LOCKWASHER, 1-1/4"	
10	70664509	2	SHAFT, pivot	
11	70664511	4	SEAL, grease, pivot shaft (1/4" wide)	
12	70664341	8	BLOCK, equalizing beam seat (7/8" tapped hole)	
	70921174	8	CAPSCREW, 5/8"NC x 2-1/4"	
	70912942	8	LOCKWASHER, 5/8"	
13	70035250	2	PLUG, filling hole	
14	70667252	2	GASKET, filling hole plug	
15	70664340	6	BLOCK, tapped (For mounting dozing equipment)	Tractors prior to unit #13185 including #13187
	70921403	6	CAPSCREW, 5/8"NC x 2"	
	70912942	6	LOCKWASHER, 5/8"	
16	70662788	6	CORK, thread protecting (1" diam.)(For protecting dozer mounting holes)	
17	70677705	2	PLATE, closure (Tractors prior to unit #12112)	
	70678974	2	PLATE, closure (Tractors unit #12112 thru #12154)	
	70686281	2	PLATE, closure (Tractors unit #12155 thru #14926)	
	70696901	2	PLATE, closure (Tractors unit #14927 and up)	
	70927172	4	CAPSCREW, 1/2"NC x 1-1/8"	Tractors prior to unit #14927
	70677008	4	WASHER	
	70921535	4	CAPSCREW, 5/8"NC x 1-3/4"	Tractors unit #14927 and up
	70928169	10	WASHER	
18	70916270	2	CAPSCREW, oil level check (3/8"NC x 1/2")	
	70922464	2	WASHER	
19	70663967	2	WASHER, sealing, oil level capscrew	
			NOTE: Items listed below are Special Equipment	
20	70656749	2	GUARD, end, left hand	
	70656750	2	GUARD, end, right hand	
21	70921565	8	CAPSCREW, 5/8"NC x 1-3/4"	
	70912942	8	LOCKWASHER, 5/8"	
	70911029	8	NUT, 5/8"NC	

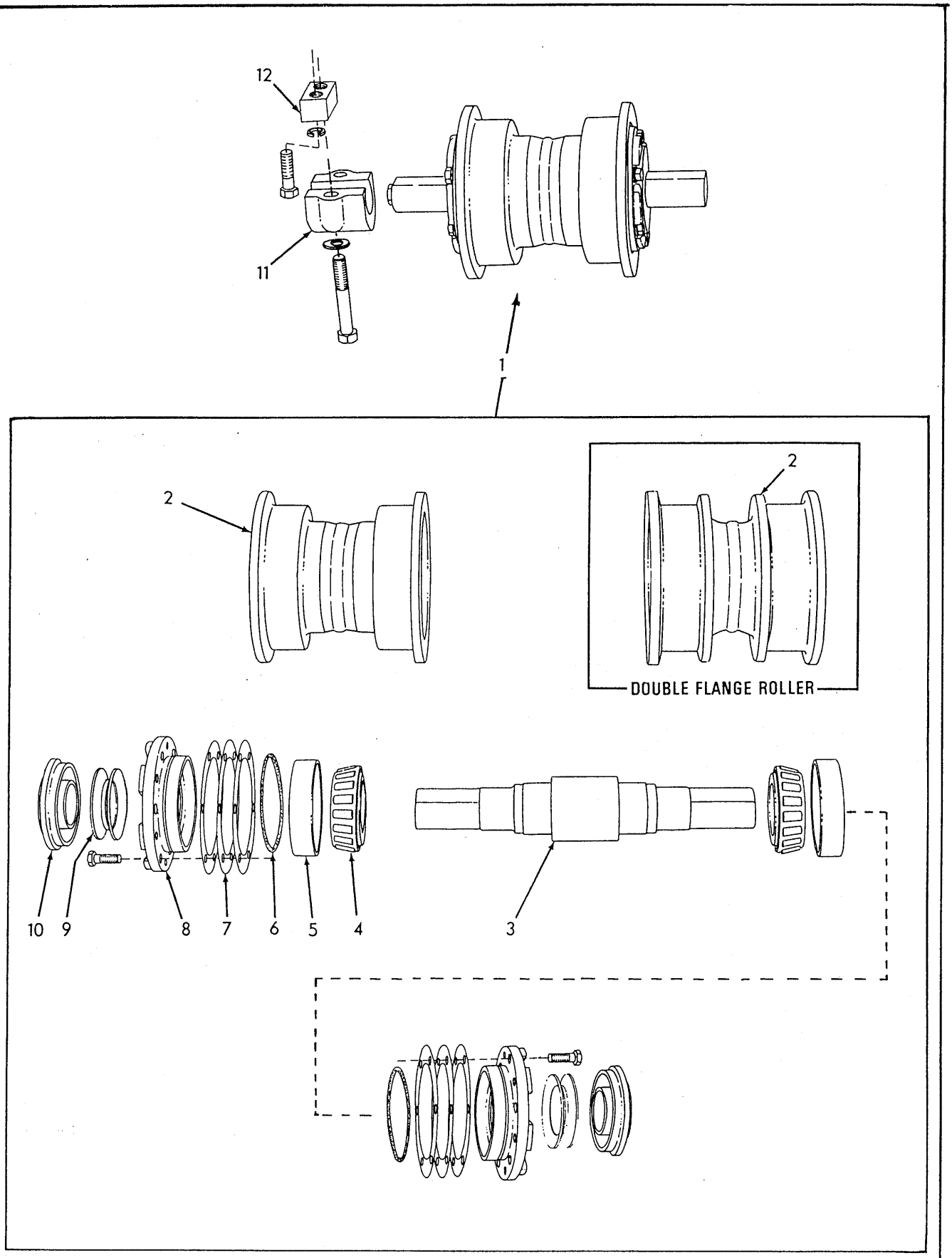

TRACK ROLLER
(Bearing type)

T-5149

(Revised April 1980)

TRACK ROLLER (Bearing type)

USAGE: Standard equipment on tractors prior to S/N 19S15282; also on tractors S/N 19S15368 and up. For tractors S/N 19S15282 thru 19S15367, see page 199A.

* Tractors prior to serial No. 19S10486
** Tractors serial No. 19S10486 and up

ITEM	PART NO.	QTY. *	QTY. **	DESCRIPTION	
1	70673418	1	-	ROLLER ASSY., single flange	Each consists of items 2 thru 10
	70675323	-	1	ROLLER ASSY., single flange	
	70673420	1	-	ROLLER ASSY., double flange	
	70675327	-	1	ROLLER ASSY., double flange	
2	70673419	1	-	ROLLER, single flange	
	70675322	-	1	ROLLER, single flange	
	70673421	1	-	ROLLER, double flange	
	70675326	-	1	ROLLER, double flange	
3	70622002	1	1	SHAFT	
4	70673415	2	2	CONE ASSY., bearing	
5	70680631	2	2	CUP, bearing	
6	70924772	2	2	O-RING, retainer (Tractors prior to unit #10495)	
	70923821	-	2	O-RING, retainer (Tractors unit #10495 and up)	
7	70655464	4	4	SHIM, bearing adjustment (.003" thick)	Use as required
	70077287	4	4	SHIM, bearing adjustment (.007" thick)	
	70077286	4	4	SHIM, bearing adjustment (.010" thick)	
	70077285	2	2	SHIM, bearing adjustment (.032" thick)	
8	70670074	2	2	RETAINER, bearing (Tractors prior to unit #10495)	
	70680417	-	2	RETAINER, bearing (Tractor unit #10495 and up)	
	70680419	12	12	CAPSCREW, 1/2"NF x 1-1/4"	
9	70670071	2	2	SEAL ASSY. (Includes item 13)	
10	70670073	2	2	RETAINER, seal	
11	70681565	2	2	BRACKET, attaching	
	70925947	4	4	CAPSCREW, 3/4"NF x 4-1/4"	
	70926201	4	4	WASHER, plain	
12	70631290	4	4	BLOCK, attaching capscrews	Not used when Track Roller Guards are installed
	70921171	4	4	CAPSCREW, 3/4"NF x 2-3/4"	
	70914726	4	4	LOCKWASHER, 3/4"	
13	70690649	-	-	RING SET, seal (Enables replacement of the rubber sealing washers without having to replace the steel sealing rings or the entire Seal Assy.)(Includes 2 sealing washer, sufficient to service 1 Seal Assy.)	

NOTE: All quantities indicated above are for (1) roller only. The number of rollers used is 6 single flange and 8 double flange.

(Revised April 1980)

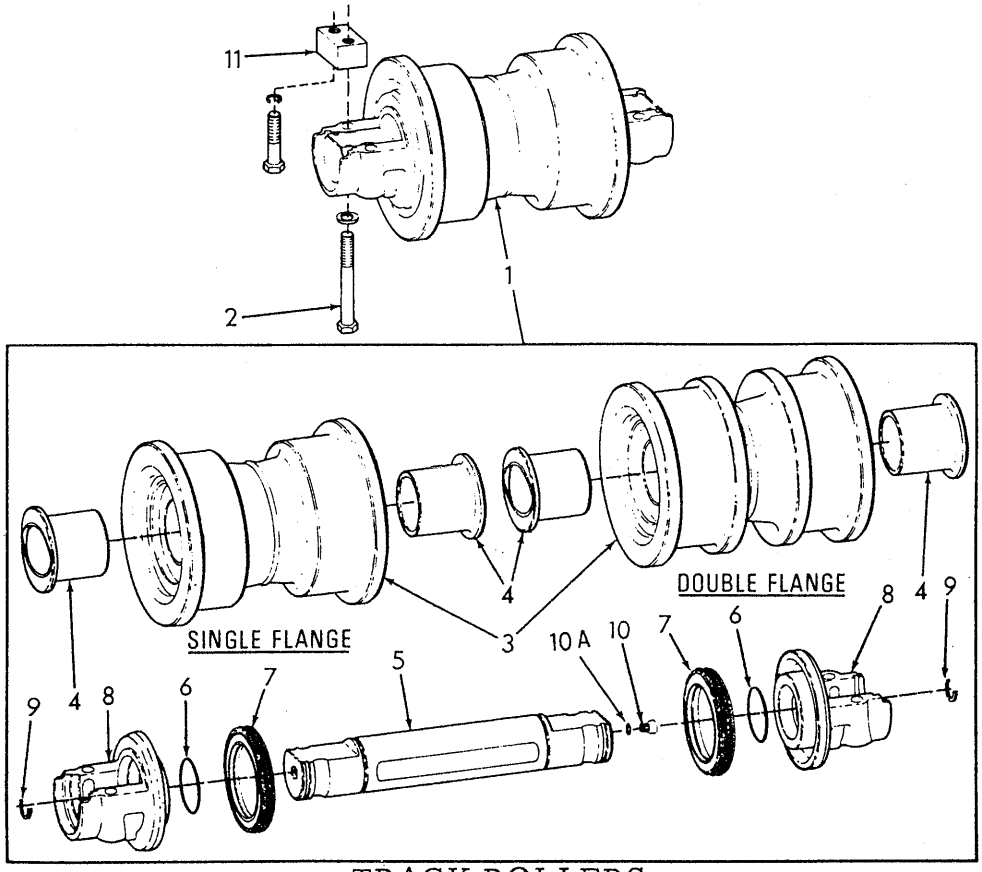

TRACK ROLLERS
(Bushing type)

USAGE: Standard on tractors S/N 19S15282 thru 19S15367. Special on earlier units. For tractors prior to S/N 19S15282 and tractors S/N 19S15368 and up, see page 199.

ITEM	PART NO.	QTY.	DESCRIPTION
1	70699179	6	ROLLER ASSY., single-flange } Each includes
	70699180	6	ROLLER ASSY., double-flange } items 3 thru 10
2	70927423	56	CAPSCREW, 3/4"NF x 5"
	70926201	56	WASHER
3	70699181	6	ROLLER ASSY., single-flange } Each includes item 4
	70699182	8	ROLLER ASSY., double-flange }
			NOTE: Quantities listed below are for one (1) roller only.
4	70699190	2	BUSHING, roller
5	70699191	1	SHAFT
6	14464980	2	O-RING, shaft
7	73121457	2	SEAL
8	70699192	2	RETAINER
9	70699193	4	RING, retaining
10	04982082	1	PLUG, shaft (Early design. Does not require O-RING)
	70689291	1	PLUG, shaft (Late design. Requires O-RING)
10A	70923847	1	O-RING (Used with late design PLUG)
11	70631290	4	BLOCK, attaching capscrews } Not used when
	70921171	4	CAPSCREW, 3/4"NF x 2-3/4" } track roller guards
	70914726	4	LOCKWASHER, 3/4" } are installed

(Revised April 1980)

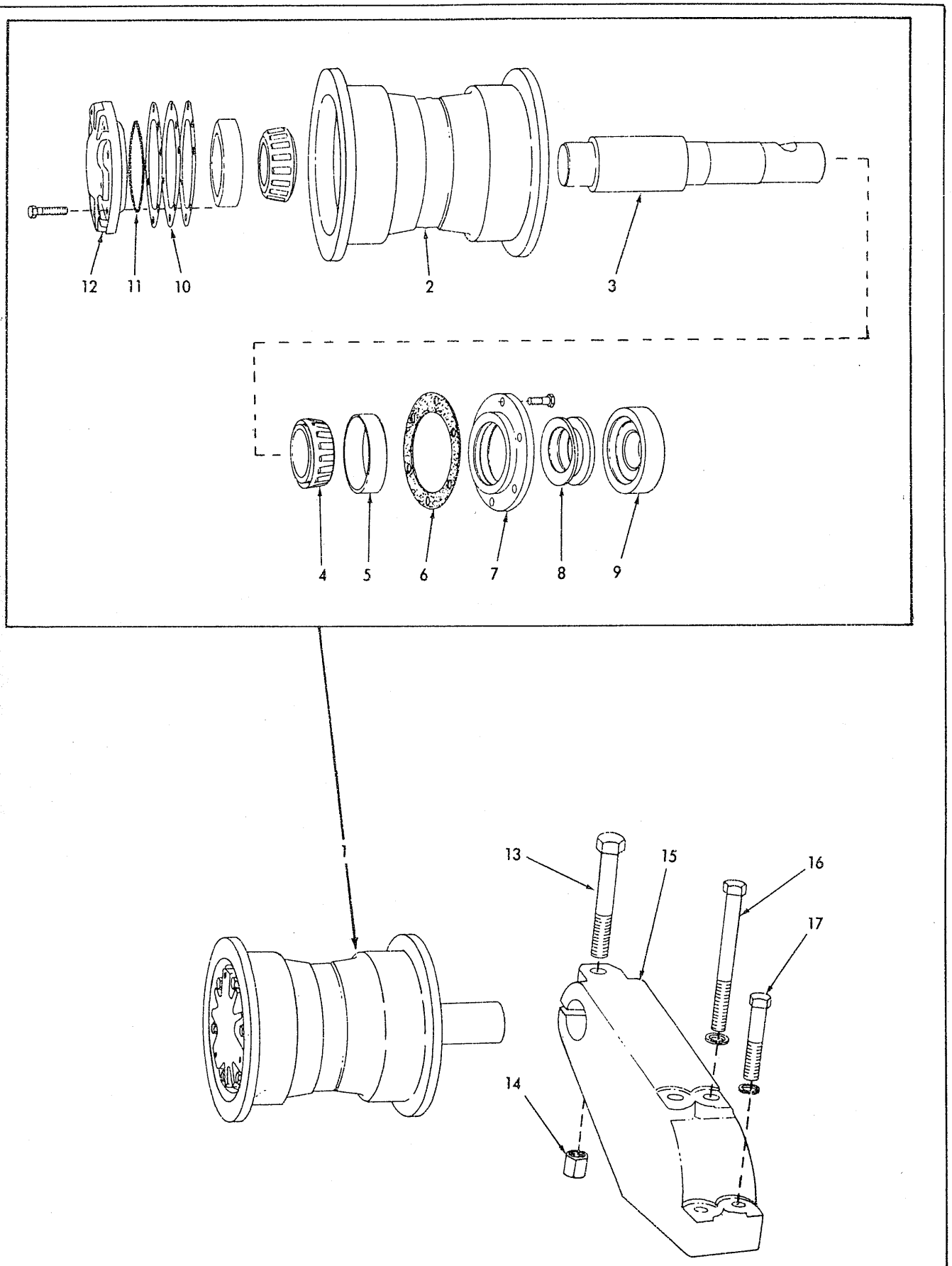

T-75875

TRACK CARRIER ROLLER

TRACK CARRIER ROLLER

USAGE: *Original equipment
**Service replacement

ITEM	PART NO.	QTY. *	QTY. **	DESCRIPTION
1	70671163	4	-	ROLLER ASSY. (Includes items 2 thru 12)
	73129942	-	4	ROLLER ASSY. (Includes items 2 thru 9 and 12)
2	70633268	4	-	ROLLER
	73129941	-	4	ROLLER
3	70698977	4	-	SHAFT
	73129937	-	4	SHAFT
	73129936	-	4	NUT, 1-1/2"NF } Not illustrated
	73129935	-	4	RING, lock } Not illustrated
4	70043491	8	8	CONE
5	70074740	8	8	CUP
6	70671157	4	4	GASKET
7	70671161	4	4	RETAINER, bearing
	70683586	24	24	CAPSCREW, 3/8"NF x 1-1/4"
	70910287	-	24	LOCKWASHER, 3/8"
8	70671158	4	4	SEAL ASSY. (See item 18)
9	70671160	4	4	RETAINER
10	70655497	8	-	SHIM, .003" } Use as required
	70059618	12	-	SHIM, .007" } Use as required
	70059619	12	-	SHIM, .010" } Use as required
	70059617	4	-	SHIM, .032" } Use as required
11	70923586	4	-	O-RING (Tractors prior to unit #10505)
	70923931	4	-	O-RING (Tractor unit #10505 and up)
12	70677276	4	-	RETAINER (Tractors prior to unit #10505)
	70678716	4	-	RETAINER (Tractor unit #10505 and up)
	73129938	-	4	RETAINER
	70683586	24	24	CAPSCREW, 3/8"NF x 1-1/4"
	70910287	24	24	LOCKWASHER, 3/8"
	70904206	-	4	PLUG, pipe, ctsk.-hd., 3/8"NPT
13	70625970	4	4	CAPSCREW, bracket clamping (1"NF x 6")
14	70600236	4	4	NUT, high, 1"NF
15	70663260	4	4	BRACKET
16	70926601	8	8	CAPSCREW, 3/4"NC x 8-1/2"
17	70922458	8	8	CAPSCREW, 3/4"NC x 3-1/2"
	70914726	16	16	LOCKWASHER, 3/4"
18	70699062	4	4	RING SET, seal (Includes 2 rubber sealing washers sufficient to service 1 Seal Assy.)

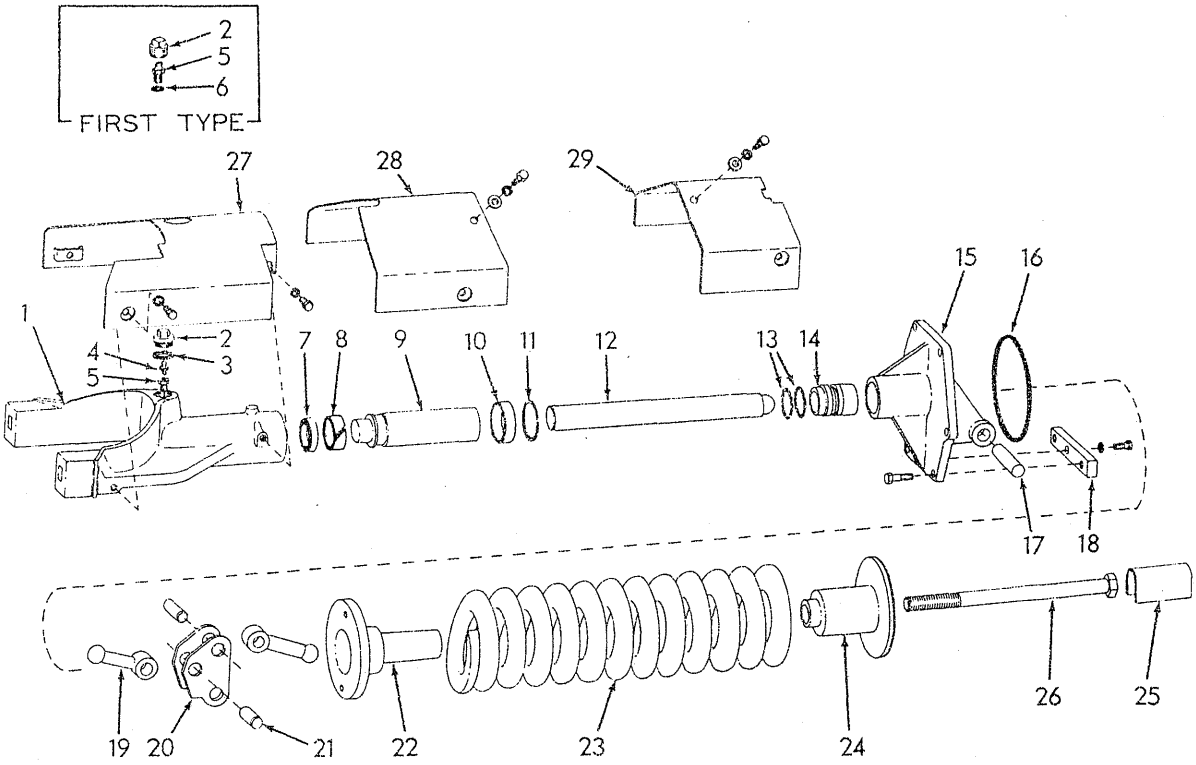

TRACK RELEASE (First type)

USAGE: Tractors prior to serial No. 19S12112

ITEM	PART NO.	QTY.	DESCRIPTION
1	70670649	2	YOKE ASSY. (Includes items 2 and 5 thru 11)(Tractors prior to unit #10310)
	70675246	2	YOKE ASSY. (Includes items 2 thru 7 thru 11)(Tractors unit #10310 and up)
2	70665040	2	PLUG, yoke (For YOKE 70670649)
	70644255	2	PLUG, yoke (For YOKE 70675246)
3	70623144	2	GASKET, plug sealing (For YOKE 70675246)
4	70676456	2	FITTING, pressurizing valve (For YOKE 70675246)
5	70644330	2	VALVE ASSY., pressurizing (Includes ball)(For YOKE 7067064)
	70676455	2	BALL CHECK ASSY., pressurizing ball)(For YOKE 706755246)
6	70908191	2	WASHER, pressurizing valve (For YOKE 70670649)
7	70670648	2	SEAL, piston
8	70664171	2	RING, wear, adjusting piston

(Continued)

ITEM	PART NO.	QTY.	DESCRIPTION
9	70667104	2	PISTON, adjusting
10	70664170	2	RING, wear, release yoke
11	70065513	2	RING, snap
12	70667080	2	BAR, push
13	70923827	4	O-RING, crosshead
14	70621299	2	CROSSHEAD
15	70664875	2	GUIDE, crosshead
	70921168	12	CAPSCREW, 5/8"NF x 2-1/2"
	70912942	12	LOCKWASHER, 5/8"
16	70059742	2	GASKET, crosshead guide
17	70656208	2	PIN, bellcrank pivot
18	70059599	2	BLOCK, mounting, crosshead guide
	70916028	2	CAPSCREW, 1/2"NC x 1-3/4"
	70904208	2	LOCKWASHER, 1/2"
19	70664844	4	ROD, push
20	70664847	2	BELLCRANK
21	70051798	4	PIN, push rod
22	70664815	2	PLUNGER, spring
23	70664879	2	SPRING
24	70664813	2	SEAT, spring
25	70664843	2	LOCK, spring adjustment capscrew
26	70059739	2	CAPSCREW, spring adjustment
27	70661612	2	GUARD, front section
	70920582	8	CAPSCREW, 1/2"NC x 1-1/4"
	70912441	8	LOCKWASHER, 1/2"
28	70650082	2	GUARD, intermediate section
	70920582	8	CAPSCREW, 1/2"NC x 1-1/4"
	70912441	8	LOCKWASHER, 1/2"
	70064531	4	WASHER, plain
29	70664451	1	GUARD, rear section, left side
	70664452	1	GUARD, rear section, right side
	70920582	8	CAPSCREW, 1/2"NC x 1-1/4"
	70912441	8	LOCKWASHER, 1/2"
	70064531	4	WASHER, plain

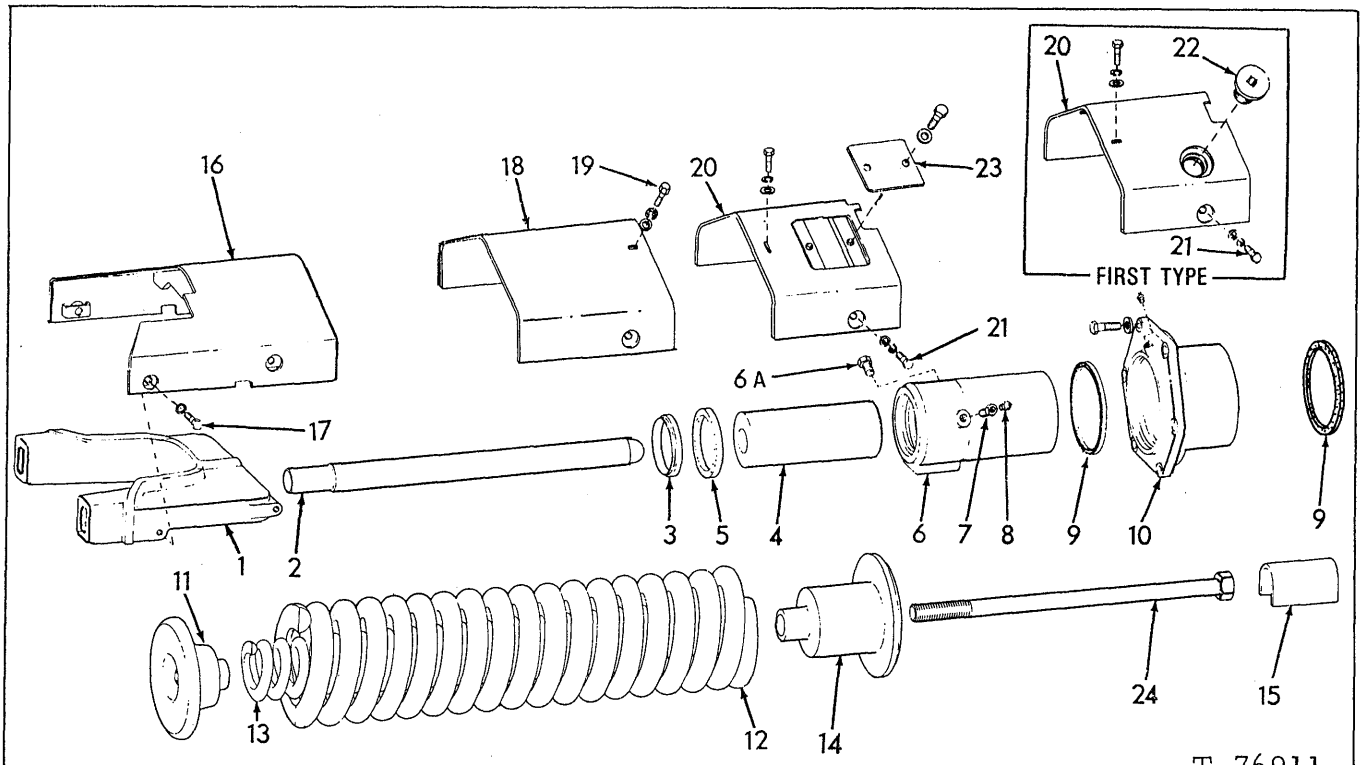

TRACK RELEASE (Second Type)

USAGE: Tractors serial No. 19S12112 and up

ITEM	PART NO.	QTY.	DESCRIPTION	
1	70678420	2	YOKE (Tractors prior to unit #12520)	
	70681744	2	YOKE (Tractors unit #12520 and up)	
2	70678966	2	BAR, push	
3	70678438	2	SEAL, piston, small	
4	70678436	2	PISTON, adjusting	
5	70096803	2	SEAL (5-7/32" O.D.)(Tractors prior to unit #12910)	
	70686912	2	SEAL (4-1/2" O.D.)(Tractor unit #12910 and up)	
6	70677810	2	CYLINDER (If for first replacement on tractors prior to unit #12910, order CYLINDER 70686411 and SEAL 70686912)	
	70686411	2	CYLINDER (Tractor unit #12910 thru #14280)	
	70694031	2	CYLINDER (Tractor unit #14281 and up)	
6A	70693719	2	VALVE, relief (Tractor unit #14281 and up)	
7	70676455	2	CHECK BALL ASSY., pressurizing (Includes ball)	
8	70676456	2	FITTING, check ball assy.	
9	70678437	4	SEAL, cylinder	
10	70678374	2	HOUSING, cylinder	Tractors prior to unit #14927
	70914465	2	FITTING, lubricating, 1/8" NPT	
	70928130	12	CAPSCREW, 5/8" NF x 1-7/8"	
	70927328	12	WASHER	
	70696785	2	HOUSING, cylinder	Tractor unit #14927 and up
	70914465	2	FITTING, lubricating, 1/8" NPT	
	70921069	8	CAPSCREW, 5/8" NC x 1-7/8"	
	70930364	8	WASHER	
	70928498	4	CAPSCREW, 1" NC x 2-1/4"	
	70928452	4	WASHER	

(Continued)

TRACK RELEASE (Second Type)(Continued)

ITEM	PART NO.	QTY.	DESCRIPTION
11	70678846	2	PLUNGER, spring
12	70673350	2	SPRING, outer
13	70679637	2	SPRING, inner (Tractors unit #13112 and up)
14	70685788	2	SEAT, spring
15	70664843	2	LOCK, spring adjustment capscrew
16	70678958	2	GUARD, front section
17	70670849	8	CAPSCREW, 1/2"NC x 1-1/4"
18	70678964	2	GUARD, intermediate section
19	70920582	8	CAPSCREW, 1/2"NC x 1-1/4"
	70677008	4	WASHER
	70912441	4	LOCKWASHER, 1/2"
20	70678961	1	GUARD, rear section, left side (Tractors prior to unit #13385 excluding #13373 thru #13379 and #13382)
	70692987	1	GUARD, rear section, left side (Includes item 23) (Tractor unit #13385 and up excluding #13373 thru #13379 and #13382)
	70678962	1	GUARD, rear section, right side (Tractors prior to unit #13385 excluding #13373 thru #13379 and #13382)
	70692988	1	GUARD, rear section, right side (Includes item 23) (Tractor unit #13385 and up including #13373 thru #13379 and #13382)
21	70920582	8	CAPSCREW, 1/2"NC x 1-1/4"
	70677008	4	WASHER
	70912441	4	LOCKWASHER, 1/2"
22	70035250	2	PLUG (Tractors prior to unit #13385, excluding #13373 thru #13379 and #13382)
23	70693044	2	COVER } Tractor unit #13385 and up including #13373 thru #13379 and #13382
	70920582	4	CAPSCREW, 1/2"NC x 1-1/4" }
	70677008	4	WASHER }
24	70678428	2	CAPSCREW, spring adjustment

(Revised May 1977)

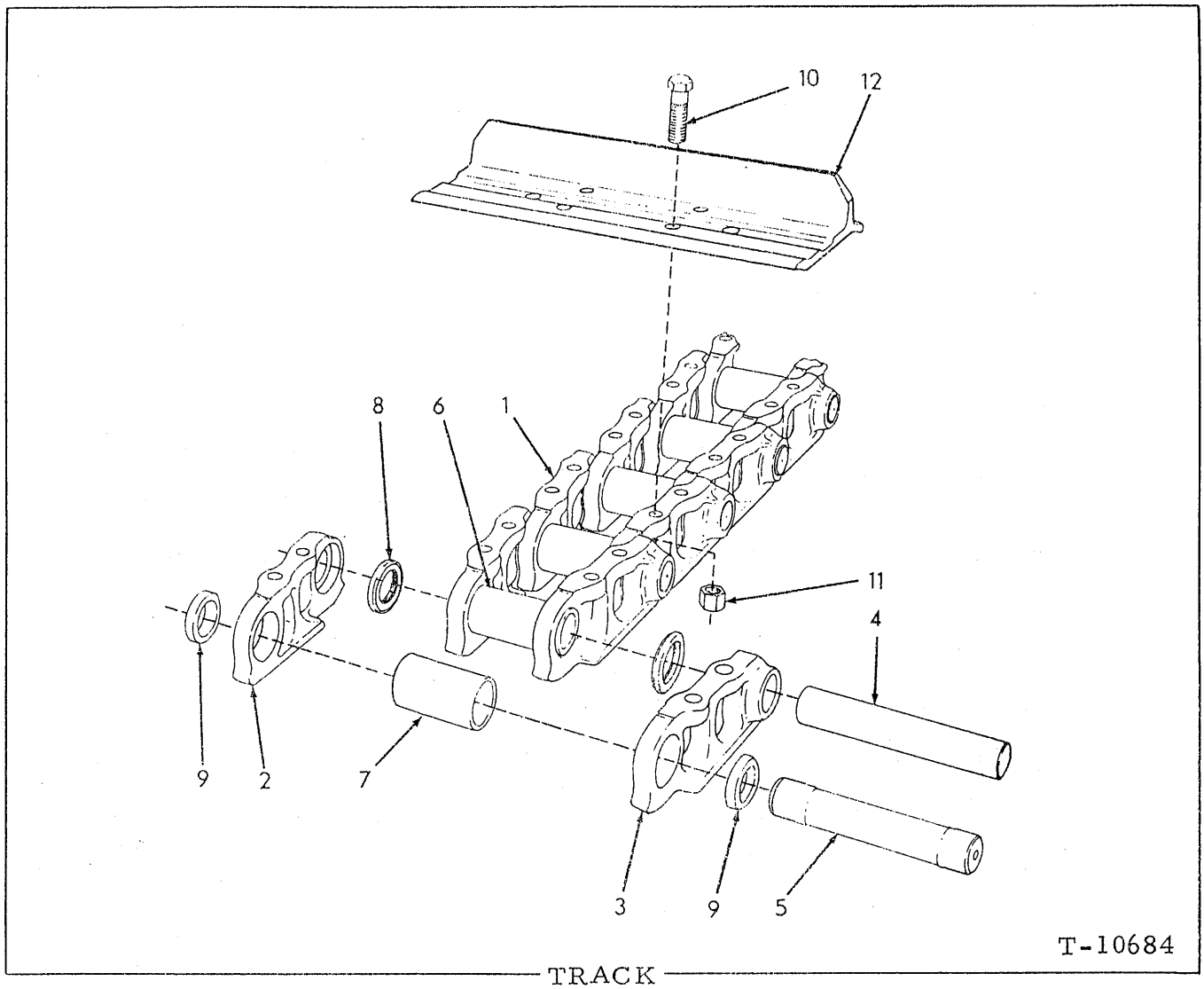

TRACK

* Optional (Sealed type)
** Standard (Unsealed type)

ITEM	PART NO.	QTY. *	QTY. **	DESCRIPTION
1	70677560	2	-	CHAIN ASSY. (41 links)(Consists of items 2 thru 8)
	70679815	-	2	CHAIN ASSY. (41 links)(Consists of items 2 thru 7 and 9)
2	70676871	80	80	LINK, left
	70677491	2	2	LINK, master, left (3/8" wide spacer)(Tractors prior to unit #14866)
	70676871	2	2	LINK, master, left (1/2" wide spacer)(Tractor unit #14866 and up)
3	70676872	80	80	LINK, right
	70677492	2	2	LINK, master, right (3/8" wide spacer)(Tractors prior to unit #14866)
	70676872	2	2	LINK, master, right (1/2" wide spacer)(Tractor unit #14866 and up)

(Continued)

(Revised April 1980)

ITEM	PART NO.	QTY. *	QTY. **	DESCRIPTION
4	70633365	80	80	PIN (10-1/4" long)
5	70665383	2	2	PIN, master (10-1/4" long)
6	70645920	80	-	BUSHING (6-15/16" long)
	70633364	-	80	BUSHING (7-3/4" long)
7	70645947	2	2	BUSHING, master (6-3/4" long)
8	70668466	164	—	SEAL
9	70679734	-	4	SPACER, master bushing (3/8" thick)(Tractors prior to unit #14866)
	70633266	-	4	SPACER, master bushing (1/2" thick)(Tractor unit #14866 and up)
10	70097324	328	328	BOLT, track shoe (3/4"NF x 2-1/2")
11	70683232	328	328	NUT, 3/4"NF

				TRACK SHOES	COMPLETE TRACK ASSEMBLIES WITH SHOES (2 Required) *	**
12	70633380	82	82	SHOE, grouser, 18"	70677518	70682033
	70633270	82	82	SHOE, grouser, 20"	70677495	70679816
	70668882	82	82	SHOE, grouser, 20" (Severe service)	70677511	70679817
	70633355	82	82	SHOE, grouser, 22"	70677520	70682034
	70668881	82	82	SHOE, grouser, 22" (Severe service)	70677509	70682035
	70633390	82	82	SHOE, grouser, 24"	70677519	70682036
	70669193	82	82	SHOE, grouser, 24" (Severe service)	70677605	70682037
	70679159	82	82	SHOE, grouser, 28"	70679160	70682038

NOTE: Complete TRACK ASSEMBLIES WITH SHOES are furnished only in sizes and types as listed. Assemblies other than those listed, may be made up in the field by ordering the various components.

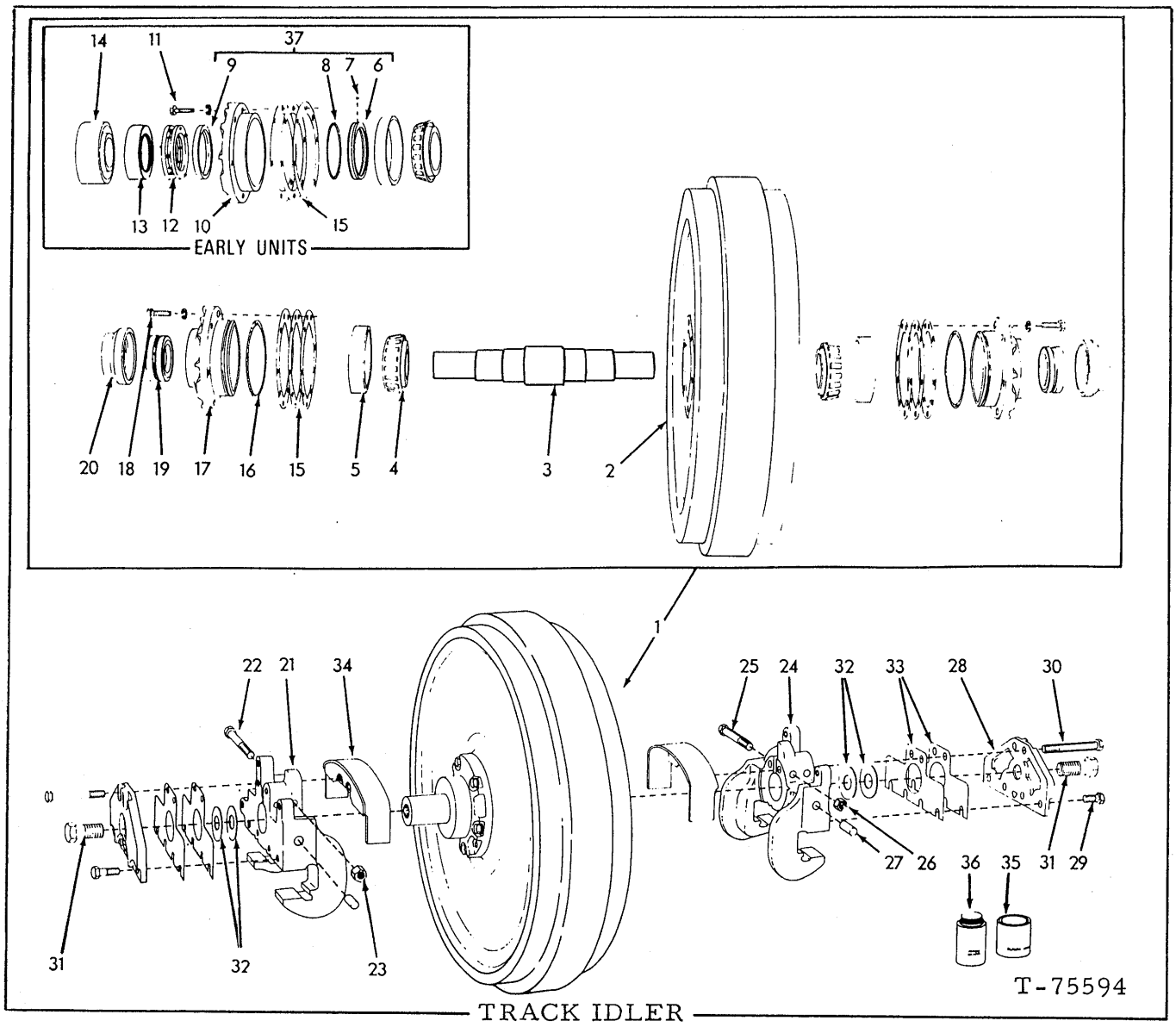

TRACK IDLER

*Tractors prior to S/N 19S14882
**Tractors S/N 19S14882 and up

ITEM	PART NO.	QTY. *	QTY. **	DESCRIPTION
1	70665317	2	-	IDLER ASSY., track (Consists of items 2 thru 20)
	70696168	-	2	IDLER ASSY., track (Consists of items 2 thru 20)
2	70669703	2	-	IDLER
	70696161	-	2	IDLER
3	70676364	2	-	SHAFT (3-1/4" O. D.)
	70696167	-	2	SHAFT (3-3/4" O. D.)
4	70669786	4	-	CONE ASSY., bearing (2-1/2" I. D.)
	70076296	-	4	CONE ASSY., bearing (3" I. D.)
5	70069328	4	-	CUP, bearing (5-3/8" O. D.)
	70604398	-	4	CUP, bearing (5-7/8" O. D.)
6	70670623	4	-	□RING, seal, inner
7	70905357	4	-	□BALL, steel, 3/16" diam.

(Continued)

(Revised June 1978)

ITEM	PART NO.	QTY. *	QTY. **	DESCRIPTION
8	70067137	4	-	□O-RING, seal ring
9	70051623	4	-	□RING, seal, outer
10	70067141	4	-	RETAINER, bearing
11	70922726	24	-	CAPSCREW, 1/2"NF x 1-1/2"
	70912441	24	-	LOCKWASHER, 1/2"
12	70051959	4	-	SPRING ASSY., seal (Serviced only as a unit
13	70051629	4	-	BOOT, seal
14	70099506	4	-	RETAINER, seal
15	70655528	4	4	SHIM, bearing adjustment (.003" thick) } Use as required
	70059387	8	8	SHIM, bearing adjustment (.007" thick) } Use as required
	70059386	12	12	SHIM, bearing adjustment (.010" thick) } Use as required
	70059385	4	4	SHIM, bearing adjustment (.032" thick) } Use as required
16	70924138	4	-	O-RING, retainer } Late units
	70923825	-	4	O-RING, retainer } Late units
17	70677694	4	-	RETAINER, bearing } Late units
	70696166	-	4	RETAINER, bearing } Late units
18	70922726	24	-	CAPSCREW, 1/2"NF x 1-1/2" } Late units
	70670849	-	24	CAPSCREW } Late units
	70912441	24	-	LOCKWASHER, 1/2" } Late units
19	70670071	4	4	SEAL ASSY. (Each includes two seals. See item 38) } Late units
20	70677696	4	-	RETAINER, seal } Late units
	73107848	-	4	RETAINER, seal } Late units
21	70657777	2	2	BRACKET ASSY., left (Includes item 27)(Tractors prior to unit #12520)
	70683835	2	2	BRACKET ASSY., left (Includes item 27)(Tractors unit #12520 and up)
22	70922319	4	4	CAPSCREW, 5/8"NF x 5"
23	70072366	4	4	NUT, high, 5/8"NF
24	70657778	2	2	BRACKET ASSY., right (Includes item 27)(Tractor prior to unit # 12520)
	70683836	2	2	BRACKET ASSY., right (Includes item 27)(Tractors unit 12520 and up)
25	70922319	4	4	CAPSCREW, 5/8"NF x 5"
26	70072366	4	4	NUT, high, 5/8"NF
27	70056585	4	4	PIN, dowel, idler bracket to release yoke
28	70669298	4	4	PLATE, guide
29	70923884	16	16	CAPSCREW, 5/8"NF x 1-1/2"
30	70921404	8	8	CAPSCREW, 5/8"NC x 4"
	70911029	8	8	NUT, 5/8"NC (Not used with special idler guard)
31	70926566	4	4	CAPSCREW, idler adjustment (1"NF x 2")
32	70669302	12	12	SHIM, idler adjustment (1/16" thick) } Use as required
	70669303	12	12	SHIM, idler adjustment (1/32" thick) } Use as required
33	70655990	8	8	SHIM, guide plate (1/32" thick) } Use as required
	70655989	4	4	SHIM, guide plate (1/16" thick) } Use as required
34	70669791	4	4	GUARD (Special equipment)
35	70033288	-	-	CEMENT, neoprene, 1/2 pint can } For cementing seal boots
36	70054890	-	-	SOLVENT, neoprene cement, 1/2 pint can } For cementing seal boots
37	70083209	2	2	SEAL KIT (Includes parts for one (1) idler only; items 6 thru 9)
38	70690649	4	4	RING KIT, seal (Each includes 2 rubber sealing washers sufficient to service 1 Seal Assy.)

□Component of item 37

(Revised August 1977)

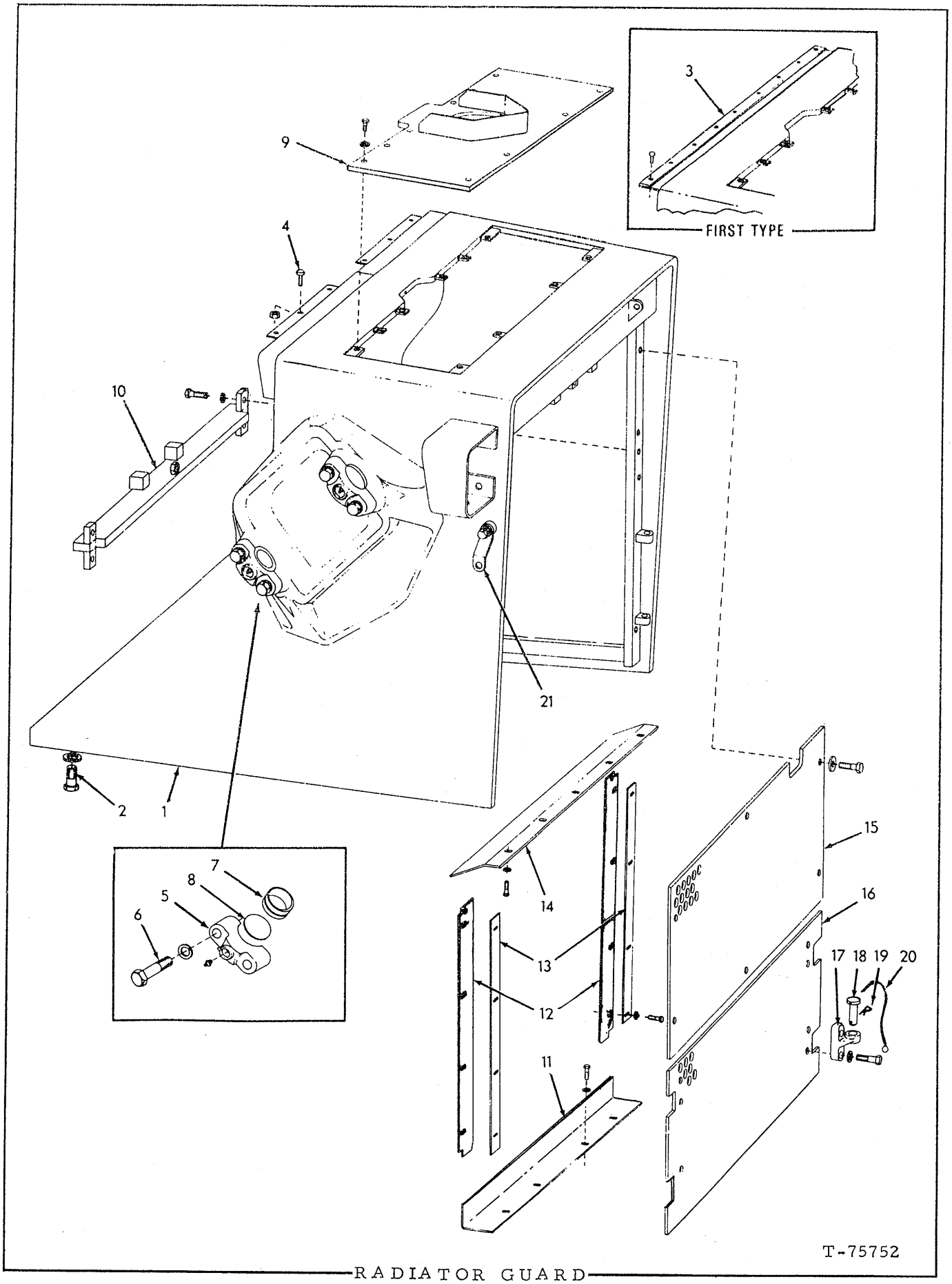

RADIATOR GUARD

(Revised February 1976)

RADIATOR GUARD

USAGE: All units except those equipped with cable-operated dozer

ITEM	PART NO.	QTY.	DESCRIPTION	
1	70677905	1	GUARD, radiator (For units without dozer)	Tractors prior to unit #11528. If for tractors prior to unit #10497 including #10500 also order item 4.
	70677900	1	GUARD ASSY. (Includes items 5 and 6)(For units with hydraulic dozer)	
	70679549	1	GUARD, radiator (For units without dozer)	Tractor unit #11528 and up
	70679664	1	GUARD ASSY. (Includes item 5 and 6)(For units with hydraulic dozer)	
2	70927487	12	CAPSCREW, 1-1/4"NC x 3"	
	70928453	12	WASHER, plain	
3	70668803	1	PAD, friction	Tractors prior to unit #10497 including #10500
	70678287	9	ANCHOR, friction pad	
4	70677885	7	BUTTON, bumper, hood	Tractor unit #10497 and up excluding #10500
	70917730	7	NUT, elastic stop, 1/4"NC	
5	70085140	4	CAP, trunnion	For GUARDS 70677900 and 70679664 only
	70914465	4	FITTING, lubricating, straight, 1/8"NPT	
6	70036546	8	CAPSCREW, 1"NF x 4-1/4"	
	70910916	8	LOCKWASHER, 1"	
7	70084581	4	BUSHING, trunnion	
8	70084612	4	PLATE, retaining, trunnion bushing	
9	70669718	1	COVER, top closure	
	70922763	10	CAPSCREW, 3/8"NC x 1"	
	70683421	10	WASHER, plain	
10	70661739	1	BAR, front closure plate supporting	
	70921556	4	CAPSCREW, 1/2"NC x 2"	
	70677008	4	WASHER, plain	
11	70662069	1	BAFFLE, air, lower (Tractors prior to unit #11503)	
	70678234	1	BAFFLE, air, lower (Tractors unit #11503 and up)	
	70921076	4	CAPSCREW, 3/8"NC x 1-1/4"	
	70677006	4	WASHER, plain	
12	70662076	2	BAFFLE, air, side (Tractors prior to unit #10517)	
	70678583	2	BAFFLE, air, side (Tractors unit #10517 and up)	
	70927373	8	CAPSCREW, 5/16"NC x 7/8"	
	70677005	8	WASHER, plain	
13	70677750	2	STRIP, side baffle (Tractors unit #10517 and up)	
14	70662080	1	BAFFLE, air, upper	
	70922763	5	CAPSCREW, 3/8"NC x 1"	
	70677006	5	WASHER, plain	

(Continued)

ITEM	PART NO.	QTY.	DESCRIPTION
15	70661744	1	GRILL, front closure, upper (Standard)
	70927519	6	CAPSCREW, Nylok, 5/8"NC x 1-1/2"
	70677010	6	WASHER, plain
	70679417	1	GRILL, front closure, upper (Optional, Severe-service)
	70926744	6	CAPSCREW, Nylok, 5/8"NC x 1-3/4"
	70677010	6	WASHER, plain
16	70668557	1	GRILL, front closure, lower (Standard)
	70679418	1	GRILL, front closure, lower (Optional. Severe service)
17	70667159	4	BRACKET, hinge bottom closure plate
	70922509	8	CAPSCREW, Nylok, 1/2"NC x 1-3/4"
	70677008	8	WASHER, plain
18	70643124	4	PIN, hinge
19	70920570	4	PIN, hinge pin retaining
20	70643229	4	CHAIN ASSY., hinge pin (Serviced only as a unit)
21	70660513	2	STRAP, cylinder ti-down (Used only when transporting tractor with dozer blade removed)
	70920574	2	CAPSCREW, 1/2"NC x 1-3/8"
	70677008	2	WASHER

"ALWAYS GIVE MODEL AND SERIAL NUMBER WHEN ORDERING PARTS"

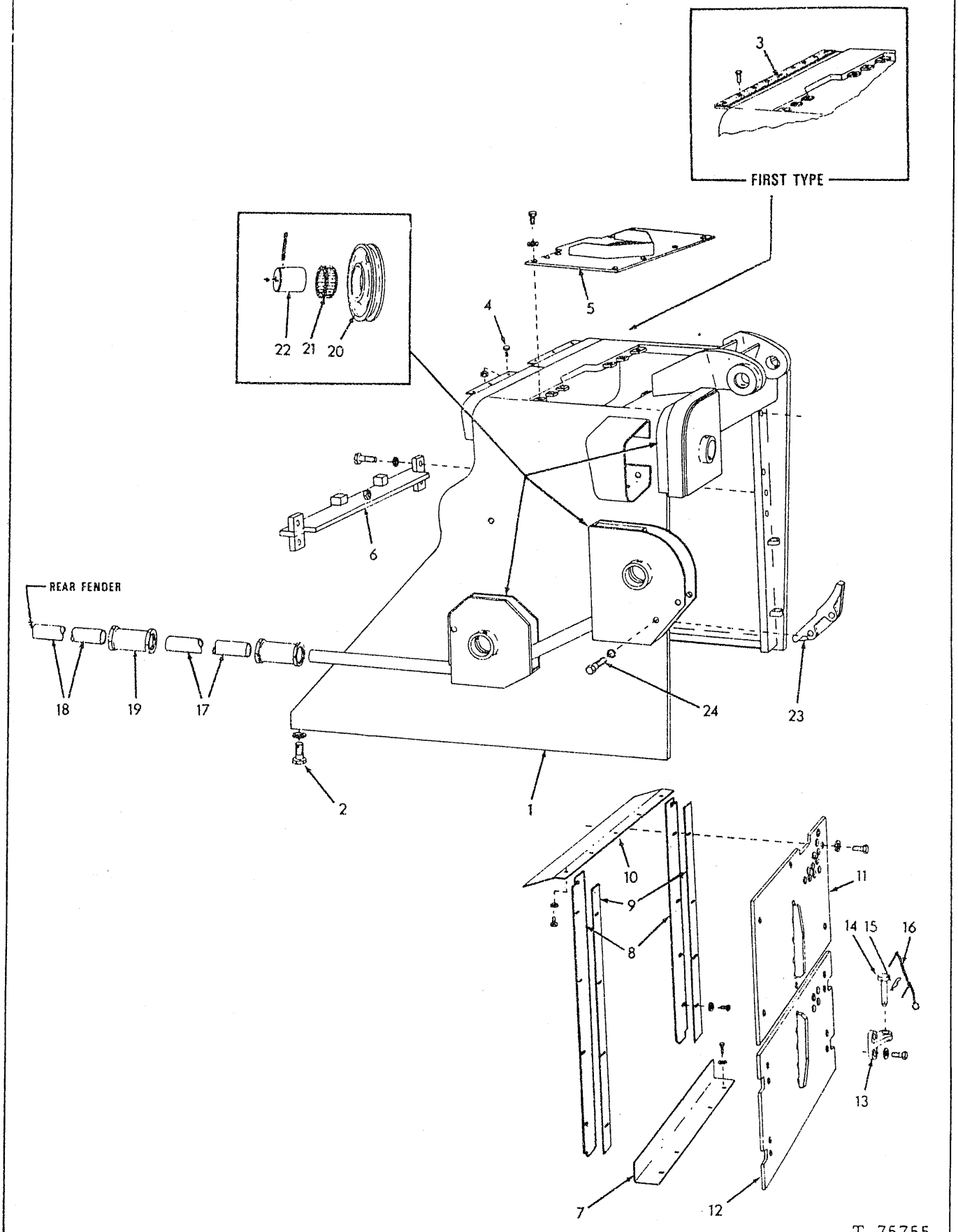

RADIATOR GUARD

(Revised February 1976)

RADIATOR GUARD

USAGE: For units equipped with cable dozer

ITEM	PART NO.	QTY.	DESCRIPTION
1	70677932	1	GUARD, radiator (Tractors prior to unit #11528. If for tractors prior to unit #10497 including #10500 also order item 4)
	70679695	1	GUARD, radiator (Tractor unit #11528 and up)
2	70927487	12	CAPSCREW, 1-1/4"NC x 3"
	70928453	12	WASHER, plain
3	70668803	1	PAD, friction } Tractors prior to unit #10497
	70678287	9	ANCHOR, friction pad } including #10500
4	70677885	7	BUTTON, bumper, hood } Tractor unit #10497 and up
	70917730	7	NUT, elastic stop, 1/4"NC } excluding #10500
5	70669718	1	COVER, top closure
	70922763	10	CAPSCREW, 3/8"NC x 1"
	70683421	10	WASHER, plain
6	70661739	1	BAR, front closure plate supporting
	70921556	4	CAPSCREW, 1/2"NC x 2"
	70677008	4	WASHER, plain
7	70662069	1	BAFFLE, air, lower (Tractors prior to unit #11503)
	70678234	1	BAFFLE, air, lower (Tractor unit #11503 and up)
	70921076	4	CAPSCREW, 3/8"NC x 1-1/4"
	70677006	4	WASHER, plain
8	70662076	2	BAFFLE, air, side (Tractors prior to unit #10517)
	70678583	2	BAFFLE, air, side (Tractor unit #10517 and up)
	70927373	8	CAPSCREW, 5/16"NC x 7/8"
	70677006	8	WASHER, plain
9	70677750	2	STRIP, side baffle (Tractor unit #10517 and up)
10	70662080	1	BAFFLE, air, upper
	70922763	5	CAPSCREW, 3/8"NC x 1"
	70677006	5	WASHER, plain
11	70666092	1	GRILL, front closure, upper
	70927159	6	CAPSCREW, Nylok, 5/8"NC x 1-1/2"
	70677010	6	WASHER, plain
12	70666093	1	GRILL, front closure, lower
13	70667159	4	BRACKET, hinge, bottom closure plate
	70922509	8	CAPSCREW, Nylok, 1/2"NC x 1-3/4"
	70677008	8	WASHER, plain
14	70643124	4	PIN, hinge
15	70920570	4	PIN, hinge pin retaining
16	70643229	4	CHAIN ASSY., hinge pin (Serviced only as a unit)

(Continued)

ITEM	PART NO.	QTY.	DESCRIPTION
17	70670270	1	PIPE, protecting, cable (front)
18	70669430	1	PIPE, protecting, cable (rear)
19	70665394	2	COUPLING ASSY., pipe (Includes nuts and seals)
20	70084758	3	SHEAVE, control cable
21	70044875	3	BEARING, roller, cable sheave
22	70665364	3	SHAFT, sheave
	70917936	3	PIN, spring, 3/8" x 3-1/2"
	70914465	3	FITTING, lubricating, straight, 1/8"NPT
23	70084694	1	GUIDE, cable
24	70921174	2	CAPSCREW, 5/8"NC x 2-1/2"
	70904209	2	LOCKWASHER, 5/8"

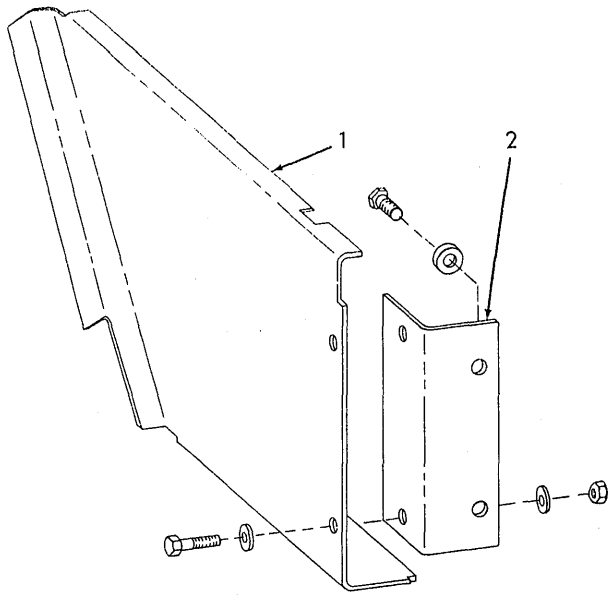

T-75718

FRONT FENDERS

ITEM	PART NO.	QTY.	DESCRIPTION
1	70662043	1	FENDER, left side
	70662044	1	FENDER, right side
	70920585	4	CAPSCREW, 1/2"NC x 1-3/4"
	70677008	8	WASHER
	70911028	4	NUT, 1/2"NC
2	70662049	2	ANGLE, fender attaching
	70920585	4	CAPSCREW, 1/2"NC x 1-3/4"
	70677008	4	WASHER

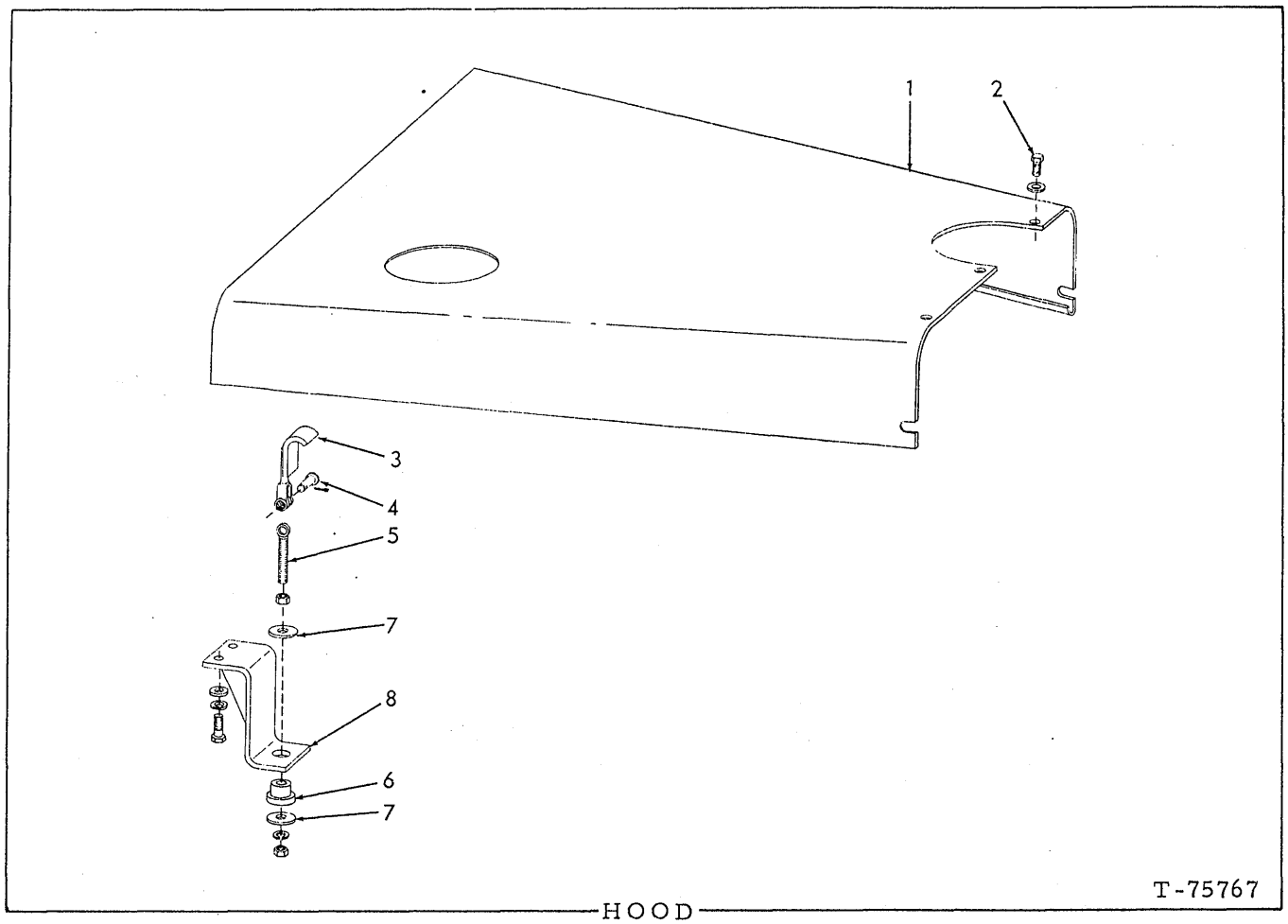

HOOD

ITEM	PART NO.	QTY.	DESCRIPTION
1	70666166	1	HOOD, engine (Tractors prior to unit #11528)
	70679578	1	HOOD, engine (Tractors unit #11528 thru #13608)
	70692106	1	HOOD, engine (Tractors unit #13609 and up)
2	70928873	5	CAPSCREW, 1/2"NC x 1"
	70929379	5	WASHER, plain
3	70664624	2	HOOK, hold-down
4	70917648	2	PIN, pivot, hook
	70900806	2	PIN, cotter
5	70668541	2	ROD, hold-down hook
	70911028	4	NUT, 1/2"NC
6	70642441	2	SNUBBER, vibration, hold-down
7	70929380	4	WASHER, snubber
8	70667475	2	BRACKET, mounting, hold-down
	70920583	4	CAPSCREW, 1/2"NC x 1-1/2"
	70912441	4	LOCKWASHER, 1/2"
	70677008	4	WASHER, plain

NOTE: See PAINTING AND MARKING for transfers

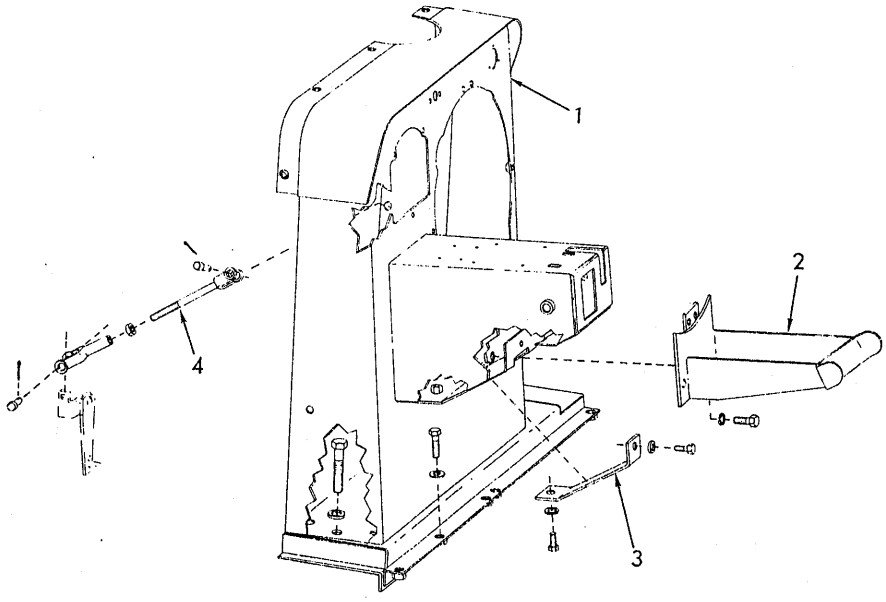

T-75876

COWL

ITEM	PART NO.	QTY.	DESCRIPTION
1	70659740	1	COWL (Tractors prior to unit #12124)
	70682861	1	COWL (Tractors unit #12124 thru #14885)
	70695116	1	COWL (Tractor unit #14886 and up)
	70920582	4	CAPSCREW, 1/2"NC x 1-1/4"
	70677008	4	WASHER
	70921597	3	CAPSCREW, 5/8"NC x 3"
	70677010	3	WASHER
2	70671847	1	REST, right foot
	70920582	2	CAPSCREW, 1/2"NC x 1-1/4"
	70912441	2	LOCKWASHER, 1/2"
3	70656921	1	COVER, access
	70922763	2	CAPSCREW, 3/8"NC x 1"
	70677006	2	WASHER
4	70671903	1	ROD, cowl bracing
	70913830	1	NUT, jam, 1/2"NF
	70917666	1	YOKE, rod end, adjustable, 1/2"NF
	70917648	2	PIN, yoke, 1/2" diam.
	70900806	2	PIN, cotter, 1/8" x 1"

NOTE: See PAINTING AND MARKING for transfers

(Revised May 1977)

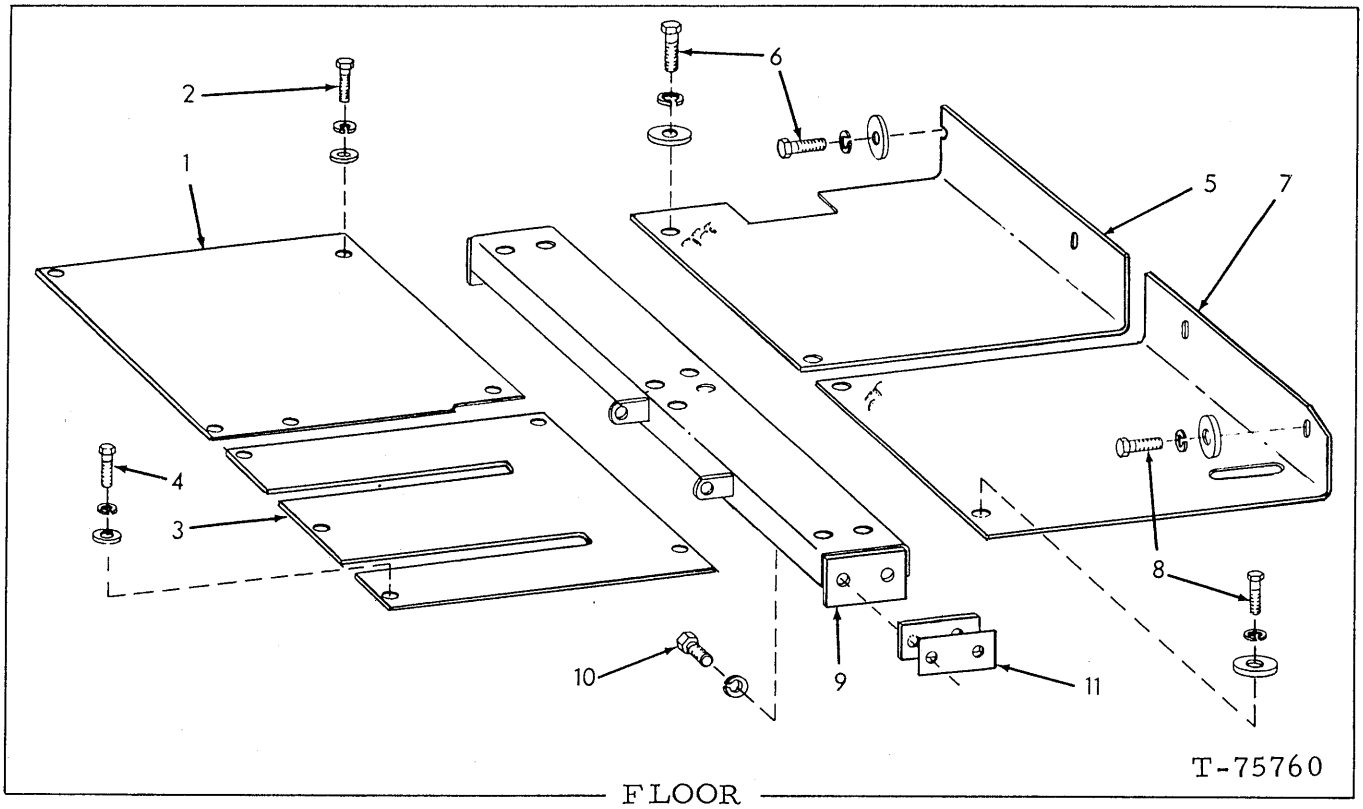

FLOOR

ITEM	PART NO.	QTY.	DESCRIPTION
1	70658413	1	PLATE, front section, right (Standard)(Tractors prior to unit #14893)
	70696722	1	PLATE, front section, right (Standard)(Tractor unit #14893 and up)
	70668150	1	PLATE, front section, right (Special. For units equipped with special Air Cleaner Unloader Extension) (Tractors prior to unit #14893)
	70696726	1	PLATE, front section, right (Special. For units equipped with special Air Cleaner Unloader Extension) (Tractor unit #14893 and up)
2	70920583	4	CAPSCREW, 1/2"NC x 1-1/2"
	70912441	4	LOCKWASHER, 1/2"
	70677008	4	WASHER
3	70658718	1	PLATE, front section, left
4	70920583	5	CAPSCREW, 1/2"NC x 1-1/2"
	70912441	5	LOCKWASHER, 1/2"
	70677008	5	WASHER
5	70663265	1	PLATE, rear section, right
6	70920583	4	CAPSCREW, 1/2"NC x 1-1/2"
	70912441	4	LOCKWASHER, 1/2"
	70929379	4	WASHER
7	70663292	1	PLATE, rear section, left
8	70920583	4	CAPSCREW, 1/2"NC x 1-1/2"
	70912441	4	LOCKWASHER, 1/2"
	70929379	4	WASHER
9	70663308	1	CHANNEL, floor supporting
10	70921556	4	CAPSCREW, 1/2"NC x 2"
	70912441	4	LOCKWASHER, 1/2"
11	70087741	1	SHIM, channel spacing (1/32" thick. Use as required)
	70087742	1	SHIM, channel spacing (1/8" thick. Use as required)

(Revised May 1977)

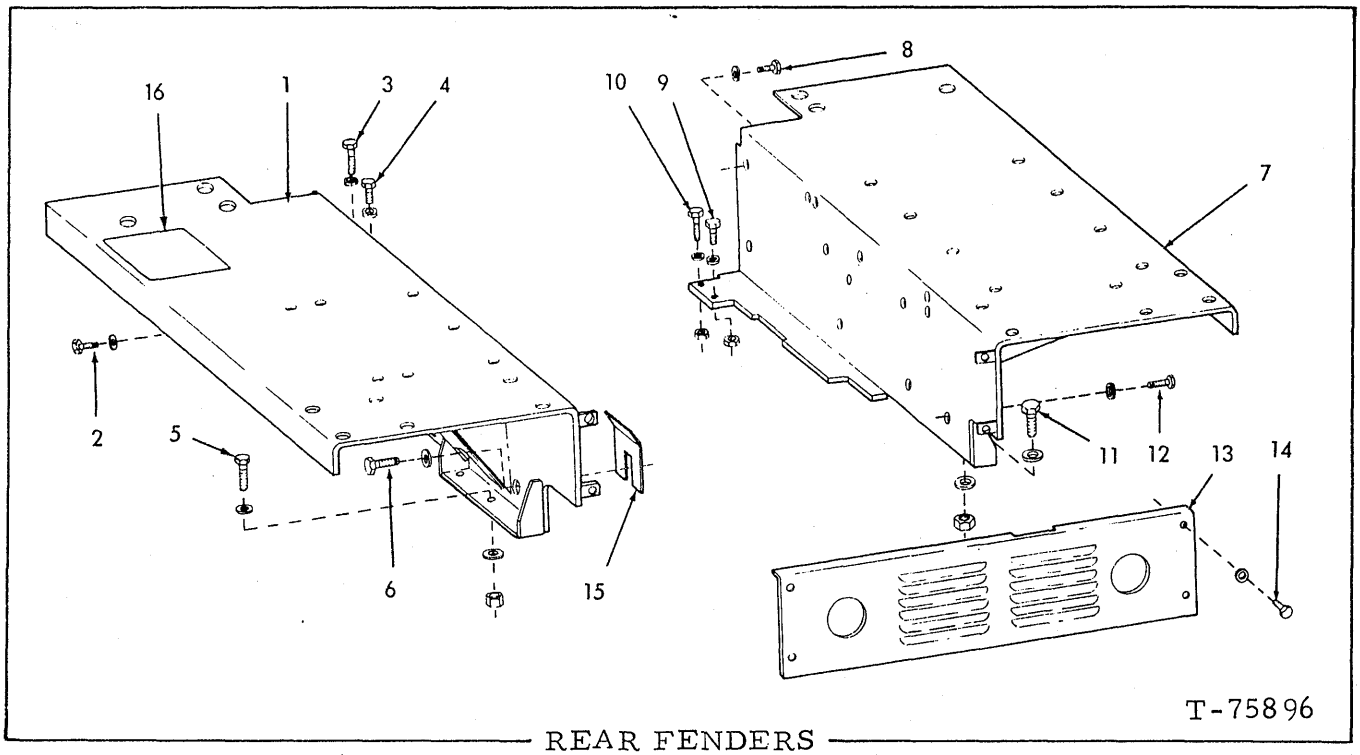

REAR FENDERS

ITEM	PART NO.	QTY.	DESCRIPTION
1	70686315	1	FENDER
2	70922509	2	CAPSCREW, Nylok, 1/2"NC x 1-3/4"
	70677008	2	WASHER
3	70921539	1	CAPSCREW, 1/2"NC x 3-1/2"
4	70922526	1	CAPSCREW, 1/2"NC x 2-1/2"
	70677008	2	WASHER
	70911028	2	NUT, 1/2"NC
5	70921171	3	CAPSCREW, 3/4"NF x 2-3/4"
	70677012	6	WASHER
6	70927298	2	CAPSCREW, Nylok, 3/4"NF x 2-1/4"
	70677012	8	WASHER
	70012767	3	NUT, 3/4"NF
7	70686316	1	FENDER (For standard units or units equipped with hydraulic dozer)
	70666110	1	FENDER (For units equipped with cable dozer)
8	70922509	2	CAPSCREW, Nylok, 1/2"NC x 1-3/4"
	70677008	2	WASHER
9	70921539	1	CAPSCREW, 1/2"NC x 3-1/2"
10	70922526	1	CAPSCREW, 1/2"NC x 2-1/2"
	70677008	2	WASHER
	70911028	2	NUT, 1/2"NC
11	70921171	3	CAPSCREW, 3/4"NF x 2-3/4"
	70677012	6	WASHER
12	70927298	2	CAPSCREW, Nylok, 3/4"NF x 2-3/4"
	70677012	8	WASHER
	70012767	3	NUT, 3/4"NF
13	70670218	1	PLATE } Not used on units
14	70922763	4	CAPSCREW, 3/8"NC x 1" } equipped with
	70677006	4	WASHER } ripper or ROPS
15	70670430	2	SPACER (Use as required)
16	73127578	1	STEP TREAD (12" x 16")

(Revised April 1981)

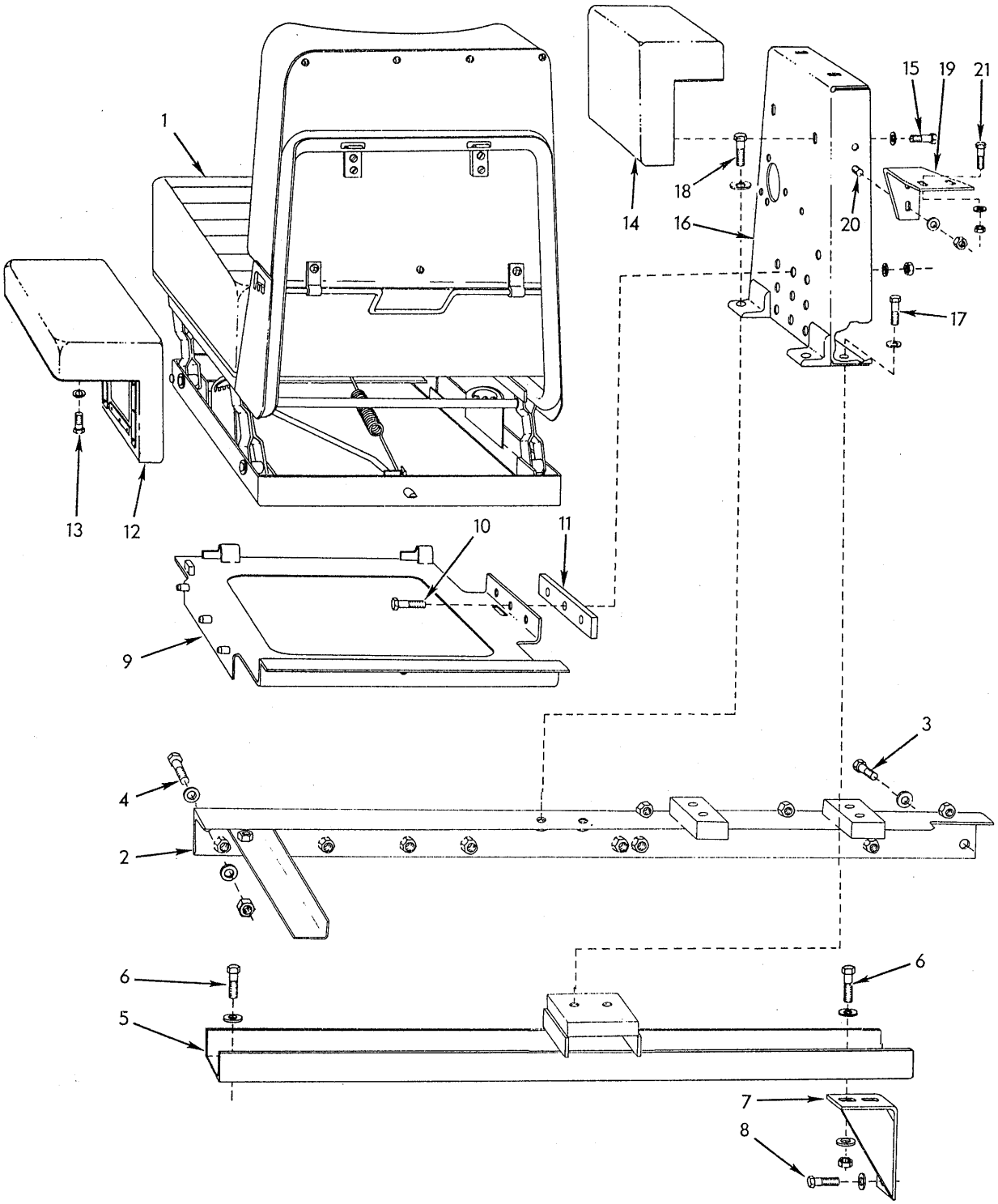

T-75148

SEAT

ITEM	PART NO.	QTY.	DESCRIPTION
1	--------	1	SEAT ASSY. (See pages 225, 225A, 225C, 225E and 225G)
2	70664857	1	ANGLE, seat supporting, front
3	70920583	1	CAPSCREW, 1/2"NC x 1-1/2"
4	70922510	1	CAPSCREW, 1/2"NC x 2-3/4"
	70911028	1	NUT, 1/2"NC
	70677008	2	WASHER
5	70664819	1	CHANNEL, seat supporting, rear
6	70920585	3	CAPSCREW, 1/2"NC x 1-3/4"
	70677008	5	WASHER
	70911028	2	NUT, 1/2"NC
7	70660680	1	BRACKET, channel supporting
8	70921556	2	CAPSCREW, 1/2"NC x 2"
	70677008	2	WASHER
9	70666235	1	SUPPORT, seat (Tractors prior to unit #11528)
	70680690	1	SUPPORT, seat (Tractors unit #11528 and up)
10	70920585	3	CAPSCREW, 1/2"NC x 1-3/4"
	70677008	3	WASHER
	70911028	3	NUT, 1/2"NC
11	70666240	1	PLATE, seat support spacing
12	70632179	1	CUSHION, arm rest, left side
13	70927008	4	CAPSCREW, 3/8"NF x 1" } Plated
	70920743	4	WASHER
14	70632188	1	CUSHION, arm rest, right side
15	70927008	4	CAPSCREW, 3/8"NF x 1" } Plated
	70920743	4	WASHER
16	70665892	1	SUPPORT, right arm rest cushion
17	70920583	2	CAPSCREW, 1/2"NC x 1-1/2"
18	70920585	2	CAPSCREW, 1/2"NC x 1-3/4"
	70677008	4	WASHER
19	70660678	1	ANGLE, bracing, right arm rest support
20	70922763	2	CAPSCREW, 3/8"NC x 1"
21	70921565	2	CAPSCREW, 3/8"NC x 1-1/2"
	70677006	6	WASHER
	70911026	4	NUT, 3/8"NC
22	70680080	1	BELT, safety (Special equipment on units prior to January 1977, standard thereafter. Not illustrated) (Used on units prior to approx. September 1979. See page 225E for later units)

(Revised August 1980)

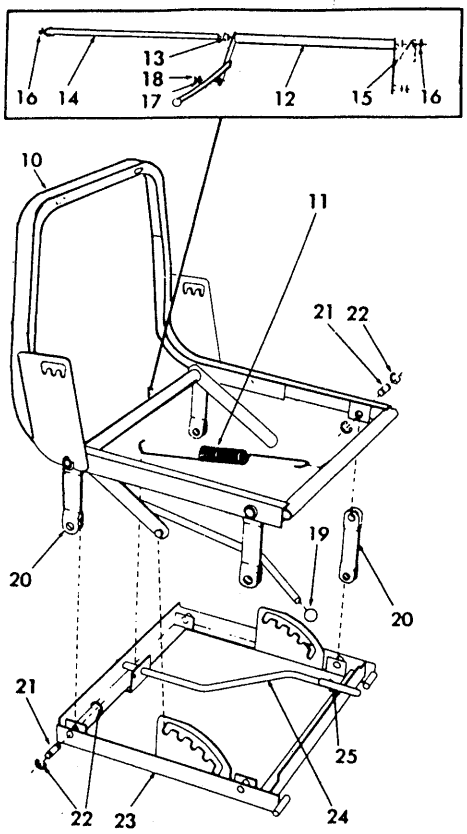

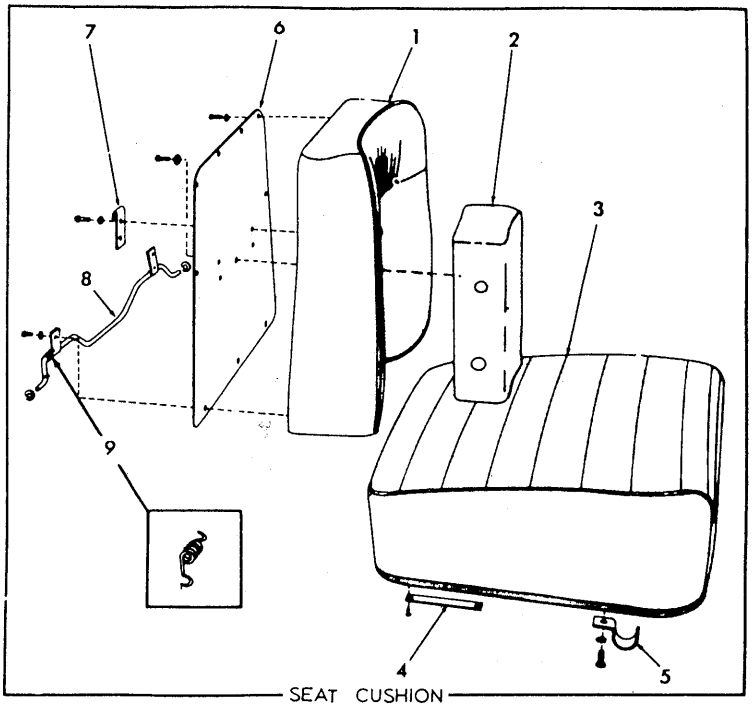

SEAT CUSHION

T-71877

SEAT ASSEMBLY

SEAT ASSEMBLY

USAGE: See page 223. Tractors prior to S/N 19S14281

ITEM	PART NO.	QTY.	DESCRIPTION
-	70659093	1	SEAT ASSY. (Includes items 1 thru 25)
1	70638422	1	CUSHION, back (outside section)
	70642499	1	COVER, slip, back cushion (Includes fastenings)(Not original equipment)
2	70638421	1	CUSHION, back (center section)
	70916532	2	SCREW, machine, rd-hd., 1/4"NC x 3/4"
	70914105	2	LOCKWASHER, ext-tooth, 1/4"
	70642498	1	COVER, slip, back cushion (Includes fastenings)(Not original equipment)
3	70659102	1	CUSHION ASSY., seat (Includes item 4)
	70642500	1	COVER, slip, seat cushion (Includes fastenings)(Not original equipment)
4	70638431	2	PLATE, bearing, seat cushion
	-------	4	SCREW, wood, fl-hd., #8 x 1/2" (Procure locally)
5	70638432	2	BRACKET, pivot, seat cushion
	70916532	2	SCREW, machine, rd-hd., 1/4"NC x 3/4"
	70914105	2	LOCKWASHER, ext-tooth, 1/4"
6	70650143	1	PLATE, reinforcing, back cushion
	70916532	8	SCREW, machine, rd-hd., 1/4"NC x 3/4"
	70914105	8	LOCKWASHER, ext-tooth, 1/4"
7	70650132	2	BRACKET, retaining, back cushion
	70916532	4	SCREW, machine, rd-hd., 1/4"NC x 3/4"
	70914105	4	LOCKWASHER, ext-tooth, 1/4"
8	70650141	1	ROD ASSY., back cushion adjustment (Includes mounting clips)
	70916532	2	SCREW, machine, rd-hd., 1/4"NC x 3/4"
	70914105	2	LOCKWASHER, ext-tooth, 1/4"
	70928197	2	RING, retaining
9	70650137	1	SPRING, back cushion adjustment rod
10	70650144	1	FRAME, seat
11	70650138	1	SPRING, retracting, seat frame
12	70650142	1	LATCH, seat adjustment
13	70650146	2	BEARING, seat adjustment latch
14	70650136	1	SHAFT, seat adjustment latch
15	70650135	1	SPRING, seat adjustment latch
16	70638351	2	RING, snap, seat adjustment latch shaft
17	70188436	2	WASHER, seat adjustment latch
18	70650147	2	RING, snap, seat adjustment latch
19	70650133	1	KNOB, seat adjustment latch
20	70650139	4	LINK, suspension, seat frame
21	70650131	6	PIN, seat frame suspension link
22	70638351	12	RING, snap, suspension link pin
23	70650145	1	FRAME ASSY., base (Includes items 24 and 25)
24	70650140	1	ROD, seat release
	70188436	1	WASHER, plain
	70924169	2	PIN, groove, 1/8" x 1"
25	70650134	1	SPRING, seat release rod

(Revised February 1976)

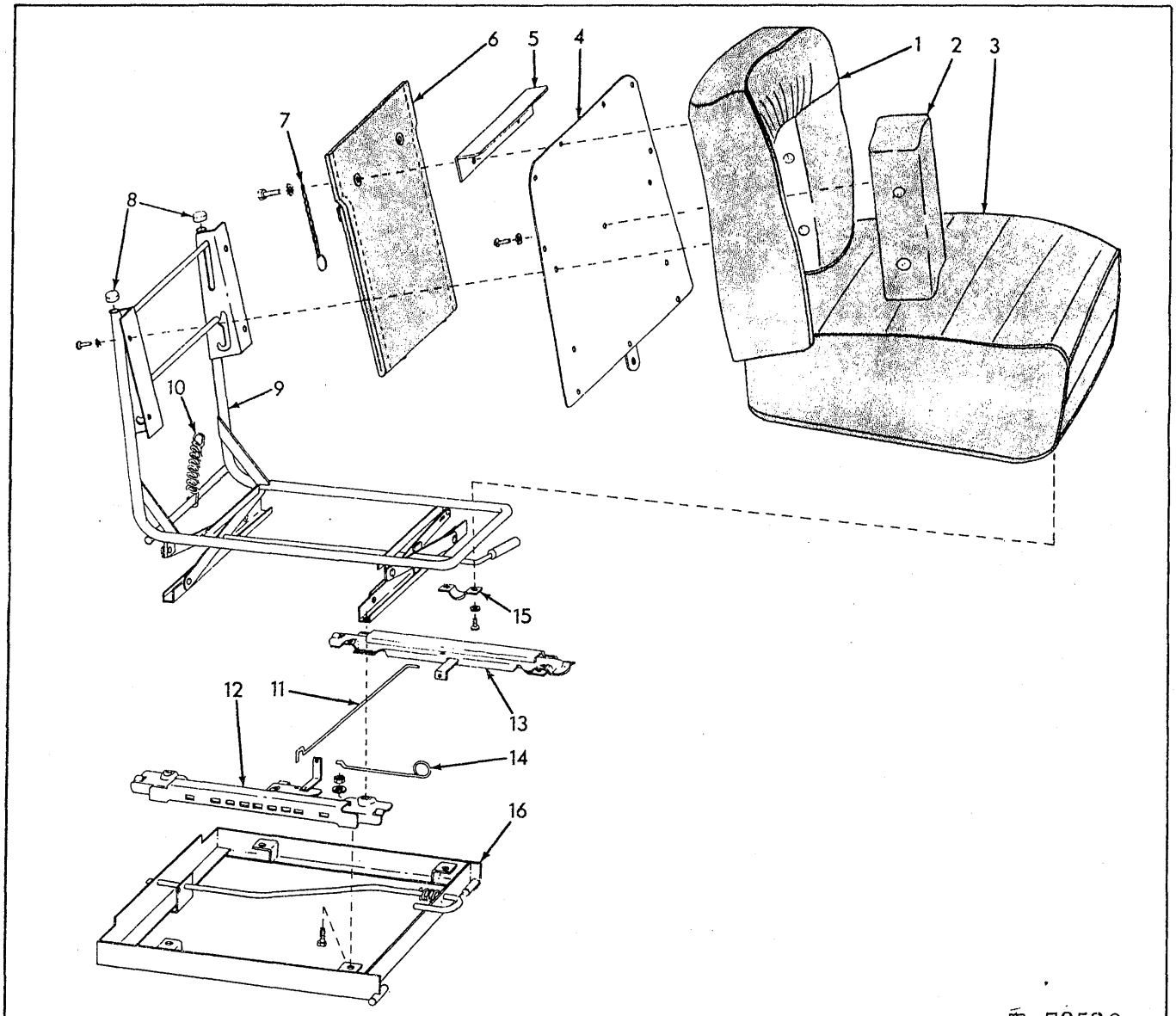

SEAT ASSEMBLY

USAGE: See page 223

* Tractor serial No. 19S14281 thru 19S14815
** Tractor serial No. 19S14816 thru 19S15121 excluding exceptions listed below

ITEM	PART NO.	QTY.		DESCRIPTION
-	70690729	1	-	SEAT ASSY. (Includes items 1 thru 4, 8, 9 and 11 thru 15)
-	73108384	-	1	SEAT ASSY. (Includes items 1 thru 15)
1	70694306	1	1	CUSHION
	70916532	8	6	SCREW, machine, rd-hd., 1/4"NC x 3/4"
	70921382	-	2	CAPSCREW, 1/4"NC x 1-1/4"
	70914105	8	8	LOCKWASHER, int-tooth, 1/4"
2	70694303	1	1	CUSHION
	70916532	2	2	SCREW, machine, rd-hd., 1/4"NC x 3/4"
	70914105	2	2	LOCKWASHER, int-tooth, 1/4"

(Continued)

(Revised September 1979)

SEAT ASSEMBLY (Continued)

ITEM	PART NO.	QTY. *	QTY. **	DESCRIPTION
3	70694307	1	1	CUSHION
4	70694785	1	-	PLATE
	73108830	-	1	PLATE
	70916532	4	4	SCREW, machine, rd-hd., 1/4"NC x 3/4"
5	--------	-	1	ANGLE } Refer to item 18
6	--------	-	1	POUCH } Refer to item 18
7	--------	-	1	CHAIN ASSY. } Refer to item 18
8	70694784	2	2	CAP
9	70694305	1	1	FRAME ASSY. (Serviced only as a unit)
10	--------	-	1	SPRING (Not serviced separately)
11	70694781	1	1	ROD
12	--------	1	1	SLIDE } Order item 17
13	--------	1	1	SLIDE } Order item 17
14	70694782	1	1	WIRE
15	70694783	2	4	BRACKET
	70916532	4	8	SCREW, machine, rd-hd., 1/4"NC x 3/4"
	70914105	4	8	LOCKWASHER, int-tooth, 1/4"
16	70696162	1	1	BASE
	70921566	4	4	CAPSCREW, 5/16"NC x 1"
	70677005	4	4	WASHER
	70911025	4	4	NUT, 5/16"NC
17	70695868	1	1	SLIDE KIT (Includes items 12 and 13)
18	73109343	-	1	POUCH KIT (Includes item 5 thru 7)

EXCEPTIONS: 14990, 15004, 15006, 15011, 15014, 15055, 15058, 15060, 15061, 15067, 15068, 15070, 15071, 15073, 15074, 15079 thru 15081, 15094, 15100, 15106, 15111 and 15112.

(Revised April 1980)

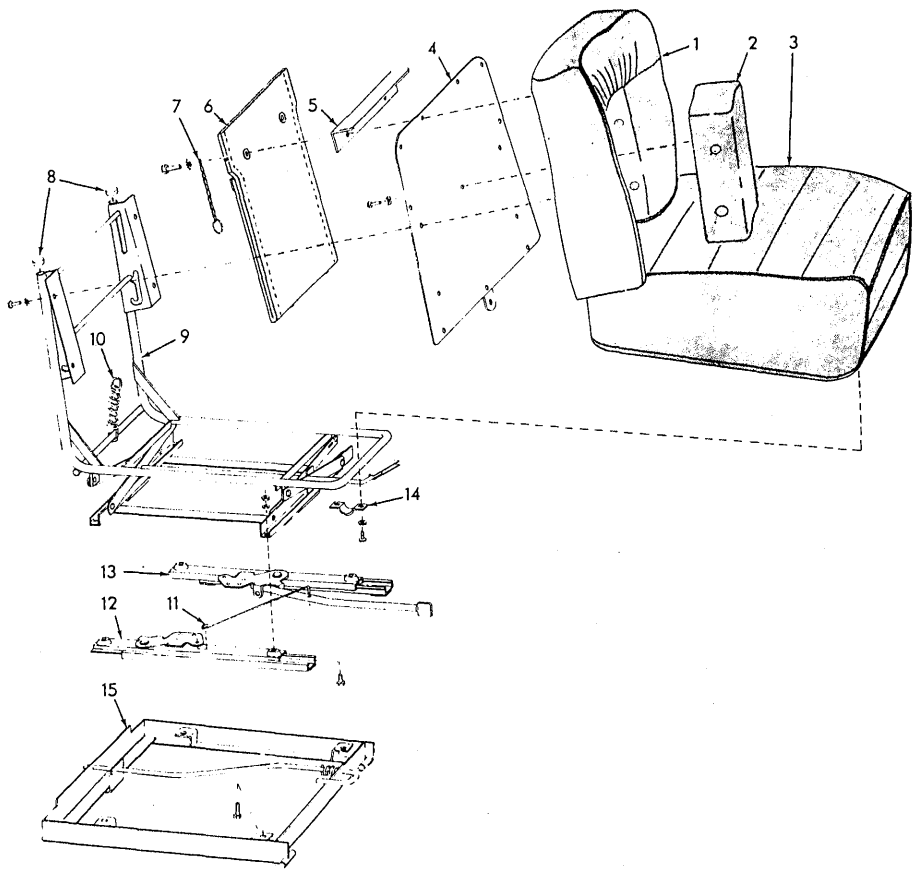

T-78529

SEAT ASSEMBLY

USAGE: See page 223. Tractor serial No. 19S15122 and up including exceptions listed below, thru approximately August 1979. See page 225E for later design.

ITEM	PART NO.	QTY.	DESCRIPTION
-	73113527	1	SEAT ASSY. (Includes items 1 thru 14)
1	70694306	1	CUSHION
	70921615	6	SCREW, button-hd., hex-skt., 1/4" NC x 3/4"
	70914105	8	LOCKWASHER, ext-tooth, 1/4"
2	70694303	1	CUSHION
	70921615	2	SCREW, button-hd., hex-skt., 1/4"NC x 3/4"
	70914105	2	LOCKWASHER, ext-tooth, 1/4"
3	70694307	1	CUSHION
4	73108830	1	PLATE
	70921615	4	SCREW, button-hd., hex-skt., 1/4" NC x 3/4"
	70914105	4	LOCKWASHER, ext-tooth, 1/4"
5	--------	1	ANGLE }
6	--------	1	POUCH } See item 17
	--------	2	CAPSCREW }
7	--------	1	CHAIN ASSY. }
8	70694784	2	CAP
9	73113740	1	FRAME ASSY. (Serviced only as a unit)
	70921566	4	CAPSCREW, 5/16"NC x 1"
	70900366	4	NUT, 5/16"NC

(Continued)

(Revised April 1980)

SEAT ASSEMBLY (Continued)

ITEM	PART NO.	QTY.	DESCRIPTION
10	--------	1	SPRING (Not serviced separately)
11	73113741	1	ROD
12	--------	1	SLIDE } Order item 16
13	--------	1	SLIDE }
14	70694783	4	BRACKET
	70921615	8	SCREW, button-hd., hex-skt., 1/4"NC x 3/4"
	70914105	8	LOCKWASHER, ext-tooth, 1/4"
15	70696162	1	BASE
	70921566	4	CAPSCREW, 5/16"NC x 1"
	70677005	4	WASHER
	70911025	4	NUT, 5/16"NC
16	73113745	1	SLIDE KIT (Includes items 12 and 13)
17	73109343	1	POUCH KIT (Includes items 5, 6 and 7)

EXCEPTIONS: 14990, 15004, 15006, 15011, 15014, 15055, 15058, 15060, 15061, 15067, 15068, 15070, 15071, 15073, 15074, 15079 thru 15081, 15094, 15100, 15106, 15111 and 15112.

(Revised April 1980)

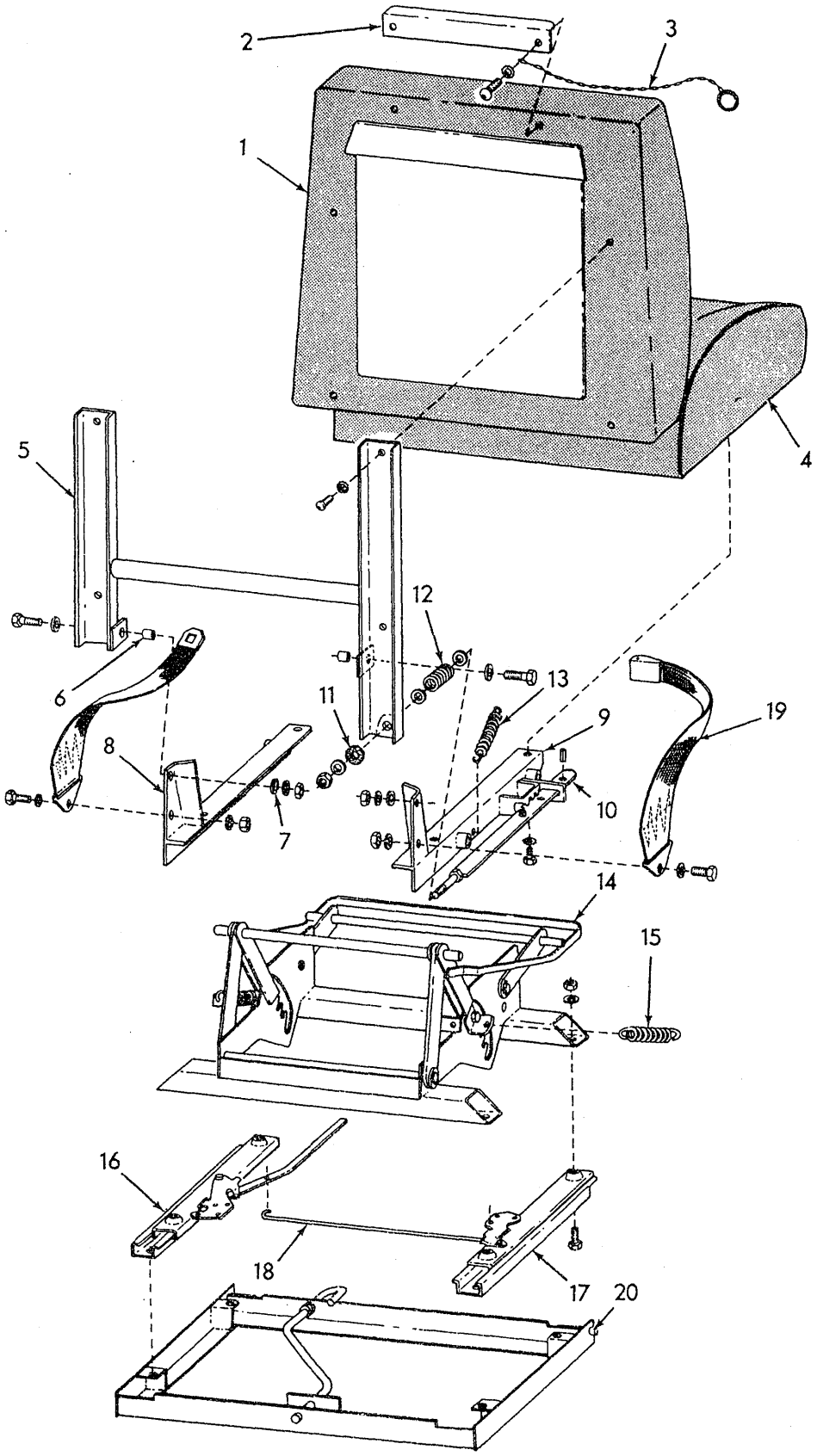

T-82491

SEAT ASSEMBLY

(Added April 1980)

225E

SEAT ASSEMBLY

USAGE: See page 223. Effective approximately September 1979. See page 225C for early design.

ITEM	PART NO.	QTY.	DESCRIPTION
-	73115577	1	SEAT ASSY. (Includes items 1 thru 19)
1	73118952	1	BACK CUSHION
	70927541	4	CAPSCREW, 1/4"NC x 3/4"
	70914105	4	LOCKWASHER, ext-tooth, 1/4"
2	73118966	1	BRACKET
	70927541	2	CAPSCREW, 1/4"NC x 3/4"
	70914105	2	LOCKWASHER, ext-tooth, 1/4"
3	73108440	1	CHAIN
4	73118951	1	SEAT CUSHION
	70927541	4	CAPSCREW, 1/4"NC x 3/4"
	70914105	4	LOCKWASHER, ext-tooth, 1/4"
5	73118965	1	FRAME
	70921076	2	CAPSCREW, 3/8"NC x 1-1/4"
	70914900	4	WASHER
	70915891	2	NUT, elastic stop, 3/8"NC
6	73118963	2	BUSHING
7	73118964	2	WASHER, nylon
8	73118955	1	FRAME, left
9	73118956	1	FRAME, right
10	73118958	1	STRAP, back tilt latch
	70919347	2	PIN, spring, 1/4" x 5/8"
11	73118961	1	BUMPER
	70914903	2	WASHER
	70915633	1	NUT
12	73118960	1	SPRING, back cushioning
13	73118959	1	SPRING, back return
14	73118953	1	BASE ASSY. (Serviced only as a unit)
	70921566	4	CAPSCREW, 5/16"NC x 1"
	70904205	4	LOCKWASHER, 5/16"
	70910323	4	NUT, 5/16"
15	73118962	2	SPRING, height adjustment
16	--------	1	SLIDE } Order item 21
17	--------	1	SLIDE }
18	73118957	1	ROD
19	73118967	1	BELT, safety
	70927158	2	CAPSCREW, 1/2"NF x 1"
	70911414	2	WASHER
	70912441	2	LOCKWASHER, 1/2"
	70910195	2	NUT, 1/2"NF
20	70696162	1	BASE
	70921566	4	CAPSCREW, 5/16"NC x 1"
	70677005	4	WASHER
	70911025	4	NUT, 5/16"NC
21	73118954	1	SLIDE KIT (Includes items 16 and 17)

(Added April 1980)

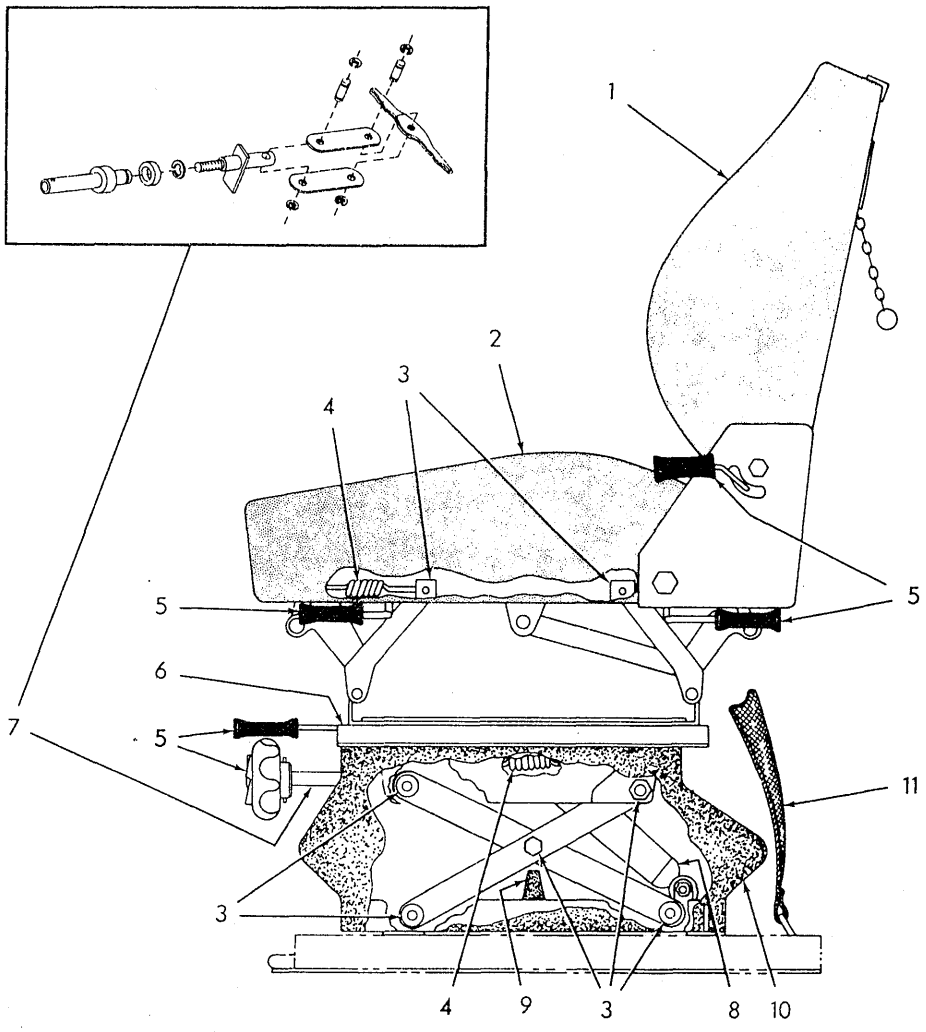

SEAT ASSEMBLY

USAGE: Optional equipment. See page 223

ITEM	PART NO.	QTY.	DESCRIPTION
-	73116939	1	SEAT ASSY. (Includes items 1 thru 11)
1	73116929	1	BACK CUSHION
2	73116930	1	SEAT CUSHION
3	73116931	1	ROLLER AND BEARING SET (Includes rollers bushings and shafts)
4	73116932	1	SPRING SET (Includes all required springs)
5	73116933	1	KNOB SET (Includes 5 knobs)
6	73116934	1	ADJUSTERS
7	73116938	1	WEIGHT ADJUSTMENT ASSY. (Serviced only as a unit)
8	73116936	1	SHOCK ABSORBER (Includes attaching hardware)
9	73116937	1	BUMPER SET (Includes 2 bumbers and attaching hardware)
10	73116935	1	BOOT, dust (Includes attaching hardware)
11	73117148	1	BELT, safety (Includes attaching hardware)

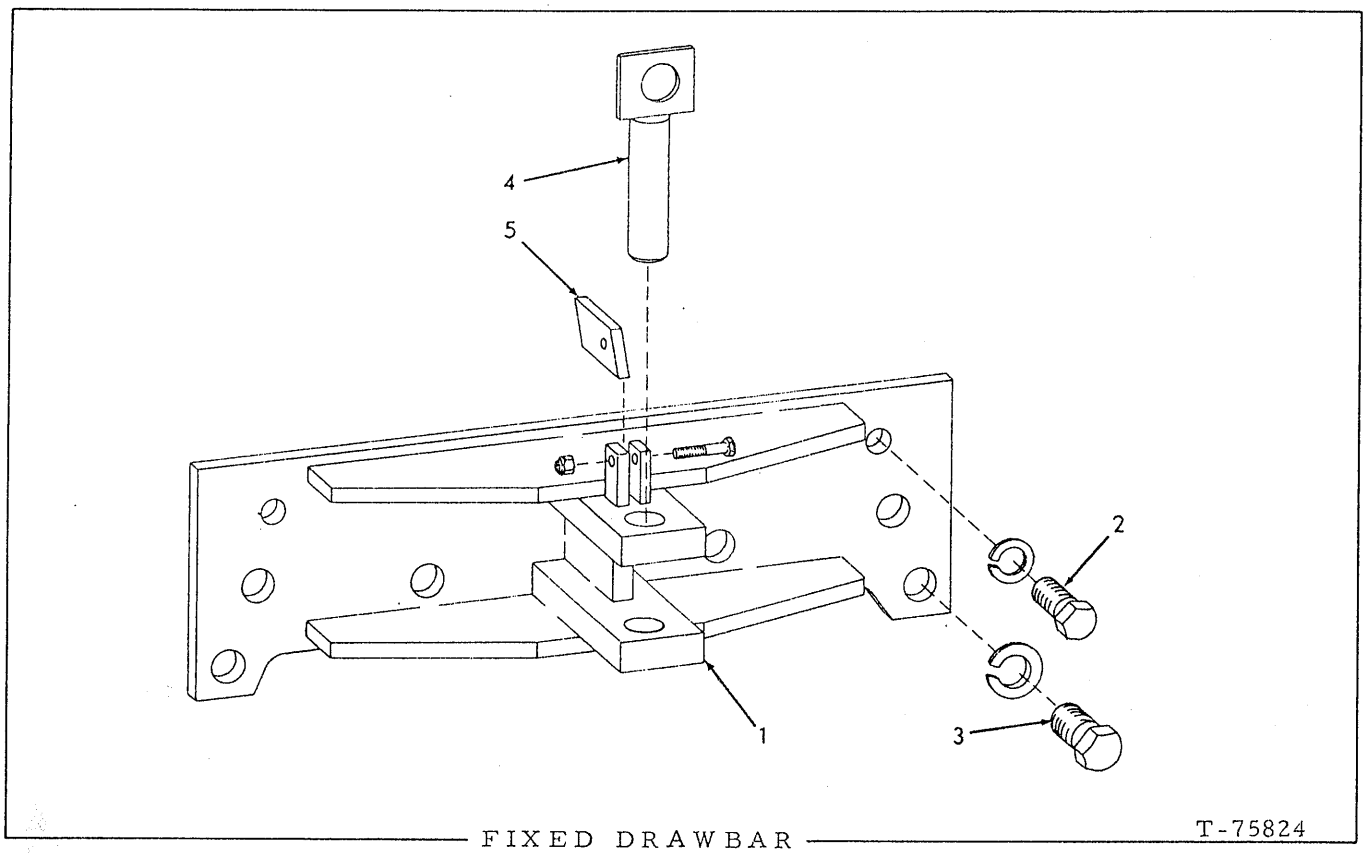

FIXED DRAWBAR

USAGE: Standard equipment. Not used on units equipped with Ripper.

ITEM	PART NO.	QTY.	DESCRIPTION
1	70673438	1	DRAWBAR
2	70927355	2	CAPSCREW, 1-1/4"NF x 3-1/4"
	70914730	2	LOCKWASHER, 1-1/4"
3	70927370	4	CAPSCREW, 1-1/2"NF x 3-3/4"
	70912603	4	LOCKWASHER, 1-1/2"
4	70673436	1	PIN, coupling
5	70664052	1	PLATE, pin retaining
	70922526	1	CAPSCREW, 1/2"NC x 2-1/2"
	70915972	1	NUT, elastic stop, 1/2"NC

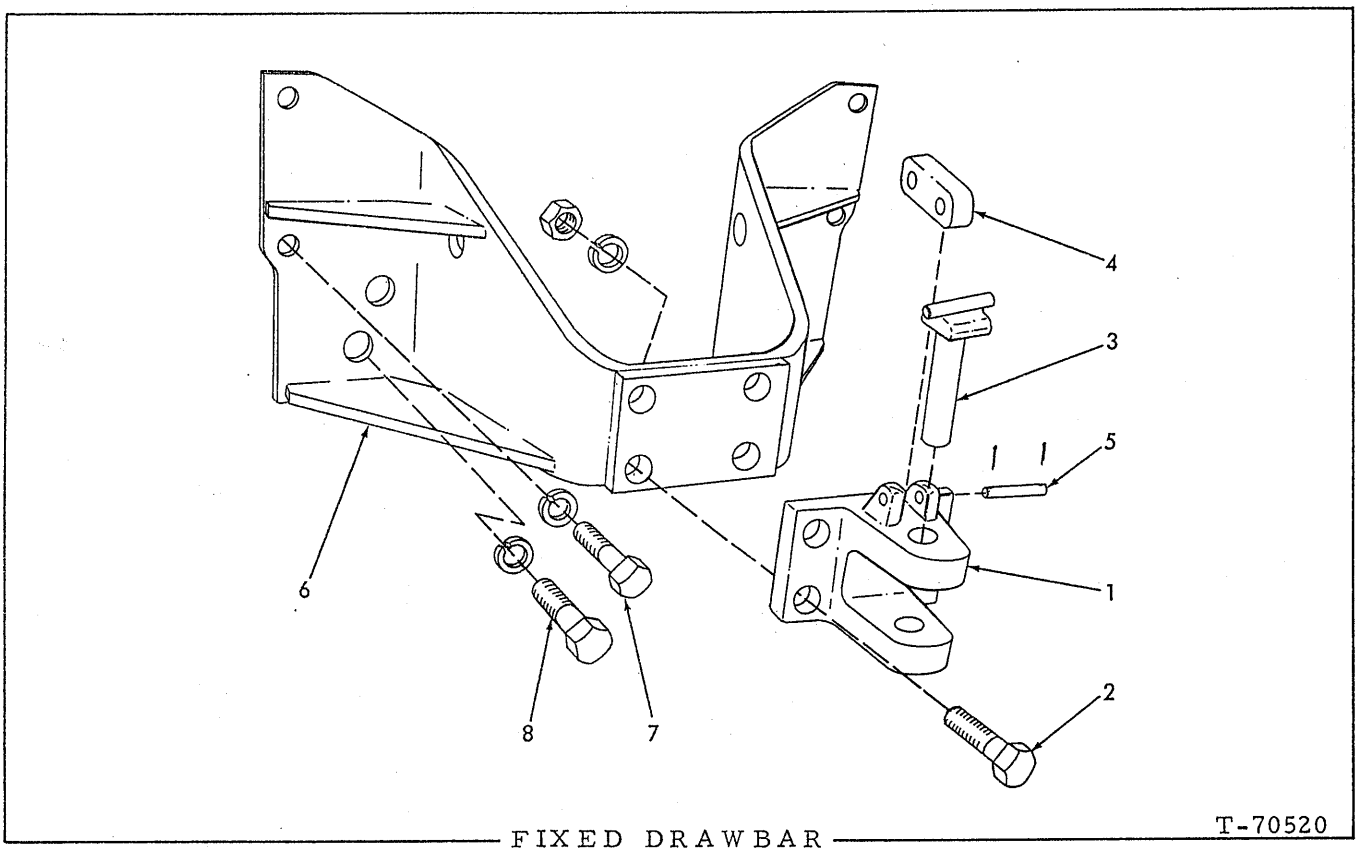

FIXED DRAWBAR

USAGE: Optional equipment

ITEM	PART NO.	QTY.	DESCRIPTION
			NOTE: Cannot be used with special Ripper
1	70633729	1	BRACKET, coupling
	70927367	4	CAPSCREW, 1-1/2"NF x 5-1/2"
	70912603	4	LOCKWASHER, 1-1/2"
	70916555	4	NUT, 1-1/2"NF
3	70633730	1	PIN, drawbar
4	70629697	1	BLOCK, retaining, drawbar pin
5	70629698	1	PIN, retaining block
	70900806	2	PIN, cotter, 1/8" x 1"
6	70633720	1	BRACKET, supporting
7	70927355	4	CAPSCREW, 1-1/4"NF x 3-1/4"
	70914730	4	LOCKWASHER, 1-1/4"
8	70927370	4	CAPSCREW, 1-1/2"NF x 3-3/4"
	70912603	4	LOCKWASHER, 1-1/2"

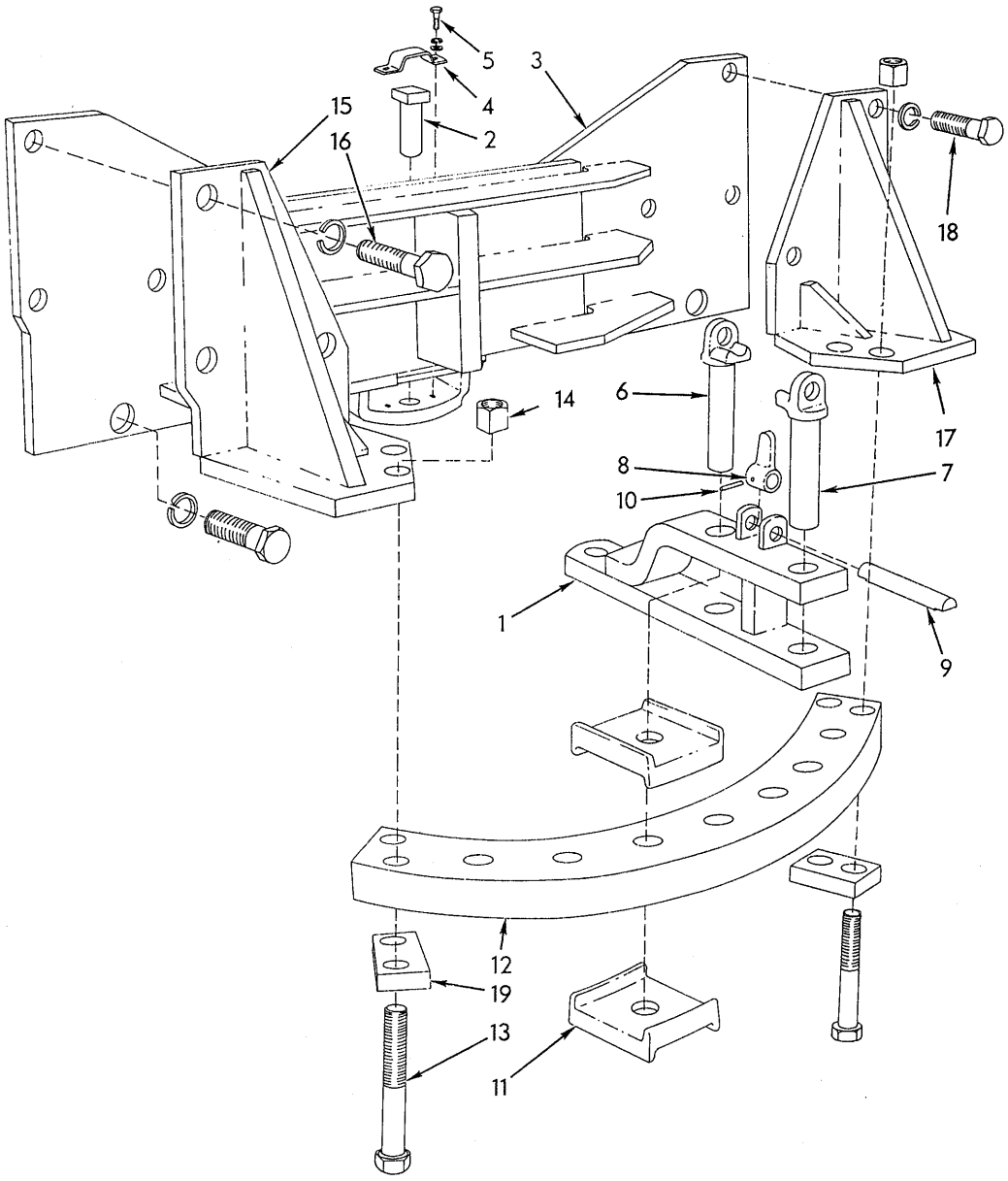

SWINGING DRAWBAR

USAGE: Optional equipment

ITEM	PARTNO.	QTY.	DESCRIPTION
1	70643844	1	DRAWBAR
2	70080669	1	PIN, hinge
3	70664793	1	BRACKET, rear
	70625383	2	CAPSCREW, 1-1/2NF x 4"
	70913077	2	LOCKWASHER, 1-1/2"
4	70050447	1	PLATE, hinge pin retaining
5	70913249	2	CAPSCREW, 1/2"NF x 1-1/4"
	70904208	2	LOCKWASHER, 1/2"
	70910244	2	WASHER, plain, SAE std., 1/2"

(Continued)

ITEM	PART NO.	QTY.	DESCRIPTION
6	70059010	1	PIN, drawbar locking
7	70059007	1	PIN, drawbar coupling
8	70051352	1	ARM, locking, drawbar pins
9	70078866	1	SHAFT, drawbar pin locking arm
10	70915504	1	PIN, spring, 5/16" x 1-3/4"
11	70643832	2	SHOE, wear
12	70648996	1	PLATE, supporting
13	70648954	4	CAPSCREW, 1-1/4"NF x 7-1/2"
14	70028847	4	NUT, high, 1-1/4"NF
15	70648997	1	BRACKET, supporting plate, left
16	70053251	3	CAPSCREW, 1-1/4"NF x 4-1/2"
	70904210	3	LOCKWASHER, 1-1/4"
17	70648998	1	BRACKET, supporting plate, right
18	70053251	3	CAPSCREW, 1-1/4"NF x 4-1/2"
	70904210	3	LOCKWASHER, 1-1/4"
19	70648943	2	BLOCK, drawbar stop

PAINTING AND MARKING
(Not Illustrated)

ITEM	PART NO.	QTY.	DESCRIPTION
			NOTE: Approximately 15 gallons paint required for spraying
1	70925108	-	ENAMEL, yellow, 12 oz. pressurized spray-type can
	70698037	-	ENAMEL, yellow orange, 12 oz. pressurized spray-type can
2	70925109	-	ENAMEL, yellow, quart can
3	70925110	-	ENAMEL, yellow, gallon can
	70698038	-	ENAMEL, yellow orange,gallon can
			NOTE: All plates and decals listed below are English language printings unless otherwise indicated.
4	70666400	1	PLATE, lubricating and service guide (7" x 10") (Tractors prior to unit #12112)
	70680337	1	PLATE, lubrication and service guide (7" x 10") (Tractors unit #12112 thru #14070)
	70696797	1	PLATE, lubrication and service guide (7" x 10") (Tractor unit #14071 and up)
	70666401	1	PLATE, lubrication and service guide (multi-language, 7" x 12-7/8")(Tractors prior to unit #12112)
	70680339	1	PLATE, lubrication and service guide (multi-language, 7" x 12-7/8")(Tractor unit #12112 and up)
	70697549	1	PLATE, lubrication and service guide (7" x 10") (Spanish)
	70697550	1	PLATE, lubrication and service guide (7" x 10") (Portuguese)
	70697551	1	PLATE, lubrication and service guide (7" x 10") (French)
	70698936	1	PLATE, lubrication and service guide (7" x 10") (Italian)
	70699016	1	PLATE, lubrication and service guide (7" x 10") (German)
	70034076	4	SCREW, thd-cutting, cross-recessed hd., #8 x 1/2" (2 additional used on multi-language plates)
			NOTE: Item 4 above attaches to front of Battery Box
5	70672642	1	□ DECAL , instruction, air cleaner (3" x 5")(Applied to top of air cleaner)
6	70669933	1	□ DECAL , instruction, coolant filter (2-3/8" x 3-1/2") (Applied to filter)(Tractors prior to unit #12651; also unit #14071 and up)
7	70621342	1	DECAL , instruction, engine primer (1-3/4" x 6") (Applied to dash)
8	73107886	1	□ DECAL, instruction, engine starting (3-3/16" x 6-3/16") (Applied to left side of steering lever housing)
9	70666497	1	DECAL , instruction, engine operation (2-1/4" x 4-1/2")(Applied to top of steering lever housing) (Tractors prior to unit #12687)

(Continued)

ITEM	PART NO.	QTY.	DESCRIPTION
10	70677914	2	□DECAL , instruction, fuel filter (2-1/4" x 3-1/4") (Applied to filter)
11	70667810	1	□DECAL, instruction, hydraulic oil filter (8" x 6") (Applied to front of hydraulic tank)
12	73109131	1	□DECAL, instruction manual location (6-5/8" x 1-1/8") (Applied to top of seat back)
13	73112616	2	□ DECAL , instruction, oil filter (2-1/4" x 3-3/8") (Applied to engine oil filter)
14	70658630	1	□DECAL , instruction, transmission filter)(1-3/4" x 2-1/4")(Applied to transmission filter)
15	73107880	1	□DECAL, important, engine oil filter (6-7/16" x 2-1/2")
	73109141	1	DECAL, important, engine oil filter (Italian) (6-1/2" x 2-1/2")
	73109142	1	DECAL, important, engine oil filter (Spanish) (6-1/2" x 2-1/2")
	73109143	1	DECAL, important, engine oil filter (German) (6-1/2" x 2-1/2")
	73109144	1	DECAL, important, engine oil filter (French) (6-1/2" x 2-1/2")
	73109145	1	DECAL, important, engine oil filter (Portuguese) (6-1/2" x 2-1/2")
			NOTE: Item 15 listed above applies to engine oil by-pass filter.
16	73107882	1	□DECAL, danger, flammable vapors (4-9/16" x 2-1/8") (Applied to inside of battery box cover)
17	73107884	3	□DECAL, danger, fluid pressure (5-7/16" x 1-15/16") (Applied to radiator filler cap guard and right side of hydraulic tank)
17A	73108929	2	□DECAL, danger, track tension (6" x 2-5/16")(Applied to track release spring cover)
18	73107893	4	□DECAL, danger, track release spring (4-7/16" x 2-1/8")(Applied to track release spring guard and cylinder housing)
19	73107895	1	□DECAL, warning, do not start (4-1/2" x 2-1/2")
	73109135	1	DECAL, warning, do not start (Italian)(4-1/2" x 2-1/2")
	73109136	1	DECAL, warning, do not start (Spanish)(4-1/2" x 2-1/2")
	73109137	1	DECAL, warning, do not start (German)(4-1/2" x 2-1/2")
	73109138	1	DECAL, warning, do not start (French)(4-1/2" x 2-1/2")
	73109139	1	DECAL, warning, do not start (Portuguese) (4-1/2" x 2-1/2")
			NOTE: Item 19 listed above applies to the COWL
20	73109154	1	□DECAL, warning, operation (5-5/16" x 8-5/16") (Applied to front of fuel tank)
21	73108776	1	□DECAL, warning, start up, shut-down (5" x 6-11/16") (Applied to front of fuel tank)

(Continued)

ITEM	PART NO.	QTY.	DESCRIPTION
22	73108722	2	□DECAL, warning, starting fluid (4-7/16" x 2-1/4") (Applied to air pre-cleaner extension pipe)
23	73107891	1	□DECAL, warning, master switch (4-7/16" x 2-1/8") (Applied to left side of battery box)
23A	73130433	1	□DECAL, "OFF-ON" master switch disconnect (3/4" x 2) (Applied to left inner side of battery box)
24	73107881	2	□DECAL, warning, blades and belts (4-7/16" x 1-7/8" (Applied to front fenders)
25	73107889	1	□DECAL, warning, pressure leaks (7-7/16" x 1-15/16") (Applied to front of battery box)
26	73107885	2	□DECAL, warning, towing (4-7/16" x 1-15/16")(Applied to front main frame and rear of main housing)
27	73107894	2	□DECAL, warning, element cleaning (4-7/16" x 1-15/16") (Applied to cowl)
28	73107897	4	□DECAL, warning, inoperative brakes (4-9/16" x 2-1/8") (Applied to rear of main housing)
29	73107890	2	DECAL, warning, scissors point (6-1/2" x 2-1/4") (Applied to ripper tool bar linkage)
30	73108074	1	□DECAL, horn (2" x 3")(Applied to right side of transmission control tower)
31	70661226	3	DECAL , "HD16" (Applied to side of battery box, rear of fuel tank and side of hydraulic tank or tool box)
32	70666405	3	DECAL , "SERIES B" (1-1/4" x 8-1/8")(Applied to side of battery box, rear of fuel tank and side of hydraulic tank or tool box)
33	70694453	2	□DECAL , "16-B" (6" x 16-5/8")(Applied to rear of hydraulic tank or tool box and side of battery box)
34	70927640	2	DECAL , "17000 - MARK II POWER"
35	70924320	1	DECAL , "A-C" trademark (6-3/4", black and orange) } Applied to rear of fuel tank
	70924541	1	DECAL , "A-C" trademark (6-3/4", white)(Optional) } Applied to rear of fuel tank
36	70924306	2	DECAL , "A-C" trademark (7-3/4", black and orange) } Applied to sides of radiator guards
	70924463	2	DECAL , "A-C" trademark (7-3/4", white)(Optional) } Applied to sides of radiator guards
37	70924550	3	DECAL , "ALLIS-CHALMERS" (1-7/8" x 30") (Applied to sides of hood and front of radiator guard)
38	70924554	1	DECAL , "ALLIS-CHALMERS" (3-1/16" x 50") (Applied to rear of fuel tank)
39	70694424	2	□DECAL , "F-A" trademark (8" x 9-1/16" black) (Applied to sides of radiator guard)
40	70694425	1	DECAL , "F-A" trademark (9-1/2" x 10-3/4") (Applied to canopy right bracket for units equipped with RIPPER)
41	70694436	1	□DECAL , "FIAT-ALLIS" (3" x 19-1/4" black) (Applied to front of radiator guard)
42	70694437	2	□DECAL , "FIAT-ALLIS" (3-1/2" x 22-1/2" black) (Applied to sides of hood)
43	70697242	1	□DECAL , "FIAT-ALLIS" (16" x 29-1/2" black) (Applied to rear of fuel tank)(Not used with RIPPER)
44	--------	1	DECAL , ROPS (2-1/2" x 6")(Applied to top rear cross tube of ROPS frame)(Order from local Fiat-Allis dealer)
45	73110431	1	KIT, decal (Includes items 5, 6, 8, 10 thru 14, 16 thru 28, 30, 33, 39 and 41 thru 43)

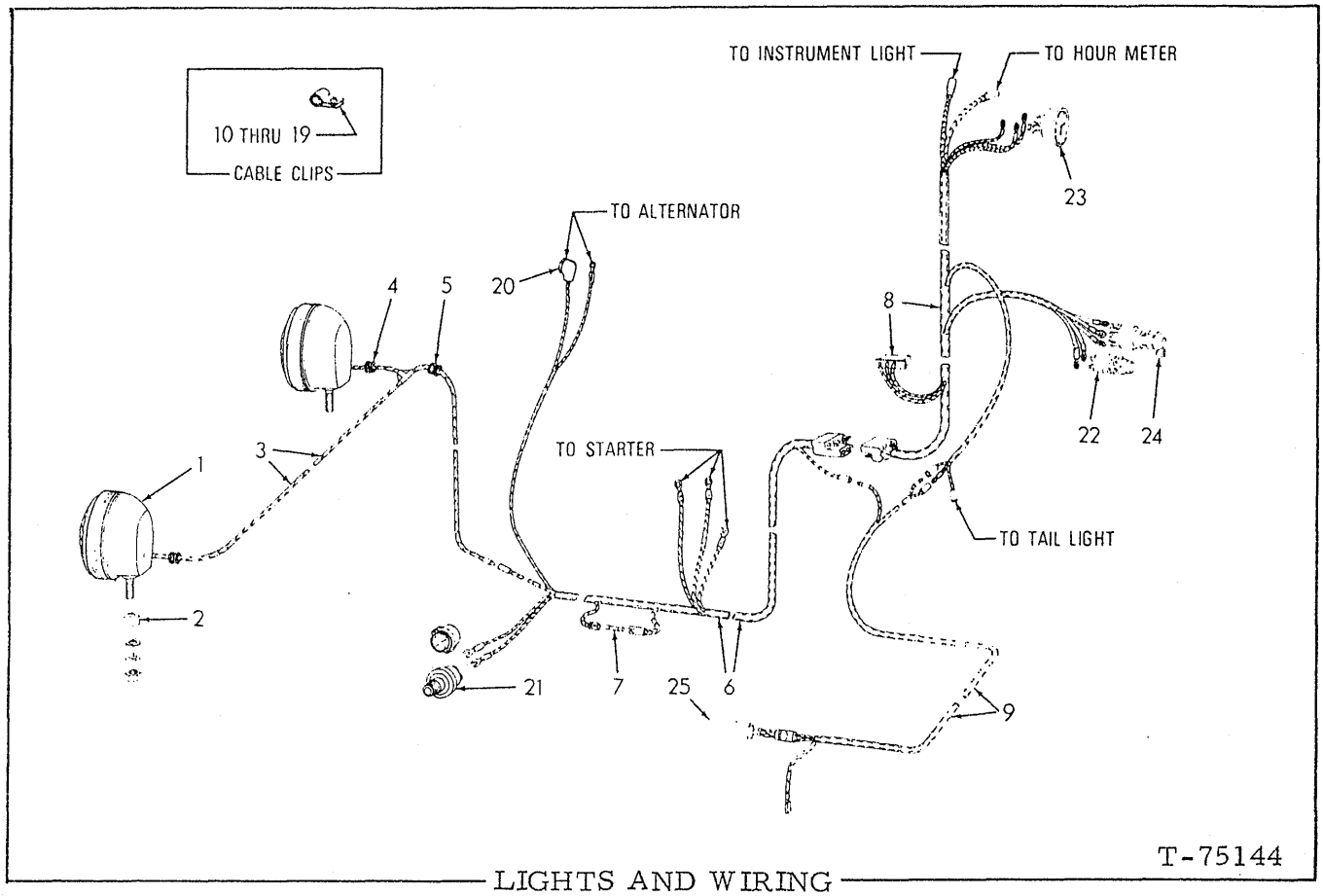

LIGHTS AND WIRING

USAGE: Tractors prior to serial No. 19S14886

△ Units with standard 20 amp. alternator (See page 233A for second type)
△△ Units with optional 50 amp. alternator (See page 233C for second type)

ITEM	PART NO.	QTY. △	QTY. △△	DESCRIPTION	
1	70621429	2	2	LIGHT ASSY., head (See page 237)	
	70910210	2	2	LOCKWASHER, ext-tooth, 1/2"	
	70677008	2	2	WASHER	
	70911043	2	2	NUT, 1/2" NF	
2	70064531	2	2	SPACER, head light	
3	70667145	1	1	CABLE, head light	
4	70087855	2	2	GROMMET, head light cable (1" diam.)(Tractors prior to unit #13264)	
	70696335	2	2	GROMMET, head light cable (1-1/4" diam.)(Tractor unit #13264 and up)	
5	70083987	1	1	GROMMET, head light cable (small)	
6	70682712	1	-	HARNESS, wiring, front section	Includes item 7
	70667572	-	1	HARNESS, wiring, front section (Tractors prior to unit #12124)	Includes item 7
	70683147	-	1	HARNESS, wiring, front section (Tractors unit #12124 and up)	Includes item 7
7	70208960	1	1	FUSE, cartridge type, 1/4" x 1-1/4" - 20 amperes	

(Continued)

(Revised April 1980)

ITEM	PART NO.	QTY. △	QTY. △△	DESCRIPTION
8	70664959	1	-	HARNESS, wiring, intermediate section (Tractors prior to unit #12124)
	70682711	1	-	HARNESS, wiring, intermediate section (Tractors unit #12124 & up)
	70667571	-	1	HARNESS, wiring, intermediate section (Tractors prior to unit #12124)
	70682705	-	1	HARNESS, wiring, intermediate section (Tractors unit #12124 & up)
	70653645	-	1	CABLE, alternator and starter to ammeter, front section
	70667573	-	1	HARNESS, alternator and starter to ammeter, rear section
9	70658355	1	1	HARNESS, wiring, rear section (Tractors prior to unit #12124)
	70682848	1	1	HARNESS, wiring, rear section (Tractors unit #12124 and up)
10	70639388	9	9	CLIP, headlight cables (1/8" diam., 13/32" bolt-hole)
	70922300	4	4	CAPSCREW, 3/8"NC x 3/4"
	70929156	4	4	WASHER, plain
	70922763	1	1	CAPSCREW, 3/8"NC x 1"
	70677006	1	1	WASHER, plain
11	70640676	2	2	CLIP, wiring harness (5/16" diam., 13/32" bolt-hole)
	70922262	1	1	CAPSCREW, 3/8"NC x 7/8"
	70677006	1	1	WASHER, plain
	70911026	1	1	NUT, 3/8"NC
12	70644006	-	1	CLIP, front wiring harness (9/16" diam., 17/32" bolt-hole)
13	70637741	-	1	CLIP, front wiring harness (5/8" diam., 17/32" bolt-hole)
14	70639314	2	-	CLIP, wiring harness (3/8" diam., 13/32" bolt-hole)
	70922262	1	-	CAPSCREW, 3/8"NC x 7/8"
	70677006	1	-	WASHER, plain
15	70927384	1	-	CLIP, front wiring harness (5/16" diam.)
	70921175	1	-	CAPSCREW, 1/2"NC x 1"
	70677008	1	-	WASHER, plain
16	70094527	5	-	CLIP, wirng harness (1/2" diam., 13/32" bolt-hole)
	70922262	4	-	CAPSCREW, 3/8"NC x 7/8"
	70677006	4	-	WASHER, plain
17	70624508	1	-	CLIP, front wiring harness (1/2" diam., 17/32" bolt-hole)
	70921175	1	-	CAPSCREW, 1/2"NC x 1"
	70677008	1	-	WASHER, plain
18	70094422	1	6	CLIP, wiring harness (5/8" diam., x 13/32" bolt-hole)
	70922262	1	-	CAPSCREW, 3/8"NC x 7/8"
	70677006	1	-	WASHER, plain
	70928138	-	1	CAPSCREW, 1/4"NC x 5/8"
	70928190	-	1	WASHER, plain
	70911024	-	1	NUT, 1/4"NC
19	70639314	2	-	CLIP, wiring harness (3/8" diam., 13/32" bolt-hole)
20	70667579	1	1	BOOT, protecting, alternator terminal
	70917376	1	1	NUT, #12-24NC
21	70660694	1	1	SWITCH, pressure, alternator cut-off
	70632706	1	1	BOOT, pressure switch
22	--------	-	-	SWITCH, starter (See INSTRUMENTS)
23	--------	-	-	AMMETER (See INSTRUMENTS)
24	--------	-	-	SWITCH, lights (See INSTRUMENTS)
25	70631844	1	1	SWITCH, safety

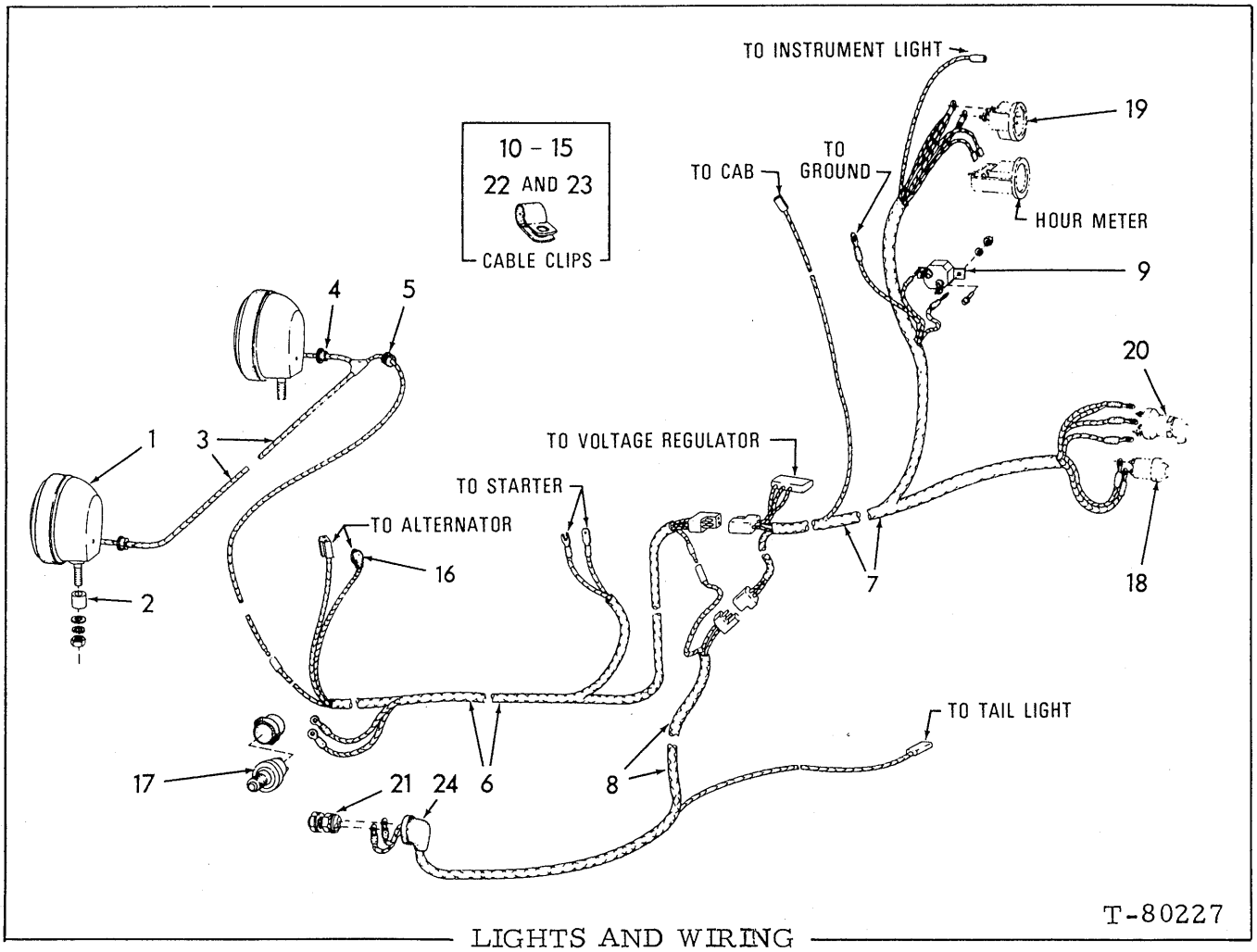

LIGHTS AND WIRING

USAGE: Tractors serial No. 19S14886 and up equipped with Standard 20 amp. alternator. See page 232 for first type.

ITEM	PART NO.	QTY.	DESCRIPTION
1	70621429	2	LIGHT ASSY., head (See page 237)
	70910210	2	LOCKWASHER, ext-tooth, 1/2"
	70677008		WASHER
	70910195	2	NUT, 1/2"NF
2	70064531	2	SPACER, head light
3	70695023	1	CABLE, head light
4	70696335	2	GROMMET, head light cable (1-1/4" diam.)
5	70083987	1	GROMMET, head light cable (small)
6	70695006	1	HARNESS, front section
7	70695031	1	HARNESS, intermediate section
8	70695091	1	HARNESS, rear section
9	70161824	1	CIRCUIT BREAKER
	70910968	2	SCREW, #10-24NC x 1"
	70910284	2	LOCKWASHER, #10
	70901310	2	NUT, #10-24NC

(Continued

(Revised April 1980)

ITEM	PART NO.	QTY.	DESCRIPTION
10	70925097	3	CLAMP
	70922763	2	CAPSCREW, 3/8"NC x 1"
	70922262	1	CAPSCREW, 3/8"NC x 7/8"
	70677006	3	WASHER
	70906960	1	LOCKWASHER, int-tooth, 3/8"
11	70639388	6	CLIP
	70922262	3	CAPSCREW, 3/8"NC x 7/8"
	70677006	3	WASHER
12	70665211	1	CLIP
	70922262	1	CAPSCREW, 3/8"NC x 7/8"
	70677006	1	WASHER
13	70928654	1	CLIP
	70922262	1	CAPSCREW, 3/8"NC x 7/8"
	70677006	1	WASHER
14	70927177	1	CLIP
	70921175	1	CAPSCREW, 1/2"NC x 1" } Tractors prior
	70677008	1	WASHER } to unit #14878
	70923470	1	CAPSCREW, 3/8"NC x 1-1/2" } Tractor unit
	70930370	2	WASHER } #14878 and up
15	70927217	1	CLIP
	70921175	1	CAPSCREW, 1/2"NC x 1" } Tractors prior
	70677008	1	WASHER } to unit #14878
	70929154	2	WASHER (Tractor unit #14878 and up)
16	70667579	1	BOOT
	70917376	1	NUT, #12-24NC
17	70660694	1	SWITCH
	70632706	1	BOOT
18	--------	-	SWITCH, starter }
19	--------	-	AMMETER } See page 238
20	--------	-	SWITCH, light }
21	73057506	1	SWITCH, safety
22	70925613	2	CLAMP
23	70928656	1	CLAMP
	70922763	1	CAPSCREW, 3/8"NC x 1"
	70930370	2	WASHER
	70900367	1	NUT, 3/8"NC
24	73061193	1	BOOT
25	70927177	1	CLAMP
	70921556	1	CAPSCREW, 1/2"NC x 2" } Tractor unit
	70928844	3	WASHER } #14878 and up
	70900369	1	NUT, 1/2"NC

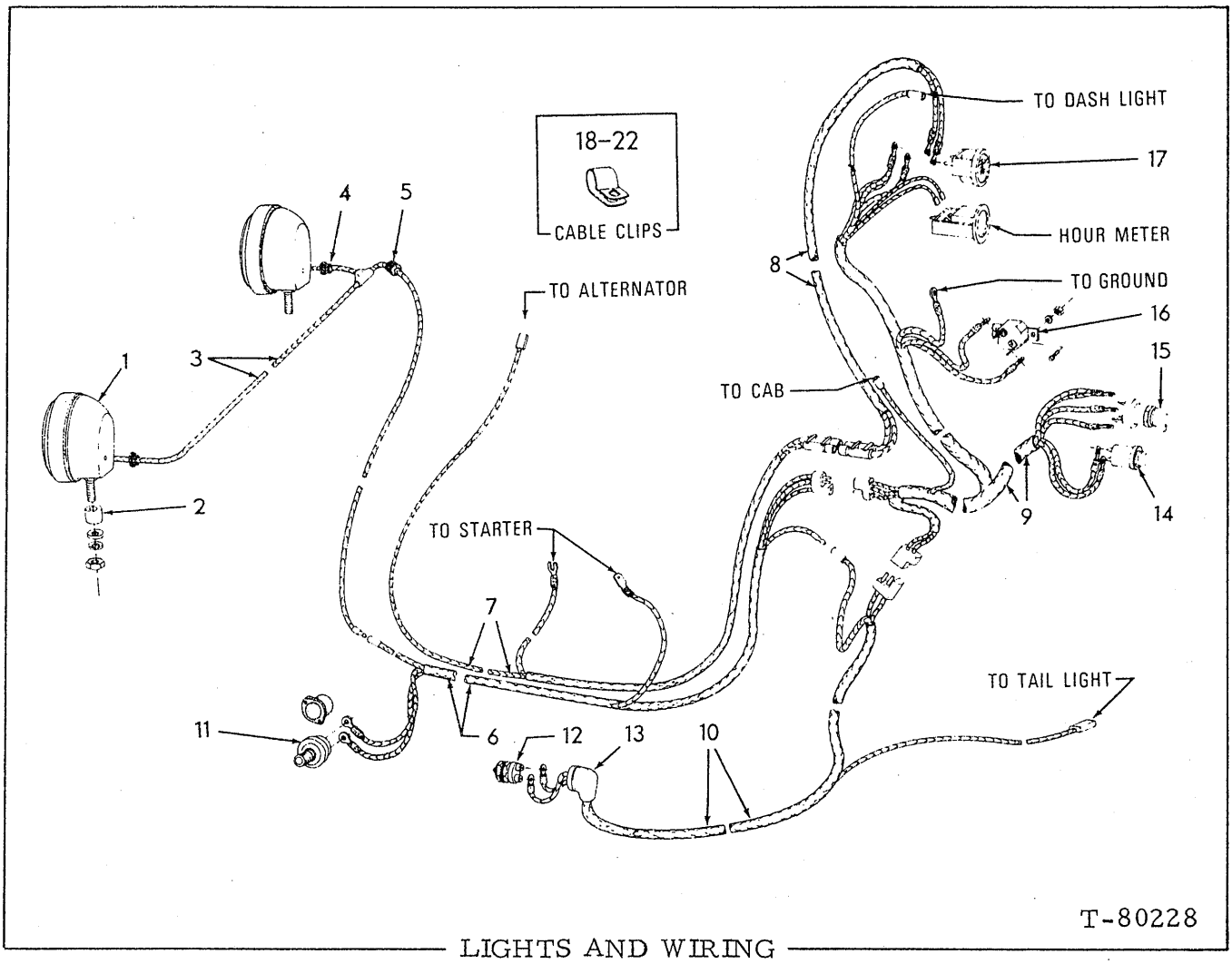

LIGHTS AND WIRING

USAGE: Tractors serial No. 19S14888 and up equipped with optional 50 amp. alternator. See page 232 for first type.

ITEM	PART NO.	QTY.	DESCRIPTION
1	70621429	2	LIGHT ASSY., head (See page 237)
	70910210	2	LOCKWASHER, ext-tooth, 1/2"
	70677008	2	WASHER
	70910195	2	NUT, 1/2" NF
2	70064531	2	SPACER
3	70695023	1	CABLE, head light
4	70696335	2	GROMMET (1-1/4" diam.)
5	70083987	1	GROMMET (small)
6	70695060	1	HARNESS, front section
7	70695038	1	CABLE, front section (Tractors prior to unit #14878)
	73112351	1	CABLE, front section (Tractor unit #14878 and up)
8	70695039	1	CABLE, intermediate section
9	70695042	1	HARNESS, intermediate section
10	70695091	1	HARNESS, rear section
11	70660694	1	SWITCH, pressure
	70632706	1	BOOT

(Continued)

(Revised April 1980)

ITEM	PART NO.	QTY.	DESCRIPTION
12	73057506	1	SWITCH, safety
13	73061193	1	BOOT
14	--------	-	SWITCH, starter } See page 238
15	--------	-	SWITCH, lights } See page 238
16	70161824	1	CIRCUIT BREAKER
	70910968	2	SCREW, #10-24NC x 1"
	70910284	2	LOCKWASHER, #10
	70901310	2	NUT, #10-24NC
17	--------	-	AMMETER (See page 238)
18	70639388	6	CLIP
	70922262	3	CAPSCREW, 3/8"NC x 7/8"
	70677006	3	WASHER
19	70925617	1	CLAMP
20	70927104	1	CLAMP
21	70927176	1	CLAMP
22	70929872	3	CLAMP

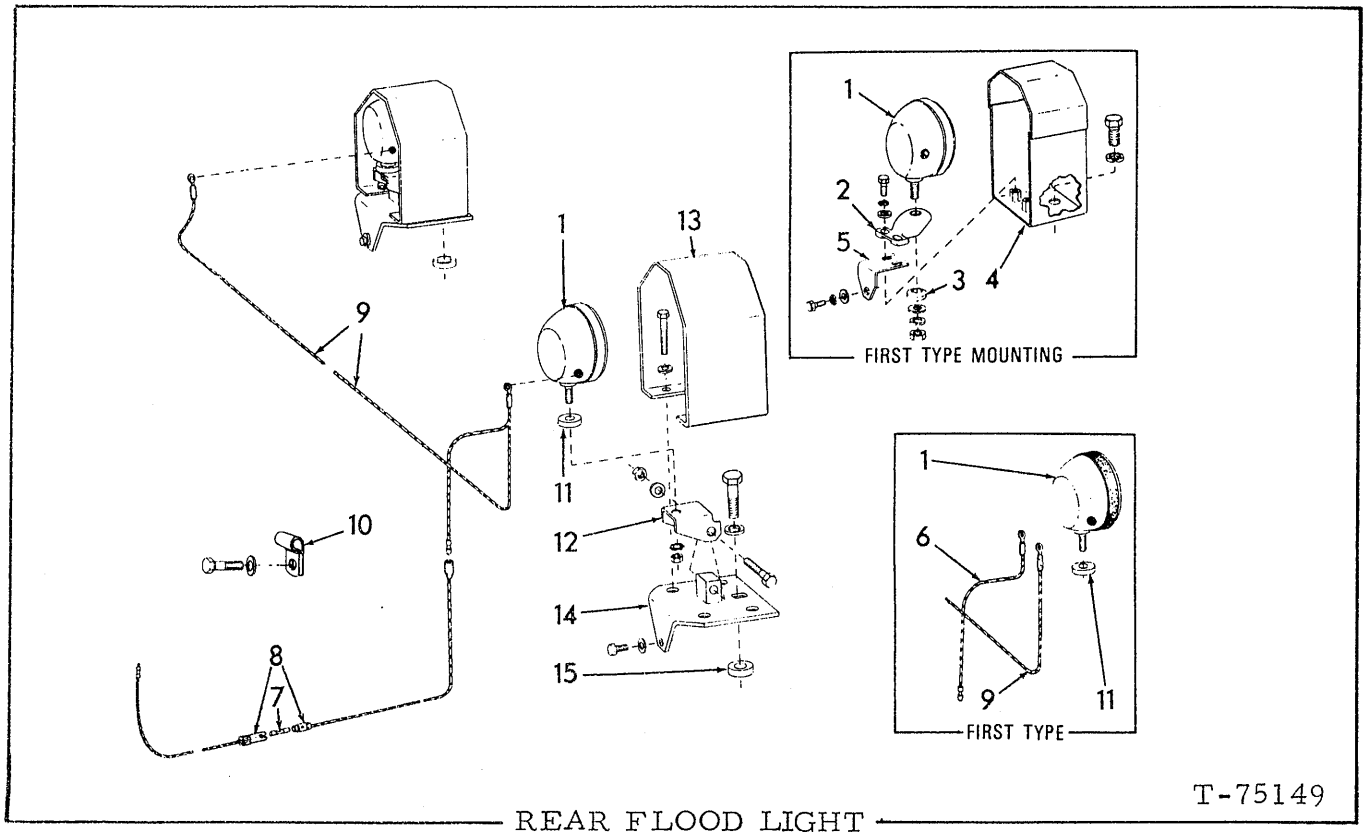

REAR FLOOD LIGHT

USAGE: Special equipment. (Units without ROPS cab or canopy)

ITEM	PART NO.	QTY.	DESCRIPTION	
1	--------	2	LIGHT ASSY. (See page 237)	
	70910210	2	LOCKWASHER, ext-tooth, 1/2"	
	70911043	2	NUT, 1/2" NF	
2	70075429	2	BRACKET, mounting	First type Mounting
	70916272	4	CAPSCREW, 3/8" NC x 1-1/4"	
	70904206	4	LOCKWASHER, 3/8"	
	70044973	4	WASHER	
3	70075535	2	WASHER, mounting	
4	70675657	2	GUARD, flood light	
	70916287	2	CAPSCREW, 3/4" NC x 1-1/2"	
	70904369	2	LOCKWASHER, 3/4"	
5	70664776	2	ANGLE, guard bracing	
	70915408	2	CAPSCREW, 3/8" NC x 3/4"	
	70904206	2	LOCKWASHER, 3/8"	
	70911115	2	WASHER, plain, SAE std., 3/8"	
6	70667147	1	CABLE, rear section (11" long)(First type only)	
7	70208960	1	FUSE, cartridge type (1/4" x 1-1/4", 20 amperes)	
8	70655485	1	CABLE ASSY., front section (107" long)(Includes item 7)	
9	70667146	1	CABLE, light connecting (57" long)(First type)	
	70695025	1	CABLE, light connecting (Second type)	
10	70639388	4	CLIP, cable (1/8" diam., 13/32" bolt-hole)	
	70922300	3	CAPSCREW, 3/8" NC x 3/4"	
	70677006	3	WASHER	

(Continued)

REAR FLOOD LIGHT (Continued)

ITEM	PART NO.	QTY.	DESCRIPTION	
11	70061528	2	BOSS	Second type Mounting
12	70076140	2	BRACKET, mounting	
	70928043	2	CAPSCREW, 5/8"NC x 3-1/2"	
	70927381	2	WASHER	
	70911029	2	NUT, 5/8"NC	
13	70670774	2	GUARD, flood light	
	70921175	8	CAPSCREW, 1/2"NC x 1"	
	70928460	8	WASHER	
14	70678242	2	BRACKET, guard mounting	
	70922300	2	CAPSCREW, 3/8"NC x 3/4"	
	70677006	2	WASHER	
	70921068	2	CAPSCREW, 3/4"NC x 2-1/4"	
	70677012	2	WASHER	
15	70635831	2	BLOCK, spacing	

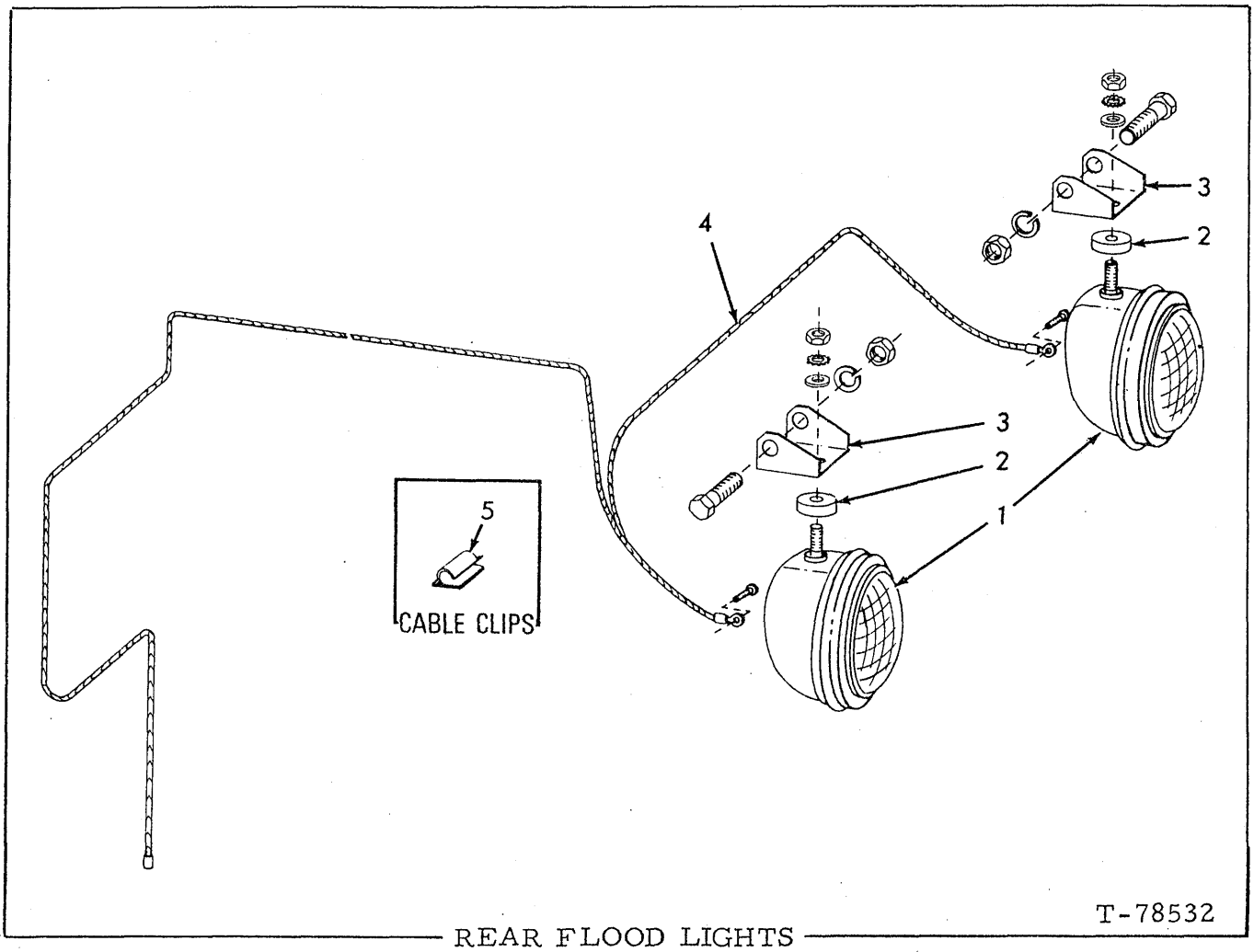

REAR FLOOD LIGHTS

USAGE: Special equipment (Units with ROPS Cab or Canopy

ITEM	PART NO.	QTY.	DESCRIPTION
1	--------	2	LIGHT ASSY. (See page 237)
	70911043	2	NUT, 1/2" NF
	70910210	2	LOCKWASHER, 1/2"
	70677008	2	WASHER (Two additional used on late units)
2	70061528	2	BOSS (First type only)
3	70076140	2	BRACKET, pivot
	70928043	2	CAPSCREW, 5/8" NC x 3-1/2"
	70927381	2	WASHER
	70911029	2	NUT, 5/8" NC
4	70691253	1	CABLE, light connecting (86" long)
5	73059884	16	CLIP, cable supporting (Adhesive backing)

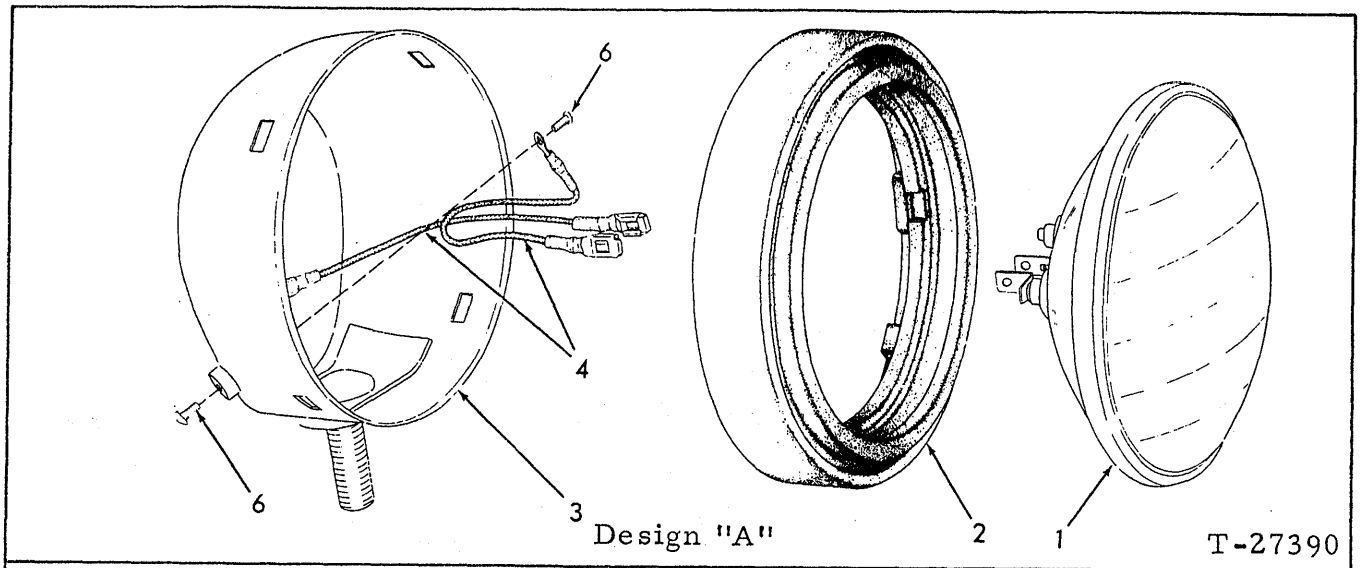

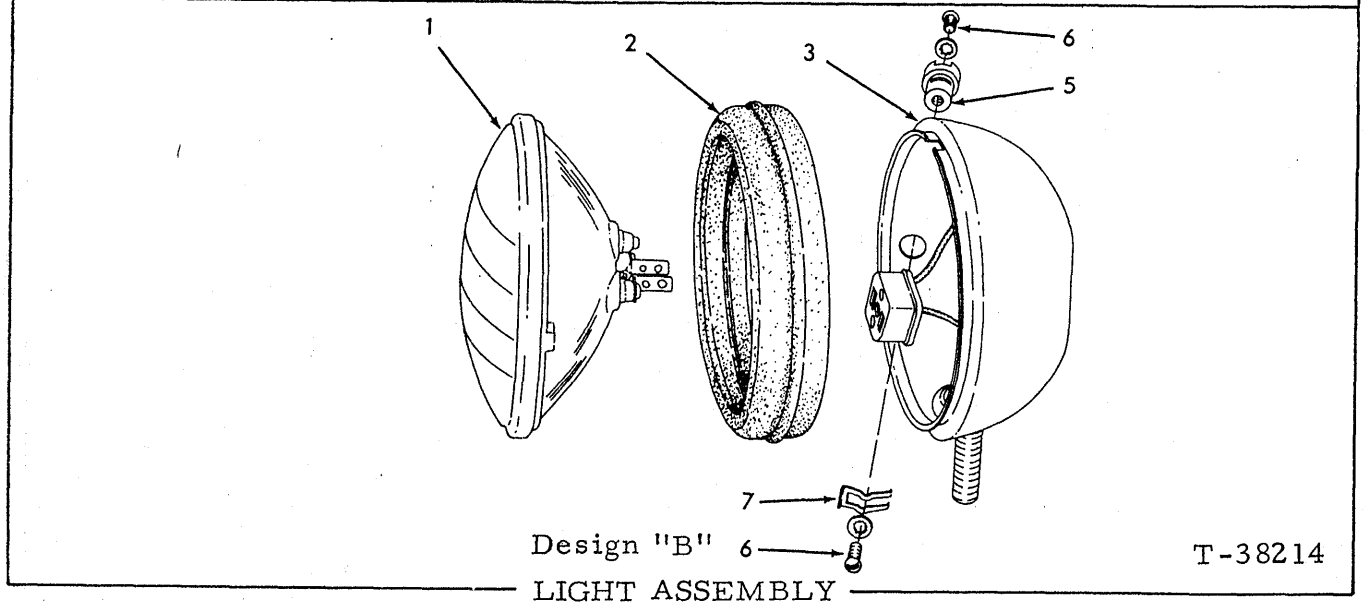

LIGHT ASSEMBLY

USAGE: See pages 232, 233A, 233C, 234 and 236

* Design "A"

** Design "B"

ITEM	PART NO.	QTY. *	QTY. **	DESCRIPTION
				NOTE: This Light Assembly is available in two designs. Check illustration to determine which is applicable to your unit and order service parts accordingly.
-	70621429	2	2	LIGHT ASSY. (Includes items 1 thru 7)
1	70182763	1	1	SEALED BEAM (24 volt)
2	70621428	1	-	RETAINER
	70638282	-	1	RETAINER
3	--------	1	-	BODY } Not serviced
	--------	-	1	BODY (Includes receptacle) } separately
4	70621724	2	-	CABLE
5	70695694	-	1	INSULATOR PACKAGE
6	70912731	2	2	SCREW, machined, rd-hd., #8NC x 5/16"
	70912739	-	2	LOCKWASHER, #8
7	70048922	-	1	SPRING

(Revised June 1978)

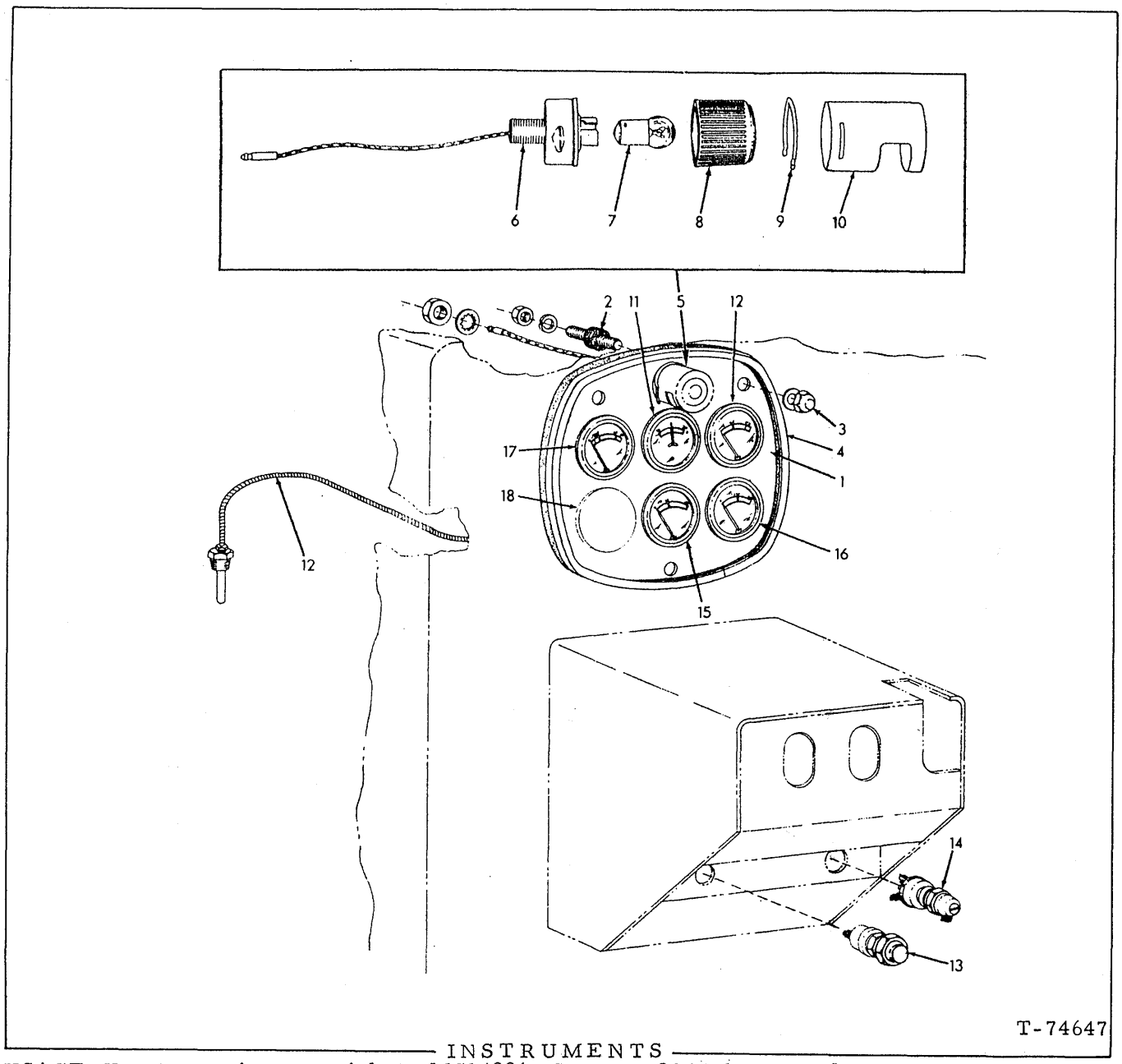

INSTRUMENTS

USAGE: Tractors prior to serial No. 19S14886. See page 239A for second type.

ITEM	PART NO.	QTY.	DESCRIPTION
1	70656905	1	PLATE, instrument mounting (Tractors prior to unit #12833)
	70686358	1	PLATE, instrument mounting (Tractors unit #12833 and up)
2	70642746	3	CUSHION, instrument mounting plate
	70910287	3	LOCKWASHER, 3/8"
	70911041	3	NUT, 3/8"NF
3	70930404	3	NUT, instrument mounting plate
	70930728	3	WASHER, plain (Stainless steel)
4	70656923	1	SEAL, weather, instrument mounting plate (Tractors prior to unit #12833)
	70686516	1	SEAL, weather, instrument mounting plate (Tractors unit #12833 and up)

(Continued)

(Revised April 1980)

ITEM	PART NO.	QTY.	DESCRIPTION	
5	70658641	1	LIGHT ASSY. (Consists of items 6 thru 10)	
	70911049	1	NUT, jam, 5/8"NF	
	70910334	1	LOCKWASHER, int-tooth, 5/8"	
6	--------	1	BASE ASSY. (Not serviced separately)	
7	70074452	1	BULB, single contact, 6 C.P., 24 volt	
	73115057	1	BULB, single contact, 3 C.P., 24 volt	
8	70095267	1	LENS, clear	
	73115058	1	LENS, blue	
9	70095265	1	SPRING	
10	70659002	1	COVER	
11	70658348	1	AMMETER (30 amp. Standard)(Tractors prior to unit #14647)	Each includes mounting clamp
	70695983	1	AMMETER (50 amp. Standard)(Tractor unit #14647 and up)	
	70658534	1	AMMETER (80 amp. Special equipment)	
12	70658397	1	GAUGE, engine temperature (Tractors prior to unit #14647)	Each includes mounting clamp
	70695982	1	GAUGE, engine temperature (Tractor unit #14647 and up)	
13	70240962	1	SWITCH ASSY., starter (Includes mounting nut)	
14	70661345	1	SWITCH ASSY., lights (Includes mounting nut)	
15	--------	1	GAUGE, transmission lubricating oil pressure (See page 242)	
16	--------	1	GAUGE, transmission hydraulic pressure (See page 242)	
17	--------	1	GAUGE, engine oil pressure (See page 241)	
18	--------	1	GAUGE, fuel pressure (See page 240)(Tractors prior to unit #12651)	
	70921193	1	PLUG, button, 2-3/32" hole diam. (Tractors unit #12651 and up)	

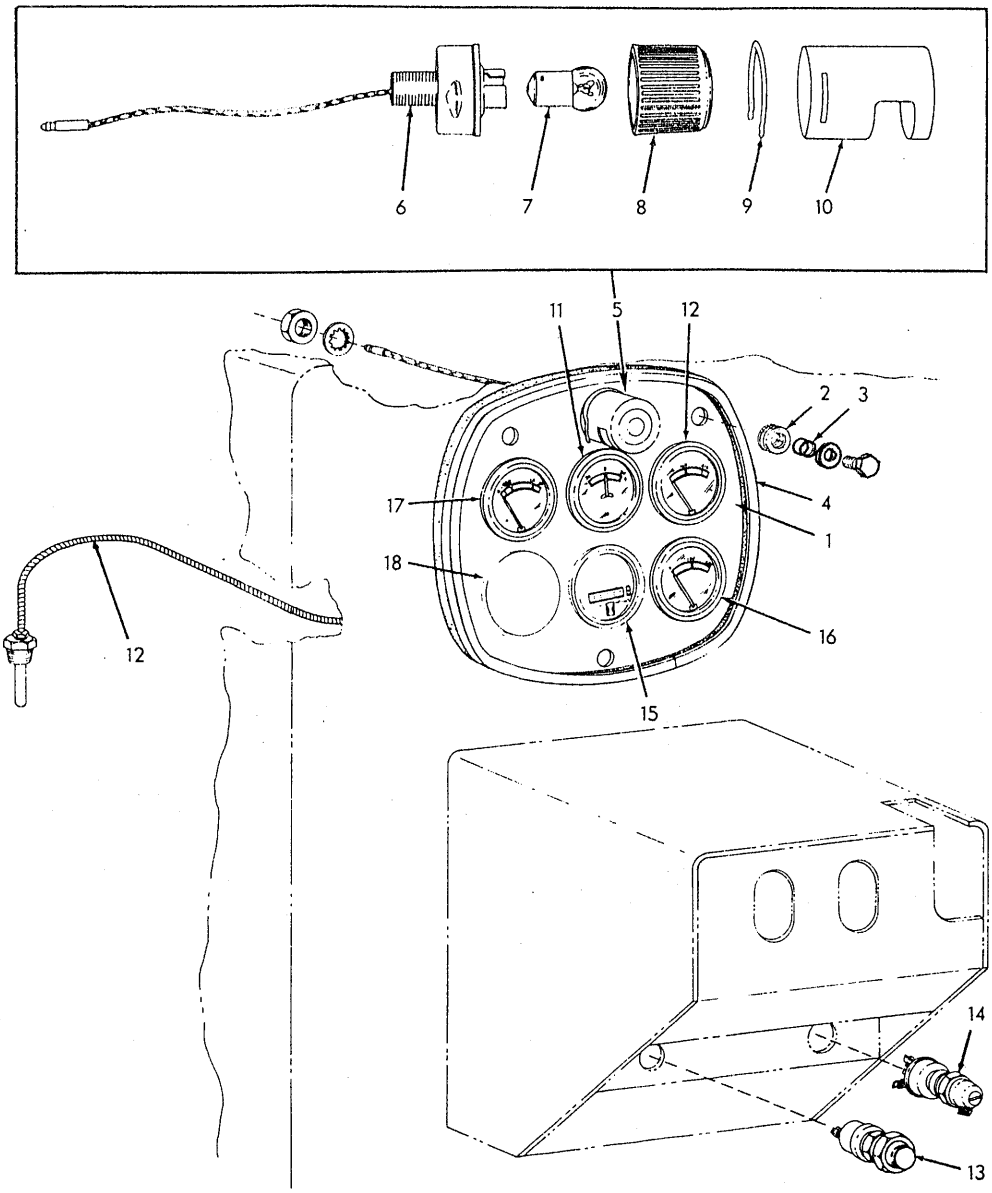

INSTRUMENTS

USAGE: Tractors serial No. 19S14886 and up. See page 238 for first type.

ITEM	PART NO.	QTY.	DESCRIPTION
1	70695839	1	PLATE, instrument mounting
2	70913233	3	GROMMET
3	70698697	3	SLEEVE
	70930736	3	CAPSCREW, 1/4"NC x 3/4"
	70930735	3	WASHER
4	70692562	1	SEAL, weather, instrument mounting plate
5	70693635	1	LIGHT ASSY. (Consists of items 6 thru 10)
	70911049	1	NUT, jam, 5/8"NF
	70910334	1	LOCKWASHER, int-tooth, 5/8"

(Continued)

(Revised April 1980)

INSTRUMENTS (Continued)

ITEM	PART NO.	QTY.	DESCRIPTION
6	--------	1	BASE ASSY. (Not serviced separately)
7	70074452	1	BULB, single contact, 6 C.P. 24 volt
	73115057	1	BULB, single contact, 3 C.P. 24 volt
8	70095267	1	LENS, clear
	73115058	1	LENS, blue
9	70095265	1	SPRING
10	70693636	1	COVER
11	70695983	1	AMMETER (50 amp. Standard) } Each includes mounting clamp
	70658534	1	AMMETER (80 amp. Special equipment) } Each includes mounting clamp
12	70695982	1	GAUGE, engine temperature (Includes mounting clamp)
13	70240962	1	SWITCH ASSY., starter (Includes mounting nut)
14	70661345	1	SWITCH ASSY., lights (Includes mounting nut)
15	--------	1	HOUR METER (See page 244)
16	--------	1	GAUGE, transmission hydraulic pressure (See page 242)
17	--------	1	GAUGE, engine oil pressure (See page 241)
18	70921193	1	PLUG, button, 2-3/32" hole diam.

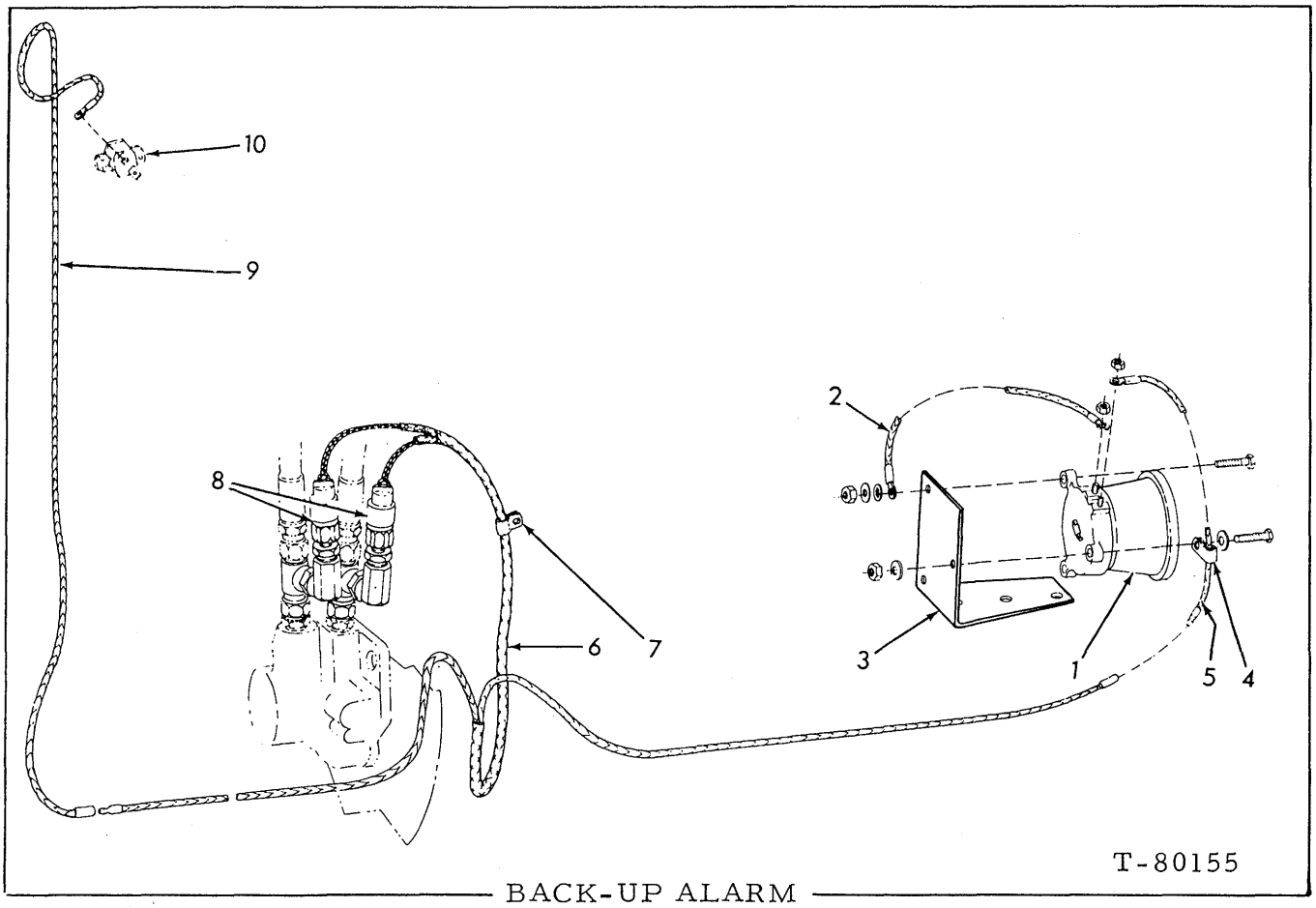

BACK-UP ALARM

USAGE: Tractor S/N 19S14896 and up

ITEM	PART NO.	QTY.	DESCRIPTION
1	73122739	1	HORN
	70921382	3	CAPSCREW, 1/4"NC x 1-1/4"
	70677004	6	WASHER
	70917730	3	NUT, 1/4"NC
2	70671763	1	CABLE
	70920187	1	LOCKWASHER, int.-tooth, 1/4"
3	73109537	1	BRACKET
4	70640707	1	CLIP
5	73109703	1	CABLE
6	73109973	1	HARNESS
7	70653050	1	CLIP
8	73066429	2	SWITCH, pressure
	70904269	2	BUSHING, pipe, 1/2" x 1/8"
	70932842	2	ELBOW, flare type, 1/2" tube, 1/2" str. thd.
	70921298	2	TEE, flare type, 1/2" tube, 3/4" str.thd. (Includes nuts)
9	70688282	1	CABLE
10	--------	1	CIRCUIT BREAKER (See page 233A)

(Revised April 1981)

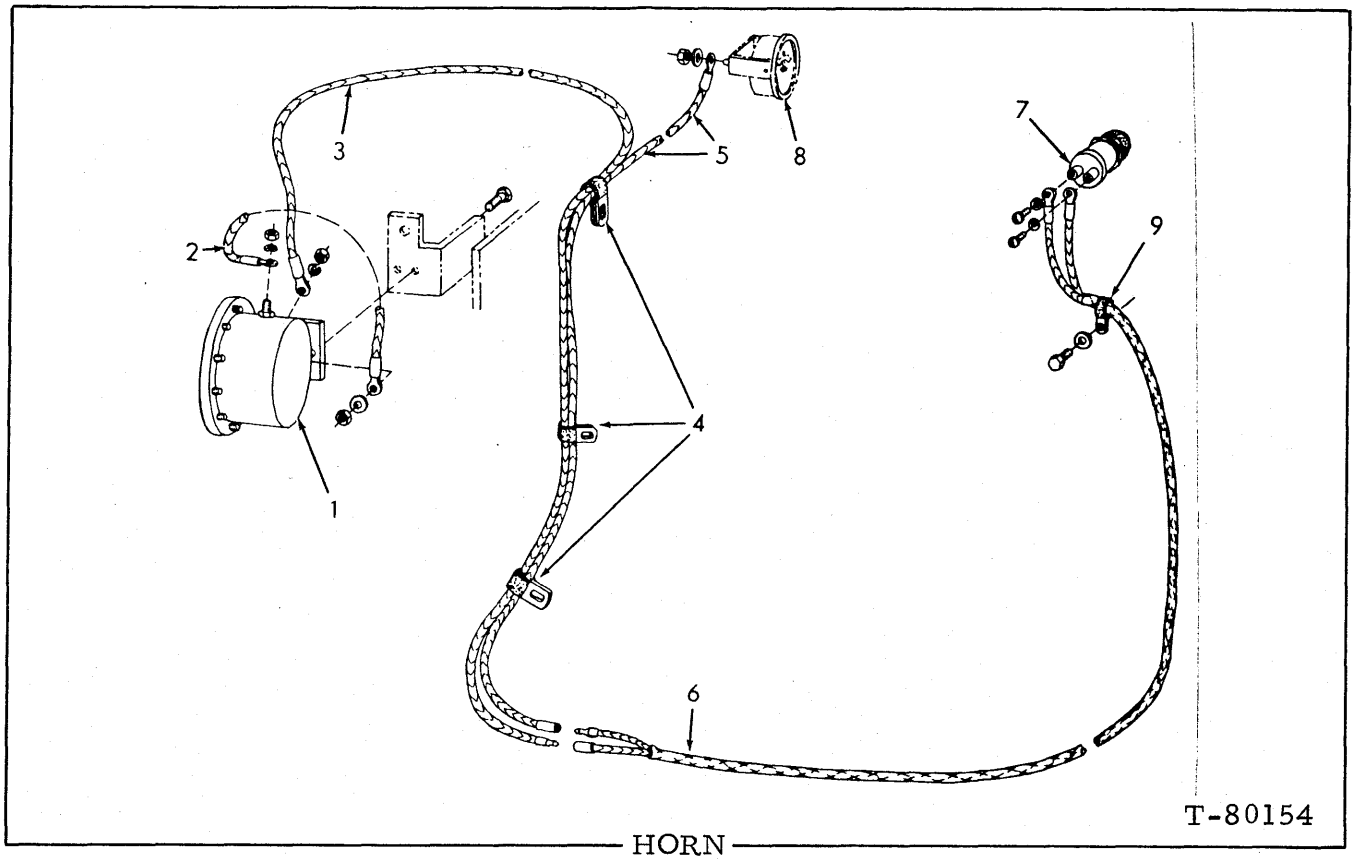

HORN

USAGE: Used on units S/N 19S14896 and up

ITEM	PART NO.	QTY.	DESCRIPTION
1	73107839	1	HORN
	70921382	2	CAPSCREW, 1/4"NC x 1-1/4"
	70677004	2	WASHER
	70900365	2	NUT, 1/4"NC
2	70697529	1	CABLE
	70909055	1	LOCKWASHER, #10
	70917415	1	NUT, #10-32 NF
3	73108455	1	CABLE
	70909055	1	LOCKWASHER, #10
	70917415	1	NUT, #10-32 NF
4	70640677	4	CLIP
5	70688282	1	CABLE
6	73110061	1	HARNESS
7	70253322	1	SWITCH ASSY. (Serviced only as a unit)
8	--------	1	AMMETER (See page 239)
9	70640674	1	CLIP
	70928138	1	CAPSCREW, 1/4"NC x 5/8"
	70928190	1	WASHER

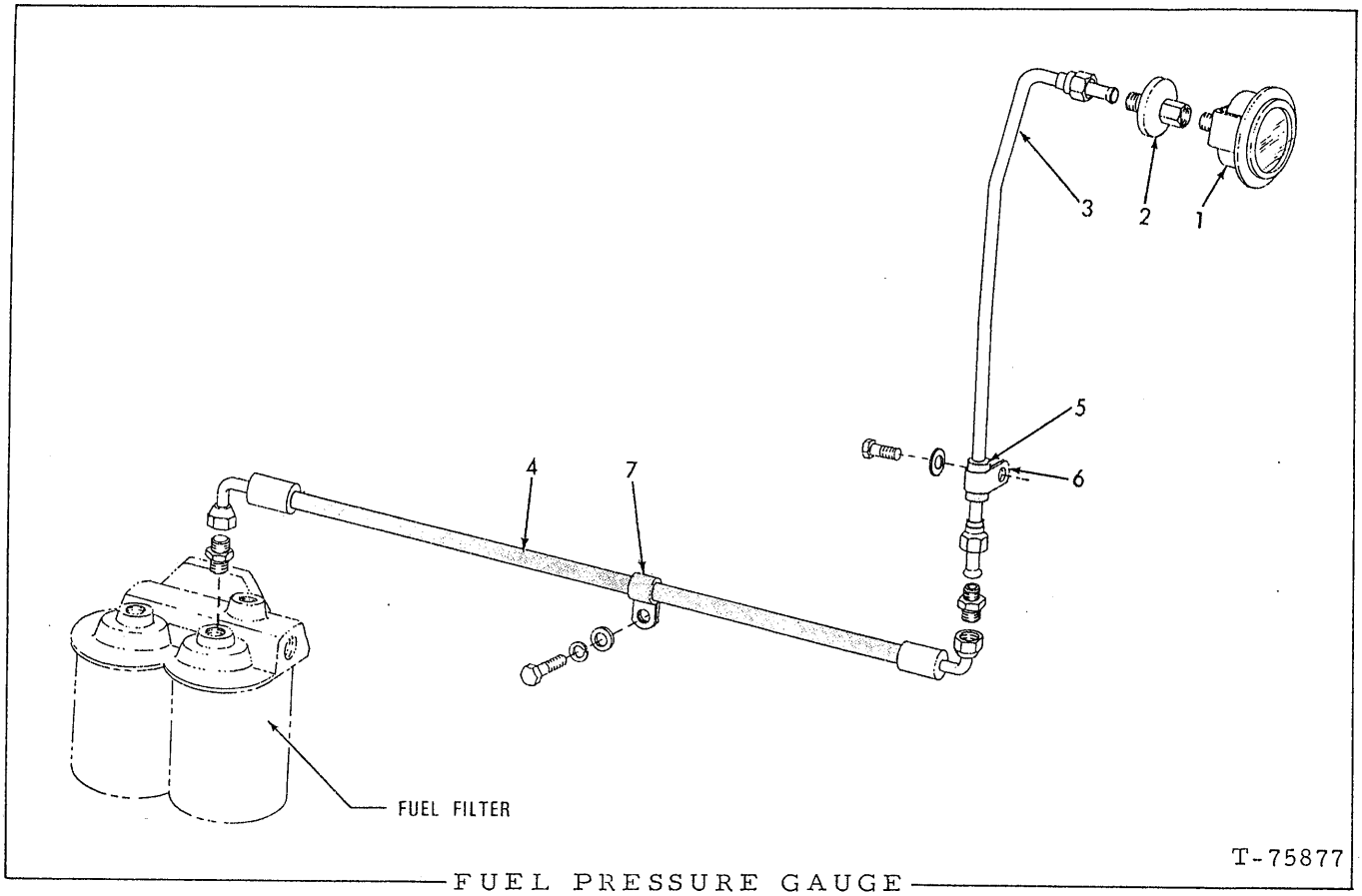

FUEL PRESSURE GAUGE

USAGE: Tractors prior to serial No. 19S12651

ITEM	PART NO.	QTY.	DESCRIPTION
1	70658349	1	GAUGE (Includes mounting clamp)
2	70088534	1	RESTRICTOR
3	70656940	1	TUBE ASSY. (Includes nuts)
	70919214	1	UNION, flare type, 1/4" tube
4	70658320	1	HOSE (See HOSE PARTS)(Tractors prior to unit #12088)
	70919171	1	CONNECTOR, flare type, 1/4" tube, 1/8"NPT female (Tractors prior to unit #12088)
	70646910	1	HOSE (See HOSE PARTS)(Tractors unit #12088 thru #12650)
	70926292	1	CONNECTOR, flare type, 1/4" tube, 1/8"NPT female (Tractors unit #12088 thru #12650)
5	70093972	1	BOOT, tube protecting (rubber)
6	70047381	1	CLIP, tube supporting
	70922300	1	CAPSCREW, 3/8"NC x 3/4"
	70927453	1	WASHER, plain
7	70620035	1	CLIP, hose supporting
	70927400	1	CAPSCREW, 3/8"NC x 5/8"
	70910287	1	LOCKWASHER, 3/8"
	70911115	1	WASHER, plain, SAE std., 3/8"

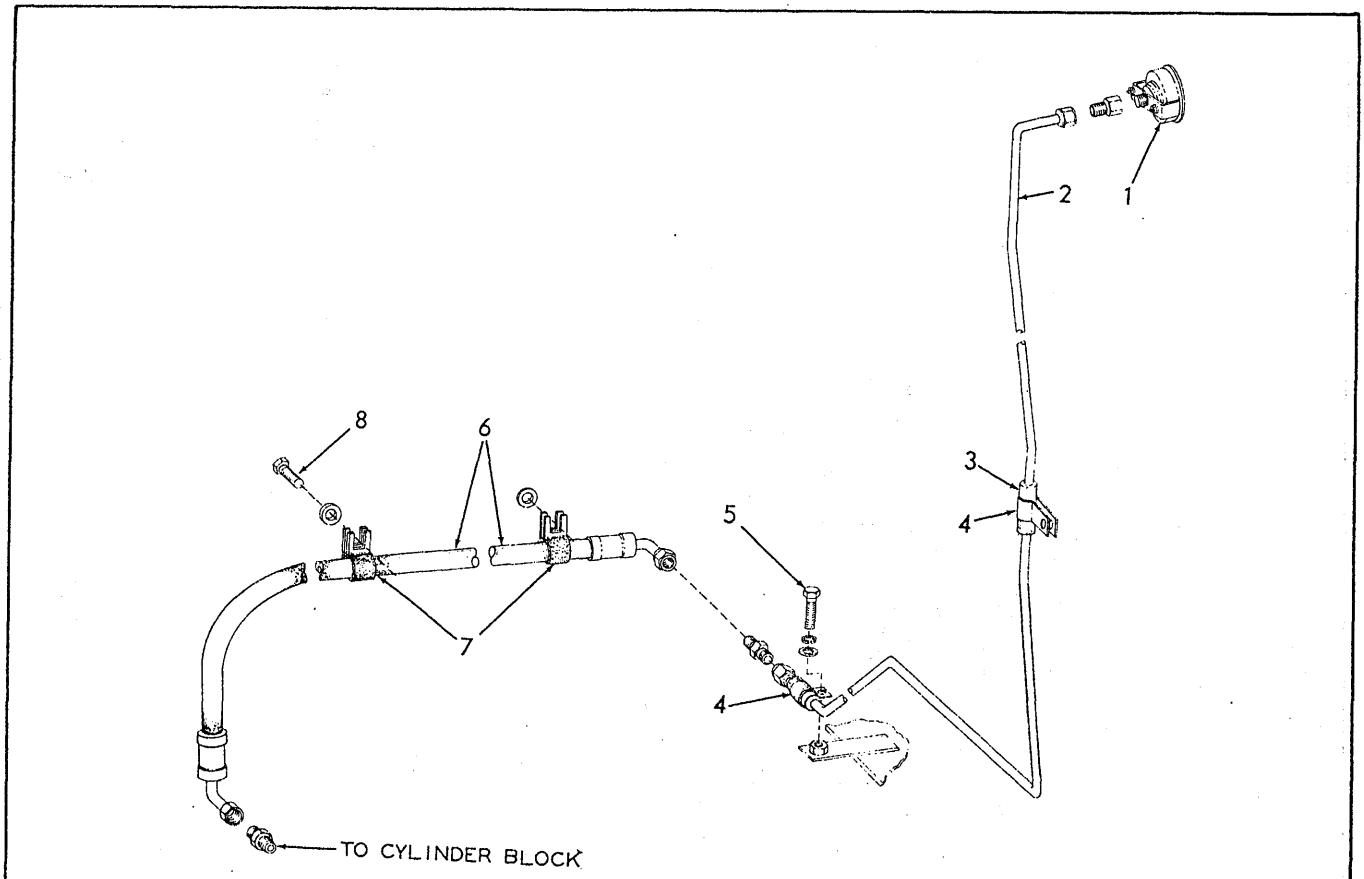

ENGINE OIL PRESSURE GAUGE

ITEM	PART NO.	QTY.	DESCRIPTION	
1	70658293	1	GAUGE (Tractors prior to unit #14647	Each includes mounting clamp
	70691745	1	GAUGE (Tractor unit #14647 and up)	
2	70656909	1	TUBE ASSY. (Tractors prior to unit # 11677)	Each includes nuts
	70679563	1	TUBE ASSY. (Tractors unit #11677 and up)	
	70919174	1	CONNECTOR, flare type, 1/4" tube, 1/8"NPT female	
	70919214	1	UNION, flare type, 1/4" tube	
3	70093972	2	BOOT (rubber)	
4	70047381	2	CLIP (5/8" diam., 13/32" bolt-hole)	
5	70922300	1	CAPSCREW, 3/8"NC x 3/4"	Tractors prior to unit #14886
	70927453	1	WASHER	
	70910287	1	LOCKWASHER, 3/8"	
	70927173	1	CAPSCREW, 3/8"NC x 1-1/8"	Tractor unit #14886 and up
	70677006	2	WASHER	
	70911026	1	NUT, 3/8"NC	
6	70658321	1	HOSE (See HOSE PARTS)	
	70919140	1	CONNECTOR, flare type, 1/4" tube, 1/4"NPT male	
7	70620035	2	CLIP (1/2" diam., 13/32" bolt-hole)	
8	70922300	1	CAPSCREW, 3/8"NC x 3/4"	
	70677006	2	WASHER	

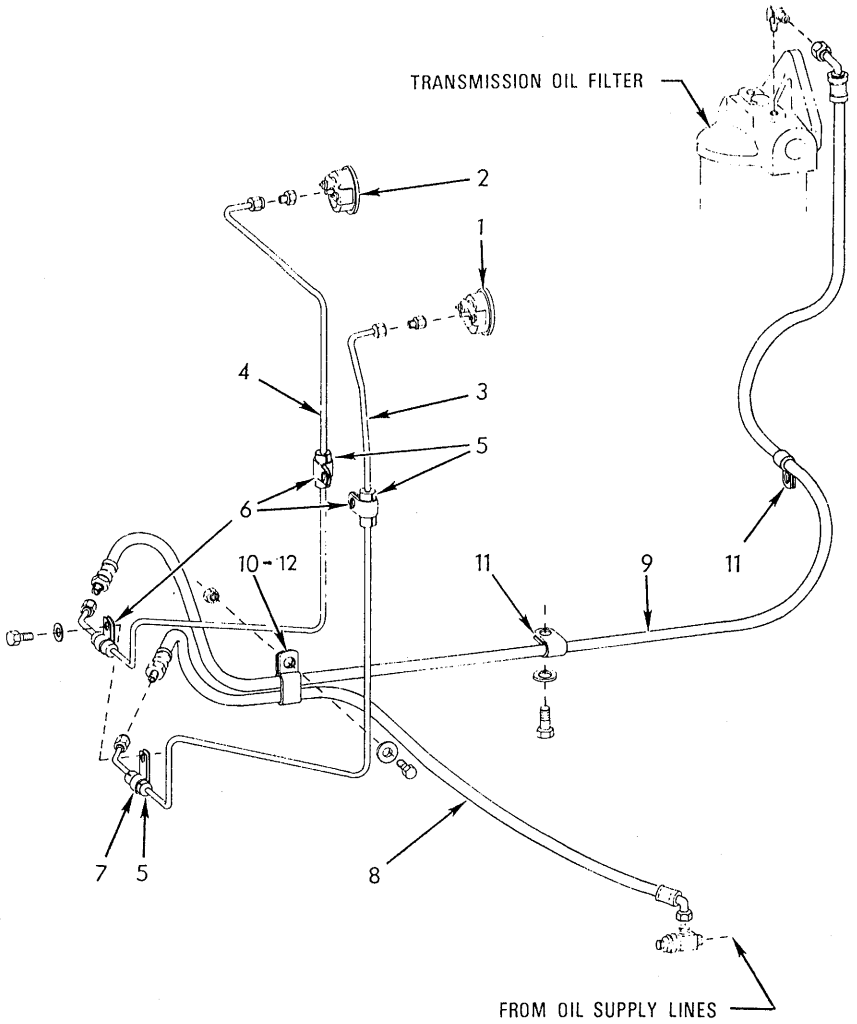

T-75878

TRANSMISSION PRESSURE GAUGES

ITEM	PART NO.	QTY.	DESCRIPTION	
1	70658313	1	GAUGE (Tractors prior to unit #14647)	Each includes mounting clamp
	70695985	1	GAUGE (Tractors unit #14647 thru #14885)	
2	70676408	1	GAUGE (Tractors prior to unit #14647)	
	70695987	1	GAUGE (Tractor unit #14647 and up)	
3	70658123	1	TUBE ASSY. (Tractors prior to unit #11677)	Each includes nuts
	70679562	1	TUBE ASSY. (Tractors unit #11677 thru #14885)	
	70919174	1	CONNECTOR, flare type, 1/4" tube, 1/8" NPT female	
4	70656907	1	TUBE ASSY. (Tractors prior to unit #12719)	Each includes nuts
	70678890	1	TUBE ASSY. (Tractors unit #12719 and up)	
	70919174	1	CONNECTOR, flare type, 1/4" tube, 1/8" NPT female	

(Continued)

TRANSMISSION PRESSURE GAUGES (Continued)

ITEM	PART NO.	QTY.	DESCRIPTION	
5	70093972	4	BOOT, tube protecting (rubber)(Two less used on unit #14886 and up)	
6	70047381	3	CLIP, tube supporting (short)(One less used on unit #14886 and up)	
	70922763	2	CAPSCREW, 3/8"NC x 1"	
	70677006	2	WASHER, plain	
7	70628723	1	CLIP (Used prior to unit #14886)	
8	70658319	1	HOSE, lube oil gauge (See HOSE PARTS)(Tractors prior to unit #14886)	
9	70665900	1	HOSE, hydraulic pressure gauge (See HOSE PARTS)	
	70919546	1	ELBOW, flare type, 90°, 1/4"NPT male	
10	70644908	1	CLIP, hose supporting	Tractors prior to unit #14886
	70922300	1	CAPSCREW, 3/8"NC x 3/4"	
	70927453	1	WASHER, plain	
	70911026	1	NUT, 3/8"NC	
11	70644006	2	CLIP, hose supporting (9/16" diam.)	
	70921175	1	CAPSCREW, 1/2"NF x 1"	
	70928188	1	WASHER, plain	
12	70620035	1	CLIP	Tractors unit #14886 and up
	70922763	1	CAPSCREW, 3/8"NC x 1"	
	70677006	1	WASHER	
	70911026	1	NUT, 3/8"NC	

(Revised April 1980)

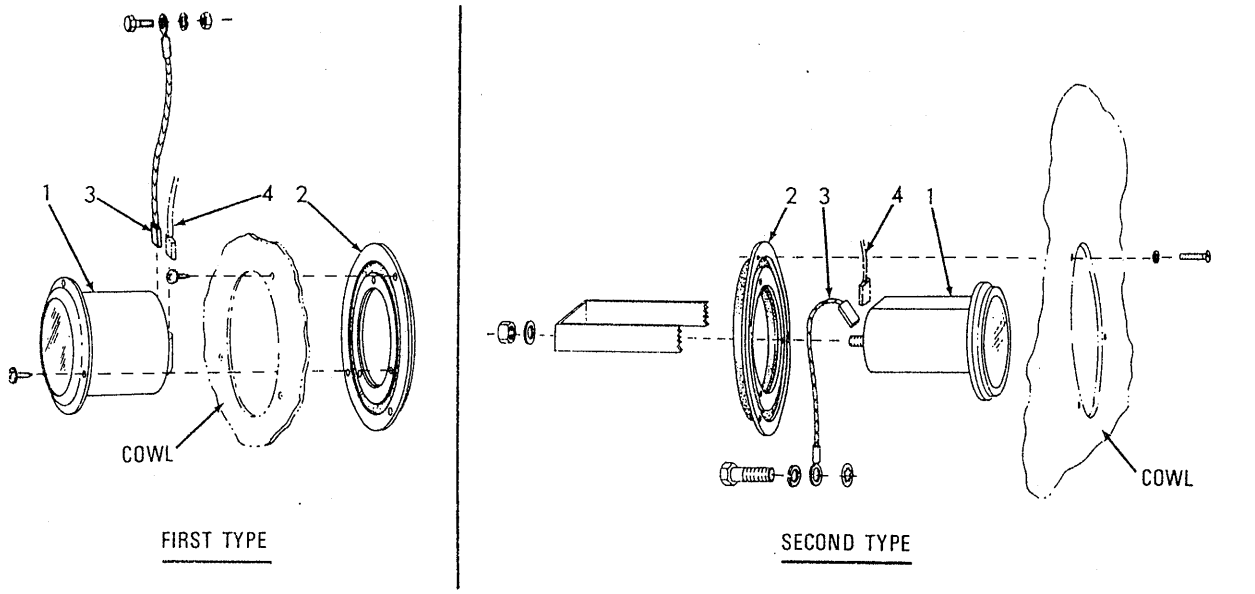

HOUR METER (ELECTRICAL)

USAGE: Replaces mechanical hour meter

* Tractors serial No. 19S12124 thru 19S12926
** Tractors serial No. 19S12927 and up

ITEM	PART NO.	QTY. *	QTY. **	DESCRIPTION
1	70650299	1	-	METER
	70688997	-	1	METER (Tractors prior to unit #14647) } Each includes mounting hardware
	70699126	-	1	METER (Tractor unit #14647 and up) } Each includes mounting hardware
	70918210	3	-	SCREW, thread-cutting #6 x 1/2" (Includes lockwasher)
				NOTE: Meter carries manufacturer's warranty and in case of failure should not be returned to Fiat-Allis. Return "Hobbs" meter to nearest Stewart-Warner agency.
2	70066467	1	1	DAMPER
	70918210	3	-	SCREW, thread-cutting #6 x 1/2" (Includes lockwasher)
3	70630917	1	1	CABLE (8-1/2" long)
	70928182	1	1	CAPSCREW, 1/4"NC x 1/2"
	70910285	1	1	LOCKWASHER, 1/4"
	70911024	1	-	NUT, 1/4"NC
	70906958	-	1	LOCKWASHER, 1/4"
4	--------	1	1	HARNESS (See page 232)

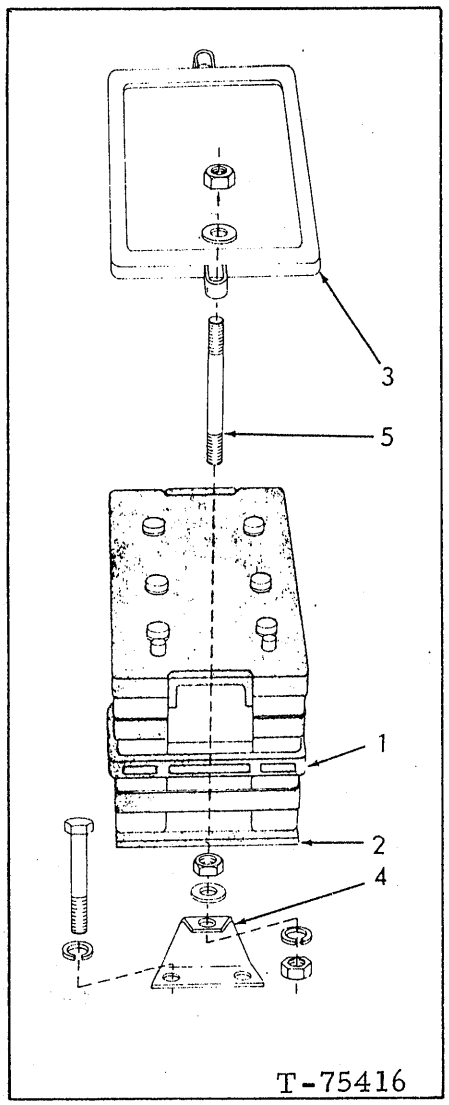

BATTERY MOUNTING

ITEM	PART NO.	QTY.	DESCRIPTION
1	--------	2	BATTERY (See BATTERIES and CABLES)
2	70085680	2	PAD, battery bottom
3	70662760	2	HOLD-DOWN, battery
4	70662745	2	BRACKET, hold-down stud
	70927542	4	CAPSCREW, 1/2"NC x 5-1/2"
	70928460	4	WASHER
5	70619814	4	STUD, hold-down
	70677008	8	WASHER
	70928460	4	WASHER
	70911043	12	NUT, 1/2"NF

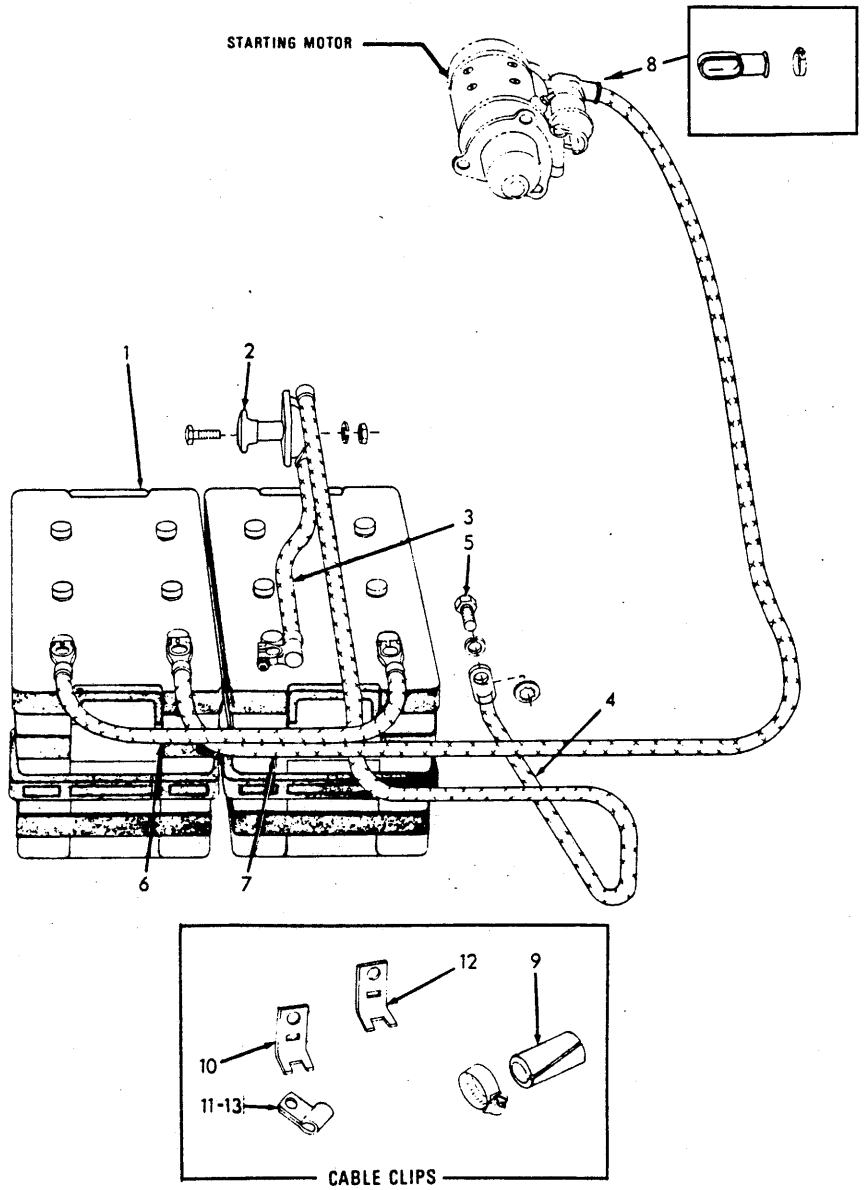

T-74652

BATTERIES AND CABLES

ITEM	PART NO.	QTY.	DESCRIPTION	
1	70695471	2	BATTERY, storage, 12 volts, dry-charged (Each requires 14 qts. electrolyte)	
1A	70243526	1	ELECTROLYTE ("Z" pack -6.1 qts.)	Not illustrated
	70243527	1	ELECTROLYTE ("F" pack - 5 gal.)	
1B	70243528	1	HOSE, electrolyte dispensing (For use with 5 gal. pack)	
2	79010713	1	SWITCH ASSY., master (Serviced only as a unit)	Trs. prior to unit #15471
	70927541	2	CAPSCREW, 1/4"NC x 3/4"	
	70910285	2	LOCKWASHER, 1/4"	
	70911024	2	NUT, 1/4"NC	
	73129379	1	SWITCH ASSY. master (Serviced only as a unit)(Includes mounting hardware)(Tractor unit #15471 and up)	

(Continued)

(Revised March 1982)

ITEM	PART NO.	QTY.	DESCRIPTION	
3	70662841	1	CABLE, battery to master switch (13" long)	
4	70662843	1	CABLE, master switch to ground (69" long)	
5	70922262	1	CAPSCREW, 3/8" NC x 7/8"	
	70930370	1	WASHER	
	70906960	1	LOCKWASHER, internal teeth, 3/8"	
6	70662844	1	CABLE, battery connecting (19" long)	
7	70662840	1	CABLE, battery to starter (140" long)	
8	70076572	1	BOOT, protecting, starter terminal	
	70922660	1	CLAMP, hose, 13/16" to 1-1/2" diam.	
9	70076469	9	BOOT, cable protecting	
	70922660	9	CLAMP, hose, 13/16" to 1-1/2" diam.	
10	70084895	2	CLIP, cable supporting	
11	70094422	1	CLIP, cable supporting	
	70922262	1	CAPSCREW, 3/8" NC x 3/4"	
	70677006	1	WASHER	
12	70633653	5	CLIP, cable supporting	Tractor unit #14888 and up
	70922262	2	CAPSCREW, 3/8" NC x 7/8"	
	70930370	2	WASHER	
13	70665211	1	CLIP	

(Revised April 1980)

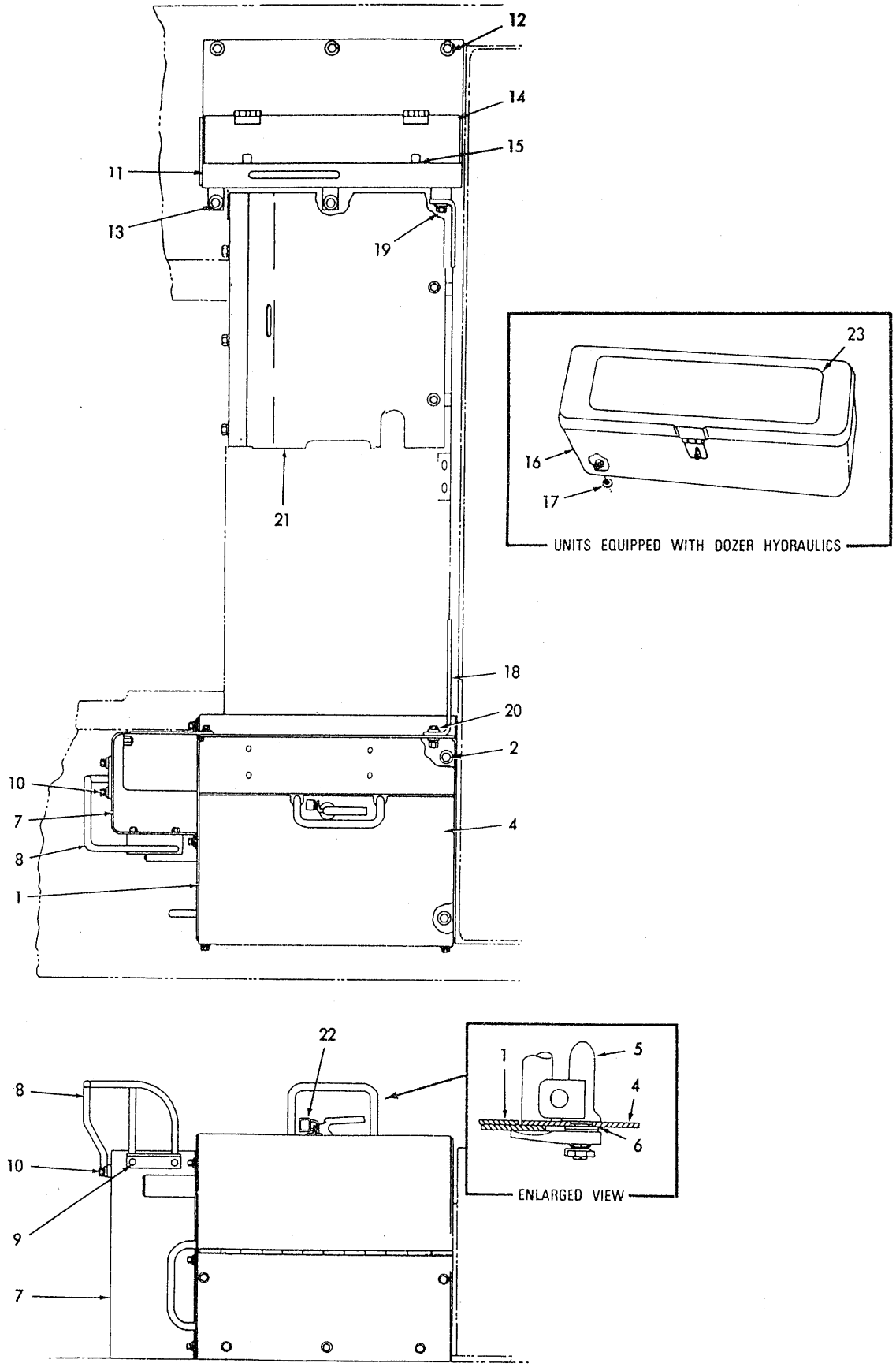
12
14
15
11
13
19
21
23
16
17
UNITS EQUIPPED WITH DOZER HYDRAULICS
18
20
2
10
7
8
1
4
22
1
5
4
6
ENLARGED VIEW
8
10
9
7

T-75145

BATTERY AND TOOL BOXES

ITEM	PART NO.	QTY.	DESCRIPTION
			NOTE: Tool Box, items 11 thru 15, is not used on units equipped with independent hydraulic system for dozer operation. See item 16 for tool box applicable to units equipped with dozer hydraulics.
1	70658134	1	BOX, battery (Tractors prior to unit #15471)
	73130793	1	BOX, battery (Tractor unit #15471 and up)
2	70925889	3	CAPSCREW, 1/2"NC x 4-1/2"
	70677008	3	WASHER, plain
4	70666379	1	COVER, battery box (Tractors prior to unit #12856)
	70685919	1	COVER, battery box (Tractors unit #12856 and up)
	70922763	5	CAPSCREW, 3/8"NC x 1"
	70677006	5	WASHER, plain
5	70650901	1	LOCK ASSY., battery box cover (Serviced only as a unit)
6	70911115	2	WASHER, plain, SAE std., 3/8"
7	70658536	1	COVER, speed control linkage
	70922763	6	CAPSCREW, 3/8"NC x 1"
	70677006	6	WASHER, plain
8	70656926	1	GUARD, speed shift lever (Tractors prior to unit #12849)
	70671922	1	GUARD, speed shift lever (Tractor unit #12849 and up)
9	70921076	2	CAPSCREW, 3/8"NC x 1"
10	70922763	2	CAPSCREW, 3/8"NC x 1-1/2"
	70677006	4	WASHER, plain
	70911026	2	NUT, 3/8"NC
11	70660670	1	BOX, tool
12	70921172	3	CAPSCREW, 5/8"NC x 2-1/4"
13	70921266	3	CAPSCREW, 5/8"NC x 3-1/4"
	70677010	6	WASHER, plain
14	70643369	1	COVER ASSY., tool box (Includes item 15)
	70922300	4	CAPSCREW, 3/8"NC x 3/4"
	70911026	4	NUT, 3/8"NC
15	70639480	2	CLAMP, cover latching
	70911608	8	RIVET, button-head, 1/8" x 3/8"
16	70604943	1	BOX, tool (Mounts on right track fender)
	70921076	4	CAPSCREW, 3/8"NC x 1-1/4"
	70929156	12	WASHER
	70911026	4	NUT, 3/8" NC
17	70630753	4	WASHER, tool box spacing (Early units)
18	70662188	1	SUPPORT
19	70920574	3	CAPSCREW, 1/2"NC x 1-3/8"
	70682358	3	WASHER, plain
20	70921403	2	CAPSCREW, 5/8"NC x 2"
	70677010	4	WASHER, plain
	70911029	2	NUT, 5/8"NC
21	70665853	1	COVER, filter compartment (Not used on units equipped with dozer hydraulics)
	70648238	5	CAPSCREW, 1/2"NC x 3/4"
22	70928052	1	PADLOCK (Includes keys)
23	73127579	1	STEP TREAD (4" x 16")

(Revised March 1982)

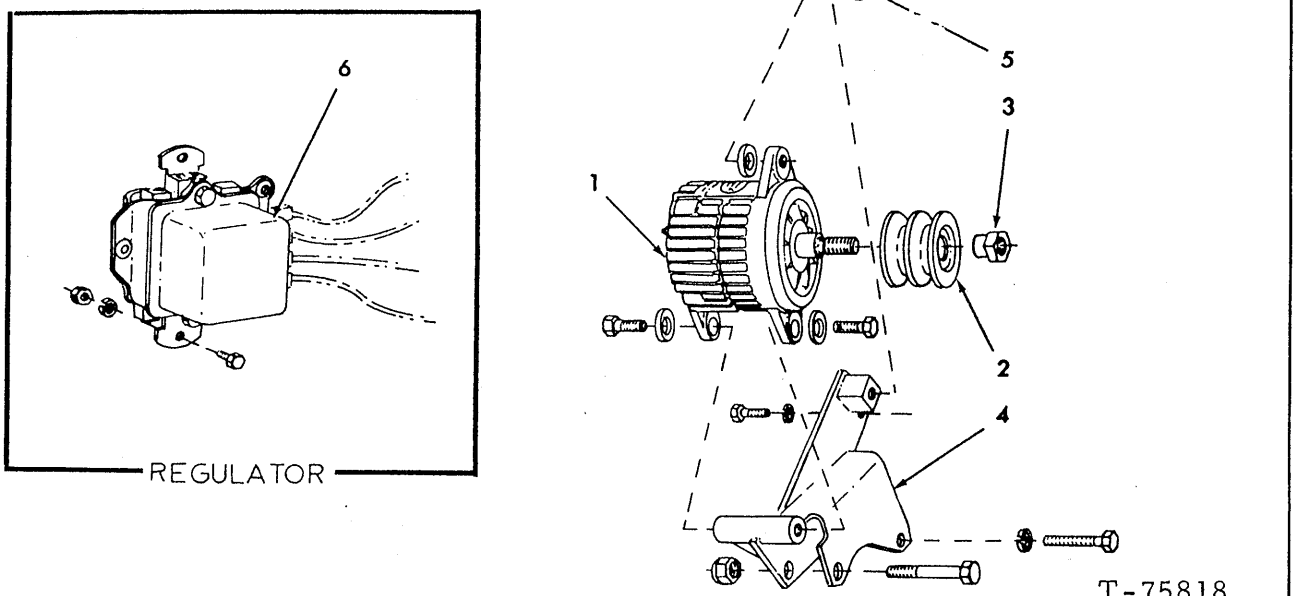

ALTERNATOR

*Standard (20 amp capacity)
**Optional (50 amp capacity)

ITEM	PART NO.	QTY. *	QTY. **	DESCRIPTION	
1	70660144	1	-	ALTERNATOR ("Delco-Remy" #1100062)	Order parts from local agency
	70662020	-	1	ALTERNATOR ("Delco-Remy" #1117236) (Order Alternator 70699268)	Order parts from local agency
	70699268	-	1	ALTERNATOR ("Delco-Remy #1117248)(See Electrical Components Parts Catalog for service breakdown)	
	73119995	-	1	ALTERNATOR ("Delco-Remy #1117254)(See Electrical Components Parts Catalog for service breakdown)	
	70927491	1	1	CAPSCREW, Nylok, 1/2"NC x 1-1/4"	
	70922508	1	1	CAPSCREW, Nylok, 1/2"NC x 1-1/2"	
	70910244	2	2	WASHER, plain, SAE std., 1/2"	
2	70667234	1	1	PULLEY	
3	70667188	1	1	NUT, pulley retaining	
4	70667216	1	1	BRACKET, alternator mounting	
	70921569	1	1	CAPSCREW, 7/16"NC x 1-1/4"	
	70914678	1	1	LOCKWASHER, 7/16"	
	70922673	1	1	CAPSCREW, 3/4"NC x 4-1/2"	
	70916170	1	1	NUT, elastic stop, 3/4"NC	
	70921539	1	1	CAPSCREW, 1/2"NC x 3-1/2"	Also attach fan bracket
	70912441	1	1	LOCKWASHER, 1/2"	Also attach fan bracket
5	70667224	1	1	STRAP, belt adjustment	
	70920582	1	1	CAPSCREW, 1/2"NC x 1-1/4"	
	70920574	1	1	CAPSCREW, 1/2"NC x 1-3/8"	
	70677008	2	2	WASHER	
6	70650944	1	-	REGULATOR, voltage and current ("Delco-Remy #1119518 order parts from local "United Motors Service agency)	
	70928138	2	-	CAPSCREW, 1/4"NC x 5/8"	
	70910285	2	-	LOCKWASHER, 1/4"	
	70911024	2	-	NUT, 1/4"NC	
				NOTE: See FAN for driving belts	

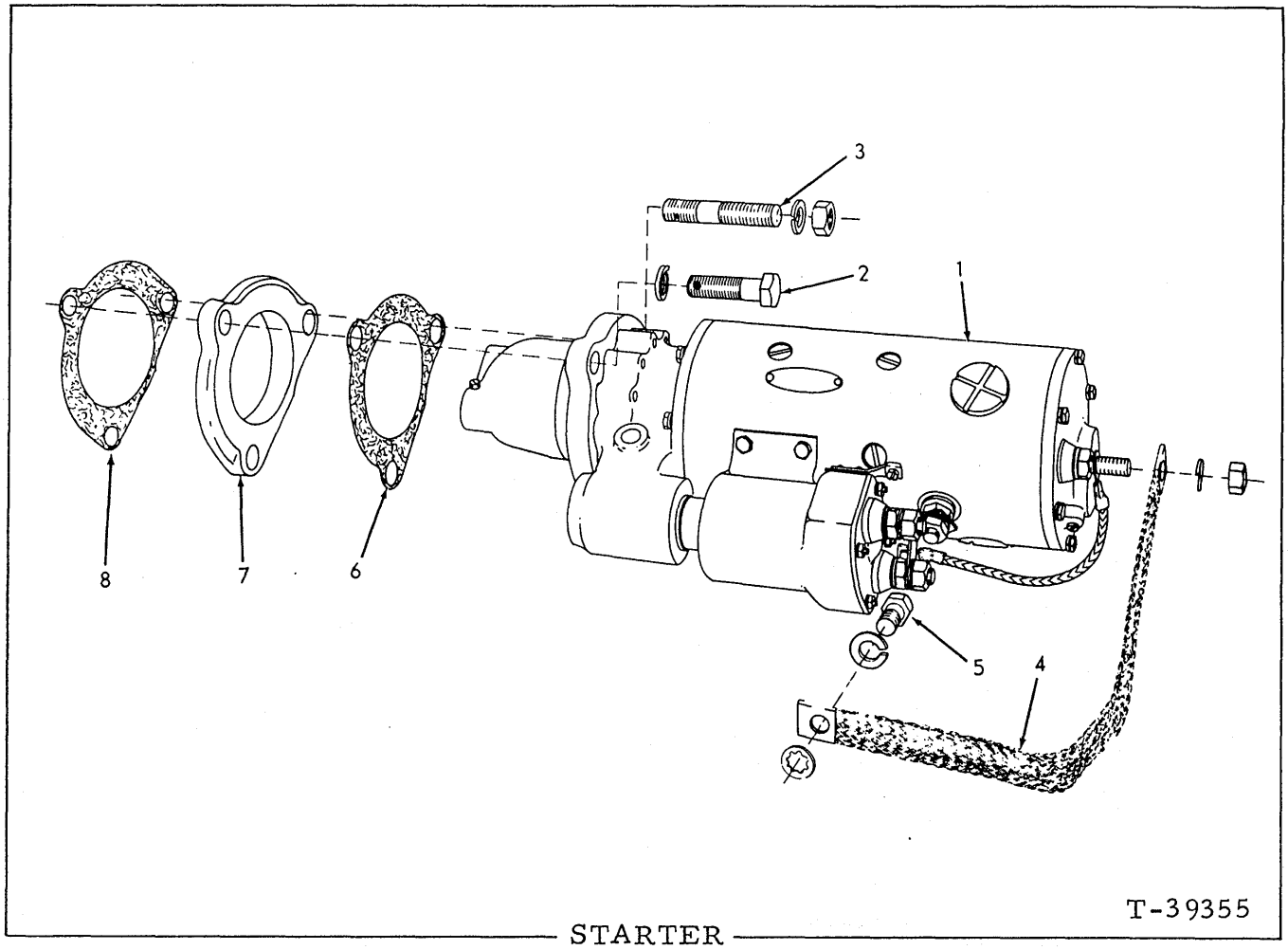

STARTER

ITEM	PART NO.	QTY.	DESCRIPTION
1	73117237	1	MOTOR, starting ("Delco-Remy" #1113898)(Standard)
	70620350	1	MOTOR, starting ("Delco-Remy" #1109986)(Heavy-duty)
2	70928839	2	CAPSCREW, Nylok, 5/8"NC x 2-1/4"
3	70648262	1	STUD, Nylok, 5/8"NC x 5/8"NF x 3-1/8"
	70912942	3	LOCKWASHER, 5/8"
	70911044	1	NUT, 5/8"NF
			NOTE: Order starter parts from local Agency
4	70630199	1	STRAP, starter to ground
5	70927158	1	CAPSCREW, 1/2"NF x 1"
	70906961	1	LOCKWASHER, int-tooth, 1/2"
	70928460	1	WASHER
6	70631573	1	GASKET, starting motor
7	70631574	1	ADAPTER, starting motor
8	70631572	1	GASKET, starting motor adapter

(Revised September 1979)

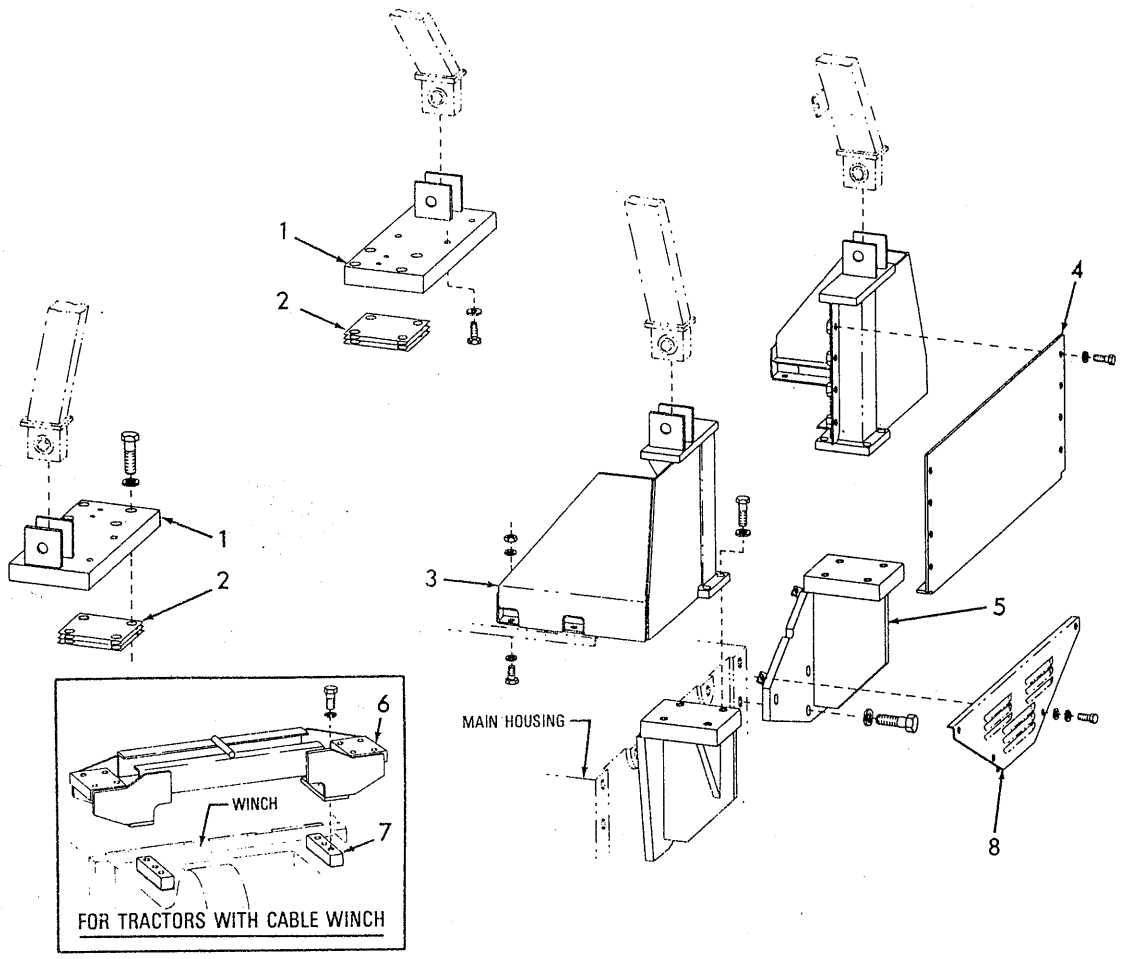

T-79131

ROPS MOUNTING BRACKETS

USAGE: Special equipment on tractors prior to January, 1977; standard equipment thereafter. For units equipped with Safety Cab or Canopy

ITEM	PART NO.	QTY.	DESCRIPTION
1	70686241	1	BRACKET, frame mounting, left
	70686242	1	BRACKET, frame mounting, right
	70922859	8	CAPSCREW, 1"NC x 4"
	70083318	8	WASHER
	70926785	6	CAPSCREW, 1"NC x 2-3/4"
	70678072	6	WASHER
2	70687956	6	SHIM (Use as required)
3	70686257	1	GUARD ASSY., frame mounting, left
	70686258	1	GUARD ASSY., frame mounting, right
	70921172	4	CAPSCREW, 5/8"NC x 2-1/4"
	70677010	8	WASHER
	70911029	4	NUT, 5/8"NC
	70927015	8	CAPSCREW, 1"NC x 3"
	70083318	8	WASHER

(Continued)

(Revised May 1977)

ITEM	PART NO.	QTY.	DESCRIPTION	
4	70686248	1	GUARD, rear plate (Special Equipment)	
	70920585	8	CAPSCREW, 1/2"NC x 1-3/4"	
	70677008	8	WASHER	
5	70683213	1	BRACKET, cab or canopy mounting, left	For tractors equipped with Drawbar or Rear Mounted Cable Control Unit. Not used on tractors equipped with RIPPER. (See NOTE)
	70683214	1	BRACKET, cab or canopy mounting, right	
	70925880	6	CAPSCREW, 1-1/4"NF x 3-1/2"	
	70914730	6	LOCKWASHER, 1-1/4"	

NOTE: Item 5 requires reworking per print S-5354 if for tractors equipped with Rear Mounted Cable Control Unit.

6	70687722	1	BRACKET, cab or canopy mounting	For tractors equipped with cable winch
	70923201	6	CAPSCREW, 1-1/4"NF x 3"	
	70914730	6	LOCKWASHER, 1-1/4"	
7	70687715	2	BLOCK, bracket mounting (Requires welding to install)	
8	70679537	1	PLATE (Not used on units equipped with RIPPER)	
	70922763	4	CAPSCREW, 3/8"NC x 1"	
	70677006	4	WASHER	

(Revised May 1977)

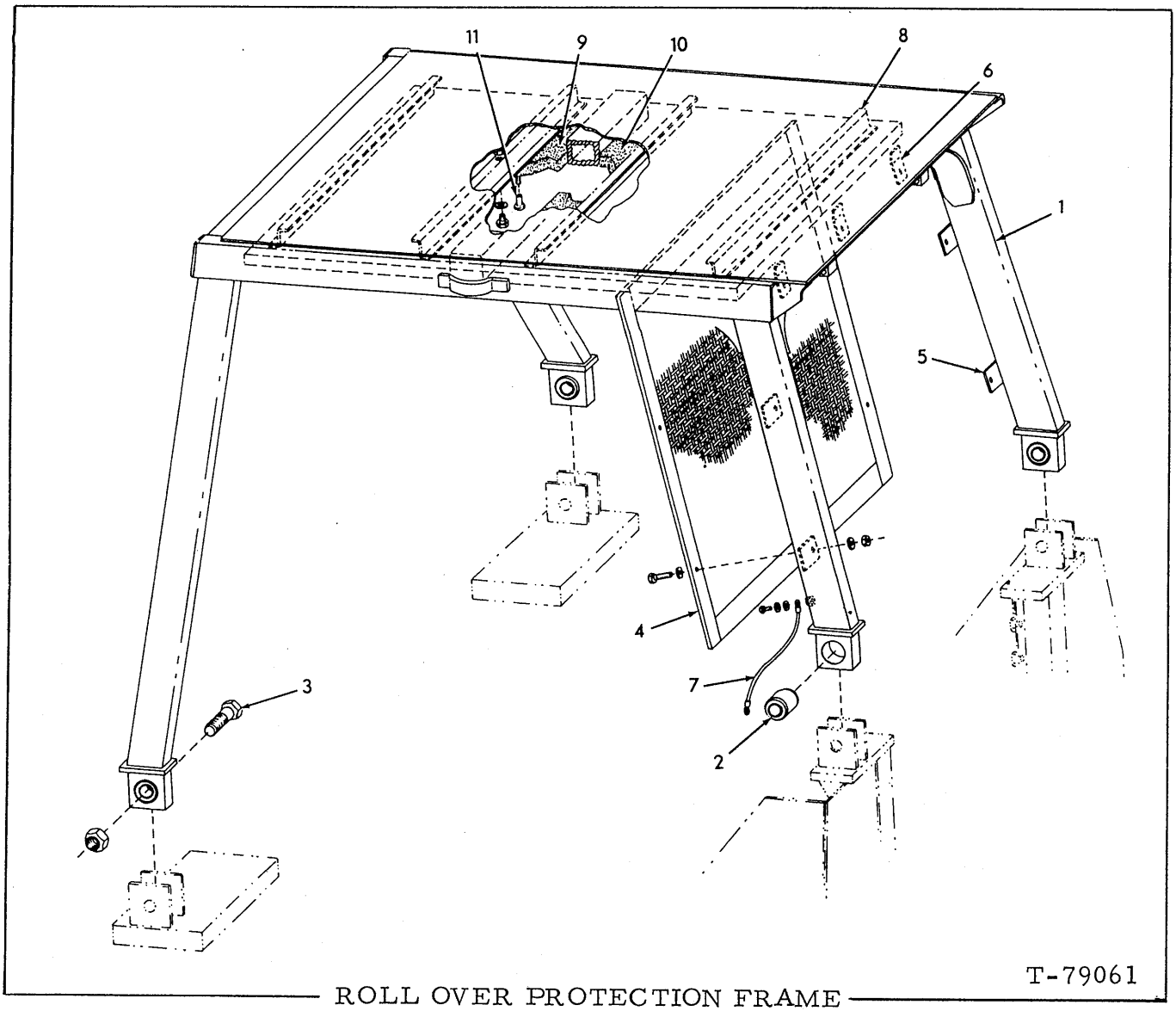

ROLL OVER PROTECTION FRAME

USAGE: Special equipment on tractors prior to January 1977; standard equipment thereafter.

ITEM	PART NO.	QTY.	DESCRIPTION	
1	70684891	1	FRAME ASSY. (Includes item 2)	
2	70684837	4	BUSHING	
3	70929311	4	CAPSCREW, 1-1/4"NC x 6-1/2"	
	70917792	4	NUT, elastic stop, 1-1/4"NC	
4	70685785	1	SCREEN	Special equipment
	70921556	7	CAPSCREW, 1/2"NC x 2"	
	70677008	14	WASHER	
	70911028	7	NUT, 1/2"NC	
5	70686446	4	BAR, screen-mounting } Requires welding to install	
6	70685768	3	BAR, screen-mounting }	
7	70093176	1	CABLE, ground	
	70922300	2	CAPSCREW, 3/8"NC x 3/4"	
	70906960	2	LOCKWASHER, internal tooth, 3/8"	
	70677006	2	WASHER	

(Continued)

(Revised May 1977)

ROLL OVER PROTECTION FRAME (Continued)

ITEM	PART NO.	QTY.	DESCRIPTION
8	70698436	4	CHANNEL
	70928532	8	CAPSCREW, drilled-hd., 3/8"NC x 3/4"
	70677006	8	WASHER
	70023633	8	WIRE, locking, 1/16" x 12"
9	70698404	1	INSULATION, front
10	70698403	1	INSULATION, rear
11	73064776	16	FASTENER
12	70696842	1	HEADLINER KIT (Includes items 8, 9, 10 and 11)

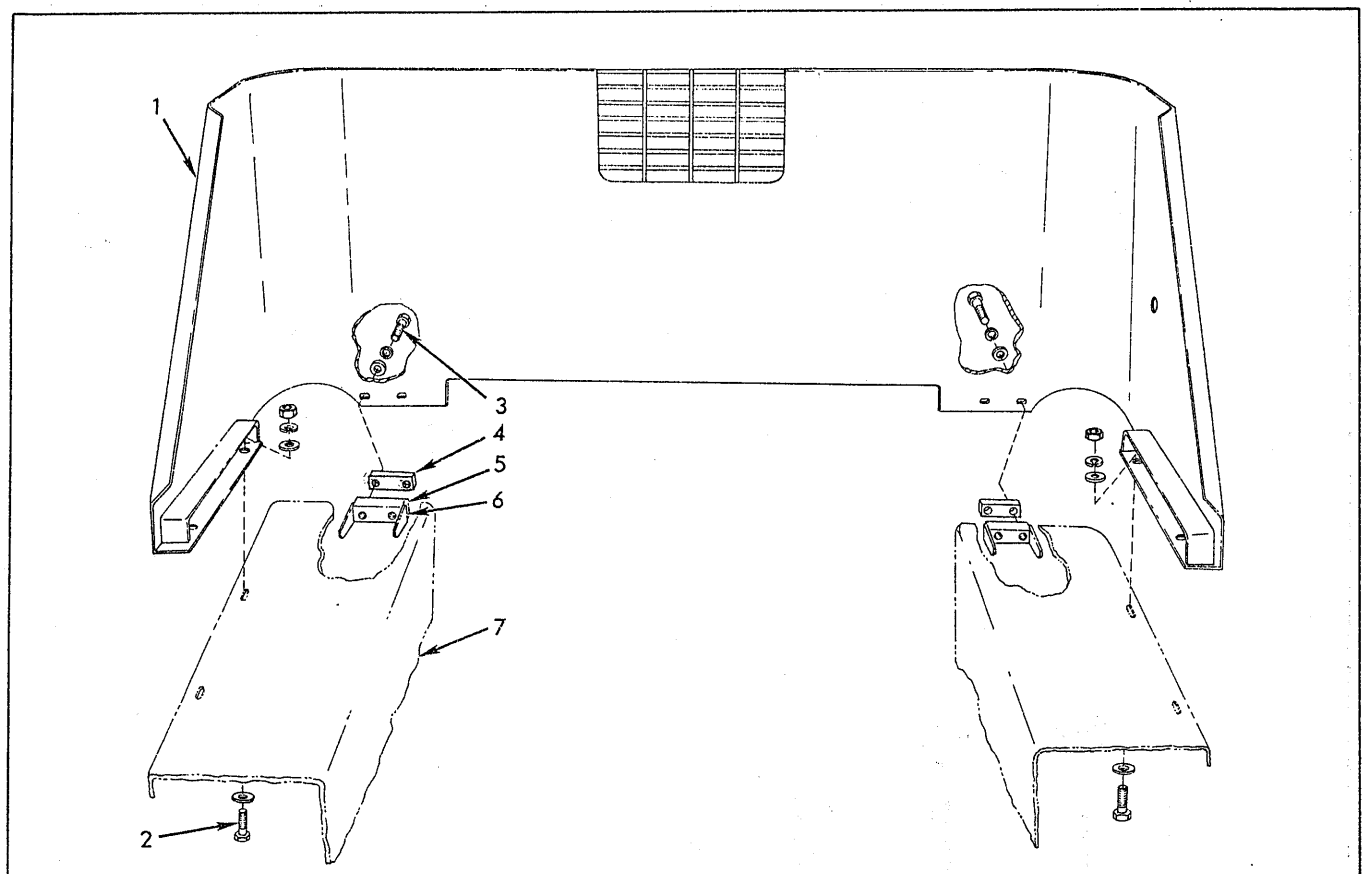

FUEL TANK AND SEAT GUARD T-75772

USAGE: Special equipment.

ITEM	PART NO.	QTY.	DESCRIPTION
1	70665199	1	GUARD
2	70914876	4	CAPSCREW, 5/8"NC x 2-1/2"
3	70916406	4	CAPSCREW, 5/8"NF x 1-3/4"
	70064810	12	WASHER, plain
	70904209	8	LOCKWASHER, 5/8"
	70911029	4	NUT, 5/8"NC
4	70651185	2	SPACER
5	70651184	2	BLOCK, tapped (Requires welding to fender)
6	70670398	4	GUSSET, bracing, tapped block (Requires welding to tapped block)
7	------	-	FENDER (See REAR FENDERS)

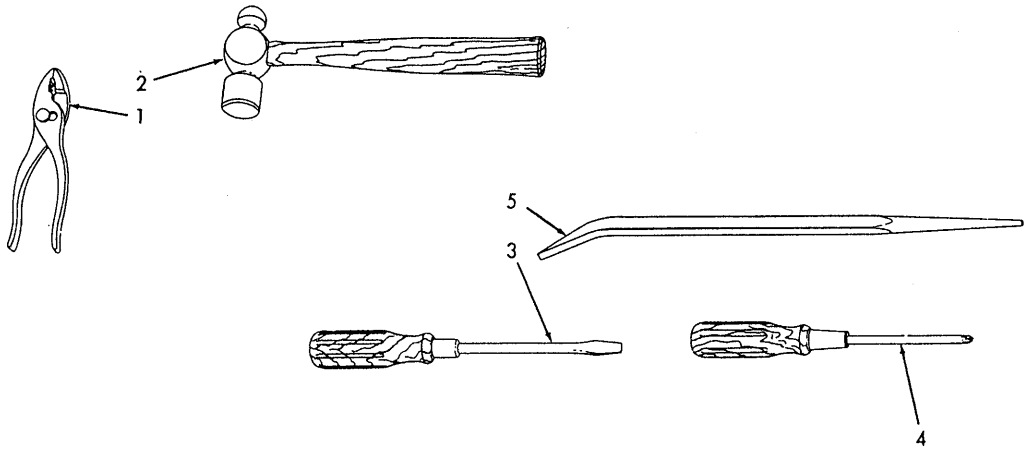

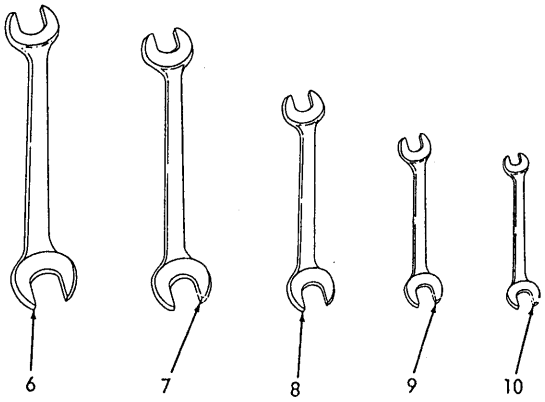

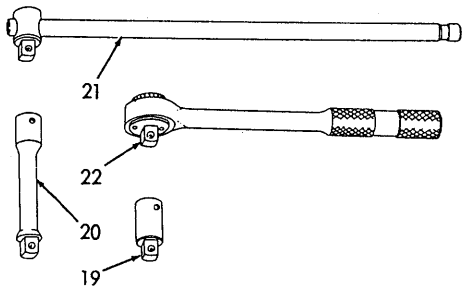

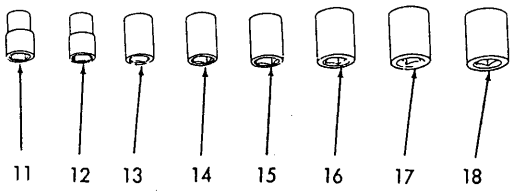

T-17464

TOOLS

ITEM	PART NO.	QTY.	DESCRIPTION
1	70012389	1	PLIERS, slip joint, 6"
2	70012387	1	HAMMER, ball peen, 1 lb.
3	70036268	1	SCREWDRIVER, 9-3/4" long
4	70914732	1	SCREWDRIVER, Phillips #2
5	70052371	1	BAR, pinch, 16" long
6	70050611	1	WRENCH, open end, double head, 15°, 15/16" and 1-1/16"
7	70050610	1	WRENCH, open end, double head, 15°, 3/4" and 7/8"
8	70050609	1	WRENCH, open end, double head, 15°, 5/8" and 3/4"
9	70050608	1	WRENCH, open end, double head, 15°, 1/2" and 9/16"
10	70050607	1	WRENCH, open end, double head, 15°, 5/16" and 3/8"
11	70914709	1	SOCKET, 1/2" square drive, 1/2" hex
12	70914710	1	SOCKET, 1/2" square drive, 9/16" hex
13	70914711	1	SOCKET, 1/2" square drive, 5/8" hex
14	70914712	1	SOCKET, 1/2" square drive, 11/16" hex
15	70914713	1	SOCKET, 1/2" square drive, 3/4" hex
16	70914714	1	SOCKET, 1/2" square drive, 7/8" hex
17	70914715	1	SOCKET, 1/2" square square drive , 15/16" hex
18	70914716	1	SOCKET, 1/2" square drive, 1" hex
19	70914717	1	BAR, extension, socket, 1/2" drive, 2" long
20	70914718	1	BAR, extension, socket, 1/2" drive, 5" long
21	70050612	1	HANDLE, socket, sliding T, 1/2" square drive, 15" long
22	70914719	1	HANDLE, socket, ratchet, 1/2" square drive

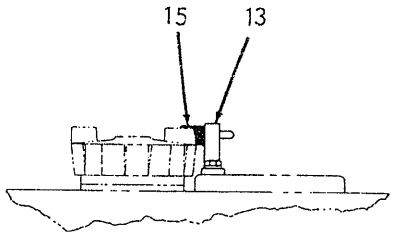

HYDRAULIC TANK

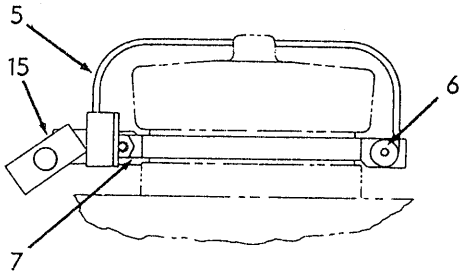

FUEL TANK

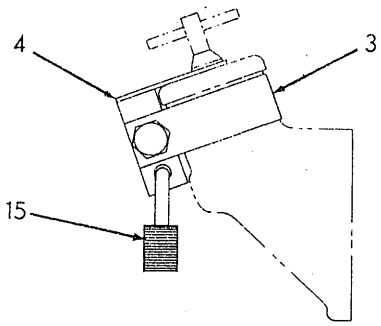

ENGINE OIL FILLER TUBE

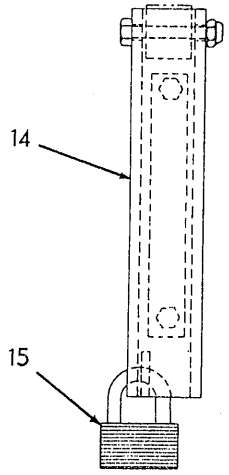

HYDRAULIC TANK SIGHT GAUGE

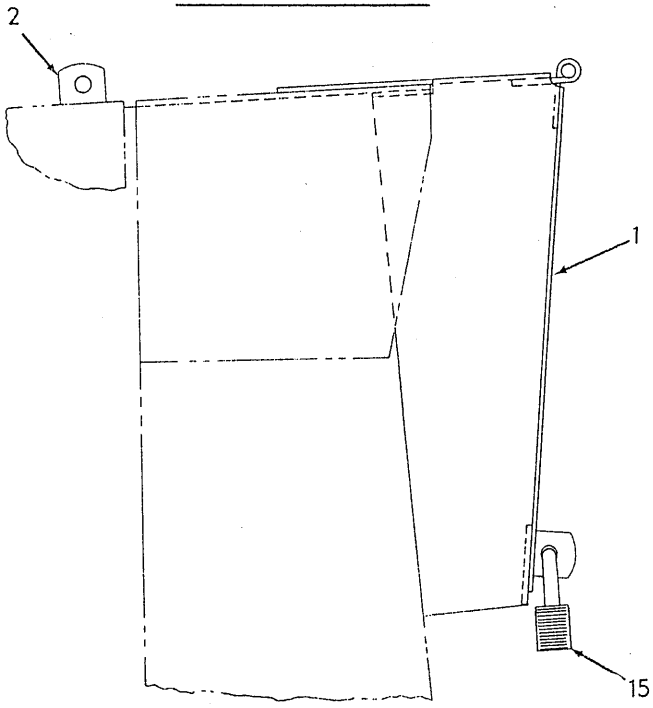

INSTRUMENT PANEL

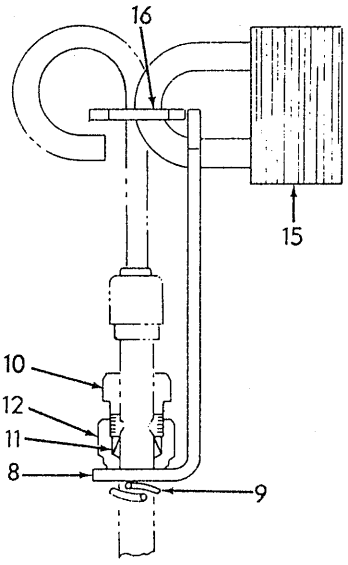

ENGINE OIL DIPSTICK

VANDALISM PREVENTION PARTS

USAGE: Special Equipment

ITEM	PART NO.	QTY.	DESCRIPTION	
1	70658147	1	GUARD, instrument panel (Requires welding to cowl)	
2	70660936	1	LUG, instrument panel guard (Requires welding to hood) (First type)	
	70697534	1	ANGLE	Second type
	70927491	1	CAPSCREW, Nylok, 1/2"NC x 1-1/4"	
3	70660070	1	COLLAR, engine oil filler elbow	
	70921076	1	CAPSCREW, 3/8"NC x 1-1/4"	
	70910287	1	LOCKWASHER, 3/8"	
	70677006	1	WASHER	
4	70659112	1	BRACKET, engine oil filler closure	
5	70657553	1	COVER, fuel tank cap	
6	70924838	1	RIVET, fuel, tank cap cover	
7	70657556	1	CLAMP, fuel tank filler neck	
	70916285	1	CAPSCREW, 1/4"NC x 1"	
	70910285	1	LOCKWASHER, 1/4"	
	70911024	1	NUT, 1/4"NC	
8	70659175	1	ANGLE, locking, engine oil level gauge	
9	74254980	1	CLAMP, supporting, locking angle	
10	70650178	1	NUT, locking, engine oil level gauge (upper)	
11	70925164	1	FERRULE, locking nut	
12	70925162	1	NUT, locking, engine oil level gauge (lower)	
13	70682498	1	PLATE, locking, hydraulic tank cap	Not required on units with cab
	70922287	2	CAPSCREW, 3/8"NC x 1-3/4"	
	70910287	2	LOCKWASHER, 3/8"	
14	70677711	1	CHANNEL, sight gauge guarding	
	70920996	1	CAPSCREW, 3/8"NC x 2-1/4"	
	70915891	1	NUT, elastic stop, 3/8"NC	
15	70928052	6	PADLOCK	
16	70657555	1	LUG	

CAB
(Not Illustrated)

USAGE: Special equipment

ITEM	PART NO.	QTY.	DESCRIPTION
1	--------	1	CAB ASSY. (Vendor Part No. 10019C. Service must be obtained from Industrial Cab Company, Route 22 Western Ave. Essex, Mass. 01929)

CAB GLASS
(Not Illustrated)

USAGE: Not applicable to Air Conditioned Cabs.

ITEM	PART NO.	QTY.	DESCRIPTION
1	---------	2	GLASS, door upper (Vendor No. A1696)
2	---------	2	GLASS, side panel (Vendor No. A1694)
3	---------	1	GLASS, left windshield (Vendor No. A1691)
4	---------	2	GLASS, rear (Vendor No. A1693)
5	----------	1	GLASS, right windshield (Vendor No. A1692)
6	---------	2	GLASS, door lower (Vendor No. A1695)
7	---------	1	GLASS, windshield, center (Vendor No. A1690)

NOTE: Glass must be procured locally. Refer to Cab Glass Catalog for pattern.

(Added May 1977)

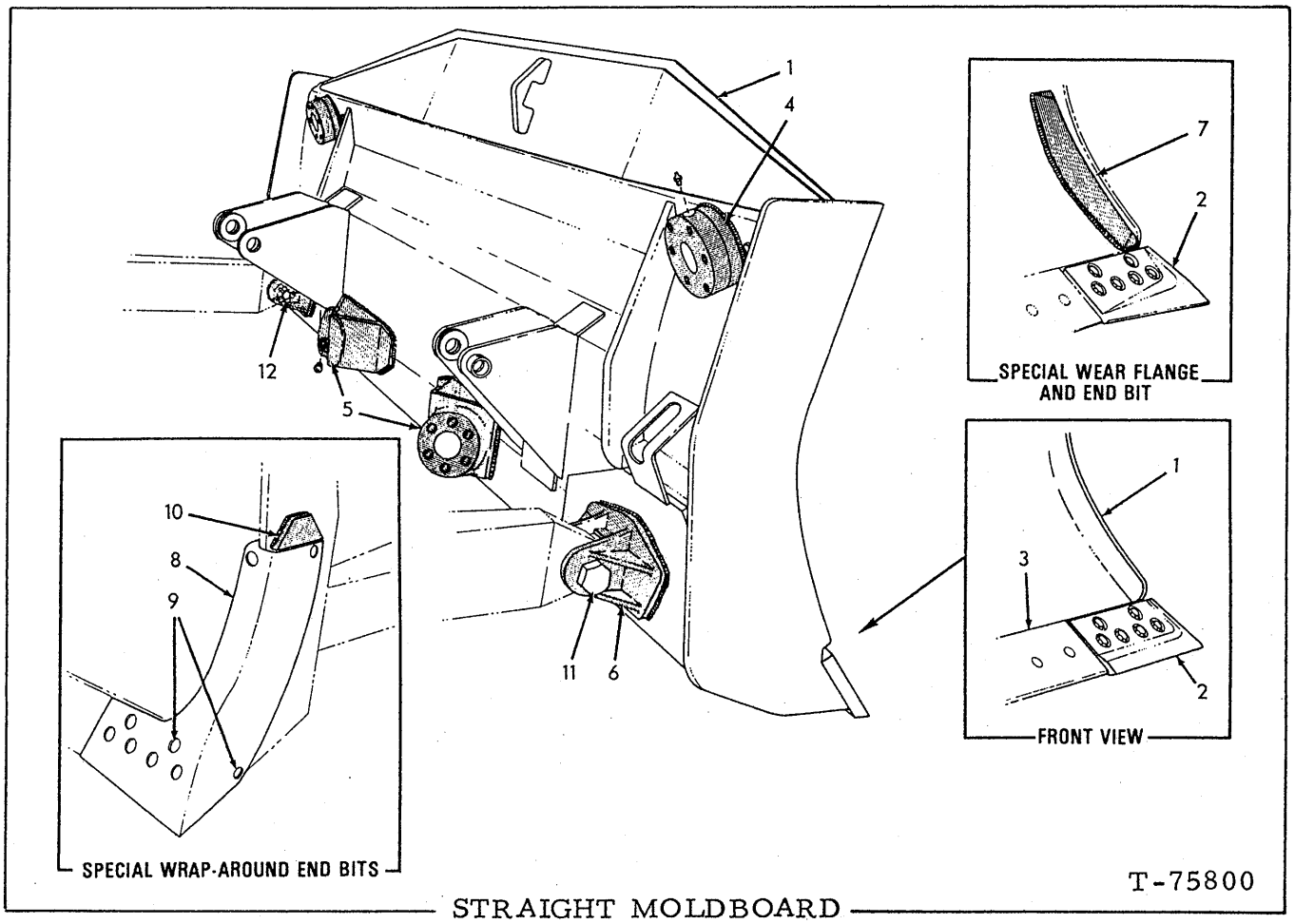

STRAIGHT MOLDBOARD

USAGE: Model 16HS. See following pages for optional types

ITEM	PART NO.	QTY.	DESCRIPTION	
1	70670090	1	MOLDBOARD ASSY. (Includes items 2 thru 6)	
2	70606742	2	BIT (Standard, 18" long)	Used prior to July 1974
	70923455	12	CAPSCREW, 7/8"NC x 2-1/4"	
	70911031	12	NUT, 7/8"NC	
	70691674	2	BIT (Standard, 18" long)	Effective July 1974
	70660335	12	BOLT, plow, 7/8"NC x 2-3/4"	
	70911031	12	NUT, 7/8"NC	
	70615219	1	BIT, left (19-1/4" long)(Used prior to June 1974)	Special Heavy-duty Type
	70927359	6	CAPSCREW, 7/8"NF x 2-3/4"	
	70070400	6	NUT, high, 7/8"NF	
	70691685	1	BIT, left (20-1/2" long)(Effective June 1974)	
	70660335	6	BOLT, plow, 7/8"NC x 2-3/4"	
	70911031	6	NUT, 7/8"NC	
	70615220	1	BIT, right (19-1/4" long)(Used prior to June 1974)	
	70927359	6	CAPSCREW, 7/8"NF x 2-3/4"	
	70070400	6	NUT, high, 7/8"NF	
	70691686	1	BIT, right (20-1/2" long)(Effective June 1974)	
	70660335	6	BOLT, plow, 7/8"NC x 2-3/4"	
	70911031	6	NUT, 7/8"NC	

(Continued)

(Revised May 1977)

ITEM	PART NO.	QTY.	DESCRIPTION
3	70673000	2	EDGE (Standard, 7/8" thick, 51-1/4" long)
	70660335	18	BOLT, plow, 7/8"NC x 2-3/4"
	70911031	18	NUT, 7/8"NC
4	70651733	2	△SOCKET
	70914465	2	FITTING, lubricating, straight, 1/8"NPT
5	70667496	2	△SOCKET WELDMENT
	70914465	2	FITTING, lubricating, straight, 1/8"NPT
6	70669266	2	△LUG
7	70609447	1	△FLANGE, left side } Recommended for heavy-
	70609448	1	△FLANGE, right side } duty applications
8	70617395	1	BIT, left end } Special. Heavy-duty
	70617396	1	BIT, right end } wrap-around type
9	70660335	18	BOLT, plow, 7/8"NC x 2-3/4"
	70911031	18	NUT, 7/8"NC
10	70615210	2	△BLOCK
11	70614880	2	BOLT
12	70606702	2	NUT
	70911069	2	PIN, cotter, 5/16" x 3"

△Requires welding to install

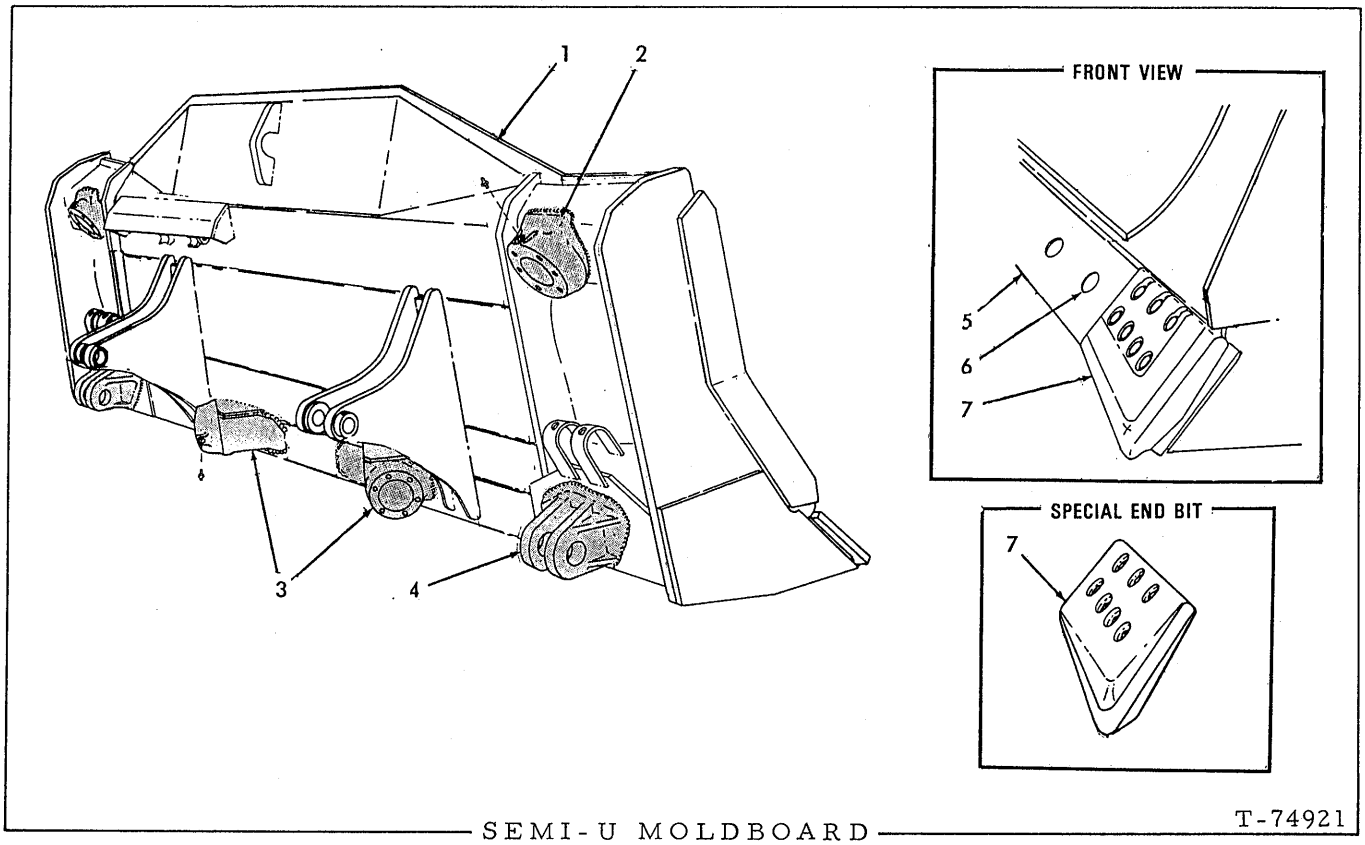

SEMI-U MOLDBOARD

T-74921

USAGE: Models 16HSU, 16CSU

ITEM	PART NO.	QTY.	DESCRIPTION	
1	70669314	1	MOLDBOARD ASSY. (Hydraulic units)	Each includes items 2 thru 7
	70669315	1	MOLDBOARD ASSY. (Cable units)	
2	70667493	2	*SOCKET, tilt brace	
	70914465	2	FITTING, lubricating, straight, 1/8"NPT	
3	70667496	2	*SOCKET WELDMENT, diagonal brace	
	70914465	2	FITTING, lubricating, straight, 1/8"NPT	
4	70669266	2	*LUG, attaching	
5	70672194	2	EDGE, cutting	
6	70660900	18	BOLT, plow, 1"NC x 2-3/4"	
	70911032	18	NUT, 1"NC	
7	70661213	1	BIT, left end	Standard
	70661214	1	BIT, right end	
	70926785	14	CAPSCREW, 1"NC x 2-3/4"	
	70911032	14	NUT, 1"NC	
	70673081	1	BIT, left end	Special
	70673082	1	BIT, right end	
	70661209	14	BOLT, plow, 1"NC x 3-1/4"	
	70911032	14	NUT, 1"NC	

*Requires welding to install

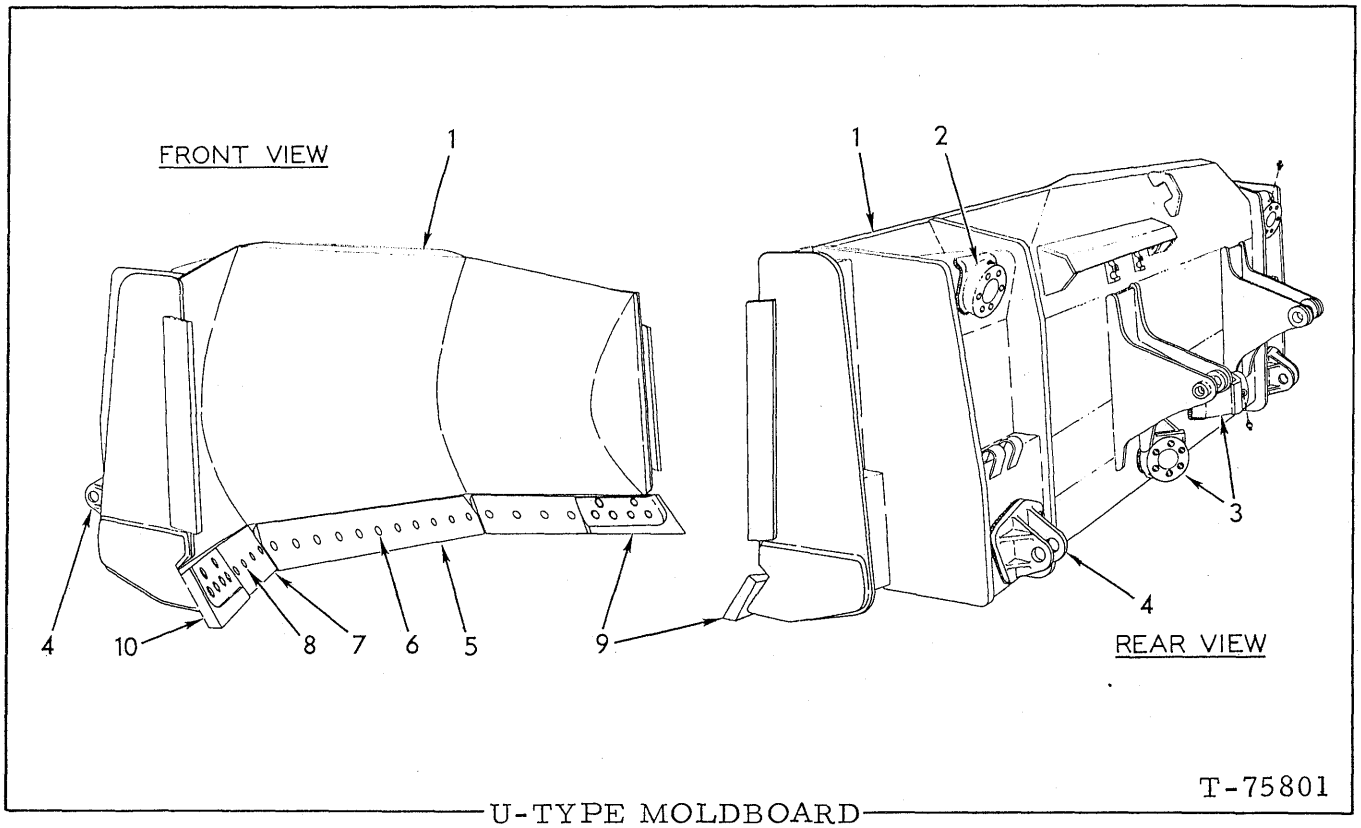

U-TYPE MOLDBOARD

USAGE: Model 16HU

ITEM	PART NO.	QTY.	DESCRIPTION	
1	70673130	1	MOLDBOARD ASSY. (Includes items 2 thru 10)	
2	70667493	2	*SOCKET	
	70914465	2	FITTING, lubricating, straight, 1/8"NPT	
3	70667496	2	*SOCKET	
	70914465	2	FITTING, lubricating, straight, 1/8"NPT	
4	70669266	2	*LUG	
5	70673565	1	EDGE	
6	70660335	11	BOLT	
	70911031	11	NUT	
7	70673566	2	EDGE	
8	70660335	8	BOLT	
	70911031	8	NUT	
9	70606763	1	BIT (Recessed for capscrews)	Standard
	70925671	6	CAPSCREW, 7/8"NC x 2-1/2"	Standard
	70911031	6	NUT, 7/8"NC	Standard
	70690675	1	BIT (Recessed for plow bolts)	Standard
	70660335	6	BOLT	Standard
	70911031	6	NUT, 7/8"NC	Standard
	70617079	1	BIT (Recessed for capscrews)	Severe service
	70927359	6	CAPSCREW, 7/8"NF x 2-3/4"	Severe service
	70070400	6	NUT	Severe service
	70691057	1	BIT (Recessed for plow bolts)	Severe service
	70617131	6	BOLT	Severe service
	70911031	6	NUT	Severe service

* Requires welding to install

(Continued)

(Revised February 1976)

ITEM	PART NO.	QTY.	DESCRIPTION	
10	70606762	1	BIT (Recessed for capscrews)	Standard
	70925671	6	CAPSCREW, 7/8"NC x 2-1/2"	
	70911031	6	NUT, 7/8"NC	
	70690676	1	BIT (Recessed for plow bolts)	
	70660335	6	BOLT	
	70911031	6	NUT, 7/8"NC	
	70617080	1	BIT (Recessed for capscrews)	Severe service
	70927359	6	CAPSCREW, 7/8"NF x 2-3/4"	
	70070400	6	NUT	
	70691058	1	BIT (Recessed for plow bolts)	
	70617131	6	BOLT	
	70911031	6	NUT, 7/8"NC	

*Requires welding to install

(Added February 1976)

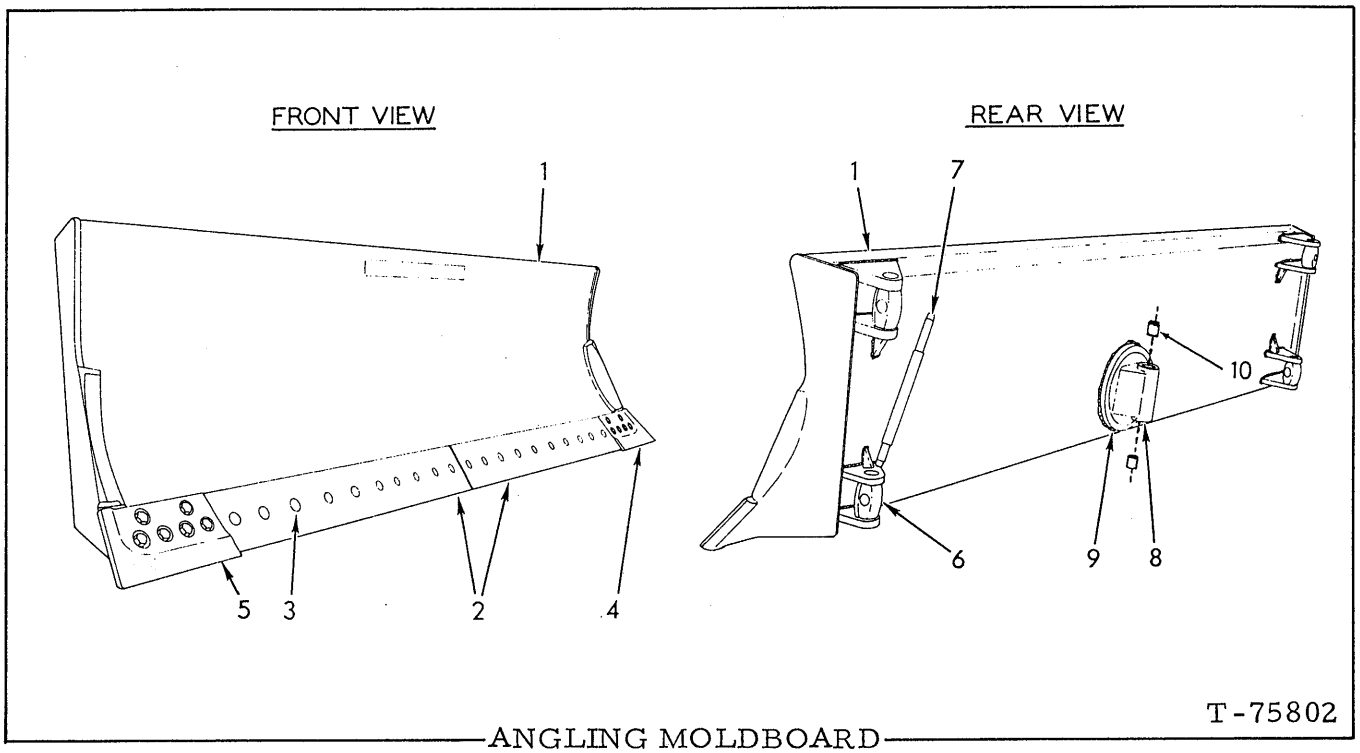

ANGLING MOLDBOARD

USAGE: Models 16HA, 16CA. Standard equipment

* Standard
** Severe service

ITEM	PART NO.	QTY. *	QTY. **	DESCRIPTION	
1	70672644	1	-	MOLDBOARD ASSY. (Includes items 2 thru 9)	
	70693606	-	1	MOLDBOARD ASSY. (Includes items 2 thru 10)	
2	70668615	2	2	EDGE	
3	70660335	20	-	BOLT	
	70617131	-	20	BOLT	
	70911031	20	20	NUT, 7/8"NC	
4	70606763	1	-	BIT (Recessed for capscrews)	Standard
	70925671	6	-	CAPSCREW, 7/8"NC x 2-1/2"	
	70911031	6	-	NUT, 7/8"NC	
	70690675	1	-	BIT (Recessed for plow bolts)	
	70660335	6	-	BOLT	
	70911031	6	-	NUT, 7/8"NC	
	70617079	1	-	BIT (Recessed for capscrews)	Severe service
	70927359	6	-	CAPSCREW, 7/8"NF x 2-3/4"	
	70070400	6	-	NUT	
	70691057	-	1	BIT (Recessed for plow bolts)	
	70617131	-	6	BOLT	
	70911031	-	6	NUT, 7/8"NC	

(Continued)

(Revised February 1976)

ITEM	PART NO.	QTY. *	QTY. **	DESCRIPTION	
5	70606762	1	-	BIT (Recessed for capscrews)	Standard
	70925671	6	-	CAPSCREW, 7/8"NC x 2-1/2"	
	70911031	6	-	NUT, 7/8"NC	
	70690676	1	-	BIT (Recessed for plow bolts)	
	70660335	6	-	BOLT	
	70911031	6	-	NUT, 7/8"NC	
	70617080	1	-	BIT (Recessed for capscrews)	Severe service
	70927359	6	-	CAPSCREW, 7/8"NF x 2-3/4"	
	70070400	6	-	NUT	
	70691058	-	1	BIT (Recessed for plow bolts)	
	70617131	-	6	BOLT	
	70911031	-	6	NUT, 7/8"NC	
6	70619648	4	4	*SWIVEL	
7	70609368	1	1	BAR	
8	70668693	1	-	*PIVOT	
	70693599	-	1	*PIVOT ASSY. (Includes item 10)	
9	70609611	1	1	*RING	
10	70607556	-	4	BUSHING	

*Requires welding to install

(Added February 1976)

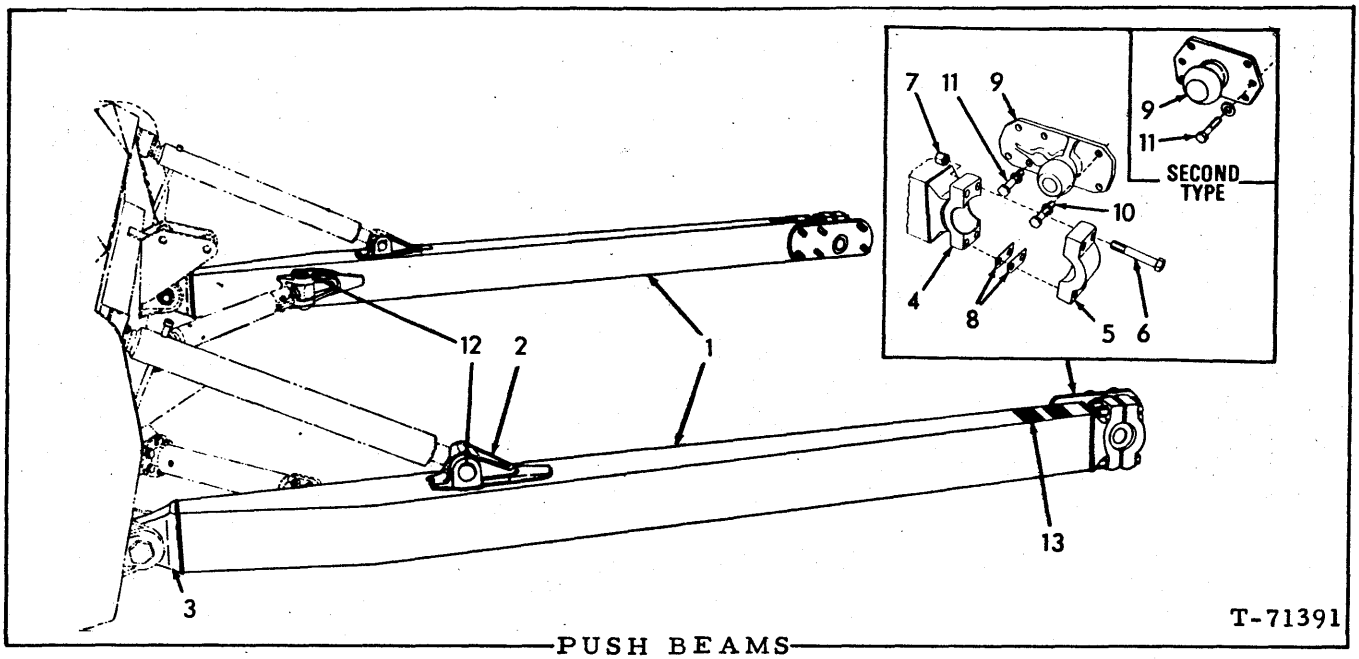

PUSH BEAMS

USAGE: Mosels 16HS, 16HSU, 16HU, 16CSU

ITEM	PART NO.	QTY.	DESCRIPTION	
1	70667069	1	BEAM, push, left side	Each includes items 2 thru 4
	70667070	1	BEAM, push, right side	
2	70665208	4	*LUG, brace attachment	
3	70667002	2	*HINGE, push beam	
4	70667026	2	*PIVOT, push beam	
5	70617069	2	CAP, push beam	
6	70926283	8	CAPSCREW, 1"NF x 5-3/4"	
7	70600236	8	NUT, high, 1"NF	
8	70615912	32	SHIM, push beam cap (Use as required)	
9	70617515	1	TRUNNION, left side	Units prior to #13185 including #13187
	70617516	1	TRUNNION, right side	
	70687732	2	TRUNNION (Unit #13185 and up, including #13187)	
10	70925809	6	CAPSCREW, 1"NF x 2-3/4"	Units prior to #13185 including #13187
11	70925810	6	CAPSCREW, 1"NF x 3-1/2"	
	70910916	12	LOCKWASHER, 1"	
	70925671	12	CAPSCREW, 7/8"NC x 2-1/2"	Unit #13185 and up, excluding #13187
	70676122	12	WASHER	
12	70609122	4	PIN, moldboard brace	
	70918245	4	PIN, spring, 1/2" x 2-1/2"	
13	73116394	4	STEP TREAD	

*Requires welding to install

(Revised March 1982)

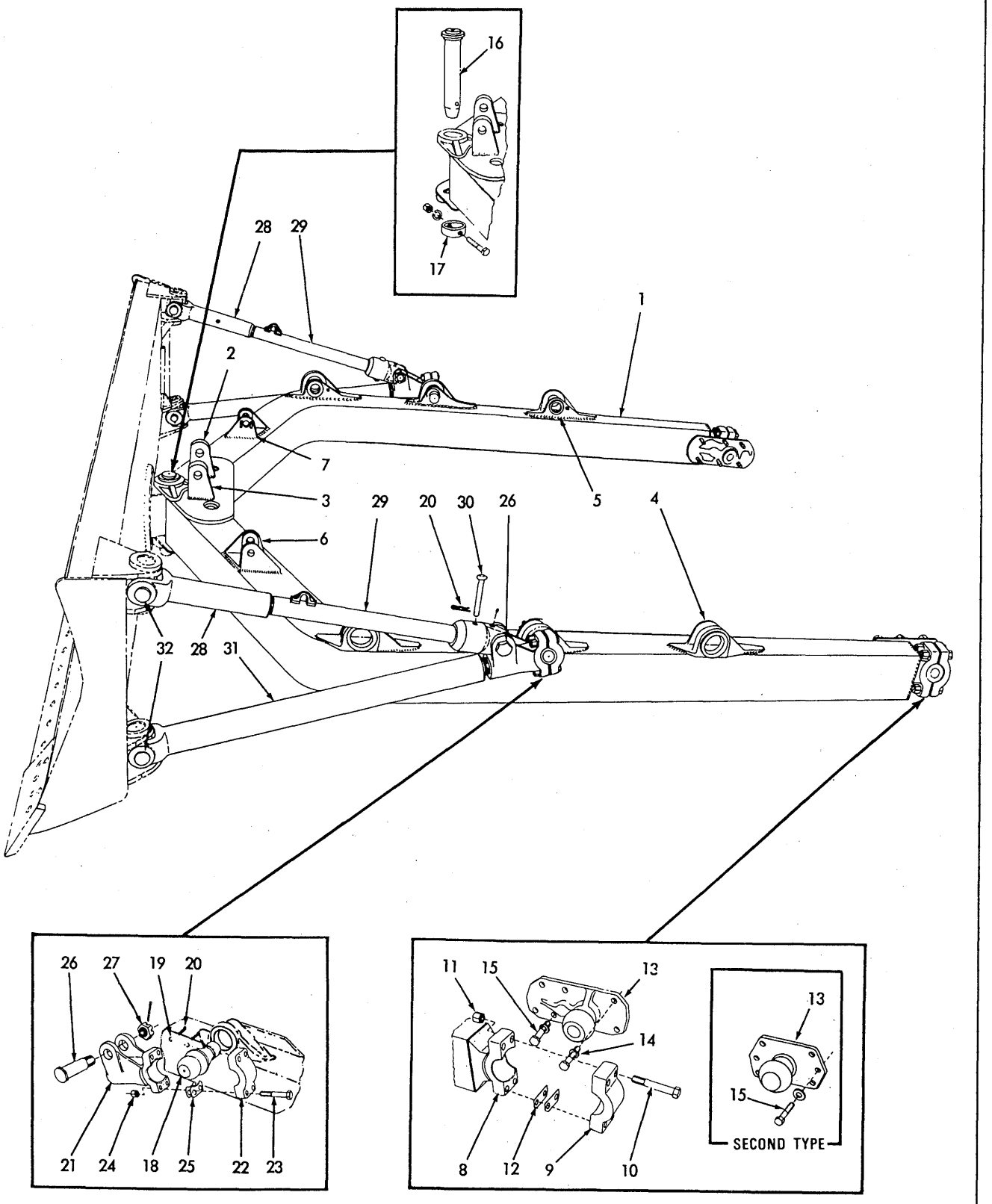

C-FRAME AND STRUTS 16HA, 16CA

T-79294

(Revised February 1976)

C-FRAME AND STRUTS

USAGE: Models 16HA, 16CA

ITEM	PART NO.	QTY.	DESCRIPTION
1	70668662	1	C-FRAME (Includes items 4 thru 8)(Model 16HA)
	70669571	1	C-FRAME (Includes items 2 thru 5 and 8)(Model 16CA)
1A	73116394	4	STEP TREAD
2	70609209	1	*PLATE, lifting, right side } For cable C-Frame only
3	70609210	1	*PLATE, lifting, left side } For cable C-Frame only
4	70618083	3	*BRACKET, ball pin, left side
5	70618084	3	*BRACKET, ball pin, right side
6	70618037	1	*LUG, lifting, left side } For Hydraulic C-Frame only
7	70618038	1	*LUG, lifting, right side } For Hydraulic C-Frame only
8	70667026	2	*PIVOT, C-Frame
9	70617069	2	CAP, C-Frame
10	70926283	8	CAPSCREW, 1"NF x 5-3/4"
11	70600236	8	NUT, high, 1"NF
12	70615912	32	SHIM, C-frame cap (Use as required)
13	70617515	1	TRUNNION, left side } Units prior to #13185, including #13185
	70617516	1	TRUNNION, right side } Units prior to #13185, including #13185
	70687732	2	TRUNNION (Unit #13185 and up, excluding #13187)
14	70925809	6	CAPSCREW, 1"NF x 2-3/4" } Units prior to #13185, including #13187
15	70925810	6	CAPSCREW, 1"NF x 3-1/2" } Units prior to #13185, including #13187
	70910916	12	LOCKWASHER, 1" } Units prior to #13185, including #13187
	70925671	12	CAPSCREW, 7/8"NC x 2-1/2" } Unit #13185 and up, excluding #13187
	70676122	12	WASHER } Unit #13185 and up, excluding #13187
16	70668680	1	PIN, moldboard pivot
17	70606981	1	COLLAR, moldboard pivot pin
	70916321	1	CAPSCREW, 1/2"NC x 4-1/2"
	70912441	1	LOCKWASHER, 1/2"
	70911028	1	NUT, 1/2"NC
18	70615581	2	PIN, ball, strut bracket
19	70615619	2	PIN, retaining, strut bracket ball pin
20	70617855	6	CLIP, pin retaining
21	70618840	2	BRACKET, moldboard strut
22	70618173	2	CAP, strut bracket
23	70925954	8	CAPSCREW, 3/4"NF x 4-1/2"
24	70012767	8	NUT, high, 3/4"NF
25	70614721	40	SHIM, strut bracket cap (use as required)
26	70609361	2	BOLT, upper strut
27	70606702	2	NUT, upper strut bolt (slotted, 1-3/4"NF)
	70911069	2	PIN, cotter, 5/16" x 3"

*Requires welding to install

(Continued)

(Revised March 1982)

C—FRAME AND STRUTS (Continued)

ITEM	PART NO.	QTY.	DESCRIPTION
28	70619841	2	CLEVIS, upper strut (Standard. 2-1/2"NC thread)
	70619275	2	CLEVIS, upper strut (Heavy-duty. 3-1/2"NC thread)
	70914465	2	FITTING, lubricating, straight, 1/8"NPT
29	70609355	2	STRUT, upper (Standard. 2-1/2"NC thread)
	70619274	2	STRUT, upper (Heavy-duty. 3-1/2"NC thread)
	70914465	2	FITTING, lubricating, straight, 1/8"NPT
30	70618692	2	PIN, strut locking
31	70619840	2	STRUT, lower
32	70609122	4	PIN, moldboard strut
	70918245	4	PIN, spring, 1/2" x 2-1/2"

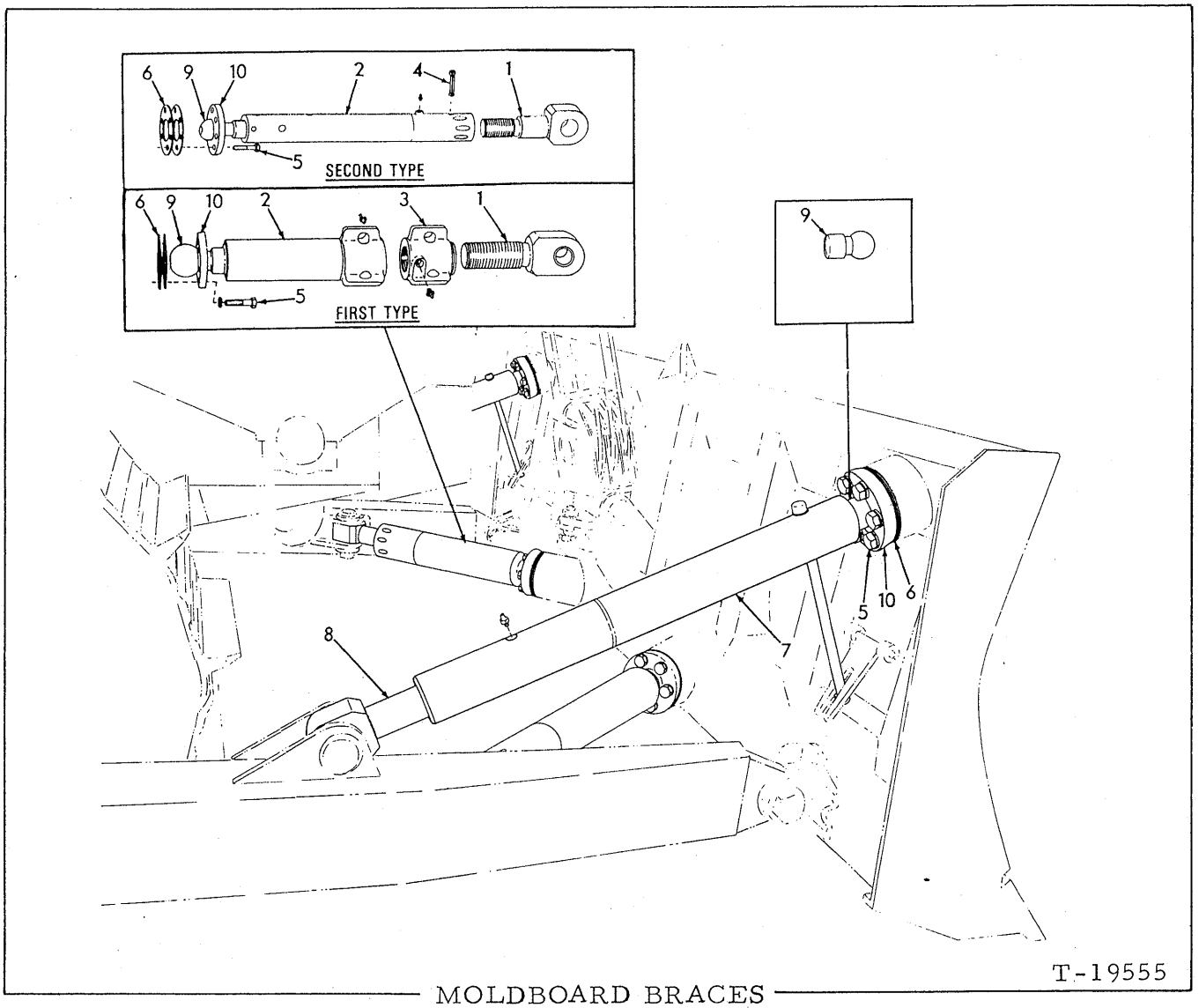

MOLDBOARD BRACES

USAGE: Models 16HS, 16HSU, 16HU, 16CSU

ITEM	PART NO.	QTY.	DESCRIPTION	
1	70664864	2	SCREW (Used prior to March 1974)	
	70686974	2	SCREW (Effective March 1974)	
2	70669307	2	BRACE ASSY.,(Used prior to March 1974)	Each includes items 9 and 10
	70687801	2	BRACE ASSY. (Effective March 1974)	
	70914465	2	FITTING, lubricating, straight, 1/8"NPT	
3	70664859	2	NUT	Used prior to March 1974
	70914465	2	FITTING, lubricating, straight, 1/8"NPT	
4	70667156	2	PIN (Effective March 1974)	
5	70925806	24	CAPSCREW (7/8"NC x 3")	
	70905347	24	LOCKWASHER, 7/8"	
6	70609389	40	SHIM (Use as required)	
7	70671084	2	BRACE ASSY. (Includes items 9 and 10)	One less used when special tilt cylinder is installed
	70914465	2	FITTING, lubricating, straight, 1/8"NPT	
8	70619952	2	SCREW, tilt brace	
9	70671076	2	BALL, diagonal brace	Requires welding to install
	70672959	2	BALL, tilt brace	
10	70651704	4	COLLAR, brace ball	

(Revised May 1977)

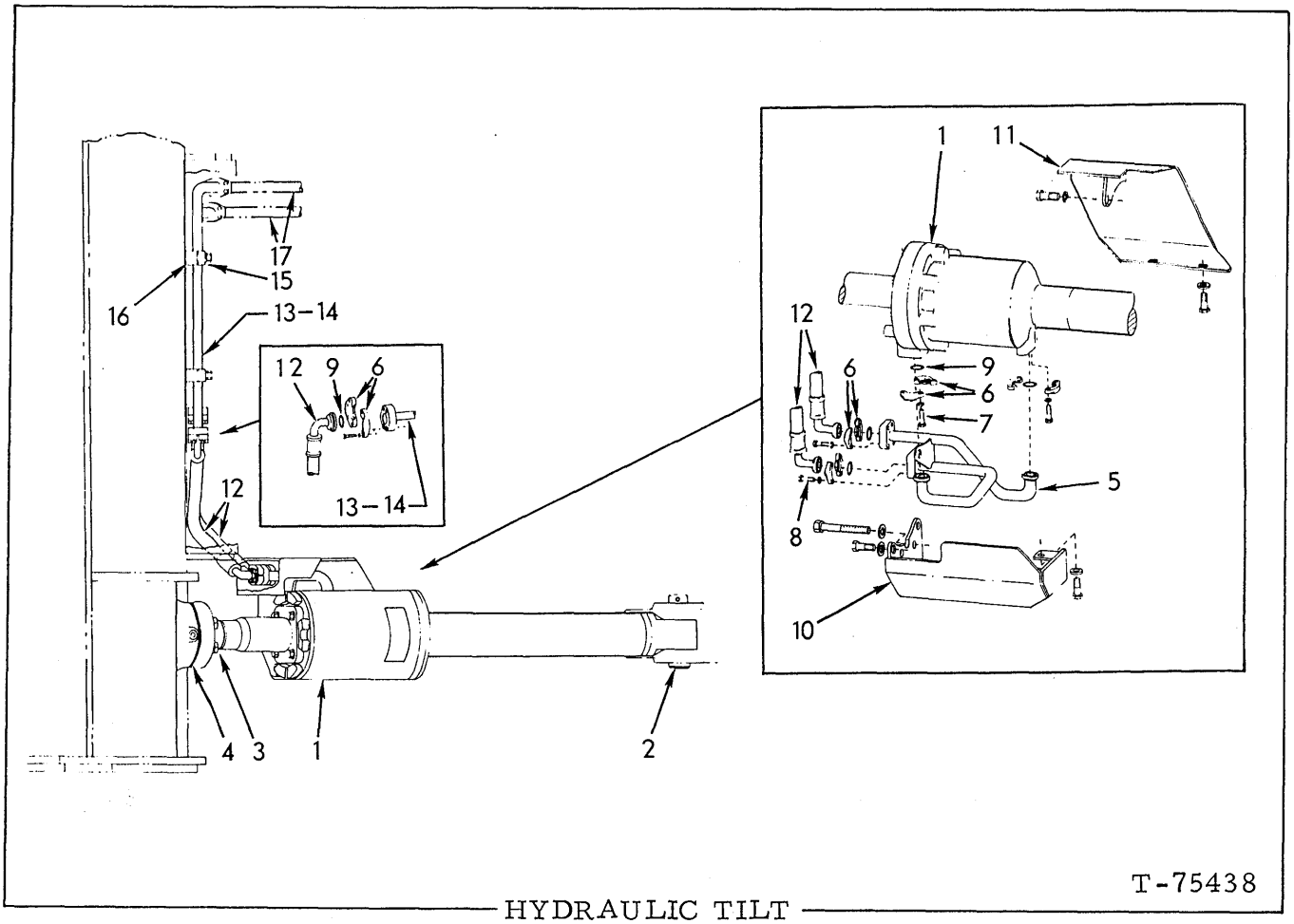

HYDRAULIC TILT

USAGE: Special equipment. Replaces standard manual tilt on one side of unit.

ITEM	PART NO.	QTY.	DESCRIPTION
1	---------	1	CYLINDER ASSY., tilt (See pages 275 and 276)
2	70609122	1	PIN
	70918245	1	PIN, spring, 1/2" x 2-1/2"
3	70925806	6	CAPSCREW, tilt cylinder (7/8"NC x 3")
	70905347	6	LOCKWASHER, 7/8"
4	70609389	8	SHIM (Use as required)
5	70659320	1	TUBE WELDMENT (17-3/4" long)(Early units)
	70698044	1	TUBE WELDMENT (19-3/4" long)(Late units)
6	70921115	12	FLANGE (half only)
7	70927342	8	CAPSCREW, 3/8"NF x 1-1/8" (Early units)
	70921076	8	CAPSCREW, 3/8"NC x 1-1/4" (Late units)
8	70921076	16	CAPSCREW, 3/8"NC x 1-1/4"
	70930370	24	WASHER
9	70924110	6	O-RING

(Continued)

ITEM	PART NO.	QTY.	DESCRIPTION	
10	70667740	1	GUARD	
	70921411	1	CAPSCREW, 5/8"NC x 1-1/2"	
	70677010	1	WASHER	
	70922726	2	CAPSCREW, 1/2"NF x 1-1/2"	
	70064531	2	WASHER	
	70925954	2	CAPSCREW, 3/4"NF x 4-1/2"	Use with 70698044 TUBE WELDMENT
	70928914	4	WASHER	
11	70667737	1	GUARD	
	70921411	1	CAPSCREW, 5/8"NC x 1-1/2"	
	70677010	1	WASHER	
	70920583	2	CAPSCREW, 1/2"NC x 1-1/2"	
	70677008	2	WASHER	
12	70670722	2	HOSE (See HOSE PARTS)	
13	70665681	1	TUBE	
14	70665665	1	TUBE	
15	70645609	2	CLAMP (plain hole)	
	70927353	2	CAPSCREW, 1/2"NF x 1-1/4"	First type
	70677008	2	WASHER	
	70698393	2	CLAMP	
	70927522	2	CAPSCREW, 1/2"NF x 1-3/4"	Second type
	70677008	2	WASHER	
16	70645610	2	CLAMP (threaded hole)(Requires welding to dozer moldboard)	
17	--------	2	HOSE (See HYDRAULIC TILT PIPING)	

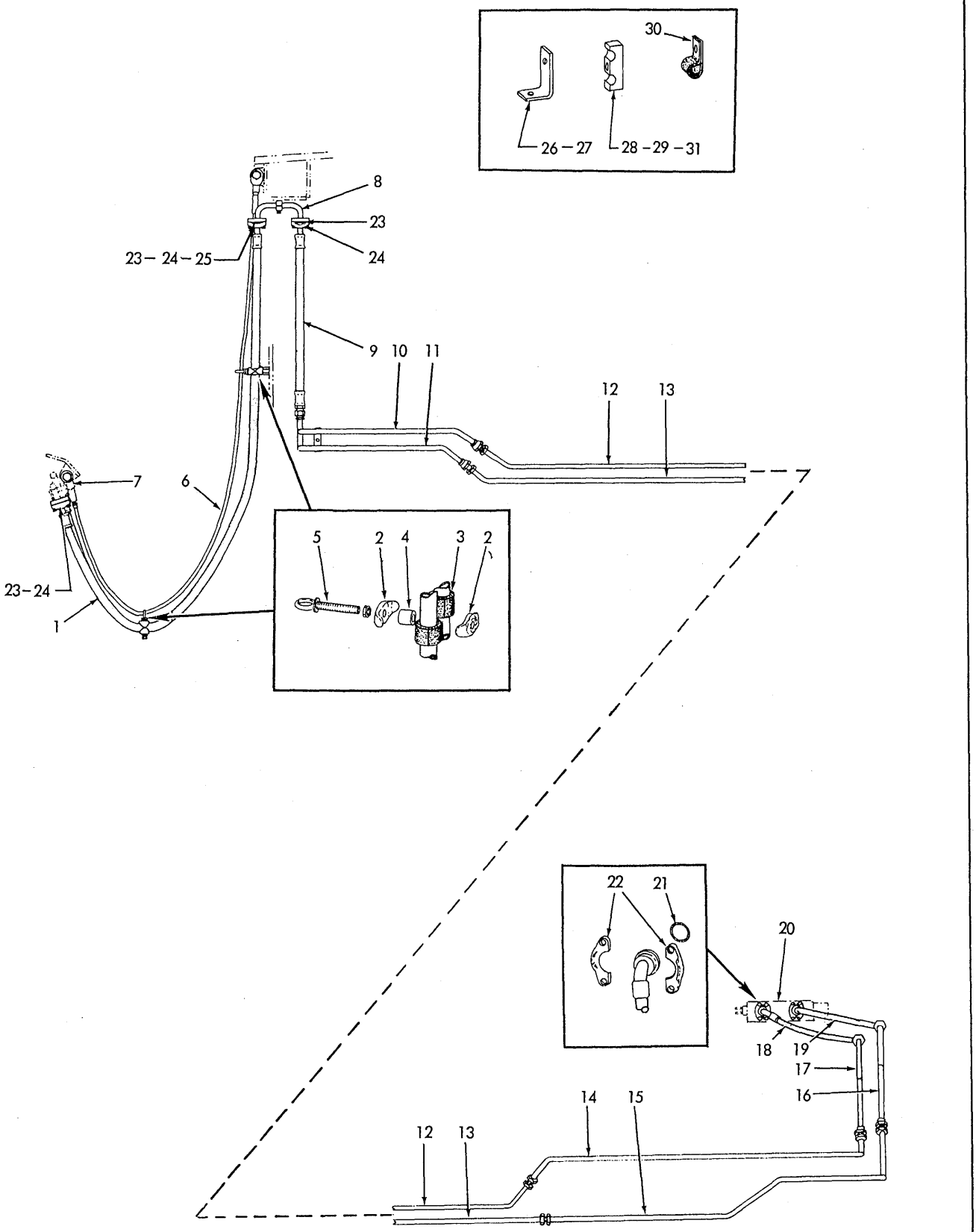

HYDRAULIC TILT PIPING

HYDRAULIC TILT PIPING

USAGE: Special Equipment

ITEM	PART NO.	QTY.	DESCRIPTION
1	70670723	2	HOSE, front (See HOSE PARTS)
2	70619966	4	CLAMP, front hose supporting
3	70670217	4	BOOT, hose protecting
4	70613231	2	BLOCK, spacing, hose clamp
5	70667711	2	EYE-BOLT, cable guiding
	70911035	1	NUT, jam, 1/2"NC
	70911028	1	NUT, 1/2"NC
	70677008	1	WASHER, plain
6	70670726	1	CABLE, hose supporting
	70927344	1	CAPSCREW, 7/8"NC x 4"
	70921039	1	NUT, elastic stop, 7/8"NC
7	70668814	1	FITTING, hose supporting cables (Includes capscrew and nut)
8	70659322	2	TUBE, upper
9	70670721	2	HOSE, intermediate (See HOSE PARTS)
10	70662687	1	TUBE, front section, upper
11	70662700	1	TUBE, front section, lower
12	70662719	1	TUBE, front intermediate section, upper
13	70662688	1	TUBE, front intermediate section, lower
14	70662666	1	TUBE, rear intermediate section, upper
15	70662654	1	TUBE, rear intermediate section, lower
16	70662737	1	TUBE, rear section (rear hose)
17	70662723	1	TUBE, rear section (front hose)
18	70669245	1	HOSE, rear section (front)
19	70670759	1	HOSE, rear section (rear)
20	------	1	VALVE ASSY., operating (See pages 297 and 301)
21	70924200	2	O-RING, valve connection
22	70921116	4	FLANGE, valve connection (half only)
	70921076	8	CAPSCREW, 3/8"NC x 1-1/4"
	70930370	8	WASHER
23	70924110	6	O-RING, tube connections
24	70921115	12	FLANGE, tube connecting (half only)
	70921076	24	CAPSCREW, 3/8"NC x 1-1/4"
	70930370	24	WASHER

(Continued)

HYDRAULIC TILT PIPING (Continued)

ITEM	PART NO.	QTY.	DESCRIPTION
25	70666575	2	PLUG, closure (Used only when lines are disconnected)
26	70670751	1	ANGLE, tube supporting
	70920582	1	CAPSCREW, 1/2"NC x 2-1/4"
	70912441	1	LOCKWASHER, 1/2"
	70064531	1	WASHER, plain
27	70662741	1	ANGLE, tube supporting
	70920583	1	CAPSCREW, 1/2"NC x 1-1/2"
	70910244	1	WASHER, plain, SAE std., 1/2"
	70064531	1	WASHER, plain
	70912441	1	LOCKWASHER, 1/2"
	70911028	1	NUT, 1/2"NC
28	70080116	6	BLOCK, tube supporting
	70927446	1	CAPSCREW, 3/8"NC x 3"
	70927174	2	CAPSCREW, 3/8"NC x 2-1/2"
	70677006	3	WASHER, plain
	70910287	2	LOCKWASHER, 3/8"
	70911026	3	NUT, 3/8"NC
29	70659327	4	CLAMP, tube supporting
	70921565	2	CAPSCREW, 3/8"NC x 1-1/2"
	70927174	1	CAPSCREW, 3/8"NC x 2-1/2"
	70910287	3	LOCKWASHER, 3/8"
30	70927104	4	CLAMP, tube supporting
	70927216	4	CAPSCREW, 1/2"NC x 7/8"
	70912441	4	LOCKWASHER, 1/2"
31	70627917	4	CLAMP, tube supporting,
	70927218	2	CAPSCREW, 3/8"NC x 2-3/4"
	70044973	2	WASHER, plain
	70910287	2	LOCKWASHER, 3/8"
	70911026	2	NUT, 3/8"NC

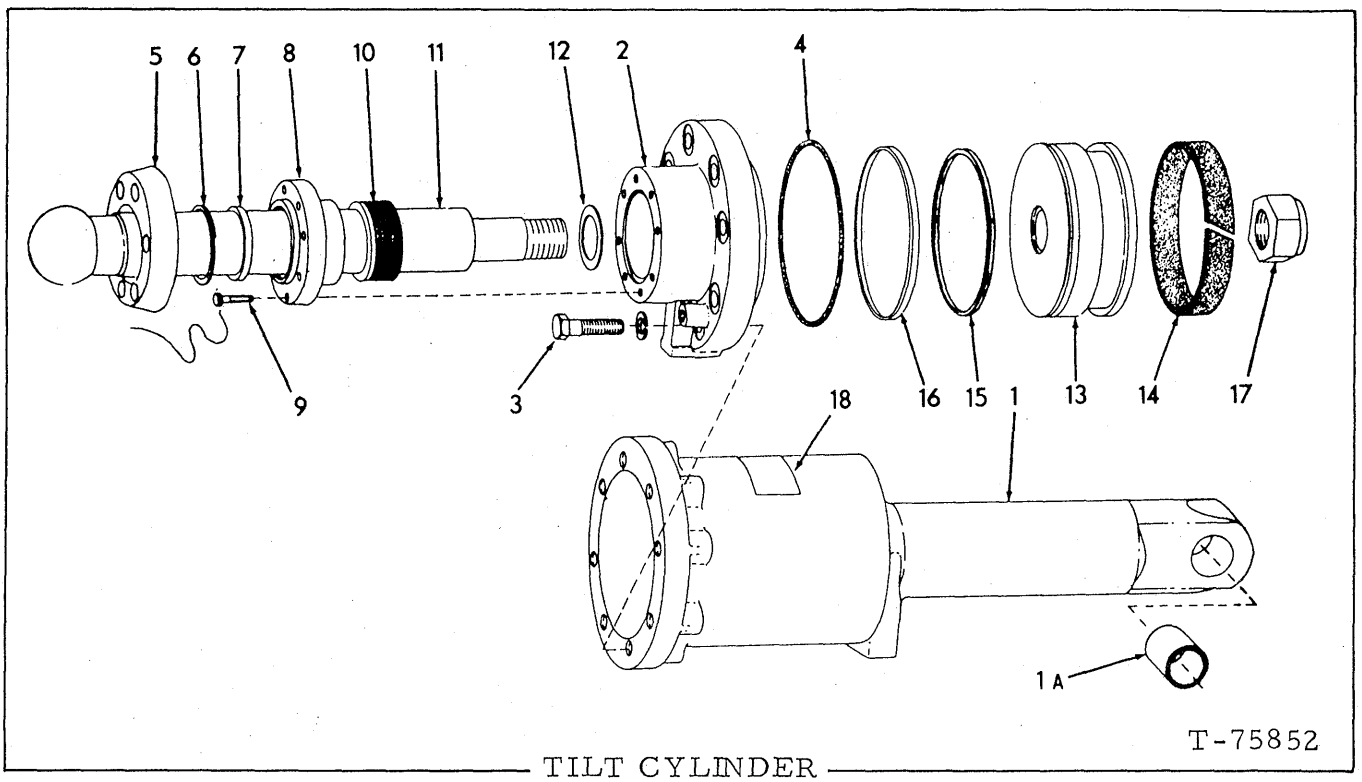

TILT CYLINDER

USAGE: See page 270 (Used prior to February 1973)

ITEM	PART NO.	QTY.	DESCRIPTION
-	73055465	1	CYLINDER ASSY. (Includes items 1 thru 18)
1	70653790	1	CYLINDER ASSY. (Includes item 1A)
1A	73057408	1	BUSHING
2	70636792	1	COVER, cylinder
3	70923137	8	CAPSCREW, 3/4"NF x 3"
	70904369	8	LOCKWASHER, 3/4"
4	70928741	1	□RING, sealing, cylinder cover
5	70651704	1	COLLAR, piston rod
6	70926978	1	RING, seal retaining
7	70619965	1	□SEAL, piston rod wiping
8	70636795	1	RETAINER, rod seal
9	70636796	8	CAPSCREW, drilled-hd., 3/8"NF x 1-7/8"
	70023756	1	WIRE, locking, 1/16" x 26"
10	73047563	1	□PACKING SET, piston rod
11	73055463	1	ROD, piston
12	73054108	1	SPACER, piston (Early units)
13	73059271	1	PISTON
14	73053716	1	□RING, piston wear
15	70926822	1	□RING, piston, inner
16	73053715	1	□RING, piston, outer
17	70929290	1	NUT, piston rod (self-locking)
18	70635335	1	TRANSFER, caution
19	73055467	1	REPAIR KIT (Includes items 4, 7, 10, 14, 15 and 16)

□Components of item 19

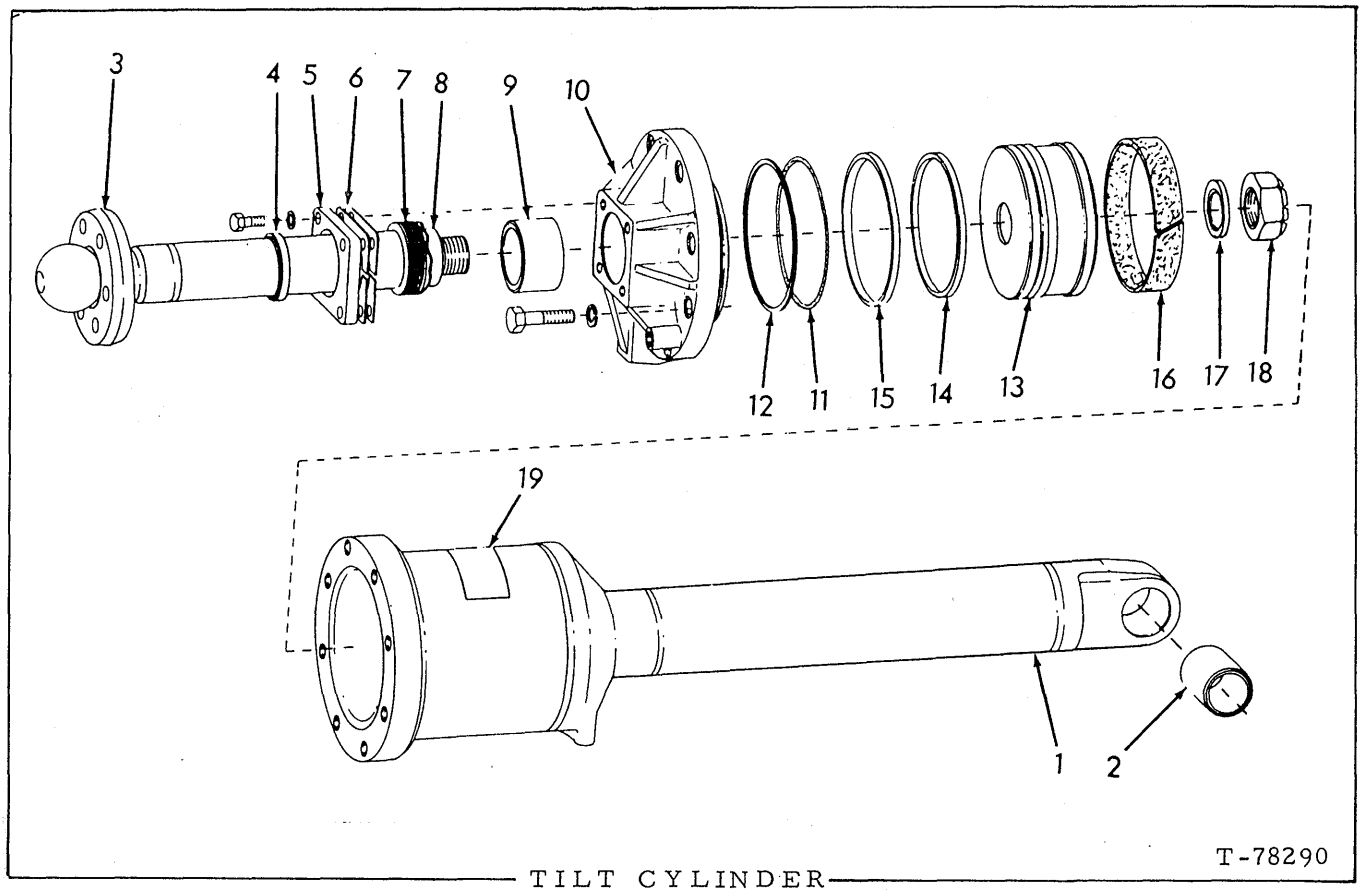

TILT CYLINDER

USAGE: See page 270 (Effective February 1973)

ITEM	PART NO.	QTY.	DESCRIPTION
-	73061763	1	CYLINDER ASSY. (Includes items 1 thru 19)
1	73061080	1	CYLINDER ASSY. (Includes item 2)
2	73057408	1	BUSHING
3	70651704	1	COLLAR, piston rod
4	73052942	1	□ WIPER, piston rod
5	73059354	1	PLATE, retaining
	70915987	4	CAPSCREW, 1/2"NC x 1-1/2"
	70904208	4	LOCKWASHER, 1/2"
6	73054488	4	□ SHIM (.029" thick)
7	73054073	1	□ PACKING SET, piston rod
8	73055463	1	ROD, piston
9	73054072	1	BUSHING, rod (Early units)
10	73061759	1	HEAD, cylinder (Early units. Used with item 9)
	73062228	1	HEAD, cylinder (Late units)
	70921170	6	CAPSCREW, 3/4"NF x 2-1/2" (2 additional required for HEAD 3061759)
	70924815	2	CAPSCREW, 3/4"NF x 4" (For HEAD 3062228 only)
	70904369	8	LOCKWASHER, 3/4"

(Continued)

ITEM	PART NO.	QTY.	DESCRIPTION
11	70927171	1	☐RING, sealing, cylinder cover
12	70930345	1	☐RING, back up
13	73059271	1	PISTON
14	70926822	1	☐RING, piston, inner
15	73053715	1	☐RING, piston, outer
16	73053716	1	☐RING, piston wear
17	73054108	1	SPACER, nut
18	70929290	1	NUT, piston rod (self-locking)
19	70635335	1	TRANSFER, caution
20	73056933	1	REPAIR KIT (Includes items 4, 6, 7, 11, 12, 14, 15 and 16)

☐Components of item 20

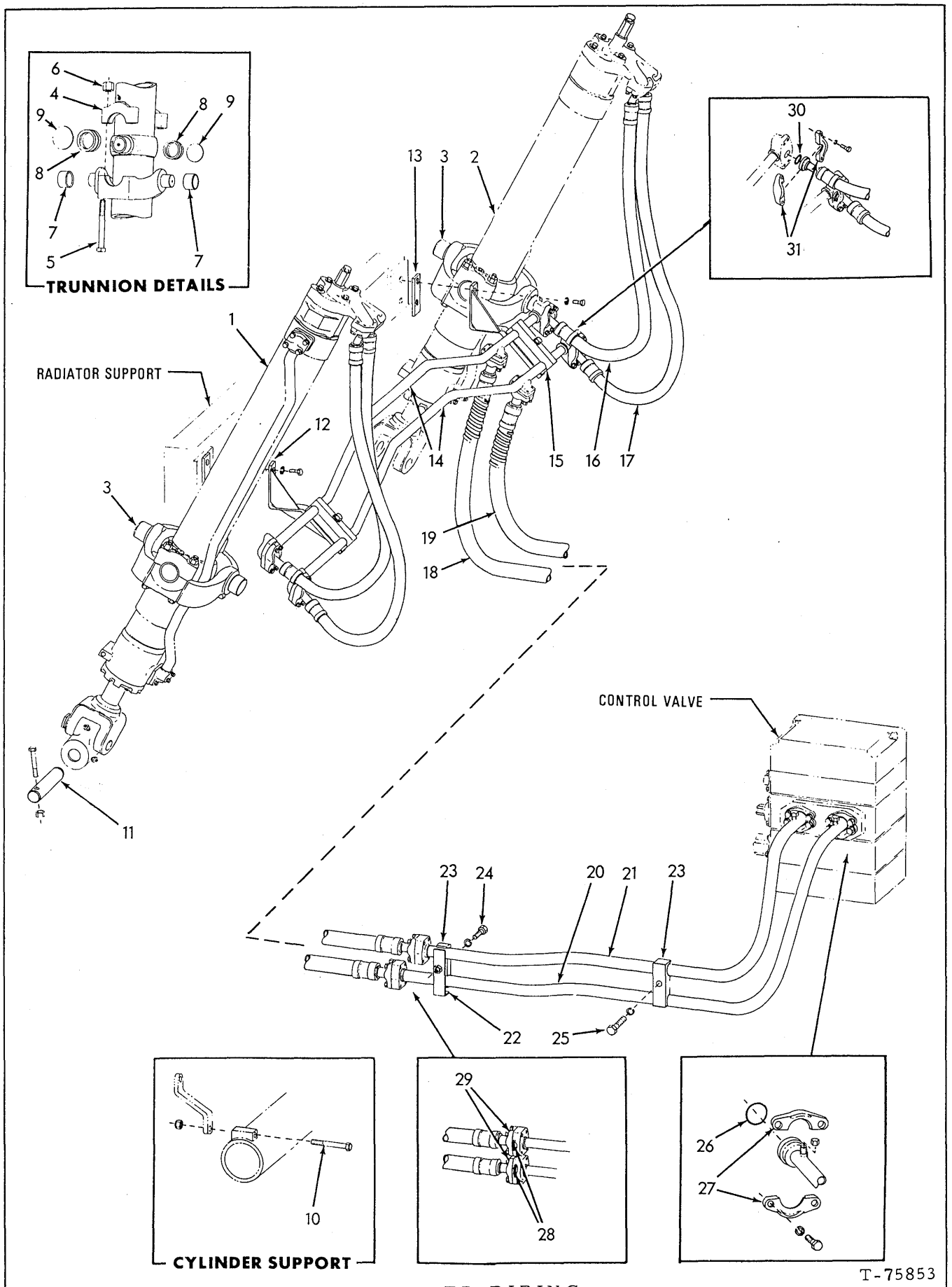

CYLINDER PIPING

CYLINDER PIPING

USAGE: Models 16HA, 16HS, 16HSU, 16HI

ITEM	PART NO.	QTY.	DESCRIPTION
1	--------	1	CYLINDER ASSY., left side } See page 283
2	--------	1	CYLINDER ASSY., right side } See page 283
3	70646416	2	TRUNNION ASSY. (Includes items 4 thru 7)
	70914465	4	FITTING, lubricating, straight, 1/8"NPT
4	70085140	4	CAP
5	70084955	8	CAPSCREW, 1"NF x 7-1/2"
6	70600236	8	NUT, high, 1"NF
7	70609222	4	BUSHING (2-1/2" O.D.)
8	70084581	4	BUSHING, 3"O.D.
9	70084612	4	PLATE
10	70926165	2	CAPSCREW, 5/8"NC x 4-1/2" (For securing cylinders when blade is removed)
	70914501	2	NUT, elastic stop, 5/8"NC
11	70649611	2	PIN
	70926157	2	CAPSCREW, 1/2"NC x 3-3/4"
	70918309	2	NUT, elastic stop, 1/2"NC
12	70670356	2	BRACKET
	70921175	4	CAPSCREW, 1/2"NC x 1"
	70928188	4	WASHER
13	70655807	2	BLOCK (Tractors prior to unit #11610 only)
14	70669740	2	TUBE, cross (Tractors prior to unit #14009)
	70691712	1	TUBE, raise line } Tractor unit #14009 and up
	70691713	1	TUBE, drop line } Tractor unit #14009 and up
15	70670354	2	CLAMP
	70920585	2	CAPSCREW, 1/2"NC x 1-3/4"
	70928188	2	WASHER
16	70669727	2	HOSE, drop line (See HOSE PARTS)
17	70670357	2	HOSE, raise line (See HOSE PARTS)
18	70669728	1	HOSE, drop line (See HOSE PARTS)
19	70669726	1	HOSE, raise line (See HOSE PARTS)
20	70669918	1	TUBE, drop line
	70921467	1	CAP, flare fitting, 1/4" tube
21	70669919	1	TUBE, raise line
	70921467	1	CAP, flare fitting, 1/4" tube

(Continued)

(Revised April 1980)

ITEM	PART NO.	QTY.	DESCRIPTION
22	70669950	1	ANGLE
	70921175	1	CAPSCREW, 1/2"NC x 1"
	70928188	1	WASHER
23	70669732	2	CLAMP
24	70922510	1	CAPSCREW, 1/2"NC x 2-3/4"
	70926156	1	CAPSCREW, 1/2"NC x 3-1/4"
	70928188	2	WASHER
26	70924193	2	O-RING
27	70921118	4	FLANGE
	70920583	8	CAPSCREW, 1/2"NC x 1-1/2"
	70928460	8	WASHER
28	70924192	4	O-RING
29	70921117	8	FLANGE
	70921569	16	CAPSCREW, 7/16"NC x 1-1/4"
	70929154	16	WASHER
30	70924200	8	O-RING
31	70921116	16	FLANGE
	70921076	16	CAPSCREW, 3/8"NC x 1-1/4"
	70923470	16	CAPSCREW, 3/8"NC x 1-3/8"
	70930370	32	WASHER

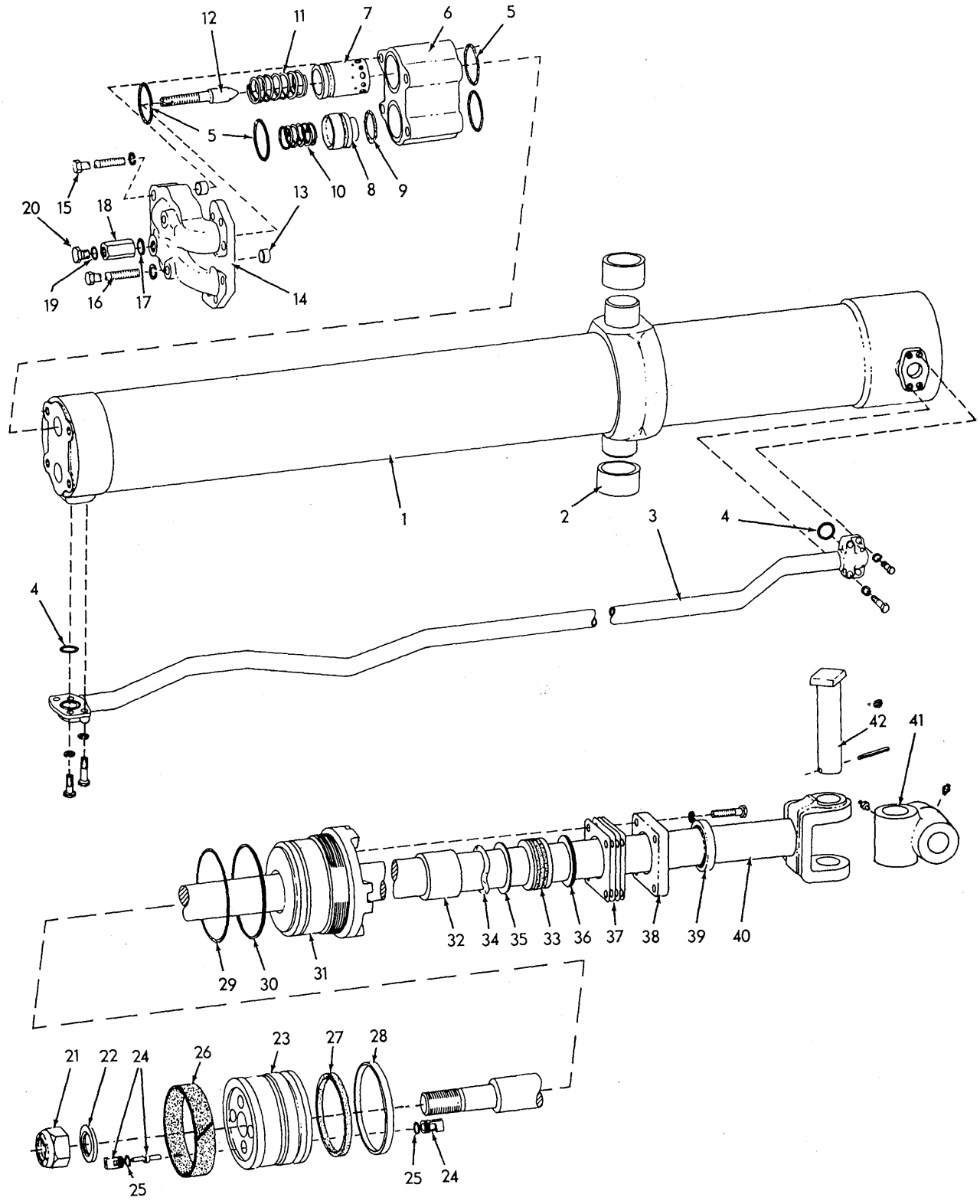
12
11
7
6
5
5
10
8
9
13
20
15
18
19
16
17
14
1
2
3
4
4
42
41
32
34
35
33
36
37
38
39
40
29
30
31
21
22
24
26
23
27
28
25
25
24

T-75854

HYDRAULIC DOZER CYLINDERS

* Cylinder Assembly (Left Side)
** Cylinder Assembly (Right Side)

USAGE: See page 279

ITEM	PART NO.	QTY. *	QTY. **	DESCRIPTION
-	70662179	1	-	CYLINDER ASSY., left (Tractors prior to unit #15182)
	73116737	1	-	CYLINDER ASSY., left (Tractor unit #15182 and up)
	70662180	-	1	CYLINDER ASSY., right (Tractors prior to #15182)
	73116738	-	1	CYLINDER ASSY., right (Tractor unit #15182 and up)
				} Each includes items 1 thru 42
1	73062237	1	-	CYLINDER ASSY.
	73062238	-	1	CYLINDER ASSY.
				} Each includes item 2
2	70609222	2	2	BUSHING, cylinder pivot
	70661961	1	-	TUBE, jumper
3	70661962	1	-	TUBE, jumper
	70922763	4	4	CAPSCREW, 3/8"NC x 1"
	70920996	4	4	CAPSCREW, 3/8"NC x 2-1/4"
	70930370	8	8	WASHER
4	70924200	2	2	O-RING, jumper tube
5	70924274	4	4	O-RING, valve housing
6	70669002	1	1	VALVE AND HOUSING ASSY. (Includes items 7 thru 9)
7	--------	1	1	VALVE, by-pass, raise line (Not serviced separately)
8	70650560	1	1	VALVE, by-pass, drop line
9	70923578	1	1	O-RING, drop line by-pass valve
10	70635447	1	1	SPRING, drop line valve
11	70657207	1	1	SPRING, raise line valve
12	73110369	1	1	SCREW, orifice adjustment (5/8"NC diam.)(Tractors prior to unit #15182)
	73116504	1	1	SCREW, orifice adjustment (7/8"NC diam.)(Tractors unit #15182 and up)
13	70050227	2	2	BUSHING, dowel
14	70697003	1	-	HEAD, connecting (Tractors prior to unit #15182)
	73116501	1	-	HEAD, connecting (Tractors unit #15182 and up)
	70697004	-	1	HEAD, connecting (Tractors prior to unit #15182)
	73116502	-	1	HEAD, connecting (Tractors unit #15182 and up)
15	70927335	2	2	CAPSCREW, 5/8"NF x 6"
16	70927336	2	2	CAPSCREW, 5/8"NF x 7"
	70927381	4	4	WASHER
17	70668394	1	1	SEAL, adjustment screw (Tractors prior to unit #15182)
	73116457	1	1	SEAL, adjustment screw (Tractor unit #15182 and up)
18	70668387	1	1	NUT, locking, adjustment screw (Tractors prior to unit #15182)
	73116456	1	1	NUT, locking, adjustment screw (Tractors unit #15182 and up)
19	70921206	1	1	O-RING, valve access plug
20	70921204	1	1	PLUG, valve access (Includes item 19)
21	73073206	1	1	NUT, piston rod (self-locking)
22	73053978	1	1	SPACER, piston rod

(Continued)

(Revised September 1979)

HYDRAULIC DOZER CYLINDERS (Continued)

ITEM	PART NO.	QTY. *	QTY. **	DESCRIPTION
23	73061069	1	1	PISTON ASSY. (Includes items 24 thru 29)
24	73058925	2	2	PLUNGER - GUIDE ASSY. (Includes 1 plunger (.340" diam.) 2 guides and item 25)
25	70923843	4	4	O-RING
26	73052623	1	1	☐RING, piston wear
27	70926818	1	1	☐RING, piston, inner (rubber)
28	73052618	1	1	☐RING, piston, outer (teflon)
29	70925247	1	1	☐O-RING, cylinder head
30	70926633	1	1	☐RING, back-up, head o-ring
31	73062217	1	1	HEAD, cylinder
32	73053885	1	1	BUSHING, piston rod (Early cylinders)
33	73053886	1	1	☐PACKING SET, piston rod (Includes items 34 and 35)
34	--------	1	1	SPRING, wave, rod packing } Not serviced
35	--------	1	1	WASHER, rod packing, inner } separately
36	73054485	1	1	WASHER, rod packing, outer
37	73054486	4	4	☐SHIM, packing plate (Use as required)
38	73051194	1	1	PLATE, packing adjustment
	70914847	4	4	CAPSCREW, 3/8"NC x 1-1/2"
	70904206	4	4	LOCKWASHER, 3/8"
39	73052879	1	1	☐WIPER, piston rod
40	73052687	1	1	ROD, piston
41	70620703	1	1	UNIVERSAL, piston rod (Tractors prior to unit #14438)
	70695869	1	1	UNIVERSAL, piston rod (Tractor unit #14438 and up)
	70915275	4	4	FITTING, lubricating, 65°, 1/8"NPT
42	70637056	2	2	PIN, piston
	70637051	2	2	PIN, Spirol, 3/8" x 2"
43	73056484	1	1	REPAIR KIT (Includes items 26 thru 30, 33, 37 and39)

☐Components of item 43

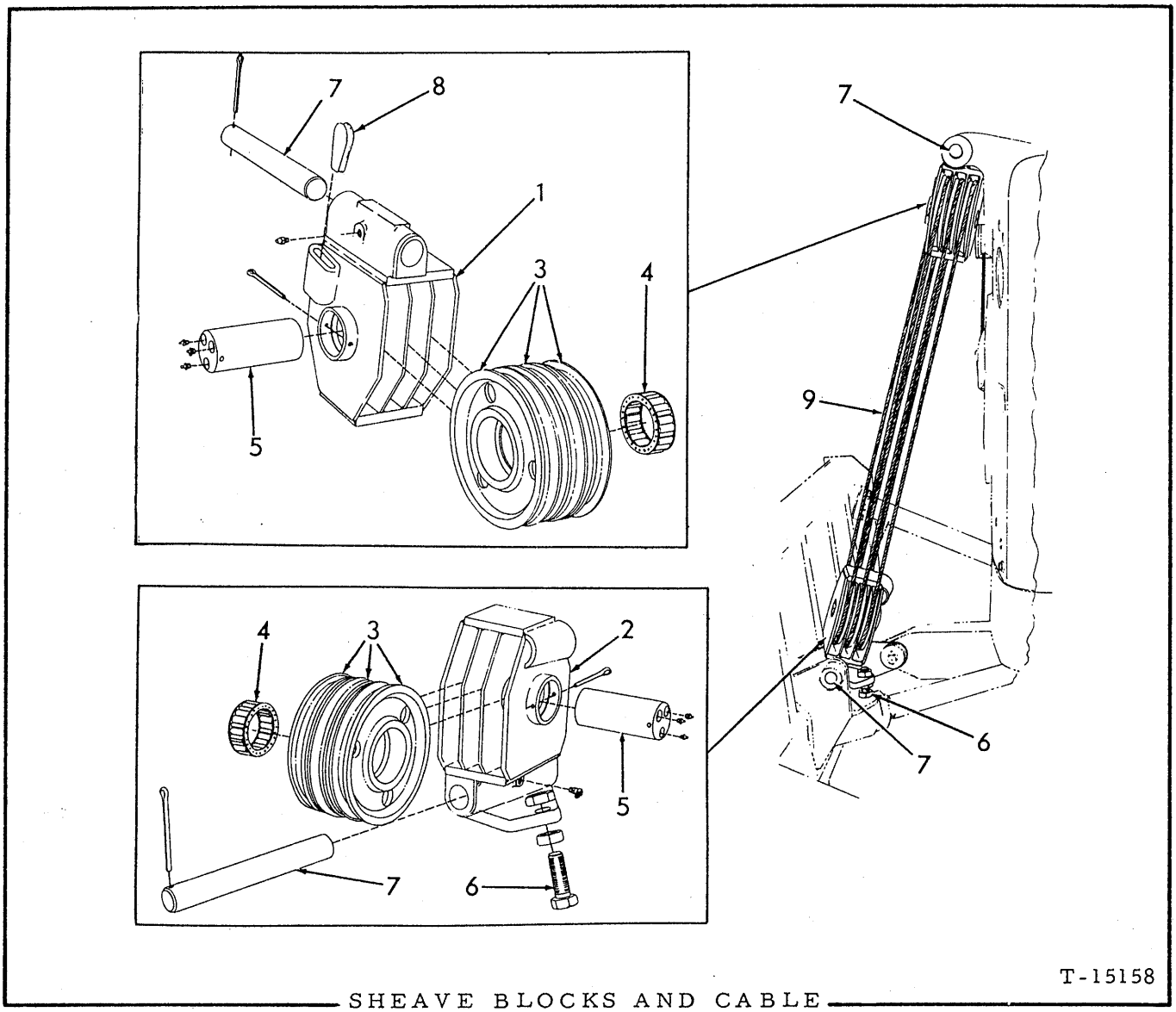

SHEAVE BLOCKS AND CABLE

USAGE: Models 16CSU, 16CA

* 3-sheave type (Standard)
** 4-sheave type (Optional)

ITEM	PART NO.	QTY. *	QTY. **	DESCRIPTION
				NOTE: See page 215 for additional sheaves which conduct cable to control unit
-	70614350	1	-	BLOCK ASSY., upper (Consists of items 1, 3, 4, 5)
-	70619955	-	1	BLOCK ASSY., upper (Consists of items 1, 3, 4, 5)
-	70614351	1	-	BLOCK ASSY., lower (Consists of items 2 thru 6)
-	70619957	-	1	BLOCK ASSY., lower (Consists of items 2 thru 6)

(Continued)

SHEAVE BLOCKS AND CABLE (Continued)

ITEM	PART NO.	QTY. *	QTY. **	DESCRIPTION
1	70609414	1	-	BLOCK, upper sheaves
	70619956	-	1	BLOCK, upper sheaves
	70914465	1	1	FITTING, lubricating, 1/8"NPT
2	70609379	1	-	BLOCK, lower sheaves
	70619954	-	1	BLOCK, lower sheaves
	70915274	1	1	FITTING, lubricating, 45°, 1/8"NPT
3	70084758	6	8	SHEAVE
4	70044875	6	8	BEARING, roller
5	70609388	2	-	SHAFT, sheave block
	70619958	-	2	SHAFT, sheave block
	70916244	2	2	PIN, cotter, 3/8" x 5"
	70914465	6	8	FITTING, lubricating, 1/8"NPT
6	70625975	1	-	CAPSCREW, lower sheave block positioning (4" long)
	70615166	-	1	CAPSCREW, lower sheave block positioning (3-1/2" long)
	70912251	2	2	NUT, jam, 1-1/4"NF
7	70609390	2	2	PIN, sheave block suspension
	70916244	2	2	PIN, cotter, 3/8" x 5"
8	70625604	1	1	WEDGE, cable anchor, upper sheave block
9	70609224	1	1	CABLE (1/2" diam. x 75" long)

NOTE: Order rear corner sheave parts from Gar Wood Industries, Findlay, Ohio 45840

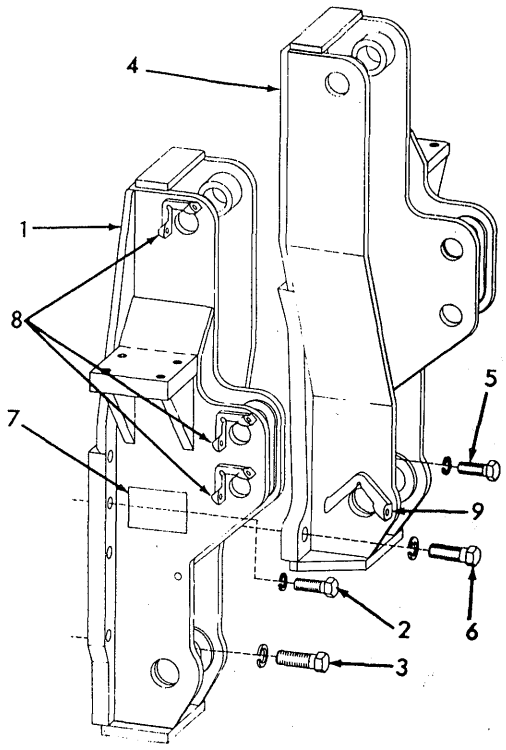

RIPPER MOUNTING FRAME

T-73612

ITEM	PART NO.	QTY.	DESCRIPTION
1	70683223	1	FRAME, mounting, left side (Includes items 8 and 9)
2	70927355	6	CAPSCREW, 1-1/4"NF x 3-1/4"
	70914730	6	LOCKWASHER, 1-1/4"
3	70926857	3	CAPSCREW, 1-1/2"NF x 4"
	70912603	3	LOCKWASHER, 1-1/2"
4	70683224	1	FRAME, mounting, right side (Includes items 8 and 9)
5	70927355	6	CAPSCREW, 1-1/4" NF x 3-1/4"
	70914730	6	LOCKWASHER, 1-1/4"
6	70926857	3	CAPSCREW, 1-1/2" x 4"
	70912603	3	LOCKWASHER, 1-1/2"
7	70662243	1	TRANSFER, installation torque data (Early units)
8	70648977	6	STOP, pin } Requires welding to install
9	70647808	2	STOP, pin }

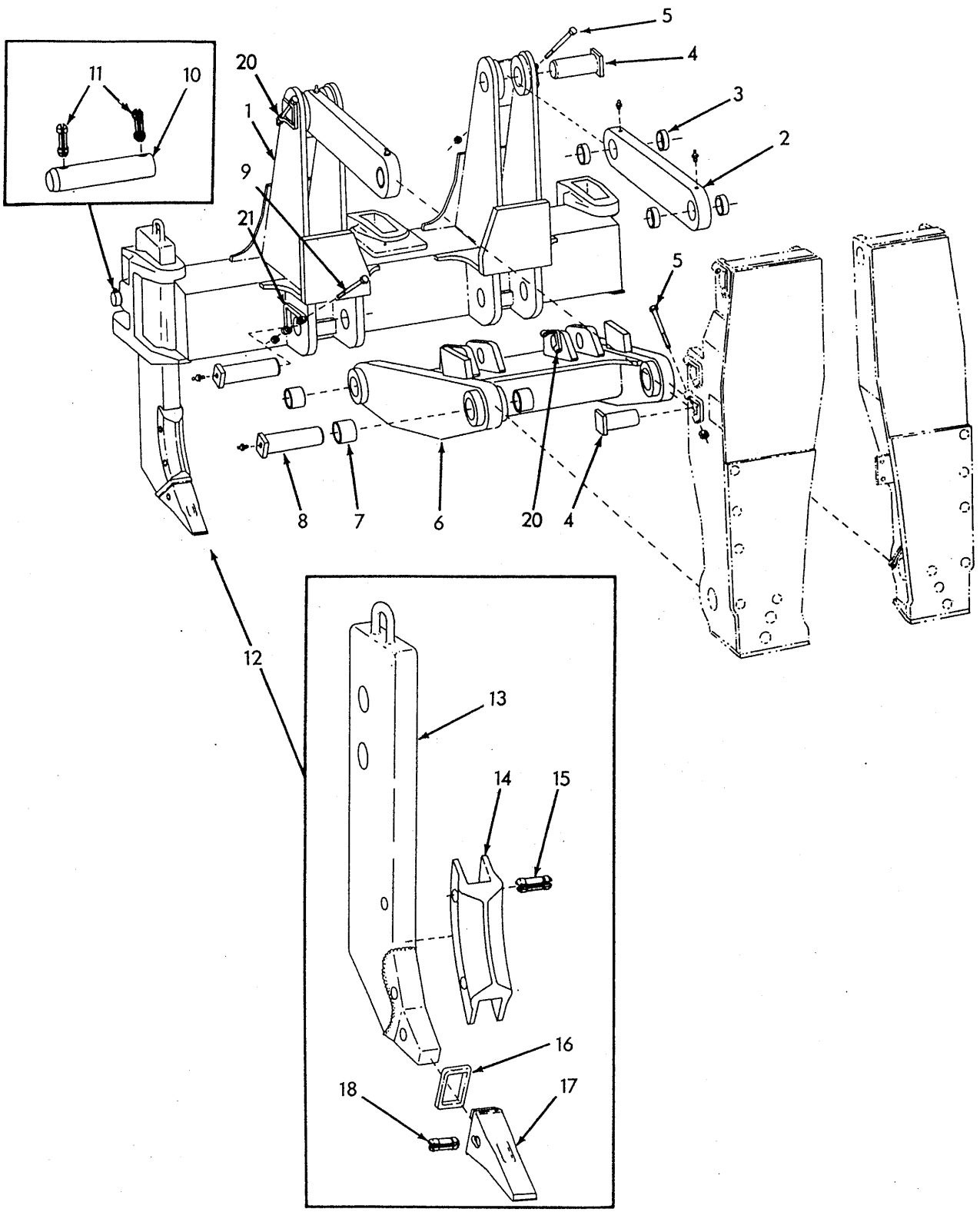

TOOL BAR AND LINKAGE T-73613

TOOL BAR AND LINKAGE

ITEM	PART NO.	QTY.	DESCRIPTION
1	70649084	1	BAR, tool (Includes items 20 and 21)
2	70648930	2	STRUT ASSY., upper (Includes item 3)
	70914465	4	FITTING, lubricating, straight, 1/8"NPT
3	70648909	8	BUSHING, upper strut
4	70648928	4	PIN, upper strut
5	70046590	4	CAPSCREW, retaining, upper strut pin (1/2"NC x 5-1/4")
	70915972	4	NUT, elastic stop, 1/2"NC
6	70649011	1	BEAM ASSY., lower (Includes items 7 and 20)
7	70651540	8	BUSHING, lower beam
8	70648944	4	PIN, lower beam
	70912497	4	FITTING, lubricating, straight, 1/4"NPT
9	70918394	4	CAPSCREW, retaining, lower beam pin (5/8"NC x 7")
	70914501	4	NUT, elastic stop, 5/8"NC
10	70670920	3	PIN, shank
11	70667156	6	PIN, shank retaining pin
12	70658078	3	SHANK ASSY., ripper tooth (Includes items 13 thru 18)
13	73127463	3	SHANK
14	70657733	3	☐PLATE, wear, ripper shank
15	70657736	6	☐PIN, Flex, 1" x 4-7/8"
16	70657735	3	☐COLLAR, ripper tooth
17	70657734	3	☐TOOTH, ripper shank
18	70657737	3	☐PIN, tooth (Spirol, 7/8" x 4-1/2")
19	70656942	3	SHANK REPAIR KIT (Includes parts for one (1) shank; items 14 thru 18; also special nose-piece, welding rod, template and instructions)
20	70648977	4	STOP } Requires welding to install
21	70647808	2	STOP }

☐Components of item 19

(Revised April 1981)

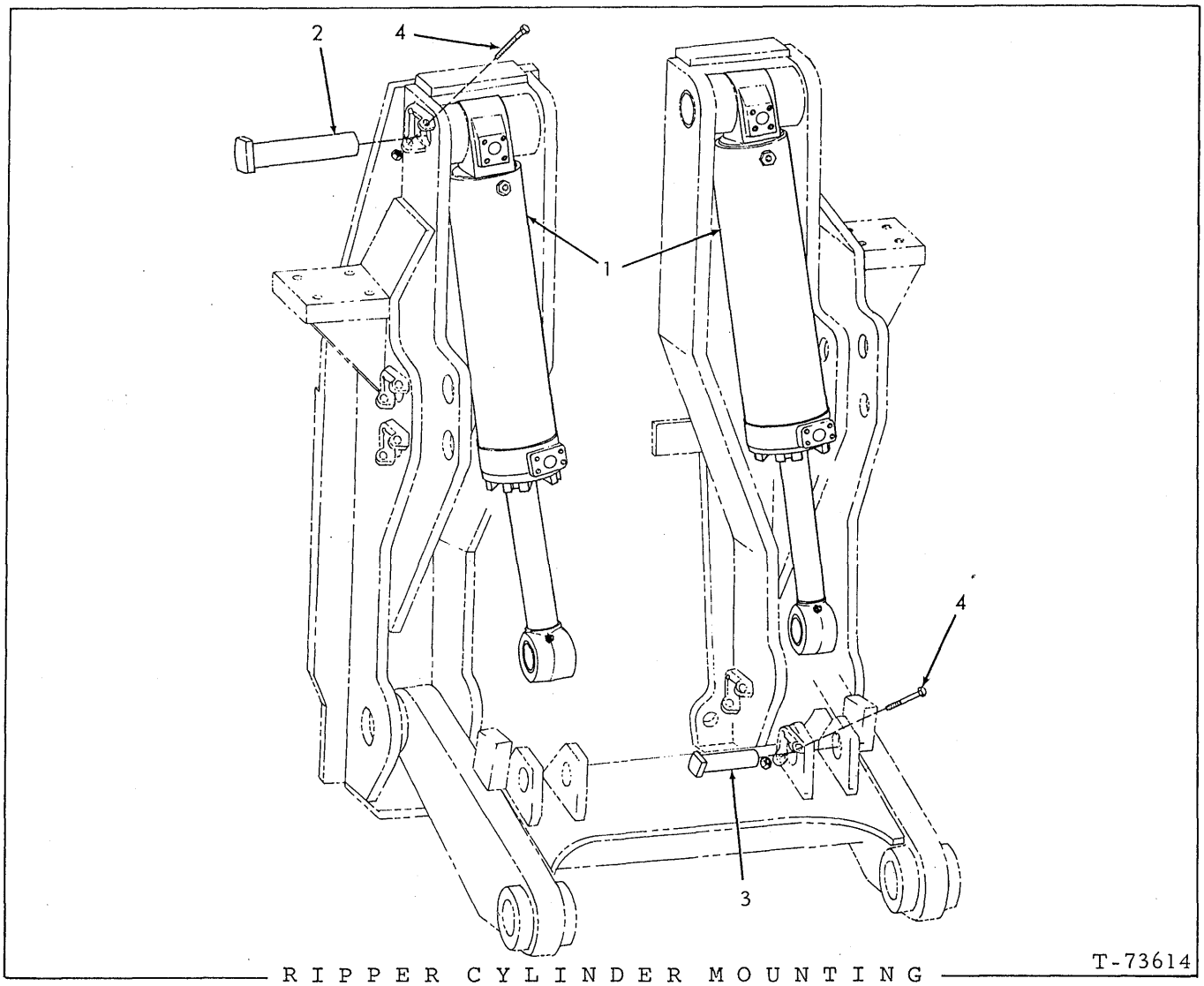

RIPPER CYLINDER MOUNTING

ITEM	PART NO.	QTY.	DESCRIPTION
1	------	2	CYLINDER ASSY. (See page 292)
2	70648937	2	PIN, cylinder pivot, upper
3	70648928	2	PIN, cylinder pivot, lower
4	70046590	4	CAPSCREW, pin retaining (1/2"NC x 5-1/4")
	70915972	4	NUT, elastic stop, 1/2"NC

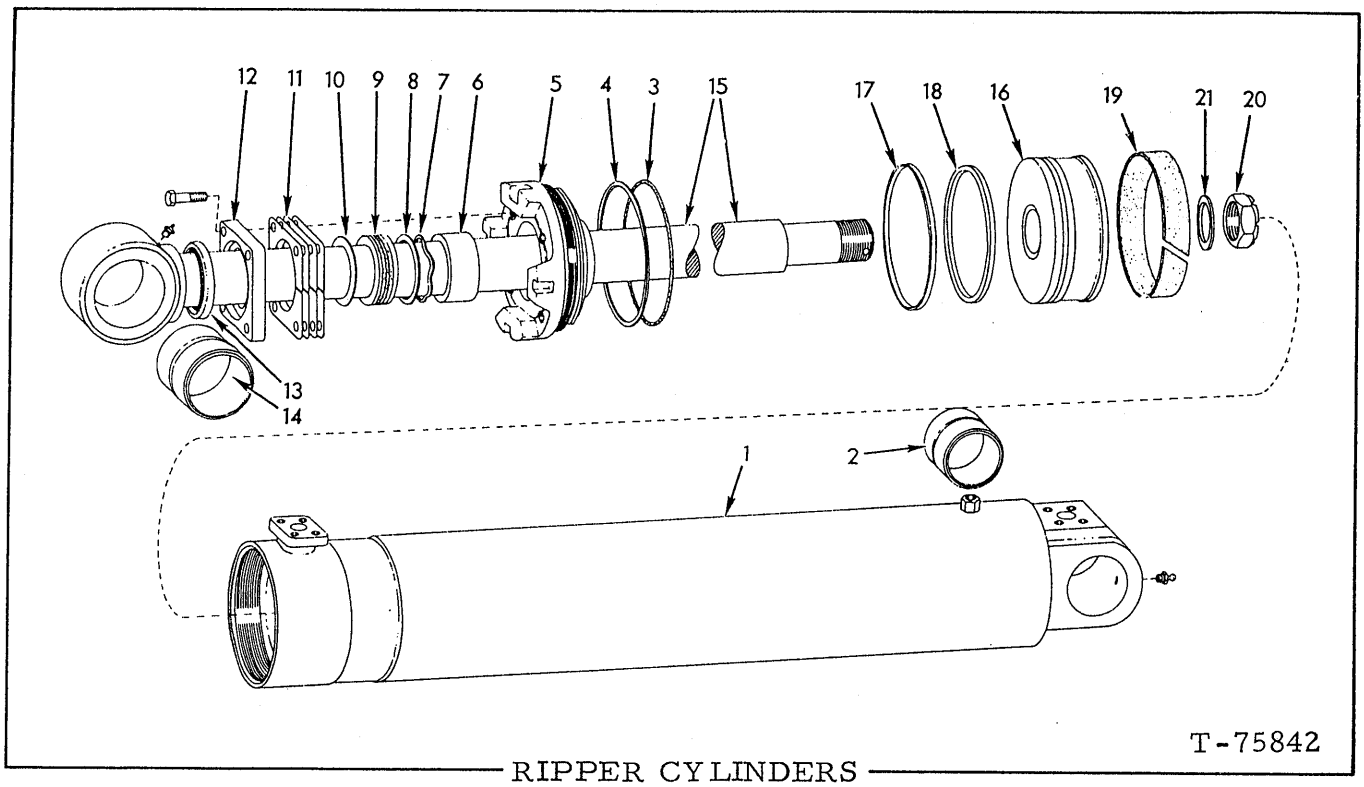

RIPPER CYLINDERS

USAGE: See page 290

ITEM	PART NO.	QTY.	DESCRIPTION
-	73052983	2	CYLINDER ASSY. (Includes items 1 thru 21)
1	73052982	2	CYLINDER ASSY. (Includes item 2)
	70914465	2	FITTING, lubricating, straight, 1/8"NPT
2	70650592	2	BUSHING
3	70924138	2	☐ O-RING
4	70926637	2	☐ RING
5	73054424	2	HEAD (Early units)
	73062208	2	HEAD (Late units)
6	73053885	2	☐ BUSHING (Early units)
7	--------	2	SPRING
8	--------	2	WASHER
9	73053886	2	☐ PACKING SET (Includes items 7 and 8)
10	73054485	2	☐ WASHER
11	73054486	8	☐ SHIM (Use as required)
12	73051194	2	PLATE
	70914847	8	CAPSCREW, drilled-hd., 3/8"NC x 1-1/2"
	70904206	8	LOCKWASHER, 3/8"
13	73052879	2	SEAL
14	70649261	2	BUSHING

(Continued)

RIPPER CYLINDERS (Continued)

ITEM	PART NO.	QTY.	DESCRIPTION
15	73052980	2	ROD ASSY., piston (Includes item 14)
	70914465	2	FITTING, lubricating, straight, 1/8"NPT
16	73053360	2	PISTON ASSY. (Includes items 17 thru 19)
17	73053357	2	☐RING, piston sealing (outer)
18	70926865	2	☐RING, piston sealing (inner)
19	73053359	2	RING, piston wear
20	**73073212**	2	NUT, piston rod
21	73053977	2	SPACER, piston rod nut
22	73054598	2	REPAIR KIT, cylinder (Includes parts for one (1) cylinder (Not illustrated)
			☐Components of item 22

(Revised September 1979)

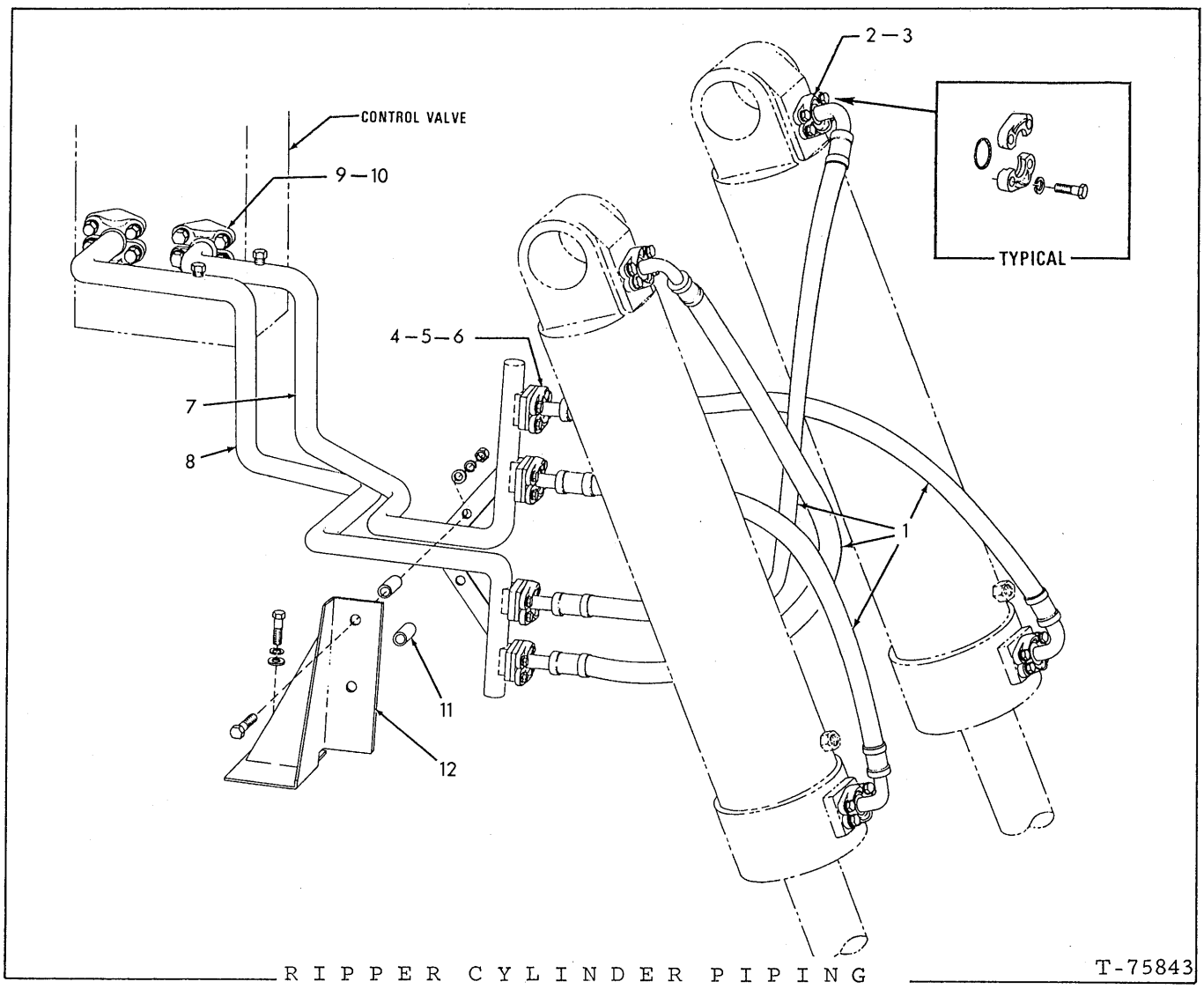

RIPPER CYLINDER PIPING T-75843

ITEM	PART NO.	QTY.	DESCRIPTION
1	70662265	2	HOSE, cylinder (top connection)
	70662264	2	HOSE, cylinder (bottom connection)
2	70921116	8	FLANGE, hose connection at cylinder end (half only)
	70916272	16	CAPSCREW, 3/8"NF x 1-1/4"
	70904206	16	LOCKWASHER, 3/8"
3	70924200	4	O-RING, hose connections at cylinder end
4	70921115	8	FLANGE, hose connecting (half only)
	70916272	16	CAPSCREW, 3/8"NC x 1-1/4"
	70904206	16	LOCKWASHER, 3/8"
5	70924110	4	O-RING, hose connections at tube end
6	70666575	4	PLUG, closure (Used only when cylinder lines are disconnected)

(Continued)

ITEM	PART NO.	QTY.	DESCRIPTION
7	70662230	1	TUBE, raise line
	70921467	1	CAP, flare fitting, 1/4" tube
	70916316	1	CAPSCREW, 1/2"NC x 2-1/2"
	70064531	1	WASHER, plain
	70904208	1	LOCKWASHER, 1/2"
	70911028	1	NUT, 1/2"NC
8	70662231	1	TUBE, drop line
	70921467	1	CAP, flare fitting, 1/4" tube
	70916316	1	CAPSCREW, 1/2"NC x 2-1/2"
	70064531	1	WASHER, plain
	70904208	1	LOCKWASHER, 1/2"
	70911028	1	NUT, 1/2"NC
9	70921117	4	FLANGE, tube connecting
	70916191	8	CAPSCREW, 7/16"NC x 1-1/2"
	70904207	8	LOCKWASHER, 7/16"
10	70924192	2	O-RING, tube connection at valve end
11	70097413	2	BLOCK, tube spacing
12	70670360	1	BRACKET, tube supporting
	70915779	2	CAPSCREW, 1/2"NF x 2"
	70064531	2	WASHER, plain
	70904208	2	LOCKWASHER, 1/2"

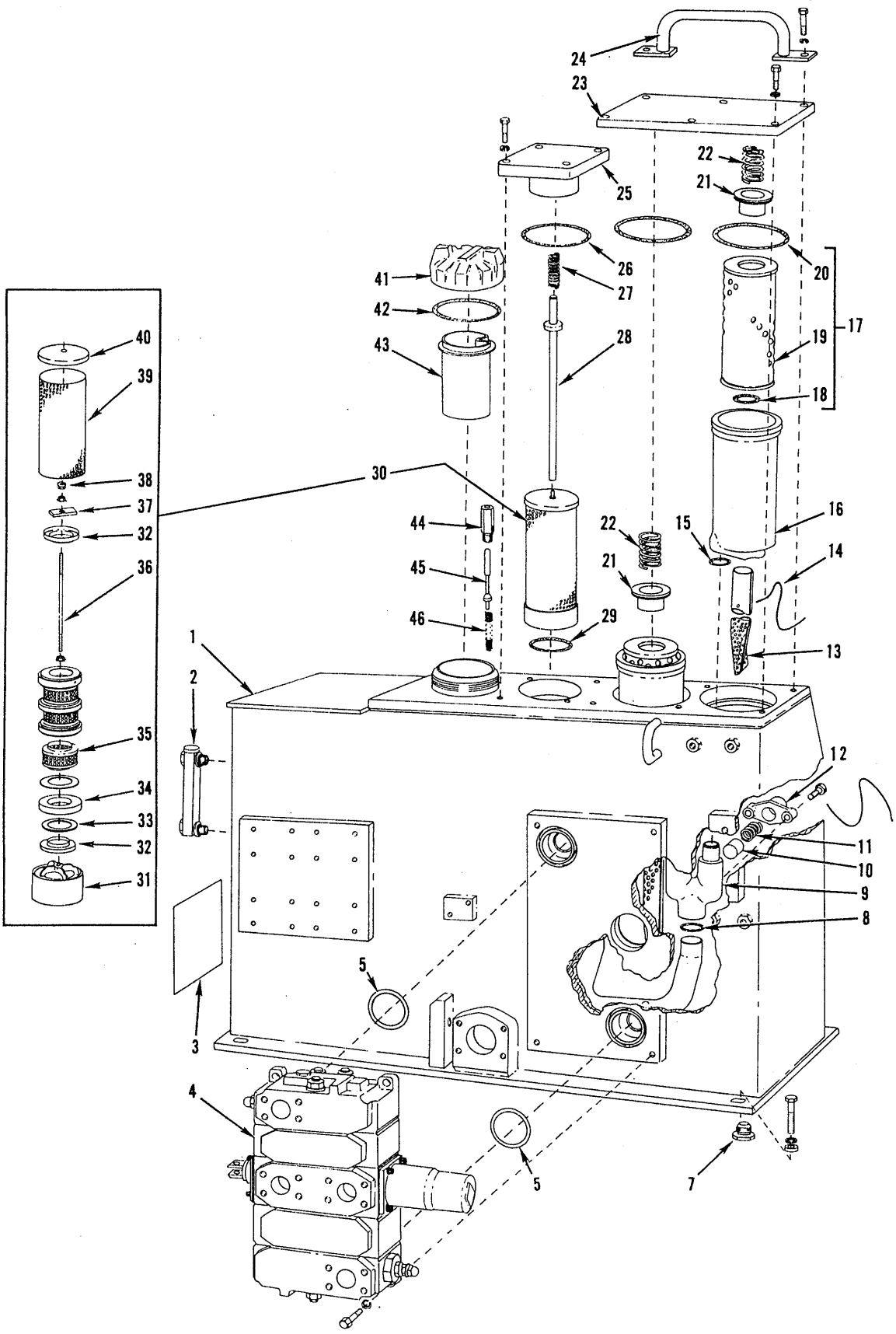

T-75426

HYDRAULIC TANK AND CONTROL VALVE

HYDRAULIC TANK AND CONTROL VALVE

ITEM	PART NO.	QTY.	DESCRIPTION
1	70670280	1	TANK
	70923881	5	CAPSCREW, 5/8"NC x 2"
	70677010	5	WASHER
2	70666282	1	GAUGE (Tractors prior to unit #14609)(Includes Capscrews and Gaskets)
	70678984	1	GAUGE (Tractor unit #14609 and up)(Includes Capscrews and Gaskets)
3	70667810	1	TRANSFER
4	70660647	1	VALVE ASSY. (Standard. Tractors prior to unit #12714)(For operating dozer only)(See page 301)
	70686090	1	VALVE ASSY. (Standard. Tractors unit #12714 thru #14987)(For operating dozer only)(See page 301)
	73110106	1	VALVE ASSY. (Standard. Tractors unit #14988 thru #15344)(For operating dozer only)(See page 301)
	73123044	1	VALVE ASSY. (Standard. Tractors unit #15345 and up) (For operating dozer only)(See page 301A)
	70665122	1	VALVE ASSY. (Special. For operating dozer and ripper)(See page 301)
	70665121	1	VALVE ASSY. (Special. For operating dozer and hydraulic tilt)(See page 301)
	70662085	1	VALVE ASSY. (Special. Tractors prior to unit #12714) (For operating dozer, ripper and hydraulic tilt) (See page 301)
	70686070	1	VALVE ASSY. (Special. Tractors unit #12714 thru #14951)(For operating dozer, ripper and hydraulic tilt)(See page 301)
	73110105	1	VALVE ASSY. (Special. Tractors unit #14952 and up) (For operating dozer, ripper and hydraulic tilt) (See page 301)
	70916316	4	CAPSCREW, 1/2"NC x 2-1/2"
	70912441	4	LOCKWASHER, 1/2"
5	70927464	2	O-RING
7	70924692	1	PLUG
8	70923850	1	O-RING
9	70667727	1	ADAPTER ASSY. (Serviced only as a unit)
10	70647151	1	VALVE
11	70647108	1	SPRING
12	70647122	1	CAP
	70033182	2	CAPSCREW, drilled-hd., 3/8"NC x 1-1/2"
	70023633	1	WIRE, locking, 1/16" x 12"
13	70665841	2	TUBE
14	70023633	2	WIRE
15	70923948	2	O-RING
16	70660769	2	HOUSING
17	70665859	1	ELEMENT KIT (Consists of 2 elements and items 18 and 20)
18	70923664	2	O-RING
19	--------	2	ELEMENT (Order item 17)
20	70924691	2	O-RING
21	70665879	2	CAP (Includes bonded gasket)
22	70665886	2	SPRING

(Continued)

ITEM	PART NO.	QTY.	DESCRIPTION
23	70655084	1	COVER, filters
	70916272	4	CAPSCREW, 3/8"NC x 1-1/4"
	70910287	4	LOCKWASHER, 3/8"
24	70666215	1	HANDLE, grab
	70914847	2	CAPSCREW, 3/8"NC x 1-1/2" } Also attach
	70910287	2	LOCKWASHER, 3/8" } filter cover
25	70665763	1	COVER, contaminant separator
	70916272	4	CAPSCREW, 3/8"NC x 1-1/4"
	70910287	4	LOCKWASHER, 3/8"
26	70924153	1	O-RING, separator cover
27	70098292	1	SPRING, contaminant rod
28	70670697	1	ROD, contaminant separator
29	70923581	1	O-RING, contaminant separator (Early units)
30	70670698	1	SEPARATOR ASSY., contaminant, suction line (Consists of items 31 thru 40)
31	70670741	1	HEAD, contaminant separator
32	70666388	2	SPACER, contaminant separator (end)
33	70666387	8	PLATE, contaminant separator
34	70666385	4	MAGNET, contaminant separator
35	70666383	3	SPACER, contaminant separator (perforated)
36	70670699	1	TIE-ROD, contaminant separator
37	70666382	1	BRIDGE, contaminant separator
38	70666565	4	NUT, contaminant separator
39	70666384	1	SLEEVE, contaminant separator
40	70670735	1	PLATE, top, contaminant separator
41	70665726	1	CAP, oil filler
42	70923950	1	O-RING, oil filler cap
43	70671325	1	STRAINER, filler
44	70666634	1	GUIDE, filler pressure release valve
45	70665767	1	PLUNGER, filler pressure release valve
46	70666654	1	SPRING, filler pressure release valve

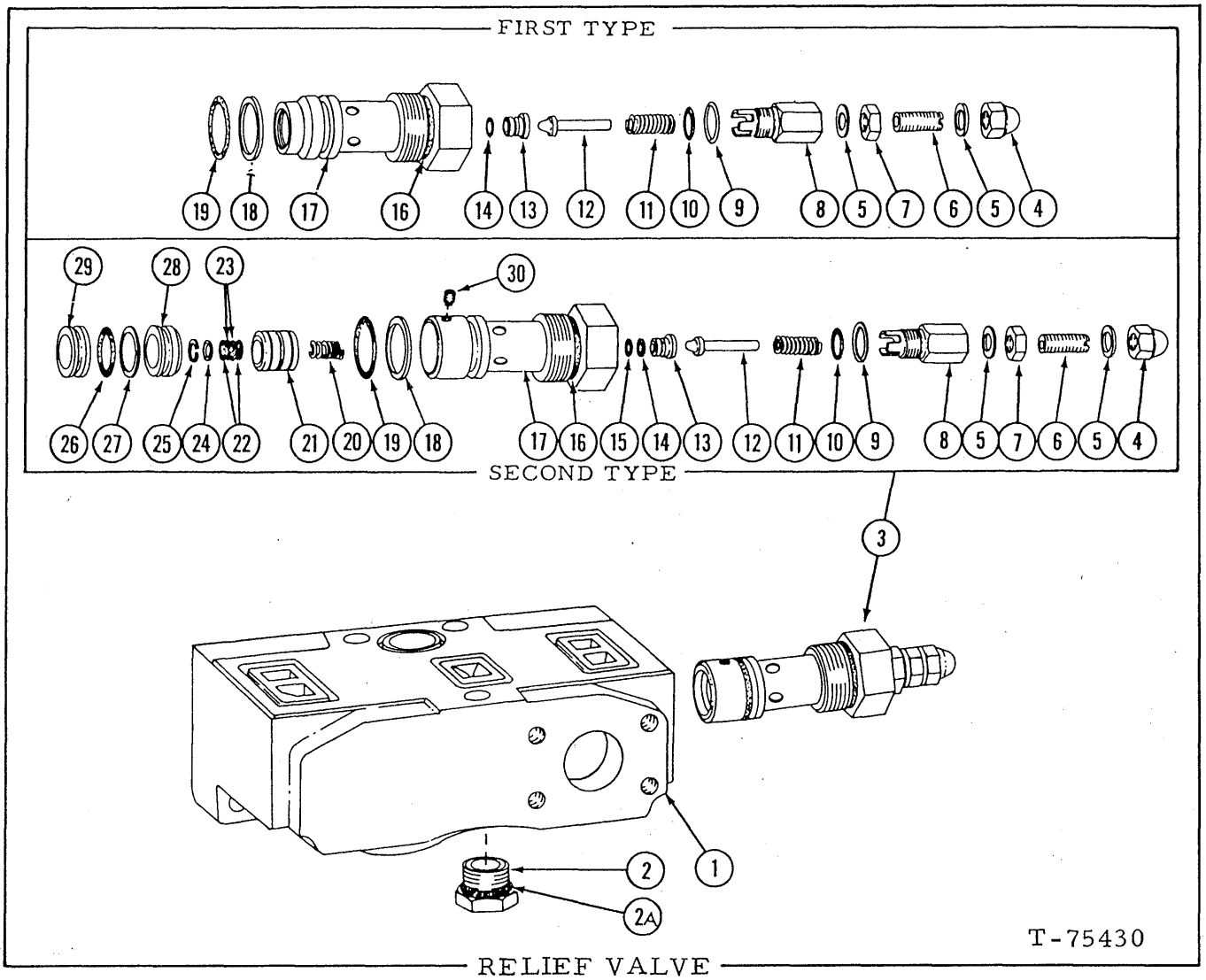

RELIEF VALVE

USAGE: See page 301 and 301A

*Valve Assembly 70664533 (First type)
**Valve Assembly 70664533 (Second type)
***Valve Assembly 73122965

ITEM	PART NO.	QUANTITY *	**	***	DESCRIPTION
1	--------	1	1	1	HOUSING (Not serviced separately)
2	70921204	1	-	-	PLUG (Includes item 2A)
	70924102	-	1	1	PLUG
2A	70921206	1	-	-	O-RING
3	70669198	1	-	-	VALVE ASSY. (Includes items 4 thru 14 and 16 thru 19)
	70683795	-	1	-	VALVE ASSY. } Each includes items 4 thru 30
	73122964	-	-	1	VALVE ASSY. }
4	70916559	1	1	1	NUT (3/8"NF acorn)
5	70668552	2	2	2	GASKET
6	70668550	1	1	1	SCREW
7	70910329	1	1	1	NUT, jam, 3/8"NF
8	70668551	1	1	1	RETAINER
9	70668548	1	1	1	GASKET

(Continued)

RELIEF VALVE (Continued)

ITEM	PART NO.	QUANTITY *	**	***	DESCRIPTION
10	70923846	1	1	-	O-RING
	70926842	-	-	1	O-RING
11	70668555	1	-	-	SPRING
	70684439	-	1	1	SPRING
12	70669188	1	1	1	POPPET
13	70669189	1	-	-	SEAT
	70684438	-	1	1	SEAT
14	70926356	1	1	-	O-RING
	70926841	-	-	1	O-RING
15	70684416	-	1	1	RING
16	70924270	1	1	-	O-RING
	70925934	-	-	1	O-RING
17	--------	1	1	1	CARTRIDGE ASSY. (Not serviced separately)
18	70658245	1	1	1	RING
19	70924696	1	1	-	O-RING
	70925933	-	-	1	O-RING
20	70684435	-	1	1	SPRING
21	--------	-	1	1	POPPET (Not serviced separately)
22	70684408	-	2	2	SCREEN (30 mesh)
23	70684409	-	2	2	SCREEN (100 mesh)
24	70684410	-	1	1	SPACER
25	70927685	-	1	1	RING, snap
26	70924774	-	1	-	O-RING
	70925931	-	-	1	O-RING
27	70684411	-	1	1	RING
28	70684436	-	1	1	SEAT
29	70684437	-	1	1	RETAINER
30	70684413	-	2	2	SETSCREW

VALVE ASSY. 70660647, 70686090, 73110106

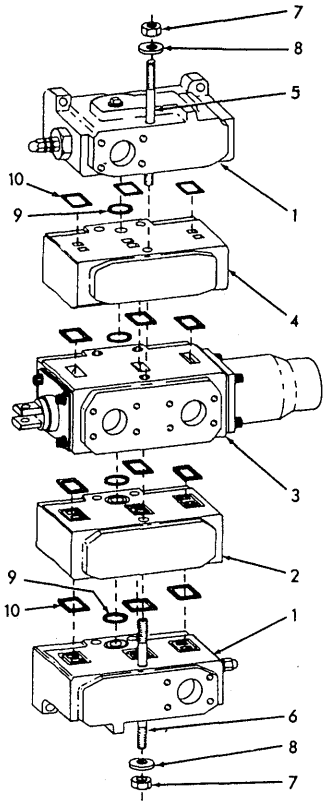

VALVE ASSY. 70665122

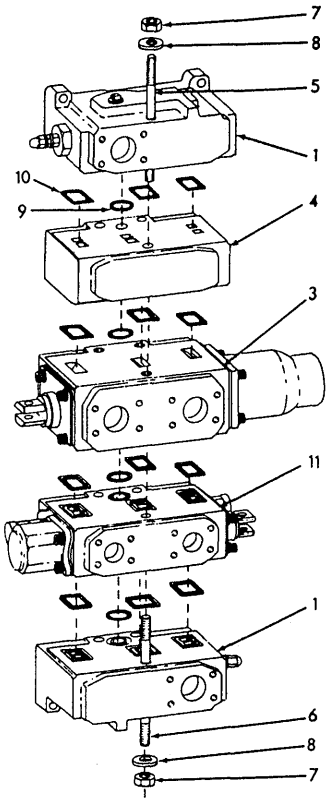

VALVE ASSY. 70665121

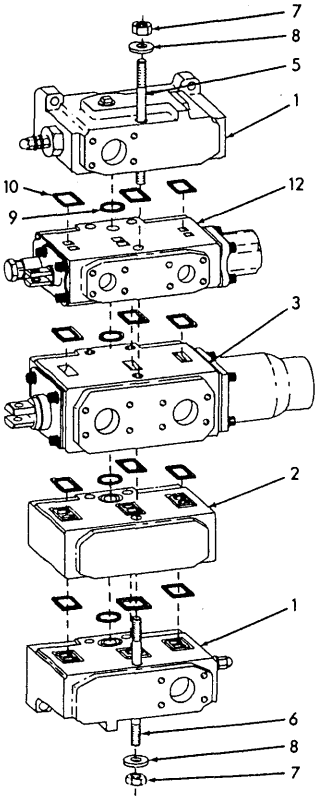

VALVE ASSY. 70662085, 70686070, 73110105

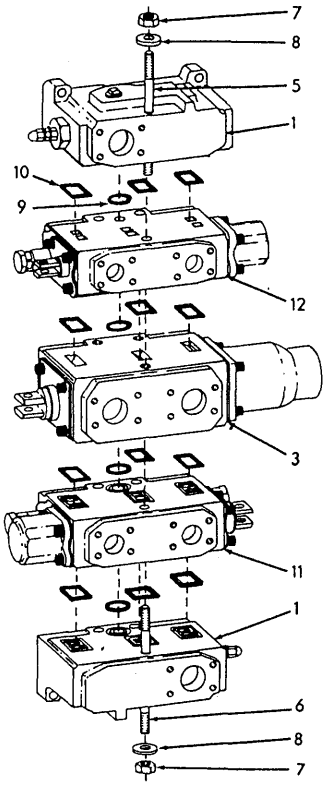

T-75429

* 70660647 VALVE ASSEMBLY
** 70665122 VALVE ASSEMBLY
△ 70665121 VALVE ASSEMBLY
△△ 70662085 VALVE ASSEMBLY
□ 70686070 VALVE ASSEMBLY (First Type)
□ 73110105 VALVE ASSEMBLY (Second Type)
□□ 70686090 VALVE ASSEMBLY (First Type)
□□ 73110106 VALVE ASSEMBLY (Second Type)

See page 297

ITEM	PART NO.	QUANTITY *	**	△	△△	□	□□	DESCRIPTION
1	70664533	2	2	2	2	2	2	VALVE ASSY., relief (See page 299 for parts)
2	70663725	1	-	1	-	-	-	SPACER
	70696088	-	-	-	-	-	1	SPACER
3	70664566	1	1	1	1	-	-	VALVE ASSY., dozer control
	70686100	-	-	-	-	1	1	VALVE ASSY., dozer control (First type)
	73109998	-	-	-	-	1	1	VALVE ASSY., dozer control (Second type)
4	70664067	1	1	-	-	-	1	SPACER
5	70664748	3	3	3	3	3	3	STUD (7-1/2" long)
6	70664747	3	3	3	3	3	3	STUD (7-7/8" long)
7	70668231	6	6	6	6	6	6	NUT (5/8"NC
8	70659494	6	6	6	6	6	6	WASHER
9	70659496	4	4	4	4	4	4	RING
10	70659497	12	12	12	12	12	12	RING
11	70655655	-	1	-	1	1	-	VALVE ASSY., ripper control (See page 302 for parts)
12	70660869	-	-	1	1	-	-	VALVE ASSY., dozer tilt control
	70685999	-	-	-	-	1	-	VALVE ASSY., dozer tilt control

See page 304 for parts

See page 302 for parts

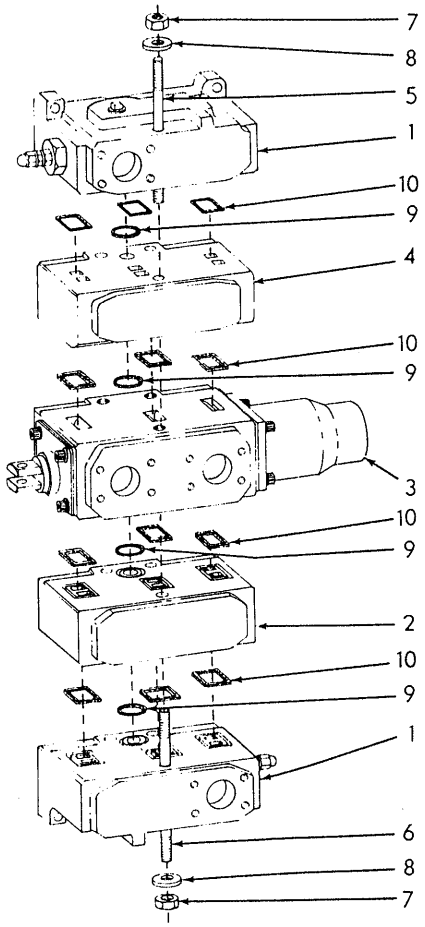

T-75429

CONTROL VALVE

USAGE: See page 297

ITEM	PART NO.	QTY.	DESCRIPTION
-	73123044	1	VALVE ASSY. (Includes items 1 thru 8)
1	73122965	2	VALVE ASSY., relief (See page 299)
2	73123042	1	SPACER
3	73122983	1	VALVE ASSY., dozer control (See page 304)
4	73123034	1	SPACER
5	70664748	3	STUD (7-1/2" long)
6	70664747	3	STUD (7-7/8" long)
7	70668231	6	NUT (5/8"NC)
8	70659494	6	WASHER
9	70925937	4	O-RING
10	70925938	12	O-RING

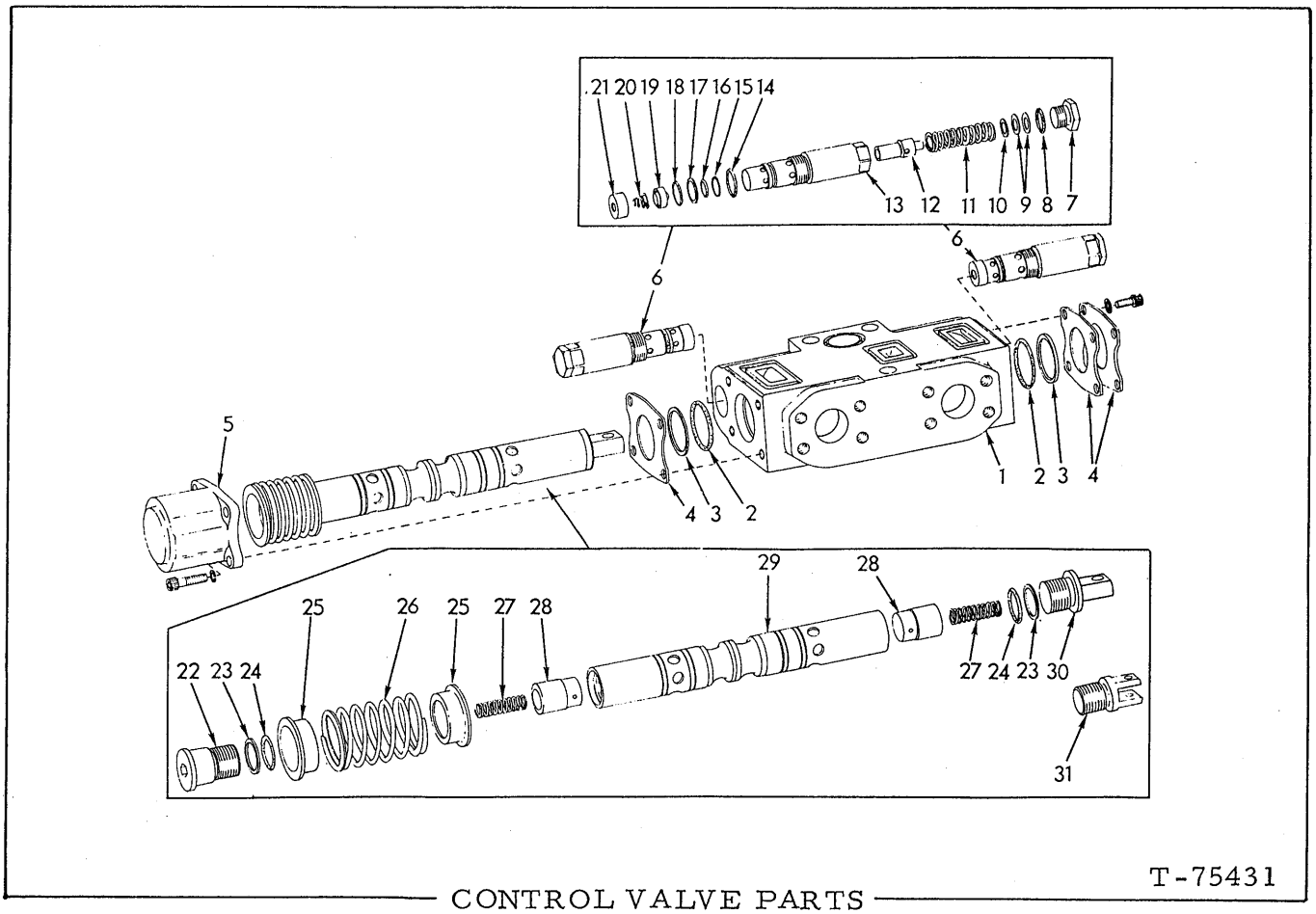

CONTROL VALVE PARTS

* 70660869 VALVE ASSEMBLY, tilt control
** 70685999 VALVE ASSEMBLY, tilt control
*** 70655655 VALVE ASSEMBLY, ripper control

See page 301

ITEM	PART NO.	QUANTITY *	**	***	DESCRIPTION
1	--------	1	1	1	HOUSING (Not serviced separately)
2	70676693	2	-	-	O-RING
	70923813	-	2	-	O-RING
	70676692	-	-	2	O-RING
3	70664462	2	2	-	RING
	70658284	-	-	2	RING
4	70664464	3	3	-	PLATE
	70658286	-	-	3	PLATE
	70925192	4	4	4	CAPSCREW, socket-hd., 5/16"NC x 5/8"
	70906959	4	4	4	LOCKWASHER, internal teeth, 5/16"
5	70664456	1	1	-	CAP
	70658282	-	-	1	CAP
	70926269	4	4	4	CAPSCREW, socket-hd., 5/16"NC x 1-1/4"
	70904205	4	4	4	LOCKWASHER, 5/16"
6	70658466	2	-	2	VALVE ASSY., relief, } Each consists of items
	70671986	-	2	-	VALVE ASSY., relief } 7 thru 21

(Continued)

CONTROL VALVE PARTS (Continued)

ITEM	PART NO.	QUANTITY *	**	***	DESCRIPTION
7	70658363	2	2	2	CAP
8	70923379	2	2	2	O-RING (1" O.D.)
9	70658360	1	1	1	WASHER (1/64" thick) } Use as required
	70911992	1	1	1	WASHER (1/16" thick) }
10	70660792	1	1	1	SHIM (.005" thick)
11	70659555	2	2	2	SPRING
12	70658364	2	2	2	SEAT
13	---------	2	2	2	CARTRIDGE (Not serviced separately)
14	70924775	2	2	2	O-RING (1-1/8" O.D.)
15	70660793	2	2	2	RING
16	70925081	2	2	2	O-RING (3/4" O.D.)
17	70665250	2	2	2	RING
18	70924854	2	2	2	O-RING (1" O.D.)
19	70658365	2	2	2	BALL ASSY. (Serviced only as a unit)(Early Valve)
	73109599	2	2	2	POPPET (Late Valves)
20	70658361	2	2	2	SPRING (Conical)(Early Valves)
	73109602	2	2	2	SPRING (straight) (Late Valves)
21	70665174	2	2	2	CAP
22	70664458	1	1	-	BOLT
	70658279	-	-	1	BOLT
23	70664466	2	2	-	RING
	70660780	-	-	2	RING
24	70924922	2	2	-	O-RING
	70925069	-	-	2	O-RING
25	70664460	2	2	-	GUIDE
	70658280	-	-	2	GUIDE
26	70664461	1	1	-	SPRING
	70659506	-	-	1	SPRING
27	70665814	2	2	-	SPRING
	70659504	-	-	2	SPRING
28	70664459	2	2	-	VALVE
	70658278	-	-	2	VALVE
29	--------	1	1	1	PLUNGER (Not serviced separately)
30	70658281	-	-	1	CLEVIS
31	70665718	1	1	-	CLEVIS

(Revised May 1977)

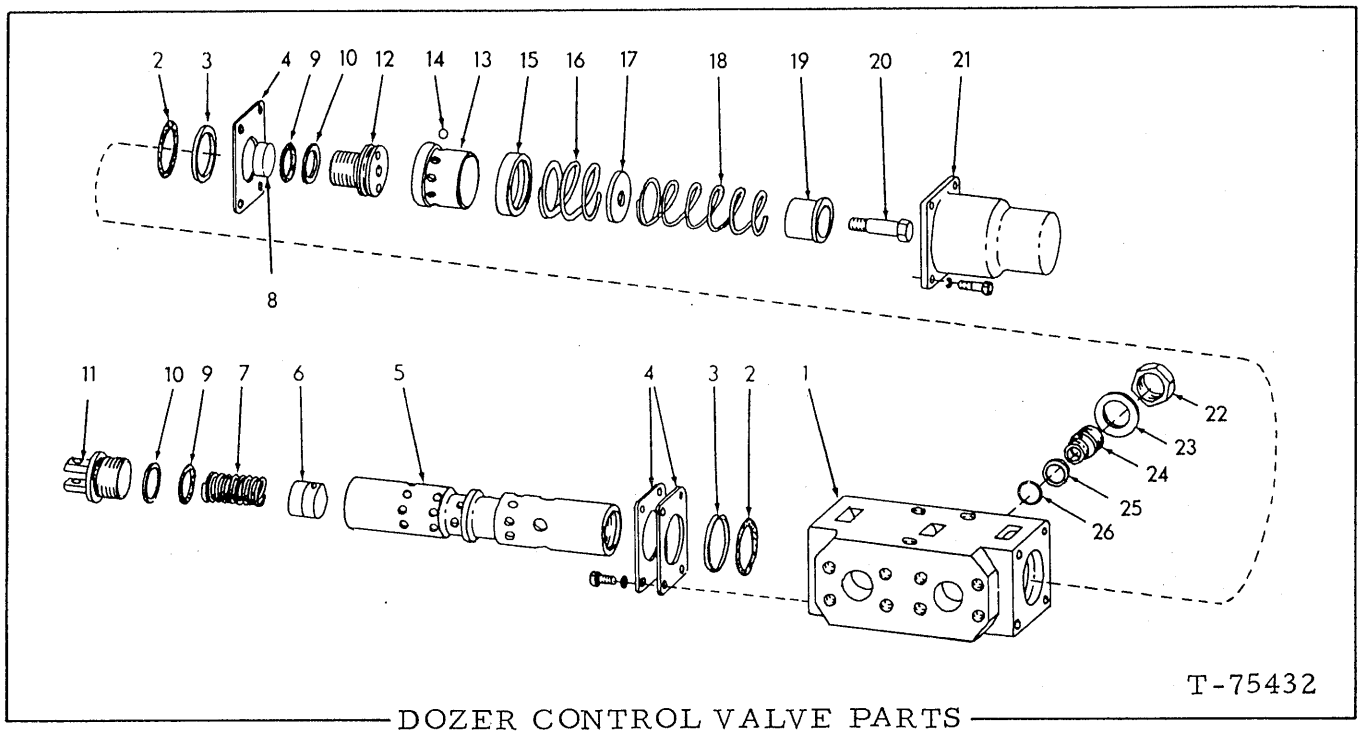

DOZER CONTROL VALVE PARTS

USAGE: See page 301 and 301A

* 70664566 VALVE ASSY. (Commercial Shearing No. 12F163R)

** { 70686100 VALVE ASSY. (First type)(Commercial Shearing No. 12F165R)
73109998 VALVE ASSY. (Second type)(Commercial Shearing No. 12F168R)
73122983 VALVE ASSY. (Third type)(Commercial Shearing No. 12F171R) }

ITEM	PART NO.	QTY. *	QTY. **	DESCRIPTION
				NOTE: Check Commercial Shearing No. for positive identification
1	--------	1	1	HOUSING (Not serviced separately)
2	70923580	2	2	O-RING
3	70664577	2	2	RING
4	70664575	3	3	PLATE
	70925640	4	4	CAPSCREW, socket-hd., 5/16"NC x 3/4"
	70910286	4	4	LOCKWASHER, 5/16"
5	--------	1	1	PLUNGER (Not serviced separately)
6	70664576	1	-	VALVE
	70680246	-	2	VALVE
7	70664580	1	-	SPRING
	70680244	-	2	SPRING
8	70680511	-	1	SPACER
9	70927101	2	2	O-RING (Not used on VALVE ASSY. 73122983)
	70933912	-	2	O-RING (Used on VALVE ASSY. 73122983)
10	70664578	2	2	RING (Not used on VALVE ASSY. 73122983)
	73122982	-	2	RING (Used on VALVE ASSY. 73122983)

(Continued)

(Revised April 1981)

DOZER CONTROL VALVE PARTS (Continued)

ITEM	PART NO.	QTY. *	QTY. **	DESCRIPTION	
11	70664567	1	-	CLEVIS	
	70680245	-	1	CLEVIS	
12	70664570	1	-	DETENT	
	70680241	-	1	DETENT	
13	70664571	1	1	RETAINER	
14	70924855	6	6	BALL, steel, 3/8" diam.	
15	70664572	1	1	SLEEVE	
16	70664582	1	1	SPRING	
17	70664573	1	1	WASHER	
18	70664581	1	1	SPRING	
19	70664569	1	1	GUIDE	
20	70664574	1	1	BOLT	
21	70664568	1	1	CAP	
	70926269	4	4	CAPSCREW, socket-hd., 5/16"NC x 1-1/4"	
	70910286	4	4	LOCKWASHER, 5/16"	
22	70664588	1	1	CAP	Not used on Valve Assy. 73109998
23	70664584	1	1	GASKET	
24	70693476	1	1	SEAT ASSY. (Includes poppet)	
25	70668840	1	1	RING	
26	70925638	1	1	O-RING	

(Revised June 1978)

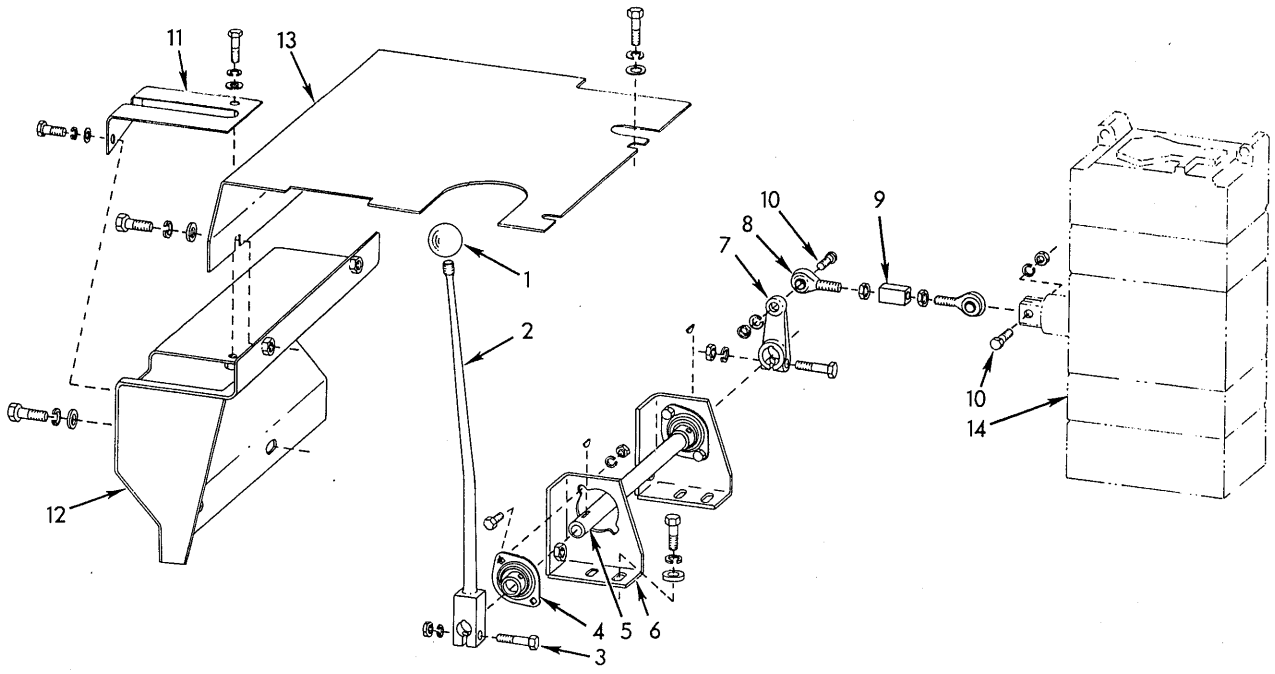

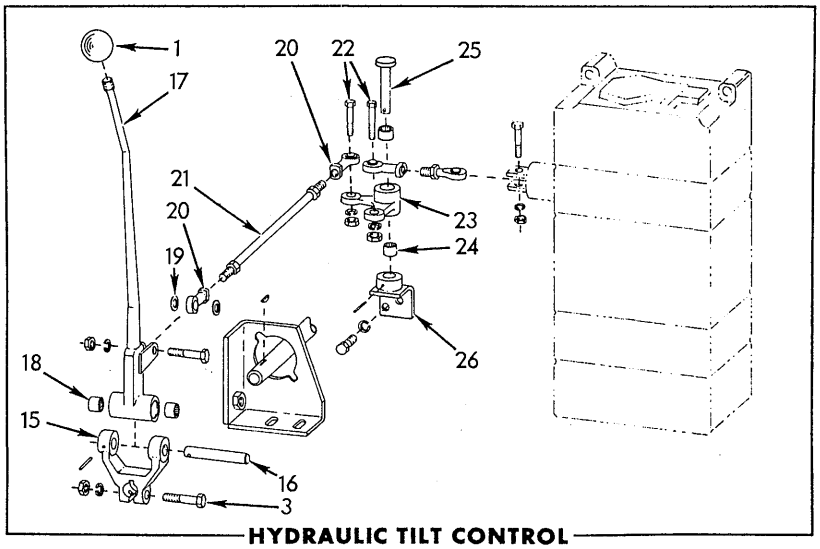

HYDRAULIC TILT CONTROL

T-75813

VALVE CONTROLS

USAGE: Tractors with hydraulic dozer

* Units without hydraulic tilt
** Units with hydraulic tilt

ITEM	PART NO.	QTY. *	QTY. **	DESCRIPTION
1	70090020	1	1	KNOB, operating lever
2	70662156	1	-	LEVER, operating
3	70922287	2	3	CAPSCREW, operating lever (3/8"NC x 1-3/4")
	70910287	2	3	LOCKWASHER, 3/8"
	70911026	2	3	NUT, 3/8"NC
4	70666630	2	2	BEARING, operating lever shaft (self-aligning)
	70927373	4	4	CAPSCREW. 5/16"NC x 7/8"
	70677005	4	4	WASHER
	70911025	4	4	NUT, 5/16"NC
5	70662191	1	1	SHAFT, operating lever
	70905122	2	2	KEY, #7 woodruff, 1/8" x 3/4"
6	70659345	2	2	BRACKET, operating lever shaft
	70920582	4	4	CAPSCREW, 1/2"NC x 1-3/8"
	70677008	4	4	WASHER, plain
7	70617648	1	1	LEVER, valve operating
8	70639916	2	3	END, ball (male thread)
	70911041	2	3	NUT, 3/8"NF
9	70082366	1	1	BLOCK, adjusting
10	70921565	2	2	CAPSCREW, ball end (3/8"NC x 1-1/2")
	70910287	2	2	LOCKWASHER, 3/8"
	70911026	2	2	NUT, 3/8"NC
11	70660103	1	-	GUIDE, operating lever
	70916271	2	-	CAPSCREW, 3/8"NC x 1"
	70910287	2	-	LOCKWASHER, 3/8"
	70044973	2	-	WASHER, plain
12	70669739	1	1	COVER, valve, front
	70927172	2	2	CAPSCREW, 1/2"NC x 1-1/8"
	70677008	2	2	WASHER, plain
13	70665635	1	1	COVER, valve, top
	70927172	4	4	CAPSCREW, 1/2"NC x 1-1/8"
	70677008	4	4	WASHER, plain
14	------	1	1	VALVE ASSY., control (See page 297)
15	70659338	-	1	LEVER, pivot
16	70655418	-	1	SHAFT, pivot
	70915797	-	1	PIN, spring, 3/16" x 1-1/4"

(Continued)

ITEM	PART NO.	QTY. *	QTY. **	DESCRIPTION
17	70660101	-	1	LEVER, operating
18	70655215	-	2	BEARING, needle, operating lever
19	70078402	-	2	WASHER, spacing
20	70617932	-	3	END, ball (female thread)
21	70657290	-	1	ROD, control
	70911041	-	2	NUT, 3/8"NF
22	70921565	-	3	CAPSCREW, 3/8"NC x 1-1/2"
	70910287	-	3	LOCKWASHER, 3/8"
	70911026	-	3	NUT, 3/8"NC
23	70659340	-	1	LEVER, bellcrank
24	70655215	-	2	BEARING, needle, bellcrank lever
25	70655211	-	1	PIN, bellcrank lever
	70915797	-	1	PIN, spring, 3/16" x 1-1/4"
26	70659347	-	1	ANGLE, bellcrank lever mounting
	70922763	-	2	CAPSCREW, 3/8"NC x 1"
	70910287	-	2	LOCKWASHER, 3/8"

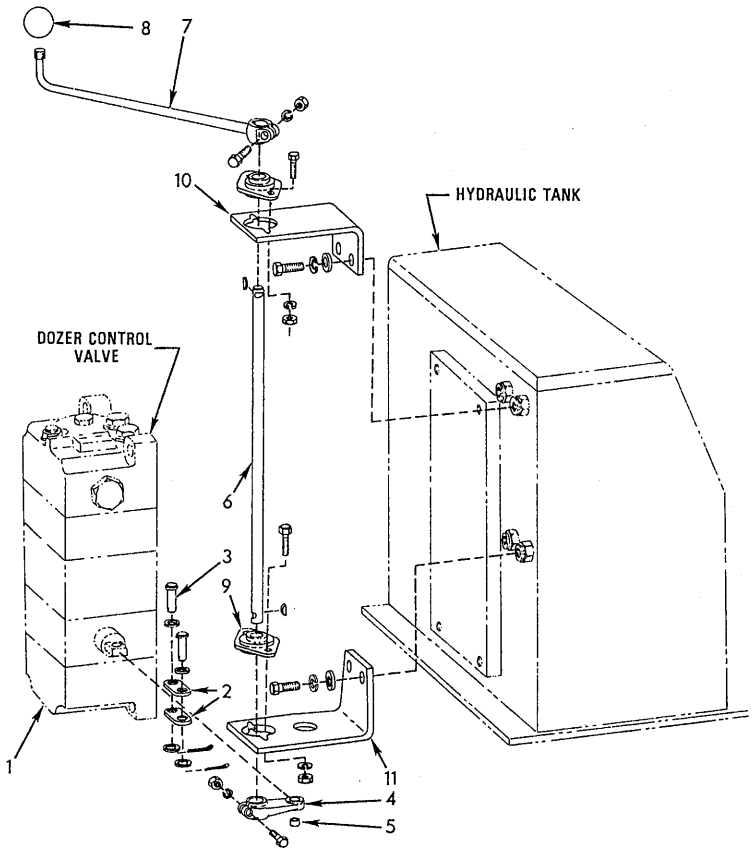

T-75814

AUXILIARY VALVE CONTROL

AUXILIARY VALVE CONTROL

USAGE: Units equipped with ripper or other allied equipment. See page 307 for basic dozer controls.

ITEM	PART NO.	QTY.	DESCRIPTION
1	--------	1	VALVE ASSY. (See H-9)
2	70659312	2	LINK, connecting
3	70094317	2	PIN, connecting link
	70910244	4	WASHER, plain, SAE std., 1/2"
	70900806	2	PIN, cotter, 1/8"
4	70659310	1	LEVER ASSY., control (Includes item 5)
	70916273	1	CAPSCREW, 3/8"NC x 1-3/4"
	70904206	1	LOCKWASHER, 3/8"
	70911026	1	NUT, 3/8"NC
5	70049988	1	BUSHING, control lever
6	70666683	1	SHAFT, control lever
	70905122	2	KEY, #7 woodruff, 1/8" x 3/4"
7	70659315	1	LEVER, operating
	70910948	1	CAPSCREW, 3/8"NC x 2"
	70904206	1	LOCKWASHER, 3/8"
	70911026	1	NUT, 3/8"NC
8	70090020	1	KNOB, operating lever
9	70666630	2	BEARING, operating lever shaft (self-aligning)
	70921566	4	CAPSCREW, 5/16"NC x 1"
	70677005	4	WASHER
	70911025	4	NUT, 5/16"NC
10	70662220	1	ANGLE, supporting, operating shaft, upper
	70919230	2	CAPSCREW, 1/2"NC x 1-3/8"
	70904208	2	LOCKWASHER, 1/2"
	70064531	2	WASHER
11	70662223	1	ANGLE, supporting, operating shaft, lower
	70919230	2	CAPSCREW, 1/2"NC x 1-3/8"
	70904208	2	LOCKWASHER, 1/2"
	70064531	2	WASHER

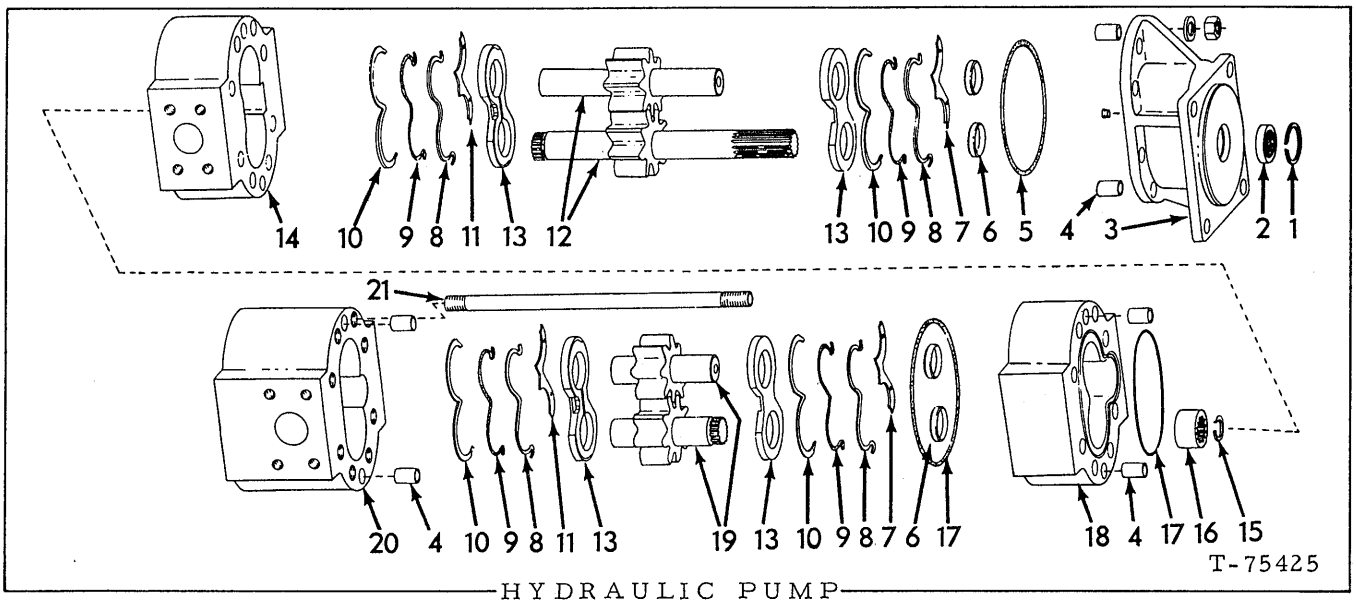

HYDRAULIC PUMP

USAGE: See page 313

*Tractors prior to serial No. 19S13033, excluding 19S12931 thru 19S12935
**Tractors serial No. 19S13033 and up, including 19S12931 thru 19S12935

ITEM	PART NO.	QTY. *	QTY. **	DESCRIPTION
				NOTE: The term "front" as used herein refers to the drive end of the pump
-	70665692	1	-	PUMP ASSY. } Each includes items 1 thru 21
-	70687729	-	1	PUMP ASSY. }
1	70194166	1	1	RING, snap, seal retaining
2	70194165	1	1	SEAL, oil
3	70663327	1	1	FLANGE ASSY., mounting (Includes PLUG indented below)
	70910231	1	1	PLUG, pipe, hex-socket, 1/8"NPT
4	70194132	6	6	DOWEL, pump body
5	70925655	1	1	O-RING, mounting flange
6	70664694	4	4	□RING, seal positioning
7	70665098	2	2	□PLATE, isolation
8	70665096	4	4	□RING, back-up (teflon)
9	70665097	4	4	□RING, sealing (rubber)
10	70665099	4	4	□RETAINER, seal ring (nylon)
11	70665095	2	2	□PLATE, isolation

(Continued)

ITEM	PART NO.	QTY. *	QTY. **	DESCRIPTION	
12	70663363	1	-	GEAR KIT, front pump	(Each consists of 2 matched gears. (Includes shafts)
	70686005	-	1	GEAR KIT, front pump	
13	70658241	4	4	PLATE, wear	
14	70660460	1	1	BODY ASSY., front pump	
15	70667593	1	-	RING, snap, gear coupling	
	70927691	-	1	RING, snap, gear coupling	
16	70667594	1	1	COUPLING, gear	
17	70925393	2	-	O-RING, center body	
	70684487	-	2	O-RING, center body	
18	70663304	1	-	BODY ASSY., center (2" wide)	
	70684485	-	1	BODY ASSY., center (2-7/16" wide)	
19	70663365	1	-	GEAR KIT, rear pump	(Each consists of 2 matched gears. (Includes shafts)
	70686006	-	1	GEAR KIT, rear pump	
20	70663323	1	-	BODY ASSY., rear pump (3-5/16" wide)	
	70685833	-	1	BODY ASSY., rear pump (3-7/8" wide)	
21	70665818	8	-	STUD	
	70685832	-	8	STUD	
	70665930	16	16	NUT, 1/2"NF	
	70651109	16	16	WASHER, plain	
22	70665141	2	2	SEAL KIT (Consists of items 6 thru 11; includes half of quantites listed above)	

□Components of item 22

(Revised February 1976)

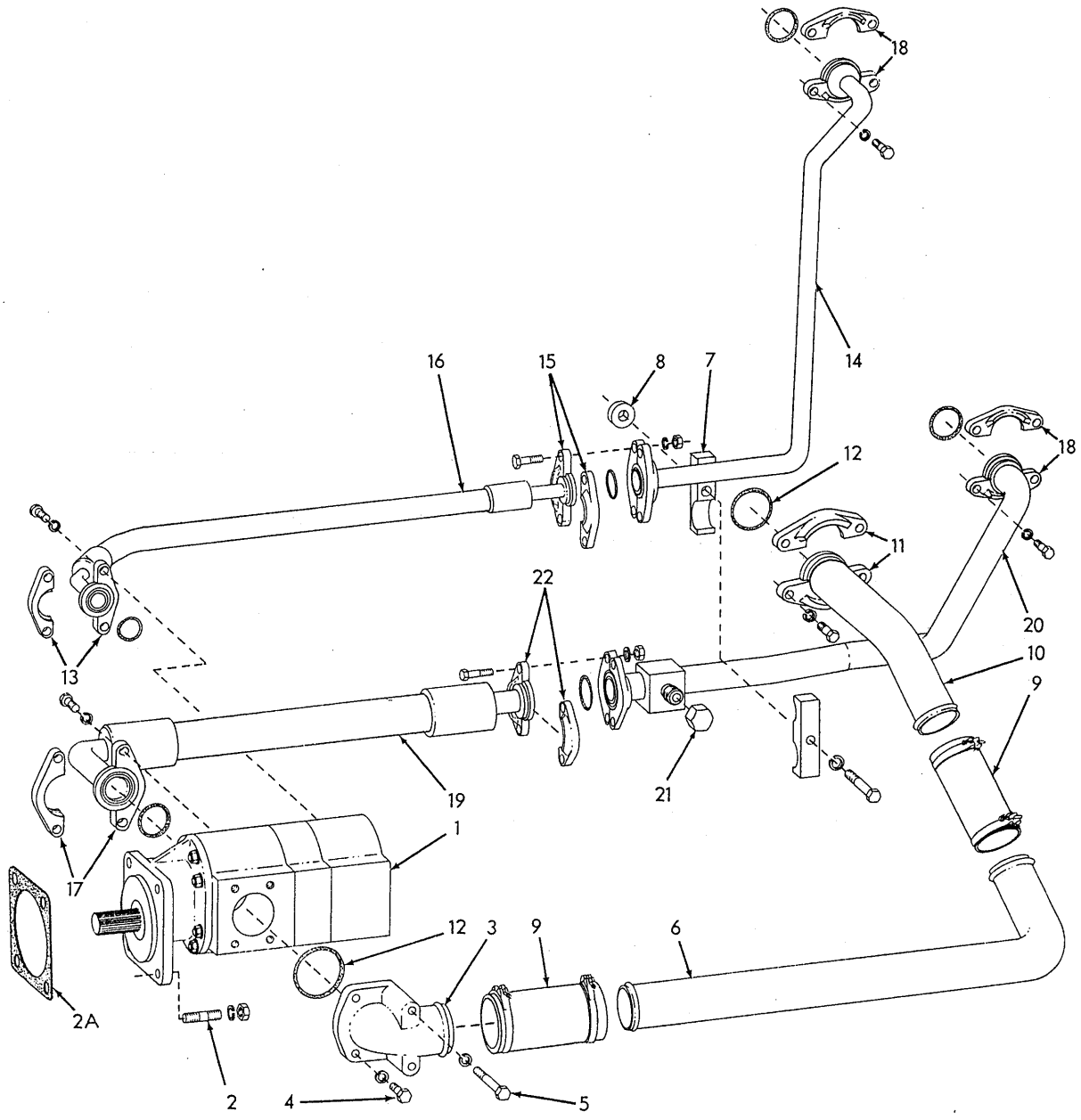

T-75815

OIL PUMP AND LINES

ITEM	PART NO.	QTY.	DESCRIPTION	
1	70665692	1	PUMP ASSY., oil (See page 310 for parts)	
2	70604241	4	STUD, 1/2"NC x 1-7/8"	
	70904208	4	LOCKWASHER, 1/2"	
	70914012	4	NUT, 1/2"NC	
2A	70665933	1	GASKET, pump mounting	
3	70660947	1	ELBOW, suction line, front	
4	70915987	2	CAPSCREW, 1/2"NC x 1-1/2"	
5	70916318	2	CAPSCREW, 1/2"NC x 3-1/4"	
	70904208	4	LOCKWASHER, 1/2"	
6	70670319	1	TUBE, suction line, intermediate	
7	70662662	2	CLAMP, tube supporting	
	70916319	1	CAPSCREW, 1/2"NC x 3-1/2"	
	70904208	1	LOCKWASHER, 1/2"	
8	70091553	1	SPACER, clamp	
9	70665278	2	HOSE, suction line	
	70927141	4	CLAMP, hose, 2-7/8" to 3-3/16" diam.	
10	70670320	1	TUBE, suction line, rear	
11	70921599	2	FLANGE, rear suction line (half only)	
	70915987	4	CAPSCREW, 1/2"NC x 1-1/2"	
	70904208	4	LOCKWASHER, 1/2"	
12	70924686	2	O-RING, suction line elbow	
13	70921116	2	FLANGE, high-pressure line hose (half only)	Pump end
	70916272	4	CAPSCREW, 3/8"NC x 1-1/4"	
	70904206	4	LOCKWASHER, 3/8"	
	70924200	1	O-RING, high-pressure line	
14	70662183	1	TUBE, high-pressure line	
15	70921115	2	FLANGE, high-pressure line hose (half only)	
	70916272	4	CAPSCREW, 3/8"NC x 1-1/4"	
	70904206	4	LOCKWASHER, 3/8"	
	70924110	1	O-RING, high-pressure line hose	
16	70670341	1	HOSE, high-pressure line	
17	70921118	2	FLANGE, low-pressure line hose (half only)	Pump end
	70915987	4	CAPSCREW, 1/2"NC x 1-1/2"	
	70904208	4	LOCKWASHER, 1/2"	
	70924193	1	O-RING, high-pressure line	
18	70921118	4	FLANGE, pressure line tubes (half only)	Valve end
	70915987	8	CAPSCREW, 1/2"NC x 1-1/2"	
	70904208	8	LOCKWASHER, 1/2"	
	70924193	2	O-RING, low-pressure line	
19	70670344	1	HOSE, low-pressure line	

(Continued)

ITEM	PART NO.	QTY.	DESCRIPTION
20	70662184	1	TUBE, low-pressure line
21	70921244	1	CAP, flare fitting, 3/4" tube
	70921117	2	FLANGE, low-pressure line hose (half only)
	70916197	4	CAPSCREW, 7/16"NC x 1-1/4"
22	70904207	4	LOCKWASHER, 7/16"
	70924192	1	O-RING, low-pressure line hose

Part No.	Page
70012389	257
70012762	156
70012762	190
70012767	267
70012767	221
70012767	167
70012992	117
70012992	116
70012992	249
70021527	114
70023416	114
70023633	297
70023633	297
70023633	11
70023633	158
70023633	121
70023633	121
70023633	125
70023633	89
70023633	114
70023756	275
70023756	162
70028847	229
70033074	187
70033182	297
70033288	209
70033288	161
70033288	168
70033751	134
70034076	230
70035167	151
70035221	151
70035250	197
70035250	205
70035250	34
70035250	35
70035250	157
70035250	125
70035337	135
70035439	151
70035439	135
70035793	163
70035793	165
70036032	151
70036268	257
70036546	211
70037000	158
70040475	163
70040503	190
70043491	201
70043881	175
70043881	187
70043881	65
70044249	137
70044875	286
70044875	216
70044973	274
70044973	307
70044973	234
70044973	253
70044973	151
70044973	158
70044973	119
70044973	67
70044973	83
70044973	111
70046321	137
70046321	143
70046419	151
70046590	289
70046590	290
70047381	240
70047381	241
70047381	243
70048705	131
70048923	237
70049918	167
70049936	164
70049988	309
70049988	187
70049993	187
70050227	283
70050276	159
70050292	126
70050433	187
70050442	144
70050447	228
70050594	156
70050595	156
70050607	257
70050608	257
70050609	257
70050610	257
70050611	257
70050612	257
70051352	229
70051623	208
70051629	208
70051630	159
70051715	95
70051798	203
70051959	208
70052021	89
70052070	164
70052071	164
70052106	95
70052119	162
70052161	167
70052168	117
70052175	129
70052225	65
70052371	257
70052444	167
70052669	188
70052669	185
70052671	188
70052747	187
70052976	158
70052977	158
70052979	158
70053251	229
70053616	115
70053616	141
70054073	115
70054130	143
70054890	209
70054890	161
70054890	168
70055234	57
70055589	237
70055604	90
70055914	111
70056166	189
70056585	209
70058614	70
70058739	121
70058741	120
70058741	121
70058841	165
70058842	165
70058843	165
70058875	165
70059007	229
70059010	229
70059024	159
70059025	159
70059026	159
70059035	162
70059048	162
70059315	158
70059385	209
70059386	209
70059387	209
70059599	203
70059617	201
70059618	201
70059619	201
70059739	203
70059742	203
70059783	156
70060689	90
70061528	235
70061528	236
70061528	51
70061655	89
70061656	89
70061671	89
70063222	66
70063890	49
70063891	49
70064531	232
70064531	271
70064531	274
70064531	295
70064531	307
70064531	309
70064531	203
70064531	212
70064531	220
70064531	153
70064531	141
70064810	297
70064810	255
70065513	203
70066235	7006
70066251	85
70066252	85
70066253	84
70066255	85
70066261	84
70066467	244
70066517	84
70066794	287
70066872	86
70066873	86
70066874	86
70066875	86
70066876	86
70067137	208
70067141	208
70067348	167
70067518	167
70067519	167
70067520	167
70067534	167
70067535	164
70067543	157
70067766	115
70067884	90
70067962	95
70068173	137
70068875	85
70068876	85
70068878	85
70068879	85
70068881	85
70069164	85
70069327	164
70069328	208
70069328	165
70069328	167
70069441	165
70069441	167
70069761	161
70069810	196
70070212	69
70070299	181
70070400	260
70070400	190
70070400	263A
70070400	264A
70071014	267
70072366	209
70072438	66
70073539	89
70074452	239
70074679	93
70074740	201
70075053	175
70075203	95
70075354	135
70075429	234
70075535	234
70075769	85
70075770	85
70075771	85
70076140	235
70076140	236
70076469	247
70076572	247
70077285	199
70077286	199
70077287	199
70078402	308
70078810	155
70078810	176
70078810	69
70078866	229
70079489	93
70079763	93
70080116	274
70080547	167
70080669	228
70080758	49
70081094	65
70081614	89
70081672	69
70082189	57
70082303	161
70082306	161
70082307	167
70082308	167
70082309	161
70082310	167
70082311	161
70082312	161
70082315	168
70082316	161
70082317	161
70082318	168
70082320	167
70082321	167
70082322	167
70082323	167
70082327	161
70082343	131
70082356	161
70082357	161
70082358	161
70082366	307
70082443	49
70082444	49
70082449	49
70082487	49
70082488	49
70082489	49
70082490	49
70082608	89
70082915	195
70083209	209
70083318	252
70083524	91
70083540	90
70083616	121
70083792	165
70083847	151
70083987	232
70084351	121
70084432	161
70084432	167
70084581	279
70084581	211
70084612	279
70084612	211
70084694	216
70084758	286
70084758	216
70084895	247
70084897	49
70084899	49
70084955	279
70085140	279
70085140	211
70085680	245
70086546	134
70087741	220
70087742	220
70087855	232
70088491	70
70088534	240
70088560	95
70088561	95
70090020	307
70090020	309
70090020	175
70090020	65
70090020	69
70091553	313
70091572	167
70091662	191
70091978	168
70091979	161
70092160	86
70092163	220
70092665	89
70092727	57
70093751	57
70093752	45
70093752	57
70093972	240

Part No.	Page	Part No.	Page	Part No.	Page	Part No.	Page	Part No.	Page
70093972	241	70607556	264A	70619814	245	70623968	130	70628736	70
70093972	243	70609122	265	70619840	268	70623969	126	70628737	66
70094167	49	70609122	268	70619841	268	70623971	130	70628738	66
70094317	309	70609122	270	70619952	269	70623973	130	70628738	67
70094422	233	70609209	267	70619954	286	70623974	127	70628768	137
70094422	247	70609210	267	70619955	285	70623989	137	70628799	137
70094467	57	70609222	279	70619956	286	70623995	137	70628940	127
70094467	151	70609222	283	70619957	285	70623997	137	70628951	157
70094467	133	70609224	286	70619958	286	70623999	127	70629223	126
70094527	233	70609355	268	70619965	275	70624128	130	70629312	137
70094527	57	70609361	267	70619966	273	70624130	130	70629391	135
70095265	239	70609368	264	70620035	240	70624137	130	70629392	135
70095267	239	70609368	264A	70620035	241	70624139	127	70629393	135
70095575	89	70609379	286	70620350	251	70624140	121	70629454	175
70095869	180	70609388	286	70620604	151	70624142	130	70629697	227
70096055	77	70609389	269	70620604	148	70624174	127	70629698	227
70096164	57	70609389	270	70620604	111	70624177	127	70629709	153
70096212	156	70609390	286	70620703	284	70624508	233	70629717	175
70096803	204	70609414	286	70621299	203	70624584	175	70629755	77
70096815	49	70609447	261	70621304	152	70624584	176	70629755	83
70096816	49	70609448	261	70621304	137	70624584	66	70629879	139
70096908	246	70609611	264	70621304	111	70624584	69	70629881	139
70097088	114	70609611	264A	70621342	230	70624585	66	70629882	139
70097324	207	70610563	65	70621343	230	70624624	69	70629884	140
70097324	167	70611975	134	70621357	230	70624695	125	70629885	139
70097413	295	70613231	273	70621358	231	70624706	125	70629886	139
70097413	157	70614350	285	70621428	237	70624706	137	70629887	139
70097534	45	70614351	285	70621428	237	70624783	127	70629888	140
70097534	57	70614721	267	70621429	232	70624815	117	70629889	140
70098292	298	70614880	261	70621429	237	70624816	117	70629890	139
70099506	208	70615166	286	70621429	237	70625383	287	70629891	140
70182763	237	70615210	261	70621614	70	70625383	228	70629892	140
70182763	237	70615219	260	70621724	237	70625604	286	70629893	140
70186266	143	70615220	260	70621724	237	70625970	201	70629894	139
70186266	144	70615581	267	70622002	199	70625975	286	70629895	139
70186668	144	70615619	267	70622992	45	70627347	132	70629897	140
70188436	225	70615912	265	70622992	57	70627347	133	70629898	139
70189267	129	70615912	267	70622992	180	70627348	120	70629899	139
70194132	311	70617069	265	70623003	163	70627350	121	70629900	139
70194165	311	70617069	267	70623004	163	70627451	176	70629901	139
70194166	311	70617079	263	70623007	163	70627917	274	70629902	140
70197576	79	70617079	264	70623008	163	70628038	137	70629904	140
70208253	134	70617080	263A	70623144	202	70628039	137	70629906	140
70208960	234	70617080	264A	70623144	157	70628065	135	70629907	139
70208960	232	70617131	263	70623151	187	70628116	69	70629908	140
70209942	137	70617131	263A	70623235	148	70628138	70	70629909	139
70240962	239	70617131	264	70623516	162	70628157	153	70629943	121
70243526	246	70617131	264	70623781	165	70628157	155	70629945	121
70243527	246	70617131	264A	70623782	165	70628234	185	70629946	120
70243528	246	70617395	261	70623784	165	70628243	151	70630056	168
70248922	246	70617396	261	70623786	165	70628378	139	70630199	251
70253308	87	70617515	265	70623804	125	70628381	139	70630295	134
70336916	137	70617515	267	70623876	162	70628382	139	70630331	70
70336917	137	70617516	265	70623877	162	70628384	140	70630502	189
70442491	33	70617516	267	70623878	162	70628389	140	70630503	189
70600236	265	70617648	307	70623879	162	70628391	140	70630540	49
70600236	267	70617855	267	70623927	162	70628392	140	70630578	140
70600236	279	70617932	308	70623928	165	70628399	139	70630584	125
70600236	201	70617932	153	70623929	163	70628401	139	70630636	179
70604241	313	70618037	267	70623930	159	70628402	139	70630753	249
70604398	164	70618038	267	70623932	163	70628402	140	70630795	175
70604493	249	70618083	267	70623933	159	70628403	140	70630795	176
70606702	261	70618084	267	70623953	130	70628440	137	70630795	176
70606702	267	70618173	267	70623954	130	70628441	137	70630833	176
70606742	260	70618692	268	70623955	130	70628442	137	70630836	176
70606762	264A	70618840	267	70623956	131	70628443	137	70630837	175
70606762	263A	70619274	268	70623957	131	70628492	116	70630841	175
70606763	263	70619275	268	70623959	131	70628521	135	70630847	175
70606763	264	70619648	264	70623963	126	70628723	243	70630848	175
70606981	267	70619648	264A	70623966	127	70628736	175	70630850	176

Part No.	Page
70630852	176
70630917	244
70631031	196
70631034	196
70631106	139
70631290	199
70631476	66
70631494	65
70631496	66
70631498	66
70631525	187
70631542	181
70631571	251
70631572	251
70631573	251
70631574	251
70631646	66
70631650	66
70631652	66
70631653	65
70631657	70
70631682	65
70631683	65
70631769	79
70631773	11
70631788	119
70631788	147
70631790	147
70631828	181
70631844	233
70631844	155
70631846	181
70631868	181
70631869	181
70631870	181
70631872	181
70631874	148
70631883	187
70631885	125
70631886	137
70631887	137
70631888	137
70631959	193
70631959	194
70631960	193
70631960	194
70631975	65
70632038	155
70632060	149
70632060	181
70632062	181
70632063	181
70632065	131
70632065	132
70632065	133
70632066	131
70632067	125
70632162	69
70632166	131
70632179	223
70632188	223
70632226	230
70632323	195
70632580	196
70632581	116
70632582	116
70632583	117
70632584	116
70632585	114
70632587	117
70632588	116
70632589	117
70632590	116
70632591	116
70632592	117
70632595	117
70632600	116
70632601	114
70632603	114
70632604	116
70632606	116
70632613	114
70632620	116
70632621	117
70632623	117
70632624	116
70632630	116
70632632	117
70632635	116
70632638	117
70632652	116
70632706	233
70632710	69
70632716	69
70632747	69
70632752	69
70632756	69
70632766	65
70632771	69
70632794	126
70633268	201
70633270	207
70633355	207
70633364	207
70633365	206
70633380	207
70633390	207
70633496	45
70633519	51
70633653	247
70633717	194
70633720	227
70633729	227
70633730	227
70634074	69
70634271	147
70634342	116
70634427	140
70634650	66
70634670	130
70635124	148
70635335	275
70635335	277
70635447	283
70635831	235
70636792	275
70636795	275
70636796	275
70637051	284
70637056	284
70637286	153
70637286	155
70637623	144
70637701	196
70637741	233
70638088	139
70638131	151
70638205	6
70638205	151
70638232	140
70638236	139
70638256	157
70638282	237
70638334	127
70638335	130
70638336	127
70638351	225
70638352	116
70638421	225
70638422	225
70638431	225
70638432	225
70638609	115
70638610	115
70638612	115
70638616	115
70638618	115
70638848	117
70638968	190
70639021	196
70639237	95
70639314	233
70639314	117
70639314	67
70639388	233
70639388	234
70639388	87
70639480	249
70639502	126
70639504	126
70639505	126
70639508	126
70639520	115
70639522	115
70639523	114
70639524	115
70639527	114
70639532	115
70639534	115
70639534	116
70639535	114
70639536	114
70639543	114
70639544	114
70639551	118
70639563	114
70639567	129
70639572	129
70639576	129
70639578	129
70639579	129
70639584	129
70639585	129
70639591	129
70639594	129
70639596	129
70639597	129
70639598	129
70639609	129
70639614	143
70639615	114
70639617	129
70639620	151
70639622	129
70639628	116
70639630	129
70639638	143
70639639	143
70639641	141
70639642	141
70639646	144
70639655	130
70639749	143
70639753	153
70639756	151
70639761	126
70639762	126
70639762	127
70639763	143
70639766	153
70639775	153
70639778	153
70639779	155
70639784	155
70639785	153
70639790	153
70639846	144
70639882	141
70639903	141
70639907	143
70639916	307
70639916	153
70639919	144
70639920	143
70639921	143
70639924	143
70639929	143
70639933	143
70639937	143
70639939	143
70639946	141
70639947	143
70639948	143
70639949	143
70639950	141
70639955	115
70639969	143
70639969	144
70639970	143
70639976	144
70640083	158
70640096	117
70640097	117
70640121	143
70640146	143
70640205	143
70640206	143
70640415	69
70640636	119
70640637	153
70640664	119
70640667	119
70640676	233
70640677	158
70640722	117
70640742	114
70640743	114
70640778	116
70640779	114
70640783	115
70640784	115
70640791	114
70641008	155
70641031	149
70641314	137
70641564	134
70641839	134
70641840	134
70641841	134
70641849	147
70641854	134
70641855	134
70641979	155
70642113	129
70642146	129
70642148	129
70642305	158
70642329	129
70642441	218
70642441	51
70642448	163
70642498	225
70642499	225
70642500	225
70642534	151
70642535	179
70642705	194
70642709	194
70642713	191
70642716	114
70642719	194
70642720	194
70642743	191
70642746	238
70642767	190
70642787	125
70642788	125
70642849	144
70642886	133
70642887	133
70642888	133
70642889	133
70642891	132
70642891	133
70642968	129
70643027	131
70643028	131
70643032	187
70643080	125
70643081	125
70643124	212
70643124	215
70643229	212
70643229	215
70643275	165
70643276	165
70643369	249
70643404	93
70643437	66
70643561	129
70643571	129
70643572	129
70643763	116
70643810	125
70643832	229
70643844	228
70643957	151
70644006	233
70644006	243
70644064	153
70644065	155
70644255	202
70644265	143
70644266	143
70644268	143
70644276	144
70644277	144
70644278	144
70644330	202
70644457	152

Part No.	Page
70644457	148
70644457	111
70644534	230
70644713	180
70644759	6
70644759	151
70644908	243
70644927	115
70645236	6
70645236	163
70645248	6
70645248	151
70645250	6
70645250	151
70645269	116
70645320	159
70645609	271
70645610	271
70645672	115
70645920	207
70645947	207
70646091	158
70646092	158
70646093	158
70646094	158
70646108	193
70646155	192
70646157	192
70646162	192
70646192	192
70646302	181
70646340	169
70646416	279
70646532	149
70646910	240
70646910	6
70646910	79
70646985	114
70647080	196
70647108	297
70647122	297
70647151	297
70647404	114
70647563	123
70647808	287
70647808	289
70647972	126
70648167	185
70648231	6
70648231	57
70648238	249
70648262	251
70648501	6
70648501	111
70648795	185
70648909	289
70648928	289
70648928	290
70648930	289
70648937	290
70648943	229
70648944	289
70648954	229
70648956	175
70648977	287
70648977	289
70648996	229
70648997	229
70648998	229
70649011	289
70649084	289
70649107	195
70649108	195
70649205	185
70649261	292
70649611	279
70650026	187
70650053	187
70650082	203
70650131	225
70650132	225
70650133	225
70650134	225
70650135	225
70650136	225
70650137	225
70650138	225
70650139	225
70650140	225
70650141	225
70650142	225
70650143	225
70650144	225
70650145	225
70650146	225
70650147	225
70650178	259
70650299	244
70650399	114
70650476	164
70650477	164
70650509	51
70650587	230
70650592	292
70650622	162
70650673	177
70650674	177
70650675	177
70650676	177
70650677	177
70650679	177
70650724	130
70650811	165
70650813	162
70650901	249
70650944	250
70651036	141
70651109	311
70651184	255
70651185	255
70651373	182
70651384	182
70651385	182
70651387	182
70651388	182
70651506	182
70651540	289
70651564	170
70651565	170
70651566	170
70651567	170
70651569	170
70651570	170
70651571	170
70651572	170
70651573	170
70651574	170
70651575	170
70651576	170
70651577	170
70651629	119
70651655	119
70651694	119
70651704	269
70651704	275
70651704	276
70651733	260
70651739	170
70651774	151
70651892	164
70651903	164
70651910	156
70651978	157
70653046	111
70653645	233
70653790	275
70653793	119
70653806	119
70653807	147
70653813	130
70653839	132
70653840	132
70653841	132
70653842	147
70653843	132
70653905	6
70653905	151
70653916	145
70653919	145
70653920	145
70653928	145
70653929	177
70653932	177
70653935	145
70653936	177
70653983	125
70654068	125
70654069	123
70654070	123
70654081	7
70654081	147
70654096	93
70654098	93
70654294	123
70654523	171
70654523	173
70654656	175
70654767	188
70654798	125
70654840	51
70655084	298
70655193	195
70655211	308
70655215	308
70655373	93
70655418	307
70655464	199
70655485	234
70655497	201
70655510	11
70655528	209
70655636	143
70655655	301
70655702	188
70655707	187
70655777	153
70655807	279
70655875	158
70655958	188
70655989	209
70655990	209
70656151	176
70656155	153
70656159	153
70656179	177
70656190	171
70656190	173
70656191	171
70656192	171
70656192	173
70656208	203
70656227	51
70656233	147
70656332	89
70656694	145
70656749	197
70656750	197
70656905	238
70656907	242
70656909	241
70656910	83
70656921	219
70656923	238
70656926	249
70656937	65
70656940	240
70656942	289
70657207	283
70657290	308
70657553	259
70657555	259
70657556	259
70657733	289
70657734	289
70657735	289
70657736	289
70657737	289
70657768	164
70657769	164
70657770	164
70657771	164
70657772	164
70657777	209
70657778	209
70658078	289
70658123	242
70658134	249
70658147	259
70658182	177
70658241	311
70658245	299
70658278	303
70658279	303
70658280	303
70658281	303
70658282	302
70658284	302
70658286	302
70658293	241
70658313	242
70658319	243
70658319	7
70658320	240
70658320	7
70658321	241
70658321	7
70658348	239
70658349	240
70658355	233
70658360	303
70658361	303
70658363	303
70658364	303
70658365	303
70658397	239
70658399	79
70658413	220
70658466	302
70658509	79
70658514	111
70658517	118
70658534	239
70658536	249
70658556	118
70658585	79
70658610	123
70658613	157
70658633	79
70658641	239
70658654	125
70658711	158
70658712	158
70658718	220
70658737	188
70658746	118
70659002	239
70659034	79
70659093	225
70659102	225
70659112	259
70659175	259
70659175	179
70659310	309
70659312	309
70659315	309
70659320	270
70659322	273
70659327	274
70659338	307
70659340	308
70659345	307
70659347	308
70659432	111
70659433	111
70659440	123
70659441	7
70659441	123
70659465	119
70659494	301
70659496	301
70659497	301
70659504	303
70659506	303
70659538	230
70659539	230
70659555	303
70659566	79
70659740	219
70659774	118
70659814	79
70660057	171
70660070	259
70660101	308
70660103	307
70660144	250
70660335	260
70660335	261
70660335	263
70660335	264
70660335	263A

Part No.	Page
70660335	264A
70660460	311
70660480	89
70660513	212
70660557	90
70660606	89
70660647	297
70660670	249
70660678	223
70660680	223
70660694	233
70660769	297
70660780	303
70660792	303
70660793	303
70660869	301
70660900	262
70660936	259
70660947	313
70661209	262
70661213	262
70661214	262
70661226	231
70661229	195
70661268	149
70661345	239
70661534	149
70661612	203
70661627	196
70661628	196
70661676	170
70661714	190
70661718	89
70661739	211
70661739	215
70661744	212
70661927	195
70661928	195
70661961	283
70661962	283
70662006	89
70662011	89
70662020	250
70662028	89
70662034	89
70662043	217
70662044	217
70662049	217
70662060	89
70662069	211
70662069	215
70662076	211
70662076	215
70662080	211
70662080	215
70662085	297
70662089	190
70662090	190
70662132	51
70662156	307
70662179	283
70662180	283
70662183	313
70662184	314
70662188	249
70662191	307
70662220	309
70662223	309
70662230	295
70662231	295
70662243	287
70662264	294
70662265	294
70662303	145
70662487	175
70662654	273
70662662	313
70662666	273
70662687	273
70662688	273
70662700	273
70662719	273
70662723	273
70662737	273
70662741	274
70662745	245
70662760	245
70662840	247
70662841	247
70662843	247
70662844	247
70662886	155
70662922	7
70662922	147
70662928	141
70662979	114
70662988	114
70662989	114
70662990	114
70662991	114
70662992	114
70662993	114
70663117	163
70663117	165
70663123	171
70663134	7
70663134	45
70663145	7
70663145	45
70663153	45
70663154	45
70663245	162
70663245	165
70663260	201
70663265	220
70663292	220
70663304	311
70663308	220
70663323	311
70663326	311
70663327	311
70663328	311
70663363	311
70663365	311
70663507	159
70663510	159
70663581	159
70663725	301
70663850	2
70663967	197
70664052	226
70664067	301
70664075	51
70664149	283
70664150	283
70664170	203
70664171	202
70664270	156
70664278	189
70664340	197
70664341	196
70664345	189
70664356	189
70664381	185
70664414	158
70664451	203
70664452	203
70664456	302
70664458	303
70664459	303
70664460	303
70664461	303
70664462	302
70664464	302
70664466	303
70664506	156
70664509	196
70664511	196
70664512	196
70664533	301
70664566	301
70664567	304
70664568	305
70664569	305
70664570	304
70664571	304
70664572	304
70664573	304
70664574	305
70664575	304
70664576	304
70664577	304
70664578	304
70664580	304
70664581	305
70664582	304
70664584	305
70664586	305
70664588	305
70664624	218
70664682	51
70664694	311
70664747	301
70664748	301
70664776	234
70664793	228
70664813	203
70664815	203
70664816	69
70664819	223
70664843	203
70664843	205
70664844	203
70664847	203
70664850	197
70664851	157
70664852	157
70664857	223
70664859	269
70664864	269
70664865	57
70664867	51
70664869	7
70664869	57
70664870	7
70664870	57
70664875	203
70664878	57
70664879	203
70664880	57
70664887	51
70664921	189
70664968	193
70665040	202
70665095	311
70665096	311
70665097	311
70665098	311
70665099	311
70665110	165
70665121	297
70665122	297
70665141	311
70665159	70
70665174	303
70665199	255
70665208	265
70665250	303
70665278	313
70665317	208
70665364	216
70665383	206
70665394	216
70665458	67
70665460	69
70665462	66
70665635	307
70665665	271
70665681	271
70665692	313
70665718	303
70665726	298
70665763	298
70665767	298
70665814	303
70665818	311
70665841	297
70665853	249
70665859	297
70665879	297
70665886	297
70665890	45
70665891	11
70665892	223
70665900	243
70665900	7
70665910	7
70665910	111
70665930	311
70665931	7
70665931	137
70665933	313
70665933	111
70665934	111
70666092	215
70666093	215
70666110	221
70666166	218
70666194	311
70666215	298
70666219	65
70666235	223
70666240	223
70666259	175
70666261	175
70666282	297
70666379	249
70666382	298
70666383	298
70666384	298
70666385	298
70666387	298
70666388	298
70666391	185
70666400	230
70666401	230
70666403	69
70666404	175
70666405	231
70666426	185
70666429	7
70666429	90
70666485	188
70666497	230
70666513	165
70666514	159
70666533	187
70666534	187
70666535	188
70666536	185
70666538	185
70666539	185
70666540	185
70666543	157
70666545	157
70666546	157
70666547	162
70666547	165
70666549	185
70666565	298
70666575	274
70666575	294
70666598	7
70666630	307
70666630	309
70666634	298
70666654	298
70666659	93
70666683	309
70666745	179
70666753	179
70666758	95
70666778	179
70666779	179
70666785	179
70666786	157
70666787	157
70666788	177
70666789	179
70666795	65
70666804	169
70666807	176
70666808	176
70666809	7
70666809	179
70666810	7
70666810	179
70666811	7
70666811	179
70666907	125
70667002	265
70667026	265
70667026	267
70667069	265
70667070	265
70667080	203
70667104	203
70667123	79
70667145	232
70667146	234

Part No.	Page
70667147	234
70667156	289
70667159	212
70667159	215
70667188	250
70667216	250
70667224	250
70667234	250
70667252	197
70667252	8
70667252	34
70667252	35
70667252	157
70667252	125
70667400	131
70667462	158
70667470	157
70667475	218
70667493	262
70667493	263
70667496	260
70667496	262
70667496	263
70667557	65
70667571	233
70667572	232
70667573	233
70667579	233
70667593	311
70667594	311
70667626	232
70667676	45
70667683	80
70667684	80
70667711	273
70667718	7
70667718	45
70667719	7
70667727	297
70667737	271
70667740	271
70667810	297
70668149	79
70668150	220
70668158	90
70668159	90
70668231	301
70668252	51
70668262	51
70668263	51
70668373	2
70668374	2
70668375	2
70668387	283
70668394	283
70668401	283
70668466	207
70668516	7
70668516	79
70668541	218
70668548	299
70668550	299
70668551	299
70668552	299
70668555	299
70668557	212
70668593	91
70668595	91
70668615	264
70668662	267
70668680	267
70668693	264
70668693	264A
70668803	211
70668803	215
70668804	51
70668805	51
70668806	51
70668814	273
70668840	305
70668881	207
70668882	207
70669002	283
70669031	158
70669032	158
70669053	87
70669188	299
70669189	299
70669193	207
70669198	299
70669218	185
70669245	273
70669266	261
70669266	262
70669266	263
70669298	209
70669299	11
70669301	190
70669302	209
70669303	209
70669307	269
70669314	262
70669315	262
70669330	167
70669359	87
70669430	216
70669434	149
70669526	87
70669565	169
70669571	267
70669703	208
70669718	211
70669718	215
70669726	279
70669726	7
70669727	279
70669727	7
70669728	279
70669728	7
70669732	280
70669739	307
70669740	279
70669770	167
70669780	89
70669786	208
70669791	209
70669918	279
70669919	279
70669933	230
70669950	280
70669992	145
70669994	145
70669996	145
70669997	145
70669998	145
70670071	199
70670071	209
70670073	199
70670074	199
70670090	260
70670217	273
70670218	221
70670270	216
70670280	297
70670319	313
70670320	313
70670339	90
70670341	313
70670344	313
70670354	279
70670356	279
70670357	279
70670357	7
70670360	295
70670398	255
70670411	115
70670451	11
70670457	11
70670623	208
70670648	202
70670649	202
70670697	298
70670698	298
70670699	298
70670721	273
70670721	7
70670722	271
70670722	7
70670723	273
70670723	7
70670726	273
70670735	298
70670741	298
70670751	274
70670759	273
70670774	235
70670849	205
70670920	289
70671012	69
70671076	269
70671084	269
70671157	201
70671158	201
70671160	201
70671161	201
70671162	201
70671163	201
70671187	93
70671212	167
70671325	298
70671431	80
70671433	80
70671497	149
70671616	149
70671617	149
70671622	167
70671624	167
70671643	161
70671644	161
70671645	161
70671646	161
70671695	93
70671723	89
70671809	80
70671838	80
70671839	80
70671847	219
70671903	219
70671922	249
70672194	262
70672642	230
70672644	264
70672650	187
70672959	269
70672995	185
70672996	185
70673000	260
70673019	93
70673020	93
70673037	11
70673081	262
70673082	262
70673130	263
70673163	2
70673204	147
70673350	204
70673415	199
70673418	199
70673419	199
70673420	199
70673421	199
70673436	226
70673438	226
70673565	263
70673566	263
70673761	185
70673822	147
70674401	115
70674402	115
70674403	115
70674532	177
70674533	177
70674534	177
70674535	177
70674536	177
70674537	2
70674538	2
70674753	67
70674754	67
70674755	66
70674774	66
70674798	149
70674799	57
70674799	157
70674813	2
70674814	7
70674814	57
70674868	7
70674868	57
70674997	157
70675036	157
70675246	202
70675322	199
70675323	199
70675326	199
70675327	199
70675657	234
70676074	79
70676213	127
70676364	208
70676408	242
70676455	202
70676455	204
70676456	202
70676456	204
70676465	95
70676652	189
70676660	149
70676691	304
70676692	302
70676693	302
70676697	95
70676698	95
70676871	206
70676872	206
70677004	79
70677004	79
70677005	211
70677005	89
70677005	225B
70677006	233
70677006	211
70677006	215
70677006	219
70677006	221
70677006	223
70677006	235
70677006	241
70677006	247
70677006	249
70677006	259
70677006	57
70677006	59
70677006	175
70677006	179
70677006	180
70677006	79
70677006	82
70677006	90
70677008	232
70677008	233
70677008	271
70677008	273
70677008	188
70677008	190
70677008	194
70677008	197
70677008	205
70677008	211
70677008	212
70677008	215
70677008	217
70677008	218
70677008	219
70677008	221
70677008	223
70677008	236
70677008	245
70677008	249
70677008	253
70677008	254
70677008	45
70677008	57
70677008	157
70677008	180
70677008	187
70677008	79
70677008	82
70677008	83
70677008	89
70677010	271
70677010	191
70677010	192
70677010	194
70677010	212
70677010	215
70677010	219
70677010	249
70677010	252
70677010	161

Part No.	Page
70677012	192
70677012	193
70677012	194
70677012	195
70677012	221
70677012	235
70677012	51
70677012	89
70677064	2
70677228	2
70677276	201
70677289	149
70677482	188
70677487	188
70677491	206
70677492	206
70677560	206
70677634	172
70677636	172
70677637	172
70677638	172
70677639	172
70677641	172
70677642	172
70677643	172
70677694	209
70677696	209
70677705	197
70677711	259
70677719	45
70677750	211
70677750	215
70677810	204
70677885	211
70677885	215
70677900	211
70677905	211
70677914	230
70677932	215
70678072	190
70678072	252
70678234	211
70678234	215
70678235	190
70678242	235
70678287	211
70678287	215
70678363	2
70678374	204
70678420	204
70678428	205
70678436	204
70678437	204
70678438	204
70678531	2
70678532	2
70678533	2
70678534	2
70678535	2
70678536	2
70678563	117
70678564	117
70678570	2
70678583	211
70678583	215
70678674	168
70678677	168
70678716	201
70678725	2
70678726	2
70678727	2
70678729	2
70678730	2
70678731	2
70678846	204
70678890	242
70678958	205
70678961	205
70678962	205
70678964	205
70678966	204
70678971	196
70678972	196
70678974	197
70679132	157
70679159	207
70679362	91
70679375	158
70679375	125
70679417	212
70679418	212
70679479	2
70679480	2
70679481	2
70679482	2
70679483	2
70679484	2
70679520	167
70679521	167
70679522	167
70679537	253
70679538	167
70679549	211
70679562	242
70679563	241
70679578	218
70679637	204
70679664	211
70679695	215
70679734	207
70679752	117
70679753	115
70679815	206
70680006	2
70680080	223
70680337	230
70680339	230
70680417	199
70680419	199
70680600	233
70680602	233
70680631	199
70680690	223
70680987	161
70680988	161
70680991	161
70680992	161
70680995	161
70680996	161
70681008	121
70681024	121
70681025	120
70681565	199
70681649	2
70681744	204
70681812	2
70681841	231
70682127	230
70682224	11
70682358	249
70682498	259
70682549	11
70682555	11
70682573	121
70682705	233
70682711	233
70682712	232
70682797	2
70682843	93
70682861	219
70682968	231
70682971	114
70683147	232
70683202	144
70683213	253
70683214	253
70683223	287
70683224	287
70683232	207
70683235	190
70683421	211
70683421	215
70683586	201
70683586	201
70683656	82
70683701	82
70683702	82
70683833	192
70683835	209
70683836	209
70683878	191
70683962	231
70684142	123
70684479	163
70684479	165
70684480	163
70684480	165
70684654	172
70684699	139
70684700	140
70684701	139
70684702	140
70684703	140
70684837	254
70684864	173
70684891	254
70684979	87
70684988	87
70685142	230
70685535	127
70685768	254
70685771	127
70685772	127
70685785	254
70685788	204
70685919	249
70686241	252
70686242	252
70686248	253
70686257	252
70686258	252
70686281	197
70686315	221
70686316	221
70686358	238
70686411	204
70686446	254
70686516	238
70686912	204
70686969	2
70687715	253
70687722	253
70687956	252
70688101	172
70688188	230
70688997	244
70689443	145
70690393	196
70690394	196
70690675	263
70690675	264
70690676	263A
70690676	264A
70690729	225A
70690916	2
70691057	263
70691057	264
70691058	263A
70691058	264A
70691232	82
70691253	236
70691461	82
70691546	83
70692106	218
70692644	121
70692644	121
70692645	120
70692646	121
70692672	120
70692987	205
70692988	205
70693044	205
70693599	264A
70693606	264
70693957	117
70694292	115
70694303	225A
70694305	225B
70694306	225A
70694307	225A
70694424	231
70694436	231
70694437	231
70694438	231
70694453	231
70694781	225B
70694782	225B
70694783	225A
70694784	225B
70694785	225A
70694795	231
70695339	231
70695868	225B
70696162	225B
70696415	2
70900703	31
70900801	155
70900801	155
70900801	176
70900801	139
70900806	309
70900806	188
70900806	218
70900806	219
70900806	227
70900806	11
70900806	153
70900806	185
70900806	187
70900806	66
70900808	11
70900808	80
70900808	100
70900818	234
70900820	192
70900942	69
70900942	69
70900970	149
70900970	181
70900970	66
70900970	67
70901165	104
70901171	62
70901223	140
70901310	84
70901310	62
70901478	105A
70901651	182
70901652	149
70901653	185
70901666	164
70901667	71
70901723	57
70901781	139
70901781	85
70901839	108
70902071	115
70903584	93
70903772	93
70903773	93
70904016	161
70904203	62
70904203	84
70904204	62
70904204	61
70904204	22
70904204	29
70904204	32
70904204	33
70904204	34
70904204	53
70904204	55
70904204	59
70904204	134
70904205	302
70904205	305
70904205	307
70904205	309
70904205	22
70904205	29
70904205	38
70904205	134
70904205	137
70904205	65
70904205	66
70904205	67
70904205	93
70904206	62
70904206	280
70904206	284
70904206	292
70904206	294
70904206	298
70904206	309
70904206	313
70904206	234
70904206	249
70904206	253
70904206	17
70904206	18

Part No.	Page
70904206	26
70904206	31
70904206	34
70904206	37
70904206	38
70904206	59
70904206	151
70904206	152
70904206	153
70904206	158
70904206	132
70904206	133
70904206	135
70904206	137
70904206	67
70904206	73
70904206	83
70904206	96
70904206	97
70904206	99
70904206	102
70904206	103
70904206	107
70904206	108
70904207	280
70904207	295
70904207	314
70904207	37
70904207	41
70904207	115
70904207	103
70904207	107
70904207	108
70904207	111
70904207	105A
70904208	276
70904208	279
70904208	280
70904208	295
70904208	297
70904208	307
70904208	309
70904208	313
70904208	193
70904208	203
70904208	212
70904208	219
70904208	220
70904208	228
70904208	17
70904208	27
70904208	29
70904208	37
70904208	41
70904208	47
70904208	52
70904208	54
70904208	59
70904208	151
70904208	153
70904208	141
70904208	148
70904208	65
70904208	66
70904208	77
70904208	97
70904208	105
70904208	106
70904208	107
70904208	111
70904209	297
70904209	216
70904209	255
70904210	287
70904210	229
70904223	156
70904271	105
70904273	79
70904369	275
70904369	276
70904369	234
70904369	69
70904371	139
70905014	105A
70905122	307
70905122	309
70905122	134
70905122	95
70905123	153
70905123	175
70905123	175
70905123	141
70905129	20
70905347	269
70905347	270
70905347	156
70905357	208
70905357	85
70905359	137
70905657	182
70905845	59
70905850	31
70906820	87
70906958	244
70906958	182
70906959	302
70906959	304
70906960	247
70906961	251
70907859	129
70907863	39
70908191	202
70909055	139
70909091	115
70909091	117
70910123	31
70910123	96
70910123	99
70910141	32
70910175	97
70910210	236
70910210	232
70910224	42
70910231	311
70910231	118
70910231	139
70910231	143
70910244	274
70910244	309
70910244	228
70910244	250
70910244	27
70910244	151
70910244	148
70910244	66
70910244	107
70910244	111
70910255	185
70910267	66
70910285	244
70910285	246
70910285	250
70910285	259
70910285	69
70910285	70
70910285	87
70910286	45
70910286	48
70910286	125
70910286	69
70910286	89
70910286	104
70910287	270
70910287	273
70910287	274
70910287	283
70910287	307
70910287	308
70910287	234
70910287	238
70910287	240
70910287	247
70910287	241
70910287	259
70910287	45
70910287	51
70910287	59
70910287	152
70910287	157
70910287	158
70910287	169
70910287	175
70910287	179
70910287	176
70910287	177
70910287	185
70910287	119
70910287	125
70910287	131
70910287	147
70910287	67
70910287	69
70910287	89
70910287	90
70910287	91
70910287	95
70910287	111
70910287	55A
70910324	73
70910324	102
70910324	107
70910325	29
70910329	299
70910334	239
70910335	87
70910510	97
70910847	13
70910847	99
70910880	61
70910880	53
70910880	55
70910880	62
70910916	265
70910916	267
70910916	211
70910919	105A
70910948	309
70910948	153
70910948	176
70911005	225B
70911024	233
70911024	244
70911024	246
70911024	250
70911024	259
70911024	49
70911024	87
70911025	307
70911025	309
70911025	45
70911025	187
70911025	69
70911025	93
70911026	233
70911026	274
70911026	307
70911026	308
70911026	309
70911026	223
70911026	241
70911026	243
70911026	249
70911026	45
70911026	57
70911026	152
70911026	153
70911026	157
70911026	175
70911026	179
70911026	180
70911026	176
70911026	187
70911026	119
70911026	147
70911026	67
70911026	69
70911026	79
70911026	82
70911026	83
70911026	111
70911028	267
70911028	273
70911028	274
70911028	295
70911028	188
70911028	217
70911028	218
70911028	221
70911028	223
70911028	254
70911028	45
70911028	153
70911028	157
70911028	158
70911028	179
70911028	180
70911028	187
70911028	141
70911028	148
70911028	82
70911028	111
70911029	197
70911029	209
70911029	235
70911029	236
70911029	249
70911029	252
70911029	255
70911030	192
70911030	194
70911031	260
70911031	261
70911031	264A
70911031	263A
70911032	262
70911032	190
70911034	153
70911034	155
70911034	66
70911035	273
70911035	66
70911040	69
70911040	70
70911040	79
70911041	307
70911041	308
70911041	238
70911041	249
70911041	175
70911041	176
70911043	232
70911043	234
70911043	236
70911043	245
70911044	251
70911044	31
70911044	187
70911046	195
70911046	90
70911048	153
70911048	155
70911048	66
70911048	69
70911048	70
70911049	188
70911049	239
70911049	49
70911069	261
70911069	267
70911114	22
70911114	59
70911115	62
70911115	234
70911115	240
70911115	249
70911115	45
70911115	151
70911115	152
70911115	153
70911115	155
70911115	158
70911115	141
70911115	69
70911115	107
70911115	114
70911401	151
70911423	34
70911608	249
70911841	87
70911992	303
70911992	41
70912007	35
70912007	52
70912007	54
70912007	73
70912060	79
70912069	31
70912069	132
70912069	133
70912069	97

Part No.	Page
70912069	99
70912069	107
70912069	108
70912177	69
70912177	70
70912201	105A
70912226	61
70912226	53
70912226	55
70912251	286
70912262	144
70912267	141
70912274	37
70912333	34
70912333	47
70912333	106
70912415	12
70912415	103
70912441	267
70912441	274
70912441	188
70912441	191
70912441	194
70912441	203
70912441	205
70912441	208
70912441	209
70912441	218
70912441	234
70912441	235
70912441	245
70912441	250
70912441	251
70912441	45
70912441	57
70912441	152
70912441	157
70912441	158
70912441	159
70912441	161
70912441	163
70912441	165
70912441	167
70912441	168
70912441	179
70912441	176
70912441	187
70912441	119
70912441	123
70912441	125
70912441	126
70912441	127
70912441	131
70912441	147
70912441	148
70912441	70
70912441	95
70912441	104
70912441	111
70912497	289
70912589	87
70912603	226
70912603	227
70912731	237
70912731	237
70912739	237
70912768	115
70912942	283
70912942	196
70912942	197
70912942	203
70912942	235
70912942	236
70912942	251
70912942	158
70912942	161
70912942	164
70912942	167
70912942	187
70913077	287
70913077	228
70913112	59
70913249	228
70913257	105A
70913280	11
70913544	26
70913544	59
70913544	73
70913683	99
70913706	84
70913755	38
70913798	95
70913830	219
70914012	313
70914105	225
70914105	225A
70914378	57
70914399	279
70914452	69
70914465	260
70914465	262
70914465	263
70914465	268
70914465	269
70914465	279
70914465	286
70914465	289
70914465	292
70914465	293
70914465	196
70914465	204
70914465	211
70914465	216
70914465	117
70914498	55A
70914501	279
70914501	289
70914659	61
70914678	250
70914678	177
70914678	89
70914678	90
70914678	111
70914678	55A
70914687	121
70914709	257
70914710	257
70914711	257
70914712	257
70914713	257
70914714	257
70914715	257
70914716	257
70914717	257
70914718	257
70914719	257
70914726	199
70914726	201
70914726	90
70914727	195
70914728	190
70914730	196
70914730	226
70914730	227
70914730	253
70914732	257
70914847	284
70914847	292
70914847	298
70914847	26
70914847	34
70914847	153
70914847	118
70914876	255
70915274	286
70915275	284
70915343	34
70915343	59
70915406	29
70915406	49
70915408	62
70915408	234
70915408	18
70915408	158
70915408	73
70915408	103
70915408	55A
70915432	85
70915486	84
70915488	84
70915504	229
70915556	84
70915557	84
70915569	69
70915692	95
70915751	42
70915779	295
70915797	307
70915797	308
70915797	175
70915807	29
70915813	307
70915813	309
70915813	22
70915813	37
70915813	38
70915888	93
70915891	259
70915891	90
70915903	177
70915904	118
70915905	144
70915917	91
70915963	297
70915969	29
70915969	141
70915969	106
70915969	107
70915972	289
70915972	290
70915972	226
70915987	276
70915987	280
70915987	313
70915987	220
70915987	34
70915987	176
70915987	71
70915987	76
70915987	106
70915987	107
70915989	153
70916001	38
70916001	40
70916009	11
70916009	107
70916028	203
70916028	70
70916168	172
70916168	69
70916168	70
70916170	250
70916191	295
70916191	107
70916191	108
70916197	280
70916197	314
70916197	105A
70916222	115
70916244	286
70916254	55A
70916265	279
70916269	73
70916270	197
70916271	307
70916271	253
70916271	155
70916271	103
70916272	280
70916272	294
70916272	298
70916272	313
70916272	234
70916272	26
70916272	153
70916272	117
70916272	67
70916272	103
70916272	107
70916272	55A
70916273	309
70916274	153
70916274	103
70916277	66
70916277	67
70916279	65
70916284	22
70916285	259
70916287	234
70916308	27
70916309	148
70916310	279
70916310	280
70916310	193
70916310	148
70916311	307
70916311	219
70916311	17
70916311	29
70916311	59
70916311	153
70916311	115
70916311	148
70916311	105
70916311	106
70916311	107
70916311	111
70916313	279
70916313	41
70916313	151
70916314	220
70916314	34
70916314	37
70916314	97
70916316	295
70916316	297
70916316	14
70916316	153
70916317	280
70916317	14
70916317	47
70916317	76
70916317	106
70916318	280
70916318	313
70916319	313
70916319	66
70916320	106
70916320	107
70916321	267
70916321	17
70916322	107
70916323	47
70916326	34
70916381	155
70916406	255
70916422	51
70916532	225
70916532	225A
70916543	40
70916543	41
70916555	227
70916559	299
70916591	65
70916871	41
70916873	105A
70916937	188
70917013	32
70917014	31
70917023	31
70917376	233
70917378	87
70917409	31
70917409	32
70917425	76
70917555	42
70917555	43
70917648	218
70917648	219
70917666	219
70917673	31
70917673	32
70917673	71
70917730	211
70917730	215
70917792	254
70917807	52
70917807	53
70917807	55
70917807	59
70917807	73
70917807	55A
70917809	62
70917809	61
70917809	108
70917810	52
70917810	53
70917810	55
70917810	59
70917810	59

Part No.	Page
70917810	73
70917810	55A
70917841	32
70917936	216
70918015	187
70918111	66
70918115	117
70918116	117
70918182	100
70918210	244
70918245	265
70918245	268
70918245	270
70918308	79
70918309	279
70918374	103
70918390	118
70918394	289
70918395	103
70918397	143
70918547	143
70918547	144
70918697	47
70918740	103
70918794	62
70918794	61
70918850	12
70918851	12
70918851	35
70918887	12
70918887	29
70918888	47
70918951	47
70918951	90
70919005	52
70919005	53
70919005	73
70919015	59
70919062	137
70919063	45
70919063	151
70919063	90
70919075	6
70919075	7
70919076	6
70919076	7
70919079	6
70919079	7
70919080	7
70919081	6
70919081	7
70919081	7
70919082	7
70919108	95
70919128	45
70919134	12
70919134	52
70919134	170
70919134	172
70919134	105A
70919135	57
70919135	137
70919136	111
70919140	241
70919143	6
70919143	7
70919144	7
70919155	6
70919155	7
70919156	6
70919156	7
70919157	7
70919158	7
70919159	6
70919171	240
70919172	111
70919174	241
70919174	242
70919174	79
70919180	139
70919180	114
70919194	6
70919194	7
70919196	6
70919196	7
70919206	45
70919206	90
70919207	7
70919214	240
70919214	241
70919218	6
70919224	17
70919224	34
70919224	132
70919224	97
70919224	99
70919224	102
70919224	103
70919225	153
70919225	99
70919225	107
70919225	108
70919226	102
70919229	13
70919229	17
70919230	307
70919230	309
70919230	212
70919230	52
70919230	54
70919230	77
70919231	106
70919246	151
70919246	147
70919246	111
70919253	7
70919254	7
70919281	7
70919282	6
70919282	7
70919294	107
70919303	61
70919342	132
70919342	133
70919464	158
70919469	6
70919472	151
70919472	123
70919473	6
70919481	108
70919520	132
70919520	133
70919546	243
70919546	169
70919761	153
70919773	169
70919784	141
70919789	105
70919797	61
70919800	61
70919801	141
70919824	158
70919824	125
70919840	12
70919840	34
70919840	170
70919840	172
70919840	125
70919840	71
70919840	103
70919840	107
70920107	156
70920131	104
70920144	7
70920221	7
70920222	6
70920222	7
70920275	118
70920275	103
70920279	59
70920280	52
70920280	53
70920280	55
70920280	59
70920280	55A
70920286	7
70920301	6
70920301	7
70920302	6
70920303	6
70920303	7
70920319	91
70920333	18
70920333	22
70920333	126
70920333	100
70920344	7
70920416	12
70920416	100
70920416	102
70920449	144
70920525	125
70920525	132
70920525	133
70920525	103
70920570	212
70920570	215
70920574	249
70920574	22
70920574	157
70920574	163
70920574	119
70920582	274
70920582	190
70920582	194
70920582	203
70920582	205
70920582	219
70920582	250
70920582	57
70920582	145
70920582	147
70920582	104
70920583	271
70920583	274
70920583	218
70920583	223
70920583	45
70920583	168
70920583	179
70920583	125
70920583	79
70920583	83
70920583	87
70920585	217
70920585	223
70920585	253
70920585	187
70920585	125
70920585	126
70920585	127
70920585	82
70920594	39
70920612	55A
70920722	105
70920743	223
70920790	59
70920794	7
70920795	7
70920798	7
70920847	6
70920847	7
70920849	6
70920850	6
70920850	7
70920851	6
70920852	7
70920855	7
70920857	6
70920857	7
70920858	7
70920862	6
70920862	7
70920864	7
70920865	6
70920865	7
70920866	6
70920868	7
70920869	7
70920871	7
70920872	7
70920877	7
70920879	6
70920880	7
70920944	7
70920972	7
70920973	7
70920978	7
70920982	7
70920986	7
70920995	51
70920995	175
70920995	79
70920996	274
70920996	283
70920996	259
70920996	175
70921033	6
70921033	7
70921034	6
70921034	7
70921039	273
70921046	6
70921068	235
70921076	270
70921076	273
70921076	211
70921076	215
70921076	249
70921076	259
70921076	59
70921076	79
70921076	82
70921076	90
70921076	91
70921076	95
70921085	145
70921115	270
70921115	273
70921115	294
70921115	313
70921116	273
70921116	280
70921116	294
70921116	313
70921117	280
70921117	295
70921117	314
70921117	111
70921118	280
70921118	313
70921122	187
70921168	203
70921168	167
70921171	276
70921171	199
70921171	221
70921172	191
70921172	249
70921172	252
70921174	196
70921174	216
70921175	233
70921175	235
70921175	243
70921175	152
70921175	167
70921175	179
70921175	180
70921175	148
70921175	111
70921177	164
70921178	159
70921181	51
70921193	239
70921203	132
70921203	133
70921204	283
70921204	299
70921205	151
70921205	179
70921206	283
70921206	156
70921206	179
70921206	123
70921206	132
70921214	151
70921214	179
70921214	125
70921214	147
70921214	111
70921215	147
70921216	125
70921227	179
70921227	147
70921228	151
70921228	111
70921235	147
70921244	314
70921266	191

Part No.	Page
70921266	192
70921266	194
70921266	249
70921272	185
70921326	151
70921349	163
70921349	169
70921349	179
70921396	134
70921401	116
70921401	117
70921402	163
70921403	192
70921403	197
70921403	249
70921404	209
70921409	169
70921409	179
70921411	271
70921411	161
70921422	104
70921466	179
70921467	279
70921467	295
70921472	57
70921495	7
70921513	7
70921520	31
70921535	161
70921539	221
70921539	250
70921556	188
70921556	211
70921556	215
70921556	223
70921556	254
70921556	22
70921556	82
70921556	89
70921556	111
70921565	274
70921565	307
70921565	308
70921565	223
70921565	187
70921565	125
70921566	45
70921566	48
70921566	125
70921569	250
70921569	177
70921569	89
70921569	111
70921570	157
70921573	163
70921597	219
70921597	161
70921598	125
70921599	313
70921841	59
70921852	57
70921865	66
70921865	73
70921885	54
70921885	55
70921885	55A
70921885	55A
70921887	179
70921887	119
70921887	147
70921911	185
70921911	73
70921911	105
70921911	105A
70921912	179
70921912	147
70921912	73
70921913	119
70921914	185
70921914	89
70921914	90
70921915	79
70922051	114
70922063	177
70922064	35
70922065	34
70922198	27
70922198	103
70922199	107
70922220	35
70922262	233
70922262	247
70922262	45
70922262	57
70922262	179
70922262	180
70922262	119
70922262	147
70922262	69
70922286	152
70922286	69
70922287	307
70922287	259
70922287	79
70922300	233
70922300	234
70922300	235
70922300	240
70922300	241
70922300	243
70922300	249
70922300	45
70922300	179
70922300	180
70922300	69
70922319	209
70922458	201
70922464	197
70922508	250
70922509	212
70922509	215
70922509	221
70922510	188
70922510	223
70922510	187
70922524	114
70922526	221
70922526	226
70922526	158
70922526	187
70922577	54
70922660	247
70922673	250
70922726	271
70922726	208
70922726	209
70922726	158
70922726	165
70922726	123
70922744	194
70922744	90
70922745	129
70922763	233
70922763	283
70922763	308
70922763	211
70922763	211
70922763	215
70922763	219
70922763	221
70922763	223
70922763	243
70922763	249
70922763	51
70922763	57
70922763	152
70922763	157
70922763	164
70922763	167
70922763	175
70922763	119
70922763	125
70922763	131
70922763	79
70922763	89
70922763	90
70922789	192
70922808	7
70922843	89
70922848	177
70922848	79
70922848	83
70922850	116
70922859	252
70922872	57
70922884	22
70922925	225B
70923011	7
70923124	177
70923124	187
70923137	275
70923174	179
70923192	111
70923193	40
70923193	41
70923201	253
70923253	7
70923255	7
70923259	7
70923259	7
70923276	196
70923379	303
70923379	8
70923408	42
70923408	43
70923421	99
70923438	149
70923455	260
70923560	86
70923574	31
70923575	8
70923575	115
70923578	283
70923581	298
70923585	117
70923586	201
70923594	127
70923641	57
70923645	61
70923645	8
70923645	170
70923645	172
70923651	8
70923651	107
70923663	171
70923663	173
70923664	297
70923664	111
70923687	169
70923717	179
70923738	29
70923810	8
70923810	22
70923813	8
70923814	116
70923816	115
70923821	199
70923821	167
70923827	203
70923846	299
70923850	297
70923853	275
70923884	209
70923931	201
70923934	8
70923934	52
70923934	54
70923935	8
70923935	96
70923935	99
70923936	8
70923947	169
70923948	297
70923950	298
70923980	147
70923984	157
70923988	171
70923988	173
70924110	270
70924110	273
70924110	294
70924110	313
70924137	33
70924138	209
70924149	192
70924149	193
70924153	298
70924169	225
70924177	7
70924192	280
70924192	295
70924192	314
70924193	280
70924193	313
70924200	273
70924200	280
70924200	283
70924200	294
70924200	313
70924270	299
70924274	283
70924306	231
70924320	231
70924408	7
70924416	170
70924416	172
70924433	225B
70924433	225B
70924463	231
70924541	231
70924550	231
70924554	231
70924636	35
70924678	190
70924686	313
70924691	292
70924691	297
70924692	297
70924696	299
70924772	199
70924775	303
70924787	145
70924790	145
70924815	276
70924822	13
70924828	111
70924838	259
70924843	111
70924854	303
70924855	304
70924863	97
70924863	99
70924864	188
70924864	187
70924864	131
70924864	95
70924921	145
70924922	303
70924989	170
70925069	303
70925081	303
70925108	230
70925109	230
70925110	230
70925135	125
70925135	95
70925162	259
70925164	259
70925192	302
70925238	105A
70925247	284
70925310	145
70925393	311
70925612	8
70925612	106
70925638	305
70925640	304
70925655	311
70925671	264
70925671	263A
70925671	264A
70925806	269
70925806	270
70925807	313
70925809	265
70925809	267
70925810	190
70925810	265
70925810	267
70925880	253
70925889	249
70925947	199
70926180	90
70926193	11
70926199	11
70926201	199
70926216	177
70926269	302
70926269	305
70926283	265

Part No.	Page	Part No.	Page	Part No.	Page	Part No.	Page	Part No.	Page
70926283	267	70927421	177	70930349	55A	73054598	293	74059979	105
70926292	240	70927422	177	70930404	238	73055463	275	74059992	75
70926339	91	70927453	240	70930481	189	73055463	276	74060051	75
70926356	299	70927453	241	70930728	238	73055465	275	74060052	75
70926380	195	70927453	243	70930804	55A	73055467	275	74060053	75
70926391	293	70927464	297	70930805	32	73056933	277	74060054	75
70926566	209	70927483	158	71002154	173	73057408	275	74060055	75
70926601	201	70927485	41	71002296	145	73057408	276	74060056	75
70926633	284	70927485	90	73007474	100	73059271	275	74060057	75
70926637	292	70927487	211	73027756	115	73059271	277	74060643	59
70926672	25	70927487	215	73034915	115	73059354	276	74060645	59
70926699	51	70927491	250	73035105	114	73059884	236	74060646	59
70926744	212	70927519	212	73037615	129	73061080	276	74060647	59
70926772	49	70927522	159	73037629	129	73061759	276	74060691	49
70926785	262	70927522	131	73037631	129	73061763	276	74060693	49
70926785	252	70927529	197	73037638	129	73062228	276	74060861	63
70926818	284	70927541	246	73037641	129	73100082	87	74061040	59
70926822	275	70927542	245	73037645	129	74020145	61	74061041	59
70926822	277	70927543	157	73037646	129	74021227	63	74061042	59
70926865	293	70927574	194	73037730	143	74023721	55A	74061078	59
70926959	283	70927574	161	73037768	129	74024482	87	74061528	9
70926978	275	70927583	41	73037990	115	74026614	39	74061546	9
70927008	223	70927599	79	73038933	134	74028077	39	74113897	8
70927015	190	70927612	45	73038935	134	74028922	17	74115287	61
70927015	252	70927640	231	73038937	134	74028945	52	74119937	8
70927044	40	70927801	100	73038938	134	74028945	54	74119937	13
70927101	304	70927803	100	73039013	134	74041092	100	74119937	17
70927104	274	70928043	235	73042943	80	74041097	100	74142263	105
70927139	59	70928043	236	73045531	79	74050778	139	74181061	75
70927157	185	70928052	249	73047563	275	74052052	139	74250723	71
70927158	251	70928052	259	73051194	284	74052167	100	74250898	21
70927159	215	70928130	204	73051194	292	74053409	47	74251367	55A
70927171	277	70928138	233	73052086	87	74053410	47	74251601	31
70927172	197	70928138	250	73052618	284	74053627	115	74253190	29
70927173	158	70928138	87	73052623	284	74054566	105	74253286	59
70927174	274	70928175	196	73052624	284	74054568	104	74253555	49
70927174	111	70928182	244	73052687	284	74054569	104	74253749	9
70927205	158	70928188	243	73052689	283	74054570	114	74253749	9
70927211	175	70928188	187	73052690	283	74055031	104	74253749	15
70927216	274	70928188	125	73052693	284	74055032	105	74253862	95
70927218	274	70928190	233	73052879	284	74055033	105	74254100	97
70927224	79	70928197	225	73052879	292	74055034	105	74254100	99
70927225	119	70928211	39	73052942	276	74055195	75	74254742	32
70927298	221	70928212	40	73052980	293	74055971	47	74254873	8
70927298	185	70928291	51	73052982	292	74056289	75	74254873	26
70927309	157	70928389	177	73052983	292	74056291	75	74254905	114
70927322	59	70928452	190	73053357	293	74056293	75	74254948	100
70927328	204	70928453	211	73053359	293	74056294	75	74254971	149
70927335	283	70928453	215	73053360	293	74056295	75	74254980	259
70927336	283	70928532	125	73053715	275	74056296	75	74255110	97
70927342	270	70928798	188	73053715	277	74056300	75	74255110	99
70927344	273	70928873	218	73053716	275	74056305	75	74255179	61
70927353	271	70929009	120	73053716	277	74056306	75	74255286	105
70927353	191	70929021	79	73053885	284	74056314	75	74255286	105A
70927355	226	70929024	79	73053885	292	74059019	75	74255287	105
70927355	227	70929071	89	73053886	284	74059029	75	74255287	105A
70927359	260	70929090	121	73053886	292	74059030	75	74255335	119
70927359	263A	70929156	233	73053904	284	74059262	49	74255338	100
70927359	264A	70929188	185	73053977	293	74059264	49	74255351	27
70927367	227	70929247	234	73053978	283	74059265	49	74255361	27
70927370	226	70929290	275	73054072	276	74059266	49	74255490	25
70927370	227	70929290	277	73054073	276	74059343	49	74255491	25
70927373	211	70929293	79	73054108	275	74059380	105	74255511	8
70927373	215	70929311	254	73054108	277	74059809	49	74255513	8
70927373	89	70929379	218	73054424	292	74059810	49	74255577	25
70927382	97	70929379	51	73054485	284	74059811	49	74255631	8
70927384	233	70929380	218	73054485	292	74059812	49	74255631	47
70927384	55A	70929416	71	73054486	284	74059813	49	74255631	107
70927400	240	70929864	158	73054486	292	74059814	49	74255631	108
70927400	67	70930345	277	73054488	276	74059817	49	74255665	8

Part No.	Page
74255665	59
74255770	105
74255781	8
74255781	107
74255839	97
74255839	99
74255895	71
74255898	8
74255898	22
74255904	8
74255904	22
74255912	8
74255912	23
74255914	71
74255956	62
74255956	61
74255956	8
74255956	108
74255977	73
74271289	8
74303038	29
74303694	23
74310257	8
74310257	9
74310257	14
74310257	73
74310257	90
74313015	103
74317554	103
74320597	40
74320608	31
74335548	38
74335610	37
74335669	32
74336491	11
74336646	29
74336897	8
74336897	22
74339021	47
74339532	9
74339532	73
74339533	9
74339533	73
74339535	73
74348682	38
74348683	38
74348684	38
74348691	32
74348691	38
74354449	14
74354537	103
74354568	38
74354568	40
74354573	37
74355843	33
74355843	59
74359248	104
74359293	33
74359310	38
74359310	40
74359656	47
74359776	55
74359968	76
74359972	73
74361551	8
74361740	8
74361740	96
74361740	99
74361829	61
74361829	32
74362338	35
74362458	103
74364166	32
74364404	31
74365129	34
74365129	35
74365627	32
74367090	8
74367090	31
74368204	14
74368205	14
74368206	14
74369002	14
74369746	32
74371021	47
74371027	8
74371027	18
74371107	71
74371107	76
74371107	107
74371118	31
74371160	8
7437116C	107
74371253	37
74371253	40
74371255	34
74371270	42
74371270	43
74371289	34
74371300	43
74371345	8
74371444	17
74371445	17
74371707	95
74371742	8
74371742	177
74372325	47
74372421	100
74373613	47
74373619	13
74373716	22
74374127	37
74374695	76
74375682	100
74375686	100
74375691	100
74375694	100
74376277	29
74376294	37
74376398	8
74376398	96
74376398	99
74376483	8
74376483	103
74376497	25
74376520	8
74376520	103
74376538	29
74376590	32
74376591	31
74376596	31
74376598	31
74376603	8
74376603	31
74376604	31
74376609	8
74376609	17
74376627	32
74376749	8
74376749	14
74376749	47
74376986	15
74377038	42
74377039	42
74377039	43
74377050	43
74377054	43
74377120	8
74377120	14
74377201	37
74377202	38
74377267	61
74377278	32
74377541	29
74378031	63
74378031	8
74378033	63
74378112	8
74378112	103
74378253	102
74378298	73
74378558	37
74379070	8
74379070	34
74379198	14
74379268	47
74379269	47
74379415	42
74379610	43
74379723	73
74379913	73
74380652	63
74385253	125
74385317	8
74385320	8
74385485	9
74385485	13
74385536	37
74385537	37
74385715	37
74385781	34
74385796	34
74386077	42
74386083	42
74386088	42
74386137	8
74386137	103
74386223	8
74386359	21
74386360	21
74386384	37
74386405	29
74386406	29
74386413	25
74386421	26
74386453	21
74386454	21
74386455	21
74386456	21
74386457	21
74386458	21
74386466	21
74386467	21
74386468	21
74386469	21
74386473	20
74386474	20
74386475	20
74386476	20
74386480	20
74386481	20
74386482	20
74386483	20
74386495	8
74386495	106
74386601	61
74386602	61
74386617	62
74386628	25
74386650	22
74386651	22
74386653	25
74386711	31
74386776	29
74386779	103
74386790	25
74386826	31
74386855	97
74386856	8
74386862	100
74386879	32
74386881	103
74386891	103
74386894	103
74386901	26
74386924	100
74387031	20
74387032	20
74387033	21
74387050	100
74387051	100
74387385	61
74387418	107
74387525	8
74387529	251
74387605	100
74387606	100
74387607	100
74387609	100
74387697	8
74387697	71
74387697	76
74387726	26
74387906	73
74388142	15
74388146	15
74388148	62
74388185	107
74388261	37
74388349	71
74388428	29
74388465	107
74388488	37
74388563	103
74388574	105
74388648	79
74388809	47
74388810	47
74388836	47
74388848	47
74389036	103
74389040	14
74389052	20
74389058	13
74389231	13
74389232	13
74389234	13
74389235	12
74389291	9
74389291	106
74389292	13
74389293	25
74389294	25
74389317	29
74389359	100
74389397	25
74389593	31
74389599	31
74389635	9
74389635	106
74389676	9
74389676	107
74389678	9
74389678	107
74389685	25
74389732	37
74389782	9
74389782	37
74389911	13
74389923	13
74389924	13
74389943	13
74389961	8
74389961	26
74389965	26
74390006	63
74390011	15
74390064	42
74390067	42
74390068	15
74390093	61
74390094	61
74390095	61
74390097	43
74390098	43
74390117	29
74390120	97
74390170	8
74390172	77
74390175	9
74390175	9
74390175	15
74390202	73
74390229	11
74390252	42
74390254	29
74390270	29
74390294	29
74390295	29
74390296	29
74390297	29
74390328	38
74390362	37
74390432	9
74390432	22
74390507	27
74390547	25
74390548	25
74390583	108
74390589	108
74390590	108
74390591	107
74390592	107
74390593	48
74390594	108
74390595	107
74390655	97
74390655	99
74390809	12
74390837	18

Part No.	Page
74390888	107
74390992	97
74390992	99
74390995	99
74391003	99
74391019	31
74391146	47
74391154	97
74391154	99
74391156	16
74391157	16
74391158	16
74391159	16
74391160	13
74391231	23
74391240	63
74391306	25
74391307	13
74391307	25
74391346	73
74391351	97
74391351	99
74391366	14
74391378	14
74391390	34
74391403	31
74391407	31
74391408	32
74391411	31
74391412	31
74391412	32
74391419	31
74391425	76
74391441	31
74391473	9
74391473	14
74391475	32
74391487	9
74391487	15
74391554	32
74391593	97
74391593	99
74391634	73
74391646	34
74391650	97
74391666	23
74391687	97
74391704	71
74391707	8
74391707	9
74391707	71
74391845	29
74391849	29
74391869	29
74391870	29
74391885	32
74391911	17
74391912	33
74391914	33
74391933	99
74391934	99
74391938	99
74391949	99
74391950	99
74391955	99
74392024	15
74392025	15
74392051	25
74392052	25
74392053	25
74392054	25
74392057	63
74392068	25
74392121	63
74392183	29
74392190	33
74392272	75
74392279	8
74392279	102
74392304	63
74392305	63
74392350	59
74392384	61
74392385	61
74392386	61
74392387	61
74392388	61
74392389	61
74392445	61
74392482	52
74392486	53
74392492	59
74392494	59
74392498	52
74392500	59
74392576	25
74392626	105
74392630	59
74392788	62
74392789	61
74392801	53
74392839	25
74393077	54
74393090	55
74393259	66
74393260	67
74393267	9
74393322	20
74393324	100
74393325	100
74393341	41
74393342	39
74393344	39
74393346	39
74393346	39
74393347	39
74393349	39
74393351	39
74393354	39
74393355	39
74393356	41
74393359	9
74393359	40
74393360	41
74393362	40
74393363	41
74393364	41
74393373	13
74393388	12
74393391	41
74393392	35
74393397	13
74393399	29
74393426	9
74393426	13
74393427	105A
74393436	19
74393443	19
74393443	25
74393466	9
74393466	73
74393504	105A
74393505	105A
74393548	76
74393552	17
74393557	106
74393560	17
74393563	77
74393586	107
74393591	106
74393599	41
74393600	41
74393601	41
74393625	26
74393628	26
74393636	13
74393702	106
74393708	107
74393764	55
74393765	55
74393778	71
74393813	61
74393853	14
74393854	14
74393924	25
74393973	14
74393975	14
74393989	8
74393989	25
74394009	59
74394015	8
74394034	8
74394034	9
74394036	22
74394038	22
74394053	9
74394053	16
74394055	9
74394172	16
74394177	61
74394178	53
74394178	55
74394188	107
74394264	19
74394288	22
74394301	59
74394302	59
74394306	59
74394318	59
74394346	12
74394407	55A
74394408	55A
74394426	25
74394434	105A
74394451	100
74394624	55A
74394625	55A
74394679	20
74500230	13
74507358	61
74507359	62
74507414	61
74507415	62
74509035	37
74509035	38
74511213	63
74511243	63
74513810	96
74513810	99
74516821	29
74640973	95
74640975	95
74640978	95
74660358	13
74660389	13
74660423	9
74660423	37
74660423	41
74660440	13
74660492	9
74660492	17
74660677	100
74662263	107
74665306	13
74752002	97
74752002	99
74905633	145