CATERPILLAR®

SEBP3329
December 2002

RUTHZIL TRATOR COMERCIAL DE PEÇAS LTDA 11 97083-6812 ROLANDO CITRANGULO

Parts Manual

SIS

See "General Information" for New Parts Manual Features.

16H Motor Grader

ATS1-Up (Machine)
5ED478-Up (Engine)
DWH1-Up (Transmission)

Powered By 3196 Engine
This Parts Manual is also Available in .PDF Format on Compact Disc(CD-ROM)-Caterpillar Form No. SERP3329

Product and Dealer Information

Note: For product identification plate locations, see the section “Product Identification Information” in the Operation and Maintenance Manual.

Delivery Date: _____

Product Information

Model: _____

Product Identification Number: _____

Engine Serial Number: _____

Transmission Serial Number: _____

Generator Serial Number: _____

Attachment Serial Numbers: _____

Attachment Information: _____

Customer Equipment Number: _____

Dealer Equipment Number: _____

Dealer Information

Name: _____ Branch: _____

Address: _____

_____

_____

	Dealer Contact	Phone Number	Hours
Sales:	_____	_____	_____
Parts:	_____	_____	_____
Service:	_____	_____	_____

Informations produit et concessionnaire

Nota: Voir l'emplacement de la plaque signalétique du produit au chapitre "Informations produit" du guide d'utilisation et d'entretien.

Date de livraison: _____

Informations produit

Modèle: _____

Numéro d'identification produit: _____

Numéro de série du moteur: _____

Numéro de série de la boîte de vitesses: _____

Numéro de série de l'alternateur: _____

Numéros de série d'équipement: _____

Informations sur l'équipement: _____

Numéro matériel client: _____

Numéro matériel concessionnaire: _____

Informations concessionnaire

Nom: _____ Agence: _____

Adresse: _____

_____

_____

	Contact concessionnaire	Numéro de téléphone	Heures
Ventes:			
Pièces:			
Service:			

Información del Producto/Distribuidor

Nota: Para saber la ubicación de las placas de identificación del producto, ver la sección “Información sobre identificación del producto” en el Manual de Operación y Mantenimiento.

Fecha de entrega: _____

Información del producto

Modelo: _____

Número de identificación del producto: _____

Número de serie del motor: _____

Número de serie de la transmisión: _____

Número de serie del generador: _____

Números de serie de los accesorios: _____

Información sobre los accesorios: _____

Número del equipo del cliente: _____

Número del equipo del distribuidor: _____

Información del distribuidor

Nombre: _____ Sucursal: _____

Dirección: _____

_____

_____

	Comunicación con el distribuidor	Número de teléfono	Horas
Ventas:	_____	_____	_____
Piezas:	_____	_____	_____
Servicio:	_____	_____	_____

Informações Sobre Produto e Revendedor

Nota: Para localizações da placa de identificação do produto, consulte a seção, “Informações Sobre Identificação do Produto” no Manual de Operação e Manutenção.

Data de Entrega: _____

Informações Sobre o Produto

Modelo: _____

Número de Identificação do Produto: _____

Número de Série do Motor: _____

Número de Série da Transmissão: _____

Número de Série do Gerador: _____

Números de Série de Acessórios: _____

Informações Sobre Acessórios: _____

Número do Equipamento do Cliente: _____

Número do Equipamento do Revendedor: _____

Informações Sobre o Revendedor

Nome: _____ Filial: _____

Endereço: _____

_____

_____

	Contato do Revendedor	Telefone	Horas
Vendas:	_____	_____	_____
Peças:	_____	_____	_____
Serviço:	_____	_____	_____

Produkt- und Händlerinformation

Anmerkung: Für die Lage der Produkt-Identnummer und Seriennummern siehe Abschnitt "Produkt-Identinformation" im Betriebs- und Wartungshandbuch.

Lieferdatum: _____

Produkt-Identinformation

Modell: _____

Produkt-Identnummer: _____

Seriennummer des Motors: _____

Seriennummer des Getriebes: _____

Seriennummer des Generators: _____

Seriennummern der Arbeitsgeräte: _____

Arbeitsgeräteinformation: _____

Kundennummer: _____

Händlernummer: _____

Händlerinformation

Name: _____ Niederlassung: _____

Adresse: _____

_____

_____

	Kontaktperson beim Händler	Telefon	Dienststunden
Verkauf:	_____	_____	_____
Ersatzteile:	_____	_____	_____
Service:	_____	_____	_____

MEMORANDA

TABLE OF CONTENTS

Name	Page
GENERAL INFORMATION	A23
REPAIR ALTERNATIVES	A42
SUPPLEMENTAL COOLANT ADDITIVES	A47
MAINTENANCE PARTS	A52
INDEX	A91
MACHINE ARRANGEMENT	1
CONVERSION AR-CERTIFICATION	1
GENERAL AR	2
ENGINE ARRANGEMENT	4
ENGINE AR	4
BASIC ENGINE	6
AIR COMPRESSOR GP	6
BELT TENSIONER GP	10
CAMSHAFT GP	12
COVER GP-CYLINDER BLOCK	14
CRANKSHAFT GP	16
CYLINDER BLOCK AS	18
CYLINDER BLOCK GP	20
CYLINDER HEAD AS	22
CYLINDER HEAD GP	24
DRIVE GP-ACCESSORY	26
FASTENER GP-CYLINDER HEAD	28
FLYWHEEL GP	29
GEAR GP-FRONT	30
HOUSING GP-FLYWHEEL	31
HOUSING GP-FRONT	32
LIFTER GP-VALVE	34
LIFTING GP-ENGINE	35
MOUNTING GP-ENGINE	36
MOUNTING GP-VALVE MECHANISM	37
PAN GP-OIL	38
PISTON & ROD GP	40
PLUG GP-CYLINDER BLOCK	41
PLUG GP-ENGINE	42
ROCKER ARM GP	44
SEAL GP-CRANKSHAFT	46
SUPPORT GP-ENGINE	47
SUPPRESSION GP-SOUND	48
VALVE MECHANISM GP	50
LUBRICATION SYSTEM	52
BASE GP-OIL FILTER	52
FILLER GP-ENGINE OIL	54
FILTER GP-ENGINE OIL	56
GAUGE GP-OIL LEVEL (DIPSTICK)	58
LINES GP-TURBOCHARGER OIL	59
PUMP GP-ENGINE OIL	60
COOLING SYSTEM	62
COOLING AR	62
FAN & MOTOR GP	64
FASTENER GP-RADIATOR	66
HOUSING & REGULATOR GP	67
LINES GP-AFTERCOOLER WATER	68
LINES GP-POWER TRAIN COOLER	70
LINES GP-WATER	72
PUMP GP-WATER	77
RADIATOR & MOUNTING GP	80
RADIATOR GP	82
AIR INLET AND EXHAUST SYSTEM	84
AFTERCOOLER & MOUNTING GP	84
AIR CLEANER GP	85
MANIFOLD GP-EXHAUST	88
MANIFOLD GP-INLET	89
MUFFLER GP	90
TURBOCHARGER GP	92
FUEL SYSTEM	94
ADAPTER GP-FAST FILL FUEL	94
CONTROL GP-GOVERNOR	96
FILTER GP-FUEL	98
FILTER GP-WATER SEP & FUEL	99
INJECTOR GP-FUEL	100
LINES GP-DRAIN	101
LINES GP-FUEL	102
LINES GP-FUEL INJECTION	108
PUMP & MTG GP-FUEL TRANSFER	110
PUMP GP-FUEL INJECTION	111
PUMP GP-FUEL PRIMING	112
TANK GP-FUEL	114
VALVE GP-CHECK	122
ELECTRICAL AND STARTING SYSTEM	123
ALARM GP	123
ALTERNATOR GP-CHARGING	124
BATTERY GP	127
BLOCK GP-JUNCTION	128
CIRCUIT BREAKER GP	129
CONTROL & MTG GP-ENGINE ELEK	131
CONTROL GP-ENGINE ELECTRONIC	132
CONTROL GP-SECONDARY STEERING	134
CONVERTER AR-ELECTRICAL	135
CONVERTER GP-ELECTRICAL	136
ELECTRONICS GP-MONITOR	139
HEATER GP-JACKET WATER	140
INSTALLATION GP-WARNING BEACON	142
LAMP GP-DOME	143
LAMP GP-FLOOD	144
LAMP GP-HEAD	145
LAMP GP-HEAD & SIGNAL	152

TABLE OF CONTENTS

Name	Page
LAMP GP-SIGNAL	156
LAMP GP-WARNING BEACON	158
LIGHTING AR-FLOOD	159
LIGHTING AR-FLOOD & SIGNAL	160
LIGHTING GP-BACKUP	162
LIGHTING GP-FLOOD	166
LIGHTING GP-SIGNAL	193
LIGHTING GP-WARNING	194
MOTOR GP-ELECTRIC	198
SENSOR GP-GROUND SPEED	201
SENSOR GP-POSITION	202
SENSOR GP-PRESSURE	203
SENSOR GP-SPEED	208
SENSOR GP-TEMPERATURE	210
STARTING AID GP-ETHER	212
STARTING MOTOR GP-ELECTRIC	216
SWITCH GP-DISCONNECT	218
SWITCH GP-LIGHT	220
SWITCH GP-MAGNETIC	222
SWITCH GP-WIPER	223
WARNING GP-BACKUP	224
WIRING GP-BLADE CUSHION	225
WIRING GP-CAB	226
WIRING GP-ENGINE	232
WIRING GP-FRONT	236
WIRING GP-REAR	240
WIRING GP-SECONDARY STEERING	254
WIRING GP-SHIFT CONSOLE	258
WIRING GP-STEERING CONSOLE	260
WIRING GP-UNIT INJECTOR	263
POWER TRAIN	264
ADAPTER GP-ENGINE TO TMSN	264
CASE GP-TRANSMISSION	265
CHAIN GP-DRIVE	266
CONTROL GP-CLUTCH	268
CONTROL GP-DIFFERENTIAL LOCK	272
CONTROL GP-TRANSMISSION	274
CONTROL GP-TRANSMISSION HYD	278
COOLER GP-TRANSMISSION OIL	280
COVER GP-SHIPPING	282
DIFFERENTIAL & BEVEL GEAR GP	284
DIFFERENTIAL GP	288
FILLER GP-POWER TRAIN OIL	290
FILTER GP-OIL	292
FINAL DRIVE GP	294
GEAR & CASE GP-TRANSFER	296
LINES GP-POWER TRAIN OIL	302
MOUNTING GP-WHEEL	304
PLANETARY GP-TRANSMISSION	306
PUMP GP-GEAR	312
TANDEM & COVER GP	314
TRANSMISSION AR	315
VALVE & MTG GP-DIFF LOCK	316
VALVE GP-CONTROL	317
VALVE GP-PILOT	318
VALVE GP-RELIEF	320
VALVE GP-SELECTOR & PRESS CONT	322
VALVE GP-SOLENOID	328
VALVE GP-TRANSMISSION CONTROL	330
WHEEL & TIRE AR	332
WHEEL & TIRE GP	337
WHEEL AR	349
WHEEL GP	349
FRAME AND BODY	352
AXLE GP-FRONT	352
CASE & FRAME GP	355
ENCLOSURE GP-ENGINE	356
FRAME GP-FRONT	359
GUARD & SUPPORT GP-RADIATOR	360
GUARD GP-BOTTOM	362
GUARD GP-PLATFORM	364
HITCH GP-ARTICULATING	368
LINES GP-GREASE	370
LINK GP-STEERING	371
SHIELD GP-DRIVE SHAFT	372
STEP GP	373
SUPPORT AR-REAR CHASSIS	374
SUPPORT GP-FUEL TANK	375
SUPPORT GP-PLATFORM	376
BRAKING SYSTEM	377
ACTUATOR GP-BRAKE	377
AIR DRYER GP	378
BRAKE GP-SERVICE	382
CONTROL GP-PARKING BRAKE	384
CONTROL GP-SERVICE BRAKE	388
LINES GP-AIR TANK	393
TANK GP-AIR	394
VALVE GP-AIR CONTROL	396
HYDRAULIC SYSTEM	398
ACCUMULATOR & MTG GP-HYDRAULIC	398
ACCUMULATOR GP-BLADE CUSHION	399
ACCUMULATOR GP-HYDRAULIC	400
CONTROL AR-HYDRAULIC	401
CONTROL GP-CENTERSHIFT LOCK	404
CONTROL GP-STEERING	406
CYLINDER & MTG GP-ARTICULATION	407
CYLINDER & MTG GP-BLADE LIFT	408
CYLINDER & MTG GP-BLADE TIP	409
CYLINDER & MTG GP-CENTERSHIFT	410
CYLINDER & MTG GP-SIDESHIFT	411
CYLINDER & MTG GP-STEERING	412

TABLE OF CONTENTS

Name	Page
CYLINDER & MTG GP-WHEEL LEAN	413
CYLINDER GP-ARTICULATION	414
CYLINDER GP-BLADE LIFT	416
CYLINDER GP-BLADE TIP	418
CYLINDER GP-CENTERSHIFT	420
CYLINDER GP-RIPPER LIFT	422
CYLINDER GP-SIDESHIFT	424
CYLINDER GP-STEERING	426
CYLINDER GP-WHEEL LEAN	430
DETENT GP-CONTROL VALVE	432
DRIVE GP-CIRCLE	436
DRIVE GP-PUMP	439
LINES GP-HYDRAULIC	440
LINES GP-HYDRAULIC FAN	448
LINES GP-PUMP	452
LINES GP-RIPPER	456
LINES GP-SECONDARY STEERING	460
LINES GP-STEERING	462
LOCK GP-CENTERSHIFT	466
LOCK GP-HYDRAULIC HAND CONTROL	467
MOTOR GP-GEAR	468
MOTOR GP-GEROTOR	470
PUMP & MOTOR GP	472
PUMP & MTG GP-PISTON	474
PUMP & MTG GP-SECONDARY STEER	476
PUMP GP-METERING	478
PUMP GP-PISTON	480
ROTATING GP-PUMP	484
STEERING AR-SECONDARY	486
SWIVEL GP	487
TANK & FILTER GP-HYDRAULIC	488
TANK & MTG GP-HYDRAULIC	490
VALVE & LINKAGE GP	492
VALVE GP-BANK 4	510
VALVE GP-BANK 5	515
VALVE GP-BANK 6	519
VALVE GP-BANK 7	520
VALVE GP-COMBINATION	522
VALVE GP-CONTROL	524
VALVE GP-PRESS & FLOW CMPNSTR	574
VALVE GP-PURGE	578
VALVE GP-RELIEF	579
VALVE GP-SHUTTLE	587
VALVE GP-SOLENOID	588
VALVE GP-SOLENOID & MANIFOLD	589
IMPLEMENTS	592
CIRCLE GP	592
DRAWBAR GP	594
PLATE GP-PUSH	596
WORK TOOLS	597
BIT GP	597
BLADE GP	598
EDGE GP-CUTTING	599
LIFT GP-BLADE	600
MOUNTING GP-RIPPER	602
RIPPER AR	603
RIPPER GP	604
TOOTH GP-RIPPER	606
OPERATOR STATION	607
ACCESSORY GP-CAB	607
AIR CONDITIONER & MOUNTING GP	609
AIR CONDITIONER AR	609
AIR CONDITIONER GP	610
ARMREST GP	614
COMPRESSOR GP-REFRIGERANT	616
CONDENSER & MTG GP-REFRIGERANT	618
CONSOLE GP-OPERATOR	620
CONVERSION AR-NON-ROPS	624
DOOR GP	626
DOOR GP-CAB	630
DUCT & CONTROL GP	638
DUCT GP	639
EXTENSION GP-BACKREST	640
FAN GP-CIRCULATING	642
FILTER GP-CAB AIR	648
HAMMER & MOUNTING GP	649
HEATER & MTG GP-CAB	651
HEATER AR-CAB	651
HEATER GP-CAB	652
HORN GP-AIR	656
HOUSING GP-SEAT SUSPENSION	660
INSTALLATION AR-RADIO	663
INSTALLATION GP-RADIO	664
INSTRUMENT AR	666
INSULATION GP-WEATHER	668
LINER GP-CAB	670
LINES GP-AIR CONDITIONER	682
LINES GP-HEATER	686
MIRROR GP-REAR VIEW	688
MODULE GP-QUAD GAUGE	696
MODULE GP-SPEEDOMETER & TACH	697
MOUNTING GP-ROPS	698
PAN GP-BACKREST	701
PAN GP-SEAT	702
PANEL GP-CAB	704
PANEL GP-INSTRUMENT	706
PANEL GP-WINDOW	710
ROPS AR-ENCLOSED	714
ROPS AR-OPEN	715
ROPS GP-ENCLOSED	716
ROPS GP-OPEN	717
SCREEN GP-SUN	718
SEAT BELT GP	719

TABLE OF CONTENTS

Name	Page	Name	Page
SEAT GP	720		
SEAT GP-SUSPENSION	724		
SUPPORT GP-SEAT	732		
SUSPENSION GP-SEAT	734		
VALVE GP-SOLENOID	738		
WASHER GP-WINDOW	740		
WINDOW GP	743		
WIPER AR-WINDOW	748		
WIPER GP-WINDOW	749		
SERVICE EQUIPMENT AND SUPPLIES	759		
TOOL BOX GP	759		
FILM GP	760		
PLATE & FILM GP	760		
PART NUMBER INDEX	B1		

TABLE DES MATIÈRES

Désignation	Page
GÉNÉRALITÉS	A26
OPTIONS DE RÉPARATION	A43
ADDITIFS POUR LIQUIDE DE REFROIDISSEMENT	A48
PIÈCES DE RECHANGE	A58
INDEX	A104
VERSION DE MACHINE	1
VERSION DE TRANSFORMATION - HOMOLOGATION	1
VUE DU MODÈLE	2
MOTEUR COMPLET	4
MOTEUR (VERSION)	4
MOTEUR STANDARD	6
COMPRESSEUR D'AIR (ASS)	6
TENDEUR DE COURROIE (ASS)	10
ARBRE A CAMES (ASS)	12
BLOC-CYLINDRES - COUVERCLE (ASS)	14
VILEBREQUIN (ASS)	16
BLOC-CYLINDRES (ENS)	18
BLOC-CYLINDRES (ASS)	20
CULASSE (ENS)	22
CULASSE (ASS)	24
ENTRAÎNEMENT AUXILIAIRE (ASS)	26
BOULONNERIE DE LA CULASSE (ASS)	28
VOLANT MOTEUR (ASS)	29
PIGNONNERIE AV (ASS)	30
CARTER DE VOLANT (ASS)	31
CARTER AV (ASS)	32
POUSSOIR DE SOUPAPE (ASS)	34
OEILLETONS DE LEVAGE MOTEUR (ASS)	35
MONTAGE DE MOTEUR (ASS)	36
MONTAGE DE CULBUTERIE (ASS)	37
HUILE MOTEUR - CARTER (ASS)	38
PISTON ET BIELLE (ASS)	40
BOUCHON - BLOC-CYLINDRES	41
BOUCHON DE MOTEUR (ASS)	42
AXE DE CULBUTEUR (ASS)	44
JOINT DE VILEBREQUIN (ASS)	46
SUPPORT DE MOTEUR (ASS)	47
INSONORISATION (ASS)	48
CULBUTERIE (ASS)	50
CIRCUIT DE GRAISSAGE	52
SUPPORT DE FILTRE À HUILE (ASS)	52
BOUCHON DE REMPLISSAGE D'HUILE MOTEUR (ASS)	54
FILTRE À HUILE MOTEUR (ASS)	56
JAUGE D'HUILE MOTEUR (BAIONNETTE) (ASS)	58
CANALISATIONS D'HUILE DE TURBOCOMPRESSEUR (ASS)	59
POMPE A HUILE MOTEUR (ASS)	60
CIRCUIT DE REFROIDISSEMENT	62
REFROIDISSEMENT (VERSION)	62
MOTEUR ET VENTILATEUR (ASS)	64
BOULONNERIE DU RADIATEUR (ASS)	66
THERMOSTAT ET BOITIER (ASS)	67
CANALIS. D'EAU - REFROIDISSEUR D'ADMISSION (ASS)	68
CANALISATIONS DE REFROIDIS. DE TRANSMISSION	70
CANALISATIONS D'EAU (ASS)	72
POMPE A EAU (ASS)	77
RADIATEUR ET MONTAGE (ASS)	80
RADIATEUR (ASS)	82
CIRCUIT D'ADMISSION D'AIR ET D'ÉCHAPPEMENT	84
REFROIDISSEUR D'ADMISSION ET MONTAGE (ASS)	84
FILTRE A AIR (ASS)	85
COLLECTEUR D'ÉCHAPPEMENT (ASS)	88
COLLECTEUR D'ADMISSION (ASS)	89
SILENCIEUX (ASS)	90
TURBOCOMPRESSEUR (ASS)	92
CIRCUIT DE CARBURANT	94
ADAPTATEUR DE REMPLIS. RAPIDE DE CARBURANT (ASS)	94
COMMANDE DE RÉGULATEUR (ASS)	96
FILTRE A CARBURANT (ASS)	98
FILTRE DE SÉPARATEUR D'EAU ET DE CARBURANT (ASS)	99
INJECTEUR DE CARBURANT (ASS)	100
CANALISATIONS DE VIDANGE (ASS)	101
CANALISATIONS DE CARBURANT (ASS)	102
CANALISATIONS D'INJECTION DE CARBURANT (ASS)	108
POMPE D'ALIMENTATION ET MONTAGE (ASS)	110

* TRADUCTION NON DISPONIBLE AU MOMENT DE LA PUBLICATION

TABLE DES MATIÈRES

Désignation	Page
POMPE D'INJECTION DE CARBURANT (ASS)	111
POMPE D'AMORÇAGE DE CARBURANT (ASS)	112
RÉSERVOIR DE CARBURANT (ASS)	114
CLAPET DE RETENUE (ENS)	122
CIRCUIT ÉLECTRIQUE ET DE DÉMARRAGE	123
AVERTISSEUR (ASS)	123
ALTERNATEUR DE CHARGE (ASS)	124
BATTERIE (ASS)	127
BLOC DE BRANCHEMENT (ASS)	128
DISJONCTEUR (ASS)	129
COMMANDE ET MONTAGE - MOTEUR	131
COMMANDE ELECTRONIQUE DE MOTEUR (ASS)	132
COMMANDE DE DIRECTION SECONDAIRE (ASS)	134
TRANSFORMATION ÉLECTRIQUE (VERSION)	135
TRANSFORMATION ELECTRIQUE (ASS)	136
ÉLECTRONIQUE-MONITEUR (ASS)	139
EAU DES CHEMISES - RECHAUFFEUR (ASS)	140
MONTAGE - GYROPHARE (ASS)	142
PLAFONNIER (ASS)	143
LAMPE - PHARE (ASS)	144
PHARE AV (ASS)	145
LAMPE - PHARE ET CLIGNOTANT	152
LAMPE - CLIGNOTANT DE DIRECTION (ASS)	156
LAMPE - GYROPHARE (ASS)	158
ÉCLAIRAGE-PROJECTEURS (VERSION)	159
ÉCLAIRAGE (VERSION)-PROJECTEUR & SIGNAL	160
ECLAIRAGE AR (ASS)	162
ÉCLAIRAGE - PROJECTEURS (ASS)	166
ÉCLAIRAGE CLIGNOTANT	193
ÉCLAIRAGE - AVERTISSEUR (ASS)	194
MOTEUR ELECTRIQUE (ASS)	198
CAPTEUR DE VITESSE DE TRANSLATION	201
SONDE - CIRCUIT DE CARBURANT	202
CAPTEUR DE PRESSION (ASS)	203
CAPTEUR DE VITESSE (ASS)	208
CAPTEUR DE TEMPERATURE (ASS)	210
AUXILIAIRE DE DÉMARRAGE À L'ÉTHER	212
DÉMARREUR ÉLECTRIQUE (ASS)	216
ROBINET DE BATTERIE (ASS)	218
INTERRUPTEUR D'ÉCLAIRAGE (ASS)	220
CONTACTEUR MAGNETIQUE (ASS)	222
INTERRUPTEUR D'ESSUIE-GLACE (ASS)	223
AVERTISSEUR DE RECUL (ASS)	224
CÂBLE D'AMORTISSEUR DE LAME (ASS)	225
CABLAGE DE CABINE (ASS)	226
CABLAGE DE MOTEUR (ASS)	232
CABLAGE AV (ASS)	236
CABLAGE AR (ASS)	240
CABLAGE DE DIRECTION AUXILIAIRE (ASS)	254
CABLAGE DE LA CONSOLE DE CHANGEMENTS DE VITESSE	258
CABLAGE DE LA CONSOLE DE DIRECTION	260
CABLAGE D'INJECTEUR	263
TRANSMISSION	264
ADAPTATEUR DU MOTEUR A LA TRANSMISSION (ASS)	264
CARTER DE BOITE	265
ENTRAÎNEMENT DE CHAÎNE (ASS)	266
COMMANDE D'EMBRAYAGE (ASS)	268
COMMANDE DE DIFFÉRENTIEL - VERROUILLAGE (ASS)	272
COMMANDE DE BOITE DE VITESSES (ASS)	274
COMMANDE HYDRAULIQUE DE BOÎTE (ASS)	278
REFROIDISSEUR D'HUILE DE BOÎTE (ASS)	280
COUVERCLES D'EXPEDITION (ASS)	282
COURONNE ET DIFFERENTIEL (ASS)	284
DIFFERENTIEL (ASS)	288
GOULOTTE DE REMPLISSAGE D'HUILE DE TRANSMISSION	290
FILTRE A HUILE (ASS)	292
RÉDUCTEURS (ASS)	294
ENGRENAGES DE TRANSFERT ET CARTER (ASS)	296
CANALISATIONS D'HUILE DE TRANSMISSION (ASS)	302
ROUE - GROUPE DE MONTAGE	304
BOÎTE PLANÉTAIRE (ASS)	306
POMPE A ENGRENAGES (ASS)	312
TANDEM ET CARTER (ASS)	314
BOÎTE DE VITESSES (VERSION)	315

* TRADUCTION NON DISPONIBLE AU MOMENT DE LA PUBLICATION

TABLE DES MATIÈRES

Désignation	Page
SOUPAPE ET MONTAGE DE VERROUILLAGE DE DIF. (ASS)	316
DISTRIBUTEUR (ASS)	317
SOUPAPE PILOTE (ASS)	318
CLAPET DE DECHARGE (ASS)	320
SOUPAPE SELECTRICE ET REGULATRICE DE PRESSION	322
SOUPAPE - SOLÉNOÏDE (ASS)	328
DISTRIBUTEUR DE BOITE (ASS)	330
ROUE ET PNEU (VERSION)	332
ROUE ET PNEU (ASS)	337
ROUE (VERSION)	349
JANTE (ASS)	349
CHÂSSIS ET BENNE	352
ESSIEU AV (ASS)	352
CHÂSSIS ET CARTER (ASS)	355
CARENAGE DE MOTEUR (ASS)	356
CHÂSSIS AV (ASS)	359
PROTÈGE-RADIATEUR ET SUPPORT (ASS)	360
BLINDAGE INFÉRIEUR (ASS)	362
PROTECTION DE PLATE-FORME (ASS)	364
ATTELAGE D'ARTICULATION (ASS)	368
CANALISATIONS DE GRAISSAGE (ASS)	370
ARTICULATION DE DIRECTION (ASS)	371
ÉCRAN D'ARBRE MOTEUR (ASS)	372
MARCHEPIED (ASS)	373
VERSION DE SUPPORT DE CHÂSSIS ARRIÈRE	374
SUPPORT DU RESERVOIR DE CARBURANT (ASS)	375
PLATE-FORME - SUPPORT (ASS)	376
CIRCUIT DE FREINAGE	377
DISPOSITIF DE COMMANDE DE FREIN (ASS)	377
DESHYDRATEUR (ASS)	378
FREIN DE MANOEUVRE (ASS)	382
COMMANDE DE FREIN DE STATIONNEMENT (ASS)	384
FREIN DE MANOEUVRE - COMMANDE (ASS)	388
CANALISATIONS DU RÉSERVOIR D'AIR (ASS)	393
RÉSERVOIR PNEUMATIQUE (ASS)	394
DISTRIBUTEUR D'AIR (ASS)	396
CIRCUIT HYDRAULIQUE	398
ACCUMULATEUR ET MONTAGE - HYDRAULIQUE (ASS)	398
ACCUMULATEUR D'AMORTISSEUR DE LAME	399
ACCUMULATEUR HYDRAULIQUE (ASS)	400
COMMANDE HYDRAULIQUE (VERSION)	401
COMMANDE DE VERROUILLAGE DE DÉPORT DE FREIN	404
COMMANDE DE DIRECTION (ASS)	406
VÉRIN D'ARTICULATION ET MONTAGE (ASS)	407
VÉRIN DE RELEVAGE DE LAME ET MONTAGE (ASS)	408
VÉRIN D'INCLINAISON DE LAME ET MONTAGE (ASS)	409
VÉRIN DE DÉPORT DE CERCLE ET MONTAGE (ASS)	410
VÉRIN DE DÉPORT DE LAME (ASS)	411
VERIN DE DIRECTION ET MONTAGE (ASS)	412
VÉRIN D'INCLINAISON DE ROUE ET MONTAGE (ASS)	413
VÉRIN D'ARTICULATION (ASS)	414
VÉRIN DE LEVAGE DE LAME (ASS)	416
VÉRIN D'INCIDENCE DE LAME (ASS)	418
VÉRIN DE DÉPORT DE CERCLE (ASS)	420
VERIN DE LEVAGE DE RIPPER (ASS)	422
VÉRIN DE DÉPORT DE LAME (ASS)	424
VERIN DE DIRECTION (ASS)	426
VÉRIN D'INCLINAISON DE ROUE (ASS)	430
DISPOSITIF D'ARRÊT DE DISTRIBUTEUR (ASS)	432
ENTRAÎNEMENT DE CERCLE (ASS)	436
ENTRAÎNEMENT DE POMPE (ASS)	439
CANALISATIONS HYDRAULIQUES (ASS)	440
CANALISATIONS HYDRAULIQUES DE VENTILATEUR (ASS)	448
CANALISATIONS DE POMPE (ASS)	452
CANALISATIONS DU RIPPER (ASS)	456
CANALISATION DE DIRECTION AUXILIAIRE	460
CANALISATIONS DE DIRECTION (ASS)	462
VERROUILLAGE DE DÉPORT DE CERCLE (ASS)	466
VERROUILLAGE DE COMMANDE MANUELLE HYDRAUL. (ASS)	467
MOTEUR À ENGRENAGES (ASS)	468
MOTEUR HYDRAULIQUE (ASS)	470
POMPE ET MOTEUR (ASS)	472

* TRADUCTION NON DISPONIBLE AU MOMENT DE LA PUBLICATION

TABLE DES MATIÈRES

Désignation	Page
POMPE ET MONTAGE - PISTON (ASS)	474
POMPE DE DIRECTION AUXILIAIRE ET MONTAGE (ASS)	476
POMPE DE REGULARISATION DE DEBIT (ASS)	478
POMPE A PISTONS (ASS)	480
GROUPE DE ROTATION DE POMPE	484
DIRECTION AUXILIAIRE (VERSION)	486
GROUPE D'ORIENTATION	487
RÉSERVOIR HYDRAULIQUE ET FILTRE (ASS)	488
RÉSERVOIR HYDRAULIQUE ET MONTAGE (ASS)	490
SOUPAPE ET TIMONERIE (ASS)	492
DISTRIBUTEUR 4 ÉLÉMENTS (ASS)	510
DISTRIBUTEUR 5 ÉLÉMENTS (ASS)	515
DISTRIBUTEUR 6 ÉLÉMENTS (ASS)	519
DISTRIBUTEUR 7 ÉLÉMENTS (ASS)	520
SOUPAPE DE COMBINAISON (ASS)	522
DISTRIBUTEUR (ASS)	524
SOUPAPE RÉGULATRICE DE PRESSION ET DÉBIT	574
SOUPAPE DE PURGE (ASS)	578
CLAPET DE DECHARGE (ASS)	579
VANNE PILOTE (ASS)	587
SOUPAPE - SOLÉNOÏDE (ASS)	588
SOUPAGE - SOLÉNOIDE ET COLLECTEUR	589
ÉQUIPEMENTS	592
CERCLE (ASS)	592
BARRE D'ATTELAGE (ASS)	594
PLAQUE DE POUSSÉE (ASS)	596
OUTILS DE TRAVAIL	597
EMBOUT (ASS)	597
LAME (ASS)	598
LAME DE COUPE (ASS)	599
LEVAGE - LAME (ASS)	600
MONTAGE DE RIPPER (ASS)	602
RIPPER (VERSION)	603
RIPPER (ASS)	604
DENT DE RIPPER (ASS)	606
POSTE DE CONDUITE	607
VISIÈRE - GROUPE AUXILIAIRE	607
CLIMATISEUR ET MONTAGE (ASS)	609
CLIMATISEUR (VERSION)	609
CLIMATISEUR (ASS)	610
ACCOUDOIR (ASS)	614
COMPRESSEUR DE REFRIGERANT (ASS)	616
CONDENSATEUR ET MONTAGE (RÉFRIGÉRANT)	618
CONSOLE DE CONDUITE (ASS)	620
VERSION DE TRANSFORMATION - SANS ROPS	624
PORTE (ASS)	626
PORTIÈRE DE CABINE (ASS)	630
CONDUIT ET COMMANDE (ASS)	638
CONDUIT (ASS)	639
RALLONGE DU DOSSIER DE SIEGE	640
VENTILATEUR DE CABINE (ASS)	642
FILTRE À AIR DE CABINE (ASS)	648
MARTEAU ET MONTAGE (ASS)	649
CHAUFFAGE ET MONTAGE - CABINE (ASS)	651
CHAUFFAGE DE CABINE (VERSION)	651
CHAUFFAGE DE CABINE (ASS)	652
KLAXON PNEUMATIQUE (ASS)	656
SUSPENSION DE SIEGE - CARTER (ASS)	660
MONTAGE DE RADIO (VERSION)	663
MONTAGE DE RADIO (ASS)	664
INSTRUMENTS (VERSION)	666
ISOLATION DE CABINE (ASS)	668
CABINE - REVÊTEMENT (ASS)	670
CANALISATIONS DE CLIMATISEUR (ASS)	682
CANALISATIONS DE CHAUFFAGE (ASS)	686
RÉTROVISEUR (ASS)	688
MODULE - QUATRE INSTRUMENTS (ASS)	696
MODULE D'INDICATEUR DE VITESSE ET COMPTE-TOURS (ASS)	697
MONTAGE DU TOIT ROPS (ASS)	698
COUVERCLE INFÉRIEUR-DOSSIER (ASS)	701
SIEGE - COUVERCLE INFERIEUR (ASS)	702
TABLEAU DE BORD (ASS)	704
FENÊTRE D'AFFICHAGE - TABLEAU DE BORD (ASS)	710
TOIT ROPS FERME (VERSION)	714
ROPS OUVERTE (VERSION)	715
CABINE ROPS FERMÉE (ASS)	716
TOIT ROPS - OUVERT (ASS)	717
PARE-SOLEIL (ASS)	718
CEINTURE DE SECURITE (ASS)	719
SIÈGE (ASS)	720
SIÈGE AVEC SUSPENSION (ASS)	724
SUPPORT DE SIÈGE (ASS)	732
SIÈGE AVEC SUSPENSION (ASS)	734
SOUPAPE - SOLÉNOÏDE (ASS)	738

* TRADUCTION NON DISPONIBLE AU MOMENT DE LA PUBLICATION

TABLE DES MATIÈRES

Désignation	Page	Désignation	Page
LAVE-GLACE - VITRE (ASS)	740		
VITRE (ASS)	743		
ESSUIE-GLACE (VERSION)	748		
ESSUIE-GLACE (ASS)	749		
MATÉRIEL ET FOURNITURES D'ENTRETIEN	759		
*TOOL BOX GP	759		
PLAQUE SIGNALÉTIQUE (ASS)	760		
PLAQUES SIGNALETIQUES ET AUTOCOLLANTS (ASS)	760		
INDEX DE NUMÉROS DE PIÈCES	B1		

* TRADUCTION NON DISPONIBLE AU MOMENT DE LA PUBLICATION

CONTENIDO

Nombre	Página
INFORMACIÓN GENERAL	A30
ALTERNATIVAS DE REPARACIÓN	A44
ADITIVOS DE REFRIGERANTE SUPLEMENTARIOS	A49
PIEZAS DE MANTENIMIENTO	A66
INDICE	A119
CONFIGURACIÓN DE MÁQUINA	1
CONFIGURACIÓN DE TRANSFORMACIÓN PARA CERTIFICACIÓN	1
CONFIGURACIÓN GENERAL	2
CONFIGURACIÓN DE MOTOR	4
CONFIGURACIÓN DE MOTORES	4
MOTOR BÁSICO	6
COMPRESOR DE AIRE (GR)	6
TENSOR DE CORREA (GR)	10
ÁRBOL DE LEVAS (GR)	12
TAPA DEL BLOQUE MOTOR (GR)	14
CIGÜEÑAL (GR)	16
BLOQUE MOTOR (CONJ)	18
BLOQUE MOTOR (GR)	20
CULATA DE CILINDROS (CONJ)	22
CULATA DE CILINDROS (GR)	24
ACCESORIOS - IMPULSOR DE (GR)	26
CULATA DE CILINDROS - TORNILLERÍA DE LA (GR)	28
VOLANTE (GR)	29
ENGRANAJE DELANTERO (GR)	30
VOLANTE - CAJA DE (GR)	31
CAJA DELANTERA (GR)	32
VÁLVULA DE LEVANTAMIENTO (GR)	34
CÁNCAMOS DE LEVANTAMIENTO DEL MOTOR (GR)	35
MONTAJE DEL MOTOR (GR)	36
MECANISMO DE LA VÁLVULA - MONTAJE DEL (GR)	37
CÁRTER - COLECTOR DEL (GR)	38
PISTÓN Y BIELA (GR)	40
TAPÓN DEL BLOQUE MOTOR (GR)	41
TAPÓN DEL MOTOR (GR)	42
BALANCÍN (GR)	44
SELLO DE CIGÜEÑAL (GR)	46
MOTOR - SOPORTE DEL (GR)	47
INSONORIZADOR (GR)	48
MECANISMO DE VÁLVULAS (GR)	50
SISTEMA DE LUBRICACIÓN	52
FILTRO DE ACEITE - BASE DEL (GR)	52
TUBO DE LLENADO DE ACEITE (GR)	54
FILTRO DE ACEITE DEL MOTOR (GR)	56
INDICADOR DEL NIVEL DE ACEITE (VARILLA) (GR)	58
TURBOCOMPRESOR - TUBERÍAS DE ACEITE DEL (GR)	59
BOMBA DE ACEITE DEL MOTOR (GR)	60
SISTEMA DE ENFRIAMIENTO	62
CONFIGURACIÓN DE ENFRIAMIENTO	62
MOTOR Y VENTILADOR (GR)	64
TORNILLERIA DEL RADIADOR	66
REGULADOR Y CAJA (GR)	67
TUBERÍAS DEL AGUA - POSENFRIADOR (GR)	68
TUBERÍAS DEL ENFRIADOR DEL TREN DE FUERZA (GR)	70
TUBERÍAS DEL AGUA (GR)	72
BOMBA DE AGUA (GR)	77
RADIADOR Y MONTAJE (GR)	80
RADIADOR (GR)	82
SISTEMA DE ADMISIÓN Y ESCAPE DE AIRE	84
GRUPO DE POSTENFRIAMIENTO Y MONTAJE	84
FILTRO DE AIRE (GR)	85
MÚLTIPLE DE ESCAPE (GR)	88
MÚLTIPLE DE ADMISIÓN (GR)	89
SILENCIADOR (GR)	90
TURBOCOMPRESOR (GR)	92
SISTEMA DE COMBUSTIBLE	94
ADAPTADOR DE LLENADO RÁPIDO DE COMBUSTIBLE (GR)	94
CONTROL DE REGULADOR (GR)	96
FILTRO DE COMBUSTIBLE (GR)	98
FILTRO DE COMBUSTIBLE Y SEPARADOR DE AGUA (GR)	99
INYECTOR DE COMBUSTIBLE (GR)	100
TUBERÍAS DE DRENAJE (GR)	101
TUBERÍAS DE COMBUSTIBLE (GR)	102
TUBERÍAS DE INYECCIÓN DE COMBUSTIBLE (GR)	108
BOMBA DE TRANSFERENCIA DE COMBUSTIBLE Y MONTAJE (GR)	110
BOMBA DE INYECCIÓN DE COMBUSTIBLE (GR)	111
BOMBA DE CEBADO DE COMBUSTIBLE (GR)	112

* NO HAY TRADUCCION DISPONIBLE EN EL MOMENTO DE LA IMPRESION

CONTENIDO

Nombre	Página
COMBUSTIBLE - TANQUE DE (GR)	114
VÁLVULA DE RETENCIÓN (GR)	122
SISTEMA ELÉCTRICO Y DE ARRANQUE	123
ALARMA (GR)	123
CARGA - ALTERNADOR DE (GR)	124
BATERÍA (GR)	127
BLOQUE DE EMPALME (GR)	128
DISYUNTOR DE CIRCUITO (GR)	129
CONTROL ELECTRÓNICO DEL MOTOR Y MONTAJE	131
CONTROL ELECTRÓNICO DEL MOTOR (GR)	132
CONTROL DE LA DIRECCION SECUNDARIA (GR)	134
CONVERTIDOR ELÉCTRICO (CONFIG)	135
CONVERTIDOR ELÉCTRICO (GR)	136
ELECTRONICA DE MONITOR (GR)	139
AGUA DE LAS CAMISAS - CALENTADOR DEL (GR)	140
BALIZA DE ADVERTENCIA (GR) - INSTALACIÓN	142
LÁMPARA DEL TECHO (GR)	143
REFLECTOR (GR)	144
LÁMPARA DE FARO DELANTERO (GR)	145
LÁMPARA DE LUZ DELANTERA Y DE SEÑAL (GR)	152
LUZ DE SEÑAL DE GIRO (GR)	156
LÁMPARA DE BALIZA DE ADVERTENCIA (GR)	158
REFLECTORES (CONFIG)	159
LUCES DE REFLECTOR Y SEÑAL (CONFIG)	160
LUCES DE RETROCESO (GR)	162
LUCES DE REFLECTOR (GR)	166
LUCES DE GIRO (GR)	193
LUCES DE ADVERTENCIA (GR)	194
MOTOR ELÉCTRICO (GR)	198
SENSOR DE VELOCIDAD DE DESPLAZAMIENTO (GR)	201
DETECTOR DE POSICIÓN (SISTEMA DE COMBUST.) (GR)	202
SENSOR DE PRESIÓN (GR)	203
SENSOR DE VELOCIDAD (GR)	208
SENSOR DE TEMPERATURA (GR)	210
AUXILIAR DE ARRANQUE CON ÉTER (GR)	212
MOTOR DE ARRANQUE ELÉCTRICO (GR)	216
DISYUNTOR (GR)	218
INTERRUPTOR DE LUZ (GR)	220
INTERRUPTOR MAGNÉTICO (GR)	222
INTERRUPTOR DEL LIMPIADOR (GR)	223
RETROCESO - ALARMA DE (GR)	224
GRUPO DE CABLES, HOJA AMORTIGUADORA	225
CABLES DE LA CABINA (GR)	226
CABLES DEL MOTOR (GR)	232
CABLES DELANTEROS (GR)	236
CABLES POSTERIORES (GR)	240
CABLES DE LA DIRECCIÓN SECUNDARIA	254
CABLES DE LA CONSOLA DE CAMBIOS (GR)	258
CABLES DE LA CONSOLA DE DIRECCIÓN (GR)	260
CABLES DE INYECTOR (GR)	263
TREN DE FUERZA	264
ADAPTADOR DEL MOTOR A LA TRANSMISIÓN	264
CAJA DE LA TRANSMISIÓN (GR)	265
CADENA DE IMPULSIÓN (GR)	266
CONTROL DEL EMBRAGUE (GR)	268
CONTROL DE TRABA DEL DIFERENCIAL (GR)	272
CONTROL DE LA TRANSMISIÓN (GR)	274
CONTROL HIDRÁULICO DE LA TRANSMISIÓN (GR)	278
ENFRIADOR DE ACEITE DE LA TRANSMISIÓN (GR)	280
TAPAS PROTECTORAS DE EMBARQUE (GR)	282
DIFERENCIAL Y CORONA (GR)	284
DIFERENCIAL (GR)	288
TUBO DE LLENADO DE ACEITE DE LA TRANSMISIÓN (GR)	290
FILTRO DE ACEITE (GR)	292
MANDO FINAL (GR)	294
CAJA Y TRANSFERENCIA DEL ENGRANAJE (GR)	296
TUBERÍAS DE ACEITE DEL TREN DE FUERZA (GR)	302
MONTAJE DE RUEDA (GR)	304
TRANSMISIÓN PLANETARIA (GR)	306
BOMBA DE ENGRANAJES (GR)	312
TÁNDEM Y CUBIERTA (GR)	314
TRANSMISION (CONFIG)	315
VÁLVULA DE LA TRABA DEL DIFERENCIAL Y MONTAJE (GR)	316
VÁLVULA DE CONTROL (GR)	317
VÁLVULA PILOTO (GR)	318
VÁLVULA DE ALIVIO (GR)	320

* NO HAY TRADUCCION DISPONIBLE EN EL MOMENTO DE LA IMPRESION

CONTENIDO

Nombre	Página
VÁLVULA SELECTORA Y DE CONTROL DE PRESIÓN (GR)	322
VÁLVULA DE SOLENOIDE (GR)	328
VÁLVULA DE CONTROL DE LA TRANSMISIÓN (GR)	330
RUEDA Y LLANTA (CONFIG)	332
RUEDA Y NEUMÁTICO (GR)	337
RUEDA (CONFIG)	349
RUEDA (GR)	349
BASTIDOR Y CAJA	352
EJE DELANTERO (GR)	352
CAJA Y BASTIDOR (GR)	355
COMPARTIMIENTO DEL MOTOR (GR)	356
BASTIDOR DELANTERO (GR)	359
PROTECTOR Y SOPORTE DEL RADIADOR (GR)	360
PROTECTOR INFERIOR (GR)	362
PROTECTOR DE LA PLATAFORMA (GR)	364
ENGANCHE ARTICULADO (GR)	368
TUBERÍAS DE ENGRASE (GR)	370
TIRANTE DE DIRECCIÓN (GR)	371
PROTECTOR TÉRMICO DEL EJE DE MANDO (GR)	372
ESTRIBO DEL OPERADOR (GR)	373
CONFIGURACIÓN DE SOPORTE DE CHASIS TRASERO	374
SOPORTE DEL TANQUE DE COMBUSTIBLE (GR)	375
SOPORTE DE PLATAFORMA (GR)	376
SISTEMA DE FRENOS	377
ACTIVADOR DEL FRENO (GR)	377
DESHIDRATADOR (GR)	378
FRENO DE SERVICIO (GR)	382
CONTROL DEL FRENO DE ESTACIONAMIENTO	384
FRENO DE SERVICIO - CONTROL (GR)	388
TUBERÍAS DEL TANQUE DE AIRE (GR)	393
TANQUE DE AIRE (GR)	394
CONTROL DE AIRE-VÁLVULA	396
SISTEMA HIDRÁULICO	398
ACUMULADOR HIDRAULICO Y MONTAJE (GR)	398
GRUPO DE ACUMULADOR DE AMORTIGUACIÓN DE LA HOJA	399
ACUMULADOR HIDRAULICO (GR)	400
CONTROL HIDRÁULICO (CONFIG)	401
CONTROL DE TRABA DEL DESPLAZADOR DEL CÍRCULO (GR)	404
CONTROL DE DIRECCIÓN (GR)	406
CILINDRO DE ARTICULACIÓN Y MONTAJE (GR)	407
CILINDRO DE LEVANTAMIENTO DE HOJA Y MONTAJE (GR)	408
CILINDRO DE LA PUNTA DE LA HOJA Y MONTAJE (GR)	409
CILINDRO DE DESPLAZAMIENTO DEL CÍRCULO Y MONTAJE (GR)	410
CILINDRO DE DESPLAZAMIENTO LATERAL Y MONTAJE (GR)	411
CILINDRO DE DIRECCIÓN Y MONTAJE (GR)	412
CILINDRO DE INCLINACIÓN DE RUEDA Y MONTAJE (GR)	413
ARTICULACIÓN DE CILINDRO (GR)	414
CILINDRO DE LEVANTAMIENTO DE LA HOJA (GR)	416
CILINDRO DE INCLINACIÓN DE LA HOJA (GR)	418
CILINDRO DE DESPLAZAMIENTO DEL CÍRCULO (GR)	420
CILINDRO DE LEVANTAMIENTO DEL DESGARRADOR (GR)	422
CILINDRO DE DESPLAZAMIENTO LATERAL (GR)	424
CILINDRO DE DIRECCIÓN (GR)	426
CILINDRO DE INCLINACIÓN DE LAS RUEDAS (GR)	430
TOPE DE VÁLVULA DE CONTROL (GR)	432
MANDO DEL CIRCULO (GR)	436
MANDO DE BOMBA (GR)	439
TUBERÍAS HIDRÁULICAS (GR)	440
TUBERÍAS HIDRÁULICAS DEL VENTILADOR (GR)	448
BOMBA - TUBERÍAS DE (GR)	452
TUBERÍAS DEL DESGARRADOR (GR)	456
TUBERÍAS DE LA DIRECCIÓN SECUNDARIA (GR)	460
TUBERÍAS DE DIRECCIÓN (GR)	462
TRABA DE DESPLAZAMIENTO DEL CIRCULO (GR)	466
TRABA DE CONTROL HIDRÁULICO MANUAL (GR)	467
MOTOR DE ENGRANAJES (GR)	468
MOTOR HIDRÁULICO DE ENGRANAJES (GR)	470
BOMBA Y MOTOR (GR)	472

* NO HAY TRADUCCION DISPONIBLE EN EL MOMENTO DE LA IMPRESION

CONTENIDO

Nombre	Página
BOMBA Y MONTAJE DEL PISTÓN (GR)	474
BOMBA Y MONTAJE DE LA DIRECCIÓN SECUNDARIA (GR)	476
DOSIFICACIÓN - BOMBA DE (GR)	478
BOMBA DE PISTONES (GR)	480
GRUPO GIRATORIO DE BOMBA	484
DIRECCIÓN SECUNDARIA (CONFIG)	486
UNIÓN GIRATORIA (GR)	487
TANQUE Y FILTRO HIDRÁULICOS (GR)	488
TANQUE HIDRÁULICO Y MONTAJE (GR)	490
VÁLVULA Y VARILLAJE (GR)	492
GRUPO DE 4 VÁLVULAS HIDRÁULICAS	510
BANCADA 5 (GR)	515
VÁLVULAS HIDRÁULICAS - GRUPO DE 6	519
VÁLVULAS HIDRÁULICAS - GRUPO DE 7	520
VÁLVULA DE COMBINACIÓN (GR)	522
VÁLVULA DE CONTROL (GR)	524
VÁLVULA COMPENSADORA DE FLUJO Y PRESIÓN (GR)	574
VALVULA DE PURGA (GR)	578
VÁLVULA DE ALIVIO (GR)	579
VÁLVULA DE LANZADERA (GR)	587
VÁLVULA DE SOLENOIDE (GR)	588
VÁLVULA DE SOLENOIDE Y MÚLTIPLE (GR)	589
IMPLEMENTOS	592
CÍRCULO (GR)	592
BARRA DE TIRO (GR)	594
PLANCHA DE EMPUJE (GR)	596
HERRAMIENTAS	597
CANTONERA (GR)	597
HOJA (GR)	598
CUCHILLA (GR)	599
LEVANTAMIENTO - HOJA DE (GR)	600
MONTAJE DEL DESGARRADOR (GR)	602
DESGARRADOR (CONFIG)	603
DESGARRADOR (GR)	604
DIENTE DE DESGARRADOR (GR)	606
PUESTO DEL OPERADOR	607
ACCESORIOS DE LA CABINA (GR)	607
ACONDICIONADOR DE AIRE Y MONTAJE (GR)	609
ACONDICIONADOR DE AIRE (CONFIG)	609
ACONDICIONADOR DE AIRE (GR)	610
POSABRAZOS (GR)	614
COMPRESOR DE REFRIGERANTE (GR)	616
CONDENSADOR DEL REFRIGERANTE Y MONTAJE (GR)	618
CONSOLA DEL OPERADOR (GR)	620
CONJUNTO DE MODIFICACIÓN (SIN ROPS)	624
PUERTA (GR)	626
PUERTA DE CABINA	630
CONDUCTO Y CONTROL (GR)	638
CONDUCTO (GR)	639
EXTENSIÓN DEL RESPALDO (GR)	640
VENTILADOR DE CIRCULACION	642
FILTRO DE AIRE DE LA CABINA (GR)	648
MARTILLO Y MONTAJE (GR)	649
CALEFACCIÓN Y MONTAJE DE LA CABINA (GR)	651
CALEFACCIÓN DE LA CABINA (CONFIG)	651
CALEFACCIÓN DE LA CABINA (GR)	652
BOCINA DE AIRE (GR)	656
CAJA DE LA SUSPENSIÓN DEL ASIENTO (GR)	660
INSTALACIÓN DE RADIO (CONFIG)	663
INSTALACIÓN DE RADIO (GR)	664
INSTRUMENTOS (CONFIG)	666
GRUPO DE AISLAMIENTO DE LA CABINA	668
REVESTIMIENTO DE LA CABINA (GR)	670
TUBERÍAS DE ACONDICIONADOR DE AIRE (GR)	682
TUBERÍAS DE LA CALEFACCIÓN (GR)	686
RETROVISOR (GR)	688
MODULO ELECTRÓNICO DE CUATRO INDICADORES (GR)	696
MÓDULO DEL TACÓMETRO Y DEL VELOCÍMETRO (GR)	697
MONTAJE DE LA ESTRUCTURA ROPS (GR)	698
GRUPO DE SOPORTE DEL RESPALDO	701
CUBIERTA INFERIOR DEL ASIENTO DEL OPERADOR (GR)	702
PANEL DE LA CABINA (GR)	704
TABLERO DE INSTRUMENTOS (GR)	706
PANEL DE LA VENTANA (GR)	710
INCLUYE ROPS (CONFIG)	714
ESTRUCTURA ROPS ABIERTA	715
CABINA ROPS CERRADA (GR)	716
ESTRUCTURA ROPS ABIERTA (GR)	717

* NO HAY TRADUCCION DISPONIBLE EN EL MOMENTO DE LA IMPRESION

CONTENIDO

Nombre	Página	Nombre	Página
PERSIANA PARA EL SOL (GR)	718		
CINTURÓN DE SEGURIDAD (GR)	719		
ASIENTO (GR)	720		
SUSPENSIÓN - ASIENTO CON (GR)	724		
SOPORTE DEL ASIENTO (GR)	732		
ASIENTO CON SUSPENSIÓN (GR)	734		
VÁLVULA DE SOLENOIDE (GR)	738		
LAVAPARABRISAS DE LA VENTANA (GR)	740		
VENTANA (GR)	743		
LIMPIAPARABRISAS (CONFIG)	748		
LIMPIAPARABRISAS DE LA VENTANA (GR)	749		
EQUIPO Y SUMINISTRO DE SERVICIOS	759		
*TOOL BOX GP	759		
ETIQUETA DE ADVERTENCIA (GR)	760		
CALCOMANÍAS Y PLACAS DE IDENTIFICACIÓN (GR)	760		
INDICE DE NUMEROS DE PIEZA	B1		

* NO HAY TRADUCCION DISPONIBLE EN EL MOMENTO DE LA IMPRESION

ÍNDICE

Designação	Página
INFORMAÇÃO GERAL	A34
ALTERNATIVAS DE REPARO	A45
ADITIVOS SUPLEMENTARES DO LÍQUIDO ARREFECEDOR	A50
PEÇAS DE MANUTENÇÃO	A75
ÍNDICE	A135
MÁQUINA - ARRANJO	1
GR. DE CONVERSÃO - CERTIFICADO	1
ARRANJO GERAL	2
MOTOR - ARRANJO	4
MOTOR	4
MOTOR BÁSICO	6
COMPRESSOR DE AR	6
TENSOR DA CORREIA	10
EIXO-COMANDO DE VÁLVULA	12
TAMPA - BLOCO DO MOTOR	14
VIRABREQUIM	16
BLOCO DO MOTOR	18
CABEÇOTE DO MOTOR	22
COMANDO DE ACESSÓRIOS	26
FIXADORES - CABEÇOTE DO MOTOR	28
VOLANTE DO MOTOR	29
ENGRENAGENS DE DISTRIBUIÇÃO	30
CAIXA DO VOLANTE DO MOTOR	31
CAIXA DIANTEIRA	32
TUCHO DA VÁLVULA	34
LEVANTAMENTO DO MOTOR	35
MONTAGEM - MOTOR	36
MONTAGEM - MECANISMO DAS VÁLVULAS	37
CÁRTER DO ÓLEO DO MOTOR	38
PISTÃO E BIELA	40
BUJÃO DO BLOCO DO CILINDRO	41
BUJÃO DO MOTOR	42
BALANCIM	44
RETENTOR DO VIRABREQUIM	46
SUPORTE DO MOTOR	47
REDUÇÃO DE RUÍDO	48
MECANISMO DAS VÁLVULAS	50
SISTEMA DE LUBRIFICAÇÃO	52
BASE DO FILTRO DE ÓLEO	52
BOCAL DE ENCHIMENTO DE ÓLEO DO MOTOR	54
FILTRO - ÓLEO DO MOTOR	56
INDICADOR - NÍVEL DO ÓLEO (VARETA)	58
TUBOS - ÓLEO DO TURBOALIMENTADOR	59
BOMBA DE ÓLEO - MOTOR	60
SISTEMA DE ARREFECIMENTO	62
ARREFECIMENTO	62
MOTOR E VENTILADOR	64
FIXADORES - RADIADOR	66
TERMOSTATO / REGULADOR DE TEMPERATURA	67
TUBOS - ÁGUA DO PÓS-ARREFECEDOR	68
TUBOS - ARREFECEDOR DO TREM DE FORÇA	70
TUBOS - ÁGUA	72
BOMBA DE ÁGUA	77
RADIADOR E MONTAGEM	80
RADIADOR	82
SISTEMA DE ADMISSÃO DE AR E DE ESCAPE	84
PÓS-ARREFECEDOR E MONTAGEM	84
PURIFICADOR DE AR	85
COLETOR DE ESCAPE	88
COLETOR DE ADMISSÃO	89
SILENCIADOR	90
TURBOALIMENTADOR	92
SISTEMA DE COMBUSTÍVEL	94
ADAPTADOR - ABASTECIMENTO RÁPIDO DE COMBUSTÍVEL	94
CONTROLE DO GOVERNADOR	96
FILTRO - COMBUSTÍVEL	98
FILTRO DE COMBUSTÍVEL E SEPARADOR DE ÁGUA	99
INJETOR DE COMBUSTÍVEL	100
TUBOS - DRENAGEM	101
TUBOS - COMBUSTÍVEL	102
TUBOS - INJEÇÃO DO COMBUSTÍVEL	108
BOMBA E MONTAGEM - TRANSFERÊNCIA DE COMBUSTÍVEL	110
BOMBA DE INJEÇÃO DO COMBUSTÍVEL	111
BOMBA DE ESCORVA DO COMBUSTÍVEL	112
TANQUE DE COMBUSTÍVEL	114
VÁLVULA DE RETENÇÃO	122
SISTEMA ELÉTRICO E DE PARTIDA	123
ALARME	123

* TRADUÇÃO NÃO DISPONÍVEL NO MOMENTO DA IMPRESSÃO

ÍNDICE

Designação	Página
ALTERNADOR DE CORRENTE	124
BATERIA	127
BLOCO DE JUNÇÃO	128
INTERRUPTOR - CIRCUITO	129
CONTROLE ELETRÔNICO E MONTAGEM - MOTOR	131
CONTROLE ELETRÔNICO - MOTOR	132
CONTROLE DA DIREÇÃO SECUNDÁRIA	134
CONVERSOR ELÉTRICO	135
SISTEMA ELETRÔNICO - MONITOR	139
AQUECEDOR DA ÁGUA DO MOTOR	140
INSTALAÇÃO DO PISCA-PISCA DE ADVERTÊNCIA	142
LÂMPADA - TETO	143
LÂMPADA - FAROL	144
FAROL DIANTEIRO	145
LÂMPADA DIANTEIRA E DE SINAL	152
LÂMPADA - SINALIZAÇÃO	156
LUZ GIRATÓRIA DE ALARME	158
SISTEMA DE ILUMINAÇÃO - FARÓIS	159
ILUMINAÇÃO - FAROL E SINALIZAÇÃO	160
ILUMINAÇÃO - MARCHA A RÉ	162
SISTEMA DE ILUMINAÇÃO - FARÓIS	166
ILUMINAÇÃO - SINALIZAÇÃO	193
SISTEMA DE ILUMINAÇÃO - ADVERTÊNCIA	194
MOTOR ELÉTRICO	198
SENSOR - VELOCIDADE ABSOLUTA	201
EMISSOR - POSIÇÃO	202
SENSOR - PRESSÃO	203
SENSOR DE VELOCIDADE	208
SENSOR - TEMPERATURA	210
AUXILIAR DE PARTIDA A ÉTER	212
MOTOR ELÉTRICO DE PARTIDA	216
CHAVE GERAL	218
INTERRUPTOR - LUZES	220
INTERRUPTOR - MAGNÉTICO	222
INTERRUPTOR - LIMPADOR DO PÁRA-BRISA	223
ALARME DE MARCHA À RÉ	224
FIAÇÃO - AMORTECEDOR DA LÂMINA	225
CABOS/FIOS ELÉTRICOS - CABINE	226
CABOS/FIOS ELÉTRICOS - MOTOR	232
CABOS/FIOS ELÉTRICOS - DIANTEIROS	236
CABOS/FIOS ELÉTRICOS - TRASEIROS	240
CABOS/FIOS ELÉTRICOS - DIREÇÃO SECUNDÁRIA	254
CABOS/FIOS ELÉTRICOS - CONSOLE DA TRANSMISSÃO	258
CABOS/FIOS ELÉTRICOS - CONSOLE DA DIREÇÃO	260
CABOS/FIOS ELÉTRICOS - INJETOR	263
TREM DE FORÇA	264
ADAPTADOR ENTRE O MOTOR E A TRANSMISSÃO	264
CARCAÇA DA TRANSMISSÃO	265
CORRENTE - COMANDO	266
CONTROLE DA EMBREAGEM	268
CONTROLE DA TRAVA DO DIFERENCIAL	272
CONTROLE DA TRANSMISSÃO	274
CONTROLE HIDRÁULICO DA TRANSMISSÃO	278
ARREFECEDOR DE ÓLEO DA TRANSMISSÃO	280
TAMPA - EMBARQUE	282
DIFERENCIAL E COROA	284
DIFERENCIAL	288
BOCAL DE ENCHIMENTO DE ÓLEO DO TREM DE FORÇA	290
FILTRO - ÓLEO	292
COMANDO FINAL	294
CAIXA DE ENGRENAGEM DE TRANSFERÊNCIA	296
TUBOS - ÓLEO DA TRANSMISSÃO	302
MONTAGEM - RODA	304
ENGRENAGENS PLANETÁRIAS - TRANSMISSÃO	306
BOMBA DE ENGRENAGENS	312
TANDEM E TAMPA	314
TRANSMISSÃO	315
VÁLVULA E MONTAGEM - TRAVA DO DIFERENCIAL	316
VÁLVULA DE CONTROLE	317
VÁLVULA DE CONTROLE PILOTO	318
VÁLVULA DE ALÍVIO	320
VÁLVULA SELETORA E CONTROLE DE PRESSÃO	322
VÁLVULA SOLENÓIDE	328
VÁLVULA DE CONTROLE - TRANSMISSÃO	330
RODA E PNEU	332
RODA	349
CHASSI E CARROCERIA	352
EIXO DIANTEIRO	352
CAIXA E CHASSI	355
COBERTURA DO MOTOR	356
CHASSI DIANTEIRO	359

* TRADUÇÃO NÃO DISPONÍVEL NO MOMENTO DA IMPRESSÃO

ÍNDICE

Designação	Página
PROTETOR E SUPORTE DO RADIADOR	360
PROTETOR INFERIOR	362
PROTETOR - PLATAFORMA	364
ENGATE - ARTICULAÇÃO	368
TUBOS - GRAXA	370
ELO - DIREÇÃO	371
BLINDAGEM DO EIXO DA TRANSMISSÃO	372
DEGRAU	373
SUPORTE - CHASSI TRASEIRO	374
SUPORTE DO TANQUE DE COMBUSTÍVEL	375
SUPORTE - PLATAFORMA	376
SISTEMA DE FREIO	377
CONJUNTO ACIONADOR DO FREIO	377
SECADOR DE AR	378
FREIO DE SERVIÇO	382
CONTROLE DO FREIO DE ESTACIONAMENTO	384
CONTROLE DO FREIO DE SERVIÇO	388
TUBOS - TANQUE DE AR	393
TANQUE DE AR	394
VÁLVULA DE CONTROLE DO AR	396
SISTEMA HIDRÁULICO	398
ACUMULADOR HIDRÁULICO E MONTAGEM	398
ACUMULADOR - AMORTECEDOR DA LÂMINA	399
ACUMULADOR HIDRÁULICO	400
CONTROLE HIDRÁULICO	401
CONTROLE DO PINO MESTRE DE DESLOCAMENTO LATERAL	404
CONTROLE DE DIREÇÃO	406
CILINDRO E MONTAGEM - ARTICULAÇÃO	407
CILINDRO E MONTAGEM - LEVANTAMENTO DA LÂMINA	408
CILINDRO E MONTAGEM - TOMBAMENTO DA LÂMINA	409
CILINDRO E MONTAGEM - DESLOCAMENTO DO CÍRCULO	410
CILINDRO E MONTAGEM - DESLOCAMENTO DA LÂMINA	411
CILINDRO DE DIREÇÃO E MONTAGEM	412
CILINDRO E MONTAGEM - INCLINAÇÃO DAS RODAS	413
CILINDRO DE ARTICULAÇÃO	414
CILINDRO DE LEVANTAMENTO DA LÂMINA	416
CILINDRO DE TOMBAMENTO DA LÂMINA	418
CILINDRO DE DESLOCAMENTO LATERAL	420
CILINDRO DE LEVANTAMENTO DO RIPER	422
CILINDRO DE DESLIZAMENTO LONGITUDINAL	424
CILINDRO DA DIREÇÃO	426
CILINDRO DE INCLINAÇÃO LATERAL DAS RODAS	430
RETEM DA VÁLVULA DE CONTROLE	432
MOTOR DE REVERSÃO DO CÍRCULO	436
COMANDO DA BOMBA	439
TUBOS - ÓLEO HIDRÁULICO	440
TUBOS - VENTILADOR HIDRÁULICOS	448
TUBOS - BOMBA	452
TUBOS - RIPER	456
TUBOS - DIREÇÃO SECUNDÁRIA	460
TUBOS - DIREÇÃO	462
TRAVA - DESLOCAMENTO LATERAL	466
TRAVA - CONTROLE MANUAL HIDRÁULICO	467
MOTOR - ENGRENAGENS	468
MOTOR HIDRÁULICO DO GEROTOR	470
BOMBA HIDRÁULICA E MOTOR	472
BOMBA E MONTAGEM - PISTÃO	474
BOMBA DA DIREÇÃO SECUNDÁRIA E MONTAGEM	476
BOMBA REGULADORA	478
BOMBA DE PISTÃO	480
GRUPO ROTATIVO DA BOMBA	484
DIREÇÃO SECUNDÁRIA	486
ARTICULAÇÃO GIRATÓRIA	487
TANQUE HIDRÁULICO E FILTRO	488
TANQUE DE ÓLEO HIDRÁULICO E MONTAGEM	490
VÁLVULA E ARTICULAÇÕES	492
GRUPO DE VÁLVULAS DE CONTROLE - QUÁDRUPLO	510
GRUPO DE VÁLVULAS DE CONTROLE - CINCO	515
GRUPO DE VÁLVULAS DE CONTROLE - SEIS	519
GRUPO DE VÁLVULAS DE CONTROLE - SETE	520
VÁLVULA COMBINADA	522
VÁLVULA DE CONTROLE	524
VÁLVULA DE CONTROLE - PRESSÃO E COMPENSAÇÃO DE FLUXO	574
VÁLVULA DE PURIFICAÇÃO	578
VÁLVULA DE ALÍVIO	579

* TRADUÇÃO NÃO DISPONÍVEL NO MOMENTO DA IMPRESSÃO

ÍNDICE

Designação	Página
VÁLVULA DE SEPARAÇÃO	587
VÁLVULA SOLENÓIDE	588
VÁLVULA - COLETOR E SOLENÓIDE	589
ACESSÓRIOS	592
CÍRCULO	592
BARRA DE TRAÇÃO	594
CHAPA DE EMPUXO	596
FERRAMENTAS DE TRABALHO	597
CANTO DE LÂMINA	597
LÂMINA	598
BORDA CORTANTE	599
LEVANTAMENTO DA LÂMINA	600
MONTAGEM - RIPER	602
RIPER	603
DENTE DO RÍPER	606
ESTAÇÃO DO OPERADOR	607
ACESSÓRIO - CABINE	607
CONDICIONADOR DE AR E MONTAGEM	609
CONDICIONADOR DE AR	609
BRAÇO DO ASSENTO	614
COMPRESSOR DE REFRIGERANTE	616
CONDENSADOR DO REFRIGERANTE E MONTAGEM	618
CONSOLE DO OPERADOR	620
CONVERSÃO PARA ESTRUTURA NÃO ROPS	624
PORTA	626
PORTA DA CABINE	630
DUCTO E CONTROLE	638
DUCTO	639
EXTENSÃO - ENCOSTO	640
VENTILADOR DE CIRCULAÇÃO DE AR DA CABINE	642
FILTRO - AR DA CABINE	648
MARTELO E MONTAGEM	649
AQUECEDOR DA CABINE E MONTAGEM	651
AQUECEDOR DA CABINE	651
BUZINA DE AR	656
CAIXA - SUSPENSÃO DO ASSENTO	660
INSTALAÇÃO DO RÁDIO - ARRANJO	663
INSTALAÇÃO DO RÁDIO	664
INSTRUMENTOS - ARRANJO	666
ISOLADOR - TEMPO	668
REVESTIMENTO DA CABINE	670
TUBOS - AR CONDICIONADO	682
TUBOS - AQUECEDOR	686
ESPELHO RETROVISOR	688
MÓDULO ELETRÔNICO DE QUATRO INDICADORES	696
MÓDULO - VELOCÍMETRO E TACÔMETRO	697
MONTAGEM - ESTRUTURA ROPS	698
FUNDO - ENCOSTO	701
ASSENTO - FUNDO	702
PAINEL - CABINE	704
PAINEL DE INSTRUMENTOS	706
PAINEL - JANELA	710
ESTRUTURA ROPS FECHADA	714
ESTRUTURA ROPS ABERTA	715
ROPS FECHADA	716
ROPS ABERTA	717
TELA PÁRA-SOL	718
CINTO DE SEGURANÇA	719
ASSENTO	720
ASSENTO COM SUSPENSÃO	724
SUPORTE - ASSENTO	732
SUSPENSÃO - ASSENTO	734
VÁLVULA SOLENÓIDE	738
LAVADOR DO VIDRO	740
VIDRO	743
LIMPADOR DO VIDRO	748
EQUIPAMENTOS DE SERVIÇO E SUPRIMENTOS	759
*TOOL BOX GP	759
DECALQUE	760
PLACA E DECALQUE	760
ÍNDICE DE NÚMERO DE PEÇA	B1

* TRADUÇÃO NÃO DISPONÍVEL NO MOMENTO DA IMPRESSÃO

INHALTSVERZEICHNIS

Bezeichnung	Seite
ALLGEMEINE HINWEISE	A38
REPARATURALTERNATIVEN	A46
KÜHLMITTELZUSATZ	A51
WARTUNGSTEILE	A83
STICHWORTVERZEICHNIS	A150
MASCHINE	1
UMBAUSATZ - ZULASSUNG	1
GRUNDAUSFÜHRUNG	2
MOTOR	4
MOTORAUSFÜHRUNG	4
MOTOR - GRUNDAUSFÜHRUNG	6
LUFTKOMPRESSOR	6
RIEMENSPANNER	10
NOCKENWELLE	12
MOTORBLOCKDECKEL	14
KURBELWELLE	16
MOTORBLOCK	18
ZYLINDERKOPF	22
NEBENANTRIEB	26
ZYLINDERKOPF-HALTETEILE	28
SCHWUNGRAD	29
STIRNRAD	30
SCHWUNGRADGEHÄUSE	31
STIRNRADGEHÄUSE	32
HUBVENTIL	34
MOTORHUBÖSE	35
MOTORAUFLAGER	36
VENTILMECHANISMUSAUFHÄNGUNG	37
ÖLWANNE	38
PLEUELSTANGE UND KOLBEN	40
ZYLINDERBLOCKSCHRAUBE	41
MOTORSTOPFEN	42
VENTILKIPPHEBEL	44
KURBELWELLENDICHTUNG	46
MOTORAUFHÄNGUNG	47
SCHALLDÄMPFUNG	48
VENTILSTEUERUNG	50
SCHMIERSYSTEM	52
ÖLFILTERSOCKEL	52
MOTORÖLEINFÜLLSTUTZEN	54
ÖLFILTER	56
ÖLMESSSTAB	58
TURBOLADERÖLLEITUNGEN	59
SCHMIERPUMPE	60
KÜHLSYSTEM	62
KÜHLSYSTEM	62
MOTOR UND LÜFTER	64
KUEHLER-HALTETEILE	66
KÜHLWASSER-TEMPERATURREGLER UND GEHÄUSE	67
KÜHLWASSERLEITUNGEN (LADELUFTKÜHLER)	68
ÖLKÜHLERLEITUNGEN (KRAFTÜBERTRAGUNG)	70
KÜHLWASSERLEITUNGEN	72
KÜHLWASSERPUMPE	77
KÜHLER U. BEFESTIGUNG	80
KÜHLER	82
LUFTANSAUG- UND ABGASSYSTEM	84
LADELUFTKÜHLER U. BEFESTIGUNG	84
LUFTREINIGER	85
AUSPUFFKRÜMMER	88
ANSAUGKRÜMMER	89
SCHALLDÄMPFER	90
TURBOLADER	92
KRAFTSTOFFSYSTEM	94
SCHNELLBETANKUNGSANSCHLUSS	94
REGLERSTEUERUNG	96
KRAFTSTOFFILTER	98
WASSERABSCHEIDER- U. KRAFTSTOFFILTER	99
KRAFTSTOFFEINSPRITZDÜSE	100
ABLASSLEITUNGEN	101
KRAFTSTOFFLEITUNGEN	102
KRAFTSTOFFEINSPRITZLEITUNGEN	108
KRAFTSTOFFÖRDERPUMPE UND BEFESTIGUNGSTEILE	110
KRAFTSTOFFEINSPRITZPUMPE	111
KRAFTSTOFF-ENTLÜFTUNGSPUMPE	112
KRAFTSTOFFTANK	114
SPERRVENTIL	122
ELEKTRISCHE ANLAGE UND STARTSYSTEM	123
WARNVORRICHTUNG	123
DREHSTROMGENERATOR	124
BATTERIE	127
KLEMMLEISTE	128
UNTERBRECHER	129
STEUERUNGSEINHEIT, ELEKTRON. FÜR MOTOR UND BEFEST.	131

* ÜBERSETZUNG ZUM ZEITPUNKT DER DRUCKLEGUNG NICHT VORHANDEN

INHALTSVERZEICHNIS

Bezeichnung	Seite
MOTORSTEUERUNG, ELEKTRON.	132
NOTLENKUNGSSTEUERUNG	134
UMFORMER, ELEKTR.	135
ELEKTR. UMFORMER	136
ELEKTRONIK - MONITOR	139
UMLAUFKÜHLWASSERHEIZUNG	140
RUNDUMWARNLEUCHTE - EINBAU-SATZ	142
FAHRERHAUSBELEUCHTUNG	143
ARBEITSLEUCHTEN	144
FRONTSCHEINWERFER	145
SCHEINWERFER U. RICHTUNGSLEUCHTE	152
BLINKLEUCHTE	156
RUNDUM-KENNLEUCHTE	158
ARBEITSLEUCHTEN	159
ARBEITS- U. SIGNALBELEUCHTUNG	160
SCHEINWERFER, HINTEN	162
ARBEITSLEUCHTEN	166
BLINKERLEUCHTEN	193
WARNLEUCHTEN	194
MOTOR, ELEKTR.	198
FAHRGESCHWINDIGKEITSSENSOR	201
STELLUNGSSENSOR	202
DRUCKSENSOR	203
DREHZAHLSENSOR	208
TEMPERATURSENSOR	210
ÄTHERSTARTHILFE	212
STARTERMOTOR	216
TRENNSCHALTER	218
LICHTSCHALTER	220
MAGNETSCHALTER	222
SCHEIBENWISCHERSCHALTER	223
RÜCKFAHRWARNHORN	224
VERDRAHTUNG - SCHARDÄMPFUNG	225
FAHRERHAUSVERDRAHTUNG	226
MOTORVERDRAHTUNG	232
VERDRAHTUNG, VORNE	236
VERDRAHTUNG, HINTEN	240
NOTLENKUNGSVERDRAHTUNG	254
SCHALTKONSOLENVERDRAHTUNG	258
LENKKONSOLENVERDRAHTUNG	260
VERDRAHTUNG (EINSPRITZEINHEIT)	263
KRAFTÜBERTRAGUNG	264
GETRIEBEANSCHLUSS	264
GETRIEBEGEHÄUSE	265
ANTRIEBSKETTE	266
KUPPLUNGSGESTÄNGE	268
DIFFERENTIALSPERRENGESTÄNGE	272
GETRIEBESTEUERUNG	274
GETRIEBEHYDRAULIK	278
GETRIEBEÖLKÜHLER	280
VERSANDDECKEL	282
DIFFERENTIAL UND TELLERRAD	284
DIFFERENTIAL	288
GETRIEBEÖLFÜLLSTUTZEN	290
ÖLFILTER	292
SEITENANTRIEB	294
VERTEILERGETRIEBE UND GEHÄUSE	296
ÖLLEITUNGEN - KRAFTÜBERTRAGUNG	302
RADAUFHAENGUNG	304
PLANETENGETRIEBE	306
ZAHNRADPUMPE	312
TANDEMGEHÄUSE UND DECKEL	314
GETRIEBE	315
DIFFERENTIALSPERRE - VENTIL UND BEFESTIGUNGSTEILE	316
STEUERVENTIL	317
VORSTEUERVENTIL	318
ÜBERDRUCKVENTIL	320
VENTIL - SCHALT- UND DRUCKSTEUERUNG	322
MAGNETVENTIL	328
GETRIEBESTEUERVENTIL	330
RAD UND REIFEN	332
RADSATZ	349
RAHMEN UND AUFBAU	352
VORDERACHSE	352
RAHMEN UND GEHÄUSE	355
MOTORVERKLEIDUNG	356
VORDERRAHMEN	359
VERKLEIDUNG UND BEFESTIGUNG - KÜHLER	360
PANZERWANNE	362
FAHRERPLATTFORMVERKLEIDUNG	364
KNICKGELENK-ANHÄNGUNG	368
SCHMIERLEITUNGEN	370
LENKGESTÄNGE	371
ANTRIEBSWELLENSCHUTZ	372
STEIGLEITER	373
AUFHÄNGUNG - HINTERES FAHRWERK	374
KRAFTSTOFFTANKABSTÜTZUNG	375
PLATTFORMUNTERBAU	376
BREMSSYSTEM	377
BREMSBETÄTIGUNG	377
LUFTTROCKNER	378
BETRIEBSBREMSE	382

* ÜBERSETZUNG ZUM ZEITPUNKT DER DRUCKLEGUNG NICHT VORHANDEN

INHALTSVERZEICHNIS

Bezeichnung	Seite
FESTSTELLBREMSGESTÄNGE	384
BREMSGESTÄNGE	388
DRUCKLUFTTANKLEITUNGEN	393
DRUCKLUFTBEHÄLTER	394
DRUCKLUFT-STEUERVENTIL	396
HYDRAULIKSYSTEM	398
HYDRAULIKDRUCKSPEICHER U. BEFESTIGUNG	398
DRUCKSPEICHER - SCHARDÄMPFUNG	399
HYDRAULIKDRUCKSPEICHER	400
HYDRAULIKSTEUERUNG	401
SCHARDREHWERKSPERRENSTEUERUNG	404
LENKBETÄTIGUNG	406
GELENKZYLINDER UND BEFESTIGUNGSTEILE	407
SCHARHUBZYLINDER UND BEFESTIGUNGSTEILE	408
SCHARKIPPZYLINDER UND BEFESTIGUNGSTEILE	409
SEITENSCHUBZYLINDER UND BEFESTIGUNGSTEILE	410
SEITENSCHIEBERZYLINDER UND BEFESTIGUNGSTEILE	411
LENKZYLINDER UND AUFHÄNGUNG	412
RADSTURZZYLINDER UND BEFESTIGUNGSTEILE	413
KNICKLENKZYLINDER	414
SCHARHUBZYLINDER	416
SCHARNEIGEZYLINDER	418
SEITENSCHUBZYLINDER	420
AUFREISSERHUBZYLINDER	422
SEITENSCHUBZYLINDER	424
LENKZYLINDER	426
RADSTURZZYLINDER	430
STEUERVENTILSPERRE	432
SCHARDREHWERK	436
PUMPENANTRIEB	439
HYDRAULIKLEITUNGEN	440
HYDRAULIKLÜFTERLEITUNGEN	448
HYDRAULIKPUMPE UND LEITUNGEN	452
AUFREISSERLEITUNGEN	456
NOTLENKUNGSLEITUNGEN	460
LENKÖLLEITUNGEN	462
SEITENSCHUBSPERRE	466
HYDRAULIKSPERRE (HANDBEDIENUNG)	467
MOTORANTRIEB	468
ZAHNRADANTRIEB	470
PUMPE UND MOTOR	472
KOLBENPUMPE UND BEFESTIGUNG	474
NOTLENKUNGSPUMPE UND BEFESTIGUNGSTEILE	476
ZUMESSPUMPE	478
KOLBENPUMPE	480
KOLBENPUMPENUMLAUFSATZ	484
NOTLENKUNG	486
SCHWENKBLOCK	487
HYDRAULIKTANK UND SCHMIERFILTER	488
HYDRAULIKTANK UND BEFESTIGUNGSTEILE	490
VENTIL UND GESTÄNGE	492
VENTILSATZ (4-VENTIL)	510
VENTILSATZ (5-VENTIL)	515
VENTILSATZ (6-VENTIL)	519
VENTILSATZ (7-VENTIL)	520
SAMMELVENTIL	522
STEUERVENTIL	524
DRUCK- U. STROMAUSGLEICHSVENTIL	574
ENTLEERVENTIL	578
ÜBERDRUCKVENTIL	579
PENDELVENTIL	587
MAGNETVENTIL	588
VENTILSOLENOID U. -KRÜMMER	589
ARBEITSGERÄTE	592
SCHARDREHWERK	592
ZUGHAKEN	594
SCHUBPLATTE	596
ARBEITSGERÄTE	597
ECKMESSER	597
SCHAR	598
SCHNEIDMESSER	599
SCHILDHUB	600
AUFREISSERBEFESTIGUNG	602
AUFREISSER	603
AUFREISSERZAHN	606
FAHRERHAUS	607
FAHRERHAUSZUBEHÖR	607
KLIMAANLAGE UND AUFHÄNGUNG	609
KLIMAANLAGE	609
ARMLEHNE	614
KÄLTEMITTELKOMPRESSOR	616
KÄLTEMITTELKONDENSATOR U. BEFESTIGUNGSTEILE	618
STEUERKONSOLE	620
UMBAUSATZ - OHNE ÜBERROLLSCHUTZ	624
FAHRERHAUSTÜR	626

* ÜBERSETZUNG ZUM ZEITPUNKT DER DRUCKLEGUNG NICHT VORHANDEN

INHALTSVERZEICHNIS

Bezeichnung	Seite
LUFTKANAL UND REGULIERUNG	638
LUFTKANAL	639
RÜCKLEHNENVERLÄNGERUNG	640
UMLAUFLÜFTER	642
FAHRERHAUSLUFTFILTER	648
HAMMER UND BEFESTIGUNG	649
FAHRERHAUSHEIZUNG U. BEFESTIGUNGSTEILE	651
FAHRERHAUSHEIZUNG	651
DRUCKLUFTHUPE	656
FAHRERSITZFEDERUNGSGEHÄUSE	660
RADIOEINBAUSATZ	663
ARMATUR	666
WÄRMEISOLIERUNG	668
FAHRERHAUSAUSKLEIDUNG	670
KLIMAANLAGENLEITUNGEN	682
HEIZUNGSLEITUNGEN	686
RÜCKSPIEGEL	688
MODUL - VIER ELEKTRON. ANZEIGEN	696
GESCHWINDIGKEITS- U. DREHZAHLMESSERMODUL	697
ÜBERROLLSCHUTZAUFLAGER	698
SCHALE - RÜCKENLEHNE	701
FAHRERSITZVERKLEIDUNG	702
FAHRERHAUSVERKLEIDUNG	704
INSTRUMENTENTAFEL	706
FENSTERVERKLEIDUNG	710
ÜBERROLLSCHUTZKABINE	714
ÜBERROLLSCHUTZDACH	715
ÜBERROLL-SCHUTZKABINE	716
ÜBERROLL-SCHUTZDACH	717
SONNENBLENDE	718
SICHERHEITSGURT	719
FAHRERSITZ	720
SCHWINGSITZ	724
SITZUNTERBAU	732
FAHRERSITZFEDERUNG	734
MAGNETVENTIL	738
SCHEIBENWASCHANLAGE	740
FAHRERHAUSFENSTER	743
SCHEIBENWISCHER	748
WARTUNGSAUSRÜSTUNG	759
*TOOL BOX GP	759
AUFKLEBER	760
SCHILD UND AUFKLEBER	760
ERSATZTEILNUMMERNINDEX	B1

* ÜBERSETZUNG ZUM ZEITPUNKT DER DRUCKLEGUNG NICHT VORHANDEN

1. MACHINE IDENTIFICATION

Caterpillar machines are identified by Product Identification Numbers (PIN). Some components included in a machine may be identified by Serial Numbers (S/N). Typical components that will be serialized include engines, transmissions, bulldozers, and rippers. The machine and engine are further identified by arrangement numbers and in some cases modification numbers. These numbers are shown on the product identification plate(s) and on the master plate in the operator's compartment.

Caterpillar dealers need all of these numbers to determine accurate parts identification.

SIS ***New Feature***

Effective First Quarter 2001 the Caterpillar Product Identification Number (PIN) will change from 8 to 17 characters. In an effort to provide uniform equipment identification, Caterpillar and other construction equipment manufacturers are moving to comply with the latest version of the product identification numbering standard. Non-road machine PINs are defined by ISO 10261. The new PIN format will apply to all Caterpillar machines and generator sets. The PIN plates and frame marking will display the 17 character PIN. The new format will look like the following:

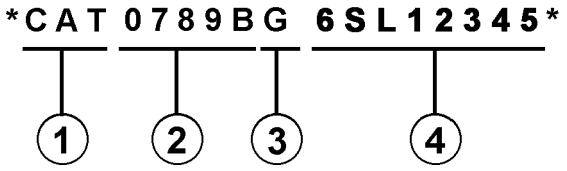

Where:

1. Caterpillar's World Manufacturing Code (characters 1-3)

2. Machine Descriptor (characters 4-8)

3. Check Character (character 9)

4. Machine Indicator Section (MIS) or Product Sequence Number (characters 10-17). These were previously referred to as the Serial Number.

Machines and generator sets produced before First Quarter 2001 will maintain their 8 character PIN format.

Components such as engines, transmissions, axles, etc. and work tools will continue to use an 8 character Serial Number (S/N).

2. ORDERING PARTS

⚠ WARNING

When replacement parts are required for this product Caterpillar recommends using Caterpillar replacement parts or parts with equivalent specifications including, but not limited to, physical dimensions, type, strength and material.

Failure to heed this warning can lead to premature failures, product damage, personal injury or death.

Quality Caterpillar replacement parts are available from Caterpillar dealers throughout the world. Their parts inventories are up to date and include all parts normally required to protect your investment in Caterpillar machines. Dealers may offer repair kits or remanufactured parts to allow selection of the most effective repair alternative for a particular situation. When ordering parts, your order should specify the quantity, part number, part name, and the serial number/product identification number of the machine for which the parts are needed.

3. PARTS MANUAL ORGANIZATION

Product information in this manual is presented as "information elements" that represent all of the components for the specific model. Engine Arrangement and Seat Group are examples of information elements. The information elements are organized alphabetically by part name and secondarily by part number within each major section of the manual.

4. TABLE OF CONTENTS

SIS ***New Feature***

A table of contents (TOC) is found at the beginning of the manual. The TOC lists each section of the manual with a complete list of all information elements organized as they appear in the manual. Page numbers are provided for quick reference to detailed parts identification illustrations and serviceable consist lists.

5. MAINTENANCE PARTS INDEX

The Maintenance Parts Index, located near the beginning of the manual, references most frequently used maintenance part numbers, providing description, quantity, usage and page number. This information is organized alphabetically by part description.

6. INDEX

The index located near the front of the manual is an alphabetical listing of all information elements included in the manual. Page numbers are provided for quick reference to detailed parts identification illustrations and serviceable consist lists.

7. PART NUMBER INDEX

A numerical index listing all part numbers and the corresponding page number(s) appears at the back of the manual.

8. CAPTIONS

Captions located at the top of each page of an information element identify the part number and part name along with additional descriptive information. PIN and S/N information found in each caption should be used to select correct information for a specific machine. Field replacement options, identification of optional attachment components, and where used ("part of") information is also provided.

SIS ***New Feature***

The first line of a caption is shown in larger type font to indicate the beginning of an information element. Captions for additional pages that may be required to illustrate an information element will be shown in standard type font and will include the term *(contd.)* .

9. NON-SERVICED PARTS

SIS ***New Feature***

In some instances it is necessary to display non-serviced parts that are a link to a lower level serviceable consist lists. These non-serviced part numbers are shown in *italic* type indicating that they are not available.

10. PARTS LIST REFERENCE NUMBERS

SIS ***New Feature***

Numbers shown in the Ref No column correspond to numbers used in the associated graphic(s). An alphabetic suffix may be added to a reference number to identify lower level consist items. Numbers shown in the Graphic Ref column refer to the graphic number identifier displayed in the lower left corner of each illustration. The Graphic Ref number may be used in combination with the item Ref No to determine the correct part number. There may be intentional omission of a Ref No in a consist list as information is updated to reflect the latest serviceable part numbers.

11. INDENTED PART NAMES

When a part name is indented in a parts list, it is part of (included in) the group or assembly under which it is indented.

12. ILLUSTRATION REFERENCE LETTERS

When necessary, illustrations contain reference letters (A, B, C etc.) that are intended to track lines and harnesses from one point to another. They are also used to show where to reconnect illustrations that have been separated.

13. ABBREVIATIONS AND SYMBOLS

O.D. – Outside Diameter
I.D. – Inside Diameter
A – Not Part Of This Group
B – Use As Required
C – Change From Previous Type
D – Order By The Meter
E – Order By The Centimeter
F – Not Shown
G – Order By The Inch
I – See Hose Fabrication Guide
M – Metric Part
R – Remfg Part May Be Available
Y – Separate Illustration
Z – Not Serviced Separately

NOTE:

Continuing improvement and advancement of product design may cause changes to your machine which may not be included in this publication. Whenever a question arises regarding your Caterpillar product or this publication, please consult your Caterpillar dealer for the latest available information.

FRAME AND BODY

8E-3299 PLATFORM GP-CAB

PIN 3SK1-09999

SMCS-7253 100090751

NOTE	REF NO	GRAPHIC REF	PART NUMBER	QTY	PART NAME (1 2 3 4 5 6 PRODUCT LEVEL)	SEE PAGE
	1	1	3T-3953	1	PLATE AS	
	2	1	5B-2992	25	BOLT (3/8-16X.750IN)	
	3	1	6P-1075	41	WASHER-HARD (3MM THK)	
	4	1	9P-1444	2	SUPPORT AS-FOOT	
	5	1	9P-2229	19	BOLT (1/2-13X1IN)	
		1	9P-[illegible]4	19	WASHER-HARD (4MM THK)	
	6	1	8E-8136	1	COVER AS-LH	
		1	9F-2979	6	NUT-WELD (3/8-16 THD)	
		1	1P-8188	1	CLIP	
	7	1	7S-3411	4	COVER	
	8	1	6J-0488	18	SCREW-HEAD (3/8-16X.875IN)	
	9	1	7[illegible]-4474	1	COVER	
		1	8E-8[illegible]7	1	GASKET	
	10	1	8E-3249	1	[illegible]	
		1	8E-3250	1	GASKET	
	11	1	3T-3835	1	HANDHOLD	
	12	1	8E-8878	1	COVER AS	
		1	9F-2979	8	NUT-WELD (3/8-16 THD)	
		1	8E-8078	1	GASKET	
	13	1	7T-0131	1	FLOORPLATE AS	
		1	1F-0748	4	NUT-WELD (1/2-13 THD)	
	14	1	7Y-8087	1	PLUG-BUTTON	
	15	1	7T-0136	1	PLATE AS	
		1	9F-2978	6	NUT-WELD (3/8-16 THD)	
	16	1	7T-8086	1	COVER	
		1	7T-0779	1	GASKET	
	17	1	3T-3981	1	PLATE AS	
	18	1	6T-9364	4	BOLT (1/4-20X.625IN)	
M		1	6T-4205	4	WASHER-HARD (2MM THK)	
	19	1	6L-8484	1	FLOOR MAT	
	20	1	9E-8946	1	MODULE AS-OPERATOR	
	21	1	3T-3834	1	HANDHOLD	
	22	1	9P-8571	2	PLUG	
	23	2	6T-9364	4	BOLT (1/4-20X.625IN)	
M		2	6T-4205	4	WASHER-HARD (2MM THK)	
	24	2	5B-3062	17	BOLT (3/8-16X.750IN)	
	26	2	6F-1075	21	WASHER-HARD (3MM THK)	
	26	2	7T-0135	1	SEAL	
	27	2	7X-0378	2	BOLT (3/4-10X5IN)	
		2	7X-0682	2	WASHER-HARD (5MM THK)	
	28	2	3T-3482	2	PLATE	
	29	2	3T-8280	1	PLATE AS	
		2	7S-0038	8	SPACER	
	30	2	3T-8281	1	SEAL	
	31	2	7S-0017	1	GASKET	
	32	2	7S-0016	1	COVER AS	
		2	2R-2276	2	WASHER	
		2	6P-0028	2	SCREW-KNURLED	
	33	2	9W-3429	1	COVER	
	34	2	8E-0697	1	COVER	
	35	2	9D-3031	8	SCREW-SOCKET HEAD	
	36	2	9W-3142	8	MOUNTING	
	37	2	9W-9027	2	PLATE	
	38	2	7X-0390	2	BOLT (7/8-9X5IN)	
		2	7X-0672	2	WASHER-HARD	
	39	2	4L-8454	4	BOLT (3/8-16X1.0IN)	
	40	2	3T-4788	1	COVER	

12 FRAME AND BODY 1 of 4 SELP4570-01

FRAME AND BODY

8E-3299 PLATFORM GP-CAB (contd.)

100090751

NOTE	REF NO	GRAPHIC REF	PART NUMBER	QTY	PART NAME (1 2 3 4 5 6 PRODUCT LEVEL)	SEE PAGE
	41	2	8E-3515	1	COVER	
	42	2	7T-0134	1	PLATE	
	43	2	7T-0139	1	GASKET	
	44	2	7S-0724	1	GASKET	
	45	2	7S-0723	1	COVER	
	46	2	6V-1969	2	PLUG-BUTTON	

M-METRIC PART

SELP4570-01 2 of 4 FRAME AND BODY 13

FRAME AND BODY

8E-3299 PLATFORM GP-CAB (contd.)

100090751

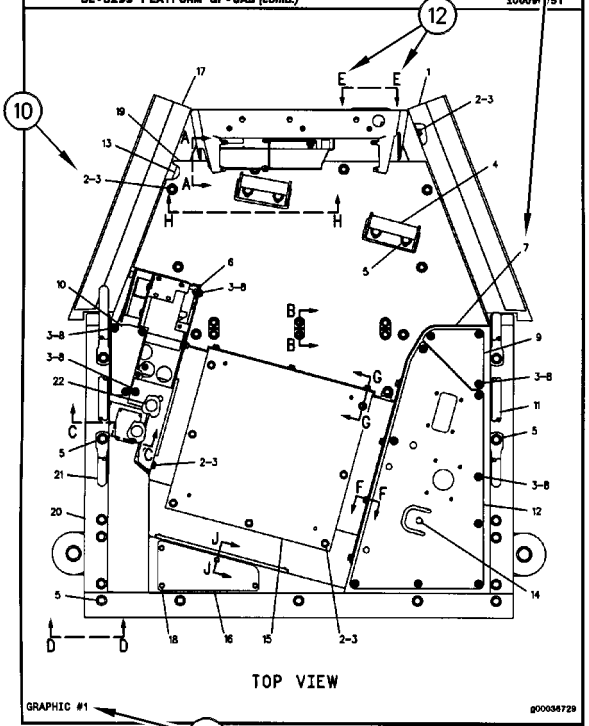

GRAPHIC #1 g00036729

14 FRAME AND BODY 3 of 4 SELP4570-01

FRAME AND BODY

8E-3299 PLATFORM GP-CAB (contd.)

100090751

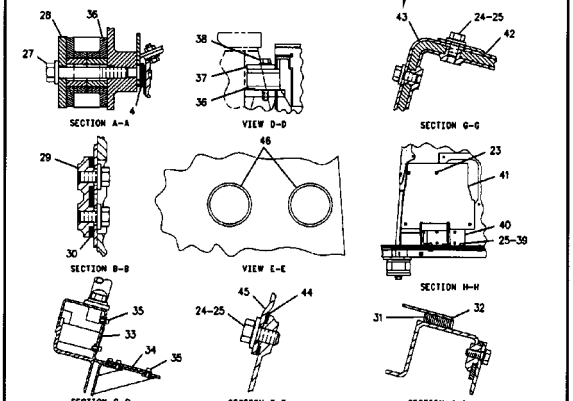

GRAPHIC #2 g00105874

SELP4570-01 4 of 4 FRAME AND BODY 15

1. IDENTIFICATION DE LA MACHINE

Toutes les machines Caterpillar portent un numéro d'identification (PIN). Certains composants des machines peuvent porter des numéros de série (S/N). En général, parmi les composants qui portent des numéros de série il y a les moteurs, les transmissions, les bulldozers et les rippers. En plus, la machine et le moteur peuvent recevoir des numéros de version, et dans certains cas, de modification. Ces numéros figurent sur les plaques de numéro de série et sur la plaque signalétique principale qui se trouve dans le poste de conduite.

Les concessionnaires Caterpillar doivent connaître tous ces numéros pour identifier correctement les pièces.

SIS ***Nouvelle Caractéristique***

À partir du premier trimestre 2001, le numéro d'identification produit (PIN) Caterpillar passe de 8 à 17 caractères. Afin de permettre une identification uniforme des matériels, Caterpillar et d'autres constructeurs de machines de travaux publics s'efforcent de se conformer à la norme la plus récente portant sur les numéros d'identification des produits. Les numéros d'identification (PIN) de machines de chantier sont définis par la norme ISO 10261. Le nouveau format du numéro d'identification est valable pour toutes les machines et tous les groupes électrogènes Caterpillar. Le numéro d'identification produit (PIN) figurant sur la plaque et sur le châssis se composera de 17 caractères. Le nouveau format ressemblera à ceci:

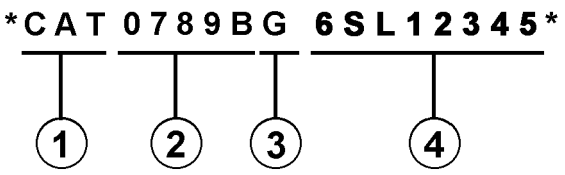

Il se décomposera de la façon suivante:

1. Code international de fabrication de Caterpillar (caractères 1 à 3)

2. Descriptif de la machine (caractères 4 à 8)

3. Contrôle (caractère 9)

4. Indicateur machine (MIS) ou numéro de séquence produit (caractères 10 à 17). Ceux-ci étaient auparavant désignés sous le terme de numéro de série.

Les machines et les groupes électrogènes construits avant le premier trimestre 2001 garderont le format à 8 caractères du numéro d'identification produit (PIN).

Les organes tels que les moteurs, les boîtes de vitesses, les essieux, etc., continueront d'être désignés par un numéro de série (S/N) à 8 caractères.

2. COMMANDE DE PIÈCES

⚠ DANGER

Lorsqu'il faut remplacer des pièces de rechange pour ce produit Caterpillar recommande d'utiliser les pièces de rechange Caterpillar ou les pièces qui ont des spécifications équivalentes dont les dimensions physiques, le type, la force et le matériau. Ces équivalences ne se limitent pas à l'énoncé précédent.

L'inobservation de cette mise en garde peut entraîner des défaillances prématurées, des dommages au produit, des blessures ou même la mort.

Les concessionnaires Caterpillar fournissent dans le monde entier des pièces de rechange de qualité Caterpillar. Leurs stocks de pièces sont constamment réapprovisionnés et comptent toutes les pièces nécessaires pour assurer la bonne marche de vos machines Caterpillar. Certains concessionnaires proposent également des kits de réparation ou des pièces rénovées, ce qui permet de choisir la solution la plus économique dans une situation donnée. Lors des commandes de pièces, mentionner la quantité, le numéro et la désignation des pièces ainsi que le numéro de série ou le numéro d'identification (PIN) de la machine pour laquelle ces pièces sont requises.

3. ORGANISATION DU CATALOGUE DE PIÈCES

Les renseignements sur les produits sont présentés sous forme de "Information element" (élément d'information) représentant tous les composants d'un modèle donné. "Engine Arrangement" (version de moteur) et "Seat Group" (assemblage de siège)" sont des exemples d'éléments d'information. Les éléments d'information sont classés par ordre alphabétique par la désignation standard des pièces et par numéros de pièces dans chaque partie importante du manuel.

4. TABLE DES MATIÈRES

Nouvelle Caractéristique

La table des matières se trouve au début du manuel. La table des matières fournit la liste de tous les chapitres du manuel avec une liste complète de tous les éléments d'information classés par ordre d'apparition dans le manuel. Les numéros de page sont fournis afin que l'utilisateur puisse trouver rapidement les illustrations détaillées concernant l'identification des pièces et les listes des pièces d'entretien.

5. INDEX DES PIÈCES D'ENTRETIEN

La rubrique "Index des pièces d'entretien" qui se trouve au début du manuel renvoie aux pièces d'entretien les plus fréquemment utilisées en précisant la désignation, la quantité, là où la pièce est utilisée et le numéro de page. Ces pièces sont classés par ordre alphabétique.

6. INDEX

L'index qui se trouve vers le début du manuel est une liste alphabétique de tous les éléments d'information du manuel. Les numéros de page sont fournis afin que l'utilisateur puisse trouver rapidement les illustrations détaillées concernant l'identification des pièces et les listes des pièces d'entretien.

7. INDEX DES NUMÉROS DE PIÈCES

Une liste numérique de tous les numéros de pièces et des pages correspondantes se trouve à la fin du manuel.

8. LÉGENDES

Les légendes qui se trouvent en haut de chaque page de chaque élément d'information fournissent le numéro de pièce, la désignation ainsi que des renseignements supplémentaires sur les pièces. Les renseignements concernant les numéros de série (S/N) qui se trouvent dans chaque légende doivent être utilisés pour sélectionner les informations correctes pour un moteur donné. Les informations concernant les options de remplacement sur le chantier, l'identification des composants des équipements offerts en option et les lieux d'application sont aussi fournies.

Nouvelle Caractéristique

Les lettres de la première ligne d'une légende sont présentées en police plus grande afin d'indiquer le début d'une unité d'information. Les légendes qui pourraient être requises pour des pages supplémentaires afin d'illustrer une unité d'information seront présentées en police standard et comprendront le terme (à suivre).

9. PIÈCES NON FOURNIES

Nouvelle Caractéristique

Dans certains cas, il est nécessaire d'indiquer les pièces non fournies qui sont en aval de la liste des pièces d'entretien. Les numéros des pièces non fournies dans la liste des pièces et les légendes seront en italique pour signaler qu'ils ne sont pas disponibles.

10. NUMÉROS DE RÉFÉRENCE DE LA LISTE DES PIÈCES

Nouvelle Caractéristique

Les numéros indiqués dans la colonne des numéros de références correspondent aux numéros utilisés dans les illustrations auxquelles ils sont associés. Un suffixe alphabétique peut être ajouté à un numéro de référence pour identifier la liste des articles en aval. Les numéros indiqués dans la colonne de référence de l'illustration renvoient à l'identification du numéro affiché dans le coin inférieur gauche de chaque illustration. Le numéro de référence de l'illustration pourrait être utilisé avec le numéro de référence de l'article pour déterminer le numéro de pièce correct. Il peut y avoir une omission intentionnelle d'un numéro de référence dans une liste de pièces suite à la mise à jour des informations en vue de refléter les numéros de pièces les plus récentes.

11. DÉSIGNATIONS DE PIÈCES EN RETRAIT

Lorsqu'une désignation de pièce est en retrait, cela veut dire que l'article en regard fait partie de l'ensemble sous lequel il figure.

12. LETTRES DE RÉFÉRENCE DES ILLUSTRATIONS

Quand cela est nécessaire, les illustrations comportent des lettres de référence (A, B, C, etc.) pour montrer le trajet des canalisations et faisceaux de câbles d'un point à l'autre. Elles sont utilisées également pour indiquer où relier les illustrations séparées auparavant.

13. ABRÉVIATIONS ET SYMBOLES

O.D. – Diamètre extérieur
I.D. – Diamètre intérieur
A – Ne fait pas partie de ce groupe
B – Utiliser selon besoin
C – Modification
D – Commander par mètre
E – Commander par centimètre
F – Non représenté
G – Commander par pouce
I – Voir "Hose Fabrication Guide"
M – Pièce métrique
R – Pièce rénovée éventuellement disponible
Y – Illustration séparée
Z – Non fourni séparément

NOTA:

En raison du progrès technique et des améliorations continuelles apportées au matériel, votre machine comporte peut-être des modifications qui n'apparaissent pas dans la présente publication. En cas de doute sur un détail de votre machine Caterpillar ou sur le texte de la présente publication, adressez-vous à votre concessionnaire Caterpillar.

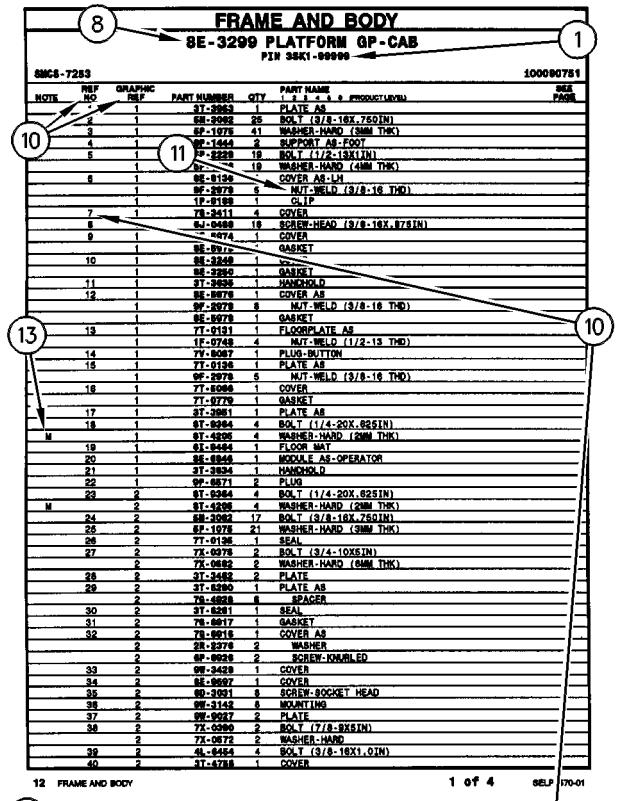
FRAME AND BODY
8E-3299 PLATFORM GP-CAB
PIN 38K1-09999
SMCS-7253
100090751
NOTE | REF NO | GRAPHIC REF | PART NUMBER | QTY | PART NAME (1 2 3 4 5 6 PRODUCT LEVEL) | SEE PAGE
1 | 1 | 3T-2953 | 1 | PLATE AS
2 | 1 | 5B-2992 | 25 | BOLT (3/8-16X.750IN)
3 | 1 | 6P-1075 | 41 | WASHER-HARD (3MM THK)
4 | 1 | 9P-1444 | 2 | SUPPORT AS-FOOT
5 | 1 | 9P-2229 | 19 | BOLT (1/2-13X1IN)
1 | 9P-[illegible] | 19 | WASHER-HARD (4MM THK)
6 | 1 | 8E-9136 | 1 | COVER AS-LH
1 | 9F-2979 | 6 | NUT-WELD (3/8-16 THD)
1 | 1P-8188 | 1 | CLIP
7 | 1 | 7S-3411 | 4 | COVER
8 | 6J-0488 | 18 | SCREW-HEAD (3/8-16X.875IN)
9 | 1 | [illegible]-4474 | 1 | COVER
1 | 8E-8917 | 1 | GASKET
10 | 1 | 8E-3249 | 1 | [illegible]
1 | 8E-3250 | 1 | GASKET
11 | 1 | 3T-3835 | 1 | HANDHOLD
12 | 1 | 8E-8878 | 1 | COVER AS
1 | 9F-2979 | 8 | NUT-WELD (3/8-16 THD)
1 | 8E-8078 | 1 | GASKET
13 | 1 | 7T-0131 | 1 | FLOORPLATE AS
1 | 1F-0748 | 4 | NUT-WELD (1/2-13 THD)
14 | 1 | 7Y-8087 | 1 | PLUG-BUTTON
15 | 1 | 7T-0136 | 1 | PLATE AS
1 | 9F-2978 | 6 | NUT-WELD (3/8-16 THD)
16 | 1 | 7T-8086 | 1 | COVER
1 | 7T-8779 | 1 | GASKET
17 | 1 | 3T-3981 | 1 | PLATE AS
18 | 1 | 6T-9364 | 4 | BOLT (1/4-20X.625IN)
M | 1 | 6T-4205 | 4 | WASHER-HARD (2MM THK)
19 | 1 | 6L-8484 | 1 | FLOOR MAT
20 | 1 | 9E-8946 | 1 | MODULE AS-OPERATOR
21 | 1 | 3T-3834 | 1 | HANDHOLD
22 | 1 | 9P-8571 | 2 | PLUG
23 | 2 | 6T-9364 | 4 | BOLT (1/4-20X.625IN)
M | 2 | 6T-4205 | 4 | WASHER-HARD (2MM THK)
24 | 2 | 5B-3062 | 17 | BOLT (3/8-16X.750IN)
25 | 2 | 6P-1075 | 21 | WASHER-HARD (3MM THK)
26 | 2 | 7T-8135 | 1 | SEAL
27 | 2 | 7X-9378 | 2 | BOLT (3/4-10X5IN)
2 | 7X-0682 | 2 | WASHER-HARD (5MM THK)
26 | 2 | 3T-3482 | 2 | PLATE
29 | 2 | 3T-8280 | 1 | PLATE AS
2 | 7S-8038 | 8 | SPACER
30 | 2 | 3T-8281 | 1 | SEAL
31 | 2 | 7S-8017 | 1 | GASKET
32 | 2 | 7S-8018 | 1 | COVER AS
2 | 2R-2276 | 2 | WASHER
2 | 6P-8028 | 2 | SCREW-KNURLED
33 | 2 | 9W-3429 | 1 | COVER
34 | 2 | 8E-8697 | 1 | COVER
35 | 2 | 9D-3031 | 8 | SCREW-SOCKET HEAD
36 | 2 | 9W-3142 | 8 | MOUNTING
37 | 2 | 9W-9027 | 2 | PLATE
38 | 2 | 7X-0390 | 2 | BOLT (7/8-9X5IN)
2 | 7X-0672 | 2 | WASHER-HARD
39 | 2 | 4L-8454 | 4 | BOLT (3/8-16X1.0IN)
40 | 2 | 3T-4788 | 1 | COVER
12 FRAME AND BODY
1 of 4
SELP4570-01

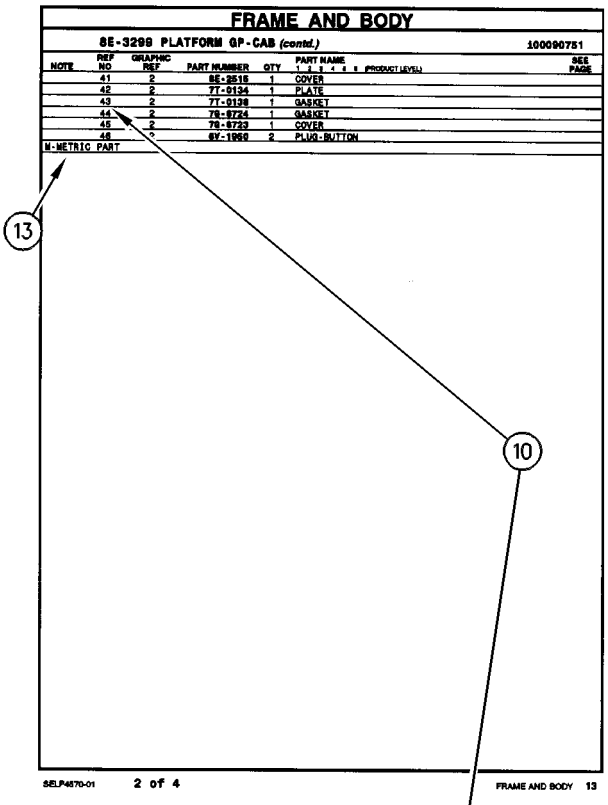
FRAME AND BODY
8E-3299 PLATFORM GP-CAB (contd.)
100090751
NOTE | REF NO | GRAPHIC REF | PART NUMBER | QTY | PART NAME (1 2 3 4 5 6 PRODUCT LEVEL) | SEE PAGE
41 | 2 | 8E-3515 | 1 | COVER
42 | 2 | 7T-0134 | 1 | PLATE
43 | 2 | 7T-0139 | 1 | GASKET
44 | 2 | 7S-8724 | 1 | GASKET
45 | 2 | 7S-8723 | 1 | COVER
46 | 2 | 6V-1969 | 2 | PLUG-BUTTON
M-METRIC PART
SELP4570-01
2 of 4
FRAME AND BODY 13

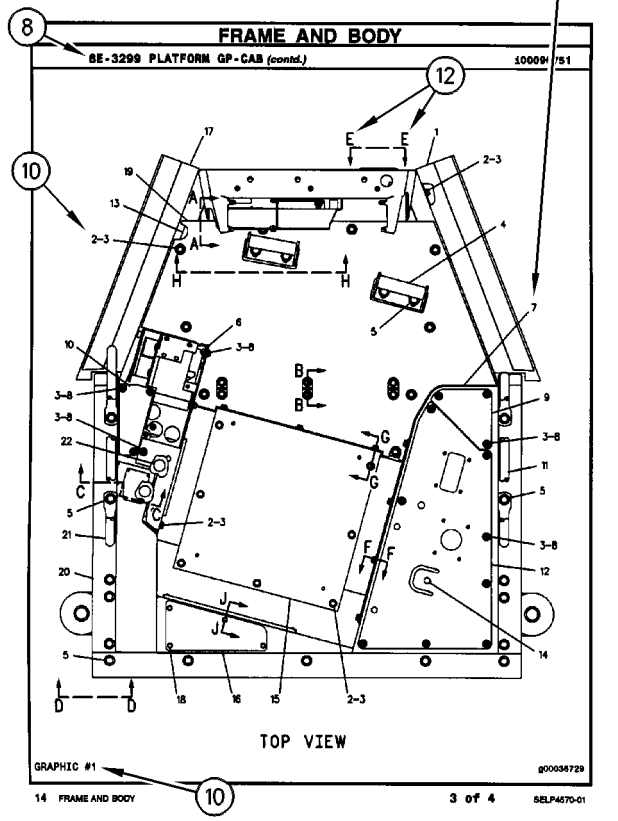
FRAME AND BODY
8E-3299 PLATFORM GP-CAB (contd.)
100090751
TOP VIEW
GRAPHIC #1
g00036729
14 FRAME AND BODY
3 of 4
SELP4570-01

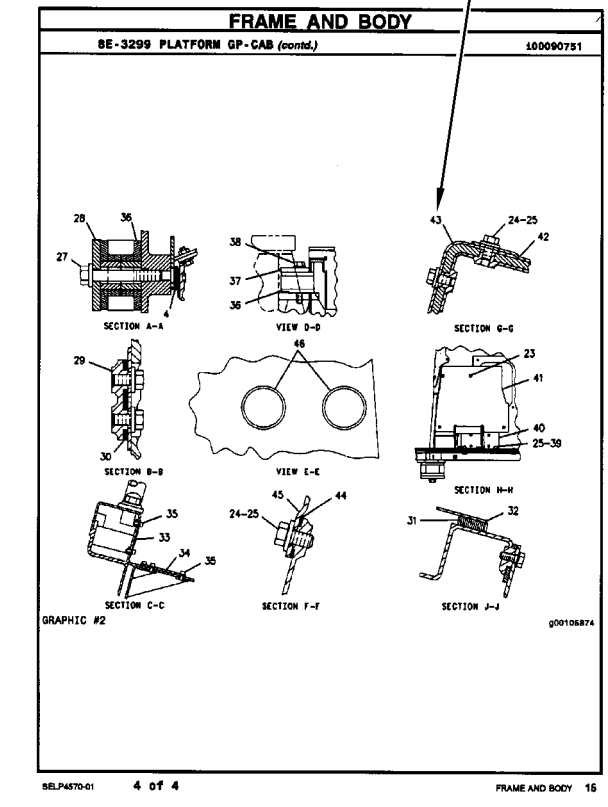
FRAME AND BODY
8E-3299 PLATFORM GP-CAB (contd.)
100090751
SECTION A-A
VIEW D-D
SECTION G-G
SECTION B-B
VIEW E-E
SECTION H-H
SECTION C-C
SECTION F-F
SECTION J-J
GRAPHIC #2
g00105874
SELP4570-01
4 of 4
FRAME AND BODY 15

1. MÁQUINAS

Las máquinas Caterpillar se identifican con Números de Identificación del Producto (PIN). Algunos componentes incluídos en la máquina pueden estar identificados con Números de Serie (N/S). Los componentes que tienen típicamente esta identificación incluyen motores, transmisiones, hojas topadoras y desgarradores. La máquina y el motor se identifican además con Números de Configuración y en algunos casos, Números de Modificación. Estos números están en las placas de identificación del producto o en la placa principal en la cabina del operador.

Los distribuidores Caterpillar necesitan estos números para identificar con exactitud los números de piezas de repuesto.

SIS *Nueva Característica*

A partir del primer trimestre del 2001, el Número de Identificación de Producto (PIN) de Caterpillar cambiará de 8 a 17 caracteres. Para hacer más uniforme el método de identificación de equipos, Caterpillar y otros fabricantes de equipo de construcción han tomado medidas para cumplir con la versión más reciente de la norma de numeración de identificación de productos. Los Números de Identificación de Producto para máquinas que no se operan en carreteras son definidos por la norma ISO 10261. El nuevo formato PIN corresponderá a todas las máquinas y grupos electrógenos Caterpillar. Las placas y los caracteres PIN estampados en el bastidor mostrarán el PIN de 17 caracteres. El nuevo formato tendrá la apariencia siguiente:

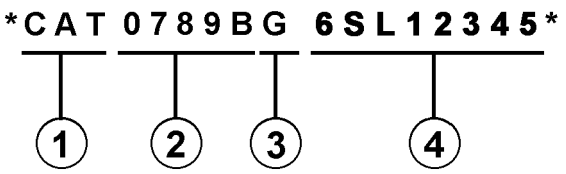

Significado de los caracteres:

1. Código de Fabricación Mundial de Caterpillar (caracteres 1-3)

2. Sección Descriptor de la Máquina (caracteres 4-8)

3. Carácter de Verificación (carácter 9)

4. Sección Indicador de la Máquina (MIS) o Número de Secuencia de Producto (caracteres 10-17). Anteriormente, estos caracteres constituían el Número de Serie.

Las máquinas y grupos electrógenos producidos antes del primer semestre del 2001 mantendrán su formato PIN de 8 caracteres.

Los componentes como motores, transmisiones, ejes, herramientas de trabajo, etc., continuarán usando un Número de Serie (S/N) de 8 caracteres.

2. COMO PEDIR REPUESTOS

⚠ ADVERTENCIA

Cuando se necesiten piezas de repuesto para este producto, Caterpillar recomienda usar piezas de repuesto Caterpillar o piezas que tengan especificaciones equivalentes incluyendo, pero sin estar limitadas a, dimensiones físicas, tipo, fortaleza y material.

El no hacer caso de esta advertencia puede llevar a fallas prematuras, daños al producto y lesiones graves o mortales.

Las piezas de repuesto Caterpillar de calidad están a la disposición de los distribuidores Caterpillar en todo el mundo. Sus existencias actualizadas incluyen todas las piezas normalmente requeridas para proteger su inversión en máquinas Caterpillar. Los distribuidores pueden tener juegos de reparación o piezas remanufacturadas para permitir la selección de la mejor alternativa de reparación en un caso en particular. Al pedir piezas de repuesto, especifique en su pedido la cantidad, el número de pieza, el nombre de la pieza y el número de serie/número de identificación del producto, de la máquina para la cual se necesitan estas piezas.

3. ORGANIZACION DEL MANUAL DE PIEZAS

La información sobre el producto, se presenta en este manual, como "elementos de información" que representan todos los componentes de un modelo específico. Las configuraciones de motores y los grupos de asientos son ejemplos de elementos de información. Los elementos de información están organizados primeramente por nombres de piezas en orden alfabético y en segundo lugar, por el número de pieza dentro de cada sección principal del manual.

4. CONTENIDO

Nueva Característica

La página de Contenido se encuentra al principio del manual. El Contenido indica cada sección del manual con una lista completa de todos los elementos de información organizados en el orden que aparecen en el manual. Los números de página proporcionan una referencia rápida a las ilustraciones detalladas de identificación de piezas y a las listas de componentes de repuesto de dichas piezas.

5. ÍNDICE DE PIEZAS DE MANTENIMIENTO

Al principio de este catálogo se encuentra un índice de los números de piezas utilizadas más frecuentemente para el mantenimiento, que incluye descripción, cantidad necesaria, lugar de utilización y número de página. Esta información está organizada alfabéticamente, por descripción de la pieza.

6. ÍNDICE

El Índice, ubicado cerca del principio del manual, es una lista en orden alfabético de todos los elementos de información incluídos en el manual. Los números de página proporcionan una referencia rápida a las ilustraciones detalladas de identificación de piezas y a las listas de componentes de repuesto de dichas piezas.

7. INDICE NUMÉRICO DE PIEZAS

Un índice numérico de piezas con el correspondiente número de página aparece al final de este catálogo.

8. TÍTULOS

Los títulos ubicados en la parte superior de cada página de elementos de información identifican el número y el nombre de la pieza junto con información descriptiva adicional para ayudar al usuario a determinar las piezas necesarias para una máquina en particular. También se suministra información sobre las opciones de reparación en el campo, la identificación de componentes de accesorios optativos y el lugar de ubicación de la pieza ("es parte de").

Nueva Característica

La primera línea del título se muestra con un tipo de letra más grande para indicar el comienzo de un elemento de información. Si se requieren páginas adicionales para ilustrar un elemento de información, los títulos se muestran con un tipo de letra normal y la continuación se indica entre paréntesis.

9. PIEZAS QUE NO SE SUMINISTRAN COMO REPUESTO

Nueva Característica

En algunos casos es necesario indicar piezas que no se suministran como repuesto pero que pueden estar conectadas a listas de componentes de otras piezas de repuesto. En tal caso, dichas piezas se muestran en cursiva para indicar que no son piezas disponibles.

10. NÚMEROS DE REFERENCIA

Nueva Característica

Los números en la columna de No. de Referencia corresponden a los números indicados en la ilustración que pertenece a ese número de pieza. Los números que tienen un sufijo alfabético identifican artículos de las listas de componentes de piezas. Los números en la columna de Referencia de la ilustración se identifican en la esquina inferior izquierda de cada ilustración. Para determinar el número de pieza correcto se puede utilizar tanto el No. de Referencia de la ilustración como el No. de Referencia del artículo. A medida que se actualiza la información para indicar los más recientes números de piezas de repuesto, puede omitirse intencionalmente un No. de Referencia en una lista de componentes de piezas.

11. NOMBRES DE PIEZA SANGRADOS

Cuando el nombre de una pieza está sangrado en una lista, significa que esta pieza forma parte del grupo o conjunto del renglón inmediatamente superior.

12. LETRAS DE REFERENCIA DE ILUSTRACIONES

Las ilustraciones contienen algunas veces letras de referencia (A, B, C etc.) cuyo propósito es seguir el trayecto de líneas y mazos de cables de un punto a otro. También se utilizan para mostrar dónde volver a unir ilustraciones que se habían separado.

13. ABREVIATURAS Y SIMBOLOS

O.D. – Diámetro exterior
I.D. – Diámetro interior
A – No es pieza de este grupo
B – Utilizado según la demanda
C – Indica cambio
D – Se pide por metro
E – Se pide por centímetro
F – No se muestra
G – Se pide por pulgada
I – Ver "Hose Fabrication Guide"
M – Pieza métrica
R – Puede estar disponible como pieza remanufacturada
Y – Ilustración separada
Z – No se suministra por separado

NOTA:

Las contínuas mejoras y adelantos en diseño podrían originar cambios a su máquina que no se incluyen en esta publicación. Cuando tenga alguna pregunta acerca de su producto Caterpillar o de esta publicación, consulte al distribuidor Caterpillar para obtener la información más reciente.

FRAME AND BODY

8E-3299 PLATFORM GP-CAB

PIN 3SK1-09999

SMCS-7253 100090751

NOTE	REF NO	GRAPHIC REF	PART NUMBER	QTY	PART NAME (1 2 3 4 5 6 PRODUCT LEVEL)	SEE PAGE
	1	1	3T-3953	1	PLATE AS	
	2	1	5B-2992	25	BOLT (3/8-16X.750IN)	
	3	1	6P-1075	41	WASHER-HARD (3MM THK)	
	4	1	9P-1444	2	SUPPORT AS-FOOT	
	5	1	9P-2229	19	BOLT (1/2-13X1IN)	
		1	6P-[illegible]4	19	WASHER-HARD (4MM THK)	
	6	1	9E-9136	1	COVER AS-LH	
		1	9F-2979	6	NUT-WELD (3/8-16 THD)	
		1	1P-0188	1	CLIP	
	7	1	7S-3411	4	COVER	
	8	1	6J-0488	18	SCREW-HEAD (3/8-16X.875IN)	
	9	1	[illegible]-4474	1	COVER	
		1	9E-9[illegible]7	1	GASKET	
	10	1	9E-3249	1	[illegible]	
		1	9E-3250	1	GASKET	
	11	1	3T-3935	1	HANDHOLD	
	12	1	9E-9078	1	COVER AS	
		1	9F-2979	8	NUT-WELD (3/8-16 THD)	
		1	9E-9079	1	GASKET	
	13	1	7T-0131	1	FLOORPLATE AS	
		1	1F-0748	4	NUT-WELD (1/2-13 THD)	
	14	1	7Y-9087	1	PLUG-BUTTON	
	15	1	7T-0136	1	PLATE AS	
		1	9F-2978	6	NUT-WELD (3/8-16 THD)	
	16	1	7T-9086	1	COVER	
		1	7T-9779	1	GASKET	
	17	1	3T-3981	1	PLATE AS	
	18	1	6T-9364	4	BOLT (1/4-20X.625IN)	
M		1	6T-4205	4	WASHER-HARD (2MM THK)	
	19	1	6L-9484	1	FLOOR MAT	
	20	1	9E-9946	1	MODULE AS-OPERATOR	
	21	1	3T-3934	1	HANDHOLD	
	22	1	9P-8571	2	PLUG	
	23	2	6T-9364	4	BOLT (1/4-20X.625IN)	
M		2	6T-4205	4	WASHER-HARD (2MM THK)	
	24	2	5B-3062	17	BOLT (3/8-16X.750IN)	
	26	2	6F-1075	21	WASHER-HARD (3MM THK)	
	26	2	7T-0135	1	SEAL	
	27	2	7X-0378	2	BOLT (3/4-10X5IN)	
		2	7X-0682	2	WASHER-HARD (5MM THK)	
	28	2	3T-3482	2	PLATE	
	29	2	3T-5290	1	PLATE AS	
		2	7S-0038	8	SPACER	
	30	2	3T-5281	1	SEAL	
	31	2	7S-0017	1	GASKET	
	32	2	7S-0016	1	COVER AS	
		2	2R-2276	2	WASHER	
		2	6P-0028	2	SCREW-KNURLED	
	33	2	9W-3429	1	COVER	
	34	2	9E-9697	1	COVER	
	35	2	9D-3031	8	SCREW-SOCKET HEAD	
	36	2	9W-3142	8	MOUNTING	
	37	2	9W-9027	2	PLATE	
	38	2	7X-0390	2	BOLT (7/8-9X5IN)	
		2	7X-0672	2	WASHER-HARD	
	39	2	4L-9454	4	BOLT (3/8-16X1.0IN)	
	40	2	3T-4788	1	COVER	

12 FRAME AND BODY 1 of 4 SELP4570-01

FRAME AND BODY

8E-3299 PLATFORM GP-CAB (contd.)

100090751

NOTE	REF NO	GRAPHIC REF	PART NUMBER	QTY	PART NAME (1 2 3 4 5 6 PRODUCT LEVEL)	SEE PAGE
	41	2	9E-3515	1	COVER	
	42	2	7T-0134	1	PLATE	
	43	2	7T-0139	1	GASKET	
	44	2	7S-9724	1	GASKET	
	45	2	7S-9723	1	COVER	
	46	2	6V-1969	2	PLUG-BUTTON	

M-METRIC PART

SELP4570-01 2 of 4 FRAME AND BODY 13

FRAME AND BODY

8E-3299 PLATFORM GP-CAB (contd.)

100090751

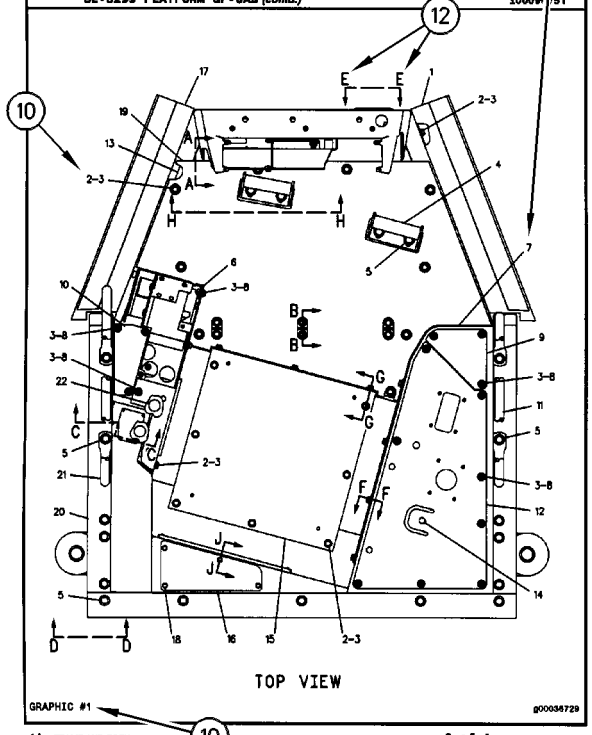

GRAPHIC #1 g00036729

14 FRAME AND BODY 3 of 4 SELP4570-01

FRAME AND BODY

8E-3299 PLATFORM GP-CAB (contd.)

100090751

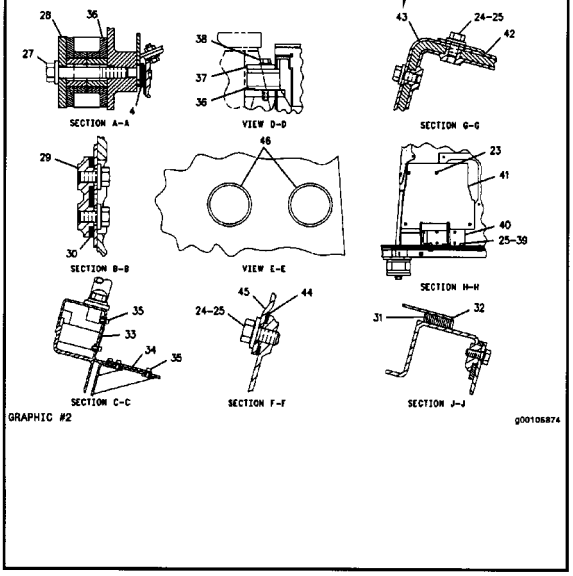

GRAPHIC #2 g00105874

SELP4570-01 4 of 4 FRAME AND BODY 15

INFORMAÇÃO GERAL

1. IDENTIFICAÇÃO DA MÁQUINA

As máquinas Caterpillar são identificadas pelos Números de Informação do Produto (PIN). Alguns componentes incluídos numa máquina podem ser identificados por Números de Série (S/N). Componentes típicos que serão enumerados com números de série incluem motores, transmissões, lâminas e ríperes. Além do número de série, a máquina e o motor são ainda identificados por números de arranjo e, em alguns casos, números de modificações. Tais números encontram-se na(s) placa(s) de identificação do produto e na placa mestre no compartimento do operador.

SIS ***Novidades***

A partir do primeiro trimestre de 2001 o Número de Identificação de Produto da Caterpillar (PIN) vai mudar de 8 para 17 caracteres. Esforçando-se para fornecer uma identificação uniforme de equipamentos, a Caterpillar e outros fabricantes de equipamento de construção estão mudando para atender a versão mais atualizada do padrão de identificação de produtos. Os números de PIN para produtos de aplicações não rodoviárias são definidos pela ISO 10261. O novo formato de número PIN será adotado em todas as máquinas e grupos geradores Caterpillar. As placas e as marcações do chassi mostrarão os 17 dígitos de PIN. O novo formato terá a seguinte disposição:

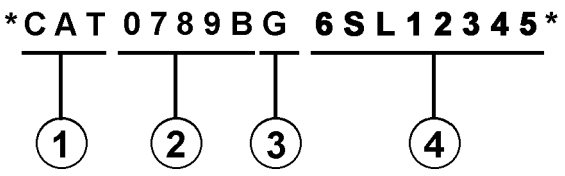

Onde:

1. Código de Fabricação Mundial da Caterpillar (dígitos 1-3)

2. Descrição da Máquina (dígitos 4-8)

3. Dígito de Verificação (dígito 9)

4. Seção de Indicador da Máquina (MIS) ou Número de Seqüência de Produto (dígitos 10-17). Estes eram anteriormente chamados de Número de Série.

Máquinas e grupos geradores produzidos antes do primeiro trimestre de 2001 manterão o formato de 8 caracteres de PIN.

Componentes como motores, transmissões, eixos, ferramentas de trabalho, etc. continuarão a usar Número de Série (S/N) com oito caracteres.

2. COMO OBTER PEÇAS

⚠ CUIDADO

Quando peças de substituição são exigidas para este produto, a Caterpillar recomenda a utilização de peças de substituição Caterpillar ou peças com as especificações equivalentes incluindo, mas não limitadas, à dimensões físicas, tipos, resistência e materiais.

A inobservância desta advertência poderá resultar em falhas prematuras, danos ao produto, ferimentos ou morte.

As Peças de Reposição de Qualidade Caterpillar encontram-se disponíveis nos revendedores Caterpillar no mundo inteiro. Seus estoques de peças são atualizados e incluem todas as peças normalmente necessárias para proteger seu investimento em máquinas Caterpillar. Alguns revendedores podem oferecer jogos de reparo ou peças de troca/remanufaturadas disponíveis como uma opção da alternativa de reparo mais eficaz para uma situação específica. Ao encomendar peças, seu pedido deve especificar a quantidade, o número e o nome da peça e o número de série/número de identificação do produto referentes à máquina para a qual as peças se destinam.

3. ORGANIZAÇÃO DO MANUAL DE PEÇAS

A informação do produto neste manual é apresentada em forma de "elementos de informação" que representam todos os componentes para o modelo específico. Arranjo de Motor e Grupo de Assento são exemplos de elementos de informação. Os elementos de informação são organizados em ordem alfabética por nome de peça ou secundariamente, por número de peça incluído em cada seção principal do manual.

4. LISTA DE CONTEÚDOS

SIS ***Novidades***

A Lista de Conteúdos (TOC) se encontra no princípio do manual. A Lista de Conteúdos (TOC) relaciona em cada seção do manual uma lista completa com todos os elementos de informação organizados conforme aparecem no manual. Números de página são fornecidos para que se tenha referência rápida de ilustrações de peças detalhadas e listas de conteúdos que podem receber serviço de manutenção.

5. ÍNDICE DE PEÇAS DE MANUTENÇÃO

O Índice de Peças de Manutenção, localizado perto do princípio do manual, faz referência aos números de peça de manutenção usados com maior frequência, fornecendo uma descrição, a quantidade, o uso e o número de página. Esta informação é organizada com a descrição da peça em ordem alfabética.

6. ÍNDICE

O Índice localizado perto do princípio do manual, consiste de uma lista em ordem alfabética de todos os elementos de informação incluídos no manual. Números de página são fornecidos para que se tenha referência rápida de ilustrações de peças detalhadas e listas de conteúdos que podem receber serviço de manutenção.

7. ÍNDICE DE NÚMERO DE PEÇA

Um índice numérico relacionando todos os números de peça e a(s) página(s) correspondentes, aparece no final do manual.

8. LEGENDAS

As legendas localizadas na parte de cima de cada página de um elemento de informação identifica o número de peça e o nome da peça, juntamente com informação descritiva adicional. Informações sobre o Número de Informação do Produto (PIN) e o Número de Série (S/N) encontradas em cada legenda devem ser usadas para selecionar a informação correta sobre uma máquina específica. Opções de substituição no campo, identificação de componentes de acessórios opcionais e informações sobre onde são utilizados ("parte de") são também fornecidas.

SIS ***Novidades***

A primeira linha de uma legenda é indicada em tipo maior para indicar o princípio de um elemento de informação. Legendas para páginas adicionais que podem ser necessárias para ilustrar um elemento de informação serão apresentadas em tipo padrão e incluirão o termo *(continua)* .

9. NÃO DISPONÍVEL SEPARADAMENTE

SIS ***Novidades***

Em alguns casos, é necessário mostrar peças não disponíveis separadamente que têm uma ligação com listas de conteúdos de nível inferior que podem receber serviço de manutenção. Os números de peça destes componentes não disponíveis aparecerão em *itálico* , a fim de indicar que não estão disponíveis.

10. NÙMEROS DE REFERÊNCIA À LISTA DE PEÇAS

SIS ***Novidades***

Os números indicados na coluna Ref No (No. de Referência) correspondem-se aos números usados no(s) gráfico(s) correspondente(s). Um sufixo com letras pode ser acrescentado a um número de referência para identificar itens de conteúdo de nível inferior. Os números indicados na coluna Graphic Ref (Referência de Gráfico) referem-se ao identificador de número de gráfico presente no canto esquerdo inferior de cada ilustração. O número de Referência de Gráfico pode ser usado em combinação com o item Ref No para determinar-se o número de peça correto. Poderá haver omissão intencional de um número de referência (Ref No) de uma lista de conteúdos uma vez que as informações são atualizadas para refletir os números de peça mais recentes que podem receber serviço de manutenção.

11. NOMES DE PEÇAS DESALINHADOS

Quando um nome de peça encontra-se desalinhado numa lista de peças, significa que tal item faz parte do (está incluído no) grupo ou conjunto sob o qual está relacionado.

12. LETRAS DE REFERÊNCIA NAS ILUSTRAÇÕES

Quando necessário, as ilustrações contêm letras de referência (A, B, C, etc.) que são utilizadas para seguir tubulações e cabos elétricos de um ponto a outro. Também foram utilizadas para indicar onde se pode reconectar as ilustrações que foram separadas.

13. ABREVIAÇÕES E SÍMBOLOS

O.D. – "Outside Diameter" (Diâmetro Externo)
I.D. – "Inside Diameter" (Diâmetro Interno)
A – Não faz parte deste grupo
B – Use conforme necessário
C – Indica modificação
D – Vendido por metro
E – Vendido por centímetro
F – Não ilustrado
G – Vendido por polegada
I – Consulte o seu revendedor quanto a mangueira
M – Peça métrica
R – Peça remanufaturada pode estar disponível; consulte o seu revendedor Cat
Y – Ilustração separada
Z – Não disponível separadamente

NOTA:

Os contínuos aperfeiçoamentos e avanços no projeto do produto podem ocasionar modificações em sua máquina que talvez ainda não estejam incluídas nesta publicação. Sempre que surgirem dúvidas quanto a um produto Caterpillar ou quanto à presente publicação, consulte o seu revendedor Caterpillar para obter as informações mais recentes disponíveis.

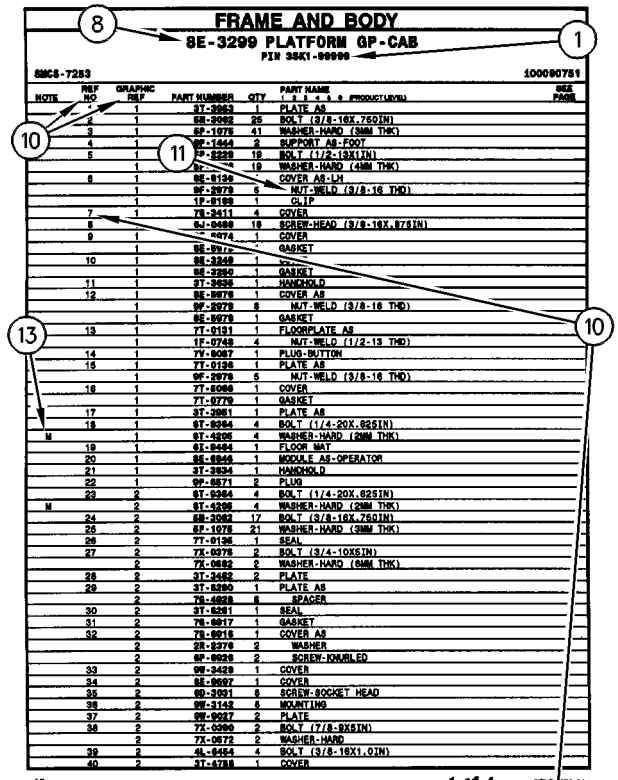

FRAME AND BODY

8E-3299 PLATFORM GP-CAB

PIN 38K1-09999

SMCS-7253 100090751

NOTE	REF NO	GRAPHIC REF	PART NUMBER	QTY	PART NAME (1 2 3 4 5 6 PRODUCT LEVEL)	SEE PAGE
	1	1	3T-3963	1	PLATE AS	
	2	1	5B-2992	25	BOLT (3/8-16X.750IN)	
	3	1	5P-1075	41	WASHER-HARD (3MM THK)	
	4	1	8P-1444	2	SUPPORT AS-FOOT	
	5	1	5P-2223	19	BOLT (1/2-13X1IN)	
		1	5P-[illegible]4	19	WASHER-HARD (4MM THK)	
	6	1	9E-8136	1	COVER AS-LH	
		1	9F-2979	6	NUT-WELD (3/8-16 THD)	
		1	1P-8188	1	CLIP	
	7	1	7S-3411	4	COVER	
	8	1	6J-0488	18	SCREW-HEAD (3/8-16X.875IN)	
	9	1	[illegible]-4474	1	COVER	
		1	9E-8[illegible]7		GASKET	
	10	1	9E-3248	1	[illegible]	
		1	9E-3250	1	GASKET	
	11	1	3T-3935	1	HANDHOLD	
	12	1	9E-8078	1	COVER AS	
		1	9F-2979	8	NUT-WELD (3/8-16 THD)	
		1	9E-8078	1	GASKET	
	13	1	7T-0131	1	FLOORPLATE AS	
		1	1F-0748	4	NUT-WELD (1/2-13 THD)	
	14	1	7Y-8087	1	PLUG-BUTTON	
	15	1	7T-0136	1	PLATE AS	
		1	9F-2978	6	NUT-WELD (3/8-16 THD)	
	16	1	7T-8086	1	COVER	
		1	7T-8779	1	GASKET	
	17	1	3T-3981	1	PLATE AS	
	18	1	6T-9364	4	BOLT (1/4-20X.625IN)	
M		1	6T-4205	4	WASHER-HARD (2MM THK)	
	19	1	6L-8484	1	FLOOR MAT	
	20	1	9E-8946	1	MODULE AS-OPERATOR	
	21	1	3T-3934	1	HANDHOLD	
	22	1	9P-8571	2	PLUG	
	23	2	6T-9364	4	BOLT (1/4-20X.625IN)	
M		2	6T-4205	4	WASHER-HARD (2MM THK)	
	24	2	5B-2992	17	BOLT (3/8-16X.750IN)	
	26	2	5P-1075	21	WASHER-HARD (3MM THK)	
	26	2	7T-0135	1	SEAL	
	27	2	7X-0378	2	BOLT (3/4-10X5IN)	
		2	7X-0682	2	WASHER-HARD (6MM THK)	
	28	2	3T-3482	2	PLATE	
	29	2	3T-8280	1	PLATE AS	
		2	7S-8038	8	SPACER	
	30	2	3T-8281	1	SEAL	
	31	2	7S-8017	1	GASKET	
	32	2	7S-8016	1	COVER AS	
		2	2R-2276	2	WASHER	
		2	6P-8028	2	SCREW-KNURLED	
	33	2	9W-3429	1	COVER	
	34	2	9E-8697	1	COVER	
	35	2	9D-3031	8	SCREW-SOCKET HEAD	
	36	2	9W-3142	8	MOUNTING	
	37	2	9W-9027	2	PLATE	
	38	2	7X-0390	2	BOLT (7/8-9X5IN)	
		2	7X-0672	2	WASHER-HARD	
	39	2	4L-8454	4	BOLT (3/8-16X1.0IN)	
	40	2	3T-4788	1	COVER	

12 FRAME AND BODY 1 of 4 SELP4570-01

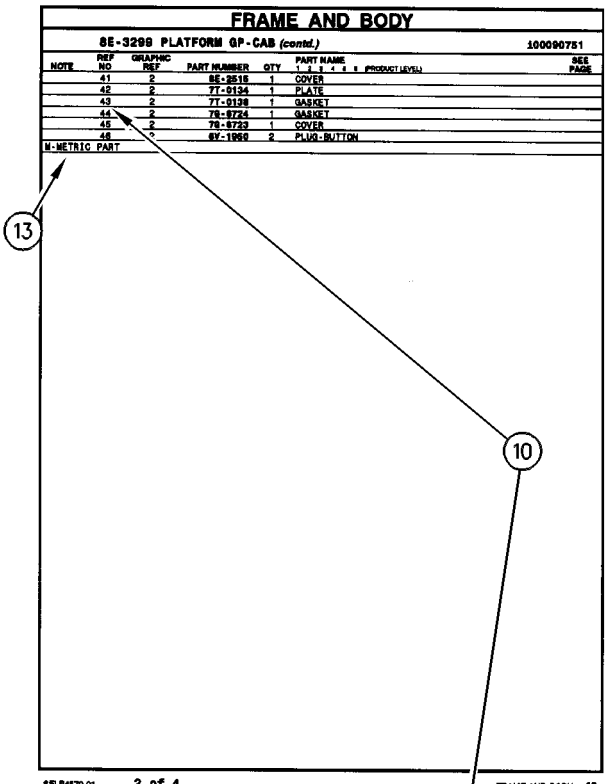

FRAME AND BODY

8E-3299 PLATFORM GP-CAB (contd.) 100090751

NOTE	REF NO	GRAPHIC REF	PART NUMBER	QTY	PART NAME (1 2 3 4 5 6 PRODUCT LEVEL)	SEE PAGE
	41	2	8E-3515	1	COVER	
	42	2	7T-0134	1	PLATE	
	43	2	7T-0139	1	GASKET	
	44	2	7S-8724	1	GASKET	
	45	2	7S-8723	1	COVER	
	46	2	6V-1969	2	PLUG-BUTTON	

M-METRIC PART

SELP4570-01 2 of 4 FRAME AND BODY 13

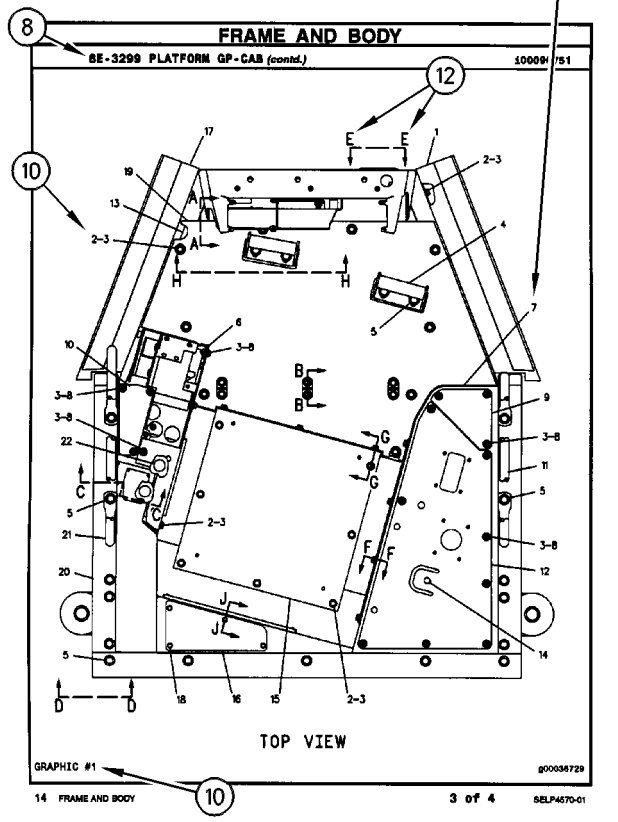

FRAME AND BODY

8E-3299 PLATFORM GP-CAB (contd.) 100090751

TOP VIEW

GRAPHIC #1 g00036729

14 FRAME AND BODY 3 of 4 SELP4570-01

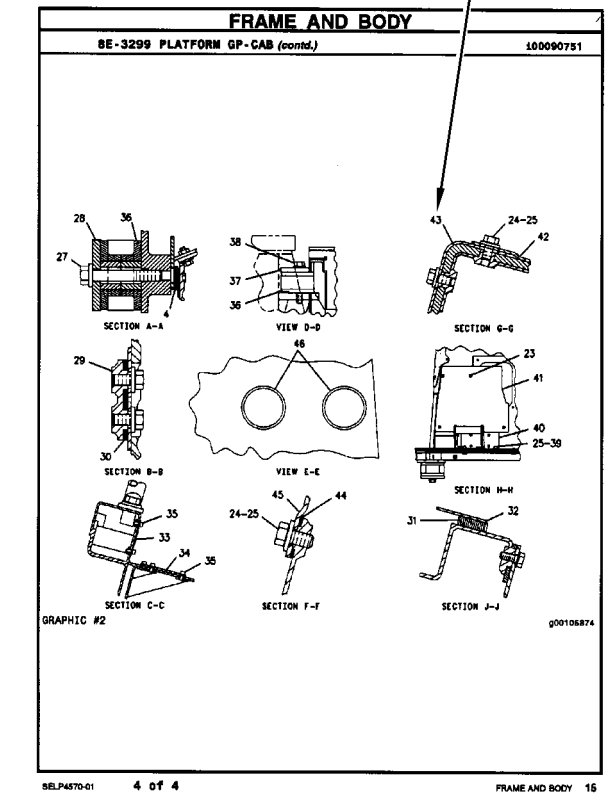

FRAME AND BODY

8E-3299 PLATFORM GP-CAB (contd.) 100090751

SECTION A-A VIEW D-D SECTION G-G

SECTION B-B VIEW E-E SECTION H-H

SECTION C-C SECTION F-F SECTION J-J

GRAPHIC #2 g00105874

SELP4570-01 4 of 4 FRAME AND BODY 15

ALLGEMEINE HINWEISE

1. MASCHINENKENNZEICHNUNG

Caterpillar-Maschinen sind mit PRODUCT IDENTIFICATION NUMBERS (PIN) (Produkt-Identnummern) gekennzeichnet. Einige Baugruppen, z.B. Motoren, Getriebe, Planierschilde und Aufreißer, sind mit SERIAL NUMBERS (S/N) (Seriennummern) gekennzeichnet. An der Maschine und am Motor befinden sich außerdem ARRANGEMENT NUMBERS (Ausrüstungsnummern) sowie in einigen Fällen MODIFICATION NUMBERS (Änderungsnummern). Sie befinden sich auf den PIN-Schildern und auf dem Typenschild im Fahrerhaus.

Bei Ersatzteilbestellungen müssen dem Händler alle diese Nummern zur Verfügung gestellt werden.

SIS ***Neu im Parts Manual***

Vom ersten Quartal 2001 ab wird die Caterpillar Produkt-Identnummer (PIN) von 8 auf 17 Zeichen geändert. Um zur Standardisierung der Produkt-Identnummer beizutragen, sind Caterpillar und andere Baumaschinenhersteller bestrebt, die aktuellste Norm zur Produkt-Identnummerierung einzuführen. Produkt-Identnummern für Baumaschinen sind durch ISO 10261 definiert. Das neue Format der Produkt-Identnummern gilt für alle Caterpillar-Maschinen und -Stromaggregate. Die Produkt-Identschilder und -Identrahmenmarkierung enthalten die aus 17 Zeichen bestehende Identnummer. Das neue Format hat folgende Abschnitte:

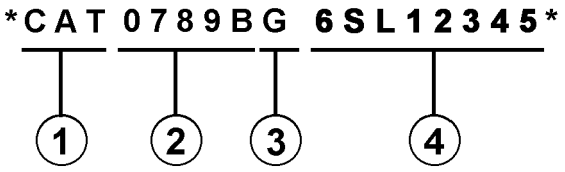

Abschnitte:

1. Caterpillars weltweiter Herstellungscode (Zeichen 1-3)

2. Modell (Zeichen 4-8)

3. Kontrollzeichen (Zeichen 9)

4. Maschinenspezifische Kennung (MIS) oder Produktsequenznummer (Zeichen 10-17). Diese wurde früher als Seriennummer bezeichnet.

Für vor dem ersten Quartal 2001 hergestellte Maschinen und Stromaggregate wird das aus 8 Zeichen bestehende PIN-Format beibehalten.

Bauteile wie z.B. Motoren, Getriebe, Achsen sowie Arbeitsgeräte werden weiterhin eine aus 8 Zeichen bestehende Seriennummer (S/N) aufweisen.

2. BESTELLEN VON ERSATZTEILEN

⚠ WARNUNG

Wenn für diese Maschine Ersatzteile benötigt werden, empfiehlt Caterpillar, ausschließlich Caterpillar-Ersatzteile oder solche zu verwenden, die die gleichen technischen Merkmale hinsichtlich Typ, Festigkeit, Werkzeugeigenschaften und die gleichen Maße aufweisen.

Bei Nichtbeachtung dieser Warnung besteht Verletzungs- oder sogar Lebensgefahr! Ferner kann Nichtbeachtung vorzeitige Ausfälle der Teile und Beschädigung der Maschine zur Folge haben.

Original Caterpillar-Ersatzteile können weltweit bei jedem Caterpillar-Händlern bestellt werden. Die umfangreichen Händlerlager enthalten normalerweise alle Teile, die Sie für Ihre Caterpillar-Maschine benötigen. Einige Händler bieten Reparatursätze, Austausch- oder werküberholte Teile an, so daß Sie eine Auswahl unter verschiedenen Reparaturmöglichkeiten treffen können. Ihre Bestellung muß folgende Angaben enthalten: Anzahl der benötigten Teile, Bestellnummer, Bezeichnung des Teils, Serien-Nr./Produkt-Ident-Nr., Ausrüstungs-Nr. und Änderungs-Nr. der Maschine, für die diese Teile benötigt werden.

3. AUFBAU DES PARTS MANUAL

Die Produktinformationen für alle Komponenten eines bestimmten Modells sind in INFORMATION ELEMENTS (Informationseinheiten) gegliedert. ENGINE ARRANGEMENT (Motorausführung) und SEAT GROUP (Fahrersitz) sind Beispiele für solche Informationseinheiten. Sie sind innerhalb jeder Gruppe alphabetisch, entsprechend der Ersatzteilbezeichnung, und zusätzlich numerisch, entsprechend der Ersatzteilnummer, geordnet.

4. INHALTSVERZEICHNIS

SIS ***Neu im Parts Manual***

Das Inhaltsverzeichnis befindet sich am Anfang des Buches. Im Inhaltsverzeichnis werden die einzelnen Abschnitte des Buches aufgeführt. Die Abschnitte enthalten eine vollständige Aufstellung aller Informationseinheiten. Diese sind entsprechend ihrem Erscheinen im Buch geordnet. Das Inhaltsverzeichnis enthält Seitenangaben für Schnellverweise auf detaillierte Abbildungen und Teillisten.

5. INDEX FÜR WARTUNGSTEILE

Der Index für Wartungsteile vorn im Buch enthält die Bestellnummern, Seitenangaben, Mengenangaben und Informationen über den Einsatzbereich für die am häufigsten benötigten Ersatzteile. Die Angaben sind alphabetisch entsprechend der Teilebezeichnung geordnet.

6. INDEX

Der Index vorn im Buch enthält eine alphabetische Liste aller Informationseinheiten. Er enthält Seitenangaben für Schnellverweise auf detaillierte Abbildungen und Teillisten.

7. INDEX FÜR BESTELLNUMMERN

Hinten im Buch befindet sich ein numerischer Index, mit allen Bestellnummern und dem Hinweis auf die Seite, auf der sich die betreffende Abbildung befindet.

8. ÜBERSCHRIFTEN

Die Überschriften, die sich oben auf den Seiten der Informationseinheiten befinden, enthalten Bestellnummern, Ersatzteilbezeichnungen und zusätzliche beschreibende Informationen. Produkt-Ident- und Seriennummern in den Überschriften sollten zur Auswahl der richtigen Informationen für die betreffende Maschine verwendet werden. Die Überschriften enthalten außerdem Informationen über möglichen Außendienstersatz, mögliche Baugerätekomponenten und die Baugruppe, zu der das Teil gehört.

SIS *Neu im Parts Manual*

Die erste Zeile einer Überschrift erscheint in einer größeren Schriftart, um den Anfang einer Informationseinheit zu kennzeichnen. Überschriften für zusätzliche Seiten, die zur Erläuterung einer Informationseinheit notwendig sind, erscheinen in normaler Schriftart und enthalten den Begriff "(contd.)".

9. NICHT EINZELN LIEFERBARE TEILE

SIS *Neu im Parts Manual*

In einigen Fällen ist es notwendig nicht lieferbare Teile, die selbst mit einer eigenen Teilliste im Buch vertreten sind, aufzuführen. Die Bestellnummern dieser nicht einzeln lieferbaren Teile erscheinen kursiv, wodurch angezeigt wird, daß sie nur in Verbindung mit anderen Teilen lieferbar sind.

10. REFERENZNUMMER FÜR ERSATZTEILE

SIS *Neu im Parts Manual*

Die Zahlen, die in der Spalte "Ref No" aufgeführt sind, stimmen mit den Zahlen in den beigefügten Abbildungen überein. Ein Buchstaben-Suffix kann zu einer Referenznummer hinzugefügt werden, um zu kennzeichnen, daß das Teil mit einer eigenen Teilliste im Buch aufgeführt ist. Die in der Spalte "Graphic Ref" angeführten Zahlen verweisen auf die Identifikationsnummer der Abbildung, die sich in der linken unteren Ecke der Abbildung befindet. Diese Nummer kann zusammen mit der Referenznummer des Teils angegeben werden, um die richtige Ersatzteilnummer zu ermitteln. Referenznummern können absichtlich weggelassen werden, da die Nummern der lieferbaren Ersatzteile ständig aktualisiert werden.

11. EINGERÜCKTE BEZEICHNUNGEN

Wenn eine Bezeichnung eingerückt ist, wird dadurch angezeigt, daß das Teil zu einer Baugruppe gehört, unter deren Bezeichnung es eingerückt ist.

12. REFERENZBUCHSTABEN

Falls erforderlich sind in den Abbildungen Referenzbuchstaben enthalten (z.B. A, B, C, usw.), die Leitungen und Kabelbäume von einem Punkt zum anderen verfolgen. Außerdem geben sie die Stelle an, an der getrennte Abbildungen fortgesetzt werden.

13. ABKÜRZUNGEN UND SYMBOLE

O.D. – Außendurchmesser
I.D. – Innendurchmesser
A – kein Teil dieser Gruppe
B – nach Bedarf verwenden
C – Hinweis auf eine Änderung
D – in Meter-Länge bestellen
E – in Zentimeter-Länge bestellen
F – nicht gezeigt
G – in Zoll-Länge bestellen
I – siehe "Hose Fabrication Guide"
M – metrisches Teil
R – werküberholtes Teil unter Umständen lieferbar
Y – separate Abbildung
Z – nicht einzeln lieferbar

ANMERKUNG:

Ständig vorgenommene Verbesserungen und Weiterentwicklungen an Ihrer Maschine können Änderungen verursachen, die in der vorliegenden Ausgabe noch nicht berücksichtigt sind. Fragen zu Ihrer Caterpillar-Maschine oder diesem Ersatzteilbuch beantwortet Ihr Caterpillar-Händler.

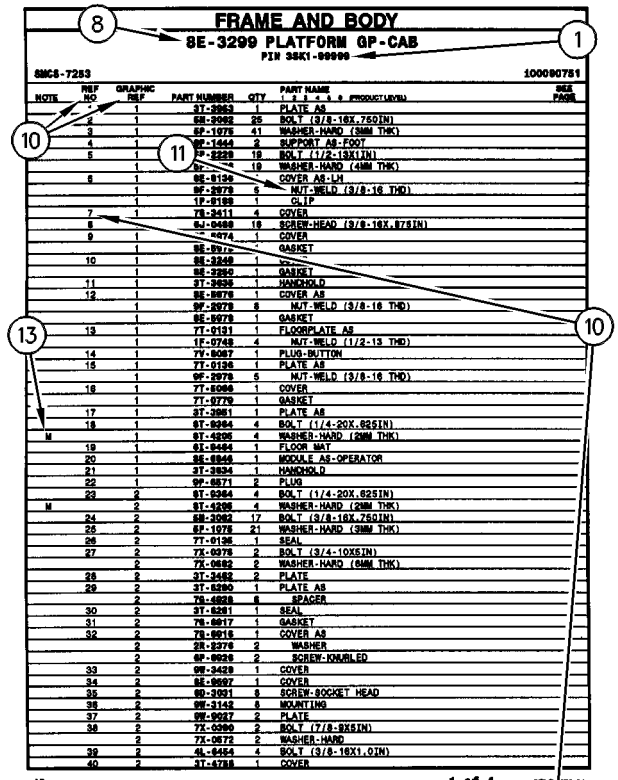

FRAME AND BODY

8E-3299 PLATFORM GP-CAB

PIN 38K1-09999

SMCS-7253 100090751

NOTE	REF NO	GRAPHIC REF	PART NUMBER	QTY	PART NAME (1 2 3 4 5 6 PRODUCT LEVEL)	SEE PAGE
	1	1	3T-3963	1	PLATE AS	
	2	1	5B-2992	25	BOLT (3/8-16X.750IN)	
	3	1	6P-1075	41	WASHER-HARD (3MM THK)	
	4	1	6P-1444	2	SUPPORT AS-FOOT	
	5	1	6P-2229	19	BOLT (1/2-13X1IN)	
		1	6P-[illegible]4	19	WASHER-HARD (4MM THK)	
	6	1	8E-8136	1	COVER AS-LH	
		1	9F-2979	6	NUT-WELD (3/8-16 THD)	
		1	1P-8188	1	CLIP	
	7	1	7S-3411	4	COVER	
	8	1	6J-0488	18	SCREW-HEAD (3/8-16X.875IN)	
	9	1	[illegible]-4474	1	COVER	
		1	8E-8[illegible]7	1	GASKET	
	10	1	8E-3248	1	[illegible]	
		1	8E-3250	1	GASKET	
	11	1	3T-3835	1	HANDHOLD	
	12	1	8E-8878	1	COVER AS	
		1	9F-2979	8	NUT-WELD (3/8-16 THD)	
		1	8E-8078	1	GASKET	
	13	1	7T-0131	1	FLOORPLATE AS	
		1	1F-0748	4	NUT-WELD (1/2-13 THD)	
	14	1	7Y-8087	1	PLUG-BUTTON	
	15	1	7T-0136	1	PLATE AS	
		1	9F-2978	6	NUT-WELD (3/8-16 THD)	
	16	1	7T-8086	1	COVER	
		1	7T-0779	1	GASKET	
	17	1	3T-3981	1	PLATE AS	
	18	1	6T-9364	4	BOLT (1/4-20X.625IN)	
M		1	6T-4205	4	WASHER-HARD (2MM THK)	
	19	1	6L-8484	1	FLOOR MAT	
	20	1	9E-8946	1	MODULE AS-OPERATOR	
	21	1	3T-3834	1	HANDHOLD	
	22	1	9P-8571	2	PLUG	
	23	2	6T-9364	4	BOLT (1/4-20X.625IN)	
M		2	6T-4205	4	WASHER-HARD (2MM THK)	
	24	2	5B-3062	17	BOLT (3/8-16X.750IN)	
	26	2	6P-1075	21	WASHER-HARD (3MM THK)	
	26	2	7T-0135	1	SEAL	
	27	2	7X-0378	2	BOLT (3/4-10X5IN)	
		2	7X-0682	2	WASHER-HARD (6MM THK)	
	28	2	3T-3482	2	PLATE	
	29	2	3T-8280	1	PLATE AS	
		2	7S-0038	8	SPACER	
	30	2	3T-8281	1	SEAL	
	31	2	7S-0017	1	GASKET	
	32	2	7S-0016	1	COVER AS	
		2	2R-2276	2	WASHER	
		2	6P-0028	2	SCREW-KNURLED	
	33	2	9W-3429	1	COVER	
	34	2	8E-0697	1	COVER	
	35	2	9D-3031	8	SCREW-SOCKET HEAD	
	36	2	9W-3142	8	MOUNTING	
	37	2	9W-9027	2	PLATE	
	38	2	7X-0390	2	BOLT (7/8-9X5IN)	
		2	7X-0672	2	WASHER-HARD	
	39	2	4L-8454	4	BOLT (3/8-16X1.0IN)	
	40	2	3T-4788	1	COVER	

12 FRAME AND BODY 1 of 4 SELP4570-01

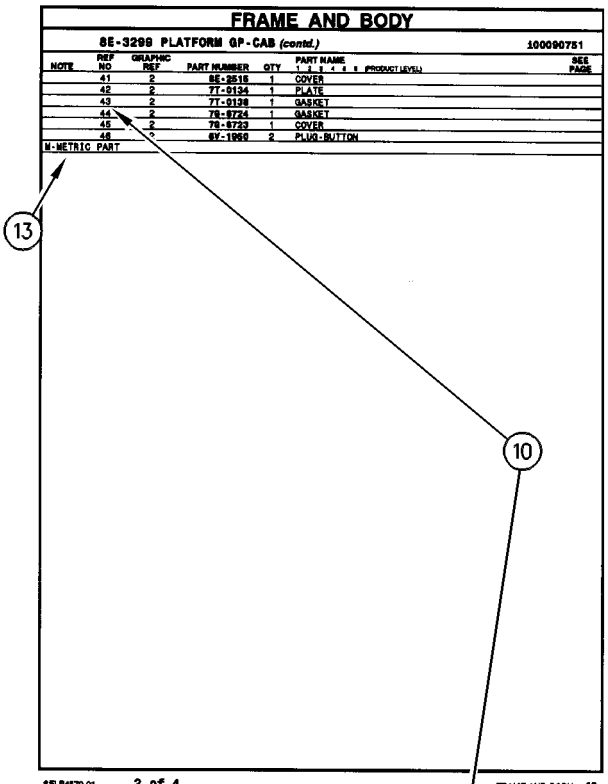

FRAME AND BODY

8E-3299 PLATFORM GP-CAB (contd.) 100090751

NOTE	REF NO	GRAPHIC REF	PART NUMBER	QTY	PART NAME (1 2 3 4 5 6 PRODUCT LEVEL)	SEE PAGE
	41	2	8E-3515	1	COVER	
	42	2	7T-0134	1	PLATE	
	43	2	7T-0139	1	GASKET	
	44	2	7S-0724	1	GASKET	
	45	2	7S-0723	1	COVER	
	46	2	6V-1969	2	PLUG-BUTTON	

M-METRIC PART

SELP4570-01 2 of 4 FRAME AND BODY 13

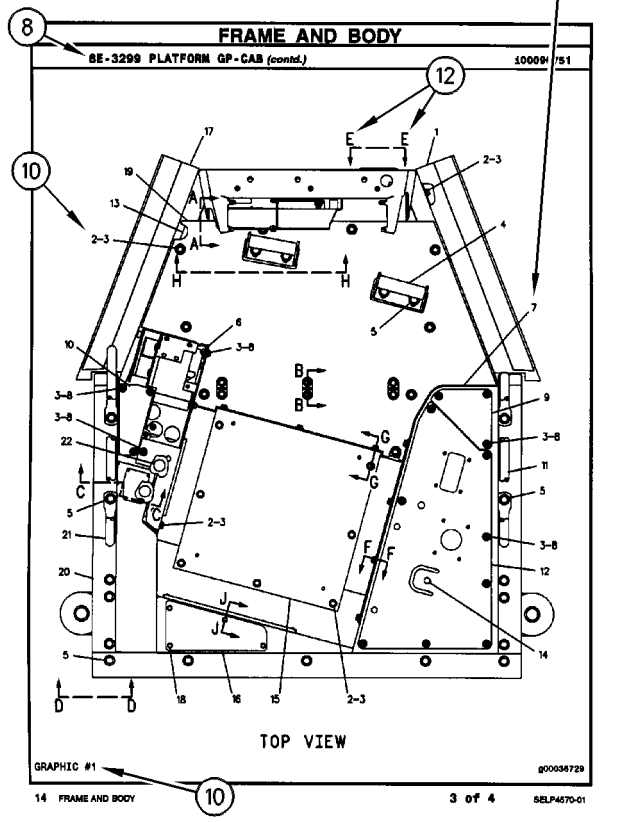

FRAME AND BODY

8E-3299 PLATFORM GP-CAB (contd.) 100090751

TOP VIEW

GRAPHIC #1 g00036729

14 FRAME AND BODY 3 of 4 SELP4570-01

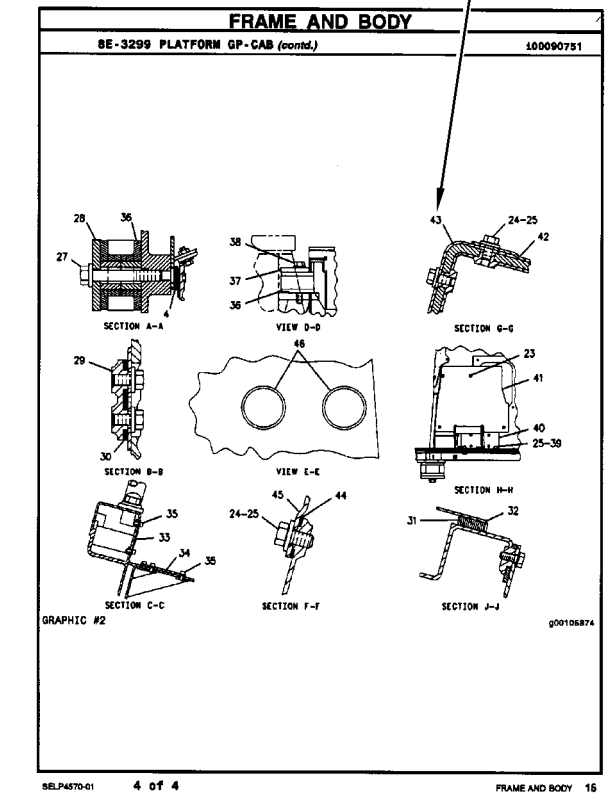

FRAME AND BODY

8E-3299 PLATFORM GP-CAB (contd.) 100090751

SECTION A-A VIEW D-D SECTION G-G

SECTION B-B VIEW E-E SECTION H-H

SECTION C-C SECTION F-F SECTION J-J

GRAPHIC #2 g00105874

SELP4570-01 4 of 4 FRAME AND BODY 15

REMANUFACTURED COMPONENTS

As an option when making repairs consider Caterpillar Remanufactured Components. Components that are available through the Caterpillar Remanufactured Program are identified three ways in the parts book:

- with the letter R in the note field of the parts list
- with an R* at the beginning of the first line of the caption
- with an *R at the end of the first line of the caption

Typical components included in the Remanufacturing Program include:

ALTERNATORS
CONNECTING RODS
CRANKSHAFTS - UNDERSIZE
CRANKSHAFTS - UPGRADE TO NEW
CYLINDER HEADS
ELECTRONIC CONTROL MODULES (ECM)
ELECTRONIC SENSORS
FUEL INJECTORS
FUEL NOZZLES
FUEL PUMPS
GOVERNORS
OIL PUMPS
PISTONS
SHORT BLOCKS
STARTERS
TURBOCHARGERS - COMPLETE
TURBOCHARGER CARTRIDGES
WATER PUMPS

Caterpillar Remanufactured engines for many engine arrangements are also available.

COMPOSANTS RÉNOVÉS

Comme option de réparation, considérer les composants rénovés Caterpillar. Les composants disponibles dans le cadre du programme Caterpillar de composants rénovés sont identifiés de trois façons dans le catalogue de pièces:

- avec la lettre "R" dans l'espace note de la liste des pièces
- avec R* au début de la première ligne des légendes
- avec *R à la fin de la première ligne des légendes

Les composants suivants figurent parmi les composants typiques du programme de rénovation:

ALTERNATEURS
BIELLES
VILEBREQUINS - SOUS-DIMENSIONNÉS
VILEBREQUINS - REMIS À NEUF
CULASSES
MODULES DE COMMANDE ÉLECTRONIQUE (ECM)
CAPTEURS ÉLECTRONIQUES
INJECTEURS
TÊTES D'INJECTEURS
POMPES À CARBURANT
RÉGULATEURS
POMPES À HUILE
PISTONS
BLOCS EMBIELLÉS
DÉMARREURS
TURBOCOMPRESSEURS - COMPLETS
CARTOUCHES DE TURBOCOMPRESSEUR
POMPES À EAU

Des moteurs rénovés sont aussi disponibles pour plusieurs versions de moteur.

ALTERNATIVAS DE REPARACIÓN

COMPONENTES REMANUFACTURADOS

Al hacer reparaciones, tenga en cuenta la opción de Componentes Remanufacturados Caterpillar. Los componentes que están disponibles por medio del programa de Productos Remanufacturados Caterpillar se identifican de tres maneras en el manual de piezas:

- con la letra R en el espacio de Nota de la lista de piezas
- con una R* al comienzo de la primera línea de la leyenda
- con una *R al final de la primera línea de la leyenda

Los componentes que se incluyen típicamente en el Programa de Productos Remanufacturados son:

ALTERNADORES
BIELAS
CIGÜEÑALES - BAJOMEDIDA
CIGÜEÑALES - REMANUFACTURADOS A NUEVO
CULATAS
MÓDULOS DE CONTROL ELECTRÓNICO (ECM)
SENSORES ELECTRONICOS
INYECTORES
BOQUILLAS
BOMBAS DE COMBUSTIBLE
REGULADORES
BOMBAS DE ACEITE
PISTONES
MONOBLOQUES
MOTORES DE ARRANQUE
TURBOCOMPRESORES - COMPLETOS
NÚCLEOS DE TURBOCOMPRESOR
BOMBAS DE AGUA

También hay disponibles motores Remanufacturados Caterpillar para muchas de las configuraciones de motores.

COMPONENTES REMANUFATURADOS

Considere o uso de Componentes Remanufaturados Caterpillar ao efetuar reparos. Os componentes disponíveis através do Programa de Remanufatura Caterpillar são identificados de três formas no manual de peças:

- com um R na área da nota da lista de peças
- com um R* no princípio da primeira linha da legenda
- com um *R no final da primeira linha da legenda

Os componentes típicos que constam no Programa de Remanufatura incluem:

ALTERNADORES
BIELAS
VIRABREQUINS - SUBMEDIDAS
VIRABREQUINS - ATUALIZAÇÃO
CABEÇOTES
MÓDULOS DE CONTROLE ELETRÔNICO (ECM)
SENSORES ELETRÔNICOS
INJETORES DE COMBUSTÍVEL
BICOS DE ABASTECIMENTO DE COMBUSTÍVEL
BOMBAS DE COMBUSTÍVEL
GOVERNADORES
BOMBAS DE ÓLEO
PISTÕES
BLOCOS BÁSICOS DO MOTOR
MOTORES DE PARTIDA
TURBOALIMENTADORES - COMPLETOS
CARTUCHOS DE TURBOALIMENTADORES
BOMBAS D'ÁGUA

Motores Remanufaturados Caterpillar também encontram-se disponíveis para diversos arranjos de motor.

WERKÜBERHOLTE AT-PRODUKTE

Bei Reparaturen sollten werküberholte AT-Produkte von Caterpillar in Betracht gezogen werden. Die durch das AT-Programm von Caterpillar erhältlichen Teile sind im Parts Book auf drei verschiedene Arten gekennzeichnet:

- mit dem Buchstaben R in der Spalte NOTE der Ersatzteilliste
- mit einem R* am Anfang der ersten Zeile der Überschrift
- mit einem *R am Ende der ersten Zeile der Überschrift

Das AT-Programm umfaßt u.a. folgende Produkte:

DREHSTROMGENERATOREN
PLEUELSTANGEN
KURBELWELLEN - MIT UNTERMASS
KURBELWELLEN - MIT ORIGINALMASS
ZYLINDERKÖPFE
ELEKTRONISCHE STEUEREINHEITEN (EMC)
ELEKTRONISCHE SENSOREN
PUMPENDÜSEN
EINSPRITZDÜSEN
KRAFTSTOFFPUMPEN
DREHZAHLREGLER
ÖLPUMPEN
KOLBEN
TEILMOTOREN
ANLASSER
TURBOLADER - KOMPLETT
TURBOLADERLAUFZEUGE
KÜHLWASSERPUMPEN

Viele Motoren können durch werküberholte AT-Motoren von Caterpillar ersetzt werden.

SUPPLEMENTAL COOLANT ADDITIVES

CUSTOMER BENEFITS:

Protects against cavitation, foam, erosion, corrosion, and scale buildup in cooling systems.

- Provides measured coolant conditioner.

DESCRIPTION:

Additives deplete from the coolant with normal operation. For this reason, Supplemental Coolant Additives (SCA) must be added to all heavy duty coolants at regular intervals. In addition, when not using a fully formulated, pre-charged antifreeze, like Caterpillar's DEAC, an initial charge of SCA must be added to the cooling system. The amount of SCA added to the system is dependent on the capacity of the system.

The SCA for initial fill is provided as a liquid. SCA's for maintenance intervals are available in liquid form and as a spin-on element. (No Spin-on available for 3600 Family of Engines)

NOTE:

The amount of SCA added at initial fill is not the same as the amount added at maintenance intervals.

The coolant additive elements can be used with any ethylene or propylene glycol type antifreeze which meets ASTM D4985 or ASTM D5345 Specifications.

NOTE:

For use with standard heavy duty coolant only, not for use with Extended Life Coolant.

PARTS NEEDED:

Cooling System Capacity		Liquid SCA at Initial Fill	Liquid SCA at Maintenance*	Spin-on SCA Maintenance Element*
Liters	Gallons			
22-30	(6-8)	3P-2044 (1)	6V-3542 (1)	111-2370 (1)
30-38	(8-10)	3P-2044 (1) 6V-3542 (1)	111-2372 (1)	111-2369 (1)
38-49	(10-13)	3P-2044 (1) 8T-1589 (1)	111-2372 (1)	111-2369 (1)
49-64	(13-17)	3P-2044 (2)	8T-1589 (1)	9N-3368 (1)
64-83	(17-22)	3P-2044 (2) 8T-1589 (1)	111-2372 (1) 6V-3542 (1)	111-2371 (1)
83-114	(22-30)	3P-2044 (3) 8T-1589 (1)	3P-2044 (1)	9N-3718 (1)
114-163	(30-43)	3P-2044 (5)	3P-2044 (1) 6V-3542 (1)	111-2371 (2)
163-242	(43-64)	3P-2044 (8)	3P-2044 (2)	9N-3718 (2)

** Normal maintenance period is 250 hrs. See your Operation and Maintenance Manual for complete coolant maintenance instructions.*

( ) Indicates quantity required.

ADDITIFS POUR LIQUIDE DE REFROIDISSEMENT

AVANTAGES POUR LE CLIENT

L'additif protège contre la cavitation, la mousse, l'érosion, la corrosion et l'accumulation de dépôts dans le circuit de refroidissement.

- L'additif complémentaire fournit une quantité mesurée d'additif.

DESCRIPTION:

Les additifs s'épuisent pendant l'utilisation du moteur. C'est pourquoi l'on doit ajouter de l'additif au liquide de refroidissement/antigel pour moteurs diesel à intervalles réguliers. En plus, si l'on n'utilise pas de l'antigel entièrement formulé et pré-chargé comme le liquide de refroidissement/antigel Caterpillar pour moteurs diesel, une quantité initiale d'additif doit être ajoutée au circuit de refroidissement. La quantité d'additif à ajouter au circuit dépend de la contenance du circuit.

L'additif pour le remplissage initial est fourni sous forme liquide. L'additif pour l'entretien ultérieur est disponible sous forme liquide et sous forme d'élément à visser. (Il n'y a pas d'élément à visser pour les moteurs de la famille 3600).

NOTA:

La quantité d'additif à ajouter au remplissage initial diffère de la quantité à ajouter aux intervalles d'entretien.

Les éléments d'additif peuvent être utilisés avec tout antigel de type éthylène ou propylène-glycol conforme à la norme ASTM D4985 ou ASTM D5345.

NOTA:

A utiliser uniquement avec du liquide de refroidissement pour moteurs diesel et non avec le liquide de refroidissement longue durée.

PIÈCES NÉCESSAIRES:

Contenance du circuit de refroidissement		Additif liquide au remplissage initial	Additif liquide aux intervalles d'entretien*	Elément d'additif à visser aux intervalles d'entretien*
Litres	Gallons U.S.			
22-30	(6-8)	3P-2044 (1)	6V-3542 (1)	111-2370 (1)
30-38	(8-10)	3P-2044 (1) 6V-3542 (1)	111-2372 (1)	111-2369 (1)
38-49	(10-13)	3P-2044 (1) 8T-1589 (1)	111-2372 (1)	111-2369 (1)
49-64	(13-17)	3P-2044 (2)	8T-1589 (1)	9N-3368 (1)
64-83	(17-22)	3P-2044 (2) 8T-1589 (1)	111-2372 (1) 6V-3542 (1)	111-2371 (1)
83-114	(22-30)	3P-2044 (3) 8T-1589 (1)	3P-2044 (1)	9N-3718 (1)
114-163	(30-43)	3P-2044 (5)	3P-2044 (1) 6V-3542 (1)	111-2371 (2)
163-242	(43-64)	3P-2044 (8)	3P-2044 (2)	9N-3718 (2)

** L'intervalle d'entretien normal est de 250 heures-service. Voir le Guide d'utilisation et d'entretien pour de plus amples renseignements concernant l'entretien du circuit de refroidissement.*

( ) Indique la quantité exigée.

ADITIVOS DE REFRIGERANTE SUPLEMENTARIOS

VENTAJAS PARA EL USUARIO:

Protegen contra la cavitación, la formación de espuma, la corrosión y la acumulación de escamas en los sistemas de enfriamiento.

- Suministra un acondicionador dosificado de refrigerante.

DESCRIPCIÓN:

Los aditivos en el refrigerante se agotan con la operación normal. Por esta razón, se debe agregar Aditivo de refrigerante suplementario (SCA) a todos los refrigerantes para servicio pesado, a intervalos regulares. Además, cuando no se usa un anticongelante de precarga completo, tal como el DEAC de Caterpillar, es necesario agregar una cantidad de aditivo de refrigerante suplementario inicial al sistema de enfriamiento. La cantidad de aditivo que se debe agregar depende de la capacidad del sistema.

El SCA de llenado inicial es líquido. El que se usa para el mantenimiento está disponible tanto en líquido como en un elemento enroscable. (No hay elemento enroscable disponible para la Familia de Motores 3600).

NOTA:

La cantidad de aditivo de llenado inicial no es la misma que se agrega en los intervalos de mantenimiento.

Los elementos de aditivo de refrigerante se pueden usar con cualquier anticongelante de tipo glicol etilénico o propílico que esté de acuerdo con las especificaciones de las normas ASTM D4985 o ASTM D5345.

NOTA:

Se debe utilizar únicamente con refrigerante estándar para servicio pesado; no se debe usar con Refrigerante de Larga Duración.

PIEZAS NECESARIAS:

Capacidad del Sistema de Enfriamiento		SCA líquido de llenado inicial	SCA líquido de mantenimiento*	Elemento de mantenimiento enroscable*
litros	gal EE.UU.			
22-30	6-8	3P-2044 (1)	6V-3542 (1)	111-2370 (1)
30-38	8-10	3P-2044 (1) 6V-3542 (1)	111-2372 (1)	111-2369 (1)
38-49	10-13	3P-2044 (1) 8T-1589 (1)	111-2372 (1)	111-2369 (1)
49-64	13-17	3P-2044 (2)	8T-1589 (1)	9N-3368 (1)
64-83	17-22	3P-2044 (2) 8T-1589 (1)	111-2372 (1) 6V-3542 (1)	111-2371 (1)
83-114	22-30	3P-2044 (3) 8T-1589 (1)	3P-2044 (1)	9N-3718 (1)
114-163	30-43	3P-2044 (5)	3P-2044 (1) 6V-3542 (1)	111-2371 (2)
163-242	43-64	3P-2044 (8)	3P-2044 (2)	9N-3718 (2)

** El período normal de mantenimiento es de 250 horas. Para ver las instrucciones completas sobre el mantenimiento del refrigerante, consulte el Manual de Operación y Mantenimiento.*

( ) Indica la cantidad necesaria.

ADITIVOS SUPLEMENTARES DO LÍQUIDO ARREFECEDOR

BENEFÍCIOS PARA O CLIENTE:

Protege contra cavitação, espuma, erosão, corrosão e acúmulo de crostas nos sistemas de arrefecimento.

- Fornece uma quantidade pré-determinada de condicionador de arrefecimento.

DESCRIÇÃO:

Com a operação normal, os aditivos se esgotam do líquido arrefecedor. Por isso, Aditivos Suplementares do Líquido Arrefecedor (SCA) devem ser acrescentados a todos os líquidos arrefecedores para serviço pesado em intervalos regulares. Além disso, quando um anticongelante pré-carregado, totalmente formulado não for usado, como o DEAC Caterpillar, uma carga inicial de SCA deve ser acrescentada ao sistema de arrefecimento. A quantidade de SCA acrescentada ao sistema depende da capacidade do sistema.

O SCA para abastecimento inicial é fornecido em forma de líquido. Os aditivos suplementares (SCA) para intervalos de manutenção estão à disposição em forma líquida e como um elemento com roscas. (Exceto os Motores da Família 3600)

NOTA:

A quantidade de SCA adicionada no abastecimento inicial não é a mesma que a acrescentada nos intervalos de manutenção.

Os elementos do aditivo do líquido arrefecedor podem ser usados com qualquer tipo de anticongelante etileno ou propileno que satisfaz as Especificações ASTM D4985 ou ASTM D5345.

NOTA:

Para uso apenas com líquido arrefecedor para serviço pesado padrão, não deve ser usado com Líquido Arrefecedor de Vida Longa.

PEÇAS NECESSÁRIAS:

Capacidade do Sistema de Arrefecimento		Líquido SCA Durante Abastecimento Inicial	Líquido SCA Durante Manutenção*	Elemento de Manutenção de SCA com Roscas*
Litros	Galões			
22-30	6-8	3P-2044 (1)	6V-3542 (1)	111-2370 (1)
30-38	8-10	3P-2044 (1) 6V-3542 (1)	111-2372 (1)	111-2369 (1)
38-49	10-13	3P-2044 (1) 8T-1589 (1)	111-2372 (1)	111-2369 (1)
49-64	13-17	3P-2044 (2)	8T-1589 (1)	9N-3368 (1)
64-83	17-22	3P-2044 (2) 8T-1589 (1)	111-2372 (1) 6V-3542 (1)	111-2371 (1)
83-114	22-30	3P-2044 (3) 8T-1589 (1)	3P-2044 (1)	9N-3718 (1)
114-163	30-43	3P-2044 (5)	3P-2044 (1) 6V-3542 (1)	111-2371 (2)
163-242	43-64	3P-2044 (8)	3P-2044 (2)	9N-3718 (2)

** O período normal de manutenção é de 250 horas. Consulte o Manual de Operação e Manutenção para obter instruções completas quanto à manutenção do líquido arrefecedor.*

( ) Indica a quantidade exigida.

KÜHLMITTELZUSATZ

VORTEILE FÜR DEN KUNDEN:

Schutz gegen Kavitation, Schaumbildung, Erosion, Korrosion und Kesselsteinbildung in Kühlsystemen.

- Richtig dosierter Kühlmittelzusatz

BESCHREIBUNG:

Additive erschöpfen sich während des Motorbetriebs. Deshalb muß allen HD-Kühlmitteln regelmäßig Kühlmittelzusatz beigefügt werden. Wenn bei Erstfüllung kein vollwertiges Fertigkühlmittel, wie das Frostschutz- und Kühlmittel für Dieselmotoren von Caterpiller (DEAC), verwendet wird, muß bei Erstfüllung Kühlmittelzusatz beigefügt werden. Wieviel Kühlmittelzusatz beigefügt werden muß, hängt vom Inhalt des Kühlsystems ab.

Für Erstfüllung ist Kühlmittelzusatz nur in flüssiger Form erhältlich. Für Wartungsintervalle ist Kühlmittelzusatz in flüssiger Form und als Zusatzelement erhältlich. (Für die Motorbaureihe 3600 sind keine Zusatzelemente erhältlich.)

ANMERKUNG:

Die Kühlmittelmenge bei Erstfüllung ist nicht die gleiche Menge, die bei Wartungsintervallen beigefügt werden muß.

Die Kühlmittelzusatzelemente können mit allen Frostschutzmitteln auf Ethylen- oder Propylenglykolbasis verwendet werden, die den Standards nach ASTM D4985 oder ASTM D5345 entsprechen.

ANMERKUNG:

Den Kühlmittelzusatz nicht mit Langzeitkühlmittel (ELC) von Caterpillar verwenden. Der Kühlmittelzusatz ist nur für HD-Kühlmittel bestimmt.

TEILEBEZEICHNUNG:

Kühlsysteminhalt		Kühlmittelzusatz bei Erstfüllung	Flüssiger Kühlmittelzusatz bei Wartung*	Kühlmittelzusatzelement bei Wartung*
Liter	US-Gall.			
22-30	(6-8)	3P-2044 (1)	6V-3542 (1)	111-2370 (1)
30-38	(8-10)	3P-2044 (1) 6V-3542 (1)	111-2372 (1)	111-2369 (1)
38-49	(10-13)	3P-2044 (1) 8T-1589 (1)	111-2372 (1)	111-2369 (1)
49-64	(13-17)	3P-2044 (2)	8T-1589 (1)	9N-3368 (1)
64-83	(17-22)	3P-2044 (2) 8T-1589 (1)	111-2372 (1) 6V-3542 (1)	111-2371 (1)
83-114	(22-30)	3P-2044 (3) 8T-1589 (1)	3P-2044 (1)	9N-3718 (1)
114-163	(30-43)	3P-2044 (5)	3P-2044 (1) 6V-3542 (1)	111-2371 (2)
163-242	(43-64)	3P-2044 (8)	3P-2044 (2)	9N-3718 (2)

** Der normale Wartungsintervall beträgt 250 Betriebsstunden. Für vollständige Anweisungen zur Wartung des Kühlsystems, siehe Betriebs- und Wartungshandbuch.*

( ) Erforderliche Anzahl

MAINTENANCE PARTS

DESCRIPTION	PART NUMBER	QTY	WHERE USED	PAGE
AIR INLET AND EXHAUST SYSTEM				
ELEMENT AS-PRIMARY	6I-0273	1	AIR CLEANER GP	85
ELEMENT AS-SECONDARY	6I-0274	1	AIR CLEANER GP	85
INDICATOR AS (AIR FILTER CHANGE)	8N-2694	1	AIR CLEANER GP	86
BASIC ENGINE				
BREATHER AS (ENGINE)	9Y-4357	1	VALVE MECHANISM GP	50
CAP-DUST	6V-0852	1	PLUG GP-ENGINE	42
GASKET-BASE (VALVE COVER)	109-5309	1	VALVE MECHANISM GP	50
GASKET-BREATHER	9Y-1758	1	VALVE MECHANISM GP	50
HOSE-FUMES DISPOSAL	126-0146	1	AIR COMPRESSOR GP	8
BRAKING SYSTEM				
CARTRIDGE-DESICCANT (AIR DRYER)	203-2389	1	AIR DRYER GP	381
ELEMENT-HEATING (AIR DRYER) (12 VOLT)	203-2423	1	AIR DRYER GP	381
COOLING SYSTEM				
CAP-DUST	6V-0852	2	LINES GP-POWER TRAIN COOLER	70
		1	LINES GP-WATER	74
CAP-DUST (TRANSMISSION OIL)	8C-3447	1	LINES GP-POWER TRAIN COOLER	70
CAP-RADIATOR	6L-8617	1	RADIATOR GP	82
FILTER ELEMENT AS-OIL (HYDRAULIC)	1R-0773	1	LINES GP-POWER TRAIN COOLER	70
GASKET	7E-7912	1	HOUSING & REGULATOR GP	67
REGULATOR-WATER TEMPERATURE (98 DEG C)	7C-3095	1	HOUSING & REGULATOR GP	67
VALVE-DRAIN (RADIATOR)	1P-7297	1	RADIATOR GP	83
VALVE-DRAIN (WATER)	1P-7297	1	LINES GP-WATER	74
ELECTRICAL AND STARTING SYSTEM				
BATTERY	153-5710	2	BATTERY GP	127
BELT-DRIVE (WARNING BEACON)	9X-8139	1	LAMP GP-WARNING BEACON	158
CAP AS-DUST (JACKET WATER HEATER)	133-6517	1	HEATER GP-JACKET WATER	140
		1	HEATER GP-JACKET WATER	141
CIRCUIT BREAKER AS (15 AMP) (HEADLAMP/LIGHTBAR LOW BEAM)	3T-2662	2	LIGHTING GP-FLOOD	176
CIRCUIT BREAKER AS (15 AMP) (HEADLAMPS)	3T-2662	1	CIRCUIT BREAKER GP	129
		1	CIRCUIT BREAKER GP	130
CIRCUIT BREAKER AS (15 AMP) (LIGHTBAR WORKLAMPS)	3T-2662	1	CIRCUIT BREAKER GP	129
CIRCUIT BREAKER AS (15 AMP) (STARTING RELAY)	6T-3643	1	WIRING GP-REAR	249
CIRCUIT BREAKER AS (80 AMP) (ALTERNATOR)	171-2210	1	WIRING GP-REAR	250
CIRCUIT BREAKER AS (80 AMP) (MAIN)	171-2210	1	WIRING GP-REAR	248
ELEMENT AS-HEATER (240 VOLT/1250 WATT)	154-2881	1	HEATER GP-JACKET WATER	141
ELEMENT AS-JACKET WATER HEATER (120 VOLT/1250 WATT)	131-8627	1	HEATER GP-JACKET WATER	140
FLASHER AS-ELECTRONIC (12/24 VOLT) (TURN SIGNAL/HAZARD)	108-0358	1	LIGHTING GP-FLOOD	176

DESCRIPTION	PART NUMBER	QTY	WHERE USED	PAGE
FLASHER AS-ELECTRONIC (12/24 VOLT) (TURN SIGNALS & HAZARDS)	108-0358	1	LIGHTING GP-FLOOD	184
FUSE (10 AMP) (AUXILARY BACK-UP ALARM)	9W-1442	1	LIGHTING GP-BACKUP	164
FUSE (10 AMP) (BACKUP LAMP)	9W-1442	1	LIGHTING GP-BACKUP	162
FUSE (10 AMP) (BLADE LAMP)	9W-1442	2	LIGHTING GP-FLOOD	168
FUSE (10 AMP) (CONTROLLER FOR THE BLADE)	9W-1442	1	WIRING GP-CAB	228
FUSE (10 AMP) (FLOODLAMP RH)	9W-1442	1	LIGHTING GP-FLOOD	170
FUSE (10 AMP) (FRONT WORK LAMPS)	9W-1442	1	LIGHTING GP-FLOOD	172
FUSE (10 AMP) (HIGH/LOW BEAM)	9W-1442	1	LIGHTING GP-FLOOD	176
FUSE (10 AMP) (HIGH/LOW BEAM & SIGNAL)	9W-1442	1	LIGHTING GP-FLOOD	184
FUSE (10 AMP) (MOLDBOARD LAMP)	9W-1442	1	WIRING GP-CAB	230
FUSE (10 AMP) (POWER CONVERTER)	9W-1442	1	CONVERTER GP-ELECTRICAL	138
FUSE (10 AMP) (RADIO)	9W-1442	1	CONVERTER GP-ELECTRICAL	136
FUSE (10 AMP) (RH FLOODLAMP)	9W-1442	1	LIGHTING GP-FLOOD	188
FUSE (10 AMP) (STEERING CONSOLE)	9W-1442	11	WIRING GP-STEERING CONSOLE	260
FUSE (10 AMP) (TAIL PANEL LAMPS/SEC STER TEST)	9W-1442	2	WIRING GP-SECONDARY STEERING	254
FUSE (10 AMP) (TURN SIGNAL/HAZARD)	9W-1442	1	LIGHTING GP-FLOOD	180
FUSE (10 AMP) (TURN SIGNALS)	9W-1442	1	SWITCH GP-LIGHT	220
FUSE (10 AMP) (WARNING BEACON)	9W-1442	1	LIGHTING GP-WARNING	196
		1	LIGHTING GP-WARNING	194
		1	INSTALLATION GP-WARNING BEACON	142
FUSE (15 AMP) (UPPER/LOWER FRONT WIPERS)	9W-1441	1	WIRING GP-CAB	226
FUSE (30 AMP) (CONVERTER-POWER)	8T-9636	2	CONVERTER GP-ELECTRICAL	137
KEY	8H-5306	1	WIRING GP-REAR	250
KEY (BATTERY DISCONNECT)	8H-5306	1	SWITCH GP-DISCONNECT	218
LAMP AS-LH (STOP/TAIL/TURN)	6C-0110	1	WIRING GP-REAR	246
LAMP AS-RH (STOP/TAIL/TURN)	6C-0109	1	WIRING GP-REAR	246
LAMP GP-SIGNAL (LH)	135-0427	1	LIGHTING GP-FLOOD	166
LAMP GP-SIGNAL (RH)	135-0427	1	LIGHTING GP-FLOOD	166
LAMP GP-SIGNAL (24 VOLT) (LIGHT BAR TURN/PARK)	135-0427	2	LIGHTING GP-FLOOD	172
LAMP-HEAD (24 VOLT) (LOW BEAM)	9X-3463	1	LAMP GP-HEAD	145
LAMP-HEAD (24 VOLT)(65 WATT) (FLOODLAMP)	9X-3463	1	LAMP GP-FLOOD	144
LAMP-HEAD (24 VOLT)(65 WATT) (HIGH BEAM)	9X-3463	1	LAMP GP-HEAD	146
LAMP (SINGLE FILAMENT) (TURN SIGNAL)	9X-4493	1	LAMP GP-HEAD	148
		1	LAMP GP-HEAD	150
LAMP (WARNING BEACON)(24 VOLT)	9X-7849	1	LAMP GP-WARNING BEACON	158
LAMP (24 VOLT) (AUXILARY BACK-UP ALARM)	3E-8825	1	LIGHTING GP-BACKUP	164
LAMP (24 VOLT) (AUXILIARY BACKUP LAMP)	3E-8825	2	LIGHTING GP-BACKUP	162
LAMP (24 VOLT) (BLADE CUSHION CONT/INDICATOR)	3E-8825	1	WIRING GP-BLADE CUSHION	225
LAMP (24 VOLT) (BLADE LAMP)	3E-8825	2	LIGHTING GP-FLOOD	168

MAINTENANCE PARTS

DESCRIPTION	PART NUMBER	QTY	WHERE USED	PAGE
LAMP (24 VOLT) (CAB-RH FLOOD)	3E-8825	1	LIGHTING GP-FLOOD	188
LAMP (24 VOLT) (CENTERSHIFT PIN PULLER SWITCH)	3E-8825	1	WIRING GP-SHIFT CONSOLE	258
LAMP (24 VOLT) (DIFFERENTIAL LOCK SWITCH)	3E-8825	2	WIRING GP-STEERING CONSOLE	260
LAMP (24 VOLT) (DOME)	7N-9943	1	LAMP GP-DOME	143
LAMP (24 VOLT) (ETHER STARTING AID INDICATOR)	3E-8825	1	STARTING AID GP-ETHER	214
LAMP (24 VOLT) (FLOODLAMP RH)	3E-8825	1	LIGHTING GP-FLOOD	170
LAMP (24 VOLT) (HEADLAMP/TAIL)	3E-8825	2	LIGHTING GP-FLOOD	176
		2	LIGHTING GP-FLOOD	184
		2	LIGHTING GP-FLOOD	180
LAMP (24 VOLT) (HEADLAMP/TAIL INDICATOR)	3E-8825	2	LIGHTING GP-FLOOD	172
LAMP (24 VOLT) (HEADLAMP/TAIL/INDICATOR)	3E-8825	2	SWITCH GP-LIGHT	220
LAMP (24 VOLT) (HIGH BEAM)	9X-3463	1	LIGHTING GP-FLOOD	166
LAMP (24 VOLT) (HIGH/LOW BEAM)	9X-3465	1	LAMP GP-HEAD	150
		1	LAMP GP-HEAD & SIGNAL	152
		1	LAMP GP-HEAD	148
LAMP (24 VOLT) (HIGH/LOW BEAM)(RH)	9X-3465	1	LAMP GP-HEAD & SIGNAL	154
LAMP (24 VOLT) (LIGHTBAR LOW BEAM)	3E-8825	1	LIGHTING GP-FLOOD	177
		1	LIGHTING GP-FLOOD	180
LAMP (24 VOLT) (LOW BEAM)	9X-3463	1	LIGHTING GP-FLOOD	166
LAMP (24 VOLT) (MOLDBOARD)	3E-8825	1	WIRING GP-CAB	230
LAMP (24 VOLT) (MOLDBOARD/INDICATOR)	3E-8825	1	WIRING GP-CAB	228
LAMP (24 VOLT) (PANEL LAMP DIMMER SWITCH)	3E-8825	1	WIRING GP-STEERING CONSOLE	260
LAMP (24 VOLT) (RUNNING LAMP)	100-3245	1	LAMP GP-HEAD & SIGNAL	154
LAMP (24 VOLT) (RUNNING LIGHTS)	100-3245	1	LAMP GP-HEAD	150
		1	LAMP GP-HEAD & SIGNAL	152
		1	LAMP GP-HEAD	148
LAMP (24 VOLT) (SECONDARY STEERING)	3E-8825	2	WIRING GP-SECONDARY STEERING	254
LAMP (24 VOLT) (SHIFT CONSOLE)	7N-5876	1	WIRING GP-SHIFT CONSOLE	258
LAMP (24 VOLT) (TAIL LAMP SWITCH)	3E-8825	1	WIRING GP-STEERING CONSOLE	260
LAMP (24 VOLT) (THROTTLE HOLD AUTO/MAN SWITCH)	3E-8825	2	WIRING GP-SHIFT CONSOLE	258
LAMP (24 VOLT) (TURN SIGNAL)	100-3245	1	LAMP GP-HEAD	148
		1	LAMP GP-HEAD	150
		1	LAMP GP-HEAD & SIGNAL	152
		1	LAMP GP-HEAD & SIGNAL	154
LAMP (24 VOLT) (WARNING BEACON)	3E-8825	1	INSTALLATION GP-WARNING BEACON	142
		1	LIGHTING GP-WARNING	194
		1	LIGHTING GP-WARNING	196
LAMP (24 VOLT)(21 WATT) (STOP/TAIL)	5C-9584	2	WIRING GP-REAR	246
		2	WIRING GP-REAR	246
LAMP (24 VOLT/21 WATT) (TURN SIGNAL)	9X-4493	1	LAMP GP-HEAD & SIGNAL	152
		1	LAMP GP-HEAD & SIGNAL	154
LAMP (24 VOLT)(5 WATT) (TURN)	4V-8116	1	WIRING GP-REAR	246
LENS (AMBER) (TURN SIGNAL)	100-3250	1	LAMP GP-HEAD & SIGNAL	152

MAINTENANCE PARTS

DESCRIPTION	PART NUMBER	QTY	WHERE USED	PAGE
		1	LAMP GP-HEAD & SIGNAL	154
LENS-AMBER (TURN SIGNAL)	100-3250	1	LAMP GP-HEAD	148
		1	LAMP GP-HEAD	150
LENS-AMBER (WARNING BEACON)	9X-8121	1	LAMP GP-WARNING BEACON	158
LENS AS (FLOODLAMP)	158-0248	1	LAMP GP-FLOOD	144
LENS AS (HEADLAMP)(HIGH BEAM)	158-0249	1	LAMP GP-HEAD	146
LENS AS (HEADLAMP)(LOW BEAM)	162-2077	1	LAMP GP-HEAD	145
LENS AS (HEADLIGHT) (HIGH BEAM)	158-0249	1	LIGHTING GP-FLOOD	166
LENS AS (HEADLIGHT) (LOW BEAM)	162-2077	1	LIGHTING GP-FLOOD	166
LENS AS (HIGH/LOW BEAM)	100-3248	1	LAMP GP-HEAD & SIGNAL	152
		1	LAMP GP-HEAD & SIGNAL	154
LENS AS (TURN SIGNAL)	136-3848	1	LAMP GP-HEAD	148
		1	LAMP GP-HEAD	150
		1	LAMP GP-HEAD & SIGNAL	152
		1	LAMP GP-HEAD & SIGNAL	154
LENS (DOME LAMP)	7T-0020	1	LAMP GP-DOME	143
SWITCH AS (AUXILIARY BACKUP LAMP)	161-1418	1	LIGHTING GP-BACKUP	162
SWITCH AS (THROTTLE HOLD AUTO/MAN)	196-7268	1	WIRING GP-SHIFT CONSOLE	258
FRAME AND BODY				
FITTING-GREASE (AXLE OSCILLATION)	3B-8489	2	AXLE GP-FRONT	352
FITTING-GREASE (KINGPIN)	3B-8489	4	AXLE GP-FRONT	352
FITTING-GREASE (WHEEL LEAN BAR)	3B-8489	2	AXLE GP-FRONT	352
FITTING-GREASE (WHEEL LEAN BEARING)	3B-8489	4	AXLE GP-FRONT	352
FITTING-GREASE (1/8-27 THD) (UPPER/LOWER ARTICULATION PIN)	3B-8489	2	LINES GP-GREASE	370
PLUG-MAGNETIC (DIFFERENTIAL)	8M-3837	1	CASE & FRAME GP	355
FUEL SYSTEM				
BOWL AS-WATER COLLECTION	129-0375	1	FILTER GP-WATER SEP & FUEL	99
CAP AS (HIGH SPEED OIL CHANGE PORT)	9S-9272	1	LINES GP-DRAIN	101
CAP-DUST	9D-0630	1	ADAPTER GP-FAST FILL FUEL	94
CAP GP-FUEL TANK (LOCKABLE)	164-4858	1	TANK GP-FUEL	116
		1	TANK GP-FUEL	120
ELEMENT-FILTER (FUEL/WATER SEPARATOR) (PRIMARY)	133-5673	1	FILTER GP-WATER SEP & FUEL	99
FILTER AS-FUEL	1R-0762	1	FILTER GP-FUEL	98
HYDRAULIC SYSTEM				
CAP-DUST	6V-0852	1	LINES GP-HYDRAULIC FAN	450
		1	LINES GP-PUMP	453
		1	VALVE GP-COMBINATION	522
	8C-3451	1	LINES GP-STEERING	463
CAP-FILLER (HYDRAULIC OIL TANK)	7H-1447	1	TANK & FILTER GP-HYDRAULIC	488
FILTER ELEMENT AS-OIL (HYDRAULIC) (REVERSE FLOW)	1R-0774	1	TANK & FILTER GP-HYDRAULIC	488
KEY	5P-8500	1	TANK & MTG GP-HYDRAULIC	490
PADLOCK GP	5P-8502	1	TANK & MTG GP-HYDRAULIC	490
STRAINER (HYDRAULIC OIL FILLER)	9J-3047	1	TANK & FILTER GP-HYDRAULIC	488

MAINTENANCE PARTS

DESCRIPTION	PART NUMBER	QTY	WHERE USED	PAGE
LUBRICATION SYSTEM				
CAP AS-OIL FILLER	5L-2952	1	FILLER GP-ENGINE OIL	54
CAP-DUST	8C-3445	1	FILTER GP-ENGINE OIL	56
FILTER AS-ENGINE OIL	1R-0716	1	FILTER GP-ENGINE OIL	56
OPERATOR STATION				
BELT-RIBBED (A/C)	174-9690	1	AIR CONDITIONER AR	609
BLADE AS-WIPER (HIGH PROFILE FRONT UPPER)	6V-5853	1	WIPER GP-WINDOW	752
BLADE AS-WIPER (HIGH PROFILE REAR)	6V-5853	1	WIPER GP-WINDOW	756
BLADE AS-WIPER (LOW PROFILE FRONT LOWER)	6V-5853	1	WIPER GP-WINDOW	750
BLADE AS-WIPER (LOW PROFILE REAR)	6V-5849	1	WIPER GP-WINDOW	754
BLADE AS-WIPER (VENT FRONT LOWER)	6V-8255	2	WINDOW GP	743
CAP AS (AIR CONDITIONER) (SEAL)	3E-4051	1	LINES GP-AIR CONDITIONER	682
FILTER-AIR (ROPS REAR PANEL)	7T-7358	1	FILTER GP-CAB AIR	648
FILTER (CAB AIR)	9X-4986	2	FILTER GP-CAB AIR	648
FUSE (10 AMP) (FRONT DEFROSTER)	9W-1442	1	FAN GP-CIRCULATING	646
FUSE (10 AMP) (HEATED MIRROR)	9W-1442	1	MIRROR GP-REAR VIEW	690
FUSE (10 AMP) (OUTSIDE HEATED MIRROR)	9W-1442	1	MIRROR GP-REAR VIEW	692
FUSE (10 AMP) (REAR DEFROSTER)	9W-1442	1	FAN GP-CIRCULATING	647
FUSE (10 AMP) (WIPER)	9W-1442	1	WIPER GP-WINDOW	754
		1	WIPER GP-WINDOW	756
FUSE (15 AMP) (AIR CONDITIONER)	9W-1441	1	AIR CONDITIONER & MOUNTING GP	609
FUSE (15 AMP) (HEATING & AIR CONDITIONING)	9W-1441	1	HEATER & MTG GP-CAB	651
GAUGE GP-AIR PRESSURE (LH BRAKE)	1W-3306	1	PANEL GP-INSTRUMENT	706
GAUGE GP-AIR PRESSURE (RH BRAKE)	1W-3306	1	PANEL GP-INSTRUMENT	706
INDICATOR AS-AIR PRESSURE (LH BRAKE)	1W-3306	1	PANEL GP-INSTRUMENT	708
INDICATOR AS-AIR PRESSURE (RH BRAKE)	1W-3306	1	PANEL GP-INSTRUMENT	708
LAMP (24 VOLT) (A/C & HEATER CONTROL PANEL)	8D-1429	1	HEATER GP-CAB	652
LAMP (24 VOLT) (DIFF LOCK INDICATOR)	115-1748	1	PANEL GP-INSTRUMENT	706
LAMP (24 VOLT) (EMS MASTER ACTION INDICATOR)	107-1983	1	PANEL GP-INSTRUMENT	706
		1	PANEL GP-INSTRUMENT	708
LAMP (24 VOLT) (FRONT DEFROSTER)	3E-8825	1	FAN GP-CIRCULATING	646
LAMP (24 VOLT) (HEATED MIRROR INDICATOR)	3E-8825	1	MIRROR GP-REAR VIEW	690
		1	MIRROR GP-REAR VIEW	692
LAMP (24 VOLT) (HIGH BEAM INDICATOR)	115-1748	1	PANEL GP-INSTRUMENT	706
LAMP (24 VOLT) (HVAC PANEL)	8D-1429	1	AIR CONDITIONER GP	610
LAMP (24 VOLT) (INSTRUMENT PANEL)	115-1748	5	PANEL GP-INSTRUMENT	708

MAINTENANCE PARTS

DESCRIPTION	PART NUMBER	QTY	WHERE USED	PAGE
LAMP (24 VOLT) (LH AIR PRESSURE INDICATOR)	7N-5876	1	PANEL GP-INSTRUMENT	706
LAMP (24 VOLT) (LH TURN INDICATOR)	115-1748	1	PANEL GP-INSTRUMENT	706
LAMP (24 VOLT) (QUAD GAGE MODULE INDICATOR)	7N-5876	2	PANEL GP-INSTRUMENT	706
LAMP (24 VOLT) (QUAD GAUGE & AIR PRESSURE)	7N-5876	4	PANEL GP-INSTRUMENT	708
LAMP (24 VOLT) (REAR DEFROSTER)	3E-8825	1	FAN GP-CIRCULATING	647
LAMP (24 VOLT) (RH AIR PRESSURE INDICATOR)	7N-5876	1	PANEL GP-INSTRUMENT	706
LAMP (24 VOLT) (RIGHT TURN INDICATOR)	115-1748	1	PANEL GP-INSTRUMENT	706
LAMP (24 VOLT) (SPEEDOMETER & TACH)	7N-5876	2	MODULE GP-SPEEDOMETER & TACH	697
LAMP (24 VOLT) (THROTTLE HOLD INDICATOR)	115-1748	1	PANEL GP-INSTRUMENT	706
PADLOCK GP	5P-8502	1	CONVERSION AR-NON-ROPS	624
		1	ROPS AR-OPEN	715
SEAT BELT GP (RETRACTABLE)	156-1148	1	SEAT GP-SUSPENSION	726
		1	SEAT GP-SUSPENSION	727
		1	SEAT GP-SUSPENSION	729
POWER TRAIN				
BREATHER AS (TANDEM)	1F-8488	2	TANDEM & COVER GP	314
BREATHER (TRANSFER CASE)	9G-5127	1	GEAR & CASE GP-TRANSFER	297
CAP-DUST	6V-0852	1	CONTROL GP-DIFFERENTIAL LOCK	272
CAP-FILLER (POWER TRAIN OIL)	6G-9333	1	FILLER GP-POWER TRAIN OIL	290
CAP-VALVE (STEM)	9K-7951	1	WHEEL & TIRE AR	335
		1	WHEEL & TIRE GP	339
		1	WHEEL & TIRE GP	340
		1	WHEEL & TIRE GP	341
		1	WHEEL & TIRE GP	342
		1	WHEEL & TIRE GP	343
		1	WHEEL & TIRE GP	344
		1	WHEEL & TIRE GP	345
		1	WHEEL & TIRE GP	346
		1	WHEEL & TIRE GP	347
		1	WHEEL & TIRE GP	348
		1	WHEEL GP	350
FILTER ELEMENT-HYDRAULIC (POWER TRAIN)	132-8875	1	FILTER GP-OIL	292
FILTER-MAGNETIC (DIFFERENTIAL)	8S-9129	1	GEAR & CASE GP-TRANSFER	297
PLUG-DRAIN	6B-5262	1	DIFFERENTIAL & BEVEL GEAR GP	285
PLUG-DRAIN (TRANSMISSION)	4T-2069	1	GEAR & CASE GP-TRANSFER	297
SCREEN-SUCTION (DIFFERENTIAL)	8S-9130	1	GEAR & CASE GP-TRANSFER	297
SCREEN-SUCTION (TRANSMISSION)	4S-8598	1	GEAR & CASE GP-TRANSFER	297
SERVICE EQUIPMENT AND SUPPLIES				
KEY	5P-8500	2	TOOL BOX GP	759
PADLOCK GP	5P-8502	1	TOOL BOX GP	759
WORK TOOLS				
SEAL-O-RING (123.19MM ID)	2S-8439	2	LIFT GP-BLADE	600

PIÈCES DE RECHANGE

DESCRIPTION	NUMÉRO DE PIECÈS	QTÉ	DOMAINE D'APPLICATION	PAGE
CHÂSSIS ET BENNE				
BOUCHON AIMANTÉ (DIFFÉRENTIEL)	8M-3837	1	CHÂSSIS ET CARTER (ASS)	355
GRAISSEUR (BARRE D'INCLINAISON DES ROUES)	3B-8489	2	ESSIEU AV (ASS)	352
GRAISSEUR (FILET 1/8-27) (AXE D'ARTICULATION SUPÉRIEUR/INFÉRIEUR)	3B-8489	2	CANALISATIONS DE GRAISSAGE (ASS)	370
GRAISSEUR (OSCILLATION D'ESSIEU)	3B-8489	2	ESSIEU AV (ASS)	352
GRAISSEUR (PALIER D'INCLINAISON DES ROUES)	3B-8489	4	ESSIEU AV (ASS)	352
GRAISSEUR (PIVOT DE FUSÉE)	3B-8489	4	ESSIEU AV (ASS)	352
CIRCUIT D'ADMISSION D'AIR ET D'ÉCHAPPEMENT				
ÉLÉMENT PRINCIPAL (ENS)	6I-0273	1	FILTRE A AIR (ASS)	85
ÉLÉMENT SECONDAIRE (ENS)	6I-0274	1	FILTRE A AIR (ASS)	85
INDICATEUR (ENS) (REMPLACEMENT DE FILTRE À AIR)	8N-2694	1	FILTRE A AIR (ASS)	86
CIRCUIT DE CARBURANT				
BOUCHON DE RÉSERVOIR À CARBURANT (ASS) (VERROUILLABLE)	164-4858	1	RÉSERVOIR DE CARBURANT (ASS)	116
		1	RÉSERVOIR DE CARBURANT (ASS)	120
CHAPEAU (ENS) (ORIFICE DE VIDANGE D'HUILE RAPIDE)	9S-9272	1	CANALISATIONS DE VIDANGE (ASS)	101
CUVETTE-ACCUMULATION D'EAU (ENS)	129-0375	1	FILTRE DE SÉPARATEUR D'EAU ET DE CARBURANT (ASS)	99
ÉLÉMENT DE FILTRE (CARBURANT/SÉPARATEUR D'EAU) (PRINCIPAL)	133-5673	1	FILTRE DE SÉPARATEUR D'EAU ET DE CARBURANT (ASS)	99
FILTRE A CARBURANT (ENS)	1R-0762	1	FILTRE A CARBURANT (ASS)	98
PARE-POUSSIERE	9D-0630	1	ADAPTATEUR DE REMPLIS. RAPIDE DE CARBURANT (ASS)	94
CIRCUIT DE FREINAGE				
CARTOUCHE DE DÉSHYDRATEUR (DÉSHYDRATEUR)	203-2389	1	DESHYDRATEUR (ASS)	381
ÉLÉMENT DE CHAUFFAGE (DÉSHYDRATEUR) (12 VOLTS)	203-2423	1	DESHYDRATEUR (ASS)	381
CIRCUIT DE GRAISSAGE				
BOUCHON DE GOULOTTE DE REMPLISSAGE D'HUILE MOTEUR	5L-2952	1	BOUCHON DE REMPLISSAGE D'HUILE MOTEUR (ASS)	54
FILTRE A HUILE MOTEUR (ENS)	1R-0716	1	FILTRE À HUILE MOTEUR (ASS)	56
PARE-POUSSIERE	8C-3445	1	FILTRE À HUILE MOTEUR (ASS)	56

PIÈCES DE RECHANGE

DESCRIPTION	NUMÉRO DE PIECÈS	QTÉ	DOMAINE D'APPLICATION	PAGE
CIRCUIT DE REFROIDISSEMENT				
CHAPEAU - RADIATEUR	6L-8617	1	RADIATEUR (ASS)	82
ÉLÉMENT DE FILTRE À HUILE (ENS) (HYDRAULIQUE)	1R-0773	1	CANALISATIONS DE REFROIDIS. DE TRANSMISSION	70
JOINT PLAT	7E-7912	1	THERMOSTAT ET BOITIER (ASS)	67
PARE-POUSSIERE	6V-0852	2	CANALISATIONS DE REFROIDIS. DE TRANSMISSION	70
		1	CANALISATIONS D'EAU (ASS)	74
PARE-POUSSIERE (HUILE DE BOÎTE)	8C-3447	1	CANALISATIONS DE REFROIDIS. DE TRANSMISSION	70
SOUPAPE DE VIDANGE (EAU)	1P-7297	1	CANALISATIONS D'EAU (ASS)	74
SOUPAPE DE VIDANGE (RADIATEUR)	1P-7297	1	RADIATEUR (ASS)	83
THERMOSTAT-TEMPÉRATURE D'EAU (98 DEG C)	7C-3095	1	THERMOSTAT ET BOITIER (ASS)	67
CIRCUIT ÉLECTRIQUE ET DE DÉMARRAGE				
AMPOULE (FILAMENT SIMPLE) (CLIGNOTANT DE DIRECTION)	9X-4493	1	PHARE AV (ASS)	148
		1	PHARE AV (ASS)	150
AMPOULE (GYROPHARE)(24 VOLTS)	9X-7849	1	LAMPE - GYROPHARE (ASS)	158
AMPOULE (24 VOLTS) (AVERTISSEUR DE RECUL AUXILIAIRE)	3E-8825	1	ECLAIRAGE AR (ASS)	164
AMPOULE (24 VOLTS) (BOUCLIER)	3E-8825	1	CABLAGE DE CABINE (ASS)	230
AMPOULE (24 VOLTS) (BOUCLIER/ INDICATEUR)	3E-8825	1	CABLAGE DE CABINE (ASS)	228
AMPOULE (24 VOLTS) (CABINE-PROJECTEUR DROIT)	3E-8825	1	ÉCLAIRAGE - PROJECTEURS (ASS)	188
AMPOULE (24 VOLTS) (CLIGNOTANT DE DIRECTION)	100-3245	1	LAMPE - PHARE ET CLIGNOTANT	152
		1	LAMPE - PHARE ET CLIGNOTANT	154
		1	PHARE AV (ASS)	148
		1	PHARE AV (ASS)	150
AMPOULE (24 VOLTS) (CONSOLE DE CHANGEMENT DE VITESSES)	7N-5876	1	CABLAGE DE LA CONSOLE DE CHANGEMENTS DE VITESSE	258
AMPOULE (24 VOLTS) (CONTACTEUR AUTO/MAN DE RETENUE DU PAPILLON DES GAZ)	3E-8825	2	CABLAGE DE LA CONSOLE DE CHANGEMENTS DE VITESSE	258
AMPOULE (24 VOLTS) (CONTACTEUR DE RÉGLAGE D'INTENSITÉ DU TABLEAU)	3E-8825	1	CABLAGE DE LA CONSOLE DE DIRECTION	260
AMPOULE (24 VOLTS) (CONTACTEUR DE VERROUILLAGE DE DIFFÉRENTIEL)	3E-8825	2	CABLAGE DE LA CONSOLE DE DIRECTION	260
AMPOULE (24 VOLTS) (CONTACTEUR D'ÉCLAIRAGE DE FEU ARRIÈRE)	3E-8825	1	CABLAGE DE LA CONSOLE DE DIRECTION	260
AMPOULE (24 VOLTS) (CONTACTEUR D'EXTRACTEUR DE BROCHE DE DÉPORT DE CERCLE)	3E-8825	1	CABLAGE DE LA CONSOLE DE CHANGEMENTS DE VITESSE	258
AMPOULE (24 VOLTS) (DIRECTION AUXILIAIRE)	3E-8825	2	CABLAGE DE DIRECTION AUXILIAIRE (ASS)	254
AMPOULE (24 VOLTS) (FEU DE ROUTE)	100-3245	1	LAMPE - PHARE ET CLIGNOTANT	154
AMPOULE (24 VOLTS) (FEUX AVANT FEUX ARRIÈRE)	3E-8825	2	ÉCLAIRAGE - PROJECTEURS (ASS)	176
		2	ÉCLAIRAGE - PROJECTEURS (ASS)	180

PIÈCES DE RECHANGE

DESCRIPTION	NUMÉRO DE PIECÈS	QTÉ	DOMAINE D'APPLICATION	PAGE
		2	ÉCLAIRAGE - PROJECTEURS (ASS)	184
AMPOULE (24 VOLTS) (FEUX DE CROISEMENT)	9X-3463	1	ÉCLAIRAGE - PROJECTEURS (ASS)	166
AMPOULE (24 VOLTS) (FEUX DE ROUTE)	9X-3463	1	ÉCLAIRAGE - PROJECTEURS (ASS)	166
	100-3245	1	LAMPE - PHARE ET CLIGNOTANT	152
		1	PHARE AV (ASS)	148
		1	PHARE AV (ASS)	150
AMPOULE (24 VOLTS) (FEUX DE ROUTE/DE CROISEMENT)(DROIT)	9X-3465	1	LAMPE - PHARE ET CLIGNOTANT	154
AMPOULE (24 VOLTS) (FEUX DE ROUTE/FEUX DE CROISEMENT)	9X-3465	1	PHARE AV (ASS)	150
		1	LAMPE - PHARE ET CLIGNOTANT	152
		1	PHARE AV (ASS)	148
AMPOULE (24 VOLTS) (GYROPHARE)	3E-8825	1	ÉCLAIRAGE - AVERTISSEUR (ASS)	194
		1	ÉCLAIRAGE - AVERTISSEUR (ASS)	196
		1	MONTAGE - GYROPHARE (ASS)	142
AMPOULE (24 VOLTS) (INDICATEUR/ COMMANDE D'AMORTISSEUR DE LAME)	3E-8825	1	CÂBLE D'AMORTISSEUR DE LAME (ASS)	225
AMPOULE (24 VOLTS) (INTERRUPTEUR D'ÉCLAIRAGE - POTENCE)	3E-8825	1	ÉCLAIRAGE - PROJECTEURS (ASS)	180
		1	ÉCLAIRAGE - PROJECTEURS (ASS)	177
AMPOULE (24 VOLTS) (LAMPE D'APPOINT AUXILIAIRE)	3E-8825	2	ECLAIRAGE AR (ASS)	162
AMPOULE (24 VOLTS) (PHARE/ FEUX ARRIÈRE/ INDICATEUR)	3E-8825	2	INTERRUPTEUR D'ÉCLAIRAGE (ASS)	220
AMPOULE (24 VOLTS) (PLAFONNIER)	7N-9943	1	PLAFONNIER (ASS)	143
AMPOULE (24 VOLTS) (PROJECTEUR DE LAME)	3E-8825	2	ÉCLAIRAGE - PROJECTEURS (ASS)	168
AMPOULE (24 VOLTS) (PROJECTEUR DROIT)	3E-8825	1	ÉCLAIRAGE - PROJECTEURS (ASS)	170
AMPOULE (24 VOLTS) (TÉMOIN D'AIDE AU DÉMARRAGE À L'ÉTHER)	3E-8825	1	AUXILIAIRE DE DÉMARRAGE À L'ÉTHER	214
AMPOULE (24 VOLTS) (TÉMOIN DE PHARES/FEUX ARRIÈRE)	3E-8825	2	ÉCLAIRAGE - PROJECTEURS (ASS)	172
AMPOULE (24 VOLTS/21 WATTS) (CLIGNOTANT DE DIRECTION)	9X-4493	1	LAMPE - PHARE ET CLIGNOTANT	152
		1	LAMPE - PHARE ET CLIGNOTANT	154
AMPOULE (24 VOLTS)(21 WATTS) (FEUX D'ARRÊT/FEUX ARRIÈRE)	5C-9584	2	CABLAGE AR (ASS)	246
		2	CABLAGE AR (ASS)	246
AMPOULE (24 VOLTS)(5 WATTS) (CLIGNOTANT)	4V-8116	1	CABLAGE AR (ASS)	246
BATTERIE	153-5710	2	BATTERIE (ASS)	127
CHAPEAU ANTI-POUSSIERE (RÉCHAUFFEUR D'EAU)	133-6517	1	EAU DES CHEMISES - RECHAUFFEUR (ASS)	140
		1	EAU DES CHEMISES - RECHAUFFEUR (ASS)	141
CLÉ	8H-5306	1	CABLAGE AR (ASS)	250
CLÉ (COUPE-BATTERIE)	8H-5306	1	ROBINET DE BATTERIE (ASS)	218
CLIGNOTANT ÉLECTRONIQUE (ENS) (12/24 VOLTS) (CLIGNOTANT/ FEUX DE DÉTRESSE)	108-0358	1	ÉCLAIRAGE - PROJECTEURS (ASS)	176

PIÈCES DE RECHANGE

DESCRIPTION	NUMÉRO DE PIECÈS	QTÉ	DOMAINE D'APPLICATION	PAGE
CLIGNOTANT ÉLECTRONIQUE (ENS) (12/24 VOLTS) (CLIGNOTANTS ET FEUX DE DÉTRESSE)	108-0358	1	ÉCLAIRAGE - PROJECTEURS (ASS)	184
CONTACTEUR (ENS) (LAMPE D'APPOINT AUXILIAIRE)	161-1418	1	ECLAIRAGE AR (ASS)	162
CONTACTEUR (ENS) (RETENUE DU PAPILLON DES GAZ AUTO/MAN)	196-7268	1	CABLAGE DE LA CONSOLE DE CHANGEMENTS DE VITESSE	258
DISJONCTEUR (ENS) (15A) (FEUX DE ROUTE/ FEUX DE CROISEMENT À BARRE LUMINEUSE)	3T-2662	2	ÉCLAIRAGE - PROJECTEURS (ASS)	176
DISJONCTEUR (ENS) (15A) (PHARES AVANT)	3T-2662	1	DISJONCTEUR (ASS)	129
		1	DISJONCTEUR (ASS)	130
DISJONCTEUR (ENS) (15A) (PROJECTEURS DE TRAVAIL AVEC BARRE LUMINEUSE)	3T-2662	1	DISJONCTEUR (ASS)	129
DISJONCTEUR (ENS) (15A) (RELAIS DE DÉMARRAGE)	6T-3643	1	CABLAGE AR (ASS)	249
DISJONCTEUR (ENS) (80 A) (ALTERNATEUR)	171-2210	1	CABLAGE AR (ASS)	250
DISJONCTEUR (ENS) (80 A) (PRINCIPAL)	171-2210	1	CABLAGE AR (ASS)	248
ÉLÉMENT DE RÉCHAUFFEUR (ENS) (240 VOLTS/1250 WATTS)	154-2881	1	EAU DES CHEMISES - RECHAUFFEUR (ASS)	141
ÉLÉMENT DU RÉCHAUFFEUR D'EAU DES CHEMISES (ENS) (120 VOLTS/1250 WATTS)	131-8627	1	EAU DES CHEMISES - RECHAUFFEUR (ASS)	140
ENTRAÎNEMENT POUR COURROIE (GYROPHARE)	9X-8139	1	LAMPE - GYROPHARE (ASS)	158
FUSIBLE (10A) (AVERTISSEUR DE RECUL AUXILIAIRE)	9W-1442	1	ECLAIRAGE AR (ASS)	164
FUSIBLE (10A) (CLIGNOTANT/ FEUX DE DÉTRESSE)	9W-1442	1	ÉCLAIRAGE - PROJECTEURS (ASS)	180
FUSIBLE (10A) (CLIGNOTANTS)	9W-1442	1	INTERRUPTEUR D'ÉCLAIRAGE (ASS)	220
FUSIBLE (10A) (CONSOLE DE DIRECTION)	9W-1442	11	CABLAGE DE LA CONSOLE DE DIRECTION	260
FUSIBLE (10A) (CONTRÔLEUR DE LAME)	9W-1442	1	CABLAGE DE CABINE (ASS)	228
FUSIBLE (10A) (DÉVOLTEUR POUR COURANT)	9W-1442	1	TRANSFORMATION ELECTRIQUE (ASS)	138
FUSIBLE (10A) (FEUX ARRIÈRE, TÉMOINS DE TABLEAU/ CONTRÔLE DE DIRECTION AUXILIAIRE)	9W-1442	2	CABLAGE DE DIRECTION AUXILIAIRE (ASS)	254
FUSIBLE (10A) (FEUX DE CROISEMENT/ DE ROUTE ET CLIGNOTANT)	9W-1442	1	ÉCLAIRAGE - PROJECTEURS (ASS)	184
FUSIBLE (10A) (FEUX DE ROUTE/FEUX DE CROISEMENT)	9W-1442	1	ÉCLAIRAGE - PROJECTEURS (ASS)	176
FUSIBLE (10A) (GYROPHARE)	9W-1442	1	ÉCLAIRAGE - AVERTISSEUR (ASS)	194
		1	ÉCLAIRAGE - AVERTISSEUR (ASS)	196
		1	MONTAGE - GYROPHARE (ASS)	142
FUSIBLE (10A) (LAMPE D'APPOINT)	9W-1442	1	ECLAIRAGE AR (ASS)	162
FUSIBLE (10A) (LAMPE DE BOUCLIER)	9W-1442	1	CABLAGE DE CABINE (ASS)	230

PIÈCES DE RECHANGE

DESCRIPTION	NUMÉRO DE PIECÈS	QTÉ	DOMAINE D'APPLICATION	PAGE
FUSIBLE (10A) (PHARES DE TRAVAIL AVANT)	9W-1442	1	ÉCLAIRAGE - PROJECTEURS (ASS)	172
FUSIBLE (10A) (PROJECTEUR DE LAME)	9W-1442	2	ÉCLAIRAGE - PROJECTEURS (ASS)	168
FUSIBLE (10A) (PROJECTEUR DROIT)	9W-1442	1	ÉCLAIRAGE - PROJECTEURS (ASS)	170
		1	ÉCLAIRAGE - PROJECTEURS (ASS)	188
FUSIBLE (10A) (RADIO)	9W-1442	1	TRANSFORMATION ELECTRIQUE (ASS)	136
FUSIBLE (15A) (ESSUIE-GLACE AVANT SUPÉRIEUR /INFÉRIEUR)	9W-1441	1	CABLAGE DE CABINE (ASS)	226
FUSIBLE (30A) (CONVERTISSEUR DE PUISSANCE)	8T-9636	2	TRANSFORMATION ELECTRIQUE (ASS)	137
LAMPE - CLIGNOTANT DE DIRECTION (ASS) (DROITE)	135-0427	1	ÉCLAIRAGE - PROJECTEURS (ASS)	166
LAMPE - CLIGNOTANT DE DIRECTION (ASS) (GAUCHE)	135-0427	1	ÉCLAIRAGE - PROJECTEURS (ASS)	166
LAMPE - CLIGNOTANT DE DIRECTION (ASS) (24 VOLTS) (CLIGNOTANT DE BARRE LUMINEUSE/ FEUX DE STATIONNEMENT)	135-0427	2	ÉCLAIRAGE - PROJECTEURS (ASS)	172
LAMPE - FEUX AV (24 VOLTS) (FEUX DE CROISEMENT)	9X-3463	1	PHARE AV (ASS)	145
LAMPE - FEUX AV (24 VOLTS)(65 WATTS) (FEUX DE ROUTE)	9X-3463	1	PHARE AV (ASS)	146
LAMPE - FEUX AV (24 VOLTS)(65 WATTS) (PROJECTEUR)	9X-3463	1	LAMPE - PHARE (ASS)	144
LAMPE-CÔTÉ DROIT (ENS) (STOP/FEU AR/CLIGNOTANT DIRECTION)	6C-0109	1	CABLAGE AR (ASS)	246
LAMPE-CÔTÉ GAUCHE (ENS) (STOP/FEU AR/CLIGNOTANT DIRECTION)	6C-0110	1	CABLAGE AR (ASS)	246
LENTILLE (ENS) (CLIGNOTANT DE DIRECTION)	136-3848	1	LAMPE - PHARE ET CLIGNOTANT	152
		1	LAMPE - PHARE ET CLIGNOTANT	154
		1	PHARE AV (ASS)	148
		1	PHARE AV (ASS)	150
LENTILLE (ENS) (FEUX DE ROUTE/FEUX DE CROISEMENT)	100-3248	1	LAMPE - PHARE ET CLIGNOTANT	152
		1	LAMPE - PHARE ET CLIGNOTANT	154
LENTILLE (ENS) (PHARE AVANT) (FEUX DE CROISEMENT)	162-2077	1	ÉCLAIRAGE - PROJECTEURS (ASS)	166
LENTILLE (ENS) (PHARE AVANT) (FEUX DE ROUTE)	158-0249	1	ÉCLAIRAGE - PROJECTEURS (ASS)	166
LENTILLE (ENS) (PHARE AVANT)(FEUX DE CROISEMENT)	162-2077	1	PHARE AV (ASS)	145
LENTILLE (ENS) (PHARE AVANT)(FEUX DE ROUTE)	158-0249	1	PHARE AV (ASS)	146
LENTILLE (ENS) (PROJECTEUR)	158-0248	1	LAMPE - PHARE (ASS)	144
LENTILLE (JAUNE) (CLIGNOTANT DE DIRECTION)	100-3250	1	LAMPE - PHARE ET CLIGNOTANT	152
		1	LAMPE - PHARE ET CLIGNOTANT	154

PIÈCES DE RECHANGE

DESCRIPTION	NUMÉRO DE PIECÈS	QTÉ	DOMAINE D'APPLICATION	PAGE
LENTILLE ORANGE (CLIGNOTANT DE DIRECTION)	100-3250	1	PHARE AV (ASS)	148
		1	PHARE AV (ASS)	150
LENTILLE ORANGE (GYROPHARE)	9X-8121	1	LAMPE - GYROPHARE (ASS)	158
LENTILLE (PLAFONNIER)	7T-0020	1	PLAFONNIER (ASS)	143
CIRCUIT HYDRAULIQUE				
BOUCHON DE GOULOTTE DE REMPLISSAGE (RÉSERVOIR D'HUILE HYDRAULIQUE)	7H-1447	1	RÉSERVOIR HYDRAULIQUE ET FILTRE (ASS)	488
CADENAS (ASS)	5P-8502	1	RÉSERVOIR HYDRAULIQUE ET MONTAGE (ASS)	490
CLÉ	5P-8500	1	RÉSERVOIR HYDRAULIQUE ET MONTAGE (ASS)	490
CREPINE (GOULOTTE DE REMPLISSAGE D'HUILE HYDRAULIQUE)	9J-3047	1	RÉSERVOIR HYDRAULIQUE ET FILTRE (ASS)	488
ÉLÉMENT DE FILTRE À HUILE (ENS) (HYDRAULIQUE) (RETOUR DE DÉBIT)	1R-0774	1	RÉSERVOIR HYDRAULIQUE ET FILTRE (ASS)	488
PARE-POUSSIERE	6V-0852	1	CANALISATIONS DE POMPE (ASS)	453
		1	CANALISATIONS HYDRAULIQUES DE VENTILATEUR (ASS)	450
		1	SOUPAPE DE COMBINAISON (ASS)	522
	8C-3451	1	CANALISATIONS DE DIRECTION (ASS)	463
MATÉRIEL ET FOURNITURES D'ENTRETIEN				
CADENAS (ASS)	5P-8502	1	*TOOL BOX GP	759
CLÉ	5P-8500	2	*TOOL BOX GP	759
MOTEUR STANDARD				
FLEXIBLE D'ÉVACUATION DES VAPEURS	126-0146	1	COMPRESSEUR D'AIR (ASS)	8
JOINT DE RENIFLARD	9Y-1758	1	CULBUTERIE (ASS)	50
JOINT DE SUPPORT (CACHE-SOUPAPES)	109-5309	1	CULBUTERIE (ASS)	50
PARE-POUSSIERE	6V-0852	1	BOUCHON DE MOTEUR (ASS)	42
RENIFLARD (ENS) (MOTEUR)	9Y-4357	1	CULBUTERIE (ASS)	50
OUTILS DE TRAVAIL				
JOINT TORIQUE (DIA INT 123,19MM)	2S-8439	2	LEVAGE - LAME (ASS)	600
POSTE DE CONDUITE				
AMPOULE (24 VOLTS) (COMPTEUR DE VITESSE ET COMPTE-TOURS)	7N-5876	2	MODULE D'INDICATEUR DE VITESSE ET COMPTE-TOURS (ASS)	697
AMPOULE (24 VOLTS) (DÉGIVREUR ARRIÈRE)	3E-8825	1	VENTILATEUR DE CABINE (ASS)	647
AMPOULE (24 VOLTS) (DÉGIVREUR AVANT)	3E-8825	1	VENTILATEUR DE CABINE (ASS)	646
AMPOULE (24 VOLTS) (INDICATEUR DE FEUX DE ROUTE)	115-1748	1	TABLEAU DE BORD (ASS)	706
AMPOULE (24 VOLTS) (INDICATEUR DE MIROIR CHAUFFÉ)	3E-8825	1	RÉTROVISEUR (ASS)	690
		1	RÉTROVISEUR (ASS)	692

PIÈCES DE RECHANGE

DESCRIPTION	NUMÉRO DE PIECÈS	QTÉ	DOMAINE D'APPLICATION	PAGE
AMPOULE (24 VOLTS) (PANNEAU HVAC)	8D-1429	1	CLIMATISEUR (ASS)	610
AMPOULE (24 VOLTS) (QUATRE INSTRUMENTS ET PRESSION D'AIR)	7N-5876	4	TABLEAU DE BORD (ASS)	708
AMPOULE (24 VOLTS) (TABLEAU DE BORD)	115-1748	5	TABLEAU DE BORD (ASS)	708
AMPOULE (24 VOLTS) (TABLEAU DE COMMANDE DU RÉCHAUFFEUR ET CLIMATISEUR)	8D-1429	1	CHAUFFAGE DE CABINE (ASS)	652
AMPOULE (24 VOLTS) (TÉMOIN DE BLOCAGE D'ACCÉLÉRATEUR)	115-1748	1	TABLEAU DE BORD (ASS)	706
AMPOULE (24 VOLTS) (TÉMOIN DE CLIGNOTANT DROIT)	115-1748	1	TABLEAU DE BORD (ASS)	706
AMPOULE (24 VOLTS) (TÉMOIN DE CLIGNOTANT GAUCHE)	115-1748	1	TABLEAU DE BORD (ASS)	706
AMPOULE (24 VOLTS) (TÉMOIN DE MODULE QUATRE INSTRUMENTS)	7N-5876	2	TABLEAU DE BORD (ASS)	706
AMPOULE (24 VOLTS) (TÉMOIN DE PRESSION D'AIR DE DROITE)	7N-5876	1	TABLEAU DE BORD (ASS)	706
AMPOULE (24 VOLTS) (TÉMOIN DE PRESSION D'AIR DE GAUCHE)	7N-5876	1	TABLEAU DE BORD (ASS)	706
AMPOULE (24 VOLTS) (TÉMOIN DE VERROUILLAGE DE DIFFÉRENTIEL)	115-1748	1	TABLEAU DE BORD (ASS)	706
AMPOULE (24 VOLTS) (TÉMOIN PRINCIPAL DE MISE EN GARDE EMS)	107-1983	1	TABLEAU DE BORD (ASS)	706
		1	TABLEAU DE BORD (ASS)	708
BALAI D'ESSUIE-GLACE (ENS) (ÉVENT AVANT INFÉRIEUR)	6V-8255	2	VITRE (ASS)	743
BALAI D'ESSUIE-GLACE (ENS) (PROFIL BAS ARRIÈRE)	6V-5849	1	ESSUIE-GLACE (ASS)	754
BALAI D'ESSUIE-GLACE (ENS) (PROFIL BAS AVANT INFÉRIEUR)	6V-5853	1	ESSUIE-GLACE (ASS)	750
BALAI D'ESSUIE-GLACE (ENS) (PROFIL ÉLEVÉ ARRIÈRE)	6V-5853	1	ESSUIE-GLACE (ASS)	756
BALAI D'ESSUIE-GLACE (ENS) (PROFIL ÉLEVÉ SUPÉRIEUR AVANT)	6V-5853	1	ESSUIE-GLACE (ASS)	752
CADENAS (ASS)	5P-8502	1	ROPS OUVERTE (VERSION)	715
		1	VERSION DE TRANSFORMATION - SANS ROPS	624
CEINTURE DE SECURITE (ASS) (RÉTRACTABLE)	156-1148	1	SIÈGE AVEC SUSPENSION (ASS)	726
		1	SIÈGE AVEC SUSPENSION (ASS)	727
		1	SIÈGE AVEC SUSPENSION (ASS)	729
CHAPEAU (ENS) (CLIMATISEUR) (JOINT)	3E-4051	1	CANALISATIONS DE CLIMATISEUR (ASS)	682
COURROIE NERVURÉE (CLIMATISEUR)	174-9690	1	CLIMATISEUR (VERSION)	609
FILTRE À AIR (PANNEAU ARRIÈRE ROPS)	7T-7358	1	FILTRE À AIR DE CABINE (ASS)	648
FILTRE (AÉRATION DE LA CABINE)	9X-4986	2	FILTRE À AIR DE CABINE (ASS)	648
FUSIBLE (10A) (DÉGIVREUR ARRIÈRE)	9W-1442	1	VENTILATEUR DE CABINE (ASS)	647
FUSIBLE (10A) (DÉGIVREUR AVANT)	9W-1442	1	VENTILATEUR DE CABINE (ASS)	646
FUSIBLE (10A) (ESSUIE-GLACE)	9W-1442	1	ESSUIE-GLACE (ASS)	754
		1	ESSUIE-GLACE (ASS)	756
FUSIBLE (10A) (MIROIR CHAUFFÉ)	9W-1442	1	RÉTROVISEUR (ASS)	690

PIÈCES DE RECHANGE

DESCRIPTION	NUMÉRO DE PIECÈS	QTÉ	DOMAINE D'APPLICATION	PAGE
FUSIBLE (10A) (RÉTROVISEUR EXTÉRIEUR CHAUFFÉ)	9W-1442	1	RÉTROVISEUR (ASS)	692
FUSIBLE (15A) (CHAUFFAGE ET CLIMATISATION)	9W-1441	1	CHAUFFAGE ET MONTAGE - CABINE (ASS)	651
FUSIBLE (15A) (CLIMATISEUR)	9W-1441	1	CLIMATISEUR ET MONTAGE (ASS)	609
MANOMETRE D'AIR (ASS) (FREIN - DROITE)	1W-3306	1	TABLEAU DE BORD (ASS)	706
MANOMETRE D'AIR (ASS) (FREIN GAUCHE)	1W-3306	1	TABLEAU DE BORD (ASS)	706
MANOMÈTRE D'AIR (ENS) (FREIN - DROITE)	1W-3306	1	TABLEAU DE BORD (ASS)	708
MANOMÈTRE D'AIR (ENS) (FREIN GAUCHE)	1W-3306	1	TABLEAU DE BORD (ASS)	708
TRANSMISSION				
BOUCHON DE GOULOTTE DE REMPLISSAGE (HUILE DE TRANSMISSION)	6G-9333	1	GOULOTTE DE REMPLISSAGE D'HUILE DE TRANSMISSION	290
BOUCHON DE VIDANGE	6B-5262	1	COURONNE ET DIFFERENTIEL (ASS)	285
BOUCHON DE VIDANGE (BOîTE DE VITESSES)	4T-2069	1	ENGRENAGES DE TRANSFERT ET CARTER (ASS)	297
CHAPEAU DE VALVE (TIGE)	9K-7951	1	JANTE (ASS)	350
		1	ROUE ET PNEU (ASS)	339
		1	ROUE ET PNEU (ASS)	340
		1	ROUE ET PNEU (ASS)	341
		1	ROUE ET PNEU (ASS)	342
		1	ROUE ET PNEU (ASS)	343
		1	ROUE ET PNEU (ASS)	344
		1	ROUE ET PNEU (ASS)	345
		1	ROUE ET PNEU (ASS)	346
		1	ROUE ET PNEU (ASS)	347
		1	ROUE ET PNEU (ASS)	348
		1	ROUE ET PNEU (VERSION)	335
ÉCRAN MAGNÉTIQUE (DIFFÉRENTIEL)	8S-9129	1	ENGRENAGES DE TRANSFERT ET CARTER (ASS)	297
ÉLÉMENT DE FILTRE-HYDRAULIQUE (TRANSMISSION)	132-8875	1	FILTRE A HUILE (ASS)	292
PARE-POUSSIERE	6V-0852	1	COMMANDE DE DIFFÉRENTIEL - VERROUILLAGE (ASS)	272
RENIFLARD (CARTER DE DISTRIBUTION)	9G-5127	1	ENGRENAGES DE TRANSFERT ET CARTER (ASS)	297
RENIFLARD (ENS) (TANDEM)	1F-8488	2	TANDEM ET CARTER (ASS)	314
TAMIS D'ASPIRATION (BOîTE DE VITESSES)	4S-8598	1	ENGRENAGES DE TRANSFERT ET CARTER (ASS)	297
TAMIS D'ASPIRATION (DIFFÉRENTIEL)	8S-9130	1	ENGRENAGES DE TRANSFERT ET CARTER (ASS)	297

PIEZAS DE MANTENIMIENTO

DESCRIPCION	NUMERO DE PIEZA	CANT	SE UTILIZA EN	PAGINA
BASTIDOR Y CAJA				
CONEXIÓN DE ENGRASE (BARRA DE INCLINACION DE RUEDA)	3B-8489	2	EJE DELANTERO (GR)	352
CONEXIÓN DE ENGRASE (COJINETE DE INCLINACION DE RUEDA)	3B-8489	4	EJE DELANTERO (GR)	352
CONEXIÓN DE ENGRASE (OSCILACION DEL EJE)	3B-8489	2	EJE DELANTERO (GR)	352
CONEXIÓN DE ENGRASE (PIVOTE DE DIRECCION)	3B-8489	4	EJE DELANTERO (GR)	352
CONEXIÓN DE ENGRASE (ROSCA DE 1/8-27) (PASADOR DE ARTICULACION SUPERIOR/INFERIOR)	3B-8489	2	TUBERÍAS DE ENGRASE (GR)	370
TAPÓN MAGNÉTICO (DIFERENCIAL)	8M-3837	1	CAJA Y BASTIDOR (GR)	355
EQUIPO Y SUMINISTRO DE SERVICIOS				
CANDADO (GR)	5P-8502	1	*TOOL BOX GP	759
LLAVE	5P-8500	2	*TOOL BOX GP	759
HERRAMIENTAS				
SELLO ANULAR (DI 123,19MM)	2S-8439	2	LEVANTAMIENTO - HOJA DE (GR)	600
MOTOR BÁSICO				
EMPAQUETADURA DE BASE (TAPA DE VÁLVULA)	109-5309	1	MECANISMO DE VÁLVULAS (GR)	50
EMPAQUETADURA-RESPIRADERO	9Y-1758	1	MECANISMO DE VÁLVULAS (GR)	50
MANGUERA DE ESCAPE DE GASES	126-0146	1	COMPRESOR DE AIRE (GR)	8
RESPIRADERO (CONJ) (MOTOR)	9Y-4357	1	MECANISMO DE VÁLVULAS (GR)	50
TAPA CONTRA EL POLVO	6V-0852	1	TAPÓN DEL MOTOR (GR)	42
PUESTO DEL OPERADOR				
CANDADO (GR)	5P-8502	1	CONJUNTO DE MODIFICACIÓN (SIN ROPS)	624
		1	ESTRUCTURA ROPS ABIERTA	715
CINTURÓN DE SEGURIDAD (GR) (RETRACTIL)	156-1148	1	SUSPENSIÓN - ASIENTO CON (GR)	726
		1	SUSPENSIÓN - ASIENTO CON (GR)	727
		1	SUSPENSIÓN - ASIENTO CON (GR)	729
CORREA ACOSTIALLADA (A/A)	174-9690	1	ACONDICIONADOR DE AIRE (CONFIG)	609
FILTRO (AIRE DE LA CABINA)	9X-4986	2	FILTRO DE AIRE DE LA CABINA (GR)	648
FILTRO DE AIRE (ROPS DEL TABLERO TRASERO)	7T-7358	1	FILTRO DE AIRE DE LA CABINA (GR)	648
FUSIBLE (10 A) (DESCONGELADOR DELANTERO)	9W-1442	1	VENTILADOR DE CIRCULACION	646
FUSIBLE (10 A) (DESCONGELADOR TRASERO)	9W-1442	1	VENTILADOR DE CIRCULACION	647
FUSIBLE (10 A) (LIMPIADOR)	9W-1442	1	LIMPIAPARABRISAS DE LA VENTANA (GR)	754
		1	LIMPIAPARABRISAS DE LA VENTANA (GR)	756
FUSIBLE (10 A) (RETROVISOR DELANTERO)	9W-1442	1	RETROVISOR (GR)	690

PIEZAS DE MANTENIMIENTO

DESCRIPCION	NUMERO DE PIEZA	CANT	SE UTILIZA EN	PAGINA
FUSIBLE (10 A) (RETROVISOR EXTERIOR DELANTERO)	9W-1442	1	RETROVISOR (GR)	692
FUSIBLE (15 A) (ACONDICIONADOR DE AIRE Y CALEFACCIÓN)	9W-1441	1	CALEFACCIÓN Y MONTAJE DE LA CABINA (GR)	651
FUSIBLE (15 A) (AIRE ACONDICIONADO)	9W-1441	1	ACONDICIONADOR DE AIRE Y MONTAJE (GR)	609
HOJA DE LIMPIAPARABRISAS (CONJ) (DELANTERO DE BAJO PERFIL)	6V-5853	1	LIMPIAPARABRISAS DE LA VENTANA (GR)	750
HOJA DE LIMPIAPARABRISAS (CONJ) (DELANTERO SUPERIOR DE ALTO PERFIL)	6V-5853	1	LIMPIAPARABRISAS DE LA VENTANA (GR)	752
HOJA DE LIMPIAPARABRISAS (CONJ) (RESPIRADERO INFERIOR DELANTERO)	6V-8255	2	VENTANA (GR)	743
HOJA DE LIMPIAPARABRISAS (CONJ) (TRASERO DE ALTO PARFIL)	6V-5853	1	LIMPIAPARABRISAS DE LA VENTANA (GR)	756
HOJA DE LIMPIAPARABRISAS (CONJ) (TRSERO DE BAJO PERFIL)	6V-5849	1	LIMPIAPARABRISAS DE LA VENTANA (GR)	754
INDICADOR DE PRESIÓN DE AIRE (CONJ) (FRENO DERECHO)	1W-3306	1	TABLERO DE INSTRUMENTOS (GR)	708
INDICADOR DE PRESIÓN DE AIRE (CONJ) (FRENOS DE LA PARTE IZQUIERDA)	1W-3306	1	TABLERO DE INSTRUMENTOS (GR)	708
INDICADOR DE PRESION DE AIRE (GR) (FRENO DERECHO)	1W-3306	1	TABLERO DE INSTRUMENTOS (GR)	706
INDICADOR DE PRESION DE AIRE (GR) (FRENOS DE LA PARTE IZQUIERDA)	1W-3306	1	TABLERO DE INSTRUMENTOS (GR)	706
LÁMPARA (24 VOLTIOS) (ACONDICIONADOR DE AIRE Y TABLERO DE CONTROL DE CALEFACCIÓN)	8D-1429	1	CALEFACCIÓN DE LA CABINA (GR)	652
LÁMPARA (24 VOLTIOS) (DESCONGELADOR DELANTERO)	3E-8825	1	VENTILADOR DE CIRCULACION	646
LÁMPARA (24 VOLTIOS) (DESCONGELADOR TRASERO)	3E-8825	1	VENTILADOR DE CIRCULACION	647
LÁMPARA (24 VOLTIOS) (INDICADOR DE ACELERACIÓN SOSTENIDA)	115-1748	1	TABLERO DE INSTRUMENTOS (GR)	706
LÁMPARA (24 VOLTIOS) (INDICADOR DE GIRO A LA DERECHA)	115-1748	1	TABLERO DE INSTRUMENTOS (GR)	706
LÁMPARA (24 VOLTIOS) (INDICADOR DE LUZ ALTA)	115-1748	1	TABLERO DE INSTRUMENTOS (GR)	706
LÁMPARA (24 VOLTIOS) (INDICADOR DE MÓDULO DE CUATRO MEDIDORES)	7N-5876	2	TABLERO DE INSTRUMENTOS (GR)	706
LÁMPARA (24 VOLTIOS) (INDICADOR DE PRESIÓN DE AIRE DE PARTE DERECHA)	7N-5876	1	TABLERO DE INSTRUMENTOS (GR)	706
LÁMPARA (24 VOLTIOS) (INDICADOR DE PRESIÓN DE AIRE DE PARTE IZQUERDA)	7N-5876	1	TABLERO DE INSTRUMENTOS (GR)	706
LÁMPARA (24 VOLTIOS) (INDICADOR DE TRABA DEL DIFERENCIAL)	115-1748	1	TABLERO DE INSTRUMENTOS (GR)	706
LÁMPARA (24 VOLTIOS) (LUZ INDIC. DE ACCION MAESTRA DE EMS)	107-1983	1	TABLERO DE INSTRUMENTOS (GR)	706

PIEZAS DE MANTENIMIENTO

DESCRIPCION	NUMERO DE PIEZA	CANT	SE UTILIZA EN	PAGINA
		1	TABLERO DE INSTRUMENTOS (GR)	708
LÁMPARA (24 VOLTIOS) (MODULO DE CUATRO MEDIDORES Y PRESIÓN DE AIRE)	7N-5876	4	TABLERO DE INSTRUMENTOS (GR)	708
LÁMPARA (24 VOLTIOS) (RETROVISOR INDICADOR DELANTERO)	3E-8825	1	RETROVISOR (GR)	690
		1	RETROVISOR (GR)	692
LÁMPARA (24 VOLTIOS) (SEÑAL DE GIRO, IZQUIERDA)	115-1748	1	TABLERO DE INSTRUMENTOS (GR)	706
LÁMPARA (24 VOLTIOS) (TABLERO DE AIRE ACONDICIONADO)	8D-1429	1	ACONDICIONADOR DE AIRE (GR)	610
LÁMPARA (24 VOLTIOS) (TABLERO DE INSTRUMENTOS)	115-1748	5	TABLERO DE INSTRUMENTOS (GR)	708
LÁMPARA (24 VOLTIOS) (VELOCÍMETRO, TACÓMETRO)	7N-5876	2	MÓDULO DEL TACÓMETRO Y DEL VELOCÍMETRO (GR)	697
TAPÓN (CONJ) (ACONDICIONADOR DE AIRE) (SELLO)	3E-4051	1	TUBERÍAS DE ACONDICIONADOR DE AIRE (GR)	682
SISTEMA DE ADMISIÓN Y ESCAPE DE AIRE				
ELEMENTO PRIMARIO (CONJ)	6I-0273	1	FILTRO DE AIRE (GR)	85
ELEMENTO SECUNDARIO (CONJ)	6I-0274	1	FILTRO DE AIRE (GR)	85
INDICADOR (CONJ) (CAMBIO DE FILTRO DE AIRE)	8N-2694	1	FILTRO DE AIRE (GR)	86
SISTEMA DE COMBUSTIBLE				
ELEMENTO DE FILTRO (SEPARADOR DE COMBUSTIBLE/AGUA) (PRIMARIO)	133-5673	1	FILTRO DE COMBUSTIBLE Y SEPARADOR DE AGUA (GR)	99
FILTRO DE COMBUSTIBLE (CONJ)	1R-0762	1	FILTRO DE COMBUSTIBLE (GR)	98
RECIPIENTE DE RECOLECCION DE AGUA (CONJ)	129-0375	1	FILTRO DE COMBUSTIBLE Y SEPARADOR DE AGUA (GR)	99
TAPA CONTRA EL POLVO	9D-0630	1	ADAPTADOR DE LLENADO RÁPIDO DE COMBUSTIBLE (GR)	94
TAPA, TANQUE DE COMBUSTIBLE (GR) (TRABABLE)	164-4858	1	COMBUSTIBLE - TANQUE DE (GR)	116
		1	COMBUSTIBLE - TANQUE DE (GR)	120
TAPÓN (CONJ) (ORIFICIO PARA CAMBIO RÁPIDO DE ACEITE)	9S-9272	1	TUBERÍAS DE DRENAJE (GR)	101
SISTEMA DE ENFRIAMIENTO				
ELEMENTO DE FILTRO DE ACEITE (CONJ) (HIDRAULICO)	1R-0773	1	TUBERÍAS DEL ENFRIADOR DEL TREN DE FUERZA (GR)	70
EMPAQUETADURA	7E-7912	1	REGULADOR Y CAJA (GR)	67
REGULADOR DE TEMPERATURA DEL AGUA (98 GRADOS C)	7C-3095	1	REGULADOR Y CAJA (GR)	67
TAPA CONTRA EL POLVO	6V-0852	1	TUBERÍAS DEL AGUA (GR)	74
		2	TUBERÍAS DEL ENFRIADOR DEL TREN DE FUERZA (GR)	70
TAPA CONTRA EL POLVO (ACEITE DE LA TRANSMISIÓN)	8C-3447	1	TUBERÍAS DEL ENFRIADOR DEL TREN DE FUERZA (GR)	70
TAPA DEL RADIADOR	6L-8617	1	RADIADOR (GR)	82
VÁLVULA DE DRENAJE (AGUA)	1P-7297	1	TUBERÍAS DEL AGUA (GR)	74
VÁLVULA DE DRENAJE (RADIADOR)	1P-7297	1	RADIADOR (GR)	83

PIEZAS DE MANTENIMIENTO

DESCRIPCION	NUMERO DE PIEZA	CANT	SE UTILIZA EN	PAGINA
SISTEMA DE FRENOS				
CARATUCHO-DESECANTE (SECADOR DE AIRE)	203-2389	1	DESHIDRATADOR (GR)	381
ELEMENTO DE CALEFACCION (12 VOLTIOS, AIRE SECO)	203-2423	1	DESHIDRATADOR (GR)	381
SISTEMA DE LUBRICACIÓN				
FILTRO DE ACEITE DEL MOTOR (CONJ)	1R-0716	1	FILTRO DE ACEITE DEL MOTOR (GR)	56
TAPA CONTRA EL POLVO	8C-3445	1	FILTRO DE ACEITE DEL MOTOR (GR)	56
TAPA DEL TUBO DE LLENADO DE ACEITE (CONJ)	5L-2952	1	TUBO DE LLENADO DE ACEITE (GR)	54
SISTEMA ELÉCTRICO Y DE ARRANQUE				
BATERÍA	153-5710	2	BATERÍA (GR)	127
CONJUNTO DE ELEMENTO DE CALEFACCION (240 VOLTIOS/1250 VATIOS)	154-2881	1	AGUA DE LAS CAMISAS - CALENTADOR DEL (GR)	141
CRISTAL (AMBAR) (SEÑAL DE VIRAJE)	100-3250	1	LÁMPARA DE LUZ DELANTERA Y DE SEÑAL (GR)	152
		1	LÁMPARA DE LUZ DELANTERA Y DE SEÑAL (GR)	154
CRISTAL (LUZ DE TECHO)	7T-0020	1	LÁMPARA DEL TECHO (GR)	143
DESTELLADOR ELECTRONICO (CONJ) (12/24 VOLTIOS) (LUZ DE GIRO/PELIGRO)	108-0358	1	LUCES DE REFLECTOR (GR)	176
DESTELLADOR ELECTRONICO (CONJ) (12/24 VOLTIOS) (SEÑAL DE GIROS Y PELIGROS)	108-0358	1	LUCES DE REFLECTOR (GR)	184
DISYUNTOR (CONJ) (15 A) (BARRA DE LUCES BAJAS DELANTERAS)	3T-2662	2	LUCES DE REFLECTOR (GR)	176
DISYUNTOR (CONJ) (15 A) (BARRA DE LUCES DE TRABAJO)	3T-2662	1	DISYUNTOR DE CIRCUITO (GR)	129
DISYUNTOR (CONJ) (15 A) (FAROS)	3T-2662	1	DISYUNTOR DE CIRCUITO (GR)	129
		1	DISYUNTOR DE CIRCUITO (GR)	130
DISYUNTOR (CONJ) (15 A) (RELE DE ARRANQUE)	6T-3643	1	CABLES POSTERIORES (GR)	249
DISYUNTOR (CONJ) (80 AMP) (ALTERNADOR)	171-2210	1	CABLES POSTERIORES (GR)	250
DISYUNTOR (CONJ) (80 AMP) (PRINCIPAL)	171-2210	1	CABLES POSTERIORES (GR)	248
ELEMENTO DEL CALENTADOR DEL AGUA DE LAS CAMISAS (120 VOLTIOS/1250 VATIOS)	131-8627	1	AGUA DE LAS CAMISAS - CALENTADOR DEL (GR)	140
FUSIBLE (10 A) (ALARM AUXILIAR DE RETROCESO)	9W-1442	1	LUCES DE RETROCESO (GR)	164
FUSIBLE (10 A) (BALIZA GIRATORIA DE ADVERTENCIA)	9W-1442	1	BALIZA DE ADVERTENCIA (GR) - INSTALACIÓN	142
		1	LUCES DE ADVERTENCIA (GR)	194
		1	LUCES DE ADVERTENCIA (GR)	196
FUSIBLE (10 A) (CONSOLA DE DIRECCIÓN)	9W-1442	11	CABLES DE LA CONSOLA DE DIRECCIÓN (GR)	260
FUSIBLE (10 A) (CONTROLADOR PARA LA HOJA)	9W-1442	1	CABLES DE LA CABINA (GR)	228

PIEZAS DE MANTENIMIENTO

DESCRIPCION	NUMERO DE PIEZA	CANT	SE UTILIZA EN	PAGINA
FUSIBLE (10 A) (LAMPARA DE RETROCESO)	9W-1442	1	LUCES DE RETROCESO (GR)	162
FUSIBLE (10 A) (LAMPARA, VERTEDERA)	9W-1442	1	CABLES DE LA CABINA (GR)	230
FUSIBLE (10 A) (LUCES DE TABLERO DE COLA)	9W-1442	2	CABLES DE LA DIRECCIÓN SECUNDARIA	254
FUSIBLE (10 A) (LUCES DE TRABAJO DELANTERAS)	9W-1442	1	LUCES DE REFLECTOR (GR)	172
FUSIBLE (10 A) (LUZ ALTA/BAJA)	9W-1442	1	LUCES DE REFLECTOR (GR)	176
FUSIBLE (10 A) (LUZ ALTA/BAJA Y SEÑAL)	9W-1442	1	LUCES DE REFLECTOR (GR)	184
FUSIBLE (10 A) (LUZ DE GIRO/PELIGRO)	9W-1442	1	LUCES DE REFLECTOR (GR)	180
FUSIBLE (10 A) (LUZ DE LA HOJA)	9W-1442	2	LUCES DE REFLECTOR (GR)	168
FUSIBLE (10 A) (RADIO)	9W-1442	1	CONVERTIDOR ELÉCTRICO (GR)	136
FUSIBLE (10 A) (REFLECTORES DEL LADO DERECHO)	9W-1442	1	LUCES DE REFLECTOR (GR)	170
FUSIBLE (10 A) (REFLECTORES, LADO DERECHO)	9W-1442	1	LUCES DE REFLECTOR (GR)	188
FUSIBLE (10 A) (SEÑALES DE GIRO)	9W-1442	1	INTERRUPTOR DE LUZ (GR)	220
FUSIBLE (10 A) (TRANSFORMADOR DE CORRIENTE)	9W-1442	1	CONVERTIDOR ELÉCTRICO (GR)	138
FUSIBLE (15 A) (ESCOBILLAS FRONTALES SUPERIOR/INFERIOR)	9W-1441	1	CABLES DE LA CABINA (GR)	226
FUSIBLE (30 A) (TRANSFORMADOR DE CORRIENTE)	8T-9636	2	CONVERTIDOR ELÉCTRICO (GR)	137
INTERRUPTOR (CONJ) (ACELERACIÓN SOSTENIDA AUTOMÁTICA/MANUAL)	196-7268	1	CABLES DE LA CONSOLA DE CAMBIOS (GR)	258
INTERRUPTOR (CONJ) (LUZ AUXILIAR DE RETROCESO)	161-1418	1	LUCES DE RETROCESO (GR)	162
LÁMPARA (BALIZA DE ADVERTENCIA, 24 VOLTIOS)	9X-7849	1	LÁMPARA DE BALIZA DE ADVERTENCIA (GR)	158
LÁMPARA DE FARO DELANTERO (24 VOLTIOS) (LUZ BAJA)	9X-3463	1	LÁMPARA DE FARO DELANTERO (GR)	145
LÁMPARA DE FARO DELANTERO (24 VOLTIOS)(65 VATIOS) (REFLECTOR)	9X-3463	1	REFLECTOR (GR)	144
LÁMPARA DE FARO DELANTERO (24 VOLTIOS)(65 VATIOS) (VIGA ALTA)	9X-3463	1	LÁMPARA DE FARO DELANTERO (GR)	146
LAMPARA DERECHA (CONJ) (PARADA/COLA/GIRO)	6C-0109	1	CABLES POSTERIORES (GR)	246
LÁMPARA (FILAMENTO SENCILLO) (SEÑAL DE VIRAJE)	9X-4493	1	LÁMPARA DE FARO DELANTERO (GR)	148
		1	LÁMPARA DE FARO DELANTERO (GR)	150
LAMPARA IZQUIERDA (CONJ) (PARADA/COLA/GIRO)	6C-0110	1	CABLES POSTERIORES (GR)	246
LÁMPARA (24 VOLTIOS) (ALARM AUXILIAR DE RETROCESO)	3E-8825	1	LUCES DE RETROCESO (GR)	164
LÁMPARA (24 VOLTIOS) (BALIZA GIRATORIA DE ADVERTENCIA)	3E-8825	1	BALIZA DE ADVERTENCIA (GR) - INSTALACIÓN	142
		1	LUCES DE ADVERTENCIA (GR)	194
		1	LUCES DE ADVERTENCIA (GR)	196
LÁMPARA (24 VOLTIOS) (CONSOLA DE CAMBIOS)	7N-5876	1	CABLES DE LA CONSOLA DE CAMBIOS (GR)	258

PIEZAS DE MANTENIMIENTO

DESCRIPCION	NUMERO DE PIEZA	CANT	SE UTILIZA EN	PAGINA
LÁMPARA (24 VOLTIOS) (CÚPULA)	7N-9943	1	LÁMPARA DEL TECHO (GR)	143
LÁMPARA (24 VOLTIOS) (DIRECCIÓN SECUNDARIA)	3E-8825	2	CABLES DE LA DIRECCIÓN SECUNDARIA	254
LÁMPARA (24 VOLTIOS) (FARO DELANTERO/COLA)	3E-8825	2	LUCES DE REFLECTOR (GR)	176
		2	LUCES DE REFLECTOR (GR)	180
		2	LUCES DE REFLECTOR (GR)	184
LÁMPARA (24 VOLTIOS) (HOJA AMORTIGUADORA/INDICADOR)	3E-8825	1	GRUPO DE CABLES, HOJA AMORTIGUADORA	225
LÁMPARA (24 VOLTIOS) (INDICADOR DE ARRANQUE ASISTIDO POR ÉTER)	3E-8825	1	AUXILIAR DE ARRANQUE CON ÉTER (GR)	214
LÁMPARA (24 VOLTIOS) (INTERRUPTOR ATENUADOR DE LUCES DEL TABLERO)	3E-8825	1	CABLES DE LA CONSOLA DE DIRECCIÓN (GR)	260
LÁMPARA (24 VOLTIOS) (INTERRUPTOR DE ACELERACIÓN SOSTENIDA AUTOMÁTICA/MANUAL)	3E-8825	2	CABLES DE LA CONSOLA DE CAMBIOS (GR)	258
LÁMPARA (24 VOLTIOS) (INTERRUPTOR DE EXTRACTOR DE PASADORES DE DESPLAZADOR DEL CIRCULO)	3E-8825	1	CABLES DE LA CONSOLA DE CAMBIOS (GR)	258
LÁMPARA (24 VOLTIOS) (INTERRUPTOR DE LUCES TRASERAS)	3E-8825	1	CABLES DE LA CONSOLA DE DIRECCIÓN (GR)	260
LÁMPARA (24 VOLTIOS) (INTERRUPTOR DE TRABA DEL DIFERENCIAL)	3E-8825	2	CABLES DE LA CONSOLA DE DIRECCIÓN (GR)	260
LÁMPARA (24 VOLTIOS) (LÁMPARA DE FUNCIONAMIENTO)	100-3245	1	LÁMPARA DE LUZ DELANTERA Y DE SEÑAL (GR)	154
LÁMPARA (24 VOLTIOS) (LUCES DE MANO DERECHA, ALTAS/BAJAS)	9X-3465	1	LÁMPARA DE LUZ DELANTERA Y DE SEÑAL (GR)	154
LÁMPARA (24 VOLTIOS) (LUCES DE TRABAJO)	100-3245	1	LÁMPARA DE FARO DELANTERO (GR)	150
		1	LÁMPARA DE LUZ DELANTERA Y DE SEÑAL (GR)	152
		1	LÁMPARA DE FARO DELANTERO (GR)	148
LÁMPARA (24 VOLTIOS) (LUZ ALTA/BAJA)	9X-3465	1	LÁMPARA DE FARO DELANTERO (GR)	150
		1	LÁMPARA DE FARO DELANTERO (GR)	148
		1	LÁMPARA DE LUZ DELANTERA Y DE SEÑAL (GR)	152
LÁMPARA (24 VOLTIOS) (LUZ AUXILIAR DE RETROCESO)	3E-8825	2	LUCES DE RETROCESO (GR)	162
LÁMPARA (24 VOLTIOS) (LUZ BAJA)	9X-3463	1	LUCES DE REFLECTOR (GR)	166
LÁMPARA (24 VOLTIOS) (LUZ BAJA DE BARRA DE LUCES)	3E-8825	1	LUCES DE REFLECTOR (GR)	180
		1	LUCES DE REFLECTOR (GR)	177
LÁMPARA (24 VOLTIOS) (LUZ DE LA HOJA)	3E-8825	2	LUCES DE REFLECTOR (GR)	168
LÁMPARA (24 VOLTIOS) (LUZ DELANTERA/TRASERA/INDICADOR)	3E-8825	2	INTERRUPTOR DE LUZ (GR)	220
LÁMPARA (24 VOLTIOS) (LUZ INDICADORA DE LAMPARA DELANTERA/TRASERA)	3E-8825	2	LUCES DE REFLECTOR (GR)	172

PIEZAS DE MANTENIMIENTO

DESCRIPCION	NUMERO DE PIEZA	CANT	SE UTILIZA EN	PAGINA
LÁMPARA (24 VOLTIOS) (REFLECTOR LADO DERECHO, CABINA)	3E-8825	1	LUCES DE REFLECTOR (GR)	188
LÁMPARA (24 VOLTIOS) (REFLECTORES DEL LADO DERECHO)	3E-8825	1	LUCES DE REFLECTOR (GR)	170
LÁMPARA (24 VOLTIOS) (SEÑAL DE VIRAJE)	100-3245	1	LÁMPARA DE FARO DELANTERO (GR)	148
		1	LÁMPARA DE FARO DELANTERO (GR)	150
		1	LÁMPARA DE LUZ DELANTERA Y DE SEÑAL (GR)	152
		1	LÁMPARA DE LUZ DELANTERA Y DE SEÑAL (GR)	154
LÁMPARA (24 VOLTIOS) (VERTEDERA)	3E-8825	1	CABLES DE LA CABINA (GR)	230
LÁMPARA (24 VOLTIOS) (VERTEDERA/INDICADOR)	3E-8825	1	CABLES DE LA CABINA (GR)	228
LÁMPARA (24 VOLTIOS) (VIGA ALTA)	9X-3463	1	LUCES DE REFLECTOR (GR)	166
LÁMPARA (24 VOLTIOS, 21 VATIOS) (LUZ DE SEÑAL DE PARADA/COLA)	5C-9584	2	CABLES POSTERIORES (GR)	246
		2	CABLES POSTERIORES (GR)	246
LÁMPARA (24 VOLTIOS, 21 VATIOS) (SEÑAL DE VIRAJE)	9X-4493	1	LÁMPARA DE LUZ DELANTERA Y DE SEÑAL (GR)	154
		1	LÁMPARA DE LUZ DELANTERA Y DE SEÑAL (GR)	152
LÁMPARA (24 VOLTIOS, 5 VATIOS) (DE GIRO)	4V-8116	1	CABLES POSTERIORES (GR)	246
LENTE AMBAR (BALIZA GIRATORIA DE ADVERTENCIA)	9X-8121	1	LÁMPARA DE BALIZA DE ADVERTENCIA (GR)	158
LENTE AMBAR (SEÑAL DE VIRAJE)	100-3250	1	LÁMPARA DE FARO DELANTERO (GR)	148
		1	LÁMPARA DE FARO DELANTERO (GR)	150
LLAVE	8H-5306	1	CABLES POSTERIORES (GR)	250
LLAVE (DESCONECTAR BATERIA)	8H-5306	1	DISYUNTOR (GR)	218
LUZ DE SEÑAL DE GIRO (GR) (LADO DERECHO)	135-0427	1	LUCES DE REFLECTOR (GR)	166
LUZ DE SEÑAL DE GIRO (GR) (LADO IZQUIERDO)	135-0427	1	LUCES DE REFLECTOR (GR)	166
LUZ DE SEÑAL DE GIRO (GR) (24 VOLTIOS) (LUCES DE ESTACIONAMIENTO/GIRO)	135-0427	2	LUCES DE REFLECTOR (GR)	172
MANDO DE CORREA (BALIZA GIRATORIA DE ADVERTENCIA)	9X-8139	1	LÁMPARA DE BALIZA DE ADVERTENCIA (GR)	158
TAPA CONTRA EL POLVO (CONJ) (CALENTADOR DE AGUA DE LAS CAMISAS)	133-6517	1	AGUA DE LAS CAMISAS - CALENTADOR DEL (GR)	140
		1	AGUA DE LAS CAMISAS - CALENTADOR DEL (GR)	141
VIDRIO (CONJ) (FARO DELANTERO) (LUZ BAJA)	162-2077	1	LUCES DE REFLECTOR (GR)	166
VIDRIO (CONJ) (FARO DELANTERO) (VIGA ALTA)	158-0249	1	LUCES DE REFLECTOR (GR)	166
VIDRIO (CONJ) (LAMPARA-LUZ ALTA)	158-0249	1	LÁMPARA DE FARO DELANTERO (GR)	146
VIDRIO (CONJ) (LAMPARA-LUZ BAJA)	162-2077	1	LÁMPARA DE FARO DELANTERO (GR)	145
VIDRIO (CONJ) (LUZ ALTA/BAJA)	100-3248	1	LÁMPARA DE LUZ DELANTERA Y DE SEÑAL (GR)	154

PIEZAS DE MANTENIMIENTO

DESCRIPCION	NUMERO DE PIEZA	CANT	SE UTILIZA EN	PAGINA
		1	LÁMPARA DE LUZ DELANTERA Y DE SEÑAL (GR)	152
VIDRIO (CONJ) (REFLECTOR)	158-0248	1	REFLECTOR (GR)	144
VIDRIO (CONJ) (SEÑAL DE VIRAJE)	136-3848	1	LÁMPARA DE FARO DELANTERO (GR)	148
		1	LÁMPARA DE FARO DELANTERO (GR)	150
		1	LÁMPARA DE LUZ DELANTERA Y DE SEÑAL (GR)	154
		1	LÁMPARA DE LUZ DELANTERA Y DE SEÑAL (GR)	152
SISTEMA HIDRÁULICO				
CANDADO (GR)	5P-8502	1	TANQUE HIDRÁULICO Y MONTAJE (GR)	490
COLADOR (LLENADOR DE ACEITE HIDRAULICO)	9J-3047	1	TANQUE Y FILTRO HIDRÁULICOS (GR)	488
ELEMENTO DE FILTRO DE ACEITE (CONJ) (HIDRAULICO) (FLUJO INVERSO)	1R-0774	1	TANQUE Y FILTRO HIDRÁULICOS (GR)	488
LLAVE	5P-8500	1	TANQUE HIDRÁULICO Y MONTAJE (GR)	490
TAPA CONTRA EL POLVO	6V-0852	1	BOMBA - TUBERÍAS DE (GR)	453
		1	TUBERÍAS HIDRÁULICAS DEL VENTILADOR (GR)	450
		1	VÁLVULA DE COMBINACIÓN (GR)	522
	8C-3451	1	TUBERÍAS DE DIRECCIÓN (GR)	463
TAPA DEL TUBO DE LLENADO (TANQUE DE ACEITE HIDRÁULICO)	7H-1447	1	TANQUE Y FILTRO HIDRÁULICOS (GR)	488

PIEZAS DE MANTENIMIENTO

DESCRIPCION	NUMERO DE PIEZA	CANT	SE UTILIZA EN	PAGINA
TREN DE FUERZA				
ELEMENTO DE FILTRO HIDRÁULICO (TREN DE FUERZA)	132-8875	1	FILTRO DE ACEITE (GR)	292
FILTRO MAGNÉTICO (DIFERENCIAL)	8S-9129	1	CAJA Y TRANSFERENCIA DEL ENGRANAJE (GR)	297
REJILLA DE SUCCIÓN (DIFERENCIAL)	8S-9130	1	CAJA Y TRANSFERENCIA DEL ENGRANAJE (GR)	297
REJILLA DE SUCCIÓN (TRANSMISION)	4S-8598	1	CAJA Y TRANSFERENCIA DEL ENGRANAJE (GR)	297
RESPIRADERO (CAJA DE TRANSFERENCIA)	9G-5127	1	CAJA Y TRANSFERENCIA DEL ENGRANAJE (GR)	297
RESPIRADERO (CONJ) (TANDEM)	1F-8488	2	TÁNDEM Y CUBIERTA (GR)	314
TAPA CONTRA EL POLVO	6V-0852	1	CONTROL DE TRABA DEL DIFERENCIAL (GR)	272
TAPA DEL TUBO DE LLENADO (ACEITE DEL TREN DE FUERZA)	6G-9333	1	TUBO DE LLENADO DE ACEITE DE LA TRANSMISIÓN (GR)	290
TAPA (VASTAGO)	9K-7951	1	RUEDA (GR)	350
		1	RUEDA Y LLANTA (CONFIG)	335
		1	RUEDA Y NEUMÁTICO (GR)	339
		1	RUEDA Y NEUMÁTICO (GR)	340
		1	RUEDA Y NEUMÁTICO (GR)	341
		1	RUEDA Y NEUMÁTICO (GR)	342
		1	RUEDA Y NEUMÁTICO (GR)	343
		1	RUEDA Y NEUMÁTICO (GR)	344
		1	RUEDA Y NEUMÁTICO (GR)	345
		1	RUEDA Y NEUMÁTICO (GR)	346
		1	RUEDA Y NEUMÁTICO (GR)	347
		1	RUEDA Y NEUMÁTICO (GR)	348
TAPÓN DE DRENAJE	6B-5262	1	DIFERENCIAL Y CORONA (GR)	285
TAPÓN DE DRENAJE (TRANSMISION)	4T-2069	1	CAJA Y TRANSFERENCIA DEL ENGRANAJE (GR)	297

PEÇAS DE MANUTENÇÃO

DESCRIÇÃO	NÚMERO DE PEÇA	QUANT	UTILIZADA EM	PÁGINA
CHASSI E CARROCERIA				
BUJÃO MAGNÉTICO (DIFERENCIAL)	8M-3837	1	CAIXA E CHASSI	355
GRAXEIRA (BARRA DE INCLINAÇÃO DA RODA)	3B-8489	2	EIXO DIANTEIRO	352
GRAXEIRA (MANCAL DE INCLINAÇÃO DA RODA)	3B-8489	4	EIXO DIANTEIRO	352
GRAXEIRA (OSCILÇÃO DO EIXO)	3B-8489	2	EIXO DIANTEIRO	352
GRAXEIRA (PINO MESTRE)	3B-8489	4	EIXO DIANTEIRO	352
GRAXEIRA (ROSCA 1/8-27 POL) (PINO DE ARTICULAÇÃO SUPERIOR/INFERIOR)	3B-8489	2	TUBOS - GRAXA	370
EQUIPAMENTOS DE SERVIÇO E SUPRIMENTOS				
CADEADO	5P-8502	1	*TOOL BOX GP	759
CHAVE	5P-8500	2	*TOOL BOX GP	759
ESTAÇÃO DO OPERADOR				
CADEADO	5P-8502	1	CONVERSÃO PARA ESTRUTURA NÃO ROPS	624
		1	ESTRUTURA ROPS ABERTA	715
CINTO DE SEGURANÇA (RETRÁTIL)	156-1148	1	ASSENTO COM SUSPENSÃO	726
		1	ASSENTO COM SUSPENSÃO	727
		1	ASSENTO COM SUSPENSÃO	729
CORREIA-ESTRIADA (AR CONDICIONADO)	174-9690	1	CONDICIONADOR DE AR	609
FILTRO - AR (ROPS - PAINEI TRASEIRO)	7T-7358	1	FILTRO - AR DA CABINE	648
FILTRO (AR DA CABINE)	9X-4986	2	FILTRO - AR DA CABINE	648
FUSÍVEL (10 A) (DESCONGELADOR DIANTEIRO)	9W-1442	1	VENTILADOR DE CIRCULAÇÃO DE AR DA CABINE	646
FUSÍVEL (10 A) (DESCONGELADOR TRASEIRO)	9W-1442	1	VENTILADOR DE CIRCULAÇÃO DE AR DA CABINE	647
FUSÍVEL (10 A) (ESPELHO AQUECIDO)	9W-1442	1	ESPELHO RETROVISOR	690
FUSÍVEL (10 A) (ESPELHO AQUECIDO DO LADO EXTERNO)	9W-1442	1	ESPELHO RETROVISOR	692
FUSÍVEL (10 A) (LIMPADOR)	9W-1442	1	LIMPADOR DO VIDRO	754
		1	LIMPADOR DO VIDRO	756
FUSÍVEL (15 A) (AQUECIMENTO E CONDICIONAMENTO DE AR)	9W-1441	1	AQUECEDOR DA CABINE E MONTAGEM	651
FUSÍVEL (15 A) (AR CONDICIONADO)	9W-1441	1	CONDICIONADOR DE AR E MONTAGEM	609
INDICADOR - PRESSÃO DO AR (FREIO - LADO DIREITO)	1W-3306	1	PAINEL DE INSTRUMENTOS	706
INDICADOR - PRESSÃO DO AR (FREIO DO LADO ESQUERDO)	1W-3306	1	PAINEL DE INSTRUMENTOS	706
LÂMINA DO LIMPADOR DE PÁRA-BRISA (ALTO PERFIL DIANTEIRO SUPERIOR)	6V-5853	1	LIMPADOR DO VIDRO	752
LÂMINA DO LIMPADOR DE PÁRA-BRISA (PERFIL ALTO - TRASEIRO)	6V-5853	1	LIMPADOR DO VIDRO	756
LÂMINA DO LIMPADOR DE PÁRA-BRISA (PERFIL BAIXO - INFERIOR DIANTEIRO)	6V-5853	1	LIMPADOR DO VIDRO	750
LÂMINA DO LIMPADOR DE PÁRA-BRISA (PERFIL BAIXO - TRASEIRO)	6V-5849	1	LIMPADOR DO VIDRO	754

PEÇAS DE MANUTENÇÃO

DESCRIÇÃO	NÚMERO DE PEÇA	QUANT	UTILIZADA EM	PÁGINA
LÂMINA DO LIMPADOR DE PÁRA-BRISA (VENTILADOR INFERIOR DIANTEIRO)	6V-8255	2	VIDRO	743
LÂMPADA (24 V) (DESCONGELADOR DIANTEIRO)	3E-8825	1	VENTILADOR DE CIRCULAÇÃO DE AR DA CABINE	646
LÂMPADA (24 V) (DESCONGELADOR TRASEIRO)	3E-8825	1	VENTILADOR DE CIRCULAÇÃO DE AR DA CABINE	647
LÂMPADA (24 V) (INDICADOR DA AÇÃO PRINCIPAL DO EMS)	107-1983	1	PAINEL DE INSTRUMENTOS	706
		1	PAINEL DE INSTRUMENTOS	708
LÂMPADA (24 V) (INDICADOR DA PRESSÃO DO AR DO LADO DIREITO)	7N-5876	1	PAINEL DE INSTRUMENTOS	706
LÂMPADA (24 V) (INDICADOR DA PRESSÃO DO AR DO LADO ESQUERDO)	7N-5876	1	PAINEL DE INSTRUMENTOS	706
LÂMPADA (24 V) (INDICADOR DA TRAVA DO DIFERENCIAL)	115-1748	1	PAINEL DE INSTRUMENTOS	706
LÂMPADA (24 V) (INDICADOR DE ESPELHO AQUECIDO)	3E-8825	1	ESPELHO RETROVISOR	690
		1	ESPELHO RETROVISOR	692
LÂMPADA (24 V) (INDICADOR DE FACHO ALTO)	115-1748	1	PAINEL DE INSTRUMENTOS	706
LÂMPADA (24 V) (INDICADOR DE RETENÇÃO DO ACELERADOR)	115-1748	1	PAINEL DE INSTRUMENTOS	706
LÂMPADA (24 V) (INDICADOR DE VIRADA À DIREITA)	115-1748	1	PAINEL DE INSTRUMENTOS	706
LÂMPADA (24 V) (INDICADOR DE VIRADA PARA A ESQUERDA)	115-1748	1	PAINEL DE INSTRUMENTOS	706
LÂMPADA (24 V) (INDICADOR DO MÓDULO DE QUATRO MEDIDORES)	7N-5876	2	PAINEL DE INSTRUMENTOS	706
LÂMPADA (24 V) (PAINEL DE CONTROLE DO AQUECEDOR E AR CONDICIONADO)	8D-1429	1	AQUECEDOR DA CABINE	652
LÂMPADA (24 V) (PAINEL DE INSTRUMENTOS)	115-1748	5	PAINEL DE INSTRUMENTOS	708
LÂMPADA (24 V) (PAINELDE AQUECIMENTO - VENTILADOR - AR CONDICIONADO)	8D-1429	1	CONDICIONADOR DE AR	610
LÂMPADA (24 V) (QUATRO INDICADORES E PRESSÃO DO AR)	7N-5876	4	PAINEL DE INSTRUMENTOS	708
LÂMPADA (24 V) (VELOCÍMETRO E TACÔMETRO)	7N-5876	2	MÓDULO - VELOCÍMETRO E TACÔMETRO	697
MANÔMETRO DE AR (FREIO - LADO DIREITO)	1W-3306	1	PAINEL DE INSTRUMENTOS	708
MANÔMETRO DE AR (FREIO DO LADO ESQUERDO)	1W-3306	1	PAINEL DE INSTRUMENTOS	708
TAMPA (CONDICIONADOR DE AR) (RETENTOR)	3E-4051	1	TUBOS - AR CONDICIONADO	682
FERRAMENTAS DE TRABALHO				
RETENTOR DE ANEL-O (DIÂMETRO INTERNO DE 123,19 MM)	2S-8439	2	LEVANTAMENTO DA LÂMINA	600

PEÇAS DE MANUTENÇÃO

DESCRIÇÃO	NÚMERO DE PEÇA	QUANT	UTILIZADA EM	PÁGINA
MOTOR BÁSICO				
JUNTA-BASE (MECANISMO DAS VÁLVULAS - TAMPA)	109-5309	1	MECANISMO DAS VÁLVULAS	50
JUNTA-RESPIRO	9Y-1758	1	MECANISMO DAS VÁLVULAS	50
MANGUEIRA - ELIMINAÇÃO DE VAPORES	126-0146	1	COMPRESSOR DE AR	8
RESPIRO (MOTOR)	9Y-4357	1	MECANISMO DAS VÁLVULAS	50
TAMPA CONTRA POEIRA	6V-0852	1	BUJÃO DO MOTOR	42
SISTEMA DE ADMISSÃO DE AR E DE ESCAPE				
ELEMENTO - PRIMÁRIO	6I-0273	1	PURIFICADOR DE AR	85
ELEMENTO - SECUNDÁRIO	6I-0274	1	PURIFICADOR DE AR	85
INDICADOR (TROCA DO FILTRO DE AR)	8N-2694	1	PURIFICADOR DE AR	86
SISTEMA DE ARREFECIMENTO				
ELEMENTO FILTRANTE - ÓLEO (HIDRÁULICO)	1R-0773	1	TUBOS - ARREFECEDOR DO TREM DE FORÇA	70
JUNTA	7E-7912	1	TERMOSTATO / REGULADOR DE TEMPERATURA	67
REGULADOR DE TEMPERATURA DA ÁGUA (98 GRAUS C)	7C-3095	1	TERMOSTATO / REGULADOR DE TEMPERATURA	67
TAMPA - RADIADOR	6L-8617	1	RADIADOR	82
TAMPA CONTRA POEIRA	6V-0852	1	TUBOS - ÁGUA	74
		2	TUBOS - ARREFECEDOR DO TREM DE FORÇA	70
TAMPA CONTRA POEIRA (ÓLEO DA TRANSMISSÃO)	8C-3447	1	TUBOS - ARREFECEDOR DO TREM DE FORÇA	70
VÁLVULA DE DRENAGEM (ÁGUA)	1P-7297	1	TUBOS - ÁGUA	74
VÁLVULA DE DRENAGEM (RADIADOR)	1P-7297	1	RADIADOR	83
SISTEMA DE COMBUSTÍVEL				
ELEMENTO - FILTRANTE (SEPARADOR DE ÁGUA E DE COMBUSTÍVEL) (PRIMÁRIO)	133-5673	1	FILTRO DE COMBUSTÍVEL E SEPARADOR DE ÁGUA	99
FILTRO - COMBUSTÍVEL	1R-0762	1	FILTRO - COMBUSTÍVEL	98
RESERVATÓRIO - ARMAZENAGEM DE ÁGUA	129-0375	1	FILTRO DE COMBUSTÍVEL E SEPARADOR DE ÁGUA	99
TAMPA - TANQUE DE COMBUSTÍVEL (PODE SER TRANCADO)	164-4858	1	TANQUE DE COMBUSTÍVEL	116
		1	TANQUE DE COMBUSTÍVEL	120
TAMPA (ABERTURA PARA TROCA DE ÓLEO DE ALTA VELOCIDADE)	9S-9272	1	TUBOS - DRENAGEM	101
TAMPA CONTRA POEIRA	9D-0630	1	ADAPTADOR - ABASTECIMENTO RÁPIDO DE COMBUSTÍVEL	94
SISTEMA DE FREIO				
CARTUCHO-DESSECANTE (SECADOR A AR)	203-2389	1	SECADOR DE AR	381
ELEMENTO-AQUECEDOR (SECADOR DE AR) (12 VOLTS)	203-2423	1	SECADOR DE AR	381

PEÇAS DE MANUTENÇÃO

DESCRIÇÃO	NÚMERO DE PEÇA	QUANT	UTILIZADA EM	PÁGINA
SISTEMA DE LUBRIFICAÇÃO				
FILTRO - ÓLEO DO MOTOR	1R-0716	1	FILTRO - ÓLEO DO MOTOR	56
TAMPA - BOCAL DE ENCHIMENTO DE ÓLEO	5L-2952	1	BOCAL DE ENCHIMENTO DE ÓLEO DO MOTOR	54
TAMPA CONTRA POEIRA	8C-3445	1	FILTRO - ÓLEO DO MOTOR	56
SISTEMA ELÉTRICO E DE PARTIDA				
BATERIA	153-5710	2	BATERIA	127
CHAVE	8H-5306	1	CABOS/FIOS ELÉTRICOS - TRASEIROS	250
CHAVE (DESCONECTAR A BATERIA)	8H-5306	1	CHAVE GERAL	218
CORREIA DE COMANDO (PISCA-PISCA DE ADVERTÊNCIA)	9X-8139	1	LUZ GIRATÓRIA DE ALARME	158
DISJUNTOR AUTOMÁTICO DE CIRCUITO (15 A) (FARÓIS)	3T-2662	1	INTERRUPTOR - CIRCUITO	129
		1	INTERRUPTOR - CIRCUITO	130
DISJUNTOR AUTOMÁTICO DE CIRCUITO (15 A) (FAROL - FACHO BAIXO DA BARRA DE LUZES)	3T-2662	2	SISTEMA DE ILUMINAÇÃO - FARÓIS	176
DISJUNTOR AUTOMÁTICO DE CIRCUITO (15 A) (LÂMPADAS DE TRABALHO - BARRA)	3T-2662	1	INTERRUPTOR - CIRCUITO	129
DISJUNTOR AUTOMÁTICO DE CIRCUITO (15 A) (RELÉ DE PARTIDA)	6T-3643	1	CABOS/FIOS ELÉTRICOS - TRASEIROS	249
DISJUNTOR AUTOMÁTICO DE CIRCUITO (80 A) (ALTERNADOR)	171-2210	1	CABOS/FIOS ELÉTRICOS - TRASEIROS	250
DISJUNTOR AUTOMÁTICO DE CIRCUITO (80 A) (PRINCIPAL)	171-2210	1	CABOS/FIOS ELÉTRICOS - TRASEIROS	248
ELEMENTO - AQUECEDOR DE ÁGUA DA CAMISA (120 VOLTS/1250 WATTS)	131-8627	1	AQUECEDOR DA ÁGUA DO MOTOR	140
ELEMENTO - AQUECEDOR (240 VOLTS/1250 WATTS)	154-2881	1	AQUECEDOR DA ÁGUA DO MOTOR	141
FAROL DIANTEIRO (24 V) (FAROL BAIXO)	9X-3463	1	FAROL DIANTEIRO	145
FAROL DIANTEIRO (24 VOLTS)(65 WATTS) (FAROL)	9X-3463	1	LÂMPADA - FAROL	144
FAROL DIANTEIRO (24 VOLTS)(65 WATTS) (LUZ ALTA)	9X-3463	1	FAROL DIANTEIRO	146
FUSÍVEL (10 A) (ALARME DE MARCHA À RÉ AUXILIAR)	9W-1442	1	ILUMINAÇÃO - MARCHA A RÉ	164
FUSÍVEL (10 A) (CONSOLE DA DIREÇÃO)	9W-1442	11	CABOS/FIOS ELÉTRICOS - CONSOLE DA DIREÇÃO	260
FUSÍVEL (10 A) (CONTROLADOR DA LÂMINA)	9W-1442	1	CABOS/FIOS ELÉTRICOS - CABINE	228
FUSÍVEL (10 A) (CONVERSOR DE ENERGIA)	9W-1442	1	CONVERSOR ELÉTRICO	138
FUSÍVEL (10 A) (FAIXO ALTO E BAIXO E PISCA)	9W-1442	1	SISTEMA DE ILUMINAÇÃO - FARÓIS	184
FUSÍVEL (10 A) (FARÓIS DIANTEIROS)	9W-1442	1	SISTEMA DE ILUMINAÇÃO - FARÓIS	172
FUSÍVEL (10 A) (FAROL DO LADO DIREITO)	9W-1442	1	SISTEMA DE ILUMINAÇÃO - FARÓIS	170
		1	SISTEMA DE ILUMINAÇÃO - FARÓIS	188
FUSÍVEL (10 A) (LÂMPADA DA ARMAÇÃO DA LÂMPADA)	9W-1442	1	CABOS/FIOS ELÉTRICOS - CABINE	230

PEÇAS DE MANUTENÇÃO

DESCRIÇÃO	NÚMERO DE PEÇA	QUANT	UTILIZADA EM	PÁGINA
FUSÍVEL (10 A) (LÂMPADA DA LÂMINA)	9W-1442	2	SISTEMA DE ILUMINAÇÃO - FARÓIS	168
FUSÍVEL (10 A) (LUZ ALTA/BAIXA)	9W-1442	1	SISTEMA DE ILUMINAÇÃO - FARÓIS	176
FUSÍVEL (10 A) (LUZ DE MARCHA À RÉ)	9W-1442	1	ILUMINAÇÃO - MARCHA A RÉ	162
FUSÍVEL (10 A) (PISCA-PISCA DE ADVERTÊNCIA)	9W-1442	1	INSTALAÇÃO DO PISCA-PISCA DE ADVERTÊNCIA	142
		1	SISTEMA DE ILUMINAÇÃO - ADVERTÊNCIA	194
		1	SISTEMA DE ILUMINAÇÃO - ADVERTÊNCIA	196
FUSÍVEL (10 A) (RADIO)	9W-1442	1	CONVERSOR ELÉTRICO	136
FUSÍVEL (10 A) (SETA DE DIREÇÃO - PISCA)	9W-1442	1	SISTEMA DE ILUMINAÇÃO - FARÓIS	180
FUSÍVEL (10 A) (SETAS DE DIREÇÃO)	9W-1442	1	INTERRUPTOR - LUZES	220
FUSÍVEL (10 A) (TESTE DAS LÂMPADAS DO PAINEL TRASEIRO / DIREÇÃO SECUNDÁRIA)	9W-1442	2	CABOS/FIOS ELÉTRICOS - DIREÇÃO SECUNDÁRIA	254
FUSÍVEL (15 A) (LIMPADORES DIANTEIROS SUPERIOR E INFERIOR)	9W-1441	1	CABOS/FIOS ELÉTRICOS - CABINE	226
FUSÍVEL (30 A) (CONVERSOR - FORÇA)	8T-9636	2	CONVERSOR ELÉTRICO	137
INTERRUPTOR (LÂMPADA DE MARCHA À RÉ AUXILIAR)	161-1418	1	ILUMINAÇÃO - MARCHA A RÉ	162
INTERRUPTOR (RETENÇÃO DO ACELERADOR AUTOMÁTICA - MANUSL)	196-7268	1	CABOS/FIOS ELÉTRICOS - CONSOLE DA TRANSMISSÃO	258
LÂMPADA - LADO DIREITO (LUZES DO FREIO/LUZES TRASEIRAS/LUZES INDICADORAS DE DIREÇÃO)	6C-0109	1	CABOS/FIOS ELÉTRICOS - TRASEIROS	246
LÂMPADA - LADO ESQUERDO (LUZES DO FREIO/LUZES TRASEIRAS/LUZES INDICADORAS DE DIREÇÃO)	6C-0110	1	CABOS/FIOS ELÉTRICOS - TRASEIROS	246
LÂMPADA - SINALIZAÇÃO (DIREITO)	135-0427	1	SISTEMA DE ILUMINAÇÃO - FARÓIS	166
LÂMPADA - SINALIZAÇÃO (ESQUERDO)	135-0427	1	SISTEMA DE ILUMINAÇÃO - FARÓIS	166
LÂMPADA - SINALIZAÇÃO (24 V) (BARRA DE LUZ CURVA - ESTACIONAMENTO)	135-0427	2	SISTEMA DE ILUMINAÇÃO - FARÓIS	172
LÂMPADA (FILAMENTO SIMPLES) (SETA DE DIREÇÃO)	9X-4493	1	FAROL DIANTEIRO	148
		1	FAROL DIANTEIRO	150
LÂMPADA (PISCA ALERTA)(24 VOLTS)	9X-7849	1	LUZ GIRATÓRIA DE ALARME	158
LÂMPADA (24 V) (ALARME DE MARCHA À RÉ AUXILIAR)	3E-8825	1	ILUMINAÇÃO - MARCHA A RÉ	164
LÂMPADA (24 V) (ARMAÇÃO DA LÂMINA)	3E-8825	1	CABOS/FIOS ELÉTRICOS - CABINE	230
LÂMPADA (24 V) (ARMAÇÃO DA LÂMINA - INDICADOR)	3E-8825	1	CABOS/FIOS ELÉTRICOS - CABINE	228
LÂMPADA (24 V) (BARRA DE LUZ BAIXA)	3E-8825	1	SISTEMA DE ILUMINAÇÃO - FARÓIS	177
		1	SISTEMA DE ILUMINAÇÃO - FARÓIS	180
LÂMPADA (24 V) (CABINE - FAROL DO LADO DIREITO)	3E-8825	1	SISTEMA DE ILUMINAÇÃO - FARÓIS	188
LÂMPADA (24 V) (CONSOLE DO EIXO)	7N-5876	1	CABOS/FIOS ELÉTRICOS - CONSOLE DA TRANSMISSÃO	258
LÂMPADA (24 V) (CONTROLE - INDICADOR DE AMORTECIMENTO DE LÂMINA)	3E-8825	1	FIAÇÃO - AMORTECEDOR DA LÂMINA	225

PEÇAS DE MANUTENÇÃO

DESCRIÇÃO	NÚMERO DE PEÇA	QUANT	UTILIZADA EM	PÁGINA
LÂMPADA (24 V) (DIREÇÃO SECUNDÁRIA)	3E-8825	2	CABOS/FIOS ELÉTRICOS - DIREÇÃO SECUNDÁRIA	254
LÂMPADA (24 V) (FACHO ALTO - BAIXO)(LADO DIREITO)	9X-3465	1	LÂMPADA DIANTEIRA E DE SINAL	154
LÂMPADA (24 V) (FAROL BAIXO)	9X-3463	1	SISTEMA DE ILUMINAÇÃO - FARÓIS	166
LÂMPADA (24 V) (FAROL DIANTEIRO - FAROL TRASEIRO - INDICADOR)	3E-8825	2	INTERRUPTOR - LUZES	220
LÂMPADA (24 V) (FAROL DO LADO DIREITO)	3E-8825	1	SISTEMA DE ILUMINAÇÃO - FARÓIS	170
LÂMPADA (24 V) (ILUMINAÇÃO DE OPERAÇÃO)	100-3245	1	FAROL DIANTEIRO	148
		1	FAROL DIANTEIRO	150
		1	LÂMPADA DIANTEIRA E DE SINAL	152
LÂMPADA (24 V) (INDICADOR DE AUXILIAR DE PARTIDA A ÉTER)	3E-8825	1	AUXILIAR DE PARTIDA A ÉTER	214
LÂMPADA (24 V) (INDICADOR DE FAROL DIANTEIRO/TRASEIRO)	3E-8825	2	SISTEMA DE ILUMINAÇÃO - FARÓIS	172
LÂMPADA (24 V) (INTERRUPTOR AUTOMTICO - MANUAL DE RETENÇÃO DO ACELERADOR)	3E-8825	2	CABOS/FIOS ELÉTRICOS - CONSOLE DA TRANSMISSÃO	258
LÂMPADA (24 V) (INTERRUPTOR DE TRAVA DO DIFERENCIAL)	3E-8825	2	CABOS/FIOS ELÉTRICOS - CONSOLE DA DIREÇÃO	260
LÂMPADA (24 V) (INTERRUPTOR DO FAROL TRASEIRO)	3E-8825	1	CABOS/FIOS ELÉTRICOS - CONSOLE DA DIREÇÃO	260
LÂMPADA (24 V) (INTERRUPTOR DO REDUTOR DE LUMINOSIDADE DAS LÂMPADAS DO PAINEL)	3E-8825	1	CABOS/FIOS ELÉTRICOS - CONSOLE DA DIREÇÃO	260
LÂMPADA (24 V) (INTERRUPTOR DO SACADOR DE PINO DO EIXO CENTRAL)	3E-8825	1	CABOS/FIOS ELÉTRICOS - CONSOLE DA TRANSMISSÃO	258
LÂMPADA (24 V) (LÂMPADA DA LÂMINA)	3E-8825	2	SISTEMA DE ILUMINAÇÃO - FARÓIS	168
LÂMPADA (24 V) (LÂMPADA DE MARCHA À RÉ AUXILIAR)	3E-8825	2	ILUMINAÇÃO - MARCHA A RÉ	162
LÂMPADA (24 V) (LUZ ALTA)	9X-3463	1	SISTEMA DE ILUMINAÇÃO - FARÓIS	166
LÂMPADA (24 V) (LUZ ALTA/BAIXA)	9X-3465	1	FAROL DIANTEIRO	150
		1	LÂMPADA DIANTEIRA E DE SINAL	152
		1	FAROL DIANTEIRO	148
LÂMPADA (24 V) (LUZ DE OPERAÇÃO)	100-3245	1	LÂMPADA DIANTEIRA E DE SINAL	154
LÂMPADA (24 V) (LUZ DIANTEIRA / TRASEIRA)	3E-8825	2	SISTEMA DE ILUMINAÇÃO - FARÓIS	176
		2	SISTEMA DE ILUMINAÇÃO - FARÓIS	180
		2	SISTEMA DE ILUMINAÇÃO - FARÓIS	184
LÂMPADA (24 V) (PISCA-PISCA DE ADVERTÊNCIA)	3E-8825	1	INSTALAÇÃO DO PISCA-PISCA DE ADVERTÊNCIA	142
		1	SISTEMA DE ILUMINAÇÃO - ADVERTÊNCIA	194
		1	SISTEMA DE ILUMINAÇÃO - ADVERTÊNCIA	196
LÂMPADA (24 V) (SETA DE DIREÇÃO)	100-3245	1	FAROL DIANTEIRO	148
		1	FAROL DIANTEIRO	150
		1	LÂMPADA DIANTEIRA E DE SINAL	152
		1	LÂMPADA DIANTEIRA E DE SINAL	154
LÂMPADA (24 V) (TETO)	7N-9943	1	LÂMPADA - TETO	143

PEÇAS DE MANUTENÇÃO

DESCRIÇÃO	NÚMERO DE PEÇA	QUANT	UTILIZADA EM	PÁGINA
LÂMPADA (24 VOLTS)(21 WATTS) (PARADA/TRASEIRA)	5C-9584	2	CABOS/FIOS ELÉTRICOS - TRASEIROS	246
		2	CABOS/FIOS ELÉTRICOS - TRASEIROS	246
LÂMPADA (24 VOLTS/21 WATTS) (SETA DE DIREÇÃO)	9X-4493	1	LÂMPADA DIANTEIRA E DE SINAL	154
		1	LÂMPADA DIANTEIRA E DE SINAL	152
LÂMPADA (24 VOLTS)(5 WATTS) (VIRADA)	4V-8116	1	CABOS/FIOS ELÉTRICOS - TRASEIROS	246
LENTE ÂMBAR (PISCA-PISCA DE ADVERTÊNCIA)	9X-8121	1	LUZ GIRATÓRIA DE ALARME	158
LENTE ÂMBAR (SETA DE DIREÇÃO)	100-3250	1	FAROL DIANTEIRO	148
		1	FAROL DIANTEIRO	150
LENTE (ÂMBER) (SETA DE DIREÇÃO)	100-3250	1	LÂMPADA DIANTEIRA E DE SINAL	152
		1	LÂMPADA DIANTEIRA E DE SINAL	154
LENTE (FAROL)	158-0248	1	LÂMPADA - FAROL	144
LENTE (FAROL) (FAIXA BAIXA)	162-2077	1	FAROL DIANTEIRO	145
LENTE (FAROL) (FAIXO ALTO)	158-0249	1	FAROL DIANTEIRO	146
LENTE (LÂMPADA DO TETO)	7T-0020	1	LÂMPADA - TETO	143
LENTE (LUZ ALTA/BAIXA)	100-3248	1	LÂMPADA DIANTEIRA E DE SINAL	152
		1	LÂMPADA DIANTEIRA E DE SINAL	154
LENTE (LUZES DIANTEIRAS) (FAROL BAIXO)	162-2077	1	SISTEMA DE ILUMINAÇÃO - FARÓIS	166
LENTE (LUZES DIANTEIRAS) (LUZ ALTA)	158-0249	1	SISTEMA DE ILUMINAÇÃO - FARÓIS	166
LENTE (SETA DE DIREÇÃO)	136-3848	1	FAROL DIANTEIRO	148
		1	FAROL DIANTEIRO	150
		1	LÂMPADA DIANTEIRA E DE SINAL	152
		1	LÂMPADA DIANTEIRA E DE SINAL	154
PISCA-PISCA ELETRÔNICO (12-24 VOLTS) (PISCA PISCA E PISCA ALERTA)	108-0358	1	SISTEMA DE ILUMINAÇÃO - FARÓIS	184
PISCA-PISCA ELETRÔNICO (12-24 VOLTS) (SETA DE DIREÇÃO - PISCA)	108-0358	1	SISTEMA DE ILUMINAÇÃO - FARÓIS	176
TAMPA CONTRA POEIRA (AQUECEDOR DE ÁGUA DA CAMISA)	133-6517	1	AQUECEDOR DA ÁGUA DO MOTOR	140
		1	AQUECEDOR DA ÁGUA DO MOTOR	141
SISTEMA HIDRÁULICO				
CADEADO	5P-8502	1	TANQUE DE ÓLEO HIDRÁULICO E MONTAGEM	490
CHAVE	5P-8500	1	TANQUE DE ÓLEO HIDRÁULICO E MONTAGEM	490
ELEMENTO FILTRANTE - ÓLEO (HIDRÁULICO) (FLUXO INVERSO)	1R-0774	1	TANQUE HIDRÁULICO E FILTRO	488
TAMPA - BOCAL DE ENCHIMENTO (TANQUE DE ÓLEO HIDRÁULICO)	7H-1447	1	TANQUE HIDRÁULICO E FILTRO	488
TAMPA CONTRA POEIRA	6V-0852	1	TUBOS - BOMBA	453
		1	TUBOS - VENTILADOR HIDRÁULICOS	450
		1	VÁLVULA COMBINADA	522
	8C-3451	1	TUBOS - DIREÇÃO	463
TELA FILTRANTE (BOCAL DE ENCHIMENTO DO ÓLEO HIDRÁULICO)	9J-3047	1	TANQUE HIDRÁULICO E FILTRO	488

PEÇAS DE MANUTENÇÃO

DESCRIÇÃO	NÚMERO DE PEÇA	QUANT	UTILIZADA EM	PÁGINA
TREM DE FORÇA				
BUJÃO DO DRENO	6B-5262	1	DIFERENCIAL E COROA	285
BUJÃO DO DRENO (TRANSMISSÃO)	4T-2069	1	CAIXA DE ENGRENAGEM DE TRANSFERÊNCIA	297
FILTRO - ELEMENTO HIDRÁULICO (TREM DE FORÇA)	132-8875	1	FILTRO - ÓLEO	292
FILTRO - MAGNÉTICO (DIFERENCIAL)	8S-9129	1	CAIXA DE ENGRENAGEM DE TRANSFERÊNCIA	297
RESPIRO (CAIXA DE TRANSFERÊNCIA)	9G-5127	1	CAIXA DE ENGRENAGEM DE TRANSFERÊNCIA	297
RESPIRO (TANDEM)	1F-8488	2	TANDEM E TAMPA	314
TAMPA - BOCAL DE ENCHIMENTO (ÓLEO DO TREM DE FORÇA)	6G-9333	1	BOCAL DE ENCHIMENTO DE ÓLEO DO TREM DE FORÇA	290
TAMPA CONTRA POEIRA	6V-0852	1	CONTROLE DA TRAVA DO DIFERENCIAL	272
TAMPA DA VÁLVULA (HASTE)	9K-7951	1	RODA	350
		1	RODA E PNEU	335
		1	RODA E PNEU	339
		1	RODA E PNEU	340
		1	RODA E PNEU	341
		1	RODA E PNEU	342
		1	RODA E PNEU	343
		1	RODA E PNEU	344
		1	RODA E PNEU	345
		1	RODA E PNEU	346
		1	RODA E PNEU	347
		1	RODA E PNEU	348
TELA DE SUCÇÃO (DIFERENCIAL)	8S-9130	1	CAIXA DE ENGRENAGEM DE TRANSFERÊNCIA	297
TELA DE SUCÇÃO (TRANSMISSÃO)	4S-8598	1	CAIXA DE ENGRENAGEM DE TRANSFERÊNCIA	297

WARTUNGSTEILE

BESCHREIBUNG	ERSATZTEIL-NUMMER	MENGE	VERWENDET IN	SEITE
ARBEITSGERÄTE				
O-RING-DICHTUNG (123,19 MM INNENDURCHMESSER)	2S-8439	2	SCHILDHUB	600
BREMSSYSTEM				
HEIZELEMENT (LUFTTROCKNER)(12 V)	203-2423	1	LUFTTROCKNER	381
TROCKENMITTELPATRONE (LUFTTROCKNER)	203-2389	1	LUFTTROCKNER	381
ELEKTRISCHE ANLAGE UND STARTSYSTEM				
ABDECKGLAS (ARBEITSLEUCHTE)	158-0248	1	ARBEITSLEUCHTEN	144
ABDECKGLAS (FAHRERHAUS-INNENLEUCHTE)	7T-0020	1	FAHRERHAUSBELEUCHTUNG	143
ABDECKGLAS (FAHRTRICHTUNGSANZEIGER)	136-3848	1	FRONTSCHEINWERFER	148
		1	FRONTSCHEINWERFER	150
		1	SCHEINWERFER U. RICHTUNGSLEUCHTE	152
		1	SCHEINWERFER U. RICHTUNGSLEUCHTE	154
ABDECKGLAS (FERNLICHT/ABBLENDLICHT)	100-3248	1	SCHEINWERFER U. RICHTUNGSLEUCHTE	152
		1	SCHEINWERFER U. RICHTUNGSLEUCHTE	154
ABDECKGLAS (FRONTSCHEINWERFER) (ABBLENDLICHT)	162-2077	1	ARBEITSLEUCHTEN	166
ABDECKGLAS (FRONTSCHEINWERFER) (FERNLICHT)	158-0249	1	ARBEITSLEUCHTEN	166
ABDECKGLAS (FRONTSCHEINWERFER)(ABBLENDLICHT)	162-2077	1	FRONTSCHEINWERFER	145
ABDECKGLAS (FRONTSCHEINWERFER)(FERNLICHT)	158-0249	1	FRONTSCHEINWERFER	146
ABDECKGLAS (GELB) (FAHRTRICHTUNGSANZEIGER)	100-3250	1	FRONTSCHEINWERFER	148
		1	FRONTSCHEINWERFER	150
		1	SCHEINWERFER U. RICHTUNGSLEUCHTE	152
		1	SCHEINWERFER U. RICHTUNGSLEUCHTE	154
ABDECKGLAS (GELB) (RUNDUM-KENNLEUCHTE)	9X-8121	1	RUNDUM-KENNLEUCHTE	158
BATTERIE	153-5710	2	BATTERIE	127
BLINKLEUCHTE (LINKS)	135-0427	1	ARBEITSLEUCHTEN	166
BLINKLEUCHTE (RECHTS)	135-0427	1	ARBEITSLEUCHTEN	166
BLINKLEUCHTE (24 V) (LICHTBALKEN - RICHTUNGSWECHSEL/PARKEN)	135-0427	2	ARBEITSLEUCHTEN	172
ELEKTRON. BLINKER (12/24 V) (RICHTUNGSBLINKER U. WARNLEUCHTEN)	108-0358	1	ARBEITSLEUCHTEN	184
ELEKTRON. BLINKER (12/24 V) (RICHTUNGSBLINKER/WARNLEUCHTE)	108-0358	1	ARBEITSLEUCHTEN	176
HEIZUNGSELEMENT (240 V/1250 W)	154-2881	1	UMLAUFKÜHLWASSERHEIZUNG	141
LAUFBAND UND ANTRIEB (RUNDUM-KENNLEUCHTE)	9X-8139	1	RUNDUM-KENNLEUCHTE	158

WARTUNGSTEILE

BESCHREIBUNG	ERSATZTEIL-NUMMER	MENGE	VERWENDET IN	SEITE
LEUCHTE - RECHTS (STOPP/HECK/RICHTUNGSWECHSEL)	6C-0109	1	VERDRAHTUNG, HINTEN	246
LEUCHTE (EINZELGLÜHFADEN) (FAHRTRICHTUNGSANZEIGER)	9X-4493	1	FRONTSCHEINWERFER	148
		1	FRONTSCHEINWERFER	150
LEUCHTE, LINKS (STOPP/HECK/RICHTUNGSWECHSEL)	6C-0110	1	VERDRAHTUNG, HINTEN	246
LEUCHTE (RUNDUM-KENNLEUCHTE)(24 V)	9X-7849	1	RUNDUM-KENNLEUCHTE	158
LEUCHTE (24 V) (ABBLENDLICHT)	9X-3463	1	ARBEITSLEUCHTEN	166
LEUCHTE (24 V) (ABBLENDSCHEINWERFER)	3E-8825	1	ARBEITSLEUCHTEN	180
		1	ARBEITSLEUCHTEN	177
LEUCHTE (24 V) (ABSTREIFSCHILD)	3E-8825	1	FAHRERHAUSVERDRAHTUNG	230
LEUCHTE (24 V) (ABSTREIFSCHILD/ANZEIGE)	3E-8825	1	FAHRERHAUSVERDRAHTUNG	228
LEUCHTE (24 V) (ARBEITSSCHEINWERFER, RECHTS)	3E-8825	1	ARBEITSLEUCHTEN	170
LEUCHTE (24 V) (ÄTHERSTARTHILFE U. ANZEIGE)	3E-8825	1	ÄTHERSTARTHILFE	214
LEUCHTE (24 V) (AUSFALL-SCHUTZ-RÜCKFAHRLEUCHTE)	3E-8825	2	SCHEINWERFER, HINTEN	162
LEUCHTE (24 V) (AUSFALL-SCHUTZ-RÜCKFAHRWARNHORN)	3E-8825	1	SCHEINWERFER, HINTEN	164
LEUCHTE (24 V) (DIFFERENZIALSPERRSCHALTER)	3E-8825	2	LENKKONSOLENVERDRAHTUNG	260
LEUCHTE (24 V) (FAHRERHAUS - RECHTER ARBEITSSCHEINWERFER)	3E-8825	1	ARBEITSLEUCHTEN	188
LEUCHTE (24 V) (FAHRERHAUSDACH)	7N-9943	1	FAHRERHAUSBELEUCHTUNG	143
LEUCHTE (24 V) (FAHRLEUCHTE)	100-3245	1	SCHEINWERFER U. RICHTUNGSLEUCHTE	154
LEUCHTE (24 V) (FAHRSCHEINWERFER)	100-3245	1	FRONTSCHEINWERFER	148
		1	FRONTSCHEINWERFER	150
		1	SCHEINWERFER U. RICHTUNGSLEUCHTE	152
LEUCHTE (24 V) (FAHRTRICHTUNGSANZEIGER)	100-3245	1	FRONTSCHEINWERFER	148
		1	FRONTSCHEINWERFER	150
		1	SCHEINWERFER U. RICHTUNGSLEUCHTE	152
		1	SCHEINWERFER U. RICHTUNGSLEUCHTE	154
LEUCHTE (24 V) (FERNLICHT)	9X-3463	1	ARBEITSLEUCHTEN	166
LEUCHTE (24 V) (FERNLICHT/ABBLENDLICHT)	9X-3465	1	FRONTSCHEINWERFER	148
		1	FRONTSCHEINWERFER	150
		1	SCHEINWERFER U. RICHTUNGSLEUCHTE	152
LEUCHTE (24 V) (FERNLICHT/ABBLENDLICHT)(RECHTS)	9X-3465	1	SCHEINWERFER U. RICHTUNGSLEUCHTE	154
LEUCHTE (24 V) (FRONTSCHEINWERFER-/HECKLEUCHTENANZEIGE)	3E-8825	2	ARBEITSLEUCHTEN	172

WARTUNGSTEILE

BESCHREIBUNG	ERSATZTEIL-NUMMER	MENGE	VERWENDET IN	SEITE
LEUCHTE (24 V) (FRONTSCHEINWERFER/HECKLEUCHTE/ANZEIGE)	3E-8825	2	LICHTSCHALTER	220
LEUCHTE (24 V) (GASREGELUNG HALTEN/MAN SCHALTER)	3E-8825	2	SCHALTKONSOLENVERDRAHTUNG	258
LEUCHTE (24 V) (HECKLEUCHTENSCHALTER)	3E-8825	1	LENKKONSOLENVERDRAHTUNG	260
LEUCHTE (24 V) (HECKSCHEINWERFER)	3E-8825	2	ARBEITSLEUCHTEN	176
		2	ARBEITSLEUCHTEN	184
		2	ARBEITSLEUCHTEN	180
LEUCHTE (24 V) (NOTLENKUNG)	3E-8825	2	NOTLENKUNGSVERDRAHTUNG	254
LEUCHTE (24 V) (RUNDUM-KENNLEUCHTE)	3E-8825	1	RUNDUMWARNLEUCHTE - EINBAUSATZ	142
		1	WARNLEUCHTEN	194
		1	WARNLEUCHTEN	196
LEUCHTE (24 V) (SCHALTKONSOLE)	7N-5876	1	SCHALTKONSOLENVERDRAHTUNG	258
LEUCHTE (24 V) (SCHARDÄMPFUNGS-STEUERUNG/ANZEIGE)	3E-8825	1	VERDRAHTUNG - SCHARDÄMPFUNG	225
LEUCHTE (24 V) (SCHARLEUCHTE)	3E-8825	2	ARBEITSLEUCHTEN	168
LEUCHTE (24 V) (SCHWENKWERKBOLZENZIEHSCHALTER)	3E-8825	1	SCHALTKONSOLENVERDRAHTUNG	258
LEUCHTE (24 V) (TAFELLEUCHTEN-DIMMERSCHALTER)	3E-8825	1	LENKKONSOLENVERDRAHTUNG	260
LEUCHTE (24 V)(21 W) (BREMSLICHT - HECKLEUCHTE)	5C-9584	2	VERDRAHTUNG, HINTEN	246
		2	VERDRAHTUNG, HINTEN	246
LEUCHTE (24 V/21 W) (FAHRTRICHTUNGSANZEIGER)	9X-4493	1	SCHEINWERFER U. RICHTUNGSLEUCHTE	152
		1	SCHEINWERFER U. RICHTUNGSLEUCHTE	154
LEUCHTE (24 V)(5 W) (RECHTS- U. LINKSWENDUNG)	4V-8116	1	VERDRAHTUNG, HINTEN	246
		1	VERDRAHTUNG, HINTEN	246
SCHALTER (AUSFALLSCHUTZ-RÜCKFAHRLEUCHTE)	161-1418	1	SCHEINWERFER, HINTEN	162
SCHALTER (GASREGELUNG HALTEN AUTO/MAN)	196-7268	1	SCHALTKONSOLENVERDRAHTUNG	258
SCHEINWERFER (24 V) (ABBLENDLICHT)	9X-3463	1	FRONTSCHEINWERFER	145
SCHEINWERFER (24 V)(65 W) (ARBEITSLEUCHTE)	9X-3463	1	ARBEITSLEUCHTEN	144
SCHEINWERFER (24 V)(65 W) (FERNLICHT)	9X-3463	1	FRONTSCHEINWERFER	146
SCHLÜSSEL	8H-5306	1	VERDRAHTUNG, HINTEN	250
SCHLÜSSEL (HAUPTSCHALTER)	8H-5306	1	TRENNSCHALTER	218
SICHERUNG (10 A) (ARBEITSSCHEINWERFER, RECHTS)	9W-1442	1	ARBEITSLEUCHTEN	170
SICHERUNG (10 A) (AUSFALL-SCHUTZ-RÜCKFAHRWARNHORN)	9W-1442	1	SCHEINWERFER, HINTEN	164
SICHERUNG (10 A) (BLINKER)	9W-1442	1	LICHTSCHALTER	220
SICHERUNG (10 A) (FERNLICHT/ABBLENDLICHT)	9W-1442	1	ARBEITSLEUCHTEN	176

WARTUNGSTEILE

BESCHREIBUNG	ERSATZTEIL-NUMMER	MENGE	VERWENDET IN	SEITE
SICHERUNG (10 A) (FERNLICHT/ABBLENDLICHT U. SIGNAL)	9W-1442	1	ARBEITSLEUCHTEN	184
SICHERUNG (10 A) (HECKTAFEL-LEUCHTEN/NOTLENKUNGSTEST)	9W-1442	2	NOTLENKUNGSVERDRAHTUNG	254
SICHERUNG (10 A) (LENKUNGSKONSOLE)	9W-1442	11	LENKKONSOLENVERDRAHTUNG	260
SICHERUNG (10 A) (RADIO)	9W-1442	1	ELEKTR. UMFORMER	136
SICHERUNG (10 A) (RECHTER ARBEITSSCHEINWERFER)	9W-1442	1	ARBEITSLEUCHTEN	188
SICHERUNG (10 A) (RICHTUNGSBLINKER/WARNLEUCHTE)	9W-1442	1	ARBEITSLEUCHTEN	180
SICHERUNG (10 A) (RÜCKFAHRLEUCHTE)	9W-1442	1	SCHEINWERFER, HINTEN	162
SICHERUNG (10 A) (RUNDUM-KENNLEUCHTE)	9W-1442	1	RUNDUMWARNLEUCHTE - EINBAUSATZ	142
		1	WARNLEUCHTEN	194
		1	WARNLEUCHTEN	196
SICHERUNG (10 A) (SCHARKÖRPERLEUCHTE)	9W-1442	1	FAHRERHAUSVERDRAHTUNG	230
SICHERUNG (10 A) (SCHARLEUCHTE)	9W-1442	2	ARBEITSLEUCHTEN	168
SICHERUNG (10 A) (SCHARSTEUERUNG)	9W-1442	1	FAHRERHAUSVERDRAHTUNG	228
SICHERUNG (10 A) (UMFORMER)	9W-1442	1	ELEKTR. UMFORMER	138
SICHERUNG (10 A) (VORDERE ARBEITSSCHEINWERFER)	9W-1442	1	ARBEITSLEUCHTEN	172
SICHERUNG (15 A) (UNTERE/OBERE SCHEIBENWISCHER, VORNE)	9W-1441	1	FAHRERHAUSVERDRAHTUNG	226
SICHERUNG (30 A) (UMFORMER)	8T-9636	2	ELEKTR. UMFORMER	137
STAUBKAPPE (UMLAUFKÜHLWASSERHEIZUNG)	133-6517	1	UMLAUFKÜHLWASSERHEIZUNG	140
		1	UMLAUFKÜHLWASSERHEIZUNG	141
UMLAUFKÜHLWASSERHEIZUNGS-ELEMENT (120 V/1250 W)	131-8627	1	UMLAUFKÜHLWASSERHEIZUNG	140
UNTERBRECHER (15 A) (FRONTSCHEINWERFER)	3T-2662	1	UNTERBRECHER	129
		1	UNTERBRECHER	130
UNTERBRECHER (15 A) (FRONTSCHEINWERFER/ABBLENDLICHT)	3T-2662	2	ARBEITSLEUCHTEN	176
UNTERBRECHER (15 A) (LICHTBALKEN - ARBEITSCHEINWERFER)	3T-2662	1	UNTERBRECHER	129
UNTERBRECHER (15 A) (STARTERRELAIS)	6T-3643	1	VERDRAHTUNG, HINTEN	249
UNTERBRECHER (80 A) (DREHSTROMGENERATOR)	171-2210	1	VERDRAHTUNG, HINTEN	250
UNTERBRECHER (80 A) (HAUPTUNTERBRECHER)	171-2210	1	VERDRAHTUNG, HINTEN	248
FAHRERHAUS				
FILTER (FAHRERHAUSLUFT)	9X-4986	2	FAHRERHAUSLUFTFILTER	648
KAPPE (KLIMAANLAGE) (DICHTUNG)	3E-4051	1	KLIMAANLAGENLEITUNGEN	682
LEUCHTE (24 V) (ANZEIGE FÜR RECHTEN RICHTUNGSBLINKER)	115-1748	1	INSTRUMENTENTAFEL	706

WARTUNGSTEILE

BESCHREIBUNG	ERSATZTEIL-NUMMER	MENGE	VERWENDET IN	SEITE
LEUCHTE (24 V) (DIFFERENZIALSPERRANZEIGE)	115-1748	1	INSTRUMENTENTAFEL	706
LEUCHTE (24 V) (ENTFROSTER, HINTEN)	3E-8825	1	UMLAUFLÜFTER	647
LEUCHTE (24 V) (FERNLICHTANZEIGE)	115-1748	1	INSTRUMENTENTAFEL	706
LEUCHTE (24 V) (GASREGELUNG - ARRETIERANZEIGE)	115-1748	1	INSTRUMENTENTAFEL	706
LEUCHTE (24 V) (GESCHWINDIGKEITSMESSER U. DREZAHLMESSER)	7N-5876	2	GESCHWINDIGKEITS- U. DREHZAHLMESSERMODUL	697
LEUCHTE (24 V) (HAUPTFUNKTIONSLEUCHTE DES ELEKTRON. ÜBERWACHUNGSSYSTEMS)	107-1983	1	INSTRUMENTENTAFEL	708
		1	INSTRUMENTENTAFEL	706
LEUCHTE (24 V) (HVAC TAFEL)	8D-1429	1	KLIMAANLAGE	610
LEUCHTE (24 V) (INSTRUMENTENTAFEL)	115-1748	5	INSTRUMENTENTAFEL	708
LEUCHTE (24 V) (KLIMAANLAGE U. HEIZUNG ß SCHALTTAFEL)	8D-1429	1	FAHRERHAUSHEIZUNG	652
LEUCHTE (24 V) (LINKER RICHTUNGSBLINKER)	115-1748	1	INSTRUMENTENTAFEL	706
LEUCHTE (24 V) (LUFTDRUCKANZEIGE, LINKS)	7N-5876	1	INSTRUMENTENTAFEL	706
LEUCHTE (24 V) (LUFTDRUCKANZEIGE, RECHTS)	7N-5876	1	INSTRUMENTENTAFEL	706
LEUCHTE (24 V) (SPIEGELHEIZUNGSANZEIGE)	3E-8825	1	RÜCKSPIEGEL	690
		1	RÜCKSPIEGEL	692
LEUCHTE (24 V) (VIERINSTRUMENTENMODUL U. LUFTDRUCK)	7N-5876	4	INSTRUMENTENTAFEL	708
LEUCHTE (24 V) (VIERINSTRUMENTENMODULANZEIGE)	7N-5876	2	INSTRUMENTENTAFEL	706
LEUCHTE (24 V) (VORDERER ENTFROSTER)	3E-8825	1	UMLAUFLÜFTER	646
LUFTDRUCKANZEIGE (BREMSE, RECHTS)	1W-3306	1	INSTRUMENTENTAFEL	706
LUFTDRUCKANZEIGE (LINKE BREMSE)	1W-3306	1	INSTRUMENTENTAFEL	706
LUFTDRUCKMESSER (BREMSE, RECHTS)	1W-3306	1	INSTRUMENTENTAFEL	708
LUFTDRUCKMESSER (LINKE BREMSE)	1W-3306	1	INSTRUMENTENTAFEL	708
LUFTFILTER (ÜBERROLLSCHUTZ - HECKPLATTE)	7T-7358	1	FAHRERHAUSLUFTFILTER	648
RIEMEN - GERIPPT (A/C)	174-9690	1	KLIMAANLAGE	609
SCHEIBENWISCHERBLATT (ENTLÜFTUNG, VORNE, UNTEN)	6V-8255	2	FAHRERHAUSFENSTER	743
SCHEIBENWISCHERBLATT (HOCHPROFIL VORNE OBEN)	6V-5853	1	SCHEIBENWISCHER	752
SCHEIBENWISCHERBLATT (HOHES PROFIL, HINTEN)	6V-5853	1	SCHEIBENWISCHER	756
SCHEIBENWISCHERBLATT (NIEDRIGES PROFIL, HINTEN)	6V-5849	1	SCHEIBENWISCHER	754

WARTUNGSTEILE

BESCHREIBUNG	ERSATZTEIL-NUMMER	MENGE	VERWENDET IN	SEITE
SCHEIBENWISCHERBLATT (NIEDRIGES PROFIL, VORNE, UNTEN)	6V-5853	1	SCHEIBENWISCHER	750
SICHERHEITSGURT (AUSZIEHBAR)	156-1148	1	SCHWINGSITZ	726
		1	SCHWINGSITZ	727
		1	SCHWINGSITZ	729
SICHERUNG (10 A) (AUSSENSPIEGELHEIZUNG)	9W-1442	1	RÜCKSPIEGEL	692
SICHERUNG (10 A) (BEHEIZTER SPIEGEL)	9W-1442	1	RÜCKSPIEGEL	690
SICHERUNG (10 A) (ENTFROSTER, HINTEN)	9W-1442	1	UMLAUFLÜFTER	647
SICHERUNG (10 A) (SCHEIBENWISCHER)	9W-1442	1	SCHEIBENWISCHER	754
		1	SCHEIBENWISCHER	756
SICHERUNG (10 A) (VORDERER ENTFROSTER)	9W-1442	1	UMLAUFLÜFTER	646
SICHERUNG (15 A) (HEIZUNG U. KLIMAANLAGE)	9W-1441	1	FAHRERHAUSHEIZUNG U. BEFESTIGUNGSTEILE	651
SICHERUNG (15 A) (KLIMAANLAGE)	9W-1441	1	KLIMAANLAGE UND AUFHÄNGUNG	609
VORHÄNGESCHLOSS	5P-8502	1	ÜBERROLLSCHUTZDACH	715
		1	UMBAUSATZ - OHNE ÜBERROLLSCHUTZ	624
HYDRAULIKSYSTEM				
EINFÜLLSTUTZENKAPPE (HYDRAULIKÖLTANK)	7H-1447	1	HYDRAULIKTANK UND SCHMIERFILTER	488
ÖLFILTERELEMENT (HYDRAULISCH) (RÜCKFLUSS)	1R-0774	1	HYDRAULIKTANK UND SCHMIERFILTER	488
SCHLÜSSEL	5P-8500	1	HYDRAULIKTANK UND BEFESTIGUNGSTEILE	490
SIEB (HYDRAULIKÖLEINFÜLLKAPPE)	9J-3047	1	HYDRAULIKTANK UND SCHMIERFILTER	488
STAUBKAPPE	6V-0852	1	HYDRAULIKLÜFTERLEITUNGEN	450
		1	HYDRAULIKPUMPE UND LEITUNGEN	453
		1	SAMMELVENTIL	522
	8C-3451	1	LENKÖLLEITUNGEN	463
VORHÄNGESCHLOSS	5P-8502	1	HYDRAULIKTANK UND BEFESTIGUNGSTEILE	490
KRAFTSTOFFSYSTEM				
FILTER (KRAFTSTOFF-/WASSERABSCHEIDER) (HAUPT)	133-5673	1	WASSERABSCHEIDER- U. KRAFTSTOFFILTER	99
KAPPE (ÖLSCHNELLWECHSELÖFFNUNG)	9S-9272	1	ABLASSLEITUNGEN	101
KRAFTSTOFFILTER	1R-0762	1	KRAFTSTOFFILTER	98
KRAFTSTOFFTANKKAPPE (VERSCHLIESSBAR)	164-4858	1	KRAFTSTOFFTANK	116
		1	KRAFTSTOFFTANK	120
STAUBKAPPE	9D-0630	1	SCHNELLBETANKUNGSANSCHLUSS	94
WASSERAUFFANGSCHALE	129-0375	1	WASSERABSCHEIDER- U. KRAFTSTOFFILTER	99

WARTUNGSTEILE

BESCHREIBUNG	ERSATZTEIL-NUMMER	MENGE	VERWENDET IN	SEITE
KRAFTÜBERTRAGUNG				
ABLASSSTOPFEN	6B-5262	1	DIFFERENTIAL UND TELLERRAD	285
ABLASSSTOPFEN (GETRIEBE)	4T-2069	1	VERTEILERGETRIEBE UND GEHÄUSE	297
ANSAUGSIEB (DIFFERENTIAL)	8S-9130	1	VERTEILERGETRIEBE UND GEHÄUSE	297
ANSAUGSIEB (GETRIEBE)	4S-8598	1	VERTEILERGETRIEBE UND GEHÄUSE	297
EINFÜLLSTUTZENKAPPE (KRAFTÜBERTRAGUNGSÖL)	6G-9333	1	GETRIEBEÖLFÜLLSTUTZEN	290
ENTLÜFTER (TANDEM)	1F-8488	2	TANDEMGEHÄUSE UND DECKEL	314
ENTLÜFTER (VERTEILERGETRIEBEGEHÄUSE)	9G-5127	1	VERTEILERGETRIEBE UND GEHÄUSE	297
FILTERELEMENT - HYDRAULIK (KRAFTÜBERTRAGUNG)	132-8875	1	ÖLFILTER	292
MAGNETFILTER (DIFFERENTIAL)	8S-9129	1	VERTEILERGETRIEBE UND GEHÄUSE	297
STAUBKAPPE	6V-0852	1	DIFFERENTIALSPERRENGESTÄNGE	272
VENTILKAPPE (SCHAFT)	9K-7951	1	RAD UND REIFEN	335
		1	RAD UND REIFEN	339
		1	RAD UND REIFEN	340
		1	RAD UND REIFEN	341
		1	RAD UND REIFEN	342
		1	RAD UND REIFEN	343
		1	RAD UND REIFEN	344
		1	RAD UND REIFEN	345
		1	RAD UND REIFEN	346
		1	RAD UND REIFEN	347
		1	RAD UND REIFEN	348
		1	RADSATZ	350
KÜHLSYSTEM				
ABLASSVENTIL (KÜHLER)	1P-7297	1	KÜHLER	83
ABLASSVENTIL (WASSER)	1P-7297	1	KÜHLWASSERLEITUNGEN	74
DICHTUNG	7E-7912	1	KÜHLWASSER-TEMPERATURREGLER UND GEHÄUSE	67
KÜHLERKAPPE	6L-8617	1	KÜHLER	82
ÖLFILTERELEMENT (HYDRAULISCH)	1R-0773	1	ÖLKÜHLERLEITUNGEN (KRAFTÜBERTRAGUNG)	70
STAUBKAPPE	6V-0852	1	KÜHLWASSERLEITUNGEN	74
		2	ÖLKÜHLERLEITUNGEN (KRAFTÜBERTRAGUNG)	70
STAUBKAPPE (GETRIEBEÖL)	8C-3447	1	ÖLKÜHLERLEITUNGEN (KRAFTÜBERTRAGUNG)	70
WASSERTEMPERATURREGLER (98 GRAD CELSIUS)	7C-3095	1	KÜHLWASSER-TEMPERATURREGLER UND GEHÄUSE	67
LUFTANSAUG- UND ABGASSYSTEM				
ANZEIGE (LUFTFILTERWECHSEL)	8N-2694	1	LUFTREINIGER	86
HAUPTFILTER	6I-0273	1	LUFTREINIGER	85
SICHERHEITSFILTER	6I-0274	1	LUFTREINIGER	85
MOTOR - GRUNDAUSFÜHRUNG				
ENTDUNSTERSCHLAUCH	126-0146	1	LUFTKOMPRESSOR	8
ENTLÜFTER (MOTOR)	9Y-4357	1	VENTILSTEUERUNG	50
ENTLÜFTERDICHTUNG	9Y-1758	1	VENTILSTEUERUNG	50
SOCKELDICHTUNG (VENTILDECKEL)	109-5309	1	VENTILSTEUERUNG	50
STAUBKAPPE	6V-0852	1	MOTORSTOPFEN	42

WARTUNGSTEILE

BESCHREIBUNG	ERSATZTEIL-NUMMER	MENGE	VERWENDET IN	SEITE
RAHMEN UND AUFBAU				
MAGNETSTOPFEN (DIFFERENTIAL)	8M-3837	1	RAHMEN UND GEHÄUSE	355
SCHMIERNIPPEL (KÖNIGSBOLZEN)	3B-8489	4	VORDERACHSE	352
SCHMIERNIPPEL (PENDELACHSE)	3B-8489	2	VORDERACHSE	352
SCHMIERNIPPEL (RADSTURZLAGER)	3B-8489	4	VORDERACHSE	352
SCHMIERNIPPEL (RADSTURZSCHENKEL)	3B-8489	2	VORDERACHSE	352
SCHMIERNIPPEL (1/8-27-GEWINDE) (UNTERER/OBERER KNICKGELENKBOLZEN)	3B-8489	2	SCHMIERLEITUNGEN	370
SCHMIERSYSTEM				
ÖLEINFÜLLSTUTZEN	5L-2952	1	MOTORÖLEINFÜLLSTUTZEN	54
ÖLFILTER	1R-0716	1	ÖLFILTER	56
STAUBKAPPE	8C-3445	1	ÖLFILTER	56
WARTUNGSAUSRÜSTUNG				
SCHLÜSSEL	5P-8500	2	*TOOL BOX GP	759
VORHÄNGESCHLOSS	5P-8502	1	*TOOL BOX GP	759

INDEX

Name	Page
A	
ACCESSORY GP-CAB–15 AMP	608
ACCESSORY GP-CAB–5 AMP	607
ACCUMULATOR & MTG GP-HYDRAULIC	398
ACCUMULATOR GP-BLADE CUSHION	399
ACCUMULATOR GP-HYDRAULIC–EU	400
ACTUATOR GP-BRAKE	377
ADAPTER GP	70
ADAPTER GP-ENGINE TO TMSN	264
ADAPTER GP-FAST FILL FUEL	94
AFTERCOOLER & MOUNTING GP	84
AIR CLEANER GP	85
	86
AIR COMPRESSOR GP	6
	8
AIR CONDITIONER & MOUNTING GP	609
AIR CONDITIONER AR	609
AIR CONDITIONER GP	610
AIR DRYER GP	380
	381
AIR DRYER GP–SNOW	378
ALARM GP–EMS ACTION	123
ALTERNATOR GP-CHARGING	124
	126
ARMREST GP–LH	614
ARMREST GP–RH	615
ASHTRAY	670
	674
ATOMIZER AS-ETHER	214
AXLE GP-FRONT	352
B	
BASE GP-OIL FILTER	52
BATTERY	127
BATTERY GP	127
BELT-DRIVE (WARNING BEACON)	158
BELT-RIBBED (A/C)	609
BELT TENSIONER GP	10
BIT GP	597
BLADE AS-WIPER (HIGH PROFILE FRONT UPPER)	752
BLADE AS-WIPER (HIGH PROFILE REAR)	756
BLADE AS-WIPER (LOW PROFILE FRONT LOWER)	750
BLADE AS-WIPER (LOW PROFILE REAR)	754
BLADE AS-WIPER (VENT FRONT LOWER)	743
BLADE GP	598
BLOCK GP-JUNCTION	128
BOWL AS-WATER COLLECTION	99
BOWL AS-WATER COLLECTION (24 VOLT HEATER)	99
BOWL AS (12 VOLT HEATER) (FUEL/WATER SEPARATOR)	99
BRAKE GP-SERVICE	382
BREATHER AS (ENGINE)	50
BREATHER AS (TANDEM)	314
BREATHER (TRANSFER CASE)	297
C	
CAMSHAFT GP	12
CAP AS (AIR CONDITIONER) (SEAL)	682
CAP AS-DUST (JACKET WATER HEATER)	140
	141
CAP AS (HIGH SPEED OIL CHANGE PORT)	101
CAP AS-OIL FILLER	54
CAP-DUST	42
	56
	70
	74
	94
	272
	450
	453
	463
	522
CAP-DUST (TRANSMISSION OIL)	70
CAP-FILLER (HYDRAULIC OIL TANK)	488
CAP-FILLER (POWER TRAIN OIL)	290
CAP GP-FUEL TANK (LOCKABLE)	116
	120
CAP-RADIATOR	82
CAP-VALVE (STEM)	335
	339
	340
	341
	342
	343
	344
	345
	346
	347
	348
	350
CARTRIDGE-DESICCANT (AIR DRYER)	381
CARTRIDGE GP-TURBOCHARGER	93
CASE & FRAME GP	355
CASE GP-TRANSMISSION	265
CHAIN GP-DRIVE	266
CIRCLE GP	592
CIRCUIT BREAKER AS (15 AMP) (HEADLAMP/LIGHTBAR LOW BEAM)	176
CIRCUIT BREAKER AS (15 AMP) (HEADLAMPS)	129
	130
CIRCUIT BREAKER AS (15 AMP) (LIGHTBAR WORKLAMPS)	129

INDEX

Name	Page
CIRCUIT BREAKER AS (15 AMP) (STARTING RELAY)	249
CIRCUIT BREAKER AS (80 AMP) (ALTERNATOR)	250
CIRCUIT BREAKER AS (80 AMP) (MAIN)	248
CIRCUIT BREAKER GP	129 130
COMPRESSOR GP-REFRIGERANT	616 617
CONDENSER & MTG GP-REFRIGERANT–A/C	618
CONSOLE GP-OPERATOR	620
CONTROL & MTG GP-ENGINE ELEK	131
CONTROL AR-HYDRAULIC	401 402
CONTROL AR-HYDRAULIC–EU	401 402
CONTROL GP-CENTERSHIFT LOCK	404
CONTROL GP-CLUTCH	268
CONTROL GP-DIFFERENTIAL LOCK	272
CONTROL GP-ENGINE ELECTRONIC	132 133
CONTROL GP-GOVERNOR	96
CONTROL GP-MONITOR (CATERPILLAR MONITORING SYSTEM)	139 706 708
CONTROL GP-PARKING BRAKE	384
CONTROL GP-SECONDARY STEERING	134
CONTROL GP-SERVICE BRAKE	388
CONTROL GP-STEERING	406
CONTROL GP-TRANSMISSION	274
CONTROL GP-TRANSMISSION HYD	278
CONVERSION AR-CERTIFICATION	1
CONVERSION AR-NON-ROPS	624
CONVERTER AR-ELECTRICAL–12 V POWER PORT–15 AMPS	135
CONVERTER AR-ELECTRICAL–12V POWER PORT–5 AMPS	135
CONVERTER GP-ELECTRICAL–RADIO	136
CONVERTER GP-ELECTRICAL–12 V POWER PORT	138
CONVERTER GP-ELECTRICAL–25 AMP	137
CONVERTER GP-ELECTRICAL (24 VOLT TO 12 VOLT)	138
COOLER GP-TRANSMISSION OIL	280
COOLING AR	62 63
COVER GP-CYLINDER BLOCK	14
COVER GP-SHIPPING	282
CRANKSHAFT GP	16
CYLINDER & MTG GP-ARTICULATION	407
CYLINDER & MTG GP-BLADE LIFT	408
CYLINDER & MTG GP-BLADE TIP	409
CYLINDER & MTG GP-CENTERSHIFT	410
CYLINDER & MTG GP-SIDESHIFT	411
CYLINDER & MTG GP-STEERING	412
CYLINDER & MTG GP-WHEEL LEAN	413
CYLINDER AS-ETHER	212
CYLINDER BLOCK AS	18 19
CYLINDER BLOCK GP	20
CYLINDER GP-ARTICULATION	414
CYLINDER GP-BLADE LIFT	416
CYLINDER GP-BLADE TIP	418
CYLINDER GP-CENTERSHIFT	420
CYLINDER GP-RIPPER LIFT	422
CYLINDER GP-SIDESHIFT	424
CYLINDER GP-STEERING	428
CYLINDER GP-STEERING–RH	426
CYLINDER GP-WHEEL LEAN	430
CYLINDER HEAD AS	22
CYLINDER HEAD GP	24 25

D

Name	Page
DETENT GP-CONTROL VALVE	432
DETENT GP-CONTROL VALVE–EU	434
DIFFERENTIAL & BEVEL GEAR GP	284
DIFFERENTIAL GP	288
DOOR GP–HIGH PROFILE–LH	628
DOOR GP–HIGH PROFILE–RH	626
DOOR GP-CAB–HIGH PROFILE	630
DOOR GP-CAB–LOW PROFILE	636
DOOR GP-CAB–LOW PROFILE–LH	634
DOOR GP-CAB–LOW PROFILE–RH	632
DRAWBAR GP	594
DRIVE GP-ACCESSORY	26
DRIVE GP-CIRCLE	436
DRIVE GP-PUMP	439
DUCT & CONTROL GP–SUPPLEMENTAL LOUVERS	638
DUCT GP	639

E

Name	Page
EDGE GP-CUTTING	599
ELECTRONICS GP-MONITOR–CAT MONITORING SYSTEM	139
ELEMENT AS-HEATER (240 VOLT/1250 WATT)	141
ELEMENT AS-JACKET WATER HEATER (120 VOLT/1250 WATT)	140
ELEMENT AS-PRIMARY	85
ELEMENT AS-SECONDARY	85
ELEMENT-FILTER (FUEL/WATER SEPARATOR) (PRIMARY)	99
ELEMENT-HEATING (AIR DRYER) (12 VOLT)	381
ENCLOSURE GP-ENGINE	356

INDEX

Name	Page
ENGINE AR	4
EXTENSION GP-BACKREST–CLOTH	640
EXTENSION GP-BACKREST–VINYL	641

F

FAN & MOTOR GP	64
FAN-ALTERNATOR	124
FAN GP-CIRCULATING	644
FAN GP-CIRCULATING–FRONT DEFROSTER	646
FAN GP-CIRCULATING–REAR	642
FAN GP-CIRCULATING–REAR DEFROSTER	647
FASTENER GP-CYLINDER HEAD	28
FASTENER GP-RADIATOR	66
FILLER GP-ENGINE OIL	54
FILLER GP-POWER TRAIN OIL	290
FILM-CONTROL (FAN SPEED/TEMP)	652
FILM-FACE (HEADLIGHTS HIGH/LOW BEAM)	172
FILM-FACE (HEADLIGHTS HIGH/LOW BEAM)	180
FILM-FACE (TURN SIGNAL/HAZARD)	172, 180
FILM-FUSE (LIGHTS, WASHER, WIPER, DEFROST)	226
FILM GP–VHP	760
FILM GP (NON VARIABLE HORSEPOWER)	3
FILM-IDENTIFICATION (ENGINE OIL FILTER)	760
FILM-IDENTIFICATION (FUSE) (HIGH/LOW BEAM)	176
FILM-INSTRUCTION (ALT EXIT/REMOVE WINDOW)	649, 650
FILM-INSTRUCTION (DO NOT DRILL/WELD ROPS)	716, 717
FILM-INSTRUCTION (ENGINE SHUTDOWN)	241
FILM-INSTRUCTION (SEAT ADJUSTMENT)	734, 736
FILM-INSTRUCTION (WASHER FILL)	761
FILM-LIFT & TIE DOWN	761
FILM (LIFT EYE LOCATION)	760
FILM-MONITOR	708
FILM-MONITOR (MAIN DISPLAY MODULE)	706
FILM-PANEL (LH)	706, 708
FILM-PANEL (RH)	706, 708
FILM-REFLECTOR (RED)	761
FILM (SUN VISOR)	705
FILM-WARNING (CABLE CONNECTION)	761
FILM-WARNING (HIGH COMPRESSION SPRING)	761
FILM-WARNING (HIGH PRESSURE CYLINDER)	761
FILM-WARNING (NO STEP)	116
FILM-WARNING (PRESSURIZED COOLANT)	761
FILTER-AIR (ROPS REAR PANEL)	648
FILTER AS-ENGINE OIL	56
FILTER AS-FUEL	98
FILTER (CAB AIR)	648
FILTER ELEMENT AS-OIL (HYDRAULIC)	70
FILTER ELEMENT AS-OIL (HYDRAULIC) (REVERSE FLOW)	488
FILTER ELEMENT-HYDRAULIC (POWER TRAIN)	292
FILTER GP-CAB AIR	648
FILTER GP-ENGINE OIL	56
FILTER GP-FUEL	98
FILTER GP-OIL–TRANSMISSION	292
FILTER GP-WATER SEP & FUEL–PRIMARY	99
FILTER-MAGNETIC (DIFFERENTIAL)	297
FINAL DRIVE GP	294
FITTING AS	70
FITTING-GREASE (AXLE OSCILLATION)	352
FITTING-GREASE (KINGPIN)	352
FITTING-GREASE (WHEEL LEAN BAR)	352
FITTING-GREASE (WHEEL LEAN BEARING)	352
FITTING-GREASE (1/8-27 THD) (UPPER/LOWER ARTICULATION PIN)	370
FLASHER AS-ELECTRONIC (12/24 VOLT) (TURN SIGNAL/HAZARD)	176
FLASHER AS-ELECTRONIC (12/24 VOLT) (TURN SIGNALS & HAZARDS)	184
FLASHER AS (12/24 VOLT)	172
FLASHER AS (12/24 VOLT) (TURN SIGNAL/HAZARD)	180
FLOOR MAT (CAB)	668
FLYWHEEL GP	29
FRAME GP-FRONT	359
FUSE (10 AMP) (AUXILARY BACK-UP ALARM)	164
FUSE (10 AMP) (BACKUP LAMP)	162
FUSE (10 AMP) (BLADE LAMP)	168
FUSE (10 AMP) (CONTROLLER FOR THE BLADE)	228
FUSE (10 AMP) (FLOODLAMP RH)	170
FUSE (10 AMP) (FRONT DEFROSTER)	646
FUSE (10 AMP) (FRONT WORK LAMPS)	172
FUSE (10 AMP) (HEATED MIRROR)	690
FUSE (10 AMP) (HIGH/LOW BEAM)	176
FUSE (10 AMP) (HIGH/LOW BEAM & SIGNAL)	184
FUSE (10 AMP) (MOLDBOARD LAMP)	230
FUSE (10 AMP) (OUTSIDE HEATED MIRROR)	692
FUSE (10 AMP) (POWER CONVERTER)	138
FUSE (10 AMP) (RADIO)	136

INDEX

Name	Page
FUSE (10 AMP) (REAR DEFROSTER)	647
FUSE (10 AMP) (RH FLOODLAMP)	188
FUSE (10 AMP) (STEERING CONSOLE)	260
FUSE (10 AMP) (TAIL PANEL LAMPS/SEC STER TEST)	254
FUSE (10 AMP) (TURN SIGNAL/HAZARD)	180
FUSE (10 AMP) (TURN SIGNALS)	220
FUSE (10 AMP) (WARNING BEACON)	142
	194
	196
FUSE (10 AMP) (WIPER)	756
FUSE (10 AMP) (WIPER)	754
FUSE (15 AMP) (AIR CONDITIONER)	609
FUSE (15 AMP) (HEATING & AIR CONDITIONING)	651
FUSE (15 AMP) (UPPER/LOWER FRONT WIPERS)	226
FUSE (30 AMP) (CONVERTER-POWER)	137
G	
GASKET	67
GASKET-BASE (VALVE COVER)	50
GASKET-BREATHER	50
GAUGE GP-AIR PRESSURE (LH BRAKE)	706
GAUGE GP-AIR PRESSURE (RH BRAKE)	706
GAUGE GP-OIL LEVEL (DIPSTICK)	58
GEAR & CASE GP-TRANSFER	296
GEAR GP-FRONT	30
GENERAL AR	2
GUARD & SUPPORT GP-RADIATOR	360
GUARD GP-BOTTOM	362
GUARD GP-PLATFORM–NON-ROPS	366
GUARD GP-PLATFORM–OPEN–HIGH PROFILE	364
H	
HAMMER & MOUNTING GP–HIGH PROFILE	650
HAMMER & MOUNTING GP–LOW PROFILE	649
HARNESS AS-CHASSIS	225
HARNESS AS-MONITOR	706
	708
HEATER & MTG GP-CAB–EU	651
HEATER AR-CAB	651
HEATER GP-CAB–EU	652
HEATER GP-JACKET WATER–120 VOLT	140
HEATER GP-JACKET WATER–240 VOLT	141
HITCH GP-ARTICULATING	368
HORN GP-AIR	656
	658
HOSE-FUMES DISPOSAL	8
HOUSING & REGULATOR GP	67
HOUSING GP-FLYWHEEL	31
HOUSING GP-FRONT	32
HOUSING GP-SEAT SUSPENSION	660
I	
INDICATOR AS (AIR FILTER CHANGE)	86
INDICATOR AS-AIR PRESSURE (LH BRAKE)	708
INDICATOR AS-AIR PRESSURE (RH BRAKE)	708
INJECTOR GP-FUEL	100
INSTALLATION AR-RADIO	663
INSTALLATION GP-RADIO	664
INSTALLATION GP-WARNING BEACON	142
INSTRUMENT AR–SPEEDOMETER/TACH–EU	666
INSULATION GP-WEATHER–ENCLOSED	668
K	
KEY	250
	490
	759
KEY (BATTERY DISCONNECT)	218
KIT-ADJUSTER	702
KIT-AIR CLEANER CLAMP	85
KIT-BACK TILT	702
KIT-BEARING	661
KIT-BELT TETHER	734
KIT-BIAS PISTON (HYDRAULIC STEERING)	480
KIT-BRAKE ACTUATOR	377
KIT-BRUSH (STARTING MOTOR)	216
KIT-BUMPER	661
KIT-BUSHING (STARTING MOTOR)	216
KIT-CARTRIDGE SEAL	328
KIT-CARTRIDGE SEAL (DIFFERENTIAL LOCK)	316
KIT-CONNECTING PLUG (12 PIN)	164
	170
	176
	180
	184
	188
	226
	228
	230
	236
	240
	258
	260
	364
	366
	692
	706
	708
KIT-CONNECTING PLUG (12 PIN)	172
KIT-CONNECTING PLUG (12 PIN)	226
	241

INDEX

Name	Page
	690
KIT-CONNECTING PLUG (12 PIN)	232
KIT-CONNECTING PLUG (12 PIN) (FRONT/REAR DEFROSTER)	162
KIT-CONNECTING PLUG (2 PIN)	170
	186
	191
	222
	225
	226
	236
	240
	241
	258
	682
	690
KIT-CONNECTING PLUG (2 PIN)	232
	248
	682
KIT-CONNECTING PLUG (2 PIN) (BACK-UP ALARM/RETURN)	244
KIT-CONNECTING PLUG (2 PIN) (BEACON LIGHT)	196
KIT-CONNECTING PLUG (2 PIN) (CRANKING RELAY)	249
KIT-CONNECTING PLUG (2 PIN) (ETHER START AID)	212
KIT-CONNECTING PLUG (2 PIN) (FLOOD LAMP SIDE)	230
KIT-CONNECTING PLUG (2 PIN) (FLOOD LAMP SIDE)	188
KIT-CONNECTING PLUG (2 PIN) (FLOOD LAMP SIDE & AUX CKT)	692
KIT-CONNECTING PLUG (2 PIN) (HEATER - A/C MOTOR)	611
KIT-CONNECTING PLUG (2 PIN) (LIGHT BAR HEADLAMPS)	172
KIT-CONNECTING PLUG (2 PIN) (LIGHTBAR WORKLAMPS)	180
KIT-CONNECTING PLUG (2 PIN) (LIGHTBAR WORKLAMPS)	176
KIT-CONNECTING PLUG (2 PIN) (MOTOR)	652
KIT-CONNECTING PLUG (2 PIN) (OPERATOR MODE SWITCH)	708
KIT-CONNECTING PLUG (2 PIN) (PANEL LAMPS SWITCH/HORN)	260
KIT-CONNECTING PLUG (2 PIN) (SIDE FLOOD LAMP)	164
KIT-CONNECTING PLUG (2 PIN) (SNOW WING LAMP)	162
	170
	188
KIT-CONNECTING PLUG (2 PIN) (SNOW WING LAMP)	228
KIT-CONNECTING PLUG (3 PIN)	203
	204
	226
	236
	241
	244
KIT-CONNECTING PLUG (3 PIN)	232
KIT-CONNECTING PLUG (3 PIN) (AWD CONTROL LEVER SENSOR)	260
KIT-CONNECTING PLUG (3 PIN) (LIGHTBAR TURN LAMPS)	172
KIT-CONNECTING PLUG (4 PIN)	164
	188
	230
	241
	258
	260
	690
	692
KIT-CONNECTING PLUG (4 PIN) (AUX BACK-UP LAMP & SWITCH)	228
KIT-CONNECTING PLUG (4 PIN) (AUX BACKUP LAMP SWITCH)	170
KIT-CONNECTING PLUG (4 PIN) (AUXILIARY BACKUP LAMP)	162
KIT-CONNECTING PLUG (4 PIN) (ENG CNTL BRKR & CRANKING RELAY)	249
KIT-CONNECTING PLUG (4 PIN) (GROUND SPEED SENSOR/POWER/GND)	236
KIT-CONNECTING PLUG (4 PIN) (STARTING RELAY)	249
KIT-CONNECTING PLUG (6 PIN)	184
	226
	236
	258
	708
KIT-CONNECTING PLUG (6 PIN)	249
KIT-CONNECTING PLUG (8 PIN)	164
	170
	188
	226
	228
	230
	236
	690
	692
KIT-CONNECTING PLUG (8 PIN) (FRONT/REAR WIPER/WASHER)	162
KIT-CRANKSHAFT BEARING (AIR COMPRESSOR)	6
KIT-CUSHION (BACKREST EXTENSION)	640
KIT-CUSHION (VINYL BACK REST)	641
KIT-CYLINDER HEAD (AIR COMPRESSOR)	6
KIT-DIAPHRAGM (HORN)	656
KIT-FASTENER (SEAT)	736
KIT-FOLLOWER	660

INDEX

Name	Page
	661
KIT-FUEL FILTER & WATER SEP	99
KIT-HAMMER	649
	650
KIT-INDICATOR	661
KIT-INDICATOR (SEAT)	736
KIT-INSULATOR (STARTING MOTOR)	216
KIT-LEVER (STARTING MOTOR)	216
KIT-MAIN BEARING (CRANKSHAFT)	16
KIT-PISTON (HYDRAULIC STEERING)	480
KIT-RECEPTACLE (12 PIN)	134
	172
	176
	180
	184
	260
	690
KIT-RECEPTACLE (12 PIN)	164
	170
	188
	226
	228
	230
	236
	244
	249
	258
	364
	366
	692
	706
	708
KIT-RECEPTACLE (12 PIN)	246
KIT-RECEPTACLE (12 PIN) (BEACON SWITCH)	162
KIT-RECEPTACLE (12 PIN) (LIGHTBAR WORKLAMPS)	176
	180
KIT-RECEPTACLE (2 PIN)	123
	158
	159
	162
	164
	170
	186
	188
	191
	199
	224
	225
	226
	228
	230
	232
	236
	237
	240
	241
	244
	328
	384
	588
	611
	616
	642
	682
	690
	692
	706
	708
KIT-RECEPTACLE (2 PIN)	658
KIT-RECEPTACLE (2 PIN) (AIR DRYER/ BACKUP ALARM)	249
KIT-RECEPTACLE (2 PIN) (AIR INLET HEATER)	232
KIT-RECEPTACLE (2 PIN) (CENTERSHIFT SOLENOID VALVES)	404
KIT-RECEPTACLE (2 PIN) (ETHER START)	212
KIT-RECEPTACLE (2 PIN) (HEATER MOTOR)	652
KIT-RECEPTACLE (2 PIN) (IGNITION/RADIO CONVERTER)	137
KIT-RECEPTACLE (2 PIN) (MAIN RELAY)	249
KIT-RECEPTACLE (2 PIN) (PANEL LAMPS)	258
KIT-RECEPTACLE (2 PIN) (SNOW WING LAMP)	170
	188
KIT-RECEPTACLE (2 PIN) (SOLENOID VALVE)	738
KIT-RECEPTACLE (2 PIN) (12V POWER PORT)	607
	608
KIT-RECEPTACLE (3 PIN)	186
	191
	202
	225
	226
	232
	236
	240
	241
	244
	254
	260
KIT-RECEPTACLE (3 PIN)	156
	157
KIT-RECEPTACLE (3 PIN)	143
	246
KIT-RECEPTACLE (3 PIN) (TURN/PARK)	166
KIT-RECEPTACLE (4 PIN)	164
	170

INDEX

Name	Page
	188
	226
	228
	230
	236
	240
	241
	260
	692
KIT-RECEPTACLE (4 PIN) (AUXILIARY BACKUP LAMP)	162
KIT-RECEPTACLE (4 PIN) (BEACON SWITCH)	196
KIT-RECEPTACLE (4 PIN) (CRANKING RELAY/ ENG CNTL BRKR)	249
KIT-RECEPTACLE (4 PIN) (ETHER START AID)	212
KIT-RECEPTACLE (4 PIN) (GROUND SPEED)	201
KIT-RECEPTACLE (4 PIN) (HEATED MIRROR/MOLDBOARD LAMPS)	162
KIT-RECEPTACLE (6 PIN)	226
	236
	241
	258
	364
	366
	652
	706
	708
	749
KIT-RECEPTACLE (6 PIN) (HEADLAMP)	148
	150
	152
	154
KIT-RECEPTACLE (6 PIN) (HEATER & A/C)	611
KIT-RECEPTACLE (6 PIN) (QUAD GAGE MODULE)	696
KIT-RECEPTACLE (6 PIN) (SPEEDOMETER & TACH)	697
KIT-RECEPTACLE (6 PIN) (WINDOW WIPER MOTOR)	750
	752
KIT-RECEPTACLE (8 PIN)	162
	164
	170
	188
	223
	226
	228
	230
	690
	692
	706
	708
KIT-RECEPTACLE (8 PIN) (FRONT WIPER SWITCHES)	226
KIT-RECEPTACLE (8 PIN) (REAR WIPER SWITCH)	754
	756
KIT-ROD	702
KIT-ROLLER (SEAT)	736
KIT-SEAL	400
	478
KIT-SEAL (HYDRAULIC FAN)	590
KIT-SEAL (SOLENOID VALVE)	588
KIT-SEAT CUSHION	720
KIT-SEAT CUSHION (VINYL)	722
KIT-SEAT TILT	702
KIT-SENSOR (FUEL LEVEL)	116
KIT-SLIDER BLOCK	720
	722
	726
	727
	728
KIT-SPRING	478
	661
KIT-STANDARD RING (AIR COMPRESSOR)	6
KIT-SUSPENSION BOOT	734
KIT-SUSPENSION ROLLER	734
KIT-TETHER (SEAT)	736
KIT-TILT PAN	720
	722
KIT-UNLOADER (AIR COMPRESSOR)	6
KIT-WIPER BLADE (REAR)	754
KNOB-DAMPER (SEAT)	736

L

LAMP AS-LH (STOP/TAIL/TURN)	246
LAMP AS-RH (STOP/TAIL/TURN)	246
LAMP GP-DOME	143
LAMP GP-FLOOD–VERTICAL	144
LAMP GP-HEAD–HIGH BEAM	146
LAMP GP-HEAD–LH	148
LAMP GP-HEAD–LOW BEAM	145
LAMP GP-HEAD–RH	150
LAMP GP-HEAD & SIGNAL–LH	152
LAMP GP-HEAD & SIGNAL–RH	154
LAMP GP-HEAD (24 VOLT) (LOW BEAM)	180
LAMP GP-SIGNAL–STOP/TAIL	156
LAMP GP-SIGNAL–TURN/PARK	157
LAMP GP-SIGNAL (LH)	166
LAMP GP-SIGNAL (RH)	166
LAMP GP-SIGNAL (24 VOLT) (LIGHT BAR TURN/PARK)	172
LAMP GP-WARNING BEACON	158
LAMP-HEAD (24 VOLT) (LOW BEAM)	145
LAMP-HEAD (24 VOLT)(65 WATT) (FLOODLAMP)	144

INDEX

Name	Page
LAMP-HEAD (24 VOLT)(65 WATT) (HIGH BEAM)	146
LAMP (SINGLE FILAMENT) (TURN SIGNAL)	148, 150
LAMP (WARNING BEACON)(24 VOLT)	158
LAMP (24 VOLT) (A/C & HEATER CONTROL PANEL)	652
LAMP (24 VOLT) (AUXILARY BACK-UP ALARM)	164
LAMP (24 VOLT) (AUXILIARY BACKUP LAMP)	162
LAMP (24 VOLT) (BLADE CUSHION CONT/INDICATOR)	225
LAMP (24 VOLT) (BLADE LAMP)	168
LAMP (24 VOLT) (CAB-RH FLOOD)	188
LAMP (24 VOLT) (CENTERSHIFT PIN PULLER SWITCH)	258
LAMP (24 VOLT) (DIFF LOCK INDICATOR)	706
LAMP (24 VOLT) (DIFFERENTIAL LOCK SWITCH)	260
LAMP (24 VOLT) (DOME)	143
LAMP (24 VOLT) (EMS MASTER ACTION INDICATOR)	706, 708
LAMP (24 VOLT) (ETHER STARTING AID INDICATOR)	214
LAMP (24 VOLT) (FLOODLAMP RH)	170
LAMP (24 VOLT) (FRONT DEFROSTER)	646
LAMP (24 VOLT) (HEADLAMP/TAIL)	176, 180, 184
LAMP (24 VOLT) (HEADLAMP/TAIL INDICATOR)	172
LAMP (24 VOLT) (HEADLAMP/TAIL/INDICATOR)	220
LAMP (24 VOLT) (HEATED MIRROR INDICATOR)	690, 692
LAMP (24 VOLT) (HIGH BEAM)	166
LAMP (24 VOLT) (HIGH BEAM INDICATOR)	706
LAMP (24 VOLT) (HIGH/LOW BEAM)	150, 152
LAMP (24 VOLT) (HIGH/LOW BEAM)	148
LAMP (24 VOLT) (HIGH/LOW BEAM)(RH)	154
LAMP (24 VOLT) (HVAC PANEL)	610
LAMP (24 VOLT) (INSTRUMENT PANEL)	708
LAMP (24 VOLT) (LH AIR PRESSURE INDICATOR)	706
LAMP (24 VOLT) (LH TURN INDICATOR)	706
LAMP (24 VOLT) (LIGHTBAR LOW BEAM)	177
LAMP (24 VOLT) (LIGHTBAR LOW BEAM)	180
LAMP (24 VOLT) (LOW BEAM)	166
LAMP (24 VOLT) (MOLDBOARD)	230
LAMP (24 VOLT) (MOLDBOARD/INDICATOR)	228
LAMP (24 VOLT) (PANEL LAMP DIMMER SWITCH)	260
LAMP (24 VOLT) (QUAD GAGE MODULE INDICATOR)	706
LAMP (24 VOLT) (QUAD GAUGE & AIR PRESSURE)	708
LAMP (24 VOLT) (REAR DEFROSTER)	647
LAMP (24 VOLT) (RH AIR PRESSURE INDICATOR)	706
LAMP (24 VOLT) (RIGHT TURN INDICATOR)	706
LAMP (24 VOLT) (RUNNING LAMP)	154
LAMP (24 VOLT) (RUNNING LIGHTS)	148, 150, 152
LAMP (24 VOLT) (SECONDARY STEERING)	254
LAMP (24 VOLT) (SHIFT CONSOLE)	258
LAMP (24 VOLT) (SPEEDOMETER & TACH)	697
LAMP (24 VOLT) (TAIL LAMP SWITCH)	260
LAMP (24 VOLT) (THROTTLE HOLD AUTO/MAN SWITCH)	258
LAMP (24 VOLT) (THROTTLE HOLD INDICATOR)	706
LAMP (24 VOLT) (TURN SIGNAL)	148, 150, 152, 154
LAMP (24 VOLT) (WARNING BEACON)	196
LAMP (24 VOLT) (WARNING BEACON)	142, 194
LAMP (24 VOLT)(21 WATT) (STOP/TAIL)	246
LAMP (24 VOLT)(21 WATT) (STOP/TAIL)	246
LAMP (24 VOLT/21 WATT) (TURN SIGNAL)	152, 154
LAMP (24 VOLT)(5 WATT) (TURN)	246
LENS (AMBER) (TURN SIGNAL)	152, 154
LENS-AMBER (TURN SIGNAL)	148, 150
LENS-AMBER (WARNING BEACON)	158
LENS AS (FLOODLAMP)	144
LENS AS (HEADLAMP)(HIGH BEAM)	146
LENS AS (HEADLAMP)(LOW BEAM)	145
LENS AS (HEADLIGHT) (HIGH BEAM)	166
LENS AS (HEADLIGHT) (LOW BEAM)	166
LENS AS (HIGH/LOW BEAM)	152, 154
LENS AS (TURN SIGNAL)	148, 150, 152, 154
LENS (DOME LAMP)	143
LIFT GP-BLADE	600
LIFTER GP-VALVE	34
LIFTING GP-ENGINE	35
LIGHTER AS (CIGAR)(24 VOLT)	258
LIGHTING AR-FLOOD– FRONT & REAR MOUNTED FLOOD	160

INDEX

Name	Page
LIGHTING AR-FLOOD–MOLDBOARD–EU	159
LIGHTING AR-FLOOD–REAR	160
LIGHTING AR-FLOOD & SIGNAL	160
LIGHTING AR-FLOOD & SIGNAL–BOLSTER	161
LIGHTING AR-FLOOD & SIGNAL–CAB–BOLSTER	160
LIGHTING AR-FLOOD & SIGNAL–CAB–EXTENDED BOLSTER	161
LIGHTING GP-BACKUP	162
LIGHTING GP-BACKUP–EU	164
LIGHTING GP-FLOOD–BOLSTER	180
LIGHTING GP-FLOOD–BOLSTER –EU	184
LIGHTING GP-FLOOD–BOLSTER–DOUBLE WORKLAMPS	172
LIGHTING GP-FLOOD–CAB	166
LIGHTING GP-FLOOD–CAB–RH	188
LIGHTING GP-FLOOD–CAB–SNOW–RH	170
LIGHTING GP-FLOOD–EU	190
LIGHTING GP-FLOOD–EXTENDED BOLSTER	176
LIGHTING GP-FLOOD–MOLDBOARD	186
LIGHTING GP-FLOOD–MOLDBOARD – REAR	191
LIGHTING GP-FLOOD–REAR	192
LIGHTING GP-FLOOD–SNOW–BLADE	168
LIGHTING GP-SIGNAL–REAR TURN LAMPS	193
LIGHTING GP-WARNING–ROTATING – OPEN CAB	196
LIGHTING GP-WARNING–ROTATING W/CAB	194
LINER GP-CAB–ENCLOSED–HIGH PROFILE	674
LINER GP-CAB–LOW PROFILE	670
LINER GP-CAB–OPEN–HIGH PROFILE	680
LINES GP-AFTERCOOLER WATER	68
LINES GP-AIR CONDITIONER	682
LINES GP-AIR TANK	393
LINES GP-DRAIN	101
LINES GP-FUEL	102
LINES GP-FUEL–CROSSOVER	106
LINES GP-FUEL INJECTION	108
LINES GP-GREASE	370
LINES GP-HEATER	686
LINES GP-HYDRAULIC–LH	440
LINES GP-HYDRAULIC–RH	444
LINES GP-HYDRAULIC FAN	450
LINES GP-HYDRAULIC FAN–RADIATOR	448
LINES GP-POWER TRAIN COOLER	70
LINES GP-POWER TRAIN OIL	302
LINES GP-PUMP	452
LINES GP-RIPPER	456, 458, 459
LINES GP-SECONDARY STEERING	460
LINES GP-STEERING	462
LINES GP-TURBOCHARGER OIL	59
LINES GP-WATER	72, 73, 74, 76
LINK GP-STEERING	371
LOCK GP-CENTERSHIFT	466
LOCK GP-HYDRAULIC HAND CONTROL–EU	467

M

MANIFOLD GP-EXHAUST	88
MANIFOLD GP-INLET	89
MIRROR GP-REAR VIEW–INSIDE	688
MIRROR GP-REAR VIEW–INSIDE–DUAL–EU	695
MIRROR GP-REAR VIEW–OUTSIDE–CLOSED ROPS	694
MIRROR GP-REAR VIEW–OUTSIDE–HEATED	690
MIRROR GP-REAR VIEW–OUTSIDE–HEATED–EU	692
MODULE GP-QUAD GAUGE	696
MODULE GP-SPEEDOMETER & TACH–SNOW	697
MOTOR GP-ELECTRIC	198
MOTOR GP-ELECTRIC–DEFROSTER FAN	199
MOTOR GP-ELECTRIC–24 VOLT	200
MOTOR GP-ELECTRIC (27 VOLT) (A/C)	611
MOTOR GP-ELECTRIC (27 VOLT) (HEATER)	652
MOTOR GP-GEAR	468
MOTOR GP-GEROTOR	470
MOUNTING GP-ENGINE	36
MOUNTING GP-RIPPER	602
MOUNTING GP-ROPS–ENCLOSED	698
MOUNTING GP-ROPS–OPEN–HIGH PROFILE	700
MOUNTING GP-VALVE MECHANISM	37
MOUNTING GP-WHEEL	304
MUFFLER GP	90

P

PADLOCK GP	490, 624, 715, 759
PAN GP-BACKREST	701
PAN GP-OIL	38
PAN GP-SEAT	702
PANEL GP-CAB–HIGH PROFILE	705
PANEL GP-CAB–LOW PROFILE	704
PANEL GP-INSTRUMENT	706
PANEL GP-INSTRUMENT–HIGH PROFILE	708
PANEL GP-WINDOW–LH	712
PANEL GP-WINDOW–RH	710

INDEX

Name	Page
PISTON & ROD GP	40
PLANETARY GP-TRANSMISSION	306
PLATE & FILM GP	760
PLATE & FILM GP–FRENCH	763
PLATE & FILM GP–GERMAN	764
PLATE & FILM GP–PORTUGUESE	764
PLATE & FILM GP–REFLECTOR–EU	762
PLATE & FILM GP–SPANISH	763
PLATE & FILM GP (ENGINE)	3
PLATE & FILM GP (REFLECTOR)	1
PLATE GP-PUSH	596
PLATE-INFORMATION (AIR COMPRESSOR)	6
PLATE-INSTRUCTION (BATTERY)	248
PLATE-INSTRUCTION (CRANKCASE DRAIN AND FILL)	101
PLATE (MAIN)	249
PLATE (PRODUCT IDENTIFICATION)	761
PLATE-SERIAL NUMBER (ENGINE)	761
PLATE-SERIAL NUMBER (TRANSMISSION)	306
PLATE-WARNING (NO CLEARANCE)	761
PLUG-DRAIN	285
PLUG-DRAIN (TRANSMISSION)	297
PLUG GP-CYLINDER BLOCK	41
PLUG GP-ENGINE	42
PLUG-MAGNETIC (DIFFERENTIAL)	355
PULLEY GP	10
PUMP & MOTOR GP–SECONDARY STEERING	472
PUMP & MTG GP-FUEL TRANSFER	110
PUMP & MTG GP-PISTON	474
PUMP & MTG GP-SECONDARY STEER	476
PUMP-ELECTRIC HYDRAULIC	198
PUMP GP-ENGINE OIL	60 61
PUMP GP-FUEL INJECTION	111
PUMP GP-FUEL PRIMING	112
PUMP GP-FUEL TRANSFER	110
PUMP GP-GEAR–2 SECTION	312
PUMP GP-METERING	478
PUMP GP-PISTON–FAN DRIVE	482
PUMP GP-PISTON–HYDRAULIC STEERING	480
PUMP GP-WATER	77 78

R

Name	Page
RADIATOR & MOUNTING GP	80
RADIATOR GP	83
RADIATOR GP–FOLDED CORE	82
RECEIVER-DRYER GP (AIR CONDITIONER) (REFRIGERANT)	682
RECEPTACLE AS-POWER (12 VOLT)	607 608
REGULATOR-WATER TEMPERATURE (98 DEG C)	67
RELAY AS (24 VOLT) (TAIL/PANEL LAMPS)	260
RIPPER AR	603
RIPPER GP	604
ROCKER ARM GP	44
ROPS AR-ENCLOSED–HIGH PROFILE	714
ROPS AR-ENCLOSED–LOW PROFILE	714
ROPS AR-OPEN–HIGH PROFILE	715
ROPS GP-ENCLOSED–HIGH PROFILE	716
ROPS GP-ENCLOSED–LOW PROFILE	716
ROPS GP-OPEN–HIGH PROFILE	717
ROTATING GP-PUMP–HYDRAULIC FAN	485
ROTATING GP-PUMP–HYDRAULIC STEERING	484

S

Name	Page
SCREEN GP-SUN–REAR	718
SCREEN-SUCTION (DIFFERENTIAL)	297
SCREEN-SUCTION (TRANSMISSION)	297
SEAL GP-CRANKSHAFT	32 46
SEAL GP-CRANKSHAFT–SINGLE LIP	46
SEAL-O-RING (123.19MM ID)	600
SEAT BELT GP–RETRACTABLE	719
SEAT BELT GP (RETRACTABLE)	726 727 729
SEAT GP–CLOTH	720
SEAT GP–VINYL	722
SEAT GP-SUSPENSION–CLOTH	724 726 728 730
SEAT GP-SUSPENSION–CLOTH–BACK REST	729
SEAT GP-SUSPENSION–VINYL	725 727
SENDER AS-FUEL LEVEL	116
SENDER AS-POSITION (GEAR)	240
SENSOR GP-GROUND SPEED	201
SENSOR GP-POSITION–THROTTLE	202
SENSOR GP-PRESSURE	204 205 206
SENSOR GP-PRESSURE–ENGINE SPEED	205
SENSOR GP-PRESSURE–FAN DRIVE	203
SENSOR GP-PRESSURE–FUEL	206
SENSOR GP-PRESSURE–INLET MANIFOLD	207
SENSOR GP-PRESSURE (ENGINE OIL)	232
SENSOR GP-SPEED	208 209
SENSOR GP-SPEED–CAMSHAFT	209
SENSOR GP-SPEED–CRANKSHAFT	208
SENSOR GP-TEMPERATURE	210 211

INDEX

Name	Page
SENSOR GP-TEMPERATURE–COOLANT	211
SENSOR GP-TEMPERATURE–INLET MANIFOLD/FUEL	210
SHIELD GP-DRIVE SHAFT	372
SPRING	542
	552
STARTING AID GP-ETHER	212
	214
STARTING MOTOR GP-ELECTRIC	216
STEERING AR-SECONDARY	486
STEP GP–BELTED	373
STRAINER (HYDRAULIC OIL FILLER)	488
SUPPORT AR-REAR CHASSIS	374
SUPPORT GP-ENGINE	47
SUPPORT GP-FUEL TANK	375
SUPPORT GP-PLATFORM	376
SUPPORT GP-SEAT	732
SUPPRESSION GP-SOUND–ENGINE ENCLOSURE	48
SUSPENSION GP-SEAT	734
SUSPENSION GP-SEAT–AIR	736
SWITCH AS (AUXILARY BACK-UP ALARM)	164
SWITCH AS (AUXILIARY BACKUP LAMP)	162
SWITCH AS-BALL (GEAR RANGE)	240
SWITCH AS (BLADE CUSHION CONTROL)	225
SWITCH AS (CAB-RH FLOOD)	188
SWITCH AS (DIFFERENTIAL LOCK)	260
SWITCH AS (ETHER STARTING AID)	214
SWITCH AS (FLOODLAMP RH)	170
SWITCH AS (HEATED MIRROR)	690
	692
SWITCH AS (LIGHTBAR LOW BEAM)	177
	180
SWITCH AS-LIMIT (BRAKE/INCHING PEDAL)	260
SWITCH AS (MOLDBOARD)	230
SWITCH AS (MOLDBOARD LAMPS)	228
SWITCH AS (ON/OFF) (FRONT DEFROSTER)	646
SWITCH AS (ON/OFF) (REAR DEFROSTER)	647
SWITCH AS (PANEL LAMP DIMMER)	260
SWITCH AS-PRESSURE (AIR CONDITIONER)(HIGH - LOW)	682
SWITCH AS-PRESSURE (PRIMARY STEERING)	254
SWITCH AS-PRESSURE (STOP LAMP)	236
SWITCH AS-PUSH BUTTON (OPERATOR MODE DIGITAL DISPLAY)	706
SWITCH AS-PUSH BUTTON (OPERATOR MODE)(DIGITAL DISPLAY)	708
SWITCH AS-ROCKER (BLADE LAMP)	168
SWITCH AS-ROCKER (HEADLAMP/TAIL)	172
	176
	180
	184
	220
SWITCH AS-ROTARY (FAN SPEED)	610
SWITCH AS-ROTARY (HIGH/LOW BEAM)	172
	176
	180
	184
SWITCH AS-ROTARY (TURN SIGNAL)	220
SWITCH AS-ROTARY (UPPER/LOWER FRONT WIPERS)	226
SWITCH AS (SECONDARY STEERING)	254
SWITCH AS (TAIL LAMP)	260
SWITCH AS-THERMOSTAT (REFRIGERANT)	610
SWITCH AS (THROTTLE HOLD AUTO/MAN)	258
SWITCH AS (THROTTLE HOLD SET/RESUME)	258
SWITCH AS-TOGGLE (ENGINE SHUTDOWN)	240
SWITCH AS-TURN SIG & WARNING	172
	176
	180
	184
	220
SWITCH AS (WARNING BEACON)	142
	194
	196
SWITCH AS-WIPER	223
SWITCH AS-WIPER (REAR)	754
	756
SWITCH GP-DISCONNECT–BATTERY	218
SWITCH GP-LIGHT–TURN	220
SWITCH GP-MAGNETIC–MAIN POWER RELAY	222
SWITCH GP-MAGNETIC (FUSE RELAY) (MAIN POWER RELAY)	248
SWITCH GP-MAGNETIC (SECONDARY STEERING RELAY)	254
SWITCH GP-MAGNETIC (24V) (STARTING REALY)	248
SWITCH GP-START (KEY)	258
SWITCH GP-WIPER	223
SWIVEL GP	487

T

TANDEM & COVER GP	314
TANK & FILTER GP-HYDRAULIC	488
TANK & MTG GP-HYDRAULIC	490
TANK GP-AIR	394
TANK GP-FUEL	114
	116
	119
TANK GP-FUEL–LH	120
TANK GP-FUEL–RH	118
TOOL BOX GP	759
TOOTH GP-RIPPER	606
TRANSMISSION AR	315

INDEX

Name	Page
TURBOCHARGER GP	92, 93

V

Name	Page
VALVE & LINKAGE GP–BANK 4-LH,RH	504
VALVE & LINKAGE GP–BANK 4-RH–BANK 5-LH	492, 496, 506
VALVE & LINKAGE GP–BANK 4-RH–BANK 7-LH	508
VALVE & LINKAGE GP–BANK 5-LH,RH–EU	498
VALVE & LINKAGE GP–BANK 6-RH–BANK 7-LH–EU	500
VALVE & LINKAGE GP–BANK4-LH,RH	494
VALVE & MTG GP-DIFF LOCK	316
VALVE-AIR RELIEF (TANK)	394
VALVE AS (AIR CONDITIONER)	682
VALVE AS (SEAT)	736
VALVE-COOLANT SAMPLING	74
VALVE-DRAIN (RADIATOR)	83
VALVE-DRAIN (WATER)	74
VALVE GP-AIR CONTROL–PARKING BRAKE	396
VALVE GP-AIR CONTROL–SERVICE BRAKE	397
VALVE GP-BANK 4–LH	510, 513
VALVE GP-BANK 4–RH	511, 512, 514
VALVE GP-BANK 5–LH	515, 516, 518
VALVE GP-BANK 5–RH–EU	517
VALVE GP-BANK 6–RH–EU	519
VALVE GP-BANK 7–LH	520
VALVE GP-CHECK–FUEL	122
VALVE GP-CHECK (FUEL)	108
VALVE GP-COMBINATION	522
VALVE GP-CONTROL	317
VALVE GP-CONTROL–ARTICULATION	524, 546
VALVE GP-CONTROL–BLADE LIFT	542, 552, 566, 568
VALVE GP-CONTROL–BLADE LIFT–LH	562
VALVE GP-CONTROL–BLADE LIFT–RH	560
VALVE GP-CONTROL–BLADE TILT	536
VALVE GP-CONTROL–BLADE TIP–LH	530
VALVE GP-CONTROL–CENTERSHIFT	526, 548
VALVE GP-CONTROL–CIRCLE DRIVE	532, 538
VALVE GP-CONTROL–PLOW/DOZER ANGLE–RH	554
VALVE GP-CONTROL–PLOW/DOZER LIFT–RH	564
VALVE GP-CONTROL–RIPPER–LH	544, 556, 558
VALVE GP-CONTROL–SIDESHIFT	534, 540
VALVE GP-CONTROL–WHEEL LEAN	528, 550
VALVE GP-CONTROL–WING LIFT–LH	572
VALVE GP-CONTROL–WING TILT–LH	570
VALVE GP-CONTROL (BLADE TIP)	516, 520
VALVE GP-CONTROL (CIRCLE DRIVE)	516, 520
VALVE GP-CONTROL (SIDESHIFT)	516, 520
VALVE GP-ETHER START	212
VALVE GP-FLUID SAMPLING	56, 70, 462
VALVE GP-FLUID SAMPLING (TRANSMISSION OIL)	70
VALVE GP-PILOT–SPEED SELECT	318
VALVE GP-PRESS & FLOW CMPNSTR	576
VALVE GP-PRESS & FLOW CMPNSTR–HYDRAULIC STEERING	574
VALVE GP-PURGE–IMPLEMENT	578
VALVE GP-RELIEF	583, 584, 585
VALVE GP-RELIEF–IMPLEMENT SIGNAL	580
VALVE GP-RELIEF–MAIN	320, 579
VALVE GP-RELIEF–PLOW/DOZER LIFT	586
VALVE GP-RELIEF–STEERING	581, 582
VALVE GP-RELIEF (MAIN)	522
VALVE GP-SELECTOR & PRESS CONT–DIRECTION	322
VALVE GP-SELECTOR & PRESS CONT–MANUAL MODULATING–DIFFERENTIAL–SPEED	326
VALVE GP-SELECTOR & PRESS CONT–MODULATING REDUCING–SPEED	324
VALVE GP-SHUTTLE–IMPLEMENT SIGNAL	587
VALVE GP-SOLENOID	588
VALVE GP-SOLENOID–AIR HORN	738
VALVE GP-SOLENOID–DIFFERENTIAL LOCK	328
VALVE GP-SOLENOID & MANIFOLD–BLADE CUSHION	589

INDEX

Name	Page
VALVE GP-SOLENOID & MANIFOLD–HYDRAULIC FAN	590
VALVE GP-SOLENOID (BLADE CUSHION)	589
VALVE GP-TRANSMISSION CONTROL	330
VALVE MECHANISM GP	50
VALVE-PUMP BYPASS	52

W

Name	Page
WARNING GP-BACKUP	224
WASHER GP-WINDOW–FRONT	740
WASHER GP-WINDOW–REAR	742
WHEEL & TIRE AR	332
	333
	334
	335
	336
	337
WHEEL & TIRE GP	337
	338
	339
	340
	341
	342
	343
	344
	345
	346
	347
	348
WHEEL AR	349
WHEEL GP	349
	350
WINDOW GP–SIDE SLIDING –LOW PROFILE	746
WINDOW GP–SIDE SLIDING–HIGH PROFILE	744
	747
WINDOW GP–SIDE SLIDING–LOW PROFILE	745
WINDOW GP–VENT–CAB	743
WIPER AR-WINDOW–REAR–HIGH PROFILE	748
WIPER AR-WINDOW–REAR–LOW PROFILE	748
WIPER GP-WINDOW	749
WIPER GP-WINDOW–FRONT	758
WIPER GP-WINDOW–FRONT–HIGH PROFILE	752
WIPER GP-WINDOW–FRONT–LOW PROFILE	750
WIPER GP-WINDOW–REAR–HIGH PROFILE	756
WIPER GP-WINDOW–REAR–LOW PROFILE	754
WIRING GP-BLADE CUSHION	225
WIRING GP-CAB	226
WIRING GP-CAB–MOLDBOARD	228
WIRING GP-CAB–MOLDBOARD–EU	230
WIRING GP-ENGINE	232
WIRING GP-FRONT	236
WIRING GP-REAR	240
WIRING GP-REAR–EU	246
WIRING GP-REAR–RADIATOR	244
WIRING GP-REAR–SERVICE CENTER–RH	248
WIRING GP-SECONDARY STEERING	254
WIRING GP-SHIFT CONSOLE	258
WIRING GP-STEERING CONSOLE	260
WIRING GP-UNIT INJECTOR	263

INDEX

Désignation	Page

A

ACCOUDOIR (ASS)	614 615
ACCUMULATEUR D'AMORTISSEUR DE LAME	399
ACCUMULATEUR ET MONTAGE - HYDRAULIQUE (ASS)	398
ACCUMULATEUR HYDRAULIQUE (ASS)	400
ADAPTATEUR (ASS)	70
ADAPTATEUR DE REMPLIS. RAPIDE DE CARBURANT (ASS)	94
ADAPTATEUR DU MOTEUR A LA TRANSMISSION (ASS)	264
ALLUME-CIGARE (ENS) (CIGARE)(24 VOLTS)	258
ALTERNATEUR DE CHARGE (ASS)	126
ALTERNATEUR DE CHARGE (ASS)	124
ALTERNATEUR-VENTILATEUR	124
AMPOULE (FILAMENT SIMPLE) (CLIGNOTANT DE DIRECTION)	148 150
AMPOULE (GYROPHARE)(24 VOLTS)	158
AMPOULE (24 VOLTS) (AVERTISSEUR DE RECUL AUXILIAIRE)	164
AMPOULE (24 VOLTS) (BOUCLIER)	230
AMPOULE (24 VOLTS) (BOUCLIER/ INDICATEUR)	228
AMPOULE (24 VOLTS) (CABINE-PROJECTEUR DROIT)	188
AMPOULE (24 VOLTS) (CLIGNOTANT DE DIRECTION)	148 150 152 154
AMPOULE (24 VOLTS) (COMPTEUR DE VITESSE ET COMPTE-TOURS)	697
AMPOULE (24 VOLTS) (CONSOLE DE CHANGEMENT DE VITESSES)	258
AMPOULE (24 VOLTS) (CONTACTEUR AUTO/MAN DE RETENUE DU PAPILLON DES GAZ)	258
AMPOULE (24 VOLTS) (CONTACTEUR DE RÉGLAGE D'INTENSITÉ DU TABLEAU)	260
AMPOULE (24 VOLTS) (CONTACTEUR DE VERROUILLAGE DE DIFFÉRENTIEL)	260
AMPOULE (24 VOLTS) (CONTACTEUR D'ÉCLAIRAGE DE FEU ARRIÈRE)	260
AMPOULE (24 VOLTS) (CONTACTEUR D'EXTRACTEUR DE BROCHE DE DÉPORT DE CERCLE)	258
AMPOULE (24 VOLTS) (DÉGIVREUR ARRIÈRE)	647
AMPOULE (24 VOLTS) (DÉGIVREUR AVANT)	646
AMPOULE (24 VOLTS) (DIRECTION AUXILIAIRE)	254
AMPOULE (24 VOLTS) (FEU DE ROUTE)	154
AMPOULE (24 VOLTS) (FEUX AVANT FEUX ARRIÈRE)	176 180 184
AMPOULE (24 VOLTS) (FEUX DE CROISEMENT)	166
AMPOULE (24 VOLTS) (FEUX DE ROUTE)	148 150 152
AMPOULE (24 VOLTS) (FEUX DE ROUTE)	166
AMPOULE (24 VOLTS) (FEUX DE ROUTE/DE CROISEMENT)(DROIT)	154
AMPOULE (24 VOLTS) (FEUX DE ROUTE/FEUX DE CROISEMENT)	150
AMPOULE (24 VOLTS) (FEUX DE ROUTE/FEUX DE CROISEMENT)	148 152
AMPOULE (24 VOLTS) (GYROPHARE)	142 194 196
AMPOULE (24 VOLTS) (INDICATEUR/ COMMANDE D'AMORTISSEUR DE LAME)	225
AMPOULE (24 VOLTS) (INDICATEUR DE FEUX DE ROUTE)	706
AMPOULE (24 VOLTS) (INDICATEUR DE MIROIR CHAUFFÉ)	690 692
AMPOULE (24 VOLTS) (INTERRUPTEUR D'ÉCLAIRAGE - POTENCE)	177 180
AMPOULE (24 VOLTS) (LAMPE D'APPOINT AUXILIAIRE)	162
AMPOULE (24 VOLTS) (PANNEAU HVAC)	610
AMPOULE (24 VOLTS) (PHARE/ FEUX ARRIÈRE/ INDICATEUR)	220
AMPOULE (24 VOLTS) (PLAFONNIER)	143
AMPOULE (24 VOLTS) (PROJECTEUR DE LAME)	168
AMPOULE (24 VOLTS) (PROJECTEUR DROIT)	170
AMPOULE (24 VOLTS) (QUATRE INSTRUMENTS ET PRESSION D'AIR)	708
AMPOULE (24 VOLTS) (TABLEAU DE BORD)	708
AMPOULE (24 VOLTS) (TABLEAU DE COMMANDE DU RÉCHAUFFEUR ET CLIMATISEUR)	652
AMPOULE (24 VOLTS) (TÉMOIN D'AIDE AU DÉMARRAGE À L'ÉTHER)	214
AMPOULE (24 VOLTS) (TÉMOIN DE BLOCAGE D'ACCÉLÉRATEUR)	706
AMPOULE (24 VOLTS) (TÉMOIN DE CLIGNOTANT DROIT)	706

INDEX

Désignation	Page
AMPOULE (24 VOLTS) (TÉMOIN DE CLIGNOTANT GAUCHE)	706
AMPOULE (24 VOLTS) (TÉMOIN DE MODULE QUATRE INSTRUMENTS)	706
AMPOULE (24 VOLTS) (TÉMOIN DE PHARES/FEUX ARRIÈRE)	172
AMPOULE (24 VOLTS) (TÉMOIN DE PRESSION D'AIR DE DROITE)	706
AMPOULE (24 VOLTS) (TÉMOIN DE PRESSION D'AIR DE GAUCHE)	706
AMPOULE (24 VOLTS) (TÉMOIN DE VERROUILLAGE DE DIFFÉRENTIEL)	706
AMPOULE (24 VOLTS) (TÉMOIN PRINCIPAL DE MISE EN GARDE EMS)	706 708
AMPOULE (24 VOLTS/21 WATTS) (CLIGNOTANT DE DIRECTION)	152 154
AMPOULE (24 VOLTS)(21 WATTS) (FEUX D'ARRÊT/FEUX ARRIÈRE)	246
AMPOULE (24 VOLTS)(21 WATTS) (FEUX D'ARRÊT/FEUX ARRIÈRE)	246
AMPOULE (24 VOLTS)(5 WATTS) (CLIGNOTANT)	246
ARBRE A CAMES (ASS)	12
ARTICULATION DE DIRECTION (ASS)	371
ATTELAGE D'ARTICULATION (ASS)	368
AUTOCOLLANT - FUSIBLE (TÉMOINS, LAVE-GLACE, ESSUIE-GLACE, DÉGIVREUR)	226
AUTOCOLLANT-COMMANDE (VITESSE/ TEMPÉRATURE DE VENTILATEUR)	652
AUTOCOLLANT DE MISE EN GARDE (LIQUIDE DE REFROIDISSEMENT SOUS PRESSION)	761
AUTOCOLLANT DE MISE EN GARDE (PAS DE MARCHEPIED)	116
AUTOCOLLANT DE MISE EN GARDE (RACCORD DE CÂBLE)	761
AUTOCOLLANT DE MISE EN GARDE (RESSORT À TAUX DE COMPRESSION ÉLEVÉ)	761
AUTOCOLLANT DE MISE EN GARDE (VÉRIN HAUTE PRESSION)	761
AUTOCOLLANT D'IDENTIFICATION (FILTRE À HUILE MOTEUR)	760
AUTOCOLLANT D'IDENTIFICATION (FUSIBLE) (FEUX DE ROUTE/FEUX DE CROISEMENT)	176
AUTOCOLLANT DU PANNEAU (DROITE)	706 708
AUTOCOLLANT DU PANNEAU (GAUCHE)	706 708
AUTOCOLLANT (EMPLACEMENT D'OEILLETON DE LEVAGE)	760
AUTOCOLLANT-LEVAGE ET ARRIMAGE	761
AUTOCOLLANT (PARE-SOLEIL)	705
AUTOCOLLANT-RÉFLECTEUR (ROUGE)	761
AUXILIAIRE DE DÉMARRAGE À L'ÉTHER	212 214
AVERTISSEUR (ASS)	123
AVERTISSEUR DE RECUL (ASS)	224
AXE DE CULBUTEUR (ASS)	44

B

Désignation	Page
BALAI D'ESSUIE-GLACE (ENS) (ÉVENT AVANT INFÉRIEUR)	743
BALAI D'ESSUIE-GLACE (ENS) (PROFIL BAS ARRIÈRE)	754
BALAI D'ESSUIE-GLACE (ENS) (PROFIL BAS AVANT INFÉRIEUR)	750
BALAI D'ESSUIE-GLACE (ENS) (PROFIL ÉLEVÉ ARRIÈRE)	756
BALAI D'ESSUIE-GLACE (ENS) (PROFIL ÉLEVÉ SUPÉRIEUR AVANT)	752
BARRE D'ATTELAGE (ASS)	594
BATTERIE	127
BATTERIE (ASS)	127
BLINDAGE INFÉRIEUR (ASS)	362
BLOC-CYLINDRES - COUVERCLE (ASS)	14
BLOC-CYLINDRES (ASS)	20
BLOC-CYLINDRES (ENS)	18 19
BLOC DE BRANCHEMENT (ASS)	128
BOÎTE DE VITESSES (VERSION)	315
BOÎTE PLANÉTAIRE (ASS)	306
BOUCHON - BLOC-CYLINDRES	41
BOUCHON AIMANTÉ (DIFFÉRENTIEL)	355
BOUCHON DE GOULOTTE DE REMPLISSAGE D'HUILE MOTEUR	54
BOUCHON DE GOULOTTE DE REMPLISSAGE (HUILE DE TRANSMISSION)	290
BOUCHON DE GOULOTTE DE REMPLISSAGE (RÉSERVOIR D'HUILE HYDRAULIQUE)	488
BOUCHON DE MOTEUR (ASS)	42
BOUCHON DE REMPLISSAGE D'HUILE MOTEUR (ASS)	54
BOUCHON DE RÉSERVOIR À CARBURANT (ASS) (VERROUILLABLE)	120
BOUCHON DE RÉSERVOIR À CARBURANT (ASS) (VERROUILLABLE)	116
BOUCHON DE VIDANGE	285
BOUCHON DE VIDANGE (BOÎTE DE VITESSES)	297
BOULONNERIE DE LA CULASSE (ASS)	28
BOULONNERIE DU RADIATEUR (ASS)	66
BOUTON D'AMORTISSEUR (SIÈGE)	736

INDEX

Désignation	Page

C

CABINE - REVÊTEMENT (ASS)	670 674 680
CABINE ROPS FERMÉE (ASS)	716
CABLAGE AR (ASS)	240 244 246 248
CABLAGE AV (ASS)	236
CABLAGE DE CABINE (ASS)	226 230
CABLAGE DE CABINE (ASS)	228
CABLAGE DE DIRECTION AUXILIAIRE (ASS)	254
CABLAGE DE LA CONSOLE DE CHANGEMENTS DE VITESSE	258
CABLAGE DE LA CONSOLE DE DIRECTION	260
CABLAGE DE MOTEUR (ASS)	232
CABLAGE D'INJECTEUR	263
CÂBLAGE-MONITEUR	706 708
CÂBLE D'AMORTISSEUR DE LAME (ASS)	225
CADENAS (ASS)	490 624 715 759
CANALIS. D'EAU - REFROIDISSEUR D'ADMISSION (ASS)	68
CANALISATION DE DIRECTION AUXILIAIRE	460
CANALISATIONS DE CARBURANT (ASS)	102 106
CANALISATIONS DE CHAUFFAGE (ASS)	686
CANALISATIONS DE CLIMATISEUR (ASS)	682
CANALISATIONS DE DIRECTION (ASS)	462
CANALISATIONS DE GRAISSAGE (ASS)	370
CANALISATIONS DE POMPE (ASS)	452
CANALISATIONS DE REFROIDIS. DE TRANSMISSION	70
CANALISATIONS DE VIDANGE (ASS)	101
CANALISATIONS D'EAU (ASS)	72 73 74 76
CANALISATIONS D'HUILE DE TRANSMISSION (ASS)	302
CANALISATIONS D'HUILE DE TURBOCOMPRESSEUR (ASS)	59
CANALISATIONS D'INJECTION DE CARBURANT (ASS)	108
CANALISATIONS DU RÉSERVOIR D'AIR (ASS)	393
CANALISATIONS DU RIPPER (ASS)	456 458 459
CANALISATIONS HYDRAULIQUES (ASS)	440 444
CANALISATIONS HYDRAULIQUES DE VENTILATEUR (ASS)	448 450
CAPTEUR DE PRESSION (ASS)	203 204 205 206 207
CAPTEUR DE PRESSION (ASS) (HUILE MOTEUR)	232
CAPTEUR DE TEMPERATURE (ASS)	210 211
CAPTEUR DE VITESSE (ASS)	208 209
CAPTEUR DE VITESSE DE TRANSLATION	201
CARENAGE DE MOTEUR (ASS)	356
CARTER AV (ASS)	32
CARTER DE BOITE	265
CARTER DE VOLANT (ASS)	31
CARTOUCHE DE DÉSHYDRATEUR (DÉSHYDRATEUR)	381
CEINTURE DE SECURITE (ASS)	719
CEINTURE DE SECURITE (ASS) (RÉTRACTABLE)	726 727 729
CENDRIER	670 674
CERCLE (ASS)	592
CHAPEAU - RADIATEUR	82
CHAPEAU ANTI-POUSSIERE (RÉCHAUFFEUR D'EAU)	140
CHAPEAU ANTI-POUSSIERE (RÉCHAUFFEUR D'EAU)	141
CHAPEAU DE VALVE (TIGE)	335 339 340 341 342 343 344 345 346 347 348 350
CHAPEAU (ENS) (CLIMATISEUR) (JOINT)	682
CHAPEAU (ENS) (ORIFICE DE VIDANGE D'HUILE RAPIDE)	101
CHÂSSIS AV (ASS)	359
CHÂSSIS ET CARTER (ASS)	355
CHAUFFAGE DE CABINE (ASS)	652
CHAUFFAGE DE CABINE (VERSION)	651

INDEX

Désignation	Page
CHAUFFAGE ET MONTAGE - CABINE (ASS)	651
CLAPET DE DECHARGE (ASS)	320
	579
	580
	581
	582
	583
	584
	585
	586
CLAPET DE DECHARGE (ASS) (PRINCIPAL)	522
CLAPET DE DECHARGE D'AIR (RÉSERVOIR)	394
CLAPET DE RETENUE (ENS)	122
CLAPET DE RETENUE (ENS) (CARBURANT)	108
CLAPET (ENS) (CLIMATISEUR)	682
CLAPET (ENS) (SIÈGE)	736
CLÉ	250
	490
	759
CLÉ (COUPE-BATTERIE)	218
CLIGNOTANT ÉLECTRONIQUE (ENS) (12/24 VOLTS) (CLIGNOTANT/ FEUX DE DÉTRESSE)	176
CLIGNOTANT ÉLECTRONIQUE (ENS) (12/24 VOLTS) (CLIGNOTANTS ET FEUX DE DÉTRESSE)	184
CLIGNOTANT (ENS) (12/24 VOLTS)	172
CLIGNOTANT (ENS) (12/24 VOLTS) (CLIGNOTANT/ FEUX DE DÉTRESSE)	180
CLIMATISEUR (ASS)	610
CLIMATISEUR ET MONTAGE (ASS)	609
CLIMATISEUR (VERSION)	609
COLLECTEUR D'ADMISSION (ASS)	89
COLLECTEUR D'ÉCHAPPEMENT (ASS)	88
COMMANDE DE BOITE DE VITESSES (ASS)	274
COMMANDE DE DIFFÉRENTIEL - VERROUILLAGE (ASS)	272
COMMANDE DE DIRECTION (ASS)	406
COMMANDE DE DIRECTION SECONDAIRE (ASS)	134
COMMANDE DE FREIN DE STATIONNEMENT (ASS)	384
COMMANDE DE RÉGULATEUR (ASS)	96
COMMANDE DE VERROUILLAGE DE DÉPORT DE FREIN	404
COMMANDE D'EMBRAYAGE (ASS)	268
COMMANDE ELECTRONIQUE DE MOTEUR (ASS)	132
	133
COMMANDE ET MONTAGE - MOTEUR	131
COMMANDE HYDRAULIQUE DE BOÎTE (ASS)	278
COMMANDE HYDRAULIQUE (VERSION)	401
	402
COMPRESSEUR D'AIR (ASS)	6
	8
COMPRESSEUR DE REFRIGERANT (ASS)	616
	617
CONDENSATEUR ET MONTAGE (RÉFRIGÉRANT)	618
CONDUIT (ASS)	639
CONDUIT ET COMMANDE (ASS)	638
CONSOLE DE CONDUITE (ASS)	620
CONTACTEUR DE CLIGNOTANT DE DIRECTION ET AVERTISS.	172
	176
	180
	184
	220
CONTACTEUR (ENS) (AVERTISSEUR DE RECUL AUXILIAIRE)	164
CONTACTEUR (ENS) (BOUCLIER)	230
CONTACTEUR (ENS) (CABINE-PROJECTEUR DROIT)	188
CONTACTEUR (ENS) (COMMANDE D'AMORTISSEUR DE LAME)	225
CONTACTEUR (ENS) (DÉMARRAGE À L'ÉTHER)	214
CONTACTEUR (ENS) (DIRECTION AUXILIAIRE)	254
CONTACTEUR (ENS) (FEU ARRIÈRE)	260
CONTACTEUR (ENS) (GYROPHARE)	142
	196
CONTACTEUR (ENS) (GYROPHARE)	194
CONTACTEUR (ENS) (INTERRUPTEUR D'ÉCLAIRAGE - POTENCE)	177
CONTACTEUR (ENS) (INTERRUPTEUR D'ÉCLAIRAGE - POTENCE)	180
CONTACTEUR (ENS) (INVERSEUR D'ÉCLAIRAGE DU PANNEAU)	260
CONTACTEUR (ENS) (LAMPE D'APPOINT AUXILIAIRE)	162
CONTACTEUR (ENS) (LAMPES DE BOUCLIER)	228
CONTACTEUR (ENS) (MARCHE/ARRÊT) (DÉGIVREUR ARRIÈRE)	647
CONTACTEUR (ENS) (MARCHE/ARRÊT) (DÉGIVREUR AVANT)	646
CONTACTEUR (ENS) (MIROIR CHAUFFÉ)	690
	692
CONTACTEUR (ENS) (PROJECTEUR DROIT)	170
CONTACTEUR (ENS) (RÉGLAGE/ REPRISE RETENUE DU PAPILLON DES GAZ)	258
CONTACTEUR (ENS) (RETENUE DU PAPILLON DES GAZ AUTO/MAN)	258
CONTACTEUR (ENS) (VERROUILLAGE DE DIFFÉRENTIEL)	260
CONTACTEUR MAGNETIQUE (ASS)	222

INDEX

Désignation	Page
CONTACTEUR MAGNETIQUE (ASS) (RELAIS DE DIRECTION AUXILIAIRE)	254
CONTACTEUR MAGNETIQUE (ASS) (RELAIS DE FUSIBLE) (RELAIS DE PUISSANCE PRINCIPAL)	248
CONTACTEUR MAGNETIQUE (ASS) (24 V) (RELAIS DE DÉMARRAGE)	248
COURONNE ET DIFFERENTIEL (ASS)	284
COURROIE NERVURÉE (CLIMATISEUR)	609
COUVERCLE INFÉRIEUR-DOSSIER (ASS)	701
COUVERCLES D'EXPEDITION (ASS)	282
CREPINE (GOULOTTE DE REMPLISSAGE D'HUILE HYDRAULIQUE)	488
CULASSE (ASS)	24 25
CULASSE (ENS)	22
CULBUTERIE (ASS)	50
CUVETTE-ACCUMULATION D'EAU (ENS)	99
CUVETTE-ACCUMULATION D'EAU (ENS) (RÉCHAUFFEUR 24 VOLTS)	99
CYLINDRE D'ETHER (ENS)	212

D

Désignation	Page
DÉMARREUR ÉLECTRIQUE (ASS)	216
DENT DE RIPPER (ASS)	606
DESHYDRATEUR (ASS)	378 380 381
DIFFERENTIEL (ASS)	288
DIRECTION AUXILIAIRE (VERSION)	486
DISJONCTEUR (ASS)	129 130
DISJONCTEUR DE SECURITE (ENS) (PÉDALE DE FREIN/ APPROCHE)	260
DISJONCTEUR (ENS) (15A) (FEUX DE ROUTE/ FEUX DE CROISEMENT À BARRE LUMINEUSE)	176
DISJONCTEUR (ENS) (15A) (PHARES AVANT)	129 130
DISJONCTEUR (ENS) (15A) (PROJECTEURS DE TRAVAIL AVEC BARRE LUMINEUSE)	129
DISJONCTEUR (ENS) (15A) (RELAIS DE DÉMARRAGE)	249
DISJONCTEUR (ENS) (80 A) (ALTERNATEUR)	250
DISJONCTEUR (ENS) (80 A) (PRINCIPAL)	248
DISPOSITIF D'ARRÊT DE DISTRIBUTEUR (ASS)	432 434
DISPOSITIF DE COMMANDE DE FREIN (ASS)	377
DISTRIBUTEUR (ASS)	317 524 526 528 530 532 534 536 538 540 542 544 546 548 550 552 554 556 558 560 562 564 566 568 570 572
DISTRIBUTEUR (ASS) (DÉPORT LATÉRAL)	516 520
DISTRIBUTEUR (ASS) (DEVERS DE LAME)	516 520
DISTRIBUTEUR (ASS) (ENTRAÎNEMENT DE CERCLE)	516 520
DISTRIBUTEUR D'AIR (ASS)	396 397
DISTRIBUTEUR DE BOITE (ASS)	330
DISTRIBUTEUR 4 ÉLÉMENTS (ASS)	510 511 512 513 514
DISTRIBUTEUR 5 ÉLÉMENTS (ASS)	515 516 517 518
DISTRIBUTEUR 6 ÉLÉMENTS (ASS)	519
DISTRIBUTEUR 7 ÉLÉMENTS (ASS)	520

E

Désignation	Page
EAU DES CHEMISES - RECHAUFFEUR (ASS)	140 141
ÉCLAIRAGE - AVERTISSEUR (ASS)	194 196
ÉCLAIRAGE - PROJECTEURS (ASS)	166 168

INDEX

Désignation	Page
	170
	172
	176
	180
	184
	186
	188
	190
	191
	192
ECLAIRAGE AR (ASS)	162
	164
ÉCLAIRAGE CLIGNOTANT	193
ÉCLAIRAGE-PROJECTEURS (VERSION)	159
	160
ÉCLAIRAGE (VERSION)-PROJECTEUR & SIGNAL	160
	161
ÉCRAN D'ARBRE MOTEUR (ASS)	372
ÉCRAN MAGNÉTIQUE (DIFFÉRENTIEL)	297
ÉLECTRONIQUE-MONITEUR (ASS)	139
ÉLÉMENT DE CHAUFFAGE (DÉSHYDRATEUR) (12 VOLTS)	381
ÉLÉMENT DE FILTRE À HUILE (ENS) (HYDRAULIQUE)	70
ÉLÉMENT DE FILTRE À HUILE (ENS) (HYDRAULIQUE) (RETOUR DE DÉBIT)	488
ÉLÉMENT DE FILTRE (CARBURANT/SÉPARATEUR D'EAU) (PRINCIPAL)	99
ÉLÉMENT DE FILTRE-HYDRAULIQUE (TRANSMISSION)	292
ÉLÉMENT DE RÉCHAUFFEUR (ENS) (240 VOLTS/1250 WATTS)	141
ÉLÉMENT DU RÉCHAUFFEUR D'EAU DES CHEMISES (ENS) (120 VOLTS/1250 WATTS)	140
ÉLÉMENT PRINCIPAL (ENS)	85
ÉLÉMENT SECONDAIRE (ENS)	85
EMBOUT (ASS)	597
ENGRENAGES DE TRANSFERT ET CARTER (ASS)	296
ENTRAÎNEMENT AUXILIAIRE (ASS)	26
ENTRAÎNEMENT DE CERCLE (ASS)	436
ENTRAÎNEMENT DE CHAÎNE (ASS)	266
ENTRAÎNEMENT DE POMPE (ASS)	439
ENTRAÎNEMENT POUR COURROIE (GYROPHARE)	158
ESSIEU AV (ASS)	352
ESSUIE-GLACE (ASS)	749
	750
	752
	754
	756
	758
ESSUIE-GLACE (VERSION)	748

F

FAISCEAU DE CHÂSSIS (ENS)	225
FENÊTRE D'AFFICHAGE - TABLEAU DE BORD (ASS)	710
	712
FILTRE A AIR (ASS)	85
	86
FILTRE À AIR DE CABINE (ASS)	648
FILTRE À AIR (PANNEAU ARRIÈRE ROPS)	648
FILTRE A CARBURANT (ASS)	98
FILTRE A CARBURANT (ENS)	98
FILTRE A HUILE (ASS)	292
FILTRE À HUILE MOTEUR (ASS)	56
FILTRE A HUILE MOTEUR (ENS)	56
FILTRE (AÉRATION DE LA CABINE)	648
FILTRE DE SÉPARATEUR D'EAU ET DE CARBURANT (ASS)	99
FLEXIBLE D'ÉVACUATION DES VAPEURS	8
FREIN DE MANOEUVRE - COMMANDE (ASS)	388
FREIN DE MANOEUVRE (ASS)	382
FUSIBLE (10A) (AVERTISSEUR DE RECUL AUXILIAIRE)	164
FUSIBLE (10A) (CLIGNOTANT/ FEUX DE DÉTRESSE)	180
FUSIBLE (10A) (CLIGNOTANTS)	220
FUSIBLE (10A) (CONSOLE DE DIRECTION)	260
FUSIBLE (10A) (CONTRÔLEUR DE LAME)	228
FUSIBLE (10A) (DÉGIVREUR ARRIÈRE)	647
FUSIBLE (10A) (DÉGIVREUR AVANT)	646
FUSIBLE (10A) (DÉVOLTEUR POUR COURANT)	138
FUSIBLE (10A) (ESSUIE-GLACE)	754
FUSIBLE (10A) (ESSUIE-GLACE)	756
FUSIBLE (10A) (FEUX ARRIÈRE, TÉMOINS DE TABLEAU/ CONTRÔLE DE DIRECTION AUXILIAIRE)	254
FUSIBLE (10A) (FEUX DE CROISEMENT/ DE ROUTE ET CLIGNOTANT)	184
FUSIBLE (10A) (FEUX DE ROUTE/FEUX DE CROISEMENT)	176
FUSIBLE (10A) (GYROPHARE)	142
	194
	196
FUSIBLE (10A) (LAMPE D'APPOINT)	162
FUSIBLE (10A) (LAMPE DE BOUCLIER)	230
FUSIBLE (10A) (MIROIR CHAUFFÉ)	690
FUSIBLE (10A) (PHARES DE TRAVAIL AVANT)	172
FUSIBLE (10A) (PROJECTEUR DE LAME)	168
FUSIBLE (10A) (PROJECTEUR DROIT)	170
	188

INDEX

Désignation	Page
FUSIBLE (10A) (RADIO)	136
FUSIBLE (10A) (RÉTROVISEUR EXTÉRIEUR CHAUFFÉ)	692
FUSIBLE (15A) (CHAUFFAGE ET CLIMATISATION)	651
FUSIBLE (15A) (CLIMATISEUR)	609
FUSIBLE (15A) (ESSUIE-GLACE AVANT SUPÉRIEUR /INFÉRIEUR)	226
FUSIBLE (30A) (CONVERTISSEUR DE PUISSANCE)	137

G

GICLEUR-ÉTHER (ENS)	214
GOULOTTE DE REMPLISSAGE D'HUILE DE TRANSMISSION	290
GRAISSEUR (BARRE D'INCLINAISON DES ROUES)	352
GRAISSEUR (ENS)	70
GRAISSEUR (FILET 1/8-27) (AXE D'ARTICULATION SUPÉRIEUR/INFÉRIEUR)	370
GRAISSEUR (OSCILLATION D'ESSIEU)	352
GRAISSEUR (PALIER D'INCLINAISON DES ROUES)	352
GRAISSEUR (PIVOT DE FUSÉE)	352
GROUPE DE CONTROLE (SYSTÈME DE SURVEILLANCE CATERPILLAR)	706 708
GROUPE DE CONTROLE (SYSTÈME DE SURVEILLANCE CATERPILLAR)	139
GROUPE DE ROTATION DE POMPE	484 485
GROUPE D'ORIENTATION	487

H

HUILE MOTEUR - CARTER (ASS)	38

I

INDICATEUR (ENS) (REMPLACEMENT DE FILTRE À AIR)	86
INJECTEUR DE CARBURANT (ASS)	100
INJECTEUR D'ÉTHER AU DÉMARRAGE (ASS)	212
INSONORISATION (ASS)	48
INSTRUMENTS (VERSION)	666
INTERRUPTEUR - BOUTON-POUSSOIR (ENS) (AFFICHAGE NUMÉRIQUE DU MODE CONDUCTEUR)	706
INTERRUPTEUR - BOUTON-POUSSOIR (ENS) (MODE CONDUCTEUR)(AFFICHAGE NUMÉRIQUE)	708
INTERRUPTEUR À BASCULE (ENS) (ARRÊT DU MOTEUR)	240
INTERRUPTEUR BALANCIER (ENS) (FEUX AVANT FEUX ARRIÈRE)	172 176 184 220
INTERRUPTEUR BALANCIER (ENS) (FEUX AVANT FEUX ARRIÈRE)	180
INTERRUPTEUR BALANCIER (ENS) (PROJECTEUR DE LAME)	168
INTERRUPTEUR DE DÉMARRAGE (ASS) (CLAVETTE)	258
INTERRUPTEUR DE THERMOSTAT (ENS) (RÉFRIGÉRANT)	610
INTERRUPTEUR D'ÉCLAIRAGE (ASS)	220
INTERRUPTEUR D'ESSUIE-GLACE	223
INTERRUPTEUR D'ESSUIE-GLACE (ARRIÈRE)	754 756
INTERRUPTEUR D'ESSUIE-GLACE (ASS)	223
INTERRUPTEUR ROTATIF (ENS) (CLIGNOTANT DE DIRECTION)	220
INTERRUPTEUR ROTATIF (ENS) (ESSUIE-GLACE AVANT SUPÉRIEUR /INFÉRIEUR)	226
INTERRUPTEUR ROTATIF (ENS) (FEUX DE ROUTE/FEUX DE CROISEMENT)	172 180 184
INTERRUPTEUR ROTATIF (ENS) (FEUX DE ROUTE/FEUX DE CROISEMENT)	176
INTERRUPTEUR ROTATIF (ENS) (VITESSE DU VENTILATEUR)	610
INTERRUPTEUR SPHÉRIQUE (ENS) (RAPPORT DE VITESSE)	240
ISOLATION DE CABINE (ASS)	668

J

JANTE (ASS)	350
JANTE (ASS)	349 350
JAUGE D'HUILE MOTEUR (BAIONNETTE) (ASS)	58
JOINT DE RENIFLARD	50
JOINT DE SUPPORT (CACHE-SOUPAPES)	50
JOINT DE VILEBREQUIN (ASS)	32 46
JOINT PLAT	67
JOINT TORIQUE (DIA INT 123,19MM)	600

K

KIT - COUSSIN (DOSSIER DE VINYLE)	641

INDEX

Désignation	Page
KIT - COUSSIN (RALLONGE DE DOSSIER)	640
KIT - DÉCHARGE (COMPRESSEUR D'AIR) (COMPRESSEUR D'AIR)	6
KIT D'ATTACHE DE CEINTURE DE SECURITE	734
KIT D'ATTACHE (SIÈGE)	736
KIT DE BAGUE (DÉMARREUR)	216
KIT DE BALAI D'ESSUIE-GLACE (ARRIÈRE)	754
KIT DE BALAIS (DÉMARREUR)	216
KIT DE BLOC COULISSANT	720
	722
	726
	727
	728
KIT DE BOUGIE (12 BROCHES)	164
	170
	172
	176
	180
	184
	188
	226
	230
	236
	240
	241
	258
	260
	364
	366
	706
	708
KIT DE BOUGIE (12 BROCHES)	232
KIT DE BOUGIE (12 BROCHES)	228
	692
KIT DE BOUGIE (12 BROCHES)	690
KIT DE BOUGIE (12 BROCHES) (DÉGIVREUR AVANT/ ARRIÈRE)	162
KIT DE BOUGIE (2 BROCHES)	170
	191
	222
	225
	226
	232
	236
	240
	241
	248
	258
	682
KIT DE BOUGIE (2 BROCHES)	186
KIT DE BOUGIE (2 BROCHES)	690
KIT DE BOUGIE (2 BROCHES) (AUXILIAIRE DE DÉMARRAGE À L'ÉTHER)	212
KIT DE BOUGIE (2 BROCHES) (AVERTISSEUR DE RECUL/RETOUR)	244
KIT DE BOUGIE (2 BROCHES) (CONTACTEUR D'ÉCLAIRAGE DE TABLEAU/ KLAXON)	260
KIT DE BOUGIE (2 BROCHES) (CONTACTEUR DES MODES CONDUCTEUR)	708
KIT DE BOUGIE (2 BROCHES) (CÔTÉ PROJECTEUR)	188
KIT DE BOUGIE (2 BROCHES) (CÔTÉ PROJECTEUR)	230
KIT DE BOUGIE (2 BROCHES) (CÔTÉ PROJECTEUR ET CIRCUIT AUXILIAIRE)	692
KIT DE BOUGIE (2 BROCHES) (GYROPHARE)	196
KIT DE BOUGIE (2 BROCHES) (LAMPE D'AILERON CHASSE-NEIGE)	162
	170
KIT DE BOUGIE (2 BROCHES) (LAMPE D'AILERON CHASSE-NEIGE)	188
KIT DE BOUGIE (2 BROCHES) (LAMPE D'AILERON CHASSE-NEIGE)	228
KIT DE BOUGIE (2 BROCHES) (MOTEUR)	652
KIT DE BOUGIE (2 BROCHES) (PHARES AVANT À BARRE LUMINEUSE)	172
KIT DE BOUGIE (2 BROCHES) (PROJECTEUR LATÉRAL)	164
KIT DE BOUGIE (2 BROCHES) (PROJECTEURS DE TRAVAIL AVEC BARRE LUMINEUSE)	176
	180
KIT DE BOUGIE (2 BROCHES) (RÉCHAUFFEUR DE MOTEUR DE CLIMATISEUR)	611
KIT DE BOUGIE (2 BROCHES) (RELAIS DE DÉMARRAGE)	249
KIT DE BOUGIE (3 BROCHES)	203
	204
	226
	232
	236
	241
	244
KIT DE BOUGIE (3 BROCHES) (CAPTEUR DE LEVIER DE COMMANDE DE TRACTION INTÉGRALE)	260
KIT DE BOUGIE (3 BROCHES) (CLIGNOTANTS À BARRE LUMINEUSE)	172
KIT DE BOUGIE (4 BROCHES)	164
	188
	230
	241
	258
	260
KIT DE BOUGIE (4 BROCHES)	690
	692

INDEX

Désignation	Page
KIT DE BOUGIE (4 BROCHES) (CAPTEUR DE VITESSE DE TRANSLATION/ PUISSANCE/ TRANSLATION)	236
KIT DE BOUGIE (4 BROCHES) (CONTACTEUR DE LAMPE D'APPOINT AUXILIAIRE)	170
KIT DE BOUGIE (4 BROCHES) (LAMPE D'APPOINT AUXILIAIRE)	162
KIT DE BOUGIE (4 BROCHES) (LAMPE ET CONTACTEUR D'APPOINT AUXILIAIRE)	228
KIT DE BOUGIE (4 BROCHES) (RELAIS DE DÉMARRAGE)	249
KIT DE BOUGIE (4 BROCHES) (RELAIS DE DISJONCTEUR DE COMMANDE MOTEUR ET DE DÉMARRAGE)	249
KIT DE BOUGIE (6 BROCHES)	184 226 236 249 258 708
KIT DE BOUGIE (8 BROCHES)	164 170 188 226 230 236
KIT DE BOUGIE (8 BROCHES)	228 690 692
KIT DE BOUGIE (8 BROCHES) (ESSUIE-GLACE/ LAVE-GLACE AVANT/ ARRIÈRE)	162
KIT DE BOULONNERIE (SIÈGE)	736
KIT DE BRIDE DE FIXATION DE FILTRE A AIR	85
KIT DE CAPTEUR (NIVEAU DE CARBURANT)	116
KIT DE COUSSIN DE SIEGE	720
KIT DE COUSSIN DE SIEGE (VINYLE)	722
KIT DE COUSSINET	661
KIT DE COUSSINET DE VILEBREQUIN (COMPRESSEUR D'AIR)	6
KIT DE CULASSE (COMPRESSEUR D'AIR)	6
KIT DE DECLENCHEUR DE FREIN	377
KIT DE DIAPHRAGME (KLAXON)	656
KIT DE FILTRE DE SÉPARATEUR D'EAU ET DE CARBURANT	99
KIT DE GAINE	734
KIT DE JOINT DE CARTOUCHE	328
KIT DE JOINT DE CARTOUCHE (VERROUILLAGE DE DIFFÉRENTIEL)	316
KIT DE JOINTS	400 478
KIT DE JOINTS (ÉLECTROVANNE)	588
KIT DE JOINTS (VENTILATEUR HYDRAULIQUE)	590
KIT DE LEVIER (DÉMARREUR)	216
KIT DE MARTEAU HYDRAULIQUE	649 650
KIT DE PALIER PRINCIPAL (VILEBREQUIN)	16
KIT DE PANNEAU DU DOSSIER DU SIEGE	720 722
KIT DE PARE-CHOCS	661
KIT DE PISTON (DIRECTION HYDRAULIQUE)	480
KIT DE PISTON EXCENTRIQUE (DIRECTION HYDRAULIQUE)	480
KIT DE POUSSOIR	660 661
KIT DE PRISE FEMELLE (12 BROCHES)	172 176 180 184
KIT DE PRISE FEMELLE (12 BROCHES)	134 260
KIT DE PRISE FEMELLE (12 BROCHES)	164 170 188 226 228 230 236 244 249 258 364 366 690 692 706 708
KIT DE PRISE FEMELLE (12 BROCHES)	246
KIT DE PRISE FEMELLE (12 BROCHES) (CONTACTEUR DE GYROPHARE)	162
KIT DE PRISE FEMELLE (12 BROCHES) (PROJECTEURS DE TRAVAIL AVEC BARRE LUMINEUSE)	180
KIT DE PRISE FEMELLE (12 BROCHES) (PROJECTEURS DE TRAVAIL AVEC BARRE LUMINEUSE)	176
KIT DE PRISE FEMELLE (2 BROCHES)	123 158 162 164 170 186 188 191 199 224 226

INDEX

Désignation	Page
	228
	230
	232
	236
	237
	244
	384
	611
	616
	642
	658
	682
	690
	692
KIT DE PRISE FEMELLE (2 BROCHES)	240
	241
	682
	706
	708
KIT DE PRISE FEMELLE (2 BROCHES)	159
KIT DE PRISE FEMELLE (2 BROCHES)	225
	236
	328
	588
KIT DE PRISE FEMELLE (2 BROCHES) (CONVERTISSEUR DE RADIO/ALLUMAGE)	137
KIT DE PRISE FEMELLE (2 BROCHES) (DÉMARRAGE À L'ÉTHER)	212
KIT DE PRISE FEMELLE (2 BROCHES) (DÉSHYDRATEUR/ AVERTISSEUR DE RECUL)	249
KIT DE PRISE FEMELLE (2 BROCHES) (ÉLECTROVANNE)	738
KIT DE PRISE FEMELLE (2 BROCHES) (ÉLECTROVANNES DE DÉPORT DE CERCLE)	404
KIT DE PRISE FEMELLE (2 BROCHES) (LAMPE D'AILERON CHASSE-NEIGE)	170
	188
KIT DE PRISE FEMELLE (2 BROCHES) (MOTEUR DE RÉCHAUFFEUR)	652
KIT DE PRISE FEMELLE (2 BROCHES) (ORIFICE DE PUISSANCE 12V)	607
	608
KIT DE PRISE FEMELLE (2 BROCHES) (RÉCHAUFFEUR D'ADMISSION D'AIR)	232
KIT DE PRISE FEMELLE (2 BROCHES) (RELAIS PRINCIPAL)	249
KIT DE PRISE FEMELLE (2 BROCHES) (TÉMOINS DU TABLEAU DE BORD)	258
KIT DE PRISE FEMELLE (3 BROCHES)	143
	156
	157
	186
	191
	202
	226
	232
	236
	244
	260
KIT DE PRISE FEMELLE (3 BROCHES)	240
	241
KIT DE PRISE FEMELLE (3 BROCHES)	225
	246
	254
KIT DE PRISE FEMELLE (3 BROCHES) (CLIGNOTANT/FEUX DE STATIONNEMENT)	166
KIT DE PRISE FEMELLE (4 BROCHES)	164
	170
	188
	226
	228
	230
	236
	241
	260
	692
KIT DE PRISE FEMELLE (4 BROCHES)	240
KIT DE PRISE FEMELLE (4 BROCHES) (AUXILIAIRE DE DÉMARRAGE À L'ÉTHER)	212
KIT DE PRISE FEMELLE (4 BROCHES) (CONTACTEUR DE GYROPHARE)	196
KIT DE PRISE FEMELLE (4 BROCHES) (LAMPE D'APPOINT AUXILIAIRE)	162
KIT DE PRISE FEMELLE (4 BROCHES) (LAMPES DE BOUCLIER/MIROIR CHAUFFÉ)	162
KIT DE PRISE FEMELLE (4 BROCHES) (RELAIS DE DÉMARRAGE/ DISJONCTEUR DE COMMANDE MOTEUR)	249
KIT DE PRISE FEMELLE (4 BROCHES) (VITESSE DE TRANSLATION)	201
KIT DE PRISE FEMELLE (6 BROCHES)	226
	236
	258
	652
	706
	708
	749
KIT DE PRISE FEMELLE (6 BROCHES)	241
KIT DE PRISE FEMELLE (6 BROCHES)	364
	366
KIT DE PRISE FEMELLE (6 BROCHES) (CHAUFFAGE ET CLIMATISATION)	611
KIT DE PRISE FEMELLE (6 BROCHES) (COMPTEUR DE VITESSE ET COMPTE-TOURS)	697

INDEX

Désignation	Page
KIT DE PRISE FEMELLE (6 BROCHES) (MODULE QUATRE INSTRUMENTS)	696
KIT DE PRISE FEMELLE (6 BROCHES) (MOTEUR D'ESSUIE-GLACE)	750
KIT DE PRISE FEMELLE (6 BROCHES) (MOTEUR D'ESSUIE-GLACE)	752
KIT DE PRISE FEMELLE (6 BROCHES) (PHARE AVANT)	148
	150
	152
	154
KIT DE PRISE FEMELLE (8 BROCHES)	162
	164
	170
	188
	223
	226
	228
	230
	690
	692
	706
	708
KIT DE PRISE FEMELLE (8 BROCHES) (CONTACTEUR D'ESSUIE-GLACE ARRIÈRE)	754
	756
KIT DE PRISE FEMELLE (8 BROCHES) (CONTACTEURS D'ESSUIE-GLACE AVANT)	226
KIT DE REDRESSEMENT	702
KIT DE REGLAGE	702
KIT DE REGLAGE DE SIEGE - INCLINAISON	702
KIT DE RESSORTS	478
	661
KIT DE ROULEAU	734
KIT DE ROULEAU (SIÈGE)	736
KIT DE SEGMENT STANDARD (COMPRESSEUR D'AIR)	6
KIT DE TIGE	702
KIT D'INDICATEUR	661
KIT D'INDICATEUR (SIÈGE)	736
KIT D'ISOLANT (DÉMARREUR)	216
KLAXON PNEUMATIQUE (ASS)	656
KLAXON PNEUMATIQUE (ASS)	658

L

Désignation	Page
LAME (ASS)	598
LAME DE COUPE (ASS)	599
LAMPE - CLIGNOTANT DE DIRECTION (ASS)	156
	157
LAMPE - CLIGNOTANT DE DIRECTION (ASS) (DROITE)	166
LAMPE - CLIGNOTANT DE DIRECTION (ASS) (GAUCHE)	166
LAMPE - CLIGNOTANT DE DIRECTION (ASS) (24 VOLTS) (CLIGNOTANT DE BARRE LUMINEUSE/ FEUX DE STATIONNEMENT)	172
LAMPE - FEUX AV (24 VOLTS) (FEUX DE CROISEMENT)	145
LAMPE - FEUX AV (24 VOLTS)(65 WATTS) (FEUX DE ROUTE)	146
LAMPE - FEUX AV (24 VOLTS)(65 WATTS) (PROJECTEUR)	144
LAMPE - GYROPHARE (ASS)	158
LAMPE - PHARE (ASS)	144
LAMPE - PHARE ET CLIGNOTANT	152
	154
LAMPE-CÔTÉ DROIT (ENS) (STOP/FEU AR/CLIGNOTANT DIRECTION)	246
LAMPE-CÔTÉ GAUCHE (ENS) (STOP/FEU AR/CLIGNOTANT DIRECTION)	246
LAVE-GLACE - VITRE (ASS)	740
	742
LENTILLE (ENS) (CLIGNOTANT DE DIRECTION)	148
	150
	152
	154
LENTILLE (ENS) (FEUX DE ROUTE/FEUX DE CROISEMENT)	152
	154
LENTILLE (ENS) (PHARE AVANT) (FEUX DE CROISEMENT)	166
LENTILLE (ENS) (PHARE AVANT) (FEUX DE ROUTE)	166
LENTILLE (ENS) (PHARE AVANT)(FEUX DE CROISEMENT)	145
LENTILLE (ENS) (PHARE AVANT)(FEUX DE ROUTE)	146
LENTILLE (ENS) (PROJECTEUR)	144
LENTILLE (JAUNE) (CLIGNOTANT DE DIRECTION)	152
	154
LENTILLE ORANGE (CLIGNOTANT DE DIRECTION)	148
	150
LENTILLE ORANGE (GYROPHARE)	158
LENTILLE (PLAFONNIER)	143
LEVAGE - LAME (ASS)	600

M

Désignation	Page
MACHOIRE (ENS) (RÉCHAUFFEUR 12 VOLTS) (SÉPARATEUR CARBURANT/EAU)	99
MANOCONTACT (ENS) (CLIMATISEUR)(VIT ÉLEVÉE-BASSE)	682

INDEX

Désignation	Page
MANOCONTACT (ENS) (DIRECTION PRINCIPALE)	254
MANOCONTACT (ENS) (FEU D'ARRÊT)	236
MANOMETRE D'AIR (ASS) (FREIN - DROITE)	706
MANOMETRE D'AIR (ASS) (FREIN GAUCHE)	706
MANOMÈTRE D'AIR (ENS) (FREIN - DROITE)	708
MANOMÈTRE D'AIR (ENS) (FREIN GAUCHE)	708
MARCHEPIED (ASS)	373
MARTEAU ET MONTAGE (ASS)	649
	650
MODULE - QUATRE INSTRUMENTS (ASS)	696
MODULE D'INDICATEUR DE VITESSE ET COMPTE-TOURS (ASS)	697
MONTAGE - GYROPHARE (ASS)	142
MONTAGE DE CULBUTERIE (ASS)	37
MONTAGE DE MOTEUR (ASS)	36
MONTAGE DE RADIO (ASS)	664
MONTAGE DE RADIO (VERSION)	663
MONTAGE DE RIPPER (ASS)	602
MONTAGE DU TOIT ROPS (ASS)	698
	700
MOTEUR À ENGRENAGES (ASS)	468
MOTEUR ELECTRIQUE (ASS)	198
	199
	200
MOTEUR ELECTRIQUE (ASS) (27 VOLTS) (CLIMATISEUR)	611
MOTEUR ELECTRIQUE (ASS) (27 VOLTS) (RÉCHAUFFEUR)	652
MOTEUR ET VENTILATEUR (ASS)	64
MOTEUR HYDRAULIQUE (ASS)	470
MOTEUR (VERSION)	4

O

OEILLETONS DE LEVAGE MOTEUR (ASS)	35

P

PARE-POUSSIERE	42
	56
	70
	74
	94
	272
	450
	453
	463
	522
PARE-POUSSIERE (HUILE DE BOÎTE)	70
PARE-SOLEIL (ASS)	718
PHARE AV (ASS)	145
	146
	148
	150
PHARE AV (ASS) (24 VOLTS) (FEUX DE CROISEMENT)	180
PIGNONNERIE AV (ASS)	30
PISTON ET BIELLE (ASS)	40
PLAFONNIER (ASS)	143
PLAQUE - AVERTISSEMENT (PAS DE DÉGAGEMENT)	761
PLAQUE DE NUMÉRO DE SÉRIE (BOITE DE VITESSE)	306
PLAQUE DE NUMÉRO DE SÉRIE (MOTEUR)	761
PLAQUE DE POUSSÉE (ASS)	596
PLAQUE D'INSTRUCTIONS (BATTERIE)	248
PLAQUE D'INSTRUCTIONS (VIDANGE ET REMPLISSAGE DU CARTER MOTEUR)	101
PLAQUE (IDENTIFICATION PRODUIT)	761
PLAQUE (PRINCIPAL)	249
PLAQUE SIGNALÉTIQUE (ASS)	760
PLAQUE SIGNALÉTIQUE (ASS) (SANS PUISSANCE VARIABLE)	3
PLAQUE SIGNALETIQUE (CLIGNOTANT/ DÉTRESSE)	172
	180
PLAQUE SIGNALÉTIQUE (COMPRESSEUR D'AIR)	6
PLAQUE SIGNALÉTIQUE DE CONTROLEUR	708
PLAQUE SIGNALÉTIQUE DE CONTROLEUR (MODULE D'AFFICHAGE PRINCIPAL)	706
PLAQUE SIGNALETIQUE (FEUX DE ROUTE/DE CROISEMENT)	172
	180
PLAQUES SIGNALETIQUES ET AUTOCOLLANTS (ASS)	760
PLAQUES SIGNALETIQUES ET AUTOCOLLANTS (ASS)	762
	763
	764
PLAQUES SIGNALETIQUES ET AUTOCOLLANTS (ASS) (MOTEUR)	3
PLAQUES SIGNALETIQUES ET AUTOCOLLANTS (ASS) (RÉFLECTEUR)	1
PLATE-FORME - SUPPORT (ASS)	376
POMPE A EAU (ASS)	77
	78
POMPE A ENGRENAGES (ASS)	312
POMPE A HUILE MOTEUR (ASS)	60
	61
POMPE A PISTONS (ASS)	480
	482
POMPE D'ALIMENTATION EN CARBURANT (ASS)	110
POMPE D'ALIMENTATION ET MONTAGE (ASS)	110
POMPE D'AMORÇAGE DE CARBURANT (ASS)	112

INDEX

Désignation	Page
POMPE DE DIRECTION AUXILIAIRE ET MONTAGE (ASS)	476
POMPE DE REGULARISATION DE DEBIT (ASS)	478
POMPE D'INJECTION DE CARBURANT (ASS)	111
POMPE ÉLECTRO-HYDRAULIQUE	198
POMPE ET MONTAGE - PISTON (ASS)	474
POMPE ET MOTEUR (ASS)	472
PORTE (ASS)	626
	628
PORTIÈRE DE CABINE (ASS)	630
	632
	634
	636
POULIE (ASS)	10
POUSSOIR DE SOUPAPE (ASS)	34
PRISE DE COURANT (ENS) (12 VOLTS)	607
	608
PROTECTION DE PLATE-FORME (ASS)	364
	366
PROTÈGE-RADIATEUR ET SUPPORT (ASS)	360

R

RADIATEUR (ASS)	82
	83
RADIATEUR ET MONTAGE (ASS)	80
RALLONGE DU DOSSIER DE SIEGE	640
	641
RÉCEPTEUR-DÉSHYDRATEUR (ASS) (CLIMATISEUR) (RÉFRIGÉRANT)	682
RÉDUCTEURS (ASS)	294
REFROIDISSEMENT (VERSION)	62
	63
REFROIDISSEUR D'ADMISSION ET MONTAGE (ASS)	84
REFROIDISSEUR D'HUILE DE BOÎTE (ASS)	280
RELAIS (ENS) (24 VOLTS) (ÉCLAIRAGES ARRIÈRE/TABLEAU DE BORD)	260
RENIFLARD (CARTER DE DISTRIBUTION)	297
RENIFLARD (ENS) (MOTEUR)	50
RENIFLARD (ENS) (TANDEM)	314
RÉSERVOIR DE CARBURANT (ASS)	114
	116
	118
	119
	120
RÉSERVOIR HYDRAULIQUE ET FILTRE (ASS)	488
RÉSERVOIR HYDRAULIQUE ET MONTAGE (ASS)	490
RÉSERVOIR PNEUMATIQUE (ASS)	394
RESSORT	542
	552
RÉTROVISEUR (ASS)	688
	690
	692
	694
	695
RIPPER (ASS)	604
RIPPER (VERSION)	603
ROBINET DE BATTERIE (ASS)	218
ROBINET DE PRÉLÈVEMENT DE LIQUIDE DE REFROIDISSEMENT	74
ROBINET-PRÉLÈVEMENT D'ÉCHANTILLON DE LIQUIDE (ASS)	56
	70
	462
ROBINET-PRÉLÈVEMENT D'ÉCHANTILLON DE LIQUIDE (ASS) (HUILE DE BOÎTE)	70
ROPS OUVERTE (VERSION)	715
ROTATION DE LA ROUE DU VENTILATEUR SOUFFLANT (ARRÊT MOTEUR)	241
ROTATION DE LA ROUE DU VENTILATEUR SOUFFLANT (ISSUE DE SECOURS/RETIRER VITRE)	649
	650
ROTATION DE LA ROUE DU VENTILATEUR SOUFFLANT (NE PAS PERCER/SOUDER LE CADRE ROPS)	716
	717
ROTATION DE LA ROUE DU VENTILATEUR SOUFFLANT (RÉGLAGE DU SIÈGE)	734
	736
ROTATION DE LA ROUE DU VENTILATEUR SOUFFLANT (REMPLISSAGE DU RÉSERVOIR DE LAVE-GLACE)	761
ROUE - GROUPE DE MONTAGE	304
ROUE ET PNEU (ASS)	337
	338
	339
ROUE ET PNEU (ASS)	339
	340
	341
	342
	343
	344
	345
	346
	347
	348
ROUE ET PNEU (VERSION)	332
	333
	334
	335
	336
	337
ROUE (VERSION)	349

INDEX

Désignation	Page

S

SIEGE - COUVERCLE INFERIEUR (ASS)	702
SIÈGE (ASS)	720
	722
SIÈGE AVEC SUSPENSION (ASS)	724
	725
	726
	736
SIÈGE AVEC SUSPENSION (ASS)	727
	728
	729
	730
	734
SILENCIEUX (ASS)	90
SONDE - CIRCUIT DE CARBURANT	202
SONDE - NIVEAU DE CARBURANT (ENS)	116
SONDE (ENS)-POSITION (VITESSE)	240
SOUPAGE - SOLÉNOIDE ET COLLECTEUR	589
	590
SOUPAPE - SOLÉNOÏDE (ASS)	328
	738
SOUPAPE - SOLÉNOÏDE (ASS)	588
SOUPAPE - SOLÉNOÏDE (ASS) (AMORTISSEUR DE LAME)	589
SOUPAPE DE COMBINAISON (ASS)	522
SOUPAPE DE DERIVATION-POMPE	52
SOUPAPE DE PURGE (ASS)	578
SOUPAPE DE VIDANGE (EAU)	74
SOUPAPE DE VIDANGE (RADIATEUR)	83
SOUPAPE ET MONTAGE DE VERROUILLAGE DE DIF. (ASS)	316
SOUPAPE ET TIMONERIE (ASS)	492
	494
	496
	498
	500
	504
	506
	508
SOUPAPE PILOTE (ASS)	318
SOUPAPE RÉGULATRICE DE PRESSION ET DÉBIT	574
	576
SOUPAPE SELECTRICE ET REGULATRICE DE PRESSION	322
	324
	326
SUPPORT DE FILTRE À HUILE (ASS)	52
SUPPORT DE MOTEUR (ASS)	47
SUPPORT DE SIÈGE (ASS)	732
SUPPORT DU RESERVOIR DE CARBURANT (ASS)	375
SUSPENSION DE SIEGE - CARTER (ASS)	660

T

TABLEAU DE BORD (ASS)	704
	705
	706
	708
TAMIS D'ASPIRATION (BOÎTE DE VITESSES)	297
TAMIS D'ASPIRATION (DIFFÉRENTIEL)	297
TANDEM ET CARTER (ASS)	314
TAPIS DE PLANCHER (CABINE)	668
TENDEUR DE COURROIE (ASS)	10
THERMOSTAT ET BOITIER (ASS)	67
THERMOSTAT-TEMPÉRATURE D'EAU (98 DEG C)	67
TOIT ROPS - OUVERT (ASS)	717
TOIT ROPS FERME (VERSION)	714
*TOOL BOX GP	759
TRANSFORMATION ELECTRIQUE (ASS)	136
	137
	138
TRANSFORMATION ELECTRIQUE (ASS) (24 VOLTS À 12 VOLTS)	138
TRANSFORMATION ÉLECTRIQUE (VERSION)	135
TURBOCOMPRESSEUR - CARTOUCHE (ASS)	93
TURBOCOMPRESSEUR (ASS)	92
	93

V

VANNE PILOTE (ASS)	587
VENTILATEUR DE CABINE (ASS)	642
VENTILATEUR DE CABINE (ASS)	644
	646
	647
VÉRIN D'ARTICULATION (ASS)	414
VÉRIN D'ARTICULATION ET MONTAGE (ASS)	407
VÉRIN DE DÉPORT DE CERCLE (ASS)	420
VÉRIN DE DÉPORT DE CERCLE ET MONTAGE (ASS)	410
VÉRIN DE DÉPORT DE LAME (ASS)	411
	424
VERIN DE DIRECTION (ASS)	426
	428
VERIN DE DIRECTION ET MONTAGE (ASS)	412
VÉRIN DE LEVAGE DE LAME (ASS)	416
VERIN DE LEVAGE DE RIPPER (ASS)	422
VÉRIN DE RELEVAGE DE LAME ET MONTAGE (ASS)	408
VÉRIN D'INCIDENCE DE LAME (ASS)	418
VÉRIN D'INCLINAISON DE LAME ET MONTAGE (ASS)	409
VÉRIN D'INCLINAISON DE ROUE (ASS)	430

INDEX

Désignation	Page
VÉRIN D'INCLINAISON DE ROUE ET MONTAGE (ASS)	413
VERROUILLAGE DE COMMANDE MANUELLE HYDRAUL. (ASS)	467
VERROUILLAGE DE DÉPORT DE CERCLE (ASS)	466
VERSION DE SUPPORT DE CHÂSSIS ARRIÈRE	374
VERSION DE TRANSFORMATION - HOMOLOGATION	1
VERSION DE TRANSFORMATION - SANS ROPS	624
VILEBREQUIN (ASS)	16
VISIÈRE - GROUPE AUXILIAIRE	607
	608
VITRE (ASS)	743
	744
	745
	746
	747
VOLANT MOTEUR (ASS)	29
VUE DU MODÈLE	2

INDICE

Nombre	Página
A	
ACCESORIOS - IMPULSOR DE (GR)	26
ACCESORIOS DE LA CABINA (GR)	608
ACCESORIOS DE LA CABINA (GR)	607
ACONDICIONADOR DE AIRE (CONFIG)	609
ACONDICIONADOR DE AIRE (GR)	610
ACONDICIONADOR DE AIRE Y MONTAJE (GR)	609
ACTIVADOR DEL FRENO (GR)	377
ACUMULADOR HIDRAULICO (GR)	400
ACUMULADOR HIDRAULICO Y MONTAJE (GR)	398
ADAPTADOR DE LLENADO RÁPIDO DE COMBUSTIBLE (GR)	94
ADAPTADOR DEL MOTOR A LA TRANSMISIÓN	264
ADAPTADOR (GR)	70
AGUA DE LAS CAMISAS - CALENTADOR DEL (GR)	140 141
ALARMA (GR)	123
ALFOMBRILLA DEL PISO (CABINA)	668
ÁRBOL DE LEVAS (GR)	12
ARRANQUE - INTERRUPTOR DE (GR) (LLAVE)	258
ARTICULACIÓN DE CILINDRO (GR)	414
ASIENTO CON SUSPENSIÓN (GR)	734 736
ASIENTO (GR)	720 722
ATOMIZADOR DE ETER (CONJ)	214
AUXILIAR DE ARRANQUE CON ÉTER (GR)	214
AUXILIAR DE ARRANQUE CON ÉTER (GR)	212
B	
BALANCÍN (GR)	44
BALIZA DE ADVERTENCIA (GR) - INSTALACIÓN	142
BANCADA 5 (GR)	515 516 517 518
BARRA DE TIRO (GR)	594
BASTIDOR DELANTERO (GR)	359
BATERÍA	127
BATERÍA (GR)	127
BLOQUE DE EMPALME (GR)	128
BLOQUE DESLIZANTE-JUEGO	720 722 726 727 728
BLOQUE MOTOR (CONJ)	18 19
BLOQUE MOTOR (GR)	20
BOCINA DE AIRE (GR)	656 658
BOMBA - TUBERÍAS DE (GR)	452
BOMBA DE ACEITE DEL MOTOR (GR)	60 61
BOMBA DE AGUA (GR)	77 78
BOMBA DE CEBADO DE COMBUSTIBLE (GR)	112
BOMBA DE ENGRANAJES (GR)	312
BOMBA DE INYECCIÓN DE COMBUSTIBLE (GR)	111
BOMBA DE PISTONES (GR)	480 482
BOMBA DE TRANSFERENCIA DE COMBUSTIBLE (GR)	110
BOMBA DE TRANSFERENCIA DE COMBUSTIBLE Y MONTAJE (GR)	110
BOMBA HIDRÁULICA ELÉCTRICA	198
BOMBA Y MONTAJE DE LA DIRECCIÓN SECUNDARIA (GR)	476
BOMBA Y MONTAJE DEL PISTÓN (GR)	474
BOMBA Y MOTOR (GR)	472
C	
CABINA ROPS CERRADA (GR)	716
CABLES DE INYECTOR (GR)	263
CABLES DE LA CABINA (GR)	228
CABLES DE LA CABINA (GR)	226 230
CABLES DE LA CONSOLA DE CAMBIOS (GR)	258
CABLES DE LA CONSOLA DE DIRECCIÓN (GR)	260
CABLES DE LA DIRECCIÓN SECUNDARIA	254
CABLES DEL MOTOR (GR)	232
CABLES DELANTEROS (GR)	236
CABLES POSTERIORES (GR)	240 244 246 248
CADENA DE IMPULSIÓN (GR)	266
CAJA DE LA SUSPENSIÓN DEL ASIENTO (GR)	660
CAJA DE LA TRANSMISIÓN (GR)	265
CAJA DELANTERA (GR)	32
CAJA Y BASTIDOR (GR)	355
CAJA Y TRANSFERENCIA DEL ENGRANAJE (GR)	296

* NO HAY TRADUCCION DISPONIBLE EN EL MOMENTO DE LA IMPRESION

INDICE

Nombre	Página
CALCOMANÍA DE ADVERTENCIA (ASIENTO AJUSTABLE)	734, 736
CALCOMANÍA DE ADVERTENCIA (CILINDRO PARA ALTA PRESION)	761
CALCOMANÍA DE ADVERTENCIA (CONEXION DE CABLE)	761
CALCOMANÍA DE ADVERTENCIA (LLENADO DEL DEPÓSITO DEL LAVAPARABRISAS)	761
CALCOMANÍA DE ADVERTENCIA (MUELLE DE ALTA COMPRESÓN)	761
CALCOMANÍA DE ADVERTENCIA (NO TALADRE/SUELDE ROPS)	716, 717
CALCOMANÍA DE ADVERTENCIA (NO USAR COMO ESCALÓN)	116
CALCOMANÍA DE ADVERTENCIA (PARADA DE MOTOR)	241
CALCOMANÍA DE ADVERTENCIA (REFRIGERANTE PRESURIZADO)	761
CALCOMANÍA DE ADVERTENCIA (SALIDA ALTERNATIVA/QUITE VENTANA)	649, 650
CALCOMANIA DE FUSIBLE (LUCES, ARANDELA, LIMPIAPARABRISAS, DESCONGELADOR)	226
CALCOMANÍA DE IDENTIFICACIÓN (FILTRO DE ACEITE DE MOTOR)	760
CALCOMANÍA DE IDENTIFICACIÓN (FUSIBLE) (LUZ ALTA/BAJA)	176
CALCOMANIA DEL TABLERO DE INSTRUMENTOS (LUCES ALTAS/BAJAS DELANTERAS)	172, 180
CALCOMANIA DEL TABLERO DE INSTRUMENTOS (LUCES DE GIRO/PELIGRO)	180
CALCOMANIA DEL TABLERO DE INSTRUMENTOS (LUCES DE GIRO/PELIGRO)	172
CALCOMANIA-LEVANTAMIENTO Y AMARRE	761
CALCOMANÍA (UBICACIÓN DEL CONECTOR DE LEVANTAMIENTO)	760
CALCOMANÍA (VISERA)	705
CALCOMANÍAS Y PLACAS DE IDENTIFICACIÓN (GR)	760, 762, 763, 764
CALCOMANÍAS Y PLACAS DE IDENTIFICACIÓN (GR) (MOTOR)	3
CALCOMANÍAS Y PLACAS DE IDENTIFICACIÓN (GR) (REFLECTOR)	1
CALEFACCIÓN DE LA CABINA (CONFIG)	651
CALEFACCIÓN DE LA CABINA (GR)	652
CALEFACCIÓN Y MONTAJE DE LA CABINA (GR)	651
CÁNCAMOS DE LEVANTAMIENTO DEL MOTOR (GR)	35
CANDADO (GR)	490, 624, 715, 759
CANTONERA (GR)	597
CARATUCHO-DESECANTE (SECADOR DE AIRE)	381
CARGA - ALTERNADOR DE (GR)	126
CARGA - ALTERNADOR DE (GR)	124
CÁRTER - COLECTOR DEL (GR)	38
CENICERO	670, 674
CIGÜEÑAL (GR)	16
CILINDRO DE ARTICULACIÓN Y MONTAJE (GR)	407
CILINDRO DE DESPLAZAMIENTO DEL CÍRCULO (GR)	420
CILINDRO DE DESPLAZAMIENTO DEL CÍRCULO Y MONTAJE (GR)	410
CILINDRO DE DESPLAZAMIENTO LATERAL (GR)	424
CILINDRO DE DESPLAZAMIENTO LATERAL Y MONTAJE (GR)	411
CILINDRO DE DIRECCIÓN (GR)	426, 428
CILINDRO DE DIRECCIÓN Y MONTAJE (GR)	412
CILINDRO DE ÉTER (CONJ)	212
CILINDRO DE INCLINACIÓN DE LA HOJA (GR)	418
CILINDRO DE INCLINACIÓN DE LAS RUEDAS (GR)	430
CILINDRO DE INCLINACIÓN DE RUEDA Y MONTAJE (GR)	413
CILINDRO DE LA PUNTA DE LA HOJA Y MONTAJE (GR)	409
CILINDRO DE LEVANTAMIENTO DE HOJA Y MONTAJE (GR)	408
CILINDRO DE LEVANTAMIENTO DE LA HOJA (GR)	416
CILINDRO DE LEVANTAMIENTO DEL DESGARRADOR (GR)	422
CINTURÓN DE SEGURIDAD (GR)	719
CINTURÓN DE SEGURIDAD (GR) (RETRACTIL)	726, 727, 729
CÍRCULO (GR)	592

* NO HAY TRADUCCION DISPONIBLE EN EL MOMENTO DE LA IMPRESION

INDICE

Nombre	Página
COLADOR (LLENADOR DE ACEITE HIDRAULICO)	488
COMBUSTIBLE - TANQUE DE (GR)	114, 116, 118, 119, 120
COMPARTIMIENTO DEL MOTOR (GR)	356
COMPRESOR DE AIRE (GR)	6
COMPRESOR DE AIRE (GR)	8
COMPRESOR DE REFRIGERANTE (GR)	616, 617
CONDENSADOR DEL REFRIGERANTE Y MONTAJE (GR)	618
CONDUCTO (GR)	639
CONDUCTO Y CONTROL (GR)	638
CONEXION (CONJ)	70
CONEXIÓN DE ENGRASE (BARRA DE INCLINACION DE RUEDA)	352
CONEXIÓN DE ENGRASE (COJINETE DE INCLINACION DE RUEDA)	352
CONEXIÓN DE ENGRASE (OSCILACION DEL EJE)	352
CONEXIÓN DE ENGRASE (PIVOTE DE DIRECCION)	352
CONEXIÓN DE ENGRASE (ROSCA DE 1/8-27) (PASADOR DE ARTICULACION SUPERIOR/INFERIOR)	370
CONFIGURACIÓN DE ENFRIAMIENTO	62, 63
CONFIGURACIÓN DE MOTORES	4
CONFIGURACIÓN DE SOPORTE DE CHASIS TRASERO	374
CONFIGURACIÓN DE TRANSFORMACIÓN PARA CERTIFICACIÓN	1
CONFIGURACIÓN GENERAL	2
CONJUNTO DE DESTELLADOR (12/24 VOLTIOS)	172
CONJUNTO DE DESTELLADOR (12/24 VOLTIOS) (LUZ DE GIRO/PELIGRO)	180
CONJUNTO DE ELEMENTO DE CALEFACCION (240 VOLTIOS/1250 VATIOS)	141
CONJUNTO DE MODIFICACIÓN (SIN ROPS)	624
CONSOLA DEL OPERADOR (GR)	620
CONTROL DE AIRE-VÁLVULA	396, 397
CONTROL DE DIRECCIÓN (GR)	406
CONTROL DE LA DIRECCION SECUNDARIA (GR)	134
CONTROL DE LA TRANSMISIÓN (GR)	274
CONTROL DE MONITOR (GR) (SISTEMA MONITOR CATERPILLAR)	139
CONTROL DE MONITOR (GR) (SISTEMA MONITOR CATERPILLAR)	706, 708
CONTROL DE REGULADOR (GR)	96
CONTROL DE TRABA DEL DESPLAZADOR DEL CÍRCULO (GR)	404
CONTROL DE TRABA DEL DIFERENCIAL (GR)	272
CONTROL DEL EMBRAGUE (GR)	268
CONTROL DEL FRENO DE ESTACIONAMIENTO	384
CONTROL ELECTRÓNICO DEL MOTOR (GR)	132, 133
CONTROL ELECTRÓNICO DEL MOTOR Y MONTAJE	131
CONTROL HIDRÁULICO (CONFIG)	401, 402
CONTROL HIDRÁULICO DE LA TRANSMISIÓN (GR)	278
CONVERTIDOR ELÉCTRICO (CONFIG)	135
CONVERTIDOR ELÉCTRICO (GR)	137
CONVERTIDOR ELÉCTRICO (GR)	136, 138
CONVERTIDOR ELÉCTRICO (GR) (24 VOLTIOS A 12 VOLTIOS)	138
CORREA ACOSTIALLADA (A/A)	609
CRISTAL (AMBAR) (SEÑAL DE VIRAJE)	152, 154
CRISTAL (LUZ DE TECHO)	143
CUBIERTA INFERIOR DEL ASIENTO DEL OPERADOR (GR)	702
CUCHILLA (GR)	599
CULATA DE CILINDROS - TORNILLERÍA DE LA (GR)	28
CULATA DE CILINDROS (CONJ)	22
CULATA DE CILINDROS (GR)	24, 25

D

Nombre	Página
DESGARRADOR (CONFIG)	603
DESGARRADOR (GR)	604
DESHIDRATADOR (GR)	378, 380, 381
DESTELLADOR ELECTRONICO (CONJ) (12/24 VOLTIOS) (LUZ DE GIRO/PELIGRO)	176
DESTELLADOR ELECTRONICO (CONJ) (12/24 VOLTIOS) (SEÑAL DE GIROS Y PELIGROS)	184
DETECTOR DE NIVEL DEL COMBUSTIBLE	116

* NO HAY TRADUCCION DISPONIBLE EN EL MOMENTO DE LA IMPRESION

INDICE

Nombre	Página
DETECTOR DE POSICIÓN (SISTEMA DE COMBUST.) (GR)	202
DIENTE DE DESGARRADOR (GR)	606
DIFERENCIAL (GR)	288
DIFERENCIAL Y CORONA (GR)	284
DIRECCIÓN SECUNDARIA (CONFIG)	486
DISYUNTOR (CONJ) (15 A) (BARRA DE LUCES BAJAS DELANTERAS)	176
DISYUNTOR (CONJ) (15 A) (BARRA DE LUCES DE TRABAJO)	129
DISYUNTOR (CONJ) (15 A) (FAROS)	129 130
DISYUNTOR (CONJ) (15 A) (RELE DE ARRANQUE)	249
DISYUNTOR (CONJ) (80 AMP) (ALTERNADOR)	250
DISYUNTOR (CONJ) (80 AMP) (PRINCIPAL)	248
DISYUNTOR DE CIRCUITO (GR)	129
DISYUNTOR DE CIRCUITO (GR)	130
DISYUNTOR (GR)	218
DOSIFICACIÓN - BOMBA DE (GR)	478

E

Nombre	Página
EJE DELANTERO (GR)	352
ELECTRONICA DE MONITOR (GR)	139
ELEMENTO DE CALEFACCION (12 VOLTIOS, AIRE SECO)	381
ELEMENTO DE FILTRO DE ACEITE (CONJ) (HIDRAULICO)	70
ELEMENTO DE FILTRO DE ACEITE (CONJ) (HIDRAULICO) (FLUJO INVERSO)	488
ELEMENTO DE FILTRO HIDRÁULICO (TREN DE FUERZA)	292
ELEMENTO DE FILTRO (SEPARADOR DE COMBUSTIBLE/AGUA) (PRIMARIO)	99
ELEMENTO DEL CALENTADOR DEL AGUA DE LAS CAMISAS (120 VOLTIOS/1250 VATIOS)	140
ELEMENTO PRIMARIO (CONJ)	85
ELEMENTO SECUNDARIO (CONJ)	85
EMISOR DE POSICION (CONJ) (ENGRANAJE)	240
EMPAQUETADURA	67
EMPAQUETADURA DE BASE (TAPA DE VÁLVULA)	50
EMPAQUETADURA-RESPIRADERO	50
ENCENDEDOR (CONJ) (CIGARRO)(24 VOLTIOS)	258
ENFRIADOR DE ACEITE DE LA TRANSMISIÓN (GR)	280
ENGANCHE ARTICULADO (GR)	368
ENGRANAJE DELANTERO (GR)	30
ESTRIBO DEL OPERADOR (GR)	373
ESTRUCTURA ROPS ABIERTA	715
ESTRUCTURA ROPS ABIERTA (GR)	717
ETIQUETA DE ADVERTENCIA (GR)	760
ETIQUETA DE ADVERTENCIA (GR) (POTENCIA NO VARIABLE)	3
ETIQUETA REFLECTORA (ROJO)	761
EXTENSIÓN DEL RESPALDO (GR)	640
EXTENSIÓN DEL RESPALDO (GR)	641

F

Nombre	Página
FILTRO (AIRE DE LA CABINA)	648
FILTRO DE ACEITE - BASE DEL (GR)	52
FILTRO DE ACEITE DEL MOTOR (CONJ)	56
FILTRO DE ACEITE DEL MOTOR (GR)	56
FILTRO DE ACEITE (GR)	292
FILTRO DE AIRE DE LA CABINA (GR)	648
FILTRO DE AIRE (GR)	85 86
FILTRO DE AIRE (ROPS DEL TABLERO TRASERO)	648
FILTRO DE COMBUSTIBLE (CONJ)	98
FILTRO DE COMBUSTIBLE (GR)	98
FILTRO DE COMBUSTIBLE Y SEPARADOR DE AGUA (GR)	99
FILTRO MAGNÉTICO (DIFERENCIAL)	297
FRENO DE SERVICIO - CONTROL (GR)	388
FRENO DE SERVICIO (GR)	382
FUSIBLE (10 A) (ALARM AUXILIAR DE RETROCESO)	164
FUSIBLE (10 A) (BALIZA GIRATORIA DE ADVERTENCIA)	142 194 196
FUSIBLE (10 A) (CONSOLA DE DIRECCIÓN)	260
FUSIBLE (10 A) (CONTROLADOR PARA LA HOJA)	228
FUSIBLE (10 A) (DESCONGELADOR DELANTERO)	646
FUSIBLE (10 A) (DESCONGELADOR TRASERO)	647
FUSIBLE (10 A) (LAMPARA DE RETROCESO)	162
FUSIBLE (10 A) (LAMPARA, VERTEDERA)	230
FUSIBLE (10 A) (LIMPIADOR)	754 756
FUSIBLE (10 A) (LUCES DE TABLERO DE COLA)	254
FUSIBLE (10 A) (LUCES DE TRABAJO DELANTERAS)	172
FUSIBLE (10 A) (LUZ ALTA/BAJA)	176

* NO HAY TRADUCCION DISPONIBLE EN EL MOMENTO DE LA IMPRESION

INDICE

Nombre	Página
FUSIBLE (10 A) (LUZ ALTA/BAJA Y SEÑAL)	184
FUSIBLE (10 A) (LUZ DE GIRO/PELIGRO)	180
FUSIBLE (10 A) (LUZ DE LA HOJA)	168
FUSIBLE (10 A) (RADIO)	136
FUSIBLE (10 A) (REFLECTORES DEL LADO DERECHO)	170
FUSIBLE (10 A) (REFLECTORES, LADO DERECHO)	188
FUSIBLE (10 A) (RETROVISOR DELANTERO)	690
FUSIBLE (10 A) (RETROVISOR EXTERIOR DELANTERO)	692
FUSIBLE (10 A) (SEÑALES DE GIRO)	220
FUSIBLE (10 A) (TRANSFORMADOR DE CORRIENTE)	138
FUSIBLE (15 A) (ACONDICIONADOR DE AIRE Y CALEFACCIÓN)	651
FUSIBLE (15 A) (AIRE ACONDICIONADO)	609
FUSIBLE (15 A) (ESCOBILLAS FRONTALES SUPERIOR/INFERIOR)	226
FUSIBLE (30 A) (TRANSFORMADOR DE CORRIENTE)	137

G

Nombre	Página
GRUPO DE ACUMULADOR DE AMORTIGUACIÓN DE LA HOJA	399
GRUPO DE AISLAMIENTO DE LA CABINA	668
GRUPO DE CABLES, HOJA AMORTIGUADORA	225
GRUPO DE POSTENFRIAMIENTO Y MONTAJE	84
GRUPO DE SOPORTE DEL RESPALDO	701
GRUPO DE 4 VÁLVULAS HIDRÁULICAS	510 511 512 513 514
GRUPO GIRATORIO DE BOMBA	484 485

H

Nombre	Página
HOJA DE LIMPIAPARABRISAS (CONJ) (DELANTERO DE BAJO PERFIL)	750
HOJA DE LIMPIAPARABRISAS (CONJ) (DELANTERO SUPERIOR DE ALTO PERFIL)	752
HOJA DE LIMPIAPARABRISAS (CONJ) (RESPIRADERO INFERIOR DELANTERO)	743
HOJA DE LIMPIAPARABRISAS (CONJ) (TRASERO DE ALTO PARFIL)	756
HOJA DE LIMPIAPARABRISAS (CONJ) (TRSERO DE BAJO PERFIL)	754
HOJA (GR)	598

I

Nombre	Página
INCLUYE ROPS (CONFIG)	714
INDICADOR (CONJ) (CAMBIO DE FILTRO DE AIRE)	86
INDICADOR DE PRESIÓN DE AIRE (CONJ) (FRENO DERECHO)	708
INDICADOR DE PRESIÓN DE AIRE (CONJ) (FRENOS DE LA PARTE IZQUIERDA)	708
INDICADOR DE PRESION DE AIRE (GR) (FRENO DERECHO)	706
INDICADOR DE PRESION DE AIRE (GR) (FRENOS DE LA PARTE IZQUIERDA)	706
INDICADOR DEL NIVEL DE ACEITE (VARILLA) (GR)	58
INSONORIZADOR (GR)	48
INSTALACIÓN DE RADIO (CONFIG)	663
INSTALACIÓN DE RADIO (GR)	664
INSTRUMENTOS (CONFIG)	666
INTERRUPTOR (CONJ) (ACELERACIÓN SOSTENIDA AJUSTE/REANUDAR)	258
INTERRUPTOR (CONJ) (ACELERACIÓN SOSTENIDA AUTOMÁTICA/MANUAL)	258
INTERRUPTOR (CONJ) (ALARM AUXILIAR DE RETROCESO)	164
INTERRUPTOR (CONJ) (AUXILIAR DE ARRANQUE CON ÉTER)	214
INTERRUPTOR (CONJ) (BALIZA GIRATORIA DE ADVERTENCIA)	142 194 196
INTERRUPTOR (CONJ) (CONTROL DE HOJA AMORTIGUADORA)	225
INTERRUPTOR (CONJ) (DIRECCIÓN SECUNDARIA)	254
INTERRUPTOR (CONJ) (ENCENDIDO/APAGADO) (DESCONGELADOR DELANTERO)	646
INTERRUPTOR (CONJ) (ENCENDIDO/APAGADO) (DESCONGELADOR TRASERO)	647
INTERRUPTOR (CONJ) (LUCES DEL VERTEDERO)	228
INTERRUPTOR (CONJ) (LUZ AUXILIAR DE RETROCESO)	162
INTERRUPTOR (CONJ) (LUZ BAJA DE BARRA DE LUCES)	177
INTERRUPTOR (CONJ) (LUZ BAJA DE BARRA DE LUCES)	180

* NO HAY TRADUCCION DISPONIBLE EN EL MOMENTO DE LA IMPRESION

INDICE

Nombre	Página
INTERRUPTOR (CONJ) (LUZ DE COLA)	260
INTERRUPTOR (CONJ) (REDUCTOR DE LUCES DEL TABLERO)	260
INTERRUPTOR (CONJ) (REFLECTOR LADO DERECHO, CABINA)	188
INTERRUPTOR (CONJ) (REFLECTORES DEL LADO DERECHO)	170
INTERRUPTOR (CONJ) (RETROVISOR DELANTERO)	692
INTERRUPTOR (CONJ) (RETROVISOR DELANTERO)	690
INTERRUPTOR (CONJ) (TRABA DE DIFERENCIAL)	260
INTERRUPTOR (CONJ) (VERTEDERA)	230
INTERRUPTOR DE BOLA (CONJ) (GAMA DE ENGRANAJE)	240
INTERRUPTOR DE LÍMITE (CONJ) (PEDAL, FRENO/MOVIMIENTO ULTRALENTO)	260
INTERRUPTOR DE LUZ (GR)	220
INTERRUPTOR DE PRESIÓN (CONJ) (ACONDICIONADOR DE AIRE, ALTO-BAJO)	682
INTERRUPTOR DE PRESIÓN (CONJ) (DIRECCION PRINCIPAL)	254
INTERRUPTOR DE PRESIÓN (CONJ) (LUZ DE PARADA)	236
INTERRUPTOR DE SEÑAL DE GIRO Y ADVERTENCIA (CONJ)	172 176 180 184 220
INTERRUPTOR DE VOLQUETE (CONJ) (FARO DELANTERO/COLA)	176 184 220
INTERRUPTOR DE VOLQUETE (CONJ) (FARO DELANTERO/COLA)	180
INTERRUPTOR DE VOLQUETE (CONJ) (FARO DELANTERO/COLA)	172
INTERRUPTOR DE VOLQUETE (CONJ) (LUZ DE LA HOJA)	168
INTERRUPTOR DE VOLQUETE (CONJ) (PARADA DEL MOTOR)	240
INTERRUPTOR DEL LIMPIADOR (GR)	223
INTERRUPTOR DEL LIMPIAPARABRISAS (CONJ)	223
INTERRUPTOR DEL LIMPIAPARABRISAS (CONJ) (PARTE TRASERA)	754 756
INTERRUPTOR DEL TERMOSTATO (CONJ) (REFRIGERANTE)	610
INTERRUPTOR MAGNÉTICO (GR)	222
INTERRUPTOR MAGNÉTICO (GR) (FUSIBLES RELÉS) (RELÉ DE FUERZA PRINCIPAL)	248
INTERRUPTOR MAGNÉTICO (GR) (RELÉ DE LA DIRECCIÓN SECUNDARIA)	254
INTERRUPTOR MAGNÉTICO (GR) (24V) (RELÉ DE ARRANQUE)	248
INTERRUPTOR PULSADOR (CONJ) (PANTALLA DIGITAL, MODALIDAD DEL OPERADOR)	706 708
INTERRUPTOR ROTATIVO (CONJ) (ESCOBILLAS FRONTALES SUPERIOR/INFERIOR)	226
INTERRUPTOR ROTATIVO (CONJ) (LUZ ALTA/BAJA)	172 180 184
INTERRUPTOR ROTATIVO (CONJ) (LUZ ALTA/BAJA)	176
INTERRUPTOR ROTATIVO (CONJ) (SEÑAL DE VIRAJE)	220
INTERRUPTOR ROTATIVO (CONJ) (VELOCIDAD DEL VENTILADOR)	610
INYECTOR DE COMBUSTIBLE (GR)	100

J

Nombre	Página
JUEGO (AISLADOR) (MOTOR DE ARRANQUE)	216
JUEGO DE ABRAZADERA DEL FILTRO DE AIRE	85
JUEGO DE ACTIVADOR DE FRENO	377
JUEGO DE AJUSTE DEL ASIENTO	702
JUEGO DE AMORTIGUADOR (EXTENSION DEL RESPALDO)	640
JUEGO DE AMORTIGUADOR (RESPALDO DE VINILO)	641
JUEGO DE ANILLO ESTANDAR (COMPRESOR DE AIRE)	6
JUEGO DE ATADURA (ASIENTO)	736
JUEGO DE BUJES (MOTOR DE ARRANQUE)	216
JUEGO DE COJÍN DEL ASIENTO	720
JUEGO DE COJÍN DEL ASIENTO (VINILO)	722
JUEGO DE COJINETE PRINCIPAL (CIGÜEÑAL)	16
JUEGO DE COJINETES	661
JUEGO DE COJINETES DE BANCADA (COMPRESOR DE AIRE)	6
JUEGO DE DESCARGADOR (COMPRESOR DE AIRE) (COMPRESOR DE AIRE)	6
JUEGO DE DIAFRAGMA (BOCINA)	656
JUEGO DE ENCHUFE (12 CLAVIJAS)	164 170

* NO HAY TRADUCCION DISPONIBLE EN EL MOMENTO DE LA IMPRESION

INDICE

Nombre	Página
	172
	176
	180
	184
	188
	226
	228
	230
	232
	236
	240
	241
	258
	260
	364
	366
	692
	706
	708
JUEGO DE ENCHUFE (12 CLAVIJAS)	690
JUEGO DE ENCHUFE (12 CLAVIJAS) (DESCONGELADOR DELANTERO/TRASERO)	162
JUEGO DE ENCHUFE (2 CLAVIJAS)	170
	186
	191
	222
	225
	226
	232
	236
	240
	241
	248
	258
	682
	690
JUEGO DE ENCHUFE (2 CLAVIJAS) (ALARMA DE REVERSA/RETORNO)	244
JUEGO DE ENCHUFE (2 CLAVIJAS) (AYUDA DE ARRANQUE CON ETER)	212
JUEGO DE ENCHUFE (2 CLAVIJAS) (BALIZA GIRATORIA)	196
JUEGO DE ENCHUFE (2 CLAVIJAS) (BARRA DE FAROS)	172
JUEGO DE ENCHUFE (2 CLAVIJAS) (BARRA DE LUCES DE TRABAJO)	176
JUEGO DE ENCHUFE (2 CLAVIJAS) (BARRA DE LUCES DE TRABAJO)	180
JUEGO DE ENCHUFE (2 CLAVIJAS) (CIRCUITO AUXILIAR Y DEL REFLECTOR LATERAL)	692
JUEGO DE ENCHUFE (2 CLAVIJAS) (INTERRUPTOR DE LUCES DE TABLERO/BOCINA)	260
JUEGO DE ENCHUFE (2 CLAVIJAS) (INTERRUPTOR DE MODALIDAD DE OPERADOR)	708
JUEGO DE ENCHUFE (2 CLAVIJAS) (LUZ DE ALA PARA NIEVE)	162
	170
	188
	228
JUEGO DE ENCHUFE (2 CLAVIJAS) (MOTOR)	652
JUEGO DE ENCHUFE (2 CLAVIJAS) (MOTOR DE CALENTADOR-ACOND. DE AIRE)	611
JUEGO DE ENCHUFE (2 CLAVIJAS) (REFLECTOR LATERAL)	188
	230
JUEGO DE ENCHUFE (2 CLAVIJAS) (REFLECTOR LATERAL)	164
JUEGO DE ENCHUFE (2 CLAVIJAS) (RELE DE MOTOR DE ARRANQUE)	249
JUEGO DE ENCHUFE (3 CLAVIJAS)	203
	204
	226
	232
	236
	241
	244
JUEGO DE ENCHUFE (3 CLAVIJAS) (BARRA DE LUCES DE GIRO)	172
JUEGO DE ENCHUFE (3 CLAVIJAS) (SENSOR DE CONTROL DE TODAS LAS RUEDAS)	260
JUEGO DE ENCHUFE (4 CLAVIJAS)	164
	188
	230
	241
	258
	260
	690
	692
JUEGO DE ENCHUFE (4 CLAVIJAS) (INTERRUPTOR DE LUCES AUXILIARES DE RETROCESO)	170
JUEGO DE ENCHUFE (4 CLAVIJAS) (LUZ AUXILIAR DE RETROCESO)	162
JUEGO DE ENCHUFE (4 CLAVIJAS) (LUZ AUXILIAR DE RETROCESO, INTERRUPTOR)	228
JUEGO DE ENCHUFE (4 CLAVIJAS) (RELE DE ARRANQUE)	249

* NO HAY TRADUCCION DISPONIBLE EN EL MOMENTO DE LA IMPRESION

INDICE

Nombre	Página
JUEGO DE ENCHUFE (4 CLAVIJAS) (RELÉ DE GIRO DEL MOTOR Y DISYUNTOR DE CONTROL DEL MOTOR)	249
JUEGO DE ENCHUFE (4 CLAVIJAS) (SENSOR VELOCIDAD DE DESPLAZAMIENTO)	236
JUEGO DE ENCHUFE (6 CLAVIJAS)	184
	226
	236
	258
	708
JUEGO DE ENCHUFE (6 CLAVIJAS)	249
JUEGO DE ENCHUFE (8 CLAVIJAS)	164
	170
	188
	226
	228
	230
	236
	690
	692
JUEGO DE ENCHUFE (8 CLAVIJAS) (LIMPIAPARABRISAS DELANTERO/TRASERO)	162
JUEGO DE ESCOBILLAS (MOTOR DE ARRANQUE)	216
JUEGO DE FILTRO DE COMBUSTIBLE Y SEPARADOR DE AGUA	99
JUEGO DE FUNDA DE LA SUSPENSIÓN DEL ASIENTO	734
JUEGO DE HOJA DE LIMPIAPARABRISAS (PARTE TRASERA)	754
JUEGO DE INCLINACIÓN DE ASIENTO	702
JUEGO DE INCLINACIÓN TRASERA	702
JUEGO DE INDICADOR	661
JUEGO DE INDICADOR (ASIENTO)	736
JUEGO DE LA CULATA DE CILINDROS (COMPRESOR DE AIRE)	6
JUEGO DE MARTILLO	649
	650
JUEGO DE PALANCA (MOTOR DE ARRANQUE)	216
JUEGO DE PANEL DEL RESPALDO DEL ASIENTO	720
	722
JUEGO DE PARAGOLPES	661
JUEGO DE PISTÓN (DIRECCIÓN HIDRÁULICA)	480
JUEGO DE RECEPTÁCULO (12 CLAVIJAS)	134
	172
	176
	180
	184
	260
	690
JUEGO DE RECEPTÁCULO (12 CLAVIJAS)	164
	170
	188
	226
	228
	230
	236
	244
	249
	258
	364
	366
	692
	706
	708
JUEGO DE RECEPTÁCULO (12 CLAVIJAS)	246
JUEGO DE RECEPTÁCULO (12 CLAVIJAS) (BARRA DE LUCES DE TRABAJO)	176
	180
JUEGO DE RECEPTÁCULO (12 CLAVIJAS) (INTERRUPTOR DE BALIZA)	162
JUEGO DE RECEPTÁCULO (2 CLAVIJAS)	123
	158
	162
	170
	186
	191
	224
	226
	230
	232
	237
	240
	241
	244
	328
	384
	588
	642
	682
	690
	692
JUEGO DE RECEPTÁCULO (2 CLAVIJAS)	164
	188
	228
	236
	616
	658
	682
	692
JUEGO DE RECEPTÁCULO (2 CLAVIJAS)	225
JUEGO DE RECEPTÁCULO (2 CLAVIJAS)	240

* NO HAY TRADUCCION DISPONIBLE EN EL MOMENTO DE LA IMPRESION

INDICE

Nombre	Página
JUEGO DE RECEPTÁCULO (2 CLAVIJAS)	159, 199, 611, 706, 708
JUEGO DE RECEPTÁCULO (2 CLAVIJAS) (AIRE DE ADMISIÓN DE LA CALEFACCIÓN)	232
JUEGO DE RECEPTÁCULO (2 CLAVIJAS) (ARRANQUE CON ÉTER)	212
JUEGO DE RECEPTÁCULO (2 CLAVIJAS) (DESPLAZADOR DE CILINDRO DE VÁLVULAS SOLENOIDES)	404
JUEGO DE RECEPTÁCULO (2 CLAVIJAS) (ENCENDIDO/CONVERTIDOR RADIAL)	137
JUEGO DE RECEPTÁCULO (2 CLAVIJAS) (ENTRADA DE CORRIENTE DE 12 VOLTIOS)	607, 608
JUEGO DE RECEPTÁCULO (2 CLAVIJAS) (LUZ DE ALA PARA NIEVE)	170, 188
JUEGO DE RECEPTÁCULO (2 CLAVIJAS) (MOTOR DE CALENTADOR)	652
JUEGO DE RECEPTÁCULO (2 CLAVIJAS) (RELE PRINCIPAL)	249
JUEGO DE RECEPTÁCULO (2 CLAVIJAS) (SECADOR DE AIRE/ALARMA DE RETROCESO)	249
JUEGO DE RECEPTÁCULO (2 CLAVIJAS) (TABLERO, LUCES)	258
JUEGO DE RECEPTÁCULO (2 CLAVIJAS) (VALVULA DE SOLENOIDE)	738
JUEGO DE RECEPTÁCULO (3 CLAVIJAS)	156, 157, 186, 191, 202, 226, 232, 240, 241, 244, 260
JUEGO DE RECEPTÁCULO (3 CLAVIJAS)	236, 254
JUEGO DE RECEPTÁCULO (3 CLAVIJAS)	225
JUEGO DE RECEPTÁCULO (3 CLAVIJAS)	143
JUEGO DE RECEPTÁCULO (3 CLAVIJAS)	246
JUEGO DE RECEPTÁCULO (3 CLAVIJAS) (LUZ DE SEÑAL DE GIRO/ESTACIONAMIENTO)	166
JUEGO DE RECEPTÁCULO (4 CLAVIJAS)	164, 170, 226, 230, 241, 260
JUEGO DE RECEPTÁCULO (4 CLAVIJAS)	164, 188, 228, 236, 692
JUEGO DE RECEPTÁCULO (4 CLAVIJAS)	240
JUEGO DE RECEPTÁCULO (4 CLAVIJAS) (AYUDA DE ARRANQUE CON ETER)	212
JUEGO DE RECEPTÁCULO (4 CLAVIJAS) (INTERRUPTOR DE BALIZA)	196
JUEGO DE RECEPTÁCULO (4 CLAVIJAS) (LUCES DE VERTEDERA/RETROVISOR DELANTERO)	162
JUEGO DE RECEPTÁCULO (4 CLAVIJAS) (LUZ AUXILIAR DE RETROCESO)	162
JUEGO DE RECEPTÁCULO (4 CLAVIJAS) (RELÉ DE GIRO DEL MOTOR/DISYUNTOR DE CONTROL DEL MOTOR)	249
JUEGO DE RECEPTÁCULO (4 CLAVIJAS) (VELOCIDAD EFECTIVA)	201
JUEGO DE RECEPTÁCULO (6 CLAVIJAS)	226, 241, 258, 364, 366, 706, 749
JUEGO DE RECEPTÁCULO (6 CLAVIJAS)	236, 652, 708
JUEGO DE RECEPTÁCULO (6 CLAVIJAS) (CALENTADOR Y ACOND. DE AIRE)	611
JUEGO DE RECEPTÁCULO (6 CLAVIJAS) (FARO DELANTERO - LÁMPARA DE)	148, 150, 154
JUEGO DE RECEPTÁCULO (6 CLAVIJAS) (FARO DELANTERO - LÁMPARA DE)	152
JUEGO DE RECEPTÁCULO (6 CLAVIJAS) (MODULO DE CUATRO MEDIDORES)	696
JUEGO DE RECEPTÁCULO (6 CLAVIJAS) (MOTOR DE LAVAPARABRISA)	750, 752
JUEGO DE RECEPTÁCULO (6 CLAVIJAS) (VELOCÍMETRO, TACÓMETRO)	697
JUEGO DE RECEPTÁCULO (8 CLAVIJAS)	162, 170, 223, 226, 230

* NO HAY TRADUCCION DISPONIBLE EN EL MOMENTO DE LA IMPRESION

INDICE

Nombre	Página
	690
	706
JUEGO DE RECEPTÁCULO (8 CLAVIJAS)	164
	188
	228
	692
	708
JUEGO DE RECEPTÁCULO (8 CLAVIJAS) (INTERRUPTOR DE LIMPIAPARABRISA TRASERO)	754
	756
JUEGO DE RECEPTÁCULO (8 CLAVIJAS) (INTERRUPTORES DE ESCOBILLAS FRONTALES)	226
JUEGO DE RESORTES	478
	661
JUEGO DE RESTRICCIÓN DEL CINTURÓN	734
JUEGO DE RODILLO	734
JUEGO DE RODILLO (ASIENTO)	736
JUEGO DE SEGUIDOR	660
	661
JUEGO DE SELLO DE CARTUCHO	328
JUEGO DE SELLO DE CARTUCHO (TRABA DE DIFERENCIAL)	316
JUEGO DE SELLOS	400
	478
JUEGO DE SELLOS (VALVULA DE SOLENOIDE)	588
JUEGO DE SELLOS (VENTILADOR HIDRAULICO)	590
JUEGO DE SENSOR (NIVEL DE COMB)	116
JUEGO DE TORNILLERÍA (ASIENTO)	736
JUEGO DE VARILLA	702

L

Nombre	Página
LÁMPARA (BALIZA DE ADVERTENCIA, 24 VOLTIOS)	158
LÁMPARA DE BALIZA DE ADVERTENCIA (GR)	158
LÁMPARA DE FARO DELANTERO (GR)	145
	146
	148
LÁMPARA DE FARO DELANTERO (GR)	150
LÁMPARA DE FARO DELANTERO (GR) (24 VOLTIOS) (LUZ BAJA)	180
LÁMPARA DE FARO DELANTERO (24 VOLTIOS) (LUZ BAJA)	145
LÁMPARA DE FARO DELANTERO (24 VOLTIOS)(65 VATIOS) (REFLECTOR)	144
LÁMPARA DE FARO DELANTERO (24 VOLTIOS)(65 VATIOS) (VIGA ALTA)	146
LÁMPARA DE LUZ DELANTERA Y DE SEÑAL (GR)	152
LÁMPARA DE LUZ DELANTERA Y DE SEÑAL (GR)	154
LÁMPARA DEL TECHO (GR)	143
LAMPARA DERECHA (CONJ) (PARADA/COLA/GIRO)	246
LÁMPARA (FILAMENTO SENCILLO) (SEÑAL DE VIRAJE)	148
	150
LAMPARA IZQUIERDA (CONJ) (PARADA/COLA/GIRO)	246
LÁMPARA (24 VOLTIOS) (ACONDICIONADOR DE AIRE Y TABLERO DE CONTROL DE CALEFACCIÓN)	652
LÁMPARA (24 VOLTIOS) (ALARM AUXILIAR DE RETROCESO)	164
LÁMPARA (24 VOLTIOS) (BALIZA GIRATORIA DE ADVERTENCIA)	142
	194
	196
LÁMPARA (24 VOLTIOS) (CONSOLA DE CAMBIOS)	258
LÁMPARA (24 VOLTIOS) (CÚPULA)	143
LÁMPARA (24 VOLTIOS) (DESCONGELADOR DELANTERO)	646
LÁMPARA (24 VOLTIOS) (DESCONGELADOR TRASERO)	647
LÁMPARA (24 VOLTIOS) (DIRECCIÓN SECUNDARIA)	254
LÁMPARA (24 VOLTIOS) (FARO DELANTERO/COLA)	176
	180
	184
LÁMPARA (24 VOLTIOS) (HOJA AMORTIGUADORA/INDICADOR)	225
LÁMPARA (24 VOLTIOS) (INDICADOR DE ACELERACIÓN SOSTENIDA)	706
LÁMPARA (24 VOLTIOS) (INDICADOR DE ARRANQUE ASISTIDO POR ÉTER)	214
LÁMPARA (24 VOLTIOS) (INDICADOR DE GIRO A LA DERECHA)	706
LÁMPARA (24 VOLTIOS) (INDICADOR DE LUZ ALTA)	706
LÁMPARA (24 VOLTIOS) (INDICADOR DE MÓDULO DE CUATRO MEDIDORES)	706
LÁMPARA (24 VOLTIOS) (INDICADOR DE PRESIÓN DE AIRE DE PARTE DERECHA)	706
LÁMPARA (24 VOLTIOS) (INDICADOR DE PRESIÓN DE AIRE DE PARTE IZQUERDA)	706
LÁMPARA (24 VOLTIOS) (INDICADOR DE TRABA DEL DIFERENCIAL)	706

* NO HAY TRADUCCION DISPONIBLE EN EL MOMENTO DE LA IMPRESION

INDICE

Nombre	Página
LÁMPARA (24 VOLTIOS) (INTERRUPTOR ATENUADOR DE LUCES DEL TABLERO)	260
LÁMPARA (24 VOLTIOS) (INTERRUPTOR DE ACELERACIÓN SOSTENIDA AUTOMÁTICA/MANUAL)	258
LÁMPARA (24 VOLTIOS) (INTERRUPTOR DE EXTRACTOR DE PASADORES DE DESPLAZADOR DEL CIRCULO)	258
LÁMPARA (24 VOLTIOS) (INTERRUPTOR DE LUCES TRASERAS)	260
LÁMPARA (24 VOLTIOS) (INTERRUPTOR DE TRABA DEL DIFERENCIAL)	260
LÁMPARA (24 VOLTIOS) (LÁMPARA DE FUNCIONAMIENTO)	154
LÁMPARA (24 VOLTIOS) (LUCES DE MANO DERECHA, ALTAS/BAJAS)	154
LÁMPARA (24 VOLTIOS) (LUCES DE TRABAJO)	148 150 152
LÁMPARA (24 VOLTIOS) (LUZ ALTA/BAJA)	150
LÁMPARA (24 VOLTIOS) (LUZ ALTA/BAJA)	148
LÁMPARA (24 VOLTIOS) (LUZ ALTA/BAJA)	152
LÁMPARA (24 VOLTIOS) (LUZ AUXILIAR DE RETROCESO)	162
LÁMPARA (24 VOLTIOS) (LUZ BAJA)	166
LÁMPARA (24 VOLTIOS) (LUZ BAJA DE BARRA DE LUCES)	177 180
LÁMPARA (24 VOLTIOS) (LUZ DE LA HOJA)	168
LÁMPARA (24 VOLTIOS) (LUZ DELANTERA/TRASERA/INDICADOR)	220
LÁMPARA (24 VOLTIOS) (LUZ INDIC. DE ACCION MAESTRA DE EMS)	706 708
LÁMPARA (24 VOLTIOS) (LUZ INDICADORA DE LAMPARA DELANTERA/TRASERA)	172
LÁMPARA (24 VOLTIOS) (MODULO DE CUATRO MEDIDORES Y PRESIÓN DE AIRE)	708
LÁMPARA (24 VOLTIOS) (REFLECTOR LADO DERECHO, CABINA)	188
LÁMPARA (24 VOLTIOS) (REFLECTORES DEL LADO DERECHO)	170
LÁMPARA (24 VOLTIOS) (RETROVISOR INDICADOR DELANTERO)	690 692
LÁMPARA (24 VOLTIOS) (SEÑAL DE GIRO, IZQUIERDA)	706
LÁMPARA (24 VOLTIOS) (SEÑAL DE VIRAJE)	148 150 152 154
LÁMPARA (24 VOLTIOS) (TABLERO DE AIRE ACONDICIONADO)	610
LÁMPARA (24 VOLTIOS) (TABLERO DE INSTRUMENTOS)	708
LÁMPARA (24 VOLTIOS) (VELOCÍMETRO, TACÓMETRO)	697
LÁMPARA (24 VOLTIOS) (VERTEDERA)	230
LÁMPARA (24 VOLTIOS) (VERTEDERA/INDICADOR)	228
LÁMPARA (24 VOLTIOS) (VIGA ALTA)	166
LÁMPARA (24 VOLTIOS, 21 VATIOS) (LUZ DE SEÑAL DE PARADA/COLA)	246
LÁMPARA (24 VOLTIOS, 21 VATIOS) (LUZ DE SEÑAL DE PARADA/COLA)	246
LÁMPARA (24 VOLTIOS, 21 VATIOS) (SEÑAL DE VIRAJE)	152 154
LÁMPARA (24 VOLTIOS, 5 VATIOS) (DE GIRO)	246
LAVAPARABRISAS DE LA VENTANA (GR)	740 742
LENTE AMBAR (BALIZA GIRATORIA DE ADVERTENCIA)	158
LENTE AMBAR (SEÑAL DE VIRAJE)	148 150
LEVANTAMIENTO - HOJA DE (GR)	600
LIMPIAPARABRISAS (CONFIG)	748
LIMPIAPARABRISAS DE LA VENTANA (GR)	756 758
LIMPIAPARABRISAS DE LA VENTANA (GR)	749 750 752 754
LLAVE	250 490 759
LLAVE (DESCONECTAR BATERIA)	218
LUCES DE ADVERTENCIA (GR)	194
LUCES DE ADVERTENCIA (GR)	196
LUCES DE GIRO (GR)	193
LUCES DE REFLECTOR (GR)	166 168 170 172 176 180 184 186 188 190 191 192
LUCES DE REFLECTOR Y SEÑAL (CONFIG)	160

* NO HAY TRADUCCION DISPONIBLE EN EL MOMENTO DE LA IMPRESION

INDICE

Nombre	Página
	161
LUCES DE RETROCESO (GR)	162
	164
LUZ DE SEÑAL DE GIRO (GR)	156
	157
LUZ DE SEÑAL DE GIRO (GR) (LADO DERECHO)	166
LUZ DE SEÑAL DE GIRO (GR) (LADO IZQUIERDO)	166
LUZ DE SEÑAL DE GIRO (GR) (24 VOLTIOS) (LUCES DE ESTACIONAMIENTO/GIRO)	172

M

MANDO DE BOMBA (GR)	439
MANDO DE CORREA (BALIZA GIRATORIA DE ADVERTENCIA)	158
MANDO DEL CIRCULO (GR)	436
MANDO FINAL (GR)	294
MANGUERA DE ESCAPE DE GASES	8
MARTILLO Y MONTAJE (GR)	649
	650
MAZO DE CABLES DEL CHASIS (CONJ)	225
MAZO DE CABLES DEL MONITOR (CONJ)	706
	708
MECANISMO DE LA VÁLVULA - MONTAJE DEL (GR)	37
MECANISMO DE VÁLVULAS (GR)	50
MÓDULO DEL TACÓMETRO Y DEL VELOCÍMETRO (GR)	697
MODULO ELECTRÓNICO DE CUATRO INDICADORES (GR)	696
MONTAJE DE LA ESTRUCTURA ROPS (GR)	698
	700
MONTAJE DE RUEDA (GR)	304
MONTAJE DEL DESGARRADOR (GR)	602
MONTAJE DEL MOTOR (GR)	36
MOTOR - SOPORTE DEL (GR)	47
MOTOR DE ARRANQUE ELÉCTRICO (GR)	216
MOTOR DE ENGRANAJES (GR)	468
MOTOR ELÉCTRICO (GR)	198
	199
	200
MOTOR ELÉCTRICO (GR) (27 VOLTIOS) (A/A)	611
MOTOR ELÉCTRICO (GR) (27 VOLTIOS) (CALEFACTOR)	652
MOTOR HIDRÁULICO DE ENGRANAJES (GR)	470
MOTOR Y VENTILADOR (GR)	64
MÚLTIPLE DE ADMISIÓN (GR)	89
MÚLTIPLE DE ESCAPE (GR)	88

N

NÚCLEO DE TURBOCOMPRESOR (GR)	93

P

PANEL DE LA CABINA (GR)	704
	705
PANEL DE LA VENTANA (GR)	710
	712
PERILLA DE AMORTIGUADOR (ASIENTO)	736
PERSIANA PARA EL SOL (GR)	718
PISTÓN Y BIELA (GR)	40
PLACA DE ADVERTENCIA (NO ESPACIO LIBRE)	761
PLACA DE CONTROL	708
PLACA DE CONTROL (MODULO DE PANTALLA PRINCIPAL)	706
PLACA DE CONTROL (VENTILADOR VELOCIDAD/TEMPERATURA)	652
PLACA DE INFORMACION (COMPRESOR DE AIRE)	6
PLACA DE INSTRUCCIONES (BATERÍA)	248
PLACA DE INSTRUCCIONES (DRENAR Y LLENAR CARTER)	101
PLACA DEL NÚMERO DE SERIE (MOTOR)	761
PLACA DEL NÚMERO DE SERIE (TRANSMISION)	306
PLACA DEL TABLERO (LADO DERECHO)	706
	708
PLACA DEL TABLERO (LADO IZQUIERDO)	706
	708
PLACA (IDENTIFICACIÓN DE PRODUCTO)	761
PLACA (PRINCIPAL)	249
PLANCHA DE EMPUJE (GR)	596
POLEA (GR)	10
POSABRAZOS (GR)	614
	615
PROTECTOR DE LA PLATAFORMA (GR)	364
	366
PROTECTOR INFERIOR (GR)	362
PROTECTOR TÉRMICO DEL EJE DE MANDO (GR)	372
PROTECTOR Y SOPORTE DEL RADIADOR (GR)	360
PUERTA DE CABINA	630
	632
	634
	636
PUERTA (GR)	626
	628

* NO HAY TRADUCCION DISPONIBLE EN EL MOMENTO DE LA IMPRESION

INDICE

Nombre	Página
R	
RADIADOR (GR)	82, 83
RADIADOR Y MONTAJE (GR)	80
RECEPTACULO DE POTENCIA (CONJ) (12 VOLTIOS)	607, 608
RECEPTOR-SECADOR (GR) (ACONDICIONADOR DE AIRE) (REFRIGERANTE)	682
RECIPIENTE DE RECOLECCION DE AGUA (CONJ)	99
RECIPIENTE DE RECOLECCION DE AGUA (CONJ) (CALENTADOR DE 24 VOLTIOS)	99
REFLECTOR (GR)	144
REFLECTORES (CONFIG)	159, 160
REGULADOR DE TEMPERATURA DEL AGUA (98 GRADOS C)	67
REGULADOR Y CAJA (GR)	67
REJILLA DE SUCCIÓN (DIFERENCIAL)	297
REJILLA DE SUCCIÓN (TRANSMISION)	297
RELÉ (CONJ) (24 VOLTIOS) (COLA, LUCES DE PANEL)	260
RESORTE	542, 552
RESPIRADERO (CAJA DE TRANSFERENCIA)	297
RESPIRADERO (CONJ) (MOTOR)	50
RESPIRADERO (CONJ) (TANDEM)	314
RETROCESO - ALARMA DE (GR)	224
RETROVISOR (GR)	688, 690, 692, 694, 695
REVESTIMIENTO DE LA CABINA (GR)	670, 674, 680
RUEDA (CONFIG)	349
RUEDA (GR)	349, 350
RUEDA Y LLANTA (CONFIG)	332, 333, 334, 335
RUEDA Y LLANTA (CONFIG)	335, 336, 337
RUEDA Y NEUMÁTICO (GR)	337, 338, 339, 340, 341, 342, 343, 344, 345, 346, 347, 348
S	
SELLO ANULAR (DI 123,19MM)	600
SELLO DE CIGÜEÑAL (GR)	32, 46
SENSOR DE PRESIÓN (GR)	203
SENSOR DE PRESIÓN (GR)	204, 205, 206, 207
SENSOR DE PRESIÓN (GR) (ACEITE DEL MOTOR)	232
SENSOR DE TEMPERATURA (GR)	210, 211
SENSOR DE VELOCIDAD DE DESPLAZAMIENTO (GR)	201
SENSOR DE VELOCIDAD (GR)	208, 209
SILENCIADOR (GR)	90
SOPORTE DE PLATAFORMA (GR)	376
SOPORTE DEL ASIENTO (GR)	732
SOPORTE DEL TANQUE DE COMBUSTIBLE (GR)	375
SUSPENSIÓN - ASIENTO CON (GR)	724, 725, 726, 727, 728, 729, 730
T	
TABLERO DE INSTRUMENTOS (GR)	708
TABLERO DE INSTRUMENTOS (GR)	706
TÁNDEM Y CUBIERTA (GR)	314
TANQUE DE AIRE (GR)	394
TANQUE HIDRÁULICO Y MONTAJE (GR)	490
TANQUE Y FILTRO HIDRÁULICOS (GR)	488
TAPA CONTRA EL POLVO	42, 56, 70, 74, 94

* NO HAY TRADUCCION DISPONIBLE EN EL MOMENTO DE LA IMPRESION

INDICE

Nombre	Página
	272
	450
	453
	463
	522
TAPA CONTRA EL POLVO (ACEITE DE LA TRANSMISIÓN)	70
TAPA CONTRA EL POLVO (CONJ) (CALENTADOR DE AGUA DE LAS CAMISAS)	140
	141
TAPA DEL BLOQUE MOTOR (GR)	14
TAPA DEL RADIADOR	82
TAPA DEL TUBO DE LLENADO (ACEITE DEL TREN DE FUERZA)	290
TAPA DEL TUBO DE LLENADO DE ACEITE (CONJ)	54
TAPA DEL TUBO DE LLENADO (TANQUE DE ACEITE HIDRÁULICO)	488
TAPA, TANQUE DE COMBUSTIBLE (GR) (TRABABLE)	120
TAPA, TANQUE DE COMBUSTIBLE (GR) (TRABABLE)	116
TAPA (VASTAGO)	335
	339
	340
	341
	342
	343
	344
	345
	346
	347
	348
	350
TAPAS PROTECTORAS DE EMBARQUE (GR)	282
TAPÓN (CONJ) (ACONDICIONADOR DE AIRE) (SELLO)	682
TAPÓN (CONJ) (ORIFICIO PARA CAMBIO RÁPIDO DE ACEITE)	101
TAPÓN DE DRENAJE	285
TAPÓN DE DRENAJE (TRANSMISION)	297
TAPÓN DEL BLOQUE MOTOR (GR)	41
TAPÓN DEL MOTOR (GR)	42
TAPÓN MAGNÉTICO (DIFERENCIAL)	355
TAZA DE CUCHARÓN (CONJ) (CALENTADOR DE 12 VOLTIOS) (SEPARADOR COMBUSTIBLE/AGUA)	99
TENSOR DE CORREA (GR)	10
TIRANTE DE DIRECCIÓN (GR)	371
*TOOL BOX GP	759
TOPE DE VÁLVULA DE CONTROL (GR)	432
	434
TORNILLERIA DEL RADIADOR	66
TRABA DE CONTROL HIDRÁULICO MANUAL (GR)	467
TRABA DE DESPLAZAMIENTO DEL CIRCULO (GR)	466
TRANSMISION (CONFIG)	315
TRANSMISIÓN PLANETARIA (GR)	306
TUBERÍAS DE ACEITE DEL TREN DE FUERZA (GR)	302
TUBERÍAS DE ACONDICIONADOR DE AIRE (GR)	682
TUBERÍAS DE COMBUSTIBLE (GR)	102
	106
TUBERÍAS DE DIRECCIÓN (GR)	462
TUBERÍAS DE DRENAJE (GR)	101
TUBERÍAS DE ENGRASE (GR)	370
TUBERÍAS DE INYECCIÓN DE COMBUSTIBLE (GR)	108
TUBERÍAS DE LA CALEFACCIÓN (GR)	686
TUBERÍAS DE LA DIRECCIÓN SECUNDARIA (GR)	460
TUBERÍAS DEL AGUA - POSENFRIADOR (GR)	68
TUBERÍAS DEL AGUA (GR)	76
TUBERÍAS DEL AGUA (GR)	72
	73
	74
TUBERÍAS DEL DESGARRADOR (GR)	456
	458
	459
TUBERÍAS DEL ENFRIADOR DEL TREN DE FUERZA (GR)	70
TUBERÍAS DEL TANQUE DE AIRE (GR)	393
TUBERÍAS HIDRÁULICAS DEL VENTILADOR (GR)	448
	450
TUBERÍAS HIDRÁULICAS (GR)	440
	444
TUBO DE LLENADO DE ACEITE DE LA TRANSMISIÓN (GR)	290
TUBO DE LLENADO DE ACEITE (GR)	54
TURBOCOMPRESOR - TUBERÍAS DE ACEITE DEL (GR)	59
TURBOCOMPRESOR (GR)	92
	93

U

UNIÓN GIRATORIA (GR)	487

* NO HAY TRADUCCION DISPONIBLE EN EL MOMENTO DE LA IMPRESION

INDICE

Nombre	Página
V	
VALVULA-ALIVIO DE AIRE (TANQUE)	394
VÁLVULA COMPENSADORA DE FLUJO Y PRESIÓN (GR)	574
	576
VÁLVULA (CONJ) (ACONDICIONADOR DE AIRE)	682
VÁLVULA (CONJ) (ASIENTO)	736
VÁLVULA DE ALIVIO (GR)	320
VÁLVULA DE ALIVIO (GR)	579
	580
	581
	582
	583
	584
	585
	586
VÁLVULA DE ALIVIO (GR) (PRINCIPAL)	522
VALVULA DE ARRANQUE CON ETER (GR)	212
VÁLVULA DE COMBINACIÓN (GR)	522
VÁLVULA DE CONTROL DE LA TRANSMISIÓN (GR)	330
VÁLVULA DE CONTROL (GR)	317
VÁLVULA DE CONTROL (GR)	524
	526
	528
	530
	532
	534
	536
	538
	540
	542
	544
	546
	548
	550
	552
	554
	556
	558
	560
	562
	564
	566
	568
	570
	572
VÁLVULA DE CONTROL (GR) (DESPLAZADOR LATERAL)	516
	520
VÁLVULA DE CONTROL (GR) (MANDO DEL CÍRCULO)	516
	520
VÁLVULA DE CONTROL (GR) (PUNTA DE HOJA)	516
	520
VALVULA DE DERIVACION DE BOMBA	52
VÁLVULA DE DRENAJE (AGUA)	74
VÁLVULA DE DRENAJE (RADIADOR)	83
VÁLVULA DE LA TRABA DEL DIFERENCIAL Y MONTAJE (GR)	316
VÁLVULA DE LANZADERA (GR)	587
VÁLVULA DE LEVANTAMIENTO (GR)	34
VÁLVULA DE MUESTREO DE REFRIGERANTE	74
VÁLVULA DE MUESTREO (GR)	56
	70
	462
VÁLVULA DE MUESTREO (GR) (ACEITE DE LA TRANSMISIÓN)	70
VALVULA DE PURGA (GR)	578
VÁLVULA DE RETENCIÓN (GR)	122
VÁLVULA DE RETENCIÓN (GR) (COMBUSTIBLE)	108
VÁLVULA DE SOLENOIDE (GR)	328
	588
	738
VÁLVULA DE SOLENOIDE (GR) (AMORTIGUADOR DE LA HOJA)	589
VÁLVULA DE SOLENOIDE Y MÚLTIPLE (GR)	589
	590
VÁLVULA PILOTO (GR)	318
VÁLVULA SELECTORA Y DE CONTROL DE PRESIÓN (GR)	322
	324
	326
VÁLVULA Y VARILLAJE (GR)	492
	494
	496
	498
	500
	504
	506
	508
VÁLVULAS HIDRÁULICAS - GRUPO DE 6	519
VÁLVULAS HIDRÁULICAS - GRUPO DE 7	520
VENTANA (GR)	743
	744
	745
	746
	747
VENTILADOR DE ALTERNADOR	124
VENTILADOR DE CIRCULACION	642
	644
	646

* NO HAY TRADUCCION DISPONIBLE EN EL MOMENTO DE LA IMPRESION

INDICE

Nombre	Página	Nombre	Página
	647		
VIDRIO (CONJ) (FARO DELANTERO) (LUZ BAJA)	166		
VIDRIO (CONJ) (FARO DELANTERO) (VIGA ALTA)	166		
VIDRIO (CONJ) (LAMPARA-LUZ ALTA)	146		
VIDRIO (CONJ) (LAMPARA-LUZ BAJA)	145		
VIDRIO (CONJ) (LUZ ALTA/BAJA)	152		
	154		
VIDRIO (CONJ) (REFLECTOR)	144		
VIDRIO (CONJ) (SEÑAL DE VIRAJE)	148		
	150		
	154		
VIDRIO (CONJ) (SEÑAL DE VIRAJE)	152		
VOLANTE - CAJA DE (GR)	31		
VOLANTE (GR)	29		

* NO HAY TRADUCCION DISPONIBLE EN EL MOMENTO DE LA IMPRESION

ÍNDICE

Designação	Página

A

ACENDEDOR (CIGARRO)(24 VOLTS) 258
ACESSÓRIO - CABINE 607
608
ACUMULADOR - AMORTECEDOR DA LÂMINA 399
ACUMULADOR HIDRÁULICO 400
ACUMULADOR HIDRÁULICO E MONTAGEM . . . 398
ADAPTADOR 70
ADAPTADOR - ABASTECIMENTO RÁPIDO DE COMBUSTÍVEL 94
ADAPTADOR ENTRE O MOTOR E A TRANSMISSÃO 264
ALARME 123
ALARME DE MARCHA À RÉ 224
ALTERNADOR DE CORRENTE 124
126
AQUECEDOR DA ÁGUA DO MOTOR 140
141
AQUECEDOR DA CABINE 651
652
AQUECEDOR DA CABINE E MONTAGEM 651
ARRANJO GERAL 2
ARREFECEDOR DE ÓLEO DA TRANSMISSÃO 280
ARREFECIMENTO 62
63
ARTICULAÇÃO GIRATÓRIA 487
ASSENTO 720
722
ASSENTO - FUNDO 702
ASSENTO COM SUSPENSÃO 724
725
726
727
728
729
730
ATOMIZADOR - ÉTER 214
AUXILIAR DE PARTIDA A ÉTER 212
214

B

BALANCIM 44
BARRA DE TRAÇÃO 594
BASE DO FILTRO DE ÓLEO 52
BATERIA 127
BLINDAGEM DO EIXO DA TRANSMISSÃO 372
BLOCO DE JUNÇÃO 128
BLOCO DO MOTOR 18
19
20

Designação	Página

BOCAL DE ENCHIMENTO DE ÓLEO DO MOTOR 54
BOCAL DE ENCHIMENTO DE ÓLEO DO TREM DE FORÇA 290
BOMBA DA DIREÇÃO SECUNDÁRIA E MONTAGEM 476
BOMBA DE ÁGUA 77
78
BOMBA DE ENGRENAGENS 312
BOMBA DE ESCORVA DO COMBUSTÍVEL 112
BOMBA DE INJEÇÃO DO COMBUSTÍVEL 111
BOMBA DE ÓLEO - MOTOR 60
61
BOMBA DE PISTÃO 480
482
BOMBA DE TRANSFERÊNCIA DO COMBUSTÍVEL 110
BOMBA E MONTAGEM - PISTÃO 474
BOMBA E MONTAGEM - TRANSFERÊNCIA DE COMBUSTÍVEL 110
BOMBA ELETROHIDRÁULICA 198
BOMBA HIDRÁULICA E MOTOR 472
BOMBA REGULADORA 478
BORDA CORTANTE 599
BRAÇO DO ASSENTO 614
615
BUJÃO DO BLOCO DO CILINDRO 41
BUJÃO DO DRENO 285
BUJÃO DO DRENO (TRANSMISSÃO) 297
BUJÃO DO MOTOR 42
BUJÃO MAGNÉTICO (DIFERENCIAL) 355
BUZINA DE AR 656
658

C

CABEÇOTE DO MOTOR 22
24
25
CABOS/FIOS ELÉTRICOS - CABINE 226
228
230
CABOS/FIOS ELÉTRICOS - CONSOLE DA DIREÇÃO 260
CABOS/FIOS ELÉTRICOS - CONSOLE DA TRANSMISSÃO 258
CABOS/FIOS ELÉTRICOS - DIANTEIROS 236
CABOS/FIOS ELÉTRICOS - DIREÇÃO SECUNDÁRIA 254
CABOS/FIOS ELÉTRICOS - INJETOR 263
CABOS/FIOS ELÉTRICOS - MOTOR 232
CABOS/FIOS ELÉTRICOS - TRASEIROS 240
244

* TRADUÇÃO NÃO DISPONÍVEL NO MOMENTO DA IMPRESSÃO

ÍNDICE

Designação	Página
	246
	248
CAÇAMBA (AQUECEDOR DE 12 VOLTS) (SEPARADOR DE ÁGUA/COMBUSTÍVEL)	99
CADEADO	490
	624
	715
	759
CAIXA - SUSPENSÃO DO ASSENTO	660
CAIXA DE ENGRENAGEM DE TRANSFERÊNCIA	296
CAIXA DIANTEIRA	32
CAIXA DO VOLANTE DO MOTOR	31
CAIXA E CHASSI	355
CANTO DE LÂMINA	597
CARCAÇA DA TRANSMISSÃO	265
CÁRTER DO ÓLEO DO MOTOR	38
CARTUCHO-DESSECANTE (SECADOR A AR)	381
CARTUCHO DO TURBOALIMENTADOR	93
CHAPA DE EMPUXO	596
CHASSI DIANTEIRO	359
CHAVE	250
	490
	759
CHAVE (DESCONECTAR A BATERIA)	218
CHAVE GERAL	218
CHICOTE - CHASSI	225
CHICOTE - MONITOR	706
	708
CILINDRO DA DIREÇÃO	426
	428
CILINDRO DE ARTICULAÇÃO	414
CILINDRO DE DESLIZAMENTO LONGITUDINAL	424
CILINDRO DE DESLOCAMENTO LATERAL	420
CILINDRO DE DIREÇÃO E MONTAGEM	412
CILINDRO DE ÉTER	212
CILINDRO DE INCLINAÇÃO LATERAL DAS RODAS	430
CILINDRO DE LEVANTAMENTO DA LÂMINA	416
CILINDRO DE LEVANTAMENTO DO RIPER	422
CILINDRO DE TOMBAMENTO DA LÂMINA	418
CILINDRO E MONTAGEM - ARTICULAÇÃO	407
CILINDRO E MONTAGEM - DESLOCAMENTO DA LÂMINA	411
CILINDRO E MONTAGEM - DESLOCAMENTO DO CÍRCULO	410
CILINDRO E MONTAGEM - INCLINAÇÃO DAS RODAS	413
CILINDRO E MONTAGEM - LEVANTAMENTO DA LÂMINA	408
CILINDRO E MONTAGEM - TOMBAMENTO DA LÂMINA	409
CINTO DE SEGURANÇA	719
CINTO DE SEGURANÇA (RETRÁTIL)	726
	727
	729
CINZEIRO	670
	674
CÍRCULO	592
COBERTURA DO MOTOR	356
COLETOR DE ADMISSÃO	89
COLETOR DE ESCAPE	88
COMANDO DA BOMBA	439
COMANDO DE ACESSÓRIOS	26
COMANDO FINAL	294
COMPRESSOR DE AR	6
	8
COMPRESSOR DE REFRIGERANTE	616
	617
CONDENSADOR DO REFRIGERANTE E MONTAGEM	618
CONDICIONADOR DE AR	609
	610
CONDICIONADOR DE AR E MONTAGEM	609
CONEXÃO	70
CONJUNTO ACIONADOR DO FREIO	377
CONSOLE DO OPERADOR	620
CONTROLE DA DIREÇÃO SECUNDÁRIA	134
CONTROLE DA EMBREAGEM	268
CONTROLE DA TRANSMISSÃO	274
CONTROLE DA TRAVA DO DIFERENCIAL	272
CONTROLE DE DIREÇÃO	406
CONTROLE DO FREIO DE ESTACIONAMENTO	384
CONTROLE DO FREIO DE SERVIÇO	388
CONTROLE DO GOVERNADOR	96
CONTROLE DO PAINEL MONITOR (SISTEMA DE MONITORIZAÇÃO CATERPILLAR)	139
	706
	708
CONTROLE DO PINO MESTRE DE DESLOCAMENTO LATERAL	404
CONTROLE ELETRÔNICO - MOTOR	132
	133
CONTROLE ELETRÔNICO E MONTAGEM - MOTOR	131
CONTROLE HIDRÁULICO	401
	402
CONTROLE HIDRÁULICO DA TRANSMISSÃO	278
CONVERSÃO PARA ESTRUTURA NÃO ROPS	624
CONVERSOR ELÉTRICO	135

* TRADUÇÃO NÃO DISPONÍVEL NO MOMENTO DA IMPRESSÃO

ÍNDICE

Designação	Página
	136
	137
	138
CONVERSOR ELÉTRICO (24 VOLTS A 12 VOLTS)	138
CORREIA DE COMANDO (PISCA-PISCA DE ADVERTÊNCIA)	158
CORREIA-ESTRIADA (AR CONDICIONADO)	609
CORRENTE - COMANDO	266

D

Designação	Página
DECALCOMANIA - FACIAL (FACHO ALTO - BAIXO DOS FARÓIS DIANTEIROS)	172
	180
DECALCOMANIA - FACIAL (PISCA-PISCA - PIISCA ALERTA)	172
	180
DECALQUE	760
DECALQUE - ADVERTÊNCIA (CILINDRO DE ALTA PRESSÃO)	761
DECALQUE - ADVERTÊNCIA (CONEXÃO DE CABO)	761
DECALQUE - ADVERTÊNCIA (LÍQUIDO ARREFECEDOR PRESSURIZADO)	761
DECALQUE - ADVERTÊNCIA (MOLA DE ALTA COMPRESSÃO)	761
DECALQUE - ADVERTÊNCIA (NÃO USE COMO DEGRAU)	116
DECALQUE - CONTROLE (VELOCIDADE DO VENTILADOR - TEMPERATURA)	652
DECALQUE - FUSÍVEL (LUZES, LAVADOR, LIMPADOR, DESCONGELADOR)	226
DECALQUE - IDENTIFICAÇÃO (FILTRO DE ÓLEO DO MOTOR)	760
DECALQUE - IDENTIFICAÇÃO (FUSÍVEL) (LUZ ALTA/BAIXA)	176
DECALQUE - INSTRUÇÃO (AJUSTE DO ASSENTO)	734
DECALQUE - INSTRUÇÃO (AJUSTE DO ASSENTO)	736
DECALQUE - INSTRUÇÃO (ENCHIMENTO DO LAVADOR DE PÁRA-BRISA)	761
DECALQUE - INSTRUÇÃO (NÃO FURE OU SOLDE A ESTRUTURA ROPS)	716
	717
DECALQUE - INSTRUÇÃO (PARADA DO MOTOR)	241
DECALQUE - INSTRUÇÃO (VIDRO DE SAÍDA EMERG./REMOVÍVEL)	649
	650
DECALQUE - LEVANTAMENTO E AMARRAÇÃO	761
DECALQUE - PAINEL (DIREITO)	706
	708
DECALQUE - PAINEL (ESQUERDO)	706
	708
DECALQUE (LOCAL DO OLHAL DE LEVANTAMENTO)	760
DECALQUE MONITOR	708
DECALQUE MONITOR (MÓDULO DO VISOR PRINCIPAL)	706
DECALQUE (POTÊNCIA NÃO VARIÁVEL)	3
DECALQUE-REFLETOR (COR VERMELHA)	761
DECALQUE (VISEIRA PÁRA-SOL)	705
DEGRAU	373
DENTE DO RÍPER	606
DIFERENCIAL	288
DIFERENCIAL E COROA	284
DIREÇÃO SECUNDÁRIA	486
DISJUNTOR AUTOMÁTICO DE CIRCUITO (15 A) (FARÓIS)	129
	130
DISJUNTOR AUTOMÁTICO DE CIRCUITO (15 A) (FAROL - FACHO BAIXO DA BARRA DE LUZES)	176
DISJUNTOR AUTOMÁTICO DE CIRCUITO (15 A) (LÂMPADAS DE TRABALHO - BARRA)	129
DISJUNTOR AUTOMÁTICO DE CIRCUITO (15 A) (RELÉ DE PARTIDA)	249
DISJUNTOR AUTOMÁTICO DE CIRCUITO (80 A) (ALTERNADOR)	250
DISJUNTOR AUTOMÁTICO DE CIRCUITO (80 A) (PRINCIPAL)	248
DUCTO	639
DUCTO E CONTROLE	638

E

Designação	Página
EIXO-COMANDO DE VÁLVULA	12
EIXO DIANTEIRO	352
ELEMENTO - AQUECEDOR DE ÁGUA DA CAMISA (120 VOLTS/1250 WATTS)	140
ELEMENTO - AQUECEDOR (240 VOLTS/1250 WATTS)	141
ELEMENTO - FILTRANTE (SEPARADOR DE ÁGUA E DE COMBUSTÍVEL) (PRIMÁRIO)	99
ELEMENTO - PRIMÁRIO	85
ELEMENTO - SECUNDÁRIO	85
ELEMENTO-AQUECEDOR (SECADOR DE AR) (12 VOLTS)	381
ELEMENTO FILTRANTE - ÓLEO (HIDRÁULICO)	70
ELEMENTO FILTRANTE - ÓLEO (HIDRÁULICO) (FLUXO INVERSO)	488
ELO - DIREÇÃO	371

* TRADUÇÃO NÃO DISPONÍVEL NO MOMENTO DA IMPRESSÃO

ÍNDICE

Designação	Página
EMISSOR - NÍVEL DO COMBUSTÍVEL	116
EMISSOR - POSIÇÃO	202
EMISSOR - POSIÇÃO (ENGRENAGEM)	240
ENGATE - ARTICULAÇÃO	368
ENGRENAGENS DE DISTRIBUIÇÃO	30
ENGRENAGENS PLANETÁRIAS - TRANSMISSÃO	306
ESPELHO RETROVISOR	688
	690
	692
	694
	695
ESTRUTURA ROPS ABERTA	715
ESTRUTURA ROPS FECHADA	714
EXTENSÃO - ENCOSTO	640
	641

F

FAROL DIANTEIRO	145
	146
	148
	150
FAROL DIANTEIRO (24 V) (FAROL BAIXO)	145
	180
FAROL DIANTEIRO (24 VOLTS)(65 WATTS) (FAROL)	144
FAROL DIANTEIRO (24 VOLTS)(65 WATTS) (LUZ ALTA)	146
FIAÇÃO - AMORTECEDOR DA LÂMINA	225
FILTRO - AR DA CABINE	648
FILTRO - AR (ROPS - PAINEI TRASEIRO)	648
FILTRO - COMBUSTÍVEL	98
FILTRO - ELEMENTO HIDRÁULICO (TREM DE FORÇA)	292
FILTRO - MAGNÉTICO (DIFERENCIAL)	297
FILTRO - ÓLEO	292
FILTRO - ÓLEO DO MOTOR	56
FILTRO (AR DA CABINE)	648
FILTRO DE COMBUSTÍVEL E SEPARADOR DE ÁGUA	99
FIXADORES - CABEÇOTE DO MOTOR	28
FIXADORES - RADIADOR	66
FREIO DE SERVIÇO	382
FUNDO - ENCOSTO	701
FUSÍVEL (10 A) (ALARME DE MARCHA À RÉ AUXILIAR)	164
FUSÍVEL (10 A) (CONSOLE DA DIREÇÃO)	260
FUSÍVEL (10 A) (CONTROLADOR DA LÂMINA)	228
FUSÍVEL (10 A) (CONVERSOR DE ENERGIA)	138
FUSÍVEL (10 A) (DESCONGELADOR DIANTEIRO)	646
FUSÍVEL (10 A) (DESCONGELADOR TRASEIRO)	647
FUSÍVEL (10 A) (ESPELHO AQUECIDO)	690
FUSÍVEL (10 A) (ESPELHO AQUECIDO DO LADO EXTERNO)	692
FUSÍVEL (10 A) (FAIXO ALTO E BAIXO E PISCA)	184
FUSÍVEL (10 A) (FARÓIS DIANTEIROS)	172
FUSÍVEL (10 A) (FAROL DO LADO DIREITO)	170
	188
FUSÍVEL (10 A) (LÂMPADA DA ARMAÇÃO DA LÂMPADA)	230
FUSÍVEL (10 A) (LÂMPADA DA LÂMINA)	168
FUSÍVEL (10 A) (LIMPADOR)	754
	756
FUSÍVEL (10 A) (LUZ ALTA/BAIXA)	176
FUSÍVEL (10 A) (LUZ DE MARCHA À RÉ)	162
FUSÍVEL (10 A) (PISCA-PISCA DE ADVERTÊNCIA)	142
	194
	196
FUSÍVEL (10 A) (RADIO)	136
FUSÍVEL (10 A) (SETA DE DIREÇÃO - PISCA)	180
FUSÍVEL (10 A) (SETAS DE DIREÇÃO)	220
FUSÍVEL (10 A) (TESTE DAS LÂMPADAS DO PAINEL TRASEIRO / DIREÇÃO SECUNDÁRIA)	254
FUSÍVEL (15 A) (AQUECIMENTO E CONDICIONAMENTO DE AR)	651
FUSÍVEL (15 A) (AR CONDICIONADO)	609
FUSÍVEL (15 A) (LIMPADORES DIANTEIROS SUPERIOR E INFERIOR)	226
FUSÍVEL (30 A) (CONVERSOR - FORÇA)	137

G

GR. DE CONVERSÃO - CERTIFICADO	1
GRAXEIRA (BARRA DE INCLINAÇÃO DA RODA)	352
GRAXEIRA (MANCAL DE INCLINAÇÃO DA RODA)	352
GRAXEIRA (OSCILÇÃO DO EIXO)	352
GRAXEIRA (PINO MESTRE)	352
GRAXEIRA (ROSCA 1/8-27 POL) (PINO DE ARTICULAÇÃO SUPERIOR/INFERIOR)	370
GRUPO DE VÁLVULAS DE CONTROLE - CINCO	515
	516
	517
	518
GRUPO DE VÁLVULAS DE CONTROLE - QUÁDRUPLO	510
	511

* TRADUÇÃO NÃO DISPONÍVEL NO MOMENTO DA IMPRESSÃO

ÍNDICE

Designação	Página
	512
	513
	514
GRUPO DE VÁLVULAS DE CONTROLE - SEIS	519
GRUPO DE VÁLVULAS DE CONTROLE - SETE	520
GRUPO ROTATIVO DA BOMBA	484
	485
I	
ILUMINAÇÃO - FAROL E SINALIZAÇÃO	160
	161
ILUMINAÇÃO - MARCHA A RÉ	162
	164
ILUMINAÇÃO - SINALIZAÇÃO	193
INDICADOR - NÍVEL DO ÓLEO (VARETA)	58
INDICADOR - PRESSÃO DO AR (FREIO - LADO DIREITO)	706
INDICADOR - PRESSÃO DO AR (FREIO DO LADO ESQUERDO)	706
INDICADOR (TROCA DO FILTRO DE AR)	86
INJETOR DE COMBUSTÍVEL	100
INSTALAÇÃO DO PISCA-PISCA DE ADVERTÊNCIA	142
INSTALAÇÃO DO RÁDIO	664
INSTALAÇÃO DO RÁDIO - ARRANJO	663
INSTRUMENTOS - ARRANJO	666
INTERRUPTOR - BALANCIM (LÂMPADA DA LÂMINA)	168
INTERRUPTOR - BALANCIM (LUZ DIANTEIRA / TRASEIRA)	172
	176
	184
	220
INTERRUPTOR - BALANCIM (LUZ DIANTEIRA / TRASEIRA)	180
INTERRUPTOR - BALANCIM (PARADA DO MOTOR)	240
INTERRUPTOR - BOTÃO (MODO DO OPERADOR)(VISOR DIGITAL)	708
INTERRUPTOR - BOTÃO (VISOR DIGITAL DO MODO DO OPERADOR)	706
INTERRUPTOR - CIRCUITO	129
	130
INTERRUPTOR - ESFERA (FAIXA DE ENGRENAGEM)	240
INTERRUPTOR - LIMITADOR (PEDAL DO FREIO - MOVIMENTO GRADUAL)	260
INTERRUPTOR - LIMPADOR	223
INTERRUPTOR - LIMPADOR DO PÁRA-BRISA	223
INTERRUPTOR - LIMPADOR (TRASEIRO)	754
INTERRUPTOR - LIMPADOR (TRASEIRO)	756
INTERRUPTOR - LUZES	220
INTERRUPTOR - MAGNÉTICO	222
INTERRUPTOR - MAGNÉTICO (RELÉ DA DIREÇÃO SECUNDÁRIA)	254
INTERRUPTOR - MAGNÉTICO (RELÉ DO FUSÍVEL) (RELÉ PRINCIPAL DE POTÊNCIA)	248
INTERRUPTOR - MAGNÉTICO (24 V) (RELÉ DE PARTIDA)	248
INTERRUPTOR - PARTIDA (CHAVE)	258
INTERRUPTOR - PRESSÃO (AR CONDICIONADO)(ALTO - BAIXO)	682
INTERRUPTOR - PRESSÃO (DIREÇÃO PRIMÁRIA)	254
INTERRUPTOR - PRESSÃO (LUZ DO FREIO)	236
INTERRUPTOR - ROTATIVO (LIMPADORES DIANTEIROS SUPERIOR E INFERIOR)	226
INTERRUPTOR - ROTATIVO (LUZ ALTA/BAIXA)	172
	176
	180
	184
INTERRUPTOR - ROTATIVO (SETA DE DIREÇÃO)	220
INTERRUPTOR - ROTATIVO (VELOCIDADE DO VENTILADOR)	610
INTERRUPTOR - SINALIZAÇÃO DE DIREÇÃO / LUZ DE ALERTA	172
	180
	220
INTERRUPTOR - SINALIZAÇÃO DE DIREÇÃO / LUZ DE ALERTA	176
	184
INTERRUPTOR - TERMOSTATO (REFRIGERANTE)	610
INTERRUPTOR (ALARME DE MARCHA À RÉ AUXILIAR)	164
INTERRUPTOR (ARMAÇÃO DA LÂMINA)	230
INTERRUPTOR (AUXILIAR DE PARTIDA A ÉTER)	214
INTERRUPTOR (BARRA DE LUZ BAIXA)	177
	180
INTERRUPTOR (CABINE - FAROL DO LADO DIREITO)	188
INTERRUPTOR (CONTROLE DO AMORTECEDOR DA LÂMINA)	225
INTERRUPTOR (DIREÇÃO SECUNDÁRIA)	254
INTERRUPTOR (ESPELHO AQUECIDO)	690
	692
INTERRUPTOR (FAROL DO LADO DIREITO)	170

* TRADUÇÃO NÃO DISPONÍVEL NO MOMENTO DA IMPRESSÃO

ÍNDICE

Designação	Página
INTERRUPTOR (LÂMPADA DE MARCHA À RÉ AUXILIAR)	162
INTERRUPTOR (LÂMPADAS DA ARMAÇÃO DA LÀMINA)	228
INTERRUPTOR (LIGA/DESLIGA) (DESCONGELADOR DIANTEIRO)	646
INTERRUPTOR (LIGA/DESLIGA) (DESCONGELADOR TRASEIRO)	647
INTERRUPTOR (LUZ TRASEIRA)	260
INTERRUPTOR (PISCA-PISCA DE ADVERTÊNCIA)	142 194 196
INTERRUPTOR (REDUTOR DE LUMINOSIDADE DO PAINEL)	260
INTERRUPTOR (REGULAR - CONTINUAR RETENÇÃO DO ACELERADOR)	258
INTERRUPTOR (RETENÇÃO DO ACELERADOR AUTOMÁTICA - MANUSL)	258
INTERRUPTOR (TRAVA DO DIFERENCIAL)	260
ISOLADOR - TEMPO	668

J

Designação	Página
JOGO - MANCAL PRINCIPAL (VIRABREQUIM)	16
JOGO - SENSOR (NÍVEL DE COMBUSTÍVEL)	116
JOGO DE ABRAÇADEIRA DO PURIFICADOR DE AR	85
JOGO DE AJUSTADOR	702
JOGO DE ALAVANCA (MOTOR DE PARTIDA)	216
JOGO DE ALMOFADA DO ASSENTO	720
JOGO DE ALMOFADA DO ASSENTO (VINIL)	722
JOGO DE ALMOFADA (ENCOSTO DE VINIL)	641
JOGO DE ALMOFADA (EXTENSÃO DO ENCOSTO DO ASSENTO)	640
JOGO DE ANEL PADRÃO (COMPRESSOR DE AR)	6
JOGO DE ATIVADOR DOS FREIOS	377
JOGO DE BLOCO DESLIZADOR	720 722 726 727 728
JOGO DE BUCHA (MOTOR DE PARTIDA)	216
JOGO DE CABEÇOTE (COMPRESSOR DE AR)	6
JOGO DE CÁRTER DE INCLINAÇÃO	720 722
JOGO DE COIFA DE SUSPENSÃO	734
JOGO DE CORDÃO (ASSENTO)	736
JOGO DE DESCARREGADOR (COMPRESSOR DE AR)	6
JOGO DE DIAFRAGMA (BUZINA)	656
JOGO DE ESCOVA (MOTOR DE PARTIDA)	216
JOGO DE FILTRO DE COMBUSTÍVEL E SEPARADOR DE ÁGUA	99
JOGO DE FIXADOR DE CORREIA	734
JOGO DE FIXADORES (ASSENTO)	736
JOGO DE INCLINAÇÃO DO ASSENTO	702
JOGO DE INCLINAÇÃO TRASEIRA	702
JOGO DE INDICADOR	661
JOGO DE INDICADOR (ASSENTO)	736
JOGO DE ISOLADOR (MOTOR DE PARTIDA)	216
JOGO DE LÂMINA DO LIMPADOR DE PÁRA-BRISA (TRASEIRO)	754
JOGO DE MANCAL	661
JOGO DE MANCAL PRINCIPAL DO MOTOR (COMPRESSOR DE AR)	6
JOGO DE MARTELO	649 650
JOGO DE MOLA	478 661
JOGO DE PÁRA-CHOQUE	661
JOGO DE PISTÃO (DIREÇÃO HIDRÁULICA)	480
JOGO DE RECEPTÁCULO (12 PINOS)	134 172 176 180 184 260 690
JOGO DE RECEPTÁCULO (12 PINOS)	164 170 188 226 228 230 236 244 246 249 258 364 366 692 706 708
JOGO DE RECEPTÁCULO (12 PINOS) (INTERRUPTOR DA PISCA ALERTA)	162
JOGO DE RECEPTÁCULO (12 PINOS) (LÂMPADAS DE TRABALHO - BARRA)	176 180
JOGO DE RECEPTÁCULO (2 PINOS)	123 159 162

* TRADUÇÃO NÃO DISPONÍVEL NO MOMENTO DA IMPRESSÃO

ÍNDICE

Designação	Página
	164
	170
	186
	188
	191
	199
	224
	225
	226
	228
	230
	232
	236
	237
	240
	241
	244
	328
	384
	588
	611
	616
	642
	658
	682
	690
	692
	706
	708
JOGO DE RECEPTÁCULO (2 PINOS)	158
	682
JOGO DE RECEPTÁCULO (2 PINOS) (AQUECEDOR DE ADMISSÃO DE AR)	232
JOGO DE RECEPTÁCULO (2 PINOS) (CONVERSOR DE IGNIÇÃO - RAIO)	137
JOGO DE RECEPTÁCULO (2 PINOS) (LÂMPADA DO REMOVEDOR DE NEVE)	170
	188
JOGO DE RECEPTÁCULO (2 PINOS) (LÂMPADAS DO PAINEL)	258
JOGO DE RECEPTÁCULO (2 PINOS) (MOTOR DE AQUECEDOR)	652
JOGO DE RECEPTÁCULO (2 PINOS) (PARTIDA A ÉTER)	212
JOGO DE RECEPTÁCULO (2 PINOS) (RELÉ PRINCIPAL)	249
JOGO DE RECEPTÁCULO (2 PINOS) (SECADOR DE AR - ALARME DE MARCHA À RÉ)	249
JOGO DE RECEPTÁCULO (2 PINOS) (TOMADA DE FORÇA DE 12 VOLTS)	607
	608
JOGO DE RECEPTÁCULO (2 PINOS) (VÁLVULA SOLENÓIDE)	738
JOGO DE RECEPTÁCULO (2 PINOS) (VÁLVULAS DO SOLENÓIDE DE DESLOCAMENTO LATERAL)	404
JOGO DE RECEPTÁCULO (3 PINOS)	143
	156
	157
	186
	191
	202
	225
	226
	232
	236
	240
	241
	244
	246
	254
	260
JOGO DE RECEPTÁCULO (3 PINOS) (VIRAR/ESTACIONAR)	166
JOGO DE RECEPTÁCULO (4 PINOS)	164
	170
	188
	226
	228
	230
	236
	240
	241
	260
	692
JOGO DE RECEPTÁCULO (4 PINOS) (AUXILIAR DE PARTIDA A ÉTER)	212
JOGO DE RECEPTÁCULO (4 PINOS) (ESPELHO AQUECIDO - LÂMPADAS DA ARMAÇÃO DA LÂMINA)	162
JOGO DE RECEPTÁCULO (4 PINOS) (INTERRUPTOR DA PISCA ALERTA)	196
JOGO DE RECEPTÁCULO (4 PINOS) (LÂMPADA DE MARCHA À RÉ AUXILIAR)	162
JOGO DE RECEPTÁCULO (4 PINOS) (RELÉ DE PARTIDA - DISJUNTOR DE CONTROLE DO MOTOR)	249
JOGO DE RECEPTÁCULO (4 PINOS) (VELOCIDADE EFETIVA)	201
JOGO DE RECEPTÁCULO (6 PINOS)	226
	236
	241
	258
	364

* TRADUÇÃO NÃO DISPONÍVEL NO MOMENTO DA IMPRESSÃO

ÍNDICE

Designação	Página
	366
	652
	706
	708
	749
JOGO DE RECEPTÁCULO (6 PINOS) (AQUECEDOR & AR CONDITIONADO)	611
JOGO DE RECEPTÁCULO (6 PINOS) (FAROL DIANTEIRO)	148
	150
	152
	154
JOGO DE RECEPTÁCULO (6 PINOS) (MÓDULO DE QUATRO MEDIDORES)	696
JOGO DE RECEPTÁCULO (6 PINOS) (MOTOR DO LIMPADOR DE VIDROS)	750
	752
JOGO DE RECEPTÁCULO (6 PINOS) (VELOCÍMETRO E TACÔMETRO)	697
JOGO DE RECEPTÁCULO (8 PINOS)	162
	164
	170
	188
	223
	226
	228
	230
	690
	692
	706
	708
JOGO DE RECEPTÁCULO (8 PINOS) (INTERRUPTOR DO LIMPADOR TRASEIRO)	754
	756
JOGO DE RECEPTÁCULO (8 PINOS) (INTERRUPTORES DO LIMPADOR DIANTEIRO)	226
JOGO DE RETENTOR	400
	478
JOGO DE RETENTOR (VÁLVULA SOLENÓIDE)	588
JOGO DE RETENTOR (VENTILADOR HIDRÁULICO)	590
JOGO DE ROLETE DE SUSPENSÃO	734
JOGO DE ROLO (ASSENTO)	736
JOGO DE SEGUIDOR	660
	661
JOGO DE TOMADA DE CONEXÃO (12 PINOS)	164
	170
	172
	176
	180
	184
	188
	226
	228
	230
	236
	240
	258
	260
	364
	366
	692
	706
	708
JOGO DE TOMADA DE CONEXÃO (12 PINOS)	226
	232
	241
	690
JOGO DE TOMADA DE CONEXÃO (12 PINOS) (DESCONGELADOR DIANTEIRO - TRASEIRO)	162
JOGO DE TOMADA DE CONEXÃO (2 PINOS)	170
	186
	191
	222
	225
	226
	232
	236
	240
	241
	248
	258
	682
	690
JOGO DE TOMADA DE CONEXÃO (2 PINOS) (ALARME DE MARCHA À RÉ - RETORNO)	244
JOGO DE TOMADA DE CONEXÃO (2 PINOS) (AUXILIAR DE PARTIDA A ÉTER)	212
JOGO DE TOMADA DE CONEXÃO (2 PINOS) (FAROL LATERAL)	164
JOGO DE TOMADA DE CONEXÃO (2 PINOS) (INTERRUPTOR DAS LÂMPADAS DO PAINEL - BUZINA)	260
JOGO DE TOMADA DE CONEXÃO (2 PINOS) (INTERRUPTOR DE MODO DE OPERADOR)	708
JOGO DE TOMADA DE CONEXÃO (2 PINOS) (INTERRUPTOR PISCA ALERTA)	196
JOGO DE TOMADA DE CONEXÃO (2 PINOS) (LADO DO FAROL)	188

* TRADUÇÃO NÃO DISPONÍVEL NO MOMENTO DA IMPRESSÃO

ÍNDICE

Designação	Página
	230
JOGO DE TOMADA DE CONEXÃO (2 PINOS) (LÂMPADA DO REMOVEDOR DE NEVE)	162
	170
	228
JOGO DE TOMADA DE CONEXÃO (2 PINOS) (LÂMPADA DO REMOVEDOR DE NEVE)	188
JOGO DE TOMADA DE CONEXÃO (2 PINOS) (LÂMPADAS DE TRABALHO - BARRA)	176
	180
JOGO DE TOMADA DE CONEXÃO (2 PINOS) (LÂMPADAS DIANTEIRAS DA BARRA DE LUZ)	172
JOGO DE TOMADA DE CONEXÃO (2 PINOS) (LATERAL DO FAROL E CONTROLE AUXILIAR)	692
JOGO DE TOMADA DE CONEXÃO (2 PINOS) (MOTOR)	652
JOGO DE TOMADA DE CONEXÃO (2 PINOS) (MOTOR DE AQUECEDOR-COND. DE AR)	611
JOGO DE TOMADA DE CONEXÃO (2 PINOS) (RELÉ DE ARRANQUE)	249
JOGO DE TOMADA DE CONEXÃO (3 PINOS)	203
	204
	226
	232
	236
	241
	244
JOGO DE TOMADA DE CONEXÃO (3 PINOS) (LÂMPADAS DE VIRADA DA BARRA DE LUZ)	172
JOGO DE TOMADA DE CONEXÃO (3 PINOS) (SENSOR DA ALAVANCA DE CONTROLE DE PERCURSO À FRENTE)	260
JOGO DE TOMADA DE CONEXÃO (4 PINOS)	164
	188
	230
	241
	258
	260
	690
	692
JOGO DE TOMADA DE CONEXÃO (4 PINOS) (DISJUNTOR DE CONTROLE DO MOTOR E RELÉ DE PARTIDA)	249
JOGO DE TOMADA DE CONEXÃO (4 PINOS) (INTERRUPTOR DA LÂMPDA DE MARCHA À RÉ AUXILIAR)	170
JOGO DE TOMADA DE CONEXÃO (4 PINOS) (LÂMPADA DE MARCHA À RÉ AUXILIAR)	162
JOGO DE TOMADA DE CONEXÃO (4 PINOS) (LÂMPADA E INTERRUPTOR DE MARCHA À RÉ AUXILIAR)	228
JOGO DE TOMADA DE CONEXÃO (4 PINOS) (RELÉ DE PARTIDA)	249
JOGO DE TOMADA DE CONEXÃO (4 PINOS) (SENSOR DE VELOCIDADE NO SOLO - FORÇA ELÉTRICA - NO SOLO)	236
JOGO DE TOMADA DE CONEXÃO (6 PINOS)	184
	226
	236
	249
	258
	708
JOGO DE TOMADA DE CONEXÃO (8 PINOS)	164
	170
	188
	226
	228
	230
	236
	690
	692
JOGO DE TOMADA DE CONEXÃO (8 PINOS) (LAVADOR - LIMPADOR DIANTEIRO E TRASEIRO)	162
JOGO-HASTE	702
JOGO-VEDADOR TIPO CARTUCHO	328
JOGO-VEDADOR TIPO CARTUCHO (TRAVA DO DIFERENCIAL)	316
JUNTA	67
JUNTA-BASE (MECANISMO DAS VÁLVULAS - TAMPA)	50
JUNTA-RESPIRO	50

L

LÂMINA	598
LÂMINA DO LIMPADOR DE PÁRA-BRISA (ALTO PERFIL DIANTEIRO SUPERIOR)	752
LÂMINA DO LIMPADOR DE PÁRA-BRISA (PERFIL ALTO - TRASEIRO)	756
LÂMINA DO LIMPADOR DE PÁRA-BRISA (PERFIL BAIXO - INFERIOR DIANTEIRO)	750
LÂMINA DO LIMPADOR DE PÁRA-BRISA (PERFIL BAIXO - TRASEIRO)	754
LÂMINA DO LIMPADOR DE PÁRA-BRISA (VENTILADOR INFERIOR DIANTEIRO)	743
LÂMPADA - FAROL	144
LÂMPADA - LADO DIREITO (LUZES DO FREIO/LUZES TRASEIRAS/LUZES INDICADORAS DE DIREÇÃO)	246

* TRADUÇÃO NÃO DISPONÍVEL NO MOMENTO DA IMPRESSÃO

ÍNDICE

Designação	Página
LÂMPADA - LADO ESQUERDO (LUZES DO FREIO/LUZES TRASEIRAS/LUZES INDICADORAS DE DIREÇÃO)	246
LÂMPADA - SINALIZAÇÃO	156, 157
LÂMPADA - SINALIZAÇÃO (DIREITO)	166
LÂMPADA - SINALIZAÇÃO (ESQUERDO)	166
LÂMPADA - SINALIZAÇÃO (24 V) (BARRA DE LUZ CURVA - ESTACIONAMENTO)	172
LÂMPADA - TETO	143
LÂMPADA DIANTEIRA E DE SINAL	152, 154
LÂMPADA (FILAMENTO SIMPLES) (SETA DE DIREÇÃO)	148, 150
LÂMPADA (PISCA ALERTA)(24 VOLTS)	158
LÂMPADA (24 V) (ALARME DE MARCHA À RÉ AUXILIAR)	164
LÂMPADA (24 V) (ARMAÇÃO DA LÂMINA)	230
LÂMPADA (24 V) (ARMAÇÃO DA LÂMINA - INDICADOR)	228
LÂMPADA (24 V) (BARRA DE LUZ BAIXA)	177, 180
LÂMPADA (24 V) (CABINE - FAROL DO LADO DIREITO)	188
LÂMPADA (24 V) (CONSOLE DO EIXO)	258
LÂMPADA (24 V) (CONTROLE - INDICADOR DE AMORTECIMENTO DE LÂMINA)	225
LÂMPADA (24 V) (DESCONGELADOR DIANTEIRO)	646
LÂMPADA (24 V) (DESCONGELADOR TRASEIRO)	647
LÂMPADA (24 V) (DIREÇÃO SECUNDÁRIA)	254
LÂMPADA (24 V) (FACHO ALTO - BAIXO)(LADO DIREITO)	154
LÂMPADA (24 V) (FAROL BAIXO)	166
LÂMPADA (24 V) (FAROL DIANTEIRO - FAROL TRASEIRO - INDICADOR)	220
LÂMPADA (24 V) (FAROL DO LADO DIREITO)	170
LÂMPADA (24 V) (ILUMINAÇÃO DE OPERAÇÃO)	148, 150, 152
LÂMPADA (24 V) (INDICADOR DA AÇÃO PRINCIPAL DO EMS)	706, 708
LÂMPADA (24 V) (INDICADOR DA PRESSÃO DO AR DO LADO DIREITO)	706
LÂMPADA (24 V) (INDICADOR DA PRESSÃO DO AR DO LADO ESQUERDO)	706
LÂMPADA (24 V) (INDICADOR DA TRAVA DO DIFERENCIAL)	706
LÂMPADA (24 V) (INDICADOR DE AUXILIAR DE PARTIDA A ÉTER)	214
LÂMPADA (24 V) (INDICADOR DE ESPELHO AQUECIDO)	690, 692
LÂMPADA (24 V) (INDICADOR DE FACHO ALTO)	706
LÂMPADA (24 V) (INDICADOR DE FAROL DIANTEIRO/TRASEIRO)	172
LÂMPADA (24 V) (INDICADOR DE RETENÇÃO DO ACELERADOR)	706
LÂMPADA (24 V) (INDICADOR DE VIRADA À DIREITA)	706
LÂMPADA (24 V) (INDICADOR DE VIRADA PARA A ESQUERDA)	706
LÂMPADA (24 V) (INDICADOR DO MÓDULO DE QUATRO MEDIDORES)	706
LÂMPADA (24 V) (INTERRUPTOR AUTOMTICO - MANUAL DE RETENÇÃO DO ACELERADOR)	258
LÂMPADA (24 V) (INTERRUPTOR DE TRAVA DO DIFERENCIAL)	260
LÂMPADA (24 V) (INTERRUPTOR DO FAROL TRASEIRO)	260
LÂMPADA (24 V) (INTERRUPTOR DO REDUTOR DE LUMINOSIDADE DAS LÂMPADAS DO PAINEL)	260
LÂMPADA (24 V) (INTERRUPTOR DO SACADOR DE PINO DO EIXO CENTRAL)	258
LÂMPADA (24 V) (LÂMPADA DA LÂMINA)	168
LÂMPADA (24 V) (LÂMPADA DE MARCHA À RÉ AUXILIAR)	162
LÂMPADA (24 V) (LUZ ALTA)	166
LÂMPADA (24 V) (LUZ ALTA/BAIXA)	150
LÂMPADA (24 V) (LUZ ALTA/BAIXA)	148
LÂMPADA (24 V) (LUZ ALTA/BAIXA)	152
LÂMPADA (24 V) (LUZ DE OPERAÇÃO)	154
LÂMPADA (24 V) (LUZ DIANTEIRA / TRASEIRA)	176, 180, 184
LÂMPADA (24 V) (PAINEL DE CONTROLE DO AQUECEDOR E AR CONDICIONADO)	652
LÂMPADA (24 V) (PAINEL DE INSTRUMENTOS)	708
LÂMPADA (24 V) (PAINELDE AQUECIMENTO - VENTILADOR - AR CONDICIONADO)	610
LÂMPADA (24 V) (PISCA-PISCA DE ADVERTÊNCIA)	142, 194, 196
LÂMPADA (24 V) (QUATRO INDICADORES E PRESSÃO DO AR)	708

* TRADUÇÃO NÃO DISPONÍVEL NO MOMENTO DA IMPRESSÃO

ÍNDICE

Designação	Página
LÂMPADA (24 V) (SETA DE DIREÇÃO)	148, 150, 152, 154
LÂMPADA (24 V) (TETO)	143
LÂMPADA (24 V) (VELOCÍMETRO E TACÔMETRO)	697
LÂMPADA (24 VOLTS)(21 WATTS) (PARADA/TRASEIRA)	246
LÂMPADA (24 VOLTS)(21 WATTS) (PARADA/TRASEIRA)	246
LÂMPADA (24 VOLTS/21 WATTS) (SETA DE DIREÇÃO)	152, 154
LÂMPADA (24 VOLTS)(5 WATTS) (VIRADA)	246
LAVADOR DO VIDRO	740, 742
LENTE ÂMBAR (PISCA-PISCA DE ADVERTÊNCIA)	158
LENTE ÂMBAR (SETA DE DIREÇÃO)	148, 150
LENTE (ÂMBER) (SETA DE DIREÇÃO)	152, 154
LENTE (FAROL)	144
LENTE (FAROL) (FAIXA BAIXA)	145
LENTE (FAROL) (FAIXO ALTO)	146
LENTE (LÂMPADA DO TETO)	143
LENTE (LUZ ALTA/BAIXA)	152, 154
LENTE (LUZES DIANTEIRAS) (FAROL BAIXO)	166
LENTE (LUZES DIANTEIRAS) (LUZ ALTA)	166
LENTE (SETA DE DIREÇÃO)	148, 150, 152, 154
LEVANTAMENTO DA LÂMINA	600
LEVANTAMENTO DO MOTOR	35
LIMPADOR DO VIDRO	748, 749, 750, 752, 754, 756, 758
LUZ GIRATÓRIA DE ALARME	158
LUZ INTERMITENTE (12-24 VOLTS)	172
LUZ INTERMITENTE (12-24 VOLTS) (SETA DE DIREÇÃO - PISCA)	180

M

Designação	Página
MANGUEIRA - ELIMINAÇÃO DE VAPORES	8
MANÔMETRO DE AR (FREIO - LADO DIREITO)	708
MANÔMETRO DE AR (FREIO DO LADO ESQUERDO)	708
MARTELO E MONTAGEM	649, 650
MECANISMO DAS VÁLVULAS	50
MÓDULO - VELOCÍMETRO E TACÔMETRO	697
MÓDULO ELETRÔNICO DE QUATRO INDICADORES	696
MOLA	542, 552
MONTAGEM - ESTRUTURA ROPS	698, 700
MONTAGEM - MECANISMO DAS VÁLVULAS	37
MONTAGEM - MOTOR	36
MONTAGEM - RIPER	602
MONTAGEM - RODA	304
MOTOR	4
MOTOR - ENGRENAGENS	468
MOTOR DE REVERSÃO DO CÍRCULO	436
MOTOR E VENTILADOR	64
MOTOR ELÉTRICO	198, 199, 200
MOTOR ELÉTRICO DE PARTIDA	216
MOTOR ELÉTRICO (27 VOLT) (AQUECEDOR)	652
MOTOR ELÉTRICO (27 VOLT) (AR CONDICIONADO)	611
MOTOR HIDRÁULICO DO GEROTOR	470

P

Designação	Página
PAINEL - CABINE	704, 705
PAINEL - JANELA	710, 712
PAINEL DE INSTRUMENTOS	706, 708
PISCA-PISCA ELETRÔNICO (12-24 VOLTS) (PISCA PISCA E PISCA ALERTA)	184
PISCA-PISCA ELETRÔNICO (12-24 VOLTS) (SETA DE DIREÇÃO - PISCA)	176
PISTÃO E BIELA	40
PLACA - NÚMERO DE SÉRIE (MOTOR)	761
PLACA - NÚMERO DE SÉRIE (TRANSMISSÃO)	306
PLACA DE ADVERTÊNCIA (SEM ESPAÇO LIVRE)	761
PLACA DE INFORMAÇÃO (COMPRESSOR DE AR)	6
PLACA DE INSTRUÇÃO (BATERIA)	248

* TRADUÇÃO NÃO DISPONÍVEL NO MOMENTO DA IMPRESSÃO

ÍNDICE

Designação	Página
PLACA DE INSTRUÇÃO (DRENAR E ENCHER CÁRTER)	101
PLACA E DECALQUE	760
	762
	763
	764
PLACA E DECALQUE (MOTOR)	3
PLACA E DECALQUE (REFLECTOR)	1
PLACA/CHAPA (IDENTIFICAÇÃO DE PRODUTO)	761
PLACA/CHAPA (PRINCIPAL)	249
POLIA	10
PORTA	626
	628
PORTA DA CABINE	630
	632
	634
	636
PÓS-ARREFECEDOR E MONTAGEM	84
PROTETOR - PLATAFORMA	364
	366
PROTETOR E SUPORTE DO RADIADOR	360
PROTETOR INFERIOR	362
PURIFICADOR DE AR	85
	86
PUXADOR-AMORTECEDOR (ASSENTO)	736

R

RADIADOR	82
	83
RADIADOR E MONTAGEM	80
RECEPTÁCULO PARA ENERGIA (12 V)	607
	608
RECEPTOR - SECADOR (CONDICIONADOR DE AR) (REFRIGERANTE)	682
REDUÇÃO DE RUÍDO	48
REGULADOR DE TEMPERATURA DA ÁGUA (98 GRAUS C)	67
RELÉ (CONJ) (24 V) (LÂMPADAS TRASEIRAS/PAINEL)	260
RESERVATÓRIO - ARMAZENAGEM DE ÁGUA	99
RESERVATÓRIO - ARMAZENAGEM DE ÁGUA (AQUECEDOR DE 12 VOLTS)	99
RESPIRO (CAIXA DE TRANSFERÊNCIA)	297
RESPIRO (MOTOR)	50
RESPIRO (TANDEM)	314
RETEM DA VÁLVULA DE CONTROLE	432
	434
RETENTOR DE ANEL-O (DIÂMETRO INTERNO DE 123,19 MM)	600
RETENTOR DO VIRABREQUIM	32
	46
REVESTIMENTO DA CABINE	670
	674
	680
RIPER	603
	604
RODA	349
	350
RODA E PNEU	332
	333
	334
	335
	336
	337
	338
	339
	340
	341
	342
	343
	344
	345
	346
	347
	348
ROPS ABERTA	717
ROPS FECHADA	716

S

SECADOR DE AR	378
	380
	381
SENSOR - PRESSÃO	203
	204
	205
	206
	207
SENSOR - PRESSÃO (ÓLEO DO MOTOR)	232
SENSOR - TEMPERATURA	210
	211
SENSOR - VELOCIDADE ABSOLUTA	201
SENSOR DE VELOCIDADE	208
	209
SILENCIADOR	90
SISTEMA DE ILUMINAÇÃO - ADVERTÊNCIA	194
	196
SISTEMA DE ILUMINAÇÃO - FARÓIS	159
	160
	166
	168
	170

* TRADUÇÃO NÃO DISPONÍVEL NO MOMENTO DA IMPRESSÃO

ÍNDICE

Designação	Página
	172
	176
	180
	184
	186
	188
	190
	191
	192
SISTEMA ELETRÔNICO - MONITOR	139
SUPORTE - ASSENTO	732
SUPORTE - CHASSI TRASEIRO	374
SUPORTE - PLATAFORMA	376
SUPORTE DO MOTOR	47
SUPORTE DO TANQUE DE COMBUSTÍVEL	375
SUSPENSÃO - ASSENTO	734
	736
T	
TAMPA - BLOCO DO MOTOR	14
TAMPA - BOCAL DE ENCHIMENTO DE ÓLEO	54
TAMPA - BOCAL DE ENCHIMENTO (ÓLEO DO TREM DE FORÇA)	290
TAMPA - BOCAL DE ENCHIMENTO (TANQUE DE ÓLEO HIDRÁULICO)	488
TAMPA - EMBARQUE	282
TAMPA - RADIADOR	82
TAMPA - TANQUE DE COMBUSTÍVEL (PODE SER TRANCADO)	116
	120
TAMPA (ABERTURA PARA TROCA DE ÓLEO DE ALTA VELOCIDADE)	101
TAMPA (CONDICIONADOR DE AR) (RETENTOR)	682
TAMPA CONTRA POEIRA	42
	56
	70
	74
	94
	272
	450
	453
	463
	522
TAMPA CONTRA POEIRA (AQUECEDOR DE ÁGUA DA CAMISA)	140
	141
TAMPA CONTRA POEIRA (ÓLEO DA TRANSMISSÃO)	70
TAMPA DA VÁLVULA (HASTE)	335
	339
	340
	341
	342
	343
	344
	345
	346
	347
	348
	350
TANDEM E TAMPA	314
TANQUE DE AR	394
TANQUE DE COMBUSTÍVEL	114
	116
	118
	119
	120
TANQUE DE ÓLEO HIDRÁULICO E MONTAGEM	490
TANQUE HIDRÁULICO E FILTRO	488
TAPETE (CABINE)	668
TELA DE SUCÇÃO (DIFERENCIAL)	297
TELA DE SUCÇÃO (TRANSMISSÃO)	297
TELA FILTRANTE (BOCAL DE ENCHIMENTO DO ÓLEO HIDRÁULICO)	488
TELA PÁRA-SOL	718
TENSOR DA CORREIA	10
TERMOSTATO / REGULADOR DE TEMPERATURA	67
*TOOL BOX GP	759
TRANSMISSÃO	315
TRAVA - CONTROLE MANUAL HIDRÁULICO	467
TRAVA - DESLOCAMENTO LATERAL	466
TUBOS - ÁGUA	72
	73
	74
	76
TUBOS - ÁGUA DO PÓS-ARREFECEDOR	68
TUBOS - AQUECEDOR	686
TUBOS - AR CONDICIONADO	682
TUBOS - ARREFECEDOR DO TREM DE FORÇA	70
TUBOS - BOMBA	452
TUBOS - COMBUSTÍVEL	102
	106
TUBOS - DIREÇÃO	462
TUBOS - DIREÇÃO SECUNDÁRIA	460
TUBOS - DRENAGEM	101
TUBOS - GRAXA	370
TUBOS - INJEÇÃO DO COMBUSTÍVEL	108
TUBOS - ÓLEO DA TRANSMISSÃO	302
TUBOS - ÓLEO DO TURBOALIMENTADOR	59
TUBOS - ÓLEO HIDRÁULICO	440
	444

* TRADUÇÃO NÃO DISPONÍVEL NO MOMENTO DA IMPRESSÃO

ÍNDICE

Designação	Página
TUBOS - RIPER	456
	458
	459
TUBOS - TANQUE DE AR	393
TUBOS - VENTILADOR HIDRÁULICOS	448
	450
TUCHO DA VÁLVULA	34
TURBOALIMENTADOR	92
	93

V

VÁLVULA - AMOSTRADEM DO LÍQUIDO ARREFECEDOR	74
VÁLVULA - COLETOR E SOLENÓIDE	589
	590
VÁLVULA (ASSENTO)	736
VÁLVULA COMBINADA	522
VÁLVULA (CONDICIONADOR DE AR)	682
VÁLVULA DE ALÍVIO	320
	579
	580
	581
	582
	583
	584
	585
	586
VÁLVULA DE ALÍVIO DE AR (TANQUE)	394
VÁLVULA DE ALÍVIO (PRINCIPAL)	522
VÁLVULA DE CONTROLE	317
	524
	526
	528
	530
	532
	534
	536
	538
	540
	542
	544
	546
	548
	550
	552
	554
	556
	558
	560
	562
	564
	566
	568
	570
	572
VÁLVULA DE CONTROLE - PRESSÃO E COMPENSAÇÃO DE FLUXO	574
	576
VÁLVULA DE CONTROLE - TRANSMISSÃO	330
VÁLVULA DE CONTROLE (COMANDO DO CÍRCULO)	516
	520
VÁLVULA DE CONTROLE (DESLOCAMENTO LATERAL)	516
	520
VÁLVULA DE CONTROLE DO AR	396
	397
VÁLVULA DE CONTROLE PILOTO	318
VÁLVULA DE CONTROLE (TOMBAMENTO DA LÂMINA)	516
	520
VÁLVULA DE DERIVAÇÃO DA BOMBA	52
VÁLVULA DE DRENAGEM (ÁGUA)	74
VÁLVULA DE DRENAGEM (RADIADOR)	83
VÁLVULA DE PURIFICAÇÃO	578
VÁLVULA DE RETENÇÃO	122
VÁLVULA DE RETENÇÃO (COMBUSTÍVEL)	108
VÁLVULA DE SEPARAÇÃO	587
VÁLVULA E ARTICULAÇÕES	492
	494
	496
	498
	500
	504
	506
	508
VÁLVULA E MONTAGEM - TRAVA DO DIFERENCIAL	316
VÁLVULA PARA TIRAR AMOSTRAS DE FLUIDOS	56
	70
	462
VÁLVULA PARA TIRAR AMOSTRAS DE FLUIDOS (ÓLEO DA TRANSMISSÃO)	70
VÁLVULA SELETORA E CONTROLE DE PRESSÃO	322
	324
	326
VÁLVULA SOLENÓIDE	328
	588
	738
VÁLVULA SOLENÓIDE (AMORTECEDOR DA LÂMINA)	589
VÁVULA-PARTIDA A ÉTER	212
VENTILADOR - ALTERNADOR	124

* TRADUÇÃO NÃO DISPONÍVEL NO MOMENTO DA IMPRESSÃO

ÍNDICE

Designação	Página
VENTILADOR DE CIRCULAÇÃO DE AR DA CABINE	642
	644
	646
	647
VIDRO	743
	744
	745
	746
	747
VIRABREQUIM	16
VOLANTE DO MOTOR	29

* TRADUÇÃO NÃO DISPONÍVEL NO MOMENTO DA IMPRESSÃO

STICHWORTVERZEICHNIS

Bezeichnung	Seite
A	
ABDECKGLAS (ARBEITSLEUCHTE)	144
ABDECKGLAS (FAHRERHAUS-INNENLEUCHTE)	143
ABDECKGLAS (FAHRTRICHTUNGSANZEIGER)	148
	150
	152
	154
ABDECKGLAS (FERNLICHT/ABBLENDLICHT)	152
	154
ABDECKGLAS (FRONTSCHEINWERFER) (ABBLENDLICHT)	166
ABDECKGLAS (FRONTSCHEINWERFER) (FERNLICHT)	166
ABDECKGLAS (FRONTSCHEINWERFER) (ABBLENDLICHT)	145
ABDECKGLAS (FRONTSCHEINWERFER) (FERNLICHT)	146
ABDECKGLAS (GELB) (FAHRTRICHTUNGSANZEIGER)	148
	150
	152
	154
ABDECKGLAS (GELB) (RUNDUM-KENNLEUCHTE)	158
ABLASSLEITUNGEN	101
ABLASSSTOPFEN	285
ABLASSSTOPFEN (GETRIEBE)	297
ABLASSVENTIL (KÜHLER)	83
ABLASSVENTIL (WASSER)	74
ANSAUGKRÜMMER	89
ANSAUGSIEB (DIFFERENTIAL)	297
ANSAUGSIEB (GETRIEBE)	297
ANSCHLUSS	70
ANSCHLUSSSTÜCK	70
ANTRIEBSKETTE	266
ANTRIEBSWELLENSCHUTZ	372
ANZEIGE (LUFTFILTERWECHSEL)	86
ANZEIGEN-EINBAUSATZ	661
ANZEIGEN-EINBAUSATZ (SITZ)	736
ANZUGSLEINE (SITZ)	736
ARBEITS- U. SIGNALBELEUCHTUNG	160
	161
ARBEITSLEUCHTEN	144
	159
	160
	166
	168
	170
	172
	176
	180
	184
	186
	188
	190
	191
	192
ARMATUR	666
ARMLEHNE	614
	615
ASCHENBECHER	670
	674
ÄTHERSPRÜHGERÄT	214
ÄTHERSTARTHILFE	212
	214
ÄTHERSTARTHILFEZYLINDER	212
ÄTHERSTARTVENTIL	212
AUFHÄNGUNG - HINTERES FAHRWERK	374
AUFKLEBER	760
AUFKLEBER - HEBE- U. VERZURRPUNKT	761
AUFKLEBER - MONITOR	708
AUFKLEBER - MONITOR (HAUPTANZEIGEMODUL)	706
AUFKLEBER - SICHERUNG (BELEUCHTUNG, WASCHER, WISCHER, ENTFROSTER)	226
AUFKLEBER (FRONTSCHINWERFER FERNLICHT/ABBLENDLICHT)	172
	180
AUFKLEBER (HUBÖSE)	760
AUFKLEBER (KONTROLLE) (GEBLÄSEGESCHWINDIGKEIT/TEMPERATUR)	652
AUFKLEBER (NICHT VARIABLE LEISTUNG)	3
AUFKLEBER (RICHTUGS-/WARNBLINKER)	172
	180
AUFKLEBER (SONNENBLENDE)	705
AUFREISSER	603
	604
AUFREISSERBEFESTIGUNG	602
AUFREISSERHUBZYLINDER	422
AUFREISSERLEITUNGEN	456
	458
	459
AUFREISSERZAHN	606
AUSPUFFKRÜMMER	88
B	
BATTERIE	127
BETRIEBSBREMSE	382
BETRIEBSBREMSZYLINDERSATZ	377
BLINKER (12/24 V)	172
BLINKER (12/24 V) (RICHTUNGSBLINKER/WARNLEUCHTE)	180

* ÜBERSETZUNG ZUM ZEITPUNKT DER DRUCKLEGUNG NICHT VORHANDEN

STICHWORTVERZEICHNIS

Bezeichnung	Seite
BLINKERLEUCHTEN	193
BLINKLEUCHTE	156
	157
BLINKLEUCHTE (LINKS)	166
BLINKLEUCHTE (RECHTS)	166
BLINKLEUCHTE (24 V) (LICHTBALKEN - RICHTUNGSWECHSEL/PARKEN)	172
BREMSBETÄTIGUNG	377
BREMSGESTÄNGE	388
BUCHSEN-EINBAUSATZ (STARTERMOTOR)	216
BÜRSTEN-EINBAUSATZ (STARTERMOTOR)	216
D	
DÄMPFUNGSKNOPF (SITZ)	736
DICHTUNG	67
DICHTUNGSSATZ	400
	478
DICHTUNGSSATZ (HYDRAULIKLÜFTER)	590
DICHTUNGSSATZ (SOLENOIDVENTIL)	588
DIFFERENTIAL	288
DIFFERENTIAL UND TELLERRAD	284
DIFFERENTIALSPERRE - VENTIL UND BEFESTIGUNGSTEILE	316
DIFFERENTIALSPERRENGESTÄNGE	272
DREHKNOPFSCHALTER (FAHRTRICHTUNGS-ANZEIGER)	220
DREHKNOPFSCHALTER (FERNLICHT/ ABBLENDLICHT)	172
	180
	184
DREHKNOPFSCHALTER (FERNLICHT/ ABBLENDLICHT)	176
DREHKNOPFSCHALTER (GEBLÄSEGE-SCHWINDIGKEIT)	610
DREHKNOPFSCHALTER (UNTERE/OBERE SCHEIBENWISCHER, VORNE)	226
DREHSCHALTER (GANGBEREICH)	240
DREHSTROMGENERATOR	124
	126
DREHSTROMGENERATOR-VENTILATOR	124
DREHZAHLSENSOR	208
	209
DRUCK- U. STROMAUSGLEICHSVENTIL	574
	576
DRUCKKNOPFSCHALTER (BETRIEBSART) (DIGITALDISPLAY)	708
DRUCKKNOPFSCHALTER (FAHRERWAHLM-ODUS - DIGITALANZEIGE)	706
DRUCKLUFT-STEUERVENTIL	396
	397
DRUCKLUFTBEHÄLTER	394
DRUCKLUFTHUPE	656
	658
DRUCKLUFTTANKLEITUNGEN	393
DRUCKSCHALTER (BREMSLEUCHTE)	236
DRUCKSCHALTER (HAUPTLENKUNG)	254
DRUCKSCHALTER (KLIMAANLAGE)(HOCH - NIEDRIG)	682
DRUCKSENSOR	203
	204
	205
	206
	207
DRUCKSENSOR (MOTORÖL)	232
DRUCKSPEICHER - SCHARDÄMPFUNG	399
E	
ECKMESSER	597
EINBAUSATZ - KRAFTSTOFFILTER UND WASSERABSCHEIDER	99
EINFÜLLSTUTZENKAPPE (HYDRAULIKÖL-TANK)	488
EINFÜLLSTUTZENKAPPE (KRAFTÜBERTRA-GUNGSÖL)	290
EINSATZDICHTUNG	328
EINSATZDICHTUNG (DIFFERENTIALSPER-RE)	316
EINSTELLER-EINBAUSATZ	702
ELEKTR. UMFORMER	136
	137
	138
ELEKTR. UMFORMER (24 V ZU 12 V)	138
ELEKTRISCHE HYDRAULIKPUMPE	198
ELEKTRON. BLINKER (12/24 V) (RICHTUNGS-BLINKER U. WARNLEUCHTEN)	184
ELEKTRON. BLINKER (12/24 V) (RICHTUNGSBLINKER/WARNLEUCHTE)	176
ELEKTRONIK - MONITOR	139
ENDSCHALTER (BREMSE/KRIECHGANGPE-DAL)	260
ENTDUNSTERSCHLAUCH	8
ENTLASTUNGSVENTIL (LUFTKOMPRES-SOR)	6
ENTLEERVENTIL	578
ENTLÜFTER (MOTOR)	50
ENTLÜFTER (TANDEM)	314
ENTLÜFTER (VERTEILERGETRIEBEGEHÄU-SE)	297
ENTLÜFTERDICHTUNG	50
F	
FAHRERHAUSAUSKLEIDUNG	670
	674

* ÜBERSETZUNG ZUM ZEITPUNKT DER DRUCKLEGUNG NICHT VORHANDEN

STICHWORTVERZEICHNIS

Bezeichnung	Seite
	680
FAHRERHAUSBELEUCHTUNG	143
FAHRERHAUSFENSTER	743
	744
	745
	746
	747
FAHRERHAUSHEIZUNG	651
	652
FAHRERHAUSHEIZUNG U. BEFESTIGUNGS-TEILE	651
FAHRERHAUSLUFTFILTER	648
FAHRERHAUSTÜR	626
	628
	630
	632
	634
	636
FAHRERHAUSVERDRAHTUNG	226
	228
	230
FAHRERHAUSVERKLEIDUNG	704
	705
FAHRERHAUSZUBEHÖR	607
	608
FAHRERPLATTFORMVERKLEIDUNG	364
	366
FAHRERSITZ	720
	722
FAHRERSITZ, KIPPVORRICHTUNG	702
FAHRERSITZFEDERUNG	734
	736
FAHRERSITZFEDERUNGSGEHÄUSE	660
FAHRERSITZVERKLEIDUNG	702
FAHRGESCHWINDIGKEITSSENSOR	201
FAHRWERK-KABELBAUM	225
FEDER	542
	552
FEDER-EINBAUSATZ	478
	661
FEDERUNGS-EINBAUSATZ (MANSCHETTE)	734
FEDERUNGS-EINBAUSATZ (ROLLE)	734
FENSTERVERKLEIDUNG	710
	712
FESTSTELLBREMSGESTÄNGE	384
FILTER (FAHRERHAUSLUFT)	648
FILTER (KRAFTSTOFF-/WASSERABSCHEIDER) (HAUPT)	99
FILTERELEMENT - HYDRAULIK (KRAFTÜBERTRAGUNG)	292
FRONTSCHEINWERFER	145
	146
	148
	150
FRONTSCHEINWERFER (24 V) (ABBLENDLICHT)	180
FUSSMATTE (FAHRERHAUS)	668

G

GELENKZYLINDER UND BEFESTIGUNGSTEI-LE	407
GESCHWINDIGKEITS- U. DREHZAHLMESSER-MODUL	697
GETRIEBE	315
GETRIEBEANSCHLUSS	264
GETRIEBEGEHÄUSE	265
GETRIEBEHYDRAULIK	278
GETRIEBEÖLFÜLLSTUTZEN	290
GETRIEBEÖLKÜHLER	280
GETRIEBESTEUERUNG	274
GETRIEBESTEUERVENTIL	330
GLEITSCHIENENBLOCK-EINBAUSATZ	720
	722
	726
	727
	728
GRUNDAUSFÜHRUNG	2

H

HALTETEILESATZ (SITZ)	736
HAMMER UND BEFESTIGUNG	649
	650
HAUPTFILTER	85
HAUPTLAGERSATZ (KURBELWELLE)	16
HEBEL-EINBAUSATZ (STARTERMOTOR)	216
HEIZELEMENT (LUFTTROCKNER)(12 V)	381
HEIZUNGSELEMENT (240 V/1250 W)	141
HEIZUNGSLEITUNGEN	686
HUBVENTIL	34
HYDRAULIKDRUCKSPEICHER	400
HYDRAULIKDRUCKSPEICHER U. BEFESTIGUNG	398
HYDRAULIKHAMMER-EINBAUSATZ	649
	650
HYDRAULIKLEITUNGEN	440
	444
HYDRAULIKLÜFTERLEITUNGEN	448
	450
HYDRAULIKPUMPE UND LEITUNGEN	452
HYDRAULIKSPERRE (HANDBEDIENUNG)	467
HYDRAULIKSTEUERUNG	401
	402
HYDRAULIKTANK UND BEFESTIGUNGSTEI-LE	490

* ÜBERSETZUNG ZUM ZEITPUNKT DER DRUCKLEGUNG NICHT VORHANDEN

STICHWORTVERZEICHNIS

Bezeichnung	Seite
HYDRAULIKTANK UND SCHMIERFILTER	488
I	
IDENTIFIZIERUNGS-AUFKLEBER (MOTORÖLFILTER)	760
IDENTIFIZIERUNGS-AUFKLEBER (SICHERUNG) (FERNLICHT/ ABBLENDLICHT)	176
INFORMATIONSSCHILD (LUFTKOMPRESSOR)	6
INSTRUKTIONS-AUFKLEBER (AM ÜBERROLLSCHUTZ NICHT BOHREN/ SCHWEISSEN)	716
	717
INSTRUKTIONS-AUFKLEBER (FÜR SITZVERSTELLUNG)	734
	736
INSTRUKTIONS-AUFKLEBER (MOTORABSTELLUNG)	241
INSTRUKTIONS-AUFKLEBER (NOTAUSGANG/ FENSTER ENTFERNEN)	649
	650
INSTRUKTIONS-AUFKLEBER (SCHEIBENWASCHMITTEL)	761
INSTRUKTONSSCHILD (BATTERIE)	248
INSTRUKTONSSCHILD (KURBELGEHÄUSEABLASS U. FÜLLUNG)	101
INSTRUMENTENBRETT-AUFKLEBER (LINKS)	706
	708
INSTRUMENTENBRETT-AUFKLEBER (RECHTS)	706
	708
INSTRUMENTENTAFEL	706
	708
ISOLATOR-EINBAUSATZ (STARTERMOTOR)	216
K	
KÄLTEMITTELKOMPRESSOR	616
	617
KÄLTEMITTELKONDENSATOR U. BEFESTIGUNGSTEILE	618
KÄLTEMITTELTROCKNER (KLIMAANLAGE) (KÜHLMITTEL)	682
KAPPE (KLIMAANLAGE) (DICHTUNG)	682
KAPPE (ÖLSCHNELLWECHSELÖFFNUNG)	101
KIPPSCHALTER (HECKSCHEINWERFER)	172
	176
	180
	184
	220
KIPPSCHALTER (MOTORABSTELLUNG)	240
KIPPSCHALTER (SCHARLEUCHTE)	168
KIPPVORRICHTUNG NACH HINTEN, REPARATURSATZ	702
KIPPWANNENSATZ	720
	722
KLEMMLEISTE	128
KLIMAANLAGE	609
	610
KLIMAANLAGE UND AUFHÄNGUNG	609
KLIMAANLAGENLEITUNGEN	682
KNICKGELENK-ANHÄNGUNG	368
KNICKLENKZYLINDER	414
KOLBENPUMPE	480
	482
KOLBENPUMPE UND BEFESTIGUNG	474
KOLBENPUMPENUMLAUFSATZ	484
	485
KOLBENSATZ (HYDRAULIKSTEUERUNG)	480
KRAFTSTOFF-ENTLÜFTUNGSPUMPE	112
KRAFTSTOFFEINSPRITZDÜSE	100
KRAFTSTOFFEINSPRITZLEITUNGEN	108
KRAFTSTOFFEINSPRITZPUMPE	111
KRAFTSTOFFILTER	98
KRAFTSTOFFLEITUNGEN	102
	106
KRAFTSTOFFÖRDERPUMPE	110
KRAFTSTOFFÖRDERPUMPE UND BEFESTIGUNGSTEILE	110
KRAFTSTOFFSTANDGEBER	116
KRAFTSTOFFTANK	114
	116
	118
	119
	120
KRAFTSTOFFTANKABSTÜTZUNG	375
KRAFTSTOFFTANKKAPPE (VERSCHLIESSBAR)	116
KRAFTSTOFFTANKKAPPE (VERSCHLIESSBAR)	120
KUEHLER-HALTETEILE	66
KÜHLER	82
	83
KÜHLER U. BEFESTIGUNG	80
KÜHLERKAPPE	82
KÜHLSYSTEM	62
	63
KÜHLWASSER-TEMPERATURREGLER UND GEHÄUSE	67
KÜHLWASSERLEITUNGEN	72
	73
	74
	76

* ÜBERSETZUNG ZUM ZEITPUNKT DER DRUCKLEGUNG NICHT VORHANDEN

STICHWORTVERZEICHNIS

Bezeichnung	Seite
KÜHLWASSERLEITUNGEN (LADELUFTKÜHLER)	68
KÜHLWASSERPUMPE	77
	78
KUPPLUNGSGESTÄNGE	268
KURBELLAGER-EINBAUSATZ (LUFTKOMPRESSOR)	6
KURBELWELLE	16
KURBELWELLENDICHTUNG	32
	46

L

Bezeichnung	Seite
LADELUFTKÜHLER U. BEFESTIGUNG	84
LAGERSATZ	661
LAUFBAND UND ANTRIEB (RUNDUMKENNLEUCHTE)	158
LENKBETÄTIGUNG	406
LENKGESTÄNGE	371
LENKKONSOLENVERDRAHTUNG	260
LENKÖLLEITUNGEN	462
LENKZYLINDER	426
	428
LENKZYLINDER UND AUFHÄNGUNG	412
LEUCHTE - RECHTS (STOPP/HECK/RICHTUNGSWECHSEL)	246
LEUCHTE (EINZELGLÜHFADEN) (FAHRTRICHTUNGSANZEIGER)	148
	150
LEUCHTE, LINKS (STOPP/HECK/RICHTUNGSWECHSEL)	246
LEUCHTE (RUNDUM-KENNLEUCHTE)(24 V)	158
LEUCHTE (24 V) (ABBLENDLICHT)	166
LEUCHTE (24 V) (ABBLENDSCHEINWERFER)	177
	180
LEUCHTE (24 V) (ABSTREIFSCHILD)	230
LEUCHTE (24 V) (ABSTREIFSCHILD/ANZEIGE)	228
LEUCHTE (24 V) (ANZEIGE FÜR RECHTEN RICHTUNGSBLINKER)	706
LEUCHTE (24 V) (ARBEITSSCHEINWERFER, RECHTS)	170
LEUCHTE (24 V) (ÄTHERSTARTHILFE U. ANZEIGE)	214
LEUCHTE (24 V) (AUSFALLSCHUTZ-RÜCKFAHRLEUCHTE)	162
LEUCHTE (24 V) (AUSFALLSCHUTZ-RÜCKFAHRWARNHORN)	164
LEUCHTE (24 V) (DIFFERENZIALSPERRANZEIGE)	706
LEUCHTE (24 V) (DIFFERENZIALSPERR-SCHALTER)	260
LEUCHTE (24 V) (ENTFROSTER, HINTEN)	647
LEUCHTE (24 V) (FAHRERHAUS - RECHTER ARBEITSSCHEINWERFER)	188
LEUCHTE (24 V) (FAHRERHAUSDACH)	143
LEUCHTE (24 V) (FAHRLEUCHTE)	154
LEUCHTE (24 V) (FAHRSCHEINWERFER)	148
	150
	152
LEUCHTE (24 V) (FAHRTRICHTUNGSANZEIGER)	148
	150
	152
	154
LEUCHTE (24 V) (FERNLICHT)	166
LEUCHTE (24 V) (FERNLICHT/ABBLENDLICHT)	148
	150
	152
LEUCHTE (24 V) (FERNLICHT/ABBLENDLICHT) (RECHTS)	154
LEUCHTE (24 V) (FERNLICHTANZEIGE)	706
LEUCHTE (24 V) (FRONTSCHEINWERFER-/HECKLEUCHTENANZEIGE)	172
LEUCHTE (24 V) (FRONTSCHEINWERFER/HECKLEUCHTE/ANZEIGE)	220
LEUCHTE (24 V) (GASREGELUNG - ARRETIERANZEIGE)	706
LEUCHTE (24 V) (GASREGELUNG HALTEN/MAN SCHALTER)	258
LEUCHTE (24 V) (GESCHWINDIGKEITSMESSER U. DREZAHLMESSER)	697
LEUCHTE (24 V) (HAUPTFUNKTIONSLEUCHTE DES ELEKTRON. ÜBERWACHUNGSSYSTEMS)	706
	708
LEUCHTE (24 V) (HECKLEUCHTENSCHALTER)	260
LEUCHTE (24 V) (HECKSCHEINWERFER)	176
	180
	184
LEUCHTE (24 V) (HVAC TAFEL)	610
LEUCHTE (24 V) (INSTRUMENTENTAFEL)	708
LEUCHTE (24 V) (KLIMAANLAGE U. HEIZUNG ß SCHALTTAFEL)	652
LEUCHTE (24 V) (LINKER RICHTUNGSBLINKER)	706
LEUCHTE (24 V) (LUFTDRUCKANZEIGE, LINKS)	706
LEUCHTE (24 V) (LUFTDRUCKANZEIGE, RECHTS)	706
LEUCHTE (24 V) (NOTLENKUNG)	254
LEUCHTE (24 V) (RUNDUM-KENNLEUCHTE)	142
	194

* ÜBERSETZUNG ZUM ZEITPUNKT DER DRUCKLEGUNG NICHT VORHANDEN

STICHWORTVERZEICHNIS

Bezeichnung	Seite
	196
LEUCHTE (24 V) (SCHALTKONSOLE)	258
LEUCHTE (24 V) (SCHARDÄMPFUNGSSTEUERUNG/ANZEIGE)	225
LEUCHTE (24 V) (SCHARLEUCHTE)	168
LEUCHTE (24 V) (SCHWENKWERKBOLZENZIEHSCHALTER)	258
LEUCHTE (24 V) (SPIEGELHEIZUNGSANZEIGE)	690
	692
LEUCHTE (24 V) (TAFELLEUCHTENDIMMERSCHALTER)	260
LEUCHTE (24 V) (VIERINSTRUMENTENMODUL U. LUFTDRUCK)	708
LEUCHTE (24 V) (VIERINSTRUMENTENMODULANZEIGE)	706
LEUCHTE (24 V) (VORDERER ENTFROSTER)	646
LEUCHTE (24 V)(21 W) (BREMSLICHT - HECKLEUCHTE)	246
LEUCHTE (24 V)(21 W) (BREMSLICHT - HECKLEUCHTE)	246
LEUCHTE (24 V/21 W) (FAHRTRICHTUNGSANZEIGER)	152
	154
LEUCHTE (24 V)(5 W) (RECHTS- U. LINKSWENDUNG)	246
LEUCHTE (24 V)(5 W) (RECHTS- U. LINKSWENDUNG)	246
LICHTSCHALTER	220
LUFTDRUCKANZEIGE (BREMSE, RECHTS)	706
LUFTDRUCKANZEIGE (LINKE BREMSE)	706
LUFTDRUCKBEGRENZUNGSVENTIL (TANK)	394
LUFTDRUCKMESSER (BREMSE, RECHTS)	708
LUFTDRUCKMESSER (LINKE BREMSE)	708
LUFTFILTER (ÜBERROLLSCHUTZ - HECKPLATTE)	648
LUFTKANAL	639
LUFTKANAL UND REGULIERUNG	638
LUFTKOMPRESSOR	6
	8
LUFTREINIGER	85
	86
LUFTREINIGERKLEMMEN-EINBAUSATZ	85
LUFTTROCKNER	378
	380
	381

M

Bezeichnung	Seite
MAGNETFILTER (DIFFERENTIAL)	297
MAGNETSCHALTER	222
MAGNETSCHALTER (NOTLENKUNGSLEITUNGEN)	254
MAGNETSCHALTER (SICHERUNGSRELAIS) (HAUPTSCHALTER)	248
MAGNETSCHALTER (24 V) (STARTRELAIS)	248
MAGNETSTOPFEN (DIFFERENTIAL)	355
MAGNETVENTIL	328
	588
	738
MAGNETVENTIL (SCHARDÄMPFUNG)	589
MEMBRANESATZ (HUPE)	656
MODUL - VIER ELEKTRON. ANZEIGEN	696
MONITOR - KABELBAUM	706
	708
MONITORSTEUERUNG (CATERPILLAR ÜBERWACHUNGSSYSTEM)	139
	706
	708
MOTOR, ELEKTR.	198
	199
	200
MOTOR, ELEKTR. (27 V) (A/C)	611
MOTOR, ELEKTR. (27 V) (HEIZUNG)	652
MOTOR UND LÜFTER	64
MOTORANTRIEB	468
MOTORAUFHÄNGUNG	47
MOTORAUFLAGER	36
MOTORAUSFÜHRUNG	4
MOTORBLOCK	18
	19
	20
MOTORBLOCKDECKEL	14
MOTORHUBÖSE	35
MOTORÖLEINFÜLLSTUTZEN	54
MOTORSTEUERUNG, ELEKTRON.	132
	133
MOTORSTOPFEN	42
MOTORVERDRAHTUNG	232
MOTORVERKLEIDUNG	356

N

Bezeichnung	Seite
NEBENANTRIEB	26
NOCKENWELLE	12
NOTLENKUNG	486
NOTLENKUNGSLEITUNGEN	460
NOTLENKUNGSPUMPE UND BEFESTIGUNGSTEILE	476
NOTLENKUNGSSTEUERUNG	134
NOTLENKUNGSVERDRAHTUNG	254

* ÜBERSETZUNG ZUM ZEITPUNKT DER DRUCKLEGUNG NICHT VORHANDEN

STICHWORTVERZEICHNIS

Bezeichnung	Seite

O

O-RING-DICHTUNG (123,19 MM INNENDURCHMESSER)	600
ÖLEINFÜLLSTUTZEN	54
ÖLFILTER	56
	292
ÖLFILTERELEMENT (HYDRAULISCH)	70
ÖLFILTERELEMENT (HYDRAULISCH) (RÜCKFLUSS)	488
ÖLFILTERSOCKEL	52
ÖLKÜHLERLEITUNGEN (KRAFTÜBERTRAGUNG)	70
ÖLLEITUNGEN - KRAFTÜBERTRAGUNG	302
ÖLMESSSTAB	58
ÖLWANNE	38

P

PANZERWANNE	362
PENDELVENTIL	587
PLANETENGETRIEBE	306
PLATTE (HAUPTUNTERBRECHER)	249
PLATTE (PRODUKT-ID)	761
PLATTFORMUNTERBAU	376
PLEUELSTANGE UND KOLBEN	40
POLSTEREINBAUSATZ (RÜCKLEHNENVERLÄNGERUNG)	640
POLSTEREINBAUSATZ (VINYLRÜCKENLEHNE)	641
PROBEENTNAHMEVENTIL	56
	70
	462
PROBEENTNAHMEVENTIL - KÜHLMITTEL	74
PROBEENTNAHMEVENTIL (GETRIEBEÖL)	70
PUMPE UND MOTOR	472
PUMPENANTRIEB	439
PUMPENUMGEHUNGSVENTIL	52

R

RAD UND REIFEN	332
	333
	334
	335
	336
	337
	338
	339
	340
	341
	342
	343
	344
	345
	346
	347
	348
RADAUFHAENGUNG	304
RADIOEINBAUSATZ	663
	664
RADSATZ	349
	350
RADSTURZZYLINDER	430
RADSTURZZYLINDER UND BEFESTIGUNGSTEILE	413
RAHMEN UND GEHÄUSE	355
REFLEKTORAUFKLEBER (ROT)	761
REGLERSTEUERUNG	96
RELAIS (24 V) (HECK-/INSTRUMENTENTAFELLEUCHTEN)	260
RICHTUNGSBLINKER- UND WARNSCHALTER	172
	176
	180
	184
	220
RIEMEN - GERIPPT (A/C)	609
RIEMENSCHEIBE	10
RIEMENSPANNER	10
ROLLENSATZ (SITZ)	736
RÜCKFAHRWARNHORN	224
RÜCKLEHNENVERLÄNGERUNG	640
	641
RÜCKSPIEGEL	688
	690
	692
	694
	695
RUNDUM-KENNLEUCHTE	158
RUNDUMWARNLEUCHTE - EINBAUSATZ	142

S

SAMMELVENTIL	522
SCHALE - RÜCKENLEHNE	701
SCHALE (12 V HEIZUNG) (KRAFTSTOFF-/WASSERABSCHEIDER)	99
SCHALLDÄMPFER	90
SCHALLDÄMPFUNG	48
SCHALTER (ABBLENDSCHEINWERFER)	177
SCHALTER (ABBLENDSCHEINWERFER)	180
SCHALTER (ABSTREIFSCHILD)	230
SCHALTER (ARBEITSSCHEINWERFER, RECHTS)	170
SCHALTER (ÄTHERSTARTHILFE)	214

* ÜBERSETZUNG ZUM ZEITPUNKT DER DRUCKLEGUNG NICHT VORHANDEN

STICHWORTVERZEICHNIS

Bezeichnung	Seite
SCHALTER (AUSFALLSCHUTZ-RÜCKFAHRLEUCHTE)	162
SCHALTER (AUSFALLSCHUTZ-RÜCKFAHRWARNHORN)	164
SCHALTER (BEHEIZTER SPIEGEL)	690
	692
SCHALTER (DIFFERENTIALSPERRE)	260
SCHALTER (EIN/AUS) (ENTFROSTER, HINTEN)	647
SCHALTER (EIN/AUS) (VORDERER ENTFROSTER)	646
SCHALTER (FAHRERHAUS - RECHTER ARBEITSSCHEINWERFER)	188
SCHALTER (GASREGELUNG HALTEN AUTO/MAN)	258
SCHALTER (GASREGELUNG HALTEN EIMSTELLEN/WIEDERAUFNEHMEN)	258
SCHALTER (HECKLEUCHTE)	260
SCHALTER (NOTLENKUNG)	254
SCHALTER (RUNDUM-KENNLEUCHTE)	142
	194
SCHALTER (RUNDUM-KENNLEUCHTE)	196
SCHALTER (SCHALTTAFEL-LICHTREGLER)	260
SCHALTER (SCHARDÄMPFUNGSSTEUE-RUNG)	225
SCHALTER (SCHARKÖRPERLEUCHTEN)	228
SCHALTKONSOLENVERDRAHTUNG	258
SCHAR	598
SCHARDREHWERK	436
	592
SCHARDREHWERKSPERRENSTEUERUNG	404
SCHARHUBZYLINDER	416
SCHARHUBZYLINDER UND BEFESTIGUNGS-TEILE	408
SCHARKIPPZYLINDER UND BEFESTIGUNGS-TEILE	409
SCHARNEIGEZYLINDER	418
SCHEIBENWASCHANLAGE	740
	742
SCHEIBENWISCHER	748
	749
	750
	752
	754
	756
	758
SCHEIBENWISCHERBLATT (ENTLÜFTUNG, VORNE, UNTEN)	743
SCHEIBENWISCHERBLATT (HOCHPROFIL VORNE OBEN)	752
SCHEIBENWISCHERBLATT (HOHES PROFIL, HINTEN)	756
SCHEIBENWISCHERBLATT (NIEDRIGES PROFIL, HINTEN)	754
SCHEIBENWISCHERBLATT (NIEDRIGES PROFIL, VORNE, UNTEN)	750
SCHEIBENWISCHERBLATTSATZ (HINTEN)	754
SCHEIBENWISCHERSCHALTER	223
SCHEIBENWISCHERSCHALTER (HINTEN)	754
	756
SCHEINWERFER, HINTEN	162
	164
SCHEINWERFER U. RICHTUNGSLEUCHTE	152
	154
SCHEINWERFER (24 V) (ABBLENDLICHT)	145
SCHEINWERFER (24 V)(65 W) (ARBEITSLEUCHTE)	144
SCHEINWERFER (24 V)(65 W) (FERNLICHT)	146
SCHILD UND AUFKLEBER	760
	762
	763
	764
SCHILD UND AUFKLEBER (MOTOR)	3
SCHILD UND AUFKLEBER (REFLEKTOR)	1
SCHILDHUB	600
SCHLÜSSEL	250
	490
	759
SCHLÜSSEL (HAUPTSCHALTER)	218
SCHMIERLEITUNGEN	370
SCHMIERNIPPEL (KÖNIGSBOLZEN)	352
SCHMIERNIPPEL (PENDELACHSE)	352
SCHMIERNIPPEL (RADSTURZLAGER)	352
SCHMIERNIPPEL (RADSTURZSCHENKEL)	352
SCHMIERNIPPEL (1/8-27-GEWINDE) (UNTE-RER/OBERER KNICKGELENKBOLZEN)	370
SCHMIERPUMPE	60
	61
SCHNEIDMESSER	599
SCHNELLBETANKUNGSANSCHLUSS	94
SCHRÄGKOLBEN-EINBAUSATZ (HYDRAULIKSTEUERUNG)	480
SCHUBPLATTE	596
SCHWENKBLOCK	487
SCHWINGSITZ	724
	725
	726
	727
	728
	729
	730
SCHWUNGRAD	29
SCHWUNGRADGEHÄUSE	31
SEITENANTRIEB	294

* ÜBERSETZUNG ZUM ZEITPUNKT DER DRUCKLEGUNG NICHT VORHANDEN

STICHWORTVERZEICHNIS

Bezeichnung	Seite
SEITENSCHIEBERZYLINDER UND BEFESTIGUNGSTEILE	411
SEITENSCHUBSPERRE	466
SEITENSCHUBZYLINDER	420, 424
SEITENSCHUBZYLINDER UND BEFESTIGUNGSTEILE	410
SENSOR-EINBAUSATZ (KRAFTSTOFFSTAND)	116
SENSORANSCHLUSSSATZ (12POLIG)	164, 170, 172, 176, 180, 184, 188, 226, 230, 232, 236, 240, 241, 258, 260, 364, 366, 706, 708
SENSORANSCHLUSSSATZ (12POLIG)	228, 692
SENSORANSCHLUSSSATZ (12POLIG)	690
SENSORANSCHLUSSSATZ (12POLIG) (ENTFROSTER, VORNE/HINTEN)	162
SENSORANSCHLUSSSATZ (2POLIG)	170, 186, 191, 222, 225, 226, 232, 236, 240, 241, 248, 258, 682
SENSORANSCHLUSSSATZ (2POLIG)	682
SENSORANSCHLUSSSATZ (2POLIG)	690
SENSORANSCHLUSSSATZ (2POLIG) (ARBEITSSCHEINWERFER, SEITLICH)	164
SENSORANSCHLUSSSATZ (2POLIG) (ARBEITSSCHEINWERFER, SEITLICH U. ZUSATZKREIS)	692
SENSORANSCHLUSSSATZ (2POLIG) (ÄTHERSTARTHILFE)	212
SENSORANSCHLUSSSATZ (2POLIG) (DREHBLINKLEUCHTE)	196
SENSORANSCHLUSSSATZ (2POLIG) (DURCHDREHRELAIS)	249
SENSORANSCHLUSSSATZ (2POLIG) (FAHRereinstellungsmodusschalter)	708
SENSORANSCHLUSSSATZ (2POLIG) (KONTROLLLEUCHTE - FRONTSCHEINWERFER)	172
SENSORANSCHLUSSSATZ (2POLIG) (LICHTBALKEN - ARBEITSCHEINWERFER)	176, 180
SENSORANSCHLUSSSATZ (2POLIG) (MOTOR)	652
SENSORANSCHLUSSSATZ (2POLIG) (MOTOR - HEIZUNG/KLIMAANLAGE)	611
SENSORANSCHLUSSSATZ (2POLIG) (RÜCKFAHRALARM/RÜCKKEHR)	244
SENSORANSCHLUSSSATZ (2POLIG) (SCHNEEFLÜGELEUCHTE)	162, 170
SENSORANSCHLUSSSATZ (2POLIG) (SCHNEEFLÜGELEUCHTE)	188, 228
SENSORANSCHLUSSSATZ (2POLIG) (SEITENARBEITSSCHEINWERFER)	188, 230
SENSORANSCHLUSSSATZ (2POLIG) (TAFELLEUCHTENSCHALTER/WARNHOEN)	260
SENSORANSCHLUSSSATZ (3POLIG)	203, 204, 226, 232, 236, 241, 244
SENSORANSCHLUSSSATZ (3POLIG) (ALLRADANTRIEB - STEUERHEBELSENSOR)	260
SENSORANSCHLUSSSATZ (3POLIG) (KONTROLLLEUCHTE - RICHTUNGSBLINKER)	172
SENSORANSCHLUSSSATZ (4 POLIG)	164, 188, 230, 241, 258, 260
SENSORANSCHLUSSSATZ (4 POLIG)	690
SENSORANSCHLUSSSATZ (4 POLIG)	692
SENSORANSCHLUSSSATZ (4 POLIG) (AUSFALLSCHUTZ-RÜCKFAHRLEUCHTE)	162

* ÜBERSETZUNG ZUM ZEITPUNKT DER DRUCKLEGUNG NICHT VORHANDEN

STICHWORTVERZEICHNIS

Bezeichnung	Seite
SENSORANSCHLUSSSATZ (4 POLIG) (AUSFALLSCHUTZ-RÜCKFAHRLEUCHTE U. SCHALTER)	228
SENSORANSCHLUSSSATZ (4 POLIG) (AUSFALLSCHUTZ-RÜCKFAHRLEUCHTEN-SCHALTER)	170
SENSORANSCHLUSSSATZ (4 POLIG) (FAHRGESCHWINDIGKEITSSENSOR/ STROM/MASSE)	236
SENSORANSCHLUSSSATZ (4 POLIG) (MOTORSTEUERSCHLTER U. DURCHDREHRELAIS)	249
SENSORANSCHLUSSSATZ (4 POLIG) (STARTERRELAIS)	249
SENSORANSCHLUSSSATZ (6POLIG)	184 226 236 258 708
SENSORANSCHLUSSSATZ (6POLIG)	249
SENSORANSCHLUSSSATZ (8POLIG)	164 170 188 226 230 236
SENSORANSCHLUSSSATZ (8POLIG)	228 690 692
SENSORANSCHLUSSSATZ (8POLIG) (SCHEIBENWISCHER, VORNE/HINTEN)	162
SERIENNUMMERNSCHILD (GETRIEBE)	306
SERIENNUMMERNSCHILD (MOTOR)	761
SICHERHEITSFILTER	85
SICHERHEITSGURT	719
SICHERHEITSGURT (AUSZIEHBAR)	726 727 729
SICHERUNG (10 A) (ARBEITSSCHEINWERFER, RECHTS)	170
SICHERUNG (10 A) (AUSFALLSCHUTZ-RÜCKFAHRWARNHORN)	164
SICHERUNG (10 A) (AUSSENSPIEGELHEIZUNG)	692
SICHERUNG (10 A) (BEHEIZTER SPIEGEL)	690
SICHERUNG (10 A) (BLINKER)	220
SICHERUNG (10 A) (ENTFROSTER, HINTEN)	647
SICHERUNG (10 A) (FERNLICHT/ ABBLENDLICHT)	176
SICHERUNG (10 A) (FERNLICHT/ ABBLENDLICHT U. SIGNAL)	184
SICHERUNG (10 A) (HECKTAFELLEUCHTEN/ NOTLENKUNGSTEST)	254
SICHERUNG (10 A) (LENKUNGSKONSOLE)	260
SICHERUNG (10 A) (RADIO)	136
SICHERUNG (10 A) (RECHTER ARBEITSSCHEINWERFER)	188
SICHERUNG (10 A) (RICHTUNGSBLINKER/ WARNLEUCHTE)	180
SICHERUNG (10 A) (RÜCKFAHRLEUCHTE)	162
SICHERUNG (10 A) (RUNDUM-KENNLEUCHTE)	142 194 196
SICHERUNG (10 A) (SCHARKÖRPERLEUCHTE)	230
SICHERUNG (10 A) (SCHARLEUCHTE)	168
SICHERUNG (10 A) (SCHARSTEUERUNG)	228
SICHERUNG (10 A) (SCHEIBENWISCHER)	754
SICHERUNG (10 A) (SCHEIBENWISCHER)	756
SICHERUNG (10 A) (UMFORMER)	138
SICHERUNG (10 A) (VORDERE ARBEITSSCHEINWERFER)	172
SICHERUNG (10 A) (VORDERER ENTFROSTER)	646
SICHERUNG (15 A) (HEIZUNG U. KLIMAANLAGE)	651
SICHERUNG (15 A) (KLIMAANLAGE)	609
SICHERUNG (15 A) (UNTERE/OBERE SCHEIBENWISCHER, VORNE)	226
SICHERUNG (30 A) (UMFORMER)	137
SIEB (HYDRAULIKÖLEINFÜLLKAPPE)	488
SITZGURT-HALTESEIL	734
SITZKISSENEINBAUSATZ	720
SITZKISSENEINBAUSATZ (PVC)	722
SITZUNTERBAU	732
SOCKELDICHTUNG (VENTILDECKEL)	50
SONNENBLENDE	718
SPERRVENTIL	122
SPERRVENTIL (KRAFTSTOFF)	108
STANDARDRINGSATZ (LUFTKOMPRESSOR)	6
STANGENSATZ	702
STARTERMOTOR	216
STARTSCHALTER (TASTE)	258
STAUBKAPPE	42 56 70 74 94 272 450 453 463

* ÜBERSETZUNG ZUM ZEITPUNKT DER DRUCKLEGUNG NICHT VORHANDEN

STICHWORTVERZEICHNIS

Bezeichnung	Seite
	522
STAUBKAPPE (GETRIEBEÖL)	70
STAUBKAPPE (UMLAUFKÜHLWASSERHEIZUNG)	140
	141
STECKDOSEN - EINBAUSATZ (12POLIG)	134
	172
	176
	180
	184
	260
	690
STECKDOSEN - EINBAUSATZ (12POLIG)	164
	170
	188
	226
	228
	230
	236
	246
	249
	258
	364
	366
	692
	706
	708
STECKDOSEN - EINBAUSATZ (12POLIG)	244
STECKDOSEN - EINBAUSATZ (12POLIG) (LICHTBALKEN - ARBEITSCHEINWERFER)	176
	180
STECKDOSEN - EINBAUSATZ (12POLIG) (RUNDUM-KENNLEUCHTE - SCHALTER)	162
STECKDOSEN - EINBAUSATZ (2POLIG)	123
	158
	159
	162
	170
	186
	191
	199
	224
	225
	226
	230
	232
	236
	237
	240
	241
	328
	384
	588
	642
	682
	690
	692
	706
	708
STECKDOSEN - EINBAUSATZ (2POLIG)	164
	188
	228
	616
	658
	692
STECKDOSEN - EINBAUSATZ (2POLIG)	244
STECKDOSEN - EINBAUSATZ (2POLIG)	611
STECKDOSEN - EINBAUSATZ (2POLIG) (ANSAUGLUFT-VORWÄRMANLAGE)	232
STECKDOSEN - EINBAUSATZ (2POLIG) (ÄTHERSTARTHILFE)	212
STECKDOSEN - EINBAUSATZ (2POLIG) (HAUPTRELAIS)	249
STECKDOSEN - EINBAUSATZ (2POLIG) (HEIZUNGSMOTOR)	652
STECKDOSEN - EINBAUSATZ (2POLIG) (LUFTTROCKNER/RÜCKFAHRALARM)	249
STECKDOSEN - EINBAUSATZ (2POLIG) (SCHARSCHWENKWERK-MAGNETVENTIL)	404
STECKDOSEN - EINBAUSATZ (2POLIG) (SCHNEEFLÜGELEUCHTE)	170
	188
STECKDOSEN - EINBAUSATZ (2POLIG) (SOLENOIDVENTIL)	738
STECKDOSEN - EINBAUSATZ (2POLIG) (TAFELBELEUCHTUNG)	258
STECKDOSEN - EINBAUSATZ (2POLIG) (UMFORMER - ZÜNDUNG/RADIO)	137
STECKDOSEN - EINBAUSATZ (2POLIG) (12 V STROMANSCHLUSS)	607
	608
STECKDOSEN - EINBAUSATZ (3POLIG)	143
	156
	157
	186
	191
	202
	225
	226
	232
	236
	240
	241
	246

* ÜBERSETZUNG ZUM ZEITPUNKT DER DRUCKLEGUNG NICHT VORHANDEN

STICHWORTVERZEICHNIS

Bezeichnung	Seite
	254
	260
STECKDOSEN - EINBAUSATZ (3POLIG)	244
STECKDOSEN - EINBAUSATZ (3POLIG) (RICHTUNGSBLINKER - STANDLICHT)	166
STECKDOSEN - EINBAUSATZ (4 POLIG)	164
STECKDOSEN - EINBAUSATZ (4 POLIG)	164
	170
	188
	226
	228
	230
	236
	240
	260
	692
STECKDOSEN - EINBAUSATZ (4 POLIG)	241
STECKDOSEN - EINBAUSATZ (4 POLIG) (ÄTHERSTARTHILFE)	212
STECKDOSEN - EINBAUSATZ (4 POLIG) (AUS-FALLSCHUTZ-RÜCKFAHRLEUCHTE)	162
STECKDOSEN - EINBAUSATZ (4 POLIG) (DURCHDREHALARM/ MOTORSTEUERSCHALTER)	249
STECKDOSEN - EINBAUSATZ (4 POLIG) (FAHRGESCHWINDIGKEIT)	201
STECKDOSEN - EINBAUSATZ (4 POLIG) (RUNDUM-KENNLEUCHTE - SCHALTER)	196
STECKDOSEN - EINBAUSATZ (4 POLIG) (SPIEGELHEIZUNG/SCHARKÖRPERLEUCH-TEN)	162
STECKDOSEN - EINBAUSATZ (6POLIG)	226
	236
	241
	258
	364
	366
	706
	749
STECKDOSEN - EINBAUSATZ (6POLIG)	652
	708
STECKDOSEN - EINBAUSATZ (6POLIG) (GESCHWINDIGKEITSMESSER U. DREZAHLMESSER)	697
STECKDOSEN - EINBAUSATZ (6POLIG) (HEIZUNG U. KLIMAANLAGE)	611
STECKDOSEN - EINBAUSATZ (6POLIG) (SCHEIBENWISCHERMOTOR)	750
	752
STECKDOSEN - EINBAUSATZ (6POLIG) (SCHEINWERFER)	150
	152
	154
STECKDOSEN - EINBAUSATZ (6POLIG) (SCHEINWERFER)	148
STECKDOSEN - EINBAUSATZ (6POLIG) (VIERFACHINSTRUMENTENGRUPPE)	696
STECKDOSEN - EINBAUSATZ (8POLIG)	162
	164
	170
	188
	223
	226
	228
	230
	690
	692
	706
STECKDOSEN - EINBAUSATZ (8POLIG)	708
STECKDOSEN - EINBAUSATZ (8POLIG) (SCHALTER - HECKSCHEIBENWISCHER)	754
	756
STECKDOSEN - EINBAUSATZ (8POLIG) (SCHALTER FÜR VORDERE SCHEIBENWISCHER)	226
STEIGLEITER	373
STELLUNGSGEBER (GANG)	240
STELLUNGSSENSOR	202
STEUERKONSOLE	620
STEUERUNGSEINHEIT, ELEKTRON. FÜR MOTOR UND BEFEST.	131
STEUERVENTIL	317
	524
	526
	528
	530
	532
	534
	536
	538
	540
	542
	544
	546
	548
	550
	552
	554
	556
	558
	560
	562
	564
	566
	568
	570

* ÜBERSETZUNG ZUM ZEITPUNKT DER DRUCKLEGUNG NICHT VORHANDEN

STICHWORTVERZEICHNIS

Bezeichnung	Seite
	572
STEUERVENTIL (DREHKRANZANTRIEB)	516
	520
STEUERVENTIL (SCHARSTURZ)	516
	520
STEUERVENTIL (SEITENSCHUB)	516
	520
STEUERVENTILSPERRE	432
	434
STIRNRAD	30
STIRNRADGEHÄUSE	32
STOSSSTANGEN-EINBAUSATZ	661
STROMANSCHLUSS-STECKDOSE (12 V)	607
STROMANSCHLUSS-STECKDOSE (12 V)	608

T

TANDEMGEHÄUSE UND DECKEL	314
TEMPERATURSENSOR	210
	211
THERMOSTATSCHALTER (KÜHLMITTEL)	610
*TOOL BOX GP	759
TRENNSCHALTER	218
TROCKENMITTELPATRONE (LUFTTROCKNER)	381
TURBOLADER	92
	93
TURBOLADEREINSATZ	93
TURBOLADERÖLLEITUNGEN	59

U

ÜBERDRUCKVENTIL	320
	579
	580
	581
	582
	583
	584
	585
	586
ÜBERDRUCKVENTIL (HAUPTUNTERBRECHER)	522
ÜBERROLL-SCHUTZDACH	717
ÜBERROLL-SCHUTZKABINE	716
ÜBERROLLSCHUTZAUFLAGER	698
	700
ÜBERROLLSCHUTZDACH	715
ÜBERROLLSCHUTZKABINE	714
UMBAUSATZ - OHNE ÜBERROLLSCHUTZ	624
UMBAUSATZ - ZULASSUNG	1
UMFORMER, ELEKTR.	135
UMLAUFKÜHLWASSERHEIZUNG	140
	141
UMLAUFKÜHLWASSERHEIZUNGS-ELEMENT (120 V/1250 W)	140
UMLAUFLÜFTER	642
	644
	646
	647
UNTERBRECHER	129
	130
UNTERBRECHER (15 A) (FRONTSCHEINWERFER)	129
	130
UNTERBRECHER (15 A) (FRONTSCHEINWERFER/ABBLENDLICHT)	176
UNTERBRECHER (15 A) (LICHTBALKEN - ARBEITSCHEINWERFER)	129
UNTERBRECHER (15 A) (STARTERRELAIS)	249
UNTERBRECHER (80 A) (DREHSTROMGENERATOR)	250
UNTERBRECHER (80 A) (HAUPTUNTERBRECHER)	248

V

VENTIL - SCHALT- UND DRUCKSTEUERUNG	322
	324
	326
VENTIL (KLIMAANLAGE)	682
VENTIL (SITZ)	736
VENTIL UND GESTÄNGE	492
	494
	496
	498
	500
	504
	506
	508
VENTILKAPPE (SCHAFT)	335
	339
	340
	341
	342
	343
	344
	345
	346
	347
	348
	350
VENTILKIPPHEBEL	44
VENTILMECHANISMUSAUFHÄNGUNG	37
VENTILSATZ (4-VENTIL)	510

* ÜBERSETZUNG ZUM ZEITPUNKT DER DRUCKLEGUNG NICHT VORHANDEN

STICHWORTVERZEICHNIS

Bezeichnung	Seite
	511
	512
	513
	514
VENTILSATZ (5-VENTIL)	515
	516
	517
	518
VENTILSATZ (6-VENTIL)	519
VENTILSATZ (7-VENTIL)	520
VENTILSOLENOID U. -KRÜMMER	589
	590
VENTILSTEUERUNG	50
VENTILSTÖSSELSATZ	660
	661
VERDRAHTUNG - SCHARDÄMPFUNG	225
VERDRAHTUNG (EINSPRITZEINHEIT)	263
VERDRAHTUNG, HINTEN	240
	244
	246
	248
VERDRAHTUNG, VORNE	236
VERKLEIDUNG UND BEFESTIGUNG - KÜHLER	360
VERSANDDECKEL	282
VERTEILERGETRIEBE UND GEHÄUSE	296
VORDERACHSE	352
VORDERRAHMEN	359
VORHÄNGESCHLOSS	490
	624
	715
	759
VORSTEUERVENTIL	318

W

Bezeichnung	Seite
WÄRMEISOLIERUNG	668
WARNAUFKLEBER (HOCHDRUCKFEDER)	761
WARNAUFKLEBER (HOCHDRUCKZYLINDER)	761
WARNAUFKLEBER (KABELVERBINDUNG)	761
WARNAUFKLEBER (KEINE STUFE)	116
WARNAUFKLEBER (UNTER DRUCK STEHENDES KÜHLMITTEL)	761
WARNLEUCHTEN	194
	196
WARNSCHILD (QUETSCHGEFAHR)	761
WARNVORRICHTUNG	123
WASSERABSCHEIDER- U. KRAFTSTOFFILTER	99
WASSERAUFFANGSCHALE	99
WASSERAUFFANGSCHALE (24 V HEIZUNG)	99
WASSERTEMPERATURREGLER (98 GRAD CELSIUS)	67

Z

Bezeichnung	Seite
ZAHNRADANTRIEB	470
ZAHNRADPUMPE	312
ZIGARETTENANZÜNDER (ZIGARETTENANZ.) (24V)	258
ZUGHAKEN	594
ZUMESSPUMPE	478
ZYLINDERBLOCKSCHRAUBE	41
ZYLINDERKOPF	22
	24
	25
ZYLINDERKOPF-EINBAUSATZ (LUFTKOMPRESSOR)	6
ZYLINDERKOPF-HALTETEILE	28

* ÜBERSETZUNG ZUM ZEITPUNKT DER DRUCKLEGUNG NICHT VORHANDEN

MEMORANDA

MACHINE ARRANGEMENT

211-1771 CONVERSION AR-CERTIFICATION

S/N: ATS1-UP
WITH HEATER
AN ATTACHMENT

SMCS-7000 **i01851772**

NOTE	PART NUMBER	QTY	PART NAME 1 2 3 4 5 6 (PRODUCT LEVEL)	SEE PAGE
Y	*201-1054*	1	COOLING AR	63
Y	*167-8395*	1	HEATER AR-CAB	651
Y	*185-7968*	1	INSTRUMENT AR (SPEEDOMETER/TACH)	666
Y	*166-3310*	1	STEERING AR-SECONDARY	486
Y	*221-2800*	1	ACCUMULATOR GP-HYDRAULIC (MOUNTING))	400
Y	*201-1038*	1	CIRCUIT BREAKER GP (HEADLAMP)	130
Y	*207-1764*	1	FILM GP (VHP)	760
Y	*8X-4146*	1	GUARD GP-BOTTOM	362
Y	*192-0229*	1	LIGHTING GP-FLOOD (BOLSTER)	184
Y	*152-7903*	1	LOCK GP-HYDRAULIC HAND CONTROL	467
Y	**197-2066**	1	MIRROR GP-REAR VIEW (INSIDE DUAL)	695
Y	*192-1434*	1	PLATE & FILM GP (REFLECTOR)	762
Y	*207-5900*	1	SUPPRESSION GP-SOUND (ENGINE ENCLOSURE)	48
Y	*177-8784*	1	WIPER GP-WINDOW (FRONT)	758

Y-SEPARATE ILLUSTRATION

<END>

211-1772 CONVERSION AR-CERTIFICATION

S/N: ATS1-UP
WITH AIR CONDITIONER
AN ATTACHMENT

SMCS-7000 **i01851775**

NOTE	PART NUMBER	QTY	PART NAME 1 2 3 4 5 6 (PRODUCT LEVEL)	SEE PAGE
Y	*167-8069*	2	AIR CONDITIONER AR	609
Y	*201-1054*	1	COOLING AR	63
Y	*185-7968*	1	INSTRUMENT AR (SPEEDOMETER/TACH)	666
Y	*166-3310*	1	STEERING AR-SECONDARY	486
Y	*221-2800*	1	ACCUMULATOR GP-HYDRAULIC (MOUNTING)	400
Y	*201-1038*	1	CIRCUIT BREAKER GP (HEADLAMP)	130
Y	*207-1764*	1	FILM GP (VHP)	760
Y	*8X-4146*	1	GUARD GP-BOTTOM	362
Y	*192-0229*	1	LIGHTING GP-FLOOD (BOLSTER)	184
Y	*152-7903*	1	LOCK GP-HYDRAULIC HAND CONTROL	467
Y	**197-2066**	1	MIRROR GP-REAR VIEW (INSIDE DUAL)	695
Y	*192-1434*	1	PLATE & FILM GP (REFLECTOR)	762
Y	*207-5900*	1	SUPPRESSION GP-SOUND (ENGINE ENCLOSURE)	48
Y	*177-8784*	1	WIPER GP-WINDOW (FRONT)	758

Y-SEPARATE ILLUSTRATION

<END>

MACHINE ARRANGEMENT

162-5607 GENERAL AR

S/N: ATS1-UP

SMCS-7000 **i01848764**

NOTE	PART NUMBER	QTY	PART NAME 1 2 3 4 5 6 (PRODUCT LEVEL)	SEE PAGE
Y	*184-1670*	1	COOLING AR	62
Y	**204-7983**	1	ENGINE AR	4
Y	*179-3581*	1	ROPS AR-ENCLOSED (LOW PROFILE)	714
Y	*204-7938*	1	SUPPORT AR-REAR CHASSIS	374
Y	**183-6616**	1	TRANSMISSION AR	315
Y	*166-3367*	1	ACCUMULATOR & MTG GP-HYDRAULIC (BLADE CUSHION)	398
Y	*208-2999*	1	ADAPTER GP-ENGINE TO TMSN	264
Y	*212-5958*	1	AIR CLEANER GP	86
Y	**110-7720**	1	AXLE GP-FRONT	352
Y	*8W-8424*	1	BLADE GP	598
Y	*136-4832*	1	BOX GP-TOOL	759
Y	*8D-1690*	1	BRAKE GP-SERVICE	382
Y	*161-1130*	1	CASE & FRAME GP	355
Y	*6G-1740*	1	CHAIN GP-DRIVE	266
Y	*6G-4975*	1	CIRCLE GP	592
Y	*167-8053*	1	CONSOLE GP-OPERATOR	620
Y	*173-7375*	1	CONTROL GP-CENTERSHIFT LOCK	404
Y	*172-5717*	1	CONTROL GP-CLUTCH	268
Y	*173-5334*	1	CONTROL GP-DIFFERENTIAL LOCK	272
Y	*159-5935*	1	CONTROL GP-GOVERNOR	96
Y	*188-7062*	1	CONTROL GP-PARKING BRAKE	384
Y	*171-2866*	1	CONTROL GP-SERVICE BRAKE	388
Y	*7I-4720*	1	CONTROL GP-STEERING	406
Y	*167-9004*	1	CONTROL GP-TRANSMISSION	274
Y	*8W-3258*	1	CYLINDER & MTG GP-ARTICULATION	407
Y	*8W-3261*	1	CYLINDER & MTG GP-BLADE LIFT	408
Y	*8W-3255*	1	CYLINDER & MTG GP-BLADE TIP	409
Y	*8W-3262*	1	CYLINDER & MTG GP-CENTERSHIFT	410
Y	*8W-3257*	1	CYLINDER & MTG GP-SIDESHIFT	411
Y	*8W-3260*	1	CYLINDER & MTG GP-STEERING	412
Y	*8W-3259*	1	CYLINDER & MTG GP-WHEEL LEAN	413
Y	**8D-4290**	1	DIFFERENTIAL & BEVEL GEAR GP	284
Y	*6G-4980*	1	DRAWBAR GP	594
Y	*5T-1740*	1	DRIVE GP-CIRCLE	436
Y	*180-3491*	1	DRIVE GP-PUMP	439
Y	*206-3900*	1	ENCLOSURE GP-ENGINE	356
Y	*230-5840*	1	FASTENER GP-RADIATOR	66
Y	*204-5851*	1	FILLER GP-POWER TRAIN OIL	290
Y	*5T-7158*	1	FINAL DRIVE GP	294
Y	*161-1181*	1	FRAME GP-FRONT	359
Y	*106-4886*	1	HITCH GP-ARTICULATING	368
Y	*173-5307*	1	HORN GP-AIR	658
Y	*8D-4885*	1	LIFT GP-BLADE	600
Y	*184-1671*	1	LINES GP-AFTERCOOLER WATER	68
Y	*209-9285*	1	LINES GP-AIR TANK	393
Y	*203-2204*	1	LINES GP-DRAIN (ENGINE OIL)	101
Y	*184-1479*	1	LINES GP-FUEL	102
Y	*222-6417*	1	LINES GP-FUEL (CROSSOVER)	106
Y	*128-2522*	1	LINES GP-GREASE	370
Y	*188-7194*	1	LINES GP-HYDRAULIC (LH)	440
Y	*188-7195*	1	LINES GP-HYDRAULIC (RH)	444
Y	*188-7254*	1	LINES GP-HYDRAULIC FAN	450
Y	*206-0400*	1	LINES GP-POWER TRAIN COOLER	70
Y	*188-0756*	1	LINES GP-PUMP	452
Y	*188-7196*	1	LINES GP-STEERING	462
Y	*186-4156*	1	LINES GP-WATER (RADIATOR)	74

MACHINE ARRANGEMENT

162-5607 **GENERAL AR** ***(contd.)*** **i01848764**

NOTE	PART NUMBER	QTY	PART NAME 1 2 3 4 5 6 (PRODUCT LEVEL)	SEE PAGE
Y	*9D-5715*	1	LOCK GP-CENTERSHIFT	466
Y	**8X-2795**	1	MIRROR GP-REAR VIEW (INSIDE)	688
Y	*161-2316*	1	MOUNTING GP-ENGINE	36
Y	*142-6206*	1	MOUNTING GP-WHEEL	304
Y	*212-5959*	1	MUFFLER GP	90
Y	*187-3188*	1	PANEL GP-INSTRUMENT	706
Y	*171-5838*	1	PLATE & FILM GP	760
Y	*180-5446*	1	PUMP & MTG GP-PISTON	474
Y	*8Y-4194*	1	SEAT GP-SUSPENSION (CLOTH)	724
Y	*6G-6900*	1	SHIELD GP-DRIVE SHAFT	372
Y	*197-0580*	1	STARTING AID GP-ETHER	214
Y	*8X-1035*	1	STEP GP (BELTED)	373
Y	*206-0335*	1	SUPPORT GP-FUEL TANK	375
Y	*174-4546*	1	SUPPORT GP-SEAT	732
Y	*207-2409*	1	TANK & MTG GP-HYDRAULIC	490
Y	*161-1126*	1	TANK GP-FUEL	114
Y	*194-5867*	1	TANDEM & COVER GP	314
Y	*8X-4144*	1	VALVE & LINKAGE GP	494
Y	*161-1930*	1	WIRING GP-BLADE CUSHION	225
Y	*159-5878*	1	WIRING GP-CAB	226
Y	*159-5867*	1	WIRING GP-FRONT	236
Y	*161-1929*	1	WIRING GP-REAR	240
Y	*194-7982*	1	WIRING GP-REAR (RADIATOR)	244
Y	*159-5843*	1	WIRING GP-SHIFT CONSOLE	258
Y	*159-5855*	1	WIRING GP-STEERING CONSOLE	260
	207-1980	1	FILM GP (NON VARIABLE HORSEPOWER)	
	115-5852	1	PLATE & FILM GP (ENGINE)	
			(LOCATE ON LEFT SIDE OF CYLINDER BLOCK)	
	194-2838	1	HITCH GP-TOWING	
	207-7426	1	HITCH AS	
	1A-8063	2	BOLT (3/4-10X2.5 IN)	
	5P-8248	2	WASHER-HARD (20X36.5X3.5MM THK)	
	5P-8250	6	WASHER (28X49X5MM THK)	
	8S-9093	6	BOLT (1-8X2.25 IN)	
	178-8481	1	BELT	

Y-SEPARATE ILLUSTRATION

<END>

ENGINE ARRANGEMENT

204-7983 ENGINE AR

S/N: 5ED478-UP

PART OF 162-5607 GENERAL AR

SMCS-1000 **i01833532**

NOTE	PART NUMBER	QTY	PART NAME 1 2 3 4 5 6 (PRODUCT LEVEL)	SEE PAGE
Y	*133-7031*	1	AIR COMPRESSOR GP	8
Y	*212-0615*	1	ALTERNATOR GP-CHARGING	126
Y	*167-0017*	1	BELT TENSIONER GP	10
Y	*171-3062*	1	CAMSHAFT GP	12
Y	*168-4490*	1	CONTROL & MTG GP-ENGINE ELEK	131
Y	*163-9322*	1	COOLER GP-TRANSMISSION OIL	280
Y	*174-1762*	1	COVER GP-CYLINDER BLOCK	14
Y	*132-3212*	1	CRANKSHAFT GP	16
YR	*115-2983*	1	CYLINDER BLOCK GP	20
Y	*116-1085*	1	CYLINDER HEAD GP	24
Y	*174-1639*	1	DRIVE GP-ACCESSORY	26
	204-6652	1	ELECTRONICS GP-ENGINE RATINGS	
Y	*174-1579*	1	FILLER GP-ENGINE OIL	54
Y	*164-2490*	1	FILTER GP-ENGINE OIL	56
Y	*116-5436*	1	FILTER GP-FUEL	98
Y	*174-1766*	1	FLYWHEEL GP	29
Y	*174-1576*	1	GAUGE GP-OIL LEVEL (DIPSTICK)	58
Y	*117-2750*	1	GEAR GP-FRONT	30
Y	*208-3730*	1	HOUSING GP-FLYWHEEL	31
Y	*133-7075*	1	HOUSING GP-FRONT	32
Y	*117-2748*	1	LIFTING GP-ENGINE	35
Y	*204-0638*	1	LINES GP-FUEL INJECTION	108
Y	*199-1096*	1	LINES GP-TURBOCHARGER OIL	59
Y	*116-5460*	1	LINES GP-WATER	72
Y	*118-2808*	1	LINES GP-WATER	73
Y	*215-2063*	1	LINES GP-WATER	76
Y	*148-2142*	1	MANIFOLD GP-EXHAUST	88
Y	*116-5405*	1	MANIFOLD GP-INLET	89
Y	*179-8725*	1	MOTOR GP-ELECTRIC	200
Y	*116-5408*	1	MOUNTING GP-VALVE MECHANISM	37
Y	*174-1574*	1	PAN GP-OIL	38
YR	*130-0863*	6	PISTON & ROD GP	40
Y	*138-2028*	1	PLUG GP-CYLINDER BLOCK	41
Y	*174-1760*	1	PLUG GP-ENGINE	42
Y	*116-5428*	1	PUMP & MTG GP-FUEL TRANSFER	110
Y	*117-2746*	1	PUMP GP-ENGINE OIL	61
Y	*189-0351*	6	PUMP GP-FUEL INJECTION	111
Y	*116-5438*	1	PUMP GP-FUEL PRIMING	112
Y	*117-2674*	1	PUMP GP-WATER	77
Y	*116-1091*	1	SEAL GP-CRANKSHAFT	46
Y	*174-1625*	1	SUPPORT GP-ENGINE	47
Y	*208-5871*	1	TURBOCHARGER GP	92
Y	*117-2749*	1	VALVE MECHANISM GP	50
Y	*171-1103*	1	WIRING GP-ENGINE	232
Y	*117-2760*	1	WIRING GP-UNIT INJECTOR	263
			GASKET KITS WILL BE PROVIDED WHEN AVAILABLE	

R-REMFG PART MAY BE AVAILABLE
Y-SEPARATE ILLUSTRATION

MEMORANDA

BASIC ENGINE

131-6679 AIR COMPRESSOR GP*R

S/N: 5ED478-UP

PART OF 133-7031 AIR COMPRESSOR GP

SMCS-1803 **i01852391**

NOTE	REF NO	GRAPHIC REF	PART NUMBER	QTY	PART NAME 1 2 3 4 5 6 (PRODUCT LEVEL)	SEE PAGE
	1	1	**7C-6178**	2	BEARING-REAR	
	2	1	**7E-8928**	1	GASKET-BASE	
	3	1	**3B-4505**	4	LOCKWASHER (.097IN THK)	
	4	1	**4P-3977**	1	GASKET-CYLINDER HEAD	
	5	1	**0S-1617**	12	BOLT (5/16-18X0.75 IN)	
	6	1	**8T-6764**	2	PLUG-PIPE	
	7	1	**4P-3966**	2	PISTON & ROD AS	
	8	1	**8T-6762**	1	PLUG-PIPE	
	9	1	**0L-1352**	6	BOLT (3/8-16X3.25 IN)	
	10	1	**146-0835**	2	STUD-END COVER	
	11	1	**2H-3934**	1	SEAL-O-RING	
	12	1	**103-6216**	1	KEY	
	13	1	**124-5572**	1	VALVE (PRESSURE RELIEF)	
	14	1	**130-5997**	1	PLATE-INFORMATION (AIR COMPRESSOR)	
					AVAILABLE REPAIR KIT(S):	
			7E-8923	1	KIT-CRANKSHAFT BEARING (AIR COMPRESSOR)	
					(INCLUDES SEALS, BEARINGS, INSERTS, GASKETS, AND WASHER)	
			7E-8925	1	KIT-STANDARD RING (AIR COMPRESSOR)	
					(INCLUDES RINGS)	
			7E-8926	1	KIT-CYLINDER HEAD (AIR COMPRESSOR)	
					(INCLUDES GASKETS, PISTONS, SPRINGS, VALVES, SEATS, AND O-RING)	
			150-5146	1	KIT-UNLOADER (AIR COMPRESSOR)	

131-6679 AIR COMPRESSOR GP *(contd.)* **i01852391**

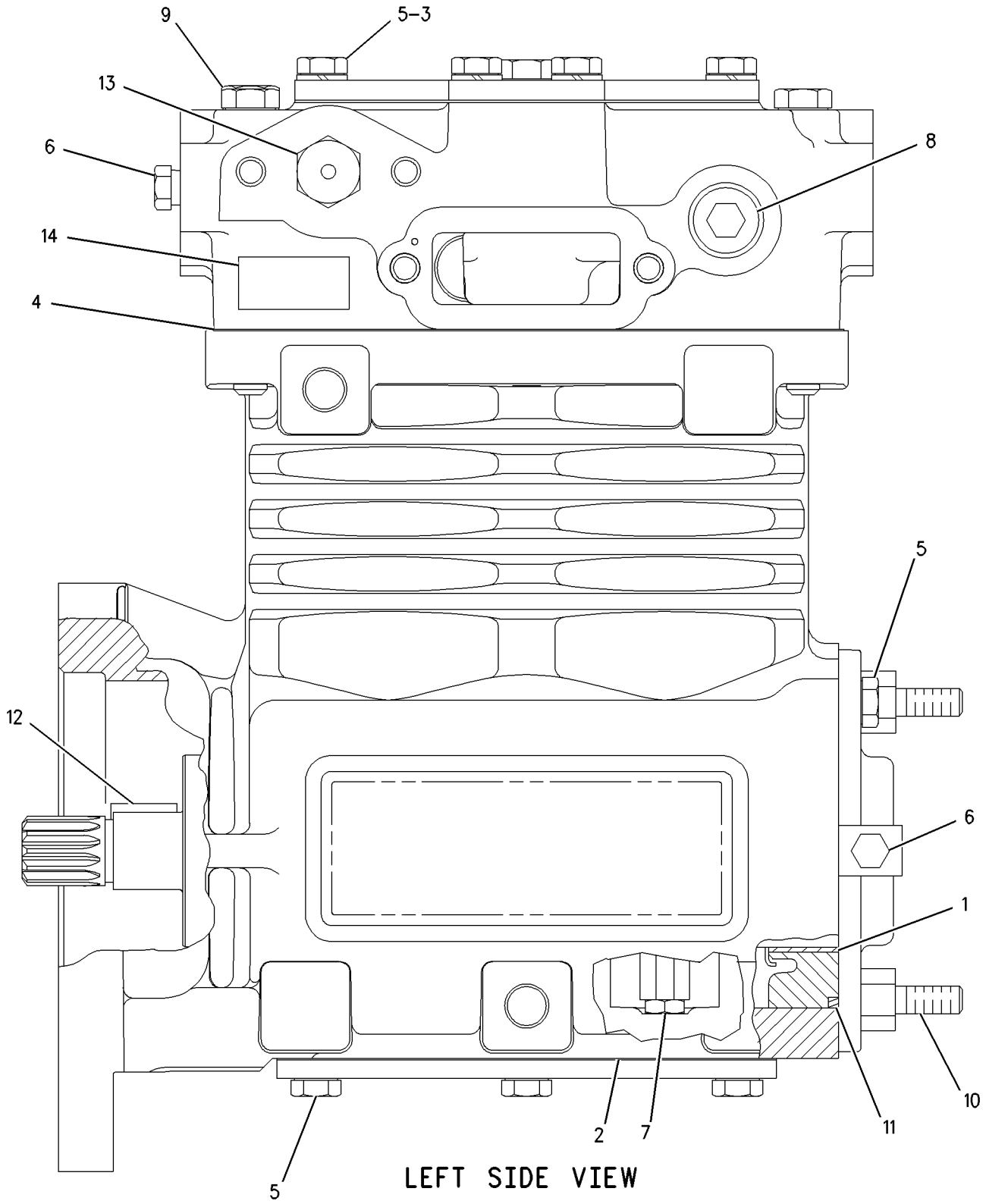

GRAPHIC #1 g00783724

BASIC ENGINE

133-7031 AIR COMPRESSOR GP

S/N: 5ED478-UP

13.2 CFM AT 1250 RPM. TWO CYLINDER, SINGLE STAGE, 1.14:1 RATIO

PART OF 204-7983 ENGINE AR

SMCS-1803 **i01782168**

NOTE	REF NO	GRAPHIC REF	PART NUMBER	QTY	PART NAME 1 2 3 4 5 6 (PRODUCT LEVEL)	SEE PAGE
I	1	1	**1W-0428**	1	HOSE AS	
	2	1	**7W-5499**	1	ELBOW	
M	3	1	**6V-8197**	3	BOLT (M12X1.75X40MM)	
	4	1	**8M-7065**	1	GASKET-AIR INLET	
	5	1	**9M-2904**	1	CLAMP-HOSE	
	6	1	**172-4702**	2	CLAMP	
I	7	1	**9Y-1116**	1	HOSE AS-END	
	8	1	**032-3631**	1	ELBOW	
	9	1	**090-8635**	1	SPACER (5MM THK)	
	10	1	**117-0221**	1	RING-PILOT	
	11	1	**126-0146**	1	HOSE-FUMES DISPOSAL	
	12	1	**128-0331**	1	HOSE	
	13	1	**128-0420**	1	GEAR (42 TEETH)	
	14	1	**129-2181**	1	SEAL-INTEGRAL	
	15	1	**131-2171**	1	CONNECTOR	
YR	16	1	**131-6679**	1	AIR COMPRESSOR GP	6
	17	1	**153-7062**	1	BRACKET	
	18	1	**166-6352**	1	TUBE AS (M10X1.50X25MM)	
	19	1	**005-0658**	1	ELBOW-FLARED	
	19A	1	**6V-5063**	1	SEAL-O-RING	
	20	1	**001-7043**	1	ELBOW (12.7MM ID)	
	21	1	**118-4728**	1	ELBOW	
	22	1	**2B-2695**	2	BOLT (5/16-18X0.875 IN)	
	23	1	**2S-2053**	1	CLIP	
	24	1	**3E-4353**	2	WASHER-HARD (11X25X3MM THK)	
	25	1	**5P-8245**	3	WASHER-HARD (13.5X25.5X3MM THK)	
	26	1	**5S-0003**	2	NUT (5/16-18 THD)	
	27	1	**6D-4244**	1	CLIP	
	28	1	**6M-7476**	1	ELBOW	
	29	1	**6V-3251**	2	SEAL-O-RING	
M	30	1	**6V-4248**	3	BOLT (M10X1.50X25MM)	
	31	1	**6V-5839**	1	WASHER (11X21X2.5MM THK)	
	32	1	**6V-6609**	1	SEAL-O-RING	
M	33	1	**6V-7742**	1	NUT-FULL (M20X2.50 THD)	
	34	1	**8L-6557**	1	CONNECTOR	
	35	1	**8M-2770**	1	CLIP	
	36	1	**8T-3282**	1	WASHER-HARD (22X35X3.5MM THK)	
	37	1	**9M-1974**	2	WASHER-HARD (8.8X16X2MM THK)	
	38	1	**9N-0869**	2	WASHER-HARD (8.8X25.5X2MM THK)	

I-SEE HOSE FABRICATION GUIDE
M-METRIC PART
R-REMFG PART MAY BE AVAILABLE
Y-SEPARATE ILLUSTRATION

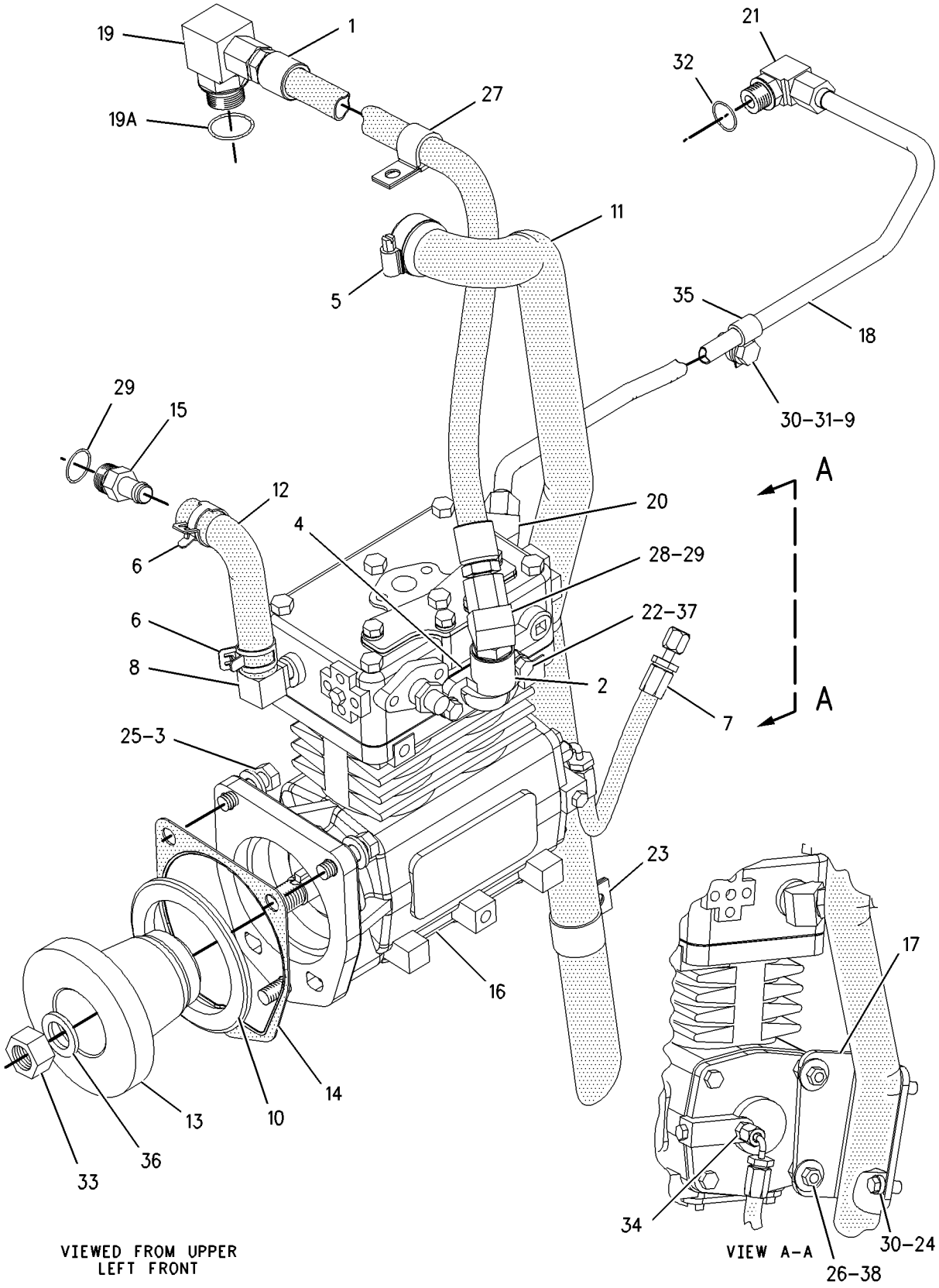

GRAPHIC #1 g00911466

BASIC ENGINE

167-0017 BELT TENSIONER GP

S/N: 5ED478-UP

PART OF 204-7983 ENGINE AR

SMCS-1358 **i01799129**

NOTE	REF NO	GRAPHIC REF	PART NUMBER	QTY	PART NAME 1 2 3 4 5 6 (PRODUCT LEVEL)	SEE PAGE
	1	1	**9Y-5631**	2	SPACER (13X26X89.9MM THK)	
	2	1	**123-0790**	1	PULLEY	
	3	1	**142-2011**	1	PULLEY GP	
	3A	1	**121-7137**	1	SEAL-O-RING	
	3B	1	**144-5611**	1	PULLEY AS-IDLER	
	3C	1	**179-6851**	1	SPACER	
	3D	1	**179-6852**	1	COVER	
M	3E	1	**179-6853**	1	BOLT-HEX HEAD	
	4	1	**173-1498**	1	PULLEY AS-IDLER	
	4A	1	**151-2900**	1	BOLT (M10X1.5X54.25MM)	
	4B	1	**166-6358**	1	COVER-DUST	
	4C	1	**173-1500**	1	SPACER-IDLER	
	5	1	**178-4875**	1	PLATE	
	6	1	**178-5252**	1	PULLEY AS-IDLER	
	6A	1	**8T-4121**	1	WASHER-HARD (11X21X2.5MM THK)	
M	6B	1	**8T-5005**	1	BOLT (M10X1.50X70MM)	
	6C	1	**121-7137**	1	SEAL-O-RING	
	6D	1	**166-6358**	1	COVER-DUST	
	6E	1	**178-5253**	1	SPACER-IDLER	
M	7	1	**123-0764**	2	STUD (M12X1.75X86.3MM OAL)	
	8	1	**190-0649**	1	TIGHTENER	
	9	1	**5P-8245**	2	WASHER-HARD (13.5X25.5X3MM THK)	
	10	1	**5R-7137**	2	WASHER-SEALING	
	11	1	**6V-5839**	1	WASHER (11X21X2.5MM THK)	
M	12	1	**6V-8004**	2	BOLT (M12X1.75X120MM)	
M	13	1	**6V-8149**	2	NUT (M12X1.75 THD)	
M	14	1	**8T-0643**	1	BOLT (M10X1.50X80MM)	

M-METRIC PART

167-0017 **BELT TENSIONER GP** *(contd.)* **i01799129**

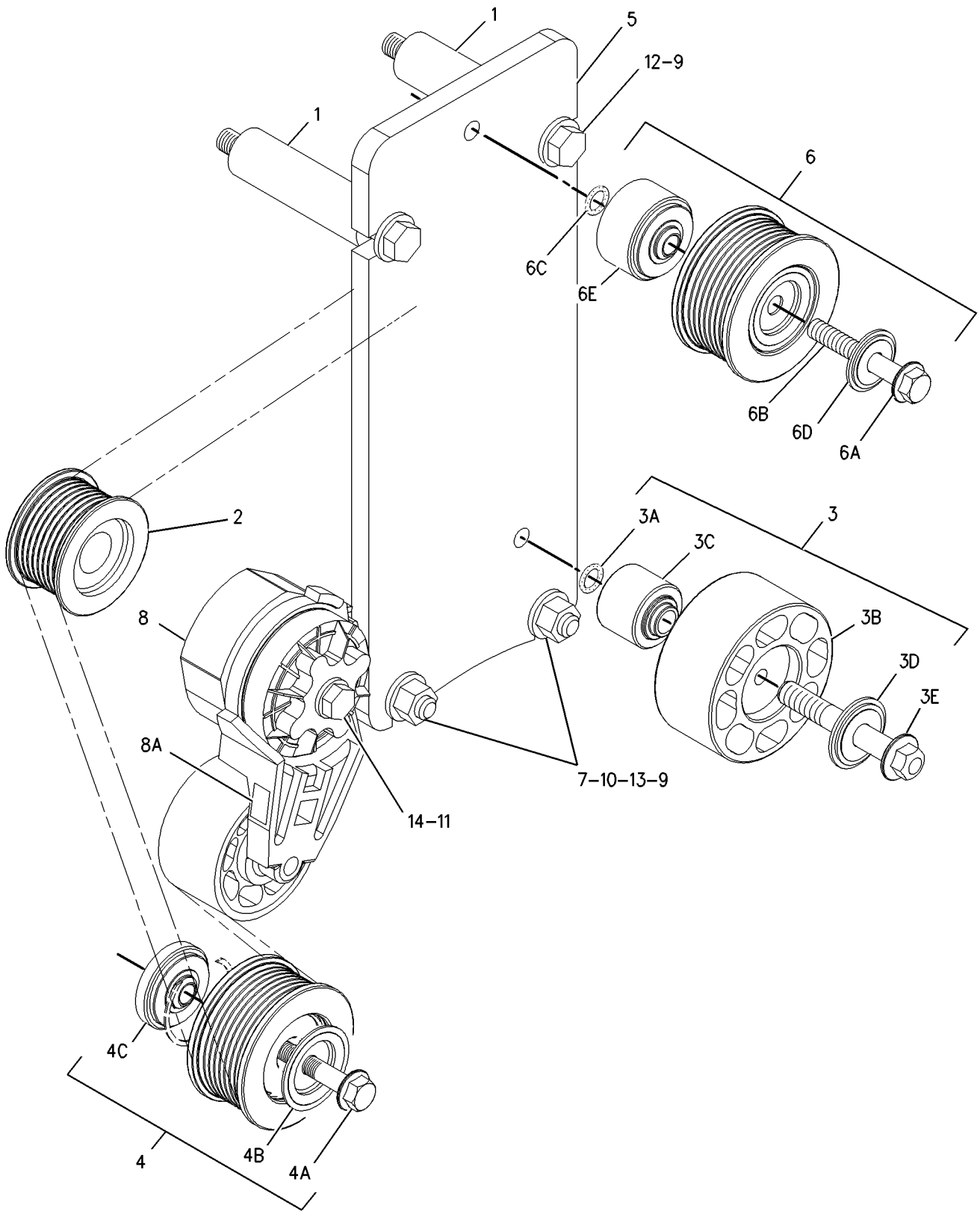

GRAPHIC #1 g00673126

171-3062 CAMSHAFT GP

S/N: 5ED478-UP

PART OF 204-7983 ENGINE AR

SMCS-1210 **i01463616**

NOTE	REF NO	GRAPHIC REF	PART NUMBER	QTY	PART NAME 1 2 3 4 5 6 (PRODUCT LEVEL)	SEE PAGE
M	1	1	**6V-5217**	5	BOLT (M8X1.25X20MM)	
	2	1	**9M-1974**	5	WASHER-HARD (8.8X16X2MM THK)	
	3	1	**178-3643**	1	PIN-THRUST	
	4	1	**133-7068**	1	GASKET-CAMSHAFT COVER	
	5	1	**171-3063**	1	CAMSHAFT AS	
	5A	1	**1B-8705**	1	KEY-WOODRUFF	
	5B	1	**128-0411**	1	JOURNAL	
	5C	1	**133-7100**	1	GEAR-CAMSHAFT DRIVE (96 TEETH)	
	6	1	**4K-9841**	1	WASHER (0.406X0.75X0.064 IN THK)	
	7	1	**118-0459**	1	COVER	

M-METRIC PART

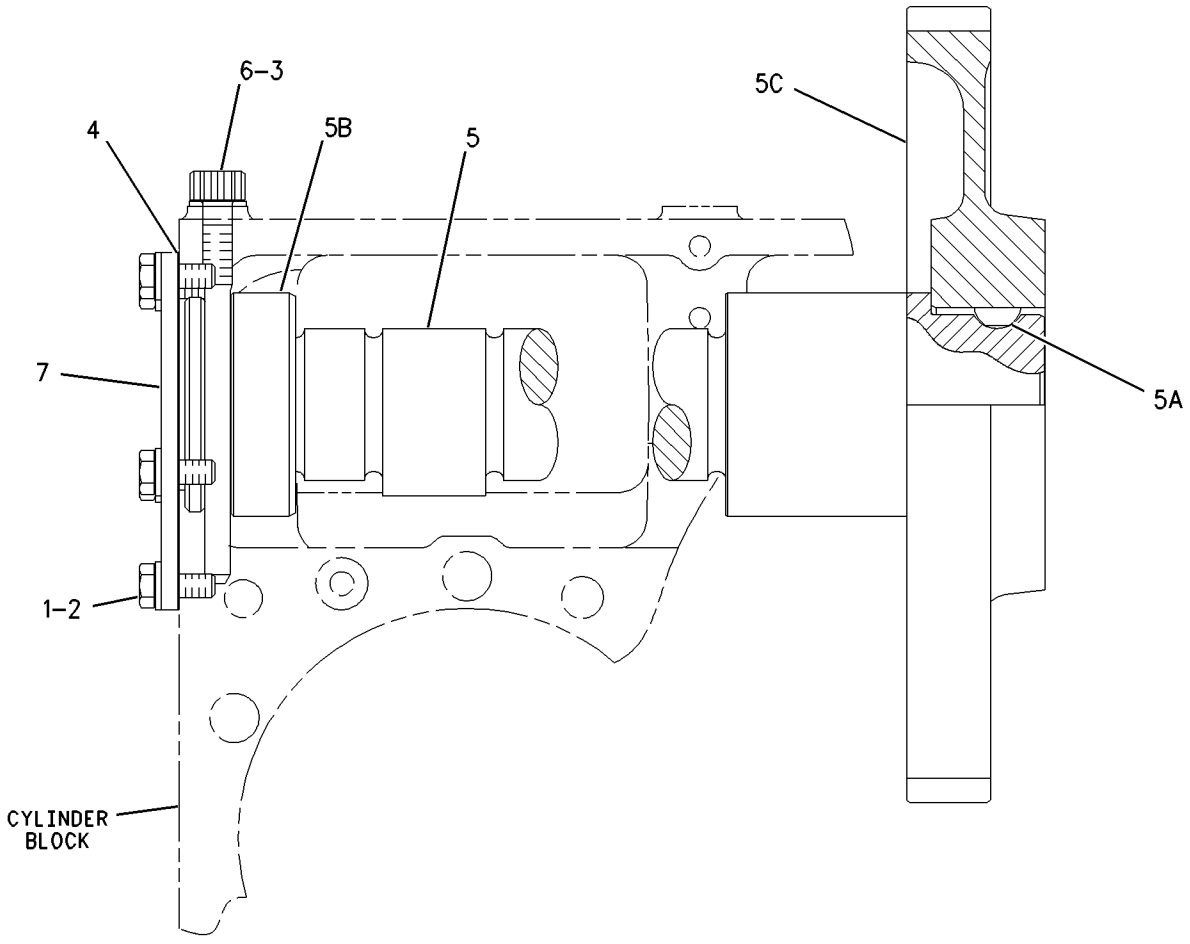

GRAPHIC #1 g00674299

MEMORANDA

BASIC ENGINE

174-1762 COVER GP-CYLINDER BLOCK

S/N: 5ED478-UP

PART OF 204-7983 ENGINE AR

SMCS-1201 **i01625947**

NOTE	REF NO	GRAPHIC REF	PART NUMBER	QTY	PART NAME 1 2 3 4 5 6 (PRODUCT LEVEL)	SEE PAGE
	1	1	**3E-4039**	1	CAP	
	2	1	**7C-1445**	3	COVER	
M	3	1	**9X-2097**	2	STUDBOLT (M8X1.25 THD)	
	4	1	**184-2524**	1	BRACKET AS	
M		1	**8T-3490**	1	NUT-WELD (M10X1.5 THD)	
		1	**183-4191**	1	BRACKET	
	5	1	**061-9455**	3	SEAL-O-RING	
	6	1	**1H-7339**	1	SEAL-O-RING	
	7	1	**4P-1650**	1	COVER	
	8	1	**4P-6587**	1	COVER	
M	9	1	**5P-7970**	1	NUT (M8X1.25 THD)	
	10	1	**5S-9134**	1	SEAL-O-RING	
	11	1	**6V-1250**	1	SEAL-O-RING	
M	12	1	**6V-1820**	2	BOLT (M10X1.50X30MM)	
M	13	1	**6V-2317**	1	BOLT (M8X1.25X30MM)	
M	14	1	**6V-5217**	5	BOLT (M8X1.25X20MM)	
	15	1	**6V-5839**	2	WASHER (11X21X2.5MM THK)	
	16	1	**7C-9542**	1	COVER-FILTER BASE	
	17	1	**9M-1974**	10	WASHER-HARD (8.8X16X2MM THK)	

M-METRIC PART

174-1762 **COVER GP-CYLINDER BLOCK** *(contd.)* **i01625947**

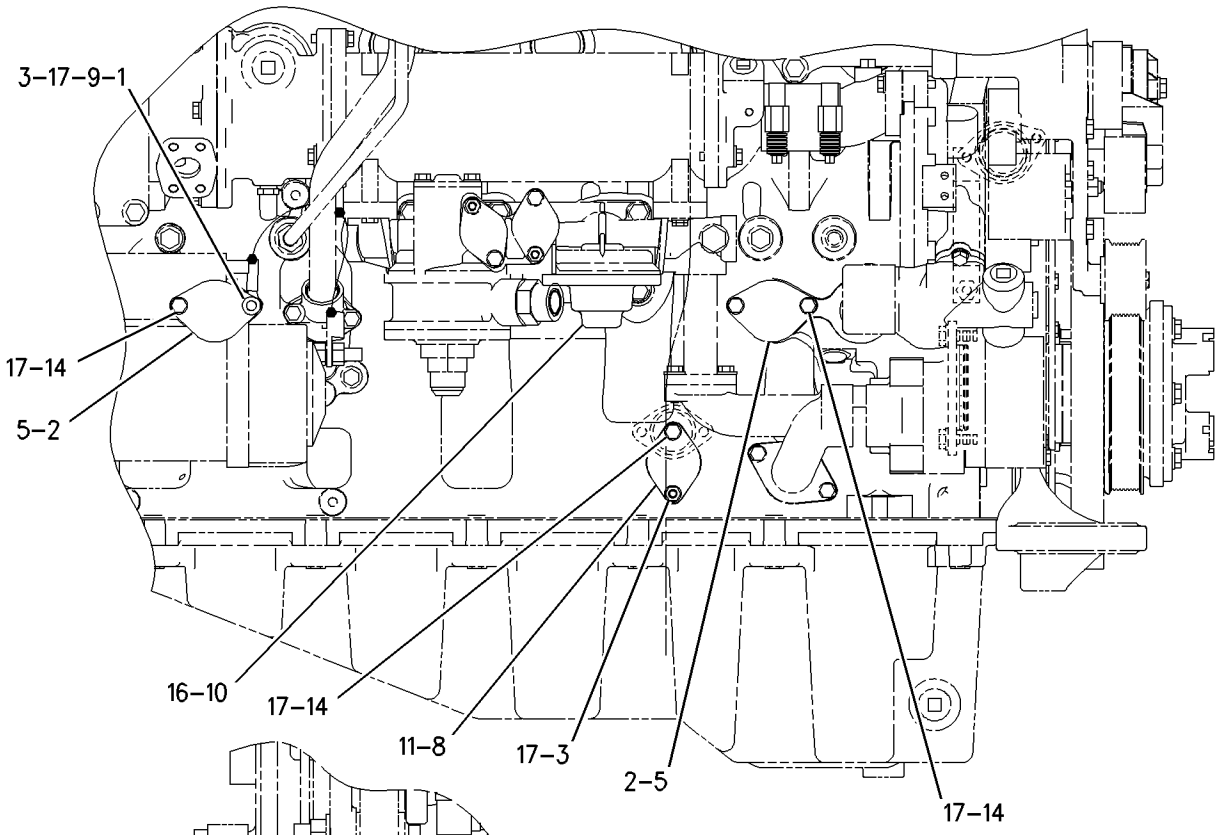

RIGHT SIDE VIEW

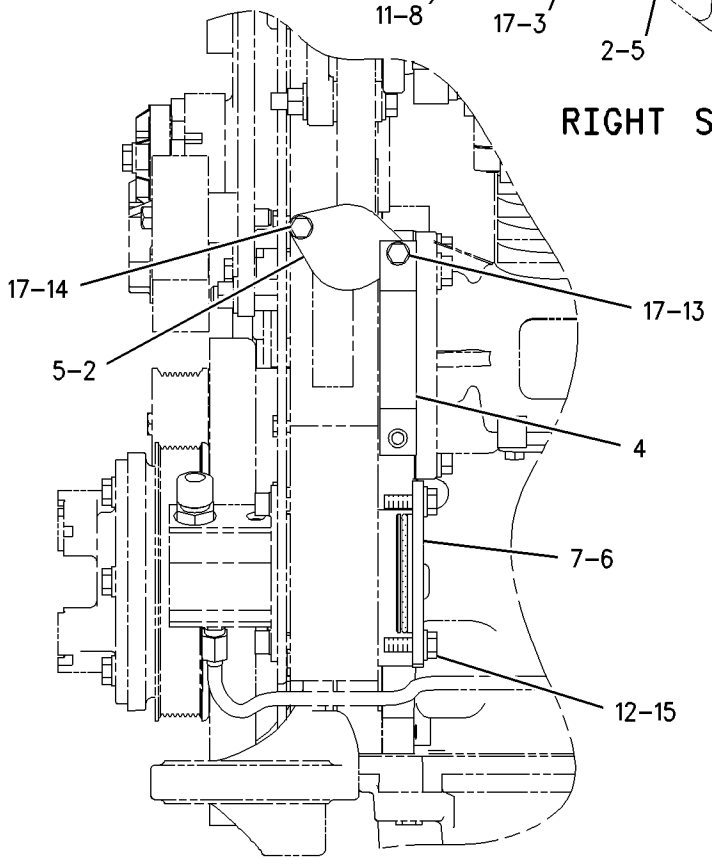

LEFT SIDE VIEW

GRAPHIC #1 g00789291

BASIC ENGINE

132-3212 CRANKSHAFT GP

S/N: 5ED478-UP

PART OF 204-7983 ENGINE AR

SMCS-1202, 1203, 1204, 1232 **i01831191**

NOTE	REF NO	GRAPHIC REF	PART NUMBER	QTY	PART NAME 1 2 3 4 5 6 (PRODUCT LEVEL)	SEE PAGE
	1	1	**116-1109**	3	BEARING-MAIN	
A		1	**128-0382**	1	BEARING-MAIN (.51MM U.S.)	
A		1	**128-0383**	1	BEARING-MAIN (.76MM U.S.)	
A		1	**128-0384**	1	BEARING-MAIN (.51MM O.S.)	
A		1	**128-0385**	1	BEARING-MAIN (.51MM U.S. - .51MM O.S.)	
	2	1	**116-1107**	2	PLATE-THRUST	
	3	1	**116-1108**	4	BEARING-MAIN	
A		1	**128-0400**	1	BEARING-MAIN (.51MM U.S.)	
A		1	**128-0401**	1	BEARING-MAIN (.76MM U.S.)	
A		1	**128-0402**	1	BEARING-MAIN (.51MM O.S.)	
A		1	**128-0403**	1	BEARING-MAIN (.51MM U.S. - .51MM O.S.)	
CR	4	1	**169-4189**	1	CRANKSHAFT AS	
	5	1	**155-6642**	1	GEAR-CRANKSHAFT (48 TEETH)	
F			**9Y-0821**	1	SLEEVE (FRONT SEAL)	
F			**9Y-0810**	1	SLEEVE (REAR SEAL)	
	6	1	**6V-3536**	1	DOWEL	
					AVAILABLE REPAIR KIT(S):	
			196-9521		KIT-MAIN BEARING (CRANKSHAFT)	
					(INCLUDES STANDARD MAIN BEARINGS AND THRUST PLATES)	

A-NOT PART OF THIS GROUP
C-CHANGE FROM PREVIOUS TYPE
F-NOT SHOWN
R-REMFG PART MAY BE AVAILABLE

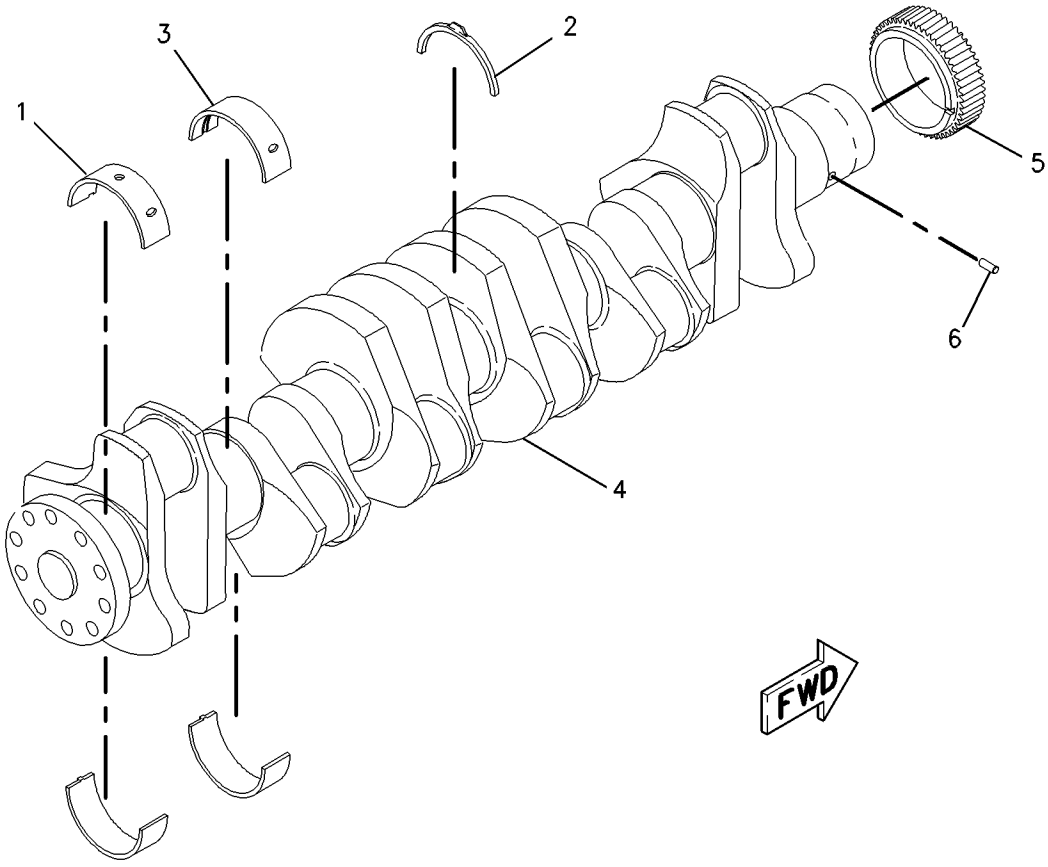

GRAPHIC #1 g00796591

BASIC ENGINE

200-2054 CYLINDER BLOCK AS

S/N: 5ED478-UP

PART OF 204-3449 CYLINDER BLOCK AS

SMCS-1201 **i01721897**

NOTE	REF NO	GRAPHIC REF	PART NUMBER	QTY	PART NAME 1 2 3 4 5 6 (PRODUCT LEVEL)	SEE PAGE
	1	1	**216-5584**	1	BEARING-SLEEVE	
	2	1	**117-0166**	7	CAP-BEARING	
M	3	1	**175-0454**	14	BOLT-HEX HEAD	
	4	1	**5P-8247**	14	WASHER-HARD (17X32X3.5MM THK)	
	5	1	**216-5585**	1	BEARING-SLEEVE	
	6	1	**216-5583**	5	BEARING-SLEEVE	

M-METRIC PART

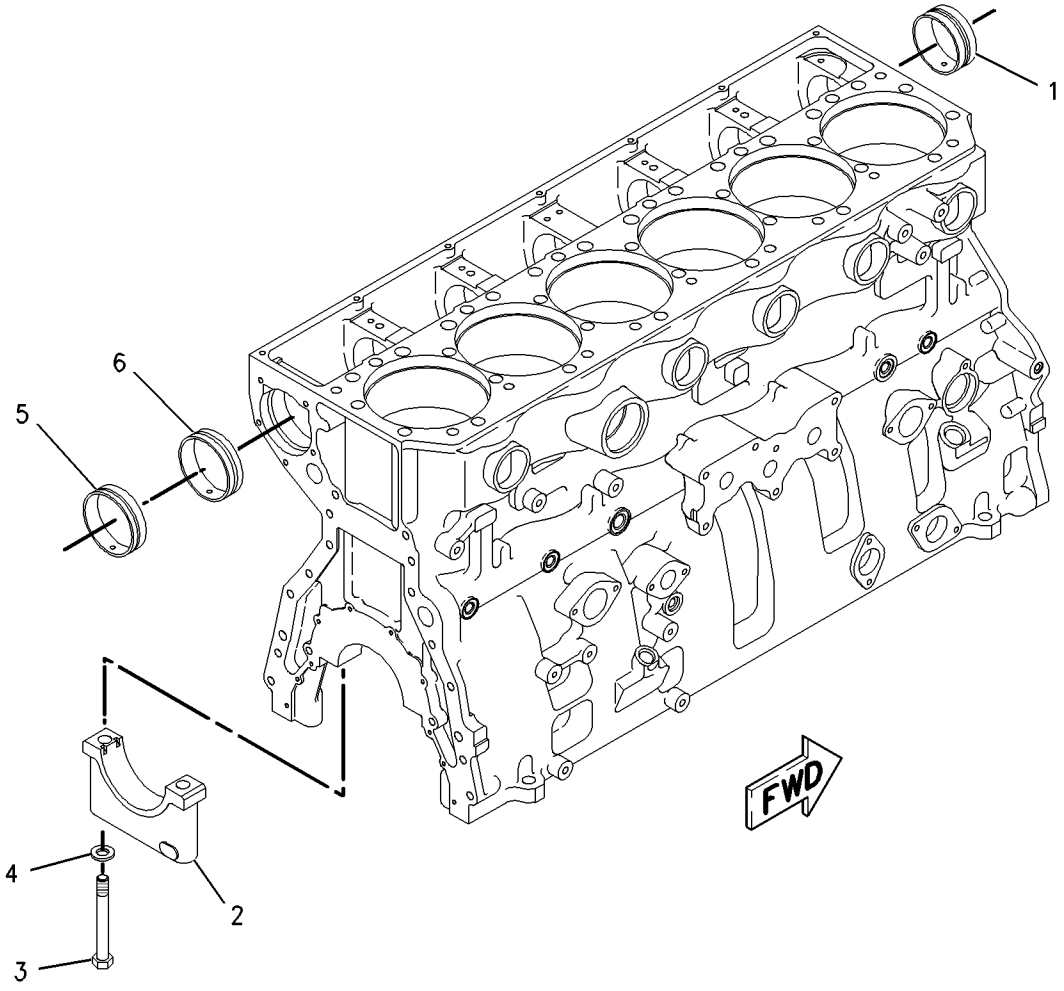

GRAPHIC #1 g00820213

BASIC ENGINE

204-3449 CYLINDER BLOCK AS

S/N: 5ED478-UP

PART OF 115-2983 CYLINDER BLOCK GP

SMCS-1201 **i01665972**

NOTE	REF NO	GRAPHIC REF	PART NUMBER	QTY	PART NAME 1 2 3 4 5 6 (PRODUCT LEVEL)	SEE PAGE
Y	1	1	**200-2054**	1	CYLINDER BLOCK AS	18
	2	1	**148-2130**	6	LINER-CYLINDER	
	3	1	**104-3560**	6	SEAL-LINER	
	4	1	**4F-5695**	6	PLUG-CUP	
					AVAILABLE REPLACEMENT PART(S):	
ABJ			**168-7363**		SHIM (0.22MM THK)	
ABJ			**168-7364**		SHIM (0.25MM THK)	
ABJ			**168-7365**		SHIM (0.28MM THK)	
ABJ			**168-7366**		SHIM (0.50MM THK)	

A-NOT PART OF THIS GROUP
B-USE AS REQUIRED
J-USED TO SET LINER PROTRUSION ON REBUILT MID-SUPPORT LINER ENGINE
Y-SEPARATE ILLUSTRATION

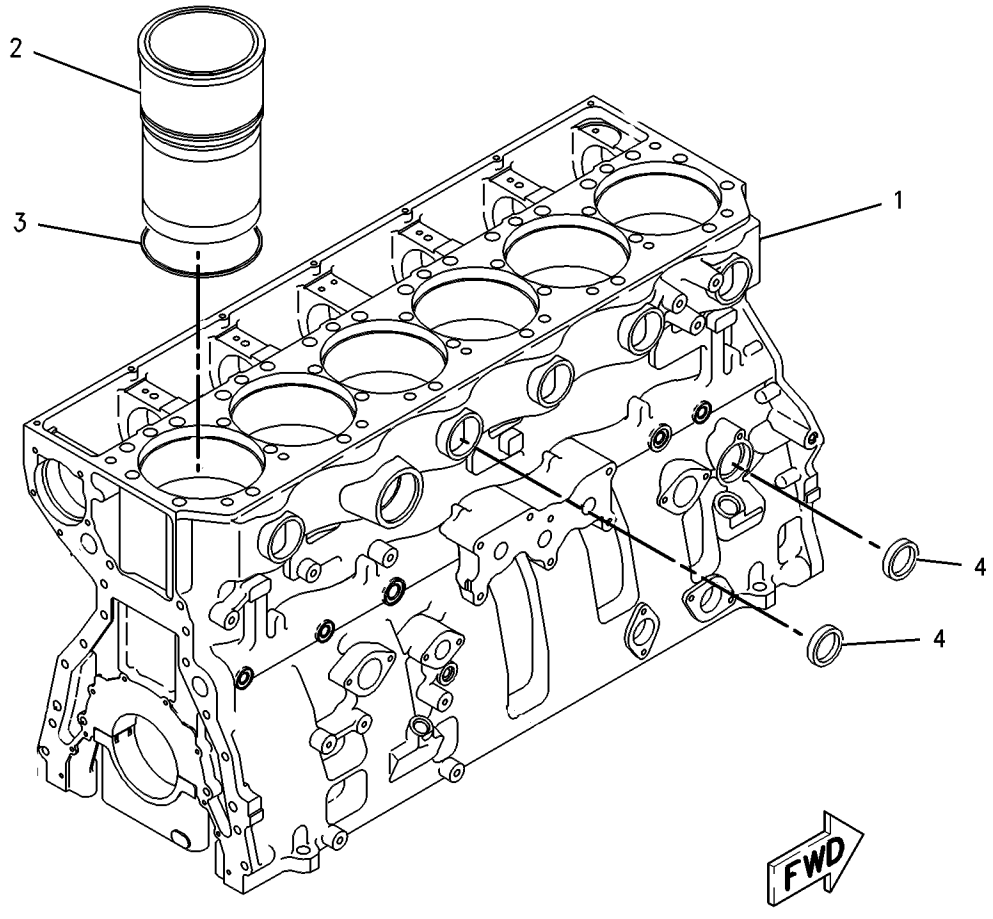

GRAPHIC #1 g00784445

BASIC ENGINE

115-2983 CYLINDER BLOCK GP*R

S/N: 5ED478-UP

PART OF 204-7983 ENGINE AR

SMCS-1201 **i01562967**

NOTE	REF NO	GRAPHIC REF	PART NUMBER	QTY	PART NAME 1 2 3 4 5 6 (PRODUCT LEVEL)	SEE PAGE
CY	1	1	**204-3449**	1	CYLINDER BLOCK AS	19
	2	1	**7N-5683**	6	DOWEL	
	3	1	**7E-4043**	6	JET AS-COOLING	
M	4	1	**8T-0100**	6	BOLT (M8X1.25X60MM)	
	5	1	**3E-4352**	6	WASHER-HARD (8.8X20.5X2.5MM THK)	
	6	1	**6V-3538**	2	DOWEL	
	7	1	**1N-5999**	2	PLUG	
	8	1	**5P-7813**	2	SEAL-O-RING	
	9	1	**9S-8002**	1	PLUG-O-RING	
	10	1	**6V-5048**	1	SEAL-O-RING	
	11	1	**3B-0623**	3	PLUG-CUP	
	12	1	**4G-4972**	6	SEAL-O-RING	

C-CHANGE FROM PREVIOUS TYPE
M-METRIC PART
Y-SEPARATE ILLUSTRATION

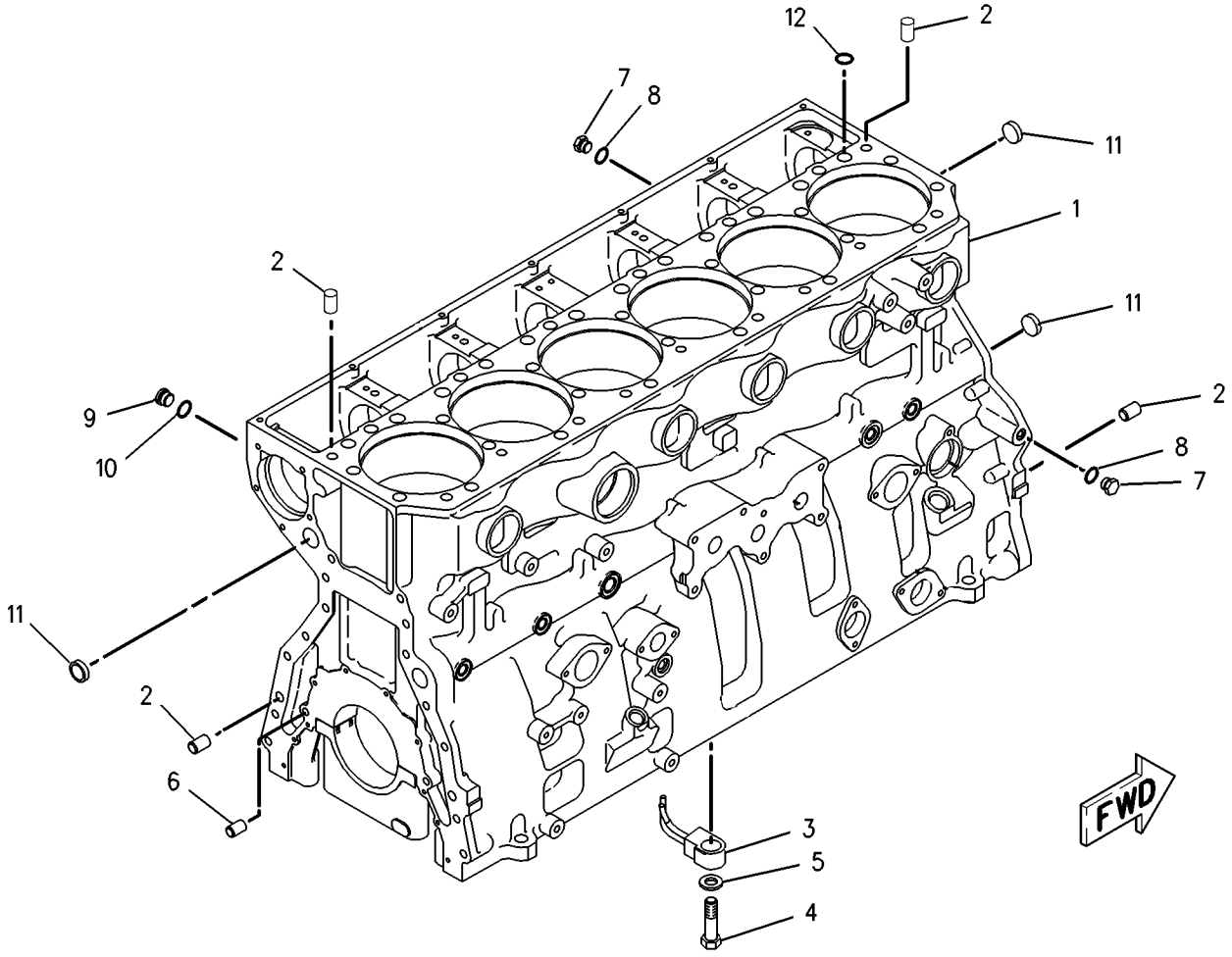

GRAPHIC #1 g00784452

MEMORANDA

BASIC ENGINE

179-9459 CYLINDER HEAD AS

S/N: 5ED478-UP

PART OF 148-2149 CYLINDER HEAD GP

SMCS-1100 **i01773392**

NOTE	REF NO	GRAPHIC REF	PART NUMBER	QTY	PART NAME 1 2 3 4 5 6 (PRODUCT LEVEL)	SEE PAGE
Z	1	1		1	CYLINDER HEAD	
	2	1	**3B-0623**	8	PLUG-CUP	
	3	1	**179-9453**	12	INSERT-VALVE SEAT (EXHAUST)	
	4	1	**138-2006**	12	INSERT-VALVE SEAT (INLET)	
	5	1	**116-1102**	6	SLEEVE-INJECTOR	
	6	1	**6V-7604**	16	PLUG-CUP	

Z-NOT SERVICED SEPARATELY

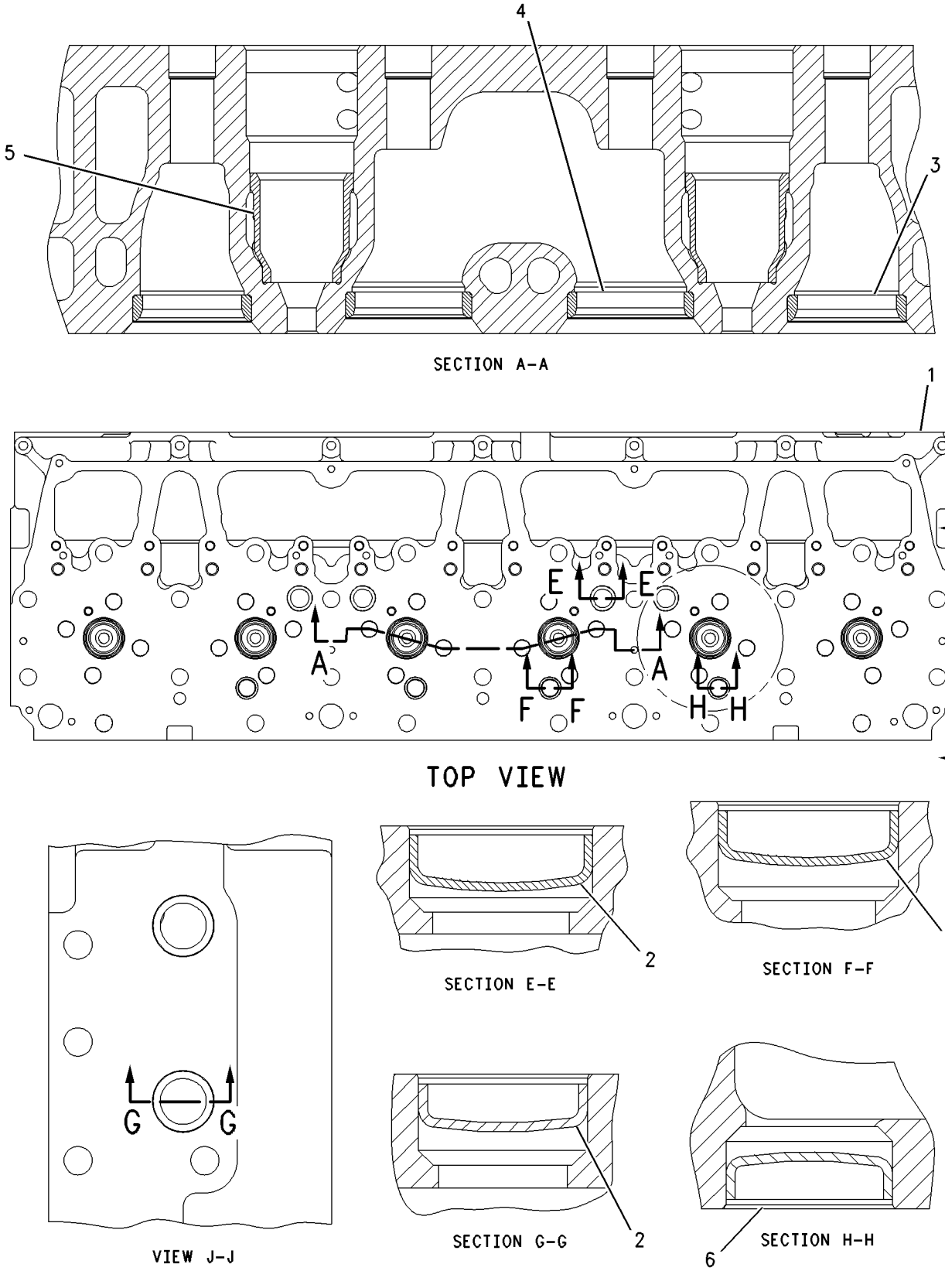

GRAPHIC #1 g00706910

116-1085 CYLINDER HEAD GP

S/N: 5ED478-UP

PART OF 204-7983 ENGINE AR

SMCS-1100 **i01509664**

NOTE	REF NO	GRAPHIC REF	PART NUMBER	QTY	PART NAME 1 2 3 4 5 6 (PRODUCT LEVEL)	SEE PAGE
CYR	1	1	**148-2149**	1	CYLINDER HEAD GP	25
M	2	1	**6V-9607**	7	BOLT (M8X1.25X120MM)	
C	3	1	**187-3307**	1	GASKET AS-CYLINDER	

C-CHANGE FROM PREVIOUS TYPE
M-METRIC PART
R-REMFG PART MAY BE AVAILABLE
Y-SEPARATE ILLUSTRATION

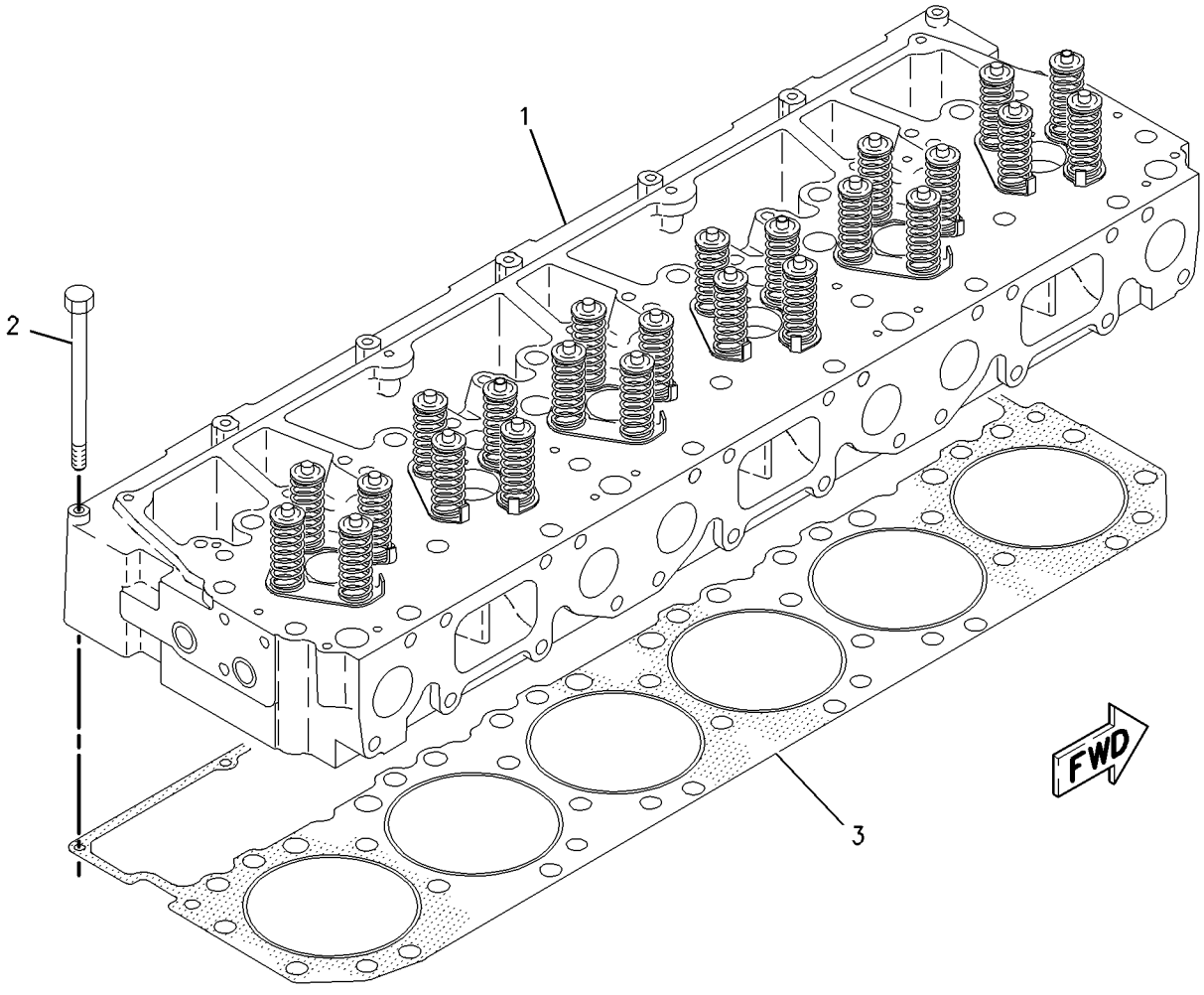

GRAPHIC #1 g00783693

148-2149 CYLINDER HEAD GP*R

S/N: 5ED478-UP

PART OF 116-1085 CYLINDER HEAD GP

SMCS-1100 **i01833148**

NOTE	REF NO	GRAPHIC REF	PART NUMBER	QTY	PART NAME 1 2 3 4 5 6 (PRODUCT LEVEL)	SEE PAGE
Y	1	1	*179-9459*	1	CYLINDER HEAD AS	22
	2	1	**100-8150**	24	GUIDE-VALVE	
	3	1	**6I-1638**	12	BASE-INJECTOR POSITIONING	
	4	1	**2A-4429**	48	LOCK-RETAINER	
	5	1	**133-7029**	12	VALVE-EXHAUST	
	6	1	**7E-9578**	12	VALVE-INLET	
	7	1	**224-4441**	24	SPRING	
	8	1	**214-0586**	24	SPRING (VALVE)	
	9	1	**6I-2663**	24	ROTOCOIL AS	
					(EACH INCLUDES)	
		1	**6I-2662**	1	SHIELD	
		1	**7C-8581**	1	ROTOCOIL AS	

Y-SEPARATE ILLUSTRATION

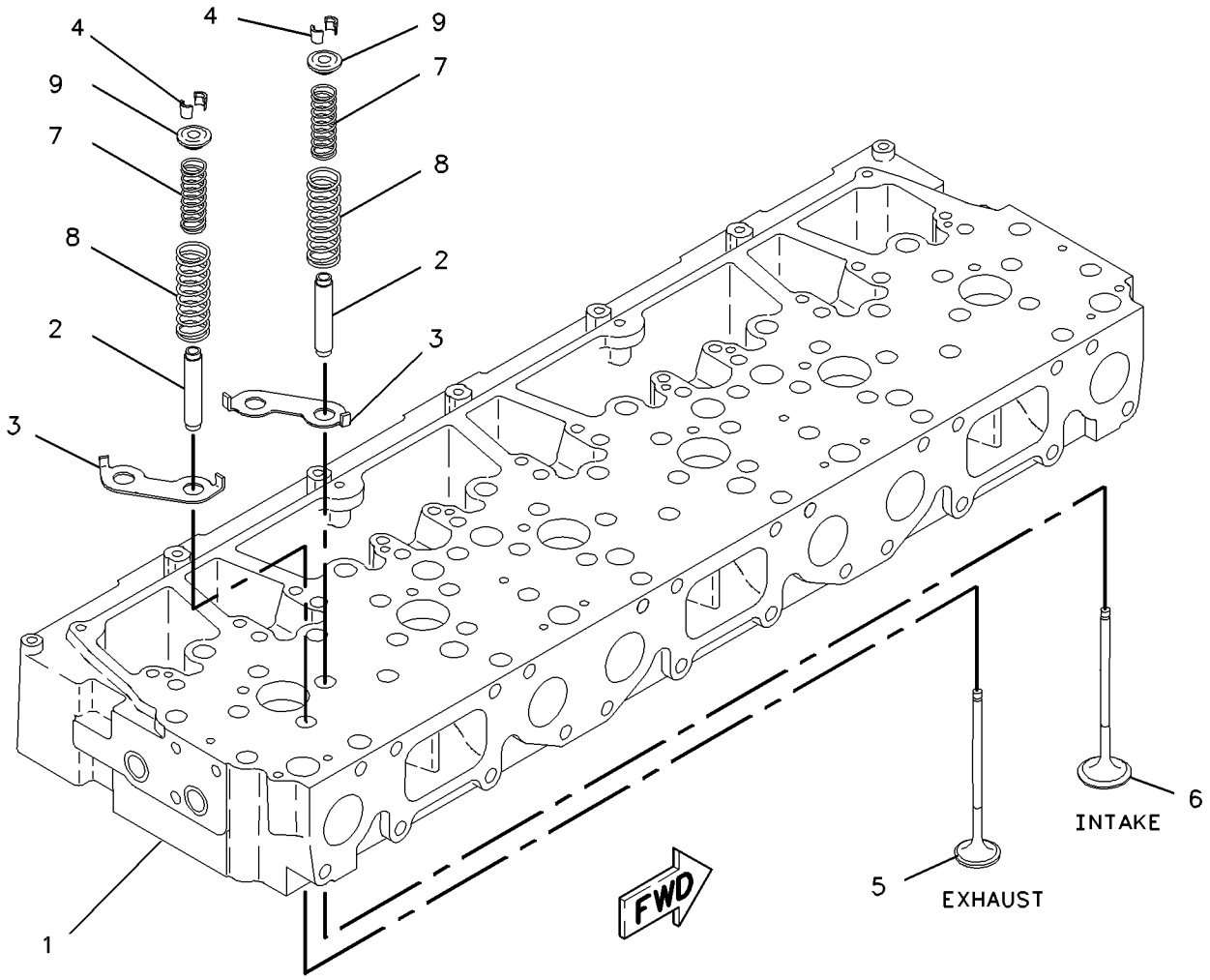

GRAPHIC #1 g00783706

174-1639 DRIVE GP-ACCESSORY

S/N: 5ED478-UP

PART OF 204-7983 ENGINE AR

SMCS-1207 **i01643507**

NOTE	REF NO	GRAPHIC REF	PART NUMBER	QTY	PART NAME 1 2 3 4 5 6 (PRODUCT LEVEL)	SEE PAGE
	1	1	**167-8125**	1	DAMPER AS	
	2	1	**174-1593**	1	ADAPTER	
	3	1	**174-1640**	1	YOKE	
	4	1	**175-7314**	1	PULLEY	
	5	1	**179-0092**	1	ADAPTER	
M	6	1	**136-4183**	8	BOLT-12 POINT HEAD (M10X1.5X30MM)	
	7	1	**5P-8247**	6	WASHER-HARD (17X32X3.5MM THK)	
	8	1	**6V-5839**	6	WASHER (11X21X2.5MM THK)	
M	9	1	**6V-5842**	6	BOLT (M10X1.50X40MM)	
M	10	1	**8T-0358**	6	BOLT (M16X2.0X90MM)	
	11	1	**9X-2027**	8	WASHER (11X18X2MM THK)	

M-METRIC PART

174-1639 **DRIVE GP-ACCESSORY** *(contd.)* **i01643507**

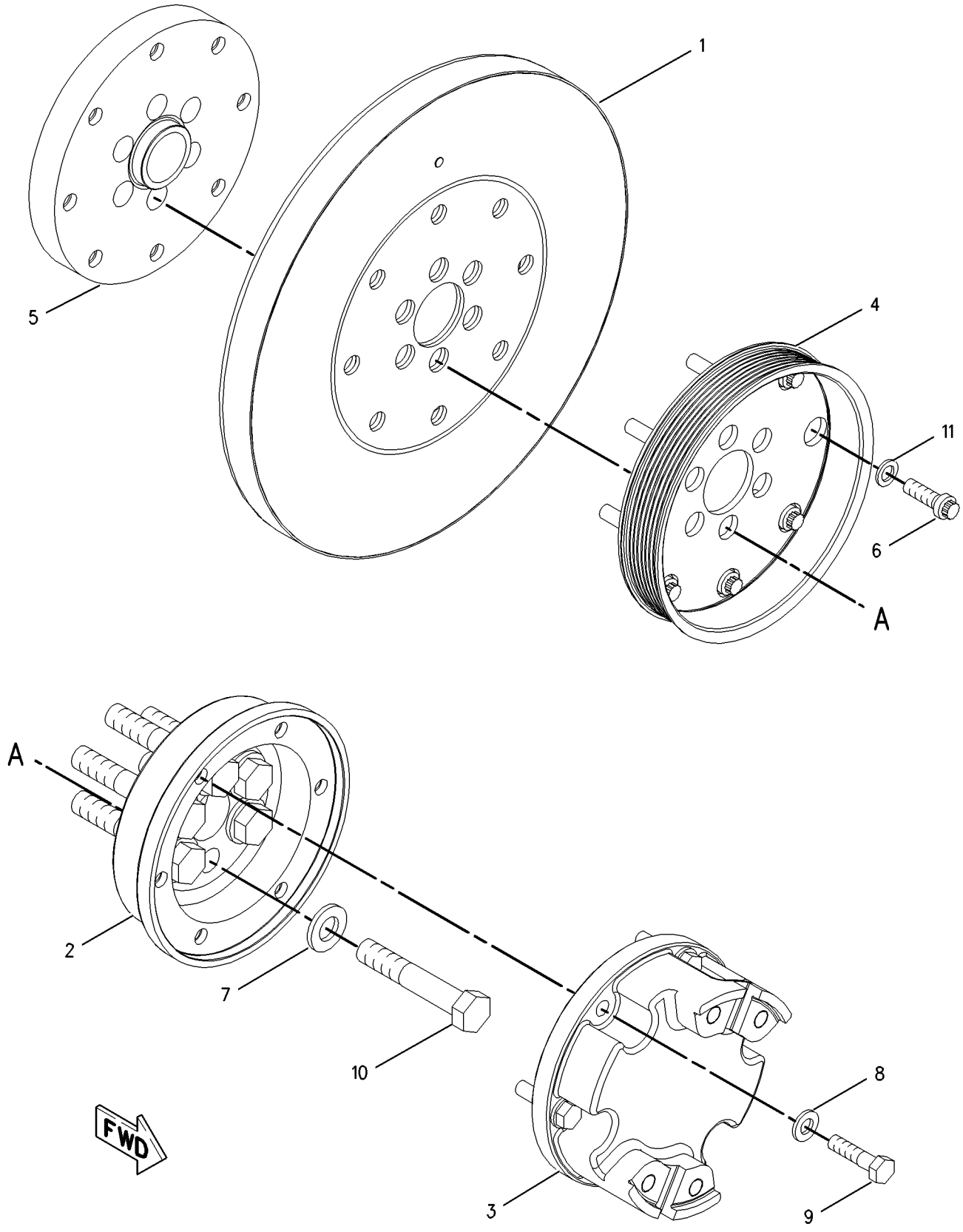

GRAPHIC #1 g00850003

116-1083 FASTENER GP-CYLINDER HEAD

S/N: 5ED478-UP

PART OF 116-5408 MOUNTING GP-VALVE MECHANISM

SMCS-1100 **i01538648**

NOTE	REF NO	GRAPHIC REF	PART NUMBER	QTY	PART NAME 1 2 3 4 5 6 (PRODUCT LEVEL)	SEE PAGE
M	1	1	**129-3184**	26	BOLT-HEX HEAD (M16X2X160MM)	
	2	1	**2S-5658**	26	WASHER-HARD (17X29X3MM THK)	

M-METRIC PART

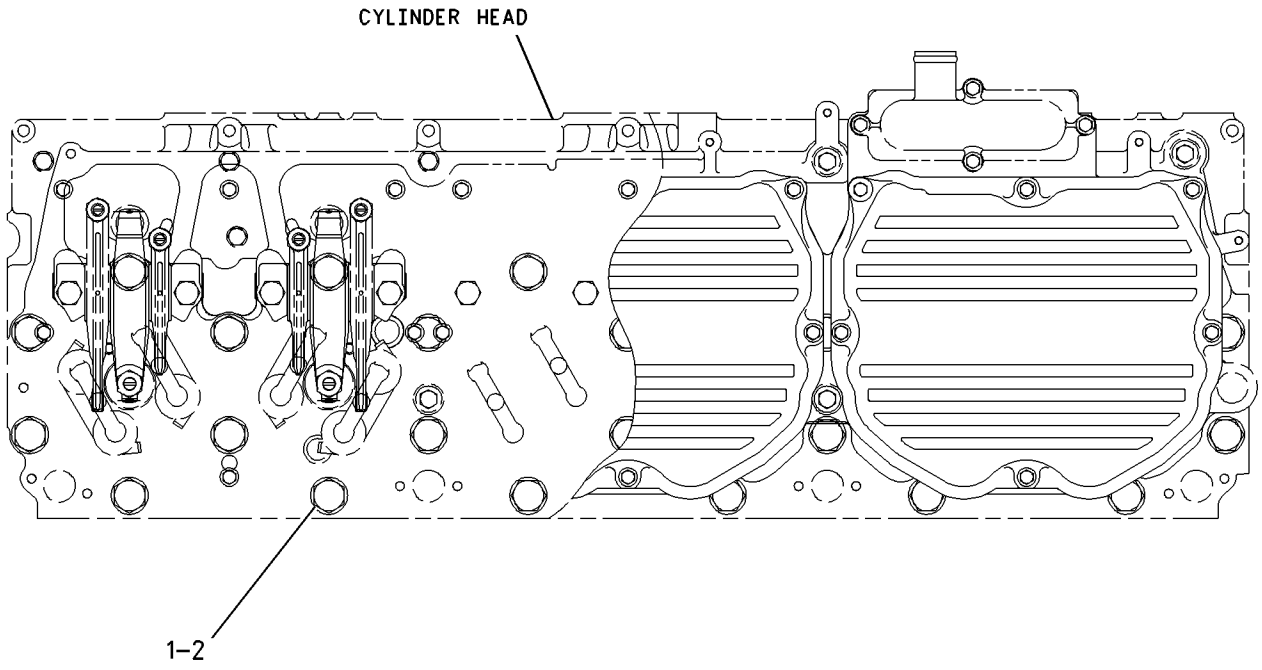

TOP VIEW

GRAPHIC #1 g00799119

BASIC ENGINE

174-1766 FLYWHEEL GP

S/N: 5ED478-UP

PART OF 204-7983 ENGINE AR

SMCS-1156, 1158 **i01819879**

NOTE	REF NO	GRAPHIC REF	PART NUMBER	QTY	PART NAME 1 2 3 4 5 6 (PRODUCT LEVEL)	SEE PAGE
	1	1	**224-3241**	1	FLYWHEEL AS	
		1	**4N-2514**	1	GEAR (113 TEETH)	
	2	1	**5P-8247**	8	WASHER-HARD (17X32X3.5MM THK)	
M	3	1	**6V-5686**	8	BOLT (M16X2X50MM)	

M-METRIC PART

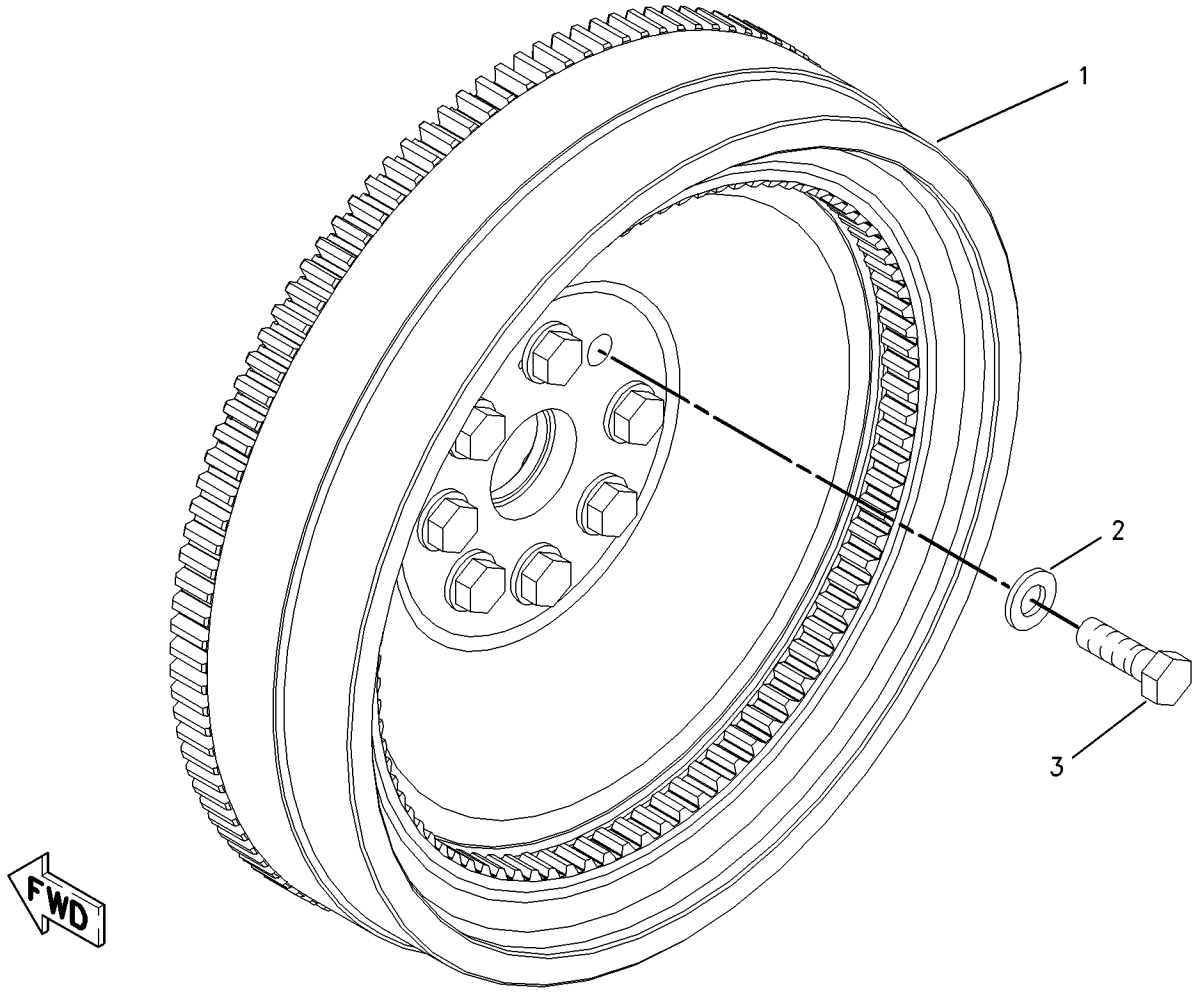

GRAPHIC #1 g00850147

BASIC ENGINE

117-2750 GEAR GP-FRONT

S/N: 5ED478-UP

PART OF 204-7983 ENGINE AR

SMCS-1206 **i01754962**

NOTE	REF NO	GRAPHIC REF	PART NUMBER	QTY	PART NAME 1 2 3 4 5 6 (PRODUCT LEVEL)	SEE PAGE
	1	1	**9Y-3520**	1	GEAR AS (61 TEETH)	
	2	1	**7C-7852**	1	BEARING	
M	3	1	**8T-0281**	2	BOLT (M16X2X80MM)	
	4	1	**7C-7851**	1	SHAFT	
	5	1	**133-7086**	1	GEAR AS-IDLER (71 TEETH)	
	6	1	**133-7083**	1	SHAFT	

M-METRIC PART

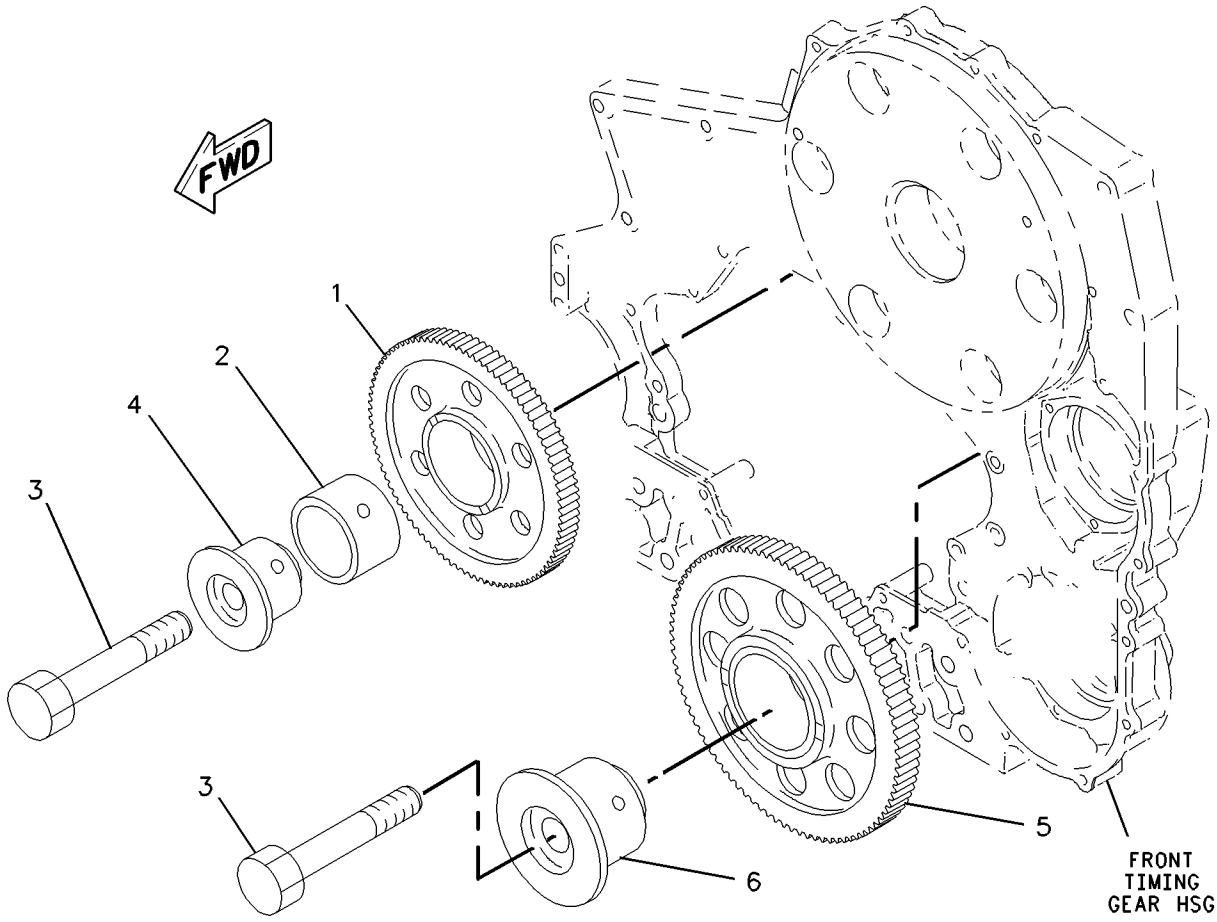

GRAPHIC #1 g00783839

BASIC ENGINE

208-3730 HOUSING GP-FLYWHEEL

S/N: 5ED478-UP

PART OF 204-7983 ENGINE AR

SMCS-1157 **i01833573**

NOTE	REF NO	GRAPHIC REF	PART NUMBER	QTY	PART NAME 1 2 3 4 5 6 (PRODUCT LEVEL)	SEE PAGE
	1	1	**199-4051**	1	COVER	
	2	1	**208-3729**	1	HOUSING	
M	3	1	**099-3649**	2	BOLT (M8X1.25X40MM)	
	4	1	**1H-5728**	1	SEAL-O-RING	
	5	1	**3K-8460**	1	PLUG (1/2-20 THD)	
	6	1	**5D-9344**	1	SEAL-O-RING (227.96MM ID)	
	7	1	**5P-7701**	1	SEAL-O-RING (29.74MM ID)	
	8	1	**5P-7814**	1	SEAL-O-RING (10.52MM ID)	
	9	1	**5P-8245**	12	WASHER-HARD (13.5X25.5X3MM THK)	
M	10	1	**6V-8197**	12	BOLT (M12X1.75X40MM)	
	11	1	**8L-2786**	1	SEAL-O-RING (16.36MM ID)	
	12	1	**8T-4224**	2	WASHER-HARD (8.8X16X2MM THK)	
	13	1	**9S-4185**	1	PLUG	
	14	1	**9S-9334**	1	PLUG	
B	15	1	**1U-8846**		SEALANT-GASKET	

B-USE AS REQUIRED
M-METRIC PART

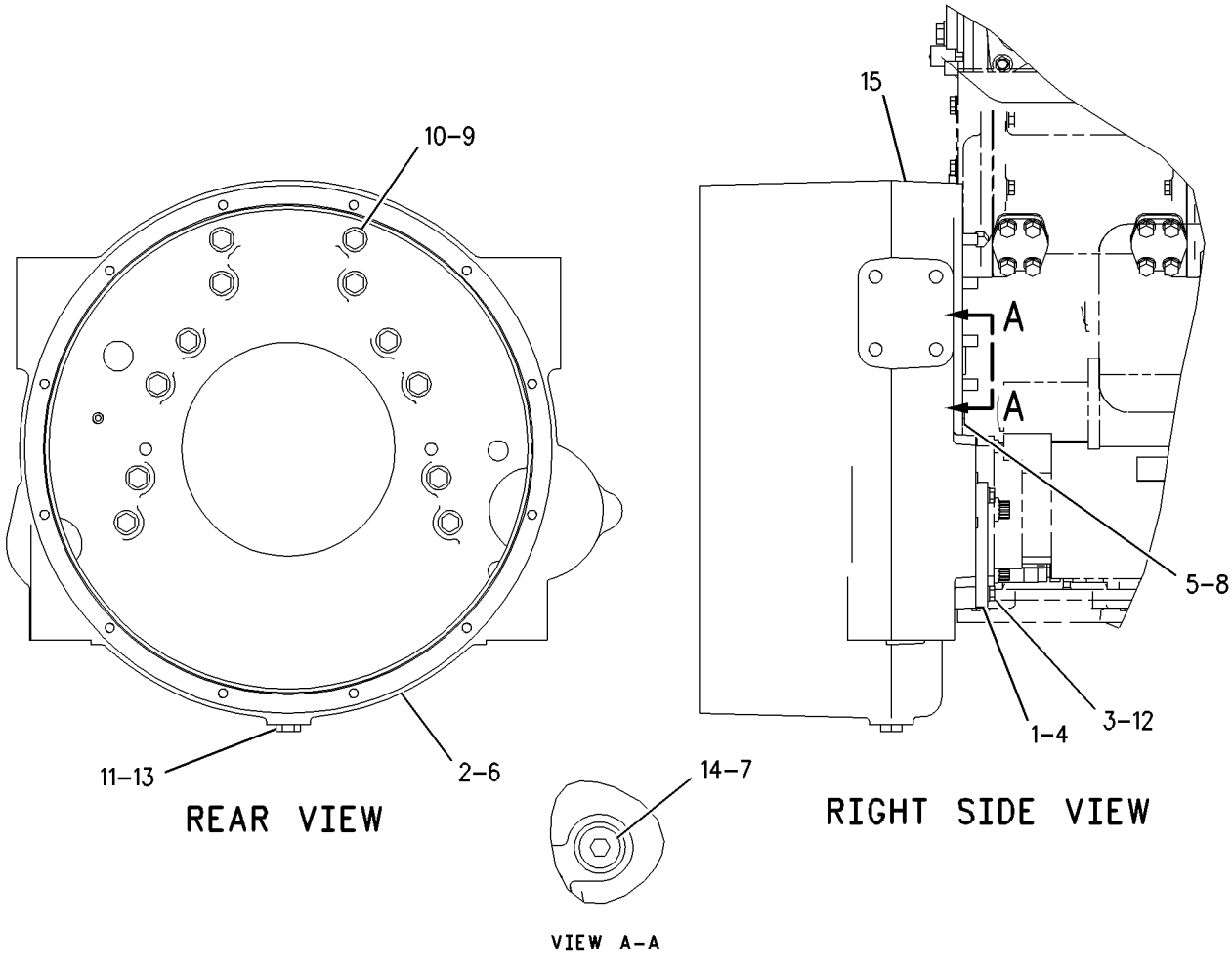

GRAPHIC #1 g00937881

BASIC ENGINE

133-7075 HOUSING GP-FRONT

S/N: 5ED478-UP

PART OF 204-7983 ENGINE AR

SMCS-1151, 1162 **i01659717**

NOTE	REF NO	GRAPHIC REF	PART NUMBER	QTY	PART NAME 1 2 3 4 5 6 (PRODUCT LEVEL)	SEE PAGE
C	1	1	**169-4170**	1	HOUSING AS-FRONT	
	1A	1	**2H-5549**	1	RING-RETAINING	
	1B	1	**8H-9789**	2	BALL BEARING	
	1C	1	**115-9424**	1	GEAR-PUMP DRIVE (34 TEETH)	
	1D	1	**2A-3348**	2	DOWEL	
	1E	1	**6V-3538**	2	DOWEL	
	1F	1	**3H-7654**	2	WASHER-HARD (13.5X22.5X3MM THK)	
M	1G	1	**8T-0343**	2	BOLT-SOCKET HEAD (M12X1.75X55MM)	
M	2	1	**204-0712**	13	BOLT (M8X1.25X30MM)	
					—OR—	
M		1	**6V-5219**	13	BOLT (M8X1.25X40MM)	
	3	1	**9M-1974**	33	WASHER-HARD (8.8X16X2MM THK)	
	4	1	**169-4172**	1	COVER AS	
	5	1	**174-2475**	1	SEAL-INTEGRAL	
	6	1	**211-2822**	1	GASKET	
	7	1	**169-4166**	1	SEAL GP-CRANKSHAFT	
	8	1	**3H-0976**	1	SEAL-O-RING	
	9	1	**5P-0537**	5	WASHER-HARD (7.2X14.5X2MM THK)	
M	10	1	**6V-8225**	5	NUT (M6X1 THD)	
M	11	1	**6V-3940**	19	BOLT (M8X1.25X25MM)	
M	12	1	**3E-8016**	1	BOLT-LOCKING (M8X1.25X25MM)	

C-CHANGE FROM PREVIOUS TYPE
M-METRIC PART

133-7075 **HOUSING GP-FRONT** *(contd.)* **i01659717**

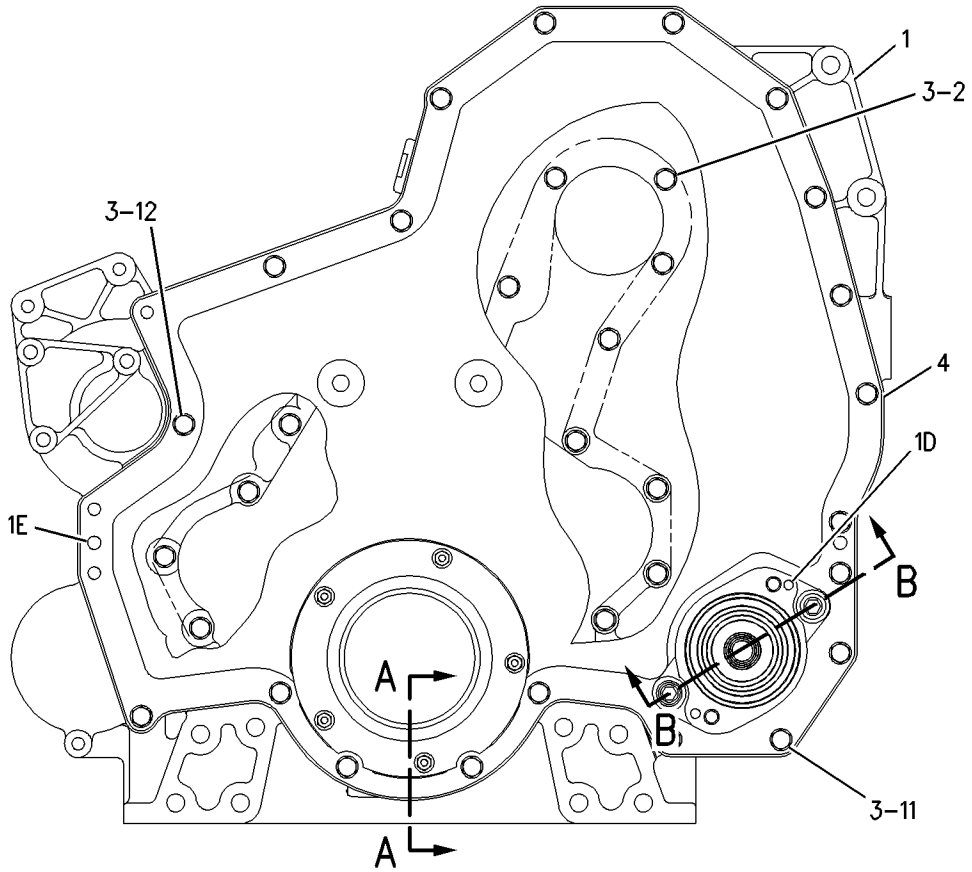

FRONT VIEW

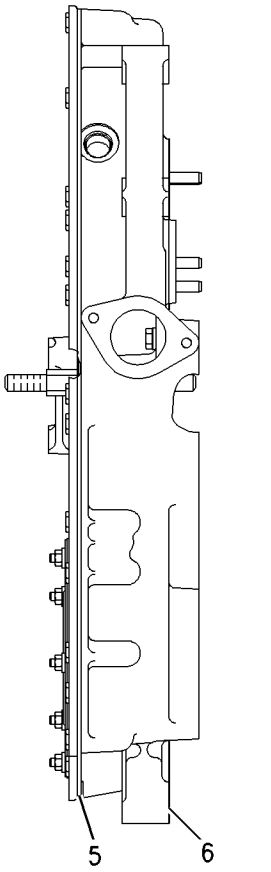

LEFT SIDE VIEW

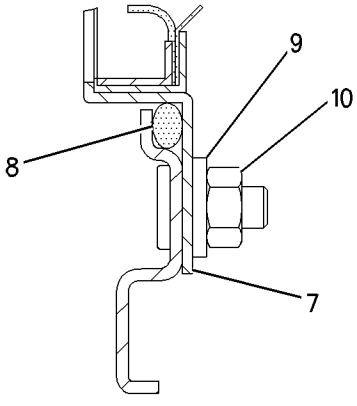

SECTION A-A

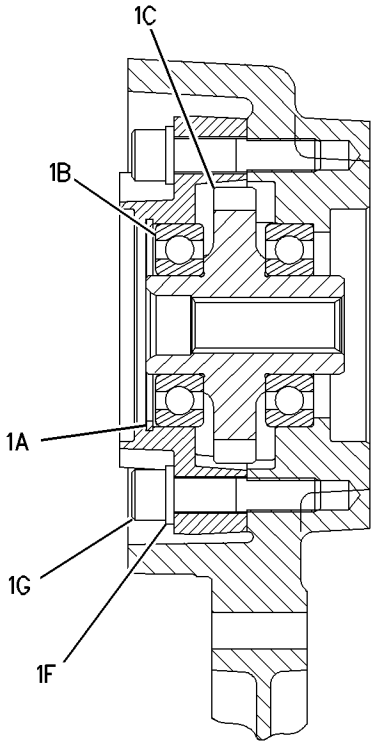

SECTION B-B

GRAPHIC #1 g00797087

148-2063 LIFTER GP-VALVE

S/N: 5ED478-UP

PART OF 117-2749 VALVE MECHANISM GP

SMCS-1209 **i01777865**

NOTE	REF NO	GRAPHIC REF	PART NUMBER	QTY	PART NAME 1 2 3 4 5 6 (PRODUCT LEVEL)	SEE PAGE
	1	1	**206-4245**	6	LIFTER AS-VALVE	
	2	1	**202-7475**	3	LIFTER AS	
	3	1	**148-2065**	1	BRACKET AS (OIL SUPPLY)	
	5	1	**115-9391**	1	SHAFT AS-LIFTER	
	6	1	**6I-1661**	1	DOWEL	
	7	1	**0T-0200**	2	PLUG-CUP	
	8	1	**148-2064**	1	BRACKET AS	
	9	1	**6V-3537**	1	DOWEL	

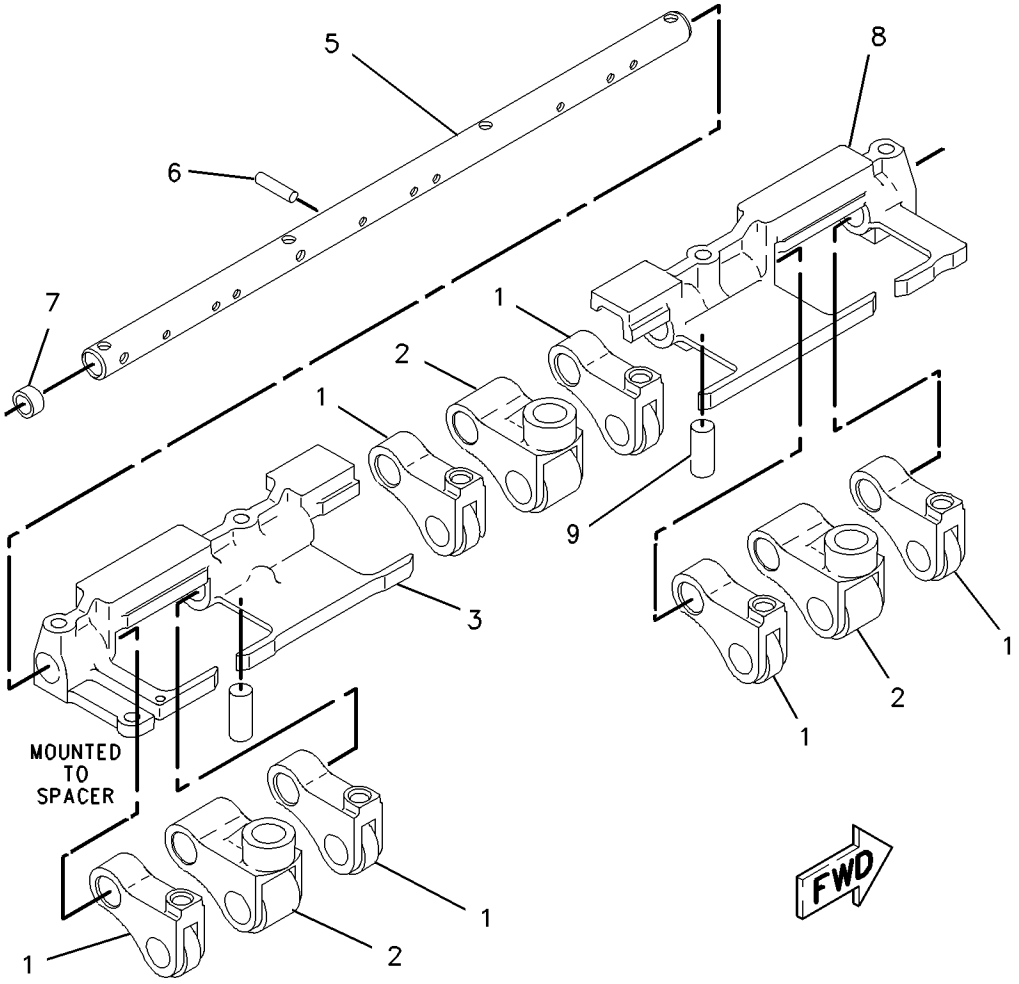

GRAPHIC #1 g00857251

BASIC ENGINE

117-2748 LIFTING GP-ENGINE

S/N: 5ED478-UP
STANDARD
PART OF 204-7983 ENGINE AR

SMCS-1122 **i01688723**

NOTE	REF NO	GRAPHIC REF	PART NUMBER	QTY	PART NAME 1 2 3 4 5 6 (PRODUCT LEVEL)	SEE PAGE
	1	1	**113-9005**	2	PLATE-LIFTING EYE	
M	2	1	**6V-8197**	6	BOLT (M12X1.75X40MM)	
	3	1	**5P-8245**	6	WASHER-HARD (13.5X25.5X3MM THK)	
	4	1	**7C-5736**	2	PLATE-EYE SPACER	

M-METRIC PART

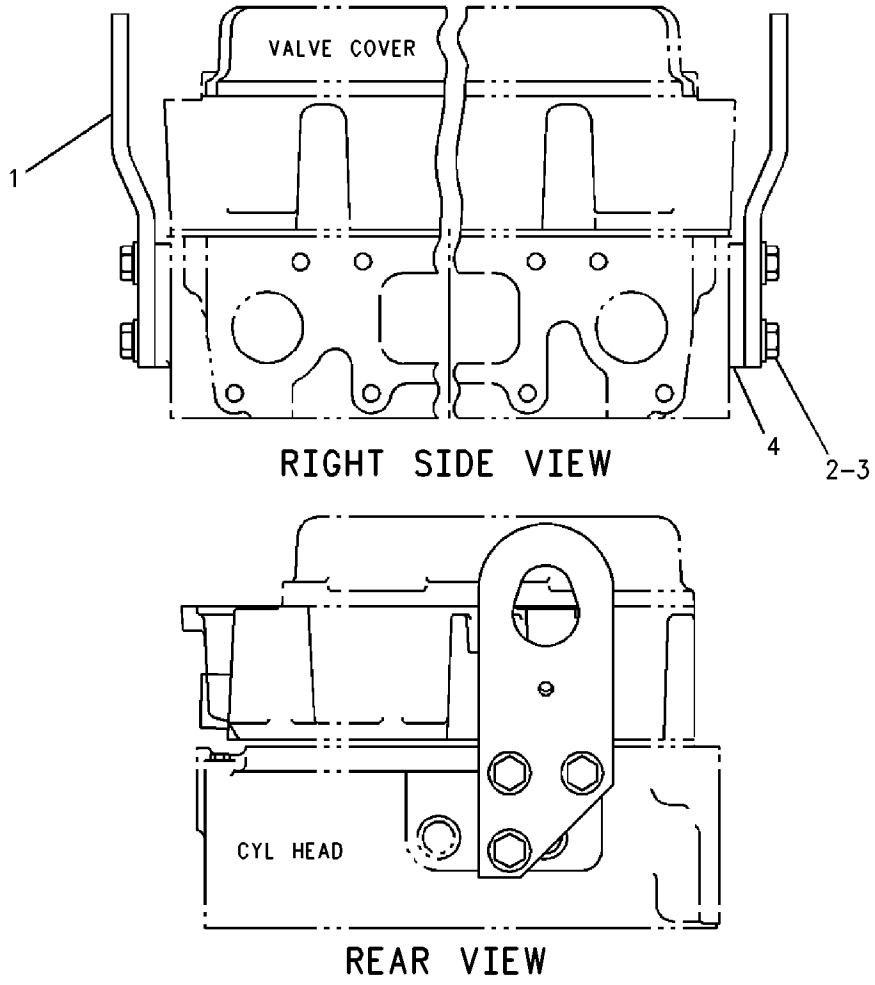

GRAPHIC #1 g00869909

161-2316 MOUNTING GP-ENGINE

S/N: ATS1-UP

PART OF 162-5607 GENERAL AR

SMCS-1152, 1153, 1154 **i01647346**

NOTE	REF NO	GRAPHIC REF	PART NUMBER	QTY	PART NAME 1 2 3 4 5 6 (PRODUCT LEVEL)	SEE PAGE
B	1	1	**184-3266**	16	SHIM (0.8MM THK)	
B	2	1	**184-3267**	16	SHIM (0.4MM THK)	
	3	1	**1D-4638**	2	BOLT (1-8X3.5IN)	
	4	1	**5D-4661**	4	WASHER-HARD (28X52.5X8MM THK)	

B-USE AS REQUIRED

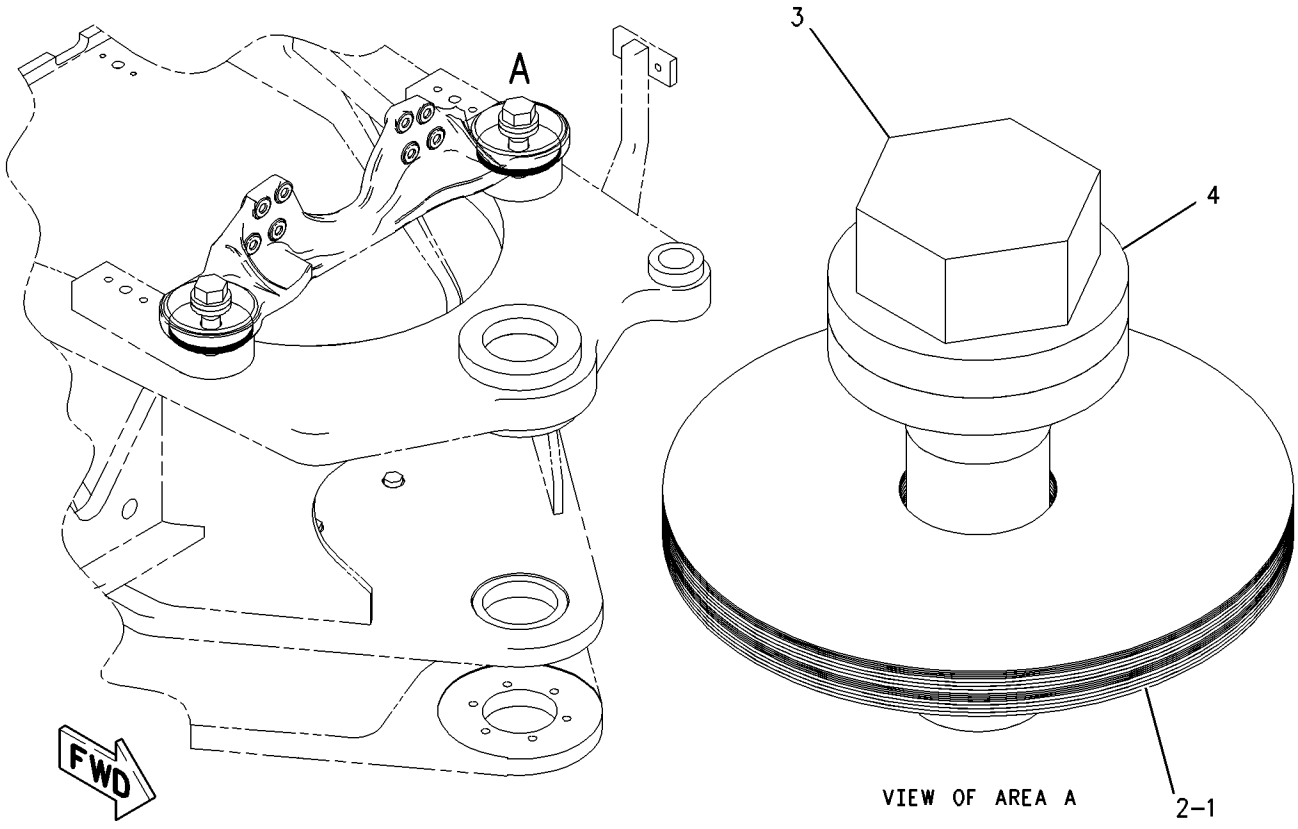

GRAPHIC #1 g00857020

116-5408 MOUNTING GP-VALVE MECHANISM

S/N: 5ED478-UP
SHORT, FLAT VALVE COVERS
PART OF 204-7983 ENGINE AR
FOR USE WITH ENGINES NOT EQUIPPED WITH ENGINE COMPRESSION BRAKE

SMCS-1102, 1107, 1154 **i01850029**

NOTE	REF NO	GRAPHIC REF	PART NUMBER	QTY	PART NAME 1 2 3 4 5 6 (PRODUCT LEVEL)	SEE PAGE
	1	1	**176-4168**	12	BRIDGE AS-VALVE	
Y	2	1	*116-1083*	1	FASTENER GP-CYLINDER HEAD	28
M	3	1	**7X-0909**	12	BOLT (M12X1.75X140MM)	
M	4	1	**6V-2315**	1	BOLT (M6X1X35MM)	
M	5	1	**7X-2533**	17	BOLT (M6X1X35MM)	
		1	**9X-8256**	17	WASHER (6.6X12X2MM THK)	
	6	1	**5P-4115**	1	WASHER-HARD (7.2X19X2MM THK)	
	7	1	**9Y-4580**	3	COVER AS-VALVE MECHANISM	
					(EACH INCLUDES)	
D		1	**5P-5678**		SEAL (1M)	

D-ORDER BY THE METER
M-METRIC PART
Y-SEPARATE ILLUSTRATION

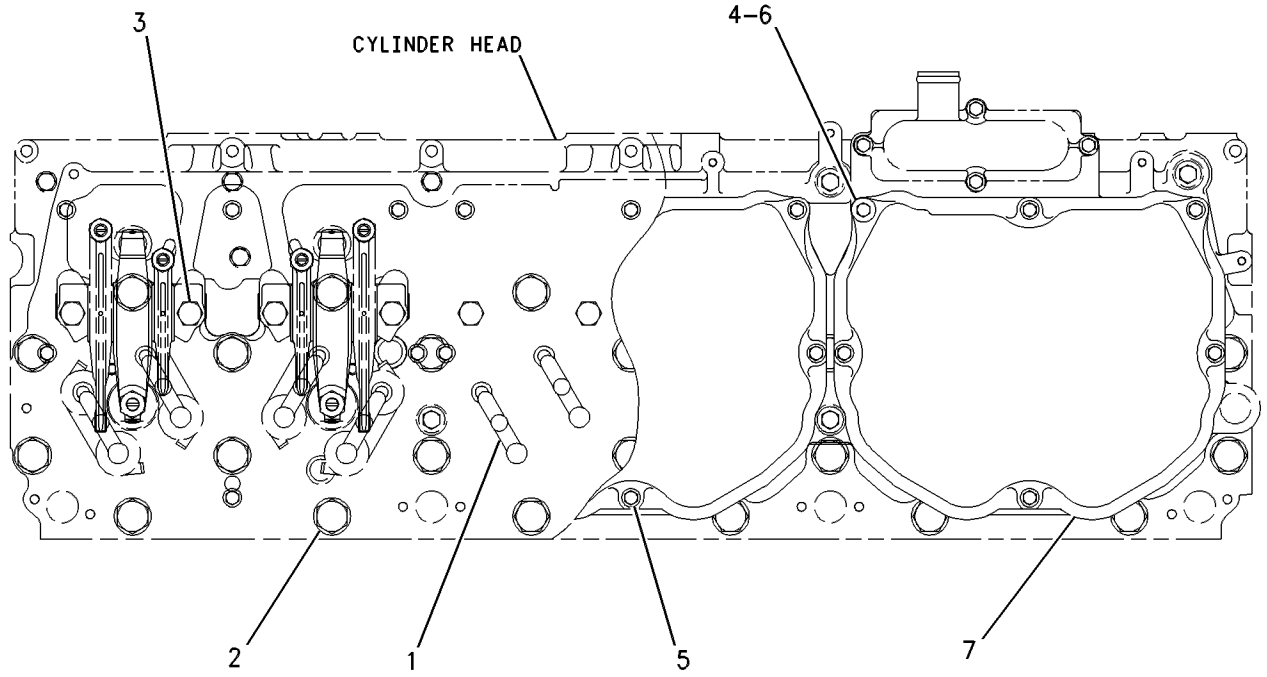

TOP VIEW

GRAPHIC #1 g00568748

BASIC ENGINE

174-1574 PAN GP-OIL

S/N: 5ED478-UP

PART OF 204-7983 ENGINE AR

SMCS-1302 **i01623669**

NOTE	REF NO	GRAPHIC REF	PART NUMBER	QTY	PART NAME 1 2 3 4 5 6 (PRODUCT LEVEL)	SEE PAGE
	1	1	**1V-8230**	2	SPACER (0.53X1X0.57 IN THK)	
	2	1	**197-3616**	1	ADAPTER-DRAIN	
	3	1	**7E-3369**	14	SLEEVE-ISOLATOR	
	4	1	**8N-6854**	1	GASKET-ADAPTER	
	5	1	**109-5308**	1	GASKET-OIL PAN	
	7	1	**174-1575**	1	PAN-OIL	
	8	1	**124-2655**	1	BELL AS-SUCTION	
M	9	1	**3E-8016**	2	BOLT-LOCKING (M8X1.25X25MM)	
	10	1	**5P-8211**	1	SEAL-O-RING	
	11	1	**5P-8245**	2	WASHER-HARD (13.5X25.5X3MM THK)	
	12	1	**6N-8863**	14	WASHER (10.2X32X2.5MM THK)	
M	13	1	**6V-5192**	2	BOLT-SOCKET HEAD (M8X1.25X30MM)	
M	14	1	**6V-5230**	14	BOLT (M10X1.5X60MM)	
M	15	1	**6V-8197**	2	BOLT (M12X1.75X40MM)	
	16	1	**7C-8296**	14	ISOLATOR	
	17	1	**8T-6761**	1	PLUG-PIPE	
	18	1	**9M-1974**	4	WASHER-HARD (8.8X16X2MM THK)	
	19	1	**9S-4183**	1	PLUG	
	20	1	**3D-2824**	1	SEAL-O-RING	

M-METRIC PART

174-1574 **PAN GP-OIL** *(contd.)* **i01623669**

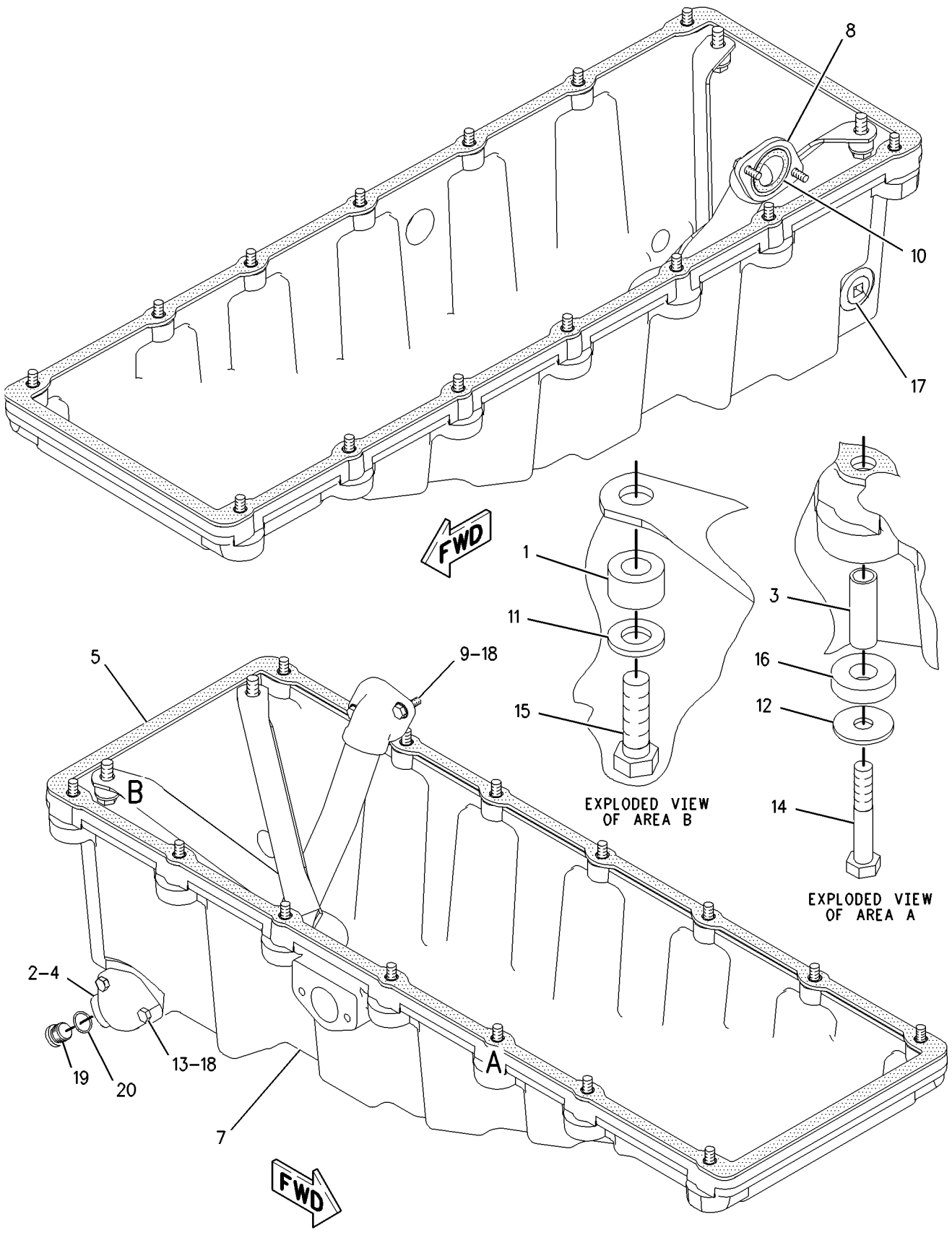

GRAPHIC #1 g00840925

130-0863 PISTON & ROD GP*R

S/N: 5ED478-UP
RATIO 16:1
PART OF 204-7983 ENGINE AR

SMCS-1225 **i01830538**

NOTE	REF NO	GRAPHIC REF	PART NUMBER	QTY	PART NAME 1 2 3 4 5 6 (PRODUCT LEVEL)	SEE PAGE
	1	1	**144-2948**	1	CROWN AS-PISTON	
	2	1	**197-9251**	1	PIN AS	
		1	**168-7296**	1	PIN-PISTON	
	3	1	**113-8999**	2	PLUG-PIN	
	4	1	**197-9341**	1	RING-PISTON (TOP)	
	5	1	**216-8570**	1	RING-INTERMEDIATE	
	6	1	**133-7053**	1	RING-PISTON (OIL CONTROL)	
R	7	1	**113-9016**	1	ROD AS	
	7A	1	**115-2972**	1	BEARING-CONNECTING ROD	
M	7B	1	**115-2973**	2	BOLT-CONNECTING ROD	
	8	1	**7N-2043**	2	DOWEL	
	9	1	**116-1089**	1	BEARING-CONNECTING ROD (STANDARD)	
A		1	**128-0395**	1	BEARING-CONNECTING ROD (0.51MM US)	
A		1	**128-0396**	1	BEARING-CONNECTING ROD (0.76MM US)	
	10	1	**161-8416**	1	SKIRT-PISTON	

A-NOT PART OF THIS GROUP
M-METRIC PART
R-REMFG PART MAY BE AVAILABLE

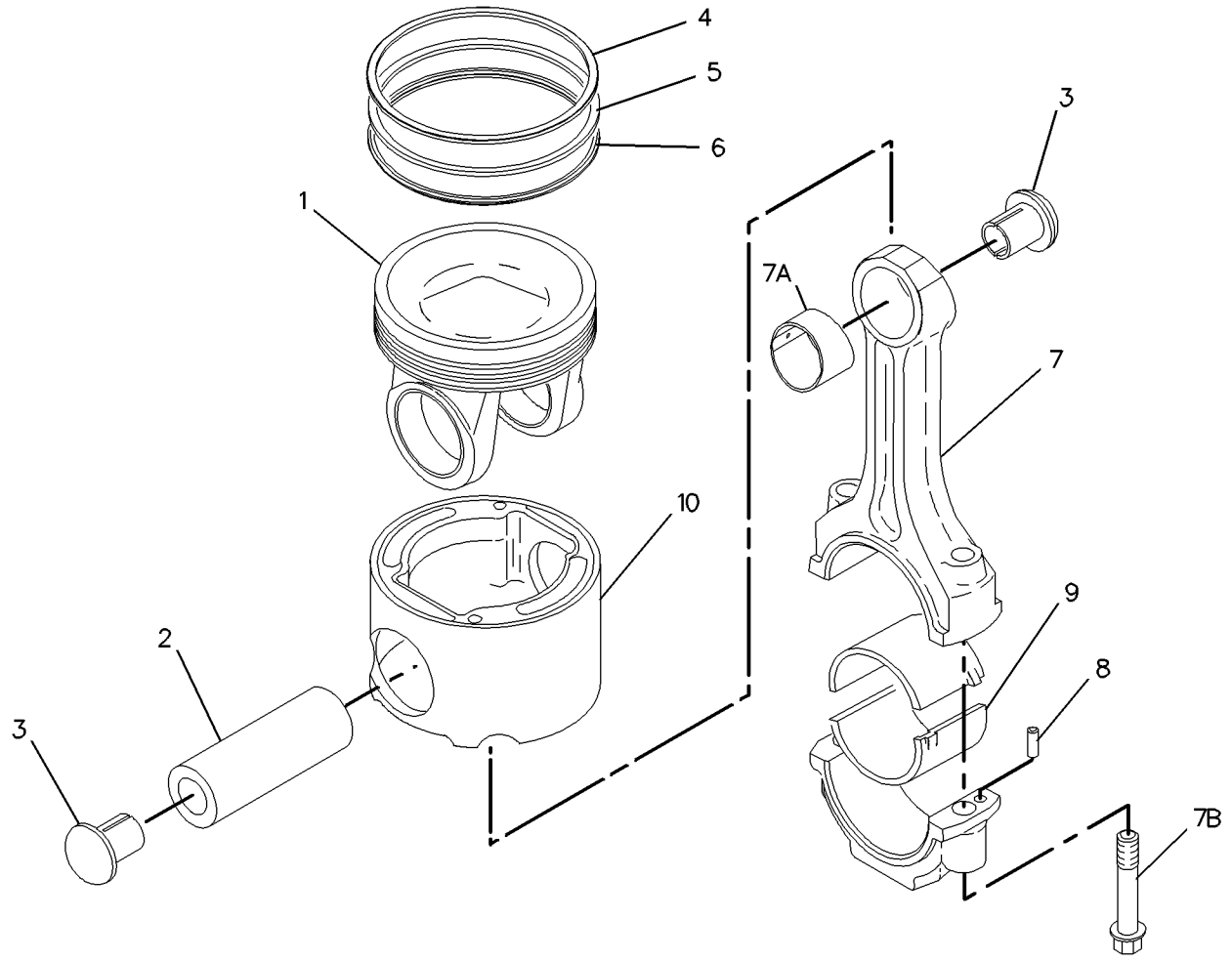

GRAPHIC #1 g00846726

138-2028 PLUG GP-CYLINDER BLOCK

S/N: 5ED478-UP
USE WHEN DIPSTICK IS NOT REQUIRED
PART OF 204-7983 ENGINE AR

SMCS-1201 **i01453738**

NOTE	PART NUMBER	QTY	PART NAME 1 2 3 4 5 6 (PRODUCT LEVEL)	SEE PAGE
	9S-4182	1	PLUG-O-RING (7/16-20 THD)	
	8T-6762	1	PLUG-PIPE (1/4-14NPTF THD)	
	9S-4191	1	PLUG-STRAIGHT THREAD (9/16-18 THD)	
	3J-1907	1	SEAL-O-RING (11.89MM ID)	
	6V-5048	1	SEAL-O-RING (8.92MM ID)	

<END>

174-1760 PLUG GP-ENGINE

S/N: 5ED478-UP

PART OF 204-7983 ENGINE AR

SMCS-1000, 1201 **i01514837**

NOTE	REF NO	GRAPHIC REF	PART NUMBER	QTY	PART NAME 1 2 3 4 5 6 (PRODUCT LEVEL)	SEE PAGE
	1	1	**3B-0623**	1	PLUG-CUP	
	2	1	**8C-3446**	1	VALVE AS-FLUID SAMPLING	
	3	1	**116-5435**	1	CONNECTOR	
	4	1	**3J-1907**	2	SEAL-O-RING	
	5	1	**3J-7354**	1	SEAL-O-RING	
	6	1	**3K-0360**	1	SEAL-O-RING	
	7	1	**5P-9617**	1	ADAPTER (9/16-18 THRD)	
	8	1	**6V-0852**	1	CAP-DUST	
	9	1	**6V-4589**	1	SEAL-O-RING	
	10	1	**6V-5049**	3	SEAL-O-RING	
	11	1	**6V-8397**	1	SEAL-O-RING	
	13	1	**9S-4191**	3	PLUG-STRAIGHT THREAD	
	14	1	**9S-8006**	1	PLUG	
	15	1	**9X-6650**	1	CONNECTOR-FLARED	

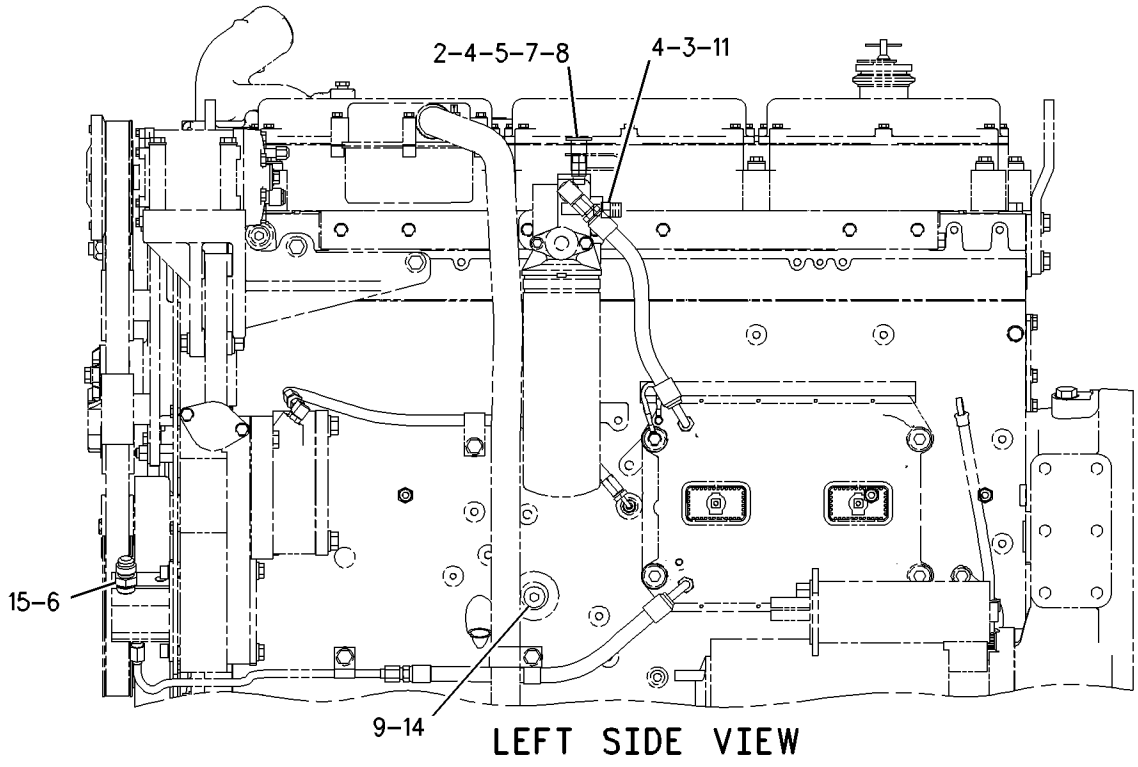

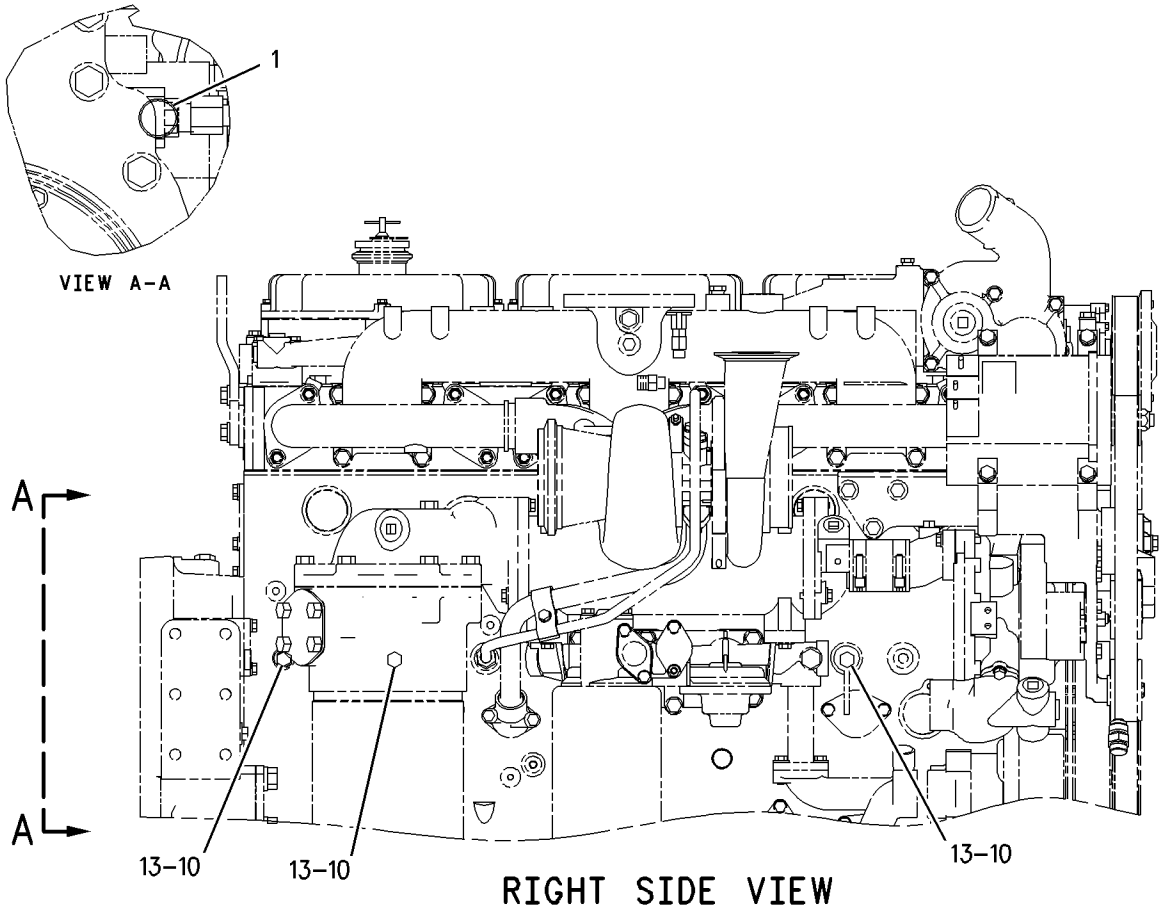

GRAPHIC #1 g00787041

BASIC ENGINE

115-9397 ROCKER ARM GP

S/N: 5ED478-UP

PART OF 117-2749 VALVE MECHANISM GP

SMCS-1102, 1123 **i01514499**

NOTE	REF NO	GRAPHIC REF	PART NUMBER	QTY	PART NAME 1 2 3 4 5 6 (PRODUCT LEVEL)	SEE PAGE
	1	1	**115-9398**	2	ARM-VALVE ROCKER (EXHAUST)	
	2	1	**115-9400**	2	ARM AS (UNIT INJECTION)	
					(EACH INCLUDES)	
		1	**2D-6642**	2	BALL	
		1	**115-9402**	1	BEARING	
	3	1	**115-9399**	2	ARM-VALVE ROCKER (INLET)	
	4	1	**7C-1798**	2	SCREW-ARM ADJUSTMENT	
M	5	1	**8T-0384**	2	NUT (M12X1.5 THD)	
	6	1	**7W-7235**	2	BUTTON	
	7	1	**8L-2777**	2	SEAL-O-RING	
	8	1	**115-9403**	2	SHAFT AS	
					(EACH INCLUDES)	
	9	1	**3S-6605**	1	PLUG-CUP	
	10	1	**096-0014**	1	PIN-SPRING	
	11	1	**185-4461**	2	SUPPORT AS	
					(EACH INCLUDES)	
	12	1	**180-1538**	2	DOWEL	
M	13	1	**183-4365**	4	SCREW-ADJUSTING (M10X1.5 THD)	
M	14	1	**184-2515**	4	NUT-HEX FLANGE (M10X1.5 THD)	

M-METRIC PART

115-9397 **ROCKER ARM GP** ***(contd.)*** **i01514499**

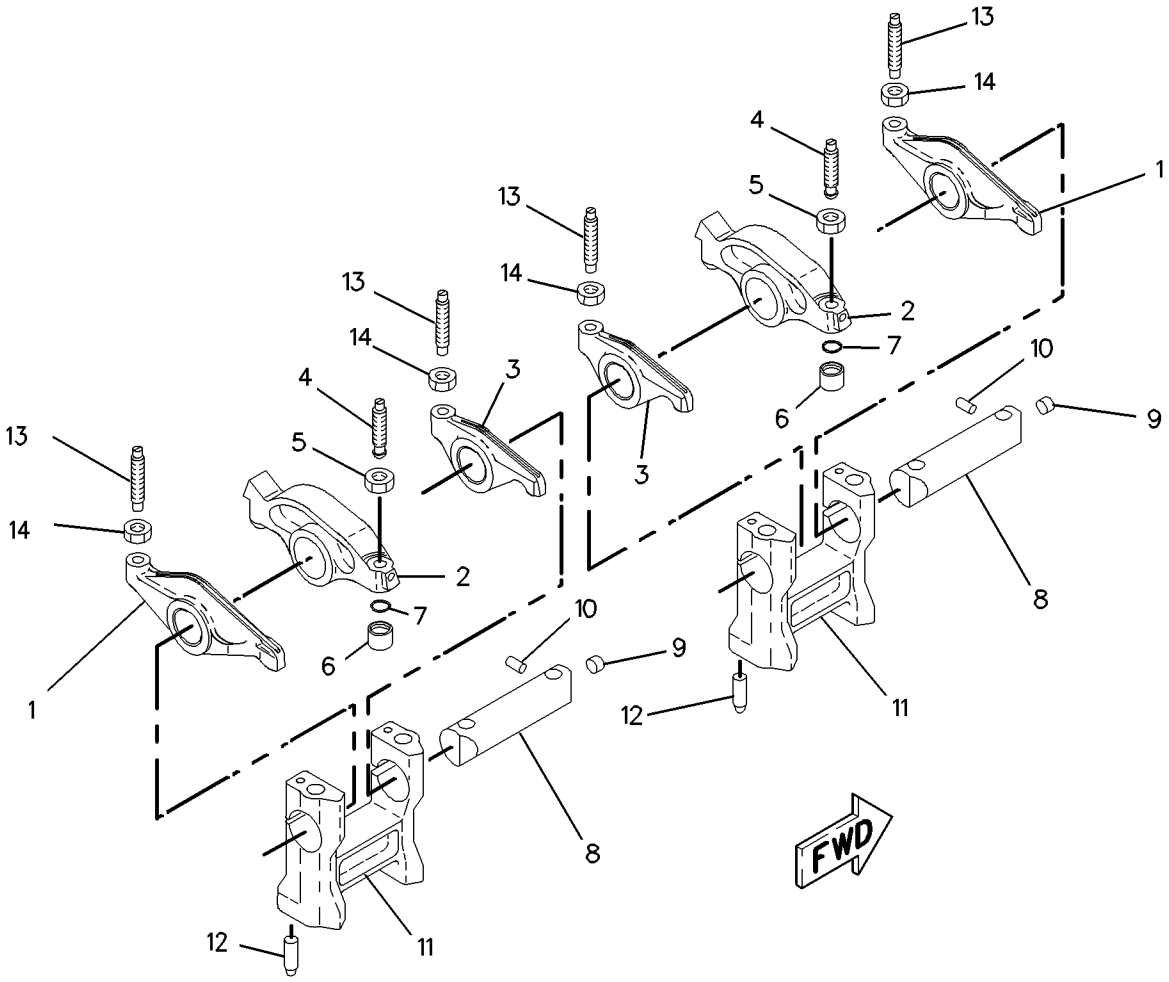

GRAPHIC #1 g00785815

116-1091 SEAL GP-CRANKSHAFT—SINGLE LIP

S/N: 5ED478-UP
PART OF 204-7983 ENGINE AR
FOR USE WITH DRY TRANSMISSIONS

SMCS-1160, 1161 **i01799131**

NOTE	REF NO	GRAPHIC REF	PART NUMBER	QTY	PART NAME 1 2 3 4 5 6 (PRODUCT LEVEL)	SEE PAGE
	1	1	**160-2323**	1	COVER	
M	2	1	**8T-0640**	6	BOLT (M6X1.0X30MM)	
	3	1	**5P-0537**	13	WASHER-HARD (7.2X14.5X2MM THK)	
M	4	1	**9X-2022**	7	BOLT-LOCKING	
	5	1	**7C-1583**	1	GASKET	
	6	1	**107-6280**	1	SEAL-O-RING	
	7	1	**7C-1728**	1	SEAL GP-CRANKSHAFT	

M-METRIC PART

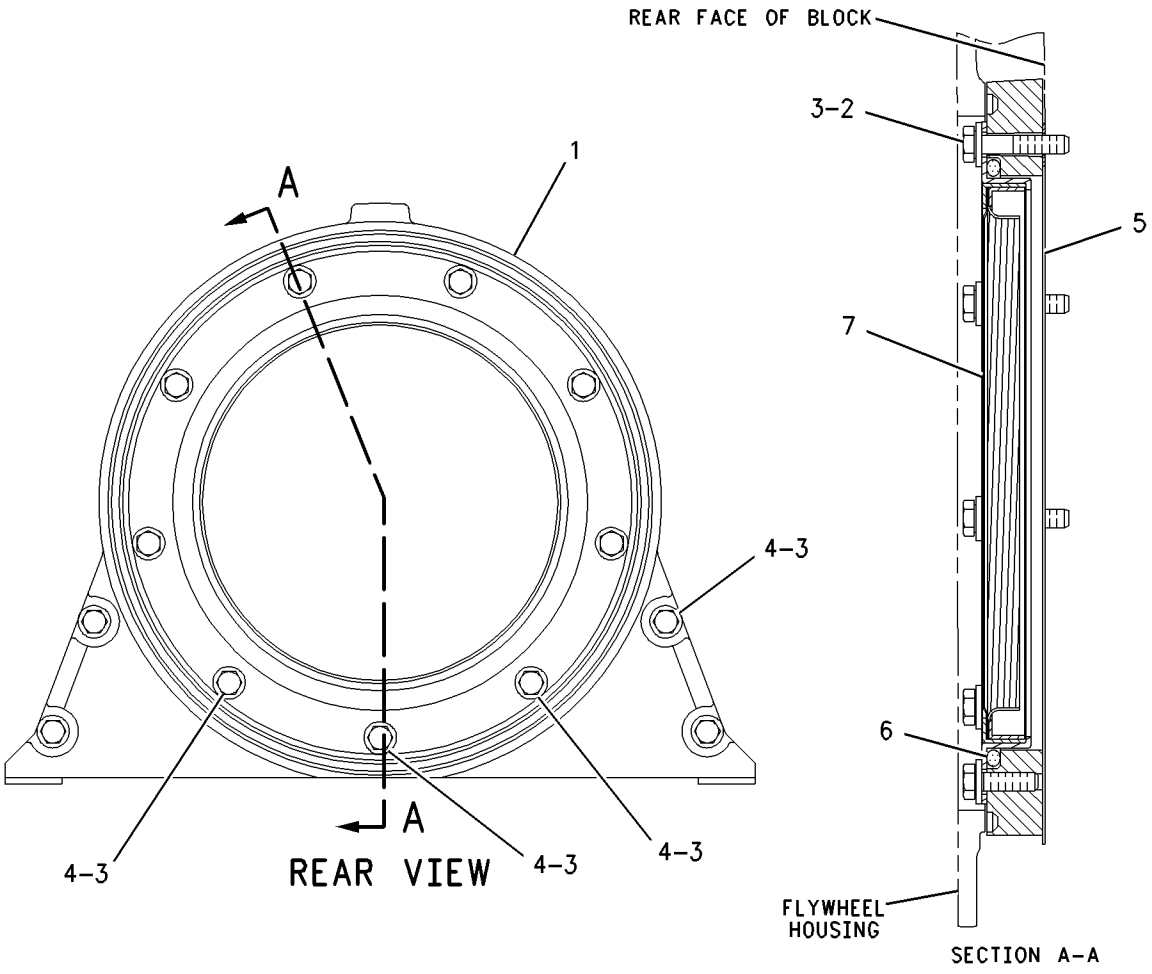

GRAPHIC #1 g00785779

174-1625 SUPPORT GP-ENGINE

S/N: 5ED478-UP

PART OF 204-7983 ENGINE AR

SMCS-1154 **i01643505**

NOTE	REF NO	GRAPHIC REF	PART NUMBER	QTY	PART NAME 1 2 3 4 5 6 (PRODUCT LEVEL)	SEE PAGE
	1	1	**174-1622**	1	SUPPORT	
	2	1	**2M-0849**	8	WASHER-HARD (13.5X25.5X5MM THK)	
M	3	1	**6V-5696**	8	BOLT (M12X1.75X80MM)	

M-METRIC PART

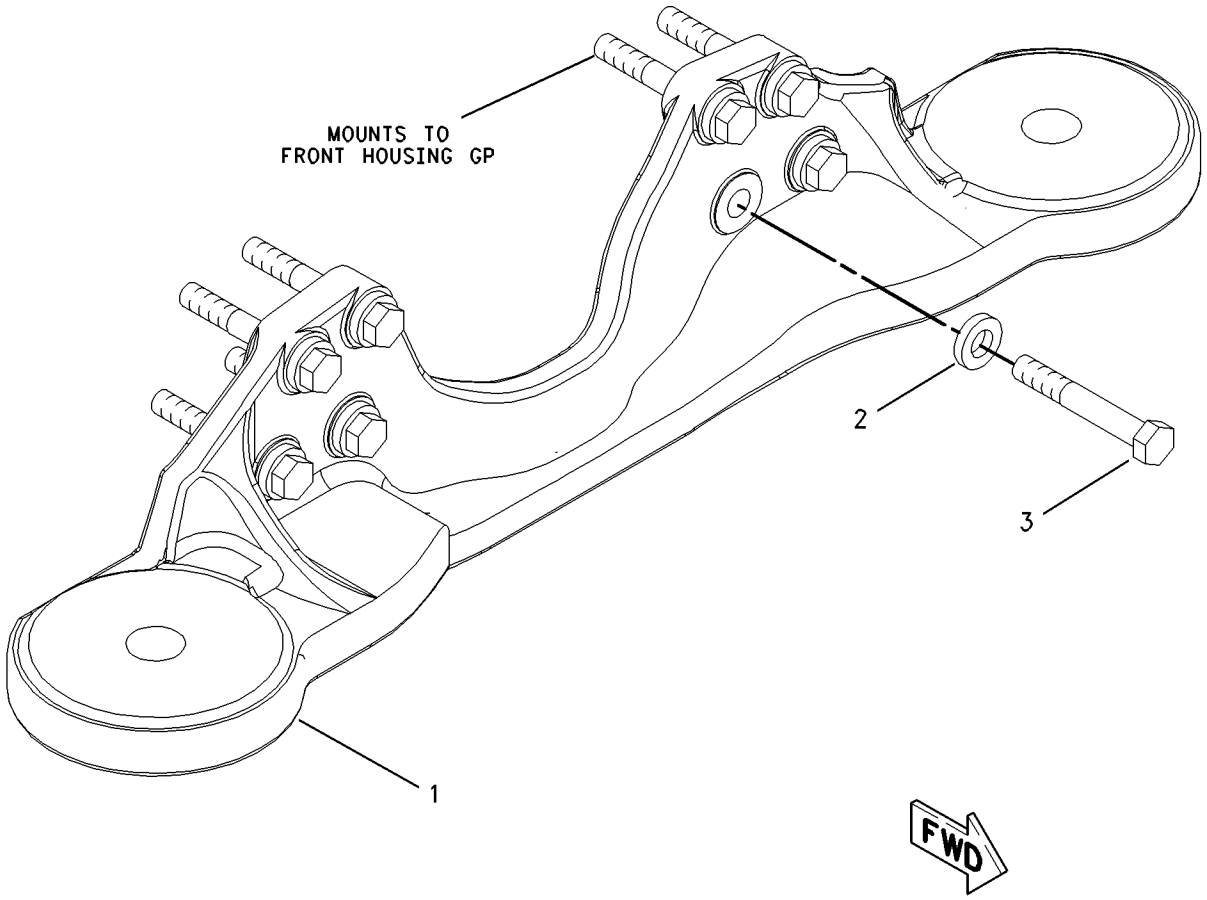

GRAPHIC #1 g00849958

207-5900 SUPPRESSION GP-SOUND—ENGINE ENCLOSURE

S/N: ATS1-UP

PART OF 211-1771, 211-1772 CONVERSION AR-CERTIFICATION

AN ATTACHMENT

SMCS-1801 **i01847826**

NOTE	REF NO	GRAPHIC REF	PART NUMBER	QTY	PART NAME 1 2 3 4 5 6 (PRODUCT LEVEL)	SEE PAGE
	1	1	**207-5901**	1	PANEL (RH)	
	2	1	**207-5902**	1	PANEL (LH)	
	3	1	**207-5904**	2	INSULATION (DASH)	
	4	1	**230-6299**	1	INSULATION (DASH)	

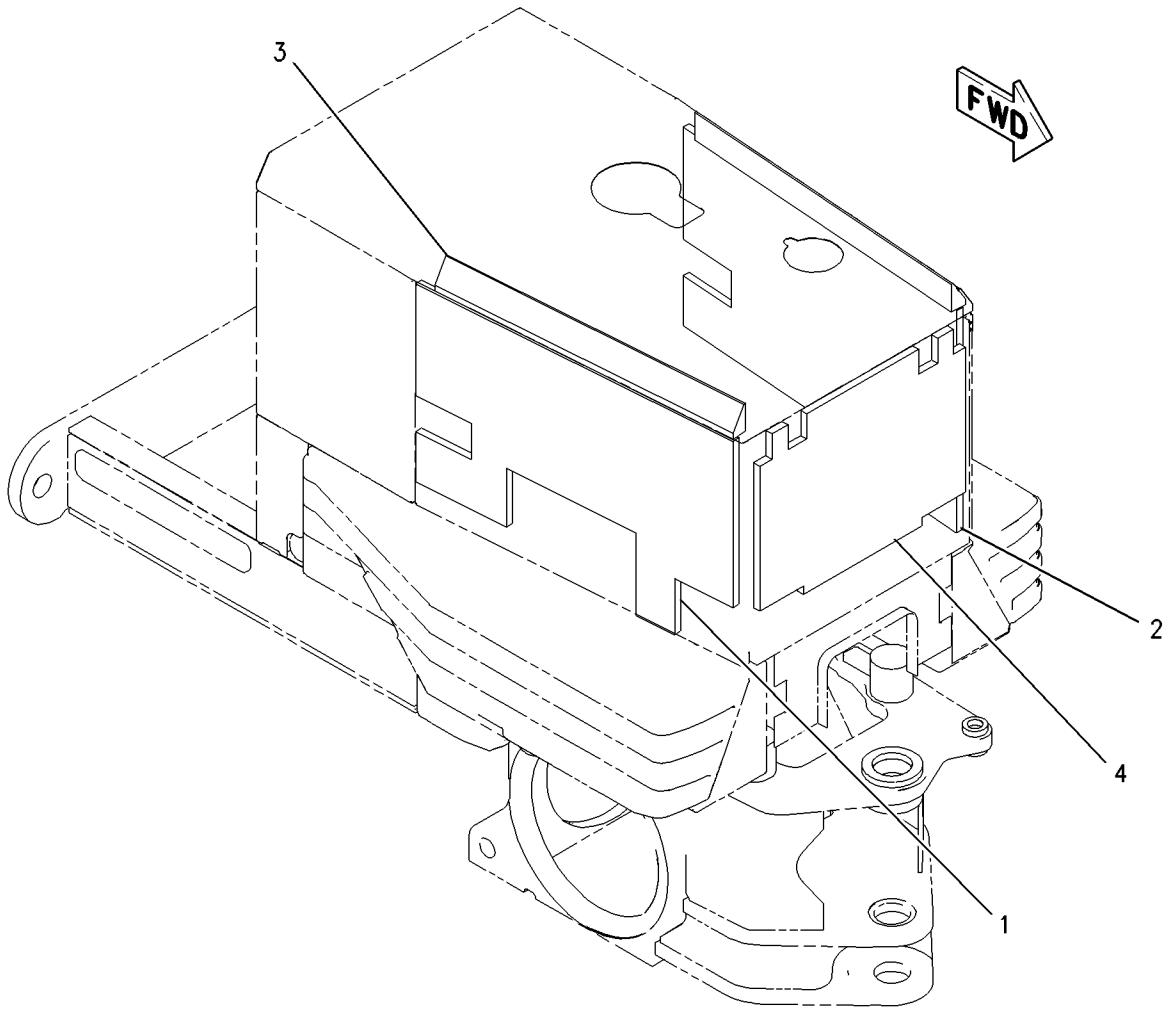

GRAPHIC #1 g00941691

MEMORANDA

BASIC ENGINE

117-2749 VALVE MECHANISM GP

S/N: 5ED478-UP

PART OF 204-7983 ENGINE AR

SMCS-1102 **i01855695**

NOTE	REF NO	GRAPHIC REF	PART NUMBER	QTY	PART NAME 1 2 3 4 5 6 (PRODUCT LEVEL)	SEE PAGE
	1	1	**9X-8267**	4	WASHER (6.6X12X2MM THK)	
M	2	1	**8T-0275**	4	BOLT (M6X1.0X50MM)	
	3	1	**3E-4352**	8	WASHER-HARD (8.8X20.5X2.5MM THK)	
M	4	1	**8T-0100**	16	BOLT (M8X1.25X60MM)	
	5	1	**7C-8292**	8	ISOLATOR	
	6	1	**9Y-7215**	8	SLEEVE-ISOLATOR	
	7	1	**9Y-4357**	1	BREATHER AS (ENGINE)	
	8	1	**9Y-1758**	1	GASKET-BREATHER	
	9	1	**102-5842**	1	BASE-VALVE COVER	
	10	1	**109-5309**	1	GASKET-BASE (VALVE COVER)	
Y	11	1	*115-9397*	3	ROCKER ARM GP	44
CY	12	1	*148-2063*	2	LIFTER GP-VALVE	34
	13	1	**104-3567**	12	PUSHROD-VALVE	
	14	1	**104-3568**	6	PUSHROD	
	15	1	**9M-1974**	9	WASHER-HARD (8.8X16X2MM THK)	
M	16	1	**6V-5217**	1	BOLT (M8X1.25X20MM)	

C-CHANGE FROM PREVIOUS TYPE
M-METRIC PART
Y-SEPARATE ILLUSTRATION

117-2749 **VALVE MECHANISM GP** *(contd.)* **i01855695**

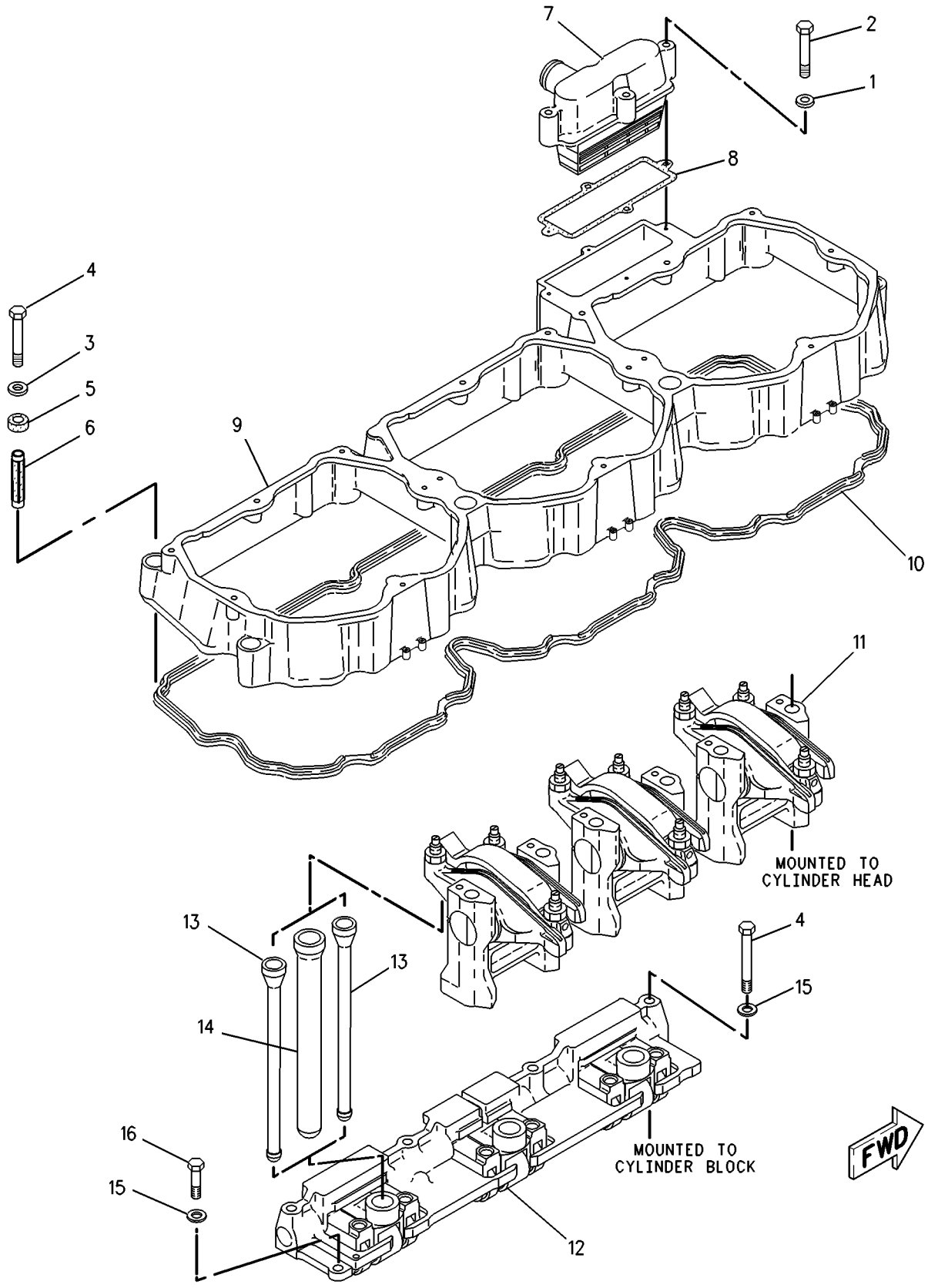

GRAPHIC #1 g00784176

LUBRICATION SYSTEM

166-1329 BASE GP-OIL FILTER

S/N: 5ED478-UP

PART OF 164-2490 FILTER GP-ENGINE OIL

SMCS-1306 **i01829344**

NOTE	REF NO	GRAPHIC REF	PART NUMBER	QTY	PART NAME 1 2 3 4 5 6 (PRODUCT LEVEL)	SEE PAGE
	1	1	**9M-1974**	6	WASHER-HARD (8.8X16X2MM THK)	
	2	1	**166-1328**	1	BASE AS	
	2A	1	**2P-4304**	1	STUD-TAPERLOCK	
	2B	1	**3B-0623**	1	PLUG-CUP	
	2C	1	**3P-1896**	2	PLUG-CUP	
	2D	1	**7W-6390**	1	STUD-FILTER BASE	
	3	1	**6V-4367**	3	SEAL-O-RING	
M	4	1	**6V-3940**	3	BOLT (M8X1.25X25MM)	
	5	1	**7C-2891**	3	COVER	
	6	1	**7C-3954**	1	SPRING AS	
	7	1	**111-2645**	1	VALVE-PUMP BYPASS	
M	8	1	**6V-8359**	1	BOLT (M6X1.0X70MM)	
	9	1	**7C-3083**	1	SEAT-RELIEF VALVE SPRING	
	10	1	**7C-3082**	1	RETAINER	
	11	1	**7C-3081**	1	SPACER (6.88X9.53X50MM THK)	
	12	1	**1A-2170**	1	SPRING-RETAINER	
	13	1	**9M-0853**	2	PLUNGER-RELIEF VALVE	
	14	1	**7C-3953**	2	SPRING AS	
	15	1	**9S-4185**	1	PLUG	
	16	1	**8L-2786**	1	SEAL-O-RING	
M	17	1	**9X-2097**	3	STUDBOLT (M8X1.25 THD)	

M-METRIC PART

166-1329 **BASE GP-OIL FILTER** *(contd.)* **i01829344**

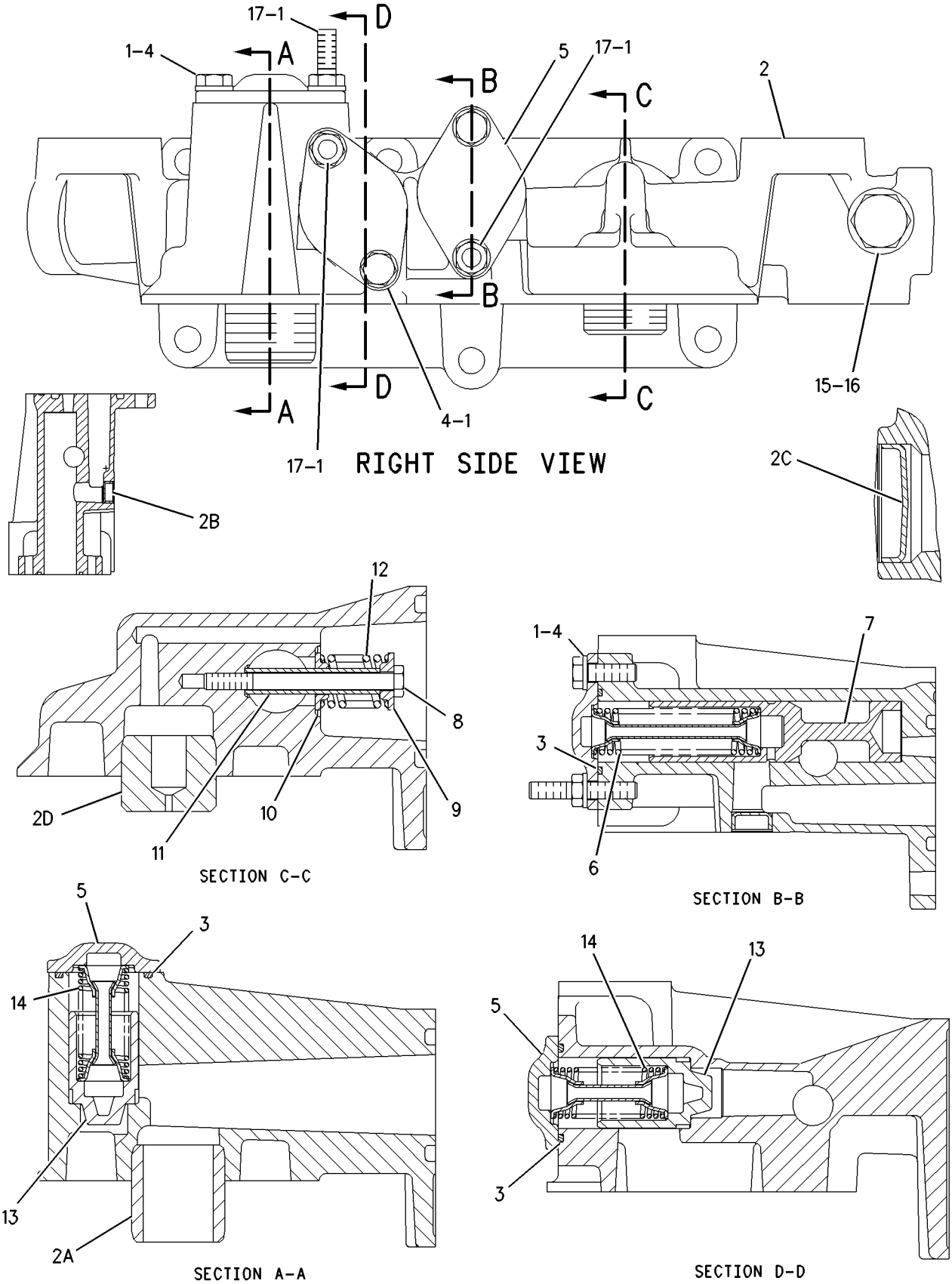

GRAPHIC #1

g00933796

174-1579 FILLER GP-ENGINE OIL

S/N: 5ED478-UP

PART OF 204-7983 ENGINE AR

SMCS-1316 **i01514827**

NOTE	REF NO	GRAPHIC REF	PART NUMBER	QTY	PART NAME 1 2 3 4 5 6 (PRODUCT LEVEL)	SEE PAGE
	1	1	**5L-2952**	1	CAP AS-OIL FILLER	
		1	**6L-2609**	1	SEAL-RUBBER	
	2	1	**174-1580**	1	TUBE AS-FILLER	
	3	1	**184-9854**	1	BRACKET AS	
	3A	1	**3T-0049**	1	CLIP	
M	3B	1	**8T-3490**	2	NUT-WELD (M10X1.5 THD)	
	4	1	**4F-7952**	1	SEAL-O-RING	
	5	1	**5P-7854**	1	CLIP	
M	6	1	**6V-3822**	2	BOLT (M10X1.5X35MM)	
	7	1	**6V-5839**	3	WASHER (11X21X2.5MM THK)	
M	8	1	**6V-6317**	1	BOLT (M10X1.5X20MM)	

M-METRIC PART

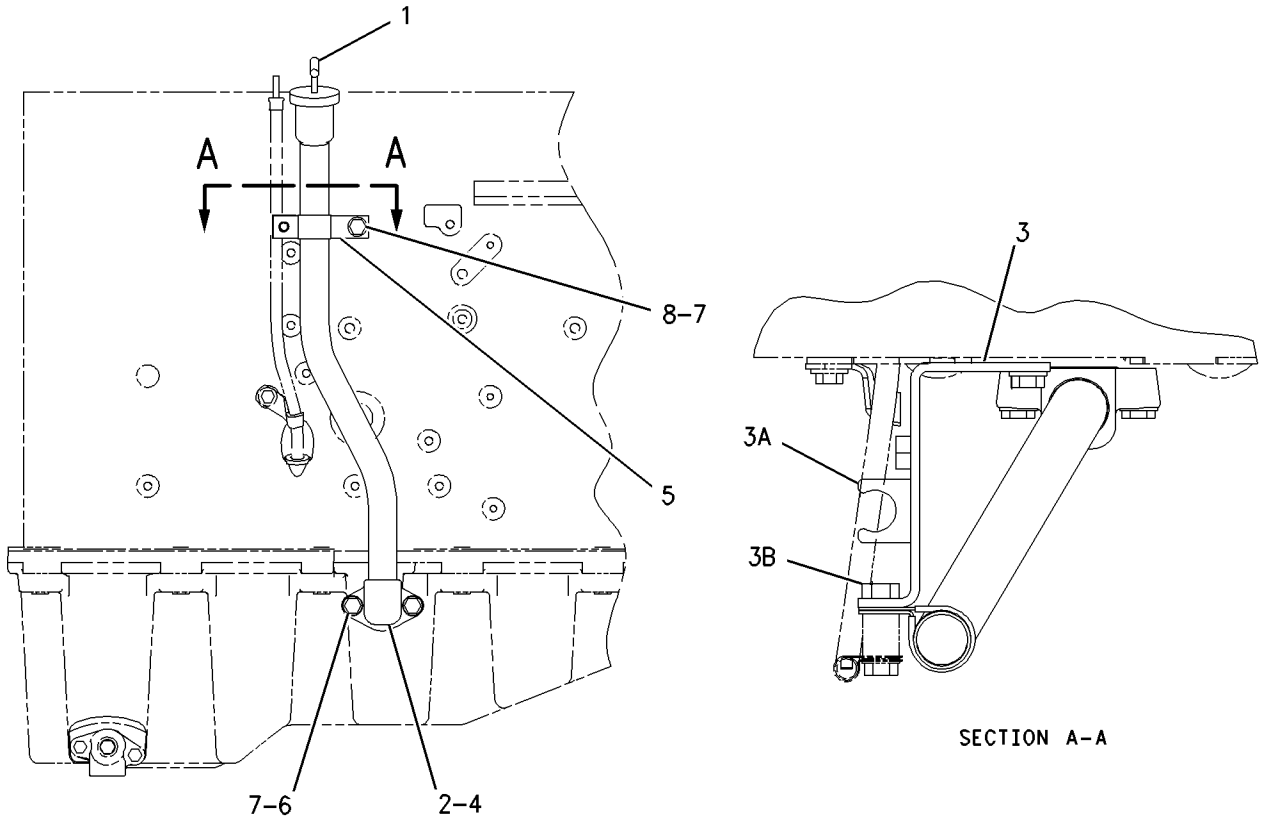

LEFT SIDE VIEW

GRAPHIC #1 g00786384

MEMORANDA

LUBRICATION SYSTEM

164-2490 FILTER GP-ENGINE OIL

S/N: 5ED478-UP

PART OF 204-7983 ENGINE AR

SMCS-1308 **i01799133**

NOTE	REF NO	GRAPHIC REF	PART NUMBER	QTY	PART NAME 1 2 3 4 5 6 (PRODUCT LEVEL)	SEE PAGE
	1	1	**1R-0716**	1	FILTER AS-ENGINE OIL	
	2	1	**3L-8855**	1	SPACER	
	3	1	**8C-3445**	1	CAP-DUST	
	4	1	**102-5828**	1	COVER	
	5	1	**102-5829**	1	ADAPTER	
	6	1	**104-7995**	1	BASE AS-OIL FILTER	
		1	**2P-4304**	1	STUD-TAPERLOCK	
M	7	1	**134-5245**	6	BOLT-HEX HEAD (M10X1.50X30)	
Y	8	1	*166-1329*	1	BASE GP-OIL FILTER (ENGINE)	52
	9	1	**177-4311**	1	BRACKET AS	
	10	1	**185-1717**	1	TUBE AS	
	11	1	**185-1718**	1	TUBE AS	
	12	1	**186-3705**	1	ELBOW	
	13	1	**192-6492**	1	CLIP AS	
	14	1	**192-7135**	1	CLIP AS	
M		1	**8T-3490**	4	NUT-WELD (M10X1.5 THD)	
	15	1	**106-9586**	4	SEAL-O-RING	
	16	1	**3J-7354**	1	SEAL-O-RING	
	17	1	**5M-7087**	3	CLAMP-TUBE	
	18	1	**5P-4116**	1	WASHER-HARD (8.8X20.5X2MM THK)	
	19	1	**5P-7701**	4	SEAL-O-RING	
M	20	1	**6V-2317**	2	BOLT (M8X1.25X30MM)	
	21	1	**6V-3831**	2	SEAL-O-RING	
	22	1	**6V-3908**	2	SEAL-O-RING	
M	23	1	**6V-5218**	1	BOLT (M8X1.25X35MM)	
	24	1	**6V-5839**	10	WASHER (11X21X2.5MM THK)	
	25	1	**6V-9005**	2	ELBOW	
	26	1	**6V-9008**	1	ELBOW	
	27	1	**8C-3446**	1	VALVE GP-FLUID SAMPLING	
	28	1	**8C-5230**	1	SEAL-O-RING	
	29	1	**8T-4121**	4	WASHER-HARD (11X21X2.5MM THK)	
M	31	1	**8T-4138**	2	BOLT (M6X1X20MM)	
M	32	1	**8T-4186**	2	BOLT (M10X1.5X40MM)	
M	33	1	**8T-4195**	4	BOLT (M10X1.5X30MM)	
M	34	1	**8T-6466**	2	BOLT (M10X1.50X60MM)	
	35	1	**9M-1974**	2	WASHER-HARD (8.8X16X2MM THK)	
	36	1	**9X-8256**	2	WASHER (6.6X12X2MM THK)	
	37	1	**9C-5344**	1	SPACER (10.5X20X18MM THK)	
	38	1	**6F-6405**	1	SPACER (.44X.75X.37 IN THK)	

M-METRIC PART
Y-SEPARATE ILLUSTRATION

164-2490 **FILTER GP-ENGINE OIL** *(contd.)* **i01799133**

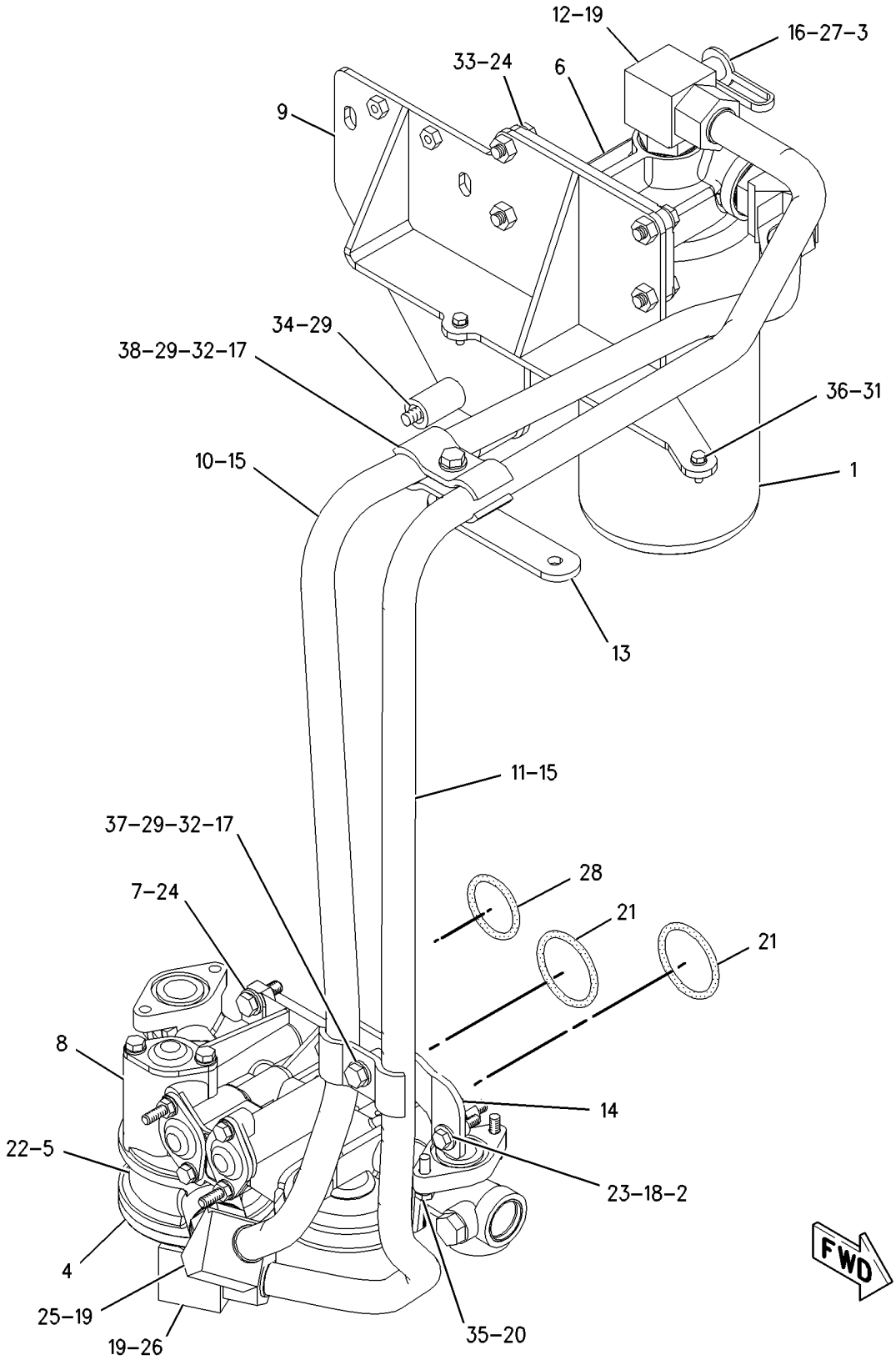

GRAPHIC #1 g00842815

LUBRICATION SYSTEM

174-1576 GAUGE GP-OIL LEVEL (DIPSTICK)

S/N: 5ED478-UP

PART OF 204-7983 ENGINE AR

SMCS-1326 **i01643479**

NOTE	REF NO	GRAPHIC REF	PART NUMBER	QTY	PART NAME 1 2 3 4 5 6 (PRODUCT LEVEL)	SEE PAGE
	1	1	**7C-6921**	1	SPACER (11X20X22.8MM THK)	
	2	1	**209-7309**	3	PLUG	
	3	1	**174-1577**	1	GAUGE AS	
	4	1	**174-1578**	1	TUBE AS-OIL	
	5	1	**3E-4352**	1	WASHER-HARD (8.8X20.5X2.5MM THK)	
	6	1	**3P-0647**	1	SEAL-O-RING	
	7	1	**4B-0418**	1	CLIP	
M	8	1	**6V-5215**	1	BOLT (M8X1.25X16MM)	
	9	1	**6V-5839**	1	WASHER (11X21X2.5MM THK)	
M	10	1	**8T-4185**	1	BOLT (M10X1.5X50MM)	

M-METRIC PART

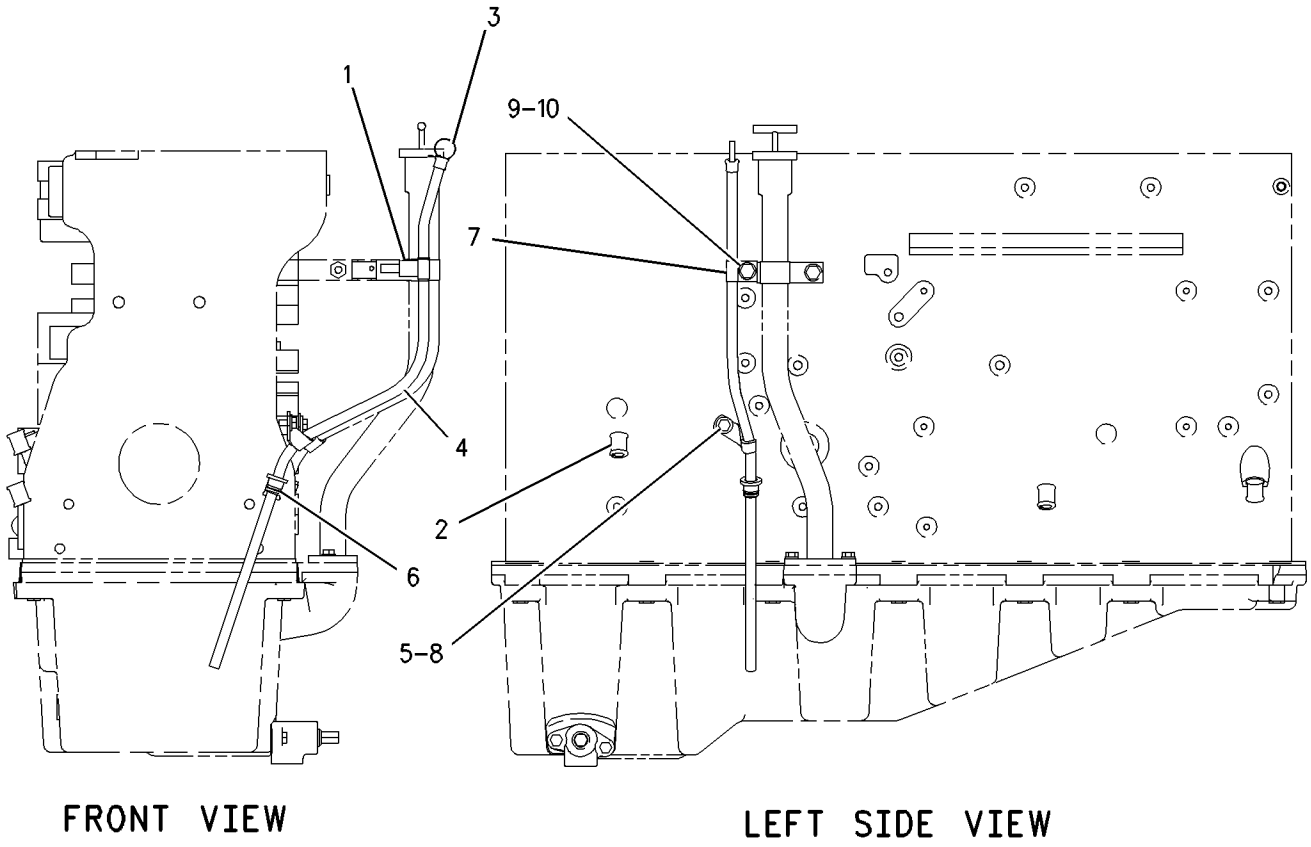

GRAPHIC #1 g00786545

LUBRICATION SYSTEM

199-1096 LINES GP-TURBOCHARGER OIL

S/N: 5ED478-UP
PART OF 204-7983 ENGINE AR
FOR USE WITH FRONT EXHAUST TURBO

SMCS-1052, 1307 **i01540803**

NOTE	REF NO	GRAPHIC REF	PART NUMBER	QTY	PART NAME 1 2 3 4 5 6 (PRODUCT LEVEL)	SEE PAGE
	1	1	**167-4379**	1	TUBE AS	
	2	1	**114-2687**	1	SEAL-O-RING	
	3	1	**5P-8066**	1	SEAL-O-RING	
	4	1	**8M-0505**	1	CONNECTOR	
	5	1	**8L-2786**	1	SEAL-O-RING	
M	6	1	**6V-3940**	1	BOLT (M8X1.25X25MM)	
	7	1	**9M-1974**	6	WASHER-HARD (8.8X16X2MM THK)	
M	8	1	**5P-7970**	1	NUT (M8X1.25 THD)	
	9	1	**6N-6033**	2	CLIP	
	10	1	**188-6126**	1	GASKET	
	11	1	**8H-9788**	1	GASKET	
	12	1	**199-1095**	1	TUBE AS	
	13	1	**119-2942**	1	ADAPTER	
M	14	1	**6V-5218**	4	BOLT (M8X1.25X35MM)	
	15	1	**4K-5824**	2	BOSS	
M	16	1	**8T-0276**	2	BOLT (M8X1.25X45MM)	
	17	1	**9G-8661**	2	SPACER	

M-METRIC PART

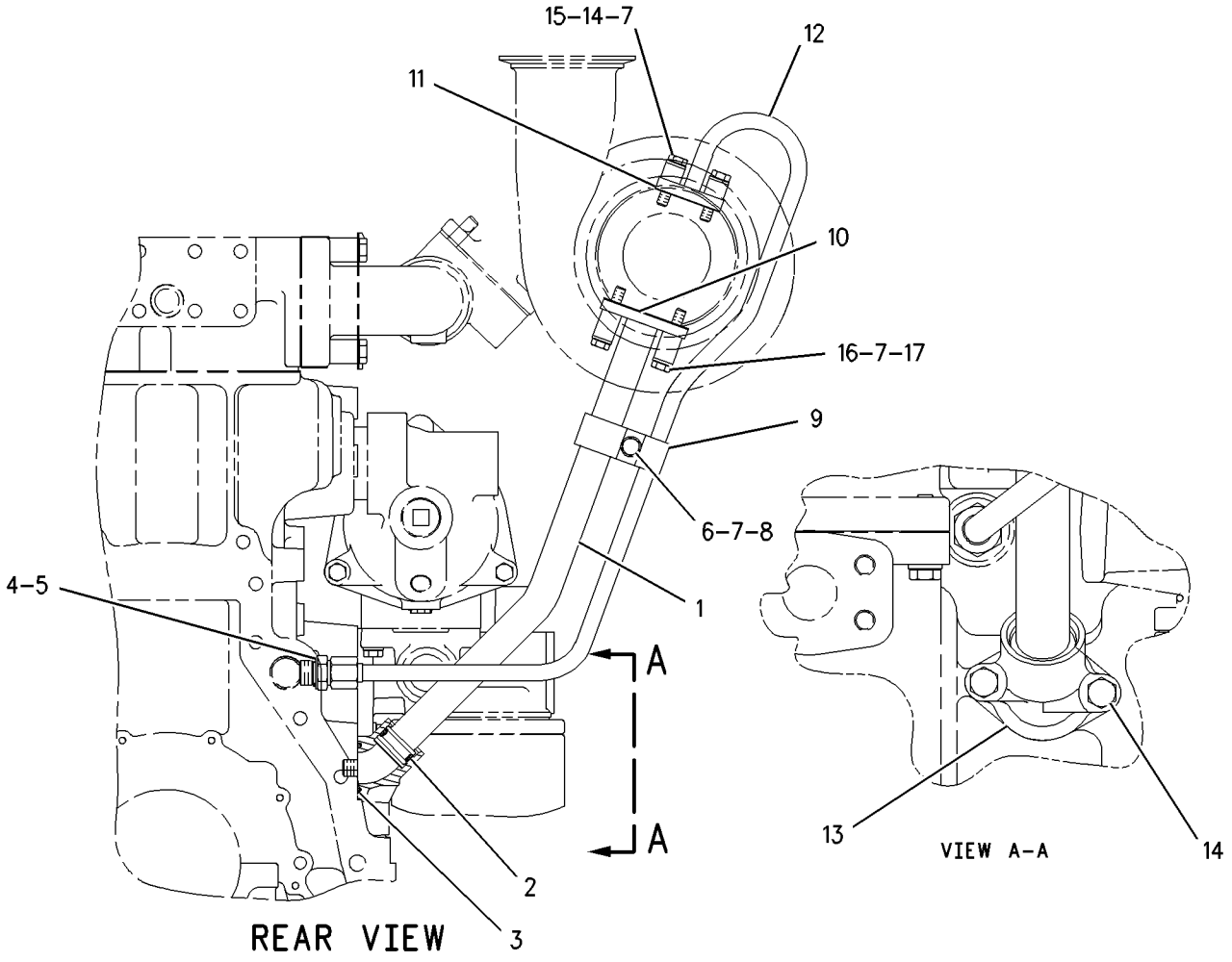

GRAPHIC #1 g00814125

9Y-8073 PUMP GP-ENGINE OIL*R

S/N: 5ED478-UP
ONE SECTION GEAR
PART OF 117-2746 PUMP GP-ENGINE OIL

SMCS-1304 **i01454176**

NOTE	REF NO	GRAPHIC REF	PART NUMBER	QTY	PART NAME 1 2 3 4 5 6 (PRODUCT LEVEL)	SEE PAGE
	1	1	**9Y-8076**	1	SHAFT AS-OIL PUMP (8 TEETH)	
	2	1	**6D-7146**	1	SEAL-O-RING	
M	3	1	**6V-2317**	4	BOLT (M8X1.25X30MM)	
	4	1	**9M-1974**	4	WASHER-HARD (8.8X16X2MM THK)	
	5	1	**9Y-8075**	1	SHAFT AS-OIL PUMP (8 TEETH)	

M-METRIC PART

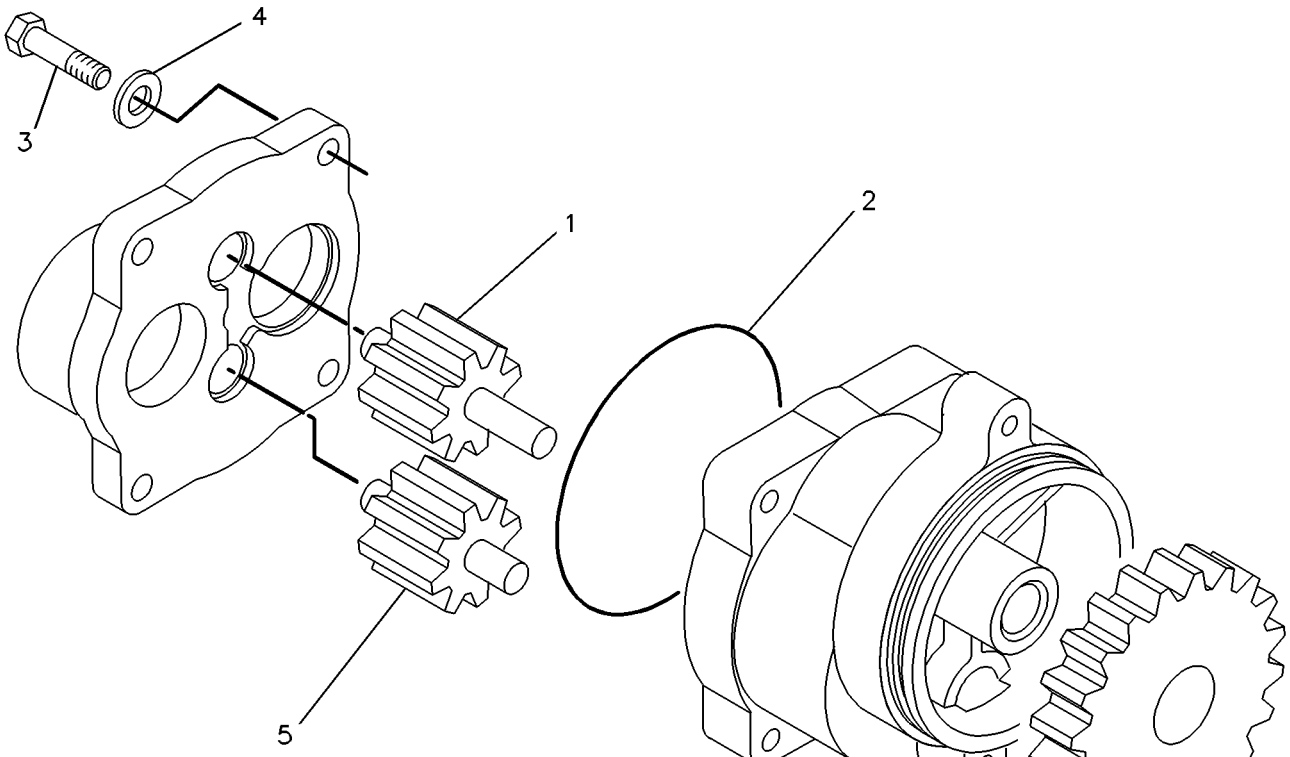

GRAPHIC #1 g00228139

LUBRICATION SYSTEM

117-2746 PUMP GP-ENGINE OIL

S/N: 5ED478-UP

PART OF 204-7983 ENGINE AR

SMCS-1304 **i01454192**

NOTE	REF NO	GRAPHIC REF	PART NUMBER	QTY	PART NAME 1 2 3 4 5 6 (PRODUCT LEVEL)	SEE PAGE
	1	1	**8J-4351**	1	SEAL-O-RING	
	2	1	**9M-1974**	4	WASHER-HARD (8.8X16X2MM THK)	
M	3	1	**3E-8016**	2	BOLT-LOCKING (M8X1.25X25MM)	
M	4	1	**6V-2317**	2	BOLT (M8X1.25X30MM)	
	5	1	**3E-4352**	2	WASHER-HARD (8.8X20.5X2.5MM THK)	
	6	1	**115-3003**	1	TUBE AS	
	7	1	**6V-5134**	3	SEAL-O-RING	
	8	1	**061-8561**	1	SEAL-O-RING	
	9	1	**122-0760**	1	ELBOW-OIL PUMP	
	10	1	**7C-1821**	1	COUPLING	
	11	1	**7C-1822**	1	COUPLING	
	12	1	**5P-8068**	2	SEAL-O-RING	
M	13	1	**6V-5221**	2	BOLT (M8X1.25X80MM)	
	14	1	**6V-3834**	1	SEAL-O-RING	
YR	15	1	**9Y-8073**	1	PUMP GP-ENGINE OIL	60

M-METRIC PART
R-REMFG PART MAY BE AVAILABLE
Y-SEPARATE ILLUSTRATION

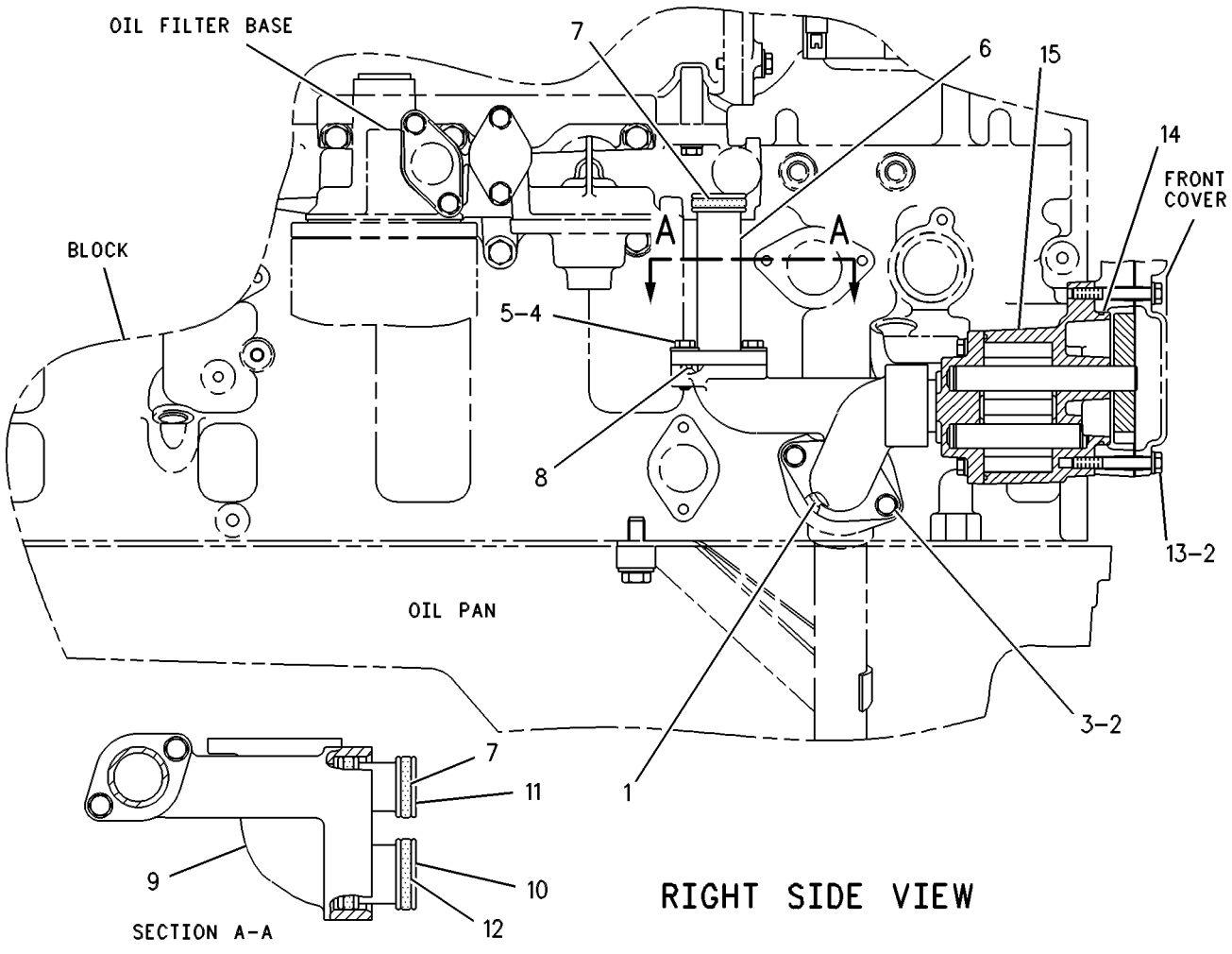

GRAPHIC #1 g00251411

COOLING SYSTEM

184-1670 COOLING AR

S/N: ATS1-UP

PART OF 162-5607 GENERAL AR

SMCS-1350 **i01834486**

NOTE	REF NO	GRAPHIC REF	PART NUMBER	QTY	PART NAME 1 2 3 4 5 6 (PRODUCT LEVEL)	SEE PAGE
Y	1	1	*175-6983*	1	LINES GP-HYDRAULIC FAN	448
Y	2	1	*179-3261*	1	FAN & MOTOR GP	64
Y	3	1	*185-1893*	1	AFTERCOOLER & MOUNTING GP	84
	4	1	**204-6322**	1	PLATE AS	
Y	5	1	*221-2349*	1	GUARD & SUPPORT GP-RADIATOR	360
Y	6	1	*221-8000*	1	RADIATOR & MOUNTING GP	80

Y-SEPARATE ILLUSTRATION

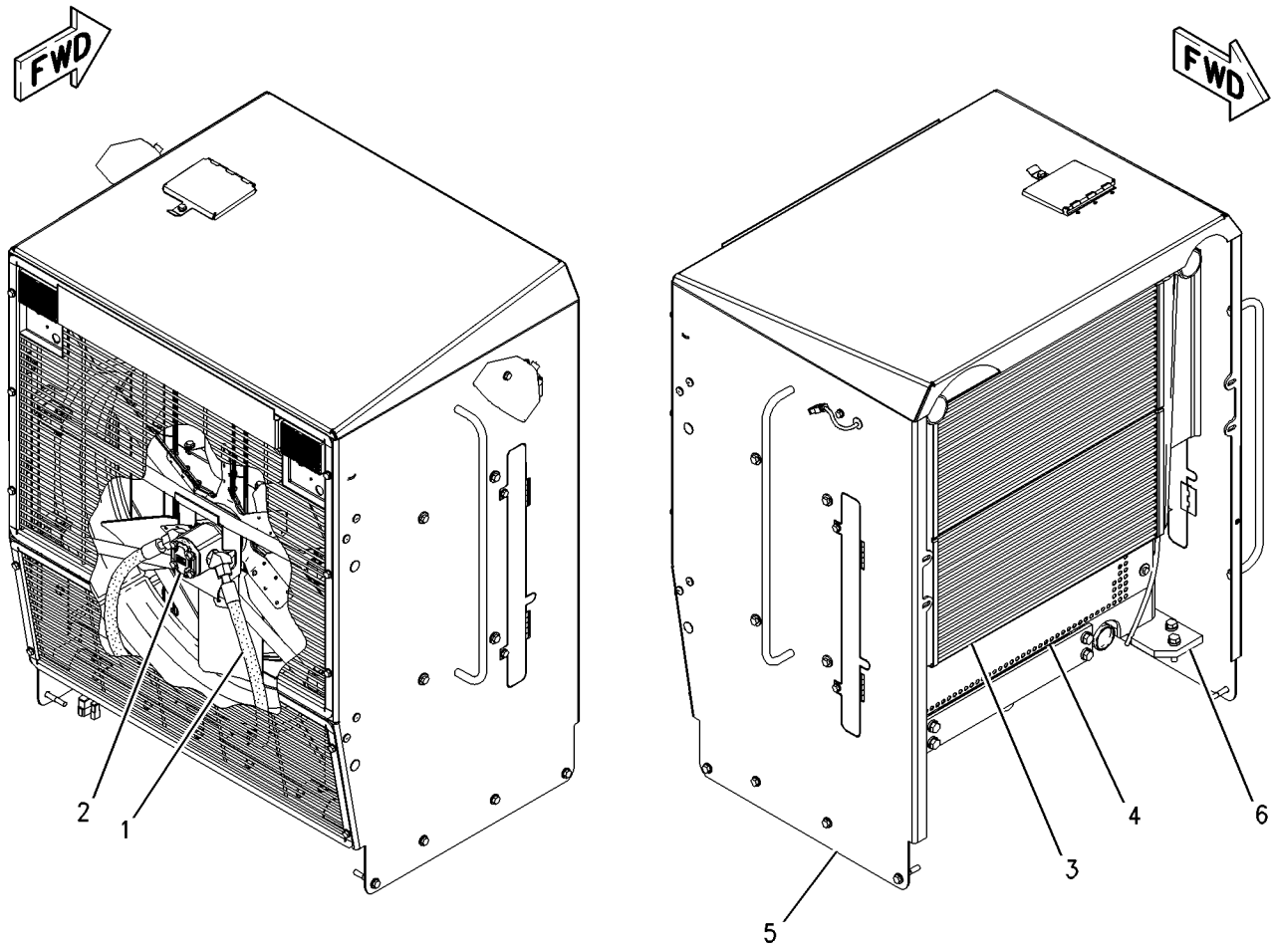

GRAPHIC #1 g00937121

201-1054 COOLING AR

S/N: ATS1-UP

PART OF 211-1771, 211-1772 CONVERSION AR-CERTIFICATION AN ATTACHMENT

SMCS-1350 **i01786973**

NOTE	REF NO	GRAPHIC REF	PART NUMBER	QTY	PART NAME 1 2 3 4 5 6 (PRODUCT LEVEL)	SEE PAGE
Y	1	1	*221-2349*	1	GUARD & SUPPORT GP-RADIATOR	360
Y	2	1	*175-6983*	1	LINES GP-HYDRAULIC FAN (RADIATOR)	448
Y	3	1	*179-3261*	1	FAN & MOTOR GP	64
Y	4	1	*185-1893*	1	AFTERCOOLER & MOUNTING GP	84
Y	5	1	*200-4983*	1	WIRING GP-REAR (EEC)	246
	6	1	**204-6322**	1	PLATE AS	
Y	7	1	*221-8000*	1	RADIATOR & MOUNTING GP	80

Y-SEPARATE ILLUSTRATION

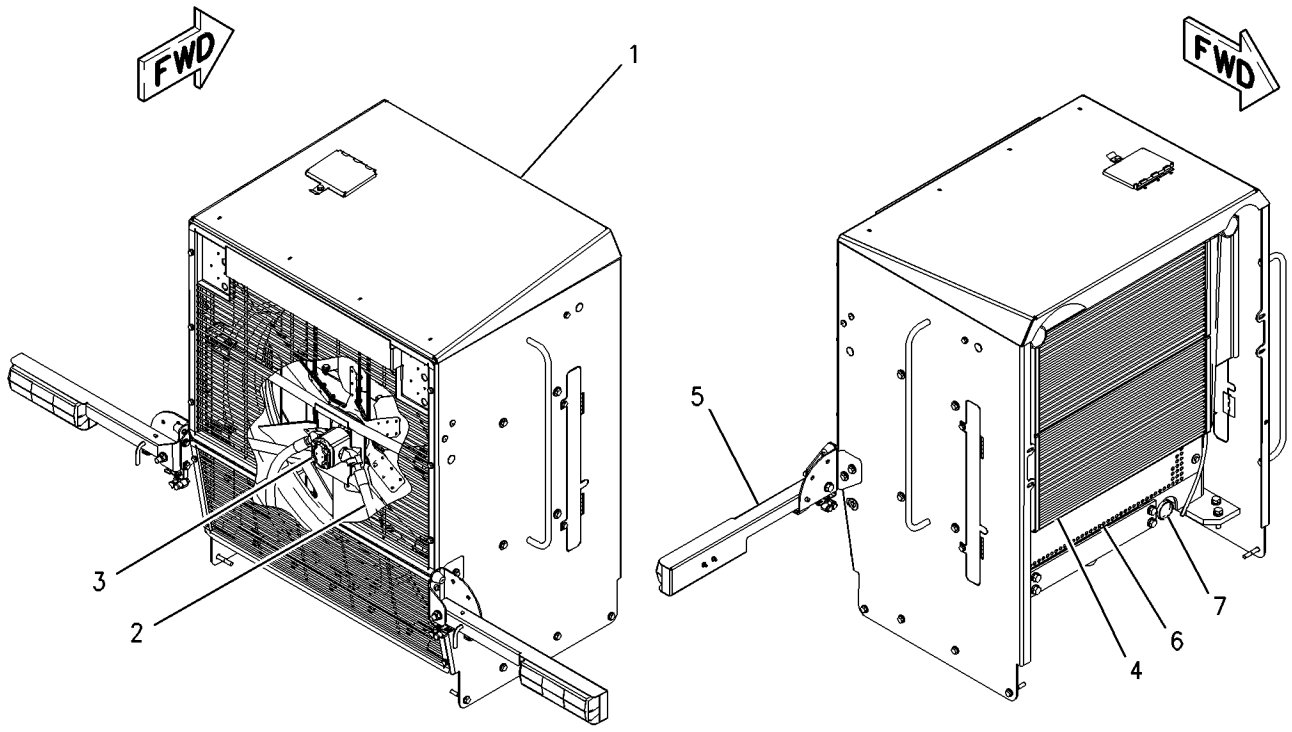

GRAPHIC #1 g00931483

179-3261 FAN & MOTOR GP

S/N: ATS1-UP
PART OF 184-1670, 201-1054 COOLING AR
ALSO AN ATTACHMENT

SMCS-1356, 1386 **i01793733**

NOTE	REF NO	GRAPHIC REF	PART NUMBER	QTY	PART NAME 1 2 3 4 5 6 (PRODUCT LEVEL)	SEE PAGE
Y	1	1	**224-7040**	1	MOTOR GP-GEAR	468
	2	1	**174-2104**	1	BRACKET AS	
	3	1	**177-5303**	1	SPIDER AS-FAN (6 BLADES)	
	4	1	**178-8993**	1	ADAPTER	
	5	1	**179-2509**	4	BRACKET AS	
M	6	1	**105-3484**	2	BOLT-HEX SOCKET (M10X1.5X25MM)	
	7	1	*153-6237*	2	ELBOW GP	
					(EACH INCLUDES)	
		1	**6V-9004**	1	ELBOW	
		1	**3D-2824**	1	SEAL-O-RING	
		1	**6V-9746**	1	SEAL-O-RING	
	8	1	**5P-1076**	4	WASHER-HARD (13.5X30X4MM THK)	
	9	1	**5P-8245**	1	WASHER-HARD (13.5X25.5X3MM THK)	
	10	1	**6B-6684**	1	NUT-FULL (1/2-20 THD)	
M	11	1	**6V-7687**	4	LOCKNUT (M12X1.75 THD)	
M	12	1	**6V-8336**	4	BOLT (M12X1.75X70MM)	
	13	1	**8T-4121**	8	WASHER-HARD (11X21X2.5MM THK)	
M	14	1	**8T-4183**	4	BOLT (M12X1.75X40MM)	
M	15	1	**8T-4195**	6	BOLT (M10X1.5X30MM)	
	16	1	**8T-4223**	8	WASHER-HARD (13.5X25.5X3MM THK)	

M-METRIC PART
Y-SEPARATE ILLUSTRATION

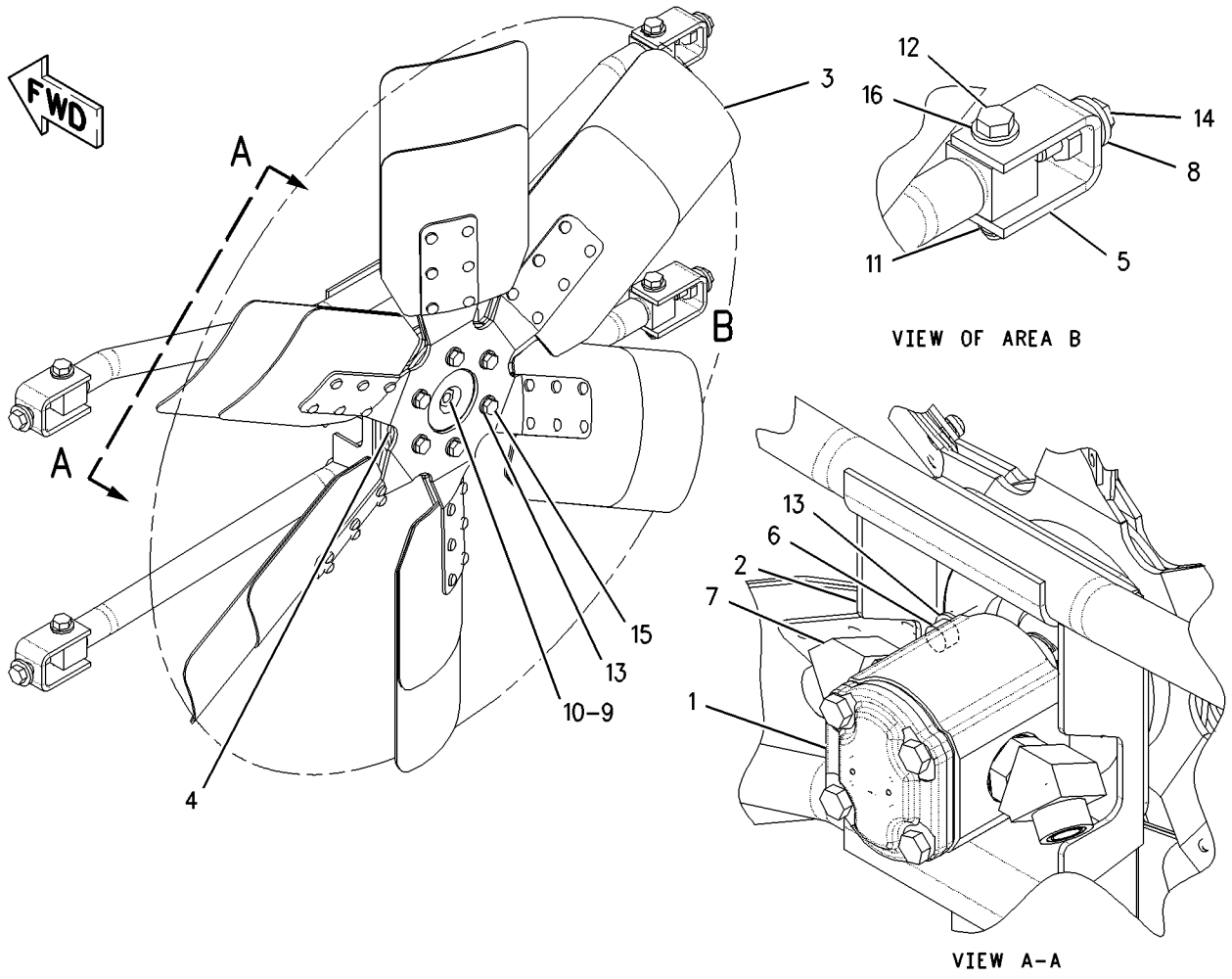

GRAPHIC #1 g00788543

230-5840 FASTENER GP-RADIATOR

S/N: ATS1-UP

PART OF 162-5607 GENERAL AR

SMCS-1353 **i01832449**

NOTE	PART NUMBER	QTY	PART NAME 1 2 3 4 5 6 (PRODUCT LEVEL)	SEE PAGE
M	**8T-4140**	8	BOLT (M16X2X60MM)	
M	**8T-4648**	8	BOLT (M12X1.75X70MM)	
	3E-4356	8	WASHER-HARD (30X17.5X6MM THK)	
	8T-4223	8	WASHER-HARD (13.5X25.5X3MM THK)	

M-METRIC PART

<END>

COOLING SYSTEM

215-2062 HOUSING & REGULATOR GP

S/N: 5ED478-UP

PART OF 215-2063 LINES GP-WATER

SMCS-1355, 1393 **i01773738**

NOTE	REF NO	GRAPHIC REF	PART NUMBER	QTY	PART NAME 1 2 3 4 5 6 (PRODUCT LEVEL)	SEE PAGE
	1	1	**4P-9485**	1	MANIFOLD	
	2	1	**7C-3095**	1	REGULATOR-WATER TEMPERATURE (98 DEG C)	
	3	1	**7E-7912**	1	GASKET	
	4	1	**118-2800**	1	HOUSING AS-REGULATOR	
	4A	1	**3S-9643**	1	SEAL-LIP	
	4B	1	**8T-6757**	1	PLUG-PIPE	
M	5	1	**123-4511**	2	STUD	
	6	1	**7X-7732**	1	PLUG-PIPE	
M	7	1	**8T-0292**	2	BOLT (M8X1.25X90MM)	
	8	1	**8T-6762**	9	PLUG-PIPE	
	9	1	**8T-6766**	1	PLUG-PIPE	
	10	1	**8T-6767**	1	PLUG-PIPE	
	11	1	**9M-1974**	4	WASHER-HARD (8.8X16X2MM THK)	

M-METRIC PART

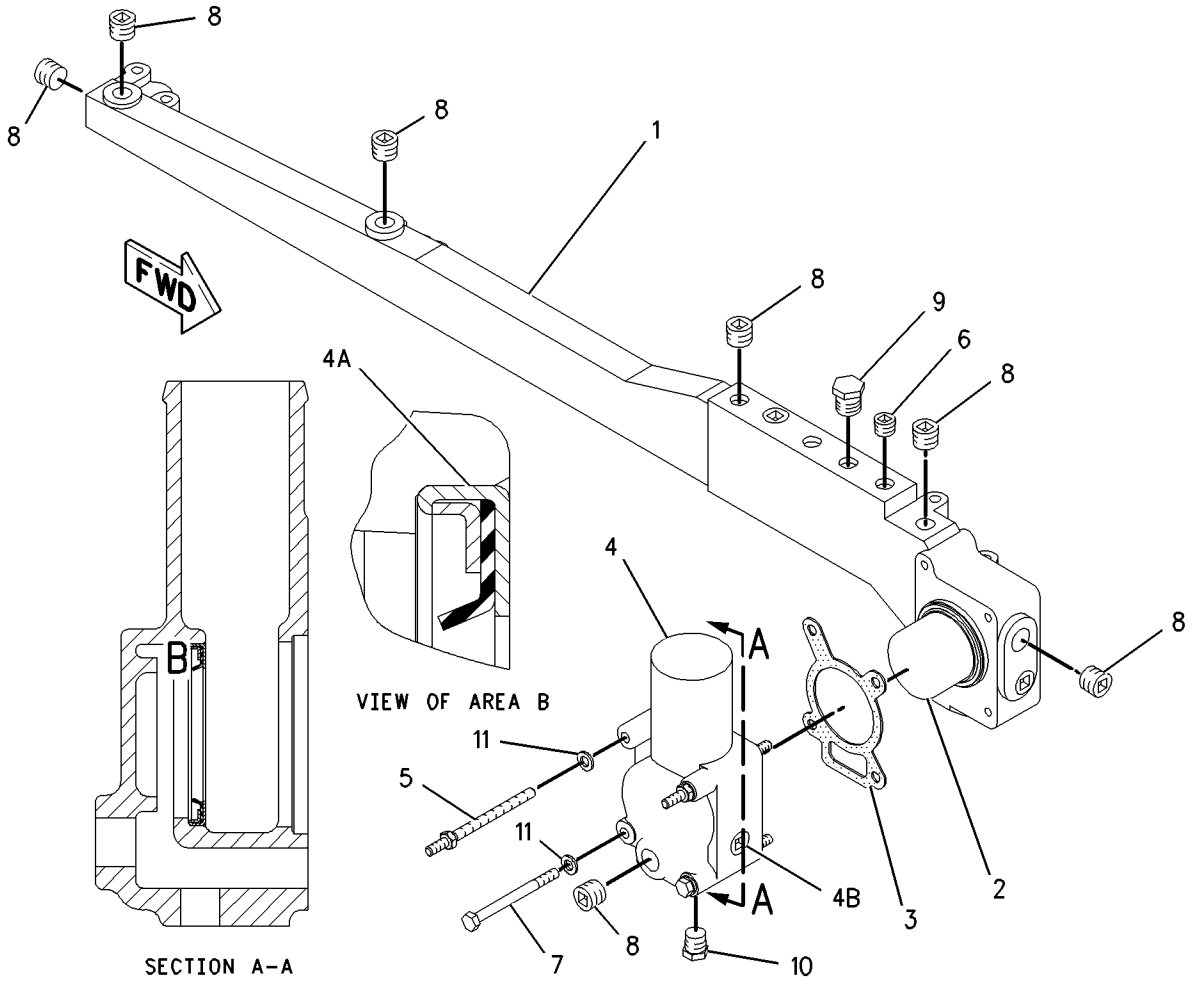

GRAPHIC #1 g00841045

COOLING SYSTEM

184-1671 LINES GP-AFTERCOOLER WATER

S/N: ATS1-UP

PART OF 162-5607 GENERAL AR

SMCS-1380 **i01795735**

NOTE	REF NO	GRAPHIC REF	PART NUMBER	QTY	PART NAME 1 2 3 4 5 6 (PRODUCT LEVEL)	SEE PAGE
	1	1	**6N-9828**	1	HOSE	
	2	1	**7C-0752**	1	CLAMP	
	3	1	**7E-8629**	1	HOSE-REDUCER	
	4	1	**177-0581**	1	HOSE	
	5	1	**177-0717**	1	TUBE	
	6	1	*177-2202*	1	ELBOW GP	
		1	**174-1602**	1	ELBOW	
M		1	**6V-2317**	4	BOLT (M8X1.25X30MM)	
		1	**8T-6765**	1	PLUG-PIPE	
		1	**9M-1974**	4	WASHER-HARD (8.8X16X2MM THK)	
		1	**101-3125**	1	GASKET (AIR INLET MANIFOLD)	
	7	1	**201-1260**	1	HOSE	
	8	1	**205-8122**	1	TUBE	
	9	1	**205-8124**	1	TUBE	
	10	1	**208-6055**	7	CLAMP	
	11	1	**208-7448**	1	CLAMP	
	12	1	**7X-7729**	2	WASHER (11X25X3MM THK)	
M	13	1	**8T-4195**	2	BOLT (M10X1.5X30MM)	
	14	1	**9X-2646**	2	CLIP (SLOT)	
	15	1	**9X-2647**	2	CLIP (TAB)	

M-METRIC PART

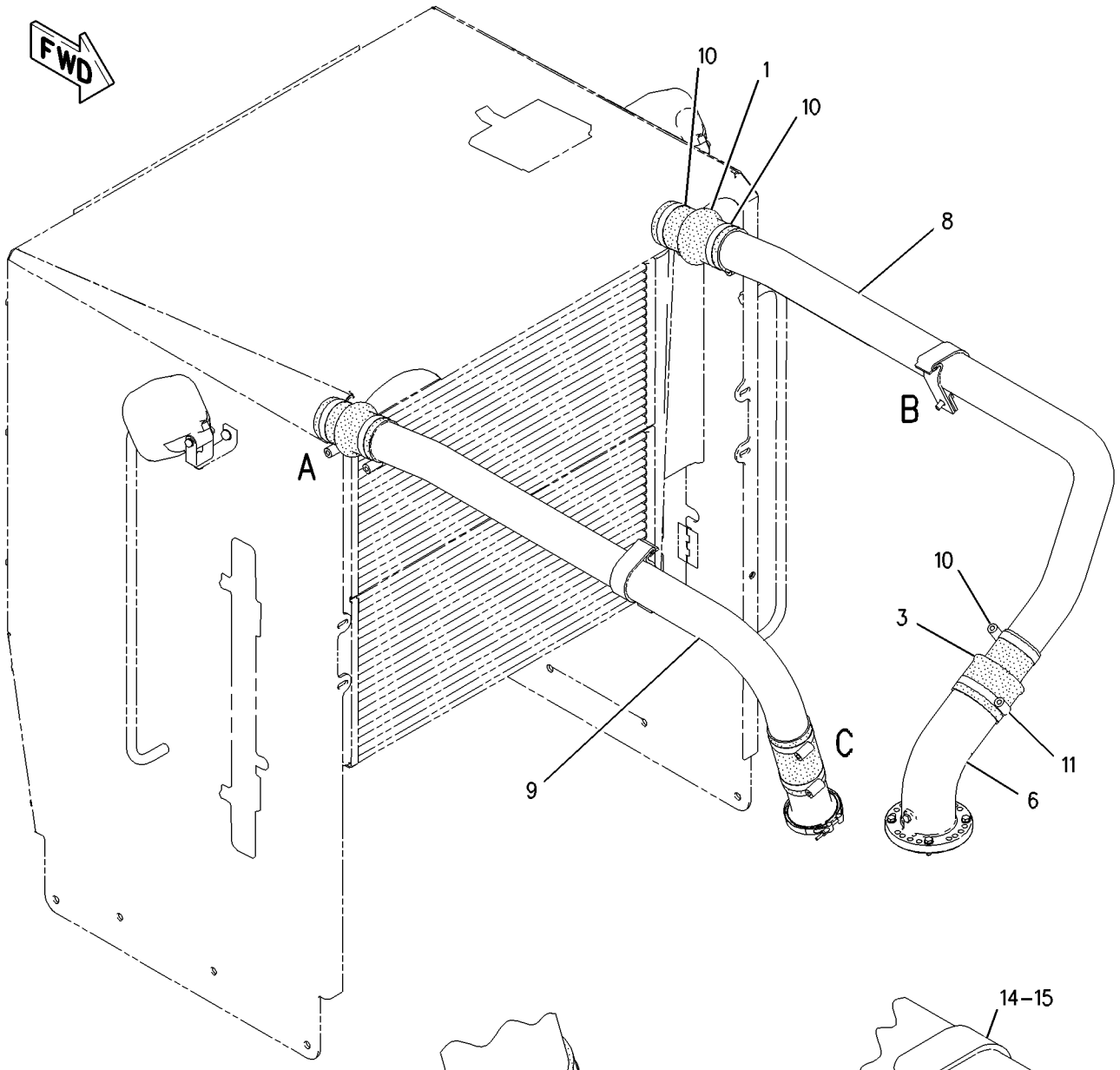

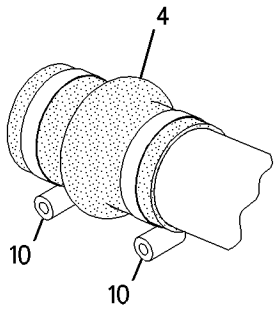

VIEW OF AREA A

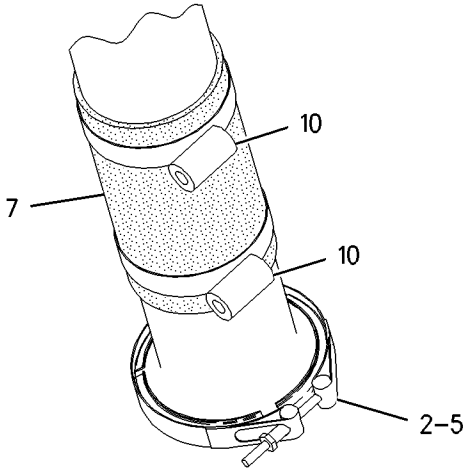

VIEW OF AREA C

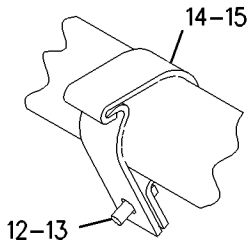

VIEW OF AREA B

GRAPHIC #1 g00936952

COOLING SYSTEM

206-0400 LINES GP-POWER TRAIN COOLER

S/N: ATS1-UP

PART OF 162-5607 GENERAL AR

SMCS-3016 **i01709849**

NOTE	REF NO	GRAPHIC REF	PART NUMBER	QTY	PART NAME 1 2 3 4 5 6 (PRODUCT LEVEL)	SEE PAGE
	1	1	**1R-0773**	1	FILTER ELEMENT AS-OIL (HYDRAULIC)	
	2	1	**6V-0852**	2	CAP-DUST	
	3	1	*164-5567*	2	FITTING GP	
					(EACH INCLUDES)	
		1	**6V-3965**	1	FITTING AS	
		1	**3J-1907**	1	SEAL-O-RING	
	4	1	*164-5590*	1	VALVE GP-FLUID SAMPLING	
		1	**8C-3446**	1	VALVE GP-FLUID SAMPLING (TRANSMISSION OIL)	
		1	**3J-7354**	1	SEAL-O-RING	
	5	1	**183-1406**	2	CLIP	
	6	1	**196-1323**	1	BRACKET AS	
	7	1	**198-8277**	1	TUBE AS	
	8	1	**206-0482**	1	HOSE AS	
	9	1	**206-0483**	1	HOSE AS	
	10	1	**0S-1588**	1	BOLT (3/8-16X1.25 IN)	
	11	1	*148-8305*	1	ADAPTER GP	
		1	**5P-9617**	1	ADAPTER	
		1	**3J-1907**	1	SEAL-O-RING	
	12	1	*148-8336*	1	CONNECTOR AS	
		1	**6V-8636**	1	CONNECTOR	
		1	**3J-1907**	1	SEAL-O-RING	
		1	**6V-8397**	1	SEAL-O-RING	
	13	1	*148-8344*	1	CONNECTOR GP	
		1	**6V-9162**	1	CONNECTOR	
		1	**3D-2824**	1	SEAL-O-RING	
		1	**6V-9746**	1	SEAL-O-RING	
	14	1	*148-8362*	1	ELBOW GP	
		1	**8T-6684**	1	ELBOW	
		1	**3D-2824**	1	SEAL-O-RING	
		1	**5K-9090**	1	SEAL-O-RING	
	15	1	*148-8392*	1	ELBOW GP	
		1	**6V-9853**	1	ELBOW-SWIVEL	
		1	**6V-9746**	1	SEAL-O-RING	
	16	1	*150-4050*	1	ELBOW AS	
		1	**8T-0788**	1	ELBOW	
		1	**3J-1907**	1	SEAL-O-RING	
	17	1	*153-6248*	2	ADAPTER GP	
					(EACH INCLUDES)	
		1	**8T-6663**	1	ADAPTER-PORT	
		1	**6V-8397**	1	SEAL-O-RING	
	18	1	**1P-4577**	4	FLANGE-HALF	
	19	1	**4J-0520**	2	SEAL-O-RING	
	20	1	**5M-2894**	1	WASHER-HARD (10.2X18.5X2.5MM THK)	
	21	1	**5S-7382**	8	BOLT (3/8-16X1.375 IN)	
	22	1	**6V-3265**	1	CLIP	
	23	1	**8C-3447**	1	CAP-DUST (TRANSMISSION OIL)	
	24	1	**8T-4121**	1	WASHER-HARD (11X21X2.5MM THK)	
M	25	1	**8T-4137**	1	BOLT (M10X1.5X20MM)	
	26	1	**8T-4896**	8	WASHER-HARD (10.2X18.5X2.5MM THK)	

M-METRIC PART

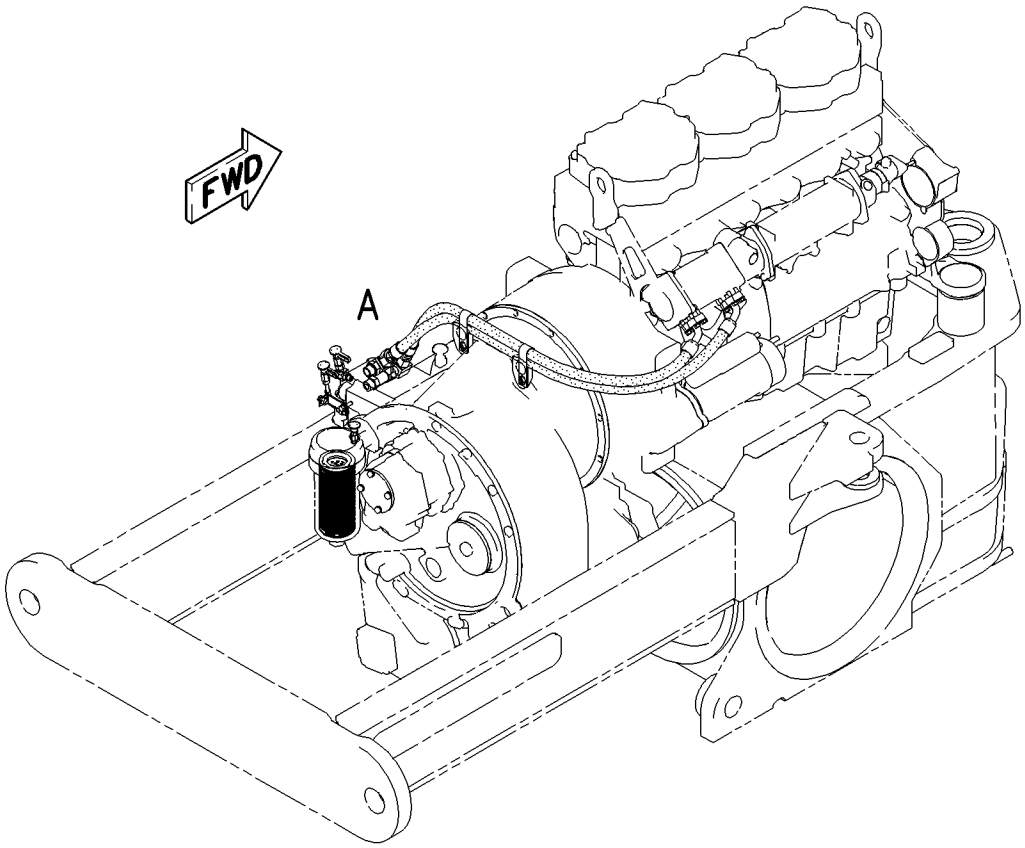

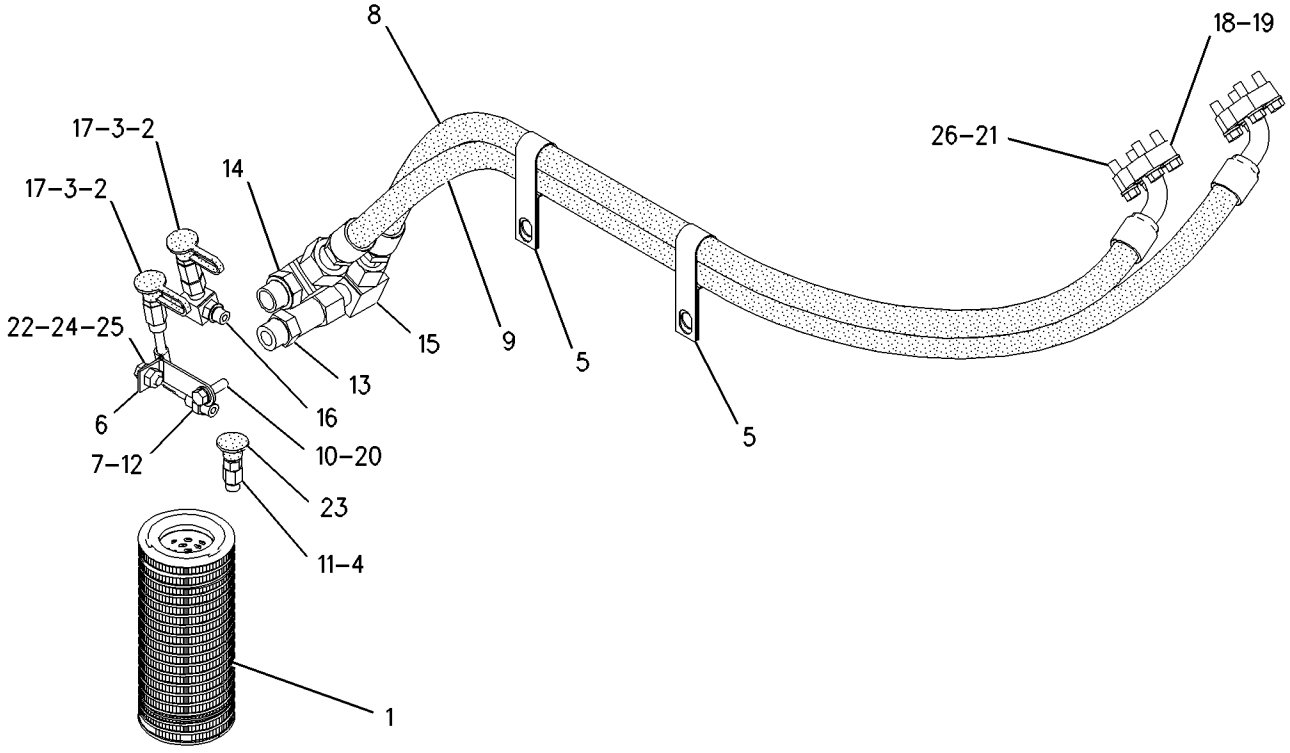

VIEW OF AREA A

GRAPHIC #1 g00935330

116-5460 LINES GP-WATER

S/N: 5ED478-UP

PROVIDES THERMOSTAT HOUSING TO WATER PUMP BYPASS LINE

PART OF 204-7983 ENGINE AR

SMCS-1355, 1380, 1393 **i00693535**

NOTE	REF NO	GRAPHIC REF	PART NUMBER	QTY	PART NAME 1 2 3 4 5 6 (PRODUCT LEVEL)	SEE PAGE
	1	1	**3E-4352**	2	WASHER-HARD (2.5MM THK)	
M	2	1	**6V-3918**	2	BOLT (M8X1.25X50MM)	
	3	1	**107-5795**	1	TUBE	
	4	1	**7L-6580**	2	SEAL-O-RING	
	5	1	**105-4208**	1	FLANGE	
	6	1	**7E-5555**	1	GASKET	

M-METRIC PART

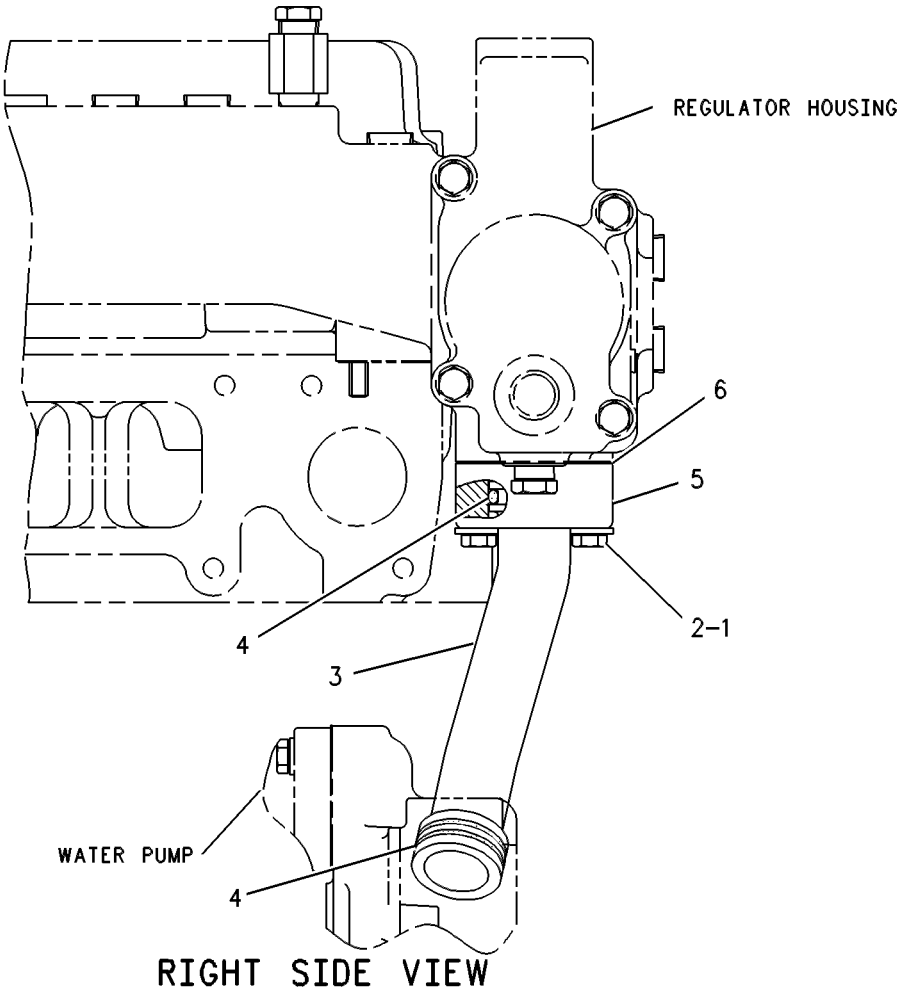

RIGHT SIDE VIEW

GRAPHIC #1 g00251320

COOLING SYSTEM

118-2808 LINES GP-WATER

S/N: 5ED478-UP
2.5 INCH REAR FACING INLET ELBOW
PART OF 204-7983 ENGINE AR

SMCS-1355, 1380, 1393 **i00830174**

NOTE	REF NO	GRAPHIC REF	PART NUMBER	QTY	PART NAME 1 2 3 4 5 6 (PRODUCT LEVEL)	SEE PAGE
	1	1	**101-1635**	1	GASKET	
M	2	1	**6V-3918**	2	BOLT (M8X1.25X50MM)	
	3	1	**9M-1974**	1	WASHER-HARD (2MM THK)	
	4	1	**102-8785**	1	ELBOW-WATER PUMP	
	5	1	**7X-7731**	3	PLUG-PIPE (3/4-14 NPTF THD)	

M-METRIC PART

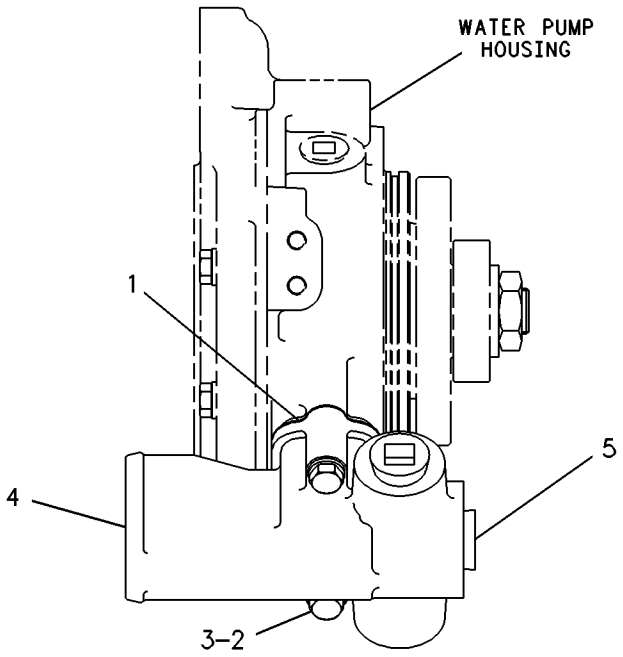

RIGHT SIDE VIEW

GRAPHIC #1 g00232449

COOLING SYSTEM

186-4156 LINES GP-WATER

S/N: ATS1-UP

PART OF 162-5607 GENERAL AR

SMCS-1355, 1380, 1393 **i01795767**

NOTE	REF NO	GRAPHIC REF	PART NUMBER	QTY	PART NAME 1 2 3 4 5 6 (PRODUCT LEVEL)	SEE PAGE
	1	1	**1P-7297**	1	VALVE-DRAIN (WATER)	
	2	1	**5D-1026**	2	CLAMP-HOSE	
	3	1	**6V-0852**	1	CAP-DUST	
	4	1	**7D-7026**	2	CONNECTOR-HOSE	
	5	1	**7K-1181**	2	STRAP-CABLE	
	6	1	**8N-9071**	1	VALVE AS	
	7	1	**8T-4984**	8	CLAMP-HOSE	
	8	1	**9B-4179**	3	HOSE	
	9	1	**091-0081**	1	SPACER (10.5X20X10.0MM THK)	
	10	1	**207-0704**	1	TUBE AS	
	11	1	**207-0706**	1	TUBE AS	
	12	1	**207-0707**	1	HOSE	
I	13	1	**212-3266**	1	HOSE AS	
	14	1	**003-9514**	1	COUPLING-PIPE	
	15	1	**154-9025**	1	VALVE-COOLANT SAMPLING	
	16	1	**2S-5658**	1	WASHER-HARD (17X29X3MM THK)	
	17	1	**3P-9847**	2	CLIP	
	18	1	**4K-0367**	1	NUT-FULL (5/8-11 THD)	
	19	1	**4W-4076**	1	ELBOW	
	20	1	**6V-1581**	1	CLIP (SLOT)	
	21	1	**6V-1582**	1	CLIP (TAB)	
	22	1	**8M-2769**	1	CLIP	
	23	1	**8T-4121**	3	WASHER-HARD (11X21X2.5MM THK)	
M	24	1	**8T-4137**	1	BOLT (M10X1.5X20MM)	
M	25	1	**8T-4195**	2	BOLT (M10X1.5X30MM)	
	26	1	**5P-0767**		HOSE (60CM)	

I-SEE HOSE FABRICATION GUIDE
M-METRIC PART

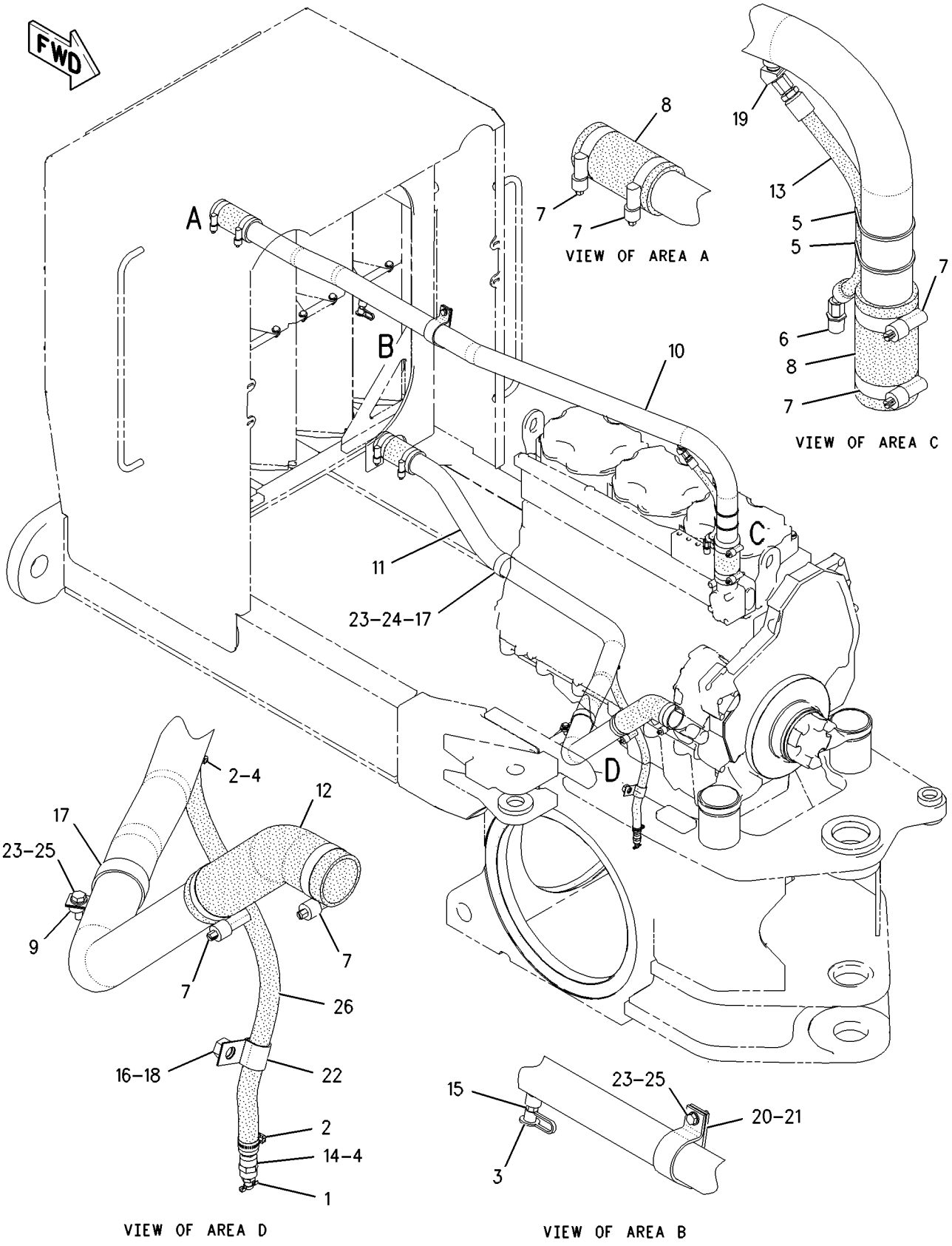

GRAPHIC #1

g00935720

215-2063 LINES GP-WATER

S/N: 5ED478-UP

PART OF 204-7983 ENGINE AR

SMCS-1355, 1380, 1393 **i01623365**

NOTE	REF NO	GRAPHIC REF	PART NUMBER	QTY	PART NAME 1 2 3 4 5 6 (PRODUCT LEVEL)	SEE PAGE
Y	1	1	*215-2062*	1	HOUSING & REGULATOR GP	67
	2	1	**118-2797**	4	GASKET	
M	3	1	**5P-8347**	7	BOLT (M8X1.25X70MM)	
M	4	1	**6V-3821**	1	BOLT (M8X1.25X110MM)	
	5	1	**9M-1974**	8	WASHER-HARD (8.8X16X2MM THK)	

M-METRIC PART
Y-SEPARATE ILLUSTRATION

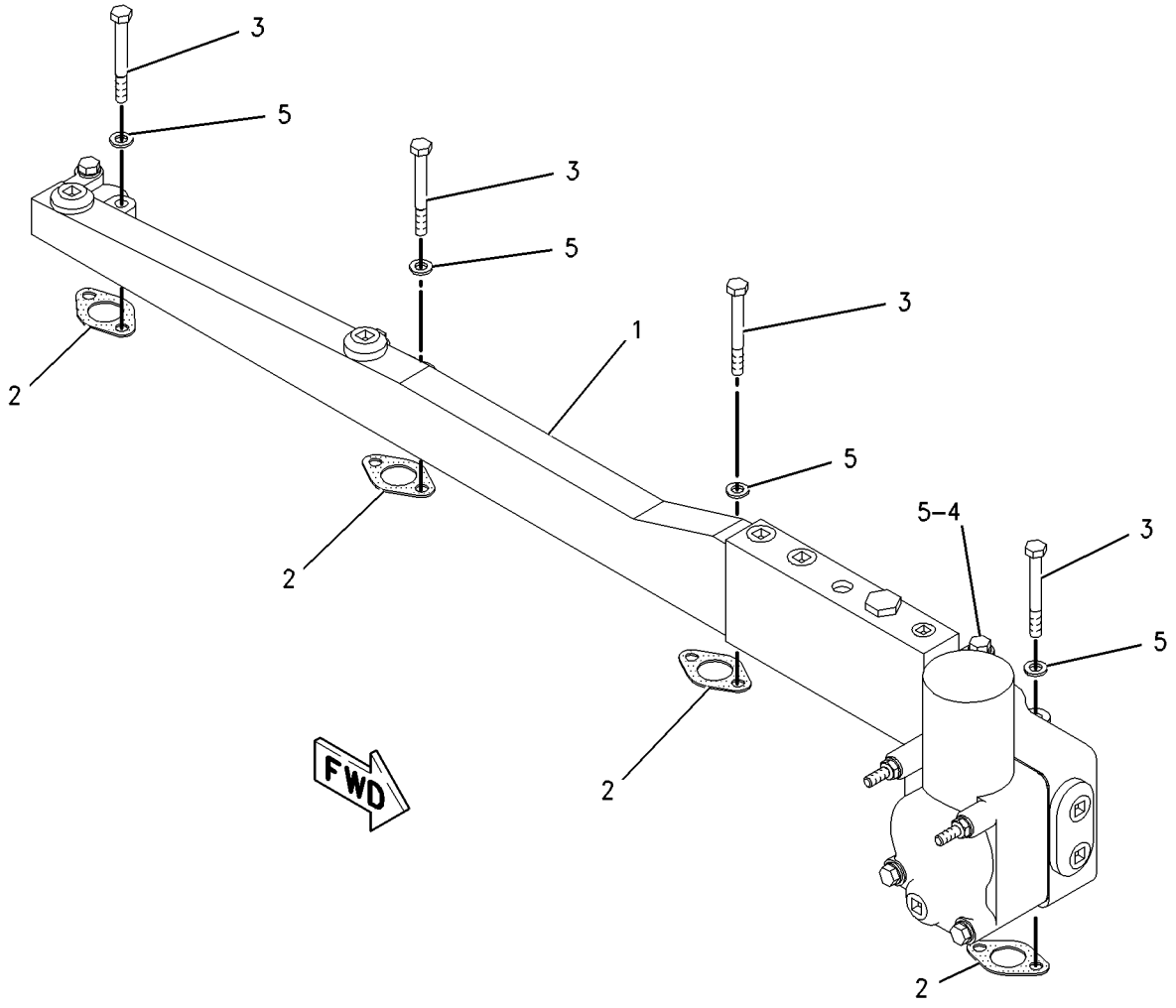

GRAPHIC #1 g00840862

COOLING SYSTEM

117-2674 PUMP GP-WATER

S/N: 5ED478-UP

PART OF 204-7983 ENGINE AR

SMCS-1361 **i01534560**

NOTE	REF NO	GRAPHIC REF	PART NUMBER	QTY	PART NAME 1 2 3 4 5 6 (PRODUCT LEVEL)	SEE PAGE
CYR	1	1	**176-7000**	1	PUMP GP-WATER	78
M	2	1	**6V-5221**	2	BOLT (M8X1.25X80MM)	
	3	1	**9M-1974**	2	WASHER-HARD (8.8X16X2MM THK)	
	4	1	**6V-7350**	1	SEAL-O-RING	

C-CHANGE FROM PREVIOUS TYPE
M-METRIC PART
R-REMFG PART MAY BE AVAILABLE
Y-SEPARATE ILLUSTRATION

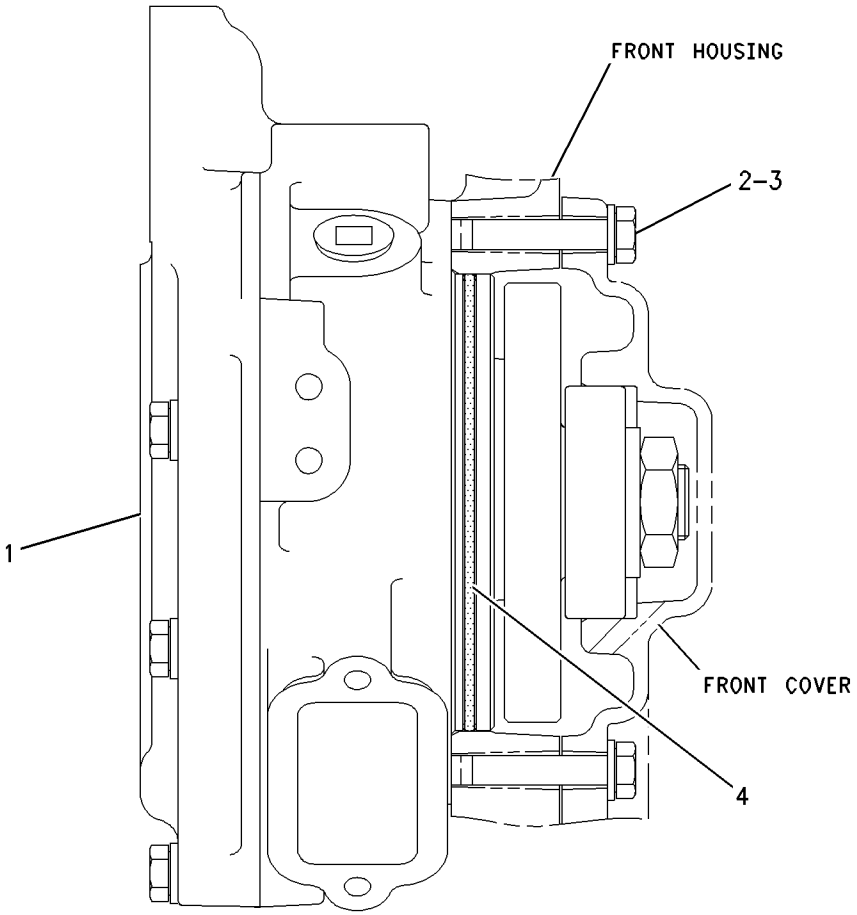

RIGHT SIDE VIEW

GRAPHIC #1 g00796828

COOLING SYSTEM

176-7000 PUMP GP-WATER

S/N: 5ED478-UP

PART OF 117-2674 PUMP GP-WATER

SMCS-1361 **i01351134**

NOTE	REF NO	GRAPHIC REF	PART NUMBER	QTY	PART NAME 1 2 3 4 5 6 (PRODUCT LEVEL)	SEE PAGE
	1	1	**9Y-3513**	1	GEAR (41 TEETH)	
	2	1	**105-4210**	1	GASKET	
	3	1	**147-5088**	1	SEAL AS-WATER PUMP	
	4	1	**176-6994**	1	WASHER	
	5	1	**176-6995**	1	COVER-PUMP	
	6	1	**176-6997**	1	SHAFT	
	7	1	**176-6998**	1	IMPELLER-PUMP	
	8	1	**176-6999**	1	HOUSING AS-PUMP	
	9	1	**1B-3867**	2	BALL BEARING	
M	10	1	**6V-3940**	6	BOLT (M8X1.25X25MM)	
	11	1	**7X-7731**	1	PLUG-PIPE (3/4-14 NPTF THD)	
	12	1	**8C-3100**	1	SEAL-LIP	
	13	1	**8T-6762**	1	PLUG-PIPE (1/2-14 NPTF THD)	
M	14	1	**8T-9515**	1	BOLT-SOCKET HEAD (M10X1.5X40MM)	
	15	1	**8T-9598**	1	RING-RETAINING	
	16	1	**9M-1974**	6	WASHER-HARD (2MM THK)	

M-METRIC PART

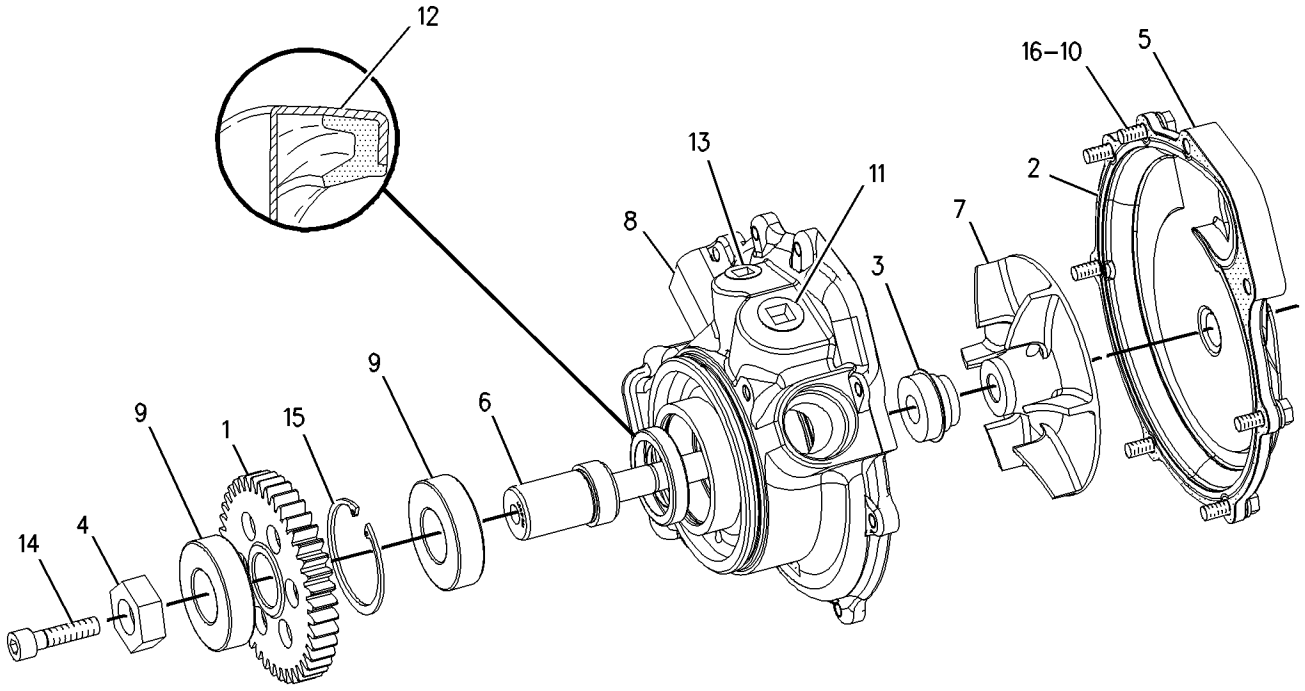

GRAPHIC #1 g00713988

MEMORANDA

COOLING SYSTEM

221-8000 RADIATOR & MOUNTING GP

S/N: ATS1-UP
PART OF 184-1670, 201-1054 COOLING AR
ALSO AN ATTACHMENT

SMCS-1353 **i01854594**

NOTE	REF NO	GRAPHIC REF	PART NUMBER	QTY	PART NAME 1 2 3 4 5 6 (PRODUCT LEVEL)	SEE PAGE
	1	1	**6I-7471**	4	PLATE	
	2	1	**7N-1639**	4	CAP	
	3	1	**166-0939**	1	SHROUD AS-FAN	
	4	1	**204-9844**	2	PLATE	
Y	5	1	*211-9028*	1	RADIATOR GP	83
	6	1	**219-7199**	3	PLATE	
	7	1	**219-7200**	1	SUPPORT AS (LH)	
	8	1	**219-7201**	1	SUPPORT AS (RH)	
	9	1	**221-8675**	1	PLATE AS	
	10	1	**222-1293**	1	PLATE AS	
	11	1	**224-9231**	2	BAFFLE	
	12	1	**227-1053**	1	BAFFLE	
	13	1	**003-9514**	1	COUPLING-PIPE	
	14	1	**100-9992**	17	WASHER (4.8X25X2MM THK)	
	15	1	**139-3785**	17	RIVET-POP	
	16	1	**3E-4356**	16	WASHER-HARD (30X17.5X6MM THK)	
	17	1	**5P-1076**	12	WASHER-HARD (13.5X30X4MM THK)	
M	18	1	**7X-2553**	16	BOLT (M16X2X40MM)	
	19	1	**7X-7729**	8	WASHER (11X25X3MM THK)	
	20	1	**8M-2770**	2	CLIP	
	21	1	**8T-4121**	4	WASHER-HARD (11X21X2.5MM THK)	
M	22	1	**8T-4136**	14	BOLT (M10X1.5X25MM)	
M	23	1	**8T-4183**	12	BOLT (M12X1.75X40MM)	
	24	1	**8T-4223**	8	WASHER-HARD (13.5X25.5X3MM THK)	
	25	1	**8T-4896**	2	WASHER-HARD (10.2X18.5X2.5MM THK)	
M	26	1	**8T-6868**	8	BOLT (M12X1.75X80MM)	
BE	27	1	**8C-3681**		HOSE (148CM)	
BE	28	1	**147-2354**		SEAL (EACH 20CM)	
BE	29	1	**123-3827**		SEAL (EACH 106CM)	
E	30	1	**7X-7877**		STRIP-EDGING (EACH 10CM)	

B-USE AS REQUIRED
E-ORDER BY THE CENTIMETER
M-METRIC PART
Y-SEPARATE ILLUSTRATION

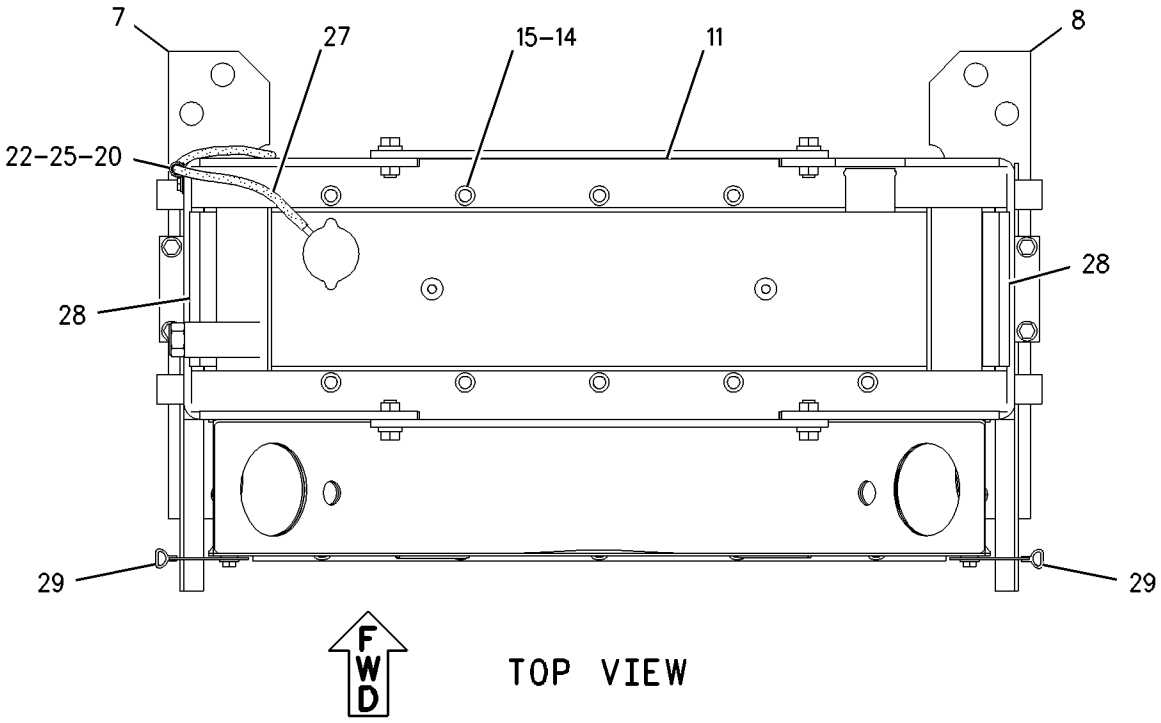

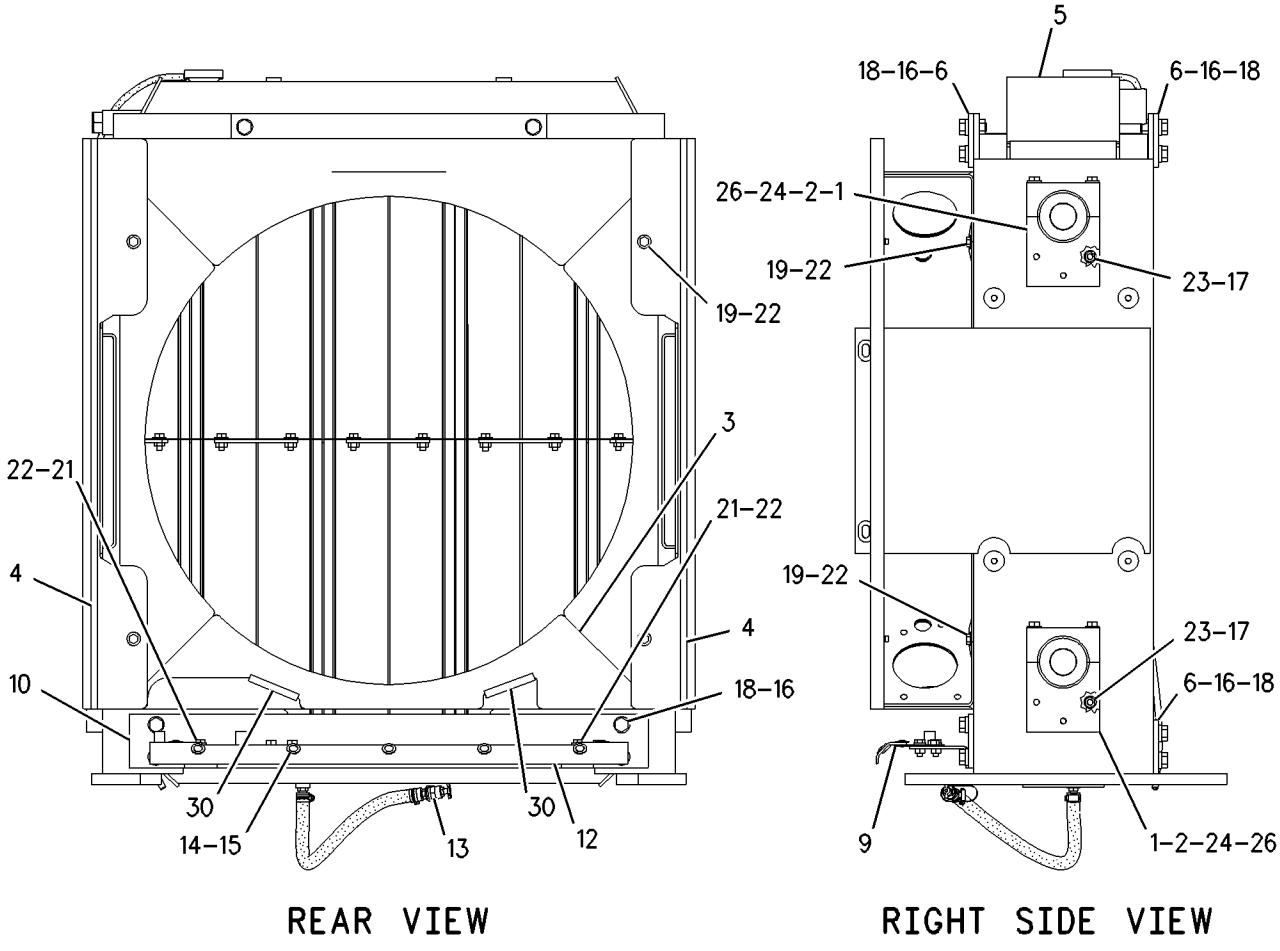

GRAPHIC #1 g00933139

COOLING SYSTEM

211-3471 RADIATOR GP–FOLDED CORE

S/N: ATS1-UP
PART OF 211-9028 RADIATOR GP
ALSO AN ATTACHMENT

SMCS-1353 **i01787090**

NOTE	REF NO	GRAPHIC REF	PART NUMBER	QTY	PART NAME 1 2 3 4 5 6 (PRODUCT LEVEL)	SEE PAGE
	1	1	**2W-5540**	8	CORE AS-RADIATOR	
					(EACH INCLUDES)	
		1	**9Y-1766**	1	TANK AS	
		1	**9Y-1767**	1	TANK AS	
	2	1	**7C-1368**	7	STRAP AS	
	3	1	**211-3470**	1	TANK AS	
	3A	1	**6L-8617**	1	CAP-RADIATOR	
	4	1	**211-3472**	1	TANK AS-RADIATOR	
	5	1	**211-3474**	2	CHANNEL AS	
	6	1	**211-5896**	2	BRACKET AS	
	7	1	**4P-9942**	8	SEAL-END TANK	
	8	1	**4P-9943**	8	SEAL-END TANK	
	9	1	**7X-7729**	50	WASHER (11X25X3MM THK)	
M	10	1	**8T-4136**	50	BOLT (M10X1.5X25MM)	

M-METRIC PART

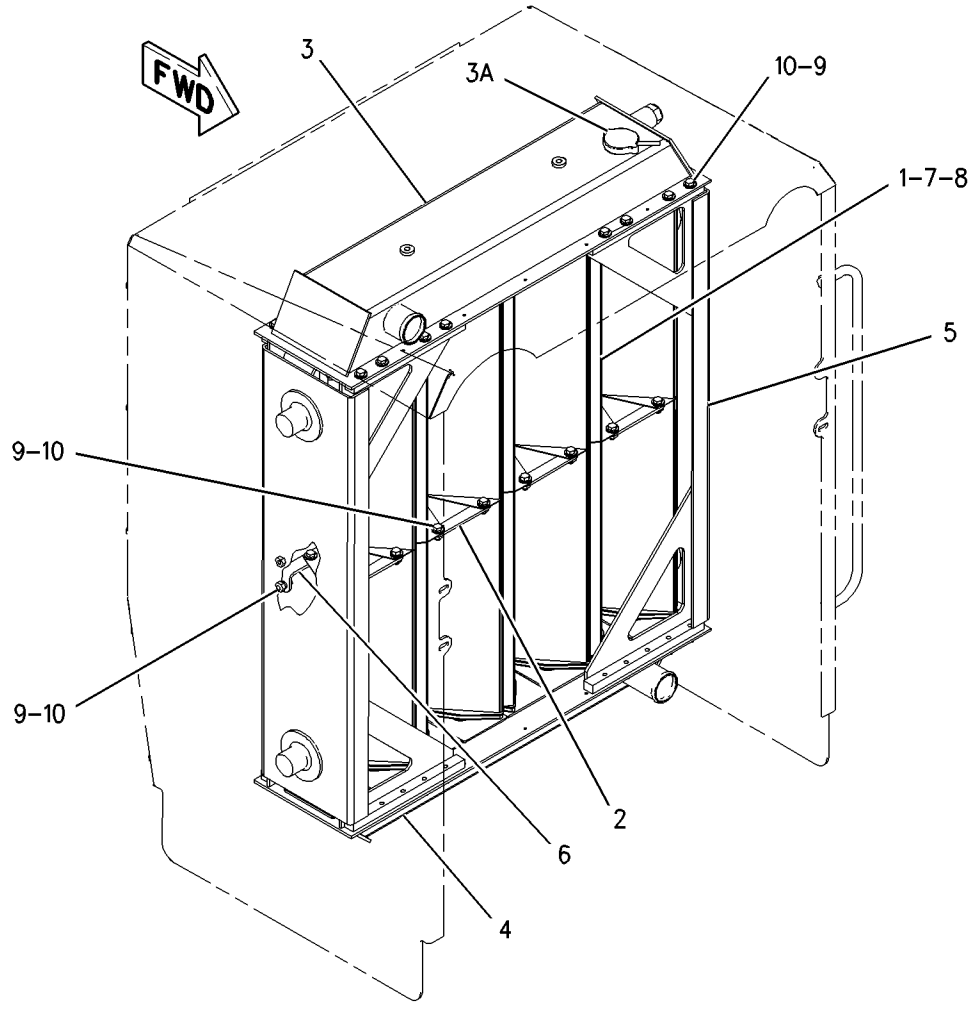

GRAPHIC #1 g00933958

COOLING SYSTEM

211-9028 RADIATOR GP

S/N: ATS1-UP
PART OF 221-8000 RADIATOR & MOUNTING GP
ALSO AN ATTACHMENT

SMCS-1353 **i01787087**

NOTE	REF NO	GRAPHIC REF	PART NUMBER	QTY	PART NAME 1 2 3 4 5 6 (PRODUCT LEVEL)	SEE PAGE
	1	1	**1P-7297**	1	VALVE-DRAIN (RADIATOR)	
	2	1	**5D-1026**	2	CLAMP-HOSE	
	3	1	**7K-1181**	1	STRAP-CABLE	
	4	1	**8N-7257**	4	MOUNT AS	
Y	5	1	**211-3471**	1	RADIATOR GP	82
	6	1	**003-9514**	1	COUPLING-PIPE	
	7	1	**7D-7026**	2	CONNECTOR-HOSE	
E	8	1	**5P-0767**		HOSE (48CM)	

E-ORDER BY THE CENTIMETER
Y-SEPARATE ILLUSTRATION

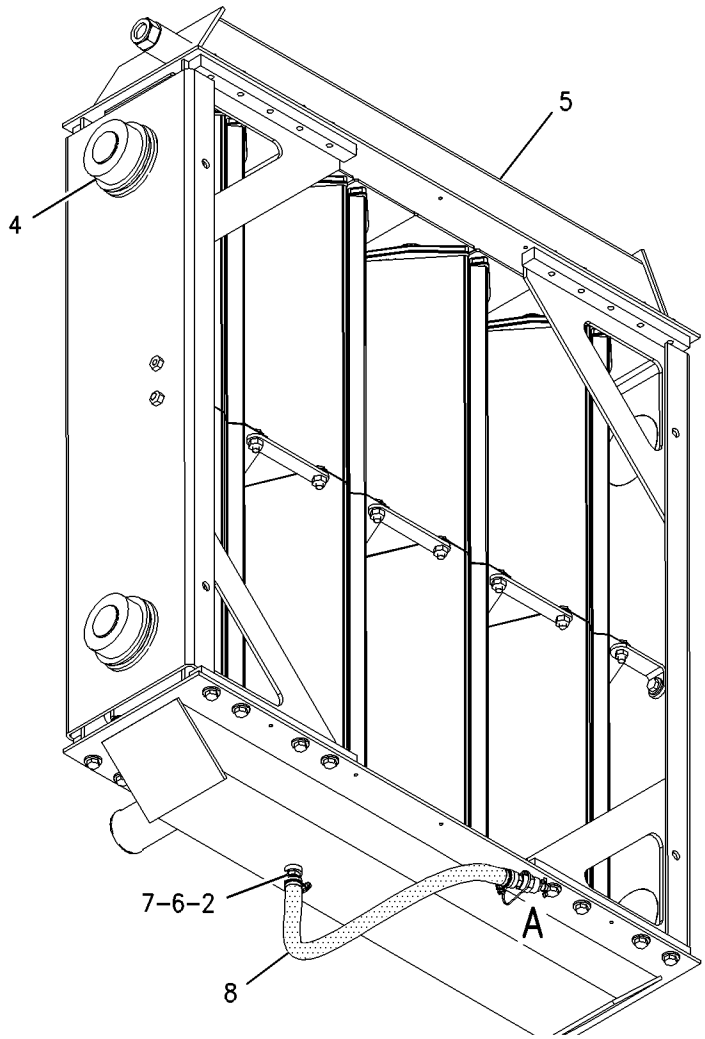

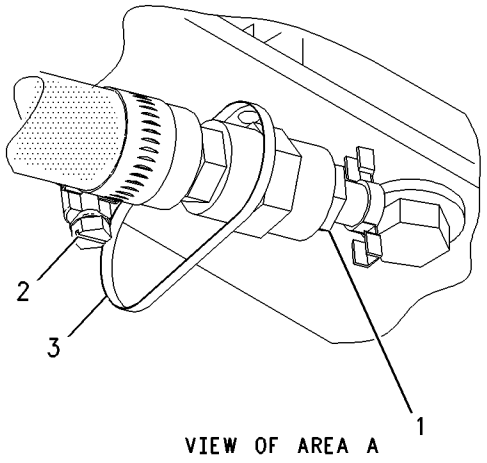

VIEW OF AREA A

GRAPHIC #1 g00937220

AIR INLET AND EXHAUST SYSTEM

185-1893 AFTERCOOLER & MOUNTING GP

S/N: ATS1-UP
PART OF 184-1670, 201-1054 COOLING AR
ALSO AN ATTACHMENT

SMCS-1063 **i01787072**

NOTE	REF NO	GRAPHIC REF	PART NUMBER	QTY	PART NAME 1 2 3 4 5 6 (PRODUCT LEVEL)	SEE PAGE
	1	1	**6N-6984**	4	MOUNT	
	2	1	**205-4655**	1	CORE AS-AFTERCOOLER (AIR TO AIR)	
	3	1	**208-5586**	4	BRACKET	
	4	1	**226-6579**	1	BAFFLE	
	5	1	**100-9992**	5	WASHER	
	6	1	**139-3785**	5	RIVET-POP	
	7	1	**4S-9191**	8	WASHER (12X22.5X5MM THK)	
M	8	1	**6V-1820**	8	BOLT (M10X1.50X30MM)	
M	9	1	**6V-5843**	4	BOLT (M10X1.50X45MM)	
	10	1	**7X-7729**	4	WASHER (11X25X3MM THK)	
	11	1	**9L-8781**	8	WASHER (0.406X1.5X0.188 IN THK)	
BE	12	1	**123-3827**		SEAL	

B-USE AS REQUIRED
E-ORDER BY THE CENTIMETER
M-METRIC PART

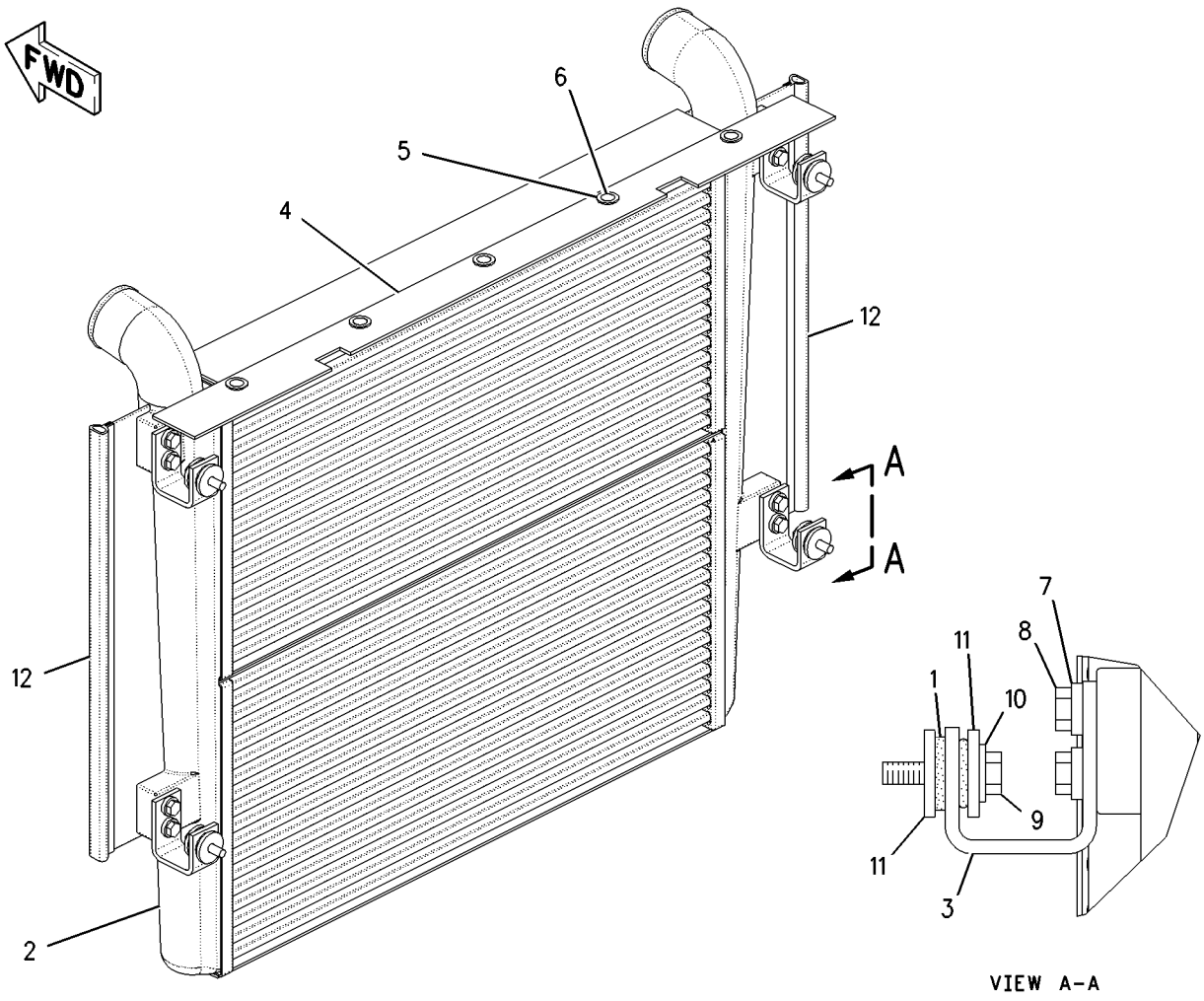

GRAPHIC #1 g00932947

AIR INLET AND EXHAUST SYSTEM

174-1612 AIR CLEANER GP

S/N: ATS1-UP

PART OF 212-5958 AIR CLEANER GP

SMCS-1051, 1054, 7452 **i01535072**

NOTE	REF NO	GRAPHIC REF	PART NUMBER	QTY	PART NAME 1 2 3 4 5 6 (PRODUCT LEVEL)	SEE PAGE
	1	1	**6I-0273**	1	ELEMENT AS-PRIMARY	
	2	1	**6I-0274**	1	ELEMENT AS-SECONDARY	
	3	1	**6I-0275**	1	COVER AS-AIR CLEANER	
		1	**4P-5524**	1	SEAL-O-RING	
		1	**101-2850**	1	FILM-AIR CLEANER (RADIAL SEAL)	
	4	1	**8N-4617**	1	KIT-AIR CLEANER CLAMP	
		1	**1N-4403**	1	CLIP AS	
		1	**9B-2596**	1	RIVET	

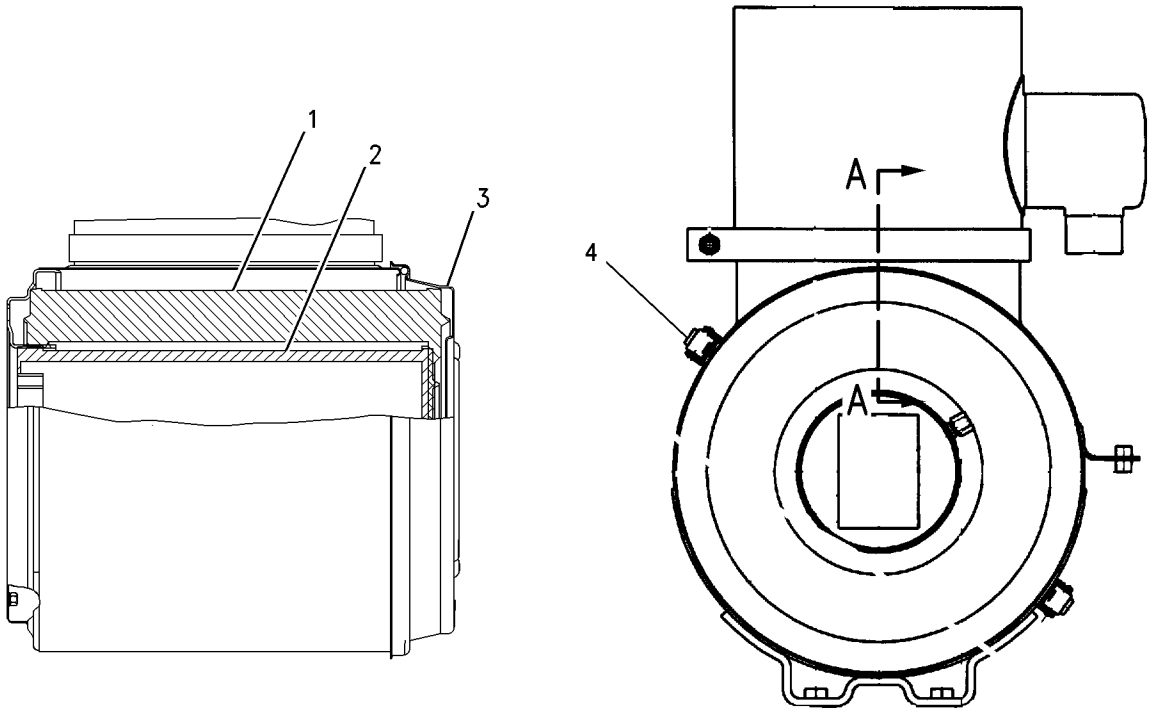

SECTION A-A

GRAPHIC #1 g00797535

AIR INLET AND EXHAUST SYSTEM

212-5958 AIR CLEANER GP

S/N: ATS1-UP

PART OF 162-5607 GENERAL AR

SMCS-1051, 1054, 7452 **i01786959**

NOTE	REF NO	GRAPHIC REF	PART NUMBER	QTY	PART NAME 1 2 3 4 5 6 (PRODUCT LEVEL)	SEE PAGE
	1	1	**7S-9396**	1	PRESCREENER AS	
		1	**0S-1591**	1	BOLT (3/8-16X1.5 IN)	
		1	**6V-8801**	1	NUT (3/8-16 THD)	
	2	1	**8N-2694**	1	INDICATOR AS (AIR FILTER CHANGE)	
	3	1	**8T-4987**	2	CLAMP-HOSE	
	4	1	**9M-0164**	2	CLAMP-HOSE	
Y	5	1	**174-1612**	1	AIR CLEANER GP	85
	6	1	**174-1613**	1	BRACKET AS	
M		1	**8T-3490**	2	NUT-WELD (M10X1.5 THD)	
	7	1	**193-1758**	1	BRACKET AS	
M		1	**8T-3490**		NUT-WELD (M10X1.5 THD)	
	8	1	**194-5140**	1	TUBE AS	
	10	1	**4J-5477**	2	SEAL-O-RING	
	11	1	**5K-5068**	1	FITTING	
	12	1	**7X-0492**	1	ELBOW	
	13	1	**7X-7729**	10	WASHER (11X25X3MM THK)	
	14	1	**8T-4128**	1	ADAPTER	
M	15	1	**8T-4195**	8	BOLT (M10X1.5X30MM)	
M	16	1	**8T-4196**	2	BOLT (M10X1.5X35MM)	
E	17	1	**5P-2817**		HOSE (44CM)	

E-ORDER BY THE CENTIMETER
M-METRIC PART
Y-SEPARATE ILLUSTRATION

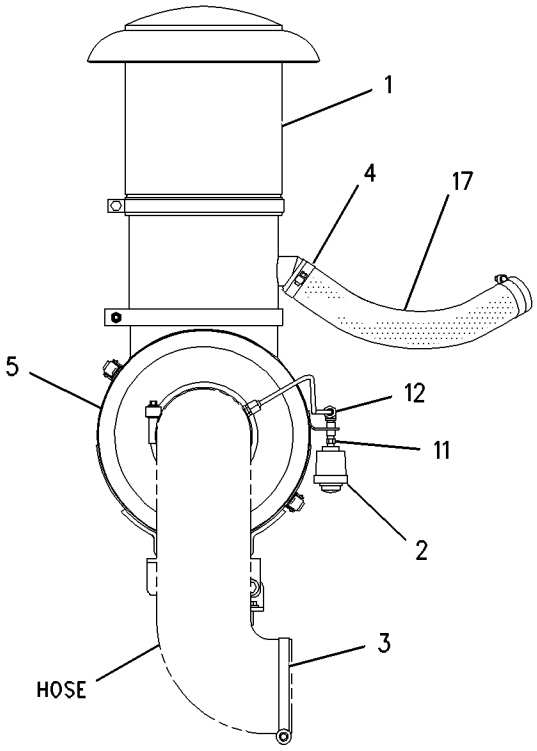

RIGHT SIDE VIEW

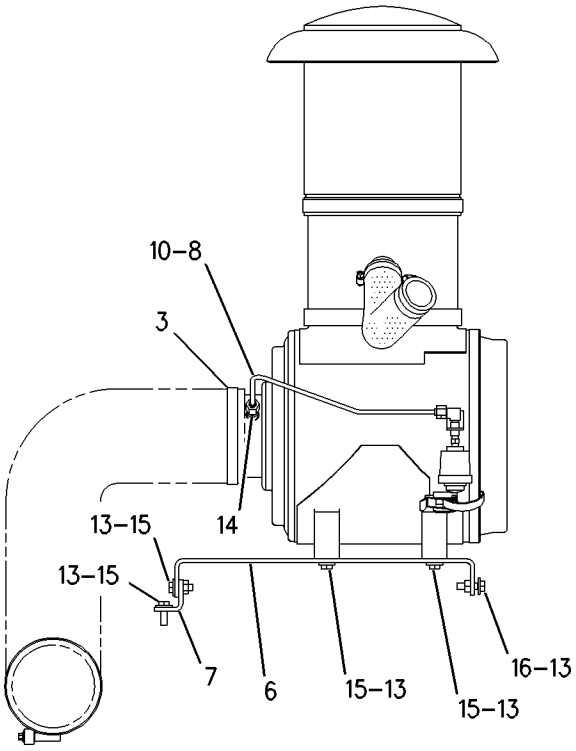

FRONT VIEW

GRAPHIC #1

g00937395

AIR INLET AND EXHAUST SYSTEM

148-2142 MANIFOLD GP-EXHAUST

S/N: 5ED478-UP
FRONT EXHAUST
PART OF 204-7983 ENGINE AR

SMCS-1059 **i01458406**

NOTE	REF NO	GRAPHIC REF	PART NUMBER	QTY	PART NAME 1 2 3 4 5 6 (PRODUCT LEVEL)	SEE PAGE
M	1	1	**3E-8017**	12	LOCKNUT (M10X1.5)	
	2	1	**4P-4369**	12	SPACER	
	3	1	**4P-8279**	1	MANIFOLD-EXHAUST	
	4	1	**4P-8280**	1	MANIFOLD-EXHAUST	
	5	1	**166-6338**	1	MANIFOLD-EXHAUST	
	6	1	**109-5313**	6	GASKET	
M	7	1	**116-3715**	12	STUD-TAPERLOCK (M10X1.5X85MM)	
	8	1	**6V-5839**	12	WASHER (11X21X2.5MM THK)	
M	9	1	**9X-8281**	4	STUD-TAPERLOCK (M10X1.5X45MM)	

M-METRIC PART

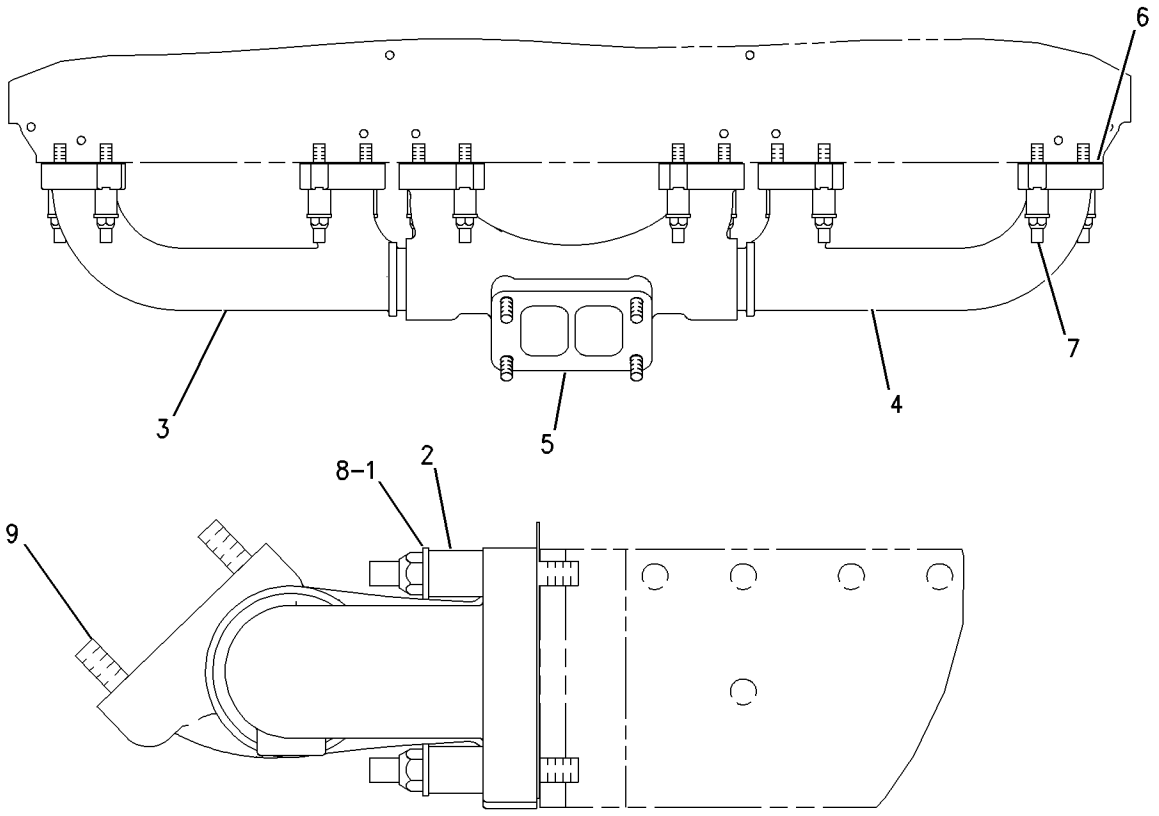

GRAPHIC #1 g00690384

AIR INLET AND EXHAUST SYSTEM

116-5405 MANIFOLD GP-INLET

S/N: 5ED478-UP
STANDARD TOP CENTER INLET
PART OF 204-7983 ENGINE AR

SMCS-1058 **i01534318**

NOTE	REF NO	GRAPHIC REF	PART NUMBER	QTY	PART NAME 1 2 3 4 5 6 (PRODUCT LEVEL)	SEE PAGE
	1	1	**7W-5164**	3	GASKET	
	2	1	**6V-5839**	12	WASHER (11X21X2.5MM THK)	
M	3	1	**6V-7981**	6	BOLT (M10X1.50X70MM)	
M	4	1	**6V-5842**	6	BOLT (M10X1.50X40MM)	
	5	1	**116-5406**	1	MANIFOLD-INLET	
	6	1	**8T-6767**	1	PLUG-PIPE	
	7	1	**8T-6765**	1	PLUG-PIPE	
	8	1	**9S-4191**	1	PLUG-STRAIGHT THREAD	
	9	1	**3J-1907**	1	SEAL-O-RING	

M-METRIC PART

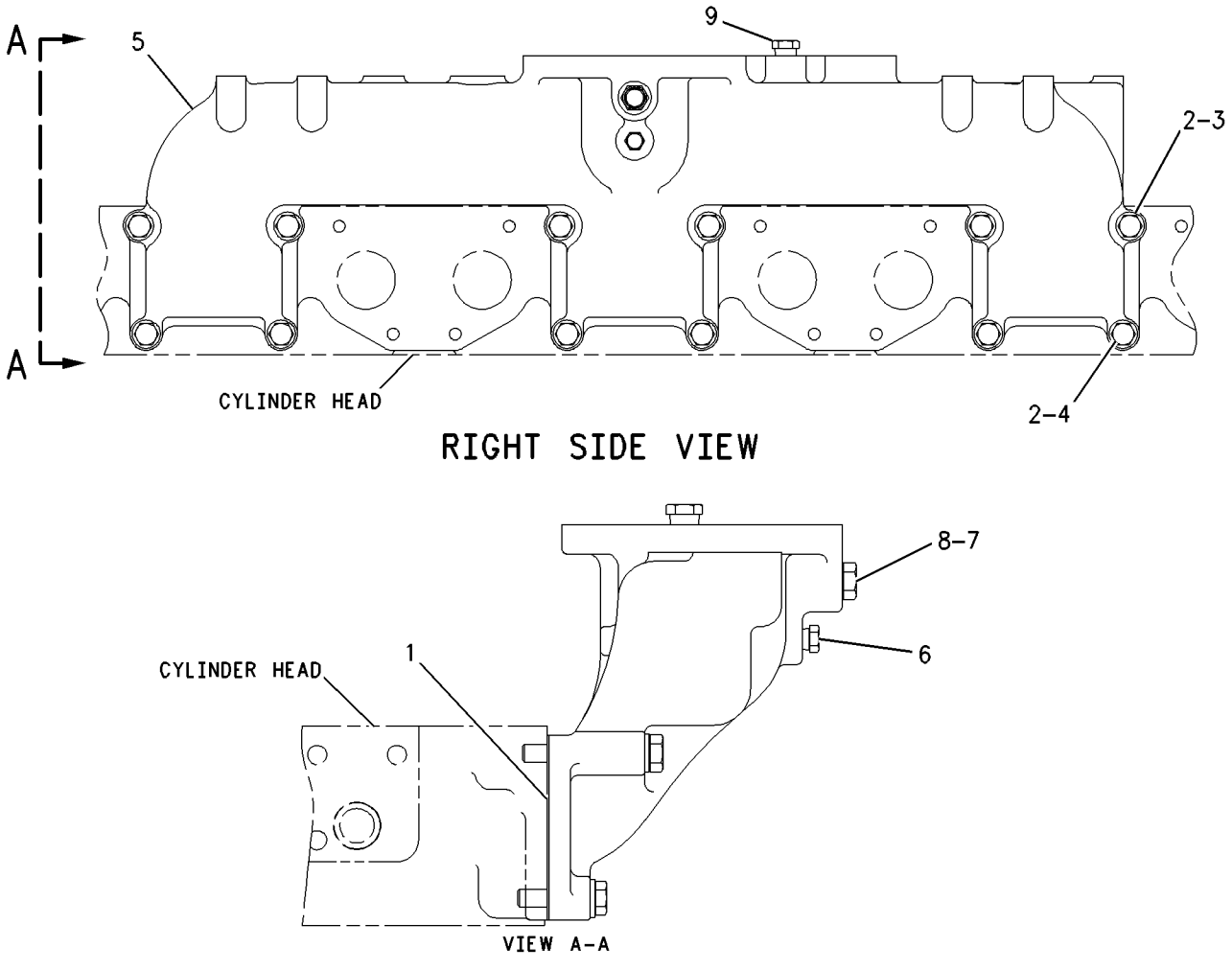

GRAPHIC #1 g00796669

AIR INLET AND EXHAUST SYSTEM

212-5959 MUFFLER GP

S/N: ATS1-UP

PART OF 162-5607 GENERAL AR

SMCS-1062 **i01786960**

NOTE	REF NO	GRAPHIC REF	PART NUMBER	QTY	PART NAME 1 2 3 4 5 6 (PRODUCT LEVEL)	SEE PAGE
	1	1	**4P-0659**	1	CLAMP	
	2	1	**9N-1941**	1	CLAMP-V-BAND	
		1	**8T-0122**	1	NUT-FULL (1/4-28 THD)	
	3	1	**141-1480**	1	CLAMP AS	
	4	1	**203-7726**	1	EJECTOR AS	
	5	1	**207-9826**	1	SHIELD-HEAT	
	6	1	**209-3332**	1	PLATE AS	
	7	1	**209-3334**	1	PLATE AS	
	8	1	**212-6961**	1	MUFFLER AS	
	9	1	**212-6962**	1	PLATE AS	
	10	1	**212-6963**	1	PLATE	
	11	1	**213-2263**	1	TUBE AS	
M	12	1	**085-8091**	3	BOLT (M10X1.5X55MM)	
	13	1	**0T-0065**	1	BOLT (3/8-16X3.5 IN)	
	14	1	**198-4777**	4	WASHER-HARD (11X25X10MM THK)	
	15	1	**5M-2894**	2	WASHER-HARD (10.2X18.5X2.5MM THK)	
	16	1	**6V-8801**	1	NUT (3/8-16 THD)	
	17	1	**7X-7729**	6	WASHER (11X25X3MM THK)	
	18	1	**8T-4121**	4	WASHER-HARD (11X21X2.5MM THK)	
M	19	1	**8T-4195**	7	BOLT (M10X1.5X30MM)	
M	20	1	**8T-4196**	4	BOLT (M10X1.5X35MM)	

M-METRIC PART

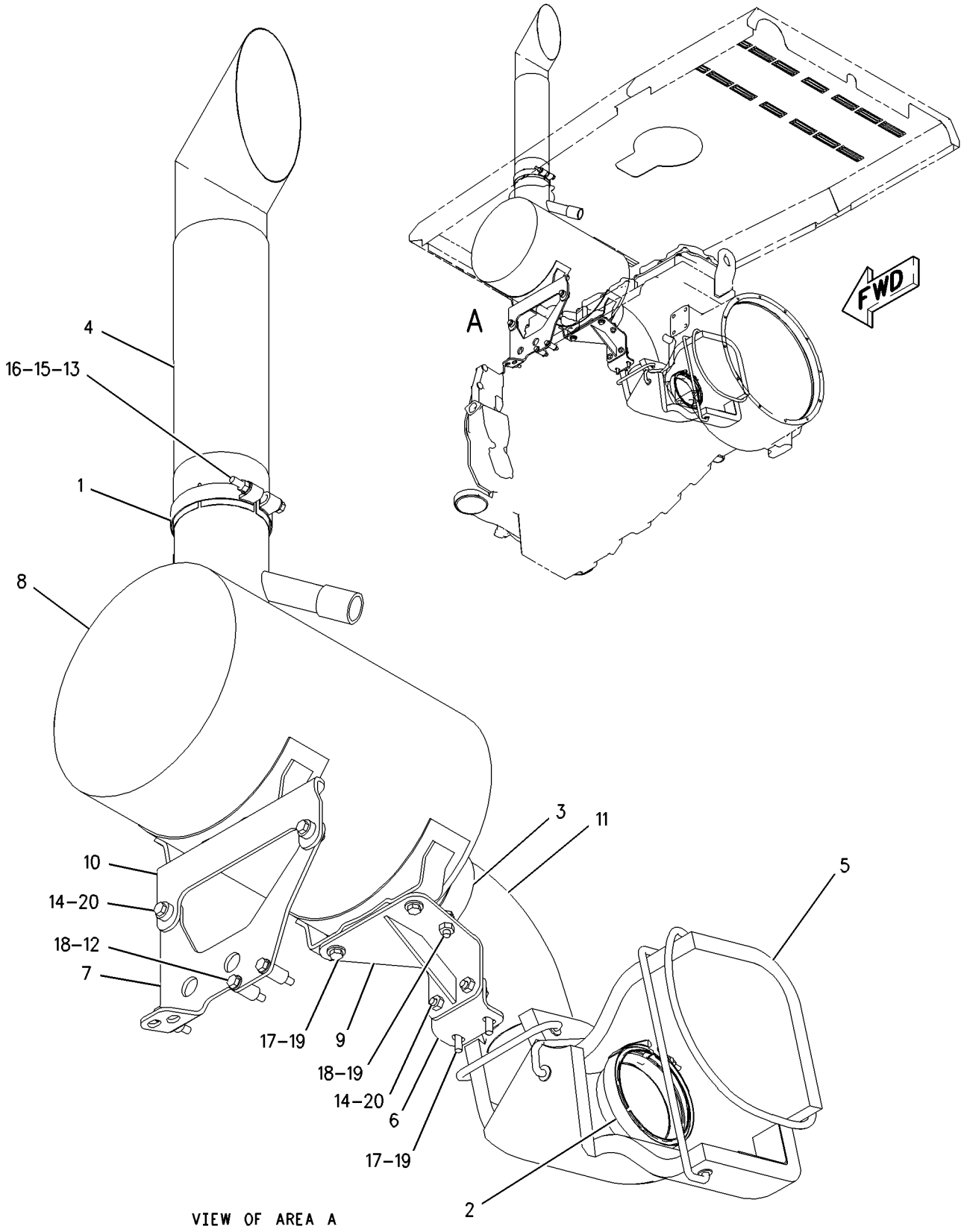

GRAPHIC #1

g00934693

AIR INLET AND EXHAUST SYSTEM

208-5871 TURBOCHARGER GP

S/N: 5ED478-UP

PART OF 204-7983 ENGINE AR

SMCS-1052 **i01833583**

NOTE	REF NO	GRAPHIC REF	PART NUMBER	QTY	PART NAME 1 2 3 4 5 6 (PRODUCT LEVEL)	SEE PAGE
	1	1	**1S-4295**	1	GASKET-TURBOCHARGER	
Y	2	1	**214-6091**	1	TURBOCHARGER GP	93
M	3	1	**3E-8017**	4	LOCKNUT	

M-METRIC PART
Y-SEPARATE ILLUSTRATION

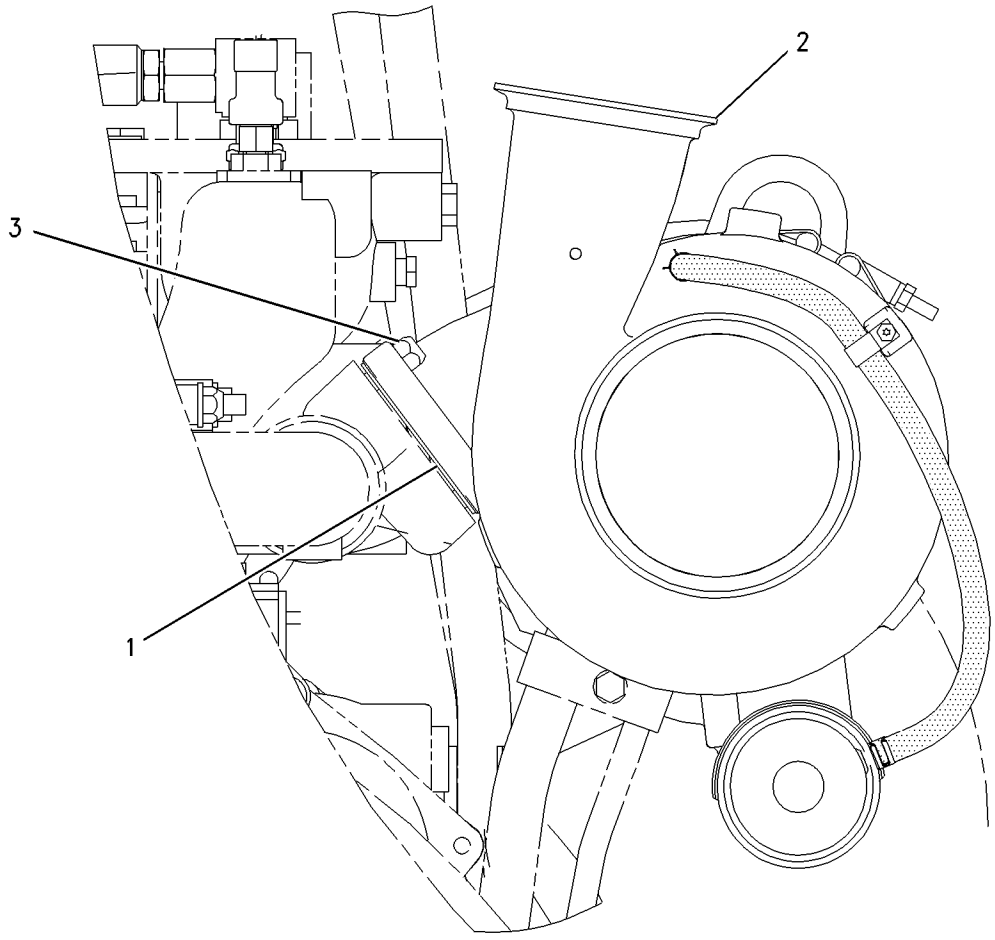

LEFT SIDE VIEW

GRAPHIC #1 g00937842

AIR INLET AND EXHAUST SYSTEM

214-6091 TURBOCHARGER GP

S/N: 5ED478-UP

PART OF 208-5871 TURBOCHARGER GP

SMCS-1052 **i01833591**

NOTE	REF NO	GRAPHIC REF	PART NUMBER	QTY	PART NAME 1 2 3 4 5 6 (PRODUCT LEVEL)	SEE PAGE
	1	1	**162-7490**	1	HOSE-WASTEGATE	
	2	1	**161-6963**	2	CLAMP	
	3	1	**161-6958**	1	CLIP-HOSE	
	4	1	**115-7087**	1	BOLT	
R	5	1	**190-6222**	1	CARTRIDGE GP-TURBOCHARGER	
	6	1	**214-6094**	1	HOUSING AS-TURBINE	
	7	1	**137-8930**	1	COVER AS-COMPRESSOR	
	8	1	**2V-4868**	1	FITTING (1/8-27 PTF)	
	9	1	**123-8253**	1	CLAMP AS (TURBINE)	
	10	1	**4W-9977**	1	CLAMP AS (COMPRESSOR)	

R-REMFG PART MAY BE AVAILABLE

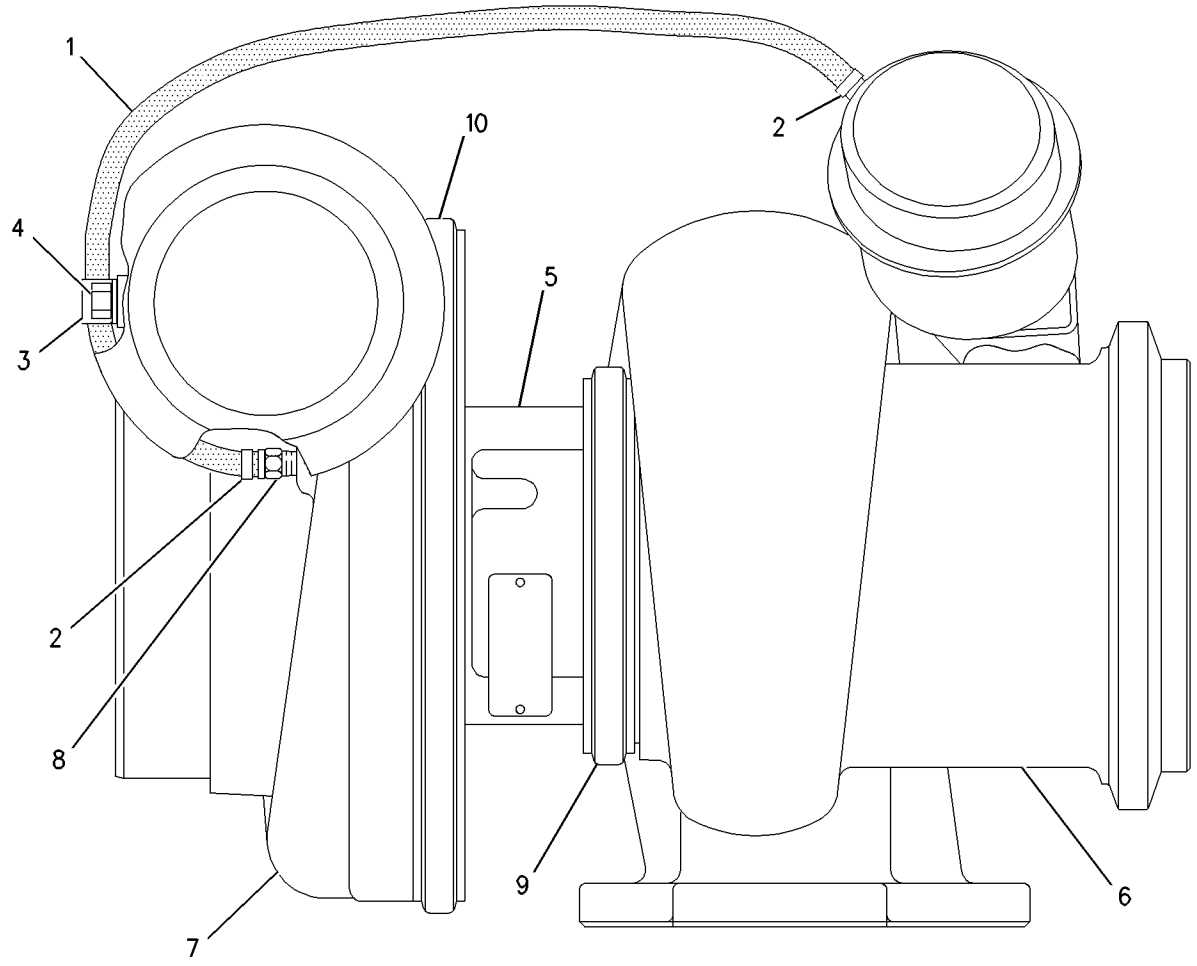

GRAPHIC #1 g00721908

FUEL SYSTEM

204-9756 ADAPTER GP-FAST FILL FUEL

S/N: ATS1-UP
AN ATTACHMENT

SMCS-1710 **i01789085**

NOTE	REF NO	GRAPHIC REF	PART NUMBER	QTY	PART NAME 1 2 3 4 5 6 (PRODUCT LEVEL)	SEE PAGE
	1	1	**8T-4984**	4	CLAMP-HOSE	
	2	1	**8T-6703**	6	CLAMP-HOSE	
I	3	1	**8W-6132**	1	HOSE AS	
	4	1	**9D-0630**	1	CAP-DUST	
	5	1	**127-4471**	1	CLAMP-HOSE	
	6	1	**197-4637**	2	FITTING (QUICK)	
	7	1	**197-4638**	2	COUPLER (QUICK)	
	8	1	**212-4635**	1	ADAPTER AS	
	9	1	**212-6235**	1	TUBE AS	
	10	1	**213-0480**	1	HOSE	
	11	1	**213-0482**	1	HOSE	
	12	1	**213-1276**	1	PANEL AS	
	13	1	**213-3143**	1	BRACKET AS	
	14	1	**124-2463**	1	ADAPTER GP-FAST FILL FUEL	
E	15	1	**5P-1293**		HOSE (77CM)	
Y	16	1	**219-0702**	1	TANK GP-FUEL	119
	17	1	**219-7181**	1	BRACKET AS	
	18	1	**212-4671**		MANIFOLD AS	
	19	1	**224-6877**	1	HOSE	
	20	1	**224-6878**	1	HOSE	
	21	1	**0S-1621**	2	BOLT (1/2-13X1 IN)	
	22	1	**1A-1460**	2	BOLT (1/2-13X2 IN)	
	23	1	**1J-9671**	2	SEAL-O-RING	
	24	1	**1P-4582**	2	FLANGE-HALF	
	25	1	**2M-0849**	2	WASHER-HARD (13.5X25.5X5MM THK)	
	26	1	**4J-0527**	1	SEAL-O-RING	
M	27	1	**5P-7970**	1	NUT (M8X1.25 THD)	
	28	1	**5P-8245**	2	WASHER-HARD (13.5X25.5X3MM THK)	
	29	1	**6V-8397**	2	SEAL-O-RING (12.83MM OD)	
	30	1	**7D-1553**	1	CLIP	
	31	1	**7X-0901**	2	ELBOW	
	32	1	**8M-2773**	1	CLIP	
M	33	1	**8T-4189**	6	BOLT (M8X1.25X20MM)	
	34	1	**8T-4223**	4	WASHER-HARD (13.5X25.5X3MM THK)	
	35	1	**8T-4224**	6	WASHER-HARD (8.8X16X2MM THK)	
	36	1	**8T-8919**	4	BOLT (1/2-13X1.75 IN)	
E	37	1	**5P-6412**		HOSE (93CM)	
	38	1	**8T-4121**	1	WASHER-HARD (11X21X2.5MM THK)	
M	39	1	**8T-4191**	1	BOLT (M10X1.5X16MM)	

E-ORDER BY THE CENTIMETER
I-SEE HOSE FABRICATION GUIDE
M-METRIC PART
Y-SEPARATE ILLUSTRATION

204-9756 **ADAPTER GP-FAST FILL FUEL** ***(contd.)*** **i01789085**

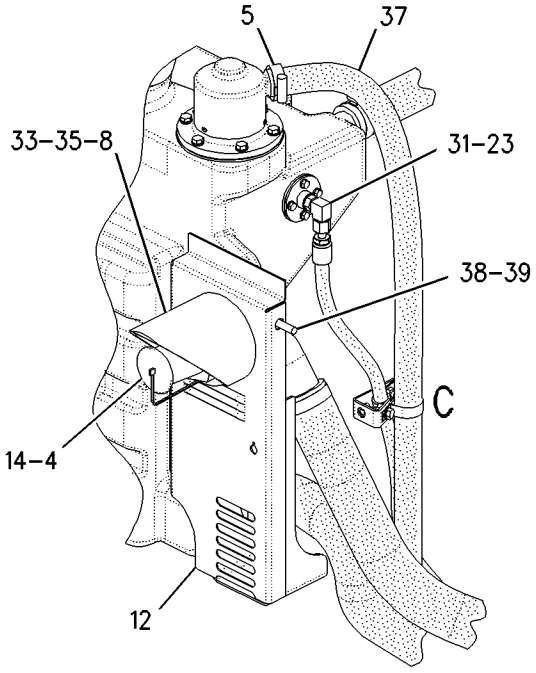

VIEW OF AREA A

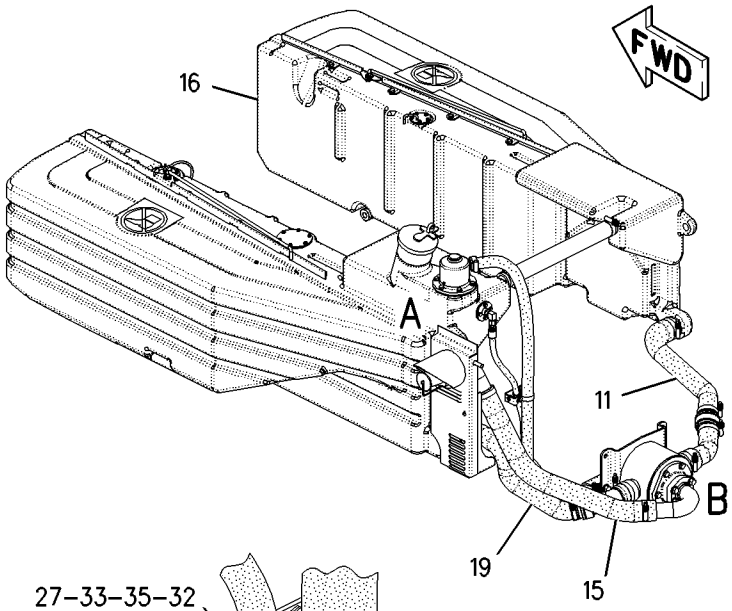

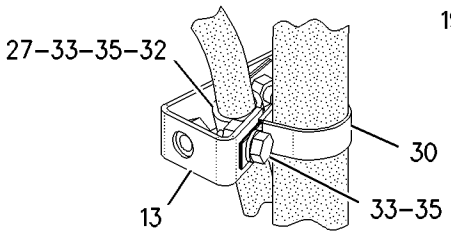

VIEW OF AREA C

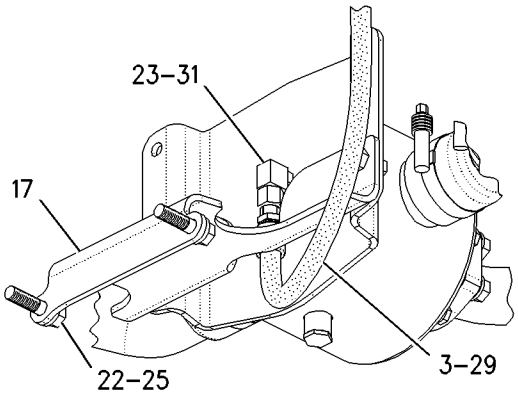

VIEW OF AREA D

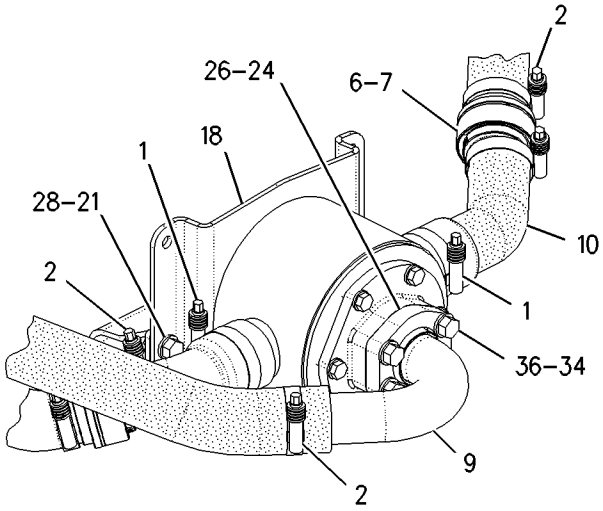

VIEW OF AREA B

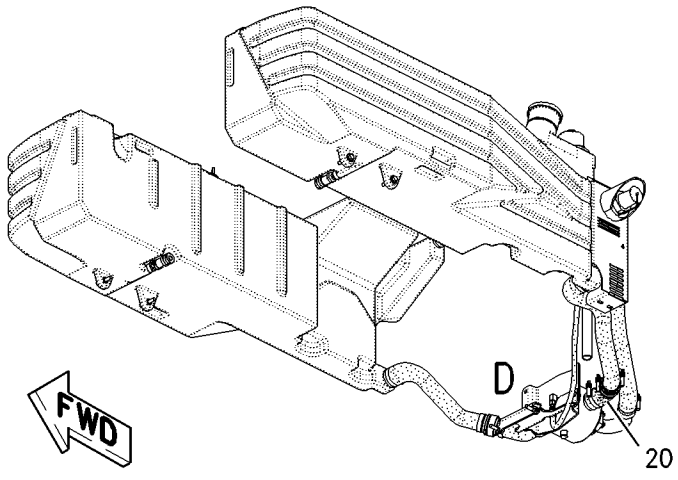

GRAPHIC #1 g00938432

FUEL SYSTEM

159-5935 CONTROL GP-GOVERNOR

S/N: ATS1-UP

PART OF 162-5607 GENERAL AR

SMCS-1265, 1276 **i01773515**

NOTE	REF NO	GRAPHIC REF	PART NUMBER	QTY	PART NAME 1 2 3 4 5 6 (PRODUCT LEVEL)	SEE PAGE
	1	1	**1B-2578**	1	NUT (3/8-16 THD)	
	2	1	**141-6343**	1	SPRING	
	3	1	**4D-4064**	1	ROD END	
	4	1	**5P-9209**	2	BEARING-ROLLER	
	5	1	**206-3599**	1	LEVER	
	6	1	**7F-0192**	1	BOLT (3/8-16X2 IN)	
	7	1	**7V-0446**	1	CLIP	
	8	1	**207-4927**	1	PEDAL-GOVERNOR CONTROL	
	9	1	**8X-3261**	1	LEVER	
	10	1	**116-5710**	1	GROMMET	
	11	1	**130-5300**	1	CLIP	
Y	12	1	**160-2443**	1	SENSOR GP-POSITION (THROTTLE)	202
	13	1	**161-7062**	1	HOUSING	
	14	1	**162-8218**	1	GASKET	
	15	1	**162-8219**	1	COVER	
	16	1	**168-8683**	1	SHAFT	
	17	1	**169-0921**	1	ROD END (INTERNAL THREAD)	
	18	1	**169-0922**	1	ROD	
	19	1	**172-0165**	1	SHAFT	
	20	1	**172-4211**	1	SPACER (10.5X22X50.8MM THK)	
	21	1	**009-0008**	1	SETSCREW-SOCKET (3/8-16X0.5 IN)	
	22	1	**206-3600**	1	LEVER	
	23	1	**129-3173**	1	BOLT-12 POINT HEAD (3/8-16X31.75MM)	
	24	1	**1B-0676**	1	PIN	
	25	1	**1B-8704**	3	KEY-WOODRUFF	
B	26	1	**2N-9421**	2	SPRING-DISC	
	27	1	**5P-1075**	2	WASHER-HARD (10.2X22.5X3MM THK)	
	28	1	**5P-1076**	1	WASHER-HARD (13.5X30X4MM THK)	
	29	1	**5S-7382**	2	BOLT (3/8-16X1.375 IN)	
M	30	1	**6V-2313**	2	BOLT (M5X0.8X30MM)	
	31	1	**6V-8801**	2	NUT (3/8-16 THD)	
	32	1	**8T-0328**	2	WASHER-HARD (5.5X10X1MM THK)	
	33	1	**8T-4121**	3	WASHER-HARD (11X21X2.5MM THK)	
M	34	1	**8T-4133**	2	NUT (M10X1.5 THD)	
M	35	1	**8T-4136**	3	BOLT (M10X1.5X25MM)	
M	36	1	**8T-4182**	2	BOLT (M10X1.5X45MM)	
	37	1	**8T-4226**	1	WASHER-PLATED (10.5X45X3MM THK)	
	38	1	**8T-5390**	1	BOLT (3/8-16X88.9MM)	
	39	1	**6V-0894**	1	SEAL-O-RING	
	40	1	**6V-8183**	1	NUT-FULL (3/8-24 THD)	

B-USE AS REQUIRED
M-METRIC PART
Y-SEPARATE ILLUSTRATION

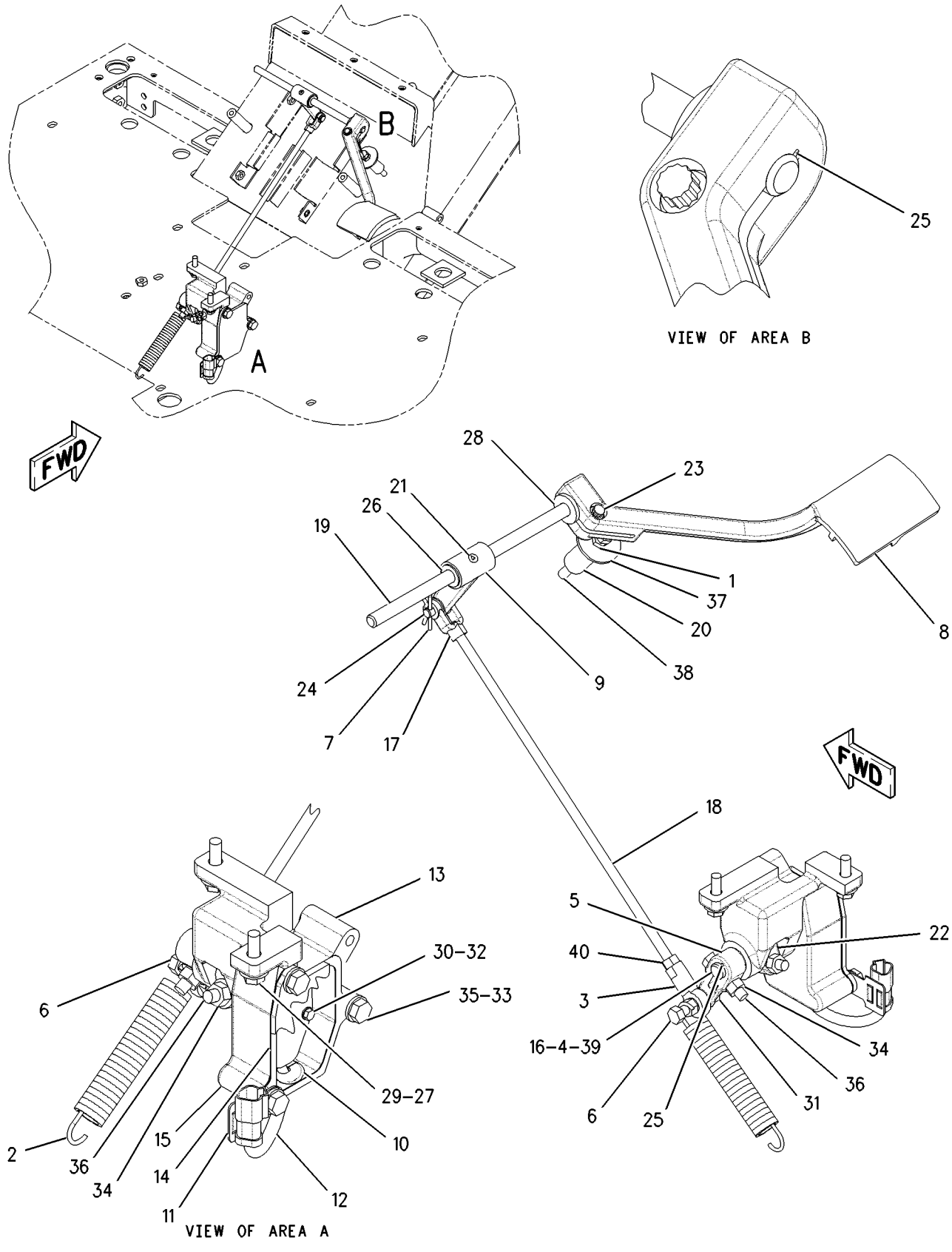

GRAPHIC #1 g00906785

116-5436 FILTER GP-FUEL

S/N: 5ED478-UP

PART OF 204-7983 ENGINE AR

SMCS-1261 **i01250482**

NOTE	REF NO	GRAPHIC REF	PART NUMBER	QTY	PART NAME 1 2 3 4 5 6 (PRODUCT LEVEL)	SEE PAGE
	1	1	**1R-0762**	1	FILTER AS-FUEL	

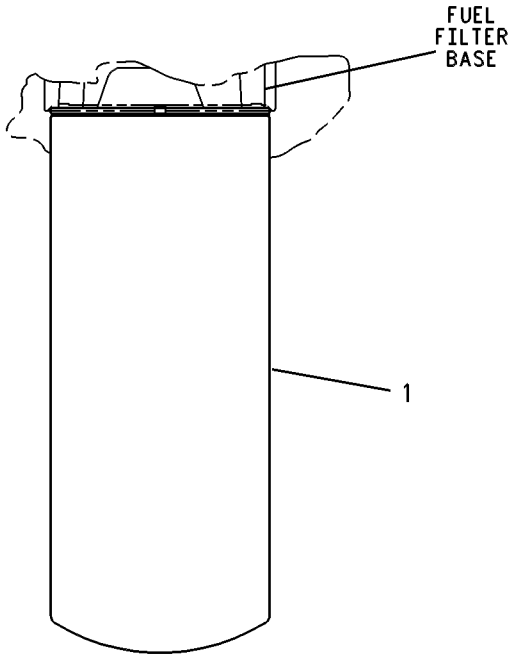

GRAPHIC #1 g00269424

FUEL SYSTEM

133-5671 FILTER GP-WATER SEP & FUEL–PRIMARY

S/N: ATS1-UP

PART OF 184-1479 LINES GP-FUEL

SMCS-1261, 1263 **i01838080**

NOTE	REF NO	GRAPHIC REF	PART NUMBER	QTY	PART NAME 1 2 3 4 5 6 (PRODUCT LEVEL)	SEE PAGE
	1	1	**195-1068**	1	BASE AS-FUEL FILTER	
	1A	1	**9S-4167**	1	STUD-HOLLOW	
	2	1	**133-5673**	1	ELEMENT-FILTER (FUEL/WATER SEPARATOR) (PRIMARY)	
	3	1	**129-0375**	1	BOWL AS-WATER COLLECTION	
					AVAILABLE REPLACEMENT PART(S):	
			141-0284		KIT-FUEL FILTER & WATER SEP	
					(THIS KIT PROVIDES REPLACEMENT SEALS FOR SEALS DAMAGED DURING INSTALLATION OF REPLACEMENT ELEMENT AND/OR BOWL)	
			155-2629	1	BOWL AS (12 VOLT HEATER) (FUEL/WATER SEPARATOR)	
			157-1206	1	BOWL AS-WATER COLLECTION (24 VOLT HEATER)	

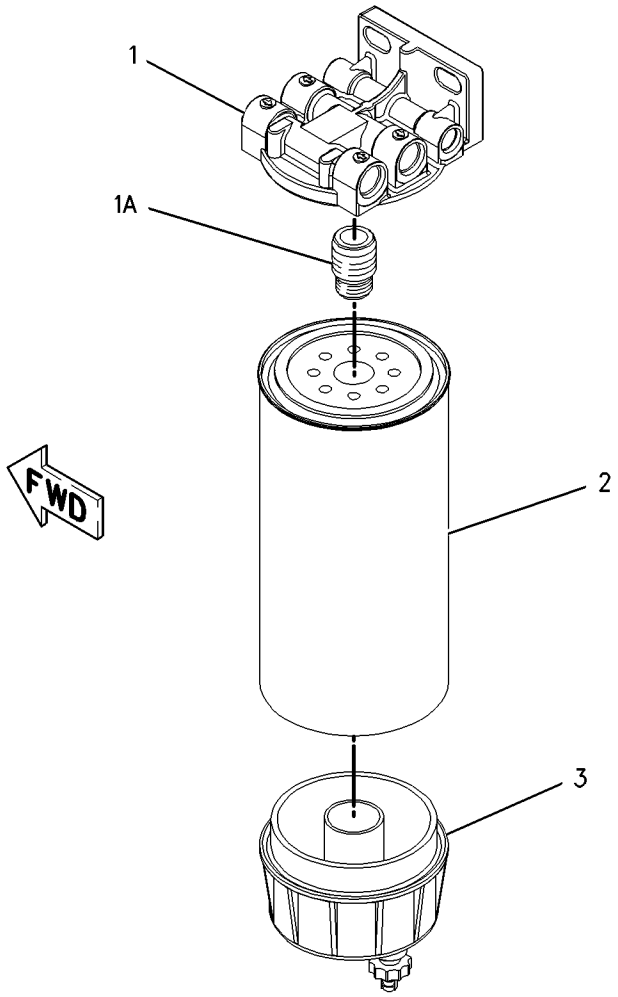

GRAPHIC #1 g00939866

FUEL SYSTEM

203-7685 INJECTOR GP-FUEL

S/N: 5ED478-UP

PART OF 189-0351 PUMP GP-FUEL INJECTION

SMCS-1290, 1713 **i01779522**

NOTE	REF NO	GRAPHIC REF	PART NUMBER	QTY	PART NAME 1 2 3 4 5 6 (PRODUCT LEVEL)	SEE PAGE
	1	1	**9X-7557**	1	SEAL-O-RING (FUEL SYSTEM)	
	2	1	**119-8784**	1	SEAL-O-RING (FUEL SYSTEM)	
	3	1	**215-3198**	1	SEAL (FUEL SYSTEM)	

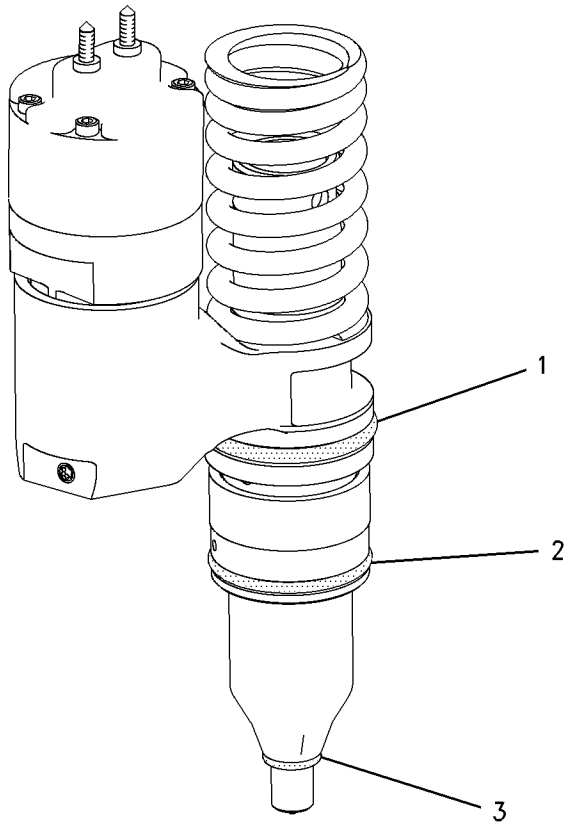

GRAPHIC #1 g00764911

FUEL SYSTEM

203-2204 LINES GP-DRAIN

S/N: ATS1-UP

PART OF 162-5607 GENERAL AR

SMCS-1274 **i01709779**

NOTE	REF NO	GRAPHIC REF	PART NUMBER	QTY	PART NAME 1 2 3 4 5 6 (PRODUCT LEVEL)	SEE PAGE
	1	1	**1P-7919**	1	COUPLER-MALE	
	2	1	**2P-6578**	1	PLATE-INSTRUCTION (CRANKCASE DRAIN AND FILL)	
	3	1	**6K-8420**	1	LOCKNUT	
	4	1	**7B-3028**	4	SCREW-DRIVE (NO 4X3/16 IN)	
	5	1	**9S-9272**	1	CAP AS (HIGH SPEED OIL CHANGE PORT)	
I	6	1	**205-2347**	1	HOSE AS	
	7	1	*153-6237*	1	ELBOW GP	
		1	**6V-9004**	1	ELBOW	
		1	**3D-2824**	1	SEAL-O-RING	
		1	**6V-9746**	1	SEAL-O-RING	
	8	1	**2H-3925**	1	LOCKWASHER	

I-SEE HOSE FABRICATION GUIDE

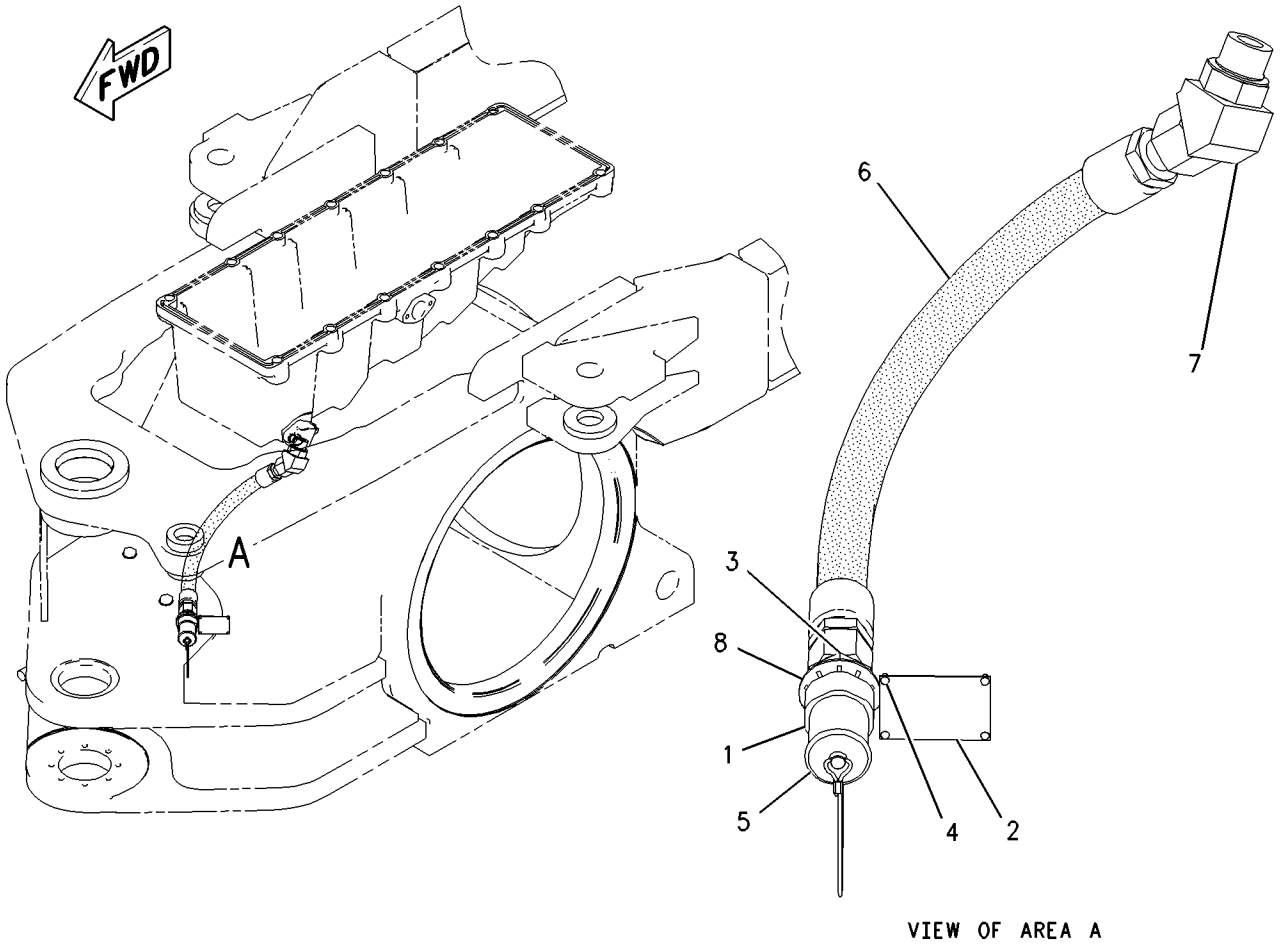

VIEW OF AREA A

GRAPHIC #1 g00912051

FUEL SYSTEM

184-1479 LINES GP-FUEL

S/N: ATS1-UP

PART OF 162-5607 GENERAL AR

SMCS-1274 **i01795733**

NOTE	REF NO	GRAPHIC REF	PART NUMBER	QTY	PART NAME 1 2 3 4 5 6 (PRODUCT LEVEL)	SEE PAGE
	1	2	**1F-7854**	1	SPACER (11.01X19.05X49.21MM THK)	
	2	1	**5P-4961**	1	CLAMP-HOSE	
	3	2	**8W-8527**	1	SLEEVE	
Y	4	1	**133-5671**	1	FILTER GP-WATER SEP & FUEL	99
	5	2	**177-4292**	1	CLIP AS	
I	6	1	**183-3072**	1	HOSE AS	
	7	1	**183-4386**	1	TUBE	
		1	**6V-8554**	2	NUT (13/16-16 THD)	
		1	**6V-8561**	2	SLEEVE	
	8	2	**194-2615**	2	FITTING	
I	9	2	**205-4839**	1	HOSE AS	
I	10	2	**205-4840**	1	HOSE AS	
I	11	2	**205-4842**	1	HOSE AS	
	12	1	*148-8318*	1	CONNECTOR GP	
		1	**6V-8634**	1	CONNECTOR	
		1	**3K-0360**	1	SEAL-O-RING	
		1	**6V-8397**	1	SEAL-O-RING	
	13	1	*148-8338*	1	CONNECTOR GP	
		1	**8T-0075**	1	CONNECTOR	
		1	**3J-1907**	1	SEAL-O-RING	
		1	**6V-8397**	1	SEAL-O-RING	
	14	2	*148-8340*	1	CONNECTOR GP	
		2	**6V-8639**	1	CONNECTOR	
		2	**3K-0360**	1	SEAL-O-RING	
		2	**6V-8398**	1	SEAL-O-RING	
	15	2	**148-8354**	3	ELBOW GP	
					(EACH INCLUDES)	
		2	**6V-9002**	1	ELBOW	
		2	**3K-0360**	1	SEAL-O-RING	
		2	**6V-8398**	1	SEAL-O-RING	
	16	1	*148-8374*	1	ELBOW GP	
		1	**6V-8723**	1	ELBOW	
		1	**3K-0360**	1	SEAL-O-RING	
		1	**6V-8397**	1	SEAL-O-RING	
	17	1	**148-8411**	2	PLUG GP	
					(EACH INCLUDES)	
		1	**9S-4185**	1	PLUG	
		1	**3K-0360**	1	SEAL-O-RING	
	18	1	*164-5572*	1	UNION AS	
		1	**6V-8731**	1	UNION-FACE SEAL	
		1	**6V-8398**	2	SEAL-O-RING	
	19	2	*164-5605*	2	CONNECTOR AS	
					(EACH INCLUDES)	
		2	**8T-0076**	1	CONNECTOR	
		2	**3K-0360**	1	SEAL-O-RING	
		2	**6V-8397**	1	SEAL-O-RING	
	20	2	*169-4279*	2	CONNECTOR GP	
					(EACH INCLUDES)	
		2	**8C-6872**	1	CONNECTOR	
		2	**6V-8398**	1	SEAL-O-RING	
I	21	2	**205-4841**	2	HOSE AS	
	22	1,2	**3S-8665**	4	CLIP	
	23	1	**4B-0418**	1	CLIP	
	24	1	**5P-4116**	2	WASHER-HARD (8.8X20.5X2MM THK)	
	25	2	**6D-3479**	1	CLIP	
	26	2	**6D-4246**	1	CLIP	

184-1479 **LINES GP-FUEL** ***(contd.)*** **i01795733**

NOTE	REF NO	GRAPHIC REF	PART NUMBER	QTY	PART NAME 1 2 3 4 5 6 (PRODUCT LEVEL)	SEE PAGE
	27	1,2	**8T-4121**	7	WASHER-HARD (11X21X2.5MM THK)	
M	28	1,2	**8T-4137**	6	BOLT (M10X1.5X20MM)	
M	29	2	**8T-5005**	1	BOLT (M10X1.50X70MM)	
M	30	1	**8T-7547**	2	BOLT (M8X1.25X30MM)	
E	31	1	**8C-6959**		HOSE (62CM)	

E-ORDER BY THE CENTIMETER
I-SEE HOSE FABRICATION GUIDE
M-METRIC PART
Y-SEPARATE ILLUSTRATION

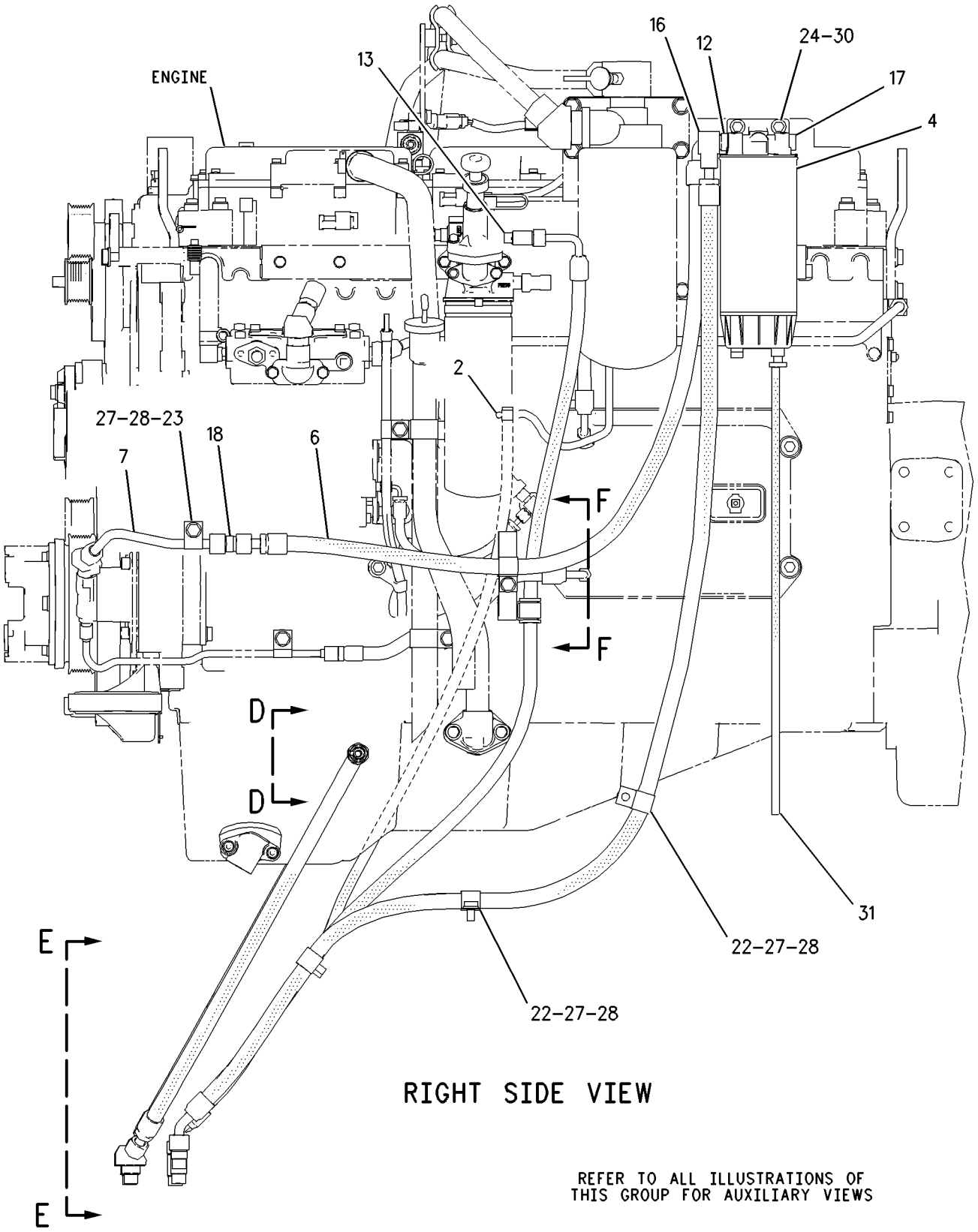

GRAPHIC #1 g00938687

184-1479 **LINES GP-FUEL** ***(contd.)*** **i01795733**

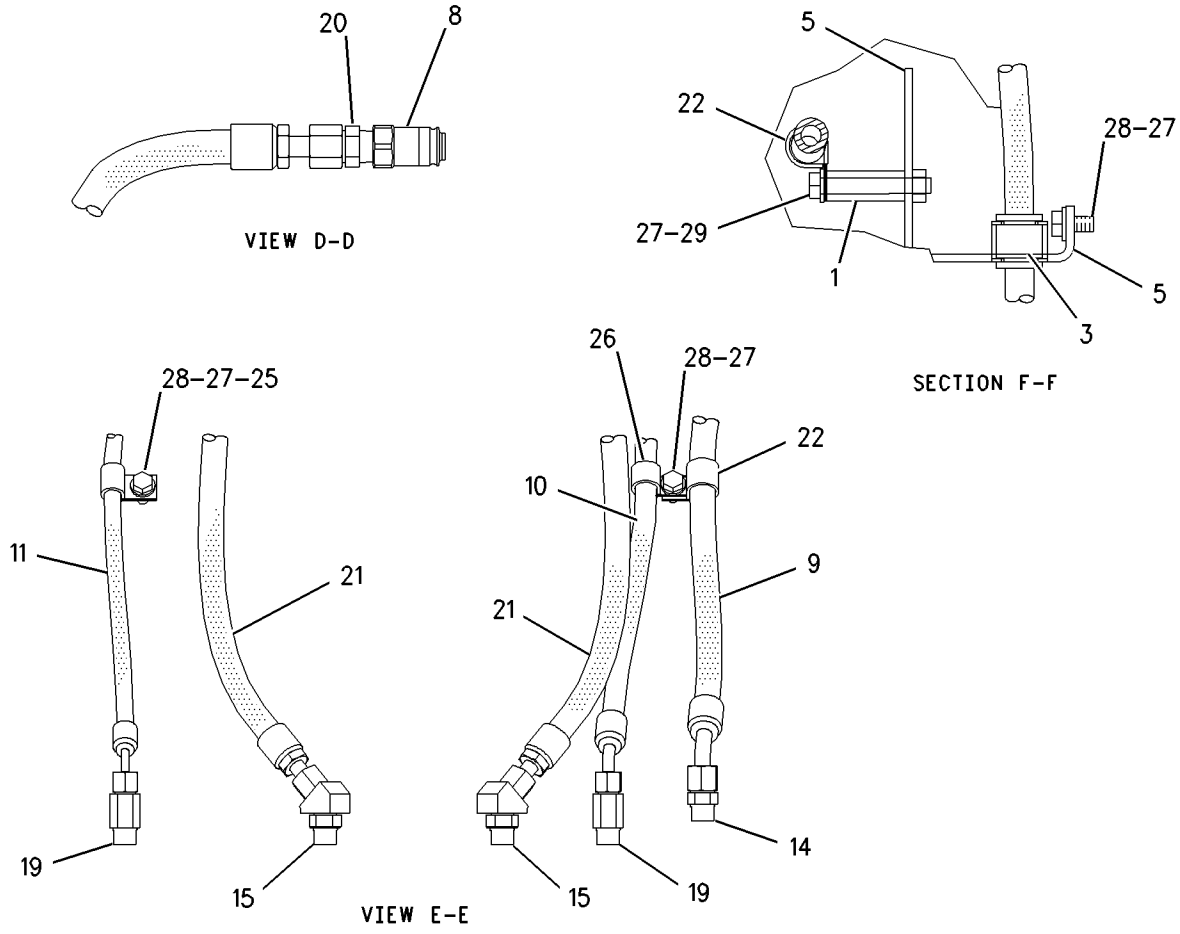

GRAPHIC #2

g00938688

222-6417 LINES GP-FUEL–CROSSOVER

S/N: ATS1-UP

PART OF 162-5607 GENERAL AR

SMCS-1274 **i01847765**

NOTE	REF NO	GRAPHIC REF	PART NUMBER	QTY	PART NAME 1 2 3 4 5 6 (PRODUCT LEVEL)	SEE PAGE
	1	1	**8T-4984**	4	CLAMP-HOSE	
	2	1	**208-0798**	1	HOSE (RH)	
	3	1	**230-8977**	1	FITTING (QUICK)	
	4	1	**230-8978**	1	COUPLER (QUICK)	
	5	1	**231-3323**	1	HOSE (LH)	
	6	1	**162-9523**	2	GROMMET	
	7	1	**6V-1572**	2	CLIP (SLOT)	
	8	1	**6V-1573**	2	CLIP (TAB)	
	9	1	**8T-4121**	2	WASHER-HARD (11X21X2.5MM THK)	
M	10	1	**8T-4195**	2	BOLT (M10X1.5X30MM)	

M-METRIC PART

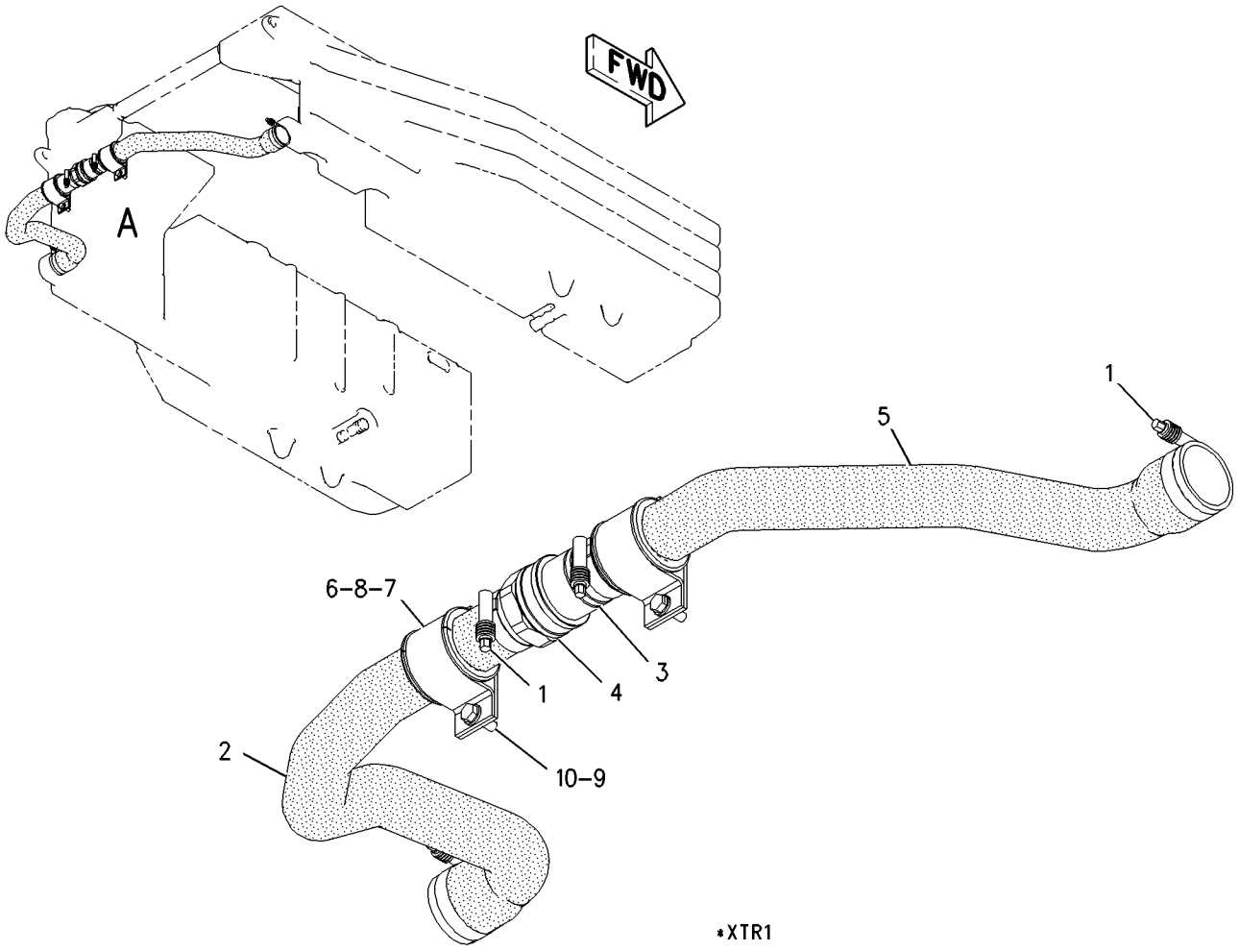

GRAPHIC #1 g00941197

MEMORANDA

FUEL SYSTEM

204-0638 LINES GP-FUEL INJECTION

S/N: 5ED478-UP
HIGH EFFICIENCY
PART OF 204-7983 ENGINE AR

SMCS-1252, 1254 **i01855768**

NOTE	REF NO	GRAPHIC REF	PART NUMBER	QTY	PART NAME 1 2 3 4 5 6 (PRODUCT LEVEL)	SEE PAGE
	1	1	**9C-5344**	1	SPACER (10.5X20X18MM THK)	
I	2	1	**116-5416**	1	HOSE AS	
I	3	1	**116-5418**	1	HOSE AS	
	4	1	**126-0179**	1	MANIFOLD-FUEL	
	5	1	**145-1780**	1	BASE AS	
		1	**9S-4167**	1	STUD-HOLLOW	
Y	6	1	**156-5783**	1	VALVE GP-CHECK (FUEL)	122
	7	1	**030-7947**	1	ELBOW	
	8	1	**3J-1907**	5	SEAL-O-RING	
	9	1	**5P-3456**	6	SEAL-O-RING	
	10	1	**6V-4589**	1	SEAL-O-RING	
M	11	1	**6V-5218**	5	BOLT (M8X1.25X35MM)	
	12	1	**6V-8676**	1	SEAL-O-RING	
	13	1	**8M-2773**	1	CLIP	
M	14	1	**8T-0276**	2	BOLT (M8X1.25X45MM)	
	15	1	**8T-4121**	1	WASHER-HARD (11X21X2.5MM THK)	
M	16	1	**8T-4186**	1	BOLT (M10X1.5X40MM)	
	17	1	**9M-1974**	7	WASHER-HARD (8.8X16X2MM THK)	
	18	1	**9S-4191**	1	PLUG	
	19	1	**9S-8004**	3	PLUG	

I-SEE HOSE FABRICATION GUIDE
M-METRIC PART
Y-SEPARATE ILLUSTRATION

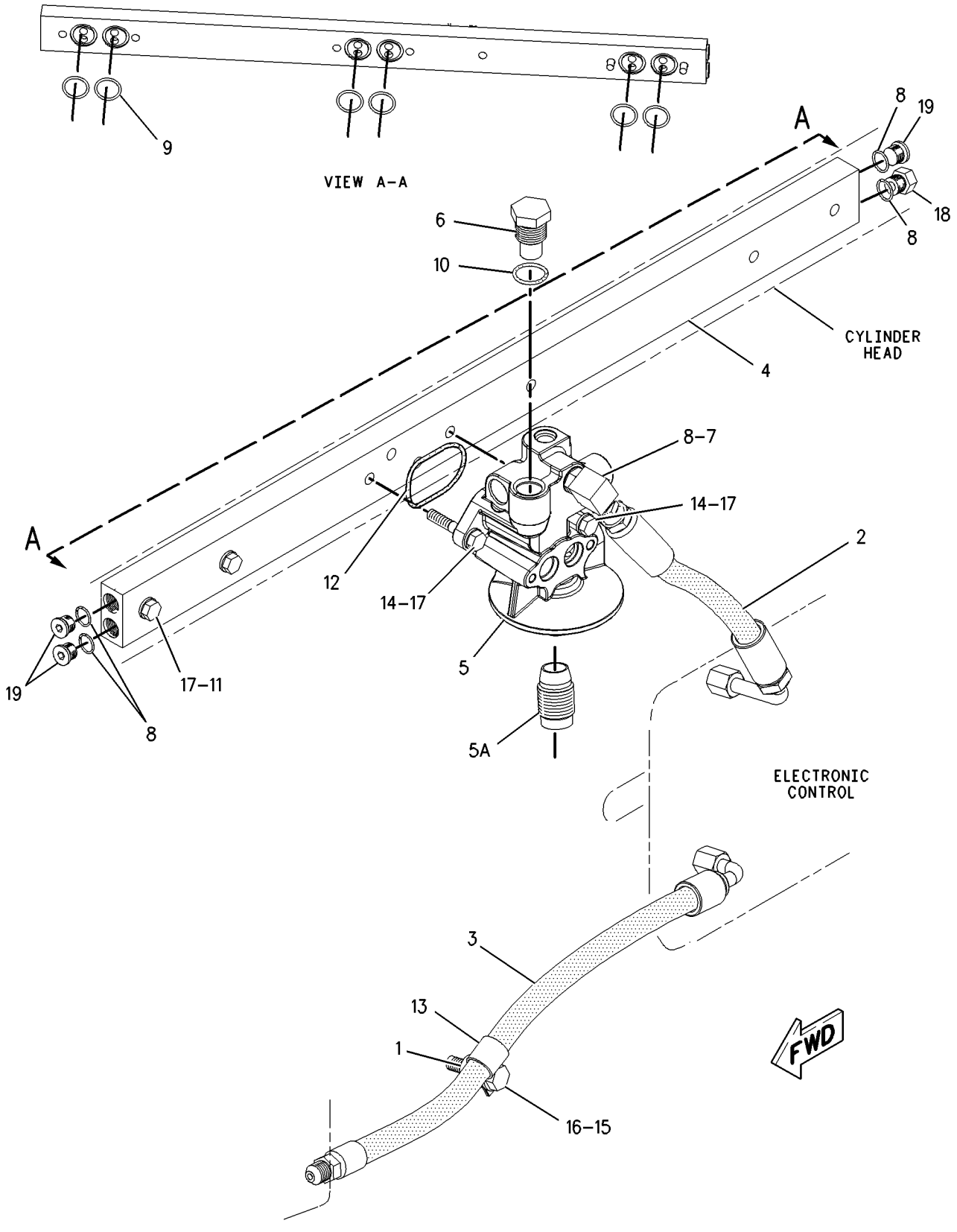

GRAPHIC #1 g00946391

FUEL SYSTEM

116-5428 PUMP & MTG GP-FUEL TRANSFER

S/N: 5ED478-UP

PART OF 204-7983 ENGINE AR

SMCS-1256 **i01816412**

NOTE	REF NO	GRAPHIC REF	PART NUMBER	QTY	PART NAME 1 2 3 4 5 6 (PRODUCT LEVEL)	SEE PAGE
	1	1	**092-2570**	2	WASHER-SEALING	
C	2	1	**190-3443**	1	PUMP GP-FUEL TRANSFER	
C	3	1	**193-3982**	1	TUBE AS	
	4	1	**2R-6806**	1	CONNECTOR	
	5	1	**3J-1907**	1	SEAL-O-RING	
	6	1	**6D-1004**	1	GASKET	
	7	1	**6V-5839**	1	WASHER (11X21X2.5MM THK)	
M	8	1	**6V-6317**	1	BOLT (M10X1.5X20MM)	
	9	1	**5P-9297**	1	CLIP	
M	10	1	**8T-1159**	2	BOLT-SOCKET HEAD (M10X1.5X25MM)	

C-CHANGE FROM PREVIOUS TYPE
M-METRIC PART

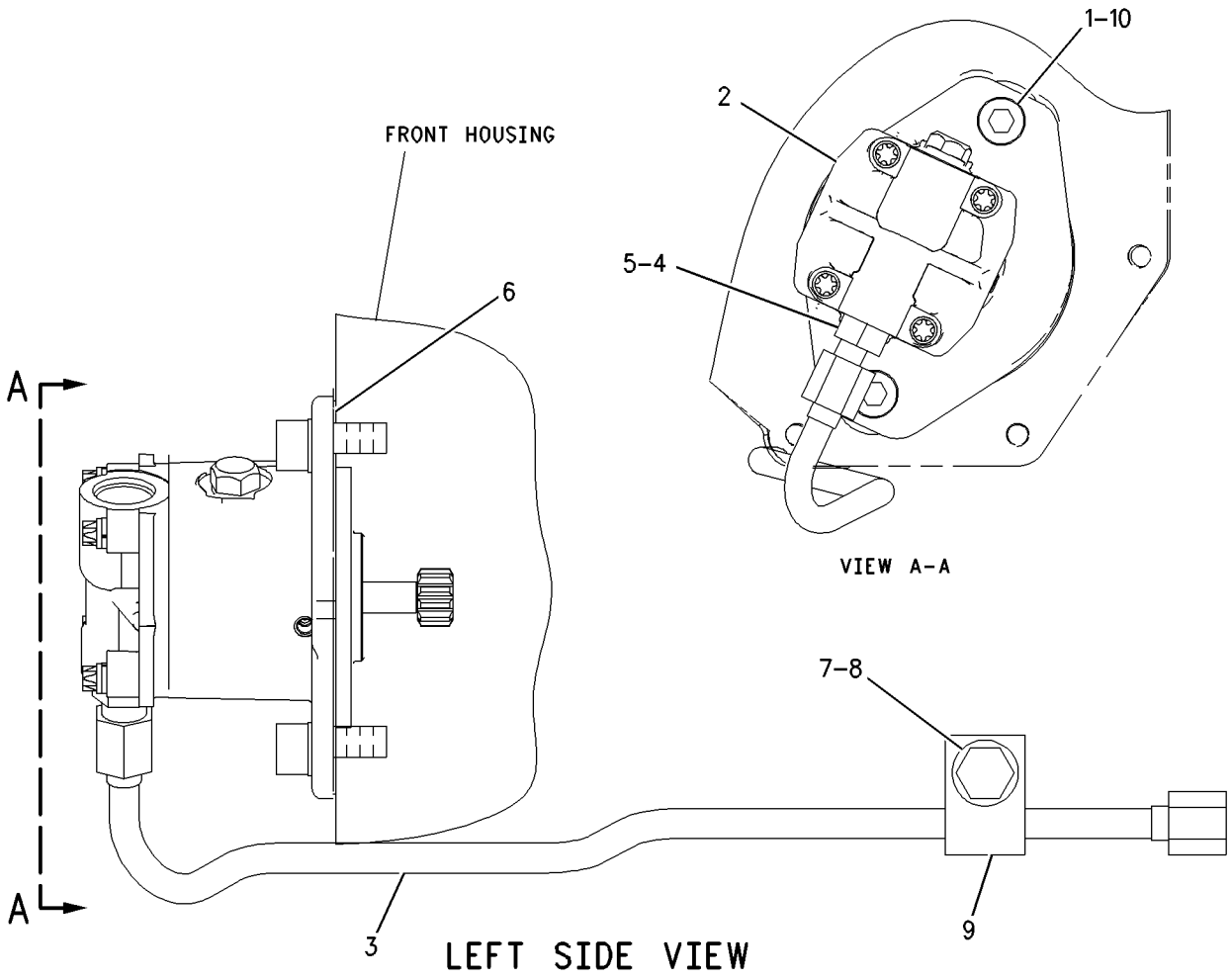

GRAPHIC #1 g00832171

189-0351 PUMP GP-FUEL INJECTION

S/N: 5ED478-UP

PART OF 204-7983 ENGINE AR

SMCS-1251 **i01776226**

NOTE	REF NO	GRAPHIC REF	PART NUMBER	QTY	PART NAME 1 2 3 4 5 6 (PRODUCT LEVEL)	SEE PAGE
CY	1	1	**203-7685**	1	INJECTOR GP-FUEL	100
M	2	1	**152-3001**	1	BOLT-HEX HEAD (8X1.25MM X 70MM)	
	3	1	**7C-8851**	1	CLAMP-INJECTOR	
	4	1	**4P-8525**	1	SPACER (30MM LG)	

C-CHANGE FROM PREVIOUS TYPE
M-METRIC PART
Y-SEPARATE ILLUSTRATION

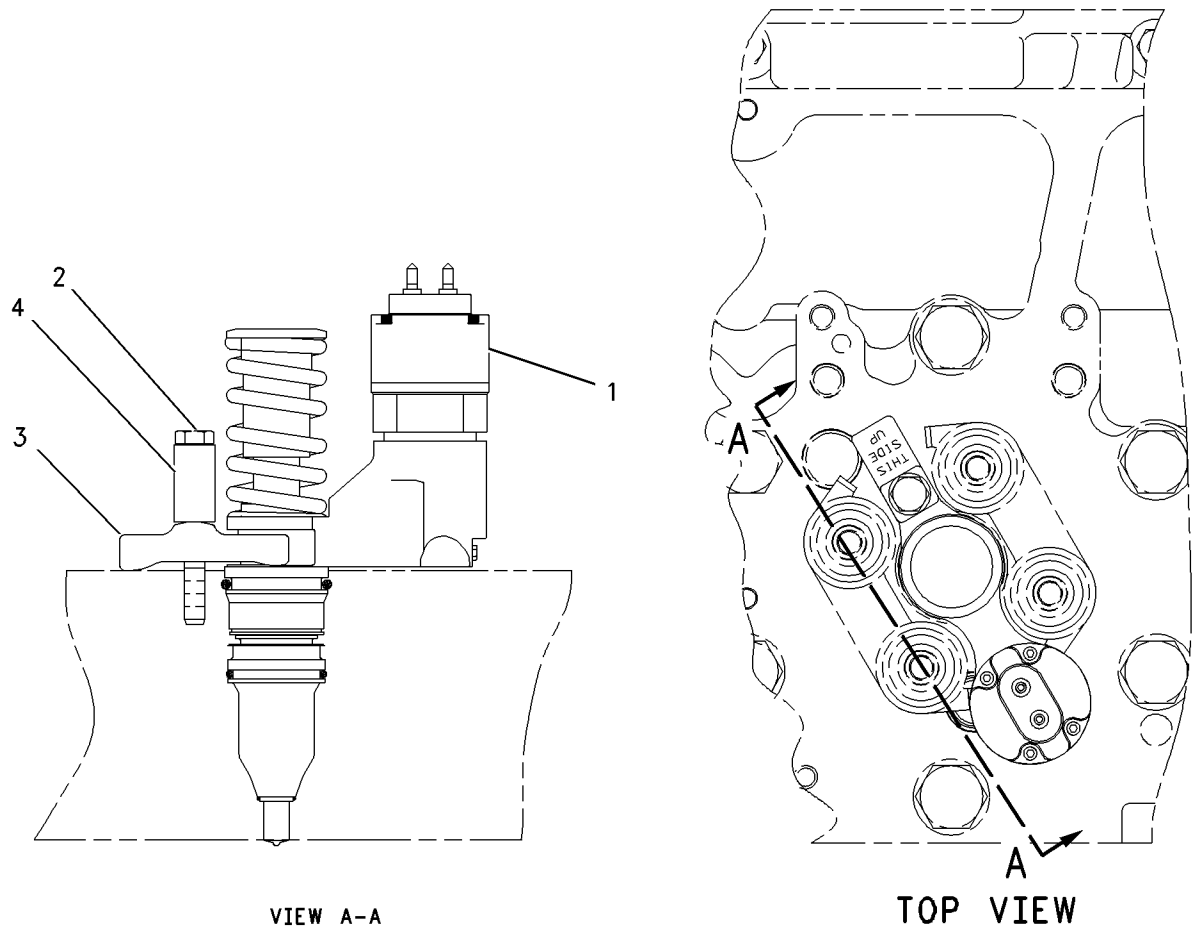

GRAPHIC #1 g00908357

FUEL SYSTEM

116-5438 PUMP GP-FUEL PRIMING

S/N: 5ED478-UP

PART OF 204-7983 ENGINE AR

SMCS-1258 **i00613468**

NOTE	REF NO	GRAPHIC REF	PART NUMBER	QTY	PART NAME 1 2 3 4 5 6 (PRODUCT LEVEL)	SEE PAGE
	1	1	**7C-4993**	1	ADAPTER-PRIMING PUMP	
	2	1	**1P-0436**	2	GASKET	
M	3	1	**6V-2317**	1	BOLT (M8X1.25X30MM)	
	4	1	**9M-1974**	2	WASHER-HARD (2MM THK)	
M	5	1	**8T-0640**	1	BOLT (M6X1.0X30MM)	
	6	1	**5P-0537**	2	WASHER (2MM THK)	
	7	1	**1B-7182**	1	BOLT (5/16-18X1.25IN)	
	8	1	**9F-6580**	1	BOLT (1/4-20X1.125IN)	
	9	1	**105-2508**	1	PUMP AS-FUEL PRIMING	
		1	**7E-5346**	1	VALVE AS	
		1	**7F-8607**	1	SEAL-O-RING (18.72MM ID)	

M-METRIC PART

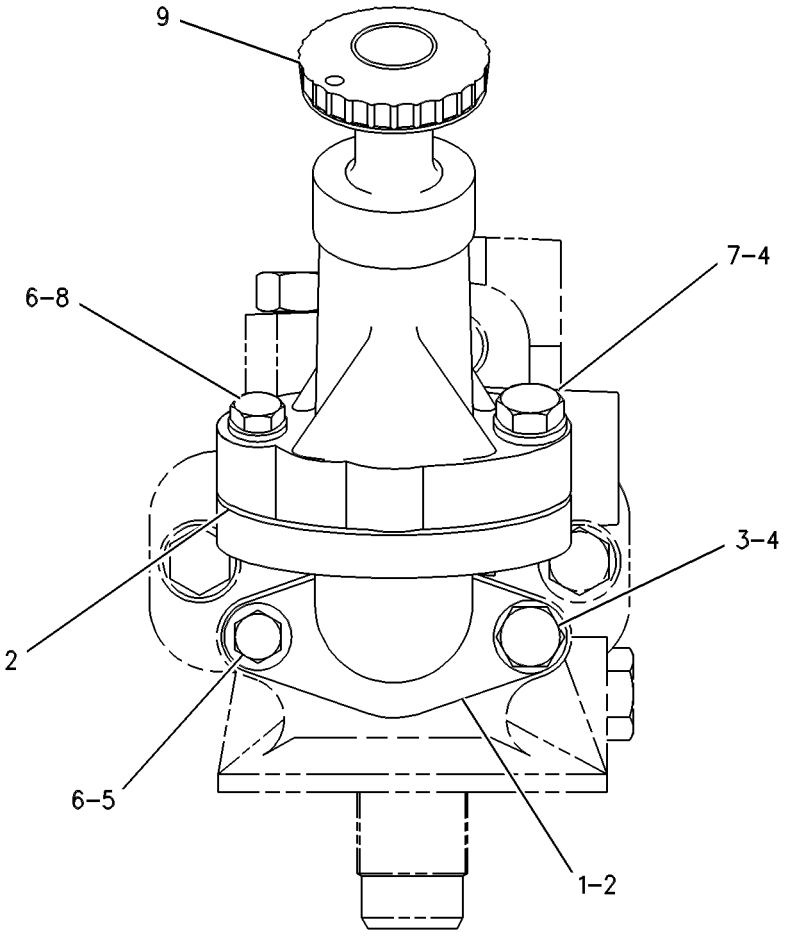

GRAPHIC #1 g00273435

MEMORANDA

161-1126 TANK GP-FUEL

S/N: ATS1-UP

PART OF 162-5607 GENERAL AR

SMCS-1273 **i01795625**

NOTE	REF NO	GRAPHIC REF	PART NUMBER	QTY	PART NAME 1 2 3 4 5 6 (PRODUCT LEVEL)	SEE PAGE
	1	1	**7X-1387**	4	WASHER (10.26X22.22X1.9MM THK)	
	2	1	**8T-6703**	2	CLAMP-HOSE	
	3	1	**113-8457**	2	ROD	
	4	1	**174-5692**	4	SPACER (13.87X21.33X28MM THK)	
Y	5	1	**208-0801**	1	TANK GP-FUEL (LH)	116
Y	6	1	**208-0802**	1	TANK GP-FUEL (RH)	118
	7	1	**3B-4615**	4	PIN-COTTER	
	8	1	**5P-1076**	4	WASHER-HARD (13.5X30X4MM THK)	
	9	1	**5P-8439**	2	GROMMET	
M	10	1	**8T-4910**	4	BOLT (M12X1.75X60MM)	
BE	11	1	**5P-1291**		HOSE	

B-USE AS REQUIRED
E-ORDER BY THE CENTIMETER
M-METRIC PART
Y-SEPARATE ILLUSTRATION

161-1126 **TANK GP-FUEL** *(contd.)* **i01795625**

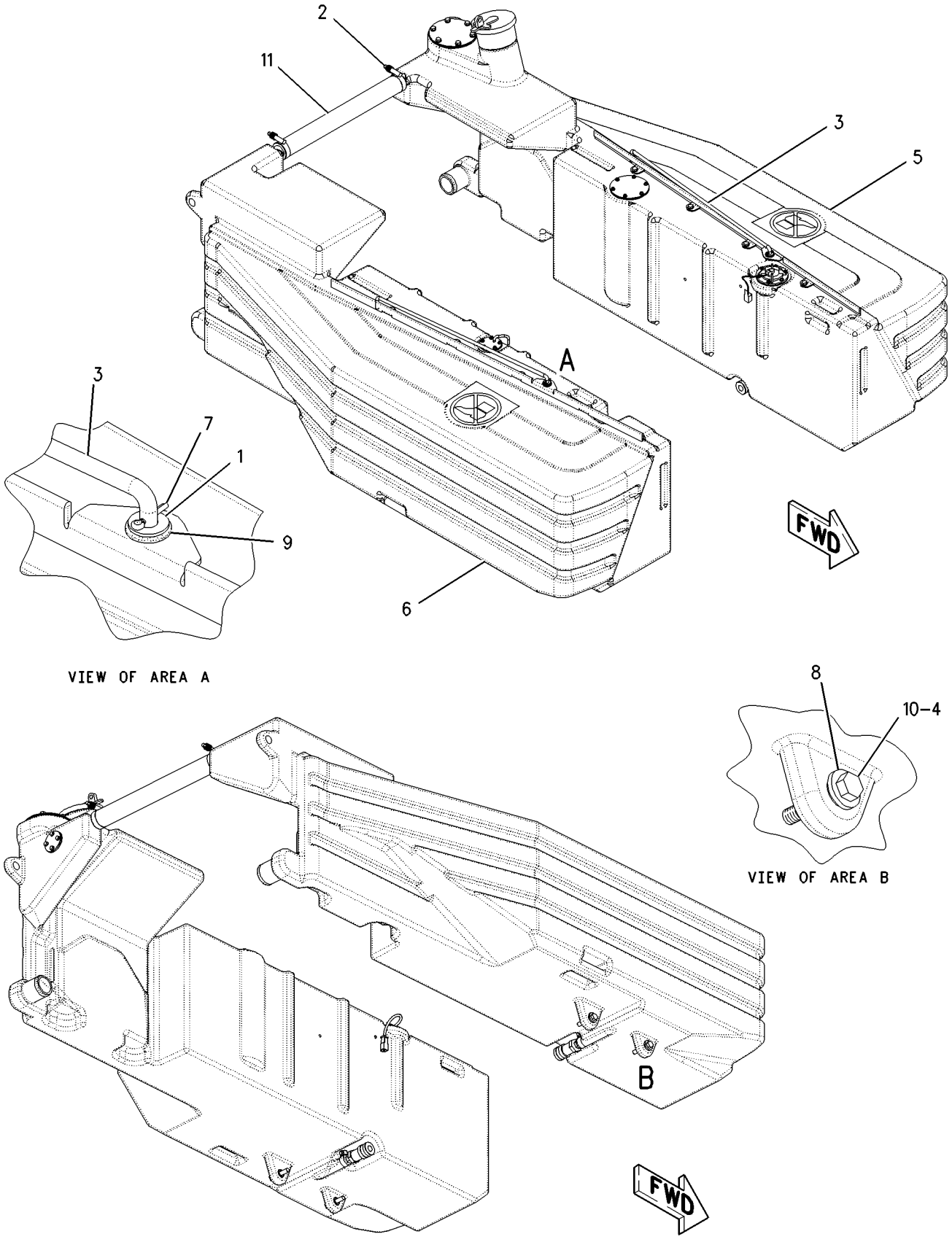

GRAPHIC #1 g00933860

208-0801 TANK GP-FUEL

S/N: ATS1-UP
(LH)
PART OF 161-1126 TANK GP-FUEL

SMCS-1273 **i01795632**

NOTE	REF NO	GRAPHIC REF	PART NUMBER	QTY	PART NAME 1 2 3 4 5 6 (PRODUCT LEVEL)	SEE PAGE
	1	1	**164-4858**	1	CAP GP-FUEL TANK (LOCKABLE)	
		1	**9X-8600**	1	SEAL-O-RING	
		1	**190-9775**	1	COVER AS-FILTER	
	2	1	**194-2612**	1	COUPLER	
	3	1	**199-9907**	1	STRAINER-FUEL	
	4	1	**199-9984**	1	PLATE	
	5	1	**199-9985**	1	PLATE	
	6	1	**203-9807**	1	GASKET	
	7	1	**203-9808**	1	GASKET	
	8	1	**206-5223**	1	TANK AS-FUEL	
		1	**002-6454**	1	NIPPLE-PIPE	
		1	**110-2445**	1	CLAMP-HOSE	
		1	**190-6535**	1	FILM-WARNING (NO STEP)	
	9	1	**208-0796**	1	BRACKET	
	10	1	**208-0800**	1	GASKET	
	11	1	**173-2018**	1	SENDER AS-FUEL LEVEL	
		1	**194-8535**	1	KIT-SENSOR (FUEL LEVEL)	
					(KIT INCLUDES WEDGE, RECEPTACLE KIT, AND PIN)	
	12	1	**194-6523**	1	ADAPTER	
	13	1	**4B-4863**	6	WASHER (4.7X11X1.2MM THK)	
M	14	1	**5C-9553**	4	BOLT (M6X1X16MM)	
	15	1	**6V-6959**	6	BOLT-SOCKET HEAD (8-32X0.625IN)	
M	16	1	**8T-4189**	6	BOLT (M8X1.25X20MM)	
	17	1	**8T-4224**	10	WASHER-HARD (8.8X16X2MM THK)	
M	18	1	**8T-4908**	4	BOLT (M8X1.25X25MM)	
	19	1	**9X-8256**	4	WASHER (6.6X12X2MM THK)	

M-METRIC PART

208-0801 TANK GP-FUEL *(contd.)* i01795632

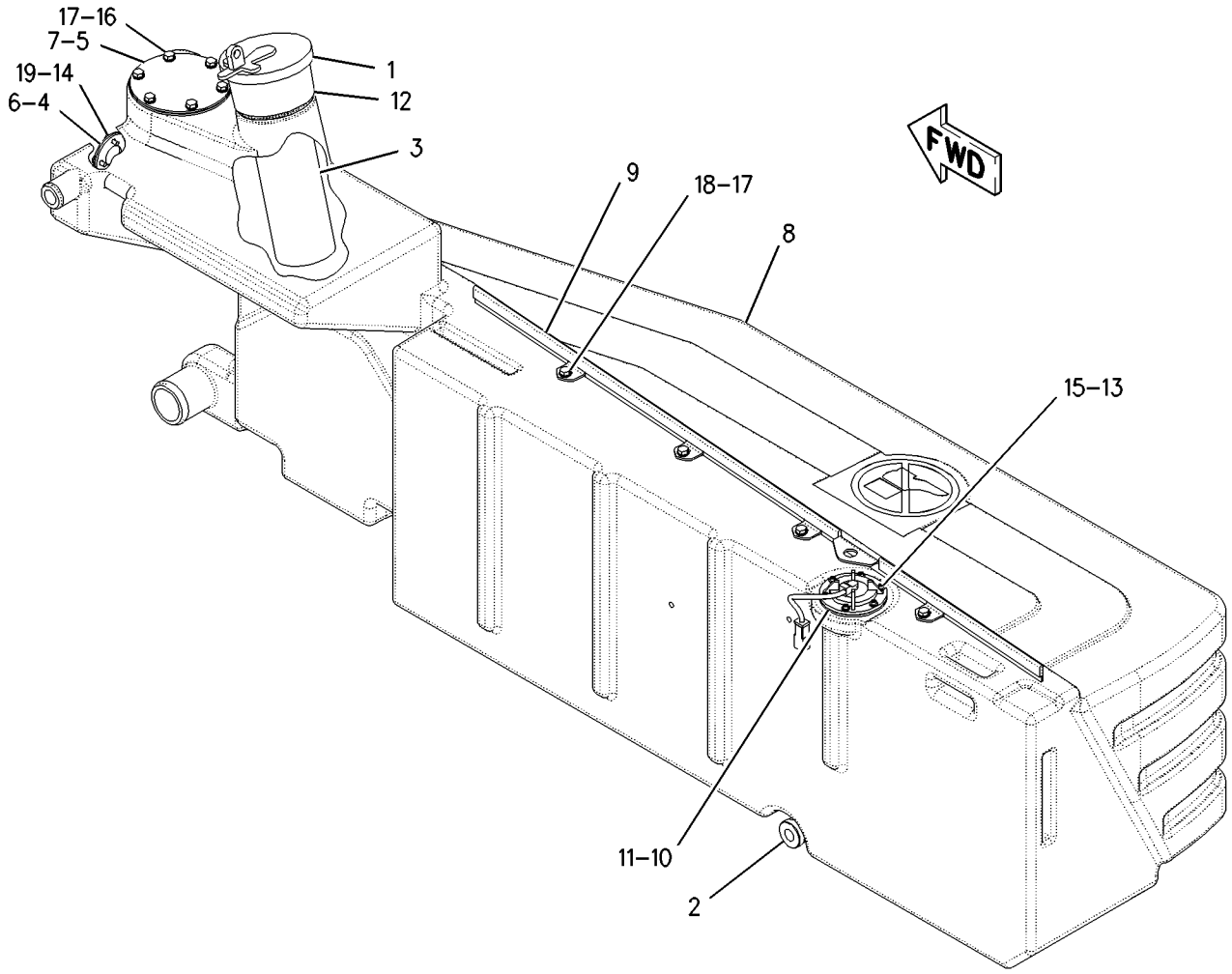

GRAPHIC #1 g00935610

208-0802 TANK GP-FUEL–RH

S/N: ATS1-UP
PART OF 161-1126, 219-0702 TANK GP-FUEL
ALSO AN ATTACHMENT

SMCS-1273 **i01790270**

NOTE	REF NO	GRAPHIC REF	PART NUMBER	QTY	PART NAME 1 2 3 4 5 6 (PRODUCT LEVEL)	SEE PAGE
	1	1	**194-2612**	1	COUPLER	
	2	1	**197-1708**	1	VENT AS	
	3	1	**206-5221**	1	TANK AS-FUEL (RH)	
	4	1	**208-0797**	1	BRACKET	
	5	1	**4B-4863**	5	WASHER (4.7X11X1.2MM THK)	
	6	1	**6V-6959**	5	BOLT-SOCKET HEAD (8-32X0.625IN)	
	7	1	**8T-4224**	4	WASHER-HARD (8.8X16X2MM THK)	
M	8	1	**8T-4908**	4	BOLT (M8X1.25X25MM)	
	9	1	**9R-7240**	1	GASKET	

M-METRIC PART

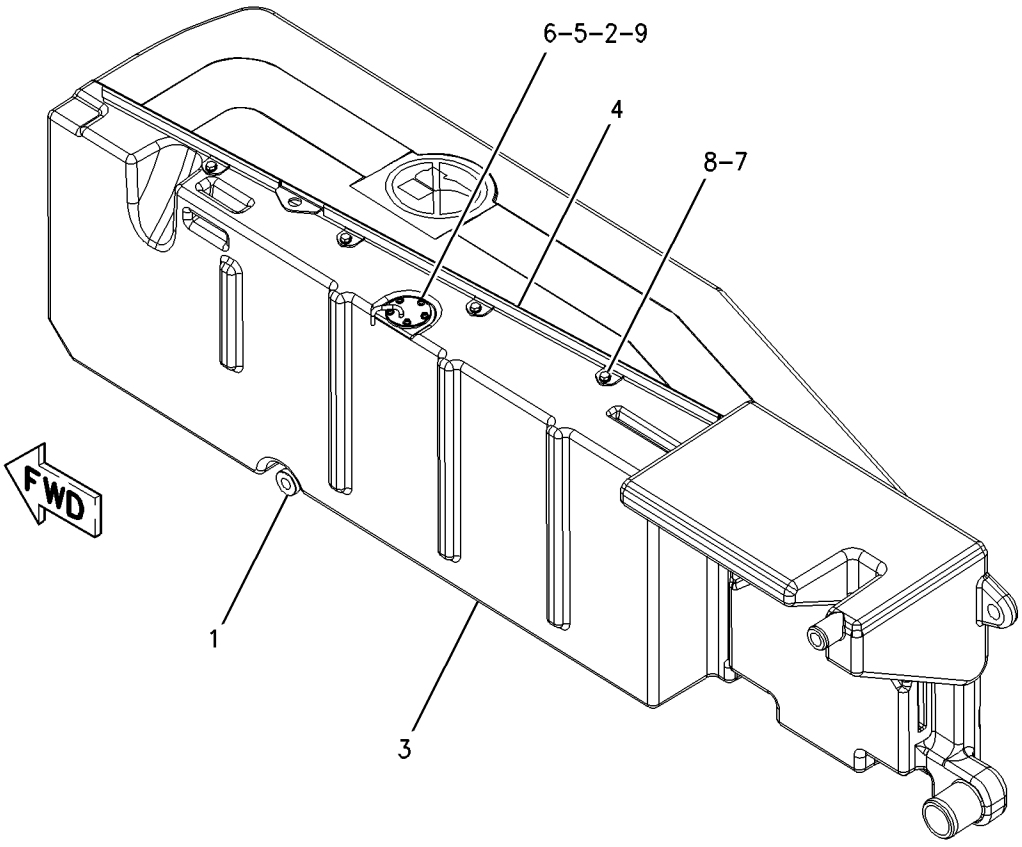

GRAPHIC #1 g00930559

219-0702 TANK GP-FUEL

S/N: ATS1-UP
PART OF 204-9756 ADAPTER GP-FAST FILL FUEL
AN ATTACHMENT

SMCS-1273 **i01790264**

NOTE	REF NO	GRAPHIC REF	PART NUMBER	QTY	PART NAME 1 2 3 4 5 6 (PRODUCT LEVEL)	SEE PAGE
	1	1	**7X-1387**	4	WASHER (10.26X22.22X1.9MM THK)	
	2	1	**8T-6703**	2	CLAMP-HOSE	
	3	1	**113-8457**	2	ROD	
	4	1	**174-5692**	4	SPACER (13.87X21.33X28MM THK)	
Y	5	1	**208-0802**	1	TANK GP-FUEL (RH)	118
Y	6	1	**219-1128**	1	TANK GP-FUEL (LH)	120
	7	1	**3B-4615**	4	PIN-COTTER	
	8	1	**5P-1076**	4	WASHER-HARD (13.5X30X4MM THK)	
	9	1	**5P-8439**	2	GROMMET	
M	10	1	**8T-4910**	4	BOLT (M12X1.75X60MM)	
E	11	1	**5P-1291**		HOSE (50CM)	

E-ORDER BY THE CENTIMETER
M-METRIC PART
Y-SEPARATE ILLUSTRATION

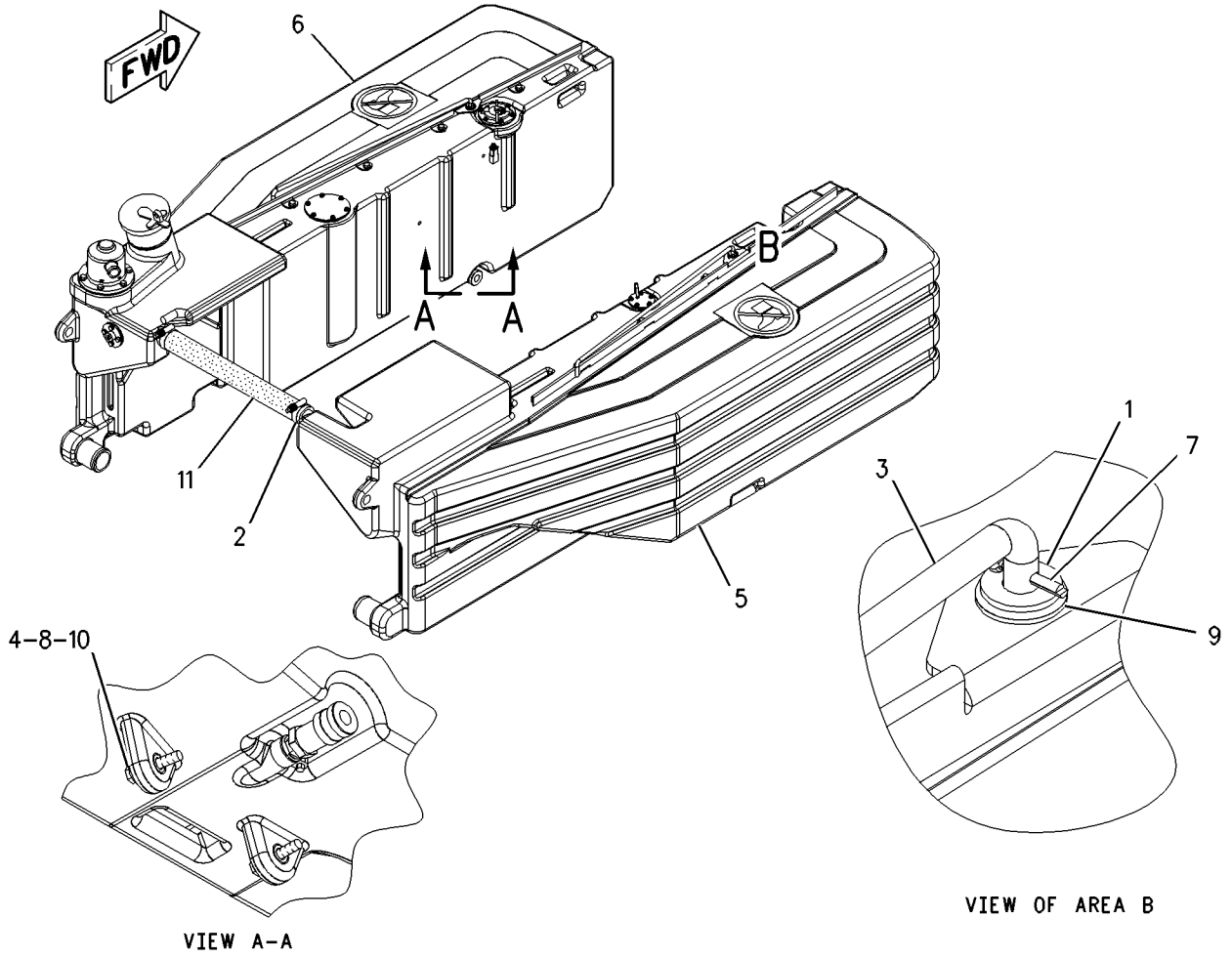

GRAPHIC #1 g00930619

FUEL SYSTEM

219-1128 TANK GP-FUEL—LH

S/N: ATS1-UP
PART OF 219-0702 TANK GP-FUEL
AN ATTACHMENT

SMCS-1273 **i01790277**

NOTE	REF NO	GRAPHIC REF	PART NUMBER	QTY	PART NAME 1 2 3 4 5 6 (PRODUCT LEVEL)	SEE PAGE
	1	1	**6V-6959**	12	BOLT-SOCKET HEAD (8-32X0.625IN)	
	2	1	**164-4858**	1	CAP GP-FUEL TANK (LOCKABLE)	
		1	**9X-8600**	1	SEAL-O-RING	
		1	**190-9775**	1	COVER AS-FILTER	
	3	1	**194-2612**	1	COUPLER	
	4	1	**199-9907**	1	STRAINER-FUEL	
	5	1	**203-9808**	1	GASKET	
	6	1	**206-5223**	1	TANK AS-FUEL	
	7	1	**208-0796**	1	BRACKET	
	8	1	**208-0800**	1	GASKET	
	9	1	**212-4669**	1	VENT AS	
	10	1	**222-0494**	1	HOSE AS	
	11	1	**222-9201**	1	FLOAT AS	
		1	**212-4621**	1	MOUNT AS	
		1	**221-0319**	1	GASKET	
	12	1	**222-9202**	1	BOSS AS	
		1	**203-9807**	1	GASKET	
	13	1	**173-2018**	1	SENDER AS-FUEL LEVEL	
		1	**194-8535**	1	KIT-SENSOR (FUEL LEVEL)	
					(INCLUDES RECEPTACLE, WEDGE, & PIN)	
	14	1	**194-6523**	1	ADAPTER	
	15	1	**4B-4863**	12	WASHER (4.7X11X1.2MM THK)	
M	16	1	**5C-9553**	4	BOLT (M6X1X16MM)	
	17	1	**5P-2618**	1	CONNECTOR	
	18	1	**8K-0968**	1	ELBOW-PORT	
	19	1	**8T-4224**	10	WASHER-HARD (8.8X16X2MM THK)	
M	20	1	**8T-4908**	10	BOLT (M8X1.25X25MM)	
	21	1	**9X-8256**	4	WASHER (6.6X12X2MM THK)	

M-METRIC PART

219-1128 TANK GP-FUEL ***(contd.)*** **i01790277**

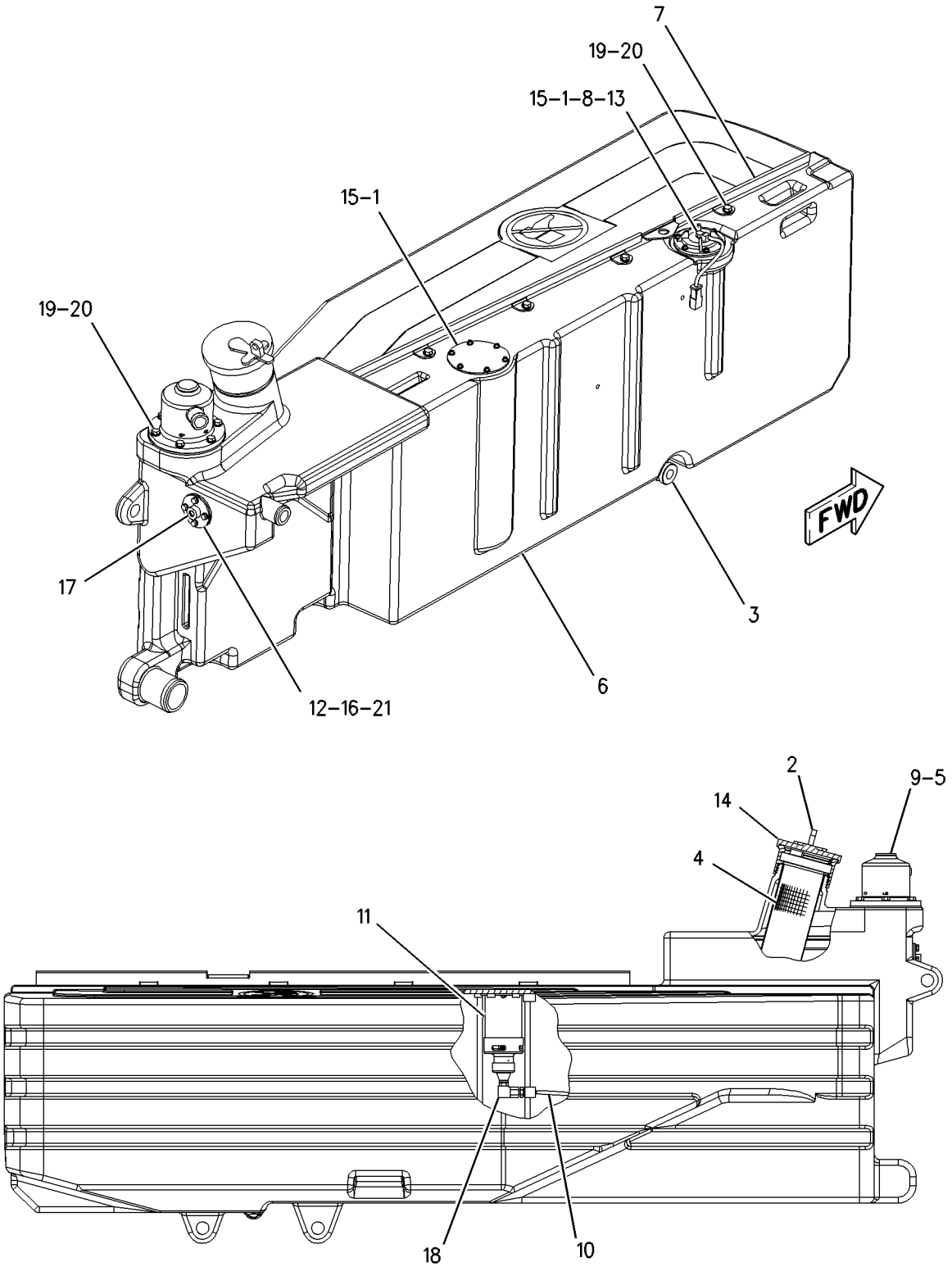

LEFT SIDE VIEW

GRAPHIC #1 g00930604

156-5783 VALVE GP-CHECK–FUEL

S/N: 5ED478-UP

PART OF 204-0638 LINES GP-FUEL INJECTION

SMCS-1250, 1274 **i01672618**

NOTE	REF NO	GRAPHIC REF	PART NUMBER	QTY	PART NAME 1 2 3 4 5 6 (PRODUCT LEVEL)	SEE PAGE
	1	1	**6V-6923**	1	RING-BACKUP (13.16MM ID)	
	2	1	**033-6033**	1	SEAL-O-RING (12.42MM ID)	

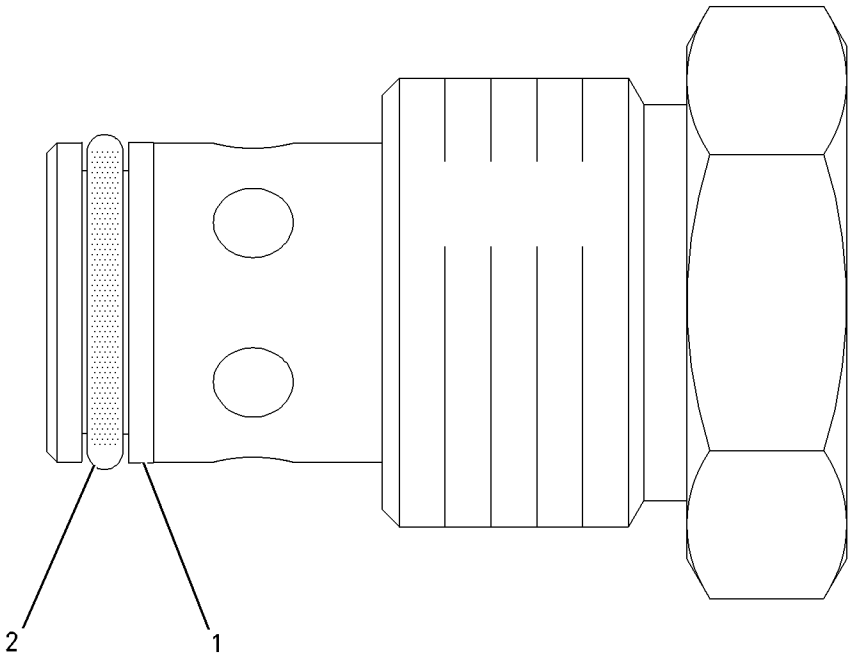

GRAPHIC #1 g00864141

3E-6328 ALARM GP—EMS ACTION

S/N: ATS1-UP
24 VOLT
PART OF 159-5843 WIRING GP-SHIFT CONSOLE

SMCS-7407 **i01847696**

NOTE	REF NO	GRAPHIC REF	PART NUMBER	QTY	PART NAME 1 2 3 4 5 6 (PRODUCT LEVEL)	SEE PAGE
	1	1	**102-8802**	1	KIT-RECEPTACLE (2 PIN)	
					(INCLUDES RECEPTACLE AS & WEDGE)	
	2	1	**186-3735**	2	PIN-CONNECTOR	
	3	1	**3E-3365**	1	WEDGE-RECEPTACLE LOCK (2 PIN)	

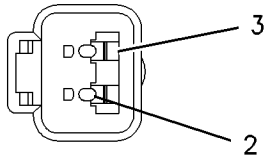

VIEW A–A

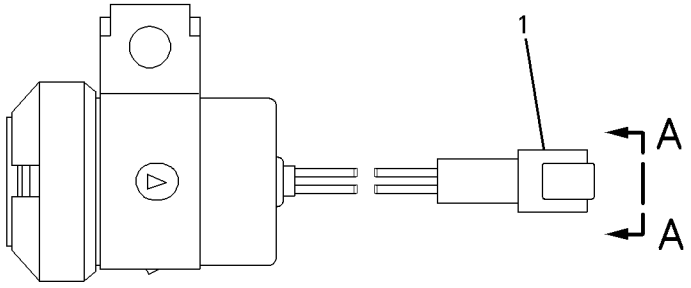

GRAPHIC #1 g00826023

200-2232 ALTERNATOR GP-CHARGING*R

S/N: 5ED478-UP
24 VOLT, 75 AMP
PART OF 212-0615 ALTERNATOR GP-CHARGING

SMCS-1405 **i01532948**

NOTE	REF NO	GRAPHIC REF	PART NUMBER	QTY	PART NAME 1 2 3 4 5 6 (PRODUCT LEVEL)	SEE PAGE
	1	1	**8T-4205**	2	WASHER-HARD (7.2X14.5X2MM THK)	
	2	1	**1H-3244**	2	LOCKWASHER	
	3	1	**6V-8187**	1	NUT (1/4-28 THD)	
	4	1	**5S-7349**	1	BOLT (1/4-20X0.5 IN)	
	5	1	**9L-6770**	1	CAP	
	6	1	**9N-0943**	1	PLUG-BEARING WELL	
	7	1	**5P-3418**	1	BEARING-ROLLER	
	8	1	**5P-3419**	1	RACE-BEARING INNER	
	9	1	**132-1225**	1	RECTIFIER AS-ALTERNATOR	
	10	1	**202-2708**	1	DIODE AS	
	11	1	**3T-6354**	1	REGULATOR AS (24 VOLT)	
	12	1	**3E-5458**	1	CAPACITOR AS-ALTERNATOR	
	13	1	**202-9897**	1	BEARING-SPECIAL BALL	
	14	1	**100-6531**	1	FAN-ALTERNATOR	
	15	1	**187-2034**	1	NUT-FLANGE (5/8-18 THD)	
	16	1	**202-2783**	1	PLATE	
	17	1	**202-7711**	1	HOUSING AS	
	18	1	**202-7713**	1	FRAME AS	
	19	1	**202-8647**	1	STATOR AS	
	20	1	**202-2703**	1	COIL AS	
	21	1	**9S-2390**	1	RETAINER	
	22	1	**9S-2302**	1	ROTOR AS	
	23	1	**4B-2047**	1	NUT (10-24 THD)	
	24	1	**8T-0328**	1	WASHER-HARD (5.5X10X1MM THK)	
	25	1	**8F-1434**	1	LOCKWASHER	
	26	1	**202-2784**	1	KIT-ALTERNATOR TERMINAL	
	27	1	**202-2785**	1	KIT-ALTERNATOR TERMINAL	
	28	1	**202-2786**	1	KIT-ALTERNATOR TERMINAL	
					AVAILABLE REPAIR KIT(S):	
			202-2787		MOUNTING GP-ALTERNATOR	
					(INCLUDES BOLTS, NUTS, PLUGS, SCREWS, LOCKWASHER, CONNECTOR, COLLAR AND BOOT)	

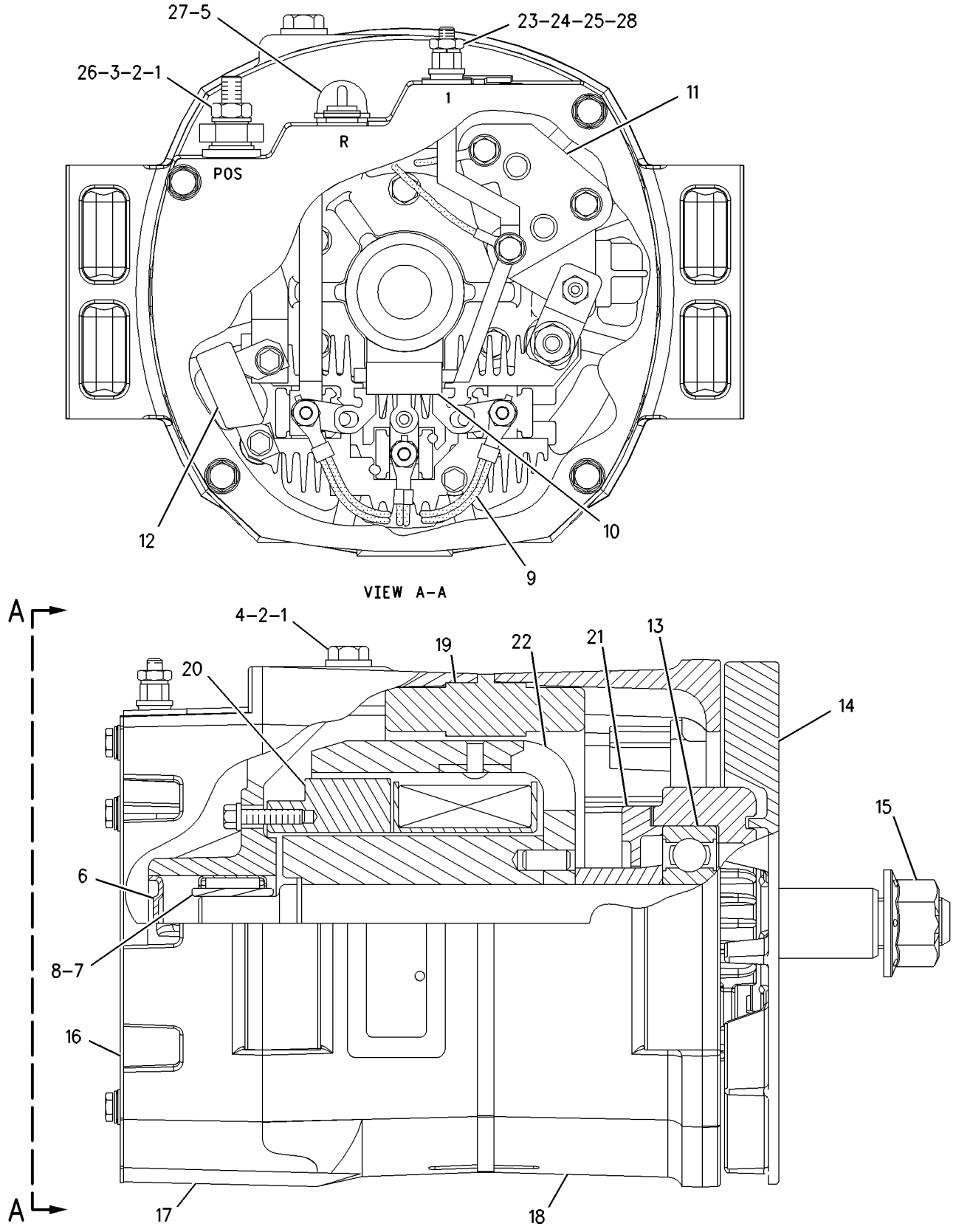

GRAPHIC #1

g00796026

212-0615 ALTERNATOR GP-CHARGING

S/N: 5ED478-UP
24 VOLT, 75 AMPERE
PART OF 204-7983 ENGINE AR

SMCS-1405 **i01772081**

NOTE	REF NO	GRAPHIC REF	PART NUMBER	QTY	PART NAME 1 2 3 4 5 6 (PRODUCT LEVEL)	SEE PAGE
	1	1	**169-4657**	1	BRACKET	
	2	1	**199-9959**	1	GUARD AS	
YR	3	1	**200-2232**	1	ALTERNATOR GP-CHARGING	124
	4	1	**3E-4353**	3	WASHER-HARD (11X25X3MM THK)	
M	5	1	**6V-1820**	3	BOLT (M10X1.50X30MM)	
M	6	1	**8T-0643**	2	BOLT (M10X1.50X80MM)	
	7	1	**8T-4121**	4	WASHER-HARD (11X21X2.5MM THK)	
M	8	1	**8T-4198**	4	BOLT (M10X1.5X100MM)	
M	9	1	**6V-3822**	2	BOLT (M10X1.5X35MM)	

M-METRIC PART
R-REMFG PART MAY BE AVAILABLE
Y-SEPARATE ILLUSTRATION

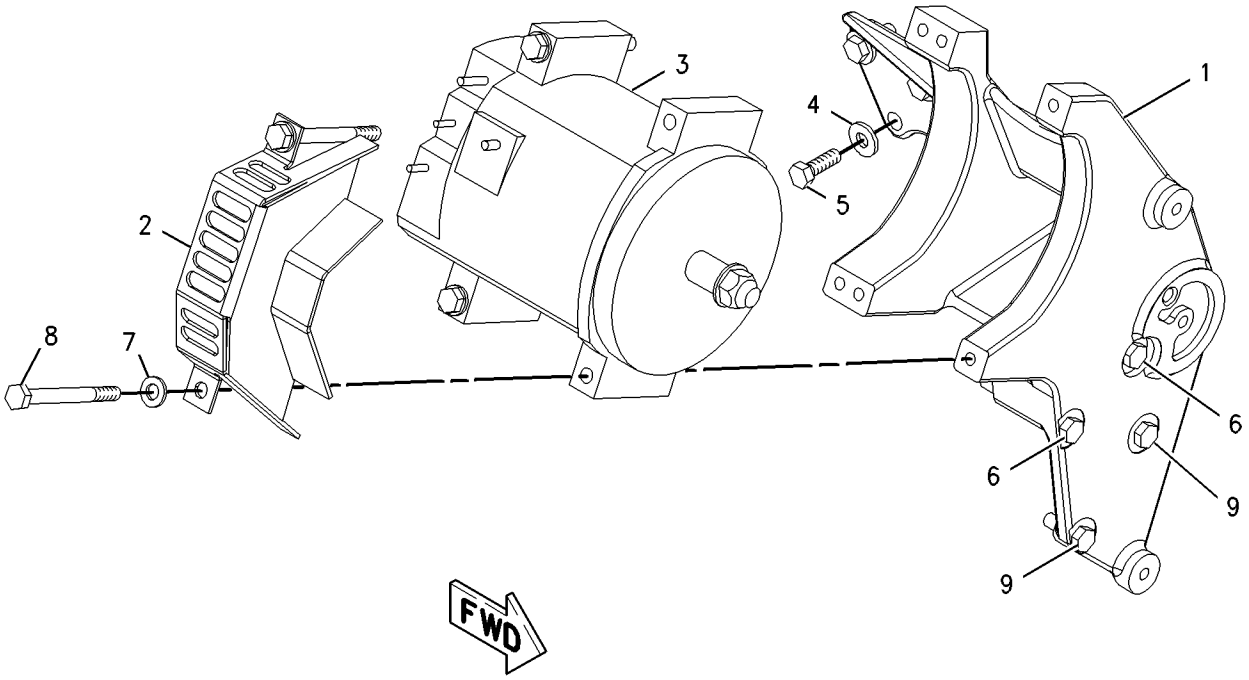

GRAPHIC #1 g00906401

ELECTRICAL AND STARTING SYSTEM

188-5131 BATTERY GP

S/N: ATS1-UP

PART OF 204-7938 SUPPORT AR-REAR CHASSIS

SMCS-1401 **i01711580**

NOTE	REF NO	GRAPHIC REF	PART NUMBER	QTY	PART NAME 1 2 3 4 5 6 (PRODUCT LEVEL)	SEE PAGE
	1	1	**8V-0622**	1	CABLE AS	
		1	**8C-5917**	1	TERMINAL AS-BATTERY (POSITIVE)	
		1	**1M-6119**	2	BOLT-BATTERY TERMINAL (5/16-18X1.375 IN)	
		1	**1M-6120**	2	NUT-BATTERY TERMINAL (5/16-18 THD)	
		1	**5P-0761**	14	CABLE (00GA)(RED)	
		1	**8T-9757**	1	TERMINAL AS-BATTERY (NEGATIVE)	
		1	**9G-0003**	1	COVER-TERMINAL (BLACK)	
		1	**9G-0004**	1	COVER-TERMINAL (RED)	
	2	1	**153-5710**	2	BATTERY	
	3	1	**188-3958**	1	BAR	
	4	1	**189-0146**	1	HOLD-DOWN	
M	5	1	**8C-0573**	2	STUD-TAPERLOCK	
M	6	1	**8T-0389**	2	LOCKNUT (M10X1.5 THD)	
	7	1	**8T-4121**	2	WASHER-HARD (11X21X2.5MM THK)	
M	8	1	**8T-4182**	2	BOLT (M10X1.5X45MM)	

M-METRIC PART

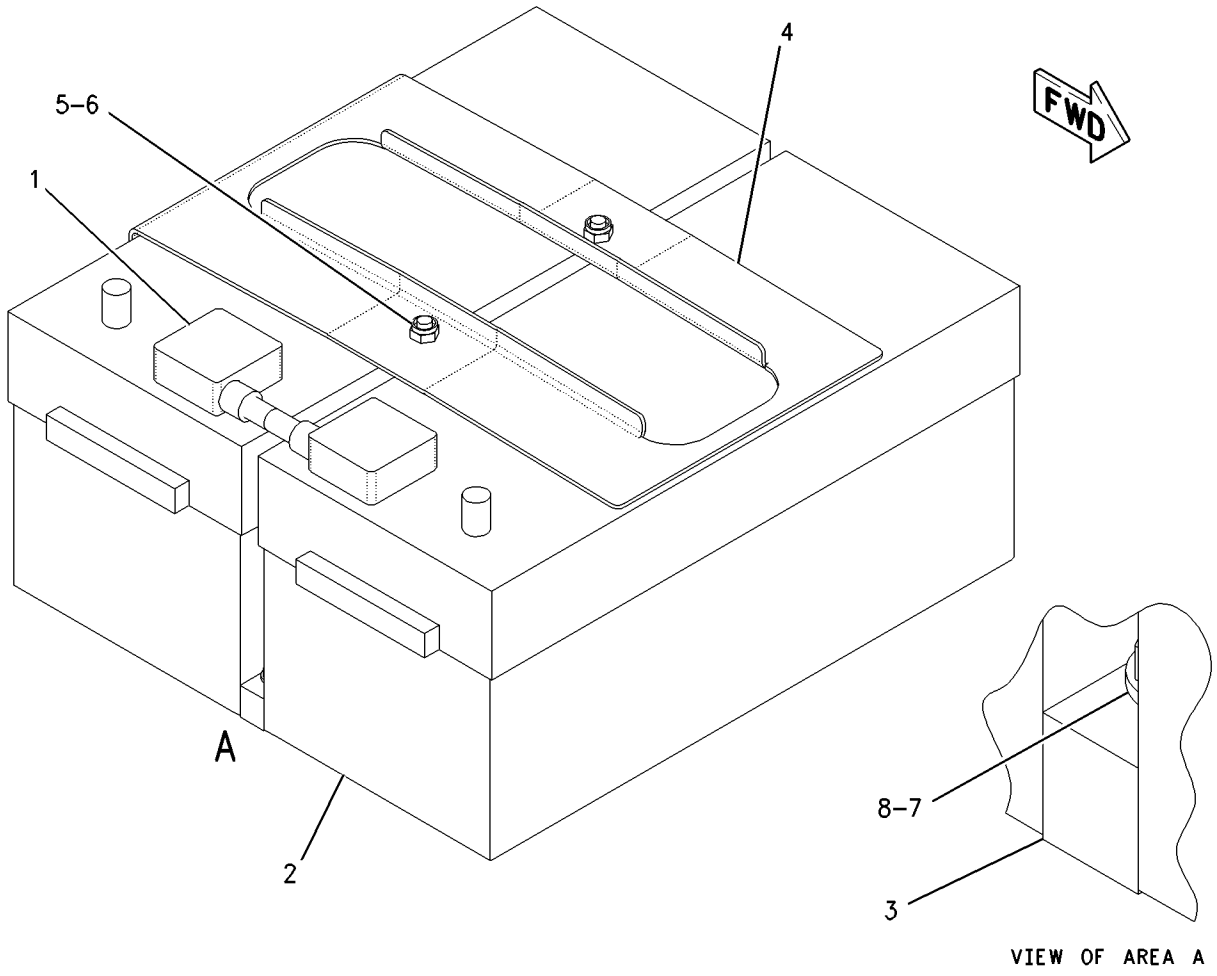

GRAPHIC #1 g00885414

9W-0742 BLOCK GP-JUNCTION

S/N: ATS1-UP

PART OF 205-3110 WIRING GP-REAR

SMCS-1408 **i01727104**

NOTE	REF NO	GRAPHIC REF	PART NUMBER	QTY	PART NAME 1 2 3 4 5 6 (PRODUCT LEVEL)	SEE PAGE
	1	1	**8C-6358**	1	JUNCTION BLOCK AS	
	1A	1	**8T-3519**	3	BOLT-BRONZE (1/2-13X2.0 IN)	
BD	2	1	**6V-2722**		TUBE-HEAT SHRINK	
	3	1	**7F-0560**	6	WASHER (2.57MM THK)	
	4	1	**8T-3518**	6	NUT-FULL (1/2-13 THD)	

B-USE AS REQUIRED
D-ORDER BY THE METER

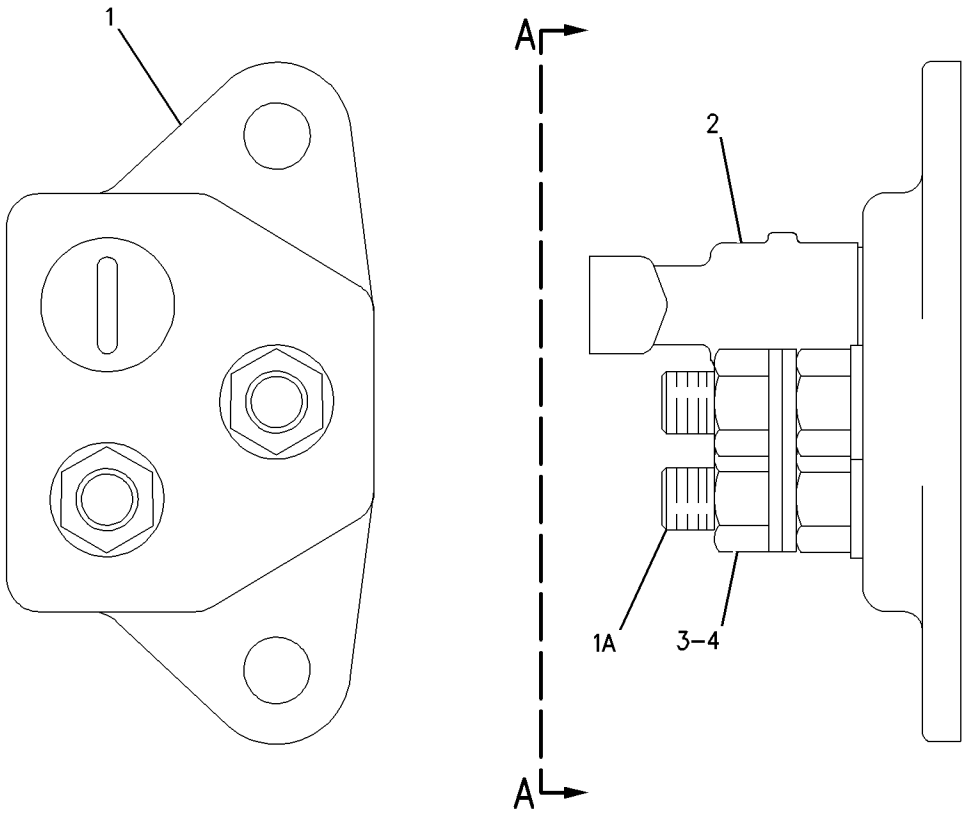

VIEW A-A

GRAPHIC #1 g00650721

201-1036 CIRCUIT BREAKER GP

S/N: ATS1-UP
PART OF 161-1924, 186-4957 LIGHTING AR-FLOOD & SIGNAL
AN ATTACHMENT

SMCS-1420 **i01626420**

NOTE	REF NO	GRAPHIC REF	PART NUMBER	QTY	PART NAME 1 2 3 4 5 6 (PRODUCT LEVEL)	SEE PAGE
	1	1	**195-2097**	1	WIRE AS	
	2	1	**201-8424**	1	STRAP	
	3	1	**3K-8106**	4	SCREW-MACHINE (8-32 X 1 IN)	
	4	1	**3T-2662**	1	CIRCUIT BREAKER AS (15 AMP) (LIGHTBAR WORKLAMPS)	
	4A	1	**3T-2662**	1	CIRCUIT BREAKER AS (15 AMP) (HEADLAMPS)	
					(EACH CIRCUIT BREAKER AS INCLUDES)	
		1	**6V-8376**	2	SCREW-MACHINE (8-32X0.25 IN)	
		1	**9B-7233**	2	LOCKWASHER (4.37X8.39X.52MM THK)	
	5	1	**9B-7233**	4	LOCKWASHER (4.37X8.39X.52MM THK)	

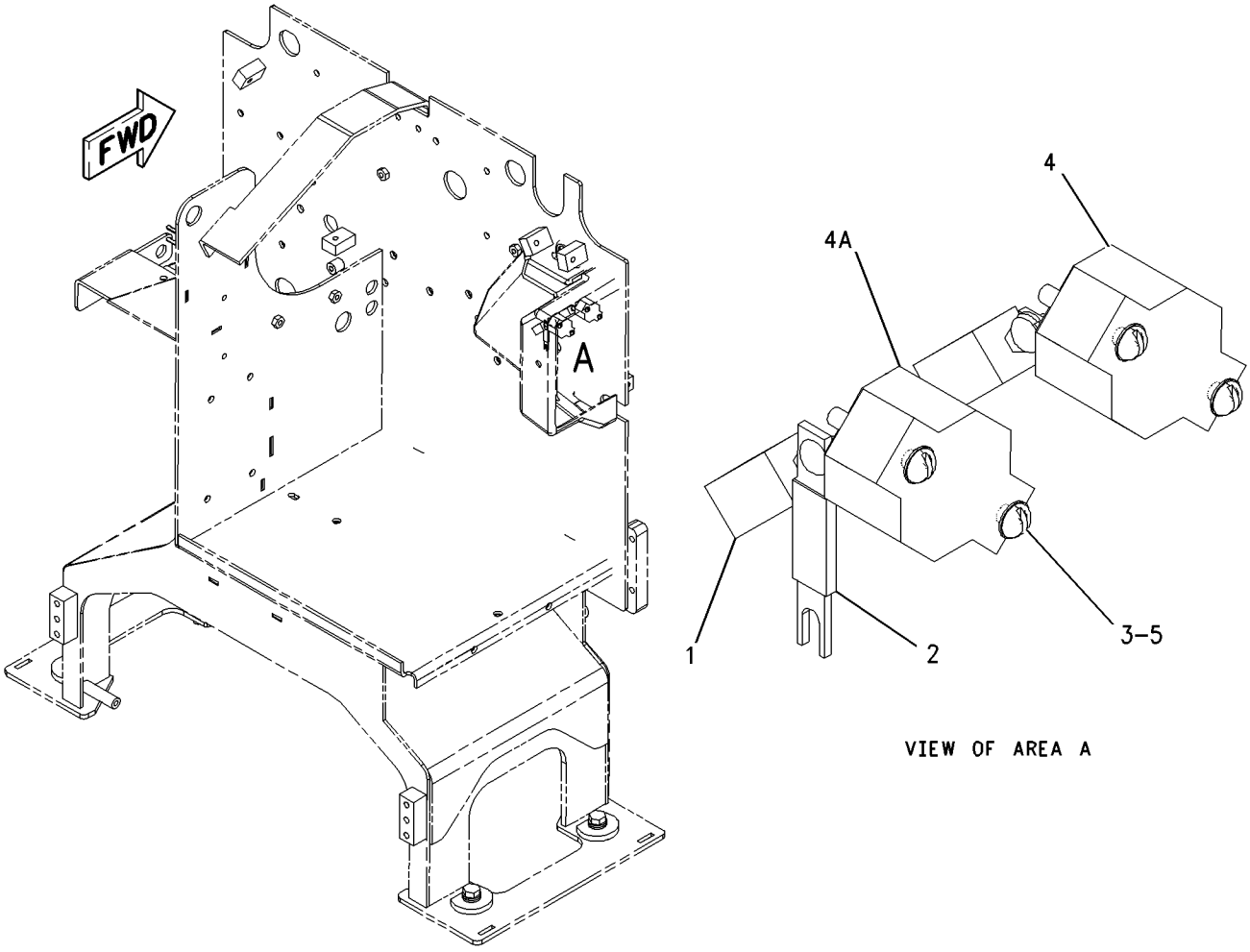

GRAPHIC #1 g00844651

201-1038 CIRCUIT BREAKER GP

S/N: ATS1-UP
PART OF 211-1771, 211-1772 CONVERSION AR-CERTIFICATION, 161-0770, 188-9329
LIGHTING AR-FLOOD & SIGNAL
AN ATTACHMENT

SMCS-1420 **i01626425**

NOTE	REF NO	GRAPHIC REF	PART NUMBER	QTY	PART NAME 1 2 3 4 5 6 (PRODUCT LEVEL)	SEE PAGE
	1	1	**201-8424**	1	STRAP	
	2	1	**3K-8106**	2	SCREW-MACHINE (8-32 X 1 IN)	
	3	1	**3T-2662**	1	CIRCUIT BREAKER AS (15 AMP) (HEADLAMPS)	
		1	**6V-8376**	2	SCREW-MACHINE (8-32X0.25 IN)	
		1	**9B-7233**	2	LOCKWASHER (4.37X8.39X.52MM THK)	
	4	1	**9B-7233**	2	LOCKWASHER (4.37X8.39X.52MM THK)	

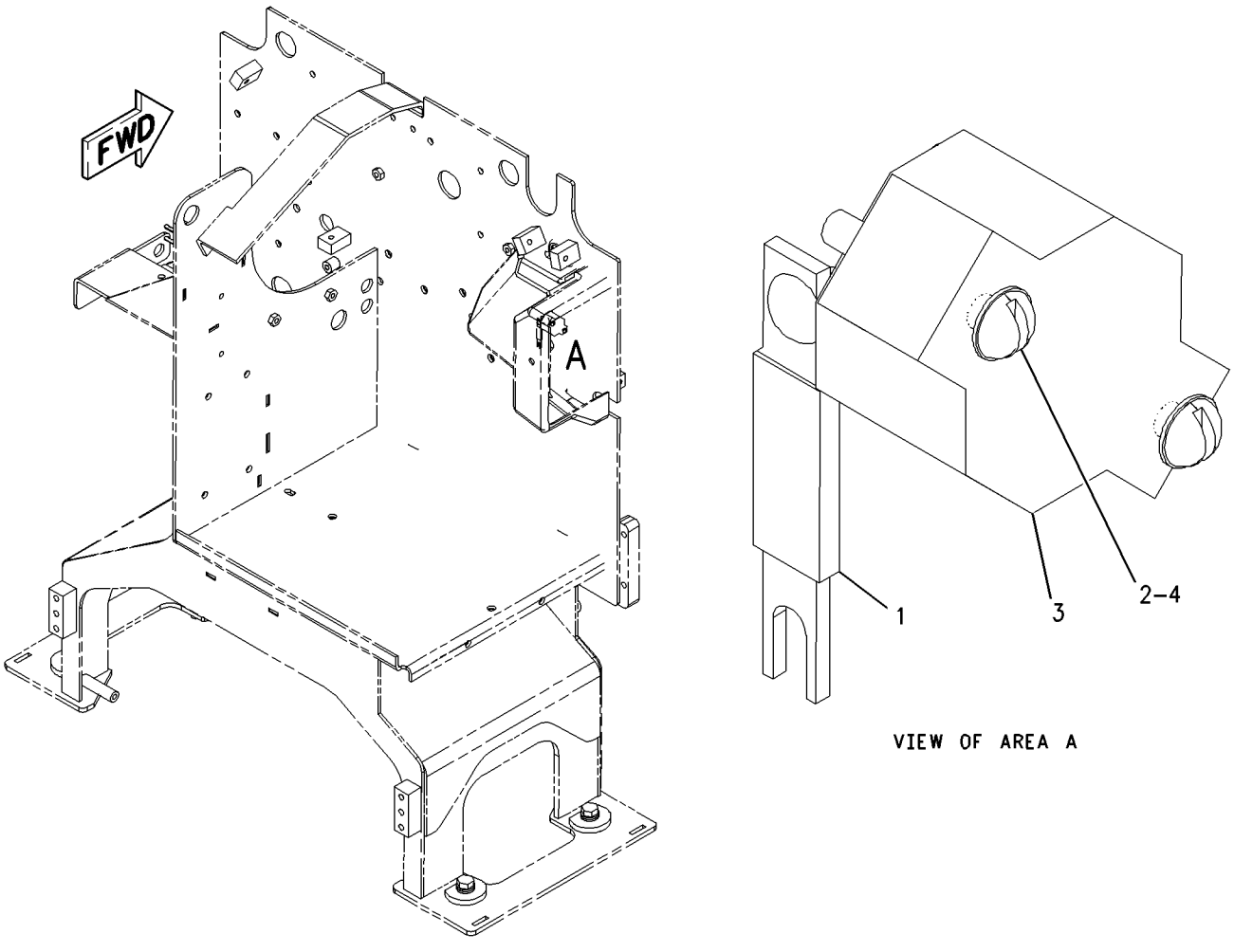

GRAPHIC #1 g00844652

ELECTRICAL AND STARTING SYSTEM

168-4490 CONTROL & MTG GP-ENGINE ELEK

S/N: 5ED478-UP

PART OF 204-7983 ENGINE AR

SMCS-1901 **i01776142**

NOTE	REF NO	GRAPHIC REF	PART NUMBER	QTY	PART NAME 1 2 3 4 5 6 (PRODUCT LEVEL)	SEE PAGE
	1	1	**6I-1418**	2	SPACER (28.7MM THK)	
	2	1	**8T-9655**	8	MOUNT	
	4	1	**168-4594**	2	SPACER	
Y	5	1	*210-0849*	1	CONTROL GP-ENGINE ELECTRONIC	133
M	6	1	**5P-8347**	2	BOLT (M8X1.25X70MM)	
M	7	1	**8T-0276**	2	BOLT (M8X1.25X45MM)	
	8	1	**9M-1974**	1	WASHER-HARD (2MM THK)	
	9	1	**9N-0869**	4	WASHER-HARD (2MM THK)	

M-METRIC PART
Y-SEPARATE ILLUSTRATION

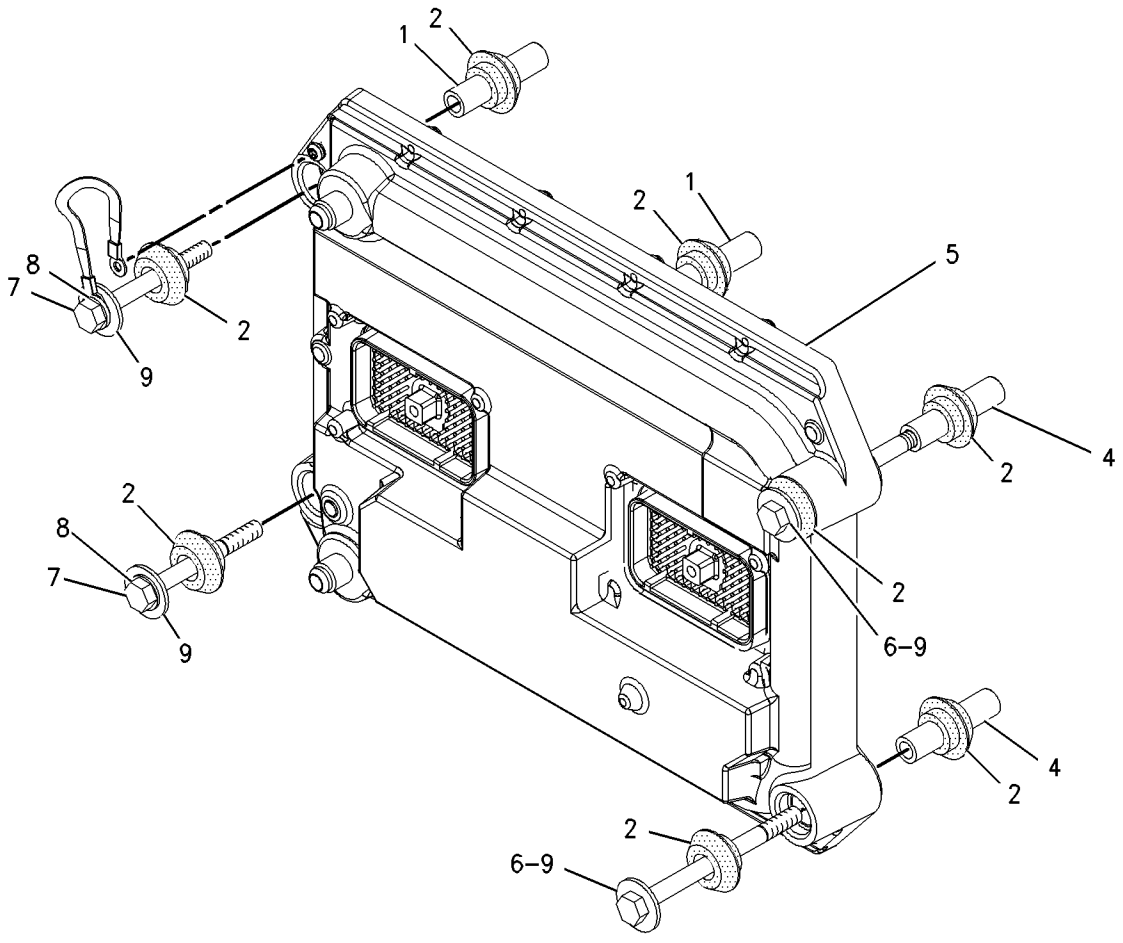

GRAPHIC #1 g00673168

210-0848 CONTROL GP-ENGINE ELECTRONIC

S/N: 5ED478-UP

PART OF 210-0849 CONTROL GP-ENGINE ELECTRONIC

FIELD REPLACEMENT FOR 210-0849—PAGE 133

SMCS-1901 **i01776083**

NOTE	REF NO	GRAPHIC REF	PART NUMBER	QTY	PART NAME 1 2 3 4 5 6 (PRODUCT LEVEL)	SEE PAGE
	1	1	**7X-6315**	1	STRAP AS-GROUND	
	2	1	**184-2472**	1	SCREW-PAN HEAD (LUBRICATED)	

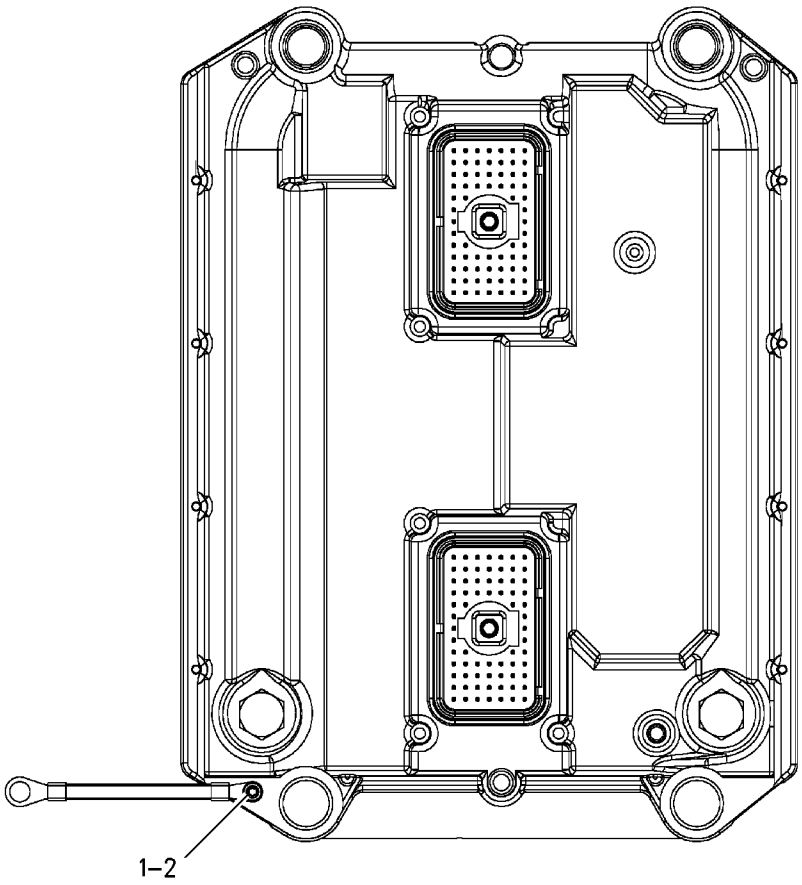

GRAPHIC #1 g00907978

ELECTRICAL AND STARTING SYSTEM

210-0849 CONTROL GP-ENGINE ELECTRONIC

S/N: 5ED478-UP

PART OF 168-4490 CONTROL & MTG GP-ENGINE ELEK

FIELD REPLACEMENT ORDER 210-0848—PAGE 132

SMCS-1901 **i01776087**

NOTE	REF NO	GRAPHIC REF	PART NUMBER	QTY	PART NAME 1 2 3 4 5 6 (PRODUCT LEVEL)	SEE PAGE
Y	1	1	**210-0848**	1	CONTROL GP-ENGINE ELECTRONIC	132

Y-SEPARATE ILLUSTRATION

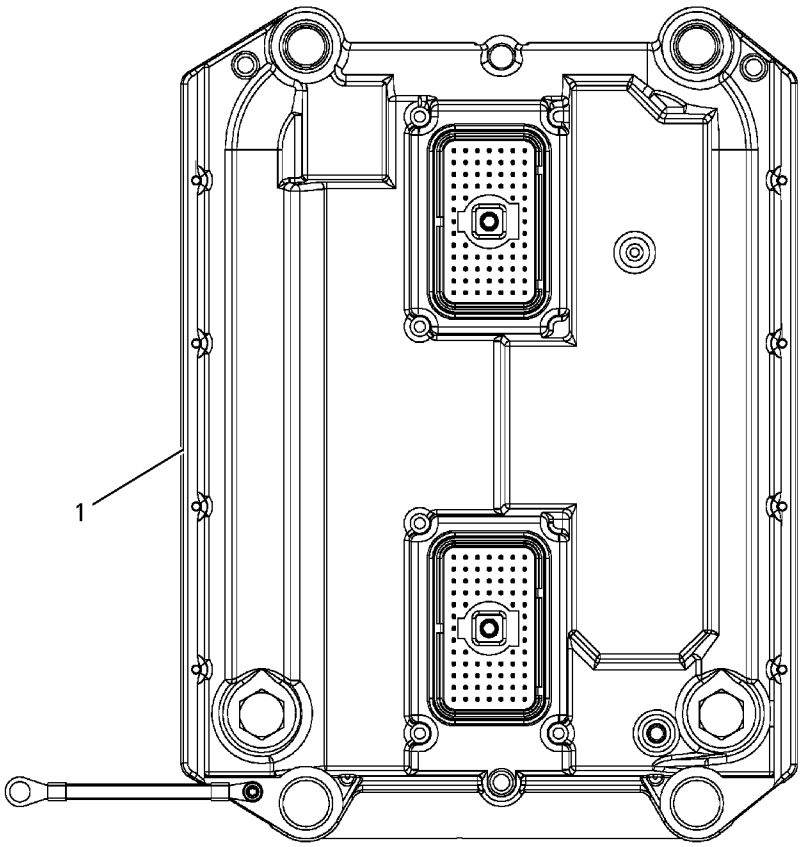

GRAPHIC #1 g00907973

132-6640 CONTROL GP-SECONDARY STEERING

S/N: ATS1-UP
PART OF 184-6045 WIRING GP-SECONDARY STEERING
AN ATTACHMENT

SMCS-4343 **i01701365**

NOTE	REF NO	GRAPHIC REF	PART NUMBER	QTY	PART NAME 1 2 3 4 5 6 (PRODUCT LEVEL)	SEE PAGE
Z	1	1		1	CONTROL AS-STEERING	
	2	1	**102-8801**	1	KIT-RECEPTACLE (12 PIN)	
					(INCLUDES RECEPTACLE AS & WEDGE)	
	3	1	**3E-5180**	1	WEDGE-RECEPTACLE LOCK	
	4	1	**186-3735**	11	PIN-CONNECTOR	
	5	1	**8T-8737**	1	PLUG-SEAL	
	6	1	**1S-9593**	4	STRAP-CABLE	

Z-NOT SERVICED SEPARATELY

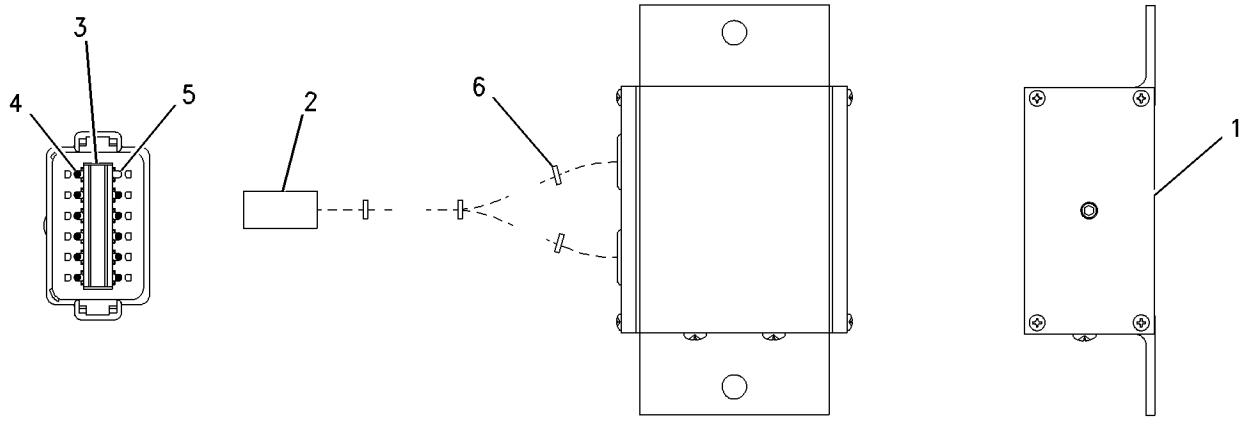

GRAPHIC #1 g00672584

161-0776 CONVERTER AR-ELECTRICAL–12V POWER PORT–5 AMPS

S/N: ATS1-UP
AN ATTACHMENT

SMCS-1421 **i01854971**

NOTE	PART NUMBER	QTY	PART NAME 1 2 3 4 5 6 (PRODUCT LEVEL)	SEE PAGE
Y	*171-7185*	1	ACCESSORY GP-CAB (5 AMPS)	607
Y	*180-4643*	1	CONVERTER GP-ELECTRICAL	138

Y-SEPARATE ILLUSTRATION

<END>

161-0777 CONVERTER AR-ELECTRICAL–12 V POWER PORT–15 AMPS

S/N: ATS1-UP
AN ATTACHMENT

SMCS-1421 **i01854973**

NOTE	PART NUMBER	QTY	PART NAME 1 2 3 4 5 6 (PRODUCT LEVEL)	SEE PAGE
Y	*171-7186*	1	ACCESSORY GP-CAB (15 AMPS)	608
Y	*180-4643*	1	CONVERTER GP-ELECTRICAL	138

Y-SEPARATE ILLUSTRATION

<END>

145-1297 CONVERTER GP-ELECTRICAL–RADIO

S/N: ATS1-UP
PART OF 145-1300 INSTALLATION AR-RADIO
AN ATTACHMENT

SMCS-1421 **i01793239**

NOTE	REF NO	GRAPHIC REF	PART NUMBER	QTY	PART NAME 1 2 3 4 5 6 (PRODUCT LEVEL)	SEE PAGE
	1	1	**8X-1853**	2	SPACER (10.3X15.9X30MM THK)	
	2	1	**9W-1442**	1	FUSE (10 AMP) (RADIO)	
C	3	1	**205-4285**	1	CONVERTER GP-ELECTRICAL (24 VOLT TO 12 VOLT)	
C	4	1	**208-7782**	1	PLATE AS	
C	5	1	**096-6166**	2	WASHER-HARD (4.5X9X1MM THK)	
M	6	1	**8T-0285**	2	SCREW-MACHINE (M4X0.7X12MM)	
	7	1	**8T-2501**	2	BOLT (3/8-16X2 IN)	
C	8	1	**8T-4896**	2	WASHER-HARD (10.2X18.5X2.5MM THK)	

C-CHANGE FROM PREVIOUS TYPE
M-METRIC PART

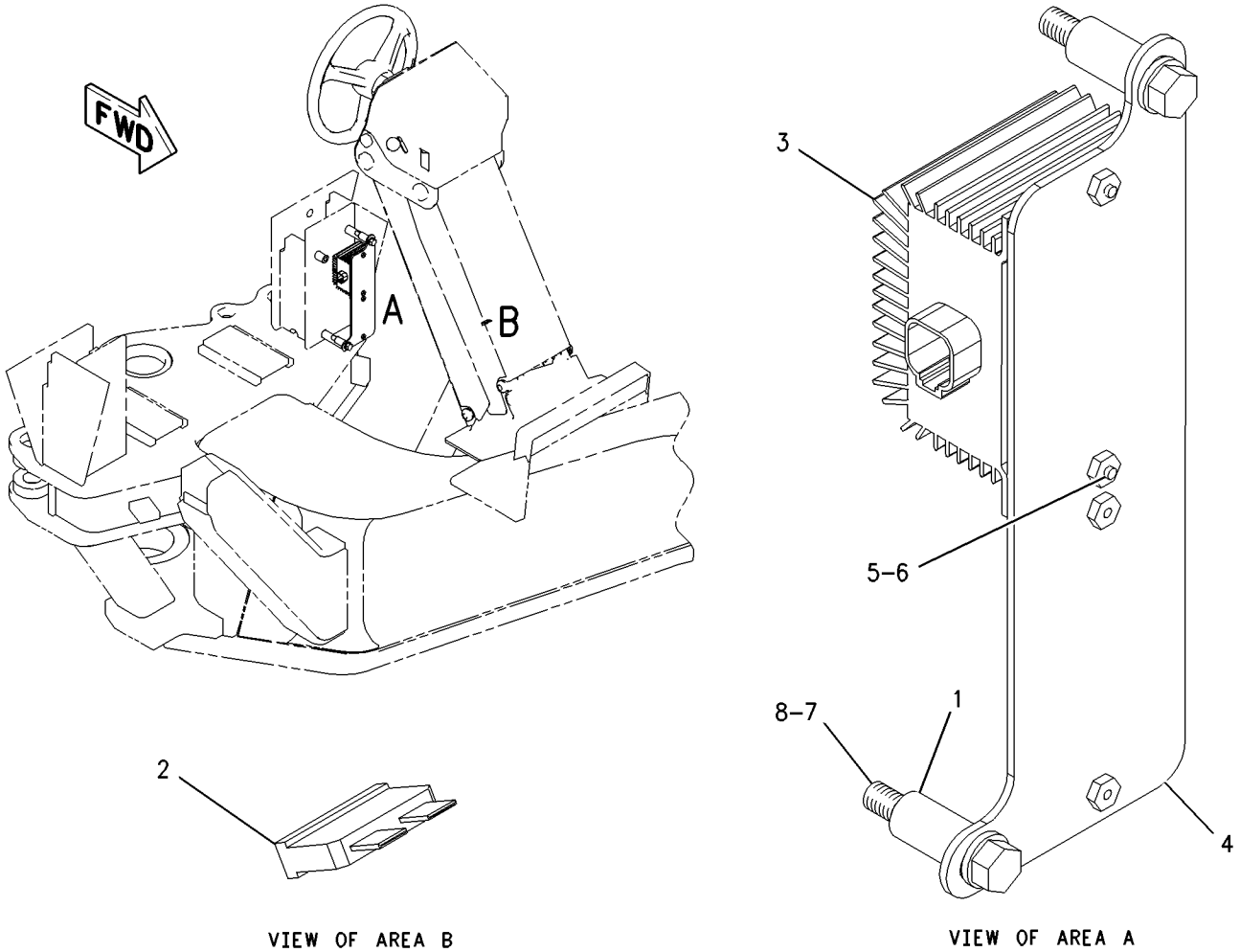

GRAPHIC #1 g00918329

ELECTRICAL AND STARTING SYSTEM

167-8382 CONVERTER GP-ELECTRICAL–25 AMP

S/N: ATS1-UP
AN ATTACHMENT

SMCS-1421 **i01627172**

NOTE	REF NO	GRAPHIC REF	PART NUMBER	QTY	PART NAME 1 2 3 4 5 6 (PRODUCT LEVEL)	SEE PAGE
	1	1	**3E-8646**	1	CONVERTER-POWER (24 VOLT TO 12 VOLT)(25 AMP)	
		1	**8T-9636**	2	FUSE (30 AMP) (CONVERTER-POWER)	
	2	1	**3S-2093**	3	STRAP-CABLE	
	3	1	**168-8233**	1	PLATE	
	4	1	**168-8235**	1	PLATE AS	
	5	1	**169-3523**	1	HARNESS AS-RADIO	
		1	**102-8802**	1	KIT-RECEPTACLE (2 PIN) (IGNITION/RADIO CONVERTER)	
	6	1	**6V-8801**	1	NUT (3/8-16 THD)	
	7	1	**8T-4121**	2	WASHER-HARD (11X21X2.5MM THK)	
M	8	1	**8T-4137**	2	BOLT (M10X1.5X20MM)	
	9	1	**8T-4896**	1	WASHER-HARD (10.2X18.5X2.5MM THK)	
M	10	1	**9X-2042**	2	SCREW-TRUSS HEAD (M6X1X12MM)	
E	11	1	**7X-7877**		STRIP-EDGING (106 CM)	

E-ORDER BY THE CENTIMETER
M-METRIC PART

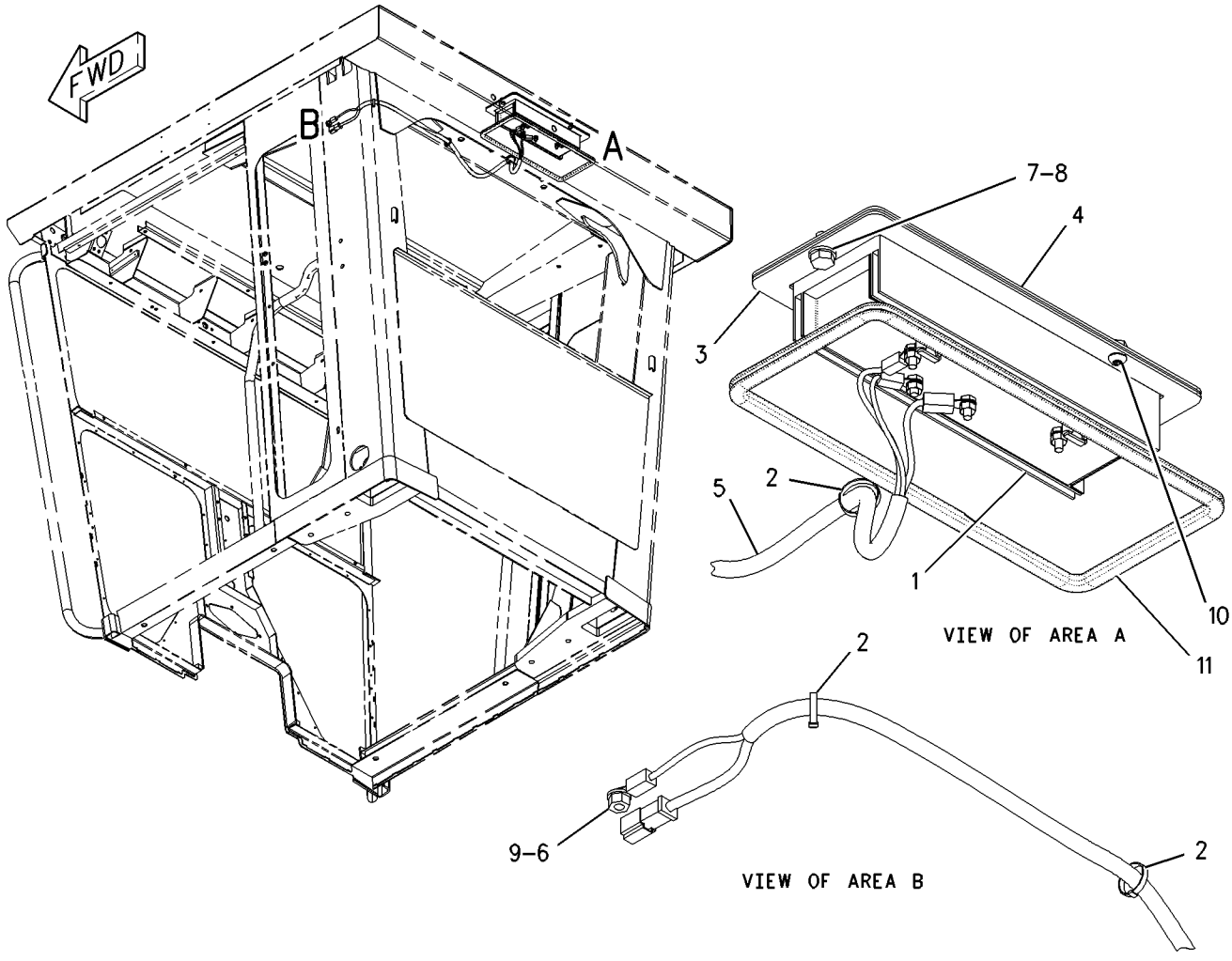

GRAPHIC #1 g00847577

180-4643 CONVERTER GP-ELECTRICAL–12 V POWER PORT

S/N: ATS1-UP

PART OF 161-0776, 161-0777 CONVERTER AR-ELECTRICAL

AN ATTACHMENT

SMCS-1421 **i01627219**

NOTE	REF NO	GRAPHIC REF	PART NUMBER	QTY	PART NAME 1 2 3 4 5 6 (PRODUCT LEVEL)	SEE PAGE
	1	1	**9W-1442**	1	FUSE (10 AMP) (POWER CONVERTER)	
	2	1	**205-4285**	1	CONVERTER GP-ELECTRICAL (24 VOLT TO 12 VOLT)	
	3	1	**208-7782**	2	PLATE AS	
	4	1	**096-6166**	2	WASHER-HARD (4.5X9X1MM THK)	
	5	1	**5M-3062**	2	BOLT (3/8-16X0.75 IN)	
M	6	1	**8T-0285**	2	SCREW-MACHINE (M4X0.7X12MM)	
	7	1	**8T-4896**	2	WASHER-HARD (10.2X18.5X2.5MM THK)	

M-METRIC PART

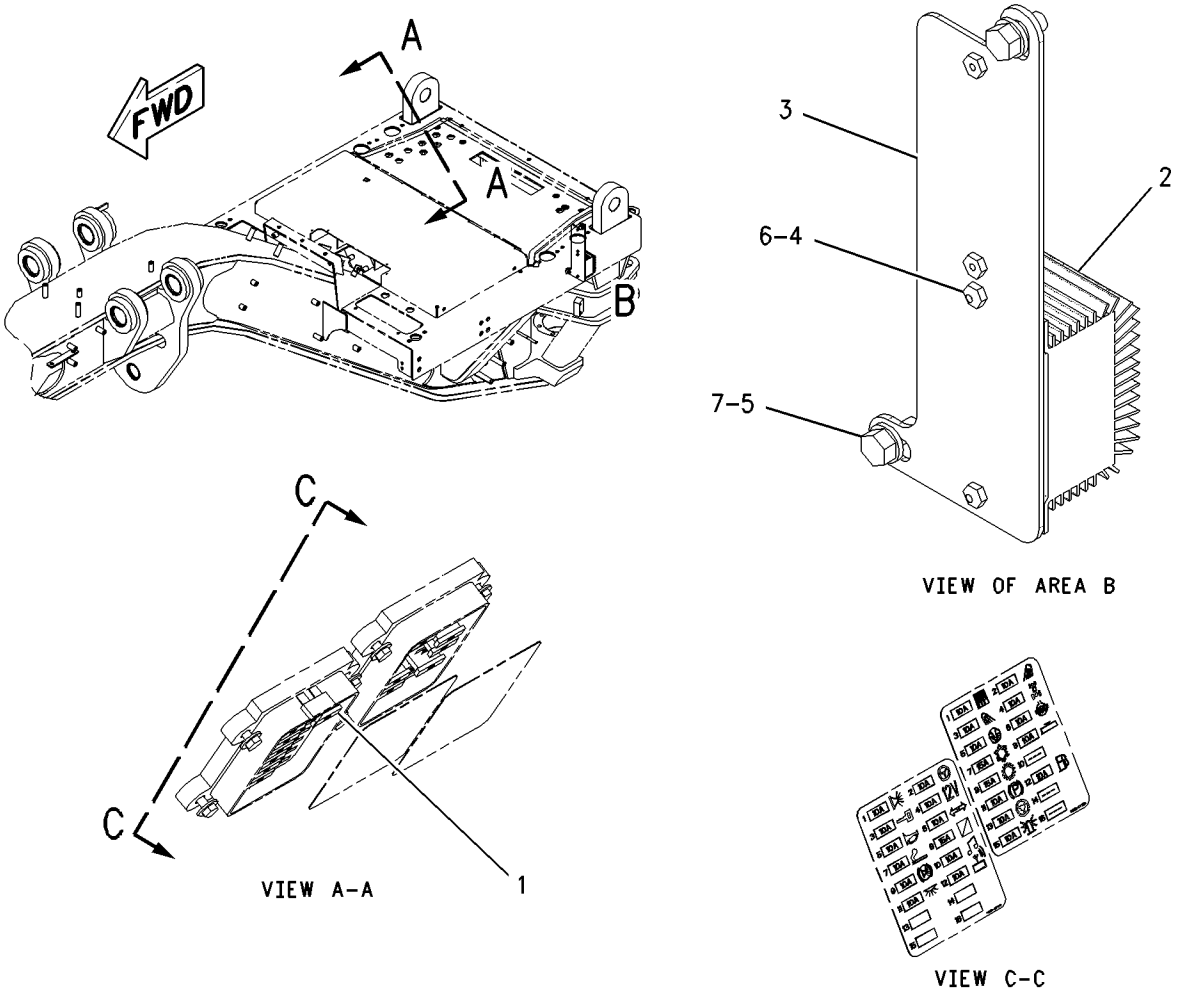

GRAPHIC #1 g00843830

198-7332 ELECTRONICS GP-MONITOR—CAT MONITORING SYSTEM

S/N: ATS1-UP

PART OF 159-5867 WIRING GP-FRONT

SMCS-7490, 7620 **i01834316**

NOTE	PART NUMBER	QTY	PART NAME 1 2 3 4 5 6 (PRODUCT LEVEL)	SEE PAGE
	222-6457	1	SOFTWARE GP-MONITOR (CATERPILLAR MONITORING SYSTEM)	
			—OR—	
	222-6458	1	SERVICE GP-MONITOR (CATERPILLAR MONITORING SYSTEM)	
			(OPTIONAL SERVICE REPLACEMENT)	
	222-6457	1	SOFTWARE GP-MONITOR (CATERPILLAR MONITORING SYSTEM)	
	160-6567	1	CONTROL GP-MONITOR (CATERPILLAR MONITORING SYSTEM)	

<END>

131-8126 HEATER GP-JACKET WATER–120 VOLT

S/N: ATS1-UP
AN ATTACHMENT

SMCS-1383 **i01831063**

NOTE	REF NO	GRAPHIC REF	PART NUMBER	QTY	PART NAME 1 2 3 4 5 6 (PRODUCT LEVEL)	SEE PAGE
	1	1	**131-8627**	1	ELEMENT AS-JACKET WATER HEATER (120 VOLT/1250 WATT)	
B	2	1	**133-6517**	1	CAP AS-DUST (JACKET WATER HEATER)	
	3	1	**7X-6312**	1	CORD AS	

B-USE AS REQUIRED

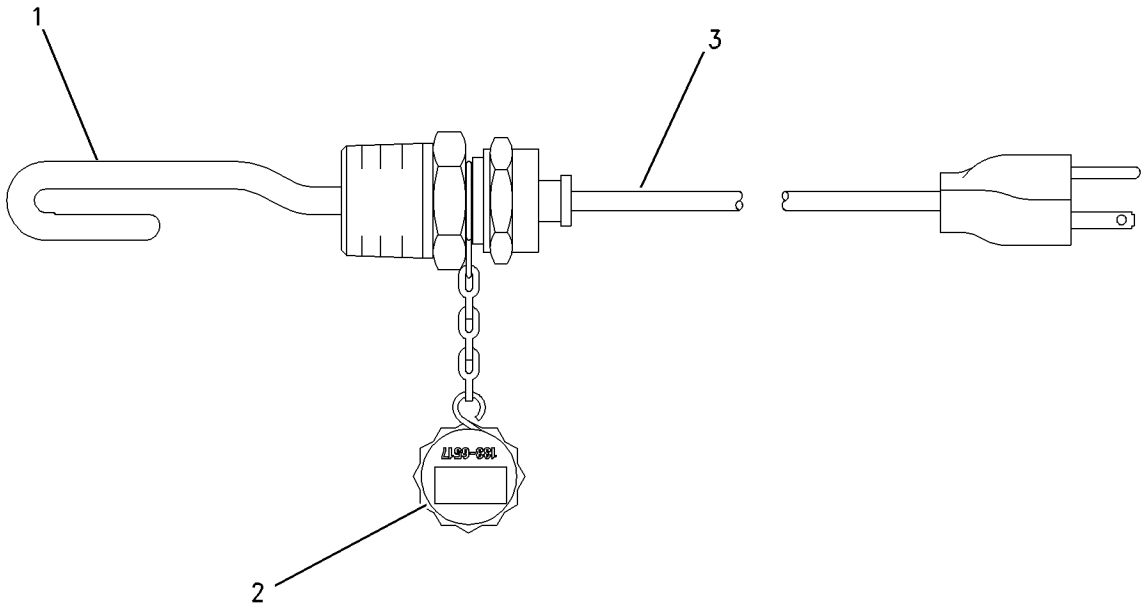

GRAPHIC #1 g00832252

154-7246 HEATER GP-JACKET WATER–240 VOLT

S/N: ATS1-UP
AN ATTACHMENT

SMCS-1383 **i01832132**

NOTE	REF NO	GRAPHIC REF	PART NUMBER	QTY	PART NAME 1 2 3 4 5 6 (PRODUCT LEVEL)	SEE PAGE
	1	1	**154-2881**	1	ELEMENT AS-HEATER (240 VOLT/1250 WATT)	
	1A	1	**133-6517**	1	CAP AS-DUST (JACKET WATER HEATER)	
	2	1	**127-8609**	1	CORD AS-JACKET WATER HEATER	

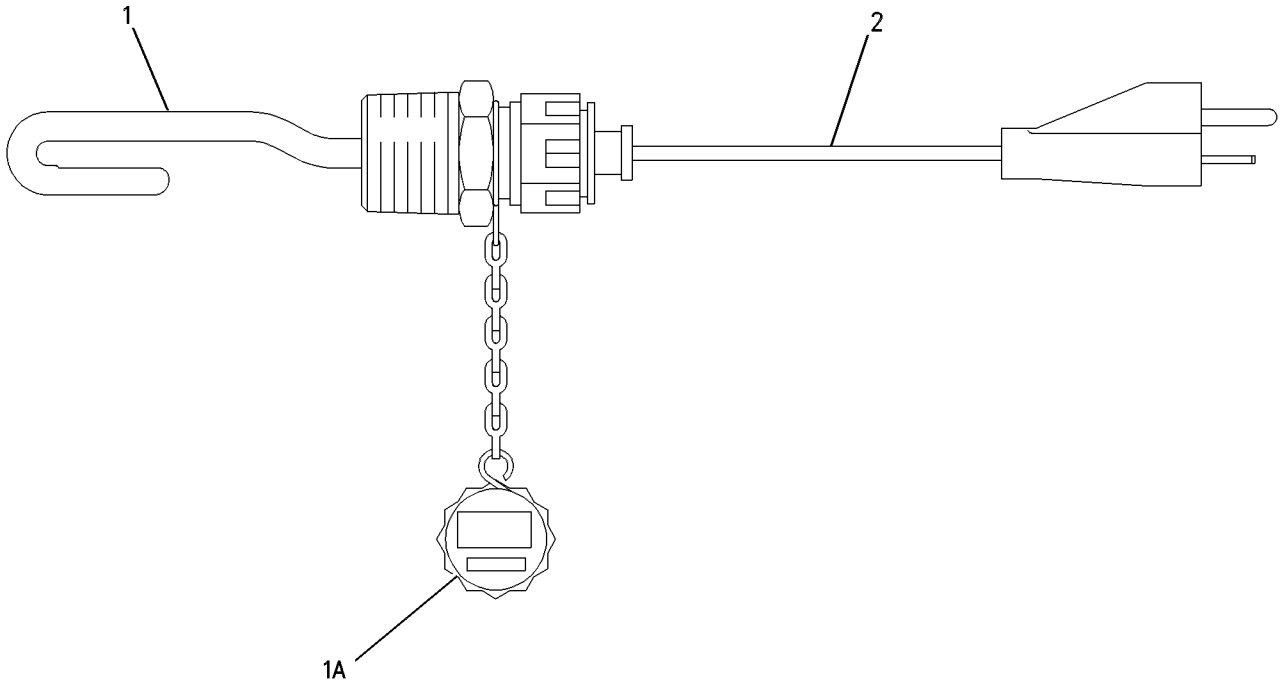

GRAPHIC #1 g00508489

161-1921 INSTALLATION GP-WARNING BEACON

S/N: ATS1-UP
AN ATTACHMENT

SMCS-1408, 1431 **i01624081**

NOTE	REF NO	GRAPHIC REF	PART NUMBER	QTY	PART NAME 1 2 3 4 5 6 (PRODUCT LEVEL)	SEE PAGE
	1	1	**9W-1442**	1	FUSE (10 AMP) (WARNING BEACON)	
	2	1	**107-4932**	1	PLATE AS	
	3	1	**130-5300**	1	CLIP	
	4	1	**5P-8525**	1	GROMMET	
	5	1	**8T-4121**	2	WASHER-HARD (11X21X2.5MM THK)	
M	6	1	**8T-4136**	2	BOLT (M10X1.5X25MM)	
	7	1	**102-9862**	1	SWITCH AS (WARNING BEACON)	
	8	1	**3E-8822**	1	ACTUATOR-ROCKER	
	9	1	**3E-8825**	1	LAMP (24 VOLT) (WARNING BEACON)	

M-METRIC PART

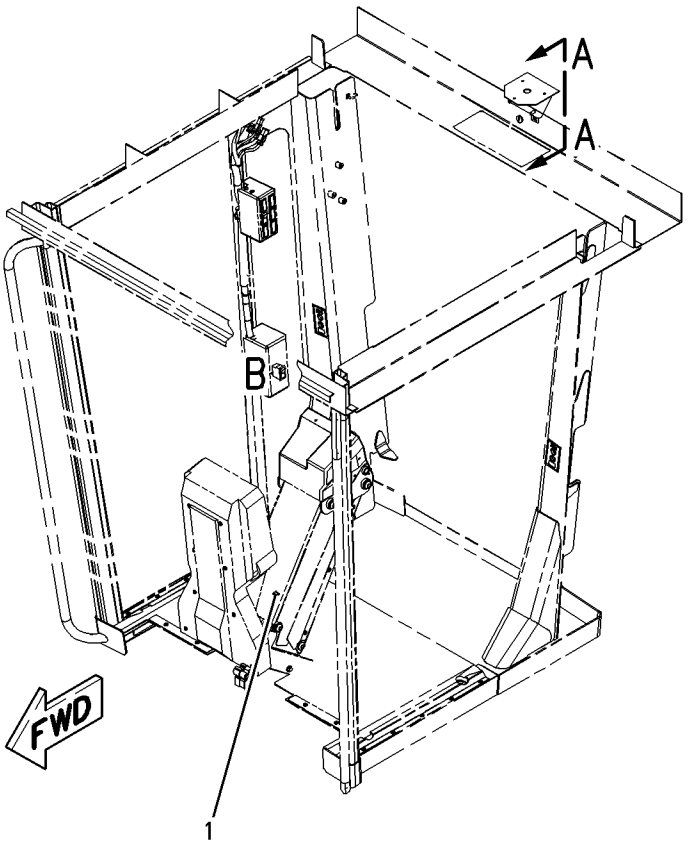

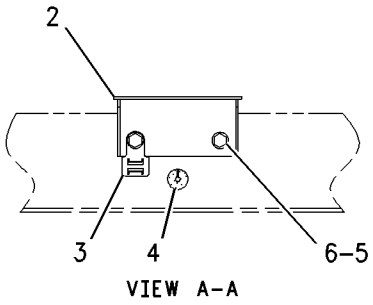

VIEW A-A

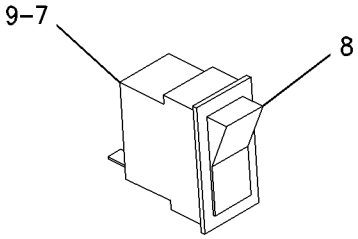

VIEW OF AREA B

GRAPHIC #1 g00848000

3E-6389 LAMP GP-DOME

S/N: ATS1-UP
24 VOLT. WITH SWITCH
PART OF 159-5878 WIRING GP-CAB

SMCS-1433 **i01742169**

NOTE	REF NO	GRAPHIC REF	PART NUMBER	QTY	PART NAME 1 2 3 4 5 6 (PRODUCT LEVEL)	SEE PAGE
	1	1	**7N-9943**	1	LAMP (24 VOLT) (DOME)	
	2	1	**102-8803**	1	KIT-RECEPTACLE (3 PIN)	
					(INCLUDES RECEPTACLE AS & WEDGE)	
	3	1	**3E-3371**	1	WEDGE-RECEPTACLE LOCK (3 PIN)	
	4	1	**8T-8729**	3	PIN-CONNECTOR	
	5	1	**7T-0020**	1	LENS (DOME LAMP)	

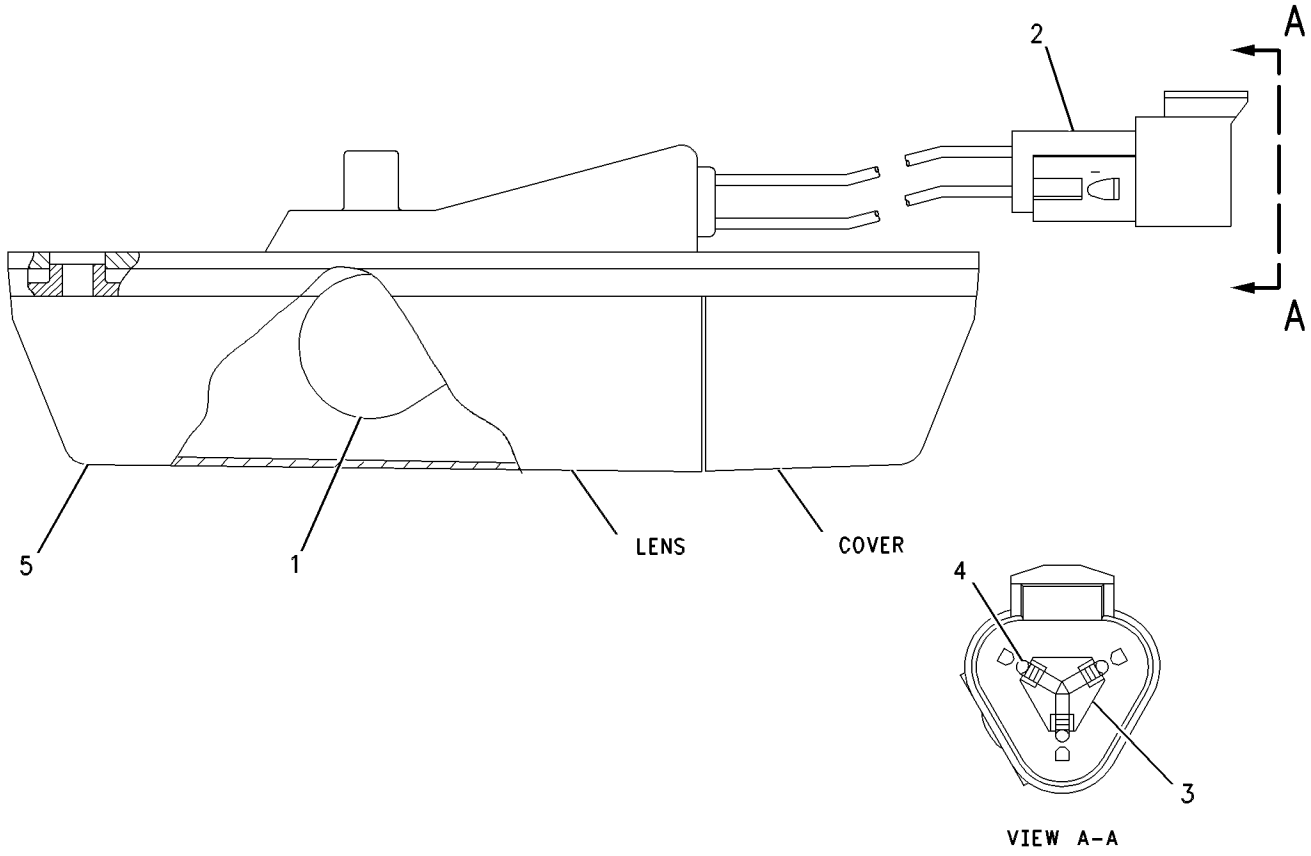

GRAPHIC #1 g00647928

153-2073 LAMP GP-FLOOD—VERTICAL

S/N: ATS1-UP
24 VOLT
PART OF 161-0778, 161-1021, 183-4070, 196-8532, 196-8559, 204-3435, 205-7262
LIGHTING GP-FLOOD
AN ATTACHMENT

SMCS-1434 **i01854975**

NOTE	REF NO	GRAPHIC REF	PART NUMBER	QTY	PART NAME 1 2 3 4 5 6 (PRODUCT LEVEL)	SEE PAGE
	1	1	**9X-3463**	1	LAMP-HEAD (24 VOLT)(65 WATT) (FLOODLAMP)	
	2	1	**158-0250**	1	BODY AS-LAMP	
	3	1	**158-0248**	1	LENS AS (FLOODLAMP)	
	4	1	**158-0252**	1	BEZEL	
	5	1	**188-8849**	2	CLAMP	

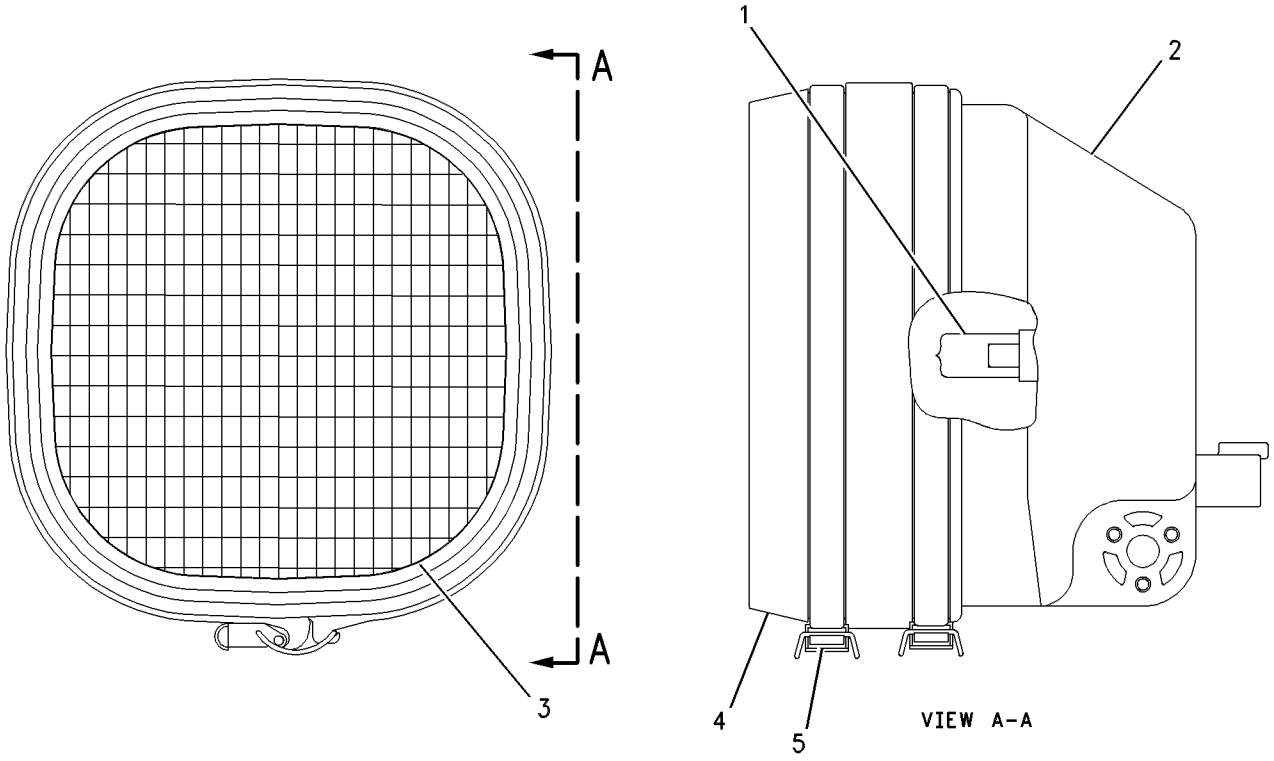

GRAPHIC #1 g00449633

161-3509 LAMP GP-HEAD–LOW BEAM

S/N: ATS1-UP
24 VOLT. VERTICAL
PART OF 161-1922, 185-6660 LIGHTING GP-FLOOD
AN ATTACHMENT

SMCS-1429 **i01683175**

NOTE	REF NO	GRAPHIC REF	PART NUMBER	QTY	PART NAME 1 2 3 4 5 6 (PRODUCT LEVEL)	SEE PAGE
	1	1	**9X-3463**	1	LAMP-HEAD (24 VOLT) (LOW BEAM)	
	2	1	**158-0250**	1	BODY AS-LAMP	
	3	1	**162-2077**	1	LENS AS (HEADLAMP)(LOW BEAM)	
	4	1	**158-0252**	1	BEZEL	
	5	1	**188-8849**	2	CLAMP	

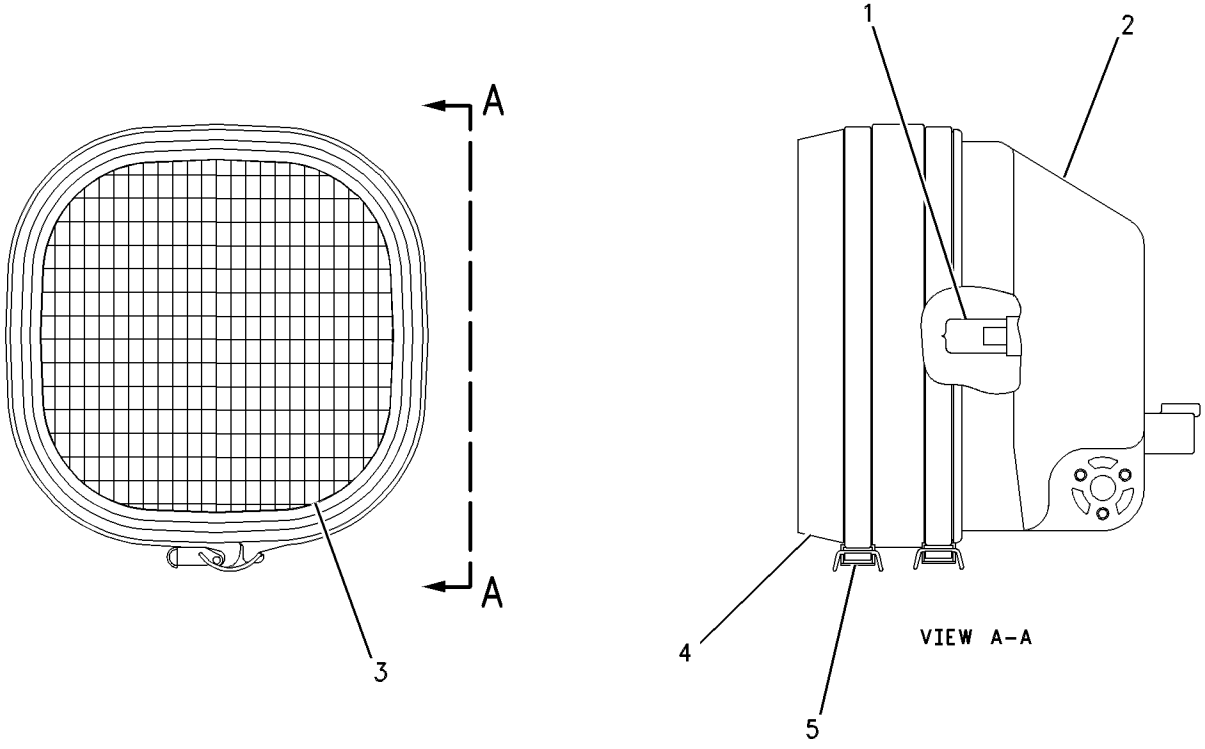

GRAPHIC #1 g00514339

180-1300 LAMP GP-HEAD—HIGH BEAM

S/N: ATS1-UP
PART OF 161-1922 LIGHTING GP-FLOOD
AN ATTACHMENT

SMCS-1429 **i01762340**

NOTE	REF NO	GRAPHIC REF	PART NUMBER	QTY	PART NAME 1 2 3 4 5 6 (PRODUCT LEVEL)	SEE PAGE
	1	1	**9X-3463**	1	LAMP-HEAD (24 VOLT)(65 WATT) (HIGH BEAM)	
	2	1	**158-0250**	1	BODY AS-LAMP	
	3	1	**158-0249**	1	LENS AS (HEADLAMP)(HIGH BEAM)	
	4	1	**158-0252**	1	BEZEL	
	5	1	**188-8849**	2	CLAMP	

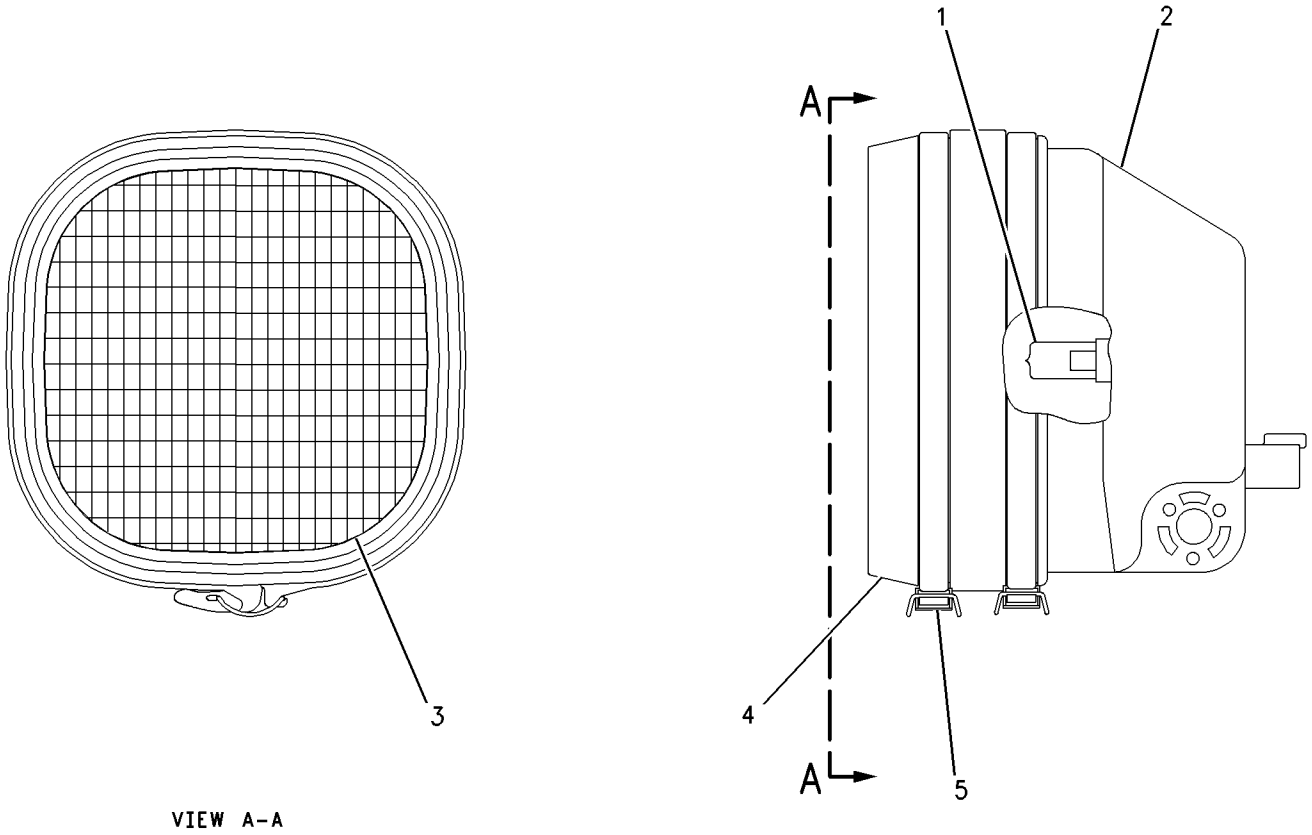

GRAPHIC #1 g00703486

MEMORANDA

203-7625 LAMP GP-HEAD–LH

S/N: ATS1-UP
24 VOLT
PART OF 203-7620 LIGHTING GP-FLOOD
AN ATTACHMENT

SMCS-1429 **i01652371**

NOTE	REF NO	GRAPHIC REF	PART NUMBER	QTY	PART NAME 1 2 3 4 5 6 (PRODUCT LEVEL)	SEE PAGE
	1	1	**9X-4244**	4	SCREW	
	2	1	**100-3251**	2	SCREW-LENS	
	3	1	**9X-9865**	1	SEAL	
	4	1	**100-3249**	1	LENS AS (HIGH/LOW BEAM)	
	5	1	**9X-3465**	1	LAMP (24 VOLT) (HIGH/LOW BEAM)	
	6	1	**136-3848**	1	LENS AS (TURN SIGNAL)	
M	7	1	**8T-5005**	1	BOLT (M10X1.50X70MM)	
M	8	1	**8T-0389**	1	LOCKNUT (M10X1.5 THD)	
	9	1	**100-3253**	1	SPACER-SPHERICAL	
	10	1	**100-3254**	1	SPACER-SPHERICAL	
	11	1	**100-3255**	1	WASHER	
	12	1	**102-8805**	1	KIT-RECEPTACLE (6 PIN) (HEADLAMP)	
	13	1	**186-3735**	5	PIN-CONNECTOR	
	14	1	**3E-3383**	1	WEDGE-RECEPTACLE LOCK	
	15	1	**8T-8737**	1	PLUG-SEAL	
	16	1	**100-3245**	1	LAMP (24 VOLT) (RUNNING LIGHTS)	
	16A	1	**100-3245**	1	LAMP (24 VOLT) (TURN SIGNAL)	
	17	1	**9X-4493**	1	LAMP (SINGLE FILAMENT) (TURN SIGNAL)	
	18	1	**100-3250**	1	LENS-AMBER (TURN SIGNAL)	
	19	1	**136-3845**	1	BODY AS-LAMP	

M-METRIC PART

203-7625 LAMP GP-HEAD *(contd.)* **i01652371**

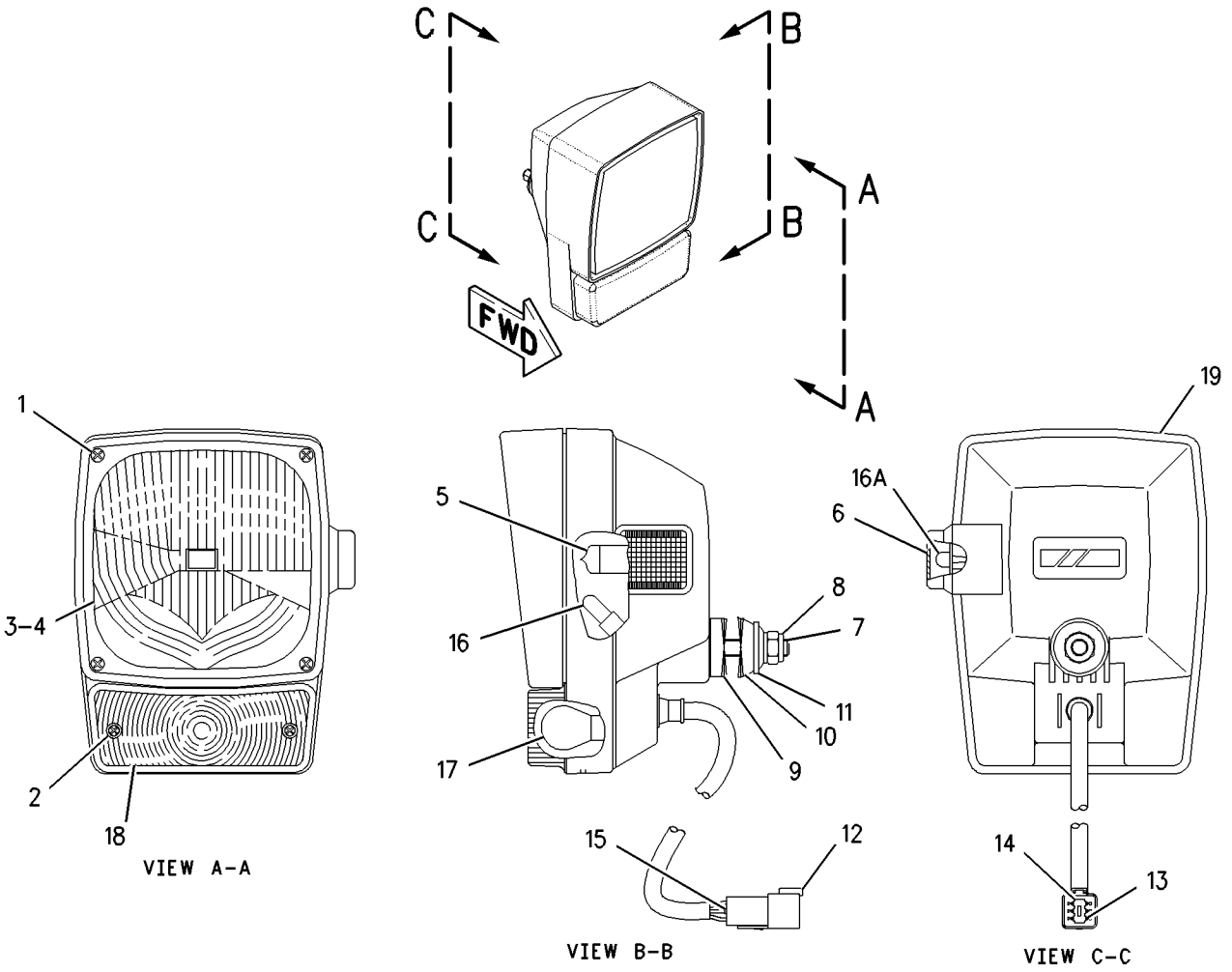

GRAPHIC #1 g00853119

203-7626 LAMP GP-HEAD—RH

S/N: ATS1-UP
24 VOLT
PART OF 203-7620 LIGHTING GP-FLOOD
AN ATTACHMENT

SMCS-1429 **i01652527**

NOTE	REF NO	GRAPHIC REF	PART NUMBER	QTY	PART NAME 1 2 3 4 5 6 (PRODUCT LEVEL)	SEE PAGE
	1	1	**9X-4244**	4	SCREW	
	2	1	**100-3251**	2	SCREW-LENS	
	3	1	**9X-3465**	1	LAMP (24 VOLT) (HIGH/LOW BEAM)	
	4	1	**100-3249**	1	LENS AS (HIGH/LOW BEAM)	
	5	1	**9X-9865**	1	SEAL	
	6	1	**136-3848**	1	LENS AS (TURN SIGNAL)	
M	7	1	**8T-5005**	1	BOLT (M10X1.50X70MM)	
M	8	1	**8T-0389**	1	LOCKNUT (M10X1.5 THD)	
	9	1	**100-3253**	1	SPACER-SPHERICAL	
	10	1	**100-3254**	1	SPACER-SPHERICAL	
	11	1	**100-3255**	1	WASHER	
	12	1	**102-8805**	1	KIT-RECEPTACLE (6 PIN) (HEADLAMP)	
	13	1	**186-3735**	5	PIN-CONNECTOR	
	14	1	**3E-3383**	1	WEDGE-RECEPTACLE LOCK	
	15	1	**8T-8737**	1	PLUG-SEAL	
	16	1	**100-3245**	1	LAMP (24 VOLT) (RUNNING LIGHTS)	
	16A	1	**100-3245**	1	LAMP (24 VOLT) (TURN SIGNAL)	
	17	1	**9X-4493**	1	LAMP (SINGLE FILAMENT) (TURN SIGNAL)	
	18	1	**100-3250**	1	LENS-AMBER (TURN SIGNAL)	
	19	1	**136-3846**	1	BODY AS-LAMP	

M-METRIC PART

203-7626 LAMP GP-HEAD *(contd.)* **i01652527**

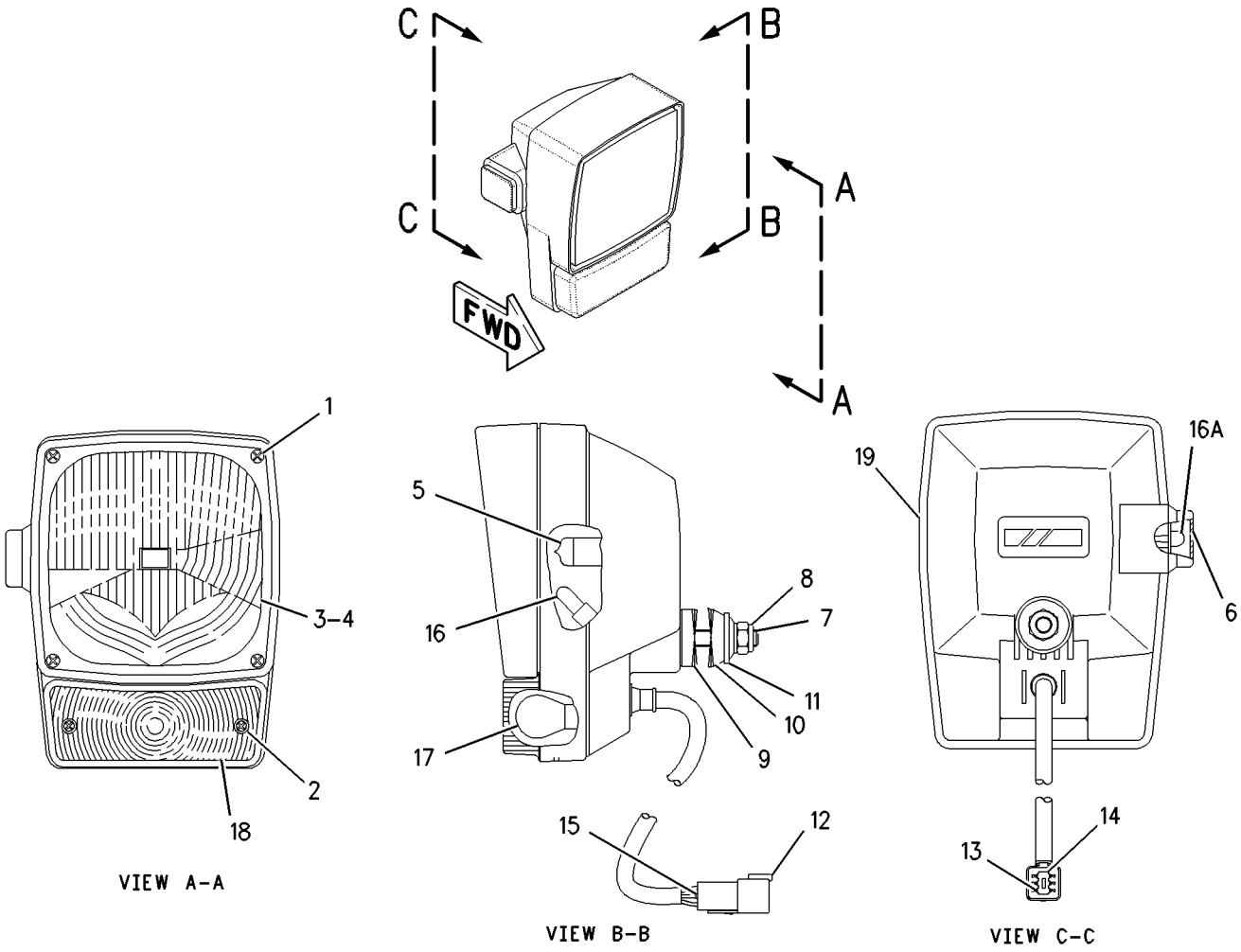

GRAPHIC #1 g00853116

105-4849 LAMP GP-HEAD & SIGNAL–LH

S/N: ATS1-UP
PART OF 192-0229 LIGHTING GP-FLOOD
AN ATTACHMENT

SMCS-1429, 1430 **i01810518**

NOTE	REF NO	GRAPHIC REF	PART NUMBER	QTY	PART NAME 1 2 3 4 5 6 (PRODUCT LEVEL)	SEE PAGE
	1	1	**9X-4244**	4	SCREW	
	2	1	**100-3251**	2	SCREW-LENS	
	3	1	**9X-9865**	1	SEAL	
	4	1	**100-3248**	1	LENS AS (HIGH/LOW BEAM)	
	5	1	**9X-3465**	1	LAMP (24 VOLT) (HIGH/LOW BEAM)	
	6	1	**136-3848**	1	LENS AS (TURN SIGNAL)	
M	7	1	**8T-5005**	1	BOLT (M10X1.50X70MM)	
M	8	1	**8T-0389**	1	LOCKNUT (M10X1.5 THD)	
	9	1	**100-3253**	1	SPACER	
	10	1	**100-3254**	1	SPACER	
	11	1	**100-3255**	1	WASHER	
	12	1	**102-8805**	1	KIT-RECEPTACLE (6 PIN) (HEADLAMP)	
	13	1	**186-3735**	5	PIN-CONNECTOR	
	14	1	**3E-3383**	1	WEDGE-RECEPTACLE LOCK	
	15	1	**8T-8737**	1	PLUG-SEAL	
	16	1	**100-3245**	1	LAMP (24 VOLT) (RUNNING LIGHTS)	
	16A	1	**100-3245**	1	LAMP (24 VOLT) (TURN SIGNAL)	
	17	1	**9X-4493**	1	LAMP (24 VOLT/21 WATT) (TURN SIGNAL)	
	18	1	**100-3250**	1	LENS (AMBER) (TURN SIGNAL)	
	19	1	**136-3845**	1	BODY AS-LAMP	

M-METRIC PART

105-4849 LAMP GP-HEAD & SIGNAL ***(contd.)*** **i01810518**

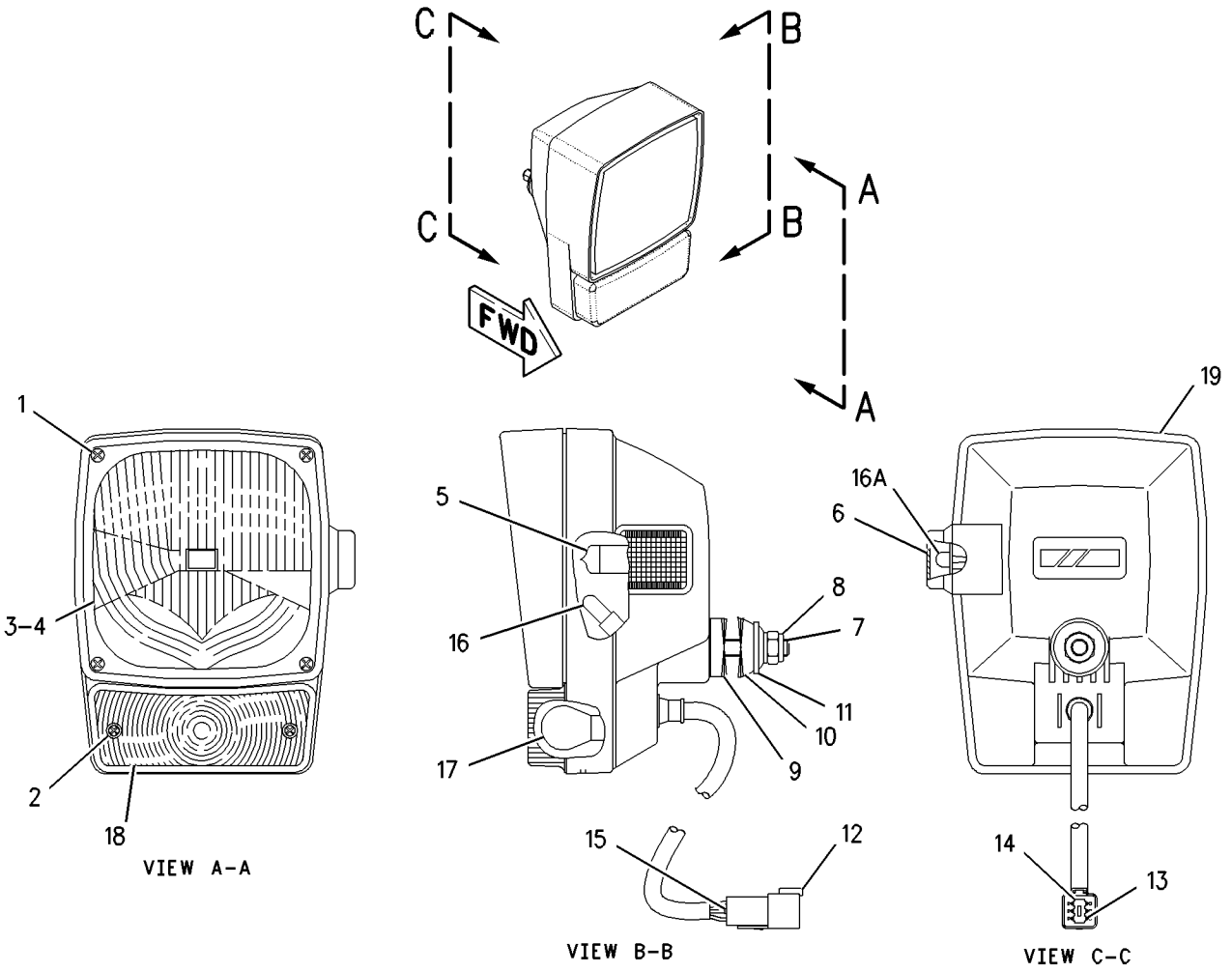

GRAPHIC #1 g00853119

105-4850 LAMP GP-HEAD & SIGNAL–RH

S/N: ATS1-UP
PART OF 192-0229 LIGHTING GP-FLOOD
AN ATTACHMENT

SMCS-1429, 1430 **i01810519**

NOTE	REF NO	GRAPHIC REF	PART NUMBER	QTY	PART NAME 1 2 3 4 5 6 (PRODUCT LEVEL)	SEE PAGE
	1	1	**9X-4244**	4	SCREW	
	2	1	**100-3251**	2	SCREW-LENS	
	3	1	**9X-9865**	1	SEAL	
	4	1	**100-3248**	1	LENS AS (HIGH/LOW BEAM)	
	5	1	**9X-3465**	1	LAMP (24 VOLT) (HIGH/LOW BEAM)(RH)	
	6	1	**136-3848**	1	LENS AS (TURN SIGNAL)	
M	7	1	**8T-5005**	1	BOLT (M10X1.50X70MM)	
M	8	1	**8T-0389**	1	LOCKNUT (M10X1.5 THD)	
	9	1	**100-3253**	1	SPACER	
	10	1	**100-3254**	1	SPACER	
	11	1	**100-3255**	1	WASHER	
	12	1	**102-8805**	1	KIT-RECEPTACLE (6 PIN) (HEADLAMP)	
	13	1	**186-3735**	5	PIN-CONNECTOR	
	14	1	**3E-3383**	1	WEDGE-RECEPTACLE LOCK	
	15	1	**8T-8737**	1	PLUG-SEAL	
	16	1	**100-3245**	1	LAMP (24 VOLT) (RUNNING LAMP)	
	16A	1	**100-3245**	1	LAMP (24 VOLT) (TURN SIGNAL)	
	17	1	**9X-4493**	1	LAMP (24 VOLT/21 WATT) (TURN SIGNAL)	
	18	1	**100-3250**	1	LENS (AMBER) (TURN SIGNAL)	
	19	1	**136-3846**	1	BODY AS-LAMP	

M-METRIC PART

105-4850 LAMP GP-HEAD & SIGNAL *(contd.)* i01810519

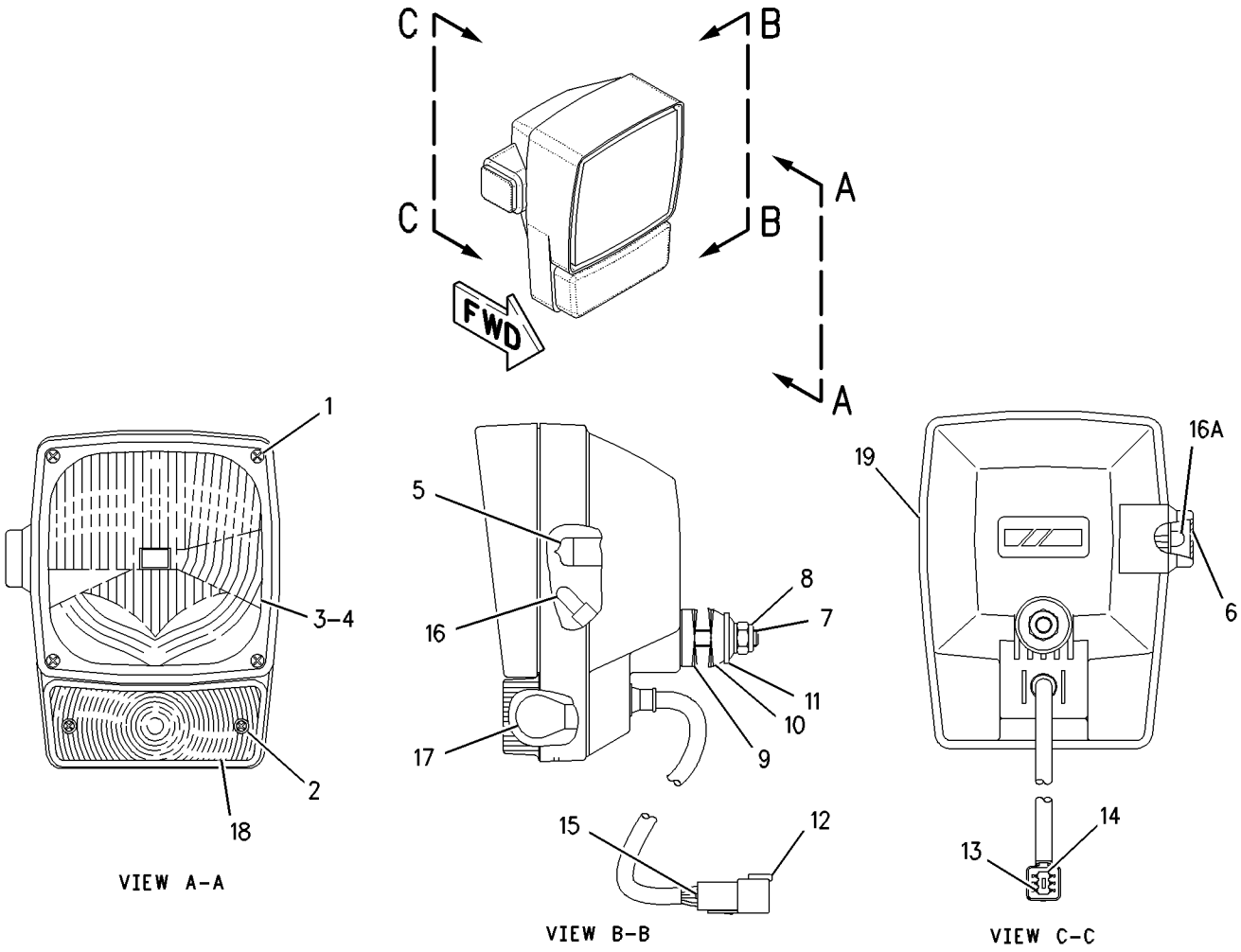

GRAPHIC #1 g00853116

135-0426 LAMP GP-SIGNAL–STOP/TAIL

S/N: ATS1-UP
24 VOLT
PART OF 194-7982 WIRING GP-REAR

SMCS-1430 **i01696455**

NOTE	REF NO	GRAPHIC REF	PART NUMBER	QTY	PART NAME 1 2 3 4 5 6 (PRODUCT LEVEL)	SEE PAGE
	1	1	**102-8803**	1	KIT-RECEPTACLE (3 PIN)	
	2	1	**3E-3371**	1	WEDGE-RECEPTACLE LOCK (3 PIN)	
	3	1	**186-3735**	3	PIN-CONNECTOR	

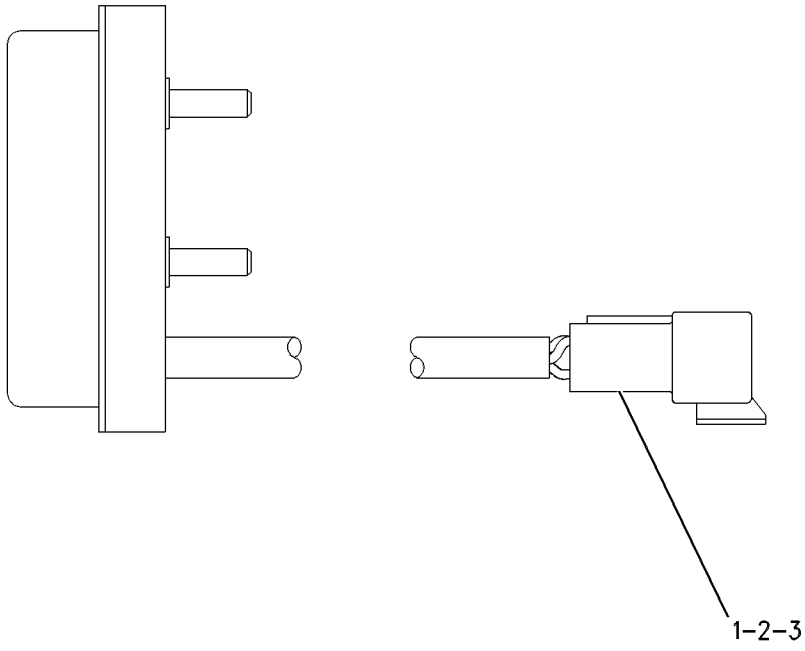

GRAPHIC #1 g00305543

135-0427 LAMP GP-SIGNAL–TURN/PARK

S/N: ATS1-UP
24 VOLT
PART OF 161-1922 LIGHTING GP-FLOOD, 188-9331 LIGHTING GP-SIGNAL
AN ATTACHMENT

SMCS-1430 **i01668509**

NOTE	REF NO	GRAPHIC REF	PART NUMBER	QTY	PART NAME 1 2 3 4 5 6 (PRODUCT LEVEL)	SEE PAGE
	1	1	**102-8803**	1	KIT-RECEPTACLE (3 PIN)	
					(INCLUDES RECEPTACLE AS & WEDGE)	
	2	1	**3E-3371**	1	WEDGE-RECEPTACLE LOCK (3 PIN)	
	3	1	**186-3735**	3	PIN-CONNECTOR	

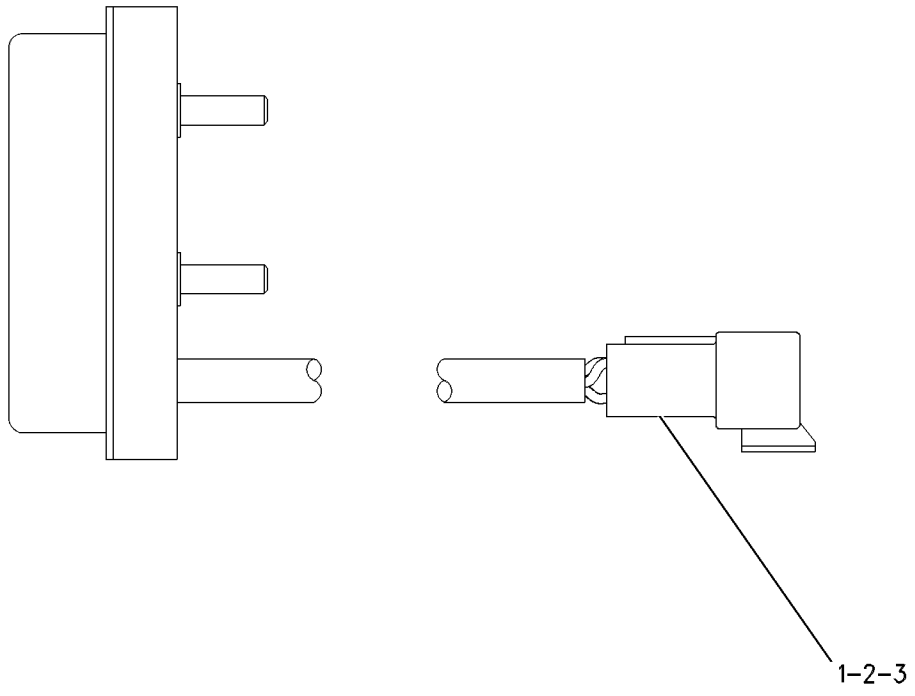

GRAPHIC #1 g00305583

128-6983 LAMP GP-WARNING BEACON

S/N: ATS1-UP
24 VOLT. AMBER , W/O REGULATOR
PART OF 161-0773, 161-0774 LIGHTING GP-WARNING
AN ATTACHMENT

SMCS-1431 **i01790971**

NOTE	REF NO	GRAPHIC REF	PART NUMBER	QTY	PART NAME 1 2 3 4 5 6 (PRODUCT LEVEL)	SEE PAGE
	1	1	**9X-8121**	1	LENS-AMBER (WARNING BEACON)	
	2	1	**9X-7849**	1	LAMP (WARNING BEACON)(24 VOLT)	
	3	1	**9X-8139**	1	BELT-DRIVE (WARNING BEACON)	
M	4	1	**6V-8225**	3	NUT (M6X1 THD)	
	5	1	**5P-0537**	3	WASHER-HARD (7.2X14.5X2MM THK)	
	6	1	**102-8802**	1	KIT-RECEPTACLE (2 PIN)	
	7	1	**186-3735**	2	PIN-CONNECTOR	
	8	1	**3E-3365**	1	WEDGE-RECEPTACLE LOCK (2 PIN)	

M-METRIC PART

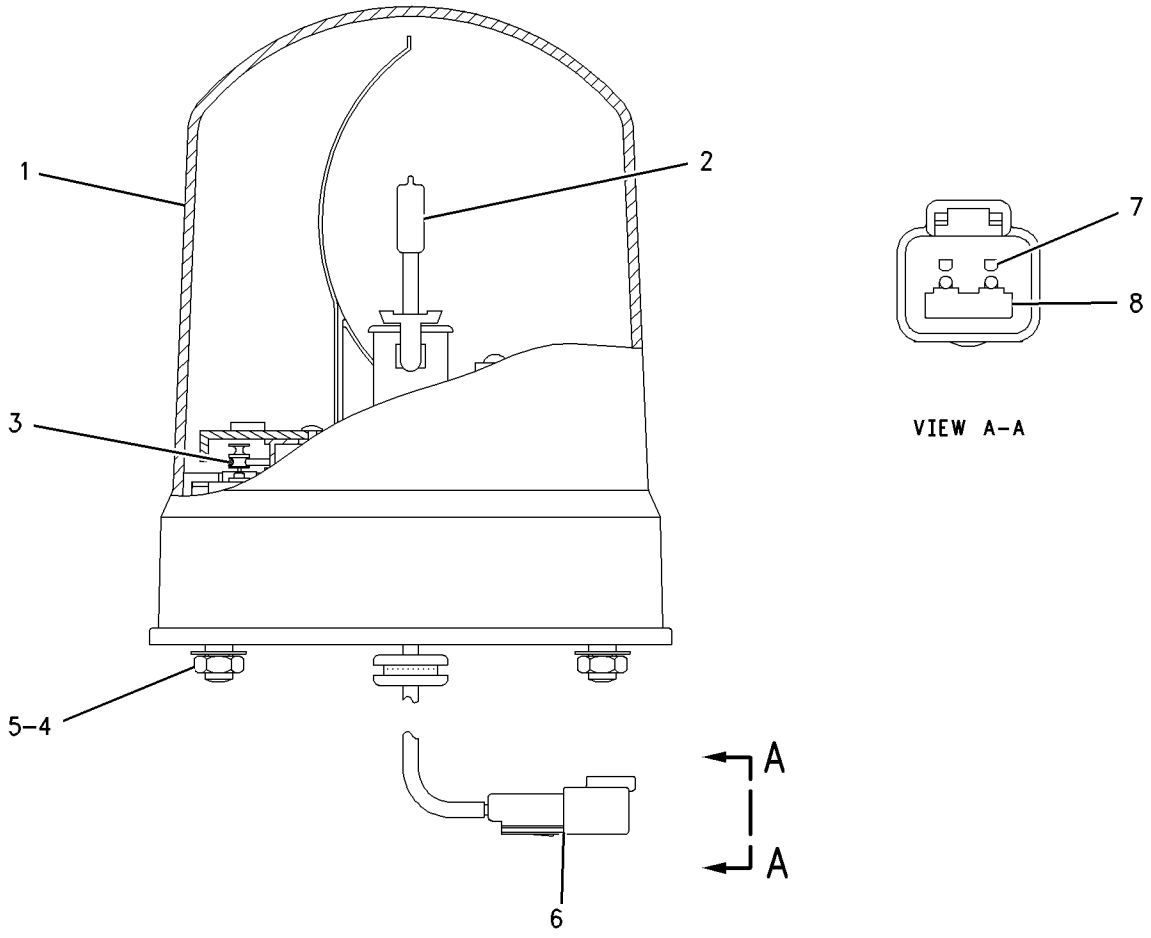

GRAPHIC #1 g00916701

204-6109 LIGHTING AR-FLOOD–MOLDBOARD–EU

S/N: ATS1-UP
AN ATTACHMENT

SMCS-1434 **i01830736**

NOTE	REF NO	GRAPHIC REF	PART NUMBER	QTY	PART NAME 1 2 3 4 5 6 (PRODUCT LEVEL)	SEE PAGE
	1	1	**106-8704**	1	SUPPRESSOR AS-ARC	
		1	**186-3735**	2	PIN-CONNECTOR	
		1	**102-8802**	1	KIT-RECEPTACLE (2 PIN)	
					(INCLUDES RECEPTACLE AS & WEDGE)	
Y	2	1	*196-8532*	1	LIGHTING GP-FLOOD (MOLDBOARD)	186
Y	3	1	*204-6127*	1	WIRING GP-CAB (MOLDBOARD)	230

Y-SEPARATE ILLUSTRATION

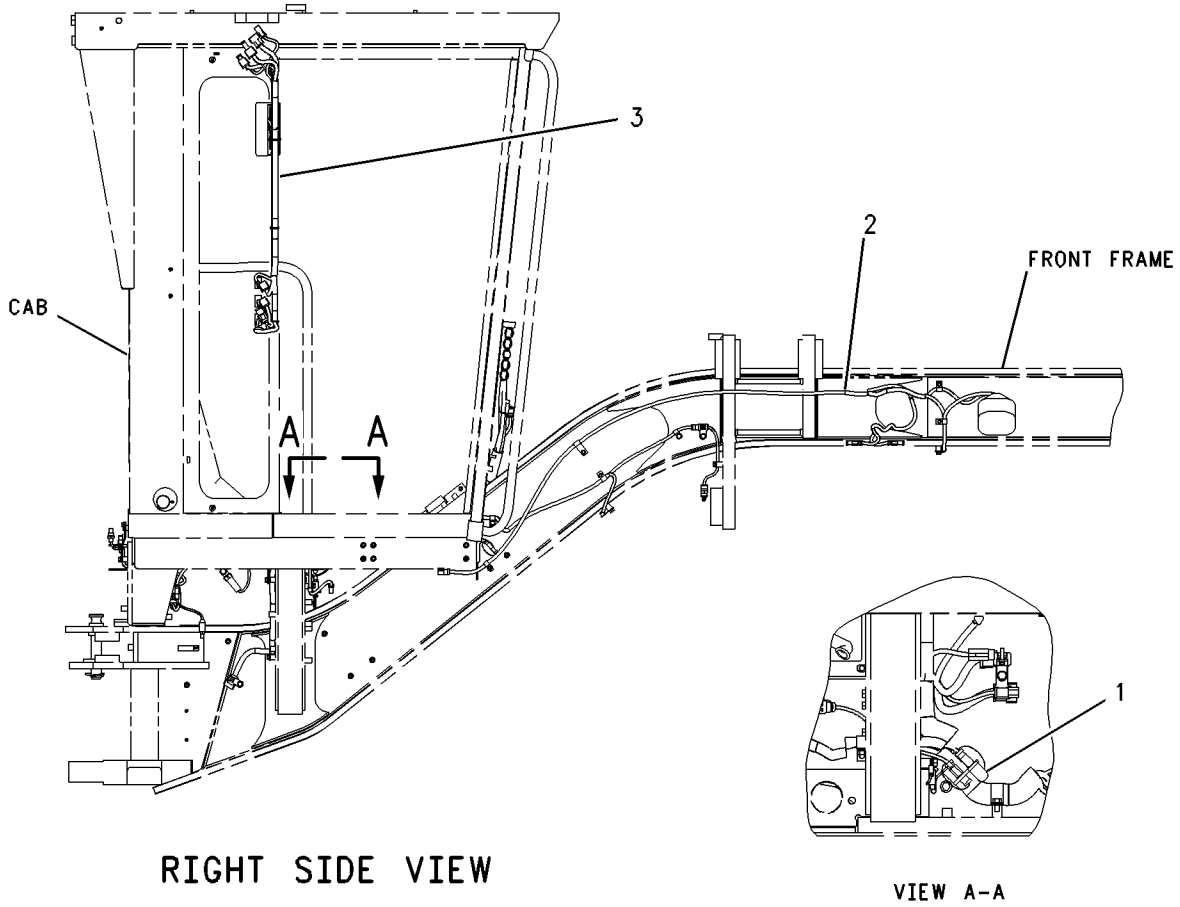

GRAPHIC #1 g00938077

205-7261 LIGHTING AR-FLOOD—FRONT & REAR MOUNTED FLOOD

S/N: ATS1-UP
AN ATTACHMENT

SMCS-1434 **i01828877**

NOTE	PART NUMBER	QTY	PART NAME 1 2 3 4 5 6 (PRODUCT LEVEL)	SEE PAGE
Y	*161-0778*	1	LIGHTING GP-FLOOD (FRONT)	168
Y	*205-7262*	1	LIGHTING GP-FLOOD (REAR)	192

Y-SEPARATE ILLUSTRATION

<END>

206-6538 LIGHTING AR-FLOOD—REAR

S/N: ATS1-UP
AN ATTACHMENT

SMCS-1434 **i01646079**

NOTE	PART NUMBER	QTY	PART NAME 1 2 3 4 5 6 (PRODUCT LEVEL)	SEE PAGE
Y	*204-3435*	1	LIGHTING GP-FLOOD (MOLDBOARD)	191
Y	*203-6551*	1	WIRING GP-CAB (MOLDBOARD)	228

Y-SEPARATE ILLUSTRATION

<END>

161-0770 LIGHTING AR-FLOOD & SIGNAL

S/N: ATS1-UP
AN ATTACHMENT

SMCS-1430, 1434 **i01854902**

NOTE	PART NUMBER	QTY	PART NAME 1 2 3 4 5 6 (PRODUCT LEVEL)	SEE PAGE
Y	*201-1038*	1	CIRCUIT BREAKER GP (HEADLAMP)	130
Y	*161-0772*	1	LIGHTING GP-FLOOD (CAB)	166
Y	*188-9331*	1	LIGHTING GP-SIGNAL (REAR)	193
Y	*161-1018*	1	SWITCH GP-LIGHT (TURN)	220

Y-SEPARATE ILLUSTRATION

<END>

161-1924 LIGHTING AR-FLOOD & SIGNAL—CAB—BOLSTER

S/N: ATS1-UP
AN ATTACHMENT

SMCS-1430, 1434 **i01685272**

NOTE	PART NUMBER	QTY	PART NAME 1 2 3 4 5 6 (PRODUCT LEVEL)	SEE PAGE
Y	*201-1036*	1	CIRCUIT BREAKER GP (FLOOD)	129
Y	*161-0772*	1	LIGHTING GP-FLOOD (CAB)	166
Y	*185-6660*	1	LIGHTING GP-FLOOD (BOLSTER)	180
Y	*188-9331*	1	LIGHTING GP-SIGNAL (REAR TURN LAMP)	193

Y-SEPARATE ILLUSTRATION

<END>

186-4957 LIGHTING AR-FLOOD & SIGNAL—CAB—EXTENDED BOLSTER

S/N: ATS1-UP

AN ATTACHMENT

SMCS-1430, 1434 **i01685287**

NOTE	PART NUMBER	QTY	PART NAME 1 2 3 4 5 6 (PRODUCT LEVEL)	SEE PAGE
Y	*201-1036*	1	CIRCUIT BREAKER GP (CAB)	129
Y	*161-0772*	1	LIGHTING GP-FLOOD (CAB)	166
Y	*183-4070*	1	LIGHTING GP-FLOOD (EXTENDED BOLSTER)	176
Y	*188-9331*	1	LIGHTING GP-SIGNAL (REAR TURN LAMP)	193

Y-SEPARATE ILLUSTRATION

<END>

188-9329 LIGHTING AR-FLOOD & SIGNAL—BOLSTER

S/N: ATS1-UP

AN ATTACHMENT

SMCS-1430, 1434 **i01645849**

NOTE	PART NUMBER	QTY	PART NAME 1 2 3 4 5 6 (PRODUCT LEVEL)	SEE PAGE
Y	*201-1038*	1	CIRCUIT BREAKER GP (BOLSTER/TURN LIGHTS)	130
Y	*161-1922*	1	LIGHTING GP-FLOOD (BOLSTER)	172
Y	*188-9331*	1	LIGHTING GP-SIGNAL (TURN)	193

Y-SEPARATE ILLUSTRATION

<END>

171-7096 LIGHTING GP-BACKUP

S/N: ATS1-UP
AN ATTACHMENT

SMCS-1408 **i01854986**

NOTE	REF NO	GRAPHIC REF	PART NUMBER	QTY	PART NAME 1 2 3 4 5 6 (PRODUCT LEVEL)	SEE PAGE
	1	1	**3E-0109**	5	PLUG-ROCKER SWITCH	
	2	1	**3E-5239**	1	RELAY AS (24 VOLT) (AUXILIARY BACKUP LAMP)	
	3	1	**3S-2093**	5	STRAP-CABLE	
	4	1	**9W-1442**	1	FUSE (10 AMP) (BACKUP LAMP)	
	5	1	**145-3350**	1	PLATE	
	6	1	**153-2147**	1	PLATE	
	7	1	**168-8243**	1	HARNESS AS-PANEL	
		1	**102-8802**	1	KIT-RECEPTACLE (2 PIN)	
		1	**102-8804**	2	KIT-RECEPTACLE (4 PIN) (HEATED MIRROR/MOLDBOARD LAMPS)	
		1	**102-8806**	1	KIT-RECEPTACLE (8 PIN)	
		1	**102-8801**	1	KIT-RECEPTACLE (12 PIN) (BEACON SWITCH)	
		1	**155-2255**	1	KIT-CONNECTING PLUG (12 PIN) (FRONT/REAR DEFROSTER)	
		1	**155-2265**	4	KIT-CONNECTING PLUG (8 PIN) (FRONT/REAR WIPER/WASHER)	
		1	**155-2270**	1	KIT-CONNECTING PLUG (2 PIN) (SNOW WING LAMP)	
		1	**155-2271**	1	KIT-CONNECTING PLUG (4 PIN) (AUXILIARY BACKUP LAMP)	
	8	1	**172-6556**	1	PANEL (UPPER SWITCH)	
	9	1	**178-6267**	1	HARNESS AS-ALARM	
		1	**102-8804**	1	KIT-RECEPTACLE (4 PIN) (AUXILIARY BACKUP LAMP)	
		1	**9X-1054**	1	PLUG AS-CONNECTOR (4 PIN) (AUXILIARY BACKUP LAMP)	
	10	1	**188-3862**	1	BRACKET AS	
	11	1	**161-1418**	1	SWITCH AS (AUXILIARY BACKUP LAMP)	
		1	**3E-8825**	2	LAMP (24 VOLT) (AUXILIARY BACKUP LAMP)	
		1	**161-1417**	1	ACTUATOR-ROCKER	
M	12	1	**9X-2043**	7	SCREW-TRUSS HEAD (M6X1X14MM)	
	13	1	**9X-8256**	1	WASHER (6.6X12X2MM THK)	

M-METRIC PART

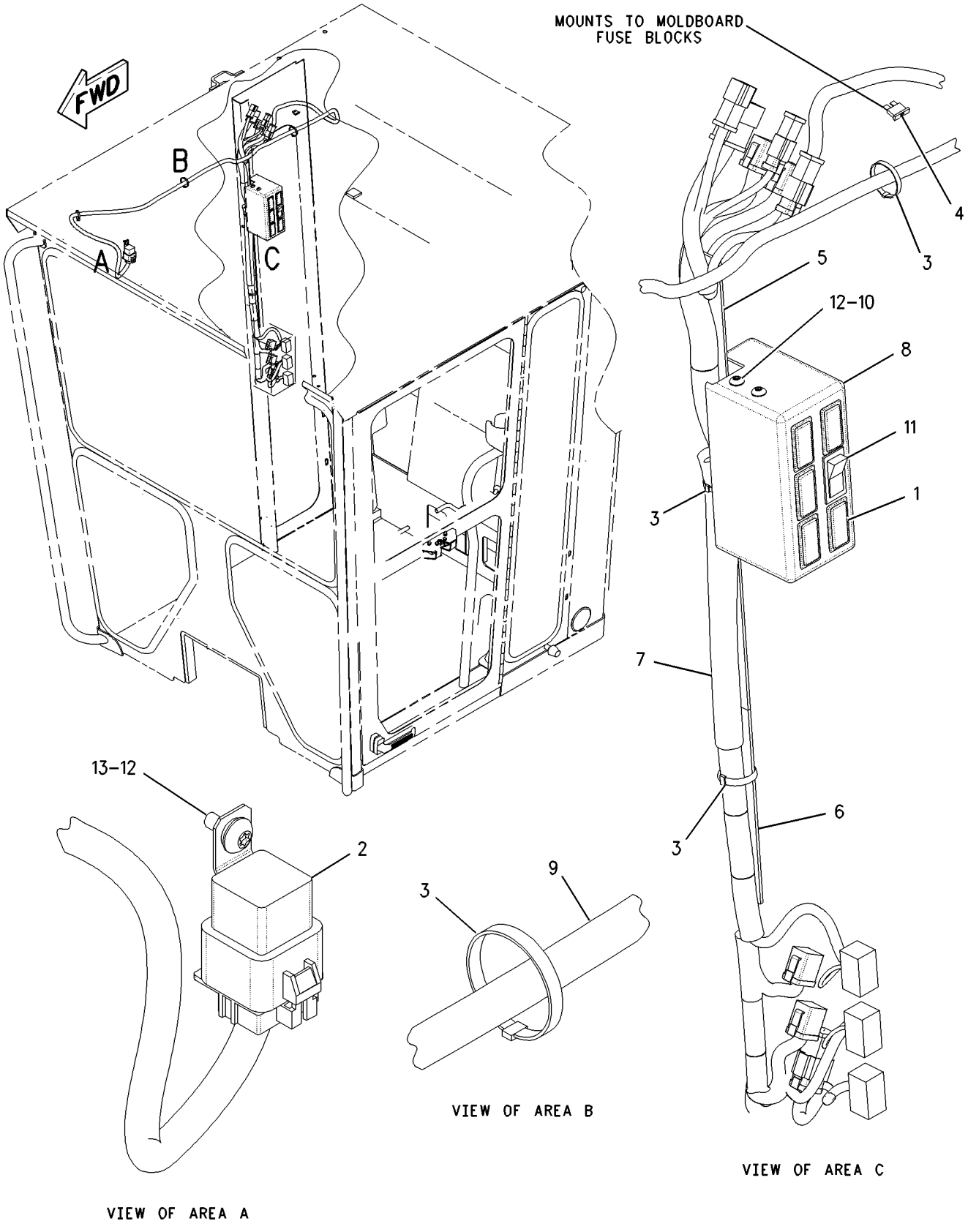

GRAPHIC #1 g00846331

197-1744 LIGHTING GP-BACKUP–EU

S/N: ATS1-UP

AN ATTACHMENT

SMCS-1408 **i01623784**

NOTE	REF NO	GRAPHIC REF	PART NUMBER	QTY	PART NAME 1 2 3 4 5 6 (PRODUCT LEVEL)	SEE PAGE
	1	1	**3E-0109**	5	PLUG-ROCKER SWITCH	
	2	1	**3E-5239**	1	RELAY AS (24 VOLT)	
	3	1	**3S-2093**	5	STRAP-CABLE	
	4	1	**9W-1442**	1	FUSE (10 AMP) (AUXILARY BACK-UP ALARM)	
	5	1	**145-3350**	1	PLATE	
	6	1	**153-2147**	1	PLATE	
	7	1	**172-6556**	1	PANEL	
	8	1	**178-6267**	1	HARNESS AS-ALARM	
		1	**9X-1054**	1	PLUG AS-CONNECTOR (4 PIN)	
		1	**102-8804**	1	KIT-RECEPTACLE (4 PIN)	
	9	1	**188-3862**	1	BRACKET AS	
	10	1	**196-8557**	1	HARNESS AS-CAB	
		1	**155-2255**	1	KIT-CONNECTING PLUG (12 PIN)	
		1	**155-2265**	4	KIT-CONNECTING PLUG (8 PIN)	
		1	**155-2270**	1	KIT-CONNECTING PLUG (2 PIN) (SIDE FLOOD LAMP)	
		1	**155-2271**	1	KIT-CONNECTING PLUG (4 PIN)	
		1	**102-8802**	1	KIT-RECEPTACLE (2 PIN)	
		1	**102-8804**	2	KIT-RECEPTACLE (4 PIN)	
		1	**102-8806**	1	KIT-RECEPTACLE (8 PIN)	
		1	**102-8801**	1	KIT-RECEPTACLE (12 PIN)	
	11	1	**3E-8770**	1	SWITCH AS (AUXILARY BACK-UP ALARM)	
		1	**141-2325**	1	ACTUATOR-ROCKER	
		1	**3E-8825**	1	LAMP (24 VOLT) (AUXILARY BACK-UP ALARM)	
M	12	1	**9X-2043**	7	SCREW-TRUSS HEAD (M6X1X14MM)	
	13	1	**9X-8256**	1	WASHER (6.6X12X2MM THK)	

M-METRIC PART

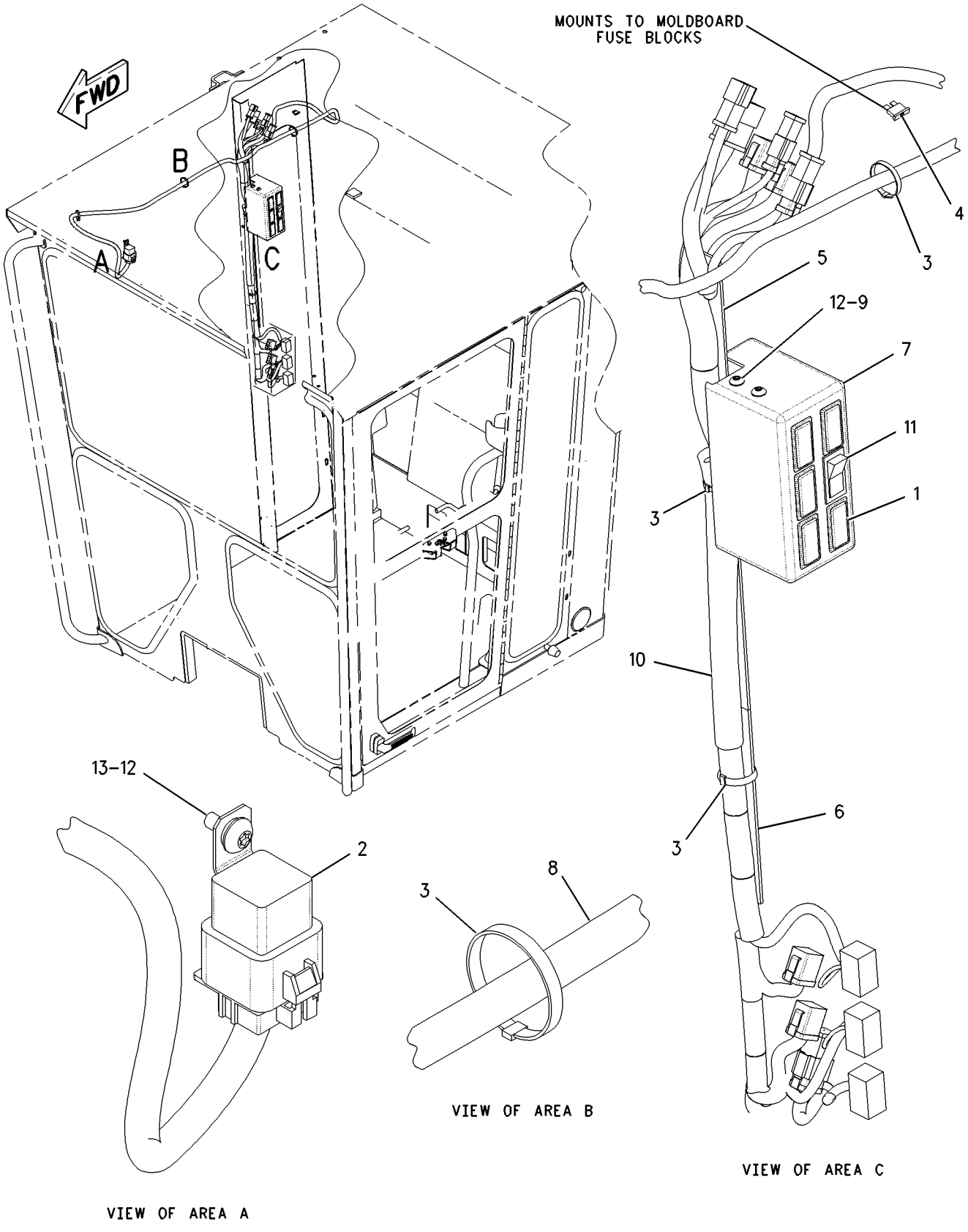

GRAPHIC #1 g00849513

161-0772 LIGHTING GP-FLOOD–CAB

S/N: ATS1-UP

PART OF 161-0770, 161-1924, 186-4957 LIGHTING AR-FLOOD & SIGNAL

AN ATTACHMENT

SMCS-1434 **i01627702**

NOTE	REF NO	GRAPHIC REF	PART NUMBER	QTY	PART NAME 1 2 3 4 5 6 (PRODUCT LEVEL)	SEE PAGE
	1	1	**116-5710**	2	GROMMET	
	2	1	**135-0427**	1	LAMP GP-SIGNAL (LH)	
	2A	1	**135-0427**	1	LAMP GP-SIGNAL (RH)	
					(EACH LAMP GP INCLUDES)	
		1	**102-8803**	1	KIT-RECEPTACLE (3 PIN) (TURN/PARK)	
		1	**3E-3371**	1	WEDGE-RECEPTACLE LOCK (3 PIN)	
		1	**186-3735**	3	PIN-CONNECTOR	
	3	1	**184-0903**	4	BRACKET AS	
					(EACH INCLUDES)	
		1	**183-9606**	1	BRACKET	
M		1	**8T-3490**	1	NUT-WELD (M10X1.5 THD)	
	4	1	**193-7416**	2	PLATE AS	
	5	1	**130-5300**	2	CLIP	
	6	1	**157-0305**	2	LAMP GP-HEAD (HIGH BEAM)	
					(EACH INCLUDES)	
		1	**158-0249**	1	LENS AS (HEADLIGHT) (HIGH BEAM)	
		1	**158-0250**	1	BODY AS-LAMP	
		1	**158-0252**	1	BEZEL	
		1	**9X-3463**	1	LAMP (24 VOLT) (HIGH BEAM)	
		1	**188-8849**	2	CLAMP	
	7	1	**161-0908**	2	LAMP GP-HEAD (LOW BEAM)	
					(EACH INCLUDES)	
		1	**162-2077**	1	LENS AS (HEADLIGHT) (LOW BEAM)	
		1	**158-0250**	1	BODY AS-LAMP	
		1	**158-0252**	1	BEZEL	
		1	**9X-3463**	1	LAMP (24 VOLT) (LOW BEAM)	
		1	**188-8849**	2	CLAMP	
	8	1	**3P-9554**	2	GROMMET	
M	9	1	**5C-2890**	6	NUT (M6X1 THD)	
M	10	1	**5C-7261**	4	NUT (M8X1.25 THD)	
	11	1	**8T-4121**	8	WASHER-HARD (11X21X2.5MM THK)	
M	12	1	**8T-4137**	8	BOLT (M10X1.5X20MM)	
	13	1	**8T-4224**	8	WASHER-HARD (8.8X16X2MM THK)	
M	14	1	**8T-6869**	4	BOLT (M8X1.25X60MM)	
	15	1	**9X-8256**	6	WASHER (6.6X12X2MM THK)	

M-METRIC PART

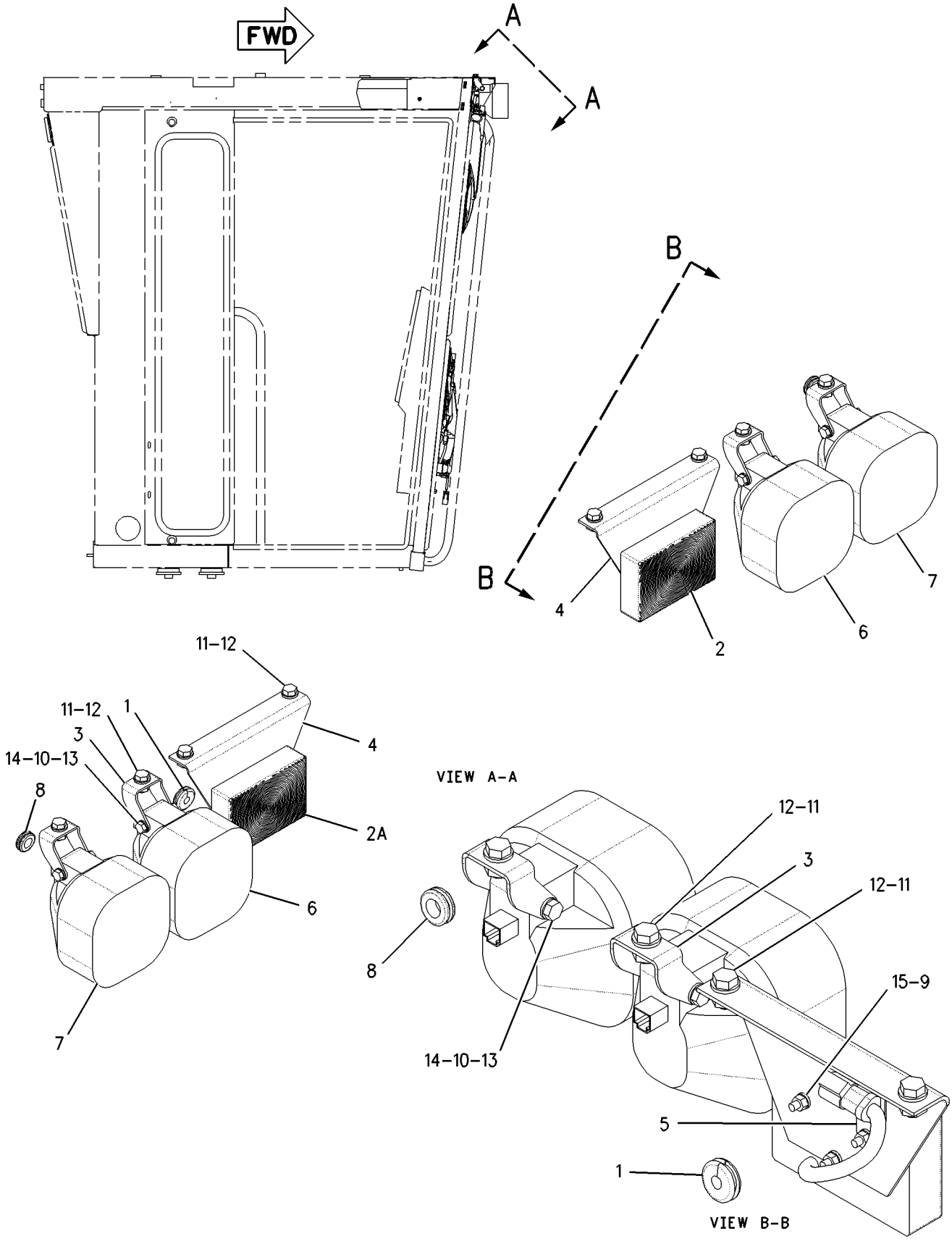

GRAPHIC #1

g00844108

161-0778 LIGHTING GP-FLOOD–SNOW–BLADE

S/N: ATS1-UP
PART OF 205-7261 LIGHTING AR-FLOOD
AN ATTACHMENT

SMCS-1434 **i01854899**

NOTE	REF NO	GRAPHIC REF	PART NUMBER	QTY	PART NAME 1 2 3 4 5 6 (PRODUCT LEVEL)	SEE PAGE
	1	1	**9W-1442**	2	FUSE (10 AMP) (BLADE LAMP)	
	2	1	**178-8067**	2	BRACKET AS	
Y	3	1	**153-2073**	2	LAMP GP-FLOOD (24 VOLT)	144
M	4	1	**5C-7261**	2	NUT (M8X1.25 THD)	
	5	1	**6V-3265**	2	CLIP	
	6	1	**8T-4121**	2	WASHER-HARD (11X21X2.5MM THK)	
M	7	1	**8T-4136**	2	BOLT (M10X1.5X25MM)	
	8	1	**8T-4224**	2	WASHER-HARD (8.8X16X2MM THK)	
M	9	1	**8T-6869**	2	BOLT (M8X1.25X60MM)	
	10	1	**3E-8772**	1	SWITCH AS-ROCKER (BLADE LAMP)	
		1	**3E-8815**	1	ACTUATOR-ROCKER	
		1	**3E-8825**	2	LAMP (24 VOLT) (BLADE LAMP)	

M-METRIC PART
Y-SEPARATE ILLUSTRATION

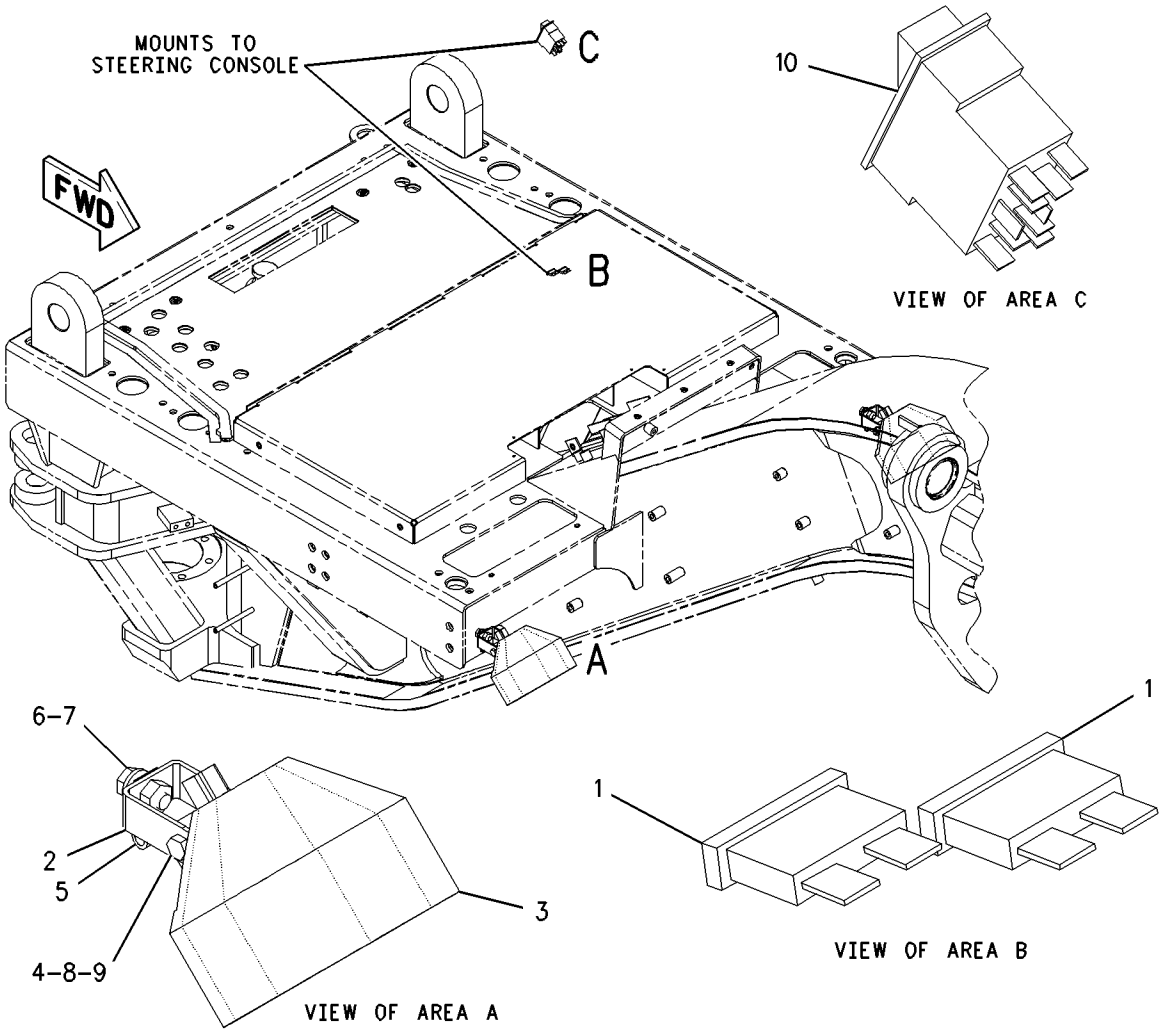

GRAPHIC #1 g00845745

MEMORANDA

161-1021 LIGHTING GP-FLOOD–CAB–SNOW–RH

S/N: ATS1-UP

AN ATTACHMENT

SMCS-1434 **i01624076**

NOTE	REF NO	GRAPHIC REF	PART NUMBER	QTY	PART NAME 1 2 3 4 5 6 (PRODUCT LEVEL)	SEE PAGE
	1	1	**3E-0109**	5	PLUG-ROCKER SWITCH	
C	2	1	**3S-2093**	2	STRAP-CABLE	
	3	1	**9W-1442**	1	FUSE (10 AMP) (FLOODLAMP RH)	
C	4	1	**145-3350**	1	PLATE	
C	5	1	**153-2147**	1	PLATE	
	6	1	**168-8243**	1	HARNESS AS-PANEL	
		1	**102-8802**	4	KIT-RECEPTACLE (2 PIN)	
		1	**102-8804**	4	KIT-RECEPTACLE (4 PIN)	
		1	**102-8806**	1	KIT-RECEPTACLE (8 PIN)	
		1	**102-8801**	1	KIT-RECEPTACLE (12 PIN)	
		1	**155-2255**	1	KIT-CONNECTING PLUG (12 PIN)	
		1	**155-2265**	1	KIT-CONNECTING PLUG (8 PIN)	
		1	**155-2270**	1	KIT-CONNECTING PLUG (2 PIN)	
		1	**155-2271**	1	KIT-CONNECTING PLUG (4 PIN) (AUX BACKUP LAMP SWITCH)	
	7	1	**171-6175**	1	HARNESS AS-FRONT LIGHTING	
		1	**155-2270**	1	KIT-CONNECTING PLUG (2 PIN) (SNOW WING LAMP)	
		1	**102-8802**	1	KIT-RECEPTACLE (2 PIN) (SNOW WING LAMP)	
	8	1	**172-6556**	1	PANEL	
	9	1	**188-3862**	1	BRACKET AS	
	10	1	**190-1680**	1	BRACKET	
	11	1	**3E-8766**	1	SWITCH AS (FLOODLAMP RH)	
		1	**3E-8782**	1	ACTUATOR-ROCKER	
		1	**3E-8825**	1	LAMP (24 VOLT) (FLOODLAMP RH)	
Y	12	1	**153-2073**	1	LAMP GP-FLOOD (RH)	144
	13	1	**5P-6459**	1	GROMMET	
	14	1	**5P-8525**	1	GROMMET	
M	15	1	**6V-9189**	1	LOCKNUT (M8X1.25 THD)	
	16	1	**8T-4224**	1	WASHER-HARD (8.8X16X2MM THK)	
M	17	1	**8T-6869**	1	BOLT (M8X1.25X60MM)	
M	18	1	**9X-2043**	6	SCREW-TRUSS HEAD (M6X1X14MM)	

C-CHANGE FROM PREVIOUS TYPE
M-METRIC PART
Y-SEPARATE ILLUSTRATION

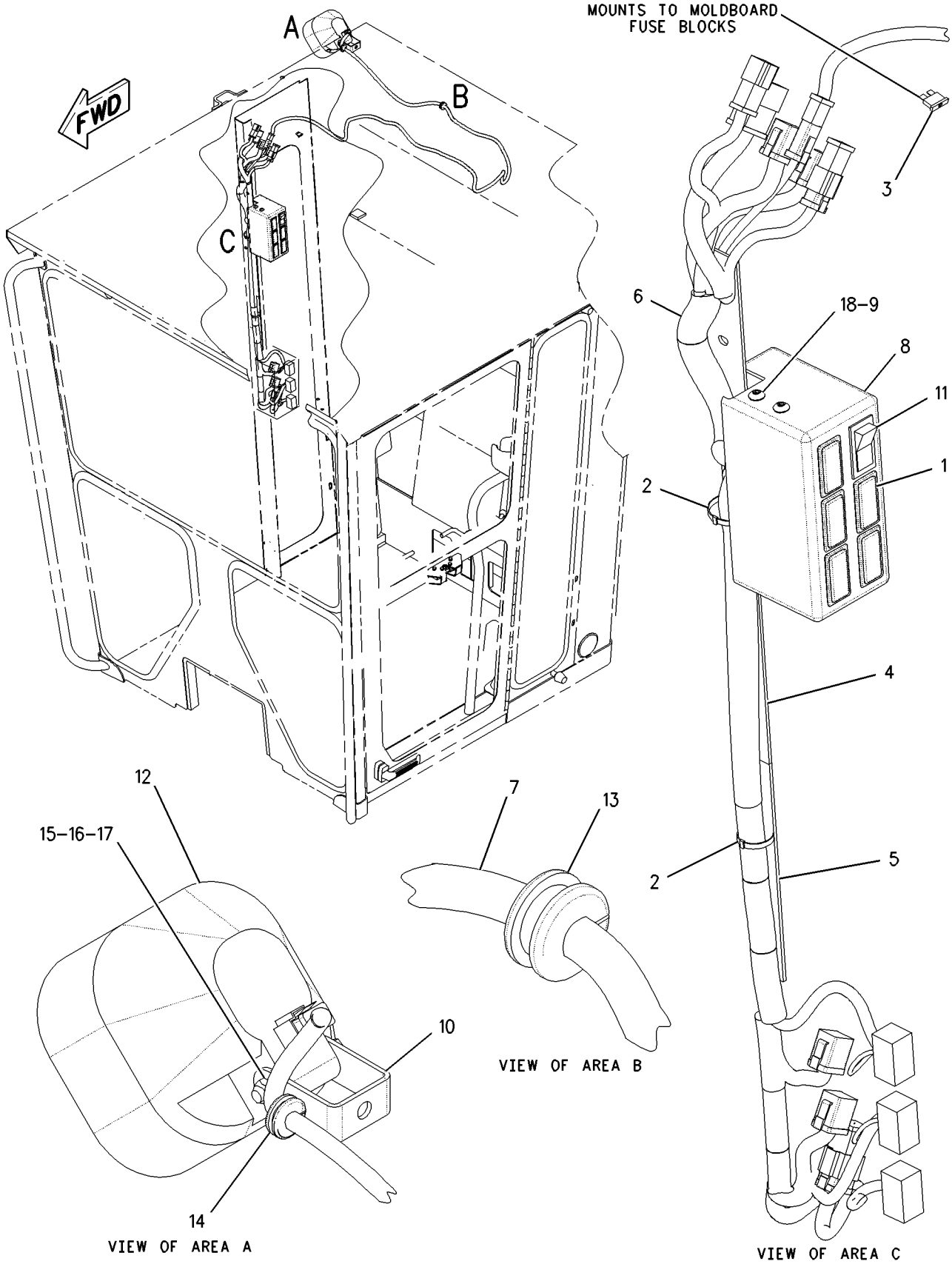

GRAPHIC #1

g00846133

161-1922 LIGHTING GP-FLOOD–BOLSTER–DOUBLE WORKLAMPS

S/N: ATS1-UP

PART OF 188-9329 LIGHTING AR-FLOOD & SIGNAL

AN ATTACHMENT

SMCS-1434 **i01834578**

NOTE	REF NO	GRAPHIC REF	PART NUMBER	QTY	PART NAME 1 2 3 4 5 6 (PRODUCT LEVEL)	SEE PAGE
	1	1	**2G-0617**	4	CLAMP	
	2	1	**2G-0988**	2	CAP	
	3	1	**3K-9520**	3	GROMMET	
	4	1	**3S-2093**	6	STRAP-CABLE	
	5	1	**5T-9313**	1	TUBE	
	6	1	**8X-5153**	1	FILM-FACE (TURN SIGNAL/HAZARD)	
	7	1	**8X-5154**	1	FILM-FACE (HEADLIGHTS HIGH/LOW BEAM)	
	8	1	**9W-1442**	1	FUSE (10 AMP) (FRONT WORK LAMPS)	
	9	1	**103-1592**	2	PLATE	
	10	1	**108-0358**	1	FLASHER AS (12/24 VOLT)	
Y	11	1	**135-0427**	2	LAMP GP-SIGNAL (24 VOLT) (LIGHT BAR TURN/PARK)	157
	12	1	**137-9410**	4	CLAMP	
	13	1	**173-3064**	1	SWITCH AS-TURN SIG & WARNING	
		1	**5L-7200**	1	SCREW (8-32X0.375 IN)	
		1	**9B-7233**	1	LOCKWASHER	
	14	1	**178-8067**	4	BRACKET AS	
Y	15	1	**180-1300**	2	LAMP GP-HEAD (24 VOLT) (HIGH BEAM)	146
	16	1	**186-2508**	1	HARNESS AS-FRONT CHASSIS	
		1	**155-2255**	1	KIT-CONNECTING PLUG (12 PIN)	
					(INCLUDES PLUG AS & WEDGE)	
		1	**102-8801**	1	KIT-RECEPTACLE (12 PIN)	
					(INCLUDES RECEPTACLE AS & WEDGE)	
	17	1	**186-4840**	1	HARNESS AS-FRONT LIGHTING	
		1	**155-2260**	2	KIT-CONNECTING PLUG (3 PIN) (LIGHTBAR TURN LAMPS)	
		1	**155-2270**	4	KIT-CONNECTING PLUG (2 PIN) (LIGHT BAR HEADLAMPS)	
					(EACH INCLUDES PLUG AS & WEDGE)	
		1	**102-8801**	1	KIT-RECEPTACLE (12 PIN)	
					(INCLUDES RECEPTACLE AS & WEDGE)	
	18	1	**103-5678**	1	SWITCH AS-ROTARY (HIGH/LOW BEAM)	
		1	**5L-7200**	1	SCREW (8-32X0.375 IN)	
		1	**9B-7233**	1	LOCKWASHER	
	19	1	**108-3519**	4	CLAMP	
	20	1	**130-5300**	2	CLIP	
Y	21	1	**161-3509**	2	LAMP GP-HEAD (24 VOLT) (LOW BEAM)	145
	22	1	**174-5907**	2	CLIP	
	23	1	**3E-8772**	1	SWITCH AS-ROCKER (HEADLAMP/TAIL)	
		1	**3E-8825**	2	LAMP (24 VOLT) (HEADLAMP/TAIL INDICATOR)	
		1	**3E-9326**	1	ACTUATOR-ROCKER	
	24	1	**4D-7794**	4	CLIP	
	25	1	**4L-6454**	4	BOLT (3/8-16X1 IN)	
M	26	1	**5C-2890**	8	NUT (M6X1 THD)	
M	27	1	**5C-7261**	4	NUT (M8X1.25 THD)	
	28	1	**5M-3062**	1	BOLT (3/8-16X0.75 IN)	
	29	1	**5S-7379**	4	BOLT (3/8-16X0.875 IN)	
	30	1	**6V-8801**	4	NUT (3/8-16 THD)	
	31	1	**8T-4121**	4	WASHER-HARD (11X21X2.5MM THK)	
M	32	1	**8T-4136**	4	BOLT (M10X1.5X25MM)	
	33	1	**8T-4224**	4	WASHER-HARD (8.8X16X2MM THK)	
	34	1	**8T-4896**	9	WASHER-HARD (10.2X18.5X2.5MM THK)	
M	35	1	**8T-6869**	4	BOLT (M8X1.25X60MM)	
	36	1	**8X-6296**	1	LEVER (TURN SIGNAL)	
	37	1	**9D-6164**	4	BOSS (3/8-16 THD)	
M	38	1	**9X-2043**	2	SCREW-TRUSS HEAD (M6X1X14MM)	

161-1922 **LIGHTING GP-FLOOD** ***(contd.)*** **i01834578**

NOTE	REF NO	GRAPHIC REF	PART NUMBER	QTY	PART NAME 1 2 3 4 5 6 (PRODUCT LEVEL)	SEE PAGE
	39	1	**9X-8256**	8	WASHER (6.6X12X2MM THK)	
	40	1	**8X-6296**	1	LEVER (HIGH/LOW BEAM)	

M-METRIC PART
Y-SEPARATE ILLUSTRATION

161-1922 **LIGHTING GP-FLOOD** *(contd.)* **i01834578**

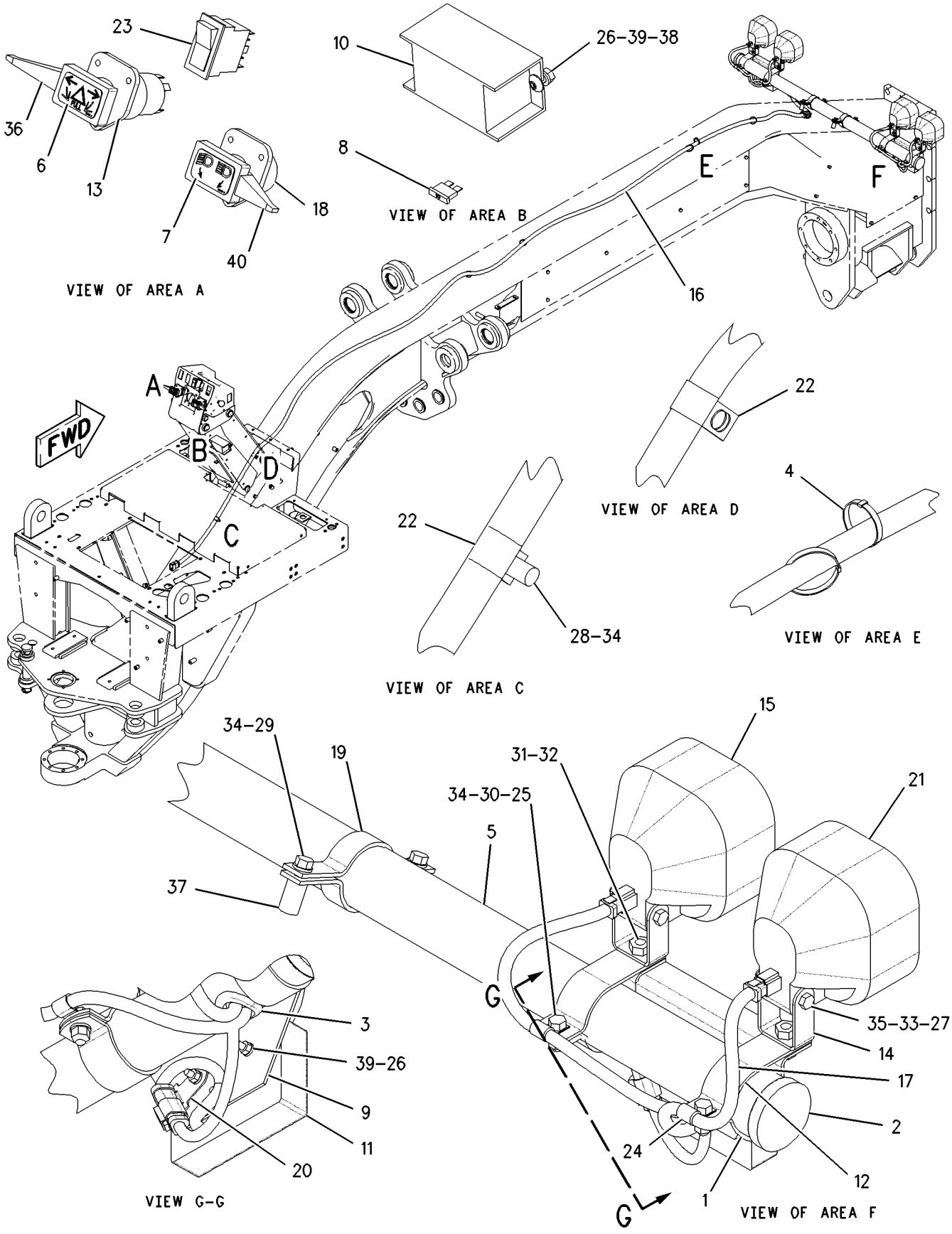

GRAPHIC #1

g00937190

MEMORANDA

183-4070 LIGHTING GP-FLOOD—EXTENDED BOLSTER

S/N: ATS1-UP

PART OF 186-4957 LIGHTING AR-FLOOD & SIGNAL

AN ATTACHMENT

SMCS-1434 **i01645273**

NOTE	REF NO	GRAPHIC REF	PART NUMBER	QTY	PART NAME 1 2 3 4 5 6 (PRODUCT LEVEL)	SEE PAGE
	1	1	**2G-0617**	2	CLAMP	
	2	1	**2G-0659**	2	BRACKET	
	3	1	**2G-0988**	2	CAP	
	4	1	**3E-9763**	1	FILM-IDENTIFICATION (FUSE) (HIGH/LOW BEAM)	
	6	1	**3K-9520**	3	GROMMET	
	7	1	**3S-2093**	4	STRAP-CABLE	
	8	1	**8X-5153**	1	FILM-FACE (TURN SIGNAL/HAZARD)	
	9	1	**8X-5154**	1	FILM-FACE (HEADLIGHTS HIGH/LOW BEAM)	
	10	1	**9W-1442**	1	FUSE (10 AMP) (HIGH/LOW BEAM)	
	11	1	**108-0358**	1	FLASHER AS-ELECTRONIC (12/24 VOLT) (TURN SIGNAL/HAZARD)	
	12	1	**137-9410**	2	CLAMP	
	13	1	**171-6330**	1	WIRE AS	
	14	1	**171-6332**	1	WIRE AS	
	15	1	**173-3064**	1	SWITCH AS-TURN SIG & WARNING	
		1	**5L-7200**	1	SCREW (8-32X0.375 IN)	
		1	**9B-7233**	1	LOCKWASHER	
	16	1	**178-8067**	2	BRACKET AS	
	17	1	**179-1549**	1	TUBE	
	18	1	**179-1550**	2	CLAMP	
	19	1	**179-8701**	1	HARNESS AS-FRONT LIGHTING	
		1	**102-8801**	1	KIT-RECEPTACLE (12 PIN) (LIGHTBAR WORKLAMPS)	
		1	**155-2270**	2	KIT-CONNECTING PLUG (2 PIN) (LIGHTBAR WORKLAMPS)	
	20	1	**092-9741**	1	GROMMET	
	21	1	**103-5678**	1	SWITCH AS-ROTARY (HIGH/LOW BEAM)	
		1	**5L-7200**	1	SCREW (8-32X0.375 IN)	
		1	**9B-7233**	1	LOCKWASHER	
Y	22	1	**153-2073**	2	LAMP GP-FLOOD (24 VOLT) (VERTICAL) (EXTENDED BOLSTER)	144
	23	1	**186-2508**	1	HARNESS AS-FRONT CHASSIS	
		1	**102-8801**	1	KIT-RECEPTACLE (12 PIN)	
		1	**155-2255**	1	KIT-CONNECTING PLUG (12 PIN)	
	24	1	**3E-8772**	1	SWITCH AS-ROCKER (HEADLAMP/TAIL)	
		1	**3E-8825**	2	LAMP (24 VOLT) (HEADLAMP/TAIL)	
		1	**3E-9326**	1	ACTUATOR-ROCKER	
	25	1	**3T-2662**	2	CIRCUIT BREAKER AS (15 AMP) (HEADLAMP/LIGHTBAR LOW BEAM)	
					(EACH INCLUDES)	
		1	**6V-8376**	2	SCREW-MACHINE (8-32X0.25 IN)	
		1	**9B-7233**	2	LOCKWASHER	
	26	1	**4D-7794**	2	CLIP	
M	27	1	**5C-2890**	2	NUT (M6X1 THD)	
M	28	1	**5C-7261**	2	NUT (M8X1.25 THD)	
	29	1	**5M-3062**	1	BOLT (3/8-16X0.75 IN)	
	30	1	**5P-8394**	4	SCREW-MACHINE (8-32X.75IN)	
	31	1	**8T-4121**	4	WASHER-HARD (11X21X2.5MM THK)	
M	32	1	**8T-4133**	2	NUT (M10X1.5 THD)	
M	33	1	**8T-4136**	4	BOLT (M10X1.5X25MM)	
	34	1	**8T-4223**	4	WASHER-HARD (13.5X25.5X3MM THK)	
	35	1	**8T-4224**	2	WASHER-HARD (8.8X16X2MM THK)	
M	36	1	**8T-4244**	4	NUT (M12X1.75 THD)	
	37	1	**8T-4896**	1	WASHER-HARD (10.2X18.5X2.5MM THK)	
M	38	1	**8T-5412**	4	BOLT (M12X1.75X140MM)	
M	39	1	**8T-6869**	2	BOLT (M8X1.25X60MM)	
	40	1	**8X-6296**	1	LEVER (TURN SIGNAL)	

183-4070 **LIGHTING GP-FLOOD** ***(contd.)*** **i01645273**

NOTE	REF NO	GRAPHIC REF	PART NUMBER	QTY	PART NAME 1 2 3 4 5 6 (PRODUCT LEVEL)	SEE PAGE
	40A	1	**8X-6296**	1	LEVER (HIGH/LOW BEAM)	
	41	1	**9B-7233**	4	LOCKWASHER	
M	42	1	**9X-2043**	2	SCREW-TRUSS HEAD (M6X1X14MM)	
	43	1	**9X-8256**	2	WASHER (6.6X12X2MM THK)	
	44	1	**3E-8764**	1	SWITCH AS (LIGHTBAR LOW BEAM)	
		1	**3E-8814**	1	ACTUATOR-ROCKER	
		1	**3E-8825**	1	LAMP (24 VOLT) (LIGHTBAR LOW BEAM)	

M-METRIC PART
Y-SEPARATE ILLUSTRATION

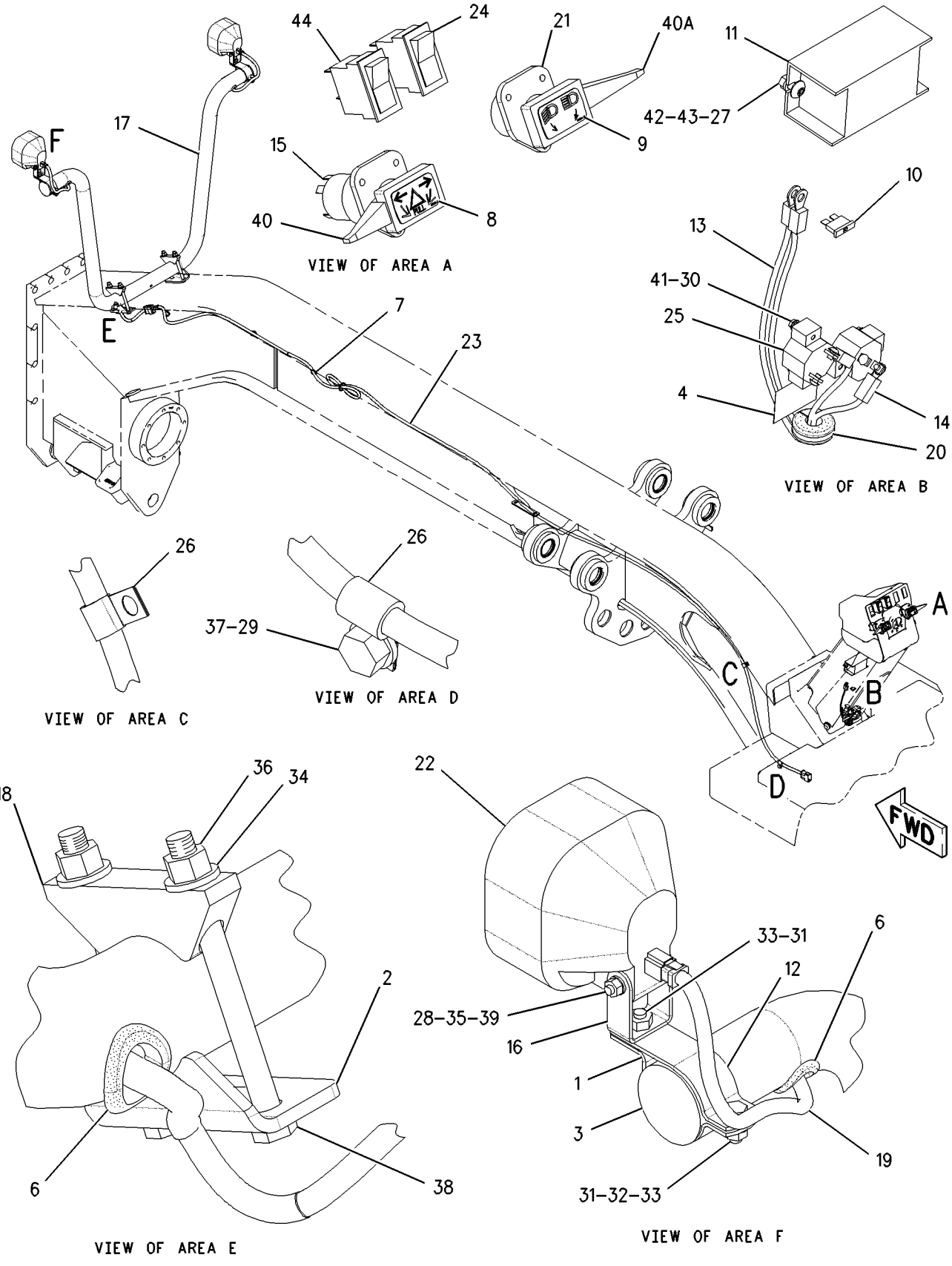

GRAPHIC #1 g00862184

MEMORANDA

185-6660 LIGHTING GP-FLOOD–BOLSTER

S/N: ATS1-UP

PART OF 161-1924 LIGHTING AR-FLOOD & SIGNAL

AN ATTACHMENT

SMCS-1434 **i01831390**

NOTE	REF NO	GRAPHIC REF	PART NUMBER	QTY	PART NAME 1 2 3 4 5 6 (PRODUCT LEVEL)	SEE PAGE
	1	1	**2G-0617**	2	CLAMP	
	2	1	**2G-0988**	2	CAP	
	3	1	**3K-9520**	3	GROMMET	
B	4	1	**3S-2093**	6	STRAP-CABLE	
	5	1	**5T-9313**	1	TUBE	
	6	1	**8X-5153**	1	FILM-FACE (TURN SIGNAL/HAZARD)	
	7	1	**8X-5154**	1	FILM-FACE (HEADLIGHTS HIGH/LOW BEAM)	
	8	1	**9W-1442**	1	FUSE (10 AMP) (TURN SIGNAL/HAZARD)	
	9	1	**108-0358**	1	FLASHER AS (12/24 VOLT) (TURN SIGNAL/HAZARD)	
	10	1	**137-9410**	2	CLAMP	
	11	1	**169-3181**	1	HARNESS AS-LIGHTING	
		1	**155-2270**	2	KIT-CONNECTING PLUG (2 PIN) (LIGHTBAR WORKLAMPS)	
					(EACH INCLUDES PLUG AS & WEDGE)	
		1	**102-8801**	1	KIT-RECEPTACLE (12 PIN) (LIGHTBAR WORKLAMPS)	
					(INCLUDES RECEPTACLE AS & WEDGE)	
	12	1	**173-3064**	1	SWITCH AS-TURN SIG & WARNING	
		1	**5L-7200**	1	SCREW (8-32X0.375 IN)	
		1	**9B-7233**	1	LOCKWASHER	
	13	1	**178-8067**	2	BRACKET AS	
	14	1	**186-2508**	1	HARNESS AS-FRONT CHASSIS	
		1	**102-8801**	1	KIT-RECEPTACLE (12 PIN)	
					(INCLUDES RECEPTACLE AS & WEDGE)	
		1	**155-2255**	1	KIT-CONNECTING PLUG (12 PIN)	
					(INCLUDES PLUG AS & WEDGE)	
	15	1	**103-5678**	1	SWITCH AS-ROTARY (HIGH/LOW BEAM)	
		1	**5L-7200**	1	SCREW (8-32X0.375 IN)	
		1	**9B-7233**	1	LOCKWASHER	
	16	1	**108-3519**	4	CLAMP	
Y	17	1	**161-3509**	2	LAMP GP-HEAD (24 VOLT) (LOW BEAM)	145
	18	1	**174-5907**	2	CLIP	
	19	1	**3E-8772**	1	SWITCH AS-ROCKER (HEADLAMP/TAIL)	
		1	**3E-8825**	2	LAMP (24 VOLT) (HEADLAMP/TAIL)	
		1	**3E-9326**	1	ACTUATOR-ROCKER	
	20	1	**4D-7794**	2	CLIP	
	21	1	**4L-6454**	2	BOLT (3/8-16X1 IN)	
M	22	1	**5C-2890**	2	NUT (M6X1 THD)	
M	23	1	**5C-7261**	2	NUT (M8X1.25 THD)	
	24	1	**5M-3062**	1	BOLT (3/8-16X0.75 IN)	
	25	1	**5S-7379**	4	BOLT (3/8-16X0.875 IN)	
	26	1	**6V-8801**	2	NUT (3/8-16 THD)	
	27	1	**8T-4121**	2	WASHER-HARD (11X21X2.5MM THK)	
M	28	1	**8T-4136**	2	BOLT (M10X1.5X25MM)	
	29	1	**8T-4205**	2	WASHER-HARD (7.2X14.5X2MM THK)	
	30	1	**8T-4224**	2	WASHER-HARD (8.8X16X2MM THK)	
	31	1	**8T-4896**	7	WASHER-HARD (10.2X18.5X2.5MM THK)	
M	32	1	**8T-6869**	2	BOLT (M8X1.25X60MM)	
	33	1	**8X-6296**	1	LEVER (TURN SIGNAL)	
	34	1	**9D-6164**	4	BOSS (3/8-16 THD)	
M	35	1	**9X-2043**	2	SCREW-TRUSS HEAD (M6X1X14MM)	
	36	1	**3E-8764**	1	SWITCH AS (LIGHTBAR LOW BEAM)	
		1	**3E-8814**	1	ACTUATOR-ROCKER	
		1	**3E-8825**	1	LAMP (24 VOLT) (LIGHTBAR LOW BEAM)	
	37	1	**8X-6296**	1	LEVER (HIGH/LOW BEAM)	

B-USE AS REQUIRED
M-METRIC PART
Y-SEPARATE ILLUSTRATION

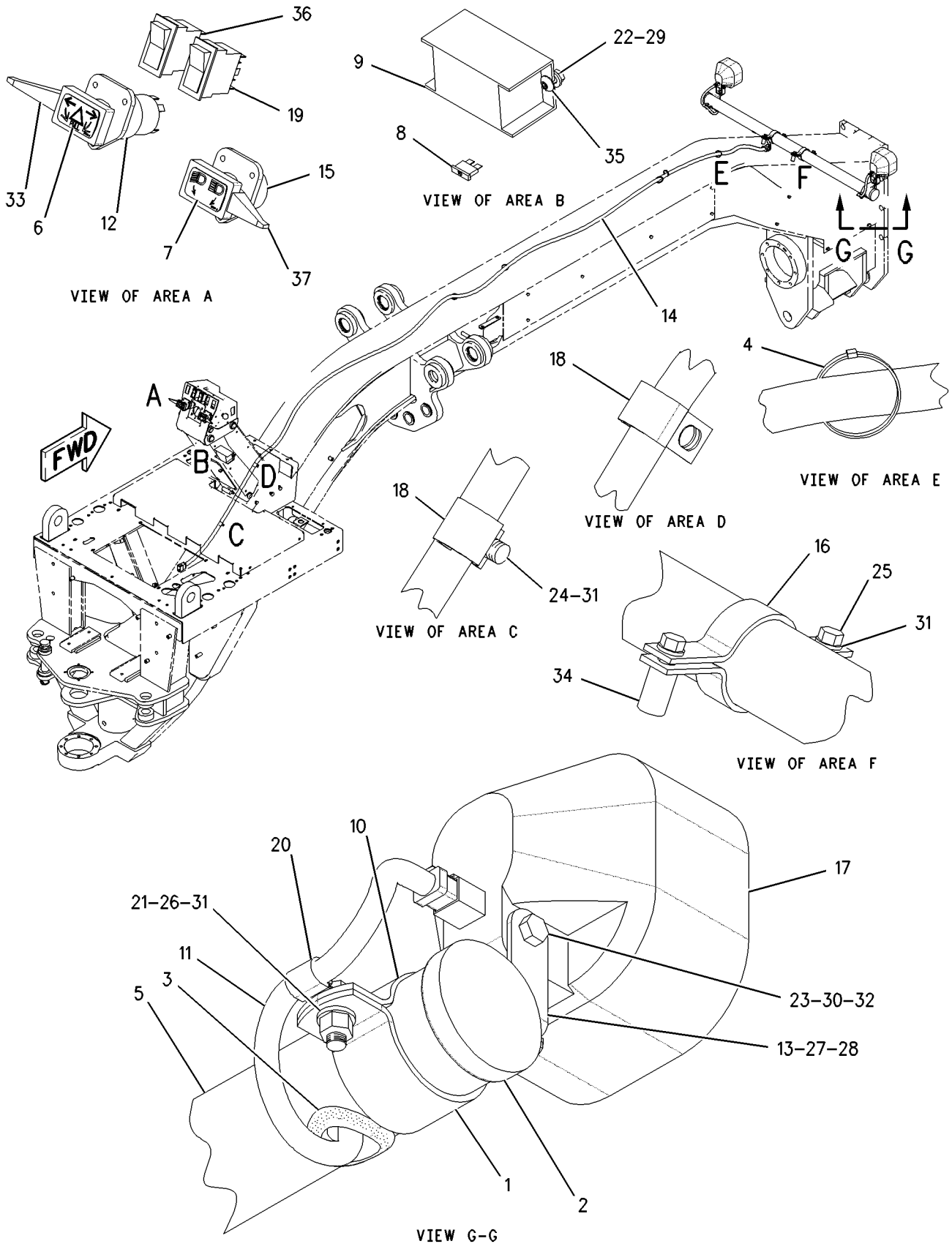

GRAPHIC #1 g00935343

MEMORANDA

192-0229 LIGHTING GP-FLOOD—BOLSTER —EU

S/N: ATS1-UP

PART OF 211-1771, 211-1772 CONVERSION AR-CERTIFICATION

AN ATTACHMENT

SMCS-1434 **i01646085**

NOTE	REF NO	GRAPHIC REF	PART NUMBER	QTY	PART NAME 1 2 3 4 5 6 (PRODUCT LEVEL)	SEE PAGE
	1	1	**2G-0617**	2	CLAMP	
	2	1	**2G-0988**	2	CAP	
	3	1	**3K-9520**	3	GROMMET	
	4	1	**3S-2093**	5	STRAP-CABLE	
	5	1	**7K-1181**	2	STRAP-CABLE	
	6	1	**8X-5153**	1	FILM-FACE (TURN SIGNAL/HAZARD)	
	7	1	**8X-5154**	1	FILM-FACE (HEADLIGHTS HIGH/LOW BEAM)	
	8	1	**9W-1442**	1	FUSE (10 AMP) (HIGH/LOW BEAM & SIGNAL)	
Y	9	1	**105-4849**	1	LAMP GP-HEAD & SIGNAL (LH)	152
Y	10	1	**105-4850**	1	LAMP GP-HEAD & SIGNAL (RH)	154
	11	1	**108-0358**	1	FLASHER AS-ELECTRONIC (12/24 VOLT) (TURN SIGNALS & HAZARDS)	
	12	1	**137-9410**	2	CLAMP	
	13	1	**159-3959**	1	TUBE	
	14	1	**173-3064**	1	SWITCH AS-TURN SIG & WARNING	
		1	**5L-7200**	1	SCREW (8-32X0.375 IN)	
		1	**9B-7233**	1	LOCKWASHER	
	15	1	**186-2508**	1	HARNESS AS-FRONT CHASSIS	
		1	**155-2255**	1	KIT-CONNECTING PLUG (12 PIN)	
		1	**102-8801**	1	KIT-RECEPTACLE (12 PIN)	
	16	1	**203-9177**	1	HARNESS AS-FRONT LIGHTING	
		1	**155-2274**	1	KIT-CONNECTING PLUG (6 PIN)	
		1	**102-8801**	1	KIT-RECEPTACLE (12 PIN)	
	17	1	**103-5678**	1	SWITCH AS-ROTARY (HIGH/LOW BEAM)	
		1	**5L-7200**	1	SCREW (8-32X0.375 IN)	
		1	**9B-7233**	1	LOCKWASHER	
	18	1	**108-3519**	4	CLAMP	
	19	1	**3E-8772**	1	SWITCH AS-ROCKER (HEADLAMP/TAIL)	
		1	**3E-8825**	2	LAMP (24 VOLT) (HEADLAMP/TAIL)	
		1	**3E-9326**	1	ACTUATOR-ROCKER	
	20	1	**4L-6454**	2	BOLT (3/8-16X1 IN)	
M	21	1	**5C-2890**	2	NUT (M6X1 THD)	
	22	1	**5M-3062**	1	BOLT (3/8-16X0.75 IN)	
	23	1	**5S-7379**	4	BOLT (3/8-16X0.875 IN)	
	24	1	**6V-8801**	2	NUT (3/8-16 THD)	
	25	1	**8M-2770**	2	CLIP	
	26	1	**8M-2773**	2	CLIP	
	27	1	**8T-4205**	2	WASHER-HARD (7.2X14.5X2MM THK)	
	28	1	**8T-4896**	7	WASHER-HARD (10.2X18.5X2.5MM THK)	
	29	1	**8X-6296**	1	LEVER (TURN SIGNAL)	
	29A	1	**8X-6296**	1	LEVER (HIGH/LOW BEAM)	
	30	1	**9D-6164**	4	BOSS (3/8-16 THD)	
M	31	1	**9X-2043**	2	SCREW-TRUSS HEAD (M6X1X14MM)	

M-METRIC PART
Y-SEPARATE ILLUSTRATION

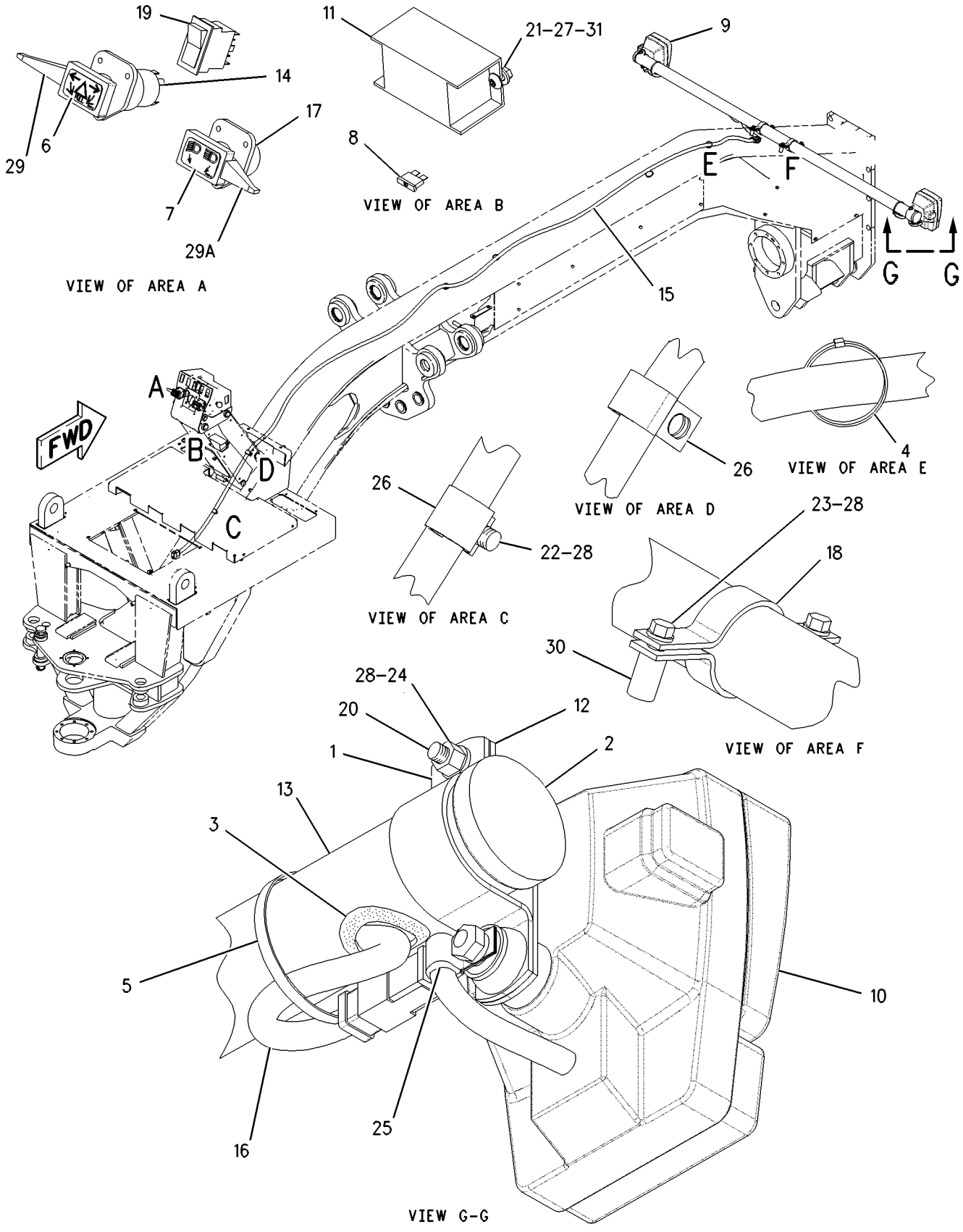

GRAPHIC #1 g00860440

196-8532 LIGHTING GP-FLOOD—MOLDBOARD

S/N: ATS1-UP
PART OF 204-6109 LIGHTING AR-FLOOD
AN ATTACHMENT

SMCS-1434 **i01627484**

NOTE	REF NO	GRAPHIC REF	PART NUMBER	QTY	PART NAME 1 2 3 4 5 6 (PRODUCT LEVEL)	SEE PAGE
	1	1	**169-3147**	1	HARNESS AS-CHASSIS	
		1	**155-2270**	4	KIT-CONNECTING PLUG (2 PIN)	
		1	**102-8802**	4	KIT-RECEPTACLE (2 PIN)	
		1	**102-8803**	1	KIT-RECEPTACLE (3 PIN)	
	2	1	**183-9606**	2	BRACKET	
	3	1	**033-8248**	5	CLIP	
Y	4	1	**153-2073**	2	LAMP GP-FLOOD	144
	5	1	**4D-9517**	1	CLIP	
M	6	1	**5C-7261**	2	NUT (M8X1.25 THD)	
	7	1	**5P-8167**	3	BOLT (3/8-16X0.625 IN)	
	8	1	**8M-2770**	1	CLIP	
	9	1	**8T-4224**	2	WASHER-HARD (8.8X16X2MM THK)	
	10	1	**8T-4896**	3	WASHER-HARD (10.2X18.5X2.5MM THK)	
M	11	1	**8T-6869**	2	BOLT (M8X1.25X60MM)	

M-METRIC PART
Y-SEPARATE ILLUSTRATION

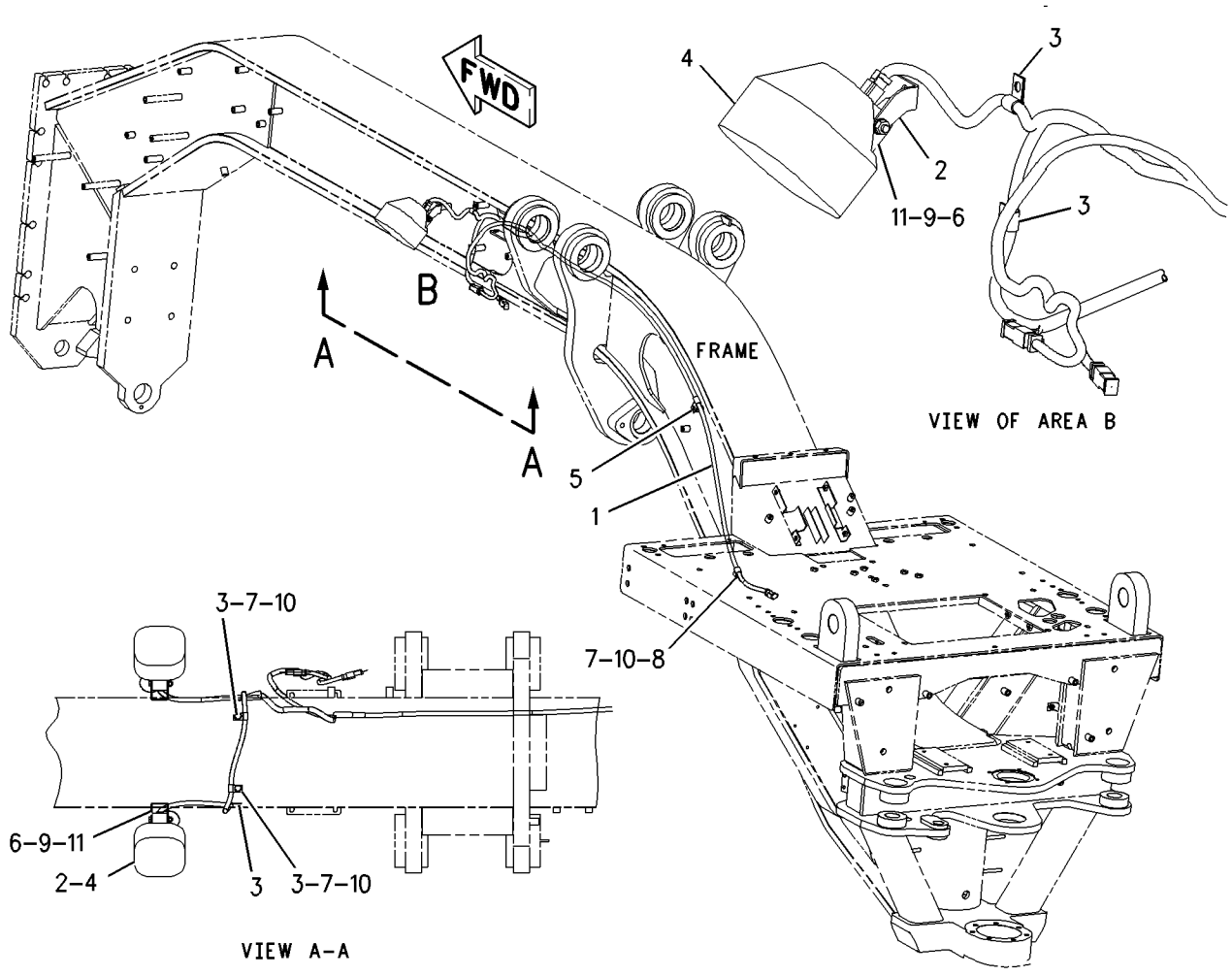

GRAPHIC #1 g00845917

MEMORANDA

ELECTRICAL AND STARTING SYSTEM

196-8559 LIGHTING GP-FLOOD—CAB—RH

S/N: ATS1-UP
AN ATTACHMENT

SMCS-1434 **i01793467**

NOTE	REF NO	GRAPHIC REF	PART NUMBER	QTY	PART NAME 1 2 3 4 5 6 (PRODUCT LEVEL)	SEE PAGE
	1	1	**3E-0109**	5	PLUG-ROCKER SWITCH	
	2	1	**3S-2093**	2	STRAP-CABLE	
	3	1	**9W-1442**	1	FUSE (10 AMP) (RH FLOODLAMP)	
	4	1	**145-3350**	1	PLATE	
B	5	1	**153-2147**	1	PLATE	
	6	1	**171-6175**	1	HARNESS AS-FRONT LIGHTING	
		1	**155-2270**	1	KIT-CONNECTING PLUG (2 PIN) (SNOW WING LAMP)	
					(INCLUDES PLUG AS & WEDGE)	
		1	**102-8802**	1	KIT-RECEPTACLE (2 PIN) (SNOW WING LAMP)	
					(INCLUDES RECEPTACLE AS & WEDGE)	
	7	1	**172-6556**	1	PANEL	
	8	1	**188-3862**	1	BRACKET AS	
	9	1	**190-1680**	1	BRACKET	
	10	1	**196-8557**	1	HARNESS AS-CAB	
		1	**155-2255**	1	KIT-CONNECTING PLUG (12 PIN)	
		1	**155-2265**	4	KIT-CONNECTING PLUG (8 PIN)	
		1	**155-2270**	4	KIT-CONNECTING PLUG (2 PIN) (FLOOD LAMP SIDE)	
		1	**155-2271**	1	KIT-CONNECTING PLUG (4 PIN)	
					(EACH INCLUDES PLUG AS & WEDGE)	
		1	**102-8802**	1	KIT-RECEPTACLE (2 PIN)	
		1	**102-8804**	2	KIT-RECEPTACLE (4 PIN)	
		1	**102-8806**	1	KIT-RECEPTACLE (8 PIN)	
		1	**102-8801**	1	KIT-RECEPTACLE (12 PIN)	
					(EACH INCLUDES RECEPTACLE AS & WEDGE)	
	11	1	**3E-8766**	1	SWITCH AS (CAB-RH FLOOD)	
		1	**3E-8782**	1	ACTUATOR-ROCKER	
		1	**3E-8825**	1	LAMP (24 VOLT) (CAB-RH FLOOD)	
Y	12	1	**153-2073**	1	LAMP GP-FLOOD (24 VOLT) (CAB-RH)	144
	13	1	**5P-6459**	1	GROMMET	
	14	1	**5P-8439**	1	GROMMET	
M	15	1	**6V-9189**	1	LOCKNUT	
	16	1	**8T-4224**	1	WASHER-HARD (8.8X16X2MM THK)	
M	17	1	**8T-6869**	1	BOLT (M8X1.25X60MM)	
M	18	1	**9X-2043**	6	SCREW-TRUSS HEAD (M6X1X14MM)	

B-USE AS REQUIRED
M-METRIC PART
Y-SEPARATE ILLUSTRATION

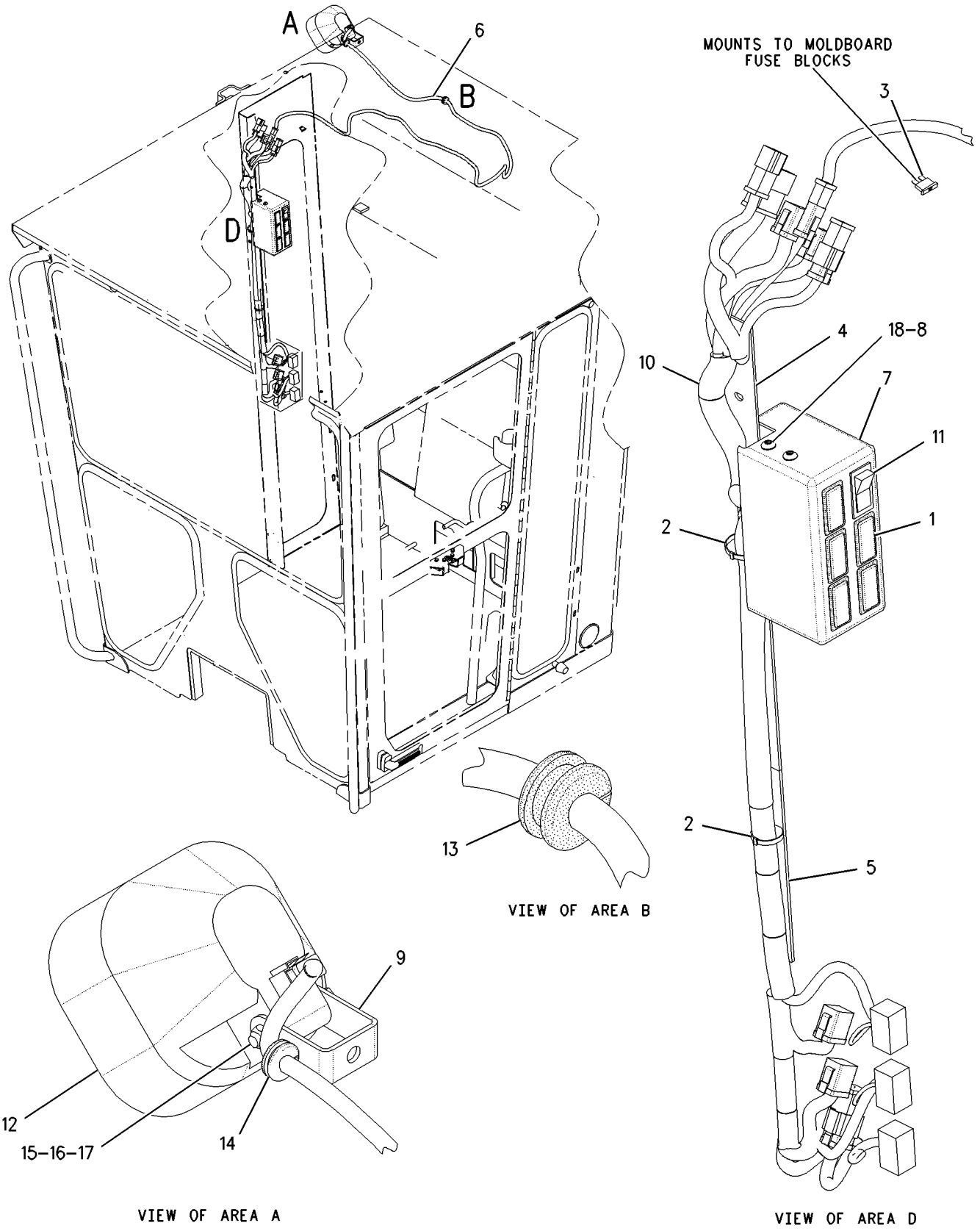

GRAPHIC #1

g00917517

203-7620 LIGHTING GP-FLOOD–EU

S/N: ATS1-UP

AN ATTACHMENT

SMCS-1434 **i01655106**

NOTE	PART NUMBER	QTY	PART NAME 1 2 3 4 5 6 (PRODUCT LEVEL)	SEE PAGE
Y	**203-7625**	1	LAMP GP-HEAD (LH) (TURN/BOLSTER)	148
Y	**203-7626**	1	LAMP GP-HEAD (RH) (TURN/BOLSTER)	150

Y-SEPARATE ILLUSTRATION

<END>

204-3435 LIGHTING GP-FLOOD—MOLDBOARD —REAR

S/N: ATS1-UP
PART OF 206-6538 LIGHTING AR-FLOOD
AN ATTACHMENT

SMCS-1434 **i01646081**

NOTE	REF NO	GRAPHIC REF	PART NUMBER	QTY	PART NAME 1 2 3 4 5 6 (PRODUCT LEVEL)	SEE PAGE
	1	1	**3S-2093**	1	STRAP-CABLE	
	3	1	**183-9606**	2	BRACKET	
	4	1	**187-9087**	1	HARNESS AS-CHASSIS	
		1	**102-8802**	1	KIT-RECEPTACLE (2 PIN)	
		1	**102-8803**	1	KIT-RECEPTACLE (3 PIN)	
		1	**155-2270**	1	KIT-CONNECTING PLUG (2 PIN)	
	5	1	**033-8248**	1	CLIP	
Y	6	1	**153-2073**	2	LAMP GP-FLOOD (MOLDBOARD)	144
	7	1	**186-0357**	2	CLIP	
	8	1	**4D-7794**	4	CLIP	
	9	1	**5M-3062**	2	BOLT (3/8-16X0.75 IN)	
	10	1	**8T-4896**	2	WASHER-HARD (10.2X18.5X2.5MM THK)	

Y-SEPARATE ILLUSTRATION

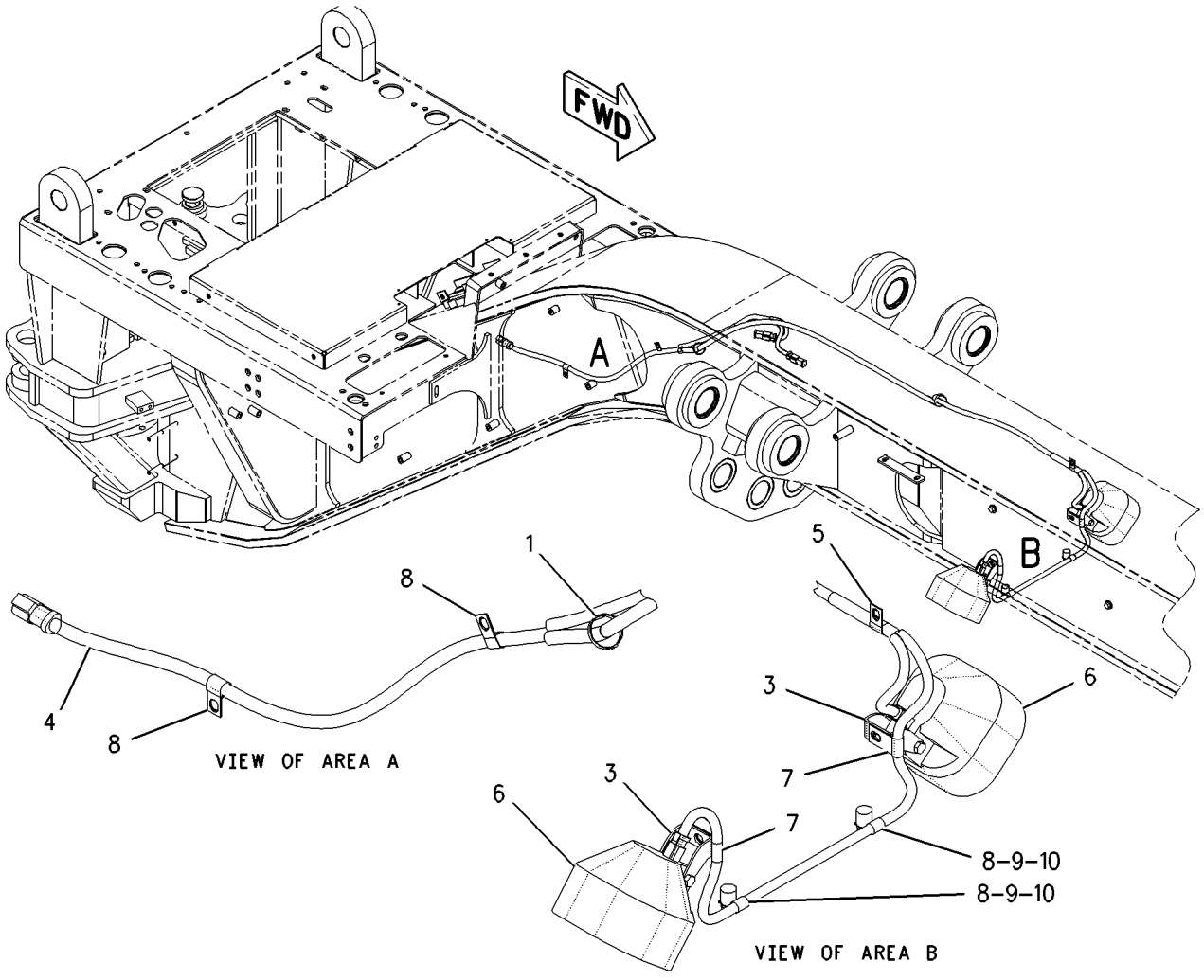

GRAPHIC #1 g00851564

205-7262 LIGHTING GP-FLOOD–REAR

S/N: ATS1-UP
PART OF 205-7261 LIGHTING AR-FLOOD
AN ATTACHMENT

SMCS-1434 **i01828879**

NOTE	REF NO	GRAPHIC REF	PART NUMBER	QTY	PART NAME 1 2 3 4 5 6 (PRODUCT LEVEL)	SEE PAGE
	1	1	**9X-9365**	2	BRACKET	
	2	1	**116-5710**	2	GROMMET	
	3	1	**178-8067**	2	BRACKET AS	
Y	4	1	**153-2073**	2	LAMP GP-FLOOD (24 VOLT) (REAR)	144
M	5	1	**5C-7261**	2	NUT (M8X1.25 THD)	
	6	1	**8T-4121**	4	WASHER-HARD (11X21X2.5MM THK)	
M	7	1	**8T-4136**	4	BOLT (M10X1.5X25MM)	
	8	1	**8T-4224**	4	WASHER-HARD (8.8X16X2MM THK)	
M	9	1	**8T-6869**	2	BOLT (M8X1.25X60MM)	

M-METRIC PART
Y-SEPARATE ILLUSTRATION

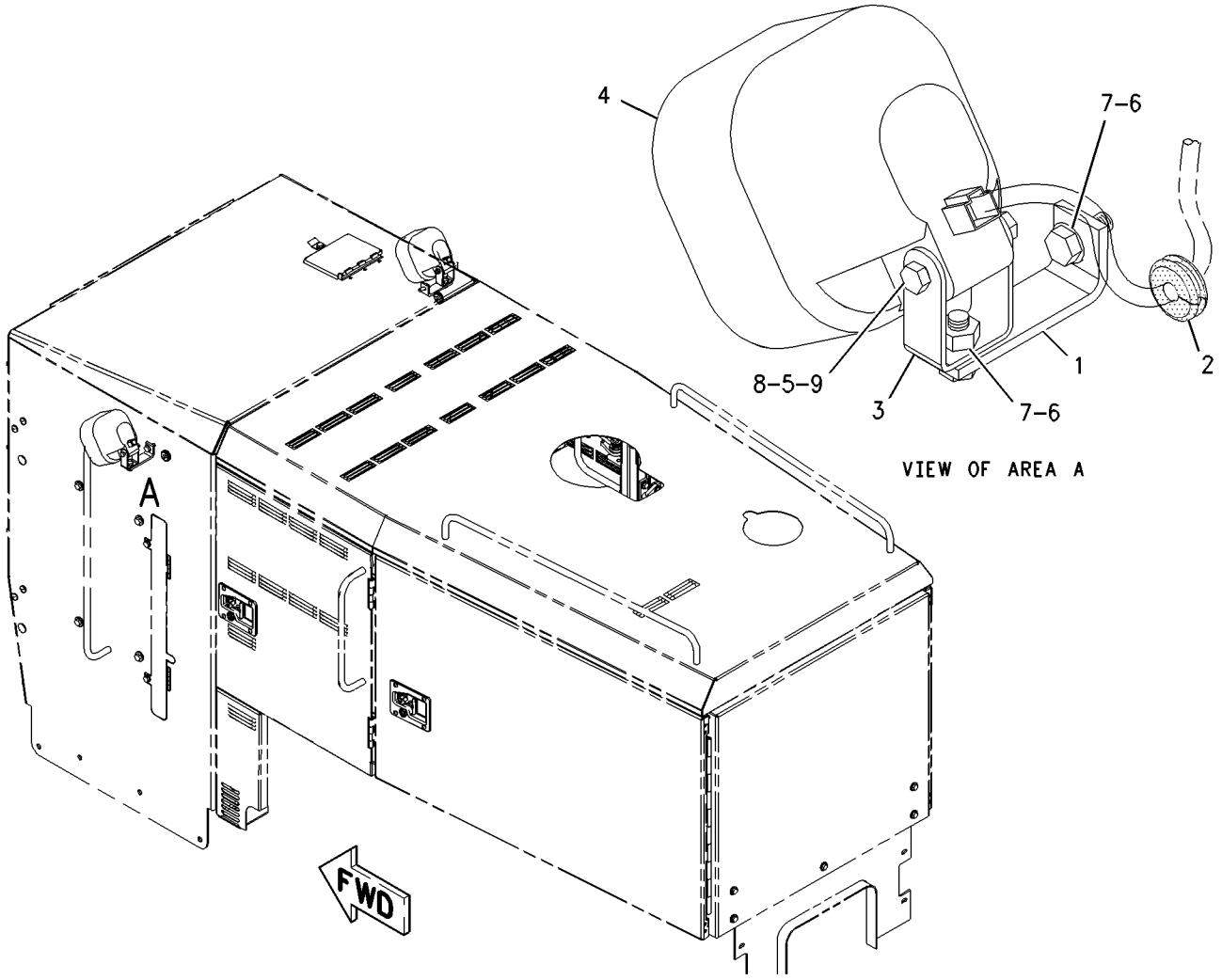

GRAPHIC #1 g00937212

188-9331 LIGHTING GP-SIGNAL–REAR TURN LAMPS

S/N: ATS1-UP

PART OF 161-0770, 161-1924, 186-4957, 188-9329 LIGHTING AR-FLOOD & SIGNAL AN ATTACHMENT

SMCS-1430 **i01706977**

NOTE	REF NO	GRAPHIC REF	PART NUMBER	QTY	PART NAME 1 2 3 4 5 6 (PRODUCT LEVEL)	SEE PAGE
Y	1	1	**135-0427**	2	LAMP GP-SIGNAL (24 VOLT) (TURN/PARK)	157
M	2	1	**5C-2890**	6	NUT (M6X1 THD)	
	3	1	**8T-4224**	6	WASHER-HARD (8.8X16X2MM THK)	

M-METRIC PART
Y-SEPARATE ILLUSTRATION

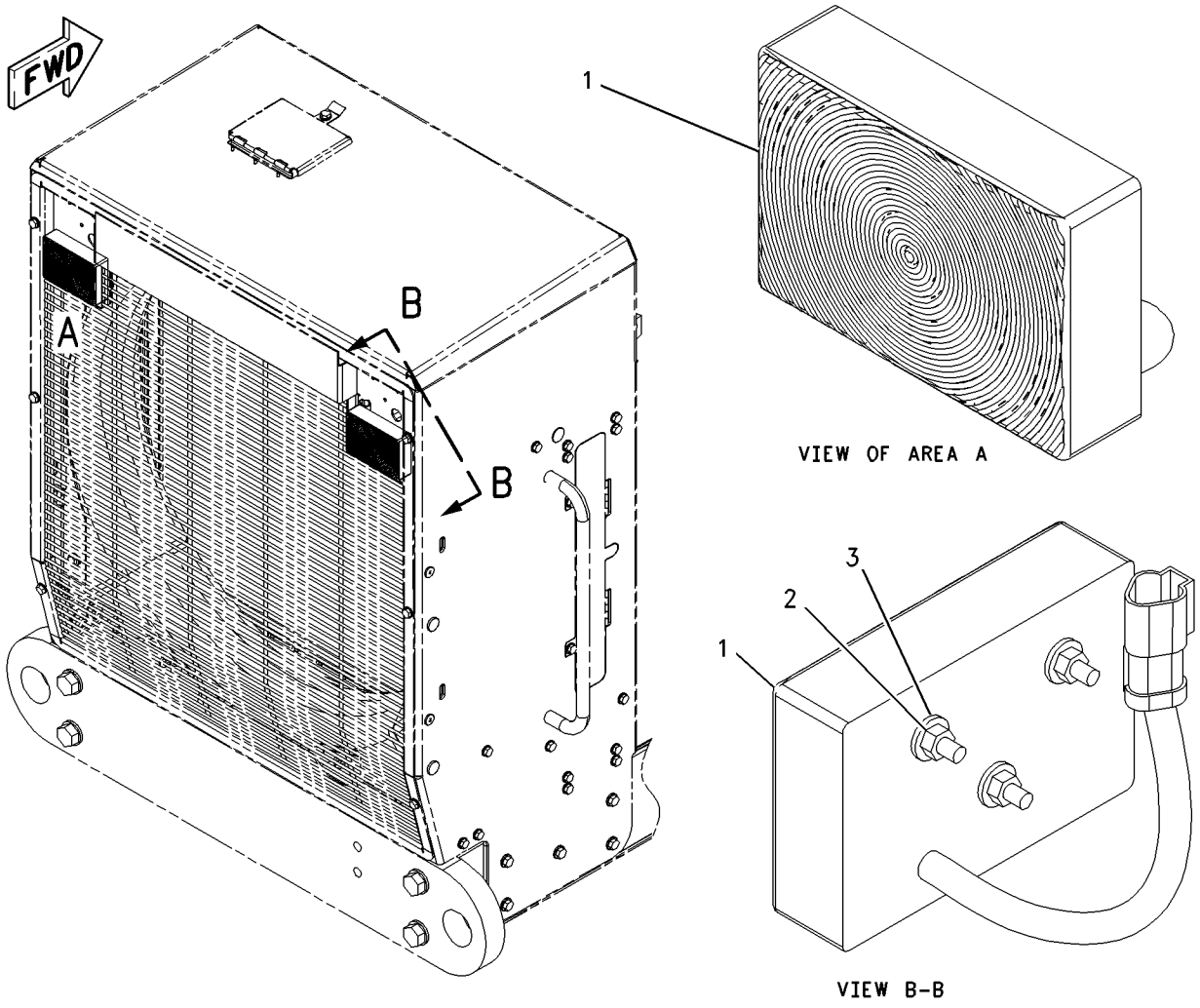

GRAPHIC #1 g00843802

161-0773 LIGHTING GP-WARNING–ROTATING W/CAB

S/N: ATS1-UP

AN ATTACHMENT

SMCS-1429, 1431 **i01623992**

NOTE	REF NO	GRAPHIC REF	PART NUMBER	QTY	PART NAME 1 2 3 4 5 6 (PRODUCT LEVEL)	SEE PAGE
	1	1	**3S-2093**	1	STRAP-CABLE	
	2	1	**9W-1442**	1	FUSE (10 AMP) (WARNING BEACON)	
	3	1	**107-4932**	1	PLATE AS	
Y	4	1	**128-6983**	1	LAMP GP-WARNING BEACON (AMBER)	158
	5	1	**130-5300**	1	CLIP	
	6	1	**5P-8525**	1	GROMMET	
	7	1	**8T-4121**	2	WASHER-HARD (11X21X2.5MM THK)	
M	8	1	**8T-4136**	2	BOLT (M10X1.5X25MM)	
	9	1	**102-9862**	1	SWITCH AS (WARNING BEACON)	
		1	**3E-8822**	1	ACTUATOR-ROCKER	
		1	**3E-8825**	1	LAMP (24 VOLT) (WARNING BEACON)	

M-METRIC PART
Y-SEPARATE ILLUSTRATION

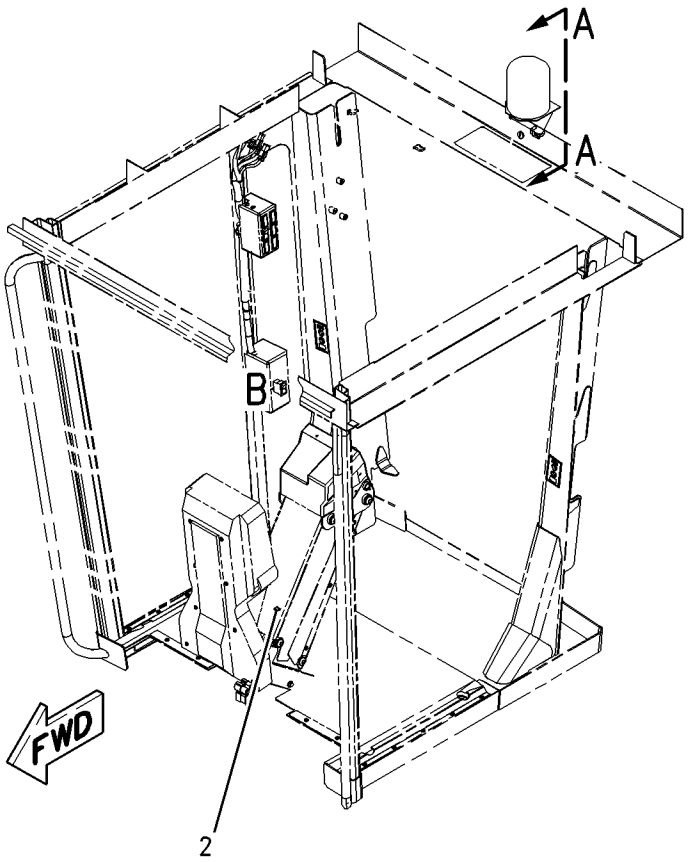

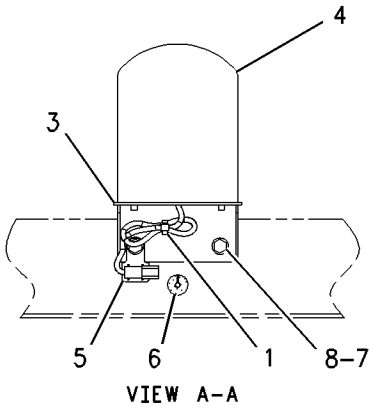

VIEW A–A

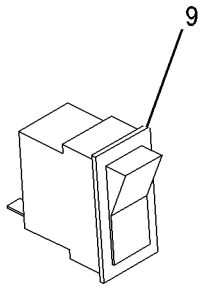

VIEW OF AREA B

GRAPHIC #1 g00847973

MEMORANDA

161-0774 LIGHTING GP-WARNING—ROTATING —OPEN CAB

S/N: ATS1-UP

AN ATTACHMENT

SMCS-1429, 1431 **i01686253**

NOTE	REF NO	GRAPHIC REF	PART NUMBER	QTY	PART NAME 1 2 3 4 5 6 (PRODUCT LEVEL)	SEE PAGE
	1	1	**3S-2093**	6	STRAP-CABLE	
	2	1	**9W-1442**	1	FUSE (10 AMP) (WARNING BEACON)	
	3	1	**107-4932**	1	PLATE AS	
Y	4	1	**128-6983**	1	LAMP GP-WARNING BEACON (AMBER)	158
	5	1	**169-3230**	1	HARNESS AS-FRONT LIGHTING	
		1	**102-8804**	1	KIT-RECEPTACLE (4 PIN) (BEACON SWITCH)	
		1	**155-2270**	1	KIT-CONNECTING PLUG (2 PIN) (BEACON LIGHT)	
	6	1	**173-1885**	1	COVER	
	7	1	**115-3070**	1	CLIP AS-CONNECT	
	8	1	**130-5300**	1	CLIP	
	9	1	**5P-8525**	1	GROMMET	
	10	1	**8T-4121**	2	WASHER-HARD (11X21X2.5MM THK)	
M	11	1	**8T-4136**	2	BOLT (M10X1.5X25MM)	
	12	1	**9D-8508**	1	GROMMET	
M	13	1	**9X-2043**	2	SCREW-TRUSS HEAD (M6X1X14MM)	
	14	1	**102-9862**	1	SWITCH AS (WARNING BEACON)	
		1	**3E-8822**	1	ACTUATOR-ROCKER	
		1	**3E-8825**	1	LAMP (24 VOLT) (WARNING BEACON)	

M-METRIC PART
Y-SEPARATE ILLUSTRATION

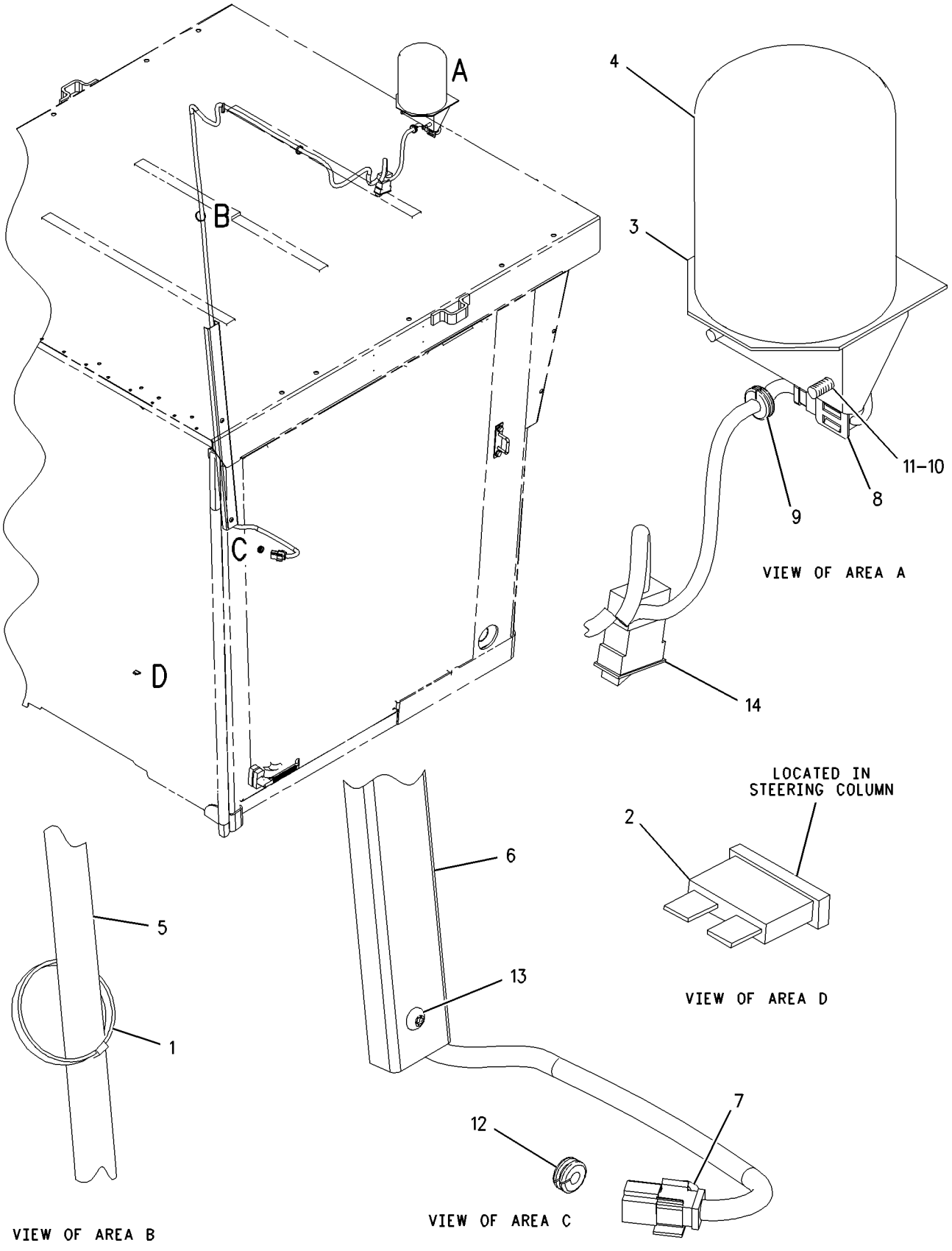

GRAPHIC #1

g00869881

117-3915 MOTOR GP-ELECTRIC

S/N: ATS1-UP
24 VOLT
PART OF 123-8915 PUMP & MOTOR GP
AN ATTACHMENT

SMCS-5927 **i01441397**

NOTE	REF NO	GRAPHIC REF	PART NUMBER	QTY	PART NAME 1 2 3 4 5 6 (PRODUCT LEVEL)	SEE PAGE
	1	1	**6V-8801**	2	NUT (3/8-16 THD)	
	2	1	**7X-0608**	2	WASHER-HARD (10.2X16X2.0MM THK)	

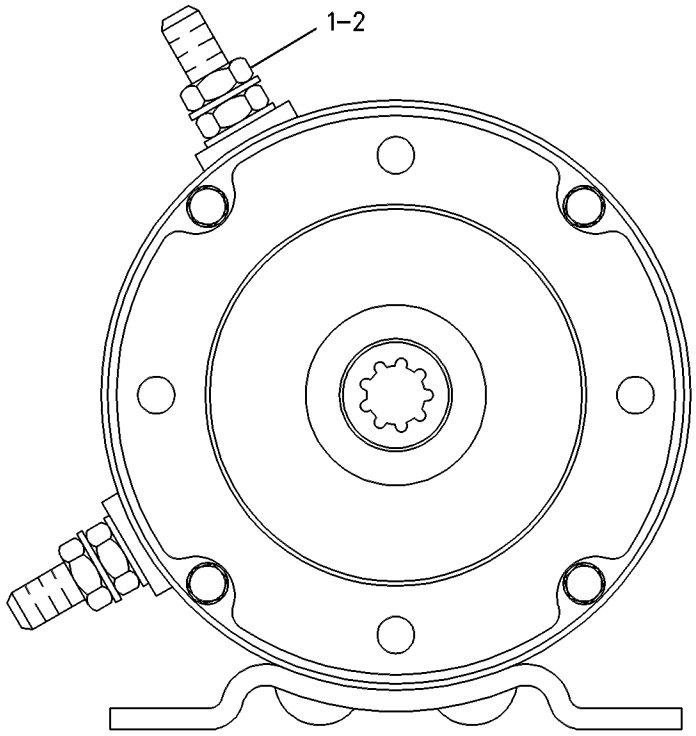

GRAPHIC #1 g00085784

170-5335 MOTOR GP-ELECTRIC—DEFROSTER FAN

S/N: ATS1-UP
27 VOLT
PART OF 170-5334 FAN GP-CIRCULATING
AN ATTACHMENT

SMCS-5927 **i01448257**

NOTE	REF NO	GRAPHIC REF	PART NUMBER	QTY	PART NAME 1 2 3 4 5 6 (PRODUCT LEVEL)	SEE PAGE
	1	1	**102-8802**	1	KIT-RECEPTACLE (2 PIN)	
	2	1	**9W-0852**	2	PIN-CONNECTOR	
	3	1	**3E-3365**	1	WEDGE-RECEPTACLE LOCK (2 PIN)	

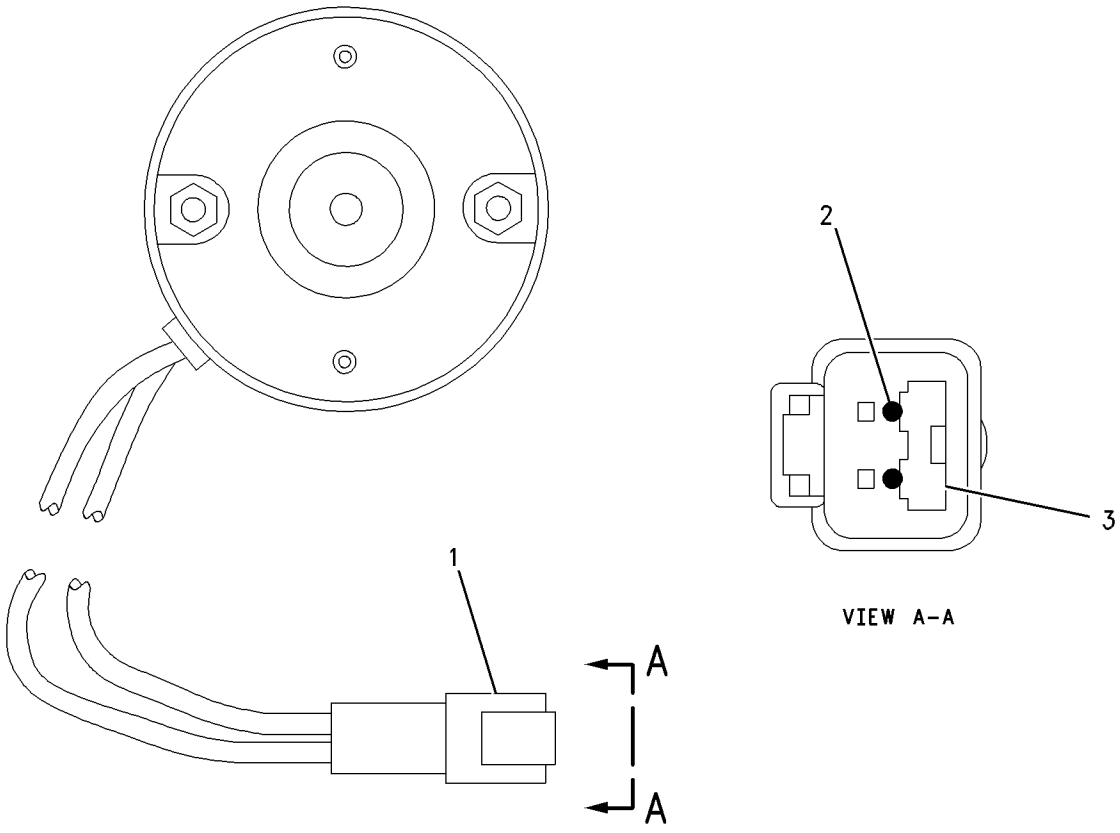

GRAPHIC #1 g00769415

179-8725 MOTOR GP-ELECTRIC–24 VOLT

S/N: 5ED478-UP

PART OF 204-7983 ENGINE AR

SMCS-5927 **i01643499**

NOTE	REF NO	GRAPHIC REF	PART NUMBER	QTY	PART NAME 1 2 3 4 5 6 (PRODUCT LEVEL)	SEE PAGE
	1	1	**4N-1059**	1	GASKET	
Y	2	1	**104-7041**	1	STARTING MOTOR GP-ELECTRIC	216
	3	1	**105-4728**	1	WIRE AS	
	4	1	**8S-2332**	3	BOLT-12 POINT HEAD (5/8-11X1.75 IN)	

Y-SEPARATE ILLUSTRATION

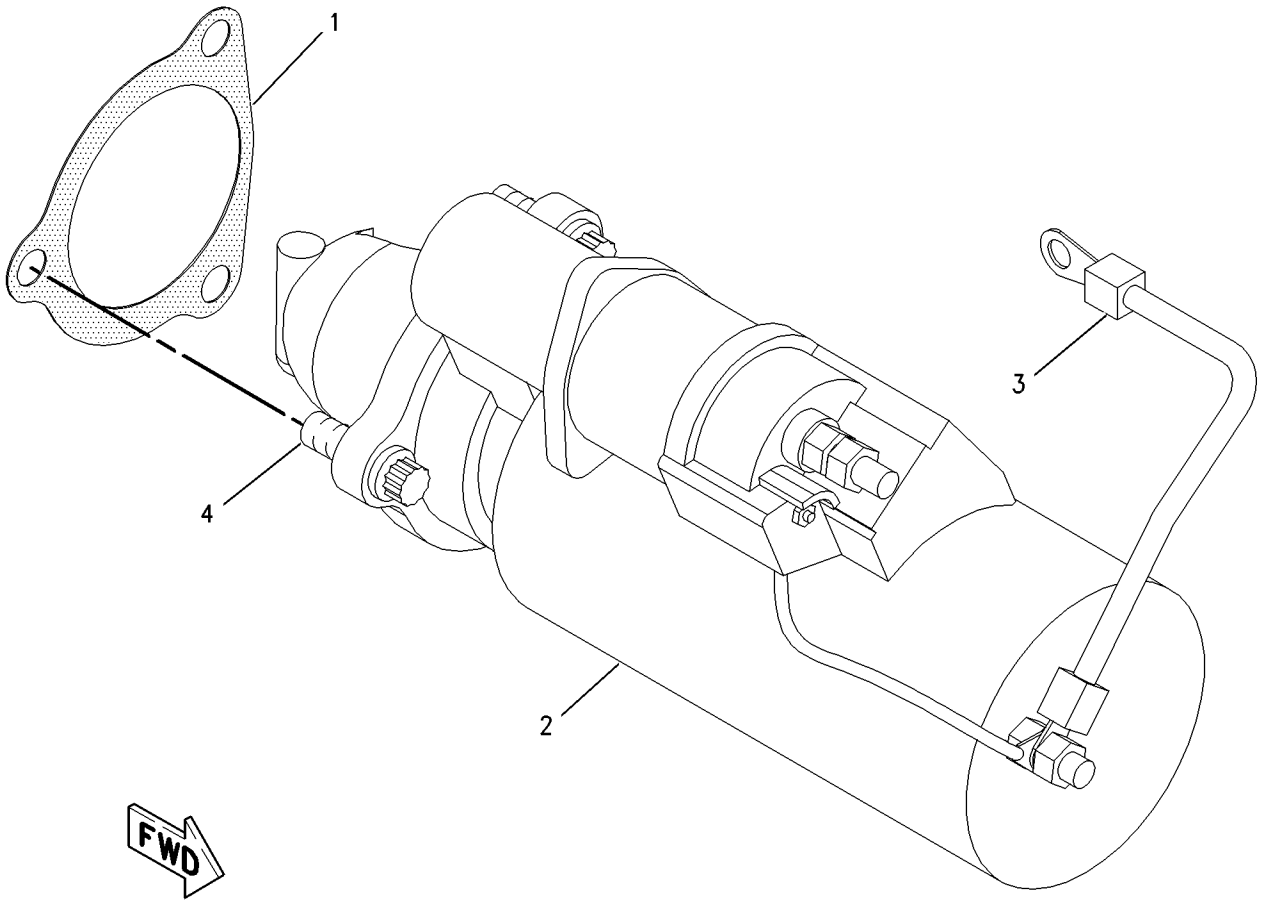

GRAPHIC #1 g00850007

185-7967 SENSOR GP-GROUND SPEED

S/N: ATS1-UP
PART OF 185-7968 INSTRUMENT AR
AN ATTACHMENT

SMCS-1408, 7493 **i01645804**

NOTE	REF NO	GRAPHIC REF	PART NUMBER	QTY	PART NAME 1 2 3 4 5 6 (PRODUCT LEVEL)	SEE PAGE
	1	1	*142-4433*	1	SENSOR GP-GROUND SPEED	
		1	**102-8804**	1	KIT-RECEPTACLE (4 PIN) (GROUND SPEED)	
		1	**3E-3377**	1	WEDGE-RECEPTACLE LOCK	
		1	**186-3735**	4	PIN-CONNECTOR	
	2	1	**186-1659**	1	BRACKET AS	
	3	1	**7X-0269**	4	BOLT (1/4-20X4 IN)	
	4	1	**7X-0550**	3	WASHER-HARD (13.5X32X5MM THK)	
	5	1	**8C-4436**	3	BOLT (1/2-13X1.375 IN)	
	6	1	**8T-4205**	4	WASHER-HARD (7.2X14.5X2MM THK)	

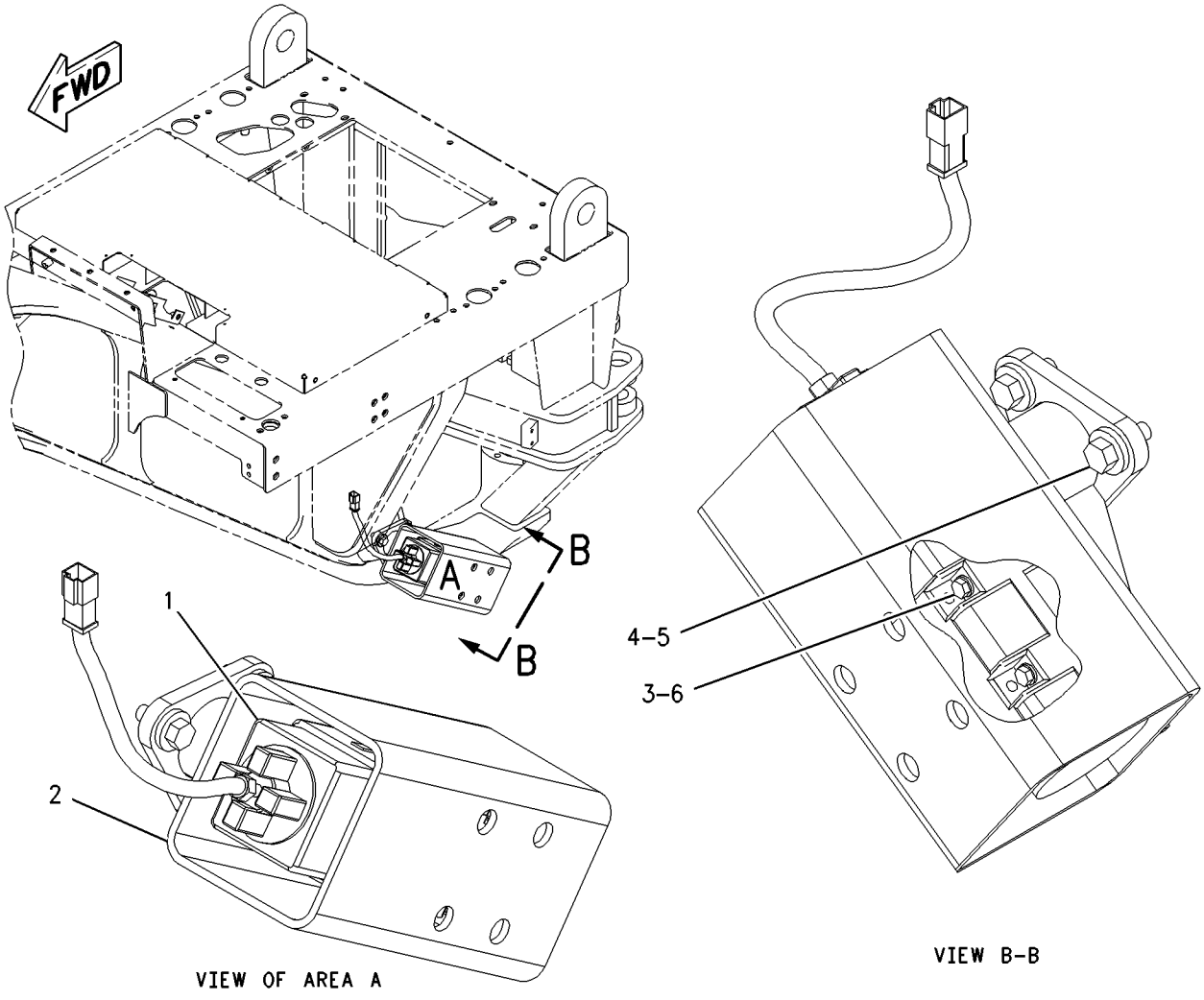

GRAPHIC #1 g00856214

160-2443 SENSOR GP-POSITION–THROTTLE

S/N: ATS1-UP
ROTARY
PART OF 159-5935 CONTROL GP-GOVERNOR

SMCS-1408, 1905 **i01834566**

NOTE	REF NO	GRAPHIC REF	PART NUMBER	QTY	PART NAME 1 2 3 4 5 6 (PRODUCT LEVEL)	SEE PAGE
J	1	1	**102-8803**	1	KIT-RECEPTACLE (3 PIN)	
	2	1	**8T-8729**	3	PIN-CONNECTOR	
J	3	1	**3E-3371**	1	WEDGE-RECEPTACLE LOCK (3 PIN)	

J-PART MARKED J INCLUDED IN KIT MARKED J

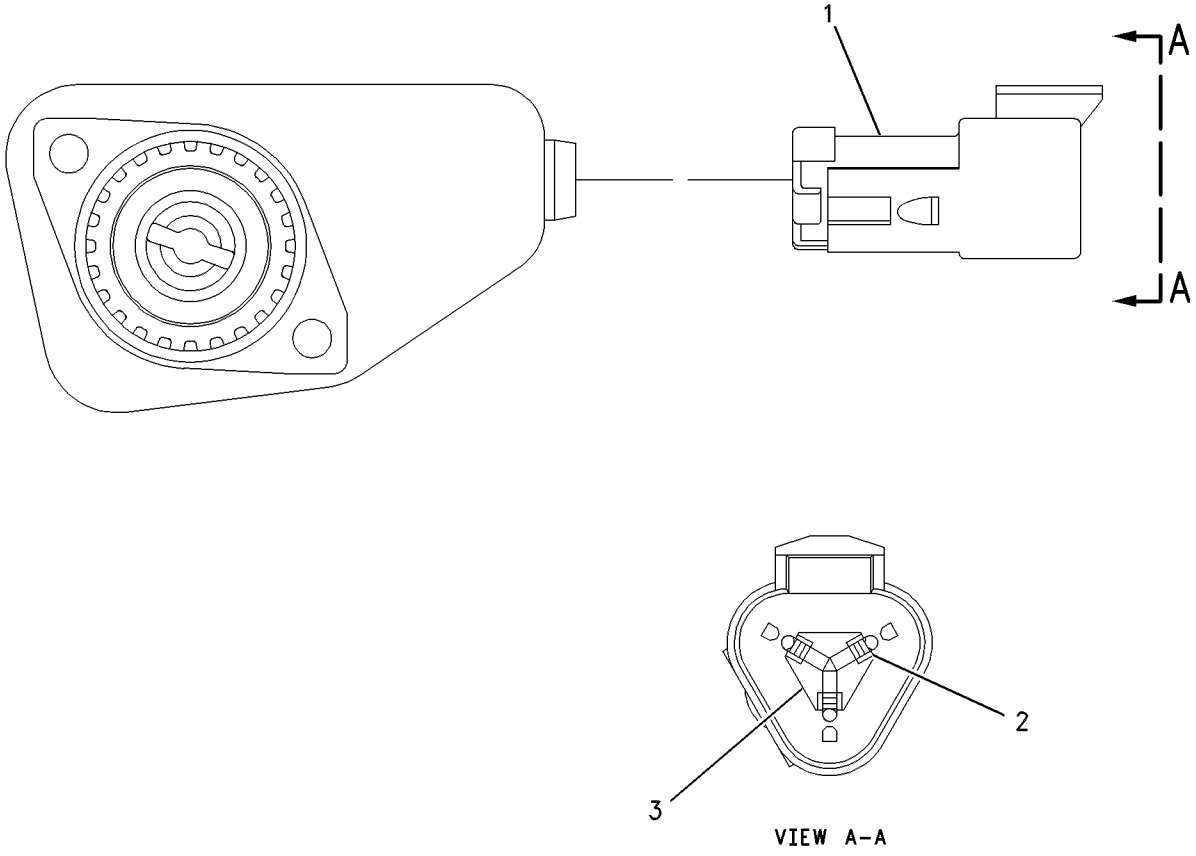

GRAPHIC #1 g00637818

167-1709 SENSOR GP-PRESSURE–FAN DRIVE

S/N: ATS1-UP
PART OF 175-6983 LINES GP-HYDRAULIC FAN
ALSO AN ATTACHMENT

SMCS-4351, 4352 **i01729441**

NOTE	REF NO	GRAPHIC REF	PART NUMBER	QTY	PART NAME 1 2 3 4 5 6 (PRODUCT LEVEL)	SEE PAGE
BE	1	1	**9X-1813**		SLEEVE	
	2	1	**155-2260**	1	KIT-CONNECTING PLUG (3 PIN)	
					(INCLUDES PLUG AS & WEDGE)	
	3	1	**9X-3402**	3	SOCKET-CONNECTOR	
	4	1	**3E-3368**	1	WEDGE-PLUG LOCK (3 PIN)	

B-USE AS REQUIRED
E-ORDER BY THE CENTIMETER

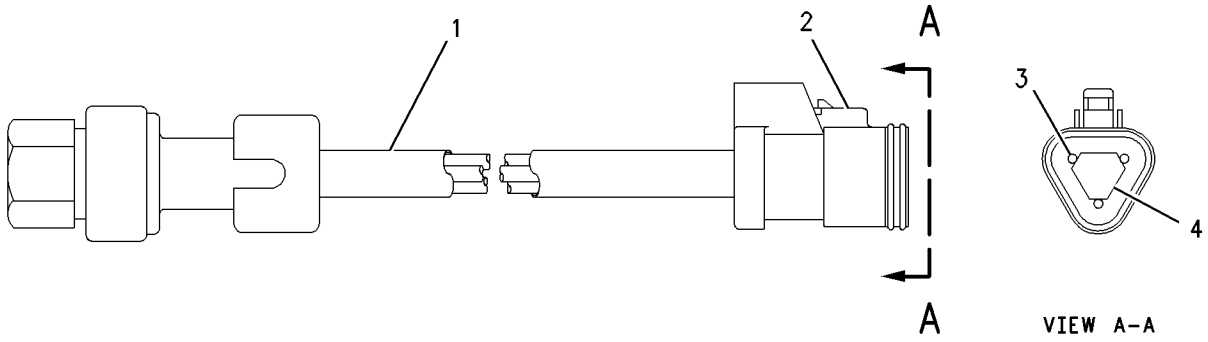

GRAPHIC #1 g00888131

194-6724 SENSOR GP-PRESSURE

S/N: 5ED478-UP

PART OF 197-8395 SENSOR GP-PRESSURE

SMCS-4351, 4352 **i01849729**

NOTE	REF NO	GRAPHIC REF	PART NUMBER	QTY	PART NAME 1 2 3 4 5 6 (PRODUCT LEVEL)	SEE PAGE
BE	1	1	**138-3094**		SLEEVE	
	2	1	**155-2260**	1	KIT-CONNECTING PLUG (3 PIN)	
					(INCLUDES PLUG ASSEMBLY & WEDGE)	
	3	1	**180-9340**	3	SOCKET-CONNECTOR	
	4	1	**3E-3368**	1	WEDGE-PLUG LOCK	

B-USE AS REQUIRED
E-ORDER BY THE CENTIMETER

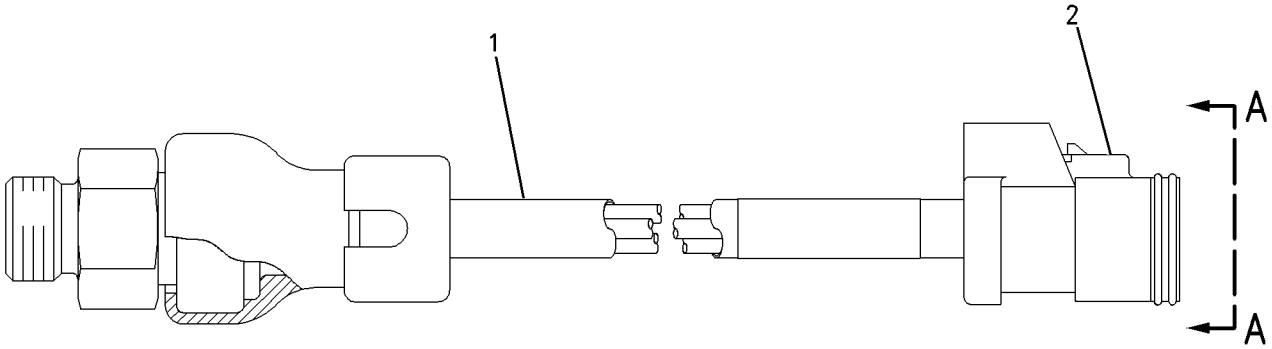

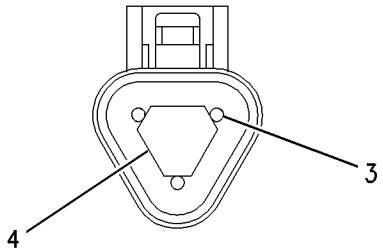

VIEW A-A

GRAPHIC #1 g00807030

ELECTRICAL AND STARTING SYSTEM

197-8393 SENSOR GP-PRESSURE–ENGINE SPEED

S/N: 5ED478-UP

PART OF 171-1103 WIRING GP-ENGINE

SMCS-4351, 4352 **i01689479**

NOTE	REF NO	GRAPHIC REF	PART NUMBER	QTY	PART NAME 1 2 3 4 5 6 (PRODUCT LEVEL)	SEE PAGE
	1	1	**161-1703**	1	SENSOR GP-PRESSURE	
	2	1	**6V-5049**	1	SEAL-O-RING	

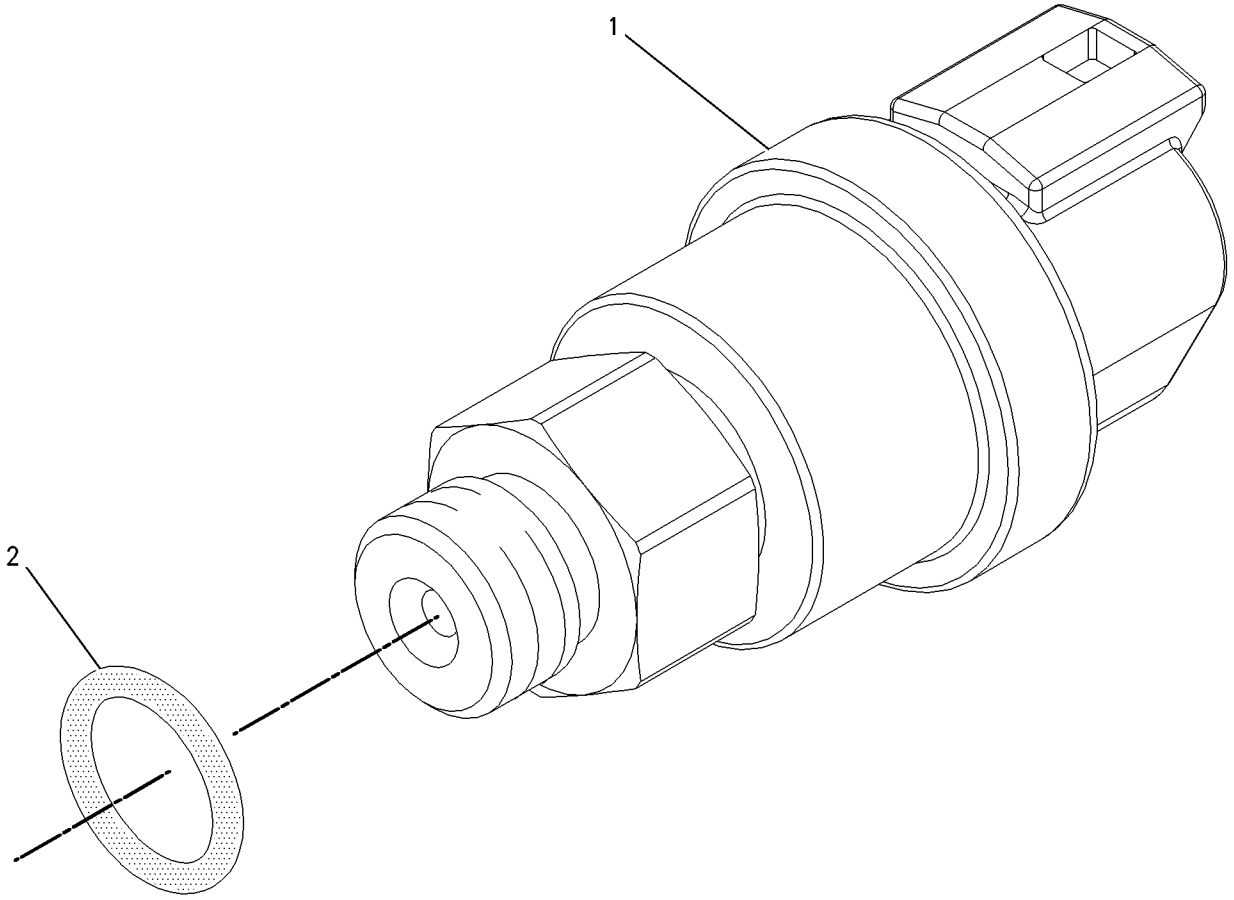

GRAPHIC #1 g00855973

197-8394 SENSOR GP-PRESSURE–FUEL

S/N: 5ED478-UP

PART OF 171-1103 WIRING GP-ENGINE

SMCS-4351, 4352 **i01652679**

NOTE	REF NO	GRAPHIC REF	PART NUMBER	QTY	PART NAME 1 2 3 4 5 6 (PRODUCT LEVEL)	SEE PAGE
	1	1	**161-1705**	1	SENSOR GP-PRESSURE	
	2	1	**6V-5048**	1	SEAL-O-RING	

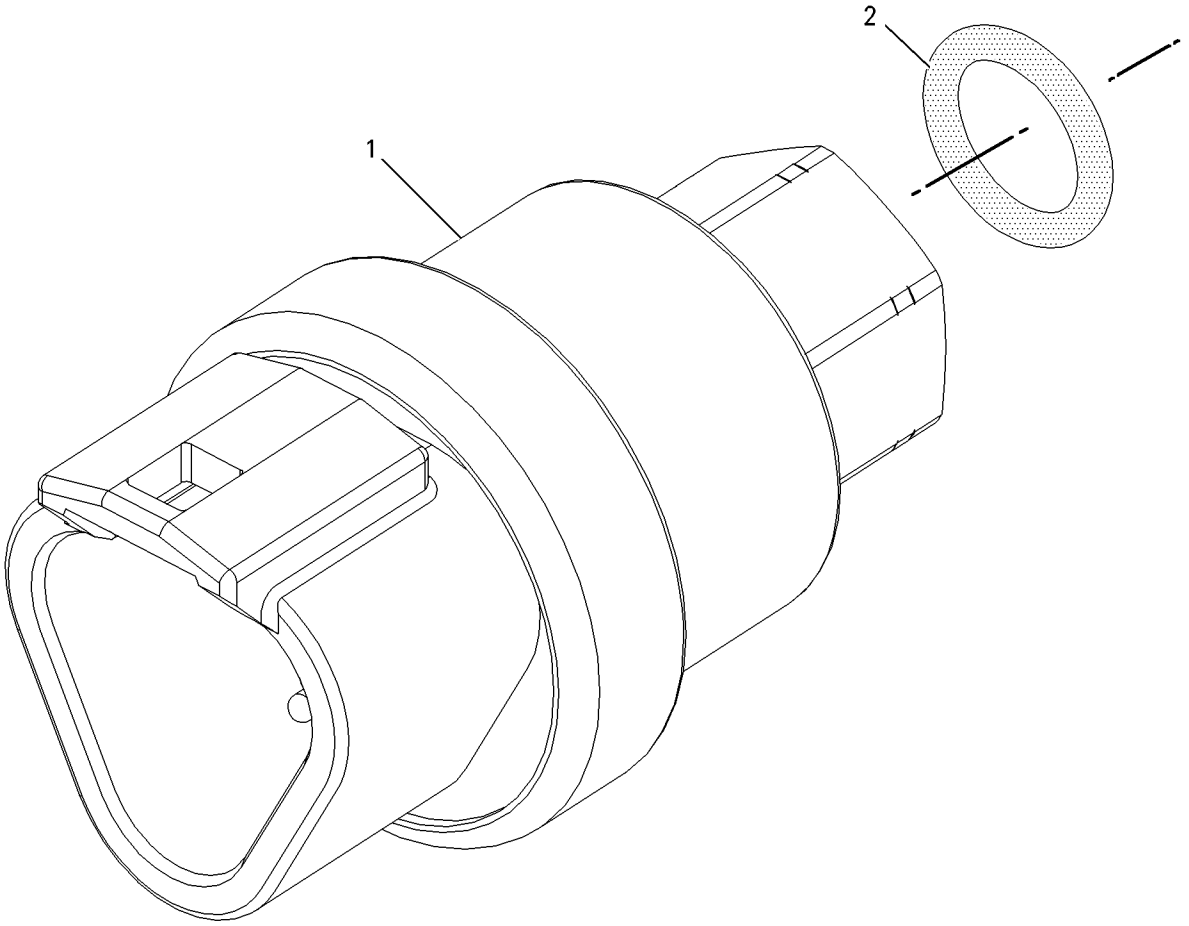

GRAPHIC #1 g00856107

197-8395 SENSOR GP-PRESSURE—INLET MANIFOLD

S/N: 5ED478-UP

PART OF 171-1103 WIRING GP-ENGINE

SMCS-4351, 4352 **i01652710**

NOTE	REF NO	GRAPHIC REF	PART NUMBER	QTY	PART NAME 1 2 3 4 5 6 (PRODUCT LEVEL)	SEE PAGE
Y	1	1	**194-6724**	1	SENSOR GP-PRESSURE	204
	2	1	**6V-5048**	1	SEAL-O-RING	

Y-SEPARATE ILLUSTRATION

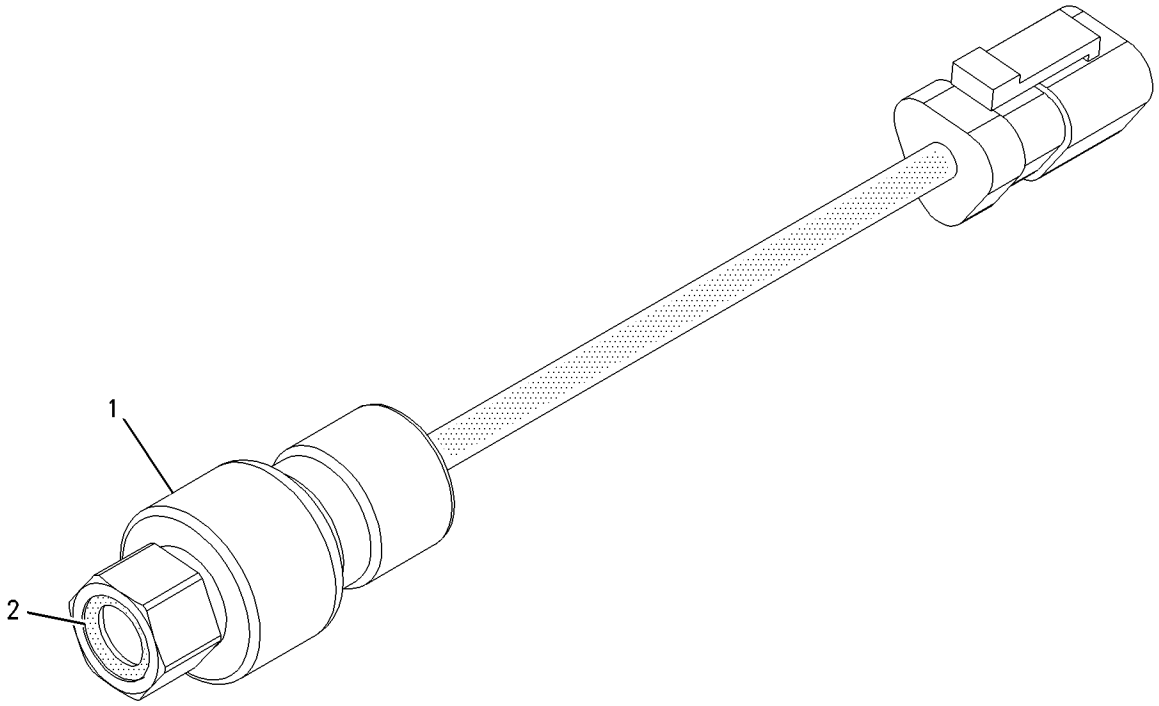

GRAPHIC #1 g00870289

197-8396 SENSOR GP-SPEED–CRANKSHAFT

S/N: 5ED478-UP

PART OF 171-1103 WIRING GP-ENGINE

SMCS-1907, 3175 **i01758046**

NOTE	REF NO	GRAPHIC REF	PART NUMBER	QTY	PART NAME 1 2 3 4 5 6 (PRODUCT LEVEL)	SEE PAGE
	1	1	**188-7511**	1	SENSOR GP-SPEED	
	2	1	**203-3940**	1	SEAL-O-RING	

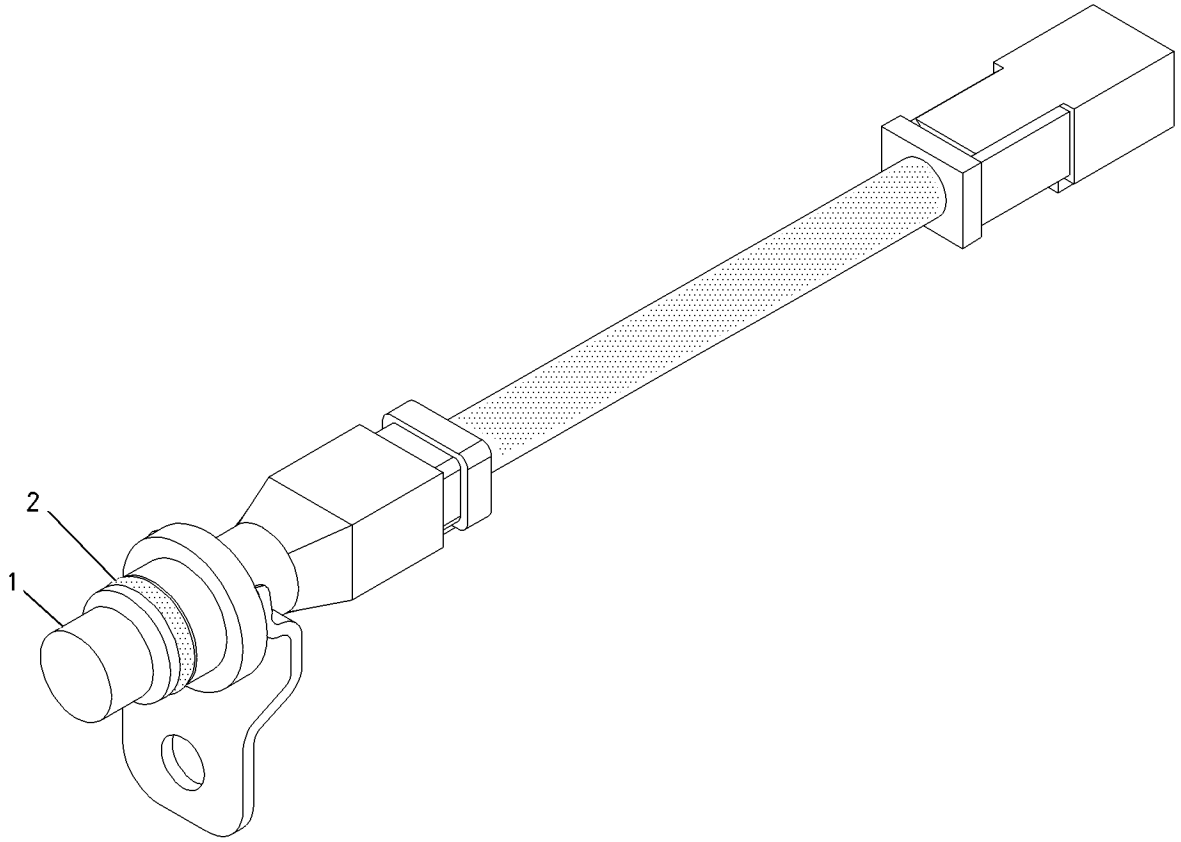

GRAPHIC #1 g00870282

197-8397 SENSOR GP-SPEED–CAMSHAFT

S/N: 5ED478-UP

PART OF 171-1103 WIRING GP-ENGINE

SMCS-1907, 3175 **i01758047**

NOTE	REF NO	GRAPHIC REF	PART NUMBER	QTY	PART NAME 1 2 3 4 5 6 (PRODUCT LEVEL)	SEE PAGE
	1	1	**189-9801**	1	SENSOR GP-SPEED	
	2	1	**203-3940**	1	SEAL-O-RING	

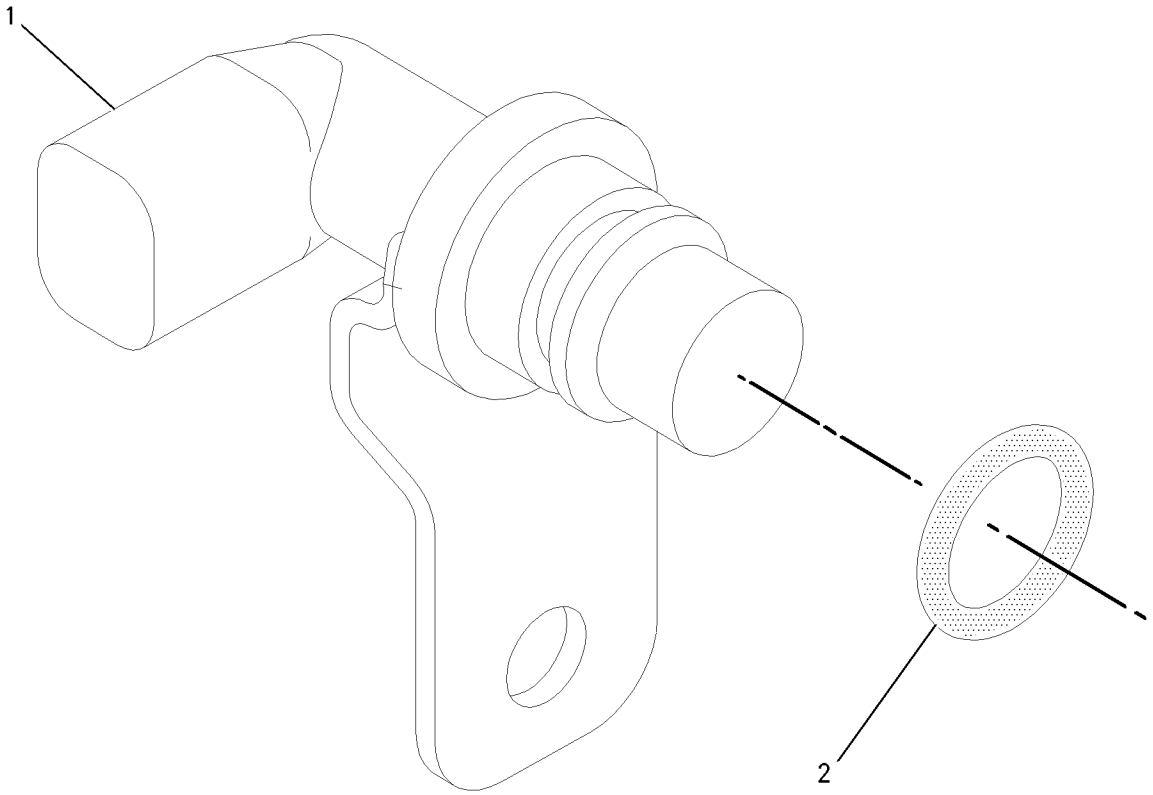

GRAPHIC #1 g00856021

197-8391 SENSOR GP-TEMPERATURE–INLET MANIFOLD/FUEL

S/N: 5ED478-UP

PART OF 171-1103 WIRING GP-ENGINE

SMCS-1330 **i01758077**

NOTE	REF NO	GRAPHIC REF	PART NUMBER	QTY	PART NAME 1 2 3 4 5 6 (PRODUCT LEVEL)	SEE PAGE
	1	1	**130-9811**	1	SENSOR GP-TEMPERATURE	
	2	1	**8L-2786**	1	SEAL-O-RING	

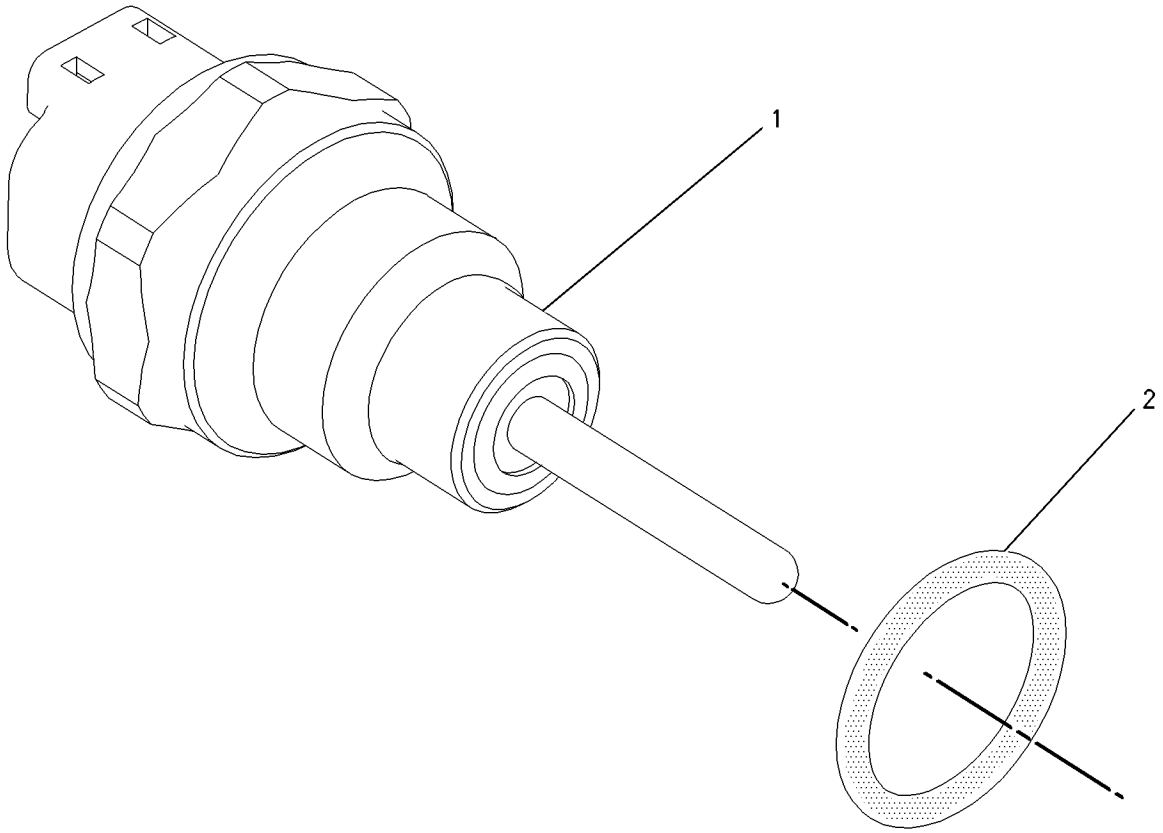

GRAPHIC #1 g00856011

197-8392 SENSOR GP-TEMPERATURE–COOLANT

S/N: 5ED478-UP

PART OF 171-1103 WIRING GP-ENGINE

SMCS-1330 **i01758079**

NOTE	REF NO	GRAPHIC REF	PART NUMBER	QTY	PART NAME 1 2 3 4 5 6 (PRODUCT LEVEL)	SEE PAGE
	1	1	**130-9811**	1	SENSOR GP-TEMPERATURE	
	2	1	**6V-6609**	1	SEAL-O-RING	

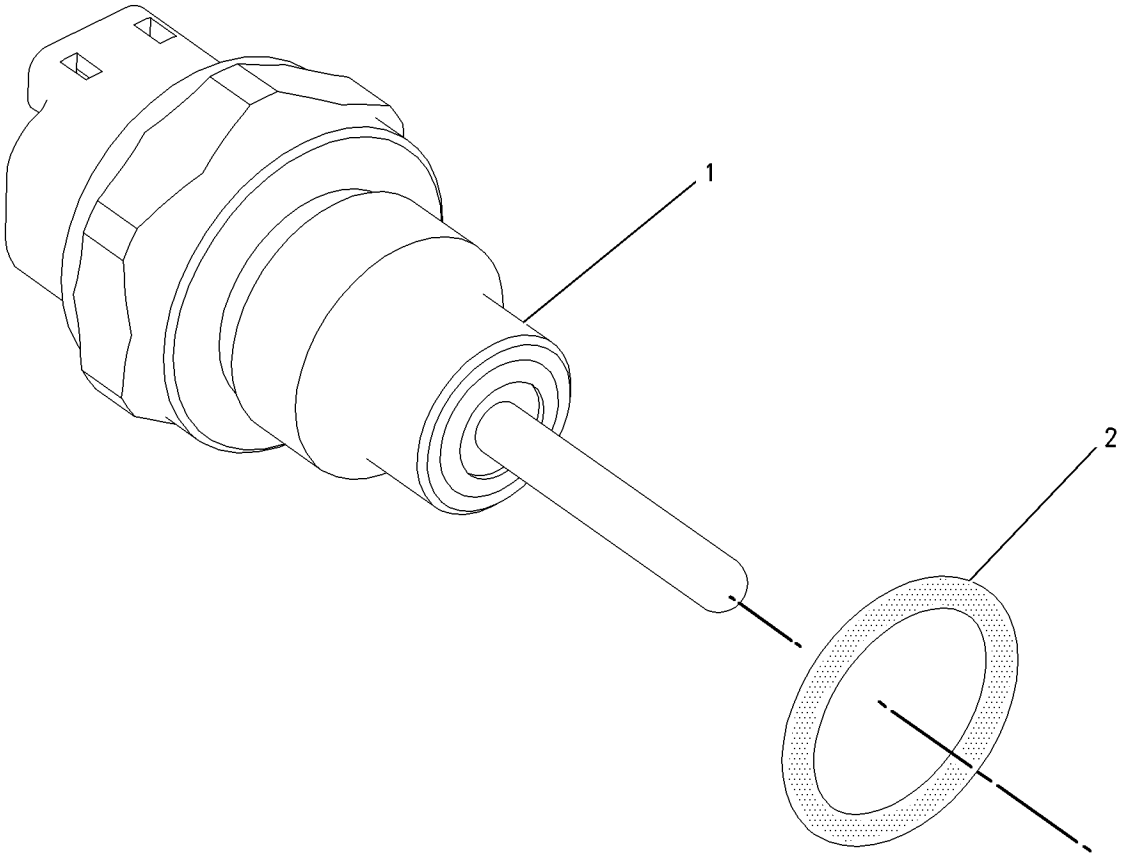

GRAPHIC #1 g00856005

ELECTRICAL AND STARTING SYSTEM

186-1728 STARTING AID GP-ETHER

S/N: ATS1-UP

PART OF 204-7938 SUPPORT AR-REAR CHASSIS

SMCS-1456 **i01671111**

NOTE	REF NO	GRAPHIC REF	PART NUMBER	QTY	PART NAME 1 2 3 4 5 6 (PRODUCT LEVEL)	SEE PAGE
	1	1	**3E-5239**	1	RELAY AS (24 VOLT) (ETHER START AID)	
	2	1	**3E-6332**	1	VALVE GP-ETHER START	
		1	**3E-3365**	1	WEDGE-RECEPTACLE LOCK (2 PIN)	
		1	**7N-9801**	1	GASKET	
		1	**8T-8729**	2	PIN-CONNECTOR	
		1	**102-8802**	1	KIT-RECEPTACLE (2 PIN) (ETHER START)	
	3	1	**3S-2093**	1	STRAP-CABLE	
	4	1	**7N-2059**	1	CLAMP AS-CYLINDER	
	5	1	**177-9812**	1	HARNESS AS-STARTING AID	
		1	**155-2270**	1	KIT-CONNECTING PLUG (2 PIN) (ETHER START AID)	
		1	**102-8804**	1	KIT-RECEPTACLE (4 PIN) (ETHER START AID)	
	6	1	**180-3558**	1	TUBE AS	
	7	1	**033-8248**	1	CLIP	
	8	1	**130-5300**	1	CLIP	
	9	1	**4D-7794**	1	CLIP	
	10	1	**4H-2558**	1	GROMMET	
	11	1	**6V-2686**	2	CLIP	
	12	1	**8T-4121**	3	WASHER-HARD (11X21X2.5MM THK)	
M	13	1	**8T-4137**	2	BOLT (M10X1.5X20MM)	
M	14	1	**8T-4189**	4	BOLT (M8X1.25X20MM)	
M	15	1	**8T-4191**	1	BOLT (M10X1.5X16MM)	
	16	1	**8T-4224**	4	WASHER-HARD (8.8X16X2MM THK)	
A		1	**7N-0296**	1	CYLINDER AS-ETHER	
					(MAY BE PROCURRED LOCALLY FROM CAT DEALER)	

A-NOT PART OF THIS GROUP
M-METRIC PART

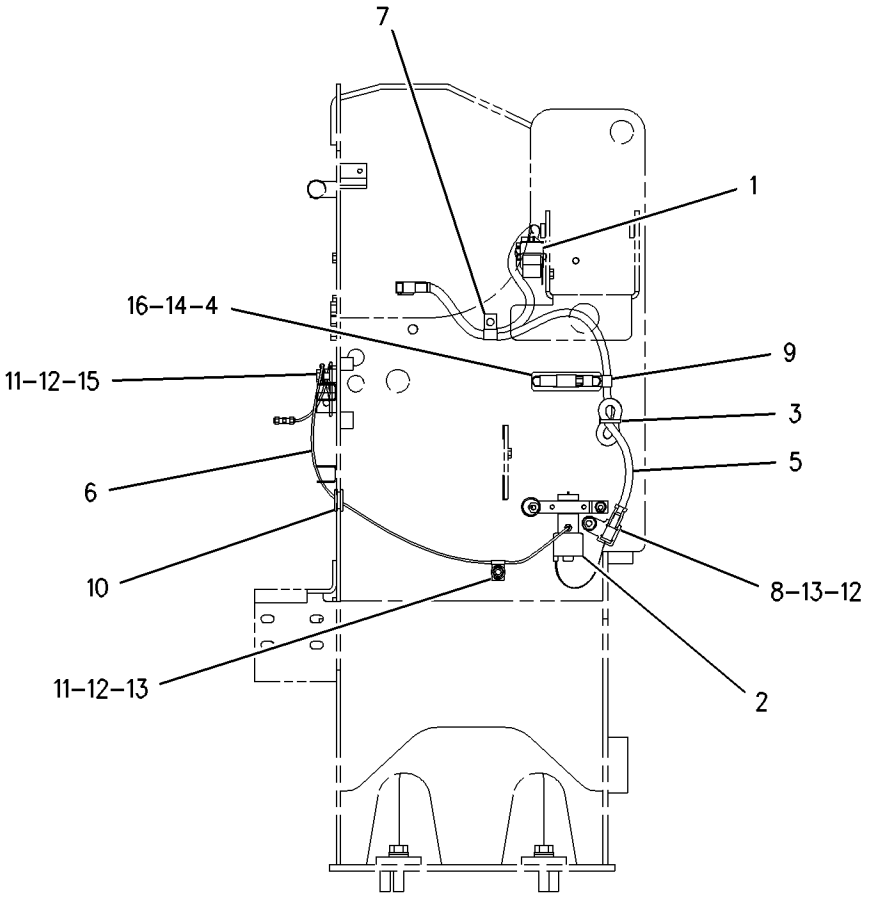

LEFT SIDE VIEW

GRAPHIC #1 g00859477

ELECTRICAL AND STARTING SYSTEM

197-0580 STARTING AID GP-ETHER

S/N: ATS1-UP

PART OF 162-5607 GENERAL AR

SMCS-1456 **i01650683**

NOTE	REF NO	GRAPHIC REF	PART NUMBER	QTY	PART NAME 1 2 3 4 5 6 (PRODUCT LEVEL)	SEE PAGE
	1	1	**6N-9995**	1	ATOMIZER AS-ETHER	
	2	1	**7N-3725**	2	BRACKET	
	3	1	**175-1367**	2	SPACER (8.8X16X10MM THK)	
	4	1	**176-6391**	1	TUBE	
	5	1	**3E-8768**	1	SWITCH AS (ETHER STARTING AID)	
		1	**3E-8825**	1	LAMP (24 VOLT) (ETHER STARTING AID INDICATOR)	
		1	**3E-8776**	1	ACTUATOR-ROCKER	
	6	1	**6V-2686**	2	CLIP	
M	7	1	**8T-3647**	2	BOLT (M8X1.25X80MM)	
	8	1	**8T-4121**	4	WASHER-HARD (11X21X2.5MM THK)	
M	9	1	**8T-4133**	2	NUT (M10X1.5 THD)	
M	10	1	**8T-4137**	2	BOLT (M10X1.5X20MM)	
	11	1	**8T-4224**	2	WASHER-HARD (8.8X16X2MM THK)	

M-METRIC PART

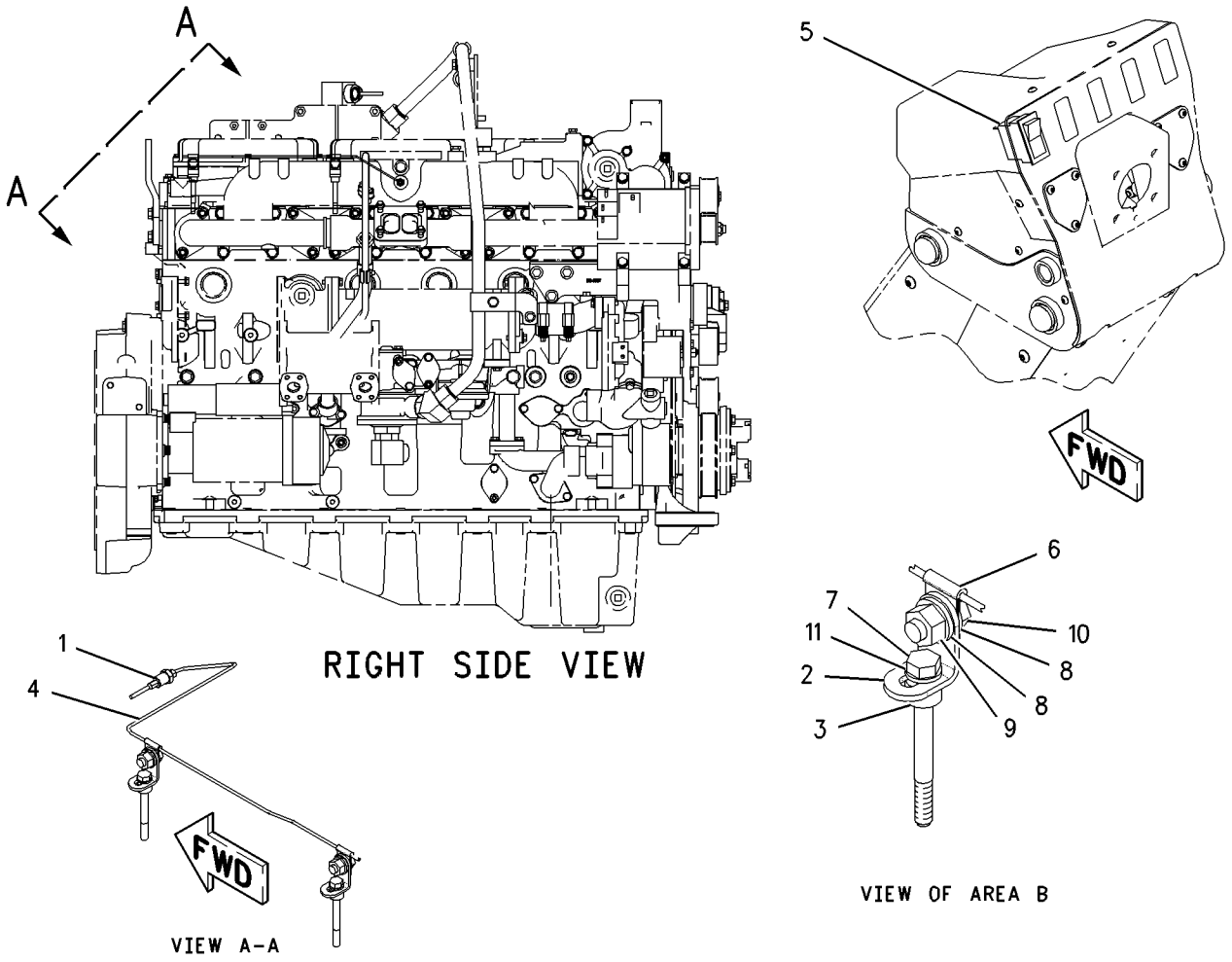

GRAPHIC #1 g00807749

MEMORANDA

104-7041 STARTING MOTOR GP-ELECTRIC

S/N: 5ED478-UP
24 VOLT
PART OF 179-8725 MOTOR GP-ELECTRIC

SMCS-1453 **i01643469**

NOTE	REF NO	GRAPHIC REF	PART NUMBER	QTY	PART NAME 1 2 3 4 5 6 (PRODUCT LEVEL)	SEE PAGE
	1	1	**3T-3434**	6	PLUG	
	2	1	**7T-3279**	1	HOUSING AS	
	3	1	**8T-8566**	1	TERMINAL AS	
	4	1	**6V-8188**	4	NUT (1/2-13 THD)	
	5	1	**7X-0562**	4	WASHER-HARD (13.5X19X0.8MM THK)	
	6	1	**3T-3422**	1	WIRE AS	
	7	1	**7T-3278**	1	HOLDER AS-BRUSH	
	8	1	**7T-3277**	1	COIL AS-FIELD	
	9	1	**7T-3454**	1	INSULATOR	
	10	1	**7T-3271**	1	CONNECTOR	
	11	1	**7T-3451**	1	INSULATOR-TERMINAL	
	12	1	**8T-8569**	1	INSULATOR-TERMINAL	
	13	1	**5S-7349**	4	BOLT (1/4-20X0.5 IN)	
	14	1	**8T-4205**	4	WASHER-HARD (7.2X14.5X2MM THK)	
	15	1	**8H-1141**	4	SHOE-POLE	
	16	1	**3F-0379**	8	SCREW-POLE SHOE (3/8-24 THD)	
	17	1	**7T-3276**	1	ARMATURE AS (24 VOLT)	
	18	1	**3E-7775**	1	HOUSING AS	
	19	1	**4M-1831**	1	PLUG-LEVER HOUSING	
	20	1	**7L-2894**	1	GASKET	
	21	1	**036-9823**	5	BOLT	
	22	1	**6N-3826**	1	DRIVE AS-MOTOR	
	23	1	**7T-3974**	1	HOUSING AS-DRIVE	
	24	1	**7X-3373**	6	BOLT (5/16-18X0.88 IN)	
	25	1	**193-8570**	1	SOLENOID AS	
	26	1	**6V-8378**	3	NUT (10-32 THD)	
	27	1	**8F-1434**	2	LOCKWASHER	
	28	1	**8T-0328**	3	WASHER-HARD (5.5X10X1MM THK)	
	29	1	**8T-9884**	1	KIT-INSULATOR (STARTING MOTOR)	
	30	1	**8C-3655**	1	KIT-BRUSH (STARTING MOTOR)	
	31	1	**7T-3268**	1	KIT-LEVER (STARTING MOTOR)	
	32	1	**9X-4824**	1	COVER-STARTING MOTOR	
					AVAILABLE REPAIR KIT(S):	
			7T-3267	1	KIT-BUSHING (STARTING MOTOR)	

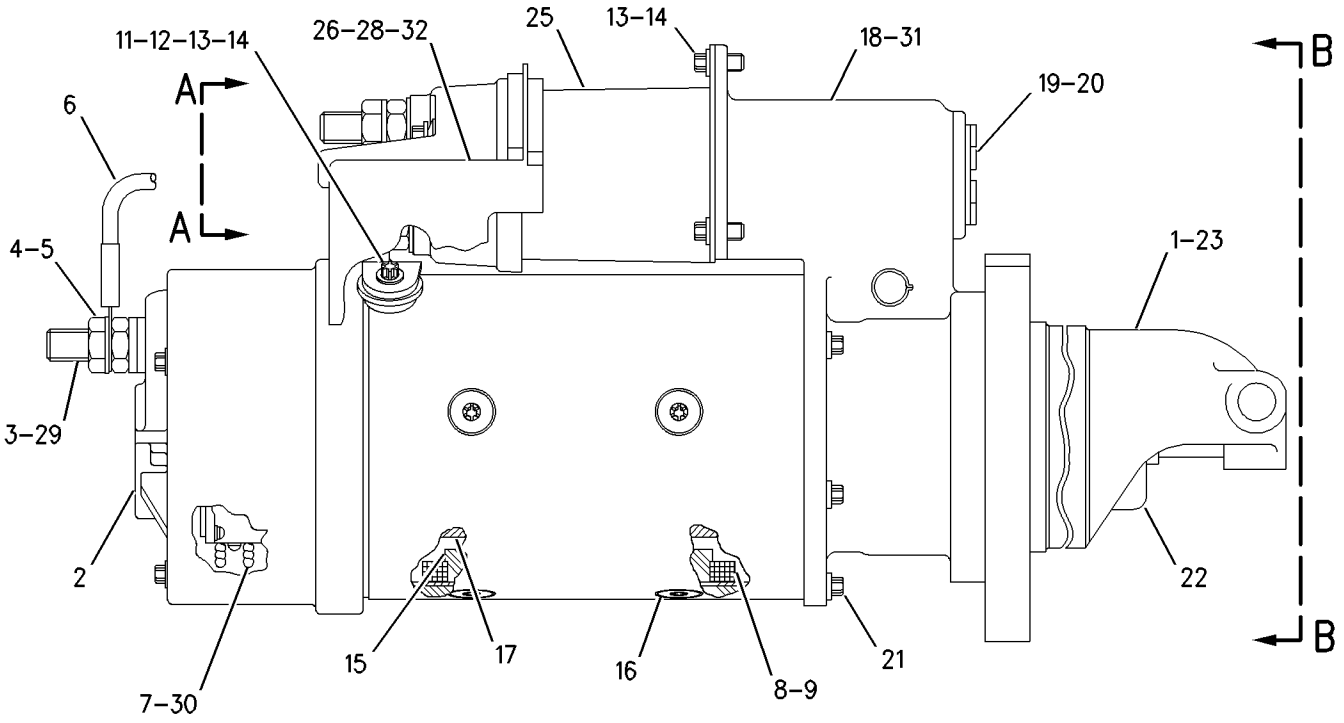

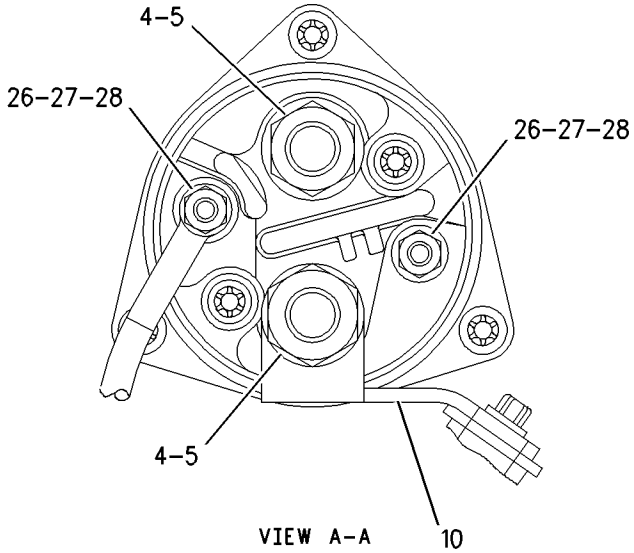

VIEW A-A

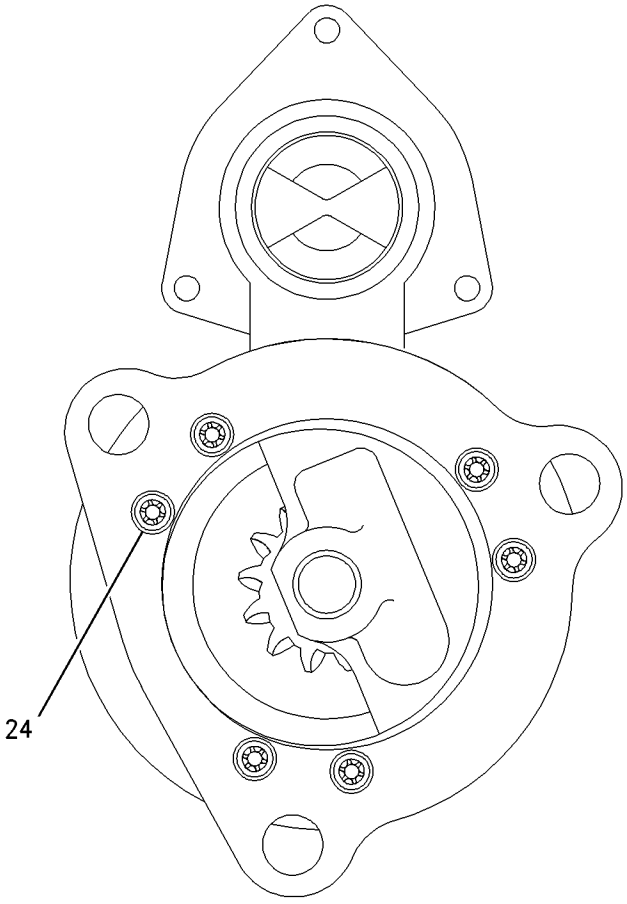

VIEW B-B

GRAPHIC #1

g00849925

7N-0718 SWITCH GP-DISCONNECT–BATTERY

S/N: ATS1-UP

PART OF 205-3110 WIRING GP-REAR

SMCS-1411 **i01727188**

NOTE	REF NO	GRAPHIC REF	PART NUMBER	QTY	PART NAME 1 2 3 4 5 6 (PRODUCT LEVEL)	SEE PAGE
	1	1	**8H-5306**	1	KEY (BATTERY DISCONNECT)	
	2	1	**8H-5303**	1	NUT (3/4-16 THD)	
	3	1	**2H-3922**	2	LOCKWASHER	
	4	1	**9F-5644**	2	LOCKWASHER	
	5	1	**6F-7045**	2	NUT-FULL (3/8X24 THD)	

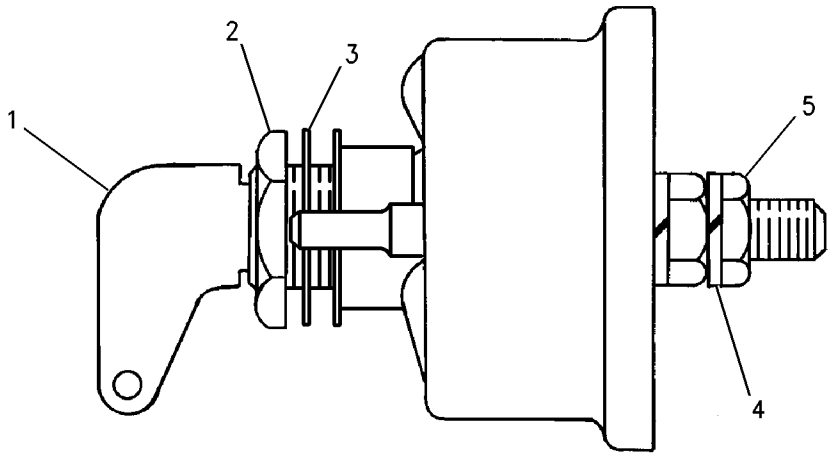

GRAPHIC #1 g00715584

MEMORANDA

161-1018 SWITCH GP-LIGHT–TURN

S/N: ATS1-UP

PART OF 161-0770 LIGHTING AR-FLOOD & SIGNAL

AN ATTACHMENT

SMCS-1429, 1435, 7332 **i01671173**

NOTE	REF NO	GRAPHIC REF	PART NUMBER	QTY	PART NAME 1 2 3 4 5 6 (PRODUCT LEVEL)	SEE PAGE
	1	1	**8X-5153**	1	FILM-FACE (TURN SIGNAL/HAZARD)	
	2	1	**8X-5154**	1	FILM-FACE (HEADLIGHTS HIGH/LOW BEAM)	
	3	1	**9W-1442**	1	FUSE (10 AMP) (TURN SIGNALS)	
	4	1	**103-5678**	1	SWITCH AS-ROTARY (TURN SIGNAL)	
		1	**5L-7200**	1	SCREW (8-32X0.375 IN)	
		1	**9B-7233**	1	LOCKWASHER	
	5	1	**108-0358**	1	FLASHER AS-ELECTRONIC (12/24 VOLT) (TURN SIGNALS/HAZARDS)	
	6	1	**173-3064**	1	SWITCH AS-TURN SIG & WARNING	
		1	**5L-7200**	1	SCREW (8-32X0.375 IN)	
		1	**9B-7233**	1	LOCKWASHER	
	7	1	**3E-8772**	1	SWITCH AS-ROCKER (HEADLAMP/TAIL)	
		1	**3E-8825**	2	LAMP (24 VOLT) (HEADLAMP/TAIL/INDICATOR)	
		1	**3E-9326**	1	ACTUATOR-ROCKER	
M	8	1	**5C-2890**	2	NUT (M6X1 THD)	
	9	1	**8X-6296**	1	LEVER (TURN SIGNAL)	
	9A	1	**8X-6296**	1	LEVER (HIGH/LOW BEAM)	
M	10	1	**9X-2043**	2	SCREW-TRUSS HEAD (M6X1X14MM)	
	11	1	**9X-8256**	2	WASHER (6.6X12X2MM THK)	

M-METRIC PART

161-1018 **SWITCH GP-LIGHT** ***(contd.)*** **i01671173**

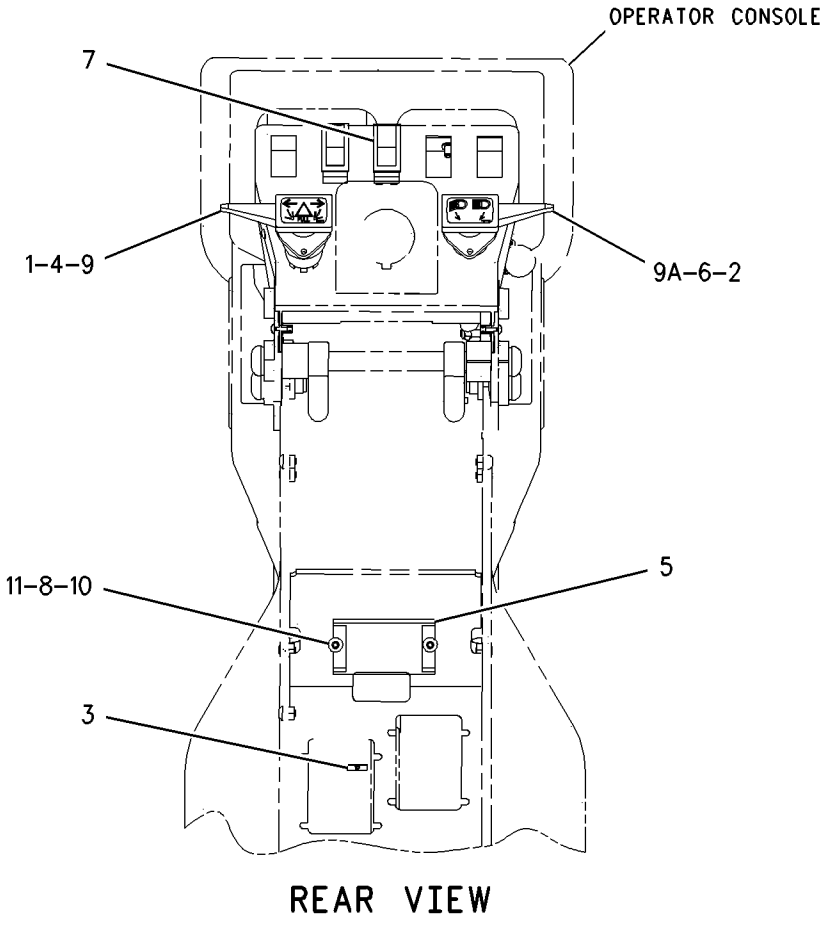

GRAPHIC #1 g00846541

167-0138 SWITCH GP-MAGNETIC–MAIN POWER RELAY

S/N: ATS1-UP
24 VOLT
PART OF 205-3110 WIRING GP-REAR

SMCS-7499 **i01700656**

NOTE	REF NO	GRAPHIC REF	PART NUMBER	QTY	PART NAME 1 2 3 4 5 6 (PRODUCT LEVEL)	SEE PAGE
	1	1	**4F-2294**	2	NUT-JAM (5/16-24 THD)	
	2	1	**6V-8186**	2	NUT-FULL (5/16-24 THD)	
	3	1	**155-2270**	1	KIT-CONNECTING PLUG (2 PIN)	
					(INCLUDES PLUG AS & WEDGE)	
	4	1	**186-3736**	2	SOCKET-CONNECTOR	
	5	1	**155-2261**	1	WEDGE-PLUG LOCK (2 PIN)	

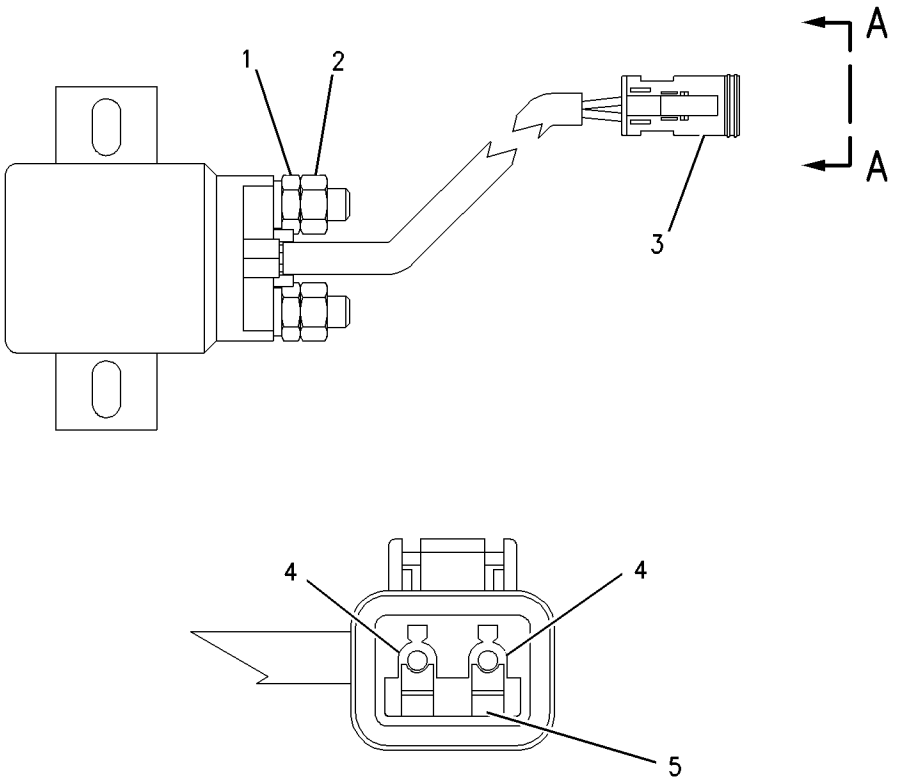

VIEW A-A

GRAPHIC #1 g00831588

3E-0155 SWITCH GP-WIPER

S/N: ATS1-UP
24 VOLT
PART OF 177-8784 WIPER GP-WINDOW
AN ATTACHMENT

SMCS-7305, 7332 **i01757997**

NOTE	REF NO	GRAPHIC REF	PART NUMBER	QTY	PART NAME 1 2 3 4 5 6 (PRODUCT LEVEL)	SEE PAGE
	1	1	**110-7886**	1	SWITCH AS-WIPER	
	1A	1	**2H-3920**	1	LOCKWASHER	
	1B	1	**3E-3389**	1	WEDGE-RECEPTACLE LOCK	
	1C	1	**6V-8369**	1	NUT (7/16-28 THD)	
	1D	1	**8T-8737**	1	PLUG-SEAL	
C	1E	1	**9W-0852**	4	PIN-CONNECTOR	
C	1F	1	**102-8806**	1	KIT-RECEPTACLE (8 PIN)	
					(SERVICES RECEPTACLE AS AND WEDGE)	
	1G	1	**186-3735**	3	PIN-CONNECTOR	
	2	1	**7T-9302**	1	KNOB	

C-CHANGE FROM PREVIOUS TYPE

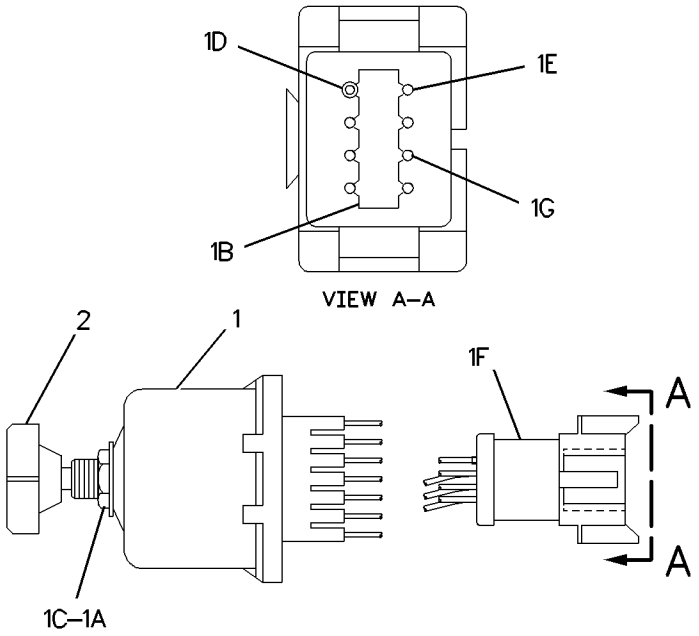

GRAPHIC #1 g00899239

123-6449 WARNING GP-BACKUP

S/N: ATS1-UP
PART OF 194-7982, 200-4983 WIRING GP-REAR
ALSO AN ATTACHMENT

SMCS-7406 **i01612351**

NOTE	REF NO	GRAPHIC REF	PART NUMBER	QTY	PART NAME 1 2 3 4 5 6 (PRODUCT LEVEL)	SEE PAGE
	1	1	**102-8802**	1	KIT-RECEPTACLE (2 PIN)	
					(KIT INCLUDES RECEPTACLE AS AND WEDGE)	
	2	1	**3E-3365**	1	WEDGE-RECEPTACLE LOCK (2 PIN)	
	3	1	**186-3735**	2	PIN-CONNECTOR	
D	4	1	**5P-5677**		WIRE-ELECTRICAL (18 GA) (0.6M)	
E	5	1	**9X-1813**		SLEEVE (28CM)	

D-ORDER BY THE METER
E-ORDER BY THE CENTIMETER

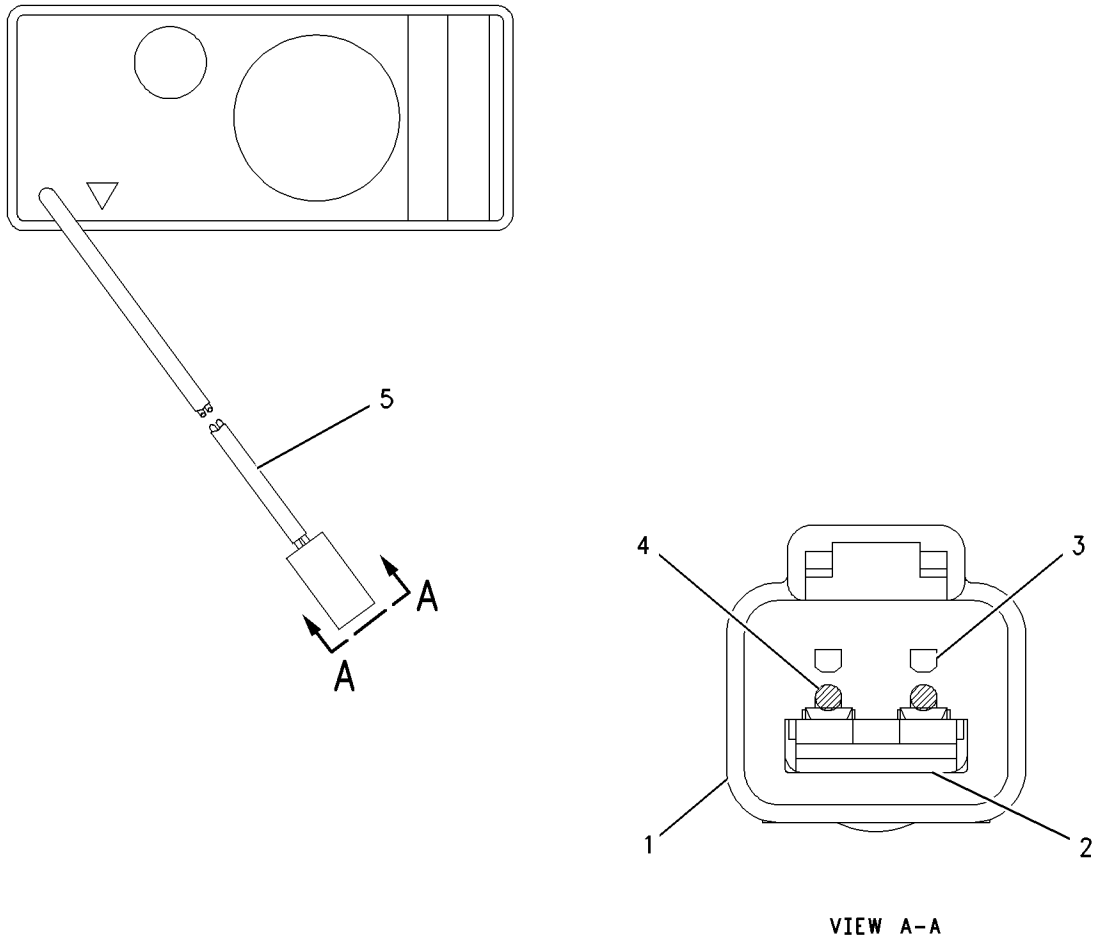

VIEW A-A

GRAPHIC #1 g00677117

161-1930 WIRING GP-BLADE CUSHION

S/N: ATS1-UP

PART OF 162-5607 GENERAL AR

SMCS-1408 **i01773562**

NOTE	REF NO	GRAPHIC REF	PART NUMBER	QTY	PART NAME 1 2 3 4 5 6 (PRODUCT LEVEL)	SEE PAGE
	1	1	**7K-1181**	1	STRAP-CABLE	
	2	1	**130-5300**	2	CLIP	
	3	1	**187-9087**	1	HARNESS AS-CHASSIS	
		1	**102-8802**	4	KIT-RECEPTACLE (2 PIN)	
		1	**102-8803**	1	KIT-RECEPTACLE (3 PIN)	
					(EACH INCLUDES RECEPTACLE AS & WEDGE)	
		1	**155-2270**	4	KIT-CONNECTING PLUG (2 PIN)	
					(INCLUDES PLUG AS & WEDGE)	
	4	1	**033-8248**	1	CLIP	
	5	1	**4D-7794**	2	CLIP	
	6	1	**4L-6459**	2	BOLT (3/8-16X2.5 IN)	
	7	1	**5M-3062**	1	BOLT (3/8-16X0.75 IN)	
	8	1	**6V-8801**	2	NUT (3/8-16 THD)	
	9	1	**8T-4896**	5	WASHER-HARD (10.2X18.5X2.5MM THK)	
	10	1	**3E-8763**	1	SWITCH AS (BLADE CUSHION CONTROL)	
		1	**3E-8812**	1	ACTUATOR-ROCKER	
		1	**3E-8825**	1	LAMP (24 VOLT) (BLADE CUSHION CONT/INDICATOR)	

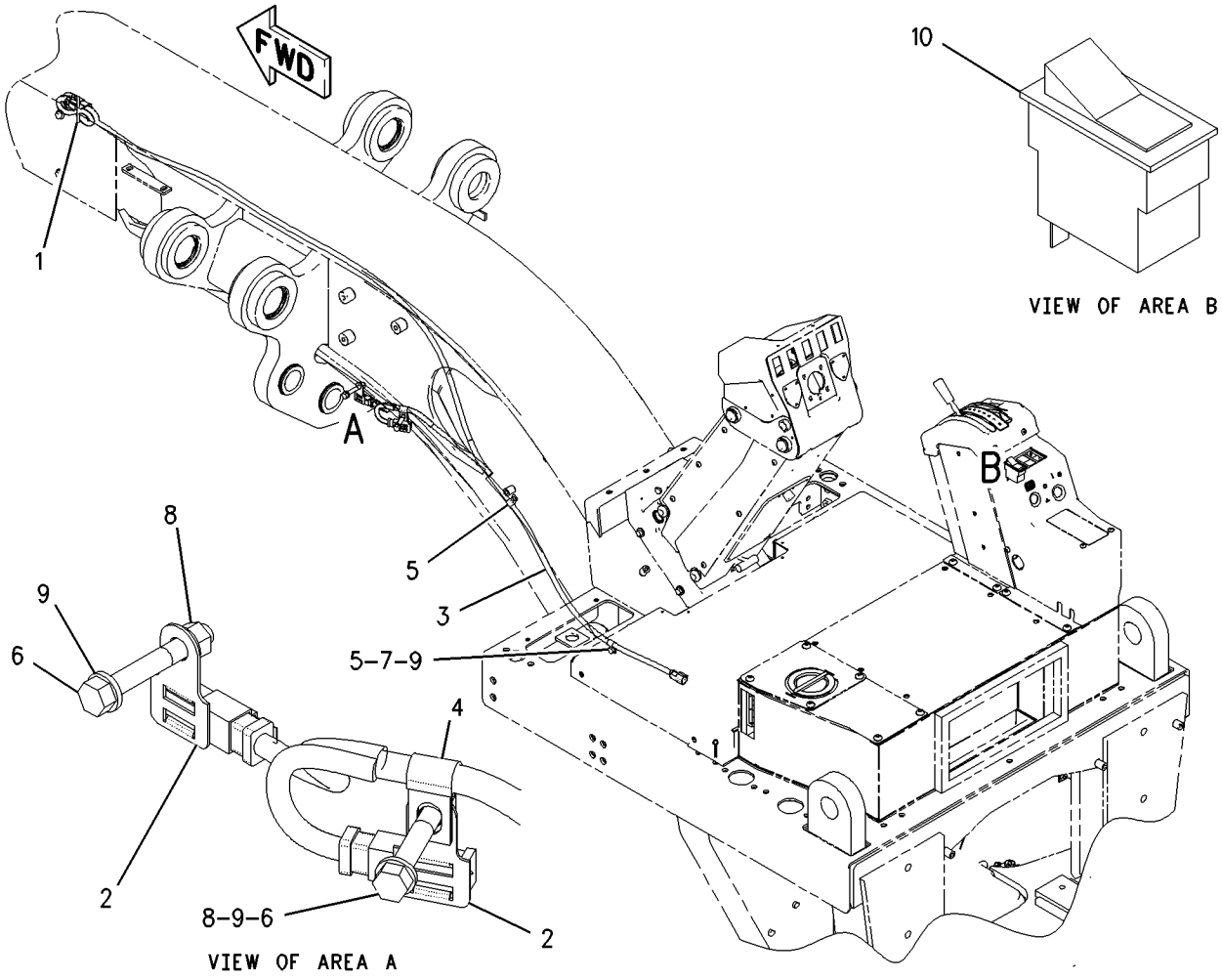

GRAPHIC #1 g00906808

159-5878 WIRING GP-CAB

S/N: ATS1-UP

PART OF 162-5607 GENERAL AR

SMCS-1408, 7301 **i01854910**

NOTE	REF NO	GRAPHIC REF	PART NUMBER	QTY	PART NAME 1 2 3 4 5 6 (PRODUCT LEVEL)	SEE PAGE
	1	1	**3E-0109**	3	PLUG-ROCKER SWITCH	
Y	2	1	**3E-6389**	1	LAMP GP-DOME (24 VOLT)	143
	3	1	**3S-2093**	23	STRAP-CABLE	
	4	1	**4E-4454**	1	PLUG	
	5	1	**6V-6578**	2	RIVET-BLIND	
	6	1	**7T-9302**	2	KNOB (WIPER) (UPPER/LOWER FRONT WIPERS)	
	7	1	**9W-1441**	1	FUSE (15 AMP) (UPPER/LOWER FRONT WIPERS)	
	8	1	**112-6174**	2	SWITCH AS-ROTARY (UPPER/LOWER FRONT WIPERS)	
					(EACH INCLUDES)	
		1	**2H-3920**	1	LOCKWASHER	
		1	**3E-3389**	1	WEDGE-RECEPTACLE LOCK	
		1	**6V-8369**	1	NUT (7/16-28 THD)	
		1	**186-3735**	6	PIN-CONNECTOR	
		1	**8T-8737**	2	PLUG-SEAL	
		1	**102-8806**	1	KIT-RECEPTACLE (8 PIN) (FRONT WIPER SWITCHES)	
	9	1	**160-6382**	1	GROMMET	
	10	1	**167-7504**	1	HARNESS AS-CAB	
		1	**102-8806**	1	KIT-RECEPTACLE (8 PIN)	
		1	**102-8801**	1	KIT-RECEPTACLE (12 PIN)	
		1	**155-2255**	1	KIT-CONNECTING PLUG (12 PIN)	
		1	**155-2265**	4	KIT-CONNECTING PLUG (8 PIN)	
	11	1	**167-7505**	1	HARNESS AS-CAB	
		1	**102-8802**	2	KIT-RECEPTACLE (2 PIN)	
		1	**102-8805**	1	KIT-RECEPTACLE (6 PIN)	
		1	**102-8806**	1	KIT-RECEPTACLE (8 PIN)	
		1	**155-2270**	2	KIT-CONNECTING PLUG (2 PIN)	
		1	**155-2274**	1	KIT-CONNECTING PLUG (6 PIN)	
	12	1	**168-8248**	1	HARNESS AS-CAB	
		1	**102-8802**	9	KIT-RECEPTACLE (2 PIN)	
		1	**102-8803**	2	KIT-RECEPTACLE (3 PIN)	
		1	**102-8804**	1	KIT-RECEPTACLE (4 PIN)	
		1	**102-8806**	1	KIT-RECEPTACLE (8 PIN)	
		1	**102-8801**	2	KIT-RECEPTACLE (12 PIN)	
		1	**155-2255**	2	KIT-CONNECTING PLUG (12 PIN)	
		1	**155-2265**	1	KIT-CONNECTING PLUG (8 PIN)	
		1	**155-2260**	3	KIT-CONNECTING PLUG (3 PIN)	
		1	**155-2270**	9	KIT-CONNECTING PLUG (2 PIN)	
		1	**155-2274**	1	KIT-CONNECTING PLUG (6 PIN)	
	13	1	**169-8938**	1	PLATE AS	
	14	1	**172-6555**	1	PANEL	
	15	1	**172-8641**	1	PLATE	
	16	1	**172-9316**	1	FILM-FUSE (LIGHTS, WASHER, WIPER, DEFROST)	
	17	1	**096-6166**	3	WASHER-HARD (4.5X9X1MM THK)	
M	18	1	**5C-8312**	3	NUT (M4X0.7 THD)	
	19	1	**6V-5645**	4	SCREW-MACHINE (10-32X0.87 IN)	
	20	1	**6V-8801**	1	NUT (3/8-16 THD)	
	21	1	**8T-4896**	1	WASHER-HARD (10.2X18.5X2.5MM THK)	
M	22	1	**9X-1046**	3	SCREW (M4X0.7X18MM)	
M	23	1	**9X-2042**	4	SCREW-TRUSS HEAD (M6X1X12MM)	
E	24	1	**7X-7877**		STRIP-EDGING (10CM)	

E-ORDER BY THE CENTIMETER
M-METRIC PART
Y-SEPARATE ILLUSTRATION

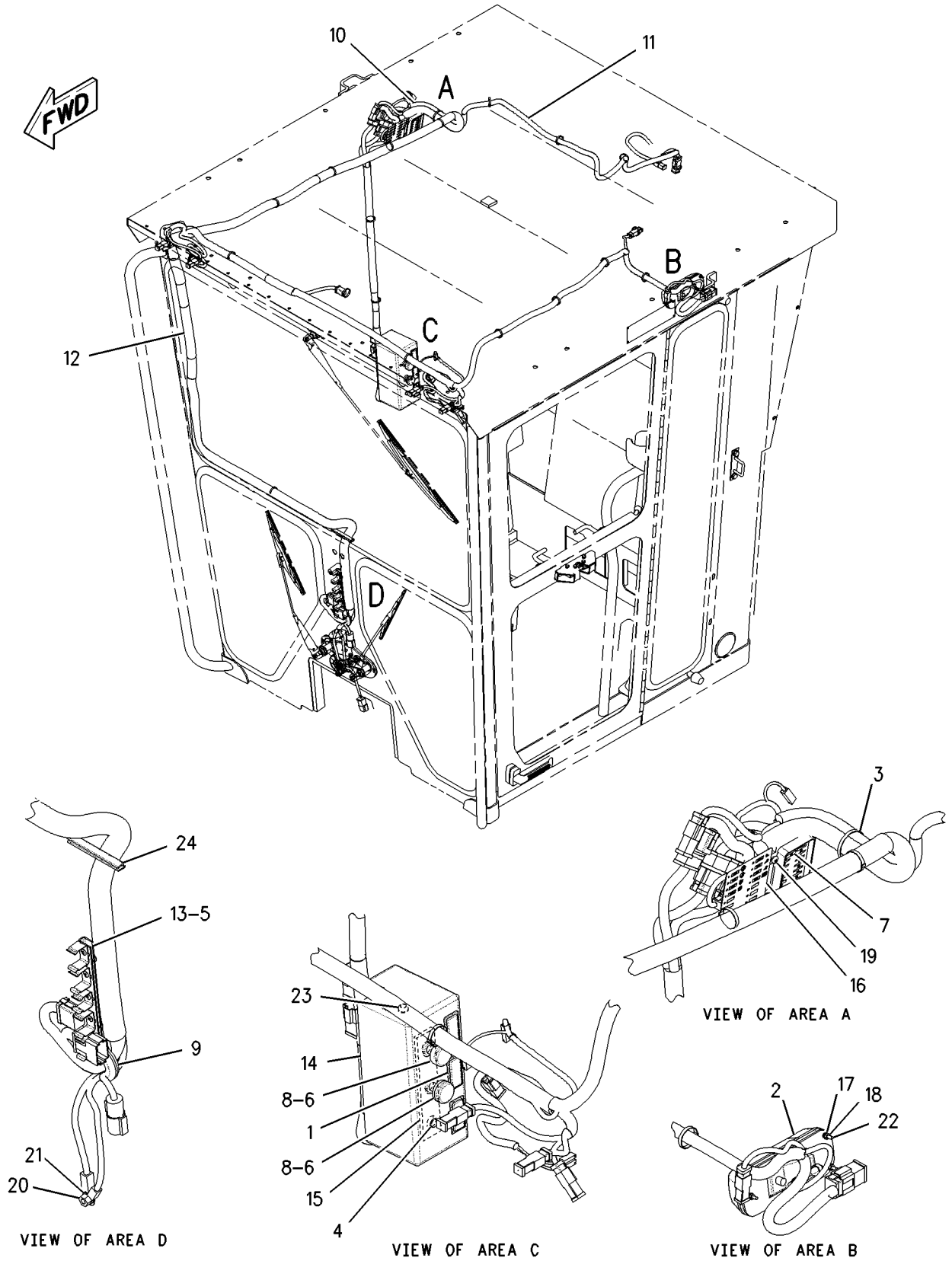

GRAPHIC #1 g00808291

203-6551 WIRING GP-CAB—MOLDBOARD

S/N: ATS1-UP
PART OF 206-6538 LIGHTING AR-FLOOD
AN ATTACHMENT

SMCS-1408, 7301 **i01671179**

NOTE	REF NO	GRAPHIC REF	PART NUMBER	QTY	PART NAME 1 2 3 4 5 6 (PRODUCT LEVEL)	SEE PAGE
	1	1	**3E-0109**	5	PLUG-ROCKER SWITCH	
	2	1	**3S-2093**	2	STRAP-CABLE	
	3	1	**9W-1442**	1	FUSE (10 AMP) (CONTROLLER FOR THE BLADE)	
	4	1	**145-3350**	1	PLATE	
	5	1	**153-2147**	1	PLATE	
	6	1	**168-8243**	1	HARNESS AS-PANEL	
					EACH CONNECTOR KIT INCLUDES CONNECTOR PLUG AS & WEDGE	
		1	**155-2255**	1	KIT-CONNECTING PLUG (12 PIN)	
		1	**155-2265**	4	KIT-CONNECTING PLUG (8 PIN)	
		1	**155-2270**	1	KIT-CONNECTING PLUG (2 PIN) (SNOW WING LAMP)	
		1	**155-2271**	1	KIT-CONNECTING PLUG (4 PIN) (AUX BACK-UP LAMP & SWITCH)	
					EACH RECEPTACLE KIT INCLUDES RECEPTACLE AS & WEDGE	
		1	**102-8802**	1	KIT-RECEPTACLE (2 PIN)	
		1	**102-8804**	2	KIT-RECEPTACLE (4 PIN)	
		1	**102-8806**	1	KIT-RECEPTACLE (8 PIN)	
		1	**102-8801**	1	KIT-RECEPTACLE (12 PIN)	
	7	1	**172-6556**	1	PANEL	
	8	1	**188-3862**	1	BRACKET AS	
	9	1	**3E-8766**	1	SWITCH AS (MOLDBOARD LAMPS)	
		1	**3E-8782**	1	ACTUATOR-ROCKER	
		1	**3E-8825**	1	LAMP (24 VOLT) (MOLDBOARD/INDICATOR)	
M	10	1	**9X-2043**	6	SCREW-TRUSS HEAD (M6X1X14MM)	

M-METRIC PART

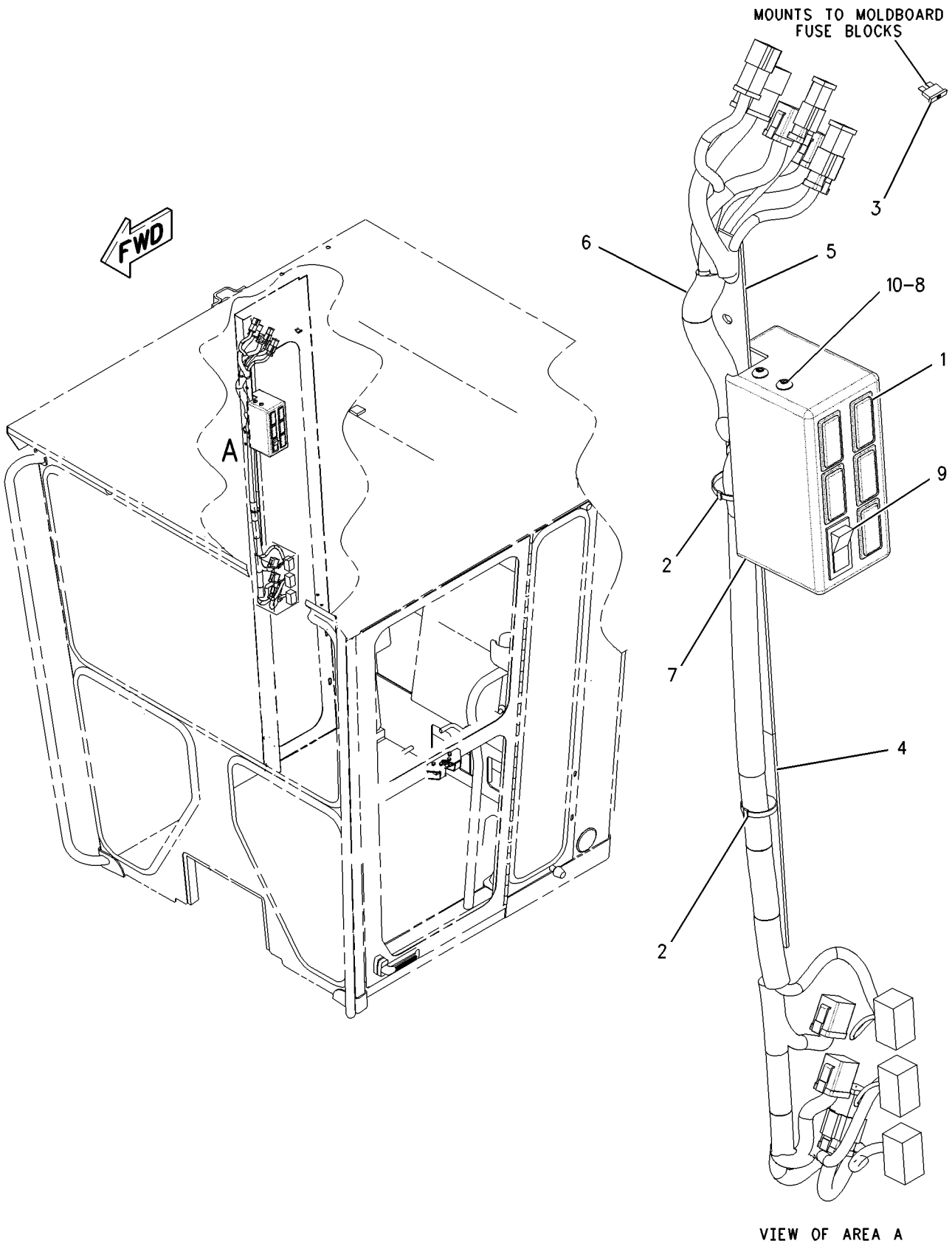

GRAPHIC #1 g00845747

204-6127 WIRING GP-CAB–MOLDBOARD–EU

S/N: ATS1-UP
PART OF 204-6109 LIGHTING AR-FLOOD
AN ATTACHMENT

SMCS-1408, 7301 **i01688646**

NOTE	REF NO	GRAPHIC REF	PART NUMBER	QTY	PART NAME 1 2 3 4 5 6 (PRODUCT LEVEL)	SEE PAGE
	1	1	**3E-0109**	5	PLUG-ROCKER SWITCH	
	2	1	**3S-2093**	2	STRAP-CABLE	
	3	1	**9W-1442**	1	FUSE (10 AMP) (MOLDBOARD LAMP)	
	4	1	**145-3350**	1	PLATE	
	5	1	**153-2147**	1	PLATE	
	6	1	**172-6556**	1	PANEL	
	7	1	**188-3862**	1	BRACKET AS	
	8	1	**196-8557**	1	HARNESS AS-CAB	
		1	**102-8802**	1	KIT-RECEPTACLE (2 PIN)	
		1	**102-8804**	2	KIT-RECEPTACLE (4 PIN)	
		1	**102-8806**	1	KIT-RECEPTACLE (8 PIN)	
		1	**102-8801**	1	KIT-RECEPTACLE (12 PIN)	
		1	**155-2255**	1	KIT-CONNECTING PLUG (12 PIN)	
		1	**155-2265**	4	KIT-CONNECTING PLUG (8 PIN)	
		1	**155-2270**	1	KIT-CONNECTING PLUG (2 PIN) (FLOOD LAMP SIDE)	
		1	**155-2271**	1	KIT-CONNECTING PLUG (4 PIN)	
	9	1	**3E-8766**	1	SWITCH AS (MOLDBOARD)	
		1	**3E-8782**	1	ACTUATOR-ROCKER	
		1	**3E-8825**	1	LAMP (24 VOLT) (MOLDBOARD)	
M	10	1	**9X-2043**	6	SCREW-TRUSS HEAD (M6X1X14MM)	

M-METRIC PART

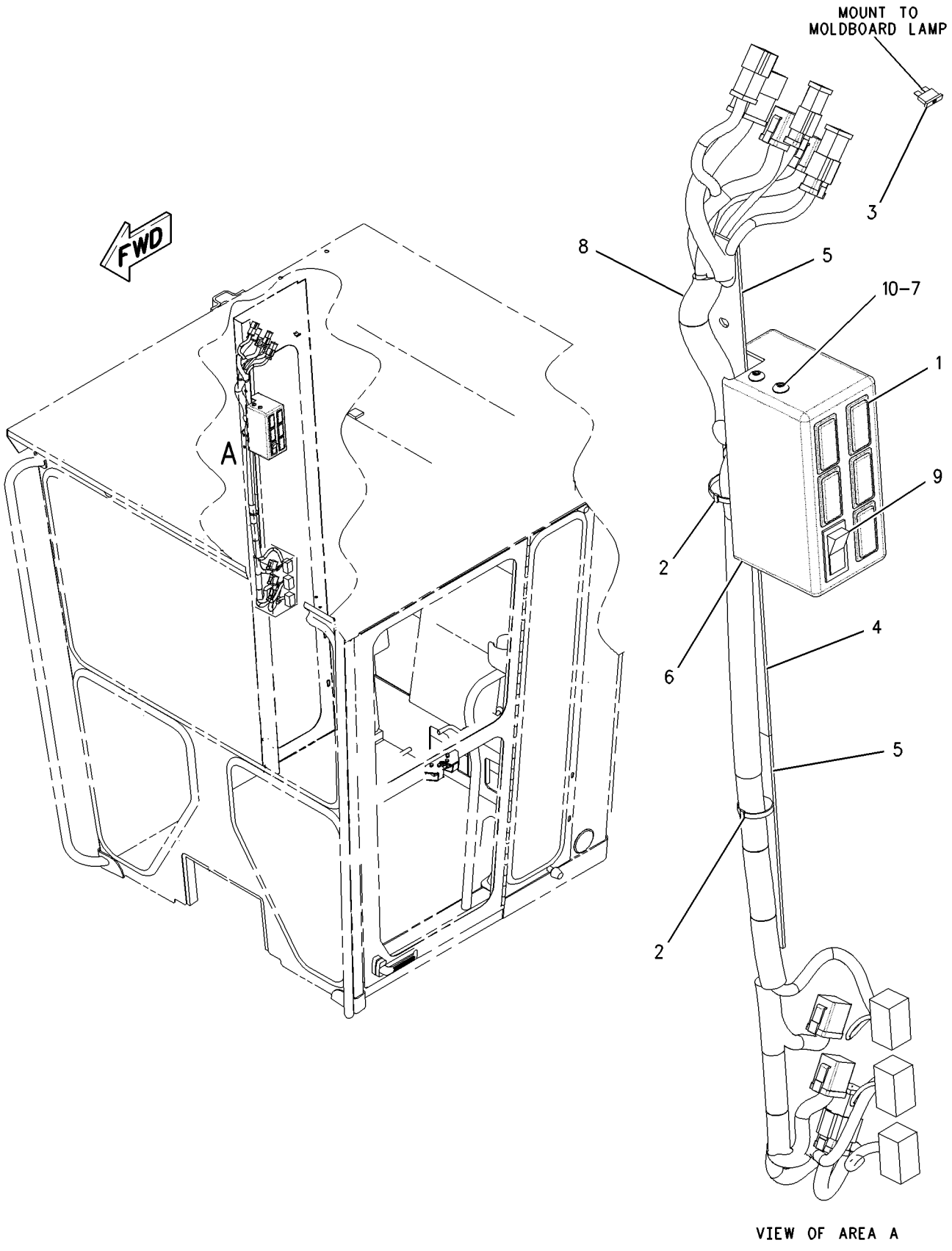

GRAPHIC #1

g00843569

ELECTRICAL AND STARTING SYSTEM

171-1103 WIRING GP-ENGINE

S/N: 5ED478-UP

PART OF 204-7983 ENGINE AR

SMCS-1408 **i01814850**

NOTE	REF NO	GRAPHIC REF	PART NUMBER	QTY	PART NAME 1 2 3 4 5 6 (PRODUCT LEVEL)	SEE PAGE
	1	1	**2M-7077**	1	SPACER (.406IN X .62IN X .37IN THK)	
	2	1	**3E-7448**	1	CONNECTOR	
C	3	1,2	**3S-2093**	6	STRAP-CABLE	
	4	1	**9X-0262**	1	ADAPTER	
C	5	1	**161-1705**	1	SENSOR GP-PRESSURE (ENGINE OIL)	
	6	1	**222-4086**	1	HARNESS AS (ENGINE ELECTRONIC)	
		1	**126-1774**	1	COVER (MODULE CONNECTOR)	
		1	**155-2255**	1	KIT-CONNECTING PLUG (12 PIN)	
					(INCLUDES PLUG AS AND WEDGE)	
		1	**155-2260**	3	KIT-CONNECTING PLUG (3 PIN)	
					(INCLUDES PLUG AS AND WEDGE)	
		1	**155-2270**	7	KIT-CONNECTING PLUG (2 PIN)	
					(INCLUDES PLUG AS AND WEDGE)	
		1	**102-8802**	1	KIT-RECEPTACLE (2 PIN)	
					(INCLUDES RECEPTACLE AS AND WEDGE)	
		1	**102-8803**	1	KIT-RECEPTACLE (3 PIN)	
					(INCLUDES RECEPTACLE AS AND WEDGE)	
		1	**160-7690**	1	PLUG AS-CONNECTOR (70 PIN)	
		1	**159-9322**	1	SEAL-O-RING	
		1	**3S-2093**	2	STRAP-CABLE (MODULE CONNECTOR)	
CY	7	1	**197-8391**	1	SENSOR GP-TEMPERATURE (INLET MANIFOLD)	210
CY	8	1	**197-8392**	1	SENSOR GP-TEMPERATURE (COOLANT)	211
CY	9	1	**197-8393**	1	SENSOR GP-PRESSURE (ATMOSPHERIC)	205
CY	10	1	**197-8394**	1	SENSOR GP-PRESSURE (FUEL)	206
CY	11	1	**197-8395**	1	SENSOR GP-PRESSURE (INLET MANIFOLD)	207
CY	12	2	**197-8396**	1	SENSOR GP-SPEED (CRANKSHAFT)	208
CY	13	1	**197-8397**	1	SENSOR GP-SPEED (CAMSHAFT)	209
	14	2	**4P-5918**	1	CLIP	
	15	1	**132-5789**	1	CLIP	
	16	1	**102-8802**	1	KIT-RECEPTACLE (2 PIN) (AIR INLET HEATER)	
C	17	1	**3E-4353**	2	WASHER-HARD (11X25X3MM THK)	
C	18	1	**4K-8864**	3	CLIP	
	19	1,2	**4P-8134**	3	CLIP	
	20	1	**5P-4115**	2	WASHER-HARD (7.2X19X2MM THK)	
C	21	1	**6V-5048**	1	SEAL-O-RING	
C	22	2	**6V-5049**	1	SEAL-O-RING	
M	23	1,2	**6V-5215**	2	BOLT (M8X1.25X16MM)	
	24	1	**6V-5839**	1	WASHER (11X21X2.5MM THK)	
CM	25	1	**6V-6317**	2	BOLT (M10X1.5X20MM)	
M	26	1	**6V-7981**	1	BOLT (M10X1.50X70MM)	
M	27	1	**6V-8214**	2	BOLT (M6X1X20MM)	
M	28	1	**6V-8837**	1	BOLT (M6X1X16 MM)	
	29	1	**8J-1256**	1	CLIP	
C	30	1	**8M-2770**	4	CLIP	
	31	1	**8M-2771**	1	CLIP	
M	32	2	**8T-0642**	1	BOLT (M8X1.25X14MM)	
	33	1	**8T-8737**	2	PLUG-SEAL	
	34	1,2	**9M-1974**	2	WASHER-HARD (8.8X16X2MM THK)	
	35	2	**9S-4191**	1	PLUG	
	36	1	**9X-8267**	1	WASHER (6.6X12X2MM THK)	
CY	37	1	**197-8391**	1	SENSOR GP-TEMPERATURE (FUEL)	210

C-CHANGE FROM PREVIOUS TYPE
M-METRIC PART
Y-SEPARATE ILLUSTRATION

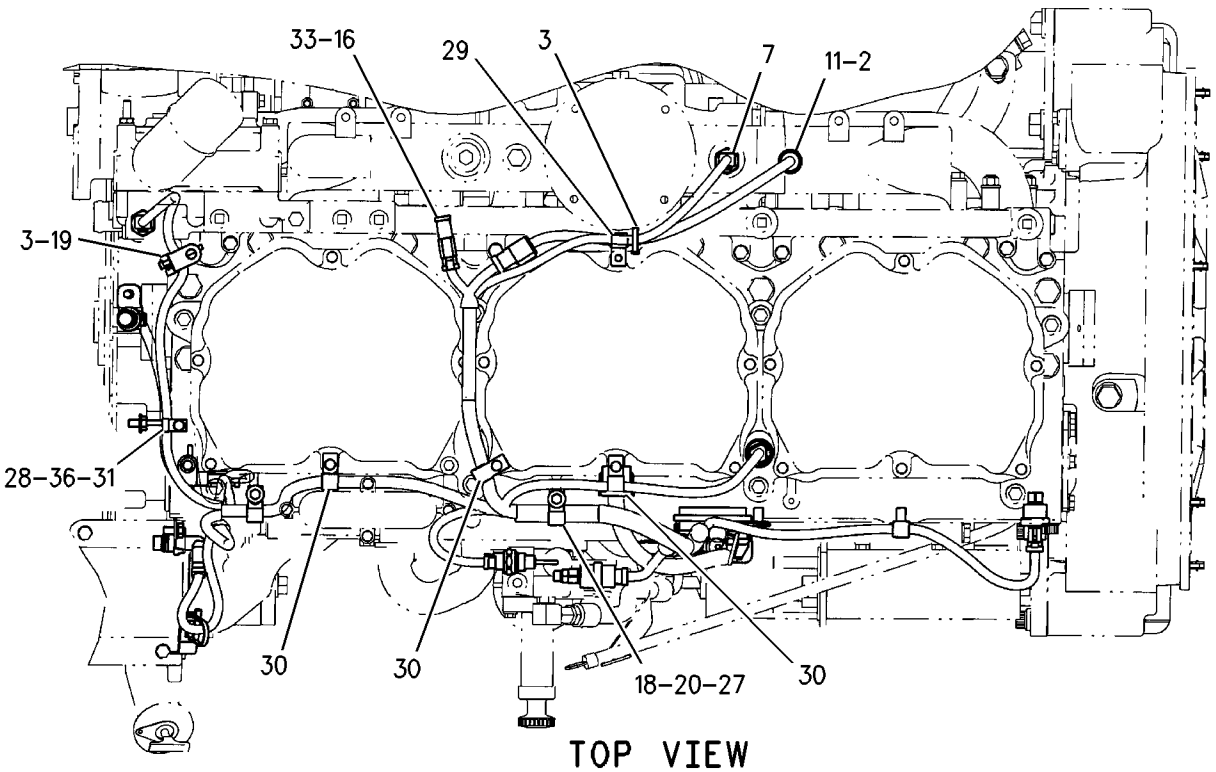

TOP VIEW

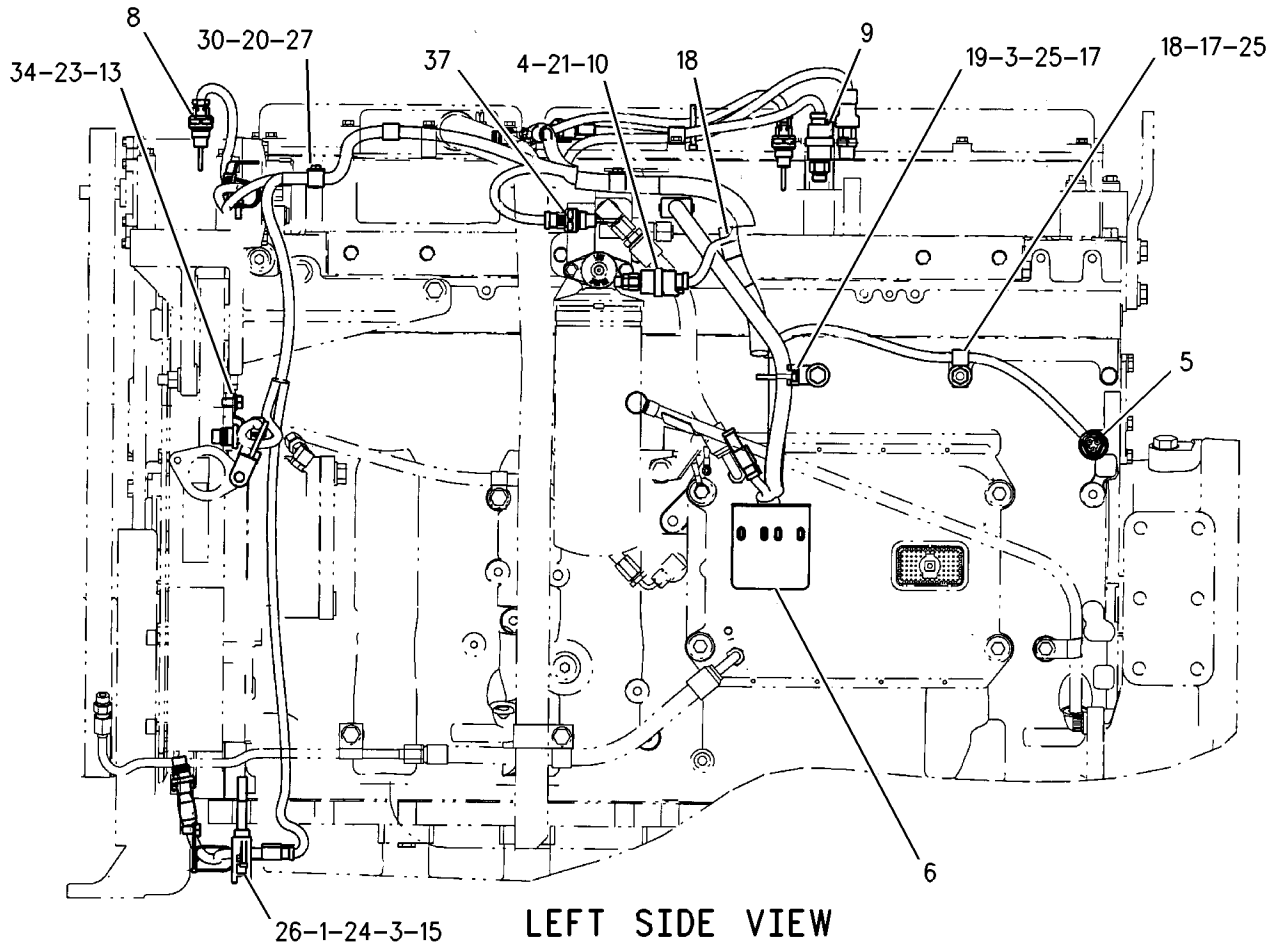

LEFT SIDE VIEW

GRAPHIC #1 g00884844

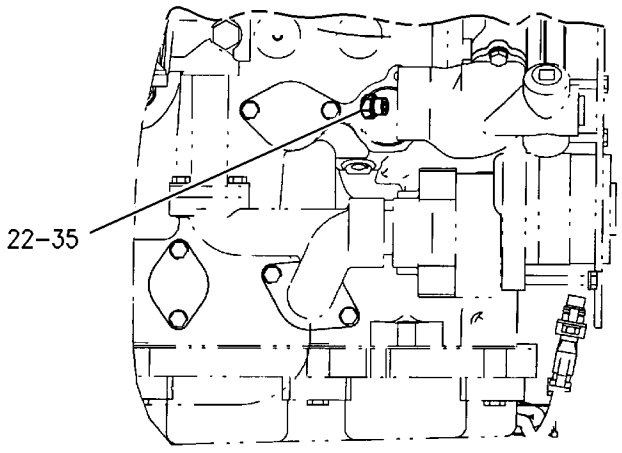

RIGHT SIDE VIEW

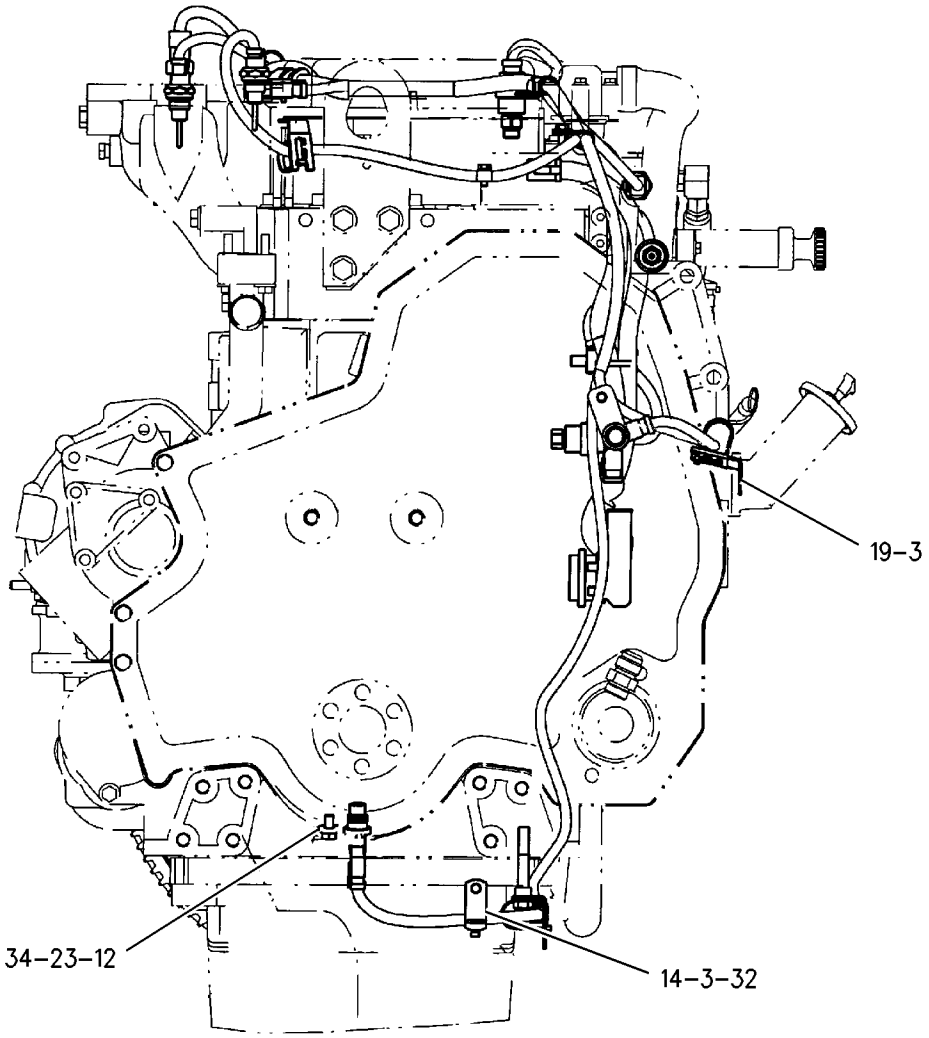

FRONT VIEW

GRAPHIC #2 g00884846

MEMORANDA

ELECTRICAL AND STARTING SYSTEM

159-5867 WIRING GP-FRONT

S/N: ATS1-UP

PART OF 162-5607 GENERAL AR

SMCS-1408 **i01849123**

NOTE	REF NO	GRAPHIC REF	PART NUMBER	QTY	PART NAME 1 2 3 4 5 6 (PRODUCT LEVEL)	SEE PAGE
	1	1	**1S-2342**	1	STRAP AS-GROUND	
	2	1	**3E-2026**	1	SWITCH AS-PRESSURE (STOP LAMP)	
		1	**186-3735**	1	PIN-CONNECTOR	
		1	**102-8802**	1	KIT-RECEPTACLE (2 PIN)	
					(INCLUDES A RECEPTACLE AS & WEDGE)	
	3	1,2	**3S-2093**	14	STRAP-CABLE	
	4	1,2	**4S-5719**	1	SPACER (10.31X25X12.7MM THK)	
	5	1,2	**7K-1181**	5	STRAP-CABLE	
	6	1	**9L-1566**	2	SUPPORT-TUBE	
	7	1	**9L-6331**	1	BRACKET	
	8	1,2	**114-9281**	2	SWITCH AS-PRESSURE (AIR BRAKE)	
					(EACH INCLUDES)	
		1,2	**186-3735**	1	PIN-CONNECTOR	
		1,2	**102-8802**	1	KIT-RECEPTACLE (2 PIN)	
					(INCLUDES A RECEPTACLE AS & WEDGE)	
	9	1	**131-4135**	1	SWITCH AS-TEMPERATURE (HYDRAULIC OIL)	
		1	**186-3735**	1	PIN-CONNECTOR	
		1	**102-8802**	1	KIT-RECEPTACLE (2 PIN)	
					(INCLUDES A RECEPTACLE AS & WEDGE)	
	10	1,2	**169-5414**	6	CLIP	
	11	1	**185-9404**	1	HARNESS AS-PLATFORM	
		1	**155-2255**	6	KIT-CONNECTING PLUG (12 PIN)	
		1	**155-2265**	1	KIT-CONNECTING PLUG (8 PIN)	
		1	**155-2260**	3	KIT-CONNECTING PLUG (3 PIN)	
		1	**155-2270**	12	KIT-CONNECTING PLUG (2 PIN)	
		1	**155-2271**	1	KIT-CONNECTING PLUG (4 PIN) (GROUND SPEED SENSOR/POWER/GND)	
		1	**155-2274**	4	KIT-CONNECTING PLUG (6 PIN)	
					(EACH INCLUDES A PLUG AS & WEDGE)	
		1	**102-8802**	3	KIT-RECEPTACLE (2 PIN)	
		1	**102-8803**	2	KIT-RECEPTACLE (3 PIN)	
		1	**102-8804**	1	KIT-RECEPTACLE (4 PIN)	
		1	**102-8805**	3	KIT-RECEPTACLE (6 PIN)	
		1	**102-8801**	8	KIT-RECEPTACLE (12 PIN)	
					(EACH INCLUDES A RECEPTACLE AS & WEDGE)	
		1	**9X-1343**	1	RECEPTACLE AS (40 PIN)	
	12	2	**201-5244**	1	PLATE AS	
	13	2	**096-6166**	4	WASHER-HARD (4.5X9X1MM THK)	
	14	1,2	**130-5300**	8	CLIP	
	15	1	**174-5907**	2	CLIP	
	16	1	**4D-7388**	2	CLIP	
	17	1	**4D-7794**	9	CLIP	
	18	1,2	**4K-8864**	2	CLIP	
	19	1,2	**4L-6454**	4	BOLT (3/8-16X1 IN)	
	20	1	**4L-6459**	1	BOLT (3/8-16X2.5 IN)	
	21	2	**4L-9337**	1	BOLT (3/8-16X1.5 IN)	
	22	1,2	**4P-8134**	2	CLIP	
	23	1	**6V-1889**	1	CLIP	
	24	1,2	**5M-3062**	28	BOLT (3/8-16X0.75 IN)	
	25	1	**6D-4246**	2	CLIP	
	26	1,2	**6V-8801**	4	NUT (3/8-16 THD)	
	27	2	**7C-4354**	1	CLIP	
	28	1,2	**8M-2769**	2	CLIP	
	29	1	**8T-4121**	5	WASHER-HARD (11X21X2.5MM THK)	
M	30	1	**8T-4137**	1	BOLT (M10X1.5X20MM)	
M	31	2	**8T-4647**	4	SCREW-MACHINE (M4X0.7X20MM)	

159-5867 **WIRING GP-FRONT** ***(contd.)*** **i01849123**

NOTE	REF NO	GRAPHIC REF	PART NUMBER	QTY	PART NAME 1 2 3 4 5 6 (PRODUCT LEVEL)	SEE PAGE
	32	1,2	**8T-4896**	38	WASHER-HARD (10.2X18.5X2.5MM THK)	
	33	1	**9W-1991**	1	SPACER (10.7X17.1X40MM THK)	
	35	1,2	**7D-7233**	2	CLIP	
	36	1	**6V-3265**	2	CLIP	
M	37	1	**8T-4195**	2	BOLT (M10X1.5X30MM)	
M	38	1	**8T-4133**	2	NUT (M10X1.5 THD)	
	39	1	**114-9281**	1	SWITCH AS-PRESSURE (PARKING BRAKE)	
		1	**186-3735**	1	PIN-CONNECTOR	
		1	**102-8802**	1	KIT-RECEPTACLE (2 PIN)	
					(INCLUDES RECEPTACLE AS & WEDGE)	
FY			*198-7332*	1	ELECTRONICS GP-MONITOR (CATERPILLAR MONITORING SYSTEM)	139

F-NOT SHOWN
M-METRIC PART
Y-SEPARATE ILLUSTRATION

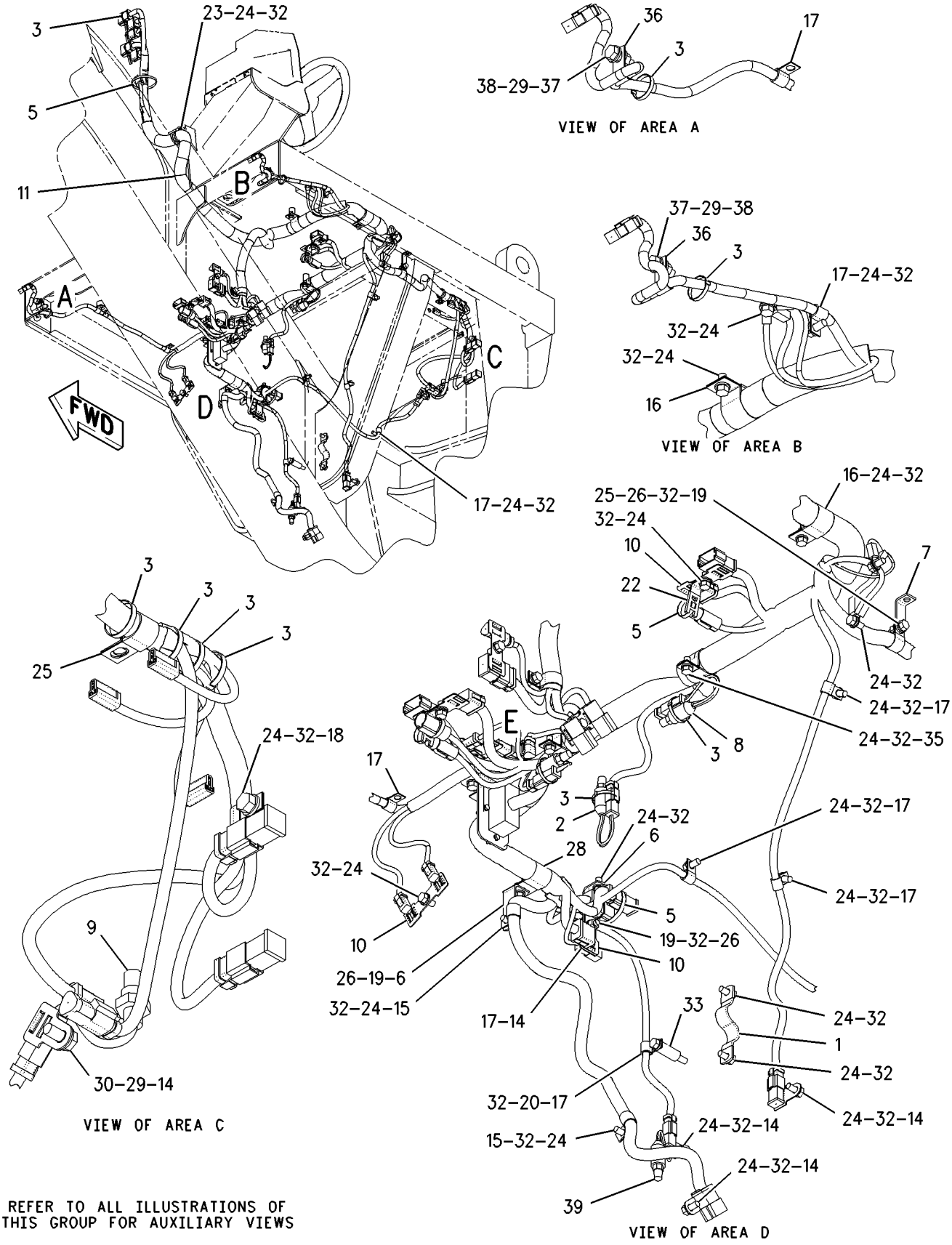

REFER TO ALL ILLUSTRATIONS OF THIS GROUP FOR AUXILIARY VIEWS

GRAPHIC #1

g00942433

159-5867 **WIRING GP-FRONT** ***(contd.)*** **i01849123**

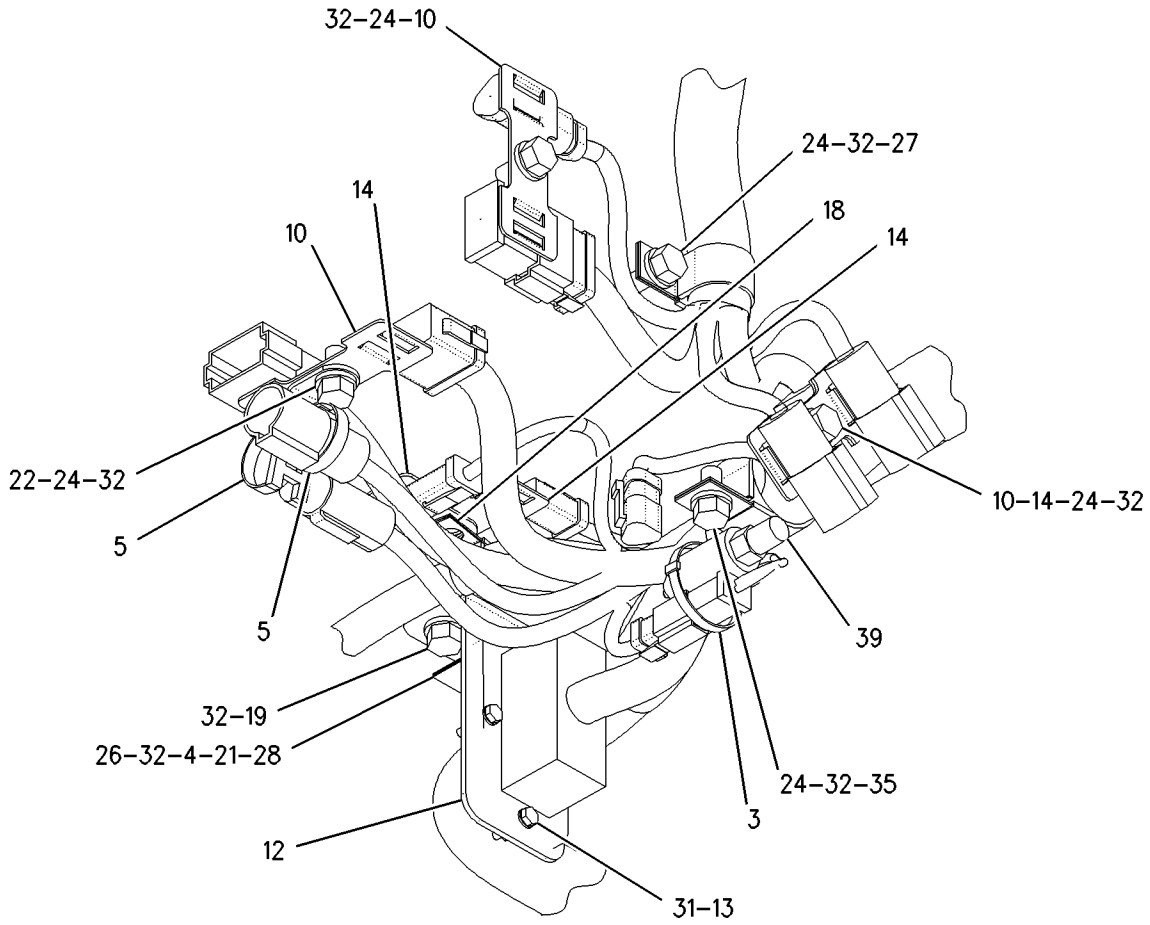

VIEW OF AREA E

GRAPHIC #2

g00942567

ELECTRICAL AND STARTING SYSTEM

161-1929 WIRING GP-REAR

S/N: ATS1-UP

PART OF 162-5607 GENERAL AR

SMCS-1408 **i01795637**

NOTE	REF NO	GRAPHIC REF	PART NUMBER	QTY	PART NAME 1 2 3 4 5 6 (PRODUCT LEVEL)	SEE PAGE
	1	2	**3E-3636**	1	SWITCH AS-BALL (GEAR RANGE)	
		2	**3E-3377**	1	WEDGE-RECEPTACLE LOCK	
		2	**186-3735**	4	PIN-CONNECTOR	
		2	**102-8804**	1	KIT-RECEPTACLE (4 PIN)	
					(INCLUDES RECEPTACLE AS & WEDGE)	
	2	1,2	**3S-2093**	4	STRAP-CABLE	
B	3	2	**5J-4857**	15	SHIM (.01MM THK)	
	4	1	**6S-1061**	1	CABLE AS-BATTERY	
		1	**1S-7251**	2	TERMINAL-RING (FOR 1/2 IN BOLT)	
	5	1	**7G-1060**	1	STRAP AS-GROUND	
	6	1	**7K-1181**	1	STRAP-CABLE	
	7	1	**8W-8527**	1	SLEEVE	
	8	1,2	**8W-8528**	4	SLEEVE	
	9	2	**9G-9154**	1	CLIP	
	10	1	**9L-1566**	2	SUPPORT-TUBE	
	11	1	**9M-4594**	1	SPACER (0.406X0.875X0.75 IN THK)	
	12	1	**9U-2277**	1	CLIP AS	
	13	2	**106-8704**	1	SUPPRESSOR AS-ARC	
		2	**102-8802**	1	KIT-RECEPTACLE (2 PIN)	
					(INCLUDES RECEPTACLE AS & WEDGE)	
		2	**3E-3365**	1	WEDGE-RECEPTACLE LOCK (2 PIN)	
		2	**186-3735**	2	PIN-CONNECTOR	
	14	1	**109-8982**	1	PLATE	
	15	1	**123-3688**	1	PLATE AS	
		1	**7L-0811**	1	DOWEL	
	16	1	**123-3689**	1	PLATE AS	
		1	**5M-6687**	1	STUD-TAPERLOCK (3/8-16X1.28 IN OAL)	
	17	1	**123-3692**	1	ARM	
	18	1	**139-2116**	1	SWITCH AS-TOGGLE (ENGINE SHUTDOWN)	
		1	**3E-3371**	1	WEDGE-RECEPTACLE LOCK (3 PIN)	
		1	**6T-3631**	2	NUT-HEX (15/32-32 THD)	
		1	**6T-3632**	1	LOCKWASHER (11.96X15.08X053MM THK)	
		1	**6T-3633**	1	RING-LOCKING	
		1	**186-3735**	3	PIN-CONNECTOR	
		1	**102-8803**	1	KIT-RECEPTACLE (3 PIN)	
					(INCLUDES RECEPTACLE AS & WEDGE)	
	19	2	**139-6122**	1	BOSS	
	20	1	**187-1008**	1	SENDER AS-POSITION (GEAR)	
		1	**3E-3365**	1	WEDGE-RECEPTACLE LOCK (2 PIN)	
E		1	**9X-1813**		SLEEVE (15CM)	
		1	**102-8802**	1	KIT-RECEPTACLE (2 PIN)	
					(INCLUDES RECEPTACLE AS & WEDGE)	
		1	**186-3735**	2	PIN-CONNECTOR	
	21	2	**187-3178**	1	SWITCH AS-BALL (NEUTRAL START)	
	22	1	**187-8546**	1	HARNESS AS-REAR	
		1	**155-2255**	2	KIT-CONNECTING PLUG (12 PIN)	
		1	**155-2270**	6	KIT-CONNECTING PLUG (2 PIN)	
					(EACH INCLUDES PLUG AS & WEDGE)	
		1	**102-8802**	3	KIT-RECEPTACLE (2 PIN)	
					(INCLUDES RECEPTACLE AS & WEDGE)	
	23	1	**192-6986**	1	CABLE AS	
		1	**1S-7251**	2	TERMINAL-RING (FOR 1/2 IN BOLT)	
E		1	**5P-0747**		CABLE (00GA)(BLACK)	
	24	1	**205-6551**	1	HARNESS AS-REAR CHASSIS	
		1	**127-5483**	5	PLUG AS-CONNECTOR (1 PIN)	
		1	**127-5485**	1	PLUG AS-CONNECTOR (1 PIN)	

161-1929 **WIRING GP-REAR** ***(contd.)*** **i01795637**

NOTE	REF NO	GRAPHIC REF	PART NUMBER	QTY	PART NAME 1 2 3 4 5 6 (PRODUCT LEVEL)	SEE PAGE
		1	**155-2255**	1	KIT-CONNECTING PLUG (12 PIN)	
		1	**155-2270**	2	KIT-CONNECTING PLUG (2 PIN)	
					(EACH INCLUDES PLUG AS & WEDGE)	
		1	**102-8802**	1	KIT-RECEPTACLE (2 PIN)	
		1	**102-8805**	1	KIT-RECEPTACLE (6 PIN)	
					(EACH INCLUDES RECEPTACLE AS & WEDGE)	
	25	2	**206-3672**	1	HARNESS AS-CHASSIS	
		2	**9X-0141**	1	PLUG AS-CONNECTOR (40 PIN)	
		2	**160-7689**	1	PLUG AS-CONNECTOR (70 PIN)	
		2	**155-2255**	2	KIT-CONNECTING PLUG (12 PIN)	
		2	**155-2260**	1	KIT-CONNECTING PLUG (3 PIN)	
		2	**155-2270**	3	KIT-CONNECTING PLUG (2 PIN)	
		2	**155-2271**	3	KIT-CONNECTING PLUG (4 PIN)	
					(EACH INCLUDES PLUG AS & WEDGE)	
		2	**102-8802**	1	KIT-RECEPTACLE (2 PIN)	
		2	**102-8803**	1	KIT-RECEPTACLE (3 PIN)	
					(EACH INCLUDES RECEPTACLE AS & WEDGE)	
	26	1	**109-0361**	1	FILM-INSTRUCTION (ENGINE SHUTDOWN)	
	27	1	**115-3073**	1	CLIP AS-CONNECTING	
		1	**8C-3334**	1	RIVET-TUBULAR	
	28	1,2	**130-5300**	10	CLIP	
	29	1,2	**174-5907**	4	CLIP	
	30	1	**1S-0996**	2	CLIP	
	31	1	**3E-5169**	1	GUARD-SWITCH (ENGINE SHUTDOWN)	
	32	1,2	**4D-7794**	8	CLIP	
	33	1	**5M-3062**	1	BOLT (3/8-16X0.75 IN)	
	34	2	**5P-4116**	2	WASHER-HARD (8.8X20.5X2MM THK)	
	35	1	**5P-8167**	2	BOLT (3/8-16X0.625 IN)	
	36	1,2	**6D-4244**	6	CLIP	
	37	1	**6D-4246**	6	CLIP	
	38	1	**6V-6893**	3	BOLT (6-32X.375 IN)	
	39	1	**6V-8801**	1	NUT (3/8-16 THD)	
	40	2	**7C-4354**	2	CLIP	
	41	1	**8M-2772**	1	CLIP	
	42	2	**8M-2773**	1	CLIP	
	43	1,2	**8T-4121**	23	WASHER-HARD (11X21X2.5MM THK)	
M	44	1	**8T-4133**	3	NUT (M10X1.5 THD)	
M	45	1	**8T-4136**	3	BOLT (M10X1.5X25MM)	
M	46	1,2	**8T-4137**	15	BOLT (M10X1.5X20MM)	
M	47	1,2	**8T-4179**	3	BOLT (M12X1.75X20MM)	
M	48	2	**8T-4185**	1	BOLT (M10X1.5X50MM)	
M	49	2	**8T-4189**	2	BOLT (M8X1.25X20MM)	
M	50	1	**8T-4196**	1	BOLT (M10X1.5X35MM)	
	51	1	**8T-4205**	2	WASHER-HARD (7.2X14.5X2MM THK)	
	52	1,2	**8T-4223**	3	WASHER-HARD (13.5X25.5X3MM THK)	
	53	1	**8T-4226**	1	WASHER-PLATED (10.5X45X3MM THK)	
	54	1	**8T-4896**	3	WASHER-HARD (10.2X18.5X2.5MM THK)	
	55	1	**8T-9364**	2	BOLT (1/4-20X0.625 IN)	
	56	1,2	**8W-8909**	5	SLEEVE	
	57	2	**8X-5489**	1	SLEEVE	
	58	2	**187-3178**	1	SWITCH AS-BALL (BACK-UP ALARM)	
					(EACH INCLUDES)	
		2	**3E-3377**	1	WEDGE-RECEPTACLE LOCK	
		2	**102-8804**	1	KIT-RECEPTACLE (4 PIN)	
					(INCLUDES RECEPTACLE AS & WEDGE)	
		2	**144-1636**	4	PIN-CONNECTOR	

B-USE AS REQUIRED
E-ORDER BY THE CENTIMETER
M-METRIC PART

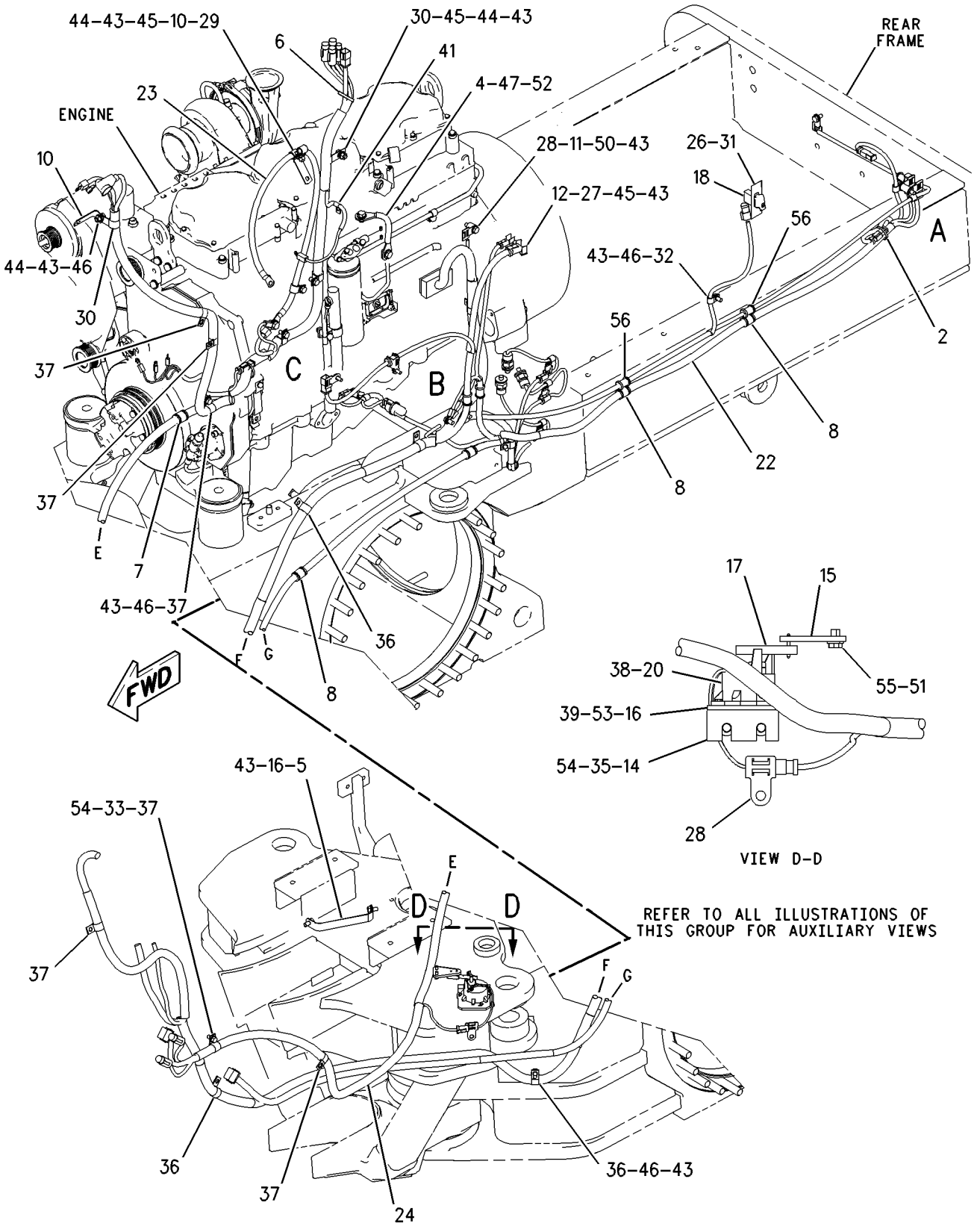

GRAPHIC #1 g00937595

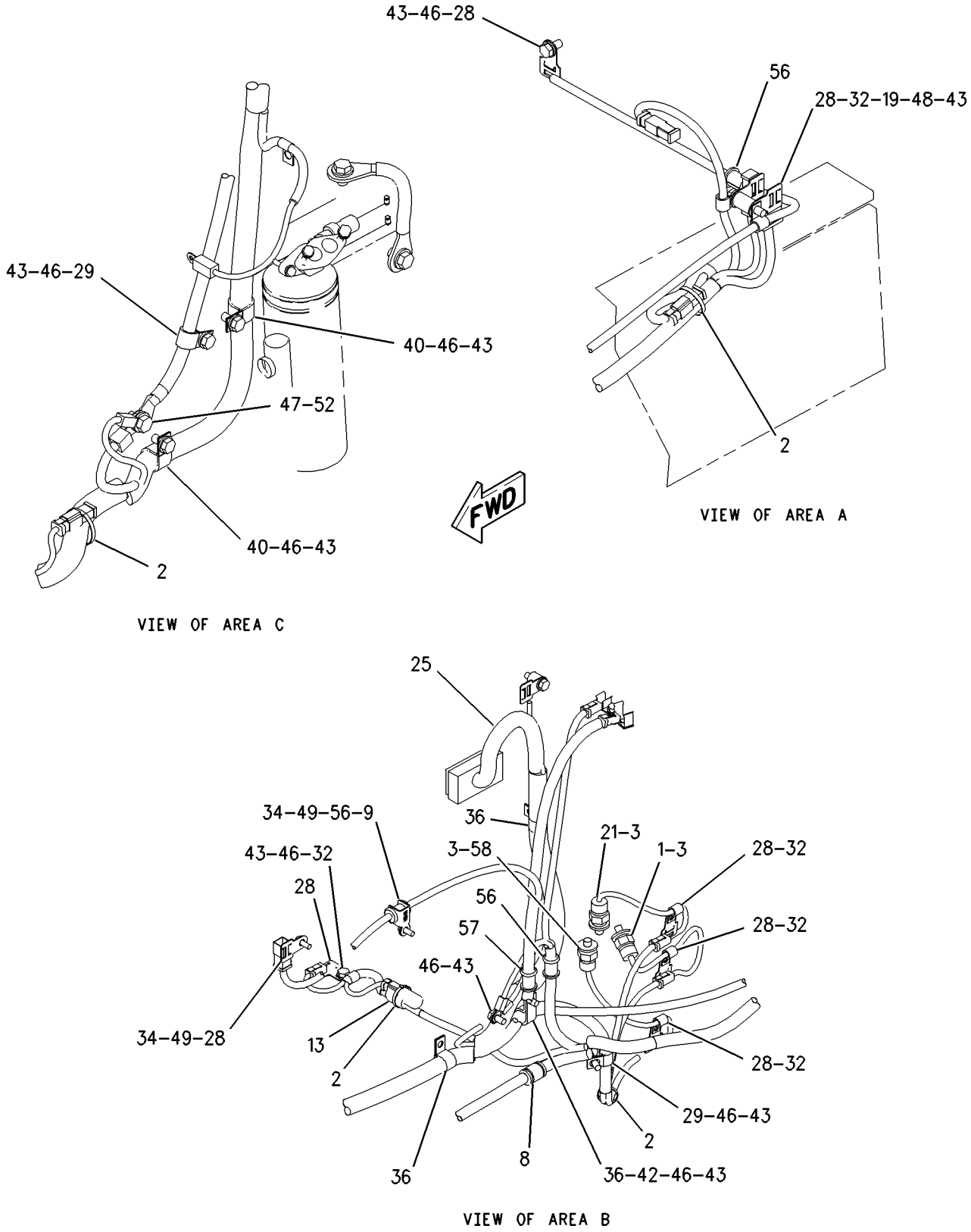

GRAPHIC #2

g00937598

194-7982 WIRING GP-REAR–RADIATOR

S/N: ATS1-UP

PART OF 162-5607 GENERAL AR

SMCS-1408 **i01830777**

NOTE	REF NO	GRAPHIC REF	PART NUMBER	QTY	PART NAME 1 2 3 4 5 6 (PRODUCT LEVEL)	SEE PAGE
	1	1	**3S-2093**	14	STRAP-CABLE	
	2	1	**116-5710**	2	GROMMET	
	3	1	**222-0355**	1	HARNESS AS	
		1	**102-8802**	3	KIT-RECEPTACLE (2 PIN)	
		1	**102-8803**	2	KIT-RECEPTACLE (3 PIN)	
		1	**102-8801**	1	KIT-RECEPTACLE (12 PIN)	
		1	**155-2260**	4	KIT-CONNECTING PLUG (3 PIN)	
		1	**155-2270**	2	KIT-CONNECTING PLUG (2 PIN) (BACK-UP ALARM/RETURN)	
Y	4	1	**123-6449**	1	WARNING GP-BACKUP	224
	5	1	**130-5300**	5	CLIP	
Y	6	1	**135-0426**	2	LAMP GP-SIGNAL (24 VOLT) (LH & RH STOP/TAIL)	156
M	7	1	**5C-2890**	8	NUT (M6X1 THD)	
M	8	1	**5C-9553**	2	BOLT (M6X1X16MM)	
	9	1	**8T-4121**	3	WASHER-HARD (11X21X2.5MM THK)	
M	10	1	**8T-4191**	1	BOLT (M10X1.5X16MM)	
M	11	1	**8T-4198**	2	BOLT (M10X1.5X100MM)	
	12	1	**8T-4224**	10	WASHER-HARD (8.8X16X2MM THK)	

M-METRIC PART
Y-SEPARATE ILLUSTRATION

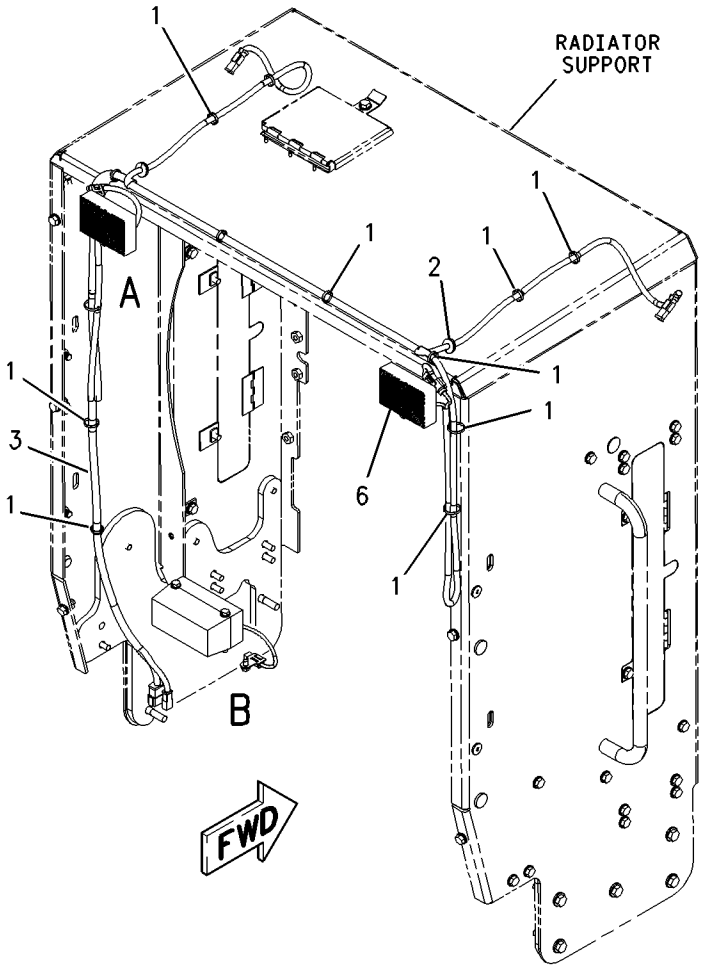

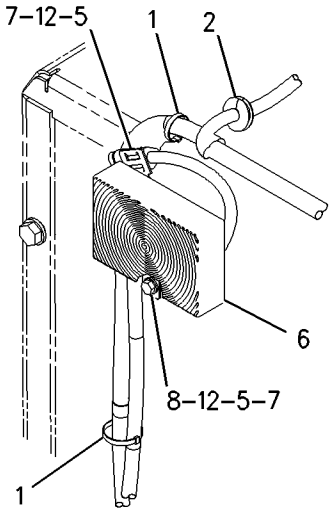

VIEW OF AREA A

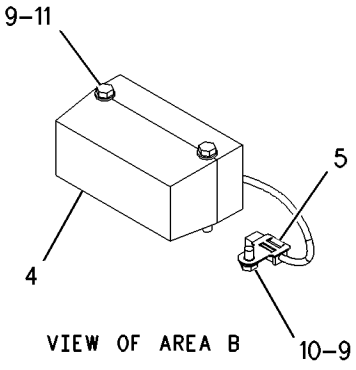

VIEW OF AREA B

GRAPHIC #1

g00934837

200-4983 WIRING GP-REAR–EU

S/N: ATS1-UP
PART OF 201-1054 COOLING AR
AN ATTACHMENT

SMCS-1408 **i01855023**

NOTE	REF NO	GRAPHIC REF	PART NUMBER	QTY	PART NAME 1 2 3 4 5 6 (PRODUCT LEVEL)	SEE PAGE
	1	1	**3S-2093**	13	STRAP-CABLE	
	2	1	*5C-9930*	1	LAMP GP (STOP/TAIL/TURN)	
		1	**6C-0109**	1	LAMP AS-RH (STOP/TAIL/TURN)	
		1	**5C-9584**	2	LAMP (24 VOLT)(21 WATT) (STOP/TAIL)	
		1	**4V-8116**	1	LAMP (24 VOLT)(5 WATT) (TURN)	
	3	1	*5C-9931*	1	LAMP GP (STOP/TAIL/TURN)	
		1	**6C-0110**	1	LAMP AS-LH (STOP/TAIL/TURN)	
		1	**5C-9584**	2	LAMP (24 VOLT)(21 WATT) (STOP/TAIL)	
		1	**4V-8116**	1	LAMP (24 VOLT)(5 WATT) (TURN)	
	4	1	**6C-5233**	1	BRACKET AS-RH	
M		1	**8T-3490**	2	NUT-WELD (M10X1.5 THD)	
	5	1	**6C-5234**	1	BRACKET AS-LH	
M		1	**8T-3490**	2	NUT-WELD (M10X1.5 THD)	
	6	1	**7X-2393**	4	BUMPER-CONICAL	
	7	1	**9S-1316**	2	SPRING	
	8	1	**112-5555**	2	ROD	
	9	1	**156-0283**	2	WASHER-HARD (8.4X35X2.5MM THK)	
	10	1	**160-1744**	2	BRACKET	
	11	1	**162-2933**	1	ARM AS	
	12	1	**162-2934**	1	ARM AS	
	13	1	**203-8471**	1	HARNESS AS-REAR CHASSIS	
		1	**102-8803**	2	KIT-RECEPTACLE (3 PIN)	
		1	**102-8801**	1	KIT-RECEPTACLE (12 PIN)	
	14	1	**208-7933**	2	PLATE	
	15	1	**208-7934**	1	HARNESS AS-REAR LIGHTING	
		1	**102-8803**	2	KIT-RECEPTACLE (3 PIN)	
	16	1	**208-7936**	1	HARNESS AS-REAR LIGHTING	
		1	**102-8803**	2	KIT-RECEPTACLE (3 PIN)	
Y	17	1	**123-6449**	1	WARNING GP-BACKUP	224
	18	1	**130-5300**	5	CLIP	
	19	1	**2V-3216**	2	CLIP	
	20	1	**3B-5301**	2	PIN-COTTER	
	21	1	**3D-5279**	2	GROMMET	
M	22	1	**5C-2890**	6	NUT (M6X1 THD)	
M	23	1	**5C-7261**	4	NUT (M8X1.25 THD)	
	24	1	**5P-1076**	4	WASHER-HARD (13.5X30X4MM THK)	
	25	1	**7N-3718**	1	CLIP	
	26	1	**8D-5641**	4	BEARING	
	27	1	**8T-4121**	10	WASHER-HARD (11X21X2.5MM THK)	
	28	1	**8T-4122**	4	WASHER-HARD (17X32X3.5MM THK)	
M	29	1	**8T-4133**	2	NUT (M10X1.5 THD)	
M	30	1	**8T-4136**	6	BOLT (M10X1.5X25MM)	
M	31	1	**8T-4139**	4	BOLT (M12X1.75X30MM)	
M	32	1	**8T-4171**	2	BOLT (M6X1X12MM)	
M	33	1	**8T-4173**	2	BOLT (M16X2.0X110MM)	
M	34	1	**8T-4198**	2	BOLT (M10X1.5X100MM)	
	35	1	**8T-4205**	6	WASHER-HARD (7.2X14.5X2MM THK)	
	36	1	**8T-4223**	2	WASHER-HARD (13.5X25.5X3MM THK)	
	37	1	**8T-4224**	4	WASHER-HARD (8.8X16X2MM THK)	
M	38	1	**8T-4778**	2	LOCKNUT (M16X2 THD)	

M-METRIC PART
Y-SEPARATE ILLUSTRATION

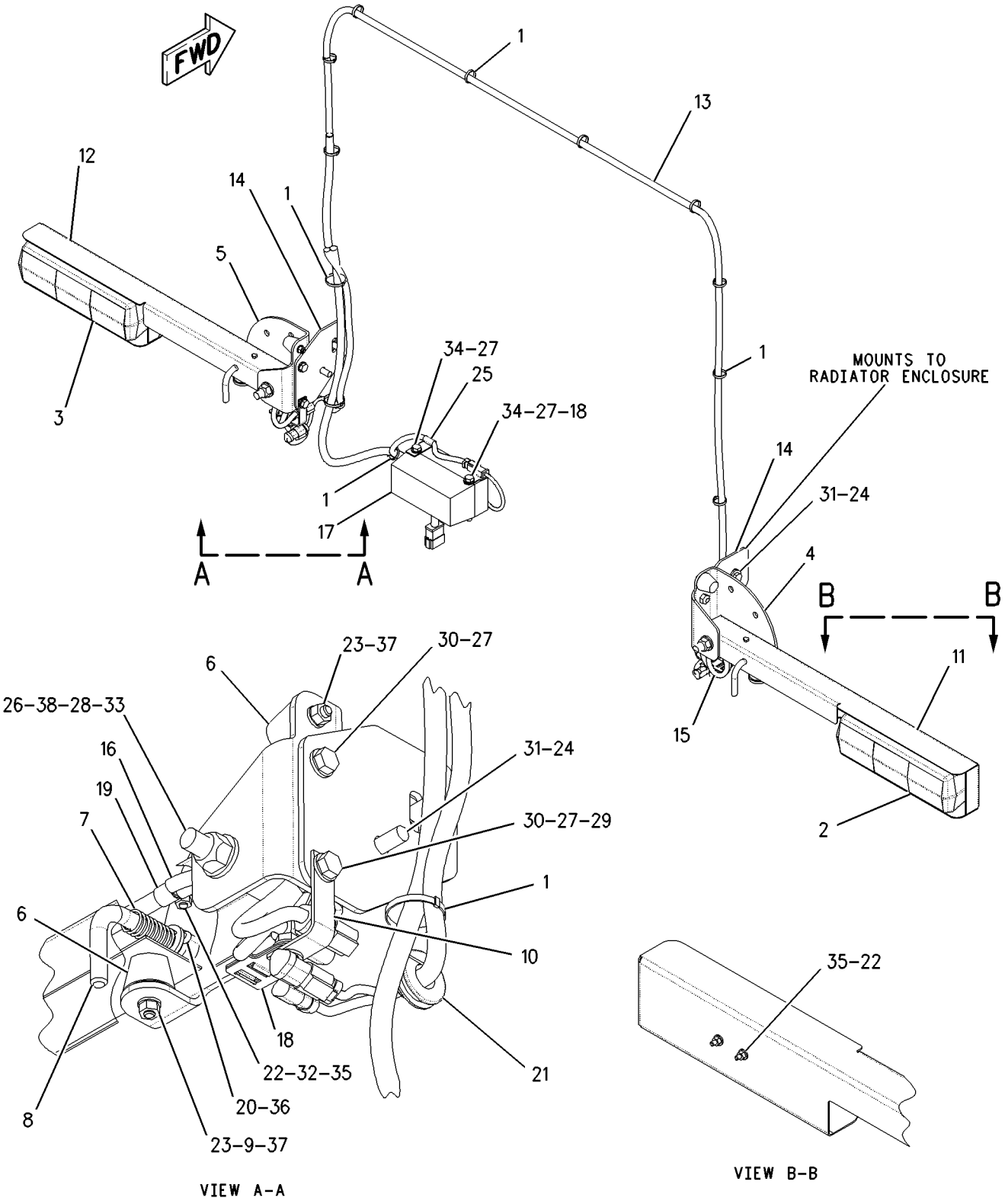

GRAPHIC #1

g00854575

ELECTRICAL AND STARTING SYSTEM

205-3110 WIRING GP-REAR—SERVICE CENTER—RH

S/N: ATS1-UP

PART OF 204-7938 SUPPORT AR-REAR CHASSIS

SMCS-1408 **i01711805**

NOTE	REF NO	GRAPHIC REF	PART NUMBER	QTY	PART NAME 1 2 3 4 5 6 (PRODUCT LEVEL)	SEE PAGE
	1	3	**2L-0273**	1	FITTING (RUBBER)	
	2	1	**3E-5239**	1	RELAY AS (24 VOLT)	
	3	3	**3E-8320**	1	PLATE-INSTRUCTION (BATTERY)	
	4	2,3	**3S-2093**	2	STRAP-CABLE	
	5	1	**4E-6622**	1	CABLE AS	
		1	**1S-7251**	2	TERMINAL-RING	
E		1	**5P-0761**		CABLE (00GA)(RED) (122 CM)	
		1	**8N-0869**	2	COVER-TERMINAL (RED)	
	6	2	**6V-4283**	1	PLATE-ALTERNATOR	
	7	2	**7K-4743**	2	SPACER	
	8	2	**7V-9275**	1	STRAP	
	9	1	**9L-1566**	1	SUPPORT-TUBE	
	10	3	**112-4428**	1	CABLE AS	
		3	**1S-7251**	1	TERMINAL-RING	
		3	**1S-7252**	1	TERMINAL-RING	
E		3	**5P-0747**		CABLE (00GA)(BLACK) (27 CM)	
	11	2	**118-3534**	1	SWITCH GP-MAGNETIC (24V) (STARTING REALY)	
	12	2	**125-6390**	1	PLATE-ENGINE	
Y	13	2	**167-0138**	1	SWITCH GP-MAGNETIC (FUSE RELAY) (MAIN POWER RELAY)	222
		2	**4F-2294**	2	NUT-JAM (5/16-24 THD)	
		2	**6V-8186**	2	NUT-FULL (5/16-24 THD)	
		2	**186-3736**	2	SOCKET-CONNECTOR	
		2	**155-2270**	1	KIT-CONNECTING PLUG (2 PIN)	
	14	2	**169-5414**	1	CLIP	
	15	2	**171-2210**	1	CIRCUIT BREAKER AS (80 AMP) (MAIN)	
		2	**1H-3244**	2	LOCKWASHER	
		2	**6V-8187**	2	NUT (1/4-28 THD)	
		2	**8T-4205**	2	WASHER-HARD (7.2X14.5X2MM THK)	
	16	3	**177-8802**	1	CABLE AS	
		3	**1S-7251**	1	TERMINAL-RING	
E		3	**5P-0761**		CABLE (00GA)(RED) (32 CM)	
		3	**8N-0869**	1	COVER-TERMINAL (RED)	
		3	**8N-1725**	1	COVER-TERMINAL (RED)	
		3	**9W-3460**	1	TERMINAL AS	
	17	2	**177-9813**	1	CABLE AS	
BD		2	**5P-5675**		WIRE (6 GA)	
		2	**2L-8050**	1	TERMINAL (6 GA, 6.35MM/.25IN SCREW)	
					—OR—	
		2	**2L-8058**	1	TERMINAL (8 GA, 6.35MM/.25IN SCREW)	
		2	**8N-1546**	1	PIN-CONNECTOR	
		2	**127-5484**	1	RECEPTACLE AS (1 PIN)	
	18	1	**177-9814**	1	CABLE AS	
		1	**9G-4343**	1	TERMINAL-CRIMP	
BD		1	**6V-2369**		WIRE (4 GA)(BLACK)	
		1	**8N-1548**	1	PIN-CONNECTOR	
		1	**127-5484**	1	RECEPTACLE AS (1 PIN)	
	19	2	**178-0160**	1	WIRE AS	
	20	2	**178-0162**	1	CABLE AS	
		2	**2L-8050**	2	TERMINAL (6 GA, 6.35MM/.25IN SCREW)	
					—OR—	
		2	**2L-8058**	2	TERMINAL (8 GA, 6.35MM/.25IN SCREW)	
	21	2	**178-0555**	1	CABLE AS	
		2	**9G-4343**	1	TERMINAL-CRIMP (FOR 1/4 IN SCREW)	
		2	**5P-3454**	1	TERMINAL-CRIMP (FOR 5/16IN BOLT)	
BD		2	**6V-2369**		WIRE (4 GA)(BLACK)	

205-3110 **WIRING GP-REAR** ***(contd.)*** **i01711805**

NOTE	REF NO	GRAPHIC REF	PART NUMBER	QTY	PART NAME 1 2 3 4 5 6 (PRODUCT LEVEL)	SEE PAGE
	22	3	**180-6153**	1	PLATE	
	23	3	**187-8359**	1	HARNESS AS-REAR (RH)	
		3	**155-2270**	1	KIT-CONNECTING PLUG (2 PIN) (CRANKING RELAY)	
		3	**155-2271**	1	KIT-CONNECTING PLUG (4 PIN) (ENG CNTL BRKR & CRANKING RELAY)	
		3	**155-2274**	1	KIT-CONNECTING PLUG (6 PIN)	
					(PLUG KITS INCLUDE PLUG AS & WEDGE)	
		3	**102-8802**	1	KIT-RECEPTACLE (2 PIN) (MAIN RELAY)	
					(RECEPTACLE KIT INCLUDES RECEPTACLE AS & WEDGE)	
	24	2	**189-0108**	1	PLATE (MAIN)	
	25	3	**194-1854**	1	COVER	
	26	3	**194-1855**	1	PLATE AS	
M		3	**6V-9632**	4	NUT-WELD (M6X1 THD)	
M		3	**8T-3490**	1	NUT-WELD (M10X1.5 THD)	
	27	3	**206-3732**	1	CABLE AS	
		3	**1S-7252**	1	TERMINAL-RING	
E		3	**5P-0747**		CABLE (00GA)(BLACK) (140 CM)	
		3	**7N-5274**	1	COVER-TERMINAL (BLACK)	
		3	**3S-6050**	1	TERMINAL AS-BATTERY (NEGATIVE)	
	28	3	**206-3733**	1	HARNESS AS-REAR (LH)	
		3	**9X-1054**	1	PLUG AS-CONNECTOR (4 PIN) (BACKUP ALARM RELAY)	
		3	**155-2271**	1	KIT-CONNECTING PLUG (4 PIN) (STARTING RELAY)	
					(PLUG KIT INCLUDES PLUG AS & WEDGE)	
		3	**102-8802**	1	KIT-RECEPTACLE (2 PIN) (AIR DRYER/ BACKUP ALARM)	
		3	**102-8804**	1	KIT-RECEPTACLE (4 PIN) (CRANKING RELAY/ ENG CNTL BRKR)	
		3	**102-8801**	1	KIT-RECEPTACLE (12 PIN)	
					(RECEPTACLE KIT INCLUDES RECEPTACLE AS & WEDGE)	
	29	3	**206-3734**	1	WIRE AS	
	30	3	**206-7216**	1	RECEPTACLE AS	
		3	**1S-7251**	2	TERMINAL-RING	
BD		3	**6V-2722**		TUBE-HEAT SHRINK	
		3	**8N-0869**	1	COVER-TERMINAL (RED)	
E		3	**159-8049**		CABLE-ELECTRICAL (73 CM)	
E		3	**159-8050**		CABLE-ELECTRICAL (21 CM)	
	31	3	**033-8248**	1	CLIP	
	32	1	**130-5300**	2	CLIP	
	33	1	**132-6938**	1	PLATE	
	34	2	**157-2528**	1	SPACER (7X16X20MM THK)	
	35	1,2,3	**174-5907**	7	CLIP	
	36	1,2	**1S-0994**	2	CLIP	
	37	1	**1S-1015**	1	CLIP	
	38	3	**1V-6688**	1	GROMMET	
	39	1	**2Y-5429**	1	GROMMET	
	40	2	**3K-8106**	2	SCREW-MACHINE (8-32 X 1 IN)	
	41	2	**4B-4274**	4	WASHER (5.5X13X1.2MM THK)	
	42	2	**4B-4863**	2	WASHER (4.7X11X1.2MM THK)	
	43	1,2	**4D-7794**	3	CLIP	
	44	1	**4D-8948**	1	CLIP (SLOT)	
	45	3	**4H-2558**	2	GROMMET	
	46	3	**4L-6454**	4	BOLT (3/8-16X1 IN)	
M	47	1,2	**5C-9553**	4	BOLT (M6X1X16MM)	
	48	2	**5L-4507**	4	SCREW-MACHINE (10-32X0.875 IN)	
	49	2	**6D-3479**	1	CLIP	
	50	1,3	**6K-8178**	2	CLIP	
	51	2	**6T-3643**	1	CIRCUIT BREAKER AS (15 AMP) (STARTING RELAY)	
		2	**6V-8376**	2	SCREW-MACHINE (8-32X0.25 IN)	

205-3110 **WIRING GP-REAR** *(contd.)* **i01711805**

NOTE	REF NO	GRAPHIC REF	PART NUMBER	QTY	PART NAME 1 2 3 4 5 6 (PRODUCT LEVEL)	SEE PAGE
		2	**9B-7233**	2	LOCKWASHER	
Y	52	3	**7N-0718**	1	SWITCH GP-DISCONNECT (BATTERY)	218
		3	**2H-3922**	2	LOCKWASHER	
		3	**6F-7045**	2	NUT-FULL (3/8X24 THD)	
		3	**8H-5303**	1	NUT (3/4-16 THD)	
		3	**8H-5306**	1	KEY	
		3	**9F-5644**	2	LOCKWASHER	
	53	1	**7N-3718**	1	CLIP	
M	54	2	**7X-2533**	1	BOLT (M6X1X35MM)	
	55	1	**7Y-8169**	1	GROMMET	
	56	1	**8M-2770**	2	CLIP	
	57	1	**8M-2772**	1	CLIP	
	58	3	**8S-2634**	1	COVER AS	
		3	**2P-2975**	2	SEAL-O-RING	
M	59	3	**8T-0293**	1	BOLT (M12X1.75X20MM)	
	60	1,2,3	**8T-4121**	24	WASHER-HARD (11X21X2.5MM THK)	
M	61	1	**8T-4133**	1	NUT (M10X1.5 THD)	
M	62	1,2,3	**8T-4136**	17	BOLT (M10X1.5X25MM)	
M	63	1,3	**8T-4137**	6	BOLT (M10X1.5X20MM)	
M	64	1	**8T-4189**	2	BOLT (M8X1.25X20MM)	
M	65	1,3	**8T-4191**	2	BOLT (M10X1.5X16MM)	
	66	2	**8T-4205**	4	WASHER-HARD (7.2X14.5X2MM THK)	
	67	3	**8T-4223**	1	WASHER-HARD (13.5X25.5X3MM THK)	
	68	1	**8T-4224**	2	WASHER-HARD (8.8X16X2MM THK)	
	69	3	**8T-4896**	4	WASHER-HARD (10.2X18.5X2.5MM THK)	
Y	70	3	*9W-0742*	1	BLOCK GP-JUNCTION	128
	71	1	**9X-8256**	1	WASHER (6.6X12X2MM THK)	
	72	2	**171-2210**	1	CIRCUIT BREAKER AS (80 AMP) (ALTERNATOR)	
		2	**1H-3244**	2	LOCKWASHER	
		2	**6V-8187**	2	NUT (1/4-28 THD)	
		2	**8T-4205**	2	WASHER-HARD (7.2X14.5X2MM THK)	

B-USE AS REQUIRED
D-ORDER BY THE METER
E-ORDER BY THE CENTIMETER
M-METRIC PART
Y-SEPARATE ILLUSTRATION

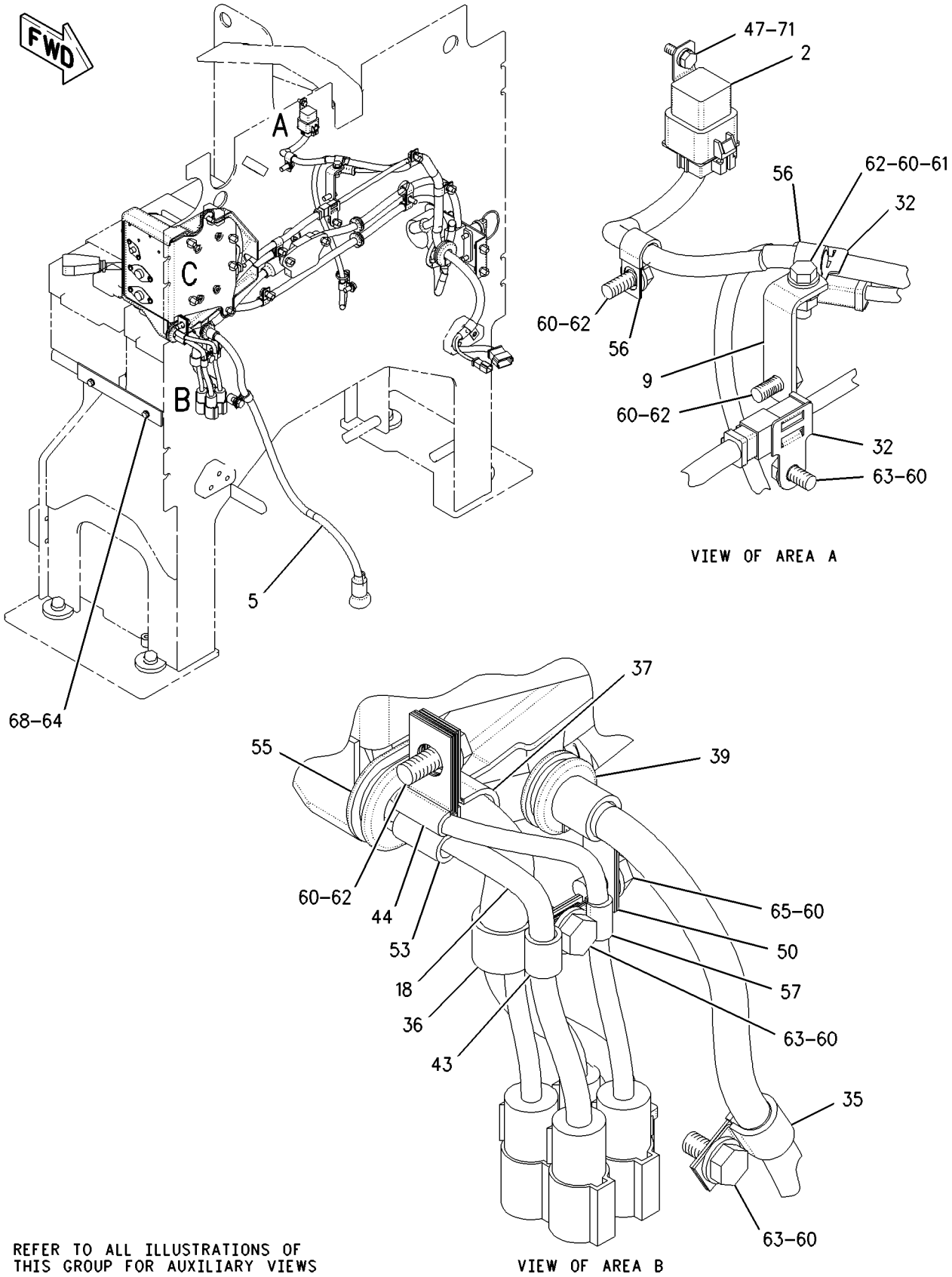

REFER TO ALL ILLUSTRATIONS OF THIS GROUP FOR AUXILIARY VIEWS

GRAPHIC #1 g00938096

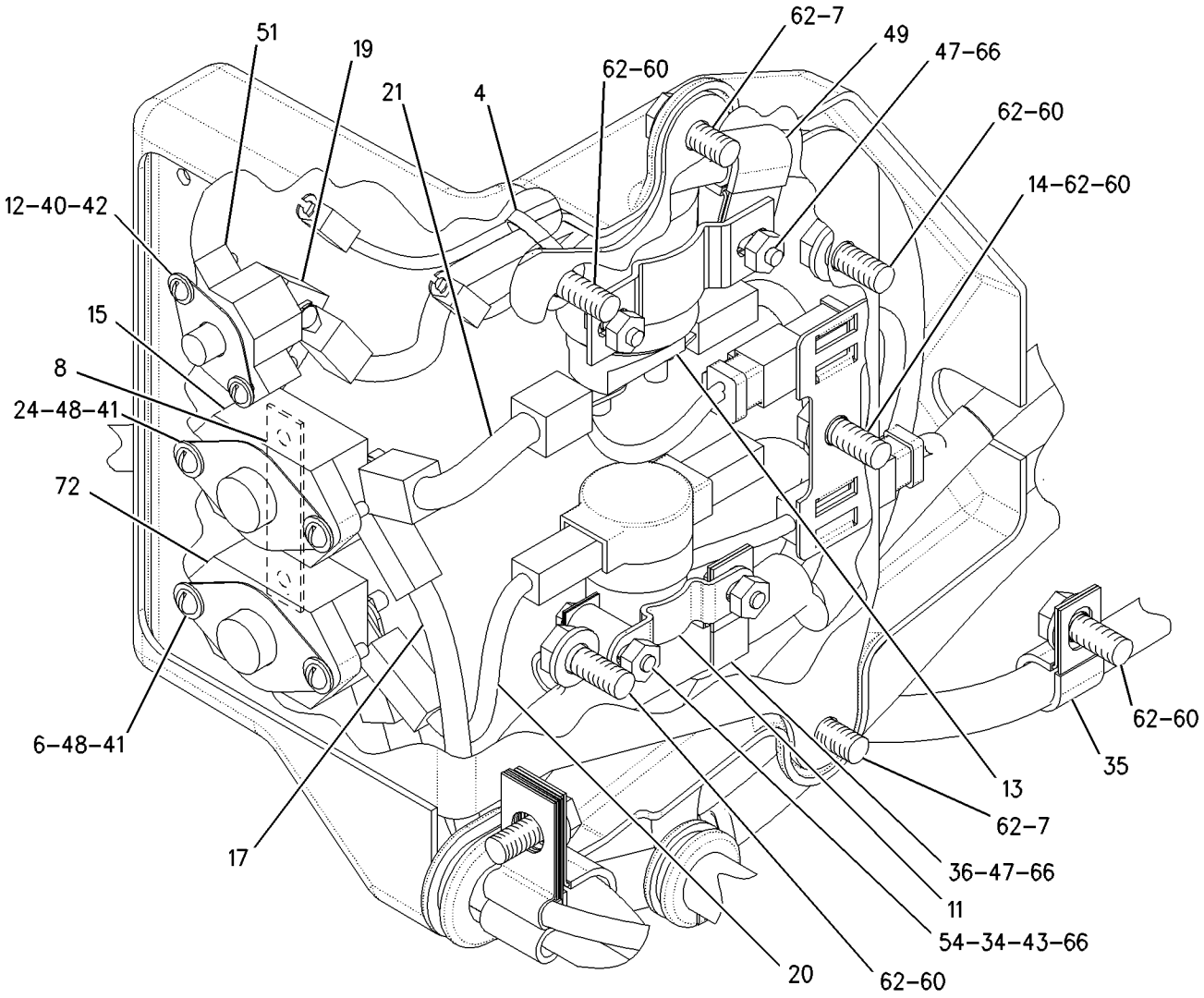

VIEW OF AREA C

GRAPHIC #2 g00938097

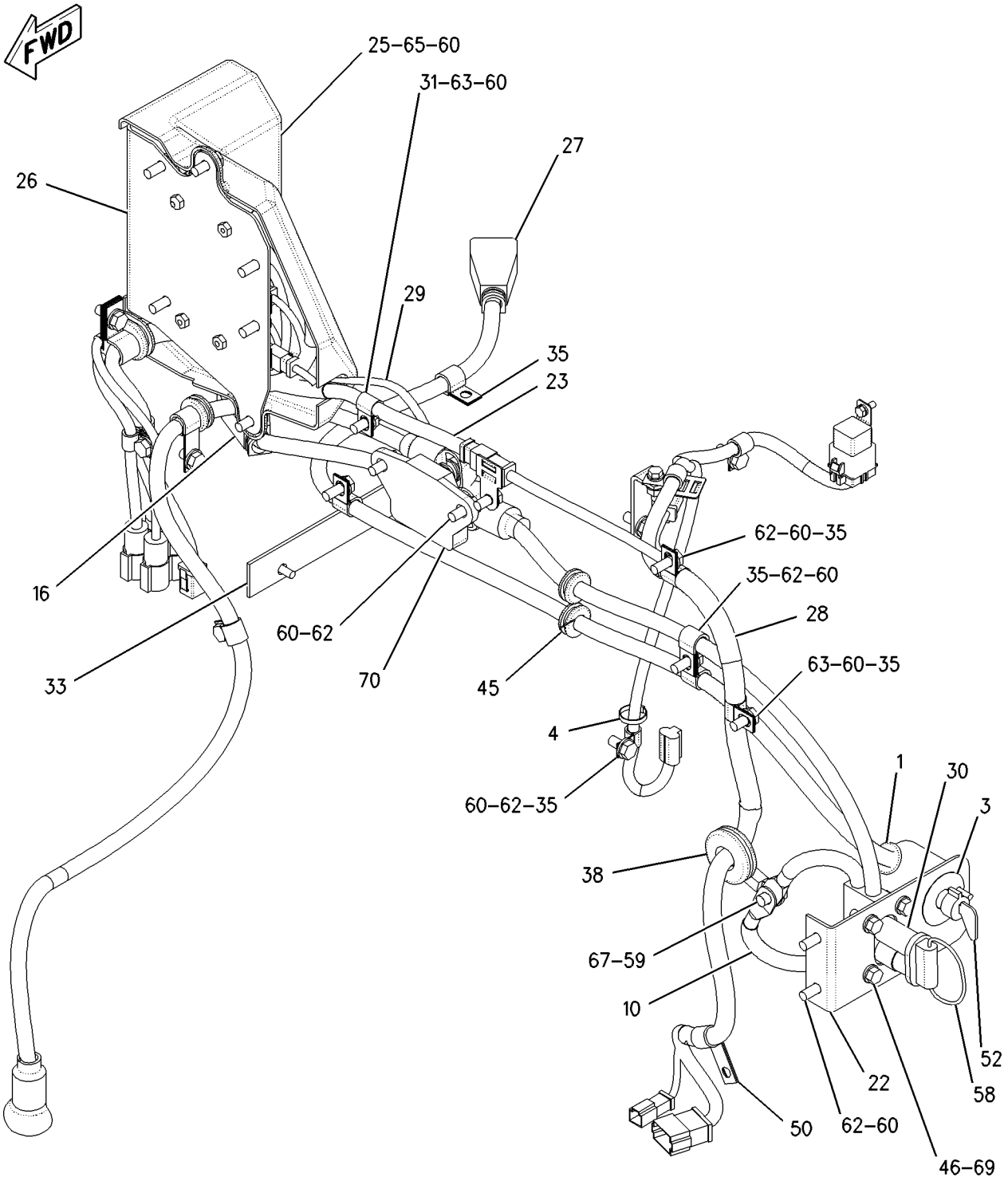

GRAPHIC #3 g00938098

184-6045 WIRING GP-SECONDARY STEERING

S/N: ATS1-UP
PART OF 166-3310 STEERING AR-SECONDARY
AN ATTACHMENT

SMCS-1408, 4334 **i01855038**

NOTE	REF NO	GRAPHIC REF	PART NUMBER	QTY	PART NAME 1 2 3 4 5 6 (PRODUCT LEVEL)	SEE PAGE
	1	1	**1S-7251**	1	TERMINAL-RING	
	2	1	**2L-0273**	1	FITTING (RUBBER)	
	3	1	**3E-0154**	1	SWITCH GP-MAGNETIC (SECONDARY STEERING RELAY)	
		1	**4D-1326**	2	LOCKWASHER	
		1	**6V-8378**	2	NUT (10-32 THD)	
		1	**6V-8801**	2	NUT (3/8-16 THD)	
		1	**7X-0608**	2	WASHER-HARD (10.2X16X2.0MM THK)	
		1	**7X-0620**	2	WASHER-HARD (5.5X13X1.6MM THK)	
		1	**8F-1434**	2	LOCKWASHER	
	4	1	**3E-6450**	1	SWITCH AS-PRESSURE (PRIMARY STEERING)	
		1	**102-8803**	1	KIT-RECEPTACLE (3 PIN)	
		1	**3E-3371**	1	WEDGE-RECEPTACLE LOCK (3 PIN)	
		1	**186-3735**	1	PIN-CONNECTOR	
	5	1	**3E-7842**	1	RESISTOR AS	
	6	1	**3S-2093**		STRAP-CABLE	
	7	1	**9L-1566**	2	SUPPORT-TUBE	
	8	1	**9W-1442**	2	FUSE (10 AMP) (TAIL PANEL LAMPS/SEC STER TEST)	
Y	9	1	**132-6640**	1	CONTROL GP-SECONDARY STEERING	134
	10	1	**134-3355**	1	STRAP AS	
	11	1	**140-8864**	1	CABLE AS	
		1	**1S-7252**	2	TERMINAL-RING	
		1	**5P-0747**		CABLE (00GA)(BLACK) (20CM)	
	12	1	**178-0103**	1	PLATE	
	13	1	**188-2683**	1	CABLE AS	
		1	**1S-7252**	1	TERMINAL-RING	
E		1	**5P-0761**		CABLE (00GA)(RED) (75CM)	
		1	**6V-2722**	1	TUBE-HEAT SHRINK	
		1	**8N-0869**	1	COVER-TERMINAL (RED)	
		1	**9X-9825**	1	TERMINAL-CABLE	
	14	1	**195-0434**	1	BRACKET	
	15	1	**207-7583**	1	CABLE AS	
		1	**1S-7252**	2	TERMINAL-RING	
E		1	**5P-0761**		CABLE (00GA)(RED) (194CM)	
		1	**8N-0869**	2	COVER-TERMINAL (RED)	
	16	1	**130-5300**	2	CLIP	
	17	1	**174-5907**	4	CLIP	
	18	1	**3E-6754**	1	GROMMET	
	19	1	**3K-0360**	1	SEAL-O-RING	
	20	1	**4D-7794**	1	CLIP	
M	21	1	**5C-2890**	2	NUT (M6X1 THD)	
	22	1	**5M-3062**	2	BOLT (3/8-16X0.75 IN)	
	23	1	**6V-1322**	4	BOLT (1/4-20X0.375 IN)	
	24	1	**6V-8801**	1	NUT (3/8-16 THD)	
	25	1	**8T-4121**	9	WASHER-HARD (11X21X2.5MM THK)	
M	26	1	**8T-4133**	2	NUT (M10X1.5 THD)	
M	27	1	**8T-4136**	2	BOLT (M10X1.5X25MM)	
M	28	1	**8T-4137**	5	BOLT (M10X1.5X20MM)	
	29	1	**8T-4205**	4	WASHER-HARD (7.2X14.5X2MM THK)	
	30	1	**8T-4896**	6	WASHER-HARD (10.2X18.5X2.5MM THK)	
M	31	1	**9X-2045**	2	SCREW-TRUSS HEAD (M6X1X20MM)	
	32	1	**9X-8256**	2	WASHER (6.6X12X2MM THK)	
	33	1	**3E-8765**	1	SWITCH AS (SECONDARY STEERING)	
		1	**3E-8816**	1	ACTUATOR-ROCKER (SECONDARY STEERING)	
		1	**3E-8825**	2	LAMP (24 VOLT) (SECONDARY STEERING)	

E-ORDER BY THE CENTIMETER
M-METRIC PART
Y-SEPARATE ILLUSTRATION

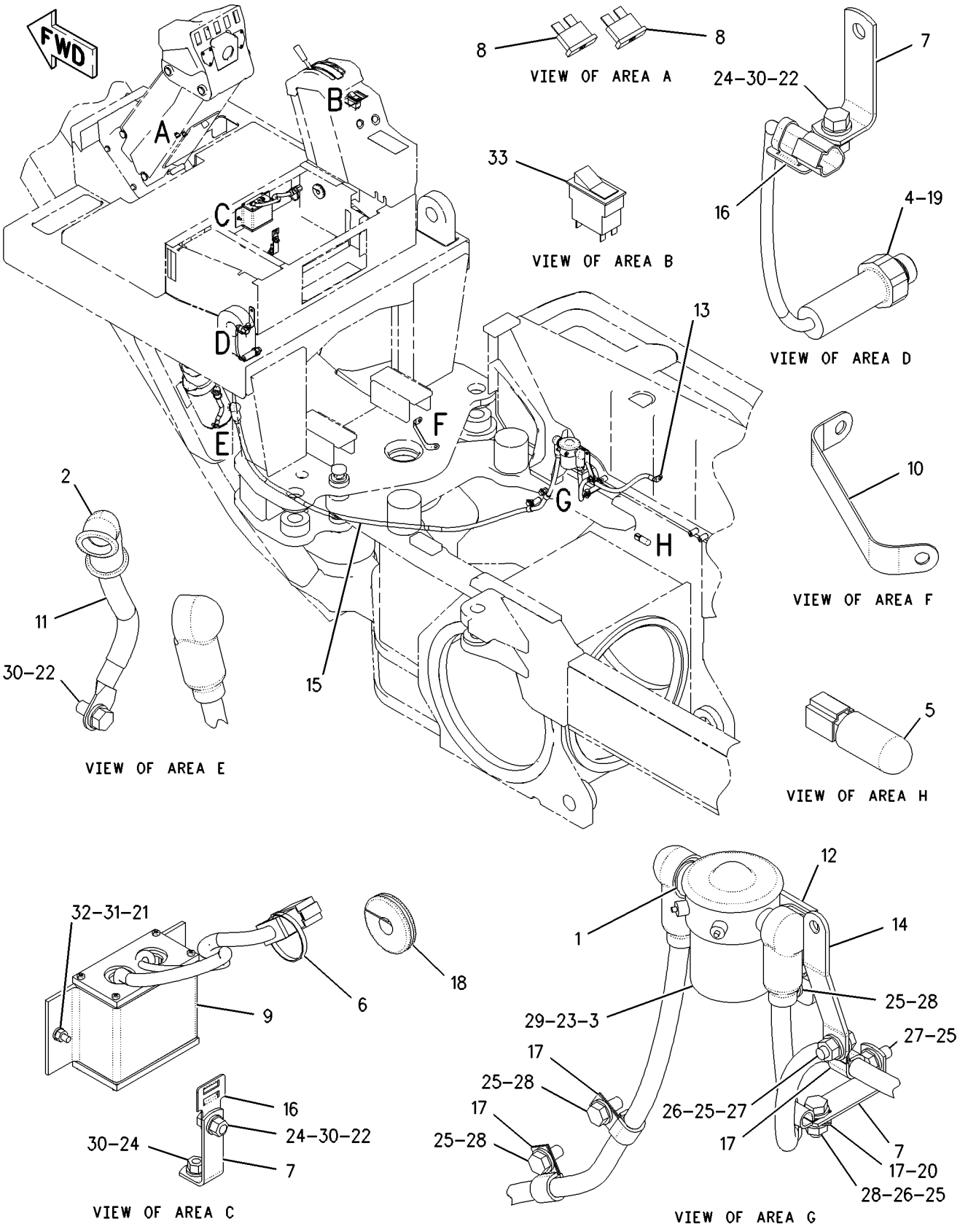

GRAPHIC #1

g00937897

MEMORANDA

ELECTRICAL AND STARTING SYSTEM

159-5843 WIRING GP-SHIFT CONSOLE

S/N: ATS1-UP

PART OF 162-5607 GENERAL AR

SMCS-1408, 1435 **i01700781**

NOTE	REF NO	GRAPHIC REF	PART NUMBER	QTY	PART NAME 1 2 3 4 5 6 (PRODUCT LEVEL)	SEE PAGE
	1	1	**3E-0109**	1	PLUG-ROCKER SWITCH (SUPPLEMENTAL STEERING)	
	1A	1	**3E-0109**	1	PLUG-ROCKER SWITCH (BLADE CUSHION)	
Y	2	1	**3E-6328**	1	ALARM GP (EMS ACTION)	123
	3	1	**3S-2093**	5	STRAP-CABLE	
	4	1	**7N-5876**	1	LAMP (24 VOLT) (SHIFT CONSOLE)	
	5	1	**8C-6354**	1	CAP-RECEPTACLE	
	6	1	**9L-6331**	1	BRACKET	
	7	1	**110-7887**	1	SWITCH GP-START (KEY)	
	9	1	**169-5414**	2	CLIP	
	10	1	**196-7268**	1	SWITCH AS (THROTTLE HOLD AUTO/MAN)	
		1	**183-2136**	1	ACTUATOR-ROCKER	
		1	**3E-8825**	2	LAMP (24 VOLT) (THROTTLE HOLD AUTO/MAN SWITCH)	
	11	1	**190-0370**	1	SWITCH AS (THROTTLE HOLD SET/RESUME)	
		1	**187-9380**	1	ACTUATOR-ROCKER	
	12	1	**188-1995**	1	HARNESS AS-CONSOLE	
		1	**199-8382**	1	RECEPTACLE AS	
		1	**155-2255**	2	KIT-CONNECTING PLUG (12 PIN)	
		1	**155-2270**	2	KIT-CONNECTING PLUG (2 PIN)	
		1	**155-2271**	2	KIT-CONNECTING PLUG (4 PIN)	
		1	**155-2274**	1	KIT-CONNECTING PLUG (6 PIN)	
					(EACH PLUG KIT INCLUDES PLUG AS & WEDGE)	
		1	**102-8804**	1	KIT-RECEPTACLE (4 PIN)	
		1	**102-8805**	1	KIT-RECEPTACLE (6 PIN)	
		1	**102-8801**	1	KIT-RECEPTACLE (12 PIN)	
					(EACH RECEPTACLE KIT INCLUDES RECEPTACLE AS & WEDGE)	
		1	**3E-7996**	3	PLUG-CONNECTOR (6 PIN)	
	13	1	**188-1996**	1	HARNESS AS-CONSOLE	
		1	**102-8802**	1	KIT-RECEPTACLE (2 PIN) (PANEL LAMPS)	
		1	**102-8801**	1	KIT-RECEPTACLE (12 PIN)	
					(EACH RECEPTACLE KIT INCLUDES RECEPTACLE AS & WEDGE)	
		1	**3E-7996**	2	PLUG-CONNECTOR (6 PIN)	
		1	**9W-1951**	1	RECEPTACLE-CONNECTOR (9 PIN) (SERVICE TOOL/CAT DATA LINK)	
	14	1	**130-5300**	1	CLIP	
	15	1	**1S-0994**	2	CLIP	
	16	1	**2V-8259**	2	GROMMET	
	17	1	**3E-8860**	1	SWITCH AS (CENTERSHIFT PIN PULLER)	
		1	**3E-8817**	1	ACTUATOR-ROCKER	
		1	**3E-8825**	1	LAMP (24 VOLT) (CENTERSHIFT PIN PULLER SWITCH)	
	18	1	**4D-7794**	1	CLIP	
	19	1	**4P-7581**	1	CLIP (LADDER)	
	20	1	**5M-3062**	3	BOLT (3/8-16X0.75 IN)	
	21	1	**5S-4246**	4	LOCKWASHER	
	22	1	**6B-4540**	4	NUT (4-40 THD)	
	23	1	**6V-2480**	4	SCREW (4-40X0.5 IN)	
	24	1	**7G-7053**	1	GROMMET	
	25	1	**8M-2770**	1	CLIP	
	26	1	**8T-4121**	4	WASHER-HARD (11X21X2.5MM THK)	
M	27	1	**8T-4133**	1	NUT (M10X1.5 THD)	
M	28	1	**8T-4137**	2	BOLT (M10X1.5X20MM)	
	29	1	**8T-4896**	3	WASHER-HARD (10.2X18.5X2.5MM THK)	
	30	1	**8T-9471**	1	GROMMET	
	31	1	**9W-0335**	1	LIGHTER AS (CIGAR)(24 VOLT)	

M-METRIC PART
Y-SEPARATE ILLUSTRATION

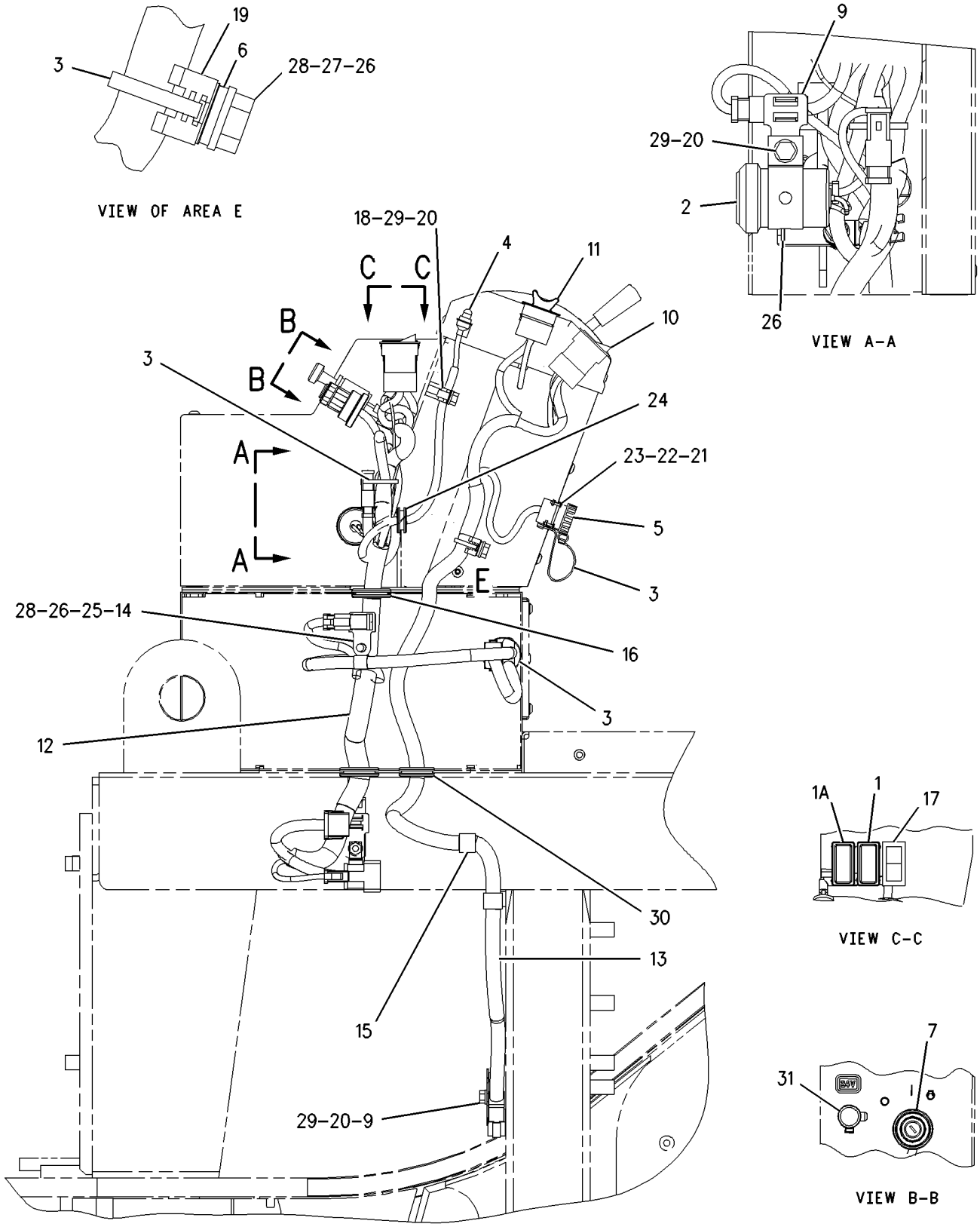

GRAPHIC #1 g00875840

159-5855 WIRING GP-STEERING CONSOLE

S/N: ATS1-UP

PART OF 162-5607 GENERAL AR

SMCS-4334 **i01844587**

NOTE	REF NO	GRAPHIC REF	PART NUMBER	QTY	PART NAME 1 2 3 4 5 6 (PRODUCT LEVEL)	SEE PAGE
	1	1	**3E-0109**	1	PLUG-ROCKER SWITCH (LIGHT BAR LOW BEAM)	
	2	1	**3E-6477**	1	RELAY AS (24 VOLT) (TAIL/PANEL LAMPS)	
	3	1	**3S-2093**	8	STRAP-CABLE	
	4	1	**9W-1442**	11	FUSE (10 AMP) (STEERING CONSOLE)	
	5	1	**102-9383**	1	PLATE	
	6	1	**112-6175**	1	SWITCH AS-LIMIT (BRAKE/INCHING PEDAL)	
		1	**6V-8376**	3	SCREW-MACHINE (8-32X0.25 IN)	
		1	**9B-7233**	3	LOCKWASHER	
	7	1	**169-3283**	1	HARNESS AS-CONSOLE	
		1	**102-8801**	2	KIT-RECEPTACLE (12 PIN)	
		1	**102-8803**	1	KIT-RECEPTACLE (3 PIN)	
		1	**102-8804**	1	KIT-RECEPTACLE (4 PIN)	
					(EACH INCLUDES RECEPTACLE AS & WEDGE)	
		1	**127-5483**	1	PLUG AS-CONNECTOR (1 PIN)	
		1	**127-5484**	2	RECEPTACLE AS (1 PIN)	
		1	**155-2255**	2	KIT-CONNECTING PLUG (12 PIN)	
		1	**155-2260**	1	KIT-CONNECTING PLUG (3 PIN) (AWD CONTROL LEVER SENSOR)	
		1	**155-2270**	2	KIT-CONNECTING PLUG (2 PIN) (PANEL LAMPS SWITCH/HORN)	
		1	**155-2271**	1	KIT-CONNECTING PLUG (4 PIN)	
					(EACH INCLUDES PLUG AS & WEDGE)	
	8	1	**180-4028**	1	BRACKET	
	9	1	**180-7033**	1	COVER	
	10	1	**186-1714**	1	FILM-FUSE (LH)	
	11	1	**188-6361**	1	FILM-FUSE (RH)	
	12	1	**194-4181**	1	RESISTOR AS	
	13	1	**130-5300**	1	CLIP	
	14	1	**139-2120**	1	SWITCH AS (DIFFERENTIAL LOCK)	
		1	**123-5861**	1	ACTUATOR-ROCKER	
		1	**3E-8825**	2	LAMP (24 VOLT) (DIFFERENTIAL LOCK SWITCH)	
M	15	1	**151-4957**	2	BOLT-SOCKET HEAD (M3X0.5X25MM)	
M	16	1	**174-8131**	1	SCREW-TRUSS HEAD (M4X0.7X12MM)	
	17	1	**228-5009**	3	CLIP	
M	18	1	**3C-6969**	2	NUT (M3X0.5 THD)	
	19	1	**3E-9324**	1	SWITCH AS (PANEL LAMP DIMMER)	
		1	**3E-8783**	1	ACTUATOR-ROCKER	
		1	**3E-8825**	1	LAMP (24 VOLT) (PANEL LAMP DIMMER SWITCH)	
	20	1	**3E-8763**	1	SWITCH AS (TAIL LAMP)	
		1	**3E-9323**	1	ACTUATOR-ROCKER	
		1	**3E-8825**	1	LAMP (24 VOLT) (TAIL LAMP SWITCH)	
	21	1	**3L-8187**	2	LOCKWASHER (3.70X7.24X.48MM THK)	
	22	1	**4B-1281**	3	SCREW-MACHINE (1/4-20X.625 IN)	
	23	1	**4B-4274**	16	WASHER (5.5X13X1.2MM THK)	
	24	1	**4D-1212**	1	GROMMET	
M	25	1	**5C-2890**	3	NUT (M6X1 THD)	
M	26	1	**5C-8312**	1	NUT (M4X0.7 THD)	
M	27	1	**5C-9553**	2	BOLT (M6X1X16MM)	
	28	1	**6D-4244**	2	CLIP	
	29	1	**6J-0488**	1	SCREW-BUTTON HEAD (3/8-16X0.875 IN)	
	30	1	**6V-8185**	3	NUT (1/4-20 THD)	
	31	1	**6V-8801**	1	NUT (3/8-16 THD)	
	32	1	**8C-7508**	2	LOCKWASHER	
	33	1	**8J-1256**	1	CLIP	
	34	1	**8L-6521**	8	BOLT (10-32X0.5IN)	
	35	1	**8T-4205**	3	WASHER-HARD (7.2X14.5X2MM THK)	

159-5855 **WIRING GP-STEERING CONSOLE** ***(contd.)*** **i01844587**

NOTE	REF NO	GRAPHIC REF	PART NUMBER	QTY	PART NAME 1 2 3 4 5 6 (PRODUCT LEVEL)	SEE PAGE
	36	1	**8T-4896**	1	WASHER-HARD (10.2X18.5X2.5MM THK)	
M	37	1	**8T-4971**	1	BOLT (M6X1X30MM)	
	38	1	**9P-2553**	1	SPACER (10.28MM THK)	
M	39	1	**9X-1046**	4	SCREW (M4X0.7X18MM)	
M	40	1	**9X-2042**	1	SCREW-TRUSS HEAD (M6X1X12MM)	
	41	1	**9X-8256**	6	WASHER (6.6X12X2MM THK)	
	42	1	**3E-0109**	1	PLUG-ROCKER SWITCH (FLOODLAMP)	

M-METRIC PART

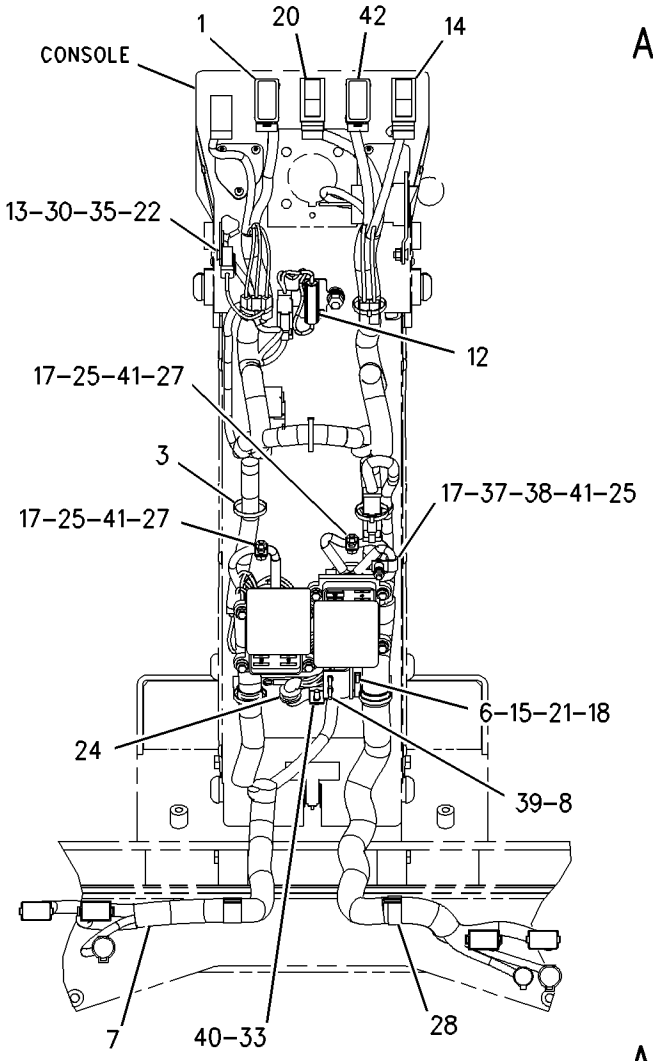

VIEW A-A

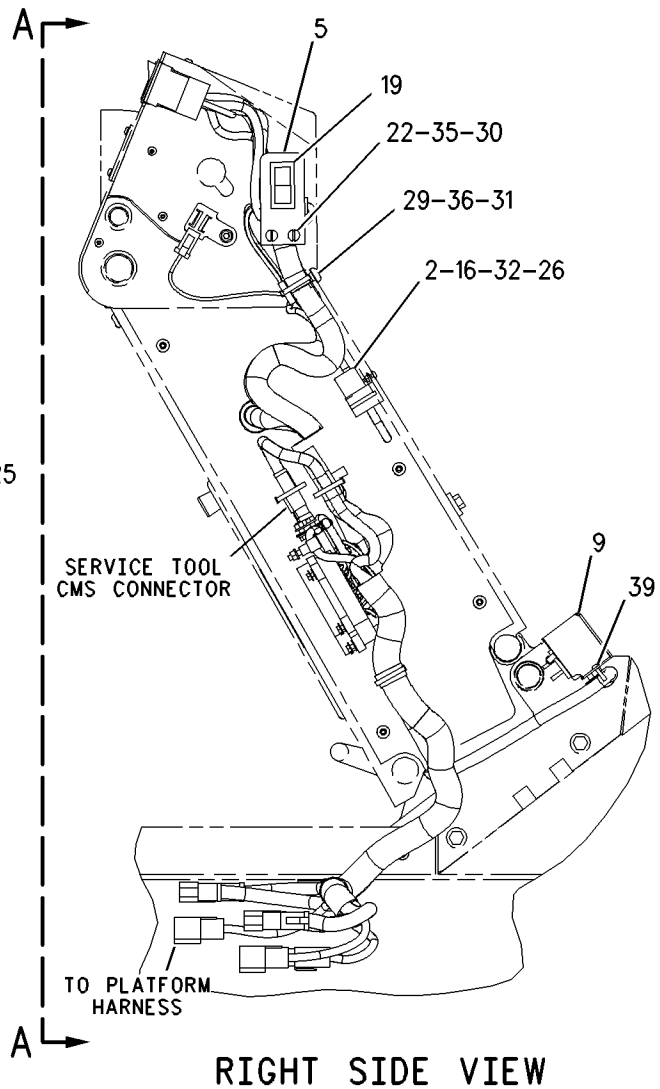

RIGHT SIDE VIEW

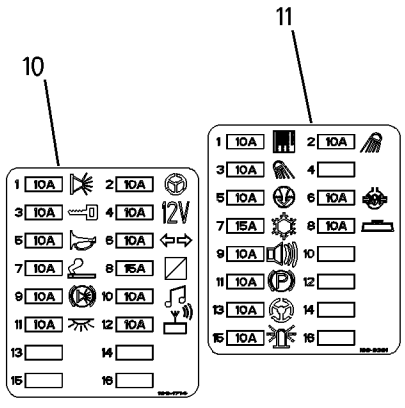

FUSE BLOCK COVER

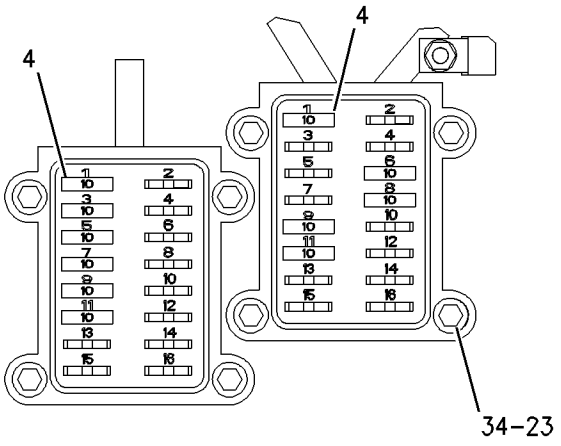

FUSE BLOCKS

GRAPHIC #1

g00944171

117-2760 WIRING GP-UNIT INJECTOR

S/N: 5ED478-UP

PART OF 204-7983 ENGINE AR

SMCS-1408 **i01595626**

NOTE	REF NO	GRAPHIC REF	PART NUMBER	QTY	PART NAME 1 2 3 4 5 6 (PRODUCT LEVEL)	SEE PAGE
	1	1	**4P-9537**	1	HARNESS AS-WIRING (UNIT INJECTOR)	
	2	1	**2V-3216**	4	CLIP	
	3	1	**7X-2468**	3	CLIP	
	4	1	**7E-6508**	6	CAP AS	
M	5	1	**6V-8214**	9	BOLT (M6X20MM)	
	6	1	**5P-0537**	9	WASHER-HARD (7.2X14.5X2MM THK)	

M-METRIC PART

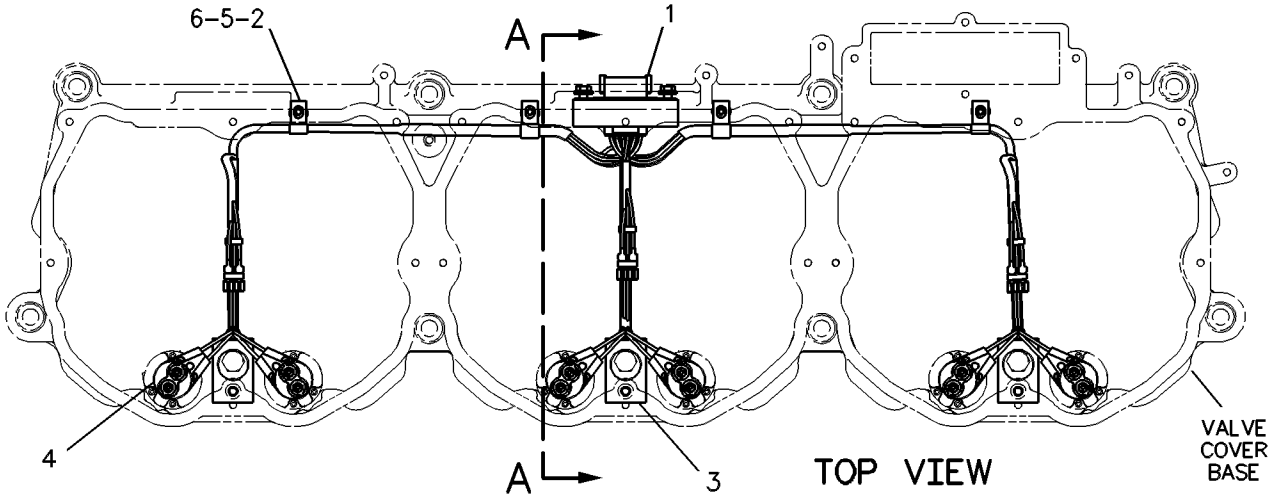

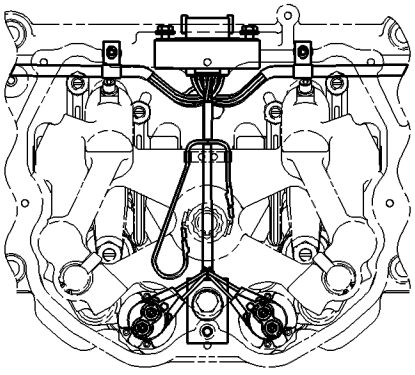

WIRING CONNECTIONS SHOWN FOR USE WITH ENGINE RETARDER

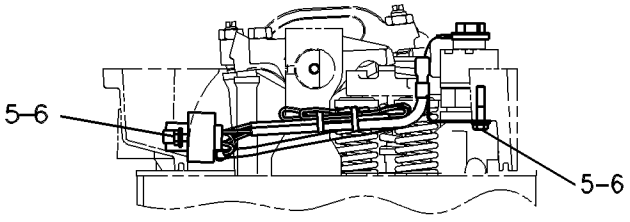

VIEW A-A

GRAPHIC #1 g00399410

208-2999 ADAPTER GP-ENGINE TO TMSN

S/N: ATS1-UP

PART OF 162-5607 GENERAL AR

SMCS-1001 **i01709858**

NOTE	REF NO	GRAPHIC REF	PART NUMBER	QTY	PART NAME 1 2 3 4 5 6 (PRODUCT LEVEL)	SEE PAGE
	1	1	**4S-5824**	1	RETAINER	
	2	1	**8F-6711**	1	SEAL-O-RING	
	3	1	**9H-0846**	1	SEAL-O-RING	
	4	1	**208-0856**	1	COUPLING	
	5	1	**0S-1579**	1	BOLT (1/2-20X2 IN)	
	6	1	**3K-6113**	11	WASHER-HARD (12X18.5X3MM THK)	
	7	1	**5P-8282**	11	BOLT-LOCKING (7/16-14X1.5 IN)	

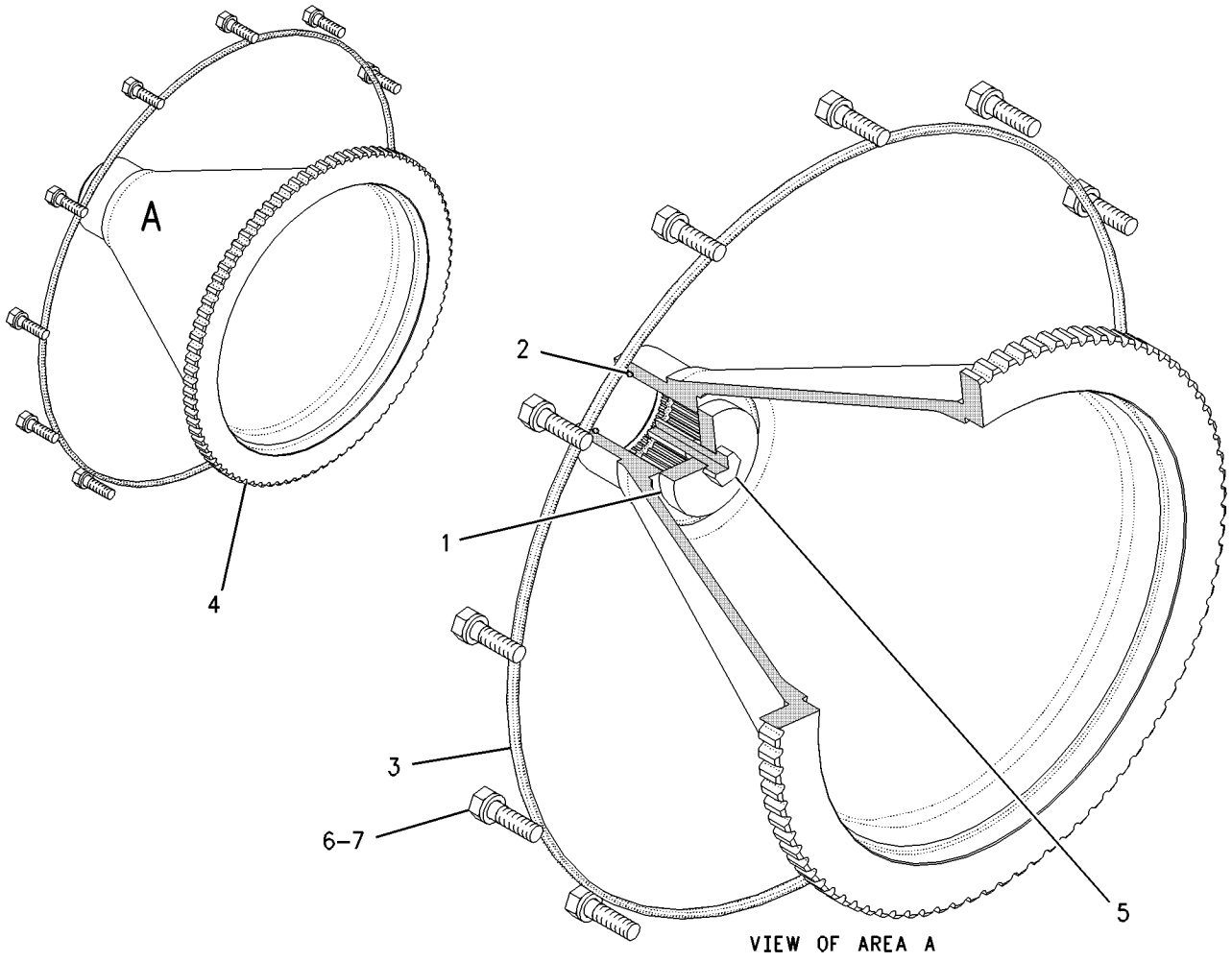

GRAPHIC #1 g00883582

2P-6899 CASE GP-TRANSMISSION

S/N: DWH1-UP

PART OF 186-4872 GEAR & CASE GP-TRANSFER

SMCS-3064 **i00922425**

NOTE	REF NO	GRAPHIC REF	PART NUMBER	QTY	PART NAME 1 2 3 4 5 6 (PRODUCT LEVEL)	SEE PAGE
	1	1	**3P-0229**	2	SLEEVE	
	2	1	**2P-6928**	1	TUBE	
	3	1	**0L-2061**	2	DOWEL (9.4 X 22 MM)	
	4	1	**9M-4007**	2	DOWEL (12.5 X 23.8 MM)	
	5	1	**2P-6897**	1	TUBE	
	6	1	**1P-8594**	4	SLEEVE	
	7	1	**4K-0149**	1	PLUG-CUP	
	8	1	**2P-5720**	1	TUBE	
	9	1	**2P-5721**	1	TUBE	
	10	1	**2P-5719**	1	TUBE	
C	11	1	**6T-3118**	1	TUBE	
	12	1	**2P-5780**	2	SLEEVE	
	13	1	**2P-6929**	1	TUBE	
	14	1	**2P-6898**	1	TUBE	

C-CHANGE FROM PREVIOUS TYPE

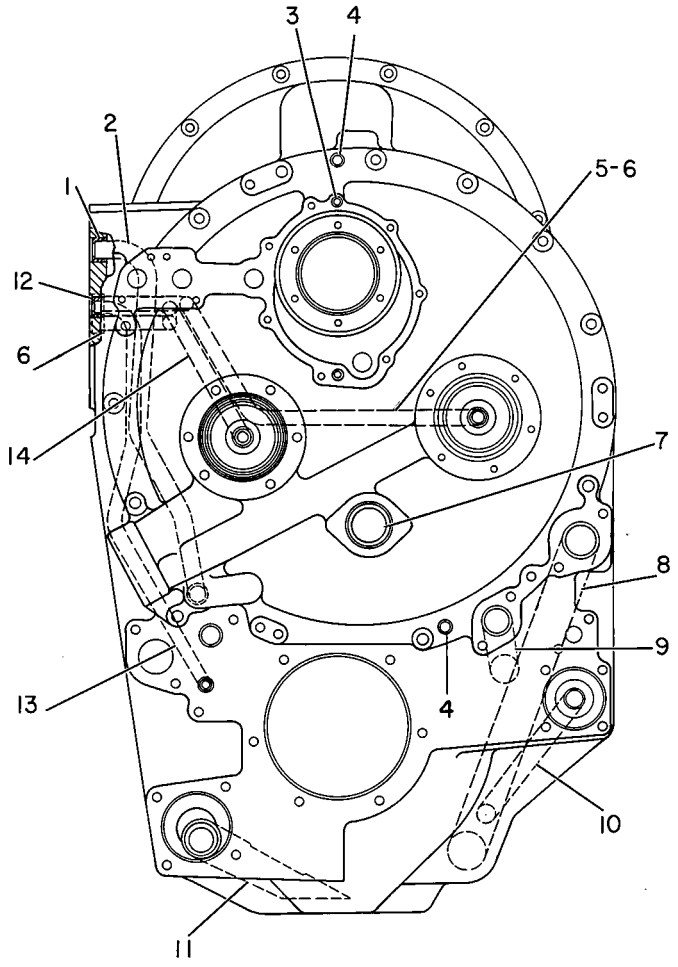

GRAPHIC #1 g00108217

6G-1740 CHAIN GP-DRIVE

S/N: ATS1-UP
TANDEM
PART OF 162-5607 GENERAL AR

SMCS-3261, 4063 **i00817372**

NOTE	REF NO	GRAPHIC REF	PART NUMBER	QTY	PART NAME 1 2 3 4 5 6 (PRODUCT LEVEL)	SEE PAGE
	1	1	**6G-1601**	4	CHAIN GP	
					(EACH INCLUDES)	
	2	1	**6G-1602**	1	LINK-CONNECTING (MASTER)	

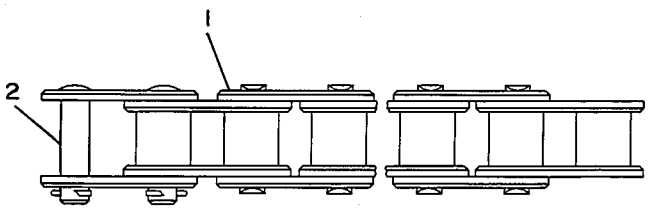

GRAPHIC #1 g00108248

MEMORANDA

POWER TRAIN

172-5717 CONTROL GP-CLUTCH

S/N: ATS1-UP

PART OF 162-5607 GENERAL AR

SMCS-5157 **i01795713**

NOTE	REF NO	GRAPHIC REF	PART NUMBER	QTY	PART NAME 1 2 3 4 5 6 (PRODUCT LEVEL)	SEE PAGE
	1	1	**1B-2578**	1	NUT (3/8-16 THD)	
	2	1	**1D-1313**	1	SPRING	
	3	1	**1F-4622**	2	BEARING AS-NEEDLE	
	4	1	**1V-6341**	1	SEAL	
	5	1	**4D-4895**	1	LEVER	
	6	1	**4J-2667**	1	BEARING AS-NEEDLE	
	7	1	**5P-7704**	1	ROD END	
	8	1	**6P-5442**	2	PLUG	
	9	1	**6V-8187**	2	NUT (1/4-28 THD)	
	10	1	**7D-9212**	1	SPRING	
	11	1	**7K-2135**	1	BEARING-ROLLER	
	12	1	**7V-0446**	2	CLIP	
	13	1	**8D-5293**	2	RING	
	14	1	**8D-5294**	1	RING	
	15	1	**8D-9969**	1	COVER	
	16	1	**8D-9973**	1	HOUSING	
	17	1	**8D-9974**	1	GASKET	
	18	1	**8X-3805**	1	SHAFT	
	19	1	**8X-3988**	1	COUPLING	
	20	1	**9D-0145**	1	LEVER	
	21	1	**9J-8783**	1	SHIM (.508MM THK)	
	22	1	**9X-5694**	1	CABLE AS	
		1	**8C-0620**	2	PROTECTOR-THREAD	
	23	1	**161-7065**	1	BRACKET AS	
	24	1	**169-0921**	1	ROD END (INTERNAL THREAD)	
	25	1	**169-0922**	1	ROD	
	26	1	**172-4211**	1	SPACER (10.5X22X50.8MM THK)	
	27	1	**180-7147**	1	LEVER	
	28	1	**188-1321**	1	BRACKET AS	
	29	1	**207-4922**	1	PEDAL-CLUTCH	
	30	1	**129-3173**	1	BOLT-12 POINT HEAD (3/8-16X31.75MM)	
	31	1	**1B-0676**	1	PIN	
	32	1	**1B-8704**	2	KEY-WOODRUFF	
	33	1	**3D-2992**	1	SEAL	
	34	1	**3D-4004**	1	SEAL-QUAD RING	
	35	1	**3K-8280**	1	PIN-CLEVIS	
	36	1	**4J-8922**	1	ROD END	
	37	1	**4L-6454**	8	BOLT (3/8-16X1 IN)	
	38	1	**5P-1075**	9	WASHER-HARD (10.2X22.5X3MM THK)	
	39	1	**5S-7383**	1	BOLT (3/8-16X1.75 IN)	
	40	1	**6V-8183**	1	NUT-FULL (3/8-24 THD)	
	41	1	**6V-8801**	1	NUT (3/8-16 THD)	
	42	1	**7X-0291**	3	BOLT (3/8-16X3.75 IN)	
	43	1	**8D-5295**	1	PIN	
	44	1	**8T-4122**	2	WASHER-HARD (17X32X3.5MM THK)	
M	45	1	**8T-4133**	4	NUT (M10X1.5 THD)	
M	46	1	**8T-4195**	2	BOLT (M10X1.5X30MM)	
	47	1	**8T-4224**	1	WASHER-HARD (8.8X16X2MM THK)	
	48	1	**8T-4226**	1	WASHER-PLATED (10.5X45X3MM THK)	
	49	1	**8T-4896**	3	WASHER-HARD (10.2X18.5X2.5MM THK)	
	50	1	**8T-5390**	1	BOLT (3/8-16X88.9MM)	
	51	1	**8T-9043**	1	BOLT (5/16-18X.875 IN)	
	52	1	**8W-8909**	3	SLEEVE	
	53	1	**9B-7237**	1	BOLT (3/8-16X1.25 IN)	
	54	1	**9D-5506**	1	ROD END	
	55	1	**9S-1354**	3	NUT (5/8-18 THD)	

172-5717 **CONTROL GP-CLUTCH** ***(contd.)*** **i01795713**

M-METRIC PART

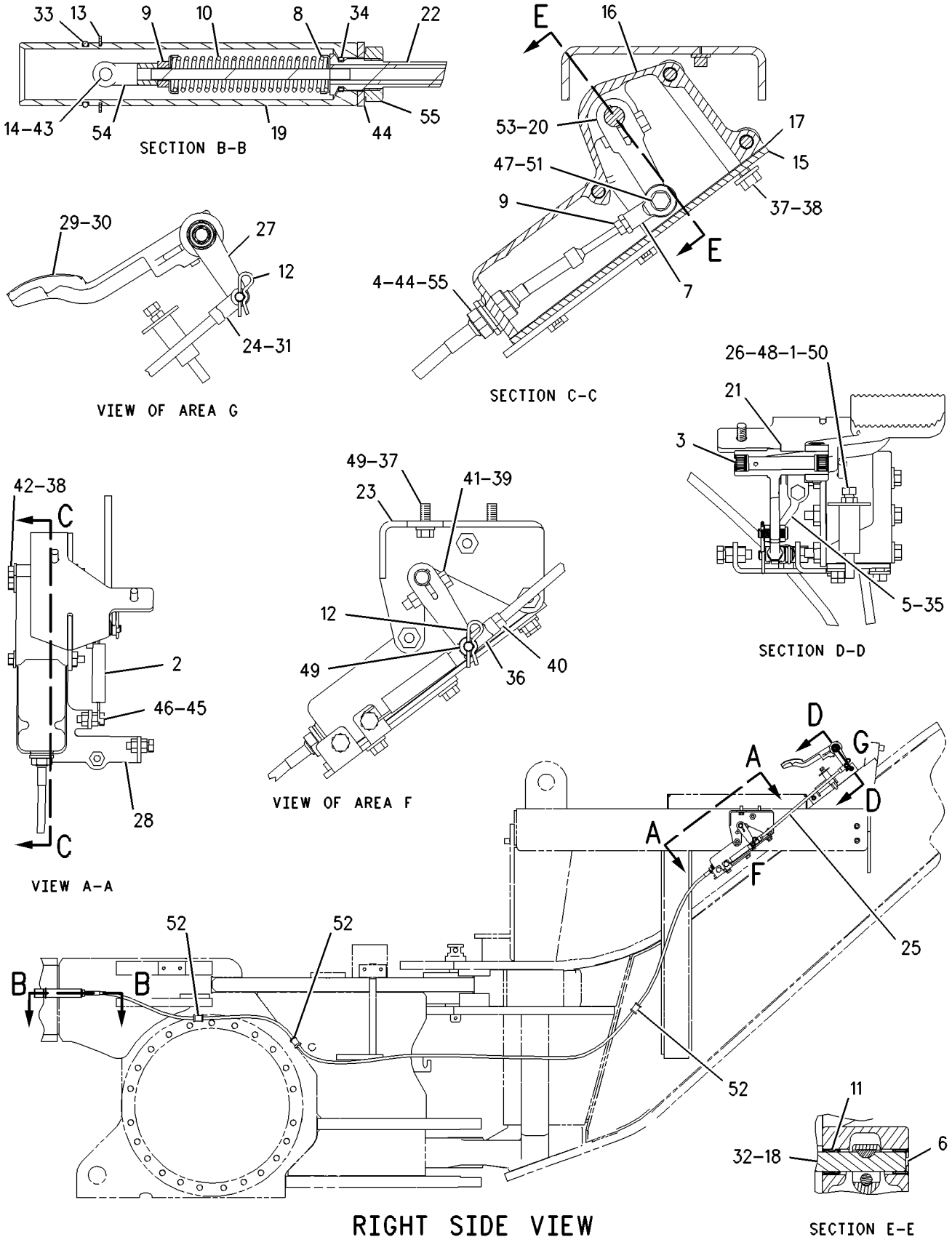

GRAPHIC #1 g00933713

MEMORANDA

173-5334 CONTROL GP-DIFFERENTIAL LOCK

S/N: ATS1-UP

PART OF 162-5607 GENERAL AR

SMCS-3264 **i01795718**

NOTE	REF NO	GRAPHIC REF	PART NUMBER	QTY	PART NAME 1 2 3 4 5 6 (PRODUCT LEVEL)	SEE PAGE
	1	1	**6V-0852**	1	CAP-DUST	
I	2	1	**130-5372**	1	HOSE AS	
Y	3	1	**174-3705**	1	VALVE & MTG GP-DIFF LOCK	316
	4	1	**3J-1907**	1	SEAL-O-RING	
	5	1	**3J-7354**	3	SEAL-O-RING	
	6	1	**4J-5477**	2	SEAL-O-RING	
	7	1	**5P-7981**	1	ELBOW	
	8	1	**6V-3966**	1	FITTING AS	
	9	1	**6V-8628**	1	ELBOW	
	10	1	**6V-8641**	1	CONNECTOR	
	11	1	**8M-4438**	2	SEAL-O-RING	
	12	1	**8T-2501**	2	BOLT (3/8-16X2 IN)	
	13	1	**8T-4896**	2	WASHER-HARD (10.2X18.5X2.5MM THK)	
	14	1	**9M-8406**	1	CLIP	

I-SEE HOSE FABRICATION GUIDE
Y-SEPARATE ILLUSTRATION

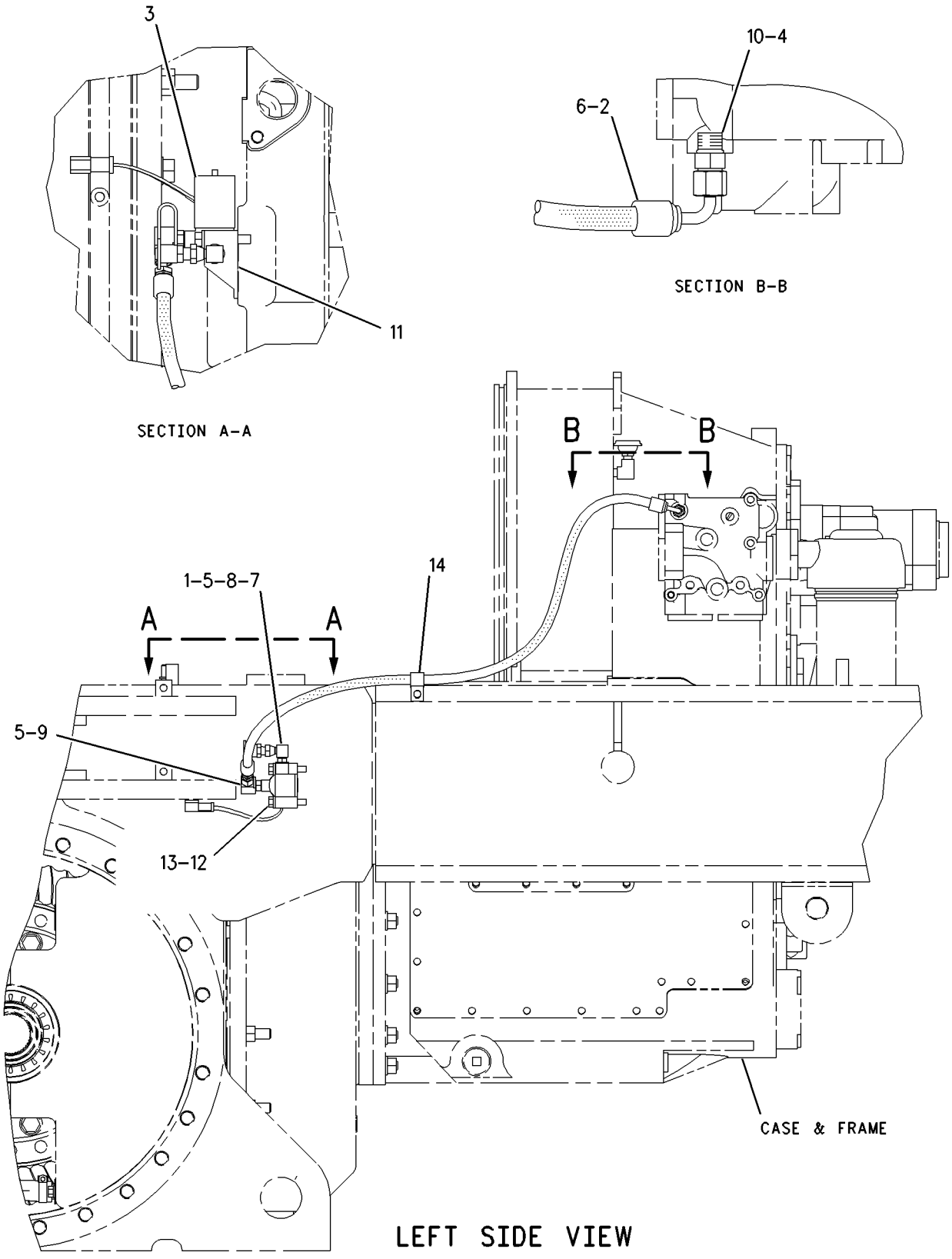

GRAPHIC #1 g00932231

POWER TRAIN

167-9004 CONTROL GP-TRANSMISSION

S/N: ATS1-UP

PART OF 162-5607 GENERAL AR

SMCS-3065 **i01795683**

NOTE	REF NO	GRAPHIC REF	PART NUMBER	QTY	PART NAME 1 2 3 4 5 6 (PRODUCT LEVEL)	SEE PAGE
BD	1	1	**5P-5924**		SEAL	
	2	2	**1F-4622**	2	BEARING AS-NEEDLE	
	3	2	**1U-2761**	1	BOLT (3/8-16X2.36 IN)	
	4	2	**2A-7090**	1	COUPLING AS	
	5	2	**2P-9858**	4	BEARING-ROLLER	
	6	2	**3N-9371**	1	SPRING	
	7	2	**4T-7520**	1	SPRING	
	8	1	**6L-7751**	2	ROD END	
	9	1,2	**6V-8187**	5	NUT (1/4-28 THD)	
	10	2	**7M-0706**	1	KNOB (GEARSHIFT)	
	11	2	**8D-5293**	4	RING	
	12	1	**8W-1614**	1	CLIP	
	13	2	**8X-3244**	1	COVER	
	14	2	**8X-3247**	2	GASKET	
	15	2	**8X-3248**	1	SHAFT AS	
		2	**7N-5352**	1	DOWEL	
	16	2	**8X-3249**	1	SHAFT AS	
	17	2	**8X-3252**	1	LEVER	
	18	2	**8X-3406**	1	LEVER	
	19	2	**8X-4879**	1	BRACKET AS	
	20	2	**8X-6328**	1	RETAINER	
	21	2	**8X-6618**	1	LEVER	
	22	2	**8X-6619**	1	COVER	
	23	2	**8X-7277**	1	BUSHING	
	24	1	**8X-8096**	1	FILM	
	25	2	**8X-8352**	1	ROD AS	
	26	2	**8X-8353**	1	YOKE	
	27	2	**9K-4848**	6	WASHER-THRUST	
	28	2	**9L-2303**	1	SPRING	
	29	1	**9X-9912**	1	CABLE AS	
	30	1	**9X-9913**	1	CABLE AS	
	31	2	**098-1290**	1	RING-RETAINING	
	32	2	**109-1004**	1	BRACKET AS	
	33	1	**119-5030**	1	RETAINER	
	34	2	**133-6047**	1	PLUNGER	
	35	2	**133-6090**	1	ROD AS	
	36	2	**143-9290**	1	PLATE AS	
	37	1	**169-2620**	1	GATE AS	
	38	2	**171-2121**	1	COVER	
	39	1	**172-7105**	1	FILM-PANEL (FORWARD/NEUTRAL/REVERSE)	
	40	1	**172-7106**	1	FILM-PANEL (SPEED SETTING)	
	41	1	**185-2274**	1	FILM-PANEL (ENGINE-HIGH IDLE-HOLD)	
	42	1	**185-2287**	1	FILM-PANEL (ENGINE-LOW IDLE-HOLD)	
	43	2	**187-0975**	1	COVER	
	44	2	**188-3541**	1	COUPLING AS	
	45	2	**188-3543**	1	YOKE	
	46	1	**211-4772**	1	HOUSING	
	47	2	**213-2061**	1	PLATE AS	
	48	2	**1B-8704**	2	KEY-WOODRUFF	
	49	2	**1H-3337**	2	BOLT (1/4-20X0.875 IN)	
	50	2	**3D-2992**	2	SEAL	
	51	2	**3D-4004**	2	SEAL-QUAD RING	
	52	1	**4D-7794**	1	CLIP	
	53	1	**4L-6454**	3	BOLT (3/8-16X1 IN)	
	54	1	**4M-5282**	2	BOLT (1/4-20X1.50 IN)	
	55	1	**5P-1075**	3	WASHER-HARD (10.2X22.5X3MM THK)	

167-9004 **CONTROL GP-TRANSMISSION** *(contd.)* **i01795683**

NOTE	REF NO	GRAPHIC REF	PART NUMBER	QTY	PART NAME 1 2 3 4 5 6 (PRODUCT LEVEL)	SEE PAGE
	56	2	**5P-4115**	3	WASHER-HARD (7.2X19X2MM THK)	
	57	1,2	**5P-8247**	4	WASHER-HARD (17X32X3.5MM THK)	
	58	2	**6V-5782**	1	BOLT (5/16-18X1.125 IN)	
	59	1	**6V-8185**	2	NUT (1/4-20 THD)	
	60	2	**6V-8189**	1	NUT (5/16-18 THD)	
	61	2	**6V-8801**	1	NUT (3/8-16 THD)	
	62	2	**8D-5641**	4	BEARING	
	63	2	**8T-4205**	2	WASHER-HARD (7.2X14.5X2MM THK)	
	64	2	**8T-4224**	1	WASHER-HARD (8.8X16X2MM THK)	
	65	2	**8T-4896**	2	WASHER-HARD (10.2X18.5X2.5MM THK)	
	66	2	**8T-7566**	2	PIN-SPRING	
	67	1	**8T-9471**	2	GROMMET	
	68	1	**8W-8909**	4	SLEEVE	
	69	2	**9H-2910**	2	PIN	
	70	1,2	**9S-1354**	6	NUT (5/8-18 THD)	
M	71	1,2	**9X-2041**	18	SCREW-TRUSS HEAD (M10X1.5X20MM)	
M	72	2	**9X-2042**	1	SCREW-TRUSS HEAD (M6X1X12MM)	
M	73	2	**9X-2043**	11	SCREW-TRUSS HEAD (M6X1X14MM)	
M	74	2	**9X-2045**	4	SCREW-TRUSS HEAD (M6X1X20MM)	

B-USE AS REQUIRED
D-ORDER BY THE METER
M-METRIC PART

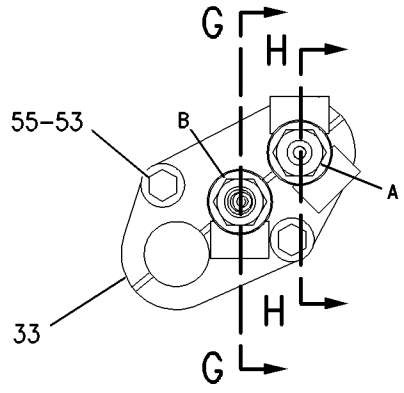

SECTION D-D

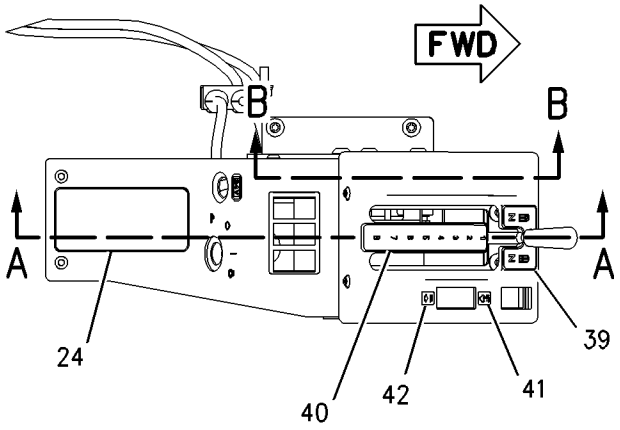

VIEW L-L

REFER TO ALL ILLUSTRATIONS OF THIS GROUP FOR AUXILIARY VIEWS

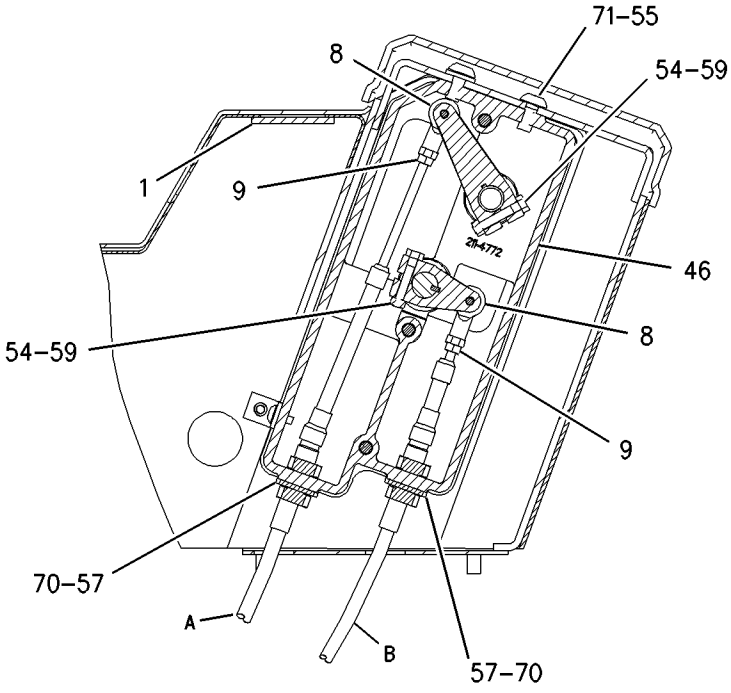

SECTION B-B

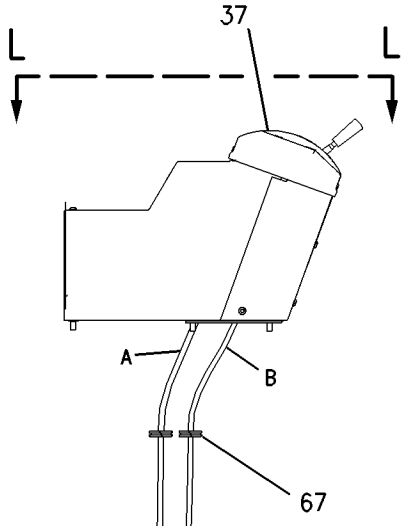

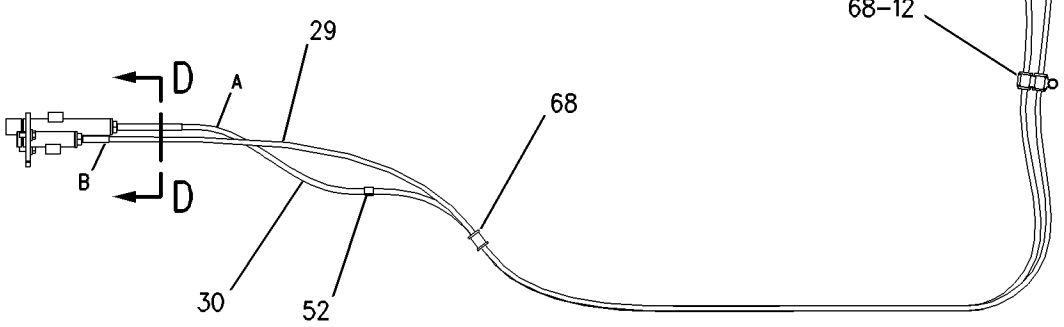

RIGHT SIDE VIEW

GRAPHIC #1 g00932487

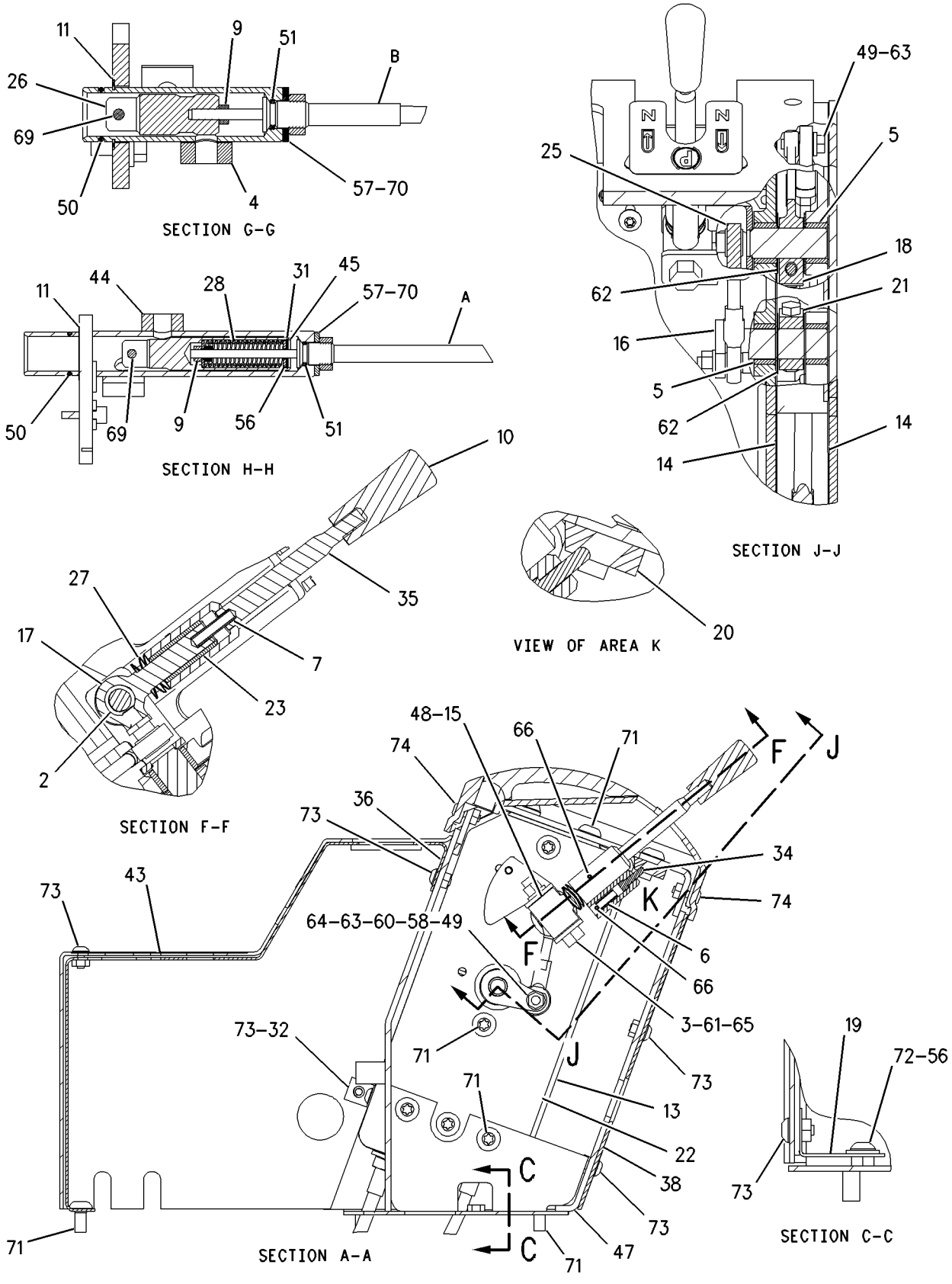

GRAPHIC #2

g00932491

8E-4132 CONTROL GP-TRANSMISSION HYD

S/N: DWH1-UP

PART OF 183-6616 TRANSMISSION AR

SMCS-3073, 3167 **i01671196**

NOTE	REF NO	GRAPHIC REF	PART NUMBER	QTY	PART NAME 1 2 3 4 5 6 (PRODUCT LEVEL)	SEE PAGE
Y	1	1	**115-1375**	1	VALVE GP-RELIEF (MAIN)	320
	2	1	**0L-1352**	4	BOLT (3/8-16X3.25 IN)	
	3	1	**3B-4506**	4	LOCKWASHER	
	4	1	**2J-0157**	2	SEAL-O-RING	
	5	1	**2H-3932**	3	SEAL-O-RING	
	6	1	**3H-0107**	1	SEAL-O-RING	
	7	1	**6F-6673**	1	SEAL-O-RING	
Y	8	1	*8E-4131*	1	VALVE GP-TRANSMISSION CONTROL	330
	9	1	**5F-6044**	2	BOLT (3/8-16X9 IN)	
	10	1	**4F-0411**	2	BOLT (3/8-16X6.5 IN)	
	11	1	**5M-2894**	4	WASHER-HARD (10.2X18.5X2.5MM THK)	
	12	1	**3J-1907**	2	SEAL-O-RING	
	13	1	**3P-2777**	1	PLATE	
	14	1	**3P-2781**	1	PLATE	
	15	1	**1T-0416**	1	BOLT (5/16-18X0.75 IN)	
	16	1	**6P-5096**	2	LINK-EXTENSION	
	17	1	**2P-7045**	1	SLEEVE	
	18	1	**2P-7044**	1	SLEEVE	
	19	1	**2P-4549**	2	SLEEVE	
	20	1	**8M-4389**	8	SEAL-O-RING	
	21	1	**9S-4191**	2	PLUG	

Y-SEPARATE ILLUSTRATION

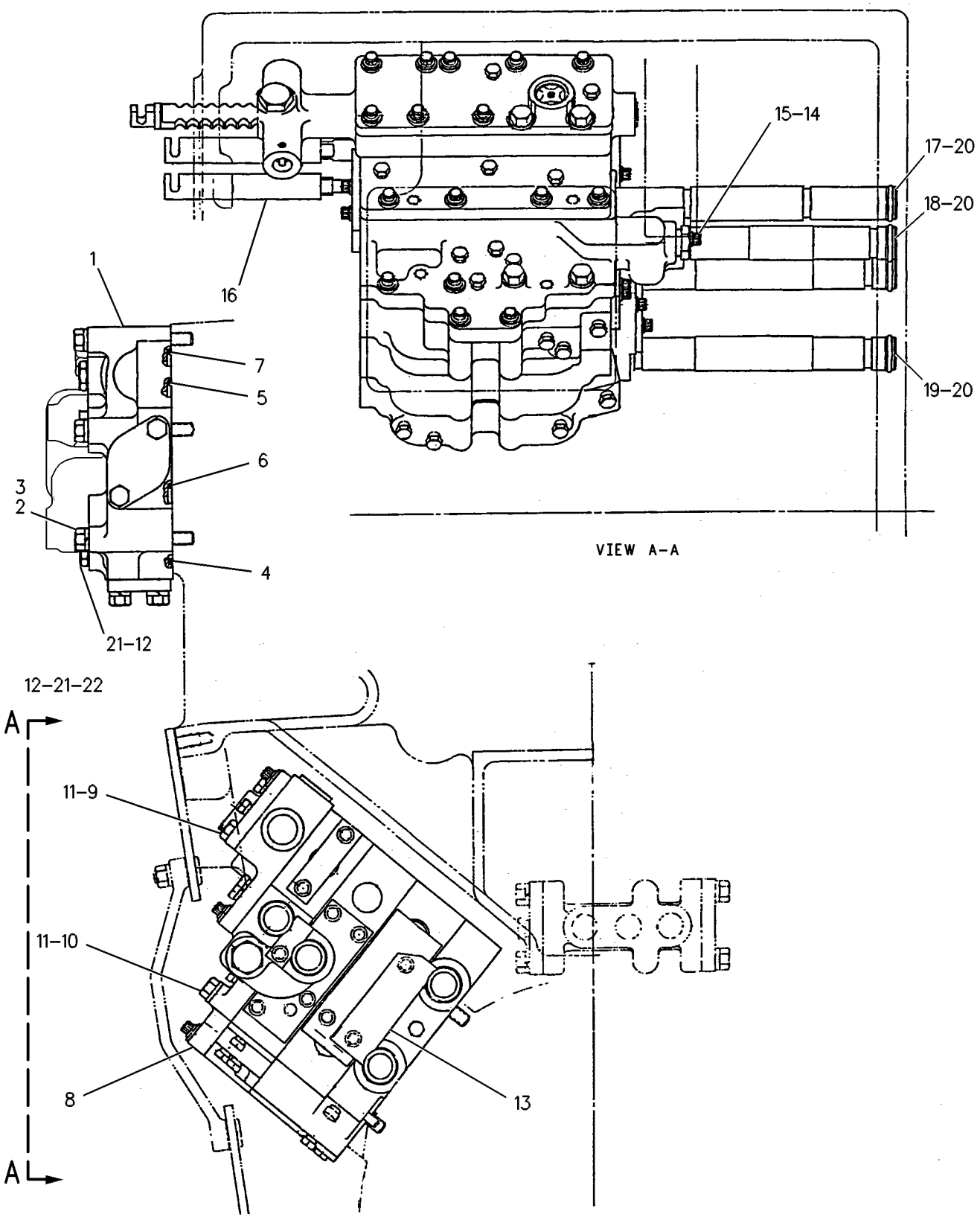

GRAPHIC #1 g00109585

163-9322 COOLER GP-TRANSMISSION OIL

S/N: 5ED478-UP

PART OF 204-7983 ENGINE AR

SMCS-1375 **i01625999**

NOTE	REF NO	GRAPHIC REF	PART NUMBER	QTY	PART NAME 1 2 3 4 5 6 (PRODUCT LEVEL)	SEE PAGE
	1	1	**8T-4984**	2	CLAMP-HOSE	
	2	1	**100-8525**	1	GASKET	
R	3	1	**115-4517**	1	CORE AS-ENGINE OIL COOLER	
	4	1	**122-0763**	1	ELBOW	
	5	1	**124-5043**	1	COUPLING	
M	6	1	**131-0353**	2	STUD	
	7	1	**131-6645**	1	HOSE	
	8	1	**155-7970**	1	BONNET-OIL COOLER	
	9	1	**174-1637**	1	ELBOW	
	10	1	**175-7453**	1	CORE AS	
	11	1	**209-1743**	1	BRACKET	
	12	1	**209-7389**	1	BONNET	
	13	1	**061-7540**	2	SEAL-O-RING	
	14	1	**117-3036**	2	SEAL-O-RING	
	15	1	**129-2861**	2	GASKET	
	16	1	**2N-0475**	2	SEAL-O-RING	
	17	1	**3E-4352**	4	WASHER-HARD (8.8X20.5X2.5MM THK)	
	18	1	**5P-4116**	4	WASHER-HARD (8.8X20.5X2MM THK)	
M	19	1	**5P-7970**	4	NUT (M8X1.25 THD)	
	20	1	**5P-8245**	2	WASHER-HARD (13.5X25.5X3MM THK)	
M	21	1	**6V-2317**	10	BOLT (M8X1.25X30MM)	
M	22	1	**6V-3918**	2	BOLT (M8X1.25X50MM)	
M	23	1	**6V-5218**	6	BOLT (M8X1.25X35MM)	
	24	1	**6V-9027**	1	SEAL-O-RING	
	25	1	**7X-7731**	1	PLUG-PIPE	
M	26	1	**6A-5591**	2	BOLT (M12X1.75X25MM)	
	27	1	**8T-6761**	1	PLUG-PIPE	
	28	1	**8T-6767**	1	PLUG-PIPE	
	29	1	**9M-1974**	16	WASHER-HARD (8.8X16X2MM THK)	
	30	1	**9S-4182**	2	PLUG-O-RING	

M-METRIC PART
R-REMFG PART MAY BE AVAILABLE

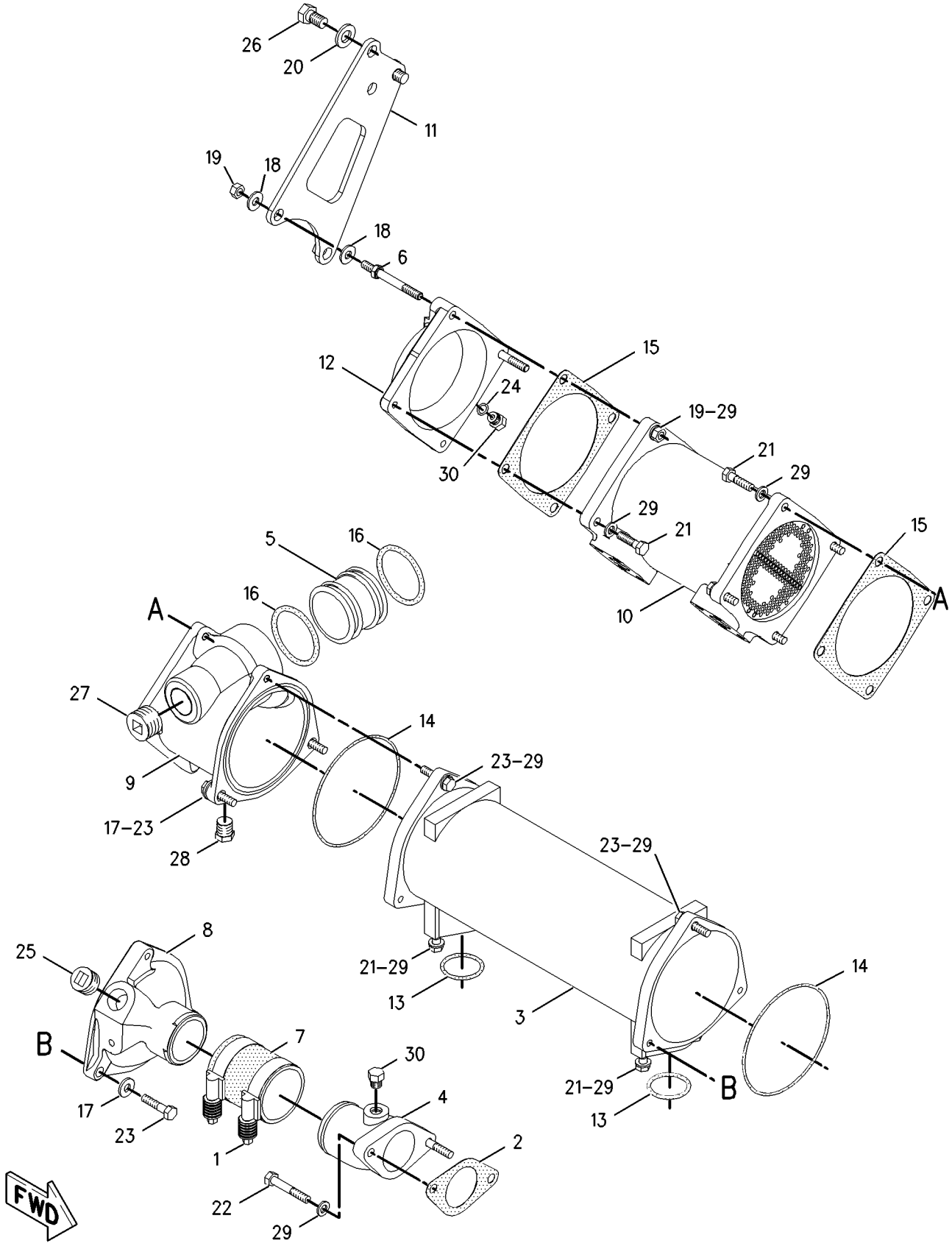

GRAPHIC #1 g00834518

227-2564 COVER GP-SHIPPING

S/N: DWH1-UP

PART OF 183-6616 TRANSMISSION AR

SMCS-3030, 3064, 3188 **i01796293**

NOTE	REF NO	GRAPHIC REF	PART NUMBER	QTY	PART NAME 1 2 3 4 5 6 (PRODUCT LEVEL)	SEE PAGE
	1	1	**224-6644**	1	COVER (SHIPPING)	
	2	1	**0T-0573**	6	BOLT (3/8-16X2.75 IN)	
	3	1	**9S-8752**	6	NUT-FULL (3/8-16 THD)	
	4	1	**3P-5640**	2	GASKET	
	5	1	**3P-5639**	1	COVER	
	6	1	**0S-0509**	2	BOLT (3/8-16X0.75 IN)	
	7	1	**5M-2894**	2	WASHER-HARD (10.2X18.5X2.5MM THK)	
	8	1	**9S-4183**	2	PLUG	
	9	1	**3D-2824**	2	SEAL-O-RING	
	10	1	**190-9841**	1	COVER-SHIPPING	
	11	1	**1D-4585**	7	BOLT (5/8-11X3.25 IN)	
	12	1	**4B-4281**	7	WASHER (16.8X33X2.5MM THK)	
	13	1	**4K-0367**	7	NUT-FULL (5/8-11 THD)	
	14	1	**6V-5839**	6	WASHER (11X21X2.5MM THK)	
	15	1	**4D-1577**	1	SEAL-O-RING	
	16	1	**9H-0846**	1	SEAL-O-RING	
	17	1	**7F-8268**	1	SEAL-O-RING	
	18	1	**4F-8946**	1	SEAL-O-RING	
	19	1	**4F-7952**	1	SEAL-O-RING	

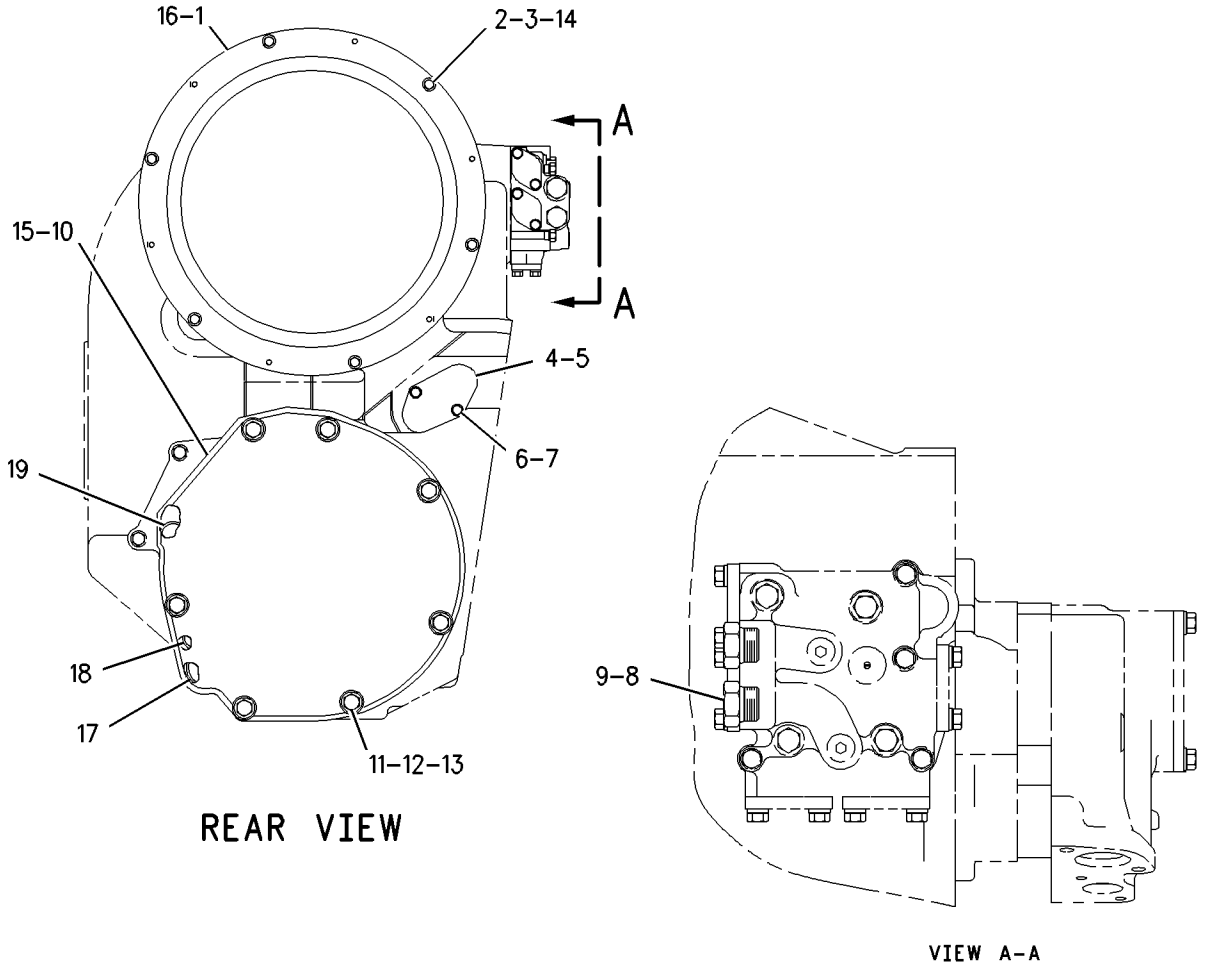

GRAPHIC #1 g00922809

MEMORANDA

POWER TRAIN

8D-4290 DIFFERENTIAL & BEVEL GEAR GP

S/N: ATS1-UP

PART OF 162-5607 GENERAL AR

SMCS-3256, 3258 **i01532341**

NOTE	REF NO	GRAPHIC REF	PART NUMBER	QTY	PART NAME 1 2 3 4 5 6 (PRODUCT LEVEL)	SEE PAGE
	1	1	**9D-9110**	1	HOUSING AS	
	2	1	**3D-8439**	10	STUD (5/8-11 X 3.4 IN OAL)	
C	3	1	**5K-9107**	1	BOLT-LOCKING (3/8-16X0.75 IN)	
C		1	**5M-2894**	1	WASHER-HARD (10.2X18.5X2.5MM THK)	
	4	1	**8D-3946**	1	CAGE	
C	5	1	**6G-4703**	1	NUT (5 1/4-12 THD)	
C	6	1	**030-0061**	1	CONE-ROLLER BEARING	
C	7	1	**030-0060**	1	CUP-ROLLER BEARING	
	8	1	**3F-1523**	1	DOWEL	
	9	1	**8D-4038**	2	LOCK	
C	10	1	**6K-7917**	2	BOLT-LOCKING (1/2-13X1 IN)	
C		1	**5P-8245**	2	WASHER-HARD (13.5X25.5X3MM THK)	
Y	11	1	**8D-4300**	1	DIFFERENTIAL GP	288
C	12	1	**6G-6272**	2	RING-SEAL	
C	13	1	**2G-7414**	1	RING	
C	14	1	**2G-7759**	1	CAGE AS	
		1	**2D-6642**	1	BALL	
	15	1	**2N-3254**	1	CONE-ROLLER BEARING	
	16	1	**2N-3253**	1	CUP-ROLLER BEARING	
C	17	1	**6G-4705**	1	NUT	
	18	1	**9D-8799**	1	RING	
		1	**2S-1914**	1	SEAL-RING (.487MM ID)	
	19	1	**5H-8038**	1	SEAL-O-RING	
	20	1	**4K-0367**	20	NUT-FULL (5/8-11 THD)	
C	21	1	**2S-5658**	24	WASHER-HARD (17X29X3MM THK)	
	22	1	**0S-1592**	4	BOLT (5/8-11X1.25IN)	
	23	1	**7F-8268**	1	SEAL-O-RING	
C	24	1	**5M-2894**	11	WASHER-HARD (10.2X18.5X2.5MM THK)	
C	25	1	**034-3557**	6	BOLT-LOCKING (3/8-16X1.125 IN)	
	26	1	**8D-4164**	1	COVER	
C	27	1	**030-8535**	5	BOLT-LOCKING (3/8-16X0.875 IN)	
	28	1	**8D-4227**	1	SPACER	
	29	1	**4D-1577**	1	SEAL-O-RING	
	30	1	**4F-7952**	1	SEAL-O-RING	
	31	1	**4F-8946**	1	SEAL-O-RING	
B	32	2	**8D-4218**	6	SHIM (.127MM THK)	
B		2	**8D-4219**	6	SHIM (.178MM THK)	
	33	2	**9D-1853**	2	RETAINER	
	34	2	**9H-3360**	1	SEAL-O-RING	
	35	2	**1P-7896**	1	CUP-ROLLER BEARING	
	36	2	**1P-7895**	1	CONE-ROLLER BEARING	
	37	2	**8D-8586**	1	CAGE	
	38	2	**8D-8706**	1	CARRIER AS-DIFFERENTIAL	
	39	2	**1D-4643**	4	BOLT (1-8X5.50 IN)	
		2	**5F-6562**	4	WASHER-HARD (28X44.5X4MM THK)	
		2	**3D-8242**	4	SLEEVE	
	40	2	**9D-3018**	1	TUBE AS	
C		2	**030-8535**	1	BOLT-LOCKING (3/8-16X0.875 IN)	
C		2	**5M-2894**	1	WASHER-HARD (10.2X18.5X2.5MM THK)	
	41	2	**9M-3786**	1	SEAL-O-RING	
	42	2	**8D-8587**	1	GEAR-TRANSFER (20 TEETH)	
	43	2	**9D-4044**	1	HOSE	
	44	2	**7H-1442**	1	CLAMP-HOSE	
	45	2	**8D-2106**	1	PINION-BEVEL	
	46	2	**4M-1552**	1	CONE-ROLLER BEARING	
	47	2	**3F-5920**	1	CUP-ROLLER BEARING	

8D-4290 DIFFERENTIAL & BEVEL GEAR GP *(contd.)* i01532341

NOTE	REF NO	GRAPHIC REF	PART NUMBER	QTY	PART NAME 1 2 3 4 5 6 (PRODUCT LEVEL)	SEE PAGE
	48	2	**8B-4967**	1	SEAL-O-RING	
	49	2	**3D-8241**	1	SEAL-O-RING	
	50	2	**8D-2277**	1	GEAR (24 TEETH)	
	51	2	**9D-1854**	1	SPACER (12.7MM THK)	
	52	2	**6B-5262**	1	PLUG-DRAIN	
C		2	**2A-3398**	1	GASKET	
	53	2	**2D-9454**	2	CUP-ROLLER BEARING	
	54	2	**2D-9455**	2	CONE-ROLLER BEARING	
	55	2	**9D-1324**	1	PLATE	
	56	2	**4B-4043**	3	BOLT (5/8-11X1.375 IN)	
		2	**9D-1404**	1	LOCK-NUT	
B	57	2	**7D-8439**	6	SHIM (.007MM THK)	
B		2	**7D-8441**	6	SHIM (.005MM THK)	

B-USE AS REQUIRED
C-CHANGE FROM PREVIOUS TYPE
Y-SEPARATE ILLUSTRATION

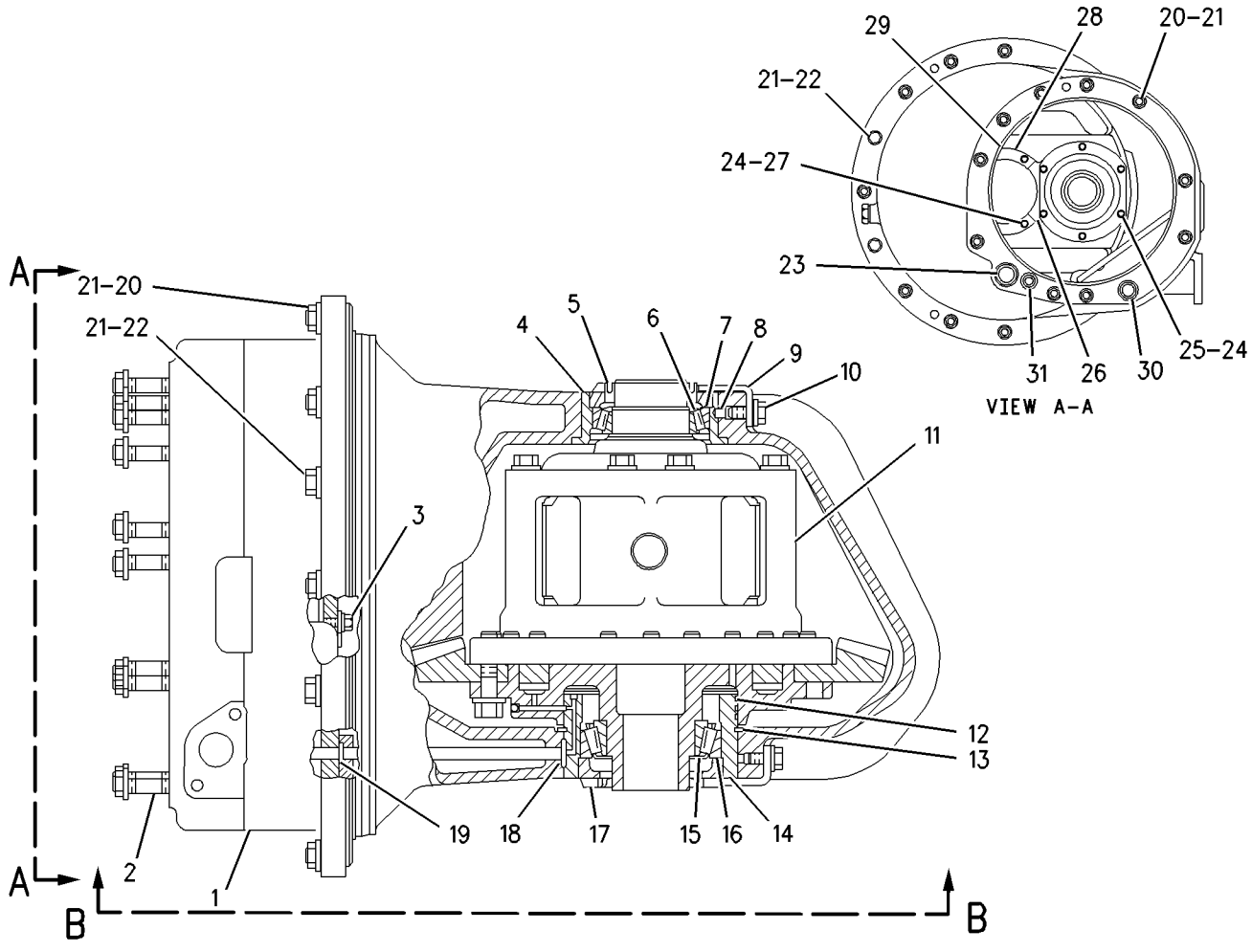

GRAPHIC #1 g00795463

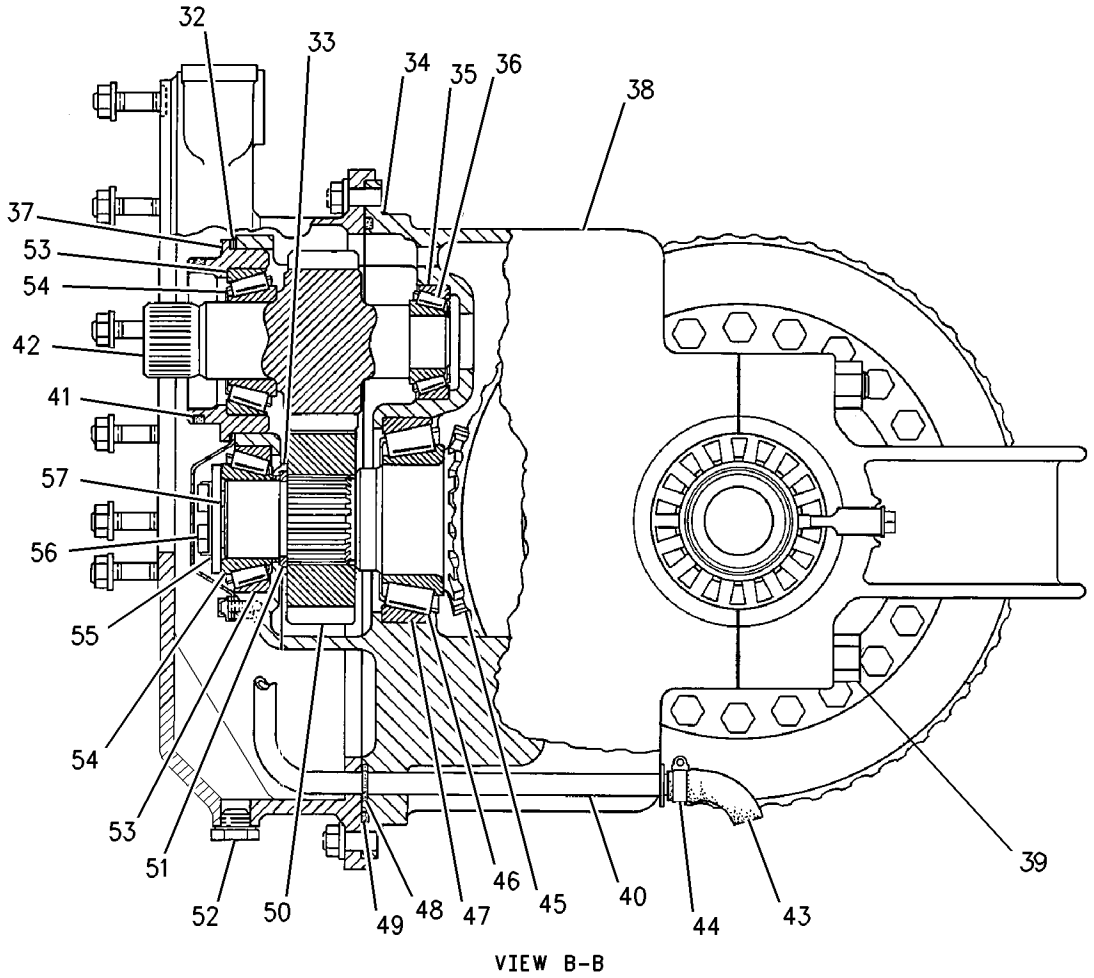

VIEW B-B

GRAPHIC #2 g00795478

MEMORANDA

8D-4300 DIFFERENTIAL GP

S/N: ATS1-UP

PART OF 8D-4290 DIFFERENTIAL & BEVEL GEAR GP

SMCS-3258 **i00130137**

NOTE	REF NO	GRAPHIC REF	PART NUMBER	QTY	PART NAME 1 2 3 4 5 6 (PRODUCT LEVEL)	SEE PAGE
	1	1	**8D-9456**	1	GEAR-DIFFERENTIAL BEVEL (24 TEETH)	
	2	1	**8D-3923**	2	WASHER-THRUST	
	3	1	**111-8209**	1	SPIDER	
	4	1	**8D-3917**	4	WASHER-THRUST	
	5	1	**8D-4278**	1	SPACER	
	6	1	**8D-1858**	1	GEAR-RING (63 TEETH)	
	7	1	**8D-4250**	1	HOUSING AS	
		1	**4B-9880**	1	BALL	
	8	1	**3D-6509**	2	DOWEL	
	9	1	**8D-3971**	1	SEAL-RING	
	10	1	**8D-3937**	1	PISTON	
	11	1	**8D-3972**	1	SEAL-RING	
	12	1	**8D-3879**	7	DISC	
	13	1	**6Y-7958**	6	DISC-FRICTION	
	14	1	**8D-9457**	1	GEAR-DIFFERENTIAL BEVEL (24 TEETH)	
	15	1	**1D-4609**	21	BOLT (3/4-10X3IN)	
		1	**2S-0115**	21	WASHER-HARD (5MM THK)	
	16	1	**8D-9459**	4	PINION AS	
					(EACH INCLUDES)	
	17	1	**8D-3912**	1	BEARING-SLEEVE	
	18	1	**8D-4325**	1	HOUSING AS	
	19	1	**1A-8651**	8	BOLT (5/8-11X4.5IN)	
		1	**4D-3704**	8	WASHER-HARD (5MM THK)	
	20	1	**3D-6509**	6	DOWEL	

8D-4300 DIFFERENTIAL GP *(contd.)* i00130137

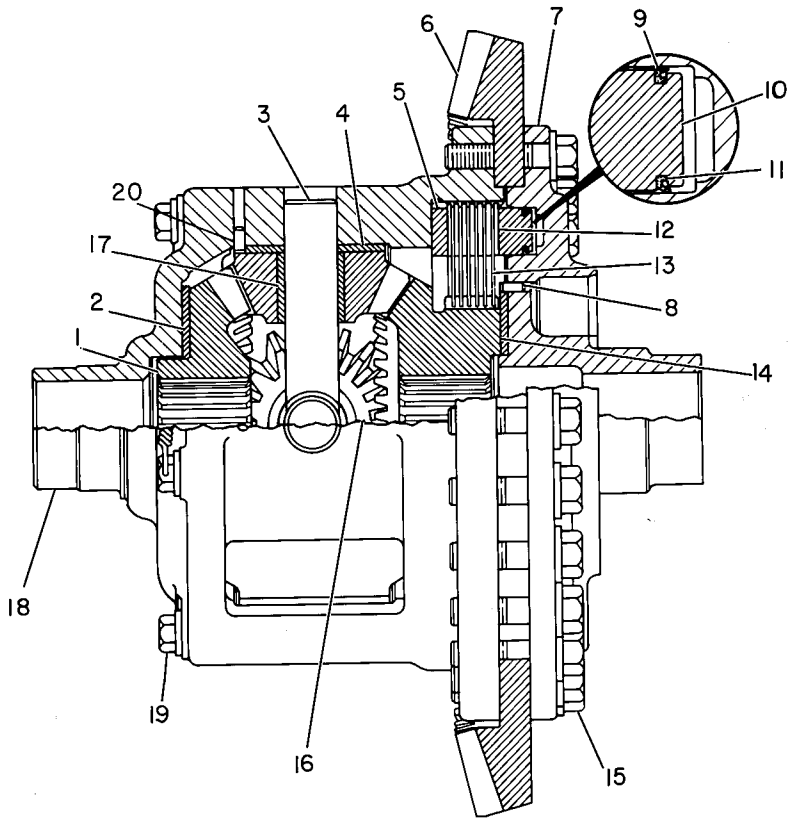

GRAPHIC #1 g00108151

204-5851 FILLER GP-POWER TRAIN OIL

S/N: ATS1-UP

PART OF 162-5607 GENERAL AR

SMCS-3005, 3081 **i01709782**

NOTE	REF NO	GRAPHIC REF	PART NUMBER	QTY	PART NAME 1 2 3 4 5 6 (PRODUCT LEVEL)	SEE PAGE
	1	1	**5P-0597**	2	CLAMP-HOSE	
	2	1	**6G-9333**	1	CAP-FILLER (POWER TRAIN OIL)	
	3	1	**205-1906**	1	TUBE AS	
	4	1	**205-1907**	1	TUBE AS	
	5	1	**205-2938**	1	GAUGE AS-OIL LEVEL (DIPSTICK)	
	6	1	**205-3673**	1	HOSE	
	7	1	**205-3674**	1	TUBE AS	
	8	1	**205-9207**	1	BRACKET AS	
	9	1	**2M-5407**	1	GASKET	
	10	1	**7F-8268**	1	SEAL-O-RING	
	11	1	**7X-0343**	2	BOLT (5/8-11X1.25 IN)	
	12	1	**7X-3327**	2	BOLT-LOCKING (1/2-13X1.25 IN)	
	13	1	**8M-2770**	1	CLIP	
	14	1	**8T-4121**	1	WASHER-HARD (11X21X2.5MM THK)	
	15	1	**8T-4122**	2	WASHER-HARD (17X32X3.5MM THK)	
M	16	1	**8T-4191**	1	BOLT (M10X1.5X16MM)	
M	17	1	**8T-4200**	2	BOLT (M8X1.25X16MM)	
	18	1	**8T-4223**	2	WASHER-HARD (13.5X25.5X3MM THK)	
	19	1	**8T-4224**	4	WASHER-HARD (8.8X16X2MM THK)	
M	20	1	**8T-5093**	2	BOLT-LOCKING (M8X1.25X25MM)	

M-METRIC PART

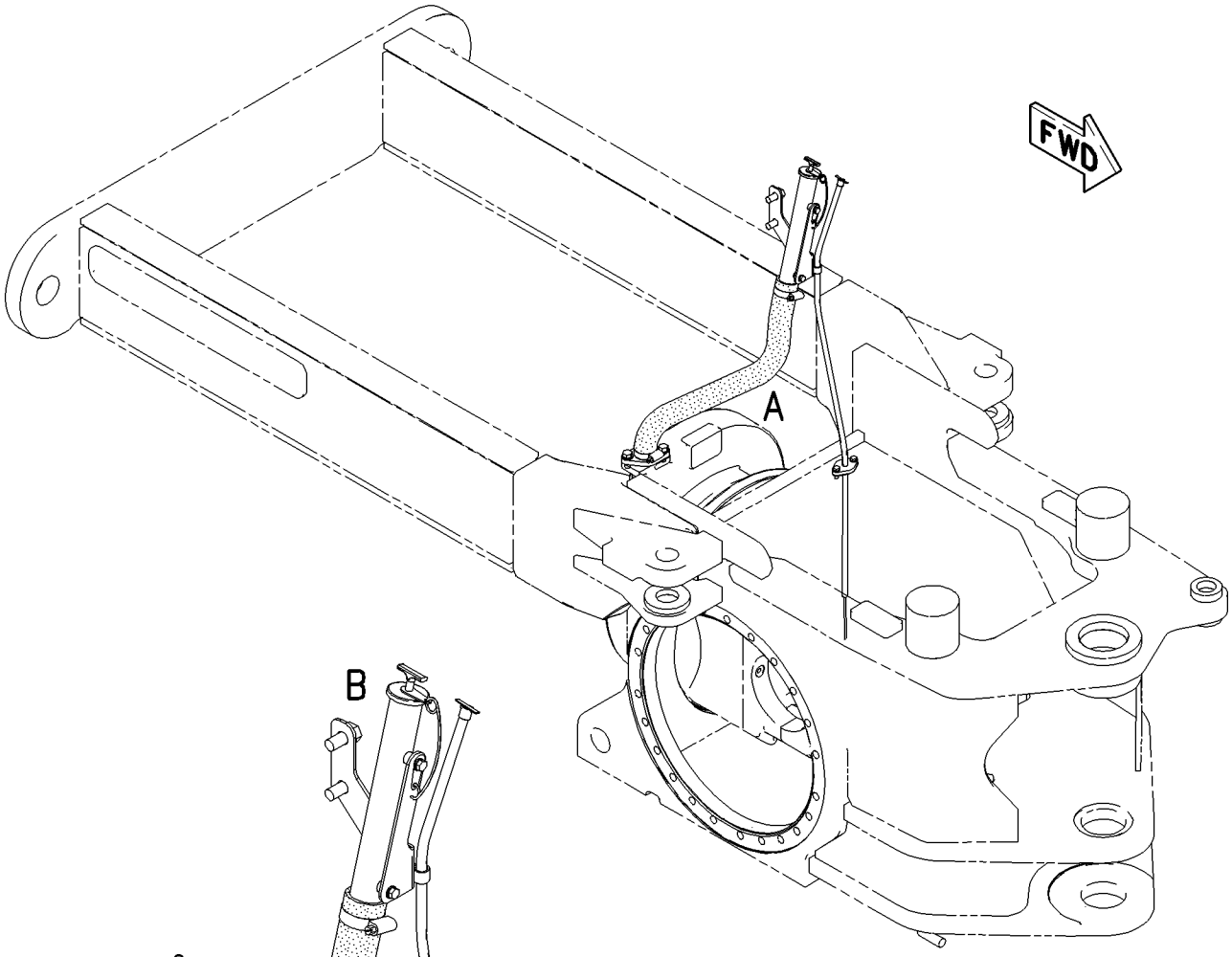

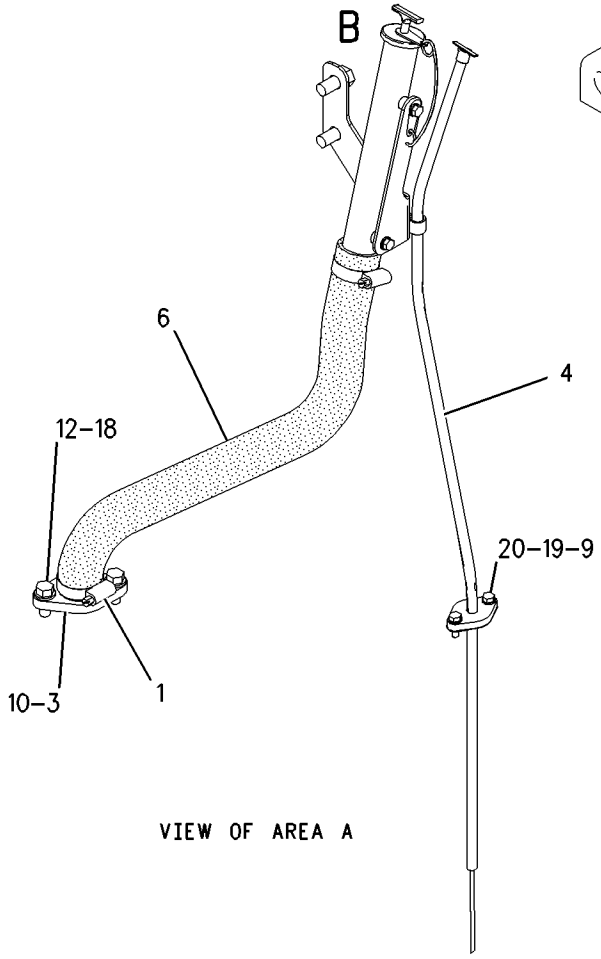

VIEW OF AREA A

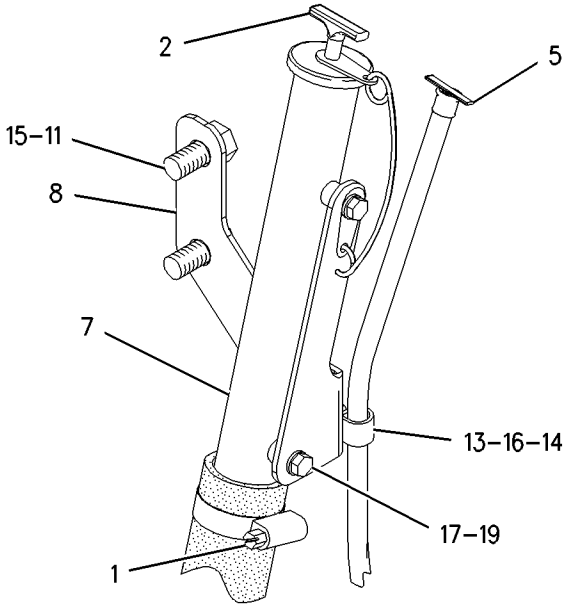

VIEW OF AREA B

GRAPHIC #1

g00931147

172-4662 FILTER GP-OIL—TRANSMISSION

S/N: DWH1-UP

PART OF 183-6616 TRANSMISSION AR

SMCS-3067 **i01286302**

NOTE	REF NO	GRAPHIC REF	PART NUMBER	QTY	PART NAME 1 2 3 4 5 6 (PRODUCT LEVEL)	SEE PAGE
	1	1	**3T-0688**	1	SPOOL	
	2	1	**9M-1986**	1	SPRING	
	3	1	**9S-8008**	1	PLUG-O-RING (1 1/16-12 THD)	
	4	1	**9S-8004**	1	PLUG-O-RING (9/16-18 THD)	
	8	1	**9S-4191**	1	PLUG-O-RING (9/16-18 THD)	
	9	1	**3J-1907**	2	SEAL-O-RING (11.89MM ID)	
	10	1	**6P-2090**	1	BASE-TMSN OIL FILTER	
	11	1	**2S-8439**	1	SEAL-O-RING (123.19MM ID)	
	12	1	**3P-0887**	1	HOUSING AS	
	13	1	**132-8875**	1	FILTER ELEMENT-HYDRAULIC (POWER TRAIN)	
	14	1	**7S-6745**	1	RETAINER	
	15	1	**3S-8652**	1	SPRING (3.80IN)	
	16	1	**2J-6356**	1	RING-RETAINING	
	18	1	**3D-2824**	1	SEAL-O-RING (23.47MM ID)	

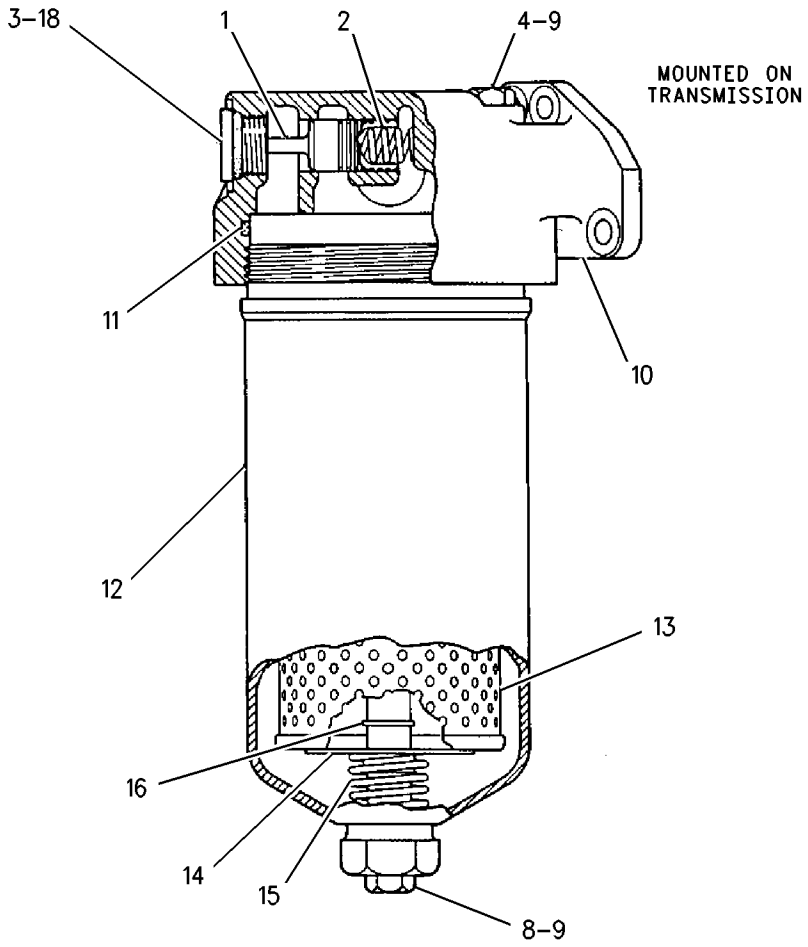

GRAPHIC #1 g00685517

MEMORANDA

POWER TRAIN

5T-7158 FINAL DRIVE GP

S/N: ATS1-UP

PART OF 162-5607 GENERAL AR

SMCS-4050 **i01805718**

NOTE	REF NO	GRAPHIC REF	PART NUMBER	QTY	PART NAME 1 2 3 4 5 6 (PRODUCT LEVEL)	SEE PAGE
	1	1	**8D-9333**	2	SHAFT AS-DRIVE	
					(EACH INCLUDES)	
		1	**8D-2161**	1	BEARING	
	2	1	**8D-1669**	2	GEAR-SUN (18 TEETH)	
	3	1	**8D-1761**	2	CARRIER-PLANETARY	
	4	1	**030-8535**	16	BOLT-LOCKING (3/8-16X0.875 IN)	
C	5	1	**5M-2894**	38	WASHER-HARD (10.2X18.5X2.5MM THK)	
	6	1	**7D-0035**	8	PLATE	
	7	1	**8D-1666**	2	GEAR-RING (78 TEETH)	
	8	1	**9H-3360**	2	SEAL-O-RING	
	9	1	**4D-6419**	46	WASHER-HARD (24.0X40.0X5.0MM THK)	
	10	1	**2J-3505**	46	NUT-FULL (7/8-9 THD)	
	11	1	**8D-2258**	2	RING-RETAINING	
	12	1	**6V-8385**	2	SEAL-LIP	
	13	1	**8D-2243**	2	WASHER (2.56X5.50X.25MM THK)	
	14	1	**8D-2423**	2	SHAFT-DRIVE	
	15	1	**6G-3208**	4	WASHER-THRUST (395.12X449.53X6.97MM THK)	
C	16	1	**8T-6469**	56	BOLT-LOCKING	
	17	1	**2S-0115**	96	WASHER-HARD (20X36.5X5MM THK)	
	18	1	**8D-4771**	2	SEAL-O-RING	
	19	1	**8W-8346**	4	SPROCKET (23 TEETH)	
	20	1	**0S-1571**	10	BOLT (3/8-16X1.75 IN)	
	22	1	**8D-1803**	2	NUT (4 1/2-12-3B THD)	
B	23	1	**6G-3645**	2	SHIM PACK (EACH INCLUDES 9 SHIMS)	
	24	1	**1H-5728**	2	SEAL-O-RING	
	25	1	**8D-8233**	2	RETAINER	
	26	1	**9K-1172**	2	CONE-BEARING	
	27	1	**9K-1171**	4	CUP-BEARING	
	28	1	**1D-4609**	40	BOLT (3/4-10X3 IN)	
	30	1	**219-2439**	2	RETAINER	
	32	1	**219-2436**	4	RING-WEAR	
	33	1	**5T-7127**	2	HOUSING	
	34	1	**8D-2311**	2	SEAL-LIP	
	35	1	**8D-2256**	2	CONE-BEARING	
	36	1	**5T-7131**	2	HOUSING	
	37	1	**8D-1671**	6	GEAR-PLANETARY (29 TEETH)	
	38	1	**8D-2424**	6	SPACER (3.50X4.37X.18MM THK)	
	39	1	**2D-6516**	12	BEARING AS-ROLLER	
	40	1	**8X-8378**	12	WASHER (85.32X131.80X2.92MM THK)	
C	41	1	**8W-2309**	6	SHAFT-GOVERNOR CONTROL	
	42	1	**8D-2248**	6	RETAINER	
C	43	1	**5D-0353**	12	BOLT-LOCKING (3/8-16X1 IN)	
	44	1	**9F-2247**	2	PLUG-PIPE	

QUANTITIES SHOWN ARE THOSE REQUIRED FOR BOTH LH AND RH SIDES
B-USE AS REQUIRED
C-CHANGE FROM PREVIOUS TYPE

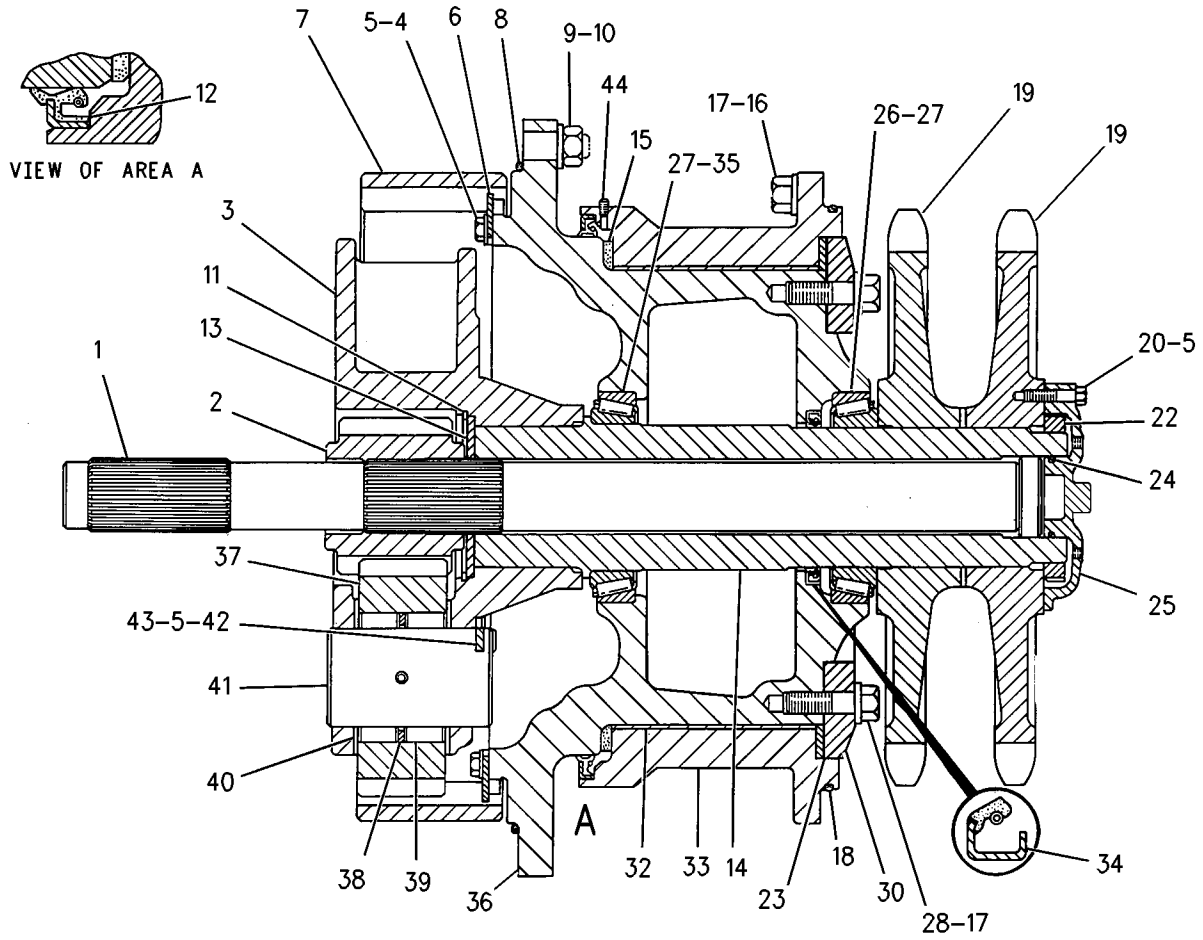

GRAPHIC #1 g00935082

186-4872 GEAR & CASE GP-TRANSFER

S/N: DWH1-UP

PART OF 183-6616 TRANSMISSION AR

SMCS-3159 **i01795771**

NOTE	REF NO	GRAPHIC REF	PART NUMBER	QTY	PART NAME 1 2 3 4 5 6 (PRODUCT LEVEL)	SEE PAGE
	1	2	**9S-4191**	1	PLUG	
	2	2	**3J-1907**	1	SEAL-O-RING	
	3	1	**0S-1585**	7	BOLT (1/2-13X1.50 IN)	
	4	1	**1D-4719**	11	NUT-FULL (1/2-13 THD)	
	5	2	**2P-4423**	1	CAGE-BEARING	
Y	6	2	**2P-6899**	1	CASE GP-TRANSMISSION	265
	7	2	**4S-5824**	1	RETAINER	
	8	3	**6Y-1151**	1	GEAR-TRANSFER	
	9	2	**1P-2636**	1	CUP-BEARING	
	10	2	**1P-2662**	1	CONE-BEARING	
	11	2,3	**7K-5449**	5	CONE-BEARING	
	12	2,3	**7K-5448**	5	CUP-BEARING	
	13	2	**3D-8422**	1	SEAL-O-RING	
	14	2,3	**1A-2029**	18	BOLT (3/8-16X1.125 IN)	
	15	1,2,3	**5M-2894**	64	WASHER-HARD (10.2X18.5X2.5MM THK)	
	16	2	**3P-3440**	1	COUPLING AS	
		2	**1T-0068**	2	PIN-SPRING	
	17	2	**1F-6726**	1	TUBE-OIL	
	18	2	**3P-0322**	1	SHIM PACK (INCLUDES 12 SHIMS)	
	19	1	**0S-1587**	11	BOLT (1/2-13X1.75 IN)	
	20	1	**2M-0849**	34	WASHER-HARD (13.5X25.5X5MM THK)	
	21	2,3	**8E-1204**	14	DISC-FRICTION	
	22	2,3	**3P-2855**	14	PLATE-CLUTCH	
	23	2,3	**3P-2856**	2	PLATE-CLUTCH PRESSURE	
	24	2,3	**3P-2852**	2	CLUTCH-HUB	
	25	2,3	**1P-9261**	2	SEAL-RING	
	26	2,3	**3D-9125**	2	CONE-BEARING	
	27	2,3	**3D-9126**	2	CUP	
	28	2,3	**9S-4185**	2	PLUG	
	29	2,3	**3K-0360**	2	SEAL-O-RING	
	30	2,3	**1H-6227**	2	SEAL-O-RING	
	31	2,3	**4M-0189**	2	SEAL-O-RING	
	32	2,3	**3P-3287**	2	CAGE-BEARING	
	33	2,3	**2P-4468**	2	SHIM PACK (INCLUDES 12 SHIMS)	
	34	2,3	**2P-7033**	2	SPACER-BEARING	
	35	2,3	**2P-7032**	2	SPACER-BEARING	
	36	2,3	**1K-6986**	2	RING-RETAINING	
	37	2,3	**186-4874**	2	PISTON-CLUTCH	
	38	2,3	**186-4875**	2	PLATE-PISTON	
	39	2,3	**6T-9196**	2	SEAL	
	40	2,3	**5H-8848**	2	SEAL-O-RING	
	41	2	**0L-2315**	1	BOLT (1/2-20X3.5 IN)	
	42	2	**4F-9653**	1	SEAL-O-RING	
	43	2	**6Y-1158**	1	GEAR	
	44	2	**165-0002**	1	BEARING AS	
	45	2	**4F-9029**	1	SEAL	
	46	2	**3P-1656**	1	MANIFOLD	
	47	2	**3H-0107**	3	SEAL-O-RING	
	48	1	**9S-1366**	1	BOLT (1/2-13X2.5 IN)	
	49	2	**9F-1399**	1	SEAL-O-RING	
	50	2	**3K-2559**	1	RING-RETAINING	
	51	2	**6Y-1150**	1	GEAR-TRANSFER	
	52	2,3	**8P-0492**	5	RING-SEAL	
	53	2	**6I-8286**	2	CUP-BEARING	
	54	2	**2P-7034**	1	SPACER-BEARING	
	55	2	**2P-7035**	1	SPACER-BEARING	

186-4872 GEAR & CASE GP-TRANSFER *(contd.)* i01795771

NOTE	REF NO	GRAPHIC REF	PART NUMBER	QTY	PART NAME 1 2 3 4 5 6 (PRODUCT LEVEL)	SEE PAGE
	56	2	**7D-8636**	2	CONE-BEARING	
	57	2	**6Y-0576**	1	SUPPORT AS	
	58	2	**6W-4750**	1	LOCKNUT-STAKE	
	59	2	**6W-4749**	1	WASHER (75.5X106X5MM THK)	
	60	2	**9U-8660**	1	GEAR-IDLER (41 TEETH)	
	61	2	**8M-0903**	1	RING-RETAINING	
	62	2	**3P-2865**	1	SHAFT AS-IDLER	
		2	**8M-6521**	1	DOWEL	
	63	2,3	**2P-5820**	2	SEAL-O-RING	
	64	2,3	**2P-4534**	2	RING-SEAL	
	65	2,3	**3P-7019**	4	SEAL-METAL	
	66	2,3	**9P-4857**	5	CARRIER-RING	
	67	2,3	**1L-8497**	2	RING-SNAP	
	68	2,3	**3P-2854**	2	SHAFT AS-CLUTCH	
		2,3	**1S-9292**	2	DOWEL	
		2,3	**3P-7009**	1	PLUG-CUP	
		2,3	**8H-9208**	1	DOWEL	
	69	2,3	**7J-8893**	2	CONE-BEARING	
	70	2,3	**7J-8894**	2	CUP-BEARING	
	71	2,3	**0S-1595**	16	BOLT (1/2-13X1.25 IN)	
	72	2,3	**4M-5893**	12	SPRING	
	73	2	**9U-8661**	1	GEAR-TRANSFER (64 TEETH)	
	74	2,3	**9U-8876**	2	DRUM AS	
	75	1	**1P-8654**	2	EYE-LIFTING	
	76	1	**0S-1589**	2	BOLT (5/8-11X1.75 IN)	
	77	1	**4D-3704**	2	WASHER-HARD (17X30X5MM THK)	
	78	1	**9G-5127**	1	BREATHER (TRANSFER CASE)	
	79	1	**3B-6553**	1	ELBOW	
	80	1,3	**2H-3932**	5	SEAL-O-RING	
	81	1	**9S-8009**	3	PLUG	
	82	1	**4K-1388**	3	SEAL-O-RING	
	83	1	**3P-3251**	1	COVER-INSPECTION	
	84	1	**3P-3252**	1	GASKET	
	85	1	**6V-8801**	12	NUT (3/8-16 THD)	
	86	1	**6T-1235**	1	GASKET	
	87	1	**6T-1233**	1	COVER AS	
	88	1	**0S-1594**	30	BOLT (3/8-16X1 IN)	
	89	3	**4S-8603**	1	TUBE AS (MAGNETIC SCREEN) (TRANSMISSION)	
	90	3	**4S-8598**	1	SCREEN-SUCTION (TRANSMISSION)	
	91	3	**3P-7160**	1	COVER AS	
	92	1	**0S-1590**	4	BOLT (3/8-16X2 IN)	
	93	3	**2N-0931**	1	GASKET	
	94	1	**3S-7781**	1	GASKET	
	95	1	**8S-9130**	1	SCREEN-SUCTION (DIFFERENTIAL)	
	96	1	**8S-9129**	1	FILTER-MAGNETIC (DIFFERENTIAL)	
	97	1	**4H-5440**	1	COVER-PUMP INLET	
	98	1	**4F-7952**	1	SEAL-O-RING	
	99	1	**7F-8268**	1	SEAL-O-RING	
	100	3	**2N-7609**	1	BEARING-ROLLER	
	101	3	**103-5962**	1	BEARING AS-NEEDLE	
	102	3	**3P-3424**	1	SHAFT-GOVERNOR CONTROL	
	103	3	**3P-3425**	1	LEVER	
	104	3	**3P-3426**	1	LEVER	
	105	3	**3K-4897**	2	PIN-SPRING	
	106	3	**4T-2069**	1	PLUG-DRAIN (TRANSMISSION)	
	107	2,3	**6P-1736**	2	WASHER (55X76X2.75MM THK)	
	108	2,3	**216-1637**	2	NUT	
	109	1	**1A-1460**	4	BOLT (1/2-13X2 IN)	
	110	1	**5P-8245**	2	WASHER-HARD (13.5X25.5X3MM THK)	

186-4872 GEAR & CASE GP-TRANSFER *(contd.)* i01795771

NOTE	REF NO	GRAPHIC REF	PART NUMBER	QTY	PART NAME 1 2 3 4 5 6 (PRODUCT LEVEL)	SEE PAGE
	111	1	**0S-1621**	2	BOLT (1/2-13X1 IN)	
	112	1	**220-1247**	1	PLATE AS	
	113	1	**220-1250**	1	PLATE AS	
	114	1	**208-5157**	1	PLATE AS	
Y-SEPARATE ILLUSTRATION						

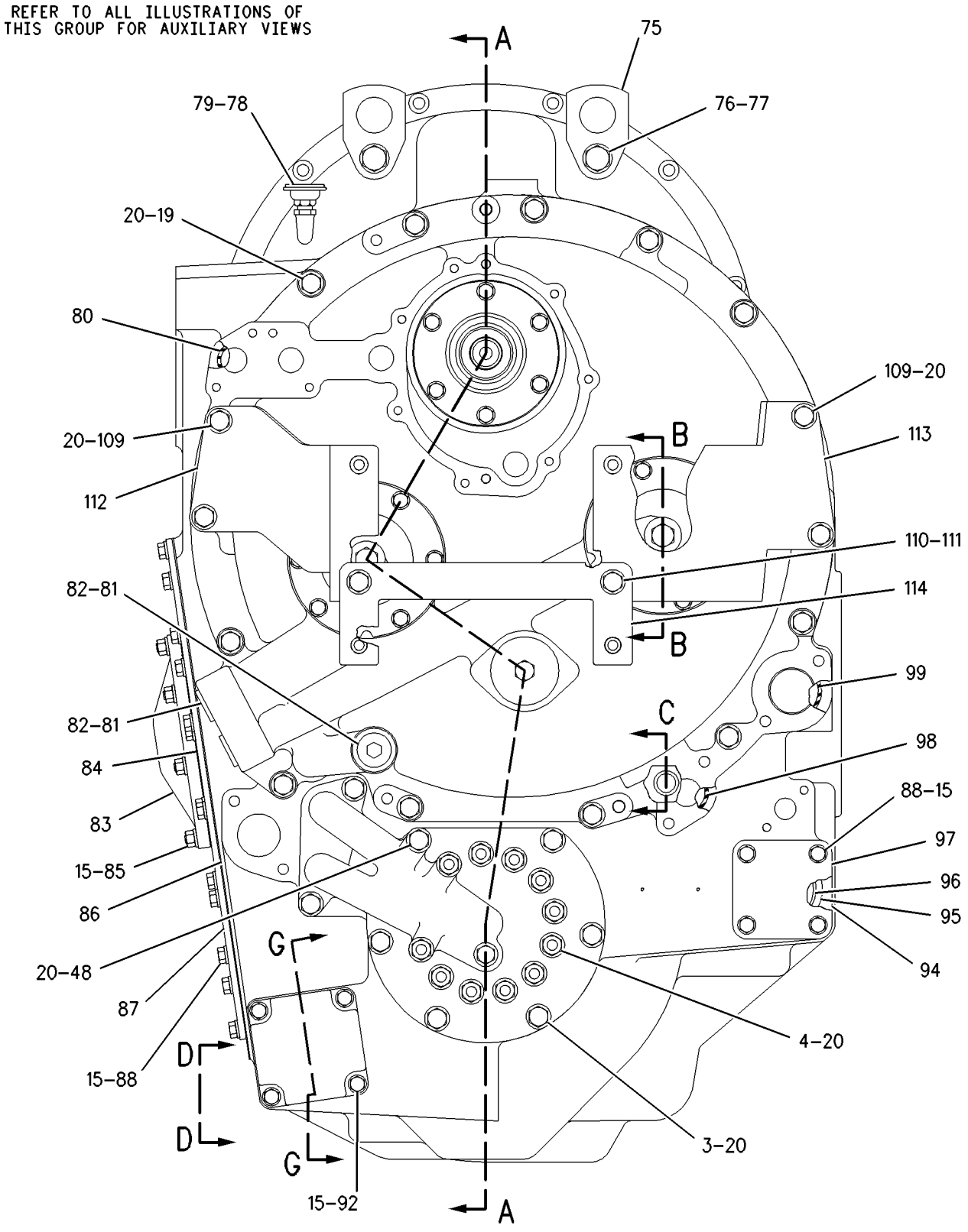

REAR VIEW

GRAPHIC #1 g00939307

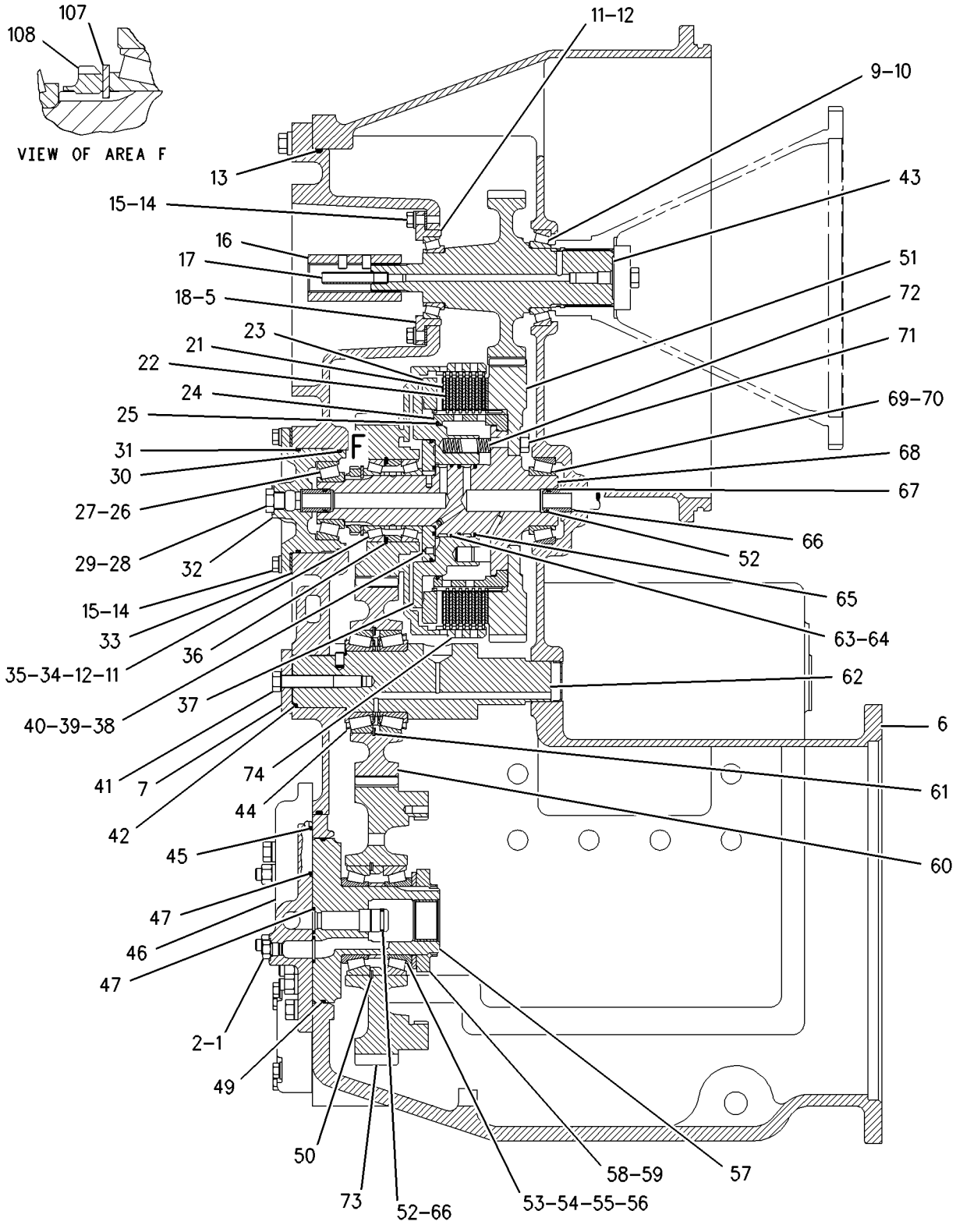

SECTION A-A

GRAPHIC #2 g00939308

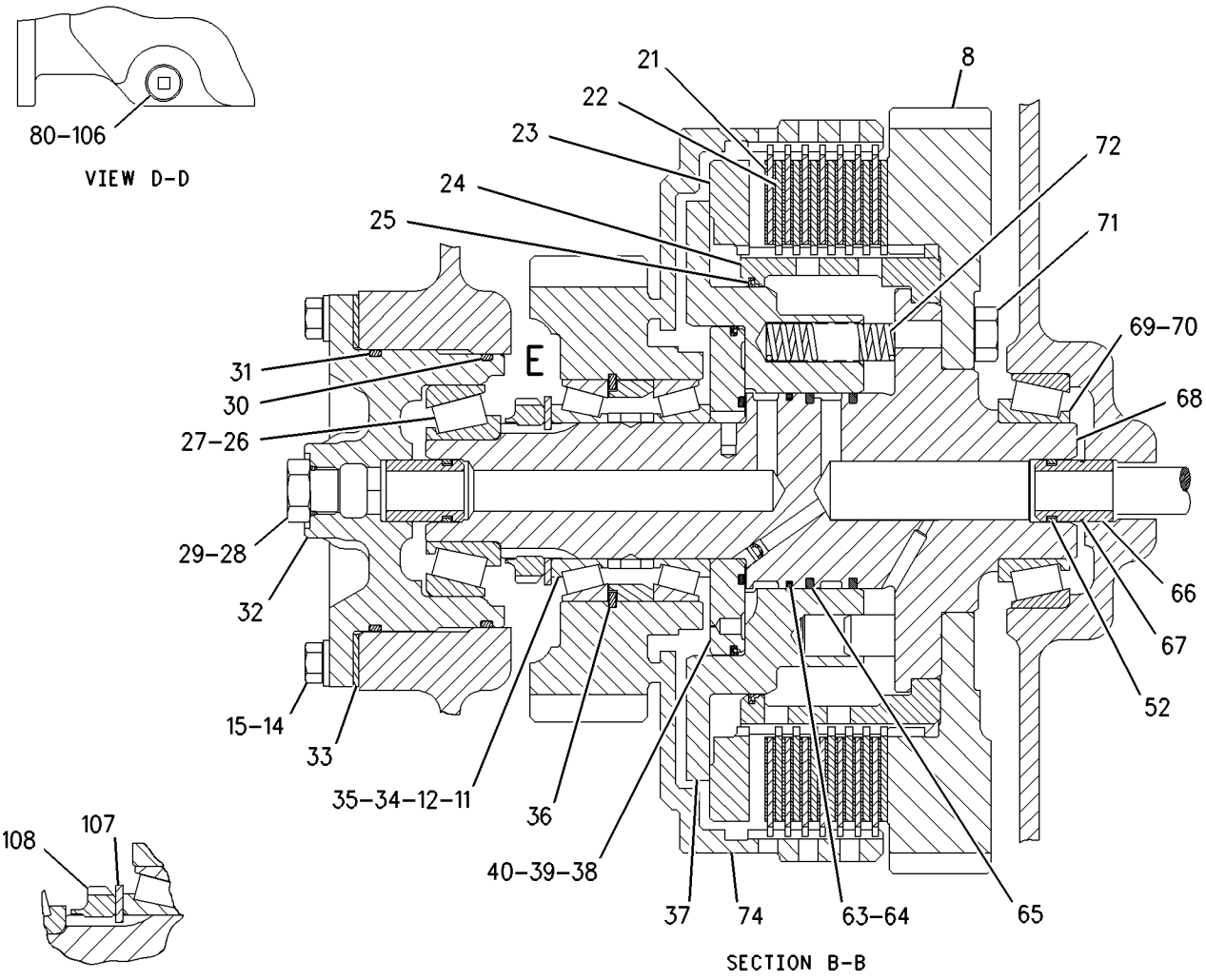

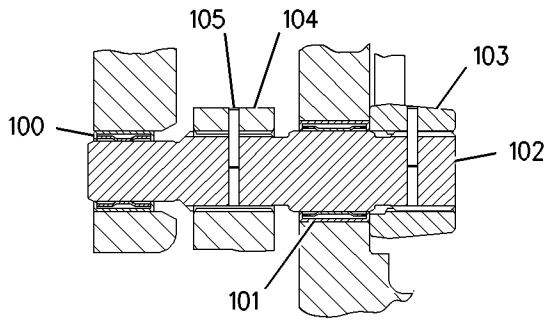

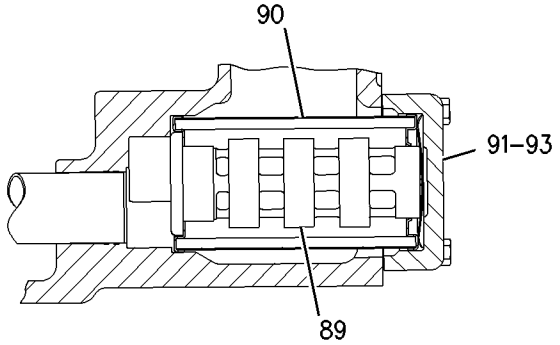

GRAPHIC #3

g00939310

6I-9851 LINES GP-POWER TRAIN OIL

S/N: DWH1-UP

PART OF 183-6616 TRANSMISSION AR

SMCS-3016 **i00128466**

NOTE	REF NO	GRAPHIC REF	PART NUMBER	QTY	PART NAME 1 2 3 4 5 6 (PRODUCT LEVEL)	SEE PAGE
	1	1	**0S-1587**	4	BOLT (1/2-13X1.75IN)	
	2	1	**5P-8245**	10	WASHER (3MM THK)	
	3	1	**5F-8000**	2	SEAL-O-RING (50.39MM ID)	
	4	1	**6I-9108**	1	TUBE AS	
	5	1	**5H-2767**	1	SEAL-O-RING	
	6	1	**0S-1588**	2	BOLT (3/8-16X1.25IN)	
	7	1	**5M-2894**	17	WASHER (2.5MM THK)	
	8	1	**6I-9107**	1	TUBE AS	
	9	1	**0V-0375**	2	BOLT (1/2-13X3.25IN)	
	10	1	**7F-8267**	1	SEAL-O-RING (47.2MM ID)	
	11	1	**0S-1590**	2	BOLT (3/8-16X2IN)	
	12	1	**6F-6673**	4	SEAL-O-RING (31.34MM ID)	
	13	1	**4F-7952**	2	SEAL-O-RING (37.7MM ID)	
	14	1	**7B-3235**	2	BOLT (1/2-13X1.375IN)	
	15	1	**2P-7069**	1	TUBE AS	
	16	1	**1A-2029**	7	BOLT (3/8-16X1.125IN)	
	17	1	**0S-1573**	2	BOLT (1/2-13X4IN)	
	18	1	**8P-1257**	1	TUBE AS	
	19	1	**0S-1594**	4	BOLT (3/8-16X1IN)	
	20	1	**7F-8268**	1	SEAL-O-RING (53.57MM ID)	
	21	1	**7F-3425**	2	BOLT (3/8-16X5.75IN)	
	22	1	**3P-0884**	1	GASKET-TRANSMISSION PUMP	

6I-9851 **LINES GP-POWER TRAIN OIL** ***(contd.)*** **i00128466**

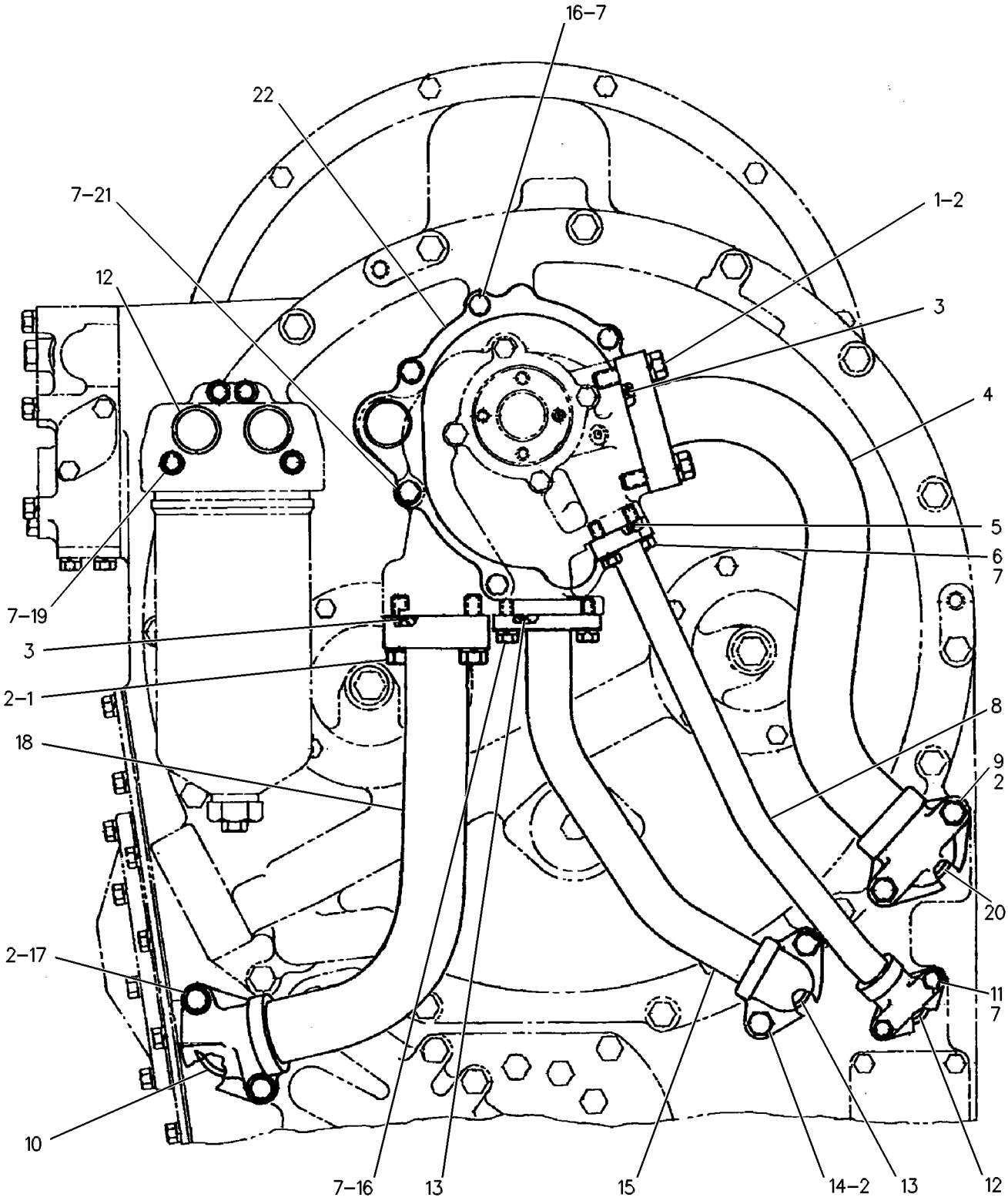

GRAPHIC #1 g00108980

142-6206 MOUNTING GP-WHEEL

S/N: ATS1-UP

PART OF 162-5607 GENERAL AR

SMCS-4201 **i01710476**

NOTE	PART NUMBER	QTY	PART NAME 1 2 3 4 5 6 (PRODUCT LEVEL)	SEE PAGE
	5D-0765	60	NUT-FULL (1 5/16-12 THD)	
	5D-0764	60	WASHER-HARD (34X57X8MM THK)	

<END>

MEMORANDA

POWER TRAIN

2P-5800 PLANETARY GP-TRANSMISSION

S/N: DWH1-UP

PART OF 183-6616 TRANSMISSION AR

SMCS-3160 **i01764425**

NOTE	REF NO	GRAPHIC REF	PART NUMBER	QTY	PART NAME 1 2 3 4 5 6 (PRODUCT LEVEL)	SEE PAGE
	1	1	**2P-4426**	3	SHAFT AS-PLANETARY	
					(EACH INCLUDES)	
		1	**2A-3746**	1	PLUG-CUP	
	2	1	**4M-3915**	6	BEARING-CAGED	
	3	1	**2P-1098**	1	RETAINER	
	4	1	**1K-6995**	2	RING-LOCK	
	5	1	**6Y-0578**	1	SHAFT AS	
		1	**6P-0856**	1	SLEEVE	
	6	1	**3P-1603**	1	TUBE	
	7	1	**6V-1720**	1	PLATE-SERIAL NUMBER (TRANSMISSION)	
		1	**7B-3028**	2	SCREW-DRIVE (NO 4X3/16 IN)	
	8	1	**3P-0896**	1	RING-RETAINING	
	9	1	**2P-4522**	1	GEAR-SUN (33 TEETH)	
	10	1	**5M-5018**	14	BEARING-ROLLER	
	11	1	**2P-4429**	3	SHAFT AS-PLANETARY	
					(EACH INCLUDES)	
		1	**2A-3746**	1	PLUG-CUP	
	12	1	**3S-2708**	10	PIN-SPRING	
	13	1	**3P-0862**	1	CARRIER-INPUT	
	14	1	**2P-4431**	1	GEAR-RING (84 TEETH)	
	15	1	**8E-8304**	14	DISC-THRUST	
	16	1	**7G-3455**	3	GEAR-PLANETARY (24 TEETH)	
	17	1	**2P-4542**	1	SPACER	
	18	1	**2K-5986**	10	PIN-SPRING	
	19	1	**5M-2055**	16	BEARING-CAGED	
	20	1	**7G-3454**	8	GEAR (17 TEETH)	
	21	1	**4S-8670**	8	SHAFT-PLANETARY	
	22	1	**8E-8297**	16	DISC-THRUST	
	23	1	**2P-4523**	1	GEAR-SUN (47 TEETH)	
	24	1	**2P-4433**	2	GEAR-RING (81 TEETH)	
	25	1	**3P-1609**	1	CARRIER-PLANETARY	
	26	1	**3P-0895**	1	BALL BEARING	
	27	1	**030-8535**	8	BOLT-LOCKING (3/8-16X0.875 IN)	
	28	1	**3P-0888**	1	CAGE-BEARING	
	29	1	**9F-8477**	1	RING-METAL SEAL	
	30	1	**6Y-0580**	1	CARRIER-PLANETARY	
	31	1	**5P-7602**	1	BALL BEARING	
	32	1	**2P-1097**	1	RETAINER	
		1	**8H-8830**	1	RING-RETAINING	
	33	1	**3P-1600**	1	CAGE AS	
		1	**4S-8537**	1	DOWEL	
	34	1	**3P-1666**	1	GEAR-SUN (47 TEETH)	
	35	1	**2P-5694**	1	CAGE-BEARING	
	36	2	**2P-4435**	1	PLATE	
	37	2	**3P-6880**	1	HOUSING AS-CLUTCH	
		2	**5M-7937**	4	DOWEL	
	38	2	**3P-2373**	2	HOUSING AS-CLUTCH	
					(EACH INCLUDES)	
		2	**5M-7937**	4	DOWEL	
	39	2	**2P-4363**	1	HOUSING-CLUTCH	
	40	2	**9M-4355**	12	DAMPER-BOLT	
	41	2	**6Y-2027**	15	DISC-FRICTION	
R	42	2	**8P-1656**	14	PLATE-CLUTCH	
	43	2	**3P-1652**	1	HOUSING AS	
		2	**5F-4250**	2	PIN (50.96MM 2.16IN LG)	
		2	**5H-8985**	10	PIN-SPRING (12.7MM .50IN LG)	

2P-5800 PLANETARY GP-TRANSMISSION *(contd.)* i01764425

NOTE	REF NO	GRAPHIC REF	PART NUMBER	QTY	PART NAME 1 2 3 4 5 6 (PRODUCT LEVEL)	SEE PAGE
	44	2	**4M-1641**	4	DOWEL-REACTION	
	45	2	**3P-1651**	1	PISTON AS	
		2	**5H-8985**	10	PIN-SPRING	
	46	2	**3P-1601**	4	PLUNGER	
	47	2	**2B-2254**	4	SPRING	
	48	2	**7T-9647**	1	PISTON-CLUTCH	
	49	2	**3P-2692**	1	CAGE-BEARING	
	50	2	**0T-0055**	30	BOLT (3/8-16X4.25 IN)	
		2	**5M-2894**	30	WASHER-HARD (10.2X18.5X2.5MM THK)	
	51	2	**3P-1626**	1	HUB AS (CLUTCH)	
	52	2	**3P-0817**	5	SPRING-DISC	
	53	2	**3P-0814**	1	RING-SEAL	
	54	2	**9S-4368**	1	RING-RETAINING	
	55	2	**3P-0815**	1	SEAL-O-RING	
		2	**3P-0800**	1	RING-SEAL	
	56	2	**3P-2672**	1	BALL BEARING	
	57	2	**9H-3452**	1	RING-RETAINING (151.13MM OD)	
	58	2	**1T-0414**	6	BOLT-12 POINT HEAD (5/16-18X1 IN)	
		2	**9M-1974**	6	WASHER-HARD (8.8X16X2MM THK)	
	59	2	**6Y-0303**	1	CAGE AS-BEARING	
	60	2	**6Y-0306**	1	BEARING-SLEEVE	
	61	2	**6Y-0583**	1	FLANGE AS	
	62	2	**8S-3426**	1	DOWEL	
	63	2	**1P-9252**	1	RING-SEAL	
	64	2	**3P-5955**	5	DISC-FRICTION	
	65	3	**3B-1915**	10	BOLT (3/8-16X1.37 IN)	
		3	**5M-2894**	10	WASHER-HARD (10.2X18.5X2.5MM THK)	
	66	3	**2P-5860**	12	BOLT (1/2-13X20.375 IN)	
		3	**2M-0849**	12	WASHER-HARD (13.5X25.5X5MM THK)	
	67	3	**3P-1691**	1	HOUSING AS	
	68	3	**2K-6921**	4	DOWEL	
	69	3	**3F-3442**	1	DOWEL	
	70	3	**0S-1588**	2	BOLT (3/8-16X1.25 IN)	
	71	3	**6D-0692**	1	SEAL-O-RING	
	72	3	**6Y-5914**	6	DISC-FRICTION	
	73	3	**3P-0801**	6	PLATE-CLUTCH	
	74	3	**6Y-0579**	1	COUPLING	
	75	3	**3P-0860**	20	INSERT	
	76	3	**5F-6199**	10	BALL	
	77	3	**1M-8651**	1	RING-RETAINING	
	78	3	**7M-1199**	10	SPRING	
	79	3	**7G-3453**	4	GEAR-PLANETARY (28 TEETH)	
	80	3	**3P-0894**	4	SHAFT AS-PLANETARY	
					(EACH INCLUDES)	
		3	**3S-0036**	1	PLUG-CORE	
C	81	3	**216-1719**	1	GEAR AS-RING (82 TEETH)	
C		3	**6V-4431**	5	PLUG-CUP	
	82	3	**2P-4511**	5	RING-SEAL	
	83	3	**9M-6166**	1	RING-RETAINING	
	84	3	**1M-3151**	5	DOWEL-REACTION	
	85	3	**3P-0898**	1	BALL BEARING	
	86	3	**5M-7878**	1	RING-SNAP	
	87	3	**3P-7042**	1	HOUSING-CLUTCH	
	88	3	**4M-9592**	40	SPRING	
	89	3	**3P-7041**	1	GEAR-RING (81 TEETH)	
	90	3	**1P-9216**	5	RING-SEAL	
	91	3	**2P-4510**	5	PISTON-CLUTCH	
	92	3	**1M-3150**	10	DOWEL-REACTION	
	93	3	**7G-3456**	3	GEAR-PLANETARY (31 TEETH)	

2P-5800 **PLANETARY GP-TRANSMISSION** *(contd.)* **i01764425**

NOTE	REF NO	GRAPHIC REF	PART NUMBER	QTY	PART NAME 1 2 3 4 5 6 (PRODUCT LEVEL)	SEE PAGE
	94	3	**8E-8307**	6	DISC-THRUST	
	95	3	**3S-8029**	3	RETAINER	
		3	**0T-0102**	6	BOLT (3/8-16X0.625 IN)	
		3	**2S-0607**	3	LOCK-NUT	
	96	3	**7F-8268**	1	SEAL-O-RING	
	97	3	**4F-8946**	1	SEAL-O-RING	
	98	3	**4F-7952**	1	SEAL-O-RING	

C-CHANGE FROM PREVIOUS TYPE
R-REMFG PART MAY BE AVAILABLE

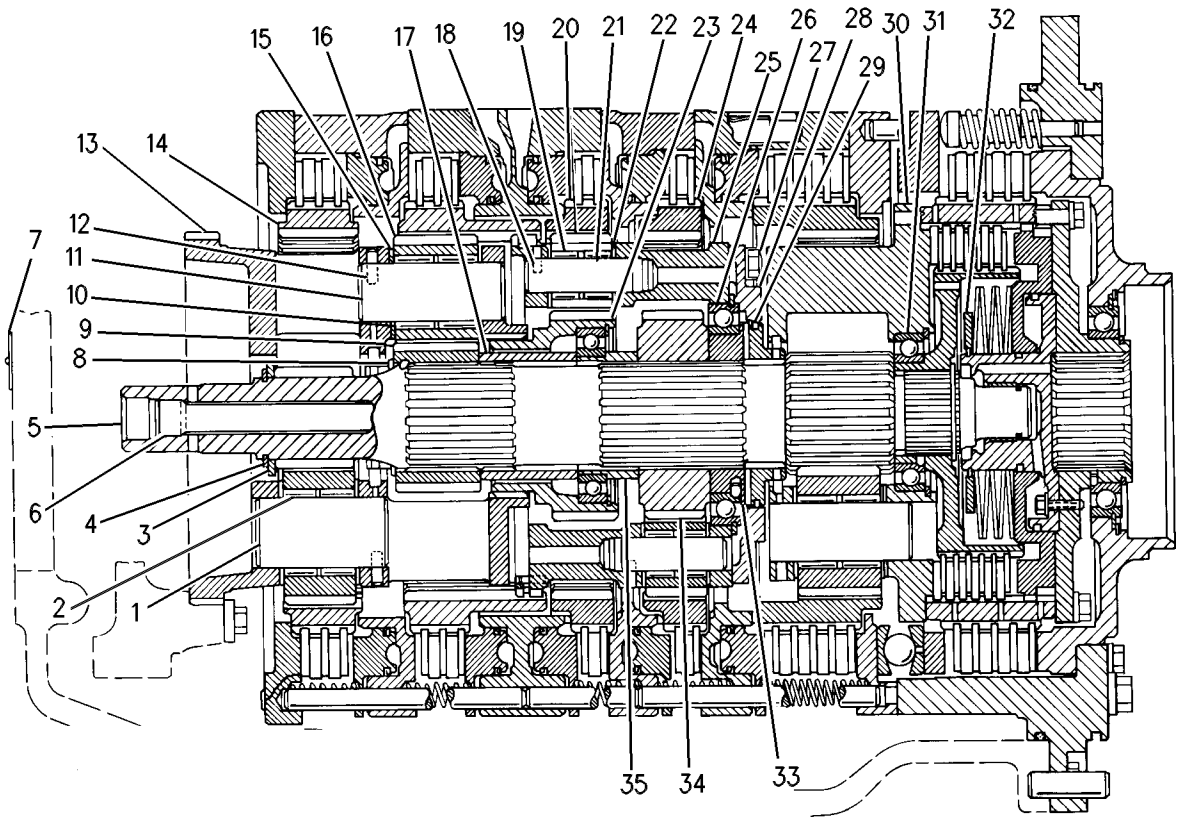

GRAPHIC #1 g00459436

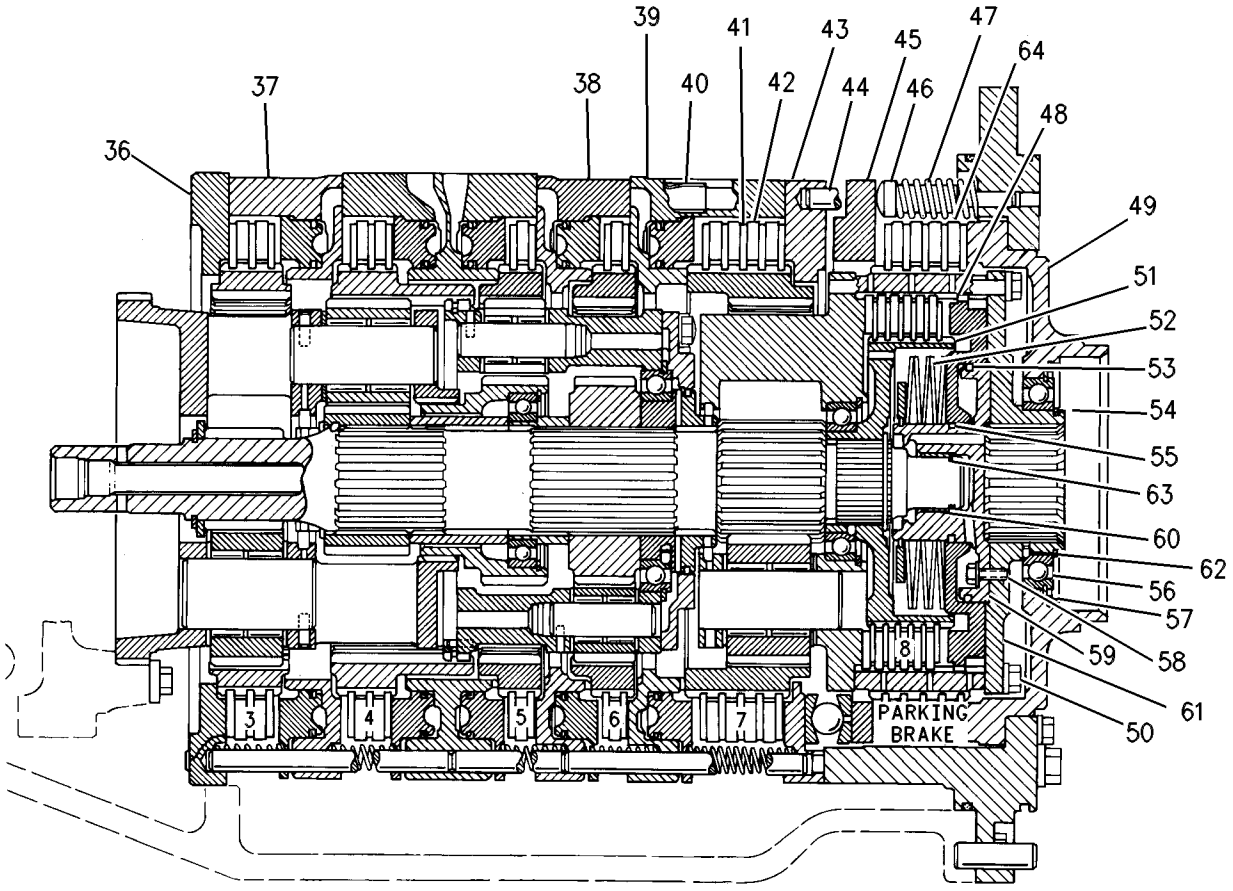

GRAPHIC #2

g00459618

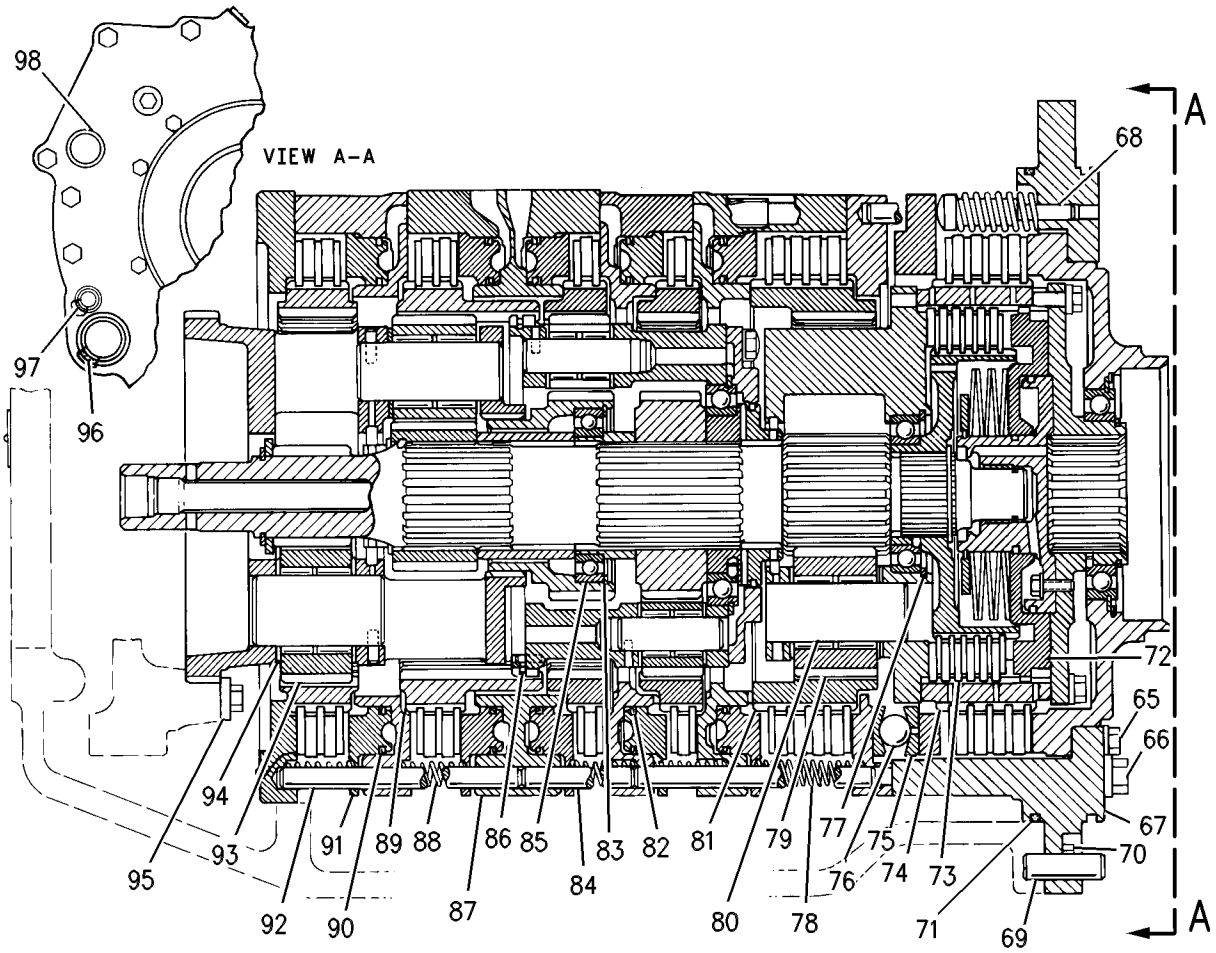

GRAPHIC #3 g00459628

MEMORANDA

178-9178 PUMP GP-GEAR–2 SECTION

S/N: DWH1-UP

PART OF 183-6616 TRANSMISSION AR

FIELD REPLACEMENT ORDER 4-1M-3780 BEARING-SLEEVE

SMCS-3066 **i01671204**

NOTE	REF NO	GRAPHIC REF	PART NUMBER	QTY	PART NAME 1 2 3 4 5 6 (PRODUCT LEVEL)	SEE PAGE
	1	1	**2P-5771**	1	COVER AS-OIL PUMP	
	2	1	**3S-0004**	6	WASHER (0.406X0.728X0.09 IN THK)	
	4	1	**8E-8847**	1	BODY AS-OIL PUMP	
		1	**8M-8489**	2	DOWEL	
	5	1	**8E-8850**	1	GEAR AS-OIL PUMP (8 TEETH)	
		1	**2B-9373**	1	KEY-WOODRUFF	
	6	1	**8E-8904**	2	GEAR (8 TEETH)	
	7	1	**9S-1018**	4	WASHER (9.73X19.05X.84MM THK)	
	8	1	**178-9175**	1	COVER	
	9	1	**178-9176**	1	GEAR AS-OIL PUMP (8 TEETH)	
		1	**2B-9373**	1	KEY-WOODRUFF	
	10	1	**179-1319**	1	MANIFOLD AS	
		1	**8M-8489**	2	DOWEL	
	12	1	**0S-1594**	4	BOLT (3/8-16X1 IN)	
	13	1	**0S-1608**	4	BOLT (3/8-16X3.75 IN)	
	14	1	**1B-8736**	1	KEY-WOODRUFF	
	15	1	**1H-7339**	1	SEAL-O-RING	
	16	1	**2D-8009**	2	SEAL-O-RING	
	17	1	**5M-2894**	4	WASHER-HARD (10.2X18.5X2.5MM THK)	
	18	1	**8S-9191**	2	BOLT (3/8-16X4 IN)	

178-9178 PUMP GP-GEAR ***(contd.)*** **i01671204**

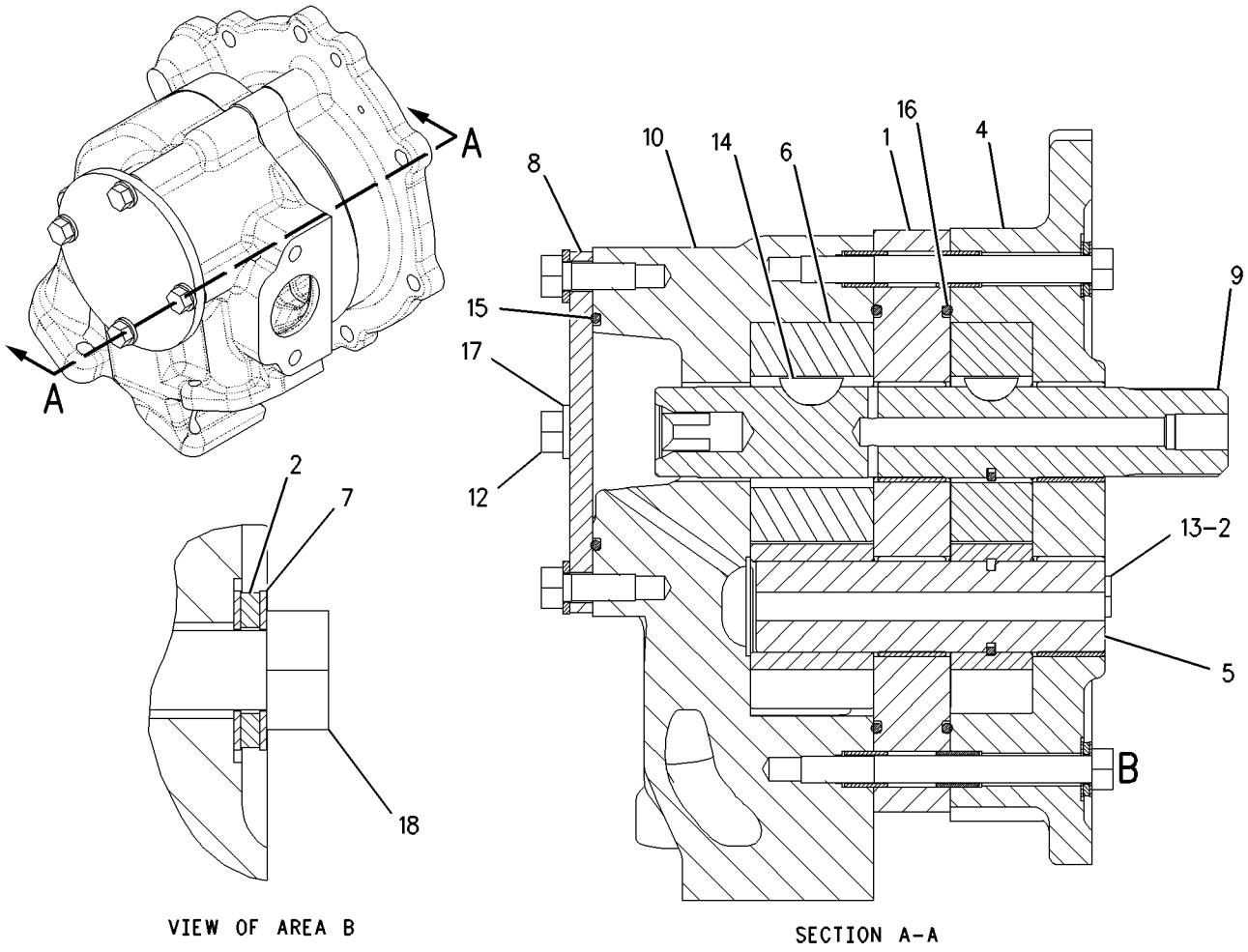

GRAPHIC #1 g00851659

POWER TRAIN

194-5867 TANDEM & COVER GP

S/N: ATS1-UP

PART OF 162-5607 GENERAL AR

SMCS-4062, 4064 **i01795829**

NOTE	REF NO	GRAPHIC REF	PART NUMBER	QTY	PART NAME 1 2 3 4 5 6 (PRODUCT LEVEL)	SEE PAGE
	1	1	**1F-8488**	2	BREATHER AS (TANDEM)	
	2	1	**2G-9794**	8	GASKET	
	3	1	**2G-9796**	4	GASKET	
	4	1	**4D-7678**	4	COVER	
	5	1	**8D-1802**	8	COVER	
	6	1	**8T-6468**	48	BOLT (1/2-13X1 IN)	
	7	1	**002-6453**	2	ELBOW-PIPE	
	8	1	**103-2236**	2	COVER	
	9	1	**194-5868**	1	HOUSING AS-TANDEM DRIVE (RH)	
		1	**205-2193**		STEP (RH)	
	10	1	**194-5869**	1	HOUSING AS-TANDEM DRIVE (LH)	
		1	**205-2192**	1	STEP (LH)	
	11	1	**2G-9792**	2	GASKET	
	12	1	**2M-9780**	2	SEAL-O-RING	
	13	1	**3K-0360**	2	SEAL-O-RING	
	14	1	**5P-8245**	32	WASHER-HARD (13.5X25.5X3MM THK)	
	15	1	**6B-5072**	2	BUSHING-TERMINAL	
	16	1	**6E-5047**	2	PLUG	
	17	1	**9S-4190**	2	PLUG	

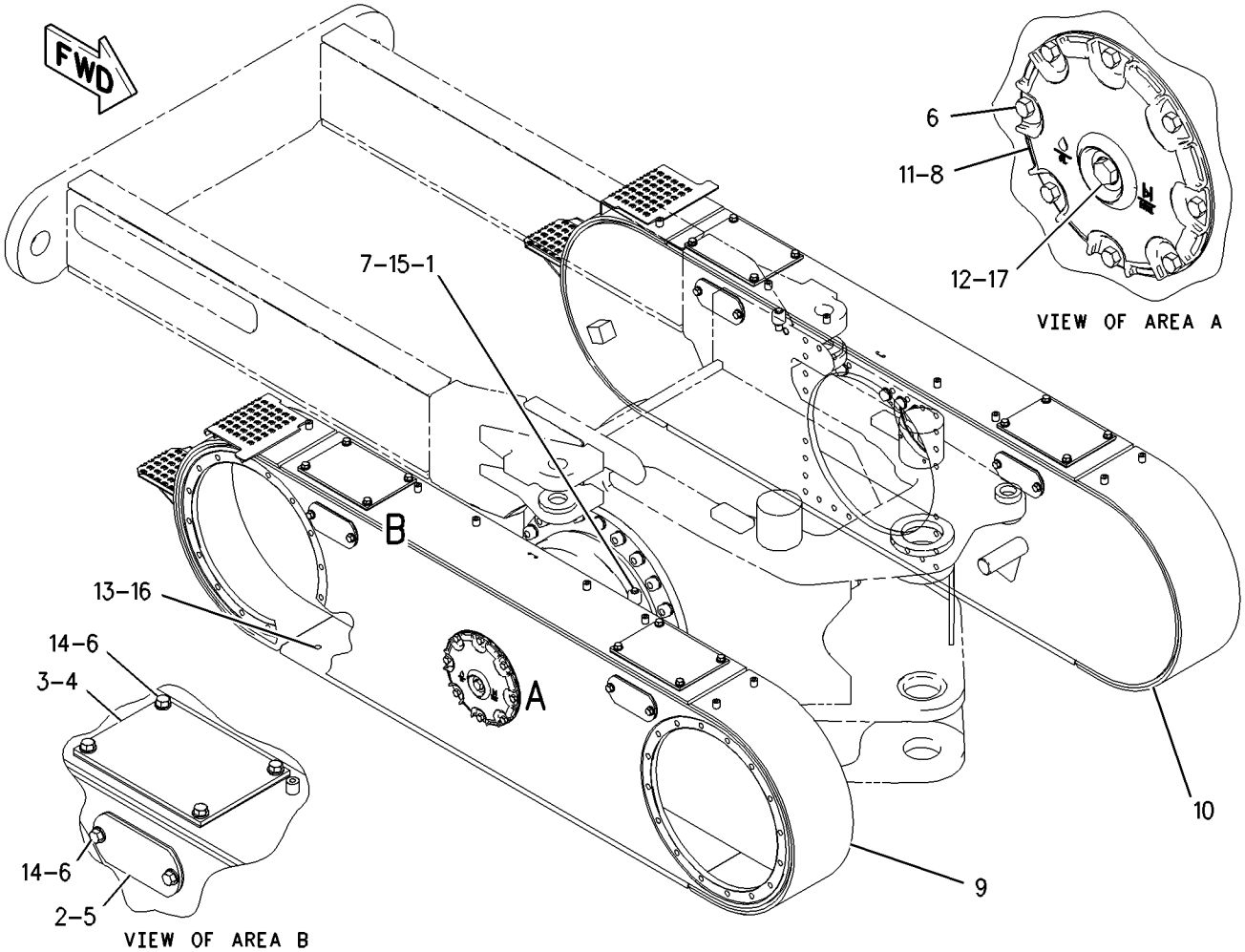

GRAPHIC #1 g00931175

POWER TRAIN

183-6616 TRANSMISSION AR

S/N: DWH1-UP

PART OF 162-5607 GENERAL AR

SMCS-3030 **i01795726**

NOTE	PART NUMBER	QTY	PART NAME 1 2 3 4 5 6 (PRODUCT LEVEL)	SEE PAGE
Y	*8E-4132*	1	CONTROL GP-TRANSMISSION HYD	278
Y	*227-2564*	1	COVER GP-SHIPPING	282
Y	**172-4662**	1	FILTER GP-OIL	292
Y	*186-4872*	1	GEAR & CASE GP-TRANSFER	296
Y	*6I-9851*	1	LINES GP-POWER TRAIN OIL	302
Y	*2P-5800*	1	PLANETARY GP-TRANSMISSION	306
Y	**178-9178**	1	PUMP GP-GEAR	312

Y-SEPARATE ILLUSTRATION

<END>

174-3705 VALVE & MTG GP-DIFF LOCK

S/N: ATS1-UP

PART OF 173-5334 CONTROL GP-DIFFERENTIAL LOCK

SMCS-3272 **i01539220**

NOTE	REF NO	GRAPHIC REF	PART NUMBER	QTY	PART NAME 1 2 3 4 5 6 (PRODUCT LEVEL)	SEE PAGE
	1	1	**6G-5979**	1	KIT-CARTRIDGE SEAL (DIFFERENTIAL LOCK)	
					(INCLUDES O-RINGS)	
Y	2	1	**154-3064**	1	VALVE GP-SOLENOID (DIFFERENTIAL LOCK)	328
	3	1	**148-2516**	1	MANIFOLD	

Y-SEPARATE ILLUSTRATION

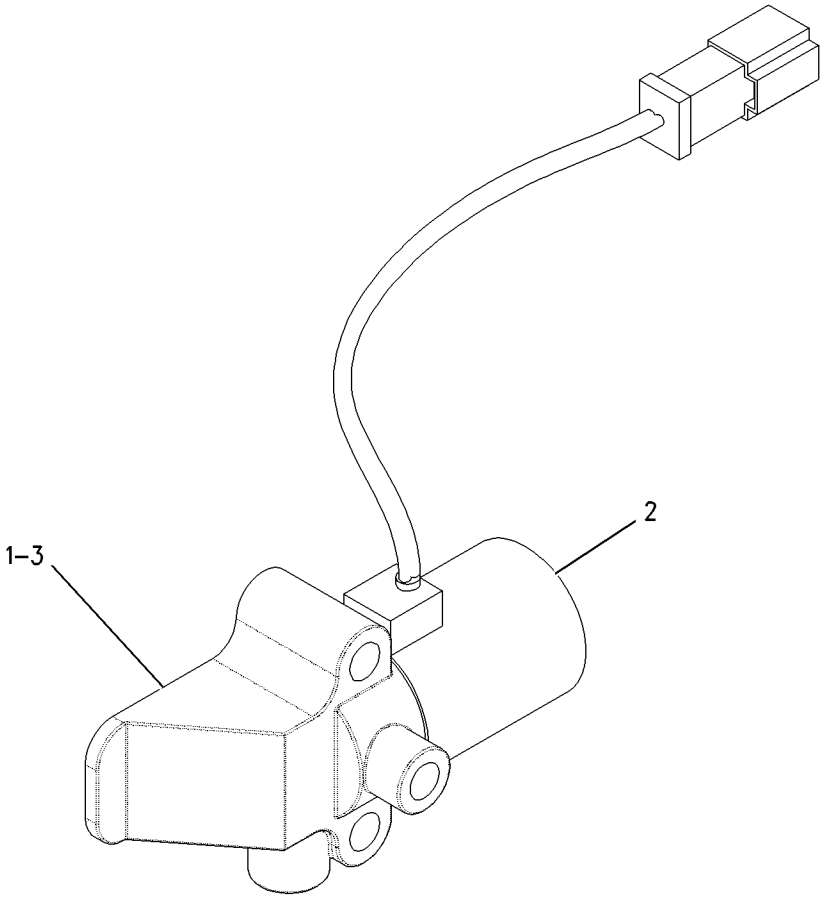

GRAPHIC #1 g00806911

2P-4548 VALVE GP-CONTROL

S/N: DWH1-UP

PART OF 115-1375 VALVE GP-RELIEF

SMCS-3073, 3167, 5051 **i00130731**

NOTE	REF NO	GRAPHIC REF	PART NUMBER	QTY	PART NAME 1 2 3 4 5 6 (PRODUCT LEVEL)	SEE PAGE
	1	1	**3P-7686**	1	COLLAR-VALVE SEAT	
	2	1	**9L-0672**	1	VALVE-CHECK	
	3	1	**3P-7685**	1	SPRING	
	4	1	**3P-8006**	1	RETAINER	
	5	1	**1P-5274**	1	PIN-VALVE SPRING	
	6	1	**3H-1156**	1	PIN	

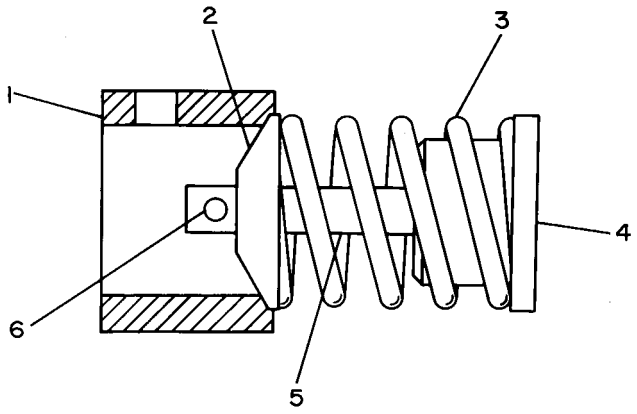

GRAPHIC #1 g00108154

8E-4130 VALVE GP-PILOT–SPEED SELECT

S/N: DWH1-UP

PART OF 8E-4131 VALVE GP-TRANSMISSION CONTROL

SMCS-5059, 5462 **i00128639**

NOTE	REF NO	GRAPHIC REF	PART NUMBER	QTY	PART NAME 1 2 3 4 5 6 (PRODUCT LEVEL)	SEE PAGE
	1	1	**3P-8067**	1	BODY AS	
		1	**8M-8489**	2	DOWEL (12.54MM DIA)	
	2	1	**8E-4129**	1	SPOOL AS-SELECTOR	
	3	1	**3K-0360**	1	SEAL-O-RING (16.36MM ID)	
	4	1	**3P-4362**	1	STOP	
	5	1	**2H-6265**	1	PIN-ROLL	
	6	1	**7S-4607**	2	DETENT AS	

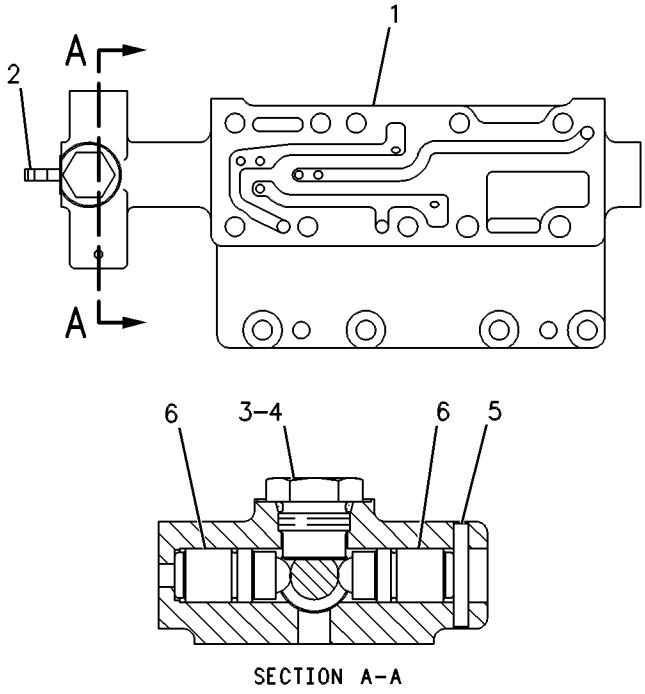

SECTION A–A

GRAPHIC #1 g00108966

MEMORANDA

115-1375 VALVE GP-RELIEF–MAIN

S/N: DWH1-UP

PART OF 8E-4132 CONTROL GP-TRANSMISSION HYD

SMCS-3133 **i01667170**

NOTE	REF NO	GRAPHIC REF	PART NUMBER	QTY	PART NAME 1 2 3 4 5 6 (PRODUCT LEVEL)	SEE PAGE
	1	1	**110-6924**	1	BODY-RELIEF VALVE	
	2	1	**1P-0562**	1	VALVE AS-RELIEF (TRANSMISSION PUMP)	
		1	**1L-3162**	1	RING-RETAINING	
		1	**4S-5982**	1	VALVE-RELIEF	
		1	**5M-9548**	1	SPRING	
		1	**8M-2537**	1	RETAINER	
		1	**9M-4313**	1	POPPET	
B	3	1	**7M-1396**	1	SPACER (1.6 MM THK)	
B	4	1	**7M-1397**	1	SPACER (3.18X19.05X0.9MM THK)	
B	5	1	**5M-3492**	4	SPACER (3.18X19.05X0.25MM THK)	
	6	1	**2P-5677**	1	SPRING (OUTER)	
	7	1	**8P-2893**	1	SPRING (MIDDLE)	
	8	1	**2S-1413**	1	SPRING (INNER)	
	9	1	**3H-1461**	2	SEAL-O-RING	
Y	10	1	**2P-4548**	1	VALVE GP-CONTROL (LUBRICATION RELIEF)	317
Y	10A	1	**2P-4548**	1	VALVE GP-CONTROL (OIL COOLER BYPASS)	317
	11	1	**6F-6673**	3	SEAL-O-RING	
	12	1	**9S-4191**	2	PLUG	
	13	1	**3J-1907**	2	SEAL-O-RING	
	14	1	**6P-4917**	2	PIN	
	15	1	**1A-2029**	10	BOLT (3/8-16X1.125 IN)	
		1	**3B-4506**	10	LOCKWASHER	
	16	1	**2M-1656**	5	COVER	
	17	1	**9S-8005**	2	PLUG	

B-USE AS REQUIRED
Y-SEPARATE ILLUSTRATION

115-1375 VALVE GP-RELIEF *(contd.)* **i01667170**

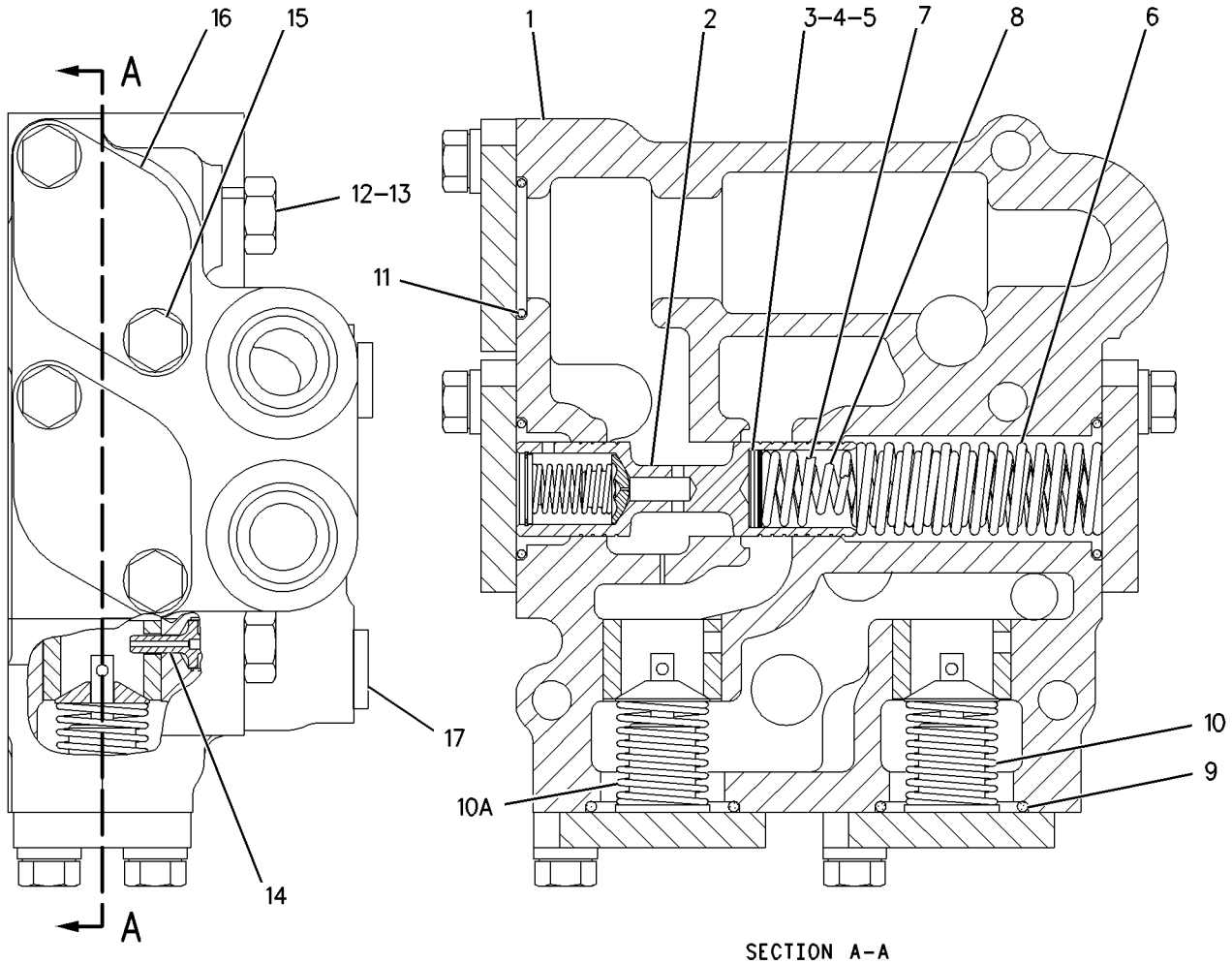

GRAPHIC #1 g00863512

2P-5814 VALVE GP-SELECTOR & PRESS CONT—DIRECTION

S/N: DWH1-UP

PART OF 8E-4131 VALVE GP-TRANSMISSION CONTROL

SMCS-3083 **i00130761**

NOTE	REF NO	GRAPHIC REF	PART NUMBER	QTY	PART NAME 1 2 3 4 5 6 (PRODUCT LEVEL)	SEE PAGE
	1	1	**1P-9685**	1	SPOOL	
	2	1	**5S-7906**	1	STOP	
	3	1	**8H-5244**	1	DOWEL	
	4	1	**2P-4529**	1	SPOOL-REDUCING	
	5	1	**1T-0416**	4	BOLT (5/16-18X.75IN)	
	6	1	**2P-5700**	1	SPRING (OUTER)	
	7	1	**2P-5701**	1	SPRING (INNER)	
	8	1	**2P-5803**	1	PLATE	
C	9	1	**2B-0858**	1	PLUG-PIPE (1/2-14 NPTF)	
	10	1	**4B-9782**	1	BALL	
	11	1	**3P-2706**	1	PLATE	

C-CHANGE FROM PREVIOUS TYPE

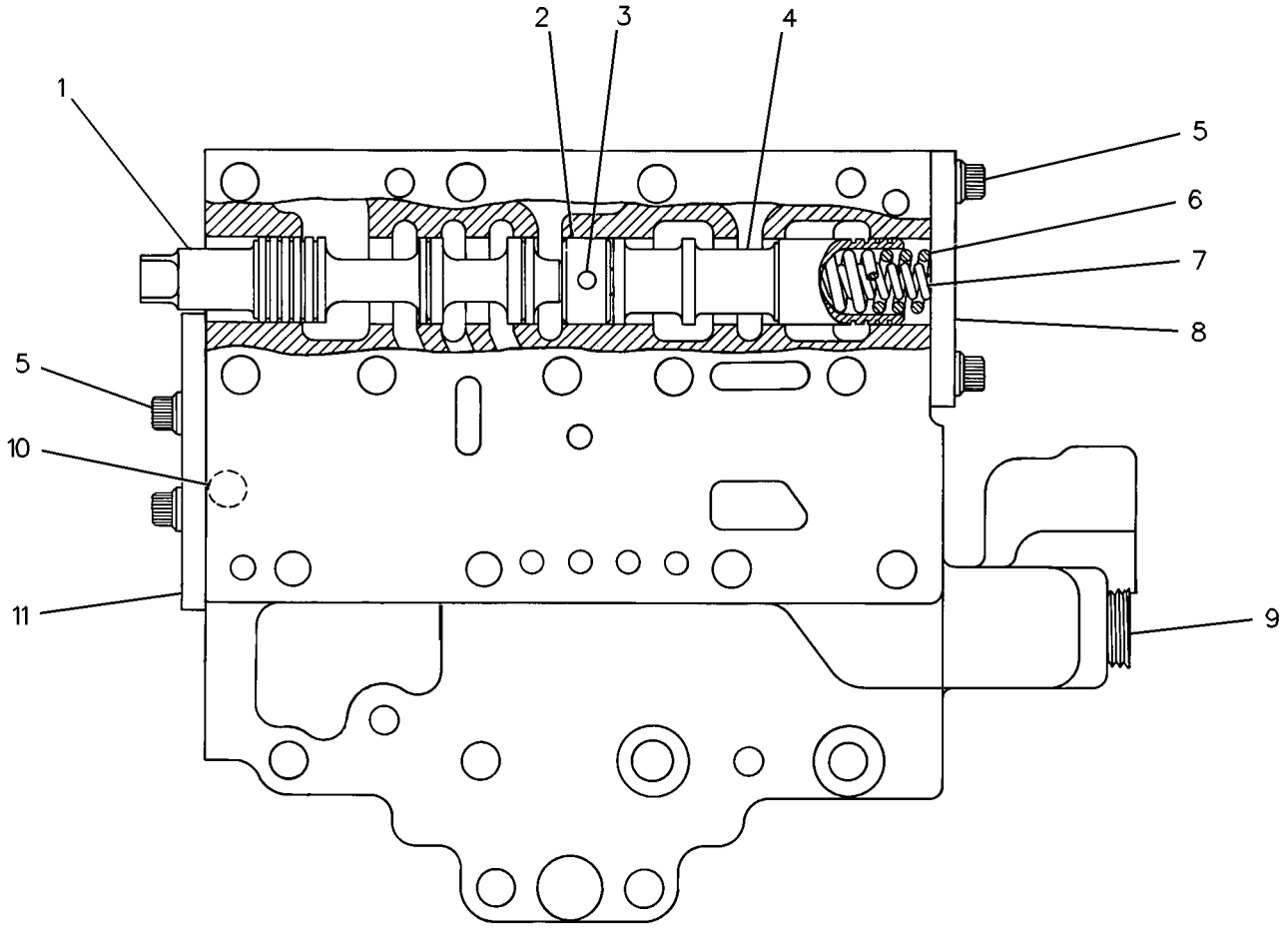

GRAPHIC #1 g00108451

MEMORANDA

2P-5816 VALVE GP-SELECTOR & PRESS CONT–

MODULATING REDUCING–SPEED

S/N: DWH1-UP

PART OF 8E-4131 VALVE GP-TRANSMISSION CONTROL

SMCS-3083 **i00914299**

NOTE	REF NO	GRAPHIC REF	PART NUMBER	QTY	PART NAME 1 2 3 4 5 6 (PRODUCT LEVEL)	SEE PAGE
	1	1	**2P-4500**	1	SPRING (OUTER)	
	2	1	**2P-4397**	1	SPACER	
	3	1	**2P-4498**	1	SPRING (INNER)	
B	4	1	**7M-1396**	1	SPACER ((1.6 MM)THK)	
B		1	**7M-1397**	1	SPACER (.92MM THK)	
B		1	**5M-3492**	4	SPACER (.25MM THK)	
C	5	1	**6P-4700**	1	SPOOL AS	
		1	**5M-8009**	1	PIN-SPRING	
	6	1	**1S-2121**	1	PLUNGER-DAMPING	
	7	1	**4M-2381**	1	SPRING	
	8	1	**1S-1636**	1	RETAINER	
		1	**1S-1638**	1	RING-RETAINING	
	9	1	**5M-2504**	1	SLUG	
	10	1	**2P-9186**	2	WASHER	
	11	1	**3P-1798**	1	COVER	
	12	1	**1L-3769**	1	RING-RETAINING	
	13	1	**6F-6673**	1	SEAL-O-RING (31.34MM ID)	
	14	1	**6L-4783**	1	BOLT-12 POINT HEAD	
	15	1	**8H-5244**	1	DOWEL	
	16	1	**5S-7906**	1	STOP	
	17	1	**2P-4486**	2	SPOOL-SELECTOR	
	18	1	**2P-4501**	3	SPRING	
	19	1	**2P-4502**	1	COVER	
	20	1	**2P-4372**	1	SPOOL-SELECTOR	
	21	1	**3D-4245**	2	SEAL-O-RING (25.07MM ID)	
	22	1	**1T-0416**	5	BOLT (5/16-18X.75IN)	
	23	1	**2P-4396**	1	PISTON-LOAD	

B-USE AS REQUIRED
C-CHANGE FROM PREVIOUS TYPE

2P-5816 VALVE GP-SELECTOR & PRESS CONT *(contd.)* i00914299

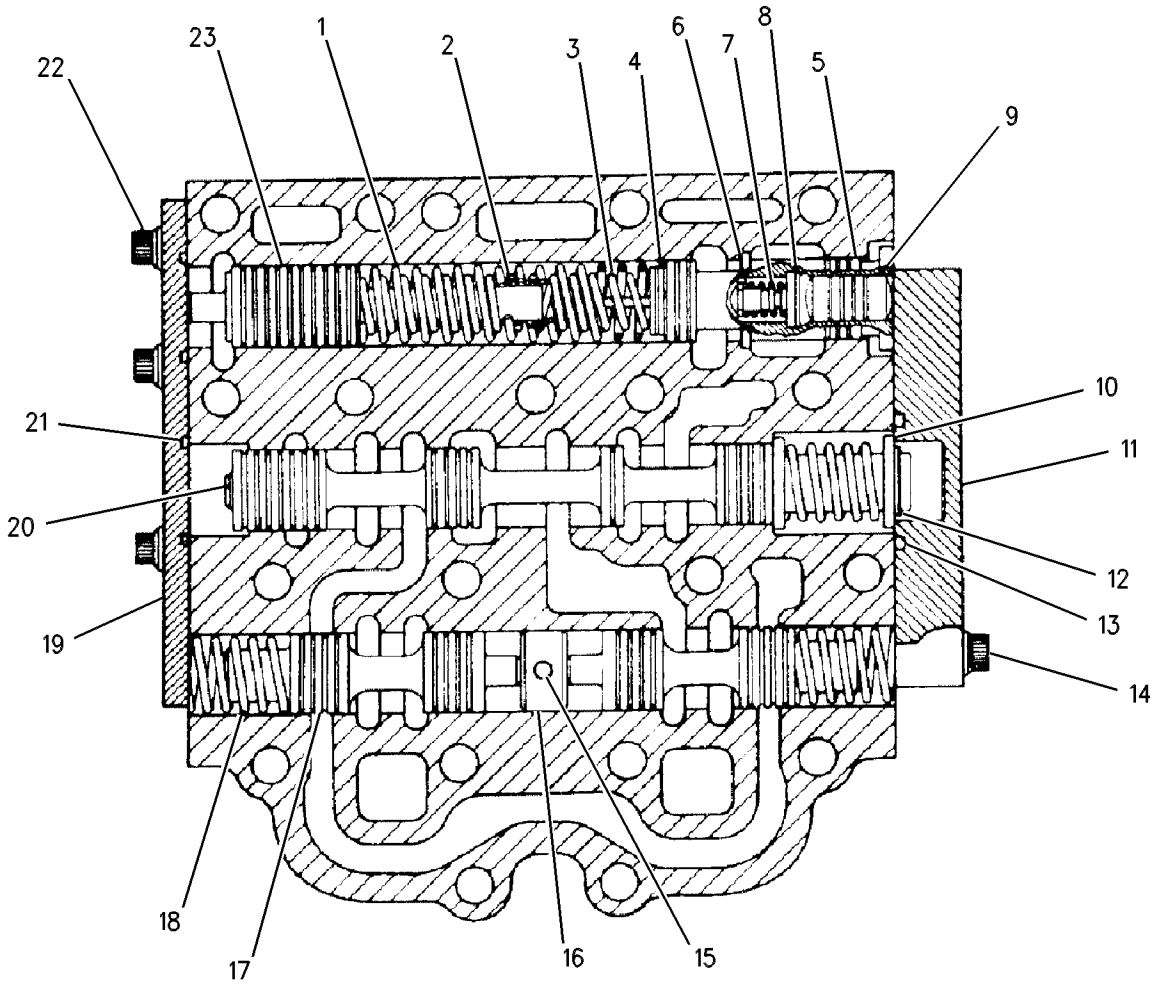

GRAPHIC #1 g00467859

8P-1100 VALVE GP-SELECTOR & PRESS CONT–
MANUAL MODULATING–DIFFERENTIAL–SPEED
S/N: DWH1-UP
PART OF 8E-4131 VALVE GP-TRANSMISSION CONTROL

SMCS-3083 **i00128451**

NOTE	REF NO	GRAPHIC REF	PART NUMBER	QTY	PART NAME 1 2 3 4 5 6 (PRODUCT LEVEL)	SEE PAGE
	1	1	**3P-8042**	1	SPRING	
C	2	1	**3T-2542**	1	SLEEVE	
C	3	1	**9P-8120**	1	SPRING (OUTER)	
		1	**3P-6881**	1	SPRING (INNER)	
	4	1	**8P-1096**	1	PISTON-MODULATING	
	5	1	**2M-1168**	1	SLUG-VALVE	
	6	1	**3S-9951**	1	WASHER-STOP	
	7	1	**3P-6669**	1	SPRING	
	8	1	**8H-5244**	2	DOWEL	
C	9	1	**3H-1118**	1	PIN-SPRING	
	10	1	**3P-7834**	1	STOP AS	
		1	**2P-4484**	1	STOP	
	11	1	**4B-9880**	1	BALL	
	12	1	**2P-4506**	1	PLUG	
		1	**2H-3932**	1	SEAL (28.17MM ID)	
	13	1	**2P-4507**	1	COVER	
	14	1	**1T-0416**	7	BOLT (5/16-18X.75IN)	
C	15	1	**5M-6214**	2	PLUG-PIPE (1/8-27 THD)	
	16	1	**3S-9949**	1	SPRING	
	17	1	**5S-7906**	1	STOP	
	18	1	**2P-4486**	2	SPOOL-SELECTOR	
	19	1	**2P-4501**	2	SPRING	
	20	1	**2P-4504**	1	COVER	
	21	1	**3D-4245**	1	SEAL-O-RING (25.07MM ID)	
	22	1	**1P-0561**	1	SPOOL-DIFFERENTIAL	
C	23	1	**3T-2543**	1	SPOOL-MODULATION	
	24	1	**8P-1098**	1	BODY AS-VALVE	
	25	1	**8M-8489**	4	DOWEL (12.54MM DIA)	
	26	1	**6P-3223**	8	DAMPER-BOLT	

C-CHANGE FROM PREVIOUS TYPE

8P-1100 VALVE GP-SELECTOR & PRESS CONT *(contd.)* i00128451

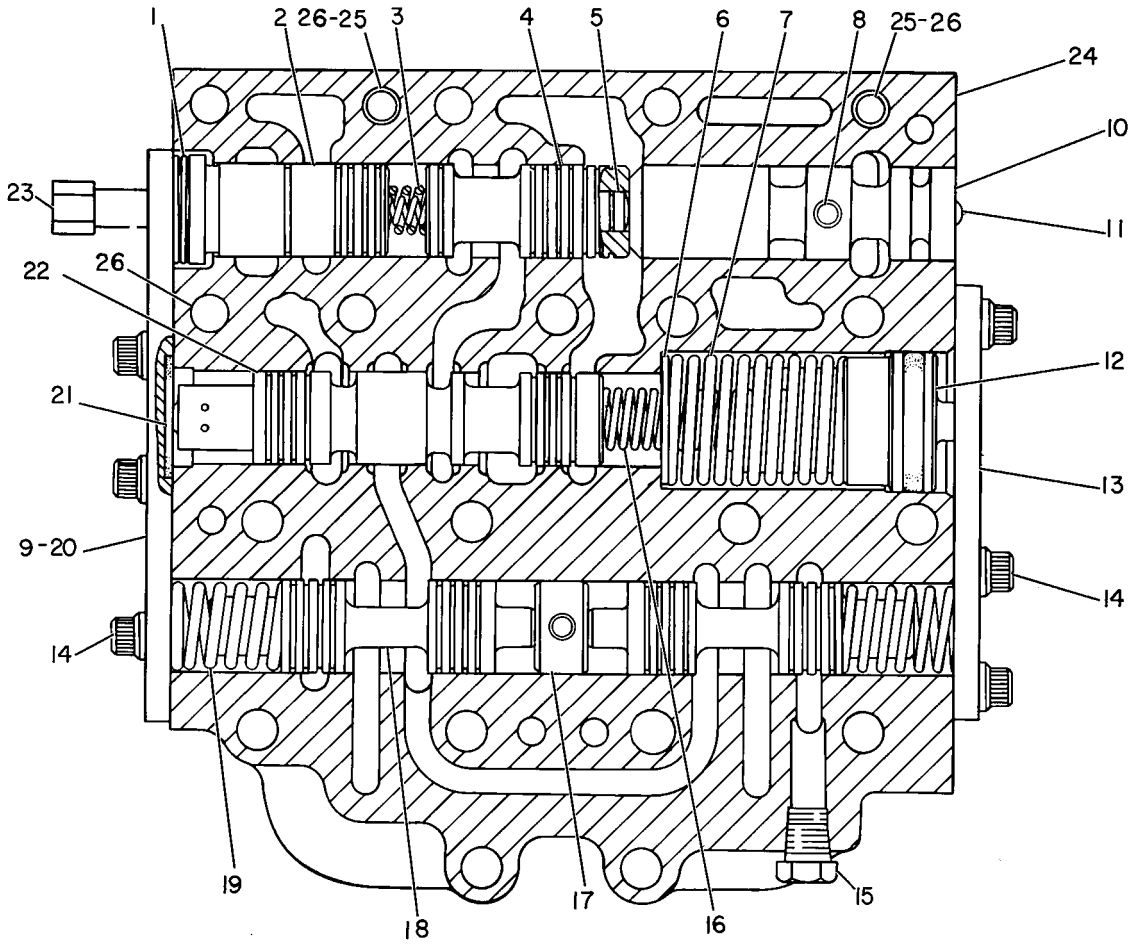

GRAPHIC #1 g00108199

154-3064 VALVE GP-SOLENOID—DIFFERENTIAL LOCK

S/N: ATS1-UP
24V DC
PART OF 174-3705 VALVE & MTG GP-DIFF LOCK
FIELD REPLACEMENT FOR 144-6294 VALVE GP-SOLENOID

SMCS-5479 **i01702271**

NOTE	REF NO	GRAPHIC REF	PART NUMBER	QTY	PART NAME 1 2 3 4 5 6 (PRODUCT LEVEL)	SEE PAGE
	1	1	**8C-9987**	1	WASHER (8.3X28X2.5MM THK)	
	2	1	**111-0343**	1	LOCKNUT (5/16-18 THD)	
	3	1	**142-0350**	1	CARTRIDGE AS	
		1	**8C-9987**	1	WASHER (8.3X28X2.5MM THK)	
		1	**111-0343**	1	LOCKNUT (5/16-18 THD)	
	4	1	**189-0189**	1	COIL AS	
		1	**1S-9593**	2	STRAP-CABLE	
		1	**102-8802**	1	KIT-RECEPTACLE (2 PIN)	
					(INCLUDES RECEPTACLE AS & WEDGE)	
		1	**3E-3365**	1	WEDGE-RECEPTACLE LOCK (2 PIN)	
		1	**186-3735**	2	PIN-CONNECTOR	
					AVAILABLE REPAIR KIT(S):	
			6G-5979	1	KIT-CARTRIDGE SEAL	

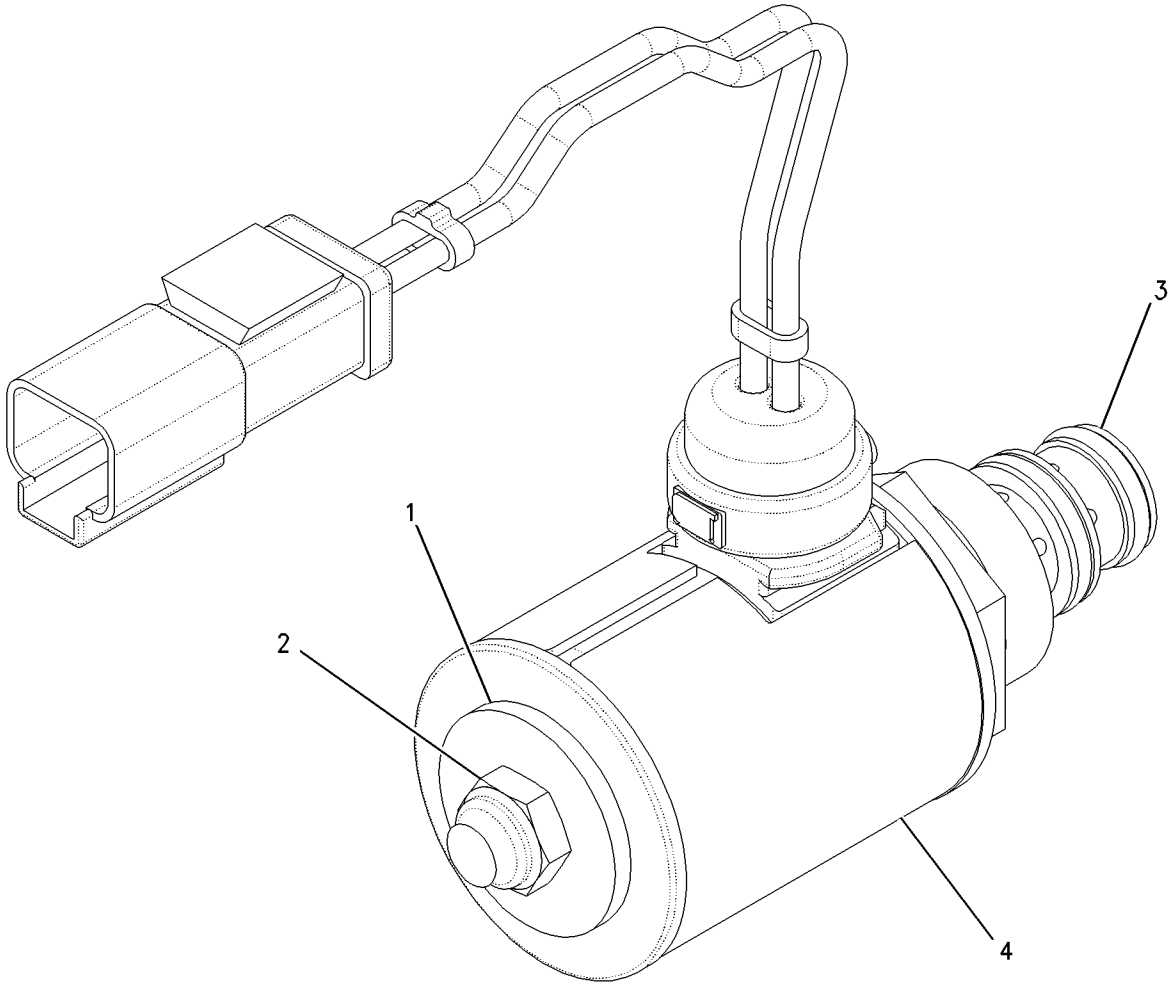

GRAPHIC #1 g00877963

MEMORANDA

8E-4131 VALVE GP-TRANSMISSION CONTROL

S/N: DWH1-UP

PART OF 8E-4132 CONTROL GP-TRANSMISSION HYD

SMCS-3073 **i01670112**

NOTE	REF NO	GRAPHIC REF	PART NUMBER	QTY	PART NAME 1 2 3 4 5 6 (PRODUCT LEVEL)	SEE PAGE
	1	1	**3P-2870**	1	MANIFOLD AS	
		1	**8M-8489**	2	DOWEL	
		1	**9M-6803**	2	DOWEL (20.5MM)	
Y	2	1	**2P-5816**	1	VALVE GP-SELECTOR & PRESS CONT (MODULATING REDUCING/SPEED)	324
Y	3	1	**8P-1100**	1	VALVE GP-SELECTOR & PRESS CONT (MAN MODULATING/DIFFERENTIAL/SP)	326
Y	4	1	**2P-5814**	1	VALVE GP-SELECTOR & PRESS CONT (DIRECTION)	322
Y	5	1	**8E-4130**	1	VALVE GP-PILOT (SPEED SELECT)	318
	6	1	**3P-0208**	8	BOLT-12 POINT HEAD (5/16-18X8 IN)	
	7	1	**9M-4289**	4	BOLT-12 POINT HEAD (5/16-18X5 IN)	
	8	1	**4S-5845**	4	BOLT-12 POINT HEAD (5/16-18X6.5 IN)	
	9	1	**9M-1974**	16	WASHER-HARD (8.8X16X2MM THK)	
	10	1	**3P-0864**	1	COVER AS	
		1	**3J-6956**	1	SPRING	
		1	**3P-0866**	1	POPPET	
		1	**3P-0867**	1	RETAINER	
		1	**4D-1322**	1	RING-RETAINING	
		1	**9F-2247**	1	PLUG-PIPE	
	11	1	**0A-4664**	1	CLIP	

Y-SEPARATE ILLUSTRATION

8E-4131 **VALVE GP-TRANSMISSION CONTROL** ***(contd.)*** **i01670112**

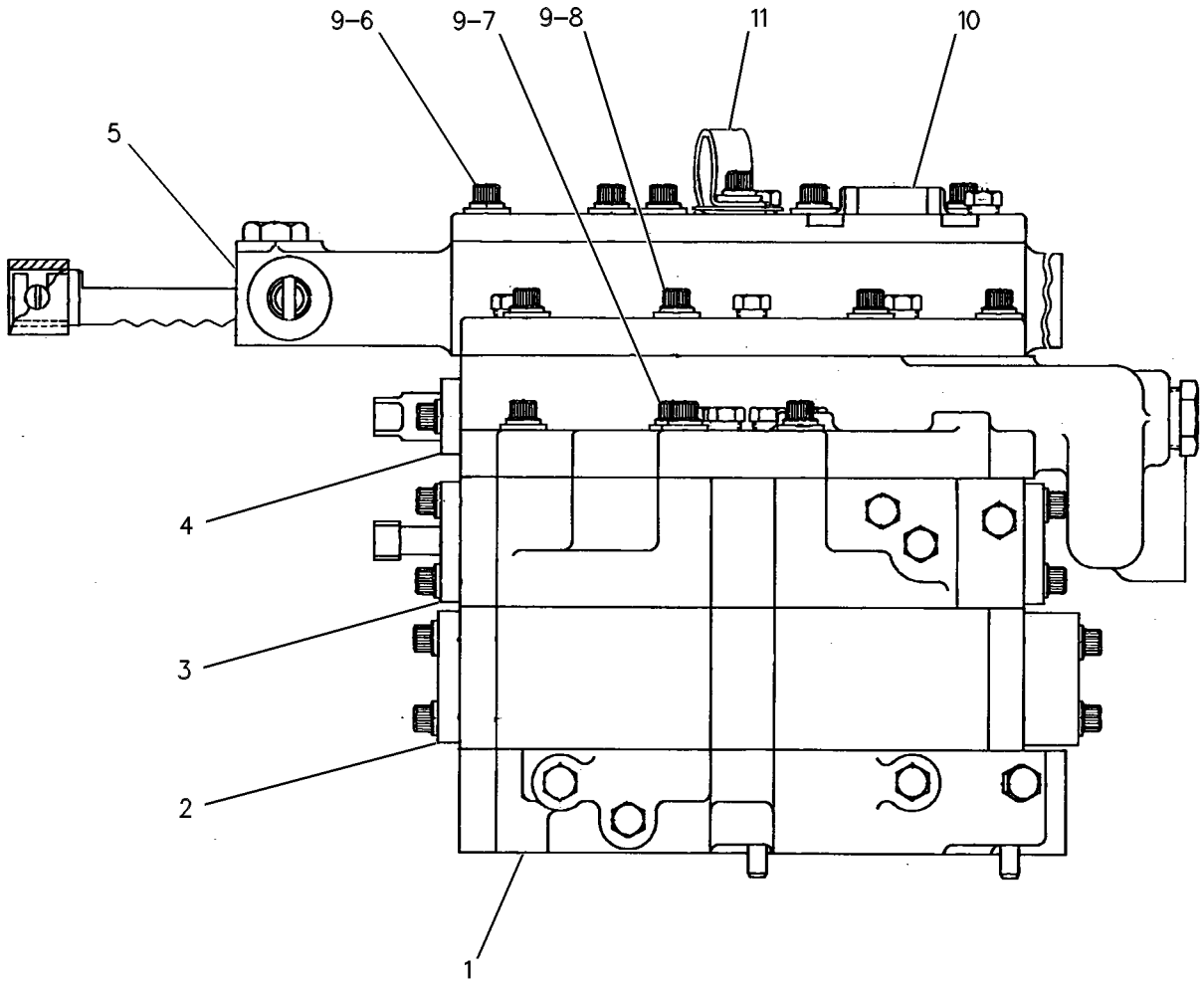

GRAPHIC #1 g00108967

152-3965 WHEEL & TIRE AR

S/N: ATS1-UP
AN ATTACHMENT

SMCS-4200 **i00893835**

NOTE	PART NUMBER	QTY	PART NAME 1 2 3 4 5 6 (PRODUCT LEVEL)	SEE PAGE
Y	*142-6417*	6	WHEEL & TIRE GP	337

Y-SEPARATE ILLUSTRATION

<END>

152-3967 WHEEL & TIRE AR

S/N: ATS1-UP
AN ATTACHMENT

SMCS-4200 **i00708587**

NOTE	PART NUMBER	QTY	PART NAME 1 2 3 4 5 6 (PRODUCT LEVEL)	SEE PAGE
Y	*142-6418*	6	WHEEL & TIRE GP	338

Y-SEPARATE ILLUSTRATION

<END>

152-3971 WHEEL & TIRE AR

S/N: ATS1-UP
AN ATTACHMENT

SMCS-4200 **i00699493**

NOTE	PART NUMBER	QTY	PART NAME 1 2 3 4 5 6 (PRODUCT LEVEL)	SEE PAGE
Y	*142-6419*	6	WHEEL & TIRE GP	338

Y-SEPARATE ILLUSTRATION

<END>

152-3974 WHEEL & TIRE AR

S/N: ATS1-UP
AN ATTACHMENT

SMCS-4200 **i00699533**

NOTE	PART NUMBER	QTY	PART NAME 1 2 3 4 5 6 (PRODUCT LEVEL)	SEE PAGE
Y	*142-6422*	6	WHEEL & TIRE GP	339

Y-SEPARATE ILLUSTRATION

<END>

152-3975 WHEEL & TIRE AR

S/N: ATS1-UP
AN ATTACHMENT

SMCS-4200 **i00699573**

NOTE	PART NUMBER	QTY	PART NAME 1 2 3 4 5 6 (PRODUCT LEVEL)	SEE PAGE
Y	*142-6423*	6	WHEEL & TIRE GP	339

Y-SEPARATE ILLUSTRATION

<END>

152-3977 WHEEL & TIRE AR

S/N: ATS1-UP
AN ATTACHMENT

SMCS-4200 **i00708575**

NOTE	PART NUMBER	QTY	PART NAME 1 2 3 4 5 6 (PRODUCT LEVEL)	SEE PAGE
Y	*142-6424*	6	WHEEL & TIRE GP	340

Y-SEPARATE ILLUSTRATION

<END>

152-3979 WHEEL & TIRE AR

S/N: ATS1-UP
AN ATTACHMENT

SMCS-4200 **i00708578**

NOTE	PART NUMBER	QTY	PART NAME 1 2 3 4 5 6 (PRODUCT LEVEL)	SEE PAGE
Y	*142-6426*	6	WHEEL & TIRE GP	341

Y-SEPARATE ILLUSTRATION

<END>

152-3987 WHEEL & TIRE AR

S/N: ATS1-UP
AN ATTACHMENT

SMCS-4200 **i00708581**

NOTE	PART NUMBER	QTY	PART NAME 1 2 3 4 5 6 (PRODUCT LEVEL)	SEE PAGE
Y	*142-6432*	6	WHEEL & TIRE GP	341

Y-SEPARATE ILLUSTRATION

<END>

152-3988 WHEEL & TIRE AR

S/N: ATS1-UP
AN ATTACHMENT

SMCS-4200 **i00708582**

NOTE	PART NUMBER	QTY	PART NAME 1 2 3 4 5 6 (PRODUCT LEVEL)	SEE PAGE
Y	*142-6433*	6	WHEEL & TIRE GP	342

Y-SEPARATE ILLUSTRATION

<END>

152-4000 WHEEL & TIRE AR

S/N: ATS1-UP
AN ATTACHMENT

SMCS-4200 **i00708583**

NOTE	PART NUMBER	QTY	PART NAME 1 2 3 4 5 6 (PRODUCT LEVEL)	SEE PAGE
Y	*142-6434*	6	WHEEL & TIRE GP	342

Y-SEPARATE ILLUSTRATION

<END>

152-4008 WHEEL & TIRE AR

S/N: ATS1-UP
AN ATTACHMENT

SMCS-4200 **i00708584**

NOTE	PART NUMBER	QTY	PART NAME 1 2 3 4 5 6 (PRODUCT LEVEL)	SEE PAGE
Y	*142-6438*	6	WHEEL & TIRE GP	343

Y-SEPARATE ILLUSTRATION

<END>

157-1739 WHEEL & TIRE AR

S/N: ATS1-UP
AN ATTACHMENT

SMCS-4200 **i01827425**

NOTE	PART NUMBER	QTY	PART NAME 1 2 3 4 5 6 (PRODUCT LEVEL)	SEE PAGE
Y	*157-1738*	6	WHEEL & TIRE GP	343

Y-SEPARATE ILLUSTRATION

<END>

163-6129 WHEEL & TIRE AR

S/N: ATS1-UP
(19.5 X 25)
AN ATTACHMENT

SMCS-4200 **i01855078**

NOTE	PART NUMBER	QTY	PART NAME 1 2 3 4 5 6 (PRODUCT LEVEL)	SEE PAGE
	163-6130	6	WHEEL & TIRE GP	
			(EACH INCLUDES)	
	2D-2443	1	SEAL-O-RING	
	135-6337	1	TIRE (23.5-25 20 PR L-5)	
	2G-6595	1	VALVE GP-TIRE	
	9K-7951	1	CAP-VALVE (STEM)	
	6F-3930	1	CORE-VALVE	
	7D-5252	1	SPUD AS	
	2D-2507	1	SPUD	
	2D-2508	1	GROMMET	
	2D-2509	1	LOCKNUT	
	226-1885	1	WHEEL GP	
	7D-7469	1	RING-LOCK	
	226-1886	1	FLANGE AS	
	228-0902	1	RIM AS	

<END>

167-0694 WHEEL & TIRE AR

S/N: ATS1-UP
AN ATTACHMENT

SMCS-4200 **i01828548**

NOTE	PART NUMBER	QTY	PART NAME 1 2 3 4 5 6 (PRODUCT LEVEL)	SEE PAGE
Y	*167-0693*	6	WHEEL & TIRE GP	344
Y-SEPARATE ILLUSTRATION				

<END>

169-8566 WHEEL & TIRE AR

S/N: ATS1-UP
AN ATTACHMENT

SMCS-4200 **i01828980**

NOTE	PART NUMBER	QTY	PART NAME 1 2 3 4 5 6 (PRODUCT LEVEL)	SEE PAGE
Y	*170-0438*	6	WHEEL & TIRE GP	345
Y-SEPARATE ILLUSTRATION				

<END>

171-4714 WHEEL & TIRE AR

S/N: ATS1-UP
AN ATTACHMENT

SMCS-4200 **i01827898**

NOTE	PART NUMBER	QTY	PART NAME 1 2 3 4 5 6 (PRODUCT LEVEL)	SEE PAGE
Y	*171-4713*	6	WHEEL & TIRE GP	345

Y-SEPARATE ILLUSTRATION

<END>

173-0978 WHEEL & TIRE AR

S/N: ATS1-UP
AN ATTACHMENT

SMCS-4200 **i01828975**

NOTE	PART NUMBER	QTY	PART NAME 1 2 3 4 5 6 (PRODUCT LEVEL)	SEE PAGE
Y	*173-0980*	6	WHEEL & TIRE GP	346

Y-SEPARATE ILLUSTRATION

<END>

191-2313 WHEEL & TIRE AR

S/N: ATS1-UP
AN ATTACHMENT

SMCS-4200 **i01828971**

NOTE	PART NUMBER	QTY	PART NAME 1 2 3 4 5 6 (PRODUCT LEVEL)	SEE PAGE
Y	*191-2312*	6	WHEEL & TIRE GP	346

Y-SEPARATE ILLUSTRATION

<END>

196-4928 WHEEL & TIRE AR

S/N: ATS1-UP
AN ATTACHMENT

SMCS-4200 **i01828951**

NOTE	PART NUMBER	QTY	PART NAME 1 2 3 4 5 6 (PRODUCT LEVEL)	SEE PAGE
Y	*196-4927*	6	WHEEL & TIRE GP	347

Y-SEPARATE ILLUSTRATION

<END>

197-7918 WHEEL & TIRE AR

S/N: ATS1-UP
AN ATTACHMENT

SMCS-4200 **i01828925**

NOTE	PART NUMBER	QTY	PART NAME 1 2 3 4 5 6 (PRODUCT LEVEL)	SEE PAGE
Y	*197-7916*	6	WHEEL & TIRE GP	347
Y-SEPARATE ILLUSTRATION				

<END>

200-2675 WHEEL & TIRE AR

S/N: ATS1-UP
AN ATTACHMENT

SMCS-4200 **i01828895**

NOTE	PART NUMBER	QTY	PART NAME 1 2 3 4 5 6 (PRODUCT LEVEL)	SEE PAGE
Y	*200-2674*	6	WHEEL & TIRE GP	348
Y-SEPARATE ILLUSTRATION				

<END>

205-2197 WHEEL & TIRE AR

S/N: ATS1-UP
AN ATTACHMENT

SMCS-4200 **i01524428**

NOTE	PART NUMBER	QTY	PART NAME 1 2 3 4 5 6 (PRODUCT LEVEL)	SEE PAGE
Y	*205-2198*	6	WHEEL & TIRE GP	348
Y-SEPARATE ILLUSTRATION				

<END>

142-6417 WHEEL & TIRE GP

S/N: ATS1-UP
PART OF 152-3965 WHEEL & TIRE AR
AN ATTACHMENT

SMCS-4200 **i00764907**

NOTE	PART NUMBER	QTY	PART NAME 1 2 3 4 5 6 (PRODUCT LEVEL)	SEE PAGE
	2D-2443	1	SEAL-O-RING	
	142-6138	1	TIRE (18.00-25 12PR E-2)	
	2G-6595	1	VALVE GP-TIRE	
	6F-3930	1	CORE-VALVE	
	9K-7951	1	CAP-VALVE	
	7D-5252	1	SPUD AS	
	2D-2507	1	SPUD	
	2D-2508	1	GROMMET	
	2D-2509	1	LOCKNUT	
Y	*142-6233*	1	WHEEL GP	349
Y-SEPARATE ILLUSTRATION				

<END>

142-6418 WHEEL & TIRE GP

S/N: ATS1-UP
PART OF 152-3967 WHEEL & TIRE AR
AN ATTACHMENT

SMCS-4200 **i00731991**

NOTE	PART NUMBER	QTY	PART NAME 1 2 3 4 5 6 (PRODUCT LEVEL)	SEE PAGE
	2D-2443	1	SEAL-O-RING	
	142-6152	1	TIRE (18.00-25 12PR E-2 404-799)	
	2G-6595	1	VALVE GP-TIRE	
	9K-7951	1	CAP-VALVE	
	6F-3930	1	CORE-VALVE	
	7D-5252	1	SPUD AS	
	2D-2508	1	GROMMET	
	2D-2509	1	LOCKNUT	
	2D-2507	1	SPUD	
Y	*142-6233*	1	WHEEL GP	349

Y-SEPARATE ILLUSTRATION

<END>

142-6419 WHEEL & TIRE GP

S/N: ATS1-UP
PART OF 152-3971 WHEEL & TIRE AR
AN ATTACHMENT

SMCS-4200 **i00764911**

NOTE	PART NUMBER	QTY	PART NAME 1 2 3 4 5 6 (PRODUCT LEVEL)	SEE PAGE
	2D-2443	1	SEAL-O-RING	
	142-6153	1	TIRE (18.00-25 12PR E-2)	
	2G-6595	1	VALVE GP-TIRE	
	6F-3930	1	CORE-VALVE	
	9K-7951	1	CAP-VALVE	
	7D-5252	1	SPUD AS	
	2D-2507	1	SPUD	
	2D-2508	1	GROMMET	
	2D-2509	1	LOCKNUT	
Y	*142-6233*	1	WHEEL GP	349

Y-SEPARATE ILLUSTRATION

<END>

142-6422 WHEEL & TIRE GP

S/N: ATS1-UP
(19.5 X 25)
PART OF 152-3974 WHEEL & TIRE AR
AN ATTACHMENT

SMCS-4200 **i01829156**

NOTE	PART NUMBER	QTY	PART NAME 1 2 3 4 5 6 (PRODUCT LEVEL)	SEE PAGE
	2D-2443	1	SEAL-O-RING	
	127-4727	1	TIRE (23.50-25 12PR D/L-2A)	
	2G-6595	1	VALVE GP-TIRE	
	6F-3930	1	CORE-VALVE	
	9K-7951	1	CAP-VALVE (STEM)	
	7D-5252	1	SPUD AS	
	2D-2507	1	SPUD	
	2D-2508	1	GROMMET	
	2D-2509	1	LOCKNUT	
	226-1885	1	WHEEL GP	
	7D-7469	1	RING-LOCK	
	226-1886	1	FLANGE AS	
	228-0902	1	RIM AS	

<END>

142-6423 WHEEL & TIRE GP

S/N: ATS1-UP
PART OF 152-3975 WHEEL & TIRE AR
AN ATTACHMENT

SMCS-4200 **i01829173**

NOTE	PART NUMBER	QTY	PART NAME 1 2 3 4 5 6 (PRODUCT LEVEL)	SEE PAGE
	2D-2443	1	SEAL-O-RING	
	127-4725	1	TIRE (23.50-25 12PR D/L-2A)	
	2G-6595	1	VALVE GP-TIRE	
	6F-3930	1	CORE-VALVE	
	9K-7951	1	CAP-VALVE (STEM)	
	7D-5252	1	SPUD AS	
	2D-2507	1	SPUD	
	2D-2508	1	GROMMET	
	2D-2509	1	LOCKNUT	
	226-1885	1	WHEEL GP	
	7D-7469	1	RING-LOCK	
	226-1886	1	FLANGE AS	
	228-0902	1	RIM AS	

<END>

142-6424 WHEEL & TIRE GP

S/N: ATS1-UP
(19.5 X 25)
PART OF 152-3977 WHEEL & TIRE AR
AN ATTACHMENT

SMCS-4200 **i01828746**

NOTE	PART NUMBER	QTY	PART NAME 1 2 3 4 5 6 (PRODUCT LEVEL)	SEE PAGE
	2D-2443	1	SEAL-O-RING	
	127-4726	1	TIRE (23.50-25 12PR D/L-2A)	
	2G-6595	1	VALVE GP-TIRE	
	9K-7951	1	CAP-VALVE (STEM)	
	6F-3930	1	CORE-VALVE	
	7D-5252	1	SPUD AS	
	2D-2508	1	GROMMET	
	2D-2509	1	LOCKNUT	
	2D-2507	1	SPUD	
	226-1885	1	WHEEL GP	
	7D-7469	1	RING-LOCK	
	226-1886	1	FLANGE AS	
	228-0902	1	RIM AS	

<END>

142-6425 WHEEL & TIRE GP

S/N: ATS1-UP
(19.5 X 25)
AN ATTACHMENT

SMCS-4200 **i01828763**

NOTE	PART NUMBER	QTY	PART NAME 1 2 3 4 5 6 (PRODUCT LEVEL)	SEE PAGE
	2D-2443	1	SEAL-O-RING	
	128-5130	1	TIRE (23.50-25 12PR D/L-3A)	
	2G-6595	1	VALVE GP-TIRE	
	9K-7951	1	CAP-VALVE (STEM)	
	6F-3930	1	CORE-VALVE	
	7D-5252	1	SPUD AS	
	2D-2508	1	GROMMET	
	2D-2509	1	LOCKNUT	
	2D-2507	1	SPUD	
	226-1885	1	WHEEL GP	
	7D-7469	1	RING-LOCK	
	226-1886	1	FLANGE AS	
	228-0902	1	RIM AS	

<END>

142-6426 WHEEL & TIRE GP

S/N: ATS1-UP
PART OF 152-3979 WHEEL & TIRE AR
AN ATTACHMENT

SMCS-4200 **i01829177**

NOTE	PART NUMBER	QTY	PART NAME 1 2 3 4 5 6 (PRODUCT LEVEL)	SEE PAGE
	2D-2443	1	SEAL-O-RING	
	128-5128	1	TIRE (23.50-25 12PR D/L-3A)	
	2G-6595	1	VALVE GP-TIRE	
	9K-7951	1	CAP-VALVE (STEM)	
	6F-3930	1	CORE-VALVE	
	7D-5252	1	SPUD AS	
	2D-2508	1	GROMMET	
	2D-2509	1	LOCKNUT	
	2D-2507	1	SPUD	
	226-1885	1	WHEEL GP	
	7D-7469	1	RING-LOCK	
	226-1886	1	FLANGE AS	
	228-0902	1	RIM AS	

<END>

142-6432 WHEEL & TIRE GP

S/N: ATS1-UP
(19.5 X 25)
PART OF 152-3987 WHEEL & TIRE AR
AN ATTACHMENT

SMCS-4200 **i01828799**

NOTE	PART NUMBER	QTY	PART NAME 1 2 3 4 5 6 (PRODUCT LEVEL)	SEE PAGE
	2D-2443	1	SEAL-O-RING	
	6C-7368	1	TIRE (23.5 R25 * GP-2B L2/3 GY)	
	2G-6595	1	VALVE GP-TIRE	
	9K-7951	1	CAP-VALVE (STEM)	
	6F-3930	1	CORE-VALVE	
	7D-5252	1	SPUD AS	
	2D-2508	1	GROMMET	
	2D-2509	1	LOCKNUT	
	2D-2507	1	SPUD	
	226-1885	1	WHEEL GP	
	7D-7469	1	RING-LOCK	
	226-1886	1	FLANGE AS	
	228-0902	1	RIM AS	

<END>

142-6433 WHEEL & TIRE GP

S/N: ATS1-UP
19.5 X 25
PART OF 152-3988 WHEEL & TIRE AR
AN ATTACHMENT

SMCS-4200 **i01828813**

NOTE	PART NUMBER	QTY	PART NAME 1 2 3 4 5 6 (PRODUCT LEVEL)	SEE PAGE
	2D-2443	1	SEAL-O-RING	
	6C-2791	1	TIRE (23.5 R25 * XHA)	
	2G-6595	1	VALVE GP-TIRE	
	9K-7951	1	CAP-VALVE (STEM)	
	6F-3930	1	CORE-VALVE	
	7D-5252	1	SPUD AS	
	2D-2508	1	GROMMET	
	2D-2509	1	LOCKNUT	
	2D-2507	1	SPUD	
	226-1885	1	WHEEL GP	
	7D-7469	1	RING-LOCK	
	226-1886	1	FLANGE AS	
	228-0902	1	RIM AS	

<END>

142-6434 WHEEL & TIRE GP

S/N: ATS1-UP
23.5, R25 * XLDD2A
PART OF 152-4000 WHEEL & TIRE AR
AN ATTACHMENT

SMCS-4200 **i01830200**

NOTE	PART NUMBER	QTY	PART NAME 1 2 3 4 5 6 (PRODUCT LEVEL)	SEE PAGE
	2D-2443	1	SEAL-O-RING	
	6C-8882	1	TIRE (23.5 R25 * XLDD2A)	
	2G-6595	1	VALVE GP-TIRE	
	9K-7951	1	CAP-VALVE (STEM)	
	6F-3930	1	CORE-VALVE	
	7D-5252	1	SPUD AS	
	2D-2508	1	GROMMET	
	2D-2509	1	LOCKNUT	
	2D-2507	1	SPUD	
	226-1885	1	WHEEL GP	
	7D-7469	1	RING-LOCK	
	226-1886	1	FLANGE AS	
	228-0902	1	RIM AS	

<END>

142-6438 WHEEL & TIRE GP

S/N: ATS1-UP
PART OF 152-4008 WHEEL & TIRE AR
AN ATTACHMENT

SMCS-4200 **i01830201**

NOTE	PART NUMBER	QTY	PART NAME 1 2 3 4 5 6 (PRODUCT LEVEL)	SEE PAGE
	2D-2443	1	SEAL-O-RING	
	140-8636	1	TIRE (23.5 R25 * RL-5K)	
	2G-6595	1	VALVE GP-TIRE	
	9K-7951	1	CAP-VALVE (STEM)	
	6F-3930	1	CORE-VALVE	
	7D-5252	1	SPUD AS	
	2D-2508	1	GROMMET	
	2D-2509	1	LOCKNUT	
	2D-2507	1	SPUD	
	226-1885	1	WHEEL GP	
	7D-7469	1	RING-LOCK	
	226-1886	1	FLANGE AS	
	228-0902	1	RIM AS	

<END>

157-1738 WHEEL & TIRE GP

S/N: ATS1-UP
(19.5 X 25)
PART OF 157-1739 WHEEL & TIRE AR
AN ATTACHMENT

SMCS-4200 **i01827424**

NOTE	PART NUMBER	QTY	PART NAME 1 2 3 4 5 6 (PRODUCT LEVEL)	SEE PAGE
	2D-2443	1	SEAL-O-RING	
	119-7463	1	TIRE (23.5 R25 * L-2 XTLA)	
	2G-6595	1	VALVE GP-TIRE	
	9K-7951	1	CAP-VALVE (STEM)	
	6F-3930	1	CORE-VALVE	
	7D-5252	1	SPUD AS	
	2D-2508	1	GROMMET	
	2D-2509	1	LOCKNUT	
	2D-2507	1	SPUD	
	226-1885	1	WHEEL GP	
	7D-7469	1	RING-LOCK	
	226-1886	1	FLANGE AS	
	228-0902	1	RIM AS	

<END>

163-6130 WHEEL & TIRE GP

S/N: ATS1-UP
(19.5 X 25)
AN ATTACHMENT

SMCS-4200 **i01827476**

NOTE	PART NUMBER	QTY	PART NAME 1 2 3 4 5 6 (PRODUCT LEVEL)	SEE PAGE
	2D-2443	1	SEAL-O-RING	
	135-6337	1	TIRE (23.5-25 20 PR L-5 GY)	
	2G-6595	1	VALVE GP-TIRE	
	9K-7951	1	CAP-VALVE (STEM)	
	6F-3930	1	CORE-VALVE	
	7D-5252	1	SPUD AS	
	2D-2508	1	GROMMET	
	2D-2509	1	LOCKNUT	
	2D-2507	1	SPUD	
	226-1885	1	WHEEL GP	
	7D-7469	1	RING-LOCK	
	226-1886	1	FLANGE AS	
	228-0902	1	RIM AS	

<END>

167-0693 WHEEL & TIRE GP

S/N: ATS1-UP
(13 X 25)
PART OF 167-0694 WHEEL & TIRE AR
AN ATTACHMENT

SMCS-4200 **i01828543**

NOTE	PART NUMBER	QTY	PART NAME 1 2 3 4 5 6 (PRODUCT LEVEL)	SEE PAGE
	2D-2443	1	SEAL-O-RING	
	106-3311	1	TIRE (18.00 R25 ** E-3)	
	2G-6595	1	VALVE GP-TIRE	
	6F-3930	1	CORE-VALVE	
	9K-7951	1	CAP-VALVE (STEM)	
	7D-5252	1	SPUD AS	
	2D-2507	1	SPUD	
	2D-2508	1	GROMMET	
	2D-2509	1	LOCKNUT	
	142-6233	1	WHEEL GP	
	7D-7469	1	RING-LOCK	
	8D-1650	1	WHEEL	
	1J-8387	2	FLANGE	
	8W-9601	1	BAND AS	

<END>

170-0438 WHEEL & TIRE GP

S/N: ATS1-UP
(19.5 X 25)
PART OF 169-8566 WHEEL & TIRE AR
AN ATTACHMENT

SMCS-4200 **i01828982**

NOTE	PART NUMBER	QTY	PART NAME 1 2 3 4 5 6 (PRODUCT LEVEL)	SEE PAGE
	2D-2443	1	SEAL-O-RING	
	170-0439	1	TIRE (25.5 R25 * EGL-4)	
	2G-6595	1	VALVE GP-TIRE	
	9K-7951	1	CAP-VALVE (STEM)	
	6F-3930	1	CORE-VALVE	
	7D-5252	1	SPUD AS	
	2D-2508	1	GROMMET	
	2D-2509	1	LOCKNUT	
	2D-2507	1	SPUD	
	226-1885	1	WHEEL GP	
	7D-7469	1	RING-LOCK	
	226-1886	1	FLANGE AS	
	228-0902	1	RIM AS	

<END>

171-4713 WHEEL & TIRE GP

S/N: ATS1-UP
PART OF 171-4714 WHEEL & TIRE AR
AN ATTACHMENT

SMCS-4200 **i01827896**

NOTE	PART NUMBER	QTY	PART NAME 1 2 3 4 5 6 (PRODUCT LEVEL)	SEE PAGE
	2D-2443	1	SEAL-O-RING	
	127-4731	1	TIRE (23.50-25 16PR D/L-3A)	
	2G-6595	1	VALVE GP-TIRE	
	9K-7951	1	CAP-VALVE (STEM)	
	6F-3930	1	CORE-VALVE	
	7D-5252	1	SPUD AS	
	2D-2507	1	SPUD	
	2D-2508	1	GROMMET	
	2D-2509	1	LOCKNUT	
	226-1885	1	WHEEL GP	
	7D-7469	1	RING-LOCK	
	226-1886	1	FLANGE AS	
	228-0902	1	RIM AS	

<END>

173-0980 WHEEL & TIRE GP

S/N: ATS1-UP
(13 X 25)
PART OF 173-0978 WHEEL & TIRE AR
AN ATTACHMENT

SMCS-4200 **i01828976**

NOTE	PART NUMBER	QTY	PART NAME 1 2 3 4 5 6 (PRODUCT LEVEL)	SEE PAGE
	2D-2443	1	SEAL-O-RING	
	173-0983	1	TIRE (18.00-25 16PR E/L2)	
	2G-6595	1	VALVE GP-TIRE	
	9K-7951	1	CAP-VALVE (STEM)	
	6F-3930	1	CORE-VALVE	
	7D-5252	1	SPUD AS	
	2D-2507	1	SPUD	
	2D-2508	1	GROMMET	
	2D-2509	1	LOCKNUT	
	142-6233	1	WHEEL GP	
	8W-9601	1	BAND AS	
	1J-8387	2	FLANGE	
	7D-7469	1	RING-LOCK	
	8D-1650	1	WHEEL	

<END>

191-2312 WHEEL & TIRE GP

S/N: ATS1-UP
(19.5 X 25)
PART OF 191-2313 WHEEL & TIRE AR
AN ATTACHMENT

SMCS-4200 **i01828969**

NOTE	PART NUMBER	QTY	PART NAME 1 2 3 4 5 6 (PRODUCT LEVEL)	SEE PAGE
	2D-2443	1	SEAL-O-RING	
	165-6162	1	TIRE (23.5 R25 * L3)	
	2G-6595	1	VALVE GP-TIRE	
	9K-7951	1	CAP-VALVE (STEM)	
	6F-3930	1	CORE-VALVE	
	7D-5252	1	SPUD AS	
	2D-2507	1	SPUD	
	2D-2508	1	GROMMET	
	2D-2509	1	LOCKNUT	
	226-1885	1	WHEEL GP	
	226-1886	1	FLANGE AS	
	228-0902	1	RIM AS	
	7D-7469	1	RING-LOCK	

<END>

196-4927 WHEEL & TIRE GP

S/N: ATS1-UP
(19.5 X 25)
PART OF 196-4928 WHEEL & TIRE AR
AN ATTACHMENT

SMCS-4200 **i01828953**

NOTE	PART NUMBER	QTY	PART NAME 1 2 3 4 5 6 (PRODUCT LEVEL)	SEE PAGE
	2D-2443	1	SEAL-O-RING	
	102-4559	1	TIRE (23.5R25 * E-2)	
	2G-6595	1	VALVE GP-TIRE	
	9K-7951	1	CAP-VALVE (STEM)	
	6F-3930	1	CORE-VALVE	
	7D-5252	1	SPUD AS	
	2D-2508	1	GROMMET	
	2D-2509	1	LOCKNUT	
	2D-2507	1	SPUD	
	226-1885	1	WHEEL GP	
	7D-7469	1	RING-LOCK	
	226-1886	1	FLANGE AS	
	228-0902	1	RIM AS	

<END>

197-7916 WHEEL & TIRE GP

S/N: ATS1-UP
PART OF 197-7918 WHEEL & TIRE AR
AN ATTACHMENT

SMCS-4200 **i01828927**

NOTE	PART NUMBER	QTY	PART NAME 1 2 3 4 5 6 (PRODUCT LEVEL)	SEE PAGE
	2D-2443	1	SEAL-O-RING	
	197-8068	1	TIRE (23.5 R25 ** VLTS E2ALS)	
	2G-6595	1	VALVE GP-TIRE	
	9K-7951	1	CAP-VALVE (STEM)	
	6F-3930	1	CORE-VALVE	
	7D-5252	1	SPUD AS	
	2D-2508	1	GROMMET	
	2D-2509	1	LOCKNUT	
	2D-2507	1	SPUD	
	226-1885	1	WHEEL GP	
	7D-7469	1	RING-LOCK	
	226-1886	1	FLANGE AS	
	228-0902	1	RIM AS	

<END>

200-2674 WHEEL & TIRE GP

S/N: ATS1-UP
(19.5 X 25)
PART OF 200-2675 WHEEL & TIRE AR
AN ATTACHMENT

SMCS-4200 **i01828896**

NOTE	PART NUMBER	QTY	PART NAME 1 2 3 4 5 6 (PRODUCT LEVEL)	SEE PAGE
	2D-2443	1	SEAL-O-RING	
	5V-1628	1	TIRE (23.5X25 XRDIA L-4)	
	2G-6595	1	VALVE GP-TIRE	
	9K-7951	1	CAP-VALVE (STEM)	
	6F-3930	1	CORE-VALVE	
	7D-5252	1	SPUD AS	
	2D-2507	1	SPUD	
	2D-2508	1	GROMMET	
	2D-2509	1	LOCKNUT	
	142-6234	1	WHEEL GP	
	8W-9601	1	BAND AS	
	1J-8387	2	FLANGE	
	7D-7469	1	RING-LOCK	
	9D-3481	1	WHEEL	

<END>

205-2198 WHEEL & TIRE GP

S/N: ATS1-UP
(19.5 X 25)
PART OF 205-2197 WHEEL & TIRE AR
AN ATTACHMENT

SMCS-4200 **i01834665**

NOTE	PART NUMBER	QTY	PART NAME 1 2 3 4 5 6 (PRODUCT LEVEL)	SEE PAGE
	2D-2443	1	SEAL-O-RING	
	205-2136	1	TIRE (23.5-25 20PR L-5)	
	2G-6595	1	VALVE GP-TIRE	
	9K-7951	1	CAP-VALVE (STEM)	
	6F-3930	1	CORE-VALVE	
	7D-5252	1	SPUD AS	
	2D-2507	1	SPUD	
	2D-2508	1	GROMMET	
	2D-2509	1	LOCKNUT	
	226-1885	1	WHEEL GP	
	7D-7469	1	RING-LOCK	
	226-1886	1	FLANGE AS	
	228-0902	1	RIM AS	

<END>

150-5143 WHEEL AR

S/N: ATS1-UP
AN ATTACHMENT

SMCS-4208 **i01045431**

NOTE	PART NUMBER	QTY	PART NAME 1 2 3 4 5 6 (PRODUCT LEVEL)	SEE PAGE
Y	*150-5142*	6	WHEEL GP	350

Y-SEPARATE ILLUSTRATION

<END>

151-0288 WHEEL AR

S/N: ATS1-UP
AN ATTACHMENT

SMCS-4208 **i01022133**

NOTE	PART NUMBER	QTY	PART NAME 1 2 3 4 5 6 (PRODUCT LEVEL)	SEE PAGE
Y	*150-5144*	6	WHEEL GP	350

Y-SEPARATE ILLUSTRATION

<END>

142-6233 WHEEL GP

S/N: ATS1-UP
(13.00 X 25)
PART OF 142-6417, 142-6418, 142-6419 WHEEL & TIRE GP, 150-5142 WHEEL GP
AN ATTACHMENT

SMCS-4201, 4208 **i00743309**

NOTE	PART NUMBER	QTY	PART NAME 1 2 3 4 5 6 (PRODUCT LEVEL)	SEE PAGE
	8W-9601	1	BAND AS	
	1J-8387	2	FLANGE	
	7D-7469	1	LOCKRING	
	8D-1650	1	WHEEL	

<END>

150-5142 WHEEL GP

S/N: ATS1-UP
PART OF 150-5143 WHEEL AR
AN ATTACHMENT

SMCS-4201, 4208 **i01855094**

NOTE	PART NUMBER	QTY	PART NAME 1 2 3 4 5 6 (PRODUCT LEVEL)	SEE PAGE
	2D-2443	1	SEAL-O-RING	
	2G-6595	1	VALVE GP-TIRE	
	6F-3930	1	CORE-VALVE	
	9K-7951	1	CAP-VALVE (STEM)	
	7D-5252	1	SPUD AS	
	2D-2507	1	SPUD	
	2D-2508	1	GROMMET	
	2D-2509	1	LOCKNUT	
Y	*142-6233*	1	WHEEL GP	349
Y-SEPARATE ILLUSTRATION				

<END>

150-5144 WHEEL GP

S/N: ATS1-UP
(19.5 X 25)
PART OF 151-0288 WHEEL AR
AN ATTACHMENT

SMCS-4201, 4208 **i01828993**

NOTE	PART NUMBER	QTY	PART NAME 1 2 3 4 5 6 (PRODUCT LEVEL)	SEE PAGE
	2D-2443	1	SEAL-O-RING	
	2G-6595	1	VALVE GP-TIRE	
	6F-3930	1	CORE-VALVE	
	9K-7951	1	CAP-VALVE (STEM)	
	7D-5252	1	SPUD AS	
	2D-2507	1	SPUD	
	2D-2508	1	GROMMET	
	2D-2509	1	LOCKNUT	
	226-1885	1	WHEEL GP	
	7D-7469	1	RING-LOCK	
	226-1886	1	FLANGE AS	
	228-0902	1	RIM AS	

<END>

MEMORANDA

FRAME AND BODY

110-7720 AXLE GP-FRONT

S/N: ATS1-UP

PART OF 162-5607 GENERAL AR

SMCS-4305, 4313, 5225 **i01514728**

NOTE	REF NO	GRAPHIC REF	PART NUMBER	QTY	PART NAME 1 2 3 4 5 6 (PRODUCT LEVEL)	SEE PAGE
	1	1	**2G-5667**	2	RETAINER	
	2	1	**5D-0353**	4	BOLT-LOCKING (3/8-16X1 IN)	
	3	1	**0S-1592**	2	BOLT (5/8-11X1.25IN)	
	4	1	**4D-3704**	2	WASHER-HARD (17X30X5MM THK)	
	5	1	**5P-8843**	4	SEAL-LIP	
	6	1	**1D-4638**	1	BOLT (1-8X3.5IN)	
	7	1	**2J-3507**	1	NUT-FULL (1-8 THD)	
	8	1	**5P-8890**	2	SEAL-LIP	
	9	1	**110-7722**	1	PIN	
	10	1	**5P-8847**	4	SEAL-LIP	
B	11	1	**2G-5669**	2	WASHER (2.78X5X.010 IN THK)	
	12	1	**2G-5668**	2	WASHER (2.78X5X.010 IN THK)	
	13	1	**7X-0332**	2	BOLT (1/2-13X4.5 IN)	
	14	1	**1K-6872**	2	LOCKNUT (1/2-13 THD)	
	15	1	**7X-7731**	2	PLUG-PIPE	
	16	1	**8W-4657**	1	HOUSING-SPINDLE (RH)	
	17	1	**110-7721**	1	PIN	
CY	18	1	*141-6145*	1	LINK GP-STEERING	371
	19	1	**8W-7285**	1	BAR AS-LEAN	
	19A	1	**2G-8635**	2	BEARING-SLEEVE	
	20	1	**2G-8623**	2	PIN	
	21	1	**5S-7379**	4	BOLT (3/8-16X0.875 IN)	
	22	1	**5P-1075**	4	WASHER-HARD (10.2X22.5X3MM THK)	
	23	1	**2G-8766**	4	WASHER (10.5X73X3MM THK)	
	24	1	**7K-9206**	4	SEAL-LIP	
	25	1	**3B-8489**	4	FITTING-GREASE (WHEEL LEAN BEARING)	
	25A	1	**3B-8489**	2	FITTING-GREASE (WHEEL LEAN BAR)	
	25B	1	**3B-8489**	2	FITTING-GREASE (AXLE OSCILLATION)	
	25C	1	**3B-8489**	4	FITTING-GREASE (KINGPIN)	
	26	1	**2G-8741**	4	RING-METAL SEAL	
	27	1	**2H-3740**	4	BOLT (3/4-16X1.25IN)	
	28	1	**2G-8742**	2	WASHER-HARD (20X65X5MM THK)	
	29	1	**0V-0375**	6	BOLT (1/2-13X3.25 IN)	
	30	1	**8W-4656**	1	HOUSING-SPINDLE (LH)	
	31	1	**9W-7215**	1	SEAL GP-DUO-CONE	
		1	**8L-5517**	2	RING-SEALING	
	32	1	**147-3402**	2	SPINDLE	
B	33	1	**2G-3868**	6	SHIM (.13MM THK)	
	34	1	**8D-1817**	2	CUP-ROLLER BEARING	
	35	1	**8D-1819**	2	CONE-ROLLER BEARING	
	36	1	**5D-1183**	20	BOLT (115/16-12X3.81 IN)	
	37	1	**1P-7835**	2	CONE-BEARING	
	38	1	**1P-7834**	2	CUP-BEARING	
	39	1	**8D-1822**	2	RETAINER	
	40	1	**8F-8733**	2	SEAL-O-RING	
	41	1	**5T-0908**	2	COVER	
	42	1	**8W-5293**	2	PIN	
	43	1	**1D-4631**	2	BOLT (7/8-9X4.25 IN)	
	44	1	**9H-1031**	2	WASHER-HARD (24X41.5X6MM THK)	
	45	1	**2J-3505**	2	NUT-FULL (7/8-9 THD)	
	46	1	**9D-0673**	2	LOCK	
	47	1	**8W-5296**	2	PIN	
	48	1	**2G-8777**	4	SEAL	
	49	1	**9M-2092**	4	SEAL-O-RING	
	50	1	**3B-4629**	2	COTTER	
	51	1	**8D-8931**	2	WASHER (1.56X2.25X.032 THK)	

110-7720 AXLE GP-FRONT *(contd.)* i01514728

NOTE	REF NO	GRAPHIC REF	PART NUMBER	QTY	PART NAME 1 2 3 4 5 6 (PRODUCT LEVEL)	SEE PAGE
	52	1	**2G-8626**	2	WASHER-THRUST (2X3.6X.155 IN THK)	
	53	1	**2G-8615**	4	WASHER-THRUST (2X3.6X.110 IN THK)	
	54	1	**8W-6482**	1	AXLE AS (FRONT)	
	55	1	**8D-1331**	1	BRACKET-ROD	
	56	1	**8W-6484**	1	BRACKET-LH	
	57	1	**8W-6485**	1	BRACKET-RH	
	58	1	**8W-6486**	1	BRACKET	
	59	1	**2G-8607**	4	BEARING-SLEEVE	
	60	1	**8J-5778**	4	BEARING-SLEEVE	
	61	1	**8W-5520**	1	ARM AS-LH	
		1	**8W-6494**	1	PIN	
	62	1	**2G-7106**	1	BEARING-SLEEVE	
	63	1	**2G-8738**	1	BEARING-SLEEVE	
	64	1	**8W-5521**	1	ARM AS-RH	
		1	**8W-6493**	1	PIN	
	65	1	**2G-7106**	1	BEARING-SLEEVE	
	66	1	**2G-8738**	1	BEARING-SLEEVE	

B-USE AS REQUIRED
C-CHANGE FROM PREVIOUS TYPE
Y-SEPARATE ILLUSTRATION

110-7720 AXLE GP-FRONT *(contd.)* i01514728

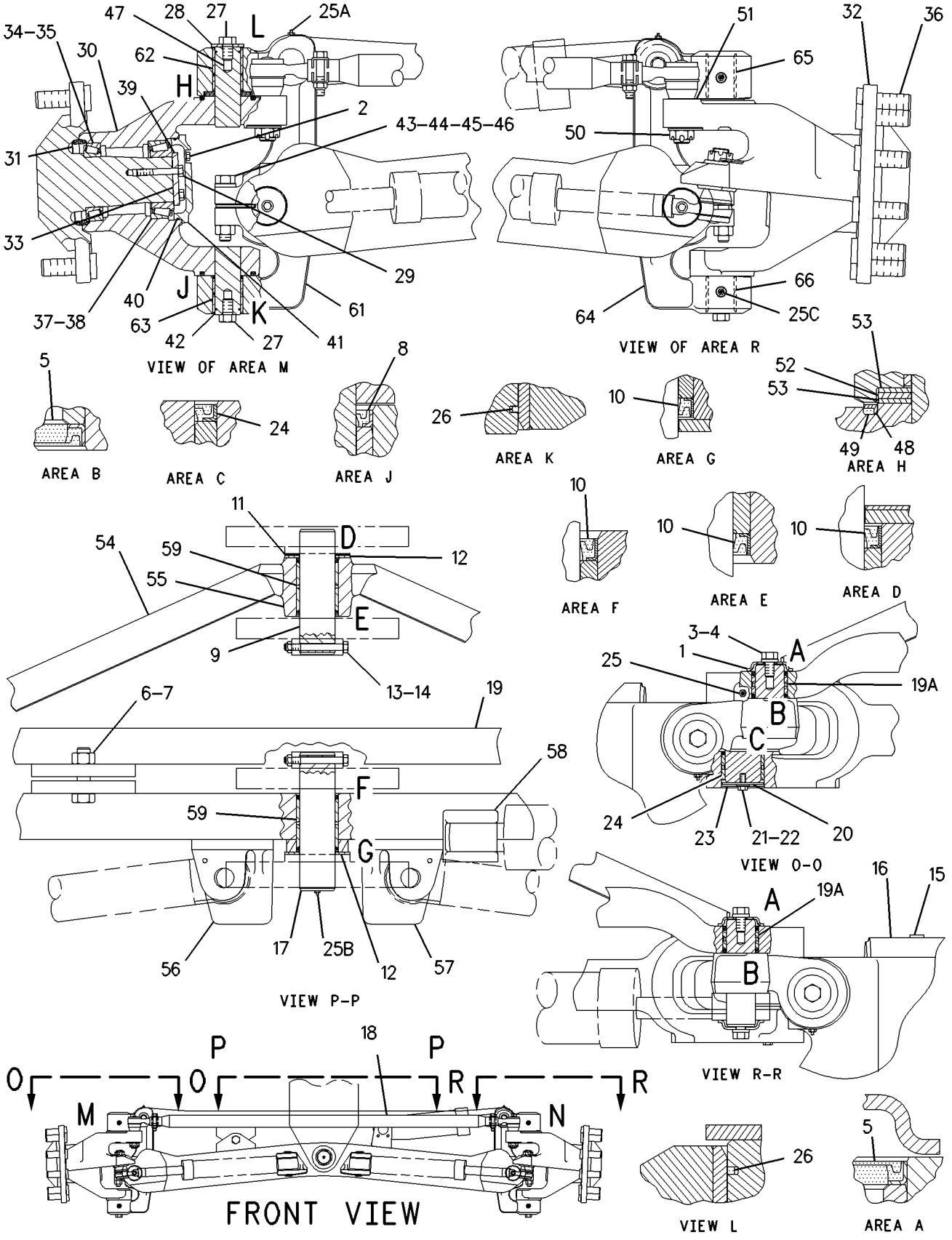

GRAPHIC #1 g00792102

FRAME AND BODY

161-1130 CASE & FRAME GP

S/N: ATS1-UP

PART OF 162-5607 GENERAL AR

SMCS-7051 **i01795626**

NOTE	REF NO	GRAPHIC REF	PART NUMBER	QTY	PART NAME 1 2 3 4 5 6 (PRODUCT LEVEL)	SEE PAGE
	1	1	**2A-3398**	1	GASKET	
	2	1	**8M-3837**	1	PLUG-MAGNETIC (DIFFERENTIAL)	
	3	1	**187-3582**	1	CASE & FRAME AS	
	4	1	**3D-8439**	10	STUD (5/8-11 X 3.4 IN OAL)	
	5	1	**4D-6589**	46	STUD-TAPERLOCK	
	6	1	**4D-8148**	3	DOWEL	

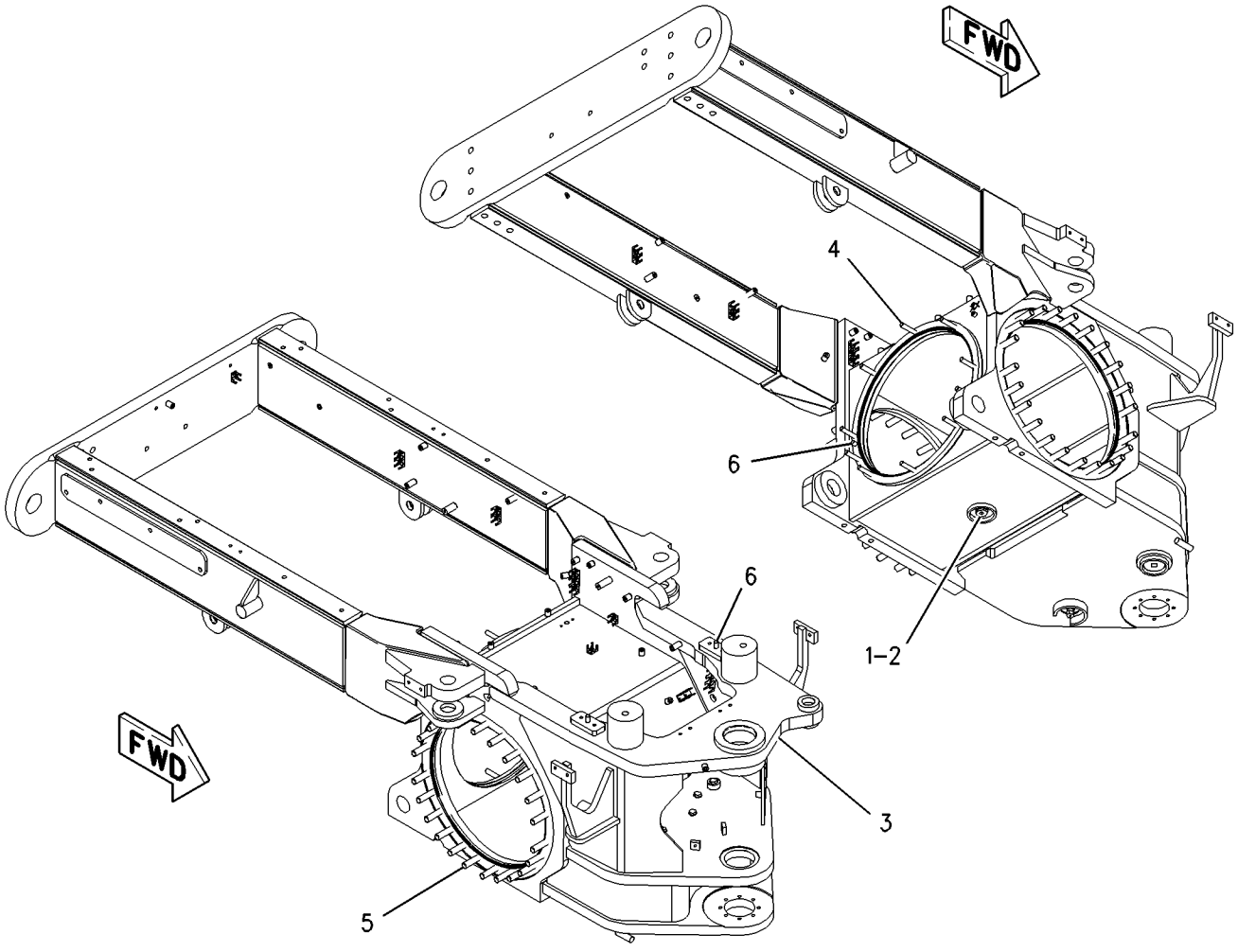

GRAPHIC #1 g00933728

FRAME AND BODY

206-3900 ENCLOSURE GP-ENGINE

S/N: ATS1-UP

PART OF 162-5607 GENERAL AR

SMCS-7263 **i01709850**

NOTE	REF NO	GRAPHIC REF	PART NUMBER	QTY	PART NAME 1 2 3 4 5 6 (PRODUCT LEVEL)	SEE PAGE
	1	1	**3P-9900**	2	WASHER (10.5X30X3MM THK)	
	2	1	**4B-4909**	2	SPRING	
	3	1	**132-4354**	2	SPACER (10.5X19X26.5MM THK)	
	4	1	**139-2944**	2	ROD	
	5	2	**177-2932**	2	CATCH AS	
	6	1	**177-4118**	2	HANDHOLD	
	7	1	**177-4120**	2	HANDHOLD	
	8	1	**192-5629**	4	LATCH AS	
		1	**126-7168**	1	LOCK AS	
		1	**7F-9223**	1	LOCKWASHER	
		1	**8T-5004**	1	SCREW-MACHINE (1/4-28X0.375 IN)	
	9	1	**192-5638**	4	PAWL	
	10	2	**199-9983**	2	GRAB IRON AS	
	11	1	**206-3367**	1	DASH AS	
	12	1	**206-3849**	1	DOOR AS	
	13	2	**206-3851**	1	DOOR AS	
	14	1	**206-3853**	1	PANEL AS-ACCESS	
	15	2	**206-3854**	1	PANEL AS	
	16	2	**206-3858**	1	PILLAR AS	
	17	1	**206-3860**	1	PILLAR AS	
	18	1	**208-5575**	1	PANEL AS	
	19	1	**208-5576**	1	PANEL AS	
	20	1	**212-7893**	1	COVER AS	
	21	2	**212-7920**	1	PLATE AS	
	22	2	**212-8417**	2	PLATE	
	23	1	**226-0722**	1	HOOD AS	
	24	1	**227-3101**	2	STRIKER AS	
	25	1	**227-3103**	2	PLATE	
	26	2	**227-3689**	2	PLATE	
	27	2	**227-4399**	2	CATCH AS	
	28	2	**227-4643**	4	SHIM (25MM THK)	
M	29	1	**127-4038**	16	SCREW-MACHINE (M6X1X16MM)	
M	30	1	**129-3178**	16	LOCKNUT (M6X1 THD)	
	31	2	**198-4767**	8	WASHER-HARD (13.5X30X12MM THK)	
	32	1	**2K-5986**	2	PIN-SPRING	
	33	1,2	**5P-1076**	12	WASHER-HARD (13.5X30X4MM THK)	
	34	2	**7X-0632**	4	WASHER-HARD (11X36X6MM THK)	
	35	1,2	**7X-7729**	64	WASHER (11X25X3MM THK)	
M	36	1	**8T-0389**	4	LOCKNUT (M10X1.5 THD)	
M	37	1	**8T-4133**	4	NUT (M10X1.5 THD)	
M	38	1,2	**8T-4136**	51	BOLT (M10X1.5X25MM)	
M	39	1	**8T-4139**	4	BOLT (M12X1.75X30MM)	
M	40	2	**8T-4183**	8	BOLT (M12X1.75X40MM)	
M	41	1	**8T-4186**	2	BOLT (M10X1.5X40MM)	
M	42	1,2	**8T-4195**	17	BOLT (M10X1.5X30MM)	
M	43	2	**8T-4956**	8	BOLT (M12X1.75X35MM)	
	44	1	**8T-4994**	2	WASHER-HARD (20X36.5X3.5MM THK)	
	45	1	**9X-8256**	16	WASHER (6.6X12X2MM THK)	
D	46	1	**5P-5923**		SEAL (.8M)	
D	47	1	**5P-5923**		SEAL (EACH .05M)	

D-ORDER BY THE METER
M-METRIC PART

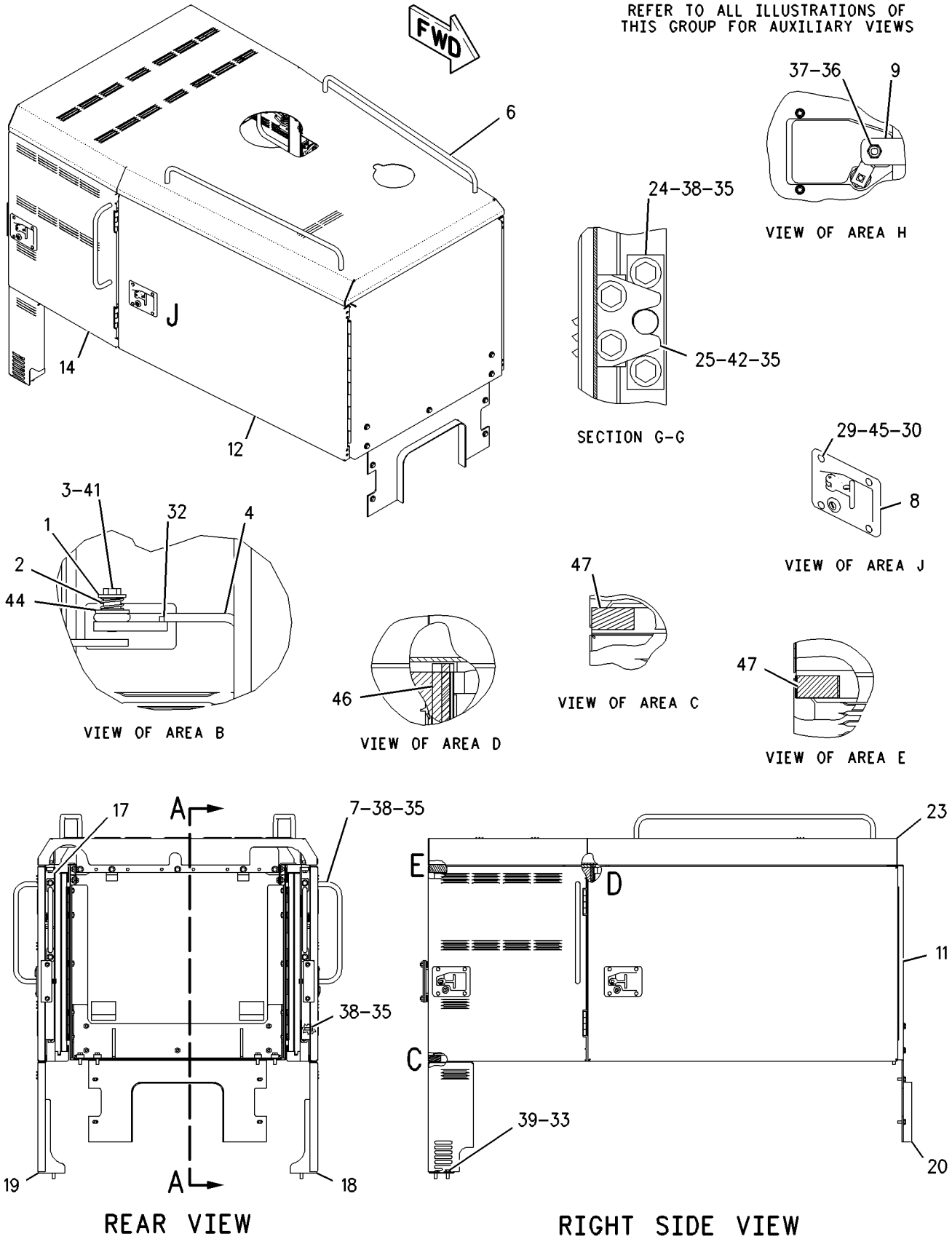

GRAPHIC #1

g00938185

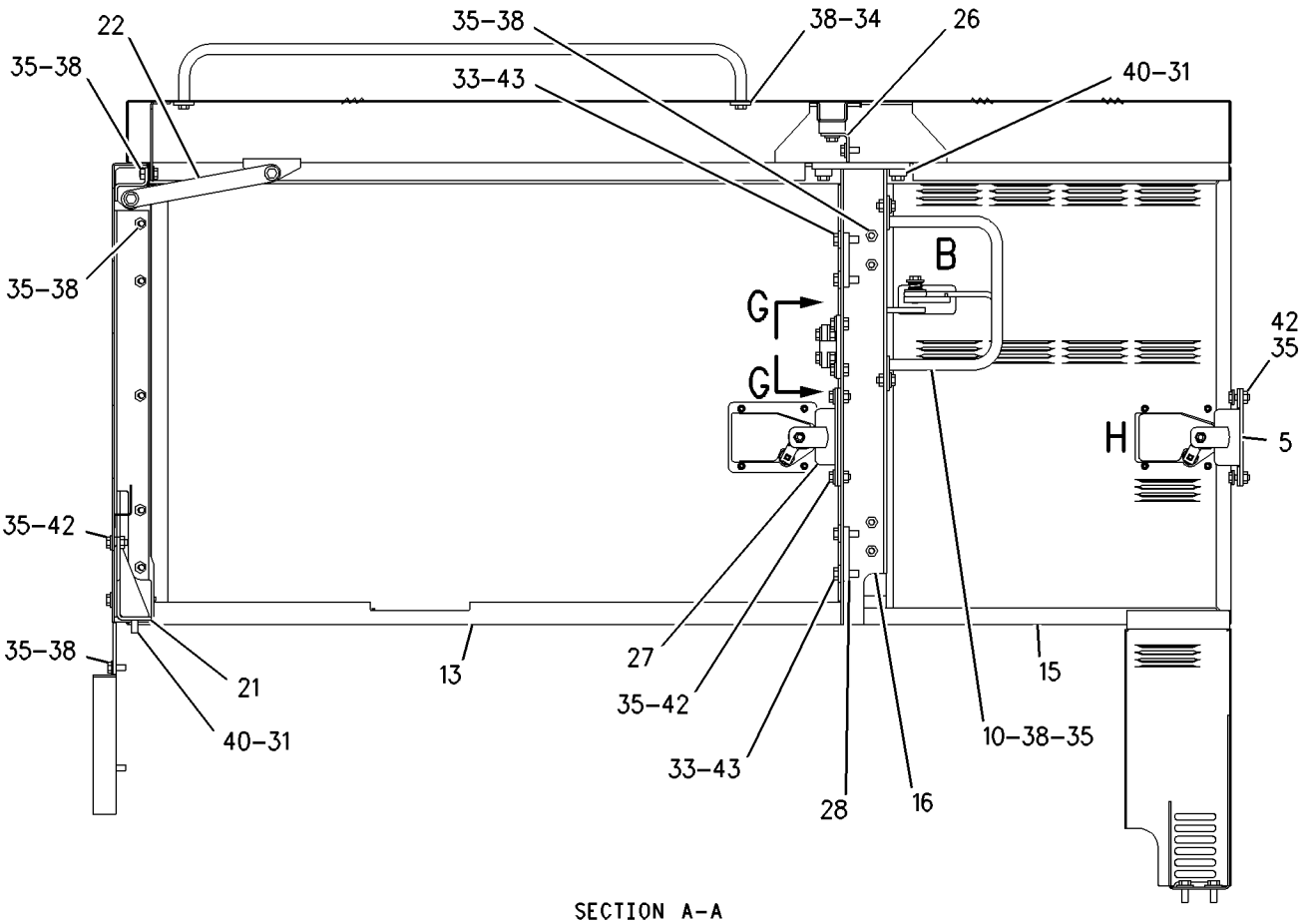

SECTION A-A

REFER TO ALL ILLUSTRATIONS OF
THIS GROUP FOR AUXILIARY VIEWS

GRAPHIC #2 g00938186

FRAME AND BODY

161-1181 FRAME GP-FRONT

S/N: ATS1-UP

PART OF 162-5607 GENERAL AR

SMCS-7050, 7051 **i01795629**

NOTE	REF NO	GRAPHIC REF	PART NUMBER	QTY	PART NAME 1 2 3 4 5 6 (PRODUCT LEVEL)	SEE PAGE
	1	1	**8D-3791**	1	PIN	
	2	1	**8X-3200**	1	PLATE AS	
	3	1	**9D-0498**	5	BUSHING-TERMINAL	
	4	1	**110-7000**	1	COVER	
	5	1	**110-7001**	1	COVER	
	6	1	**110-7547**	2	COVER	
	7	1	**164-2675**	1	FRAME AS	
	8	1	**207-7112**	1	PIN	
	9	1	**4L-6454**	7	BOLT (3/8-16X1 IN)	
	10	1	**5M-3062**	22	BOLT (3/8-16X0.75 IN)	
	11	1	**5P-1075**	29	WASHER-HARD (10.2X22.5X3MM THK)	
	12	1	**5P-8167**	3	BOLT (3/8-16X0.625 IN)	
	13	1	**8D-8572**	4	BEARING-SLEEVE	
	14	1	**9D-6591**	8	SEAL-LIP	

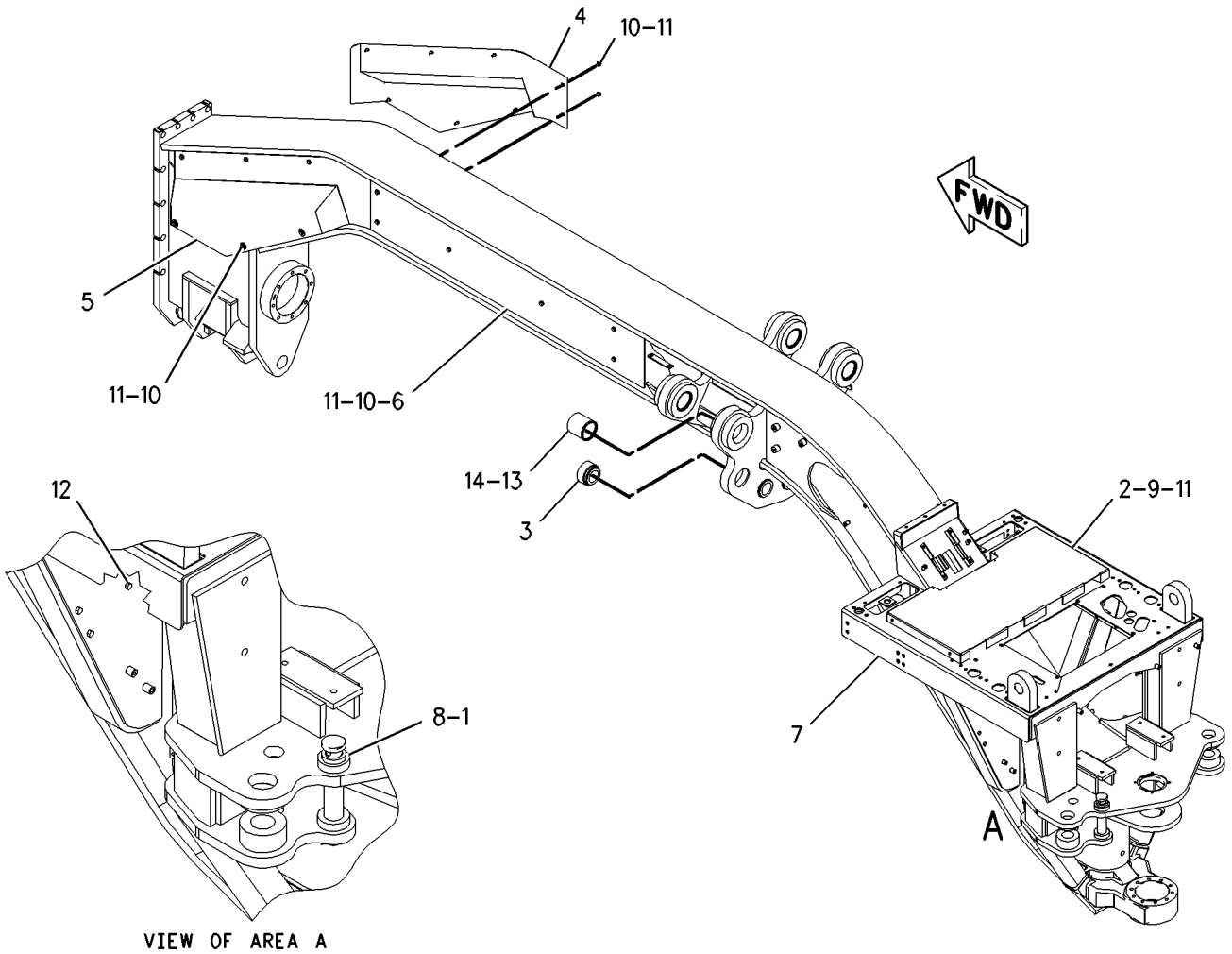

GRAPHIC #1 g00934770

221-2349 GUARD & SUPPORT GP-RADIATOR

S/N: ATS1-UP
PART OF 184-1670, 201-1054 COOLING AR
ALSO AN ATTACHMENT

SMCS-7155 **i01847809**

NOTE	REF NO	GRAPHIC REF	PART NUMBER	QTY	PART NAME 1 2 3 4 5 6 (PRODUCT LEVEL)	SEE PAGE
	1	1	**125-0359**	1	STEP AS	
	2	1	**131-5171**	8	CLIP	
	3	1	**204-9845**	1	BAFFLE	
	4	1	**208-6053**	3	HANDHOLD	
	5	1	**221-2350**	1	SUPPORT AS	
	6	1	**222-0892**	1	GUARD AS (UPPER)	
	7	1	**222-0893**	1	GUARD AS (LOWER)	
	8	1	**5P-1076**	8	WASHER-HARD (13.5X30X4MM THK)	
	9	1	**7X-0605**	6	WASHER-HARD (13X28X1.6MM THK)	
	10	1	**8T-4121**	17	WASHER-HARD (11X21X2.5MM THK)	
M	11	1	**8T-4136**	17	BOLT (M10X1.5X25MM)	
M	12	1	**8T-4139**	18	BOLT (M12X1.75X30MM)	
M	13	1	**8T-4189**	6	BOLT (M8X1.25X20MM)	
	14	1	**8T-4223**	4	WASHER-HARD (13.5X25.5X3MM THK)	
	15	1	**8T-4224**	6	WASHER-HARD (8.8X16X2MM THK)	
	16	1	**9D-3767**	6	PLUG-BUTTON	

M-METRIC PART

221-2349 **GUARD & SUPPORT GP-RADIATOR** *(contd.)* **i01847809**

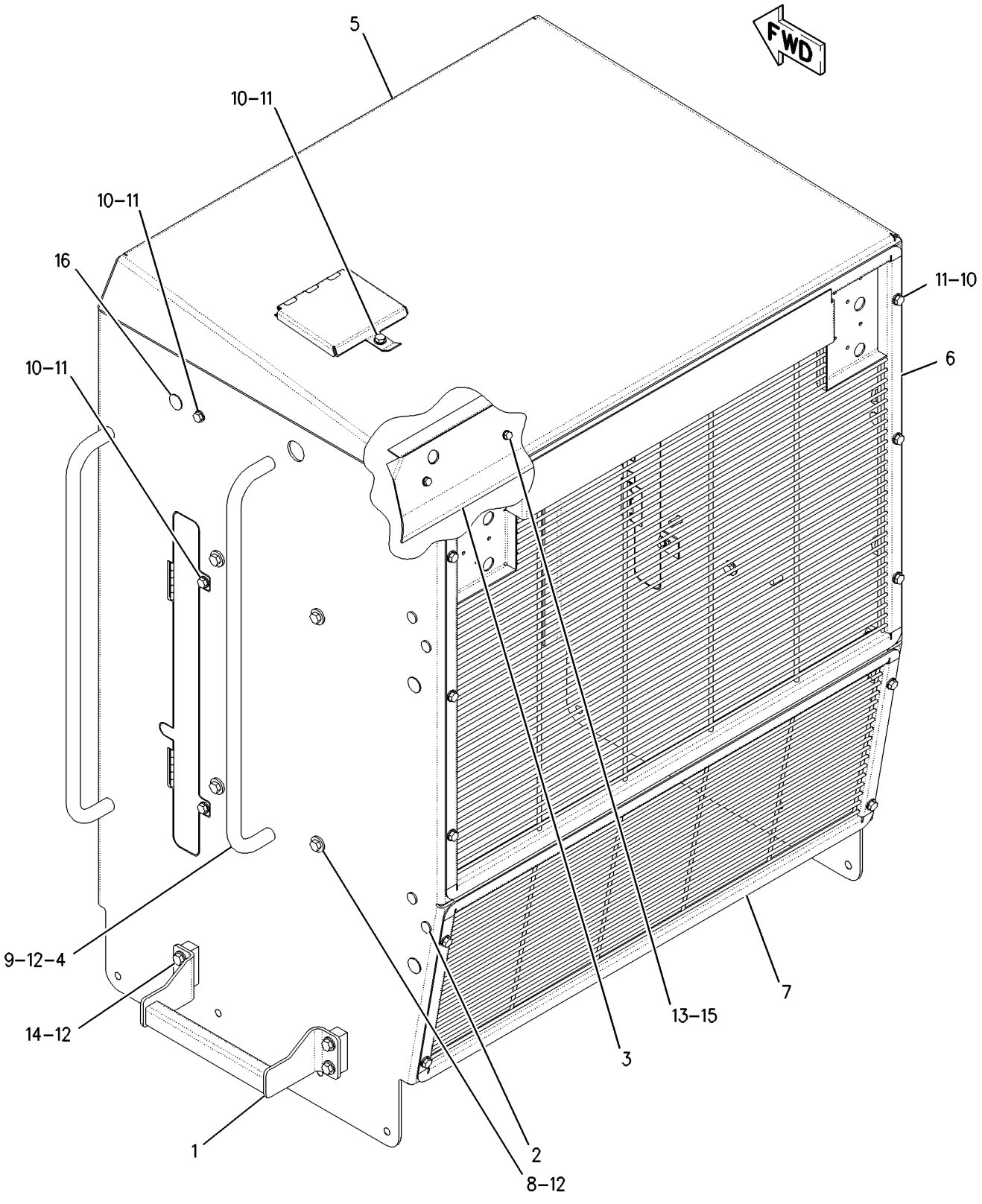

GRAPHIC #1 g00941273

8X-4146 GUARD GP-BOTTOM

S/N: ATS1-UP
PART OF 211-1771, 211-1772 CONVERSION AR-CERTIFICATION
AN ATTACHMENT

SMCS-7153 **i00130335**

NOTE	REF NO	GRAPHIC REF	PART NUMBER	QTY	PART NAME 1 2 3 4 5 6 (PRODUCT LEVEL)	SEE PAGE
	1	1	**8K-0530**	2	PIN-CABLE SOCKET	
	2	1	**7D-7496**	2	PIN AS	
	3	1	**8X-9313**	1	GUARD AS	
	4	1	**0L-1178**	4	BOLT (3/4-10X2IN)	
	5	1	**5P-6652**	4	WASHER (6.0MM THK)	
	6	1	**8W-6626**	2	CAP	

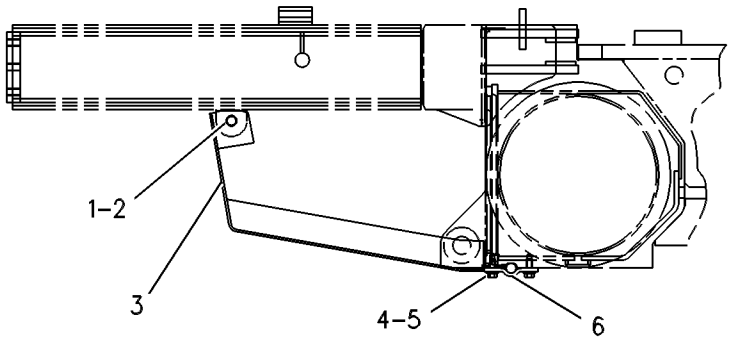

RIGHT SIDE VIEW

GRAPHIC #1 g00109014

MEMORANDA

166-7064 GUARD GP-PLATFORM–OPEN–HIGH PROFILE

S/N: ATS1-UP
PART OF 203-6642 ROPS AR-OPEN
AN ATTACHMENT

SMCS-7253, 7256 **i01628032**

NOTE	REF NO	GRAPHIC REF	PART NUMBER	QTY	PART NAME 1 2 3 4 5 6 (PRODUCT LEVEL)	SEE PAGE
	1	1	**7G-7920**	1	PLUG-SEAL	
	2	1	**7K-1181**	1	STRAP-CABLE	
	3	1	**8T-8737**	30	PLUG-SEAL	
	4	1	**8X-2226**	2	PLATE	
	5	1	**8X-2913**	2	COVER AS	
	6	1	**8X-6475**	2	PLATE	
	7	1	**8X-8505**	2	PLATE	
	9	1	**160-6382**	1	GROMMET	
	10	1	**169-5414**	1	CLIP	
	11	1	**198-8588**	1	PANEL	
	12	1	**200-3967**	1	PANEL AS	
	13	1	**115-3072**	1	CLIP AS-CONNECTOR	
	14	1	**127-5484**	1	RECEPTACLE AS (1 PIN)	
	15	1	**155-2255**	1	KIT-CONNECTING PLUG (12 PIN)	
	16	1	**102-8805**	1	KIT-RECEPTACLE (6 PIN)	
	17	1	**102-8801**	1	KIT-RECEPTACLE (12 PIN)	
	18	1	**3P-3839**	1	GROMMET	
	19	1	**4L-6454**	3	BOLT (3/8-16X1 IN)	
	20	1	**4M-5281**	4	BOLT (1/4-20X.750 IN)	
	21	1	**5P-1075**	3	WASHER-HARD (10.2X22.5X3MM THK)	
	22	1	**5P-4115**	4	WASHER-HARD (7.2X19X2MM THK)	
	23	1	**5P-9085**	2	CLIP	
	24	1	**6V-2687**	4	SCREW-PAN HEAD (10-24X1IN)	
	25	1	**8T-4121**	2	WASHER-HARD (11X21X2.5MM THK)	
M	26	1	**8T-4137**	2	BOLT (M10X1.5X20MM)	
M	27	1	**9X-2043**	22	SCREW-TRUSS HEAD (M6X1X14MM)	

M-METRIC PART

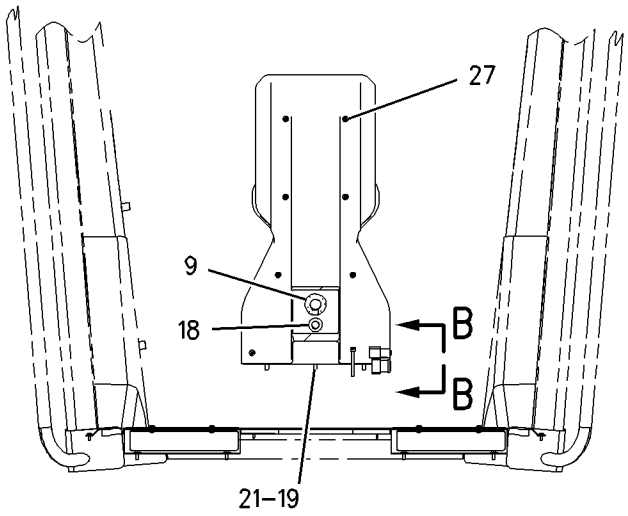

FRONT VIEW

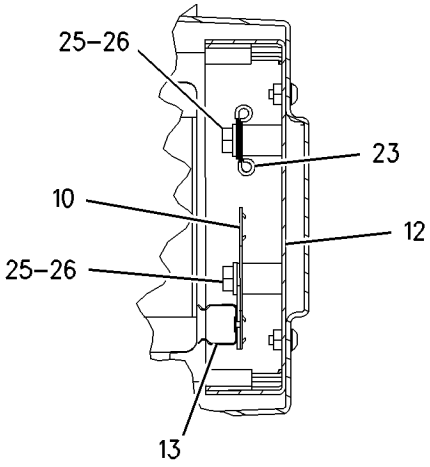

SECTION A-A

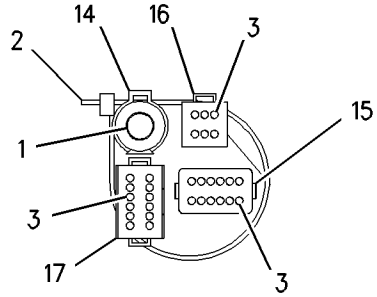

VIEW B-B

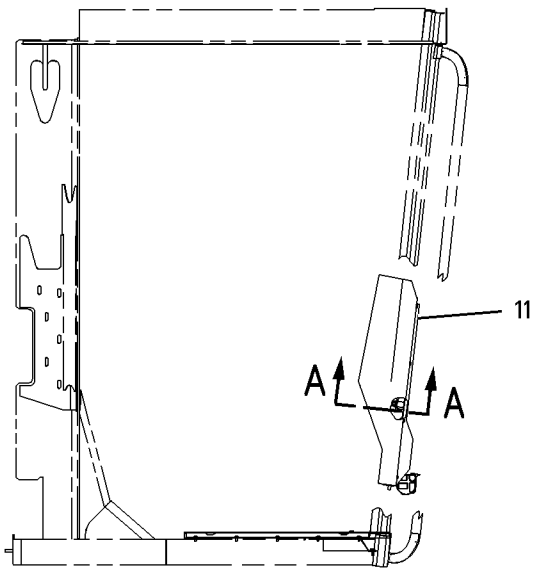

RIGHT SIDE VIEW

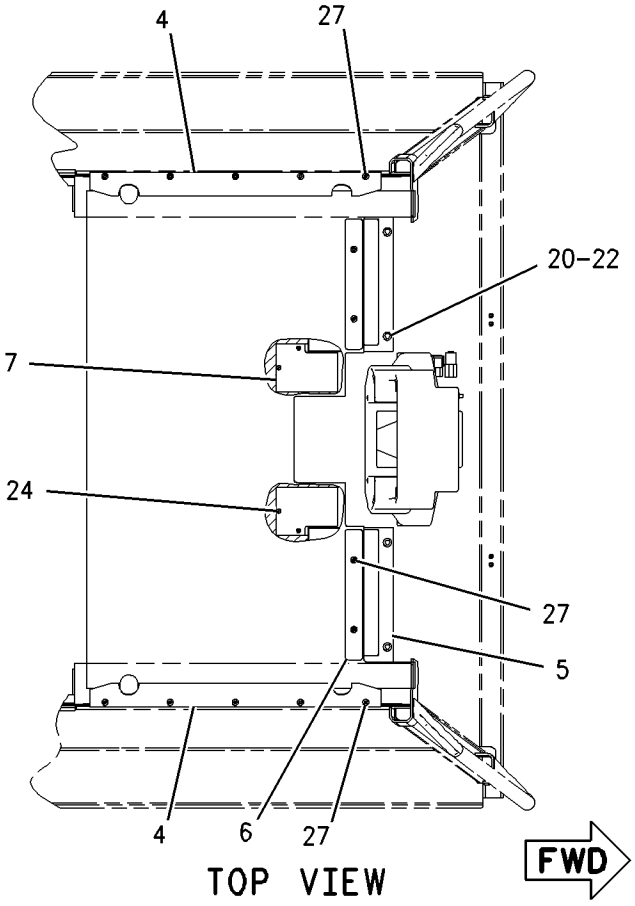

TOP VIEW

GRAPHIC #1

g00846264

166-7065 GUARD GP-PLATFORM—NON-ROPS

S/N: ATS1-UP

PART OF 203-6643 CONVERSION AR-NON-ROPS

AN ATTACHMENT

SMCS-7253, 7256 **i01671234**

NOTE	REF NO	GRAPHIC REF	PART NUMBER	QTY	PART NAME 1 2 3 4 5 6 (PRODUCT LEVEL)	SEE PAGE
	1	1	**7G-7920**	1	PLUG-SEAL	
	2	1	**7K-1181**	1	STRAP-CABLE	
	3	1	**8T-8737**	30	PLUG-SEAL	
	4	1	**8W-3902**	1	SUPPORT AS	
	5	1	**8X-2913**	2	COVER AS	
					(EACH INCLUDES)	
M		1	**6V-9632**	2	NUT-WELD (M6X1 THD)	
	6	1	**8X-6419**	1	FLOOR MAT	
	7	1	**8X-6475**	2	PLATE	
	8	1	**8X-8505**	2	PLATE	
	9	1	**8X-9464**	2	STEP AS	
	10	1	**135-3894**	1	PIPE AS	
	11	1	**160-6382**	1	GROMMET	
	12	1	**169-5414**	1	CLIP	
	13	1	**198-8588**	1	PANEL	
	14	1	**200-3967**	1	PANEL AS	
	15	1	**115-3072**	1	CLIP AS-CONNECTOR	
	16	1	**127-5484**	1	RECEPTACLE AS (1 PIN)	
	17	1	**155-2255**	1	KIT-CONNECTING PLUG (12 PIN)	
	18	1	**102-8805**	1	KIT-RECEPTACLE (6 PIN)	
	19	1	**102-8801**	1	KIT-RECEPTACLE (12 PIN)	
	20	1	**3P-3839**	1	GROMMET	
	21	1	**4L-6454**	7	BOLT (3/8-16X1 IN)	
	22	1	**4M-5281**	4	BOLT (1/4-20X.750 IN)	
	23	1	**5P-1075**	7	WASHER-HARD (10.2X22.5X3MM THK)	
	24	1	**5P-2566**	8	BOLT (1/2-13X1.5 IN)	
	25	1	**5P-4115**	4	WASHER-HARD (7.2X19X2MM THK)	
	26	1	**5P-9085**	2	CLIP	
	27	1	**6V-2687**	4	SCREW-PAN HEAD (10-24X1IN)	
	28	1	**6V-8188**	4	NUT (1/2-13 THD)	
	29	1	**7X-0328**	4	BOLT (1/2-13X3.50 IN)	
	30	1	**8T-4121**	2	WASHER-HARD (11X21X2.5MM THK)	
M	31	1	**8T-4137**	2	BOLT (M10X1.5X20MM)	
	32	1	**8T-4223**	16	WASHER-HARD (13.5X25.5X3MM THK)	
M	33	1	**9X-2043**	12	SCREW-TRUSS HEAD (M6X1X14MM)	

M-METRIC PART

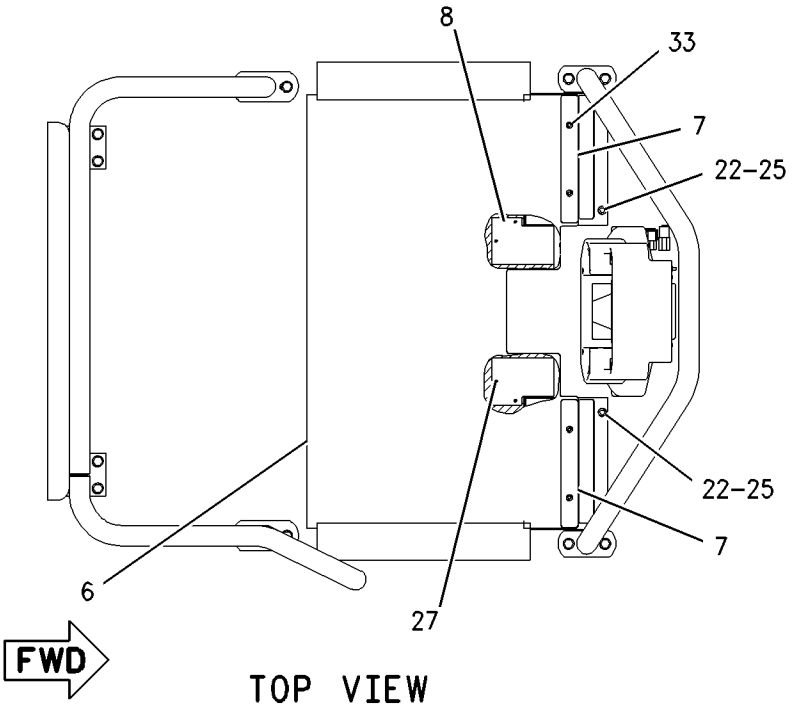

TOP VIEW

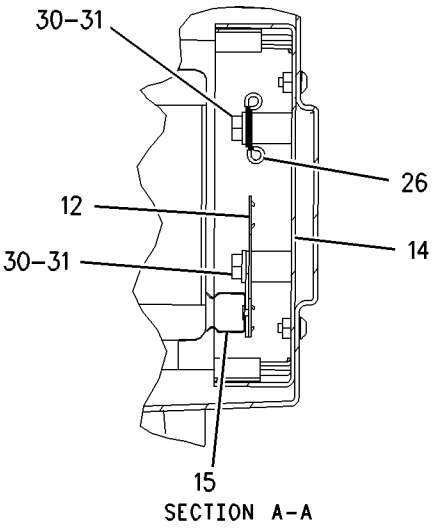

SECTION A-A

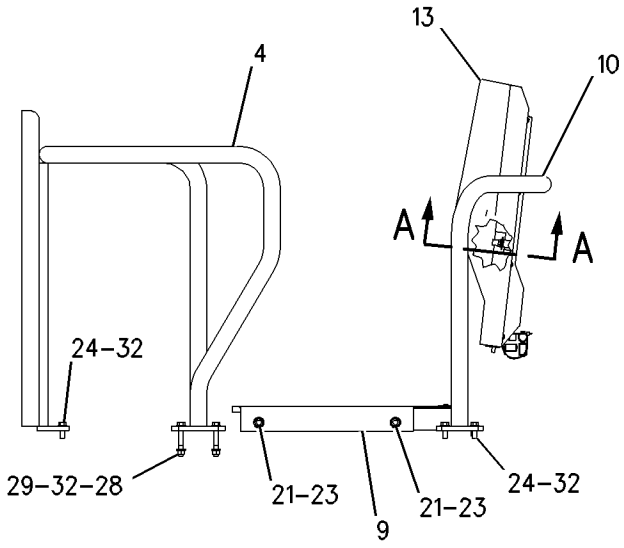

RIGHT SIDE VIEW

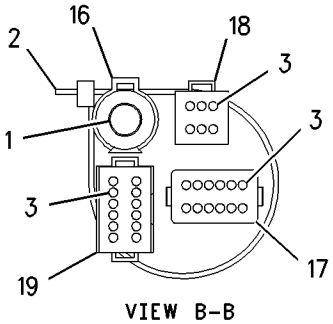

VIEW B-B

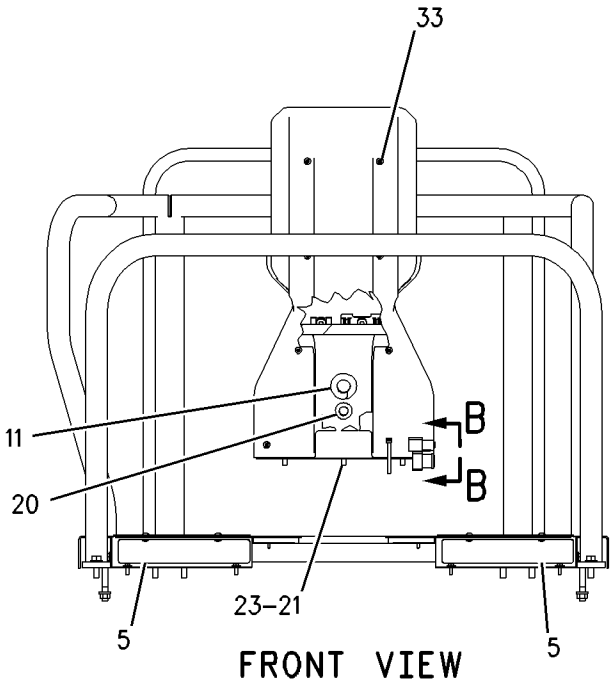

FRONT VIEW

GRAPHIC #1

g00847815

106-4886 HITCH GP-ARTICULATING

S/N: ATS1-UP

PART OF 162-5607 GENERAL AR

SMCS-7057, 7100 **i00131261**

NOTE	REF NO	GRAPHIC REF	PART NUMBER	QTY	PART NAME 1 2 3 4 5 6 (PRODUCT LEVEL)	SEE PAGE
	1	1	**5K-3496**	1	BEARING-SLEEVE	
	2	1	**1J-2150**	2	SEAL-LIP	
	3	1	**0S-1587**	2	BOLT (1/2-13X1.75IN)	
	4	1	**5P-8245**	24	WASHER (3MM THK)	
	5	1	**6G-0174**	1	COVER	
	6	1	**9S-1366**	4	BOLT (1/2-13X2.5IN)	
	7	1	**5K-3495**	1	COLLAR	
	8	1	**5K-3494**	1	BEARING-SLEEVE	
	9	1	**124-3242**	1	PIN	
	10	1	**5K-3499**	1	PIN-LOWER	
	11	1	**5K-3490**	1	SPACER	
	12	1	**5K-3492**	1	SHIM PACK (INCL 19 SHIMS)	
	13	1	**5K-3929**	1	BEARING AS-ROLLER	
	14	1	**5K-3489**	1	SHIM PACK (INCL 18 SHIMS)	
	15	1	**0S-1585**	8	BOLT (1/2-13X1.50IN)	
	16	1	**0S-1589**	4	BOLT (5/8-11X1.75IN)	
	17	1	**5P-8247**	4	WASHER-HARD (3.5MM THK)	
	18	1	**4V-3044**	1	PLATE-LOCKING	
	19	1	**5K-3491**	1	SPACER	
	20	1	**5K-3502**	1	CAP-LOWER	
	21	1	**3K-6454**	2	SEAL-LIP	
	22	1	**5K-3501**	1	CAP-UPPER	
	23	1	**1D-4574**	10	BOLT (1/2-13X6IN)	

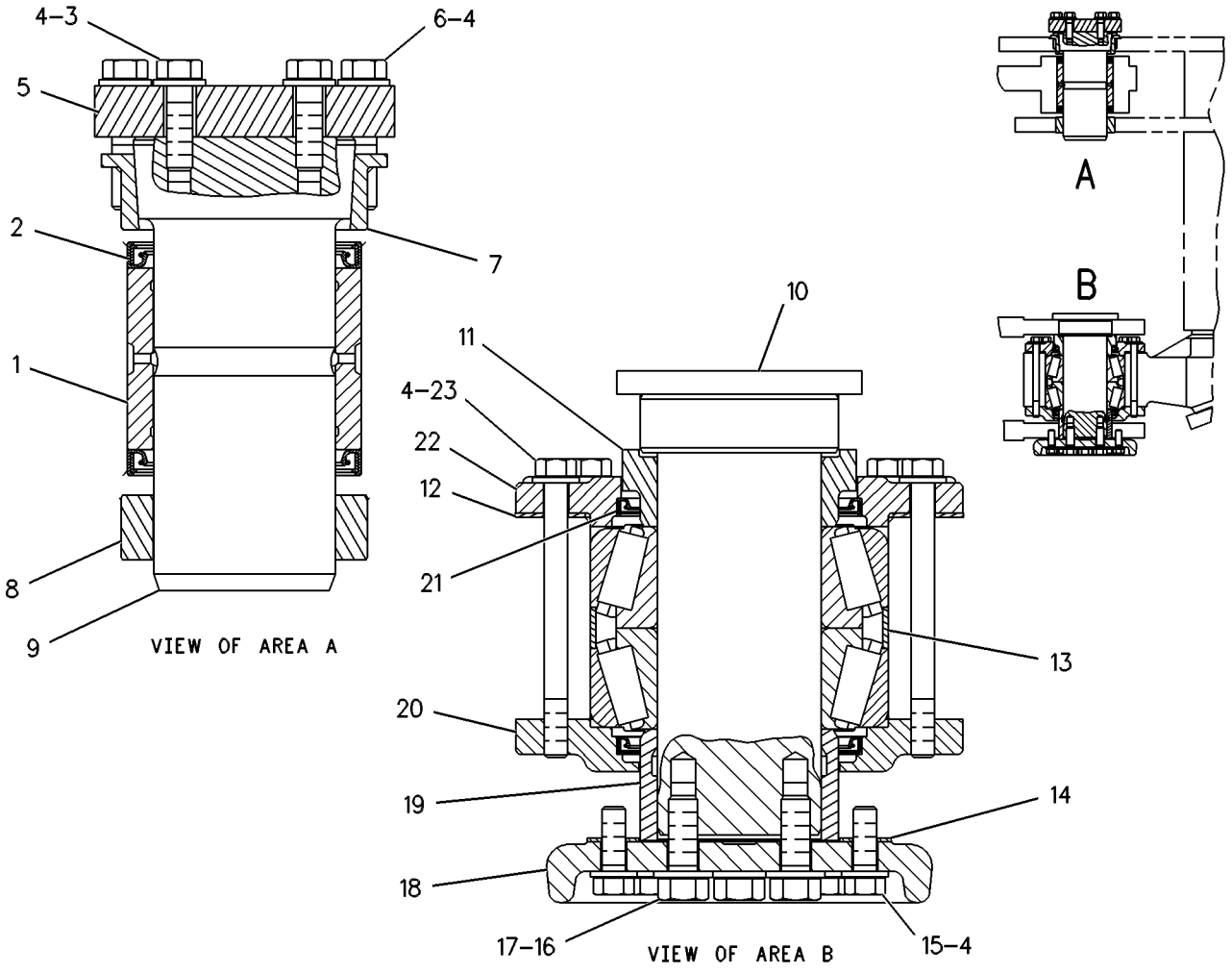

GRAPHIC #1

g00108949

FRAME AND BODY

128-2522 LINES GP-GREASE

S/N: ATS1-UP

PART OF 162-5607 GENERAL AR

SMCS-7510 **i01657996**

NOTE	REF NO	GRAPHIC REF	PART NUMBER	QTY	PART NAME 1 2 3 4 5 6 (PRODUCT LEVEL)	SEE PAGE
	1	1	**3B-6769**	1	ELBOW	
	2	1	**3B-8489**	2	FITTING-GREASE (1/8-27 THD) (UPPER/LOWER ARTICULATION PIN)	
I	3	1	**3G-6659**	1	HOSE AS	
	4	1	**8W-4342**	1	HOSE AS	
	5	1	**3B-7733**	1	FITTING	
	6	1	**4D-7794**	1	CLIP	

I-SEE HOSE FABRICATION GUIDE

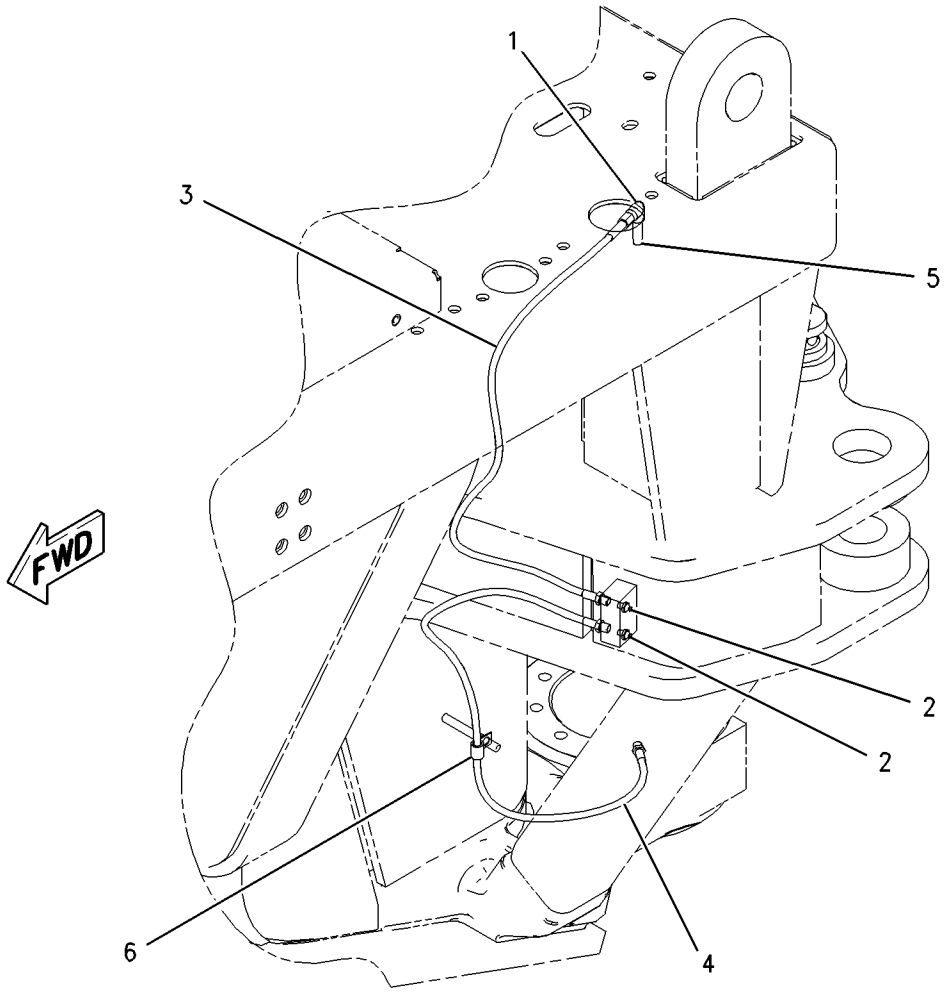

GRAPHIC #1 g00858571

141-6145 LINK GP-STEERING

S/N: ATS1-UP

PART OF 110-7720 AXLE GP-FRONT

SMCS-4305 **i00605166**

NOTE	REF NO	GRAPHIC REF	PART NUMBER	QTY	PART NAME 1 2 3 4 5 6 (PRODUCT LEVEL)	SEE PAGE
	1	1	**141-6137**	1	TIE ROD GP	
		1	**1D-0906**	1	NUT-SLOTTED	
	2	1	**141-6141**	2	CLAMP	
	3	1	**1B-4367**	2	BOLT (5/8-11X3IN)	
	4	1	**3K-2889**	2	LOCKNUT (5/8-11 THD)	
	5	1	**141-6143**	1	ROD	
	6	1	**141-6136**	1	TIE ROD GP	
		1	**1D-0906**	1	NUT-SLOTTED	

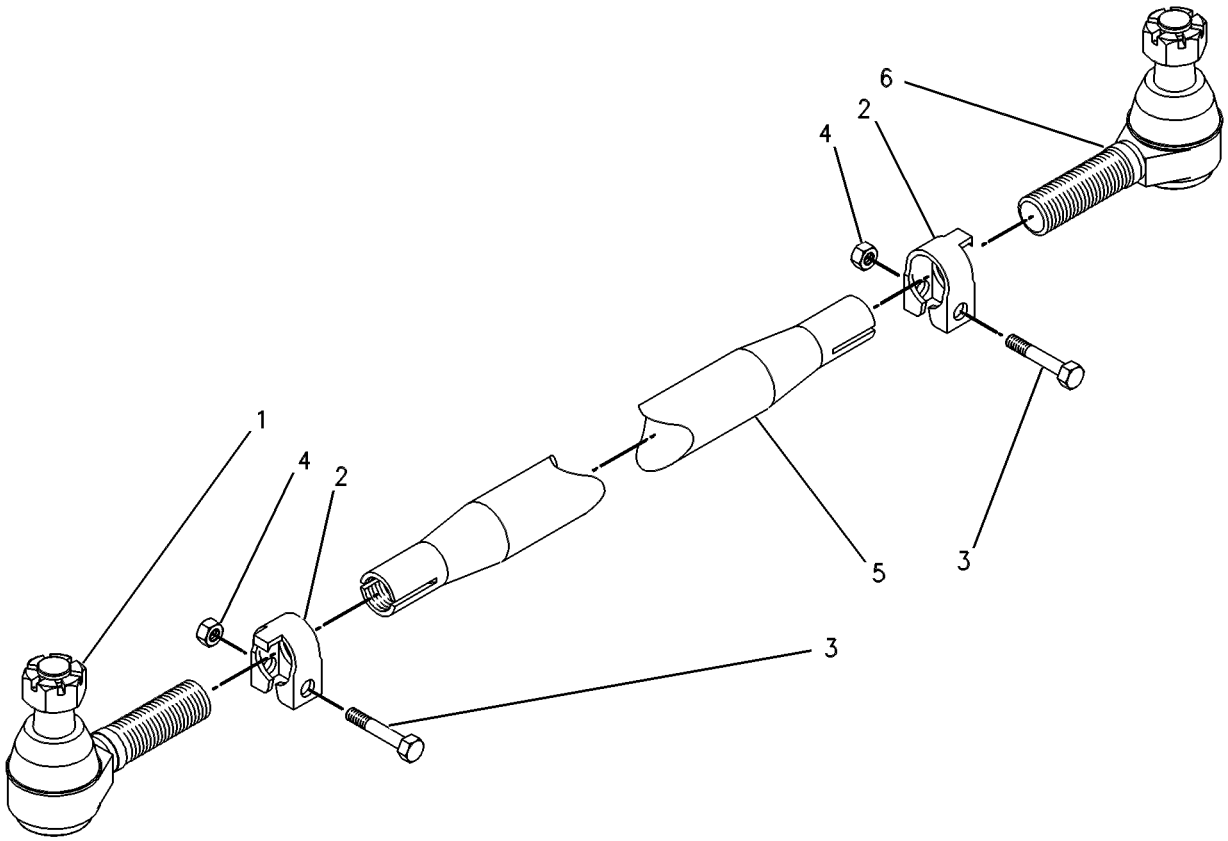

GRAPHIC #1 g00279024

6G-6900 SHIELD GP-DRIVE SHAFT

S/N: ATS1-UP

PART OF 162-5607 GENERAL AR

SMCS-3253, 7153 **i00130209**

NOTE	REF NO	GRAPHIC REF	PART NUMBER	QTY	PART NAME 1 2 3 4 5 6 (PRODUCT LEVEL)	SEE PAGE
	1	1	**5P-2228**	4	BOLT (1/2-13X1IN)	
	2	1	**5P-1076**	8	WASHER-HARD (4MM THK)	
	3	1	**6G-4319**	1	SHIELD AS (RH)	
		1	**6G-4321**	1	SHIELD AS (LH)	
	4	1	**8C-4436**	4	BOLT (1/2-13X1.375IN)	

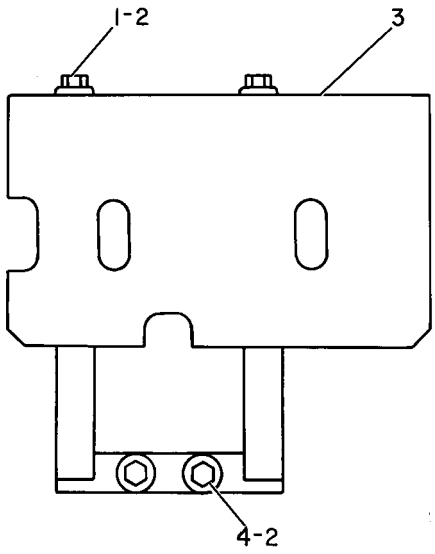

GRAPHIC #1 g00108202

FRAME AND BODY

8X-1035 STEP GP–BELTED

S/N: ATS1-UP

PART OF 162-5607 GENERAL AR

SMCS-7254 **i01514693**

NOTE	REF NO	GRAPHIC REF	PART NUMBER	QTY	PART NAME 1 2 3 4 5 6 (PRODUCT LEVEL)	SEE PAGE
	1	1	**8W-7386**	2	STEP AS	
					(EACH INCLUDES)	
		1	**4V-9803**	2	PLATE	
	2	1	**198-7380**	2	STEP AS	
					(EACH INCLUDES)	
		1	**4V-9803**	2	PLATE	
	3	1	**123-3699**	2	PLATE (LH)	
	4	1	**4V-9809**	4	STEP AS	
					(EACH INCLUDES)	
		1	**4V-9803**	2	PLATE	
	5	1	**1D-4691**	24	BOLT-CARRIAGE (1/2-13X2.5 IN)	
	6	1	**5P-1076**	8	WASHER-HARD (13.5X30X4MM THK)	
	7	1	**1K-6872**	32	LOCKNUT (1/2-13 THD)	
	8	1	**4V-9804**	12	PLATE	
	9	1	**1D-4689**	8	BOLT (1/2-13X1.75IN)	
	10	1	**123-3698**	2	PLATE (RH)	
	11	1	**141-4043**	4	BELT	
	12	1	**8T-4223**	32	WASHER-HARD (13.5X25.5X3MM THK)	
	13	1	**8T-8919**	8	BOLT (1/2-13X1.75 IN)	

QUANTITIES SHOWN ARE THOSE REQUIRED FOR BOTH LH AND RH SIDES

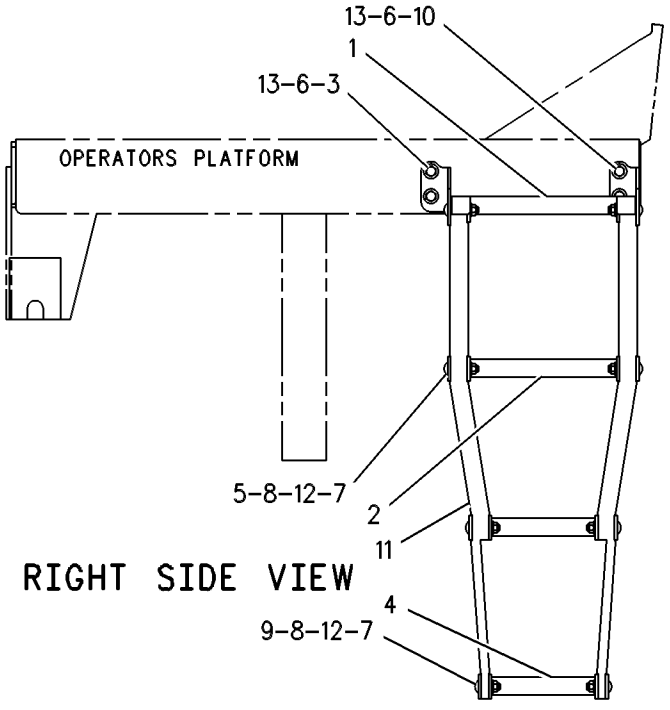

GRAPHIC #1 g00109604

FRAME AND BODY

204-7938 SUPPORT AR-REAR CHASSIS

S/N: ATS1-UP

PART OF 162-5607 GENERAL AR

SMCS-7509 **i01709792**

NOTE	REF NO	GRAPHIC REF	PART NUMBER	QTY	PART NAME 1 2 3 4 5 6 (PRODUCT LEVEL)	SEE PAGE
Y	1	1	*186-1728*	1	STARTING AID GP-ETHER	212
Y	2	1	*188-5131*	1	BATTERY GP	127
Y	3	1	*205-3110*	1	WIRING GP-REAR	248
Y	4	1	*206-6580*	1	SUPPORT GP-PLATFORM	376
Y	5	1	*207-0625*	1	TANK GP-AIR	394

Y-SEPARATE ILLUSTRATION

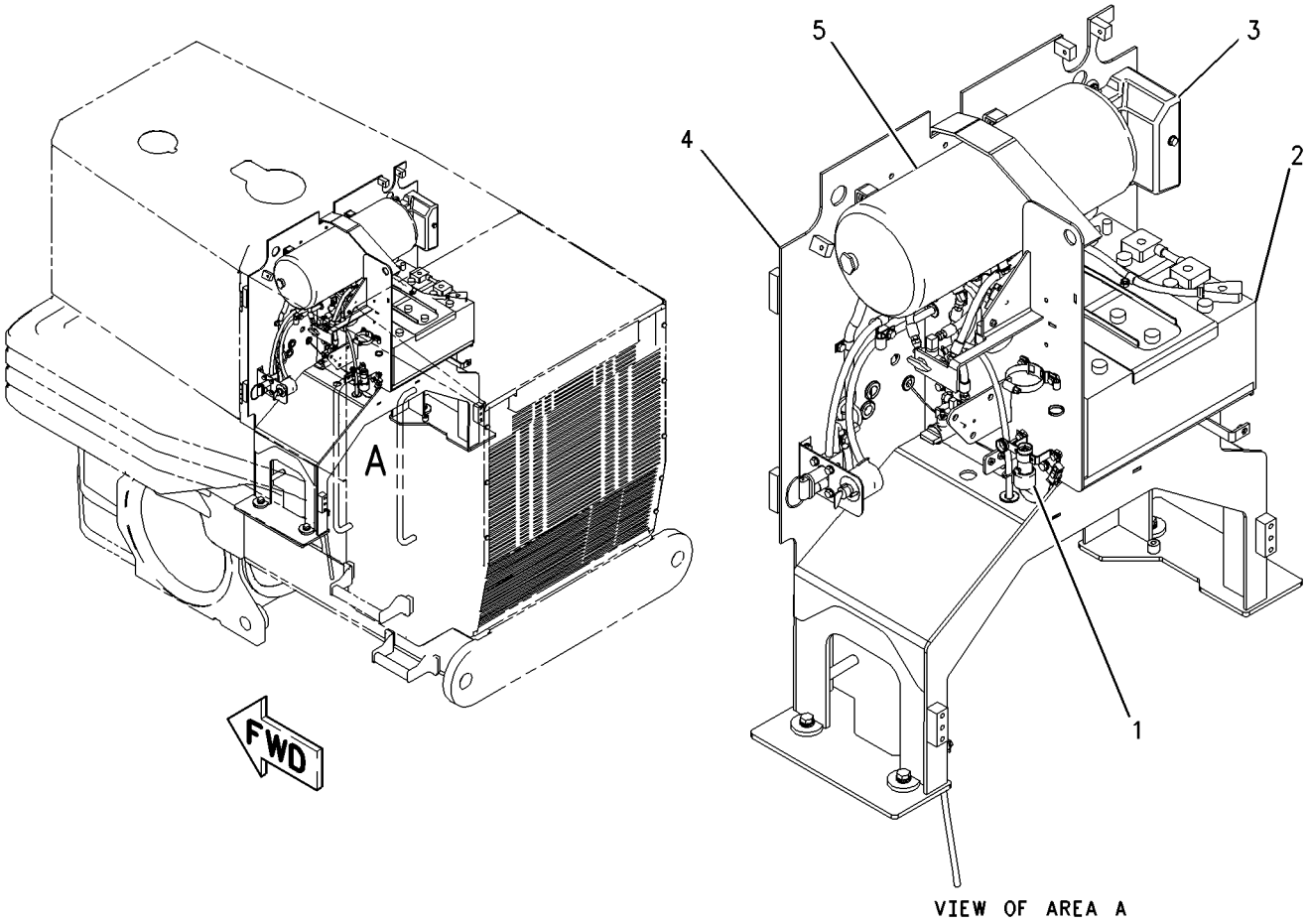

GRAPHIC #1 g00912056

FRAME AND BODY

206-0335 SUPPORT GP-FUEL TANK

S/N: ATS1-UP

PART OF 162-5607 GENERAL AR

SMCS-1273 **i01709846**

NOTE	REF NO	GRAPHIC REF	PART NUMBER	QTY	PART NAME 1 2 3 4 5 6 (PRODUCT LEVEL)	SEE PAGE
	1	1	**193-9147**	2	BRACKET	
	2	1	**194-4679**	1	BRACKET	
	3	1	**196-9295**	1	BRACKET AS	
	4	1	**199-9968**	2	BRACKET AS	
	5	1	**207-1832**	1	SUPPORT AS	
	6	1	**207-2117**	1	SUPPORT AS	
	7	1	**5P-1076**	8	WASHER-HARD (13.5X30X4MM THK)	
M	8	1	**8T-4139**	18	BOLT (M12X1.75X30MM)	
	9	1	**8T-4223**	18	WASHER-HARD (13.5X25.5X3MM THK)	
M	10	1	**8T-4956**	8	BOLT (M12X1.75X35MM)	

M-METRIC PART

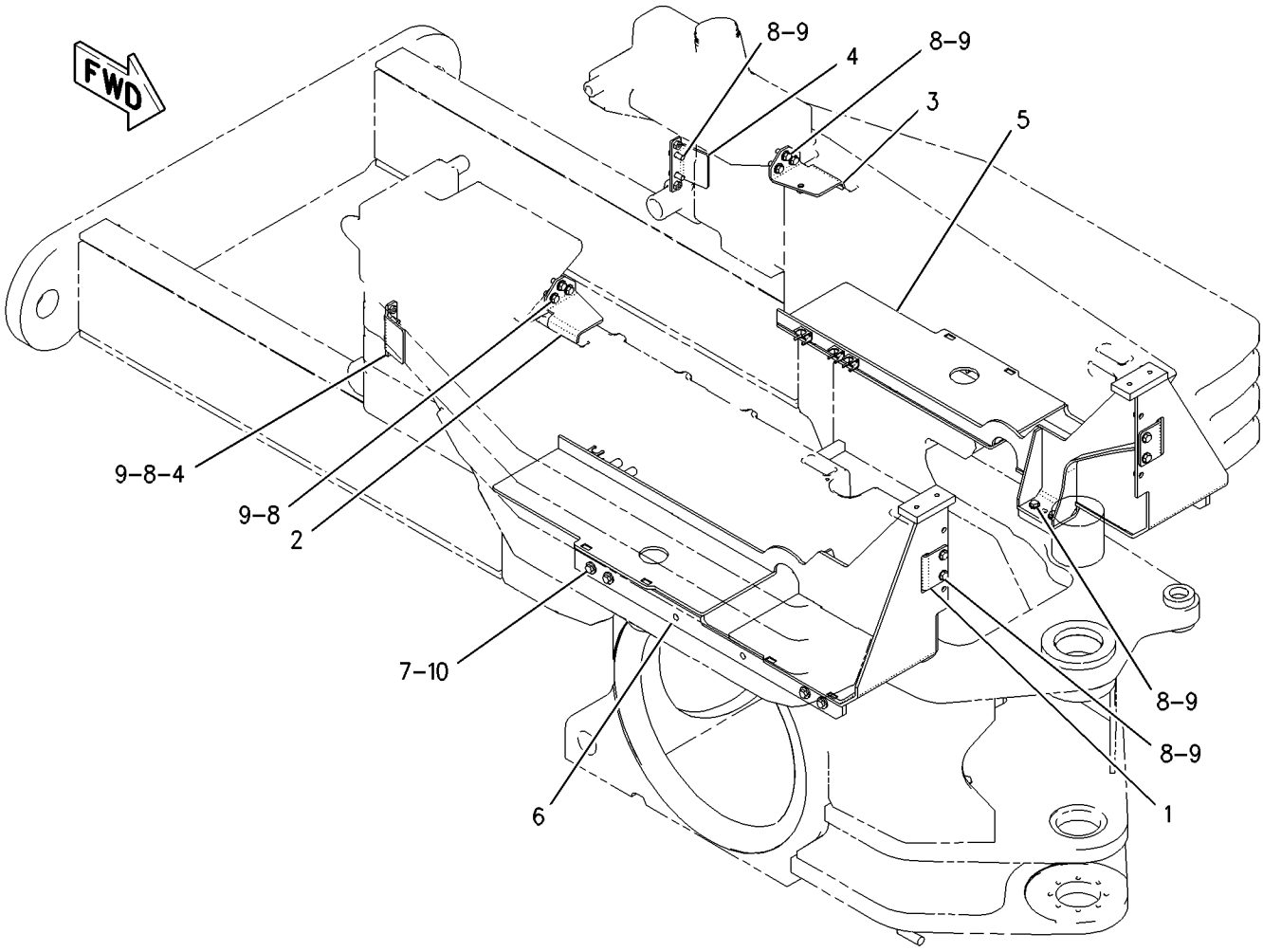

GRAPHIC #1 g00933862

FRAME AND BODY

206-6580 SUPPORT GP-PLATFORM

S/N: ATS1-UP

PART OF 204-7938 SUPPORT AR-REAR CHASSIS

SMCS-7253 **i01711868**

NOTE	REF NO	GRAPHIC REF	PART NUMBER	QTY	PART NAME 1 2 3 4 5 6 (PRODUCT LEVEL)	SEE PAGE
	1	1	**206-6002**	1	PLATFORM AS	
M	2	1	**8T-4140**	4	BOLT (M16X2X60MM)	
	3	1	**9X-8257**	8	WASHER (17.5X30X3.5MM THK)	

M-METRIC PART

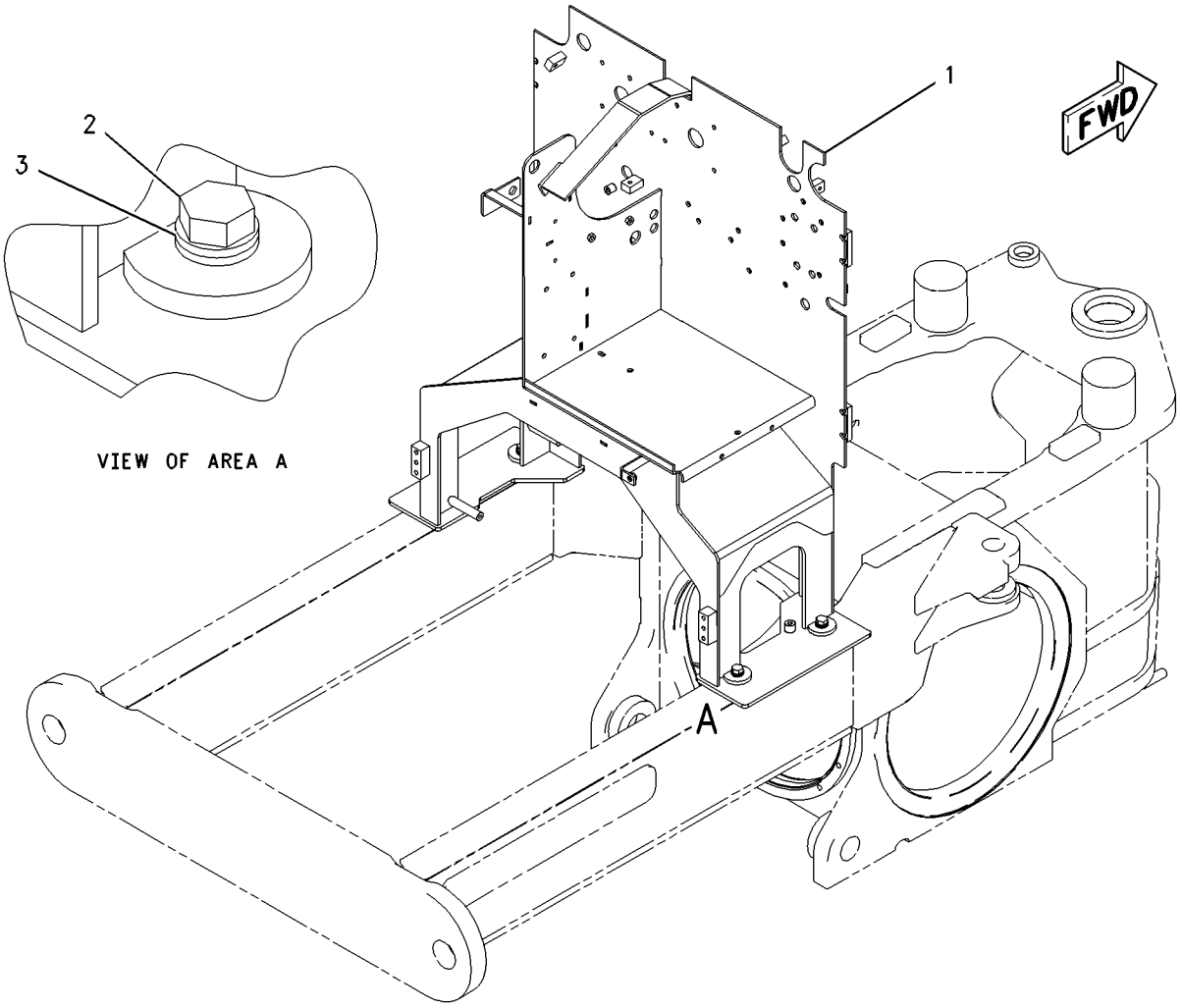

GRAPHIC #1 g00931121

BRAKING SYSTEM

102-9004 ACTUATOR GP-BRAKE

S/N: ATS1-UP

PART OF 188-7062 CONTROL GP-PARKING BRAKE

SMCS-4262 **i00130845**

NOTE	REF NO	GRAPHIC REF	PART NUMBER	QTY	PART NAME 1 2 3 4 5 6 (PRODUCT LEVEL)	SEE PAGE
	1	1	**6W-3004**	1	PLUG	
	2	1	**8K-8467**	1	SPRING	
	3	1	**8T-1363**	1	FILM-WARNING	
	4	1	**6K-2644**	1	RETAINER-BOOT	
	5	1	**8R-4145**	1	SLEEVE-BOOT	
	6	1	**3S-2093**	1	STRAP-CABLE (1.75IN DIA)	
	7	1	**6K-2643**	1	BOOT-DUST	
	8	1	**5K-5922**	8	BOLT	
	9	1	**8K-8468**	1	SUPPORT-SPRING	
					AVAILABLE REPAIR KIT(S):	
			7K-9680	1	KIT-BRAKE ACTUATOR	
					(INCLUDES FELT, O-RINGS & BUSHINGS)	
			6G-2527	1	KIT-SEAL	
					(INCLUDES O-RING & LUBRICANT)	

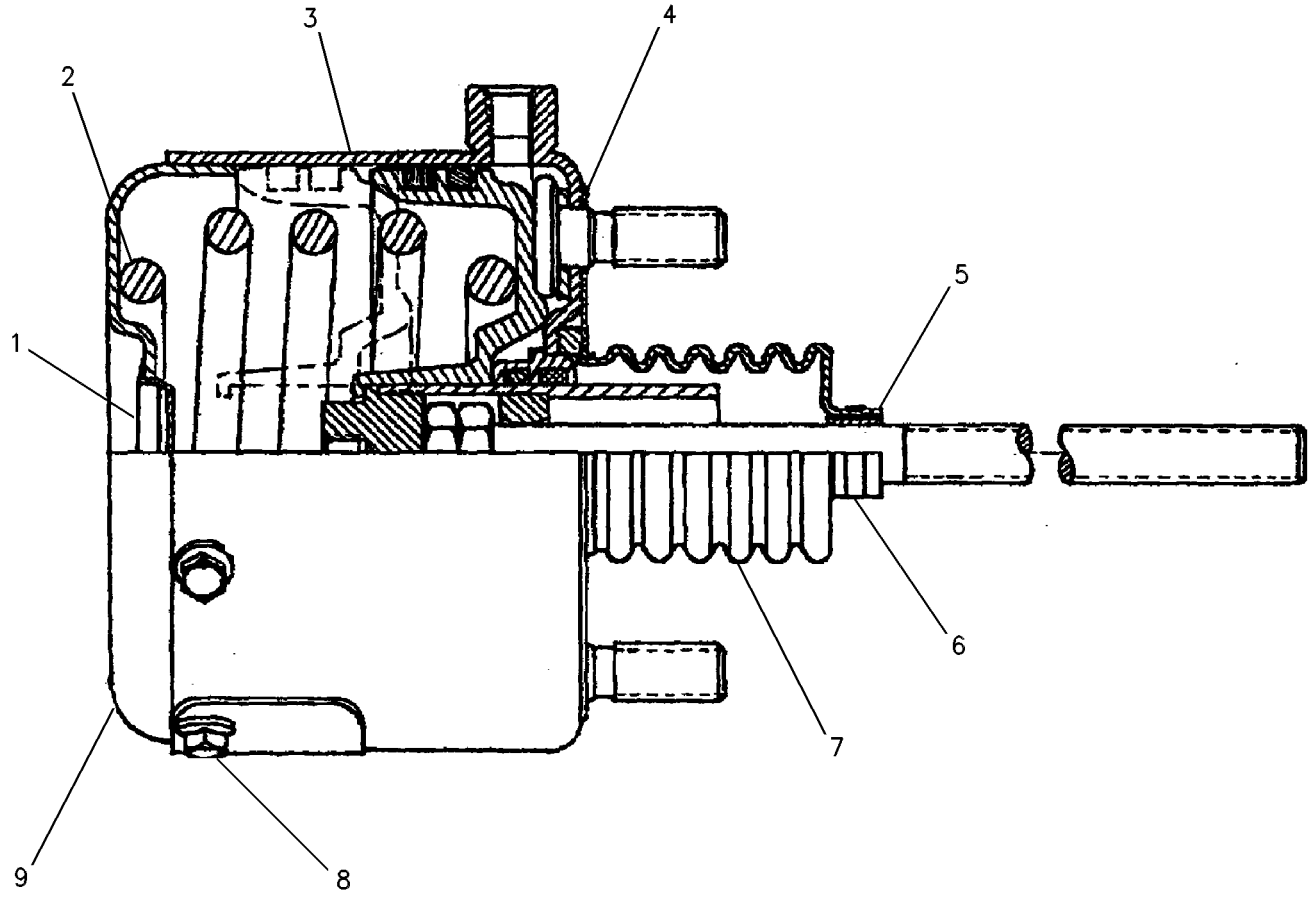

GRAPHIC #1 g00108508

208-0014 AIR DRYER GP–SNOW

S/N: ATS1-UP
PART OF 211-0981 AIR DRYER GP
AN ATTACHMENT

SMCS-4285 **i01748711**

NOTE	REF NO	GRAPHIC REF	PART NUMBER	QTY	PART NAME 1 2 3 4 5 6 (PRODUCT LEVEL)	SEE PAGE
	1	1	**0A-3721**	1	CLIP	
	2	1	**5P-4401**	1	CONNECTOR-AIR BRAKE	
	3	1	**5P-4424**	1	ELBOW-AIR BRAKE	
	4	1	**5P-4426**	3	ELBOW-AIR BRAKE	
	5	1	**6V-2610**	1	FITTING	
	6	1	**9M-7958**	1	CLAMP-HOSE	
	7	1	**175-0403**	1	TUBE	
	8	1	**177-0279**	1	HOSE AS	
	9	1	**191-3645**	1	RESERVOIR	
	10	1	**208-1512**	1	TUBE AS	
	11	1	**208-1535**	1	TUBE	
Y	12	1	**215-3005**	1	AIR DRYER GP	381
	13	1	**3J-5390**	1	PLUG (3/8-18 THD)	
C	14	1	**5P-2566**	3	BOLT (1/2-13X1.5 IN)	
	15	1	**6K-8178**	1	CLIP	
	16	1	**6P-6641**	1	GROMMET	
	17	1	**7D-0215**	1	CONNECTOR-PIPE	
	18	1	**7D-4903**	1	ADAPTER	
	19	1	**7J-8611**	1	ELBOW	
C	20	1	**8D-1470**	1	GROMMET	
	21	1	**8T-4121**	2	WASHER-HARD (11X21X2.5MM THK)	
M	22	1	**8T-4137**	2	BOLT (M10X1.5X20MM)	
M	23	1	**8T-4189**	2	BOLT (M8X1.25X20MM)	
	24	1	**8T-4223**	3	WASHER-HARD (13.5X25.5X3MM THK)	
	25	1	**8T-4224**	2	WASHER-HARD (8.8X16X2MM THK)	
E	26	1	**8I-1362**		HOSE (100CM)	

C-CHANGE FROM PREVIOUS TYPE
E-ORDER BY THE CENTIMETER
M-METRIC PART
Y-SEPARATE ILLUSTRATION

208-0014 **AIR DRYER GP** *(contd.)* **i01748711**

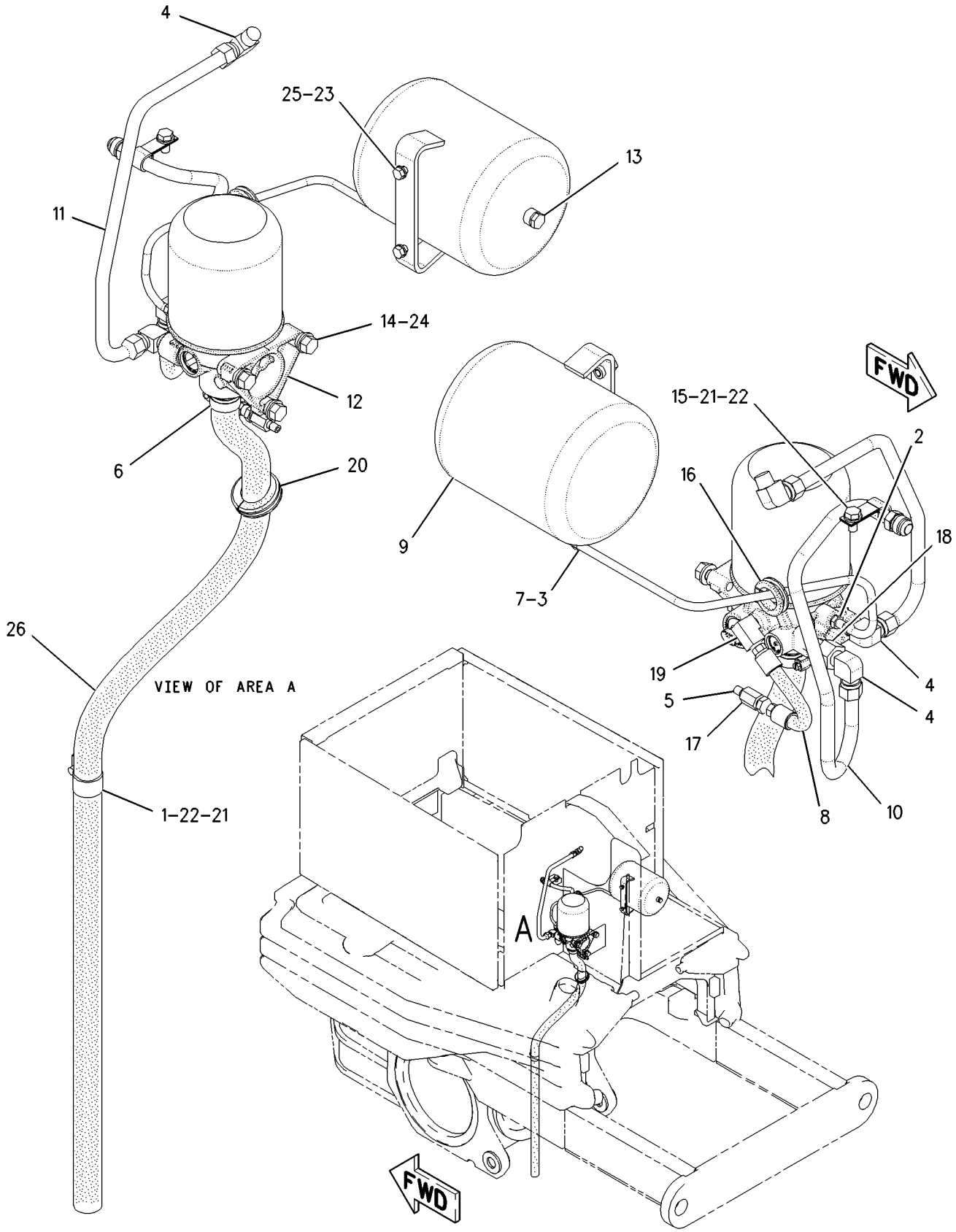

GRAPHIC #1 g00907310

BRAKING SYSTEM

211-0981 AIR DRYER GP

S/N: ATS1-UP
AN ATTACHMENT

SMCS-4285 **i01829751**

NOTE	REF NO	GRAPHIC REF	PART NUMBER	QTY	PART NAME 1 2 3 4 5 6 (PRODUCT LEVEL)	SEE PAGE
	1	1	**5F-5434**	1	VALVE AS-RELIEF	
Y	2	1	*208-0014*	1	AIR DRYER GP	378
	3	1	**208-1725**	1	HOSE AS	

Y-SEPARATE ILLUSTRATION

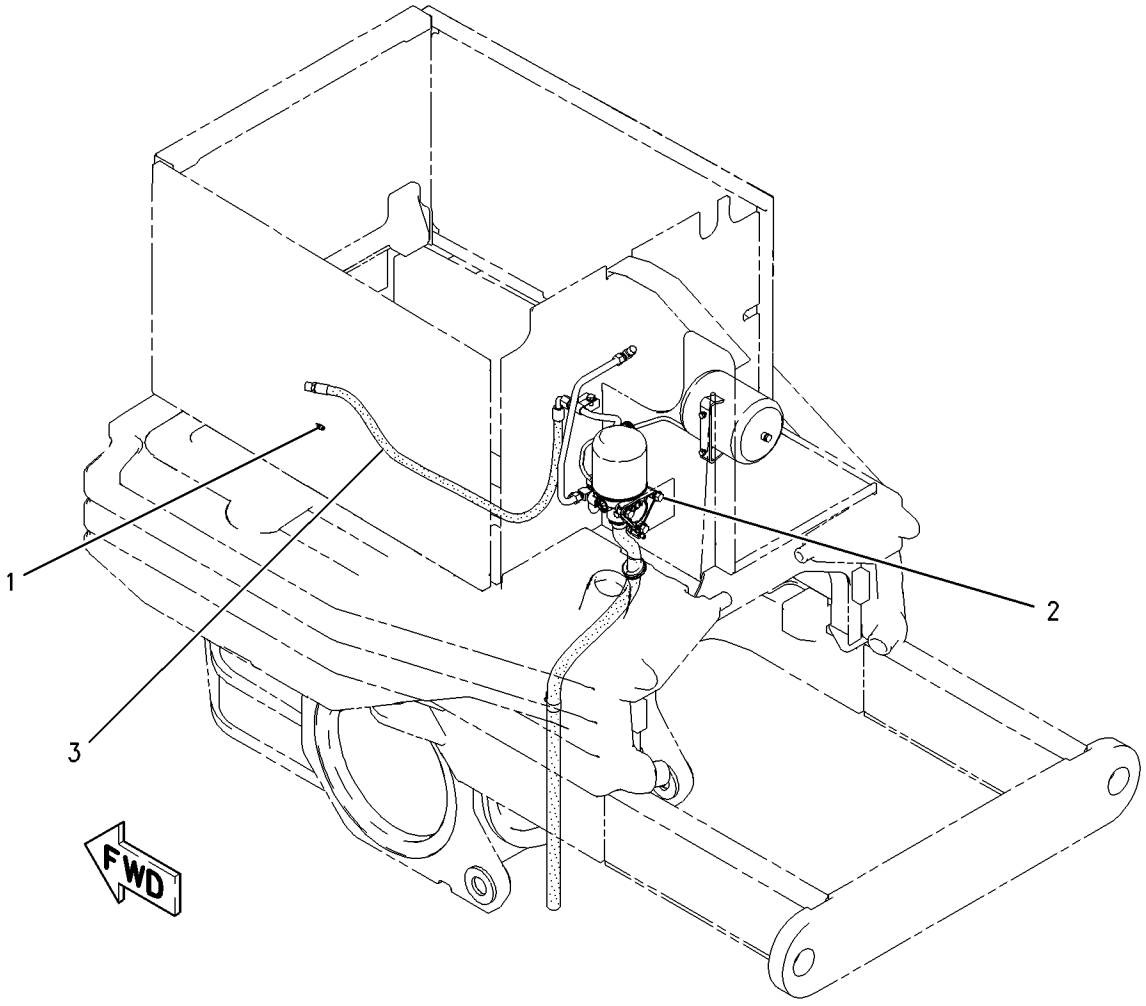

GRAPHIC #1 g00940026

BRAKING SYSTEM

215-3005 AIR DRYER GP

S/N: ATS1-UP
PART OF 208-0014 AIR DRYER GP
AN ATTACHMENT

SMCS-4285 **i01854996**

NOTE	REF NO	GRAPHIC REF	PART NUMBER	QTY	PART NAME 1 2 3 4 5 6 (PRODUCT LEVEL)	SEE PAGE
	1	1	**203-2390**	1	VALVE (AIR DRYER)	
	2	1	**203-2391**	1	VALVE AS (AIR DRYER)	
	3	1	**203-2423**	1	ELEMENT-HEATING (AIR DRYER) (12 VOLT)	
	4	1	**203-2389**	1	CARTRIDGE-DESICCANT (AIR DRYER)	
	5	1	**218-2971**	1	VALVE GP-PURGE (AIR DRYER)	

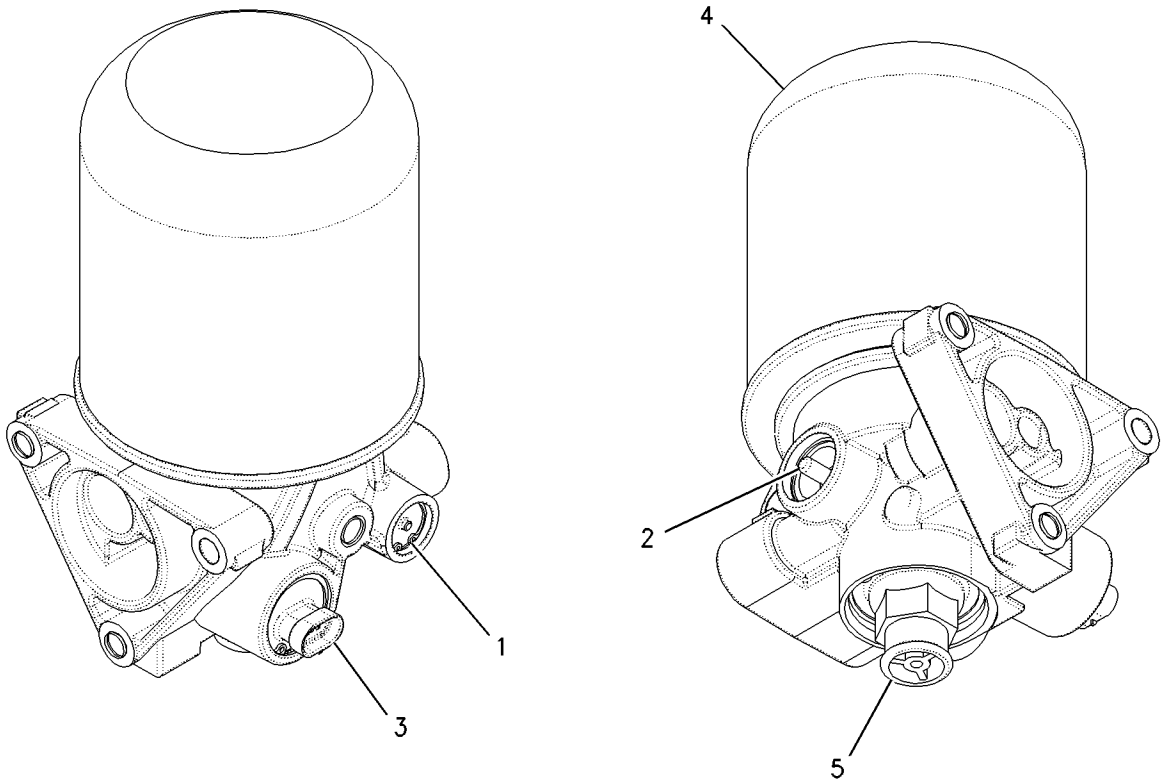

GRAPHIC #1 g00945969

BRAKING SYSTEM

8D-1690 BRAKE GP-SERVICE

S/N: ATS1-UP

PART OF 162-5607 GENERAL AR

SMCS-4251 **i00775448**

NOTE	REF NO	GRAPHIC REF	PART NUMBER	QTY	PART NAME 1 2 3 4 5 6 (PRODUCT LEVEL)	SEE PAGE
	1	1	**2D-6507**	4	SEAL-O-RING	
	2	1	**8D-1651**	4	COVER	
	3	1	**8W-8347**	2	SPROCKET (REAR MTG)	
	4	1	**8D-1634**	4	RETAINER	
	5	1	**3J-5390**	1	PLUG (3/8-18 THD)	
	6	1	**5P-6712**	12	BOLT-LOCKING	
B	7	1	**8D-1636**	20	SHIM (.13MM .005IN THK)	
B		1	**8D-1637**	20	SHIM (.18MM .007IN THK)	
B		1	**8D-9015**	8	SHIM (1.28MM .050IN THK)	
	8	1	**1B-4043**	4	CONE-ROLLER BEARING	
		1	**1B-3937**	4	CUP-ROLLER BEARING	
	9	1	**2G-6339**	4	HUB-BRAKE	
	10	1	**8W-8347**	2	SPROCKET (FRONT MTG)	
	11	1	**8D-1648**	40	DISC	
	12	1	**6Y-7917**	36	DISC-FRICTION	
	13	1	**0S-1626**	16	BOLT (3/4-10X1.5IN)	
C	14	1	**2S-0115**	80	WASHER-HARD (5MM THK)	
	15	1	**8D-1642**	4	SEAL-D-RING	
	16	1	**6G-6264**	4	PISTON	
	17	1	**4B-4279**	24	WASHER	
	18	1	**2S-6403**	24	SPRING	
	19	1	**8D-1643**	4	SEAL-D-RING	
	20	1	**6G-0901**	24	BOLT	
	21	1	**8S-9076**	4	CUP-BEARING	
		1	**8S-9075**	4	CONE-BEARING	
	22	1	**9D-1584**	4	SPACER	
C	23	1	**9G-5313**	4	SEAL GP	
					(EACH INCLUDES)	
		1	**7M-0475**	2	RING-SEALING	
	24	1	**147-3312**	4	SPINDLE-WHEEL	
	25	1	**5D-1183**	40	BOLT	
	26	1	**8T-6470**	56	BOLT-LOCKING	
C	27	1	**8T-6471**	8	BOLT-LOCKING	
	28	1	**8W-7452**	4	HOUSING	
	29	1	**2R-0098**	4	SEAL-O-RING	

QUANTITIES SHOWN ARE THOSE REQUIRED FOR BOTH LH AND RH SIDES
B-USE AS REQUIRED
C-CHANGE FROM PREVIOUS TYPE

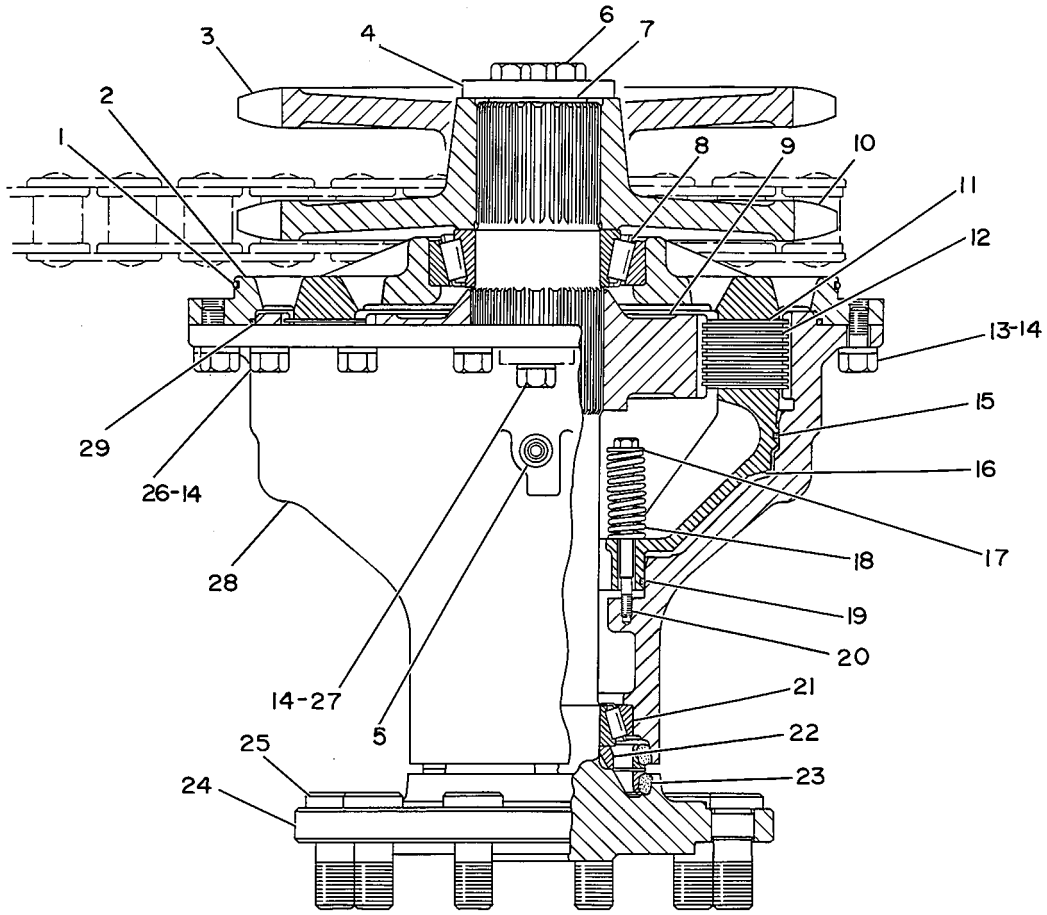

GRAPHIC #1 g00108245

BRAKING SYSTEM

188-7062 CONTROL GP-PARKING BRAKE

S/N: ATS1-UP

PART OF 162-5607 GENERAL AR

SMCS-4282, 4284 **i01795777**

NOTE	REF NO	GRAPHIC REF	PART NUMBER	QTY	PART NAME 1 2 3 4 5 6 (PRODUCT LEVEL)	SEE PAGE
	1	2	**2D-0193**	1	CONNECTOR-PIPE	
	2	1	**2G-3765**	1	SPRING	
I	3	1	**3D-8938**	1	HOSE AS	
I	4	2	**3D-8942**	1	HOSE AS	
	5	1	**5D-0470**	1	VALVE GP-QUICK-RELEASE (BRAKE AIR)	
		1	**4B-1321**	4	SCREW-MACHINE	
		1	**5D-0863**	1	DIAPHRAGM	
		1	**5D-5716**	1	SEAL	
Y	6	1	**5D-4382**	1	VALVE GP-AIR CONTROL	396
	7	1	**5H-4783**	1	HOSE AS	
	8	1	**5K-2408**	2	FITTING	
	9	1	**5T-8285**	1	JUNCTION BLOCK	
	10	1	**6B-6683**	2	NUT (5/8-18 THD)	
	11	1	**6D-1432**	1	VALVE-CHECK (BRAKE AIR PRESSURE)	
I	12	1	**7D-4922**	1	HOSE AS	
	13	1	**7D-9708**	2	BOLT-SHOULDER (5/16X18X1.25 IN)	
	14	1	**7X-4736**	1	GROMMET	
	15	2	**8W-8528**	4	SLEEVE	
	16	1	**8X-5160**	1	GROMMET	
	17	1	**9D-0972**	1	BRACKET	
Y	18	1	**102-9004**	1	ACTUATOR GP-BRAKE	377
	19	1	**111-4921**	1	PLATE AS	
	20	1	**111-4922**	1	PLATE	
	21	1	**188-9250**	1	VALVE GP-SOLENOID (BRAKE ACTUATOR)	
		1	**186-3735**	2	PIN-CONNECTOR	
		1	**102-8802**	1	KIT-RECEPTACLE (2 PIN)	
					(INCLUDES RECEPTACLE AS & WEDGE)	
	22	1	**0S-1625**	2	BOLT (5/8-11X2.5IN)	
	23	1	**3B-4617**	1	PIN-COTTER	
	24	1	**3B-8822**	1	ELBOW	
	25	1	**4D-6585**	1	ELBOW-PIPE	
	26	1	**4K-0367**	2	NUT-FULL (5/8-11 THD)	
	27	1	**4K-1540**	1	PIN-CLEVIS	
	28	1	**4M-0061**	2	BOLT (5/16-18X.750 IN)	
	29	1	**4S-7606**	2	ELBOW	
	30	1	**5H-4778**	3	ELBOW	
	31	1	**5M-6213**	2	PLUG-PIPE	
	32	1	**5P-1075**	2	WASHER-HARD (10.2X22.5X3MM THK)	
	33	1	**5P-8247**	4	WASHER-HARD (17X32X3.5MM THK)	
	34	1	**8T-2502**	2	BOLT (3/8-16X1.125 IN)	
	35	1	**8T-4121**	2	WASHER-HARD (11X21X2.5MM THK)	
M	36	1	**8T-4199**	2	BOLT (M8X1.25X12MM)	
	37	1	**8T-4224**	4	WASHER-HARD (8.8X16X2MM THK)	
	38	1	**8T-4896**	2	WASHER-HARD (10.2X18.5X2.5MM THK)	
	39	1	**9D-8632**	1	END-YOKE ROD	
	40	2	**9G-9154**	2	CLIP	
	41	1	**9S-1354**	1	NUT (5/8-18 THD)	

I-SEE HOSE FABRICATION GUIDE
M-METRIC PART
Y-SEPARATE ILLUSTRATION

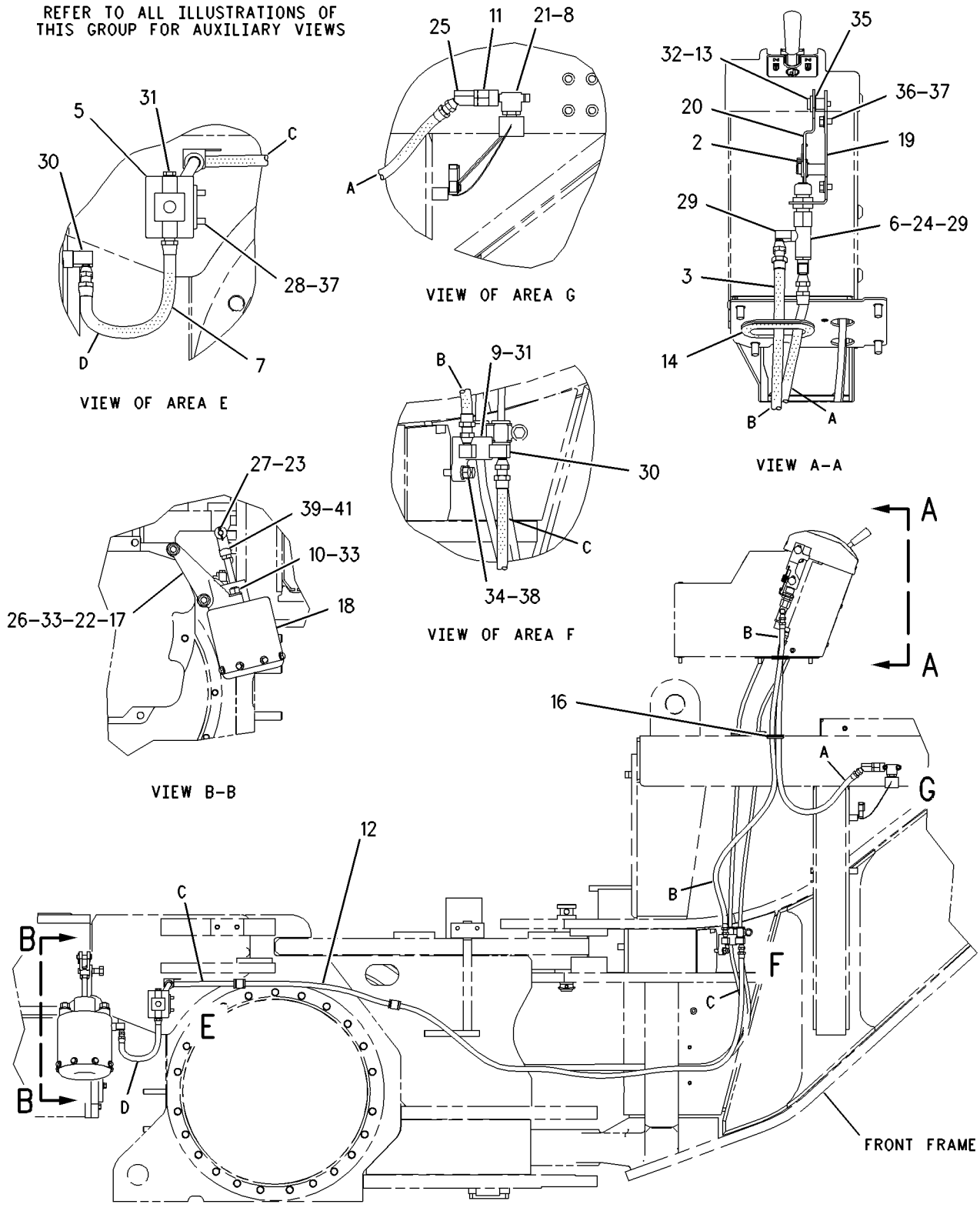

RIGHT SIDE VIEW

GRAPHIC #1 g00931894

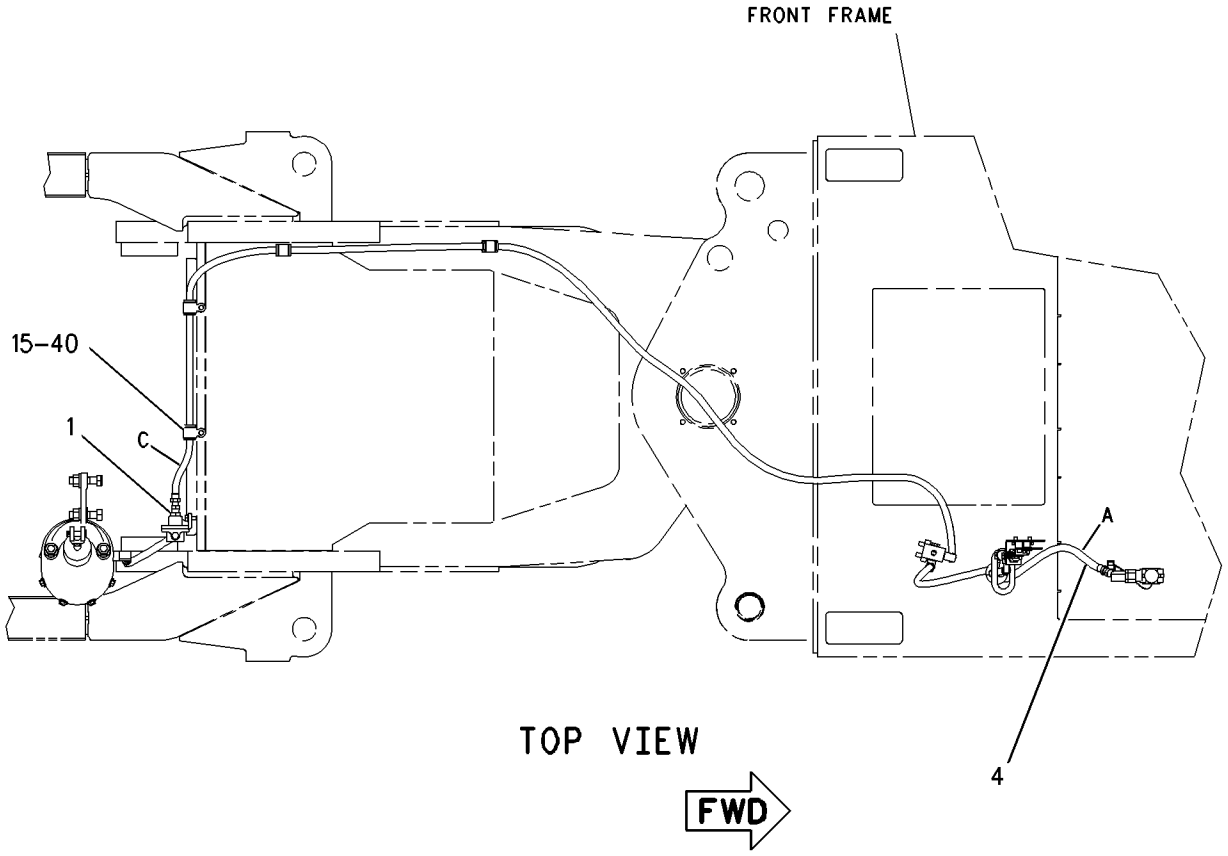

GRAPHIC #2 g00931895

MEMORANDA

BRAKING SYSTEM

171-2866 CONTROL GP-SERVICE BRAKE

S/N: ATS1-UP

PART OF 162-5607 GENERAL AR

SMCS-4265, 4269 **i01795687**

NOTE	REF NO	GRAPHIC REF	PART NUMBER	QTY	PART NAME 1 2 3 4 5 6 (PRODUCT LEVEL)	SEE PAGE
	1	3	**1B-2578**	1	NUT (3/8-16 THD)	
	2	3	**1F-1651**	1	TEE-PIPE	
	3	3	**1F-4622**	2	BEARING AS-NEEDLE	
	4	2,3	**2L-3331**	3	CONNECTOR-PIPE	
	5	2	**2M-1908**	2	FITTING-BULKHEAD	
	6	1	**3S-2093**	1	STRAP-CABLE	
	7	1	**3S-2713**	1	NUT-FULL (3/8-24 THD)	
	8	3	**5J-3658**	1	ROD	
	9	2	**5K-9238**	4	CONNECTOR	
	10	2	**6K-6826**	4	ELBOW	
	11	3	**6W-5817**	1	SPRING	
I	12	2	**7D-6294**	2	HOSE AS	
	13	3	**7V-0446**	2	CLIP	
	14	2	**8D-7026**	4	GUARD-BRAKE TUBE	
	15	2,3	**8L-6005**	3	TEE-PIPE	
	16	1,2	**8W-8527**	14	SLEEVE	
	17	1	**8W-8532**	1	CLIP	
	18	1	**8W-8903**	1	CLIP	
Y	19	1	*8X-2650*	1	VALVE GP-AIR CONTROL	397
	20	1	**8X-2680**	1	BRACKET AS	
	21	1	**8X-7603**	2	HOSE AS	
	22	3	**9J-8783**	1	SHIM (.508MM THK)	
	23	2	**9S-1302**	2	WASHER (27.0X44.45X2.5MM THK)	
	24	2	**9S-7706**	2	ELBOW-FLARED	
	25	2	**9X-8606**	8	CLIP	
	26	3	**113-1346**	1	BRACKET AS	
I	27	3	**159-1013**	1	HOSE AS	
	28	3	**169-0921**	1	ROD END (INTERNAL THREAD)	
	29	3	**172-4211**	1	SPACER (10.5X22X50.8MM THK)	
	30	3	**180-4027**	1	CAM	
	31	3	**180-7147**	1	LEVER	
	32	3	**185-1122**	1	BRACKET	
	33	1,3	**187-0745**	4	CLAMP	
	34	1,3	**191-3031**	2	CLAMP	
	35	1,3	**191-3032**	2	CLAMP	
	36	1,3	**191-3033**	2	CLAMP	
	37	2	**198-5438**	2	BLOCK	
	38	2	**205-6032**	1	TUBE AS	
	39	2	**205-6033**	1	TUBE AS	
	40	2	**205-6034**	1	TUBE AS	
	41	2	**205-6035**	1	TUBE AS	
	42	2	**205-6036**	1	TUBE AS	
	43	2	**205-6037**	1	TUBE AS	
	44	1	**207-4924**	1	PEDAL-BRAKE	
	45	2	**208-1737**	2	PLATE	
	46	2	**208-1738**	2	PLATE	
	47	2	**226-6547**	1	HOSE AS	
	48	2	**226-6622**	1	HOSE AS	
	49	3	**129-3173**	1	BOLT-12 POINT HEAD (3/8-16X31.75MM)	
	50	2	**187-4645**	1	HOSE AS	
	51	3	**1B-0676**	1	PIN	
	52	3	**1H-7724**	3	BUSHING-REDUCER	
	53	2	**226-6547**	1	HOSE AS	
	54	3	**3B-7721**	1	BUSHING-REDUCER	
	55	1,2,3	**3K-6060**	8	LOCKNUT (3/8-16 THD)	
	56	3	**3K-8280**	1	PIN-CLEVIS	

171-2866 CONTROL GP-SERVICE BRAKE *(contd.)* i01795687

NOTE	REF NO	GRAPHIC REF	PART NUMBER	QTY	PART NAME 1 2 3 4 5 6 (PRODUCT LEVEL)	SEE PAGE
	57	3	**4B-6060**	1	SETSCREW-SOCKET (1/4-20X.375 IN)	
	58	3	**4D-0577**	2	ELBOW	
	59	2	**4D-0582**	4	ELBOW	
	60	3	**4J-3914**	1	ELBOW	
	61	3	**4J-8922**	1	ROD END	
	62	1	**4L-6454**	4	BOLT (3/8-16X1 IN)	
M	63	3	**5C-2890**	2	NUT (M6X1 THD)	
	64	1	**5P-1075**	2	WASHER-HARD (10.2X22.5X3MM THK)	
	65	3	**6V-4245**	1	ELBOW	
	66	3	**6V-8189**	3	NUT (5/16-18 THD)	
	67	1,2	**6V-8801**	4	NUT (3/8-16 THD)	
	68	3	**6V-8918**	3	BOLT (5/16-18X1.25 IN)	
	69	3	**7J-8611**	1	ELBOW	
	70	2,3	**7M-7410**	6	PLUG	
	71	2	**7X-7729**	14	WASHER (11X25X3MM THK)	
	72	3	**8T-4121**	4	WASHER-HARD (11X21X2.5MM THK)	
M	73	2	**8T-4136**	14	BOLT (M10X1.5X25MM)	
M	74	3	**8T-4137**	4	BOLT (M10X1.5X20MM)	
M	75	3	**8T-4138**	1	BOLT (M6X1X20MM)	
	76	3	**8T-4224**	5	WASHER-HARD (8.8X16X2MM THK)	
	77	3	**8T-4226**	1	WASHER-PLATED (10.5X45X3MM THK)	
	78	1,2,3	**8T-4896**	19	WASHER-HARD (10.2X18.5X2.5MM THK)	
	79	3	**8T-5390**	1	BOLT (3/8-16X88.9MM)	
	80	2	**8T-9056**	4	BOLT (3/8-16X1.25 IN)	
	81	1,3	**8X-8450**	2	PLATE	
	82	1,3	**8X-8451**	2	PLATE	
E	83	1	**5P-0767**		HOSE (60CM)	

E-ORDER BY THE CENTIMETER
I-SEE HOSE FABRICATION GUIDE
M-METRIC PART
Y-SEPARATE ILLUSTRATION

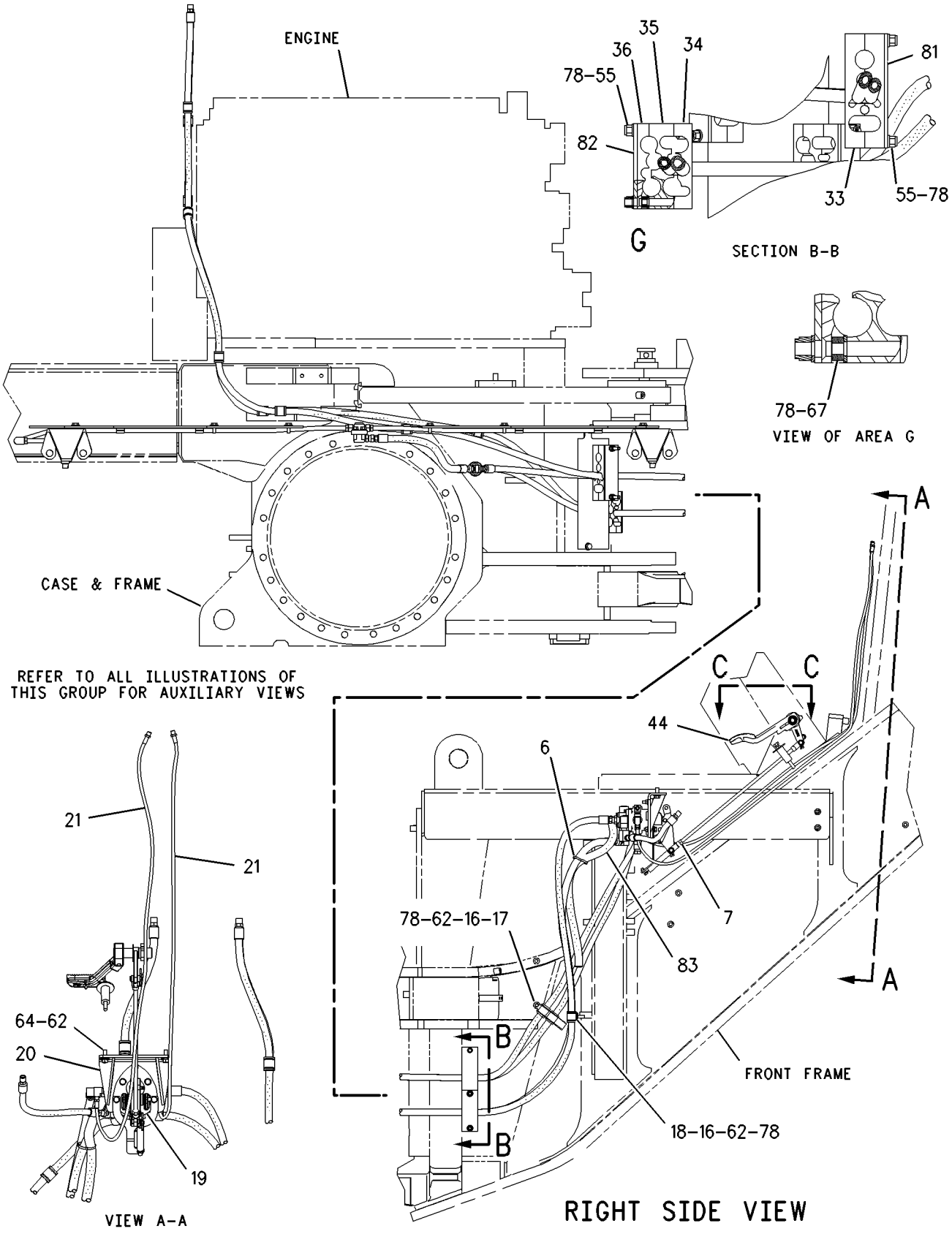

GRAPHIC #1 g00945213

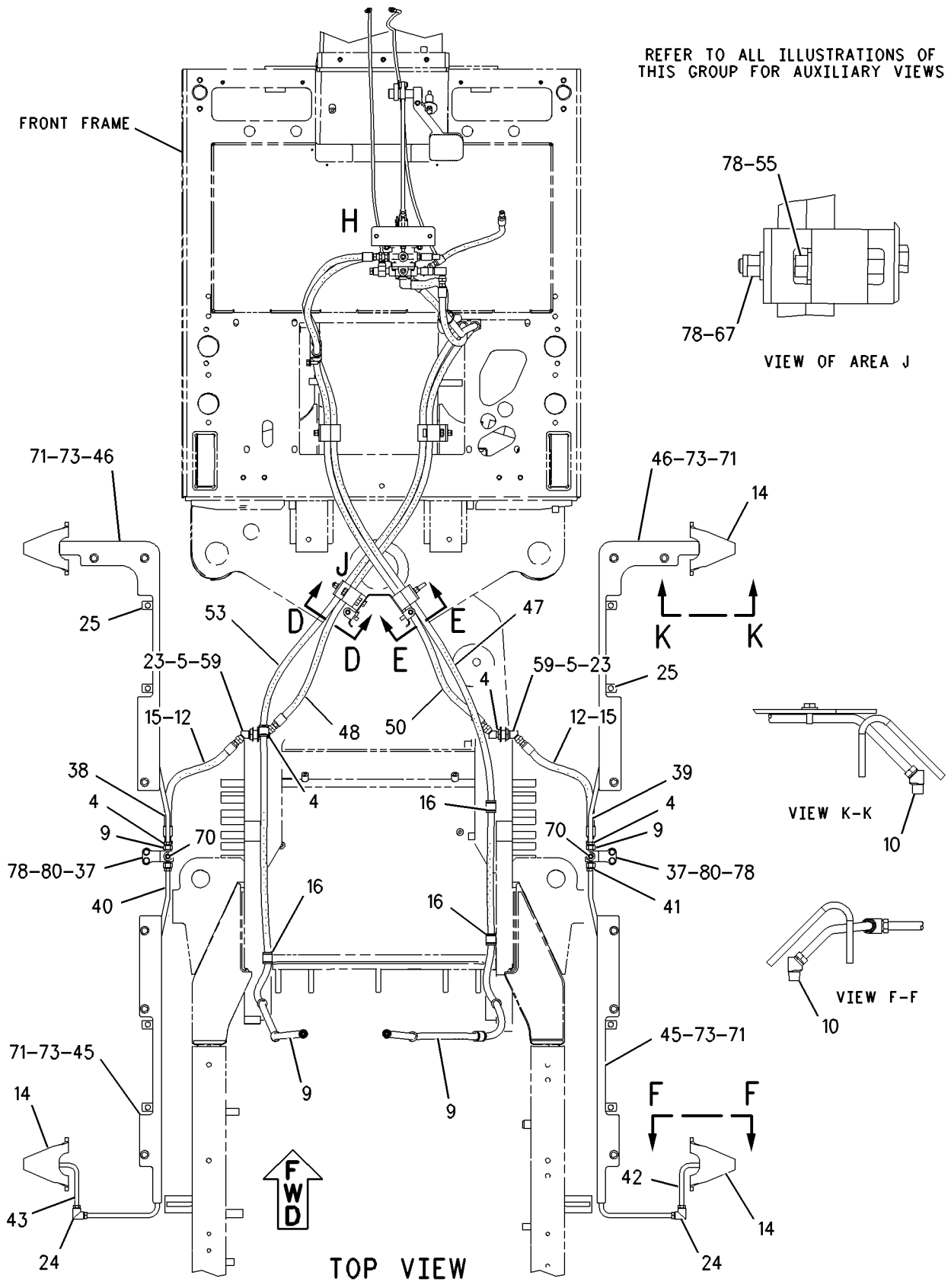

GRAPHIC #2 g00945214

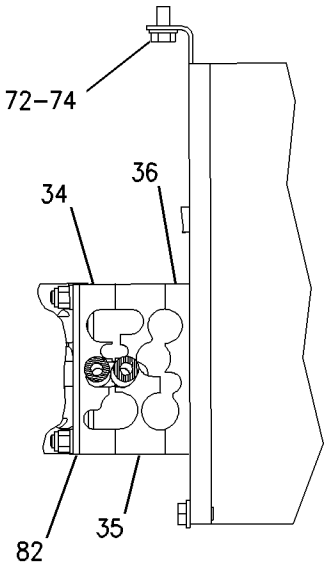

SECTION D-D

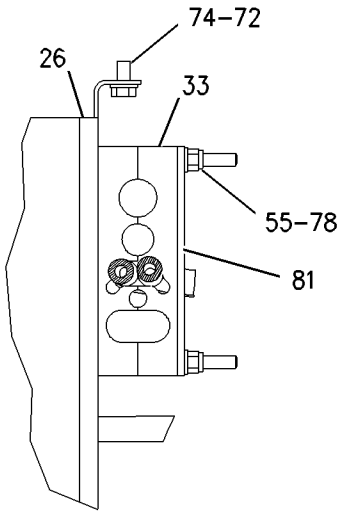

SECTION E-E

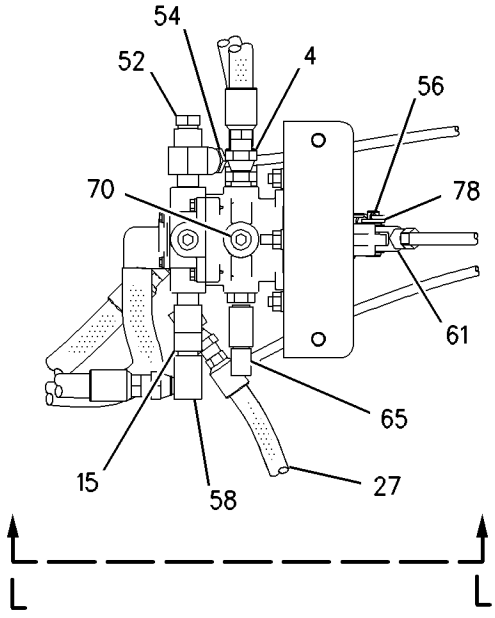

VIEW OF AREA H

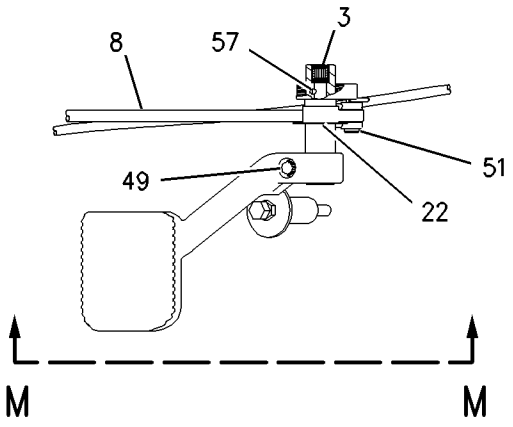

VIEW C-C

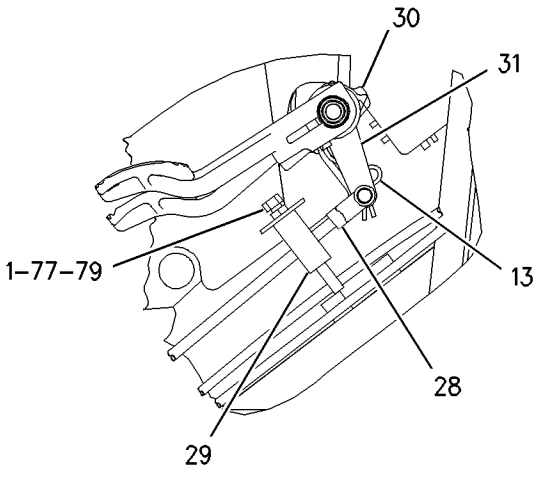

VIEW M-M

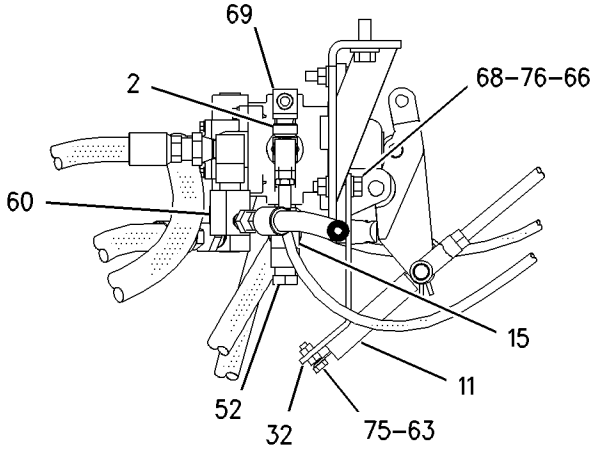

VIEW L-L

GRAPHIC #3

g00945218

209-9285 LINES GP-AIR TANK

S/N: ATS1-UP

PART OF 162-5607 GENERAL AR

SMCS-4272 **i01709860**

NOTE	REF NO	GRAPHIC REF	PART NUMBER	QTY	PART NAME 1 2 3 4 5 6 (PRODUCT LEVEL)	SEE PAGE
	1	1	**2H-3940**	1	ELBOW	
	2	1	**8W-1614**	2	CLIP	
	3	1	**8W-8528**	4	SLEEVE	
I	4	1	**8X-5395**	1	HOSE AS	
	5	1	**208-0817**	1	HOSE AS	
	6	1	**3V-0409**	1	SPACER (.423X.675X1.25 IN THK)	
	7	1	**4D-2560**	1	CONNECTOR-PIPE	
	8	1	**8L-5008**	1	ELBOW-PIPE	
	9	1	**8T-4121**	1	WASHER-HARD (11X21X2.5MM THK)	
M	10	1	**8T-4185**	1	BOLT (M10X1.5X50MM)	

I-SEE HOSE FABRICATION GUIDE
M-METRIC PART

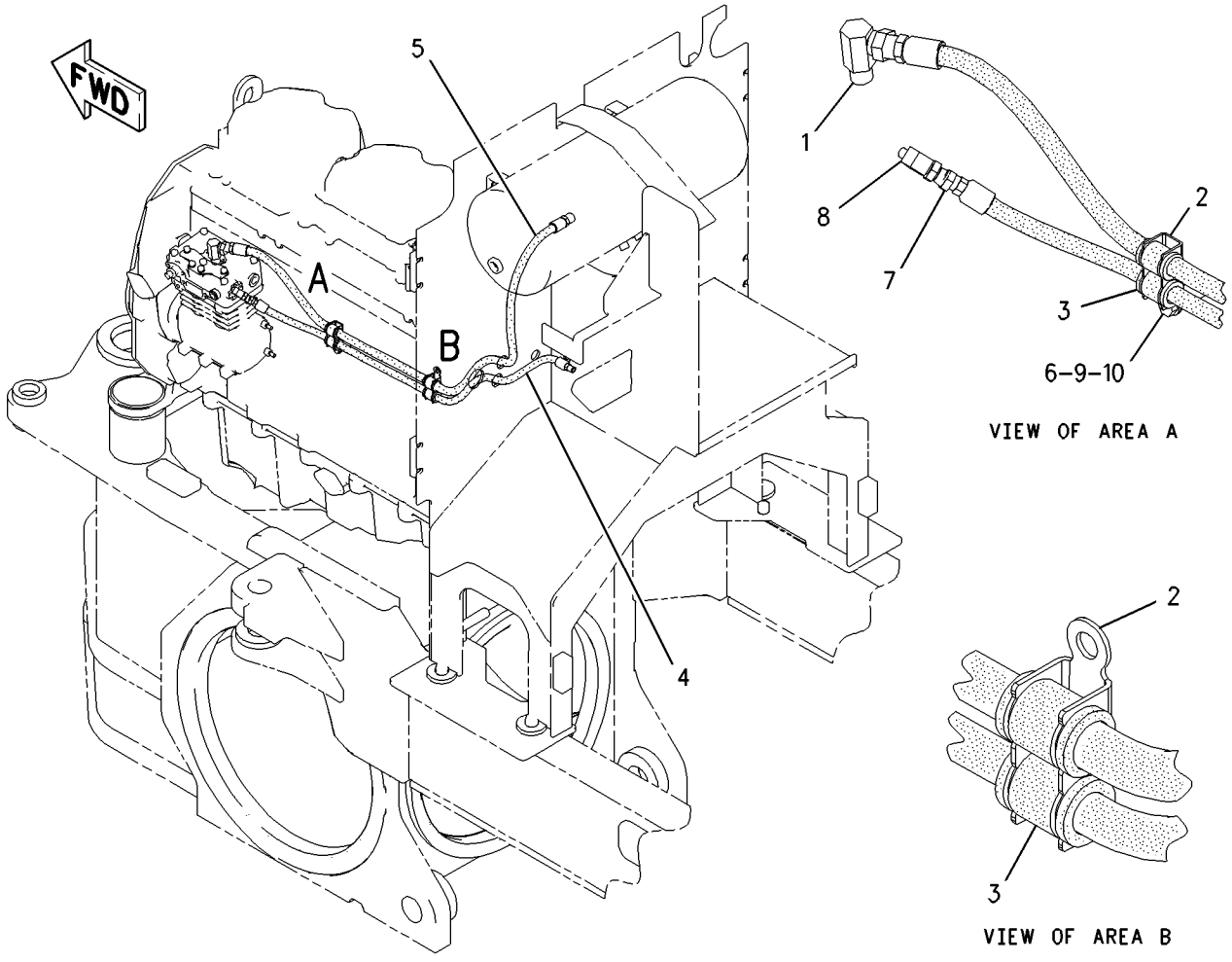

GRAPHIC #1 g00931186

BRAKING SYSTEM

207-0625 TANK GP-AIR

S/N: ATS1-UP

PART OF 204-7938 SUPPORT AR-REAR CHASSIS

SMCS-4272 **i01711877**

NOTE	REF NO	GRAPHIC REF	PART NUMBER	QTY	PART NAME 1 2 3 4 5 6 (PRODUCT LEVEL)	SEE PAGE
	1	1	**1P-4278**	1	CLAMP-HOSE	
	2	1	**1P-9328**	1	FITTING	
	3	1	**2G-1034**	1	VALVE-AIR RELIEF (TANK)	
	4	1	**2H-3940**	1	ELBOW	
	5	1	**3D-8913**	2	ELBOW	
I	6	1	**4S-7560**	1	HOSE AS	
	7	1	**5F-5434**	1	VALVE AS-RELIEF (GOVERNOR)	
	8	1	**090-9019**	2	PLUG-PIPE	
	9	1	**139-6122**	2	BOSS	
I	10	1	**160-6543**	1	HOSE AS	
	11	1	**177-0279**	1	HOSE AS	
	12	1	**205-7187**	1	GOVERNOR AS	
	13	1	**208-0517**	1	TANK AS-AIR	
		1	**208-6678**	1	VALVE-CHECK	
	14	1	**208-0520**	1	VALVE-DRAIN (AIR TANK)	
	15	1	**191-2314**	1	HOSE AS	
	16	1	**1M-4543**	2	GROMMET	
	17	1	**3D-5279**	1	GROMMET	
	18	1	**3D-7587**	1	ELBOW	
	19	1	**4D-7735**	1	CLIP	
	20	1	**4S-7606**	3	ELBOW	
	21	1	**5H-4778**	2	ELBOW	
	22	1	**5P-9299**	2	CLIP	
	23	1	**7J-8611**	3	ELBOW	
	24	1	**8T-4121**	9	WASHER-HARD (11X21X2.5MM THK)	
M	25	1	**8T-4137**	7	BOLT (M10X1.5X20MM)	
M	26	1	**8T-4185**	2	BOLT (M10X1.5X50MM)	
M	27	1	**8T-6974**	2	BOLT (M6X1X80MM)	
	28	1	**9M-8406**	2	CLIP	
	29	1	**9X-8256**	2	WASHER (6.6X12X2MM THK)	
E	30	1	**5P-1465**		HOSE (154CM)	

E-ORDER BY THE CENTIMETER
I-SEE HOSE FABRICATION GUIDE
M-METRIC PART

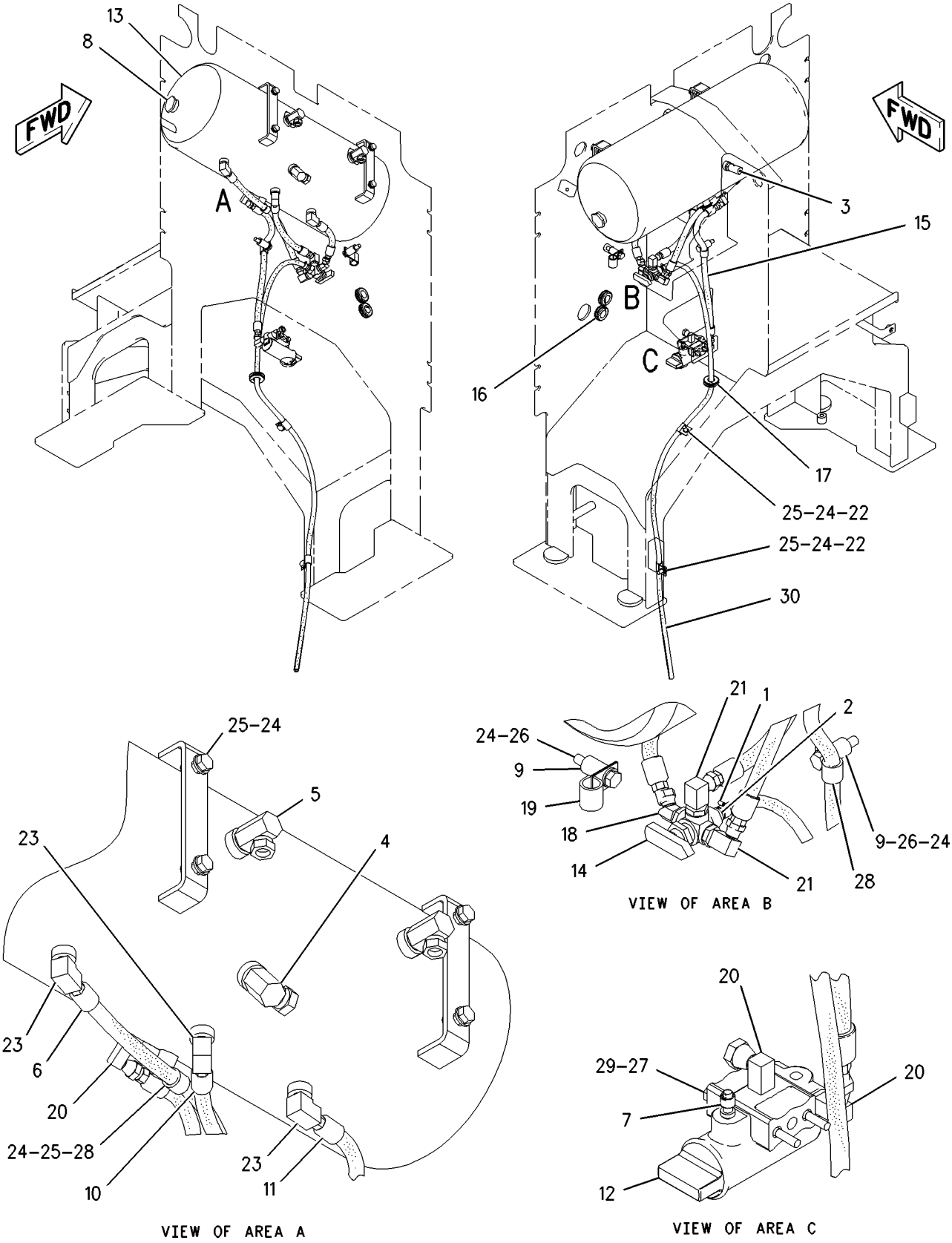

GRAPHIC #1 g00939742

5D-4382 VALVE GP-AIR CONTROL–PARKING BRAKE

S/N: ATS1-UP

PART OF 188-7062 CONTROL GP-PARKING BRAKE

SMCS-4280, 4282 **i01782479**

NOTE	REF NO	GRAPHIC REF	PART NUMBER	QTY	PART NAME 1 2 3 4 5 6 (PRODUCT LEVEL)	SEE PAGE
	1	1	**5D-7778**	1	BOOT	
	2	1	**1H-1023**	1	SEAL-O-RING	
	3	1	**6H-9691**	1	SEAL-O-RING	
	4	1	**4D-1138**	1	VALVE-INLET	
	5	1	**4J-3957**	1	SPRING	
	6	1	**4J-8527**	1	STEM	
	7	1	**4J-8524**	1	BODY	
	8	1	**4D-1135**	1	SEAT-SPRING	

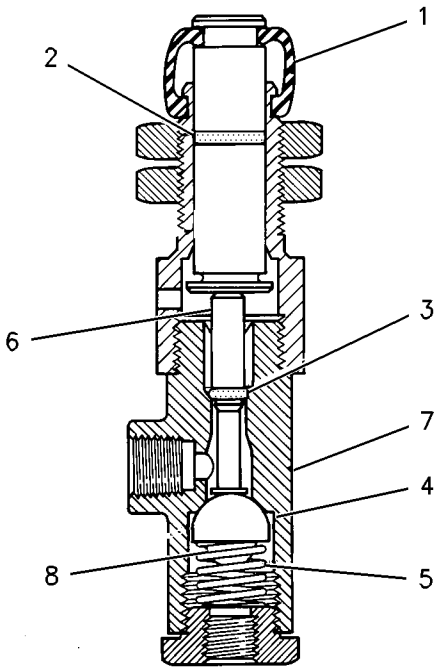

GRAPHIC #1 g00911676

8X-2650 VALVE GP-AIR CONTROL–SERVICE BRAKE

S/N: ATS1-UP

PART OF 171-2866 CONTROL GP-SERVICE BRAKE

SMCS-4280, 4282 **i01299133**

NOTE	REF NO	GRAPHIC REF	PART NUMBER	QTY	PART NAME 1 2 3 4 5 6 (PRODUCT LEVEL)	SEE PAGE
	1	1	**8X-2646**	1	LEVER AS	
	2	1	**9D-8121**	1	ROLLER	
	3	1	**3B-4607**	1	COTTER	
		1	**7B-9323**	1	PIN	
	4	1	**5D-3636**	1	BOOT	
	5	1	**2R-0719**	1	PLUNGER	
	6	1	**125-5321**	3	BOLT	
	7	1	**2R-0694**	1	PLATE-BRAKE VALVE	
	8	1	**2R-0724**	1	BUTTON-STOP	
	9	1	**2D-6006**	1	PIN	
	10	1	**3B-4610**	1	COTTER	
	11	1	**8W-5651**	1	VALVE GP-CONTROL	
		1	**5D-0768**	1	SPRING	
					AVAILABLE REPAIR KIT(S):	
			2G-6285	1	KIT-AIR CONTROL VALVE	
					(INCLUDES SPRINGS, INLET & EXHAUST VALVES, O-RINGS, BOOT,SCREW, LOCKNUT & FILTER)	

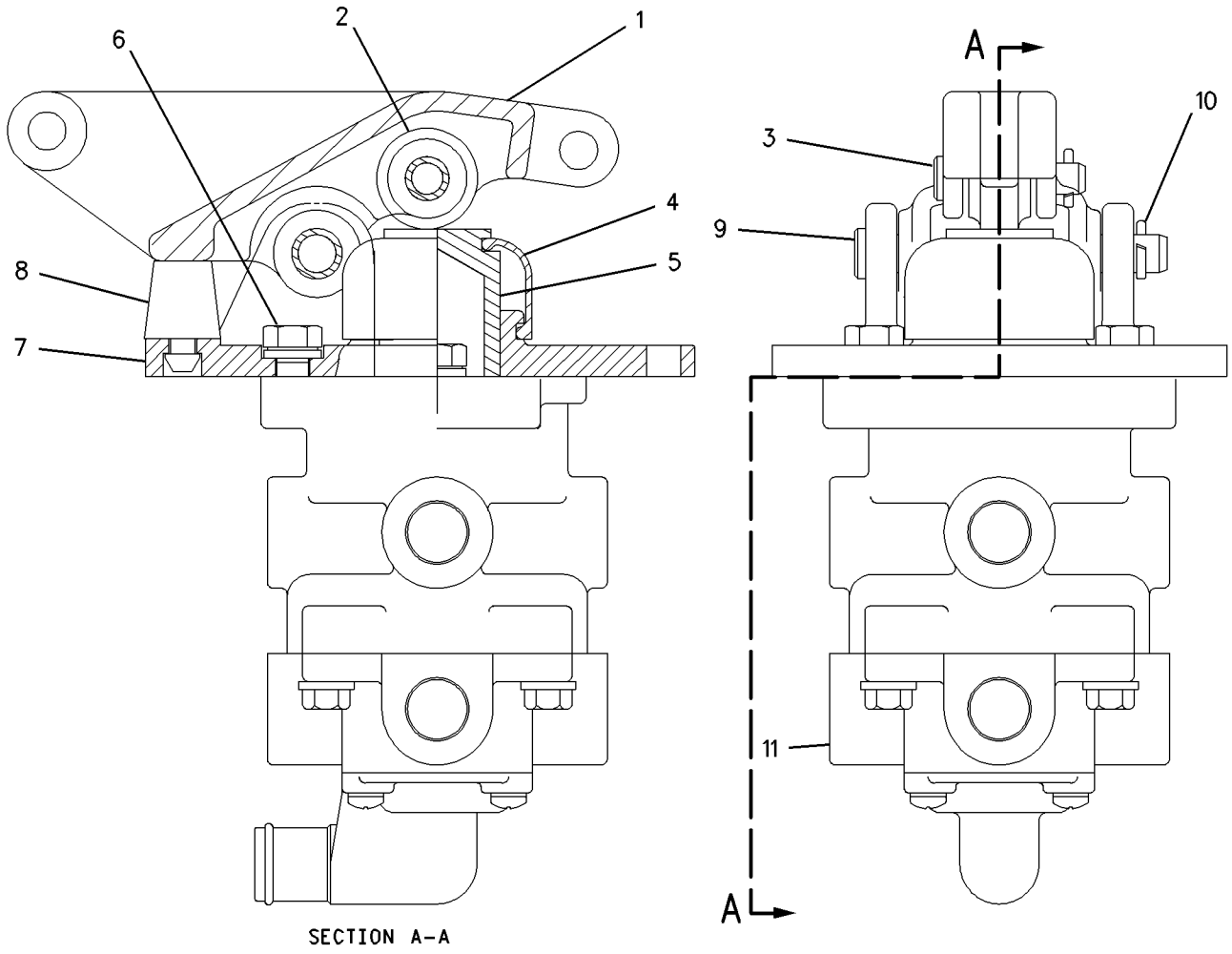

GRAPHIC #1 g00688575

HYDRAULIC SYSTEM

166-3367 ACCUMULATOR & MTG GP-HYDRAULIC

S/N: ATS1-UP

PART OF 162-5607 GENERAL AR

SMCS-5077 **i01653144**

NOTE	REF NO	GRAPHIC REF	PART NUMBER	QTY	PART NAME 1 2 3 4 5 6 (PRODUCT LEVEL)	SEE PAGE
	1	1	**4N-5091**	2	SPACER (.53X1X3.375 IN THK)	
	2	1	**9B-0347**	3	SPACER (.531X1.25X.625 IN THK)	
Y	3	1	*160-9413*	2	ACCUMULATOR GP-BLADE CUSHION	399
	4	1	**162-7449**	2	CLAMP	
	5	1	**183-4008**	1	PLATE AS	
	6	1	**5P-1076**	3	WASHER-HARD (13.5X30X4MM THK)	
	7	1	**7X-0333**	2	BOLT (1/2-13X4.75 IN)	
	8	1	**8T-4223**	2	WASHER-HARD (13.5X25.5X3MM THK)	
	9	1	**8T-4835**	3	BOLT (1/2-13X2 IN)	

Y-SEPARATE ILLUSTRATION

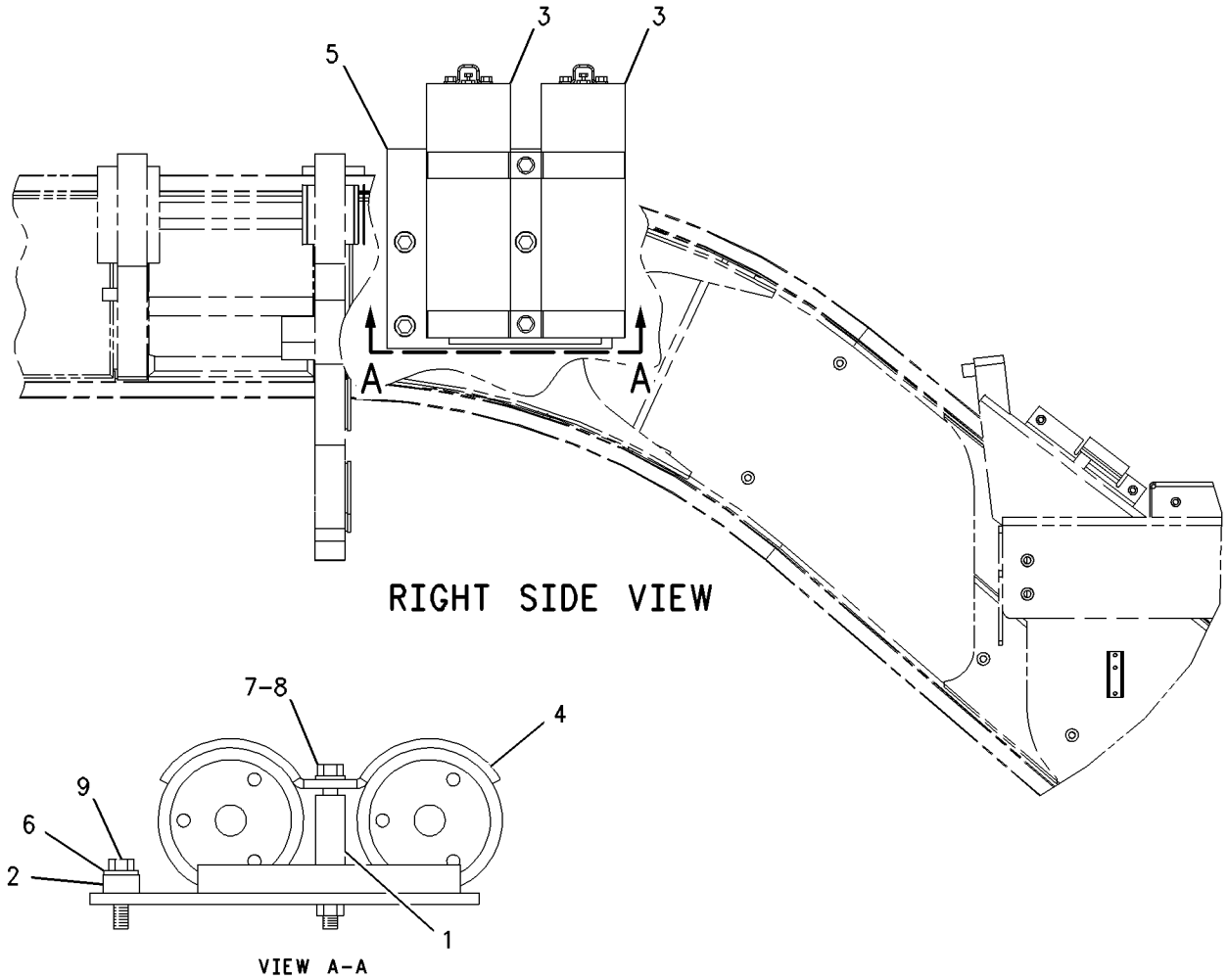

GRAPHIC #1 g00858693

160-9413 ACCUMULATOR GP-BLADE CUSHION

S/N: ATS1-UP

PART OF 166-3367 ACCUMULATOR & MTG GP-HYDRAULIC

FIELD REPLACEMENT ORDER 179-9399 ACCUMULATOR GP

SMCS-5077 **i01674511**

NOTE	REF NO	GRAPHIC REF	PART NUMBER	QTY	PART NAME 1 2 3 4 5 6 (PRODUCT LEVEL)	SEE PAGE
	1	1	**135-7123**	1	PISTON	
	2	1	**170-0493**	1	KIT-SEAL (INCLUDES SEALS)	
	3	1	**188-9390**	1	VALVE AS (ACCUMULATOR)	
	4	1	**111-9110**	1	PROTECTOR-GAS VALVE	
	5	1	**1J-9671**	1	SEAL-O-RING	
	6	1	**5M-3062**	2	BOLT (3/8-16X0.75 IN)	
	7	1	**170-0503**	1	NAMEPLATE	

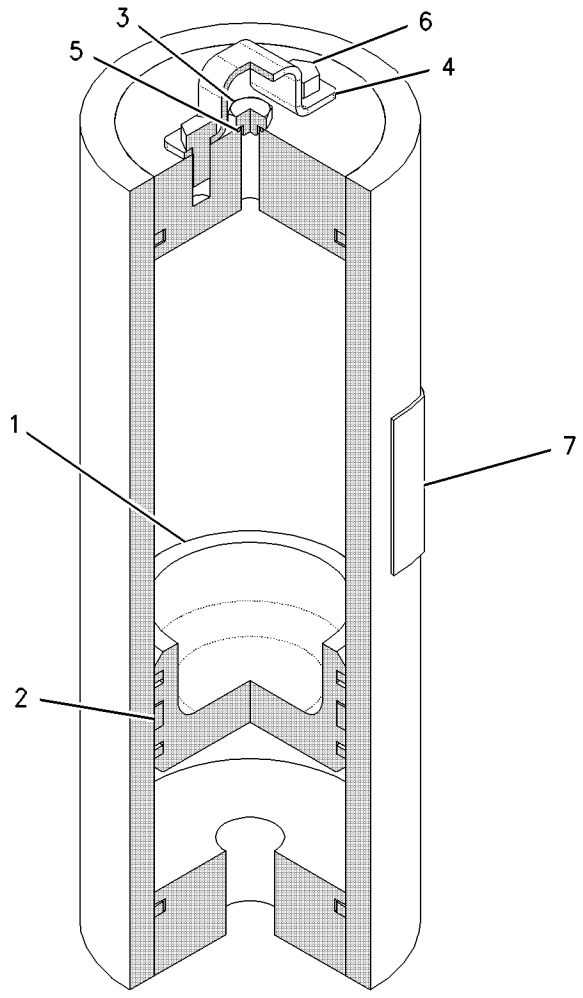

GRAPHIC #1 g00858287

HYDRAULIC SYSTEM

221-2800 ACCUMULATOR GP-HYDRAULIC–EU

S/N: ATS1-UP

PART OF 211-1771, 211-1772 CONVERSION AR-CERTIFICATION

AN ATTACHMENT

SMCS-5077 **i01767250**

NOTE	REF NO	GRAPHIC REF	PART NUMBER	QTY	PART NAME 1 2 3 4 5 6 (PRODUCT LEVEL)	SEE PAGE
	1	1	**4N-5091**	2	SPACER (.53X1X3.375 IN THK)	
	2	1	**9B-0347**	3	SPACER (.531X1.25X.625 IN THK)	
	3	1	**162-7449**	2	CLAMP	
	4	1	**183-4008**	1	PLATE AS	
	5	1	**219-8064**	2	ACCUMULATOR GP	
					(EACH INCLUDES)	
		1	**222-2367**	1	VALVE GP-ACCUMULATOR CHARGING	
		1	**190-3850**	1	CORE	
		1	**170-0493**	1	KIT-SEAL	
					(INCLUDES SEAL-O-RINGS,WASHERS, & SEAL-PISTON)	
	6	1	**5P-1076**	3	WASHER-HARD (13.5X30X4MM THK)	
	7	1	**7X-0333**	2	BOLT (1/2-13X4.75 IN)	
	8	1	**8T-4223**	2	WASHER-HARD (13.5X25.5X3MM THK)	
	9	1	**8T-4835**	3	BOLT (1/2-13X2 IN)	

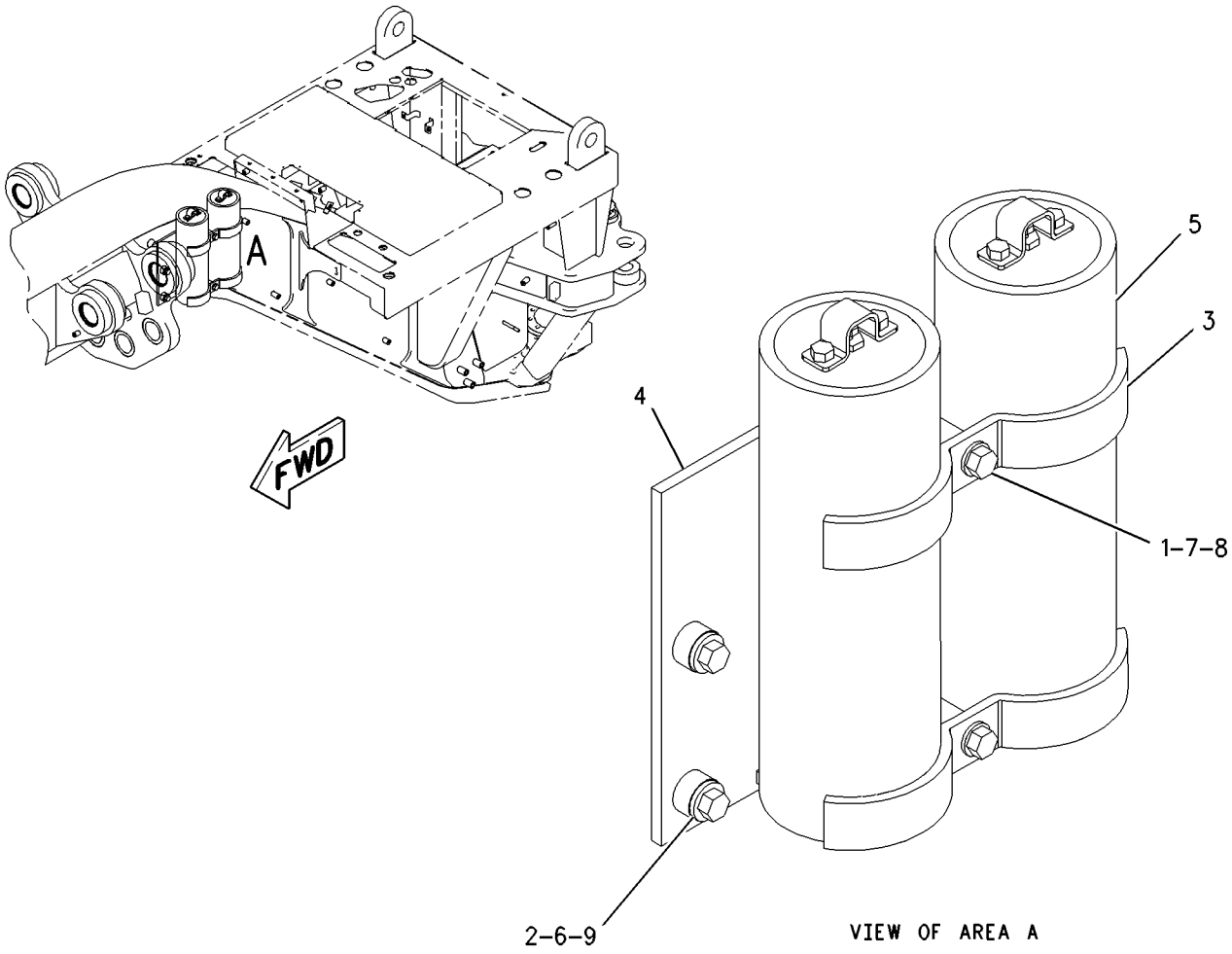

GRAPHIC #1 g00940765

HYDRAULIC SYSTEM

166-3405 CONTROL AR-HYDRAULIC

S/N: ATS1-UP
AN ATTACHMENT

SMCS-5050 **i01855105**

NOTE	PART NUMBER	QTY	PART NAME 1 2 3 4 5 6 (PRODUCT LEVEL)	SEE PAGE
Y	**166-3406**	1	LINES GP-RIPPER	458
Y	**7I-4872**	1	VALVE & LINKAGE GP (BANK 4-RH, BANK 6-LH)	492
Y-SEPARATE ILLUSTRATION				

<END>

184-7305 CONTROL AR-HYDRAULIC—EU

S/N: ATS1-UP
AN ATTACHMENT

SMCS-5050 **i01802499**

NOTE	PART NUMBER	QTY	PART NAME 1 2 3 4 5 6 (PRODUCT LEVEL)	SEE PAGE
Y	*166-3308*	1	LINES GP-RIPPER	456
Y	*121-4099*	1	VALVE & LINKAGE GP (BANK 6-RH, BANK7-LH)	500
Y-SEPARATE ILLUSTRATION				

<END>

184-7307 CONTROL AR-HYDRAULIC

S/N: ATS1-UP
AN ATTACHMENT

SMCS-5050 **i01696566**

NOTE	PART NUMBER	QTY	PART NAME 1 2 3 4 5 6 (PRODUCT LEVEL)	SEE PAGE
Y	*166-3308*	1	LINES GP-RIPPER	456
Y	*121-4097*	1	VALVE & LINKAGE GP (BANK 5-LH,RH)	498
Y-SEPARATE ILLUSTRATION				

<END>

184-7308 CONTROL AR-HYDRAULIC

S/N: ATS1-UP
AN ATTACHMENT

SMCS-5050 **i01710540**

NOTE	PART NUMBER	QTY	PART NAME 1 2 3 4 5 6 (PRODUCT LEVEL)	SEE PAGE
Y	*166-3308*	1	LINES GP-RIPPER	456
Y	*121-4090*	1	VALVE & LINKAGE GP (BANK 4-RH,BANK 5-LH)	496
Y-SEPARATE ILLUSTRATION				

<END>

HYDRAULIC SYSTEM

194-4020 CONTROL AR-HYDRAULIC

S/N: ATS1-UP
AN ATTACHMENT

SMCS-5050 **i01802517**

NOTE	PART NUMBER	QTY	PART NAME 1 2 3 4 5 6 (PRODUCT LEVEL)	SEE PAGE
Y	*166-3308*	1	LINES GP-RIPPER	456
Y	*125-2235*	1	VALVE & LINKAGE GP (BANK 4-RH, BANK 7-LH)	508
Y-SEPARATE ILLUSTRATION				

<END>

194-7985 CONTROL AR-HYDRAULIC—EU

S/N: ATS1-UP
AN ATTACHMENT

SMCS-5050 **i01855113**

NOTE	PART NUMBER	QTY	PART NAME 1 2 3 4 5 6 (PRODUCT LEVEL)	SEE PAGE
Y	*166-3406*	1	LINES GP-RIPPER	458
Y	*124-4220*	1	VALVE & LINKAGE GP (BANK 4-RH, BANK 5-LH)	506
Y-SEPARATE ILLUSTRATION				

<END>

MEMORANDA

HYDRAULIC SYSTEM

173-7375 CONTROL GP-CENTERSHIFT LOCK

S/N: ATS1-UP

PART OF 162-5607 GENERAL AR

SMCS-5221 **i01645769**

NOTE	REF NO	GRAPHIC REF	PART NUMBER	QTY	PART NAME 1 2 3 4 5 6 (PRODUCT LEVEL)	SEE PAGE
	1	1	**1F-1651**	1	TEE-PIPE	
	2	1	**3S-2093**	2	STRAP-CABLE	
	3	1	**5K-2408**	2	FITTING	
	4	1	**5P-4478**	1	ADAPTER	
	5	1	**5T-8285**	1	JUNCTION BLOCK	
I	6	1	**6J-7929**	2	HOSE AS	
	7	1	**145-0457**	1	PLATE	
	8	1	**188-2461**	2	VALVE GP-SOLENOID (CENTERSHIFT)	
					(EACH INCLUDES)	
		1	**1S-9593**	2	STRAP-CABLE	
		1	**186-3735**	2	PIN-CONNECTOR	
		1	**102-8802**	1	KIT-RECEPTACLE (2 PIN) (CENTERSHIFT SOLENOID VALVES)	
	9	1	**2N-3479**	4	SCREW (10-24X0.5 IN)	
	10	1	**4B-2047**	4	NUT (10-24 THD)	
	11	1	**4B-4274**	8	WASHER (5.5X13X1.2MM THK)	
	12	1	**4H-6147**	1	CONNECTOR	
	13	1	**4L-6454**	1	BOLT (3/8-16X1 IN)	
	14	1	**4M-0061**	3	BOLT (5/16-18X0.750 IN)	
	15	1	**5H-4778**	5	ELBOW	
	16	1	**5K-8451**	5	CLIP	
	17	1	**5M-3062**	3	BOLT (3/8-16X0.75 IN)	
	18	1	**5P-4116**	3	WASHER-HARD (8.8X20.5X2MM THK)	
	19	1	**6V-8801**	1	NUT (3/8-16 THD)	
	20	1	**7J-8611**	1	ELBOW	
	21	1	**8T-4896**	4	WASHER-HARD (10.2X18.5X2.5MM THK)	

I-SEE HOSE FABRICATION GUIDE

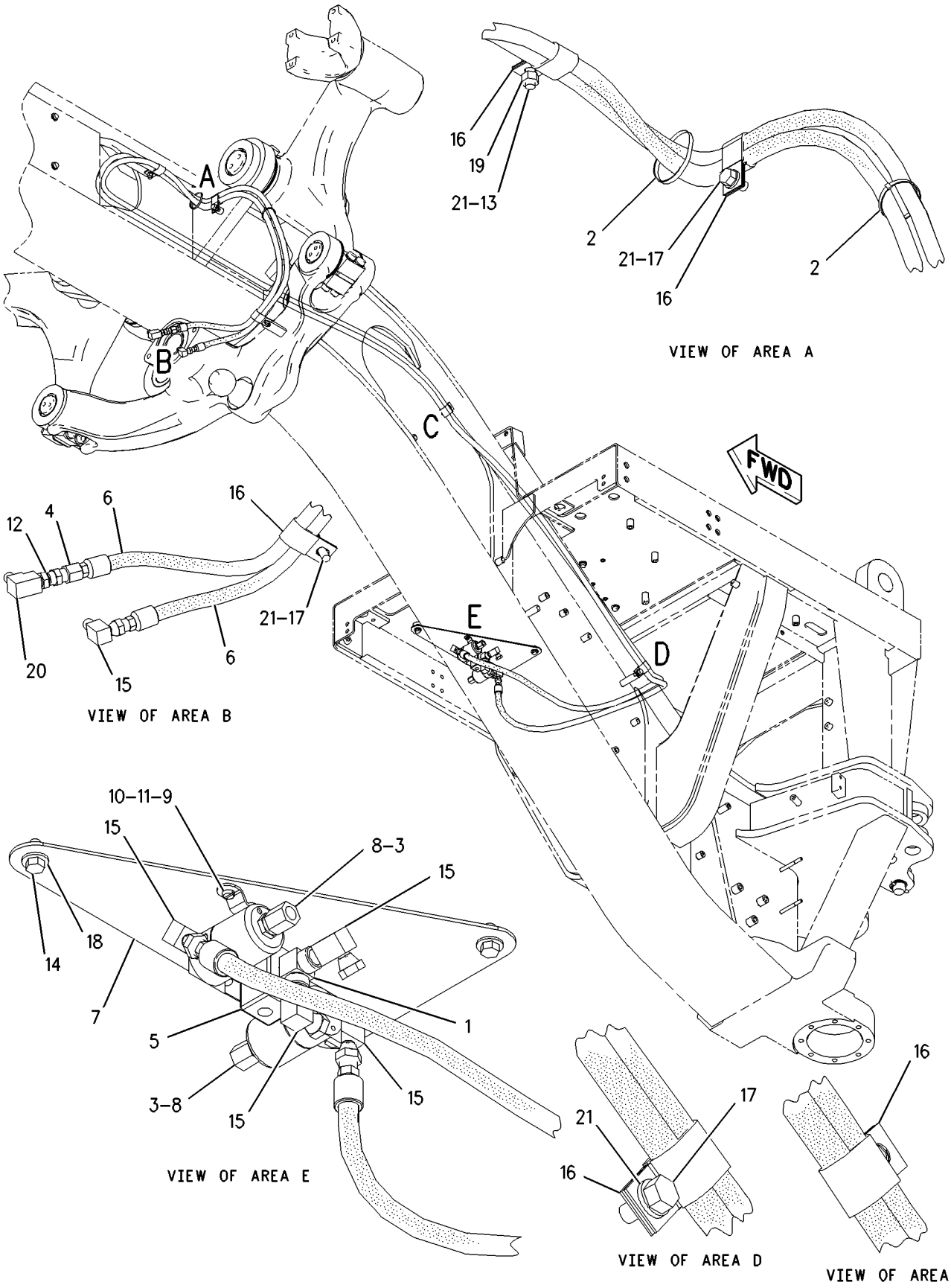

GRAPHIC #1

g00851885

HYDRAULIC SYSTEM

7I-4720 CONTROL GP-STEERING

S/N: ATS1-UP

PART OF 162-5607 GENERAL AR

SMCS-4309, 4310, 4343 **i00606956**

NOTE	REF NO	GRAPHIC REF	PART NUMBER	QTY	PART NAME 1 2 3 4 5 6 (PRODUCT LEVEL)	SEE PAGE
Y	1	1	**111-0491**	1	PUMP GP-METERING	478
	2	1	**092-3200**	1	STEERING WHEEL	
	3	1	**144-6695**	1	NUT	
	4	1	**6V-7692**	4	BOLT-12 POINT HEAD	

Y-SEPARATE ILLUSTRATION

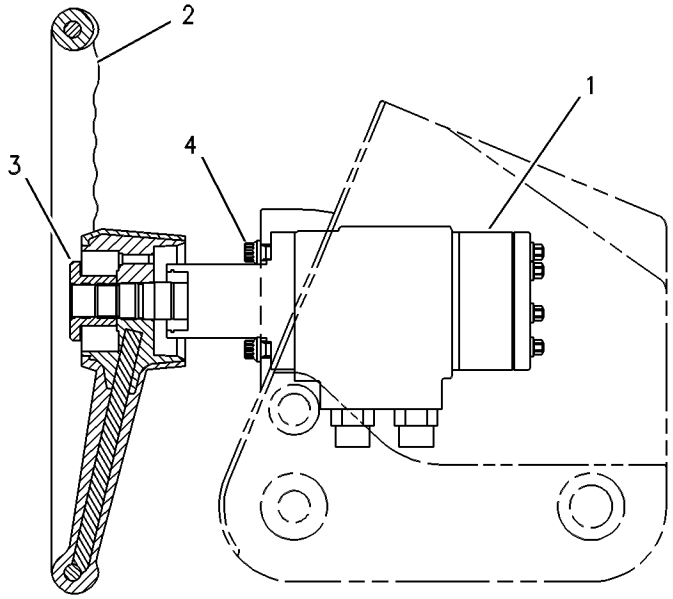

RIGHT SIDE VIEW

GRAPHIC #1 g00109033

8W-3258 CYLINDER & MTG GP-ARTICULATION

S/N: ATS1-UP

PART OF 162-5607 GENERAL AR

SMCS-5265 **i00130390**

NOTE	REF NO	GRAPHIC REF	PART NUMBER	QTY	PART NAME 1 2 3 4 5 6 (PRODUCT LEVEL)	SEE PAGE
B	1	1	**1K-7081**	14	WASHER	
	2	1	**8D-4675**	4	PIN-CYLINDER	
Y	3	1	**9T-3050**	2	CYLINDER GP-ARTICULATION	414
	4	1	**1D-4610**	2	BOLT (3/4-10X3.25IN)	
	5	1	**5P-8248**	4	WASHER-HARD (3.5MM THK)	
	6	1	**9M-2421**	4	WASHER	
	7	1	**9D-6584**	8	SEAL-LIP	
	8	1	**8D-8704**	4	BEARING	
	9	1	**1B-0964**	2	BOLT	

B-USE AS REQUIRED
Y-SEPARATE ILLUSTRATION

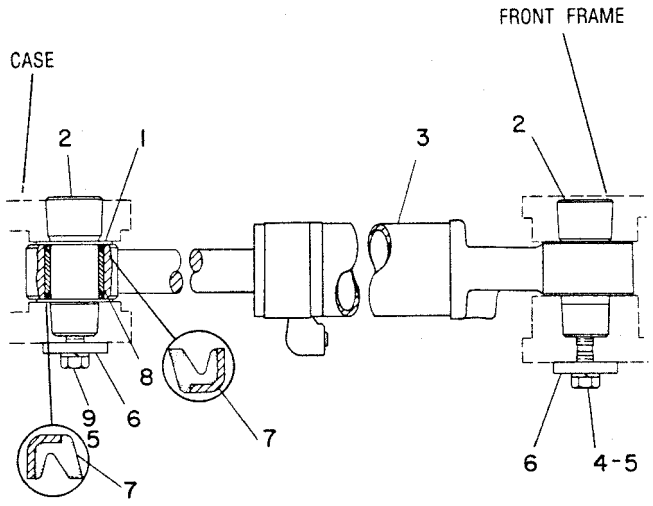

GRAPHIC #1 g00108287

HYDRAULIC SYSTEM

8W-3261 CYLINDER & MTG GP-BLADE LIFT

S/N: ATS1-UP

PART OF 162-5607 GENERAL AR

SMCS-5102 **i01031501**

NOTE	REF NO	GRAPHIC REF	PART NUMBER	QTY	PART NAME 1 2 3 4 5 6 (PRODUCT LEVEL)	SEE PAGE
	1	1	**1D-4615**	8	BOLT (3/4-10X5.5IN)	
		1	**5H-1504**	8	WASHER-HARD (5MM THK)	
	2	1	**8D-8889**	4	CAP AS	
					(EACH INCLUDES)	
	3	1	**8D-8888**	1	BEARING	
	4	1	**9D-6586**	1	SEAL-LIP	
	5	1	**8D-8024**	4	INSERT	
	6	1	**2G-9101**	2	CAP	
	7	1	**1D-4630**	4	BOLT (7/8-9X4IN)	
		1	**5P-8249**	4	WASHER (4.0MM THK)	
Y	8	1	**9T-3106**	2	CYLINDER GP-BLADE LIFT	416
	9	1	**3B-8485**	2	FITTING-GREASE (1/8-27 PTF) (45 DEGREE)	
	10	1	**2G-9106**	8	SHIM	

Y-SEPARATE ILLUSTRATION

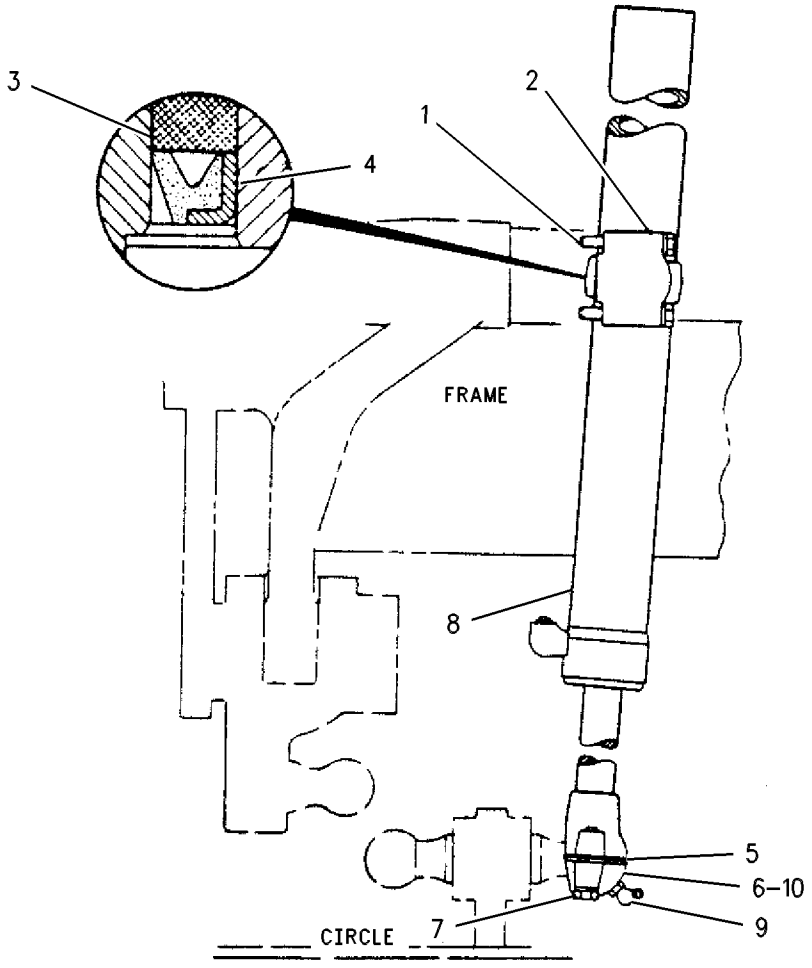

GRAPHIC #1 g00531424

8W-3255 CYLINDER & MTG GP-BLADE TIP

S/N: ATS1-UP

PART OF 162-5607 GENERAL AR

SMCS-5106 **i00128464**

NOTE	REF NO	GRAPHIC REF	PART NUMBER	QTY	PART NAME 1 2 3 4 5 6 (PRODUCT LEVEL)	SEE PAGE
	1	1	**5P-2228**	2	BOLT (1/2-13X1IN)	
		1	**8T-4223**	2	WASHER-HARD (3MM THK)	
CY	2	1	**9T-8944**	1	CYLINDER GP-BLADE TIP	418
	3	1	**8W-8513**	1	PIN AS	
		1	**8W-8511**	1	PLATE	
	4	1	**8W-8512**	1	PIN AS	
		1	**8W-8511**	1	PLATE	

C-CHANGE FROM PREVIOUS TYPE
Y-SEPARATE ILLUSTRATION

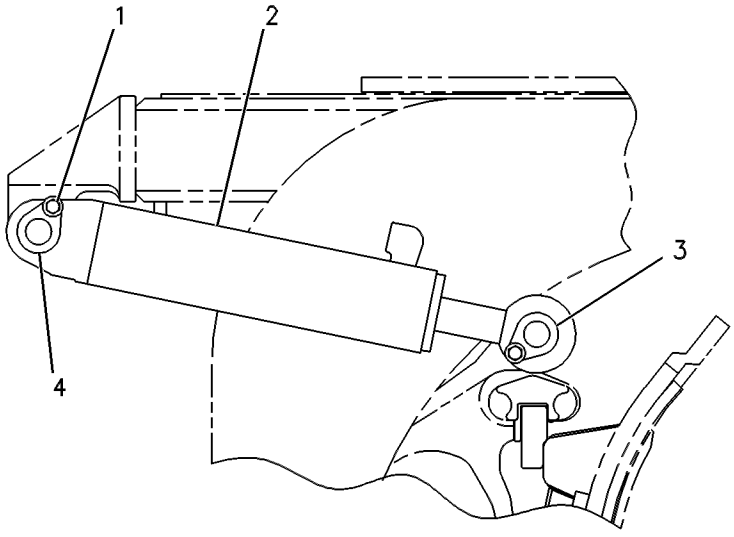

RIGHT SIDE VIEW

GRAPHIC #1 g00108929

HYDRAULIC SYSTEM

8W-3262 CYLINDER & MTG GP-CENTERSHIFT

S/N: ATS1-UP

PART OF 162-5607 GENERAL AR

SMCS-5223 **i00130155**

NOTE	REF NO	GRAPHIC REF	PART NUMBER	QTY	PART NAME 1 2 3 4 5 6 (PRODUCT LEVEL)	SEE PAGE
	1	1	**1D-4630**	4	BOLT (7/8-9X4IN)	
	2	1	**5P-8249**	4	WASHER (4.0MM THK)	
Y	3	1	**9T-3312**	1	CYLINDER GP-CENTERSHIFT	420
	4	1	**2G-9101**	2	CAP	
	5	1	**8D-8024**	4	INSERT	
	6	1	**3B-8485**	2	FITTING-HYDRAULIC	
	7	1	**2G-9106**	8	SHIM	

Y-SEPARATE ILLUSTRATION

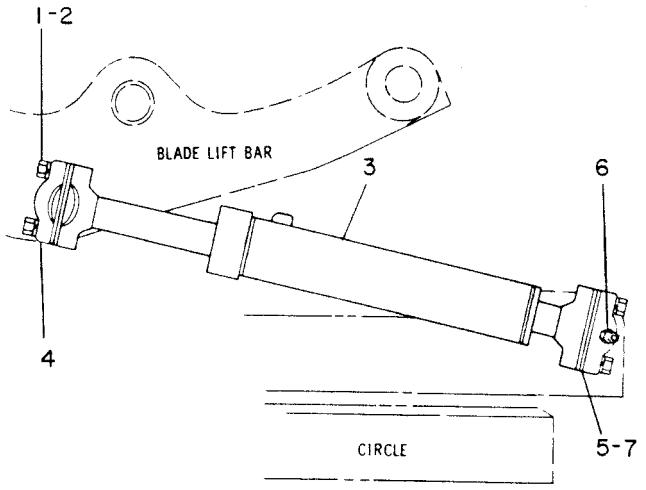

GRAPHIC #1 g00108285

8W-3257 CYLINDER & MTG GP-SIDESHIFT

S/N: ATS1-UP

PART OF 162-5607 GENERAL AR

SMCS-5229 **i00128470**

NOTE	REF NO	GRAPHIC REF	PART NUMBER	QTY	PART NAME 1 2 3 4 5 6 (PRODUCT LEVEL)	SEE PAGE
	1	1	**1H-4478**	1	PIN	
Y	2	1	**9T-3206**	1	CYLINDER GP-SIDESHIFT	424
	3	1	**2B-0947**	1	BOLT (1/2-13X2.25IN)	
	4	1	**1K-6872**	1	LOCKNUT (1/2-13 THD)	
	5	1	**5T-8417**	1	PIN	
	6	1	**3B-4647**	1	PIN-COTTER	
	7	1	**1D-4626**	4	BOLT (7/8-9X2.75IN)	
		1	**5P-8249**	4	WASHER (4.0MM THK)	
	8	1	**6G-4832**	1	BRACKET	

Y-SEPARATE ILLUSTRATION

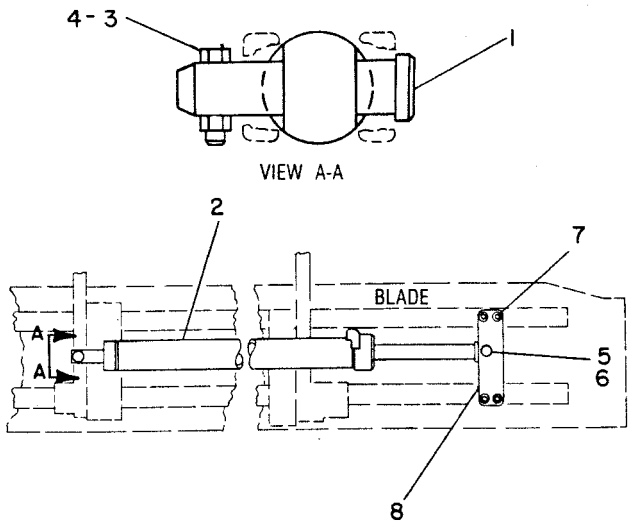

GRAPHIC #1 g00108284

HYDRAULIC SYSTEM

8W-3260 CYLINDER & MTG GP-STEERING

S/N: ATS1-UP

PART OF 162-5607 GENERAL AR

SMCS-4303 **i01855127**

NOTE	REF NO	GRAPHIC REF	PART NUMBER	QTY	PART NAME 1 2 3 4 5 6 (PRODUCT LEVEL)	SEE PAGE
	1	1	**6F-7058**	2	NUT-HEX (1 1/4-12 THD)	
	2	1	**7D-8857**	4	SPACER (1.515X1.75X.55 IN THK)	
	3	1	**7D-8859**	2	PIN AS	
	4	1	**141-6136**	2	TIE ROD GP	
					(EACH INCLUDES)	
		1	**199-7819**	1	SEAL-BOOT	
	4A	1	**1D-0906**	1	NUT-SLOTTED	
Y	5	1	**165-2506**	1	CYLINDER GP-STEERING (RH)	426
Y	6	1	**165-2507**	1	CYLINDER GP-STEERING (LH)	428
	7	1	**3B-4629**	2	PIN-COTTER	
	8	1	**8D-8931**	2	WASHER (1.56X2.25X.03 IN THK)	
	9	1	**8T-4896**	2	WASHER-HARD (10.2X18.5X2.5MM THK)	
	10	1	**9B-7237**	2	BOLT (3/8-16X1.25 IN)	

Y-SEPARATE ILLUSTRATION

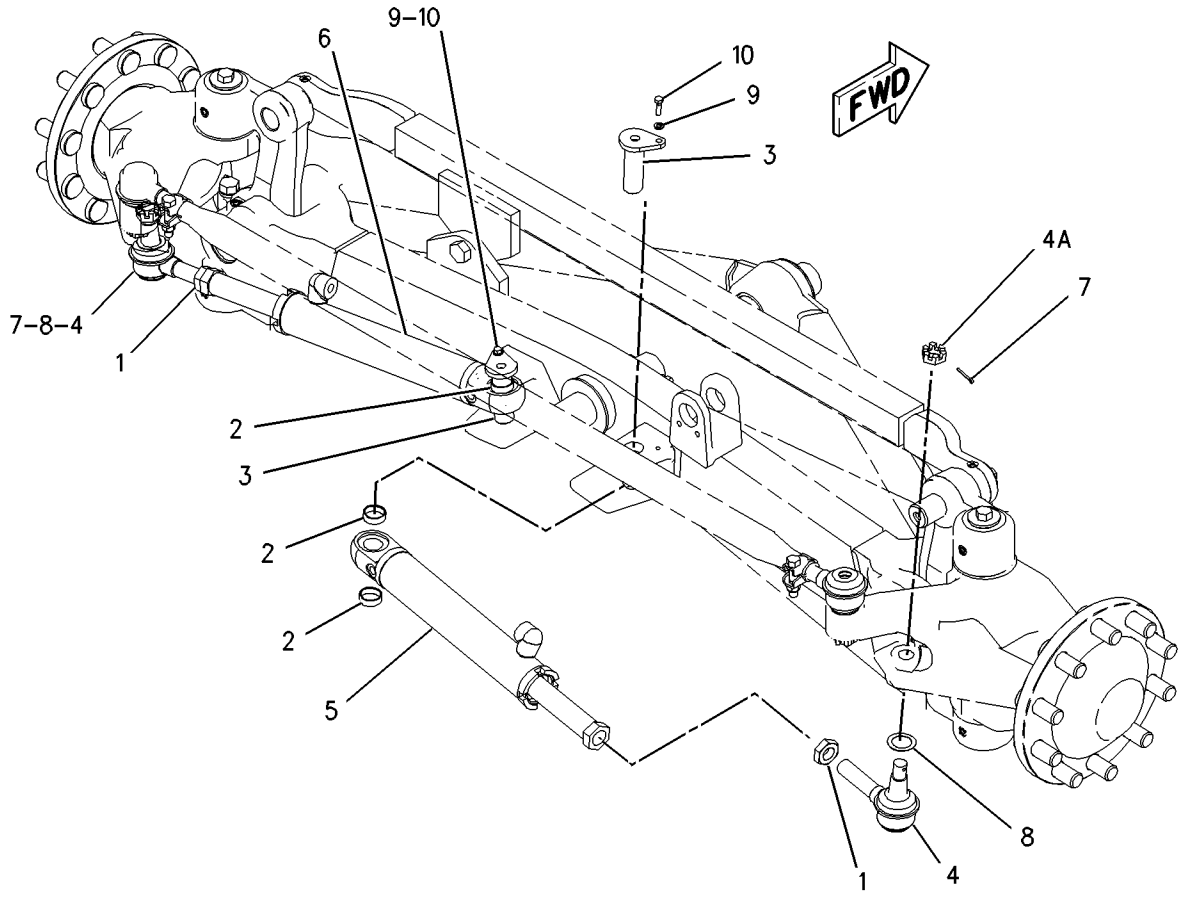

GRAPHIC #1 g00798486

HYDRAULIC SYSTEM

8W-3259 CYLINDER & MTG GP-WHEEL LEAN

S/N: ATS1-UP

PART OF 162-5607 GENERAL AR

SMCS-5211 **i01855121**

NOTE	REF NO	GRAPHIC REF	PART NUMBER	QTY	PART NAME 1 2 3 4 5 6 (PRODUCT LEVEL)	SEE PAGE
Y	1	1	**121-9244**	1	CYLINDER GP-WHEEL LEAN	430
	2	1	**2G-5667**	1	RETAINER	
	3	1	**5P-8843**	4	SEAL-LIP	
	4	1	**3B-8489**	2	FITTING-GREASE (WHEEL LEAN CYLINDERS)	
	5	1	**0S-1592**	1	BOLT (5/8-11X1.25 IN)	
		1	**4D-3704**	1	WASHER-HARD (17X30X5MM THK)	
	6	1	**2G-8611**	1	PIN	
	7	1	**6G-7187**	1	LOCK	
	8	1	**6H-1717**	1	BOLT (1/2-13X1.125 IN)	
		1	**5P-8245**	2	WASHER-HARD (13.5X25.5X3MM THK)	

Y-SEPARATE ILLUSTRATION

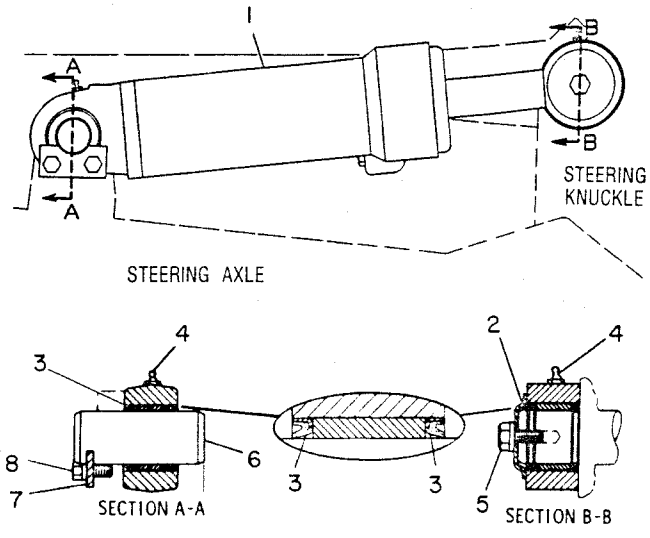

GRAPHIC #1 g00108289

HYDRAULIC SYSTEM

9T-3050 CYLINDER GP-ARTICULATION

S/N: ATS1-UP

101.6 MM BORE X 361.0 MM STROKE

PART OF 8W-3258 CYLINDER & MTG GP-ARTICULATION

SMCS-5265 **i01855237**

NOTE	REF NO	GRAPHIC REF	PART NUMBER	QTY	PART NAME 1 2 3 4 5 6 (PRODUCT LEVEL)	SEE PAGE
CM	1	1	**173-9683**	1	BOLT-HEX HEAD (M30X3.5X90MM)	
	2	1	**3S-7023**	1	WASHER (34X57X6MM THK)	
J	3	1	**5J-5402**	1	SEAL AS	
J	4	1	**6J-2797**	1	RING-WEAR	
	5	1	**9T-3051**	1	PISTON	
J	6	1	**8T-0785**	1	RING-WEAR	
CJ	7	1	**167-2201**	1	SEAL AS-BUFFER	
CJ	8	1	**175-7900**	1	SEAL-O-RING	
J	9	1	**2K-6830**	1	RING-BACKUP	
C	10	1	**172-9981**	1	HEAD	
	11	1	**6E-1050**	1	ROD AS	
CJ	12	1	**167-2463**	1	SEAL-WIPER	
CJ	13	1	**167-2312**	1	SEAL-U-CUP	
	14	1	**9T-3055**	1	CYLINDER AS	
					AVAILABLE REPAIR KIT(S):	
J			**186-4392**	1	KIT-SEAL	

C-CHANGE FROM PREVIOUS TYPE
J-KIT MARKED J INCLUDES PARTS MARKED J
M-METRIC PART

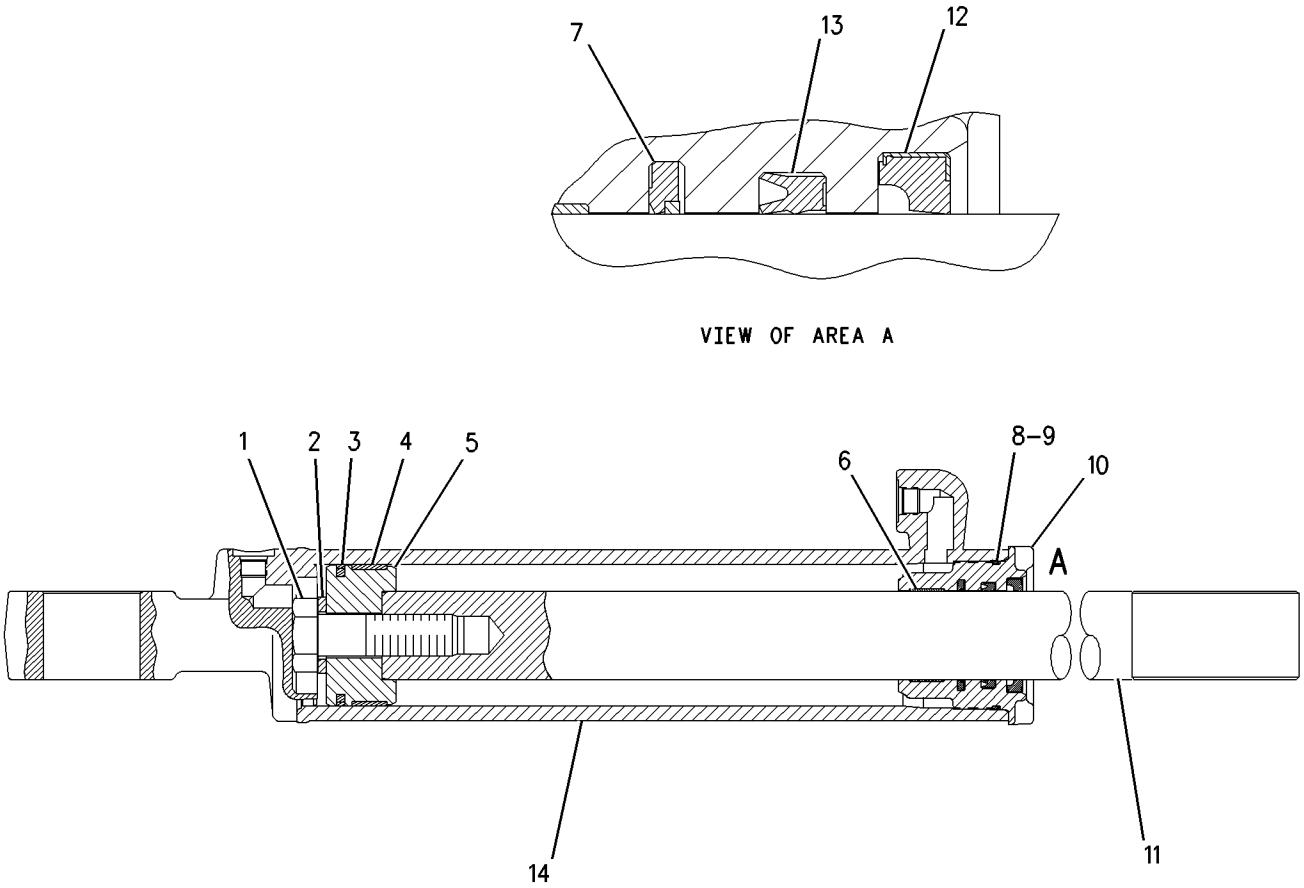

GRAPHIC #1 g00765052

9T-3106 CYLINDER GP-BLADE LIFT

S/N: ATS1-UP

101.6 MM BORE X 1117.6 MM STROKE

PART OF 8W-3261 CYLINDER & MTG GP-BLADE LIFT

SMCS-5102 **i01855240**

NOTE	REF NO	GRAPHIC REF	PART NUMBER	QTY	PART NAME 1 2 3 4 5 6 (PRODUCT LEVEL)	SEE PAGE
CM	1	1	**8C-3411**	1	BOLT (M30X3.5X90MM)	
C	2	1	**3S-7023**	1	WASHER (34X57X6MM THK)	
	3	1	**9T-3051**	1	PISTON	
	4	1	**9T-3109**	1	CYLINDER AS	
		1	**8J-5654**	2	BEARING-SLEEVE	
CJ	5	1	**175-7900**	1	SEAL-O-RING	
J	6	1	**2K-6830**	1	RING-BACKUP	
C	7	1	**6E-1043**	1	ROD AS	
	8	1	**121-3397**	1	HEAD	
CJ	9	1	**167-2201**	1	SEAL AS-BUFFER	
					(INCLUDES BUFFER SEAL & BACKUP RING)	
J	10	1	**167-2312**	1	SEAL-U-CUP	
CJ	11	1	**167-2463**	1	SEAL-WIPER	
J	12	1	**8T-0785**	1	RING-WEAR	
J	13	1	**6J-2797**	1	RING-WEAR	
J	14	1	**5J-5402**	1	SEAL AS	
					(INCLUDES EXPANDER RING & SEAL)	
					AVAILABLE REPAIR KIT(S):	
J			**186-4392**	1	KIT-SEAL	

C-CHANGE FROM PREVIOUS TYPE
J-KIT MARKED J INCLUDES PARTS MARKED J
M-METRIC PART

9T-3106 CYLINDER GP-BLADE LIFT *(contd.)* i01855240

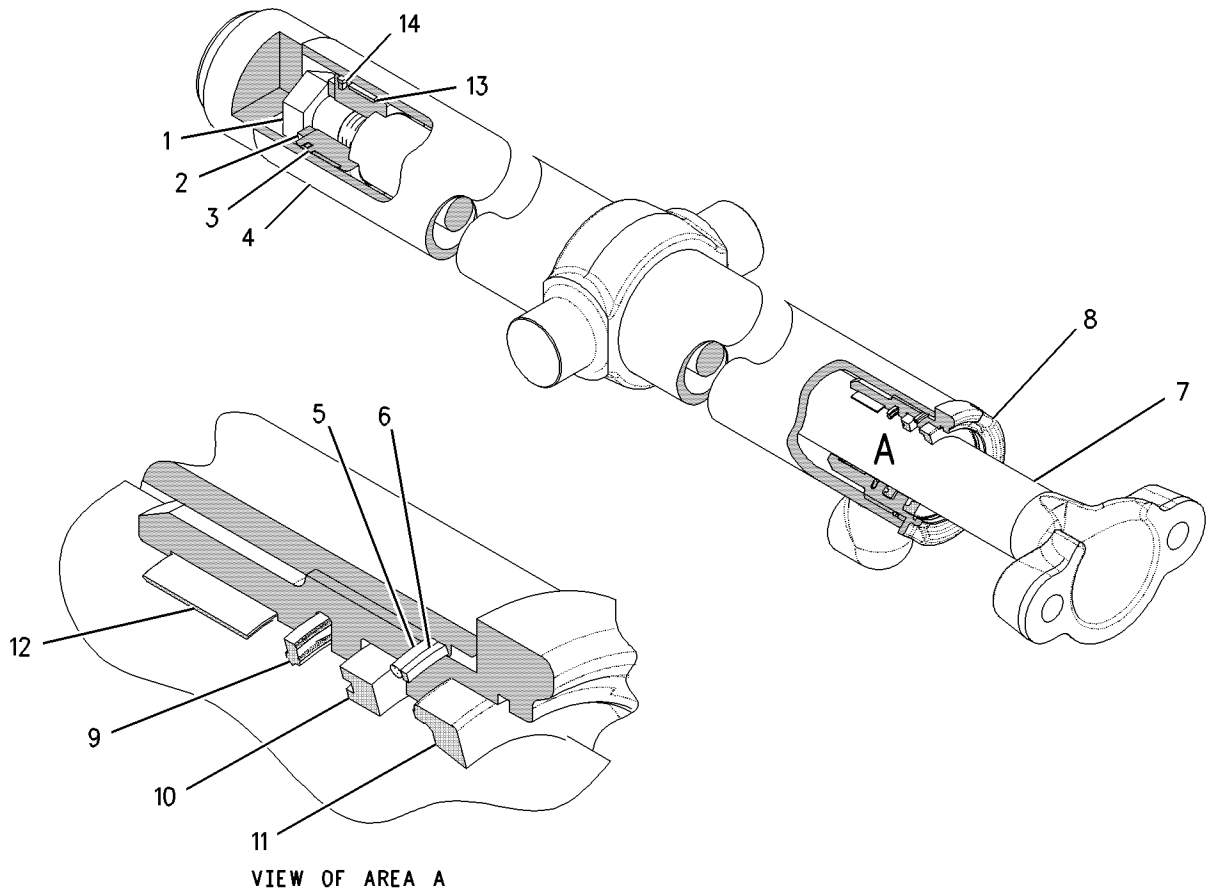

GRAPHIC #1 g00762858

9T-8944 CYLINDER GP-BLADE TIP

S/N: ATS1-UP
101.6 MM BORE X 355.5 MM STROKE
PART OF 8W-3255 CYLINDER & MTG GP-BLADE TIP

SMCS-5106 **i01855277**

NOTE	REF NO	GRAPHIC REF	PART NUMBER	QTY	PART NAME 1 2 3 4 5 6 (PRODUCT LEVEL)	SEE PAGE
	1	1	**9T-8943**	1	CYLINDER AS	
		1	**4D-0298**	1	BEARING	
M	2	1	**173-9683**	1	BOLT-HEX HEAD (M30X3.5X90MM)	
	3	1	**3S-7023**	1	WASHER (34X57X6MM THK)	
	4	1	**9T-3133**	1	PISTON	
J	5	1	**5J-5402**	1	SEAL AS	
J	6	1	**6J-2797**	1	RING-WEAR	
R	7	1	**6E-1049**	1	ROD AS	
		1	**4D-0298**	1	BEARING	
JLN	8	1	**4T-5613**	1	RING-WEAR	
JLN	9	1	**167-2195**	1	SEAL AS-BUFFER	
JLN	10	1	**167-2304**	1	SEAL-U-CUP	
JLN	11	1	**167-2457**	1	SEAL-WIPER	
J	12	1	**175-7900**	1	SEAL-O-RING	
	13	1	**2K-6830**	1	RING-BACKUP	
	14	1	**6E-0775**	1	HEAD	
					AVAILABLE REPAIR KIT(S):	
J			**185-7688**	1	KIT-SEAL (STANDARD KIT)	
L			**185-7691**	1	KIT-SEAL (UNDERSIZE KIT)	
N			**185-7690**	1	KIT-SEAL (OVERSIZE KIT)	

J-KIT MARKED J INCLUDES PARTS MARKED J
L-KIT MARKED L INCLUDES PARTS MARKED L
M-METRIC PART
N-KIT MARKED N INCLUDES PARTS MARKED N
R-REMFG PART MAY BE AVAILABLE

9T-8944 CYLINDER GP-BLADE TIP *(contd.)*

i01855277

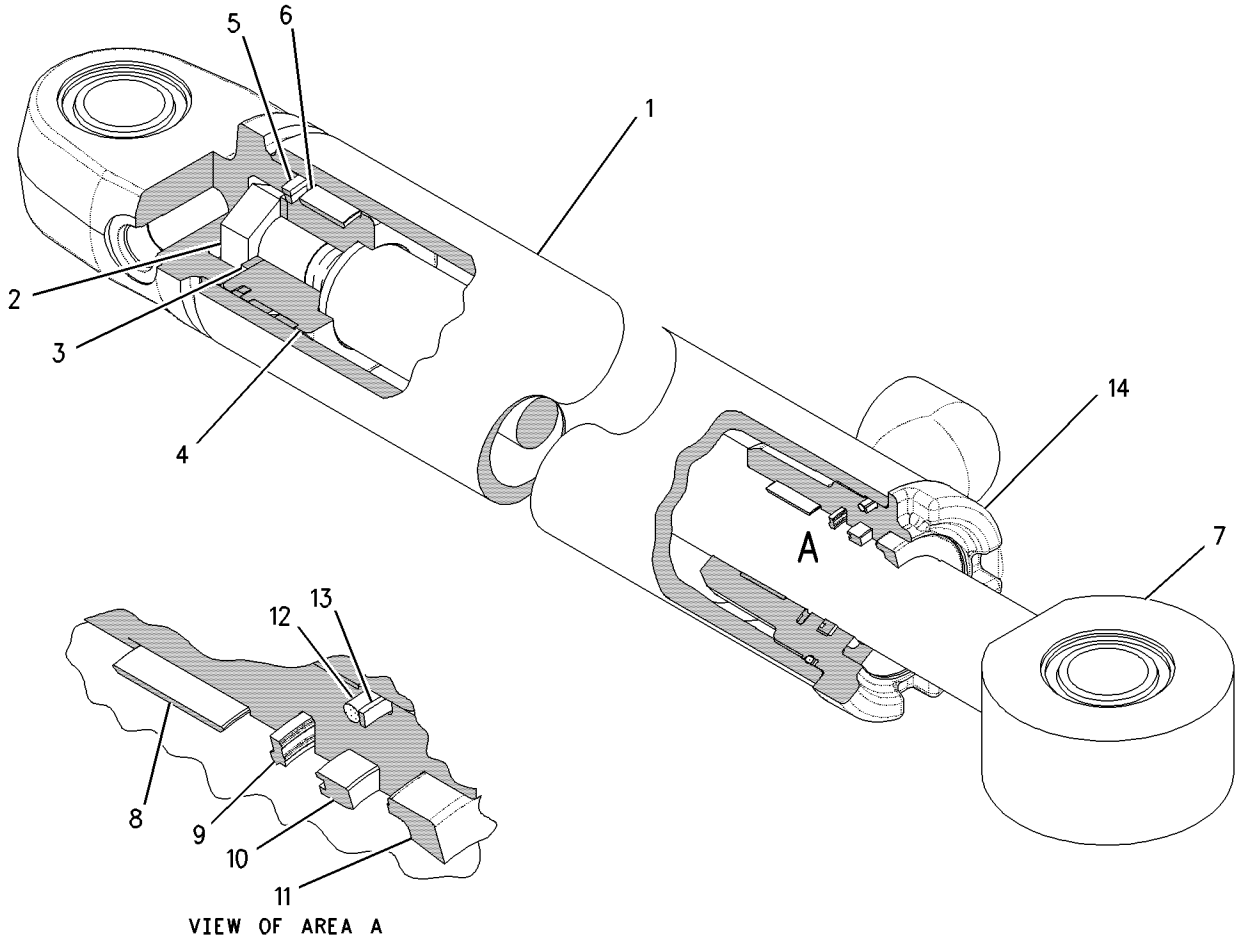

GRAPHIC #1

g00785755

9T-3312 CYLINDER GP-CENTERSHIFT

S/N: ATS1-UP
101.6 MM BORE X 479.6 MM STROKE
PART OF 8W-3262 CYLINDER & MTG GP-CENTERSHIFT

SMCS-5223 **i01855269**

NOTE	REF NO	GRAPHIC REF	PART NUMBER	QTY	PART NAME 1 2 3 4 5 6 (PRODUCT LEVEL)	SEE PAGE
	1	1	**9T-3315**	1	CYLINDER AS	
CM	2	1	**173-9683**	1	BOLT-HEX HEAD (M30X3.5X90MM)	
C	3	1	**3S-7023**	1	WASHER (34X57X6MM THK)	
	4	1	**9T-3051**	1	PISTON	
C	5	1	**6E-1046**	1	ROD AS	
CJ	6	1	**175-7900**	1	SEAL-O-RING	
J	7	1	**2K-6830**	1	RING-BACKUP	
	8	1	**121-3397**	1	HEAD	
J	9	1	**6J-2797**	1	RING-WEAR	
J	10	1	**5J-5402**	1	SEAL AS	
					(INCLUDES EXPANDER RING & SEAL)	
CJ	11	1	**167-2463**	1	SEAL-WIPER	
J	12	1	**167-2312**	1	SEAL-U-CUP	
CJ	13	1	**167-2201**	1	SEAL AS-BUFFER	
					(INCLUDES BUFFER SEAL & BACKUP RING)	
J	14	1	**8T-0785**	1	RING-WEAR	
					AVAILABLE REPAIR KIT(S):	
J			**186-4392**	1	KIT-SEAL	

C-CHANGE FROM PREVIOUS TYPE
J-KIT MARKED J INCLUDES PARTS MARKED J
M-METRIC PART

9T-3312 CYLINDER GP-CENTERSHIFT *(contd.)* i01855269

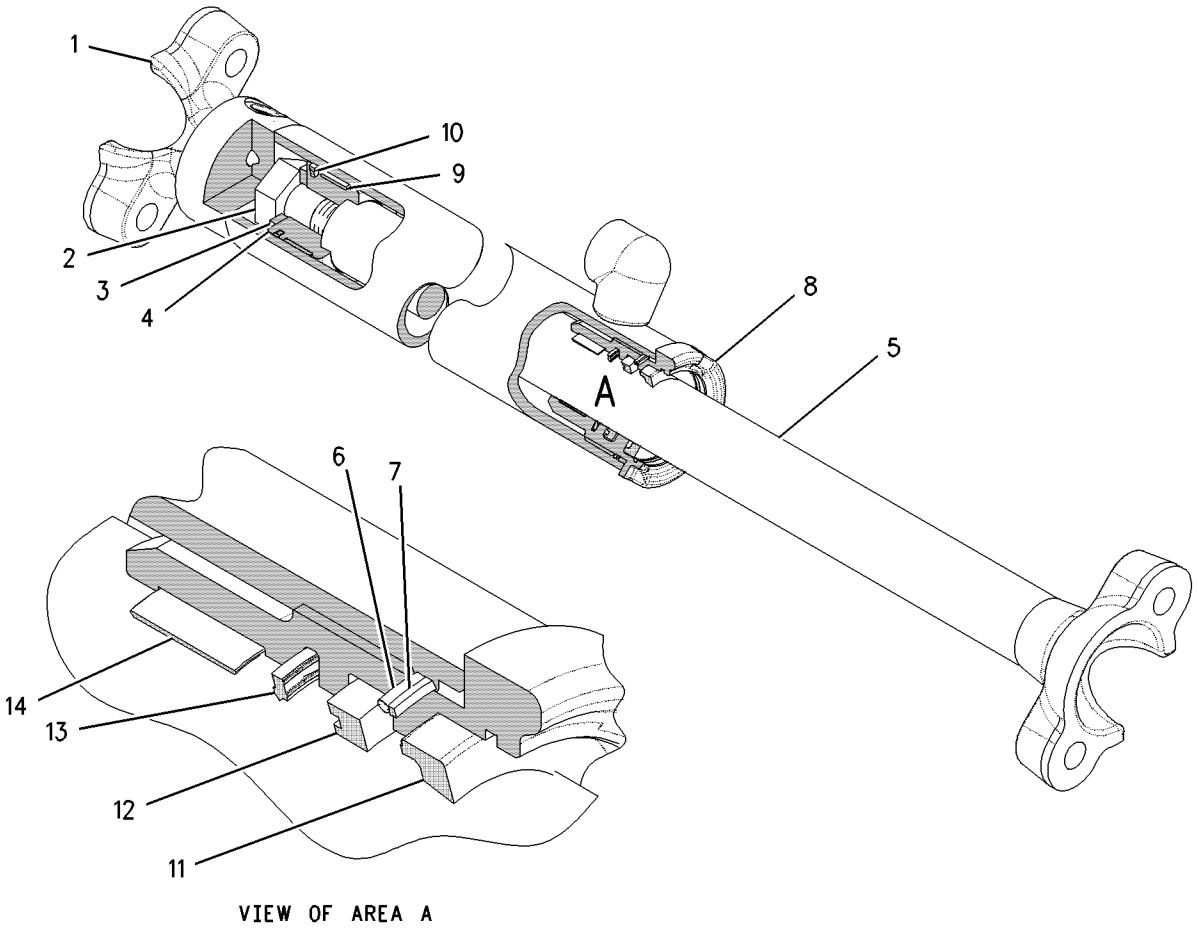

GRAPHIC #1 g00762040

HYDRAULIC SYSTEM

113-5264 CYLINDER GP-RIPPER LIFT

S/N: ATS1-UP
127.0 MM BORE X 495.0 MM STROKE
PART OF 207-2428 RIPPER AR
AN ATTACHMENT

SMCS-5352 **i01401718**

NOTE	REF NO	GRAPHIC REF	PART NUMBER	QTY	PART NAME 1 2 3 4 5 6 (PRODUCT LEVEL)	SEE PAGE
	1	1	**114-4776**	1	CYLINDER AS	
	2	1	**4K-3128**	2	BEARING-SLEEVE	
	3	1	**4J-4630**	1	RING-WEAR	
	4	1	**9X-7264**	1	SEAL AS	
	5	1	**6E-2314**	1	PISTON	
	6	1	**175-7904**	1	SEAL-O-RING (126.59MM ID)	
	7	1	**2K-4096**	1	RING	
	8	1	**121-3395**	1	HEAD	
	9	1	**114-4781**	1	ROD AS	
	10	1	**2K-4507**	1	BEARING-SLEEVE	
	11	1	**167-2463**	1	SEAL-WIPER	
	12	1	**167-2312**	1	SEAL-U-CUP	
	13	1	**167-2201**	1	SEAL AS-BUFFER	
	14	1	**8T-0785**	1	RING-WEAR	
	15	1	**5J-5731**	1	LOCKNUT	

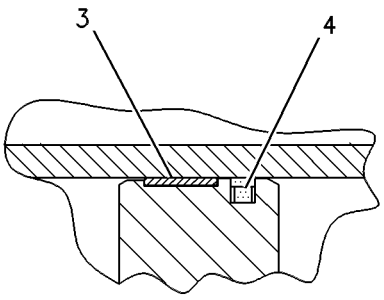

VIEW OF AREA B

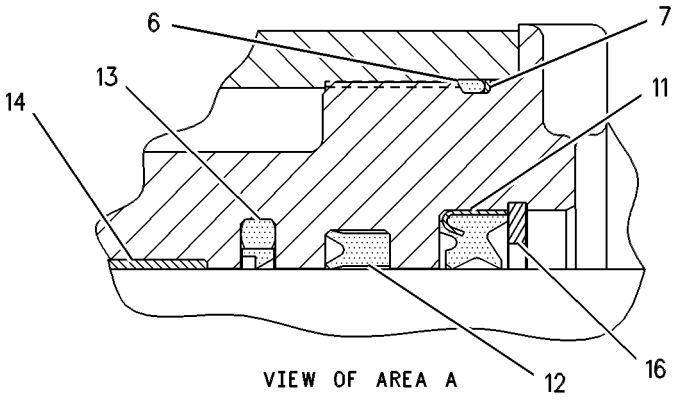

VIEW OF AREA A

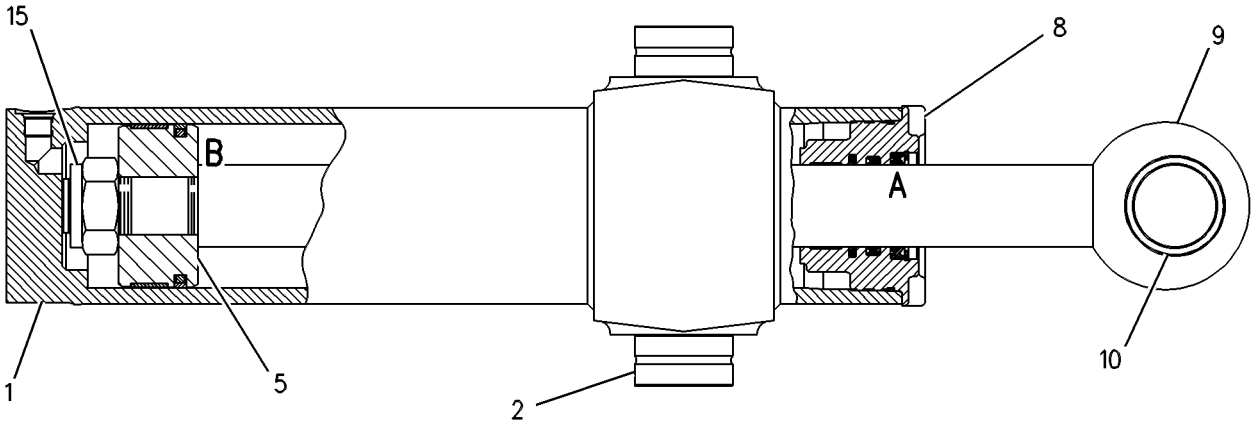

GRAPHIC #1 g00108942

MEMORANDA

HYDRAULIC SYSTEM

9T-3206 CYLINDER GP-SIDESHIFT

S/N: ATS1-UP

101.6MM BORE X 1531.9MM STROKE

PART OF 8W-3257 CYLINDER & MTG GP-SIDESHIFT

SMCS-5229 **i01855270**

NOTE	REF NO	GRAPHIC REF	PART NUMBER	QTY	PART NAME 1 2 3 4 5 6 (PRODUCT LEVEL)	SEE PAGE
CR	1	1	**6E-1047**	1	ROD AS	
	2	1	**9T-3051**	1	PISTON	
	3	1	**172-9981**	1	HEAD	
R	4	1	**175-7882**	1	CYLINDER AS	
CJ	5	1	**167-2201**	1	SEAL AS-BUFFER	
J	6	1	**167-2312**	1	SEAL-U-CUP	
CJ	7	1	**167-2463**	1	SEAL-WIPER	
CM	8	1	**173-9683**	1	BOLT-HEX HEAD (M30X3.5X90MM)	
J	9	1	**175-7900**	1	SEAL-O-RING	
J	10	1	**2K-6830**	1	RING-BACKUP	
J	11	1	**5J-5402**	1	SEAL AS	
J	12	1	**6J-2797**	1	RING-WEAR	
J	13	1	**8T-0785**	1	RING-WEAR	
C	14	1	**9X-8399**	1	WASHER (33X56X6MM THK)	
					AVAILABLE REPAIR KIT(S):	
J			**186-4392**	1	KIT-SEAL	

C-CHANGE FROM PREVIOUS TYPE
J-KIT MARKED J INCLUDES PARTS MARKED J
M-METRIC PART
R-REMFG PART MAY BE AVAILABLE

9T-3206 CYLINDER GP-SIDESHIFT *(contd.)* i01855270

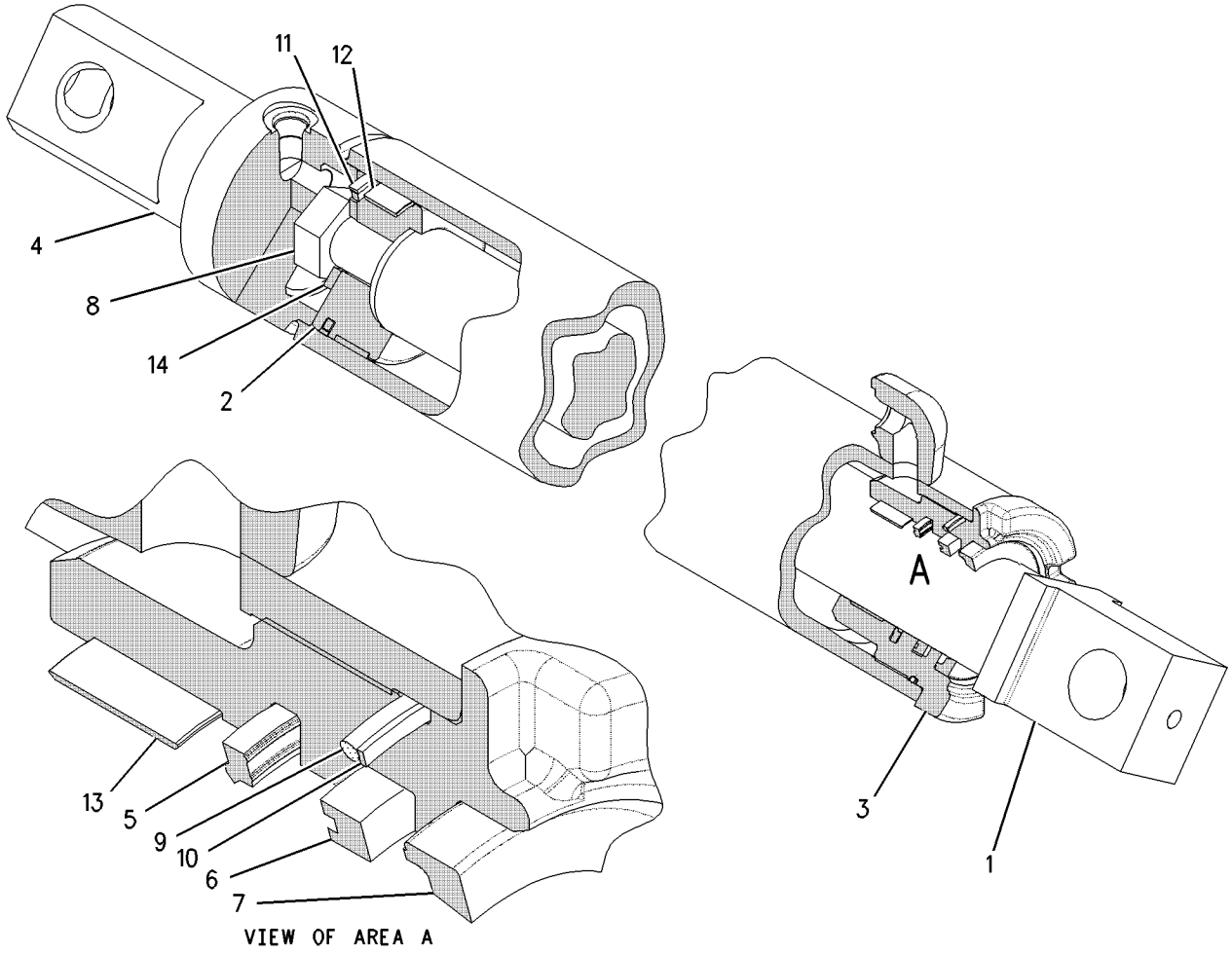

GRAPHIC #1 g00758263

HYDRAULIC SYSTEM

165-2506 CYLINDER GP-STEERING—RH

S/N: ATS1-UP

69.9 MM BORE X 314.0 MM STROKE

PART OF 8W-3260 CYLINDER & MTG GP-STEERING

SMCS-4303 **i01855271**

NOTE	REF NO	GRAPHIC REF	PART NUMBER	QTY	PART NAME 1 2 3 4 5 6 (PRODUCT LEVEL)	SEE PAGE
	1	1	**151-5349**	1	HEAD	
	2	1	**170-8528**	1	CYLINDER AS	
	2A	1	**1N-5999**	1	PLUG	
	2B	1	**7J-0204**	1	SEAL-O-RING	
	2C	1	**4D-0298**	1	BEARING	
J	3	1	**167-2191**	1	SEAL AS-BUFFER	
J	4	1	**167-2300**	1	SEAL-U-CUP	
J	5	1	**167-2452**	1	SEAL-WIPER	
	6	1	**170-5212**	1	ROD AS	
M	7	1	**173-9685**	1	BOLT-HEX HEAD (M20X2.5X70MM)	
J	8	1	**175-7895**	1	SEAL-O-RING	
	9	1	**1N-5999**	2	PLUG	
J	10	1	**4J-9225**	1	RING-BACKUP	
J	11	1	**4T-6907**	1	RING-WEAR	
J	12	1	**5J-7010**	1	SEAL AS	
	13	1	**7J-0204**	2	SEAL-O-RING	
J	14	1	**8J-0112**	1	RING-WEAR	
	15	1	**8T-3282**	1	WASHER-HARD (22X35X3.5MM THK)	
	16	1	**9T-2849**	1	PISTON	
					AVAILABLE REPAIR KIT(S):	
J			**185-7035**	1	KIT-SEAL	

J-KIT MARKED J INCLUDES PARTS MARKED J
M-METRIC PART

165-2506 CYLINDER GP-STEERING *(contd.)* i01855271

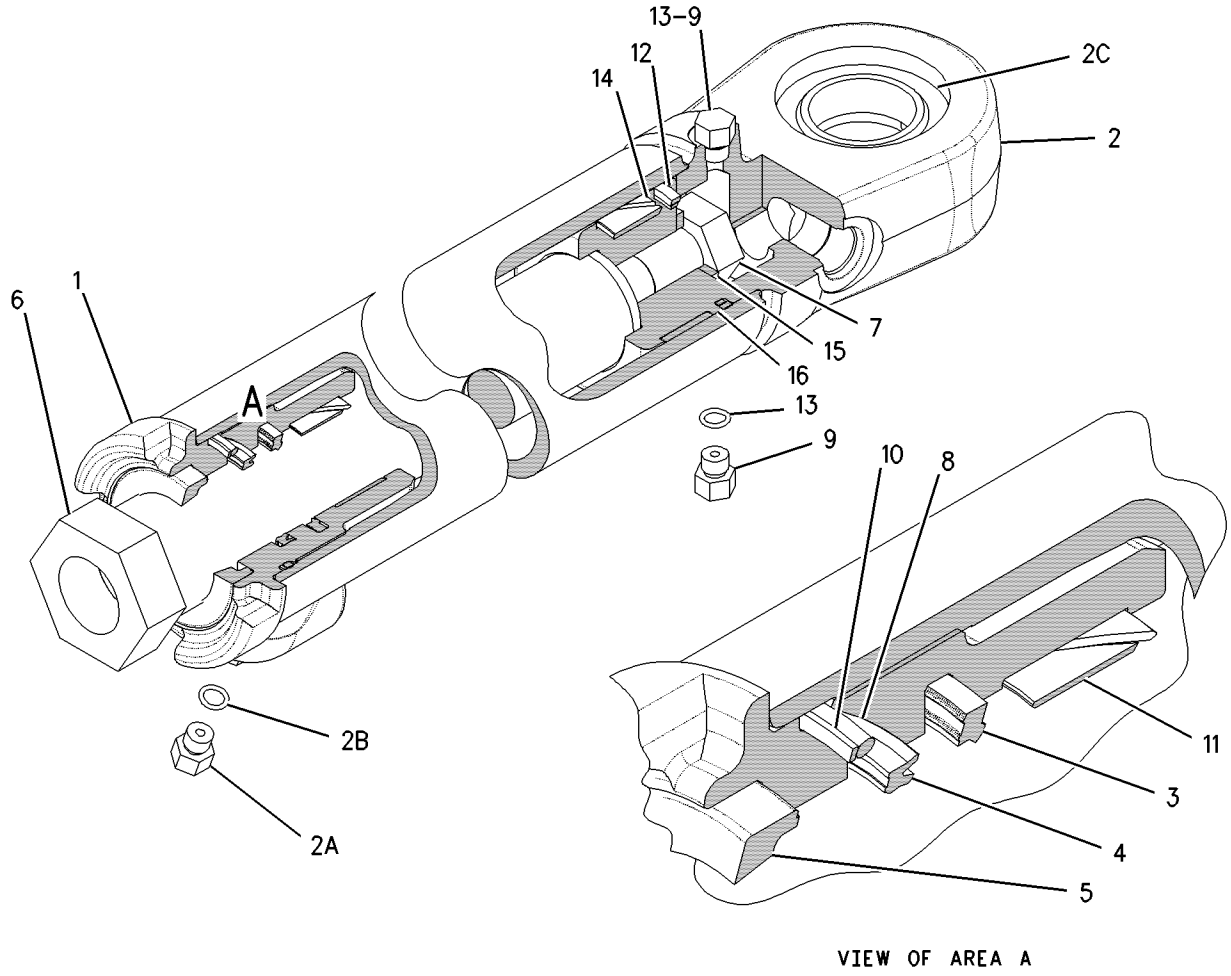

GRAPHIC #1 g00798972

HYDRAULIC SYSTEM

165-2507 CYLINDER GP-STEERING

S/N: ATS1-UP

63.5 MM BORE X 314.0 MM STROKE. LH

PART OF 8W-3260 CYLINDER & MTG GP-STEERING

SMCS-4303 **i01855278**

NOTE	REF NO	GRAPHIC REF	PART NUMBER	QTY	PART NAME 1 2 3 4 5 6 (PRODUCT LEVEL)	SEE PAGE
	1	1	**151-5349**	1	HEAD	
	2	1	**170-4846**	1	CYLINDER AS	
	2A	1	**1N-5999**	1	PLUG	
	2B	1	**7J-0204**	1	SEAL-O-RING	
	2C	1	**4D-0298**	1	BEARING	
J	3	1	**167-2191**	1	SEAL AS-BUFFER	
J	4	1	**167-2300**	1	SEAL-U-CUP	
J	5	1	**167-2452**	1	SEAL-WIPER	
	6	1	**170-5212**	1	ROD AS	
M	7	1	**173-9685**	1	BOLT-HEX HEAD (M20X2.5X70MM)	
J	8	1	**175-7895**	1	SEAL-O-RING	
	9	1	**1N-5999**	2	PLUG	
J	10	1	**4J-9225**	1	RING-BACKUP	
J	11	1	**4T-6907**	1	RING-WEAR	
J	12	1	**5J-7010**	1	SEAL AS	
	13	1	**7J-0204**	2	SEAL-O-RING	
J	14	1	**8J-0112**	1	RING-WEAR	
	15	1	**8T-3282**	1	WASHER-HARD (22X35X3.5MM THK)	
	16	1	**9T-2849**	1	PISTON	
					AVAILABLE REPAIR KIT(S):	
J			**185-7035**	1	KIT-SEAL	

J-KIT MARKED J INCLUDES PARTS MARKED J
M-METRIC PART

165-2507 CYLINDER GP-STEERING *(contd.)* i01855278

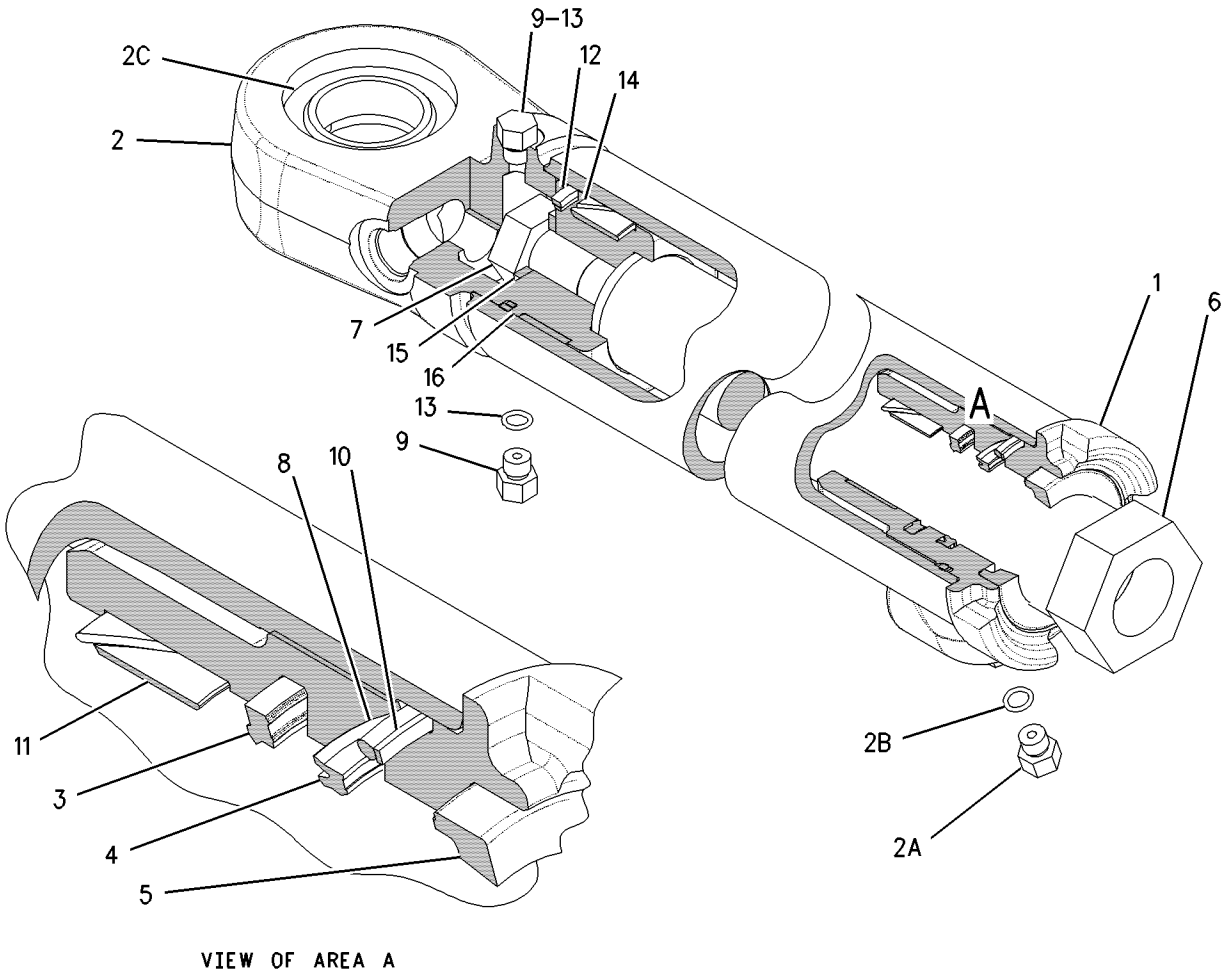

VIEW OF AREA A

GRAPHIC #1 g00798958

HYDRAULIC SYSTEM

121-9244 CYLINDER GP-WHEEL LEAN

S/N: ATS1-UP

101.6 MM(4.0 IN) BORE X 174.80 MM(6.88IN) STROKE

PART OF 8W-3259 CYLINDER & MTG GP-WHEEL LEAN

SMCS-5211 **i01458628**

NOTE	REF NO	GRAPHIC REF	PART NUMBER	QTY	PART NAME 1 2 3 4 5 6 (PRODUCT LEVEL)	SEE PAGE
	1	1	**123-1077**	1	CYLINDER AS	
		1	**2G-8635**	1	BEARING-SLEEVE	
M	2	1	**173-9683**	1	BOLT-HEX HEAD (M30X3.5X90MM)	
	3	1	**3S-7023**	1	WASHER (34X57X6MM THK)	
	4	1	**5J-5402**	1	SEAL AS	
					(INCLUDES EXPANDER RING & SEAL)	
	5	1	**6J-2797**	1	RING-WEAR	
	6	1	**9T-5927**	1	PISTON	
	7	1	**9X-4611**	1	SEAL-O-RING	
	8	1	**2K-6830**	1	RING-BACKUP	
	9	1	**6E-4977**	1	HEAD	
	10	1	**121-9247**	1	ROD AS	
		1	**2G-8635**	1	BEARING-SLEEVE	
	11	1	**167-2459**	1	SEAL-WIPER	
	12	1	**167-2307**	1	SEAL-U-CUP	
	13	1	**167-2200**	1	SEAL AS	
					(INCLUDES BUFFER SEAL & BACKUP RING)	
	14	1	**8T-4958**	1	RING-WEAR	

M-METRIC PART

121-9244 CYLINDER GP-WHEEL LEAN *(contd.)* i01458628

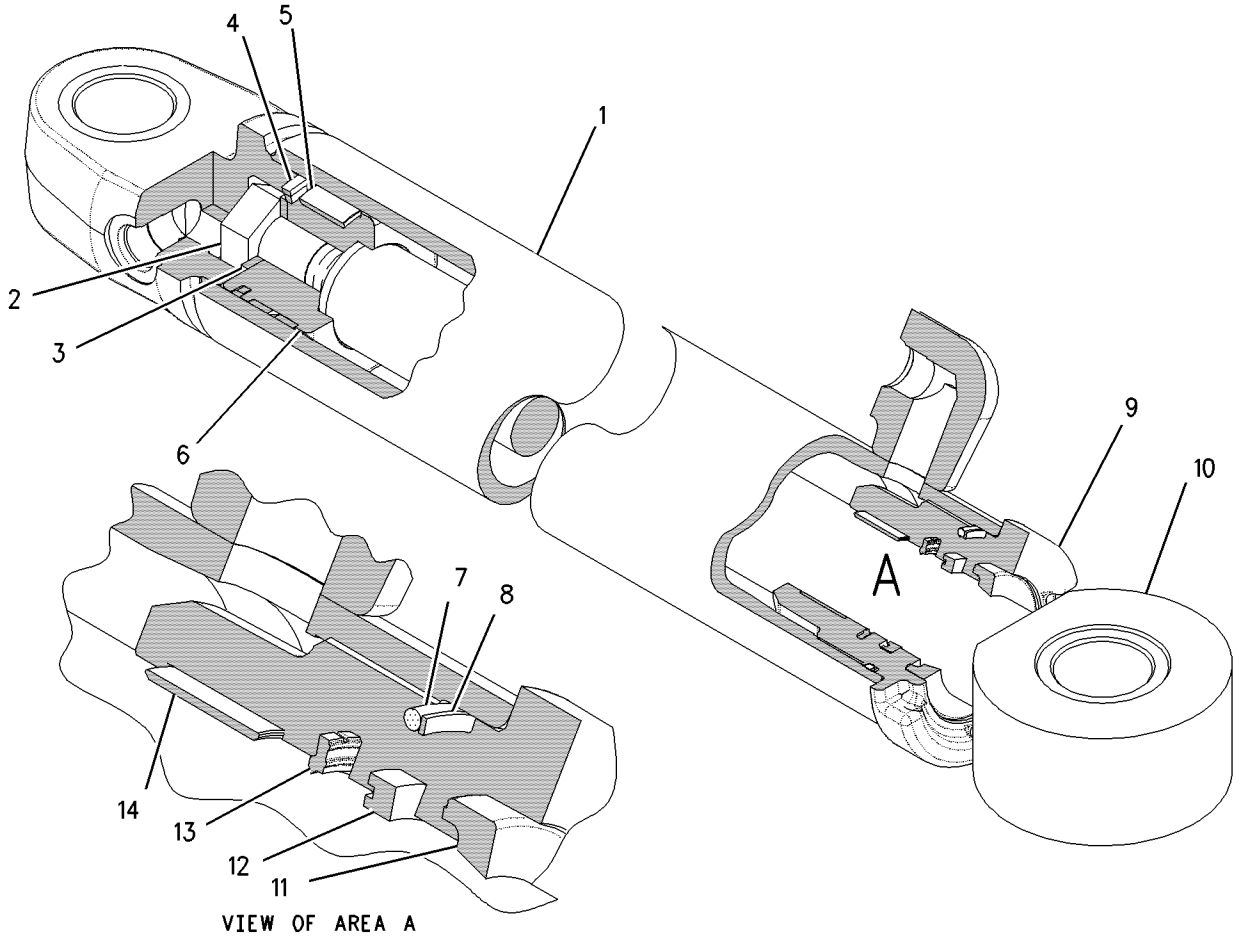

GRAPHIC #1 g00785833

108-4916 DETENT GP-CONTROL VALVE

S/N: ATS1-UP

PART OF 107-0558, 107-0565 VALVE GP-CONTROL

ALSO AN ATTACHMENT

SMCS-5051 **i00124386**

NOTE	REF NO	GRAPHIC REF	PART NUMBER	QTY	PART NAME 1 2 3 4 5 6 (PRODUCT LEVEL)	SEE PAGE
	1	1	**101-1974**	1	RETAINER	
	2	1	**101-1975**	1	RETAINER	
	3	1	**102-7423**	1	SPRING	
	4	1	**5B-9318**	6	BALL	

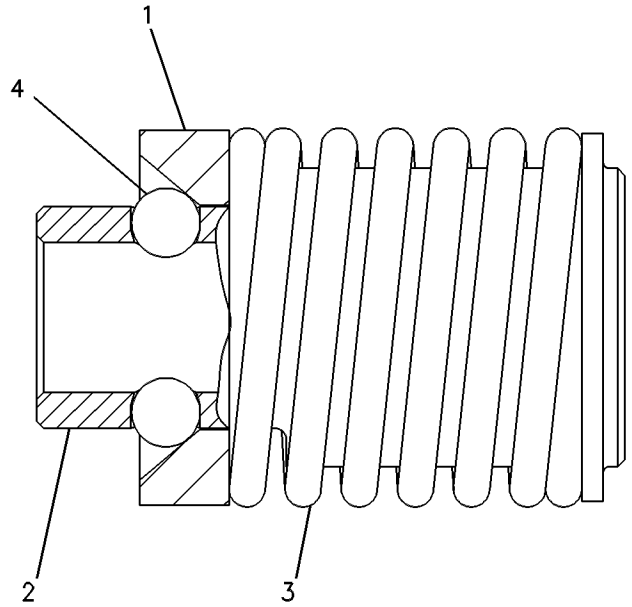

GRAPHIC #1 g00108519

MEMORANDA

HYDRAULIC SYSTEM

130-3535 DETENT GP-CONTROL VALVE–EU

S/N: ATS1-UP

PART OF 128-8647, 130-3110, 130-3111, 130-3114, 130-3115 VALVE GP-CONTROL

AN ATTACHMENT

SMCS-5051 **i01533102**

NOTE	REF NO	GRAPHIC REF	PART NUMBER	QTY	PART NAME 1 2 3 4 5 6 (PRODUCT LEVEL)	SEE PAGE
M	1	1	**7X-2540**	2	BOLT (M8X1.25X120MM)	
	2	1	**8T-4224**	2	WASHER-HARD (8.8X16X2MM THK)	
	3	1	**6V-5722**	2	SEAL-O-RING	
	4	1	**4J-7533**	2	SEAL-O-RING	
	5	1	**9S-8001**	2	PLUG	
	6	1	**124-2890**	1	HOUSING	
	7	1	**9S-8006**	1	PLUG	
	8	1	**2M-9780**	1	SEAL-O-RING	
	9	1	**124-2887**	1	PISTON	
	10	1	**124-2889**	1	STOP	
	11	1	**5B-9318**	6	BALL	
	12	1	**101-1974**	1	RETAINER	
	13	1	**124-2888**	1	RETAINER	
	14	1	**124-2891**	1	SPACER	
	15	1	**2K-8199**	2	SEAL-O-RING	
	16	1	**128-8643**	1	SPRING	
	17	1	**128-8644**	1	SPRING	

M-METRIC PART

130-3535 DETENT GP-CONTROL VALVE *(contd.)* i01533102

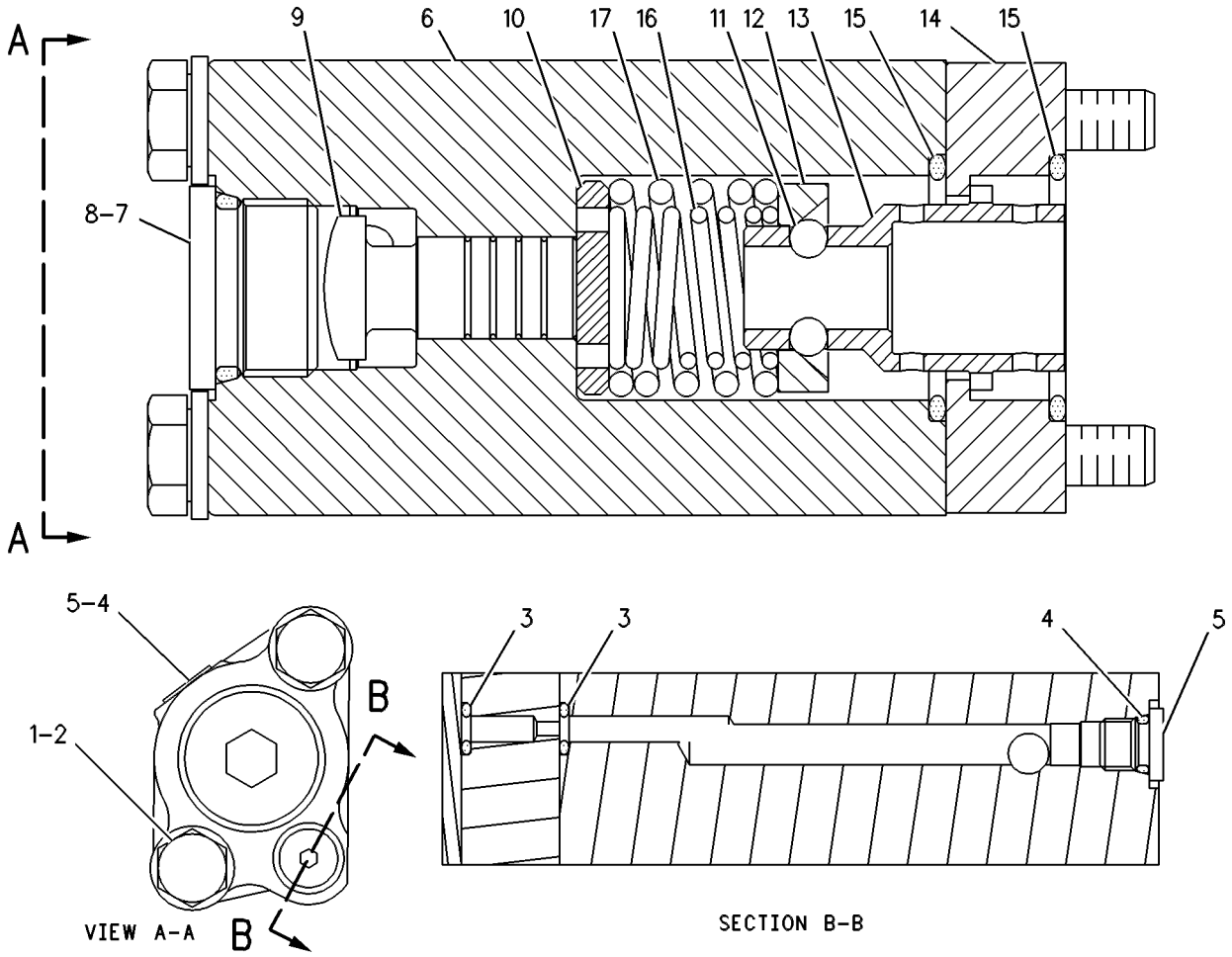

GRAPHIC #1 g00109431

HYDRAULIC SYSTEM

5T-1740 DRIVE GP-CIRCLE

S/N: ATS1-UP

PART OF 162-5607 GENERAL AR

SMCS-5207 **i00789085**

NOTE	REF NO	GRAPHIC REF	PART NUMBER	QTY	PART NAME 1 2 3 4 5 6 (PRODUCT LEVEL)	SEE PAGE
CY	1	1	**9T-5977**	1	MOTOR GP-GEROTOR	470
	2	1	**0S-1585**	4	BOLT (1/2-13X1.50IN)	
	3	1	**5T-8060**	1	ADAPTER	
	4	1	**9D-1491**	1	COUPLING	
B	5	1	**8D-4522**	4	SHIM (0.005MM THK)	
B		1	**8D-4523**	2	SHIM (0.010MM THK)	
	6	1	**2D-8009**	1	SEAL-O-RING (142.47MM ID)	
	7	1	**4D-8186**	1	PLUG-PIPE	
	8	1	**5T-8059**	1	WORM-CIRCLE DRIVE	
	9	1	**8D-3984**	2	CONE-BEARING	
	10	1	**8D-3986**	2	CUP-ROLLER BEARING	
	11	1	**6G-5538**	1	COVER	
		1	**6G-5539**	1	GASKET	
	12	1	**2B-7410**	1	PLUG-PIPE	
	13	1	**4H-6996**	1	PIN-SPRING	
	14	1	**2H-3931**	1	SEAL-O-RING (82.14MM ID)	
	15	1	**8T-0336**	1	FITTING-RELIEF	
	16	1	**5S-7379**	4	BOLT (3/8-16X.875IN)	
		1	**8T-4896**	4	WASHER-HARD (2.5MM THK)	
	17	1	**6G-1539**	1	COVER	
	18	1	**0S-1585**	4	BOLT (1/2-13X1.50IN)	
	19	1	**5K-7143**	2	BOLT (1/2-13X1.50IN) (SELF LOCKING)	
	20	1	**5P-8245**	10	WASHER (3MM THK)	
	21	1	**9S-1322**	4	BOLT (7/8-9X6IN)	
		1	**5P-8249**	4	WASHER (4.0MM THK)	
	22	2	**5T-8058**	1	HOUSING AS-DRIVE	
	23	2	**4D-4823**	4	STUD-TAPERLOCK	
	24	2	**3J-2333**	2	BEARING-SLEEVE	
	25	2	**4D-7259**	4	STUD-TAPERLOCK	
	26	2	**2D-6533**	1	SEAL-O-RING (304.39MM ID)	
	27	2	**8X-4028**	1	GEAR-WORM (36 TEETH)	
	28	2	**6G-6122**	1	SPRING-DISC	
C	29	2	**8W-6179**	1	WASHER-THRUST	
	30	2	**6G-1541**	1	SHAFT-DRIVE PINION	
	31	2	**6G-1536**	1	SPACER	
	32	2	**6G-5547**	1	PLATE	
B		2	**6G-5543**	6	SHIM (0.13MM THK)	
B		2	**6G-5544**	9	SHIM (0.25MM THK)	
	33	2	**0S-1585**	3	BOLT (1/2-13X1.50IN)	
		2	**5P-8245**	3	WASHER (3MM THK)	
	34	2	**5P-8249**	4	WASHER (4.0MM THK)	
C	35	2	**8W-4347**	1	PINION-CIRCLE DRIVE	
	36	2	**1A-2029**	4	BOLT (3/8-16X1.125IN)	
	37	2	**5M-2894**	8	WASHER (2.5MM THK)	
	38	2	**0S-1594**	4	BOLT (3/8-16X1IN)	
	39	2	**9D-0088**	1	COVER	
	40	2	**1A-1415**	1	NUT	
		2	**2G-0339**	1	LOCK-NUT	
	41	2	**8D-7424**	1	SPACER	
	42	2	**8D-7333**	1	COLLAR	
	43	2	**9D-0089**	1	CAGE AS	
	44	2	**7J-2604**	1	BEARING-SLEEVE (101.6MM OD)	
	45	2	**8D-7341**	1	GASKET	
	46	2	**9W-6645**	2	SEAL GP-DUO-CONE	
		2	**5K-5129**	2	RING-SEALING	
	47	2	**2B-7410**	1	PLUG-PIPE	

5T-1740 **DRIVE GP-CIRCLE** *(contd.)* **i00789085**

NOTE	REF NO	GRAPHIC REF	PART NUMBER	QTY	PART NAME 1 2 3 4 5 6 (PRODUCT LEVEL)	SEE PAGE
	48	2	**8D-7343**	1	WASHER-THRUST	
	49	2	**6K-0545**	4	LOCKNUT (7/8-9 THD)	
	50	2	**6Y-7953**	11	DISC-FRICTION	
	51	2	**2G-0478**	10	DISC	
	52	2	**6G-5542**	2	SPACER	
	53	2	**4K-0367**	4	NUT (5/8-11 THD)	
		2	**5P-8247**	4	WASHER-HARD (3.5MM THK)	

B-USE AS REQUIRED
C-CHANGE FROM PREVIOUS TYPE
Y-SEPARATE ILLUSTRATION

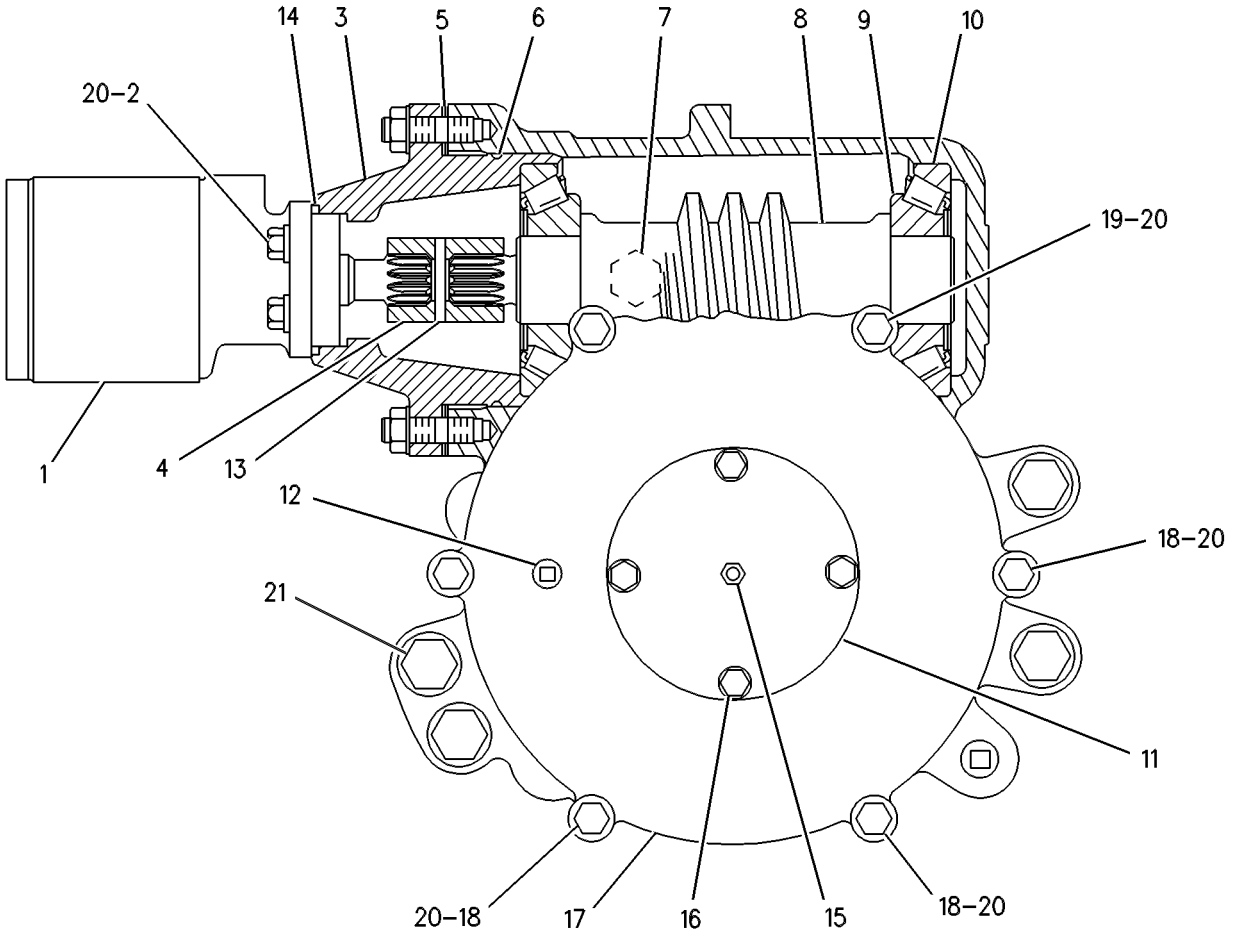

GRAPHIC #1 g00109538

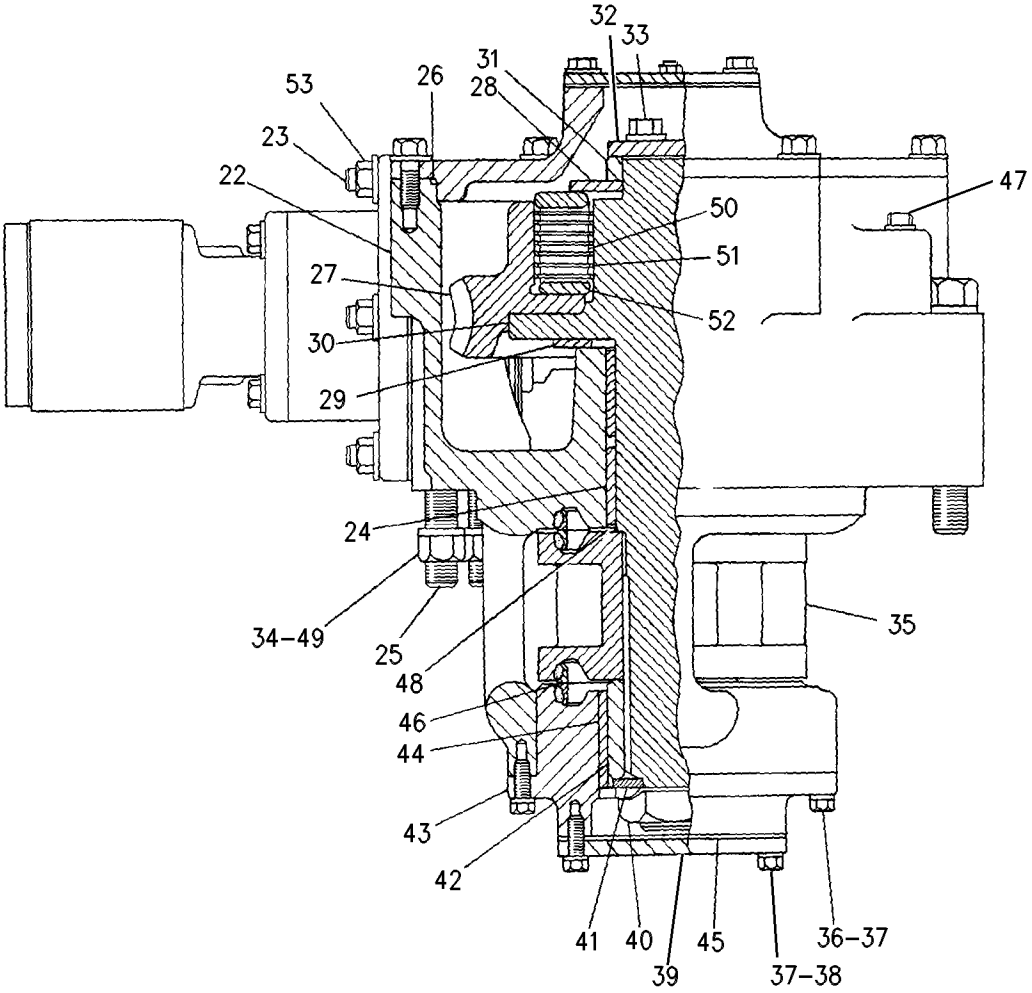

GRAPHIC #2

g00354560

HYDRAULIC SYSTEM

180-3491 DRIVE GP-PUMP

S/N: ATS1-UP

PART OF 162-5607 GENERAL AR

SMCS-3108 **i01654489**

NOTE	REF NO	GRAPHIC REF	PART NUMBER	QTY	PART NAME 1 2 3 4 5 6 (PRODUCT LEVEL)	SEE PAGE
	1	1	**8D-4578**	1	YOKE	
	2	1	*187-1499*	1	SLIP JOINT GP	
		1	**187-1597**	1	YOKE AS	
	2A	1	**9P-0356**	2	SPIDER & BEARING AS	
	2B	1	**0S-0484**	8	BOLT (1/2-20X2.25 IN)	
	3	1	**021-9791**	1	NUT-JAM	
	4	1	**0S-0484**	4	BOLT (1/2-20X2.25 IN)	
	5	1	**1B-8741**	1	KEY-WOODRUFF	
	6	1	**2B-0947**	4	BOLT (1/2-13X2.25 IN)	
	7	1	**3S-1349**	1	WASHER-HARD (31X52.5X6MM THK)	
	8	1	**5P-7213**	8	WASHER-HARD (13.5X20.5X2MM THK)	

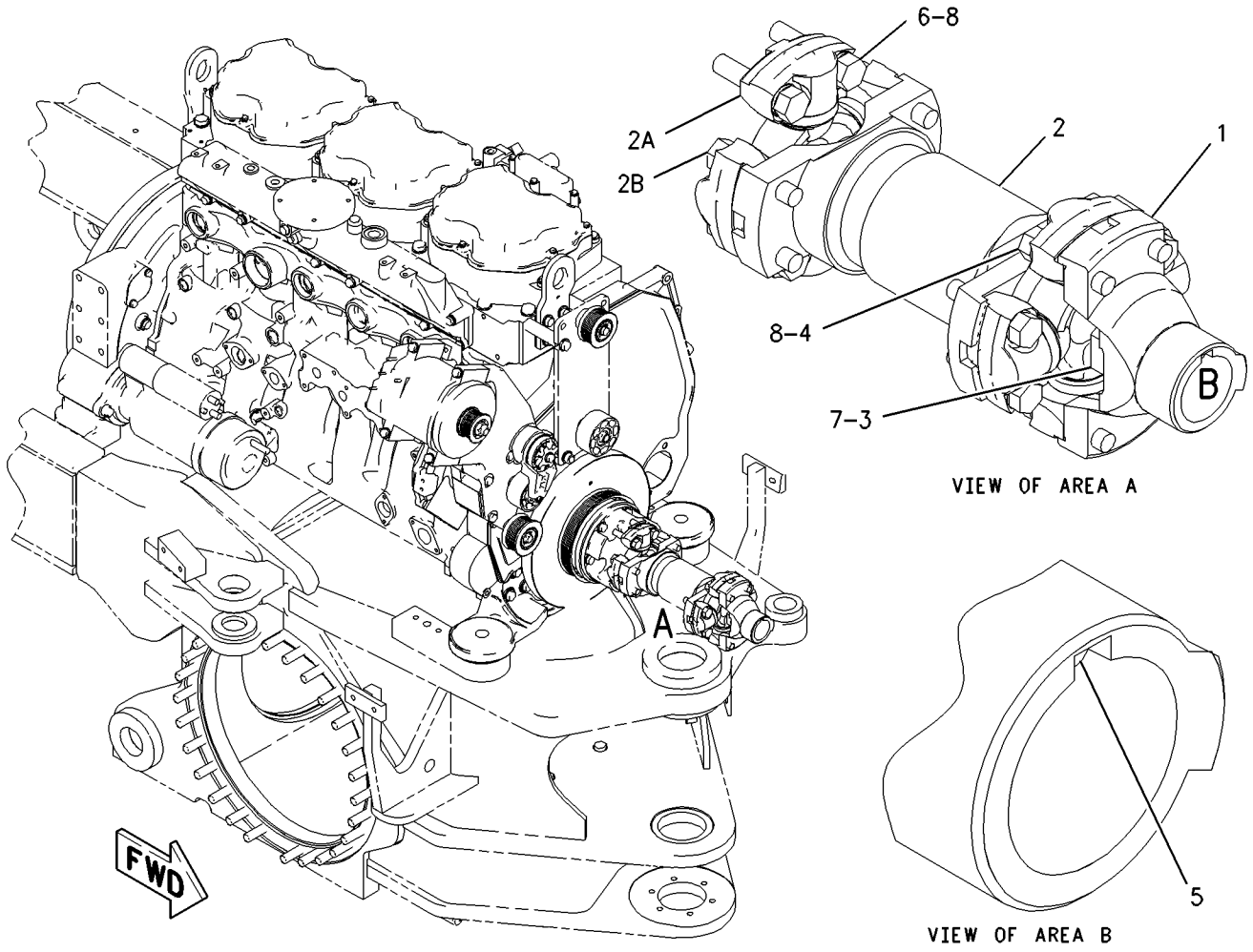

GRAPHIC #1 g00855449

HYDRAULIC SYSTEM

188-7194 LINES GP-HYDRAULIC–LH

S/N: ATS1-UP
4 CIRCUITS
PART OF 162-5607 GENERAL AR

SMCS-5057 **i01855137**

NOTE	REF NO	GRAPHIC REF	PART NUMBER	QTY	PART NAME 1 2 3 4 5 6 (PRODUCT LEVEL)	SEE PAGE
	1	2	**2B-0941**	4	SPACER (10.5X19X19MM THK)	
	2	2	**5D-2645**	4	CLAMP	
I	3	2	**5T-9686**	2	HOSE AS	
I	4	1,2	**8W-0036**	2	HOSE AS	
	5	1	**8W-3044**	1	CLAMP	
	6	1	**8W-3045**	2	CLAMP	
	7	2	**8W-3989**	2	CLAMP	
	8	2	**8W-3990**	2	CLAMP	
	9	2	**8W-3991**	2	JUNCTION BLOCK	
I	10	1	**8W-4053**	2	HOSE AS	
	11	2	**8X-5425**	1	GUIDE AS-HOSE	
	12	2	**9D-0953**	2	SPACER (.406X.75X.88 IN THK)	
I	13	1	**9R-9198**	1	HOSE AS	
	14	2	**108-1610**	7	CLAMP	
Y	15	1	**112-2240**	1	VALVE GP-SOLENOID & MANIFOLD (BLADE CUSHION)	589
I	16	1	**114-2887**	1	HOSE AS (LIFT CYLINDER)	
I	17	1	**114-2888**	2	HOSE AS (POWER BLADE)	
I	18	1	**114-2889**	2	HOSE AS (CIRCLE DRIVE)	
I	19	1	**114-2890**	1	HOSE AS	
I	20	1	**114-2895**	2	HOSE AS (BLADE TIP)	
	21	1	*171-6466*	1	UNION AS	
		1	**5P-9810**	1	UNION	
		1	**3D-2824**	2	SEAL-O-RING	
Y	22	2	**173-1011**	1	SWIVEL GP	487
	23	2	*148-8318*	5	CONNECTOR GP	
					(EACH INCLUDES)	
		2	**6V-8634**	1	CONNECTOR	
		2	**3K-0360**	1	SEAL-O-RING	
		2	**6V-8397**	1	SEAL-O-RING	
	24	1,2	*148-8340*	7	CONNECTOR GP	
					(EACH INCLUDES)	
		1,2	**6V-8639**	1	CONNECTOR	
		1,2	**3K-0360**	1	SEAL-O-RING	
		1,2	**6V-8398**	1	SEAL-O-RING	
	25	1	*148-8347*	1	ELBOW GP	
		1	**6V-9007**	1	ELBOW	
		1	**3D-2824**	1	SEAL-O-RING	
		1	**6V-9746**	1	SEAL-O-RING	
	26	2	**148-8354**	2	ELBOW GP	
					(EACH INCLUDES)	
		2	**6V-9002**	1	ELBOW	
		2	**3K-0360**	1	SEAL-O-RING	
		2	**6V-8398**	1	SEAL-O-RING	
	27	2	*148-8358*	2	ELBOW AS	
					(EACH INCLUDES)	
		2	**6V-8624**	1	ELBOW	
		2	**2M-9780**	1	SEAL-O-RING	
		2	**6V-8398**	1	SEAL-O-RING	
	28	1	*148-8364*	1	ELBOW AS	
		1	**6V-8625**	1	ELBOW	
		1	**3K-0360**	1	SEAL-O-RING	
		1	**6V-8398**	1	SEAL-O-RING	
	29	2	*148-8374*	5	ELBOW GP	
					(EACH INCLUDES)	
		2	**6V-8723**	1	ELBOW	

188-7194 **LINES GP-HYDRAULIC** ***(contd.)*** **i01855137**

NOTE	REF NO	GRAPHIC REF	PART NUMBER	QTY	PART NAME 1 2 3 4 5 6 (PRODUCT LEVEL)	SEE PAGE
		2	**3K-0360**	1	SEAL-O-RING	
		2	**6V-8397**	1	SEAL-O-RING	
	30	1	*148-8383*	2	ELBOW AS	
					(EACH INCLUDES)	
		1	**8T-1683**	1	ELBOW	
		1	**3K-0360**	1	SEAL-O-RING	
		1	**6V-8397**	1	SEAL-O-RING	
	31	1	*148-8418*	1	REDUCER GP	
		1	**6V-8942**	1	REDUCER-O-RING (FACE)	
		1	**6V-8398**	1	SEAL-O-RING	
	32	1	*164-5574*	1	TEE GP	
		1	**6V-8784**	1	TEE-FACE SEAL	
		1	**3D-2824**	1	SEAL-O-RING	
		1	**6V-9746**	2	SEAL-O-RING	
	33	1	*164-5608*	3	CONNECTOR GP	
					(EACH INCLUDES)	
		1	**8T-1687**	1	CONNECTOR	
		1	**3K-0360**	1	SEAL-O-RING	
		1	**6V-8398**	1	SEAL-O-RING	
	34	2	**1S-0994**	6	CLIP	
	35	1	**2H-9889**	1	BOLT (3/8-16X2.375 IN)	
	36	2	**3B-4628**	2	PIN-COTTER	
	37	1	**5B-2301**	1	SPACER (2 1/16 IN LG)	
	38	2	**5P-1075**	8	WASHER-HARD (10.2X22.5X3MM THK)	
	39	1	**5P-7854**	2	CLIP	
	40	1,2	**5S-7379**	7	BOLT (3/8-16X0.875 IN)	
	41	1	**6D-4244**	2	CLIP	
	42	1	**6V-8556**	1	NUT (1 3/16-12 THD)	
	43	1,2	**6V-8801**	10	NUT (3/8-16 THD)	
	44	2	**7X-0289**	2	BOLT (3/8-16X1.875 IN)	
	45	2	**7X-0326**	4	BOLT (1/2-13X3 IN)	
	46	2	**8D-9092**	1	PIN	
	47	2	**8T-2501**	2	BOLT (3/8-16X2 IN)	
	48	2	**8T-2502**	4	BOLT (3/8-16X1.125 IN)	
	49	2	**8T-4223**	4	WASHER-HARD (13.5X25.5X3MM THK)	
	50	1,2	**8T-4896**	15	WASHER-HARD (10.2X18.5X2.5MM THK)	
	51	2	**8T-4994**	2	WASHER-HARD (20X36.5X3.5MM THK)	
	52	2	**8T-7008**	4	BOLT (3/8-16X3 IN)	
	53	1	**8W-5962**	1	CLAMP	
	54	1	**9B-7237**	1	BOLT (3/8-16X1.25 IN)	

I-SEE HOSE FABRICATION GUIDE
Y-SEPARATE ILLUSTRATION

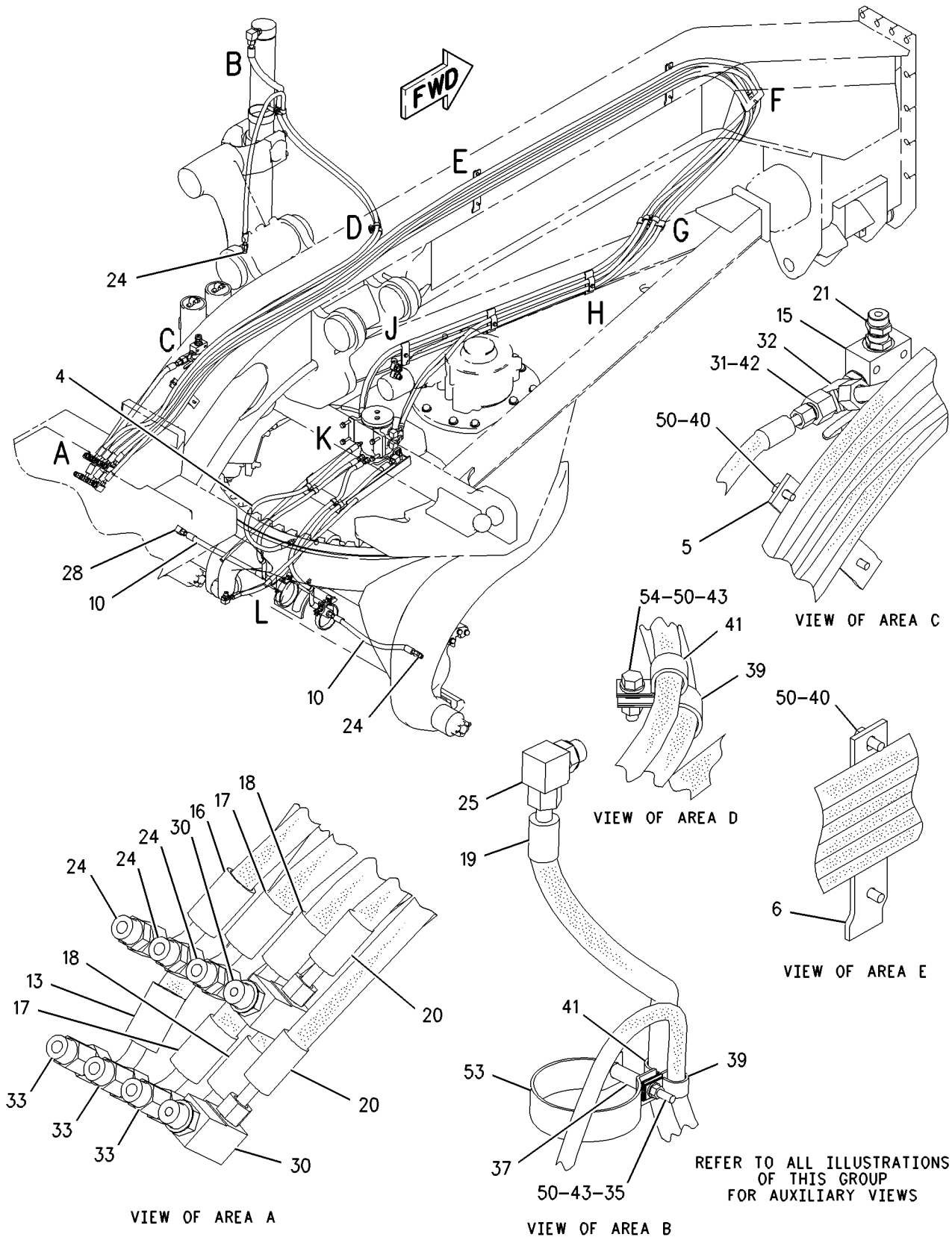

GRAPHIC #1 g00935290

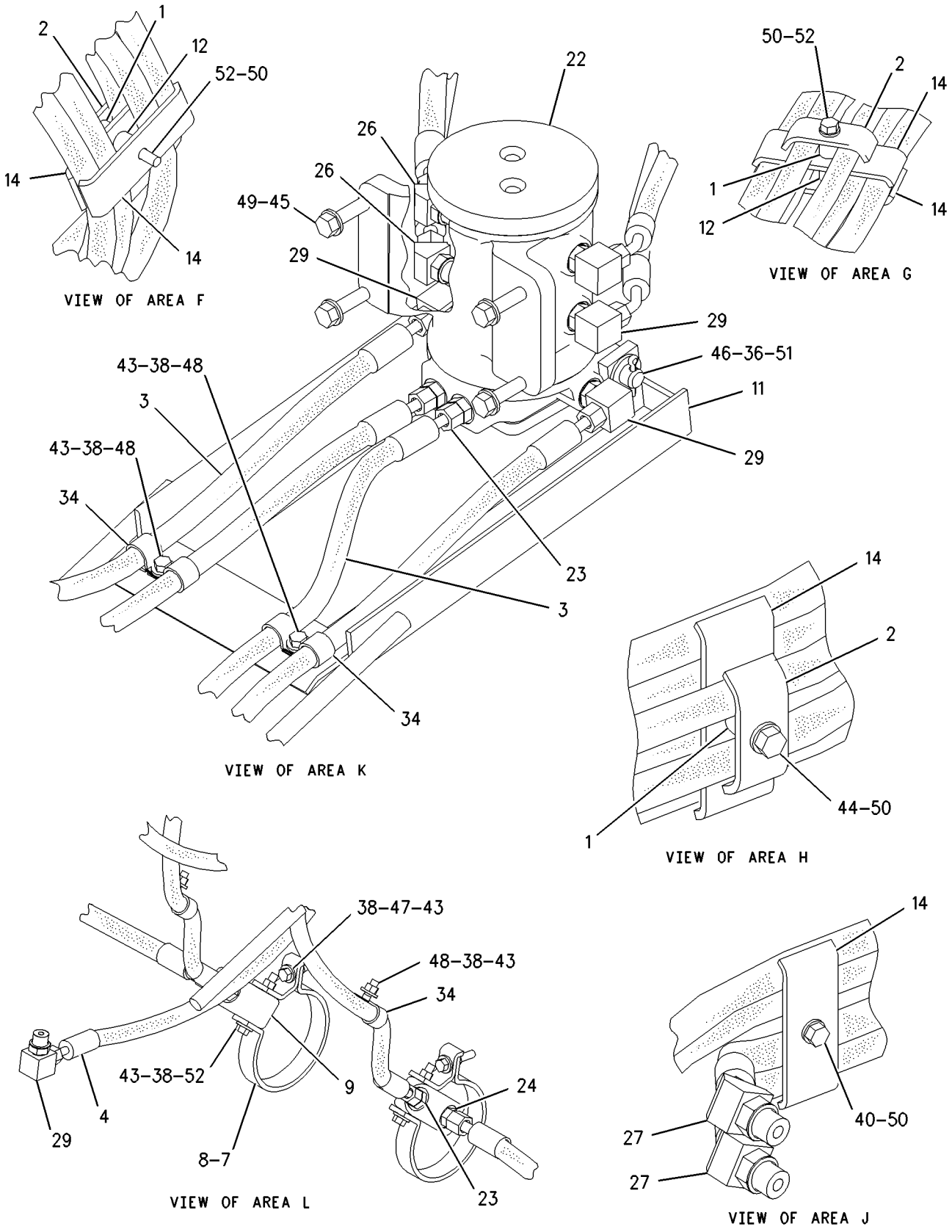

GRAPHIC #2

g00935292

HYDRAULIC SYSTEM

188-7195 LINES GP-HYDRAULIC–RH

S/N: ATS1-UP
4 CIRCUITS
PART OF 162-5607 GENERAL AR

SMCS-5057 **i01795827**

NOTE	REF NO	GRAPHIC REF	PART NUMBER	QTY	PART NAME 1 2 3 4 5 6 (PRODUCT LEVEL)	SEE PAGE
	1	1	**4J-5468**	2	CLAMP	
	2	1,2	**5D-2645**	5	CLAMP	
	3	2	**5P-0599**	1	CLAMP	
	4	1	**8W-3044**	1	CLAMP	
	5	1	**8W-3045**	2	CLAMP	
	6	1,2	**9D-0953**	3	SPACER (.406X.75X.88 IN THK)	
	7	2	**9R-8870**	1	BLOCK	
I	8	1	**108-0705**	1	HOSE AS	
I	9	1	**108-0709**	1	HOSE AS	
	10	1,2	**108-1610**	5	CLAMP	
Y	11	1	**112-2240**	1	VALVE GP-SOLENOID & MANIFOLD (BLADE CUSHION)(RH)	589
I	12	1	**114-2882**	1	HOSE AS	
I	13	1	**114-2884**	1	HOSE AS	
I	14	1	**114-2885**	1	HOSE AS	
I	15	1	**114-2886**	1	HOSE AS	
I	16	1	**114-2887**	1	HOSE AS	
I	17	1	**114-2891**	1	HOSE AS	
I	18	1	**130-2682**	1	HOSE AS	
I	19	1	**130-2684**	1	HOSE AS	
I	20	1	**167-0959**	1	HOSE AS	
	21	1	*171-6466*	1	UNION AS	
		1	**5P-9810**	1	UNION	
		1	**3D-2824**	2	SEAL-O-RING	
	22	1	*148-8312*	1	ADAPTER AS	
		1	**3T-4965**	1	ADAPTER-O-RING	
		1	**3D-2824**	1	SEAL-O-RING	
	23	1,2	*148-8340*	6	CONNECTOR GP	
					(EACH INCLUDES)	
		1,2	**6V-8639**	1	CONNECTOR	
		1,2	**3K-0360**	1	SEAL-O-RING	
		1,2	**6V-8398**	1	SEAL-O-RING	
	24	1	*148-8346*	2	ELBOW GP	
					(EACH INCLUDES)	
		1	**8T-1686**	1	ELBOW	
		1	**3K-0360**	1	SEAL-O-RING	
		1	**6V-8398**	1	SEAL-O-RING	
	25	2	**148-8347**	1	ELBOW GP	
		2	**6V-9007**	1	ELBOW	
		2	**3D-2824**	1	SEAL-O-RING	
		2	**6V-9746**	1	SEAL-O-RING	
	26	1	**148-8354**	2	ELBOW GP	
					(EACH INCLUDES)	
		1	**6V-9002**	1	ELBOW	
		1	**3K-0360**	1	SEAL-O-RING	
		1	**6V-8398**	1	SEAL-O-RING	
	27	1,2	*148-8364*	2	ELBOW AS	
					(EACH INCLUDES)	
		1,2	**6V-8625**	1	ELBOW	
		1,2	**3K-0360**	1	SEAL-O-RING	
		1,2	**6V-8398**	1	SEAL-O-RING	
	28	1	*148-8418*	1	REDUCER GP	
		1	**6V-8942**	1	REDUCER-O-RING (FACE)	
		1	**6V-8398**	1	SEAL-O-RING	
	29	1	*148-8444*	2	TEE GP	
					(EACH INCLUDES)	

188-7195 **LINES GP-HYDRAULIC** *(contd.)* **i01795827**

NOTE	REF NO	GRAPHIC REF	PART NUMBER	QTY	PART NAME 1 2 3 4 5 6 (PRODUCT LEVEL)	SEE PAGE
		1	**6V-9837**	1	TEE-SWIVEL	
		1	**6V-8398**	2	SEAL-O-RING	
	30	1	*153-6259*	1	TEE GP	
		1	**6V-8777**	1	TEE-FACE SEAL	
		1	**3D-2824**	1	SEAL-O-RING	
		1	**6V-9746**	2	SEAL-O-RING	
	31	1,2	*164-5608*	5	CONNECTOR GP	
					(EACH INCLUDES)	
		1,2	**8T-1687**	1	CONNECTOR	
		1,2	**3K-0360**	1	SEAL-O-RING	
		1,2	**6V-8398**	1	SEAL-O-RING	
	32	2	**2H-9889**	1	BOLT (3/8-16X2.375 IN)	
	33	2	**3S-2093**	1	STRAP-CABLE	
	34	2	**5B-2301**	1	SPACER (2 1/16 IN LG)	
	35	1	**5P-7854**	2	CLIP	
	36	1,2	**5S-7379**	14	BOLT (3/8-16X0.875 IN)	
	37	2	**6D-1641**	1	CLIP	
	38	1,2	**6D-4244**	2	CLIP	
	39	1	**6V-8556**	1	NUT (1 3/16-12 THD)	
	40	2	**6V-8801**	2	NUT (3/8-16 THD)	
	41	1,2	**7X-0289**	3	BOLT (3/8-16X1.875 IN)	
	42	1,2	**8T-4896**	21	WASHER-HARD (10.2X18.5X2.5MM THK)	
	43	2	**8W-5962**	1	CLAMP	
	44	2	**9B-7237**	1	BOLT (3/8-16X1.25 IN)	

I-SEE HOSE FABRICATION GUIDE
Y-SEPARATE ILLUSTRATION

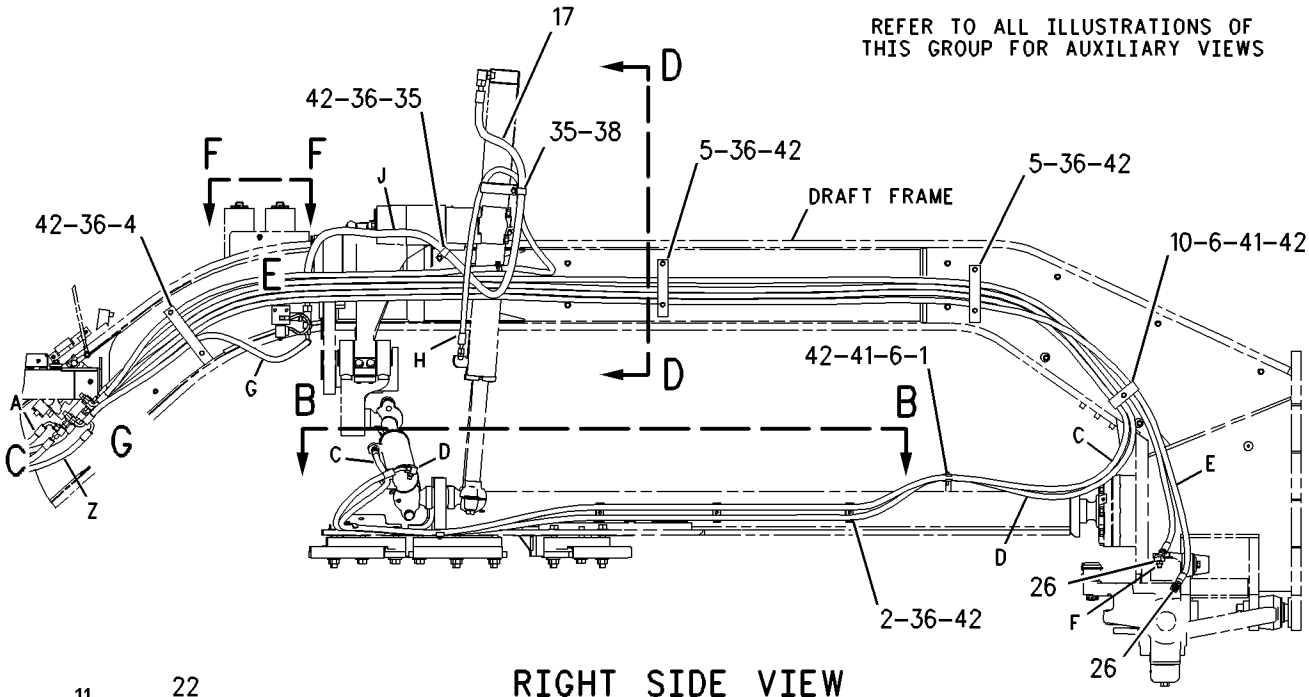

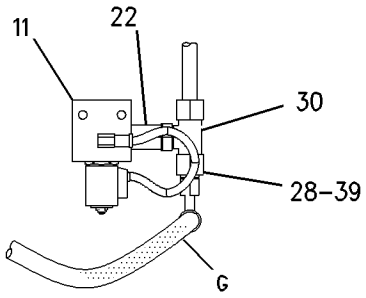

VIEW OF AREA E

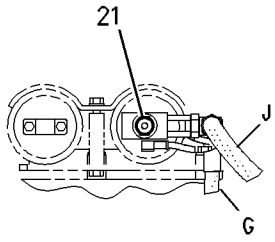

VIEW F-F

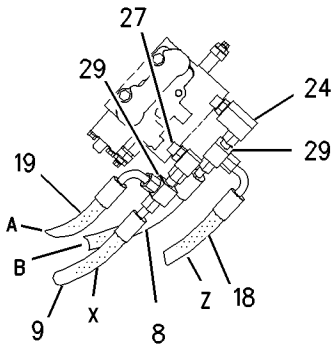

VIEW OF AREA G
(ARTICULATION)
(FIRST VALVE FROM FRAME)

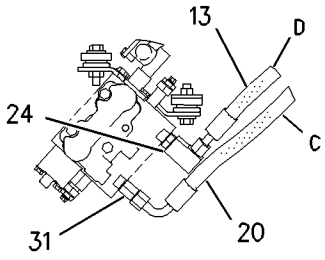

VIEW OF AREA G
(CENTERSHIFT)
(SECOND VALVE FROM FRAME)

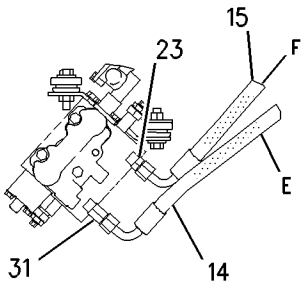

VIEW OF AREA G
(WHEEL LEAN)
(THIRD VALVE FROM FRAME)

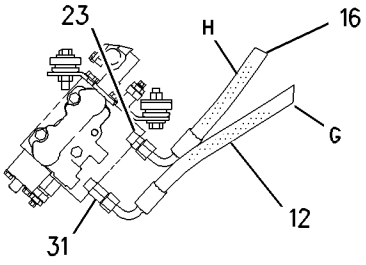

VIEW OF AREA G
(LIFT CYLINDER)
(FOURTH VALVE FROM FRAME)

GRAPHIC #1 g00939452

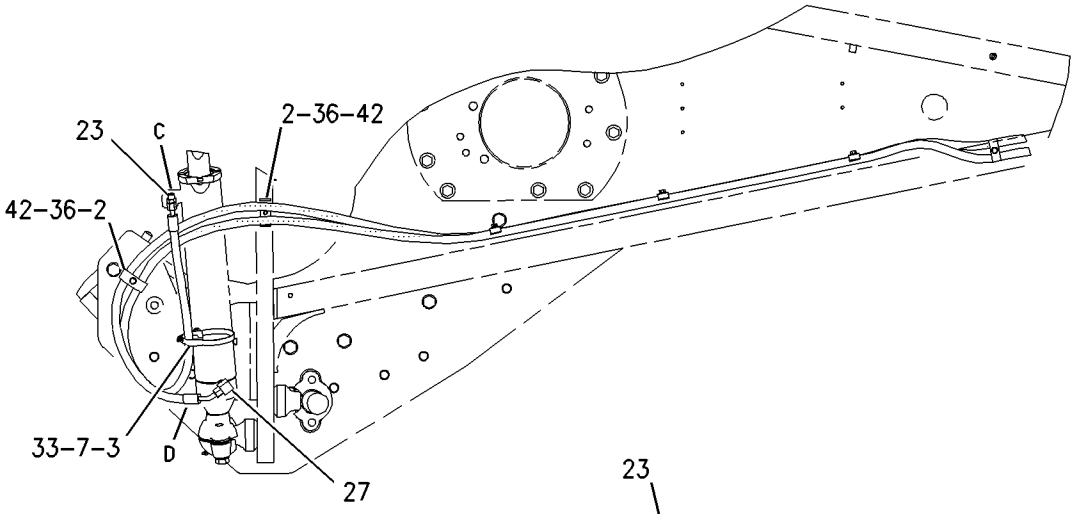

VIEW B-B

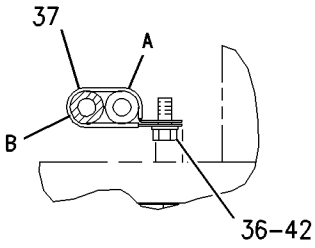

SECTION J-J

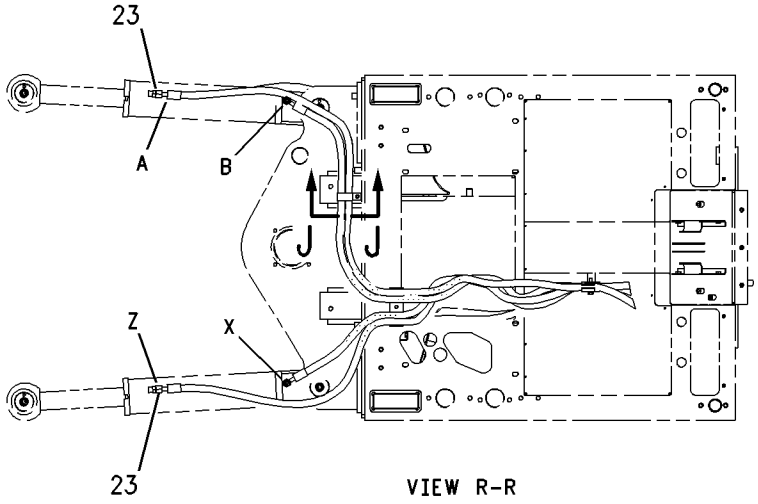

VIEW R-R

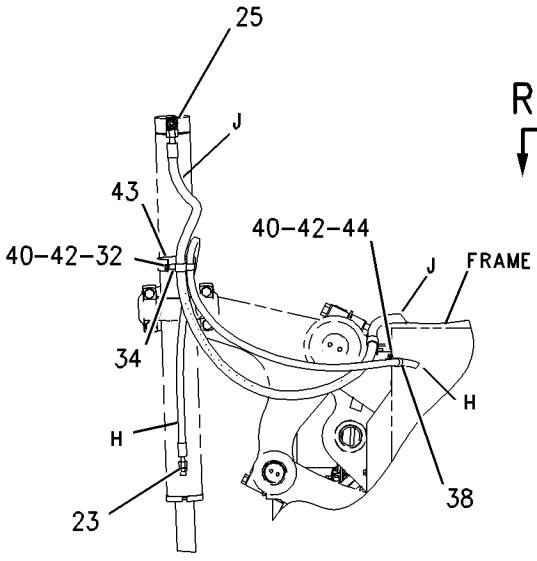

VIEW D-D

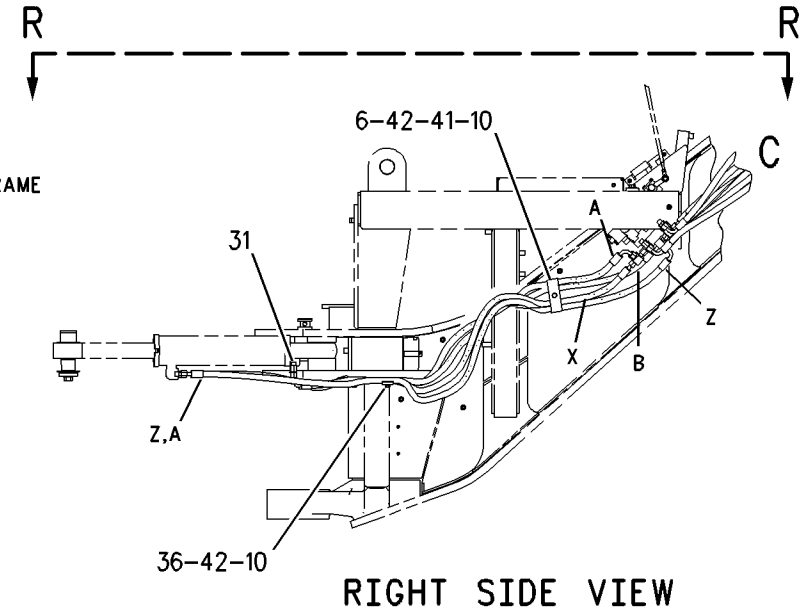

RIGHT SIDE VIEW

GRAPHIC #2 g00939453

HYDRAULIC SYSTEM

175-6983 LINES GP-HYDRAULIC FAN–RADIATOR

S/N: ATS1-UP

PART OF 184-1670, 201-1054 COOLING AR

ALSO AN ATTACHMENT

SMCS-1359, 1386, 1387, 5057 **i01714301**

NOTE	REF NO	GRAPHIC REF	PART NUMBER	QTY	PART NAME 1 2 3 4 5 6 (PRODUCT LEVEL)	SEE PAGE
I	1	1	**4E-9628**	2	HOSE AS	
Y	2	1	**167-1709**	1	SENSOR GP-PRESSURE (FAN DRIVE)	203
	3	1	**175-0447**	1	VALVE AS-CHECK (FAN DRIVE)	
	4	1	**175-7049**	1	BODY	
		1	*148-8327*	1	CONNECTOR GP	
	5	1	**6V-8637**	1	CONNECTOR-SEAL	
		1	**3D-2824**	1	SEAL-O-RING	
		1	**6V-9746**	1	SEAL-O-RING	
	6	1	*148-8347*	1	ELBOW GP	
		1	**6V-9007**	1	ELBOW	
		1	**3D-2824**	1	SEAL-O-RING	
		1	**6V-9746**	1	SEAL-O-RING	
	7	1	*148-8392*	1	ELBOW GP	
		1	**6V-9853**	1	ELBOW-SWIVEL	
		1	**6V-9746**	1	SEAL-O-RING	
	8	1	*148-8449*	1	TEE GP-SWIVEL	
		1	**6V-9839**	1	TEE-SWIVEL	
		1	**6V-9746**	2	SEAL-O-RING	
M	9	1	**5C-9553**	3	BOLT (M6X1X16MM)	
	10	1	**7J-0204**	1	SEAL-O-RING	
	11	1	**9X-8256**	3	WASHER (6.6X12X2MM THK)	

I-SEE HOSE FABRICATION GUIDE
M-METRIC PART
Y-SEPARATE ILLUSTRATION

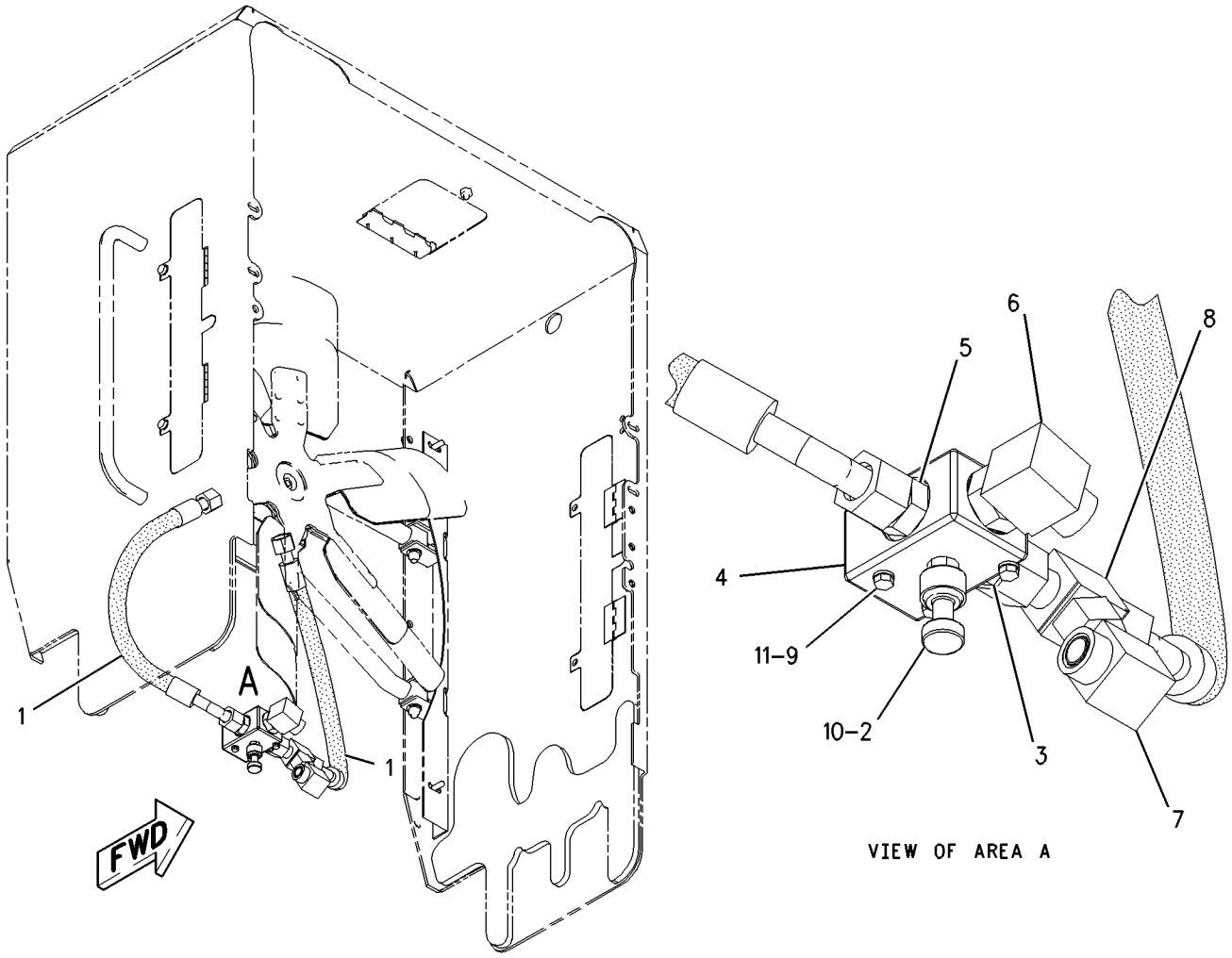

GRAPHIC #1 g00882277

HYDRAULIC SYSTEM

188-7254 LINES GP-HYDRAULIC FAN

S/N: ATS1-UP

PART OF 162-5607 GENERAL AR

SMCS-1359, 1386, 1387, 5057 **i01709753**

NOTE	REF NO	GRAPHIC REF	PART NUMBER	QTY	PART NAME 1 2 3 4 5 6 (PRODUCT LEVEL)	SEE PAGE
I	1	1	**2U-9766**	1	HOSE AS	
	2	1	**6V-0852**	1	CAP-DUST	
I	3	1	**131-5479**	1	HOSE AS	
	4	1	*148-8440*	1	TEE GP-ORFS	
		1	**8C-0569**	1	TEE-O-RING	
		1	**3D-2824**	1	SEAL-O-RING	
		1	**6V-9746**	1	SEAL-O-RING	
	5	1	*150-4027*	1	FITTING GP	
		1	**3E-2310**	1	TEE	
		1	**3J-1907**	1	SEAL-O-RING	
		1	**6V-8397**	1	SEAL-O-RING	
I	6	1	**186-2863**	1	HOSE AS	
Y	7	1	**193-5765**	1	VALVE GP-SOLENOID & MANIFOLD	590
I	8	1	**205-7203**	1	HOSE AS	
I	9	1	**205-7204**	1	HOSE AS	
	10	1	*148-8313*	1	ADAPTER GP	
		1	**5P-6944**	1	ADAPTER-STRAIGHT THREAD	
		1	**3K-0360**	1	SEAL-O-RING	
	11	1	*148-8325*	1	CONNECTOR GP	
		1	**6V-8641**	1	CONNECTOR	
		1	**3J-1907**	1	SEAL-O-RING	
		1	**4J-5477**	1	SEAL-O-RING	
	12	1	*148-8361*	1	ELBOW GP	
		1	**6V-9200**	1	ELBOW	
		1	**3J-7354**	1	SEAL-O-RING	
		1	**6V-8397**	1	SEAL-O-RING	
	13	1	*148-8368*	1	ELBOW GP	
		1	**6V-8627**	1	ELBOW	
		1	**3J-1907**	1	SEAL-O-RING	
		1	**4J-5477**	1	SEAL-O-RING	
	14	1	*148-8378*	2	ELBOW GP	
		1	**6V-8724**	1	ELBOW	
		1	**3J-1907**	1	SEAL-O-RING	
		1	**6V-8397**	1	SEAL-O-RING	
	15	1	*164-5567*	1	FITTING GP	
		1	**6V-3965**	1	FITTING AS	
		1	**3J-1907**	1	SEAL-O-RING	
	16	1	**4D-7735**	1	CLIP	
	17	1	**5M-3062**	1	BOLT (3/8-16X0.75 IN)	
	18	1	**5P-7854**	5	CLIP	
	19	1	**5S-7379**	1	BOLT (3/8-16X0.875 IN)	
	20	1	**6V-1889**	7	CLIP	
	21	1	**8M-2773**	1	CLIP	
	22	1	**8T-4121**	13	WASHER-HARD (11X21X2.5MM THK)	
M	23	1	**8T-4137**	11	BOLT (M10X1.5X20MM)	
M	24	1	**8T-4185**	2	BOLT (M10X1.5X50MM)	
	25	1	**8T-4896**	2	WASHER-HARD (10.2X18.5X2.5MM THK)	

I-SEE HOSE FABRICATION GUIDE
M-METRIC PART
Y-SEPARATE ILLUSTRATION

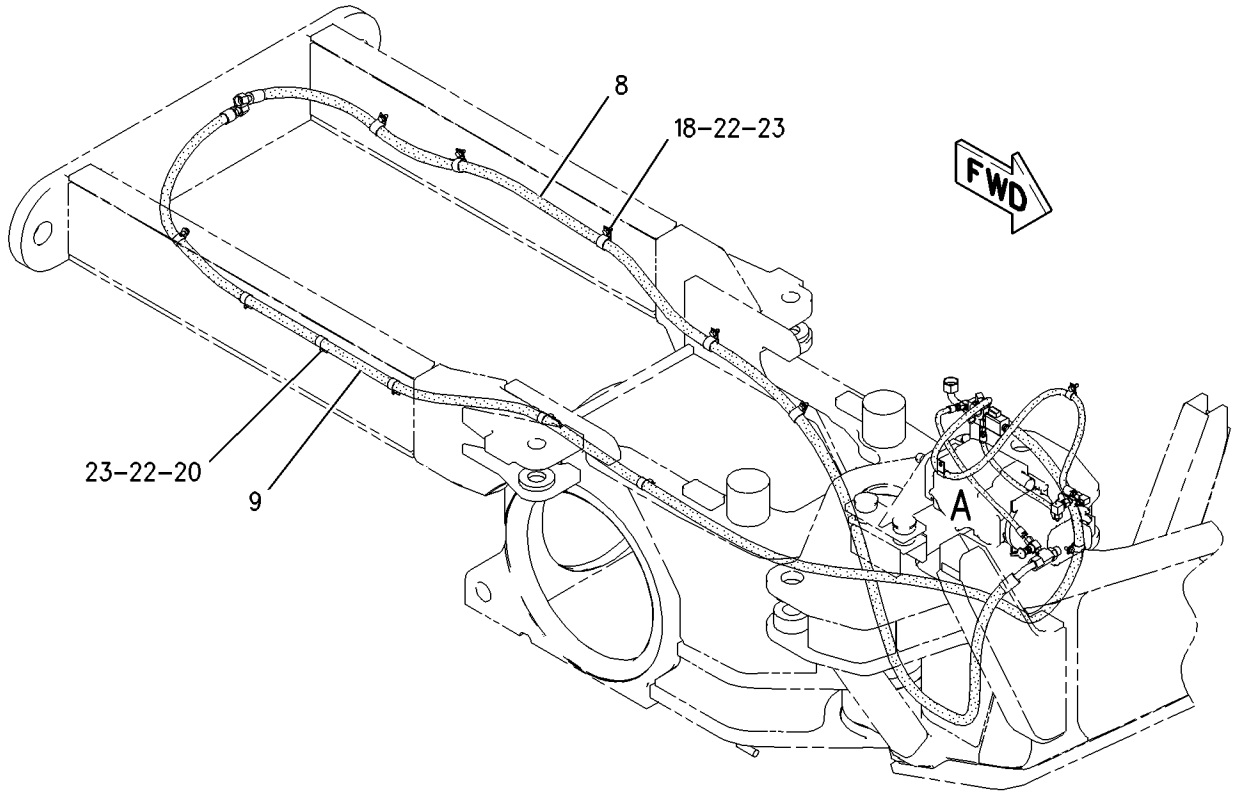

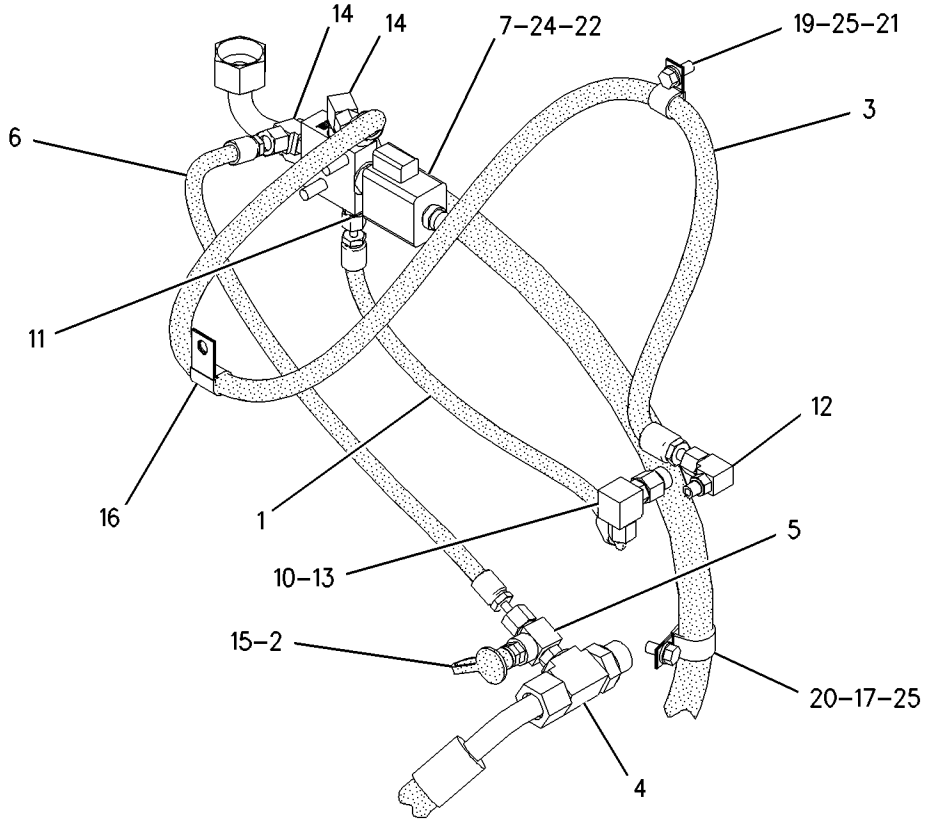

VIEW OF AREA A

GRAPHIC #1 g00912057

HYDRAULIC SYSTEM

188-0756 LINES GP-PUMP

S/N: ATS1-UP

PART OF 162-5607 GENERAL AR

SMCS-5057 **i01795772**

NOTE	REF NO	GRAPHIC REF	PART NUMBER	QTY	PART NAME 1 2 3 4 5 6 (PRODUCT LEVEL)	SEE PAGE
	1	1	**5P-1295**	2	HOSE	
	2	1	**5P-4868**	4	CLAMP-HOSE	
	3	1	**6E-1926**	1	ADAPTER	
	4	1	**5P-1291**	1	HOSE	
I	5	1	**8W-3166**	1	HOSE AS	
I	6	1	**8X-7973**	1	HOSE AS	
I	7	1	**8X-7974**	1	HOSE AS	
	8	1	**8X-8812**	1	ELBOW	
	9	1	**9M-0164**	4	CLAMP-HOSE	
Y	10	1	**9T-5957**	1	VALVE GP-COMBINATION	522
	11	1	*106-8715*	1	ELBOW GP	
		1	**8C-8400**	1	ELBOW	
		1	**3D-2824**	1	SEAL-O-RING	
		1	**6V-9746**	1	SEAL-O-RING	
I	12	1	**112-9434**	1	HOSE AS	
	13	1	**113-9533**	1	HOSE	
I	14	1	**116-3211**	1	HOSE AS	
I	15	1	**130-1813**	1	HOSE AS	
I	16	1	**130-2686**	1	HOSE AS	
	17	1	**132-3065**	1	TUBE AS	
I	18	1	**160-7703**	1	HOSE AS	
	19	1	*164-5567*	1	FITTING GP	
		1	**6V-3965**	1	FITTING AS	
		1	**3J-1907**	1	SEAL-O-RING	
	20	1	*165-7014*	1	FITTING GP	
		1	**8C-3309**	1	TEE	
		1	**3J-1907**	1	SEAL-O-RING	
		1	**4J-5477**	1	SEAL-O-RING	
I	21	1	**186-2784**	1	HOSE AS	
	22	1	*188-2008*	1	ELBOW AS	
		1	**8T-7970**	1	ELBOW	
		1	**3D-2824**	1	SEAL-O-RING	
		1	**5K-9090**	1	SEAL-O-RING	
	23	1	**203-9378**	1	TUBE	
	24	1	**203-9379**	1	TUBE AS	
	25	1	**214-4679**	1	TUBE	
M	26	1	**085-8091**	4	BOLT (M10X1.5X55MM)	
	27	1	*148-8316*	2	CONNECTOR AS	
					(EACH INCLUDES)	
		1	**6V-8647**	1	CONNECTOR	
		1	**3J-7354**	1	SEAL-O-RING	
		1	**4J-5477**	1	SEAL-O-RING	
	28	1	*148-8323*	1	CONNECTOR GP	
		1	**6V-9875**	1	CONNECTOR	
		1	**2S-4078**	1	SEAL-O-RING	
		1	**5K-9090**	1	SEAL-O-RING	
	29	1	**148-8347**	4	ELBOW GP	
					(EACH INCLUDES)	
		1	**6V-9007**	1	ELBOW	
		1	**3D-2824**	1	SEAL-O-RING	
		1	**6V-9746**	1	SEAL-O-RING	
	30	1	*148-8362*	1	ELBOW GP	
		1	**8T-6684**	1	ELBOW	
		1	**3D-2824**	1	SEAL-O-RING	
		1	**5K-9090**	1	SEAL-O-RING	
	31	1	*148-8363*	1	ELBOW GP	

188-0756 **LINES GP-PUMP** ***(contd.)*** **i01795772**

NOTE	REF NO	GRAPHIC REF	PART NUMBER	QTY	PART NAME 1 2 3 4 5 6 (PRODUCT LEVEL)	SEE PAGE
		1	**6V-9876**	1	ELBOW	
		1	**3K-0360**	1	SEAL-O-RING	
		1	**6V-8397**	1	SEAL-O-RING	
	32	1	*148-8368*	2	ELBOW GP	
					(EACH INCLUDES)	
		1	**6V-8627**	1	ELBOW	
		1	**3J-1907**	1	SEAL-O-RING	
		1	**4J-5477**	1	SEAL-O-RING	
	33	1	*148-8417*	1	REDUCER AS	
		1	**6V-8941**	1	REDUCER	
		1	**6V-8397**	1	SEAL-O-RING	
	34	1	*148-8429*	2	TEE AS	
					(EACH INCLUDES)	
		1	**6V-9840**	1	TEE-SWIVEL	
		1	**5K-9090**	2	SEAL-O-RING	
	35	1	*150-5968*	1	TEE GP	
		1	**6V-9835**	1	TEE	
		1	**4J-5477**	2	SEAL-O-RING	
	36	1	*153-6237*	1	ELBOW GP	
		1	**6V-9004**	1	ELBOW	
		1	**3D-2824**	1	SEAL-O-RING	
		1	**6V-9746**	1	SEAL-O-RING	
	37	1	*153-6259*	1	TEE GP	
		1	**6V-8777**	1	TEE-FACE SEAL	
		1	**3D-2824**	1	SEAL-O-RING	
		1	**6V-9746**	2	SEAL-O-RING	
	38	1	**1P-3705**	1	SEAL-RECTANGULAR	
	39	1	**4J-0521**	2	SEAL-O-RING	
	40	1	**5H-8848**	1	SEAL-O-RING	
	41	1	**5P-8167**	1	BOLT (3/8-16X0.625 IN)	
	42	1	**6V-0852**	1	CAP-DUST	
M	43	1	**6V-5696**	1	BOLT (M12X1.75X80MM)	
	44	1	**6V-8556**	1	NUT (1 3/16-12 THD)	
	45	1	**8M-2773**	2	CLIP	
M	46	1	**8T-0646**	3	BOLT (M12X1.75X110MM)	
M	47	1	**8T-3957**	1	BOLT-HEX SOCKET (M12X1.75X30MM)	
	48	1	**8T-4121**	4	WASHER-HARD (11X21X2.5MM THK)	
	49	1	**8T-4223**	4	WASHER-HARD (13.5X25.5X3MM THK)	
	50	1	**8T-4896**	1	WASHER-HARD (10.2X18.5X2.5MM THK)	
M	51	1	**8T-4956**	4	BOLT (M12X1.75X35MM)	

I-SEE HOSE FABRICATION GUIDE
M-METRIC PART
Y-SEPARATE ILLUSTRATION

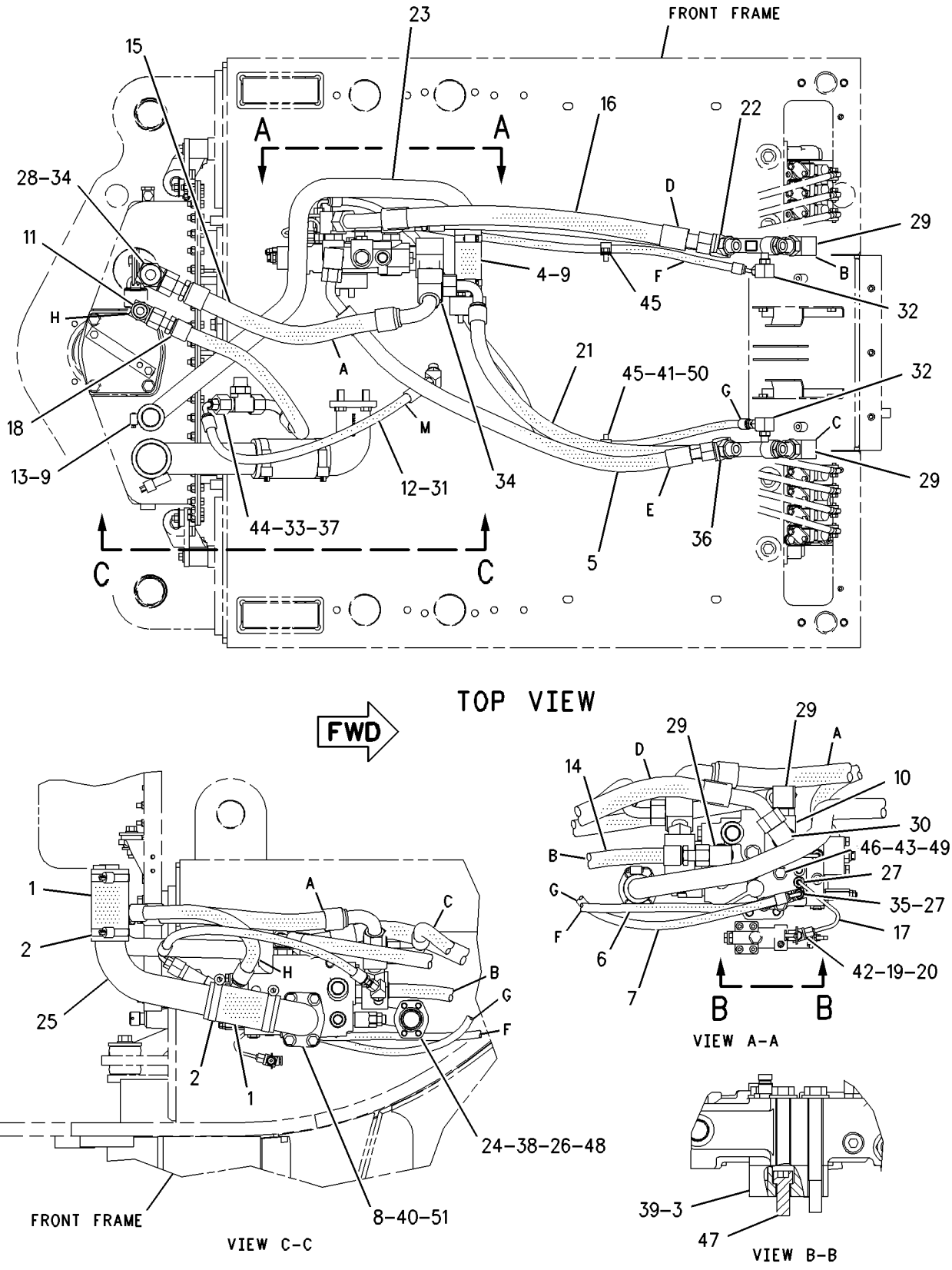

GRAPHIC #1 g00940365

MEMORANDA

HYDRAULIC SYSTEM

166-3308 LINES GP-RIPPER

S/N: ATS1-UP

PART OF 184-7305, 184-7307, 184-7308, 194-4020 CONTROL AR-HYDRAULIC

AN ATTACHMENT

SMCS-5057 **i01819318**

NOTE	REF NO	GRAPHIC REF	PART NUMBER	QTY	PART NAME 1 2 3 4 5 6 (PRODUCT LEVEL)	SEE PAGE
J	1	1	**7F-4617**	1	SPACER (.41X.75X1.31 IN THK)	
I	3	1	**8W-0206**	2	HOSE AS	
	4	1	**8W-8527**	6	SLEEVE	
	5	1	*105-7167*	2	ADAPTER GP	
					(EACH INCLUDES)	
		1	**6V-8397**	2	SEAL-O-RING	
		1	**8T-5890**	1	UNION-BULKHEAD	
JM	6	1	**116-3715**	1	STUD-TAPERLOCK (M10X1.5X85MM)	
	7	1	*148-8374*	1	ELBOW GP	
		1	**6V-8723**	1	ELBOW	
		1	**3K-0360**	1	SEAL-O-RING	
		1	**6V-8397**	1	SEAL-O-RING	
	8	1	*148-8383*	1	ELBOW AS	
		1	**8T-1683**	1	ELBOW	
		1	**3K-0360**	1	SEAL-O-RING	
		1	**6V-8397**	1	SEAL-O-RING	
J	9	1	**1S-0994**	2	CLIP	
	10	1	**5M-3062**	1	BOLT (3/8-16X0.75 IN)	
	11	1	**6D-4247**	1	CLIP	
	12	1	**6V-9168**	2	NUT (11/16-16 THD)	
	13	1	**6V-9829**	2	CAP AS	
J	14	1	**8T-4121**	1	WASHER-HARD (11X21X2.5MM THK)	
JM	15	1	**8T-4133**	1	NUT (M10X1.5 THD)	
	16	1	**8T-4896**	1	WASHER-HARD (10.2X18.5X2.5MM THK)	

I-SEE HOSE FABRICATION GUIDE
J-PARTS NOT USED ON AWD OR 120D
M-METRIC PART

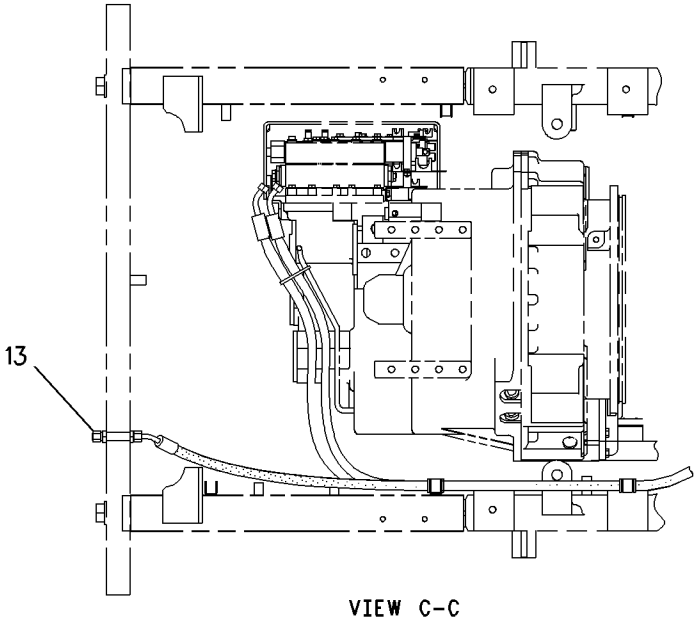

VIEW C-C

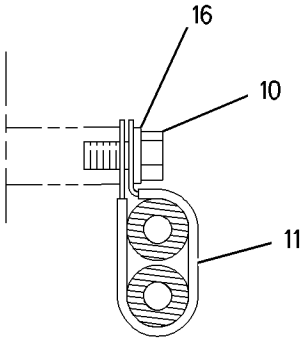

SECTION B-B

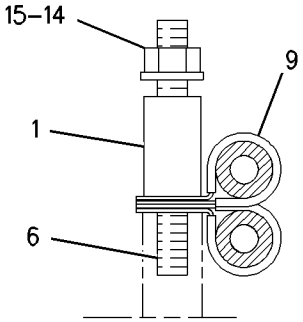

SECTION A-A

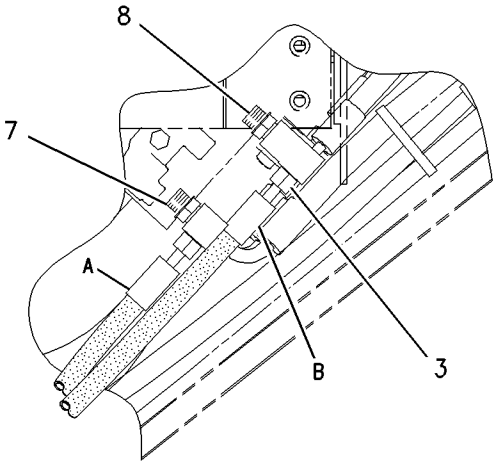

VIEW OF AREA E

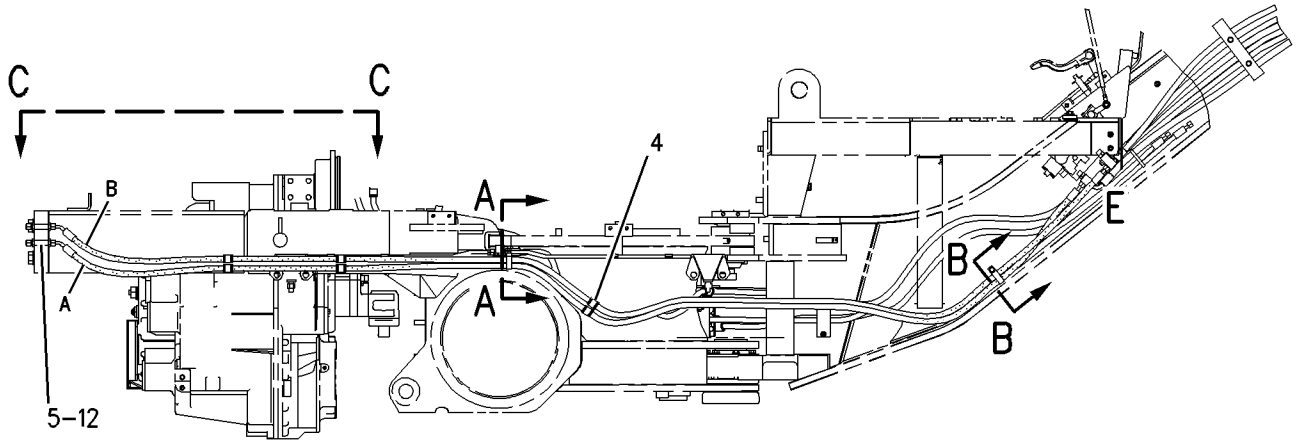

RIGHT SIDE VIEW

GRAPHIC #1

g00928693

HYDRAULIC SYSTEM

166-3406 LINES GP-RIPPER

S/N: ATS1-UP
PART OF 166-3405, 194-7985 CONTROL AR-HYDRAULIC
AN ATTACHMENT

SMCS-5057 **i01827865**

NOTE	REF NO	GRAPHIC REF	PART NUMBER	QTY	PART NAME 1 2 3 4 5 6 (PRODUCT LEVEL)	SEE PAGE
	1	1	*185-6645*	2	UNION AS	
					(EACH INCLUDES)	
		1	**185-6644**	1	UNION	
		1	**6V-8398**	2	SEAL-O-RING	
I	2	1	**201-3703**	2	HOSE AS	
	3	1	*148-8346*	1	ELBOW GP	
		1	**8T-1686**	1	ELBOW	
		1	**3K-0360**	1	SEAL-O-RING	
		1	**6V-8398**	1	SEAL-O-RING	
	4	1	*148-8364*	1	ELBOW GP	
		1	**6V-8625**	1	ELBOW	
		1	**3K-0360**	1	SEAL-O-RING	
		1	**6V-8398**	1	SEAL-O-RING	
	5	1	**5M-3062**	1	BOLT (3/8-16X0.75 IN)	
	6	1	**6D-1641**	6	CLIP	
	7	1	**6V-9169**	2	NUT-BULKHEAD (13/16-16 THD)	
	8	1	**8T-4896**	1	WASHER-HARD (10.2X18.5X2.5MM THK)	

I-SEE HOSE FABRICATION GUIDE

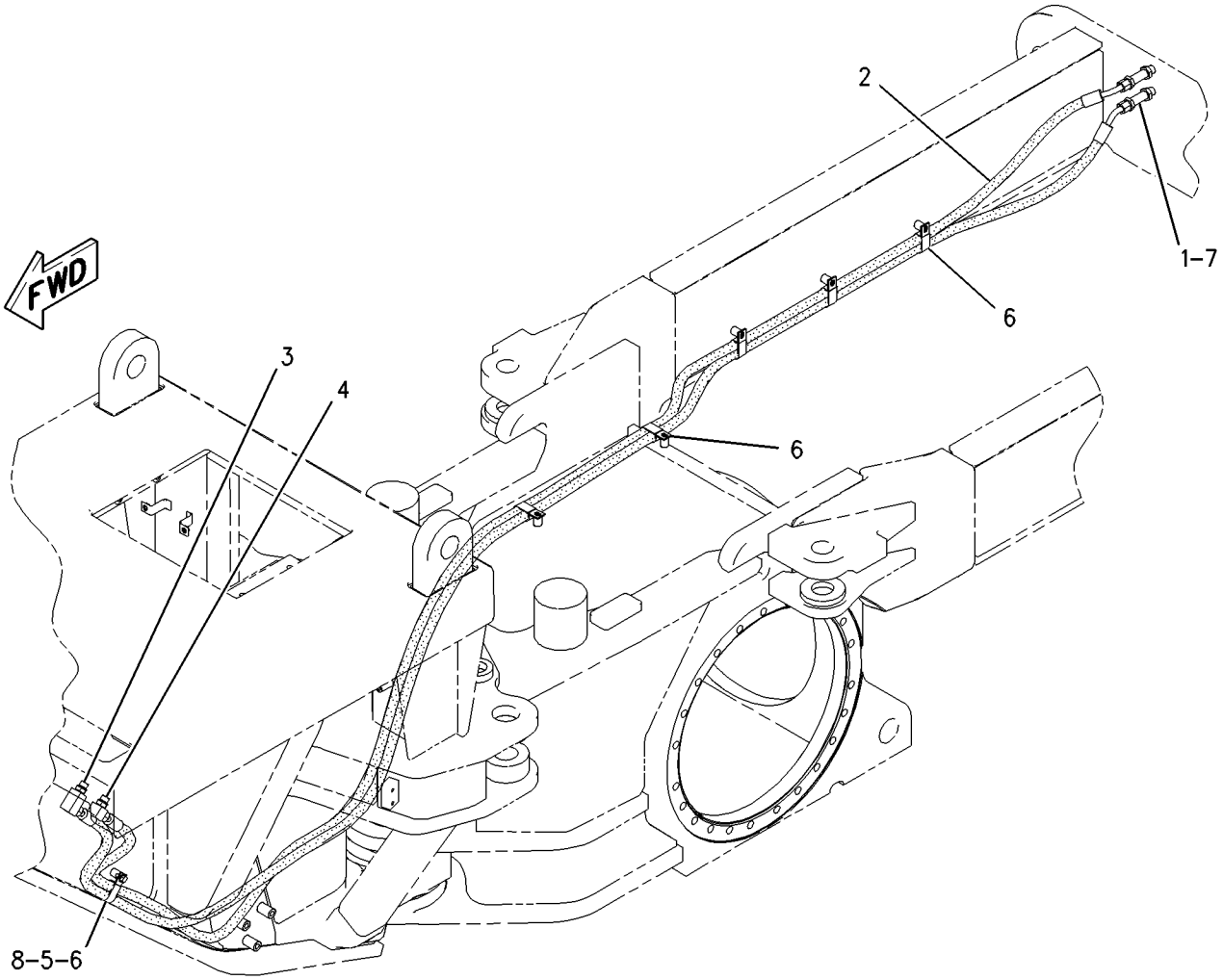

GRAPHIC #1 g00933932

207-3736 LINES GP-RIPPER

S/N: ATS1-UP
PART OF 207-2428 RIPPER AR
AN ATTACHMENT

SMCS-5057 **i01828888**

NOTE	REF NO	GRAPHIC REF	PART NUMBER	QTY	PART NAME 1 2 3 4 5 6 (PRODUCT LEVEL)	SEE PAGE
	1	1	**1B-5964**	1	SPACER (.875IN LG)	
	2	1	**5H-3473**	2	CLAMP	
I	3	1	**8E-5539**	1	HOSE AS	
I	4	1	**8X-5561**	1	HOSE AS	
	5	1	**2M-9780**	2	SEAL-O-RING	
	6	1	**5S-7383**	1	BOLT (3/8-16X1.75 IN)	
	7	1	**6V-8398**	4	SEAL-O-RING	
	8	1	**6V-8624**	1	ELBOW	
	9	1	**6V-8721**	1	ELBOW	
	10	1	**6V-8801**	1	NUT (3/8-16 THD)	

I-SEE HOSE FABRICATION GUIDE

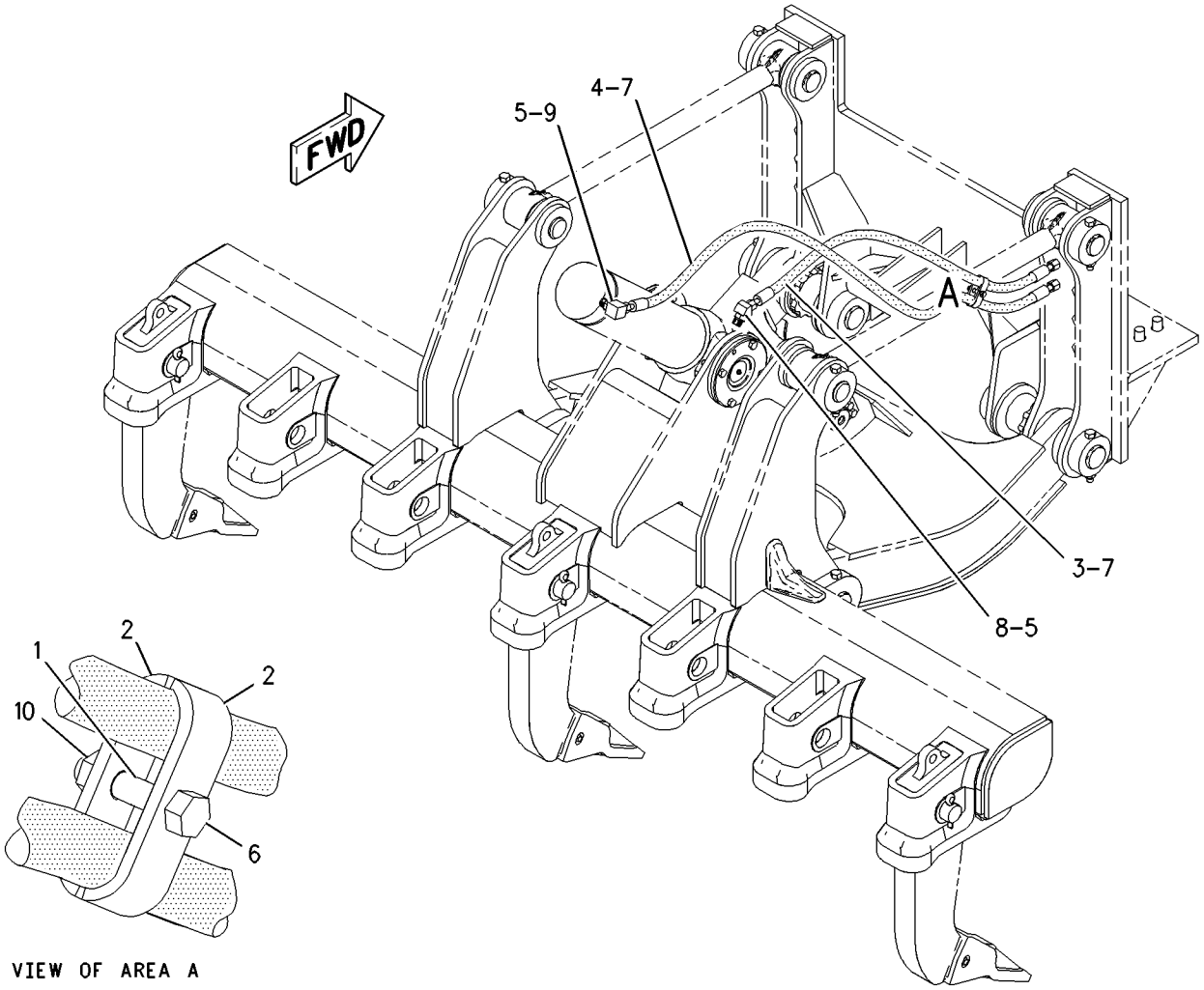

GRAPHIC #1 g00937192

HYDRAULIC SYSTEM

166-3333 LINES GP-SECONDARY STEERING

S/N: ATS1-UP
PART OF 166-3310 STEERING AR-SECONDARY
AN ATTACHMENT

SMCS-4304 **i01773622**

NOTE	REF NO	GRAPHIC REF	PART NUMBER	QTY	PART NAME 1 2 3 4 5 6 (PRODUCT LEVEL)	SEE PAGE
	1	1	**5B-8978**	1	TEE	
	2	1	**9T-1013**	1	VALVE AS-CHECK (SECONDARY STEERING)	
		1	**3K-0360**	1	SEAL-O-RING	
		1	**6V-8398**	1	SEAL-O-RING	
	3	1	**9T-8071**	1	VALVE GP-RELIEF (SECONDARY STEERING)	
I	4	1	**157-8616**	1	HOSE AS	
I	5	1	**108-0713**	1	HOSE AS	
I	6	1	**116-7089**	1	HOSE AS	
	7	1	*171-6470*	1	VALVE GP-CHECK (SECONDARY STEERING)	
		1	**9T-6146**	1	VALVE GP-CHECK	
		1	**3J-7354**	1	SEAL-O-RING	
		1	**4J-5477**	1	SEAL-O-RING	
	8	1	*171-6728*	1	ELBOW GP	
		1	**8T-0249**	1	ELBOW-SWIVEL	
		1	**3K-0360**	1	SEAL-O-RING	
	9	1	*185-2271*	1	CONNECTOR GP	
		1	**8T-9023**	1	CONNECTOR	
		1	**3D-2824**	1	SEAL-O-RING (23.47MM ID)	
		1	**6V-9746**	1	SEAL-O-RING	
	10	1	*196-2036*	1	TEE AS	
		1	**9X-2492**	1	TEE-O-RING	
		1	**3K-0360**	1	SEAL-O-RING	
		1	**6V-8398**	1	SEAL-O-RING	
	11	1	*148-8307*	1	ADAPTER GP	
		1	**5P-8874**	1	ADAPTER	
		1	**3J-1907**	1	SEAL-O-RING	
	12	1	*148-8322*	1	CONNECTOR GP	
		1	**6V-8640**	1	CONNECTOR-SEAL	
		1	**2M-9780**	1	SEAL-O-RING	
		1	**6V-9746**	1	SEAL-O-RING	
	13	1	*148-8340*	1	CONNECTOR GP	
		1	**6V-8639**	1	CONNECTOR	
		1	**3K-0360**	1	SEAL-O-RING	
		1	**6V-8398**	1	SEAL-O-RING	
	14	1	*148-8351*	1	ELBOW GP	
		1	**6V-9849**	1	ELBOW-SWIVEL	
		1	**4J-5477**	1	SEAL-O-RING	
	15	1	*148-8364*	1	ELBOW GP	
		1	**6V-8625**	1	ELBOW	
		1	**6V-8398**	1	SEAL-O-RING	
		1	**3K-0360**	1	SEAL-O-RING	
	16	1	*150-4037*	1	TEE GP	
		1	**6V-9844**	1	TEE-SWIVEL	
		1	**6V-8398**	2	SEAL-O-RING	

I-SEE HOSE FABRICATION GUIDE

166-3333 **LINES GP-SECONDARY STEERING** *(contd.)* **i01773622**

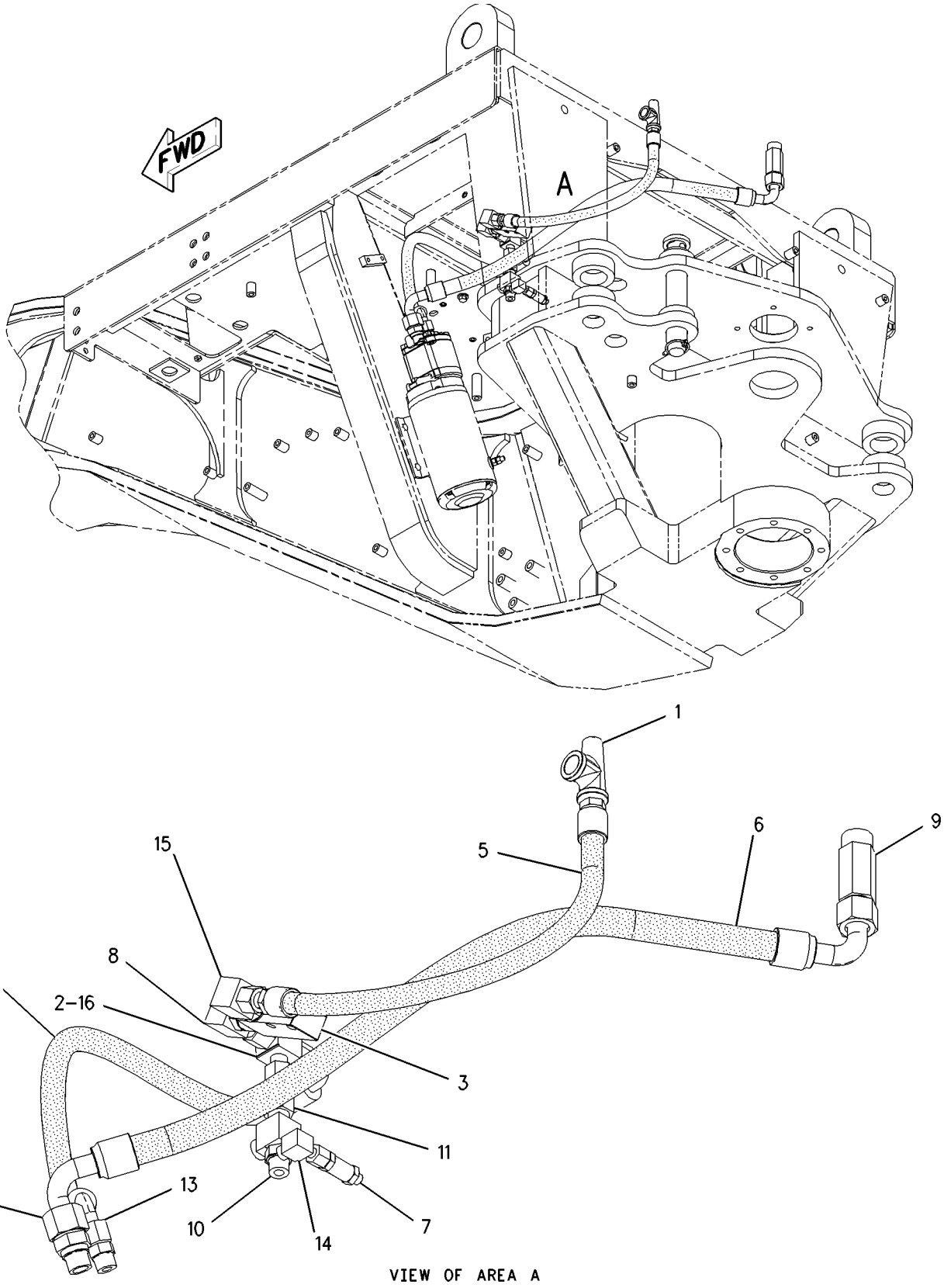

GRAPHIC #1 g00851177

HYDRAULIC SYSTEM

188-7196 LINES GP-STEERING

S/N: ATS1-UP

PART OF 162-5607 GENERAL AR

SMCS-4304 **i01795828**

NOTE	REF NO	GRAPHIC REF	PART NUMBER	QTY	PART NAME 1 2 3 4 5 6 (PRODUCT LEVEL)	SEE PAGE
	1	1	**3S-2093**	2	STRAP-CABLE	
I	2	1	**7I-5405**	2	HOSE AS	
	3	1	**7K-1181**	2	STRAP-CABLE	
I	4	1	**8W-6429**	2	HOSE AS	
I	5	1	**8X-7975**	1	HOSE AS	
Y	6	1	**9T-6129**	1	VALVE GP-RELIEF (STEERING)	581
I	7	1,2	**9U-0362**	2	HOSE AS	
I	8	1	**108-0702**	2	HOSE AS	
	9	1	**136-6330**	1	SEAL	
	10	1	**136-6331**	2	SEAL	
I	11	1	**141-4610**	2	HOSE AS	
	12	2	*148-8311*	1	ADAPTER GP	
		2	**8T-1715**	1	ADAPTER-STRAIGHT THREAD	
		2	**3K-0360**	1	SEAL-O-RING	
	13	2	*172-5761*	1	TEE AS	
		2	**126-8306**	1	TEE-O-RING	
		2	**3K-0360**	1	SEAL-O-RING	
		2	**6V-8398**	1	SEAL-O-RING	
	14	2	*148-8305*	1	ADAPTER GP	
		2	**5P-9617**	1	ADAPTER	
		2	**3J-1907**	1	SEAL-O-RING	
	15	2	**148-8316**	2	CONNECTOR AS	
					(EACH INCLUDES)	
		2	**6V-8647**	1	CONNECTOR	
		2	**3J-7354**	1	SEAL-O-RING	
		2	**4J-5477**	1	SEAL-O-RING	
	16	1	*148-8324*	2	CONNECTOR GP	
					(EACH INCLUDES)	
		1	**6V-9874**	1	CONNECTOR-SEAL	
		1	**3K-0360**	1	SEAL-O-RING	
		1	**6V-9746**	1	SEAL-O-RING	
	17	1,2	*148-8340*	8	CONNECTOR GP	
					(EACH INCLUDES)	
		1,2	**6V-8639**	1	CONNECTOR	
		1,2	**3K-0360**	1	SEAL-O-RING	
		1,2	**6V-8398**	1	SEAL-O-RING	
	18	2	*148-8351*	1	ELBOW GP	
		2	**4J-5477**	1	SEAL-O-RING	
		2	**6V-9849**	1	ELBOW-SWIVEL	
	19	1,2	*148-8364*	5	ELBOW AS	
					(EACH INCLUDES)	
		1,2	**6V-8625**	1	ELBOW	
		1,2	**3K-0360**	1	SEAL-O-RING	
		1,2	**6V-8398**	1	SEAL-O-RING	
	20	2	*164-5590*	1	VALVE GP-FLUID SAMPLING	
		2	**8C-3446**	1	VALVE GP-FLUID SAMPLING	
		2	**3J-7354**	1	SEAL-O-RING	
	21	2	*171-6467*	2	UNION AS	
					(EACH INCLUDES)	
		2	**8T-5082**	1	UNION	
		2	**6V-8398**	1	SEAL-O-RING	
		2	**6V-9746**	1	SEAL-O-RING	
	22	2	**4S-4455**	2	CLIP	
	23	2	**5S-7379**	1	BOLT (3/8-16X0.875 IN)	
	24	2	**6D-4244**	2	CLIP	
	25	1	**6V-1228**	2	CLIP	

188-7196 **LINES GP-STEERING** ***(contd.)*** **i01795828**

NOTE	REF NO	GRAPHIC REF	PART NUMBER	QTY	PART NAME 1 2 3 4 5 6 (PRODUCT LEVEL)	SEE PAGE
	26	1	**7X-0290**	3	BOLT (3/8-16X3.50 IN)	
	27	2	**8C-3451**	1	CAP-DUST	
	28	1,2	**8T-4896**	4	WASHER-HARD (10.2X18.5X2.5MM THK)	

I-SEE HOSE FABRICATION GUIDE
Y-SEPARATE ILLUSTRATION

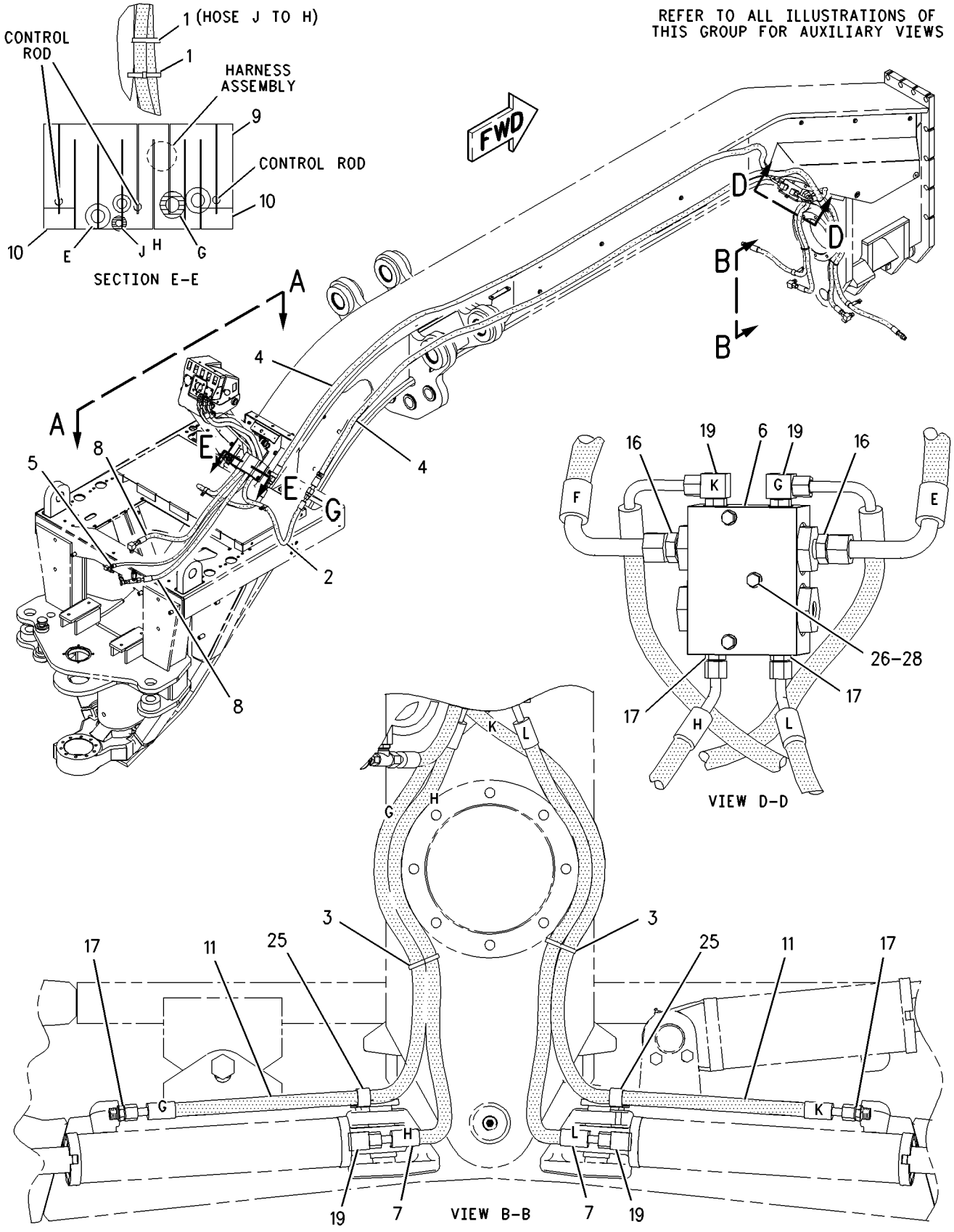

GRAPHIC #1 g00937894

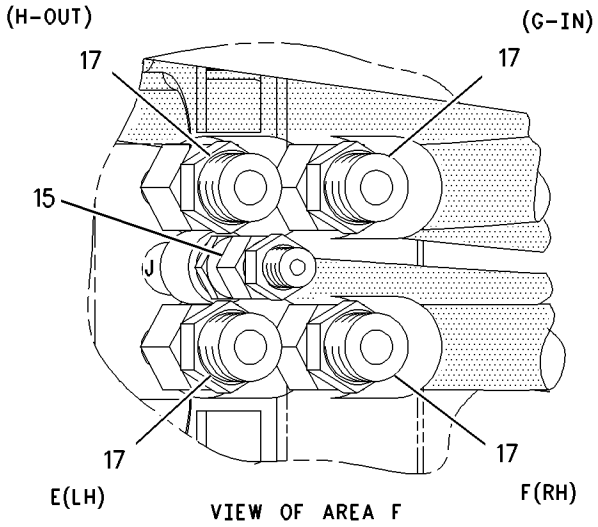

VIEW OF AREA F

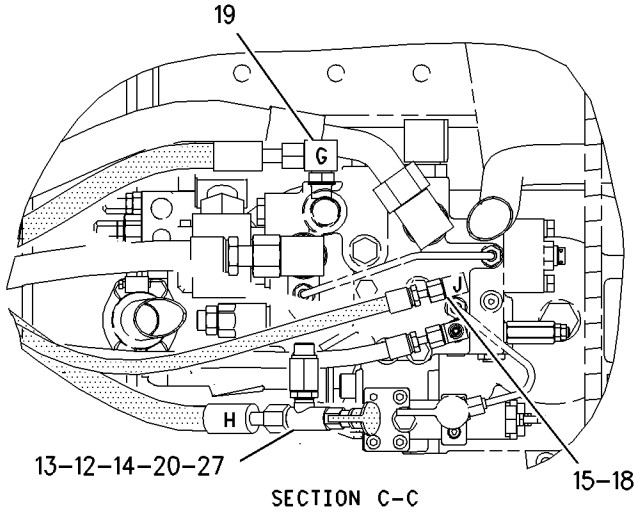

SECTION C-C

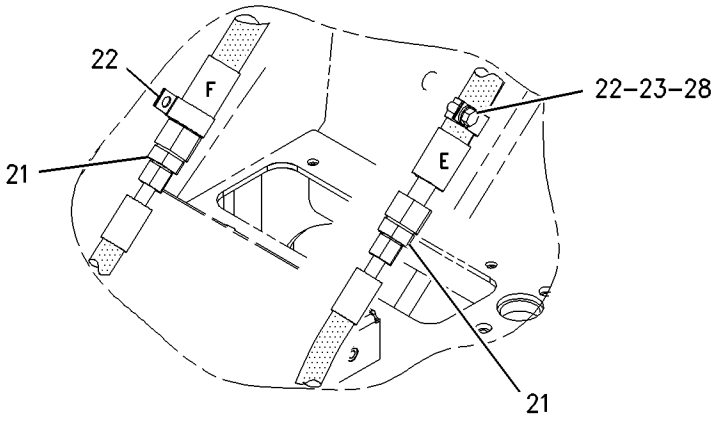

VIEW OF AREA G

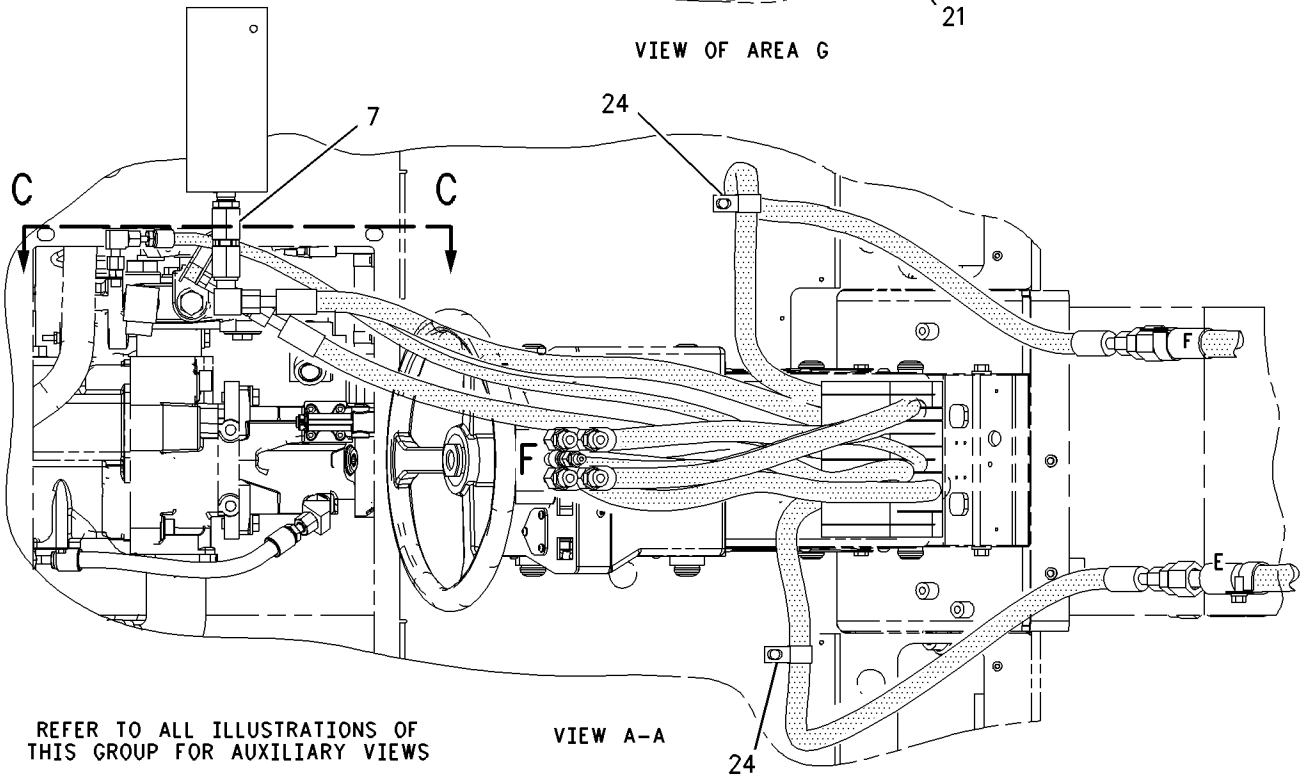

REFER TO ALL ILLUSTRATIONS OF THIS GROUP FOR AUXILIARY VIEWS

VIEW A-A

GRAPHIC #2

g00937895

HYDRAULIC SYSTEM

9D-5715 LOCK GP-CENTERSHIFT

S/N: ATS1-UP

PART OF 162-5607 GENERAL AR

SMCS-5221 **i00130347**

NOTE	REF NO	GRAPHIC REF	PART NUMBER	QTY	PART NAME 1 2 3 4 5 6 (PRODUCT LEVEL)	SEE PAGE
	1	1	**9D-5528**	1	PIN	
	2	1	**1P-8362**	2	SEAL-O-RING (RUBBER)	
		1	**8D-3556**	2	SEAL (PLASTIC)	
	3	1	**7F-8267**	1	SEAL-O-RING (47.2MM ID)	
	4	1	**8D-3564**	1	PISTON	
	5	1	**8D-3557**	1	SEAL (PLASTIC)	
		1	**6D-9157**	1	SEAL-O-RING (142.24MM ID)	
	6	1	**9D-5048**	1	CAP	
	7	1	**9D-5269**	1	HOUSING	
	8	1	**9F-1399**	1	SEAL-O-RING (171.04MM ID)	
	9	1	**9D-4075**	1	SPRING (OUTER)	
	10	1	**9D-4076**	1	SPRING (INNER)	
	11	1	**9D-5046**	1	WASHER (THRUST 24MM THK)	
		1	**9D-5047**	2	WASHER-THRUST (19.55MM THK)	
	12	1	**9D-5268**	1	HOUSING	
	13	1	**8T-6763**	1	PLUG	
	14	1	**5P-1895**	2	BOLT	
	15	1	**0S-1594**	2	BOLT (3/8-16X1IN)	
		1	**0T-0329**	1	LOCKNUT	
	16	1	**3B-4510**	2	LOCKWASHER (1.59CM THK)	
					-OR-	
C		1	**2S-5658**	2	WASHER-HARD (3.0MM THK)	

C-CHANGE FROM PREVIOUS TYPE

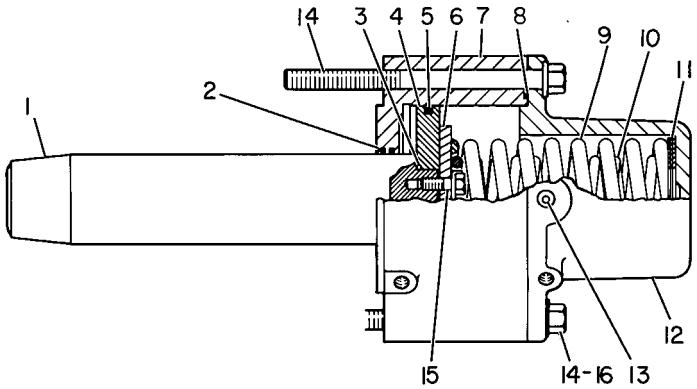

GRAPHIC #1 g00108185

152-7903 LOCK GP-HYDRAULIC HAND CONTROL–EU

S/N: ATS1-UP
PART OF 211-1771, 211-1772 CONVERSION AR-CERTIFICATION
AN ATTACHMENT

SMCS-5001 **i00792261**

NOTE	REF NO	GRAPHIC REF	PART NUMBER	QTY	PART NAME 1 2 3 4 5 6 (PRODUCT LEVEL)	SEE PAGE
	1	1	**107-5014**	4	KNOB	
	2	1	**152-5430**	4	BLOCK	
B	3	1	**152-5431**	12	COLLAR	
	4	1	**152-5436**	2	PLATE AS	
					(EACH INCLUDES)	
		1	**3W-6485**	2	SPRING	
BM	5	1	**096-3218**	12	SETSCREW-SOCKET	
M	6	1	**9X-2043**	4	SCREW-TRUSS HEAD (M6X1X14MM)	
BD	7	1	**5P-5969**		SEAL (.5 M)	

B-USE AS REQUIRED
D-ORDER BY THE METER
M-METRIC PART

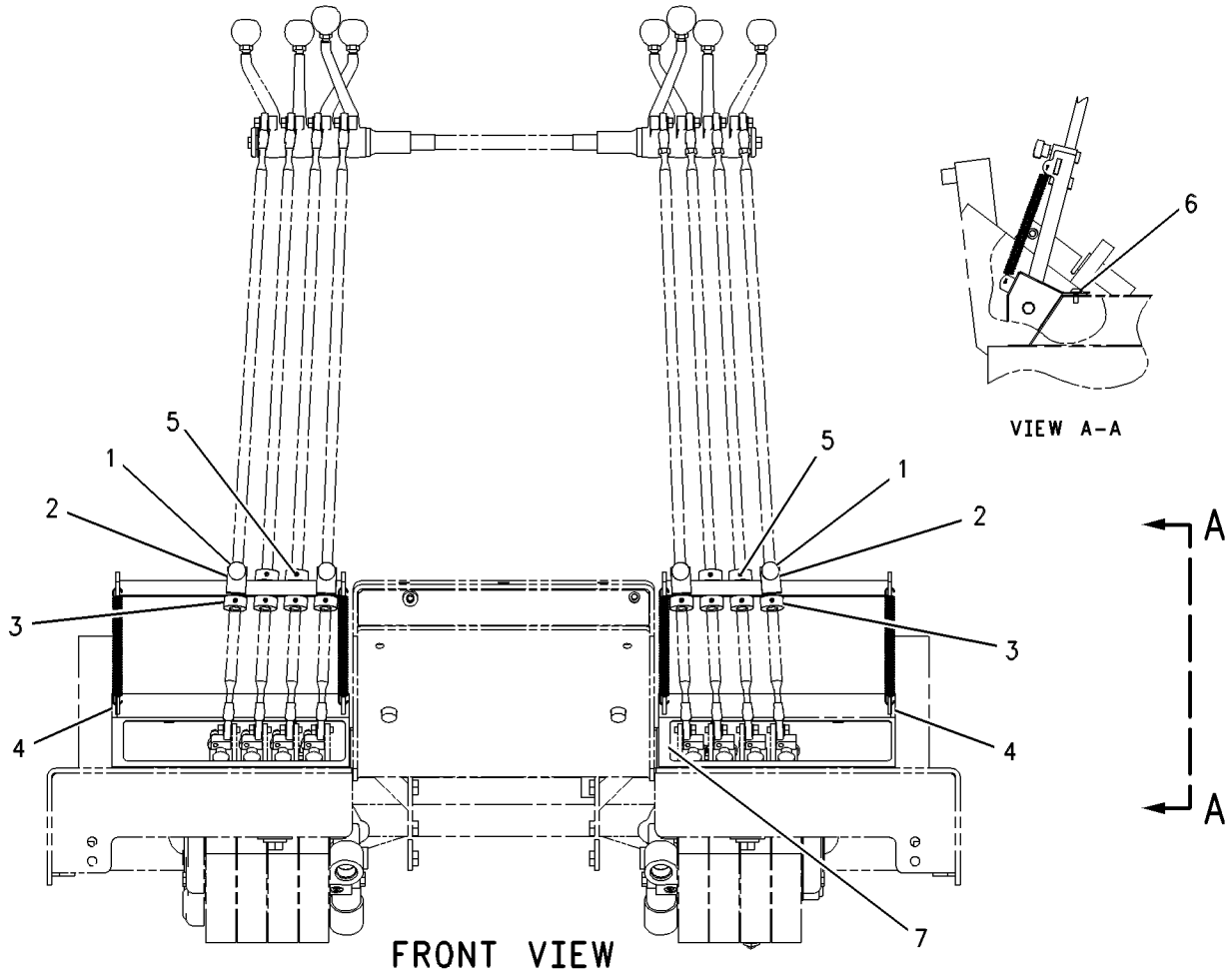

GRAPHIC #1 g00377492

224-7040 MOTOR GP-GEAR

S/N: ATS1-UP
PART OF 179-3261 FAN & MOTOR GP
ALSO AN ATTACHMENT

SMCS-1386, 5061 **i01784326**

NOTE	REF NO	GRAPHIC REF	PART NUMBER	QTY	PART NAME 1 2 3 4 5 6 (PRODUCT LEVEL)	SEE PAGE
	1	1	**6B-6684**	1	NUT-FULL (1/2-20 THD)	
	2	1	**5P-8245**	1	WASHER-HARD (13.5X25.5X3MM THK)	
J	3	1	**176-0209**	1	SEAL-LIP TYPE	
J	4	1	**8J-6273**	1	RING-RETAINING	
J	5	1	**177-4255**	1	SEAL-SHAFT	
	6	1	**199-4321**	1	FLANGE	
	7	1	**099-3095**	4	DOWEL	
J	8	1	**4W-7356**	2	SEAL	
	9	1	**199-4322**	1	COVER	
	10	1	**199-4317**	4	BOLT (M10X1.5X115MM)	
					AVAILABLE REPAIR KIT(S):	
J			**199-4320**	1	KIT-SEAL	

J-KIT MARKED J INCLUDES PARTS MARKED J

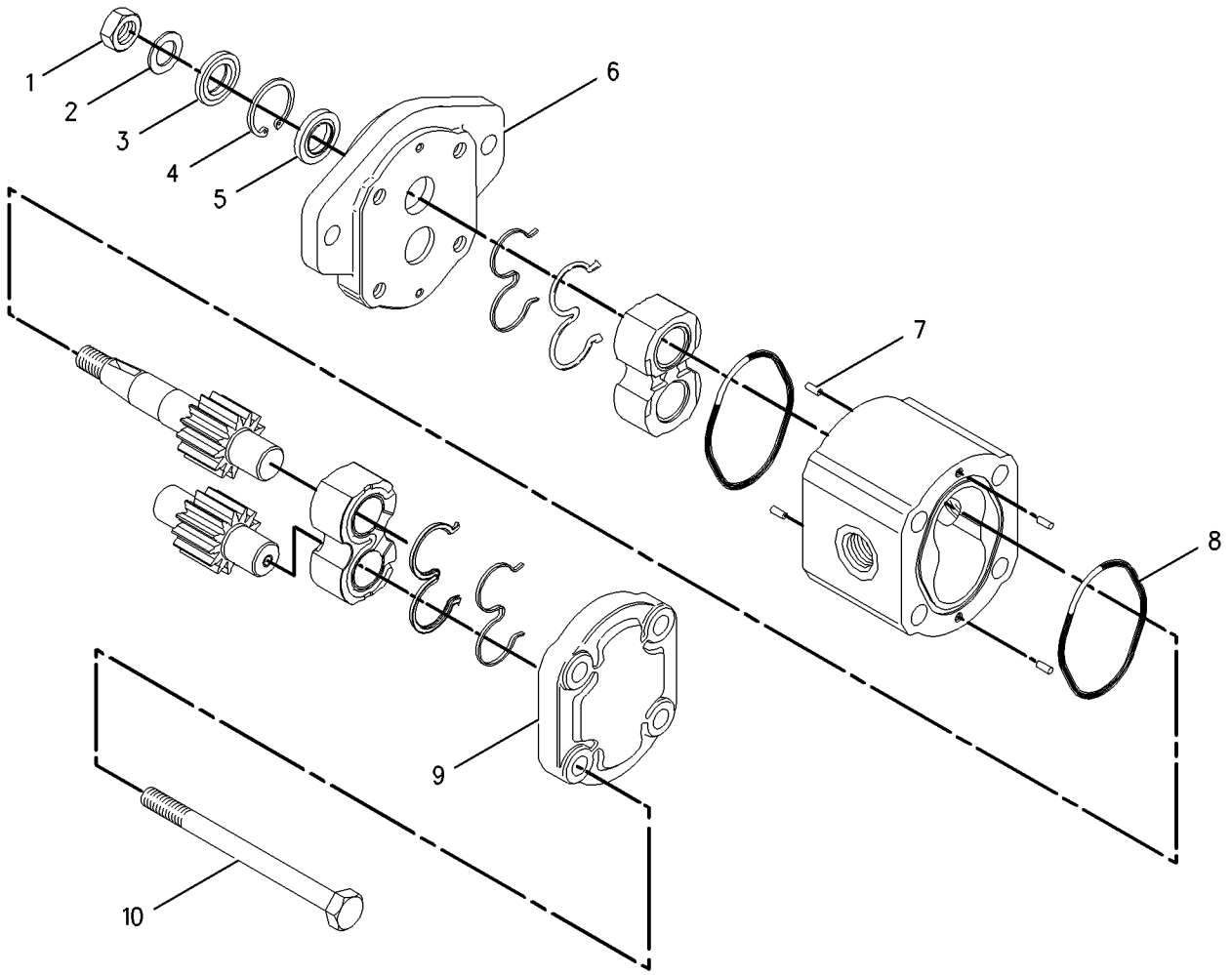

GRAPHIC #1 g00914004

MEMORANDA

HYDRAULIC SYSTEM

9T-5977 MOTOR GP-GEROTOR

S/N: ATS1-UP

PART OF 5T-1740 DRIVE GP-CIRCLE

SMCS-5082 **i00128173**

NOTE	REF NO	GRAPHIC REF	PART NUMBER	QTY	PART NAME 1 2 3 4 5 6 (PRODUCT LEVEL)	SEE PAGE
	1	1	**7X-4733**	1	SEAL-LIP	
	2	1	**9T-8070**	1	HOUSING AS	
	3	1	**6Y-2934**	1	BEARING-ROLLER	
	4	1	**6Y-2933**	2	RACE	
	5	1	**6Y-2932**	1	BEARING-THRUST	
	6	1	**8T-1698**	1	BEARING-NEEDLE	
	7	1	**9T-9071**	1	SHIM	
	8	1	**9T-8058**	1	BACKUP	
	9	1	**9T-8059**	1	SEAL	
	10	1	**9T-8057**	1	SHAFT-GOVERNOR CONTROL	
	11	1	**6Y-2935**	1	BEARING	
	12	1	**9T-8053**	5	SEAL	
	13	1	**9T-8055**	1	LINK	
	14	1	**9T-8061**	1	PLATE	
	15	1	**9T-8062**	1	ROTOR SET	
	16	1	**9T-8065**	1	MANIFOLD	
	17	1	**9J-4963**	1	RING	
	18	1	**9T-8069**	1	PLATE AS	
	19	1	**9T-8067**	1	COVER	
	20	1	**9T-8052**	7	BOLT	
					AVAILABLE REPAIR KIT(S):	
			9T-9072	1	KIT-SEAL	

9T-5977 MOTOR GP-GEROTOR *(contd.)* i00128173

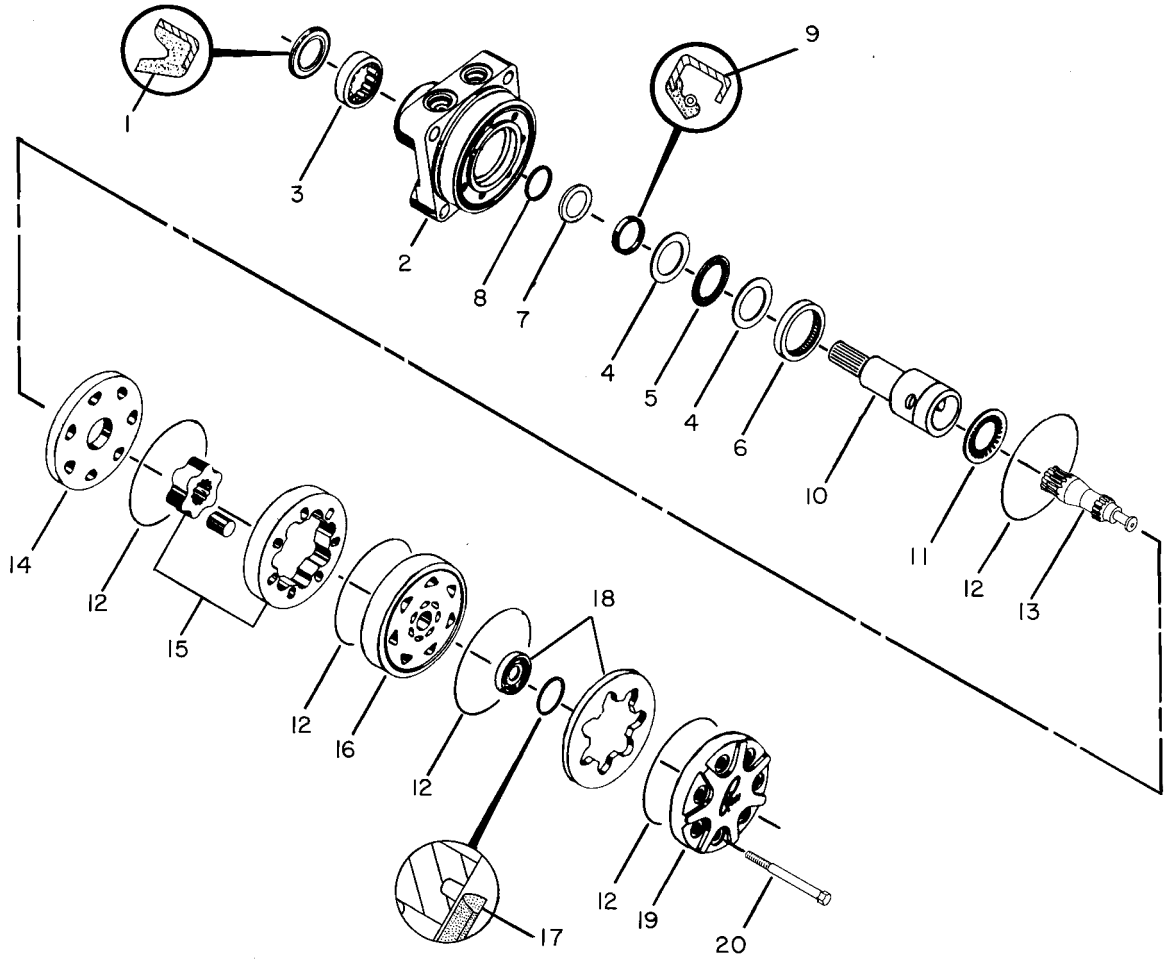

GRAPHIC #1 g00082184

123-8915 PUMP & MOTOR GP–SECONDARY STEERING

S/N: ATS1-UP

PART OF 7I-4756 PUMP & MTG GP-SECONDARY STEER

AN ATTACHMENT

SMCS-4324 **i01233451**

NOTE	REF NO	GRAPHIC REF	PART NUMBER	QTY	PART NAME 1 2 3 4 5 6 (PRODUCT LEVEL)	SEE PAGE
Y	1	1	**117-3915**	1	MOTOR GP-ELECTRIC	198
	2	1	**1A-2209**	2	BOLT (3/8-24X1.25IN)	
	3	1	**5Y-0254**	2	LOCKWASHER	
	4	1	**123-8914**	1	PUMP	

Y-SEPARATE ILLUSTRATION

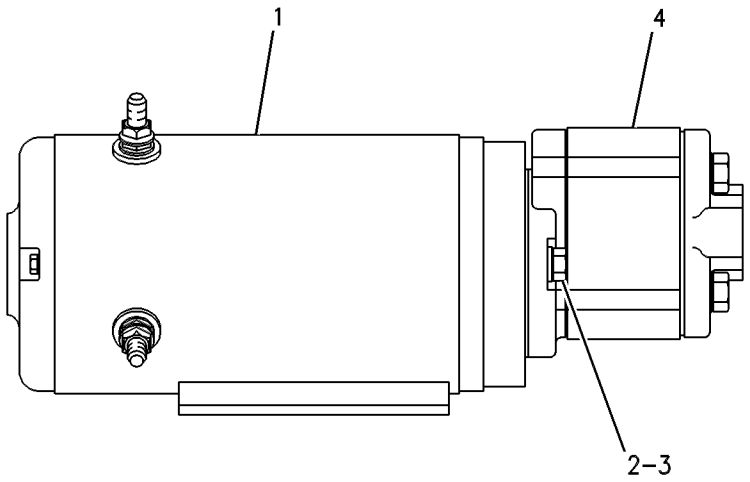

GRAPHIC #1 g00085788

MEMORANDA

HYDRAULIC SYSTEM

180-5446 PUMP & MTG GP-PISTON

S/N: ATS1-UP

PART OF 162-5607 GENERAL AR

SMCS-5070 **i01643825**

NOTE	REF NO	GRAPHIC REF	PART NUMBER	QTY	PART NAME 1 2 3 4 5 6 (PRODUCT LEVEL)	SEE PAGE
	1	1	**7Y-3058**	4	PLATE	
B	2	1	**8W-6591**	6	SHIM (.7 MM THK)	
	3	1	**8W-6598**	4	MOUNTING AS	
Y	4	1	**177-7517**	1	PUMP GP-PISTON (HYDRAULIC STEERING)	480
Y	5	1	**184-7448**	1	PUMP GP-PISTON (FAN DRIVE)	482
	6	1	**187-2018**	1	PLATE AS	
	7	1	**201-8328**	1	COUPLING	
	8	1	**5P-8245**	2	WASHER-HARD (13.5X25.5X3MM THK)	
	9	1	**6D-7146**	1	SEAL-O-RING	
M	10	1	**6V-8675**	2	BOLT (M12X1.75X35MM)	
	11	1	**6V-8765**	4	WASHER-HARD (15X26X3MM THK)	
	12	1	**7X-0350**	4	BOLT (5/8-11X3.50 IN)	
M	13	1	**8C-3425**	4	BOLT (M14X2X35MM)	
	14	1	**8T-4122**	4	WASHER-HARD (17X32X3.5MM THK)	

B-USE AS REQUIRED
M-METRIC PART
Y-SEPARATE ILLUSTRATION

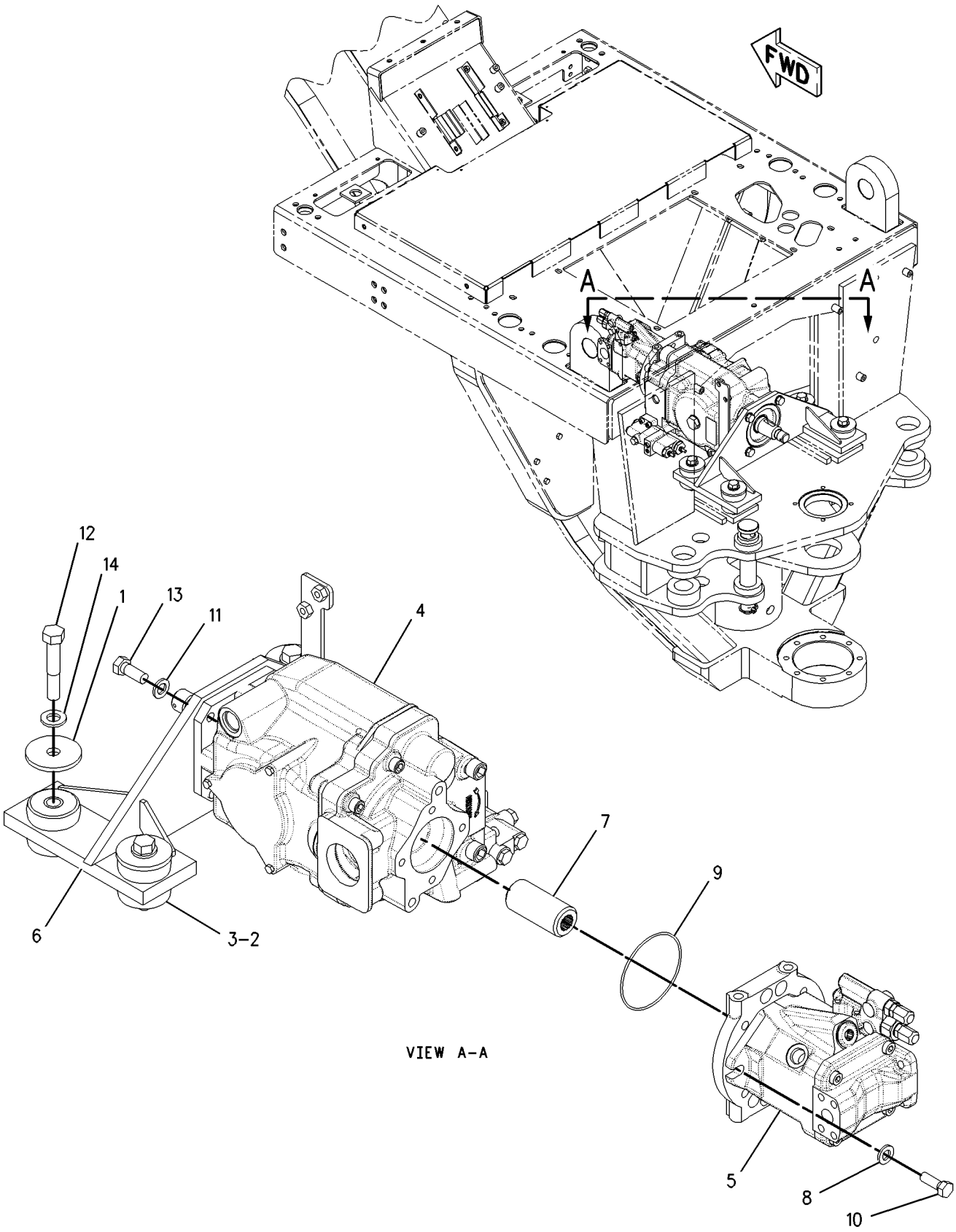

GRAPHIC #1

g00851093

HYDRAULIC SYSTEM

7I-4756 PUMP & MTG GP-SECONDARY STEER

S/N: ATS1-UP
PART OF 166-3310 STEERING AR-SECONDARY
AN ATTACHMENT

SMCS-4324 **i00128435**

NOTE	REF NO	GRAPHIC REF	PART NUMBER	QTY	PART NAME 1 2 3 4 5 6 (PRODUCT LEVEL)	SEE PAGE
Y	1	1	**123-8915**	1	PUMP & MOTOR GP	472

Y-SEPARATE ILLUSTRATION

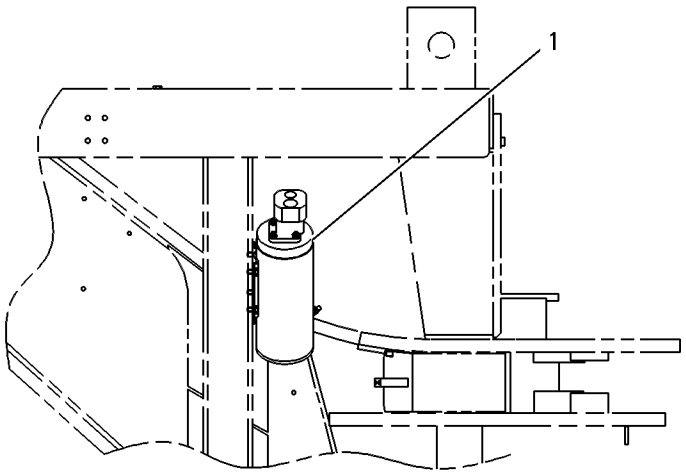

LEFT SIDE VIEW

GRAPHIC #1 g00109081

MEMORANDA

HYDRAULIC SYSTEM

111-0491 PUMP GP-METERING

S/N: ATS1-UP

PART OF 7I-4720 CONTROL GP-STEERING

SMCS-4312 **i00605048**

NOTE	REF NO	GRAPHIC REF	PART NUMBER	QTY	PART NAME 1 2 3 4 5 6 (PRODUCT LEVEL)	SEE PAGE
	1	1	**6E-5885**	1	SHAFT-GOVERNOR CONTROL	
	2	1	**9J-2935**	1	RING-RETAINING	
	3	1	**065-1153**	1	RING-SNAP	
	4	1	**9U-9693**	1	BALL BEARING	
	5	1	**6E-5887**	1	RETAINER	
	6	1	**6E-5884**	1	HOUSING	
	7	1	**6S-7826**	1	RETAINER-BALL	
	8	1	**6S-7827**	1	BALL	
	9	1	**5F-9144**	1	SEAL-O-RING (7.65MM ID)	
	10	1	**3G-6907**	1	SEAT	
	11	1	**1H-1023**	1	SEAL-O-RING (9.25MM ID)	
	12	1	**3G-6906**	1	SCREW (9/16-18XO.559IN)	
	13	1	**114-5132**	1	VALVE AS-CHECK	
	14	1	**3G-6891**	2	RACE	
	15	1	**9T-8560**	1	KIT-SPRING	
	16	1	**7J-6839**	1	DRIVE-CONTROL END	
	17	1	**102-2802**	1	SPACER	
	18	1	**102-2804**	1	SEAL	
	19	1	**114-5167**	7	BOLT	
	20	1	**102-2800**	1	GEROTOR	
	21	1	**114-5180**	1	CAP	
	22	1	**114-5190**	1	SPACER (4.04MM THK)	
	23	1	**7J-8009**	1	PIN (0.25 ODX1.62IN OAL)	
	24	1	**5L-1100**	1	BEARING-THRUST	
	25	1	**9J-5686**	3	SEAL-O-RING (72.75MM ID)	
	26	1	**9J-5442**	1	RING-RETAINING (INTERNAL)(2.279IN OD)	
	27	1	**9J-8076**	1	BUSHING-TERMINAL	
	28	1	**7F-8267**	1	SEAL-O-RING (47.2MM ID)	
	29	1	**8F-5340**	1	SEAL-LIP (25.4MM ID)	
					AVAILABLE REPAIR KIT(S):	
			118-4660	1	KIT-SEAL	

111-0491 PUMP GP-METERING *(contd.)* **i00605048**

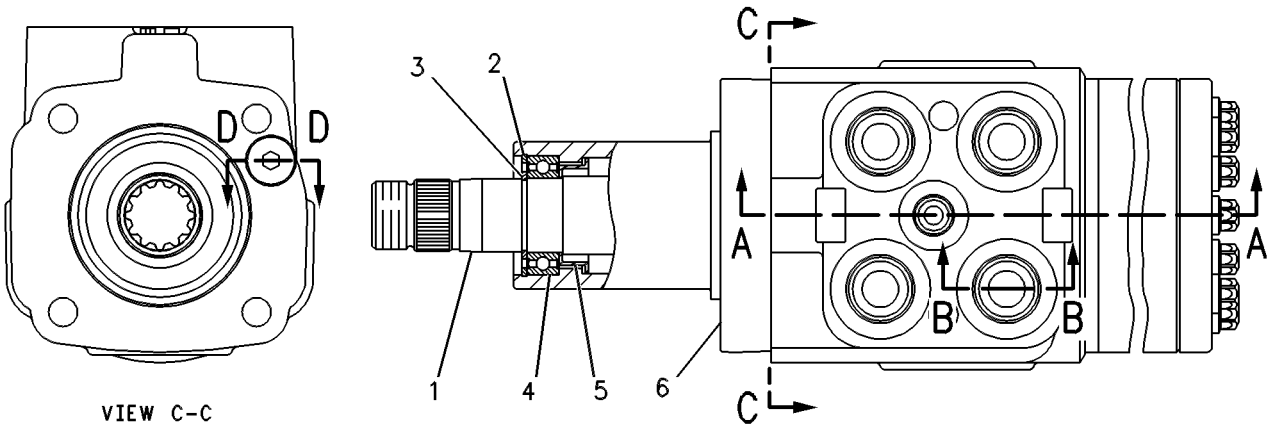

VIEW C-C

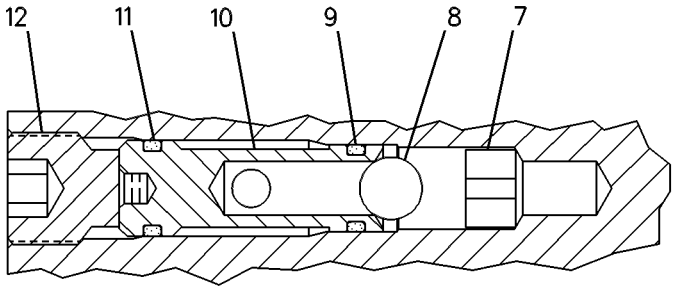

SECTION D-D

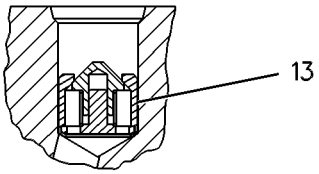

SECTION B-B

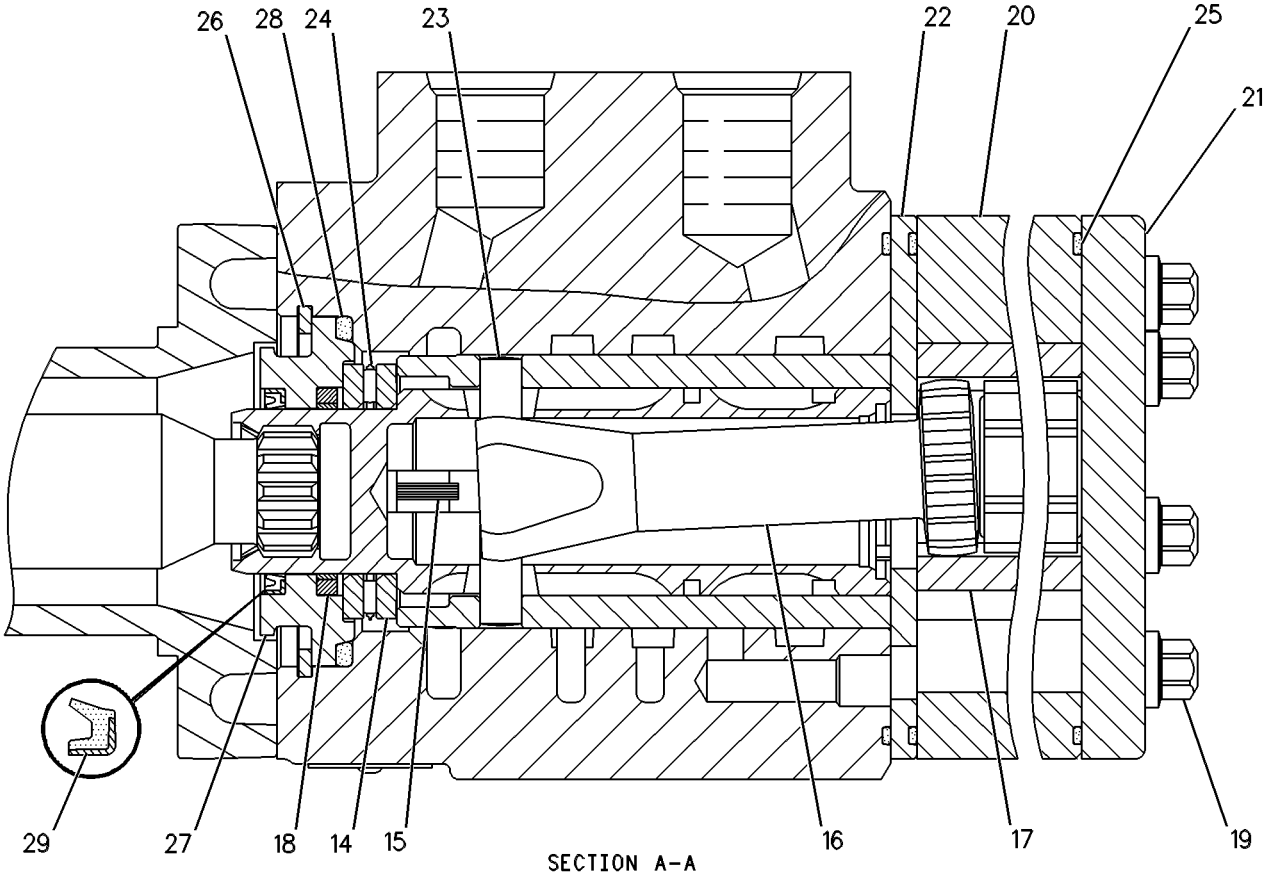

SECTION A-A

GRAPHIC #1

g00250219

HYDRAULIC SYSTEM

177-7517 PUMP GP-PISTON—HYDRAULIC STEERING

S/N: ATS1-UP

PART OF 180-5446 PUMP & MTG GP-PISTON

SMCS-5070 **i01684542**

NOTE	REF NO	GRAPHIC REF	PART NUMBER	QTY	PART NAME 1 2 3 4 5 6 (PRODUCT LEVEL)	SEE PAGE
	1	1	**199-1472**	1	SHAFT	
	2	1	**6E-4237**	1	BEARING	
	3	1	**6E-4224**	1	PLUG-SWASHPLATE	
	4	1	**033-6036**	1	SEAL-O-RING	
	5	1	**9S-4183**	1	PLUG	
	6	1	**9T-1699**	1	SPRING	
	7	1	**9T-1710**	1	POPPET	
	8	1	**9T-1636**	1	SEAT	
	9	1	**6E-4227**	1	COVER	
M	10	1	**6V-8837**	3	BOLT (M6X1X16 MM)	
	11	1	**4F-4097**	1	SEAL-O-RING	
	12	1	**6E-4236**	1	BEARING	
M	13	1	**3E-4302**	2	SCREW-FLAT HEAD (M4X0.7X10MM)	
	14	1	**109-3204**	3	SEAL-O-RING	
	15	1	**095-0888**	2	PIN-SPRING	
M	16	1	**095-0673**	4	BOLT-SOCKET HEAD (M12X1.75X60MM)	
M	17	1	**095-0705**	2	BOLT-SOCKET HEAD (M16X2X100MM)	
Y	18	1	**104-3122**	1	VALVE GP-PRESS & FLOW CMPNSTR (HYDRAULIC STEERING)	574
	19	1	**103-5689**	1	HOUSING-PUMP	
M	20	1	**6V-8337**	4	BOLT-SOCKET HEAD (M8X1.25X35MM)	
	21	1	**3D-2824**	1	SEAL-O-RING	
	22	1	**7K-8876**	1	CUP-BEARING	
	23	1	**6E-4213**	1	KIT-BIAS PISTON (HYDRAULIC STEERING)	
	24	1	**6E-4214**	1	SPRING-BIAS	
Y	25	1	**6E-4216**	1	ROTATING GP-PUMP (HYDRAULIC STEERING)	484
	26	1	**6E-4225**	1	GASKET	
	27	1	**7L-9061**	2	SEAL-O-RING	
	28	1	**3E-7417**	2	PLUG (M10X1 THD)	
	29	1	**8T-7876**	2	SEAL-O-RING	
	30	1	**6E-4234**	1	PLATE-VALVE-LH	
	31	1	**005-0471**	1	CONE-BEARING	
	32	1	**005-0469**	1	CUP-BEARING	
B	33	1	**103-6282**	1	SHIM PACK (INCLUDES 17 SHIMS)	
	34	1	**9T-1652**	1	PIN	
	35	1	**6E-4215**	1	KIT-PISTON (HYDRAULIC STEERING)	
	36	1	**184-1527**	1	SWASHPLATE GP	
		1	**1H-3937**	2	PIN	
		1	**167-1801**	2	STOP-SWASHPLATE	
	37	1	**6L-8797**	1	RING-RETAINING	
	38	1	**9X-7547**	1	SEAL-LIP	
	39	1	**7K-8877**	1	CONE-BEARING	
	40	1	**103-5691**	1	HEAD-PUMP	
	41	1	**108-4818**	1	SHIELD-SEAL	
	42	1	**8C-3089**	1	SEAL-O-RING	
M	43	1	**8T-8441**	2	BOLT-SOCKET HEAD (M12X1.75X25MM)	
	44	1	**114-9110**	1	ADAPTER-DRIVE	

B-USE AS REQUIRED
M-METRIC PART
Y-SEPARATE ILLUSTRATION

177-7517 PUMP GP-PISTON *(contd.)* **i01684542**

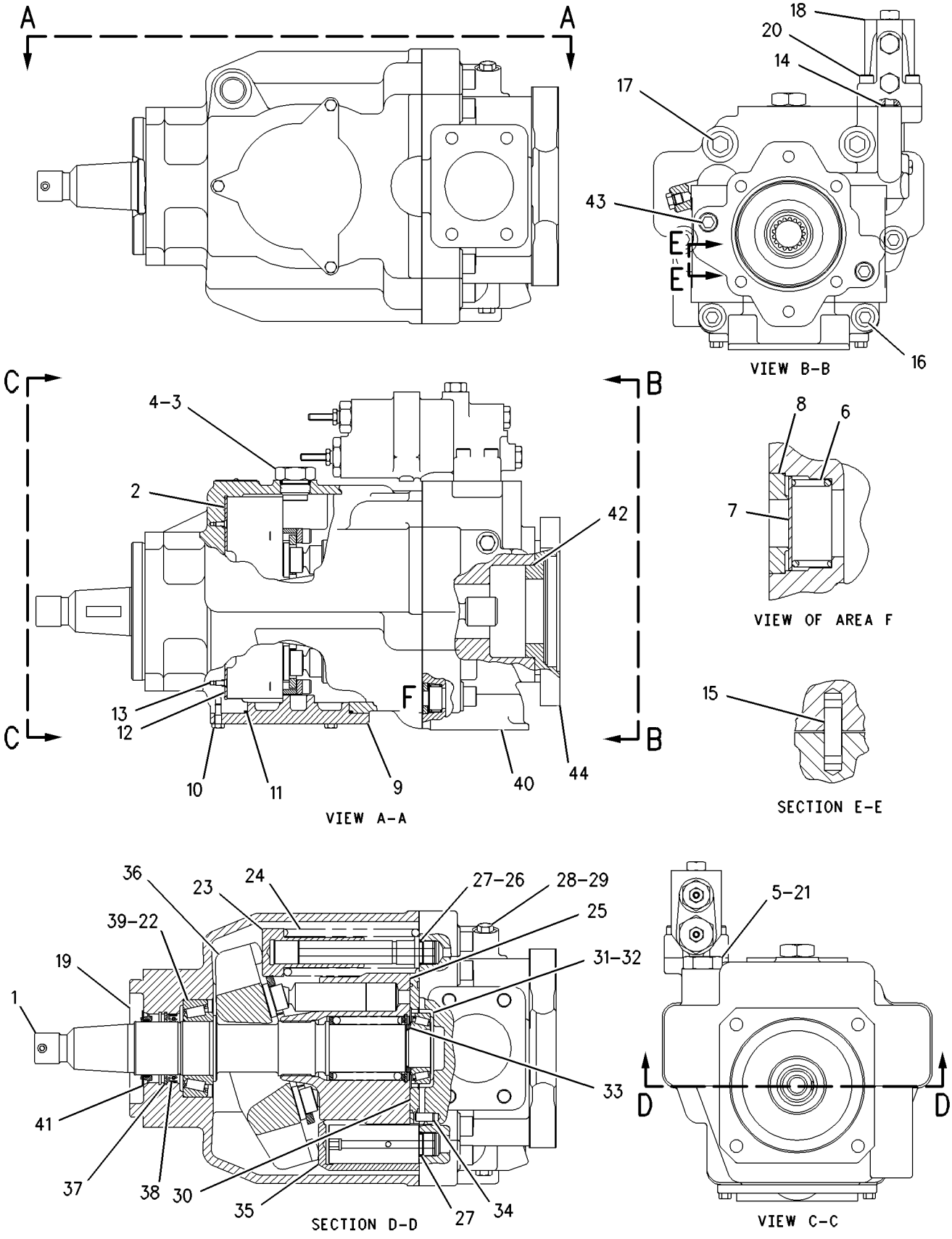

GRAPHIC #1 g00852341

HYDRAULIC SYSTEM

184-7448 PUMP GP-PISTON—FAN DRIVE

S/N: ATS1-UP

PART OF 180-5446 PUMP & MTG GP-PISTON

SMCS-5070 **i01643846**

NOTE	REF NO	GRAPHIC REF	PART NUMBER	QTY	PART NAME 1 2 3 4 5 6 (PRODUCT LEVEL)	SEE PAGE
Y	1	1	**194-9453**	1	ROTATING GP-PUMP	485
	2	1	**168-7861**	1	PISTON-CONTROL	
	3	1	**194-9461**	1	ROD-PISTON	
	4	1	**194-9471**	1	SWASHPLATE	
	5	1	**191-7581**	1	SHAFT	
	6	1	**168-7863**	1	PLUG-CONTROL	
	7	1	**194-9472**	1	SPRING	
	8	1	**191-7582**	1	SHIM (2.5MM THK)	
	9	1	**194-9473**	1	RING	
	10	1	**155-9125**	1	BEARING	
	11	1	**191-7583**	1	BEARING	
	12	1	**194-9474**	2	BEARING-CRADLE	
	13	1	**155-9127**	1	SEAL	
	14	1	**133-6578**	1	SEAL-O-RING	
	15	1	**8T-7525**	1	SEAL-O-RING	
	16	1	**168-3504**	1	SEAL	
	17	1	**8T-9597**	1	RING-RETAINING	
M	18	1	**8T-9515**	4	BOLT-SOCKET HEAD (M10X1.5X40MM)	
	19	1	**9S-8005**	1	PLUG	
	20	1	**136-8423**	1	PLUG-BREAK OFF	
	21	1	**099-3047**	1	DOWEL	
	22	1	**3K-0360**	1	SEAL-O-RING	
Y	23	1	**168-2210**	1	VALVE GP-PRESS & FLOW CMPNSTR (FAN DRIVE PISTON PUMP)	576

M-METRIC PART
Y-SEPARATE ILLUSTRATION

184-7448 PUMP GP-PISTON ***(contd.)*** **i01643846**

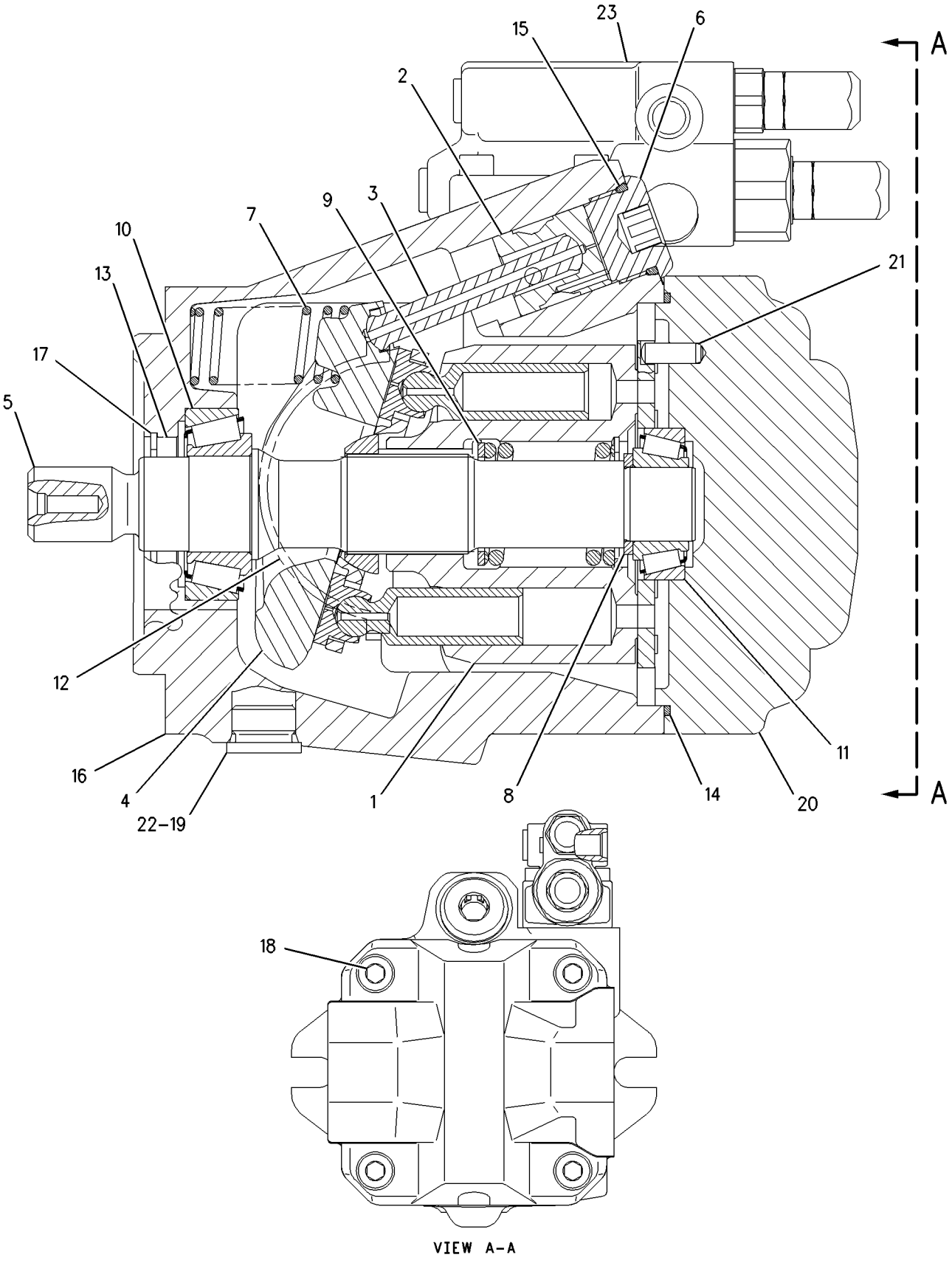

GRAPHIC #1 g00852379

6E-4216 ROTATING GP-PUMP–HYDRAULIC STEERING

S/N: ATS1-UP

PART OF 177-7517 PUMP GP-PISTON

SMCS-5070 **i00110729**

NOTE	REF NO	GRAPHIC REF	PART NUMBER	QTY	PART NAME 1 2 3 4 5 6 (PRODUCT LEVEL)	SEE PAGE
	1	1	**9T-4906**	1	RING-RETAINING	
	2	1	**6E-4219**	1	GUIDE	
M	3	1	**6V-5192**	4	BOLT-SOCKET HEAD (M8X1.25X30MM)	
	4	1	**6E-4218**	2	PLATE-SPACER	
	5	1	**6E-4217**	2	PLATE-LIMITER	
	6	1	**9T-8452**	9	PISTON	
	7	1	**9T-8445**	1	GUIDE	
	8	1	**9T-8446**	1	SPRING	
	9	1	**9T-8448**	1	BARREL	
	10	1	**9T-8450**	1	PLATE-RETAINING	

M-METRIC PART

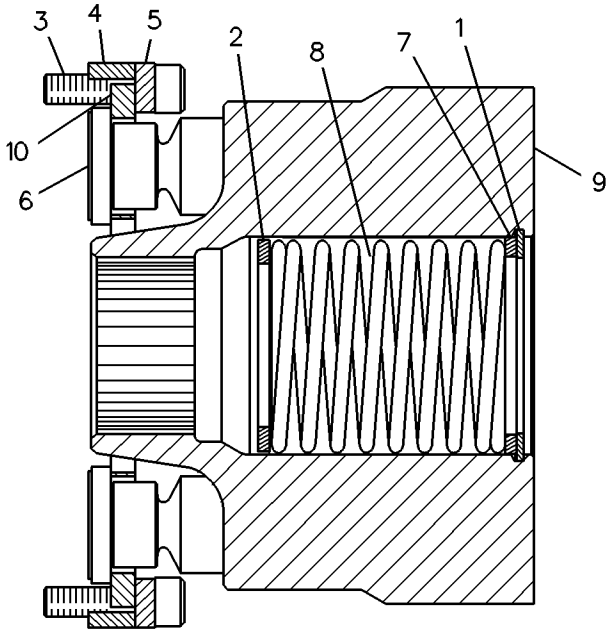

GRAPHIC #1 g00083062

194-9453 ROTATING GP-PUMP—HYDRAULIC FAN

S/N: ATS1-UP

PART OF 184-7448 PUMP GP-PISTON

SMCS-5070 **i01472512**

NOTE	REF NO	GRAPHIC REF	PART NUMBER	QTY	PART NAME 1 2 3 4 5 6 (PRODUCT LEVEL)	SEE PAGE
	1	1	**155-9112**	9	PISTON AS	
	2	1	**155-9136**	1	BARREL	
	3	1	**155-9115**	1	PLATE	
	4	1	**155-9116**	1	GUIDE-BALL	
	5	1	**155-9117**	1	SPRING	
	6	1	**194-9479**	3	PIN	
	7	1	**194-9480**	1	RING-RETAINING	
	8	1	**194-9481**	1	DISC-THRUST	
	9	1	**194-9478**	1	PLATE-PORT	

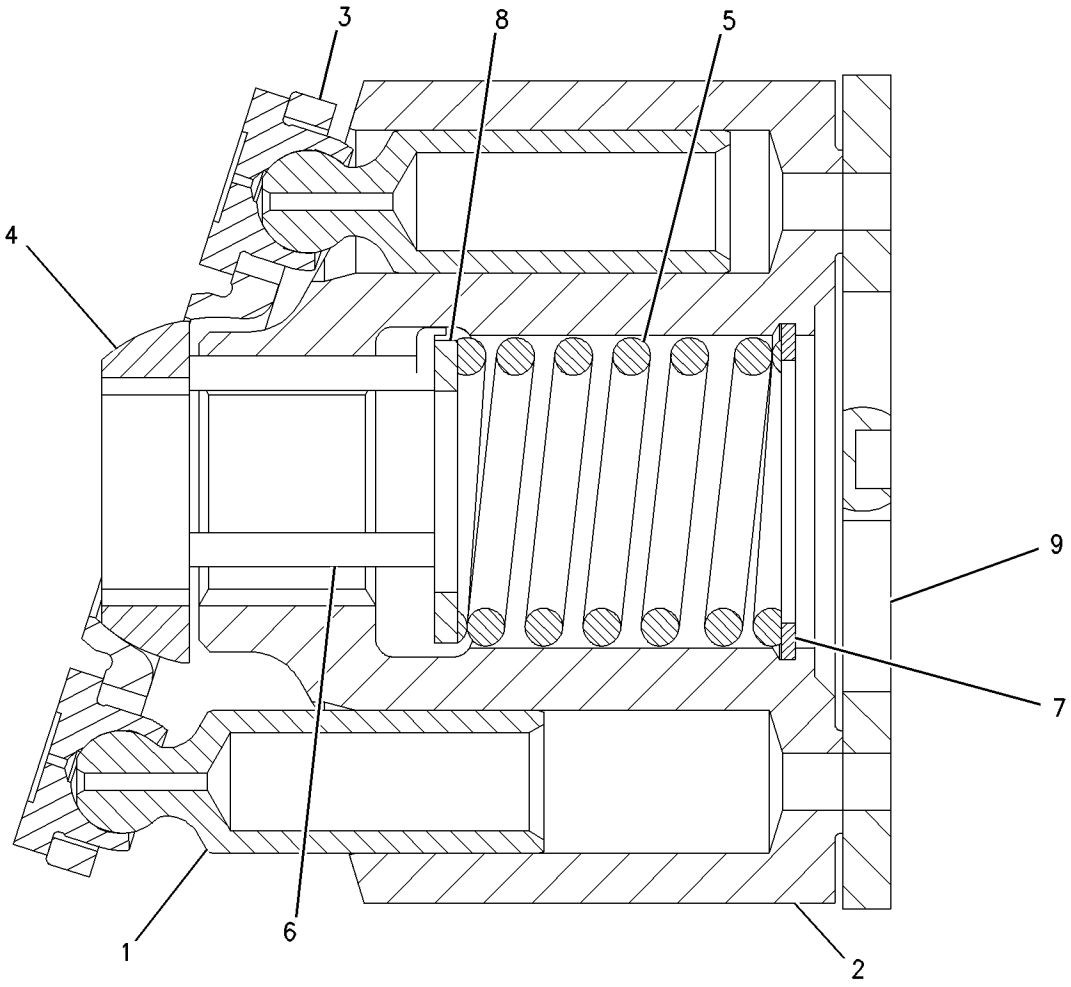

GRAPHIC #1 g00768329

HYDRAULIC SYSTEM

166-3310 STEERING AR-SECONDARY

S/N: ATS1-UP

PART OF 211-1771, 211-1772 CONVERSION AR-CERTIFICATION

AN ATTACHMENT

SMCS-4300 **i01787005**

NOTE	PART NUMBER	QTY	PART NAME 1 2 3 4 5 6 (PRODUCT LEVEL)	SEE PAGE
Y	**166-3333**	1	LINES GP-SECONDARY STEERING	460
Y	*7I-4756*	1	PUMP & MTG GP-SECONDARY STEER	476
Y	**184-6045**	1	WIRING GP-SECONDARY STEERING	254

Y-SEPARATE ILLUSTRATION

<END>

HYDRAULIC SYSTEM

173-1011 SWIVEL GP

S/N: ATS1-UP

PART OF 188-7194 LINES GP-HYDRAULIC

SMCS-5060 **i01761989**

NOTE	REF NO	GRAPHIC REF	PART NUMBER	QTY	PART NAME 1 2 3 4 5 6 (PRODUCT LEVEL)	SEE PAGE
	1	1	**173-1009**	1	RETAINER	
	2	1	**8J-2331**	7	SEAL	
	3	1	**2H-3928**	7	SEAL-O-RING	
	4	1	**173-1007**	2	SEAL	
	5	1	**9T-5603**	1	BODY	
	6	1	**4J-9964**	2	SEAL	
	7	1	**8T-4223**	4	WASHER-HARD (13.5X25.5X3MM THK)	
	8	1	**5P-2566**	6	BOLT (1/2-13X1.5 IN)	
	9	1	**1P-3700**	4	SEAL-RECTANGULAR	
	10	1	**223-0580**	1	COVER	
	11	1	**173-1008**	1	ROTOR	
B	12	1	**5J-1246**	6	SHIM (.13MM THK)	

B-USE AS REQUIRED

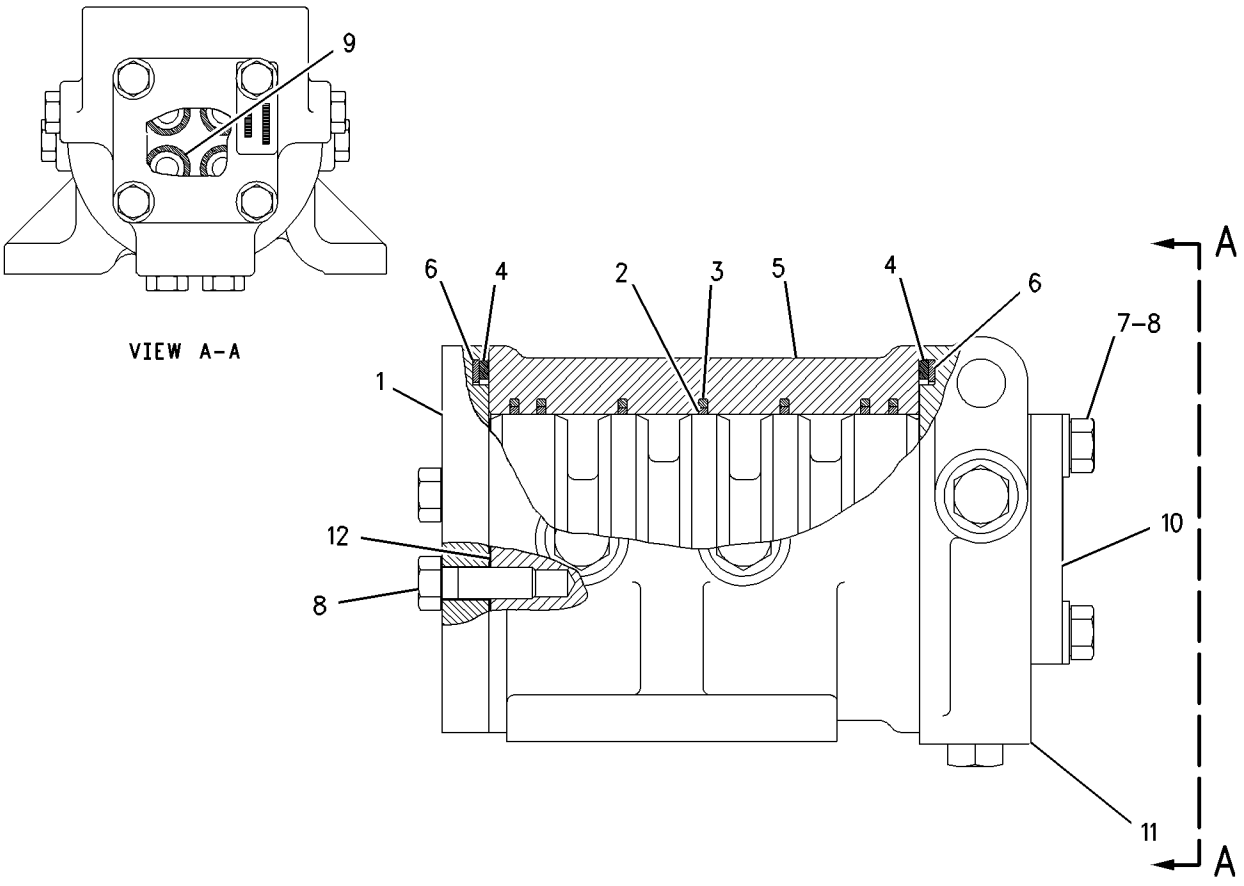

GRAPHIC #1 g00710910

HYDRAULIC SYSTEM

207-2410 TANK & FILTER GP-HYDRAULIC

S/N: ATS1-UP

PART OF 207-2409 TANK & MTG GP-HYDRAULIC

SMCS-4332, 5056, 5068 **i01793386**

NOTE	REF NO	GRAPHIC REF	PART NUMBER	QTY	PART NAME 1 2 3 4 5 6 (PRODUCT LEVEL)	SEE PAGE
	1	1	**1L-4349**	1	SPRING	
	2	1	**1R-0774**	1	FILTER ELEMENT AS-OIL (HYDRAULIC) (REVERSE FLOW)	
	3	1	**2D-4202**	1	PLATE	
	4	1	**3F-1547**	1	SEAL-O-RING	
	5	1	**3G-3498**	1	FLANGE	
	6	1	**4M-6921**	1	WASHER-SPRING	
	7	1	**5D-1911**	1	COVER-HYDRAULIC CAP	
	8	1	**226-2871**	1	ROD	
	9	1	**7H-1447**	1	CAP-FILLER (HYDRAULIC OIL TANK)	
	10	1	**9J-1979**	1	RETAINER AS	
	11	1	**9J-1985**	1	TUBE AS	
	12	1	**9J-1988**	1	VALVE (FILTER BYPASS)	
	13	1	**9J-3047**	1	STRAINER (HYDRAULIC OIL FILLER)	
	14	1	**9M-7394**	1	LEVER (HYDRAULIC OIL FILLER CAP LOCK)	
	15	1	**207-2411**	1	TANK AS-HYDRAULIC	
	16	1	**226-2870**	1	CAP AS-FILLER (HYDRAULIC TANK)	
	17	1	**217-2661**	1	GAUGE-SIGHT (HYDRAULIC OIL)	
		1	**5J-2974**	2	SEAL-O-RING	
		1	**215-6425**	2	BOLT (1/2-20X1.46 IN)	
	18	1	**086-0507**	1	PIN	
	19	1	**141-9661**	1	SPACER (20X128X6MM THK)	
	20	1	**1L-5072**	1	DOWEL	
	21	1	**2J-7761**	1	RING-RETAINING	
	22	1	**2K-4973**	1	LOCKNUT (3/8-16 THD)	
	23	1	**2S-5100**	1	VALVE AS-NEEDLE (TANK DRAIN)	
	24	1	**3G-0361**	1	GASKET (HYDRAULIC OIL TANK FILLER CAP)	
	25	1	**5K-9107**	2	BOLT-LOCKING (3/8-16X0.75 IN)	
	26	1	**7D-1195**	1	SEAL-O-RING	
	27	1	**8T-2275**	1	BALL	
	28	1	**8T-4121**	4	WASHER-HARD (11X21X2.5MM THK)	
M	29	1	**8T-4195**	4	BOLT (M10X1.5X30MM)	
	30	1	**9H-6454**	1	GASKET (HYDRAULIC OIL TANK FILLER CAP)	
	31	1	**3B-4610**	1	PIN-COTTER	
	32	1	**4B-2913**	1	PIN-CLEVIS	

M-METRIC PART

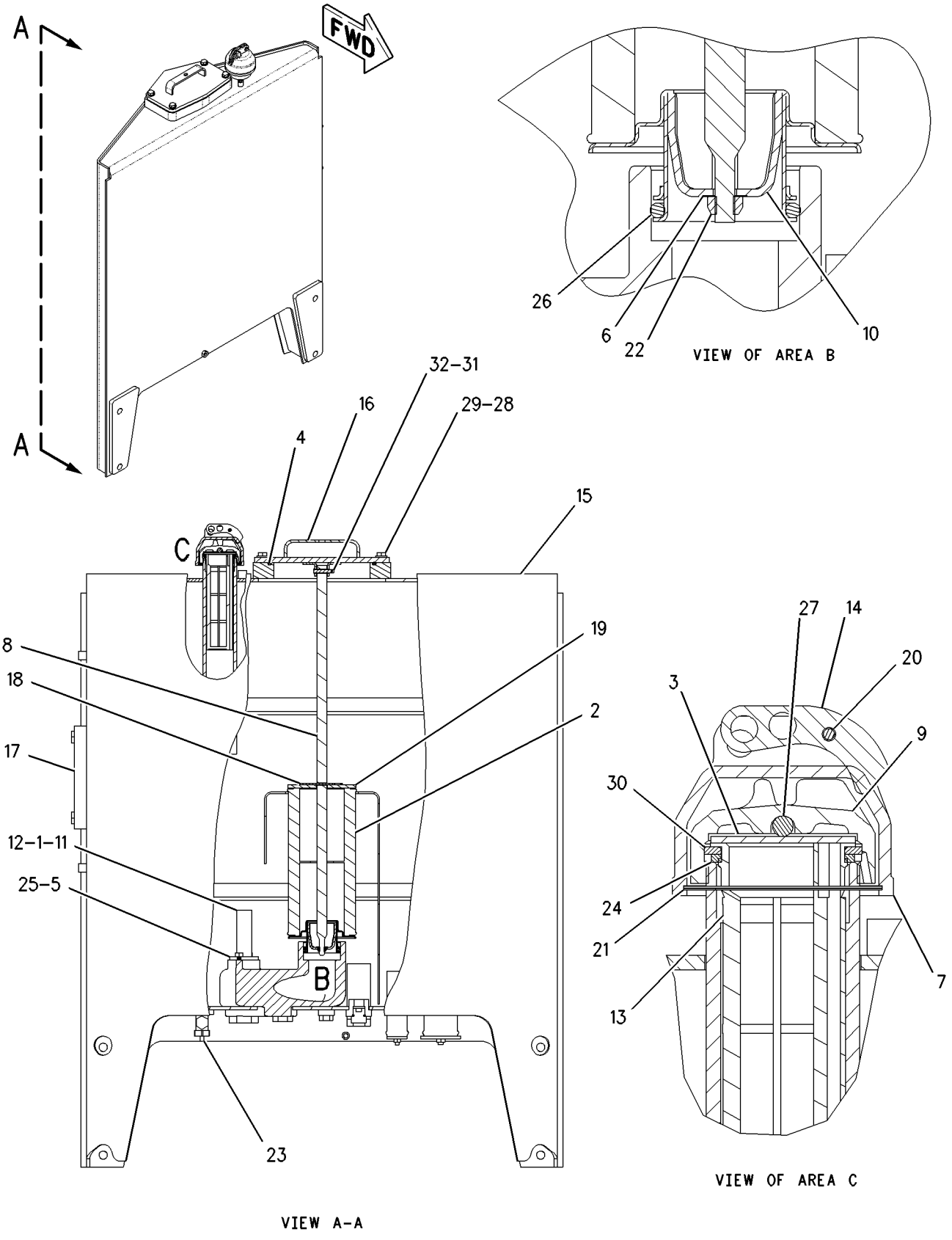

GRAPHIC #1

g00919946

HYDRAULIC SYSTEM

207-2409 TANK & MTG GP-HYDRAULIC

S/N: ATS1-UP

PART OF 162-5607 GENERAL AR

SMCS-4332, 5056, 5068 **i01771833**

NOTE	REF NO	GRAPHIC REF	PART NUMBER	QTY	PART NAME 1 2 3 4 5 6 (PRODUCT LEVEL)	SEE PAGE
	1	1	**5P-8502**	1	PADLOCK GP	
		1	**5P-8500**	1	KEY	
		1	**8Y-6364**	1	SLEEVE	
Y	2	1	*207-2410*	1	TANK & FILTER GP-HYDRAULIC	488
	3	1	**4D-7794**	3	CLIP	
	4	1	**8T-4121**	3	WASHER-HARD (11X21X2.5MM THK)	
M	5	1	**8T-4191**	3	BOLT (M10X1.5X16MM)	
	6	1	**8T-4223**	4	WASHER-HARD (13.5X25.5X3MM THK)	
	7	1	**7X-0325**	4	BOLT (1/2-13X2.5 IN)	

M-METRIC PART
Y-SEPARATE ILLUSTRATION

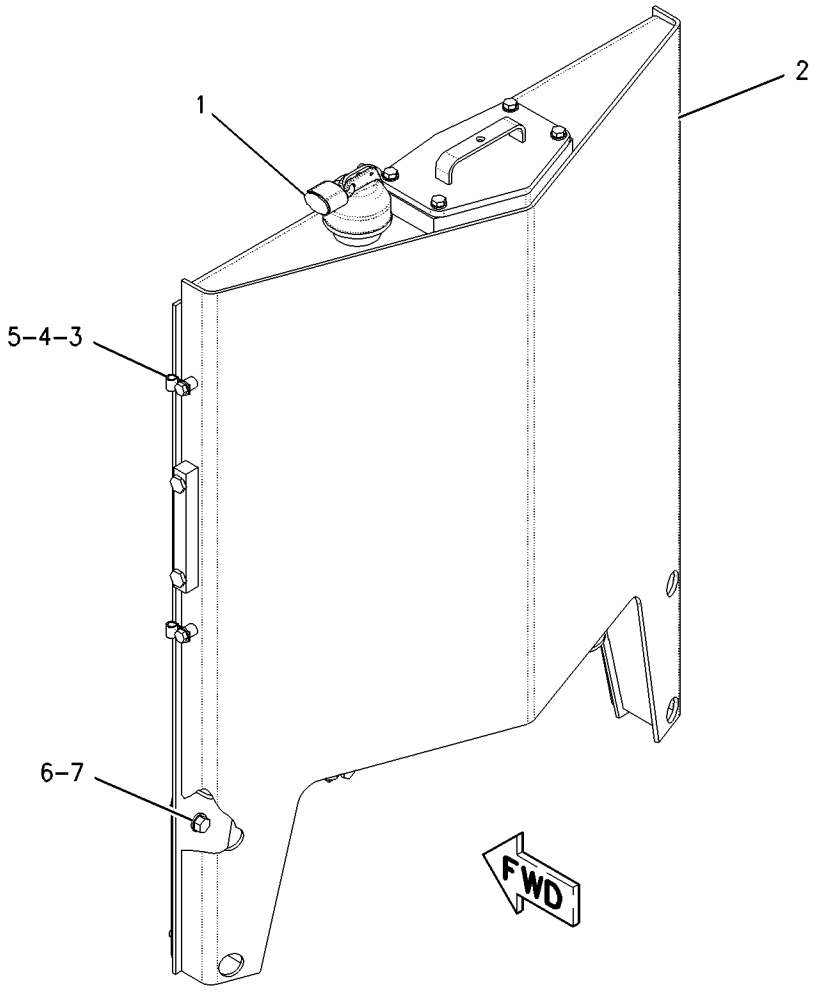

GRAPHIC #1 g00857379

MEMORANDA

HYDRAULIC SYSTEM

7I-4872 VALVE & LINKAGE GP–BANK 4-RH–BANK 5-LH

S/N: ATS1-UP
PART OF 166-3405 CONTROL AR-HYDRAULIC
AN ATTACHMENT

SMCS-5051, 5063 **i01855141**

NOTE	REF NO	GRAPHIC REF	PART NUMBER	QTY	PART NAME 1 2 3 4 5 6 (PRODUCT LEVEL)	SEE PAGE
Y	1	1	**104-8676**	1	VALVE GP-BANK 4 (RH)	511
Y	2	1	**104-8660**	1	VALVE GP-BANK 5 (LH)	515
	3	1	**8X-5499**	2	RETAINER	
	4	1	**101-2457**	1	LEVER (ARTICULATION)	
	5	1	**8D-5634**	1	LEVER (CENTERSHIFT)	
	6	1	**101-2457**	1	LEVER (RIPPER)	
	7	1	**8D-5634**	1	LEVER (BLADE LIFT-LH)	
	8	1	**8X-4276**	9	ROD	
		1	**6V-8186**	18	NUT-FULL (5/16-24 THD)	
		1	**7H-3641**	18	END-ROD (5/16-24 THD)	
	9	1	**8D-5633**	1	LEVER (WHEEL LEAN)	
	10	1	**101-2458**	1	LEVER (BLADE TIP)	
	11	1	**137-4515**	2	BUSHING	
	12	1	**8D-5640**	11	BEARING	
B	13	1	**8D-5636**	4	SHIM (.254MM THK)	
B	14	1	**8D-5637**	4	SHIM (.762MM THK)	
	15	1	**6L-1962**	9	NUT-JAM (3/8-24THD)	
	16	1	**8T-9043**	18	BOLT (5/16-18X.875 IN)	
	17	1	**3F-9556**	18	LOCKWASHER	
	18	1	**9B-7237**	2	BOLT (3/8-16X1.25 IN)	
	19	1	**8D-5641**	9	BEARING	
	20	1	**2G-6757**	1	KNOB-BLADE LIFT (LH)	
M	21	1	**8T-4136**	4	BOLT (M10X1.5X25MM)	
	22	1	**2G-6749**	1	KNOB-SIDESHIFT	
	23	1	**2G-6747**	1	KNOB-BLADE TIP	
	24	1	**8D-5632**	1	LEVER (BLADE LIFT-RH)	
	25	1	**2G-6751**	1	KNOB-CIRCLE DRIVE	
	26	1	**2G-6748**	1	KNOB-BLADE LIFT (RH)	
	27	1	**2G-6756**	1	KNOB-WHEEL LEAN	
	28	1	**2G-6752**	1	KNOB-ARTICULATION	
	29	1	**2G-6755**	1	KNOB-CENTERSHIFT	
	30	1	**5P-1075**	2	WASHER-HARD (10.2X22.5X3MM THK)	
	31	1	**9M-1853**	6	MOUNTING	
	32	1	**8D-5633**	1	LEVER (SIDESHIFT)	
	33	1	**8D-5632**	1	LEVER (CIRCLE DRIVE)	
	34	1	**8T-4121**	8	WASHER-HARD (11X21X2.5MM THK)	
	35	1	**8F-6437**	6	WASHER (13.5X50.8X4.76MM THK)	
	36	1	**5P-1076**	6	WASHER-HARD (13.5X30X4MM THK)	
M	37	1	**8T-4195**	4	BOLT (M10X1.5X30MM)	
	38	1	**104-7740**	1	PLATE AS-LH	
	39	1	**104-7419**	1	PLATE AS-RH	
	40	1	**6V-8188**	2	NUT (1/2-13 THD)	
	41	1	**5P-2424**	6	BOLT (1/2-13X2.25 IN)	
	42	1	**6B-0933**	4	SPACER (10.31X19.05X6.35MM THK)	
	43	1	**104-7429**	2	PLATE	
	44	1	**137-4516**	1	SHAFT	
	45	1	**2G-6740**	1	KNOB-RIPPER	

B-USE AS REQUIRED
M-METRIC PART
Y-SEPARATE ILLUSTRATION

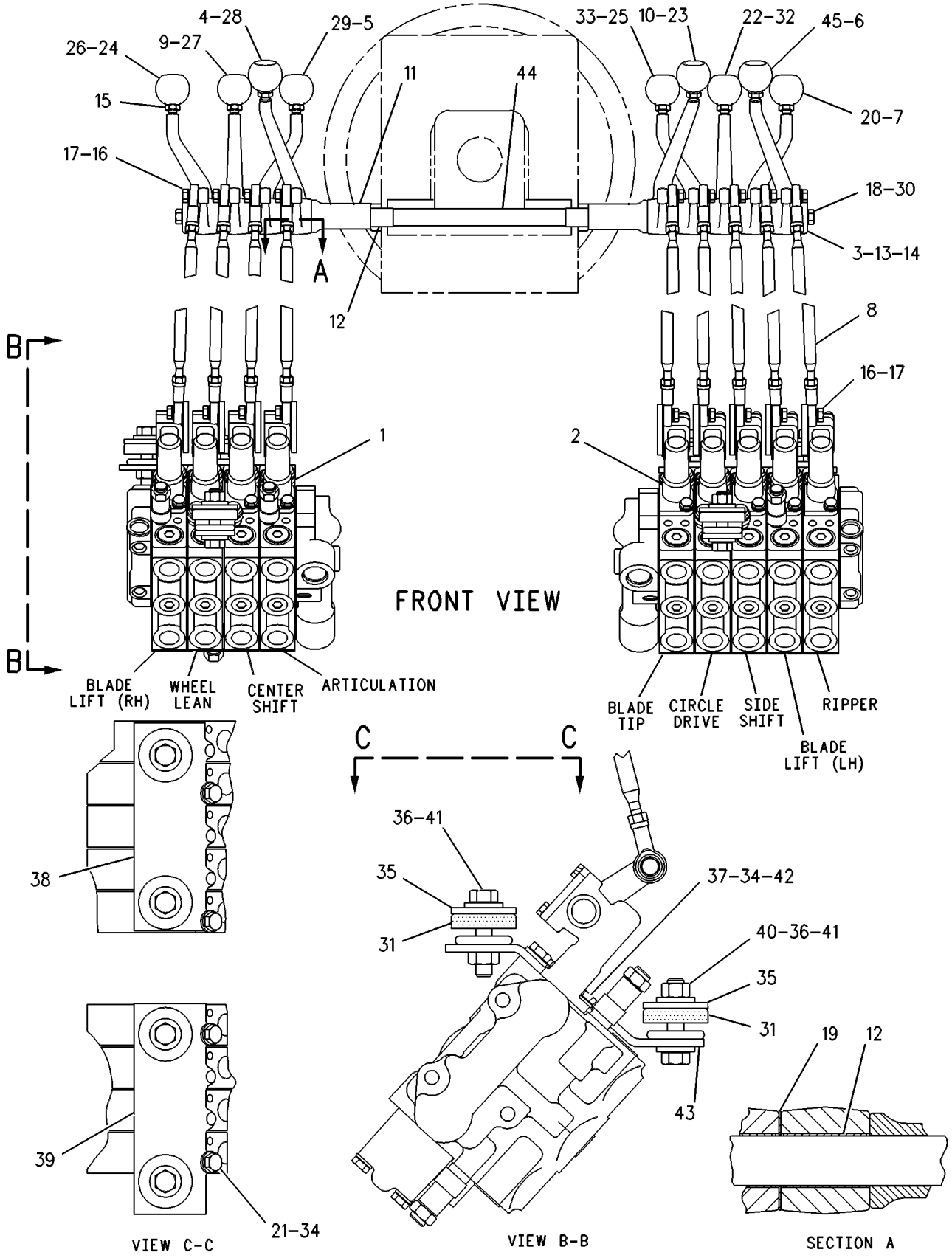

GRAPHIC #1 g00109642

HYDRAULIC SYSTEM

8X-4144 VALVE & LINKAGE GP–BANK4-LH,RH

S/N: ATS1-UP

PART OF 162-5607 GENERAL AR

SMCS-5051, 5063 **i01855149**

NOTE	REF NO	GRAPHIC REF	PART NUMBER	QTY	PART NAME 1 2 3 4 5 6 (PRODUCT LEVEL)	SEE PAGE
Y	1	1	**104-8676**	1	VALVE GP-BANK 4 (RH)	511
Y	2	1	**104-8658**	1	VALVE GP-BANK 4 (LH)	510
	3	1	**8X-5498**	2	RETAINER	
	4	1	**101-2457**	1	LEVER (ARTICULATION)	
	5	1	**8D-5634**	1	LEVER (BLADE LIFT)	
	6	1	**6V-8186**	16	NUT-FULL (5/16-24 THD)	
	7	1	**7H-3641**	16	END-ROD (5/16-24 THD)	
		1	**8X-4276**	8	ROD	
	8	1	**8D-5634**	1	LEVER (CENTER SHIFT)	
	9	1	**8D-5633**	1	LEVER (SIDE SHIFT)	
	10	1	**101-2458**	1	LEVER (BLADE TIP)	
	11	1	**137-4515**	1	BUSHING	
	12	1	**8D-5640**	10	BEARING	
B	13	1	**8D-5636**	4	SHIM (.254MM THK)	
B	14	1	**8D-5637**	4	SHIM (.762MM THK)	
	15	1	**6L-1962**	8	NUT-JAM (3/8-24THD)	
	16	1	**8T-9043**	16	BOLT (5/16-18X.875 IN)	
	17	1	**3F-9556**	16	LOCKWASHER	
	18	1	**9B-7237**	2	BOLT (3/8-16X1.25 IN)	
	19	1	**8D-5641**	8	BEARING	
	20	1	**2G-6757**	1	KNOB-BLADE LIFT	
M	21	1	**8T-4136**	4	BOLT (M10X1.5X25MM)	
	22	1	**2G-6749**	1	KNOB-SIDESHIFT	
	23	1	**2G-6747**	1	KNOB-BLADE TIP	
	24	1	**8D-5632**	1	LEVER (CIRCLE DRIVE)	
	25	1	**2G-6751**	1	KNOB-CIRCLE DRIVE	
	26	1	**2G-6748**	1	KNOB-BLADE LIFT	
	27	1	**2G-6756**	1	KNOB-WHEEL LEAN	
	28	1	**2G-6752**	1	KNOB-ARTICULATION	
	29	1	**2G-6755**	1	KNOB-CENTERSHIFT	
	30	1	**5P-1075**	2	WASHER-HARD (10.2X22.5X3MM THK)	
	31	1	**9M-1853**	6	MOUNTING	
	32	1	**8D-5633**	1	LEVER (WHEEL LEAN)	
	33	1	**8D-5632**	1	LEVER (BLADE LIFT)	
	34	1	**8F-6437**	6	WASHER (13.5X50.8X4.76MM THK)	
M	35	1	**8T-4195**	4	BOLT (M10X1.5X30MM)	
	36	1	**5P-1076**	6	WASHER-HARD (13.5X30X4MM THK)	
	37	1	**6V-8188**	2	NUT (1/2-13 THD)	
	38	1	**104-7740**	1	PLATE AS-LH	
	39	1	**104-7419**	1	PLATE AS-RH	
					(EACH INCLUDES)	
		1	**1F-0748**	2	NUT-WELD (1/2-13 THD)	
	40	1	**5P-2424**	6	BOLT (1/2-13X2.25 IN)	
	41	1	**6B-0933**	4	SPACER (10.31X19.05X6.35MM THK)	
	42	1	**8T-4121**	8	WASHER-HARD (11X21X2.5MM THK)	
	43	1	**104-7429**	2	PLATE	
	44	1	**137-4516**	1	SHAFT	

B-USE AS REQUIRED
M-METRIC PART
Y-SEPARATE ILLUSTRATION

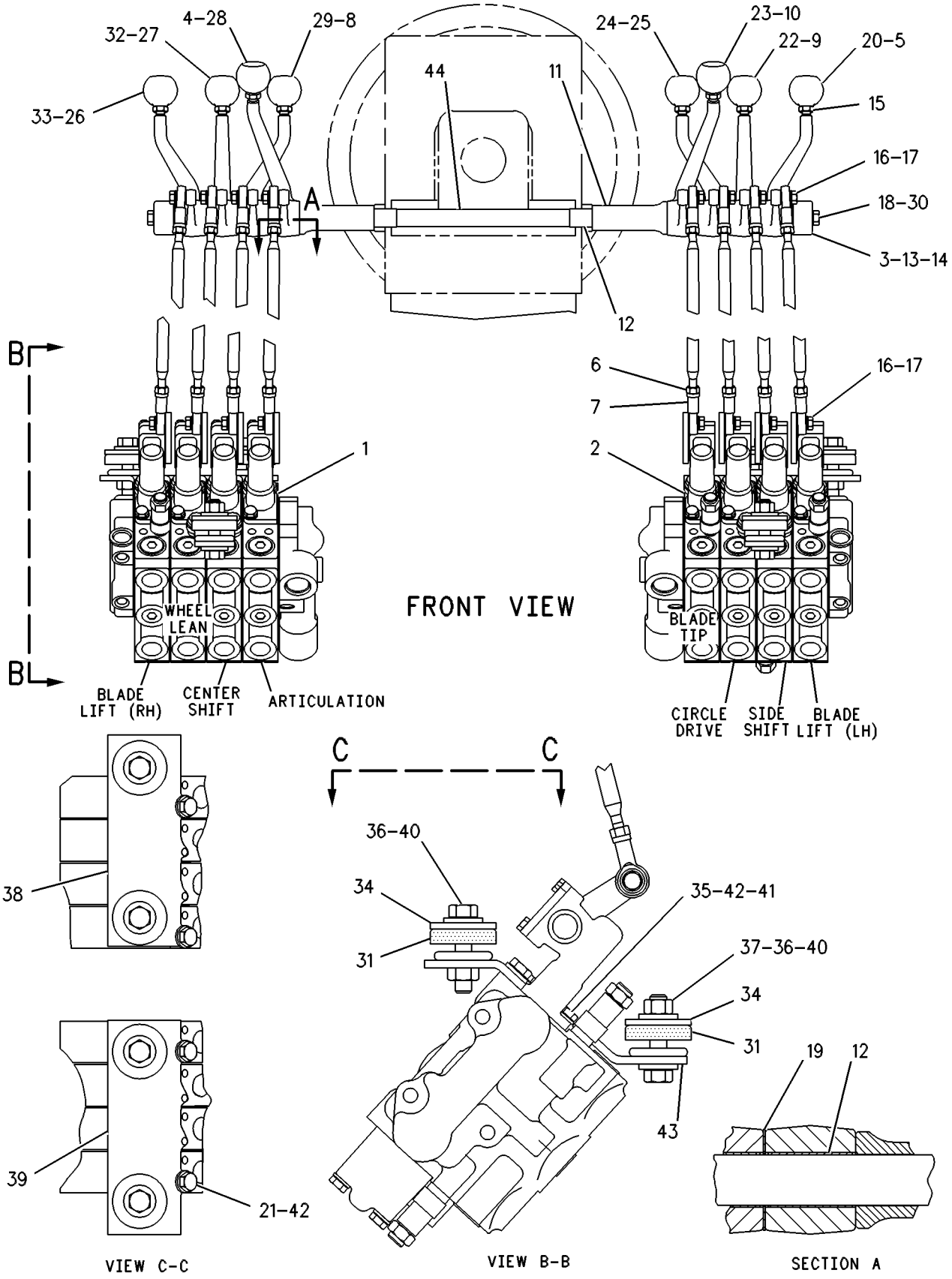

GRAPHIC #1 g00109676

HYDRAULIC SYSTEM

121-4090 VALVE & LINKAGE GP—BANK 4-RH—BANK 5-LH

S/N: ATS1-UP
PART OF 184-7308 CONTROL AR-HYDRAULIC
AN ATTACHMENT

SMCS-5051, 5063 **i01710735**

NOTE	REF NO	GRAPHIC REF	PART NUMBER	QTY	PART NAME 1 2 3 4 5 6 (PRODUCT LEVEL)	SEE PAGE
CY	1	1	**130-3116**	1	VALVE GP-BANK 4 (RH)	512
CY	2	1	**130-3118**	1	VALVE GP-BANK 5 (LH)	516
	3	1	**8X-5499**	2	RETAINER	
	4	1	**101-2457**	1	LEVER	
	5	1	**8D-5634**	1	LEVER	
	6	1	**8X-4276**	9	ROD	
	7	1	**6V-8186**	18	NUT-FULL (5/16-24 THD)	
	8	1	**7H-3641**	18	END-ROD (5/16-24 THD)	
	9	1	**137-4515**	2	BUSHING	
	10	1	**8D-5640**	11	BEARING	
B	11	1	**8D-5636**	4	SHIM (.254MM THK)	
B	12	1	**8D-5637**	4	SHIM (.762MM THK)	
	13	1	**6L-1962**	9	NUT-JAM (3/8-24THD)	
	14	1	**8T-9043**	18	BOLT (5/16-18X.875 IN)	
	15	1	**3F-9556**	18	LOCKWASHER	
	16	1	**9B-7237**	2	BOLT (3/8-16X1.25 IN)	
	17	1	**8D-5641**	9	BEARING	
	18	1	**2G-6757**	1	KNOB-BLADE LIFT	
M	19	1	**8T-4136**	4	BOLT (M10X1.5X25MM)	
	20	1	**2G-6749**	1	KNOB-SIDESHIFT	
	21	1	**2G-6747**	1	KNOB-BLADE TIP	
	22	1	**8D-5632**	1	LEVER	
	23	1	**2G-6751**	1	KNOB-CIRCLE DRIVE	
	24	1	**2G-6748**	1	KNOB-BLADE LIFT	
	25	1	**2G-6756**	1	KNOB-WHEEL LEAN	
	26	1	**2G-6752**	1	KNOB-ARTICULATION	
	27	1	**2G-6755**	1	KNOB-CENTERSHIFT	
	28	1	**5P-1075**	2	WASHER-HARD (10.2X22.5X3MM THK)	
	29	1	**9M-1853**	6	MOUNTING	
	30	1	**5P-1076**	6	WASHER-HARD (13.5X30X4MM THK)	
	31	1	**104-7740**	1	PLATE AS-LH	
	32	1	**104-7419**	1	PLATE AS-RH	
					(EACH PLATE AS. INCLUDES)	
		1	**1F-0748**	2	NUT-WELD (1/2-13 THD)	
	33	1	**104-7429**	2	PLATE	
	34	1	**137-4516**	1	SHAFT	
	35	1	**2G-6740**	1	KNOB-RIPPER	
	36	1	**6B-0933**	4	SPACER (10.31X19.05X6.35MM THK)	
	37	1	**5P-2424**	6	BOLT (1/2-13X2.25 IN)	
	38	1	**6V-8188**	2	NUT (1/2-13 THD)	
M	39	1	**8T-4195**	4	BOLT (M10X1.5X30MM)	
	40	1	**8T-4121**	8	WASHER-HARD (11X21X2.5MM THK)	
	41	1	**8F-6437**	6	WASHER (13.5X50.8X4.76MM THK)	
	42	1	**8D-5633**	1	LEVER	
	43	1	**101-2458**	1	LEVER	
	44	1	**101-2457**	1	LEVER	
	45	1	**8D-5634**	1	LEVER	
	46	1	**8D-5632**	1	LEVER	
	47	1	**8D-5633**	1	LEVER	

B-USE AS REQUIRED
C-CHANGE FROM PREVIOUS TYPE
M-METRIC PART
Y-SEPARATE ILLUSTRATION

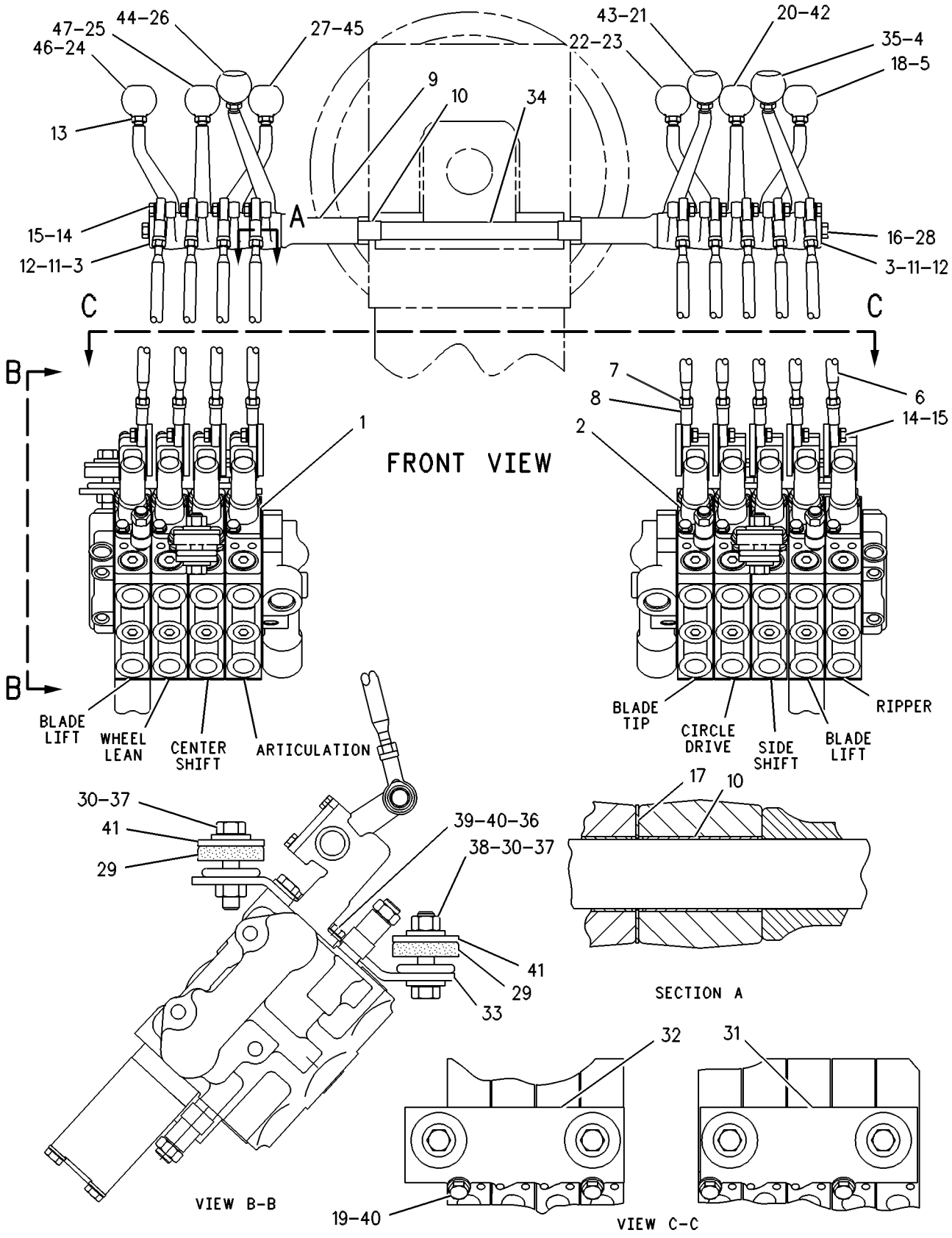

GRAPHIC #1 g00109715

HYDRAULIC SYSTEM

121-4097 VALVE & LINKAGE GP—BANK 5-LH,RH—EU

S/N: ATS1-UP
PART OF 184-7307 CONTROL AR-HYDRAULIC
AN ATTACHMENT

SMCS-5051, 5063 **i01697240**

NOTE	REF NO	GRAPHIC REF	PART NUMBER	QTY	PART NAME 1 2 3 4 5 6 (PRODUCT LEVEL)	SEE PAGE
	1	1	**8X-5499**	2	RETAINER	
	2	1	**101-2457**	2	LEVER	
	3	1	**8D-5634**	2	LEVER	
	4	1	**4L-6459**	1	BOLT (3/8-16X2.5 IN)	
	5	1	**8W-0456**	1	SHAFT-GOVERNOR CONTROL	
	6	1	**8X-4276**	10	ROD	
		1	**6V-8186**	20	NUT-FULL (5/16-24 THD)	
		1	**7H-3641**	20	END-ROD (5/16-24 THD)	
	7	1	**8D-5633**	2	LEVER	
	8	1	**101-2458**	2	LEVER	
	9	1	**137-4515**	2	BUSHING	
	10	1	**8D-5640**	12	BEARING	
B	11	1	**8D-5636**	4	SHIM (.254MM THK)	
B	12	1	**8D-5637**	4	SHIM (.762MM THK)	
	13	1	**6L-1962**	10	NUT-JAM (3/8-24THD)	
	14	1	**8T-9043**	20	BOLT (5/16-18X.875 IN)	
	15	1	**3F-9556**	20	LOCKWASHER	
	16	1	**9B-7237**	1	BOLT (3/8-16X1.25 IN)	
	17	1	**8D-5641**	10	BEARING	
	18	1	**2G-6757**	1	KNOB-BLADE LIFT (LH)	
M	19	1	**8T-4136**	4	BOLT (M10X1.5X25MM)	
	20	1	**2G-6749**	1	KNOB-SIDESHIFT	
	21	1	**2G-6747**	1	KNOB-BLADE TIP	
	22	1	**8D-5632**	2	LEVER	
	23	1	**2G-6751**	1	KNOB-CIRCLE DRIVE	
	24	1	**2G-6748**	1	KNOB-BLADE LIFT (RH)	
	25	1	**2G-6756**	1	KNOB-WHEEL LEAN	
	26	1	**2G-6752**	1	KNOB-ARTICULATION	
	27	1	**2G-6755**	1	KNOB-CENTERSHIFT	
	28	1	**5P-1075**	2	WASHER-HARD (10.2X22.5X3MM THK)	
	29	1	**9M-1853**	6	MOUNTING	
	30	1	**5P-1076**	6	WASHER-HARD (13.5X30X4MM THK)	
	31	1	**104-7740**	1	PLATE AS-LH	
		1	**1F-0748**	2	NUT-WELD (1/2-13 THD)	
	32	1	**104-7419**	1	PLATE AS-RH	
		1	**1F-0748**	2	NUT-WELD (1/2-13 THD)	
	33	1	**104-7429**	2	PLATE	
	34	1	**137-4516**	1	SHAFT	
	35	1	**2G-6740**	1	KNOB-RIPPER	
	36	1	**2G-6754**	1	KNOB (PLOW/DOZER LIFT)	
	37	1	**6V-8188**	2	NUT (1/2-13 THD)	
M	38	1	**8T-4195**	4	BOLT (M10X1.5X30MM)	
	39	1	**8F-6437**	6	WASHER (13.5X50.8X4.76MM THK)	
	40	1	**5P-2424**	6	BOLT (1/2-13X2.25 IN)	
	41	1	**6B-0933**	4	SPACER (10.31X19.05X6.35MM THK)	
	42	1	**8T-4121**	8	WASHER-HARD (11X21X2.5MM THK)	
CY	43	1	**130-3123**	1	VALVE GP-BANK 5 (RH)	517
CY	44	1	**130-3118**	1	VALVE GP-BANK 5 (LH)	516

B-USE AS REQUIRED
C-CHANGE FROM PREVIOUS TYPE
M-METRIC PART
Y-SEPARATE ILLUSTRATION

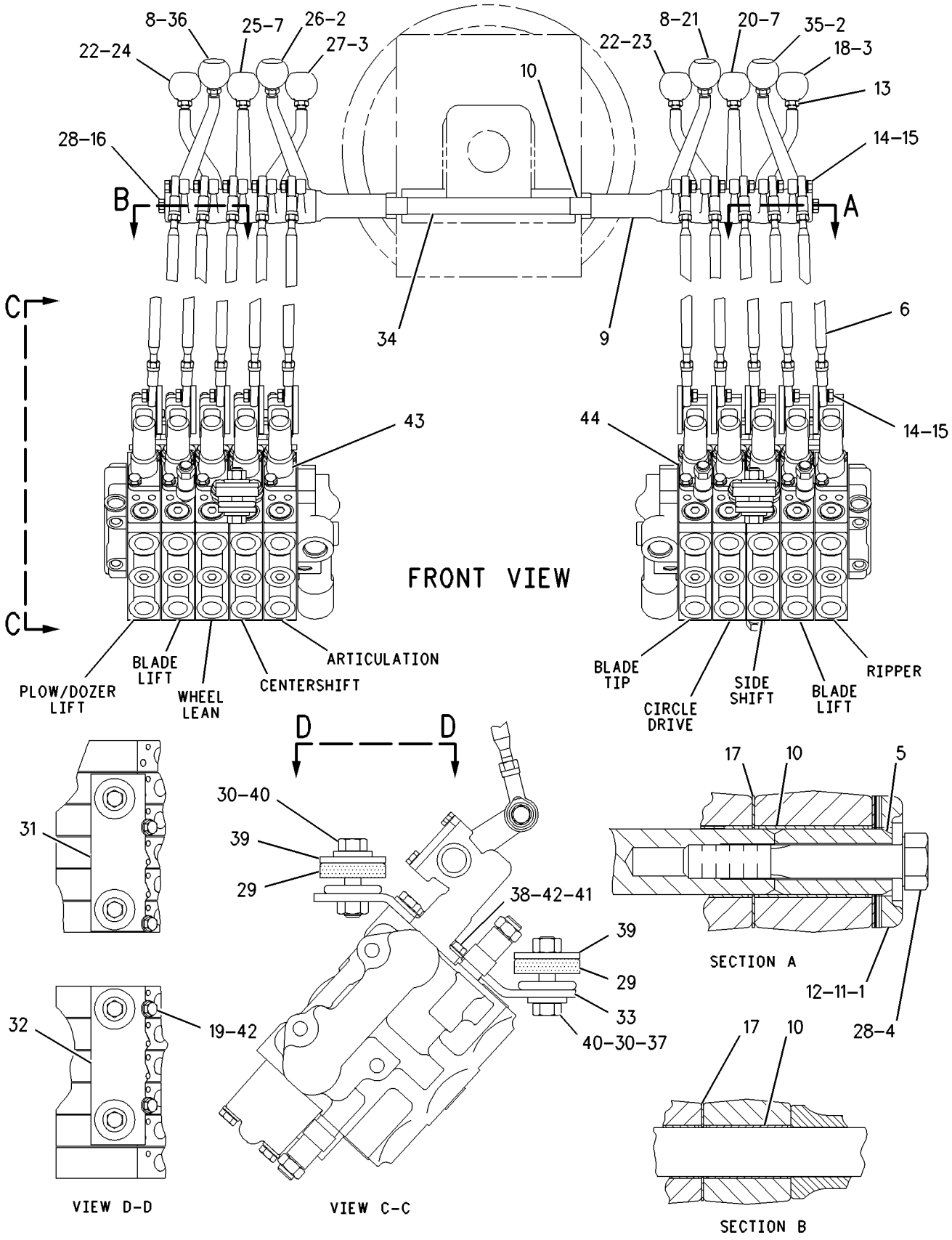

GRAPHIC #1 g00854574

HYDRAULIC SYSTEM

121-4099 VALVE & LINKAGE GP–BANK 6-RH–BANK 7-LH–EU

S/N: ATS1-UP

PART OF 184-7305 CONTROL AR-HYDRAULIC

AN ATTACHMENT

SMCS-5051, 5063 **i01793399**

NOTE	REF NO	GRAPHIC REF	PART NUMBER	QTY	PART NAME 1 2 3 4 5 6 (PRODUCT LEVEL)	SEE PAGE
CY	1	1	**130-3124**	1	VALVE GP-BANK 6 (RH)	519
CY	2	1	**130-3122**	1	VALVE GP-BANK 7 (LH)	520
	3	1	**8X-5499**	2	RETAINER	
	4	1	**101-2457**	1	LEVER	
	5	1	**8D-5634**	1	LEVER	
	6	1	**2G-7107**	1	KNOB-WING LIFT	
	7	1	**8X-4277**	13	ROD AS	
					(EACH INCLUDES)	
		1	**6V-8186**	2	NUT-FULL (5/16-24 THD)	
		1	**7H-3641**	2	END-ROD (5/16-24 THD)	
	8	1	**8D-5633**	1	LEVER	
	9	1	**101-2458**	1	LEVER	
	10	1	**137-4515**	2	BUSHING	
	11	1	**8D-5640**	15	BEARING	
B	12	1	**8D-5636**	4	SHIM (.254MM THK)	
B	13	1	**8D-5637**	4	SHIM (.762MM THK)	
	14	1	**6L-1962**	13	NUT-JAM (3/8-24THD)	
	15	1	**8T-9043**	26	BOLT (5/16-18X.875 IN)	
	16	1	**3F-9556**	26	LOCKWASHER	
	17	1	**8D-5641**	13	BEARING	
	18	1	**2G-6757**	1	KNOB-BLADE LIFT (LH)	
M	19	1	**8T-4136**	4	BOLT (M10X1.5X25MM)	
	20	1	**2G-6749**	1	KNOB-SIDESHIFT	
	21	1	**2G-6747**	1	KNOB-BLADE TIP	
	22	1	**8D-5632**	1	LEVER	
	23	1	**2G-6751**	1	KNOB-CIRCLE DRIVE	
	24	1	**2G-6748**	1	KNOB-BLADE LIFT (RH)	
	25	1	**2G-6756**	1	KNOB-WHEEL LEAN	
	26	1	**2G-6752**	1	KNOB-ARTICULATION	
	27	1	**2G-6755**	1	KNOB-CENTERSHIFT	
	28	1	**5P-1075**	2	WASHER-HARD (10.2X22.5X3MM THK)	
	29	1	**9M-1853**	6	MOUNTING	
	30	1	**5P-1076**	6	WASHER-HARD (13.5X30X4MM THK)	
	31	1	**104-7740**	1	PLATE AS-LH	
	32	1	**104-7419**	1	PLATE AS-RH	
	33	1	**117-0472**	1	KNOB (PLOW/DOZER ANGLE)	
	34	1	**104-7429**	2	PLATE	
	35	1	**137-4516**	1	SHAFT	
	36	1	**8T-4121**	8	WASHER-HARD (11X21X2.5MM THK)	
	37	1	**6B-0933**	4	SPACER (10.31X19.05X6.35MM THK)	
	38	1	**5P-2424**	6	BOLT (1/2-13X2.25 IN)	
	39	1	**6V-8188**	2	NUT (1/2-13 THD)	
M	40	1	**8T-4195**	4	BOLT (M10X1.5X30MM)	
	41	1	**2G-6754**	1	KNOB (PLOW/DOZER LIFT)	
	42	1	**2G-6740**	1	KNOB-RIPPER	
	43	1	**103-1597**	1	LEVER	
	44	1	**2G-7108**	1	KNOB-WING TILT	
	45	1	**7X-0291**	2	BOLT (3/8-16X3.75 IN)	
	46	1	**8W-0456**	4	SHAFT-GOVERNOR CONTROL	
	47	1	**8F-6437**	6	WASHER (13.5X50.8X4.76MM THK)	
	48	1	**101-2458**	1	LEVER	
	49	1	**101-2458**	1	LEVER	
	50	1	**103-1597**	1	LEVER	
	51	1	**8D-5632**	1	LEVER	
	52	1	**8D-5633**	1	LEVER	

121-4099 VALVE & LINKAGE GP *(contd.)* i01793399

NOTE	REF NO	GRAPHIC REF	PART NUMBER	QTY	PART NAME 1 2 3 4 5 6 (PRODUCT LEVEL)	SEE PAGE
	53	1	**101-2457**	1	LEVER	
	54	1	**8D-5634**	1	LEVER	

B-USE AS REQUIRED
C-CHANGE FROM PREVIOUS TYPE
M-METRIC PART
Y-SEPARATE ILLUSTRATION

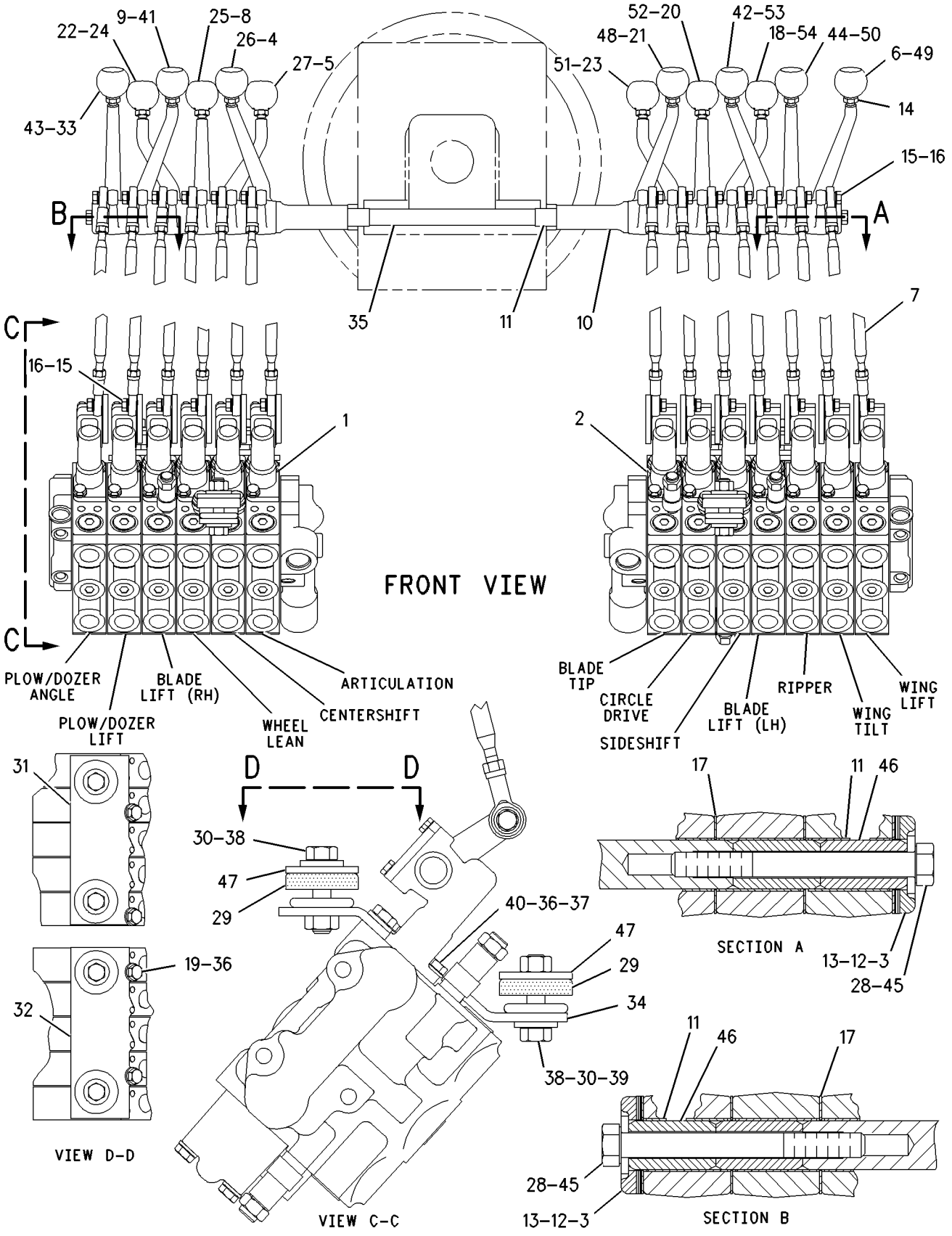

GRAPHIC #1

g00854606

MEMORANDA

HYDRAULIC SYSTEM

124-4211 VALVE & LINKAGE GP—BANK 4-LH,RH

S/N: ATS1-UP
AN ATTACHMENT

SMCS-5051, 5063 **i01855151**

NOTE	REF NO	GRAPHIC REF	PART NUMBER	QTY	PART NAME 1 2 3 4 5 6 (PRODUCT LEVEL)	SEE PAGE
CY	1	1	**130-3135**	1	VALVE GP-BANK 4 (RH)	514
CY	2	1	**130-3133**	1	VALVE GP-BANK 4 (LH)	513
	3	1	**8X-5498**	2	RETAINER	
	4	1	**101-2457**	1	LEVER (ARTICULATION)	
	5	1	**8D-5634**	1	LEVER (CENTER SHIFT)	
	6	1	**7H-3641**	16	END-ROD (5/16-24 THD)	
		1	**6V-8186**	16	NUT-FULL (5/16-24 THD)	
		1	**8X-4276**	8	ROD	
	7	1	**8D-5633**	1	LEVER (SIDE SHIFT)	
	8	1	**101-2458**	1	LEVER (BLADE TIP)	
	9	1	**137-4515**	2	BUSHING	
	10	1	**8D-5640**	10	BEARING	
B	11	1	**8D-5636**	4	SHIM (.254MM THK)	
B	12	1	**8D-5637**	4	SHIM (.762MM THK)	
	13	1	**6L-1962**	8	NUT-JAM (3/8-24THD)	
	14	1	**8T-9043**	16	BOLT (5/16-18X.875 IN)	
	15	1	**3F-9556**	16	LOCKWASHER	
	16	1	**9B-7237**	2	BOLT (3/8-16X1.25 IN)	
	17	1	**8D-5641**	8	BEARING	
	18	1	**2G-6757**	1	KNOB-BLADE LIFT	
M	19	1	**8T-4136**	4	BOLT (M10X1.5X25MM)	
	20	1	**2G-6749**	1	KNOB-SIDESHIFT	
	21	1	**2G-6747**	1	KNOB-BLADE TIP	
	22	1	**8D-5632**	1	LEVER (CIRCLE DRIVE)	
	23	1	**2G-6751**	1	KNOB-CIRCLE DRIVE	
	24	1	**2G-6748**	1	KNOB-BLADE LIFT	
	25	1	**2G-6756**	1	KNOB-WHEEL LEAN	
	26	1	**2G-6752**	1	KNOB-ARTICULATION	
	27	1	**2G-6755**	1	KNOB-CENTERSHIFT	
	28	1	**5P-1075**	2	WASHER-HARD (10.2X22.5X3MM THK)	
	29	1	**9M-1853**	6	MOUNTING	
	30	1	**5P-1076**	6	WASHER-HARD (13.5X30X4MM THK)	
	31	1	**104-7740**	1	PLATE AS-LH	
		1	**1F-0748**	2	NUT-WELD (1/2-13 THD)	
	32	1	**104-7419**	1	PLATE AS-RH	
		1	**1F-0748**	2	NUT-WELD (1/2-13 THD)	
	33	1	**104-7429**	2	PLATE	
	34	1	**137-4516**	1	SHAFT	
	35	1	**8T-4121**	8	WASHER-HARD (11X21X2.5MM THK)	
	36	1	**6B-0933**	4	SPACER (10.31X19.05X6.35MM THK)	
	37	1	**5P-2424**	6	BOLT (1/2-13X2.25 IN)	
	38	1	**6V-8188**	2	NUT (1/2-13 THD)	
M	39	1	**8T-4195**	4	BOLT (M10X1.5X30MM)	
	40	1	**8F-6437**	6	WASHER (13.5X50.8X4.76MM THK)	
	41	1	**8D-5633**	1	LEVER (SIDE SHIFT)	
	42	1	**8D-5634**	1	LEVER (BLADE LIFT-LH)	
	43	1	**8D-5632**	1	LEVER (BLADE LIFT-RH)	

B-USE AS REQUIRED
C-CHANGE FROM PREVIOUS TYPE
M-METRIC PART
Y-SEPARATE ILLUSTRATION

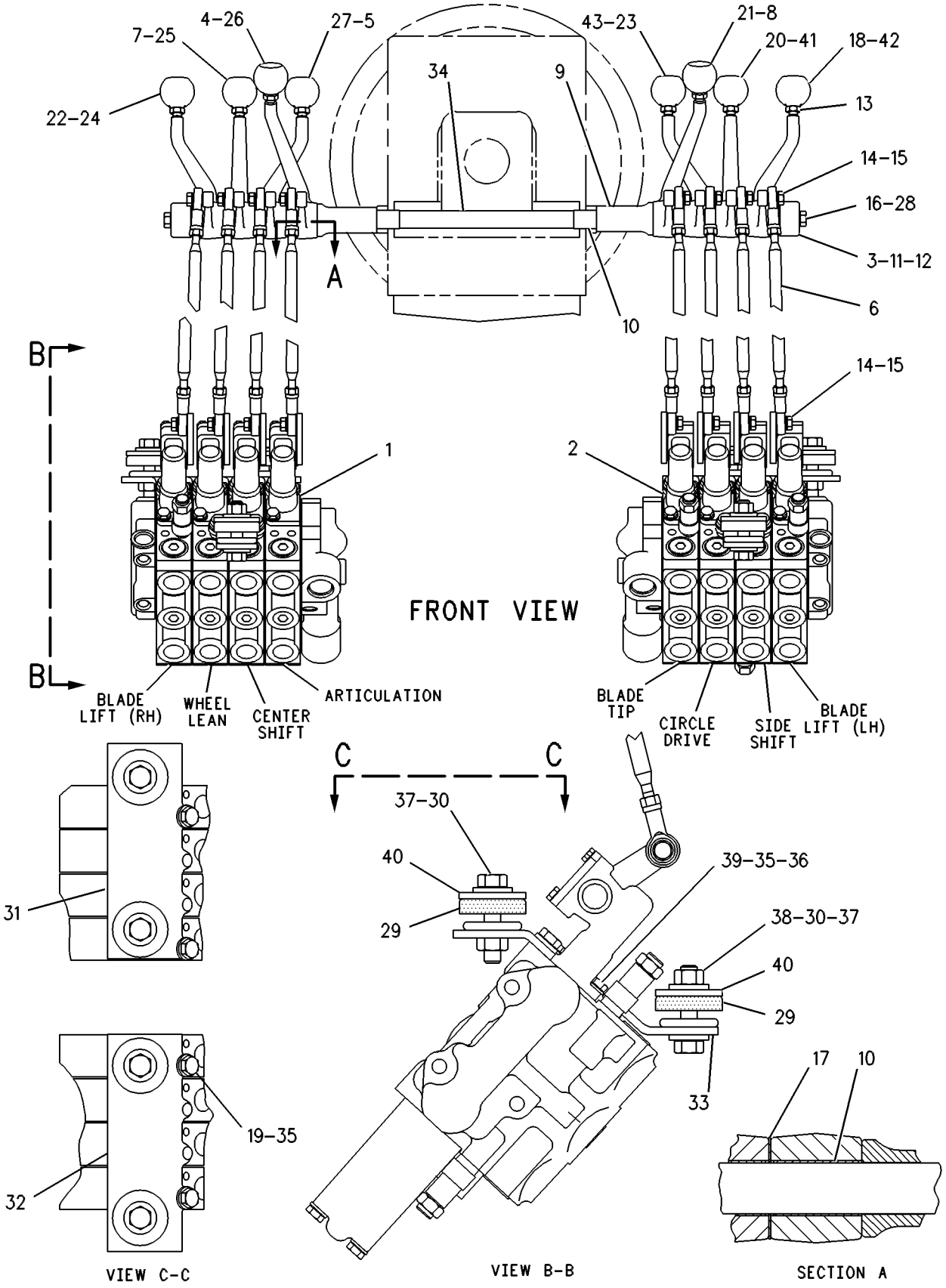

GRAPHIC #1 g00109679

HYDRAULIC SYSTEM

124-4220 VALVE & LINKAGE GP—BANK 4-RH—BANK 5-LH

S/N: ATS1-UP
PART OF 194-7985 CONTROL AR-HYDRAULIC
AN ATTACHMENT

SMCS-5051, 5063 **i00605145**

NOTE	REF NO	GRAPHIC REF	PART NUMBER	QTY	PART NAME 1 2 3 4 5 6 (PRODUCT LEVEL)	SEE PAGE
CY	1	1	**130-3135**	1	VALVE GP-BANK 4 (RH)	514
CY	2	1	**130-3134**	1	VALVE GP-BANK 5 (LH)	518
	3	1	**8X-5499**	2	RETAINER	
	4	1	**101-2457**	1	LEVER (ARTICULATION)	
	5	1	**8D-5634**	1	LEVER (CENTERSHIFT)	
	6	1	**8X-4276**	9	ROD	
		1	**6V-8186**	18	NUT-FULL (5/16-24 THD)	
		1	**7H-3641**	18	ROD END	
	7	1	**8D-5633**	1	LEVER (WHEEL LEAN)	
	8	1	**101-2458**	1	LEVER (BLADE TIP)	
	9	1	**137-4515**	2	SPACER	
	10	1	**8D-5640**	11	BEARING	
B	11	1	**8D-5636**	4	SHIM (.254MM THK)	
B	12	1	**8D-5637**	4	SHIM (.762MM THK)	
	13	1	**6L-1962**	9	NUT-JAM	
	14	1	**8T-9043**	18	BOLT (5/16-18X.875IN)	
	15	1	**3F-9556**	18	LOCKWASHER (8.4MM ID)	
	16	1	**9B-7237**	2	BOLT (3/8-16X1.25IN)	
	17	1	**8D-5641**	9	BEARING	
	18	1	**2G-6757**	1	KNOB-BLADE LIFT (LH)	
M	19	1	**8T-4136**	4	BOLT (M10X1.50X25MM)	
	20	1	**2G-6749**	1	KNOB-SIDESHIFT	
	21	1	**2G-6747**	1	KNOB-BLADE TIP	
	22	1	**8D-5632**	1	LEVER (BLADE LIFT-RH)	
	23	1	**2G-6751**	1	KNOB-CIRCLE DRIVE	
	24	1	**2G-6748**	1	KNOB-BLADE LIFT (RH)	
	25	1	**2G-6756**	1	KNOB-WHEEL LEAN	
	26	1	**2G-6752**	1	KNOB-ARTICULATION	
	27	1	**2G-6755**	1	KNOB-CENTERSHIFT	
	28	1	**5P-1075**	2	WASHER-HARD (3MM THK)	
	29	1	**9M-1853**	6	MOUNTING	
	30	1	**5P-1076**	6	WASHER-HARD (4MM THK)	
	31	1	**104-7740**	1	PLATE AS-LH	
	32	1	**104-7419**	1	PLATE AS-RH	
	33	1	**104-7429**	2	PLATE	
	34	1	**137-4516**	1	SHAFT	
	35	1	**2G-6740**	1	KNOB-RIPPER	
	36	1	**6B-0933**	4	SPACER	
	37	1	**5P-2424**	6	BOLT (1/2-13X2.25IN)	
	38	1	**6V-8188**	2	NUT (1/2-13 THD)	
M	39	1	**8T-4195**	4	BOLT (M10X1.50X30MM)	
	40	1	**8F-6437**	6	WASHER (4.76MM THK)	
	41	1	**8T-4121**	8	WASHER (2.5MM THK)	
	42	1	**101-2457**	1	LEVER (RIPPER)	
	43	1	**8D-5634**	1	LEVER (BLADE LIFT-LH)	
	44	1	**8D-5633**	1	LEVER (SIDESHIFT)	
	45	1	**8D-5632**	1	LEVER (CIRCLE DRIVE)	

B-USE AS REQUIRED
C-CHANGE FROM PREVIOUS TYPE
M-METRIC PART
Y-SEPARATE ILLUSTRATION

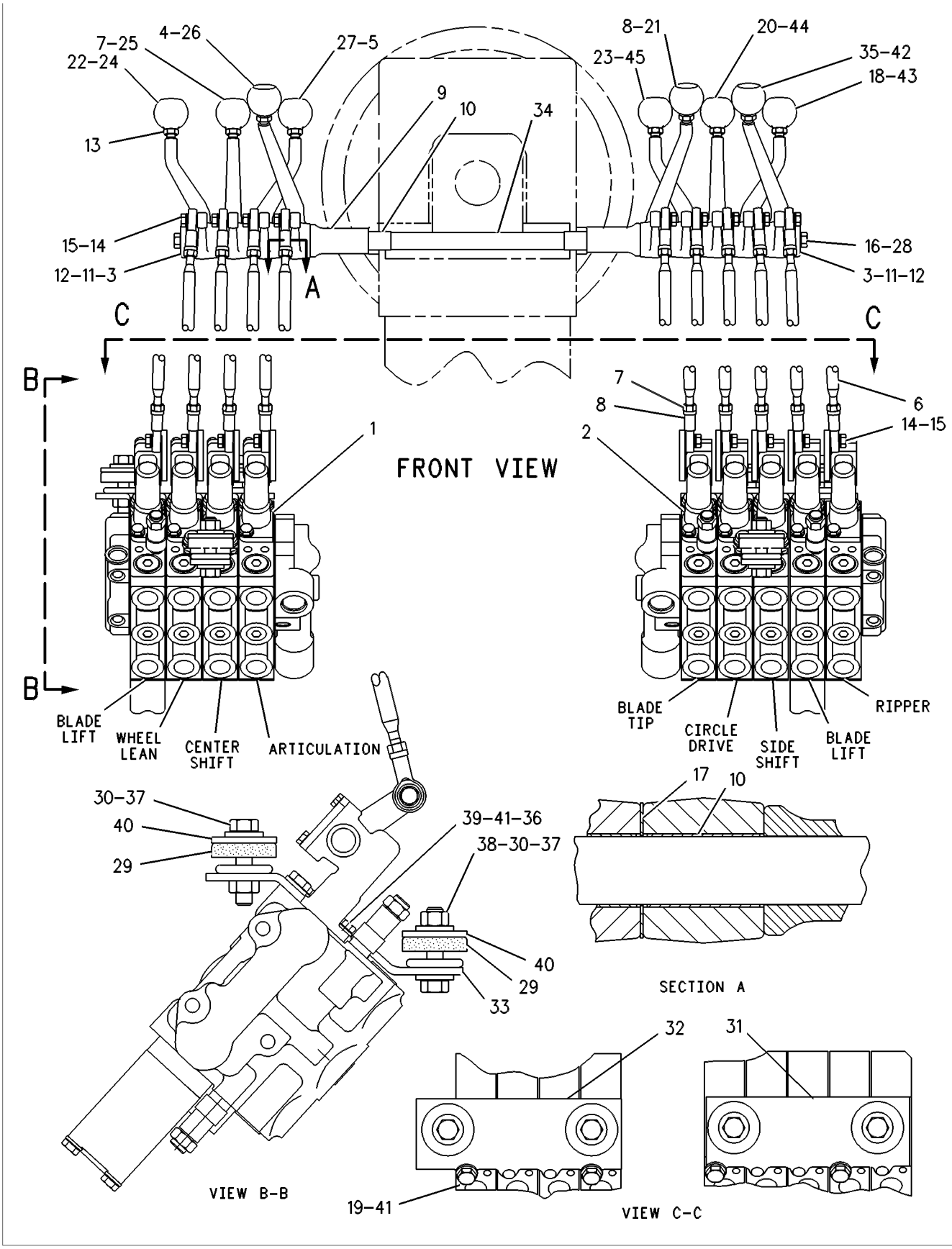

GRAPHIC #1 g00109636

HYDRAULIC SYSTEM

125-2235 VALVE & LINKAGE GP—BANK 4-RH—BANK 7-LH

S/N: ATS1-UP
PART OF 194-4020 CONTROL AR-HYDRAULIC
AN ATTACHMENT

SMCS-5051, 5063 **i01802553**

NOTE	REF NO	GRAPHIC REF	PART NUMBER	QTY	PART NAME 1 2 3 4 5 6 (PRODUCT LEVEL)	SEE PAGE
Y	1	1	**130-3116**	1	VALVE GP-BANK 4 (RH)	512
Y	2	1	**130-3122**	1	VALVE GP-BANK 7 (LH)	520
	3	1	**8X-5499**	2	RETAINER	
	4	1	**101-2457**	2	LEVER	
	5	1	**8D-5634**	2	LEVER	
	6	1	**2G-7107**	1	KNOB-WING LIFT	
	7	1	**8X-4277**	11	ROD AS	
					(EACH INCLUDES)	
		1	**6V-8186**	1	NUT-FULL (5/16-24 THD)	
		1	**7H-3641**	1	END-ROD (5/16-24 THD)	
		1	**8L-8598**	1	ROD END	
	8	1	**8D-5633**	2	LEVER	
	9	1	**101-2458**	2	LEVER	
	10	1	**137-4515**	2	BUSHING	
	11	1	**8D-5640**	13	BEARING	
B	12	1	**8D-5636**	4	SHIM (.254MM THK)	
B	13	1	**8D-5637**	4	SHIM (.762MM THK)	
	14	1	**6L-1962**	11	NUT-JAM (3/8-24THD) (3/8-24THD)	
	15	1	**8T-9043**	22	BOLT (5/16-18X.875 IN)	
	16	1	**3F-9556**	22	LOCKWASHER	
	17	1	**4L-6459**	2	BOLT (3/8-16X2.5 IN)	
	18	1	**8D-5641**	11	BEARING	
	19	1	**2G-6757**	1	KNOB-BLADE LIFT (LH)	
M	20	1	**8T-4136**	4	BOLT (M10X1.5X25MM)	
	21	1	**2G-6749**	1	KNOB-SIDESHIFT	
	22	1	**2G-6747**	1	KNOB-BLADE TIP	
	23	1	**8D-5632**	2	LEVER	
	24	1	**2G-6751**	1	KNOB-CIRCLE DRIVE	
	25	1	**2G-6748**	1	KNOB-BLADE LIFT (RH)	
	26	1	**2G-6756**	1	KNOB-WHEEL LEAN	
	27	1	**2G-6752**	1	KNOB-ARTICULATION	
	28	1	**2G-6755**	1	KNOB-CENTERSHIFT	
	29	1	**5P-1075**	2	WASHER-HARD (10.2X22.5X3MM THK)	
	30	1	**9M-1853**	6	MOUNTING	
	31	1	**5P-1076**	6	WASHER-HARD (13.5X30X4MM THK)	
	32	1	**104-7740**	1	PLATE AS-LH	
	33	1	**104-7419**	1	PLATE AS-RH	
	34	1	**104-7429**	2	PLATE	
	35	1	**137-4516**	1	SHAFT	
	36	1	**8T-4121**	4	WASHER-HARD (11X21X2.5MM THK)	
	37	1	**6B-0933**	4	SPACER (10.31X19.05X6.35MM THK)	
	38	1	**5P-2424**	6	BOLT (1/2-13X2.25 IN)	
	39	1	**6V-8188**	2	NUT (1/2-13 THD)	
M	40	1	**8T-4195**	4	BOLT (M10X1.5X30MM)	
	41	1	**2G-6740**	1	KNOB-RIPPER	
	42	1	**103-1597**	1	LEVER	
	43	1	**2G-7108**	1	KNOB-WING TILT	
	44	1	**8W-0456**	2	SHAFT-GOVERNOR CONTROL	
	45	1	**8F-6437**	6	WASHER (13.5X50.8X4.76MM THK)	

B-USE AS REQUIRED
M-METRIC PART
Y-SEPARATE ILLUSTRATION

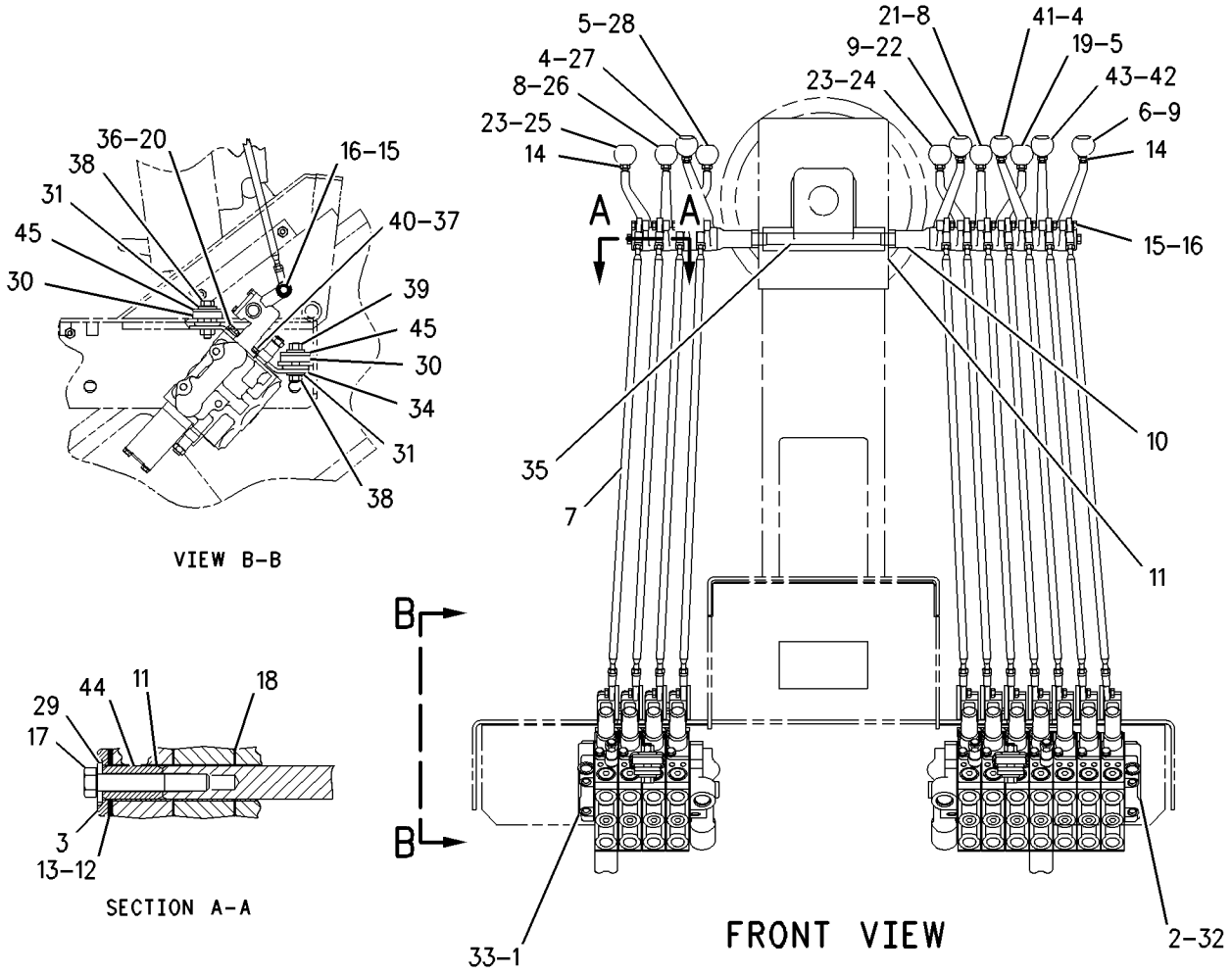

GRAPHIC #1

g00791918

HYDRAULIC SYSTEM

104-8658 VALVE GP-BANK 4–LH

S/N: ATS1-UP

PART OF 8X-4144 VALVE & LINKAGE GP

SMCS-5051 **i00604899**

NOTE	REF NO	GRAPHIC REF	PART NUMBER	QTY	PART NAME 1 2 3 4 5 6 (PRODUCT LEVEL)	SEE PAGE
M	1	1	**7X-2546**	2	BOLT (M10X1.50X180MM)	
M	2	1	**137-6720**	1	BOLT-HEX HEAD	
	3	1	**102-8385**	1	MANIFOLD	
	4	1	**101-0509**	5	PLATE-SEAL	
Y	5	1	**107-0554**	1	VALVE GP-CONTROL (BLADE TIP)	536
Y	6	1	**107-0555**	1	VALVE GP-CONTROL (CIRCLE DRIVE)	538
Y	7	1	**107-0556**	1	VALVE GP-CONTROL (SIDESHIFT)	540
Y	8	1	**107-0558**	1	VALVE GP-CONTROL (BLADE LIFT)	542
	9	1	**101-9346**	1	COVER	
M	10	1	**8T-4186**	3	BOLT (M10X1.50X40MM)	
	11	1	**4J-7533**	1	SEAL-O-RING (6.07MM ID)	
	12	1	**9S-4180**	1	PLUG-O-RING (5/16-24 THD)	

M-METRIC PART
Y-SEPARATE ILLUSTRATION

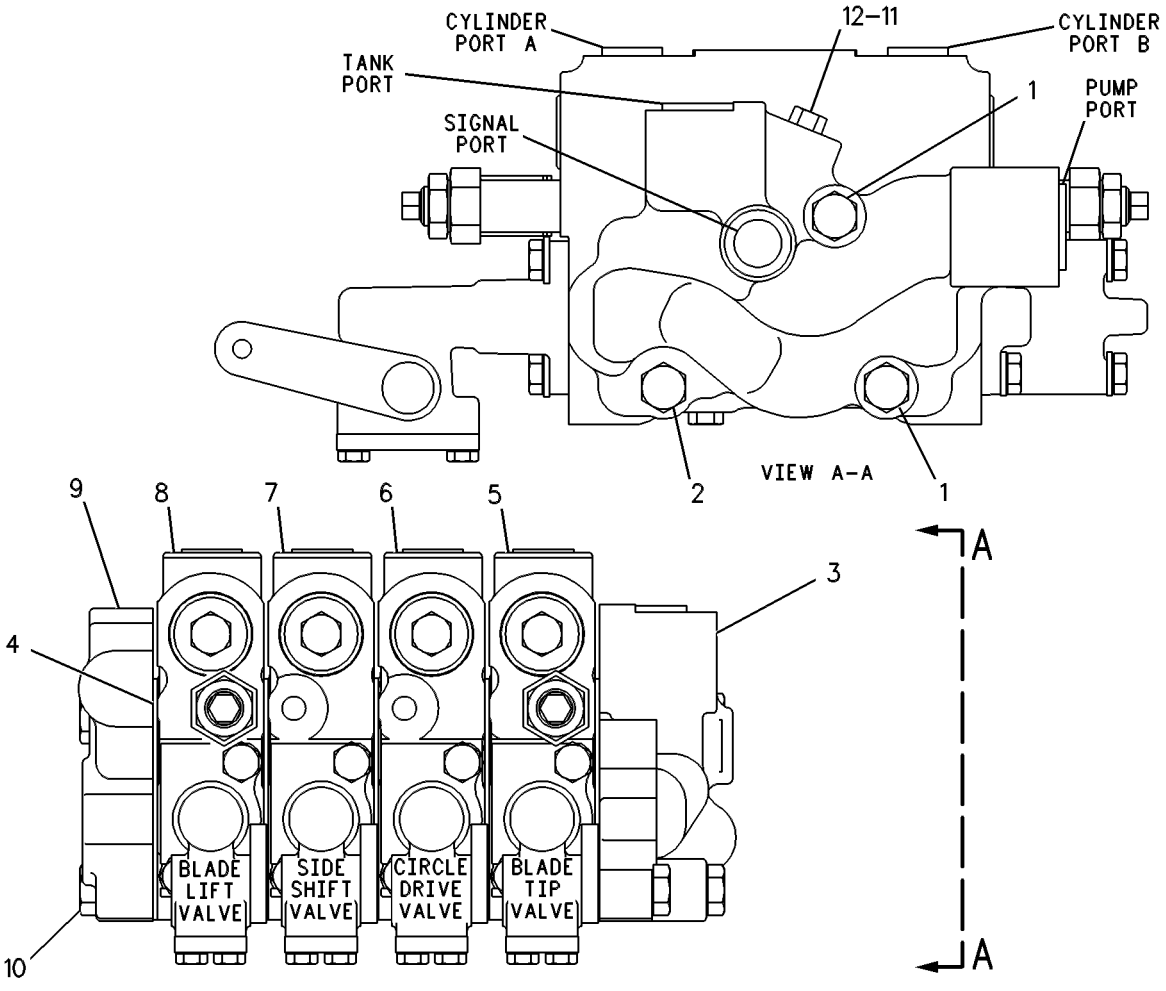

GRAPHIC #1 g00249917

104-8676 VALVE GP-BANK 4–RH

S/N: ATS1-UP
PART OF 7I-4872, 8X-4144 VALVE & LINKAGE GP
ALSO AN ATTACHMENT

SMCS-5051 **i00604926**

NOTE	REF NO	GRAPHIC REF	PART NUMBER	QTY	PART NAME 1 2 3 4 5 6 (PRODUCT LEVEL)	SEE PAGE
M	1	1	**7X-2546**	2	BOLT (M10X1.50X180MM)	
M	2	1	**137-6720**	1	BOLT-HEX HEAD	
	3	1	**102-6238**	1	MANIFOLD	
	4	1	**101-0509**	5	PLATE-SEAL	
Y	5	1	**107-0560**	1	VALVE GP-CONTROL (ARTICULATION)	546
Y	6	1	**107-0562**	1	VALVE GP-CONTROL (CENTERSHIFT)	548
Y	7	1	**107-0563**	1	VALVE GP-CONTROL (WHEEL LEAN)	550
Y	8	1	**107-0565**	1	VALVE GP-CONTROL (BLADE LIFT)	552
	9	1	**4J-7533**	1	SEAL-O-RING (6.07MM ID)	
	10	1	**101-9346**	1	COVER	
M	11	1	**8T-4186**	3	BOLT (M10X1.50X40MM)	
	12	1	**9S-4180**	1	PLUG-O-RING (5/16-24 THD)	

M-METRIC PART
Y-SEPARATE ILLUSTRATION

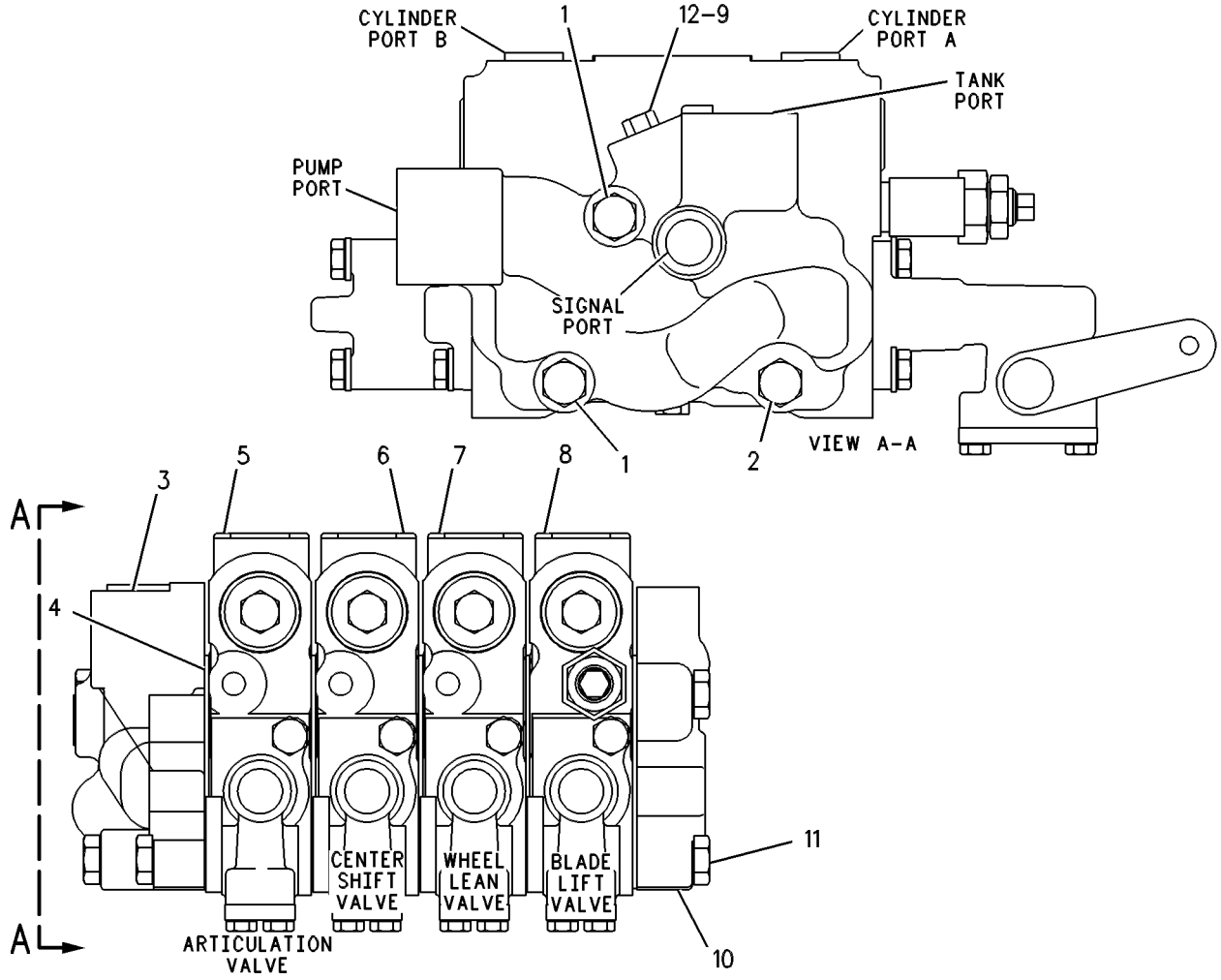

GRAPHIC #1 g00250049

130-3116 VALVE GP-BANK 4–RH

S/N: ATS1-UP
PART OF 121-4090, 125-2235 VALVE & LINKAGE GP
AN ATTACHMENT

SMCS-5051 **i01712895**

NOTE	REF NO	GRAPHIC REF	PART NUMBER	QTY	PART NAME 1 2 3 4 5 6 (PRODUCT LEVEL)	SEE PAGE
M	1	1	**7X-2546**	2	BOLT (M10X1.50X180MM)	
M	2	1	**137-6720**	1	BOLT-HEX HEAD (M10X1.50X160MM)	
	3	1	**102-6238**	1	MANIFOLD	
	4	1	**101-0509**	5	PLATE-SEAL	
Y	5	1	**6E-3028**	1	VALVE GP-CONTROL (ARTICULATION)	524
Y	6	1	**6E-3029**	1	VALVE GP-CONTROL (CENTERSHIFT)	526
Y	7	1	**6E-3030**	1	VALVE GP-CONTROL (WHEEL LEAN)	528
Y	8	1	**128-8647**	1	VALVE GP-CONTROL (BLADE LIFT)	560
	9	1	**101-9346**	1	COVER	
M	10	1	**8T-4186**	3	BOLT (M10X1.5X40MM)	
	11	1	**4J-7533**	1	SEAL-O-RING	
	12	1	**9S-4180**	1	PLUG	

M-METRIC PART
Y-SEPARATE ILLUSTRATION

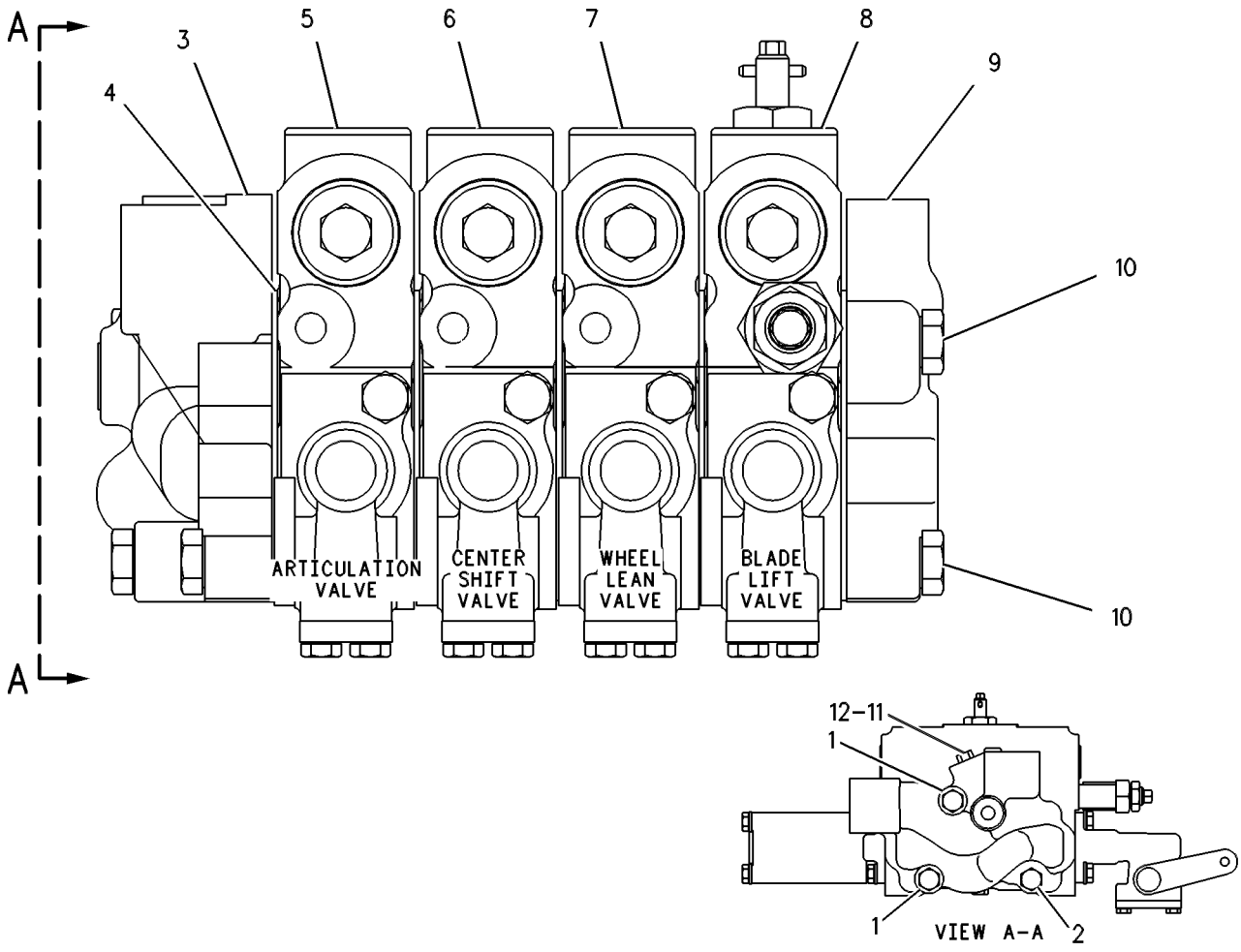

GRAPHIC #1 g00109425

130-3133 VALVE GP-BANK 4–LH

S/N: ATS1-UP
PART OF 124-4211 VALVE & LINKAGE GP
AN ATTACHMENT

SMCS-5051 **i01855156**

NOTE	REF NO	GRAPHIC REF	PART NUMBER	QTY	PART NAME 1 2 3 4 5 6 (PRODUCT LEVEL)	SEE PAGE
M	1	1	**7X-2546**	2	BOLT (M10X1.50X180MM)	
M	2	1	**137-6720**	1	BOLT-HEX HEAD (M10X1.50X160MM)	
	3	1	**102-8385**	1	MANIFOLD	
	4	1	**101-0509**	5	PLATE-SEAL	
Y	5	1	**107-0554**	1	VALVE GP-CONTROL (BLADE TILT)	536
Y	6	1	**107-0555**	1	VALVE GP-CONTROL (CIRCLE DRIVE)	538
Y	7	1	**107-0556**	1	VALVE GP-CONTROL (SIDE SHIFT)	540
	8	1	**4J-7533**	2	SEAL-O-RING	
	9	1	**101-9346**	1	COVER	
M	10	1	**8T-4186**	3	BOLT (M10X1.5X40MM)	
Y	11	1	**130-3115**	1	VALVE GP-CONTROL (BLADE LIFT)	568
	12	1	**9S-4180**	1	PLUG	

M-METRIC PART
Y-SEPARATE ILLUSTRATION

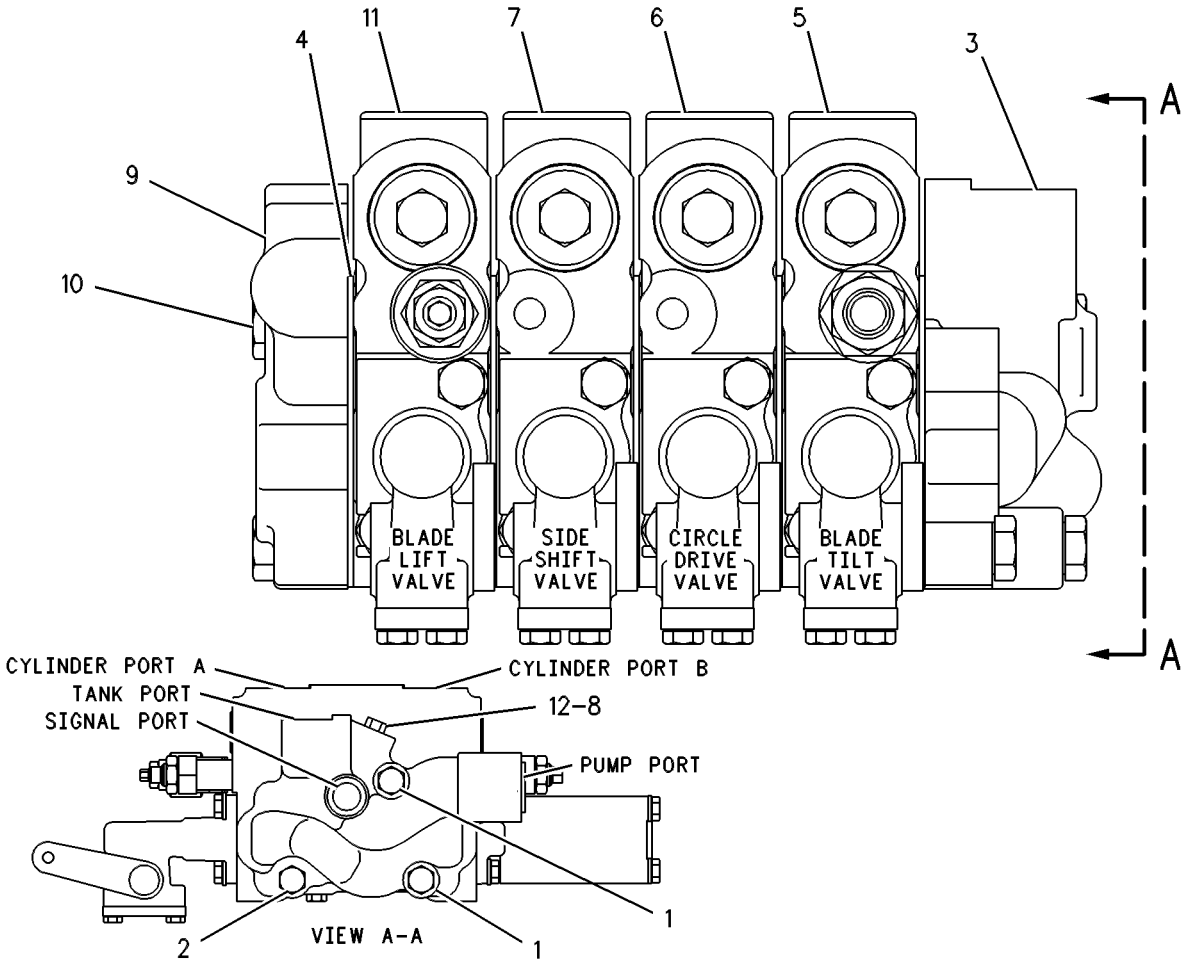

GRAPHIC #1 g00109463

130-3135 VALVE GP-BANK 4–RH

S/N: ATS1-UP
PART OF 124-4211, 124-4220 VALVE & LINKAGE GP
AN ATTACHMENT

SMCS-5051 **i00130820**

NOTE	REF NO	GRAPHIC REF	PART NUMBER	QTY	PART NAME 1 2 3 4 5 6 (PRODUCT LEVEL)	SEE PAGE
M	1	1	**7X-2546**	2	BOLT (M10X1.50X180MM)	
M	2	1	**137-6720**	1	BOLT-HEX HEAD	
	3	1	**102-6238**	1	MANIFOLD	
	4	1	**101-0509**	5	PLATE-SEAL	
Y	5	1	**107-0560**	1	VALVE GP-CONTROL (ARTICULATED)	546
Y	6	1	**107-0562**	1	VALVE GP-CONTROL (CENTERSHIFT)	548
Y	7	1	**107-0563**	1	VALVE GP-CONTROL (WHEEL LEAN)	550
	8	1	**4J-7533**	1	SEAL-O-RING (6.07MM ID)	
Y	9	1	**130-3114**	1	VALVE GP-CONTROL (BLADE LIFT)	566
	10	1	**101-9346**	1	COVER	
M	11	1	**8T-4186**	3	BOLT (M10X1.50X40MM)	
	12	1	**9S-4180**	1	PLUG-O-RING (5/16-24 THD)	

M-METRIC PART
Y-SEPARATE ILLUSTRATION

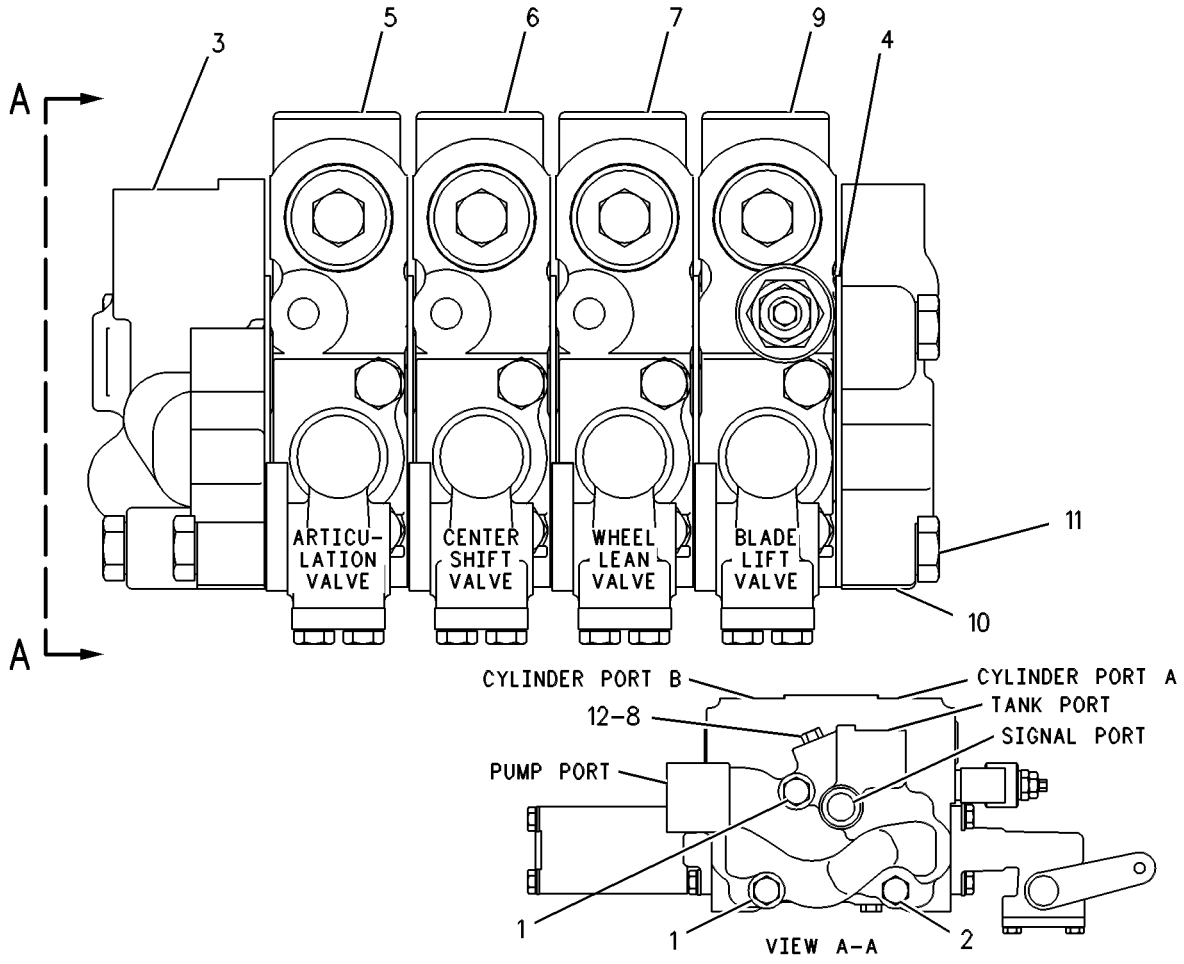

GRAPHIC #1 g00109462

104-8660 VALVE GP-BANK 5–LH

S/N: ATS1-UP
PART OF 7I-4872 VALVE & LINKAGE GP
AN ATTACHMENT

SMCS-5051 **i00604908**

NOTE	REF NO	GRAPHIC REF	PART NUMBER	QTY	PART NAME 1 2 3 4 5 6 (PRODUCT LEVEL)	SEE PAGE
M	1	1	**7X-2546**	2	BOLT (M10X1.50X180MM)	
M	2	1	**137-6720**	1	BOLT-HEX HEAD	
	3	1	**102-8385**	1	MANIFOLD	
	4	1	**101-0509**	6	PLATE-SEAL	
Y	5	1	**107-0554**	1	VALVE GP-CONTROL (BLADE TIP)	536
Y	6	1	**107-0555**	1	VALVE GP-CONTROL (CIRCLE DRIVE)	538
Y	7	1	**107-0556**	1	VALVE GP-CONTROL (SIDESHIFT)	540
Y	8	1	**107-0558**	1	VALVE GP-CONTROL (BLADE LIFT)	542
Y	9	1	**107-0559**	1	VALVE GP-CONTROL (RIPPER)	544
	10	1	**101-9346**	1	COVER	
M	11	1	**137-6719**	3	BOLT-HEX HEAD (M10X1.50X80MM)	
	12	1	**4J-7533**	1	SEAL-O-RING (6.07MM ID)	
	13	1	**9S-4180**	1	PLUG-O-RING (5/16-24 THD)	

M-METRIC PART
Y-SEPARATE ILLUSTRATION

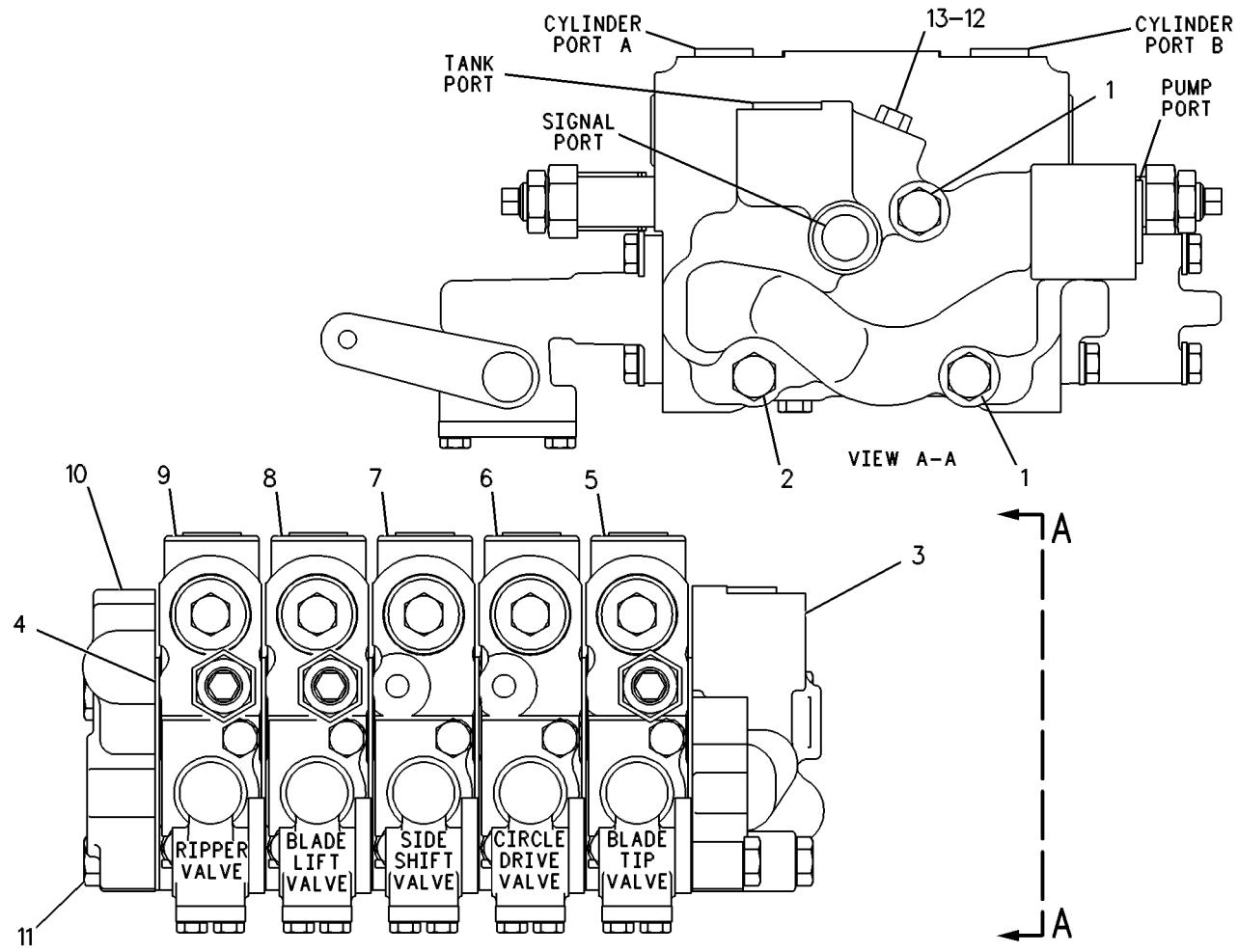

GRAPHIC #1 g00108903

HYDRAULIC SYSTEM

130-3118 VALVE GP-BANK 5–LH

S/N: ATS1-UP
PART OF 121-4090, 121-4097 VALVE & LINKAGE GP
AN ATTACHMENT

SMCS-5051 **i01712946**

NOTE	REF NO	GRAPHIC REF	PART NUMBER	QTY	PART NAME 1 2 3 4 5 6 (PRODUCT LEVEL)	SEE PAGE
M	1	1	**7X-2546**	2	BOLT (M10X1.50X180MM)	
M	2	1	**137-6720**	1	BOLT-HEX HEAD (M10X1.50X160MM)	
	3	1	**102-8385**	1	MANIFOLD	
	4	1	**101-0509**	6	PLATE-SEAL	
Y	5	1	**6E-3034**	1	VALVE GP-CONTROL (BLADE TIP)	530
Y	6	1	**6E-3035**	1	VALVE GP-CONTROL (CIRCLE DRIVE)	532
Y	7	1	**6E-3036**	1	VALVE GP-CONTROL (SIDESHIFT)	534
Y	8	1	**130-3110**	1	VALVE GP-CONTROL (BLADE LIFT)	562
Y	9	1	**119-9550**	1	VALVE GP-CONTROL (RIPPER)	556
M	10	1	**137-6719**	3	BOLT-HEX HEAD (M10X1.50X80MM)	
	11	1	**101-9346**	1	COVER	
	12	1	**9S-4180**	1	PLUG	
	13	1	**4J-7533**	1	SEAL-O-RING	

M-METRIC PART
Y-SEPARATE ILLUSTRATION

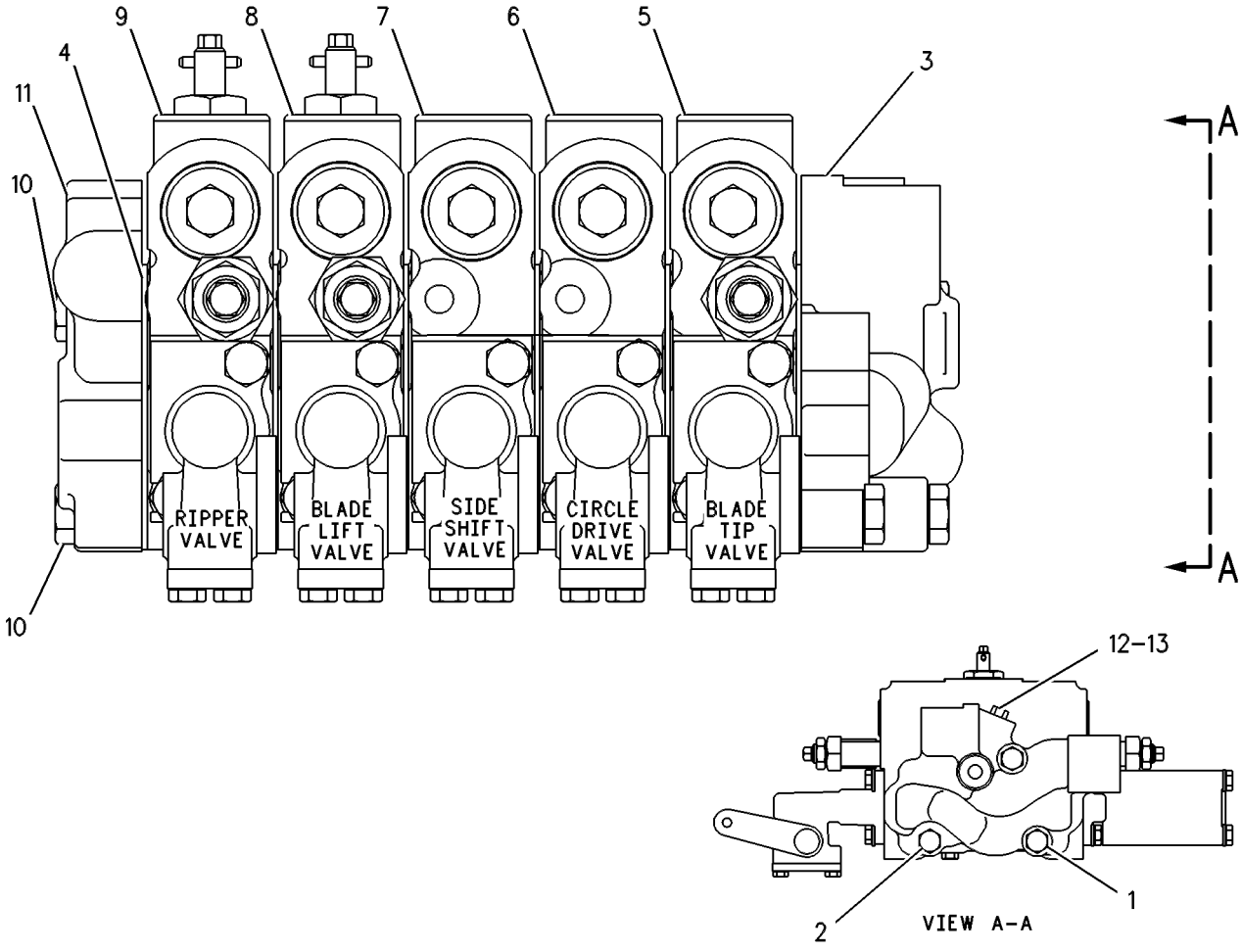

GRAPHIC #1 g00109426

HYDRAULIC SYSTEM

130-3123 VALVE GP-BANK 5–RH–EU

S/N: ATS1-UP
PART OF 121-4097 VALVE & LINKAGE GP
AN ATTACHMENT

SMCS-5051 **i01712962**

NOTE	REF NO	GRAPHIC REF	PART NUMBER	QTY	PART NAME 1 2 3 4 5 6 (PRODUCT LEVEL)	SEE PAGE
M	1	1	**7X-2546**	2	BOLT (M10X1.50X180MM)	
M	2	1	**137-6720**	1	BOLT-HEX HEAD (M10X1.50X160MM)	
	3	1	**102-6238**	1	MANIFOLD	
	4	1	**101-0509**	6	PLATE-SEAL	
Y	5	1	**6E-3028**	1	VALVE GP-CONTROL (ARTICULATION)	524
Y	6	1	**6E-3029**	1	VALVE GP-CONTROL (CENTERSHIFT)	526
Y	7	1	**6E-3030**	1	VALVE GP-CONTROL (WHEEL LEAN)	528
	8	1	**4J-7533**	1	SEAL-O-RING	
Y	9	1	**128-8647**	1	VALVE GP-CONTROL (BLADE LIFT)	560
Y	10	1	**130-3111**	1	VALVE GP-CONTROL (PLOW/DOZER LIFT)	564
	11	1	**101-9346**	1	COVER	
M	12	1	**137-6719**	3	BOLT-HEX HEAD (M10X1.50X80MM)	
	13	1	**9S-4180**	1	PLUG	

M-METRIC PART
Y-SEPARATE ILLUSTRATION

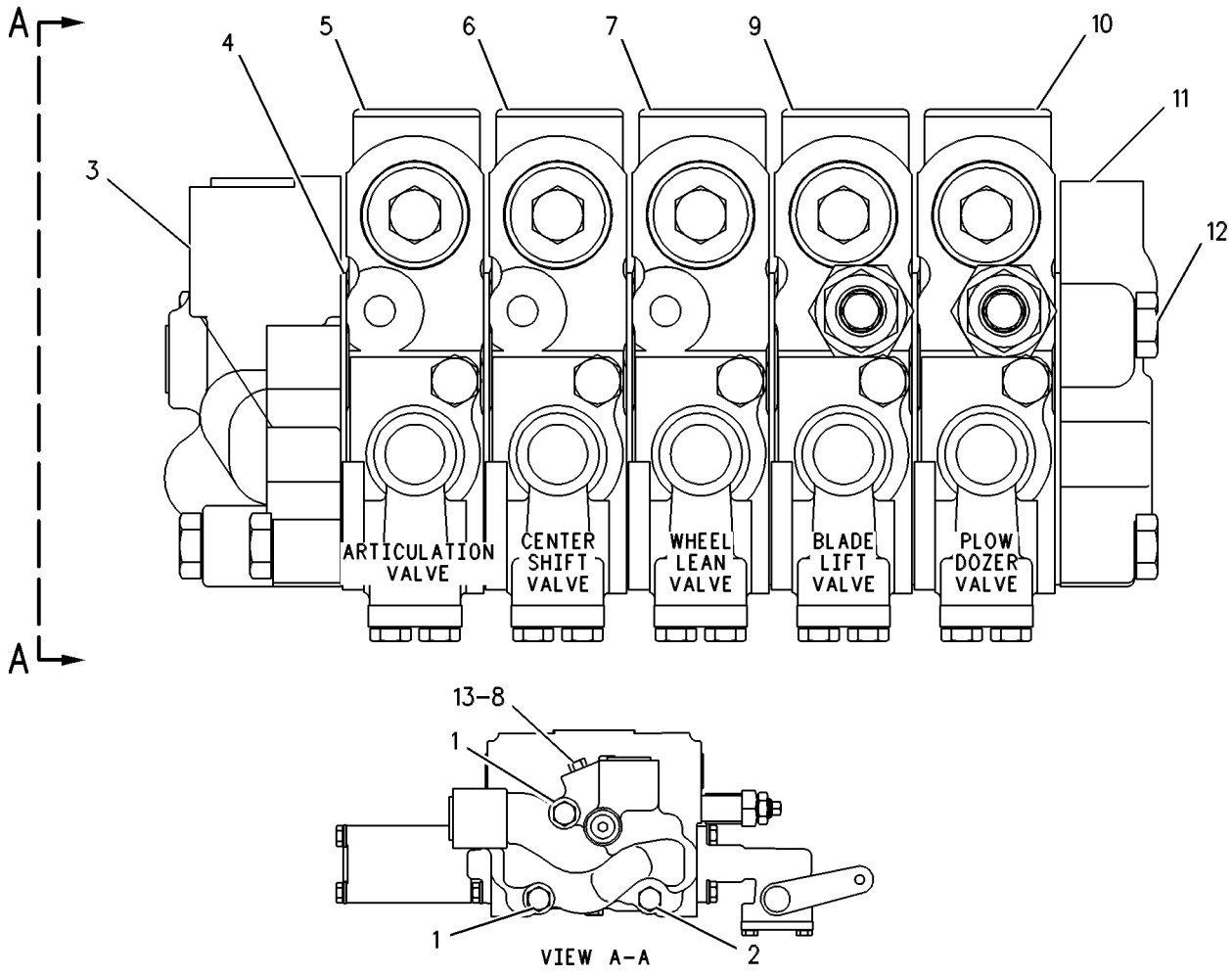

GRAPHIC #1 g00272878

HYDRAULIC SYSTEM

130-3134 VALVE GP-BANK 5–LH

S/N: ATS1-UP
PART OF 124-4220 VALVE & LINKAGE GP
AN ATTACHMENT

SMCS-5051 **i01855160**

NOTE	REF NO	GRAPHIC REF	PART NUMBER	QTY	PART NAME 1 2 3 4 5 6 (PRODUCT LEVEL)	SEE PAGE
M	1	1	**7X-2546**	2	BOLT (M10X1.50X180MM)	
M	2	1	**137-6720**	1	BOLT-HEX HEAD (M10X1.50X160MM)	
	3	1	**102-8385**	1	MANIFOLD	
	4	1	**101-0509**	6	PLATE-SEAL	
Y	5	1	**107-0554**	1	VALVE GP-CONTROL (BLADE TILT)	536
Y	6	1	**107-0555**	1	VALVE GP-CONTROL (CIRCLE DRIVE)	538
Y	7	1	**107-0556**	1	VALVE GP-CONTROL (SIDE SHIFT)	540
Y	8	1	**124-3455**	1	VALVE GP-CONTROL (RIPPER)	558
	9	1	**101-9346**	1	COVER	
M	10	1	**137-6719**	3	BOLT-HEX HEAD (M10X1.50X80MM)	
Y	11	1	**130-3115**	1	VALVE GP-CONTROL (BLADE LIFT)	568
	12	1	**9S-4180**	1	PLUG	
	13	1	**4J-7533**	1	SEAL-O-RING	

M-METRIC PART
Y-SEPARATE ILLUSTRATION

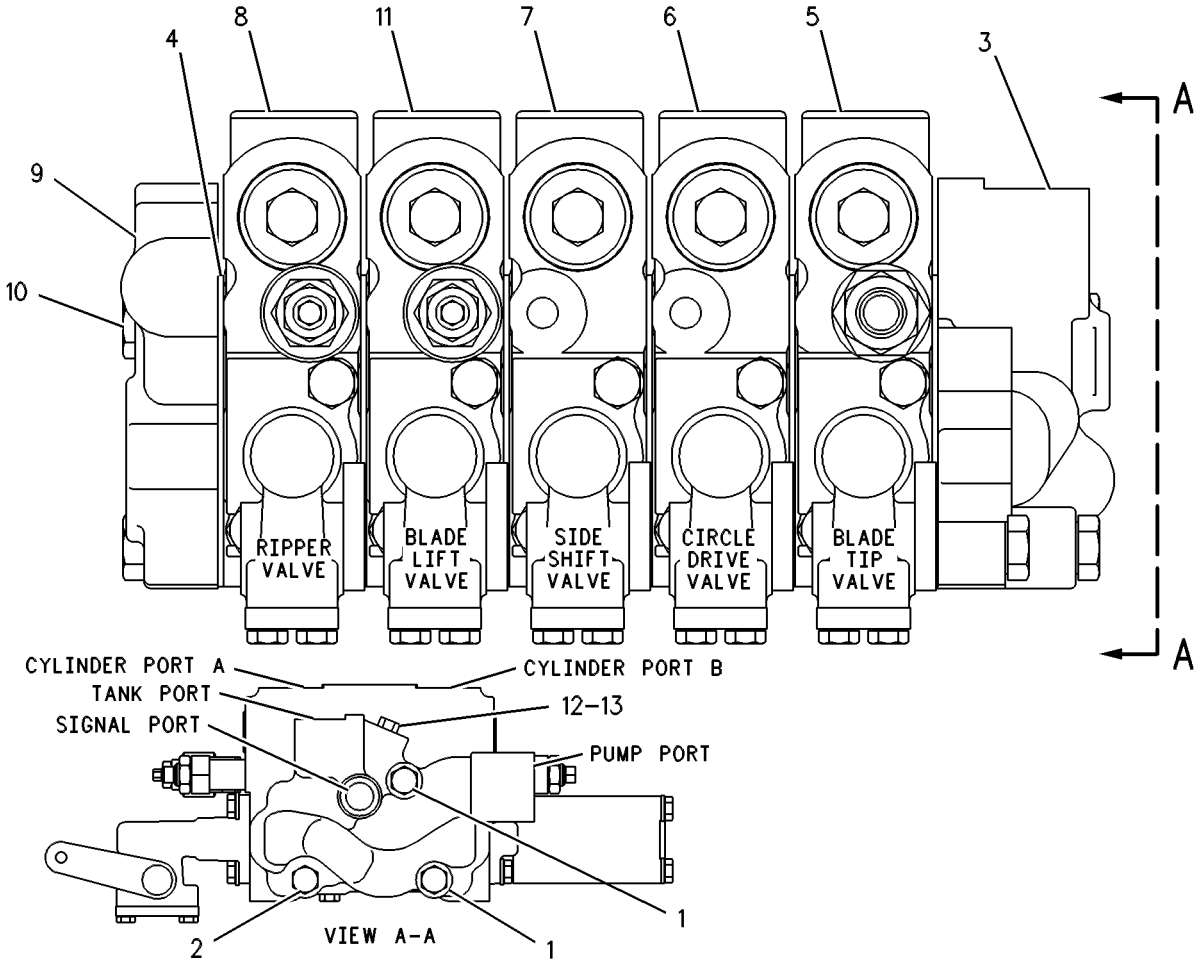

GRAPHIC #1 g00109471

130-3124 VALVE GP-BANK 6–RH–EU

S/N: ATS1-UP
PART OF 121-4099 VALVE & LINKAGE GP
AN ATTACHMENT

SMCS-5051 **i01713014**

NOTE	REF NO	GRAPHIC REF	PART NUMBER	QTY	PART NAME 1 2 3 4 5 6 (PRODUCT LEVEL)	SEE PAGE
M	1	1	**7X-2546**	2	BOLT (M10X1.50X180MM)	
M	2	1	**137-6720**	1	BOLT-HEX HEAD (M10X1.50X160MM)	
	3	1	**102-6238**	1	MANIFOLD	
	4	1	**101-0509**	7	PLATE-SEAL	
Y	5	1	**6E-3028**	1	VALVE GP-CONTROL (ARTICULATION)	524
Y	6	1	**6E-3029**	1	VALVE GP-CONTROL (CENTERSHIFT)	526
Y	7	1	**6E-3030**	1	VALVE GP-CONTROL (WHEEL LEAN)	528
M	8	1	**134-8221**	3	BOLT-HEX HEAD (M10X1.5X120MM)	
Y	9	1	**128-8647**	1	VALVE GP-CONTROL (BLADE LIFT)	560
Y	10	1	**115-1007**	1	VALVE GP-CONTROL (PLOW/DOZER ANGLE)	554
	11	1	**101-9346**	1	COVER	
	12	1	**9S-4180**	1	PLUG	
	13	1	**4J-7533**	1	SEAL-O-RING	
Y	14	1	**130-3111**	1	VALVE GP-CONTROL (PLOW/DOZER LIFT)	564

M-METRIC PART
Y-SEPARATE ILLUSTRATION

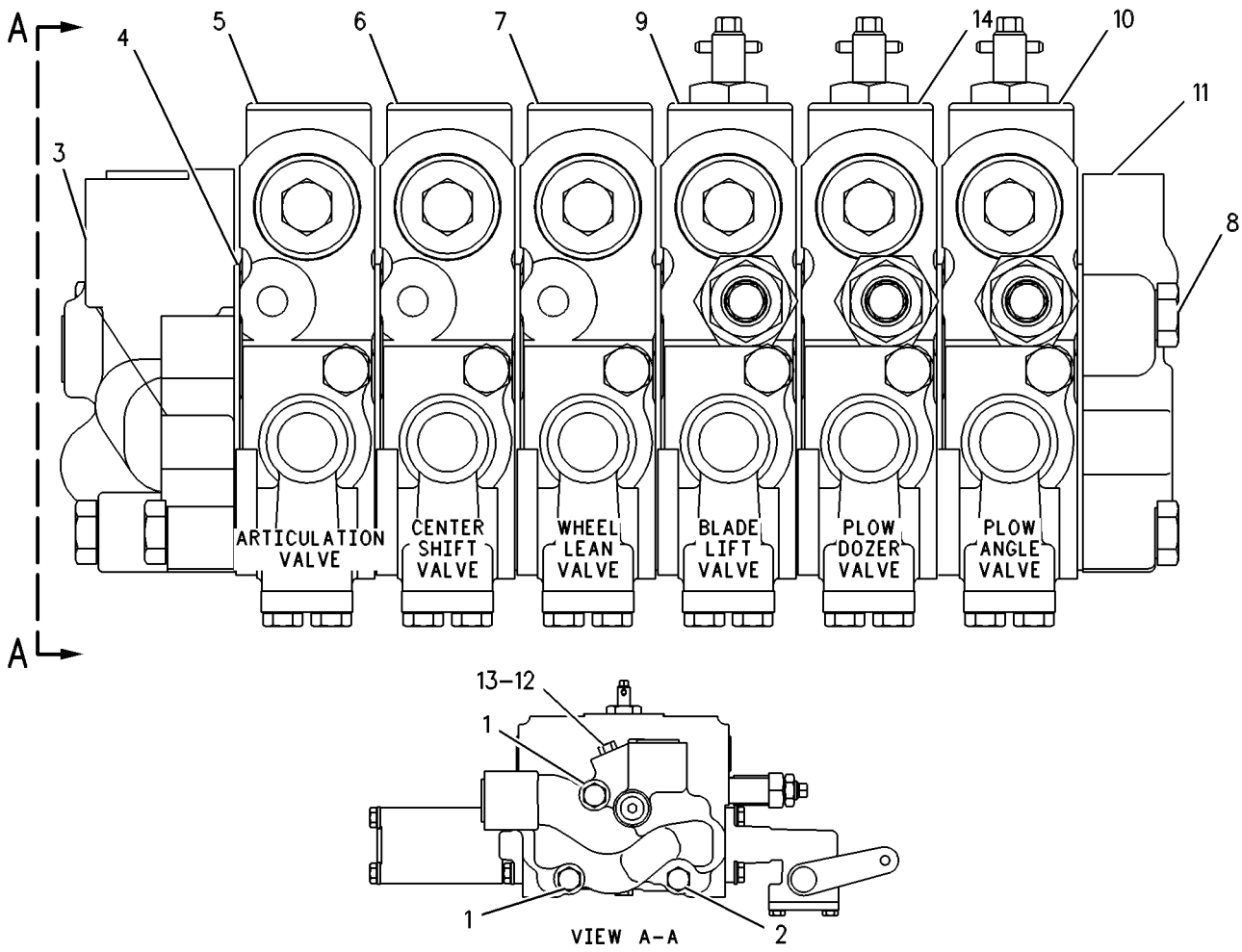

GRAPHIC #1 g00109432

HYDRAULIC SYSTEM

130-3122 VALVE GP-BANK 7–LH

S/N: ATS1-UP
PART OF 121-4099, 125-2235 VALVE & LINKAGE GP
AN ATTACHMENT

SMCS-5051 **i01713028**

NOTE	REF NO	GRAPHIC REF	PART NUMBER	QTY	PART NAME 1 2 3 4 5 6 (PRODUCT LEVEL)	SEE PAGE
M	1	1	**7X-2546**	2	BOLT (M10X1.50X180MM)	
CM	2	1	**137-6720**	4	BOLT-HEX HEAD (M10X1.50X160MM)	
	3	1	**102-8385**	1	MANIFOLD	
	4	1	**101-0509**	8	PLATE-SEAL	
Y	5	1	**6E-3034**	1	VALVE GP-CONTROL (BLADE TIP)	530
Y	6	1	**6E-3035**	1	VALVE GP-CONTROL (CIRCLE DRIVE)	532
Y	7	1	**6E-3036**	1	VALVE GP-CONTROL (SIDESHIFT)	534
	8	1	**4J-7533**	1	SEAL-O-RING	
Y	9	1	**119-9550**	1	VALVE GP-CONTROL (RIPPER)	556
YC	10	1	**137-8104**	1	VALVE GP-CONTROL (WING TILT)	570
YC	11	1	**150-6649**	1	VALVE GP-CONTROL (WING LIFT)	572
Y	12	1	**130-3110**	1	VALVE GP-CONTROL (BLADE LIFT)	562
	13	1	**101-9346**	1	COVER	
	14	1	**9S-4180**	1	PLUG	

C-CHANGE FROM PREVIOUS TYPE
M-METRIC PART
Y-SEPARATE ILLUSTRATION

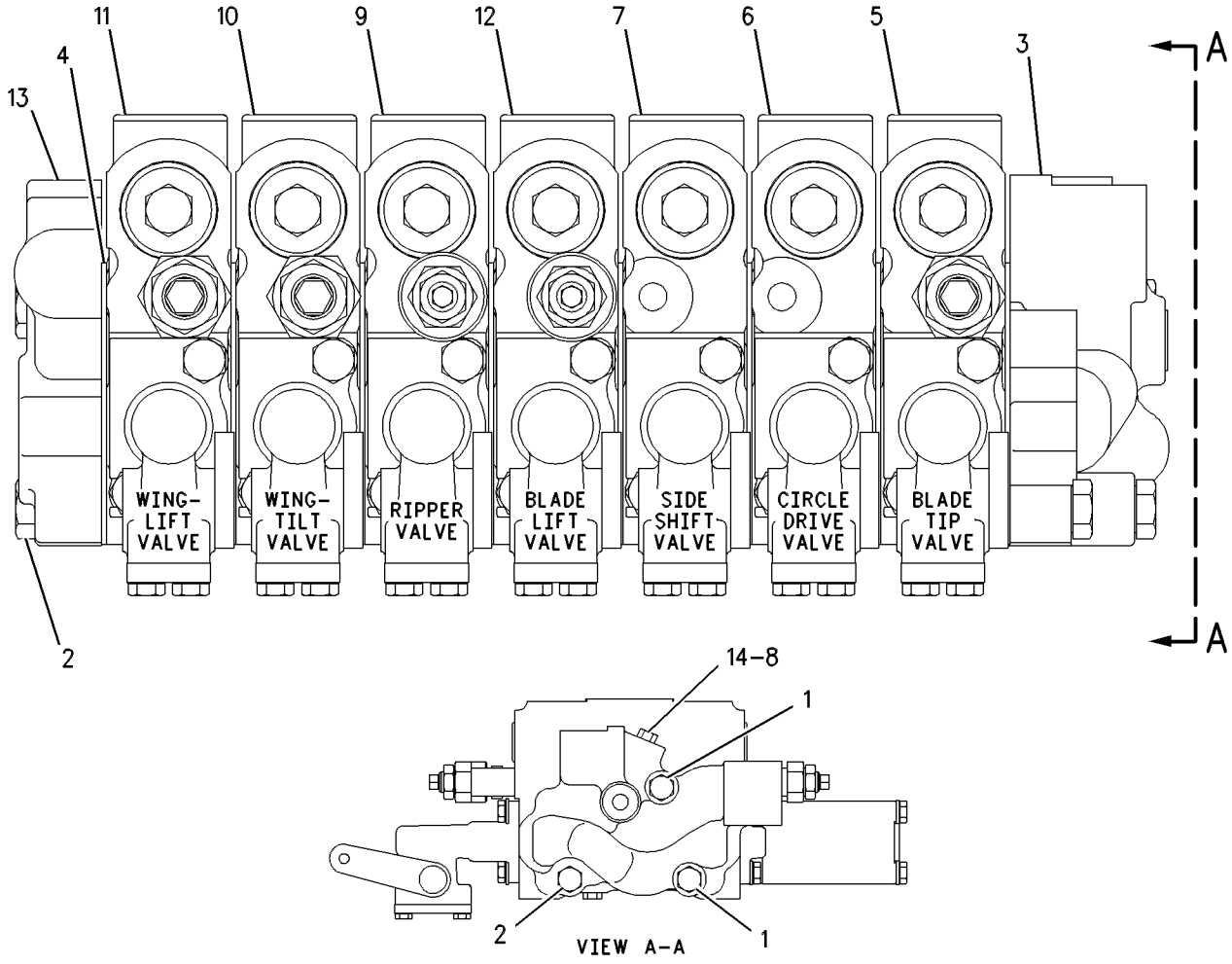

GRAPHIC #1 g00420439

MEMORANDA

HYDRAULIC SYSTEM

9T-5957 VALVE GP-COMBINATION

S/N: ATS1-UP

PART OF 188-0756 LINES GP-PUMP

SMCS-5064 **i01792629**

NOTE	REF NO	GRAPHIC REF	PART NUMBER	QTY	PART NAME 1 2 3 4 5 6 (PRODUCT LEVEL)	SEE PAGE
C	1	1	**9T-5935**	1	BODY	
Y	2	1	**100-6021**	1	VALVE GP-RELIEF (STEERING)	582
C	3	1	**9S-8003**	1	PLUG	
	4	1	**3T-8236**	1	SPRING	
M	5	1	**6V-5230**	2	BOLT (M10X1.5X60MM)	
	6	1	**6V-3965**	1	FITTING AS (QUICK DISCONNECT)	
	7	1	**3J-1907**	1	SEAL-O-RING	
	8	1	**6V-8647**	2	CONNECTOR	
C	9	1	**3J-7354**	3	SEAL-O-RING	
	10	1	**6E-1923**	1	TUBE AS	
	11	1	**4J-5477**	2	SEAL-O-RING	
Y	12	1	**4T-4935**	1	VALVE GP-RELIEF (MAIN)	579
	13	1	**8T-8987**	1	ELBOW	
	14	1	**2M-9780**	1	SEAL-O-RING	
	15	1	**1H-0337**	1	VALVE	
	16	1	**9F-6705**	1	SPRING	
	17	1	**9S-4189**	1	PLUG	
	18	1	**6E-1924**	1	SPRING (OUTER)	
	19	1	**6E-1925**	1	SPRING (INNER)	
	20	1	**5M-2057**	1	SEAL-O-RING	
	21	1	**8M-3175**	2	WASHER-HARD (10.2X16X3MM THK)	
	22	1	**6V-0852**	1	CAP-DUST	
Y	23	1	**6E-4703**	1	VALVE GP-RELIEF (IMPLEMENT SIGNAL)	580
C	24	1	**3K-0360**	1	SEAL-O-RING	
C	25	1	**9S-8001**	2	PLUG	
C	26	1	**4J-7533**	2	SEAL-O-RING	
Y	27	1	**4T-1860**	1	VALVE GP-SHUTTLE (BALL RESOLVER) (SIGNAL)	587
	30	1	**2S-4078**	1	SEAL-O-RING	
	31	1	**9S-8009**	1	PLUG	
	32	1	**4K-1388**	1	SEAL-O-RING	
C	33	1	**6V-8398**	1	SEAL-O-RING	
C	34	1	**7X-4776**	2	RING-BACKUP	
C	35	1	**9S-8002**	1	PLUG	
CY	36	1	**131-8350**	1	VALVE GP-PURGE (IMPLEMENT SIGNAL)	578
C	37	1	**3P-9498**	1	PLUG-ORIFICE	
C	38	1	**9T-5934**	1	VALVE	
C	39	1	**8J-6815**	2	PLUG-ORIFICE	
C	40	1	**1J-9671**	1	SEAL-O-RING	
	41	1	**9S-4183**	3	PLUG	
	42	1	**3D-2824**	3	SEAL-O-RING	

C-CHANGE FROM PREVIOUS TYPE
M-METRIC PART
Y-SEPARATE ILLUSTRATION

9T-5957 VALVE GP-COMBINATION *(contd.)* i01792629

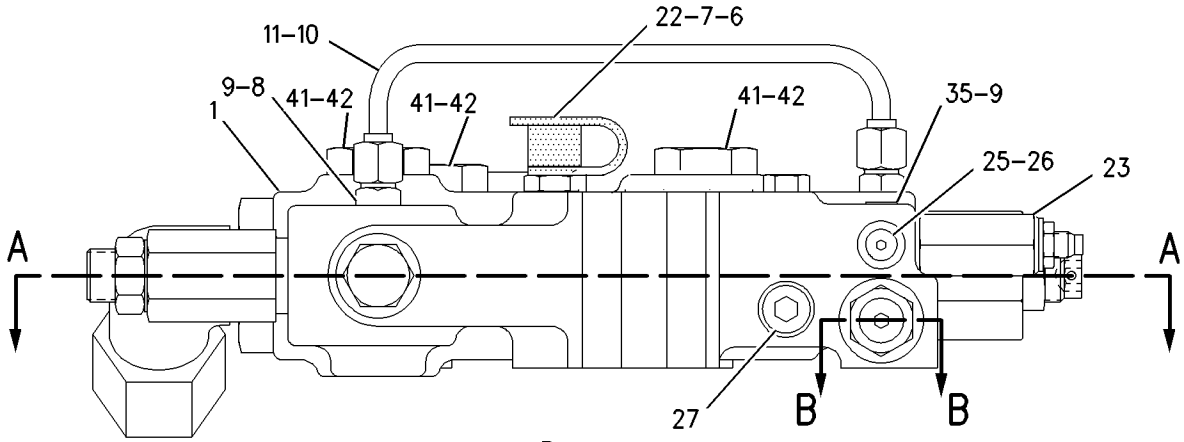

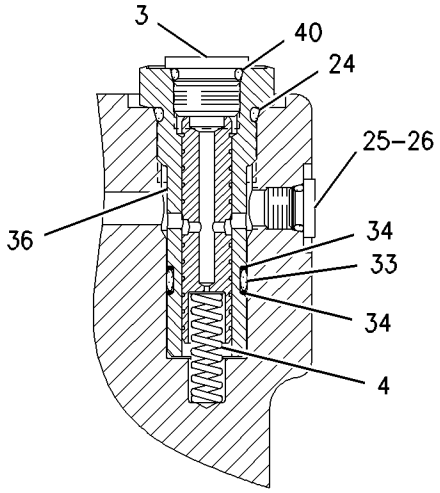

SECTION B-B

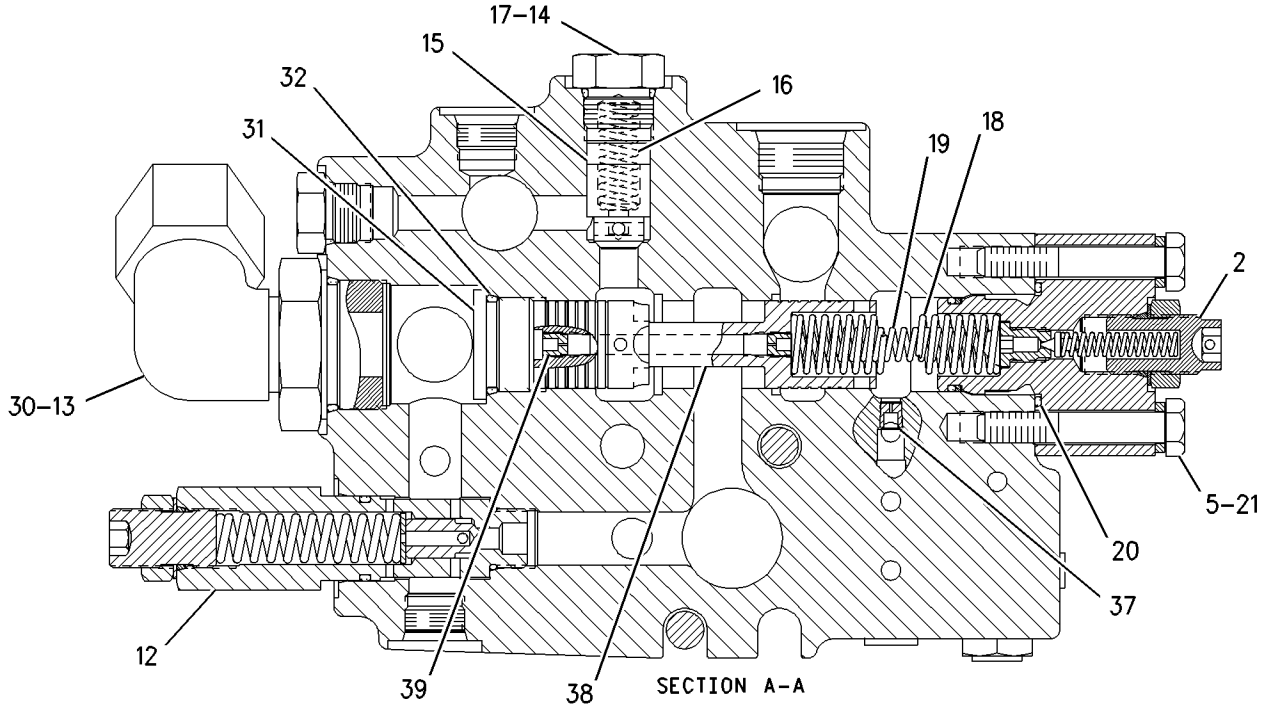

SECTION A-A

GRAPHIC #1 g00877890

6E-3028 VALVE GP-CONTROL—ARTICULATION

S/N: ATS1-UP

PART OF 130-3116 VALVE GP-BANK 4, 130-3123 VALVE GP-BANK 5, 130-3124 VALVE GP-BANK 6

AN ATTACHMENT

SMCS-5051 **i01534167**

NOTE	REF NO	GRAPHIC REF	PART NUMBER	QTY	PART NAME 1 2 3 4 5 6 (PRODUCT LEVEL)	SEE PAGE
	1	1	**6E-3044**	1	BODY	
	2	1	**101-1148**	1	STEM	
	3	1	**101-1978**	1	COVER	
	4	1	**2K-8199**	2	SEAL-O-RING	
M	5	1	**8T-4189**	4	BOLT (M8X1.25X20MM)	
	6	1	**8T-4224**	4	WASHER-HARD (8.8X16X2MM THK)	
	7	1	**101-1984**	1	BODY	
	8	1	**102-7412**	1	SPRING	
	9	1	**101-1973**	4	RETAINER	
	10	1	**101-1971**	1	LEVER	
	11	1	**101-1970**	1	LEVER AS	
	12	1	**8M-4437**	2	SEAL-O-RING	
	13	1	**101-1983**	2	RING-BACKUP (14.65MM ID)	
	14	1	**4D-9986**	1	SEAL-O-RING	
	15	1	**101-2480**	1	COVER	
M	16	1	**8T-4138**	2	BOLT (M6X1X20MM)	
	17	1	**5B-9318**	1	BALL	
	18	1	**6E-3007**	1	SPRING	
	19	1	**6E-4502**	1	PLUG	
	20	1	**4J-7533**	1	SEAL-O-RING	
	21	1	**6E-3019**	1	VALVE	
	22	1	**6E-5153**	1	SPRING	
	23	1	**108-2187**	1	PLUG-PIPE	
	24	1	**9S-8005**	1	PLUG	
	25	1	**3K-0360**	3	SEAL-O-RING	
	26	1	**106-3659**	1	PISTON	
	27	1	**6E-3013**	2	SEAT	
	28	1	**106-3658**	2	VALVE	
	29	1	**9J-0403**	2	SPRING	
	30	1	**9J-0404**	2	PLUG	
	31	1	**7J-9933**	2	SEAL-O-RING	
	32	1	**111-8233**	1	SPRING	

M-METRIC PART

6E-3028 VALVE GP-CONTROL *(contd.)* i01534167

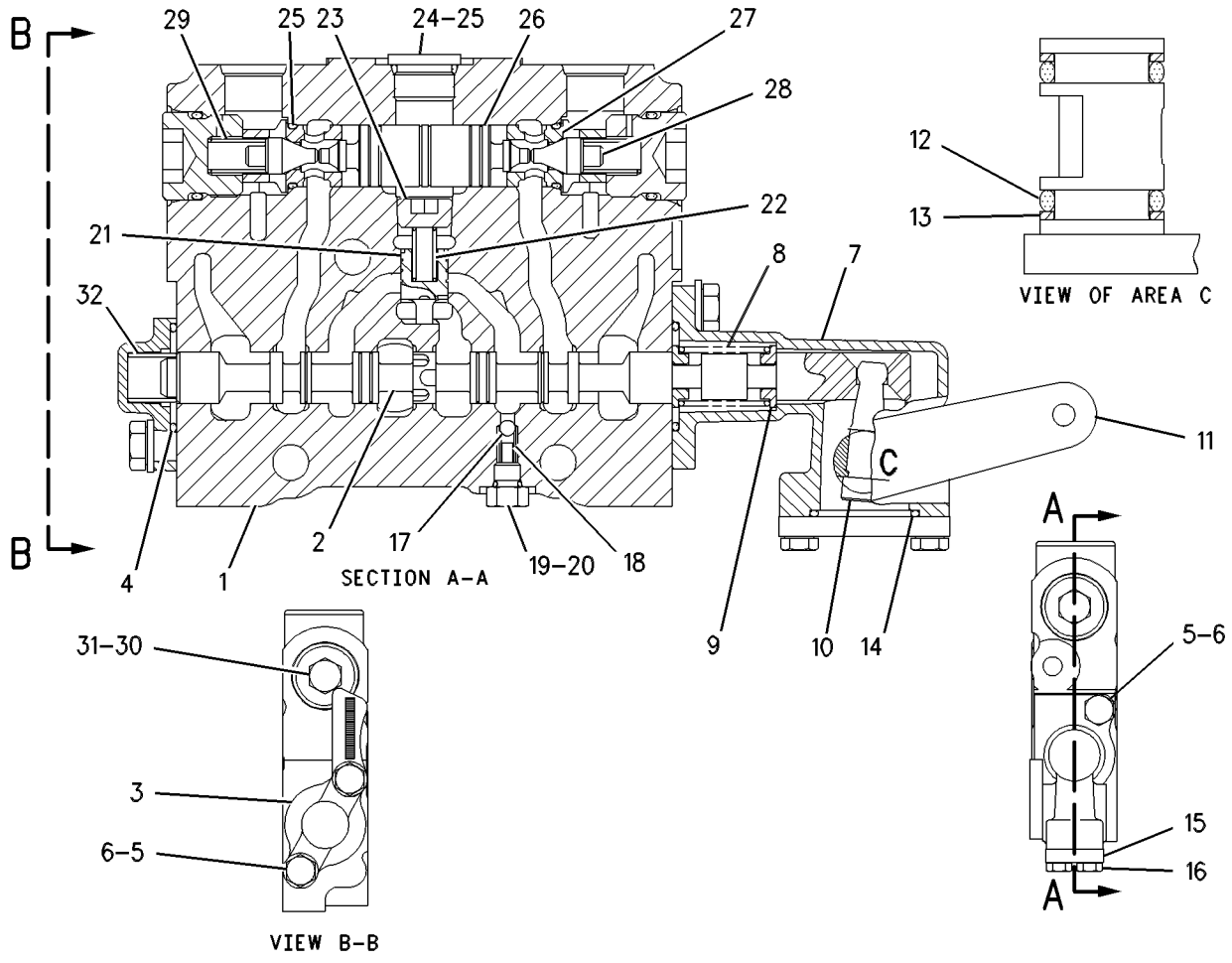

GRAPHIC #1 g00484410

HYDRAULIC SYSTEM

6E-3029 VALVE GP-CONTROL–CENTERSHIFT

S/N: ATS1-UP

PART OF 130-3116 VALVE GP-BANK 4, 130-3123 VALVE GP-BANK 5, 130-3124 VALVE GP-BANK 6

AN ATTACHMENT

SMCS-5051 **i01534179**

NOTE	REF NO	GRAPHIC REF	PART NUMBER	QTY	PART NAME 1 2 3 4 5 6 (PRODUCT LEVEL)	SEE PAGE
	1	1	**6E-3044**	1	BODY	
	2	1	**101-1149**	1	STEM	
	3	1	**101-1978**	1	COVER	
	4	1	**2K-8199**	2	SEAL-O-RING	
M	5	1	**8T-4189**	4	BOLT (M8X1.25X20MM)	
	6	1	**8T-4224**	4	WASHER-HARD (8.8X16X2MM THK)	
	7	1	**101-1984**	1	BODY	
	8	1	**102-7412**	1	SPRING	
	9	1	**101-1973**	4	RETAINER	
	10	1	**101-1971**	1	LEVER	
	11	1	**101-1970**	1	LEVER AS	
	12	1	**8M-4437**	2	SEAL-O-RING	
	13	1	**101-1983**	2	RING-BACKUP (14.65MM ID)	
	14	1	**4D-9986**	1	SEAL-O-RING	
	15	1	**101-2480**	1	COVER	
M	16	1	**8T-4138**	2	BOLT (M6X1X20MM)	
	17	1	**5B-9318**	1	BALL	
	18	1	**6E-3007**	1	SPRING	
	19	1	**6E-4502**	1	PLUG	
	20	1	**4J-7533**	1	SEAL-O-RING	
	21	1	**6E-3019**	1	VALVE	
	22	1	**6E-5153**	1	SPRING	
	23	1	**108-2187**	1	PLUG-PIPE	
	24	1	**9S-8005**	1	PLUG	
	25	1	**3K-0360**	3	SEAL-O-RING	
	26	1	**106-3659**	1	PISTON	
	27	1	**6E-3013**	2	SEAT	
	28	1	**106-3658**	2	VALVE	
	29	1	**9J-0403**	2	SPRING	
	30	1	**9J-0404**	2	PLUG	
	31	1	**7J-9933**	2	SEAL-O-RING	
	32	1	**111-8233**	1	SPRING	

M-METRIC PART

6E-3029 VALVE GP-CONTROL *(contd.)*

i01534179

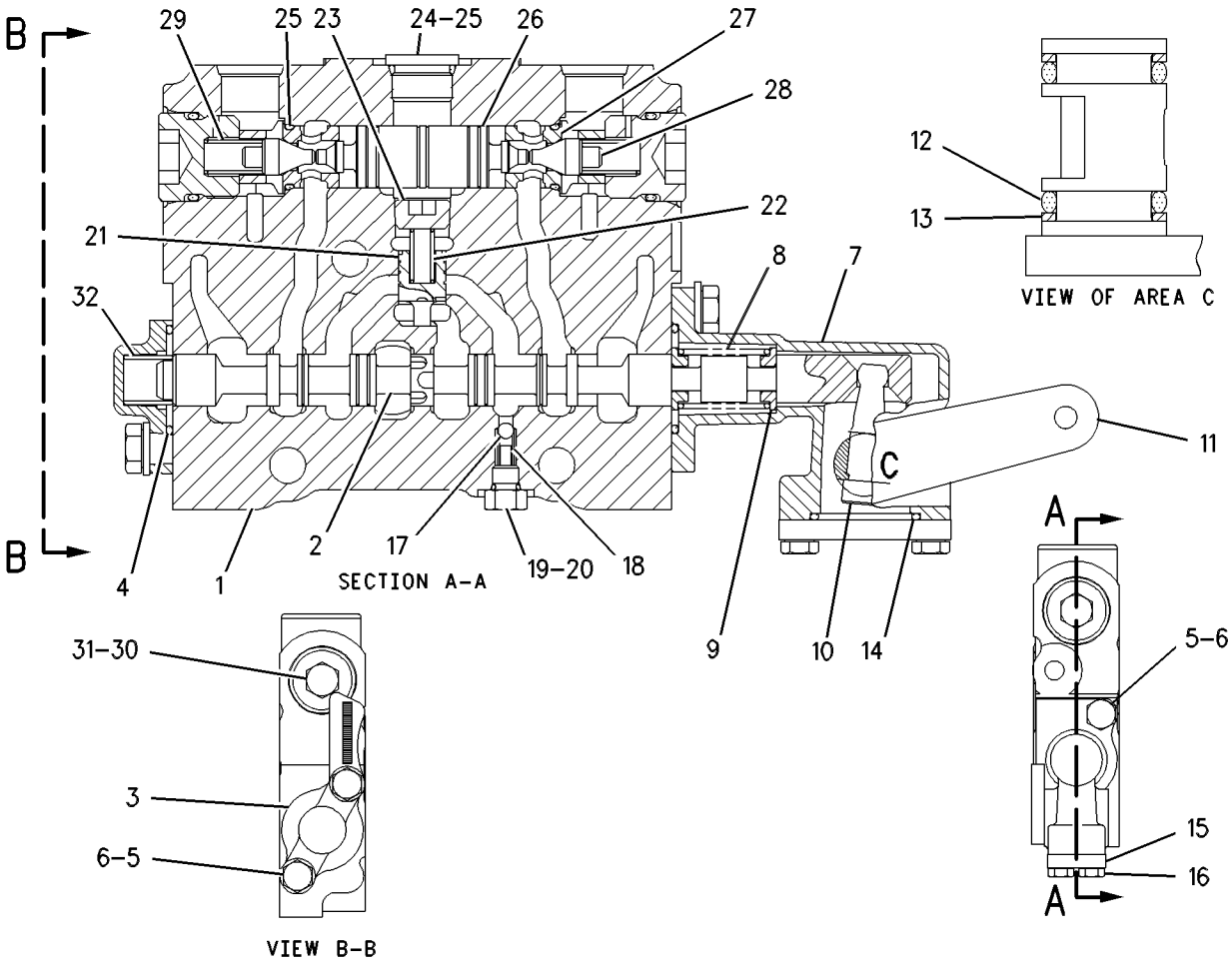

GRAPHIC #1

g00484412

HYDRAULIC SYSTEM

6E-3030 VALVE GP-CONTROL—WHEEL LEAN

S/N: ATS1-UP

PART OF 130-3116 VALVE GP-BANK 4, 130-3123 VALVE GP-BANK 5, 130-3124 VALVE GP-BANK 6

AN ATTACHMENT

SMCS-5051 **i01534180**

NOTE	REF NO	GRAPHIC REF	PART NUMBER	QTY	PART NAME 1 2 3 4 5 6 (PRODUCT LEVEL)	SEE PAGE
	1	1	**6E-3044**	1	BODY	
	2	1	**101-1154**	1	STEM	
	3	1	**101-1978**	1	COVER	
	4	1	**2K-8199**	2	SEAL-O-RING	
M	5	1	**8T-4189**	4	BOLT (M8X1.25X20MM)	
	6	1	**8T-4224**	4	WASHER-HARD (8.8X16X2MM THK)	
	7	1	**101-1984**	1	BODY	
	8	1	**102-7412**	1	SPRING	
	9	1	**101-1973**	4	RETAINER	
	10	1	**101-1971**	1	LEVER	
	11	1	**101-1970**	1	LEVER AS	
	12	1	**8M-4437**	2	SEAL-O-RING	
	13	1	**101-1983**	2	RING-BACKUP (14.65MM ID)	
	14	1	**4D-9986**	1	SEAL-O-RING	
	15	1	**101-2480**	1	COVER	
M	16	1	**8T-4138**	2	BOLT (M6X1X20MM)	
	17	1	**5B-9318**	1	BALL	
	18	1	**6E-3007**	1	SPRING	
	19	1	**6E-4502**	1	PLUG	
	20	1	**4J-7533**	1	SEAL-O-RING	
	21	1	**6E-3019**	1	VALVE	
	22	1	**6E-5153**	1	SPRING	
	23	1	**108-2187**	1	PLUG-PIPE	
	24	1	**9S-8005**	1	PLUG	
	25	1	**3K-0360**	3	SEAL-O-RING	
	26	1	**106-3659**	1	PISTON	
	27	1	**6E-3013**	2	SEAT	
	28	1	**106-3658**	2	VALVE	
	29	1	**9J-0403**	2	SPRING	
	30	1	**9J-0404**	2	PLUG	
	31	1	**7J-9933**	2	SEAL-O-RING	
	32	1	**111-8233**	1	SPRING	

M-METRIC PART

6E-3030 VALVE GP-CONTROL *(contd.)* i01534180

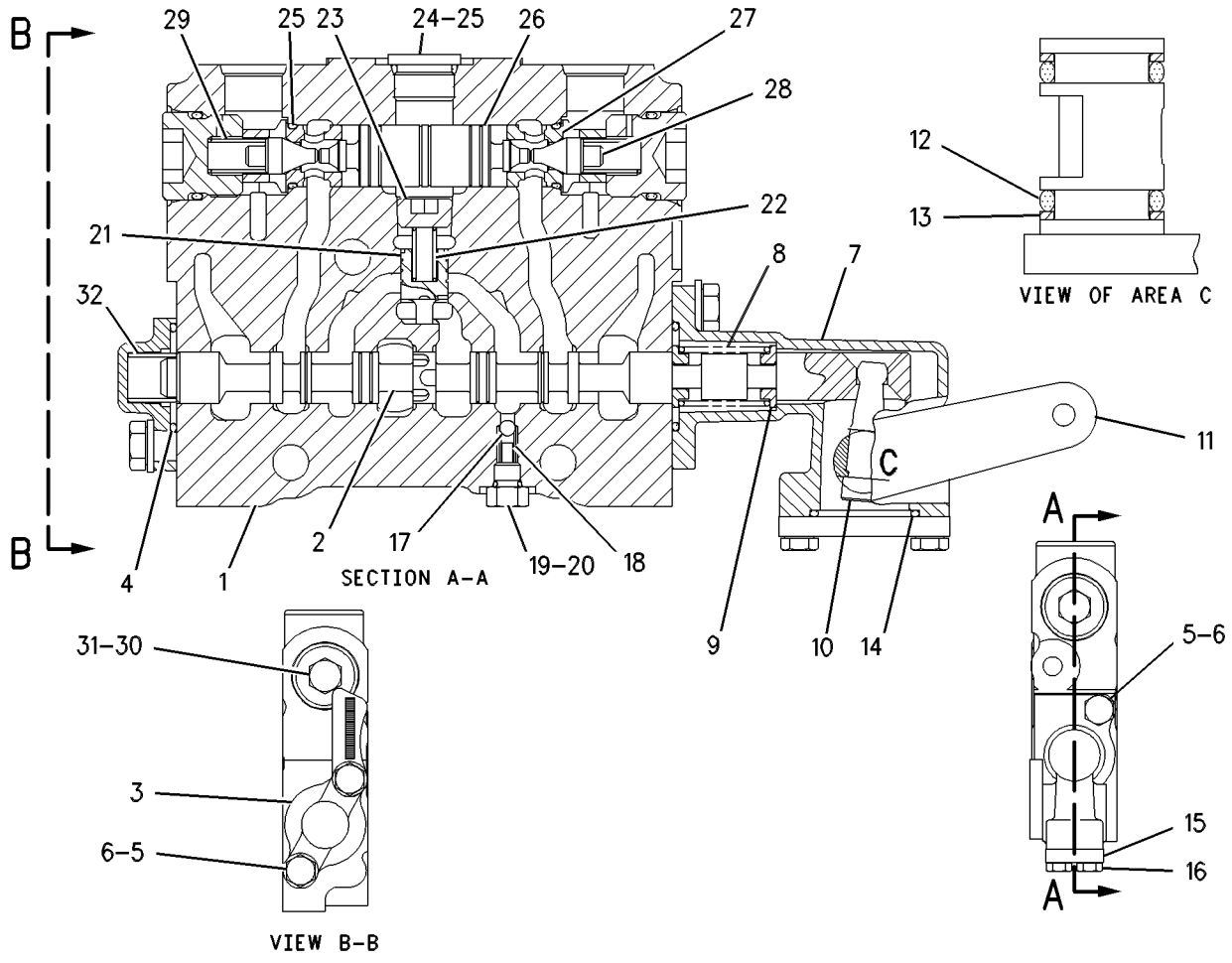

GRAPHIC #1 g00484418

HYDRAULIC SYSTEM

6E-3034 VALVE GP-CONTROL—BLADE TIP—LH

S/N: ATS1-UP

PART OF 130-3118 VALVE GP-BANK 5, 130-3122 VALVE GP-BANK 7

AN ATTACHMENT

SMCS-5051 **i01455760**

NOTE	REF NO	GRAPHIC REF	PART NUMBER	QTY	PART NAME 1 2 3 4 5 6 (PRODUCT LEVEL)	SEE PAGE
	1	1	**6E-4599**	1	BODY	
	2	1	**101-1155**	1	STEM	
	3	1	**101-1978**	1	COVER	
	4	1	**2K-8199**	2	SEAL-O-RING	
M	5	1	**8T-4189**	4	BOLT (M8X1.25X20MM)	
	6	1	**8T-4224**	4	WASHER-HARD (8.8X16X2MM THK)	
	7	1	**101-1984**	1	BODY	
	8	1	**7J-9933**	2	SEAL-O-RING	
CY	9	1	**139-8472**	1	VALVE GP-RELIEF (BLADE TIP)	583
	11	1	**102-7412**	1	SPRING	
	12	1	**101-1973**	4	RETAINER	
	13	1	**101-1971**	1	LEVER	
	14	1	**101-1982**	1	LEVER AS	
	15	1	**8M-4437**	2	SEAL-O-RING	
	16	1	**101-1983**	2	RING-BACKUP (14.65MM ID)	
	17	1	**4D-9986**	1	SEAL-O-RING	
	18	1	**101-2480**	1	COVER	
M	19	1	**8T-4138**	2	BOLT (M6X1X20MM)	
	20	1	**5B-9318**	1	BALL	
	21	1	**6E-3007**	1	SPRING	
	22	1	**6E-4502**	1	PLUG	
	23	1	**4J-7533**	1	SEAL-O-RING	
	24	1	**6E-3019**	1	VALVE	
	25	1	**6E-5153**	1	SPRING	
	26	1	**108-2187**	1	PLUG-PIPE	
	27	1	**9J-0403**	2	SPRING	
	28	1	**9J-0404**	2	PLUG	
	29	1	**9S-8005**	1	PLUG	
	30	1	**3K-0360**	3	SEAL-O-RING	
	31	1	**106-3659**	1	PISTON	
	32	1	**6E-3013**	2	SEAT	
	33	1	**106-3658**	2	VALVE	
	34	1	**111-8233**	1	SPRING	

C-CHANGE FROM PREVIOUS TYPE
M-METRIC PART
Y-SEPARATE ILLUSTRATION

6E-3034 VALVE GP-CONTROL *(contd.)*

i01455760

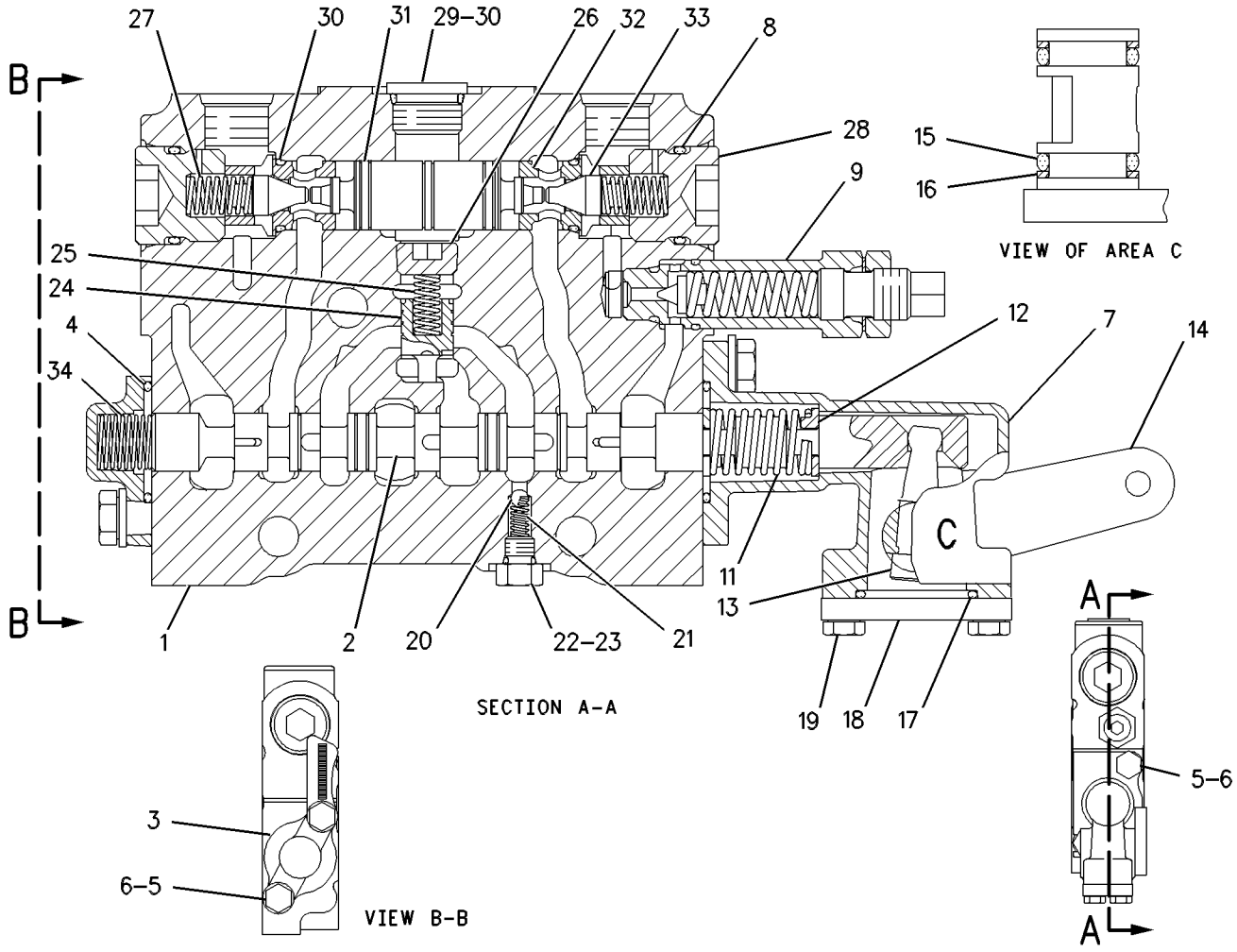

GRAPHIC #1

g00484931

HYDRAULIC SYSTEM

6E-3035 VALVE GP-CONTROL—CIRCLE DRIVE

S/N: ATS1-UP

PART OF 130-3118 VALVE GP-BANK 5, 130-3122 VALVE GP-BANK 7

AN ATTACHMENT

SMCS-5051 **i01045662**

NOTE	REF NO	GRAPHIC REF	PART NUMBER	QTY	PART NAME 1 2 3 4 5 6 (PRODUCT LEVEL)	SEE PAGE
	1	1	**6E-3044**	1	BODY	
	2	1	**148-7906**	1	STEM	
	3	1	**101-1978**	1	COVER	
	4	1	**2K-8199**	2	SEAL-O-RING (28.24MM ID)	
M	5	1	**8T-4189**	4	BOLT (M8X1.25X20MM)	
	6	1	**8T-4224**	4	WASHER-HARD (2MM THK)	
	7	1	**101-1984**	1	BODY	
	8	1	**102-7412**	1	SPRING	
	9	1	**101-1973**	4	RETAINER	
	10	1	**101-1971**	1	LEVER	
	11	1	**101-1982**	1	LEVER AS	
	12	1	**8M-4437**	2	SEAL-O-RING	
	13	1	**101-1983**	2	RING-BACKUP	
	14	1	**4D-9986**	1	SEAL-O-RING (23.47MM ID)	
	15	1	**101-2480**	1	COVER	
M	16	1	**8T-4138**	2	BOLT (M6X1.0X20MM)	
	17	1	**5B-9318**	1	BALL (4.76MM)	
	18	1	**6E-3007**	1	SPRING	
	19	1	**6E-4502**	1	PLUG	
	20	1	**4J-7533**	1	SEAL-O-RING (6.07MM ID)	
	21	1	**6E-3019**	1	VALVE	
	22	1	**6E-5153**	1	SPRING	
	23	1	**108-2187**	1	PLUG-PIPE	
	24	1	**9S-8005**	1	PLUG-O-RING (3/4-16 THD)	
	25	1	**3K-0360**	3	SEAL-O-RING (16.36MM ID)	
	26	1	**106-3659**	1	PISTON	
	27	1	**6E-3013**	2	SEAT	
	28	1	**106-3658**	2	VALVE	
	29	1	**9J-0403**	2	SPRING	
	30	1	**9J-0404**	2	PLUG	
	31	1	**7J-9933**	2	SEAL-O-RING (21.89MM ID)	
	32	1	**111-8233**	1	SPRING	

M-METRIC PART

6E-3035 VALVE GP-CONTROL *(contd.)* i01045662

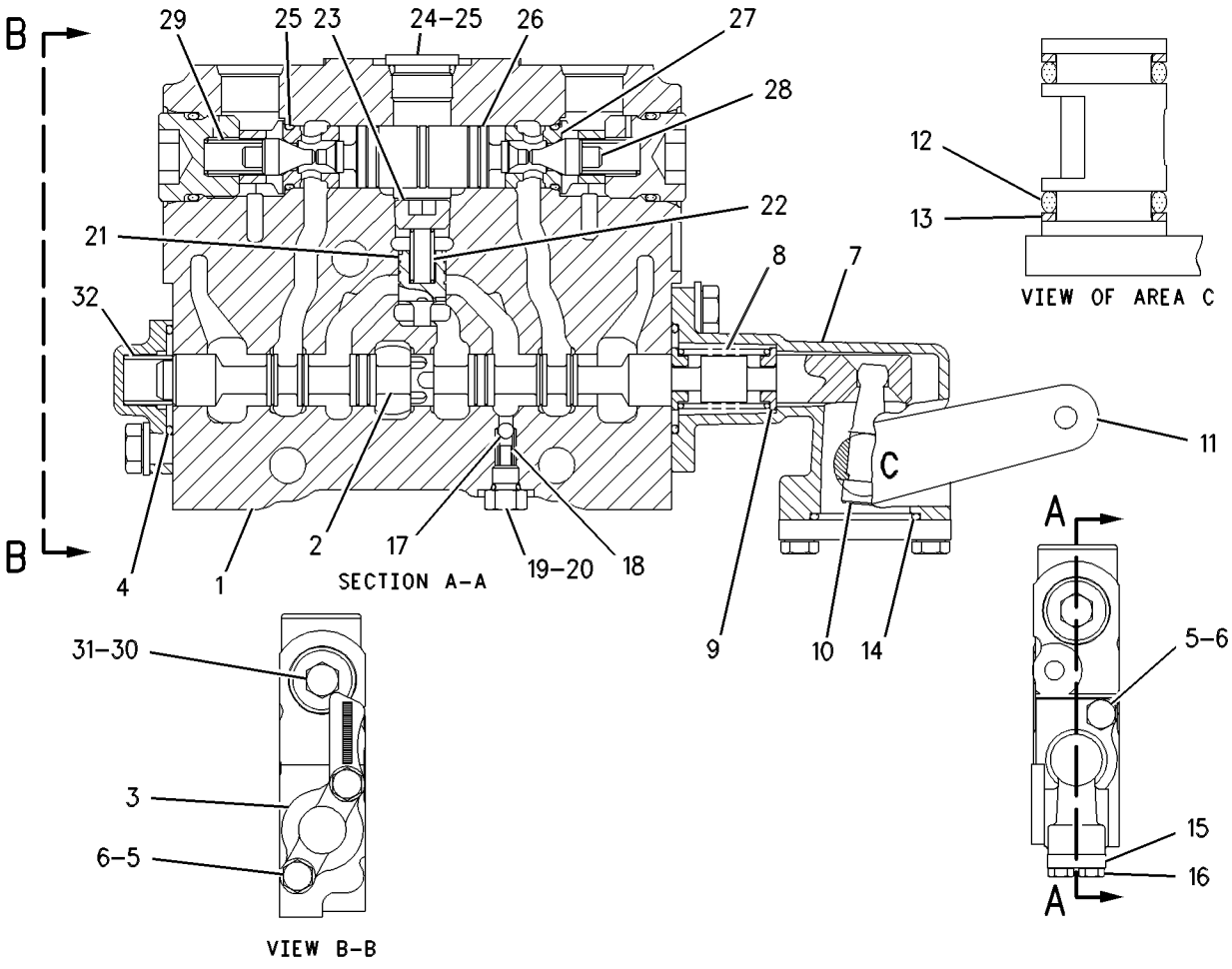

GRAPHIC #1 g00541438

HYDRAULIC SYSTEM

6E-3036 VALVE GP-CONTROL—SIDESHIFT

S/N: ATS1-UP

PART OF 130-3118 VALVE GP-BANK 5, 130-3122 VALVE GP-BANK 7

AN ATTACHMENT

SMCS-5051 **i01534206**

NOTE	REF NO	GRAPHIC REF	PART NUMBER	QTY	PART NAME 1 2 3 4 5 6 (PRODUCT LEVEL)	SEE PAGE
	1	1	**6E-3058**	1	BODY	
	2	1	**101-1153**	1	STEM	
	3	1	**101-1978**	1	COVER	
	4	1	**2K-8199**	2	SEAL-O-RING	
M	5	1	**8T-4189**	4	BOLT (M8X1.25X20MM)	
	6	1	**8T-4224**	4	WASHER-HARD (8.8X16X2MM THK)	
	7	1	**101-1984**	1	BODY	
	8	1	**7J-9933**	2	SEAL-O-RING	
CY	9	1	**139-8472**	1	VALVE GP-RELIEF (SIDESHIFT)	583
	11	1	**102-7412**	1	SPRING	
	12	1	**101-1973**	4	RETAINER	
	13	1	**101-1971**	1	LEVER	
	14	1	**101-1982**	1	LEVER AS	
	15	1	**8M-4437**	2	SEAL-O-RING	
	16	1	**101-1983**	2	RING-BACKUP (14.65MM ID)	
	17	1	**4D-9986**	1	SEAL-O-RING	
	18	1	**101-2480**	1	COVER	
M	19	1	**8T-4138**	2	BOLT (M6X1X20MM)	
	20	1	**5B-9318**	1	BALL	
	21	1	**6E-3007**	1	SPRING	
	22	1	**6E-4502**	1	PLUG	
	23	1	**4J-7533**	1	SEAL-O-RING	
	24	1	**6E-3019**	1	VALVE	
	25	1	**6E-5153**	1	SPRING	
	26	1	**108-2187**	1	PLUG-PIPE	
	27	1	**9J-0403**	2	SPRING	
	28	1	**9J-0404**	2	PLUG	
	29	1	**9S-8005**	1	PLUG	
	30	1	**3K-0360**	3	SEAL-O-RING	
C	31	1	**106-3659**	1	PISTON	
	32	1	**6E-3013**	2	SEAT	
	33	1	**106-3658**	2	VALVE	
	34	1	**111-8233**	1	SPRING	

C-CHANGE FROM PREVIOUS TYPE
M-METRIC PART
Y-SEPARATE ILLUSTRATION

6E-3036 VALVE GP-CONTROL *(contd.)* i01534206

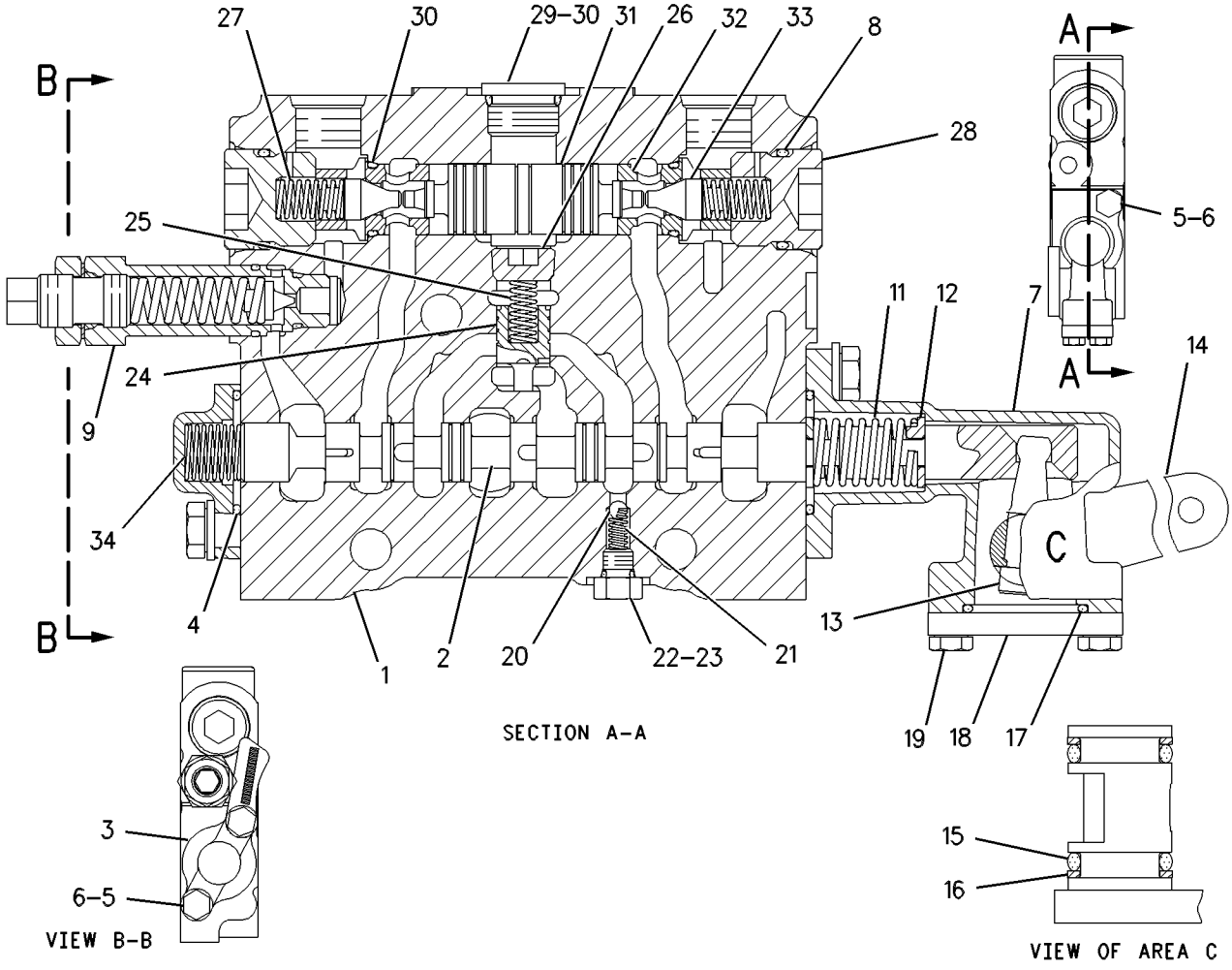

GRAPHIC #1 g00484986

HYDRAULIC SYSTEM

107-0554 VALVE GP-CONTROL—BLADE TILT

S/N: ATS1-UP

PART OF 104-8658, 130-3133 VALVE GP-BANK 4, 104-8660, 130-3134 VALVE GP-BANK 5

ALSO AN ATTACHMENT

SMCS-5051 **i01673109**

NOTE	REF NO	GRAPHIC REF	PART NUMBER	QTY	PART NAME 1 2 3 4 5 6 (PRODUCT LEVEL)	SEE PAGE
	1	1	**6E-4599**	1	BODY	
	2	1	**102-4569**	1	STEM	
	3	1	**101-1978**	1	COVER	
	4	1	**2K-8199**	2	SEAL-O-RING	
M	5	1	**8T-4189**	4	BOLT (M8X1.25X20MM)	
	6	1	**8T-4224**	4	WASHER-HARD (8.8X16X2MM THK)	
	7	1	**101-1984**	1	BODY	
	8	1	**7J-9933**	2	SEAL-O-RING	
CY	9	1	**139-8472**	1	VALVE GP-RELIEF (BLADE TILT)	583
	10	1	**111-8233**	1	SPRING	
	11	1	**102-7412**	1	SPRING	
	12	1	**101-1973**	4	RETAINER	
	13	1	**101-1971**	1	LEVER	
	14	1	**101-1982**	1	LEVER AS	
	15	1	**8M-4437**	2	SEAL-O-RING	
	16	1	**101-1983**	2	RING-BACKUP (14.65MM ID)	
	17	1	**4D-9986**	1	SEAL-O-RING	
	18	1	**101-2480**	1	COVER	
M	19	1	**8T-4138**	2	BOLT (M6X1X20MM)	
	20	1	**5B-9318**	1	BALL	
	21	1	**6E-3007**	1	SPRING	
	22	1	**6E-4502**	1	PLUG	
	23	1	**4J-7533**	1	SEAL-O-RING	
	24	1	**6E-3019**	1	VALVE	
	25	1	**6E-5153**	1	SPRING	
	26	1	**108-2187**	1	PLUG-PIPE	
	27	1	**9J-0403**	2	SPRING	
	28	1	**9J-0404**	2	PLUG	
	29	1	**9S-8005**	1	PLUG	
	30	1	**3K-0360**	3	SEAL-O-RING	
	31	1	**106-3659**	1	PISTON	
	32	1	**6E-3013**	2	SEAT	
	33	1	**106-3658**	2	VALVE	

C-CHANGE FROM PREVIOUS TYPE
M-METRIC PART
Y-SEPARATE ILLUSTRATION

107-0554 VALVE GP-CONTROL *(contd.)* i01673109

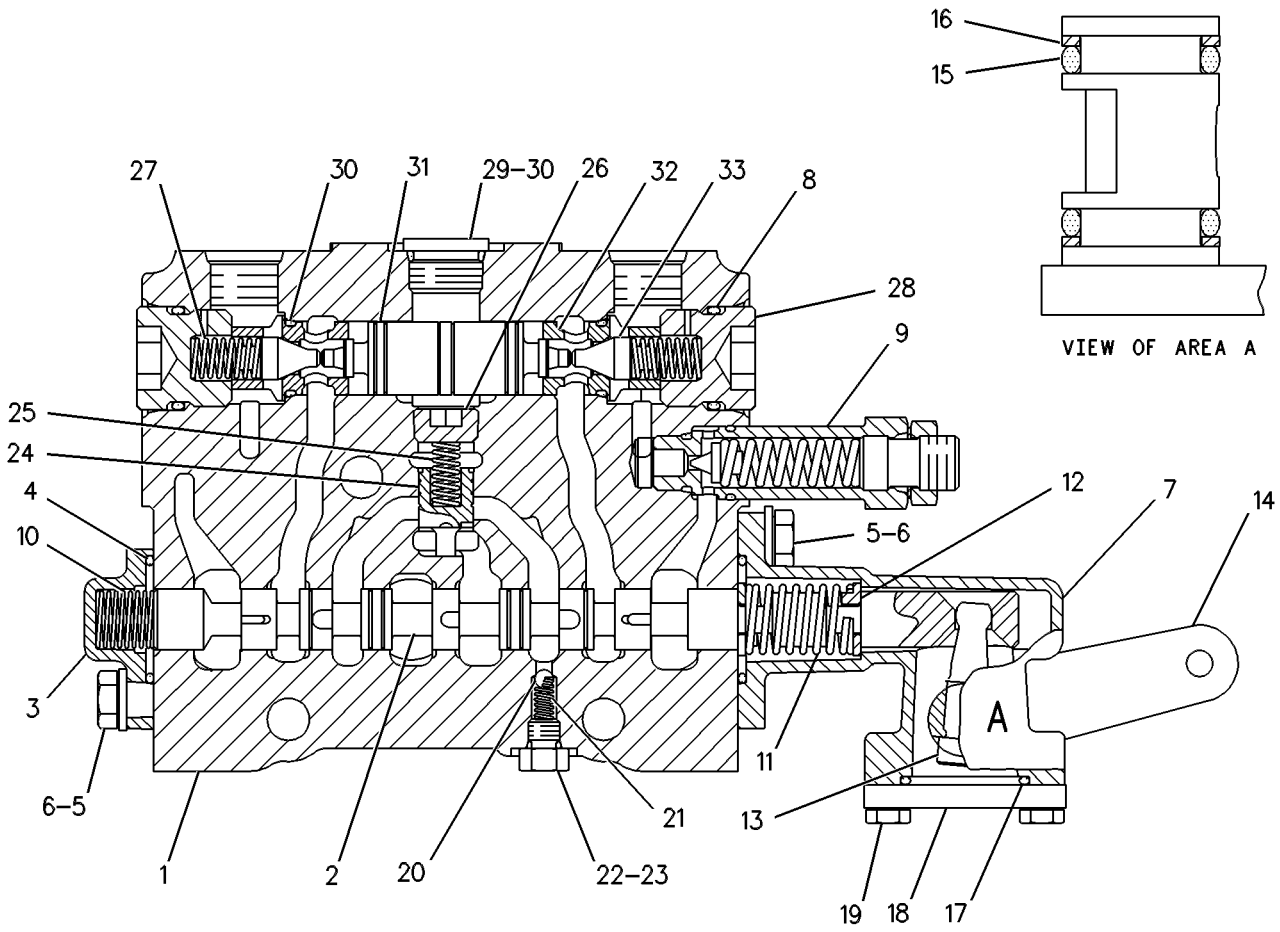

GRAPHIC #1 g00109623

HYDRAULIC SYSTEM

107-0555 VALVE GP-CONTROL—CIRCLE DRIVE

S/N: ATS1-UP

PART OF 104-8658, 130-3133 VALVE GP-BANK 4, 104-8660, 130-3134 VALVE GP-BANK 5

ALSO AN ATTACHMENT

SMCS-5051 **i00128789**

NOTE	REF NO	GRAPHIC REF	PART NUMBER	QTY	PART NAME 1 2 3 4 5 6 (PRODUCT LEVEL)	SEE PAGE
	1	1	**6E-3044**	1	BODY	
	2	1	**102-4573**	1	STEM	
	3	1	**101-1978**	1	COVER	
	4	1	**2K-8199**	2	SEAL-O-RING (28.24MM ID)	
M	5	1	**8T-4189**	4	BOLT (M8X1.25X20MM)	
	6	1	**8T-4224**	4	WASHER-HARD (2MM THK)	
	7	1	**101-1984**	1	BODY	
	8	1	**102-7412**	1	SPRING	
	9	1	**101-1973**	4	RETAINER	
	10	1	**101-1971**	1	LEVER	
	11	1	**101-1982**	1	LEVER AS	
	12	1	**8M-4437**	2	SEAL-O-RING	
	13	1	**101-1983**	2	RING-BACKUP	
	14	1	**4D-9986**	1	SEAL-O-RING (23.47MM ID)	
	15	1	**101-2480**	1	COVER	
M	16	1	**8T-4138**	2	BOLT (M6X1.0X20MM)	
	17	1	**5B-9318**	1	BALL	
	18	1	**6E-3007**	1	SPRING	
	19	1	**6E-4502**	1	PLUG	
	20	1	**4J-7533**	1	SEAL-O-RING (6.07MM ID)	
	21	1	**6E-3019**	1	VALVE	
	22	1	**6E-5153**	1	SPRING	
	23	1	**108-2187**	1	PLUG-PIPE	
	24	1	**9S-8005**	1	PLUG-O-RING (3/4-16 THD)	
	25	1	**3K-0360**	3	SEAL-O-RING (16.36MM ID)	
	26	1	**106-3659**	1	PISTON	
	27	1	**6E-3013**	2	SEAT	
	28	1	**106-3658**	2	VALVE	
	29	1	**9J-0403**	2	SPRING	
	30	1	**9J-0404**	2	PLUG	
	31	1	**7J-9933**	2	SEAL-O-RING (21.89MM ID)	
	32	1	**111-8233**	1	SPRING	

M-METRIC PART

107-0555 VALVE GP-CONTROL *(contd.)* i00128789

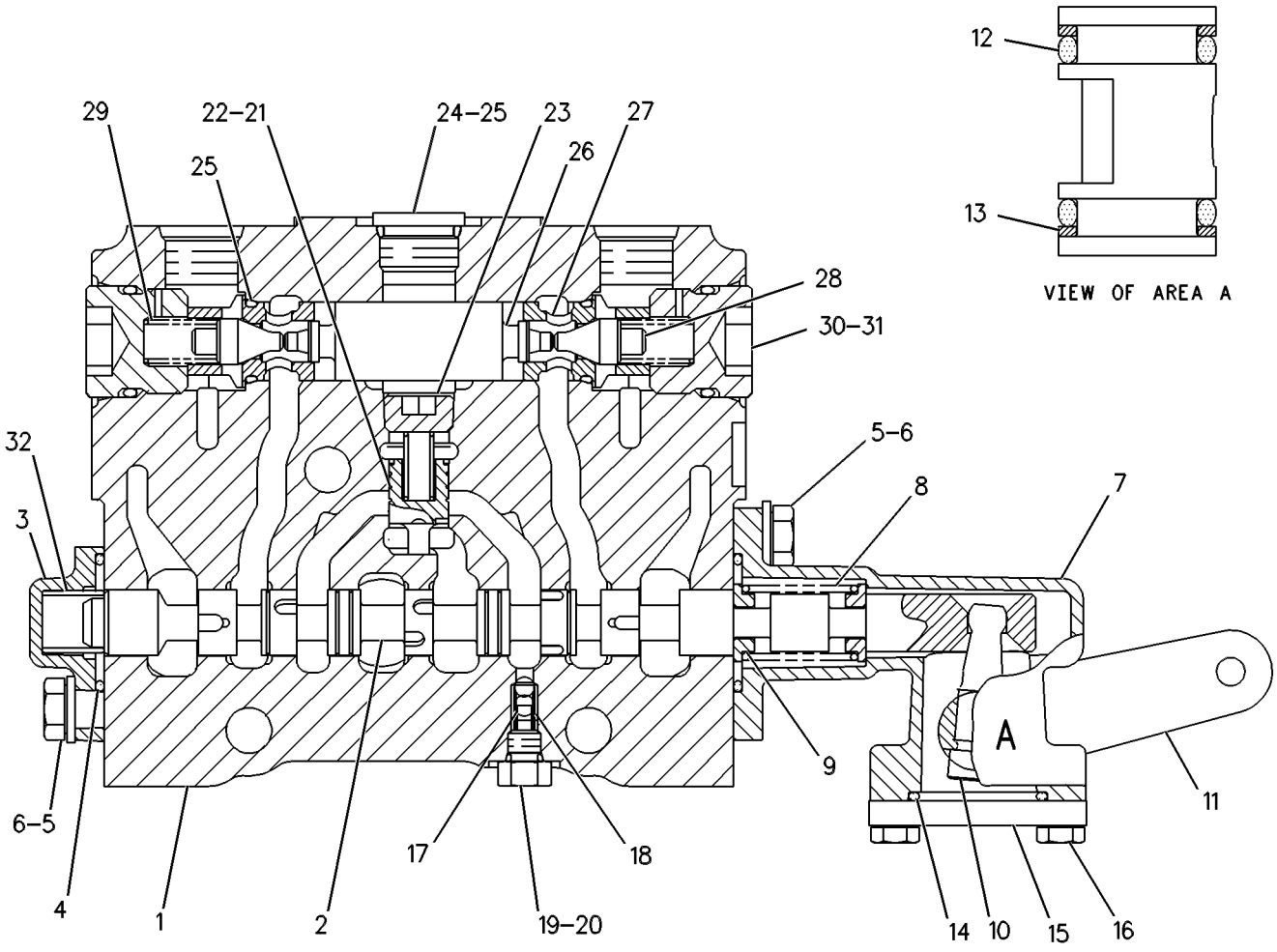

GRAPHIC #1 g00108944

HYDRAULIC SYSTEM

107-0556 VALVE GP-CONTROL—SIDESHIFT

S/N: ATS1-UP

PART OF 104-8658, 130-3133 VALVE GP-BANK 4, 104-8660, 130-3134 VALVE GP-BANK 5

ALSO AN ATTACHMENT

SMCS-5051 **i01684624**

NOTE	REF NO	GRAPHIC REF	PART NUMBER	QTY	PART NAME 1 2 3 4 5 6 (PRODUCT LEVEL)	SEE PAGE
	1	1	**6E-3058**	1	BODY	
	2	1	**102-4571**	1	STEM	
	3	1	**101-1978**	1	COVER	
	4	1	**2K-8199**	2	SEAL-O-RING	
M	5	1	**8T-4189**	4	BOLT (M8X1.25X20MM)	
	6	1	**8T-4224**	4	WASHER-HARD (8.8X16X2MM THK)	
	7	1	*101-1984*	1	BODY	
	8	1	**7J-9933**	2	SEAL-O-RING	
CY	9	1	**139-8472**	1	VALVE GP-RELIEF	583
	10	1	**111-8233**	1	SPRING	
	11	1	**102-7412**	1	SPRING	
	12	1	**101-1973**	4	RETAINER	
	13	1	**101-1971**	1	LEVER	
	14	1	**101-1982**	1	LEVER AS	
	15	1	**8M-4437**	2	SEAL-O-RING	
	16	1	**101-1983**	2	RING-BACKUP (14.65MM ID)	
	17	1	**4D-9986**	1	SEAL-O-RING	
	18	1	**101-2480**	1	COVER	
M	19	1	**8T-4138**	2	BOLT (M6X1X20MM)	
	20	1	**5B-9318**	1	BALL	
	21	1	**6E-3007**	1	SPRING	
	22	1	**6E-4502**	1	PLUG	
	23	1	**4J-7533**	1	SEAL-O-RING	
	24	1	**6E-3019**	1	VALVE (COMPENSATOR)	
	25	1	**6E-5153**	1	SPRING	
	26	1	**108-2187**	1	PLUG-PIPE	
	27	1	**9J-0403**	2	SPRING	
	28	1	**9J-0404**	2	PLUG	
	29	1	**9S-8005**	1	PLUG	
	30	1	**3K-0360**	3	SEAL-O-RING	
	31	1	**106-3659**	1	PISTON	
	32	1	**6E-3013**	2	SEAT	
	33	1	**106-3658**	2	VALVE (LOCK POPPET)	

C-CHANGE FROM PREVIOUS TYPE
M-METRIC PART
Y-SEPARATE ILLUSTRATION

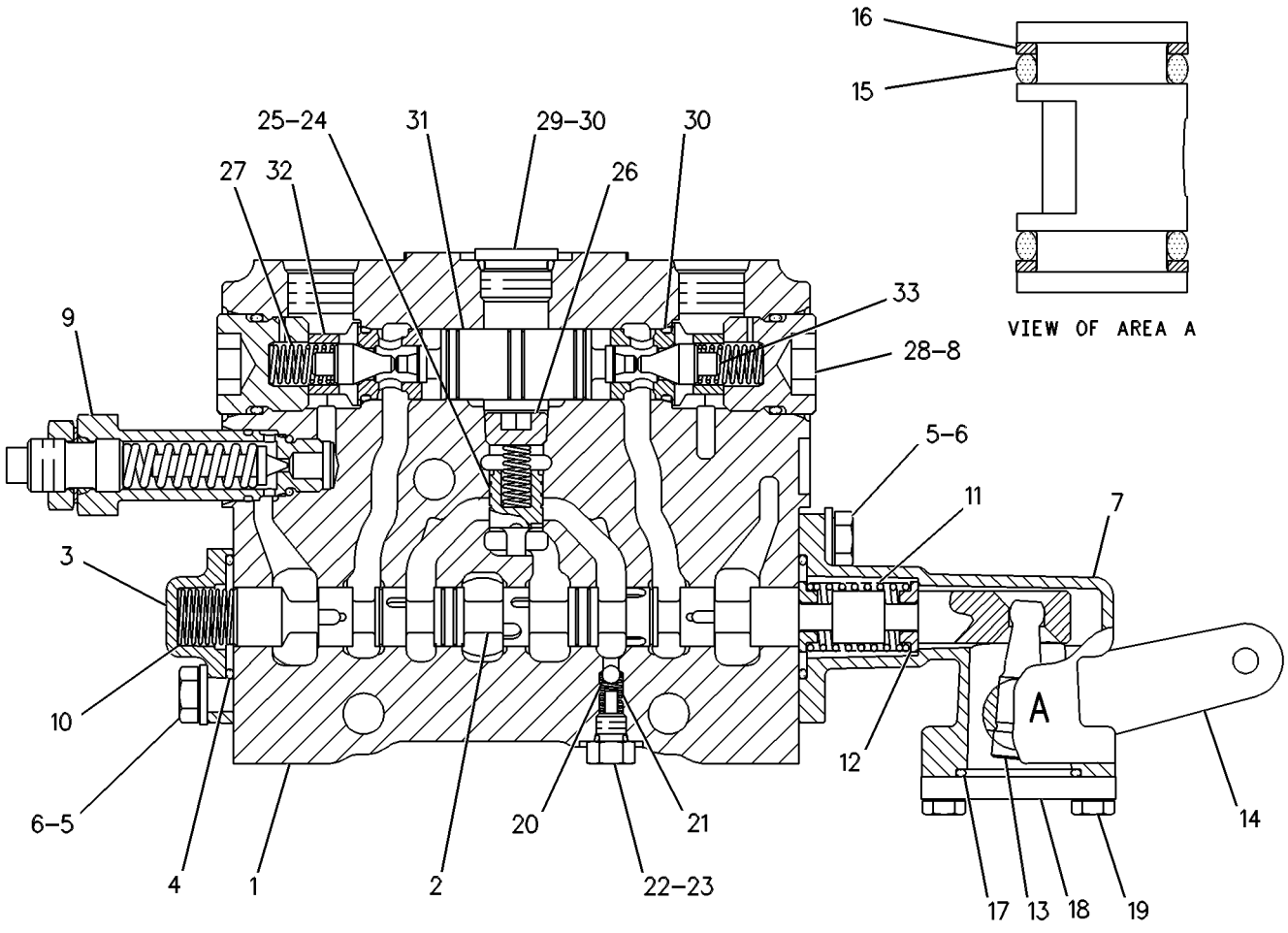

GRAPHIC #1 g00272702

HYDRAULIC SYSTEM

107-0558 VALVE GP-CONTROL—BLADE LIFT

S/N: ATS1-UP

PART OF 104-8658 VALVE GP-BANK 4, 104-8660 VALVE GP-BANK 5

ALSO AN ATTACHMENT

SMCS-5051 **i01827814**

NOTE	REF NO	GRAPHIC REF	PART NUMBER	QTY	PART NAME 1 2 3 4 5 6 (PRODUCT LEVEL)	SEE PAGE
	1	1	**6E-3043**	1	BODY	
	2	1	**102-4576**	1	STEM	
	3	1	**101-1980**	1	HOUSING	
	4	1	**101-1972**	1	DETENT	
Y	5	1	**108-4916**	1	DETENT GP-CONTROL VALVE	432
	6	1	**5B-9318**	1	BALL	
M	7	1	**8T-6869**	2	BOLT (M8X1.25X60MM)	
	8	1	**2K-8199**	2	SEAL-O-RING	
M	9	1	**8T-4189**	2	BOLT (M8X1.25X20MM)	
	10	1	**8T-4224**	4	WASHER-HARD (8.8X16X2MM THK)	
	11	1	**101-1984**	1	BODY	
	12	1	**102-7412**	1	SPRING	
	13	1	**101-1973**	4	RETAINER	
	14	1	**101-1971**	1	LEVER	
	15	1	**101-1982**	1	LEVER AS	
	16	1	**8M-4437**	2	SEAL-O-RING	
	17	1	**101-1983**	2	RING-BACKUP (14.65MM ID)	
	18	1	**4D-9986**	1	SEAL-O-RING	
	19	1	**101-2480**	1	COVER	
M	20	1	**8T-4138**	2	BOLT (M6X1X20MM)	
	21	1	**6E-3007**	1	SPRING	
	22	1	**6E-4502**	1	PLUG	
	23	1	**4J-7533**	1	SEAL-O-RING	
	24	1	**6E-3019**	1	VALVE	
	25	1	**6E-5153**	1	SPRING	
	26	1	**108-2187**	1	PLUG-PIPE	
	27	1	**9S-8005**	1	PLUG	
	28	1	**3K-0360**	3	SEAL-O-RING	
	29	1	**106-3660**	2	PISTON	
	30	1	**6E-3013**	2	SEAT	
	31	1	**106-3658**	2	VALVE	
	32	1	**9J-0403**	2	SPRING	
	33	1	**9J-0404**	2	PLUG	
	34	1	**7J-9933**	2	SEAL-O-RING	
Y	35	1	**222-7774**	1	VALVE GP-RELIEF	586
	36	1	**111-8234**	1	SPRING	

M-METRIC PART
Y-SEPARATE ILLUSTRATION

107-0558 VALVE GP-CONTROL *(contd.)* i01827814

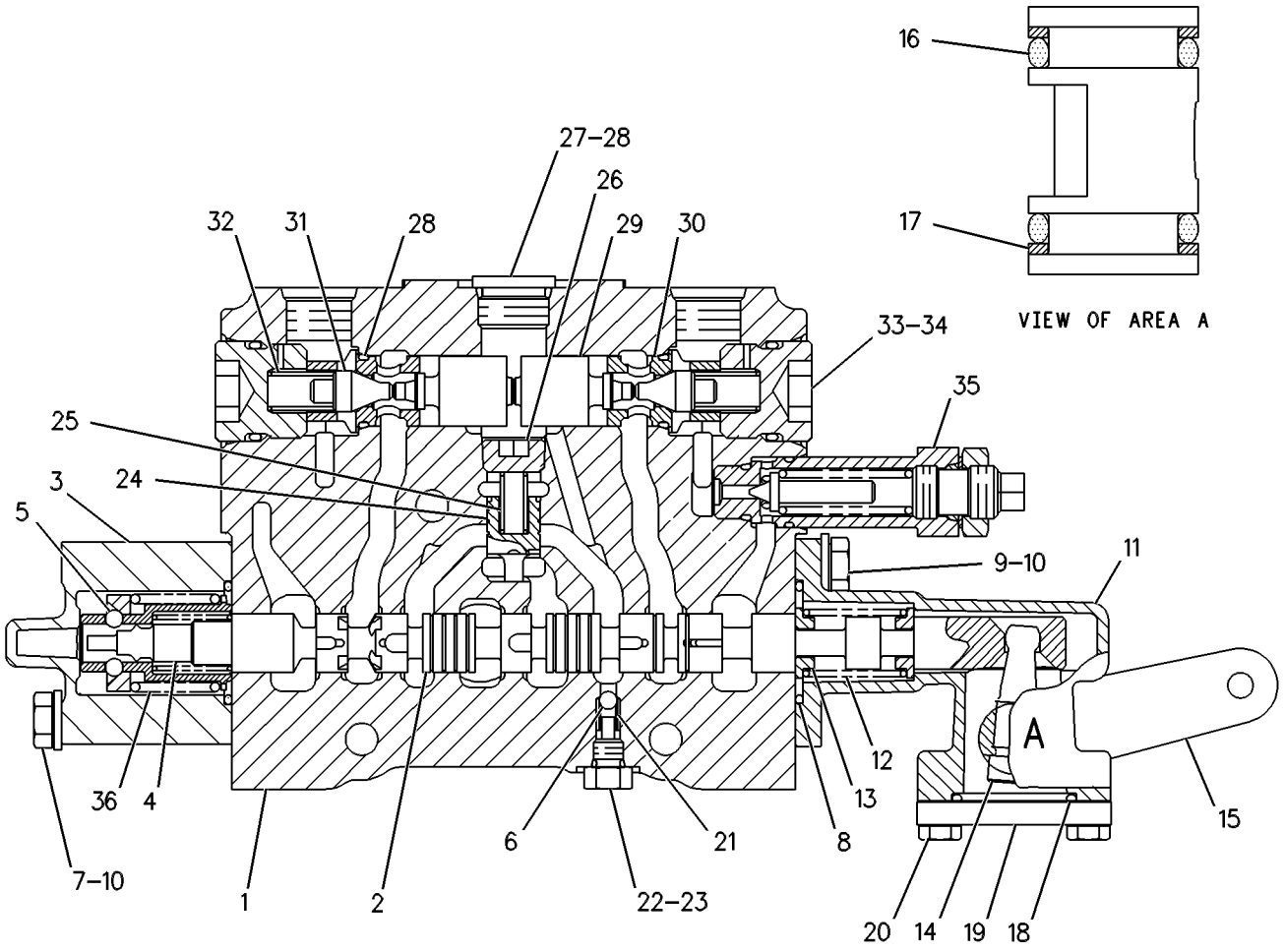

GRAPHIC #1 g00108915

HYDRAULIC SYSTEM

107-0559 VALVE GP-CONTROL–RIPPER–LH

S/N: ATS1-UP
PART OF 104-8660 VALVE GP-BANK 5
AN ATTACHMENT

SMCS-5051 **i01685346**

NOTE	REF NO	GRAPHIC REF	PART NUMBER	QTY	PART NAME 1 2 3 4 5 6 (PRODUCT LEVEL)	SEE PAGE
	1	1	**6E-4599**	1	BODY	
	2	1	**102-4572**	1	STEM	
	3	1	**101-1978**	1	COVER	
	4	1	**2K-8199**	2	SEAL-O-RING	
M	5	1	**8T-4189**	4	BOLT (M8X1.25X20MM)	
	6	1	**8T-4224**	4	WASHER-HARD (8.8X16X2MM THK)	
	7	1	**101-1984**	1	BODY	
	8	1	**7J-9933**	2	SEAL-O-RING	
CY	9	1	**139-8472**	1	VALVE GP-RELIEF	583
	10	1	**111-8233**	1	SPRING	
	11	1	**102-7412**	1	SPRING	
	12	1	**101-1973**	4	RETAINER	
	13	1	**101-1971**	1	LEVER	
	14	1	**101-1982**	1	LEVER AS	
	15	1	**8M-4437**	2	SEAL-O-RING	
	16	1	**101-1983**	2	RING-BACKUP (14.65MM ID)	
	17	1	**4D-9986**	1	SEAL-O-RING	
	18	1	**101-2480**	1	COVER	
M	19	1	**8T-4138**	2	BOLT (M6X1X20MM)	
	20	1	**5B-9318**	1	BALL	
	21	1	**6E-3007**	1	SPRING	
	22	1	**6E-4502**	1	PLUG	
	23	1	**4J-7533**	1	SEAL-O-RING	
	24	1	**6E-3019**	1	VALVE (COMPENSATOR)	
	25	1	**6E-5153**	1	SPRING	
	26	1	**108-2187**	1	PLUG-PIPE	
	27	1	**9J-0403**	2	SPRING	
	28	1	**9J-0404**	2	PLUG	
	29	1	**9S-8005**	1	PLUG	
	30	1	**3K-0360**	3	SEAL-O-RING	
C	31	1	**106-3659**	1	PISTON	
	32	1	**6E-3013**	2	SEAT	
	33	1	**106-3658**	2	VALVE (POPPET)	

C-CHANGE FROM PREVIOUS TYPE
M-METRIC PART
Y-SEPARATE ILLUSTRATION

107-0559 VALVE GP-CONTROL *(contd.)* i01685346

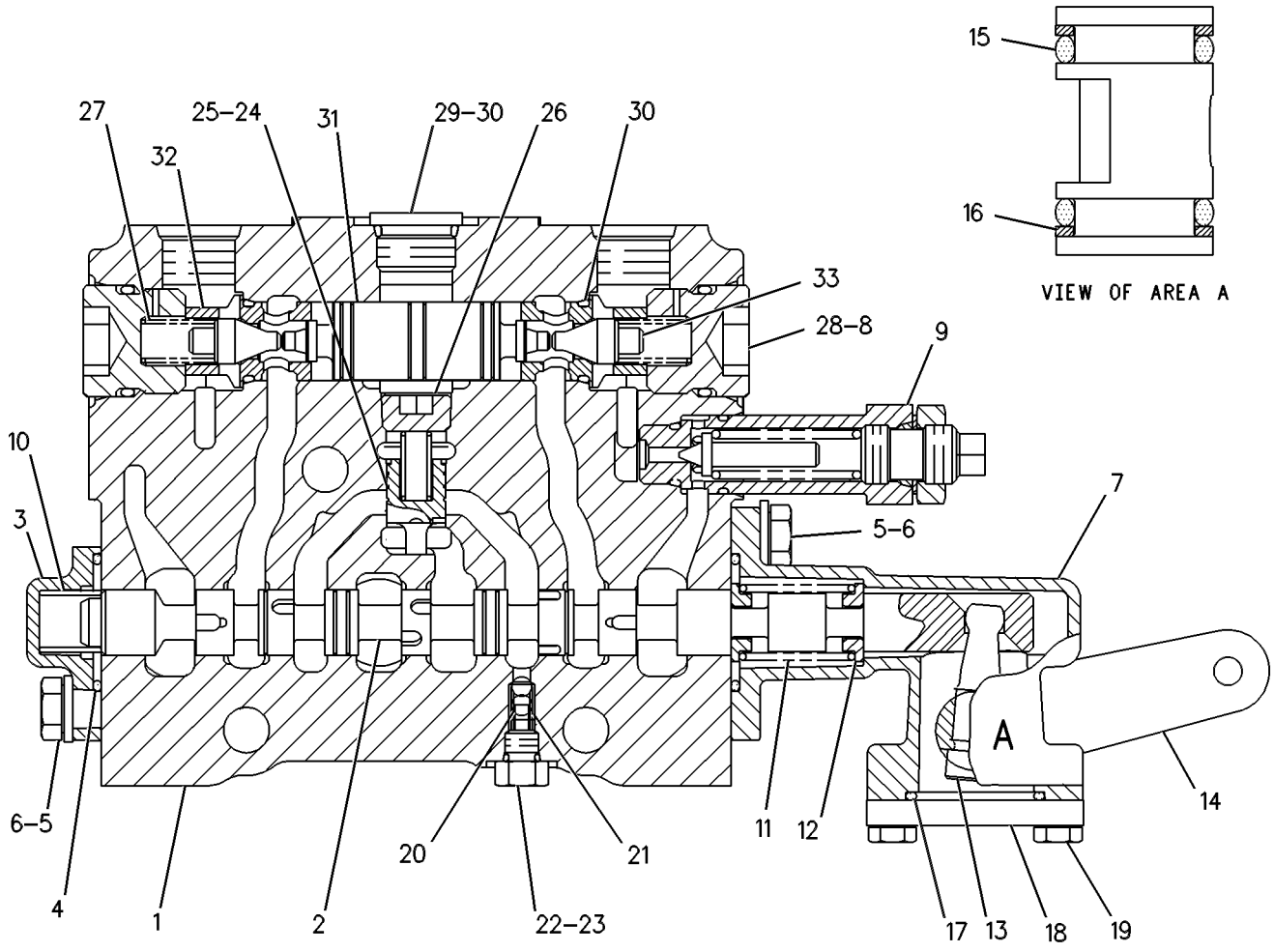

GRAPHIC #1 g00272675

107-0560 VALVE GP-CONTROL—ARTICULATION

S/N: ATS1-UP

PART OF 104-8676, 130-3135 VALVE GP-BANK 4

ALSO AN ATTACHMENT

SMCS-5051 **i01685350**

NOTE	REF NO	GRAPHIC REF	PART NUMBER	QTY	PART NAME 1 2 3 4 5 6 (PRODUCT LEVEL)	SEE PAGE
	1	1	**6E-3044**	1	BODY	
	2	1	**102-4574**	1	STEM	
	3	1	**101-1978**	1	COVER	
	4	1	**2K-8199**	2	SEAL-O-RING	
M	5	1	**8T-4189**	4	BOLT (M8X1.25X20MM)	
	6	1	**8T-4224**	4	WASHER-HARD (8.8X16X2MM THK)	
	7	1	**101-1984**	1	BODY	
	8	1	**102-7412**	1	SPRING	
	9	1	**101-1973**	4	RETAINER	
	10	1	**101-1971**	1	LEVER	
	11	1	**101-1970**	1	LEVER AS	
	12	1	**8M-4437**	2	SEAL-O-RING	
	13	1	**101-1983**	2	RING-BACKUP (14.65MM ID)	
	14	1	**4D-9986**	1	SEAL-O-RING	
	15	1	**101-2480**	1	COVER	
M	16	1	**8T-4138**	2	BOLT (M6X1X20MM)	
	17	1	**5B-9318**	1	BALL	
	18	1	**6E-3007**	1	SPRING	
	19	1	**6E-4502**	1	PLUG	
	20	1	**4J-7533**	1	SEAL-O-RING	
	21	1	**6E-3019**	1	VALVE (COMPENSATOR)	
	22	1	**6E-5153**	1	SPRING	
	23	1	**108-2187**	1	PLUG-PIPE	
	24	1	**9S-8005**	1	PLUG	
	25	1	**3K-0360**	3	SEAL-O-RING	
	26	1	**106-3659**	1	PISTON	
	27	1	**6E-3013**	2	SEAT	
	28	1	**106-3658**	2	VALVE (POPPET)	
	29	1	**9J-0403**	2	SPRING	
	30	1	**9J-0404**	2	PLUG	
	31	1	**111-8233**	1	SPRING	
	32	1	**7J-9933**	2	SEAL-O-RING	

M-METRIC PART

107-0560 VALVE GP-CONTROL *(contd.)* i01685350

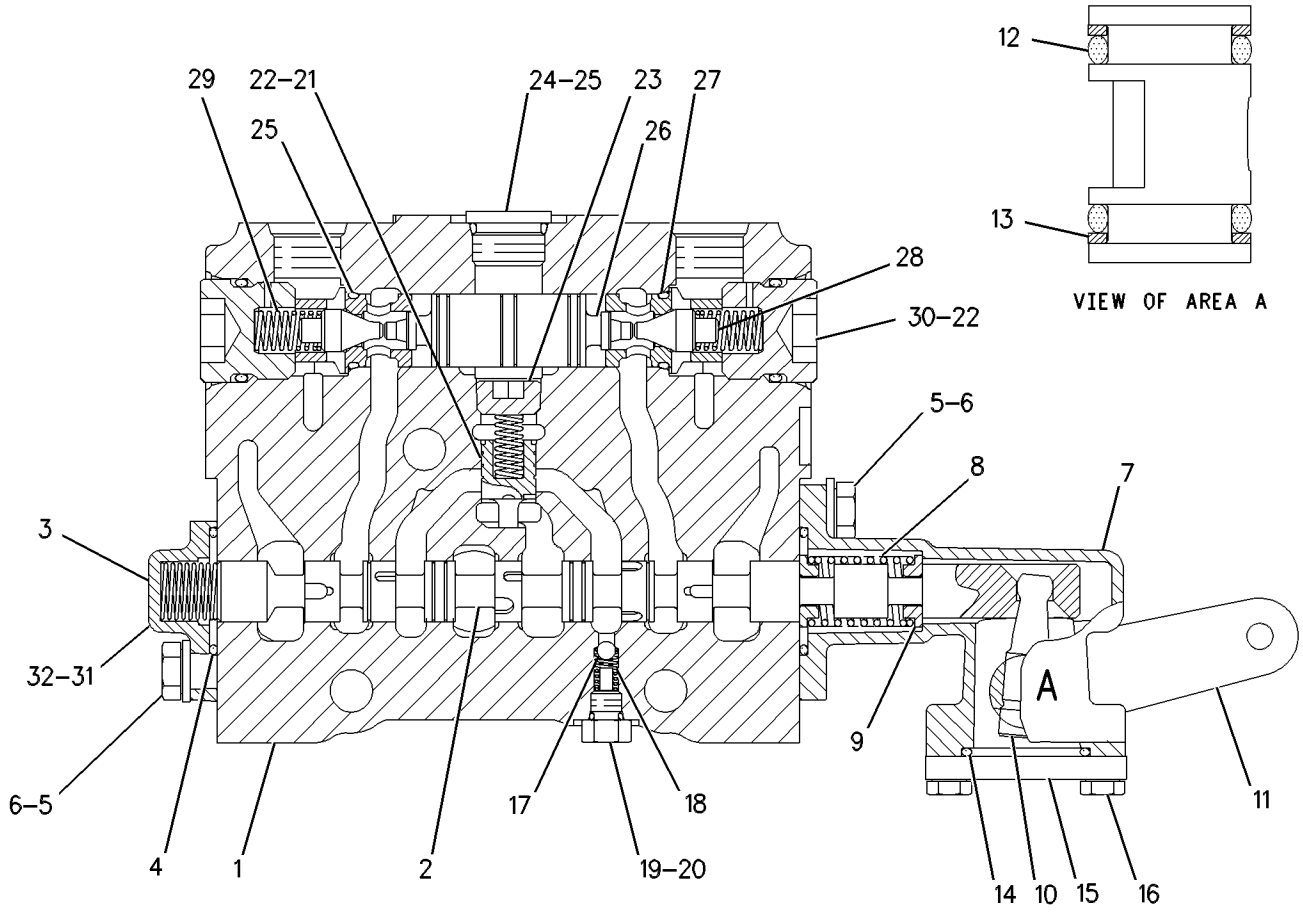

GRAPHIC #1 g00293777

HYDRAULIC SYSTEM

107-0562 VALVE GP-CONTROL–CENTERSHIFT

S/N: ATS1-UP

PART OF 104-8676, 130-3135 VALVE GP-BANK 4

ALSO AN ATTACHMENT

SMCS-5051 **i00128904**

NOTE	REF NO	GRAPHIC REF	PART NUMBER	QTY	PART NAME 1 2 3 4 5 6 (PRODUCT LEVEL)	SEE PAGE
	1	1	**6E-3044**	1	BODY	
	2	1	**102-4577**	1	STEM	
	3	1	**101-1978**	1	COVER	
	4	1	**2K-8199**	2	SEAL-O-RING (28.24MM ID)	
M	5	1	**8T-4189**	4	BOLT (M8X1.25X20MM)	
	6	1	**8T-4224**	4	WASHER-HARD (2MM THK)	
	7	1	**101-1984**	1	BODY	
	8	1	**102-7412**	1	SPRING	
	9	1	**101-1973**	4	RETAINER	
	10	1	**101-1971**	1	LEVER	
	11	1	**101-1970**	1	LEVER AS	
	12	1	**8M-4437**	2	SEAL-O-RING	
	13	1	**101-1983**	2	RING-BACKUP	
	14	1	**4D-9986**	1	SEAL-O-RING (23.47MM ID)	
	15	1	**101-2480**	1	COVER	
M	16	1	**8T-4138**	2	BOLT (M6X1.0X20MM)	
	17	1	**5B-9318**	1	BALL	
	18	1	**6E-3007**	1	SPRING	
	19	1	**6E-4502**	1	PLUG	
	20	1	**4J-7533**	1	SEAL-O-RING (6.07MM ID)	
	21	1	**6E-3019**	1	VALVE	
	22	1	**6E-5153**	1	SPRING	
	23	1	**108-2187**	1	PLUG-PIPE	
	24	1	**9S-8005**	1	PLUG-O-RING (3/4-16 THD)	
	25	1	**3K-0360**	3	SEAL-O-RING (16.36MM ID)	
	26	1	**106-3659**	1	PISTON	
	27	1	**6E-3013**	2	SEAT	
	28	1	**106-3658**	2	VALVE	
	29	1	**9J-0403**	2	SPRING	
	30	1	**9J-0404**	2	PLUG	
	31	1	**111-8233**	1	SPRING	
	32	1	**7J-9933**	2	SEAL-O-RING (21.89MM ID)	

M-METRIC PART

107-0562 VALVE GP-CONTROL *(contd.)* i00128904

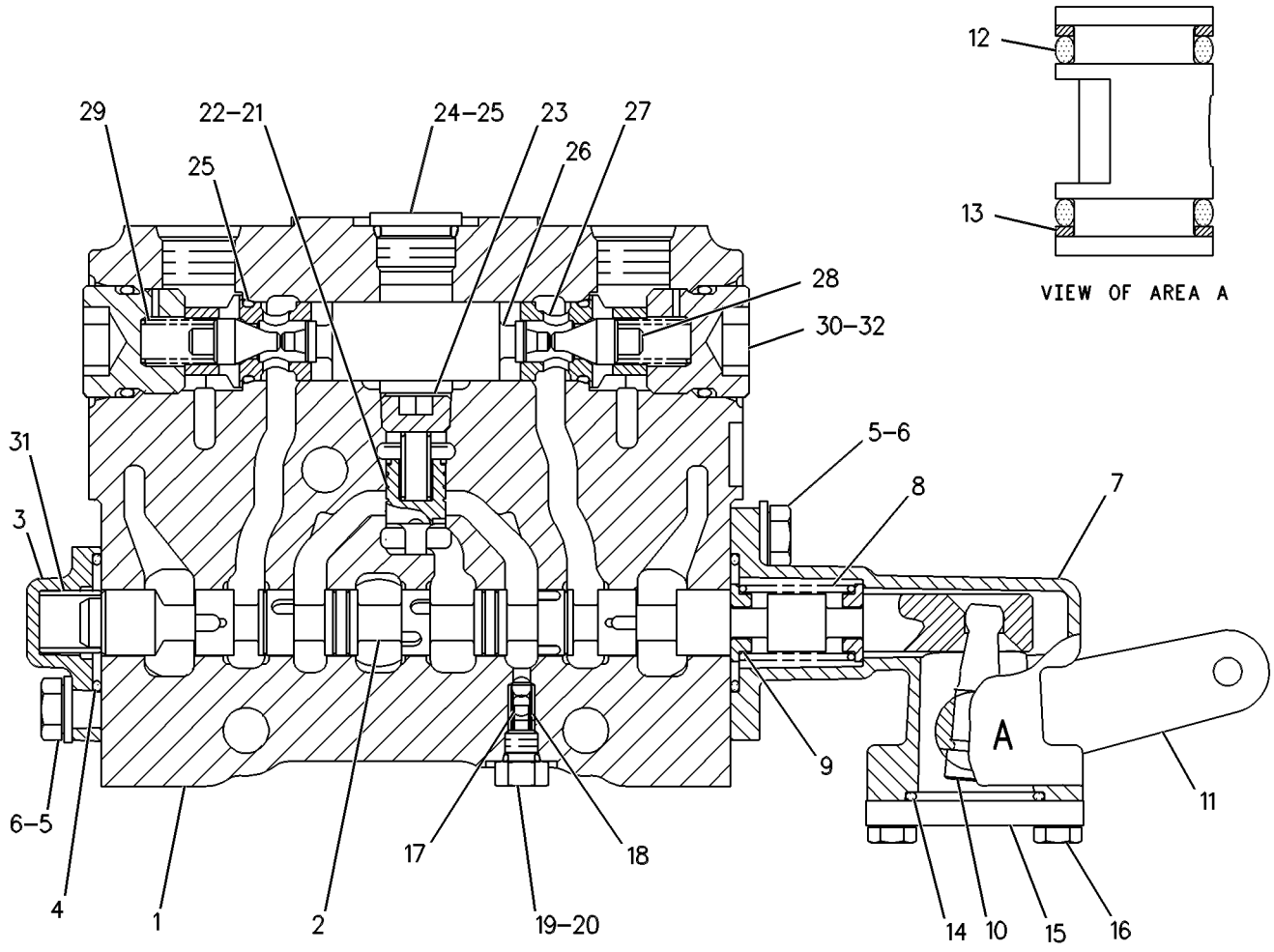

GRAPHIC #1 g00108927

HYDRAULIC SYSTEM

107-0563 VALVE GP-CONTROL—WHEEL LEAN

S/N: ATS1-UP

PART OF 104-8676, 130-3135 VALVE GP-BANK 4

ALSO AN ATTACHMENT

SMCS-5051 **i00128930**

NOTE	REF NO	GRAPHIC REF	PART NUMBER	QTY	PART NAME 1 2 3 4 5 6 (PRODUCT LEVEL)	SEE PAGE
	1	1	**6E-3044**	1	BODY	
	2	1	**106-3661**	1	STEM	
	3	1	**101-1978**	1	COVER	
	4	1	**2K-8199**	2	SEAL-O-RING (28.24MM ID)	
M	5	1	**8T-4189**	4	BOLT (M8X1.25X20MM)	
	6	1	**8T-4224**	4	WASHER-HARD (2MM THK)	
	7	1	**101-1984**	1	BODY	
	8	1	**102-7412**	1	SPRING	
	9	1	**101-1973**	4	RETAINER	
	10	1	**101-1971**	1	LEVER	
	11	1	**101-1970**	1	LEVER AS	
	12	1	**8M-4437**	2	SEAL-O-RING	
	13	1	**101-1983**	2	RING-BACKUP	
	14	1	**4D-9986**	1	SEAL-O-RING (23.47MM ID)	
	15	1	**101-2480**	1	COVER	
M	16	1	**8T-4138**	2	BOLT (M6X1.0X20MM)	
	17	1	**5B-9318**	1	BALL	
	18	1	**6E-3007**	1	SPRING	
	19	1	**6E-4502**	1	PLUG	
	20	1	**4J-7533**	1	SEAL-O-RING (6.07MM ID)	
	21	1	**6E-3019**	1	VALVE	
	22	1	**6E-5153**	1	SPRING	
	23	1	**9S-8005**	1	PLUG-O-RING (3/4-16 THD)	
	24	1	**108-2187**	1	PLUG-PIPE	
	25	1	**3K-0360**	3	SEAL-O-RING (16.36MM ID)	
	26	1	**106-3659**	1	PISTON	
	27	1	**6E-3013**	2	SEAT	
	28	1	**106-3658**	2	VALVE	
	29	1	**9J-0403**	2	SPRING	
	30	1	**9J-0404**	2	PLUG	
	31	1	**111-8233**	1	SPRING	
	32	1	**7J-9933**	2	SEAL-O-RING (21.89MM ID)	

M-METRIC PART

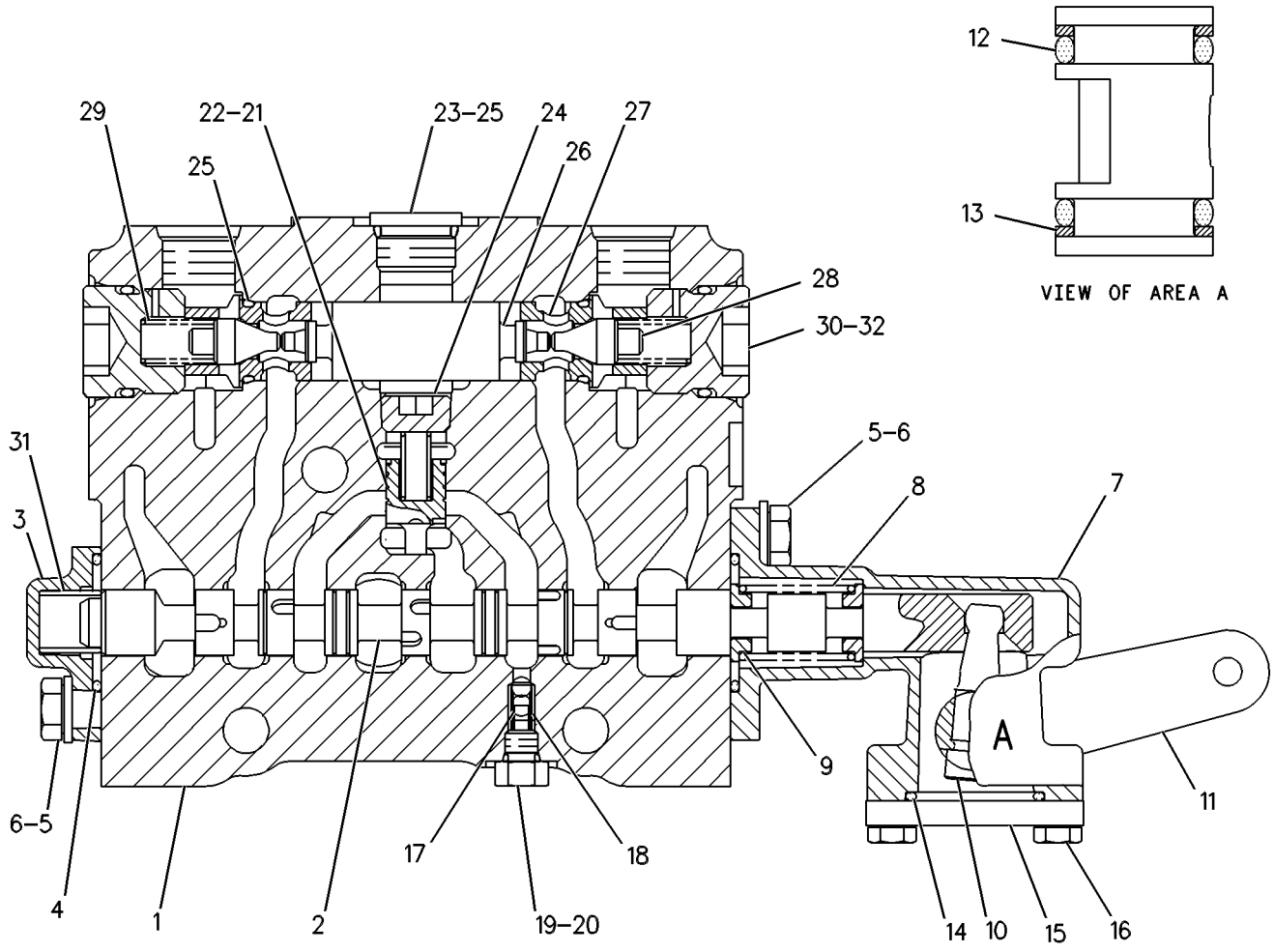

GRAPHIC #1 g00108992

HYDRAULIC SYSTEM

107-0565 VALVE GP-CONTROL—BLADE LIFT

S/N: ATS1-UP

PART OF 104-8676 VALVE GP-BANK 4

ALSO AN ATTACHMENT

SMCS-5051 **i01827824**

NOTE	REF NO	GRAPHIC REF	PART NUMBER	QTY	PART NAME 1 2 3 4 5 6 (PRODUCT LEVEL)	SEE PAGE
	1	1	**6E-3043**	1	BODY	
	2	1	**102-4576**	1	STEM	
	3	1	**101-1980**	1	HOUSING	
	4	1	**101-1972**	1	DETENT	
Y	5	1	**108-4916**	1	DETENT GP-CONTROL VALVE (BLADE LIFT)	432
	6	1	**5B-9318**	1	BALL	
M	7	1	**8T-6869**	2	BOLT (M8X1.25X60MM)	
	8	1	**2K-8199**	2	SEAL-O-RING	
M	9	1	**8T-4189**	2	BOLT (M8X1.25X20MM)	
	10	1	**8T-4224**	4	WASHER-HARD (8.8X16X2MM THK)	
	11	1	**101-1984**	1	BODY	
	12	1	**102-7412**	1	SPRING	
	13	1	**101-1973**	4	RETAINER	
	14	1	**101-1971**	1	LEVER	
	15	1	**101-1970**	1	LEVER AS	
	16	1	**8M-4437**	2	SEAL-O-RING	
	17	1	**101-1983**	2	RING-BACKUP (14.65MM ID)	
	18	1	**4D-9986**	1	SEAL-O-RING	
	19	1	**101-2480**	1	COVER	
M	20	1	**8T-4138**	2	BOLT (M6X1X20MM)	
	21	1	**6E-3007**	1	SPRING	
	22	1	**6E-4502**	1	PLUG	
	23	1	**4J-7533**	1	SEAL-O-RING	
	24	1	**6E-3019**	1	VALVE	
	25	1	**6E-5153**	1	SPRING	
	26	1	**108-2187**	1	PLUG-PIPE	
	27	1	**9S-8005**	1	PLUG	
	28	1	**3K-0360**	3	SEAL-O-RING	
	29	1	**106-3660**	2	PISTON	
	30	1	**6E-3013**	2	SEAT	
	31	1	**106-3658**	2	VALVE	
	32	1	**9J-0403**	2	SPRING	
	33	1	**9J-0404**	2	PLUG	
	34	1	**7J-9933**	2	SEAL-O-RING	
CY	35	1	**222-7774**	1	VALVE GP-RELIEF (BLADE LIFT)	586
	36	1	**111-8234**	1	SPRING	

C-CHANGE FROM PREVIOUS TYPE
M-METRIC PART
Y-SEPARATE ILLUSTRATION

107-0565 VALVE GP-CONTROL *(contd.)* i01827824

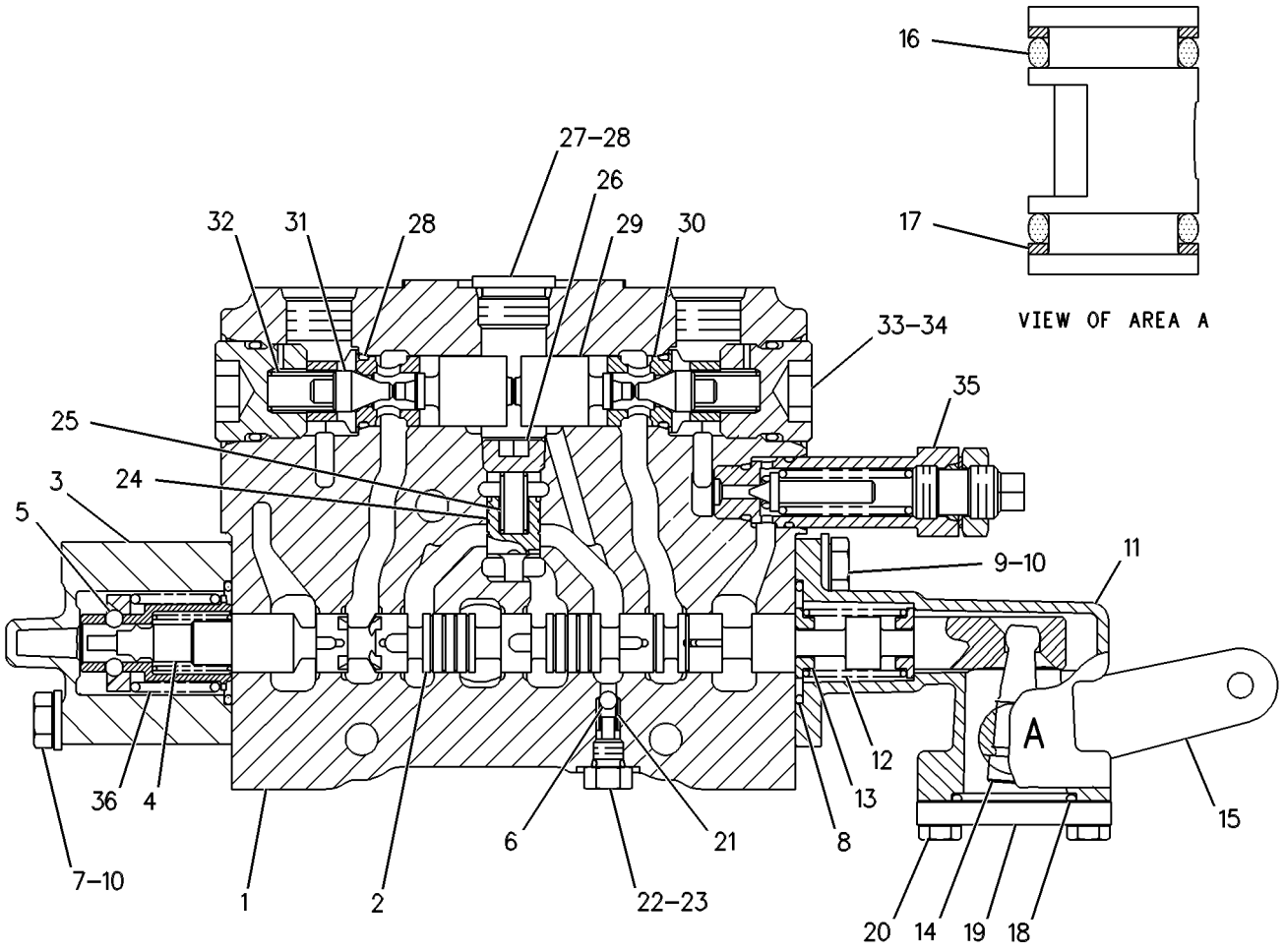

GRAPHIC #1 g00108915

HYDRAULIC SYSTEM

115-1007 VALVE GP-CONTROL—PLOW/DOZER ANGLE—RH

S/N: ATS1-UP
PART OF 130-3124 VALVE GP-BANK 6
AN ATTACHMENT

SMCS-5051 **i01652548**

NOTE	REF NO	GRAPHIC REF	PART NUMBER	QTY	PART NAME 1 2 3 4 5 6 (PRODUCT LEVEL)	SEE PAGE
	1	1	**6E-4599**	1	BODY	
	2	1	**102-4578**	1	STEM	
	3	1	**101-1978**	1	COVER	
	4	1	**2K-8199**	2	SEAL-O-RING	
M	5	1	**8T-4189**	4	BOLT (M8X1.25X20MM)	
	6	1	**8T-4224**	4	WASHER-HARD (8.8X16X2MM THK)	
	7	1	**101-1984**	1	BODY	
	8	1	**7J-9933**	2	SEAL-O-RING	
YC	9	1	**139-8472**	1	VALVE GP-RELIEF (PLOW/DOZER ANGLE)	583
	10	1	**111-8233**	1	SPRING	
	11	1	**102-7412**	1	SPRING	
	12	1	**101-1973**	4	RETAINER	
	13	1	**101-1971**	1	LEVER	
	14	1	**101-1970**	1	LEVER AS	
	15	1	**8M-4437**	2	SEAL-O-RING	
	16	1	**101-1983**	2	RING-BACKUP (14.65MM ID)	
	17	1	**4D-9986**	1	SEAL-O-RING	
	18	1	**101-2480**	1	COVER	
M	19	1	**8T-4138**	2	BOLT (M6X1X20MM)	
	20	1	**5B-9318**	1	BALL	
	21	1	**6E-3007**	1	SPRING	
	22	1	**6E-4502**	1	PLUG	
	23	1	**4J-7533**	1	SEAL-O-RING	
	24	1	**6E-3019**	1	VALVE	
	25	1	**6E-5153**	1	SPRING	
	26	1	**108-2187**	1	PLUG-PIPE	
	27	1	**9J-0403**	2	SPRING	
	28	1	**9J-0404**	2	PLUG	
	29	1	**9S-8005**	1	PLUG	
	30	1	**3K-0360**	3	SEAL-O-RING	
C	31	1	**106-3659**	1	PISTON	
	32	1	**6E-3013**	2	SEAT	
	33	1	**106-3658**	2	VALVE	

C-CHANGE FROM PREVIOUS TYPE
M-METRIC PART
Y-SEPARATE ILLUSTRATION

115-1007 VALVE GP-CONTROL *(contd.)* i01652548

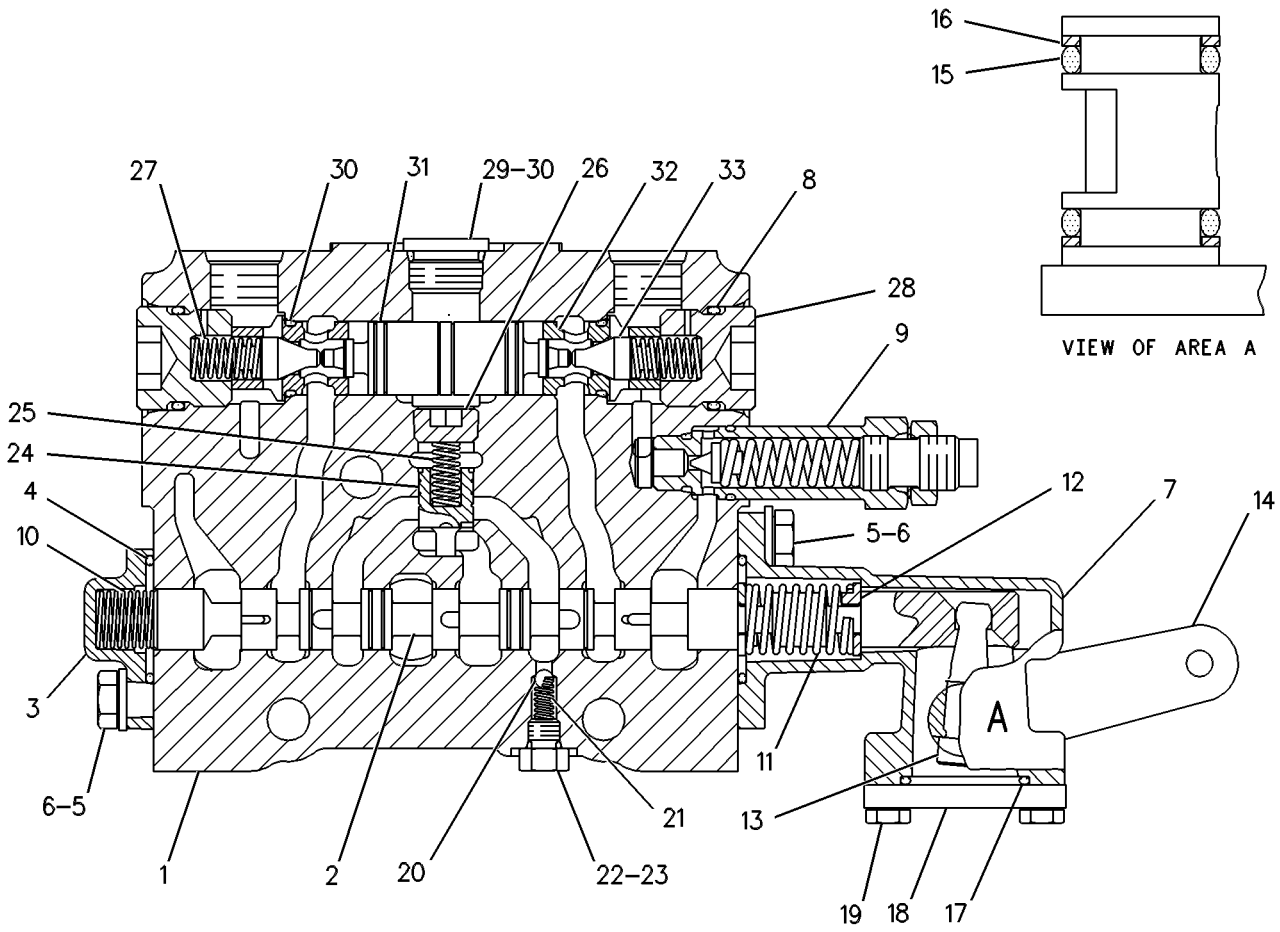

GRAPHIC #1 g00272751

HYDRAULIC SYSTEM

119-9550 VALVE GP-CONTROL–RIPPER–LH

S/N: ATS1-UP

PART OF 130-3118 VALVE GP-BANK 5, 130-3122 VALVE GP-BANK 7

AN ATTACHMENT

SMCS-5051 **i01536075**

NOTE	REF NO	GRAPHIC REF	PART NUMBER	QTY	PART NAME 1 2 3 4 5 6 (PRODUCT LEVEL)	SEE PAGE
	1	1	**6E-4599**	1	BODY	
	2	1	**101-1152**	1	STEM	
	3	1	**101-1978**	1	COVER	
	4	1	**2K-8199**	2	SEAL-O-RING	
M	5	1	**8T-4189**	4	BOLT (M8X1.25X20MM)	
	6	1	**8T-4224**	4	WASHER-HARD (8.8X16X2MM THK)	
	7	1	**101-1984**	1	BODY	
	8	1	**7J-9933**	2	SEAL-O-RING	
	9	1	**111-8233**	1	SPRING	
CY	10	1	**139-8476**	1	VALVE GP-RELIEF (RIPPER)	584
	11	1	**102-7412**	1	SPRING	
	12	1	**101-1973**	4	RETAINER	
	13	1	**101-1971**	1	LEVER	
	14	1	**101-1982**	1	LEVER AS	
	15	1	**8M-4437**	2	SEAL-O-RING	
	16	1	**101-1983**	2	RING-BACKUP (14.65MM ID)	
	17	1	**4D-9986**	1	SEAL-O-RING	
	18	1	**101-2480**	1	COVER	
M	19	1	**8T-4138**	2	BOLT (M6X1X20MM)	
	20	1	**5B-9318**	1	BALL	
	21	1	**6E-3007**	1	SPRING	
	22	1	**6E-4502**	1	PLUG	
	23	1	**4J-7533**	1	SEAL-O-RING	
	24	1	**6E-3019**	1	VALVE	
	25	1	**6E-5153**	1	SPRING	
	26	1	**108-2187**	1	PLUG-PIPE	
	27	1	**9J-0403**	2	SPRING	
	28	1	**9J-0404**	2	PLUG	
	29	1	**9S-8005**	1	PLUG	
	30	1	**3K-0360**	3	SEAL-O-RING	
	31	1	**106-3659**	1	PISTON	
	32	1	**6E-3013**	2	SEAT	
	33	1	**106-3658**	2	VALVE	

C-CHANGE FROM PREVIOUS TYPE
M-METRIC PART
Y-SEPARATE ILLUSTRATION

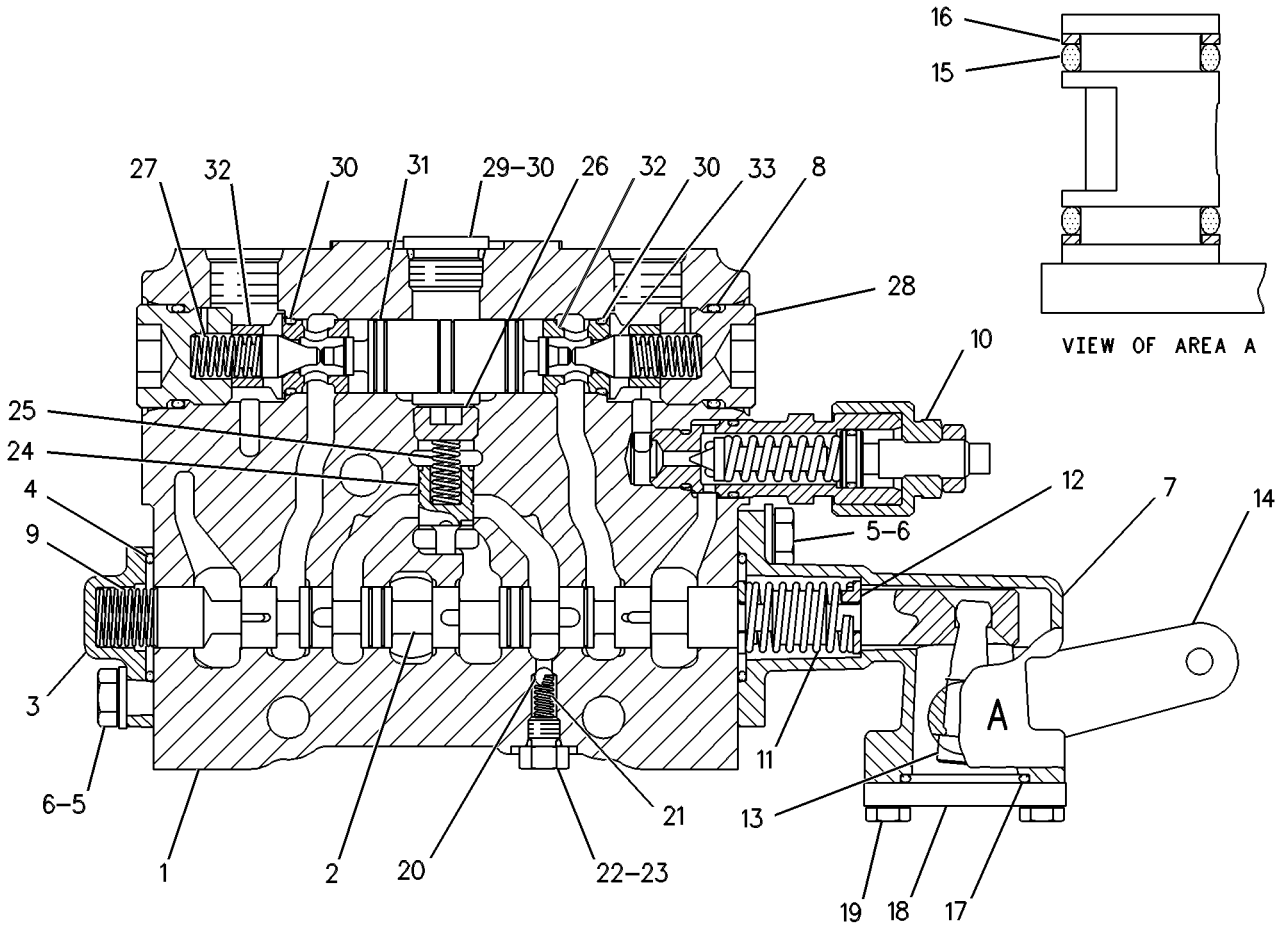

GRAPHIC #1 g00109722

HYDRAULIC SYSTEM

124-3455 VALVE GP-CONTROL–RIPPER–LH

S/N: ATS1-UP
PART OF 130-3134 VALVE GP-BANK 5
AN ATTACHMENT

SMCS-5051 **i01685360**

NOTE	REF NO	GRAPHIC REF	PART NUMBER	QTY	PART NAME 1 2 3 4 5 6 (PRODUCT LEVEL)	SEE PAGE
	1	1	**6E-4599**	1	BODY	
	2	1	**102-4572**	1	STEM	
	3	1	**101-1978**	1	COVER	
	4	1	**2K-8199**	2	SEAL-O-RING	
M	5	1	**8T-4189**	4	BOLT (M8X1.25X20MM)	
	6	1	**8T-4224**	4	WASHER-HARD (8.8X16X2MM THK)	
	7	1	**101-1984**	1	BODY	
	8	1	**7J-9933**	2	SEAL-O-RING	
CY	9	1	**139-8476**	1	VALVE GP-RELIEF	584
	10	1	**111-8233**	1	SPRING	
	11	1	**102-7412**	1	SPRING	
	12	1	**101-1973**	4	RETAINER	
	13	1	**101-1971**	1	LEVER	
	14	1	**101-1982**	1	LEVER AS	
	15	1	**8M-4437**	2	SEAL-O-RING	
	16	1	**101-1983**	2	RING-BACKUP (14.65MM ID)	
	17	1	**4D-9986**	1	SEAL-O-RING	
	18	1	**101-2480**	1	COVER	
M	19	1	**8T-4138**	2	BOLT (M6X1X20MM)	
	20	1	**5B-9318**	1	BALL	
	21	1	**6E-3007**	1	SPRING	
	22	1	**6E-4502**	1	PLUG	
	23	1	**4J-7533**	1	SEAL-O-RING	
	24	1	**6E-3019**	1	VALVE (COMPENSATOR)	
	25	1	**6E-5153**	1	SPRING	
	26	1	**108-2187**	1	PLUG-PIPE	
	27	1	**9J-0403**	2	SPRING	
	28	1	**9J-0404**	2	PLUG	
	29	1	**9S-8005**	1	PLUG	
	30	1	**3K-0360**	3	SEAL-O-RING	
	31	1	**106-3659**	1	PISTON	
	32	1	**6E-3013**	2	SEAT	
	33	1	**106-3658**	2	VALVE (POPPET)	

C-CHANGE FROM PREVIOUS TYPE
M-METRIC PART
Y-SEPARATE ILLUSTRATION

124-3455 VALVE GP-CONTROL *(contd.)* i01685360

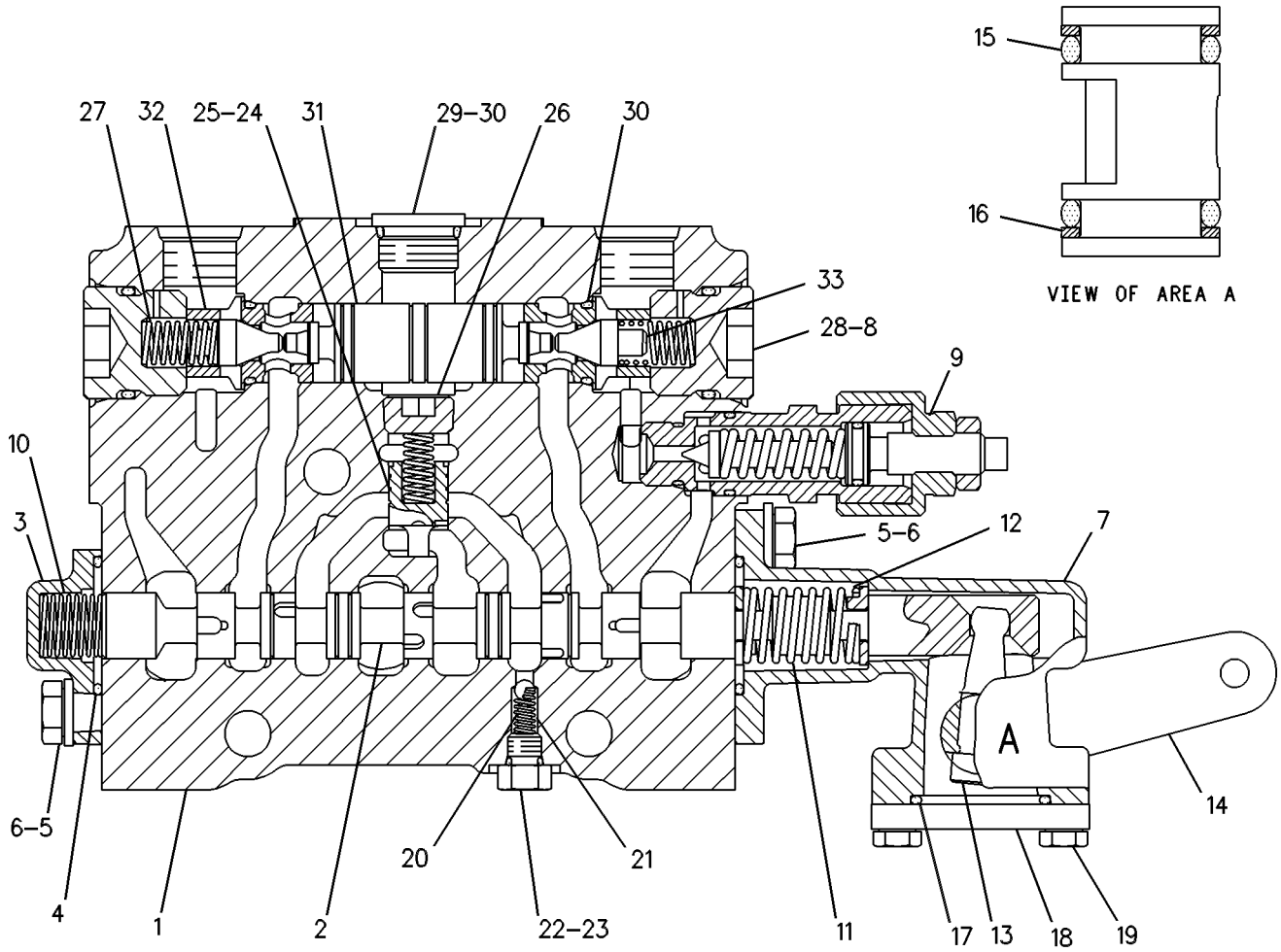

GRAPHIC #1 g00273406

HYDRAULIC SYSTEM

128-8647 VALVE GP-CONTROL–BLADE LIFT–RH

S/N: ATS1-UP

PART OF 130-3116 VALVE GP-BANK 4, 130-3123 VALVE GP-BANK 5, 130-3124 VALVE GP-BANK 6

AN ATTACHMENT

SMCS-5051 **i01652559**

NOTE	REF NO	GRAPHIC REF	PART NUMBER	QTY	PART NAME 1 2 3 4 5 6 (PRODUCT LEVEL)	SEE PAGE
	1	1	**128-8645**	1	BODY	
	2	1	**101-1150**	1	STEM	
	3	1	**9S-4180**	1	PLUG	
	4	1	**101-1972**	1	DETENT	
Y	5	1	**130-3535**	1	DETENT GP-CONTROL VALVE (BLADE LIFT)	434
	6	1	**5B-9318**	1	BALL	
	7	1	**2K-8199**	1	SEAL-O-RING	
M	8	1	**8T-4189**	2	BOLT (M8X1.25X20MM)	
	9	1	**8T-4224**	2	WASHER-HARD (8.8X16X2MM THK)	
	10	1	**101-1984**	1	BODY	
	11	1	**102-7412**	1	SPRING	
	12	1	**101-1973**	4	RETAINER	
	13	1	**101-1971**	1	LEVER	
	14	1	**101-1970**	1	LEVER AS	
	15	1	**8M-4437**	2	SEAL-O-RING	
	16	1	**101-1983**	2	RING-BACKUP (14.65MM ID)	
	17	1	**4D-9986**	1	SEAL-O-RING	
	18	1	**101-2480**	1	COVER	
M	19	1	**8T-4138**	2	BOLT (M6X1X20MM)	
	20	1	**6E-3007**	1	SPRING	
	21	1	**6E-4502**	1	PLUG	
	22	1	**4J-7533**	2	SEAL-O-RING	
	23	1	**6E-3019**	1	VALVE	
	24	1	**6E-5153**	1	SPRING	
	25	1	**108-2187**	1	PLUG-PIPE	
	26	1	**9S-8005**	1	PLUG	
	27	1	**3K-0360**	3	SEAL-O-RING	
	28	1	**106-3660**	2	PISTON	
	29	1	**6E-3013**	2	SEAT	
	30	1	**106-3658**	2	VALVE	
	31	1	**9J-0403**	2	SPRING	
	32	1	**9J-0404**	2	PLUG	
	33	1	**7J-9933**	2	SEAL-O-RING	
Y	34	1	**139-8477**	1	VALVE GP-RELIEF (BLADE LIFT)	585
	35	1	**111-8234**	1	SPRING	

M-METRIC PART
Y-SEPARATE ILLUSTRATION

128-8647 VALVE GP-CONTROL *(contd.)* i01652559

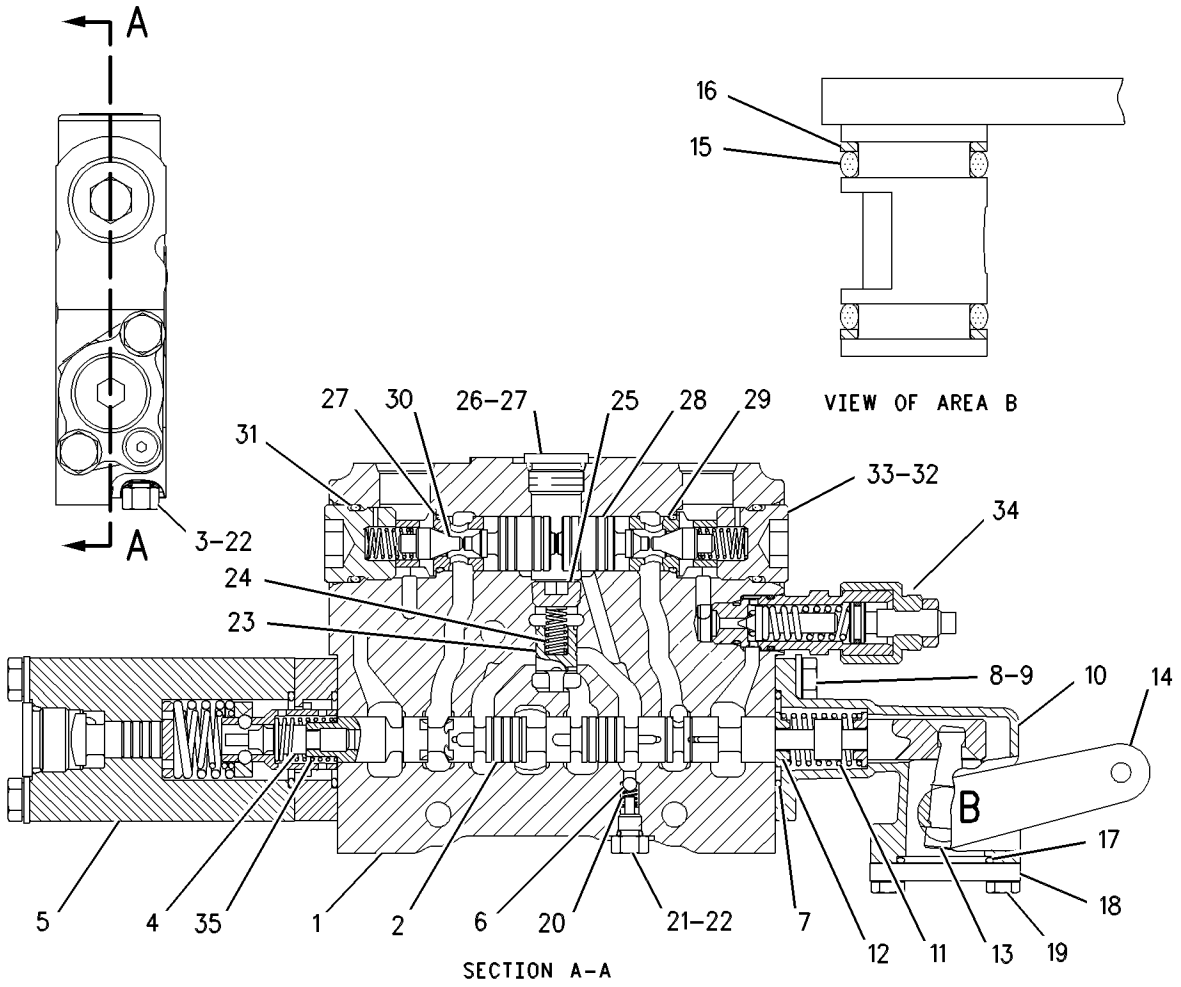

GRAPHIC #1 g00346859

HYDRAULIC SYSTEM

130-3110 VALVE GP-CONTROL–BLADE LIFT–LH

S/N: ATS1-UP

PART OF 130-3118 VALVE GP-BANK 5, 130-3122 VALVE GP-BANK 7

AN ATTACHMENT

SMCS-5051 **i01788147**

NOTE	REF NO	GRAPHIC REF	PART NUMBER	QTY	PART NAME 1 2 3 4 5 6 (PRODUCT LEVEL)	SEE PAGE
	1	1	**128-8645**	1	BODY	
	2	1	**101-1150**	1	STEM	
	3	1	**9S-4180**	1	PLUG	
	4	1	**101-1972**	1	DETENT	
Y	5	1	**130-3535**	1	DETENT GP-CONTROL VALVE (BLADE LIFT)	434
	6	1	**5B-9318**	1	BALL	
	7	1	**2K-8199**	1	SEAL-O-RING	
M	8	1	**8T-4189**	2	BOLT (M8X1.25X20MM)	
	9	1	**8T-4224**	2	WASHER-HARD (8.8X16X2MM THK)	
	10	1	**101-1984**	1	BODY	
	11	1	**102-7412**	1	SPRING	
	12	1	**101-1973**	4	RETAINER	
	13	1	**101-1971**	1	LEVER	
	14	1	**101-1982**	1	LEVER AS	
	15	1	**8M-4437**	2	SEAL-O-RING	
	16	1	**101-1983**	2	RING-BACKUP (14.65MM ID)	
	17	1	**4D-9986**	1	SEAL-O-RING	
	18	1	**101-2480**	1	COVER	
M	19	1	**8T-4138**	2	BOLT (M6X1X20MM)	
	20	1	**6E-3007**	1	SPRING	
	21	1	**6E-4502**	1	PLUG	
	22	1	**4J-7533**	2	SEAL-O-RING	
	23	1	**6E-3019**	1	VALVE	
	24	1	**6E-5153**	1	SPRING	
	25	1	**108-2187**	1	PLUG-PIPE	
	26	1	**9S-8005**	1	PLUG	
	27	1	**3K-0360**	3	SEAL-O-RING	
	28	1	**106-3660**	2	PISTON	
	29	1	**6E-3013**	2	SEAT	
	30	1	**106-3658**	2	VALVE	
	31	1	**9J-0403**	2	SPRING	
	32	1	**9J-0404**	2	PLUG	
	33	1	**7J-9933**	2	SEAL-O-RING	
Y	34	1	**139-8477**	1	VALVE GP-RELIEF (BLADE LIFT)	585
	35	1	**111-8234**	1	SPRING	

M-METRIC PART
Y-SEPARATE ILLUSTRATION

130-3110 VALVE GP-CONTROL *(contd.)* i01788147

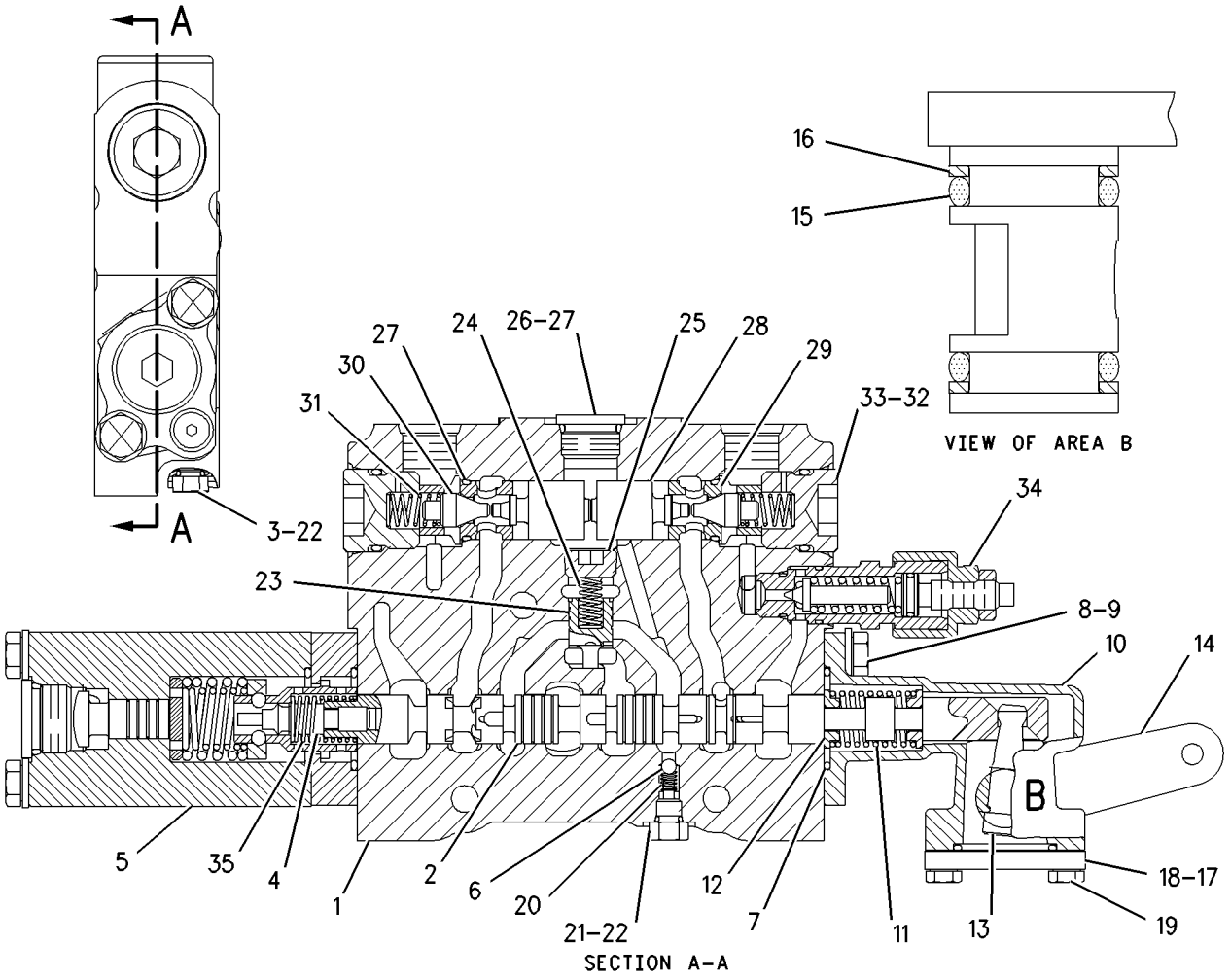

GRAPHIC #1 g00898093

HYDRAULIC SYSTEM

130-3111 VALVE GP-CONTROL—PLOW/DOZER LIFT—RH

S/N: ATS1-UP

PART OF 130-3123 VALVE GP-BANK 5, 130-3124 VALVE GP-BANK 6

AN ATTACHMENT

SMCS-5051 **i01794199**

NOTE	REF NO	GRAPHIC REF	PART NUMBER	QTY	PART NAME 1 2 3 4 5 6 (PRODUCT LEVEL)	SEE PAGE
	1	1	**128-8646**	1	BODY	
	2	1	**101-1147**	1	STEM	
	3	1	**9S-4180**	1	PLUG	
	4	1	**101-1972**	1	DETENT	
Y	5	1	**130-3535**	1	DETENT GP-CONTROL VALVE (PLOW/DOZER LIFT)	434
	6	1	**5B-9318**	1	BALL	
	7	1	**2K-8199**	1	SEAL-O-RING	
M	8	1	**8T-4189**	2	BOLT (M8X1.25X20MM)	
	9	1	**8T-4224**	2	WASHER-HARD (8.8X16X2MM THK)	
	10	1	**101-1984**	1	BODY	
	11	1	**102-7412**	1	SPRING	
	12	1	**101-1973**	4	RETAINER	
	13	1	**101-1971**	1	LEVER	
	14	1	**101-1970**	1	LEVER AS	
	15	1	**8M-4437**	2	SEAL-O-RING	
	16	1	**101-1983**	2	RING-BACKUP (14.65MM ID)	
	17	1	**4D-9986**	1	SEAL-O-RING	
	18	1	**101-2480**	1	COVER	
M	19	1	**8T-4138**	2	BOLT (M6X1X20MM)	
	20	1	**6E-3007**	1	SPRING	
	21	1	**6E-4502**	1	PLUG	
	22	1	**4J-7533**	2	SEAL-O-RING	
	23	1	**6E-3019**	1	VALVE (COMPENSATOR)	
	24	1	**6E-5153**	1	SPRING	
	25	1	**108-2187**	1	PLUG-PIPE	
	26	1	**9S-8005**	1	PLUG	
	27	1	**3K-0360**	3	SEAL-O-RING	
	28	1	**106-3660**	2	PISTON	
	29	1	**6E-3013**	2	SEAT	
	30	1	**106-3658**	2	VALVE (POPPET)	
	31	1	**9J-0403**	2	SPRING	
	32	1	**9J-0404**	2	PLUG	
	33	1	**7J-9933**	2	SEAL-O-RING	
Y	34	1	**139-8477**	1	VALVE GP-RELIEF (PLOW/DOZER LIFT)	585
	35	1	**111-8234**	1	SPRING	

M-METRIC PART
Y-SEPARATE ILLUSTRATION

130-3111 VALVE GP-CONTROL *(contd.)* i01794199

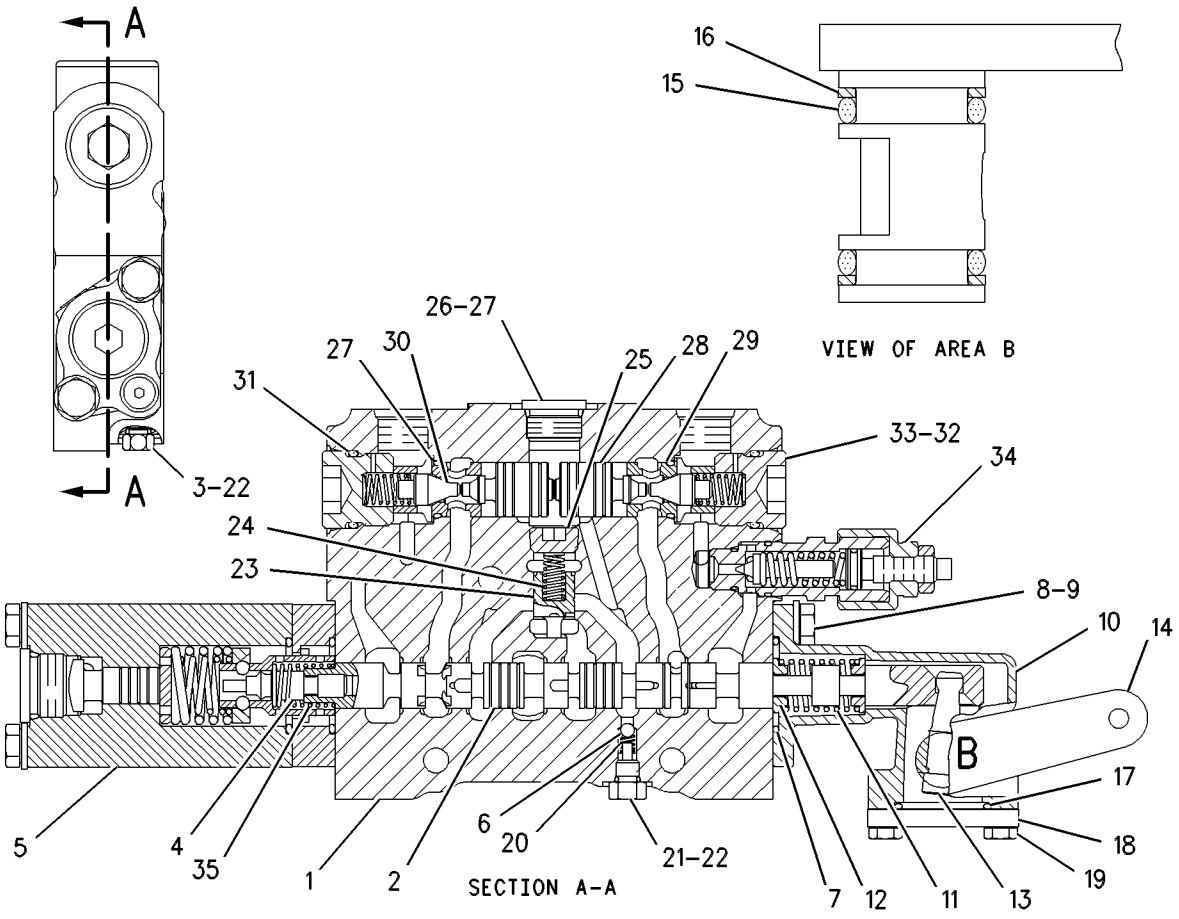

GRAPHIC #1 g00313583

HYDRAULIC SYSTEM

130-3114 VALVE GP-CONTROL—BLADE LIFT

S/N: ATS1-UP
PART OF 130-3135 VALVE GP-BANK 4
AN ATTACHMENT

SMCS-5051 **i00711879**

NOTE	REF NO	GRAPHIC REF	PART NUMBER	QTY	PART NAME 1 2 3 4 5 6 (PRODUCT LEVEL)	SEE PAGE
	1	1	**128-8645**	1	BODY	
	2	1	**102-4576**	1	STEM	
	3	1	**9S-4180**	1	PLUG-O-RING (5/16-24 THD)	
	4	1	**101-1972**	1	DETENT	
Y	5	1	**130-3535**	1	DETENT GP-CONTROL VALVE	434
	6	1	**5B-9318**	1	BALL (4.76MM)	
	7	1	**2K-8199**	1	SEAL-O-RING (28.24MM ID)	
M	8	1	**8T-4189**	2	BOLT (M8X1.25X20MM)	
	9	1	**8T-4224**	2	WASHER-HARD (2MM THK)	
	10	1	**101-1984**	1	BODY	
	11	1	**102-7412**	1	SPRING	
	12	1	**101-1973**	4	RETAINER	
	13	1	**101-1971**	1	LEVER	
	14	1	**101-1970**	1	LEVER AS	
	15	1	**8M-4437**	2	SEAL-O-RING	
	16	1	**101-1983**	2	RING-BACKUP	
	17	1	**4D-9986**	1	SEAL-O-RING (23.47MM ID)	
	18	1	**101-2480**	1	COVER	
M	19	1	**8T-4138**	2	BOLT (M6X1.0X20MM)	
	20	1	**6E-3007**	1	SPRING	
	21	1	**6E-4502**	1	PLUG	
	22	1	**4J-7533**	2	SEAL-O-RING (6.07MM ID)	
	23	1	**6E-3019**	1	VALVE	
	24	1	**6E-5153**	1	SPRING	
	25	1	**108-2187**	1	PLUG-PIPE	
C	26	1	**9S-8005**	1	PLUG-O-RING (3/4-16 THD)	
C	27	1	**3K-0360**	3	SEAL-O-RING (16.36MM ID)	
	28	1	**106-3660**	2	PISTON	
	29	1	**6E-3013**	2	SEAT	
	30	1	**106-3658**	2	VALVE	
	31	1	**9J-0403**	2	SPRING	
	32	1	**9J-0404**	2	PLUG	
	33	1	**7J-9933**	2	SEAL-O-RING (21.89MM ID)	
CY	34	1	**139-8477**	1	VALVE GP-RELIEF	585
	35	1	**111-8234**	1	SPRING	

C-CHANGE FROM PREVIOUS TYPE
M-METRIC PART
Y-SEPARATE ILLUSTRATION

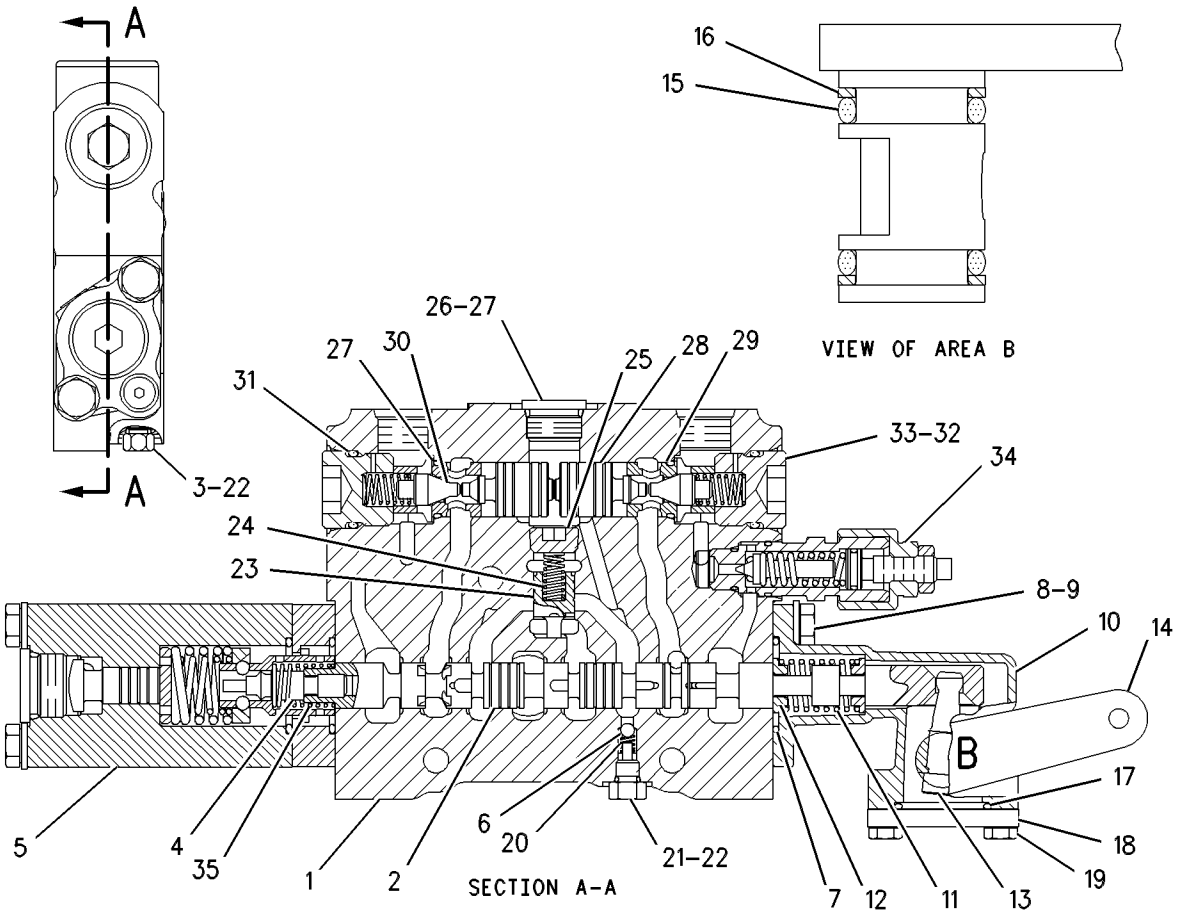

GRAPHIC #1 g00316290

HYDRAULIC SYSTEM

130-3115 VALVE GP-CONTROL–BLADE LIFT

S/N: ATS1-UP

PART OF 130-3133 VALVE GP-BANK 4, 130-3134 VALVE GP-BANK 5

AN ATTACHMENT

SMCS-5051 **i00712041**

NOTE	REF NO	GRAPHIC REF	PART NUMBER	QTY	PART NAME 1 2 3 4 5 6 (PRODUCT LEVEL)	SEE PAGE
	1	1	**128-8645**	1	BODY	
	2	1	**102-4576**	1	STEM	
	3	1	**9S-4180**	1	PLUG-O-RING (5/16-24 THD)	
	4	1	**101-1972**	1	DETENT	
Y	5	1	**130-3535**	1	DETENT GP-CONTROL VALVE	434
	6	1	**5B-9318**	1	BALL (4.76MM)	
	7	1	**2K-8199**	1	SEAL-O-RING (28.24MM ID)	
M	8	1	**8T-4189**	2	BOLT (M8X1.25X20MM)	
	9	1	**8T-4224**	2	WASHER-HARD (2MM THK)	
	10	1	**101-1984**	1	BODY	
	11	1	**102-7412**	1	SPRING	
	12	1	**101-1973**	4	RETAINER	
	13	1	**101-1971**	1	LEVER	
	14	1	**101-1982**	1	LEVER AS	
	15	1	**8M-4437**	2	SEAL-O-RING	
	16	1	**101-1983**	2	RING-BACKUP	
	17	1	**4D-9986**	1	SEAL-O-RING (23.47MM ID)	
	18	1	**101-2480**	1	COVER	
M	19	1	**8T-4138**	2	BOLT (M6X1.0X20MM)	
	20	1	**6E-3007**	1	SPRING	
	21	1	**6E-4502**	1	PLUG	
	22	1	**4J-7533**	2	SEAL-O-RING (6.07MM ID)	
	23	1	**6E-3019**	1	VALVE	
	24	1	**6E-5153**	1	SPRING	
	25	1	**108-2187**	1	PLUG-PIPE	
C	26	1	**9S-8005**	1	PLUG-O-RING (3/4-16 THD)	
C	27	1	**3K-0360**	3	SEAL-O-RING (16.36MM ID)	
	28	1	**106-3660**	2	PISTON	
	29	1	**6E-3013**	2	SEAT	
	30	1	**106-3658**	2	VALVE	
	31	1	**9J-0403**	2	SPRING	
	32	1	**9J-0404**	2	PLUG	
	33	1	**7J-9933**	2	SEAL-O-RING (21.89MM ID)	
CY	34	1	**139-8477**	1	VALVE GP-RELIEF	585
	35	1	**111-8234**	1	SPRING	

C-CHANGE FROM PREVIOUS TYPE
M-METRIC PART
Y-SEPARATE ILLUSTRATION

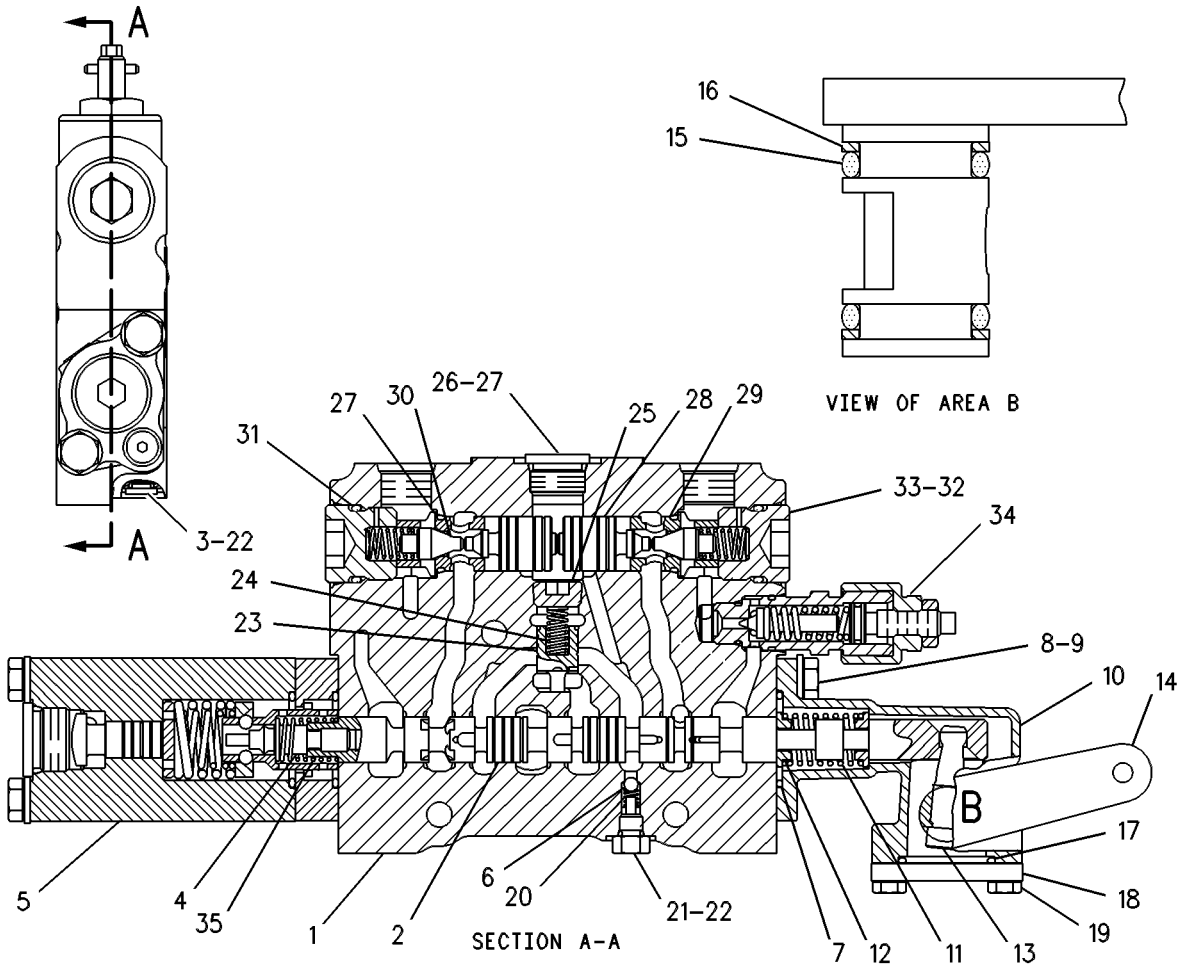

GRAPHIC #1 g00274246

HYDRAULIC SYSTEM

137-8104 VALVE GP-CONTROL—WING TILT—LH

S/N: ATS1-UP
PART OF 130-3122 VALVE GP-BANK 7
AN ATTACHMENT

SMCS-5051 **i01455640**

NOTE	REF NO	GRAPHIC REF	PART NUMBER	QTY	PART NAME 1 2 3 4 5 6 (PRODUCT LEVEL)	SEE PAGE
	1	1	**111-8233**	1	SPRING	
	2	1	**102-4577**	1	STEM	
	3	1	**101-1978**	1	COVER	
	4	1	**2K-8199**	2	SEAL-O-RING	
M	5	1	**8T-4189**	4	BOLT (M8X1.25X20MM)	
	6	1	**8T-4224**	4	WASHER-HARD (8.8X16X2MM THK)	
	7	1	**101-1984**	1	BODY	
	8	1	**7J-9933**	2	SEAL-O-RING	
	9	1	**106-3659**	1	PISTON	
	10	1	**4D-2297**	1	SEAL-O-RING	
	11	1	**102-7412**	1	SPRING	
	12	1	**101-1973**	4	RETAINER	
	13	1	**101-1971**	1	LEVER	
	14	1	**101-1982**	1	LEVER AS	
	15	1	**8M-4437**	2	SEAL-O-RING (13.94MM ID)	
	16	1	**101-1983**	2	RING-BACKUP (14.65MM ID)	
	17	1	**4D-9986**	1	SEAL-O-RING	
	18	1	**101-2480**	1	COVER	
M	19	1	**8T-4138**	2	BOLT (M6X1X20MM)	
	20	1	**5B-9318**	1	BALL	
	21	1	**6E-3007**	1	SPRING	
	22	1	**6E-4502**	1	PLUG	
	23	1	**4J-7533**	1	SEAL-O-RING	
	24	1	**6E-3019**	1	VALVE	
	25	1	**6E-5153**	1	SPRING	
	26	1	**108-2187**	1	PLUG-PIPE	
	27	1	**9J-0404**	2	PLUG	
	28	1	**9S-8005**	1	PLUG	
	29	1	**3K-0360**	3	SEAL-O-RING	
Y	30	1	**139-8472**	2	VALVE GP-RELIEF (WING TILT)	583
	31	1	**6E-3013**	2	SEAT	
	32	1	**9J-0403**	2	SPRING	
	33	1	**106-3658**	2	VALVE	

M-METRIC PART
Y-SEPARATE ILLUSTRATION

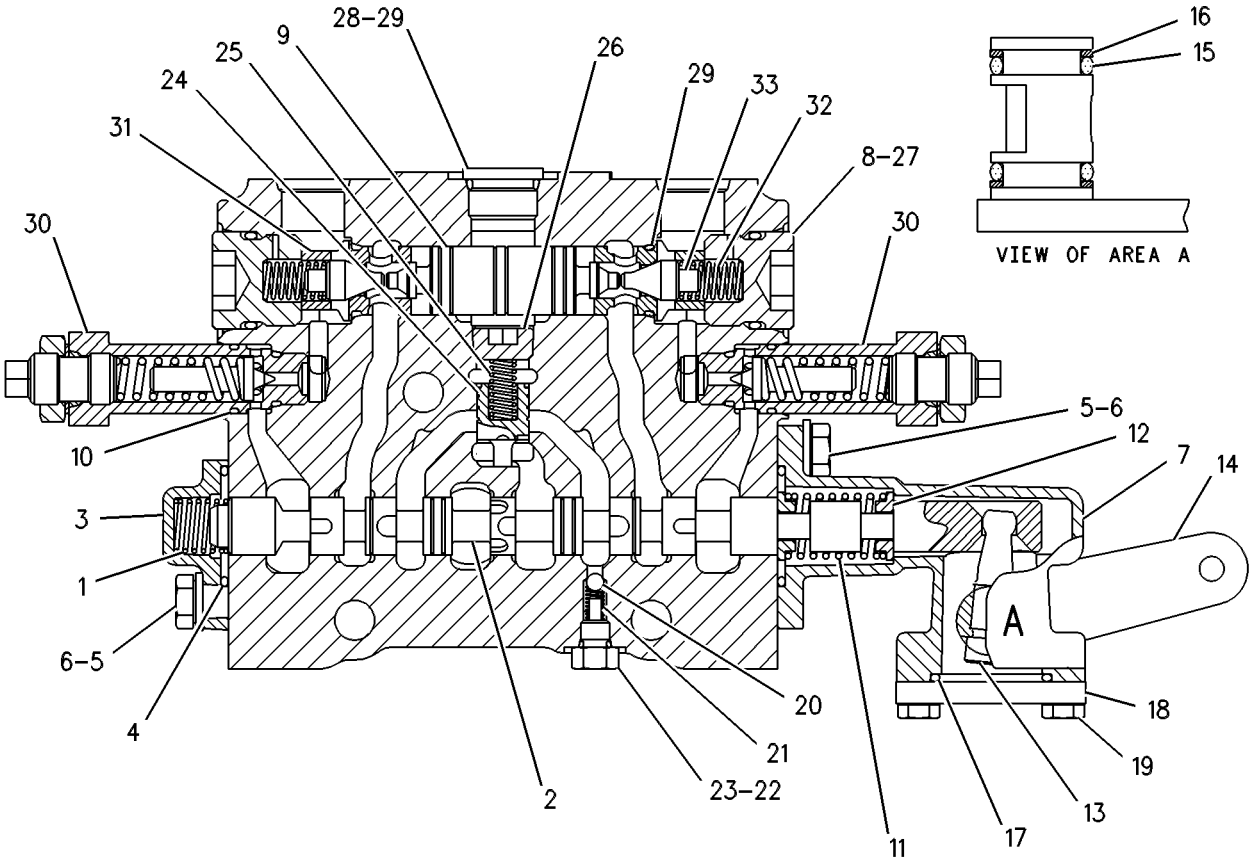

GRAPHIC #1 g00278865

HYDRAULIC SYSTEM

150-6649 VALVE GP-CONTROL—WING LIFT—LH

S/N: ATS1-UP
PART OF 130-3122 VALVE GP-BANK 7
AN ATTACHMENT

SMCS-5051 **i01652583**

NOTE	REF NO	GRAPHIC REF	PART NUMBER	QTY	PART NAME 1 2 3 4 5 6 (PRODUCT LEVEL)	SEE PAGE
	1	1	**137-8107**	1	BODY	
	2	1	**102-4578**	1	STEM	
	3	1	**101-1978**	1	COVER	
	4	1	**2K-8199**	2	SEAL-O-RING	
M	5	1	**8T-4189**	4	BOLT (M8X1.25X20MM)	
	6	1	**8T-4224**	4	WASHER-HARD (8.8X16X2MM THK)	
	7	1	**101-1984**	1	BODY	
	8	1	**7J-9933**	2	SEAL-O-RING	
	9	1	**106-3659**	1	PISTON	
	11	1	**102-7412**	1	SPRING	
	12	1	**101-1973**	4	RETAINER	
	13	1	**101-1971**	1	LEVER	
	14	1	**101-1982**	1	LEVER AS	
	15	1	**8M-4437**	2	SEAL-O-RING	
	16	1	**101-1983**	2	RING-BACKUP (14.65MM ID)	
	17	1	**4D-9986**	1	SEAL-O-RING	
	18	1	**101-2480**	1	COVER	
M	19	1	**8T-4138**	2	BOLT (M6X1X20MM)	
	20	1	**5B-9318**	1	BALL	
	21	1	**6E-3007**	1	SPRING	
	22	1	**6E-4502**	1	PLUG	
	23	1	**4J-7533**	1	SEAL-O-RING	
	24	1	**6E-3019**	1	VALVE	
	25	1	**6E-5153**	1	SPRING	
	26	1	**108-2187**	1	PLUG-PIPE	
	27	1	**9J-0404**	2	PLUG	
	28	1	**9S-8005**	1	PLUG	
	29	1	**3K-0360**	3	SEAL-O-RING	
	30	1	**6E-3013**	2	SEAT	
	31	1	**111-8233**	1	SPRING	
	32	1	**9J-0403**	2	SPRING	
	33	1	**106-3658**	2	VALVE	
Y	34	1	**139-8476**	2	VALVE GP-RELIEF (WING LIFT) (LH)	584

M-METRIC PART
Y-SEPARATE ILLUSTRATION

150-6649 VALVE GP-CONTROL *(contd.)* i01652583

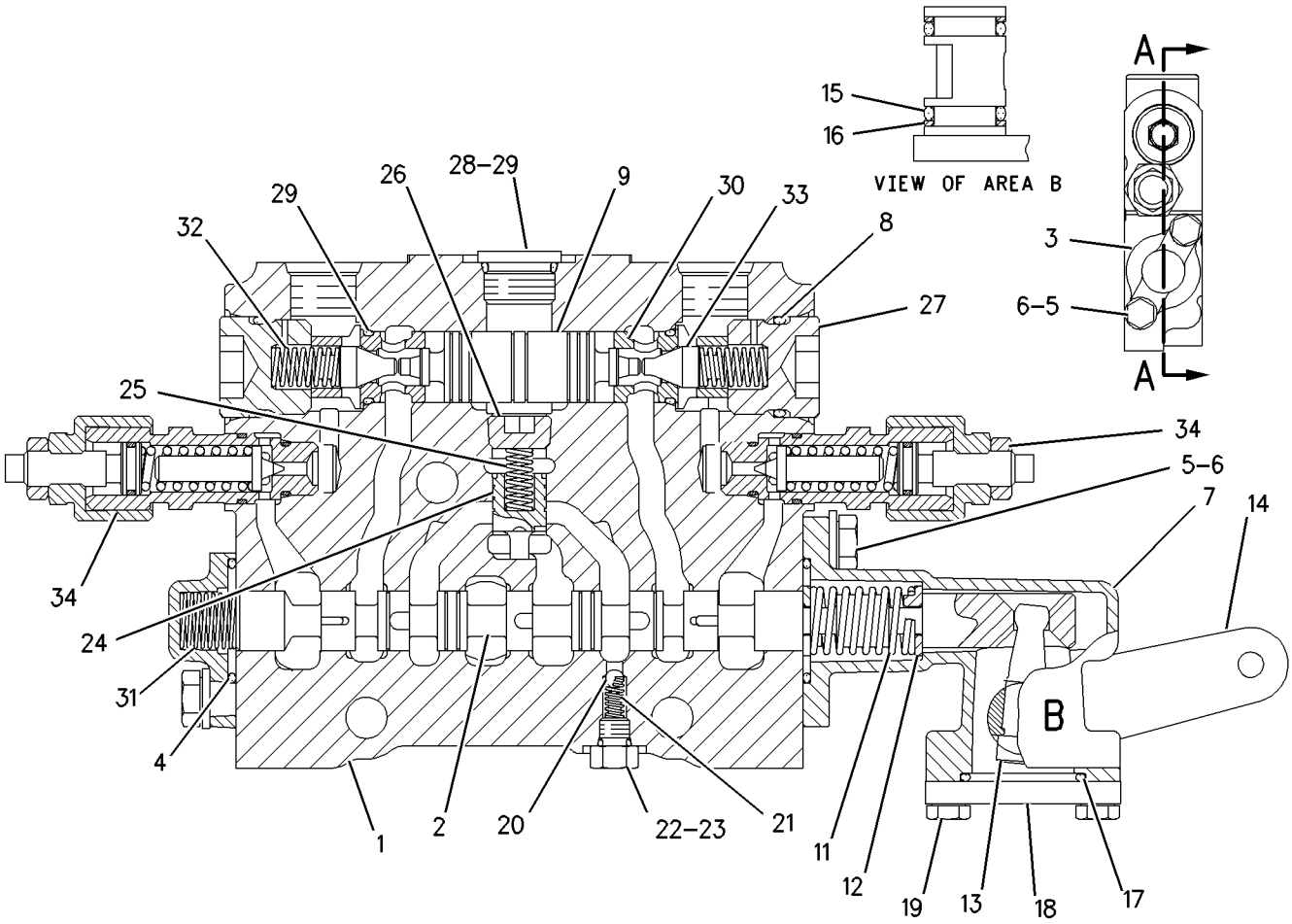

SECTION A-A

GRAPHIC #1 g00853203

HYDRAULIC SYSTEM

104-3122 VALVE GP-PRESS & FLOW CMPNSTR–

HYDRAULIC STEERING

S/N: ATS1-UP

PART OF 177-7517 PUMP GP-PISTON

SMCS-5086 **i00111552**

NOTE	REF NO	GRAPHIC REF	PART NUMBER	QTY	PART NAME 1 2 3 4 5 6 (PRODUCT LEVEL)	SEE PAGE
	1	1	**108-4814**	1	BODY-COMPENSATOR	
	2	1	**9S-4191**	1	PLUG-O-RING (9/16-18 THD)	
	3	1	**3J-1907**	3	SEAL-O-RING (11.89MM ID)	
	4	1	**108-4815**	1	SPOOL-MARGIN	
	5	1	**9T-2186**	2	PLUG	
	6	1	**6E-4239**	1	SPOOL-CUTOFF	
	7	1	**6E-4230**	2	SPRING-GUIDE	
	8	1	**6E-4228**	1	SPRING-CUTOFF	
	9	1	**6E-6140**	1	PLUG-COMPENSATOR	
	10	1	**033-6036**	1	SEAL-O-RING (23.47MM ID)	
	11	1	**6E-6141**	2	LOCKNUT-SEALING	
M	12	1	**129-7632**	2	SCREW-ADJUSTMENT	
	13	1	**6E-6142**	1	PLUG-MARGIN	
	14	1	**033-6027**	1	SEAL-O-RING (19.18MM ID)	
	15	1	**9T-7750**	1	SPRING	
	16	1	**108-4816**	1	PIN-SPRING STOP	
	17	1	**9T-1857**	2	GUIDE	
	18	1	**6E-6420**	1	VALVE-NEEDLE	
	19	1	**6E-6419**	1	RING	
	20	1	**9X-7680**	1	SEAL-O-RING	

M-METRIC PART

104-3122 VALVE GP-PRESS & FLOW CMPNSTR *(contd.)* i00111552

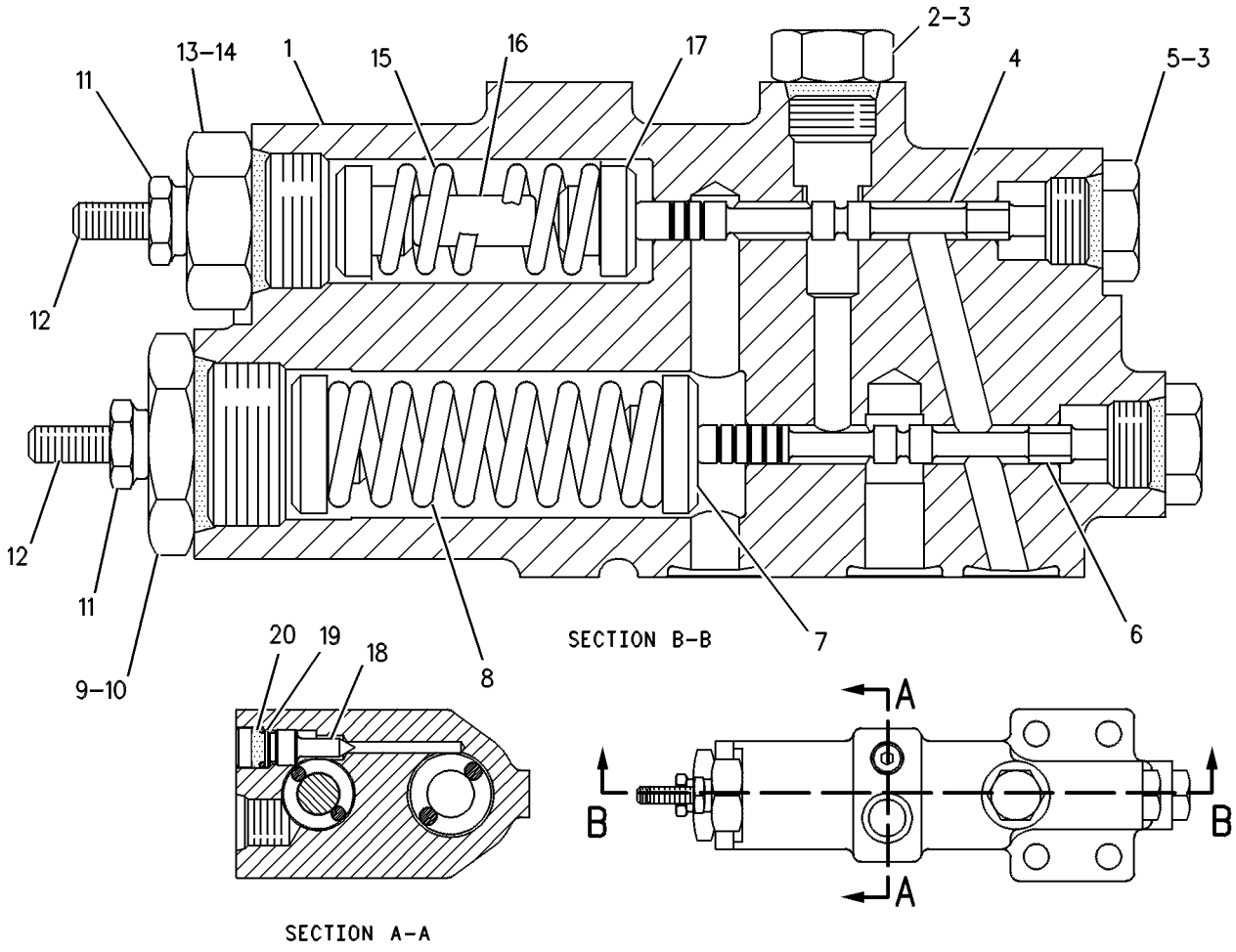

GRAPHIC #1 g00084774

HYDRAULIC SYSTEM

168-2210 VALVE GP-PRESS & FLOW CMPNSTR

S/N: ATS1-UP

PART OF 184-7448 PUMP GP-PISTON

SMCS-5086 **i01790993**

NOTE	REF NO	GRAPHIC REF	PART NUMBER	QTY	PART NAME 1 2 3 4 5 6 (PRODUCT LEVEL)	SEE PAGE
	1	1	**6E-6527**	2	PLUG	
	2	1	**6E-6528**	6	SEAL	
	3	1	**9S-8002**	1	PLUG	
	4	1	**9X-7680**	3	SEAL-O-RING	
	5	1	**5P-9262**	1	SEAL-O-RING	
	6	1	**105-2145**	1	VALVE-ORIFICE	
	7	1	**6E-3268**	1	RETAINER-SPRING	
	8	1	**6E-3269**	1	RETAINER-SPRING	
M	9	1	**8T-8442**	4	BOLT-SOCKET HEAD (M6X1X30MM)	
	10	1	**6E-3273**	1	SEAT	
	11	1	**6V-8352**	1	SEAL-O-RING	
	12	1	**6E-6536**	1	PLUG	
M	13	1	**6E-6537**	2	SCREW-ADJUSTMENT (M8X1X28MM)	
M	14	1	**6E-6538**	2	NUT-ADJUSTMENT (M8X1 THD)	
M	15	1	**6E-6539**	2	NUT-CAP (M8X1 THD)	
	16	1	**6E-6540**	1	PLUG	
	17	1	**033-6043**	1	SEAL-O-RING	
	18	1	**6E-3272**	1	SEAT	
	19	1	**6E-3274**	1	SPRING	
	20	1	**6E-3275**	1	SPRING	
	21	1	**3J-7354**	1	SEAL-O-RING	
	22	1	**201-0780**	1	ORIFICE	
	23	1	**193-1036**	1	SPRING	
	24	1	**6E-3276**	1	SPRING	
Z	25	1		1	STEM	
Z	26	1		1	STEM	
Z	27	1		1	BODY	

M-METRIC PART
Z-NOT SERVICED SEPARATELY

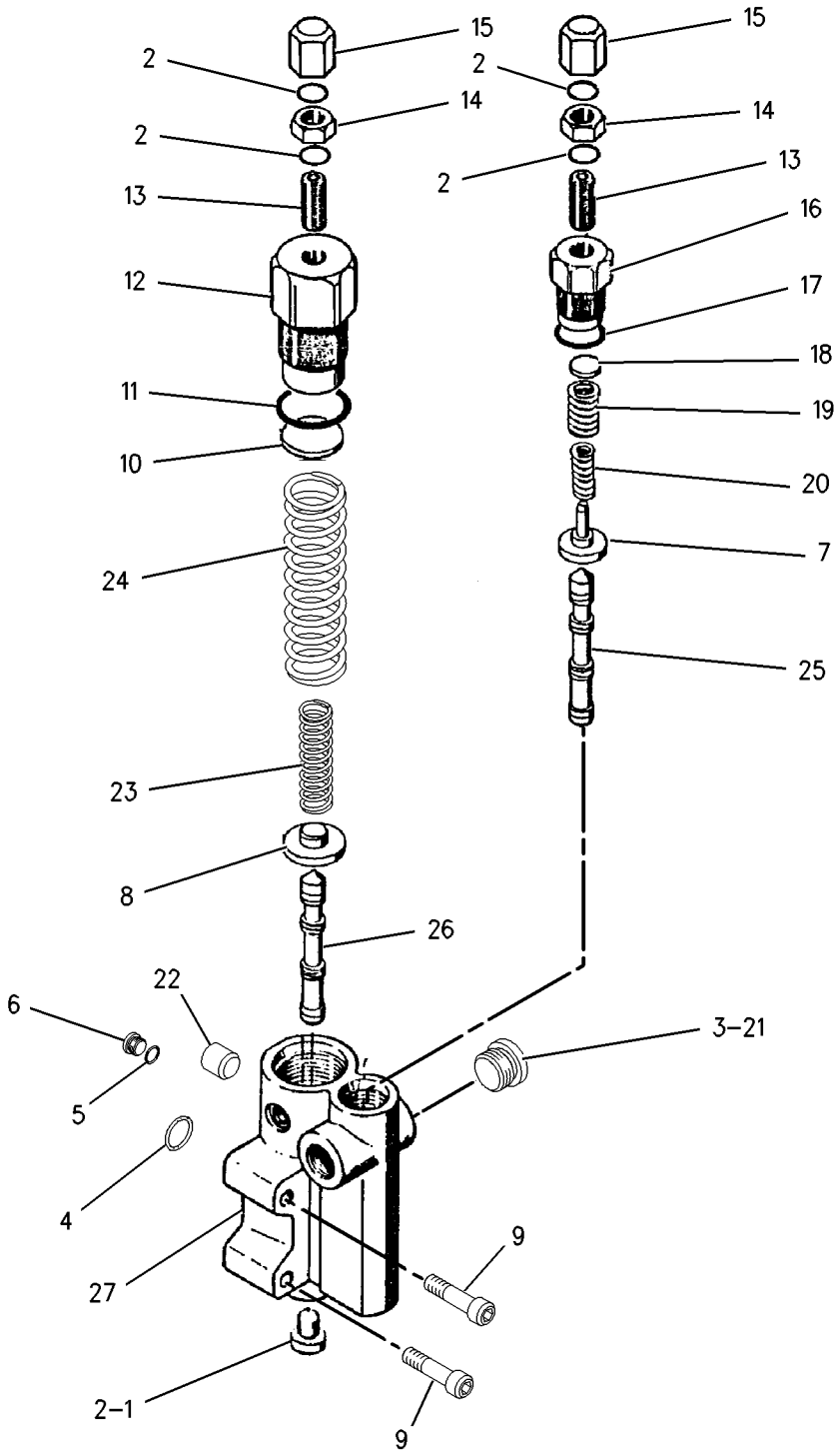

GRAPHIC #1 g00918518

HYDRAULIC SYSTEM

131-8350 VALVE GP-PURGE–IMPLEMENT

S/N: ATS1-UP

PART OF 9T-5957 VALVE GP-COMBINATION

SMCS-4293 **i00130936**

NOTE	REF NO	GRAPHIC REF	PART NUMBER	QTY	PART NAME 1 2 3 4 5 6 (PRODUCT LEVEL)	SEE PAGE
	1	1	**109-1144**	1	VALVE	
	2	1	**130-5770**	1	SLEEVE	

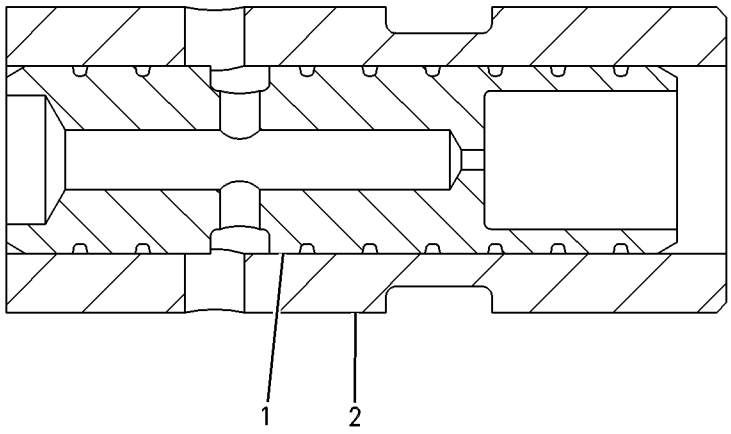

GRAPHIC #1 g00087876

4T-4935 VALVE GP-RELIEF–MAIN

S/N: ATS1-UP
DIRECT OPERATED
PART OF 9T-5957 VALVE GP-COMBINATION

SMCS-4322, 5069, 5072, 5117 **i00111654**

NOTE	REF NO	GRAPHIC REF	PART NUMBER	QTY	PART NAME 1 2 3 4 5 6 (PRODUCT LEVEL)	SEE PAGE
	1	1	**6E-1835**	1	RETAINER AS	
	2	1	**9X-6395**	1	NUT-ORFS (3/4-16 THD)	
	3	1	**7J-9933**	1	SEAL-O-RING (21.89MM ID)	
	4	1	**4T-7571**	1	PLATE	
	5	1	**6J-6439**	1	VALVE	
	6	1	**3K-0360**	2	SEAL-O-RING (16.36MM ID)	
	7	1	**4T-4942**	1	SPRING	

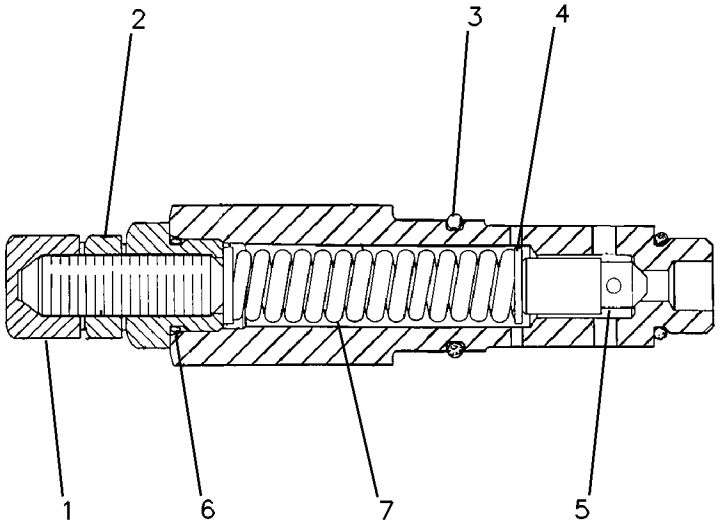

GRAPHIC #1 g00082648

6E-4703 VALVE GP-RELIEF–IMPLEMENT SIGNAL

S/N: ATS1-UP
DIRECT OPERATED
PART OF 9T-5957 VALVE GP-COMBINATION

SMCS-4322, 5069, 5072, 5117 **i00111661**

NOTE	REF NO	GRAPHIC REF	PART NUMBER	QTY	PART NAME 1 2 3 4 5 6 (PRODUCT LEVEL)	SEE PAGE
	1	1	**4D-2297**	1	SEAL-O-RING (15.60MM ID)	
	2	1	**3J-1907**	1	SEAL-O-RING (11.89MM ID)	
	3	1	**3G-3726**	1	NUT	

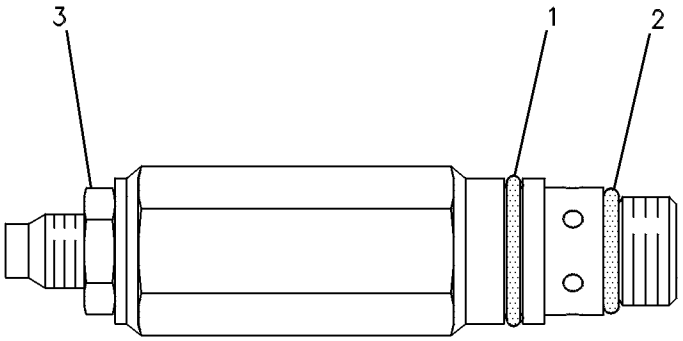

GRAPHIC #1 g00084814

9T-6129 VALVE GP-RELIEF–STEERING

S/N: ATS1-UP

PART OF 188-7196 LINES GP-STEERING

SMCS-4322, 5069, 5072, 5117 **i00128177**

NOTE	REF NO	GRAPHIC REF	PART NUMBER	QTY	PART NAME 1 2 3 4 5 6 (PRODUCT LEVEL)	SEE PAGE
	1	1	**4T-9337**	1	BODY-RELIEF	
	2	1	**5P-3903**	2	ADAPTER-O-RING	
	3	1	**4T-9336**	2	SEAT	
	4	1	**3G-7444**	2	VALVE (CROSSOVER STEERING)	
	5	1	**5J-9631**	2	SPRING	
	6	1	**9S-8005**	2	PLUG-O-RING (3/4-16 THD)	
		1	**3K-0360**	2	SEAL-O-RING (16.36MM ID)	
	7	1	**1N-6002**	4	SEAL-O-RING	
	8	1	**4J-0521**	2	SEAL-O-RING (34.52MM ID)	
B	9	1	**3G-8592**	2	SHIM (.13MM THK)	
B		1	**5J-4857**	34	SHIM (.01MM THK)	

B-USE AS REQUIRED

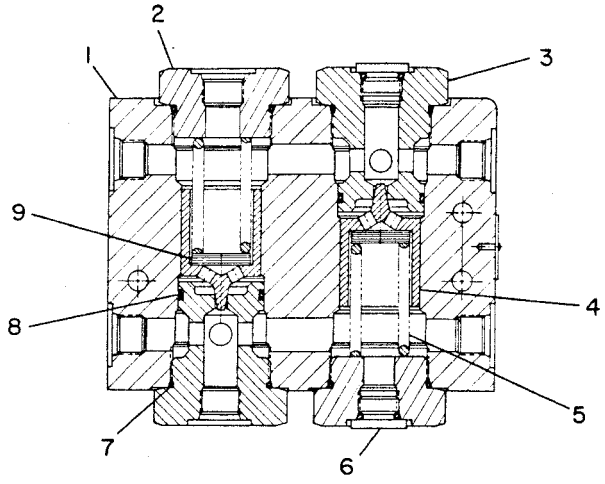

GRAPHIC #1 g00108261

HYDRAULIC SYSTEM

100-6021 VALVE GP-RELIEF–STEERING

S/N: ATS1-UP

PART OF 9T-5957 VALVE GP-COMBINATION

SMCS-4322, 5069, 5072, 5117 **i00124270**

NOTE	REF NO	GRAPHIC REF	PART NUMBER	QTY	PART NAME 1 2 3 4 5 6 (PRODUCT LEVEL)	SEE PAGE
	1	1	**123-6661**	1	HOUSING	
	2	1	**4T-5074**	1	RING-BACKUP	
	3	1	**6V-5556**	1	SEAL-O-RING (25.07MM ID)	
	4	1	**4T-4509**	1	SEAT	
	5	1	**108-5157**	1	VALVE	
	6	1	**4T-1700**	1	SPRING	
	7	1	**3K-0360**	1	SEAL-O-RING (16.36MM ID)	
	8	1	**9X-6395**	1	NUT-ORFS (3/4-16 THD)	
	9	1	**6E-5200**	1	RETAINER AS	
	10	1	**3J-7354**	1	SEAL-O-RING (8.92MM ID)	

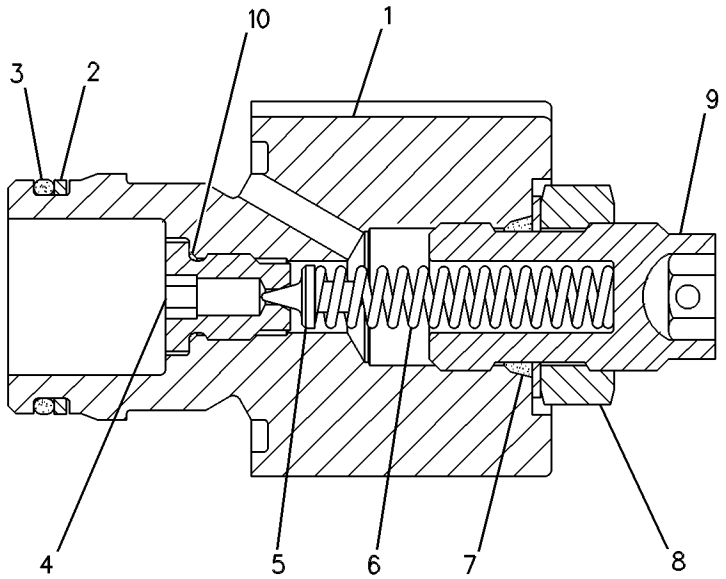

GRAPHIC #1 g00108818

139-8472 VALVE GP-RELIEF

S/N: ATS1-UP
IMPLEMENTS
PART OF 107-0554, 107-0556, 107-0559, 115-1007, 137-8104, 6E-3034, 6E-3036
VALVE GP-CONTROL
ALSO AN ATTACHMENT

SMCS-4322, 5069, 5072, 5117 **i01685370**

NOTE	REF NO	GRAPHIC REF	PART NUMBER	QTY	PART NAME 1 2 3 4 5 6 (PRODUCT LEVEL)	SEE PAGE
	1	1	**114-6635**	1	RETAINER AS	
	2	1	**2P-1279**	1	LOCKNUT (9/16-18 THD)	
	3	1	**3J-1907**	2	SEAL-O-RING	
	4	1	**2J-6089**	1	SPRING	
Z	5	1		1	BODY	
	6	1	**131-8777**	1	VALVE	
	7	1	**4D-2297**	1	SEAL-O-RING	
	8	1	**2A-3211**	1	WASHER (5.5X12.3X.8MM THK)	

Z-NOT SERVICED SEPARATELY

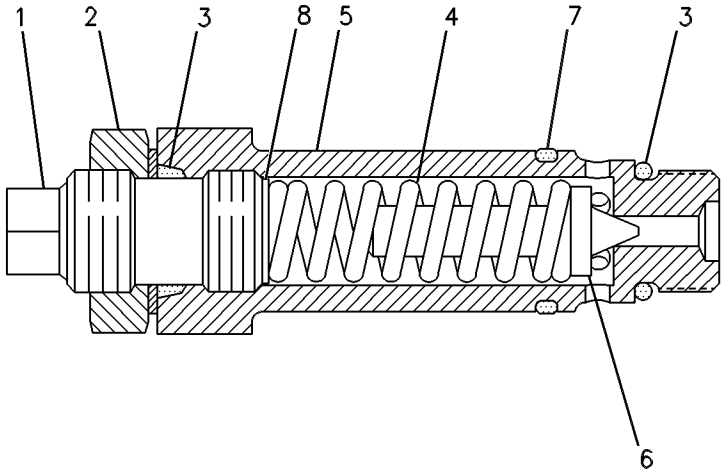

GRAPHIC #1 g00109400

139-8476 VALVE GP-RELIEF

S/N: ATS1-UP
DIRECT OPERATED
PART OF 119-9550, 124-3455, 150-6649 VALVE GP-CONTROL
AN ATTACHMENT

SMCS-4322, 5069, 5072, 5117 **i00127110**

NOTE	REF NO	GRAPHIC REF	PART NUMBER	QTY	PART NAME 1 2 3 4 5 6 (PRODUCT LEVEL)	SEE PAGE
	1	1	**5B-9079**	1	NUT-JAM (3/8-24 THD)	
	2	1	**9T-2659**	1	SPRING	
	3	1	**3J-1907**	1	SEAL-O-RING (11.89MM ID)	
	4	1	**6M-5062**	1	SEAL-O-RING (10.82MM ID)	
	5	1	**4D-2297**	1	SEAL-O-RING (15.60MM ID)	
	6	1	**131-8777**	1	VALVE	

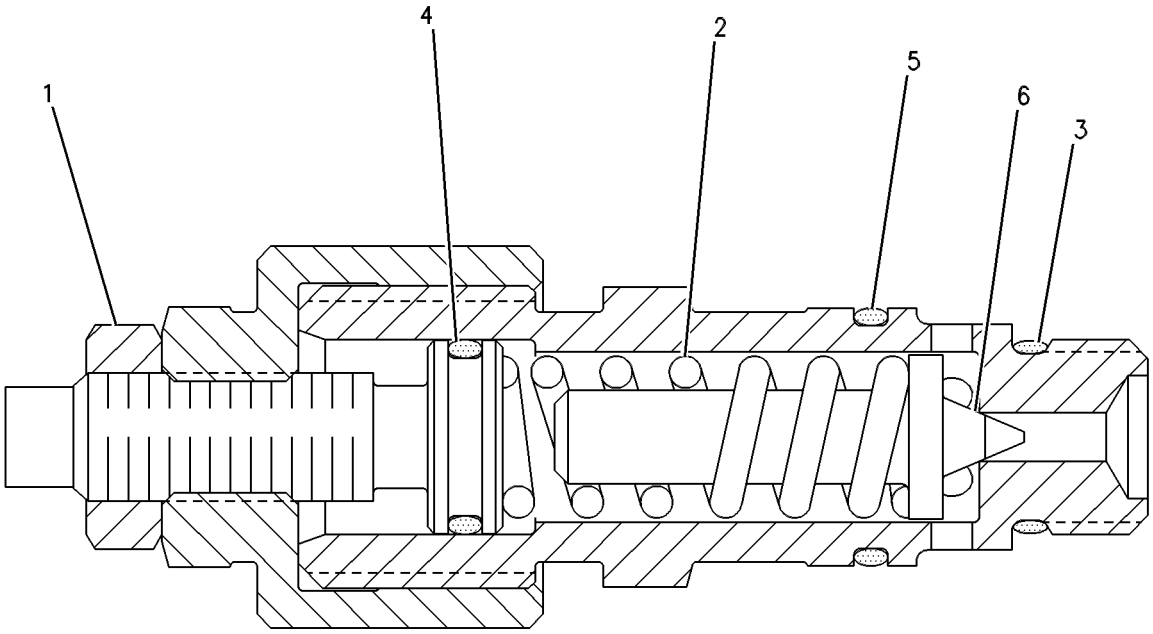

GRAPHIC #1 g00109725

HYDRAULIC SYSTEM

139-8477 VALVE GP-RELIEF

S/N: ATS1-UP
DIRECT OPERATED
PART OF 128-8647, 130-3110, 130-3111, 130-3114, 130-3115 VALVE GP-CONTROL
AN ATTACHMENT

SMCS-4322, 5069, 5072, 5117 **i00127119**

NOTE	REF NO	GRAPHIC REF	PART NUMBER	QTY	PART NAME 1 2 3 4 5 6 (PRODUCT LEVEL)	SEE PAGE
	1	1	**5B-9079**	1	NUT-JAM (3/8-24 THD)	
	2	1	**9T-2659**	1	SPRING	
	3	1	**3J-1907**	1	SEAL-O-RING (11.89MM ID)	
	4	1	**6M-5062**	1	SEAL-O-RING (10.82MM ID)	
	5	1	**4D-2297**	1	SEAL-O-RING (15.60MM ID)	
	6	1	**131-8777**	1	VALVE	

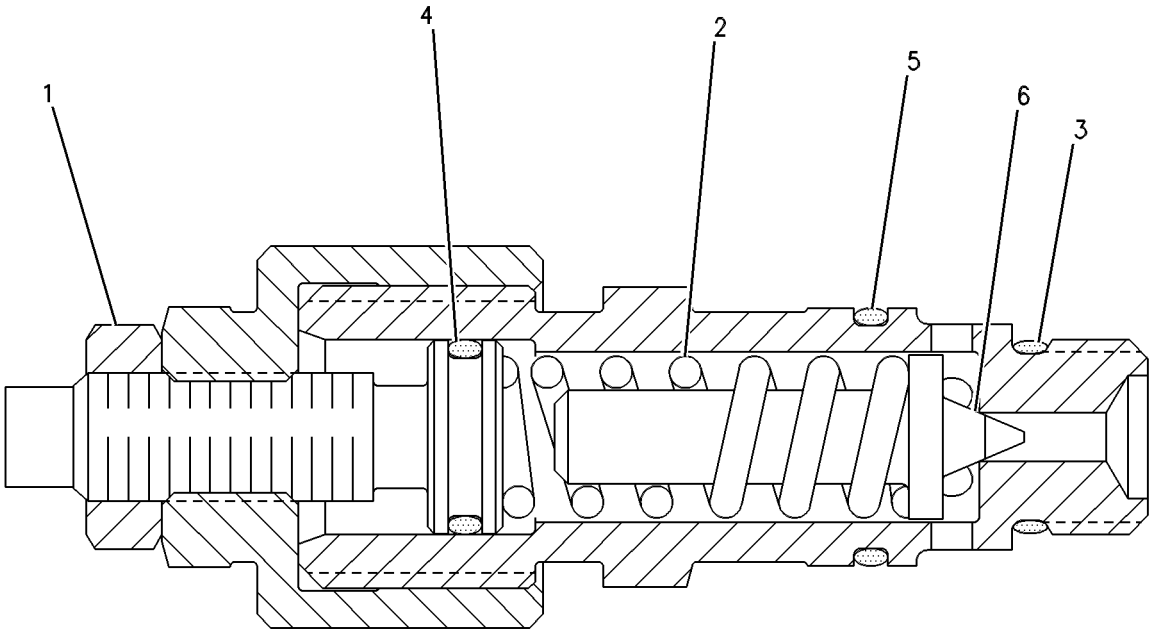

GRAPHIC #1 g00109725

222-7774 VALVE GP-RELIEF–PLOW/DOZER LIFT

S/N: ATS1-UP

PART OF 107-0558, 107-0565 VALVE GP-CONTROL

ALSO AN ATTACHMENT

SMCS-4322, 5069, 5072, 5117 **i01793546**

NOTE	REF NO	GRAPHIC REF	PART NUMBER	QTY	PART NAME 1 2 3 4 5 6 (PRODUCT LEVEL)	SEE PAGE
	1	1	**2J-6089**	1	SPRING	
	2	1	**114-6635**	1	RETAINER AS	
	3	1	**125-4572**	1	RING-RETAINING	
	4	1	**131-8777**	1	VALVE	
	5	1	**203-8519**	1	SCREEN AS	
	7	1	**2A-3211**	1	WASHER (5.5X12.3X.8MM THK)	
	8	1	**2P-1279**	1	LOCKNUT (9/16-18 THD)	
	9	1	**3J-1907**	2	SEAL-O-RING	
	10	1	**4D-2297**	1	SEAL-O-RING	

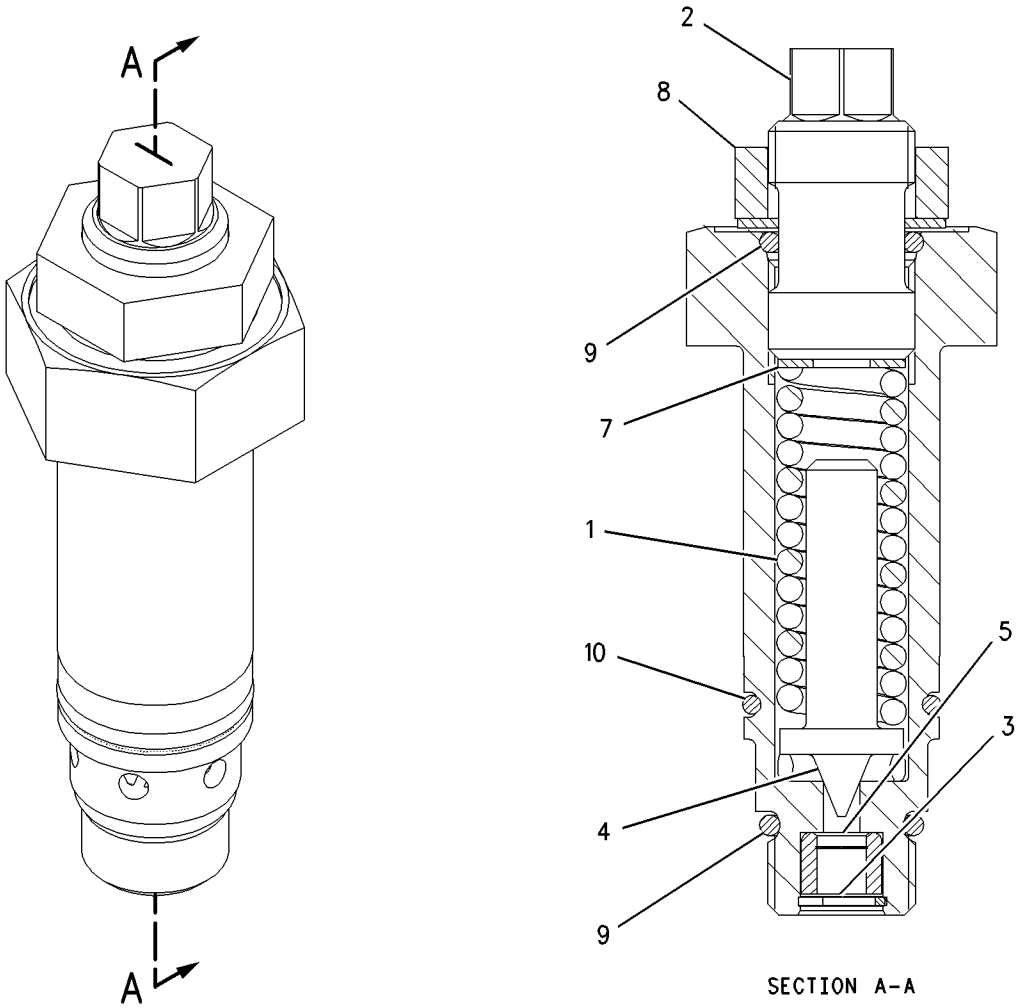

GRAPHIC #1 g00918284

4T-1860 VALVE GP-SHUTTLE–IMPLEMENT SIGNAL

S/N: ATS1-UP

PART OF 9T-5957 VALVE GP-COMBINATION

SMCS-5079 **i01624620**

NOTE	REF NO	GRAPHIC REF	PART NUMBER	QTY	PART NAME 1 2 3 4 5 6 (PRODUCT LEVEL)	SEE PAGE
Z	1	1		1	SEAT	
	2	1	**1M-6718**	1	BALL	
Z	3	1		1	VALVE	
	4	1	**8C-3085**	1	SEAL-O-RING	
	5	1	**6V-5586**	1	SEAL-O-RING	
	6	1	**3J-1907**	1	SEAL-O-RING	
	7	1	**4T-5070**	2	RING-BACKUP	
	8	1	**4T-5071**	2	RING-BACKUP	

Z-NOT SERVICED SEPARATELY

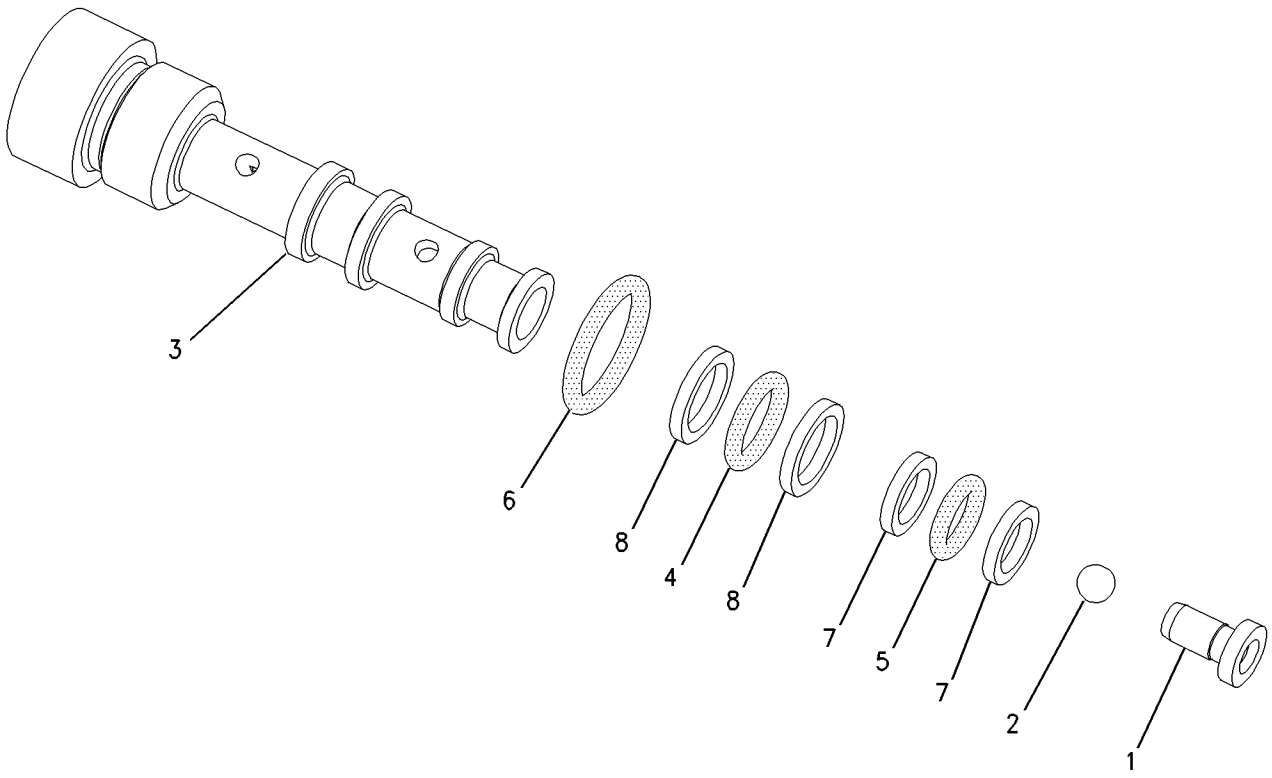

GRAPHIC #1 g00775006

HYDRAULIC SYSTEM

149-2610 VALVE GP-SOLENOID

S/N: ATS1-UP
24 VOLT
PART OF 112-2240 VALVE GP-SOLENOID & MANIFOLD

SMCS-5479 **i01682234**

NOTE	REF NO	GRAPHIC REF	PART NUMBER	QTY	PART NAME 1 2 3 4 5 6 (PRODUCT LEVEL)	SEE PAGE
	1	1	**149-2611**	1	CARTRIDGE AS	
		1	**8C-9987**	1	WASHER (8.3X28X2.5MM THK)	
	2	1	**111-0343**	1	LOCKNUT (5/16-18 THD)	
	3	1	**189-0189**	1	COIL AS	
		1	**1S-9593**	2	STRAP-CABLE	
		1	**3E-3365**	1	WEDGE-RECEPTACLE LOCK (2 PIN)	
		1	**8T-8729**	2	PIN-CONNECTOR	
		1	**102-8802**	2	KIT-RECEPTACLE (2 PIN)	
					(EACH INCLUDES RECEPTACLE AS AND WEDGE)	
	4	1	**8C-9987**	1	WASHER (8.3X28X2.5MM THK)	
		1	**111-0343**	1	LOCKNUT (5/16-18 THD)	
					AVAILABLE REPAIR KIT(S):	
			3G-8175	1	KIT-SEAL (SOLENOID VALVE)	
					(INCLUDES O-RINGS & BACK-UP RINGS)	

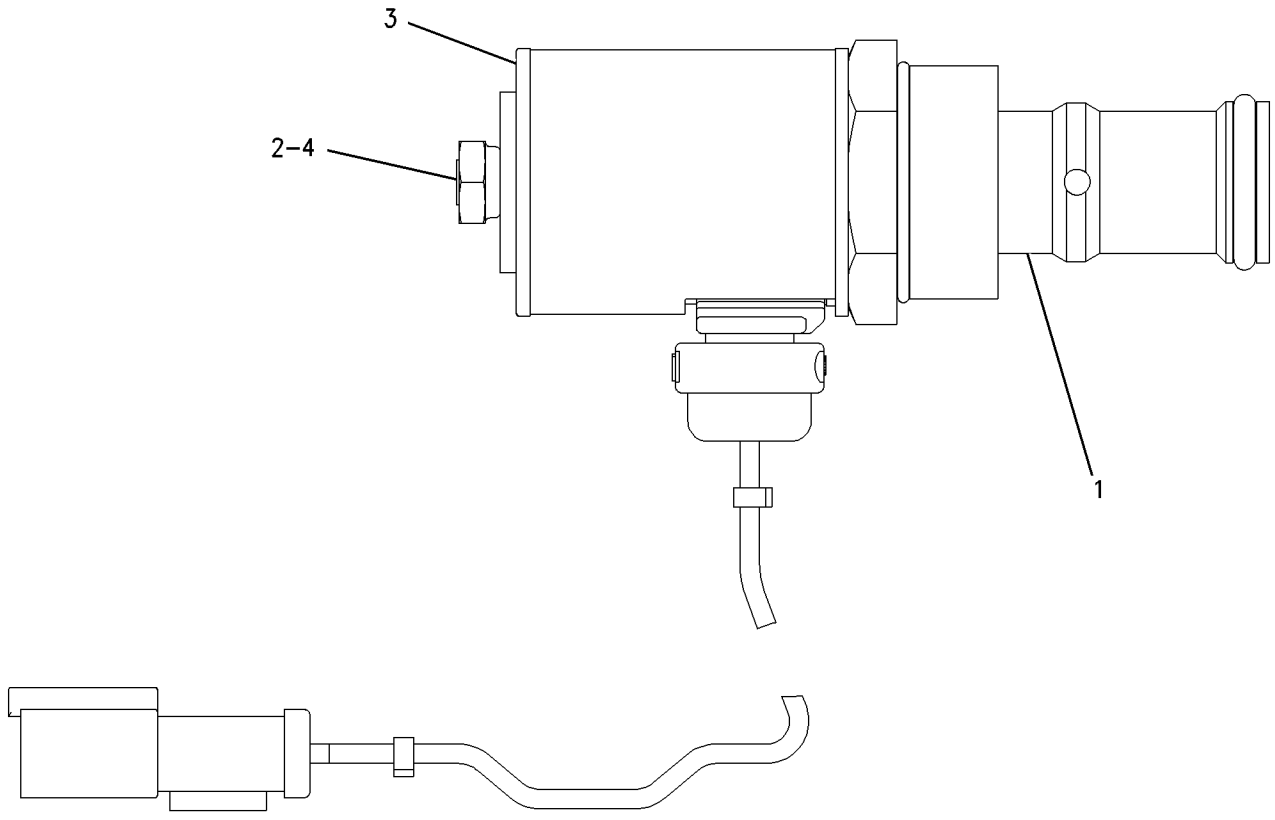

GRAPHIC #1 g00835681

112-2240 VALVE GP-SOLENOID & MANIFOLD—BLADE CUSHION

S/N: ATS1-UP

PART OF 188-7194, 188-7195 LINES GP-HYDRAULIC

SMCS-5264, 5479 **i01651335**

NOTE	REF NO	GRAPHIC REF	PART NUMBER	QTY	PART NAME 1 2 3 4 5 6 (PRODUCT LEVEL)	SEE PAGE
Y	1	1	**149-2610**	1	VALVE GP-SOLENOID (BLADE CUSHION)	588
	2	1	**8C-6162**	1	MANIFOLD	

Y-SEPARATE ILLUSTRATION

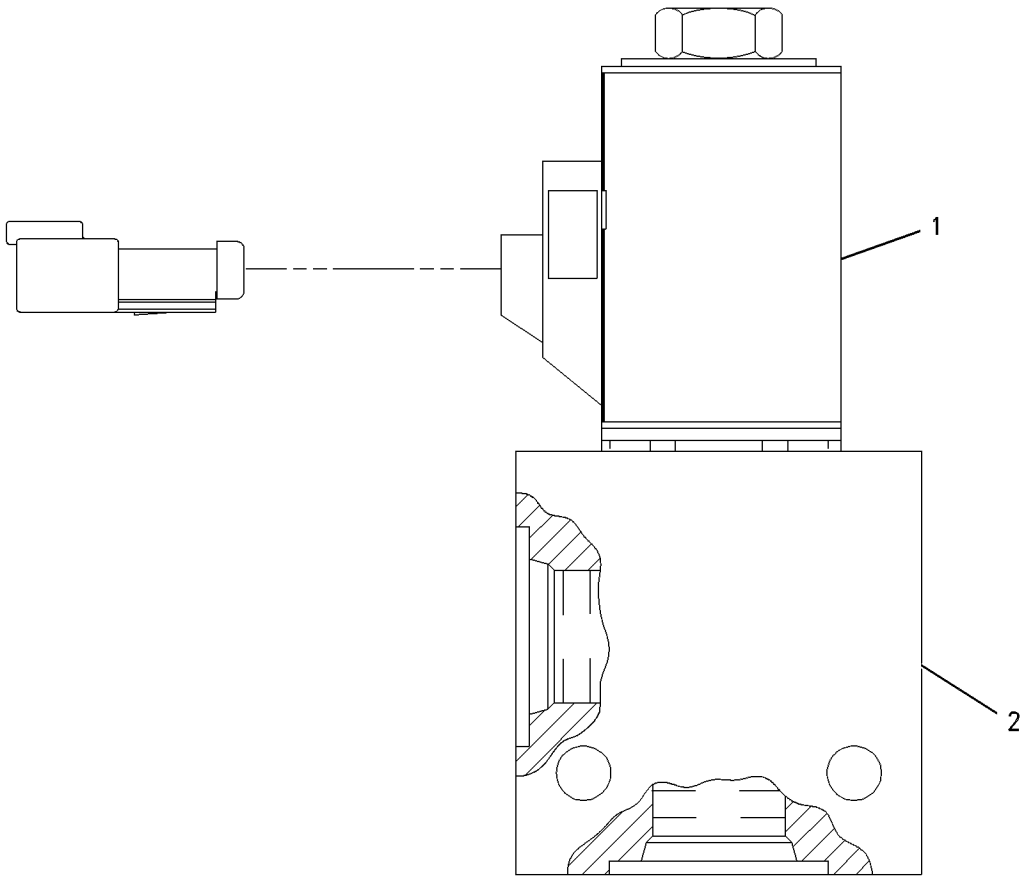

GRAPHIC #1 g00469610

193-5765 VALVE GP-SOLENOID & MANIFOLD–HYDRAULIC FAN

S/N: ATS1-UP

PART OF 188-7254 LINES GP-HYDRAULIC FAN

SMCS-5264, 5479 **i01643814**

NOTE	REF NO	GRAPHIC REF	PART NUMBER	QTY	PART NAME 1 2 3 4 5 6 (PRODUCT LEVEL)	SEE PAGE
	1	1	**3E-3584**	1	MANIFOLD	
	2	1	**183-7595**	1	VALVE GP-SOLENOID (HYDRAULIC FAN)	
					AVAILABLE REPAIR KIT(S):	
			100-4318	1	KIT-SEAL (HYDRAULIC FAN)	
					'(INCLUDES SEALS AND A RING)	

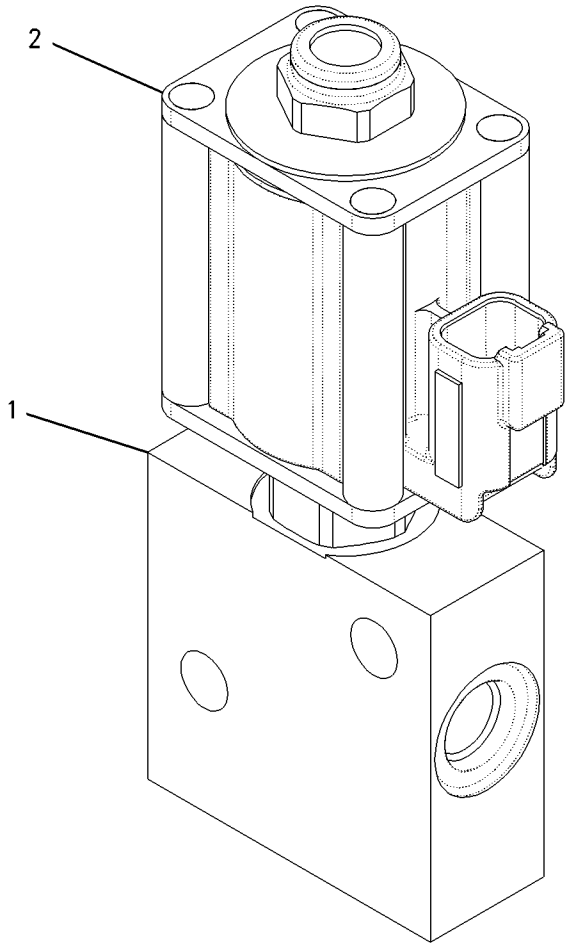

GRAPHIC #1 g00857952

MEMORANDA

IMPLEMENTS

6G-4975 CIRCLE GP

S/N: ATS1-UP

PART OF 162-5607 GENERAL AR

SMCS-6152, 6154, 6155 **i01042230**

NOTE	REF NO	GRAPHIC REF	PART NUMBER	QTY	PART NAME 1 2 3 4 5 6 (PRODUCT LEVEL)	SEE PAGE
C	1	1	**8X-4900**	1	CIRCLE & BEAM AS	
	2	1	**8X-4897**	1	BEAM-BLADE	
	3	1	**8X-4892**	1	BRACKET	
	4	1	**8X-4898**	1	BEAM-BLADE	
	5	1	**6G-4911**	2	BOSS	
	6	1	**8X-4893**	2	BLOCK	
	7	1	**6G-4831**	2	SHAFT	
	8	1	**6J-5773**	4	WASHER	
	9	1	**5F-3715**	4	NUT	
	10	1	**3B-5320**	4	COTTER	
	11	1	**8W-4167**	8	BEARING-SLEEVE	
B	12	1	**5V-0354**	6	WASHER (3MM THK)	
B	13	1	**2G-2945**	4	SHIM (.77MM THK)	
B	14	1	**2G-2946**	4	SHIM (1.52MM THK)	
	15	1	**104-7238**	8	PLATE	
	16	1	**5T-8365**	4	STRIP-WEAR	
	17	1	**5T-2354**	1	BRACKET AS	
	18	1	**9S-1374**	12	BOLT (1/2-13X8IN)	
	19	1	**1K-6872**	12	LOCKNUT (1/2-13 THD)	
		1	**2M-0849**	24	WASHER (5MM THK)	
B	20	1	**7P-7705**	4	WASHER	
AF		1	**5T-2333**	1	SEGMENT-CIRCLE (GEAR)	
					(4 TEETH-SERVICE REPAIR FOR WORN OR DAMAGED TEETH)	

A-NOT PART OF THIS GROUP
B-USE AS REQUIRED
C-CHANGE FROM PREVIOUS TYPE
F-NOT SHOWN

6G-4975 **CIRCLE GP** *(contd.)* **i01042230**

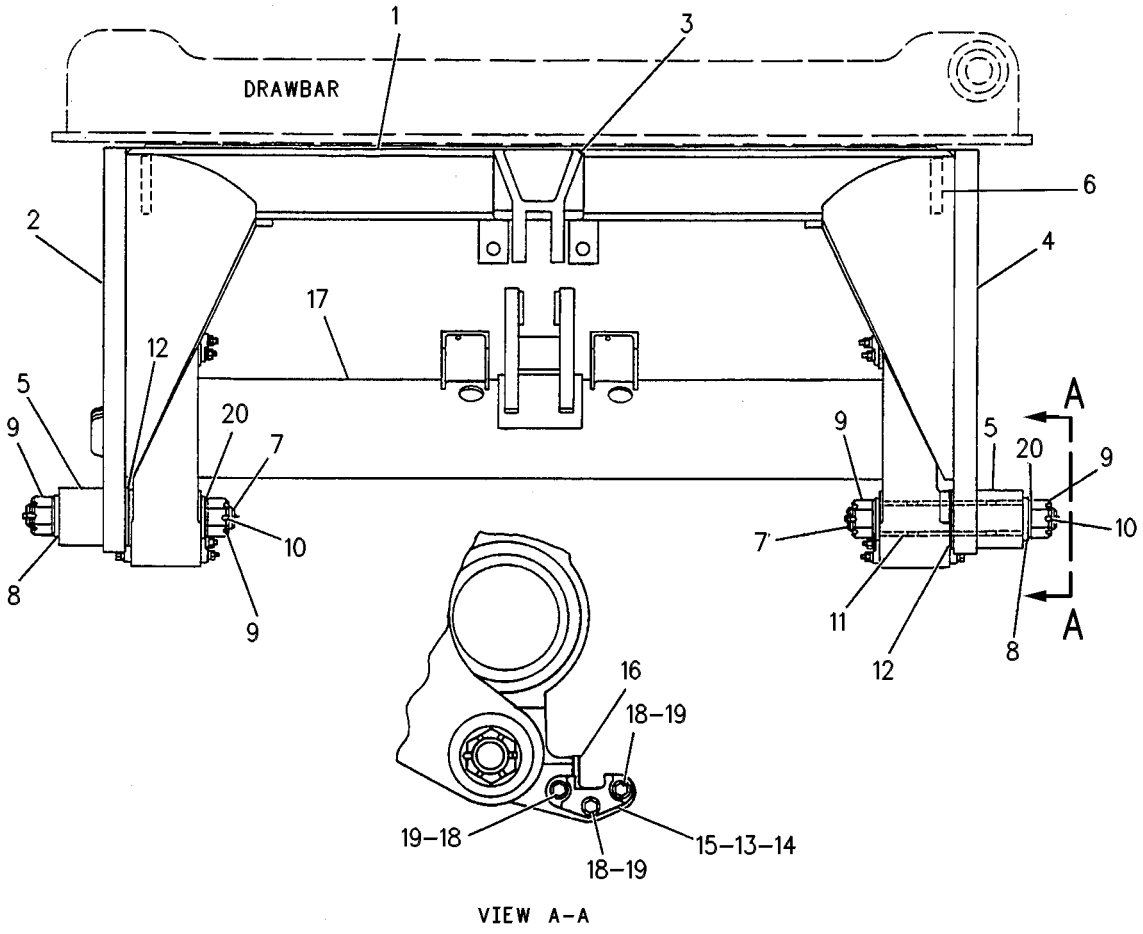

GRAPHIC #1 g00108664

IMPLEMENTS

6G-4980 DRAWBAR GP

S/N: ATS1-UP

PART OF 162-5607 GENERAL AR

SMCS-6153 **i01855171**

NOTE	REF NO	GRAPHIC REF	PART NUMBER	QTY	PART NAME 1 2 3 4 5 6 (PRODUCT LEVEL)	SEE PAGE
	1	1	**6G-4837**	1	DRAWBAR & YOKE AS	
	2	1	**2G-9042**	1	SHAFT AS	
	3	1	**6G-3535**	3	BALLSTUD AS	
	4	1	**5D-2643**	8	LUG	
	5	1	**6J-0499**	4	LUG (1/2-13 THD)	
	6	1	**6G-4833**	1	ADAPTER	
	7	1	**2A-1538**	9	BOLT (3/4-10X2.25 IN)	
	8	1	**5P-6652**	9	WASHER (20X44.5X6MM THK)	
	9	1	**1L-8793**	2	BOLT-SOCKET HEAD	
B	10	1	**8D-4811**	2	SHIM (1.52MM THK)	
B	11	1	**8D-4812**	3	SHIM (.76MM THK)	
B	12	1	**8D-4813**	3	SHIM (.25MM THK)	
	13	1	**6G-4896**	1	BALL	
	14	1	**9S-8892**	6	BOLT-12 POINT HEAD	
	15	1	**6G-4681**	1	CAP	
	16	1	**6G-4680**	1	ADAPTER	
C	17	1	**1D-4614**	8	BOLT (3/4-10X5IN)	
	18	1	**5P-8248**	8	WASHER-HARD (20X36.5X3.5MM THK)	
	19	1	**128-9654**	10	STRIP-WEAR	
C	20	1	**6J-1536**	10	BOLT (7/8-9X6.5 IN)	
C	21	1	**5P-8249**	10	WASHER-HARD (24X41.5X4MM THK)	
B	22	1	**6G-4642**	90	SHIM (0.8MM THK)	
B	23	1	**6G-4643**	24	SHIM (0.25MM THK)	
	24	1	**4D-8318**	12	SETSCREW-SQUARE HEAD	
	25	1	**1D-6306**	12	NUT (1-8 THD)	
	26	1	**6G-4173**	6	SHOE-CIRCLE GUIDE	
C	27	1	**2J-3505**	10	NUT-FULL (7/8-9 THD)	
	28	1	**5D-4281**	18	WASHER	
	29	1	**128-9655**	6	STRIP-WEAR	
	30	1	**3B-8489**	1	FITTING-GREASE (TRUUNION)	
	31	1	**1D-4634**	8	BOLT (7/8-9X5.5 IN)	
B	32	1	**153-7410**	1	SHIM (.12MM THK)	

B-USE AS REQUIRED
C-CHANGE FROM PREVIOUS TYPE

6G-4980 **DRAWBAR GP** *(contd.)* **i01855171**

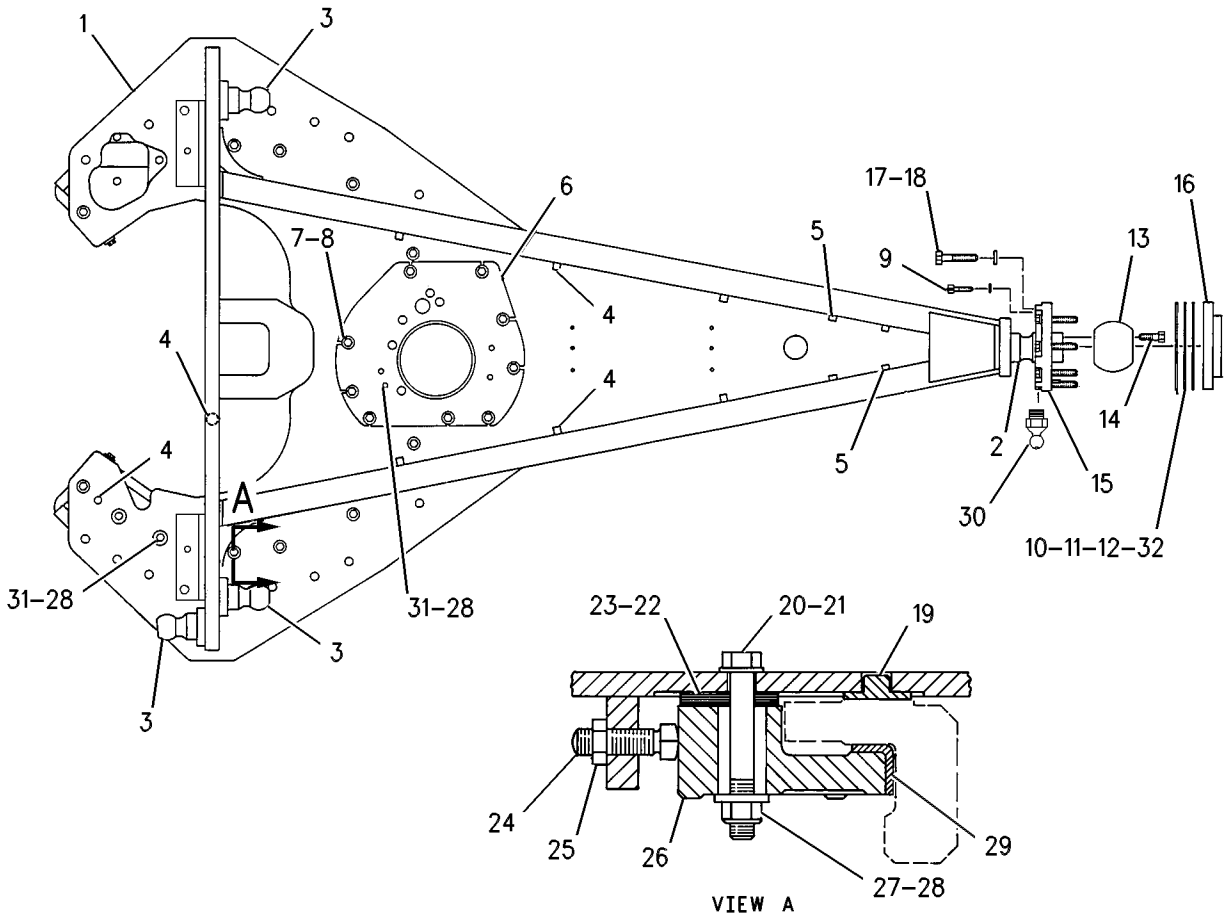

GRAPHIC #1 g00459071

8X-6330 PLATE GP-PUSH

S/N: ATS1-UP
AN ATTACHMENT

SMCS-6077 **i00130435**

NOTE	REF NO	GRAPHIC REF	PART NUMBER	QTY	PART NAME 1 2 3 4 5 6 (PRODUCT LEVEL)	SEE PAGE
	1	1	**8X-6450**	1	PLATE AS-PUSH	
		1	**5J-7333**	2	HOOK	
	2	1	**1D-4643**	10	BOLT (1-8X5.50IN)	
	3	1	**3V-5305**	20	SPACER	
	4	1	**2J-3507**	10	NUT-FULL (1-8 THD)	

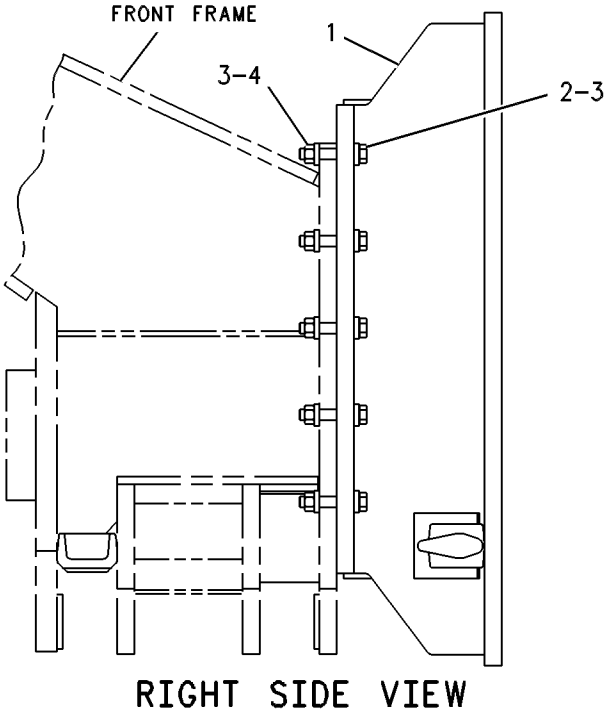

RIGHT SIDE VIEW

GRAPHIC #1 g00109058

WORK TOOLS

107-3414 BIT GP

S/N: ATS1-UP
16 FT, 64 STANDARD BITS
AN ATTACHMENT

SMCS-6804 **i00128685**

NOTE	REF NO	GRAPHIC REF	PART NUMBER	QTY	PART NAME 1 2 3 4 5 6 (PRODUCT LEVEL)	SEE PAGE
	1	1	**6Y-4339**	64	BIT AS	
					(EACH INCLUDES)	
		1	**068-4860**	1	RING-RETAINING	
	2	1	**6Y-4338**	4	ADAPTER	

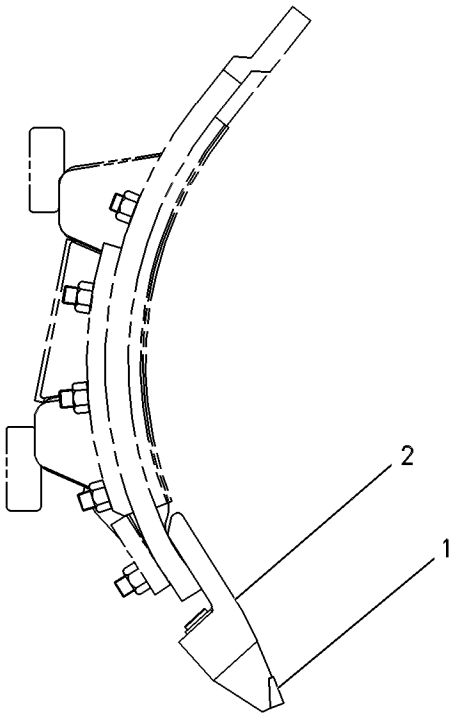

GRAPHIC #1 g00109034

WORK TOOLS

8W-8424 BLADE GP

S/N: ATS1-UP
16 FT
PART OF 162-5607 GENERAL AR

SMCS-6151 **i00130157**

NOTE	REF NO	GRAPHIC REF	PART NUMBER	QTY	PART NAME 1 2 3 4 5 6 (PRODUCT LEVEL)	SEE PAGE
	1	1	**1J-6762**	20	BOLT-PLOW	
	2	1	**2J-3506**	42	NUT-FULL (3/4-10 THD)	
	3	1	**5F-8933**	20	BOLT-PLOW	
	4	1	**8W-8088**	1	MOLDBOARD AS	
C	5	1	**8E-5530**	2	BIT-END	
	6	1	**4T-2236**	2	EDGE-CUTTING	
	7	1	**5J-4771**	2	BOLT-PLOW	

C-CHANGE FROM PREVIOUS TYPE

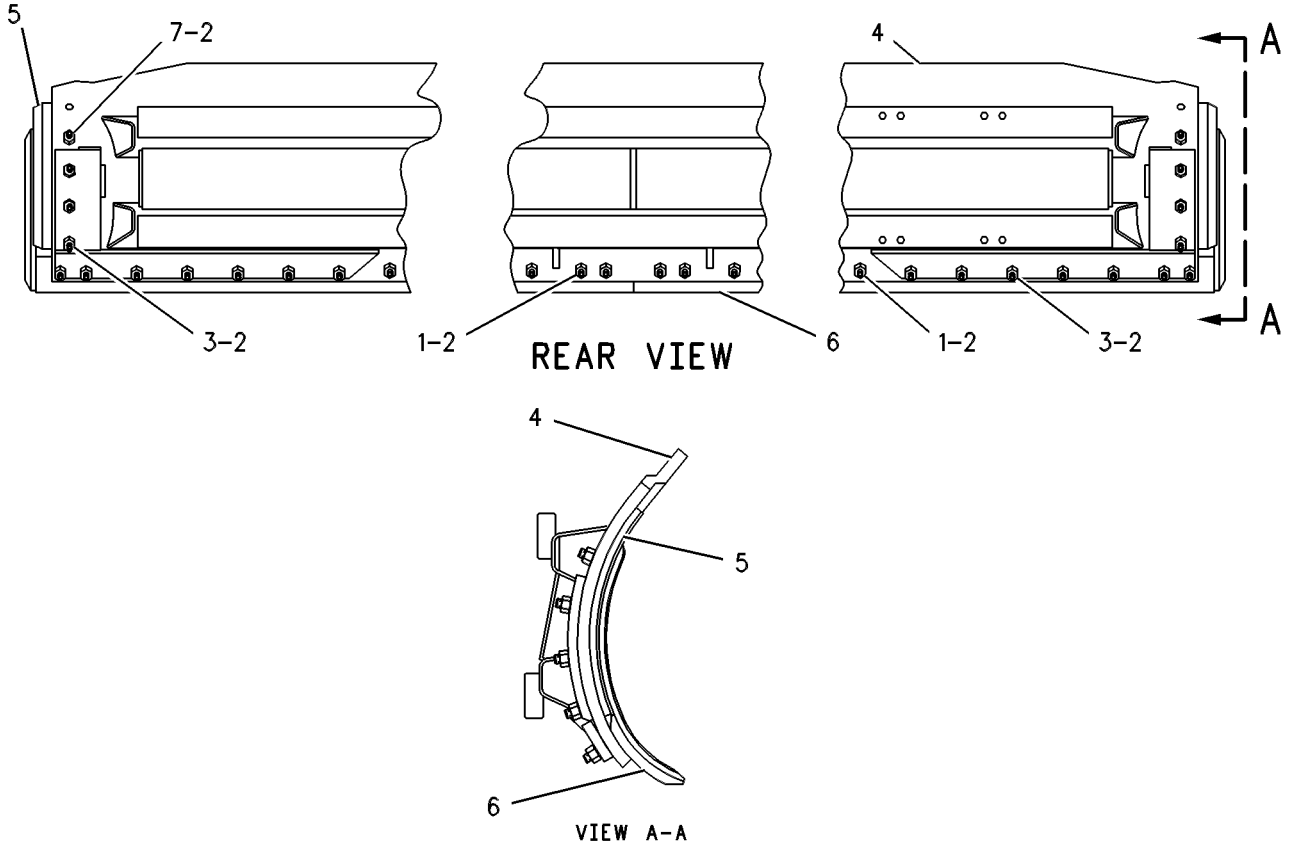

GRAPHIC #1 g00109356

WORK TOOLS

107-3423 EDGE GP-CUTTING

S/N: ATS1-UP
1043628 EDGE-CUTTING IS AVAILABLE
AN ATTACHMENT

SMCS-6801 **i00128720**

NOTE	PART NUMBER	QTY	PART NAME 1 2 3 4 5 6 (PRODUCT LEVEL)	SEE PAGE
	4T-8317	2	EDGE-CUTTING	

<END>

107-3429 EDGE GP-CUTTING

S/N: ATS1-UP
1043631 EDGE-CUTTING IS AVAILABLE
AN ATTACHMENT

SMCS-6801 **i00128724**

NOTE	PART NUMBER	QTY	PART NAME 1 2 3 4 5 6 (PRODUCT LEVEL)	SEE PAGE
	4T-6511	2	EDGE-CUTTING	

<END>

WORK TOOLS

8D-4885 LIFT GP-BLADE

S/N: ATS1-UP

PART OF 162-5607 GENERAL AR

SMCS-6151 **i00130141**

NOTE	REF NO	GRAPHIC REF	PART NUMBER	QTY	PART NAME 1 2 3 4 5 6 (PRODUCT LEVEL)	SEE PAGE
	1	1	**9D-3479**	2	LOCK	
C	2	1	**5B-5473**	6	BOLT (1-8X6.5IN)	
C		1	**5P-8250**	12	WASHER (5.0MM THK)	
C	3	1	**8W-5956**	1	ARM AS-RH	
	4	1	**8D-3311**	1	BEARING-SLEEVE	
	5	1	**8D-3309**	1	BEARING-SLEEVE	
	6	1	**9D-6588**	8	SEAL-LIP	
	7	1	**9D-6589**	1	SEAL-LIP	
	8	1	**9D-0501**	1	BAR AS	
	9	1	**8D-9507**	4	BEARING-SLEEVE	
	10	1	**6G-3533**	1	STUD-BALL	
	11	1	**9D-3313**	2	BEARING-SLEEVE	
		1	**9D-3527**	1	SPACER	
	12	1	**9D-3333**	1	RING-RETAINING	
	13	1	**8D-3328**	2	LOCK	
C	14	1	**2B-1015**	4	BOLT (3/4-10X6.5IN)	
C	15	1	**8W-5957**	1	ARM AS-LH	
	16	1	**8D-3311**	1	BEARING-SLEEVE	
	17	1	**8D-3309**	1	BEARING-SLEEVE	
C	18	1	**5P-8248**	12	WASHER-HARD (3.5MM THK)	
B	19	1	**8D-3263**	8	SHIM (.130MM THK)	
B		1	**8D-3264**	6	SHIM (.260MM THK)	
B		1	**8D-3265**	2	SHIM (.510MM THK)	
	20	1	**8D-3271**	2	RETAINER	
	21	1	**8D-3308**	2	SEAL (PLASTIC)	
		1	**5H-5672**	2	SEAL-O-RING (133.66MM ID)	
	22	1	**8D-3268**	2	WASHER (2.39MM THK)	
		1	**8D-3269**	4	WASHER (1.91MM THK)	
	23	1	**8D-3266**	2	WASHER (2.39MM THK)	
		1	**8D-3267**	4	WASHER (1.91MM THK)	
	24	1	**8D-3307**	2	SEAL (PLASTIC)	
		1	**2S-8439**	2	SEAL-O-RING (123.19MM ID)	
	25	1	**2G-8237**	2	YOKE AS	
					(EACH INCLUDES)	
	26	1	**2G-8234**	1	RING	
	27	1	**8D-3245**	8	WASHER (1.91MM THK)	
		1	**8D-3244**	4	WASHER (2.39MM THK)	
	28	1	**8D-3329**	2	PIN	
	29	1	**8D-3247**	4	WASHER (2.39MM THK)	
B		1	**8D-3251**	10	WASHER (1.22MM THK)	
B		1	**8D-3252**	10	WASHER (.78MM THK)	
	30	1	**8D-3246**	2	PIN	
	31	1	**2G-3983**	1	PLATE	
	32	1	**9S-1366**	1	BOLT (1/2-13X2.5IN)	
		1	**2M-0849**	1	WASHER (5MM THK)	
	33	1	**2A-1538**	4	BOLT (3/4-10X2.25IN)	
C	34	1	**2J-3507**	6	NUT-FULL (1-8 THD)	
C	35	1	**2J-3506**	4	NUT-FULL (3/4-10 THD)	

B-USE AS REQUIRED
C-CHANGE FROM PREVIOUS TYPE

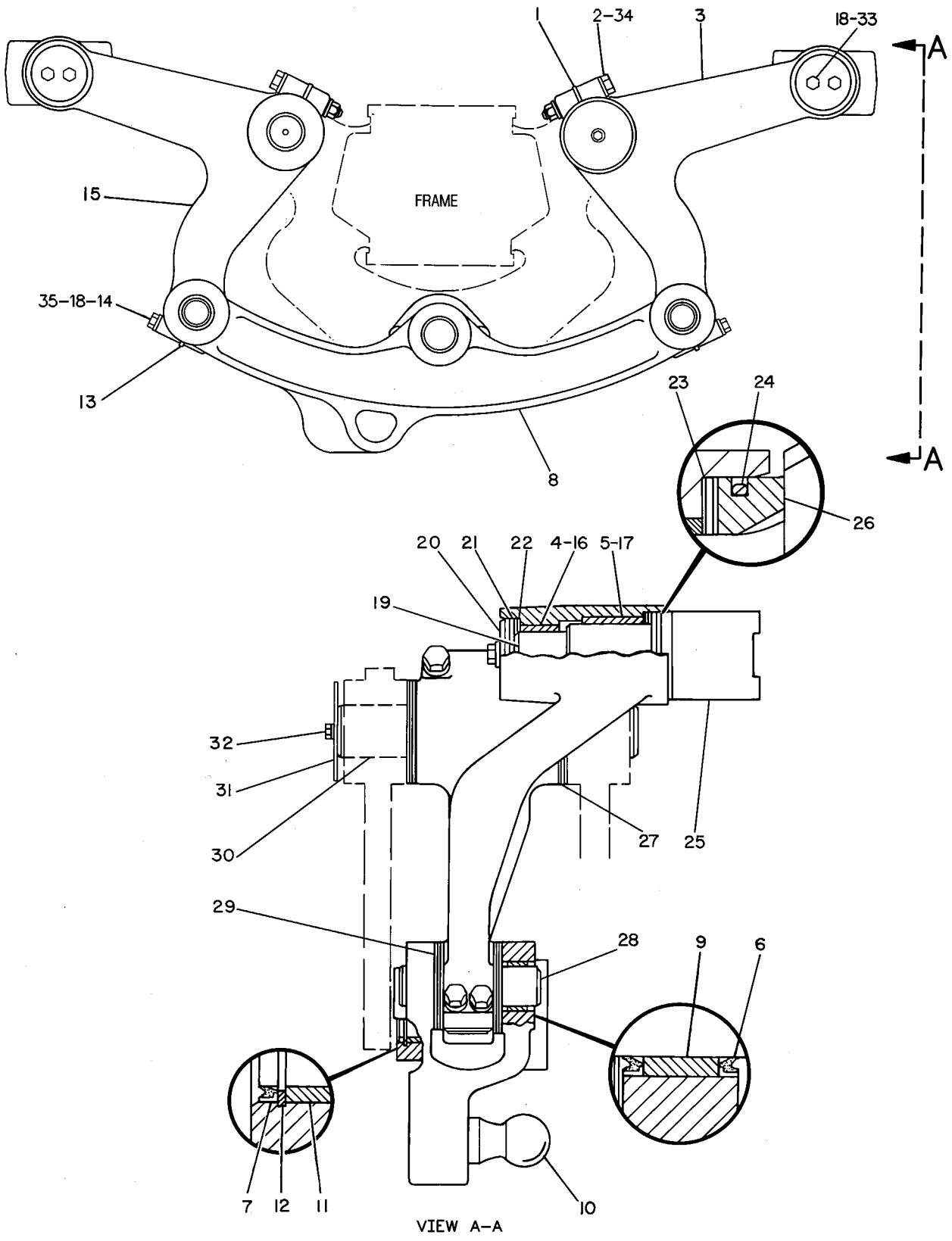

GRAPHIC #1 g00109268

WORK TOOLS

207-2801 MOUNTING GP-RIPPER

S/N: ATS1-UP
PART OF 207-2428 RIPPER AR
AN ATTACHMENT

SMCS-6165, 6324 **i01828889**

NOTE	REF NO	GRAPHIC REF	PART NUMBER	QTY	PART NAME 1 2 3 4 5 6 (PRODUCT LEVEL)	SEE PAGE
	1	1	**6W-9168**	2	BOSS	
	2	1	**8B-9840**	12	SPACER (1.125X2X1 IN THK)	
	3	1	**8J-9092**	2	PIN	
	4	1	**8J-9608**	2	PIN	
	5	1	**120-9875**	2	CAM AS	
	6	1	**121-0273**	2	LINK AS	
	7	1	**207-2802**	1	PLATE AS	
	8	1	**1K-6872**	2	LOCKNUT (1/2-13 THD)	
	9	1	**3K-2889**	4	LOCKNUT (5/8-11 THD)	
	10	1	**6K-0715**	2	PIN	
	11	1	**7X-0338**	2	BOLT (1/2-13X6 IN)	
	12	1	**7X-0358**	4	BOLT (5/8-11X5.5 IN)	
	13	1	**7X-0407**	6	BOLT (1-8X3.25 IN)	
	14	1	**7X-0410**	6	BOLT (1-8X4IN)	
	15	1	**8T-5361**	12	WASHER-HARD (28X49X5MM THK)	

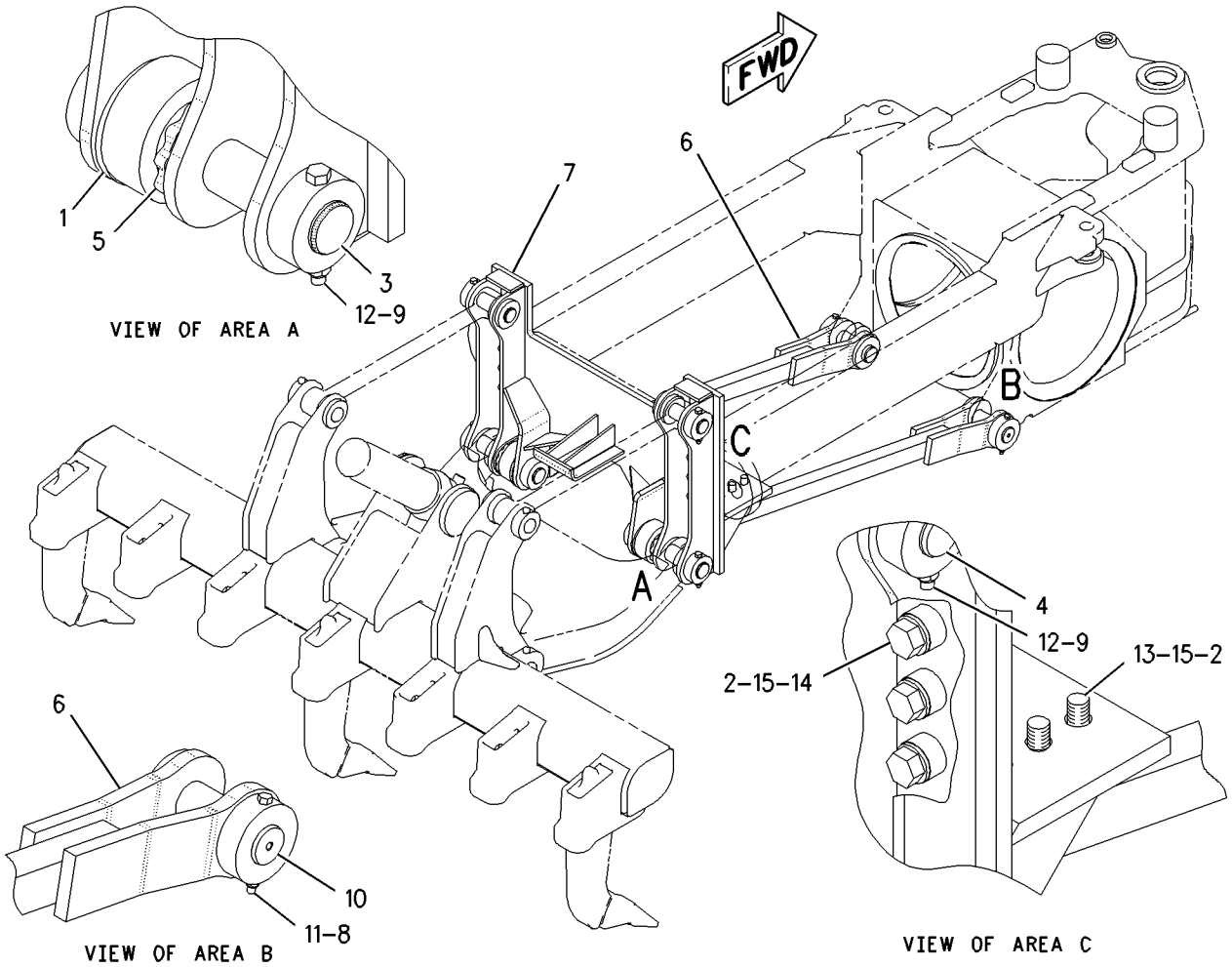

GRAPHIC #1 g00935385

WORK TOOLS

207-2428 RIPPER AR

S/N: ATS1-UP
AN ATTACHMENT

SMCS-6325 **i01828884**

NOTE	PART NUMBER	QTY	PART NAME 1 2 3 4 5 6 (PRODUCT LEVEL)	SEE PAGE
Y	**113-5264**	1	CYLINDER GP-RIPPER LIFT	422
Y	*207-3736*	1	LINES GP-RIPPER	459
Y	*207-2801*	1	MOUNTING GP-RIPPER	602
Y	*8T-4009*	1	PLATE & FILM GP	760
Y	*8J-5274*	1	RIPPER GP	604

Y-SEPARATE ILLUSTRATION

<END>

WORK TOOLS

8J-5274 RIPPER GP

S/N: ATS1-UP
PART OF 207-2428 RIPPER AR
AN ATTACHMENT

SMCS-6325 **i01855174**

NOTE	REF NO	GRAPHIC REF	PART NUMBER	QTY	PART NAME 1 2 3 4 5 6 (PRODUCT LEVEL)	SEE PAGE
	1	1	**8J-9607**	2	PIN	
Y	2	1	*8J-2189*	3	TOOTH GP-RIPPER	606
	3	1	**8J-5050**	1	CARRIAGE AS	
	4	1	**2K-4315**	4	BOSS	
	5	1	**2K-4309**	1	REINFORCEMENT (RH)	
		1	**2K-4310**	1	REINFORCEMENT (LH)	
	6	1	**5K-7748**	7	HOLDER-TOOTH	
	7	1	**8J-9608**	2	PIN	
	8	1	**7X-0358**	2	BOLT (5/8-11X5.5 IN)	
	9	1	**3K-2889**	4	LOCKNUT (5/8-11 THD)	
	10	1	**9J-2880**	2	LINK AS	
					(EACH INCLUDES)	
C	11	1	**3G-2582**	2	BEARING	
	12	1	**4K-3004**	2	BEARING-TRUNNION SUPPLEMENTARY	
	13	1	**3B-8489**	3	FITTING-GREASE (RIPPER)	
C	14	1	**7X-0325**	8	BOLT (1/2-13X2.5 IN)	
C	15	1	**1K-6872**	8	LOCKNUT (1/2-13 THD)	
	16	1	**5P-2228**	2	BOLT (1/2-13X1 IN)	
	17	1	**2K-0703**	1	BAR	
	18	1	**3K-8510**	1	PIN	
C	19	1	**9D-6585**	8	SEAL-LIP	
	20	1	**9J-2881**	1	LINK AS-LOWER	
C	21	1	**3G-2580**	4	BEARING	
C	22	1	**9D-6584**	8	SEAL-LIP	
	23	1	**7X-0362**	2	BOLT (5/8-11X7 IN)	

C-CHANGE FROM PREVIOUS TYPE
Y-SEPARATE ILLUSTRATION

8J-5274 **RIPPER GP** *(contd.)* **i01855174**

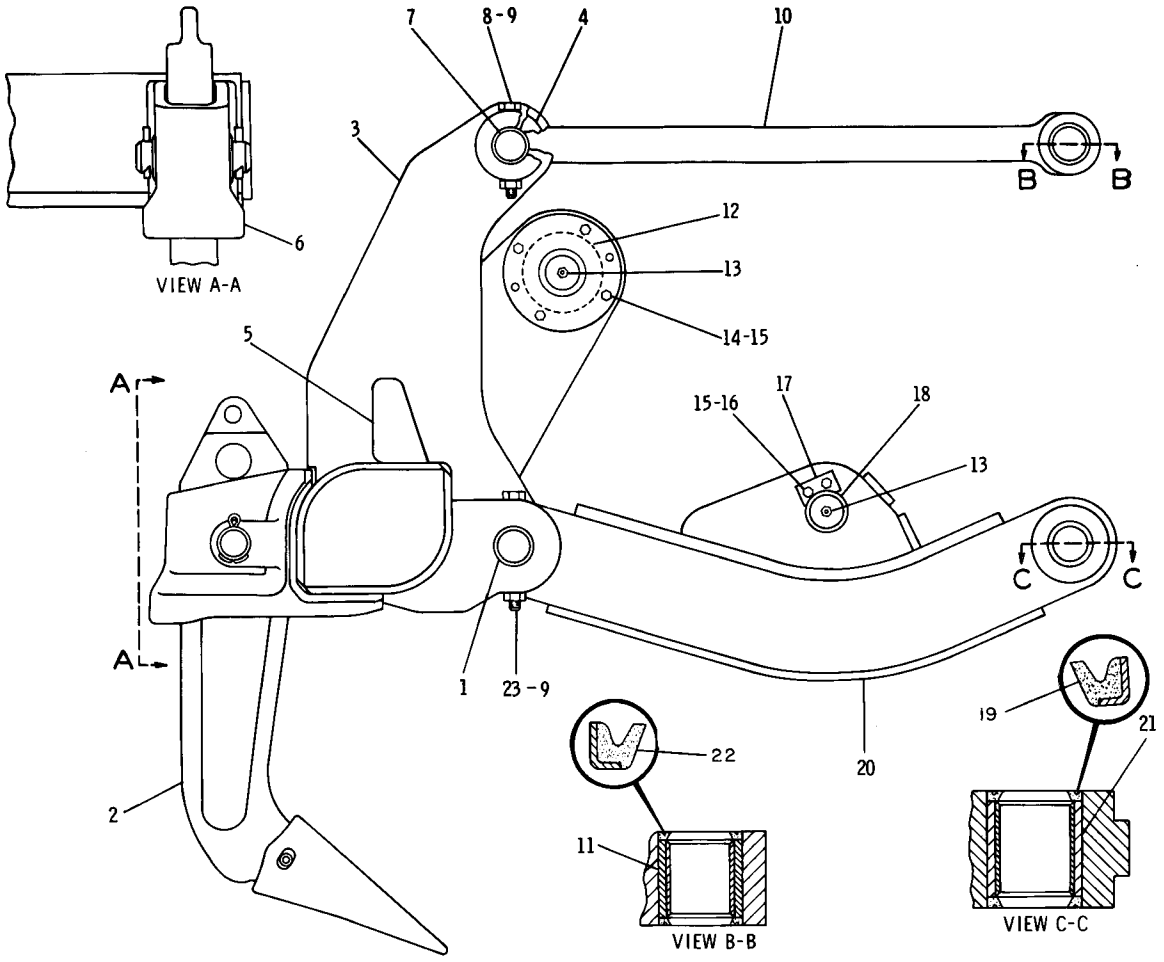

GRAPHIC #1 g00108357

WORK TOOLS

8J-2189 TOOTH GP-RIPPER

S/N: ATS1-UP
PART OF 8J-5274 RIPPER GP
AN ATTACHMENT

SMCS-6808 **i01169199**

NOTE	REF NO	GRAPHIC REF	PART NUMBER	QTY	PART NAME 1 2 3 4 5 6 (PRODUCT LEVEL)	SEE PAGE
	1	1	**3B-5325**	2	COTTER	
	2	1	**8J-2190**	1	PIN	
	3	1	**9J-3139**	1	SHANK-RIPPER	
C	4	1	**114-0358**	1	PIN-G.E.T.	
C		1	**114-0359**	1	RETAINER AS-G.E.T.	
	5	1	**6Y-0359**	1	TIP-RIPPER	

C-CHANGE FROM PREVIOUS TYPE

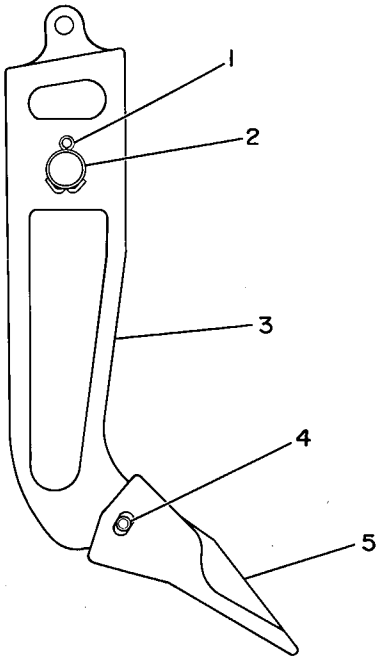

GRAPHIC #1 g00081660

OPERATOR STATION

171-7185 ACCESSORY GP-CAB–5 AMP

S/N: ATS1-UP
12V POWER PORT
PART OF 161-0776 CONVERTER AR-ELECTRICAL
AN ATTACHMENT

SMCS-1408, 1421 **i01539470**

NOTE	REF NO	GRAPHIC REF	PART NUMBER	QTY	PART NAME 1 2 3 4 5 6 (PRODUCT LEVEL)	SEE PAGE
	1	1	**117-2311**	1	RECEPTACLE AS-POWER (12 VOLT)	
	2	1	**138-7065**	1	PLATE	
	3	1	**169-3264**	1	HARNESS AS-CAB	
		1	**102-8802**	1	KIT-RECEPTACLE (2 PIN) (12V POWER PORT)	
					(INCLUDES RECEPTACLE AS & WEDGE)	
M	4	1	**129-3178**	2	LOCKNUT (M6X1 THD)	
	5	1	**6P-0205**	2	SPACER (.269X.405X.656 IN THK)	
	6	1	**9X-8256**	2	WASHER (6.6X12X2MM THK)	

M-METRIC PART

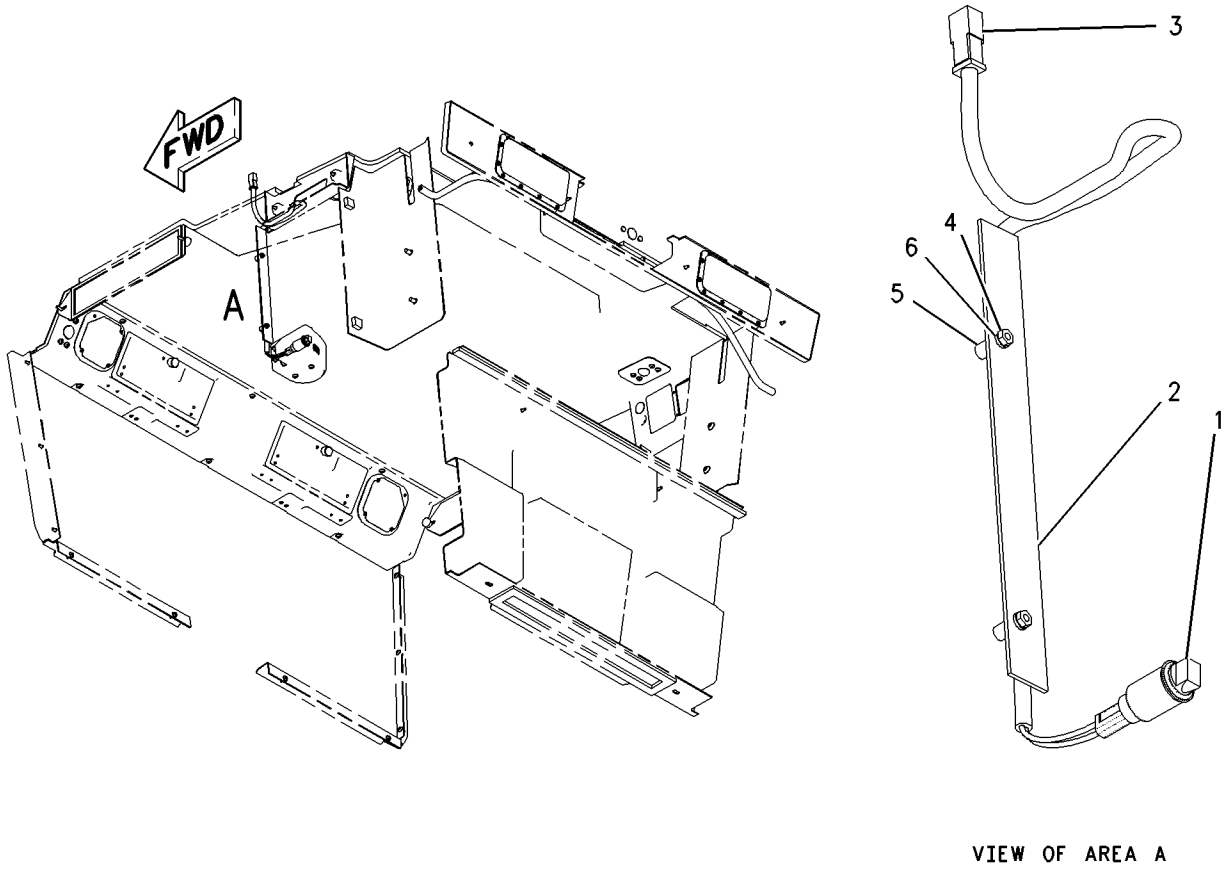

GRAPHIC #1 g00808417

OPERATOR STATION

171-7186 ACCESSORY GP-CAB–15 AMP

S/N: ATS1-UP
12V POWER PORT
PART OF 161-0777 CONVERTER AR-ELECTRICAL
AN ATTACHMENT

SMCS-1408, 1421 **i01539482**

NOTE	REF NO	GRAPHIC REF	PART NUMBER	QTY	PART NAME 1 2 3 4 5 6 (PRODUCT LEVEL)	SEE PAGE
	1	1	**117-2311**	1	RECEPTACLE AS-POWER (12 VOLT)	
	2	1	**169-3264**	1	HARNESS AS-CAB	
		1	**102-8802**	1	KIT-RECEPTACLE (2 PIN) (12V POWER PORT)	
M	3	1	**129-3178**	2	LOCKNUT (M6X1 THD)	
	4	1	**139-1153**	1	PLATE	
	5	1	**6P-0205**	2	SPACER (.269X.405X.656 IN THK)	
	6	1	**9X-8256**	2	WASHER (6.6X12X2MM THK)	

M-METRIC PART

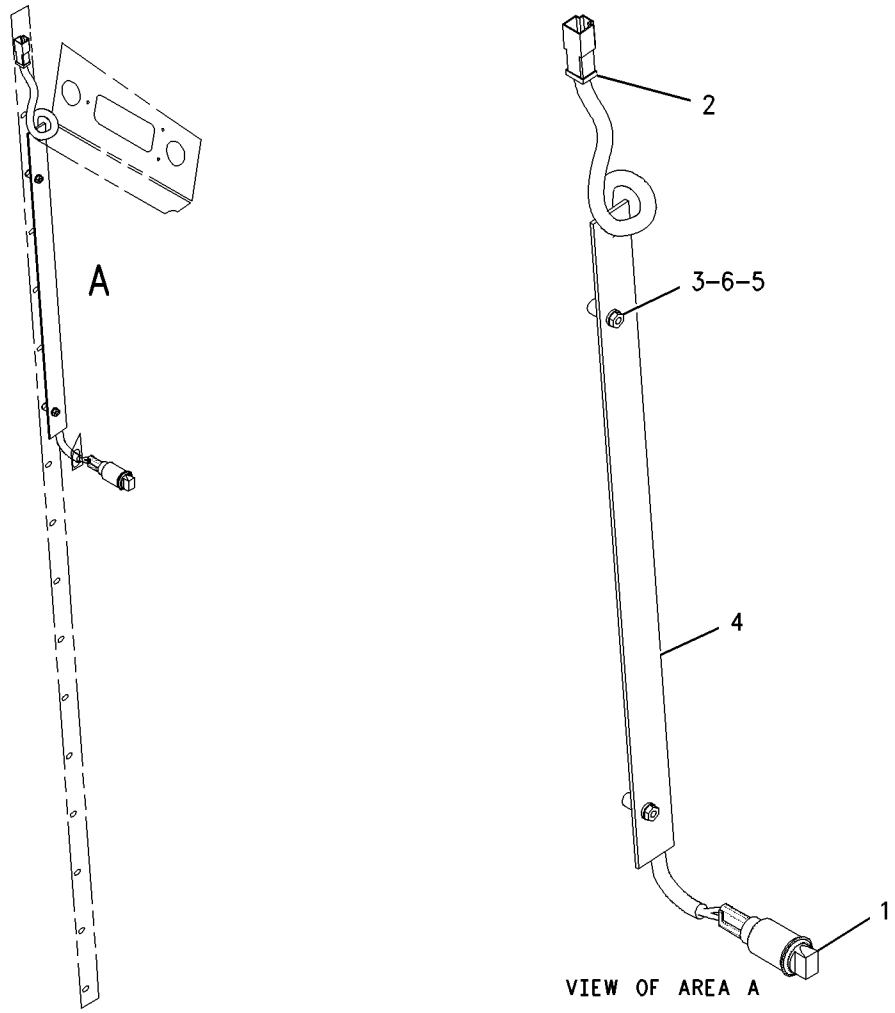

GRAPHIC #1 g00807680

OPERATOR STATION

173-5313 AIR CONDITIONER & MOUNTING GP

S/N: ATS1-UP
PART OF 167-8069 AIR CONDITIONER AR
AN ATTACHMENT

SMCS-7320 **i01528899**

NOTE	PART NUMBER	QTY	PART NAME 1 2 3 4 5 6 (PRODUCT LEVEL)	SEE PAGE
Y	**174-4548**	1	AIR CONDITIONER GP	610
	5M-3062	1	BOLT (3/8-16X0.75 IN)	
	8M-2773	2	CLIP	
	9W-1441	1	FUSE (15 AMP) (AIR CONDITIONER)	
	123-0872	1	PAD	
	191-5236	1	PAD	
	8T-4896	1	WASHER-HARD (10.2X18.5X2.5MM THK)	

Y-SEPARATE ILLUSTRATION

<END>

167-8069 AIR CONDITIONER AR

S/N: ATS1-UP
PART OF 211-1772 CONVERSION AR-CERTIFICATION
AN ATTACHMENT

SMCS-7320 **i01787053**

NOTE	PART NUMBER	QTY	PART NAME 1 2 3 4 5 6 (PRODUCT LEVEL)	SEE PAGE
Y	*173-5313*	1	AIR CONDITIONER & MOUNTING GP	609
Y	*197-4568*	1	COMPRESSOR GP-REFRIGERANT	617
Y	*208-5568*	1	CONDENSER & MTG GP-REFRIGERANT	618
Y	*177-7891*	1	DUCT & CONTROL GP	638
Y	*7I-5015*	1	DUCT GP (VEHICLE)	639
Y	**8X-2925**	1	FILTER GP-CAB AIR	648
Y	*167-8103*	1	LINES GP-AIR CONDITIONER	682
Y	*167-8399*	1	LINES GP-HEATER	686
	174-9690	1	BELT-RIBBED (A/C)	

Y-SEPARATE ILLUSTRATION

<END>

OPERATOR STATION

174-4548 AIR CONDITIONER GP

S/N: ATS1-UP

PART OF 173-5313 AIR CONDITIONER & MOUNTING GP

AN ATTACHMENT

SMCS-7320 **i01673527**

NOTE	REF NO	GRAPHIC REF	PART NUMBER	QTY	PART NAME 1 2 3 4 5 6 (PRODUCT LEVEL)	SEE PAGE
	1	1	**2P-4339**	1	NUT-JAM (7/16-20 THD)	
	2	1	**2V-0099**	1	KNOB (FAN SPEED)	
	2A	1	**2V-0099**	1	KNOB (TEMPERATURE CONTROL)	
	3	1	**3E-0400**	2	WHEEL-BLOWER	
	4	1	**3E-3890**	1	FILM-CONTROL (HEATER & A/C)	
	5	1	**3E-5464**	1	SWITCH AS-THERMOSTAT (REFRIGERANT)	
	6	1	**3S-2093**	2	STRAP-CABLE	
	7	1	**3T-3197**	1	GROMMET	
	8	1	**3T-3198**	1	GROMMET	
	9	2	**5P-7803**	2	PLUG-BUTTON	
	10	1	**6P-3236**	1	SWITCH AS-ROTARY (FAN SPEED)	
		1	**6V-8362**	5	SCREW-MACHINE (8-32X0.31 IN)	
		1	**9B-7233**	5	LOCKWASHER	
	11	1	**6T-5345**	1	BUSHING-TERMINAL	
	12	1	**6T-6708**	2	WASHER (7X28.6X4.1MM THK)	
	13	1	**204-4376**	1	CAP-PROTECTIVE	
	14	1	**7G-4824**	1	STRAP	
	15	1	**7T-9793**	2	VALVE (CHECK) (EVAPORATOR DRAIN)	
	17	1	**8C-4586**	2	CLAMP	
		1	**8C-5223**	2	PLUG-SEAL	
	18	1	**8D-1429**	1	LAMP (24 VOLT) (HVAC PANEL)	
	19	1	**8E-7791**	1	STRAP	
	20	1	**8P-5141**	2	PLATE-ORIFICE	
	21	1	**8X-5536**	1	COVER	
	22	2	**8X-5538**	1	COVER AS	
M		1	**8T-3490**	4	NUT-WELD (M10X1.5 THD)	
	23	1	**8X-5540**	1	COVER	
I	24	1	**8X-7152**	1	HOSE AS	
		1	**5F-9144**	1	SEAL-O-RING	
		1	**6M-5062**	1	SEAL-O-RING	
		1	**7X-1804**	1	COUPLING (90 DEGREES)	
		1	**7X-1805**	1	COUPLING (90 DEGREE)	
I	25	1	**8X-7153**	1	HOSE AS	
		1	**1S-8947**	1	SEAL-O-RING	
		1	**5L-4758**	1	SEAL-O-RING	
		1	**7X-1807**	1	COUPLING (90 DEGREE)	
		1	**9X-4006**	1	COUPLING-STRAIGHT	
	26	2	**8Y-6388**	4	LOUVER AS	
	27	1	**9G-1950**	1	RESISTOR	
	28	1	**9X-2185**	4	SCREW (8-15X0.44 IN)	
	29	1	**9X-2488**	6	CLAMP-HOSE	
	30	1	**9X-9653**	1	COIL AS-EVAPORATOR	
	31	1	**9X-9654**	1	COIL AS-HEATER	
	32	2	**110-6393**	1	PLATE-INSTRUCTION (AIR CONDITIONER)	
	33	1	**123-4618**	1	COVER	
	34	2	**123-4701**	1	SEAL	
	35	1	**124-1431**	1	BRACKET	
	36	1	**124-1432**	1	HOUSING AS	
		1	**7T-1099**	1	LINK	
		1	**8P-5141**	2	PLATE-ORIFICE	
	37	1	**124-3137**	1	BRACKET	
	38	1	**124-3138**	1	SEAL	
	39	1	**124-9006**	1	SHAFT	
	40	1	**124-9007**	1	SHAFT AS	
		1	**4L-5966**	2	SETSCREW (NO 10X.19 IN)	

174-4548 AIR CONDITIONER GP *(contd.)* i01673527

NOTE	REF NO	GRAPHIC REF	PART NUMBER	QTY	PART NAME 1 2 3 4 5 6 (PRODUCT LEVEL)	SEE PAGE
	41	1	**125-0438**	1	GASKET	
	42	1	**129-4935**	1	SEAL	
	43	1	**142-4940**	1	PLATE AS	
	44	1	**174-1494**	1	MOTOR GP-ELECTRIC (27 VOLT) (A/C)	
		1	**3E-3365**	1	WEDGE-RECEPTACLE LOCK (2 PIN)	
		1	**9W-0852**	2	PIN-CONNECTOR	
		1	**102-8802**	1	KIT-RECEPTACLE (2 PIN)	
	45	2	**174-4492**	1	COVER	
	46	1	**174-4971**	1	SUPPORT AS	
	47	1	**174-6353**	1	PLATE	
	48	1	**176-5507**	1	PAD	
	49	1	**177-7858**	1	HARNESS AS-HEATER & AIR COND	
		1	**155-2270**	1	KIT-CONNECTING PLUG (2 PIN) (HEATER - A/C MOTOR)	
		1	**102-8805**	1	KIT-RECEPTACLE (6 PIN) (HEATER & A/C)	
	50	2	**191-0027**	1	PAD	
	51	2	**104-2091**	8	SCREW-FLAT HEAD (6-20X0.5 IN)	
	52	1	**206-5154**	1	VALVE AS (AIR CONDITIONER)	
M	53	1	**129-3178**	4	LOCKNUT (M6X1 THD)	
	54	1	**130-5300**	1	CLIP	
M	55	1	**141-9784**	1	BOLT-HEX HEAD (M6X190MM)	
	56	1	**3B-4501**	2	LOCKWASHER	
	57	1	**3H-2900**	1	GROMMET	
M	58	1	**5C-2890**	7	NUT (M6X1 THD)	
	59	1,2	**5P-1075**	13	WASHER-HARD (10.2X22.5X3MM THK)	
	60	1	**5P-9135**	1	GROMMET	
	61	1	**6V-1668**	2	WASHER (6.5X29.1X3MM THK)	
M	62	1	**6V-7728**	1	BOLT (M6X1.0X45MM)	
	63	1,2	**6V-8801**	13	NUT (3/8-16 THD)	
	64	1	**7X-0591**	2	WASHER-HARD (17X29X3MM THK)	
M	65	1	**8T-4171**	2	BOLT (M6X1X12MM)	
	66	1	**8T-4205**	15	WASHER-HARD (7.2X14.5X2MM THK)	
	67	1	**8T-6631**	2	SCREW-MACHINE (8-32X0.5 IN)	
	68	1	**9M-8406**	1	CLIP	
M	69	1	**9X-2040**	4	SCREW-TRUSS HEAD (M10X1.5X25MM)	
M	70	1	**9X-2041**	5	SCREW-TRUSS HEAD (M10X1.5X20MM)	
M	71	2	**9X-2045**	6	SCREW-TRUSS HEAD (M6X1X20MM)	
	72	1	**9X-7381**	1	SEAL-O-RING	
	73	1	**9X-7382**	1	SEAL-O-RING	
E	74	1	**136-1953**		HOSE (8CM)	
E	74A	1	**136-1953**		HOSE (17CM)	
E	74B	1	**136-1953**		HOSE (17CM)	
BD	75	1	**5P-5908**		SEAL	
BD	76	1	**5P-5637**		SEAL	
BE	77	1	**9X-2126**		SEAL	
D	78	1	**5P-6129**		TUBE (.9M)	
D	78A	1	**5P-6129**		TUBE (.9M)	

B-USE AS REQUIRED
D-ORDER BY THE METER
E-ORDER BY THE CENTIMETER
I-SEE HOSE FABRICATION GUIDE
M-METRIC PART

174-4548 AIR CONDITIONER GP *(contd.)* i01673527

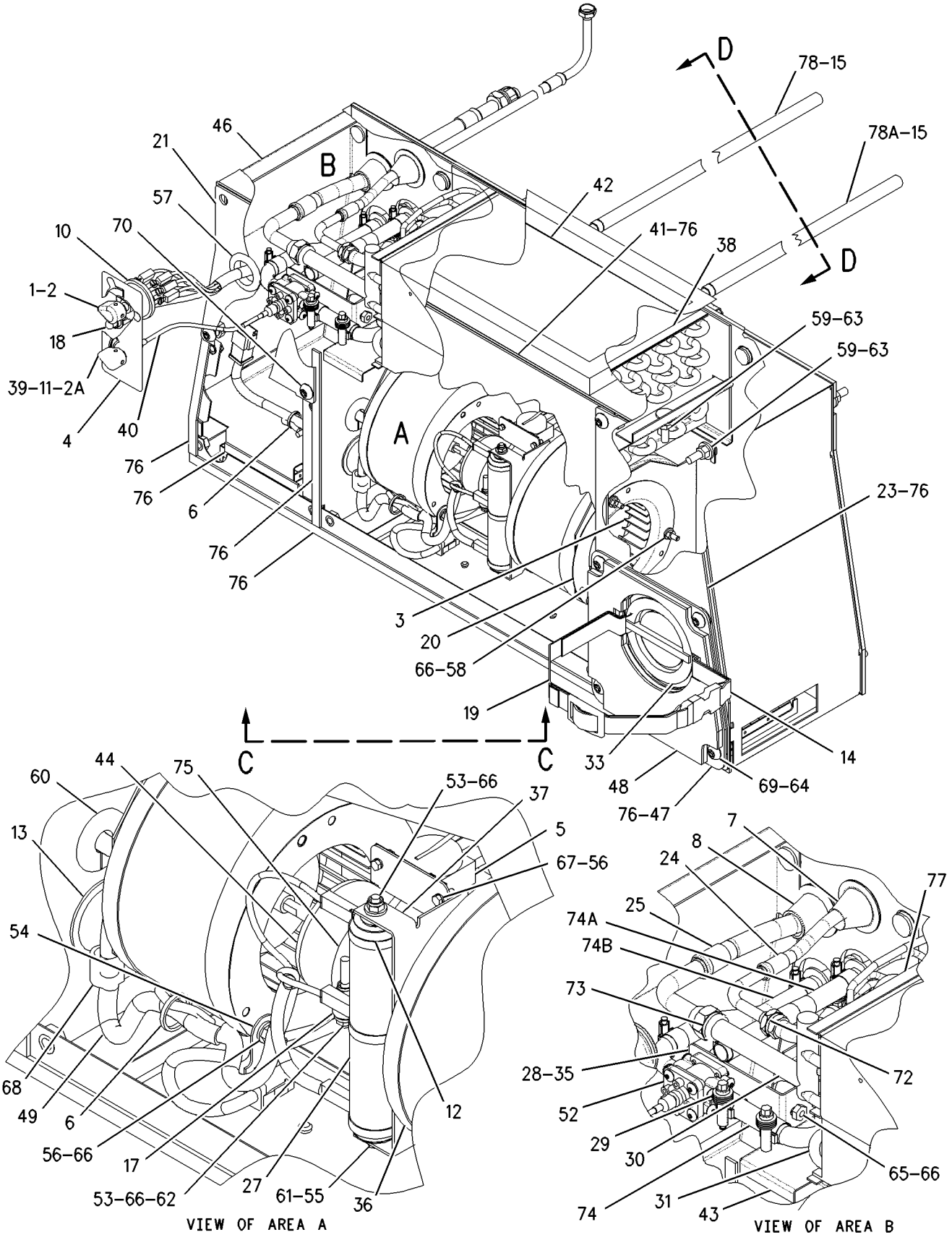

GRAPHIC #1 g00808923

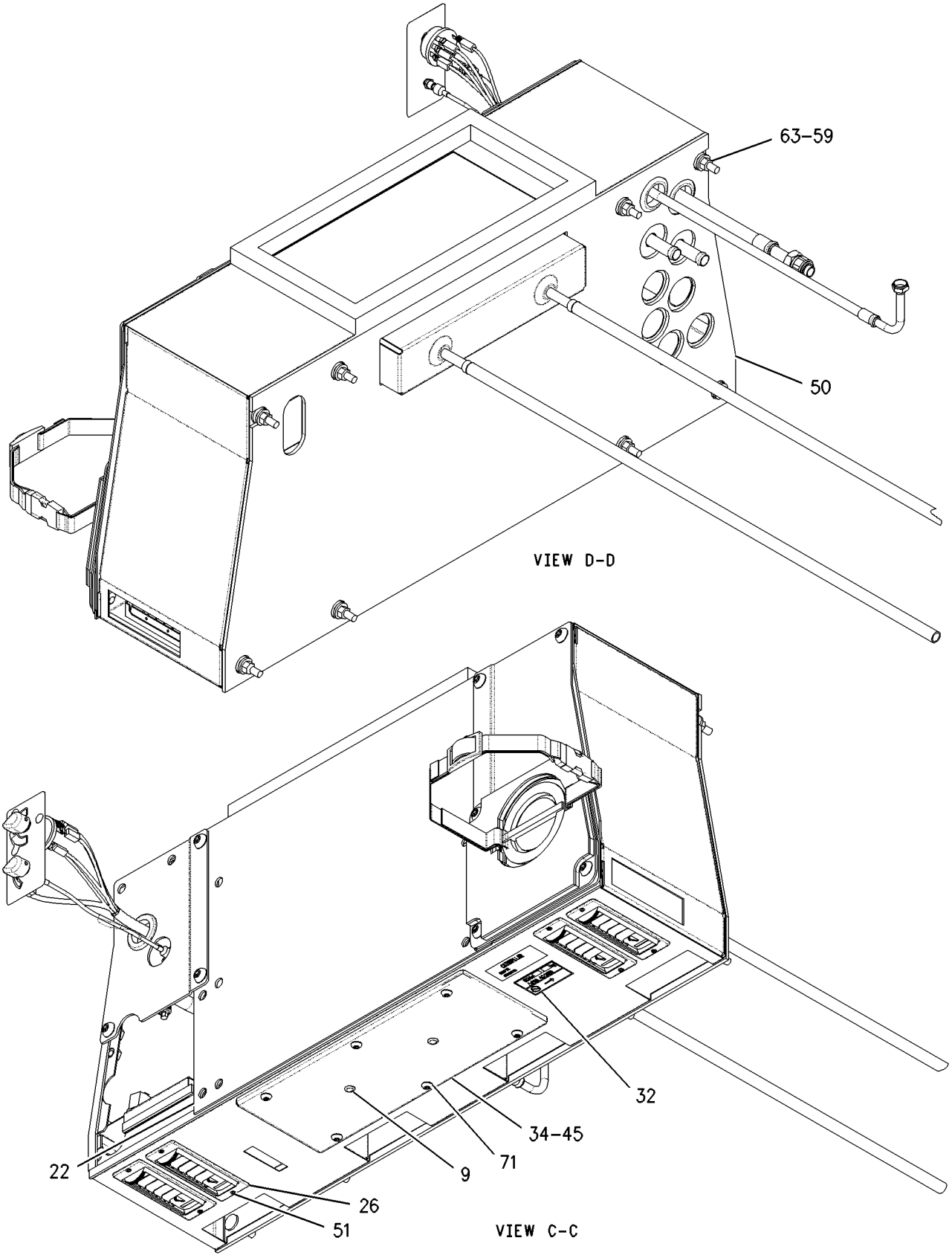

GRAPHIC #2 g00852793

OPERATOR STATION

113-4242 ARMREST GP–LH

S/N: ATS1-UP

PART OF 112-9104, 112-9105, 155-5958 SEAT GP-SUSPENSION

ALSO AN ATTACHMENT

SMCS-7307 **i01456961**

NOTE	REF NO	GRAPHIC REF	PART NUMBER	QTY	PART NAME 1 2 3 4 5 6 (PRODUCT LEVEL)	SEE PAGE
	1	1	**9V-7447**	1	PAD AS	
		1	**9F-2978**	1	NUT-WELD (3/8-16 THD)	
	2	1	**113-4240**	1	BRACKET AS-LH	
	3	1	**7X-0456**	1	BOLT (7/16-14X4.5 IN)	
	4	1	**0S-1594**	1	BOLT (3/8-16X1 IN)	
	5	1	**5V-1498**	1	LOCKNUT	
	6	1	**2K-4973**	1	LOCKNUT	
	7	1	**5S-7383**	1	BOLT (3/8-16X1.75 IN)	
	8	1	**8Y-6277**	2	SPACER (10.5X28.6X10MM THK)	
	9	1	**2K-6061**	1	SCREW-MACHINE (3/8-16X1.5 IN)	
	10	1	**8Y-6051**	1	SPACER (11.19X14.21X14.24MM THK)	
	11	1	**7X-1387**	1	WASHER (10.26X22.22X1.9MM THK)	

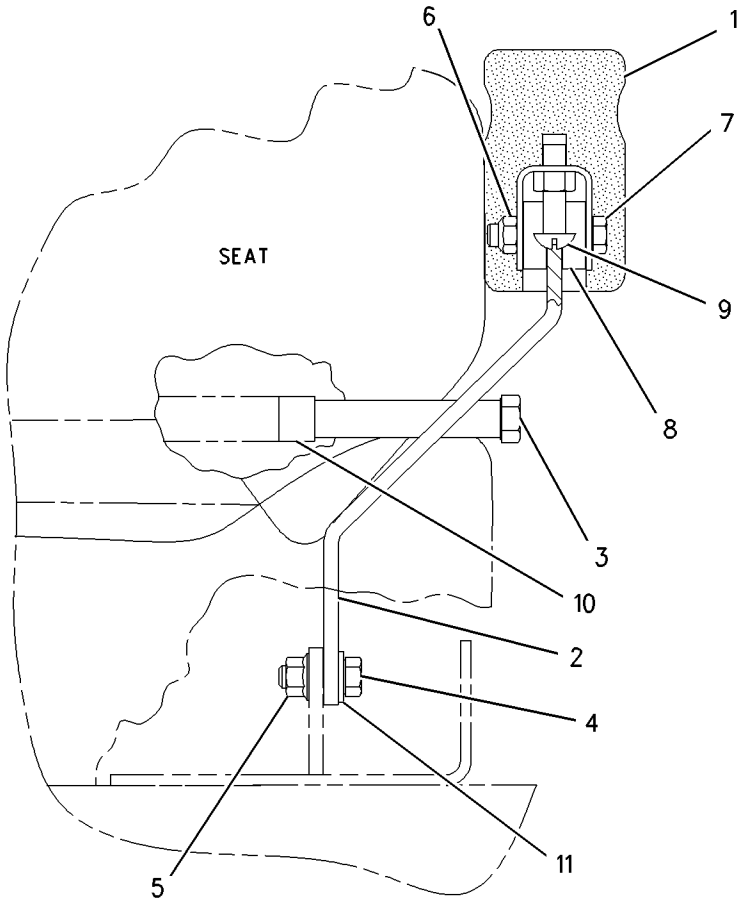

FRONT VIEW

GRAPHIC #1 g00763265

113-4245 ARMREST GP–RH

S/N: ATS1-UP

PART OF 112-9104, 112-9105, 155-5958 SEAT GP-SUSPENSION

ALSO AN ATTACHMENT

SMCS-7307 **i01498591**

NOTE	REF NO	GRAPHIC REF	PART NUMBER	QTY	PART NAME 1 2 3 4 5 6 (PRODUCT LEVEL)	SEE PAGE
	1	1	**9V-7447**	1	PAD AS	
		1	**9F-2978**	1	NUT-WELD (3/8-16 THD)	
	2	1	**113-4243**	1	BRACKET AS-RH	
	3	1	**7X-0456**	1	BOLT (7/16-14X4.5 IN)	
	4	1	**0S-1594**	1	BOLT (3/8-16X1 IN)	
	5	1	**5V-1498**	1	LOCKNUT	
	6	1	**5S-7383**	1	BOLT (3/8-16X1.75 IN)	
	7	1	**2K-4973**	1	LOCKNUT (3/8-16 THD)	
	8	1	**8Y-6277**	2	SPACER (10.5X28.6X10MM THK)	
	9	1	**2K-6061**	1	SCREW-MACHINE (3/8-16X1.5 IN)	
	10	1	**8Y-6051**	1	SPACER (11.19X14.21X14.24MM THK)	
	11	1	**7X-1387**	1	WASHER (10.26X22.22X1.9MM THK)	

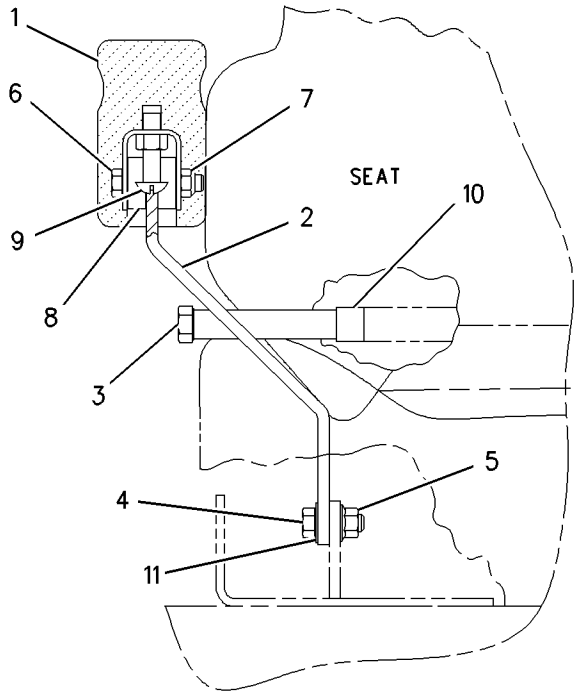

FRONT VIEW

GRAPHIC #1 g00777656

OPERATOR STATION

163-0872 COMPRESSOR GP-REFRIGERANT

S/N: ATS1-UP

PART OF 197-4568 COMPRESSOR GP-REFRIGERANT

AN ATTACHMENT

SMCS-1802 **i01546092**

NOTE	REF NO	GRAPHIC REF	PART NUMBER	QTY	PART NAME 1 2 3 4 5 6 (PRODUCT LEVEL)	SEE PAGE
	1	1	**102-8802**	1	KIT-RECEPTACLE (2 PIN)	
					(INCLUDES RECEPTACLE AS AND WEDGE)	
	2	1	**114-3469**	1	VALVE AS-REFRIGERANT RELIEF	
		1	**9X-7378**	1	SEAL-O-RING	
	3	1	**7T-4532**	1	PLUG AS	
	4	1	**9X-7385**	2	SEAL-O-RING	

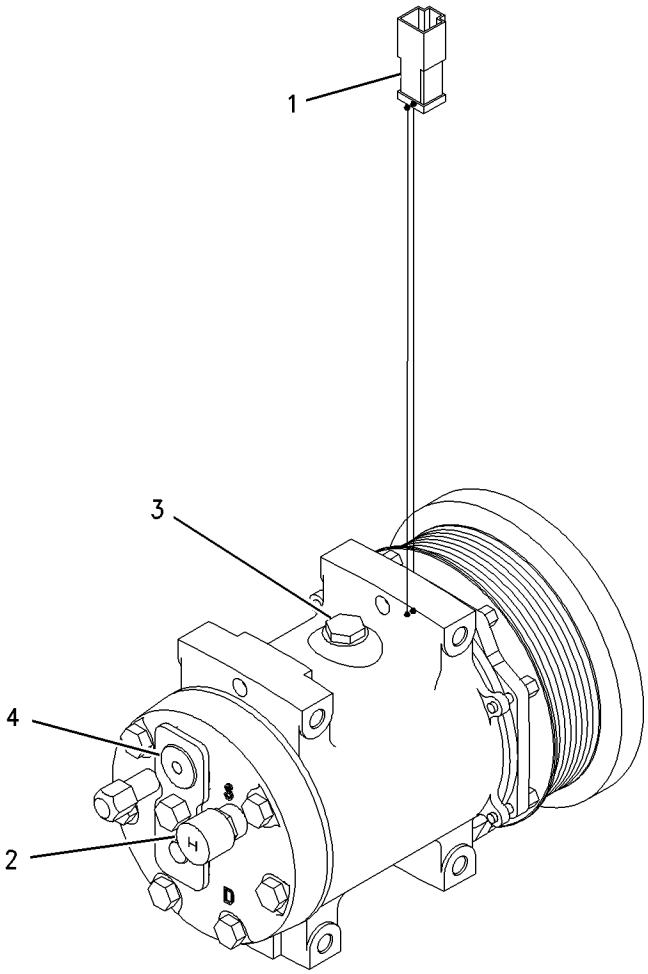

GRAPHIC #1 g00673316

OPERATOR STATION

197-4568 COMPRESSOR GP-REFRIGERANT

S/N: ATS1-UP
PART OF 167-8069 AIR CONDITIONER AR
AN ATTACHMENT

SMCS-1802 **i01613661**

NOTE	REF NO	GRAPHIC REF	PART NUMBER	QTY	PART NAME 1 2 3 4 5 6 (PRODUCT LEVEL)	SEE PAGE
Y	1	1	**163-0872**	1	COMPRESSOR GP-REFRIGERANT	616
	2	1	**194-5141**	1	GUARD	
	3	1	**197-4569**	1	BRACKET-MOUNTING	
M	4	1	**6V-5696**	2	BOLT (M12X1.75X80MM)	
M	5	1	**7X-2538**	4	BOLT (M8X1.25X100MM)	
	6	1	**7X-7729**	2	WASHER (11X25X3MM THK)	
M	7	1	**8T-4136**	2	BOLT (M10X1.5X25MM)	
	8	1	**8T-4223**	4	WASHER-HARD (13.5X25.5X3MM THK)	
	9	1	**8T-4224**	4	WASHER-HARD (8.8X16X2MM THK)	
M	10	1	**8T-4244**	2	NUT (M12X1.75 THD)	

M-METRIC PART
Y-SEPARATE ILLUSTRATION

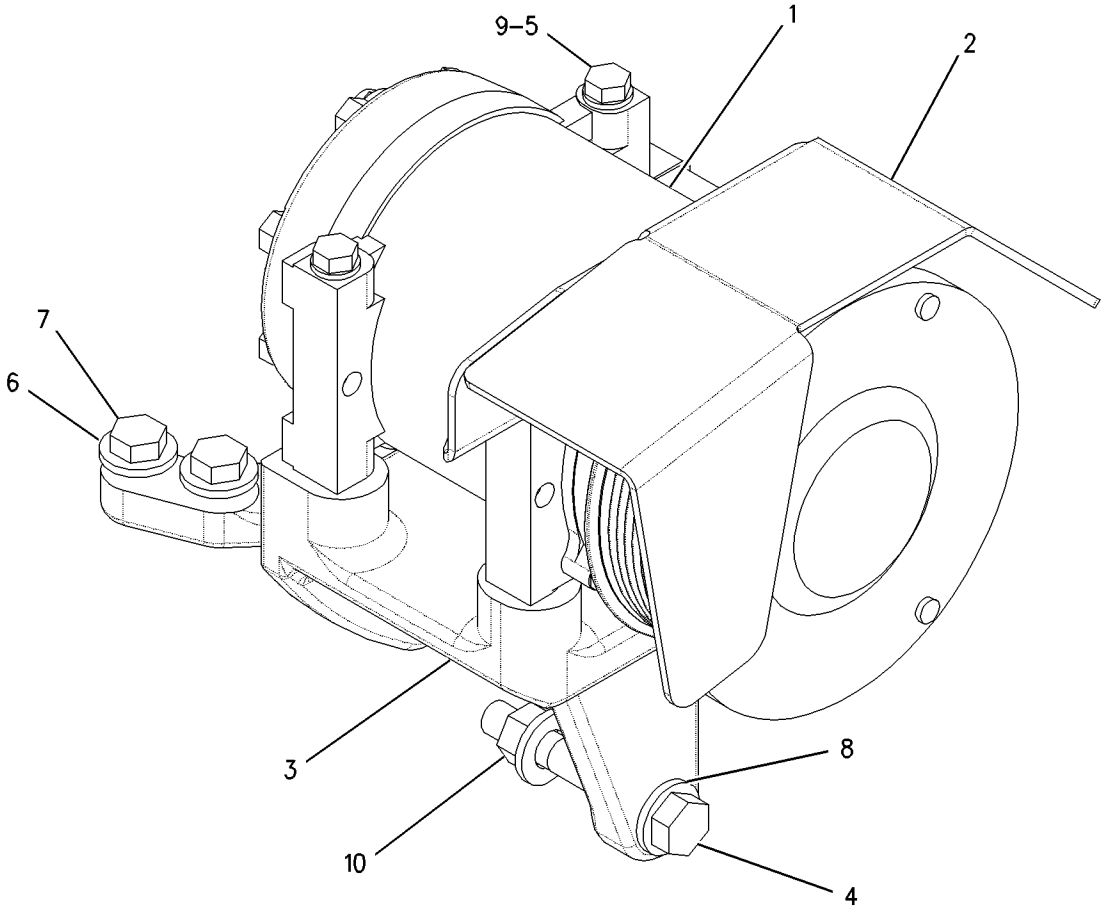

GRAPHIC #1 g00807671

OPERATOR STATION

208-5568 CONDENSER & MTG GP-REFRIGERANT–A/C

S/N: ATS1-UP
PART OF 167-8069 AIR CONDITIONER AR
AN ATTACHMENT

SMCS-1805 **i01787825**

NOTE	REF NO	GRAPHIC REF	PART NUMBER	QTY	PART NAME 1 2 3 4 5 6 (PRODUCT LEVEL)	SEE PAGE
	1	1	**199-9014**	1	CORE AS-CONDENSER	
	2	1	**221-0146**	1	PLATE AS	
	3	1	**222-1429**	1	PLATE AS	
M	4	1	**6V-4248**	4	BOLT (M10X1.50X25MM)	
	5	1	**6V-5839**	4	WASHER (11X21X2.5MM THK)	
	6	1	**8T-4121**	4	WASHER-HARD (11X21X2.5MM THK)	
M	7	1	**8T-4136**	4	BOLT (M10X1.5X25MM)	

M-METRIC PART

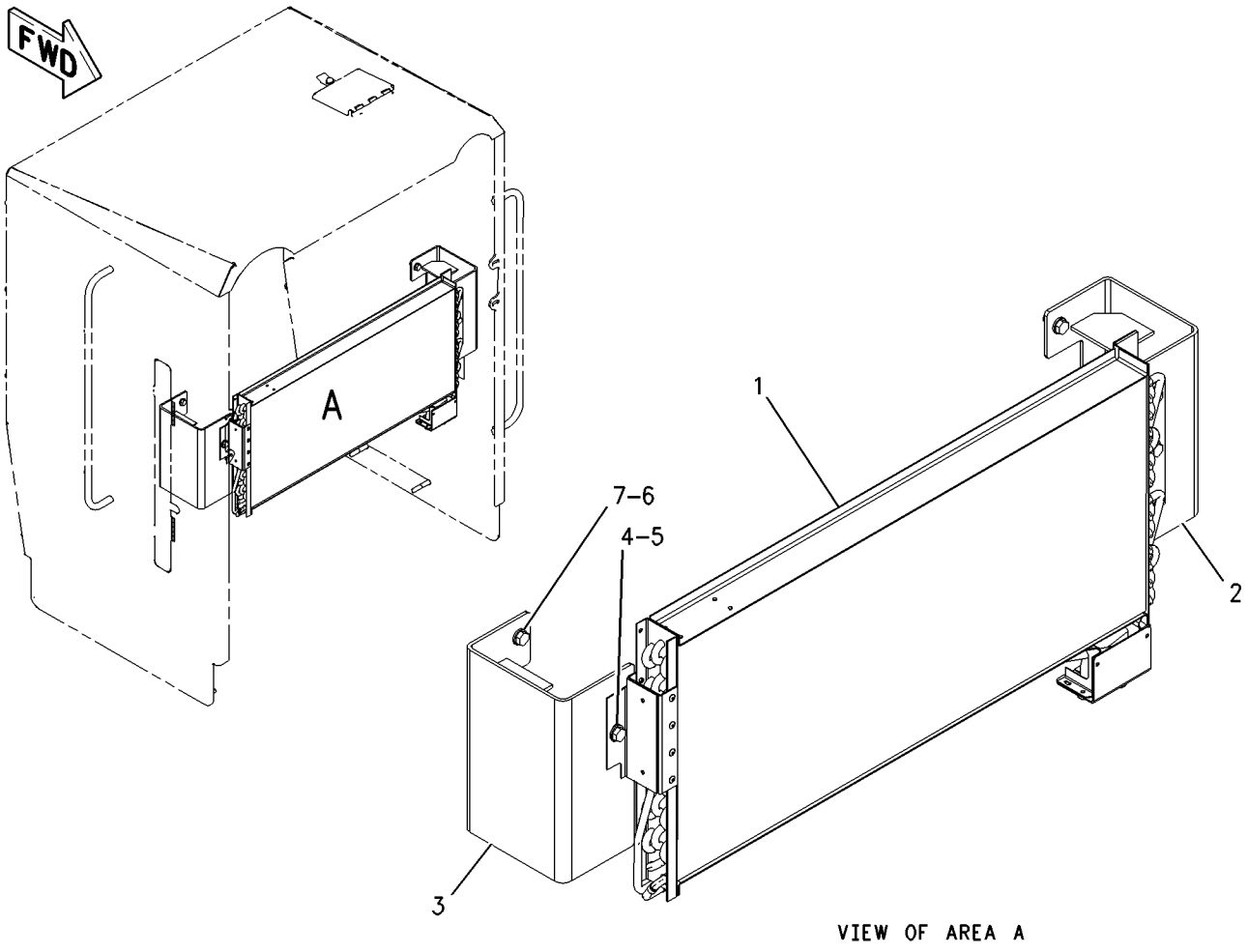

GRAPHIC #1 g00931506

MEMORANDA

OPERATOR STATION

167-8053 CONSOLE GP-OPERATOR

S/N: ATS1-UP

PART OF 162-5607 GENERAL AR

SMCS-5258 **i01848555**

NOTE	REF NO	GRAPHIC REF	PART NUMBER	QTY	PART NAME 1 2 3 4 5 6 (PRODUCT LEVEL)	SEE PAGE
	1	2	**2A-6908**	1	CYLINDER	
	2	1,2	**2G-8572**	8	WASHER-SPECIAL (10X27.81X2.54MM THK)	
	3	1,2	**2G-8573**	8	CAP	
	4	2	**2K-5830**	2	BEARING AS-NEEDLE	
	5	1	**3B-4607**	2	PIN-COTTER	
	6	1	**3E-9865**	1	LOCKNUT (1/4-20 THD)	
	7	1	**3Y-2806**	1	SPRING	
	8	1	**4B-4314**	1	RIVET	
	9	1	**6G-2914**	1	LATCH	
	10	1	**6G-8814**	2	BRACKET	
	11	1	**7I-4890**	1	PLATE AS	
	12	1	**8C-3442**	1	SPRING-COIL	
B	13	2	**8D-5641**	14	BEARING	
	14	1	**8D-7960**	2	PLATE	
	15	1	**8L-7905**	2	RIVET-POP	
M	16	1	**8T-9006**	2	BOLT-SOCKET HEAD (M3X.5X20MM)	
	17	1	**8X-1904**	1	SPACER (20X35X26MM THK)	
	18	1	**8X-1908**	1	PANEL	
	19	1	**8X-1911**	1	PANEL	
	20	2	**8X-1913**	6	SPACER	
	21	2	**8X-1914**	1	SHAFT	
	22	2	**8X-1915**	1	SPACER (10.31X25.4X35MM THK)	
	23	1	**8X-1921**	1	HOOD	
	24	1	**8X-2160**	1	LEVER	
	25	1	**8X-2161**	1	LEVER (STEERING COLUMN TILT CONTROL)	
	26	2	**8X-2893**	10	NUT (M4X0.7 THD)	
	27	1	**8X-3789**	1	PANEL	
	28	1	**8X-3951**	1	PANEL	
	29	1	**8X-3965**	1	RATCHET	
	30	2	**8X-5123**	1	RETAINER	
	31	1	**031-2666**	1	ROD	
	32	1	**034-1994**	1	PIN	
	33	1	**110-6241**	1	BRACKET	
	34	1	**177-7448**	1	CHANNEL AS	
	35	1	**183-1425**	1	BASE	
	36	1	**204-6488**	1	CHANNEL AS	
	37	1	**206-9651**	2	PLATE	
	38	2	**230-9138**	8	PLUG	
	39	1	**2A-7184**	2	PLATE	
	40	1	**030-8535**	1	BOLT-LOCKING (3/8-16X0.875 IN)	
	41	1	**096-6166**	6	WASHER-HARD (4.5X9X1MM THK)	
M	42	1,2	**174-8131**	16	SCREW-TRUSS HEAD (M4X0.7X12MM)	
	43	1,2	**2K-7979**	13	BEARING-SLEEVE	
	44	1	**3E-8043**	4	SCREW (3/8-16X.75 IN)	
	45	1	**3F-7514**	4	PIN	
	46	2	**3K-6060**	6	LOCKNUT (3/8-16 THD)	
M	47	1	**5C-8312**	6	NUT (M4X0.7 THD)	
	48	1	**5M-8500**	1	KNOB (STEERING WHEEL TILT CONTROL)	
	49	2	**5P-1075**	8	WASHER-HARD (10.2X22.5X3MM THK)	
	50	1	**5P-8167**	2	BOLT (3/8-16X0.625 IN)	
	51	2	**5S-7379**	4	BOLT (3/8-16X0.875 IN)	
	52	2	**5S-7383**	6	BOLT (3/8-16X1.75 IN)	
	53	1	**6V-8183**	1	NUT-FULL (3/8-24 THD)	
	54	2	**8T-1174**	4	SEAL-LIP	
	55	1,2	**8T-2561**	11	WASHER-HARD (10.5X28.5X5MM THK)	
M	56	2	**8T-4133**	1	NUT (M10X1.5 THD)	

167-8053 **CONSOLE GP-OPERATOR** *(contd.)* **i01848555**

NOTE	REF NO	GRAPHIC REF	PART NUMBER	QTY	PART NAME 1 2 3 4 5 6 (PRODUCT LEVEL)	SEE PAGE
	57	1	**8X-1907**	1	SHAFT	
	58	2	**9M-5590**	1	BALL	
M	59	1	**9X-2042**	12	SCREW-TRUSS HEAD (M6X1X12MM)	
D	60	1	**5P-5637**	2	SEAL (.5M EACH)	
D	61	1	**5P-5639**		SEAL (.4M)	
D	62	1	**5P-5637**	2	SEAL (.1M EACH)	

B-USE AS REQUIRED
D-ORDER BY THE METER
M-METRIC PART

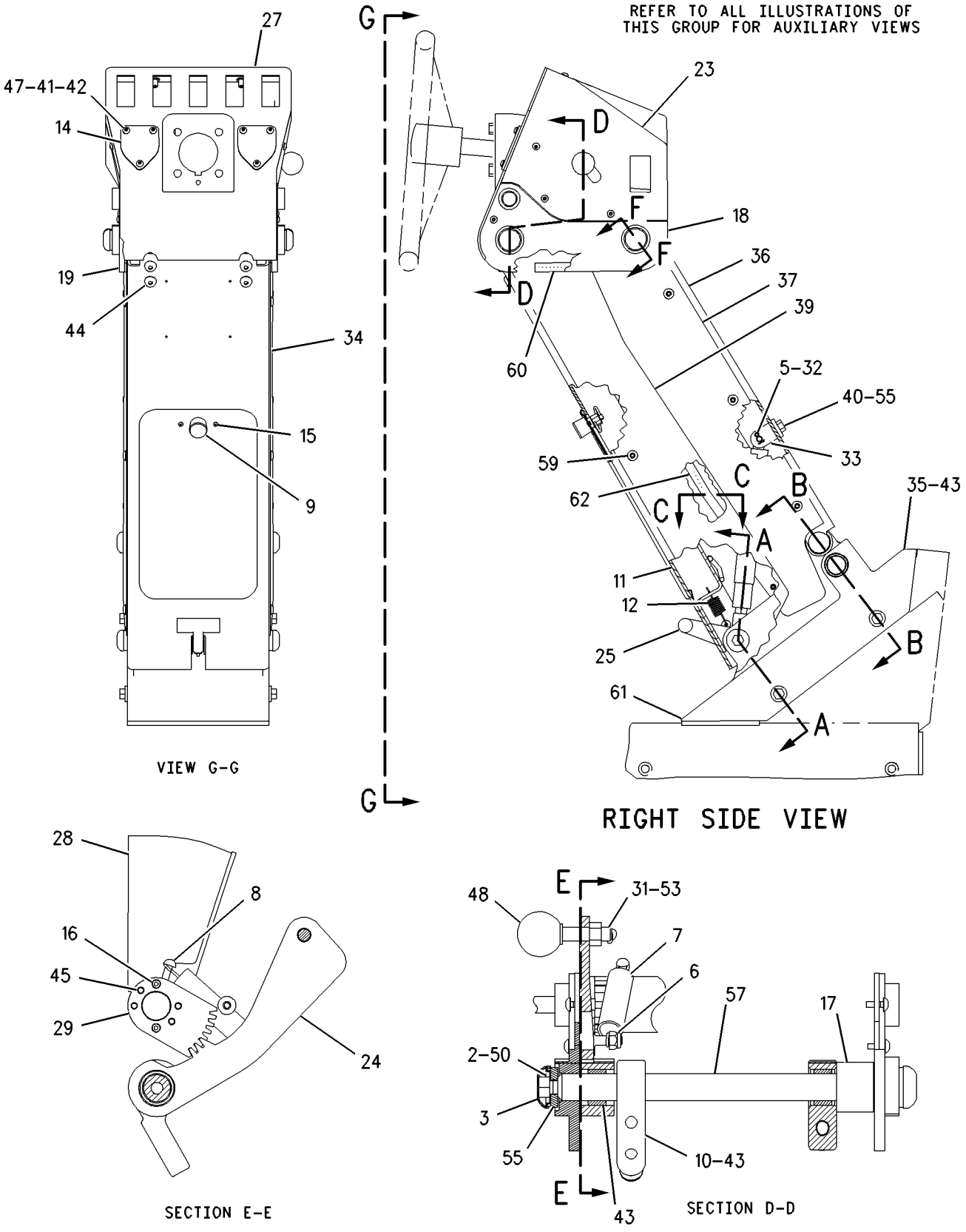

GRAPHIC #1 g00941590

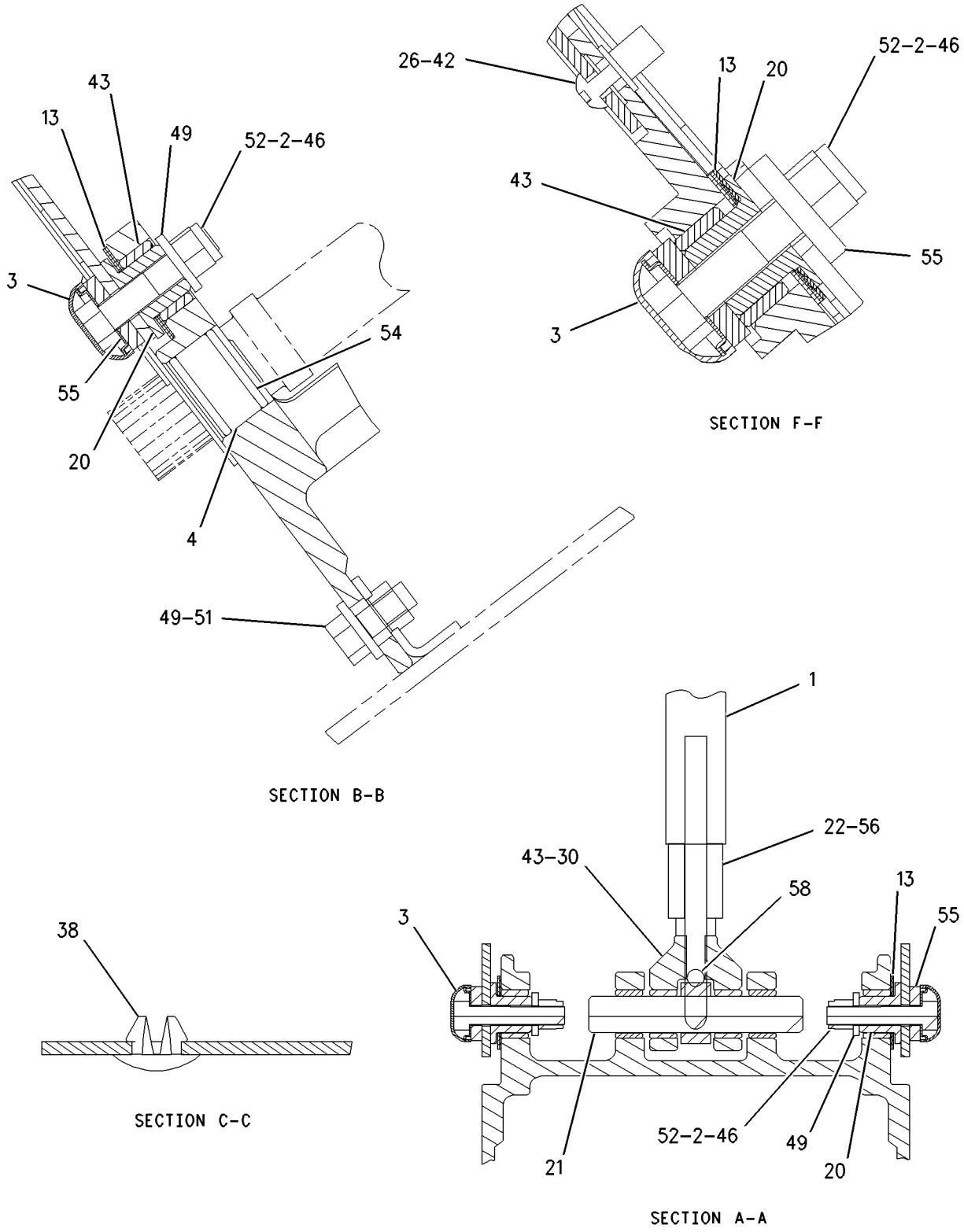

GRAPHIC #2

g00942300

OPERATOR STATION

203-6643 CONVERSION AR-NON-ROPS

S/N: ATS1-UP
AN ATTACHMENT

SMCS-7323 **i01758883**

NOTE	REF NO	GRAPHIC REF	PART NUMBER	QTY	PART NAME 1 2 3 4 5 6 (PRODUCT LEVEL)	SEE PAGE
	1	1	**5P-8502**	1	PADLOCK GP	
		1	**5P-8500**	1	KEY	
		1	**8Y-6364**	1	SLEEVE	
	2	1	**8T-1191**	1	PLATE-WARNING (MACHINE OPERATION)	
Y	3	1	*8Y-4951*	1	SEAT GP-SUSPENSION (VINYL)	725
Y	4	1	*166-7065*	1	GUARD GP-PLATFORM	366
Y	5	1	*197-7155*	1	PANEL GP-INSTRUMENT	708
	6	1	**9D-3767**	1	PLUG-BUTTON	

Y-SEPARATE ILLUSTRATION

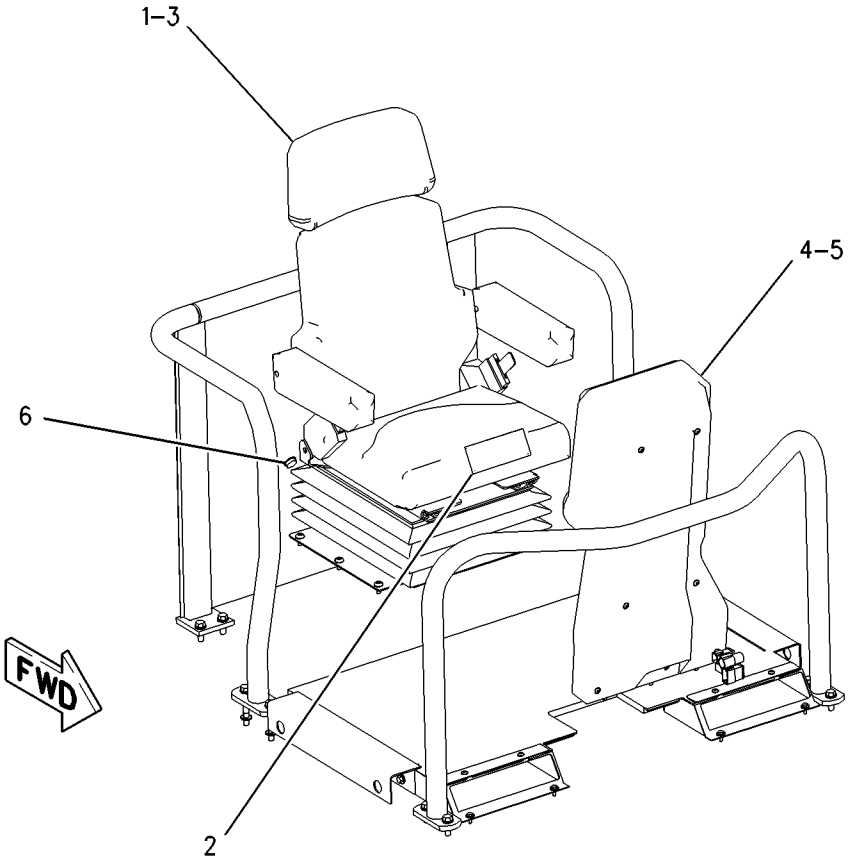

GRAPHIC #1 g00940629

MEMORANDA

OPERATOR STATION

8X-4317 DOOR GP—HIGH PROFILE—RH

S/N: ATS1-UP
PART OF 8X-4413 DOOR GP-CAB
AN ATTACHMENT

SMCS-7308 **i01797987**

NOTE	REF NO	GRAPHIC REF	PART NUMBER	QTY	PART NAME 1 2 3 4 5 6 (PRODUCT LEVEL)	SEE PAGE
	1	1	**199-2677**	1	LINK	
	2	1	**1H-3338**	1	LOCKWASHER	
	3	1	**5T-7486**	1	RETAINER-SPRING	
	4	1	**6D-6581**	16	RIVET-POP	
	5	1	**6V-2773**	2	PLUG	
	6	1	**6V-7636**	4	PIN AS-SPRING	
	7	1	**8X-3806**	1	HINGE	
	8	1	**8X-4243**	1	COVER-RH	
	9	1	**8X-4262**	1	COVER-RH	
	10	1	**8X-3938**	1	GLASS (UPPER)	
	11	1	**8X-4448**	1	GLASS (LOWER)	
	12	1	**8Y-4398**	1	LINK-CONNECTING	
	13	1	**8Y-4400**	1	LATCH AS-DOOR	
	14	1	**8Y-4401**	1	HANDLE AS (INSIDE)	
	15	1	**8Y-4619**	1	HANDLE AS (OUTSIDE)	
	16	1	**8Y-4620**	1	LINK-CONNECTING	
J	17	1	**8Y-4801**	1	LOCK AS-CYLINDER	
M	18	1	**9X-2546**	4	BOLT (M6X1X20MM)	
	19	1	**107-9641**	1	PLATE AS	
	20	1	**108-5950**	1	LATCH AS-RH	
	21	1	**108-5952**	1	LINK-TAG-RH	
	22	1	**114-9190**	1	SEAL	
	23	1	**128-0037**	1	KNOB-BALL	
	24	1	**199-2712**	1	HANDLE	
	25	1	**199-2739**	1	DOOR AS (RH) (HIGH PROFILE)	
M		1	**6V-9632**	8	NUT-WELD (M6X1 THD)	
M		1	**8T-3490**	2	NUT-WELD (M10X1.5 THD)	
	26	1	**8T-4121**	2	WASHER-HARD (11X21X2.5MM THK)	
M	27	1	**8T-4137**	2	BOLT (M10X1.5X20MM)	
M	28	1	**8T-4181**	10	BOLT (M6X1X20MM)	
	29	1	**8X-4245**	1	BOSS (M6X18MM)	
M	30	1	**9X-2042**	7	SCREW-TRUSS HEAD (M6X1X12MM)	
	31	1	**9X-8256**	6	WASHER (6.6X12X2MM THK)	
D	32	1	**5P-5678**		SEAL (2.875M)	
D	32A	1	**5P-5678**		SEAL (2.725M)	

D-ORDER BY THE METER
J-REQUIRES 5P8500 KEY
M-METRIC PART

8X-4317 DOOR GP *(contd.)* **i01797987**

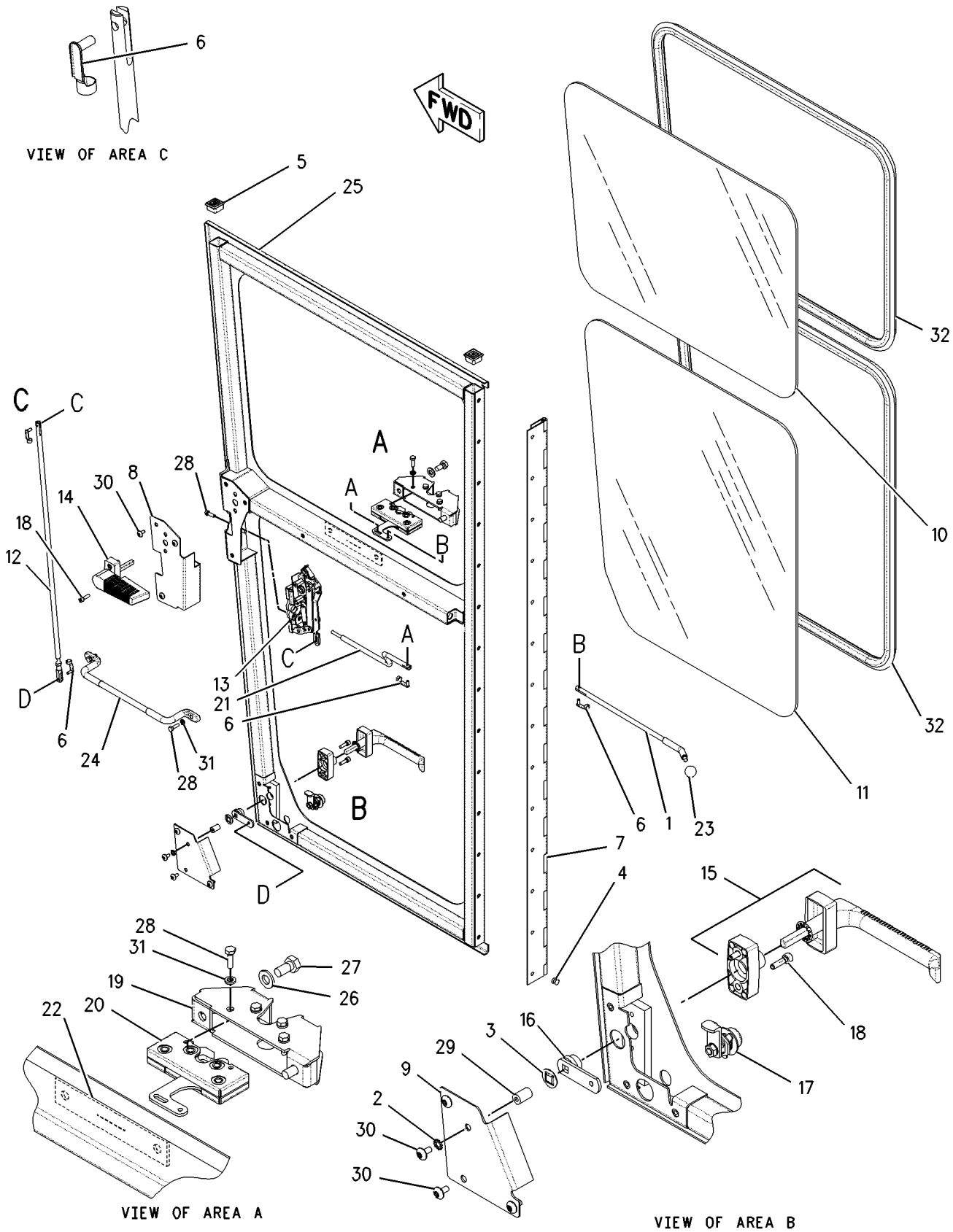

GRAPHIC #1 g00772926

OPERATOR STATION

8X-4318 DOOR GP—HIGH PROFILE—LH

S/N: ATS1-UP
PART OF 8X-4413 DOOR GP-CAB
AN ATTACHMENT

SMCS-7308 **i01797990**

NOTE	REF NO	GRAPHIC REF	PART NUMBER	QTY	PART NAME 1 2 3 4 5 6 (PRODUCT LEVEL)	SEE PAGE
	1	1	**199-2677**	1	LINK	
	2	1	**1H-3338**	1	LOCKWASHER	
	3	1	**5T-7486**	1	RETAINER-SPRING	
	4	1	**6D-6581**	16	RIVET-POP	
	5	1	**6V-2773**	2	PLUG	
	6	1	**6V-7636**	4	PIN AS-SPRING	
	7	1	**8X-3806**	1	HINGE	
	8	1	**8X-4244**	1	COVER-LH	
	9	1	**8X-4263**	1	COVER-LH	
	10	1	**8X-3938**	1	GLASS (UPPER)	
	11	1	**8X-4448**	1	GLASS (LOWER)	
	12	1	**8Y-4398**	1	LINK-CONNECTING	
	13	1	**8Y-4399**	1	LATCH AS-DOOR	
	14	1	**8Y-4401**	1	HANDLE AS (INSIDE)	
	15	1	**8Y-4619**	1	HANDLE AS (OUTSIDE)	
	16	1	**8Y-4620**	1	LINK-CONNECTING	
J	17	1	**8Y-4801**	1	LOCK AS-CYLINDER	
M	18	1	**9X-2546**	4	BOLT (M6X1X20MM)	
	19	1	**107-9641**	1	PLATE AS	
	20	1	**108-5949**	1	LATCH AS-LH	
	21	1	**108-5951**	1	LINK-TAG-LH	
	22	1	**114-9190**	1	SEAL	
	23	1	**128-0037**	1	KNOB-BALL	
	24	1	**199-2712**	1	HANDLE	
	25	1	**199-2740**	1	DOOR AS (LH) (HIGH PROFILE)	
M		1	**6V-9632**	8	NUT-WELD (M6X1 THD)	
M		1	**8T-3490**	2	NUT-WELD (M10X1.5 THD)	
	26	1	**8T-4121**	2	WASHER-HARD (11X21X2.5MM THK)	
M	27	1	**8T-4137**	2	BOLT (M10X1.5X20MM)	
M	28	1	**8T-4181**	10	BOLT (M6X1X20MM)	
	29	1	**8X-4245**	1	BOSS (M6X18MM)	
M	30	1	**9X-2042**	7	SCREW-TRUSS HEAD (M6X1X12MM)	
	31	1	**9X-8256**	6	WASHER (6.6X12X2MM THK)	
D	32	1	**5P-5768**		SEAL (2.855M)	
D	32A	1	**5P-5768**		SEAL (2.725M)	

D-ORDER BY THE METER
J-REQUIRES 5P8500 KEY
M-METRIC PART

8X-4318 DOOR GP *(contd.)* **i01797990**

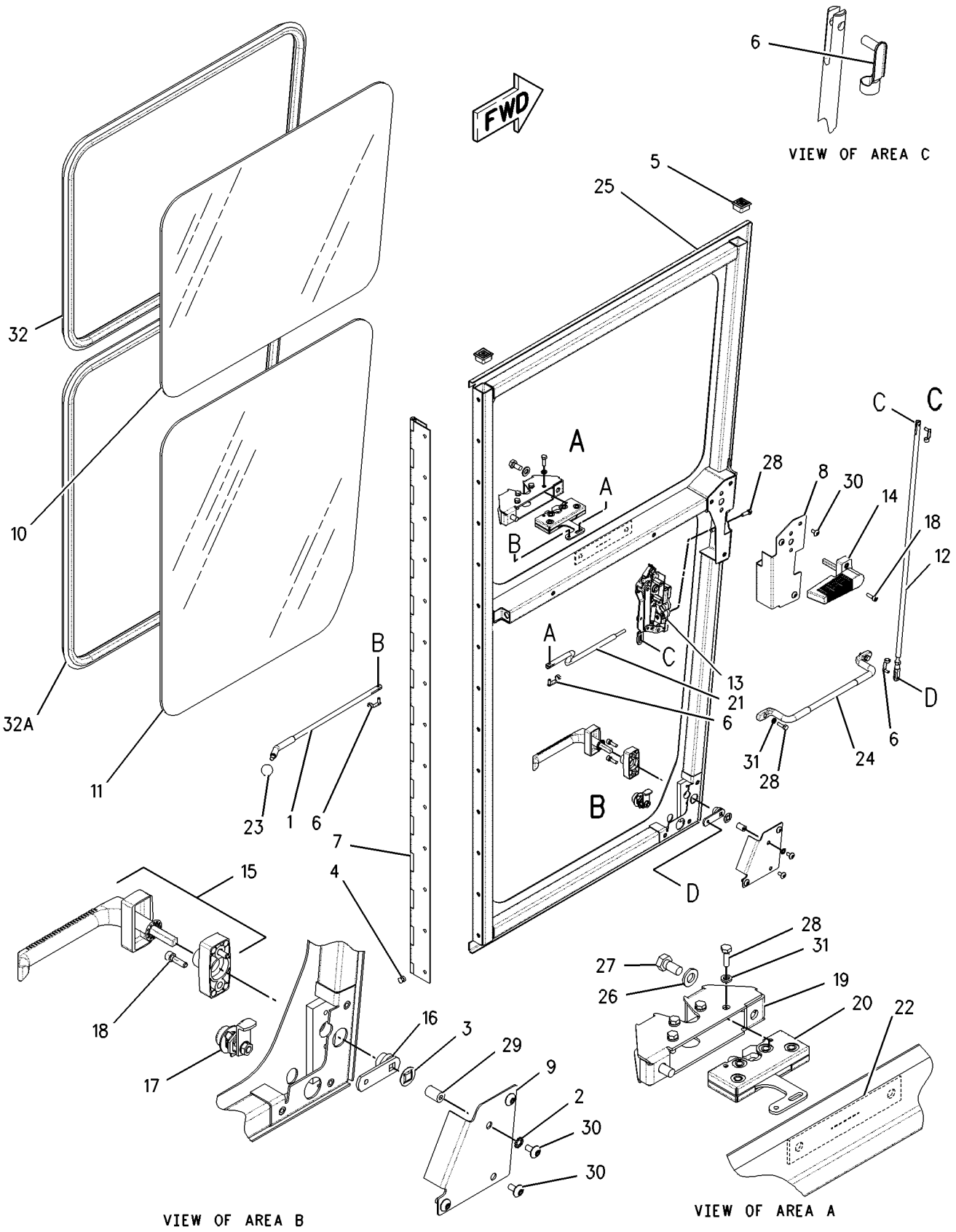

GRAPHIC #1 g00772891

OPERATOR STATION

8X-4413 DOOR GP-CAB—HIGH PROFILE

S/N: ATS1-UP
PART OF 177-8779 ROPS GP-ENCLOSED
AN ATTACHMENT

SMCS-7308 **i01650205**

NOTE	REF NO	GRAPHIC REF	PART NUMBER	QTY	PART NAME 1 2 3 4 5 6 (PRODUCT LEVEL)	SEE PAGE
Y	1	1	**8X-4317**	1	DOOR GP (RH) (HIGH PROFILE)	626
Y	2	1	**8X-4318**	1	DOOR GP (LH) (HIGH PROFILE)	628
M	3	1	**138-4054**	5	SCREW-FLAT HEAD (M6X1X45MM)	
M	4	1	**129-3178**	32	LOCKNUT (M6X1 THD)	
	5	1	**9X-8256**	32	WASHER (6.6X12X2MM THK)	
BD	6	1	**6V-5163**		SEAL	
BD	7	1	**5P-5969**		SEAL	
B	8	1	**4J-3915**	8	SHIM (1.52MM THK)	
	9	1	**6V-5158**	2	STRIKER AS-BODY	
	10	1	**154-8292**	1	SEAL (LH)	
M	11	1	**8C-8454**	27	SCREW-MACHINE (M6X1X20MM)	
	12	1	**107-6813**	2	PLATE AS	
	13	1	**8T-4121**	4	WASHER-HARD (11X21X2.5MM THK)	
M	14	1	**8T-4195**	4	BOLT (M10X1.5X30MM)	
M	15	1	**8T-4133**	4	NUT (M10X1.5 THD)	
	16	1	**106-6553**	4	BUMPER-CONICAL	
	17	1	**124-8843**	2	PLATE AS	
	18	1	**5M-3062**	4	BOLT (3/8-16X0.75 IN)	
	19	1	**5P-1075**	4	WASHER-HARD (10.2X22.5X3MM THK)	
M	20	1	**9X-2045**	4	SCREW-TRUSS HEAD (M6X1X20MM)	
	21	1	**126-4966**	2	PLATE	
	22	1	**154-8293**	1	SEAL (RH)	

B-USE AS REQUIRED
D-ORDER BY THE METER
M-METRIC PART
Y-SEPARATE ILLUSTRATION

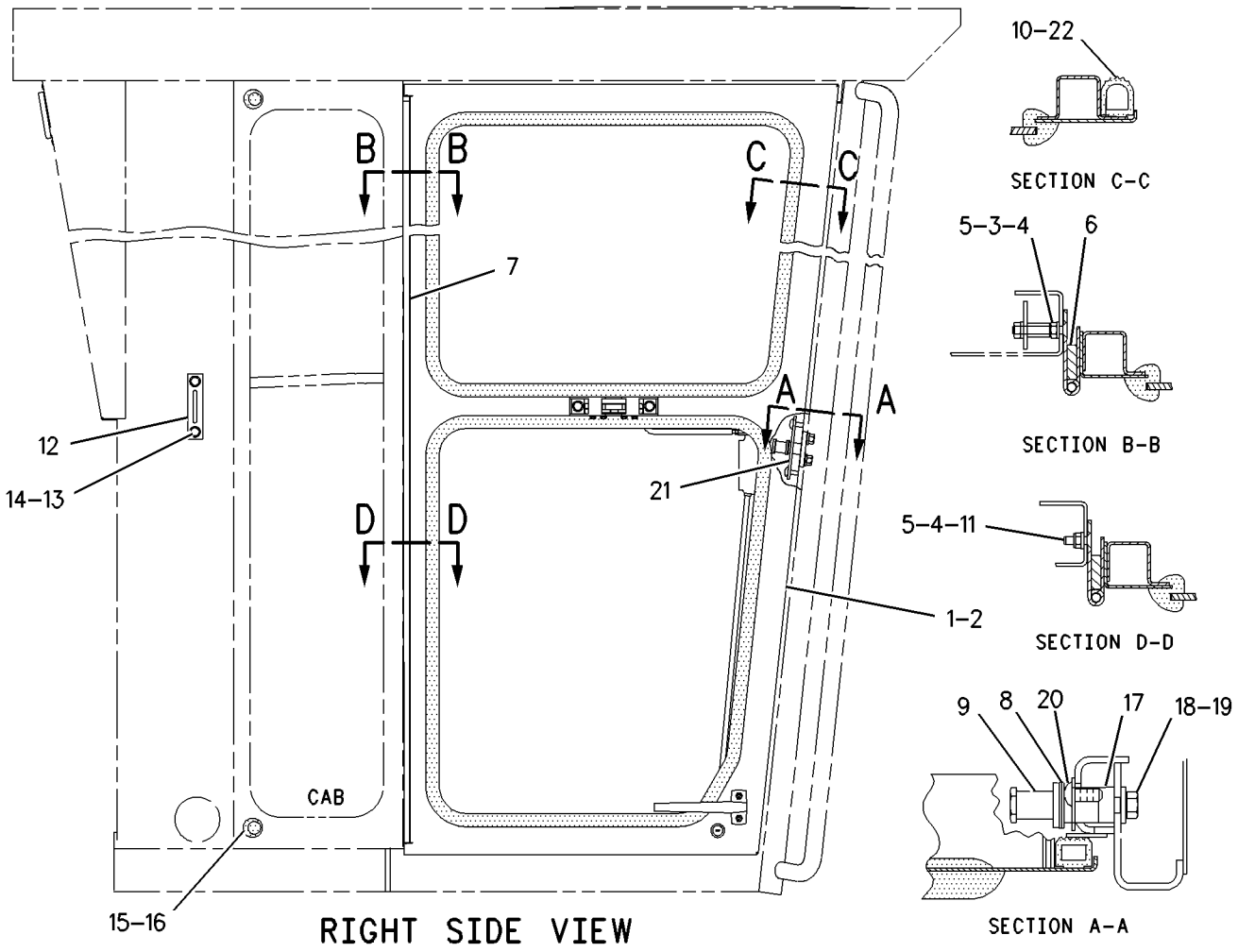

GRAPHIC #1 g00652299

OPERATOR STATION

8X-4525 DOOR GP-CAB—LOW PROFILE—RH

S/N: ATS1-UP

PART OF 8X-4527 DOOR GP-CAB

SMCS-7308 **i01628465**

NOTE	REF NO	GRAPHIC REF	PART NUMBER	QTY	PART NAME 1 2 3 4 5 6 (PRODUCT LEVEL)	SEE PAGE
	1	1	**199-2677**	1	LINK (RELEASE)	
	2	1	**1H-3338**	1	LOCKWASHER	
	3	1	**5T-7486**	1	RETAINER-SPRING	
	4	1	**6D-6581**	14	RIVET-POP	
	5	1	**6V-2773**	2	PLUG	
	6	1	**6V-7636**	4	PIN AS-SPRING	
	7	1	**8X-4066**	1	HINGE	
	8	1	**8X-4243**	1	COVER-RH	
	9	1	**8X-4262**	1	COVER-RH	
	10	1	**8X-4446**	1	GLASS (UPPER)	
	11	1	**8X-4448**	1	GLASS (LOWER)	
	12	1	**8Y-4398**	1	LINK-CONNECTING	
	13	1	**8Y-4400**	1	LATCH AS-DOOR	
	14	1	**8Y-4401**	1	HANDLE AS (INSIDE)	
	15	1	**8Y-4619**	1	HANDLE AS (OUTSIDE)	
	16	1	**8Y-4620**	1	LINK-CONNECTING	
J	17	1	**8Y-4801**	1	LOCK AS-CYLINDER	
M	18	1	**9X-2546**	4	BOLT (M6X1X20MM)	
	19	1	**107-9641**	1	PLATE AS	
	20	1	**108-5950**	1	LATCH AS-RH	
	21	1	**108-5952**	1	LINK-TAG-RH	
	22	1	**114-9190**	1	SEAL	
	23	1	**128-0037**	1	KNOB-BALL	
	24	1	**199-2712**	1	HANDLE (GRAB)	
	25	1	**199-2737**	1	DOOR AS (RH)	
M		1	**6V-9632**	8	NUT-WELD (M6X1 THD)	
M		1	**8T-3490**	2	NUT-WELD (M10X1.5 THD)	
	26	1	**8T-4121**	2	WASHER-HARD (11X21X2.5MM THK)	
M	27	1	**8T-4137**	2	BOLT (M10X1.5X20MM)	
M	28	1	**8T-4181**	10	BOLT (M6X1X20MM)	
	29	1	**8X-4245**	1	BOSS (M6X18MM)	
M	30	1	**9X-2042**	7	SCREW-TRUSS HEAD (M6X1X12MM)	
	31	1	**9X-8256**	6	WASHER (6.6X12X2MM THK)	
D	32	1	**069-5688**		SEAL (2.8M)	
D	32A	1	**069-5688**		SEAL (2.4M)	

D-ORDER BY THE METER
J-REQUIRES 5P8500 KEY
M-METRIC PART

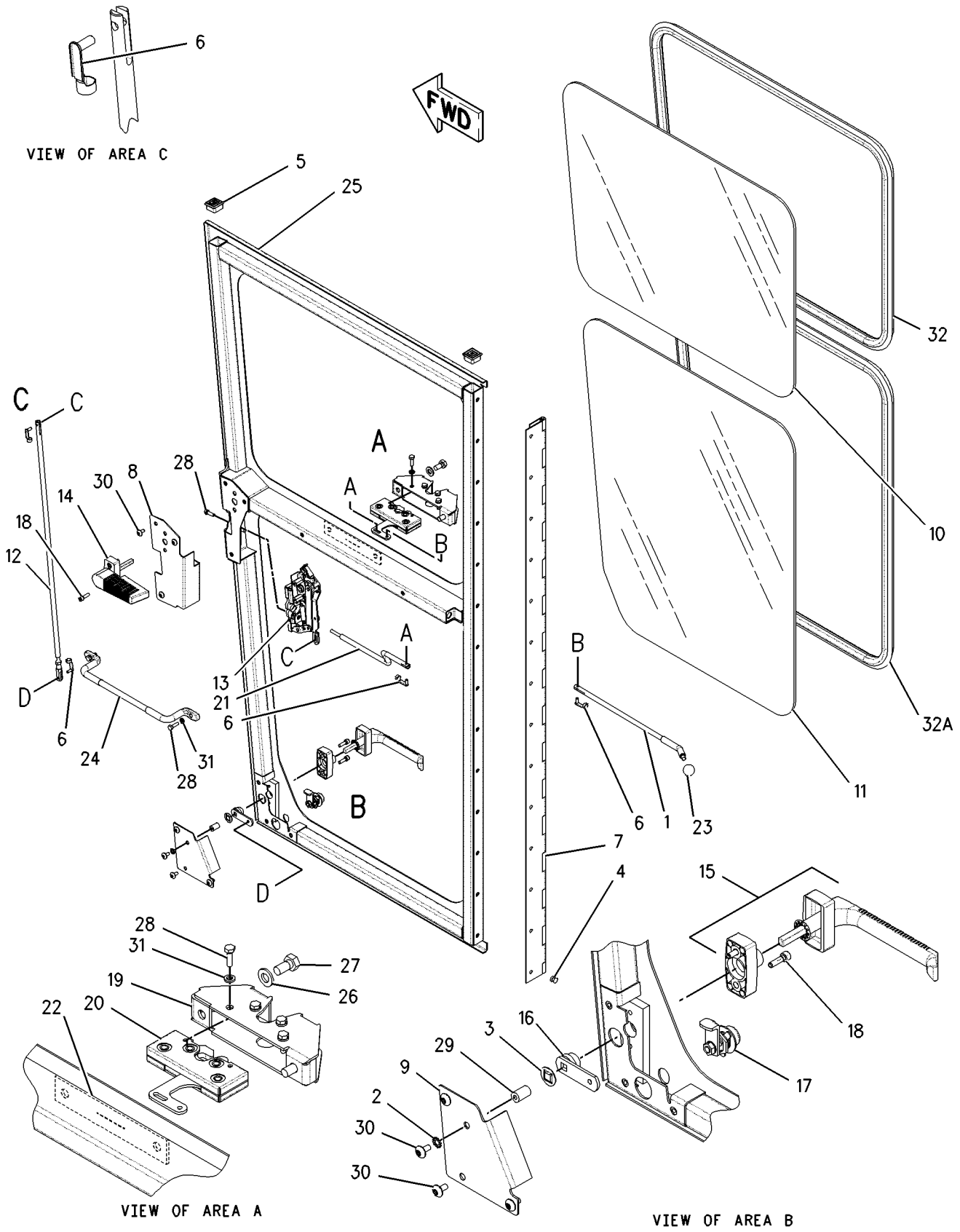

GRAPHIC #1 g00843971

OPERATOR STATION

8X-4526 DOOR GP-CAB—LOW PROFILE—LH

S/N: ATS1-UP

PART OF 8X-4527 DOOR GP-CAB

SMCS-7308 **i01628464**

NOTE	REF NO	GRAPHIC REF	PART NUMBER	QTY	PART NAME 1 2 3 4 5 6 (PRODUCT LEVEL)	SEE PAGE
	1	1	**199-2677**	1	LINK (RELEASE)	
	2	1	**1H-3338**	1	LOCKWASHER	
	3	1	**5T-7486**	1	RETAINER-SPRING	
	4	1	**6D-6581**	14	RIVET-POP	
	5	1	**6V-2773**	2	PLUG	
	6	1	**6V-7636**	4	PIN AS-SPRING	
	7	1	**8X-4066**	1	HINGE	
	8	1	**8X-4244**	1	COVER-LH	
	9	1	**8X-4263**	1	COVER-LH	
	10	1	**8X-4446**	1	GLASS (UPPER)	
	11	1	**8X-4448**	1	GLASS (LOWER)	
	12	1	**8Y-4398**	1	LINK-CONNECTING	
	13	1	**8Y-4399**	1	LATCH AS-DOOR	
	14	1	**8Y-4401**	1	HANDLE AS (INSIDE)	
	15	1	**8Y-4619**	1	HANDLE AS (OUTSIDE)	
	16	1	**8Y-4620**	1	LINK-CONNECTING	
J	17	1	**8Y-4801**	1	LOCK AS-CYLINDER	
M	18	1	**9X-2546**	4	BOLT (M6X1X20MM)	
	19	1	**107-9641**	1	PLATE AS	
	20	1	**108-5949**	1	LATCH AS-LH	
	21	1	**108-5951**	1	LINK-TAG-LH	
	22	1	**114-9190**	1	SEAL	
	23	1	**128-0037**	1	KNOB-BALL	
	24	1	**199-2712**	1	HANDLE (GRAB)	
	25	1	**199-2738**	1	DOOR AS (LH)	
M		1	**6V-9632**	8	NUT-WELD (M6X1 THD)	
M		1	**8T-3490**	2	NUT-WELD (M10X1.5 THD)	
	26	1	**8T-4121**	2	WASHER-HARD (11X21X2.5MM THK)	
M	27	1	**8T-4137**	2	BOLT (M10X1.5X20MM)	
M	28	1	**8T-4181**	10	BOLT (M6X1X20MM)	
	29	1	**8X-4245**	1	BOSS (M6X18MM)	
M	30	1	**9X-2042**	7	SCREW-TRUSS HEAD (M6X1X12MM)	
	31	1	**9X-8256**	6	WASHER (6.6X12X2MM THK)	
D	32	1	**069-5688**		SEAL (2.4M)	
D	32A	1	**069-5688**		SEAL (2.8M)	

D-ORDER BY THE METER
J-REQUIRES 5P8500 KEY
M-METRIC PART

8X-4526 **DOOR GP-CAB** ***(contd.)*** **i01628464**

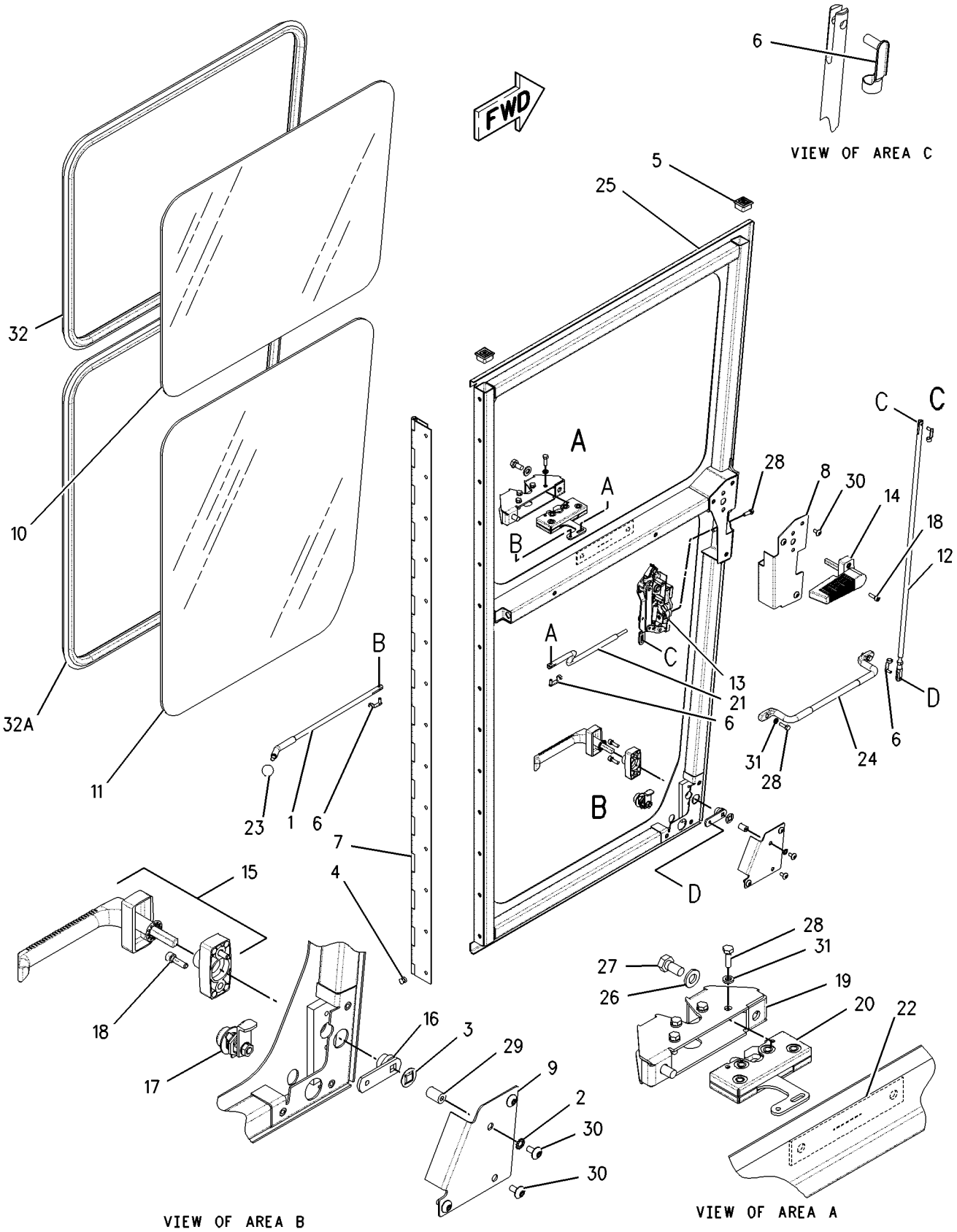

GRAPHIC #1 g00772891

OPERATOR STATION

8X-4527 DOOR GP-CAB—LOW PROFILE

S/N: ATS1-UP

PART OF 172-5377 ROPS GP-ENCLOSED

SMCS-7308 **i01650212**

NOTE	REF NO	GRAPHIC REF	PART NUMBER	QTY	PART NAME 1 2 3 4 5 6 (PRODUCT LEVEL)	SEE PAGE
Y	1	1	*8X-4526*	1	DOOR GP-CAB (LH) (LOW PROFILE)	634
Y	2	1	*8X-4525*	1	DOOR GP-CAB (RH) (LOW PROFILE)	632
M	3	1	**138-4054**	5	SCREW-FLAT HEAD (M6X1X45MM)	
M	4	1	**129-3178**	28	LOCKNUT (M6X1 THD)	
	5	1	**9X-8256**	28	WASHER (6.6X12X2MM THK)	
BD	6	1	**6V-5163**		SEAL	
	7	1	**124-8843**	2	PLATE AS	
B	8	1	**4J-3915**	8	SHIM (1.52MM THK)	
	9	1	**6V-5158**	2	STRIKER AS-BODY	
	10	1	**154-8290**	1	SEAL (LH)	
M	11	1	**8C-8454**	23	SCREW-MACHINE (M6X1X20MM)	
	12	1	**107-6813**	2	PLATE AS	
	13	1	**8T-4121**	4	WASHER-HARD (11X21X2.5MM THK)	
M	14	1	**8T-4195**	4	BOLT (M10X1.5X30MM)	
M	15	1	**8T-4133**	4	NUT (M10X1.5 THD)	
	16	1	**106-6553**	4	BUMPER-CONICAL	
BD	17	1	**5P-5969**		SEAL	
	18	1	**5M-3062**	4	BOLT (3/8-16X0.75 IN)	
	19	1	**5P-1075**	4	WASHER-HARD (10.2X22.5X3MM THK)	
M	20	1	**9X-2045**	4	SCREW-TRUSS HEAD (M6X1X20MM)	
	21	1	**126-4966**	2	PLATE	
	22	1	**154-8291**	1	SEAL (RH)	

B-USE AS REQUIRED
D-ORDER BY THE METER
M-METRIC PART
Y-SEPARATE ILLUSTRATION

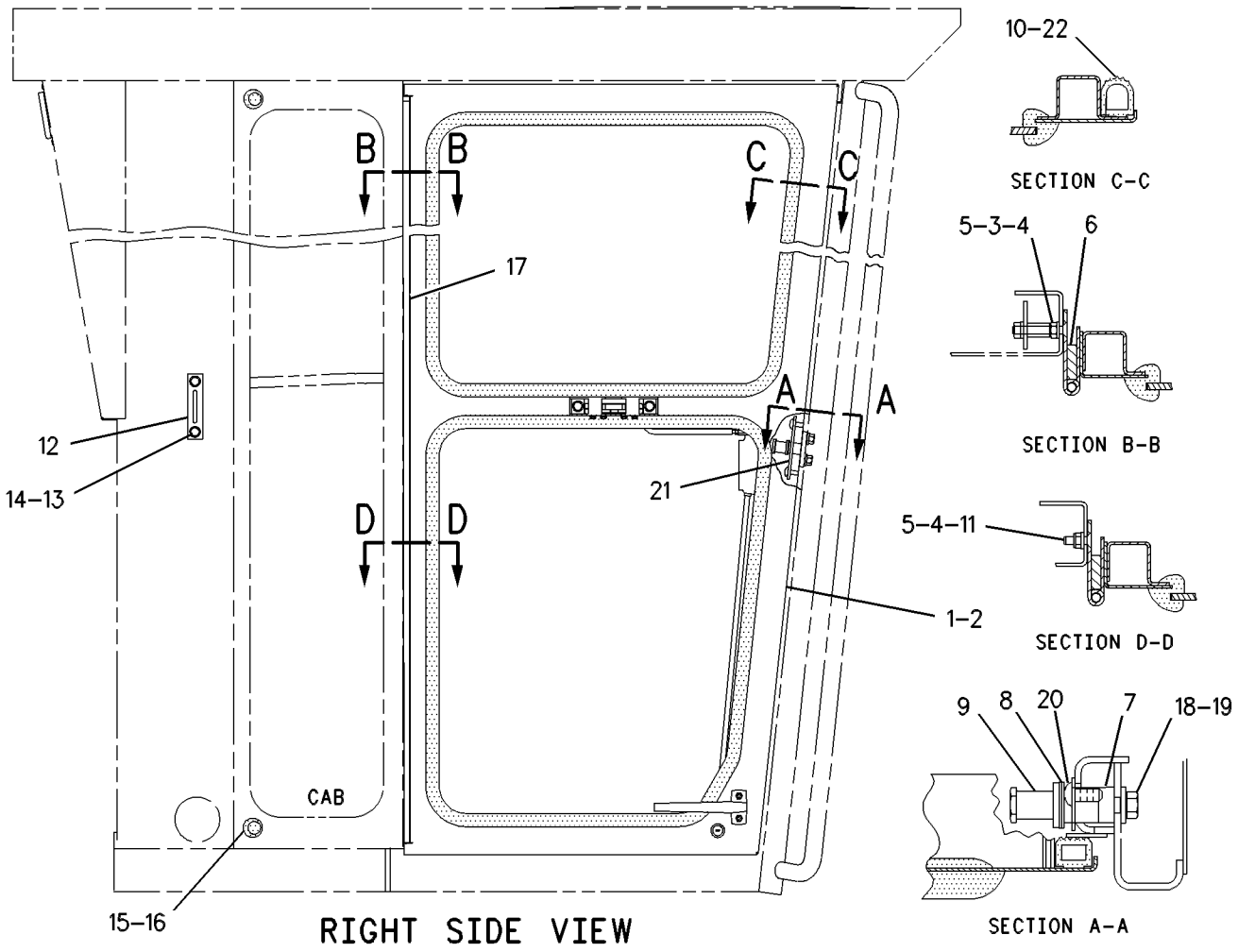

GRAPHIC #1

g00479308

OPERATOR STATION

177-7891 DUCT & CONTROL GP–SUPPLEMENTAL LOUVERS

S/N: ATS1-UP

PART OF 167-8069 AIR CONDITIONER AR, 167-8395 HEATER AR-CAB

AN ATTACHMENT

SMCS-7337 **i01528329**

NOTE	REF NO	GRAPHIC REF	PART NUMBER	QTY	PART NAME 1 2 3 4 5 6 (PRODUCT LEVEL)	SEE PAGE
	1	1	**8Y-6388**	6	LOUVER AS	
	2	1	**139-3595**	1	PANEL AS	
		1	**7K-4201**	2	NUT-SPEED	
		1	**8S-7566**	4	RIVET-POP	
	3	1	**164-8474**	2	LOUVER AS	
M	4	1	**9X-2043**	2	SCREW-TRUSS HEAD (M6X1X14MM)	

M-METRIC PART

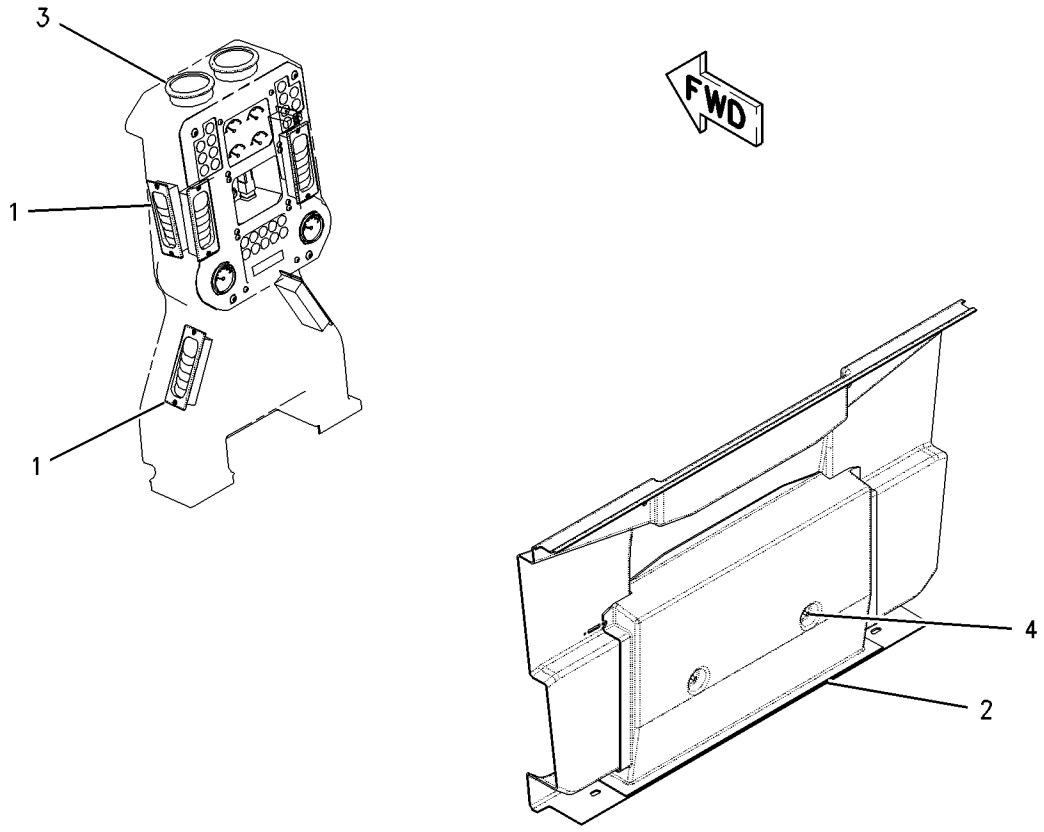

GRAPHIC #1 g00796998

OPERATOR STATION

7I-5015 DUCT GP

S/N: ATS1-UP

PART OF 167-8069 AIR CONDITIONER AR, 167-8395 HEATER AR-CAB AN ATTACHMENT

i00127489

NOTE	REF NO	GRAPHIC REF	PART NUMBER	QTY	PART NAME 1 2 3 4 5 6 (PRODUCT LEVEL)	SEE PAGE
	1	1	**104-2091**	8	SCREW-FLAT HEAD (NO.6-20X0.5IN)	
	2	1	**106-4496**	6	BRACKET AS	
					(EACH INCLUDES)	
M	3	1	**6V-9632**	1	NUT-WELD (M6X1 THD)	
	4	1	**8X-5102**	2	SEAL	
	5	1	**8Y-6388**	4	LOUVER AS	
	6	1	**122-8155**	1	DUCT	
	7	1	**122-8154**	1	DUCT	
M	8	1	**9X-2043**	8	SCREW-TRUSS HEAD (M6X1X14MM)	
	9	1	**8T-4205**	2	WASHER-HARD (2MM THK)	
M	10	1	**5C-2890**	2	NUT (M6X1.00 THD)	

M-METRIC PART

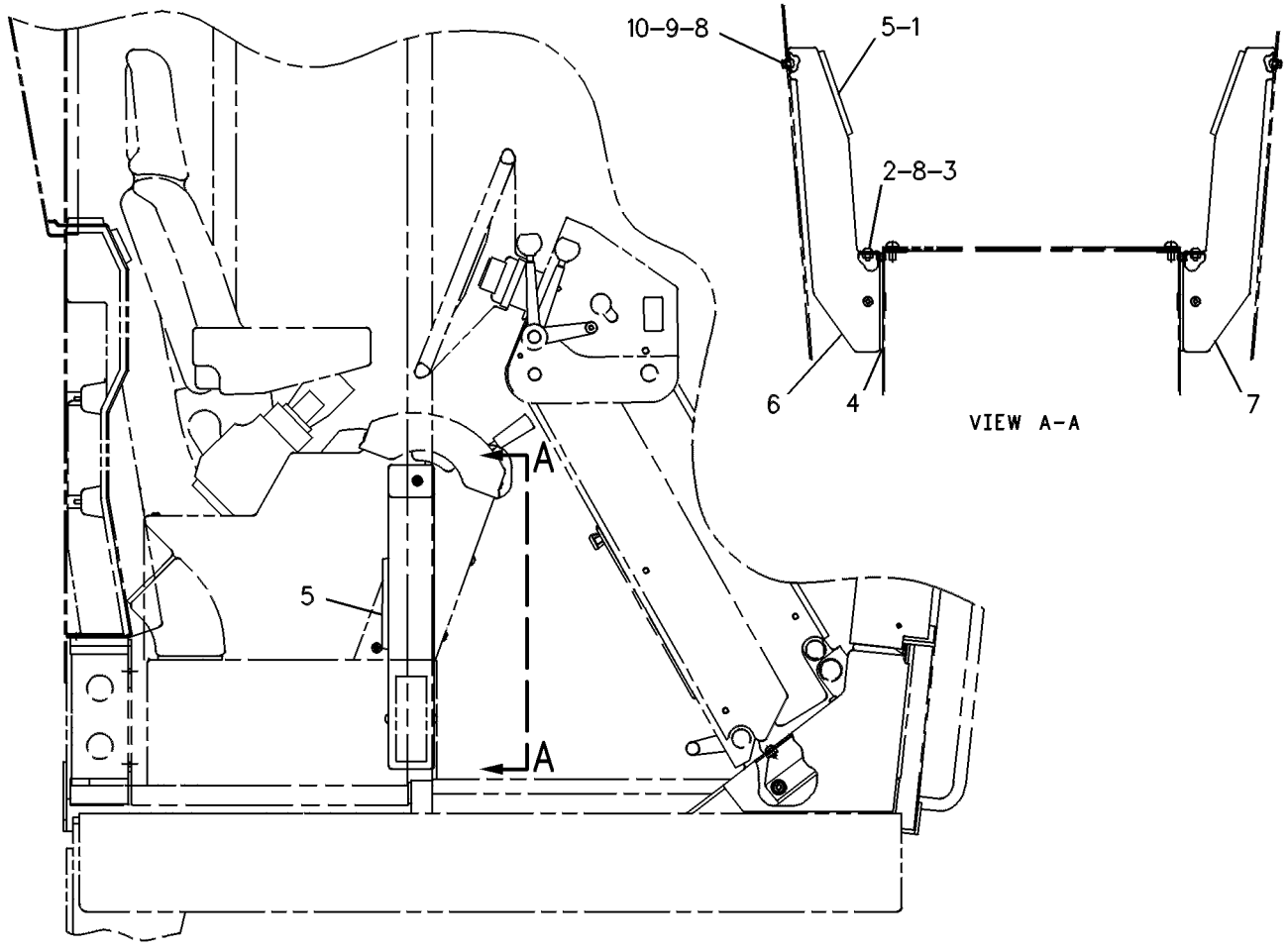

RIGHT SIDE VIEW

GRAPHIC #1

g00108768

OPERATOR STATION

8Y-5874 EXTENSION GP-BACKREST—CLOTH

S/N: ATS1-UP
PART OF 112-9104, 155-5958 SEAT GP-SUSPENSION
ALSO AN ATTACHMENT

SMCS-7312 **i01696160**

NOTE	REF NO	GRAPHIC REF	PART NUMBER	QTY	PART NAME 1 2 3 4 5 6 (PRODUCT LEVEL)	SEE PAGE
	1	1	**8Y-5877**	1	PAN AS-EXTENSION	
J	2	1	**8Y-5947**	2	FASTENER	
JZ	3	1		1	CUSHION AS	
					AVAILABLE REPAIR KIT(S):	
J			**8Y-5943**	1	KIT-CUSHION (BACKREST EXTENSION)	
					(INCLUDES CUSHION AS & FASTENER)	

J-KIT MARKED J SERVICES PART(S) MARKED J
Z-NOT SERVICED SEPARATELY

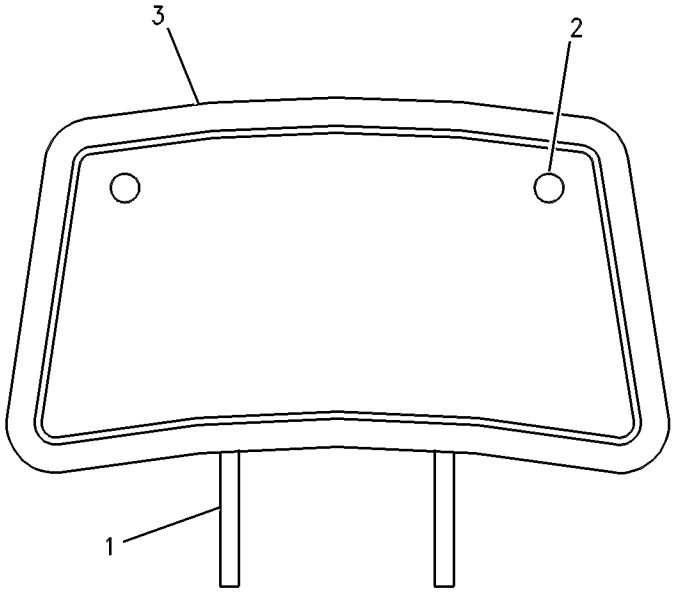

GRAPHIC #1 g00524121

OPERATOR STATION

8Y-5959 EXTENSION GP-BACKREST—VINYL

S/N: ATS1-UP
PART OF 112-9105 SEAT GP-SUSPENSION
AN ATTACHMENT

SMCS-7312 **i01395711**

NOTE	REF NO	GRAPHIC REF	PART NUMBER	QTY	PART NAME 1 2 3 4 5 6 (PRODUCT LEVEL)	SEE PAGE
	1	1	**8Y-5877**	1	PAN AS-EXTENSION	
J	2	1	**8Y-5947**	2	FASTENER	
JZ	3	1		1	CUSHION AS	
					AVAILABLE REPAIR KIT(S):	
J			**8Y-5960**	1	KIT-CUSHION (VINYL BACK REST)	

J-KIT MARKED J INCLUDES PARTS MARKED J
Z-NOT SERVICED SEPARATELY

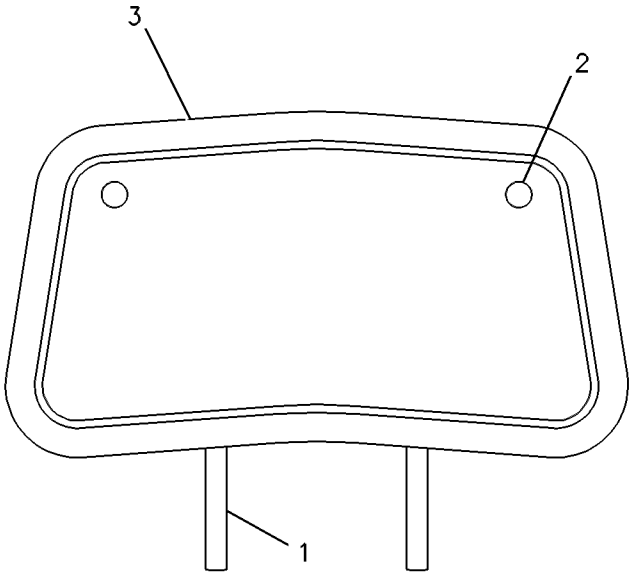

GRAPHIC #1 g00326278

OPERATOR STATION

170-4820 FAN GP-CIRCULATING—REAR

S/N: ATS1-UP
24 VOLT
PART OF 172-6835 FAN GP-CIRCULATING
AN ATTACHMENT

SMCS-7316 **i01625715**

NOTE	REF NO	GRAPHIC REF	PART NUMBER	QTY	PART NAME 1 2 3 4 5 6 (PRODUCT LEVEL)	SEE PAGE
	1	1	**3D-8747**	1	BRACKET	
	2	1	**3D-8748**	1	FAN AS	
	3	1	**3D-8749**	1	GUARD	
	4	1	**3T-6774**	1	GROMMET	
	5	1	**9X-9689**	1	BASE-FAN	
	6	1	**170-5335**	1	MOTOR GP-ELECTRIC	
		1	**3E-3365**	1	WEDGE-RECEPTACLE LOCK (2 PIN)	
		1	**9W-0852**	2	PIN-CONNECTOR	
		1	**102-8802**	1	KIT-RECEPTACLE (2 PIN)	
	7	1	**1B-2713**	1	BOLT (1/4-20X1.75IN)	
	8	1	**1M-1230**	2	NUT & LOCK AS (10/32 THD)	
	9	1	**2D-6235**	1	LOCKNUT (1/4-20 THD)	
	10	1	**3D-8752**	1	LOCKNUT (5/16-24 THD)	
	11	1	**5P-0537**	4	WASHER-HARD (7.2X14.5X2MM THK)	
	12	1	**6G-5987**	1	BRACKET	
	13	1	**7L-8316**	1	SETSCREW-SOCKET (10-32X.25IN)	
	14	1	**7T-0582**	1	BOLT	
	15	1	**9M-1974**	2	WASHER-HARD (8.8X16X2MM THK)	

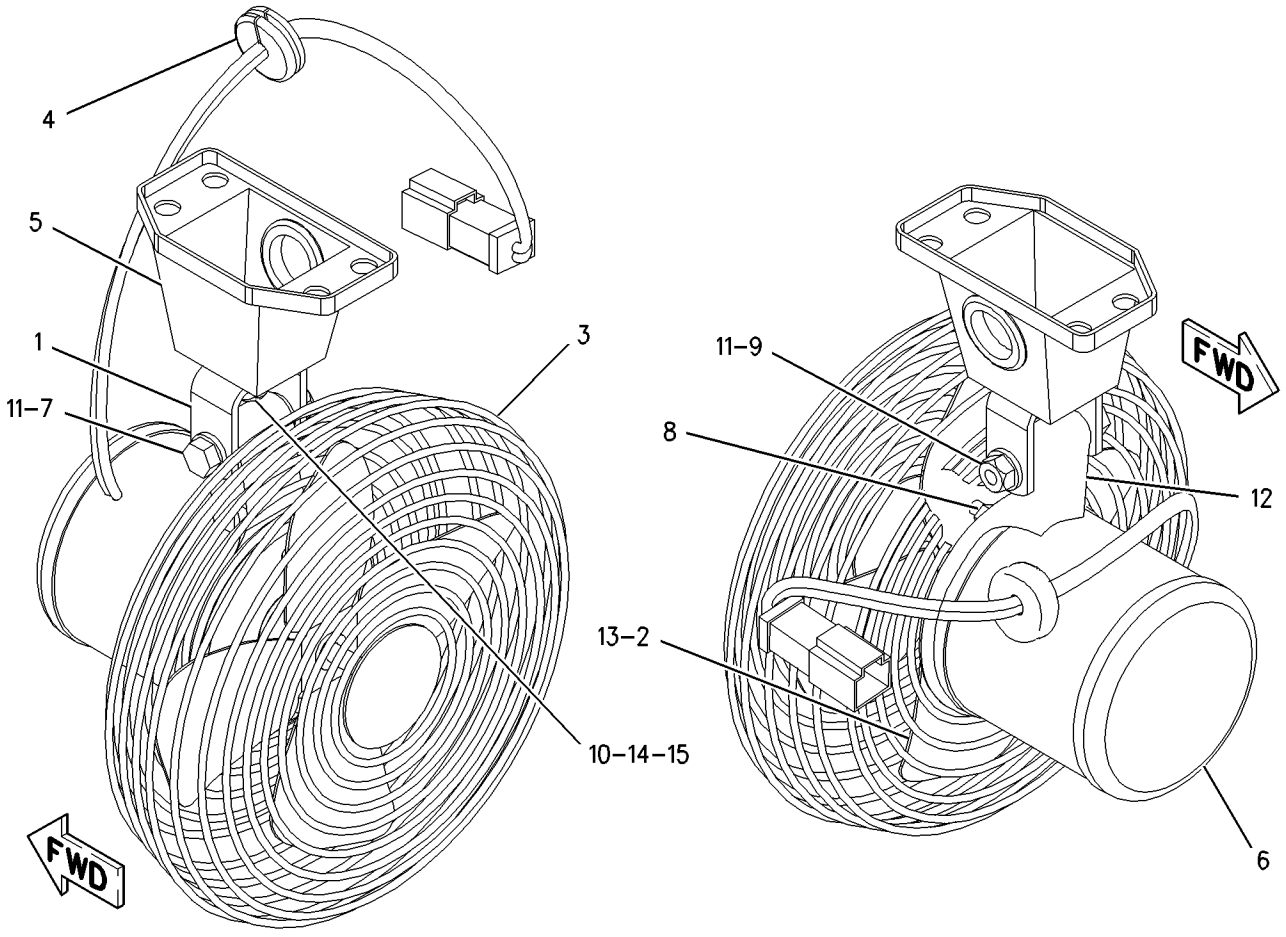

GRAPHIC #1 g00843653

OPERATOR STATION

170-5334 FAN GP-CIRCULATING

S/N: ATS1-UP
24-VOLT
PART OF 172-6834 FAN GP-CIRCULATING
AN ATTACHMENT

SMCS-7316 **i01660892**

NOTE	REF NO	GRAPHIC REF	PART NUMBER	QTY	PART NAME 1 2 3 4 5 6 (PRODUCT LEVEL)	SEE PAGE
	1	1	**3D-8747**	1	BRACKET	
	2	1	**3D-8748**	1	FAN AS	
	3	1	**3D-8749**	1	GUARD	
	4	1	**3T-6774**	1	GROMMET	
	5	1	**9X-9689**	1	BASE-FAN	
	6	1	**135-1979**	1	BRACKET	
Y	7	1	**170-5335**	1	MOTOR GP-ELECTRIC (DEFROSTER FAN)	199
	8	1	**031-4155**	1	LOCKNUT (5/16-18 THD)	
	9	1	**1B-2713**	1	BOLT (1/4-20X1.75IN)	
	10	1	**1M-1230**	2	NUT & LOCK AS	
	11	1	**2D-6235**	1	LOCKNUT (1/4-20 THD)	
	12	1	**3D-8752**	1	LOCKNUT (5/16-24 THD)	
	13	1	**4M-0061**	1	BOLT (5/16-18X0.750 IN)	
	14	1	**5P-0537**	4	WASHER-HARD (7.2X14.5X2MM THK)	
	15	1	**6G-5987**	1	BRACKET	
	16	1	**7L-8316**	1	SETSCREW-SOCKET (10-32X.25IN)	
	17	1	**7T-0582**	1	BOLT	
	18	1	**9M-1974**	3	WASHER-HARD (8.8X16X2MM THK)	
	19	1	**9T-5241**	2	WASHER (9.53X18X1MM THK)	

Y-SEPARATE ILLUSTRATION

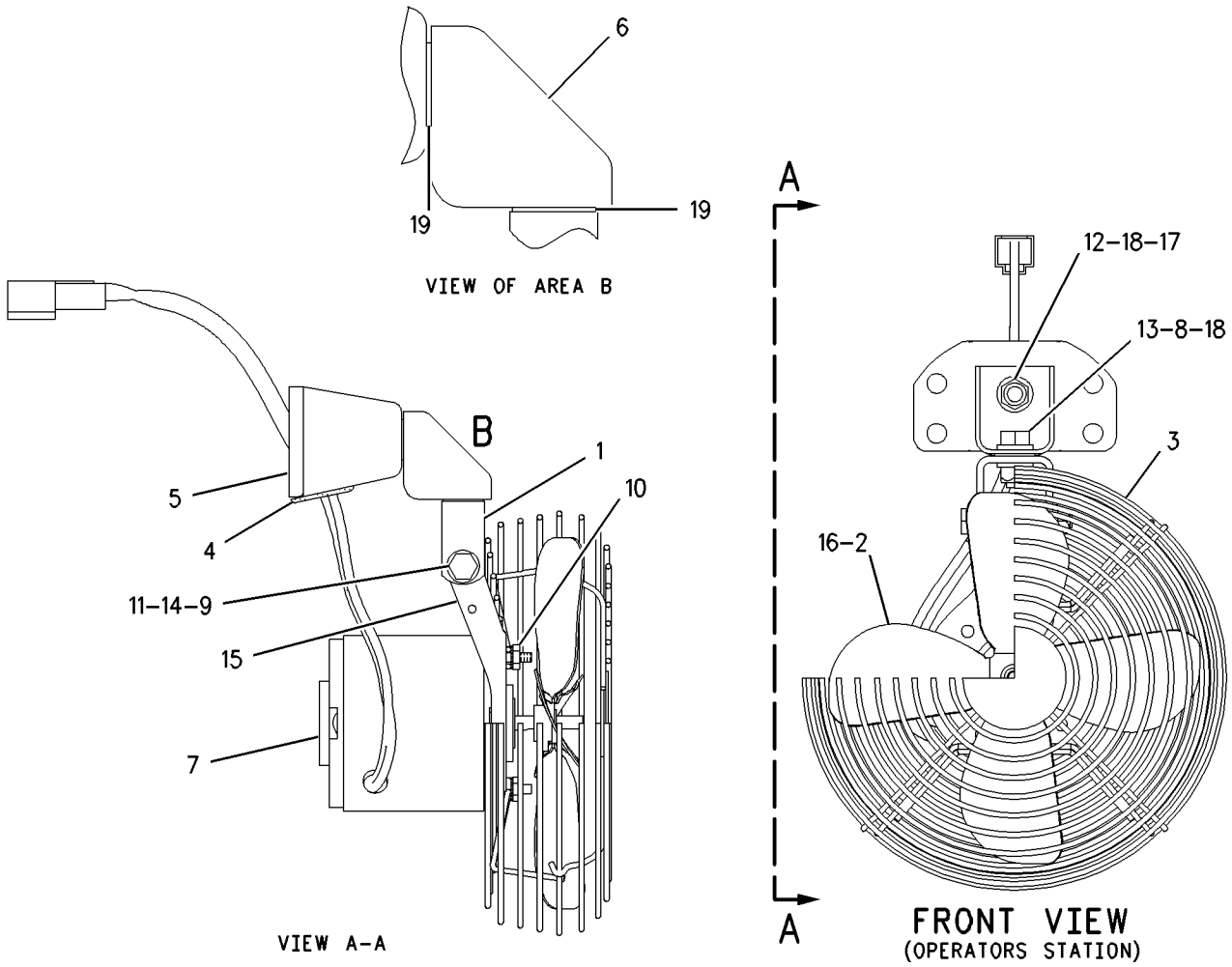

GRAPHIC #1

g00761361

OPERATOR STATION

172-6834 FAN GP-CIRCULATING–FRONT DEFROSTER

S/N: ATS1-UP
AN ATTACHMENT

SMCS-7316 **i01623796**

NOTE	REF NO	GRAPHIC REF	PART NUMBER	QTY	PART NAME 1 2 3 4 5 6 (PRODUCT LEVEL)	SEE PAGE
	1	1	**7T-4003**	1	RESISTOR	
	2	1	**9W-1442**	1	FUSE (10 AMP) (FRONT DEFROSTER)	
Y	3	1	*170-5334*	1	FAN GP-CIRCULATING (FRONT)	644
M	4	1	**9X-1046**	2	SCREW (M4X0.7X18MM)	
	5	1	**3E-9330**	1	SWITCH AS (ON/OFF) (FRONT DEFROSTER)	
		1	**3E-8821**	1	ACTUATOR-ROCKER	
		1	**3E-8825**	1	LAMP (24 VOLT) (FRONT DEFROSTER)	

M-METRIC PART
Y-SEPARATE ILLUSTRATION

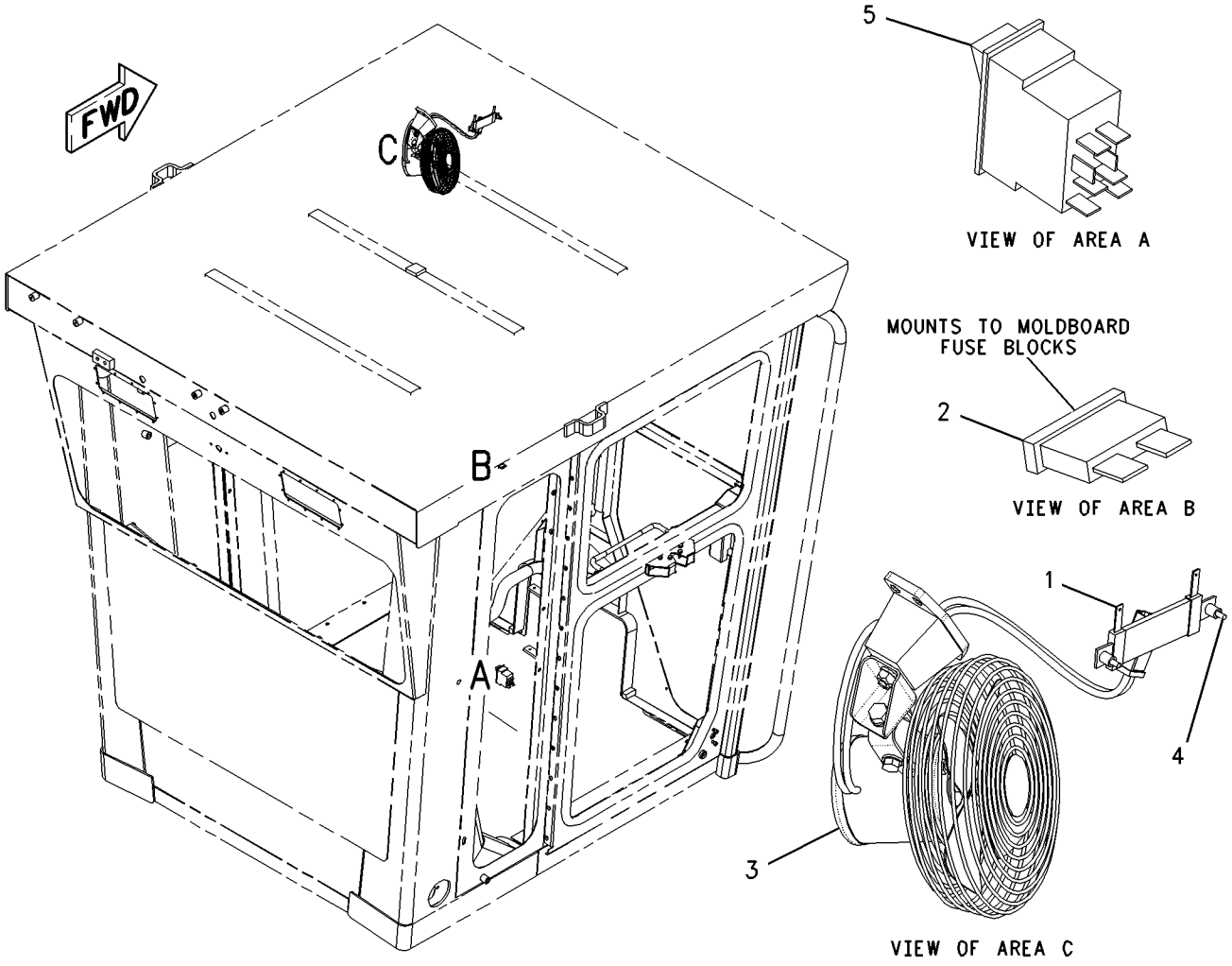

GRAPHIC #1 g00846757

OPERATOR STATION

172-6835 FAN GP-CIRCULATING–REAR DEFROSTER

S/N: ATS1-UP
AN ATTACHMENT

SMCS-7316 **i01623806**

NOTE	REF NO	GRAPHIC REF	PART NUMBER	QTY	PART NAME 1 2 3 4 5 6 (PRODUCT LEVEL)	SEE PAGE
	1	1	**7T-4003**	1	RESISTOR	
	2	1	**9W-1442**	1	FUSE (10 AMP) (REAR DEFROSTER)	
Y	3	1	*170-4820*	1	FAN GP-CIRCULATING (REAR)	642
	4	1	**5P-8525**	1	GROMMET	
M	5	1	**9X-1046**	2	SCREW (M4X0.7X18MM)	
M	6	1	**9X-2045**	4	SCREW-TRUSS HEAD (M6X1X20MM)	
	7	1	**3E-9330**	1	SWITCH AS (ON/OFF) (REAR DEFROSTER)	
		1	**3E-8821**	1	ACTUATOR-ROCKER	
		1	**3E-8825**	1	LAMP (24 VOLT) (REAR DEFROSTER)	

M-METRIC PART
Y-SEPARATE ILLUSTRATION

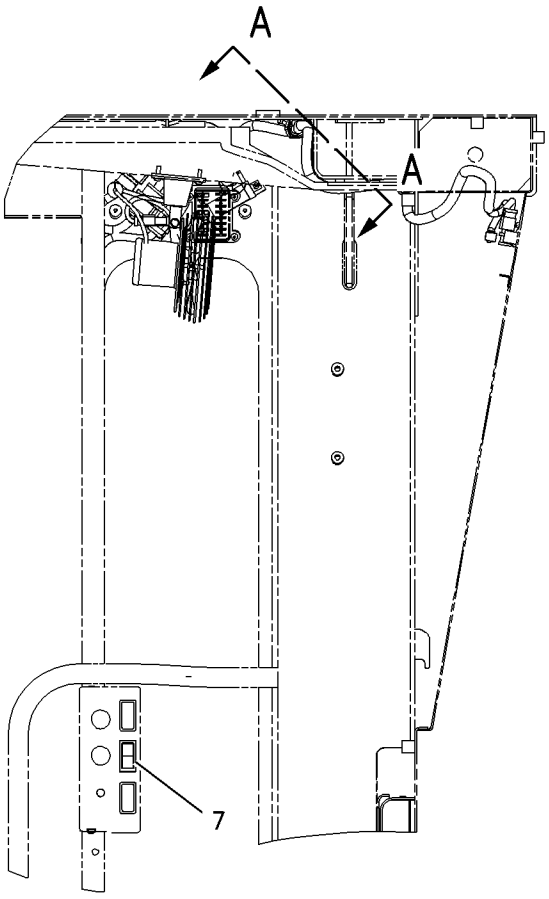

LEFT SIDE VIEW

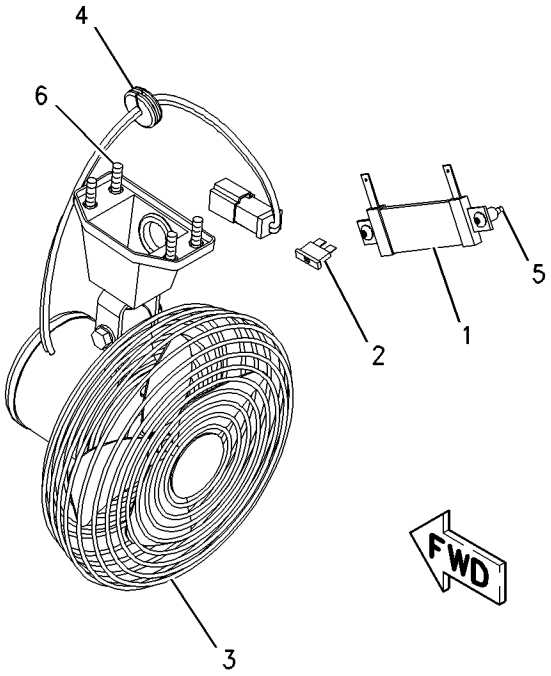

VIEW A-A

GRAPHIC #1 g00846366

OPERATOR STATION

8X-2925 FILTER GP-CAB AIR

S/N: ATS1-UP
PART OF 167-8069 AIR CONDITIONER AR, 167-8395 HEATER AR-CAB
AN ATTACHMENT

SMCS-7342 **i01655352**

NOTE	PART NUMBER	QTY	PART NAME 1 2 3 4 5 6 (PRODUCT LEVEL)	SEE PAGE
	9X-4986	2	FILTER (CAB AIR)	
			(UPPER LH & RH ROPS SIDE PANEL)	
	7T-7358	1	FILTER-AIR (ROPS REAR PANEL)	
	9X-8122	1	PLATE AS	
			(FILTER TO PANEL AS)	
	8R-1778	1	COVER-FILTER	
	133-7613	2	SCREW-BAILHEAD	
	131-5492	2	RETAINER-CAPTIVE	
	112-9555	4	SPRING-FILTER	
			(SNAP INTO UPPER LH & RH ROPS SIDE PANEL)	

<END>

OPERATOR STATION

199-2585 HAMMER & MOUNTING GP—LOW PROFILE

S/N: ATS1-UP
AN ATTACHMENT

SMCS-0606, 7310 **i01855439**

NOTE	REF NO	GRAPHIC REF	PART NUMBER	QTY	PART NAME 1 2 3 4 5 6 (PRODUCT LEVEL)	SEE PAGE
	1	1	**8Y-6379**	1	KIT-HAMMER	
					(INCLUDES BRACKET AND HAMMER)	
	2	1	**100-5612**	1	FILM-INSTRUCTION (ALT EXIT/REMOVE WINDOW)	
M	3	1	**155-4098**	4	SCREW-BUTTON HEAD	
	4	1	**199-2586**	1	COVER AS	
BD	5	1	**6V-0505**		SEAL	

B-USE AS REQUIRED
D-ORDER BY THE METER
M-METRIC PART

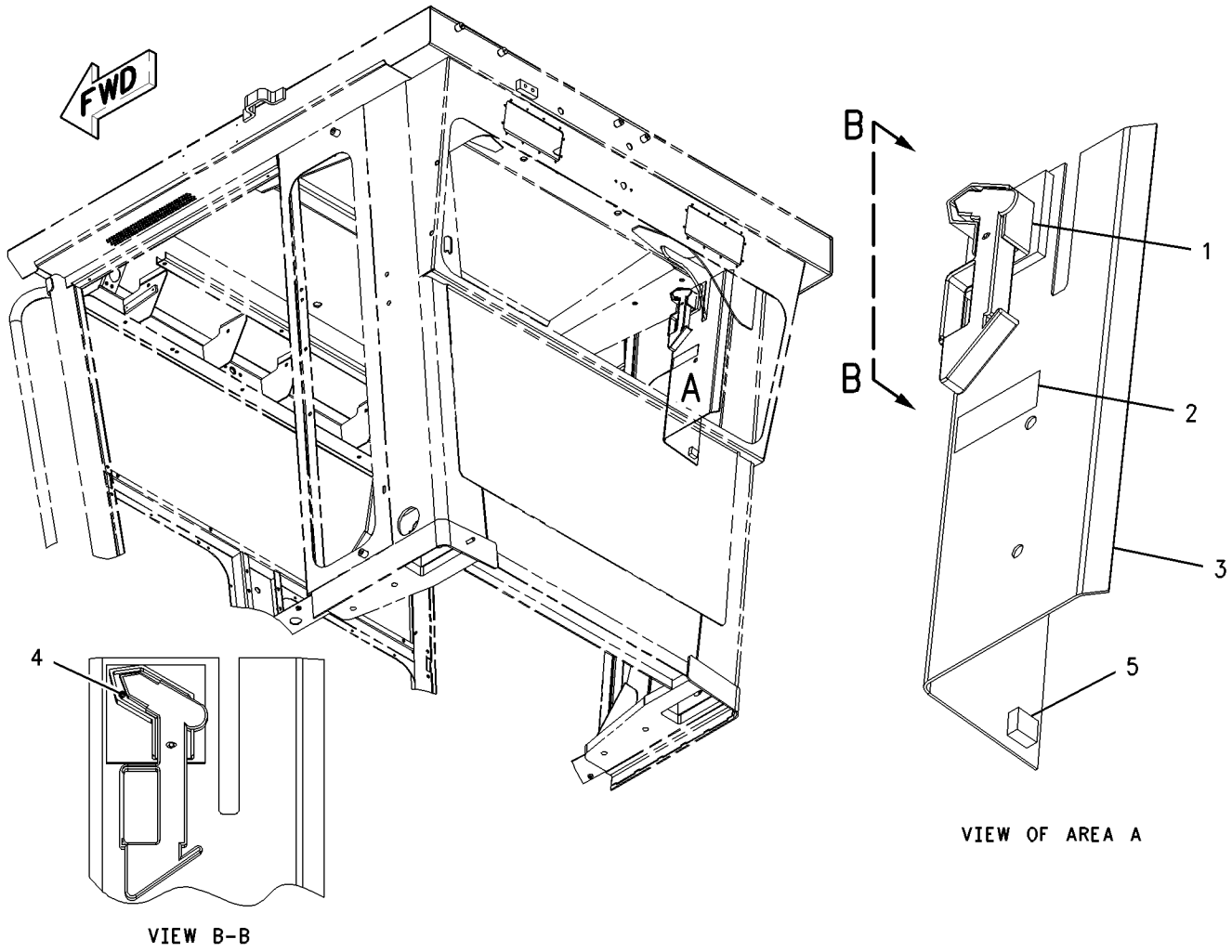

GRAPHIC #1 g00847012

OPERATOR STATION

200-7934 HAMMER & MOUNTING GP—HIGH PROFILE

S/N: ATS1-UP
AN ATTACHMENT

SMCS-0606, 7310 **i01855437**

NOTE	REF NO	GRAPHIC REF	PART NUMBER	QTY	PART NAME 1 2 3 4 5 6 (PRODUCT LEVEL)	SEE PAGE
	1	1	**8Y-6379**	1	KIT-HAMMER	
					(INCLUDES BRACKET AND HAMMER)	
	2	1	**100-5612**	1	FILM-INSTRUCTION (ALT EXIT/REMOVE WINDOW)	
	3	1	**200-7933**	1	COVER AS	
M	4	1	**155-4098**	4	SCREW-BUTTON HEAD	
BD	5	1	**6V-0505**	1	SEAL	

B-USE AS REQUIRED
D-ORDER BY THE METER
M-METRIC PART

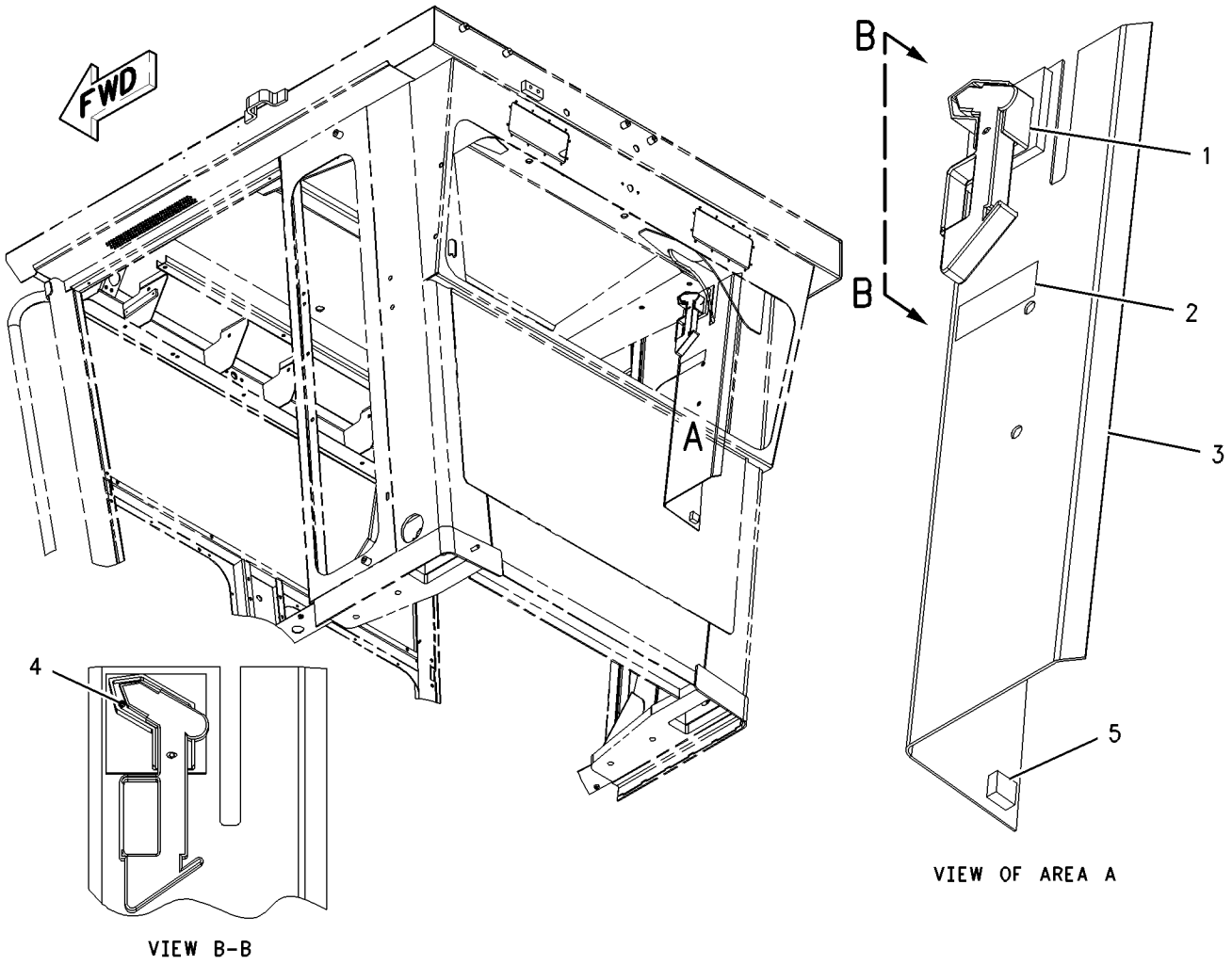

GRAPHIC #1 g00846940

OPERATOR STATION

174-4552 HEATER & MTG GP-CAB—EU

S/N: ATS1-UP
PART OF 167-8395 HEATER AR-CAB
AN ATTACHMENT

SMCS-7304 **i01650242**

NOTE	PART NUMBER	QTY	PART NAME 1 2 3 4 5 6 (PRODUCT LEVEL)	SEE PAGE
	9W-1441	1	FUSE (15 AMP) (HEATING & AIR CONDITIONING)	
Y	**173-5322**	1	HEATER GP-CAB (EU)	652
	123-0872	1	PAD	
	191-5236	1	PAD	

Y-SEPARATE ILLUSTRATION

<END>

167-8395 HEATER AR-CAB

S/N: ATS1-UP
PART OF 211-1771 CONVERSION AR-CERTIFICATION
AN ATTACHMENT

SMCS-7304 **i01787025**

NOTE	PART NUMBER	QTY	PART NAME 1 2 3 4 5 6 (PRODUCT LEVEL)	SEE PAGE
Y	*177-7891*	1	DUCT & CONTROL GP	638
Y	*7I-5015*	1	DUCT GP	639
Y	**8X-2925**	1	FILTER GP-CAB AIR	648
Y	*174-4552*	1	HEATER & MTG GP-CAB	651
Y	*167-8399*	1	LINES GP-HEATER	686

Y-SEPARATE ILLUSTRATION

<END>

OPERATOR STATION

173-5322 HEATER GP-CAB—EU

S/N: ATS1-UP
PART OF 174-4552 HEATER & MTG GP-CAB
AN ATTACHMENT

SMCS-7304 **i01855438**

NOTE	REF NO	GRAPHIC REF	PART NUMBER	QTY	PART NAME 1 2 3 4 5 6 (PRODUCT LEVEL)	SEE PAGE
	1	2	**2P-4339**	1	NUT-JAM (7/16-20 THD)	
	2	2	**2V-0099**	1	KNOB (TEMPERATURE CONTROL)	
	2A	2	**2V-0099**	1	KNOB (FAN SPEED)	
	3	2	**3E-0400**	2	WHEEL-BLOWER	
	4	2	**3E-3890**	1	FILM-CONTROL (FAN SPEED/TEMP)	
	5	1	**3S-2093**	2	STRAP-CABLE	
	6	1	**5P-7803**	2	PLUG-BUTTON	
	7	2	**5P-9135**	1	GROMMET	
	8	2	**5P-3236**	1	CONE-BEARING	
	9	2	**6T-5345**	1	BUSHING-TERMINAL	
	10	2	**6T-6708**	2	WASHER (7X28.6X4.1MM THK)	
	11	1	**7G-4824**	1	STRAP	
Z	12	1		1	FILM-IDENTIFICATION (GROUP & SEQUENCE NO.)	
	13	2	**8C-4586**	2	CLAMP	
	14	2	**8D-1429**	1	LAMP (24 VOLT) (A/C & HEATER CONTROL PANEL)	
	15	1	**8E-7791**	1	STRAP	
	16	1	**8P-5141**	2	PLATE-ORIFICE	
	17	2	**8X-5536**	1	COVER	
	18	1	**8X-5538**	1	COVER AS	
M		1	**8T-3490**	4	NUT-WELD (M10X1.5 THD)	
	19	1	**8X-5540**	1	COVER	
	20	1	**8Y-6388**	4	LOUVER AS	
	21	2	**9G-1950**	1	RESISTOR	
	22	2	**9X-2185**	4	SCREW (8-15X0.44 IN)	
	23	1,2	**9X-2488**	6	CLAMP-HOSE	
	24	1	**9X-9654**	1	COIL AS-HEATER	
	25	1	**123-4618**	1	COVER	
	26	1	**123-4701**	1	SEAL	
	27	2	**124-1431**	1	BRACKET	
	28	1	**124-1432**	1	HOUSING AS	
		1	**7T-1099**	1	LINK	
		1	**8P-5141**	2	PLATE-ORIFICE	
	29	2	**124-3137**	1	BRACKET	
	30	1	**124-3138**	1	SEAL	
	31	2	**124-9006**	1	SHAFT	
	32	2	**124-9007**	1	SHAFT AS	
		2	**4L-5966**	2	SETSCREW (NO 10X.19 IN)	
	33	1	**125-0439**	1	GASKET	
	34	1	**125-0442**	1	PLATE	
	35	2	**129-4935**	1	SEAL	
	36	1	**142-4940**	1	PLATE AS	
	37	2	**174-1494**	1	MOTOR GP-ELECTRIC (27 VOLT) (HEATER)	
		2	**3E-3365**	1	WEDGE-RECEPTACLE LOCK (2 PIN)	
		2	**9W-0852**	2	PIN-CONNECTOR	
		2	**102-8802**	1	KIT-RECEPTACLE (2 PIN) (HEATER MOTOR)	
	38	1	**174-4492**	1	COVER	
	39	1	**174-4971**	1	SUPPORT AS	
	40	1	**174-6353**	1	PLATE	
	41	1	**176-5507**	1	PAD	
	42	1	**177-7858**	1	HARNESS AS-HEATER & AIR COND	
		1	**155-2270**	1	KIT-CONNECTING PLUG (2 PIN) (MOTOR)	
		1	**102-8805**	1	KIT-RECEPTACLE (6 PIN)	
	43	1	**191-0027**	1	PAD	
	44	2	**204-4376**	1	CAP-PROTECTIVE	
	45	2	**206-5154**	1	VALVE AS (HEATER WATER)	

173-5322 **HEATER GP-CAB** ***(contd.)*** **i01855438**

NOTE	REF NO	GRAPHIC REF	PART NUMBER	QTY	PART NAME 1 2 3 4 5 6 (PRODUCT LEVEL)	SEE PAGE
	46	1	**104-2091**	8	SCREW-FLAT HEAD (6-20X0.5 IN)	
M	47	2	**129-3178**	4	LOCKNUT (M6X1 THD)	
	48	2	**130-5300**	1	CLIP	
M	49	2	**141-9784**	1	BOLT-HEX HEAD (M6X190MM)	
	50	2	**3H-2900**	1	GROMMET	
M	51	1,2	**5C-2890**	7	NUT (M6X1 THD)	
	52	1	**5P-1075**	13	WASHER-HARD (10.2X22.5X3MM THK)	
	53	2	**6V-1668**	2	WASHER (6.5X29.1X3MM THK)	
M	54	2	**6V-7728**	1	BOLT (M6X1.0X45MM)	
	55	1	**6V-8801**	13	NUT (3/8-16 THD)	
	56	1	**7X-0591**	2	WASHER-HARD (17X29X3MM THK)	
M	57	2	**8T-4171**	2	BOLT (M6X1X12MM)	
	58	1,2	**8T-4205**	15	WASHER-HARD (7.2X14.5X2MM THK)	
	59	1	**9M-8406**	1	CLIP	
M	60	1	**9X-2040**	4	SCREW-TRUSS HEAD (M10X1.5X25MM)	
M	61	1,2	**9X-2041**	5	SCREW-TRUSS HEAD (M10X1.5X20MM)	
M	62	1	**9X-2045**	6	SCREW-TRUSS HEAD (M6X1X20MM)	
E	63	1	**136-1953**		HOSE (8 CM)	
E	63A	2	**136-1953**		HOSE (17 CM)	
	63B	2	**136-1953**		HOSE (17 CM)	
BD	64	2	**5P-5908**		SEAL	
BD	65	1	**5P-5637**		SEAL	
E	66	1	**9X-2126**		SEAL (2.05 CM)	
E	66A	1	**9X-2126**		SEAL (2.05 CM)	
E	66B	1	**9X-2126**		SEAL (3.30 CM)	
E	66C	1	**9X-2126**		SEAL (2.05 CM)	
E	66D	2	**9X-2126**		SEAL (2.84 CM)	
E	66E	2	**9X-2126**		SEAL (2.84 CM)	

B-USE AS REQUIRED
D-ORDER BY THE METER
E-ORDER BY THE CENTIMETER
M-METRIC PART
Z-NOT SERVICED SEPARATELY

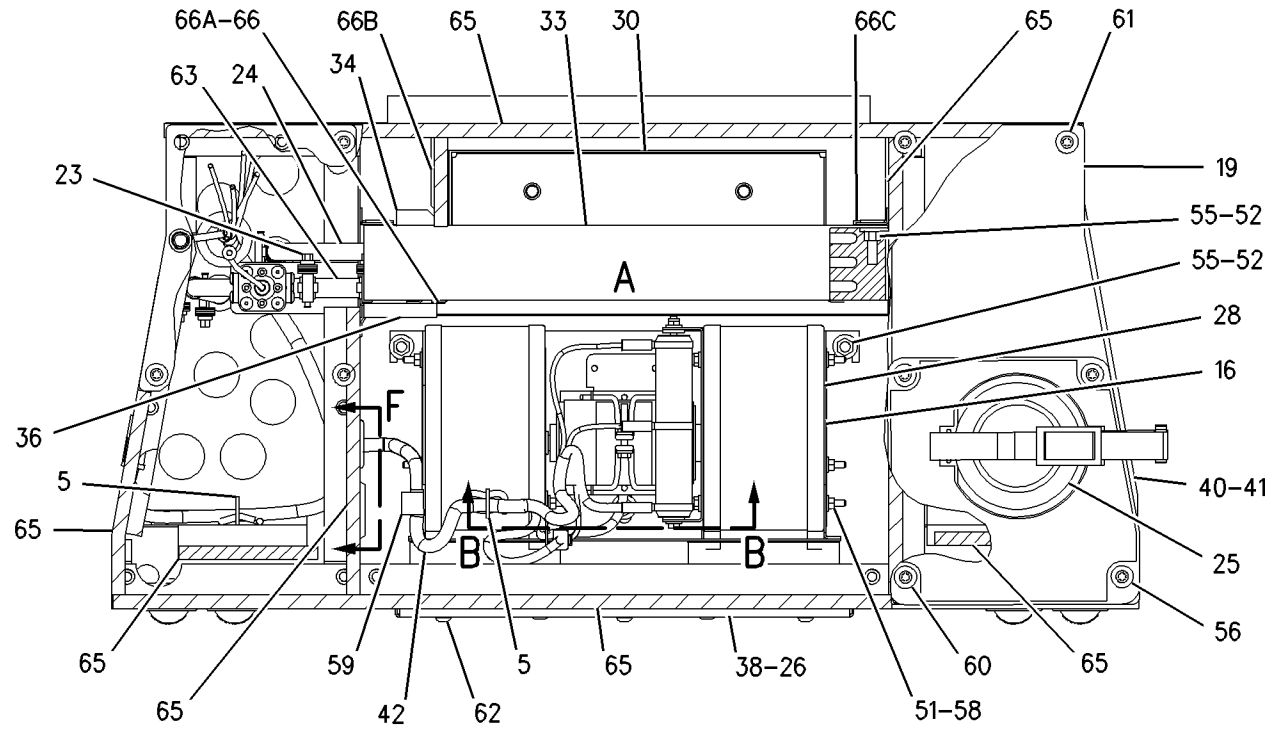

TOP VIEW

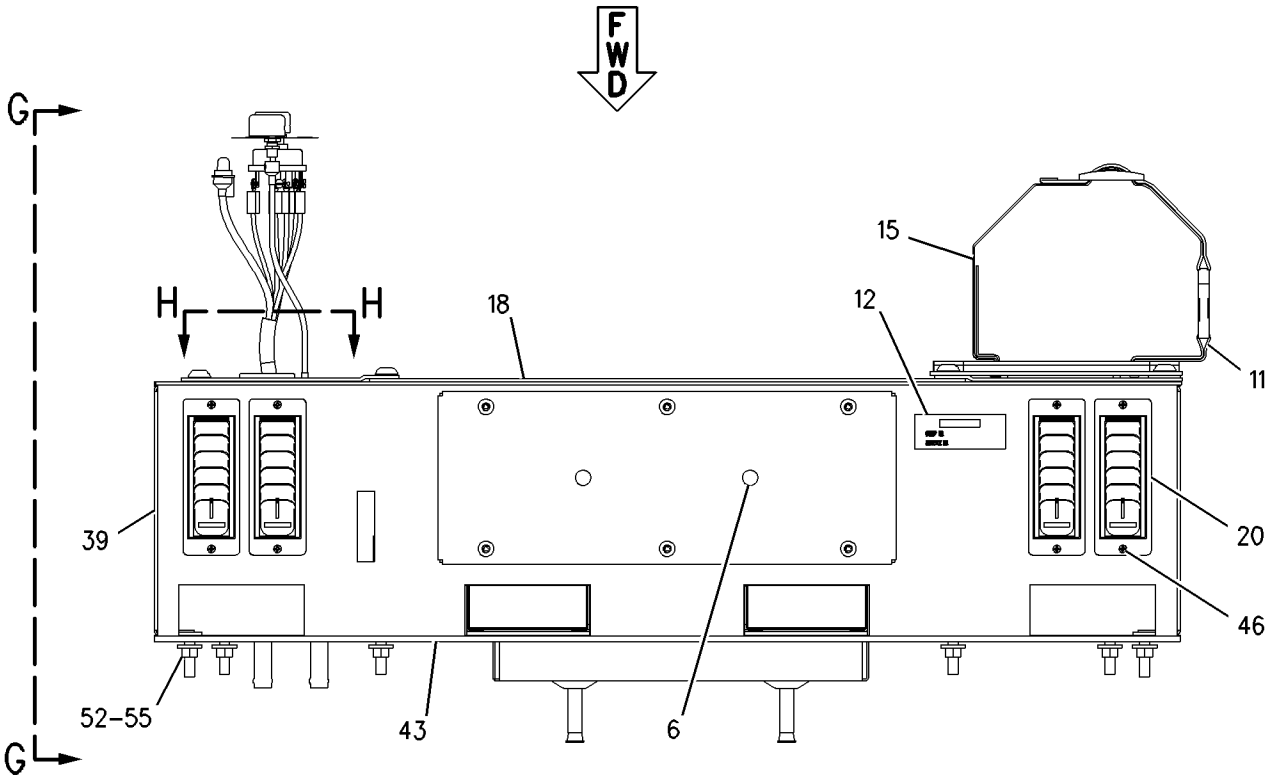

FRONT VIEW

REFER TO ALL ILLUSTRATIONS OF THIS GROUP FOR AUXILIARY VIEWS

GRAPHIC #1

g00845627

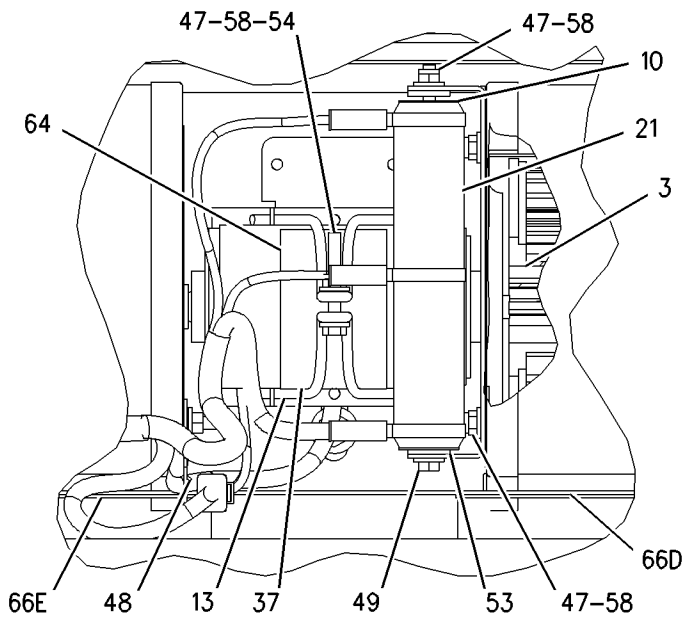

VIEW OF AREA A

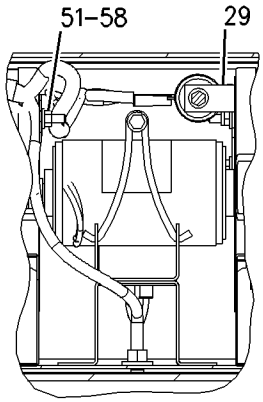

SECTION B-B

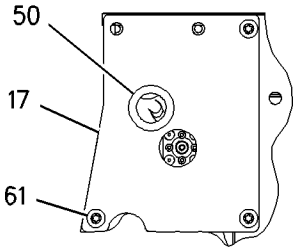

SECTION H-H

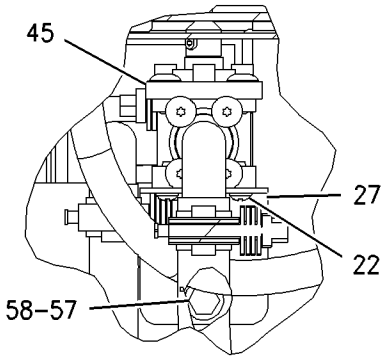

VIEW OF AREA C

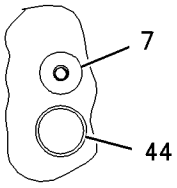

SECTION F

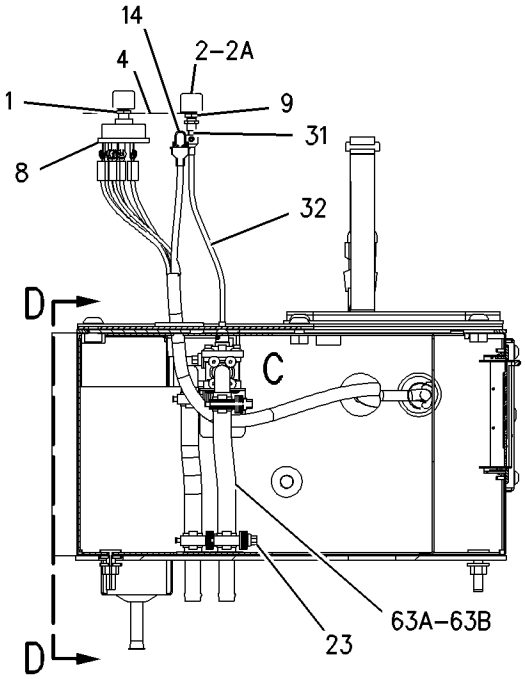

VIEW G-G

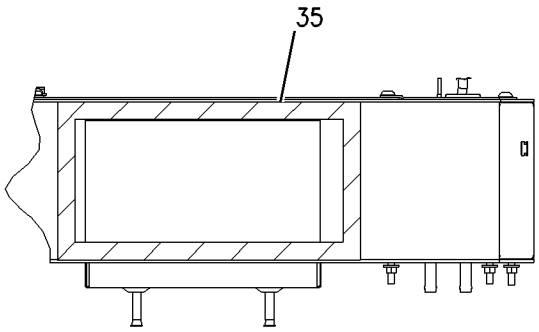

SECTION D-D

GRAPHIC #2

g00845628

OPERATOR STATION

5D-6998 HORN GP-AIR

S/N: ATS1-UP

PART OF 173-5307 HORN GP-AIR

SMCS-7402 **i01636348**

NOTE	REF NO	GRAPHIC REF	PART NUMBER	QTY	PART NAME 1 2 3 4 5 6 (PRODUCT LEVEL)	SEE PAGE
	1	1	**5D-6994**	1	PROJECTOR (LH)	
	2	1	**5D-6993**	1	HORN (RH)	
	3	1	**5D-6997**	1	PAD	
	4	1	**4B-5275**	1	WASHER (17.5X 4.4X3.5MM THK)	
	5	1	**5D-6996**	1	ADAPTER	
	6	1	**9S-1354**	1	NUT (5/8-18 THD)	
	7	1	**6F-0253**	1	LOCKWASHER	
	8	1	**157-8087**	2	COVER	
					AVAILABLE REPAIR KIT(S):	
			2G-6664	2	KIT-DIAPHRAGM (HORN)	
					(EACH INCLUDES)(DIAPHRAGM, SEAL, DECAL, SCREWS, NUTS, GASKET, & INSTRUCTION SHEET)	

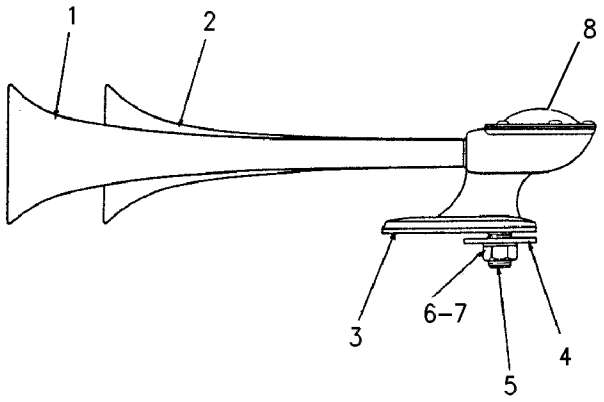

GRAPHIC #1 g00479378

MEMORANDA

OPERATOR STATION

173-5307 HORN GP-AIR

S/N: ATS1-UP

PART OF 162-5607 GENERAL AR

SMCS-7402 **i01638353**

NOTE	REF NO	GRAPHIC REF	PART NUMBER	QTY	PART NAME 1 2 3 4 5 6 (PRODUCT LEVEL)	SEE PAGE
	1	1	**3G-1701**	1	SPRING	
I	2	1	**4D-2847**	1	HOSE AS	
Y	3	1	**5D-6998**	1	HORN GP-AIR	656
	4	1	**5T-4030**	1	BRACKET	
	5	1	**7I-4696**	1	RETAINER	
	6	1	**7I-4698**	1	RING	
	7	1	**7I-4699**	1	INSULATOR	
	8	1	**8X-9387**	1	PLATE	
	9	1	**009-4184**	4	SPRING-HORN	
	10	1	**009-4185**	4	BRUSH-HORN	
	11	1	**091-9071**	1	SEAL-HORN BUTTON	
	12	1	**098-7467**	1	BUTTON	
	13	1	**169-3145**	1	WIRE AS (HORN SWITCH)	
		1	**102-8802**	1	KIT-RECEPTACLE (2 PIN)	
		1	**3E-3365**	1	WEDGE-RECEPTACLE LOCK (2 PIN)	
		1	**6D-4161**	1	CONTACT	
		1	**186-3735**	1	PIN-CONNECTOR	
		1	**9G-3695**	1	PLUG (GROMMET SEALING)	
	14	1	**179-4814**	3	PIN	
Y	15	1	**188-9250**	1	VALVE GP-SOLENOID (AIR)	738
	16	1	**3D-7587**	1	ELBOW	
	17	1	**4B-3388**	1	BOLT (5/16-18X1.125 IN)	
	18	1	**4H-6147**	1	CONNECTOR	
	19	1	**4L-6454**	3	BOLT (3/8-16X1 IN)	
	20	1	**5K-2408**	1	FITTING	
	21	1	**5S-0003**	1	NUT (5/16-18 THD)	
	22	1	**6V-3342**	1	ELBOW-PIPE	
	23	1	**8T-4896**	3	WASHER-HARD (10.2X18.5X2.5MM THK)	
	24	1	**9M-1974**	1	WASHER-HARD (8.8X16X2MM THK)	

I-SEE HOSE FABRICATION GUIDE
Y-SEPARATE ILLUSTRATION

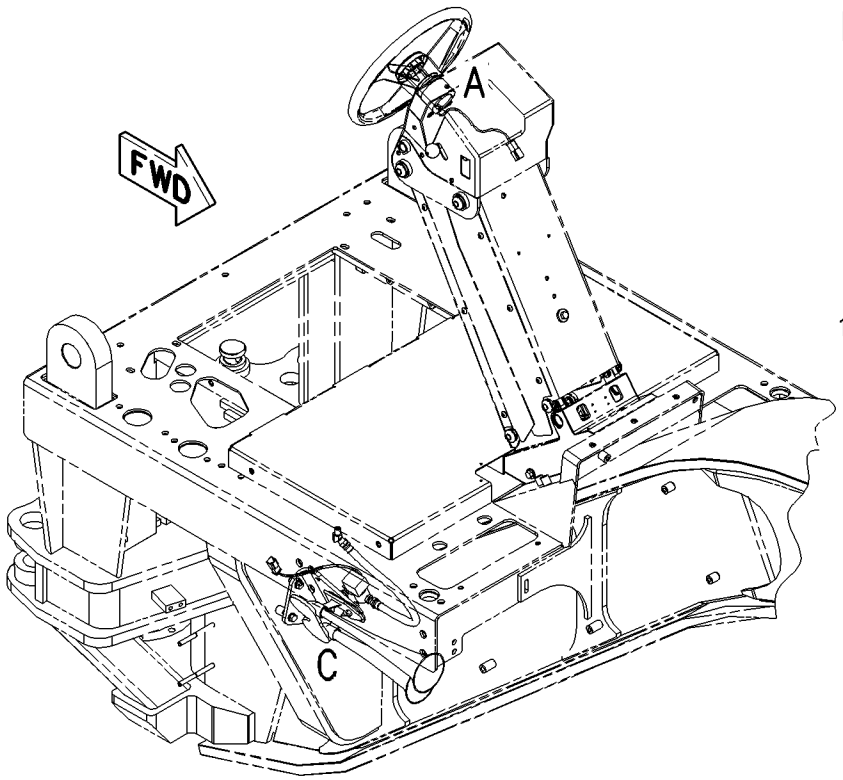

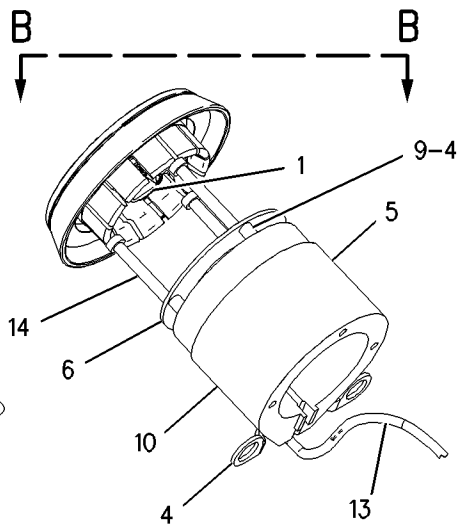

VIEW OF AREA A

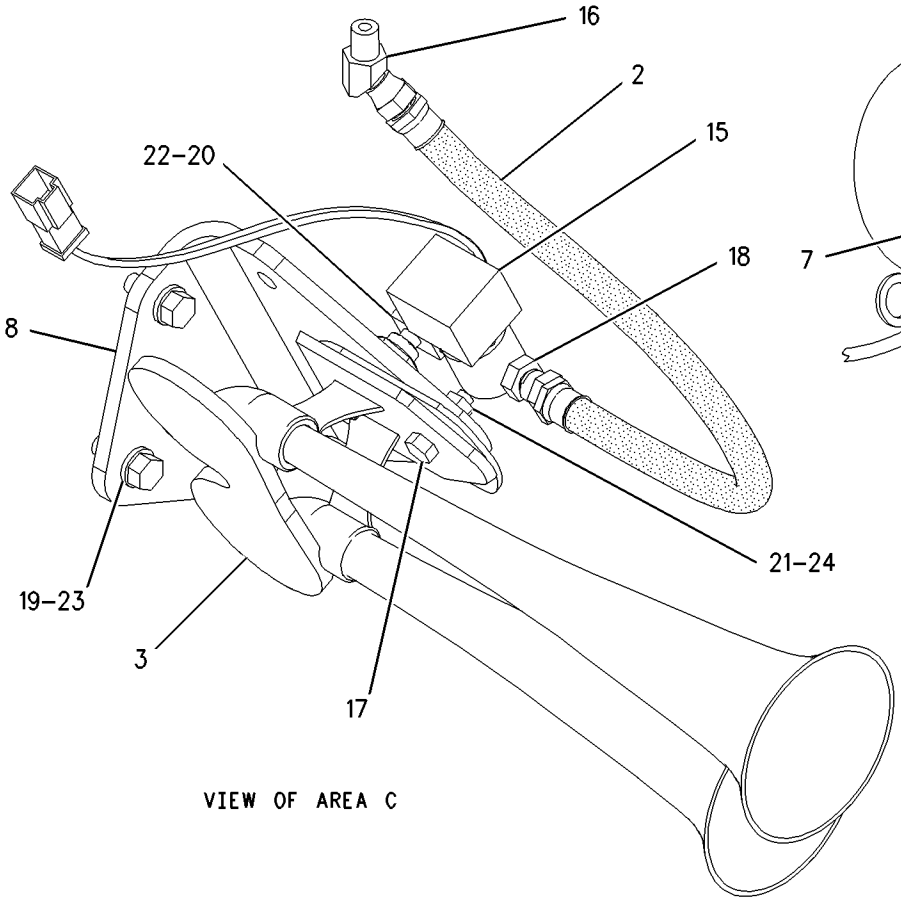

VIEW OF AREA C

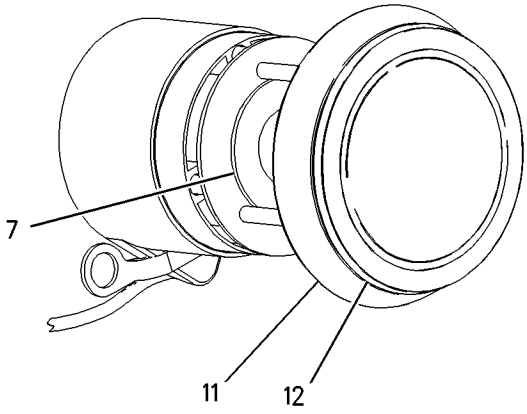

VIEW B-B

GRAPHIC #1 g00851051

OPERATOR STATION

113-5808 HOUSING GP-SEAT SUSPENSION

S/N: ATS1-UP
PART OF 113-5800 SUSPENSION GP-SEAT
ALSO AN ATTACHMENT

SMCS-7321, 7324 **i01556453**

NOTE	REF NO	GRAPHIC REF	PART NUMBER	QTY	PART NAME 1 2 3 4 5 6 (PRODUCT LEVEL)	SEE PAGE
	1	1	**161-5967**	1	SHAFT	
	2	1	**8Y-6066**	1	SPRING	
	3	1	**8Y-6069**	1	ADJUSTER AS	
	4	1	**8Y-6068**	1	NUT (3/8 X 16 THD)	
	5	1	**113-5801**	1	HOUSING AS-UPPER	
	6	1	**8Y-6047**	2	PIN	
	7	1	**2M-7819**	4	RING-RETAINING	
	8	1	**8Y-6041**	1	ARM AS	
	9	1	**8Y-6045**	1	CAM	
	10	1	**8Y-6046**	1	PIN	
	11	1	**8S-7803**	4	RING-RETAINING	
	12	1	**095-0878**	1	PIN-SPRING	
	13	1	**7M-7219**	1	BEARING-THRUST	
	14	1	**4N-2927**	2	RACE-THRUST BEARING	
	15	1	**1Y-7927**	1	PIN	
	16	1	**8Y-6060**	2	ROLLER	
	17	1	**5V-0770**	2	BOLT-CARRIAGE	
		1	**2D-6235**	2	LOCKNUT (1/4-20 THD)	
	18	1	**113-5806**	1	ROD	
	19	1	**8Y-6063**	1	LINK-ACTUATOR-LH	
	20	1	**131-5167**	1	KNOB AS-WEIGHT	
		1	**4V-7875**	1	HANDLE	
		1	**6V-3259**	1	PIN-SPRING	
		1	**149-7226**	1	SCREW-PAN HEAD	
	21	1	**8Y-6062**	1	LINK-ACTUATOR-RH	
	22	1	**113-5805**	1	KEY	
	23	1	**4B-5059**	6	WASHER (29.5X15X2.5MM THK)	
	24	1	**8Y-6064**	2	ROLLER-SLIDER	
	25	1	**7V-5191**	2	SPACER (28X10X7.1MM THK)	
	26	1	**5D-4822**	2	RING-RETAINING	
	27	1	**5P-8445**	4	RING-RETAINING	
	28	1	**3D-2975**	2	RING-RETAINING	
	29	1	**5V-1474**	1	SCREW-FORMING (10-16X0.625 IN)	
	30	1	**113-5807**	1	KNOB	
	31	1	**8Y-6067**	1	SPACER (10.54MM THK)	
	32	1	**131-4242**	1	BOLT (3/8-16X5.18 IN) (SPECIAL)	
	33	1	**8L-8413**	2	STRAP-CABLE	
JZ	34	1		1	PIN	
JZ	35	1		1	FOLLOWER-CAM	
UZ	36	1		2	SPRING	
UZ	37	1		2	BUSHING	
NZ	38	1		2	ROD	
NZ	39	1		2	SPRING	
NZ	40	1		2	SPACER	
NZ	41	1		2	BUSHING-GUIDE	
QZ	42	1		1	TAPE-INDICATOR	
QZ	43	1		1	GUIDE	
TZ	44	1		1	FOLLOWER-CAM	
TZ	45	1		1	PIN	
SZ	46	1		3	BUMPER	
LZ		1		2	ROLLER AS	
LZ		1		1	ROLLER AS	
					AVAILABLE REPAIR KIT(S):	
J			**108-4087**	1	KIT-FOLLOWER	

113-5808 HOUSING GP-SEAT SUSPENSION *(contd.)* i01556453

NOTE	REF NO	GRAPHIC REF	PART NUMBER	QTY	PART NAME 1 2 3 4 5 6 (PRODUCT LEVEL)	SEE PAGE
L			**108-4103**	1	KIT-BEARING	
U			**8Y-6859**	1	KIT-SPRING	
N			**8Y-6860**	1	KIT-SPRING	
Q			**100-3224**	1	KIT-INDICATOR	
T			**108-4086**	1	KIT-FOLLOWER	
S			**100-5179**	1	KIT-BUMPER	

J-KIT MARKED J INCLUDES PART(S) MARKED J
L-KIT MARKED L INCLUDES PART(S) MARKED L
N-KIT MARKED N INCLUDES PART(S) MARKED N
Q-KIT MARKED Q INCLUDES PART(S) MARKED Q
S-KIT MARKED S INCLUDES PART(S) MARKED S
T-KIT MARKED T INCLUDES PART(S) MARKED T
U-KIT MARKED U INCLUDES PART(S) MARKED U
Z-NOT SERVICED SEPARATELY

113-5808 HOUSING GP-SEAT SUSPENSION *(contd.)* i01556453

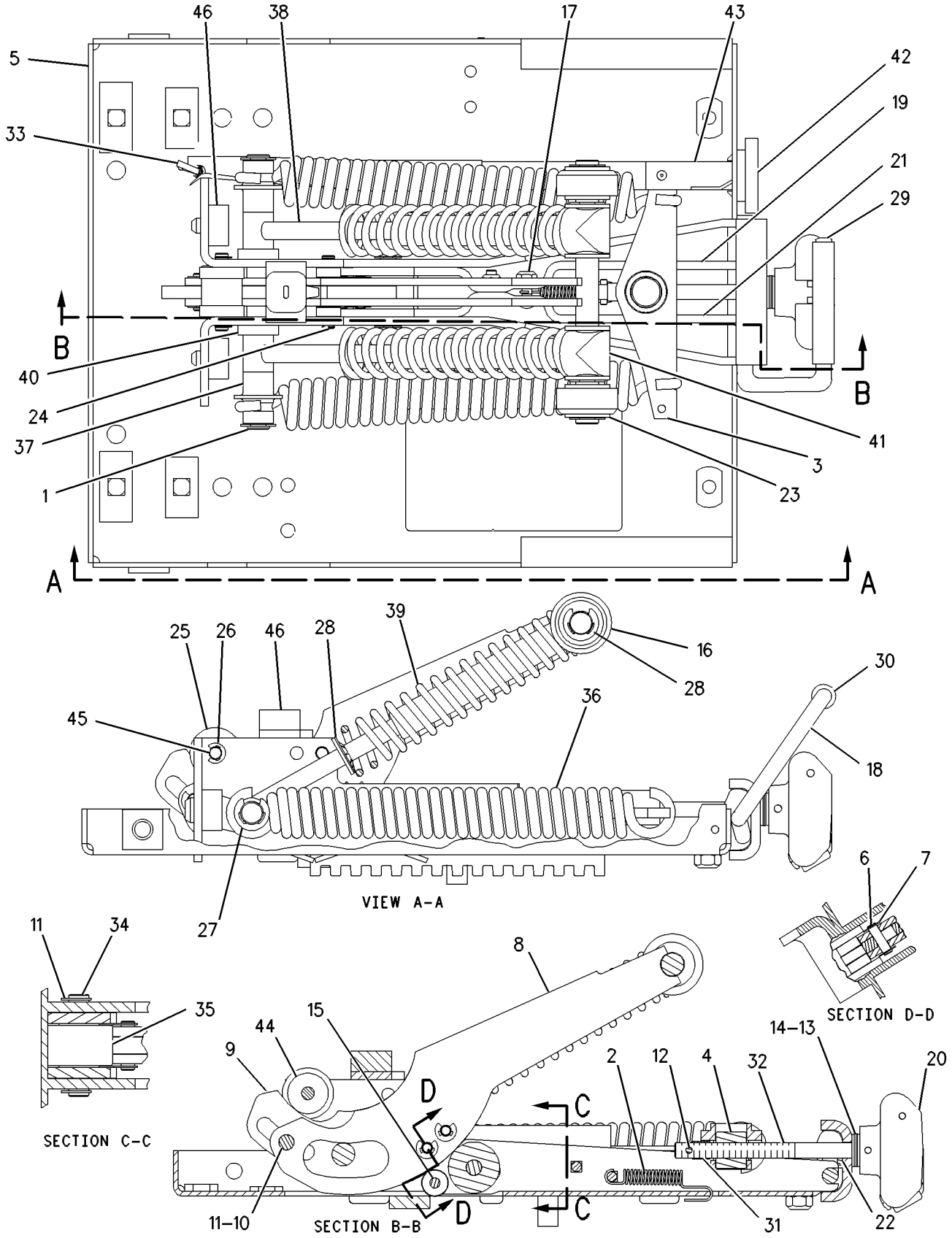

GRAPHIC #1 g00569661

OPERATOR STATION

145-1300 INSTALLATION AR-RADIO

S/N: ATS1-UP

AN ATTACHMENT

SMCS-7338 **i01650262**

NOTE	PART NUMBER	QTY	PART NAME 1 2 3 4 5 6 (PRODUCT LEVEL)	SEE PAGE
Y	*145-1297*	1	CONVERTER GP-ELECTRICAL (RADIO)	136
Y	*130-9432*	1	INSTALLATION GP-RADIO	664

Y-SEPARATE ILLUSTRATION

<END>

OPERATOR STATION

130-9432 INSTALLATION GP-RADIO

S/N: ATS1-UP

PART OF 145-1300 INSTALLATION AR-RADIO

AN ATTACHMENT

SMCS-7338 **i01449561**

NOTE	REF NO	GRAPHIC REF	PART NUMBER	QTY	PART NAME 1 2 3 4 5 6 (PRODUCT LEVEL)	SEE PAGE
	1	1	**2G-8767**	1	WASHER (10.5X60X3MM THK)	
	2	1	**9U-8263**	1	COVER	
	3	1	**2A-6684**	1	BRACKET	
	4	1	**3S-2093**	2	STRAP-CABLE	
	5	1	**6T-7695**	2	SPEAKER AS-RADIO	
	6	1	**8E-1118**	1	ANTENNA AS	
	7	1	**8X-9884**	1	BRACKET AS	
	8	1	**9W-3073**	1	CABLE AS-COAXIAL	
	9	1	**5P-8525**	1	GROMMET	
	10	1	**6V-5834**	3	SCREW-HEAD (10-14X0.75IN)	
	11	1	**8T-4121**	2	WASHER-HARD (11X21X2.5MM THK)	
M	12	1	**8T-4137**	2	BOLT (M10X1.5X20MM)	

M-METRIC PART

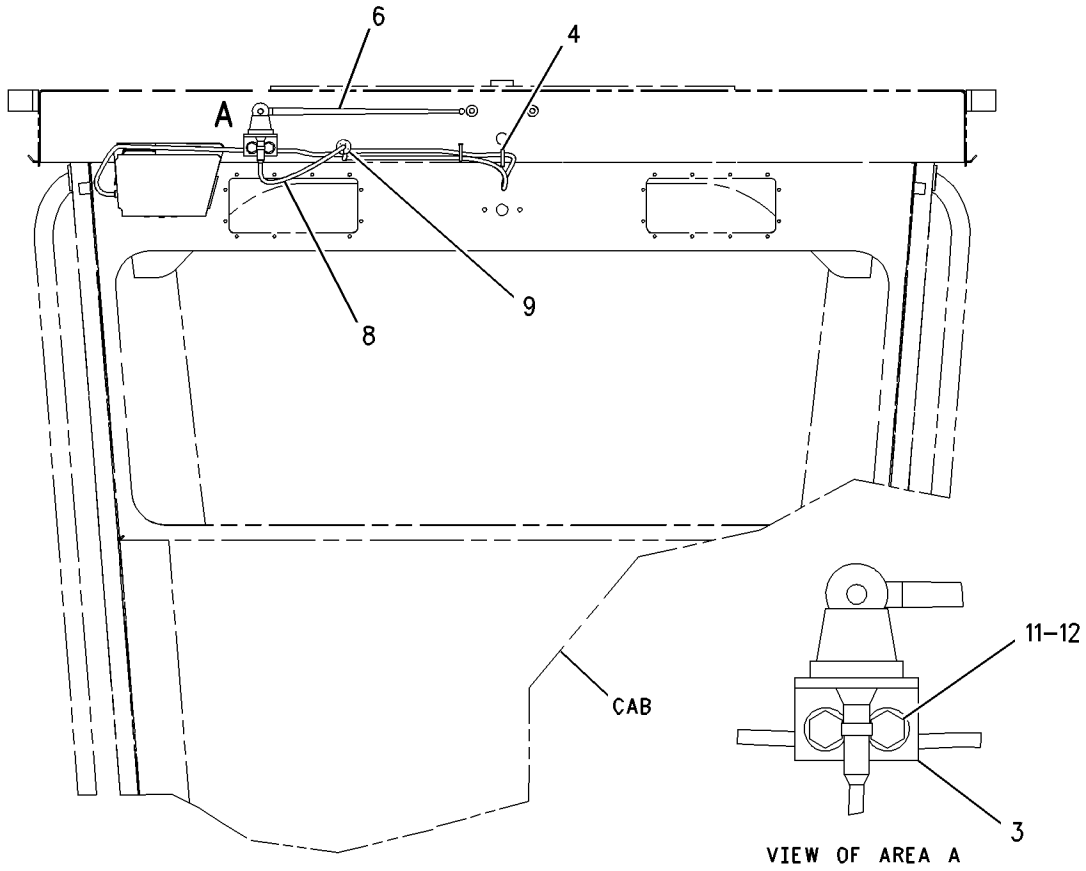

REAR VIEW

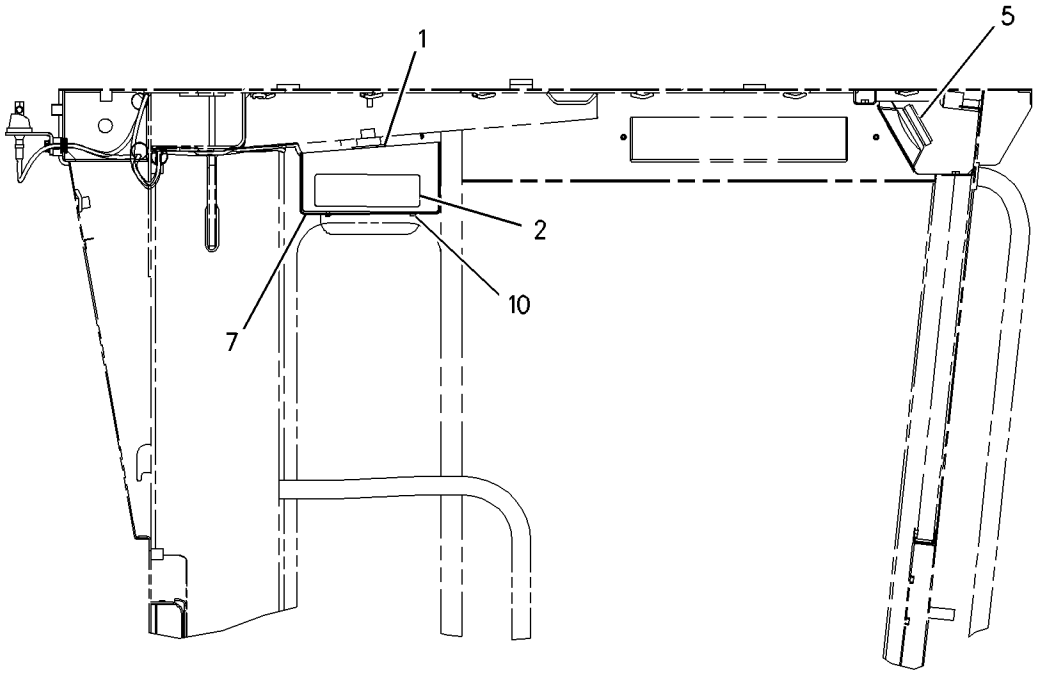

RIGHT SIDE VIEW

GRAPHIC #1 g00760152

OPERATOR STATION

185-7968 INSTRUMENT AR—SPEEDOMETER/TACH—EU

S/N: ATS1-UP

PART OF 211-1771, 211-1772 CONVERSION AR-CERTIFICATION

AN ATTACHMENT

SMCS-7450, 7451 **i01645803**

NOTE	PART NUMBER	QTY	PART NAME 1 2 3 4 5 6 (PRODUCT LEVEL)	SEE PAGE
Y	*177-9741*	1	MODULE GP-SPEEDOMETER & TACH	697
Y	*185-7967*	1	SENSOR GP-GROUND SPEED	201

Y-SEPARATE ILLUSTRATION

<END>

MEMORANDA

OPERATOR STATION

172-5378 INSULATION GP-WEATHER—ENCLOSED

S/N: ATS1-UP

PART OF 161-1141, 179-3581 ROPS AR-ENCLOSED

ALSO AN ATTACHMENT

SMCS-7329 **i01690096**

NOTE	REF NO	GRAPHIC REF	PART NUMBER	QTY	PART NAME 1 2 3 4 5 6 (PRODUCT LEVEL)	SEE PAGE
	1	1	**8X-2226**	2	PLATE	
	2	1	**8X-2913**	2	COVER AS	
					(EACH INCLUDES)	
M		1	**6V-9632**	2	NUT-WELD (M6X1 THD)	
B	3	1	**8X-8055**	6	PLUG	
	4	1	**8X-8351**	2	PLATE AS	
	5	1	**8W-6061**	1	FLOOR MAT (CAB)	
	6	1	**171-6165**	2	DUCT	
	7	1	**178-4190**	2	SEAL	
	8	1	**179-2138**	2	SEAL	
	9	1	**179-2139**	1	FOAM	
	10	1	**179-2140**	1	FOAM	
	11	1	**4M-5281**	4	BOLT (1/4-20X.750 IN)	
	12	1	**5P-4115**	4	WASHER-HARD (7.2X19X2MM THK)	
M	13	1	**9X-2043**	14	SCREW-TRUSS HEAD (M6X1X14MM)	
BD	14	1	**5P-6882**		SEAL	
BD	15	1	**5P-5969**		SEAL	

B-USE AS REQUIRED
D-ORDER BY THE METER
M-METRIC PART

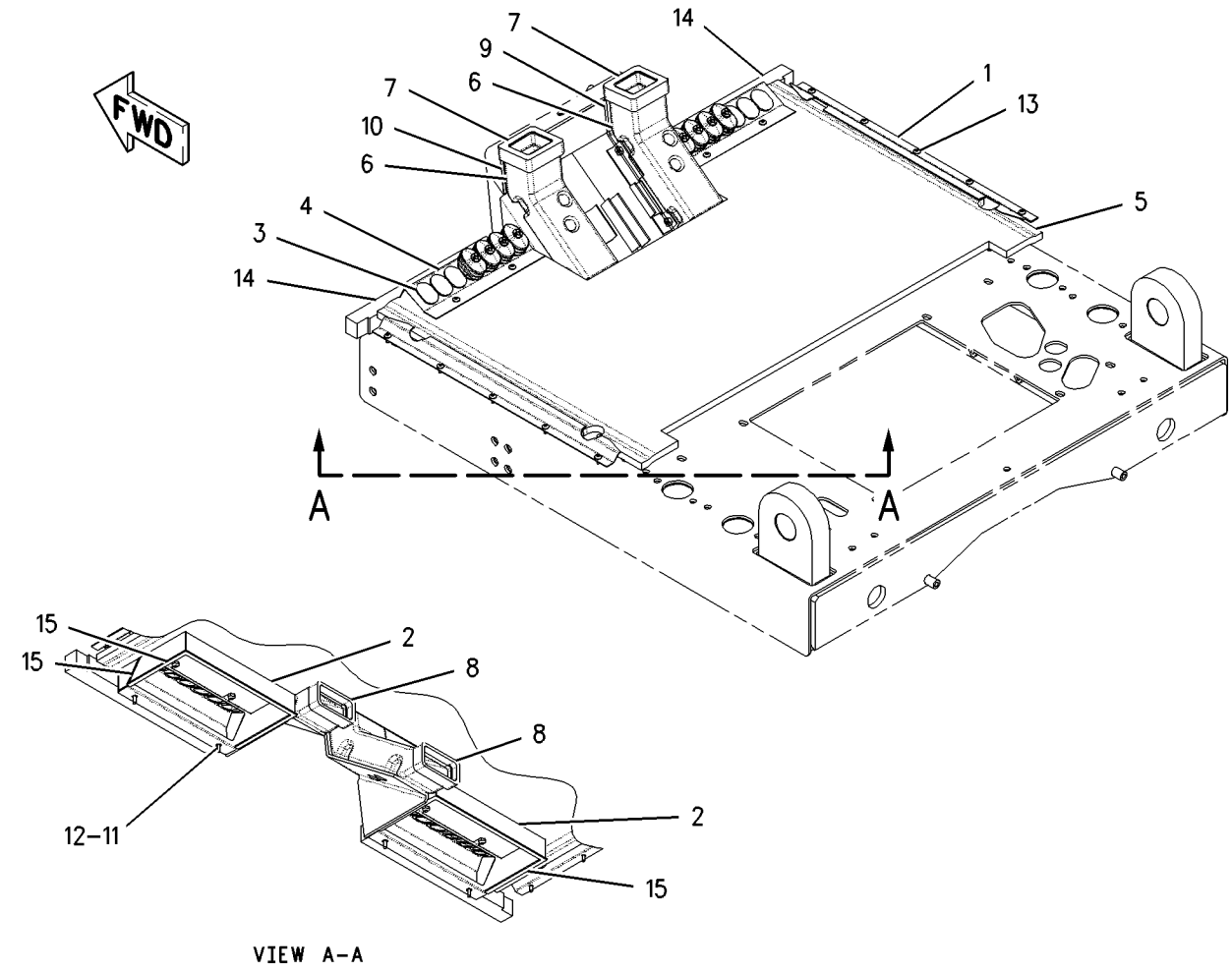

VIEW A–A

GRAPHIC #1 g00870521

OPERATOR STATION

172-5376 LINER GP-CAB—LOW PROFILE

S/N: ATS1-UP

PART OF 172-5377 ROPS GP-ENCLOSED

SMCS-7329 **i01702359**

NOTE	REF NO	GRAPHIC REF	PART NUMBER	QTY	PART NAME 1 2 3 4 5 6 (PRODUCT LEVEL)	SEE PAGE
	1	1	**2G-8572**	2	WASHER-SPECIAL (10X27.81X2.54MM THK)	
	2	1	**2G-8573**	2	CAP	
	3	1	**2G-8767**	1	WASHER (10.5X60X3MM THK)	
	4	1	**3G-3265**	24	RIVET	
	5	1	**5P-5454**	1	ASHTRAY	
	6	1	**5P-5824**	1	HOLDER-ASH TRAY	
	7	1	**5P-7803**	8	PLUG-BUTTON	
	8	1	**6G-2395**	2	DOOR GP	
					(EACH INCLUDES)	
		1	**6G-7222**	2	ROLLER	
	9	1	**6G-2396**	2	GASKET	
	10	1	**6G-2751**	4	HINGE	
	11	1	**6G-2914**	2	LATCH	
	12	1	**6K-3273**	4	RIVET-POP	
	13	1	**6P-0205**	3	SPACER (.269X.405X.656 IN THK)	
	14	1	**6V-3928**	7	PLUG-BUTTON	
	15	1	**6V-8928**	1	HOOK-COAT	
	16	1	**7G-4824**	1	STRAP	
	17	1	**8E-7791**	1	STRAP	
	18	1	**8F-0492**	1	SPACER (.531X1.125X.625 IN THK)	
	19	1	**8T-5401**	2	PLUG-BUTTON	
	20	1	**8X-5414**	1	PLATE	
	21	1	**8X-6998**	1	INSULATION	
	22	1	**8X-7845**	2	COVER	
	23	1	**9N-1995**	20	RIVET-POP	
	24	1	**101-3055**	2	COVER-SPEAKER	
	25	1	**107-5014**	4	KNOB	
	26	1	**109-2804**	2	DOOR	
	27	1	**115-6807**	1	PLATE	
	28	1	**115-9923**	1	COVER-LH	
	29	1	**122-8677**	1	PANEL	
	30	1	**122-8795**	2	PLATE	
	31	1	**137-6783**	1	HOLDER	
	32	1	**137-8065**	1	COVER	
	33	1	**138-7026**	1	PLATE	
	34	1	**138-9910**	1	PLATE AS	
	35	1	**139-1117**	1	PLATE	
	36	1	**139-3593**	1	PANEL	
	37	1	**172-1239**	1	COVER (RH)	
	38	1	**174-4141**	1	PANEL	
	39	1	**179-2173**	1	COVER (RH)	
	40	1	**179-2177**	1	COVER AS (LH)	
	41	1	**197-8611**	1	COVER (RH)	
	42	1	**197-8624**	1	COVER (LH)	
	43	1	**197-8627**	1	COVER (RH)	
	44	1	**197-8628**	1	COVER (LH)	
	45	1	**200-8623**	8	NUT-RETAINER	
	46	1	**103-9425**	8	SCREW-MACHINE (8-32X1 IN)	
M	47	1	**129-3178**	3	LOCKNUT (M6X1 THD)	
	48	1	**131-6009**	2	PIN	
	49	1	**5P-4115**	2	WASHER-HARD (7.2X19X2MM THK)	
	50	1	**6V-0292**	1	PLUG	
	51	1	**8T-4121**	1	WASHER-HARD (11X21X2.5MM THK)	
	52	1	**144-4107**	2	FASTENER	
M	53	1	**8T-4182**	2	BOLT (M10X1.5X45MM)	
M	54	1	**8T-4195**	1	BOLT (M10X1.5X30MM)	

172-5376 **LINER GP-CAB** ***(contd.)*** **i01702359**

NOTE	REF NO	GRAPHIC REF	PART NUMBER	QTY	PART NAME 1 2 3 4 5 6 (PRODUCT LEVEL)	SEE PAGE
	55	1	**9R-2620**	1	PLUG	
M	56	1	**9X-2041**	4	SCREW-TRUSS HEAD (M10X1.5X20MM)	
M	57	1	**9X-2043**	33	SCREW-TRUSS HEAD (M6X1X14MM)	
M	58	1	**9X-2045**	6	SCREW-TRUSS HEAD (M6X1X20MM)	
M	59	1	**9X-2046**	4	SCREW-TRUSS HEAD (M6X1X35MM)	
	60	1	**9X-8256**	3	WASHER (6.6X12X2MM THK)	
BD	61	1	**8T-3426**		CHANNEL-TRIM	
BD	62	1	**6V-0505**		SEAL	
BD	63	1	**5P-5969**		SEAL	
BD	64	1	**6V-5163**		SEAL	

B-USE AS REQUIRED
D-ORDER BY THE METER
M-METRIC PART

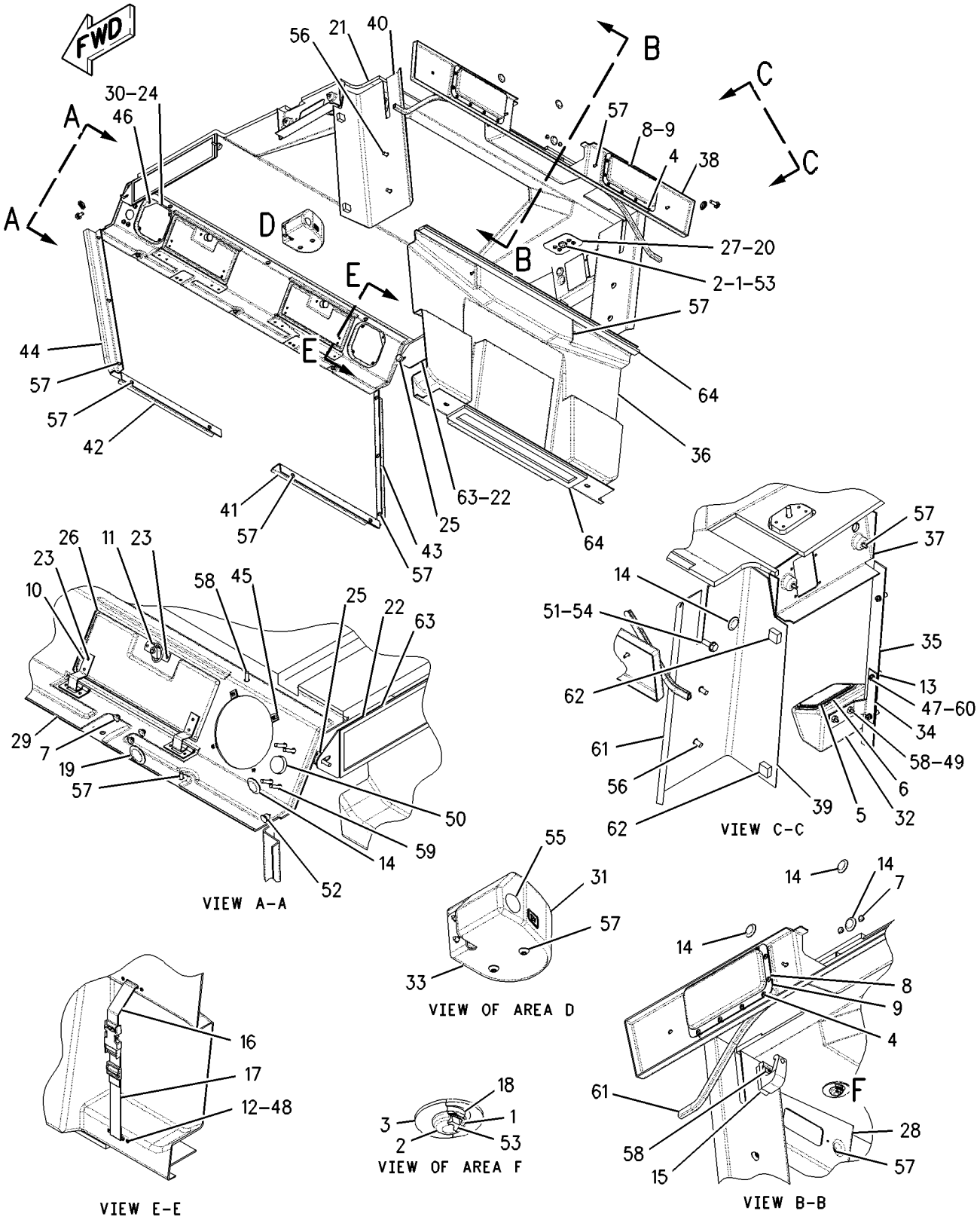

GRAPHIC #1 g00831632

MEMORANDA

OPERATOR STATION

177-8781 LINER GP-CAB—ENCLOSED—HIGH PROFILE

S/N: ATS1-UP

PART OF 177-8779 ROPS GP-ENCLOSED

AN ATTACHMENT

SMCS-7329 **i01631238**

NOTE	REF NO	GRAPHIC REF	PART NUMBER	QTY	PART NAME 1 2 3 4 5 6 (PRODUCT LEVEL)	SEE PAGE
	1	2	**2G-8572**	2	WASHER-SPECIAL (10X27.81X2.54MM THK)	
	2	2	**2G-8573**	2	CAP	
	3	2	**2G-8767**	1	WASHER (10.5X60X3MM THK)	
	4	2	**3G-3265**	24	RIVET	
	5	3	**5P-5454**	1	ASHTRAY	
	6	3	**5P-5824**	1	HOLDER-ASH TRAY	
	7	2	**5P-7803**	2	PLUG-BUTTON	
	8	1	**6G-2395**	2	DOOR GP	
	9	1	**6G-2396**	2	GASKET	
	10	1	**6G-2751**	4	HINGE	
	11	1	**6G-2914**	2	LATCH	
	12	3	**6K-3273**	4	RIVET-POP	
	13	1	**6P-0205**	3	SPACER (.269X.405X.656 IN THK)	
	14	1,2	**6V-3928**	7	PLUG-BUTTON	
	15	2	**6V-8928**	1	HOOK-COAT	
	16	3	**7G-4824**	1	STRAP	
	17	3	**8E-7791**	1	STRAP	
	18	2	**8F-0492**	1	SPACER (.531X1.125X.625 IN THK)	
	19	2	**8T-5401**	2	PLUG-BUTTON	
	20	2	**8X-5414**	1	PLATE	
	21	1	**8X-6999**	1	INSULATION	
	22	1	**8X-7845**	2	COVER	
	23	3	**9N-1995**	20	RIVET-POP	
	24	3	**101-3055**	2	COVER-SPEAKER	
	25	1	**107-5014**	4	KNOB (AIR FILTER)	
	26	3	**109-2804**	2	DOOR	
	27	2	**115-6807**	1	PLATE	
	28	1	**115-9923**	1	COVER-LH	
	29	1	**118-2558**	1	PANEL	
	30	3	**122-8795**	2	PLATE	
	31	3	**137-6783**	1	HOLDER	
	32	3	**137-8065**	1	COVER	
	33	3	**138-7026**	1	PLATE	
	34	3	**138-9910**	1	PLATE AS	
	35	1	**139-1118**	1	PLATE	
	36	1	**139-3593**	1	PANEL	
	37	2	**144-4107**	2	FASTENER	
	38	1	**172-1239**	1	COVER (RH)	
	39	1	**174-4140**	1	PANEL	
	41	1	**179-2179**	1	PLATE AS	
	42	1	**197-8611**	1	COVER (RH)	
	43	1	**197-8624**	1	COVER (LH)	
	44	2	**197-8629**	1	COVER (RH)	
	45	2	**197-8630**	1	COVER (LH)	
	46	2	**200-8623**	8	NUT-RETAINER	
	47	3	**103-9425**	8	SCREW-MACHINE (8-32X1 IN)	
M	48	1	**129-3178**	3	LOCKNUT (M6X1 THD)	
	49	3	**131-6009**	2	PIN	
	50	3	**5P-4115**	2	WASHER-HARD (7.2X19X2MM THK)	
	51	1,3	**6V-0292**	1	PLUG	
	52	1	**8T-4121**	1	WASHER-HARD (11X21X2.5MM THK)	
M	53	3	**8T-4182**	2	BOLT (M10X1.5X45MM)	
M	54	1	**8T-4195**	1	BOLT (M10X1.5X30MM)	
	55	3	**9R-2620**	1	PLUG	
M	56	2	**9X-2041**	4	SCREW-TRUSS HEAD (M10X1.5X20MM)	

177-8781 **LINER GP-CAB** ***(contd.)*** **i01631238**

NOTE	REF NO	GRAPHIC REF	PART NUMBER	QTY	PART NAME 1 2 3 4 5 6 (PRODUCT LEVEL)	SEE PAGE
M	57	1,3	**9X-2043**	33	SCREW-TRUSS HEAD (M6X1X14MM)	
M	58	1,2,3	**9X-2045**	6	SCREW-TRUSS HEAD (M6X1X20MM)	
M	59	3	**9X-2046**	4	SCREW-TRUSS HEAD (M6X1X35MM)	
	60	1	**9X-8256**	3	WASHER (6.6X12X2MM THK)	
BD	61	2	**8T-3426**		CHANNEL-TRIM	
BD	62	2	**6V-0505**		SEAL	
BD	63	1	**5P-5969**		SEAL	
B	64	1,2	**6V-5163**		SEAL	

B-USE AS REQUIRED
D-ORDER BY THE METER
M-METRIC PART

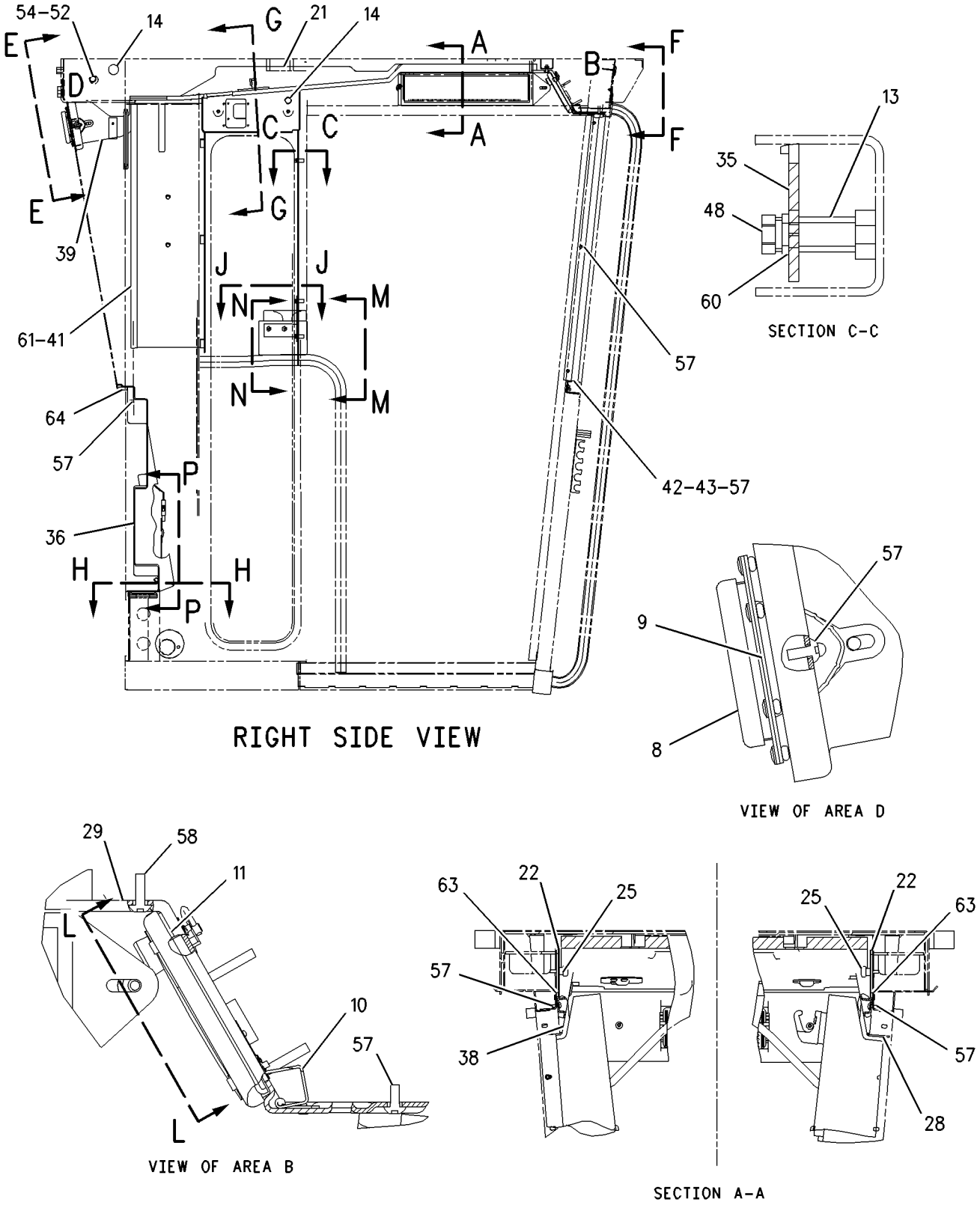

GRAPHIC #1 g00846120

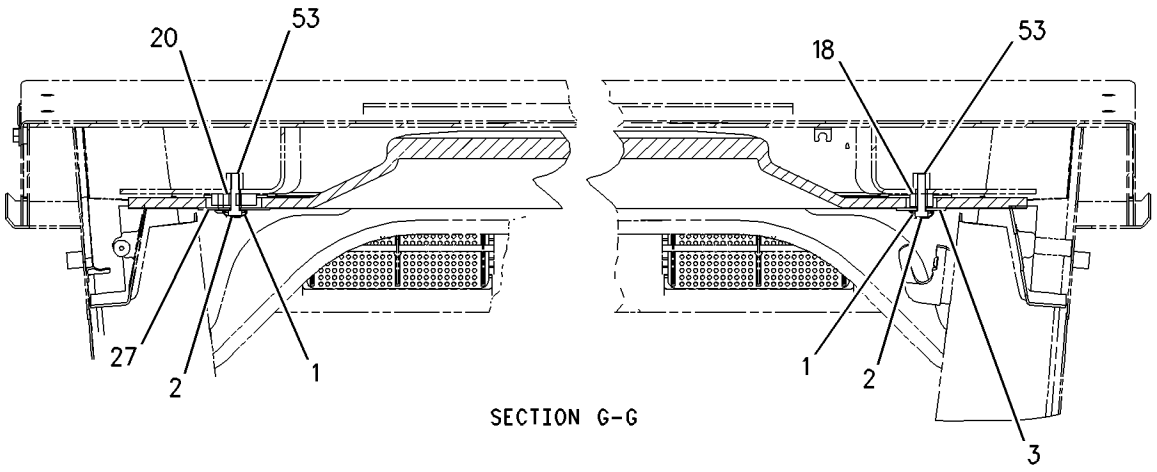

SECTION G-G

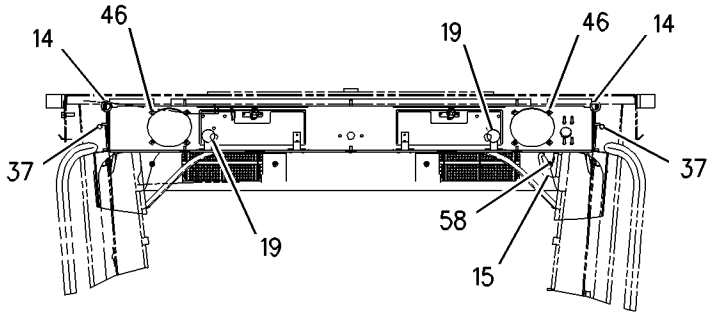

VIEW F-F

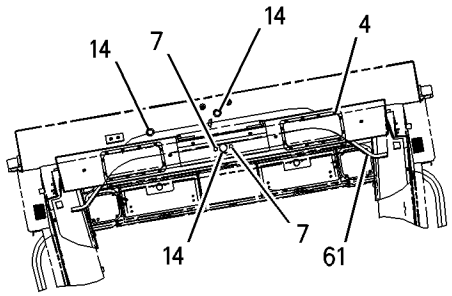

VIEW E-E

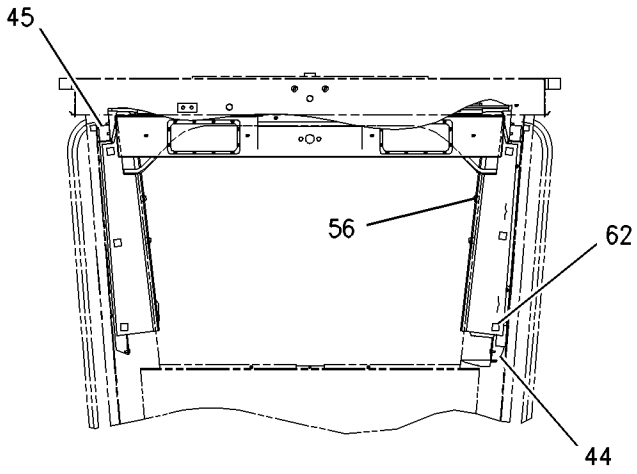

REAR VIEW

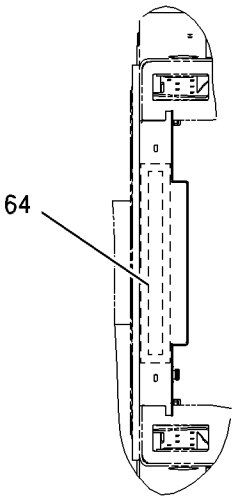

SECTION H-H

REFER TO ALL ILLUSTRATIONS OF
THIS GROUP FOR AUXILIARY VIEWS

GRAPHIC #2 g00846121

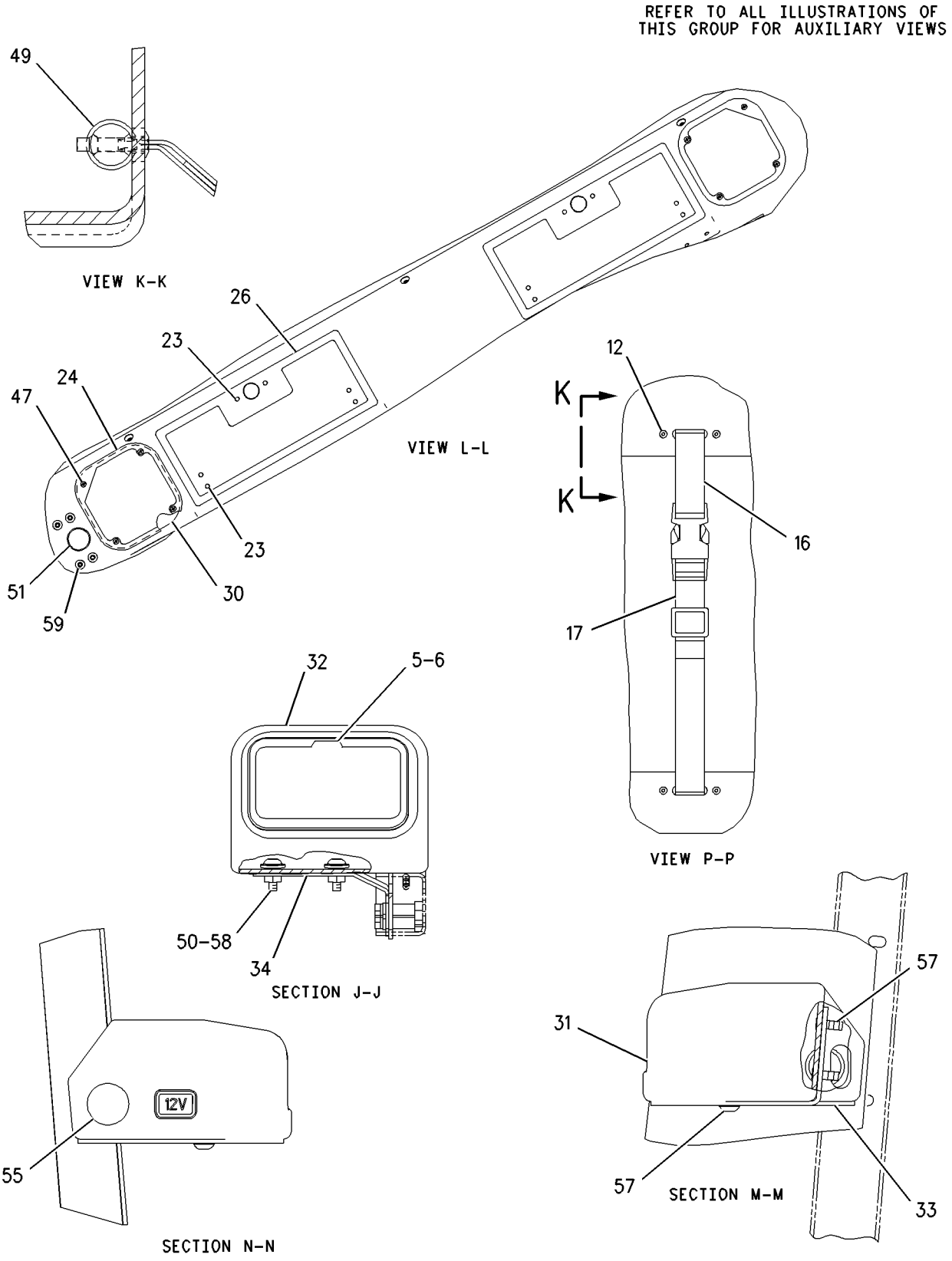

GRAPHIC #3 g00846122

MEMORANDA

OPERATOR STATION

191-8695 LINER GP-CAB—OPEN—HIGH PROFILE

S/N: ATS1-UP
PART OF 173-2751 ROPS GP-OPEN
AN ATTACHMENT

SMCS-7329 **i01628027**

NOTE	REF NO	GRAPHIC REF	PART NUMBER	QTY	PART NAME 1 2 3 4 5 6 (PRODUCT LEVEL)	SEE PAGE
	1	1	**2G-8572**	2	WASHER-SPECIAL (10X27.81X2.54MM THK)	
	2	1	**2G-8573**	2	CAP	
	3	1	**2G-8767**	1	WASHER (10.5X60X3MM THK)	
	4	1	**3E-0109**	1	PLUG-ROCKER SWITCH	
	5	1	**3G-3265**	24	RIVET	
	6	1	**3V-4694**	1	PLUG-BUTTON	
	7	1	**5P-7803**	2	PLUG-BUTTON	
	8	1	**6G-2395**	2	DOOR GP	
	9	1	**6G-2396**	2	GASKET	
	10	1	**6K-3273**	4	RIVET-POP	
	11	1	**6V-3928**	4	PLUG-BUTTON	
	12	1	**6V-8928**	1	HOOK-COAT	
	13	1	**7G-4824**	1	STRAP	
	15	1	**8E-7791**	1	STRAP	
	16	1	**8F-0492**	1	SPACER (.531X1.125X.625 IN THK)	
	17	1	**8X-5414**	1	PLATE	
	18	1	**8X-6999**	1	INSULATION	
	19	1	**115-6807**	1	PLATE	
	20	1	**117-8810**	1	INSULATION	
	21	1	**139-3593**	1	PANEL	
	22	1	**145-7214**	1	BLOCK	
	23	1	**145-7217**	1	PLATE AS	
	24	1	**156-8352**	1	HOLDER	
	25	1	**179-2176**	1	COVER	
	26	1	**179-2179**	1	PLATE AS	
	27	1	**201-5894**	1	PANEL	
	28	1	**131-6009**	2	PIN	
	29	1	**8T-4121**	3	WASHER-HARD (11X21X2.5MM THK)	
M	30	1	**8T-4182**	4	BOLT (M10X1.5X45MM)	
M	31	1	**8T-4195**	1	BOLT (M10X1.5X30MM)	
M	32	1	**9X-2041**	4	SCREW-TRUSS HEAD (M10X1.5X20MM)	
M	33	1	**9X-2043**	13	SCREW-TRUSS HEAD (M6X1X14MM)	
M	34	1	**9X-2045**	1	SCREW-TRUSS HEAD (M6X1X20MM)	
BD	35	1	**8T-3426**		CHANNEL-TRIM	
BD	36	1	**6V-0505**		SEAL	
	37	1	**6V-5164**		SEAL (2.7M)	

B-USE AS REQUIRED
D-ORDER BY THE METER
M-METRIC PART

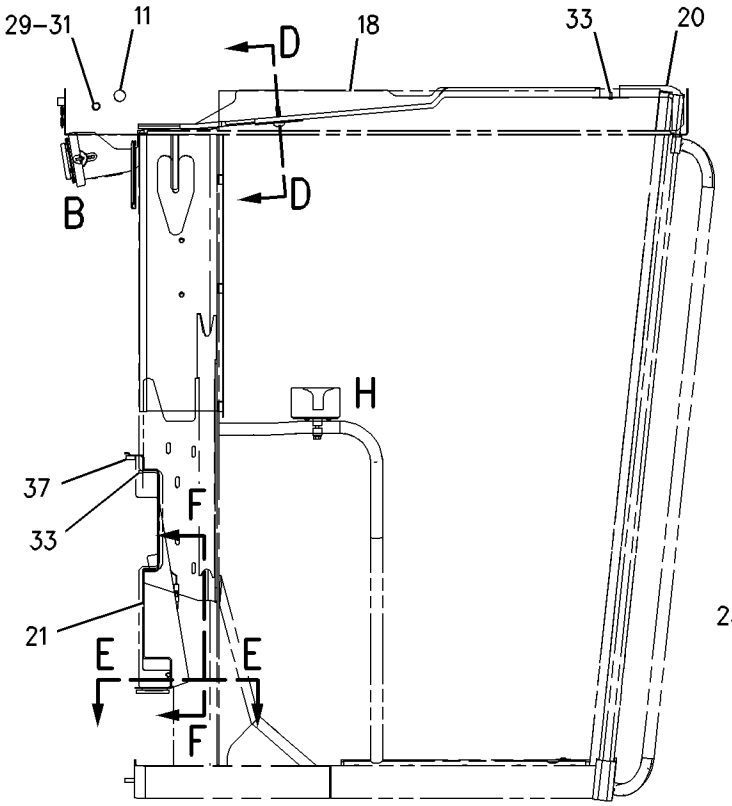

RIGHT SIDE VIEW

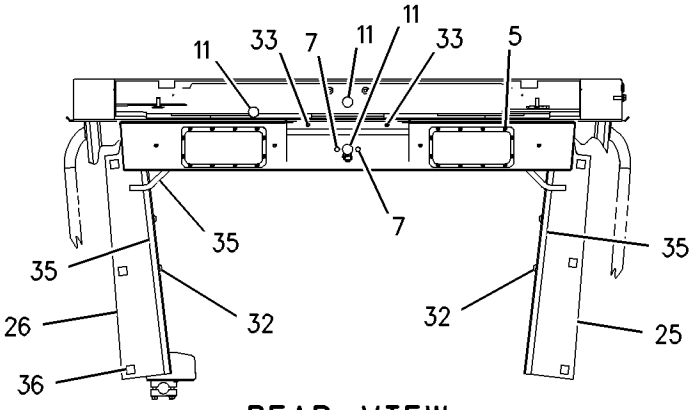

REAR VIEW

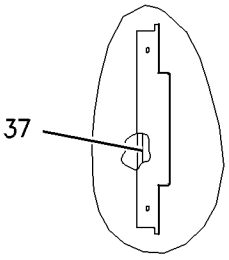

VIEW E-E

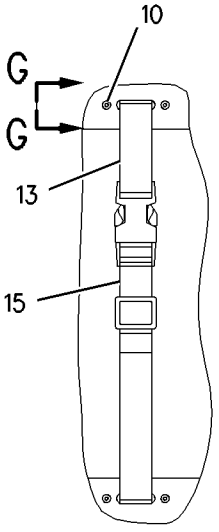

VIEW F-F

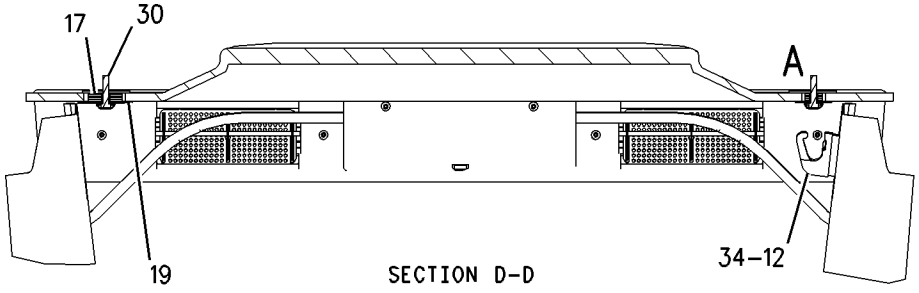

SECTION D-D

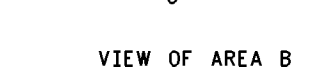

VIEW OF AREA H

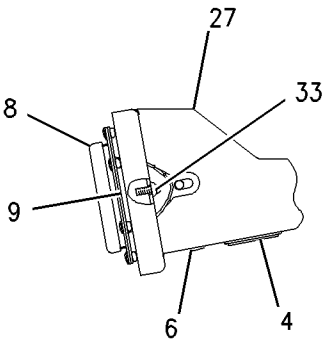

VIEW OF AREA B

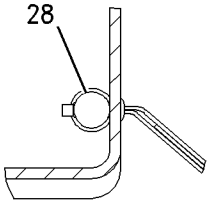

VIEW G-G

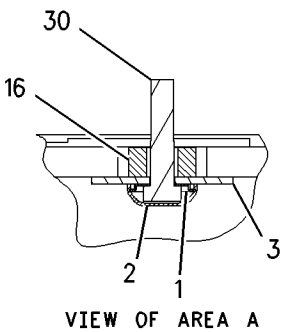

VIEW OF AREA A

GRAPHIC #1

g00847812

OPERATOR STATION

167-8103 LINES GP-AIR CONDITIONER

S/N: ATS1-UP

PART OF 167-8069 AIR CONDITIONER AR

AN ATTACHMENT

SMCS-1808, 7320 **i01838482**

NOTE	REF NO	GRAPHIC REF	PART NUMBER	QTY	PART NAME 1 2 3 4 5 6 (PRODUCT LEVEL)	SEE PAGE
	1	1	**1P-6356**	1	PLATE	
	2	1	**175-7162**	1	RECEIVER-DRYER GP (AIR CONDITIONER) (REFRIGERANT)	
					WITH QUICK DISCONNECT AND ORIFICE TUBE	
		1	**7X-2049**	1	TUBE AS-REFRIGERANT ORIFICE	
	3	1	**3S-2093**	3	STRAP-CABLE	
	4	1	**8W-8527**	4	SLEEVE	
	5	1	**8W-8528**	4	SLEEVE	
	6	1	**103-6100**	2	COUPLER AS-QUICK (REFRIGERANT)	
					(EACH INCLUDES)	
		1	**9X-7382**	2	SEAL-O-RING	
	7	1	**106-8704**	1	SUPPRESSOR AS-ARC	
		1	**3E-3365**	1	WEDGE-RECEPTACLE LOCK (2 PIN)	
		1	**102-8802**	1	KIT-RECEPTACLE (2 PIN)	
					(INCLUDES RECEPTACLE AS & WEDGE)	
		1	**186-3735**	2	PIN-CONNECTOR	
	8	1	**180-5462**	1	SWITCH AS-PRESSURE (AIR CONDITIONER)(HIGH - LOW)	
		1	**186-3736**	2	SOCKET-CONNECTOR	
		1	**155-2270**	1	KIT-CONNECTING PLUG (2 PIN)	
					(INCLUDES PLUG AS & WEDGE)	
	9	1	**188-0576**	1	HARNESS AS-HEATER & AIR COND	
		1	**102-8802**	1	KIT-RECEPTACLE (2 PIN)	
					(INCLUDES RECEPTACLE AS & WEDGE)	
		1	**155-2270**	3	KIT-CONNECTING PLUG (2 PIN)	
					(EACH INCLUDES PLUG AS & WEDGE)	
	10	1	**197-6218**	1	ACCUMULATOR (A/C)	
I	11	1	**208-2824**	1	HOSE AS	
I	12	1	**208-2825**	1	HOSE AS	
I	13	1	**208-2826**	1	HOSE AS	
	14	1	**213-4558**	1	TUBE AS	
	15	1	**214-1102**	1	FITTING AS	
		1	**3E-4051**	1	CAP AS (AIR CONDITIONER) (SEAL)	
		1	**3E-4057**	1	VALVE AS (AIR CONDITIONER)	
M	16	1	**085-8091**	1	BOLT (M10X1.5X55MM)	
	17	1	**128-5924**	1	CLAMP	
	18	1	**132-5789**	2	CLIP	
	19	1	**4D-7794**	1	CLIP	
	20	1	**4S-1962**	2	CLIP	
	21	1	**5M-3062**	2	BOLT (3/8-16X0.75 IN)	
	22	1	**5P-1075**	3	WASHER-HARD (10.2X22.5X3MM THK)	
	23	1	**6K-8178**	1	CLIP	
	24	1	**8F-9836**	1	BOSS-THREADED	
	25	1	**8M-2770**	1	CLIP	
	26	1	**8R-3393**	1	STRAP	
	27	1	**8S-6109**	1	CLIP (SLOT)	
	28	1	**8S-6110**	1	CLIP (TAB)	
	29	1	**8T-4121**	1	WASHER-HARD (11X21X2.5MM THK)	
M	30	1	**8T-4195**	1	BOLT (M10X1.5X30MM)	
	31	1	**9X-7378**	1	SEAL-O-RING	
	32	1	**9X-7380**	3	SEAL-O-RING	
	33	1	**9X-7381**	2	SEAL-O-RING	
	34	1	**9X-7382**	1	SEAL-O-RING	
	35	1	**9X-7383**	2	SEAL-O-RING	
	36	1	**9X-7385**	2	SEAL-O-RING	

I-SEE HOSE FABRICATION GUIDE
M-METRIC PART

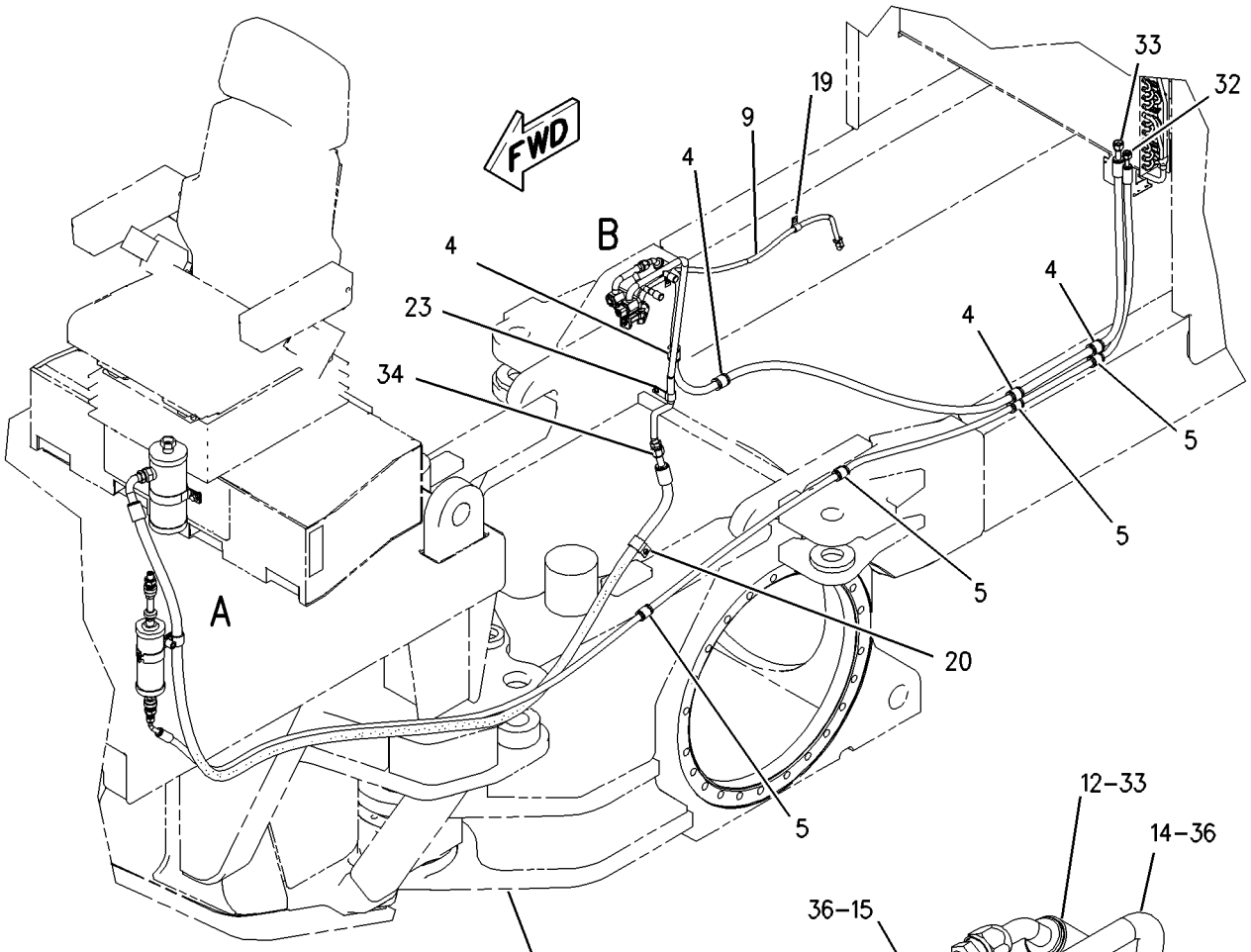

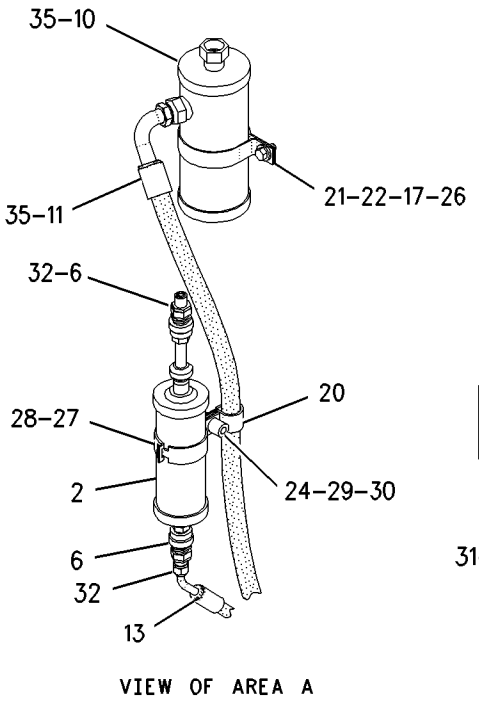

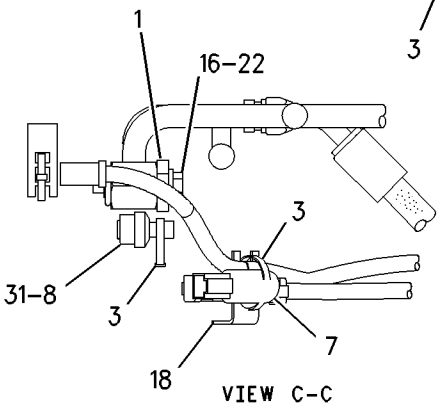

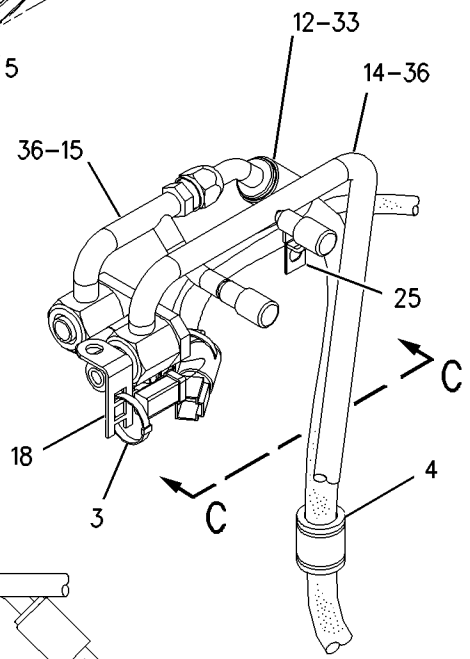

GRAPHIC #1 g00938960

MEMORANDA

OPERATOR STATION

167-8399 LINES GP-HEATER

S/N: ATS1-UP

PART OF 167-8069 AIR CONDITIONER AR, 167-8395 HEATER AR-CAB

AN ATTACHMENT

SMCS-7304 **i01831330**

NOTE	REF NO	GRAPHIC REF	PART NUMBER	QTY	PART NAME 1 2 3 4 5 6 (PRODUCT LEVEL)	SEE PAGE
	1	1	**5D-1026**	4	CLAMP-HOSE	
	2	1	**5P-1064**	1	CONNECTOR	
	3	1	**6K-8079**	1	CONNECTOR	
	4	1	**7D-7026**	1	CONNECTOR-HOSE	
	5	1	**132-9496**	1	VALVE-BALL	
	6	1	**185-3632**	1	TUBE AS	
	7	1	**170-1564**	1	CONNECTOR	
	8	1	**5F-1648**	1	CLIP	
	9	1	**5M-3062**	1	BOLT (3/8-16X0.75 IN)	
	10	1	**6D-1641**	2	CLIP	
M	11	1	**7X-2543**	1	BOLT (M10X1.5X120MM)	
	12	1	**8T-4121**	2	WASHER-HARD (11X21X2.5MM THK)	
M	13	1	**8T-4137**	1	BOLT (M10X1.5X20MM)	
	14	1	**8T-4896**	1	WASHER-HARD (10.2X18.5X2.5MM THK)	
	15	1	**8X-7893**	1	PIPE	
E	16	1	**5P-0767**		HOSE (28.1CM)	
E	17	1	**5P-0767**		HOSE (31.0CM)	

E-ORDER BY THE CENTIMETER
M-METRIC PART

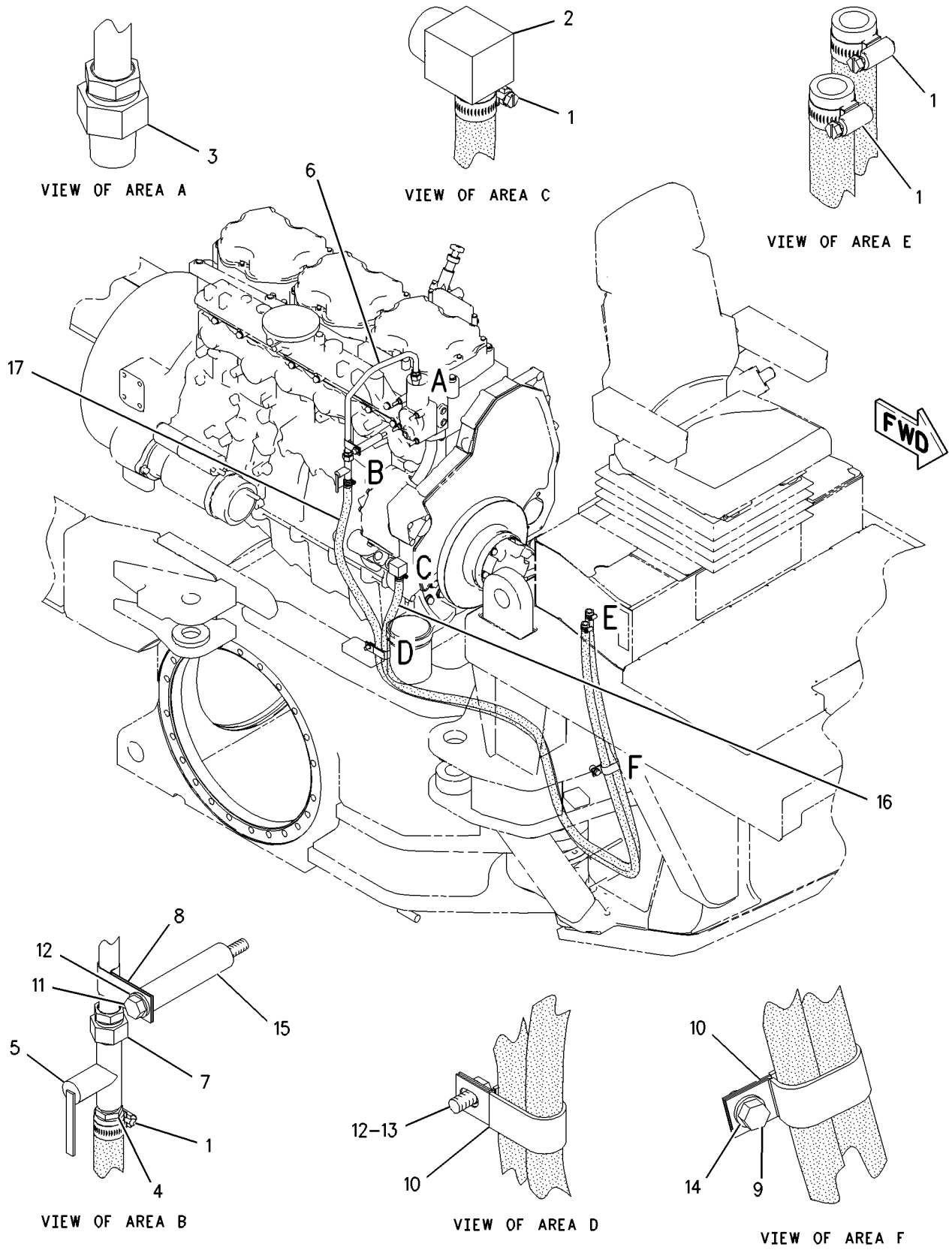

GRAPHIC #1

g00935282

OPERATOR STATION

8X-2795 MIRROR GP-REAR VIEW—INSIDE

S/N: ATS1-UP

PART OF 162-5607 GENERAL AR

SMCS-7319 **i00111633**

NOTE	REF NO	GRAPHIC REF	PART NUMBER	QTY	PART NAME 1 2 3 4 5 6 (PRODUCT LEVEL)	SEE PAGE
	1	1	**8Y-4512**	1	MIRROR	
	2	1	**2G-8241**	2	CLAMP	
M	3	1	**9X-2046**	4	SCREW-TRUSS HEAD (M6X1X35MM)	
	4	1	**2G-8572**	2	WASHER (2.54MM THK)	
	5	1	**2G-8573**	2	CAP	
	6	1	**2G-8242**	2	ARM	
	7	1	**5P-1075**	2	WASHER-HARD (3MM THK)	
	8	1	**8H-1728**	2	NUT-ACORN	
	9	1	**5S-7379**	2	BOLT (3/8-16X.875IN)	
	10	1	**1P-2378**	2	CAP	

M-METRIC PART

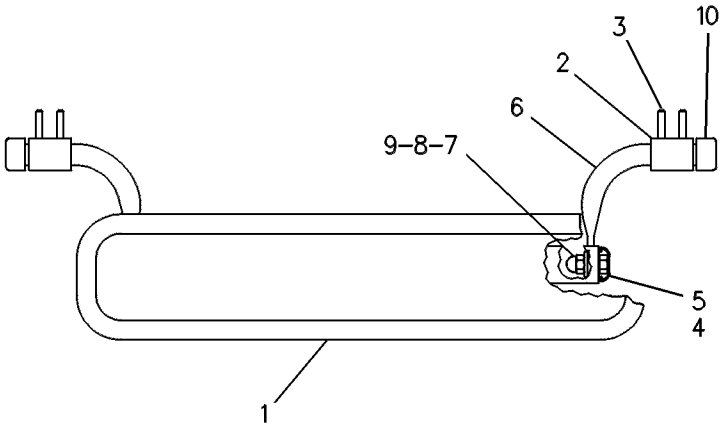

GRAPHIC #1 g00084778

MEMORANDA

OPERATOR STATION

191-9413 MIRROR GP-REAR VIEW—OUTSIDE—HEATED

S/N: ATS1-UP

AN ATTACHMENT

SMCS-7319 **i01702169**

NOTE	REF NO	GRAPHIC REF	PART NUMBER	QTY	PART NAME 1 2 3 4 5 6 (PRODUCT LEVEL)	SEE PAGE
	1	1	**3E-0109**	5	PLUG-ROCKER SWITCH	
B	2	1	**3S-2093**	8	STRAP-CABLE	
	3	1	**9W-1442**	1	FUSE (10 AMP) (HEATED MIRROR)	
	4	1	**113-8218**	2	ARM	
	5	1	**123-4586**	4	BLOCK	
	6	1	**123-4587**	4	BRACKET	
	7	1	**145-3350**	1	PLATE	
	8	1	**153-2147**	1	PLATE	
	9	1	**168-8243**	1	HARNESS AS-PANEL	
		1	**155-2271**	1	KIT-CONNECTING PLUG (4 PIN)	
		1	**155-2270**	1	KIT-CONNECTING PLUG (2 PIN)	
		1	**155-2265**	4	KIT-CONNECTING PLUG (8 PIN)	
		1	**155-2255**	1	KIT-CONNECTING PLUG (12 PIN)	
					(EACH PLUG KIT INCLUDES PLUG ASSEMBLY AND WEDGE)	
		1	**102-8801**	1	KIT-RECEPTACLE (12 PIN)	
		1	**102-8806**	1	KIT-RECEPTACLE (8 PIN)	
		1	**102-8804**	2	KIT-RECEPTACLE (4 PIN)	
		1	**102-8802**	1	KIT-RECEPTACLE (2 PIN)	
					(EACH RECEPTACLE KIT INCLUDES RECEPTACLE ASSEMBLY AND WEDGE)	
	10	1	**172-6556**	1	PANEL	
	11	1	**188-3862**	1	BRACKET AS	
	12	1	*192-1994*	2	MIRROR AS	
J		1	**110-0015**	1	MIRROR AS	
J		1	**3E-3365**	1	WEDGE-RECEPTACLE LOCK (2 PIN)	
J		1	**9G-3695**	2	PLUG (GROMMET SEALING)	
J		1	**102-8802**	1	KIT-RECEPTACLE (2 PIN)	
					(INCLUDES RECEPTACLE AS & WEDGE)	
	13	1	**3E-8766**	1	SWITCH AS (HEATED MIRROR)	
		1	**3E-8825**	1	LAMP (24 VOLT) (HEATED MIRROR INDICATOR)	
		1	**123-5857**	1	ACTUATOR-ROCKER	
	14	1	**130-5300**	2	CLIP	
	15	1	**3P-9554**	2	GROMMET	
	16	1	**6G-8831**	4	CLAMP	
M	17	1	**6V-7744**	4	LOCKNUT (M10X1.5 THD)	
	18	1	**8T-4121**	27	WASHER-HARD (11X21X2.5MM THK)	
M	19	1	**8T-4133**	8	NUT (M10X1.5 THD)	
M	20	1	**8T-4137**	8	BOLT (M10X1.5X20MM)	
M	21	1	**8T-4182**	8	BOLT (M10X1.5X45MM)	
M	22	1	**8T-4186**	4	BOLT (M10X1.5X40MM)	
M	23	1	**8T-4191**	2	BOLT (M10X1.5X16MM)	
	24	1	**9C-5928**	4	SPACER (5.15MM LG X 19.0 DIA)	
M	25	1	**9X-2043**	6	SCREW-TRUSS HEAD (M6X1X14MM)	

B-USE AS REQUIRED
J-PARTS MARKED J ARE NEEDED FOR BOTH RH & LH MIRROR ASSEMBLIES
M-METRIC PART

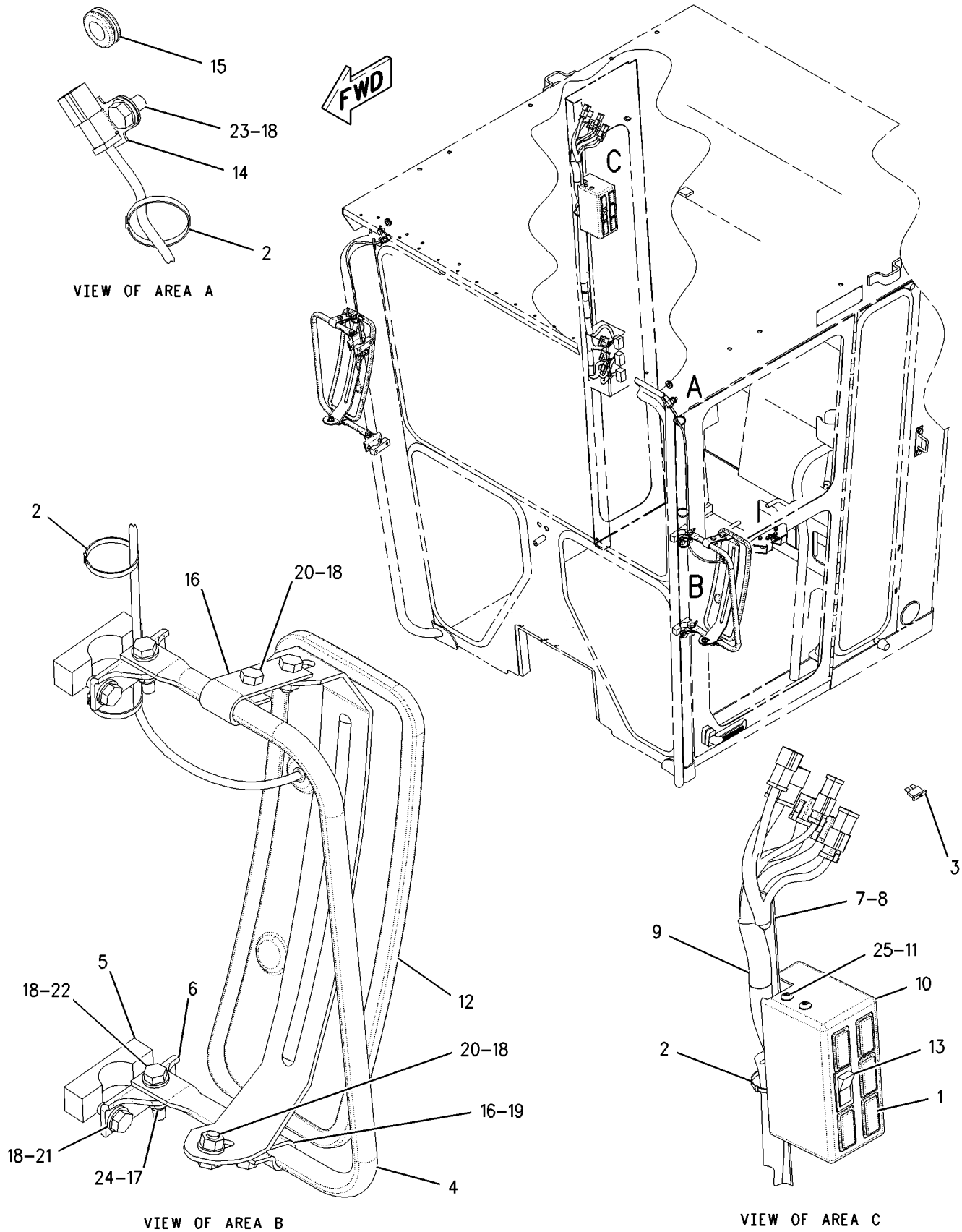

GRAPHIC #1

g00847641

OPERATOR STATION

193-8212 MIRROR GP-REAR VIEW—OUTSIDE—HEATED—EU

S/N: ATS1-UP
AN ATTACHMENT

SMCS-7319 **i01709758**

NOTE	REF NO	GRAPHIC REF	PART NUMBER	QTY	PART NAME 1 2 3 4 5 6 (PRODUCT LEVEL)	SEE PAGE
	1	1	**3E-0109**	5	PLUG-ROCKER SWITCH	
	2	1	**3S-2093**	8	STRAP-CABLE	
	3	1	**9W-1442**	1	FUSE (10 AMP) (OUTSIDE HEATED MIRROR)	
	4	1	**113-8218**	2	ARM	
	5	1	**123-4586**	4	BLOCK	
	6	1	**123-4587**	4	BRACKET	
	7	1	**145-3350**	1	PLATE	
	8	1	**153-2147**	1	PLATE	
	9	1	**172-6556**	1	PANEL	
	10	1	**188-3862**	1	BRACKET AS	
	11	1	**196-8557**	1	HARNESS AS-CAB	
		1	**155-2255**	1	KIT-CONNECTING PLUG (12 PIN)	
		1	**155-2265**	4	KIT-CONNECTING PLUG (8 PIN)	
		1	**155-2270**	1	KIT-CONNECTING PLUG (2 PIN) (FLOOD LAMP SIDE & AUX CKT)	
		1	**155-2271**	1	KIT-CONNECTING PLUG (4 PIN)	
					(EACH INCLUDES PLUG AS & WEDGE)	
		1	**102-8802**	1	KIT-RECEPTACLE (2 PIN)	
		1	**102-8804**	2	KIT-RECEPTACLE (4 PIN)	
		1	**102-8806**	1	KIT-RECEPTACLE (8 PIN)	
		1	**102-8801**	1	KIT-RECEPTACLE (12 PIN)	
					(EACH INCLUDES RECEPTACLE AS & WEDGE)	
	12	1	**202-8649**	2	MIRROR AS	
					(EACH INCLUDES)	
		1	**3E-3365**	1	WEDGE-RECEPTACLE LOCK (2 PIN)	
		1	**9G-3695**	2	PLUG (GROMMET SEALING)	
		1	**102-8802**	1	KIT-RECEPTACLE (2 PIN)	
					(INCLUDES RECEPTACLE AS AND WEDGE)	
	13	1	**3E-8766**	1	SWITCH AS (HEATED MIRROR)	
		1	**3E-8825**	1	LAMP (24 VOLT) (HEATED MIRROR INDICATOR)	
		1	**123-5857**	1	ACTUATOR-ROCKER (HEATED MIRROR)	
	14	1	**130-5300**	2	CLIP	
	15	1	**3P-9554**	2	GROMMET	
	16	1	**6G-8831**	4	CLAMP	
M	17	1	**6V-7744**	4	LOCKNUT (M10X1.5 THD)	
	18	1	**8T-4121**	27	WASHER-HARD (11X21X2.5MM THK)	
M	19	1	**8T-4133**	8	NUT (M10X1.5 THD)	
M	20	1	**8T-4136**	8	BOLT (M10X1.5X25MM)	
M	21	1	**8T-4182**	8	BOLT (M10X1.5X45MM)	
M	22	1	**8T-4186**	4	BOLT (M10X1.5X40MM)	
M	23	1	**8T-4191**	2	BOLT (M10X1.5X16MM)	
	24	1	**9C-5928**	4	SPACER (5.15MM LG X 19.0 DIA)	
M	25	1	**9X-2043**	6	SCREW-TRUSS HEAD (M6X1X14MM)	

M-METRIC PART

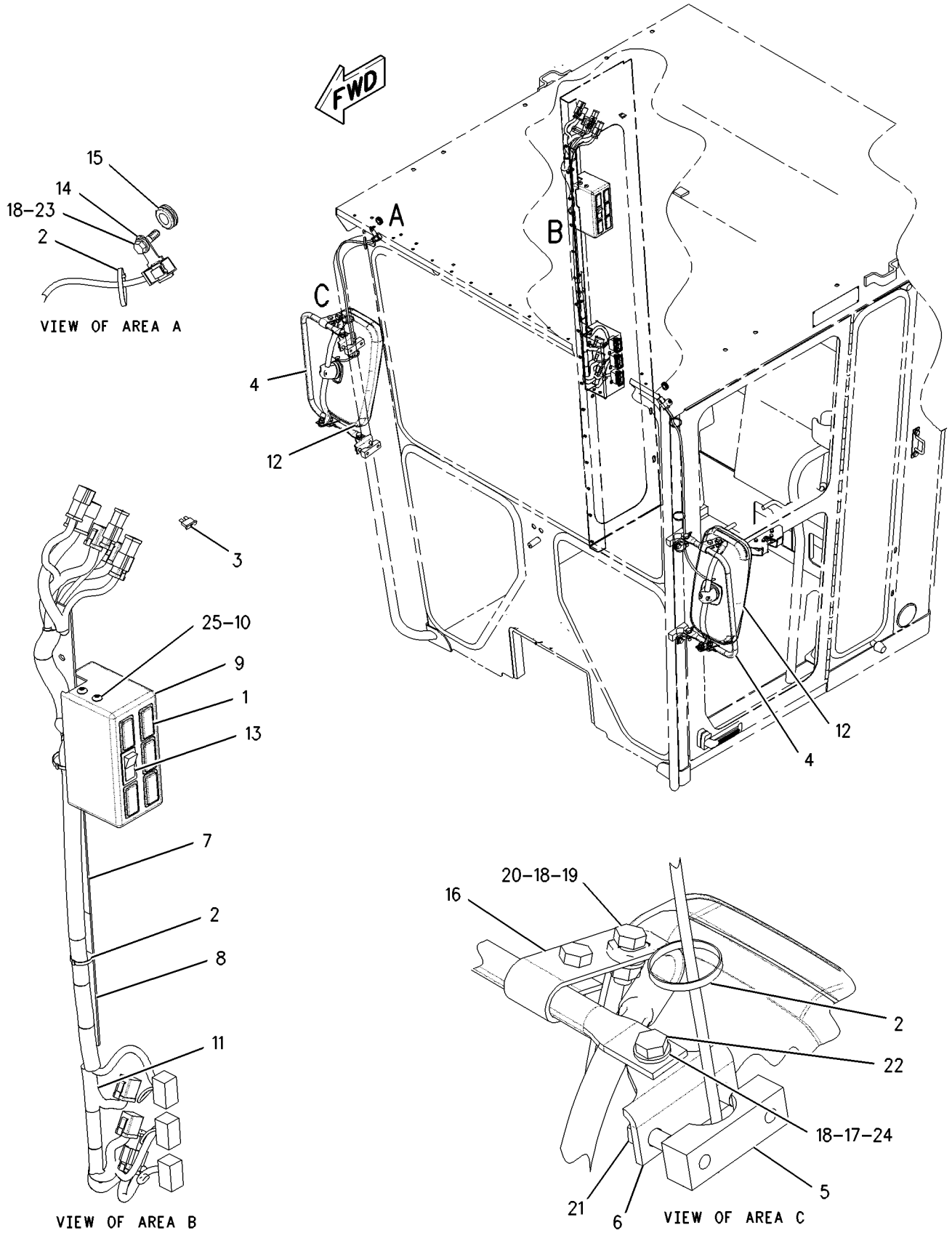

GRAPHIC #1

g00893860

OPERATOR STATION

197-2064 MIRROR GP-REAR VIEW—OUTSIDE—CLOSED ROPS

S/N: ATS1-UP

AN ATTACHMENT

SMCS-7319 **i01620179**

NOTE	PART NUMBER	QTY	PART NAME 1 2 3 4 5 6 (PRODUCT LEVEL)	SEE PAGE
	113-8218	2	ARM	
	123-4586	4	BLOCK	
M	**8T-4137**	8	BOLT (M10X1.5X20MM)	
M	**8T-4182**	8	BOLT (M10X1.5X45MM)	
M	**8T-4186**	4	BOLT (M10X1.5X40MM)	
	123-4587	4	BRACKET	
	6G-8831	4	CLAMP	
M	**6V-7744**	4	LOCKNUT (M10X1.5 THD)	
	197-2055	2	MIRROR AS	
M	**8T-4133**	8	NUT (M10X1.5 THD)	
	9C-5928	8	SPACER (5.15MM LG X 19.0 DIA)	
	8T-4121	24	WASHER-HARD (11X21X2.5MM THK)	

M-METRIC PART

<END>

OPERATOR STATION

197-2066 MIRROR GP-REAR VIEW—INSIDE—DUAL—EU

S/N: ATS1-UP
PART OF 211-1771, 211-1772 CONVERSION AR-CERTIFICATION
AN ATTACHMENT

SMCS-7319 **i01709471**

NOTE	REF NO	GRAPHIC REF	PART NUMBER	QTY	PART NAME 1 2 3 4 5 6 (PRODUCT LEVEL)	SEE PAGE
	1	1	**1P-2378**	4	CAP	
	2	1	**2G-8241**	2	CLAMP	
	3	1	**197-2054**	1	MIRROR AS (RH)	
	4	1	**213-5132**	1	MIRROR AS (LH)	
M	5	1	**9X-2046**	4	SCREW-TRUSS HEAD (M6X1X35MM)	

M-METRIC PART

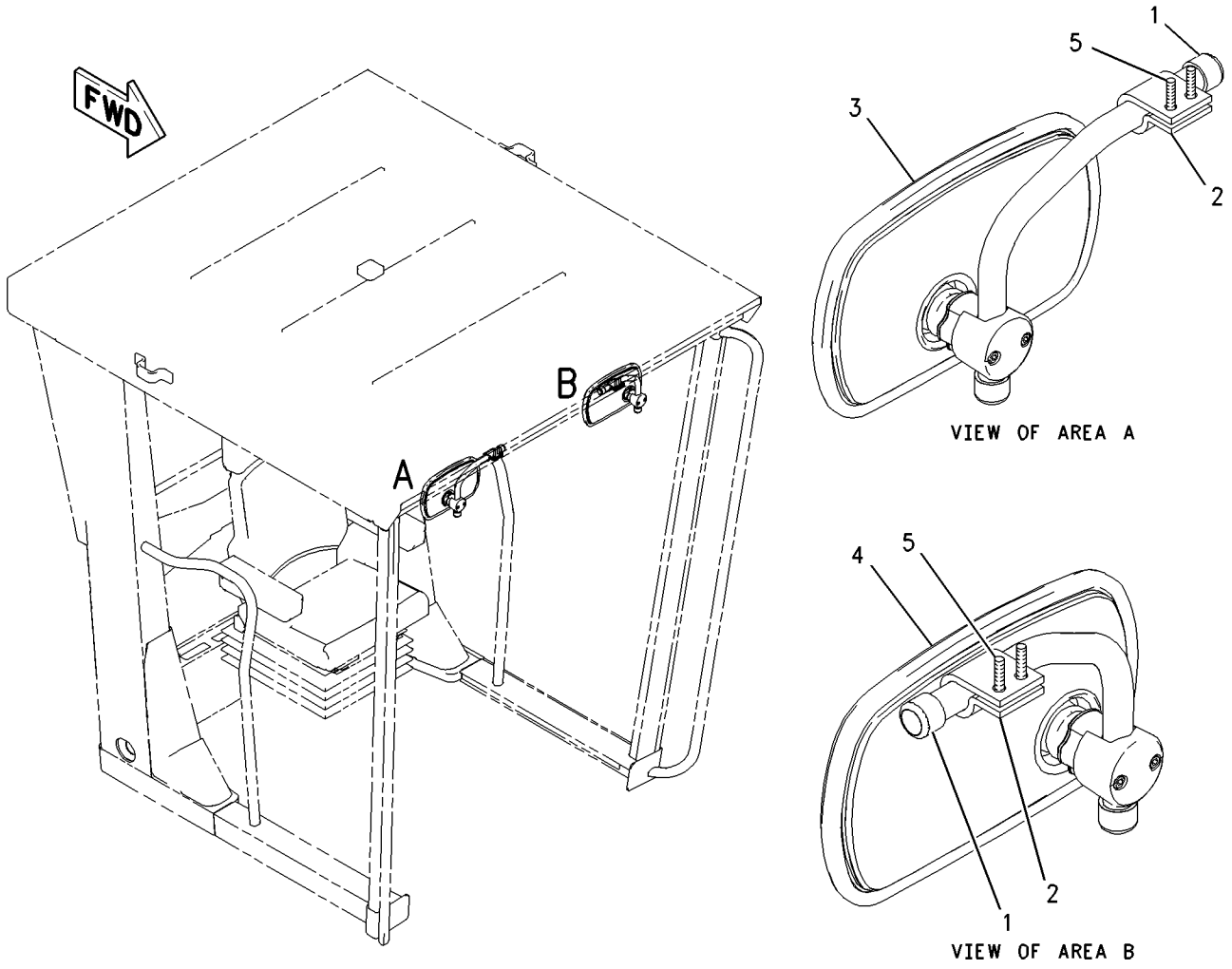

GRAPHIC #1 g00893892

OPERATOR STATION

180-9285 MODULE GP-QUAD GAUGE

S/N: ATS1-UP
PART OF 187-3188, 197-7155 PANEL GP-INSTRUMENT
ALSO AN ATTACHMENT

SMCS-7451, 7490 **i01706090**

NOTE	REF NO	GRAPHIC REF	PART NUMBER	QTY	PART NAME 1 2 3 4 5 6 (PRODUCT LEVEL)	SEE PAGE
	1	1	**102-8805**	1	KIT-RECEPTACLE (6 PIN) (QUAD GAGE MODULE)	
					(INCLUDES RECEPTACLE ASSEMBLY AND WEDGE)	
	2	1	**186-3735**	6	PIN-CONNECTOR	
	3	1	**3E-3383**	1	WEDGE-RECEPTACLE LOCK	

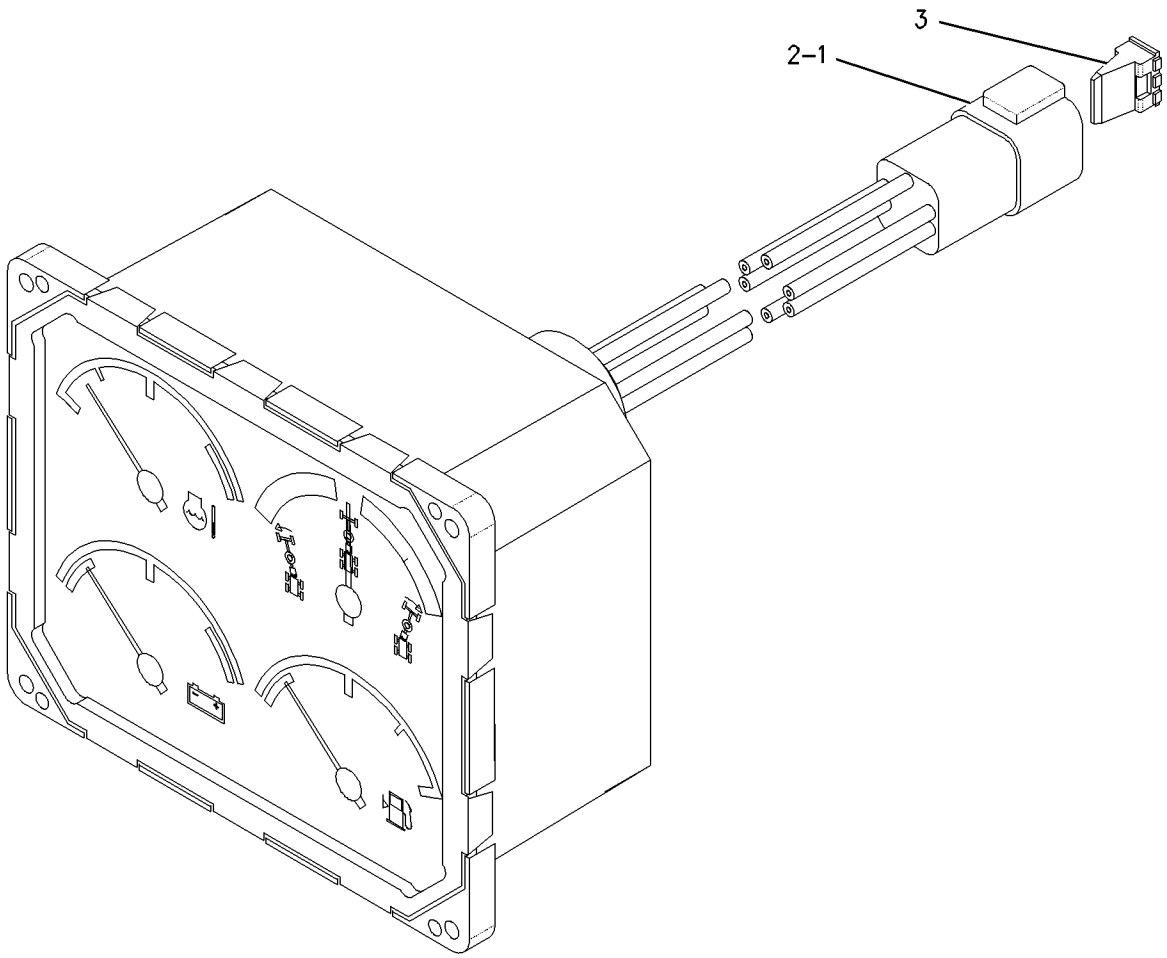

GRAPHIC #1 g00877962

OPERATOR STATION

177-9741 MODULE GP-SPEEDOMETER & TACH–SNOW

S/N: ATS1-UP
PART OF 185-7968 INSTRUMENT AR
AN ATTACHMENT

SMCS-7451, 7462, 7463, 7490 **i01624033**

NOTE	REF NO	GRAPHIC REF	PART NUMBER	QTY	PART NAME 1 2 3 4 5 6 (PRODUCT LEVEL)	SEE PAGE
	1	1	**7N-5876**	2	LAMP (24 VOLT) (SPEEDOMETER & TACH)	
	2	1	**190-3482**	1	MODULE GP-SPEEDOMETER & TACH	
		1	**3E-3383**	1	WEDGE-RECEPTACLE LOCK	
		1	**8T-8729**	6	PIN-CONNECTOR	
		1	**102-8805**	1	KIT-RECEPTACLE (6 PIN) (SPEEDOMETER & TACH)	

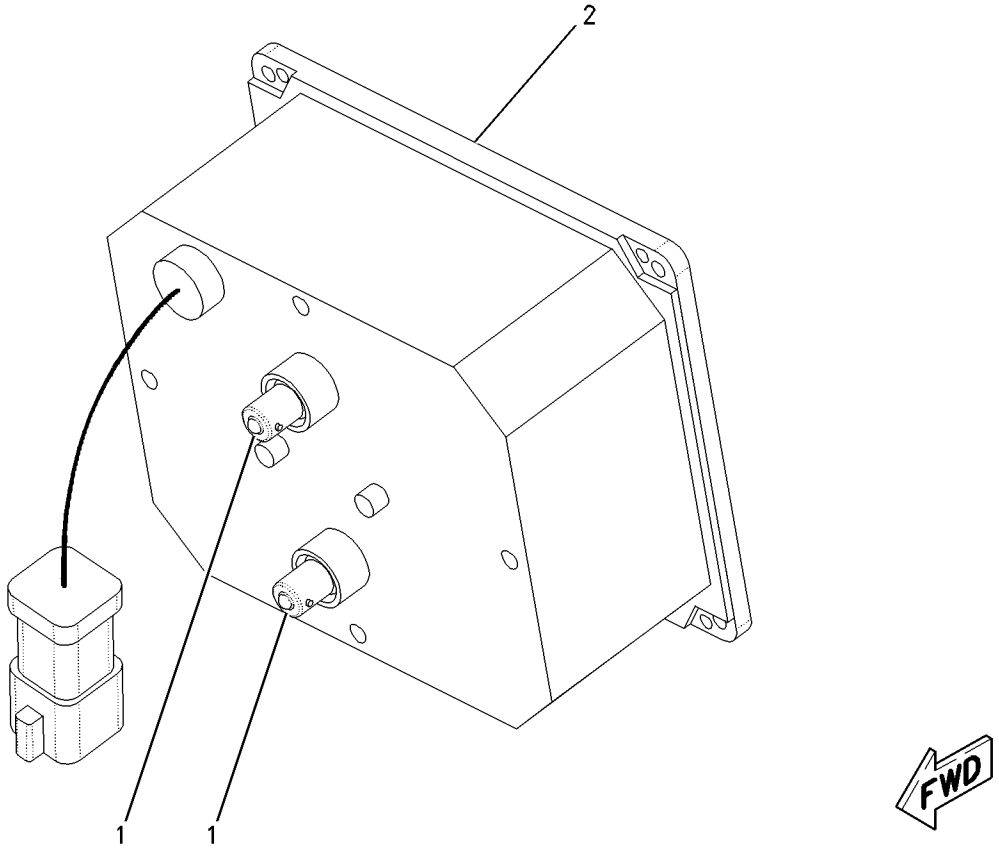

GRAPHIC #1 g00845776

OPERATOR STATION

2A-6985 MOUNTING GP-ROPS—ENCLOSED

S/N: ATS1-UP

PART OF 172-5377, 177-8779 ROPS GP-ENCLOSED

ALSO AN ATTACHMENT

SMCS-7266 **i01437207**

NOTE	REF NO	GRAPHIC REF	PART NUMBER	QTY	PART NAME 1 2 3 4 5 6 (PRODUCT LEVEL)	SEE PAGE
	1	1	**3E-4048**	2	CAP-PLUG	
	2	1	**103-5515**	1	PAD-RH	
	3	1	**103-5516**	1	PAD-LH	
	4	1	**103-4953**	4	MOUNTING	
	5	1	**7X-0375**	4	BOLT (3/4-10X5 IN)	
	6	1	**8X-0674**	4	WASHER (22X100X10MM THK)	
	7	1	**038-3987**	2	WASHER (16.75X50.8X4.76MM THK)	
	8	1	**4K-0367**	2	NUT-FULL (5/8-11 THD)	
	9	1	**7X-0354**	2	BOLT (5/8-11X4.50IN)	
	10	1	**8T-4122**	4	WASHER-HARD (17X32X3.5MM THK)	
	11	1	**8X-6131**	2	SEAL	
	12	1	**164-2465**	2	PAD	
	13	1	**9D-1589**	2	MOUNTING	
	14	1	**2G-7098**	2	PAD	
	15	1	**2G-7097**	1	PAD	
	16	1	**103-4771**	2	PIN AS	
	17	1	**030-8535**	2	BOLT-LOCKING (3/8-16X0.875 IN)	
	18	1	**8T-4896**	2	WASHER-HARD (10.2X18.5X2.5MM THK)	
B	19	1	**166-1999**	2	SHIM (2.28MM THK)	
BE	20	1	**123-6806**		SEAL	
B	21	1	**166-1997**	2	SHIM (1.2MM THK)	

B-USE AS REQUIRED
E-ORDER BY THE CENTIMETER

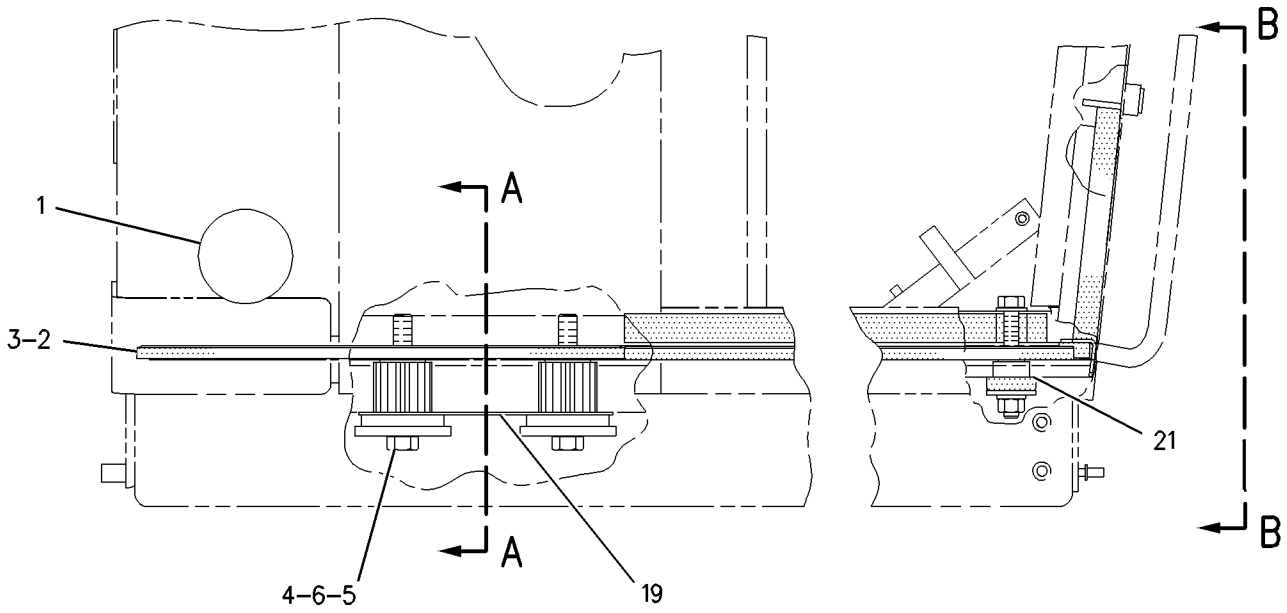

RIGHT SIDE VIEW

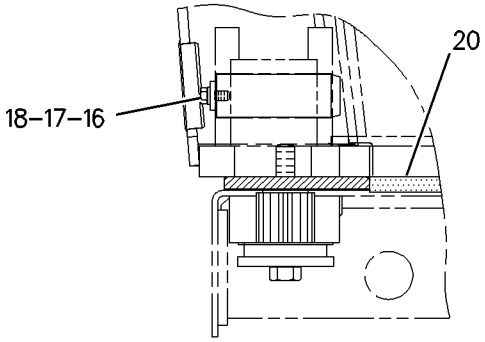

VIEW A-A

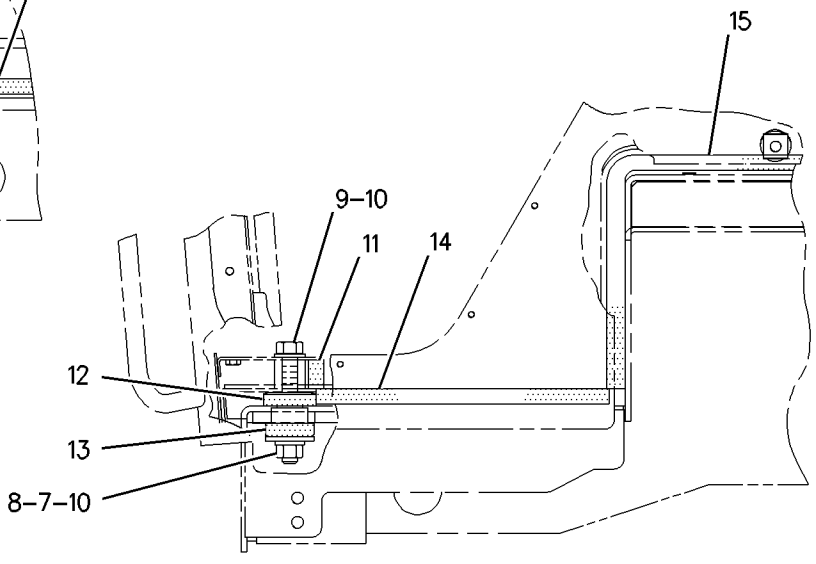

VIEW B-B

GRAPHIC #1 g00760192

OPERATOR STATION

191-8692 MOUNTING GP-ROPS—OPEN—HIGH PROFILE

S/N: ATS1-UP
PART OF 173-2751 ROPS GP-OPEN
AN ATTACHMENT

SMCS-7266 **i01628024**

NOTE	REF NO	GRAPHIC REF	PART NUMBER	QTY	PART NAME 1 2 3 4 5 6 (PRODUCT LEVEL)	SEE PAGE
	1	1	**3E-4048**	2	CAP-PLUG	
	2	1	**8T-4122**	4	WASHER-HARD (17X32X3.5MM THK)	
	3	1	**9D-1589**	2	MOUNTING	
	4	1	**103-4771**	2	PIN AS	
	5	1	**103-4953**	4	MOUNTING	
	6	1	**103-5515**	1	PAD-RH	
	7	1	**103-5516**	1	PAD-LH	
	8	1	**164-2465**	2	PAD	
	9	1	**166-1997**	2	SHIM (1.2MM THK)	
	10	1	**166-1999**	2	SHIM (2.28MM THK)	
	11	1	**030-8535**	2	BOLT-LOCKING (3/8-16X0.875 IN)	
	12	1	**3V-9244**	2	WASHER (16.5X50X5MM THK)	
	13	1	**4K-0367**	2	NUT-FULL (5/8-11 THD)	
	14	1	**7X-0354**	2	BOLT (5/8-11X4.50IN)	
	15	1	**7X-0375**	4	BOLT (3/4-10X5 IN)	
	16	1	**8T-4896**	2	WASHER-HARD (10.2X18.5X2.5MM THK)	
	17	1	**8X-0674**	4	WASHER (22X100X10MM THK)	

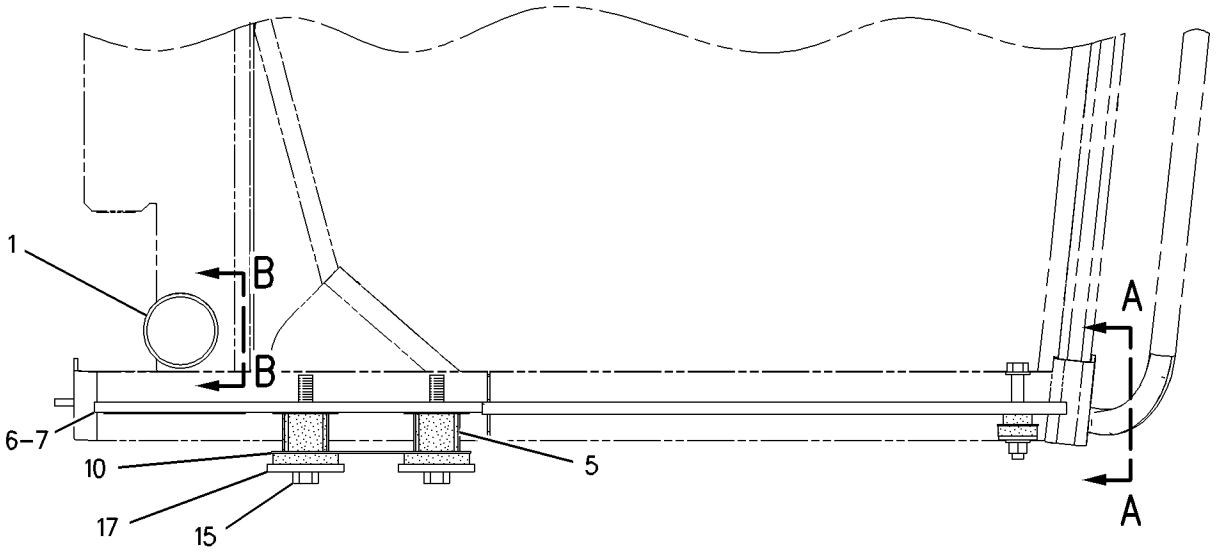

RIGHT SIDE VIEW

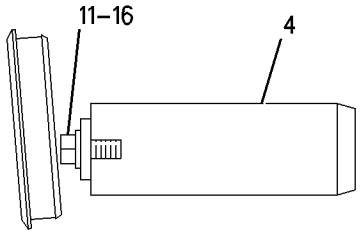

VIEW B-B

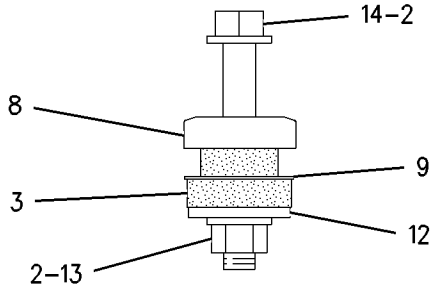

VIEW A-A

GRAPHIC #1 g00846778

OPERATOR STATION

108-8421 PAN GP-BACKREST

S/N: ATS1-UP
PART OF 114-1183, 114-1185 SEAT GP
ALSO AN ATTACHMENT

SMCS-7312 **i01818937**

NOTE	REF NO	GRAPHIC REF	PART NUMBER	QTY	PART NAME 1 2 3 4 5 6 (PRODUCT LEVEL)	SEE PAGE
	1	1	**9M-5733**	2	RIVET-POP (4.78MM DIA)	
	2	1	**8Y-6006**	1	LID AS	
	3	1	**8Y-6010**	1	LANYARD	
	4	1	**4S-8287**	8	RIVET-POP (6MM DIA)	
	5	1	**8Y-5972**	1	LATCH	
	6	1	**108-8423**	1	SHAFT AS-LUMBAR	
	7	1	**3E-4336**	1	STUD-BALL	
	8	1	**3E-4335**	1	CLIP	
	9	1	**2F-7306**	1	SCREW-MACHINE (6-32X.25 IN)	
	10	1	**8F-1462**	1	WASHER-PLATED	
E	11	1	**3E-6575**		SEAL (76CM)	
	12	1	**108-8424**	1	PAN-LUMBAR	
	13	1	**8Y-5903**	2	CAM	
	14	1	**3E-4362**	2	PIN-SPRING	

E-ORDER BY THE CENTIMETER

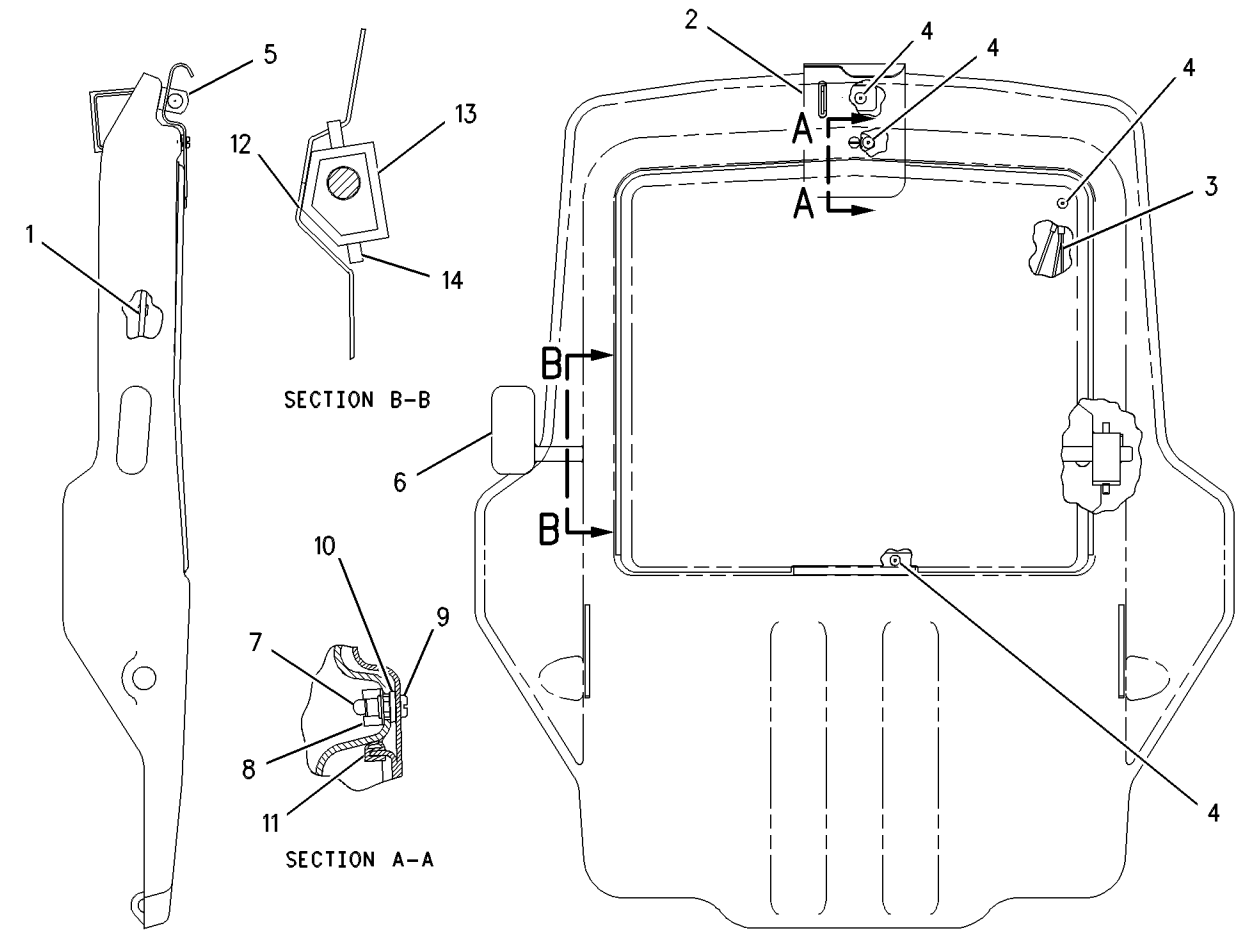

GRAPHIC #1 g00383446

OPERATOR STATION

113-5810 PAN GP-SEAT

S/N: ATS1-UP
PART OF 114-1183, 114-1185 SEAT GP
ALSO AN ATTACHMENT

SMCS-7312 **i01536202**

NOTE	REF NO	GRAPHIC REF	PART NUMBER	QTY	PART NAME 1 2 3 4 5 6 (PRODUCT LEVEL)	SEE PAGE
	1	1	**113-5809**	1	PAN AS-SEAT	
ZJ	2	1		1	ROD AS	
ZJNH	3	1		3	SPRING	
	4	1	**3K-4897**	10	PIN-SPRING	
ZH	5	1		1	ROD	
ZN	6	1		1	ROD AS	
	7	1	**9M-5733**	1	RIVET-POP (4.78MM DIA)	
	8	1	**114-1083**	1	KNOB-BACK TILT	
ZP	9	1		1	CABLE AS	
	10	1	**009-3681**	2	RING-RETAINING	
ZP	11	1		1	PIN	
ZP	12	1		1	ADJUSTER AS	
	13	1	**114-1082**	1	KNOB-SLIDE	
	14	1	**114-1081**	1	KNOB-SEAT TILT	
	15	1	**114-1070**	1	BRACKET	
					AVAILABLE REPAIR KIT(S):	
J			**114-1068**	1	KIT-SEAT TILT	
N			**114-1067**	1	KIT-BACK TILT	
P			**8Y-5999**	1	KIT-ADJUSTER	
H			**114-1069**	1	KIT-ROD	

H-KITS MARKED H SERVICES PARTS MARKED H
J-KITS MARKED H SERVICES PARTS MARKED J
N-KITS MARKED H SERVICES PARTS MARKED N
P-KITS MARKED H SERVICES PARTS MARKED P
Z-NOT SERVICED SEPARATELY

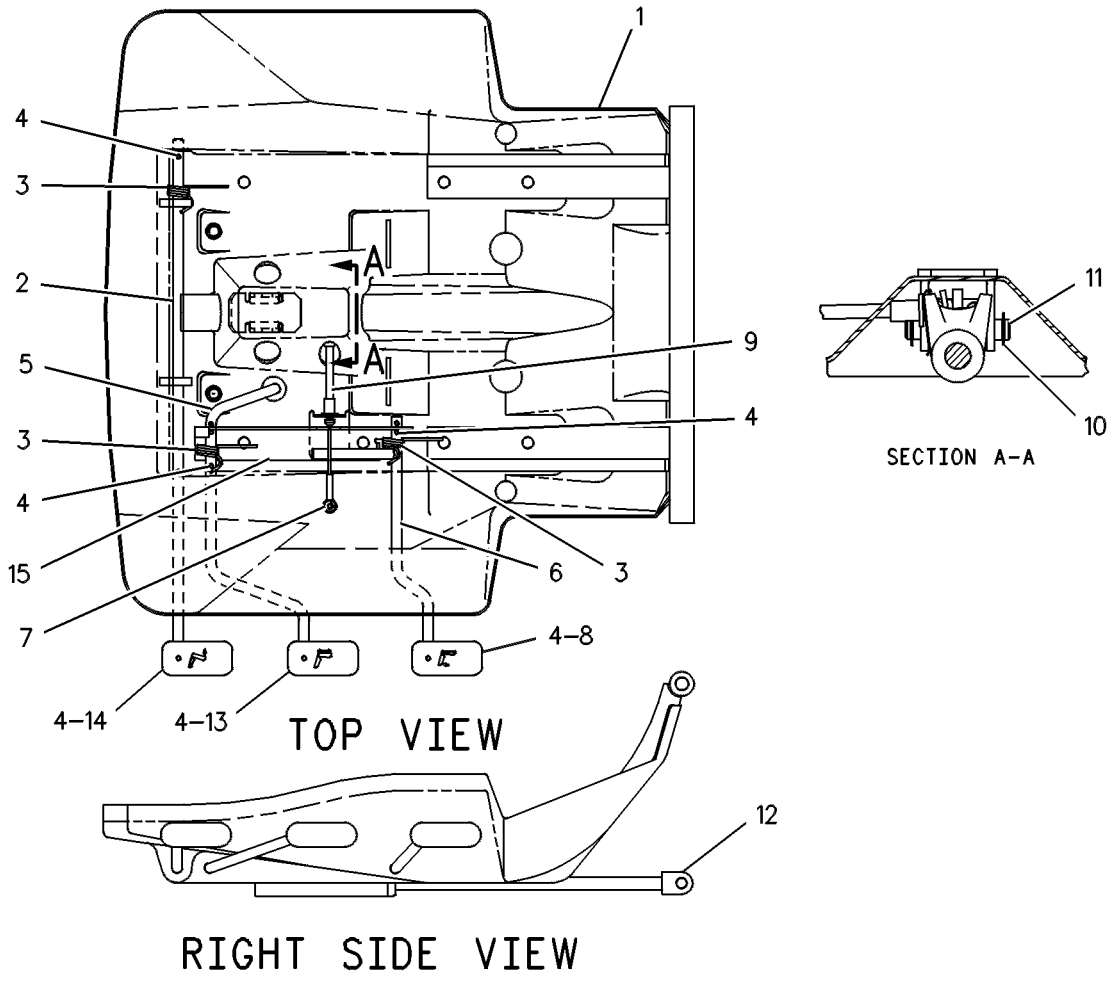

GRAPHIC #1 g00108701

OPERATOR STATION

8X-2375 PANEL GP-CAB—LOW PROFILE

S/N: ATS1-UP

PART OF 172-5377 ROPS GP-ENCLOSED

SMCS-7301 **i01364405**

NOTE	REF NO	GRAPHIC REF	PART NUMBER	QTY	PART NAME 1 2 3 4 5 6 (PRODUCT LEVEL)	SEE PAGE
	1	1	**8X-5456**	1	GLASS-FRONT	
	2	1	**102-9381**	1	GLASS-REAR	
	3	1	**118-2557**	2	GLASS (SIDE)	
	4	1	**149-3409**	2	GLASS	
	5	1	**166-2829**	1	FILM (SUN VISOR)	
D	6	1	**5P-5768**		SEAL (10.5M)	
	7	1	**3E-9413**		SEAL (913CM)	

D-ORDER BY THE METER

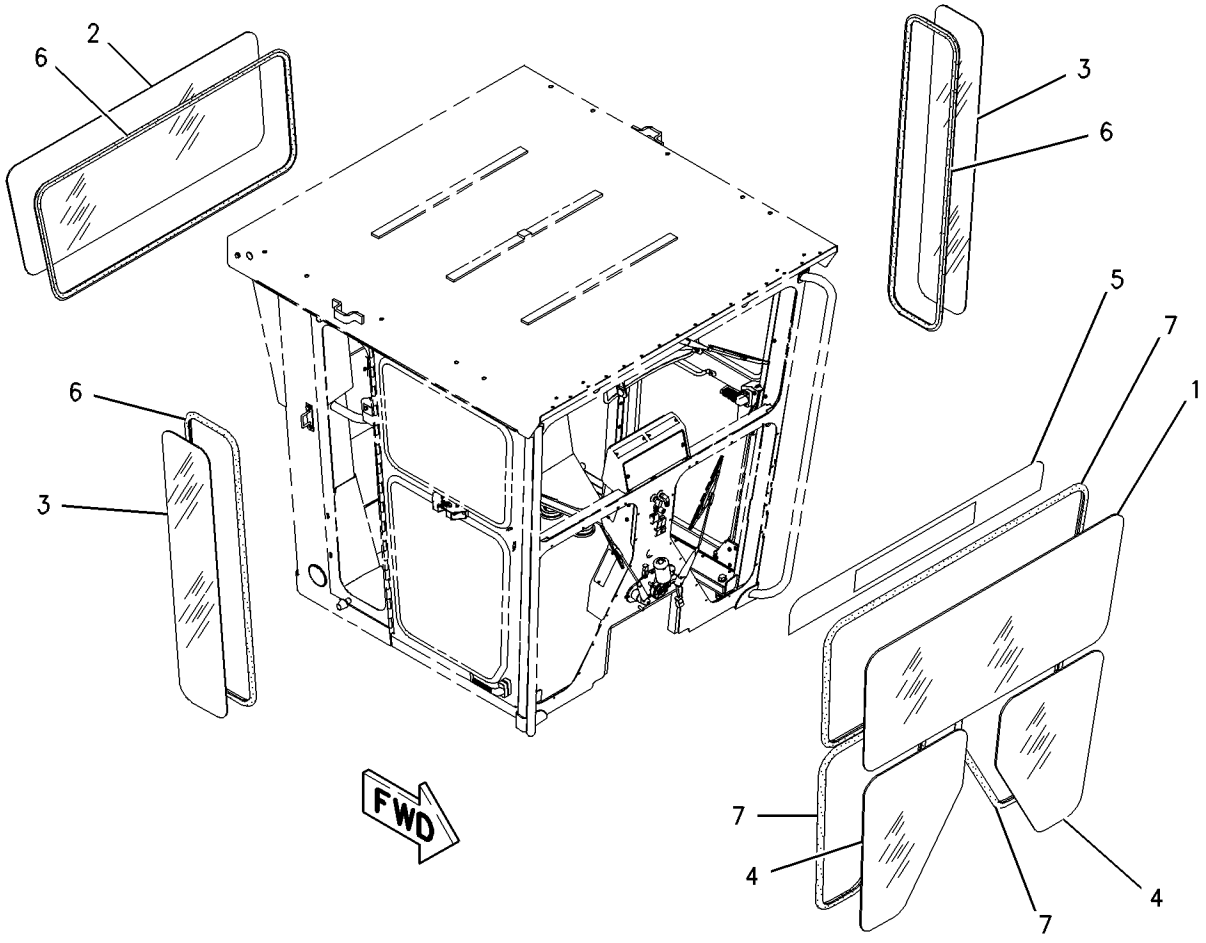

GRAPHIC #1 g00720880

OPERATOR STATION

8X-2385 PANEL GP-CAB—HIGH PROFILE

S/N: ATS1-UP
PART OF 177-8779 ROPS GP-ENCLOSED
AN ATTACHMENT

SMCS-7301 **i01794311**

NOTE	REF NO	GRAPHIC REF	PART NUMBER	QTY	PART NAME 1 2 3 4 5 6 (PRODUCT LEVEL)	SEE PAGE
	1	1	**115-6806**	2	GLASS (SIDE)	
	2	1	**8X-2228**	1	GLASS-FRONT	
D	3	1	**5P-5768**		SEAL (4.30M)	
D	3A	1	**5P-5768**		SEAL (.4M)	
D	3B	1	**5P-5768**		SEAL (.4M)	
	4	1	**102-9372**	1	GLASS	
	5	1	**149-3409**	2	GLASS	
E	6	1	**3E-9413**		SEAL (454CM)	
E	6A	1	**3E-9413**		SEAL (254CM)	
E	6B	1	**3E-9413**		SEAL (254CM)	
	7	1	**166-2830**	1	FILM (SUN VISOR)	

D-ORDER BY THE METER
E-ORDER BY THE CENTIMETER

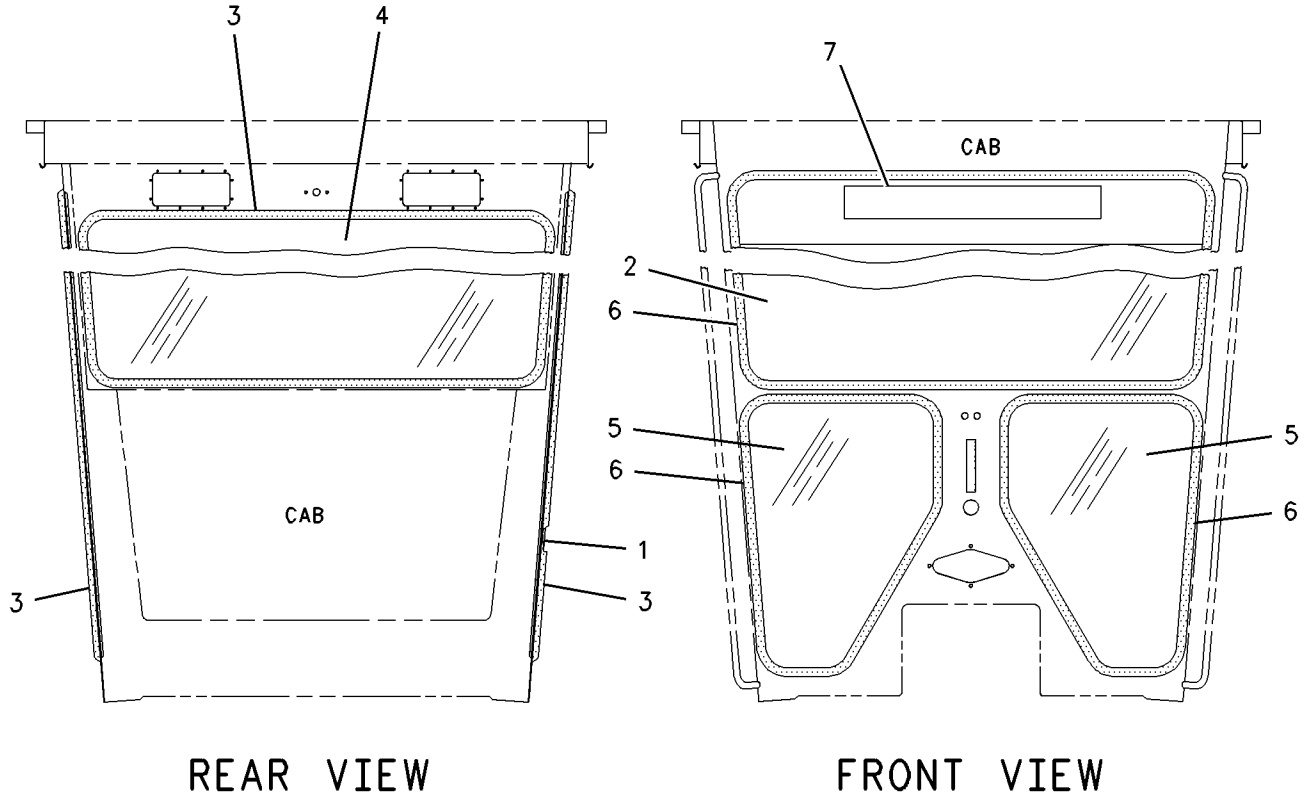

REAR VIEW FRONT VIEW

GRAPHIC #1 g00711066

OPERATOR STATION

187-3188 PANEL GP-INSTRUMENT

S/N: ATS1-UP

PART OF 162-5607 GENERAL AR

SMCS-7450, 7451 **i01855181**

NOTE	REF NO	GRAPHIC REF	PART NUMBER	QTY	PART NAME 1 2 3 4 5 6 (PRODUCT LEVEL)	SEE PAGE
	1	1	**1W-3306**	1	GAUGE GP-AIR PRESSURE (LH BRAKE)	
		1	**4B-2049**	2	NUT (10-32 THD)	
		1	**8F-1434**	2	LOCKWASHER	
	2	1	**5D-0269**	2	ELBOW	
	3	1	**5K-7577**	2	HOSE AS	
	4	1	**7N-5876**	2	LAMP (24 VOLT) (QUAD GAGE MODULE INDICATOR)	
	5	1	**9M-8662**	2	COUPLING	
	6	1	**9X-9688**	1	SWITCH AS-PUSH BUTTON (OPERATOR MODE DIGITAL DISPLAY)	
		1	**3K-0835**	1	NUT (5/8-24 THD)	
		1	**6F-0253**	1	LOCKWASHER	
		1	**8T-8748**	1	ADAPTER-MOUNT	
		1	**186-3735**	2	PIN-CONNECTOR	
		1	**102-8802**	1	KIT-RECEPTACLE (2 PIN)	
					(INCLUDES RECEPTACLE AS & WEDGE)	
	7	1	**107-1983**	1	LAMP (24 VOLT) (EMS MASTER ACTION INDICATOR)	
	8	1	**115-1748**	1	LAMP (24 VOLT) (LH TURN INDICATOR)	
	9	1	**117-9966**	2	PLUG	
	10	1	**122-7045**	6	COVER	
	11	1	**122-8146**	2	PLATE AS	
	12	1	**175-1343**	1	PANEL	
Y	13	1	**180-9285**	1	MODULE GP-QUAD GAUGE	696
	14	1	**184-4322**	1	FILM-MONITOR (MAIN DISPLAY MODULE)	
	15	1	**185-6362**	1	PAD	
	16	1	**187-6269**	1	HARNESS AS-MONITOR	
		1	**155-2255**	1	KIT-CONNECTING PLUG (12 PIN)	
					(INCLUDES PLUG AS & WEDGE)	
		1	**102-8805**	1	KIT-RECEPTACLE (6 PIN)	
		1	**102-8806**	1	KIT-RECEPTACLE (8 PIN)	
		1	**102-8806**	1	KIT-RECEPTACLE (8 PIN)	
		1	**102-8801**	1	KIT-RECEPTACLE (12 PIN)	
					(EACH INCLUDES RECEPTACLE AS & WEDGE)	
		1	**8T-9834**	1	PLUG AS-CONNECTOR (40 PIN)	
	17	1	**196-0180**	1	PANEL	
	18	1	**196-4150**	1	PANEL	
	19	1	**197-5964**	1	FILM-PANEL (LH)	
	20	1	**197-5966**	1	FILM-PANEL (RH)	
	21	1	**160-6567**	1	CONTROL GP-MONITOR (CATERPILLAR MONITORING SYSTEM)	
	22	1	**202-1138**	4	ELBOW	
	23	1	**104-2091**	12	SCREW-FLAT HEAD (6-20X0.5 IN)	
	24	1	**2H-3922**	2	LOCKWASHER	
M	25	1	**3E-8020**	10	SCREW-TRUSS HEAD (M6X1X25MM)	
M	26	1	**7Y-7388**	12	SCREW-BUTTON HEAD (M5X0.8X12MM)	
M	27	1	**9X-2043**	4	SCREW-TRUSS HEAD (M6X1X14MM)	
	28	1	**1W-3306**	1	GAUGE GP-AIR PRESSURE (RH BRAKE)	
		1	**4B-2049**	2	NUT (10-32 THD)	
		1	**8F-1434**	2	LOCKWASHER	
	29	1	**7N-5876**	1	LAMP (24 VOLT) (LH AIR PRESSURE INDICATOR)	
	30	1	**7N-5876**	1	LAMP (24 VOLT) (RH AIR PRESSURE INDICATOR)	
	31	1	**115-1748**	1	LAMP (24 VOLT) (RIGHT TURN INDICATOR)	
	32	1	**115-1748**	1	LAMP (24 VOLT) (DIFF LOCK INDICATOR)	
	33	1	**115-1748**	1	LAMP (24 VOLT) (HIGH BEAM INDICATOR)	
	34	1	**115-1748**	1	LAMP (24 VOLT) (THROTTLE HOLD INDICATOR)	

M-METRIC PART
Y-SEPARATE ILLUSTRATION

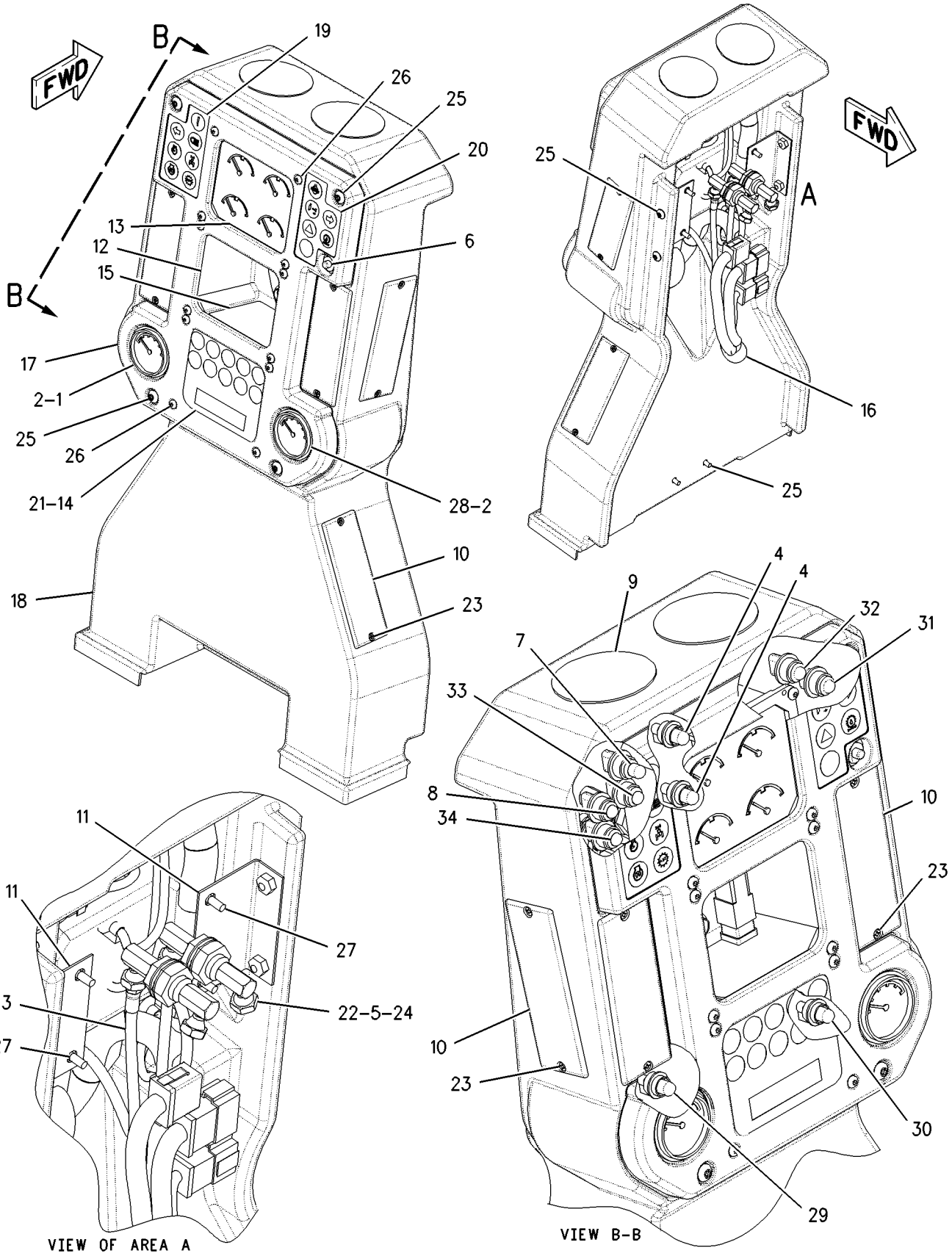

GRAPHIC #1 g00934571

OPERATOR STATION

197-7155 PANEL GP-INSTRUMENT—HIGH PROFILE

S/N: ATS1-UP

PART OF 203-6643 CONVERSION AR-NON-ROPS, 203-6642 ROPS AR-OPEN AN ATTACHMENT

SMCS-7450, 7451 **i01836584**

NOTE	REF NO	GRAPHIC REF	PART NUMBER	QTY	PART NAME 1 2 3 4 5 6 (PRODUCT LEVEL)	SEE PAGE
	1	1	**1W-3306**	1	INDICATOR AS-AIR PRESSURE (LH BRAKE)	
		1	**4B-2049**	1	NUT (10-32 THD)	
		1	**8F-1434**	1	LOCKWASHER	
	2	1	**5D-0269**	2	ELBOW	
	3	1	**7N-5876**	4	LAMP (24 VOLT) (QUAD GAUGE & AIR PRESSURE)	
	4	1	**9X-9688**	1	SWITCH AS-PUSH BUTTON (OPERATOR MODE)(DIGITAL DISPLAY)	
		1	**102-8802**	1	KIT-RECEPTACLE (2 PIN)	
					(INCLUDES RECEPTACLE AS & WEDGE)	
		1	**6F-0253**	1	LOCKWASHER	
		1	**3K-0835**	1	NUT (5/8-24 THD)	
		1	**186-3735**	2	PIN-CONNECTOR	
		1	**8T-8748**	1	ADAPTER-MOUNT	
	5	1	**107-1983**	1	LAMP (24 VOLT) (EMS MASTER ACTION INDICATOR)	
	6	1	**115-1748**	5	LAMP (24 VOLT) (INSTRUMENT PANEL)	
	7	1	**175-1343**	1	PANEL	
Y	8	1	**180-9285**	1	MODULE GP-QUAD GAUGE	696
	9	1	**184-4322**	1	FILM-MONITOR	
	10	1	**185-6362**	1	PAD	
	11	1	**187-6269**	1	HARNESS AS-MONITOR	
		1	**155-2255**	1	KIT-CONNECTING PLUG (12 PIN)	
		1	**155-2270**	1	KIT-CONNECTING PLUG (2 PIN) (OPERATOR MODE SWITCH)	
		1	**155-2274**	2	KIT-CONNECTING PLUG (6 PIN)	
					(EACH INCLUDES PLUG AS & WEDGE)	
		1	**102-8805**	1	KIT-RECEPTACLE (6 PIN)	
		1	**102-8806**	1	KIT-RECEPTACLE (8 PIN)	
		1	**102-8801**	1	KIT-RECEPTACLE (12 PIN)	
					(EACH INCLUDES RECEPTACLE AS & WEDGE)	
		1	**8T-9834**	1	PLUG AS-CONNECTOR (40 PIN)	
	12	1	**196-0180**	1	PANEL	
	13	1	**197-5964**	1	FILM-PANEL (LH)	
	14	1	**197-5966**	1	FILM-PANEL (RH)	
	15	1	**160-6567**	1	CONTROL GP-MONITOR (CATERPILLAR MONITORING SYSTEM)	
M	16	1	**3E-8020**	4	SCREW-TRUSS HEAD (M6X1X25MM)	
M	17	1	**7Y-7388**	12	SCREW-BUTTON HEAD (M5X0.8X12MM)	
	18	1	**1W-3306**	1	INDICATOR AS-AIR PRESSURE (RH BRAKE)	
		1	**4B-2049**	1	NUT (10-32 THD)	
		1	**8F-1434**	1	LOCKWASHER	

M-METRIC PART
Y-SEPARATE ILLUSTRATION

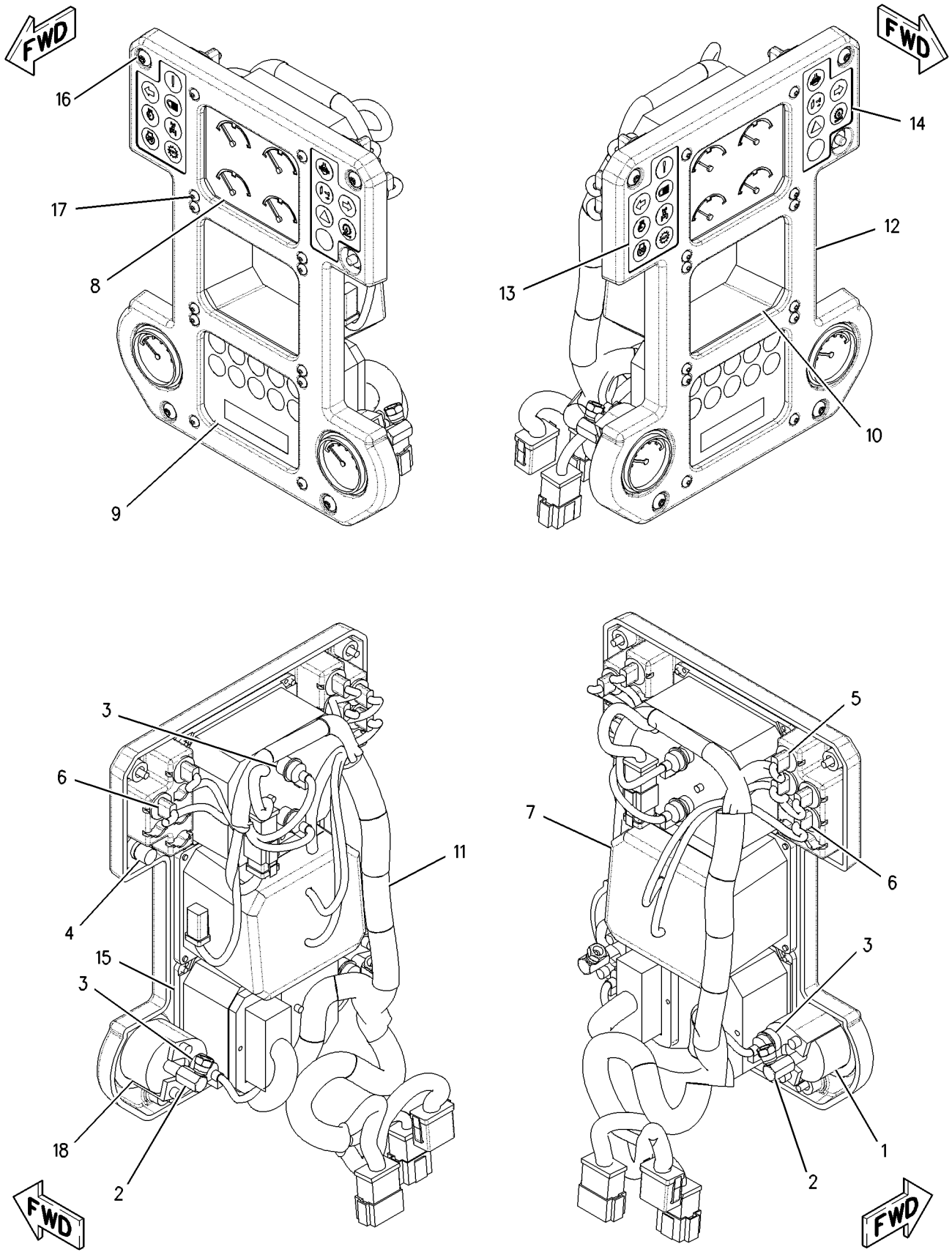

GRAPHIC #1

g00938240

OPERATOR STATION

150-5106 PANEL GP-WINDOW—RH

S/N: ATS1-UP
PART OF 126-0961 WINDOW GP
AN ATTACHMENT

SMCS-7310 **i01031178**

NOTE	REF NO	GRAPHIC REF	PART NUMBER	QTY	PART NAME 1 2 3 4 5 6 (PRODUCT LEVEL)	SEE PAGE
	1	1	**5T-1958**	1	IDLER AS-RH	
		1	**5T-3144**	1	PIVOT AS-IDLER	
		1	**5T-3146**	1	KIT-IDLER HOUSING-RH	
					(INCLUDES HOUSING, BEARING, & WASHER)	
	2	1	**1H-3340**	12	BOLT	
	3	1	**8W-1028**	1	HINGE AS-RH	
	4	1	**126-1167**	1	BOLT	
	5	1	**126-0228**	1	CATCH-STOP	
	6	1	**5T-1969**	1	HANDLE	
	7	1	**1H-8456**	2	SCREW-MACHINE (10/24X1.0 IN)	
BD	8	1	**5P-5680**		SEAL	
	9	1	**150-5105**	1	GLASS	
	10	1	**126-1539**	1	HANDLE-PULL	
	11	1	**5T-1964**	1	SEAL	
BE	12	1	**7X-7661**		TAPE	
	13	1	**126-0208**	1	SPACER	
	14	1	**126-0209**	1	PLATE	
	15	1	**126-0210**	1	PLATE	
	16	1	**5T-1972**	14	INSERT-SCREW	
M	17	1	**8T-0352**	3	BOLT	
	18	1	**8T-0328**	6	WASHER-HARD (1MM THK)	
M	19	1	**7Y-5226**	3	NUT (M5X0.8MM THD)	

B-USE AS REQUIRED
D-ORDER BY THE METER
E-ORDER BY THE CENTIMETER
M-METRIC PART

150-5106 PANEL GP-WINDOW ***(contd.)*** **i01031178**

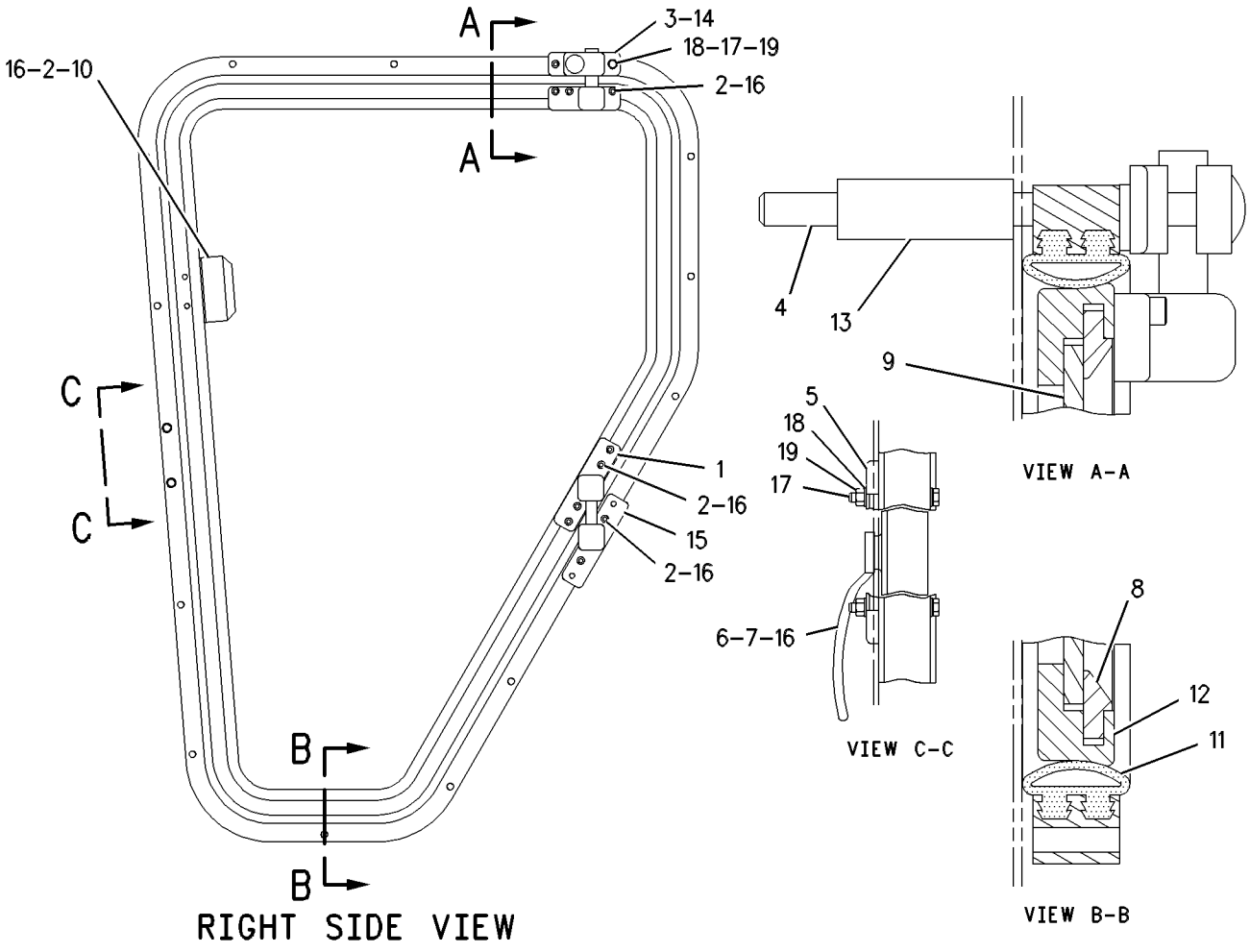

GRAPHIC #1

g00291495

OPERATOR STATION

150-5107 PANEL GP-WINDOW–LH

S/N: ATS1-UP
PART OF 126-0961 WINDOW GP
AN ATTACHMENT

SMCS-7310 **i01031170**

NOTE	REF NO	GRAPHIC REF	PART NUMBER	QTY	PART NAME 1 2 3 4 5 6 (PRODUCT LEVEL)	SEE PAGE
	1	1	**5T-1959**	1	IDLER AS-LH	
		1	**5T-3145**	1	PIVOT AS-IDLER	
	2	1	**1H-3340**	12	BOLT	
	3	1	**8W-1029**	1	HINGE AS-LH	
	4	1	**126-1167**	1	BOLT	
	5	1	**126-0228**	1	CATCH-STOP	
	6	1	**6G-2959**	1	HANDLE	
	7	1	**1H-8456**	2	SCREW-MACHINE (10/24X1.0 IN)	
BD	8	1	**5P-5680**		SEAL	
	9	1	**150-5105**	1	GLASS	
	10	1	**126-1539**	1	HANDLE-PULL	
	11	1	**5T-1964**	1	SEAL	
BE	12	1	**7X-7661**		TAPE	
	13	1	**126-0208**	1	SPACER	
	14	1	**126-0209**	1	PLATE	
	15	1	**126-0210**	1	PLATE	
	16	1	**5T-1972**	14	INSERT-SCREW	
M	17	1	**8T-0352**	3	BOLT	
	18	1	**8T-0328**	6	WASHER-HARD (1MM THK)	
M	19	1	**7Y-5226**	3	NUT (M5X0.8MM THD)	
					AVAILABLE REPAIR KIT(S):	
			5T-3147		KIT-IDLER HOUSING-LH	
					(INCLUDES HOUSING,BEARING, & WASHER)	

B-USE AS REQUIRED
D-ORDER BY THE METER
E-ORDER BY THE CENTIMETER
M-METRIC PART

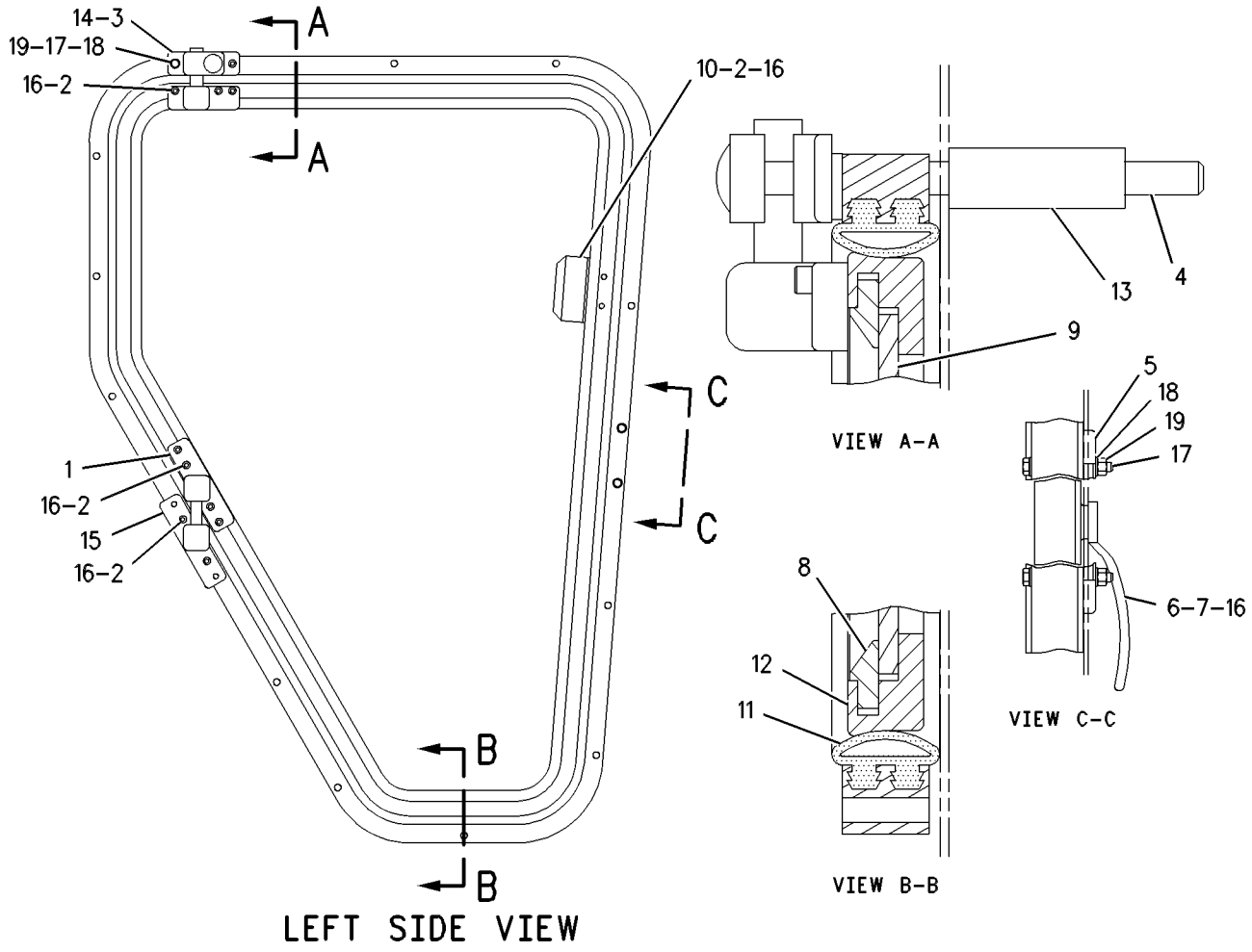

GRAPHIC #1

g00291496

OPERATOR STATION

161-1141 ROPS AR-ENCLOSED—HIGH PROFILE

S/N: ATS1-UP
AN ATTACHMENT

SMCS-7323 **i01685396**

NOTE	PART NUMBER	QTY	PART NAME 1 2 3 4 5 6 (PRODUCT LEVEL)	SEE PAGE
Y	*172-5378*	1	INSULATION GP-WEATHER	668
Y	*177-8779*	1	ROPS GP-ENCLOSED (HIGH PROFILE)	716
Y	*8X-9675*	1	WASHER GP-WINDOW	740

Y-SEPARATE ILLUSTRATION

<END>

179-3581 ROPS AR-ENCLOSED—LOW PROFILE

S/N: ATS1-UP
PART OF 162-5607 GENERAL AR

SMCS-7323 **i01685400**

NOTE	PART NUMBER	QTY	PART NAME 1 2 3 4 5 6 (PRODUCT LEVEL)	SEE PAGE
Y	*172-5378*	1	INSULATION GP-WEATHER	668
Y	*172-5377*	1	ROPS GP-ENCLOSED (LOW PROFILE)	716
Y	*8X-9675*	1	WASHER GP-WINDOW	740

Y-SEPARATE ILLUSTRATION

<END>

OPERATOR STATION

203-6642 ROPS AR-OPEN—HIGH PROFILE

S/N: ATS1-UP

AN ATTACHMENT

SMCS-7323 **i01765763**

NOTE	REF NO	GRAPHIC REF	PART NUMBER	QTY	PART NAME 1 2 3 4 5 6 (PRODUCT LEVEL)	SEE PAGE
	1	1	**4B-4158**	4	SCREW-DRIVE (3/16X0.25 IN)	
	2	1	**5P-8197**	1	PLATE-WARNING (DO NOT OPERATE)	
	3	1	**5P-8502**	1	PADLOCK GP	
		1	**5P-8500**	1	KEY	
		1	**8Y-6364**	1	SLEEVE	
Y	4	1	*8Y-4951*	1	SEAT GP-SUSPENSION (VINYL)	725
Y	5	1	*166-7064*	1	GUARD GP-PLATFORM	364
Y	6	1	*173-2751*	1	ROPS GP-OPEN	717
Y	7	1	*197-7155*	1	PANEL GP-INSTRUMENT	708
	8	1	**9D-3767**	1	PLUG-BUTTON	

Y-SEPARATE ILLUSTRATION

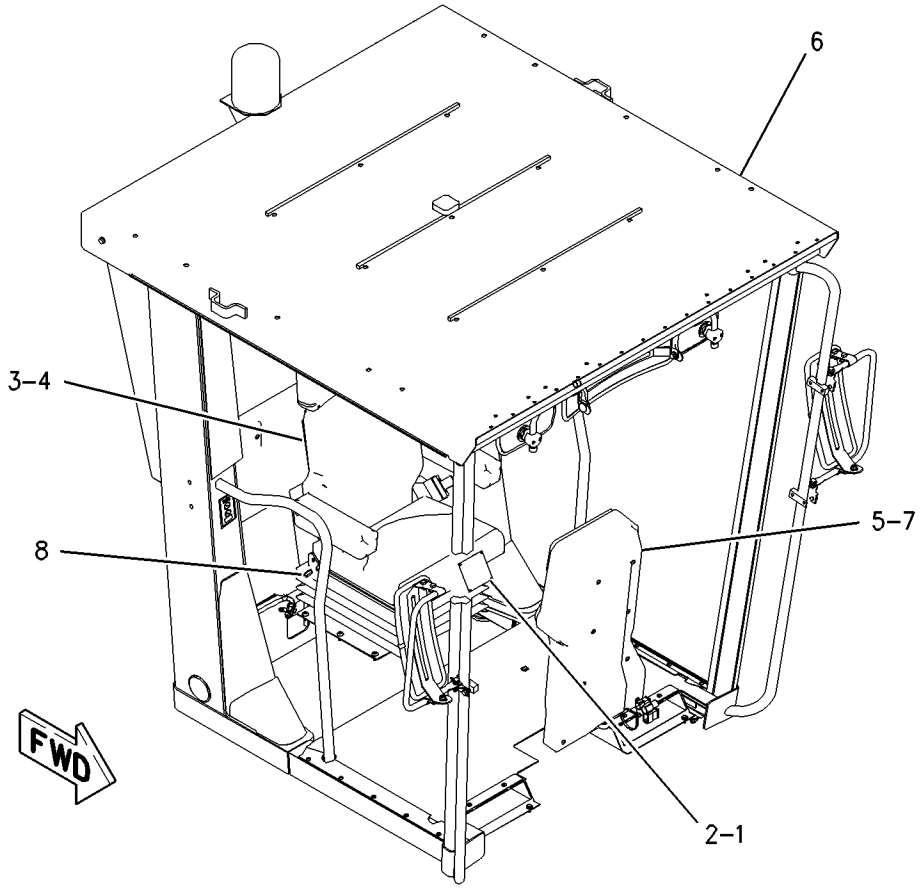

GRAPHIC #1 g00940605

OPERATOR STATION

172-5377 ROPS GP-ENCLOSED—LOW PROFILE

S/N: ATS1-UP

PART OF 179-3581 ROPS AR-ENCLOSED

SMCS-7325 **i01650416**

NOTE	PART NUMBER	QTY	PART NAME 1 2 3 4 5 6 (PRODUCT LEVEL)	SEE PAGE
Y	*8X-4527*	1	DOOR GP-CAB (LOW PROFILE)	636
	159-3759	2	FILM-INSTRUCTION (DO NOT DRILL/WELD ROPS)	
Y	*172-5376*	1	LINER GP-CAB (LOW PROFILE)	670
Y	*2A-6985*	1	MOUNTING GP-ROPS (ENCLOSED)	698
Y	*8X-2375*	1	PANEL GP-CAB (LOW PROFILE)	704
	173-6754	1	ROPS GP-ENCLOSED	
Y	**172-6830**	1	WIPER GP-WINDOW (LOW PROFILE)	750

Y-SEPARATE ILLUSTRATION

<END>

173-6756 ROPS GP-ENCLOSED—HIGH PROFILE

S/N: ATS1-UP

PART OF 177-8779 ROPS GP-ENCLOSED

AN ATTACHMENT

SMCS-7325 **i01630738**

NOTE	PART NUMBER	QTY	PART NAME 1 2 3 4 5 6 (PRODUCT LEVEL)	SEE PAGE
			(NO SERVICED PARTS)	

<END>

177-8779 ROPS GP-ENCLOSED—HIGH PROFILE

S/N: ATS1-UP

PART OF 161-1141 ROPS AR-ENCLOSED

AN ATTACHMENT

SMCS-7325 **i01655306**

NOTE	PART NUMBER	QTY	PART NAME 1 2 3 4 5 6 (PRODUCT LEVEL)	SEE PAGE
Y	*8X-4413*	1	DOOR GP-CAB (HIGH PROFILE)	630
	159-3759	2	FILM-INSTRUCTION (DO NOT DRILL/WELD ROPS)	
Y	*177-8781*	1	LINER GP-CAB (ENCLOSED HIGH PROFILE)	674
Y	*2A-6985*	1	MOUNTING GP-ROPS (ENCLOSED)	698
Y	*8X-2385*	1	PANEL GP-CAB (HIGH PROFILE)	705
Y	**173-6756**	1	ROPS GP-ENCLOSED (HIGH PROFILE)	716
Y	*172-6831*	1	WIPER GP-WINDOW (HIGH PROFILE)	752

Y-SEPARATE ILLUSTRATION

<END>

OPERATOR STATION

173-2751 ROPS GP-OPEN—HIGH PROFILE

S/N: ATS1-UP
PART OF 203-6642 ROPS AR-OPEN
AN ATTACHMENT

SMCS-7323, 7325 **i01685418**

NOTE	REF NO	GRAPHIC REF	PART NUMBER	QTY	PART NAME 1 2 3 4 5 6 (PRODUCT LEVEL)	SEE PAGE
	1	1	**159-3759**	2	FILM-INSTRUCTION (DO NOT DRILL/WELD ROPS)	
	2	1	**117-4698**	1	ROPS GP	
Y	4	1	*191-8692*	1	MOUNTING GP-ROPS (HIGH PROFILE)	700
Y	5	1	*191-8695*	1	LINER GP-CAB (HIGH PROFILE)	680
	6	1	*194-3845*	1	WINDOW GP	
BD		1	**5P-5768**		SEAL	
		1	**102-9372**	1	GLASS (HIGH PROFILE)	

B-USE AS REQUIRED
D-ORDER BY THE METER
Y-SEPARATE ILLUSTRATION

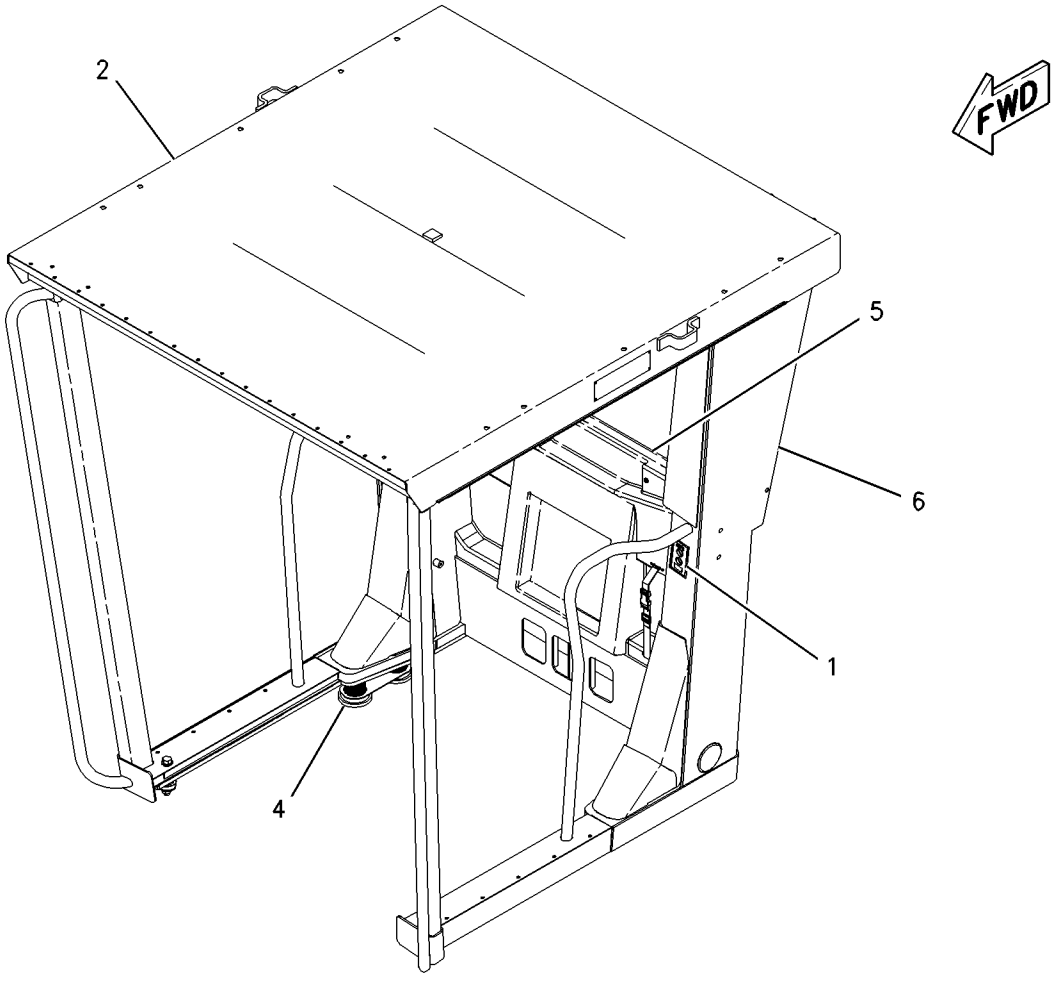

GRAPHIC #1 g00846632

OPERATOR STATION

139-4612 SCREEN GP-SUN–REAR

S/N: ATS1-UP
AN ATTACHMENT

SMCS-7165 **i00699988**

NOTE	REF NO	GRAPHIC REF	PART NUMBER	QTY	PART NAME 1 2 3 4 5 6 (PRODUCT LEVEL)	SEE PAGE
	1	1	**137-5503**	1	SCREEN GP-SUN	
	2	1	**139-4605**	1	PLATE AS	
M		1	**6V-9632**	4	NUT-WELD (M6X1 THD)	
M	3	1	**5C-9553**	4	BOLT (M6X1.0X16MM)	
	4	1	**9X-8256**	4	WASHER (2MM THK)	

M-METRIC PART

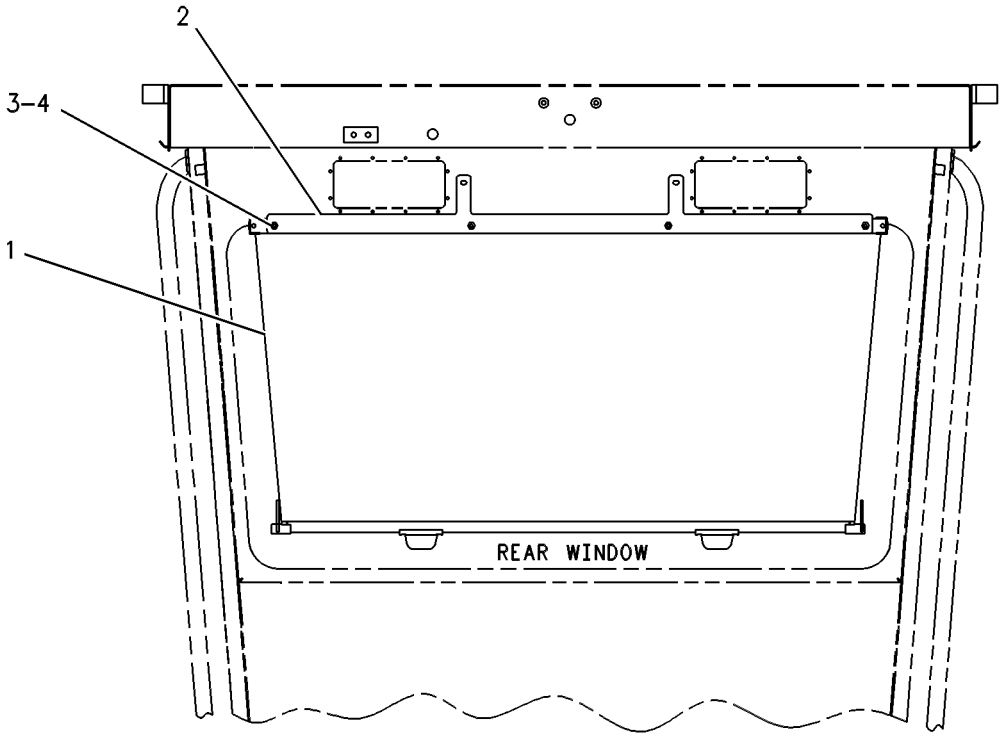

REAR VIEW

GRAPHIC #1 g00301584

156-1148 SEAT BELT GP–RETRACTABLE

S/N: ATS1-UP

PART OF 112-9104, 112-9105, 155-5958 SEAT GP-SUSPENSION

ALSO AN ATTACHMENT

SMCS-7327 **i01674134**

NOTE	REF NO	GRAPHIC REF	PART NUMBER	QTY	PART NAME 1 2 3 4 5 6 (PRODUCT LEVEL)	SEE PAGE
	1	1	**1L-9080**	1	BOLT (7/16-20X1.5 IN)	
	2	1	**8T-5360**	1	WASHER (12X22.5X2.5MM THK)	
	3	1	**1A-4350**	1	BOLT (7/16-20X1.75 IN)	
	4	1	**4D-6432**	1	LOCKNUT (7/16-20 THD)	

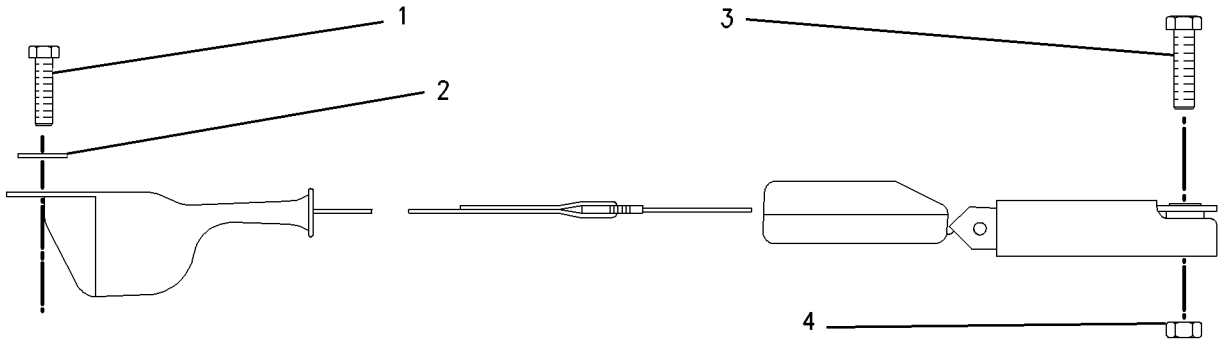

GRAPHIC #1 g00760019

OPERATOR STATION

114-1183 SEAT GP–CLOTH

S/N: ATS1-UP
PART OF 112-9104, 155-5958 SEAT GP-SUSPENSION
ALSO AN ATTACHMENT

SMCS-7312 **i01661717**

NOTE	REF NO	GRAPHIC REF	PART NUMBER	QTY	PART NAME 1 2 3 4 5 6 (PRODUCT LEVEL)	SEE PAGE
Y	1	1	**108-8421**	1	PAN GP-BACKREST	701
Y	2	1	*113-5810*	1	PAN GP-SEAT	702
	3	1	**8Y-5891**	1	KIT-SEAT CUSHION	
	4	1	**108-8426**	1	CUSHION AS-BACK	
	5	1	**8Y-6933**	1	KIT-TILT PAN	
	6	1	**8Y-5929**	1	PLATE AS-SLIDE	
		1	**4K-9097**	7	NUT-WELD (5/16-18 THD)	
	7	1	**8Y-5932**	1	LATCH AS	
	8	1	**8Y-5936**	1	SPRING	
	9	1	**095-0878**	1	PIN-SPRING	
	10	1	**8Y-5937**	1	BRACKET AS-RH	
	11	1	**8Y-5938**	1	BRACKET AS-LH	
		1	**4D-6432**	1	LOCKNUT (7/16-20 THD)	
B	12	1	**7U-4898**	6	SCREW (3/8-16X0.75 IN)	
	13	1	**2K-4973**	6	LOCKNUT (3/8-16 THD)	
	14	1	**095-1314**	1	PIN-CLEVIS	
	15	1	**9L-7469**	3	LOCK PIN	
	16	1	**8Y-5947**	4	FASTENER	
	17	1	**8Y-6833**	1	SPRING (RH)	
	18	1	**8Y-6834**	1	SPRING (LH)	
	19	1	**1C-0569**	3	BOLT (5/16-18X0.5 IN)	
	20	1	**2B-2695**	4	BOLT (5/16-18X0.875 IN)	
	21	1	**8Y-5928**	2	SPRING	
	22	1	**8Y-5981**	2	BUSHING-BACKREST	
	23	1	**7B-7525**	2	BOLT-SOCKET HEAD (7/16-14X1.25 IN)	
	24	1	**8Y-6051**	2	SPACER (11.19X14.21X14.24MM THK)	
					AVAILABLE REPAIR KIT(S):	
			149-4745	1	KIT-SLIDER BLOCK	

B-USE AS REQUIRED
Y-SEPARATE ILLUSTRATION

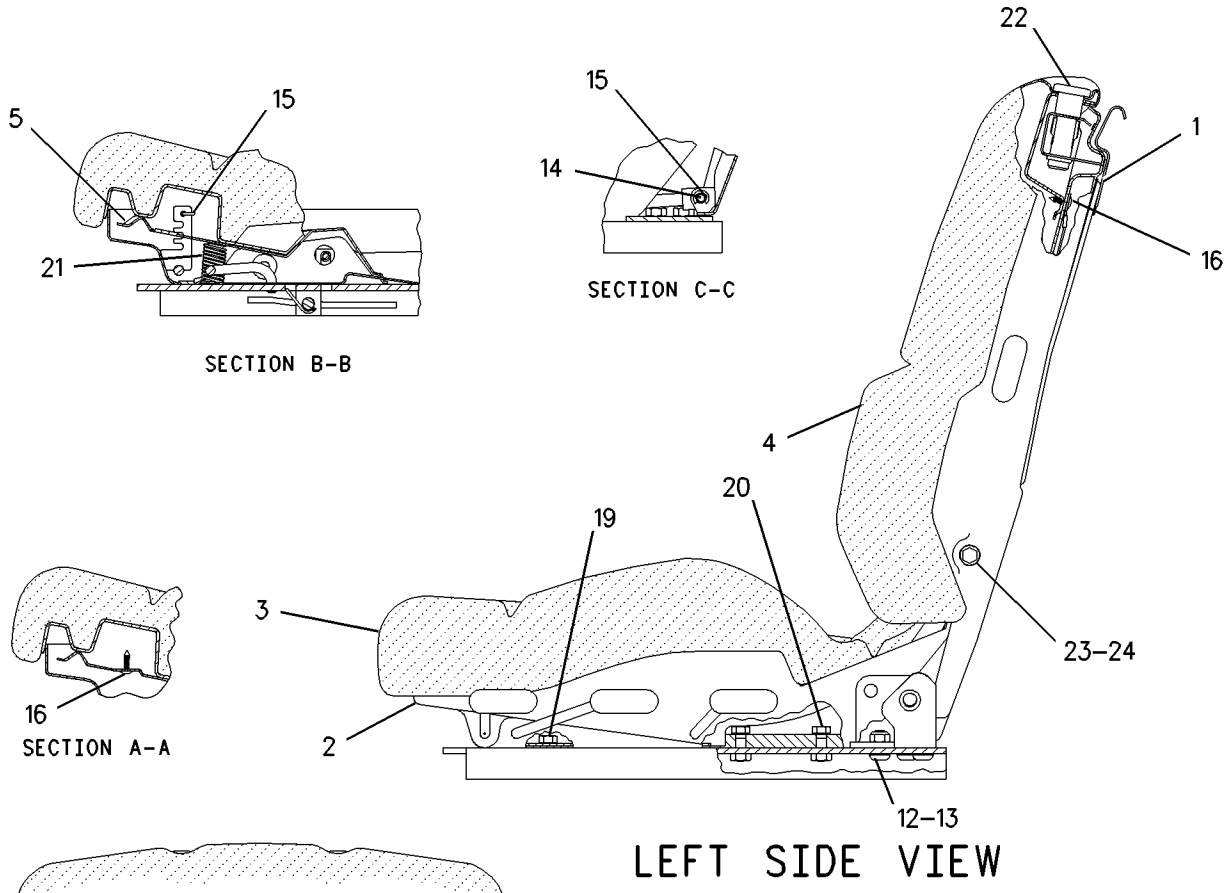

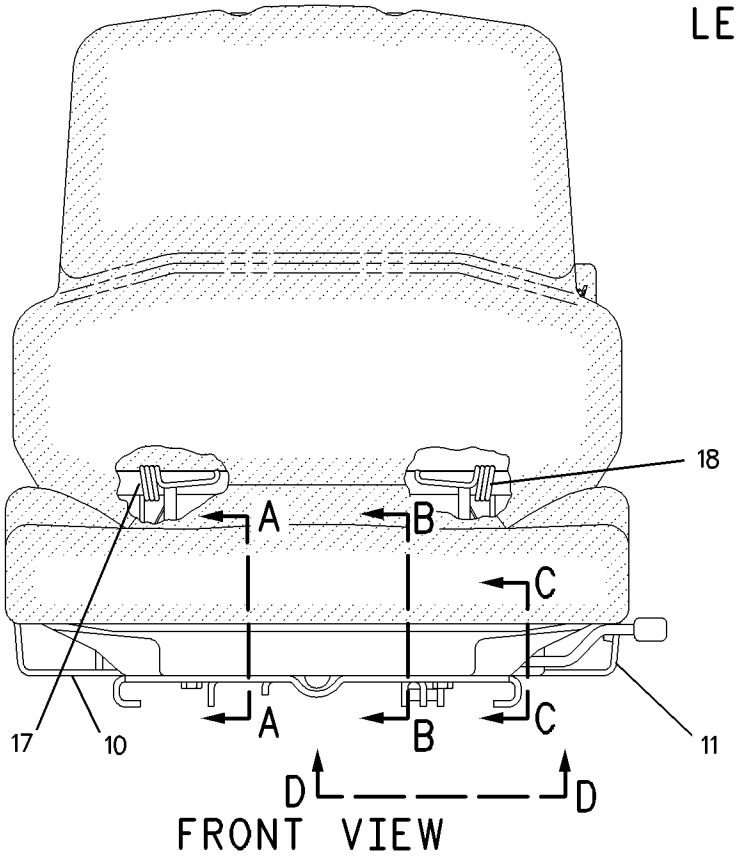

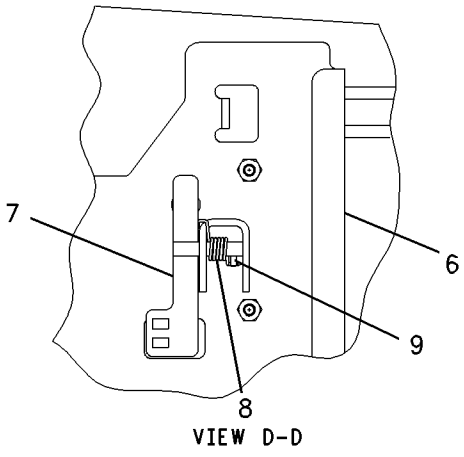

GRAPHIC #1 g00857723

OPERATOR STATION

114-1185 SEAT GP—VINYL

S/N: ATS1-UP
PART OF 112-9105 SEAT GP-SUSPENSION
AN ATTACHMENT

SMCS-7312 **i01702383**

NOTE	REF NO	GRAPHIC REF	PART NUMBER	QTY	PART NAME 1 2 3 4 5 6 (PRODUCT LEVEL)	SEE PAGE
Y	1	1	**108-8421**	1	PAN GP-BACKREST	701
	2	1	**108-8425**	1	CUSHION AS-BACK (VINYL)	
	4	1	**8Y-5929**	1	PLATE AS-SLIDE	
		1	**4K-9097**	7	NUT-WELD (5/16-18 THD)	
	5	1	**8Y-5932**	1	LATCH AS	
	6	1	**8Y-5936**	1	SPRING	
	7	1	**095-0878**	1	PIN-SPRING	
	8	1	**8Y-5937**	1	BRACKET AS-RH	
	9	1	**8Y-5938**	1	BRACKET AS-LH	
		1	**4D-6432**	1	LOCKNUT (7/16-20 THD)	
	10	1	**7U-4898**	6	SCREW (3/8-16X0.75 IN)	
	11	1	**2K-4973**	6	LOCKNUT (3/8-16 THD)	
	12	1	**095-1314**	1	PIN-CLEVIS	
Y	13	1	*113-5810*	1	PAN GP-SEAT	702
	14	1	**8Y-5947**	4	FASTENER	
	15	1	**8Y-6833**	1	SPRING (RH)	
	16	1	**8Y-6834**	1	SPRING (LH)	
	17	1	**1C-0569**	3	BOLT (5/16-18X0.5 IN)	
	18	1	**2B-2695**	4	BOLT (5/16-18X0.875 IN)	
	20	1	**8Y-5928**	2	SPRING	
	21	1	**8Y-5981**	2	BUSHING-BACKREST	
	22	1	**7B-7525**	2	BOLT-SOCKET HEAD (7/16-14X1.25 IN)	
	23	1	**8Y-6051**	2	SPACER (11.19X14.21X14.24MM THK)	
	24	1	**9L-7469**	3	LOCK PIN	
					AVAILABLE REPAIR KIT(S):	
			8Y-6933	1	KIT-TILT PAN	
					(INCLUDES FASTENERS AND PINS)	
			8Y-5957	1	KIT-SEAT CUSHION (VINYL)	
					(INCLUDES VINYL CUSHION & FASTENERS)	
			149-4745	1	KIT-SLIDER BLOCK	
					(INCLUDES BOLT)	

Y-SEPARATE ILLUSTRATION

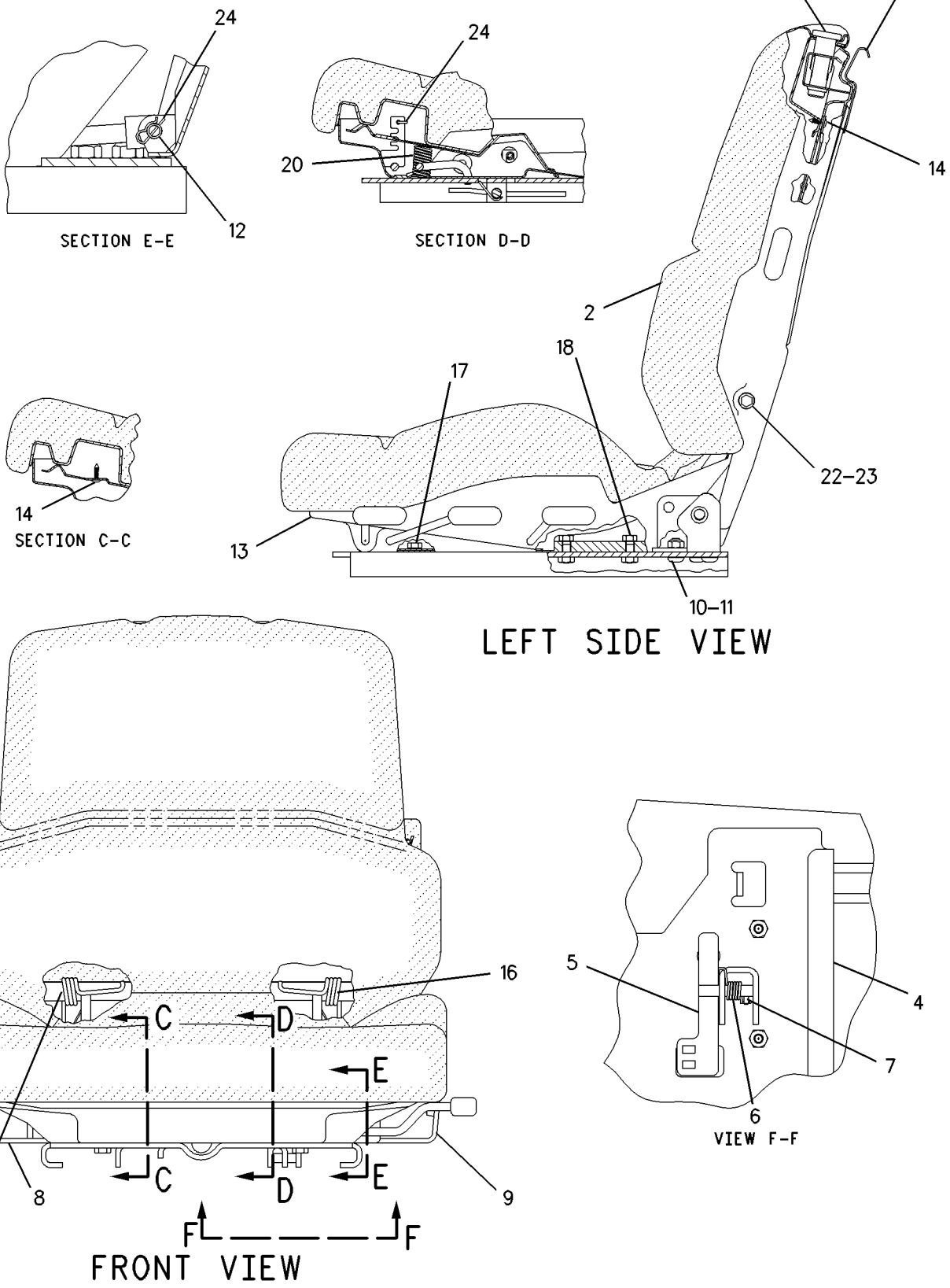

GRAPHIC #1

g00877363

OPERATOR STATION

8Y-4194 SEAT GP-SUSPENSION–CLOTH

S/N: ATS1-UP

PART OF 162-5607 GENERAL AR

SMCS-7312 **i01754185**

NOTE	REF NO	GRAPHIC REF	PART NUMBER	QTY	PART NAME 1 2 3 4 5 6 (PRODUCT LEVEL)	SEE PAGE
Y	1	1	**112-9104**	1	SEAT GP-SUSPENSION (CLOTH)	726
M	2	1	**9X-2041**	6	SCREW-TRUSS HEAD (M10X1.5X20MM)	

M-METRIC PART
Y-SEPARATE ILLUSTRATION

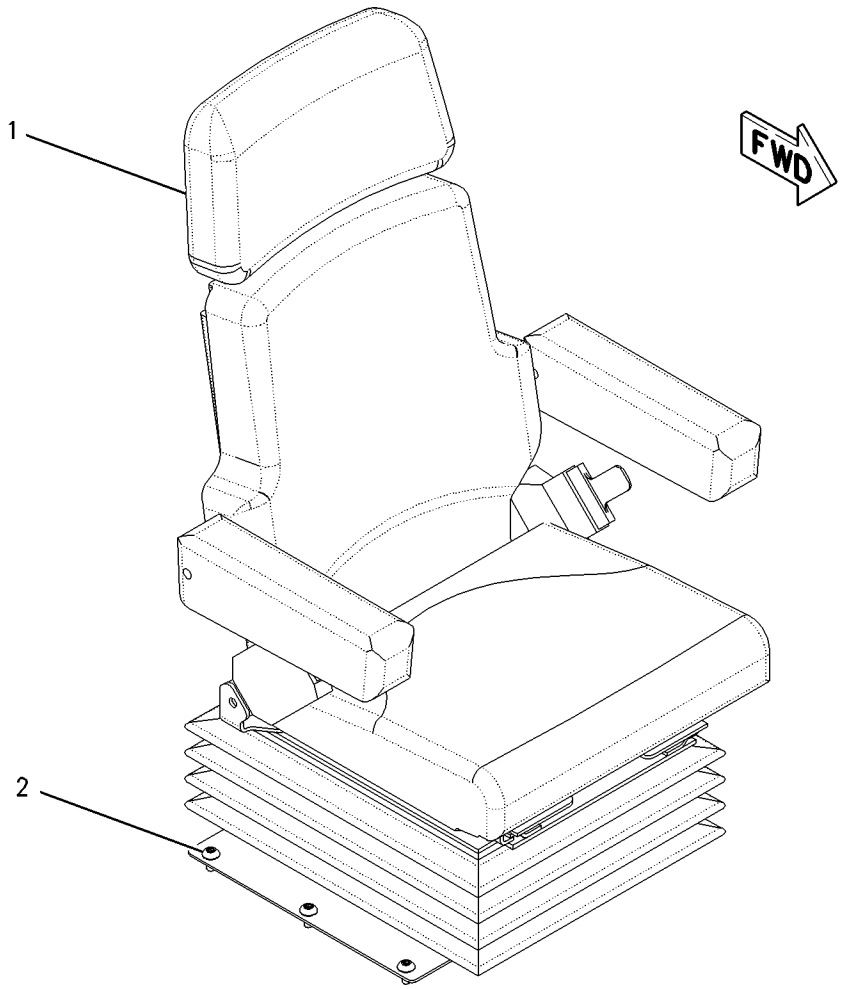

GRAPHIC #1 g00906703

OPERATOR STATION

8Y-4951 SEAT GP-SUSPENSION—VINYL

S/N: ATS1-UP

PART OF 203-6643 CONVERSION AR-NON-ROPS, 203-6642 ROPS AR-OPEN

AN ATTACHMENT

SMCS-7312 **i01685421**

NOTE	PART NUMBER	QTY	PART NAME 1 2 3 4 5 6 (PRODUCT LEVEL)	SEE PAGE
M	**9X-2041**	6	SCREW-TRUSS HEAD (M10X1.5X20MM)	
Y	**112-9105**	1	SEAT GP-SUSPENSION (VINYL)	727

M-METRIC PART
Y-SEPARATE ILLUSTRATION

<END>

OPERATOR STATION

112-9104 SEAT GP-SUSPENSION—CLOTH

S/N: ATS1-UP

PART OF 8Y-4194 SEAT GP-SUSPENSION

SMCS-7312 **i01685771**

NOTE	REF NO	GRAPHIC REF	PART NUMBER	QTY	PART NAME 1 2 3 4 5 6 (PRODUCT LEVEL)	SEE PAGE
Y	1	1	**8Y-5874**	1	EXTENSION GP-BACKREST (CLOTH)	640
Y	2	1	**114-1183**	1	SEAT GP (CLOTH)	720
Y	3	1	**113-4245**	1	ARMREST GP (RH)	615
Y	4	1	**113-4242**	1	ARMREST GP (LH)	614
Y	5	1	**113-5800**	1	SUSPENSION GP-SEAT	734
CY	6	1	**156-1148**	1	SEAT BELT GP (RETRACTABLE)	719
	7	1	**4F-4879**	1	BOLT (3/8-16X.5 IN)	
					AVAILABLE REPAIR KIT(S):	
			149-4745	1	KIT-SLIDER BLOCK	
					(INCLUDES BLOCKS AND BOLT)	

C-CHANGE FROM PREVIOUS TYPE
Y-SEPARATE ILLUSTRATION

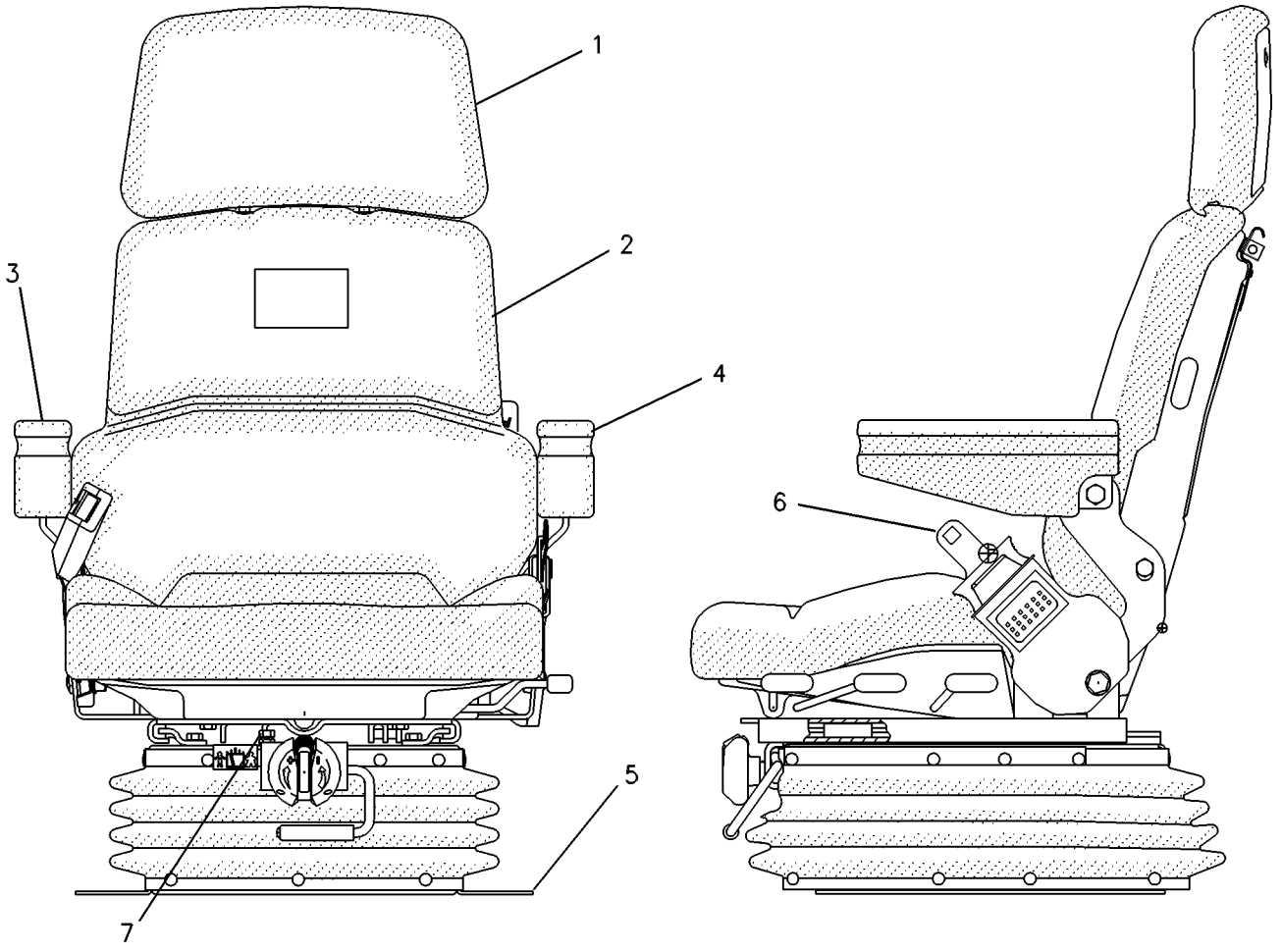

GRAPHIC #1 g00109695

OPERATOR STATION

112-9105 SEAT GP-SUSPENSION–VINYL

S/N: ATS1-UP
PART OF 8Y-4951 SEAT GP-SUSPENSION
AN ATTACHMENT

SMCS-7312 **i01685782**

NOTE	REF NO	GRAPHIC REF	PART NUMBER	QTY	PART NAME 1 2 3 4 5 6 (PRODUCT LEVEL)	SEE PAGE
Y	1	1	**8Y-5959**	1	EXTENSION GP-BACKREST (VINYL)	641
Y	2	1	**114-1185**	1	SEAT GP (VINYL)	722
Y	3	1	**113-4245**	1	ARMREST GP (RH)	615
Y	4	1	**113-4242**	1	ARMREST GP (LH)	614
Y	5	1	**113-5800**	1	SUSPENSION GP-SEAT	734
Y	6	1	**156-1148**	1	SEAT BELT GP (RETRACTABLE)	719
	7	1	**4F-4879**	1	BOLT (3/8-16X.5 IN)	
	8	1	**149-4745**	1	KIT-SLIDER BLOCK	

Y-SEPARATE ILLUSTRATION

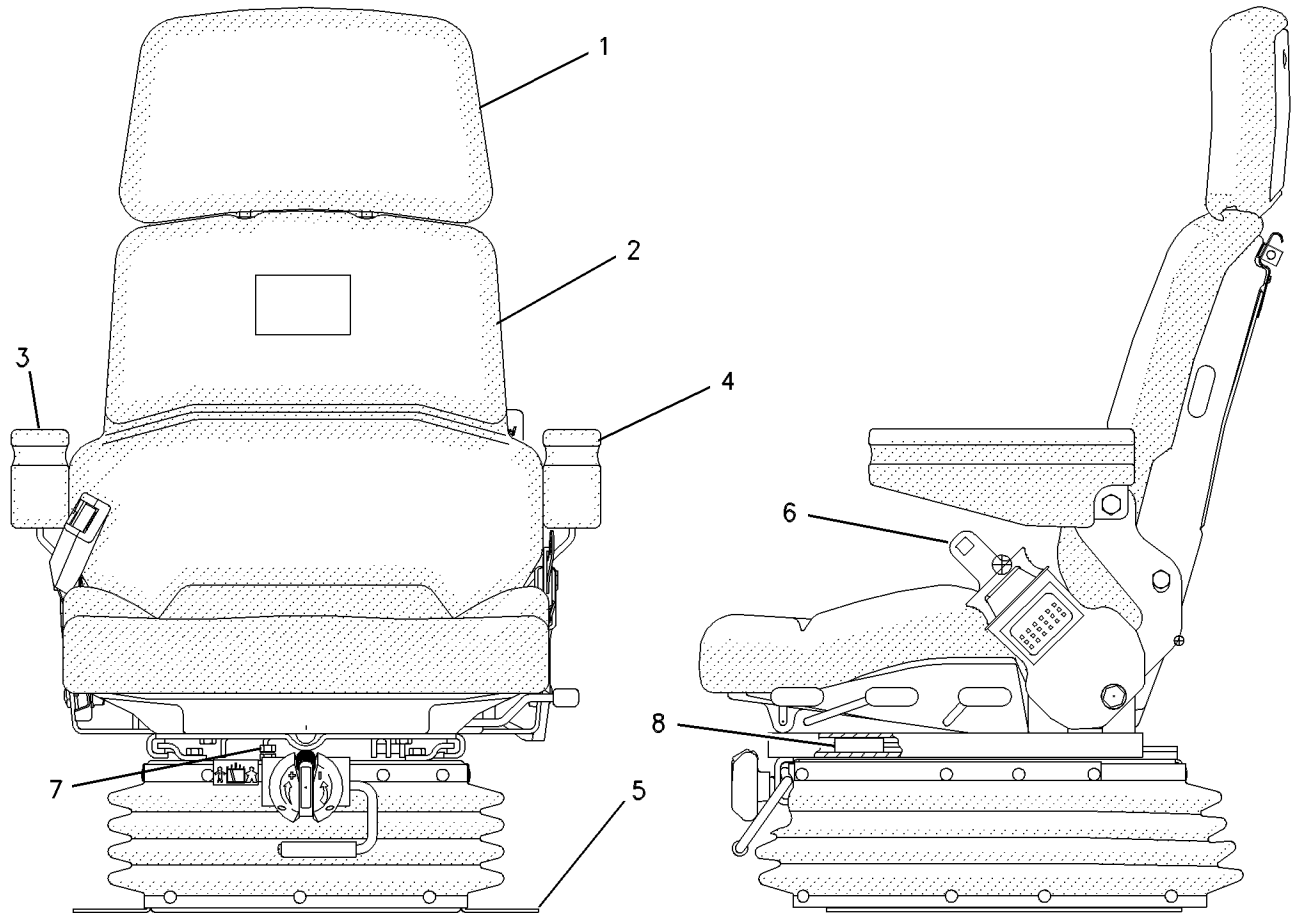

GRAPHIC #1 g00505321

OPERATOR STATION

154-5732 SEAT GP-SUSPENSION–CLOTH

S/N: ATS1-UP
PART OF 156-7778 SEAT GP-SUSPENSION
AN ATTACHMENT

SMCS-7312 **i01713048**

NOTE	REF NO	GRAPHIC REF	PART NUMBER	QTY	PART NAME 1 2 3 4 5 6 (PRODUCT LEVEL)	SEE PAGE
Y	1	1	**155-5959**	1	SUSPENSION GP-SEAT	736
Y	2	1	**155-5958**	1	SEAT GP-SUSPENSION	729
	3	1	**4F-4879**	1	BOLT (3/8-16X.5 IN)	
					AVAILABLE REPAIR KIT(S):	
			166-7225	1	KIT-SLIDER BLOCK	

Y-SEPARATE ILLUSTRATION

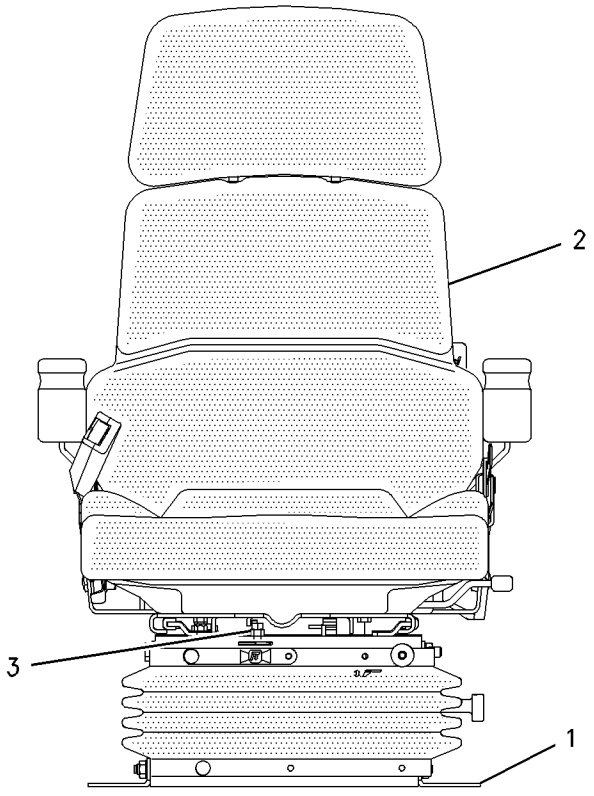

GRAPHIC #1 g00809050

155-5958 SEAT GP-SUSPENSION—CLOTH—BACK REST

S/N: ATS1-UP
PART OF 154-5732 SEAT GP-SUSPENSION
AN ATTACHMENT

SMCS-7312 **i01655334**

NOTE	REF NO	GRAPHIC REF	PART NUMBER	QTY	PART NAME 1 2 3 4 5 6 (PRODUCT LEVEL)	SEE PAGE
Y	1	1	**8Y-5874**	1	EXTENSION GP-BACKREST (CLOTH) (AIR)	640
Y	2	1	**114-1183**	1	SEAT GP (CLOTH)	720
Y	3	1	**113-4242**	1	ARMREST GP (LH)	614
Y	4	1	**113-4245**	1	ARMREST GP (RH)	615
Y	5	1	**156-1148**	1	SEAT BELT GP (RETRACTABLE)	719

Y-SEPARATE ILLUSTRATION

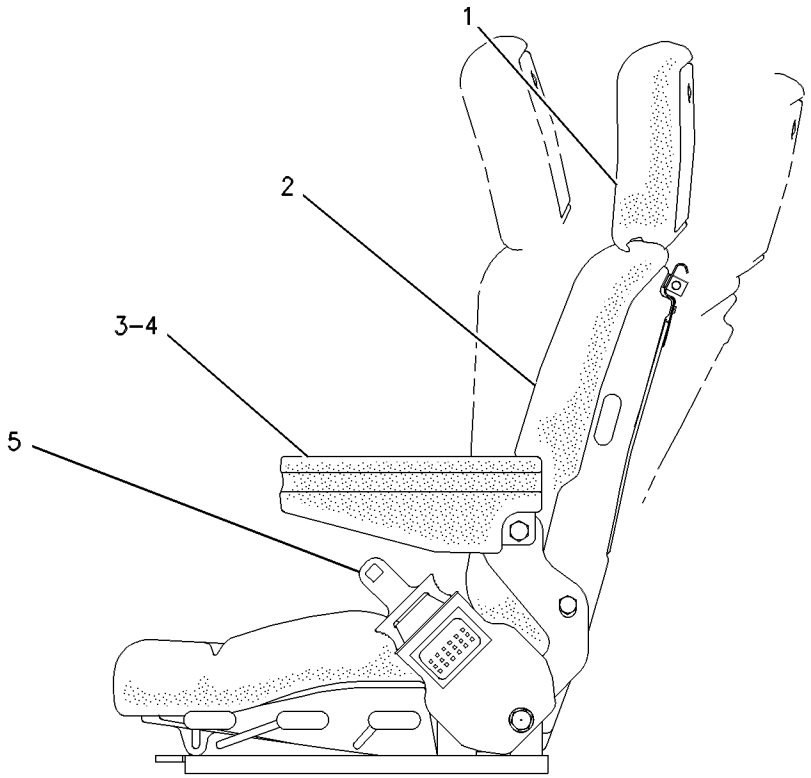

GRAPHIC #1 g00513814

OPERATOR STATION

156-7778 SEAT GP-SUSPENSION—CLOTH

S/N: ATS1-UP
AN ATTACHMENT

SMCS-7312 **i01161448**

NOTE	REF NO	GRAPHIC REF	PART NUMBER	QTY	PART NAME 1 2 3 4 5 6 (PRODUCT LEVEL)	SEE PAGE
B	1	1	**1F-1651**	1	TEE-PIPE	
	2	1	**2R-1922**	1	CONNECTOR	
	3	1	**3D-9253**	1	CONNECTOR-PIPE	
	4	1	**3G-7875**	1	HOSE AS	
	5	1	**3S-2093**	3	STRAP-CABLE	
	6	1	**5D-0269**	1	ELBOW	
	7	1	**5K-2408**	1	NIPPLE-HEX	
	8	1	**091-0081**	1	SPACER (10.0MM THK)	
Y	9	1	*154-5732*	1	SEAT GP-SUSPENSION	728
	10	1	**157-6129**	1	GROMMET	
	11	1	**160-2353**	1	HOSE AS	
	12	1	**161-2444**	1	VALVE AS	
	13	1	**161-2445**	1	VALVE AS-FILTER	
	14	1	**4D-7794**	1	CLIP (10.0MM ID)	
	15	1	**5H-8936**	1	ADAPTER	
B	16	1	**7J-8611**	1	ELBOW (1/4-18 NPTF)	
M	17	1	**9X-2039**	1	SCREW-TRUSS HEAD (M10X1.5X35MM)	
M	18	1	**9X-2041**	6	SCREW-TRUSS HEAD (M10X1.5X20MM)	

B-USE AS REQUIRED
M-METRIC PART
Y-SEPARATE ILLUSTRATION

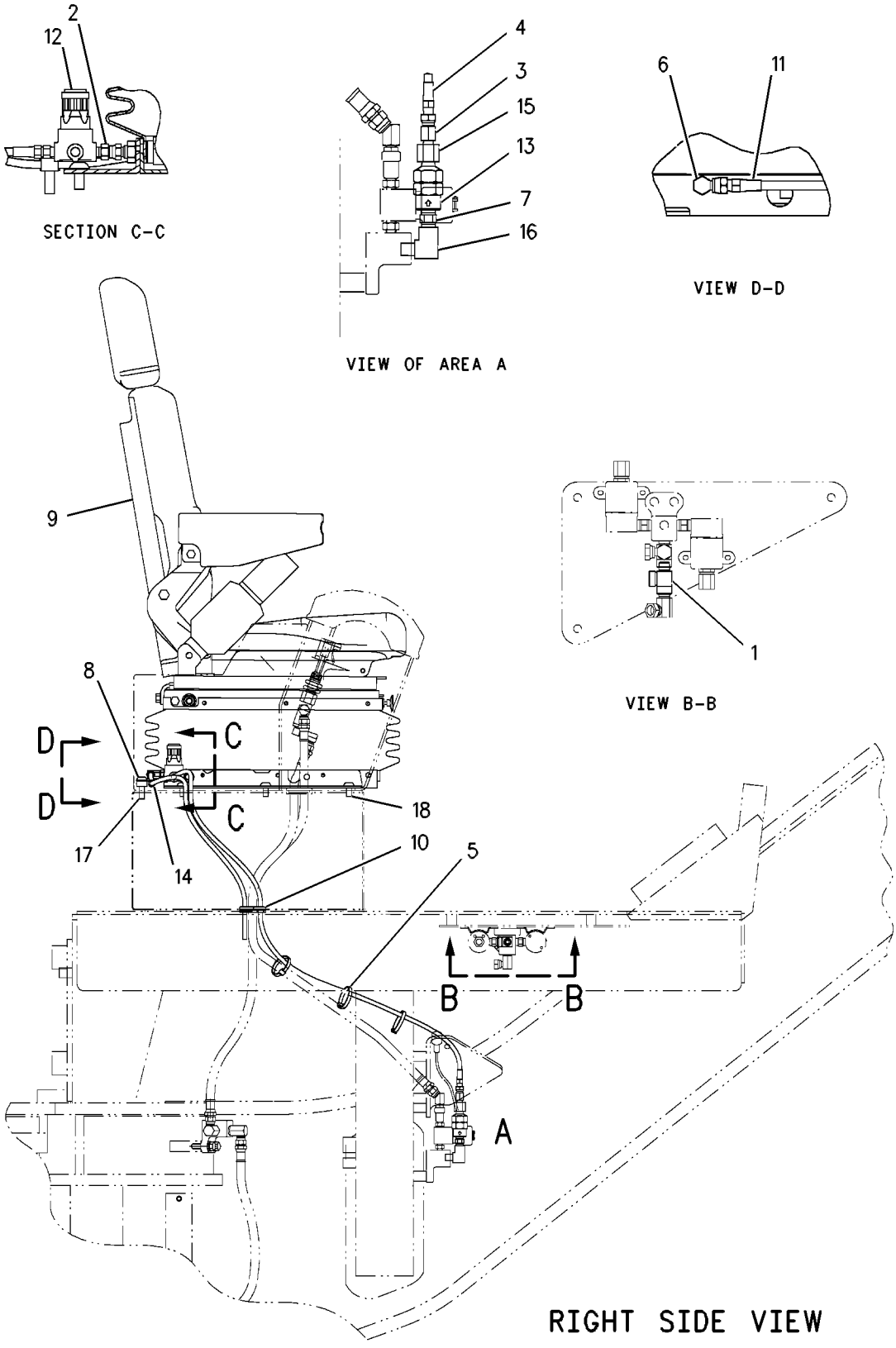

GRAPHIC #1 g00618801

OPERATOR STATION

174-4546 SUPPORT GP-SEAT

S/N: ATS1-UP

PART OF 162-5607 GENERAL AR

SMCS-7321 **i01506348**

NOTE	REF NO	GRAPHIC REF	PART NUMBER	QTY	PART NAME 1 2 3 4 5 6 (PRODUCT LEVEL)	SEE PAGE
	1	1	**5P-7803**	2	PLUG-BUTTON	
	2	1	**7G-4824**	1	STRAP	
	4	1	**8E-7791**	1	STRAP	
	5	1	**8X-5536**	1	COVER	
	6	1	**8X-5538**	1	COVER AS	
M		1	**8T-3490**	4	NUT-WELD (M10X1.5 THD)	
	7	1	**8X-5540**	1	COVER	
	8	1	**123-4618**	1	COVER	
	9	1	**123-4701**	1	SEAL	
	10	1	**174-4492**	1	COVER	
	11	1	**174-6051**	1	SUPPORT AS	
		1	**5P-1075**	8	WASHER-HARD (10.2X22.5X3MM THK)	
M		1	**6V-9632**	6	NUT-WELD (M6X1 THD)	
M		1	**8T-3490**	13	NUT-WELD (M10X1.5 THD)	
M		1	**9T-6001**	2	BOSS (M10X1.5X25MM)	
		1	**123-8408**	2	TUBE AS	
	12	1	**174-6353**	1	PLATE	
	13	1	**176-5507**	1	PAD	
	14	1	**191-0027**	1	PAD	
	15	1	**5P-1075**	8	WASHER-HARD (10.2X22.5X3MM THK)	
	16	1	**6V-8801**	8	NUT (3/8-16 THD)	
	17	1	**7X-0591**	2	WASHER-HARD (17X29X3MM THK)	
M	18	1	**9X-2040**	4	SCREW-TRUSS HEAD (M10X1.5X25MM)	
M	19	1	**9X-2041**	5	SCREW-TRUSS HEAD (M10X1.5X20MM)	
M	20	1	**9X-2045**	6	SCREW-TRUSS HEAD (M6X1X20MM)	

M-METRIC PART

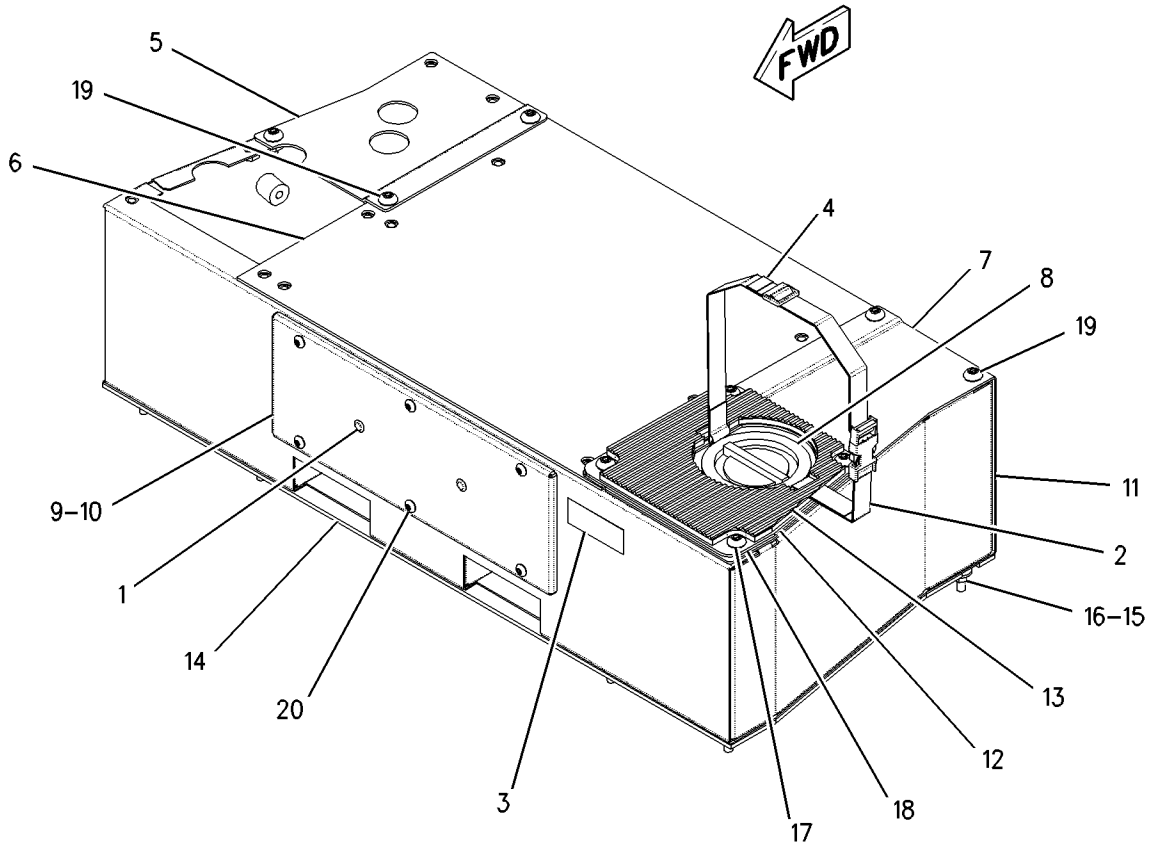

GRAPHIC #1 g00792019

OPERATOR STATION

113-5800 SUSPENSION GP-SEAT

S/N: ATS1-UP

PART OF 112-9104, 112-9105 SEAT GP-SUSPENSION

ALSO AN ATTACHMENT

SMCS-7324 **i01485167**

NOTE	REF NO	GRAPHIC REF	PART NUMBER	QTY	PART NAME 1 2 3 4 5 6 (PRODUCT LEVEL)	SEE PAGE
	1	1	**8Y-6022**	1	PLATE-SLIDE	
	2	1	**8Y-6023**	1	PLATE-SLIDE	
	3	1	**5M-3062**	2	BOLT (3/8-16X0.75 IN)	
	4	1	**5P-1075**	4	WASHER-HARD (10.2X22.5X3MM THK)	
	5	1	**2K-4973**	6	LOCKNUT (3/8-16 THD)	
	6	1	**113-5804**	1	HOUSING AS-LOWER	
Y	7	1	**113-5808**	1	HOUSING GP-SEAT SUSPENSION	660
	8	1	**8Y-6012**	1	ARM AS-SUSPENSION	
	9	1	**1D-4677**	4	BOLT-ROUND HEAD (3/8-16X1 IN)	
J	10	1	**101-0003**	20	FASTENER	
J	11	1	**163-1146**	3	FASTENER	
J	12	1	**166-6781**	6	FASTENER	
	13	1	**5V-1497**	1	RETAINER	
	14	1	**4V-7884**	2	BEARING	
	15	1	**4V-8577**	4	BEARING	
	16	1	**8Y-6024**	2	SHAFT AS	
	17	1	**124-0507**	1	ABSORBER-SHOCK	
	18	1	**145-0326**	1	FILM-INSTRUCTION (SEAT ADJUSTMENT)	
JZ	19	1		2	RETAINER	
LZ	20	1		2	BELT	
PZ	21	1		4	ROLLER	
JZ	22	1		1	BOOT	
	23	1	**197-7689**	3	FASTENER	
					AVAILABLE REPAIR KIT(S):	
J			**8Y-5944**	1	KIT-SUSPENSION BOOT	
L			**101-4194**	1	KIT-BELT TETHER	
P			**101-4195**	1	KIT-SUSPENSION ROLLER	

J-KIT MARKED J INCLUDES PARTS MARKED J
L-KIT MARKED L INCLUDES PARTS MARKED L
P-KIT MARKED P INCLUDES PARTS MARKED P
Y-SEPARATE ILLUSTRATION
Z-NOT SERVICED SEPARATELY

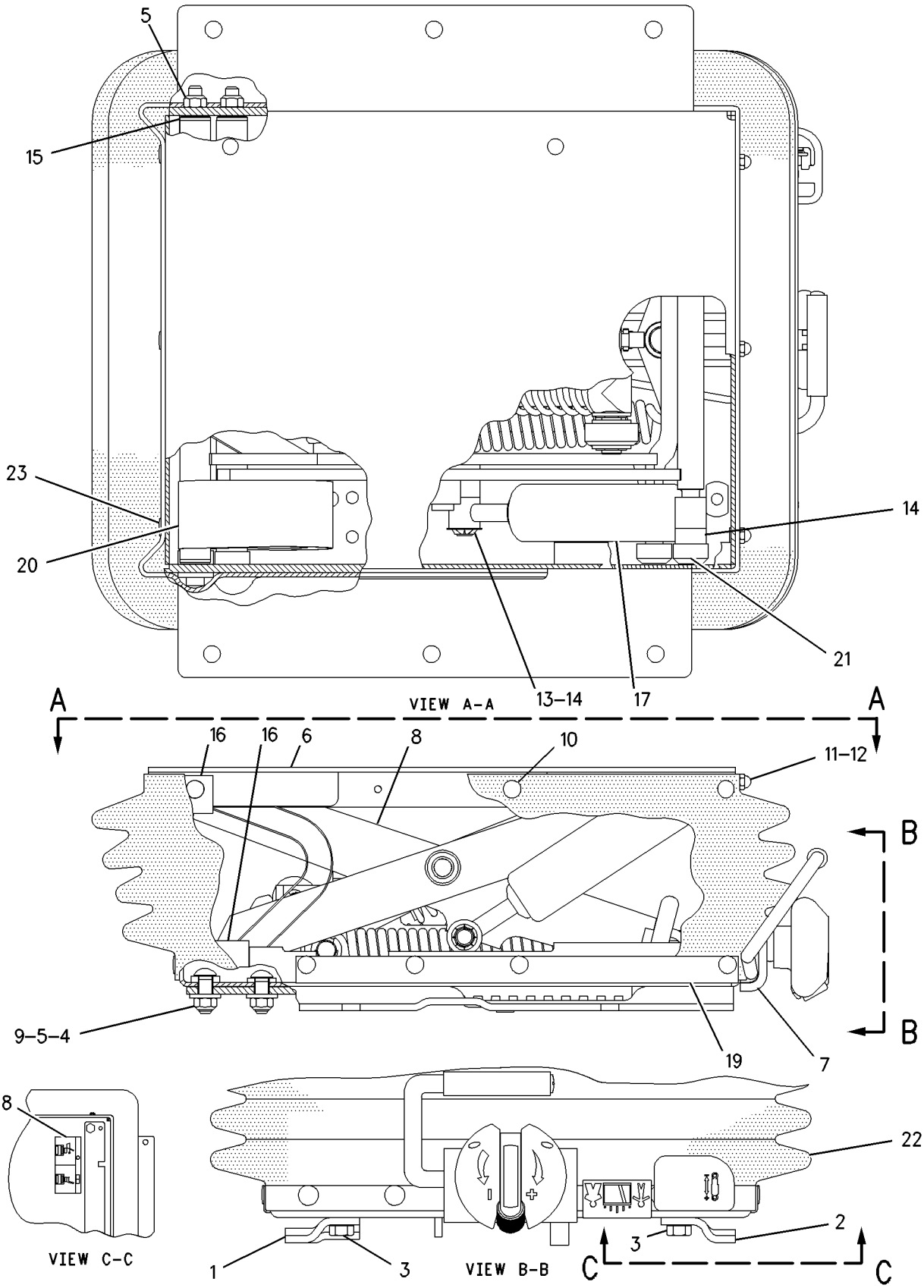

GRAPHIC #1

g00772424

OPERATOR STATION

155-5959 SUSPENSION GP-SEAT—AIR

S/N: ATS1-UP
PART OF 154-5732 SEAT GP-SUSPENSION
AN ATTACHMENT

SMCS-7324 **i01803254**

NOTE	REF NO	GRAPHIC REF	PART NUMBER	QTY	PART NAME 1 2 3 4 5 6 (PRODUCT LEVEL)	SEE PAGE
	1	1	**3J-4818**	4	LOCKWASHER	
	2	1	**102-6317**	4	BUMPER	
	3	1	**123-8157**	2	SHAFT	
	4	1	**128-0686**	2	SPACER (9.78X15.88X27.8MM THK)	
	5	1	**128-5082**	1	BOOT	
	6	1	**128-5084**	1	ABSORBER AS-SHOCK	
	7	1	**128-5085**	1	KNOB-DAMPER (SEAT)	
	8	1	**145-0326**	1	FILM-INSTRUCTION (SEAT ADJUSTMENT)	
	9	1	**147-4549**	2	FITTING-ELBOW	
	10	1	**147-6522**	1	SPRING	
	11	1	**148-3749**	1	SCISSORS AS	
	12	1	**149-2400**	1	FITTING	
	13	1	**149-2402**	1	VALVE AS (SEAT)	
	14	1	**158-3198**	1	HOUSING AS	
	15	1	**160-3662**	2	FITTING-BULKHEAD	
B	16	1	**160-7765**	1	WASHER (16.26X22.23X1.97MM THK)	
B	17	1	**160-7766**	6	WASHER (16.26X22.23X0.51MM THK)	
B	18	1	**160-7767**	6	WASHER (3.68X12.57X0.51MM THK)	
	19	1	**166-7224**	1	HOUSING AS	
	20	1	**1B-4430**	4	NUT-JAM (1/2-20 THD)	
	21	1	**2K-4973**	3	LOCKNUT (3/8-16 THD)	
	22	1	**4V-7884**	2	BEARING	
	23	1	**4V-8556**	1	BOLT (3/8-16X2.34 IN)	
	24	1	**5P-8167**	1	BOLT (3/8-16X0.625 IN)	
	25	1	**7X-7739**	1	WASHER (9.7X25.4 X4MM THK)	
	26	1	**8L-8413**	3	STRAP-CABLE	
	27	1	**8M-3267**	1	SCREW-HEX SOCKET (3/8-16X0.75 IN)	
	28	1	**8T-2501**	2	BOLT (3/8-16X2 IN)	
BE	29	1	**147-6541**		TUBE (146CM)	
F		1	**4F-4879**	1	BOLT (3/8-16X.5 IN)	
					AVAILABLE REPAIR KIT(S):	
			8Y-6928	1	KIT-FASTENER (SEAT)	
					(INCLUDES CLIPS-RACHET)	
			123-9128	1	KIT-ROLLER (SEAT)	
					(INCLUDES BEARINGS, ROLLERS, TIE WRAP)	
			128-0613	1	KIT-TETHER (SEAT)	
					(INCLUDES TETHERS)	
			132-3439	1	KIT-INDICATOR (SEAT)	
					(INCLUDES MAGNET, CAM, INDICATOR, NUT, SPRING, LABEL)	

B-USE AS REQUIRED
E-ORDER BY THE CENTIMETER
F-NOT SHOWN

155-5959 SUSPENSION GP-SEAT *(contd.)*

i01803254

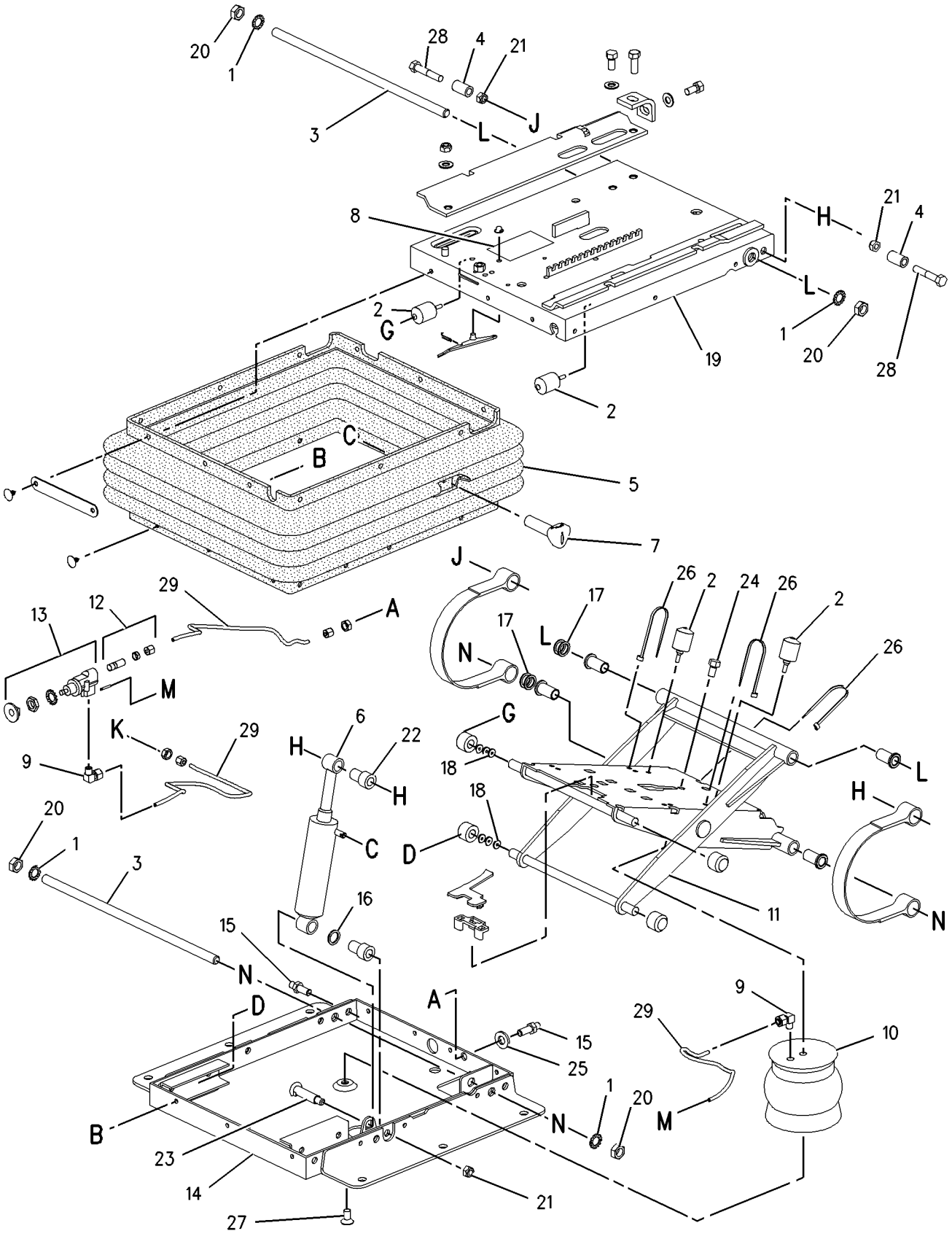

GRAPHIC #1

g00918352

OPERATOR STATION

188-9250 VALVE GP-SOLENOID–AIR HORN

S/N: ATS1-UP
24 VOLT
PART OF 173-5307 HORN GP-AIR

SMCS-5479 **i01587306**

NOTE	REF NO	GRAPHIC REF	PART NUMBER	QTY	PART NAME 1 2 3 4 5 6 (PRODUCT LEVEL)	SEE PAGE
	1	1	**102-8802**	1	KIT-RECEPTACLE (2 PIN) (SOLENOID VALVE)	
					(KIT INCLUDES RECEPTACLE AS & WEDGE)	
		1	**3E-3365**	1	WEDGE-RECEPTACLE LOCK (2 PIN)	
		1	**186-3735**	2	PIN-CONNECTOR	

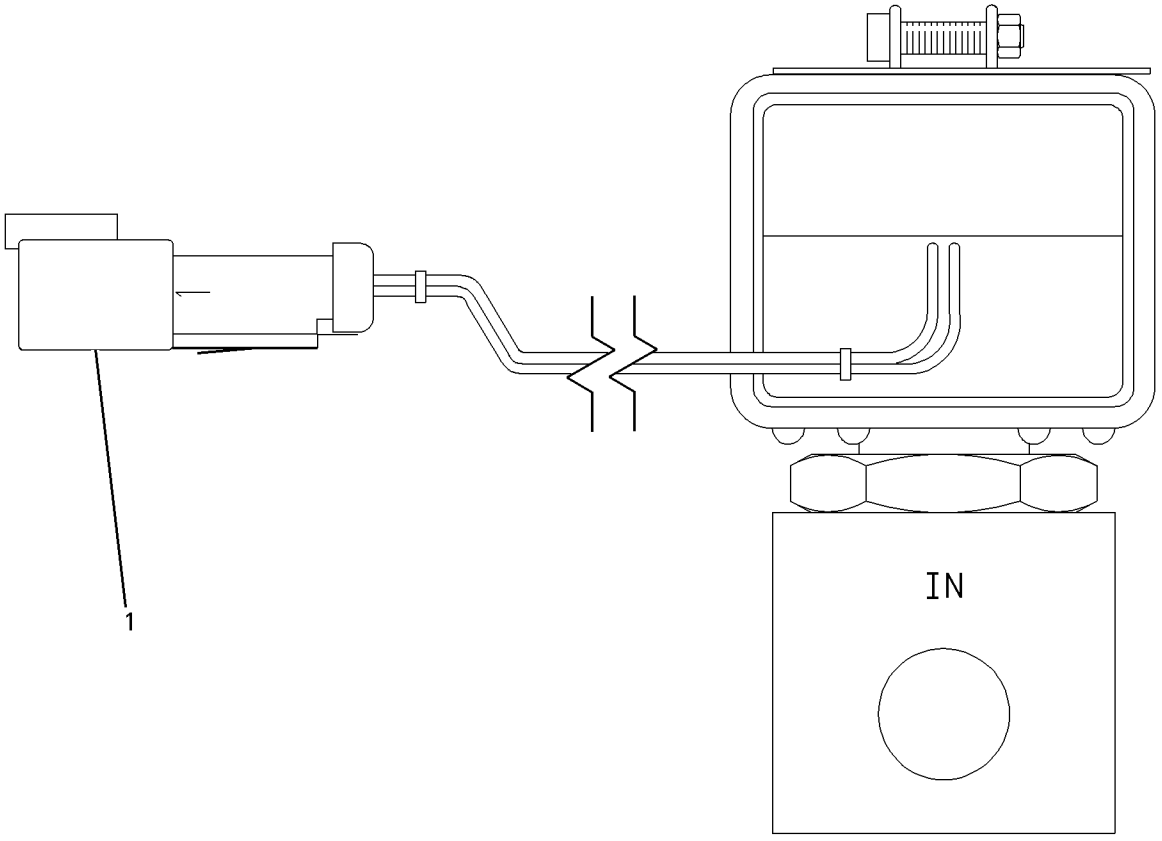

GRAPHIC #1 g00825932

MEMORANDA

OPERATOR STATION

8X-9675 WASHER GP-WINDOW—FRONT

S/N: ATS1-UP
PART OF 161-1141, 179-3581 ROPS AR-ENCLOSED
ALSO AN ATTACHMENT

SMCS-7306 **i01179092**

NOTE	REF NO	GRAPHIC REF	PART NUMBER	QTY	PART NAME 1 2 3 4 5 6 (PRODUCT LEVEL)	SEE PAGE
BE	1	1	**144-0195**		HOSE	
	2	1	**8W-0935**	1	GASKET	
	3	1	**8W-0934**	1	BRACKET	
	4	1	**9P-2369**	1	JET AS-WASHER	
	5	1	**8T-2901**	1	NOZZLE AS	
M	7	1	**5C-2890**	2	NUT (M6X1.00 THD)	
	8	1	**5P-4115**	2	WASHER (2MM THK)	
	9	1	**3S-2093**	3	STRAP-CABLE	
	10	1	**102-3645**	1	COVER	
M	11	1	**9X-2045**	5	SCREW-TRUSS HEAD (M6X1X20MM)	
	12	1	**4D-7388**	2	CLIP (34.92MM ID)	
	13	1	**5M-3062**	1	BOLT (3/8-16X.75IN)	
	14	1	**8T-4896**	2	WASHER-HARD (2.5MM THK)	
	15	1	**7T-8891**	2	PUMP AS-WASHER	
	16	1	**8X-9405**	1	RESERVOIR AS	
	17	1	**8X-5280**	2	CONNECTOR	
	18	1	**6W-5698**	2	GROMMET	
	19	1	**7T-1961**	1	CAP	
	20	1	**8X-1135**	1	GASKET	
	21	1	**8X-9349**	1	PAD	
	22	1	**107-4865**	1	PAD	
		1	**8X-7743**	1	RESERVOIR	
	24	1	**4L-6454**	1	BOLT (3/8-16X1.0IN)	
	25	1	**6V-8801**	1	NUT (3/8-16 THD)	
	26	1	**7G-4326**	1	PLATE	

B-USE AS REQUIRED
E-ORDER BY THE CENTIMETER
M-METRIC PART

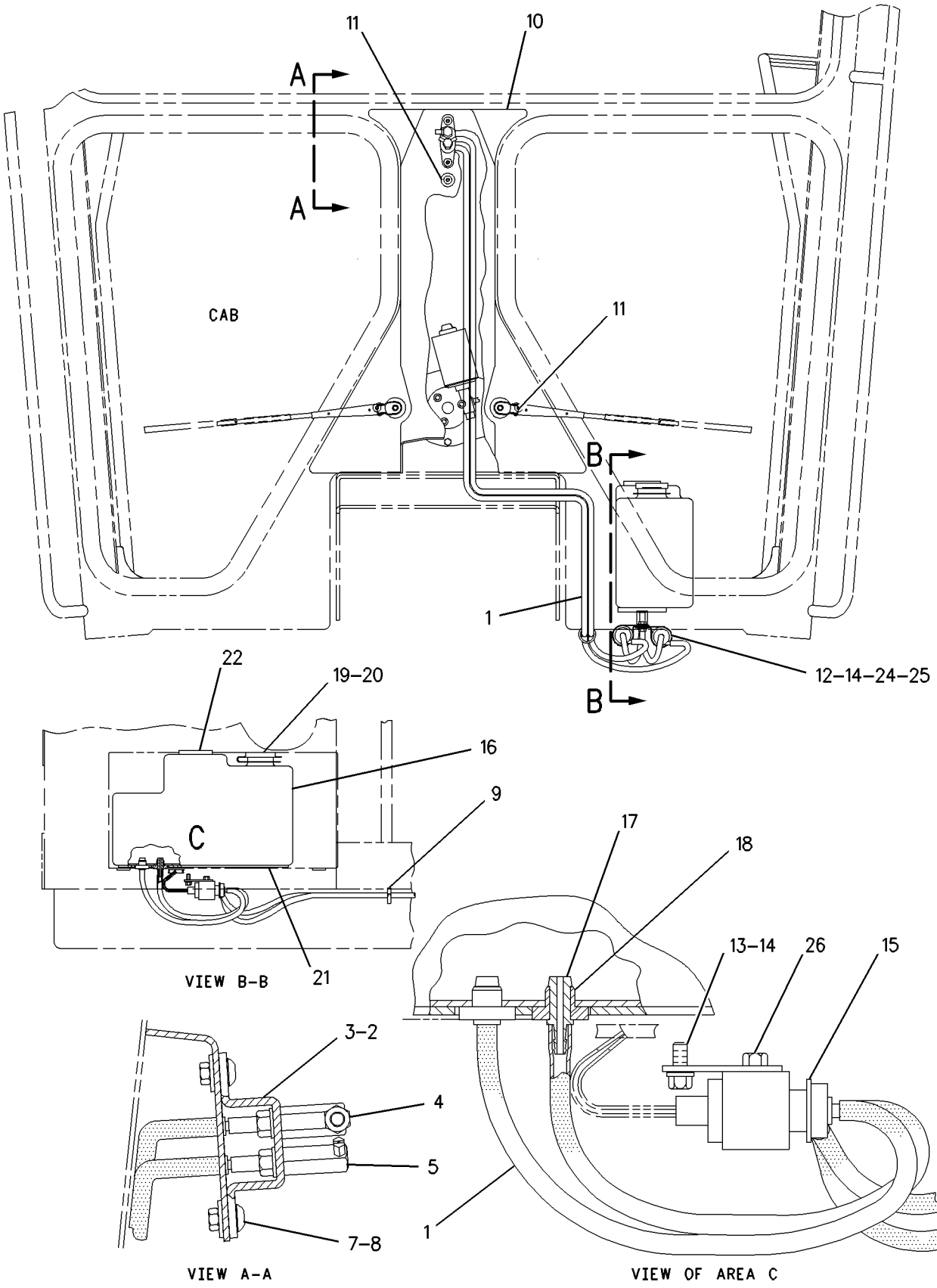

GRAPHIC #1

g00631358

OPERATOR STATION

8X-9680 WASHER GP-WINDOW–REAR

S/N: ATS1-UP

PART OF 177-8830, 177-8831 WIPER AR-WINDOW

AN ATTACHMENT

SMCS-7306 **i01830810**

NOTE	REF NO	GRAPHIC REF	PART NUMBER	QTY	PART NAME 1 2 3 4 5 6 (PRODUCT LEVEL)	SEE PAGE
	1	1	**3V-3816**	1	NOZZLE AS	
	2	1	**7T-8891**	1	PUMP AS-WASHER	
	3	1	**4D-7388**	1	CLIP	
	4	1	**4D-7794**	1	CLIP	
	5	1	**5P-8167**	2	BOLT (3/8-16X0.625 IN)	
	6	1	**6K-9632**	1	TEE	
	7	1	**8T-4896**	2	WASHER-HARD (10.2X18.5X2.5MM THK)	
E	8	1	**144-0195**		HOSE (188CM)	
E	8A	1	**144-0195**		HOSE (20CM)	
E	8B	1	**144-0195**		HOSE (10CM)	

E-ORDER BY THE CENTIMETER

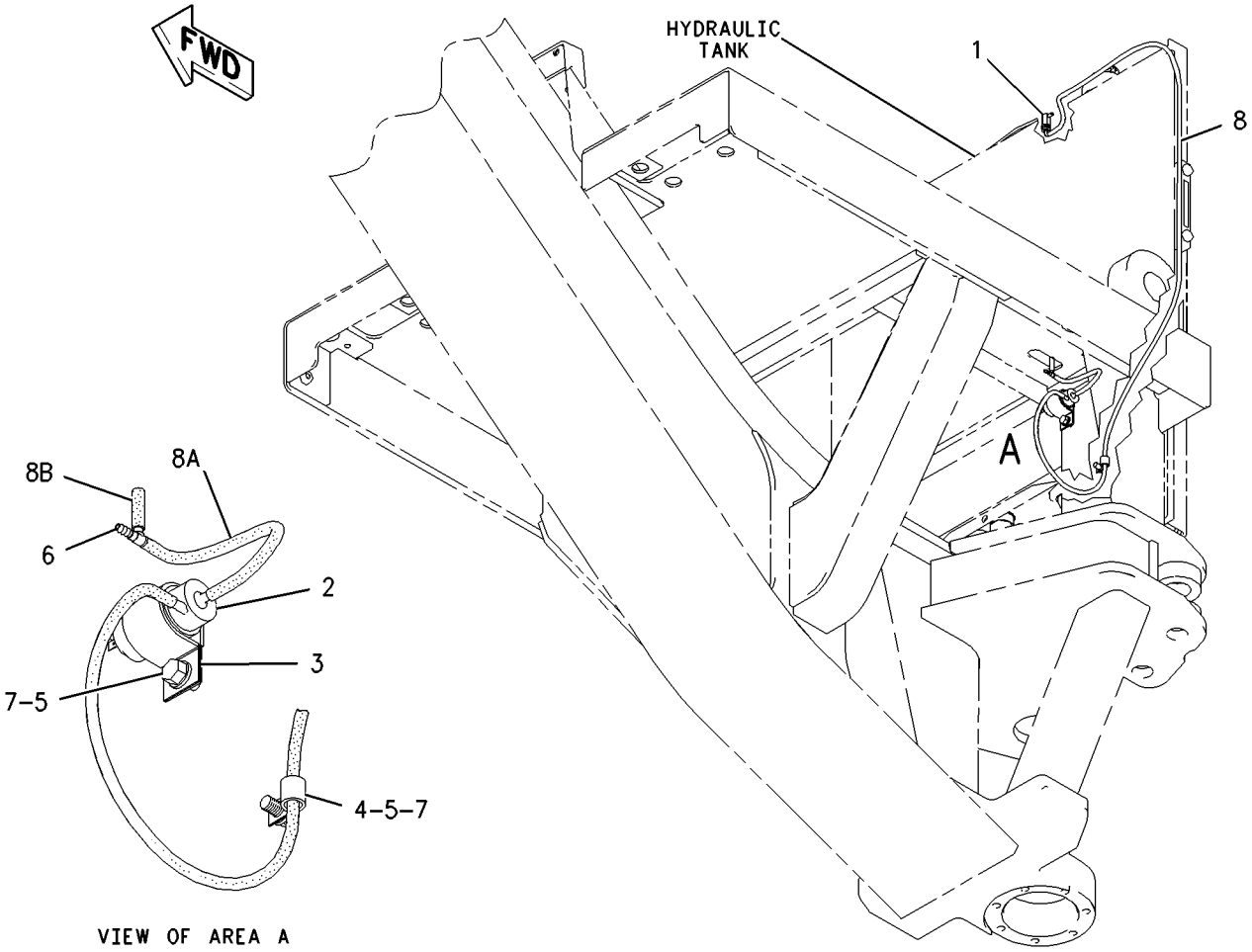

GRAPHIC #1 g00898012

OPERATOR STATION

126-0961 WINDOW GP–VENT–CAB

S/N: ATS1-UP
AN ATTACHMENT

SMCS-7310, 7340 **i01655308**

NOTE	REF NO	GRAPHIC REF	PART NUMBER	QTY	PART NAME 1 2 3 4 5 6 (PRODUCT LEVEL)	SEE PAGE
CY	1	1	**150-5107**	1	PANEL GP-WINDOW (LH)	712
CY	2	1	**150-5106**	1	PANEL GP-WINDOW (RH)	710
	3	1	**5T-3093**	2	HANDLE	
BD	4	1	**5P-5969**		SEAL	
M	5	1	**8T-0352**	4	BOLT (M5X0.8X45MM)	
	6	1	**8T-0328**	56	WASHER-HARD (5.5X10X1MM THK)	
M	7	1	**7Y-5226**	28	NUT (M5X0.8 THD)	
M	8	1	**8T-0335**	24	BOLT (M5X0.8X40MM)	
	9	1	**6V-8255**	2	BLADE AS-WIPER (VENT FRONT LOWER)	

B-USE AS REQUIRED
C-CHANGE FROM PREVIOUS TYPE
D-ORDER BY THE METER
M-METRIC PART
Y-SEPARATE ILLUSTRATION

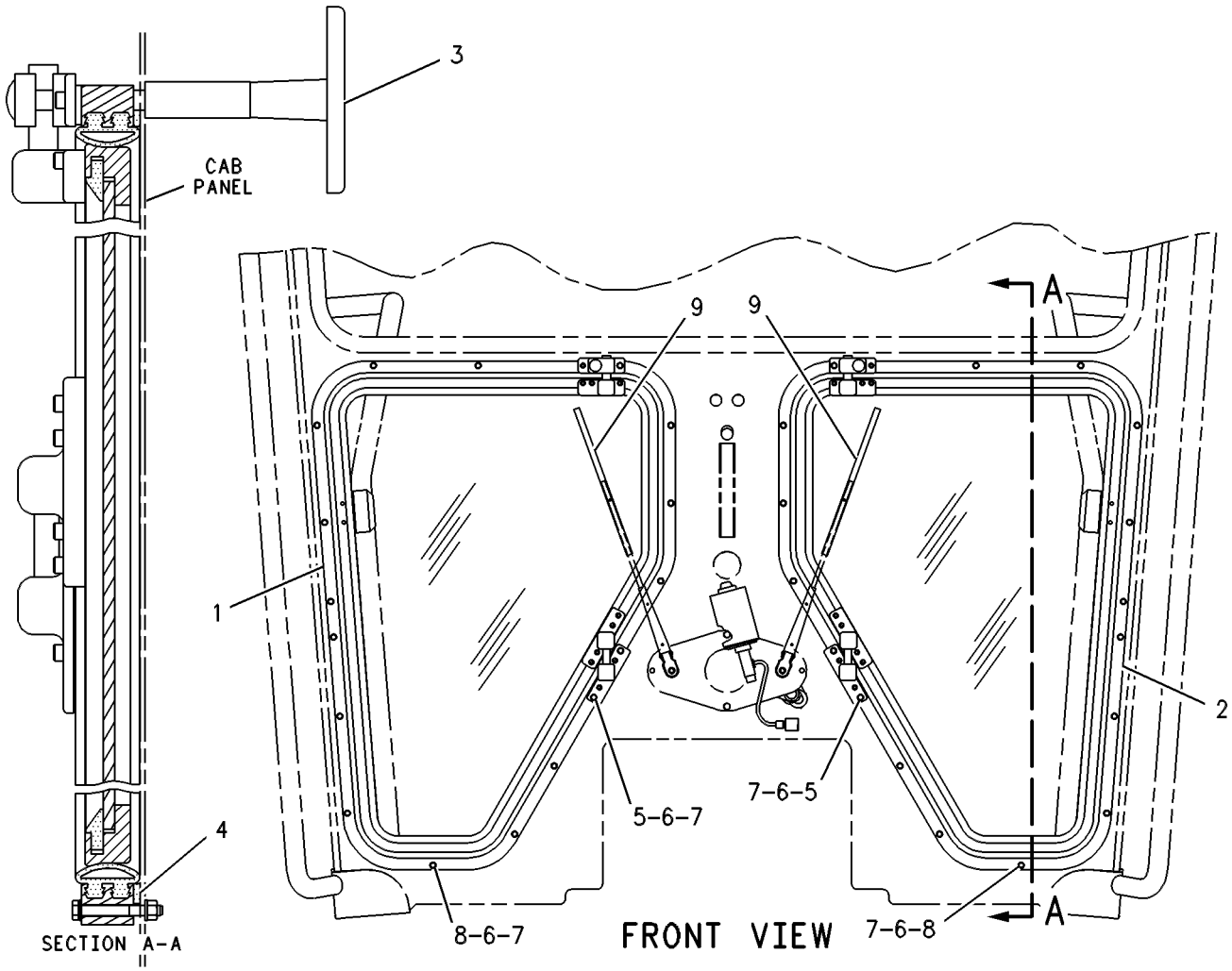

GRAPHIC #1 g00108855

OPERATOR STATION

134-8232 WINDOW GP—SIDE SLIDING—HIGH PROFILE

S/N: ATS1-UP
PART OF 139-6129 WINDOW GP
AN ATTACHMENT

SMCS-7310, 7340 **i01063098**

NOTE	REF NO	GRAPHIC REF	PART NUMBER	QTY	PART NAME 1 2 3 4 5 6 (PRODUCT LEVEL)	SEE PAGE
	1	1	**5M-9695**	4	SCREW	
	2	1	**5P-7162**	2	SCREW-MACHINE (10-32 THD)	
	3	1	**8C-6738**	2	SCREW-PAN HEAD	
	4	1	**9X-6019**	4	LOCKSCREW	
	5	1	**104-5958**	2	NUT	
	6	1	**109-0146**	2	STOP-SLIDE	
	7	1	**139-9132**	1	LATCH AS	
	8	1	**139-9138**	1	GLASS-SLIDING	
	9	1	**139-9134**	1	POST-CENTER	
	10	1	**139-9135**	1	GLASS-FIXED	
	11	1	**139-9137**	1	CATCH	
E	12	1	**8Y-6981**		SEAL (21 CM)	
E	13	1	**139-9136**		SEAL-WEATHER (285 CM)	
D	14	1	**5P-5627**		SEAL (1 M)	
E	15	1	**8Y-6982**		SEAL (188 CM)	

D-ORDER BY THE METER
E-ORDER BY THE CENTIMETER

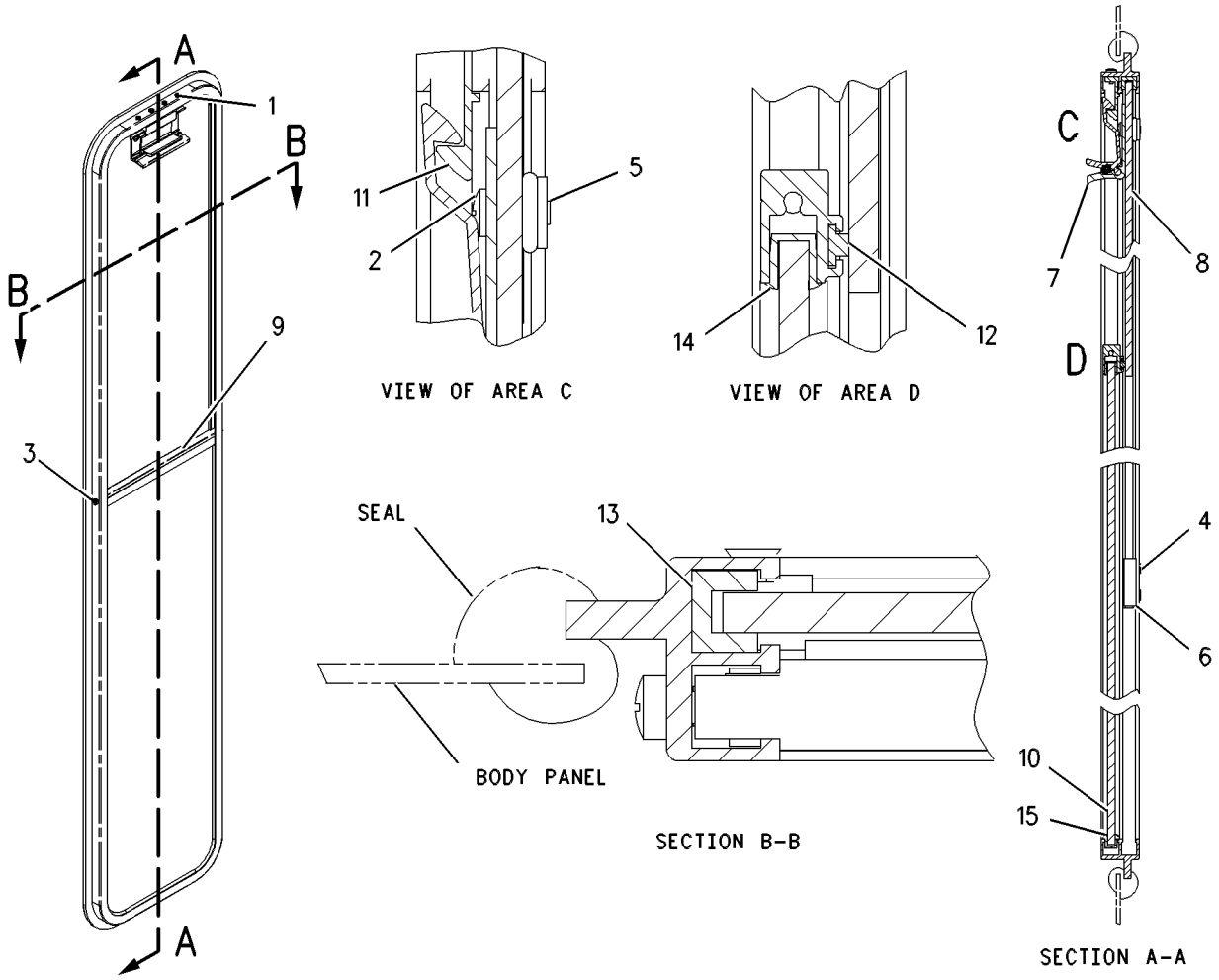

GRAPHIC #1 g00552811

OPERATOR STATION

134-8233 WINDOW GP—SIDE SLIDING—LOW PROFILE

S/N: ATS1-UP
PART OF 139-6128 WINDOW GP
AN ATTACHMENT

SMCS-7310, 7340 **i01063096**

NOTE	REF NO	GRAPHIC REF	PART NUMBER	QTY	PART NAME 1 2 3 4 5 6 (PRODUCT LEVEL)	SEE PAGE
	1	1	**5M-9695**	4	SCREW	
	2	1	**5P-7162**	2	SCREW-MACHINE (10-32 THD)	
	3	1	**8C-6738**	2	SCREW-PAN HEAD	
	4	1	**9X-6019**	4	LOCKSCREW	
	5	1	**104-5958**	2	NUT	
	6	1	**109-0146**	2	STOP-SLIDE	
	7	1	**139-9132**	1	LATCH AS	
	8	1	**139-9133**	1	GLASS-SLIDING	
	9	1	**139-9134**	1	POST-CENTER	
	10	1	**139-9135**	1	GLASS-FIXED	
	11	1	**139-9137**	1	CATCH	
E	12	1	**8Y-6981**		SEAL (21 CM)	
E	13	1	**139-9136**		SEAL-WEATHER (194 CM)	
D	14	1	**5P-5627**		SEAL (1 M)	
E	15	1	**8Y-6982**		SEAL (188 CM)	

D-ORDER BY THE METER
E-ORDER BY THE CENTIMETER

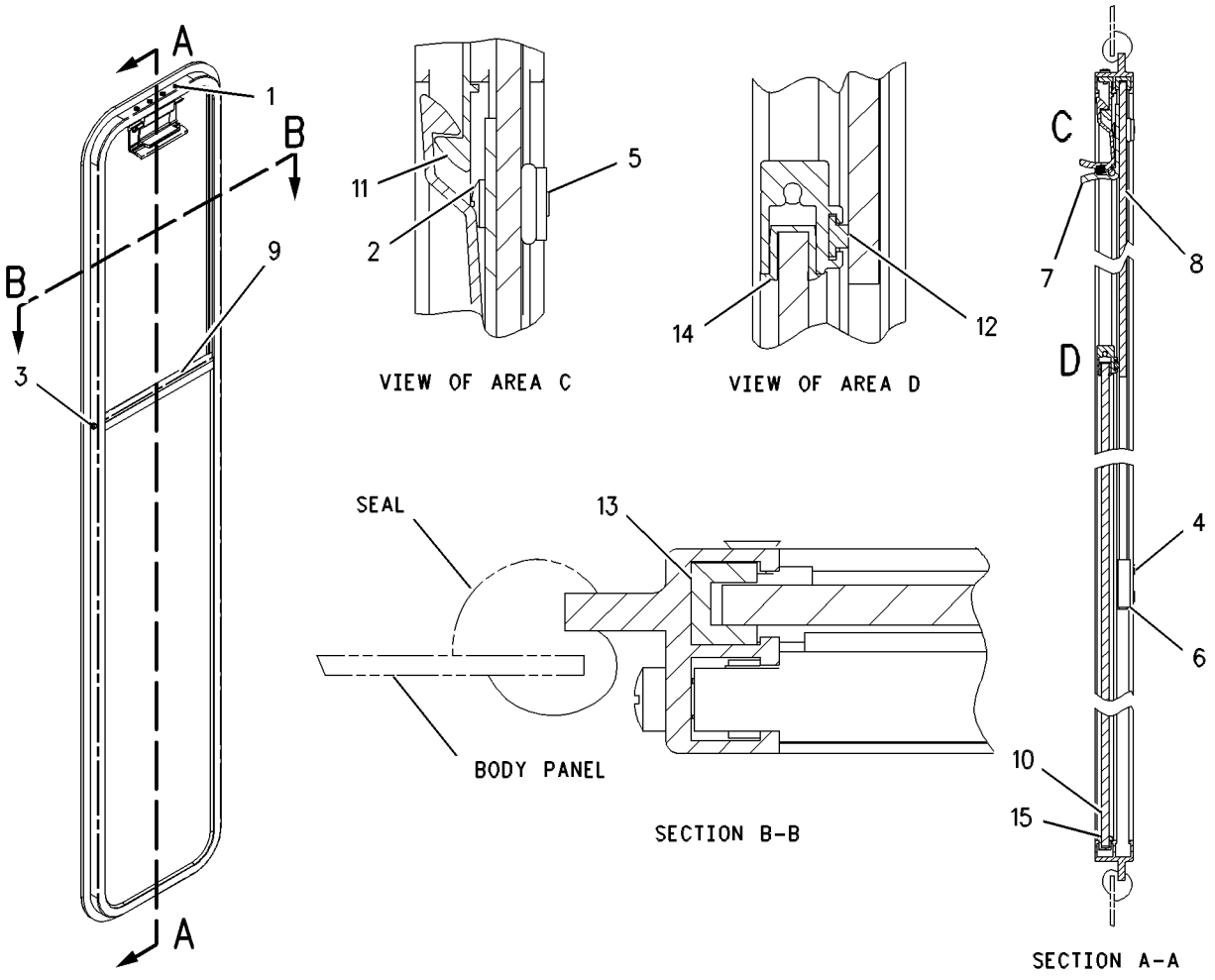

GRAPHIC #1 g00552809

OPERATOR STATION

139-6128 WINDOW GP—SIDE SLIDING —LOW PROFILE

S/N: ATS1-UP

AN ATTACHMENT

SMCS-7310, 7340 **i01650502**

NOTE	REF NO	GRAPHIC REF	PART NUMBER	QTY	PART NAME 1 2 3 4 5 6 (PRODUCT LEVEL)	SEE PAGE
Y	1	1	**134-8233**	2	WINDOW GP (SIDE SLIDE LOW PROFILE)	745

Y-SEPARATE ILLUSTRATION

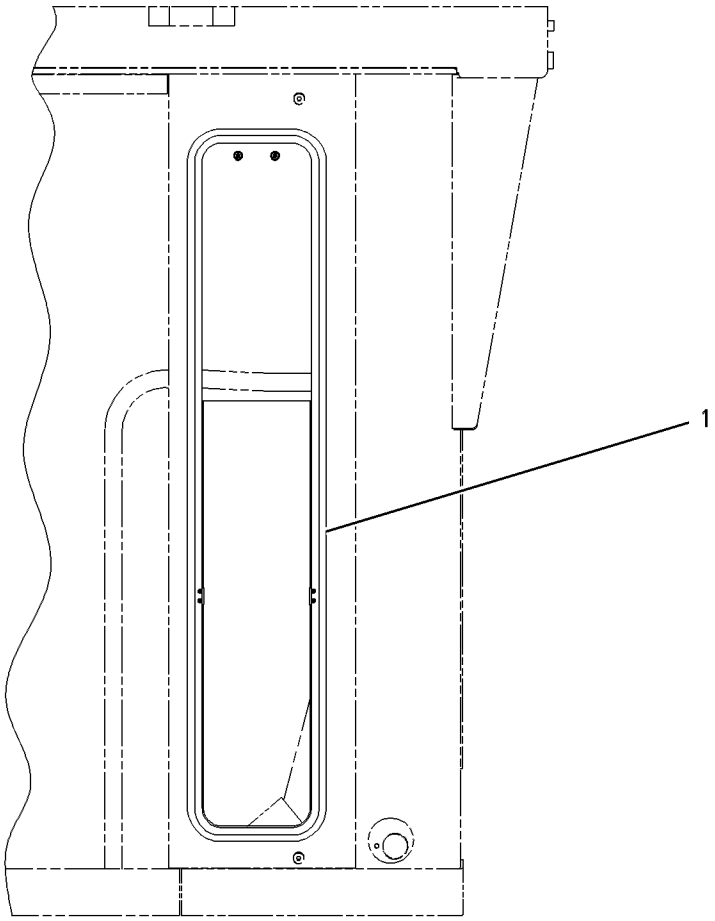

GRAPHIC #1 g00301642

139-6129 WINDOW GP–SIDE SLIDING–HIGH PROFILE

S/N: ATS1-UP
AN ATTACHMENT

SMCS-7310, 7340 **i01650505**

NOTE	REF NO	GRAPHIC REF	PART NUMBER	QTY	PART NAME 1 2 3 4 5 6 (PRODUCT LEVEL)	SEE PAGE
Y	1	1	**134-8232**	2	WINDOW GP (SIDE SLIDE HIGH PROFILE)	744

Y-SEPARATE ILLUSTRATION

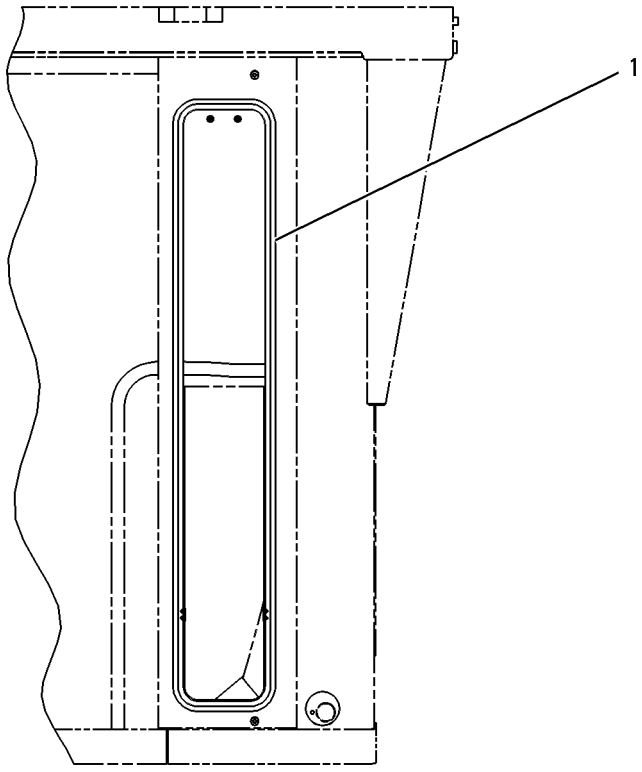

LEFT SIDE VIEW

GRAPHIC #1 g00301585

OPERATOR STATION

177-8830 WIPER AR-WINDOW—REAR—LOW PROFILE

S/N: ATS1-UP
AN ATTACHMENT

SMCS-7305, 7306 **i01699213**

NOTE	PART NUMBER	QTY	PART NAME 1 2 3 4 5 6 (PRODUCT LEVEL)	SEE PAGE
Y	*8X-9680*	1	WASHER GP-WINDOW (REAR)	742
Y	*173-5320*	1	WIPER GP-WINDOW (REAR)	754

Y-SEPARATE ILLUSTRATION

<END>

177-8831 WIPER AR-WINDOW—REAR—HIGH PROFILE

S/N: ATS1-UP
AN ATTACHMENT

SMCS-7305, 7306 **i01650519**

NOTE	PART NUMBER	QTY	PART NAME 1 2 3 4 5 6 (PRODUCT LEVEL)	SEE PAGE
Y	*8X-9680*	1	WASHER GP-WINDOW (REAR)	742
Y	*173-5321*	1	WIPER GP-WINDOW (REAR)	756

Y-SEPARATE ILLUSTRATION

<END>

OPERATOR STATION

114-6685 WIPER GP-WINDOW

S/N: ATS1-UP

PART OF 172-6830, 172-6831, 173-5320, 173-5321 WIPER GP-WINDOW

ALSO AN ATTACHMENT

SMCS-7305 **i01536204**

NOTE	REF NO	GRAPHIC REF	PART NUMBER	QTY	PART NAME 1 2 3 4 5 6 (PRODUCT LEVEL)	SEE PAGE
	1	1	**3T-7059**	1	BRACKET	
M	2	1	**5C-9553**	3	BOLT (M6X1X16MM)	
	3	1	**3T-7086**	1	CRANK AS	
M	4	1	**6V-6889**	2	NUT (M8X1.25 THD)	
	5	1	**6V-6888**	1	WASHER-SPRING	
	6	1	**6V-6219**	1	LINK-CONNECTING	
M	7	1	**3C-1884**	4	SCREW-MACHINE (M5X0.8 BG THD)	
	8	1	**6T-2770**	1	SHAFT AS-DRIVE	
	9	1	**6V-6209**	1	CAP	
M	10	1	**6V-6213**	1	NUT (M20X1 THD)	
	11	1	**6V-6214**	1	WASHER (20.15X29.6X1MM THK)	
	12	1	**5P-0537**	3	WASHER-HARD (7.2X14.5X2MM THK)	
	13	1	**6A-9718**	1	WASHER (8.1X12.5X1MM THK)	
	14	1	**3E-6388**	1	MOTOR AS-WINDOW WIPER	
		1	**102-8805**	1	KIT-RECEPTACLE (6 PIN)	
					(INCLUDES RECEPTACLE AS & WEDGE)	
		1	**102-8805**	1	KIT-RECEPTACLE (6 PIN)	
					(INCLUDES RECEPTACLE AS & WEDGE)	
		1	**3E-3383**	1	WEDGE-RECEPTACLE LOCK	
		1	**186-3735**	5	PIN-CONNECTOR	
		1	**8T-8737**	1	PLUG-SEAL	

M-METRIC PART

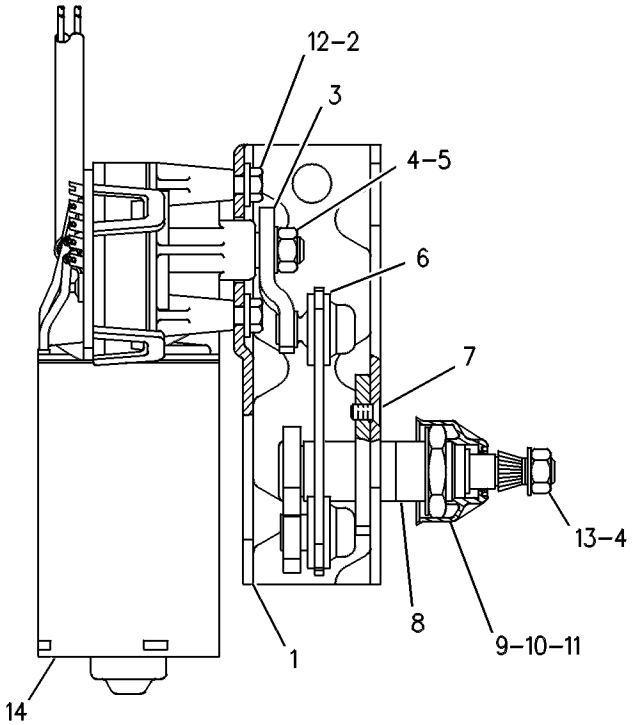

GRAPHIC #1 g00245521

OPERATOR STATION

172-6830 WIPER GP-WINDOW—FRONT—LOW PROFILE

S/N: ATS1-UP

PART OF 172-5377 ROPS GP-ENCLOSED

SMCS-7305 **i01786094**

NOTE	REF NO	GRAPHIC REF	PART NUMBER	QTY	PART NAME 1 2 3 4 5 6 (PRODUCT LEVEL)	SEE PAGE
	1	1	**2A-6926**	1	LEVER AS	
	2	1	**2A-6928**	1	LINK	
	3	1	**2A-6929**	1	LINK	
	4	1	**3E-6388**	1	MOTOR AS-WINDOW WIPER	
		1	**3E-3383**	1	WEDGE-RECEPTACLE LOCK	
		1	**186-3735**	5	PIN-CONNECTOR	
		1	**8T-8737**	1	PLUG-SEAL	
		1	**102-8805**	1	KIT-RECEPTACLE (6 PIN) (WINDOW WIPER MOTOR) (INCLUDES RECEPTACLE AS & WEDGE)	
B	5	1	**4B-4283**	2	WASHER (20.6X37.5X3.5MM THK)	
	6	1	**6V-5853**	1	BLADE AS-WIPER (LOW PROFILE FRONT LOWER)	
	7	1	**6V-6888**	1	WASHER-SPRING (8.31X15.54X1.07MM THK)	
M	8	1	**6V-6889**	1	NUT (M8X1.25 THD)	
	9	1	**6V-8258**	1	ARM AS-WIPER	
	10	1	**8X-2556**	1	FLANGE	
	11	1	**8X-2663**	1	GASKET	
Y	12	1	**114-6685**	1	WIPER GP-WINDOW (FRONT)	749
	13	1	**123-4354**	2	ARM AS-WIPER	
	14	1	**123-4355**	2	BLADE AS-WIPER	
	15	1	**125-7003**	1	SHAFT AS	
	16	1	**125-7004**	1	SHAFT AS	
M	17	1	**5C-7423**	3	SCREW (M6X1X16MM)	
	18	1	**5P-4115**	2	WASHER-HARD (7.2X19X2MM THK)	
	19	1	**7X-3182**	2	BOLT (1/4-28X0.5 IN)	
M	20	1	**8T-4138**	2	BOLT (M6X1X20MM)	

B-USE AS REQUIRED
M-METRIC PART
Y-SEPARATE ILLUSTRATION

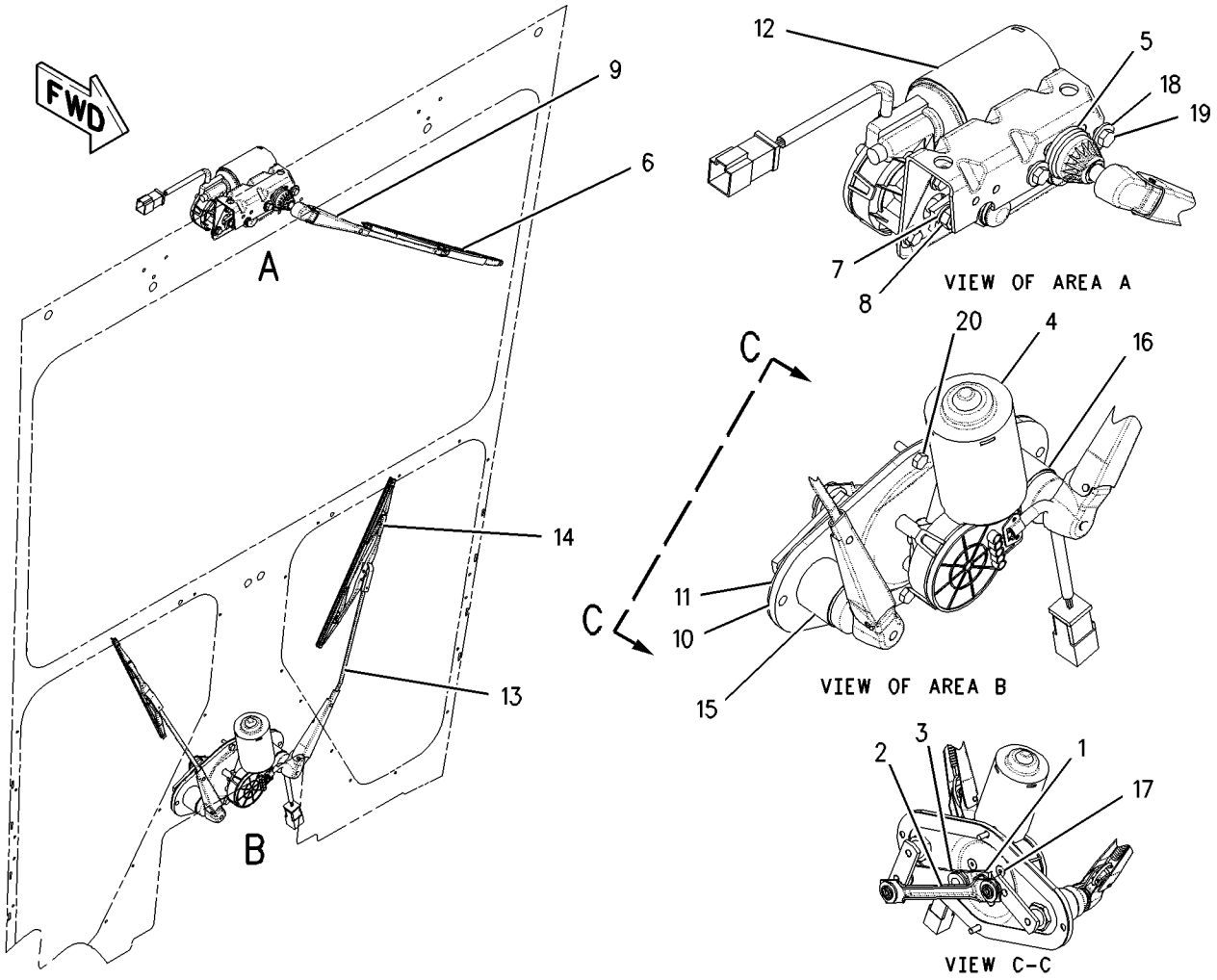

GRAPHIC #1 g00913514

OPERATOR STATION

172-6831 WIPER GP-WINDOW—FRONT—HIGH PROFILE

S/N: ATS1-UP

PART OF 177-8779 ROPS GP-ENCLOSED

AN ATTACHMENT

SMCS-7305 **i01786038**

NOTE	REF NO	GRAPHIC REF	PART NUMBER	QTY	PART NAME 1 2 3 4 5 6 (PRODUCT LEVEL)	SEE PAGE
	1	1	**2A-6926**	1	LEVER AS	
	2	1	**2A-6928**	1	LINK	
	3	1	**2A-6929**	1	LINK	
	4	1	**3E-6388**	1	MOTOR AS-WINDOW WIPER (LOWER)	
		1	**3E-3383**	1	WEDGE-RECEPTACLE LOCK	
		1	**186-3735**	5	PIN-CONNECTOR	
		1	**8T-8737**	1	PLUG-SEAL	
		1	**102-8805**	1	KIT-RECEPTACLE (6 PIN) (WINDOW WIPER MOTOR) (INCLUDES RECEPTACLE AS & WEDGE)	
	5	1	**4B-4283**	2	WASHER (20.6X37.5X3.5MM THK)	
	6	1	**6V-5853**	1	BLADE AS-WIPER (HIGH PROFILE FRONT UPPER)	
	7	1	**6V-6888**	1	WASHER-SPRING (8.31X15.54X1.07MM THK)	
M	8	1	**6V-6889**	1	NUT (M8X1.25 THD)	
	9	1	**6V-8259**	1	ARM AS-WIPER (UPPER)	
	10	1	**8X-2556**	1	FLANGE	
	11	1	**8X-2663**	1	GASKET	
Y	12	1	**114-6685**	1	WIPER GP-WINDOW (FRONT UPPER)	749
	13	1	**123-4354**	2	ARM AS-WIPER (LOWER)	
	14	1	**123-4355**	2	BLADE AS-WIPER (HIGH PROFILE FRONT LOWER)	
	15	1	**125-7003**	1	SHAFT AS (WIPER LOWER RH)	
	16	1	**125-7004**	1	SHAFT AS (WIPER LOWER LH)	
M	17	1	**5C-7423**	3	SCREW (M6X1X16MM)	
	18	1	**5P-4115**	2	WASHER-HARD (7.2X19X2MM THK)	
	19	1	**7X-3182**	2	BOLT (1/4-28X0.5 IN)	
M	20	1	**8T-4138**	2	BOLT (M6X1X20MM)	

M-METRIC PART
Y-SEPARATE ILLUSTRATION

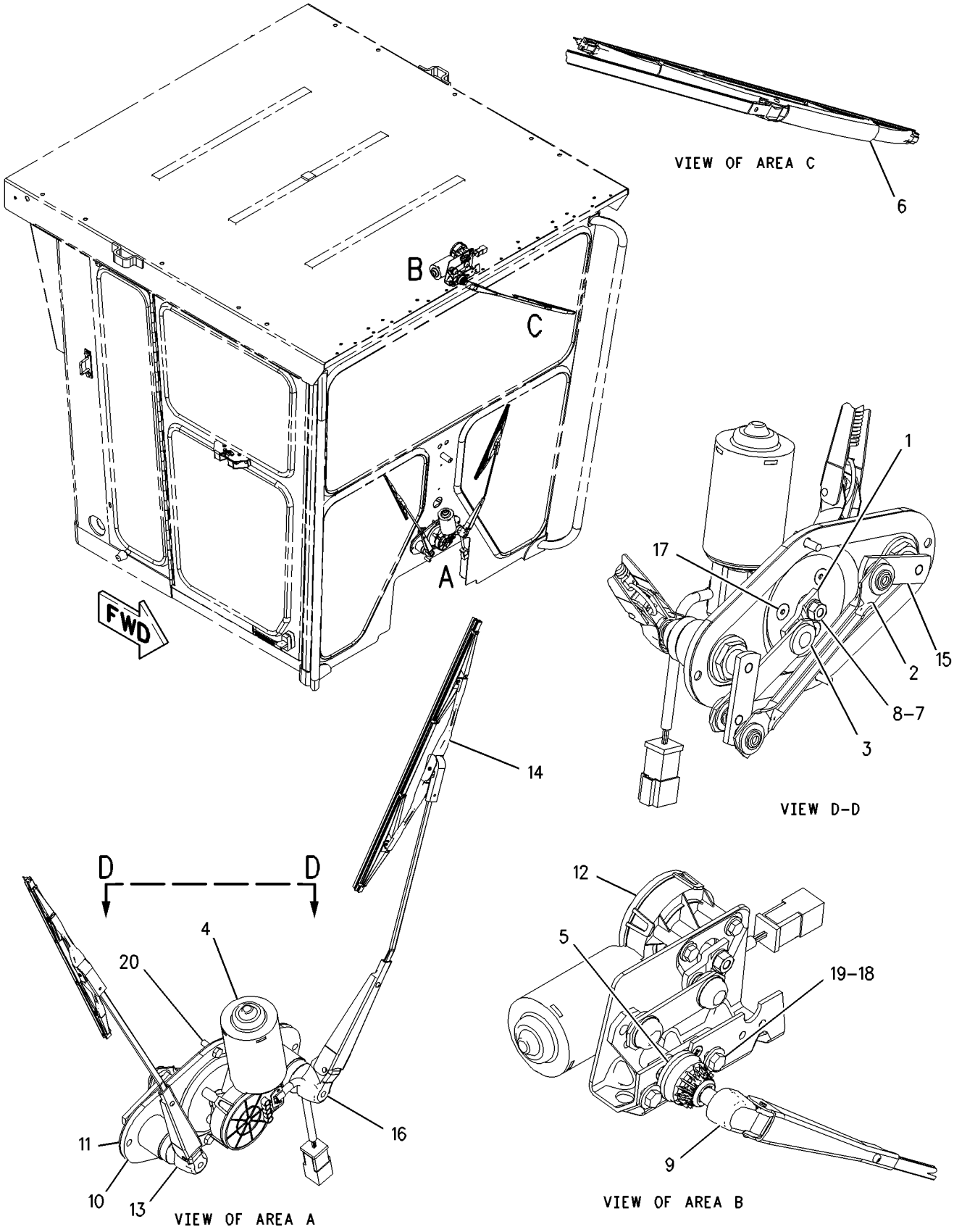

GRAPHIC #1

g00913478

OPERATOR STATION

173-5320 WIPER GP-WINDOW—REAR—LOW PROFILE

S/N: ATS1-UP

PART OF 177-8830 WIPER AR-WINDOW

AN ATTACHMENT

SMCS-7305 **i01802732**

NOTE	REF NO	GRAPHIC REF	PART NUMBER	QTY	PART NAME 1 2 3 4 5 6 (PRODUCT LEVEL)	SEE PAGE
	1	1	**4B-4283**	2	WASHER (20.6X37.5X3.5MM THK)	
	2	1	**6V-5849**	1	BLADE AS-WIPER (LOW PROFILE REAR)	
		1	**8C-5060**	1	KIT-WIPER BLADE (REAR)	
	3	1	**6V-8258**	1	ARM AS-WIPER	
	4	1	**9W-1442**	1	FUSE (10 AMP) (WIPER)	
	5	1	**110-7885**	1	KNOB (WIPER) (REAR)	
	6	1	**110-7886**	1	SWITCH AS-WIPER (REAR)	
		1	**186-3735**	3	PIN-CONNECTOR	
		1	**2H-3920**	1	LOCKWASHER	
		1	**3E-3389**	1	WEDGE-RECEPTACLE LOCK	
		1	**6V-8369**	1	NUT (7/16-28 THD)	
		1	**8T-8737**	1	PLUG-SEAL	
		1	**9W-0852**	4	PIN-CONNECTOR	
		1	**102-8806**	1	KIT-RECEPTACLE (8 PIN) (REAR WIPER SWITCH)	
Y	7	1	**114-6685**	1	WIPER GP-WINDOW (REAR)	749
	8	1	**5P-4115**	2	WASHER-HARD (7.2X19X2MM THK)	
	9	1	**7X-3182**	2	BOLT (1/4-28X0.5 IN)	

Y-SEPARATE ILLUSTRATION

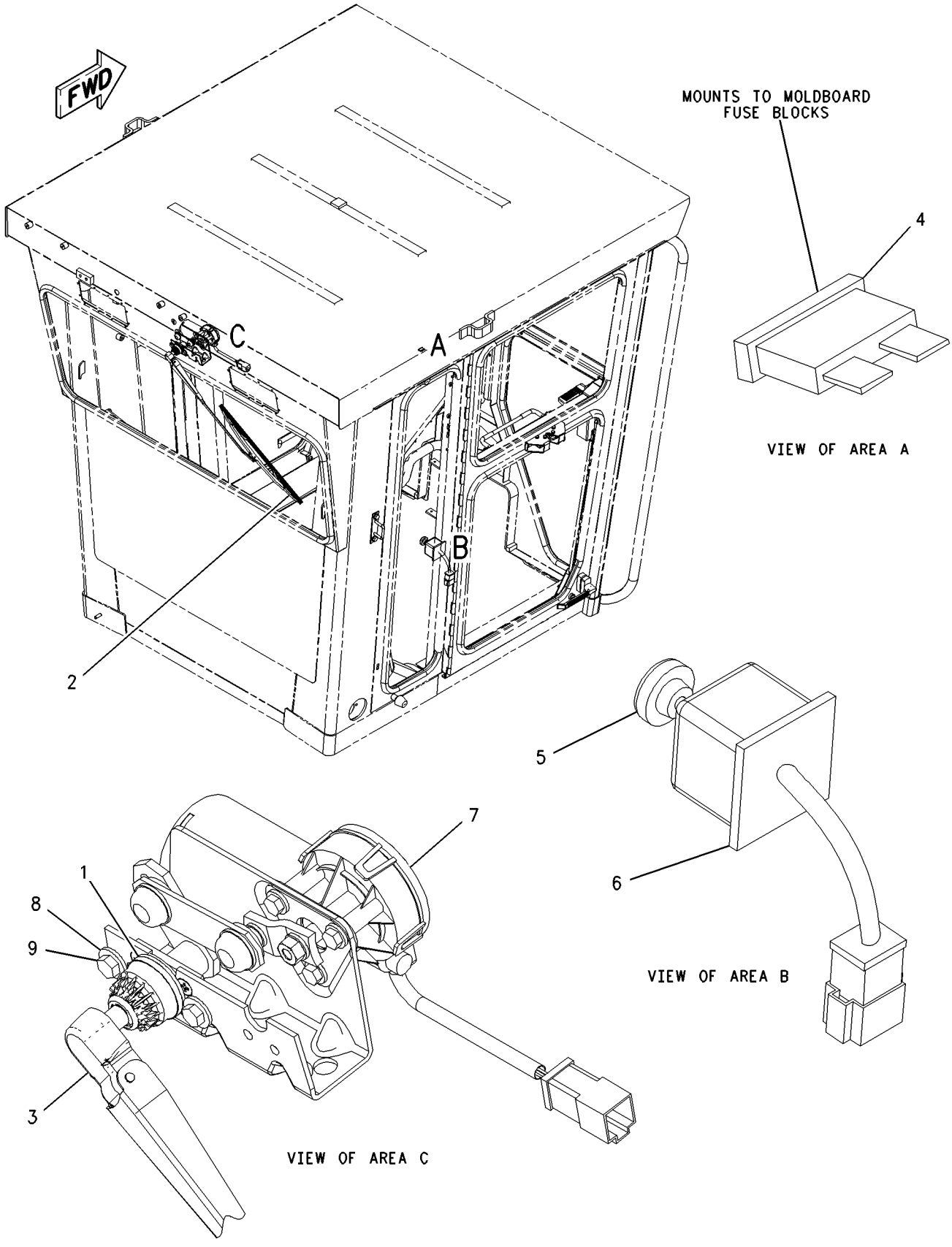

GRAPHIC #1

g00846638

OPERATOR STATION

173-5321 WIPER GP-WINDOW—REAR—HIGH PROFILE

S/N: ATS1-UP

PART OF 177-8831 WIPER AR-WINDOW

AN ATTACHMENT

SMCS-7305 **i01674273**

NOTE	REF NO	GRAPHIC REF	PART NUMBER	QTY	PART NAME 1 2 3 4 5 6 (PRODUCT LEVEL)	SEE PAGE
B	1	1	**4B-4283**	2	WASHER (20.6X37.5X3.5MM THK)	
	2	1	**6V-5853**	1	BLADE AS-WIPER (HIGH PROFILE REAR)	
	3	1	**6V-8258**	1	ARM AS-WIPER	
	4	1	**9W-1442**	1	FUSE (10 AMP) (WIPER)	
	5	1	**110-7885**	1	KNOB-WIPER SWITCH (REAR WINDOW)	
	6	1	**110-7886**	1	SWITCH AS-WIPER (REAR)	
		1	**2H-3920**	1	LOCKWASHER	
		1	**3E-3389**	1	WEDGE-RECEPTACLE LOCK	
		1	**6V-8369**	1	NUT (7/16-28 THD)	
		1	**186-3735**	3	PIN-CONNECTOR	
		1	**8T-8737**	1	PLUG-SEAL	
		1	**9W-0852**	4	PIN-CONNECTOR	
		1	**102-8806**	1	KIT-RECEPTACLE (8 PIN) (REAR WIPER SWITCH)	
Y	7	1	**114-6685**	1	WIPER GP-WINDOW (REAR)	749
	8	1	**5P-4115**	2	WASHER-HARD (7.2X19X2MM THK)	
	9	1	**7X-3182**	2	BOLT (1/4-28X0.5 IN)	

B-USE AS REQUIRED
Y-SEPARATE ILLUSTRATION

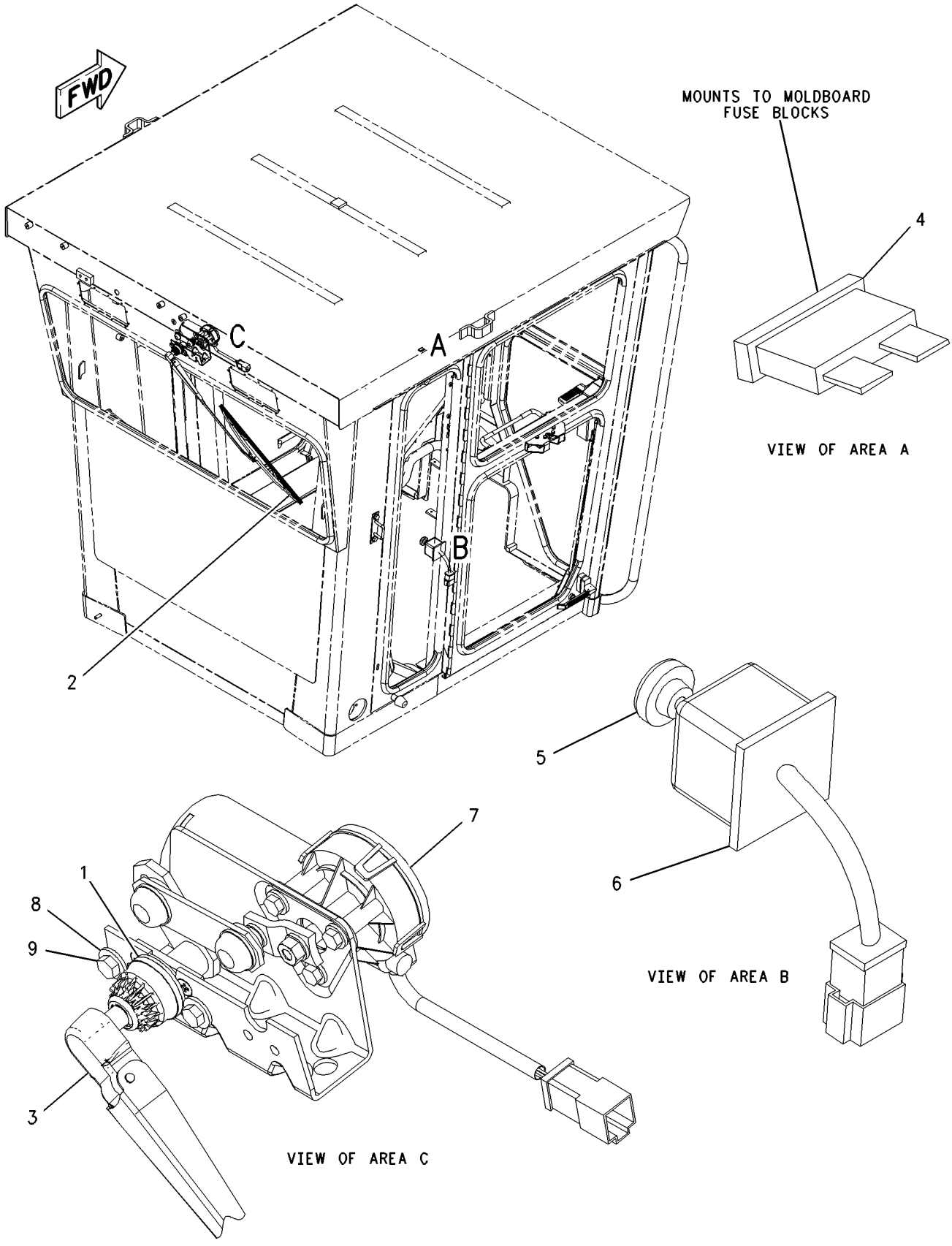

GRAPHIC #1 g00846638

OPERATOR STATION

177-8784 WIPER GP-WINDOW–FRONT

S/N: ATS1-UP

PART OF 211-1771, 211-1772 CONVERSION AR-CERTIFICATION

AN ATTACHMENT

SMCS-7305 **i01624013**

NOTE	REF NO	GRAPHIC REF	PART NUMBER	QTY	PART NAME 1 2 3 4 5 6 (PRODUCT LEVEL)	SEE PAGE
Y	1	1	**3E-0155**	2	SWITCH GP-WIPER	223

Y-SEPARATE ILLUSTRATION

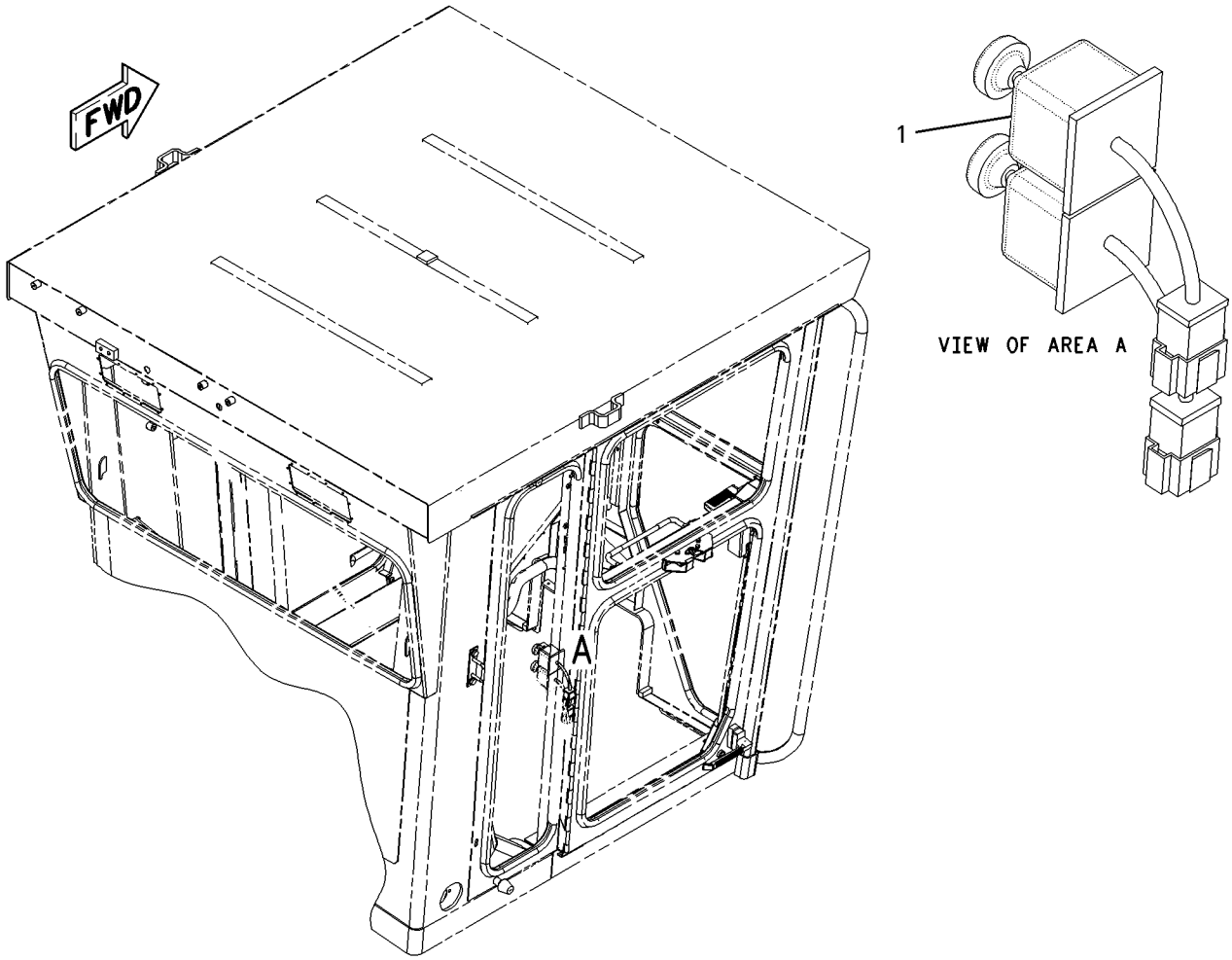

GRAPHIC #1 g00847324

136-4832 TOOL BOX GP

S/N: ATS1-UP

PART OF 162-5607 GENERAL AR

SMCS-7259 **i00130343**

NOTE	REF NO	GRAPHIC REF	PART NUMBER	QTY	PART NAME 1 2 3 4 5 6 (PRODUCT LEVEL)	SEE PAGE
	1	1	**8W-0791**	1	TOOL BOX AS	
	2	1	**5P-8502**	1	PADLOCK GP	
A		1	**5P-8500**	2	KEY	
A		1	**8Y-6364**	1	SLEEVE	
	3	1	**5M-3062**	4	BOLT (3/8-16X.750IN)	
	4	1	**5P-1075**	4	WASHER-HARD (3MM THK)	

A-NOT PART OF THIS GROUP

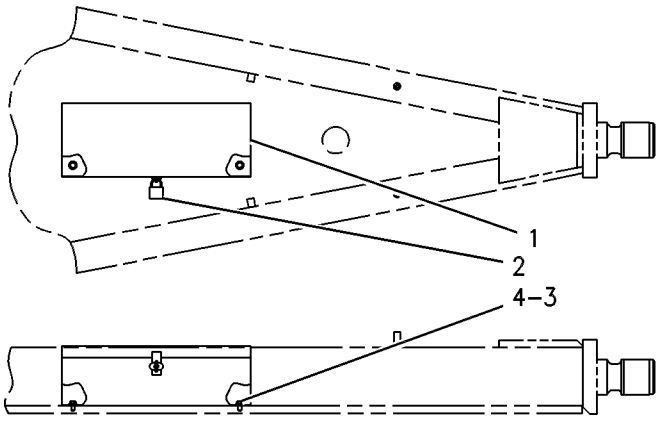

GRAPHIC #1 g00109546

207-1764 FILM GP–VHP

S/N: ATS1-UP
PART OF 211-1771, 211-1772 CONVERSION AR-CERTIFICATION
AN ATTACHMENT

i01787107

NOTE	PART NUMBER	QTY	PART NAME 1 2 3 4 5 6 (PRODUCT LEVEL)	SEE PAGE
	114-5224	2	FILM (VARIABLE HORSE POWER)	
			(LOCATE ON BOTH SIDES OF PLATFORM)	
	115-5852	1	PLATE & FILM GP	
			(LOCATE ON LEFT SIDE OF CYLINDER BLOCK TOWARDS REAR ON VERTICAL SURFACE BELOW FUEL RAIL TO RIGHT OF THE FUEL FILTERS)	

<END>

8T-4009 PLATE & FILM GP

S/N: ATS1-UP
PART OF 207-2428 RIPPER AR
AN ATTACHMENT

SMCS-7405, 7557 **i01153136**

NOTE	PART NUMBER	QTY	PART NAME 1 2 3 4 5 6 (PRODUCT LEVEL)	SEE PAGE
			(NO SERVICED PARTS)	

<END>

171-5838 PLATE & FILM GP

S/N: ATS1-UP
PART OF 162-5607 GENERAL AR

SMCS-7405, 7557 **i01829122**

NOTE	PART NUMBER	QTY	PART NAME 1 2 3 4 5 6 (PRODUCT LEVEL)	SEE PAGE
	1P-2807	2	FILM (LIFT EYE LOCATION)	
			(LOCATE ON OUTBOARD SIDE OF RH & LH BLADE LIFT ARMS)	
	7X-7644	2	FILM (TIE DOWN)	
			(LOCATE BY CENTERING ON RH & LH BOTTOM OF MAIN FRAME BOLSTER ASSEMBLY LOWER PLATE)	
	5P-1175	1	FILM (ENGINE OIL FILL)	
			(LOCATE ON ENGINE OIL FILLER CAP)	
	209-5776	1	FILM (ENGINE COOLANT)	
			(LOCATE NEAR RADIATOR SIGHT GAGE ON LH RADIATOR SUPPORT)	
	215-5648	1	FILM (TILT STEERING WHEEL CONTROL)	
			(LOCATE NEAR TILT KNOB ON STEERING CONSOLE)	
	224-6637	1	FILM (FAST FILL)	
			(LOCATE ON FILL NECK OF LH FUEL TANK)	
	183-5812	1	FILM GP	
	208-5828	1	FILM-CATERPILLAR	
	223-3842	2	FILM-STRIPE (RH/LH)(EACH 90CM)	
	223-3843	2	FILM-STRIPE (RH/LH)(EACH 75CM)	
	223-3843	2	FILM-STRIPE (RH/LH)(EACH 90CM)	
	124-5648	2	FILM-STRIPE (16H)(LH/RH)	
	208-5826	2	FILM-STRIPE (CAT)(LH/RH)	
	8C-5897	1	FILM-IDENTIFICATION (SIGHT GAUGE)	
			(LOCATE ON THE HYDRAULIC TANK ABOVE THE SIGHT GAUGE)	
	8C-8902	1	FILM-IDENTIFICATION (ENGINE OIL FILTER)	
			(LOCATE ON ENGINE OIL FILTER)	

171-5838 **PLATE & FILM GP** ***(contd.)*** **i01829122**

NOTE	PART NUMBER	QTY	PART NAME 1 2 3 4 5 6 (PRODUCT LEVEL)	SEE PAGE
	9X-8372	1	FILM-INSTRUCTION (WASHER FILL)	
			(LOCATE ON COVER OVER WINDOW WASHER BOTTLE)	
	7X-3229	2	FILM-LIFT & TIE DOWN	
			(LOCATE BY CENTERING ON OUTSIDE OF LH & RH REAR FRAME RAILS TO THE REAR OF THE LIFTING EYES)	
	190-5386	2	FILM-REFLECTOR (RED)	
			(LOCATE NEAR LIFTING EYES ON REAR PLATE OF CASE & FRAME)	
	9T-7308	1	FILM-WARNING (HIGH PRESSURE CYLINDER)	
			(LOCATE UNDER STEERING ACCUMULATR UNDER PLATFORM (LH SIDE))	
	5P-4114	1	FILM-WARNING (SPRING LOADED PIN)	
			(LOCATE ON RH SIDE OF CENTERSHIFT LOCK PIN HOUSING)	
	190-2938	1	FILM-WARNING (PRESSURIZED COOLANT)	
			(LOCATE UNDER RADIATOR FILL LID TO BE READ FROM LH SIDE OF THE MACHINE)	
	5P-4077	1	FILM-WARNING (GROUND BLADE)	
			(LOCATE ON SHIFT CONSOLE BELOW THE CENTERSHIFT PIN PULLER SWITCH)	
	212-2162	1	FILM-WARNING (CABLE CONNECTION)	
			(LOCATE ON SERVICE CENTER ACCESS DOOR BETWEEN LOUVERS)	
	8T-1363	1	FILM-WARNING (HIGH COMPRESSION SPRING)	
			(LOCATE ON REAR OF ROTOCHAMBER)	
	194-0856	1	PLATE (PRODUCT IDENTIFICATION)	
			(LOCATE ON LEFT SIDE OF MAIN FRAME IN FRONT OF LIFT CYLINDER BRACKET BELOW MAIN FRAME PLATE)	
	5T-4330	1	PLATE-INDICATOR	
			(LOCATE ON RH BLADE LIFT PIN)	
	5P-3999	1	PLATE-MAIN FRAME (DO NOT DRILL OR WELD)	
			(LOCATE ON LH SIDE OF FRONT FRAME IN FRONT OF LIFT CYLINDER BRACKET)	
	201-7603	2	PLATE-WARNING (NO CLEARANCE)	
			(LOCATE ON RH & LH ROPS SUPPORT)	
	8T-1191	1	PLATE-WARNING (MACHINE OPERATION)	
			(LOCATE ON RH GLOVE BOX DOOR)	
	3F-5535	2	SCREW-DRIVE	
	8T-9530	8	TACK-FASTENER	
A	**4W-1413**	1	PLATE-SERIAL NUMBER (ENGINE)	

A-NOT PART OF THIS GROUP

<END>

SERVICE EQUIPMENT AND SUPPLIES

192-1434 PLATE & FILM GP–REFLECTOR–EU

S/N: ATS1-UP

PART OF 211-1771, 211-1772 CONVERSION AR-CERTIFICATION

AN ATTACHMENT

SMCS-7405, 7557 **i01626417**

NOTE	REF NO	GRAPHIC REF	PART NUMBER	QTY	PART NAME 1 2 3 4 5 6 (PRODUCT LEVEL)	SEE PAGE
	1	1	**190-5386**	2	FILM-REFLECTOR (RED-EXTENDED LIFE COOLANT)	
	2	1	**195-2274**	6	FILM (YELLOW REFLECTIVE)	
	3	1	**197-5867**	2	PLATE	

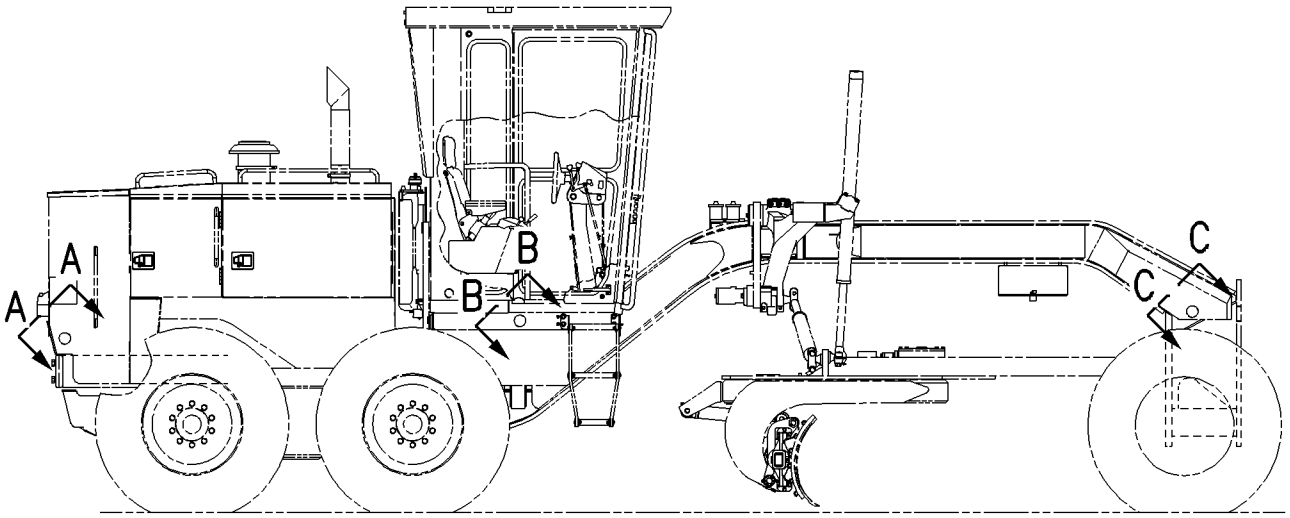

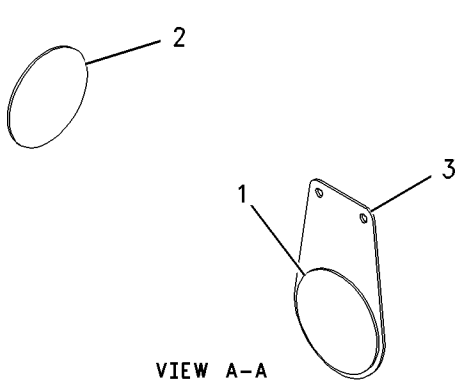

VIEW A-A

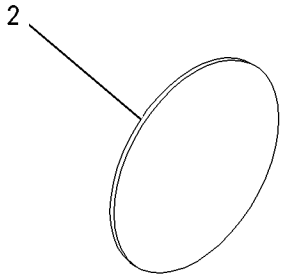

VIEW B-B

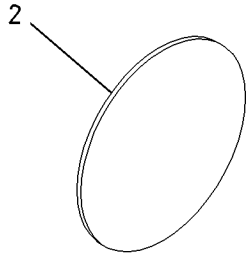

VIEW C-C

GRAPHIC #1 g00844040

206-1404 PLATE & FILM GP—FRENCH

S/N: ATS1-UP
AN ATTACHMENT

SMCS-7405, 7557 **i01729001**

NOTE	PART NUMBER	QTY	PART NAME 1 2 3 4 5 6 (PRODUCT LEVEL)	SEE PAGE
	224-6637	1	FILM (FAST FILL)	
			(LOCATE ON FILL NECK OF LH FUEL TANK	
	5P-4118	1	FILM-WARNING (SPRING LOADED PIN)	
			(LOCATE ON RH SIDE OF CENTERSHIFT LOCK PIN HOUSING)	
	7X-0943	1	FILM-WARNING (HIGH PRESS CYLINDER)	
			(LOCATE NEAR TILT KNOB ON STEERING CONSOLE)	
	3E-1129	1	FILM-WARNING (GROUND SPEED SENSOR)	
			(LOCATE ON GUARD FOR RADAR UNIT)	
	213-0430	1	FILM-WARNING (CABLE CONNECTION)	
			(LOCATE ON RH SIDE OF SERVICE CENTER)	
	5P-4000	1	PLATE-MAIN FRAME (DO NOT DRILL OR WELD)	
			(LOCATE ON LH SIDE OF FRONT FRAME IN FRONT OF LIFT CYLINDER BRACKET)	
	8T-1192	1	PLATE-WARNING (MACHINE OPERATION)	
			(LOCATE ON RH GLOVE BOX DOOR)	
	201-7626	2	PLATE-WARNING (NO CLEARANCE)	
			(LOCATE ON RH & LH REAR PLATFORM SUPPORTS)	

<END>

206-1405 PLATE & FILM GP—SPANISH

S/N: ATS1-UP
AN ATTACHMENT

SMCS-7405, 7557 **i01729120**

NOTE	PART NUMBER	QTY	PART NAME 1 2 3 4 5 6 (PRODUCT LEVEL)	SEE PAGE
	224-6637	1	FILM (FAST FILL)	
			(LOCATE ON FILL NECK ON LH FUEL TANK)	
	5P-4119	1	FILM-WARNING (CENTERSHIFT PIN)	
			(LOCATE ON RH SIDE OF CENTERSHIFT LOCK PIN HOUSING)	
	7X-0944	1	FILM-WARNING (HIGH PRESSURE CYLINDER)	
			(LOCATE ON STEERING ACCUMULATOR UNDER PLATFORM)	
	213-0437	1	FILM-WARNING (CABLE CONNECTION)	
			(LOCATE ON SERVICE CENTER ACCESS DOOR BETWEEN LOUVERS)	
	9X-1768	1	FILM-WARNING (GROUND SPEED SENSOR)	
			(LOCATE ON GUARD FOR RADAR UNIT)	
	5P-4001	1	PLATE-MAIN FRAME (DO NOT DRILL OR WELD)	
			(LOCATE ON LH SIDE OF FRONT FRAME IN FRONT OF LIFT CYLINDER BRACKET)	
	201-7633	2	PLATE-WARNING (NO CLEARANCE)	
			(LOCATE ON RH AND LH REAR PLATFORM SUPPORTS)	
	8T-1193	1	PLATE-WARNING (MACHINE OPERATION)	
			(LOCATE ON RH GLOVE BOX DOOR)	

<END>

SERVICE EQUIPMENT AND SUPPLIES

206-1406 PLATE & FILM GP—PORTUGUESE

S/N: ATS1-UP
AN ATTACHMENT

SMCS-7405, 7557 **i01729135**

NOTE	PART NUMBER	QTY	PART NAME 1 2 3 4 5 6 (PRODUCT LEVEL)	SEE PAGE
	224-6963	1	FILM (FAST FILL)	
			(LOCATE ON FILL NECK OF LH TANK)	
	5P-4086	1	FILM-WARNING (GROUND BLADE)	
			(LOCATE ON THE SHIFT CONSOLE BELOW THE CENTERSHIFT PIN PULLER SWITCH)	
	5P-4120	1	FILM-WARNING (SPRING LOADED PIN)	
			(LOCATE ON RH SIDE OF CENTERSHIFT LOCK PIN HOUSING)	
	7X-0945	1	FILM-WARNING (HIGH PRESSURE CYLINDER)	
			(LOCATE NEAR TILT KNOB ON STEERING CONSOLE)	
	3E-1130	1	FILM-WARNING (GROUND SPEED SENSOR)	
			(LOCATE ON GUARD RADAR UNIT)	
	213-0435	1	FILM-WARNING (CABLE CONNECTION)	
			(LOCATE OR RH SIDE OF SERVICE CENTER)	
	8T-1194	1	PLATE-WARNING (MACHINE OPERATION)	
			(LOCATE ON RH GLOVE BOX DOOR)	
	201-7631	2	PLATE-WARNING (NO CLEARANCE)	
			(LOCATE ON RH & LH REAR PLATFORM SUPPORTS)	

<END>

206-1407 PLATE & FILM GP—GERMAN

S/N: ATS1-UP
AN ATTACHMENT

SMCS-7405, 7557 **i01729136**

NOTE	PART NUMBER	QTY	PART NAME 1 2 3 4 5 6 (PRODUCT LEVEL)	SEE PAGE
	224-6959	1	FILM (FAST FILL)	
			(LOCATE ON FILL NECK ON LH FUEL TANK)	
	5P-4121	1	FILM-WARNING (CENTERSHIFT PIN)	
			(LOCATE ON RH SIDE OF CENTERSHIFT LOCK PIN HOUSING)	
	7X-0946	1	FILM-WARNING (HIGH PRESSURE CYLINDER)	
			(LOCATE ON STEERING ACCUMULATOR UNDER PLATFORM)	
	213-0431	1	FILM-WARNING (JUMPER CABLE)	
			(LOCATE ON SERVICE CENTER ACCESS DOOR BETWEEN LOUVERS)	
	3E-1131	1	FILM-WARNING (GROUND SPEED SENSOR)	
			(LOCATE ON GUARD FOR RADAR UNIT)	
	5P-4003	1	PLATE-MAIN FRAME (DO NOT DRILL OR WELD)	
			(LOCATE ON LH SIDE OF FRONT FRAME IN FRONT OF LIFT CYLINDER BRACKET)	
	201-7627	2	PLATE-WARNING (NO CLEARANCE)	
			(LOCATE ON RH AND LH REAR PLATFORM SUPPORTS)	
	8T-1195	1	PLATE-WARNING (MACHINE OPERATION)	
			(LOCATE ON RH GLOVE BOX DOOR)	

<END>

PART NUMBER INDEX

Part	Page
0	
0A-3721	378
0A-4664	330
0L-1178	362
0L-1352	6
	278
0L-2061	265
0L-2315	296
0S-0484	439
0S-0509	282
0S-1571	294
0S-1573	302
0S-1579	264
0S-1585	296
	368
	436
0S-1587	296
	302
	368
0S-1588	70
	302
	307
0S-1589	297
	368
0S-1590	297
	302
0S-1591	86
0S-1592	284
	352
	413
0S-1594	297
	302
	312
	436
	466
	614
	615
0S-1595	297
0S-1608	312
0S-1617	6
0S-1621	94
	298
0S-1625	384
0S-1626	382
0T-0055	307
0T-0065	90
0T-0102	308
0T-0200	34
0T-0329	466
0T-0573	282
0V-0375	302
	352
1	
1A-1415	436
1A-1460	94
	297
1A-2029	296
	302
	320
	436
1A-2170	52
1A-2209	472
1A-4350	719
1A-8063	3
1A-8651	288
1B-0676	96
	268
	388
1B-0964	407
1B-2578	96
	268
	388
1B-2713	642
	644
1B-3867	78
1B-3937	382
1B-4043	382
1B-4367	371
1B-4430	736
1B-5964	459
1B-7182	112
1B-8704	96
	268
	274
1B-8705	12
1B-8736	312
1B-8741	439
1C-0569	720
	722
1D-0906	371
	412
1D-1313	268
1D-4574	368
1D-4585	282
1D-4609	288
	294
1D-4610	407
1D-4614	594
1D-4615	408
1D-4626	411
1D-4630	408
	410
1D-4631	352
1D-4634	594
1D-4638	36
	352
1D-4643	284
	596
1D-4677	734
1D-4689	373
1D-4691	373
1D-4719	296
1D-6306	594
1F-0748	494
	496
	498
	504
1F-1651	388
	404
	730
1F-4622	268
	274
	388
1F-6726	296
1F-7854	102
1F-8488	314
1H-0337	522
1H-1023	396
	478
1H-3244	124
	248
	250
1H-3337	274
1H-3338	626
	628
	632
	634
1H-3340	710
	712
1H-3937	480
1H-4478	411
1H-5728	31
	294
1H-6227	296
1H-7339	14
	312
1H-7724	388
1H-8456	710
	712
1J-2150	368
1J-6762	598
1J-8387	344
	346
	348
	349
1J-9671	94
	399
	522
1K-6872	352
	373
	411
	592
1K-6986	296
1K-6995	306
1K-7081	407
1L-3162	320
1L-3769	324
1L-4349	488
1L-5072	488
1L-8497	297
1L-8793	594
1L-9080	719
1M-1230	642
	644
1M-3150	307
1M-3151	307
1M-4543	394
1M-6119	127
1M-6120	127
1M-6718	587
1M-8651	307
1N-4403	85
1N-5999	20
	426
	428
1N-6002	581
1P-0436	112
1P-0561	326
1P-0562	320
1P-2378	688
	695
1P-2636	296
1P-2662	296
1P-2807	760
1P-3700	487
1P-3705	453
1P-4278	394
1P-4577	70
1P-4582	94
1P-5274	317
1P-6356	682
1P-7297	74
	83
1P-7834	352
1P-7835	352
1P-7895	284
1P-7896	284
1P-7919	101
1P-8362	466
1P-8594	265
1P-8654	297
1P-9216	307
1P-9252	307
1P-9261	296
1P-9328	394
1P-9685	322
1R-0716	56
1R-0762	98
1R-0773	70
1R-0774	488
1S-0994	249
	258
	441
	456
1S-0996	241
1S-1015	249
1S-1636	324
1S-1638	324
1S-2121	324
1S-2342	236
1S-4295	92
1S-7251	240
	248
	249
	254
1S-7252	248
	249
	254
1S-8947	610
1S-9292	297
1S-9593	134
	328
	404
	588
1T-0068	296
1T-0414	307
1T-0416	278
	322
	324
	326
1U-2761	274
1U-8846	31
1V-6341	268
1V-6688	249

► **PRIMARY REFERENCE**

PART NUMBER INDEX

Part	Page
1V-8230	38
1W-0428	8
1W-3306	706
	708
1Y-7927	660
2	
2A-1538	594
	600
2A-3211	583
	586
2A-3348	32
2A-3398	285
	355
2A-3746	306
2A-4429	25
2A-6684	664
2A-6908	620
2A-6926	750
	752
2A-6928	750
	752
2A-6929	750
	752
2A-6985	▶698
	716
2A-7090	274
2A-7184	620
2B-0858	322
2B-0941	440
2B-0947	411
	439
2B-1015	600
2B-2254	307
2B-2695	8
	720
	722
2B-7410	436
2B-9373	312
2D-0193	384
2D-2443	335
	337
	338
	339
	340
	341
	342
	343
	344
	345
	346
	347
	348
	350
2D-2507	335
	337
	338
	339
	340
	341
	342
	343
	344
	345
	346
	347
	348
	350
2D-2508	335
	337
	338
	339
	340
	341
	342
	343
	344
	345
	346
	347
	348
	350
2D-2509	335
	337
	338
	339
	340
	341
	342
	343
	344
	345
	346
	347
	348
	350
2D-4202	488
2D-6006	397
2D-6235	642
	644
	660
2D-6507	382
2D-6516	294
2D-6533	436
2D-6642	44
	284
2D-8009	312
	436
2D-9454	285
2D-9455	285
2F-7306	701
2G-0339	436
2G-0478	437
2G-0617	172
	176
	180
	184
2G-0659	176
2G-0988	172
	176
	180
	184
2G-1034	394
2G-2945	592
2G-2946	592
2G-3765	384
2G-3868	352
2G-3983	600
2G-5667	352
	413
2G-5668	352
2G-5669	352
2G-6285	397
2G-6339	382
2G-6595	335
	337
	338
	339
	340
	341
	342
	343
	344
	345
	346
	347
	348
	350
2G-6664	656
2G-6740	492
	496
	498
	500
	506
	508
2G-6747	492
	494
	496
	498
	500
	504
	506
	508
2G-6748	492
	494
	496
	498
	500
	504
	506
	508
2G-6749	492
	494
	496
	498
	500
	504
	506
	508
2G-6751	492
	494
	496
	498
	500
	504
	506
	508
2G-6752	492
	494
	496
	498
	500
	504
2G-6754	498
	500
2G-6755	492
	494
	496
	498
	500
	504
	506
	508
2G-6756	492
	494
	496
	498
	500
	504
	506
	508
2G-6757	492
	494
	496
	498
	500
	504
	506
	508
2G-7097	698
2G-7098	698
2G-7106	353
2G-7107	500
	508
2G-7108	500
	508
2G-7414	284
2G-7759	284
2G-8234	600
2G-8237	600
2G-8241	688
	695
2G-8242	688
2G-8572	620
	670
	674
	680
	688
2G-8573	620
	670
	674
	680
	688
2G-8607	353
2G-8611	413
2G-8615	353
2G-8623	352
2G-8626	353
2G-8635	352
	430
2G-8738	353
2G-8741	352
2G-8742	352
2G-8766	352
2G-8767	664
	670

▶ **PRIMARY REFERENCE**

PART NUMBER INDEX

Part	Page	Part	Page	Part	Page	Part	Page
	674		418		586	2P-7034	296
	680		420	2P-2975	250	2P-7035	296
2G-8777	352		424	2P-4304	52	2P-7044	278
2G-9042	594		430		56	2P-7045	278
2G-9101	408	2K-6921	307	2P-4339	610	2P-7069	302
	410	2K-7979	620		652	2P-9186	324
2G-9106	408	2K-8199	434	2P-4363	306	2P-9858	274
	410		524	2P-4372	324	2R-0098	382
2G-9792	314		526	2P-4396	324	2R-0694	397
2G-9794	314		528	2P-4397	324	2R-0719	397
2G-9796	314		530	2P-4423	296	2R-0724	397
2H-3740	352		532	2P-4426	306	2R-1922	730
2H-3920	223		534	2P-4429	306	2R-6806	110
	226		536	2P-4431	306	2S-0115	288
	754		538	2P-4433	306		294
	756		540	2P-4435	306		382
2H-3922	218		542	2P-4468	296	2S-0607	308
	250		544	2P-4484	326	2S-1413	320
	706		546	2P-4486	324	2S-1914	284
2H-3925	101		548		326	2S-2053	8
2H-3928	487		550	2P-4498	324	2S-4078	452
2H-3931	436		552	2P-4500	324		522
2H-3932	278		554	2P-4501	324	2S-5100	488
	297		556		326	2S-5658	28
	326		558	2P-4502	324		74
2H-3934	6		560	2P-4504	326		284
2H-3940	393		562	2P-4506	326		466
	394		564	2P-4507	326	2S-6403	382
2H-5549	32		566	2P-4510	307	2S-8439	292
2H-6265	318		568	2P-4511	307		600
2H-9889	441		570	2P-4522	306	2U-9766	450
	445		572	2P-4523	306	2V-0099	610
2J-0157	278	2L-0273	248	2P-4529	322		652
2J-3505	294		254	2P-4534	297	2V-3216	246
	352	2L-3331	388	2P-4542	306		263
	594	2L-8050	248	2P-4548	▶317	2V-4868	93
2J-3506	598	2L-8058	248		320	2V-8259	258
	600	2M-0849	47	2P-4549	278	2W-5540	82
2J-3507	352		94	2P-5677	320	2Y-5429	249
	596		296	2P-5694	306		
	600		307	2P-5700	322		
2J-6089	583		592	2P-5701	322	**3**	
	586		600	2P-5719	265		
2J-6356	292	2M-1168	326	2P-5720	265	3B-0623	20
2J-7761	488	2M-1656	320	2P-5721	265		22
2K-0703	604	2M-1908	388	2P-5771	312		42
2K-4096	422	2M-5407	290	2P-5780	265		52
2K-4309	604	2M-7077	232	2P-5800	▶306	3B-1915	307
2K-4310	604	2M-7819	660		315	3B-4501	611
2K-4315	604	2M-9780	314	2P-5803	322	3B-4505	6
2K-4507	422		434	2P-5814	▶322	3B-4506	278
2K-4973	488		440		330		320
	614		459	2P-5816	▶324	3B-4510	466
	615		460		330	3B-4607	397
	720		522	2P-5820	297		620
	722	2N-0475	280	2P-5860	307	3B-4610	397
	734	2N-0931	297	2P-6578	101		488
	736	2N-3253	284	2P-6897	265	3B-4615	114
2K-5830	620	2N-3254	284	2P-6898	265		119
2K-5986	306	2N-3479	404	2P-6899	▶265	3B-4617	384
	356	2N-7609	297		296	3B-4628	441
2K-6061	614	2N-9421	96	2P-6928	265	3B-4629	352
	615	2P-1097	306	2P-6929	265		412
2K-6830	414	2P-1098	306	2P-7032	296	3B-4647	411
	416	2P-1279	583	2P-7033	296	3B-5301	246

▶ **PRIMARY REFERENCE**

PART NUMBER INDEX

Part	Page
3B-5320	592
3B-5325	606
3B-6553	297
3B-6769	370
3B-7721	388
3B-7733	370
3B-8485	408
	410
3B-8489	352
	370
	413
	594
	604
3B-8822	384
3C-1884	749
3C-6969	260
3D-2824	38
	64
	70
	101
	282
	292
	440
	441
	444
	445
	448
	450
	452
	453
	460
	480
	522
3D-2975	660
3D-2992	268
	274
3D-4004	268
	274
3D-4245	324
	326
3D-5279	246
	394
3D-6509	288
3D-7587	394
	658
3D-8241	285
3D-8242	284
3D-8422	296
3D-8439	284
	355
3D-8747	642
	644
3D-8748	642
	644
3D-8749	642
	644
3D-8752	642
	644
3D-8913	394
3D-8938	384
3D-8942	384
3D-9125	296
3D-9126	296
3D-9253	730
3E-0109	162
	164
	170
	188
	226
	228
	230
	258
	260
	261
	680
	690
	692
3E-0154	254
3E-0155	▶223
	758
3E-0400	610
	652
3E-1129	763
3E-1130	764
3E-1131	764
3E-2026	236
3E-2310	450
3E-3365	123
	158
	199
	212
	224
	240
	328
	588
	611
	642
	652
	658
	682
	690
	692
	738
3E-3368	203
	204
3E-3371	143
	156
	157
	166
	202
	240
	254
3E-3377	201
	240
	241
3E-3383	148
	150
	152
	154
	696
	697
	749
	750
	752
3E-3389	223
	226
	754
	756
3E-3584	590
3E-3636	240
3E-3890	610
	652
3E-4039	14
3E-4048	698
	700
3E-4051	682
3E-4057	682
3E-4302	480
3E-4335	701
3E-4336	701
3E-4352	20
	50
	58
	61
	72
	280
3E-4353	8
	126
	232
3E-4356	66
	80
3E-4362	701
3E-5169	241
3E-5180	134
3E-5239	162
	164
	212
	248
3E-5458	124
3E-5464	610
3E-6328	▶123
	258
3E-6332	212
3E-6388	749
	750
	752
3E-6389	▶143
	226
3E-6450	254
3E-6477	260
3E-6575	701
3E-6754	254
3E-7417	480
3E-7448	232
3E-7775	216
3E-7842	254
3E-7996	258
3E-8016	32
	38
	61
3E-8017	88
	92
3E-8020	706
	708
3E-8043	620
3E-8320	248
3E-8646	137
3E-8763	225
	260
3E-8764	177
	180
3E-8765	254
3E-8766	170
	188
	228
	230
	690
	692
3E-8768	214
3E-8770	164
3E-8772	168
	172
	176
	180
	184
	220
3E-8776	214
3E-8782	170
	188
	228
	230
3E-8783	260
3E-8812	225
3E-8814	177
	180
3E-8815	168
3E-8816	254
3E-8817	258
3E-8821	646
	647
3E-8822	142
	194
	196
3E-8825	142
	162
	164
	168
	170
	172
	176
	177
	180
	184
	188
	194
	196
	214
	220
	225
	228
	230
	254
	258
	260
	646
	647
	690
	692
3E-8860	258
3E-9323	260
3E-9324	260
3E-9326	172
	176
	180
	184
	220
3E-9330	646
	647
3E-9413	704
	705

▶ **PRIMARY REFERENCE**

PART NUMBER INDEX

Part	Page	Part	Page	Part	Page	Part	Page
3E-9763	176		585	3K-0835	706	3P-2852	296
3E-9865	620		586		708	3P-2854	297
3F-0379	216		587	3K-2559	296	3P-2855	296
3F-1523	284	3J-2333	436	3K-2889	371	3P-2856	296
3F-1547	488	3J-4818	736		602	3P-2865	297
3F-3442	307	3J-5390	378		604	3P-2870	330
3F-5535	761		382	3K-4897	297	3P-3251	297
3F-5920	284	3J-6956	330		702	3P-3252	297
3F-7514	620	3J-7354	42	3K-6060	388	3P-3287	296
3F-9556	492		56		620	3P-3424	297
	494		70	3K-6113	264	3P-3425	297
	496		272	3K-6454	368	3P-3426	297
	498		450	3K-8106	129	3P-3440	296
	500		452		130	3P-3839	364
	504		460		249		366
	506		462	3K-8280	268	3P-4362	318
	508		522		388	3P-5639	282
3G-0361	488		576	3K-8460	31	3P-5640	282
3G-1701	658		582	3K-8510	604	3P-5955	307
3G-2580	604	3K-0360	42	3K-9520	172	3P-6669	326
3G-2582	604		102		176	3P-6880	306
3G-3265	670		254		180	3P-6881	326
	674		296		184	3P-7009	297
	680		314	3L-8187	260	3P-7019	297
3G-3498	488		318	3L-8855	56	3P-7041	307
3G-3726	580		440	3N-9371	274	3P-7042	307
3G-6659	370		441	3P-0208	330	3P-7160	297
3G-6891	478		444	3P-0229	265	3P-7685	317
3G-6906	478		445	3P-0322	296	3P-7686	317
3G-6907	478		450	3P-0647	58	3P-7834	326
3G-7444	581		453	3P-0800	307	3P-8006	317
3G-7875	730		456	3P-0801	307	3P-8042	326
3G-8175	588		458	3P-0814	307	3P-8067	318
3G-8592	581		460	3P-0815	307	3P-9498	522
3H-0107	278		462	3P-0817	307	3P-9554	166
	296		482	3P-0860	307		690
3H-0976	32		522	3P-0862	306		692
3H-1118	326		524	3P-0864	330	3P-9847	74
3H-1156	317		526	3P-0866	330	3P-9900	356
3H-1461	320		528	3P-0867	330	3S-0004	312
3H-2900	611		530	3P-0884	302	3S-0036	307
	653		532	3P-0887	292	3S-1349	439
3H-7654	32		534	3P-0888	306	3S-2093	137
3J-1907	41		536	3P-0894	307		162
	42		538	3P-0895	306		164
	70		540	3P-0896	306		170
	89		542	3P-0898	307		172
	102		544	3P-1600	306		176
	108		546	3P-1601	307		180
	110		548	3P-1603	306		184
	272		550	3P-1609	306		188
	278		552	3P-1626	307		191
	292		554	3P-1651	307		194
	296		556	3P-1652	306		196
	320		558	3P-1656	296		212
	450		560	3P-1666	306		226
	452		562	3P-1691	307		228
	453		564	3P-1798	324		230
	460		566	3P-1896	52		232
	462		568	3P-2373	306		236
	522		570	3P-2672	307		240
	574		572	3P-2692	307		244
	580		579	3P-2706	322		246
	583		581	3P-2777	278		248
	584		582	3P-2781	278		254

► **PRIMARY REFERENCE**

PART NUMBER INDEX

Part	Page
	258
	260
	377
	388
	404
	445
	462
	610
	652
	664
	682
	690
	692
	730
	740
3S-2708	306
3S-2713	388
3S-6050	249
3S-6605	44
3S-7023	414
	416
	418
	420
	430
3S-7781	297
3S-8029	308
3S-8652	292
3S-8665	102
3S-9643	67
3S-9949	326
3S-9951	326
3T-0049	54
3T-0688	292
3T-2542	326
3T-2543	326
3T-2662	129
	130
	176
3T-3197	610
3T-3198	610
3T-3422	216
3T-3434	216
3T-4965	444
3T-6354	124
3T-6774	642
	644
3T-7059	749
3T-7086	749
3T-8236	522
3V-0409	393
3V-3816	742
3V-4694	680
3V-5305	596
3V-9244	700
3W-6485	467
3Y-2806	620

4

Part	Page
4B-0418	58
	102
4B-1281	260
4B-1321	384
4B-2047	124
4B-2049	706
	708
4B-2913	488
4B-3388	658
4B-4043	285
4B-4158	715
4B-4274	249
	260
	404
4B-4279	382
4B-4281	282
4B-4283	750
	752
	754
	756
4B-4314	620
4B-4863	116
	118
	120
	249
4B-4909	356
4B-5059	660
4B-5275	656
4B-6060	389
4B-9782	322
4B-9880	288
	326
4D-0298	418
	426
	428
4D-0577	389
4D-0582	389
4D-1135	396
4D-1138	396
4D-1212	260
4D-1322	330
4D-1326	254
4D-1577	282
	284
4D-2297	570
	580
	583
	584
	585
	586
4D-2560	393
4D-2847	658
4D-3704	288
	297
	352
	413
4D-4064	96
4D-4823	436
4D-4895	268
4D-6419	294
4D-6432	719
	720
	722
4D-6585	384
4D-6589	355
4D-7259	436
4D-7388	236
	740
	742
4D-7678	314
4D-7735	394
	450
4D-7794	172
	176
	180
	191
	212
	225
	236
	241
	249
	254
	258
	274
	370
	490
	682
	730
	742
4D-8148	355
4D-8186	436
4D-8318	594
4D-8948	249
4D-9517	186
4D-9986	524
	526
	528
	530
	532
	534
	536
	538
	540
	542
	544
	546
	548
	550
	552
	554
	556
	558
	560
	562
	564
	566
	568
	570
	572
4E-4454	226
4E-6622	248
4E-9628	448
4F-0411	278
4F-2294	222
	248
4F-4097	480
4F-4879	726
	727
	728
	736
4F-5695	19
4F-7952	54
	282
	284
	297
	302
	308
4F-8946	282
	284
	308
4F-9029	296
4F-9653	296
4G-4972	20
4H-2558	212
	249
4H-5440	297
4H-6147	404
	658
4H-6996	436
4J-0520	70
4J-0521	453
	581
4J-0527	94
4J-2667	268
4J-3914	389
4J-3915	630
	636
4J-3957	396
4J-4630	422
4J-5468	444
4J-5477	86
	272
	450
	452
	453
	460
	462
	522
4J-7533	434
	510
	511
	512
	513
	514
	515
	516
	517
	518
	519
	520
	522
	524
	526
	528
	530
	532
	534
	536
	538
	540
	542
	544
	546
	548
	550
	552
	554
	556
	558

► **PRIMARY REFERENCE**

PART NUMBER INDEX

Part	Page	Part	Page	Part	Page	Part	Page
	560		668	4V-3044	368		653
	562	4M-5282	274	4V-7875	660		740
	564	4M-5893	297	4V-7884	734	5C-7261	166
	566	4M-6921	488		736		168
	568	4M-9592	307	4V-8116	246		172
	570	4N-1059	200	4V-8556	736		176
	572	4N-2514	29	4V-8577	734		180
4J-8524	396	4N-2927	660	4V-9803	373		186
4J-8527	396	4N-5091	398	4V-9804	373		192
4J-8922	268		400	4V-9809	373		246
	389	4P-0659	90	4W-1413	761	5C-7423	750
4J-9225	426	4P-1650	14	4W-4076	74		752
	428	4P-3966	6	4W-7356	468	5C-8312	226
4J-9964	487	4P-3977	6	4W-9977	93		260
4K-0149	265	4P-4369	88				620
4K-0367	74	4P-5524	85			5C-9553	116
	282	4P-5918	232	**5**			120
	284	4P-6587	14				244
	384	4P-7581	258	5B-2301	441		249
	437	4P-8134	232		445		260
	698		236	5B-5473	600		448
	700	4P-8279	88	5B-8978	460		718
4K-1388	297	4P-8280	88	5B-9079	584		749
	522	4P-8525	111		585	5C-9584	246
4K-1540	384	4P-9485	67	5B-9318	432	5C-9930	246
4K-3004	604	4P-9537	263		434	5C-9931	246
4K-3128	422	4P-9942	82		524	5D-0269	706
4K-5824	59	4P-9943	82		526		708
4K-8864	232	4S-1962	682		528		730
	236	4S-4455	462		530	5D-0353	294
4K-9097	720	4S-5719	236		532		352
	722	4S-5824	264		534	5D-0470	384
4K-9841	12		296		536	5D-0764	304
4L-5966	610	4S-5845	330		538	5D-0765	304
	652	4S-5982	320		540	5D-0768	397
4L-6454	172	4S-7560	394		542	5D-0863	384
	180	4S-7606	384		544	5D-1026	74
	184		394		546		83
	236	4S-8287	701		548		686
	249	4S-8537	306		550	5D-1183	352
	268	4S-8598	297		552		382
	274	4S-8603	297		554	5D-1911	488
	359	4S-8670	306		556	5D-2643	594
	364	4S-9191	84		558	5D-2645	440
	366	4T-1700	582		560		444
	389	4T-1860	522		562	5D-3636	397
	404		▶587		564	5D-4281	594
	658	4T-2069	297		566	5D-4382	384
	740	4T-2236	598		568		▶396
4L-6459	225	4T-4509	582		570	5D-4661	36
	236	4T-4935	522		572	5D-4822	660
	498		▶579	5C-2890	166	5D-5716	384
	508	4T-4942	579		172	5D-6993	656
4L-9337	236	4T-5070	587		176	5D-6994	656
4M-0061	384	4T-5071	587		180	5D-6996	656
	404	4T-5074	582		184	5D-6997	656
	644	4T-5613	418		193	5D-6998	▶656
4M-0189	296	4T-6511	599		220		658
4M-1552	284	4T-6907	426		244	5D-7778	396
4M-1641	307		428		246	5D-9344	31
4M-1831	216	4T-7520	274		254	5F-1648	686
4M-2381	324	4T-7571	579		260	5F-3715	592
4M-3915	306	4T-8317	599		389	5F-4250	306
4M-5281	364	4T-9336	581		611	5F-5434	380
	366	4T-9337	581		639		394

▶ **PRIMARY REFERENCE**

PART NUMBER INDEX

Part	Page	Part	Page	Part	Page	Part	Page
5F-6044	278	5K-9238	388		112		500
5F-6199	307	5L-1100	478		158		504
5F-6562	284	5L-2952	54		263		506
5F-8000	302	5L-4507	249		642		508
5F-8933	598	5L-4758	610		644	5P-1175	760
5F-9144	478	5L-7200	172		749	5P-1291	114
	610		176	5P-0597	290		119
5H-1504	408		180	5P-0599	444		452
5H-2767	302		184	5P-0747	240	5P-1293	94
5H-3473	459		220		248	5P-1295	452
5H-4778	384	5M-2055	306		249	5P-1465	394
	394	5M-2057	522		254	5P-1895	466
	404	5M-2504	324	5P-0761	127	5P-2228	372
5H-4783	384	5M-2894	70		248		409
5H-5672	600		90		254		604
5H-8038	284		278	5P-0767	74	5P-2424	492
5H-8848	296		282		83		494
	453		284		389		496
5H-8936	730		294		686		498
5H-8985	306		296	5P-1064	686		500
	307		302	5P-1075	96		504
5J-1246	487		307		268		506
5J-2974	488		312		274		508
5J-3658	388		436		352	5P-2566	366
5J-4771	598	5M-3062	138		359		378
5J-4857	240		172		364		487
	581		176		366	5P-2618	120
5J-5402	414		180		384	5P-2817	86
	416		184		389	5P-3236	652
	418		191		441	5P-3418	124
	420		225		492	5P-3419	124
	424		236		494	5P-3454	248
	430		241		496	5P-3456	108
5J-5731	422		254		498	5P-3903	581
5J-7010	426		258		500	5P-3999	761
	428		359		504	5P-4000	763
5J-7333	596		399		506	5P-4001	763
5J-9631	581		404		508	5P-4003	764
5K-2408	384		450		611	5P-4077	761
	404		456		620	5P-4086	764
	658		458		630	5P-4114	761
	730		609		636	5P-4115	37
5K-3489	368		630		653		232
5K-3490	368		636		682		275
5K-3491	368		682		688		364
5K-3492	368		686		732		366
5K-3494	368		734		734		668
5K-3495	368		740		759		670
5K-3496	368		759	5P-1076	64		674
5K-3499	368	5M-3492	320		80		740
5K-3501	368		324		96		750
5K-3502	368	5M-5018	306		114		752
5K-3929	368	5M-6213	384		119		754
5K-5068	86	5M-6214	326		246		756
5K-5129	436	5M-6687	240		356	5P-4116	56
5K-5922	377	5M-7087	56		360		102
5K-7143	436	5M-7878	307		372		241
5K-7577	706	5M-7937	306		373		280
5K-7748	604	5M-8009	324		375		404
5K-8451	404	5M-8500	620		398	5P-4118	763
5K-9090	70	5M-9548	320		400	5P-4119	763
	452	5M-9695	744		492	5P-4120	764
	453		745		494	5P-4121	764
5K-9107	284	5P-0537	32		496	5P-4401	378
	488		46		498	5P-4424	378

► **PRIMARY REFERENCE**

PART NUMBER INDEX

Part	Page
5P-4426	378
5P-4478	404
5P-4868	452
5P-4961	102
5P-5454	670
	674
5P-5627	744
	745
5P-5637	611
	621
	653
5P-5639	621
5P-5675	248
5P-5677	224
5P-5678	37
	626
5P-5680	710
	712
5P-5768	628
	704
	705
	717
5P-5824	670
	674
5P-5908	611
	653
5P-5923	356
5P-5924	274
5P-5969	467
	630
	636
	668
	671
	675
	743
5P-6129	611
5P-6412	94
5P-6459	170
	188
5P-6652	362
	594
5P-6712	382
5P-6882	668
5P-6944	450
5P-7162	744
	745
5P-7213	439
5P-7602	306
5P-7701	31
	56
5P-7704	268
5P-7803	610
	652
	670
	674
	680
	732
5P-7813	20
5P-7814	31
5P-7854	54
	441
	445
	450
5P-7970	14
	59
	94
	280
5P-7981	272
5P-8066	59
5P-8068	61
5P-8167	186
	241
	359
	453
	620
	736
	742
5P-8197	715
5P-8211	38
5P-8245	8
	10
	31
	35
	38
	64
	94
	280
	284
	297
	302
	314
	368
	413
	436
	468
	474
5P-8247	18
	26
	29
	275
	368
	384
	437
5P-8248	3
	407
	594
	600
5P-8249	408
	410
	411
	436
	594
5P-8250	3
	600
5P-8282	264
5P-8347	76
	131
5P-8394	176
5P-8439	114
	119
	188
5P-8445	660
5P-8500	490
	624
	715
	759
5P-8502	490
	624
	715
	759
5P-8525	142
	170
	194
	196
	647
	664
5P-8843	352
	413
5P-8847	352
5P-8874	460
5P-8890	352
5P-9085	364
	366
5P-9135	611
	652
5P-9209	96
5P-9262	576
5P-9297	110
5P-9299	394
5P-9617	42
	70
	462
5P-9810	440
	444
5R-7137	10
5S-0003	8
	658
5S-4246	258
5S-7349	124
	216
5S-7379	172
	180
	184
	352
	436
	441
	445
	450
	462
	620
	688
5S-7382	70
	96
5S-7383	268
	459
	614
	615
	620
5S-7906	322
	324
	326
5S-9134	14
5T-0908	352
5T-1740	2
	▶436
5T-1958	710
5T-1959	712
5T-1964	710
	712
5T-1969	710
5T-1972	710
	712
5T-2333	592
5T-2354	592
5T-3093	743
5T-3144	710
5T-3145	712
5T-3146	710
5T-3147	712
5T-4030	658
5T-4330	761
5T-7127	294
5T-7131	294
5T-7158	2
	▶294
5T-7486	626
	628
	632
	634
5T-8058	436
5T-8059	436
5T-8060	436
5T-8285	384
	404
5T-8365	592
5T-8417	411
5T-9313	172
	180
5T-9686	440
5V-0354	592
5V-0770	660
5V-1474	660
5V-1497	734
5V-1498	614
	615
5V-1628	348
5Y-0254	472
	6
6A-5591	280
6A-9718	749
6B-0933	492
	494
	496
	498
	500
	504
	506
	508
6B-4540	258
6B-5072	314
6B-5262	285
6B-6683	384
6B-6684	64
	468
6C-0109	246
6C-0110	246
6C-2791	342
6C-5233	246
6C-5234	246
6C-7368	341
6C-8882	342
6D-0692	307
6D-1004	110
6D-1432	384
6D-1641	445
	458
	686

▶ **PRIMARY REFERENCE**

PART NUMBER INDEX

Part	Page
6D-3479	102
	249
6D-4161	658
6D-4244	8
	241
	260
	441
	445
	462
6D-4246	102
	236
	241
6D-4247	456
6D-6581	626
	628
	632
	634
6D-7146	60
	474
6D-9157	466
6E-0775	418
6E-1043	416
6E-1046	420
6E-1047	424
6E-1049	418
6E-1050	414
6E-1835	579
6E-1923	522
6E-1924	522
6E-1925	522
6E-1926	452
6E-2314	422
6E-3007	524
	526
	528
	530
	532
	534
	536
	538
	540
	542
	544
	546
	548
	550
	552
	554
	556
	558
	560
	562
	564
	566
	568
	570
	572
6E-3013	524
	526
	528
	530
	532
	534
	536
	538
6E-3019	524
	526
	528
	530
	532
	534
	536
	538
	540
	542
	544
	546
	548
	550
	552
	554
	556
	558
	560
	562
	564
	566
	568
	570
	572
6E-3028	512
	517
	519
	▶524
6E-3029	512
	517
	519
	▶526
6E-3030	512
	517
	519
	▶528
6E-3034	516
	520
	▶530
6E-3035	516
	520
	▶532
6E-3036	516
	520
	▶534
6E-3043	542
	552
6E-3044	524
	526
	528
	532
	538
	546
	548
	550
6E-3058	534
	540
6E-3268	576
6E-3269	576
6E-3272	576
6E-3273	576
6E-3274	576
6E-3275	576
6E-3276	576
6E-4213	480
6E-4214	480
6E-4215	480
6E-4216	480
	▶484
6E-4217	484
6E-4218	484
6E-4219	484
6E-4224	480
6E-4225	480
6E-4227	480
6E-4228	574
6E-4230	574
6E-4234	480
6E-4236	480
6E-4237	480
6E-4239	574
6E-4502	524
	526
	528
	530
	532
	534
	536
	538
	540
	542
	544
	546
	548
	550
	552
	554
	556
	558
6E-4599	530
	536
	544
	554
	556
	558
6E-4703	522
	▶580
6E-4977	430
6E-5047	314
6E-5153	524
	526
	528
	530
	532
	534
	536
	538
	540
	542
	544
	546
	548
	550
	552
6E-5200	582
6E-5884	478
6E-5885	478
6E-5887	478
6E-6140	574
6E-6141	574
6E-6142	574
6E-6419	574
6E-6420	574
6E-6527	576
6E-6528	576
6E-6536	576
6E-6537	576
6E-6538	576
6E-6539	576
6E-6540	576
6F-0253	656
	706
	708
6F-3930	335
	337
	338
	339
	340
	341
	342
	343
	344
	345
	346
	347
	348
	350
6F-6405	56
6F-6673	278
	302

▶ **PRIMARY REFERENCE**

PART NUMBER INDEX

Part	Page	Part	Page	Part	Page	Part	Page
	320	6G-7187	413		610		84
	324	6G-7222	670	6M-7476	8		126
6F-7045	218	6G-8814	620	6N-3826	216	6V-1889	236
	250	6G-8831	690	6N-6033	59		450
6F-7058	412		692	6N-6984	84	6V-2313	96
6G-0174	368		694	6N-8863	38	6V-2315	37
6G-0901	382	6G-9333	290	6N-9828	68	6V-2317	14
6G-1536	436	6H-1717	413	6N-9995	214		56
6G-1539	436	6H-9691	396	6P-0205	607		60
6G-1541	436	6I-0273	85		608		61
6G-1601	266	6I-0274	85		670		68
6G-1602	266	6I-0275	85		674		112
6G-1740	2	6I-1418	131	6P-0856	306		280
	▶266	6I-1638	25	6P-1736	297	6V-2369	248
6G-2395	670	6I-1661	34	6P-2090	292	6V-2480	258
	674	6I-2662	25	6P-3223	326	6V-2610	378
	680	6I-2663	25	6P-3236	610	6V-2686	212
6G-2396	670	6I-7471	80	6P-4700	324		214
	674	6I-8286	296	6P-4917	320	6V-2687	364
	680	6I-9107	302	6P-5096	278		366
6G-2527	377	6I-9108	302	6P-5442	268	6V-2722	128
6G-2751	670	6I-9851	▶302	6P-6641	378		249
	674		315	6S-1061	240		254
6G-2914	620	6J-0488	260	6S-7826	478	6V-2773	626
	670	6J-0499	594	6S-7827	478		628
	674	6J-1536	594	6T-1233	297		632
6G-2959	712	6J-2797	414	6T-1235	297		634
6G-3208	294		416	6T-2770	749	6V-3251	8
6G-3533	600		418	6T-3118	265	6V-3259	660
6G-3535	594		420	6T-3631	240	6V-3265	70
6G-3645	294		424	6T-3632	240		168
6G-4173	594		430	6T-3633	240		237
6G-4319	372	6J-5773	592	6T-3643	249	6V-3342	658
6G-4321	372	6J-6439	579	6T-5345	610	6V-3536	16
6G-4642	594	6J-7929	404		652	6V-3537	34
6G-4643	594	6K-0545	437	6T-6708	610	6V-3538	20
6G-4680	594	6K-0715	602		652		32
6G-4681	594	6K-2643	377	6T-7695	664	6V-3821	76
6G-4703	284	6K-2644	377	6T-9196	296	6V-3822	54
6G-4705	284	6K-3273	670	6V-0292	670		126
6G-4831	592		674		674	6V-3831	56
6G-4832	411		680	6V-0505	649	6V-3834	61
6G-4833	594	6K-6826	388		650	6V-3908	56
6G-4837	594	6K-7917	284		671	6V-3918	72
6G-4896	594	6K-8079	686		675		73
6G-4911	592	6K-8178	249		680		280
6G-4975	2		378	6V-0852	42	6V-3928	670
	▶592		682		70		674
6G-4980	2	6K-8420	101		74		680
	▶594	6K-9632	742		272	6V-3940	32
6G-5538	436	6L-1962	492		450		52
6G-5539	436		494		453		59
6G-5542	437		496		522		78
6G-5543	436		498	6V-0894	96	6V-3965	70
6G-5544	436		500	6V-1228	462		450
6G-5547	436		504	6V-1250	14		452
6G-5979	316		506	6V-1322	254		522
	328		508	6V-1572	106	6V-3966	272
6G-5987	642	6L-2609	54	6V-1573	106	6V-4245	389
	644	6L-4783	324	6V-1581	74	6V-4248	8
6G-6122	436	6L-7751	274	6V-1582	74		618
6G-6264	382	6L-8617	82	6V-1668	611	6V-4283	248
6G-6272	284	6L-8797	480		653	6V-4367	52
6G-6900	3	6M-5062	584	6V-1720	306	6V-4431	307
	▶372		585	6V-1820	14	6V-4589	42

▶ **PRIMARY REFERENCE**

PART NUMBER INDEX

Part	Page
	108
6V-5048	20
	41
	206
	207
	232
6V-5049	42
	205
	232
6V-5063	8
6V-5134	61
6V-5158	630
	636
6V-5163	630
	636
	671
	675
6V-5164	680
6V-5192	38
	484
6V-5215	58
	232
6V-5217	12
	14
	50
6V-5218	56
	59
	108
	280
6V-5219	32
6V-5221	61
	77
6V-5230	38
	522
6V-5556	582
6V-5586	587
6V-5645	226
6V-5686	29
6V-5696	47
	453
	617
6V-5722	434
6V-5782	275
6V-5834	664
6V-5839	8
	10
	14
	26
	54
	56
	58
	88
	89
	110
	232
	282
	618
6V-5842	26
	89
6V-5843	84
6V-5849	754
6V-5853	750
	752
	756
6V-6209	749
6V-6213	749
6V-6214	749
6V-6219	749
6V-6317	54
	110
	232
6V-6578	226
6V-6609	8
	211
6V-6888	749
	750
	752
6V-6889	749
	750
	752
6V-6893	241
6V-6923	122
6V-6959	116
	118
	120
6V-7350	77
6V-7604	22
6V-7636	626
	628
	632
	634
6V-7687	64
6V-7692	406
6V-7728	611
	653
6V-7742	8
6V-7744	690
	692
	694
6V-7981	89
	232
6V-8004	10
6V-8149	10
6V-8183	96
	268
	620
6V-8185	260
	275
6V-8186	222
	248
	492
	494
	496
	498
	500
	504
	506
	508
6V-8187	124
	248
	250
	268
	274
6V-8188	216
	366
	492
	494
	496
	498
	500
	504
	506
	508
6V-8189	275
	389
6V-8197	8
	31
	35
	38
6V-8214	232
	263
6V-8225	32
	158
6V-8255	743
6V-8258	750
	754
	756
6V-8259	752
6V-8336	64
6V-8337	480
6V-8352	576
6V-8359	52
6V-8362	610
6V-8369	223
	226
	754
	756
6V-8376	129
	130
	176
	249
	260
6V-8378	216
	254
6V-8385	294
6V-8397	42
	70
	94
	102
	440
	441
	450
	453
	456
6V-8398	102
	440
	441
	444
	445
	458
	459
	460
	462
	522
6V-8554	102
6V-8556	441
	445
	453
6V-8561	102
6V-8624	440
	459
6V-8625	440
	444
	458
	460
	462
6V-8627	450
	453
6V-8628	272
6V-8634	102
	440
6V-8636	70
6V-8637	448
6V-8639	102
	440
	444
	460
	462
6V-8640	460
6V-8641	272
	450
6V-8647	452
	462
	522
6V-8675	474
6V-8676	108
6V-8721	459
6V-8723	102
	440
	456
6V-8724	450
6V-8731	102
6V-8765	474
6V-8777	445
	453
6V-8784	441
6V-8801	86
	90
	96
	137
	172
	180
	184
	198
	225
	226
	236
	241
	254
	260
	268
	275
	297
	389
	404
	441
	445
	459
	611
	653
	732
	740
6V-8837	232
	480
6V-8918	389
6V-8928	670
	674
	680
6V-8941	453
6V-8942	441

► **PRIMARY REFERENCE**

PART NUMBER INDEX

Part	Page	Part	Page	Part	Page	Part	Page
	444	6Y-0359	606		337	7F-9223	356
6V-9002	102	6Y-0576	297		338	7G-1060	240
	440	6Y-0578	306		339	7G-3453	307
	444	6Y-0579	307		340	7G-3454	306
6V-9004	64	6Y-0580	306		341	7G-3455	306
	101	6Y-0583	307		342	7G-3456	307
	453	6Y-1150	296		343	7G-4326	740
6V-9005	56	6Y-1151	296		344	7G-4824	610
6V-9007	440	6Y-1158	296		345		652
	444	6Y-2027	306		346		670
	448	6Y-2932	470		347		674
	452	6Y-2933	470		348		680
6V-9008	56	6Y-2934	470		350		732
6V-9027	280	6Y-2935	470	7D-6294	388	7G-7053	258
6V-9162	70	6Y-4338	597	7D-7026	74	7G-7920	364
6V-9168	456	6Y-4339	597		83		366
6V-9169	458	6Y-5914	307		686	7H-1442	284
6V-9189	170	6Y-7917	382	7D-7233	237	7H-1447	488
	188	6Y-7953	437	7D-7469	335	7H-3641	492
6V-9200	450	6Y-7958	288		339		494
6V-9607	24				340		496
6V-9632	249				341		498
	366	**7**			342		500
	626				343		504
	628	7B-3028	101		344		506
	632		306		345		508
	634	7B-3235	302		346	7I-4696	658
	639	7B-7525	720		347	7I-4698	658
	668		722		348	7I-4699	658
	718	7B-9323	397		349	7I-4720	2
	732	7C-0752	68		350		►406
6V-9746	64	7C-1368	82	7D-7496	362	7I-4756	►476
	70	7C-1445	14	7D-8439	285		486
	101	7C-1583	46	7D-8441	285	7I-4872	401
	440	7C-1728	46	7D-8636	297		►492
	441	7C-1798	44	7D-8857	412	7I-4890	620
	444	7C-1821	61	7D-8859	412	7I-5015	609
	445	7C-1822	61	7D-9212	268		►639
	448	7C-2891	52	7D-9708	384		651
	450	7C-3081	52	7E-3369	38	7I-5405	462
	452	7C-3082	52	7E-4043	20	7J-0204	426
	453	7C-3083	52	7E-5346	112		428
	460	7C-3095	67	7E-5555	72		448
	462	7C-3953	52	7E-6508	263	7J-2604	436
6V-9829	456	7C-3954	52	7E-7912	67	7J-6839	478
6V-9835	453	7C-4354	236	7E-8629	68	7J-8009	478
6V-9837	445		241	7E-8923	6	7J-8611	378
6V-9839	448	7C-4993	112	7E-8925	6		389
6V-9840	453	7C-5736	35	7E-8926	6		394
6V-9844	460	7C-6178	6	7E-8928	6		404
6V-9849	460	7C-6921	58	7E-9578	25		730
	462	7C-7851	30	7F-0192	96	7J-8893	297
6V-9853	70	7C-7852	30	7F-0560	128	7J-8894	297
	448	7C-8292	50	7F-3425	302	7J-9933	524
6V-9874	462	7C-8296	38	7F-4617	456		526
6V-9875	452	7C-8581	25	7F-8267	302		528
6V-9876	453	7C-8851	111		466		530
6W-3004	377	7C-9542	14		478		532
6W-4749	297	7D-0035	294	7F-8268	282		534
6W-4750	297	7D-0215	378		284		536
6W-5698	740	7D-1195	488		290		538
6W-5817	388	7D-1553	94		297		540
6W-9168	602	7D-4903	378		302		542
6Y-0303	307	7D-4922	384		308		544
6Y-0306	307	7D-5252	335	7F-8607	112		546

► **PRIMARY REFERENCE**

PART NUMBER INDEX

Part	Page
	548
	550
	552
	554
	556
	558
	560
	562
	564
	566
	568
	570
	572
	579
7K-1181	74
	83
	184
	225
	236
	240
	364
	366
	462
7K-2135	268
7K-4201	638
7K-4743	248
7K-5448	296
7K-5449	296
7K-8876	480
7K-8877	480
7K-9206	352
7K-9680	377
7L-0811	240
7L-2894	216
7L-6580	72
7L-8316	642
	644
7L-9061	480
7M-0475	382
7M-0706	274
7M-1199	307
7M-1396	320
	324
7M-1397	320
	324
7M-7219	660
7M-7410	389
7N-0296	212
7N-0718	▶218
	250
7N-1639	80
7N-2043	40
7N-2059	212
7N-3718	246
	250
7N-3725	214
7N-5274	249
7N-5352	274
7N-5683	20
7N-5876	258
	697
	706
	708
7N-9801	212
7N-9943	143
7P-7705	592
7S-4607	318
7S-6745	292
7S-9396	86
7T-0020	143
7T-0582	642
	644
7T-1099	610
	652
7T-1961	740
7T-3267	216
7T-3268	216
7T-3271	216
7T-3276	216
7T-3277	216
7T-3278	216
7T-3279	216
7T-3451	216
7T-3454	216
7T-3974	216
7T-4003	646
	647
7T-4532	616
7T-7358	648
7T-8891	740
	742
7T-9302	223
	226
7T-9647	307
7T-9793	610
7U-4898	720
	722
7V-0446	96
	268
	388
7V-5191	660
7V-9275	248
7W-5164	89
7W-5499	8
7W-6390	52
7W-7235	44
7X-0269	201
7X-0289	441
	445
7X-0290	463
7X-0291	268
	500
7X-0325	490
	604
7X-0326	441
7X-0328	366
7X-0332	352
7X-0333	398
	400
7X-0338	602
7X-0343	290
7X-0350	474
7X-0354	698
	700
7X-0358	602
	604
7X-0362	604
7X-0375	698
	700
7X-0407	602
7X-0410	602
7X-0456	614
	615
7X-0492	86
7X-0550	201
7X-0562	216
7X-0591	611
	653
	732
7X-0605	360
7X-0608	198
	254
7X-0620	254
7X-0632	356
7X-0901	94
7X-0909	37
7X-0943	763
7X-0944	763
7X-0945	764
7X-0946	764
7X-1387	114
	119
	614
	615
7X-1804	610
7X-1805	610
7X-1807	610
7X-2049	682
7X-2393	246
7X-2468	263
7X-2533	37
	250
7X-2538	617
7X-2540	434
7X-2543	686
7X-2546	510
	511
	512
	513
	514
	515
	516
	517
	518
	519
	520
7X-2553	80
7X-3182	750
	752
	754
	756
7X-3229	761
7X-3327	290
7X-3373	216
7X-4733	470
7X-4736	384
7X-4776	522
7X-6312	140
7X-6315	132
7X-7644	760
7X-7661	710
	712
7X-7729	68
	80
	82
	84
	86
	90
	356
	389
	617
7X-7731	73
	78
	280
	352
7X-7732	67
7X-7739	736
7X-7877	80
	137
	226
7Y-3058	474
7Y-5226	710
	712
	743
7Y-7388	706
	708
7Y-8169	250
8	
8B-4967	285
8B-9840	602
8C-0569	450
8C-0573	127
8C-0620	268
8C-3085	587
8C-3089	480
8C-3100	78
8C-3309	452
8C-3334	241
8C-3411	416
8C-3425	474
8C-3442	620
8C-3445	56
8C-3446	42
	56
	70
	462
8C-3447	70
8C-3451	463
8C-3655	216
8C-3681	80
8C-4436	201
	372
8C-4586	610
	652
8C-5060	754
8C-5223	610
8C-5230	56
8C-5897	760
8C-5917	127
8C-6162	589
8C-6354	258
8C-6358	128
8C-6738	744
	745
8C-6872	102
8C-6959	103
8C-7508	260

▶ **PRIMARY REFERENCE**

PART NUMBER INDEX

Part	Page
8C-8400	452
8C-8454	630
	636
8C-8902	760
8C-9987	328
	588
8D-1331	353
8D-1429	610
	652
8D-1470	378
8D-1634	382
8D-1636	382
8D-1637	382
8D-1642	382
8D-1643	382
8D-1648	382
8D-1650	344
	346
	349
8D-1651	382
8D-1666	294
8D-1669	294
8D-1671	294
8D-1690	2
	▶382
8D-1761	294
8D-1802	314
8D-1803	294
8D-1817	352
8D-1819	352
8D-1822	352
8D-1858	288
8D-2106	284
8D-2161	294
8D-2243	294
8D-2248	294
8D-2256	294
8D-2258	294
8D-2277	285
8D-2311	294
8D-2423	294
8D-2424	294
8D-3244	600
8D-3245	600
8D-3246	600
8D-3247	600
8D-3251	600
8D-3252	600
8D-3263	600
8D-3264	600
8D-3265	600
8D-3266	600
8D-3267	600
8D-3268	600
8D-3269	600
8D-3271	600
8D-3307	600
8D-3308	600
8D-3309	600
8D-3311	600
8D-3328	600
8D-3329	600
8D-3556	466
8D-3557	466
8D-3564	466
8D-3791	359
8D-3879	288
8D-3912	288
8D-3917	288
8D-3923	288
8D-3937	288
8D-3946	284
8D-3971	288
8D-3972	288
8D-3984	436
8D-3986	436
8D-4038	284
8D-4164	284
8D-4218	284
8D-4219	284
8D-4227	284
8D-4250	288
8D-4278	288
8D-4290	2
	▶284
8D-4300	284
	▶288
8D-4325	288
8D-4522	436
8D-4523	436
8D-4578	439
8D-4675	407
8D-4771	294
8D-4811	594
8D-4812	594
8D-4813	594
8D-4885	2
	▶600
8D-5293	268
	274
8D-5294	268
8D-5295	268
8D-5632	492
	494
	496
	498
	500
	504
	506
	508
8D-5633	492
	494
	496
	498
	500
	504
	506
	508
8D-5634	492
	494
	496
	498
	500
	501
	504
	506
	508
8D-5636	492
	494
	496
	498
	500
	504
	506
	508
8D-5637	492
	494
	496
	498
	500
	504
	506
	508
8D-5640	492
	494
	496
	498
	500
	504
	506
	508
8D-5641	246
	275
	492
	494
	496
	498
	500
	504
	506
	508
	620
8D-7026	388
8D-7333	436
8D-7341	436
8D-7343	437
8D-7424	436
8D-7960	620
8D-8024	408
	410
8D-8233	294
8D-8572	359
8D-8586	284
8D-8587	284
8D-8704	407
8D-8706	284
8D-8888	408
8D-8889	408
8D-8931	352
	412
8D-9015	382
8D-9092	441
8D-9333	294
8D-9456	288
8D-9457	288
8D-9459	288
8D-9507	600
8D-9969	268
8D-9973	268
8D-9974	268
8E-1118	664
8E-1204	296
8E-4129	318
8E-4130	▶318
	330
8E-4131	278
	▶330
8E-4132	▶278
	315
8E-5530	598
8E-5539	459
8E-7791	610
	652
	670
	674
	680
	732
8E-8297	306
8E-8304	306
8E-8307	308
8E-8847	312
8E-8850	312
8E-8904	312
8F-0492	670
	674
	680
8F-1434	124
	216
	254
	706
	708
8F-1462	701
8F-5340	478
8F-6437	492
	494
	496
	498
	500
	504
	506
	508
8F-6711	264
8F-8733	352
8F-9836	682
8H-1141	216
8H-1728	688
8H-5244	322
	324
	326
8H-5303	218
	250
8H-5306	218
	250
8H-8830	306
8H-9208	297
8H-9788	59
8H-9789	32
8I-1362	378
8J-0112	426
	428
8J-1256	232
	260
8J-2189	604
	▶606
8J-2190	606
8J-2331	487
8J-4351	61
8J-5050	604
8J-5274	603
	▶604

▶ **PRIMARY REFERENCE**

PART NUMBER INDEX

Part	Page	Part	Page	Part	Page	Part	Page
8J-5654	416		546	8T-0276	59	8T-2561	620
8J-5778	353		548		108	8T-2901	740
8J-6273	468		550		131	8T-3282	8
8J-6815	522		552	8T-0281	30		426
8J-9092	602		554	8T-0285	136		428
8J-9607	604		556		138	8T-3426	671
8J-9608	602		558	8T-0292	67		675
	604		560	8T-0293	250		680
8K-0530	362		562	8T-0328	96	8T-3490	14
8K-0968	120		564		124		54
8K-8467	377		566		216		56
8K-8468	377		568		710		86
8L-2777	44		570		712		166
8L-2786	31		572		743		246
	52	8M-4438	272	8T-0335	743		249
	59	8M-6521	297	8T-0336	436		610
	210	8M-7065	8	8T-0343	32		626
8L-5008	393	8M-8489	312	8T-0352	710		628
8L-5517	352		318		712		632
8L-6005	388		326		743		634
8L-6521	260		330	8T-0358	26		652
8L-6557	8	8N-0869	248	8T-0384	44		732
8L-7905	620		249	8T-0389	127	8T-3518	128
8L-8413	660		254		148	8T-3519	128
	736	8N-1546	248		150	8T-3647	214
8L-8598	508	8N-1548	248		152	8T-3957	453
8M-0505	59	8N-1725	248		154	8T-4009	603
8M-0903	297	8N-2694	86		356		▶760
8M-2537	320	8N-4617	85	8T-0640	46	8T-4121	10
8M-2769	74	8N-6854	38		112		56
	236	8N-7257	83	8T-0642	232		64
8M-2770	8	8N-9071	74	8T-0643	10		70
	80	8P-0492	296		126		74
	184	8P-1096	326	8T-0646	453		80
	186	8P-1098	326	8T-0785	414		90
	232	8P-1100	▶326		416		94
	250		330		420		96
	258	8P-1257	302		422		103
	290	8P-1656	306		424		106
	682	8P-2893	320	8T-0788	70		108
8M-2771	232	8P-5141	610	8T-1159	110		126
8M-2772	241		652	8T-1174	620		127
	250	8R-1778	648	8T-1191	624		137
8M-2773	94	8R-3393	682		761		142
	108	8R-4145	377	8T-1192	763		166
	184	8S-2332	200	8T-1193	763		168
	241	8S-2634	250	8T-1194	764		172
	450	8S-3426	307	8T-1195	764		176
	453	8S-6109	682	8T-1363	377		180
	609	8S-6110	682		761		192
8M-3175	522	8S-7566	638	8T-1683	441		194
8M-3267	736	8S-7803	660		456		196
8M-3837	355	8S-9075	382	8T-1686	444		212
8M-4389	278	8S-9076	382		458		214
8M-4437	524	8S-9093	3	8T-1687	441		236
	526	8S-9129	297		445		241
	528	8S-9130	297	8T-1698	470		244
	530	8S-9191	312	8T-1715	462		246
	532	8T-0075	102	8T-2275	488		250
	534	8T-0076	102	8T-2501	136		254
	536	8T-0100	20		272		258
	538		50		441		290
	540	8T-0122	90		736		360
	542	8T-0249	460	8T-2502	384		364
	544	8T-0275	50		441		366

▶ **PRIMARY REFERENCE**

PART NUMBER INDEX

Part	Page	Part	Page	Part	Page	Part	Page
	378		176		552		530
	384		180		554		532
	389		192		556		534
	393		194		558		536
	394		196		560		538
	450		241		562		540
	453		246		564		542
	456		250		566		544
	488		254		568		546
	490		356		570		548
	492		360		572		550
	494		389		750		552
	496		492		752		554
	498		494	8T-4139	246		556
	500		496		356		558
	504		498		360		560
	506		500		375		562
	508		504	8T-4140	66		564
	618		506		376		566
	626		508	8T-4171	246		568
	628		617		611		570
	630		618		653		572
	632		692	8T-4173	246	8T-4191	94
	634	8T-4137	70	8T-4179	241		212
	636		74	8T-4181	626		244
	664		103		628		250
	670		137		632		290
	674		166		634		490
	680		212	8T-4182	96		690
	682		214		127		692
	686		236		670	8T-4195	56
	690		241		674		64
	692		250		680		68
	694		254		690		74
8T-4122	246		258		692		86
	268		364		694		90
	290		366	8T-4183	64		106
	474		378		80		237
	698		389		356		268
	700		394	8T-4185	58		356
8T-4128	86		450		241		488
8T-4133	96		626		393		492
	176		628		394		494
	214		632		450		496
	237		634	8T-4186	56		498
	241		664		108		500
	246		686		356		504
	250		690		510		506
	254		694		511		508
	258	8T-4138	56		512		630
	268		389		513		636
	356		524		514		670
	456		526		690		674
	620		528		692		680
	630		530		694		682
	636		532	8T-4189	94	8T-4196	86
	690		534		116		90
	692		536		212		241
	694		538		241	8T-4198	126
8T-4136	80		540		250		244
	82		542		360		246
	96		544		378	8T-4199	384
	142		546		524	8T-4200	290
	168		548		526	8T-4205	124
	172		550		528		180

► **PRIMARY REFERENCE**

PART NUMBER INDEX

Part	Page	Part	Page	Part	Page	Part	Page
	184		528		453	8T-6763	466
	201		530		456	8T-6764	6
	216		532		458	8T-6765	68
	241		534		463		89
	246		536		609	8T-6766	67
	248		538		658	8T-6767	67
	250		540		686		89
	254		542		698		280
	260		544		700	8T-6868	80
	275		546		740	8T-6869	166
	611		548		742		168
	639		550	8T-4908	116		170
	653		552		118		172
8T-4223	64		554		120		176
	66		556	8T-4910	114		180
	80		558		119		186
	94		560	8T-4956	356		188
	176		562		375		192
	241		564		453		542
	246		566	8T-4958	430		552
	250		568	8T-4971	261	8T-6974	394
	290		570	8T-4984	74	8T-7008	441
	360		572		94	8T-7525	482
	366		617		106	8T-7547	103
	373	8T-4226	96		280	8T-7566	275
	375		241	8T-4987	86	8T-7876	480
	378		268	8T-4994	356	8T-7970	452
	398		389		441	8T-8441	480
	400	8T-4244	176	8T-5004	356	8T-8442	576
	409		617	8T-5005	10	8T-8566	216
	441	8T-4647	236		103	8T-8569	216
	453	8T-4648	66		148	8T-8729	143
	487	8T-4778	246		150		202
	490	8T-4835	398		152		212
	617		400		154		588
8T-4224	31	8T-4896	70	8T-5082	462		697
	94		80	8T-5093	290	8T-8737	134
	116		136	8T-5360	719		148
	118		137	8T-5361	602		150
	120		138	8T-5390	96		152
	166		172		268		154
	168		176		389		223
	170		180	8T-5401	670		226
	172		184		674		232
	176		186	8T-5412	176		364
	180		191	8T-5890	456		366
	186		225	8T-6466	56		749
	188		226	8T-6468	314		750
	192		237	8T-6469	294		752
	193		241	8T-6470	382		754
	212		250	8T-6471	382		756
	214		254	8T-6631	611	8T-8748	706
	244		258	8T-6663	70		708
	246		261	8T-6684	70	8T-8919	94
	250		268		452		373
	268		272	8T-6703	94	8T-8987	522
	275		275		114	8T-9006	620
	290		384		119	8T-9023	460
	360		389	8T-6757	67	8T-9043	268
	378		404	8T-6761	38		492
	384		412		280		494
	389		436	8T-6762	6		496
	434		441		41		498
	524		445		67		500
	526		450		78		504

► **PRIMARY REFERENCE**

PART NUMBER INDEX

Part	Page	Part	Page	Part	Page	Part	Page
	506	8W-5956	600	8X-2375	▶704	8X-4317	▶626
	508	8W-5957	600		716		630
8T-9056	389	8W-5962	441	8X-2385	▶705	8X-4318	▶628
8T-9364	241		445		716		630
8T-9471	258	8W-6061	668	8X-2556	750	8X-4413	▶630
	275	8W-6132	94		752		716
8T-9515	78	8W-6179	436	8X-2646	397	8X-4446	632
	482	8W-6429	462	8X-2650	388		634
8T-9530	761	8W-6482	353		▶397	8X-4448	626
8T-9597	482	8W-6484	353	8X-2663	750		628
8T-9598	78	8W-6485	353		752		632
8T-9636	137	8W-6486	353	8X-2680	388		634
8T-9655	131	8W-6493	353	8X-2795	3	8X-4525	▶632
8T-9757	127	8W-6494	353		▶688		636
8T-9834	706	8W-6591	474	8X-2893	620	8X-4526	▶634
	708	8W-6598	474	8X-2913	364		636
8T-9884	216	8W-6626	362		366	8X-4527	▶636
8V-0622	127	8W-7285	352		668		716
8W-0036	440	8W-7386	373	8X-2925	609	8X-4879	274
8W-0206	456	8W-7452	382		▶648	8X-4892	592
8W-0456	498	8W-8088	598		651	8X-4893	592
	500	8W-8346	294	8X-3200	359	8X-4897	592
	508	8W-8347	382	8X-3244	274	8X-4898	592
8W-0791	759	8W-8424	2	8X-3247	274	8X-4900	592
8W-0934	740		▶598	8X-3248	274	8X-5102	639
8W-0935	740	8W-8511	409	8X-3249	274	8X-5123	620
8W-1028	710	8W-8512	409	8X-3252	274	8X-5153	172
8W-1029	712	8W-8513	409	8X-3261	96		176
8W-1614	274	8W-8527	102	8X-3406	274		180
	393		240	8X-3789	620		184
8W-2309	294		388	8X-3805	268		220
8W-3044	440		456	8X-3806	626	8X-5154	172
	444		682		628		176
8W-3045	440	8W-8528	240	8X-3938	626		180
	444		384		628		184
8W-3166	452		393	8X-3951	620		220
8W-3255	2		682	8X-3965	620	8X-5160	384
	▶409	8W-8532	388	8X-3988	268	8X-5280	740
8W-3257	2	8W-8903	388	8X-4028	436	8X-5395	393
	▶411	8W-8909	241	8X-4066	632	8X-5414	670
8W-3258	2		268		634		674
	▶407		275	8X-4144	3		680
8W-3259	2	8W-9601	344		▶494	8X-5425	440
	▶413		346	8X-4146	1	8X-5456	704
8W-3260	2		348		▶362	8X-5489	241
	▶412		349	8X-4243	626	8X-5498	494
8W-3261	2	8X-0674	698		632		504
	▶408		700	8X-4244	628	8X-5499	492
8W-3262	2	8X-1035	3		634		496
	▶410		▶373	8X-4245	626		498
8W-3902	366	8X-1135	740		628		500
8W-3989	440	8X-1853	136		632		506
8W-3990	440	8X-1904	620		634		508
8W-3991	440	8X-1907	621	8X-4262	626	8X-5536	610
8W-4053	440	8X-1908	620		632		652
8W-4167	592	8X-1911	620	8X-4263	628		732
8W-4342	370	8X-1913	620		634	8X-5538	610
8W-4347	436	8X-1914	620	8X-4276	492		652
8W-4656	352	8X-1915	620		494		732
8W-4657	352	8X-1921	620		496	8X-5540	610
8W-5293	352	8X-2160	620		498		652
8W-5296	352	8X-2161	620		504		732
8W-5520	353	8X-2226	364		506	8X-5561	459
8W-5521	353		668	8X-4277	500	8X-6131	698
8W-5651	397	8X-2228	705		508	8X-6296	172

▶ **PRIMARY REFERENCE**

PART NUMBER INDEX

Part	Page
	173
	176
	177
	180
	184
	220
8X-6328	274
8X-6330	▶596
8X-6419	366
8X-6450	596
8X-6475	364
	366
8X-6618	274
8X-6619	274
8X-6998	670
8X-6999	674
	680
8X-7152	610
8X-7153	610
8X-7277	274
8X-7603	388
8X-7743	740
8X-7845	670
	674
8X-7893	686
8X-7973	452
8X-7974	452
8X-7975	462
8X-8055	668
8X-8096	274
8X-8351	668
8X-8352	274
8X-8353	274
8X-8378	294
8X-8450	389
8X-8451	389
8X-8505	364
	366
8X-8812	452
8X-9313	362
8X-9349	740
8X-9387	658
8X-9405	740
8X-9464	366
8X-9675	714
	▶740
8X-9680	▶742
	748
8X-9884	664
8Y-4194	3
	▶724
8Y-4398	626
	628
	632
	634
8Y-4399	628
	634
8Y-4400	626
	632
8Y-4401	626
	628
	632
	634
8Y-4512	688
8Y-4619	626
	628
	632
	634
8Y-4620	626
	628
	632
	634
8Y-4801	626
	628
	632
	634
8Y-4951	624
	715
	▶725
8Y-5874	▶640
	726
	729
8Y-5877	640
	641
8Y-5891	720
8Y-5903	701
8Y-5928	720
	722
8Y-5929	720
	722
8Y-5932	720
	722
8Y-5936	720
	722
8Y-5937	720
	722
8Y-5938	720
	722
8Y-5943	640
8Y-5944	734
8Y-5947	640
	641
	720
	722
8Y-5957	722
8Y-5959	▶641
	727
8Y-5960	641
8Y-5972	701
8Y-5981	720
	722
8Y-5999	702
8Y-6006	701
8Y-6010	701
8Y-6012	734
8Y-6022	734
8Y-6023	734
8Y-6024	734
8Y-6041	660
8Y-6045	660
8Y-6046	660
8Y-6047	660
8Y-6051	614
	615
	720
	722
8Y-6060	660
8Y-6062	660
8Y-6063	660
8Y-6064	660
8Y-6066	660
8Y-6067	660
8Y-6068	660
8Y-6069	660
8Y-6277	614
	615
8Y-6364	490
	624
	715
	759
8Y-6379	649
	650
8Y-6388	610
	638
	639
	652
8Y-6833	720
	722
8Y-6834	720
	722
8Y-6859	661
8Y-6860	661
8Y-6928	736
8Y-6933	720
	722
8Y-6981	744
	745
8Y-6982	744
	745
9B-0347	398
	400
9B-2596	85
9B-4179	74
9B-7233	129
	130
	172
	176
	177
	180
	184
	220
	250
	260
	610
9B-7237	268
	412
	441
	445
	492
	494
	496
	498
	504
	506
9C-5344	56
	108
9C-5928	690
	692
	694
9D-0088	436
9D-0089	436
9D-0145	268
9D-0498	359
9D-0501	600
9D-0630	94
9D-0673	352
9D-0953	440
	444
9D-0972	384
9D-1324	285
9D-1404	285
9D-1491	436
9D-1584	382
9D-1589	698
	700
9D-1853	284
9D-1854	285
9D-3018	284
9D-3313	600
9D-3333	600
9D-3479	600
9D-3481	348
9D-3527	600
9D-3767	360
	624
	715
9D-4044	284
9D-4075	466
9D-4076	466
9D-5046	466
9D-5047	466
9D-5048	466
9D-5268	466
9D-5269	466
9D-5506	268
9D-5528	466
9D-5715	3
	▶466
9D-6164	172
	180
	184
9D-6584	407
	604
9D-6585	604
9D-6586	408
9D-6588	600
9D-6589	600
9D-6591	359
9D-8121	397
9D-8508	196
9D-8632	384
9D-8799	284
9D-9110	284
9F-1399	296
	466
9F-2247	294
	330
9F-2978	614
	615
9F-5644	218
	250
9F-6580	112
9F-6705	522
9F-8477	306
9G-0003	127
9G-0004	127

9

▶ **PRIMARY REFERENCE**

PART NUMBER INDEX

Part	Page	Part	Page	Part	Page	Part	Page
9G-1950	610		566		56		656
	652		568		59	9S-1366	296
9G-3695	658		570		60		368
	690		572		61		600
	692	9J-1979	488		67	9S-1374	592
9G-4343	248	9J-1985	488		68	9S-2302	124
9G-5127	297	9J-1988	488		73	9S-2390	124
9G-5313	382	9J-2880	604		76	9S-4167	99
9G-8661	59	9J-2881	604		77		108
9G-9154	240	9J-2935	478		78	9S-4180	510
	384	9J-3047	488		108		511
9H-0846	264	9J-3139	606		112		512
	282	9J-4963	470		131		513
9H-1031	352	9J-5442	478		232		514
9H-2910	275	9J-5686	478		280		515
9H-3360	284	9J-8076	478		307		516
	294	9J-8783	268		330		517
9H-3452	307		388		642		518
9H-6454	488	9K-1171	294		644		519
9J-0403	524	9K-1172	294		658		520
	526	9K-4848	274	9M-1986	292		560
	528	9K-7951	335	9M-2092	352		562
	530		337	9M-2421	407		564
	532		338	9M-2904	8		566
	534		339	9M-3786	284		568
	536		340	9M-4007	265	9S-4182	41
	538		341	9M-4289	330		280
	540		342	9M-4313	320	9S-4183	38
	542		343	9M-4355	306		282
	544		344	9M-4594	240		480
	546		345	9M-5590	621		522
	548		346	9M-5733	701	9S-4185	31
	550		347		702		52
	552		348	9M-6166	307		102
	554		350	9M-6803	330		296
	556	9L-0672	317	9M-7394	488	9S-4189	522
	558	9L-1566	236	9M-7958	378	9S-4190	314
	560		240	9M-8406	272	9S-4191	41
	562		248		394		42
	564		254		611		89
	566	9L-2303	274		653		108
	568	9L-6331	236	9M-8662	706		232
	570		258	9N-0869	8		278
	572	9L-6770	124		131		292
9J-0404	524	9L-7469	720	9N-0943	124		296
	526		722	9N-1941	90		320
	528	9L-8781	84	9N-1995	670		574
	530	9M-0164	86		674	9S-4368	307
	532		452	9P-0356	439	9S-7706	388
	534	9M-0853	52	9P-2369	740	9S-8001	434
	536	9M-1853	492	9P-2553	261		522
	538		494	9P-4857	297	9S-8002	20
	540		496	9P-8120	326		522
	542		498	9R-2620	671		576
	544		500		674	9S-8003	522
	546		504	9R-7240	118	9S-8004	108
	548		506	9R-8870	444		292
	550		508	9R-9198	440	9S-8005	320
	552	9M-1974	8	9S-1018	312		482
	554		12	9S-1302	388		524
	556		14	9S-1316	246		526
	558		32	9S-1322	436		528
	560		38	9S-1354	268		530
	562		50		275		532
	564		52		384		534

► **PRIMARY REFERENCE**

PART NUMBER INDEX

Part	Page
	536
	538
	540
	542
	544
	546
	548
	550
	552
	554
	556
	558
	560
	562
	564
	566
	568
	570
	572
	581
9S-8006	42
	434
9S-8008	292
9S-8009	297
	522
9S-8752	282
9S-8892	594
9S-9272	101
9S-9334	31
9T-1013	460
9T-1636	480
9T-1652	480
9T-1699	480
9T-1710	480
9T-1857	574
9T-2186	574
9T-2659	584
	585
9T-2849	426
	428
9T-3050	407
	▶414
9T-3051	414
	416
	420
	424
9T-3055	414
9T-3106	408
	▶416
9T-3109	416
9T-3133	418
9T-3206	411
	▶424
9T-3312	410
	▶420
9T-3315	420
9T-4906	484
9T-5241	644
9T-5603	487
9T-5927	430
9T-5934	522
9T-5935	522
9T-5957	452
	▶522
9T-5977	436
	▶470
9T-6001	732
9T-6129	462
	▶581
9T-6146	460
9T-7308	761
9T-7750	574
9T-8052	470
9T-8053	470
9T-8055	470
9T-8057	470
9T-8058	470
9T-8059	470
9T-8061	470
9T-8062	470
9T-8065	470
9T-8067	470
9T-8069	470
9T-8070	470
9T-8071	460
9T-8445	484
9T-8446	484
9T-8448	484
9T-8450	484
9T-8452	484
9T-8560	478
9T-8943	418
9T-8944	409
	▶418
9T-9071	470
9T-9072	470
9U-0362	462
9U-2277	240
9U-8263	664
9U-8660	297
9U-8661	297
9U-8876	297
9U-9693	478
9V-7447	614
	615
9W-0335	258
9W-0742	▶128
	250
9W-0852	199
	223
	611
	642
	652
	754
	756
9W-1441	226
	609
	651
9W-1442	136
	138
	142
	162
	164
	168
	170
	172
	176
	180
	184
	188
	194
	196
	220
	228
	230
	254
	260
	646
	647
	690
	692
	754
	756
9W-1951	258
9W-1991	237
9W-3073	664
9W-3460	248
9W-6645	436
9W-7215	352
9X-0141	241
9X-0262	232
9X-1046	226
	261
	646
	647
9X-1054	162
	164
	249
9X-1343	236
9X-1768	763
9X-1813	203
	224
	240
9X-2022	46
9X-2027	26
9X-2039	730
9X-2040	611
	653
	732
9X-2041	275
	611
	653
	671
	674
	680
	724
	725
	730
	732
9X-2042	137
	226
	261
	275
	621
	626
	628
	632
	634
9X-2043	162
	164
	170
	172
	177
	180
	184
9X-2045	254
	275
	611
	630
	636
	647
	653
	671
	675
	680
	732
	740
9X-2046	671
	675
	688
	695
9X-2097	14
	52
9X-2126	611
	653
9X-2185	610
	652
9X-2488	610
	652
9X-2492	460
9X-2546	626
	628
	632
	634
9X-2646	68
9X-2647	68
9X-3402	203
9X-3463	144
	145
	146
	166
9X-3465	148
	150
	152
	154
9X-4006	610
9X-4244	148
	150
	152
	154
9X-4493	148
	150

▶ **PRIMARY REFERENCE**

PART NUMBER INDEX

Part	Page
	152
	154
9X-4611	430
9X-4824	216
9X-4986	648
9X-5694	268
9X-6019	744
	745
9X-6395	579
	582
9X-6650	42
9X-7264	422
9X-7378	616
	682
9X-7380	682
9X-7381	611
	682
9X-7382	611
	682
9X-7383	682
9X-7385	616
	682
9X-7547	480
9X-7557	100
9X-7680	574
	576
9X-7849	158
9X-8121	158
9X-8122	648
9X-8139	158
9X-8256	37
	56
	116
	120
	162
	164
	166
	173
	177
	220
	250
	254
	261
	356
	394
	448
	607
	608
	626
	628
	630
	632
	634
	636
	671
	675
	718
9X-8257	376
9X-8267	50
	232
9X-8281	88
9X-8372	761
9X-8399	424
9X-8600	116
	120
9X-8606	388
9X-9365	192
9X-9653	610
9X-9654	610
	652
9X-9688	706
	708
9X-9689	642
	644
9X-9825	254
9X-9865	148
	150
	152
	154
9X-9912	274
9X-9913	274
9Y-0810	16
9Y-0821	16
9Y-1116	8
9Y-1758	50
9Y-1766	82
9Y-1767	82
9Y-3513	78
9Y-3520	30
9Y-4357	50
9Y-4580	37
9Y-5631	10
9Y-7215	50
9Y-8073	▶60
	61
9Y-8075	60
9Y-8076	60
	0
001-7043	8
002-6453	314
002-6454	116
003-9514	74
	80
	83
005-0469	480
005-0471	480
005-0658	8
009-0008	96
009-3681	702
009-4184	658
009-4185	658
021-9791	439
030-0060	284
030-0061	284
030-7947	108
030-8535	284
	294
	306
	620
	698
	700
031-2666	620
031-4155	644
032-3631	8
033-6027	574
033-6033	122
033-6036	480
	574
033-6043	576
033-8248	186
	191
	212
	225
	249
034-1994	620
034-3557	284
036-9823	216
038-3987	698
061-7540	280
061-8561	61
061-9455	14
065-1153	478
068-4860	597
069-5688	632
	634
085-8091	90
	452
	682
086-0507	488
090-8635	8
090-9019	394
091-0081	74
	730
091-9071	658
092-2570	110
092-3200	406
092-9741	176
095-0673	480
095-0705	480
095-0878	660
	720
	722
095-0888	480
095-1314	720
	722
096-0014	44
096-3218	467
096-6166	136
	138
	226
	236
	620
098-1290	274
098-7467	658
099-3047	482
099-3095	468
099-3649	31
	1
100-3224	661
100-3245	148
	150
	152
	154
100-3248	152
	154
100-3249	148
	150
100-3250	148
	150
	152
	154
100-3251	148
	150
	152
	154
100-3253	148
	150
	152
	154
100-3254	148
	150
	152
	154
100-3255	148
	150
	152
	154
100-4318	590
100-5179	661
100-5612	649
	650
100-6021	522
	▶582
100-6531	124
100-8150	25
100-8525	280
100-9992	80
	84
101-0003	734
101-0509	510
	511
	512
	513
	514
	515
	516
	517
	518
	519
	520
101-1147	564
101-1148	524
101-1149	526
101-1150	560
	562
101-1152	556
101-1153	534
101-1154	528
101-1155	530
101-1635	73
101-1970	524
	526
	528
	546
	548
	550
	552
	554
	560
	564
	566
101-1971	524
	526
	528

▶ **PRIMARY REFERENCE**

PART NUMBER INDEX

Part	Page	Part	Page	Part	Page	Part	Page
	530		540		552		516
	532		544		554		517
	534		546		556		518
	536		548		558		519
	538		550		560		520
	540		554		562	102-2800	478
	542		556		564	102-2802	478
	544		558		566	102-2804	478
	546		570		568	102-3645	740
	548		572		570	102-4559	347
	550	101-1980	542		572	102-4569	536
	552		552	101-2457	492	102-4571	540
	554	101-1982	530		494	102-4572	544
	556		532		496		558
	558		534		498	102-4573	538
	560		536		500	102-4574	546
	562		538		501	102-4576	542
	564		540		504		552
	566		542		506		566
	568		544		508		568
	570		556	101-2458	492	102-4577	548
	572		558		494		570
101-1972	542		562		496	102-4578	554
	552		568		498		572
	560		570		500	102-5828	56
	562		572		504	102-5829	56
	564	101-1983	524		506	102-5842	50
	566		526		508	102-6238	511
	568		528	101-2480	524		512
101-1973	524		530		526		514
	526		532		528		517
	528		534		530		519
	530		536		532	102-6317	736
	532		538		534	102-7412	524
	534		540		536		526
	536		542		538		528
	538		544		540		530
	540		546		542		532
	542		548		544		534
	544		550		546		536
	546		552		548		538
	548		554		550		540
	550		556		552		542
	552		558		554		544
	554		560		556		546
	556		562		558		548
	558		564		560		550
	560		566		562		552
	562		568		564		554
	564		570		566		556
	566		572		568		558
	568	101-1984	524		570		560
	570		526		572		562
	572		528	101-2850	85		564
101-1974	432		530	101-3055	670		566
	434		532		674		568
101-1975	432		534	101-3125	68		570
101-1978	524		536	101-4194	734		572
	526		538	101-4195	734	102-7423	432
	528		540	101-9346	510	102-8385	510
	530		542		511		513
	532		544		512		515
	534		546		513		516
	536		548		514		518
	538		550		515		520

PART NUMBER INDEX

Part	Page	Part	Page	Part	Page	Part	Page
102-8785	73		708		692		500
102-8801	134		738		706		504
	162	102-8803	143		708		506
	164		156		754		508
	170		157		756	104-7740	492
	172		166	102-9004	▶377		494
	176		186		384		496
	180		191	102-9372	705		498
	184		202		717		500
	188		225	102-9381	704		504
	226		226	102-9383	260		506
	228		232	102-9862	142		508
	230		236		194	104-7995	56
	236		240		196	104-8658	494
	244		241	103-1592	172		▶510
	246		244	103-1597	500	104-8660	492
	249		246		508		▶515
	258		254	103-2236	314	104-8676	492
	260		260	103-4771	698		494
	364	102-8804	162		700		▶511
	366		164	103-4953	698	105-2145	576
	690		170		700	105-2508	112
	692		188	103-5515	698	105-3484	64
	706		196		700	105-4208	72
	708		201	103-5516	698	105-4210	78
102-8802	123		212		700	105-4728	200
	137		226	103-5678	172	105-4849	▶152
	158		228		176		184
	159		230		180	105-4850	▶154
	162		236		184		184
	164		240		220	105-7167	456
	170		241	103-5689	480	106-3311	344
	186		249	103-5691	480	106-3658	524
	188		258	103-5962	297		526
	191		260	103-6100	682		528
	199		690	103-6216	6		530
	212		692	103-6282	480		532
	224	102-8805	148	103-9425	670		534
	225		150		674		536
	226		152	104-2091	611		538
	228		154		639		540
	230		226		653		542
	232		236		706		544
	236		241	104-3122	480		546
	237		258		▶574		548
	240		364	104-3560	19		550
	241		366	104-3567	50		552
	244		611	104-3568	50		554
	249		652	104-5958	744		556
	258		696		745		558
	328		697	104-7041	200		560
	384		706		▶216		562
	404		708	104-7238	592		564
	588		749	104-7419	492		566
	607		750		494		568
	608		752		496		570
	611	102-8806	162		498		572
	616		164		500	106-3659	524
	642		170		504		526
	652		188		506		528
	658		223		508		530
	682		226	104-7429	492		532
	690		228		494		534
	692		230		496		536
	706		690		498		538

▶ **PRIMARY REFERENCE**

PART NUMBER INDEX

Part	Page
	540
	544
	546
	548
	550
	554
	556
	558
	570
	572
106-3660	542
	552
	560
	562
	564
	566
	568
106-3661	550
106-4496	639
106-4886	2
	▶368
106-6553	630
	636
106-8704	159
	240
	682
106-8715	452
106-9586	56
107-0554	510
	513
	515
	518
	▶536
107-0555	510
	513
	515
	518
	▶538
107-0556	510
	513
	515
	518
	▶540
107-0558	510
	515
	▶542
107-0559	515
	▶544
107-0560	511
	514
	▶546
107-0562	511
	514
	▶548
107-0563	511
	514
	▶550
107-0565	511
	▶552
107-1983	706
	708
107-3414	▶597
107-3423	▶599
107-3429	▶599
107-4865	740
107-4932	142
	194
	196
107-5014	467
	670
	674
107-5795	72
107-6280	46
107-6813	630
	636
107-9641	626
	628
	632
	634
108-0358	172
	176
	180
	184
	220
108-0702	462
108-0705	444
108-0709	444
108-0713	460
108-1610	440
	444
108-2187	524
	526
	528
	530
	532
	534
	536
	538
	540
	542
	544
	546
	548
	550
	552
	554
	556
	558
	560
	562
	564
	566
	568
108-3519	172
	180
	184
108-4086	661
108-4087	660
108-4103	661
108-4814	574
108-4815	574
108-4816	574
108-4818	480
108-4916	▶432
	542
	552
108-5157	582
108-5949	628
	634
108-5950	626
	632
108-5951	628
	634
108-5952	626
	632
108-8421	▶701
	720
	722
108-8423	701
108-8424	701
108-8425	722
108-8426	720
109-0146	744
	745
109-0361	241
109-1004	274
109-1144	578
109-2804	670
	674
109-3204	480
109-5308	38
109-5309	50
109-5313	88
109-8982	240
110-0015	690
110-2445	116
110-6241	620
110-6393	610
110-6924	320
110-7000	359
110-7001	359
110-7547	359
110-7720	2
	▶352
110-7721	352
110-7722	352
110-7885	754
	756
110-7886	223
	754
	756
110-7887	258
111-0343	328
	588
111-0491	406
	▶478
111-2645	52
111-4921	384
111-4922	384
111-8209	288
111-8233	524
	526
	528
	530
	532
	534
	536
	538
	540
	544
	546
	548
	550
111-8234	542
	552
	560
	562
	564
	▶589
111-9110	399
112-2240	440
	444
	▶589
112-4428	248
112-5555	246
112-6174	226
112-6175	260
112-9104	724
	▶726
112-9105	725
	▶727
112-9434	452
112-9555	648
113-1346	388
113-4240	614
113-4242	▶614
	726
	727
	729
113-4243	615
113-4245	▶615
	726
	727
	729
113-5264	▶422
	603
113-5800	726
	727
	▶734
113-5801	660
113-5804	734
113-5805	660
113-5806	660
113-5807	660
113-5808	▶660
	734
113-5809	702
113-5810	▶702
	720
	722
113-8218	690
	692
	694
113-8457	114
	119
113-8999	40
113-9005	35
113-9016	40
113-9533	452
114-0358	606
114-0359	606
114-1067	702

▶ **PRIMARY REFERENCE**

PART NUMBER INDEX

Part	Page
114-1068	702
114-1069	702
114-1070	702
114-1081	702
114-1082	702
114-1083	702
114-1183	▶720
	726
	729
114-1185	▶722
	727
114-2687	59
114-2882	444
114-2884	444
114-2885	444
114-2886	444
114-2887	440
	444
114-2888	440
114-2889	440
114-2890	440
114-2891	444
114-2895	440
114-3469	616
114-4776	422
114-4781	422
114-5132	478
114-5167	478
114-5180	478
114-5190	478
114-5224	760
114-6635	583
	586
114-6685	▶749
	750
	752
	754
	756
114-9110	480
114-9190	626
	628
	632
	634
114-9281	236
	237
115-1007	519
	▶554
115-1375	278
	▶320
115-1748	706
	708
115-2972	40
115-2973	40
115-2983	4
	▶20
115-3003	61
115-3070	196
115-3072	364
	366
115-3073	241
115-4517	280
115-5852	3
	760
115-6806	705
115-6807	670
	674
	680
115-7087	93
115-9391	34
115-9397	▶44
	50
115-9398	44
115-9399	44
115-9400	44
115-9402	44
115-9403	44
115-9424	32
115-9923	670
	674
116-1083	▶28
	37
116-1085	4
	▶24
116-1089	40
116-1091	4
	▶46
116-1102	22
116-1107	16
116-1108	16
116-1109	16
116-3211	452
116-3715	88
	456
116-5405	4
	▶89
116-5406	89
116-5408	4
	▶37
116-5416	108
116-5418	108
116-5428	4
	▶110
116-5435	42
116-5436	4
	▶98
116-5438	4
	▶112
116-5460	4
	▶72
116-5710	96
	166
	192
	244
116-7089	460
117-0166	18
117-0221	8
117-0472	500
117-2311	607
	608
117-2674	4
	▶77
117-2746	4
	▶61
117-2748	4
	▶35
117-2749	4
	▶50
117-2750	4
	▶30
117-2760	4
	▶263
117-3036	280
117-3915	▶198
	472
117-4698	717
117-8810	680
117-9966	706
118-0459	12
118-2557	704
118-2558	674
118-2797	76
118-2800	67
118-2808	4
	▶73
118-3534	248
118-4660	478
118-4728	8
119-2942	59
119-5030	274
119-7463	343
119-8784	100
119-9550	516
	520
	▶556
120-9875	602
121-0273	602
121-3395	422
121-3397	416
	420
121-4090	401
	▶496
121-4097	401
	▶498
121-4099	401
	▶500
121-7137	10
121-9244	413
	▶430
121-9247	430
122-0760	61
122-0763	280
122-7045	706
122-8146	706
122-8154	639
122-8155	639
122-8677	670
122-8795	670
	674
123-0764	10
123-0790	10
123-0872	609
	651
123-1077	430
123-3688	240
123-3689	240
123-3692	240
123-3698	373
123-3699	373
123-3827	80
	84
123-4354	750
	752
123-4355	750
	752
123-4511	67
123-4586	690
	692
	694
123-4587	690
	692
	694
123-4618	610
	652
	732
123-4701	610
	652
	732
123-5857	690
	692
123-5861	260
123-6449	▶224
	244
	246
123-6661	582
123-6806	698
123-8157	736
123-8253	93
123-8408	732
123-8914	472
123-8915	▶472
	476
123-9128	736
124-0507	734
124-1431	610
	652
124-1432	610
	652
124-2463	94
124-2655	38
124-2887	434
124-2888	434
124-2889	434
124-2890	434
124-2891	434
124-3137	610
	652
124-3138	610
	652
124-3242	368
124-3455	518
	▶558
124-4211	▶504
124-4220	402
	▶506
124-5043	280
124-5572	6
124-5648	760
124-8843	630
	636
124-9006	610
	652
124-9007	610
	652
125-0359	360
125-0438	611
125-0439	652
125-0442	652
125-2235	402
	▶508
125-4572	586

▶ **PRIMARY REFERENCE**

PART NUMBER INDEX

Part	Page
125-5321	397
125-6390	248
125-7003	750
	752
125-7004	750
	752
126-0146	8
126-0179	108
126-0208	710
	712
126-0209	710
	712
126-0210	710
	712
126-0228	710
	712
126-0961	▶743
126-1167	710
	712
126-1539	710
	712
126-1774	232
126-4966	630
	636
126-7168	356
126-8306	462
127-4038	356
127-4471	94
127-4725	339
127-4726	340
127-4727	339
127-4731	345
127-5483	240
	260
127-5484	248
	260
	364
	366
127-5485	240
127-8609	141
128-0037	626
	628
	632
	634
128-0331	8
128-0382	16
128-0383	16
128-0384	16
128-0385	16
128-0395	40
128-0396	40
128-0400	16
128-0401	16
128-0402	16
128-0403	16
128-0411	12
128-0420	8
128-0613	736
128-0686	736
128-2522	2
	▶370
128-5082	736
128-5084	736
128-5085	736
128-5128	341
128-5130	340
128-5924	682
128-6983	▶158
	194
	196
128-8643	434
128-8644	434
128-8645	560
	562
	566
	568
128-8646	564
128-8647	512
	517
	519
	▶560
128-9654	594
128-9655	594
129-0375	99
129-2181	8
129-2861	280
129-3173	96
	268
	388
129-3178	356
	607
	608
	611
	630
	636
	653
	670
	674
129-3184	28
129-4935	611
	652
129-7632	574
130-0863	4
	▶40
130-1813	452
130-2682	444
130-2684	444
130-2686	452
130-3110	516
	520
	▶562
130-3111	517
	519
	▶564
130-3114	514
	▶566
130-3115	513
	518
	▶568
130-3116	496
	508
	▶512
130-3118	496
	498
	▶516
130-3122	500
	508
	▶520
130-3123	498
	▶517
130-3124	500
	▶519
130-3133	504
	▶513
130-3134	506
	▶518
130-3135	504
	506
	▶514
130-3535	▶434
	560
	562
	564
	566
	568
130-5300	96
	142
	166
	172
	194
	196
	212
	225
	236
	241
	244
	246
	249
	254
	258
	260
	611
	653
	690
	692
130-5372	272
130-5770	578
130-5997	6
130-9432	663
	▶664
130-9811	210
	211
131-0353	280
131-2171	8
131-4135	236
131-4242	660
131-5167	660
131-5171	360
131-5479	450
131-5492	648
131-6009	670
	674
	680
131-6645	280
131-6679	▶6
	8
131-8126	▶140
131-8350	522
	▶578
131-8627	140
131-8777	583
	584
	585
	586
132-1225	124
132-3065	452
132-3212	4
	▶16
132-3439	736
132-4354	356
132-5789	232
	682
132-6640	▶134
	254
132-6938	249
132-8875	292
132-9496	686
133-5671	▶99
	102
133-5673	99
133-6047	274
133-6090	274
133-6517	140
	141
133-6578	482
133-7029	25
133-7031	4
	▶8
133-7053	40
133-7068	12
133-7075	4
	▶32
133-7083	30
133-7086	30
133-7100	12
133-7613	648
134-3355	254
134-5245	56
134-8221	519
134-8232	▶744
	747
134-8233	▶745
	746
135-0426	▶156
	244
135-0427	▶157
	166
	172
	193
135-1979	644
135-3894	366
135-6337	335
	344
135-7123	399
136-1953	611
	653
136-3845	148
	152
136-3846	150
	154
136-3848	148
	150
	152
	154
136-4183	26
136-4832	2
	▶759
136-6330	462
136-6331	462
136-8423	482

▶ **PRIMARY REFERENCE**

PART NUMBER INDEX

Part	Page
137-4515	492
	494
	496
	498
	500
	504
	506
	508
137-4516	492
	494
	496
	498
	500
	504
	506
	508
137-5503	718
137-6719	515
	516
	517
	518
137-6720	510
	511
	512
	513
	514
	515
	516
	517
	518
	519
	520
137-6783	670
	674
137-8065	670
	674
137-8104	520
	▶570
137-8107	572
137-8930	93
137-9410	172
	176
	180
	184
138-2006	22
138-2028	4
	▶41
138-3094	204
138-4054	630
	636
138-7026	670
	674
138-7065	607
138-9910	670
	674
139-1117	670
139-1118	674
139-1153	608
139-2116	240
139-2120	260
139-2944	356
139-3593	670
	674
	680
139-3595	638
139-3785	80
	84
139-4605	718
139-4612	▶718
139-6122	240
	394
139-6128	▶746
139-6129	▶747
139-8472	530
	534
	536
	540
	544
	554
	570
	▶583
139-8476	556
	558
	572
	▶584
139-8477	560
	562
	564
	566
	568
	▶585
139-9132	744
	745
139-9133	745
139-9134	744
	745
139-9135	744
	745
139-9136	744
	745
139-9137	744
	745
139-9138	744
140-8636	343
140-8864	254
141-0284	99
141-1480	90
141-2325	164
141-4043	373
141-4610	462
141-6136	371
	412
141-6137	371
141-6141	371
141-6143	371
141-6145	352
	▶371
141-6343	96
141-9661	488
141-9784	611
	653
142-0350	328
142-2011	10
142-4433	201
142-4940	611
	652
142-6138	337
142-6152	338
142-6153	338
142-6206	3
	▶304
142-6233	337
	338
	344
	346
	▶349
	350
142-6234	348
142-6417	332
	▶337
142-6418	332
	▶338
142-6419	332
	▶338
142-6422	332
	▶339
142-6423	333
	▶339
142-6424	333
	▶340
142-6425	▶340
142-6426	333
	▶341
142-6432	333
	▶341
142-6433	334
	▶342
142-6434	334
	▶342
142-6438	334
	▶343
143-9290	274
144-0195	740
	742
144-1636	241
144-2948	40
144-4107	670
	674
144-5611	10
144-6695	406
145-0326	734
	736
145-0457	404
145-1297	▶136
	663
145-1300	▶663
145-1780	108
145-3350	162
	164
	170
	188
	228
	230
	690
	692
145-7214	680
145-7217	680
146-0835	6
147-2354	80
147-3312	382
147-3402	352
147-4549	736
147-5088	78
147-6522	736
147-6541	736
148-2063	▶34
	50
148-2064	34
148-2065	34
148-2130	19
148-2142	4
	▶88
148-2149	24
	▶25
148-2516	316
148-3749	736
148-7906	532
148-8305	70
	462
148-8307	460
148-8311	462
148-8312	444
148-8313	450
148-8316	452
	462
148-8318	102
	440
148-8322	460
148-8323	452
148-8324	462
148-8325	450
148-8327	448
148-8336	70
148-8338	102
148-8340	102
	440
	444
	460
	462
148-8344	70
148-8346	444
	458
148-8347	440
	444
	448
	452
148-8351	460
	462
148-8354	102
	440
	444
148-8358	440
148-8361	450
148-8362	70
	452
148-8363	452
148-8364	440
	444
	458
	460
	462
148-8368	450
	453
148-8374	102
	440
	456
148-8378	450
148-8383	441
	456
148-8392	70

▶ **PRIMARY REFERENCE**

PART NUMBER INDEX

Part	Page	Part	Page	Part	Page	Part	Page
	448		186	155-2265	162	155-5959	728
148-8411	102		188		164		▶736
148-8417	453		191		170	155-6642	16
148-8418	441		192		188	155-7970	280
	444	153-2147	162		226	155-9112	485
148-8429	453		164		228	155-9115	485
148-8440	450		170		230	155-9116	485
148-8444	444		188		236	155-9117	485
148-8449	448		228		690	155-9125	482
149-2400	736		230		692	155-9127	482
149-2402	736		690	155-2270	162	155-9136	485
149-2610	▶588		692		164	156-0283	246
	589	153-5710	127		170	156-1148	▶719
149-2611	588	153-6237	64		172		726
149-3409	704		101		176		727
	705		453		180		729
149-4745	720	153-6248	70		186	156-5783	108
	722	153-6259	445		188		▶122
	726		453		191	156-7778	▶730
	727	153-7062	8		196	156-8352	680
149-7226	660	153-7410	594		212	157-0305	166
150-4027	450	154-2881	141		222	157-1206	99
150-4037	460	154-3064	316		225	157-1738	334
150-4050	70		▶328		226		▶343
150-5105	710	154-5732	▶728		228	157-1739	▶334
	712		730		230	157-2528	249
150-5106	▶710	154-7246	▶141		232	157-6129	730
	743	154-8290	636		236	157-8087	656
150-5107	▶712	154-8291	636		240	157-8616	460
	743	154-8292	630		241	158-0248	144
150-5142	349	154-8293	630		244	158-0249	146
	▶350	154-9025	74		248		166
150-5143	▶349	155-2255	162		249	158-0250	144
150-5144	349		164		258		145
	▶350		170		260		146
150-5146	6		172		611		166
150-5968	453		176		652	158-0252	144
150-6649	520		180		682		145
	▶572		184		690		146
151-0288	▶349		188		692		166
151-2900	10		226		708	158-3198	736
151-4957	260		228	155-2271	162	159-1013	388
151-5349	426		230		164	159-3759	716
	428		232		170		717
152-3001	111		236		188	159-3959	184
152-3965	▶332		240		228	159-5843	3
152-3967	▶332		241		230		▶258
152-3971	▶332		258		236	159-5855	3
152-3974	▶332		260		241		▶260
152-3975	▶333		364		249	159-5867	3
152-3977	▶333		366		258		▶236
152-3979	▶333		690		260	159-5878	3
152-3987	▶333		692		690		▶226
152-3988	▶334		706		692	159-5935	2
152-4000	▶334		708	155-2274	184		▶96
152-4008	▶334	155-2260	172		226	159-8049	249
152-5430	467		203		236	159-8050	249
152-5431	467		204		249	159-9322	232
152-5436	467		226		258	160-1744	246
152-7903	1		232		708	160-2323	46
	▶467		236	155-2629	99	160-2353	730
153-2073	▶144		241	155-4098	649	160-2443	96
	168		244		650		▶202
	170		260	155-5958	728	160-3662	736
	176	155-2261	222		▶729	160-6382	226

▶ **PRIMARY REFERENCE**

PART NUMBER INDEX

Part	Page
	364
	366
160-6543	394
160-6567	139
	706
	708
160-7689	241
160-7690	232
160-7703	452
160-7765	736
160-7766	736
160-7767	736
160-9413	398
	▶399
161-0770	▶160
161-0772	160
	161
	▶166
161-0773	▶194
161-0774	▶196
161-0776	▶135
161-0777	▶135
161-0778	160
	▶168
161-0908	166
161-1018	160
	▶220
161-1021	▶170
161-1126	3
	▶114
161-1130	2
	▶355
161-1141	▶714
161-1181	2
	▶359
161-1417	162
161-1418	162
161-1703	205
161-1705	206
	232
161-1921	▶142
161-1922	161
	▶172
161-1924	▶160
161-1929	3
	▶240
161-1930	3
	▶225
161-2316	3
	▶36
161-2444	730
161-2445	730
161-3509	▶145
	172
	180
161-5967	660
161-6958	93
161-6963	93
161-7062	96
161-7065	268
161-8416	40
162-2077	145
	166
162-2933	246
162-2934	246
162-5607	▶2
162-7449	398
	400
162-7490	93
162-8218	96
162-8219	96
162-9523	106
163-0872	▶616
	617
163-1146	734
163-6129	▶335
163-6130	335
	▶344
163-9322	4
	▶280
164-2465	698
	700
164-2490	4
	▶56
164-2675	359
164-4858	116
	120
164-5567	70
	450
	452
164-5572	102
164-5574	441
164-5590	70
	462
164-5605	102
164-5608	441
	445
164-8474	638
165-0002	296
165-2506	412
	▶426
165-2507	412
	▶428
165-6162	346
165-7014	452
166-0939	80
166-1328	52
166-1329	▶52
	56
166-1997	698
	700
166-1999	698
	700
166-2829	704
166-2830	705
166-3308	401
	402
	▶456
166-3310	1
	▶486
166-3333	▶460
	486
166-3367	2
	▶398
166-3405	▶401
166-3406	401
	402
	▶458
166-6338	88
166-6352	8
166-6358	10
166-6781	734
166-7064	▶364
	715
166-7065	▶366
	624
166-7224	736
166-7225	728
167-0017	4
	▶10
167-0138	▶222
	248
167-0693	335
	▶344
167-0694	▶335
167-0959	444
167-1709	▶203
	448
167-1801	480
167-2191	426
	428
167-2195	418
167-2200	430
167-2201	414
	416
	420
	422
	424
167-2300	426
	428
167-2304	418
167-2307	430
167-2312	414
	416
	420
	422
	424
167-2452	426
	428
167-2457	418
167-2459	430
167-2463	414
	416
	420
	422
	424
167-4379	59
167-7504	226
167-7505	226
167-8053	2
	▶620
167-8069	1
	▶609
167-8103	609
	▶682
167-8125	26
167-8382	▶137
167-8395	1
	▶651
167-8399	609
	651
	▶686
167-9004	2
	▶274
168-2210	482
	▶576
168-3504	482
168-4490	4
	▶131
168-4594	131
168-7296	40
168-7363	19
168-7364	19
168-7365	19
168-7366	19
168-7861	482
168-7863	482
168-8233	137
168-8235	137
168-8243	162
	170
	228
	690
168-8248	226
168-8683	96
169-0921	96
	268
	388
169-0922	96
	268
169-2620	274
169-3145	658
169-3147	186
169-3181	180
169-3230	196
169-3264	607
	608
169-3283	260
169-3523	137
169-4166	32
169-4170	32
169-4172	32
169-4189	16
169-4279	102
169-4657	126
169-5414	236
	248
	258
	364
	366
169-8566	▶335
169-8938	226
170-0438	335
	▶345
170-0439	345
170-0493	399
	400
170-0503	399
170-1564	686
170-4820	▶642
	647
170-4846	428
170-5212	426
	428
170-5334	▶644
	646
170-5335	▶199
	642
	644
170-8528	426

▶ **PRIMARY REFERENCE**

PART NUMBER INDEX

Part	Page
171-1103	4
	▶232
171-2121	274
171-2210	248
	250
171-2866	2
	▶388
171-3062	4
	▶12
171-3063	12
171-4713	336
	▶345
171-4714	▶336
171-5838	3
	▶760
171-6165	668
171-6175	170
	188
171-6330	176
171-6332	176
171-6466	440
	444
171-6467	462
171-6470	460
171-6728	460
171-7096	▶162
171-7185	135
	▶607
171-7186	135
	▶608
172-0165	96
172-1239	670
	674
172-4211	96
	268
	388
172-4662	▶292
	315
172-4702	8
172-5376	▶670
	716
172-5377	714
	▶716
172-5378	▶668
	714
172-5717	2
	▶268
172-5761	462
172-6555	226
172-6556	162
	164
	170
	188
	228
	230
	690
	692
172-6830	716
	▶750
172-6831	716
	▶752
172-6834	▶646
172-6835	▶647
172-7105	274
172-7106	274
172-8641	226
172-9316	226
172-9981	414
	424
173-0978	▶336
173-0980	336
	▶346
173-0983	346
173-1007	487
173-1008	487
173-1009	487
173-1011	440
	▶487
173-1498	10
173-1500	10
173-1885	196
173-2018	116
	120
173-2751	715
	▶717
173-3064	172
	176
	180
	184
	220
173-5307	2
	▶658
173-5313	609
173-5320	748
	▶754
173-5321	748
	▶756
173-5322	651
	▶652
173-5334	2
	▶272
173-6754	716
173-6756	716
173-7375	2
	▶404
173-9683	414
	418
	420
	424
	430
173-9685	426
	428
174-1494	611
	652
174-1574	4
	▶38
174-1575	38
174-1576	4
	▶58
174-1577	58
174-1578	58
174-1579	4
	▶54
174-1580	54
174-1593	26
174-1602	68
174-1612	▶85
	86
174-1613	86
174-1622	47
174-1625	4
	▶47
174-1637	280
174-1639	4
	▶26
174-1640	26
174-1760	4
	▶42
174-1762	4
	▶14
174-1766	4
	▶29
174-2104	64
174-2475	32
174-3705	272
	▶316
174-4140	674
174-4141	670
174-4492	611
	652
	732
174-4546	3
	▶732
174-4548	609
	▶610
174-4552	▶651
174-4971	611
	652
174-5692	114
	119
174-5907	172
	180
	236
	241
	249
	254
174-6051	732
174-6353	611
	652
	732
174-8131	260
	620
174-9690	609
175-0403	378
175-0447	448
175-0454	18
175-1343	706
	708
175-1367	214
175-6983	62
	63
	▶448
175-7049	448
175-7162	682
175-7314	26
175-7453	280
175-7882	424
175-7895	426
	428
175-7900	414
	416
	418
	420
	424
175-7904	422
176-0209	468
176-4168	37
176-5507	611
	652
	732
176-6391	214
176-6994	78
176-6995	78
176-6997	78
176-6998	78
176-6999	78
176-7000	77
	▶78
177-0279	378
	394
177-0581	68
177-0717	68
177-2202	68
177-2932	356
177-4118	356
177-4120	356
177-4255	468
177-4292	102
177-4311	56
177-5303	64
177-7448	620
177-7517	474
	▶480
177-7858	611
	652
177-7891	609
	▶638
	651
177-8779	714
	▶716
177-8781	▶674
	716
177-8784	1
	▶758
177-8802	248
177-8830	▶748
177-8831	▶748
177-9741	666
	▶697
177-9812	212
177-9813	248
177-9814	248
178-0103	254
178-0160	248
178-0162	248
178-0555	248
178-3643	12
178-4190	668
178-4875	10
178-5252	10
178-5253	10
178-6267	162
	164
178-8067	168
	172
	176
	180
	192
178-8481	3
178-8993	64

▶ **PRIMARY REFERENCE**

PART NUMBER INDEX

Part	Page
178-9175	312
178-9176	312
178-9178	▶312
	315
179-0092	26
179-1319	312
179-1549	176
179-1550	176
179-2138	668
179-2139	668
179-2140	668
179-2173	670
179-2176	680
179-2177	670
179-2179	674
	680
179-2509	64
179-3261	62
	63
	▶64
179-3581	2
	▶714
179-4814	658
179-6851	10
179-6852	10
179-6853	10
179-8701	176
179-8725	4
	▶200
179-9453	22
179-9459	▶22
	25
180-1300	▶146
	172
180-1538	44
180-3491	2
	▶439
180-3558	212
180-4027	388
180-4028	260
180-4643	135
	▶138
180-5446	3
	▶474
180-5462	682
180-6153	249
180-7033	260
180-7147	268
	388
180-9285	▶696
	706
	708
180-9340	204
183-1406	70
183-1425	620
183-2136	258
183-3072	102
183-4008	398
	400
183-4070	161
	▶176
183-4191	14
183-4365	44
183-4386	102
183-5812	760
183-6616	2
	▶315
183-7595	590
183-9606	166
	186
	191
184-0903	166
184-1479	2
	▶102
184-1527	480
184-1670	2
	▶62
184-1671	2
	▶68
184-2472	132
184-2515	44
184-2524	14
184-3266	36
184-3267	36
184-4322	706
	708
184-6045	▶254
	486
184-7305	▶401
184-7307	▶401
184-7308	▶401
184-7448	474
	▶482
184-9854	54
185-1122	388
185-1717	56
185-1718	56
185-1893	62
	63
	▶84
185-2271	460
185-2274	274
185-2287	274
185-3632	686
185-4461	44
185-6362	706
	708
185-6644	458
185-6645	458
185-6660	160
	▶180
185-7035	426
	428
185-7688	418
185-7690	418
185-7691	418
185-7967	▶201
	666
185-7968	1
	▶666
185-9404	236
186-0357	191
186-1659	201
186-1714	260
186-1728	▶212
	374
186-2508	172
	176
	180
	184
186-2784	452
186-2863	450
186-3705	56
186-3735	123
	134
	148
	150
	152
	154
	156
	157
	158
	159
	166
	201
	223
	224
	226
	236
	237
	240
	254
	328
	384
	404
	658
	682
	696
	706
	708
	738
	749
	750
	752
	754
	756
186-3736	222
	248
	682
186-4156	2
	▶74
186-4392	414
	416
	420
	424
186-4840	172
186-4872	▶296
	315
186-4874	296
186-4875	296
186-4957	▶161
187-0745	388
187-0975	274
187-1008	240
187-1499	439
187-1597	439
187-2018	474
187-2034	124
187-3178	240
	241
187-3188	3
	▶706
187-3307	24
187-3582	355
187-4645	388
187-6269	706
	708
187-8359	249
187-8546	240
187-9087	191
	225
187-9380	258
188-0576	682
188-0756	2
	▶452
188-1321	268
188-1995	258
188-1996	258
188-2008	452
188-2461	404
188-2683	254
188-3541	274
188-3543	274
188-3862	162
	164
	170
	188
	228
	230
	690
	692
188-3958	127
188-5131	▶127
	374
188-6126	59
188-6361	260
188-7062	2
	▶384
188-7194	2
	▶440
188-7195	2
	▶444
188-7196	2
	▶462
188-7254	2
	▶450
188-7511	208
188-8849	144
	145
	146
	166
188-9250	384
	658
	▶738
188-9329	▶161
188-9331	160
	161
	▶193
188-9390	399
189-0108	249
189-0146	127
189-0189	328
	588
189-0351	4
	▶111
189-9801	209
190-0370	258
190-0649	10
190-1680	170
	188

▶ **PRIMARY REFERENCE**

PART NUMBER INDEX

Part	Page
190-2938	761
190-3443	110
190-3482	697
190-3850	400
190-5386	761
	762
190-6222	93
190-6535	116
190-9775	116
	120
190-9841	282
191-0027	611
	652
	732
191-2312	336
	▶346
191-2313	▶336
191-2314	394
191-3031	388
191-3032	388
191-3033	388
191-3645	378
191-5236	609
	651
191-7581	482
191-7582	482
191-7583	482
191-8692	▶700
	717
191-8695	▶680
	717
191-9413	▶690
192-0229	1
	▶184
192-1434	1
	▶762
192-1994	690
192-5629	356
192-5638	356
192-6492	56
192-6986	240
192-7135	56
193-1036	576
193-1758	86
193-3982	110
193-5765	450
	▶590
193-7416	166
193-8212	▶692
193-8570	216
193-9147	375
194-0856	761
194-1854	249
194-1855	249
194-2612	116
	118
	120
194-2615	102
194-2838	3
194-3845	717
194-4020	▶402
194-4181	260
194-4679	375
194-5140	86
194-5141	617
194-5867	3
	▶314
194-5868	314
194-5869	314
194-6523	116
	120
194-6724	▶204
	207
194-7982	3
	▶244
194-7985	▶402
194-8535	116
	120
194-9453	482
	▶485
194-9461	482
194-9471	482
194-9472	482
194-9473	482
194-9474	482
194-9478	485
194-9479	485
194-9480	485
194-9481	485
195-0434	254
195-1068	99
195-2097	129
195-2274	762
196-0180	706
	708
196-1323	70
196-2036	460
196-4150	706
196-4927	336
	▶347
196-4928	▶336
196-7268	258
196-8532	159
	▶186
196-8557	164
	188
	230
	692
196-8559	▶188
196-9295	375
196-9521	16
197-0580	3
	▶214
197-1708	118
197-1744	▶164
197-2054	695
197-2055	694
197-2064	▶694
197-2066	1
	▶695
197-3616	38
197-4568	609
	▶617
197-4569	617
197-4637	94
197-4638	94
197-5867	762
197-5964	706
	708
197-5966	706
	708
197-6218	682
197-7155	624
	▶708
	715
197-7689	734
197-7916	337
	▶347
197-7918	▶337
197-8068	347
197-8391	▶210
	232
197-8392	▶211
	232
197-8393	▶205
	232
197-8394	▶206
	232
197-8395	▶207
	232
197-8396	▶208
	232
197-8397	▶209
	232
197-8611	670
	674
197-8624	670
	674
197-8627	670
197-8628	670
197-8629	674
197-8630	674
197-9251	40
197-9341	40
198-4767	356
198-4777	90
198-5438	388
198-7332	▶139
	237
198-7380	373
198-8277	70
198-8588	364
	366
199-1095	59
199-1096	4
	▶59
199-1472	480
199-2585	▶649
199-2586	649
199-2677	626
	628
	632
	634
199-2712	626
	628
	632
	634
199-2737	632
199-2738	634
199-2739	626
199-2740	628
199-4051	31
199-4317	468
199-4320	468
199-4321	468
199-4322	468
199-7819	412
199-8382	258
199-9014	618
199-9907	116
	120
199-9959	126
199-9968	375
199-9983	356
199-9984	116
199-9985	116
	232
	2
	232
200-2054	▶18
	19
200-2232	▶124
	126
200-2674	337
	▶348
200-2675	▶337
200-3967	364
	366
200-4983	63
	▶246
200-7933	650
200-7934	▶650
200-8623	670
	674
201-0780	576
201-1036	▶129
	160
	161
201-1038	1
	▶130
	160
	161
201-1054	1
	▶63
201-1260	68
201-3703	458
201-5244	236
201-5894	680
201-7603	761
201-7626	763
201-7627	764
201-7631	764
201-7633	763
201-8328	474
201-8424	129
	130
202-1138	706
202-2703	124
202-2708	124
202-2783	124
202-2784	124
202-2785	124
202-2786	124
202-2787	124
202-7475	34
202-7711	124
202-7713	124
202-8647	124
202-8649	692

▶ **PRIMARY REFERENCE**

PART NUMBER INDEX

Part	Page	Part	Page	Part	Page	Part	Page
202-9897	124	205-3110	▶248		▶394	208-5575	356
203-2204	2		374	207-0704	74	208-5576	356
	▶101	205-3673	290	207-0706	74	208-5586	84
203-2389	381	205-3674	290	207-0707	74	208-5826	760
203-2390	381	205-4285	136	207-1764	1	208-5828	760
203-2391	381		138		▶760	208-5871	4
203-2423	381	205-4655	84	207-1832	375		▶92
203-3940	208	205-4839	102	207-1980	3	208-6053	360
	209	205-4840	102	207-2117	375	208-6055	68
203-6551	160	205-4841	102	207-2409	3	208-6678	394
	▶228	205-4842	102		▶490	208-7448	68
203-6642	▶715	205-6032	388	207-2410	▶488	208-7782	136
203-6643	▶624	205-6033	388		490		138
203-7620	▶190	205-6034	388	207-2411	488	208-7933	246
203-7625	▶148	205-6035	388	207-2428	▶603	208-7934	246
	190	205-6036	388	207-2801	▶602	208-7936	246
203-7626	▶150	205-6037	388		603	209-1743	280
	190	205-6551	240	207-2802	602	209-3332	90
203-7685	▶100	205-7187	394	207-3736	▶459	209-3334	90
	111	205-7203	450		603	209-5776	760
203-7726	90	205-7204	450	207-4922	268	209-7309	58
203-8471	246	205-7261	▶160	207-4924	388	209-7389	280
203-8519	586	205-7262	160	207-4927	96	209-9285	2
203-9177	184		▶192	207-5900	1		▶393
203-9378	452	205-8122	68		▶48	210-0848	▶132
203-9379	452	205-8124	68	207-5901	48		133
203-9807	116	205-9207	290	207-5902	48	210-0849	131
	120	206-0335	3	207-5904	48		▶133
203-9808	116		▶375	207-7112	359	211-0981	▶380
	120	206-0400	2	207-7426	3	211-1771	▶1
204-0638	4		▶70	207-7583	254	211-1772	▶1
	▶108	206-0482	70	207-9826	90	211-2822	32
204-0712	32	206-0483	70	208-0014	▶378	211-3470	82
204-3435	160	206-1404	▶763		380	211-3471	▶82
	▶191	206-1405	▶763	208-0517	394		83
204-3449	▶19	206-1406	▶764	208-0520	394	211-3472	82
	20	206-1407	▶764	208-0796	116	211-3474	82
204-4376	610	206-3367	356		120	211-4772	274
	652	206-3599	96	208-0797	118	211-5896	82
204-5851	2	206-3600	96	208-0798	106	211-9028	80
	▶290	206-3672	241	208-0800	116		▶83
204-6109	▶159	206-3732	249		120	212-0615	4
204-6127	159	206-3733	249	208-0801	114		▶126
	▶230	206-3734	249		▶116	212-2162	761
204-6322	62	206-3849	356	208-0802	114	212-3266	74
	63	206-3851	356		▶118	212-4621	120
204-6488	620	206-3853	356		119	212-4635	94
204-6652	4	206-3854	356	208-0817	393	212-4669	120
204-7938	2	206-3858	356	208-0856	264	212-4671	94
	▶374	206-3860	356	208-1512	378	212-5958	2
204-7983	2	206-3900	2	208-1535	378		▶86
	▶4		▶356	208-1725	380	212-5959	3
204-9756	▶94	206-4245	34	208-1737	388		▶90
204-9844	80	206-5154	611	208-1738	388	212-6235	94
204-9845	360		652	208-2824	682	212-6961	90
205-1906	290	206-5221	118	208-2825	682	212-6962	90
205-1907	290	206-5223	116	208-2826	682	212-6963	90
205-2136	348		120	208-2999	2	212-7893	356
205-2192	314	206-6002	376		▶264	212-7920	356
205-2193	314	206-6538	▶160	208-3729	31	212-8417	356
205-2197	▶337	206-6580	374	208-3730	4	213-0430	763
205-2198	337		▶376		▶31	213-0431	764
	▶348	206-7216	249	208-5157	298	213-0435	764
205-2347	101	206-9651	620	208-5568	609	213-0437	763
205-2938	290	207-0625	374		▶618	213-0480	94

▶ **PRIMARY REFERENCE**

PART NUMBER INDEX

Part	Page	Part	Page	Part	Page	Part	Page
213-0482	94	222-6457	139		343		
213-1276	94	222-6458	139		344		
213-2061	274	222-7774	542		345		
213-2263	90		552		346		
213-3143	94		▶586		347		
213-4558	682	222-9201	120		348		
213-5132	695	222-9202	120		350		
214-0586	25	223-0580	487	228-5009	260		
214-1102	682	223-3842	760	230-5840	2		
214-4679	452	223-3843	760		▶66		
214-6091	92	224-3241	29	230-6299	48		
	▶93	224-4441	25	230-8977	106		
214-6094	93	224-6637	760	230-8978	106		
215-2062	▶67		763	230-9138	620		
	76	224-6644	282	231-3323	106		
215-2063	4	224-6877	94				
	▶76	224-6878	94				
215-3005	378	224-6959	764				
	▶381	224-6963	764				
215-3198	100	224-7040	64				
215-5648	760		▶468				
215-6425	488	224-9231	80				
216-1637	297	226-0722	356				
216-1719	307	226-1885	335				
216-5583	18		339				
216-5584	18		340				
216-5585	18		341				
216-8570	40		342				
217-2661	488		343				
218-2971	381		344				
219-0702	94		345				
	▶119		346				
219-1128	119		347				
	▶120		348				
219-2436	294		350				
219-2439	294	226-1886	335				
219-7181	94		339				
219-7199	80		340				
219-7200	80		341				
219-7201	80		342				
219-8064	400		343				
220-1247	298		344				
220-1250	298		345				
221-0146	618		346				
221-0319	120		347				
221-2349	62		348				
	63		350				
	▶360	226-2870	488				
221-2350	360	226-2871	488				
221-2800	1	226-6547	388				
	▶400	226-6579	84				
221-8000	62	226-6622	388				
	63	227-1053	80				
	▶80	227-2564	▶282				
221-8675	80		315				
222-0355	244	227-3101	356				
222-0494	120	227-3103	356				
222-0892	360	227-3689	356				
222-0893	360	227-4399	356				
222-1293	80	227-4643	356				
222-1429	618	228-0902	335				
222-2367	400		339				
222-4086	232		340				
222-6417	2		341				
	▶106		342				

▶ **PRIMARY REFERENCE**



© 2002 Caterpillar
All Rights Reserved

Printed in U.S.A.