CATERPILLAR®

SEBP6123
September 2010

RUTHZIL TRATOR COMERCIAL DE PEÇAS LTDA 11 97083-6812 ROLANDO

Parts Manual

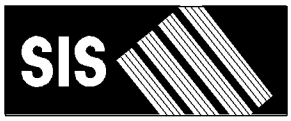

See "General Information" for New Parts Manual Features.

16M Motor Grader

R9H1-Up (Machine)
MHX1214-Up (Engine)
DZM1-Up (Transmission)

Powered By C13 Engine
This Parts Manual is also available in .PDF format on Compact Disc (CD-ROM) - Caterpillar Form No. SERP6123

Product and Dealer Information

Note: For product identification plate locations, see the section “Product Identification Information” in the Operation and Maintenance Manual.

Delivery Date: _____

Product Information

Model: _____

Product Identification Number: _____

Engine Serial Number: _____

Transmission Serial Number: _____

Generator Serial Number: _____

Attachment Serial Numbers: _____

Attachment Information: _____

Customer Equipment Number: _____

Dealer Equipment Number: _____

Dealer Information

Name: _____ Branch: _____

Address: _____

_____

_____

	Dealer Contact	Phone Number	Hours
Sales:	_____	_____	_____
Parts:	_____	_____	_____
Service:	_____	_____	_____

MEMORANDA

TABLE OF CONTENTS

Name	Page
GENERAL INFORMATION	A5
REPAIR ALTERNATIVES	A8
SUPPLEMENTAL COOLANT ADDITIVES	A9
MAINTENANCE PARTS	A10
INDEX	A14
MACHINE ARRANGEMENT	1
COMMON AR	1
OPTION AR-CAB	2
OPTION AR-COLD WEATHER	2
OPTION AR-LADDER	3
OPTION AR-LIGHTING	3
OPTION AR-REGIONAL	5
OPTION AR-WORK TOOL	5
SNOW AR-MOTOR GRADER	5
ENGINE ARRANGEMENT	6
ENGINE AR-COMPLETE	6
ENGINE AR-CORE	12
BASIC ENGINE	18
ACTUATOR GP-VALVE	18
BASE GP-VALVE COVER	19
CAMSHAFT GP	22
COVER GP-FLYWHEEL HOUSING	23
COVER GP-FRONT HOUSING	26
COVER GP-VALVE MECHANISM	28
CRANKSHAFT GP	30
CYLINDER BLOCK AS	32
CYLINDER BLOCK GP	35
CYLINDER HEAD AS	38
CYLINDER HEAD GP	43
DAMPER GP	48
DRIVE GP-ACCESSORY	49
FASTENER GP-CYLINDER HEAD	52
FASTENER GP-DAMPER & PULLEY	53
FLYWHEEL GP	54
GEAR GP-FRONT	55
GEAR GP-REAR	56
HOUSING GP-FLYWHEEL	59
HOUSING GP-FRONT	63
LIFTER GP-VALVE	65
LIFTING GP-ENGINE	66
MOUNTING GP-ENGINE & XMSN	67
MOUNTING GP-FAN DRIVE	69
MOUNTING GP-VALVE MECHANISM	72
PAN GP-OIL	74
PISTON & ROD GP	76
PLUG GP-CYLINDER BLOCK	82
PLUG GP-ENGINE	85
PULLEY GP-CRANKSHAFT	86
ROCKER ARM GP	87
SEAL GP-CRANKSHAFT	95
SUPPORT GP-ENGINE	96
SUPPRESSION GP-SOUND	97
VALVE MECHANISM GP	99
LUBRICATION SYSTEM	103
BASE GP-OIL FILTER	103
BREATHER GP	106
COVER GP-OIL FILTER BASE	109
FILLER GP-ENGINE OIL	110
FILTER GP-ENGINE OIL	112
FUMES DISPOSAL GP	117
GAUGE GP-OIL LEVEL (DIPSTICK)	118
LINES GP-TURBOCHARGER OIL	120
OIL CHANGE GP-HIGH SPEED	121
PUMP GP-ENGINE OIL	122
COOLING SYSTEM	125
COOLER GP-ENGINE OIL	125
COOLING AR	128
FAN & MOTOR GP	129
GUARD GP-FAN	131
LINES GP-WATER	133
PUMP GP-WATER	139
RADIATOR GP	145
TANK GP-COOLANT	146
AIR INLET AND EXHAUST SYSTEM	148
AFTERCOOLER GP-AIR	148
AIR CLEANER GP	149
LINES GP-AIR	151
MANIFOLD GP-EXHAUST	153
MANIFOLD GP-INLET	154
MUFFLER GP	155
TURBOCHARGER GP	156
FUEL SYSTEM	158
ADAPTER GP-FAST FILL FUEL	158
FILTER GP-FUEL	159
FILTER GP-WATER SEP & FUEL	169
INJECTOR GP-FUEL	170
LINES GP-FUEL	171
PUMP GP-FUEL INJECTION	181
PUMP GP-FUEL PRIMING	182
PUMP GP-FUEL PRM & WATER SEP	185
PUMP GP-FUEL TRANSFER	186
TANK GP-FUEL	195
VALVE GP-CHECK	197
VALVE GP-FLUID SAMPLING	199
VALVE GP-FUEL SHUTOFF	200
ELECTRICAL AND STARTING SYSTEM	201
ALARM GP	201
BATTERY GP	202

TABLE OF CONTENTS

Name	Page
BRACKET GP-MOUNTING	205
CAMERA AR	207
CONNECTION GP-ELECTRICAL	208
CONTROL & MTG GP-ENGINE ELEK	209
CONTROL & MTG GP-IMPLEMENT	212
CONTROL GP-ENGINE ELECTRONIC	213
CONTROL GP-IMPLEMENT	214
CONTROL GP-UNPROGRAMMED	216
CONVERTER GP-ELECTRICAL	217
ELECTRONICS GP-COMMUNICATION	219
ELECTRONICS GP-IMPLEMENT	219
ELECTRONICS GP-MONITOR	220
ELECTRONICS GP-POWER TRAIN	222
GRADE CONTROL AR	222
GRADE CONTROL AR-LASER	223
GRADE CONTROL GP	224
HEATER GP-JACKET WATER	225
INSTALLATION AR-COMMUNICATION	227
INSTALLATION GP-LIGHTING	229
INSTALLATION GP-SECURITY	230
INSTALLATION GP-WARNING BEACON	232
LAMP GP	233
LAMP GP-DOME	234
LAMP GP-FLOOD	235
LAMP GP-HEAD	245
LAMP GP-HEAD & SIGNAL	247
LAMP GP-SIGNAL	249
LAMP GP-WARNING BEACON	251
LIGHTING GP-FLOOD	253
LIGHTING GP-ROADING	268
MAST GP	268
MOTOR GP-ELECTRIC	270
MOUNTING GP-LAMP	272
MOUNTING GP-LIGHTING	273
MOUNTING GP-MAST	277
MOUNTING GP-RECEIVER	278
POWER SUPPLY GP	280
RADIO GP-COMMUNICATION	281
RECEIVER AR-LASER	281
RECEIVER AR-SATELLITE	282
RECEIVER GP-LASER	282
RECEIVER GP-SATELLITE	283
SENSOR & MOUNTING GP	284
SENSOR & MTG GP-POSITION	285
SENSOR AR-GRADE	288
SENSOR GP-ENGINE	289
SENSOR GP-POSITION	292
SENSOR GP-PRESSURE	294
SENSOR GP-SONIC	303
SENSOR GP-SPEED	305
SENSOR GP-TEMPERATURE	310
STARTING AID GP-ETHER	317
STARTING MOTOR GP-ELECTRIC	318
SUPPORT GP-LIGHT	321
SWITCH GP-BYPASS	322
SWITCH GP-DISCONNECT	323
SWITCH GP-LIGHT	324
SWITCH GP-LIMIT	325
SWITCH GP-MAGNETIC	326
SWITCH GP-PRESSURE	331
SWITCH GP-ROADING	333
SWITCH GP-ROCKER	335
SWITCH GP-WIPER	339
TARGET GP-LASER	341
VALVE GP-ETHER STARTING	343
WARNING GP-BACKUP	344
WIRING GP-CAB	345
WIRING GP-CAMERA	353
WIRING GP-ELECTRONIC CONTROL	355
WIRING GP-FRONT	365
WIRING GP-GRADE CONTROL	369
WIRING GP-LUBRICATION	373
WIRING GP-MONITOR	374
WIRING GP-POWER RECEPTACLE	378
WIRING GP-REAR	382
WIRING GP-REAR LIGHTING	389
WIRING GP-SECONDARY STEERING	393
WIRING GP-SENSOR	395
WIRING GP-UNIT INJECTOR	396
POWER TRAIN	399
AUTOSHIFT AR	399
AXLE GP-REAR	400
BASE GP-OIL FILTER	402
CARRIER GP-FINAL DRIVE	403
CASE & PARTS GP-TRANSMISSION	404
CHAIN GP-DRIVE	407
CLUTCH GP-TRANSMISSION	408
CONTROL GP-DIFFERENTIAL LOCK	418
CONTROL GP-TRANSMISSION HYD	422
COOLER GP-TRANSMISSION OIL	426
COUPLING GP-TORSIONAL	428
COVER GP-SHIPPING	429
DIFFERENTIAL GP	431
DRIVE GP-FINAL	433
FILLER GP-POWER TRAIN OIL	437
FILTER GP-OIL	438
GEAR GP-BEVEL & PINION	440
LINES GP-LUBRICATION	442
LINES GP-TRANSMISSION OIL	443
MOUNTING GP-WHEEL	448
POWER TRAIN AR	448
PUMP GP-GEAR	449
SCREEN GP-MAGNETIC	452
SHAFT GP-DRIVE	453
SHAFT GP-INPUT	454
TANDEM & COVER GP	455
TRANSMISSION AR	457

TABLE OF CONTENTS

Name	Page
VALVE & MTG GP-SOLENOID	458
VALVE GP-MODULATING	459
VALVE GP-RELIEF	460
WHEEL & TIRE AR	462
WHEEL & TIRE GP	463
WHEEL AR	465
WHEEL GP	467
FRAME AND BODY	474
AXLE AR-FRONT	474
AXLE AS-FRONT	475
AXLE GP-FRONT	476
COVER GP-CONTROL VALVE	478
COVER GP-PROTECTION	481
ENCLOSURE GP-ENGINE	482
FASTENER GP-ENCLOSURE	487
FASTENER GP-SENSOR	488
FENDER & SUPPORT GP	490
FRAME GP-FRONT	492
FRAME GP-REAR	494
GUARD GP-BOTTOM	495
GUARD GP-DEBRIS	496
HITCH GP-ARTICULATING	497
HITCH GP-TOWING	499
INSULATION GP-SOUND SUPPR	500
LINES GP-AUTOMATIC LUBRICATION	501
LINES GP-LUBRICATION	508
LINK GP-STEERING	509
LUBRICATION AR-AUTOMATIC	510
MOUNTING GP-AXLE	513
MOUNTING GP-VALVE	515
PUMP GP-LUBRICATION	516
REFLECTOR GP	518
SERVICE CENTER AR	520
SHIELD GP-ENGINE COMPARTMENT	521
STEP GP	522
SUPPORT GP-FUEL TANK	525
VALVE GP-LUBE DISTRIBUTION	526
WALKWAY GP	530
BRAKING SYSTEM	534
ACCUMULATOR & MTG GP-BRAKE	534
ACCUMULATOR GP-BRAKE	535
BRAKE GP-PARKING	538
CONTROL GP-SERVICE BRAKE	540
LINES GP-SERVICE BRAKE	545
HYDRAULIC SYSTEM	547
ACCUMULATOR GP-BLADE CUSHION	547
ACCUMULATOR GP-HYDRAULIC	548
BASE GP-OIL FILTER	549
CONTROL AR-HYDRAULIC	550
CONTROL AR	553
COOLER GP-HYDRAULIC OIL	554
CYLINDER & MTG GP-ARTICULATION	556
CYLINDER & MTG GP-BLADE LIFT	557
CYLINDER & MTG GP-BLADE TIP	558
CYLINDER & MTG GP-CENTERSHIFT	559
CYLINDER & MTG GP-SIDESHIFT	560
CYLINDER & MTG GP-STEERING	561
CYLINDER & MTG GP-WHEEL LEAN	562
CYLINDER GP-ARTICULATION	563
CYLINDER GP-BLADE TIP	564
CYLINDER GP-CENTERSHIFT	566
CYLINDER GP-LIFT	567
CYLINDER GP-RIPPER	568
CYLINDER GP-SIDESHIFT	569
CYLINDER GP-STEERING	570
CYLINDER GP-WHEEL LEAN	572
DRIVE GP-CIRCLE	573
FILTER & MTG GP-HYDRAULIC	576
FILTER GP-OIL	578
FLOAT AR-BLADE	580
HYDRAULIC AR	580
LINES GP-ACCUMULATOR	581
LINES GP-CENTERSHIFT LOCK	595
LINES GP-HYDRAULIC	597
LINES GP-HYDRAULIC FAN	612
LINES GP-RIPPER	615
LINES GP-SECONDARY STEERING	618
LOCK GP-CENTERSHIFT	630
MANIFOLD GP-CONTROL	631
MANIFOLD GP-VALVE	636
MOTOR GP-GEROTOR	639
PUMP & MOTOR GP-SEC STEERING	641
PUMP & MTG GP-HYDRAULIC FAN	642
PUMP & MTG GP-PISTON	643
PUMP & MTG GP-SECONDARY STEER	644
PUMP GP-PISTON	645
ROTATING GP-PUMP	647
SWASHPLATE GP	648
SWIVEL GP	649
TANK & MTG GP-HYDRAULIC	651
TANK GP-HYDRAULIC	652
VALVE GP-BANK 3	653
VALVE GP-BANK 4	654
VALVE GP-BANK 5	655
VALVE GP-BANK 6	656
VALVE GP-BANK 7	661
VALVE GP-CHECK	663
VALVE GP-CONTROL	664
VALVE GP-DIVERTER	690
VALVE GP-PRESSURE REDUCING	691
VALVE GP-PUMP CONTROL	692
VALVE GP-RELIEF	693
VALVE GP-SHUTTLE	695
VALVE GP-SOLENOID	696
VALVE GP-SOLENOID & MANIFOLD	699

TABLE OF CONTENTS

Name	Page
IMPLEMENTS	700
CIRCLE & BEAM AS	700
CIRCLE GP	701
DRAWBAR GP	703
PLATE GP-PUSH	705
OPERATOR STATION	706
AIR CONDITIONER & MOUNTING GP	706
AIR CONDITIONER GP	707
ARMREST GP	713
CAB AR	715
COIL GP-EVAPORATOR & HEATER	716
COMPRESSOR GP-REFRIGERANT	718
CONTROL & MTG GP-JOYSTICK	719
CONTROL GP-ELECTROHYDRAULIC	719
CONTROL GP-JOYSTICK	722
COVER GP-CAB	726
CUSHION GP-ARM	727
DISPLAY AR-MONITOR	728
DISPLAY GP-CAMERA	729
DISPLAY GP-MONITOR	730
DOOR GP-CAB	733
DUCT & FILTER GP-CAB AIR	739
FAN GP-CIRCULATING	740
HORN GP-AIR	743
HORN GP-ELECTRIC	745
LINER GP-CAB	746
LINES GP-AIR CONDITIONER	748
LINES GP-HEATER	750
LITERATURE GP	753
MIRROR GP	754
MIRROR GP-REAR VIEW	756
MOTOR GP-WINDOW WIPER	760
MOUNTING GP-ANTENNA	761
MOUNTING GP-CONTROL	762
MOUNTING GP-PLATFORM	763
PANEL GP-CAB	764
PANEL GP-CONTROL	767
PANEL GP-INSTRUMENT	772
PEDAL GP-BRAKE, XMSN & GOV	774
RADIO GP	776
ROOF GP-CAB	778
SUPPORT GP-CONTROL	779
TANK GP-WINDOW WASHER	785
WINDOW GP-CAB	786
WIPER & WASHER GP-WINDOW	788
WIPER GP-WINDOW	790
WORK TOOLS	794
BIT GP-END	794
BLADE GP	795
EDGE GP-CUTTING	796
LIFT GP-BLADE	798
MOUNTING GP-RIPPER	800
RIPPER AR	801
RIPPER GP	803
TOOTH GP-RIPPER	805
SERVICE EQUIPMENT AND SUPPLIES	806
FILM GP	806
FILM GP-INTERNATIONAL	808
FILM GP-U.S.	809
PLATE & FILM GP	810
PART NUMBER INDEX	B1

GENERAL INFORMATION

1. MACHINE IDENTIFICATION

Caterpillar machines are identified by Product Identification Numbers (PIN). Some components included in a machine may be identified by Serial Numbers (S/N). Typical components that will be serialized include engines, transmissions, bulldozers, and rippers. The machine and engine are further identified by arrangement numbers and in some cases modification numbers. These numbers are shown on the product identification plate(s) and on the master plate in the operator's compartment.

Caterpillar dealers need all of these numbers to determine accurate parts identification.

SIS *New Feature*

Effective First Quarter 2001 the Caterpillar Product Identification Number (PIN) changed from 8 to 17 characters. In an effort to provide uniform equipment identification, Caterpillar and other construction equipment manufacturers are moving to comply with the latest version of the product identification numbering standard. Non-road machine PINs are defined by ISO 10261. The new PIN format will apply to all Caterpillar machines and generator sets. The PIN plates and frame marking will display the 17 character PIN. The new format will look like the following:

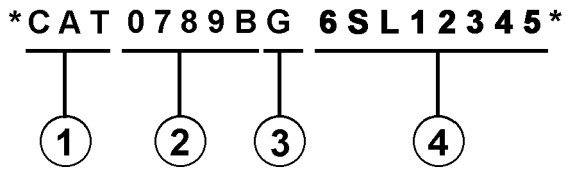

Where:

1. Caterpillar's World Manufacturing Code (characters 1-3)

2. Machine Descriptor (characters 4-8)

3. Check Character (character 9)

4. Machine Indicator Section (MIS) or Product Sequence Number (characters 10-17). These were previously referred to as the Serial Number.

Machines and generator sets produced before First Quarter 2001 will maintain their 8 character PIN format.

Components such as engines, transmissions, axles, etc. and work tools will continue to use an 8 character Serial Number (S/N).

2. ORDERING PARTS

WARNING

When replacement parts are required for this product Caterpillar recommends using Caterpillar replacement parts or parts with equivalent specifications including, but not limited to, physical dimensions, type, strength and material.

Failure to heed this warning can lead to premature failures, product damage, personal injury or death.

Quality Caterpillar replacement parts are available from Caterpillar dealers throughout the world. Their parts inventories are up to date and include all parts normally required to protect your investment in Caterpillar machines. Dealers may offer repair kits or remanufactured parts to allow selection of the most effective repair alternative for a particular situation. When ordering parts, your order should specify the quantity, part number, part name, and the serial number/product identification number of the machine for which the parts are needed.

3. PARTS MANUAL ORGANIZATION

Product information in this manual is presented as "information elements" that represent all of the components for the specific model. Engine Arrangement and Seat Group are examples of information elements. The information elements are organized alphabetically by part name and secondarily by part number within each major section of the manual.

4. TABLE OF CONTENTS

A table of contents (TOC) is found at the beginning of the manual. The TOC lists each section of the manual with a complete list of all information elements organized as they appear in the manual. Page numbers are provided for quick reference to detailed parts identification illustrations and serviceable consist lists.

5. MAINTENANCE PARTS INDEX

The Maintenance Parts Index, located near the beginning of the manual, references most frequently used maintenance part numbers, providing description, quantity, usage and page number. This information is organized alphabetically by part description.

6. INDEX

The index located near the front of the manual is an alphabetical listing of all information elements included in the manual. Page numbers are provided for quick reference to detailed parts identification illustrations and serviceable consist lists.

7. PART NUMBER INDEX

A numerical index listing all part numbers and the corresponding page number(s) appears at the back of the manual.

8. CAPTIONS

Captions located at the beginning of each information element identify the part number and part name along with additional descriptive information. PIN and S/N information found in each caption should be used to select correct information for a specific machine. Field replacement options, identification of optional attachment components, and where used ("part of") information is also provided.

The first line of a caption is shown in larger type font to indicate the beginning of an information element. Captions for additional pages that may be required to illustrate an information element will be shown in standard type font and will include the term *(contd.)* .

9. NON-SERVICED PARTS

In some instances it is necessary to display non-serviced parts that are a link to a lower level serviceable consist lists. These non-serviced part numbers are shown in *italic* type indicating that they are not available.

10. PARTS LIST REFERENCE NUMBERS

Numbers shown in the Ref No column correspond to numbers used in the associated graphic(s). An alphabetic suffix may be added to a reference number to identify lower level consist items. Numbers shown in the Graphic Ref column refer to the graphic number identifier displayed in the lower left corner of each illustration. The Graphic Ref number may be used in combination with the item Ref No to determine the correct part number. There may be intentional omission of a Ref No in a consist list as information is updated to reflect the latest serviceable part numbers.

11. INDENTED PART NAMES

When a part name is indented in a parts list, it is part of (included in) the group or assembly under which it is indented.

12. ILLUSTRATION REFERENCE LETTERS

When necessary, illustrations contain reference letters (A, B, C etc.) that are intended to track lines and harnesses from one point to another. They are also used to show where to reconnect illustrations that have been separated.

13. ABBREVIATIONS AND SYMBOLS

O.D. – Outside Diameter
I.D. – Inside Diameter
A – Not Part Of This Group
B – Use As Required
C – Change From Previous Type
D – Order By The Meter
E – Order By The Centimeter
F – Not Shown
G – Order By The Inch
I – Refer To Hydraulic Information System
M – Metric Part
R – Remfg Part May Be Available
Y – Separate Illustration
Z – Not Serviced Separately

SIS *New Feature*

14. DESCRIPTION OF TYPE CHANGES

Type - A type is defined as any configuration change that requires an additional Information Element for an Arrangement, Group, or Assembly. If serial number breaks for types are not available, a type # (Type 1, Type 2, etc.) will be displayed in the caption. These "type" changes are identified with a "C" note (change from previous type) in the Parts List. Only the "types" that apply to this Parts Manual will be included. Additional types may exist causing "C" notes to appear on an Information Element when no other types are shown.

15.<END>

This symbol indicates the end of an information element.

NOTE:

Continuing improvement and advancement of product design may cause changes to your machine which may not be included in this publication. Whenever a question arises regarding your Caterpillar product or this publication, please consult your Caterpillar dealer for the latest available information.

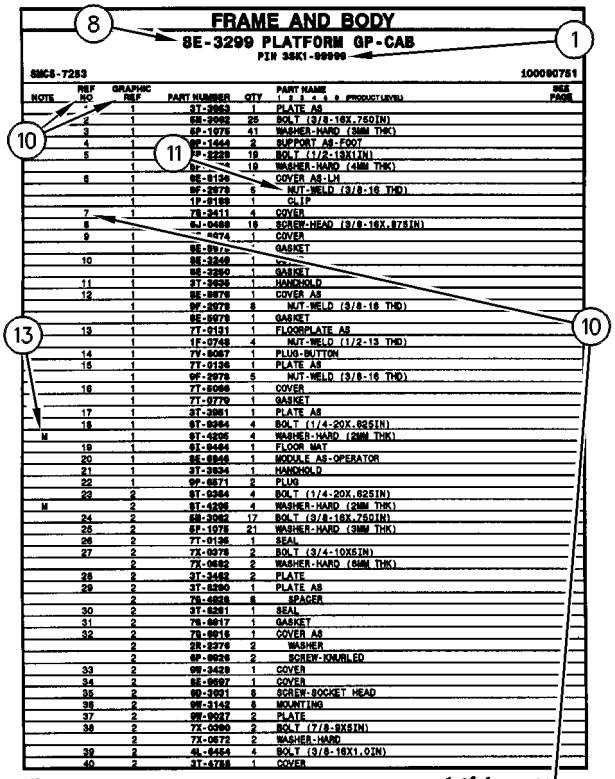

FRAME AND BODY

8E-3299 PLATFORM GP-CAB

PIN 3SK1-99999

SMCS-7253 100090751

NOTE	REF NO	GRAPHIC REF	PART NUMBER	QTY	PART NAME 1 2 3 4 5 6 (PRODUCT LEVEL)	SEE PAGE
	*	1	3T-3953	1	PLATE AS	
	2	1	6E-2992	25	BOLT (3/8-16X.750IN)	
	3	1	6F-1976	41	WASHER-HARD (3MM THK)	
	4	1	9F-1444	2	SUPPORT AS-FOOT	
	5	1	7P-2229	19	BOLT (1/2-13X1IN)	
		1	6F-	19	WASHER-HARD (4MM THK)	
	6	1	6E-6136		COVER AS-LH	
		1	9F-2978	5	NUT-WELD (3/8-16 THD)	
		1	1P-0188	1	CLIP	
	7	1	7S-3411	4	COVER	
	8		9J-0488	18	SCREW-HEAD (3/8-16X.875IN)	
	9	1	-4474	1	COVER	
		1	6E-897		GASKET	
	10	1	6E-3249	1		
		1	6E-3250	1	GASKET	
	11	1	3T-3638	1	HANDHOLD	
	12	1	6E-8978	1	COVER AS	
		1	9F-2978	8	NUT-WELD (3/8-16 THD)	
		1	6E-8979	1	GASKET	
	13	1	7T-0131	1	FLOORPLATE AS	
		1	1F-0748	4	NUT-WELD (1/2-13 THD)	
	14	1	7V-8067	1	PLUG-BUTTON	
	15	1	7T-0136	1	PLATE AS	
		1	9F-2978	5	NUT-WELD (3/8-16 THD)	
	16	1	7T-8066	1	COVER	
		1	7T-9779	1	GASKET	
	17	1	3T-3861	1	PLATE AS	
	18	1	6T-8364	4	BOLT (1/4-20X.625IN)	
M		1	9T-4205	4	WASHER-HARD (2MM THK)	
	19	1	6L-8494	1	FLOOR MAT	
	20	1	8E-8846	1	MODULE AS-OPERATOR	
	21	1	3T-3834	1	HANDHOLD	
	22	1	9F-8671	2	PLUG	
	23	2	6T-8364	4	BOLT (1/4-20X.625IN)	
M		2	9T-4205	4	WASHER-HARD (2MM THK)	
	24	2	6E-3062	17	BOLT (3/8-16X.750IN)	
	25	2	6F-1976	21	WASHER-HARD (3MM THK)	
	26	2	7T-0135	1	SEAL	
	27	2	7X-0975	2	BOLT (3/4-10X5IN)	
		2	7X-0682	2	WASHER-HARD (6MM THK)	
	28	2	3T-3462	2	PLATE	
	29	2	3T-8290	1	PLATE AS	
		2	7S-6828	8	SPACER	
	30	2	3T-8281	1	SEAL	
	31	2	7S-8817	1	GASKET	
	32	2	7S-8816	1	COVER AS	
		2	2R-2276	2	WASHER	
		2	6F-8926	2	SCREW-KNURLED	
	33	2	9W-3429	1	COVER	
	34	2	8E-8697	1	COVER	
	35	2	6D-3931	8	SCREW-SOCKET HEAD	
	36	2	9W-3142	8	MOUNTING	
	37	2	9W-8027	2	PLATE	
	38	2	7X-0990	2	BOLT (7/8-9X5IN)	
		2	7X-0672	2	WASHER-HARD	
	39	2	4L-8454	4	BOLT (3/8-16X1.0IN)	
	40	2	3T-4788	1	COVER	

12 FRAME AND BODY 1 of 4 SELP4570-01

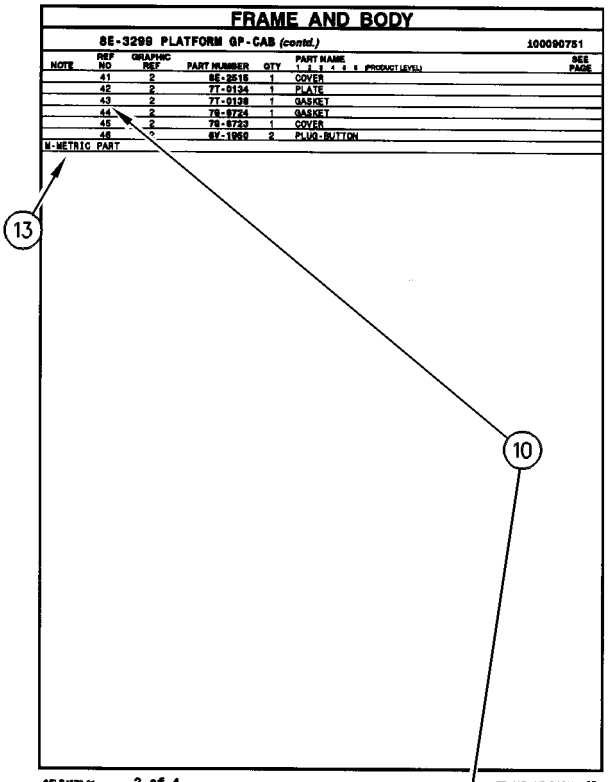

FRAME AND BODY

8E-3299 PLATFORM GP-CAB (contd.) 100090751

NOTE	REF NO	GRAPHIC REF	PART NUMBER	QTY	PART NAME 1 2 3 4 5 6 (PRODUCT LEVEL)	SEE PAGE
	41	2	6E-2516	1	COVER	
	42	2	7T-0134	1	PLATE	
	43	2	7T-0138	1	GASKET	
	44	2	7S-8724	1	GASKET	
	45	2	7S-8723	1	COVER	
	46	2	6V-1950	2	PLUG-BUTTON	

M-METRIC PART

SELP4570-01 2 of 4 FRAME AND BODY 13

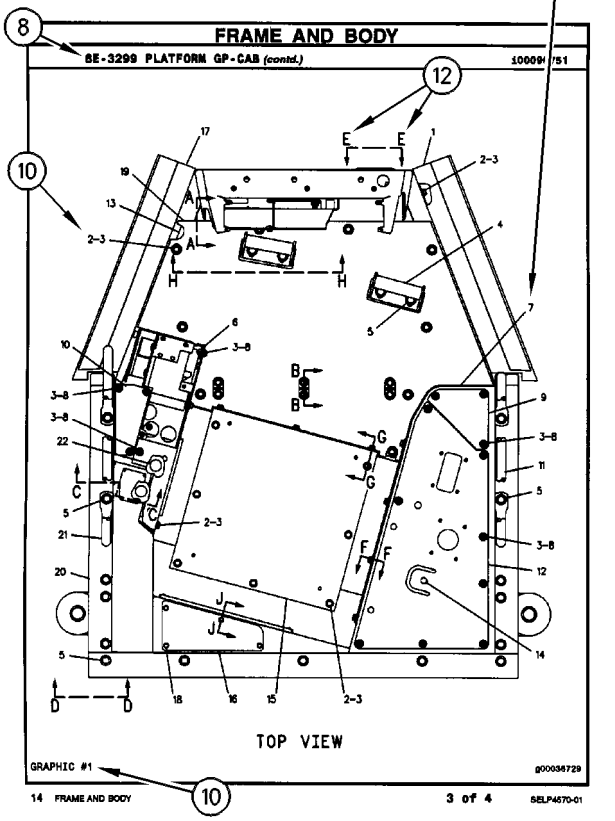

FRAME AND BODY

8E-3299 PLATFORM GP-CAB (contd.) 100090751

TOP VIEW

GRAPHIC #1 g00036729

14 FRAME AND BODY 3 of 4 SELP4570-01

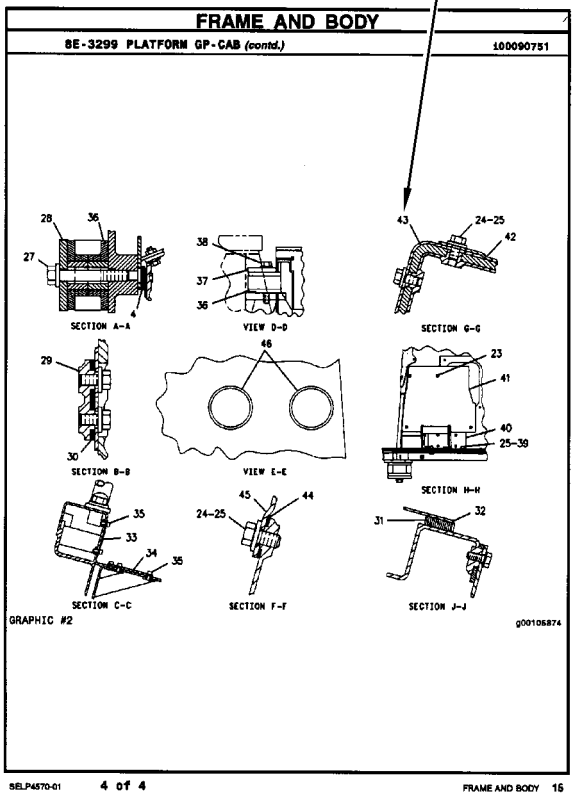

FRAME AND BODY

8E-3299 PLATFORM GP-CAB (contd.) 100090751

SECTION A-A

VIEW D-D

SECTION G-G

SECTION B-B

VIEW E-E

SECTION H-H

SECTION C-C

SECTION F-F

SECTION J-J

GRAPHIC #2 g00105874

SELP4570-01 4 of 4 FRAME AND BODY 16

REPAIR ALTERNATIVES

REMANUFACTURED COMPONENTS

As an option when making repairs consider Caterpillar Remanufactured Components. Components that are available through the Caterpillar Remanufactured Program are identified three ways in the parts book:

- with the letter R in the note field of the parts list
- with an R* at the beginning of the first line of the caption
- with an *R at the end of the first line of the caption

Typical components included in the Remanufacturing Program include:

ALTERNATORS
CONNECTING RODS
CRANKSHAFTS - UNDERSIZE
CRANKSHAFTS - UPGRADE TO NEW
CYLINDER HEADS
ELECTRONIC CONTROL MODULES (ECM)
ELECTRONIC SENSORS
FUEL INJECTORS
FUEL NOZZLES
FUEL PUMPS
GOVERNORS
OIL PUMPS
PISTONS
SHORT BLOCKS
STARTERS
TURBOCHARGERS - COMPLETE
TURBOCHARGER CARTRIDGES
WATER PUMPS

Caterpillar Remanufactured engines for many engine arrangements are also available.

SUPPLEMENTAL COOLANT ADDITIVES

CUSTOMER BENEFITS:

Protects against cavitation, foam, erosion, corrosion, and scale buildup in cooling systems.

- Provides measured coolant conditioner.

DESCRIPTION:

Additives deplete from the coolant with normal operation. For this reason, Supplemental Coolant Additives (SCA) must be added to all heavy duty coolants at regular intervals. In addition, when not using a fully formulated, pre-charged antifreeze, like Caterpillar's DEAC, an initial charge of SCA must be added to the cooling system. The amount of SCA added to the system is dependent on the capacity of the system.

The SCA for initial fill is provided as a liquid. SCA's for maintenance intervals are available in liquid form and as a spin-on element. (No Spin-on available for 3600 Family of Engines)

NOTE:

The amount of SCA added at initial fill is not the same as the amount added at maintenance intervals.

The coolant additive elements can be used with any ethylene or propylene glycol type antifreeze which meets ASTM D4985 or ASTM D5345 Specifications.

NOTE:

For use with standard heavy duty coolant only, not for use with Extended Life Coolant.

PARTS NEEDED:

Cooling System Capacity		Liquid SCA at Initial Fill	Liquid SCA at Maintenance*	Spin-on SCA Maintenance Element*
Liters	Gallons			
22-30	(6-8)	3P-2044 (1)	6V-3542 (1)	111-2370 (1)
30-38	(8-10)	3P-2044 (1) 6V-3542 (1)	111-2372 (1)	111-2369 (1)
38-49	(10-13)	3P-2044 (1) 8T-1589 (1)	111-2372 (1)	111-2369 (1)
49-64	(13-17)	3P-2044 (2)	8T-1589 (1)	9N-3368 (1)
64-83	(17-22)	3P-2044 (2) 8T-1589 (1)	111-2372 (1) 6V-3542 (1)	111-2371 (1)
83-114	(22-30)	3P-2044 (3) 8T-1589 (1)	3P-2044 (1)	9N-3718 (1)
114-163	(30-43)	3P-2044 (5)	3P-2044 (1) 6V-3542 (1)	111-2371 (2)
163-242	(43-64)	3P-2044 (8)	3P-2044 (2)	9N-3718 (2)

** Normal maintenance period is 250 hrs. See your Operation and Maintenance Manual for complete coolant maintenance instructions.*

( ) Indicates quantity required.

MAINTENANCE PARTS

DESCRIPTION	PART NUMBER	QTY	WHERE USED	PAGE
AIR INLET AND EXHAUST SYSTEM				
CAP-PROTECTIVE	248-4840	1	LINES GP-AIR	152
FILTER ELEMENT AS-AIR (PRIMARY)	245-3818	1	AIR CLEANER GP	150
FILTER ELEMENT AS-AIR (SECONDARY)	245-3819	1	AIR CLEANER GP	150
BASIC ENGINE				
PLUG-DRAIN (ENGINE OIL PAN)	9X-6451	2	PAN GP-OIL	74
SEAL-VALVE COVER	229-5711	1	COVER GP-VALVE MECHANISM	28
		1	COVER GP-VALVE MECHANISM	29
COOLING SYSTEM				
CAP AS-COOLANT TANK (COOLANT TANK)	345-1237	1	TANK GP-COOLANT	146
REGULATOR-TEMPERATURE (92-DEG C) (COOLANT)	248-5513	1	LINES GP-WATER	133
SEAL-LIP TYPE (WATER TEMPERATURE REGULATOR)	3S-9643	1	LINES GP-WATER	133

MAINTENANCE PARTS

DESCRIPTION	PART NUMBER	QTY	WHERE USED	PAGE
ELECTRICAL AND STARTING SYSTEM				
BATTERY (12-VOLT, 1400-CCA)	153-5710	2	BATTERY GP	202
CAP AS	180-9900	1	WIRING GP-CAB	345
CIRCUIT BREAKER AS (150-AMPERE) (ALTERNATOR)	171-2215	1	WIRING GP-POWER RECEPTACLE	378
CIRCUIT BREAKER AS (20-AMPERE) (CAB)	6T-3644	1	WIRING GP-CAB	348
CIRCUIT BREAKER AS (80-AMPERE) (LOAD)	171-2210	1	WIRING GP-POWER RECEPTACLE	378
CIRCUIT BREAKER AS (80-AMPERE) (MAIN)	171-2210	1	WIRING GP-POWER RECEPTACLE	378
FILTER (ETHER START)	358-4889	1	VALVE GP-ETHER STARTING	343
FLASHER AS	252-5224	1	WIRING GP-CAB	345
FUSE (10-AMPERE)	9W-1442	19	WIRING GP-CAB	345
FUSE (15-AMPERE)	9W-1441	17	WIRING GP-CAB	345
FUSE (20-AMPERE)	9W-1446	4	WIRING GP-CAB	345
KEY (BATTERY DISCONNECT)	8H-5306	1	SWITCH GP-DISCONNECT	323
KEY AS-ELECTRONIC (SECURITY)	206-5162	2	INSTALLATION GP-SECURITY	230
LAMP (24-VOLT) (DOME)	7N-9943	1	LAMP GP-DOME	234
LAMP (24-VOLT, 21-WATT)	9X-4493	1	LAMP GP	233
LAMP (24-VOLT, 5-WATT)	130-3515	1	LAMP GP-HEAD & SIGNAL	247
		1	LAMP GP-HEAD & SIGNAL	248
LAMP (24-VOLT, 75/70-WATT)	9X-3465	1	LAMP GP-HEAD & SIGNAL	247
		1	LAMP GP-HEAD & SIGNAL	248
LAMP (24-VOLT, HID)	290-8160	1	LAMP GP-FLOOD	239
		1	LAMP GP-FLOOD	240
		1	LAMP GP-FLOOD	242
		1	LAMP GP-FLOOD	243
		1	LAMP GP-FLOOD	244
LAMP AS-LED (24-VOLT, GREEN)	250-2299	1	SWITCH GP-ROCKER	335
	279-5308	1	CONTROL GP-IMPLEMENT	214
		1	WIRING GP-CAB	345
LAMP AS-LED (24-VOLT, RED)	242-3282	1	INSTALLATION GP-SECURITY	230
LAMP-HALOGEN (24-VOLT, 70-WATT)	351-9918	1	LAMP GP-FLOOD	235
		1	LAMP GP-FLOOD	236
	9X-3463	1	LAMP GP-FLOOD	237
		1	LAMP GP-FLOOD	238
		1	LAMP GP-FLOOD	241
		1	LAMP GP-HEAD	246
LAMP-HALOGEN (24-VOLT, 70-WATT) (LOW BEAM)	9X-3463	1	LAMP GP-HEAD	245
FRAME AND BODY				
BREATHER	178-8063	1	PUMP GP-LUBRICATION	516

MAINTENANCE PARTS

DESCRIPTION	PART NUMBER	QTY	WHERE USED	PAGE
FUEL SYSTEM				
CAP AS-FILLER (FUEL TANK)	7X-7700	1	TANK GP-FUEL	195
FILTER AS-WATER SEP & FUEL (PRIMARY)	326-1644	1	FILTER GP-WATER SEP & FUEL	169
FILTER-FUEL (ADVANCED EFFICIENCY)	1R-0762	1	FILTER GP-FUEL	159
		1	FILTER GP-FUEL	161
		1	FILTER GP-FUEL	163
		1	FILTER GP-FUEL	165
		1	FILTER GP-FUEL	167
STRAINER-FUEL	199-9907	1	TANK GP-FUEL	195
HYDRAULIC SYSTEM				
CAP AS-FILLER (HYDRAULIC TANK)	142-8937	1	TANK GP-HYDRAULIC	652
FILTER ELEMENT-BREATHER (HYDRAULIC TANK)	9R-9925	1	TANK & MTG GP-HYDRAULIC	651
FILTER ELEMENT-OIL (ULTRA HIGH EFFICIENCY) (HYDRAULIC TANK)	338-3540	1	FILTER GP-OIL	579
FILTER-OIL (ADVANCED EFFICIENCY) (PRIMARY)	1G-8878	1	FILTER GP-OIL	578
SCREEN (CONTROL MANIFOLD)	6E-5066	1	MANIFOLD GP-CONTROL	633
STRAINER (HYDRAULIC OIL)	206-8818	1	TANK GP-HYDRAULIC	652
LUBRICATION SYSTEM				
BREATHER AS (CRANKCASE)	290-8568	1	BREATHER GP	108
	9Y-4357	1	BREATHER GP	106
		1	BREATHER GP	107
CAP AS-ENGINE OIL FILLER	241-5645	1	FILLER GP-ENGINE OIL	110
CAP-OIL FILLER (ENGINE)	068-4497	1	FILLER GP-ENGINE OIL	111
FILTER-ENGINE OIL (ADVANCED EFFICIENCY)	1R-1808	1	FILTER GP-ENGINE OIL	112
		1	FILTER GP-ENGINE OIL	113
MACHINE ARRANGEMENT				
SCREEN AS-CAB	266-4296	1	OPTION AR-CAB	2

MAINTENANCE PARTS

DESCRIPTION	PART NUMBER	QTY	WHERE USED	PAGE
OPERATOR STATION				
BLADE AS-WIPER (400-MM) (LOWER DOOR WINDOW, LH)	6V-5851	1	WIPER GP-WINDOW	792
BLADE AS-WIPER (400-MM) (LOWER DOOR WINDOW, RH)	6V-5851	1	WIPER GP-WINDOW	790
BLADE AS-WIPER (450-MM) (FRONT)	6V-5853	1	WIPER & WASHER GP-WINDOW	788
BLADE AS-WIPER (500-MM) (UPPER DOOR WINDOW, LH)	5C-8811	1	WIPER GP-WINDOW	792
BLADE AS-WIPER (500-MM) (UPPER DOOR WINDOW, RH)	5C-8811	1	WIPER GP-WINDOW	790
CAP-VENTED (WASHER TANK)	276-3884	1	WIPER & WASHER GP-WINDOW	788
DRYER AS-REFRIGERANT	257-3227	1	AIR CONDITIONER GP	711
FILTER ELEMENT-AIR (CAB HEATER, AIR CONDITIONER)	211-2660	1	DUCT & FILTER GP-CAB AIR	739
FILTER ELEMENT-CAB AIR (ACTIVATED CHARCOAL)	220-8800	1	DUCT & FILTER GP-CAB AIR	739
FILTER ELEMENT-CAB AIR (CAB HEATER, AIR CONDITIONER)	149-1912	1	DUCT & FILTER GP-CAB AIR	739
FUSE (15-AMPERE)	133-9012	2	AIR CONDITIONER GP	707
GASKET	107-4396	1	LINES GP-AIR CONDITIONER	748
LAMP AS (24-VOLT) (IMPLEMENT CONTROL)	250-8335	2	LINER GP-CAB	746
LAMP AS-LED (24-VOLT, GREEN)	250-2299	1	PANEL GP-CONTROL	767
POWER TRAIN				
BREATHER (POWER TRAIN OIL)	9G-5127	1	FILLER GP-POWER TRAIN OIL	437
BREATHER (TANDEM)	4H-6112	1	TANDEM & COVER GP	455
FILTER ELEMENT AS-OIL (ADVANCED EFFICIENCY) (POWER TRAIN)	328-3655	1	LINES GP-TRANSMISSION OIL	444
FILTER ELEMENT AS-OIL (ADVANCED EFFICIENCY) (TRANSMISSION)	328-3655	1	FILTER GP-OIL	439
FILTER-MAGNETIC (TRANSMISSION CHARGING)	251-6673	1	SCREEN GP-MAGNETIC	452
FILTER-MAGNETIC (TRANSMISSION SUMP)	251-6673	1	CASE & PARTS GP-TRANSMISSION	404
PLUG-MAGNETIC	304-8032	2	TANDEM & COVER GP	455
	5P-4484	1	CASE & PARTS GP-TRANSMISSION	405
SCREEN-SUCTION (TRANSMISSION CHARGING)	251-6674	1	SCREEN GP-MAGNETIC	452
SCREEN-SUCTION (TRANSMISSION SUMP)	251-6674	1	CASE & PARTS GP-TRANSMISSION	404

INDEX

Name	Page

A

ACCUMULATOR & MTG GP-BRAKE 534
ACCUMULATOR GP-BLADE CUSHION–CHARGED 547
ACCUMULATOR GP-BRAKE–BRAKE ACCUMULATOR CHARGE 537
ACCUMULATOR GP-BRAKE–CHARGED 535, 536
ACCUMULATOR GP-HYDRAULIC 548
ACCUMULATOR-REFRIGERANT 711
ACTUATOR GP-VALVE 18
ADAPTER GP-FAST FILL FUEL 158
ADAPTER-FAST FILL FUEL 158
AFTERCOOLER GP-AIR 148
AIR CLEANER GP 149, 150
AIR CONDITIONER & MOUNTING GP 706
AIR CONDITIONER GP 707, 709, 710, 711
ALARM GP–ACTION 201
ARM GP-WINDOW WIPER (LOWER DOOR WINDOW, LH) 792
ARM GP-WINDOW WIPER (LOWER DOOR WINDOW, RH) 790
ARM GP-WINDOW WIPER (UPPER DOOR WINDOW, LH) 792
ARM GP-WINDOW WIPER (UPPER DOOR WINDOW, RH) 790
ARM GP-WINDOW WIPER (WINDOW WASHER, WIPER) 788
ARMREST GP–LH 714
ARMREST GP–RH 713
AUTOSHIFT AR 399
AXLE AR-FRONT–NON ALL WHEEL DRIVE 474
AXLE AS-FRONT–NON ALL WHEEL DRIVE 475
AXLE GP-FRONT 476
AXLE GP-REAR 400

B

BASE GP-OIL FILTER–ENGINE 103, 105
BASE GP-OIL FILTER–HYDRAULIC TANK RETURN 549
BASE GP-OIL FILTER–POWER TRAIN 402
BASE GP-VALVE COVER 21
BASE GP-VALVE COVER–ENGINE 19, 20
BATTERY (12-VOLT, 1400-CCA) 202
BATTERY GP–EXTREME-DUTY 202
BIT GP-END 794
BLADE AS-WIPER (400-MM) (LOWER DOOR WINDOW, LH) 792
BLADE AS-WIPER (400-MM) (LOWER DOOR WINDOW, RH) 790
BLADE AS-WIPER (450-MM) (FRONT) 788
BLADE AS-WIPER (500-MM) (UPPER DOOR WINDOW, LH) 792
BLADE AS-WIPER (500-MM) (UPPER DOOR WINDOW, RH) 790
BLADE GP 795
BLOCK AS-JUNCTION (BATTERY) 202
BRACKET GP-MOUNTING 207, 223, 281
BRACKET GP-MOUNTING–FUSE PANEL 206
BRACKET GP-MOUNTING–MAST 207
BRACKET GP-MOUNTING–SONIC SENSOR . . . 205
BRAKE GP-PARKING 538
BREATHER 516
BREATHER (POWER TRAIN OIL) 437
BREATHER (TANDEM) 455
BREATHER AS (CRANKCASE) 106, 107, 108
BREATHER GP 455
BREATHER GP–CRANKCASE 106, 107, 108

C

CAB AR 715
CAMERA AR 207
CAMERA GP (115-DEG, COLOR) (REAR VIEW) 353
CAMSHAFT GP 22
CAP AS 345
CAP AS-COOLANT TANK (COOLANT TANK) . . . 146
CAP AS-ENGINE OIL FILLER 110
CAP AS-FILLER (FUEL TANK) 195
CAP AS-FILLER (HYDRAULIC TANK) 652
CAP-OIL FILLER (ENGINE) 111
CAP-PROTECTIVE 152
CAP-VENTED (WASHER TANK) 788
CARRIER GP-FINAL DRIVE 403
CARTRIDGE GP-TURBOCHARGER 156
CASE & PARTS GP-TRANSMISSION 404
CHAIN GP-DRIVE 407
CIRCLE & BEAM AS 700
CIRCLE GP 701
CIRCUIT BREAKER AS (150-AMPERE) (ALTERNATOR) 378
CIRCUIT BREAKER AS (20-AMPERE) (CAB) . . . 348
CIRCUIT BREAKER AS (80-AMPERE) (LOAD) . . . 378
CIRCUIT BREAKER AS (80-AMPERE) (MAIN) . . . 378

INDEX

Name	Page
CLUTCH GP-TRANSMISSION–1ST, 3RD	413
CLUTCH GP-TRANSMISSION–FORWARD	408
CLUTCH GP-TRANSMISSION–HIGH, LOW	415
CLUTCH GP-TRANSMISSION–REVERSE, SECOND	410
COIL GP-EVAPORATOR & HEATER–AIR CONDITIONER, HEATER	716
COMMON AR	1
COMPRESSOR GP-REFRIGERANT	718
CONNECTION GP-ELECTRICAL	208
CONNECTOR GP-ELECTRONIC	729
CONTROL & MTG GP-ENGINE ELEK	209
	211
CONTROL & MTG GP-IMPLEMENT	212
CONTROL & MTG GP-JOYSTICK	719
CONTROL AR	553
CONTROL AR-HYDRAULIC	550
	552
CONTROL AR-HYDRAULIC–AUTO DIFF LOCK POSITION	552
CONTROL AR-HYDRAULIC–DOZER ANGLE, FRONT LIFT, RIPPER, WING MAST, WING TILT	551
CONTROL AR-HYDRAULIC–FRONT LIFT, RIPPER	550
CONTROL AR-HYDRAULIC–FRONT LIFT, WING MAST, WING TILT, RIPPER	552
CONTROL AR-HYDRAULIC–RIPPER	550
CONTROL AR-HYDRAULIC–RIPPER, WING MAST, WING TILT	551
CONTROL GP-AIR & TEMPERATURE (AIR CONDITIONER)	709
CONTROL GP-DIFFERENTIAL LOCK	418
	420
CONTROL GP-ELECTROHYDRAULIC	720
	721
CONTROL GP-ELECTROHYDRAULIC–WITH AUXILIARY LEVER	719
	720
CONTROL GP-ENGINE ELECTRONIC	213
CONTROL GP-IMPLEMENT	214
CONTROL GP-JOYSTICK	725
CONTROL GP-JOYSTICK (ELECTRONIC CONTROL)	720
CONTROL GP-JOYSTICK–LH	723
CONTROL GP-JOYSTICK–RH	722
	724
CONTROL GP-SERVICE BRAKE	540
	542
CONTROL GP-TRANSMISSION HYD	422
CONTROL GP-UNPRGMED MONITOR (MESSENGER)	220
CONTROL GP-UNPROGRAMMED (ENGINE)	213
CONTROL GP-UNPROGRAMMED (HYDRAULIC ELECTRONIC)	357
CONTROL GP-UNPROGRAMMED (IMPLEMENT 1)	216
CONTROL GP-UNPROGRAMMED (IMPLEMENT 2)	216
CONTROL GP-UNPROGRAMMED (TRANSMISSION)	422
CONTROL GP-UNPROGRAMMED–IMPLEMENT 1	216
CONTROL GP-UNPROGRAMMED–IMPLEMENT 2	216
CONVERTER GP-ELECTRICAL	218
CONVERTER GP-ELECTRICAL–RADIO	217
COOLER GP-ENGINE OIL	125
	126
COOLER GP-HYDRAULIC OIL	554
COOLER GP-TRANSMISSION OIL	426
COOLING AR	128
CORE	547
CORE AS (TRANSMISSION OIL COOLER)	426
CORE AS-AFTERCOOLER	148
CORE AS-OIL COOLER (ENGINE)	125
	126
CORE AS-OIL COOLER (HYDRAULIC)	554
CORE AS-RADIATOR	145
COUPLING GP-TORSIONAL	428
COVER GP-CAB	726
COVER GP-CONTROL VALVE	478
COVER GP-FLYWHEEL HOUSING	23
	24
	25
COVER GP-FRONT HOUSING	26
	27
COVER GP-OIL FILTER BASE–ENGINE	109
COVER GP-PROTECTION–HYDRAULIC OIL COOLER, SNOW	481
COVER GP-SHIPPING	429
COVER GP-VALVE MECHANISM	28
	29
CRANKSHAFT GP	30
CUSHION GP-ARM	727
CYLINDER & MTG GP-ARTICULATION	556
CYLINDER & MTG GP-BLADE LIFT	557
CYLINDER & MTG GP-BLADE TIP	558
CYLINDER & MTG GP-CENTERSHIFT	559
CYLINDER & MTG GP-SIDESHIFT	560
CYLINDER & MTG GP-STEERING–NON ALL WHEEL DRIVE	561
CYLINDER & MTG GP-WHEEL LEAN–NON ALL WHEEL DRIVE	562
CYLINDER BLOCK AS	32
	33
	34
CYLINDER BLOCK GP	35
	37
CYLINDER GP-ARTICULATION	563

INDEX

Name	Page
CYLINDER GP-BLADE TIP	564
CYLINDER GP-CENTERSHIFT	566
CYLINDER GP-LIFT	567
CYLINDER GP-RIPPER	568
CYLINDER GP-SIDESHIFT	569
CYLINDER GP-STEERING–NON ALL WHEEL DRIVE	570
CYLINDER GP-WHEEL LEAN–NON ALL WHEEL DRIVE	572
CYLINDER HEAD AS	38 41 42
CYLINDER HEAD GP	43 44 46 47

D

DAMPER GP	48
DIFFERENTIAL GP	431
DISPLAY AR-MONITOR	728
DISPLAY AR-MONITOR–CD610	728
DISPLAY AR-MONITOR–CD700	728
DISPLAY GP-CAMERA–WORK AREA VISUAL SYSTEM	729
DISPLAY GP-MONITOR (CD610)	732
DISPLAY GP-MONITOR (CD700C)	730
DISPLAY GP-MONITOR–CD610	732
DISPLAY GP-MONITOR–CD700C	730
DISPLAY GP-MONITOR–LIGHT BAR	731
DOOR GP-CAB–LH	733
DOOR GP-CAB–RH	736
DRAIN GP-ECOLOGY (REAR AXLE)	400
DRAWBAR GP	703
DRIVE GP-ACCESSORY	49 51
DRIVE GP-CIRCLE	573
DRIVE GP-FINAL–LH	435
DRIVE GP-FINAL–RH	433
DRYER AS-REFRIGERANT	711
DUCT & FILTER GP-CAB AIR	739

E

EDGE GP-CUTTING–CURVED	796
EDGE GP-CUTTING–STRAIGHT	797
ELECTRONICS GP-COMMUNICATION–PRODUCT LINK 300	219
ELECTRONICS GP-IMPLEMENT	219
ELECTRONICS GP-IMPLEMENT–IMPLEMENT 2	219
ELECTRONICS GP-IMPLEMENT–IMPLEMENT 3	220
ELECTRONICS GP-MONITOR–ARABIC, CHINESE, ENGLISH, PORTUGUESE, RUSSIAN	221
ELECTRONICS GP-MONITOR–DANISH, ENGLISH, FINNISH, NORWEGIAN, PORTUGUESE, SWEDISH	220
ELECTRONICS GP-MONITOR–DUTCH, ENGLISH, FRENCH, GERMAN, PORTUGUESE, SPANISH	220
ELECTRONICS GP-MONITOR–ENGLISH, GREEK, HEBREW, ITALIAN, PORTUGUESE, TURKISH	221
ELECTRONICS GP-MONITOR–ENGLISH, PORTUGUESE, ROMANIAN, SLOVENIAN	221
ELECTRONICS GP-MONITOR–MESSENGER	220
ELECTRONICS GP-POWER TRAIN	222
ENCLOSURE GP-ENGINE	482
ENGINE AR-COMPLETE	6 8 11
ENGINE AR-COMPLETE–WITH ENGINE BRAKE	10
ENGINE AR-CORE	12 13 14 15 16 17

F

FAN & MOTOR GP–HYDRAULIC	129
FAN GP-CIRCULATING	742
FAN GP-CIRCULATING–DEFROST	740
FASTENER GP-CYLINDER HEAD	52
FASTENER GP-DAMPER & PULLEY	53
FASTENER GP-ENCLOSURE	487
FASTENER GP-SENSOR	488
FASTENER GP-SENSOR–SONIC	489
FENDER & SUPPORT GP–REAR	490
FILLER GP-ENGINE OIL	110
FILLER GP-ENGINE OIL–LEFT FRONT	111
FILLER GP-POWER TRAIN OIL	437 448
FILM (EXTERIOR SOUND, 108-DB)	5
FILM GP	807
FILM GP–VARIABLE HORSEPOWER	806
FILM GP–VHP PLUS	806
FILM GP-INTERNATIONAL	808
FILM GP-U.S.	809
FILM-CERTIFICATION (OPS, READ OMM)	715
FILM-FUSE PANEL (FUSE IDENTIFICATION)	206
FILM-IDENTIFICATION (BIODEGRADABLE HYDRAULIC OIL)	580
FILM-IDENTIFICATION (DASH, LH)	772

INDEX

Name	Page
FILM-IDENTIFICATION (DASH, RH)	772
FILM-IDENTIFICATION (HORN)	783
FILM-IDENTIFICATION (IGNITION SWITCH)	230
FILM-IDENTIFICATION (LOWER) (SWITCH PANEL)	764
FILM-IDENTIFICATION (LUBRICATION POINTS, LH)	501
FILM-IDENTIFICATION (LUBRICATION POINTS, RH)	501
FILM-IDENTIFICATION (LUBRICATION, HITCH PIN)	501
FILM-IDENTIFICATION (PANEL SWITCHES)	769
FILM-IDENTIFICATION (POWER RECEPTACLE, 12-VOLT)	218
FILM-IDENTIFICATION (UPPER) (SWITCH PANEL)	764
FILM-IDENTIFICATION (VARIABLE BLADE FLOAT)	767
FILM-INFORMATION (PRODUCT LINK, READ OMM)	808 809
FILM-INSTRUCTION (ADJUSTMENT CONTROL)	783
FILM-INSTRUCTION (ALTERNATE EXIT, REMOVE WINDOW)	808 809
FILM-INSTRUCTION (AUXILIARY)	720
FILM-INSTRUCTION (BELT ROUTING)	49
FILM-INSTRUCTION (BLADE CONTROL, LH)	770
FILM-INSTRUCTION (BLADE CONTROL, RH)	770 771
FILM-INSTRUCTION (FLOAT/NO FLOAT)	214
FILM-INSTRUCTION (HVAC WATER, DRAINING, FILLING)	707 750
FILM-INSTRUCTION (LH, BLADE CONTROL)	771
FILM-INSTRUCTION (MACHINE SECURITY, CONSOLE)	230
FILM-INSTRUCTION (NO FLOAT)	721
FILM-INSTRUCTION (OPERATOR CONSOLE, LH)	783
FILM-INSTRUCTION (OPERATOR CONSOLE, RH)	783
FILM-INSTRUCTION (WIPER)	746
FILM-WARNING (BLADE, DO NOT CLIMB, READ OMM)	207 277 342
FILM-WARNING (HAND CRUSH HAZARD, STAY BACK) (ALL OTHER LANGUAGES EXCEPT ENG)	389
FILM-WARNING (HAND CRUSH HAZARD, STAY BACK) (ENGLISH)	389
FILM-WARNING (HIGH PRESSURE, READ OMM)	535 536 547 548
FILM-WARNING (LASER TRANSMITTER)	277
FILM-WARNING (PRODUCT LINK 300, INTL)	808
FILM-WARNING (UNIVERSAL, READ OMM, U.S.)	809
FILTER & MTG GP-HYDRAULIC	576
FILTER (ETHER START)	343
FILTER AS-WATER SEP & FUEL (PRIMARY)	169
FILTER ELEMENT AS-AIR (PRIMARY)	150
FILTER ELEMENT AS-AIR (SECONDARY)	150
FILTER ELEMENT AS-OIL (ADVANCED EFFICIENCY) (POWER TRAIN)	444
FILTER ELEMENT AS-OIL (ADVANCED EFFICIENCY) (TRANSMISSION)	439
FILTER ELEMENT-AIR (CAB HEATER, AIR CONDITIONER)	739
FILTER ELEMENT-BREATHER (HYDRAULIC TANK)	651
FILTER ELEMENT-CAB AIR (ACTIVATED CHARCOAL)	739
FILTER ELEMENT-CAB AIR (CAB HEATER, AIR CONDITIONER)	739
FILTER ELEMENT-OIL (ULTRA HIGH EFFICIENCY) (HYDRAULIC TANK)	579
FILTER GP-ENGINE OIL	112 113 115
FILTER GP-FUEL	159 161 163 165 167
FILTER GP-OIL–HYDRAULIC TANK RETURN	579
FILTER GP-OIL–IMPLEMENT PILOT OIL	578
FILTER GP-OIL–TRANSMISSION	438 439
FILTER GP-WATER SEP & FUEL–PRIMARY	169
FILTER-ENGINE OIL (ADVANCED EFFICIENCY)	112 113
FILTER-FUEL (ADVANCED EFFICIENCY)	159 161 163 165 167
FILTER-MAGNETIC (TRANSMISSION CHARGING)	452
FILTER-MAGNETIC (TRANSMISSION SUMP)	404

INDEX

Name	Page
FILTER-OIL (ADVANCED EFFICIENCY) (PRIMARY)	578
FINAL DRIVE GP	433, 435
FLASHER AS	345
FLOAT AR-BLADE	580
FLYWHEEL GP	54
FRAME GP-FRONT	492
FRAME GP-REAR	494
FUMES DISPOSAL GP	117
FUSE (10-AMPERE)	345
FUSE (15-AMPERE)	345, 707
FUSE (20-AMPERE)	345
G	
GASKET	748
GAUGE AS-OIL LEVEL (DIPSTICK) (ENGINE)	118, 119
GAUGE AS-OIL LEVEL (DIPSTICK) (POWER TRAIN OIL)	437
GAUGE GP-OIL LEVEL (DIPSTICK)–ENGINE	118, 119
GAUGE GP-SIGHT (HYDRAULIC TANK OIL)	652
GEAR GP-BEVEL & PINION	440
GEAR GP-FRONT	55
GEAR GP-REAR	56, 57, 58
GRADE CONTROL AR–ACCUGRADE	222
GRADE CONTROL AR–CD610	222
GRADE CONTROL AR-LASER–ADVANCED TRACKING SYSTEM	223
GRADE CONTROL GP–ACCUGRADE	224
GUARD GP-BOTTOM	495
GUARD GP-DEBRIS	496
GUARD GP-FAN	131
GUARD GP-FAN–LOWER	132
H	
HARNESS AS-ALARM	743
HARNESS AS-CAB (MAIN)	346
HARNESS AS-CHASSIS (MACHINE SECURITY SYSTEM)	230
HARNESS AS-CONTROL	346
HARNESS AS-CONTROL (HYDRAULIC ELECTRONIC)	357
HARNESS AS-ENGINE (ELECTRONIC CONTROL MODULE)	355, 359, 361
HARNESS AS-ENGINE (UNIT INJECTOR)	396
HARNESS AS-ENGINE (WIRING)	363
HARNESS AS-FRONT CHASSIS	365, 374
HARNESS AS-FRONT LIGHTING	273, 275
HARNESS AS-LIGHTING	256, 262, 264, 348
HARNESS AS-LIGHTING (FLOODLIGHTS)	258
HARNESS AS-MONITOR	376
HARNESS AS-MOTOR (HVAC)	707
HARNESS AS-PANEL	378, 770
HARNESS AS-PANEL (GRADE CONTROL)	771
HARNESS AS-POWER (PRODUCT LINK RADIO)	227
HARNESS AS-PUMP	382, 393
HARNESS AS-RADIO	374, 776
HARNESS AS-REAR CHASSIS (ARTICULATION)	383
HARNESS AS-REAR LIGHTING	389, 391
HARNESS AS-SENSOR	167, 182, 422, 719
HARNESS AS-SENSOR (ANGLE)	369
HARNESS AS-SENSOR (FUEL SENSOR)	159, 161, 163
HARNESS AS-SENSOR (FUEL)	165
HARNESS AS-SENSOR (ROTATION)	369
HARNESS AS-SENSOR (STEERING CYLINDER POSITION, LH) (STEERING, RH)	366
HARNESS AS-SENSOR (STEERING CYLINDER POSITION, RH)	366
HARNESS AS-SOLENOID	395
HARNESS AS-SWITCH	382
HARNESS AS-SWITCH (FUEL LEVEL)	382
HARNESS AS-SWITCH (GRADE CONTROL)	770
HARNESS AS-TRANSMISSION	422
HARNESS AS-VALVE	368
HARNESS AS-WINDOW WIPER	733, 736
HARNESS AS-WIRING	373
HARNESS AS-WIRING (BLADE)	369
HARNESS AS-WIRING (FRAME)	369
HARNESS AS-WIRING (LIGHT BAR)	374
HARNESS AS-WIRING (MAST)	268
HEATER GP-JACKET WATER	225, 226
HITCH GP-ARTICULATING	497

INDEX

Name	Page
HITCH GP-TOWING	499
HORN GP-AIR	743
HORN GP-ELECTRIC	745
HOUSING GP-FILTER	439
HOUSING GP-FILTER (OIL)	579
HOUSING GP-FLYWHEEL	59
	61
HOUSING GP-FRONT	63
HYDRAULIC AR–BIODEGRADABLE HYDRAULIC OIL	580
I	
INJECTOR GP-FUEL	170
INSTALLATION AR-COMMUNICATION–PRODUCT LINK 321SR	227
INSTALLATION GP-LIGHTING	229
INSTALLATION GP-SECURITY	230
INSTALLATION GP-WARNING BEACON	232
INSULATION GP-SOUND SUPPR–ENGINE ENCLOSURE	500
K	
KEY (BATTERY DISCONNECT)	323
KEY AS-ELECTRONIC (SECURITY)	230
KIT-SEAL (BRAKE ACCUMULATOR)	535
KIT-SEAL (MOTOR)	639
L	
LAMP (24-VOLT) (DOME)	234
LAMP (24-VOLT, 21-WATT)	233
LAMP (24-VOLT, 5-WATT)	247
	248
LAMP (24-VOLT, 75/70-WATT)	247
	248
LAMP (24-VOLT, HID)	239
	240
	242
	243
	244
LAMP AS (24-VOLT) (IMPLEMENT CONTROL)	746
LAMP AS-LED (24-VOLT, GREEN)	214
	335
	345
	767
LAMP AS-LED (24-VOLT, RED)	230
LAMP GP	233
LAMP GP-DOME–WITH SWITCH	234
LAMP GP-FLOOD	235
	236
	237
	238
LAMP GP-FLOOD–CAB ROOF, REAR	241
LAMP GP-FLOOD–HID	239
	240
	242
	243
	244
LAMP GP-HEAD	246
LAMP GP-HEAD & SIGNAL–LH	247
LAMP GP-HEAD & SIGNAL–RH	248
LAMP GP-HEAD–LOW BEAM	245
LAMP GP-SIGNAL–STOP, TAIL	250
LAMP GP-SIGNAL–TURN	249
LAMP GP-WARNING BEACON–AMBER, STROBE	251
	252
LAMP-HALOGEN (24-VOLT, 70-WATT)	235
	236
	237
	238
	241
	246
LAMP-HALOGEN (24-VOLT, 70-WATT) (LOW BEAM)	245
LIFT GP-BLADE	798
LIFTER GP-VALVE–MECHANISM	65
LIFTING GP-ENGINE	66
LIGHTING GP-FLOOD	253
	255
	258
	260
	262
	265
LIGHTING GP-FLOOD–BLADE	254
LIGHTING GP-FLOOD–CAB	267
LIGHTING GP-FLOOD–CAB ROOF	266
LIGHTING GP-FLOOD–HID	264
LIGHTING GP-FLOOD–SIDE	256
LIGHTING GP-FLOOD–TOE	261
LIGHTING GP-ROADING	268
LIGHTING GP-ROADING–SNOW REMOVAL	268
LINER GP-CAB	746
LINES GP-ACCUMULATOR	581
	588
LINES GP-AIR	151
LINES GP-AIR CONDITIONER	748
LINES GP-AIR–INLET	152
LINES GP-AUTOMATIC LUBRICATION	501
LINES GP-CENTERSHIFT LOCK	595
LINES GP-FUEL	171
	175
	177
	178
	179
LINES GP-FUEL–FAST FILL SYSTEM	173
LINES GP-HEATER	750

INDEX

Name	Page
	751
LINES GP-HYDRAULIC–BLADE	605
LINES GP-HYDRAULIC–BLADE CUSHION	597
LINES GP-HYDRAULIC FAN	612
LINES GP-LUBRICATION	508
LINES GP-LUBRICATION–PUMP DRIVE	442
LINES GP-RIPPER	615
	616
LINES GP-SECONDARY STEERING	618
	628
LINES GP-SERVICE BRAKE	545
LINES GP-TRANSMISSION OIL	443
	444
LINES GP-TURBOCHARGER OIL	120
LINES GP-WATER	135
	138
LINES GP-WATER–PUMP HOUSING	137
LINES GP-WATER–SINGLE WATER REGULATOR	133
LINK GP-STEERING–NON ALL WHEEL DRIVE	509
LINKAGE GP-WIPER (DOOR, RH)	790
LINKAGE GP-WIPER (LH)	792
LITERATURE GP	1
	753
LOCK GP-CENTERSHIFT	630
LOCKOUT-SWITCH (BATTERY DISCONNECT)	202
LUBRICATION AR-AUTOMATIC	510
LUBRICATION AR-AUTOMATIC–WIPER	511

M

MANIFOLD GP-CONTROL	631
	633
MANIFOLD GP-CONTROL–ACCUMULATOR	632
MANIFOLD GP-CONTROL–IMPLEMENT, STEERING	635
MANIFOLD GP-EXHAUST	153
MANIFOLD GP-INLET	154
MANIFOLD GP-VALVE–INLET	636
	637
MAST GP–LASER RECEIVER	268
	269
MIRROR GP	754
MIRROR GP-REAR VIEW–EXTERIOR	758
MIRROR GP-REAR VIEW–EXTERIOR, HEATED	759
MIRROR GP-REAR VIEW–INTERIOR	756
	757
MODULE AS-POWER SUPPLY	280
MODULE GP-DISPLAY	346
MODULE GP-DISPLAY (WORK AREA VISUAL SYSTEM)	729
MODULE GP-INTERFACE (KEY) (MACHINE SECURITY SYSTEM)	230
MOTOR GP-ELECTRIC–CIRCULATING FAN	271
MOTOR GP-ELECTRIC–SECONDARY STEERING	270
MOTOR GP-GEROTOR	639
MOTOR GP-WINDOW WIPER (24-VOLT, 2-SPEED) (DOOR, RH)	790
MOTOR GP-WINDOW WIPER (24-VOLT, 2-SPEED) (FRONT)	760
MOTOR GP-WINDOW WIPER (24-VOLT, 2-SPEED) (LH)	792
MOTOR GP-WINDOW WIPER–FRONT	760
MOUNTING GP-ANTENNA–RADIO	761
MOUNTING GP-AXLE–FRONT	514
MOUNTING GP-AXLE–REAR	513
MOUNTING GP-CONTROL–WITH ENCLOSURE	762
MOUNTING GP-ENGINE & XMSN	67
MOUNTING GP-FAN DRIVE	69
	70
MOUNTING GP-LAMP	272
MOUNTING GP-LIGHTING	275
MOUNTING GP-LIGHTING–SNOW REMOVAL	273
MOUNTING GP-MAST–LASER RECEIVER	277
MOUNTING GP-PLATFORM	763
MOUNTING GP-RECEIVER–MAST	278
MOUNTING GP-RIPPER	800
MOUNTING GP-VALVE–IMPLEMENT, STEERING	515
MOUNTING GP-VALVE MECHANISM	72
	73
MOUNTING GP-WHEEL	448
MUFFLER GP	155

O

OIL CHANGE GP-HIGH SPEED–ENGINE	121
OPTION AR-CAB	2
OPTION AR-COLD WEATHER	2
OPTION AR-LADDER	3
OPTION AR-LIGHTING	3
	4
OPTION AR-LIGHTING–FRONT	3
OPTION AR-REGIONAL	5
OPTION AR-WORK TOOL	5
ORIFICE AS-AIR CONDITIONER	711

P

PADLOCK GP	173
	810
	813
PAN GP-OIL–ENGINE	74

INDEX

Name	Page
PANEL GP-CAB–HVAC	764
PANEL GP-CONTROL	771
PANEL GP-CONTROL–ACCUGRADE	770
PANEL GP-CONTROL–ACCUGRADE, LH	769
PANEL GP-CONTROL–VARIABLE BLADE FLOAT	767
PANEL GP-INSTRUMENT	772
PEDAL GP-BRAKE, XMSN & GOV	774
	775
PISTON & ROD GP	76
	78
	80
PLATE & FILM GP	810
	813
PLATE & FILM GP–ARABIC, WITH MONITOR SOFTWARE	820
PLATE & FILM GP–BRITISH, WITH MONITOR SOFTWARE	821
PLATE & FILM GP–CHINESE, WITH MONITOR SOFTWARE	821
PLATE & FILM GP–DANISH, WITH MONITOR SOFTWARE	818
PLATE & FILM GP–DUTCH, WITH MONITOR SOFTWARE	818
PLATE & FILM GP–ENGLISH, WITH MONITOR SOFTWARE	817
PLATE & FILM GP–FINNISH, WITH MONITOR SOFTWARE	818
PLATE & FILM GP–FRENCH, WITH MONITOR SOFTWARE	817
PLATE & FILM GP–GERMAN, WITH MONITOR SOFTWARE	818
PLATE & FILM GP–GREEK, WITH MONITOR SOFTWARE	819
PLATE & FILM GP–HEBREW, WITH MONITOR SOFTWARE	820
PLATE & FILM GP–ITALIAN, WITH MONITOR SOFTWARE	819
PLATE & FILM GP–NORWEGIAN, WITH MONITOR SOFTWARE	819
PLATE & FILM GP–PORTUGESE, WITH MONITOR SOFTWARE	817
PLATE & FILM GP–ROMANIAN, WITH MONITOR SOFTWARE	821
PLATE & FILM GP–RUSSIAN, WITH MONITOR SOFTWARE	820
PLATE & FILM GP–SLOVENIAN, WITH MONITOR SOFTWARE	821
PLATE & FILM GP–SPANISH, WITH MONITOR SOFTWARE	817
PLATE & FILM GP–SWEDISH, WITH MONITOR SOFTWARE	819
PLATE & FILM GP–TURKISH, WITH MONITOR SOFTWARE	820
PLATE GP-PUSH	705
PLUG GP-CYLINDER BLOCK	83
PLUG GP-CYLINDER BLOCK–OIL GALLERY, END	82
PLUG GP-CYLINDER BLOCK–OIL GALLERY, RH	84
PLUG GP-ENGINE	85
PLUG-DRAIN (ENGINE OIL PAN)	74
PLUG-MAGNETIC	405
	455
POWER SUPPLY GP–GRADE CONTROL	280
POWER TRAIN AR	448
PULLEY GP-CRANKSHAFT	86
PUMP & MOTOR GP-SEC STEERING	641
PUMP & MTG GP-HYDRAULIC FAN–BRAKE	642
PUMP & MTG GP-PISTON	643
PUMP & MTG GP-SECONDARY STEER	644
PUMP GP-ENGINE OIL	122
	123
PUMP GP-FUEL INJECTION	181
PUMP GP-FUEL PRIMING	182
PUMP GP-FUEL PRM & WATER SEP	185
PUMP GP-FUEL TRANSFER	186
	187
	188
	189
	190
	191
	192
	193
	194
PUMP GP-GEAR	449
	450
PUMP GP-LUBRICATION	516
PUMP GP-PISTON (BRAKE, HYDRAULIC FAN)	642
PUMP GP-PISTON–IMPLEMENT, STEERING	645
PUMP GP-WATER	139
	140
	141
	142
	143
	144

R

RADIATOR GP	145
RADIO GP–AM, FM	777
RADIO GP–AM/FM/WB	776
RADIO GP-COMMUNICATION–PRODUCT LINK 121SR	281
RECEIVER AR-LASER–ACCUGRADE, DUAL	281
RECEIVER AR-LASER–ACCUGRADE, SINGLE	281
RECEIVER AR-SATELLITE–ACCUGRADE, DUAL GNSS, MS992	282

INDEX

Name	Page
RECEIVER AR-SATELLITE–ACCUGRADE, SINGLE GNSS, MS992	282
RECEIVER GP-LASER–ACCUGRADE, DUAL	282
RECEIVER GP-SATELLITE–ACCUGRADE, DUAL GNSS, MS992	283
RECEIVER GP-SATELLITE–ACCUGRADE, SINGLE GNSS, MS992	283
REFLECTOR GP–MACHINE	518
REFLECTOR GP–RIPPER	519
REGULATOR-TEMPERATURE (92-DEG C) (COOLANT)	133
RELAY AS (24-VDC, 20-AMPERE) (HEATED MIRROR TIMER)	338
RELAY AS (24-VOLT) (A/C FAN, HIGH SPEED)	345
RELAY AS (24-VOLT) (ACCUGRADE)	345
RELAY AS (24-VOLT) (AIR CLEANER)	345
RELAY AS (24-VOLT) (BACKLIGHT)	345
RELAY AS (24-VOLT) (BLADE FLOOD LAMP ONE)	345
RELAY AS (24-VOLT) (BLADE FLOOD LAMP TWO)	345
RELAY AS (24-VOLT) (CAB FLOODLIGHTS ONE)	345
RELAY AS (24-VOLT) (CAB FLOODLIGHTS TWO)	345
RELAY AS (24-VOLT) (CAB FLOODLIGHTS, REAR)	345
RELAY AS (24-VOLT) (CONDENSER FAN ONE)	345
RELAY AS (24-VOLT) (CONDENSER FAN TWO)	345
RELAY AS (24-VOLT) (DIFFERENTIAL LOCK)	345
RELAY AS (24-VOLT) (HEADLIGHT DIMMER)	345
RELAY AS (24-VOLT) (HEADLIGHTS)	345
RELAY AS (24-VOLT) (HORN)	345
RELAY AS (24-VOLT) (POSITION LAMP, LH)	345
RELAY AS (24-VOLT) (POSITION LAMP, RH)	345
RELAY AS (24-VOLT) (REAR FLOODLIGHT)	345
RIPPER AR	801 802
RIPPER GP	803
ROCKER ARM GP	89 92
ROCKER ARM GP–EXHAUST	88 94
ROCKER ARM GP–INLET	87 93
ROCKER ARM GP–UNIT INJECTOR	90 91
ROOF GP-CAB	778
ROTATING GP-PUMP–IMPLEMENT, STEERING	647

S

Name	Page
SCREEN (CONTROL MANIFOLD)	633
SCREEN AS-CAB	2
SCREEN GP-MAGNETIC	452
SCREEN-SUCTION (TRANSMISSION CHARGING)	452
SCREEN-SUCTION (TRANSMISSION SUMP)	404
SEAL GP-CRANKSHAFT (FRONT)	63
SEAL GP-CRANKSHAFT–REAR	95
SEAL GP-DUO-CONE	476
SEAL-LIP TYPE (WATER TEMPERATURE REGULATOR)	133
SEAL-VALVE COVER	28 29
SENDER AS-FUEL LEVEL (WITH GAUGE)	195
SENSOR & MOUNTING GP	284
SENSOR & MTG GP-POSITION	287
SENSOR & MTG GP-POSITION (VARIABLE BLADE FLOAT)	767
SENSOR & MTG GP-POSITION–VARIABLE BLADE FLOAT	285
SENSOR AR-GRADE	288
SENSOR AR-GRADE–CD700	288
SENSOR AS-ANGLE	284
SENSOR AS-ANGLE (AS400TC)	284
SENSOR AS-ANGLE (AS400TC) (ANGLE)	284
SENSOR AS-SONIC (ST400)	303 304
SENSOR AS-TEMPERATURE	313 314
SENSOR GP-ENGINE	9 11 16 289 290
SENSOR GP-POSITION	292
SENSOR GP-POSITION (BLADE ROTATION)	284
SENSOR GP-POSITION (ROTARY)	774
SENSOR GP-POSITION (ROTARY) (ARTICULATION)	287
SENSOR GP-POSITION (ROTARY) (XMSN MODULATOR CONTROL)	774
SENSOR GP-POSITION (STEERING CYLINDER)	570
SENSOR GP-POSITION (VARIABLE BLADE FLOAT)	285
SENSOR GP-POSITION–ROTARY	293
SENSOR GP-PRESSURE	294 295 296 297 298 299 300

INDEX

Name	Page
	301
	302
	633
SENSOR GP-PRESSURE (AIR INLET MANIFOLD)	289
SENSOR GP-PRESSURE (ATMOSPHERIC AIR)	289
SENSOR GP-PRESSURE (ATMOSPHERIC)	290
	296
SENSOR GP-PRESSURE (ENGINE OIL)	290
SENSOR GP-PRESSURE (FUEL)	159
	161
	167
SENSOR GP-PRESSURE (INTAKE AIR MANIFOLD)	290
SENSOR GP-PRESSURE (SECONDARY STEERING)	635
SENSOR GP-PRESSURE (VARIABLE DISPLACEMENT PUMP OIL)	373
SENSOR GP-SONIC	303
	304
SENSOR GP-SONIC (ST400C)	303
SENSOR GP-SPEED	305
	306
	307
	308
	309
SENSOR GP-SPEED (CAM GEAR)	309
SENSOR GP-SPEED (CRANKSHAFT)	308
SENSOR GP-SPEED (PRIMARY, TIMING)	290
SENSOR GP-SPEED (SECONDARY, TIMING)	290
SENSOR GP-SPEED (TIMING, CAMSHAFT)	289
SENSOR GP-SPEED (TIMING, CRANKSHAFT)	289
SENSOR GP-SPEED (TRANSMISSION OUTPUT, HIGH)	422
SENSOR GP-SPEED (TRANSMISSION OUTPUT, LOW)	422
SENSOR GP-TEMPERATURE	310
	311
	312
	313
	314
	315
	316
SENSOR GP-TEMPERATURE (COOLANT)	290
SENSOR GP-TEMPERATURE (FUEL)	159
	161
	163
	165
	167
SENSOR GP-TEMPERATURE (HYDRAULIC OIL)	554
SENSOR GP-TEMPERATURE (INTAKE AIR MANIFOLD)	290
SENSOR GP-TEMPERATURE (STEERING OIL)	365
SENSOR GP-TEMPERATURE (TRANSMISSION OIL)	422
SENSOR-PRESSURE	301
SENSOR-PRESSURE (TURBOCHARGER INLET)	382
SERVICE CENTER AR	520
SERVICE GP-IMPLEMENT	219
	220
SERVICE GP-MONITOR	221
SERVICE GP-POWER TRAIN	222
SHAFT GP-DRIVE	453
SHAFT GP-INPUT	454
SHIELD GP-ENGINE COMPARTMENT	521
SNOW AR-MOTOR GRADER	5
SOFTWARE	732
SOFTWARE GP-COMMUNICATION	219
SOFTWARE GP-COMMUNICATION (PRODUCT LINK 121SR)	281
SOFTWARE GP-IMPLEMENT	219
	220
SOFTWARE GP-MONITOR	221
SOFTWARE GP-POWER TRAIN	222
SOLENOID	516
STARTING AID GP-ETHER	317
STARTING MOTOR GP-ELECTRIC	318
	320
STEP GP	522
STEP GP–LH	524
STEP GP–RH	523
STRAINER (HYDRAULIC OIL)	652
STRAINER-FUEL	195
SUPPORT GP-CONTROL–JOYSTICK, LH	779
SUPPORT GP-CONTROL–JOYSTICK, RH	781
SUPPORT GP-CONTROL–OPERATOR PLATFORM	783
SUPPORT GP-ENGINE	96
SUPPORT GP-FUEL TANK	525
SUPPORT GP-LIGHT–CAB ROOF	321
SUPPRESSION GP-SOUND–REAR FRAME	97
SWASHPLATE GP	648
SWITCH AS (FORWARD, NEUTRAL, REVERSE)	723
	725
SWITCH AS (LOWER LIMIT)	268
SWITCH AS (UPPER LIMIT)	268
SWITCH AS-BALL (CENTERSHIFT INDICATOR)	365
SWITCH AS-LIMIT (BRAKE LIGHT)	774
SWITCH AS-MAGNETIC (START RELAY)	328
SWITCH AS-PRESSURE (COMPRESSOR, HIGH SIDE)	382
SWITCH AS-PRESSURE (COMPRESSOR, LOW SIDE)	382

INDEX

Name	Page
SWITCH AS-PRESSURE (FILTER BYPASS)	578
SWITCH AS-PUSH BUTTON (AUTO/MANUAL SIDESHIFT)	769
SWITCH AS-PUSH BUTTON (BLADE CONTROL)	770 771
SWITCH AS-PUSH BUTTON (HORN)	345
SWITCH AS-ROCKER (24-VOLT)	334 709
SWITCH AS-ROCKER (24-VOLT) (BLADE OFFSET, LH)	769
SWITCH AS-ROCKER (24-VOLT) (BLADE OFFSET, RH)	769
SWITCH AS-ROCKER (24-VOLT) (CENTERSHIFT PIN)	345
SWITCH AS-ROCKER (24-VOLT) (FOG LIGHT, REAR)	229
SWITCH AS-ROCKER (24-VOLT) (HEADLIGHT DIMMER)	333
SWITCH AS-ROCKER (24-VOLT) (TURN SIGNAL)	333
SWITCH AS-ROCKER (AUTOSHIFT)	335
SWITCH AS-ROCKER (BLADE CUSHION)	337
SWITCH AS-ROCKER (CAB FLOODLIGHTS)	266
SWITCH AS-ROCKER (ENGINE COMPRESSION BRAKE)	336
SWITCH AS-ROCKER (FAN BLOWER SPEED)	742
SWITCH AS-ROCKER (FLOODLIGHTS)	267
SWITCH AS-ROCKER (HAZARD)	333
SWITCH AS-ROCKER (HEADLIGHTS, TAIL LIGHTS)	333 345
SWITCH AS-ROCKER (HEATED MIRRORS)	338
SWITCH AS-ROCKER (HYDRAULIC LOCKOUT)	345
SWITCH AS-ROCKER (PARKING BRAKE)	345
SWITCH AS-ROCKER (SECONDARY STEERING)	345
SWITCH AS-ROCKER (THROTTLE LOCK ON, OFF)	345
SWITCH AS-ROCKER (THROTTLE LOCK SET)	345
SWITCH AS-ROCKER (VARIABLE BLADE FLOAT)	767
SWITCH AS-ROCKER (WARNING BEACON)	232
SWITCH AS-ROCKER (WORK LIGHT)	324
SWITCH AS-START (KEY)	345
SWITCH AS-TOGGLE (GROUND LEVEL SHUTDOWN)	382
SWITCH GP-BYPASS	322
SWITCH GP-DISCONNECT (BATTERY)	202
SWITCH GP-DISCONNECT–BATTERY	323
SWITCH GP-LIGHT (FOG LIGHT, REAR)	229
SWITCH GP-LIGHT–WORK LIGHT	324
SWITCH GP-LIMIT– BRAKE PEDAL, XMSN MDL CONT	325
SWITCH GP-MAGNETIC	326 327 328 329 330
SWITCH GP-MAGNETIC (24-VOLT) (START RELAY)	326
SWITCH GP-PRESSURE	332
SWITCH GP-PRESSURE–FUEL	331
SWITCH GP-ROADING	333 334
SWITCH GP-ROCKER	337
SWITCH GP-ROCKER–AUTOSHIFT	335
SWITCH GP-ROCKER–ENGINE BRAKE	336
SWITCH GP-ROCKER–HEATED MIRRORS	338
SWITCH GP-TOGGLE (GROUND LEVEL SHUTDOWN)	382
SWITCH GP-WIPER (24-VOLT, INTERMITTENT)	340
SWITCH GP-WIPER (24-VOLT, INTERMITTENT) (DOOR WIPER, LH)	348
SWITCH GP-WIPER (24-VOLT, INTERMITTENT) (DOOR WIPER, RH)	348
SWITCH GP-WIPER (24-VOLT, INTERMITTENT) (FRONT WIPER)	348
SWITCH GP-WIPER–INTERMITTENT	339 340
SWIVEL GP–CIRCLE DRIVE	649

T

TANDEM & COVER GP	455
TANK & MTG GP-HYDRAULIC	651
TANK GP-COOLANT	146
TANK GP-FUEL	195
TANK GP-HYDRAULIC	652
TANK GP-WINDOW WASHER	785
TARGET GP-LASER	223 341 342
TOOTH GP-RIPPER	803 805
TRANSMISSION AR	457
TURBOCHARGER GP	156 157

V

VALVE & MTG GP-SOLENOID (DIFFERENTIAL LOCK)	418 420
VALVE & MTG GP-SOLENOID– DIFFERENTIAL LOCK	458

INDEX

Name	Page
VALVE AS-GAS (HYDRAULIC ACCUMULATOR)	547
VALVE AS-PRESSURE RELIEF (REFRIGERANT COMPRESSOR)	718
VALVE GP-BANK 3–REAR	653
VALVE GP-BANK 4–REAR	654
VALVE GP-BANK 5–FRONT	655
VALVE GP-BANK 6–FRONT	656
VALVE GP-BANK 6–REAR	658, 660
VALVE GP-BANK 7–FRONT	661
VALVE GP-CHECK	516, 663, 699
VALVE GP-CHECK & RELIEF (BLADE TIP)	664
VALVE GP-CHECK & RELIEF (PLOW ANGLE)	672
VALVE GP-CHECK & RELIEF (SIDESHIFT)	666
VALVE GP-CHECK & RELIEF (WING LIFT)	676, 678
VALVE GP-CHECK & RELIEF (WING TILT)	680, 688
VALVE GP-CHECK (ARTICULATION)	674
VALVE GP-CHECK (BLADE LIFT)	682
VALVE GP-CHECK (BLADE TIP)	664
VALVE GP-CHECK (BULLDOZER LIFT, PLOW)	670
VALVE GP-CHECK (CENTERSHIFT)	684
VALVE GP-CHECK (CIRCLE DRIVE)	668
VALVE GP-CHECK (PLOW ANGLE)	672
VALVE GP-CHECK (RIPPER)	676
VALVE GP-CHECK (SIDESHIFT)	666
VALVE GP-CHECK (STEERING LINES PRESSURE)	618
VALVE GP-CHECK (STEERING OIL FILTER)	618
VALVE GP-CHECK (WHEEL LEAN)	686
VALVE GP-CHECK–FUEL	197, 198
VALVE GP-COMPENSATING (PUMP GP)	642
VALVE GP-CONTROL–ARTICULATION	674
VALVE GP-CONTROL–BLADE LIFT	682
VALVE GP-CONTROL–BLADE TIP	664
VALVE GP-CONTROL–BULLDOZER LIFT, PLOW	670
VALVE GP-CONTROL–CENTERSHIFT	684
VALVE GP-CONTROL–CIRCLE DRIVE	668
VALVE GP-CONTROL–PLOW, BULLDOZER LIFT	672
VALVE GP-CONTROL–RIPPER	676
VALVE GP-CONTROL–SIDESHIFT	666
VALVE GP-CONTROL–WHEEL LEAN	686
VALVE GP-CONTROL–WING LIFT	678
VALVE GP-CONTROL–WING TILT	680, 688
VALVE GP-DIVERTER–FAN DRIVE	690
VALVE GP-ETHER STARTING	343
VALVE GP-FLUID SAMPLING–FUEL	199
VALVE GP-FUEL SHUTOFF–FAST FILL	200
VALVE GP-LUBE DISTRIBUTION–11-INJECTOR	526, 527
VALVE GP-LUBE DISTRIBUTION–2-INJECTOR	528
VALVE GP-LUBE DISTRIBUTION–4-INJECTOR	529
VALVE GP-MODULATING–TRANSMISSION CLUTCH	459
VALVE GP-PRESSURE REDUCING	691
VALVE GP-PUMP CONTROL–PRESSURE, FLOW COMPENSATOR	692
VALVE GP-RELIEF	693, 694
VALVE GP-RELIEF (SECONDARY STEERING)	628
VALVE GP-RELIEF–TRANSMISSION CONTROL VALVE	460
VALVE GP-SHUTTLE (HYDRAULIC FAN)	633
VALVE GP-SHUTTLE–BRAKE ACCUMULATOR	695
VALVE GP-SOLENOID	696, 697, 698
VALVE GP-SOLENOID & MANIFOLD–BLADE CUSHION	699
VALVE GP-SOLENOID (24-VOLT) (BLADE CUSHION)	631
VALVE GP-SOLENOID (24-VOLT) (CENTERSHIFT LOCK)	630
VALVE GP-SOLENOID (24-VOLT) (PARKING BRAKE)	422
VALVE GP-SOLENOID (ARTICULATION)	674
VALVE GP-SOLENOID (BLADE CUSHION)	699
VALVE GP-SOLENOID (BLADE FLOAT, WING TILT)	688
VALVE GP-SOLENOID (BLADE LIFT)	682
VALVE GP-SOLENOID (BLADE TIP)	664
VALVE GP-SOLENOID (BULLDOZER LIFT, PLOW)	670
VALVE GP-SOLENOID (CENTERSHIFT)	684
VALVE GP-SOLENOID (CIRCLE DRIVE)	668
VALVE GP-SOLENOID (DIFFERENTIAL LOCK)	458
VALVE GP-SOLENOID (HYDRAULIC ACCUMULATOR)	632
VALVE GP-SOLENOID (HYDRAULIC FAN)	633
VALVE GP-SOLENOID (IMPLEMENT PILOT OIL)	635
VALVE GP-SOLENOID (PLOW ANGLE)	672
VALVE GP-SOLENOID (RIPPER)	676
VALVE GP-SOLENOID (SIDESHIFT)	666
VALVE GP-SOLENOID (WHEEL LEAN)	686

INDEX

Name	Page
VALVE GP-SOLENOID (WING LIFT)	678
VALVE GP-SOLENOID (WING TILT)	680
VALVE GP-TIRE	463
	464
	467
VALVE GP-TIRE (TIRE INFLATION)	469
VALVE MECHANISM GP	99
	101
VALVE-RELIEF	422
	423

W

Name	Page
WALKWAY GP	530
WALKWAY GP–TANDEM	533
WARNING GP-BACKUP	344
WATER SEP & FUEL PRM PUMP GP	185
WHEEL & TIRE AR	462
	463
WHEEL & TIRE GP	463
	464
	465
WHEEL AR	465
	466
WHEEL GP	467
	468
	469
WHEEL GP–BRAKE, FRONT TANDEM	470
WHEEL GP–BRAKE, REAR TANDEM	472
WINDOW GP-CAB–FRONT	786
WINDOW GP-CAB–SIDE, REAR, RH, LH	787
WIPER & WASHER GP-WINDOW–FRONT	788
WIPER GP-WINDOW–DOOR, LH	792
WIPER GP-WINDOW–DOOR, RH	790
WIRING GP-CAB	345
WIRING GP-CAMERA–REAR VIEW	353
WIRING GP-ELECTRONIC CONTROL	355
	359
	361
	363
WIRING GP-ELECTRONIC CONTROL–HYDRAULIC IMPLEMENT	357
WIRING GP-FRONT	365
	368
WIRING GP-GRADE CONTROL	369
WIRING GP-LUBRICATION	373
WIRING GP-MONITOR	374
	376
WIRING GP-POWER RECEPTACLE–CIRCUIT BREAKER PANEL	378
WIRING GP-REAR	382
WIRING GP-REAR LIGHTING	391
WIRING GP-REAR LIGHTING–STOP, TAIL, TURN, BACKUP	389
WIRING GP-SECONDARY STEERING	393
WIRING GP-SENSOR–VARIABLE BLADE FLOAT	395
WIRING GP-UNIT INJECTOR	396
	397
	398

MACHINE ARRANGEMENT

349-2556 COMMON AR

S/N: R9H1-UP

SMCS-7000 **i04037025**

NOTE	PART NUMBER	QTY	PART NAME 1 2 3 4 5 6 (PRODUCT LEVEL)	SEE PAGE
Y	*249-7319*	1	AIR CLEANER GP	149
Y	*251-1202*	1	AXLE AR-FRONT	474
Y	*257-8027*	1	BATTERY GP (EXTREME-DUTY)	202
Y	*257-3466*	1	BIT GP-END	794
Y	*249-9170*	1	BLADE GP	795
Y	*233-3107*	1	CAB AR	715
Y	*259-4500*	1	CIRCLE GP	701
Y	*288-9614*	1	CONTROL GP-DIFFERENTIAL LOCK	418
Y	*356-2953*	1	CONTROL GP-SERVICE BRAKE	542
Y	*249-7363*	1	COOLING AR	128
Y	**250-0154**	1	COUPLING GP-TORSIONAL	428
Y	*250-0159*	1	COVER GP-CONTROL VALVE	478
Y	*283-7764*	1	CYLINDER & MTG GP-ARTICULATION	556
Y	*261-2372*	1	CYLINDER & MTG GP-BLADE LIFT	557
Y	*260-3646*	1	CYLINDER & MTG GP-BLADE TIP	558
Y	*261-2373*	1	CYLINDER & MTG GP-CENTERSHIFT	559
Y	*257-6804*	1	CYLINDER & MTG GP-SIDESHIFT	560
Y	*294-1024*	1	DOOR GP-CAB	736
Y	*257-4930*	1	DRAWBAR GP	703
Y	*258-0651*	1	DRIVE GP-ACCESSORY	49
Y	**265-6725**	1	DRIVE GP-CIRCLE	573
Y	*250-0160*	1	ENCLOSURE GP-ENGINE	482
Y	*276-1279*	1	ENGINE AR-COMPLETE	10
Y	*318-2140*	1	FASTENER GP-ENCLOSURE	487
Y	*349-6144*	1	FILLER GP-POWER TRAIN OIL	437
Y	*291-6299*	1	FILTER GP-ENGINE OIL	115
Y	*286-1301*	1	FRAME GP-FRONT	492
Y	*284-6068*	1	FRAME GP-REAR	494
Y	*250-2283*	1	HITCH GP-ARTICULATING	497
Y	*265-6710*	1	LIFT GP-BLADE	798
Y	*291-4038*	1	LIGHTING GP-FLOOD (CAB ROOF)	266
Y	*249-7322*	1	LINES GP-AIR	151
Y	*283-7769*	1	LINES GP-AIR CONDITIONER	748
Y	*249-6531*	1	LINES GP-CENTERSHIFT LOCK	595
Y	*277-3628*	1	LINES GP-FUEL (FAST FILL SYSTEM)	173
Y	*283-7768*	1	LINES GP-HEATER	751
Y	*283-7734*	1	LINES GP-HYDRAULIC FAN	612
Y	*249-6548*	1	LINES GP-LUBRICATION (PUMP DRIVE) (PUMP DRIVE)	442
Y	*283-7735*	1	LINES GP-SECONDARY STEERING (FRAME MOUNT)	618
Y	*283-7767*	1	LINES GP-SECONDARY STEERING (DRIVE PUMP)	628
Y	*288-9615*	1	LINES GP-TRANSMISSION OIL	444
Y	*249-7325*	1	LINES GP-WATER	135
Y	*6V-1970*	1	LITERATURE GP	753
Y	*249-6537*	1	LOCK GP-CENTERSHIFT	630
Y	*233-3122*	1	MOUNTING GP-ANTENNA (RADIO)	761
Y	*284-5038*	1	MOUNTING GP-AXLE (REAR)	513
Y	*249-7326*	1	MOUNTING GP-ENGINE & XMSN (IMPLEMENT, STEERING)	67
Y	*249-6554*	1	MOUNTING GP-VALVE	515
Y	*250-8213*	1	MOUNTING GP-WHEEL	448
Y	*249-7327*	1	MUFFLER GP	155
Y	*292-9680*	1	OIL CHANGE GP-HIGH SPEED (ENGINE)	121
Y	*349-5188*	1	POWER TRAIN AR	448
Y	*249-6534*	1	PUMP & MTG GP-HYDRAULIC FAN (BRAKE)	642
Y	*249-6532*	1	PUMP & MTG GP-PISTON	643
Y	*283-7774*	1	PUMP & MTG GP-SECONDARY STEER (ELECTRIC DRIVE)	644

MACHINE ARRANGEMENT

349-2556 **COMMON AR** ***(contd.)*** **i04037025**

NOTE	PART NUMBER	QTY	PART NAME 1 2 3 4 5 6 (PRODUCT LEVEL)	SEE PAGE
Y	*249-7324*	1	PUMP GP-FUEL PRIMING	182
Y	*250-0162*	1	SERVICE CENTER AR	520
Y	*250-8212*	1	SHAFT GP-DRIVE	453
Y	*249-7310*	1	STARTING AID GP-ETHER	317
Y	*273-3001*	1	SUPPORT GP-FUEL TANK	525
Y	*238-8825*	1	SUPPORT GP-LIGHT (CAB ROOF)	321
Y	*257-7500*	1	TANK GP-COOLANT	146
Y	*250-0161*	1	TANK GP-FUEL	195
YR	**253-8407**	1	TRANSMISSION AR	457
Y	*262-7898*	1	WALKWAY GP	533
Y	*257-7224*	1	WARNING GP-BACKUP	344
Y	*250-0890*	1	WIRING GP-FRONT	365
Y	*260-1870*	1	WIRING GP-REAR (SENSORS)	382
Y	*260-1871*	1	WIRING GP-POWER RECEPTACLE	378
Y	*260-1872*	1	WIRING GP-SECONDARY STEERING	393

R-REMFG PART MAY BE AVAILABLE
Y-SEPARATE ILLUSTRATION

<END>

352-3820 OPTION AR-CAB

S/N: R9H1-UP
AN ATTACHMENT

SMCS-7301 **i04040404**

NOTE	PART NUMBER	QTY	PART NAME 1 2 3 4 5 6 (PRODUCT LEVEL)	SEE PAGE
Y	*233-3134*	1	CONVERTER GP-ELECTRICAL (RADIO)	217
Y	*233-3137*	1	FAN GP-CIRCULATING (WITH SWITCH)	742
Y	*233-3123*	1	RADIO GP (AM/FM/WB)	776
	266-4296	1	SCREEN AS-CAB	

Y-SEPARATE ILLUSTRATION

<END>

352-3808 OPTION AR-COLD WEATHER

S/N: R9H1-UP
PART OF 352-3817 SNOW AR-MOTOR GRADER
AN ATTACHMENT

SMCS-7000 **i03999394**

NOTE	PART NUMBER	QTY	PART NAME 1 2 3 4 5 6 (PRODUCT LEVEL)	SEE PAGE
Y	*344-0053*	1	COVER GP-PROTECTION (HYDRAULIC OIL COOLER, SNOW)	481
Y	*257-4941*	1	GUARD GP-DEBRIS	496

Y-SEPARATE ILLUSTRATION

<END>

MACHINE ARRANGEMENT

352-3813 OPTION AR-LADDER

S/N: R9H1-UP
AN ATTACHMENT

SMCS-7000 **i03999398**

NOTE	PART NUMBER	QTY	PART NAME 1 2 3 4 5 6 (PRODUCT LEVEL)	SEE PAGE
Y	*312-6371*	1	STEP GP (RH)	523
Y	*314-4860*	1	STEP GP (LH)	524

Y-SEPARATE ILLUSTRATION

<END>

352-3810 OPTION AR-LIGHTING

S/N: R9H1-UP
AN ATTACHMENT

SMCS-7000 **i03999395**

NOTE	PART NUMBER	QTY	PART NAME 1 2 3 4 5 6 (PRODUCT LEVEL)	SEE PAGE
Y	*261-0135*	1	LIGHTING GP-FLOOD (FRONT)	262
Y	*291-4038*	1	LIGHTING GP-FLOOD (CAB ROOF)	266

Y-SEPARATE ILLUSTRATION

<END>

352-3811 OPTION AR-LIGHTING–FRONT

S/N: R9H1-UP
AN ATTACHMENT

SMCS-7000 **i04037029**

NOTE	PART NUMBER	QTY	PART NAME 1 2 3 4 5 6 (PRODUCT LEVEL)	SEE PAGE
Y	*261-0136*	1	LIGHTING GP-FLOOD (FRONT)	264
Y	*291-4039*	1	LIGHTING GP-FLOOD (CAB)	267

Y-SEPARATE ILLUSTRATION

<END>

352-3821 OPTION AR-LIGHTING

S/N: R9H1-UP
AN ATTACHMENT

SMCS-7000 **i03999380**

NOTE	PART NUMBER	QTY	PART NAME 1 2 3 4 5 6 (PRODUCT LEVEL)	SEE PAGE
Y	*260-1905*	1	LIGHTING GP-FLOOD (WORK)	254
Y	*260-1907*	1	LIGHTING GP-FLOOD (SIDE)	256
Y	*261-0133*	1	LIGHTING GP-FLOOD (TOE)	260
Y	*261-0137*	1	LIGHTING GP-FLOOD (RIPPER)	265
Y	*238-8763*	1	SWITCH GP-LIGHT (WORK LIGHT)	324

Y-SEPARATE ILLUSTRATION

<END>

MACHINE ARRANGEMENT

352-3822 OPTION AR-LIGHTING

S/N: R9H1-UP

AN ATTACHMENT

SMCS-7000 **i04037032**

NOTE	PART NUMBER	QTY	PART NAME 1 2 3 4 5 6 (PRODUCT LEVEL)	SEE PAGE
Y	*250-1097*	1	LIGHTING GP-FLOOD (RIPPER)	253
Y	*260-1906*	1	LIGHTING GP-FLOOD (BLADE)	255
Y	*260-1908*	1	LIGHTING GP-FLOOD (SIDE)	258
Y	*261-0134*	1	LIGHTING GP-FLOOD (TOE)	261
Y	*238-8763*	1	SWITCH GP-LIGHT (WORK LIGHT)	324

Y-SEPARATE ILLUSTRATION

<END>

359-2893 OPTION AR-LIGHTING

S/N: R9H1-UP

AN ATTACHMENT

SMCS-7000 **i03999382**

NOTE	PART NUMBER	QTY	PART NAME 1 2 3 4 5 6 (PRODUCT LEVEL)	SEE PAGE
Y	*260-1905*	1	LIGHTING GP-FLOOD (WORK)	254
Y	*260-1907*	1	LIGHTING GP-FLOOD (SIDE)	256
Y	*261-0133*	1	LIGHTING GP-FLOOD (TOE)	260
Y	*261-0137*	1	LIGHTING GP-FLOOD (RIPPER)	265

Y-SEPARATE ILLUSTRATION

<END>

359-2894 OPTION AR-LIGHTING

S/N: R9H1-UP

AN ATTACHMENT

SMCS-7000 **i04037035**

NOTE	PART NUMBER	QTY	PART NAME 1 2 3 4 5 6 (PRODUCT LEVEL)	SEE PAGE
Y	*250-1097*	1	LIGHTING GP-FLOOD (RIPPER)	253
Y	*260-1906*	1	LIGHTING GP-FLOOD (BLADE)	255
Y	*260-1908*	1	LIGHTING GP-FLOOD (SIDE)	258
Y	*261-0134*	1	LIGHTING GP-FLOOD (TOE)	261

Y-SEPARATE ILLUSTRATION

<END>

MACHINE ARRANGEMENT

352-3815 OPTION AR-REGIONAL

S/N: R9H1-UP
AN ATTACHMENT

SMCS-7000 **i04037030**

NOTE	PART NUMBER	QTY	PART NAME 1 2 3 4 5 6 (PRODUCT LEVEL)	SEE PAGE
Y	*285-2259*	1	GUARD GP-BOTTOM	495
Y	*357-1089*	1	ACCUMULATOR GP-BRAKE	537
Y	*351-4490*	1	MIRROR GP	754
Y	*296-0011*	1	REFLECTOR GP (MACHINE)	518
Y	*296-0012*	1	REFLECTOR GP (RIPPER)	519
Y	*250-0172*	1	INSULATION GP-SOUND SUPPR (ENGINE ENCLOSURE)	500
Y	*276-3165*	1	SUPPRESSION GP-SOUND	97
	225-4148	1	PLATE-CERTIFICATION (MACHINE)	
	205-3236	1	FILM (EXTERIOR SOUND, 108-DB)	

Y-SEPARATE ILLUSTRATION

<END>

352-3819 OPTION AR-WORK TOOL

S/N: R9H1-UP
AN ATTACHMENT

SMCS-6700, 7000 **i03881297**

NOTE	PART NUMBER	QTY	PART NAME 1 2 3 4 5 6 (PRODUCT LEVEL)	SEE PAGE
Y	*251-2035*	1	CONTROL AR-HYDRAULIC (RIPPER)	550
Y	*348-3537*	1	CONTROL AR-HYDRAULIC (AUTO DIFF LOCK POSITION)	552
Y	*264-3058*	1	RIPPER AR	801
Y	*300-1275*	1	HORN GP-AIR	743
Y	*233-3295*	1	MIRROR GP-REAR VIEW (EXTERIOR)	758
Y	*265-6738*	1	PLATE GP-PUSH	705

Y-SEPARATE ILLUSTRATION

<END>

352-3817 SNOW AR-MOTOR GRADER

S/N: R9H1-UP
AN ATTACHMENT

SMCS-7000 **i04037059**

NOTE	PART NUMBER	QTY	PART NAME 1 2 3 4 5 6 (PRODUCT LEVEL)	SEE PAGE
Y	*251-2006*	1	AUTOSHIFT AR	399
Y	*249-7328*	1	FILM GP (VARIABLE HORSEPOWER PLUS)	806
Y	*233-3126*	1	INSTALLATION GP-LIGHTING (FLOODLIGHT)	229
Y	*310-2078*	1	INSTALLATION GP-WARNING BEACON	232
Y	*298-0603*	1	LIGHTING GP-ROADING (SNOW REMOVAL)	268
Y	*352-3808*	1	OPTION AR-COLD WEATHER	2

Y-SEPARATE ILLUSTRATION

<END>

ENGINE ARRANGEMENT

227-5359 ENGINE AR-COMPLETE*R

S/N: MHX1214-UP
CANNOT BE USED WITH 231-0876—PAGE 8
AN ATTACHMENT

SMCS-1000 **i02817349**

NOTE	PART NUMBER	QTY	PART NAME 1 2 3 4 5 6 (PRODUCT LEVEL)	SEE PAGE
Y	*247-9665*	1	BASE GP-OIL FILTER	105
Y	*267-0008*	1	BREATHER GP	107
			S/N: MHX1214-2151	
Y	*267-0007*	1	BREATHER GP	106
			S/N: MHX2152-UP	
Y	*241-7601*	1	CONNECTION GP-ELECTRICAL	208
Y	*233-6191*	1	CONTROL & MTG GP-ENGINE ELEK	209
Y	*231-0152*	1	COOLER GP-ENGINE OIL	125
Y	*240-5403*	1	COOLER GP-TRANSMISSION OIL	426
Y	*220-6390*	1	COVER GP-FLYWHEEL HOUSING	24
			S/N: MHX2761-UP	
Y	*136-4307*	1	COVER GP-FRONT HOUSING	26
Y	*227-2574*	1	COVER GP-FRONT HOUSING	27
Y	*117-2786*	1	COVER GP-OIL FILTER BASE (ENGINE)	109
Y	*229-2614*	1	COVER GP-VALVE MECHANISM	28
Y	*117-2766*	1	DAMPER GP	48
Y	*260-1406*	1	DRIVE GP-ACCESSORY	51
Y	*267-0009*	1	ENGINE AR-CORE	13
			S/N: MHX1214-3604	
Y	*286-5804*	1	ENGINE AR-CORE	14
			S/N: MHX3605-3944	
Y	*301-2265*	1	ENGINE AR-CORE	15
			S/N: MHX3945-UP	
Y	*117-2771*	1	FASTENER GP-DAMPER & PULLEY	53
Y	*219-7440*	1	MOUNTING GP-FAN DRIVE	69
Y	*244-8676*	1	FILLER GP-ENGINE OIL	111
			S/N: MHX1214-3604	
Y	*231-0151*	1	FILLER GP-ENGINE OIL	110
			S/N: MHX3605-UP	
Y	*262-0925*	1	FILTER GP-ENGINE OIL	113
			S/N: MHX1214-2151	
Y	*231-3492*	1	FILTER GP-ENGINE OIL	112
			S/N: MHX2152-UP	
Y	*254-4998*	1	FILTER GP-FUEL	159
Y	*252-6185*	1	FLYWHEEL GP	54
Y	*258-4484*	1	FUMES DISPOSAL GP	117
Y	*262-0596*	1	GAUGE GP-OIL LEVEL (DIPSTICK) (ENGINE)	118
Y	*277-5425*	1	GEAR GP-REAR	57
Y	*277-4435*	1	HOUSING GP-FLYWHEEL	61
Y	*224-0880*	1	LIFTING GP-ENGINE	66
Y	*268-6686*	1	LINES GP-AIR	152
Y	*254-4999*	1	LINES GP-FUEL	171
			S/N: MHX1214-2151	
Y	*289-4112*	1	LINES GP-FUEL	175
			S/N: MHX2152-UP	
Y	*224-8170*	1	LINES GP-TURBOCHARGER OIL	120
Y	*243-1667*	1	LINES GP-WATER (SINGLE WATER REGULATOR)	133
Y	*255-2396*	1	LINES GP-WATER	137
Y	*247-2833*	1	MANIFOLD GP-EXHAUST	153
Y	*222-3092*	1	MANIFOLD GP-INLET (MID)	154
Y	*240-3279*	1	PAN GP-OIL (ENGINE)	74
Y	*117-0165*	1	PLUG GP-CYLINDER BLOCK (OIL GALLERY, END)	82
Y	*227-9545*	1	PLUG GP-CYLINDER BLOCK (OIL GALLERY, RH)	84
Y	*238-8962*	1	PLUG GP-ENGINE	85
Y	*207-8103*	1	PULLEY GP-CRANKSHAFT	86

227-5359 **ENGINE AR-COMPLETE** *(contd.)* **i02817349**

NOTE	PART NUMBER	QTY	PART NAME 1 2 3 4 5 6 (PRODUCT LEVEL)	SEE PAGE
Y	*231-1975*	1	SENSOR GP-ENGINE	289
Y	*248-0716*	1	STARTING MOTOR GP-ELECTRIC (24-VOLT)	320
			S/N: MHX1214-2760	
Y	*250-7017*	1	SUPPORT GP-ENGINE	96
Y	*256-6004*	1	TURBOCHARGER GP	157
Y	*219-7462*	1	WIRING GP-ELECTRONIC CONTROL	355
			S/N: MHX1214-4886	
Y	*306-8172*	1	WIRING GP-ELECTRONIC CONTROL	359
			S/N: MHX4887-UP	
	231-0309	1	ELECTRONICS GP-ENGINE RATINGS	
			PLEASE USE THE GASKET KIT LINK IN SIS OR CONTACT YOUR LOCAL DEALER FOR THE LATEST GASKET KIT INFORMATION	

Y-SEPARATE ILLUSTRATION

ENGINE ARRANGEMENT

231-0876 ENGINE AR-COMPLETE

S/N: MHX1304-UP
PART OF 276-1279 ENGINE AR-COMPLETE
ALSO AN ATTACHMENT

SMCS-1000 **i04021440**

NOTE	PART NUMBER	QTY	PART NAME 1 2 3 4 5 6 (PRODUCT LEVEL)	SEE PAGE
Y	*248-6662*	1	ACTUATOR GP-VALVE	18
			S/N: MHX9880-UP	
Y	*247-9665*	1	BASE GP-OIL FILTER (ENGINE)	105
Y	*267-0008*	1	BREATHER GP (CRANKCASE)	107
			S/N: MHX1304-2760	
Y	*267-0007*	1	BREATHER GP (CRANKCASE)	106
			S/N: MHX2761-UP	
Y	*241-7601*	1	CONNECTION GP-ELECTRICAL	208
Y	*233-6191*	1	CONTROL & MTG GP-ENGINE ELEK	209
Y	*231-0152*	1	COOLER GP-ENGINE OIL	125
Y	*240-5403*	1	COOLER GP-TRANSMISSION OIL	426
Y	*220-6390*	1	COVER GP-FLYWHEEL HOUSING	24
			S/N: MHX2761-6111	
Y	*323-1682*	1	COVER GP-FLYWHEEL HOUSING	25
			S/N: MHX6112-UP	
Y	*136-4307*	1	COVER GP-FRONT HOUSING (HYDRAULIC PUMP DRIVE)	26
			S/N: MHX1304-2760	
Y	*227-2574*	1	COVER GP-FRONT HOUSING (AIR COMPRESSOR)	27
Y	*117-2786*	1	COVER GP-OIL FILTER BASE	109
Y	*229-2614*	1	COVER GP-VALVE MECHANISM	28
			S/N: MHX1304-9879	
Y	*355-7194*	1	COVER GP-VALVE MECHANISM	29
			S/N: MHX9880-UP	
Y	*117-2766*	1	DAMPER GP	48
Y	*260-1406*	1	DRIVE GP-ACCESSORY	51
Y	*231-0877*	1	ENGINE AR-CORE	12
			S/N: MHX1304-9879	
Y	*359-0363*	1	ENGINE AR-CORE	17
			S/N: MHX9880-UP	
Y	*117-2771*	1	FASTENER GP-DAMPER & PULLEY	53
Y	*244-8676*	1	FILLER GP-ENGINE OIL	111
			S/N: MHX1304-3604	
Y	*231-0151*	1	FILLER GP-ENGINE OIL	110
			S/N: MHX3605-UP	
Y	*262-0925*	1	FILTER GP-ENGINE OIL	113
			S/N: MHX1304-2760	
Y	*231-3492*	1	FILTER GP-ENGINE OIL	112
			S/N: MHX2761-UP	
Y	*254-4998*	1	FILTER GP-FUEL	159
			S/N: MHX1304-9843	
Y	*356-8382*	1	FILTER GP-FUEL	167
			S/N: MHX9844-UP	
Y	*252-6185*	1	FLYWHEEL GP	54
Y	*258-4484*	1	FUMES DISPOSAL GP	117
Y	*262-0596*	1	GAUGE GP-OIL LEVEL (DIPSTICK) (ENGINE)	118
Y	*261-3231*	1	GEAR GP-REAR	56
Y	*238-2949*	1	HOUSING GP-FLYWHEEL	59
Y	*218-7272*	1	HOUSING GP-FRONT	63
			S/N: MHX9880-UP	
Y	*224-0880*	1	LIFTING GP-ENGINE	66
Y	*268-6686*	1	LINES GP-AIR	152
Y	*254-4999*	1	LINES GP-FUEL	171
			S/N: MHX1304-2760	
Y	*289-4112*	1	LINES GP-FUEL	175
			S/N: MHX2761-UP	

231-0876 ENGINE AR-COMPLETE *(contd.)* i04021440

NOTE	PART NUMBER	QTY	PART NAME 1 2 3 4 5 6 (PRODUCT LEVEL)	SEE PAGE
Y	*224-8170*	1	LINES GP-TURBOCHARGER OIL	120
Y	*243-1667*	1	LINES GP-WATER (SINGLE WATER REGULATOR)	133
Y	*255-2396*	1	LINES GP-WATER (PUMP HOUSING)	137
			S/N: MHX1304-6253	
Y	*319-5079*	1	LINES GP-WATER (PUMP HOUSING)	138
			S/N: MHX6254-UP	
Y	*247-2833*	1	MANIFOLD GP-EXHAUST	153
Y	*222-3092*	1	MANIFOLD GP-INLET (MID)	154
Y	*219-7440*	1	MOUNTING GP-FAN DRIVE	69
Y	*229-8083*	1	MOUNTING GP-VALVE MECHANISM	72
			S/N: MHX9880-UP	
Y	*240-3279*	1	PAN GP-OIL	74
Y	*117-0165*	1	PLUG GP-CYLINDER BLOCK (OIL GALLERY, END)	82
Y	*227-9545*	1	PLUG GP-CYLINDER BLOCK (OIL GALLERY, RH)	84
Y	*223-3875*	1	PLUG GP-CYLINDER BLOCK	83
			S/N: MHX9880-UP	
Y	*238-8962*	1	PLUG GP-ENGINE	85
Y	*207-8103*	1	PULLEY GP-CRANKSHAFT	86
Y	*301-2262*	1	PUMP GP-FUEL TRANSFER	192
			S/N: MHX9880-UP	
Y	*231-1975*	1	SENSOR GP-ENGINE	289
			S/N: MHX1304-9843	
Y	*357-0523*	1	SENSOR GP-ENGINE	290
			S/N: MHX9844-9879	
Y	*248-0716*	1	STARTING MOTOR GP-ELECTRIC (24-VOLT)	320
			S/N: MHX1304-2760	
Y	*250-7017*	1	SUPPORT GP-ENGINE	96
Y	*256-6004*	1	TURBOCHARGER GP	157
Y	*219-7462*	1	WIRING GP-ELECTRONIC CONTROL	355
			S/N: MHX1304-4886	
Y	*306-8172*	1	WIRING GP-ELECTRONIC CONTROL	359
			S/N: MHX4887-9843	
Y	*357-0524*	1	WIRING GP-ELECTRONIC CONTROL	363
			S/N: MHX9844-UP	
	231-0309	1	ELECTRONICS GP-ENGINE RATINGS	
			S/N: MHX1304-9879	
			PLEASE USE THE GASKET KIT LINK IN SIS OR CONTACT YOUR LOCAL DEALER FOR THE LATEST GASKET KIT INFORMATION	

Y-SEPARATE ILLUSTRATION

ENGINE ARRANGEMENT

276-1279 ENGINE AR-COMPLETE—WITH ENGINE BRAKE

S/N: R9H1-UP
PART OF 349-2556 COMMON AR
ALSO AN ATTACHMENT

SMCS-1000 **i04040556**

NOTE	PART NUMBER	QTY	PART NAME 1 2 3 4 5 6 (PRODUCT LEVEL)	SEE PAGE
Y	**231-0876**	1	ENGINE AR-COMPLETE	8
Y	*278-0685*	1	SWITCH GP-ROCKER (ENGINE BRAKE)	336

Y-SEPARATE ILLUSTRATION

ENGINE ARRANGEMENT

349-4462 ENGINE AR-COMPLETE

S/N: MHX11242-UP
339 BRAKE KW (253 BHP) AT 2000 RPM
AN ATTACHMENT

SMCS-1000 **i04033165**

NOTE	PART NUMBER	QTY	PART NAME 1 2 3 4 5 6 (PRODUCT LEVEL)	SEE PAGE
Y	*247-9665*	1	BASE GP-OIL FILTER	105
Y	*267-0007*	1	BREATHER GP	106
Y	*241-7601*	1	CONNECTION GP-ELECTRICAL	208
Y	*233-6191*	1	CONTROL & MTG GP-ENGINE ELEK	209
Y	*231-0152*	1	COOLER GP-ENGINE OIL	125
Y	*240-5403*	1	COOLER GP-TRANSMISSION OIL	426
Y	*323-1682*	1	COVER GP-FLYWHEEL HOUSING	25
Y	*227-2574*	1	COVER GP-FRONT HOUSING	27
Y	*117-2786*	1	COVER GP-OIL FILTER BASE	109
Y	*229-2614*	1	COVER GP-VALVE MECHANISM	28
Y	*117-2766*	1	DAMPER GP	48
Y	*260-1406*	1	DRIVE GP-ACCESSORY	51
Y	*231-0877*	1	ENGINE AR-CORE	12
Y	*117-2771*	1	FASTENER GP-DAMPER & PULLEY	53
Y	*231-0151*	1	FILLER GP-ENGINE OIL	110
Y	*231-3492*	1	FILTER GP-ENGINE OIL	112
Y	*356-8382*	1	FILTER GP-FUEL	167
Y	*252-6185*	1	FLYWHEEL GP	54
Y	*258-4484*	1	FUMES DISPOSAL GP	117
Y	*262-0596*	1	GAUGE GP-OIL LEVEL (DIPSTICK)	118
Y	*277-5425*	1	GEAR GP-REAR	57
Y	*277-4435*	1	HOUSING GP-FLYWHEEL	61
Y	*224-0880*	1	LIFTING GP-ENGINE	66
Y	*268-6686*	1	LINES GP-AIR	152
Y	*289-4112*	1	LINES GP-FUEL	175
Y	*224-8170*	1	LINES GP-TURBOCHARGER OIL	120
Y	*243-1667*	1	LINES GP-WATER (SINGLE WATER REGULATOR)	133
Y	*319-5079*	1	LINES GP-WATER	138
Y	*247-2833*	1	MANIFOLD GP-EXHAUST	153
Y	*222-3092*	1	MANIFOLD GP-INLET (MID)	154
Y	*219-7440*	1	MOUNTING GP-FAN DRIVE	69
Y	*240-3279*	1	PAN GP-OIL	74
Y	*117-0165*	1	PLUG GP-CYLINDER BLOCK (OIL GALLERY, END)	82
Y	*227-9545*	1	PLUG GP-CYLINDER BLOCK (OIL GALLERY, RH)	84
Y	*238-8962*	1	PLUG GP-ENGINE	85
Y	*207-8103*	1	PULLEY GP-CRANKSHAFT	86
Y	*357-0523*	1	SENSOR GP-ENGINE	290
Y	*250-7017*	1	SUPPORT GP-ENGINE	96
Y	*256-6004*	1	TURBOCHARGER GP	157
Y	*357-0524*	1	WIRING GP-ELECTRONIC CONTROL	363
	231-0309	1	ELECTRONICS GP-ENGINE RATINGS	
			PLEASE USE THE GASKET KIT LINK IN SIS OR CONTACT YOUR LOCAL DEALER FOR THE LATEST GASKET KIT INFORMATION	

Y-SEPARATE ILLUSTRATION

ENGINE ARRANGEMENT

231-0877 ENGINE AR-CORE

S/N: MHX1304-9879
PART OF 231-0876, 349-4462 ENGINE AR-COMPLETE
ALSO AN ATTACHMENT

SMCS-1000 **i03252521**

NOTE	PART NUMBER	QTY	PART NAME 1 2 3 4 5 6 (PRODUCT LEVEL)	SEE PAGE
Y	*248-6662*	1	ACTUATOR GP-VALVE	18
Y	*267-0010*	1	BASE GP-VALVE COVER	19
Y	*223-7463*	1	CAMSHAFT GP	22
Y	*224-3881*	1	CRANKSHAFT GP	30
YR	*240-7271*	1	CYLINDER BLOCK GP	35
Y	*240-7679*	1	CYLINDER HEAD GP	43
			S/N: MHX1304-6079	
Y	*305-0618*	1	CYLINDER HEAD GP	47
			S/N: MHX6080-9879, 11242-UP	
Y	*229-8083*	1	MOUNTING GP-VALVE MECHANISM	72
Y	*222-3088*	1	GEAR GP-FRONT	55
Y	*218-7272*	1	HOUSING GP-FRONT	63
Y	*238-2723*	6	PISTON & ROD GP	76
Y	*223-3875*	1	PLUG GP-CYLINDER BLOCK	83
Y	*233-5221*	1	PUMP GP-ENGINE OIL	123
Y	*253-1461*	6	PUMP GP-FUEL INJECTION	181
Y	*227-5723*	1	PUMP GP-FUEL TRANSFER	188
			S/N: MHX1304-2760	
Y	*145-1695*	1	PUMP GP-FUEL TRANSFER	186
			S/N: MHX2761-3604	
Y	*284-2824*	1	PUMP GP-FUEL TRANSFER	190
			S/N: MHX3605-4476	
Y	*301-2262*	1	PUMP GP-FUEL TRANSFER	192
			S/N: MHX4477-9879, 11242-UP	
Y	*228-5812*	1	PUMP GP-WATER	141
Y	*240-7272*	1	VALVE MECHANISM GP	99
Y	*267-3088*	1	WIRING GP-UNIT INJECTOR	398
			PLEASE USE THE GASKET KIT LINK IN SIS OR CONTACT YOUR LOCAL DEALER FOR THE LATEST GASKET KIT INFORMATION	

R-REMFG PART MAY BE AVAILABLE
Y-SEPARATE ILLUSTRATION

ENGINE ARRANGEMENT

267-0009 ENGINE AR-CORE

S/N: MHX1214-3604

PART OF 227-5359 ENGINE AR-COMPLETE

AN ATTACHMENT

SMCS-1000 **i02288752**

NOTE	PART NUMBER	QTY	PART NAME 1 2 3 4 5 6 (PRODUCT LEVEL)	SEE PAGE
Y	*267-0010*	1	BASE GP-VALVE COVER	19
Y	*223-7463*	1	CAMSHAFT GP	22
Y	*224-3881*	1	CRANKSHAFT GP	30
Y	*240-7271*	1	CYLINDER BLOCK GP	35
Y	*240-7679*	1	CYLINDER HEAD GP	43
Y	*222-3088*	1	GEAR GP-FRONT	55
Y	*218-7272*	1	HOUSING GP-FRONT	63
Y	*229-8084*	1	MOUNTING GP-VALVE MECHANISM	73
Y	*238-2723*	6	PISTON & ROD GP	76
Y	*223-3875*	1	PLUG GP-CYLINDER BLOCK	83
Y	*233-5221*	1	PUMP GP-ENGINE OIL	123
Y	*253-1461*	6	PUMP GP-FUEL INJECTION	181
Y	*227-5723*	1	PUMP GP-FUEL TRANSFER	188
Y	*228-5812*	1	PUMP GP-WATER	141
Y	*240-7272*	1	VALVE MECHANISM GP	99
Y	*230-0961*	1	WIRING GP-UNIT INJECTOR	396

Y-SEPARATE ILLUSTRATION

ENGINE ARRANGEMENT

286-5804 ENGINE AR-CORE

S/N: MHX3605-3944
PART OF 227-5359 ENGINE AR-COMPLETE
AN ATTACHMENT

SMCS-1000 **i02761557**

NOTE	PART NUMBER	QTY	PART NAME 1 2 3 4 5 6 (PRODUCT LEVEL)	SEE PAGE
Y	*267-0010*	1	BASE GP-VALVE COVER	19
Y	*223-7463*	1	CAMSHAFT GP	22
Y	*224-3881*	1	CRANKSHAFT GP	30
Y	*303-3363*	1	CYLINDER BLOCK GP	37
Y	*240-7679*	1	CYLINDER HEAD GP	43
Y	*222-3088*	1	GEAR GP-FRONT	55
Y	*218-7272*	1	HOUSING GP-FRONT	63
Y	*229-8084*	1	MOUNTING GP-VALVE MECHANISM	73
Y	*238-2723*	6	PISTON & ROD GP	76
Y	*223-3875*	1	PLUG GP-CYLINDER BLOCK	83
Y	*233-5221*	1	PUMP GP-ENGINE OIL	123
Y	*253-1461*	6	PUMP GP-FUEL INJECTION	181
Y	*284-2824*	1	PUMP GP-FUEL TRANSFER	190
Y	*228-5812*	1	PUMP GP-WATER	141
Y	*240-7272*	1	VALVE MECHANISM GP	99
Y	*230-0961*	1	WIRING GP-UNIT INJECTOR	396

Y-SEPARATE ILLUSTRATION

ENGINE ARRANGEMENT

301-2265 ENGINE AR-CORE

S/N: MHX3945-UP

PART OF 227-5359 ENGINE AR-COMPLETE

AN ATTACHMENT

SMCS-1000 **i02983328**

NOTE	PART NUMBER	QTY	PART NAME 1 2 3 4 5 6 (PRODUCT LEVEL)	SEE PAGE
Y	*267-0010*	1	BASE GP-VALVE COVER	19
Y	*223-7463*	1	CAMSHAFT GP	22
Y	*224-3881*	1	CRANKSHAFT GP	30
Y	*240-7271*	1	CYLINDER BLOCK GP	35
Y	*240-7679*	1	CYLINDER HEAD GP	43
			S/N: MHX3945-6079	
Y	*305-0618*	1	CYLINDER HEAD GP	47
			S/N: MHX6080-UP	
Y	*222-3088*	1	GEAR GP-FRONT	55
Y	*218-7272*	1	HOUSING GP-FRONT	63
Y	*229-8084*	1	MOUNTING GP-VALVE MECHANISM	73
Y	*238-2723*	6	PISTON & ROD GP	76
Y	*223-3875*	1	PLUG GP-CYLINDER BLOCK	83
Y	*233-5221*	1	PUMP GP-ENGINE OIL	123
Y	*253-1461*	6	PUMP GP-FUEL INJECTION	181
Y	*301-2262*	1	PUMP GP-FUEL TRANSFER	192
Y	*228-5812*	1	PUMP GP-WATER	141
Y	*240-7272*	1	VALVE MECHANISM GP	99
Y	*230-0961*	1	WIRING GP-UNIT INJECTOR	396

Y-SEPARATE ILLUSTRATION

ENGINE ARRANGEMENT

359-0362 ENGINE AR-CORE

S/N: MHX9880-UP
PART OF 359-0363 ENGINE AR-CORE
ALSO AN ATTACHMENT

SMCS-1000 **i04020861**

NOTE	PART NUMBER	QTY	PART NAME 1 2 3 4 5 6 (PRODUCT LEVEL)	SEE PAGE
Y	*267-0010*	1	BASE GP-VALVE COVER	19
Y	*223-7463*	1	CAMSHAFT GP	22
Y	*224-3881*	1	CRANKSHAFT GP	30
YR	*240-7271*	1	CYLINDER BLOCK GP	35
Y	*305-0618*	1	CYLINDER HEAD GP	47
Y	*222-3088*	1	GEAR GP-FRONT	55
Y	*261-1506*	6	PISTON & ROD GP	80
Y	*233-5221*	1	PUMP GP-ENGINE OIL	123
Y	*253-1461*	6	PUMP GP-FUEL INJECTION	181
Y	*228-5812*	1	PUMP GP-WATER	141
Y	*357-0523*	1	SENSOR GP-ENGINE	290
Y	*240-7272*	1	VALVE MECHANISM GP	99
Y	*267-3088*	1	WIRING GP-UNIT INJECTOR	398

R-REMFG PART MAY BE AVAILABLE
Y-SEPARATE ILLUSTRATION

ENGINE ARRANGEMENT

359-0363 ENGINE AR-CORE

S/N: MHX9880-UP
PART OF 231-0876 ENGINE AR-COMPLETE
ALSO AN ATTACHMENT

SMCS-1000 **i04020859**

NOTE	PART NUMBER	QTY	PART NAME 1 2 3 4 5 6 (PRODUCT LEVEL)	SEE PAGE
Y	*359-0362*	1	ENGINE AR-CORE	16
	231-0309	1	ELECTRONICS GP-ENGINE RATINGS	

Y-SEPARATE ILLUSTRATION

248-6662 ACTUATOR GP-VALVE

S/N: MHX1304-UP
24-VOLT CAT COMPRESSION BRAKE
PART OF 231-0876 ENGINE AR-COMPLETE, 231-0877 ENGINE AR-CORE
FOR USE WITH APPLICATIONS REQUIRING AN ENGINE BRAKE
ALSO AN ATTACHMENT

SMCS-1130 **i02396992**

NOTE	REF NO	GRAPHIC REF	PART NUMBER	QTY	PART NAME 1 2 3 4 5 6 (PRODUCT LEVEL)	SEE PAGE
R	1	1	**265-3244**	3	ACTUATOR AS	
	2	1	**3H-7654**	6	WASHER-HARD (13.5X22.5X3.0-MM THK)	
M	3	1	**6V-8149**	6	NUT (M12X1.75-THD)	
M	4	1	**8T-7058**	6	BOLT-SOCKET HEAD (M12X1.75X140-MM)	

M-METRIC PART
R-REMFG PART MAY BE AVAILABLE

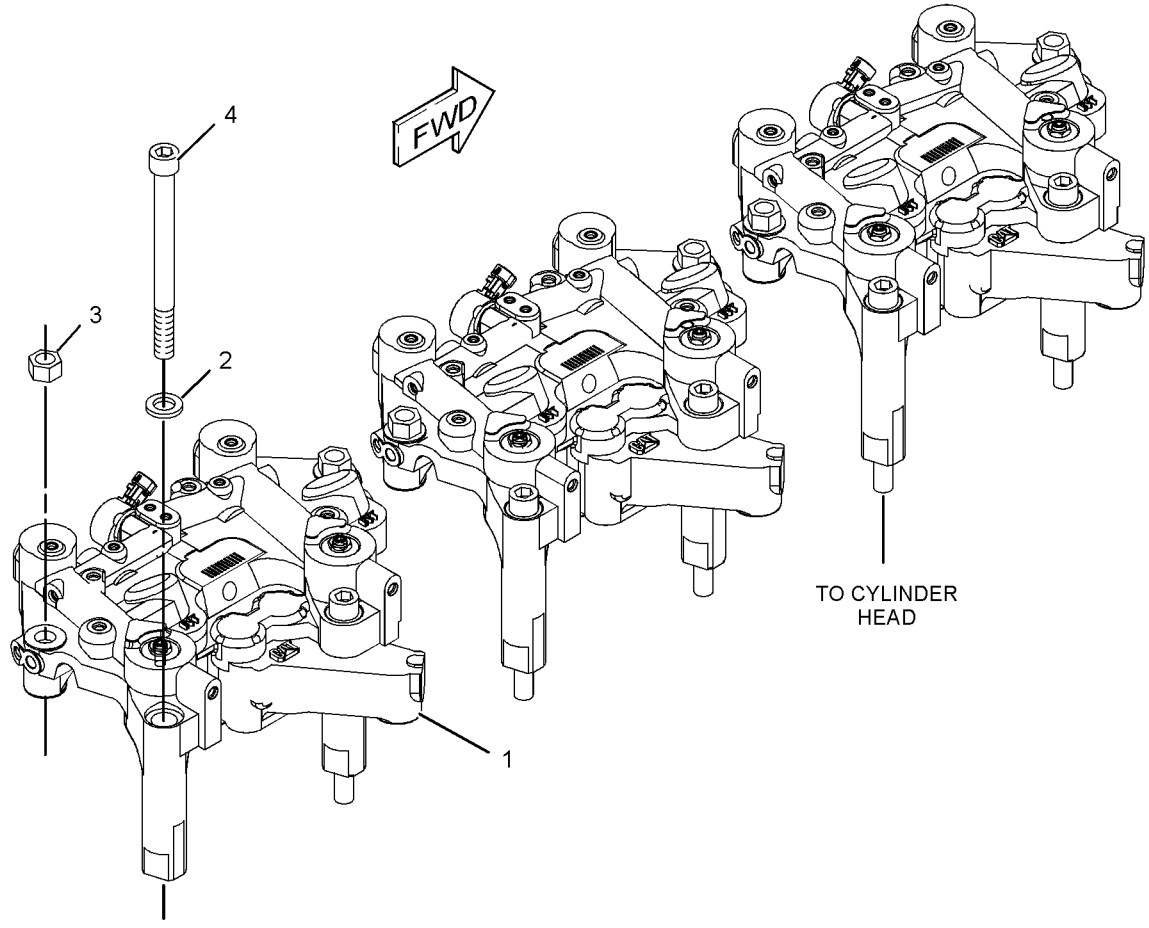

GRAPHIC #1 **<END>** g01199334

267-0010 BASE GP-VALVE COVER—ENGINE

S/N: MHX1214-1279
PART OF 267-0009 ENGINE AR-CORE
AN ATTACHMENT

SMCS-1120 **i02289413**

NOTE	REF NO	GRAPHIC REF	PART NUMBER	QTY	PART NAME 1 2 3 4 5 6 (PRODUCT LEVEL)	SEE PAGE
	1	1	**180-1538**	2	DOWEL	
	2	1	**248-6661**	1	BASE	
	3	1	**132-5789**	1	CLIP	
M	4	1	**6V-3918**	13	BOLT (M8X1.25X50-MM)	
	5	1	**9M-1974**	13	WASHER-HARD (8.8X16X2-MM THK)	
D	6	1	**5P-5678**		SEAL (3-M)	

D-ORDER BY THE METER
M-METRIC PART

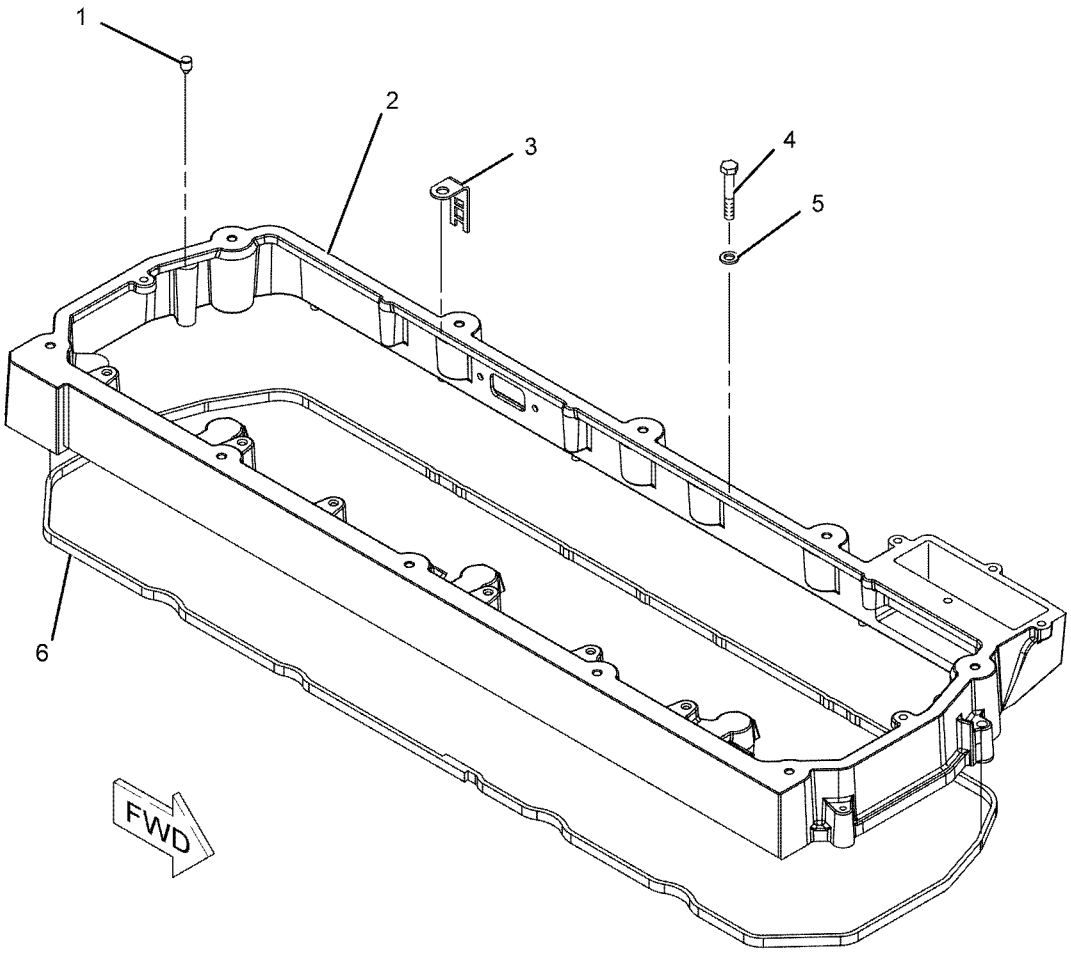

GRAPHIC #1 **<END>** g01143753

267-0010 BASE GP-VALVE COVER—ENGINE

S/N: MHX1304-8979, 9880-UP

PART OF 231-0877, 267-0009, 286-5804, 301-2265, 359-0362 ENGINE AR-CORE

ALSO AN ATTACHMENT

SMCS-1120 **i03546103**

NOTE	REF NO	GRAPHIC REF	PART NUMBER	QTY	PART NAME 1 2 3 4 5 6 (PRODUCT LEVEL)	SEE PAGE
CY	1	1	**325-4505**	1	BASE GP-VALVE COVER	21
M	2	1	**6V-5221**	6	BOLT (M8X1.25X80-MM)	
	3	1	**132-5789**	1	CLIP	
M	4	1	**6V-3918**	7	BOLT (M8X1.25X50-MM)	
	5	1	**9M-1974**	13	WASHER-HARD (8.8X16X2-MM THK)	
C	6	1	**272-0389**	1	SEAL	

C-CHANGE FROM PREVIOUS TYPE
M-METRIC PART
Y-SEPARATE ILLUSTRATION

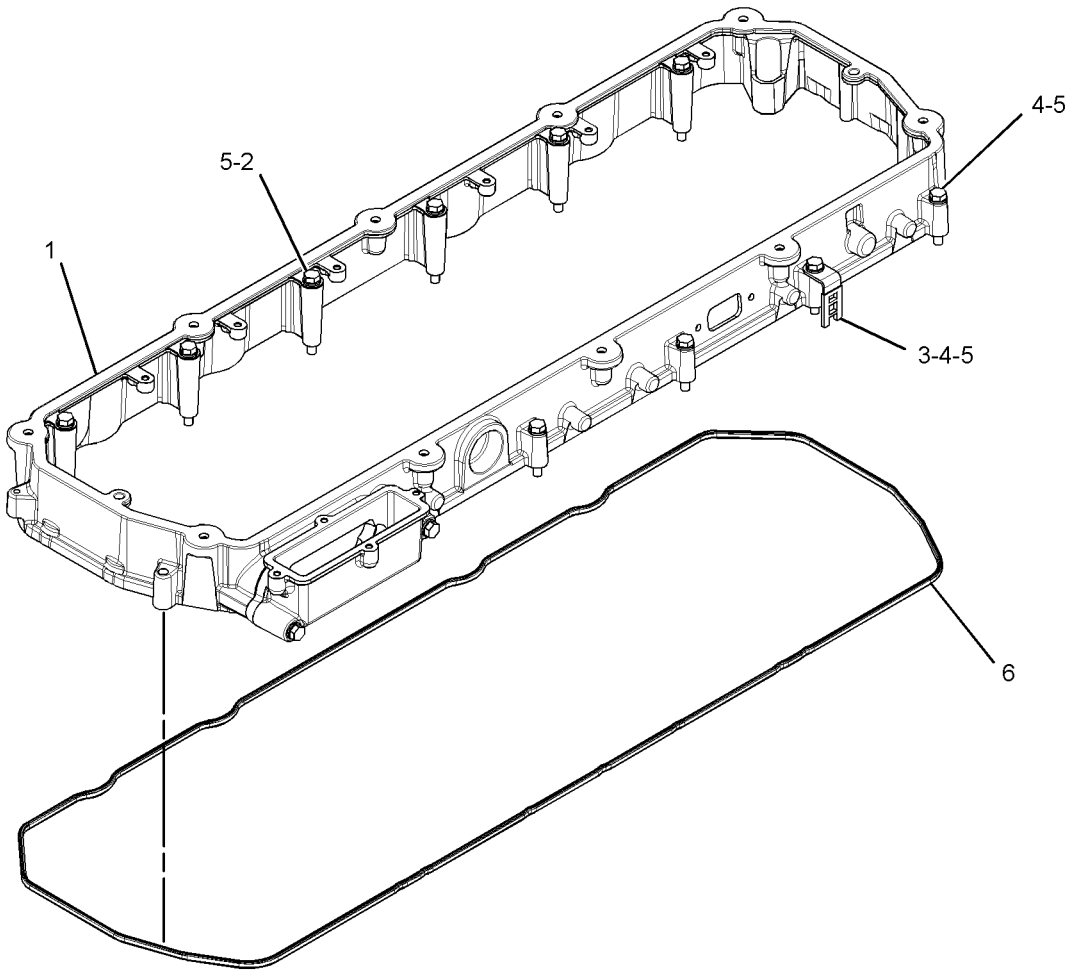

GRAPHIC #1 **<END>** g01881166

325-4505 BASE GP-VALVE COVER

S/N: MHX1280-UP
PART OF 267-0010 BASE GP-VALVE COVER
ALSO AN ATTACHMENT

SMCS-1120 **i03460120**

NOTE	REF NO	GRAPHIC REF	PART NUMBER	QTY	PART NAME 1 2 3 4 5 6 (PRODUCT LEVEL)	SEE PAGE
	1	1	**321-5639**	1	SEAL	
	2	1	**332-3707**	1	ADAPTER	
M	3	1	**5P-8347**	2	BOLT (M8X1.25X70-MM)	
	4	1	**9M-1974**	2	WASHER-HARD (8.8X16X2-MM THK)	

M-METRIC PART

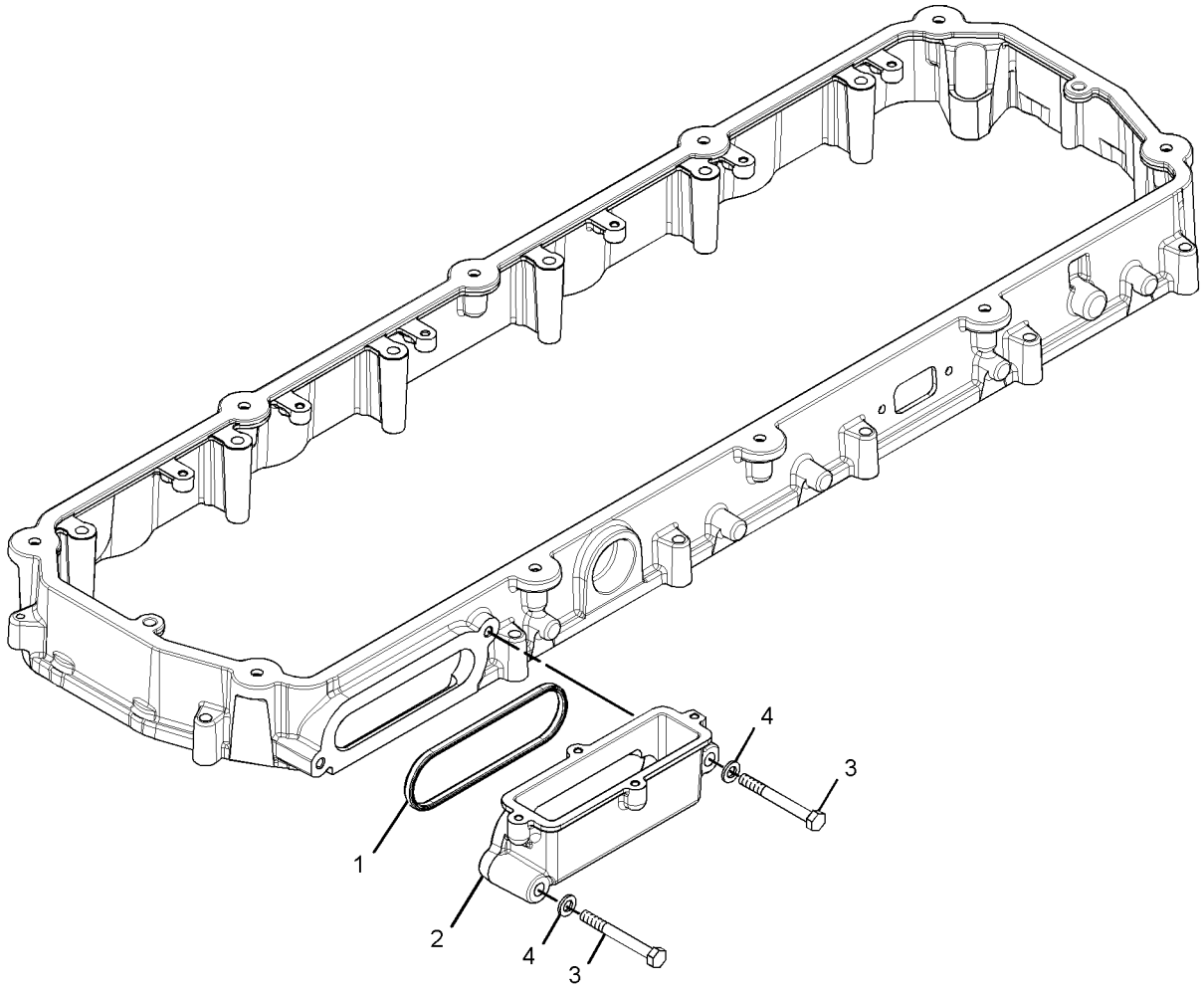

GRAPHIC #1 **<END>** g01880575

BASIC ENGINE

223-7463 CAMSHAFT GP

S/N: MHX1304-UP

PART OF 231-0877, 267-0009, 286-5804, 301-2265, 359-0362 ENGINE AR-CORE

ALSO AN ATTACHMENT

SMCS-1210 **i01966584**

NOTE	REF NO	GRAPHIC REF	PART NUMBER	QTY	PART NAME 1 2 3 4 5 6 (PRODUCT LEVEL)	SEE PAGE
R	1	1	**223-7468**	1	CAMSHAFT AS	
	1A	1	**1B-8705**	1	KEY-WOODRUFF	
	1B	1	**222-3907**	1	GEAR (96-TEETH)	
	1C	1	**223-7471**	1	PLATE-THRUST	
	2	1	**229-5684**	1	COVER	
	3	1	**131-3718**	1	SEAL-O-RING	
M	4	1	**6V-5217**	4	BOLT (M8X1.25X20-MM)	
	5	1	**9M-1974**	4	WASHER-HARD (8.8X16X2-MM THK)	
M	6	1	**8T-0338**	4	BOLT-SOCKET HEAD (M8X1.25X45-MM)	

M-METRIC PART
R-REMFG PART MAY BE AVAILABLE

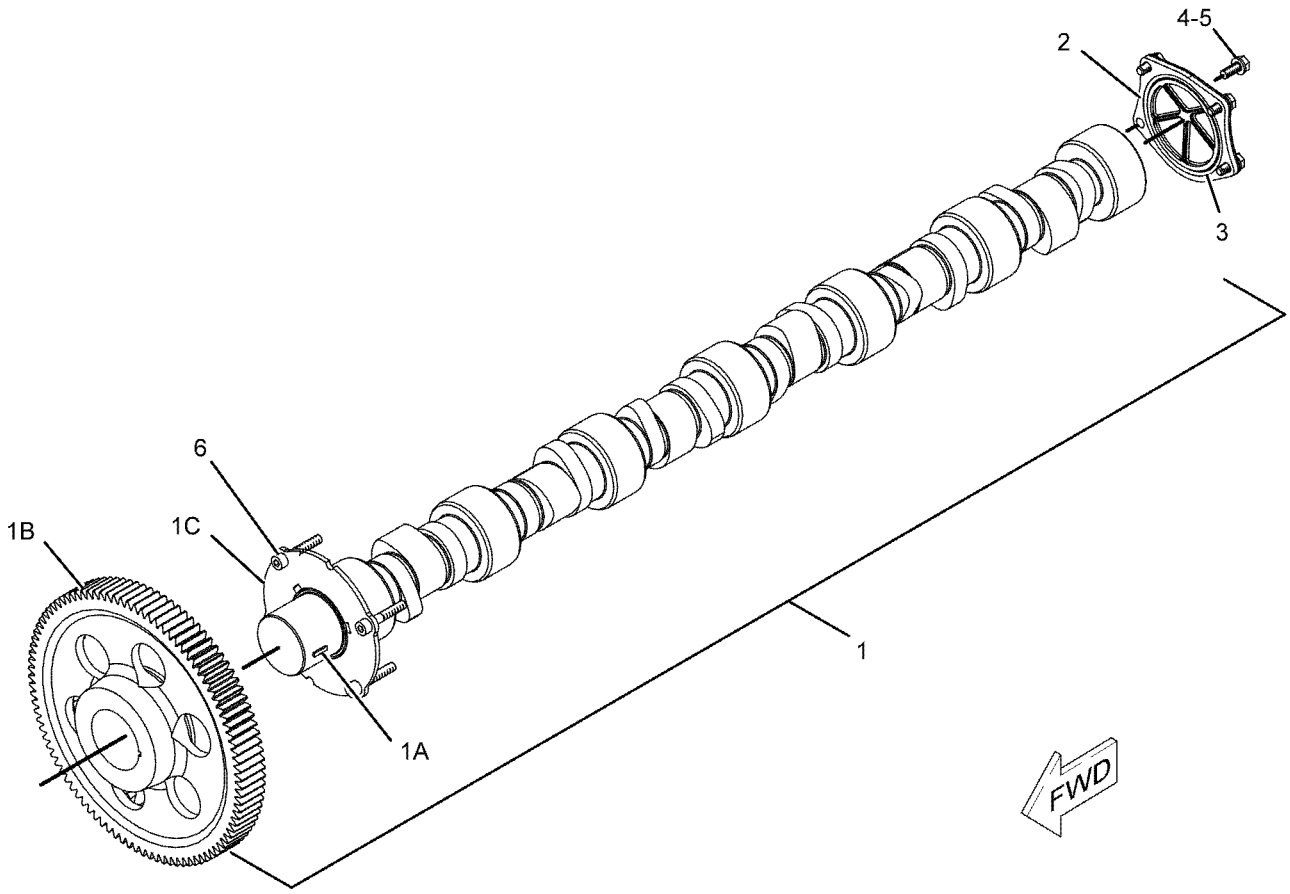

GRAPHIC #1 **<END>** g01043782

216-5540 COVER GP-FLYWHEEL HOUSING

S/N: MHX1214-UP
PART OF 238-2949, 277-4435 HOUSING GP-FLYWHEEL
ALSO AN ATTACHMENT

SMCS-1157 **i01963594**

NOTE	REF NO	GRAPHIC REF	PART NUMBER	QTY	PART NAME 1 2 3 4 5 6 (PRODUCT LEVEL)	SEE PAGE
	1	1	**217-5900**	1	COVER	
	2	1	**4M-6480**	1	GASKET	
M	3	1	**6V-4248**	2	BOLT (M10X1.5X25-MM)	
	4	1	**6V-5839**	2	WASHER (11X21X2.5-MM THK)	

M-METRIC PART

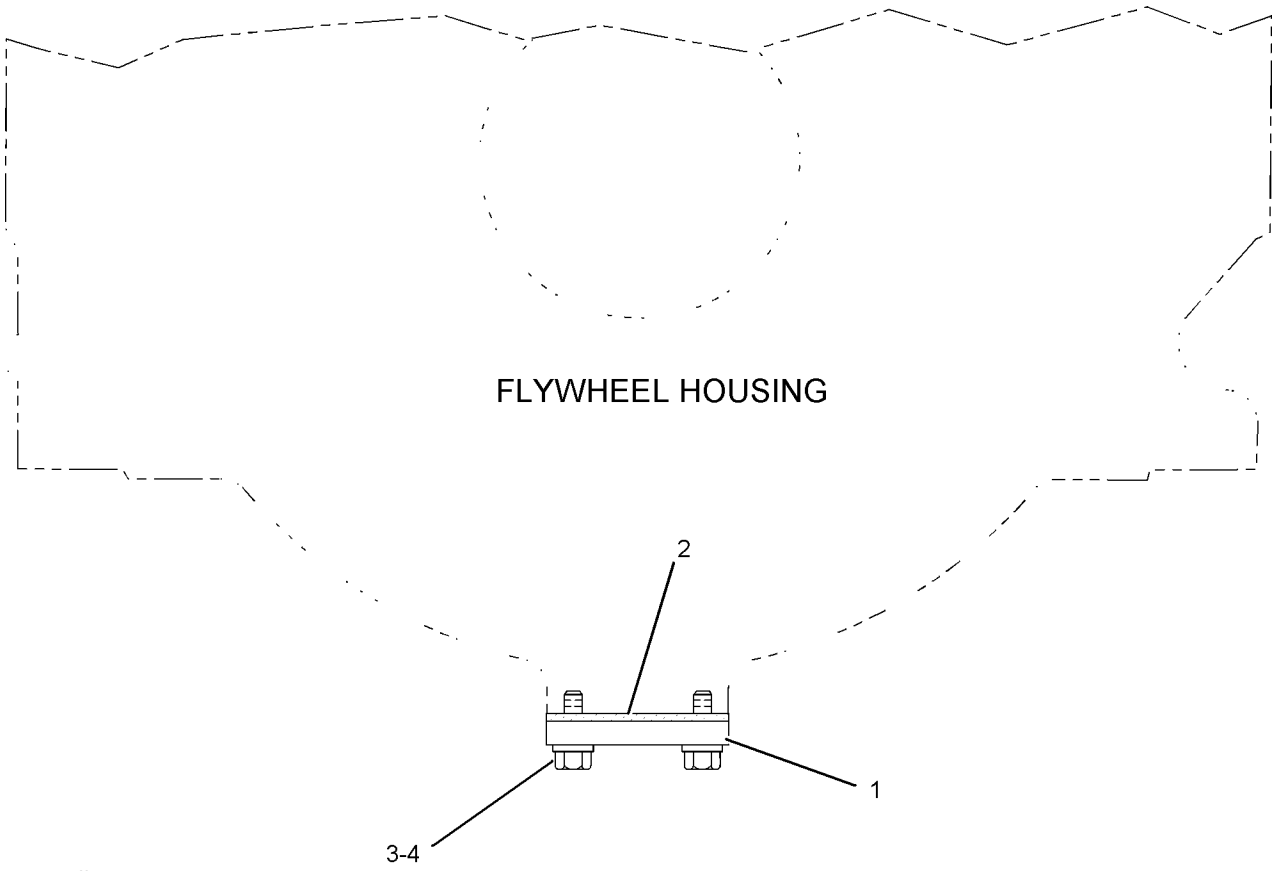

GRAPHIC #1 **<END>** g01020213

220-6390 COVER GP-FLYWHEEL HOUSING

S/N: MHX2761-6111
PART OF 227-5359, 231-0876 ENGINE AR-COMPLETE
ALSO AN ATTACHMENT

SMCS-1157 **i01964481**

NOTE	REF NO	GRAPHIC REF	PART NUMBER	QTY	PART NAME 1 2 3 4 5 6 (PRODUCT LEVEL)	SEE PAGE
	1	1	**9Y-6089**	1	GASKET	
M	2	1	**6V-4429**	3	BOLT (M16X2X40-MM)	
	3	1	**9X-8268**	3	WASHER (17.5X30X3.5-MM THK)	
	4	1	**4N-1114**	1	COVER	

M-METRIC PART

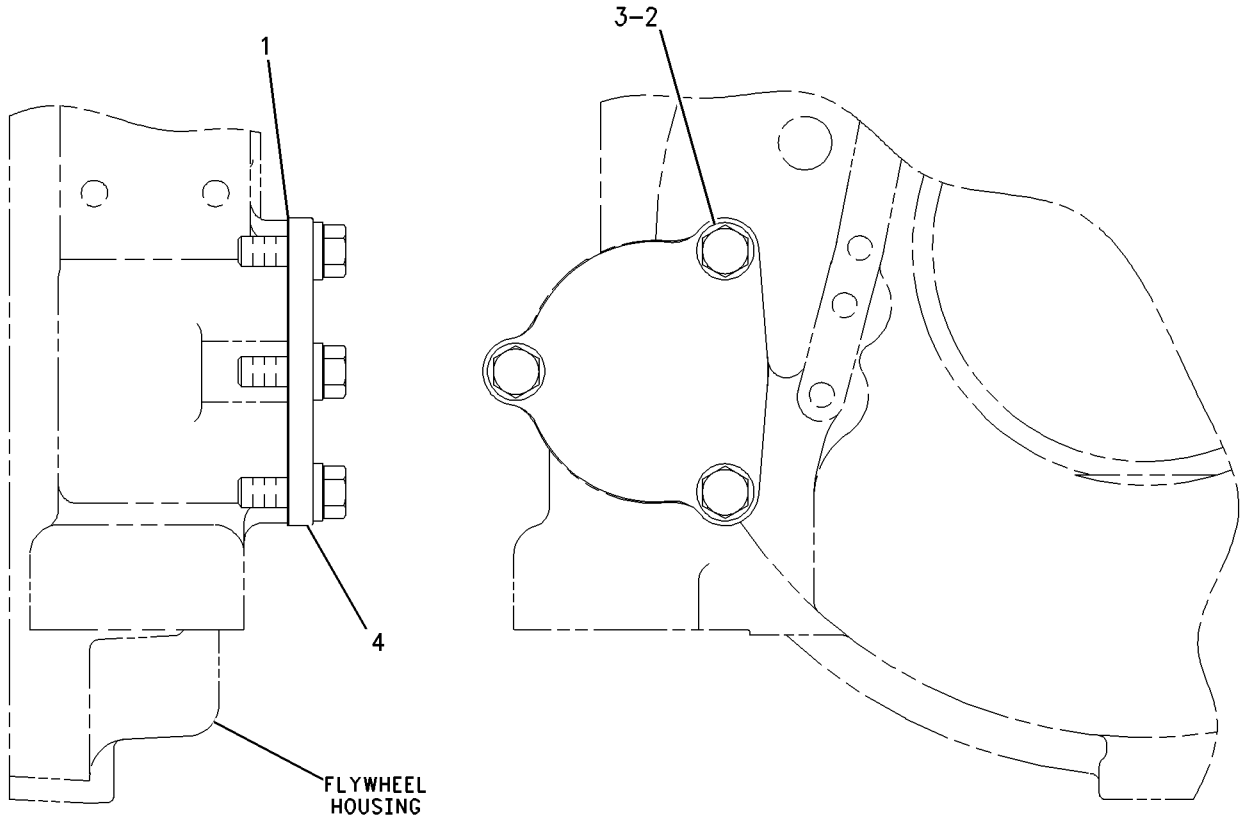

RIGHT SIDE VIEW FRONT VIEW

GRAPHIC #1 **<END>** g00783561

323-1682 COVER GP-FLYWHEEL HOUSING

S/N: MHX6112-UP
PART OF 231-0876, 349-4462 ENGINE AR-COMPLETE
ALSO AN ATTACHMENT

SMCS-1157 **i02987004**

NOTE	REF NO	GRAPHIC REF	PART NUMBER	QTY	PART NAME 1 2 3 4 5 6 (PRODUCT LEVEL)	SEE PAGE
	1	1	**4N-1114**	1	COVER	
	2	1	**9Y-6089**	1	GASKET	
M	3	1	**6V-4429**	3	BOLT (M16X2X40-MM)	
	4	1	**9X-8268**	3	WASHER (17.5X30X3.5-MM THK)	

M-METRIC PART

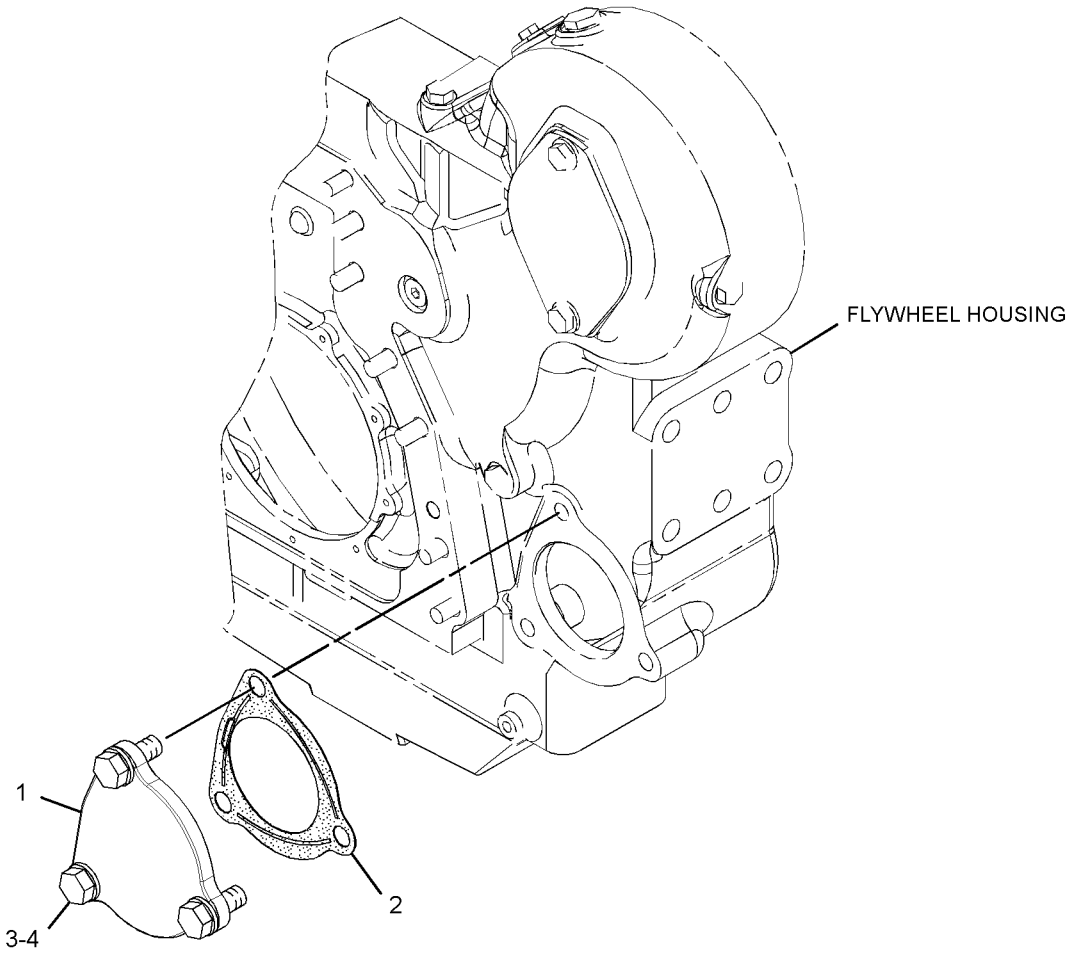

GRAPHIC #1 **<END>** g01519751

BASIC ENGINE

136-4307 COVER GP-FRONT HOUSING

S/N: MHX1304-2760
PART OF 227-5359, 231-0876 ENGINE AR-COMPLETE
ALSO AN ATTACHMENT

SMCS-1151, 1166 **i01509352**

NOTE	REF NO	GRAPHIC REF	PART NUMBER	QTY	PART NAME 1 2 3 4 5 6 (PRODUCT LEVEL)	SEE PAGE
	1	1	**4P-1650**	1	COVER	
	2	1	**1H-7339**	1	SEAL-O-RING	
M	3	1	**6V-1820**	2	BOLT (M10X1.50X30MM)	
	4	1	**6V-5839**	2	WASHER (11X21X2.5MM THK)	

M-METRIC PART

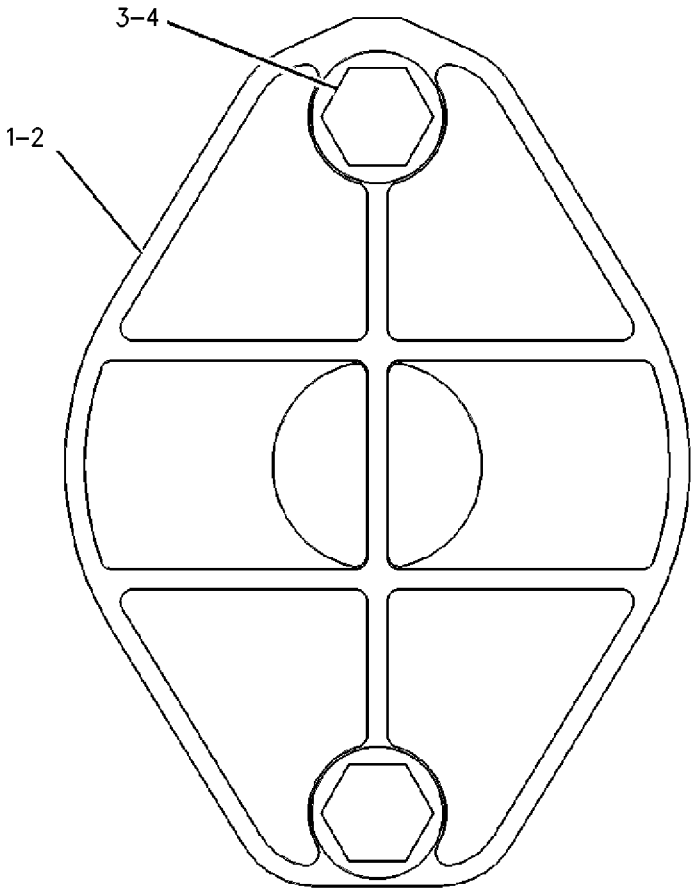

REAR VIEW

GRAPHIC #1 **<END>** g00783785

227-2574 COVER GP-FRONT HOUSING

S/N: MHX1304-UP
PROVIDES COVER WHEN AIR COMPRESSOR IS NOT USED
PART OF 227-5359, 231-0876, 349-4462 ENGINE AR-COMPLETE
ALSO AN ATTACHMENT

SMCS-1151, 1166 **i03833937**

NOTE	REF NO	GRAPHIC REF	PART NUMBER	QTY	PART NAME 1 2 3 4 5 6 (PRODUCT LEVEL)	SEE PAGE
	1	1	**285-0823**	1	COVER	
M	2	1	**6V-8197**	3	BOLT (M12X1.75X40-MM)	
	3	1	**117-8801**	1	SEAL-O-RING	
	4	1	**5P-8245**	3	WASHER-HARD (13.5X25.5X3-MM THK)	

M-METRIC PART

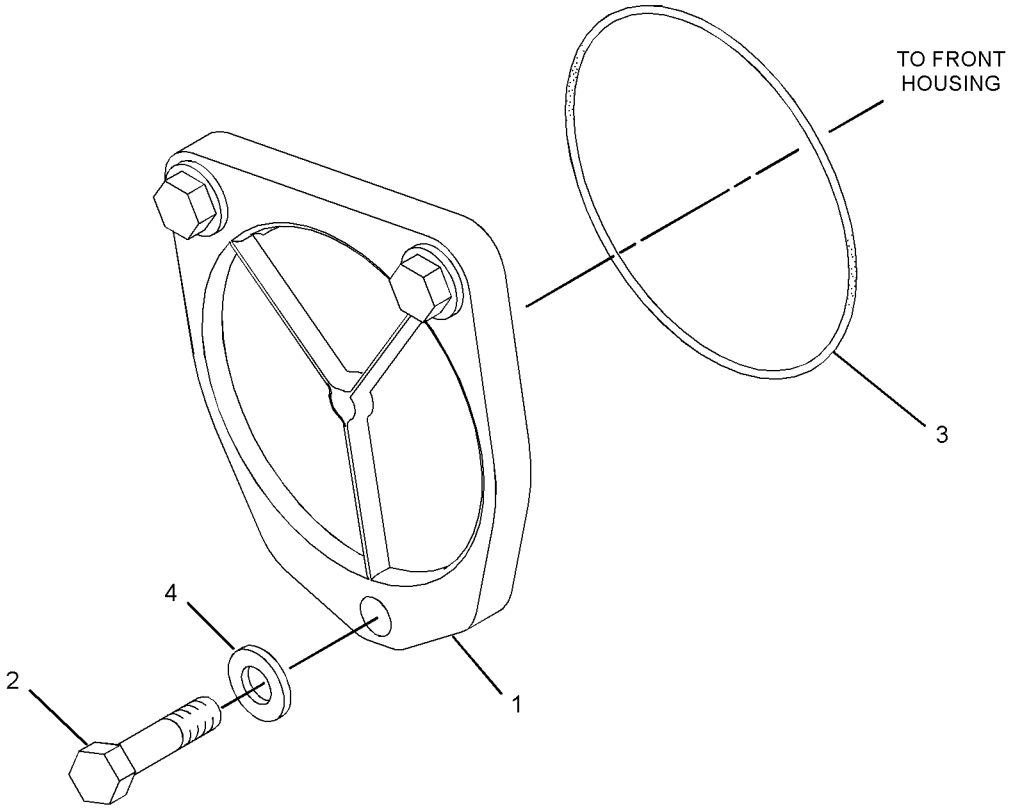

GRAPHIC #1 **<END>** g01345052

229-2614 COVER GP-VALVE MECHANISM

S/N: MHX1304-9879

PART OF 227-5359, 231-0876, 349-4462 ENGINE AR-COMPLETE

FOR USE WITH ALL ENGINES THAT REQUIRE A VARIABLE VALVE ACTUATOR GROUP OR A BRAKE

ALSO AN ATTACHMENT

SMCS-1107, 1120 **i03648759**

NOTE	REF NO	GRAPHIC REF	PART NUMBER	QTY	PART NAME 1 2 3 4 5 6 (PRODUCT LEVEL)	SEE PAGE
	1	1	**212-7728**	10	WASHER-ISOLATOR	
	2	1	**344-7561**	1	COVER AS-VALVE	
		1	**290-3785**	1	PLATE-IDENTIFICATION (CAT C13 ACERT)	
	3	1	**229-5711**	1	SEAL-VALVE COVER	
M	4	1	**8T-6912**	10	BOLT (M8X1.25X50-MM)	
	5	1	**8T-4224**	10	WASHER-HARD (8.8X16X2-MM THK)	

M-METRIC PART

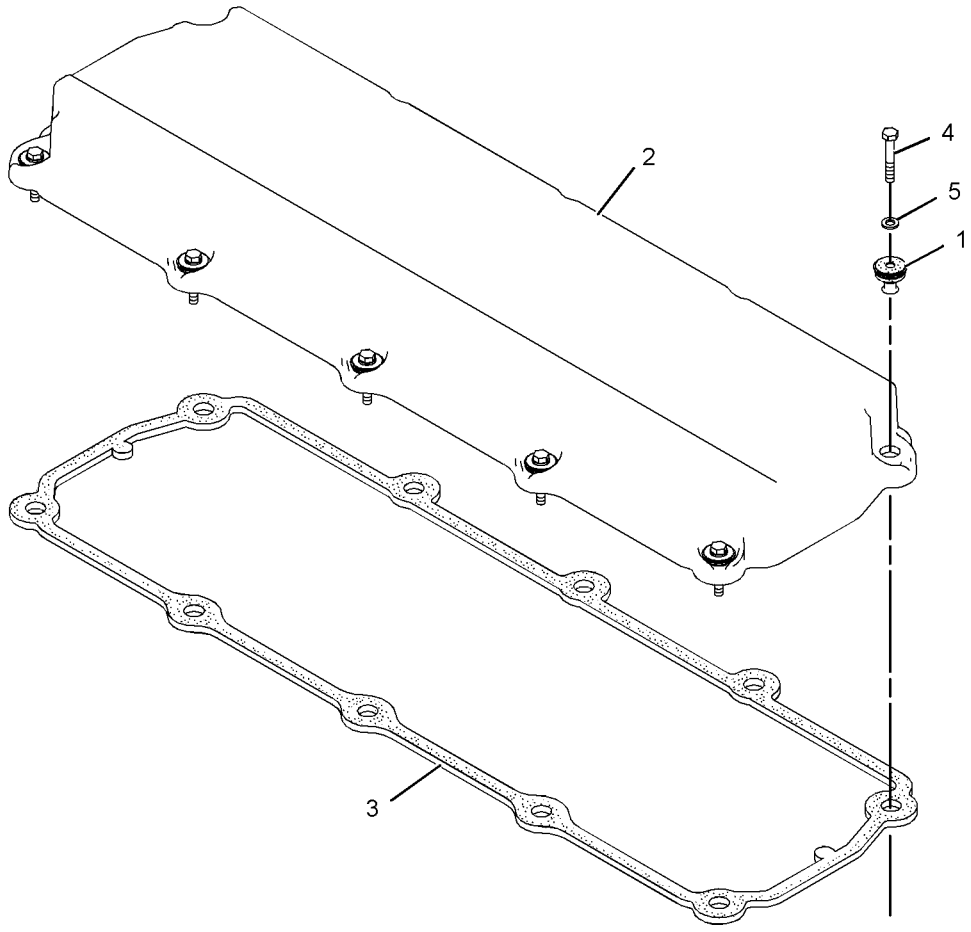

GRAPHIC #1 **<END>** g01376544

355-7194 COVER GP-VALVE MECHANISM

S/N: MHX9880-UP
PART OF 231-0876 ENGINE AR-COMPLETE
ALSO AN ATTACHMENT

SMCS-1107, 1120 **i04020857**

NOTE	REF NO	GRAPHIC REF	PART NUMBER	QTY	PART NAME 1 2 3 4 5 6 (PRODUCT LEVEL)	SEE PAGE
	1	1	**212-7728**	10	WASHER-ISOLATOR	
	2	1	**229-5711**	1	SEAL-VALVE COVER	
	3	1	**344-7562**	1	COVER-VALVE	
	4	1	**8T-4224**	10	WASHER-HARD (8.8X16X2-MM THK)	
M	5	1	**8T-6912**	10	BOLT (M8X1.25X50-MM)	

M-METRIC PART

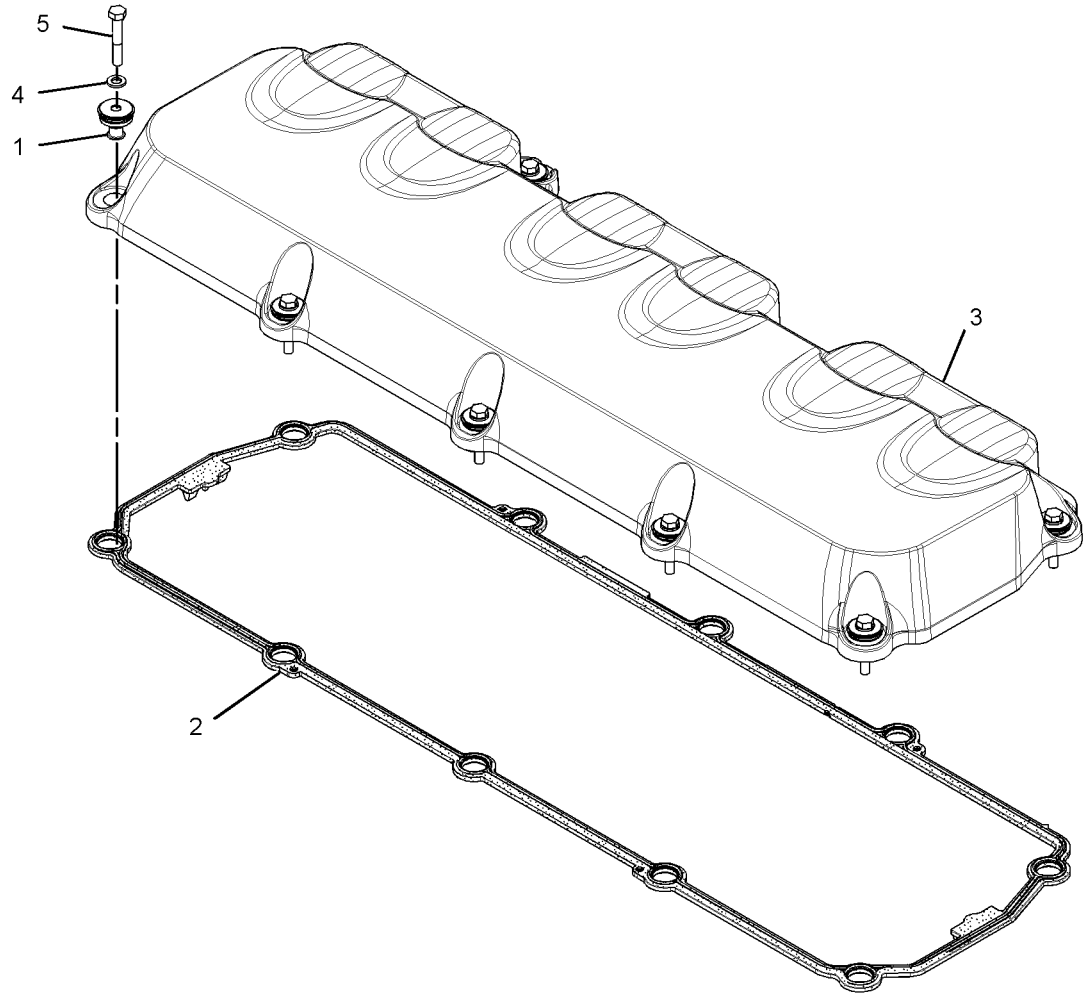

GRAPHIC #1 **<END>** g02224493

BASIC ENGINE

224-3881 CRANKSHAFT GP

S/N: MHX1304-UP

PART OF 231-0877, 267-0009, 286-5804, 301-2265, 359-0362 ENGINE AR-CORE

ALSO AN ATTACHMENT

SMCS-1202, 1203, 1204, 1232 **i03575780**

NOTE	REF NO	GRAPHIC REF	PART NUMBER	QTY	PART NAME 1 2 3 4 5 6 (PRODUCT LEVEL)	SEE PAGE
J	1	1	**211-0587**	4	BEARING-MAIN (STANDARD)	
AB		1	**128-0400**		BEARING-MAIN (0.51-MM US)	
AB		1	**128-0401**		BEARING-MAIN (0.76-MM US)	
AB		1	**128-0402**		BEARING-MAIN (0.51-MM OS)	
AB		1	**128-0403**		BEARING-MAIN (0.51-MM OS, 0.51-MM US)	
J	2	1	**211-0588**	3	BEARING-MAIN (STANDARD)	
AB		1	**128-0382**		BEARING-MAIN (0.51-MM US)	
AB		1	**128-0383**		BEARING-MAIN (0.76-MM US)	
AB		1	**128-0384**		BEARING-MAIN (0.51-MM OS)	
AB		1	**128-0385**		BEARING-MAIN (0.51-MM OS, 0.51-MM US)	
R	3	1	**313-3997**	1	CRANKSHAFT AS	
		1	**6V-3536**	1	DOWEL	
		1	**9Y-0810**	1	SLEEVE-WEAR	
		1	**9Y-0821**	1	SLEEVE	
		1	**187-8972**	1	GEAR-CRANKSHAFT (48-TEETH)	
J	4	1	**246-3144**	2	PLATE-THRUST	
					AVAILABLE REPAIR KIT(S):	
J			**243-6717**	1	KIT-CRANKSHAFT BEARING (STANDARD)	
					(INCLUDES MAIN BEARINGS & THRUST PLATES	

A-NOT PART OF THIS GROUP
B-USE AS REQUIRED
J-KIT MARKED J INCLUDES PARTS MARKED J
R-REMFG PART MAY BE AVAILABLE

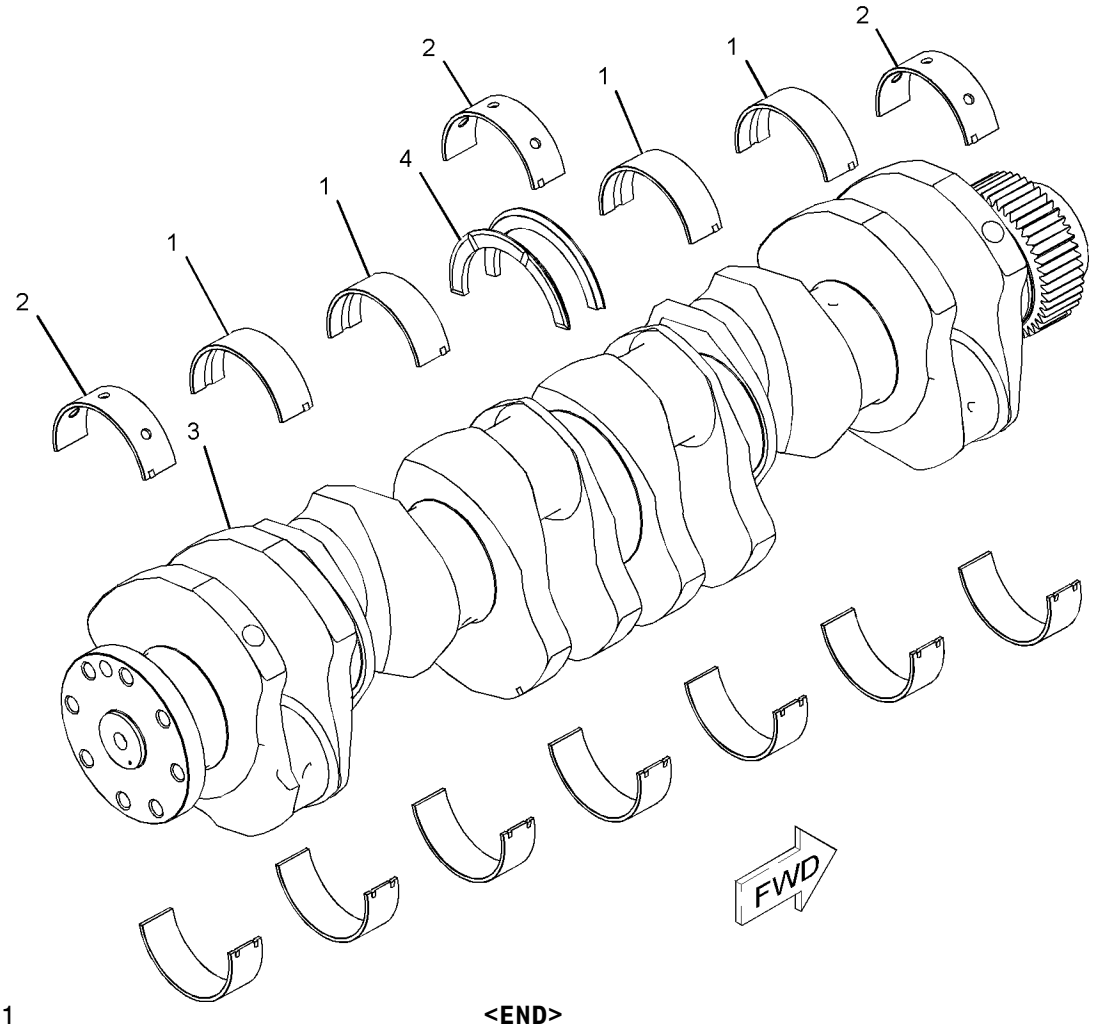

GRAPHIC #1 **<END>** g01101434

303-1382 CYLINDER BLOCK AS

S/N: MHX1214-UP
PART OF 303-1383 CYLINDER BLOCK AS
ALSO AN ATTACHMENT

SMCS-1201 **i03562880**

NOTE	REF NO	GRAPHIC REF	PART NUMBER	QTY	PART NAME 1 2 3 4 5 6 (PRODUCT LEVEL)	SEE PAGE
	1	1	**223-6546**	14	BOLT (M18X2.5X170-MM)	
	2	1	**293-9397**	14	WASHER-HARD (19X34X3.5-MM THK)	
	3	1	**207-8572**	7	CAP-BEARING	

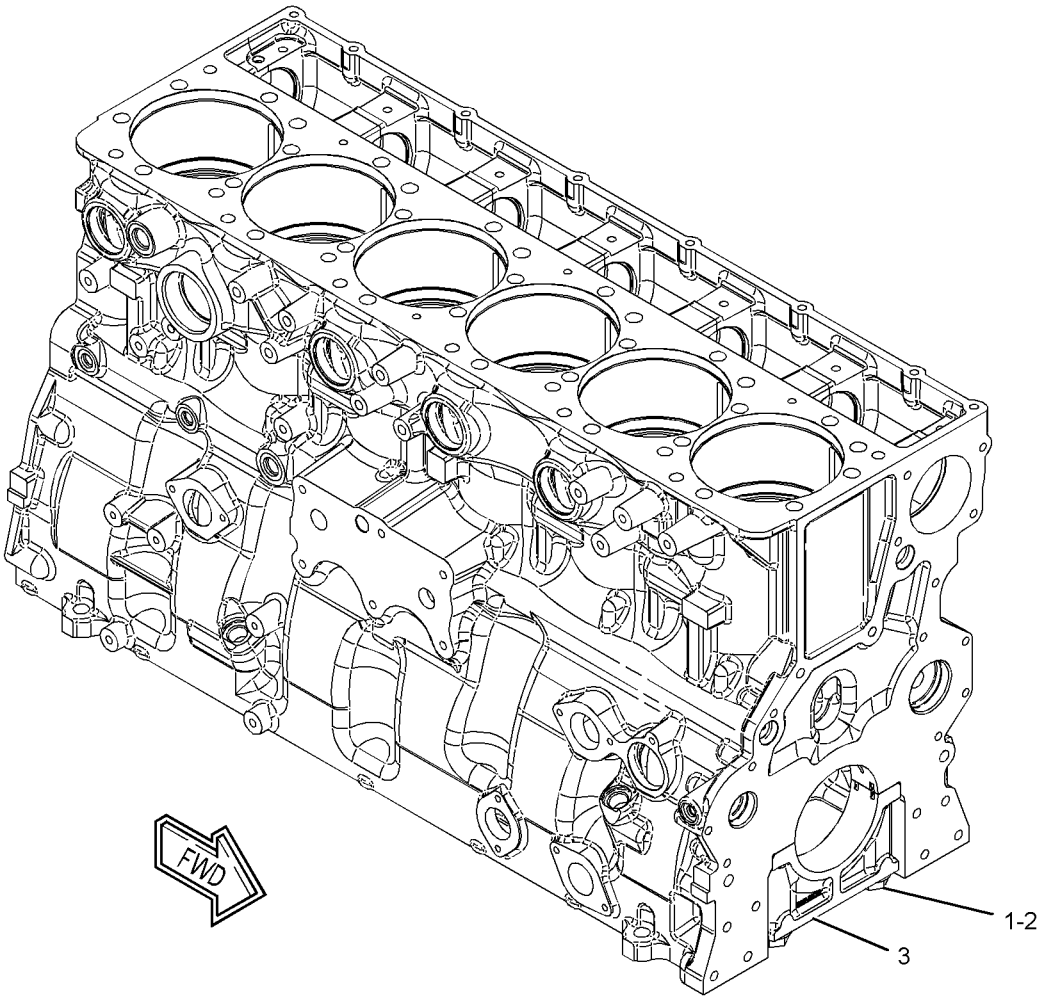

GRAPHIC #1 **<END>** g01338467

303-1383 CYLINDER BLOCK AS

S/N: MHX1214-UP
PART OF 303-1384 CYLINDER BLOCK AS
ALSO AN ATTACHMENT

SMCS-1201 **i02662418**

NOTE	REF NO	GRAPHIC REF	PART NUMBER	QTY	PART NAME 1 2 3 4 5 6 (PRODUCT LEVEL)	SEE PAGE
	1	1	**187-8969**	7	BEARING	
Y	2	1	*303-1382*	1	CYLINDER BLOCK AS	32

Y-SEPARATE ILLUSTRATION

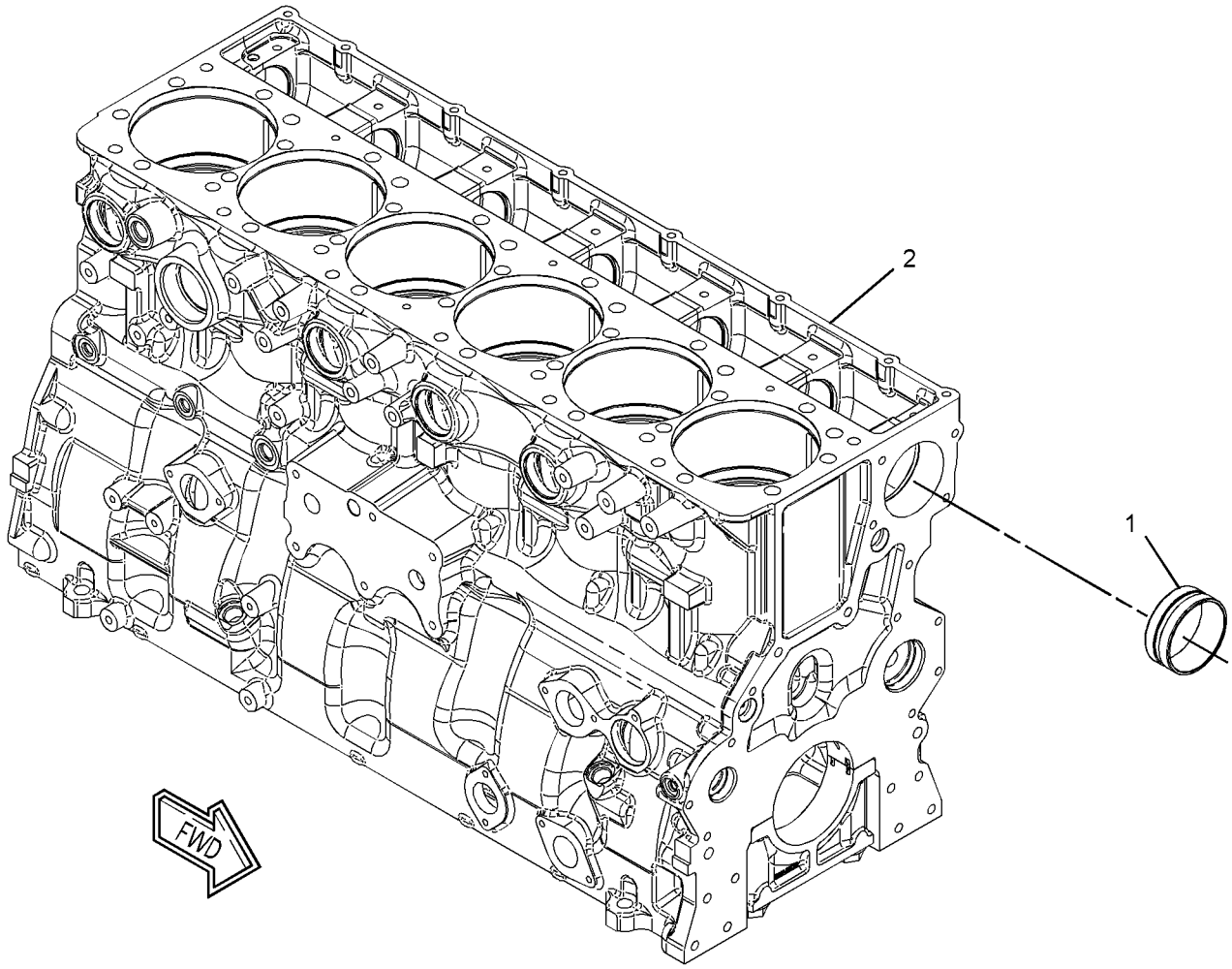

GRAPHIC #1 **<END>** g01338428

BASIC ENGINE

303-1384 CYLINDER BLOCK AS

S/N: MHX1214-UP
PART OF 240-7271, 303-3363 CYLINDER BLOCK GP
ALSO AN ATTACHMENT

SMCS-1201 **i02662417**

NOTE	REF NO	GRAPHIC REF	PART NUMBER	QTY	PART NAME 1 2 3 4 5 6 (PRODUCT LEVEL)	SEE PAGE
	1	1	**4F-5695**	5	PLUG-CUP	
	2	1	**104-3560**	6	SEAL-LINER	
	3	1	**197-9330**	6	LINER-CYLINDER	
Y	4	1	*303-1383*	1	CYLINDER BLOCK AS	33

Y-SEPARATE ILLUSTRATION

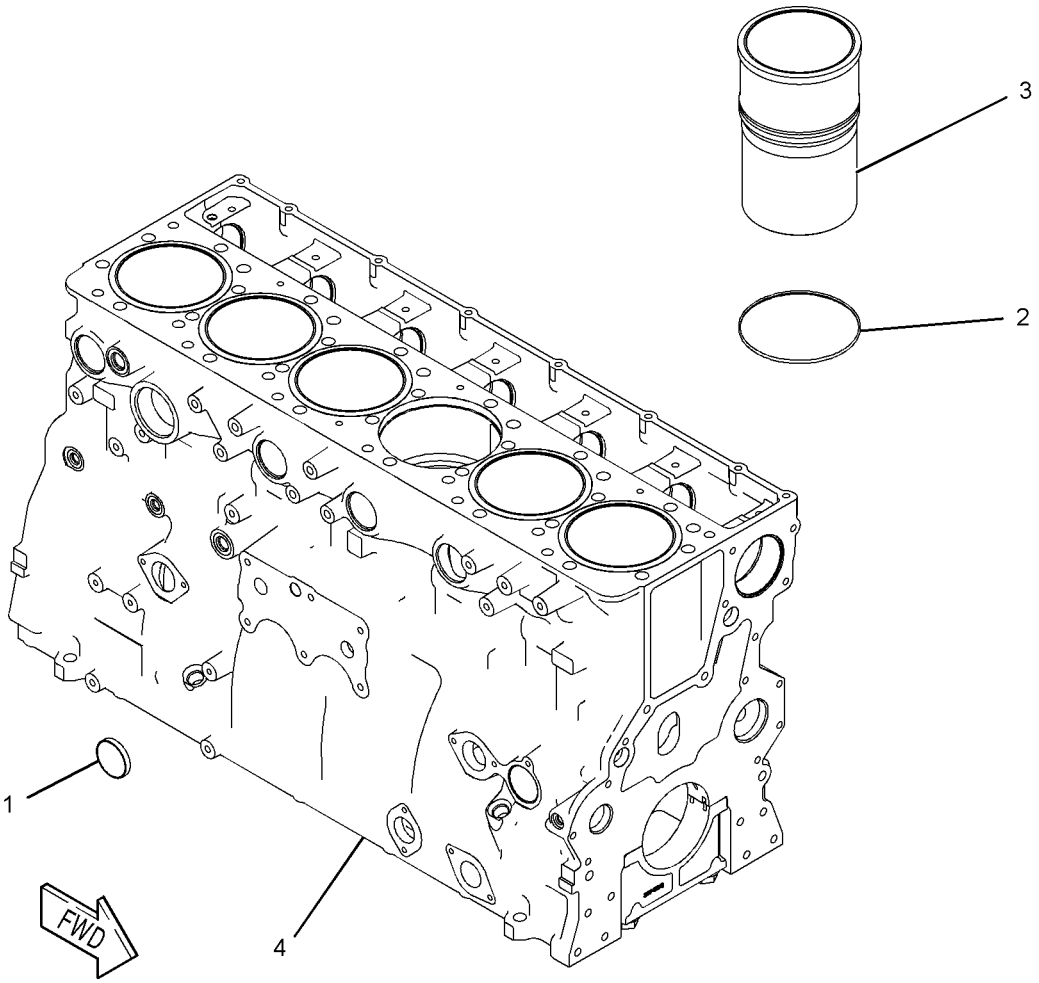

GRAPHIC #1 **<END>** g01009480

240-7271 CYLINDER BLOCK GP*R

S/N: MHX1304-UP

PART OF 231-0877, 267-0009, 301-2265, 359-0362 ENGINE AR-CORE

ALSO AN ATTACHMENT

SMCS-1201 **i03873733**

NOTE	REF NO	GRAPHIC REF	PART NUMBER	QTY	PART NAME 1 2 3 4 5 6 (PRODUCT LEVEL)	SEE PAGE
	1	1	**3B-0623**	3	PLUG-CUP	
CYR	2	1	**303-1384**	1	CYLINDER BLOCK AS	34
	3	1	**9X-7378**	2	SEAL-O-RING	
	4	1	**9S-8002**	2	PLUG-O-RING (7/16-2 THD)	
	5	1	*307-2671*	1	PLUG AS	
		1	**9S-8002**	1	PLUG-O-RING	
	5A	1	**214-7566**	1	SEAL-O-RING	
	6	1	**6V-3538**	2	DOWEL	
	7	1	**7N-5683**	6	DOWEL	

C-CHANGE FROM PREVIOUS TYPE
R-REMFG PART MAY BE AVAILABLE
Y-SEPARATE ILLUSTRATION

240-7271 CYLINDER BLOCK GP *(contd.)* i03873733

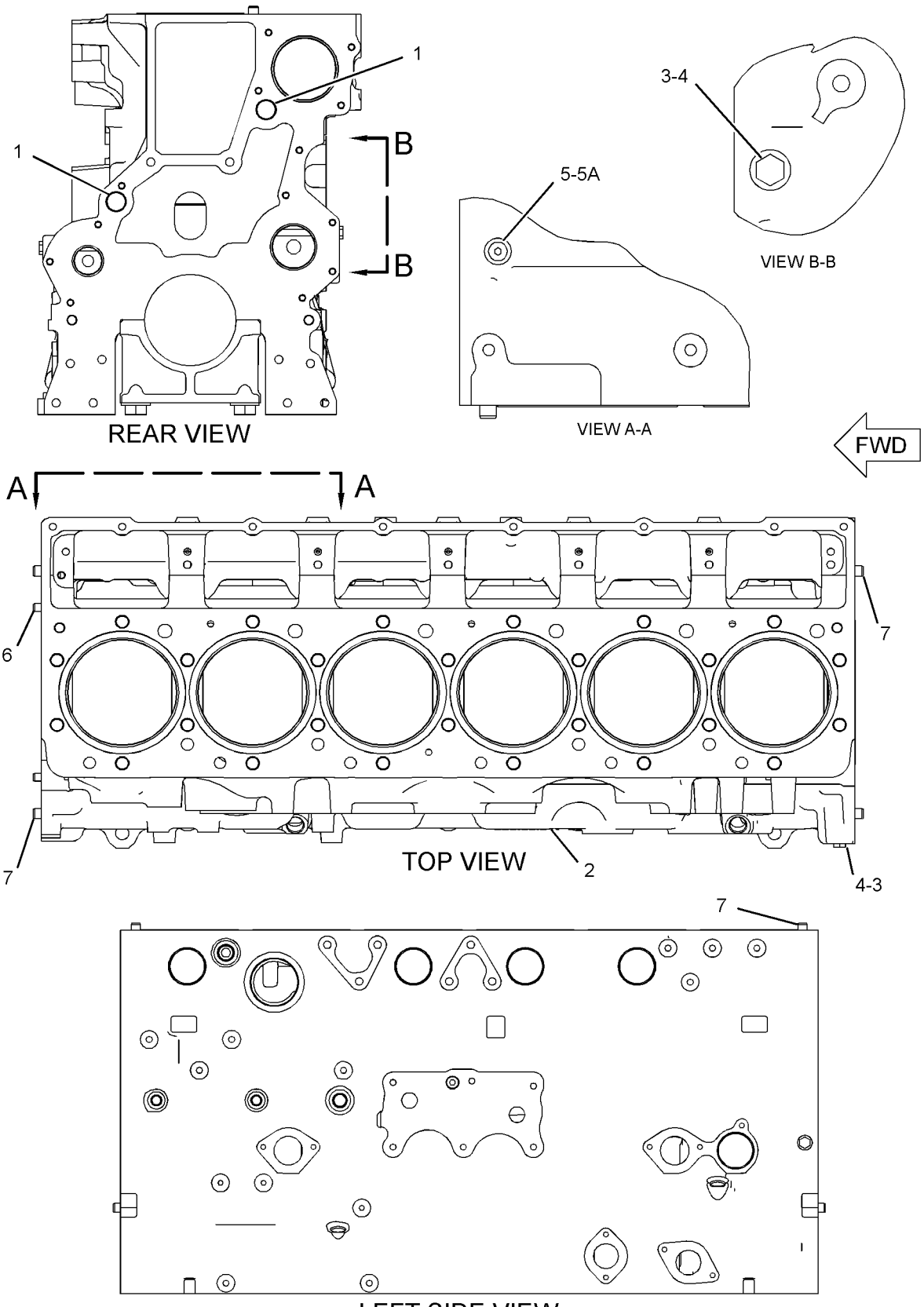

GRAPHIC #1

<END>

g02116214

303-3363 CYLINDER BLOCK GP

S/N: MHX3605-3944
PART OF 286-5804 ENGINE AR-CORE
AN ATTACHMENT

SMCS-1201 **i02662372**

NOTE	REF NO	GRAPHIC REF	PART NUMBER	QTY	PART NAME 1 2 3 4 5 6 (PRODUCT LEVEL)	SEE PAGE
	1	1	**3B-0623**	3	PLUG-CUP	
Y	2	1	*303-1384*	1	CYLINDER BLOCK AS	34
	3	1	**9X-7378**	2	SEAL-O-RING	
	4	1	**9S-4182**	2	PLUG-O-RING	
	5	1	**6V-5048**	1	SEAL-O-RING	
	6	1	**6V-3538**	2	DOWEL	
	7	1	**7N-5683**	6	DOWEL	
	8	1	**9S-8002**	1	PLUG-O-RING	

Y-SEPARATE ILLUSTRATION

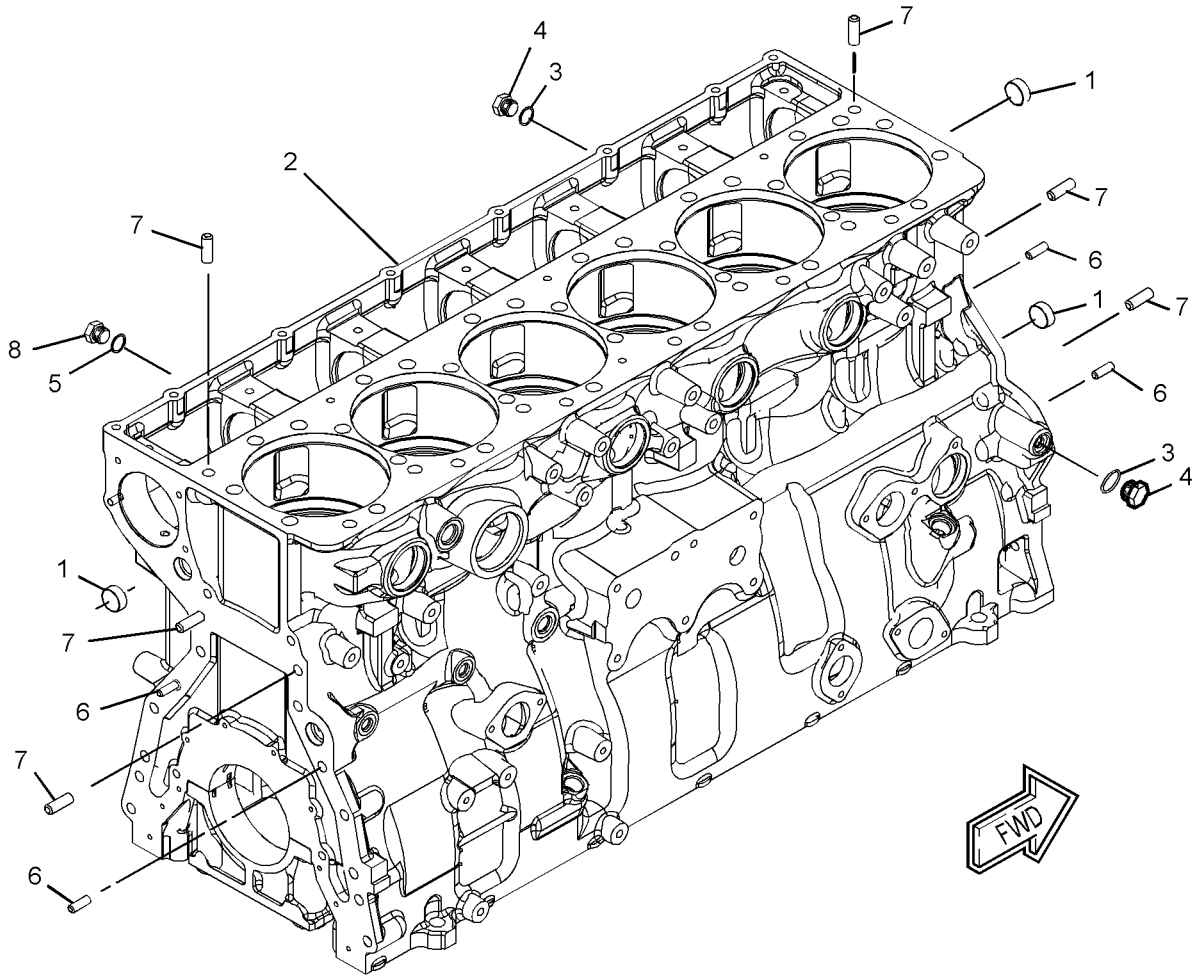

GRAPHIC #1 **<END>** g01338361

308-6358 CYLINDER HEAD AS

S/N: MHX1304-6079
PART OF 257-4095 CYLINDER HEAD GP
OPTIONAL FIELD REPLACEMENT ORDER 342-4397—PAGE 41
ALSO AN ATTACHMENT

SMCS-1100 **i03553006**

NOTE	REF NO	GRAPHIC REF	PART NUMBER	QTY	PART NAME 1 2 3 4 5 6 (PRODUCT LEVEL)	SEE PAGE
	1	2	**224-1270**	12	INSERT-VALVE SEAT (EXHAUST) (STANDARD)	
AB		2	**254-3944**		INSERT-VALVE SEAT (0.51-MM OS) (EXHAUST)	
AB		2	**331-5010**		INSERT-VALVE SEAT (0.13-MM OS) (EXHAUST)	
AB		2	**331-5011**		INSERT-VALVE SEAT (0.26-MM OS) (EXHAUST)	
	2	2	**260-4855**	12	INSERT-VALVE SEAT (INLET) (STANDARD)	
AB		2	**331-5007**		INSERT-VALVE SEAT (0.13-MM OS, INLET)	
AB		2	**331-5008**		INSERT-VALVE SEAT (0.26-MM OS, INLET)	
AB		2	**331-5009**		INSERT-VALVE SEAT (0.51-MM OS, INLET)	
	3	2	**263-4920**	6	SLEEVE-INJECTOR (INLET)	
	4	2	**268-2953**	24	GUIDE-VALVE	
	6	2	**166-2904**	12	SEAL-O-RING	
	7	1,2	**3B-0623**	35	PLUG-CUP	
	8	1,2	**6V-5049**	7	SEAL-O-RING	
	9	2	**6V-5063**	1	SEAL-O-RING	
	10	1,2	**9S-8004**	7	PLUG-O-RING	
	11	2	**9S-8008**	1	PLUG-O-RING	
	12	2	**9X-7430**	6	SEAL-O-RING	

A-NOT PART OF THIS GROUP
B-USE AS REQUIRED

308-6358 CYLINDER HEAD AS *(contd.)* **i03553006**

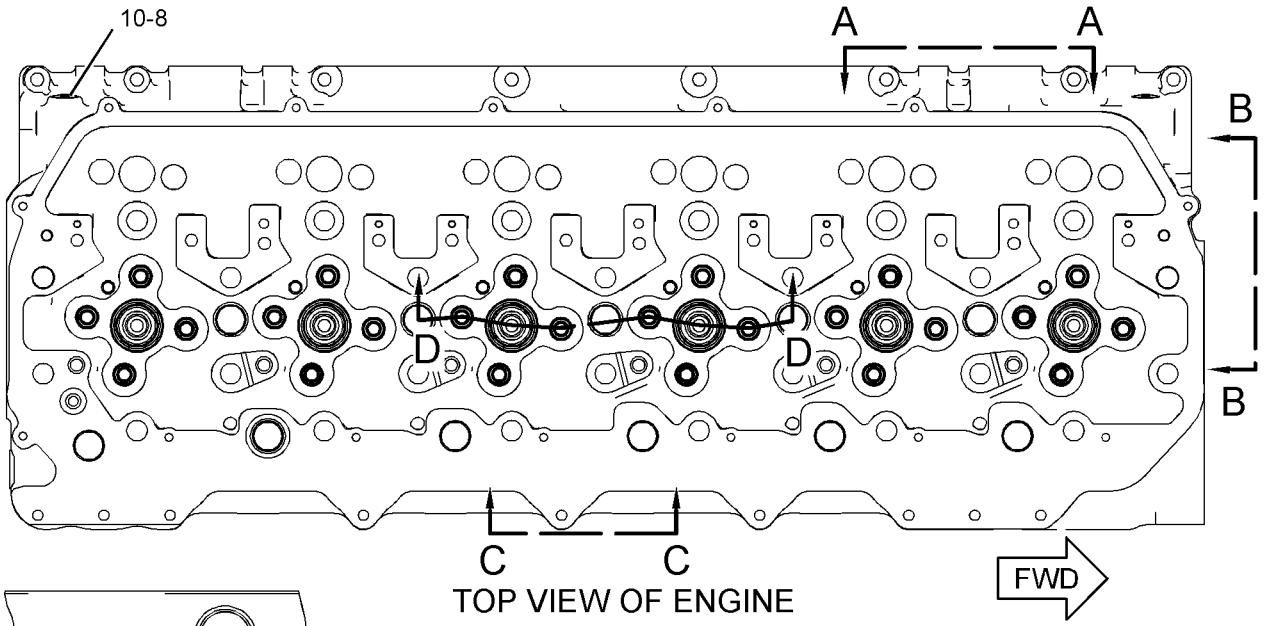

TOP VIEW OF ENGINE

REFER TO ALL ILLUSTRATIONS OF THIS GROUP FOR AUXILIARY VIEWS

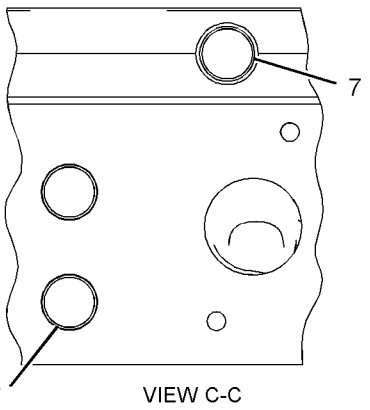

VIEW C-C

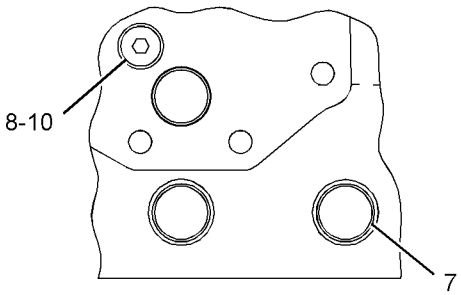

VIEW B-B

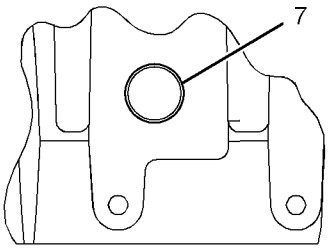

VIEW A-A

GRAPHIC #1

g01453409

308-6358 CYLINDER HEAD AS *(contd.)* i03553006

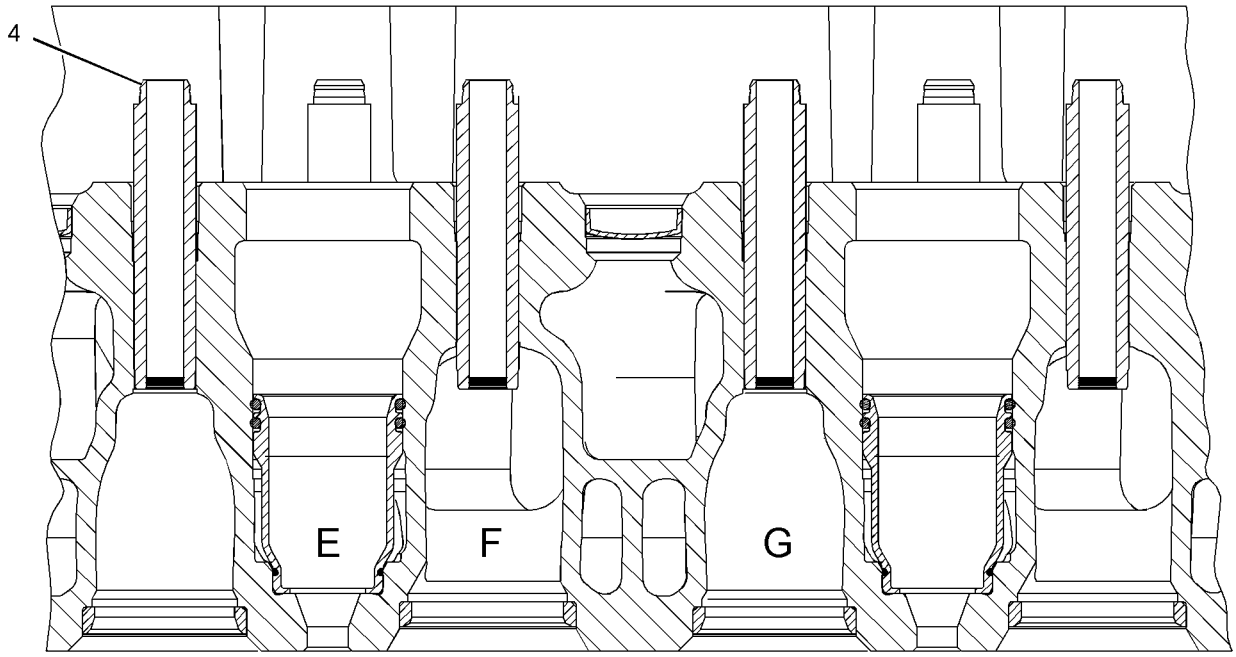

SECTION D-D

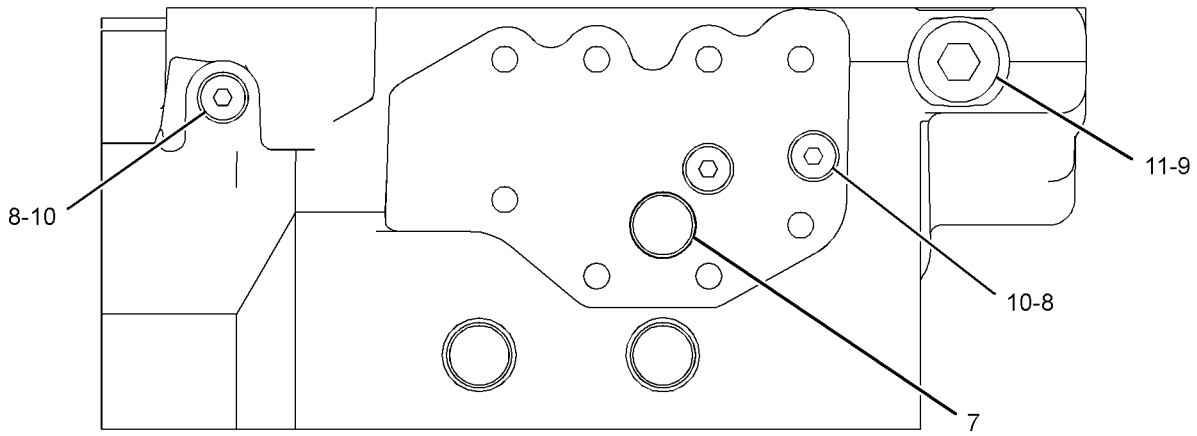

REAR VIEW OF ENGINE

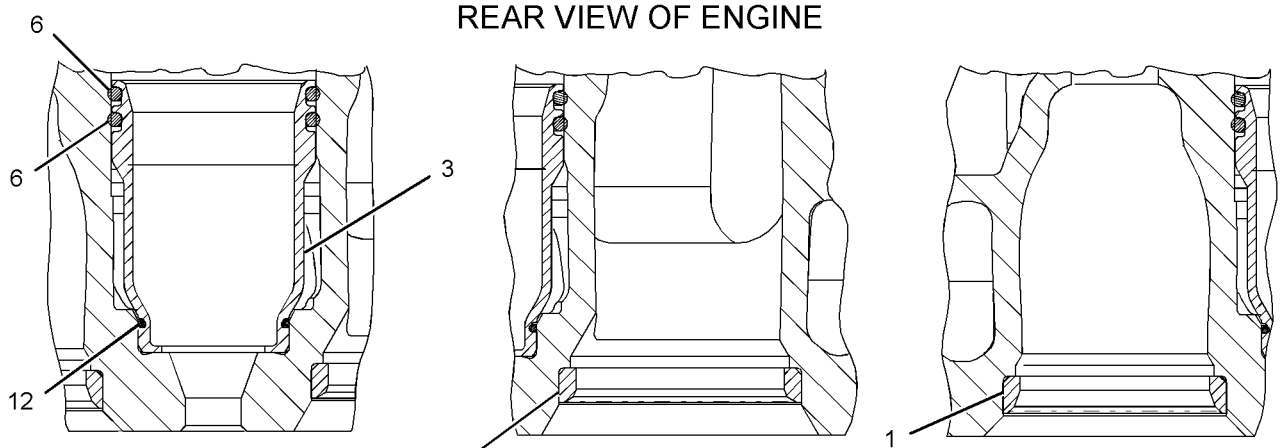

VIEW OF AREA E VIEW OF AREA F VIEW OF AREA G

GRAPHIC #2 **<END>** g01453410

BASIC ENGINE

342-4397 CYLINDER HEAD AS

S/N: MHX1214-UP

FIELD REPLACEMENT FOR 308-6358—PAGE 38

SMCS-1100 **i03873460**

NOTE	REF NO	GRAPHIC REF	PART NUMBER	QTY	PART NAME 1 2 3 4 5 6 (PRODUCT LEVEL)	SEE PAGE
	1	1	**224-1270**	12	INSERT-VALVE SEAT (EXHAUST) (STANDARD)	
AB		1	**254-3944**		INSERT-VALVE SEAT (0.51-MM OS)	
AB		1	**331-5010**		INSERT-VALVE SEAT (0.13-MM OS)	
AB		1	**331-5011**		INSERT-VALVE SEAT (0.26-MM OS)	
	2	1	**260-4855**	12	INSERT-VALVE SEAT (INLET) (STANDARD)	
AB		1	**331-5007**		INSERT-VALVE SEAT (0.13-MM OS, INLET)	
AB		1	**331-5008**		INSERT-VALVE SEAT (0.26-MM OS, INLET)	
AB		1	**331-5009**		INSERT-VALVE SEAT (0.51-MM OS, INLET)	
	3	1	**9X-7430**	6	SEAL-O-RING	
	4	1	**268-2953**	24	GUIDE-VALVE	
	6	1	**166-2904**	12	SEAL-O-RING	
	7	1	**3B-0623**	35	PLUG-CUP	
	8	1	**214-7568**	7	SEAL-O-RING	
	9	1	**6V-5063**	1	SEAL-O-RING	
	10	1	**9S-8004**	7	PLUG-O-RING	
	11	1	**9S-8008**	1	PLUG-O-RING	

A-NOT PART OF THIS GROUP
B-USE AS REQUIRED

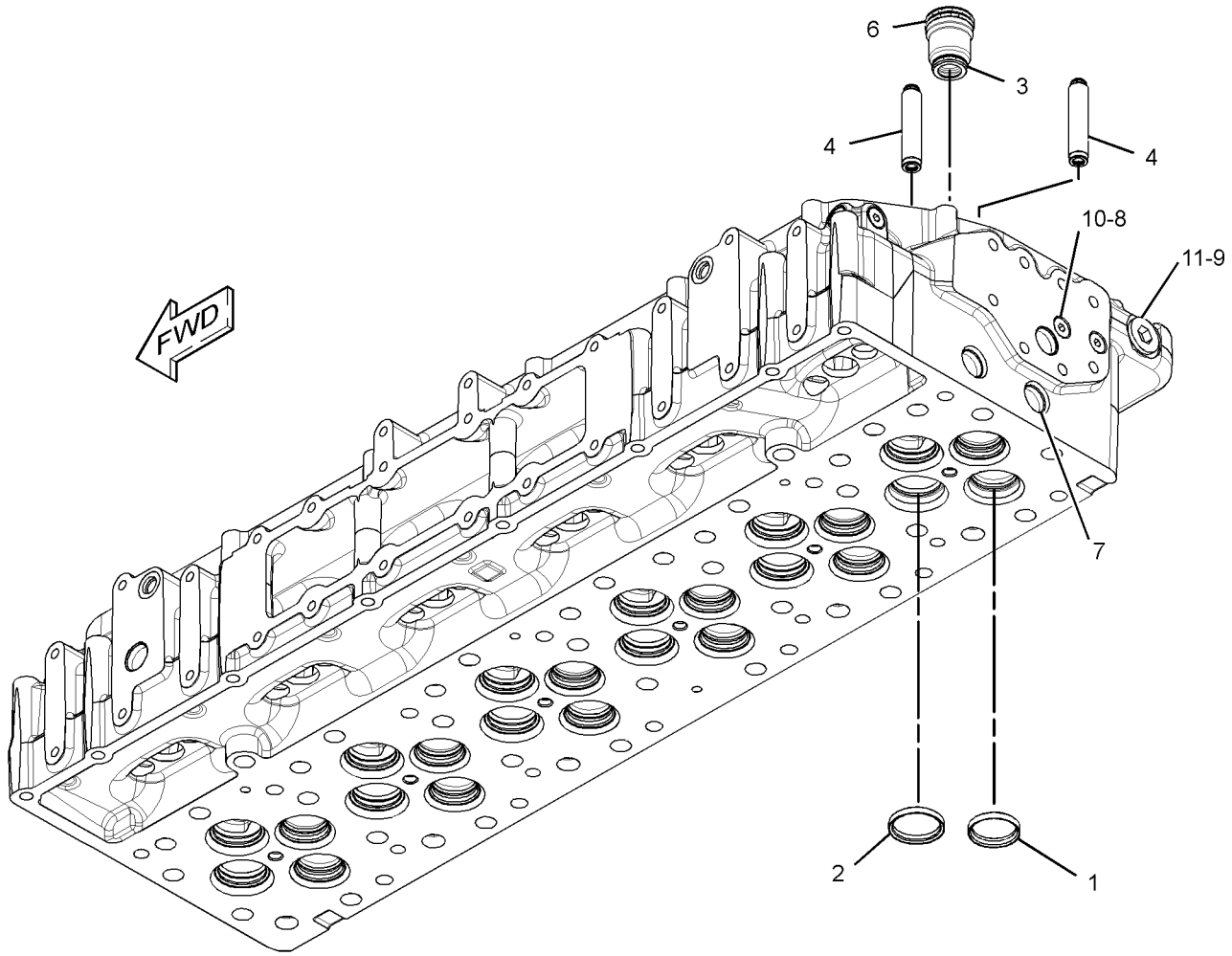

GRAPHIC #1 **<END>** g02144139

BASIC ENGINE

345-3752 CYLINDER HEAD AS

S/N: MHX6080-UP
PART OF 305-0617 CYLINDER HEAD GP
ALSO AN ATTACHMENT

SMCS-1100 **i03733646**

NOTE	REF NO	GRAPHIC REF	PART NUMBER	QTY	PART NAME 1 2 3 4 5 6 (PRODUCT LEVEL)	SEE PAGE
	1	1	**224-1270**	12	INSERT-VALVE SEAT (EXHAUST) (STANDARD)	
AB		1	**254-3944**		INSERT-VALVE SEAT (0.51-MM OS)	
AB		1	**331-5010**		INSERT-VALVE SEAT (0.13-MM OS)	
AB		1	**331-5011**		INSERT-VALVE SEAT (0.26-MM OS)	
	2	1	**260-4855**	12	INSERT-VALVE SEAT (INLET) (STANDARD)	
AB		1	**331-5007**		INSERT-VALVE SEAT (0.13-MM OS, INLET)	
AB		1	**331-5008**		INSERT-VALVE SEAT (0.26-MM OS, INLET)	
AB		1	**331-5009**		INSERT-VALVE SEAT (0.51-MM OS, INLET)	
	3	1	**263-4920**	6	SLEEVE-INJECTOR (INLET)	
	4	1	**268-2953**	24	GUIDE-VALVE	
	6	1	**166-2904**	12	SEAL-O-RING	
	7	1	**214-7568**	7	SEAL-O-RING	
	8	1	**3B-0623**	35	PLUG-CUP	
	9	1	**6V-5063**	1	SEAL-O-RING	
	10	1	**9S-8004**	7	PLUG-O-RING	
	11	1	**9S-8008**	1	PLUG-O-RING	
	12	1	**9X-7430**	6	SEAL-O-RING	

A-NOT PART OF THIS GROUP
B-USE AS REQUIRED

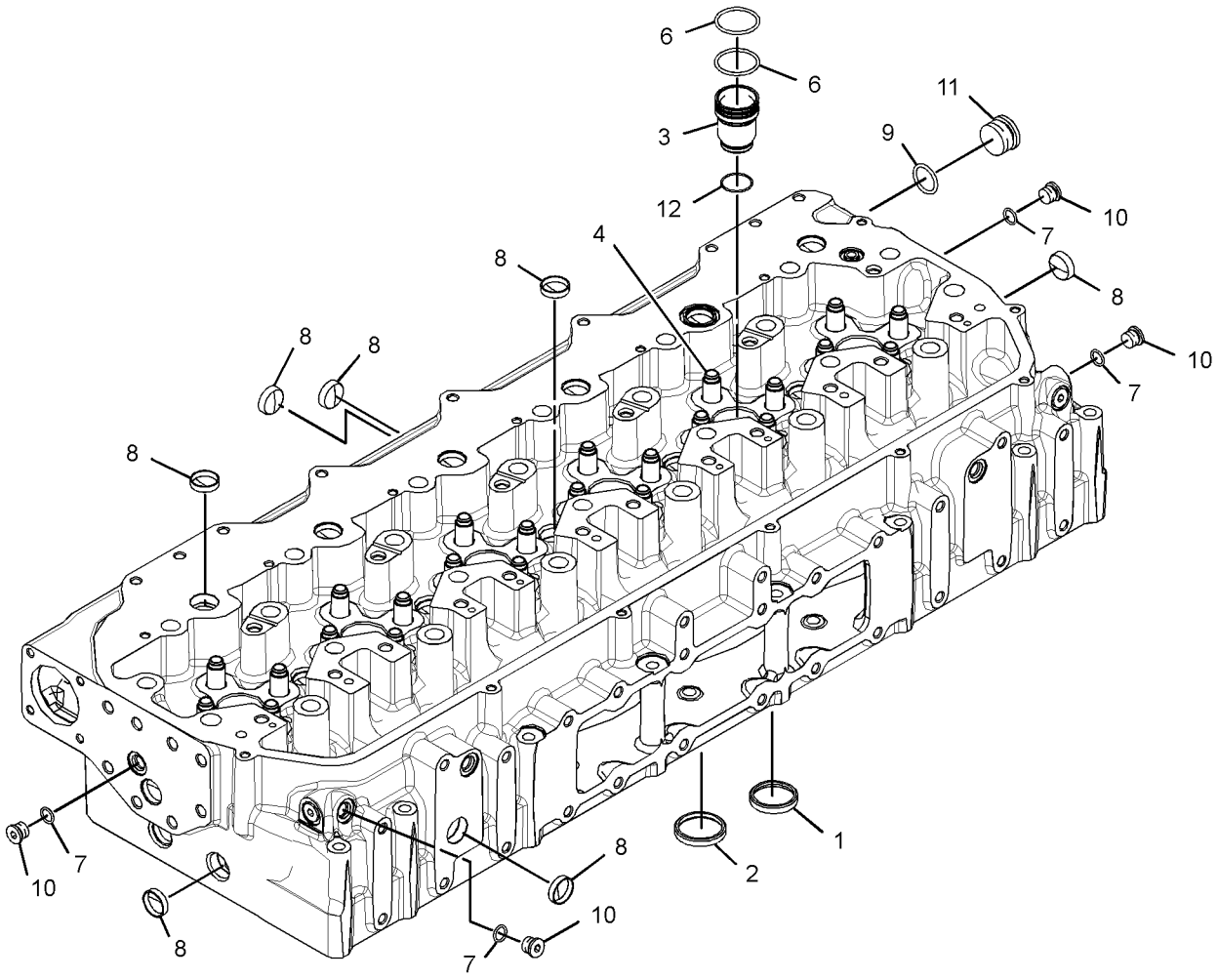

GRAPHIC #1 **<END>** g01994933

240-7679 CYLINDER HEAD GP

S/N: MHX1304-6079

PART OF 231-0877, 267-0009, 286-5804, 301-2265 ENGINE AR-CORE

ALSO AN ATTACHMENT

SMCS-1100 **i02250642**

NOTE	REF NO	GRAPHIC REF	PART NUMBER	QTY	PART NAME 1 2 3 4 5 6 (PRODUCT LEVEL)	SEE PAGE
Y	1	1	*198-4963*	1	FASTENER GP-CYLINDER HEAD	52
	2	1	**221-9392**	1	GASKET (CYLINDER HEAD)	
CY	3	1	**257-4095**	1	CYLINDER HEAD GP	44

C-CHANGE FROM PREVIOUS TYPE
Y-SEPARATE ILLUSTRATION

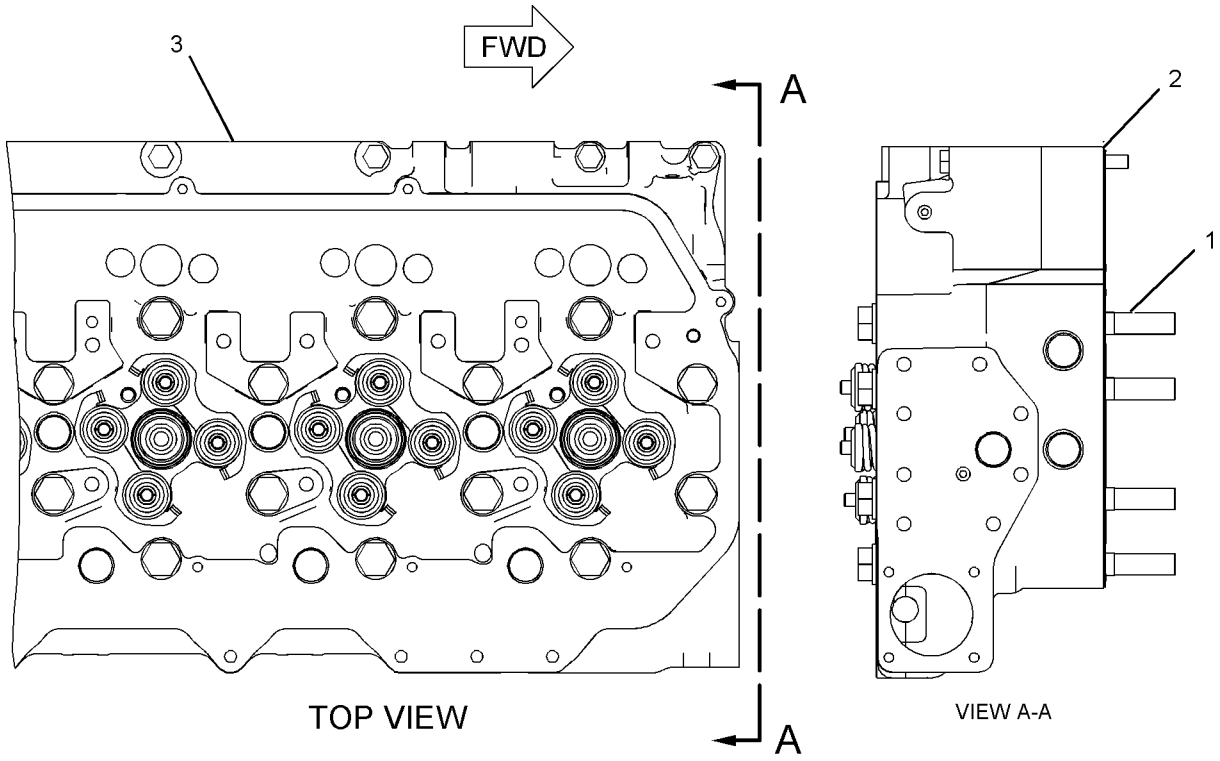

GRAPHIC #1 **<END>** g01018879

BASIC ENGINE

257-4095 CYLINDER HEAD GP*R

S/N: MHX1304-6079

PART OF 240-7679 CYLINDER HEAD GP

ALSO AN ATTACHMENT

SMCS-1100 **i02909175**

NOTE	REF NO	GRAPHIC REF	PART NUMBER	QTY	PART NAME 1 2 3 4 5 6 (PRODUCT LEVEL)	SEE PAGE
	1	1	**2A-4429**	48	LOCK-RETAINER	
	2	1	**214-0586**	24	SPRING (OUTER)	
	3	1	**6V-5063**	2	SEAL-O-RING	
	4	1	**224-3028**	12	VALVE-INLET	
	5	1	**9S-8008**	2	PLUG-O-RING	
	6	1	**224-3030**	12	VALVE-EXHAUST	
	7	1	**7E-7977**	24	ROTOCOIL AS	
					(EACH INCLUDES)	
		1	**7E-7978**	1	SHIELD	
	8	1	**224-3125**	12	BASE	
	9	1	**224-4441**	24	SPRING (INNER)	
Y	10	1	**308-6358**	1	CYLINDER HEAD AS	38
	11	1	**5P-5598**	1	SEAL-O-RING	
	12	1	**163-2478**	24	SEAL-VALVE STEM	

Y-SEPARATE ILLUSTRATION

257-4095 CYLINDER HEAD GP *(contd.)* **i02909175**

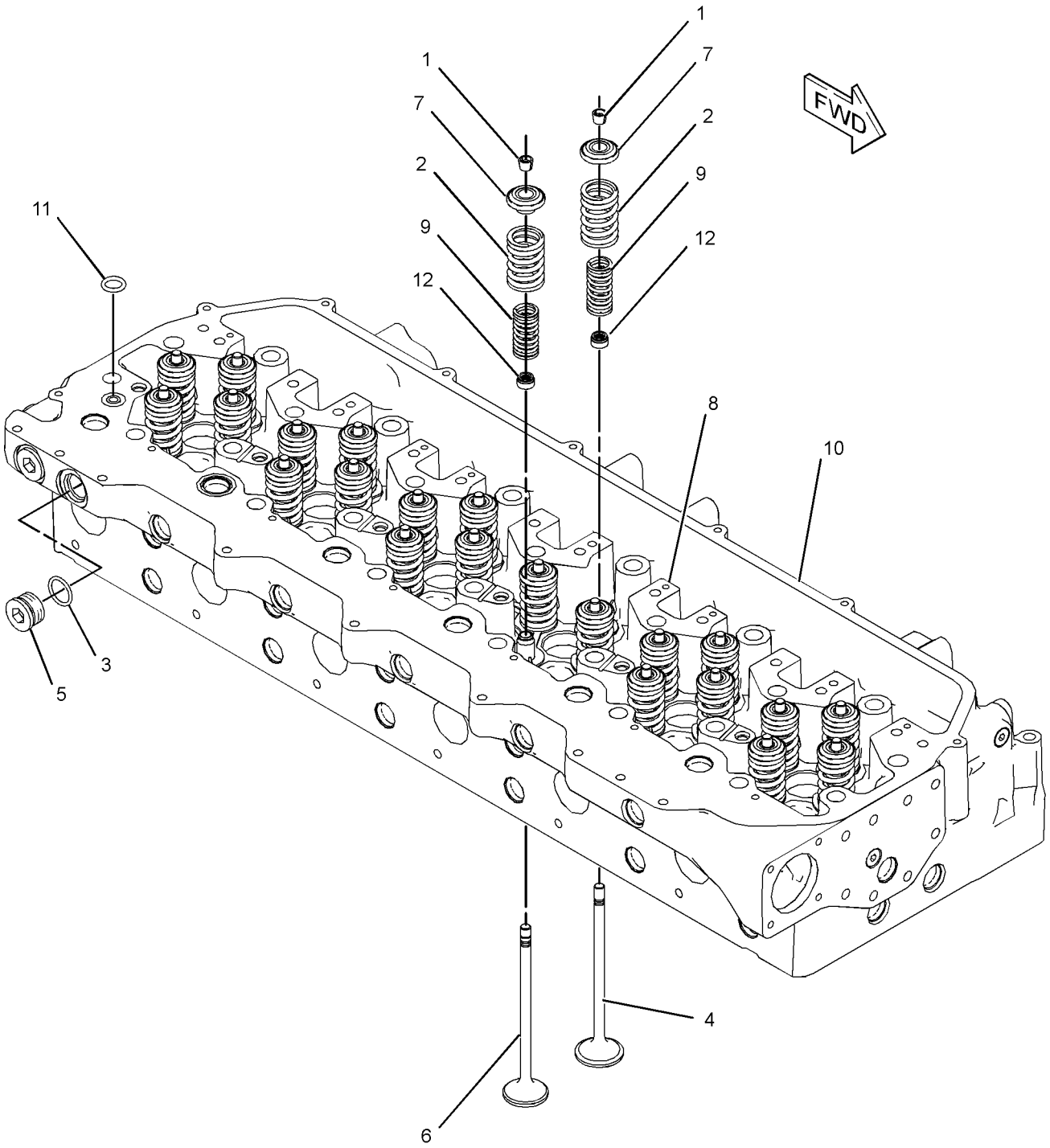

GRAPHIC #1 **<END>** g01447906

BASIC ENGINE

305-0617 CYLINDER HEAD GP

S/N: MHX6080-UP
PART OF 305-0618 CYLINDER HEAD GP
ALSO AN ATTACHMENT

SMCS-1100 **i03997510**

NOTE	REF NO	GRAPHIC REF	PART NUMBER	QTY	PART NAME 1 2 3 4 5 6 (PRODUCT LEVEL)	SEE PAGE
	1	1	**2A-4429**	48	LOCK-RETAINER	
	2	1	**332-2152**	24	SPRING-VALVE	
	3	1	*353-5140*	2	PLUG AS	
					(EACH INCLUDES)	
	3A	1	**6V-5063**	1	SEAL-O-RING	
		1	**9S-8008**	1	PLUG-O-RING	
	4	1	**224-3030**	12	VALVE-EXHAUST	
	5	1	**163-2478**	24	SEAL-VALVE STEM	
	6	1	**224-3125**	12	BASE	
	7	1	**7E-7977**	24	ROTOCOIL AS	
					(EACH INCLUDES)	
		1	**7E-7978**	1	SHIELD	
	8	1	**224-4441**	24	SPRING	
	9	1	**252-7802**	12	VALVE-INLET	
Y	10	1	**345-3752**	1	CYLINDER HEAD AS	42
	11	1	**5P-5598**	1	SEAL-O-RING	

Y-SEPARATE ILLUSTRATION

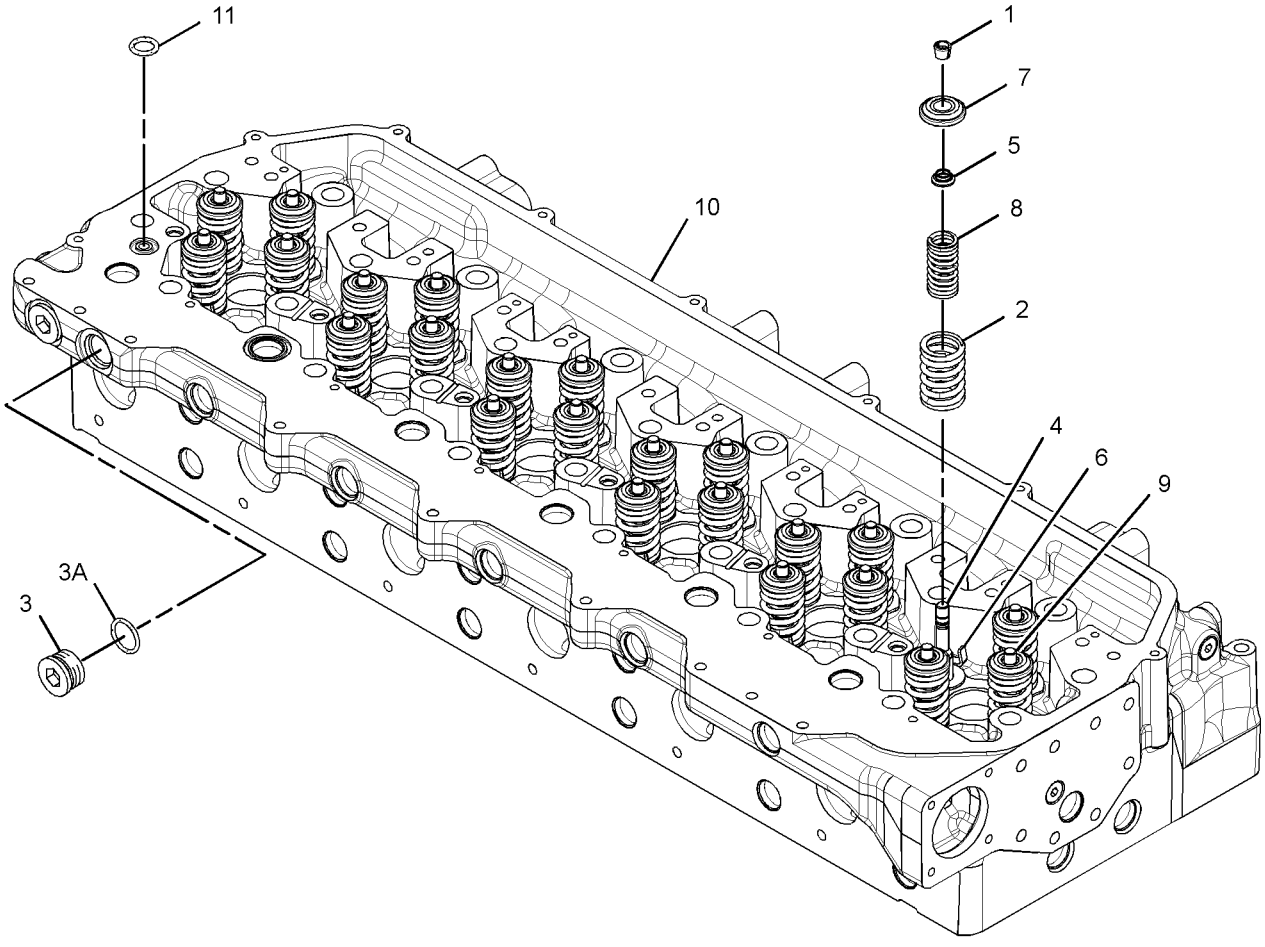

GRAPHIC #1 **<END>** g02176877

305-0618 CYLINDER HEAD GP

S/N: MHX6080-UP

PART OF 231-0877, 301-2265, 359-0362 ENGINE AR-CORE

ALSO AN ATTACHMENT

SMCS-1100 **i02694690**

NOTE	REF NO	GRAPHIC REF	PART NUMBER	QTY	PART NAME 1 2 3 4 5 6 (PRODUCT LEVEL)	SEE PAGE
Y	1	1	*198-4963*	1	FASTENER GP-CYLINDER HEAD	52
	2	1	**221-9392**	1	GASKET (CYLINDER HEAD)	
Y	3	1	**305-0617**	1	CYLINDER HEAD GP	46

Y-SEPARATE ILLUSTRATION

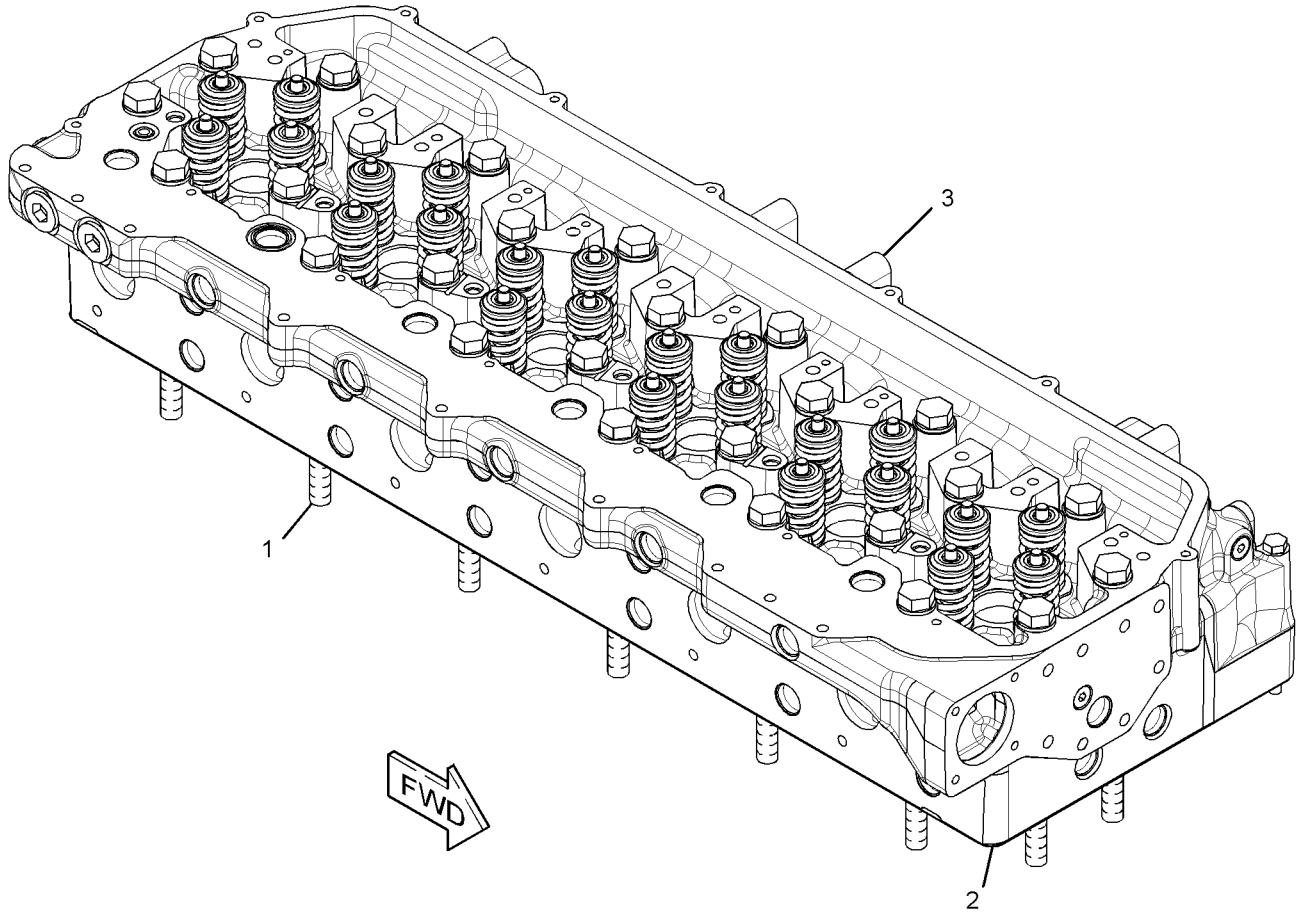

GRAPHIC #1 **<END>** g01364440

117-2766 DAMPER GP

S/N: MHX1304-UP

PROVIDES A VISCONIC DAMPER, ADAPTER AND FASTENING HARDWARE TO ATTACH THE DAMPER TO THE ADAPTER.

PART OF 227-5359, 231-0876, 349-4462 ENGINE AR-COMPLETE

ALSO AN ATTACHMENT

SMCS-1205 **i02663349**

NOTE	REF NO	GRAPHIC REF	PART NUMBER	QTY	PART NAME 1 2 3 4 5 6 (PRODUCT LEVEL)	SEE PAGE
	1	1	**179-0092**	1	ADAPTER	
	2	1	**167-8125**	1	DAMPER AS	
M	3	1	**136-4183**	8	BOLT-12 POINT HEAD (M10X1.5X30-MM)	
	4	1	**9X-2027**	8	WASHER (11X18X2-MM THK)	

M-METRIC PART

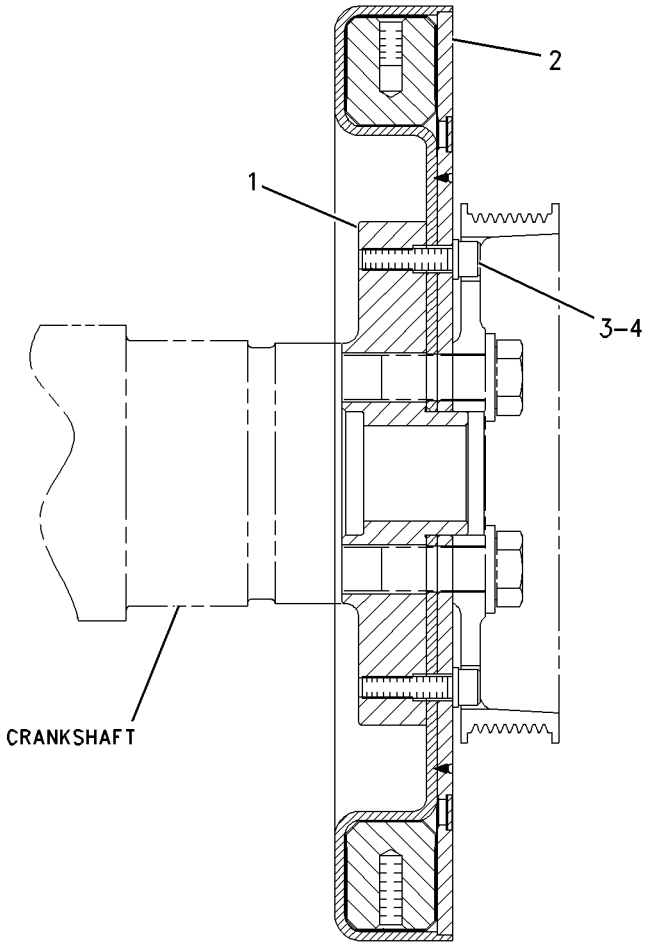

RIGHT SIDE VIEW

GRAPHIC #1 **<END>** g00783687

BASIC ENGINE

258-0651 DRIVE GP-ACCESSORY

S/N: R9H1-UP

PART OF 349-2556 COMMON AR

SMCS-1207 **i03793955**

NOTE	REF NO	GRAPHIC REF	PART NUMBER	QTY	PART NAME 1 2 3 4 5 6 (PRODUCT LEVEL)	SEE PAGE
	1	1	**124-7792**	1	PULLEY AS-IDLER	
	2	1	**145-2901**	1	COVER-DUST	
	3	1	**348-7889**	1	BELT-SERPENTINE	
Y	4	1	**183-5106**	1	COMPRESSOR GP-REFRIGERANT	718
	5	1	**250-5757**	1	SPACER	
	6	1	**253-3996**	1	PULLEY-ALTERNATOR	
M	7	1	**255-1281**	2	BOLT-FLANGE HEAD (M8X1.25X100-MM)	
	8	1	**260-0723**	1	FILM-INSTRUCTION (BELT ROUTING)	
	9	1	**264-7021**	1	GUARD AS-BELT	
			8R-8088	2	SPACER (11.66X15.88X18-MM THK)	
	10	1	**272-1889**	1	ALTERNATOR GP-CHARGING (24-VOLT, 150-AMPERE)	
	11	1	**302-4537**	1	BRACKET AS	
M		1	**8T-3612**	1	NUT-WELD (M8X1.25-THD)	
		1	**293-5895**	1	BRACKET	
	12	1	**293-5896**	1	BRACKET	
M	13	1	**7X-2538**	2	BOLT (M8X1.25X100-MM)	
	14	1	**7X-7729**	4	WASHER (11X25X3-MM THK)	
	15	1	**8T-4121**	5	WASHER-HARD (11X21X2.5-MM THK)	
M	16	1	**8T-4133**	2	NUT (M10X1.5-THD)	
M	17	1	**8T-4172**	1	BOLT (M10X1.5X80-MM)	
M	18	1	**8T-4182**	2	BOLT (M10X1.5X45-MM)	
	19	1	**8T-4224**	2	WASHER-HARD (8.8X16X2-MM THK)	
M	20	1	**8T-6685**	4	BOLT (M10X1.5X110-MM)	

M-METRIC PART
Y-SEPARATE ILLUSTRATION

258-0651 **DRIVE GP-ACCESSORY** *(contd.)* **i03793955**

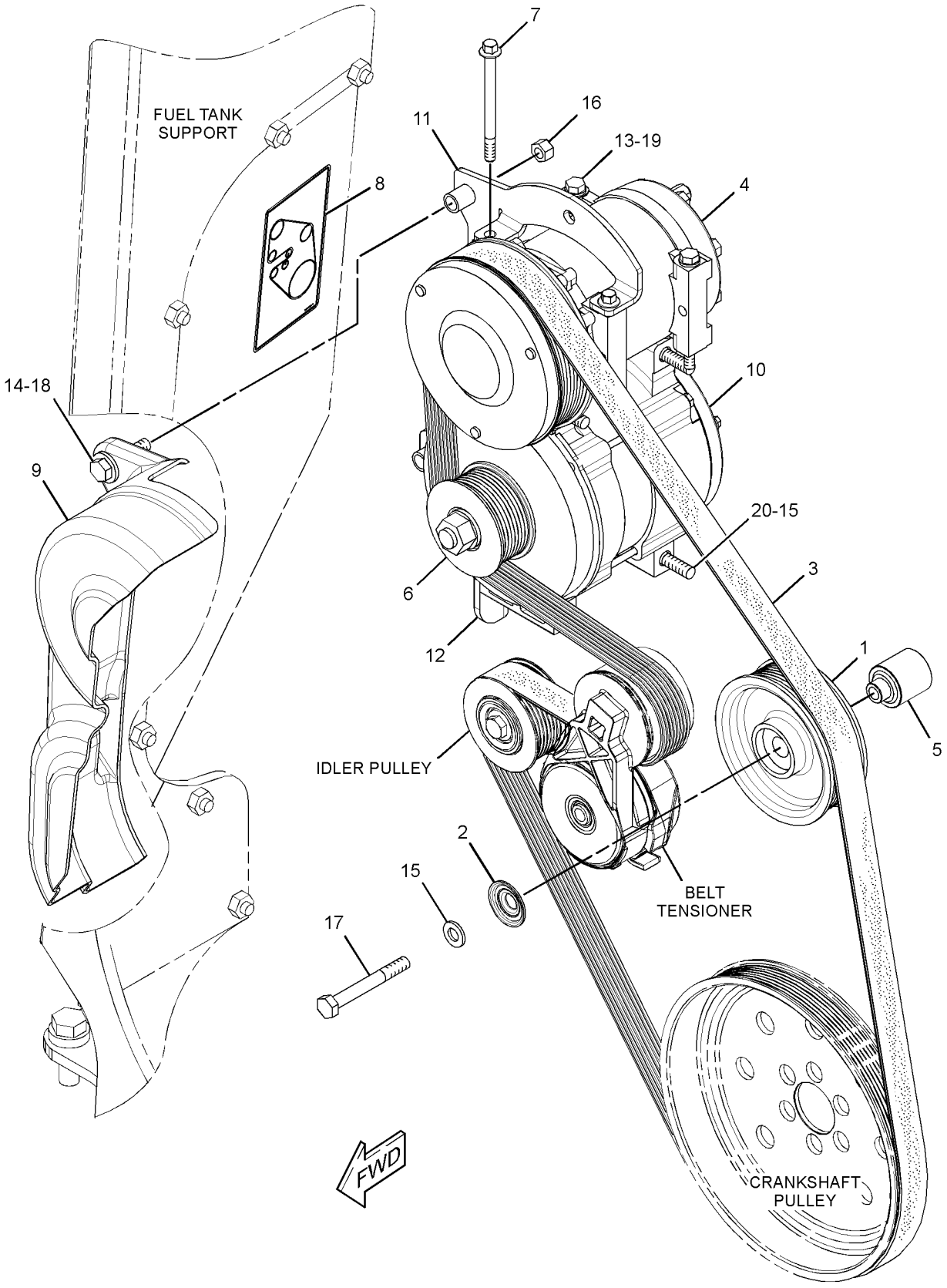

GRAPHIC #1 **<END>** g01315895

260-1406 DRIVE GP-ACCESSORY

S/N: MHX1214-UP
PART OF 227-5359, 231-0876, 349-4462 ENGINE AR-COMPLETE
ALSO AN ATTACHMENT

SMCS-1207 **i03332742**

NOTE	REF NO	GRAPHIC REF	PART NUMBER	QTY	PART NAME 1 2 3 4 5 6 (PRODUCT LEVEL)	SEE PAGE
	1	1	**197-9642**	1	PULLEY AS-IDLER (8-GROOVE)	
	2	1	**211-7895**	1	BELT TENSIONER	
	3	1	**222-2899**	1	BRACKET-SUPPORT	
	4	1	**243-1557**	1	BRACKET	
	5	1	**5P-8245**	4	WASHER-HARD (13.5X25.5X3-MM THK)	
M	6	1	**6V-2317**	2	BOLT (M8X1.25X30-MM)	
	7	1	**6V-5839**	3	WASHER (11X21X2.5-MM THK)	
M	8	1	**6V-5842**	3	BOLT (M10X1.5X40-MM)	
M	9	1	**6V-8149**	2	NUT (M12X1.75-THD)	
M	10	1	**8T-0646**	2	BOLT (M12X1.75X110-MM)	
	11	1	**8T-4121**	1	WASHER-HARD (11X21X2.5-MM THK)	
M	12	1	**8T-4178**	1	BOLT (M10X1.5X90-MM)	
	13	1	**9M-1974**	2	WASHER-HARD (8.8X16X2-MM THK)	
M	14	1	**6V-6317**	1	BOLT (M10X1.5X20-MM)	
	15	1	**8T-4222**	1	WASHER-PLATED (11X32X2.5-MM THK)	

M-METRIC PART

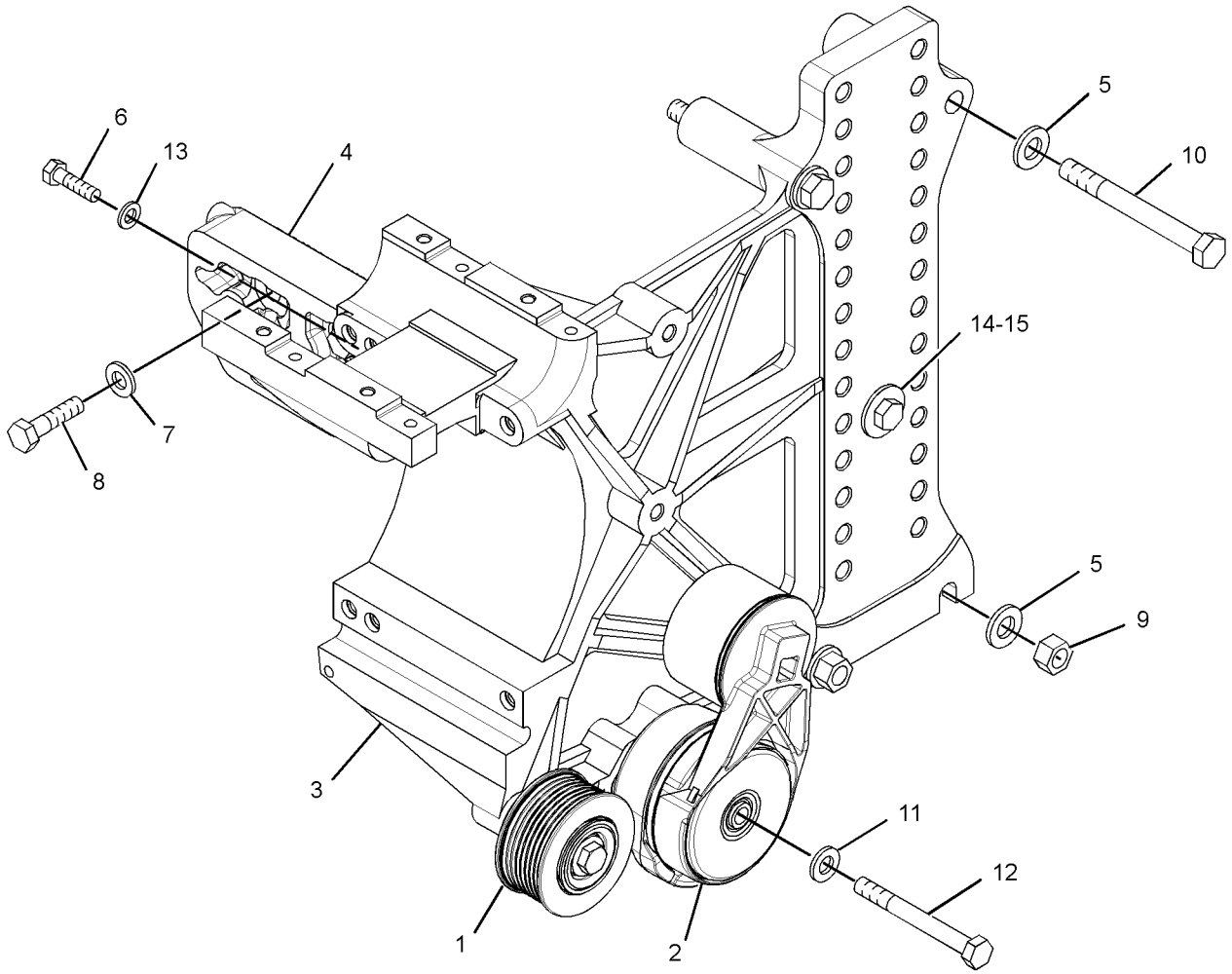

GRAPHIC #1 **<END>** g01794296

198-4963 FASTENER GP-CYLINDER HEAD

S/N: MHX1304-UP

PART OF 240-7679, 305-0618 CYLINDER HEAD GP

ALSO AN ATTACHMENT

SMCS-1100 **i02697758**

NOTE	REF NO	GRAPHIC REF	PART NUMBER	QTY	PART NAME 1 2 3 4 5 6 (PRODUCT LEVEL)	SEE PAGE
M	1	1	**242-1811**	26	BOLT-CYLINDER HEAD (M16X2X220-MM)	
	2	1	**210-4460**	8	BOLT (M10X1.5X130-MM)	
	3	1	**2S-5658**	26	WASHER-HARD (17X29X3-MM THK)	

M-METRIC PART

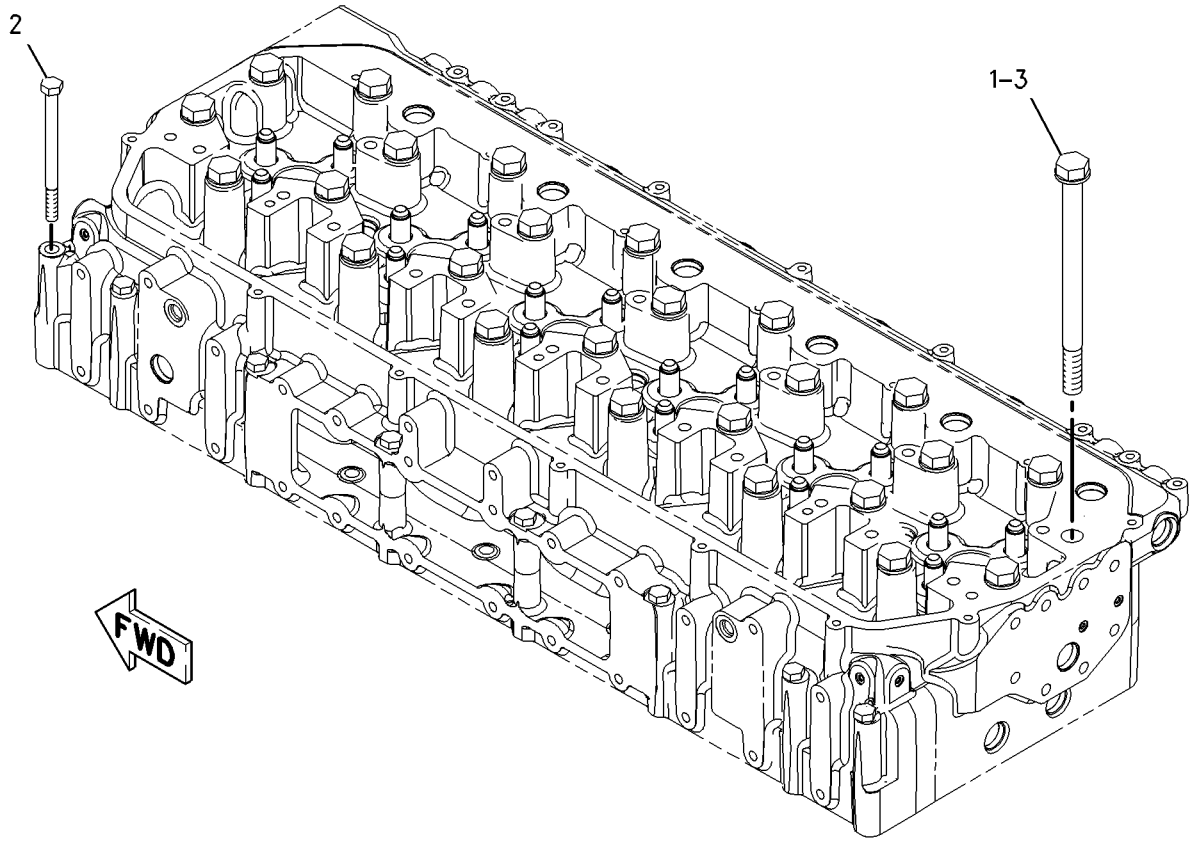

GRAPHIC #1 **<END>** g00949755

117-2771 FASTENER GP-DAMPER & PULLEY

S/N: MHX1214-UP

PART OF 227-5359, 231-0876, 349-4462 ENGINE AR-COMPLETE

ALSO AN ATTACHMENT

SMCS-1205, 7553 **i03317325**

NOTE	REF NO	GRAPHIC REF	PART NUMBER	QTY	PART NAME 1 2 3 4 5 6 (PRODUCT LEVEL)	SEE PAGE
C	1	1	**213-1585**	1	SPACER (10.5-MM THK)	
M	2	1	**8T-0281**	6	BOLT (M16X2X80-MM)	

C-CHANGE FROM PREVIOUS TYPE
M-METRIC PART

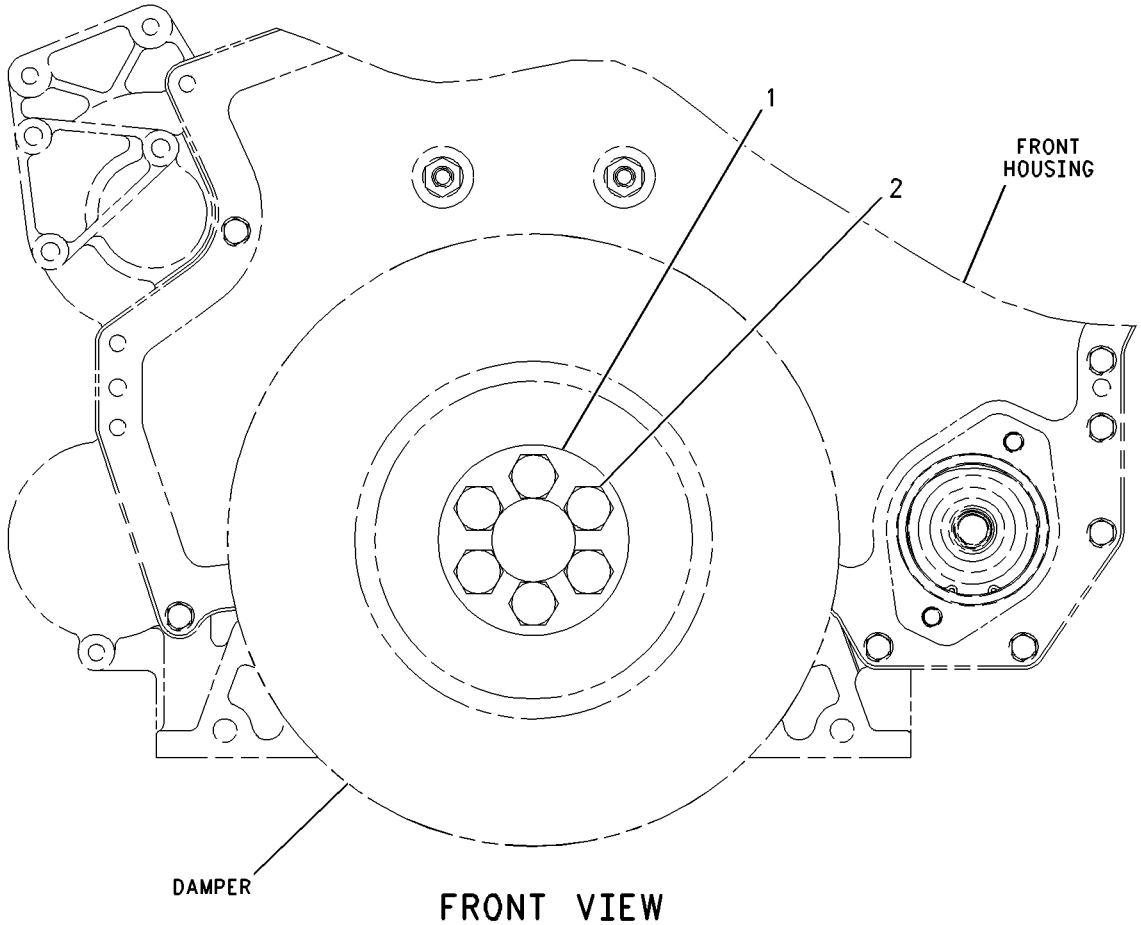

FRONT VIEW

GRAPHIC #1 **<END>** g00783716

252-6185 FLYWHEEL GP

S/N: MHX1304-UP

PART OF 227-5359, 231-0876, 349-4462 ENGINE AR-COMPLETE

ALSO AN ATTACHMENT

SMCS-1156, 1158 **i02283881**

NOTE	REF NO	GRAPHIC REF	PART NUMBER	QTY	PART NAME 1 2 3 4 5 6 (PRODUCT LEVEL)	SEE PAGE
M	1	1	**9X-2053**	8	BOLT	
	2	1	**252-5188**	1	FLYWHEEL AS	
		1	**256-9651**	1	GEAR-FLYWHEEL (113-TEETH)	
	3	1	**5P-8247**	8	WASHER-HARD (17X32X3.5-MM THK)	

M-METRIC PART

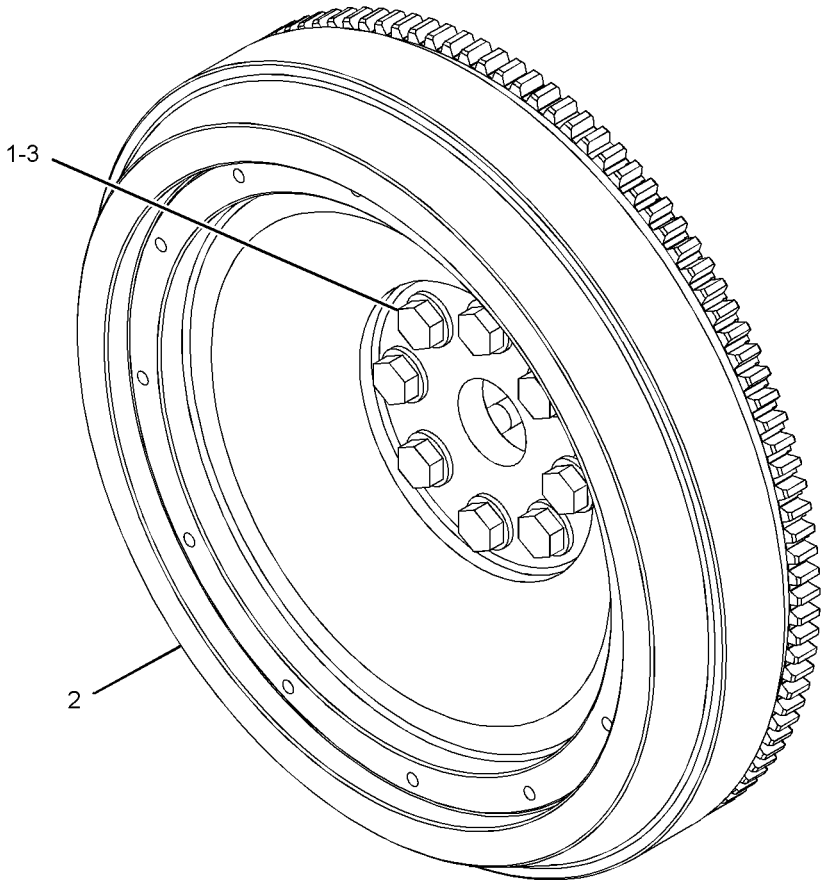

GRAPHIC #1 **<END>** g01143883

222-3088 GEAR GP-FRONT

S/N: MHX1304-UP

PART OF 231-0877, 267-0009, 286-5804, 301-2265, 359-0362 ENGINE AR-CORE

ALSO AN ATTACHMENT

SMCS-1151, 1162, 1206 **i02434273**

NOTE	REF NO	GRAPHIC REF	PART NUMBER	QTY	PART NAME 1 2 3 4 5 6 (PRODUCT LEVEL)	SEE PAGE
	1	1	**7C-7851**	1	SHAFT	
	2	1	**218-7270**	1	SHAFT	
	3	1	**222-3902**	1	GEAR AS (64-TEETH)	
		1	**7C-7852**	1	BEARING	
	4	1	**222-3905**	1	GEAR AS (CAMSHAFT IDLER, 71-TEETH)	
M	5	1	**8T-0281**	1	BOLT (M16X2X80-MM)	
M	6	1	**8T-0360**	1	BOLT (M20X2.5X90-MM)	

M-METRIC PART

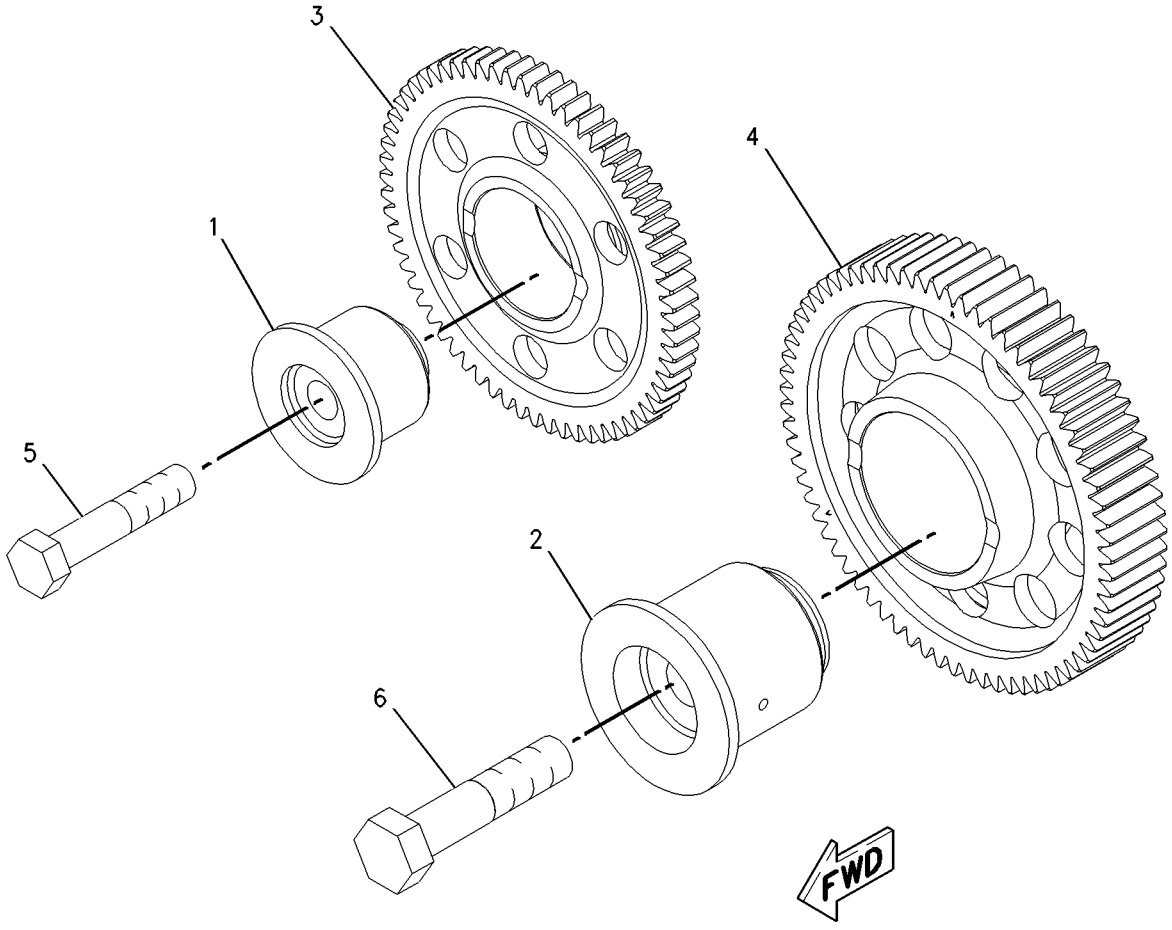

GRAPHIC #1 **<END>** g00939640

BASIC ENGINE

261-3231 GEAR GP-REAR

S/N: MHX2761-UP
PART OF 231-0876 ENGINE AR-COMPLETE
ALSO AN ATTACHMENT

SMCS-1204, 1206 **i02283902**

NOTE	REF NO	GRAPHIC REF	PART NUMBER	QTY	PART NAME 1 2 3 4 5 6 (PRODUCT LEVEL)	SEE PAGE
	1	1	**1W-4741**	2	GEAR AS-IDLER (70-TEETH)	
					(EACH INCLUDES)	
		1	**1W-4738**	1	BEARING-SLEEVE	
	2	1	**1W-4746**	2	RETAINER-GEAR	
	3	1	**154-3358**	1	GEAR-ADAPTER (68-TEETH)	
	4	1	**187-8194**	1	GEAR AS-DRIVE (64-TEETH)	
		1	**4F-6024**	1	PIN	
	5	1	**251-4812**	1	GEAR AS (64-TEETH)	
		1	**4F-6024**	1	PIN	
	6	1	**261-3246**	2	ADAPTER AS	
					(EACH INCLUDES)	
		1	**160-8184**	1	BEARING-SLEEVE	
	7	1	**4N-1230**	2	SEAL-O-RING	
M	8	1	**6V-1820**	12	BOLT (M10X1.5X30-MM)	
	9	1	**6V-5839**	12	WASHER (11X21X2.5-MM THK)	
M	10	1	**6V-7673**	6	BOLT (M12X1.75X50-MM)	

M-METRIC PART

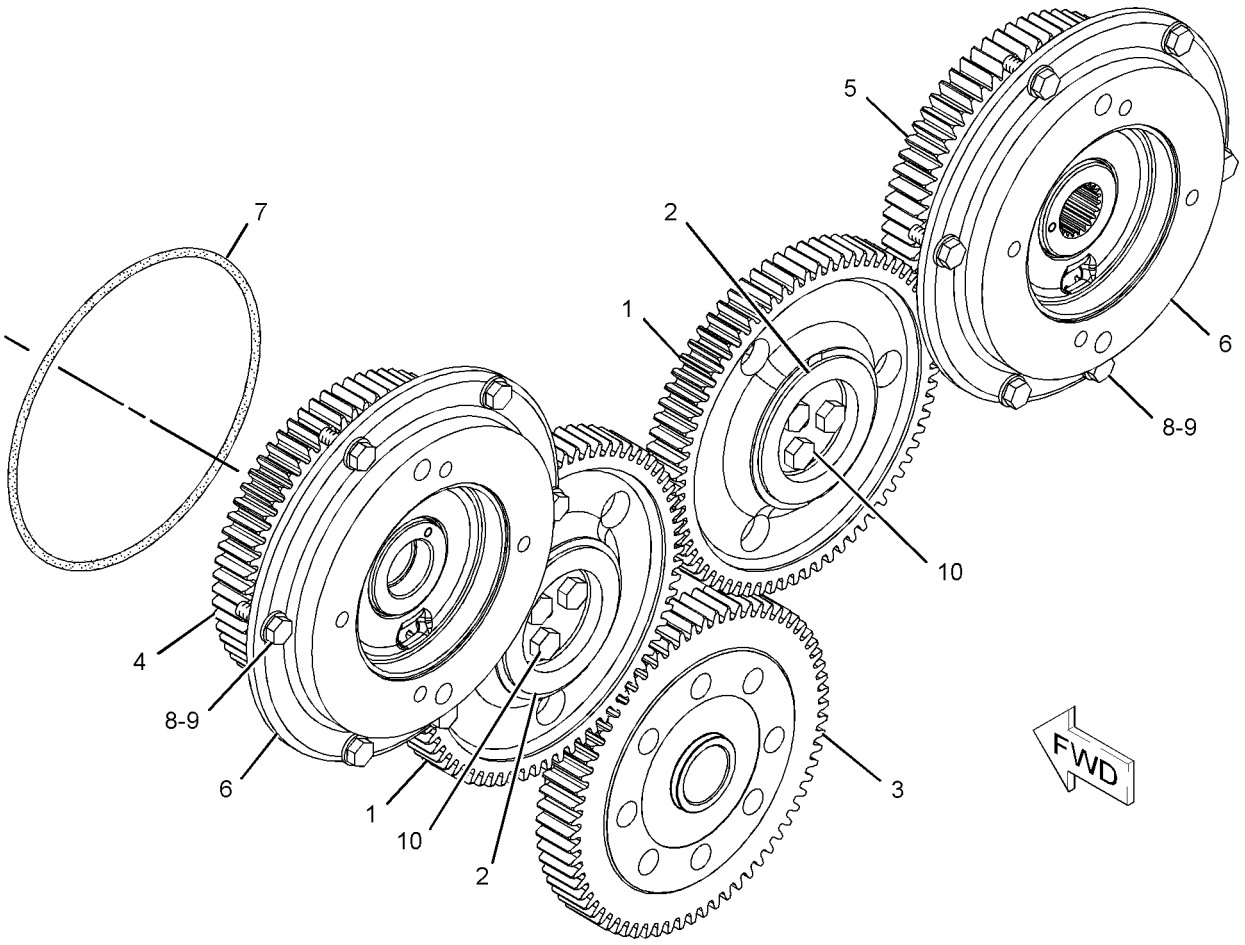

GRAPHIC #1 **<END>** g01143623

277-5425 GEAR GP-REAR

S/N: MHX1304-2151
PART OF 227-5359, 231-0876 ENGINE AR-COMPLETE
ALSO AN ATTACHMENT

SMCS-1204, 1206 **i02547170**

NOTE	REF NO	GRAPHIC REF	PART NUMBER	QTY	PART NAME 1 2 3 4 5 6 (PRODUCT LEVEL)	SEE PAGE
	1	1	**1W-4741**	1	GEAR AS-IDLER (70-TEETH)	
		1	**1W-4738**	1	BEARING-SLEEVE	
	2	1	**1W-4746**	1	RETAINER-GEAR	
	3	1	**154-3358**	1	GEAR-ADAPTER (68-TEETH)	
	4	1	**187-8194**	1	GEAR AS-DRIVE (64-TEETH)	
		1	**4F-6024**	1	PIN	
	5	1	**261-3246**	2	ADAPTER AS	
					(EACH INCLUDES)	
		1	**160-8184**	1	BEARING-SLEEVE	
	6	1	**266-0482**	1	COVER	
	7	1	**266-0483**	1	GASKET	
	8	1	**4N-1230**	2	SEAL-O-RING	
M	9	1	**6V-1820**	12	BOLT (M10X1.5X30-MM)	
	10	1	**6V-5839**	12	WASHER (11X21X2.5-MM THK)	
M	11	1	**6V-7673**	3	BOLT (M12X1.75X50-MM)	
M	12	1	**8T-4183**	4	BOLT (M12X1.75X40-MM)	
	13	1	**8T-4223**	4	WASHER-HARD (13.5X25.5X3-MM THK)	

M-METRIC PART

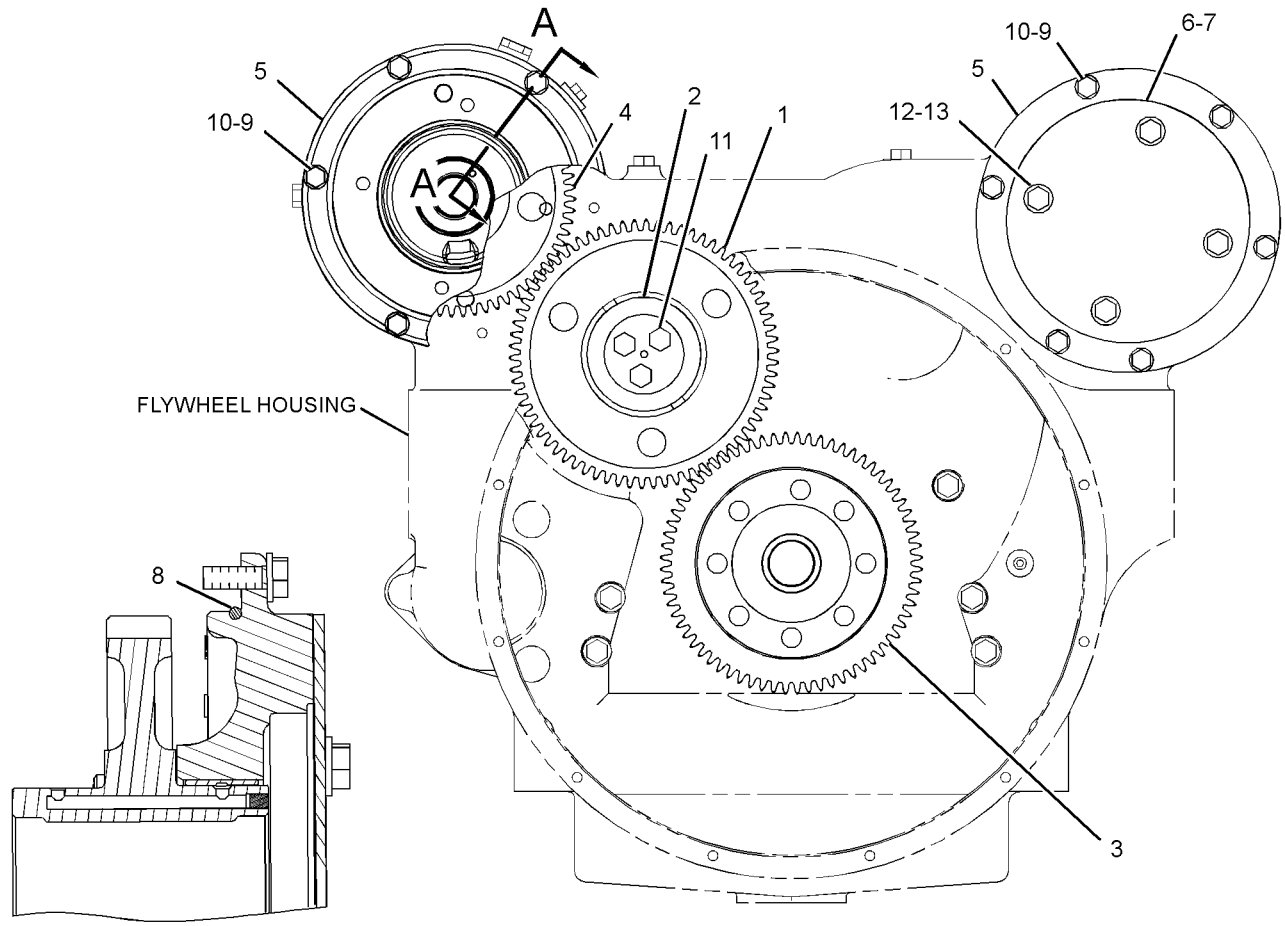

SECTION A-A

REAR VIEW OF ENGINE

GRAPHIC #1

<END>

g01308279

BASIC ENGINE

277-5425 GEAR GP-REAR

S/N: MHX2152-UP

PART OF 227-5359, 231-0876, 349-4462 ENGINE AR-COMPLETE

AN ATTACHMENT

SMCS-1204, 1206 **i03016011**

NOTE	REF NO	GRAPHIC REF	PART NUMBER	QTY	PART NAME 1 2 3 4 5 6 (PRODUCT LEVEL)	SEE PAGE
	1	1	**1W-4741**	1	GEAR AS-IDLER (70-TEETH)	
		1	**1W-4738**	1	BEARING-SLEEVE	
	2	1	**1W-4746**	1	RETAINER-GEAR	
	3	1	**154-3358**	1	GEAR-ADAPTER (68-TEETH)	
C	4	1	**287-8357**	1	GEAR AS-DRIVE (64-TEETH)	
		1	**4F-6024**	1	PIN	
C	5	1	**261-3246**	1	ADAPTER AS	
		1	**160-8184**	1	BEARING-SLEEVE	
C	6	1	**277-8283**	1	COVER	
	8	1	**4N-1230**	2	SEAL-O-RING	
CM	9	1	**6V-1820**	6	BOLT (M10X1.5X30-MM)	
	10	1	**6V-5839**	12	WASHER (11X21X2.5-MM THK)	
M	11	1	**6V-7673**	3	BOLT (M12X1.75X50-MM)	
CM	12	1	**6V-6317**	6	BOLT (M10X1.5X20-MM)	

C-CHANGE FROM PREVIOUS TYPE
M-METRIC PART

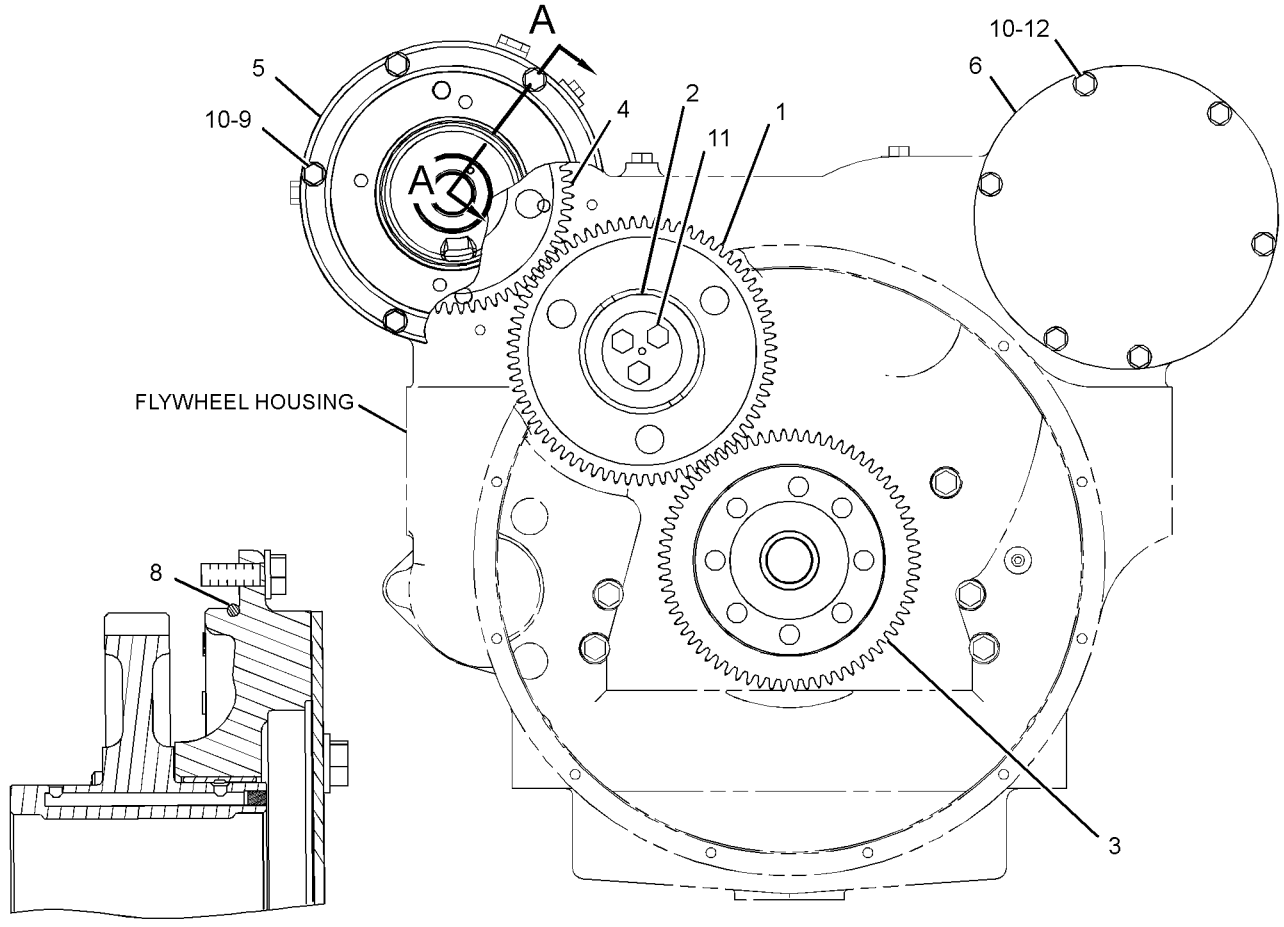

SECTION A-A

REAR VIEW OF ENGINE

GRAPHIC #1

<END>

g01330140

238-2949 HOUSING GP-FLYWHEEL

S/N: MHX2152-UP
PART OF 231-0876 ENGINE AR-COMPLETE
ALSO AN ATTACHMENT

SMCS-1157 **i04020812**

NOTE	REF NO	GRAPHIC REF	PART NUMBER	QTY	PART NAME 1 2 3 4 5 6 (PRODUCT LEVEL)	SEE PAGE
	1	1	**175-3721**	1	COVER	
C	2	1	**101-3934**	1	COVER	
Y	3	1	*227-0838*	1	SEAL GP-CRANKSHAFT	95
	4	1	*257-9839*	1	HOUSING AS-FLYWHEEL	
		1	**2A-1162**	1	GASKET	
		1	**5F-0304**	1	PLUG (FLYWHEEL HOUSING)	
		1	**321-7866**	2	HOUSING AS-FLYWHEEL	
		1	*148-8395*	2	PLUG AS	
					(EACH INCLUDES)	
		1	**3K-0360**	1	SEAL-O-RING	
		1	**9S-8005**	1	PLUG-O-RING	
		1	*148-8405*	1	PLUG AS	
		1	**1J-9671**	1	SEAL-O-RING	
		1	**3K-8460**	1	PLUG	
		1	*148-8407*	4	PLUG AS	
					(EACH INCLUDES)	
		1	**3J-1907**	1	SEAL-O-RING	
		1	**9S-4191**	1	PLUG-O-RING	
		1	*155-3624*	1	PLUG AS	
		1	**3J-7354**	1	SEAL-O-RING	
		1	**9S-4182**	1	PLUG-O-RING	
M	5	1	**191-2857**	4	BOLT	
Y	6	1	*216-5540*	1	COVER GP-FLYWHEEL HOUSING	23
	7	1	**4M-0189**	1	SEAL-O-RING	
C	9	1	**3F-5792**	1	SEAL-O-RING	
	10	1	**5P-8245**	4	WASHER-HARD (13.5X25.5X3-MM THK)	
	11	1	**5P-8246**	11	WASHER-HARD (15.5X29X3-MM THK)	
M	12	1	**6A-5591**	2	BOLT (M12X1.75X25-MM)	
M	14	1	**6V-5684**	2	BOLT (M12X1.75X45-MM)	
M	16	1	**6V-5844**	2	BOLT (M16X2X35-MM)	
M	17	1	**6V-7727**	9	BOLT (M6X1X16-MM)	
M	18	1	**8T-0226**	7	BOLT (M14X2X45-MM)	
	19	1	**9X-8267**	9	WASHER (6.6X12X2-MM THK)	
	20	1	**9X-8268**	2	WASHER (17.5X30X3.5-MM THK)	
B	21	1	**1U-8846**		SEALANT-GASKET	

B-USE AS REQUIRED
C-CHANGE FROM PREVIOUS TYPE
M-METRIC PART
Y-SEPARATE ILLUSTRATION

238-2949 **HOUSING GP-FLYWHEEL** *(contd.)* **i04020812**

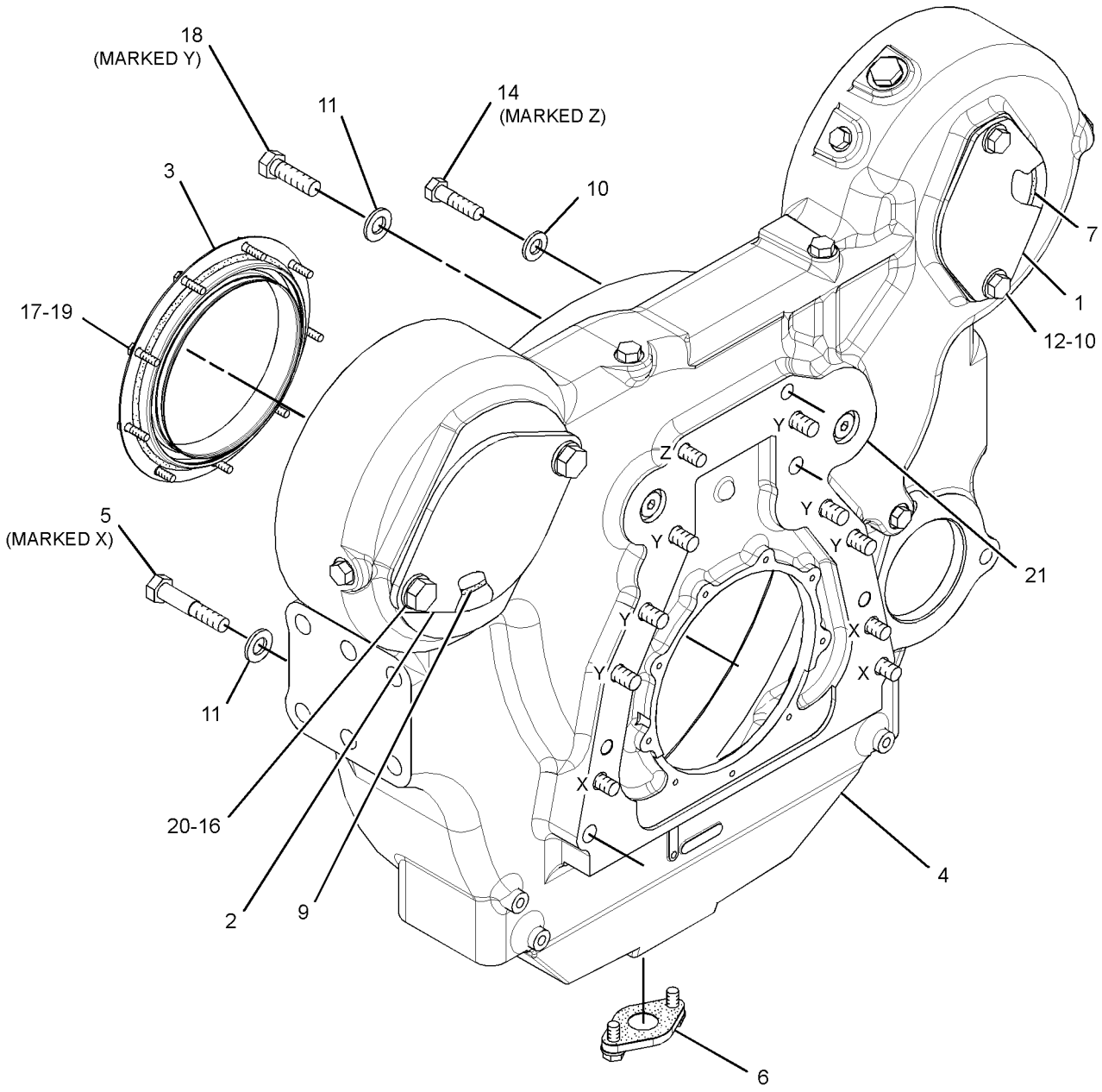

GRAPHIC #1 **<END>** g01454685

277-4435 HOUSING GP-FLYWHEEL

S/N: MHX1214-UP
PART OF 227-5359, 231-0876, 349-4462 ENGINE AR-COMPLETE
ALSO AN ATTACHMENT

SMCS-1157 **i03624091**

NOTE	REF NO	GRAPHIC REF	PART NUMBER	QTY	PART NAME 1 2 3 4 5 6 (PRODUCT LEVEL)	SEE PAGE
	1	1	**175-3721**	1	COVER	
Y	2	1	*227-0838*	1	SEAL GP-CRANKSHAFT	95
	3	1	**277-4434**	1	HOUSING AS-FLYWHEEL	
	3A	1	**2A-1162**	1	GASKET	
	3B	1	**5F-0304**	1	PLUG	
	3C	1	**8M-9315**	1	BUSHING	
	4	1	**101-3934**	1	COVER	
M	5	1	**191-2857**	4	BOLT (M14X2X70-MM)	
Y	6	1	*216-5540*	1	COVER GP-FLYWHEEL HOUSING	23
	7	1	**3F-5792**	1	SEAL-O-RING	
	8	1	**4M-0189**	1	SEAL-O-RING	
	10	1	**5P-8245**	4	WASHER-HARD (13.5X25.5X3-MM THK)	
	11	1	**5P-8246**	11	WASHER-HARD (15.5X29X3-MM THK)	
M	12	1	**6A-5591**	2	BOLT (M12X1.75X25-MM)	
M	14	1	**6V-5684**	2	BOLT (M12X1.75X45-MM)	
M	16	1	**6V-5844**	2	BOLT (M16X2X35-MM)	
M	17	1	**6V-7727**	9	BOLT (M6X1X16-MM)	
M	18	1	**8T-0226**	7	BOLT (M14X2X45-MM)	
	19	1	**9X-8267**	9	WASHER (6.6X12X2-MM THK)	
	20	1	**9X-8268**	2	WASHER (17.5X30X3.5-MM THK)	
BF			**1U-8846**	10	SEALANT-GASKET	

B-USE AS REQUIRED
F-NOT SHOWN
M-METRIC PART
Y-SEPARATE ILLUSTRATION

277-4435 **HOUSING GP-FLYWHEEL** *(contd.)* **i03624091**

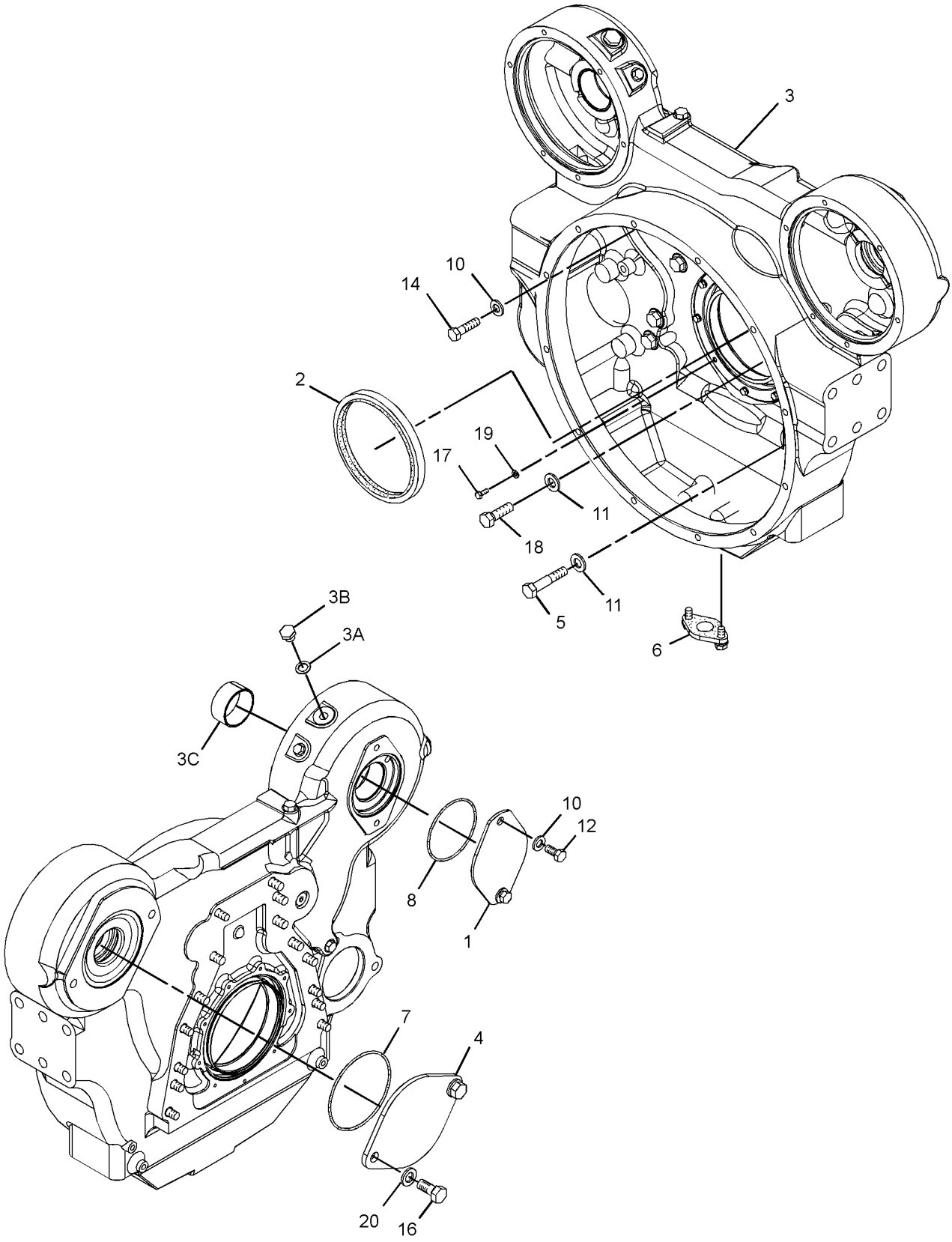

GRAPHIC #1 **<END>** g01637342

218-7272 HOUSING GP-FRONT

S/N: MHX1304-UP

PART OF 231-0876 ENGINE AR-COMPLETE, 231-0877, 267-0009, 286-5804, 301-2265 ENGINE AR-CORE

ALSO AN ATTACHMENT

SMCS-1151, 1162, 1206 **i03997814**

NOTE	REF NO	GRAPHIC REF	PART NUMBER	QTY	PART NAME 1 2 3 4 5 6 (PRODUCT LEVEL)	SEE PAGE
	1	1	*356-0955*	1	GEAR AS-DRIVE	
		1	**5P-6727**	1	BALL BEARING	
		1	**8H-9789**	1	BEARING AS-BALL	
		1	**221-9357**	1	GEAR-AUXILIARY DRIVE (40-TEETH)	
	2	1	**9M-1974**	30	WASHER-HARD (8.8X16X2-MM THK)	
	3	1	**251-4314**	1	ADAPTER	
	4	1	**278-7093**	1	COVER AS	
	5	1	**9X-8256**	5	WASHER (6.6X12X2-MM THK)	
	6	1	**257-2015**	1	GASKET	
	7	1	**223-7852**	1	SEAL-INTEGRAL	
	8	1	**226-4755**	1	SEAL GP-CRANKSHAFT (FRONT)	
		1	**169-4166**	1	SEAL GP-CRANKSHAFT (FRONT)	
		1	**220-3373**	1	SEAL-RING	
	9	1	**329-3061**	1	HOUSING AS-FRONT	
	9A	1	**6V-3535**	2	DOWEL	
	10	1	**117-8801**	1	SEAL-O-RING	
M	11	1	**6V-2317**	17	BOLT (M8X1.25X30-MM)	
M	12	1	**6V-5192**	3	BOLT-SOCKET HEAD (M8X1.25X30-MM)	
M	13	1	**6V-5219**	9	BOLT (M8X1.25X40-MM)	
M	14	1	**6V-8225**	5	NUT (M6X1-THD)	
M	15	1	**3E-8016**	1	BOLT-SELF-LOCKING (M8X1.25X25-MM)	

M-METRIC PART

218-7272 **HOUSING GP-FRONT** *(contd.)* **i03997814**

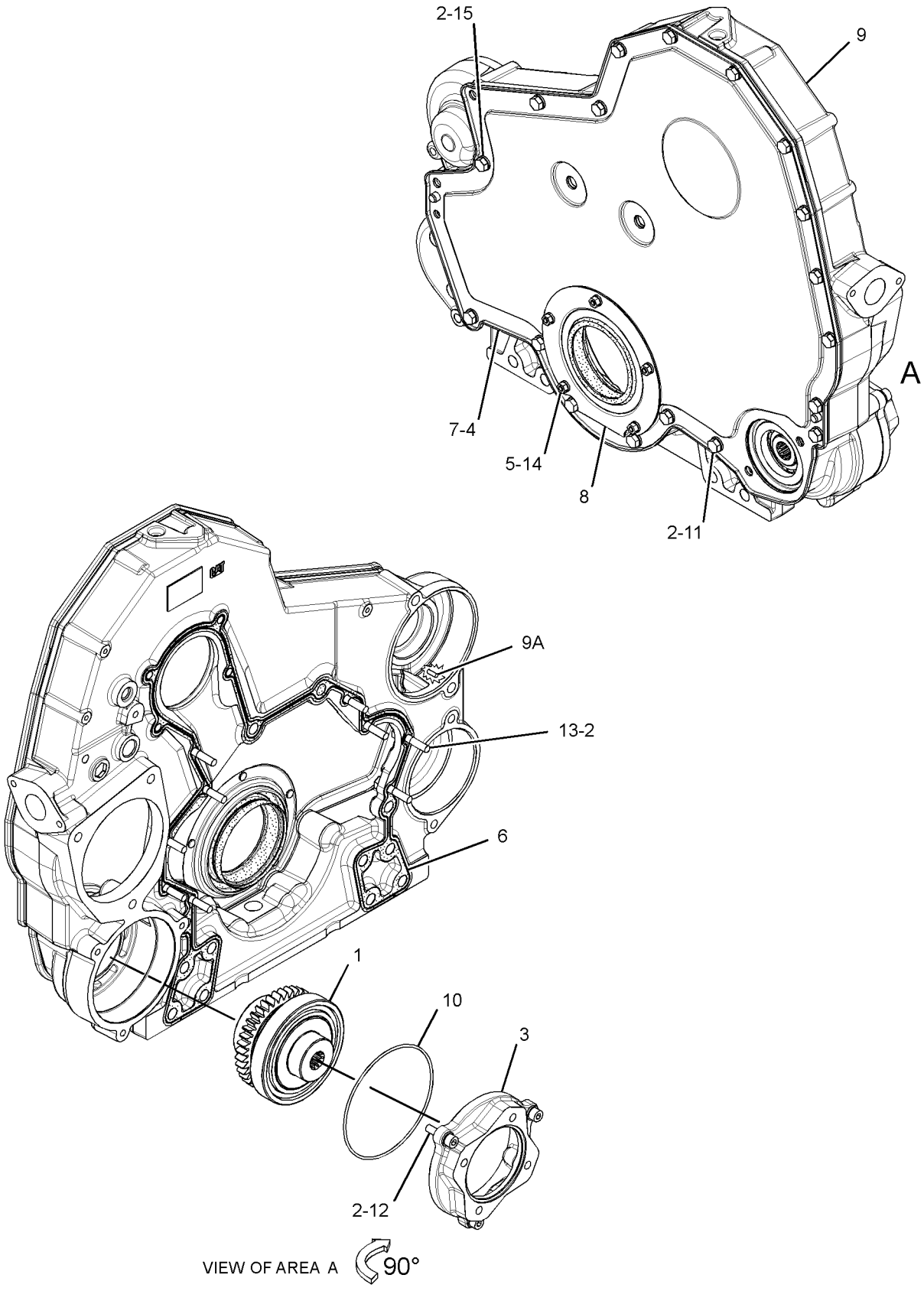

GRAPHIC #1 **<END>** g02218914

237-4376 LIFTER GP-VALVE—MECHANISM

S/N: MHX1304-UP
PART OF 240-7272 VALVE MECHANISM GP
ALSO AN ATTACHMENT

SMCS-1209 **i03596460**

NOTE	REF NO	GRAPHIC REF	PART NUMBER	QTY	PART NAME 1 2 3 4 5 6 (PRODUCT LEVEL)	SEE PAGE
	1	1	**202-7475**	6	LIFTER AS-UNIT INJECTOR	
	2	1	**251-1005**	12	LIFTER AS-VALVE	
	3	1	**269-2862**	5	BRACKET AS (INTERMEDIATE)	
					(EACH INCLUDES)	
		1	**129-2893**	1	DOWEL	
	4	1	**269-2860**	1	BRACKET AS (FRONT)	
		1	**129-2893**	1	DOWEL	
	5	1	**240-2636**	1	SHAFT AS	
	5A	1	**0L-1026**	2	PLUG-CUP	
	6	1	**269-2864**	1	BRACKET AS (REAR)	
	6A	1	**5L-4763**	1	PIN-SPRING	
M	7	1	**6V-5843**	7	BOLT (M10X1.5X45-MM)	
	8	1	**8E-8439**	1	DOWEL	

M-METRIC PART

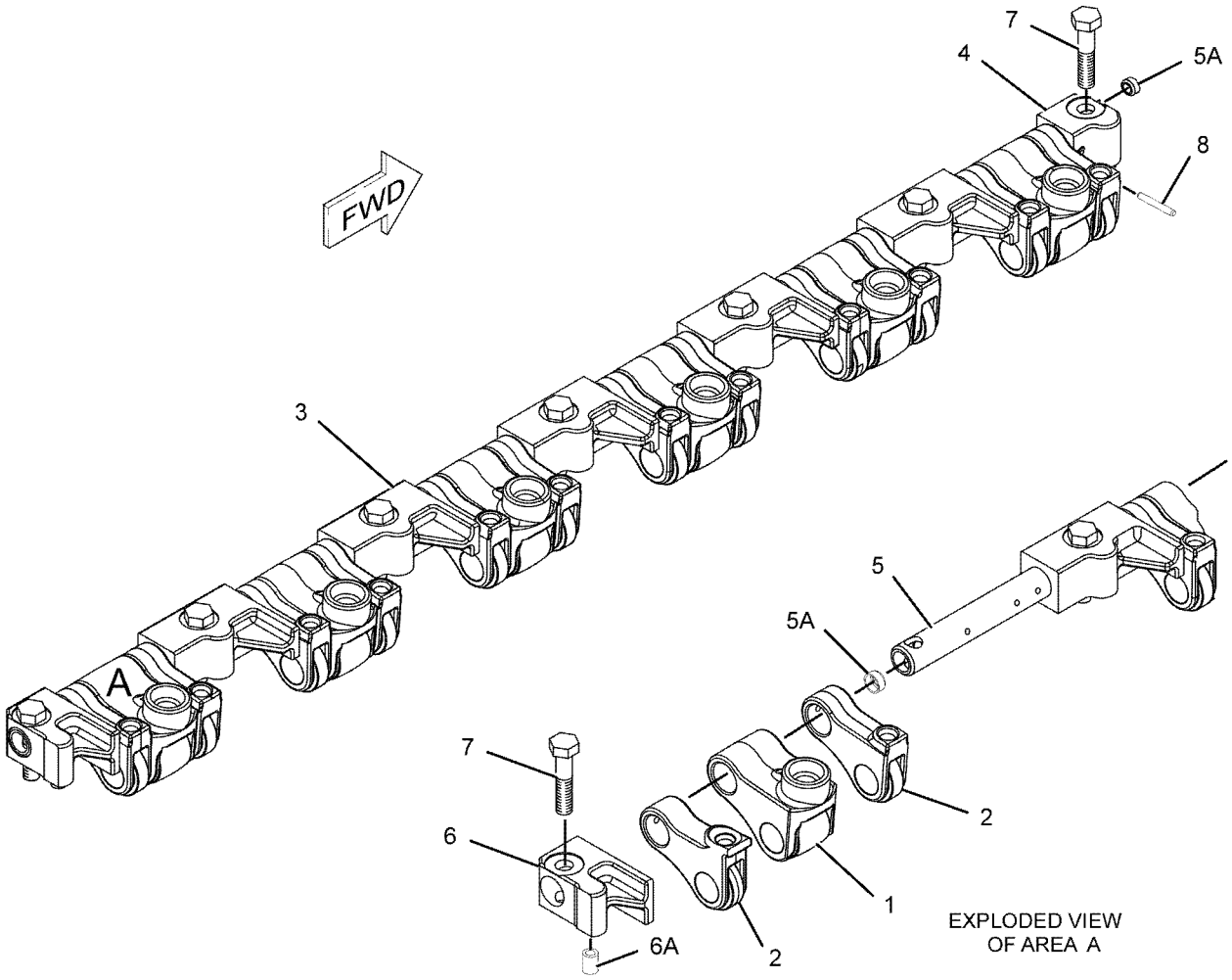

GRAPHIC #1 **<END>** g01119838

224-0880 LIFTING GP-ENGINE

S/N: MHX1214-UP
PART OF 227-5359, 231-0876, 349-4462 ENGINE AR-COMPLETE
ALSO AN ATTACHMENT

SMCS-1122 **i01861300**

NOTE	REF NO	GRAPHIC REF	PART NUMBER	QTY	PART NAME 1 2 3 4 5 6 (PRODUCT LEVEL)	SEE PAGE
	1	1	**224-4140**	2	EYE-LIFTING	
	2	1	**5P-8245**	8	WASHER-HARD (13.5X25.5X3-MM THK)	
M	3	1	**6V-3668**	8	BOLT (M12X1.75X30-MM)	

M-METRIC PART

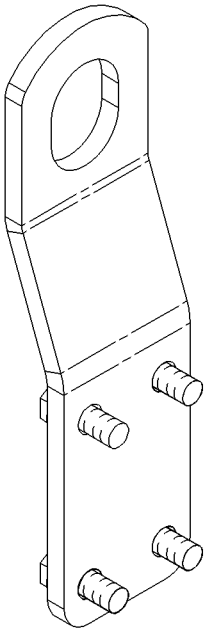

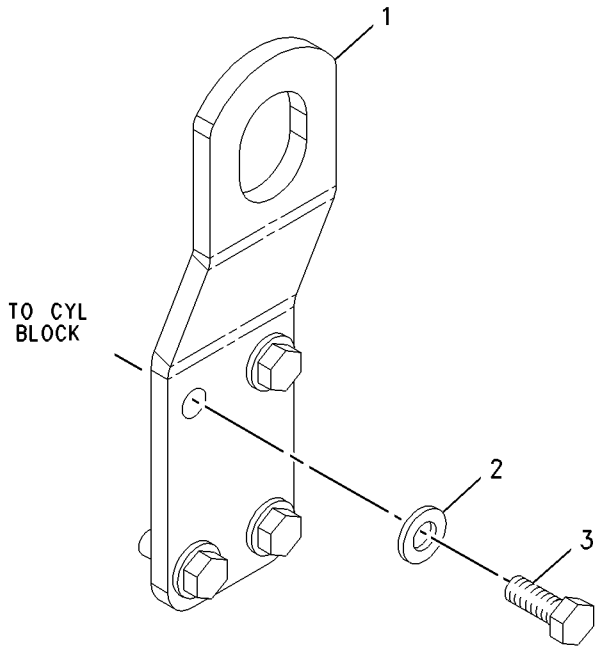

GRAPHIC #1 **<END>** g00950265

249-7326 MOUNTING GP-ENGINE & XMSN

S/N: R9H1-UP

PART OF 349-2556 COMMON AR

SMCS-1152, 1153, 1154, 3082 **i02372024**

NOTE	REF NO	GRAPHIC REF	PART NUMBER	QTY	PART NAME 1 2 3 4 5 6 (PRODUCT LEVEL)	SEE PAGE
	1	1	**146-1680**	2	WASHER (32X155X4-MM THK)	
	2	1	**174-9527**	2	MOUNT AS	
					(EACH INCLUDES)	
		1	**9W-6582**	1	SLEEVE	
		1	**9W-6584**	1	WASHER (20.5X114X10-MM THK)	
		1	**9W-9930**	1	MOUNT AS	
	3	1	**260-6908**	2	PLATE	
	4	1	*262-5528*	2	MOUNT AS	
					(EACH INCLUDES)	
		1	**3E-4887**	1	SLEEVE	
		1	**3E-4888**	1	WASHER (32X144X12-MM THK)	
		1	**6Y-9960**	1	MOUNT AS	
		1	**9W-8095**	1	PAD-REBOUND	
	5	1	**287-3089**	2	WASHER (21X130X19.3-MM THK)	
M	6	1	**107-3953**	2	BOLT (M30X3.5X150-MM)	
	7	1	**198-4782**	4	WASHER-HARD (26X47X12-MM THK)	
M	8	1	**8C-8478**	2	BOLT (M20X2.5X140-MM)	
	9	1	**8T-4123**	2	WASHER (22X35X3.5-MM THK)	
M	10	1	**8T-4183**	10	BOLT (M12X1.75X40-MM)	
M	11	1	**8T-4194**	2	BOLT (M12X1.75X50-MM)	
M	12	1	**8T-5878**	4	BOLT (M24X3X80-MM)	
	13	1	**8T-7971**	12	WASHER-HARD (13.5X25.5X5-MM THK)	
	14	1	**9X-8258**	2	WASHER (33X56X6-MM THK)	

M-METRIC PART

249-7326 **MOUNTING GP-ENGINE & XMSN** *(contd.)* **i02372024**

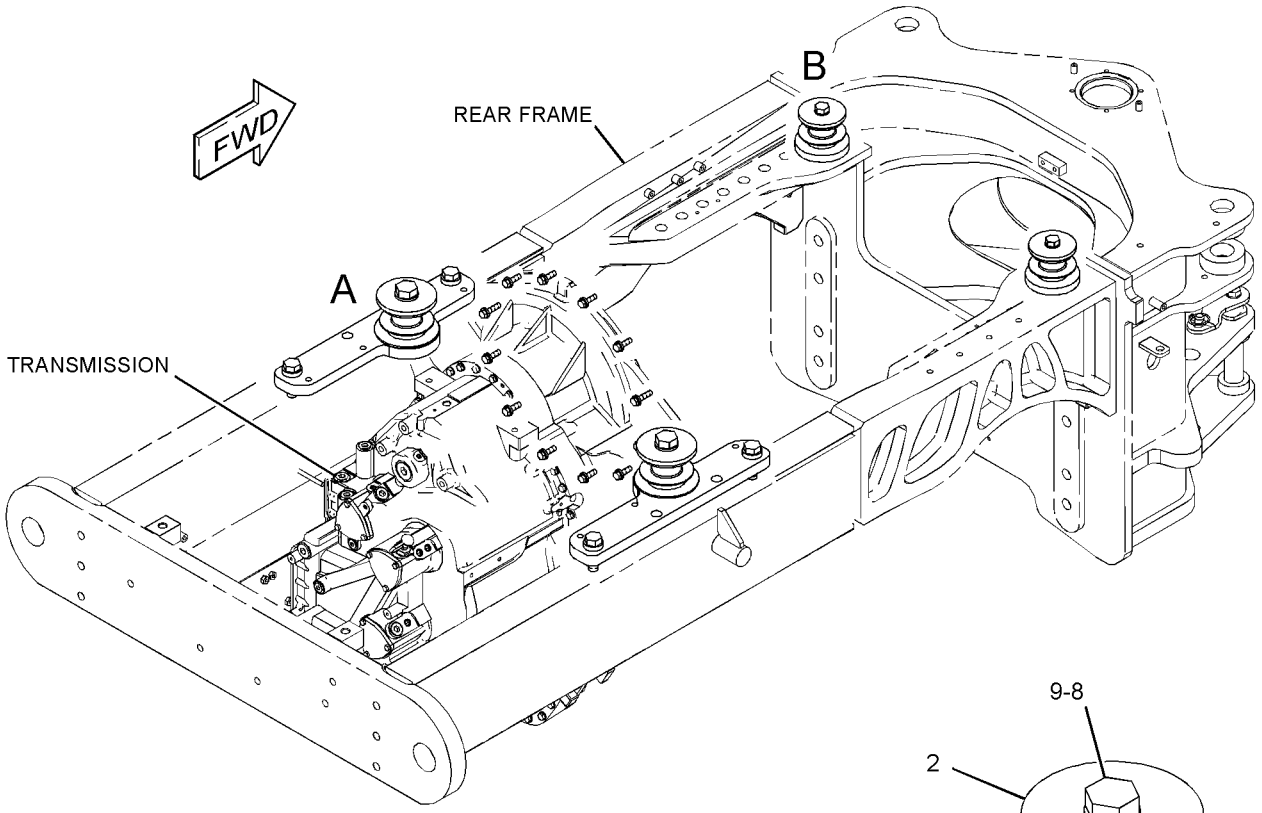

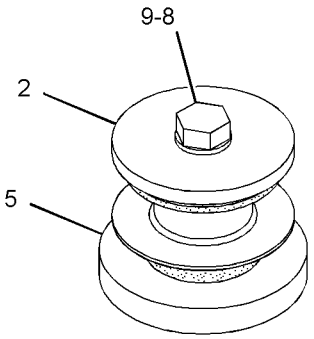

VIEW OF AREA B

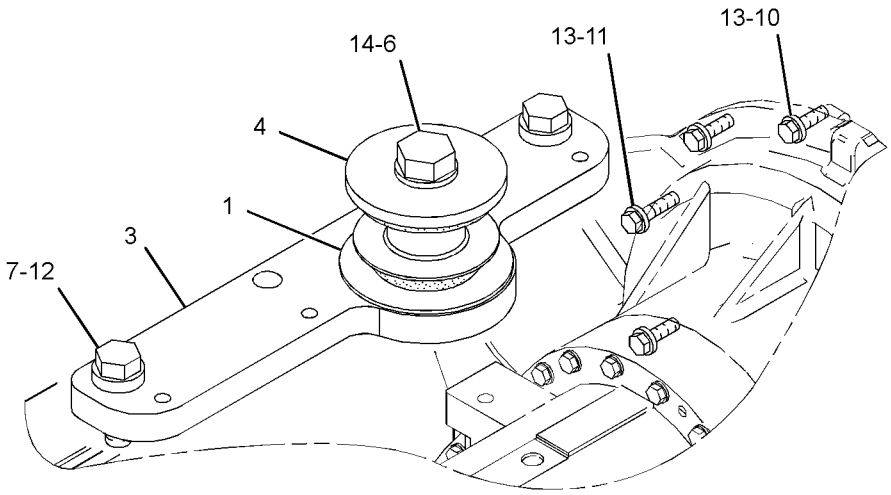

VIEW OF AREA A

GRAPHIC #1 **<END>** g01321892

219-7440 MOUNTING GP-FAN DRIVE

S/N: MHX1214-UP
52-MM
PART OF 227-5359, 231-0876, 349-4462 ENGINE AR-COMPLETE
ALSO AN ATTACHMENT

SMCS-1359 **i01879231**

NOTE	REF NO	GRAPHIC REF	PART NUMBER	QTY	PART NAME 1 2 3 4 5 6 (PRODUCT LEVEL)	SEE PAGE
M	1	1	**123-0764**	2	STUD-TAPERLOCK (BOLT)	
	2	1	**5P-8245**	2	WASHER-HARD (13.5X25.5X3-MM THK)	

M-METRIC PART

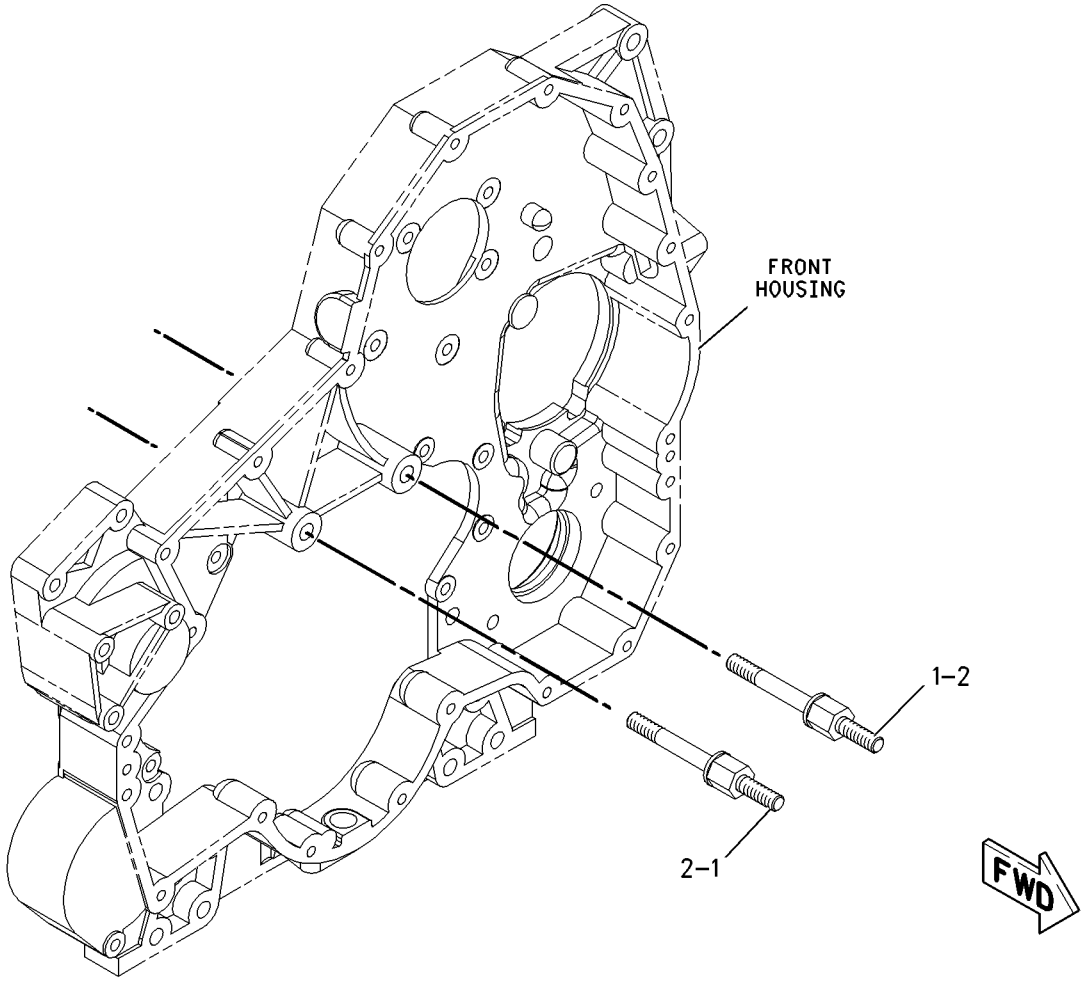

GRAPHIC #1 **<END>** g00948687

BASIC ENGINE

249-7368 MOUNTING GP-FAN DRIVE

S/N: R9H1-UP

PART OF 249-7363 COOLING AR

SMCS-1359 **i02959596**

NOTE	REF NO	GRAPHIC REF	PART NUMBER	QTY	PART NAME 1 2 3 4 5 6 (PRODUCT LEVEL)	SEE PAGE
	1	1	**262-5842**	1	SUPPORT AS (LH)	
M		1	**8T-3490**	8	NUT-WELD (M10X1.5-THD)	
M		1	**8T-3597**	6	NUT-WELD (M12X1.75-THD)	
M		1	**9R-2821**	1	BOSS (M10X1.5X15-MM)	
M		1	**9X-6269**	3	NUT-WELD (M16X2-THD)	
	2	1	**262-5843**	1	SUPPORT AS (RH)	
M		1	**8T-3490**	10	NUT-WELD (M10X1.5-THD)	
M		1	**8T-3597**	6	NUT-WELD (M12X1.75-THD)	
M		1	**9X-6269**	3	NUT-WELD (M16X2-THD)	
	3	1	**263-3963**	1	BRACKET AS	
M		1	**8T-3490**	7	NUT-WELD (M10X1.5-THD)	
M		1	**8T-3597**	4	NUT-WELD (M12X1.75-THD)	
M		1	**8T-3612**	4	NUT-WELD (M8X1.25-THD)	
	4	1	**263-3968**	1	BRACKET AS	
M		1	**8T-3612**	2	NUT-WELD (M8X1.25-THD)	
M		1	**8Y-4489**	2	BOSS (M10X1.5-THD)	
M		1	**9R-9866**	1	BOSS-THREADED (M10X1.5-THD)	
	5	1	**263-3971**	1	BRACKET AS	
		1	**7T-1099**	1	LINK	
M		1	**8T-3490**	8	NUT-WELD (M10X1.5-THD)	
M		1	**8T-3597**	8	NUT-WELD (M12X1.75-THD)	
	6	1	**272-2958**	2	PLATE	
	7	1	**272-2967**	1	BAFFLE AS	
		1	**5P-4115**	2	WASHER-HARD (7.2X19X2-MM THK)	
		1	**6V-4604**	8	RIVET-POP	
	8	1	**272-3206**	2	STRIP	
	9	1	**272-3239**	1	BAFFLE	
	10	1	**272-3266**	1	BAFFLE	
	11	1	**287-0513**	1	BRACKET AS	
M		1	**9R-2821**	1	BOSS (M10X1.5X15-MM)	
	12	1	**287-0514**	1	BRACKET AS	
		1	**7T-1099**	2	LINK	
M		1	**9R-2821**	1	BOSS (M10X1.5X15-MM)	
	13	1	**198-4778**	8	WASHER-HARD (13.5X30X12-MM THK)	
	14	1	**6V-4604**	6	RIVET-POP	
M	15	1	**7X-2553**	6	BOLT (M16X2X40-MM)	
	16	1	**7X-7729**	7	WASHER (11X25X3-MM THK)	
	17	1	**8T-4121**	21	WASHER-HARD (11X21X2.5-MM THK)	
M	18	1	**8T-4133**	10	NUT (M10X1.5-THD)	
M	19	1	**8T-4136**	16	BOLT (M10X1.5X25-MM)	
M	20	1	**8T-4183**	8	BOLT (M12X1.75X40-MM)	
M	21	1	**8T-4195**	2	BOLT (M10X1.5X30-MM)	
	22	1	**5P-1076**	8	WASHER-HARD (13.5X30X4-MM THK)	
M	23	1	**8T-4956**	8	BOLT (M12X1.75X35-MM)	
	24	1	**9X-8257**	6	WASHER (17.5X30X3.5-MM THK)	
D	25	1	**5P-8309**		SEAL (1.0-M)	
E	26	1	**112-9736**		SEAL (126-CM EACH)	

D-ORDER BY THE METER
E-ORDER BY THE CENTIMETER
M-METRIC PART

249-7368 **MOUNTING GP-FAN DRIVE** *(contd.)* **i02959596**

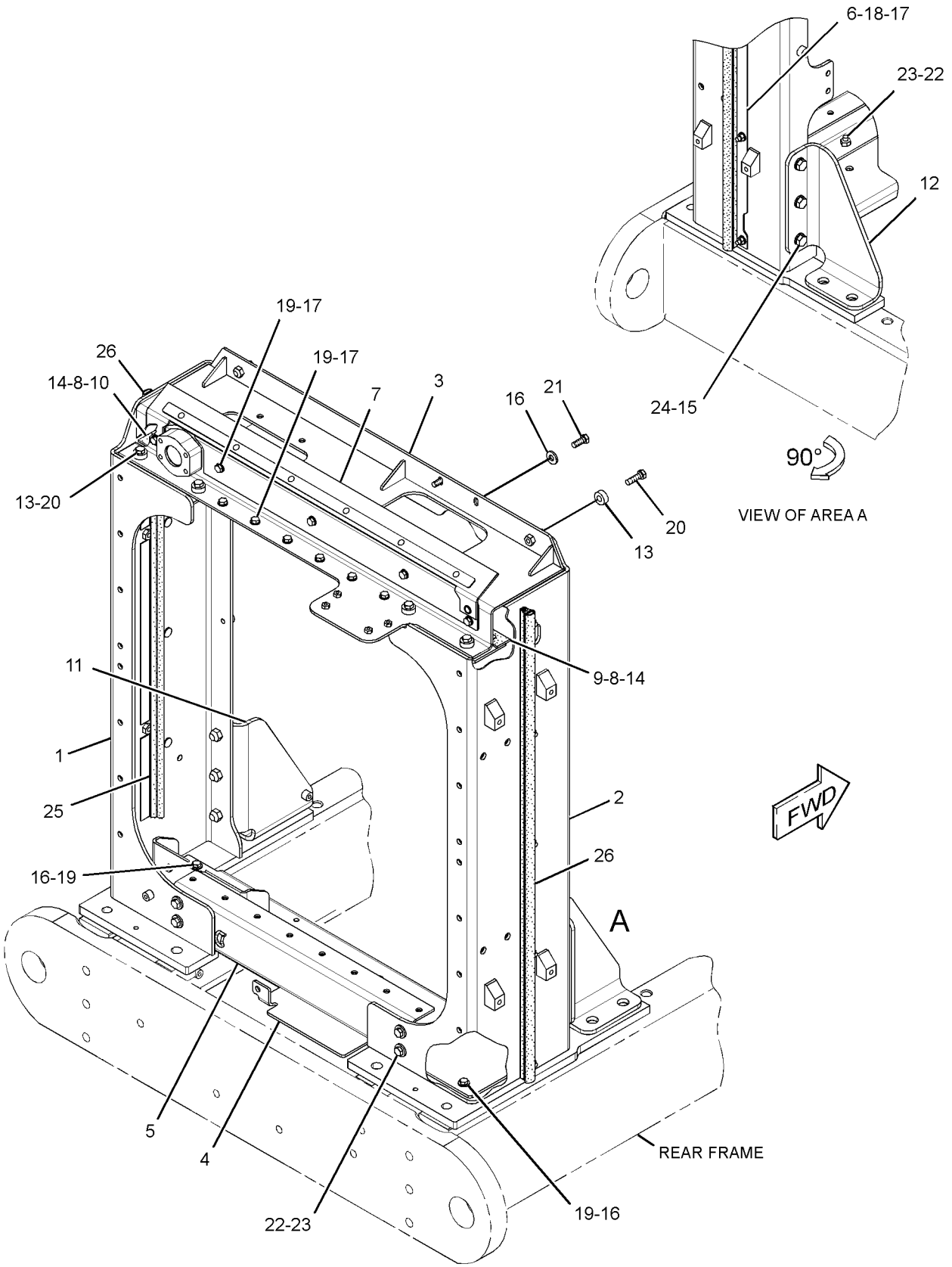

GRAPHIC #1 **<END>** g01518434

229-8083 MOUNTING GP-VALVE MECHANISM

S/N: MHX1304-UP
VARIABLE VALVE ACTUATOR
PART OF 231-0876 ENGINE AR-COMPLETE, 231-0877 ENGINE AR-CORE
CANNOT BE USED WITH NON VARIABLE VALVE ACTUATOR VALVE COVERS
ALSO AN ATTACHMENT

SMCS-1102, 1107, 1154 **i02061483**

NOTE	REF NO	GRAPHIC REF	PART NUMBER	QTY	PART NAME 1 2 3 4 5 6 (PRODUCT LEVEL)	SEE PAGE
	1	1	**238-6777**	6	STUD AS	

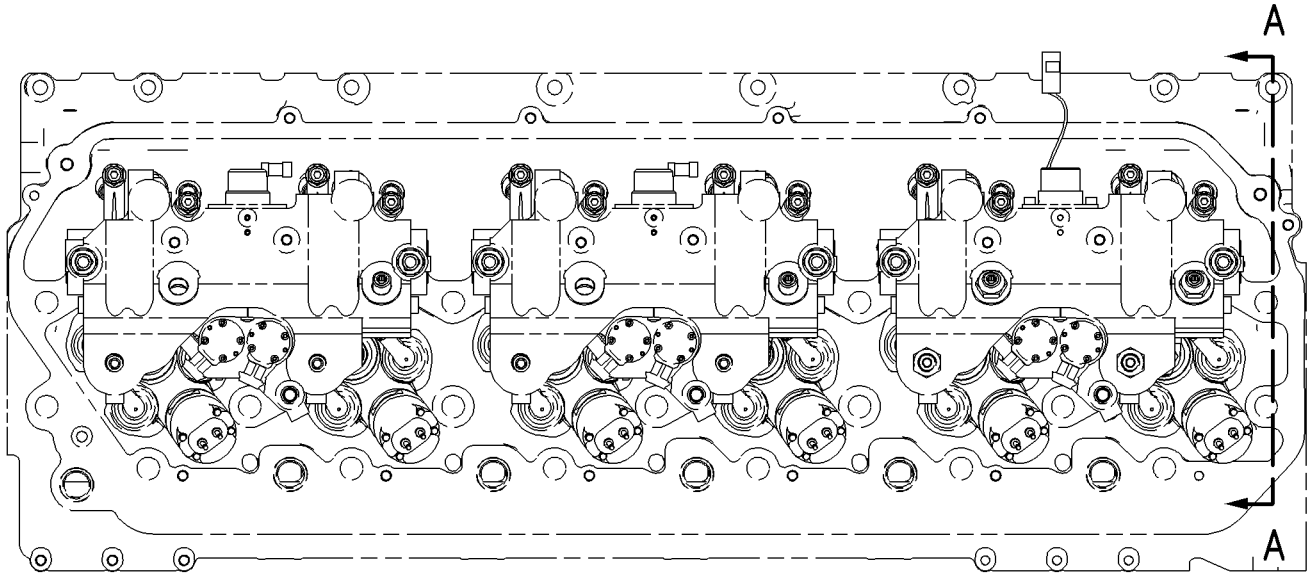

TOP VIEW

FWD

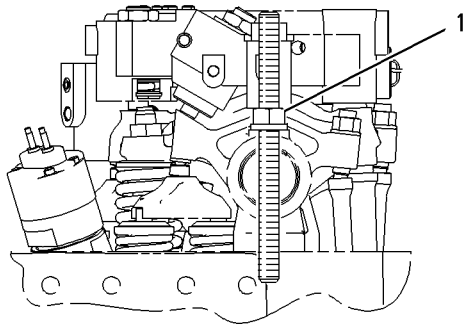

VIEW A-A

GRAPHIC #1 **<END>** g00950793

229-8084 MOUNTING GP-VALVE MECHANISM

S/N: MHX1214-UP
NON-VARIABLE VALVE ACTUATOR
PART OF 267-0009, 286-5804, 301-2265 ENGINE AR-CORE
FOR USE WITH NON-VARIABLE VALVE ACTUATOR ENGINES
AN ATTACHMENT

SMCS-1102, 1107, 1154 **i02038719**

NOTE	REF NO	GRAPHIC REF	PART NUMBER	QTY	PART NAME 1 2 3 4 5 6 (PRODUCT LEVEL)	SEE PAGE
	1	1	**241-0847**	6	BOLT (M12-1.75X93-MM THD)	

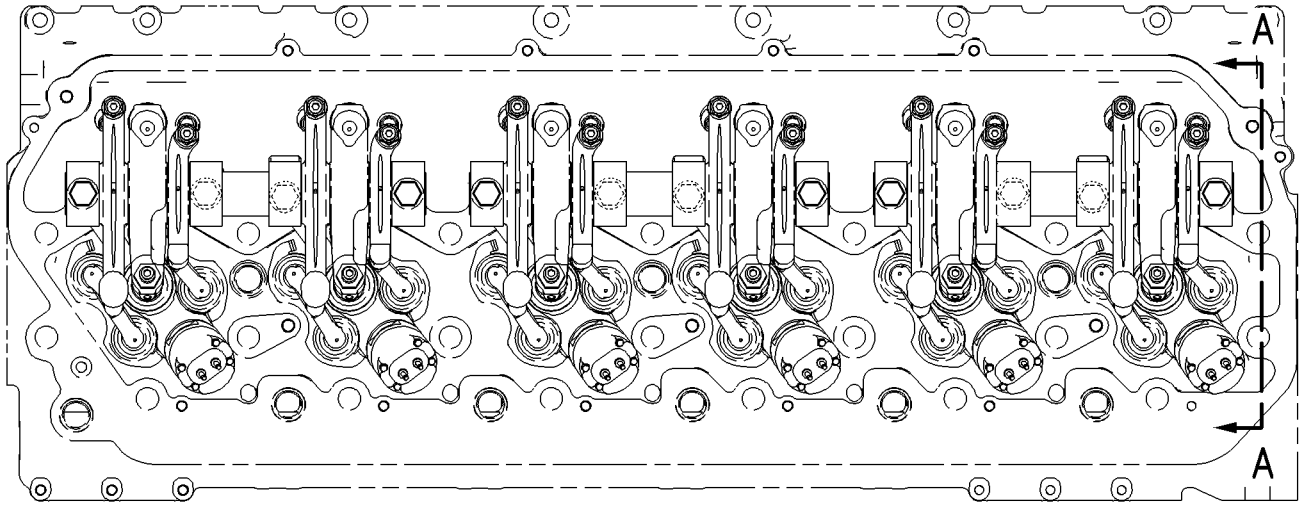

TOP VIEW

FWD

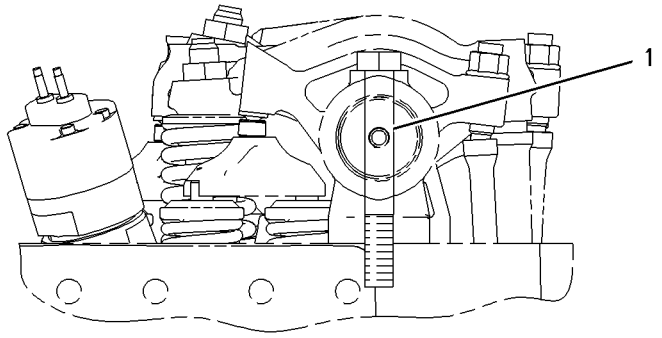

VIEW A-A

GRAPHIC #1 **<END>** g00950829

BASIC ENGINE

240-3279 PAN GP-OIL—ENGINE

S/N: MHX1304-UP
34 LITER. REAR SUMP
PART OF 227-5359, 231-0876, 349-4462 ENGINE AR-COMPLETE
ALSO AN ATTACHMENT

SMCS-1302 **i03766313**

NOTE	REF NO	GRAPHIC REF	PART NUMBER	QTY	PART NAME 1 2 3 4 5 6 (PRODUCT LEVEL)	SEE PAGE
	1	1	**9X-6451**	2	PLUG-DRAIN (ENGINE OIL PAN)	
	2	1	**210-1746**	1	BELL AS-SUCTION	
		1	**210-1743**	1	ELBOW	
	3	1	**217-3673**	1	SEAL-ISOLATION	
	4	1	**217-3674**	14	FASTENER AS	
	5	1	**240-3277**	1	PAN-OIL	
	6	1	**061-9458**	2	SEAL-O-RING	
M	7	1	**3E-8016**	2	BOLT-SELF-LOCKING (M8X1.25X25-MM)	
	9	1	**5P-8211**	1	SEAL-O-RING	
	10	1	**5P-8245**	4	WASHER-HARD (13.5X25.5X3-MM THK)	
M	11	1	**6A-5591**	4	BOLT (M12X1.75X25-MM)	
	12	1	**6N-8863**	14	WASHER (10.2X32X2.5-MM THK)	
M	13	1	**6V-4249**	13	BOLT (M10X1.5X50-MM)	
	14	1	**9M-1974**	2	WASHER-HARD (8.8X16X2-MM THK)	
	15	1	*319-6234*	2	PLUG AS	
					(EACH INCLUDES)	
	15A	1	**9S-9334**	1	PLUG-O-RING	
	15B	1	**238-5084**	1	SEAL-O-RING	
	16	1	**287-3049**	1	STUD (M10X1.5X50-MM)	

M-METRIC PART

240-3279 **PAN GP-OIL** *(contd.)* **i03766313**

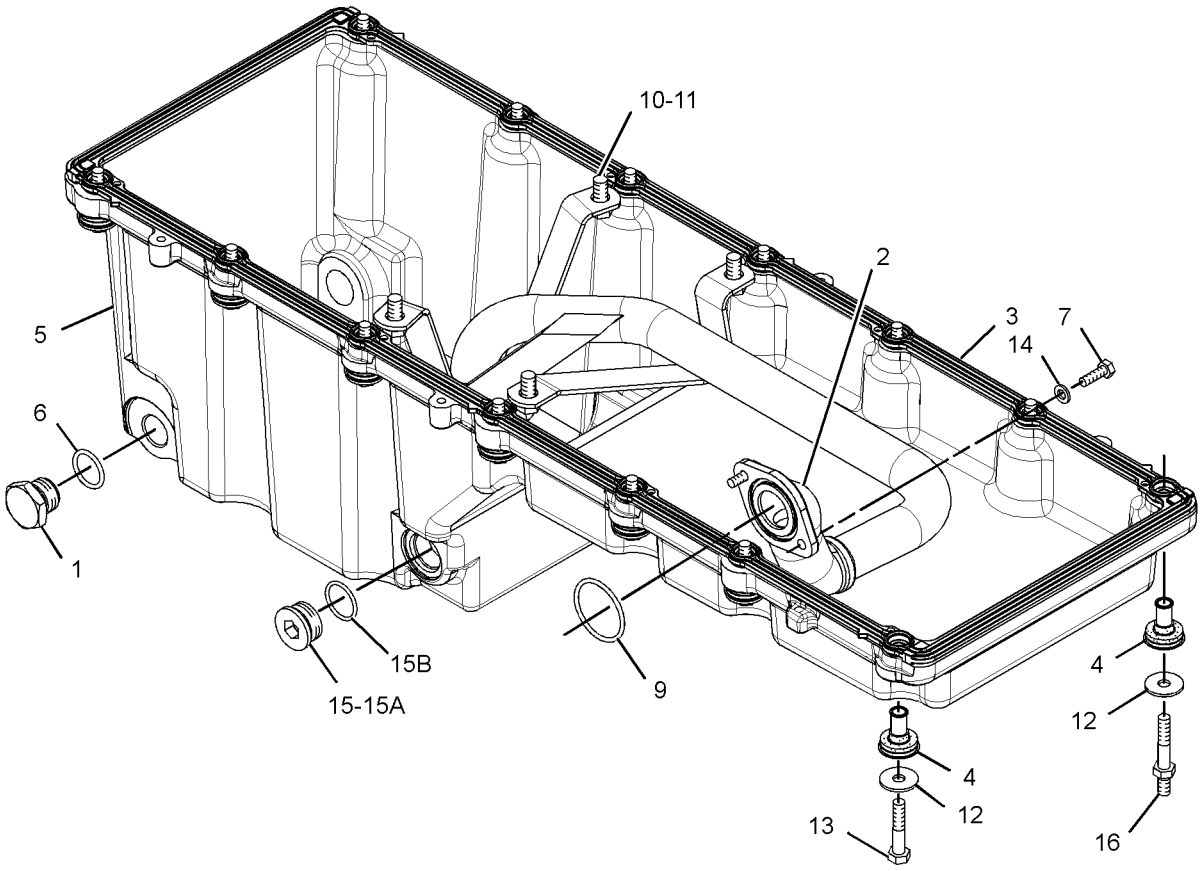

GRAPHIC #1 **<END>** g02033197

BASIC ENGINE

238-2723 PISTON & ROD GP

S/N: MHX1304-9879
17:1 COMBUSTION RATIO
PART OF 231-0877, 267-0009, 286-5804, 301-2265 ENGINE AR-CORE
ALSO AN ATTACHMENT

SMCS-1225 **i03040868**

NOTE	REF NO	GRAPHIC REF	PART NUMBER	QTY	PART NAME 1 2 3 4 5 6 (PRODUCT LEVEL)	SEE PAGE
	1	1	**116-1089**	1	BEARING-CONNECTING ROD (STANDARD)	
AB		1	**128-0395**		BEARING-CONNECTING ROD (0.51-MM US)	
AB		1	**128-0396**		BEARING-CONNECTING ROD (0.76-MM US)	
R	2	1	**160-8229**	1	ROD AS-CONNECTING	
	2A	1	**115-2972**	1	BEARING-CONNECTING ROD	
M	2B	1	**115-2973**	2	BOLT-CONNECTING ROD	
	2C	1	**219-4458**	2	PIN-DOWEL	
	3	1	**197-9326**	2	RETAINER	
	4	1	**197-9327**	1	PIN-PISTON	
CR	5	1	**265-1313**	1	BODY AS-PISTON	
	6	1	**226-6478**	1	JET AS-PISTON COOLING	
C	7	1	**265-1113**	1	RING-PISTON (OIL CONTROL)	
	8	1	**197-9257**	1	RING-PISTON (INTERMEDIATE)	
	9	1	**238-2717**	1	RING-PISTON-TOP	
	10	1	**3E-4352**	1	WASHER-HARD (8.8X20.5X2.5-MM THK)	
M	11	1	**8T-0100**	1	BOLT (M8X1.25X60-MM)	

A-NOT PART OF THIS GROUP
B-USE AS REQUIRED
C-CHANGE FROM PREVIOUS TYPE
M-METRIC PART
R-REMFG PART MAY BE AVAILABLE

238-2723 **PISTON & ROD GP** *(contd.)* **i03040868**

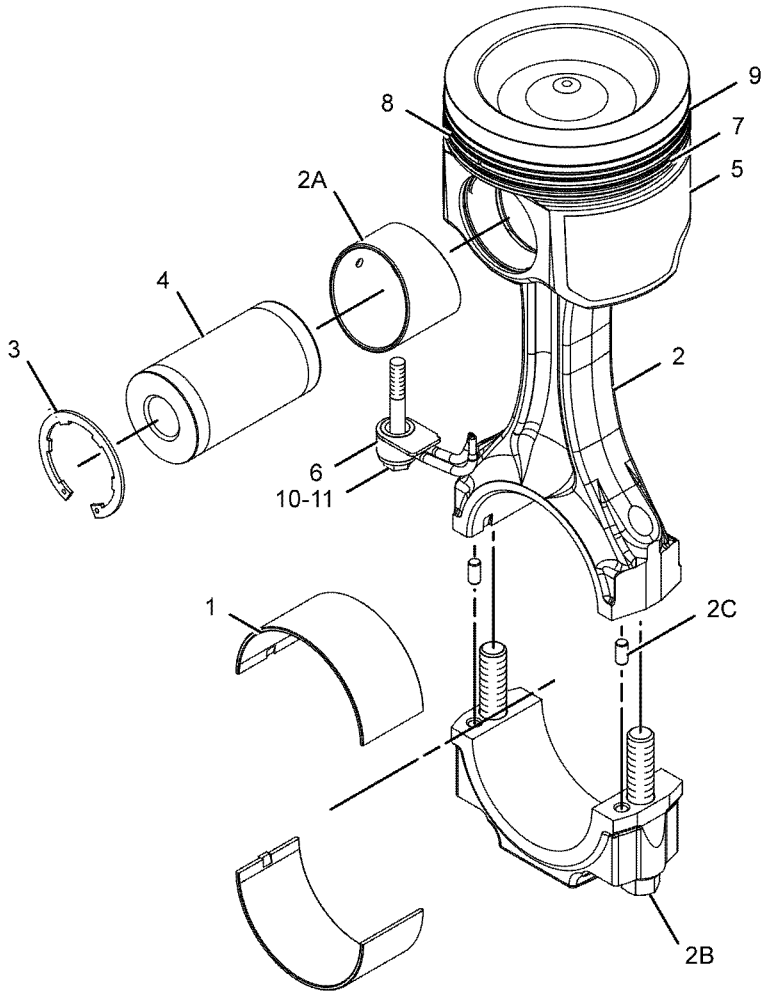

GRAPHIC #1 **<END>** g01071574

BASIC ENGINE

238-2723 PISTON & ROD GP

S/N: MHX11242-UP
17:1 COMBUSTION RATIO
PART OF 231-0877 ENGINE AR-CORE
AN ATTACHMENT

SMCS-1225 **i03898386**

NOTE	REF NO	GRAPHIC REF	PART NUMBER	QTY	PART NAME 1 2 3 4 5 6 (PRODUCT LEVEL)	SEE PAGE
	1	1	**292-0484**	1	BEARING-CONNECTING ROD (STANDARD)	
AB		1	**128-0395**		BEARING-CONNECTING ROD (0.51-MM US)	
AB		1	**128-0396**		BEARING-CONNECTING ROD (0.76-MM US)	
CR	2	1	**223-9150**	1	ROD AS-CONNECTING	
	2A	1	**115-2972**	1	BEARING-CONNECTING ROD	
M	2B	1	**115-2973**	2	BOLT-CONNECTING ROD	
	3	1	**197-9326**	2	RETAINER	
	4	1	**197-9327**	1	PIN-PISTON	
	5	1	**322-0329**	1	BODY AS-PISTON	
C	6	1	**276-7222**	1	TUBE AS-OIL JET	
	7	1	**265-1113**	1	RING-PISTON (OIL CONTROL)	
	8	1	**197-9257**	1	RING-PISTON (INTERMEDIATE)	
	9	1	**238-2717**	1	RING-PISTON-TOP	
	10	1	**3E-4352**	1	WASHER-HARD (8.8X20.5X2.5-MM THK)	
M	11	1	**8T-0100**	1	BOLT (M8X1.25X60-MM)	

A-NOT PART OF THIS GROUP
B-USE AS REQUIRED
C-CHANGE FROM PREVIOUS TYPE
M-METRIC PART
R-REMFG PART MAY BE AVAILABLE

238-2723 **PISTON & ROD GP** *(contd.)* **i03898386**

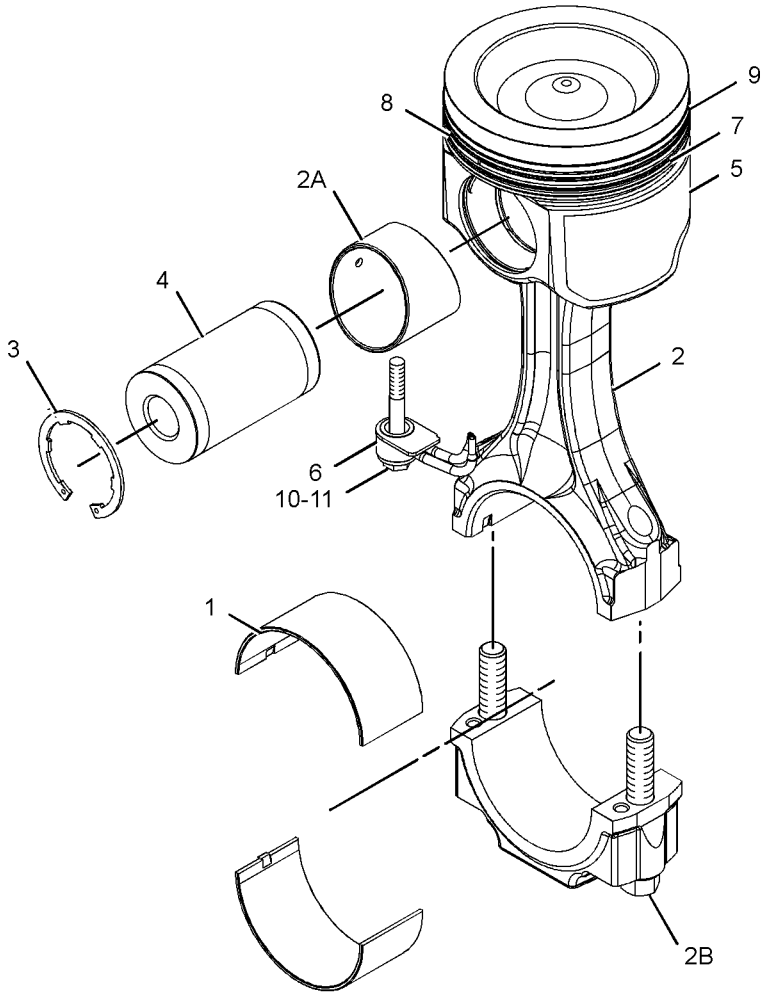

GRAPHIC #1 **<END>** g01199611

261-1506 PISTON & ROD GP

S/N: MHX9880-UP
12.5 LITER
PART OF 359-0362 ENGINE AR-CORE
ALSO AN ATTACHMENT

SMCS-1225 **i04020855**

NOTE	REF NO	GRAPHIC REF	PART NUMBER	QTY	PART NAME 1 2 3 4 5 6 (PRODUCT LEVEL)	SEE PAGE
	1	1	**292-0484**	1	BEARING-CONNECTING ROD	
AB		1	**128-0395**		BEARING-CONNECTING ROD (0.51-MM US)	
AB		1	**128-0396**		BEARING-CONNECTING ROD (0.76-MM US)	
	2	1	**300-3086**	1	RING-PISTON (INTERMEDIATE)	
	3	1	**197-9326**	2	RETAINER	
	4	1	**197-9327**	1	PIN-PISTON	
R	5	1	**223-9150**	1	ROD AS-CONNECTING	
	5A	1	**115-2972**	1	BEARING-CONNECTING ROD	
M	5B	1	**115-2973**	2	BOLT-CONNECTING ROD	
	6	1	**276-7222**	1	TUBE AS-OIL JET	
	7	1	**326-1352**	1	RING-PISTON-TOP	
	8	1	**265-1113**	1	RING-PISTON (OIL CONTROL)	
R	9	1	**322-0329**	1	BODY AS-PISTON	
	10	1	**3E-4352**	1	WASHER-HARD (8.8X20.5X2.5-MM THK)	
M	11	1	**8T-0100**	1	BOLT (M8X1.25X60-MM)	

A-NOT PART OF THIS GROUP
B-USE AS REQUIRED
M-METRIC PART
R-REMFG PART MAY BE AVAILABLE

261-1506 **PISTON & ROD GP** *(contd.)* **i04020855**

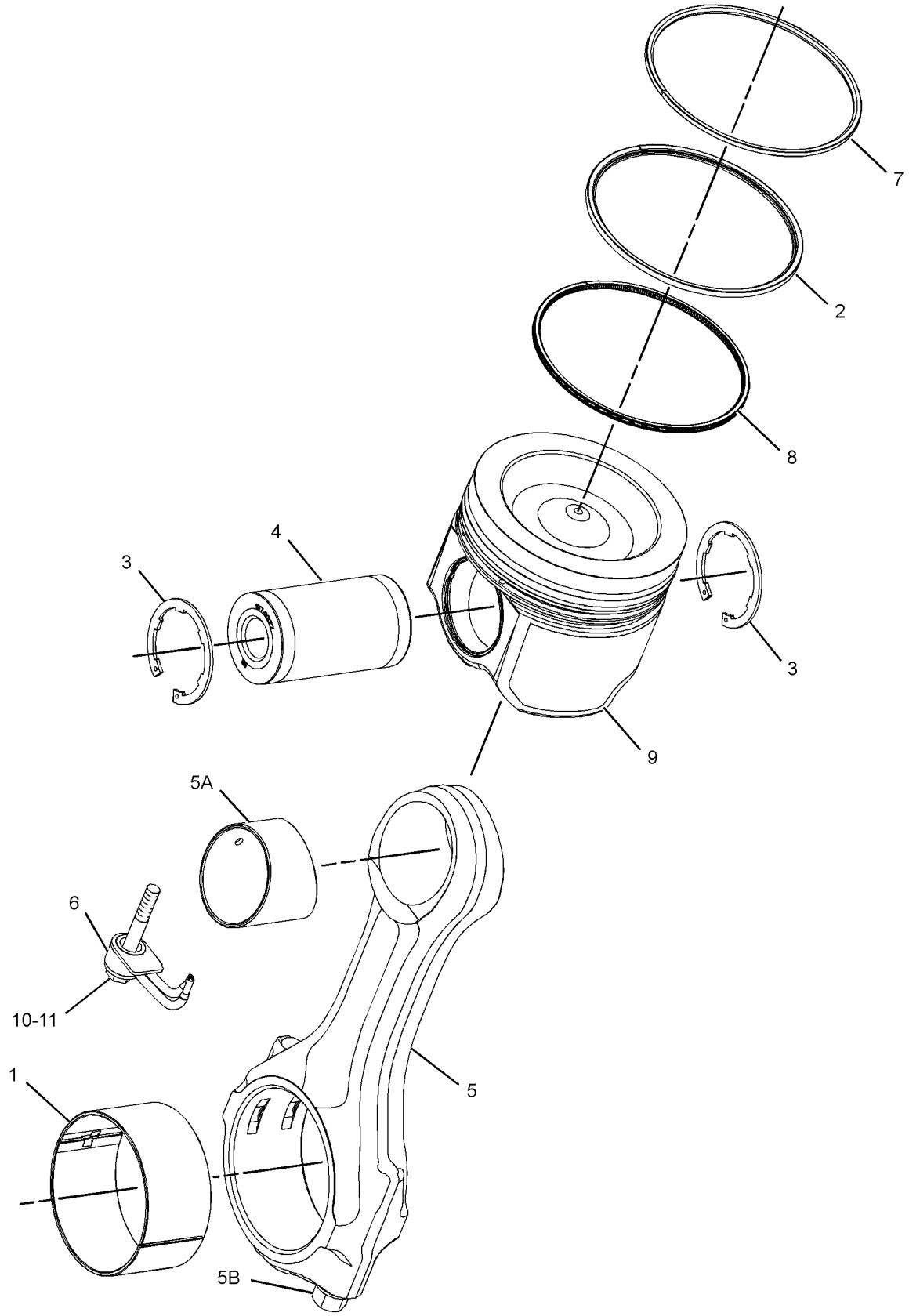

GRAPHIC #1 **<END>** g01172921

117-0165 PLUG GP-CYLINDER BLOCK–OIL GALLERY, END

S/N: MHX1214-UP

PART OF 227-5359, 231-0876, 349-4462 ENGINE AR-COMPLETE

ALSO AN ATTACHMENT

SMCS-1201 **i01534512**

NOTE	REF NO	GRAPHIC REF	PART NUMBER	QTY	PART NAME 1 2 3 4 5 6 (PRODUCT LEVEL)	SEE PAGE
	1	1	**3B-0623**	1	PLUG-CUP	

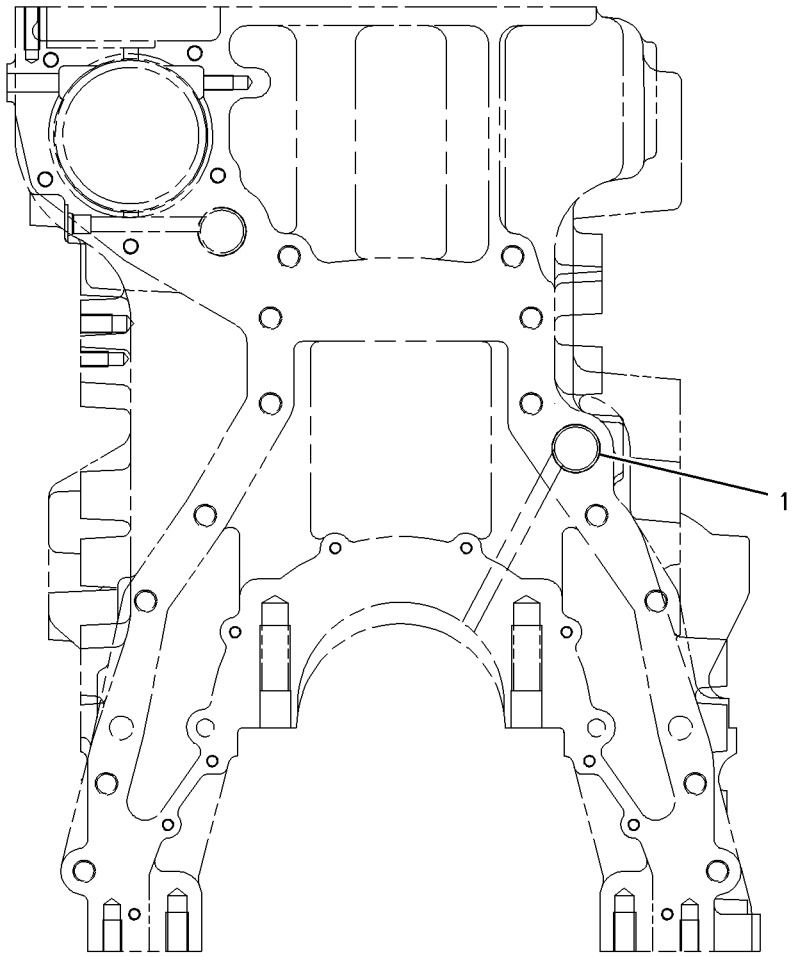

REAR VIEW

GRAPHIC #1 **<END>** g00796766

223-3875 PLUG GP-CYLINDER BLOCK

S/N: MHX1304-UP
PART OF 231-0876 ENGINE AR-COMPLETE, 231-0877, 267-0009, 286-5804, 301-2265 ENGINE AR-CORE
ALSO AN ATTACHMENT

SMCS-1201 **i03997500**

NOTE	REF NO	GRAPHIC REF	PART NUMBER	QTY	PART NAME 1 2 3 4 5 6 (PRODUCT LEVEL)	SEE PAGE
	1	1	*307-2671*	1	PLUG AS	
		1	**9S-8002**	1	PLUG-O-RING	
		1	**214-7566**	1	SEAL-O-RING	

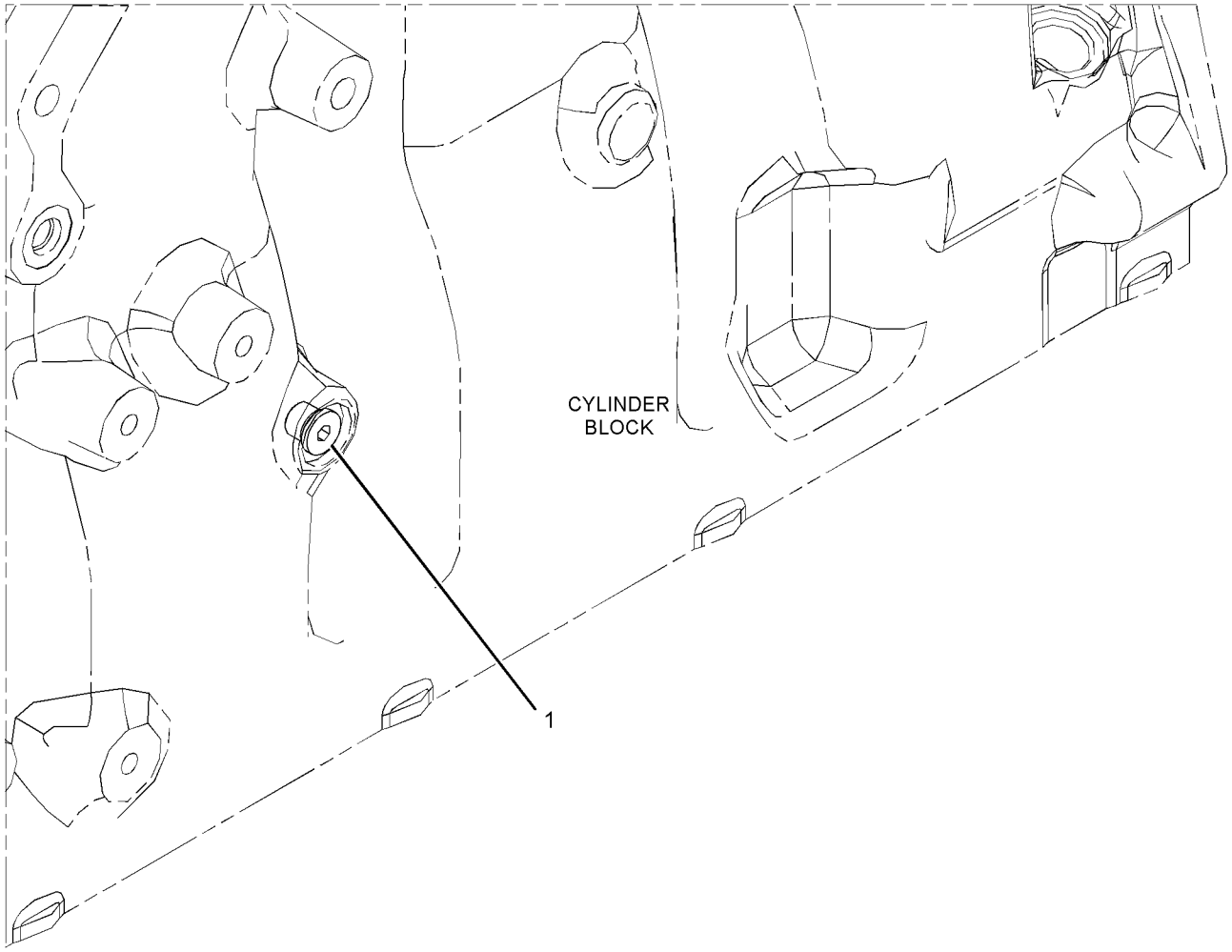

GRAPHIC #1 **<END>** g02218974

227-9545 PLUG GP-CYLINDER BLOCK–OIL GALLERY, RH

S/N: MHX1214-UP

PART OF 227-5359, 231-0876, 349-4462 ENGINE AR-COMPLETE

ALSO AN ATTACHMENT

SMCS-1201 **i03833947**

NOTE	REF NO	GRAPHIC REF	PART NUMBER	QTY	PART NAME 1 2 3 4 5 6 (PRODUCT LEVEL)	SEE PAGE
	1	1	*183-3407*	2	PLUG AS	
					(EACH INCLUDES)	
		1	**9S-8004**	1	PLUG-O-RING	
	1A	1	**214-7568**	1	SEAL-O-RING	
	2	1	*307-2673*	1	PLUG AS	
		1	**9S-8005**	1	PLUG-O-RING	
	2A	1	**238-5080**	1	SEAL-O-RING	

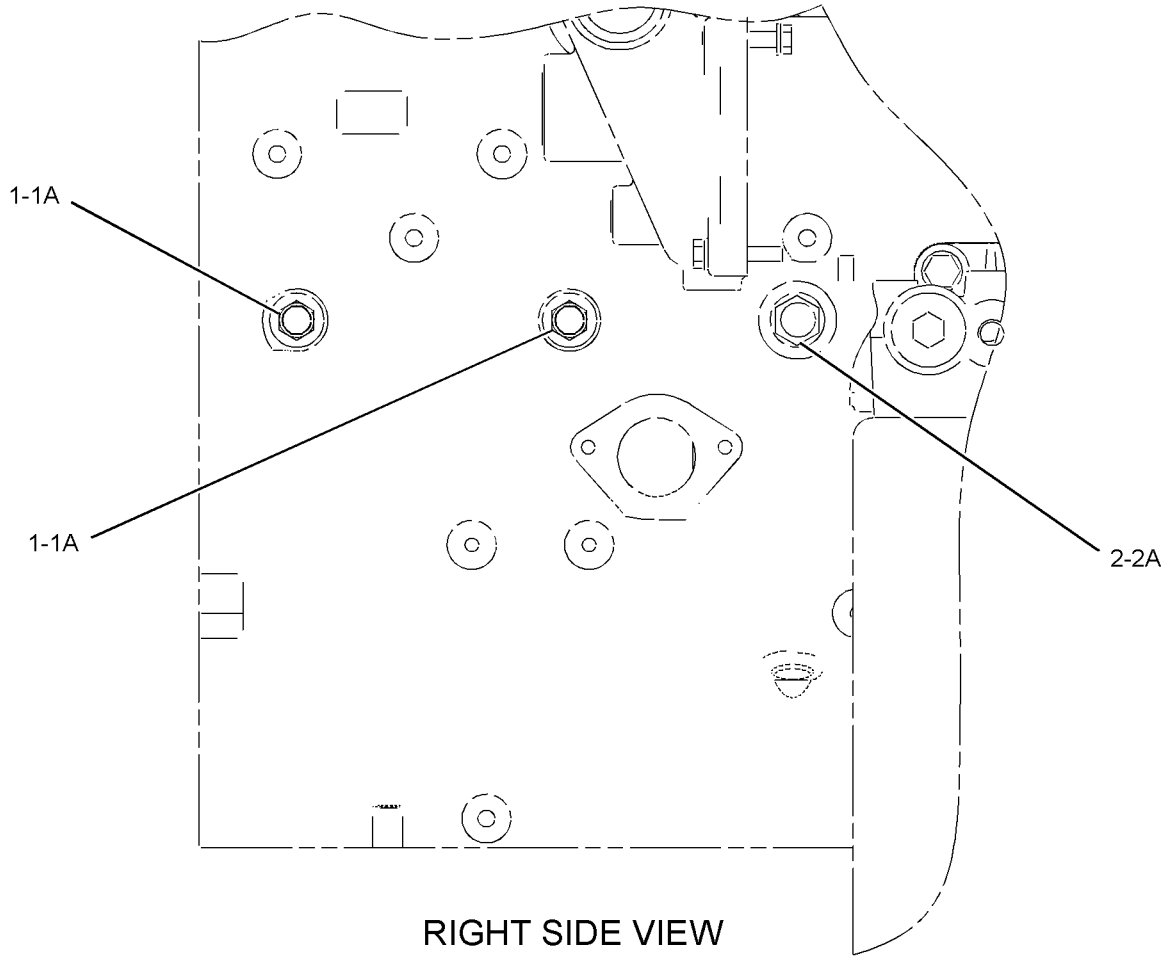

RIGHT SIDE VIEW

GRAPHIC #1 **<END>** g02083373

238-8962 PLUG GP-ENGINE

S/N: MHX1214-UP
PART OF 227-5359, 231-0876, 349-4462 ENGINE AR-COMPLETE
ALSO AN ATTACHMENT

SMCS-1000, 1201 **i02663350**

NOTE	REF NO	GRAPHIC REF	PART NUMBER	QTY	PART NAME 1 2 3 4 5 6 (PRODUCT LEVEL)	SEE PAGE
	1	1	**9L-8493**	1	CAP-FLARED	
	2	1	**3D-2824**	1	SEAL-O-RING	
	3	1	**6V-3251**	1	SEAL-O-RING	
	4	1	**6V-6609**	1	SEAL-O-RING	
	5	1	**9S-8005**	1	PLUG-O-RING	
	6	1	**9S-8006**	1	PLUG-O-RING	
	7	1	**9S-8008**	1	PLUG-O-RING	

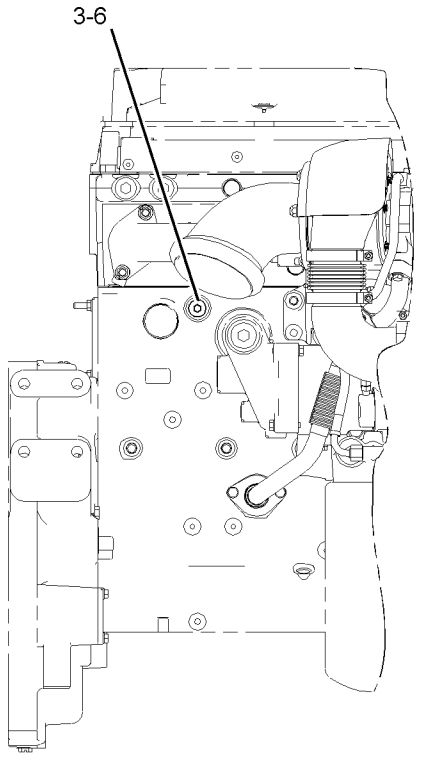

RIGHT SIDE VIEW

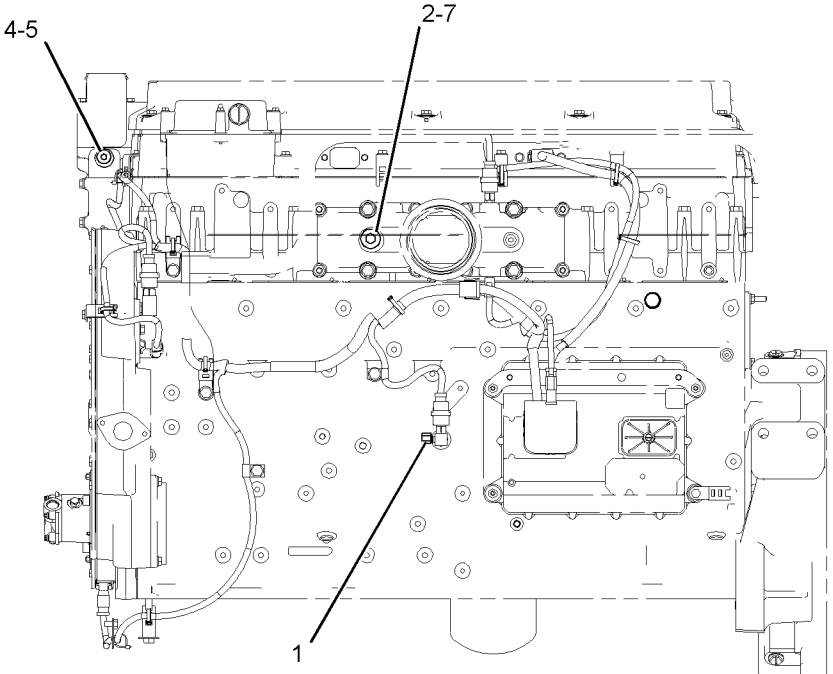

LEFT SIDE VIEW

GRAPHIC #1

<END>

g01061571

207-8103 PULLEY GP-CRANKSHAFT

S/N: MHX1214-UP
261.2MM DIAMETER, 8 GROOVE "K" SECTION
PART OF 227-5359, 231-0876, 349-4462 ENGINE AR-COMPLETE
FOR USE WITH ADAPTER OR FASTENER
ALSO AN ATTACHMENT

SMCS-1205 **i02144251**

NOTE	REF NO	GRAPHIC REF	PART NUMBER	QTY	PART NAME 1 2 3 4 5 6 (PRODUCT LEVEL)	SEE PAGE
	1	1	**207-8107**	1	PULLEY (8 GROOVE)	

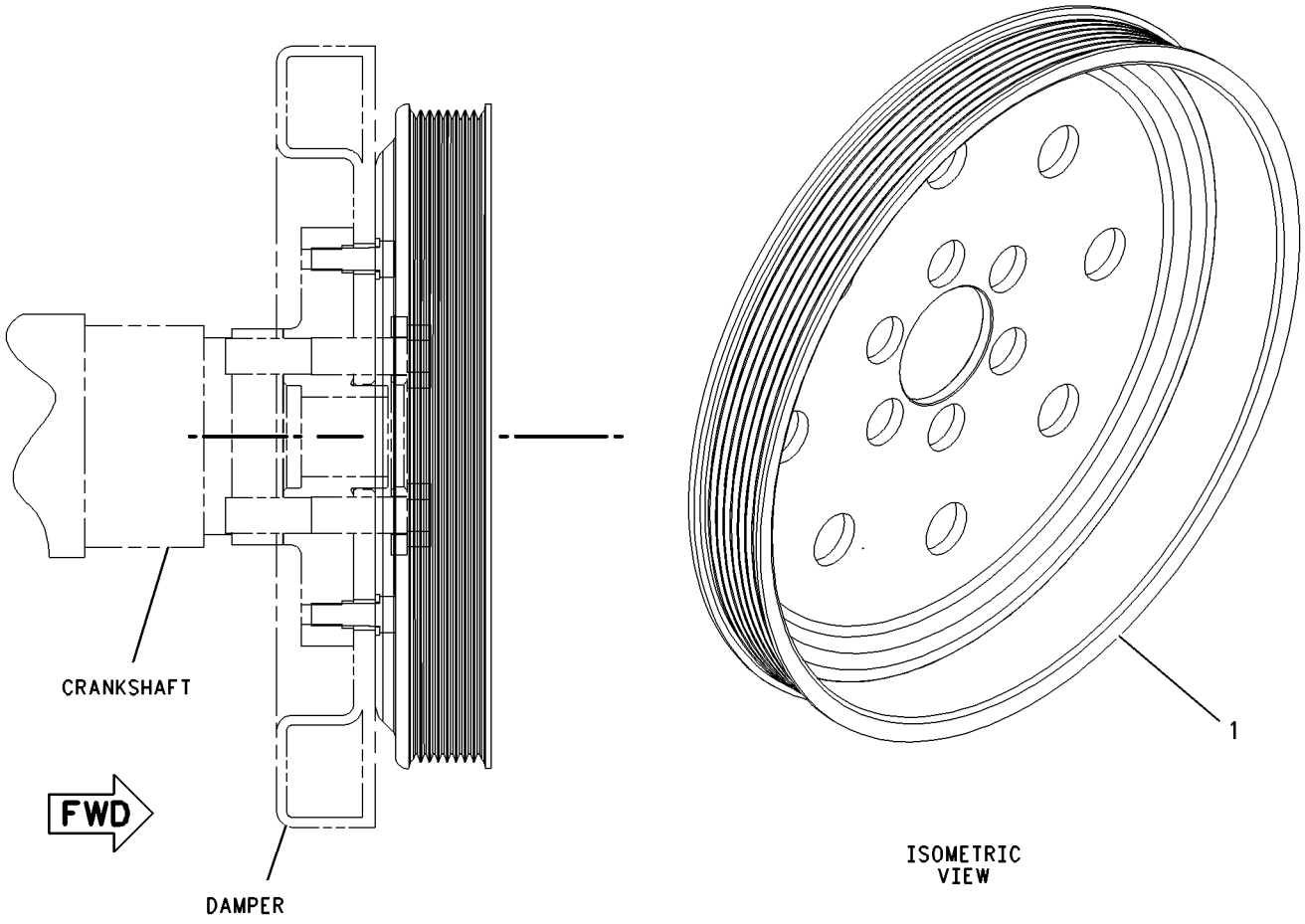

GRAPHIC #1 **<END>** g00951710

240-8461 ROCKER ARM GP–INLET

S/N: MHX1304-3401
PART OF 241-0835 ROCKER ARM GP
ALSO AN ATTACHMENT

SMCS-1102, 1123 **i02663353**

NOTE	REF NO	GRAPHIC REF	PART NUMBER	QTY	PART NAME 1 2 3 4 5 6 (PRODUCT LEVEL)	SEE PAGE
M	1	1	**183-4365**	1	SCREW-ADJUSTMENT (M10X1.5-THD)	
M	2	1	**2Y-5829**	1	NUT (M10X1.5-THD)	
R	3	1	**240-8460**	1	ROCKER ARM AS (INLET)	

M-METRIC PART
R-REMFG PART MAY BE AVAILABLE

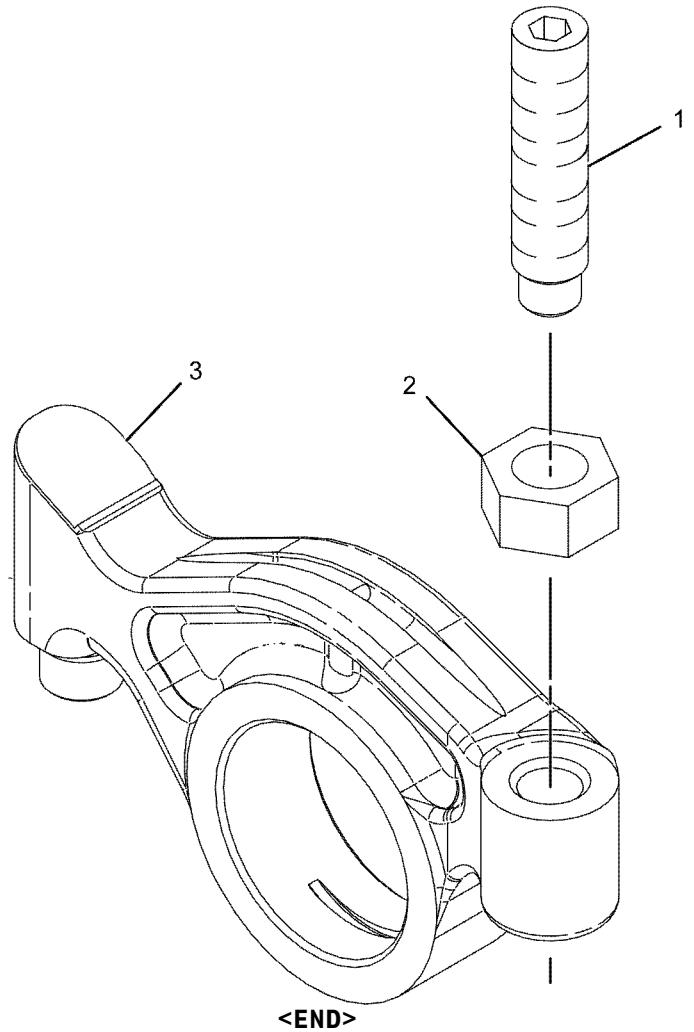

GRAPHIC #1 **<END>** g01030820

240-8463 ROCKER ARM GP–EXHAUST

S/N: MHX1304-3401
PART OF 241-0835 ROCKER ARM GP
ALSO AN ATTACHMENT

SMCS-1102, 1123 **i02663354**

NOTE	REF NO	GRAPHIC REF	PART NUMBER	QTY	PART NAME 1 2 3 4 5 6 (PRODUCT LEVEL)	SEE PAGE
M	1	1	**183-4365**	1	SCREW-ADJUSTMENT (M10X1.5-THD)	
R	2	1	**240-8462**	1	ROCKER ARM AS (EXHAUST)	
M	3	1	**2Y-5829**	1	NUT (M10X1.5-THD)	

M-METRIC PART
R-REMFG PART MAY BE AVAILABLE

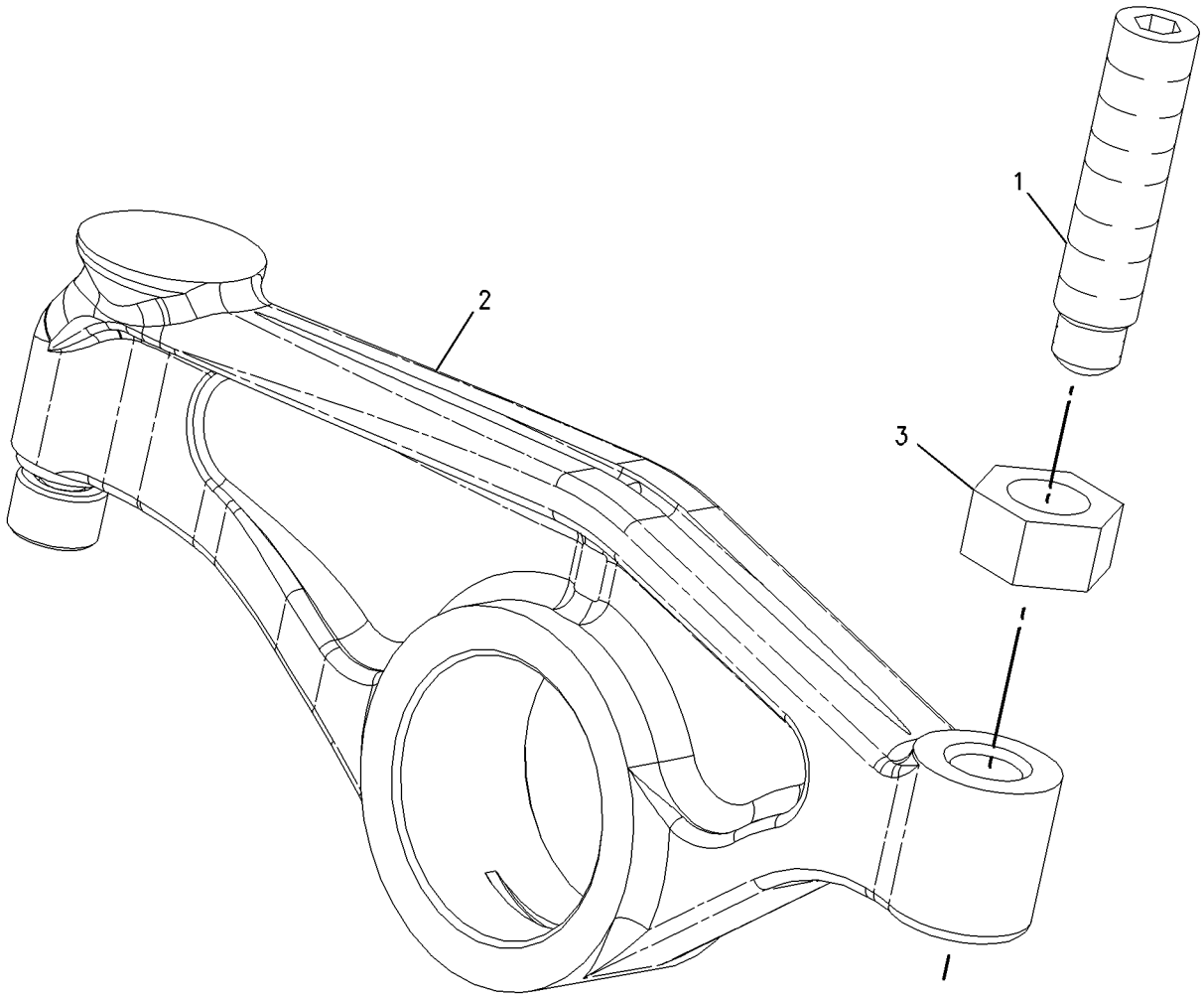

GRAPHIC #1 **<END>** g00956228

241-0835 ROCKER ARM GP

S/N: MHX1304-3401
PART OF 240-7272 VALVE MECHANISM GP
ALSO AN ATTACHMENT

SMCS-1102, 1123 **i02697818**

NOTE	REF NO	GRAPHIC REF	PART NUMBER	QTY	PART NAME 1 2 3 4 5 6 (PRODUCT LEVEL)	SEE PAGE
	1	1	**242-7418**	1	BASE	
	2	1	**242-1401**	2	BASE AS	
	3	1	**224-4418**	1	SHAFT AS	
		1	**3S-6605**	2	PLUG-CUP	
CY	4	1	*241-0845*	2	ROCKER ARM GP (UNIT INJECTOR)	90
Y	5	1	*240-8461*	2	ROCKER ARM GP (INLET)	87
Y	6	1	*240-8463*	2	ROCKER ARM GP (EXHAUST)	88
	7	1	**241-0847**	2	BOLT (M12X1.75X93-MM)	

C-CHANGE FROM PREVIOUS TYPE
Y-SEPARATE ILLUSTRATION

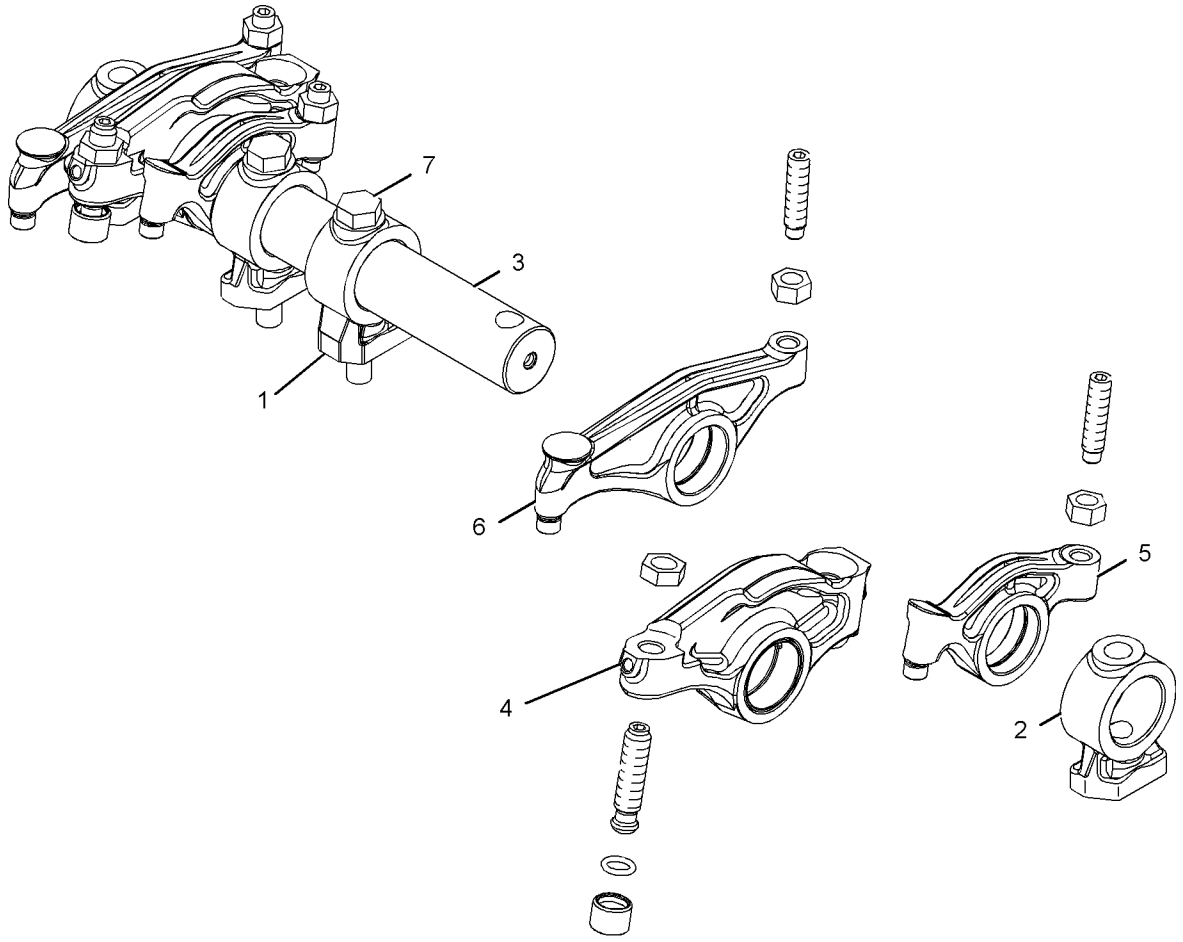

GRAPHIC #1 **<END>** g01083998

241-0845 ROCKER ARM GP–UNIT INJECTOR

S/N: MHX1304-3401
PART OF 241-0835 ROCKER ARM GP
ALSO AN ATTACHMENT

SMCS-1102, 1123 **i02364624**

NOTE	REF NO	GRAPHIC REF	PART NUMBER	QTY	PART NAME 1 2 3 4 5 6 (PRODUCT LEVEL)	SEE PAGE
	1	1	**258-8721**	1	BUTTON	
	2	1	**229-5279**	1	SCREW-ADJUSTMENT	
R	3	1	**241-0844**	1	ROCKER ARM AS (UNIT INJECTOR)	
		1	**2D-6642**	2	BALL	
	4	1	**8L-2777**	1	SEAL-O-RING	
	5	1	**245-6095**	1	NUT-HEX THIN (M12X1.5-THD)	

R-REMFG PART MAY BE AVAILABLE

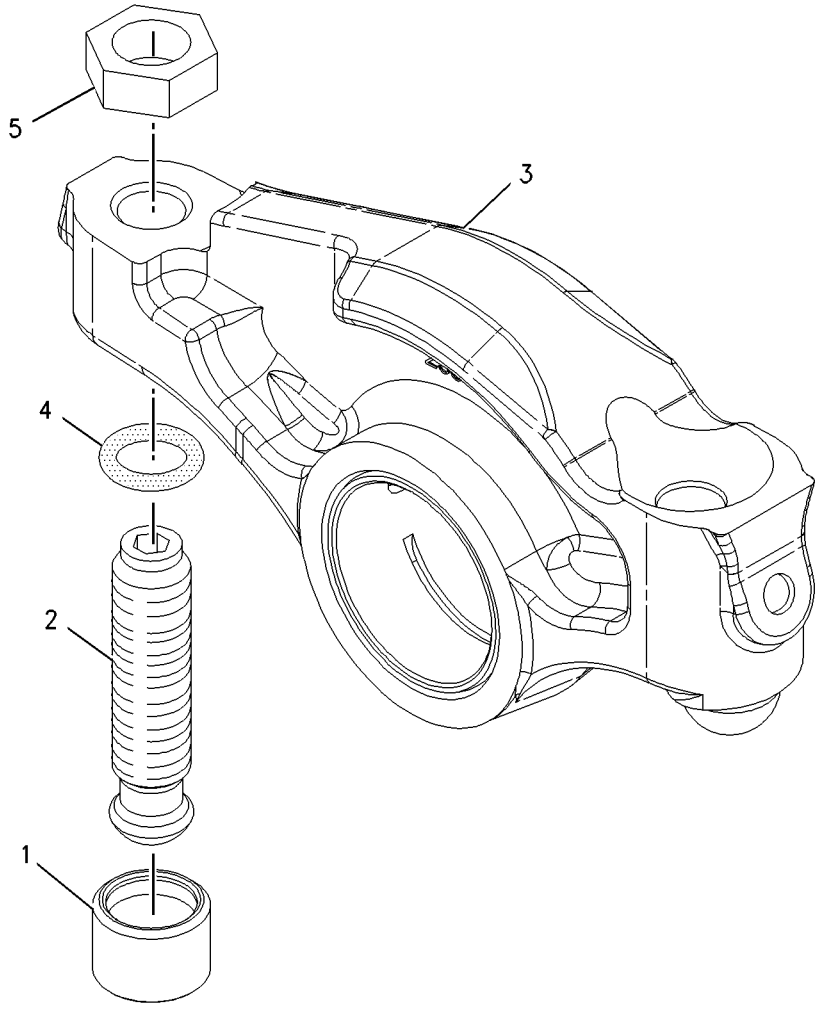

GRAPHIC #1 **<END>** g01007579

260-0251 ROCKER ARM GP–UNIT INJECTOR

S/N: MHX3402-UP
PART OF 260-0252 ROCKER ARM GP
ALSO AN ATTACHMENT

SMCS-1102, 1123 **i02343172**

NOTE	REF NO	GRAPHIC REF	PART NUMBER	QTY	PART NAME 1 2 3 4 5 6 (PRODUCT LEVEL)	SEE PAGE
	1	1	**258-8721**	1	BUTTON	
	2	1	**274-4490**	1	SCREW-ADJUSTMENT	
R	3	1	**260-0915**	1	ROCKER ARM AS (UNIT INJECTOR)	
		1	**2D-6642**	1	BALL	
	4	1	**8L-2777**	1	SEAL-O-RING	
	5	1	**245-6095**	1	NUT-HEX THIN (M12X1.5-THD)	

R-REMFG PART MAY BE AVAILABLE

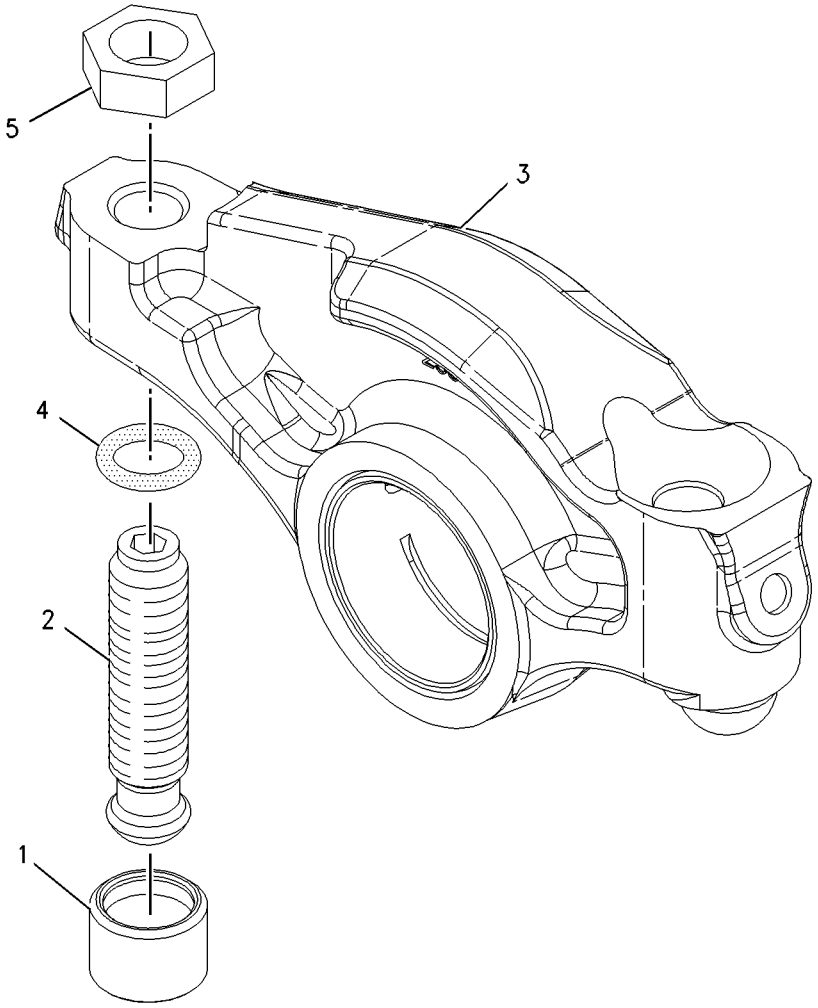

GRAPHIC #1 **<END>** g01007579

260-0252 ROCKER ARM GP

S/N: MHX3402-UP
PART OF 240-7272 VALVE MECHANISM GP
ALSO AN ATTACHMENT

SMCS-1102, 1123 **i02667392**

NOTE	REF NO	GRAPHIC REF	PART NUMBER	QTY	PART NAME 1 2 3 4 5 6 (PRODUCT LEVEL)	SEE PAGE
	1	1	**224-4418**	1	SHAFT AS	
	1A	1	**3S-6605**	2	PLUG-CUP	
	2	1	**242-1401**	2	BASE AS	
	3	1	**242-7418**	1	BASE	
Y	4	1	*260-0251*	2	ROCKER ARM GP (UNIT INJECTOR)	91
Y	5	1	*261-2290*	2	ROCKER ARM GP (INLET)	93
Y	6	1	*261-2294*	2	ROCKER ARM GP (EXHAUST)	94
	7	1	**241-0847**	2	BOLT (M12X1.75X93-MM)	

Y-SEPARATE ILLUSTRATION

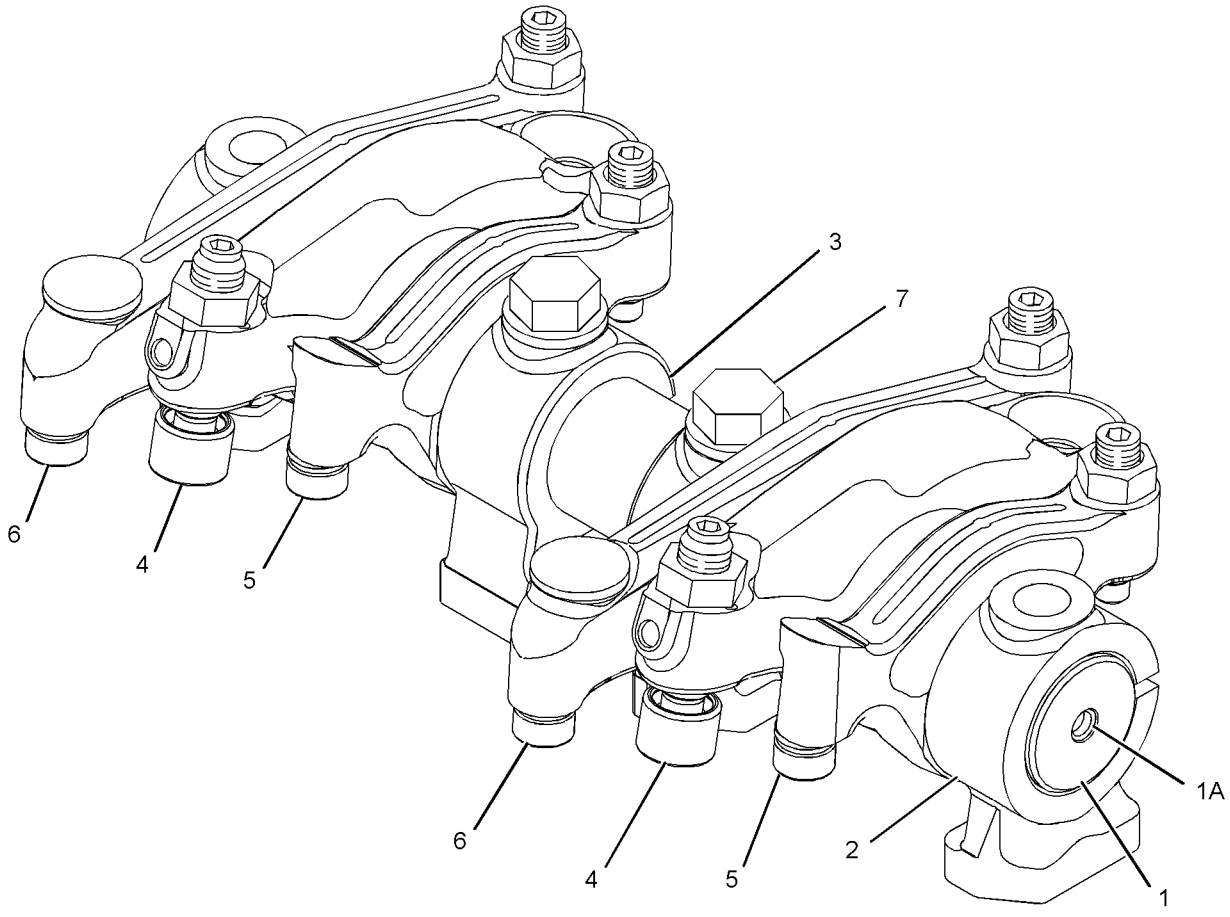

GRAPHIC #1 **<END>** g01207508

261-2290 ROCKER ARM GP–INLET

S/N: MHX3402-UP
PART OF 260-0252 ROCKER ARM GP
ALSO AN ATTACHMENT

SMCS-1102, 1123 **i02663355**

NOTE	REF NO	GRAPHIC REF	PART NUMBER	QTY	PART NAME 1 2 3 4 5 6 (PRODUCT LEVEL)	SEE PAGE
M	1	1	**260-7524**	1	SCREW-VALVE ADJUSTMENT (M10X1.5-THD)	
M	2	1	**2Y-5829**	1	NUT (M10X1.5-THD)	
R	3	1	**261-2291**	1	ROCKER ARM AS (INLET)	

M-METRIC PART
R-REMFG PART MAY BE AVAILABLE

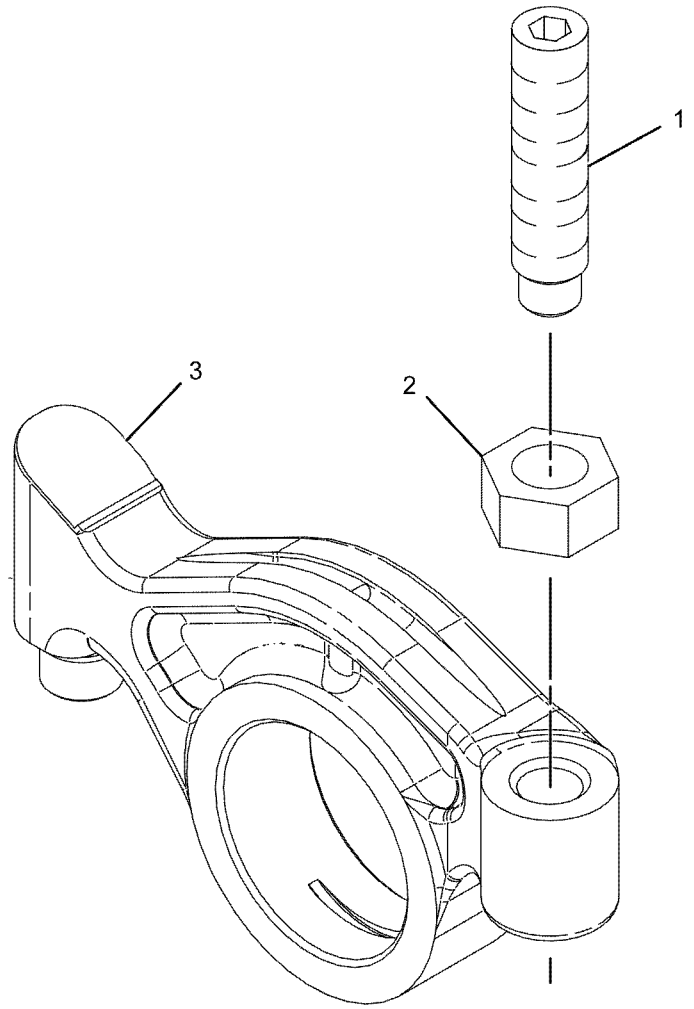

GRAPHIC #1 **<END>** g01030820

261-2294 ROCKER ARM GP–EXHAUST

S/N: MHX3402-UP
PART OF 260-0252 ROCKER ARM GP
ALSO AN ATTACHMENT

SMCS-1102, 1123 **i02663356**

NOTE	REF NO	GRAPHIC REF	PART NUMBER	QTY	PART NAME 1 2 3 4 5 6 (PRODUCT LEVEL)	SEE PAGE
M	1	1	**260-7524**	1	SCREW-VALVE ADJUSTMENT (M10X1.5-THD)	
R	2	1	**261-2293**	1	ROCKER ARM AS (EXHAUST)	
M	3	1	**2Y-5829**	1	NUT (M10X1.5-THD)	

M-METRIC PART
R-REMFG PART MAY BE AVAILABLE

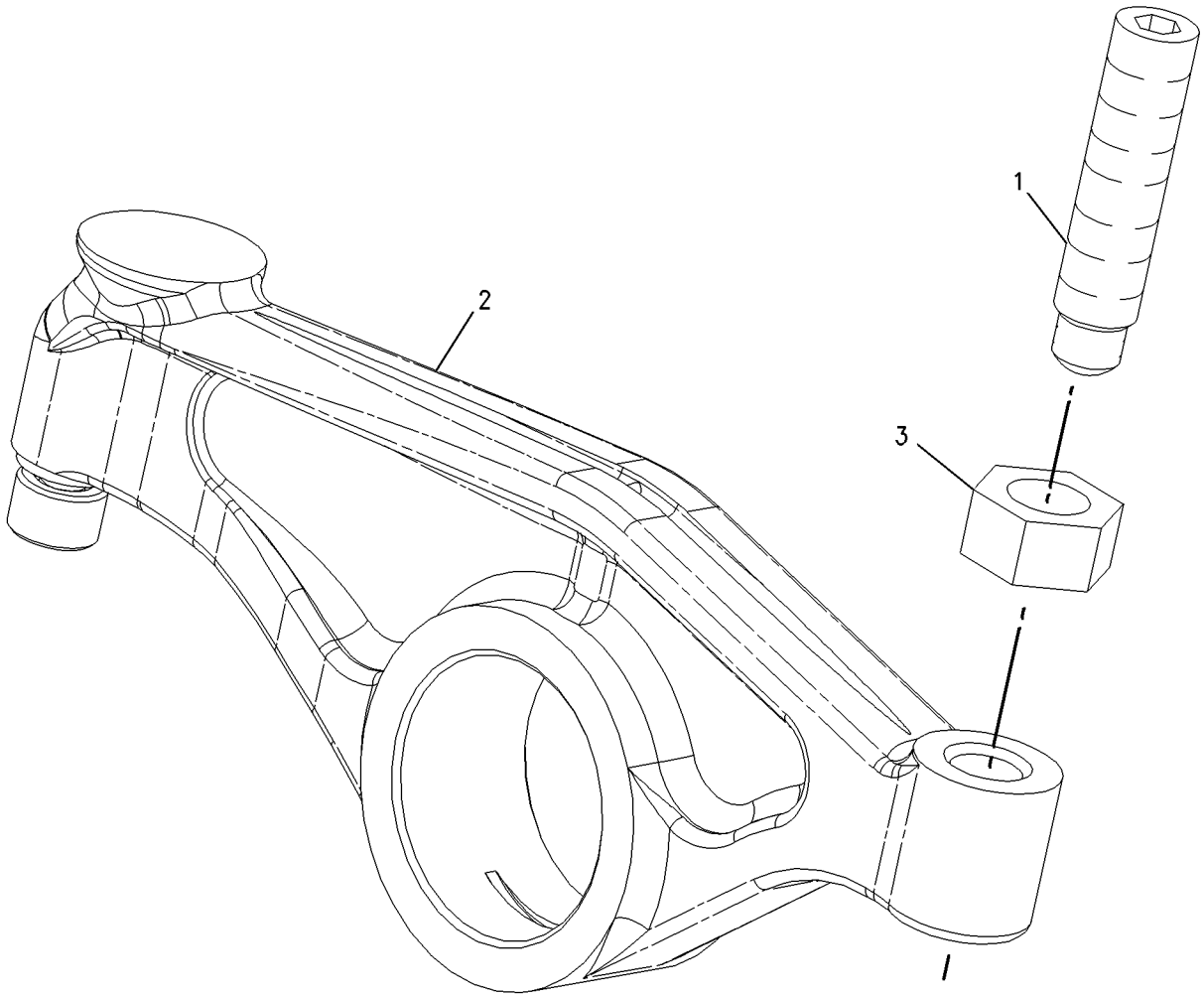

GRAPHIC #1 **<END>** g00956228

227-0838 SEAL GP-CRANKSHAFT–REAR

S/N: MHX1214-UP
COUNTER CLOCKWISE ROTATION
PART OF 238-2949, 277-4435 HOUSING GP-FLYWHEEL
ALSO AN ATTACHMENT

SMCS-1160, 1161 **i01891808**

NOTE	REF NO	GRAPHIC REF	PART NUMBER	QTY	PART NAME 1 2 3 4 5 6 (PRODUCT LEVEL)	SEE PAGE
	1	1	**100-5421**	1	SEAL GP-CRANKSHAFT	
	2	1	**107-6280**	1	SEAL-O-RING	

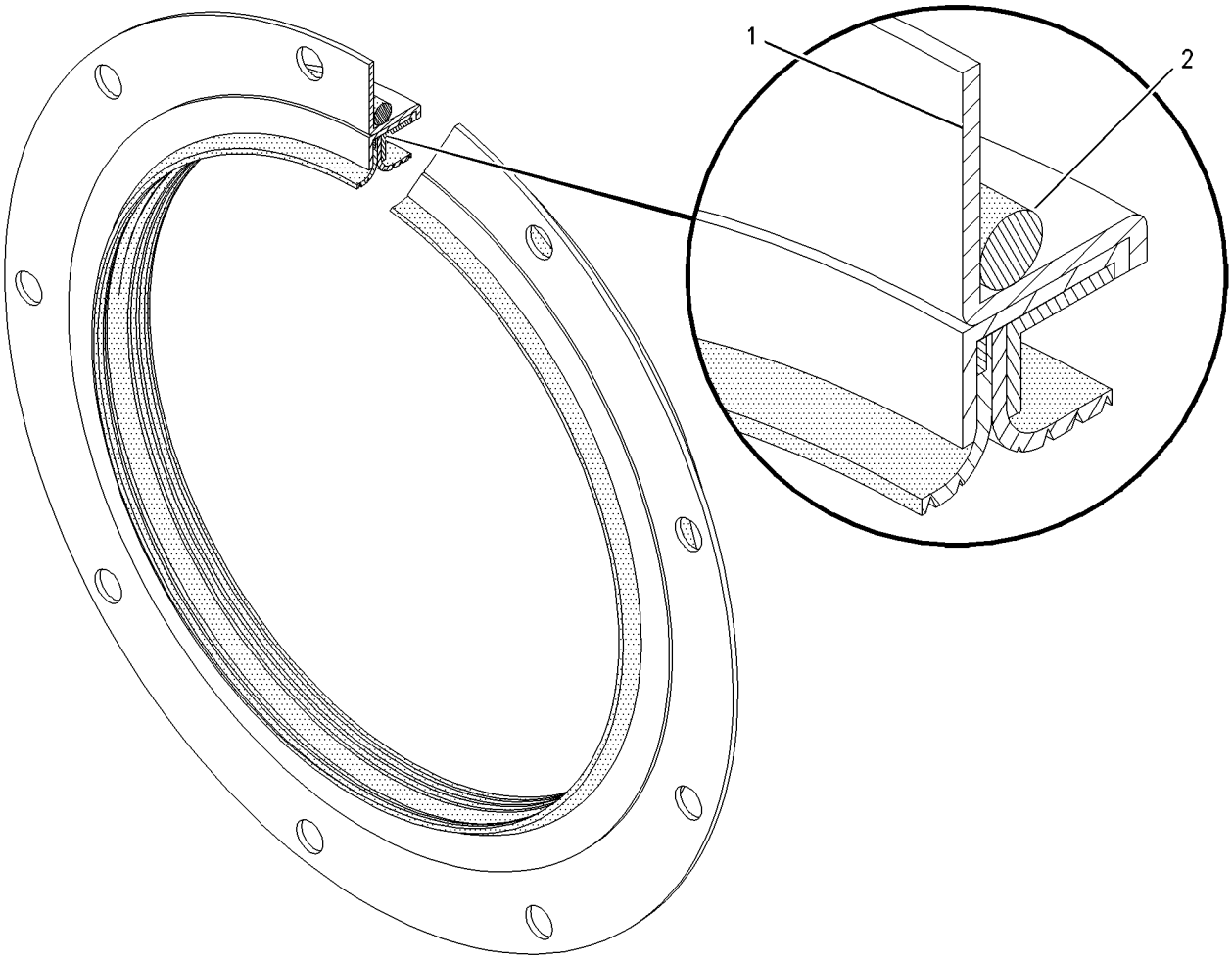

GRAPHIC #1 **<END>** g00985056

BASIC ENGINE

250-7017 SUPPORT GP-ENGINE

S/N: MHX1214-UP

PART OF 227-5359, 231-0876, 349-4462 ENGINE AR-COMPLETE

ALSO AN ATTACHMENT

SMCS-1152, 1153, 1154 **i02283874**

NOTE	REF NO	GRAPHIC REF	PART NUMBER	QTY	PART NAME 1 2 3 4 5 6 (PRODUCT LEVEL)	SEE PAGE
	1	1	**250-7012**	1	SUPPORT	
	2	1	**5P-8245**	8	WASHER-HARD (13.5X25.5X3-MM THK)	
M	3	1	**6V-5696**	8	BOLT (M12X1.75X80-MM)	

M-METRIC PART

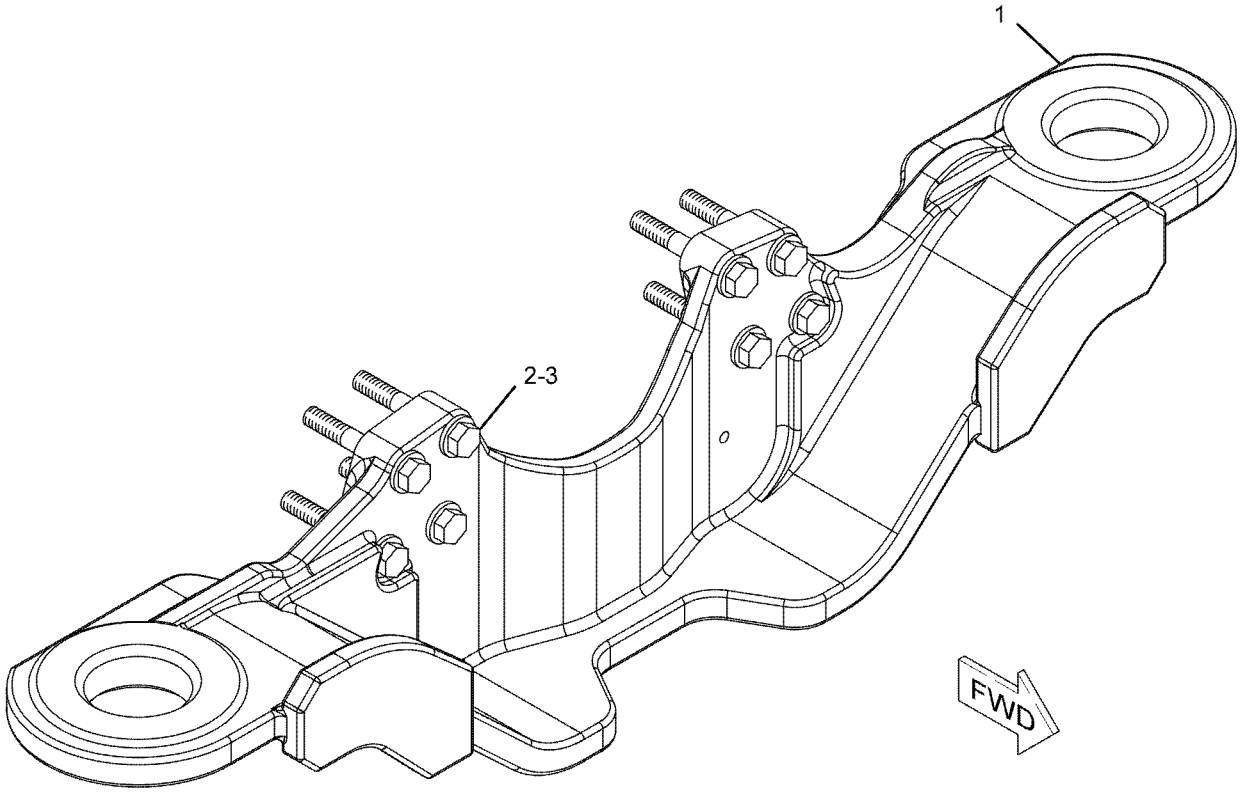

GRAPHIC #1 **<END>** g01143638

276-3165 SUPPRESSION GP-SOUND—REAR FRAME

S/N: R9H1-UP
PART OF 352-3815 OPTION AR-REGIONAL
FOR USE WITH 285-2259—PAGE 495
AN ATTACHMENT

SMCS-1801 **i02627912**

NOTE	REF NO	GRAPHIC REF	PART NUMBER	QTY	PART NAME 1 2 3 4 5 6 (PRODUCT LEVEL)	SEE PAGE
	1	1	**292-4819**	1	PLATE	
	2	1	**298-5444**	1	PLATE AS	
M		1	**8T-3612**	6	NUT-WELD (M8X1.25-THD)	
	3	1	**298-5446**	1	PLATE AS	
M		1	**8T-3612**	6	NUT-WELD (M8X1.25-THD)	
	4	1	**298-5447**	1	PLATE AS	
M		1	**8T-3490**	5	NUT-WELD (M10X1.5-THD)	
M		1	**8T-3612**	6	NUT-WELD (M8X1.25-THD)	
	5	1	**298-5448**	1	PLATE AS	
M		1	**8T-3490**	5	NUT-WELD (M10X1.5-THD)	
M		1	**8T-3612**	6	NUT-WELD (M8X1.25-THD)	
	6	1	**298-5455**	1	PLATE	
	7	1	**298-5456**	2	PLATE	
	8	1	**298-5458**	1	INSULATION	
	9	1	**298-7472**	1	PLATE	
	10	1	**298-7473**	1	PLATE	
	11	1	**298-7474**	1	PLATE	
	12	1	**299-3418**	1	INSULATION	
	13	1	**299-3419**	1	INSULATION	
	14	1	**299-3420**	1	INSULATION	
	15	1	**299-3421**	1	INSULATION	
	16	1	**299-3422**	1	INSULATION	
	17	1	**5P-1076**	4	WASHER-HARD (13.5X30X4-MM THK)	
	18	1	**5P-4116**	24	WASHER-HARD (8.8X20.5X2-MM THK)	
	19	1	**7X-7729**	26	WASHER (11X25X3-MM THK)	
M	20	1	**8T-4136**	16	BOLT (M10X1.5X25-MM)	
M	21	1	**8T-4189**	12	BOLT (M8X1.25X20-MM)	
M	22	1	**8T-4195**	10	BOLT (M10X1.5X30-MM)	
M	23	1	**8T-4908**	12	BOLT (M8X1.25X25-MM)	
M	24	1	**8T-4956**	4	BOLT (M12X1.75X35-MM)	

M-METRIC PART

276-3165 **SUPPRESSION GP-SOUND** *(contd.)* **i02627912**

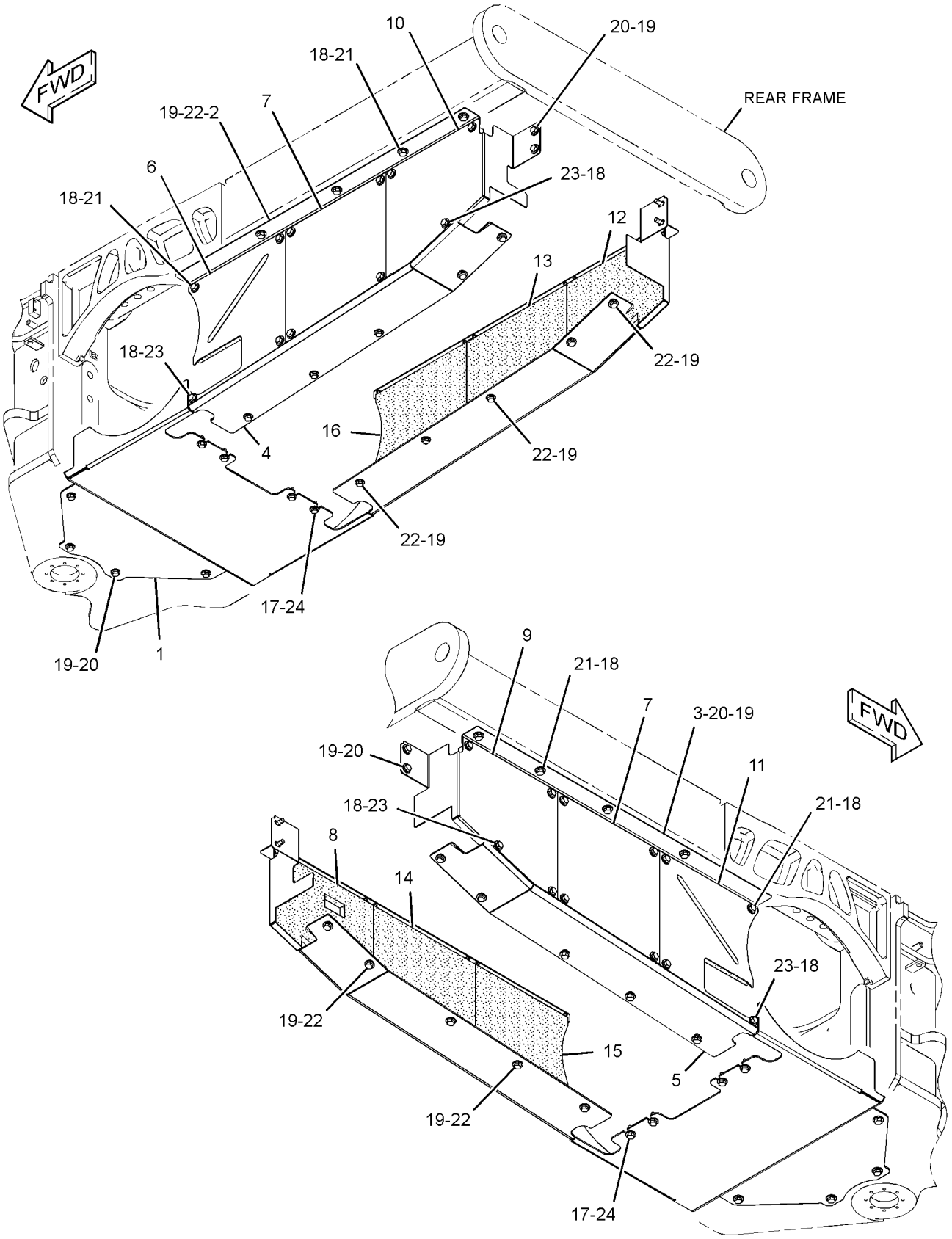

GRAPHIC #1 **<END>** g01318556

240-7272 VALVE MECHANISM GP

S/N: MHX1304-3401
PART OF 231-0877, 267-0009 ENGINE AR-CORE
ALSO AN ATTACHMENT

SMCS-1102 **i02663383**

NOTE	REF NO	GRAPHIC REF	PART NUMBER	QTY	PART NAME 1 2 3 4 5 6 (PRODUCT LEVEL)	SEE PAGE
	1	1	**224-3117**	6	PUSHROD (INJECTOR)	
Y	2	1	*241-0835*	3	ROCKER ARM GP	89
Y	3	1	*237-4376*	1	LIFTER GP-VALVE (MECHANISM)	65
	4	1	**237-6469**	12	PUSHROD-VALVE	
	5	1	**237-7253**	12	BRIDGE-VALVE	

Y-SEPARATE ILLUSTRATION

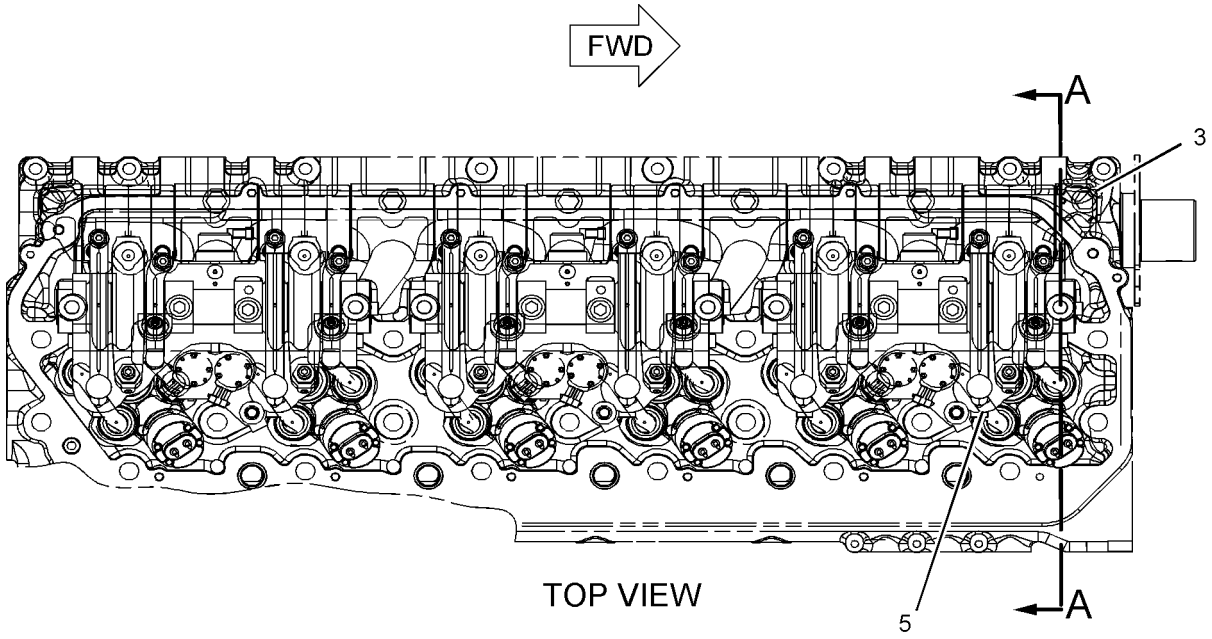

TOP VIEW

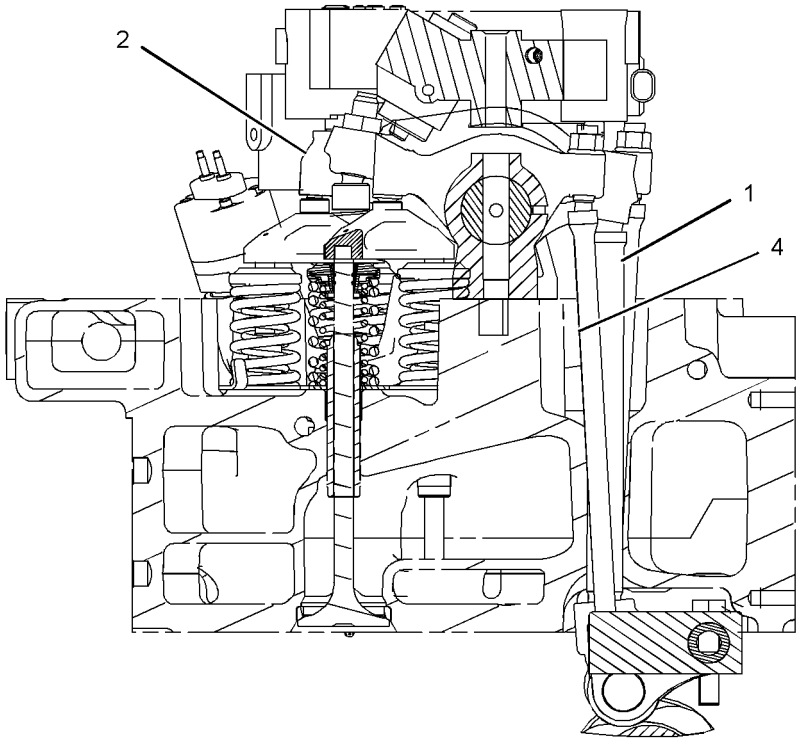

VIEW A-A

GRAPHIC #1 **<END>** g01017512

240-7272 VALVE MECHANISM GP

S/N: MHX3402-UP

PART OF 231-0877, 267-0009, 286-5804, 301-2265, 359-0362 ENGINE AR-CORE

ALSO AN ATTACHMENT

SMCS-1102 **i03493686**

NOTE	REF NO	GRAPHIC REF	PART NUMBER	QTY	PART NAME 1 2 3 4 5 6 (PRODUCT LEVEL)	SEE PAGE
	1	1	**319-0271**	6	PUSHROD-INJECTOR	
Y	2	1	*237-4376*	1	LIFTER GP-VALVE (MECHANISM)	65
	3	1	**319-0270**	12	PUSHROD-VALVE	
	4	1	**237-7253**	12	BRIDGE-VALVE	
CY	5	1	*260-0252*	3	ROCKER ARM GP	92

C-CHANGE FROM PREVIOUS TYPE
Y-SEPARATE ILLUSTRATION

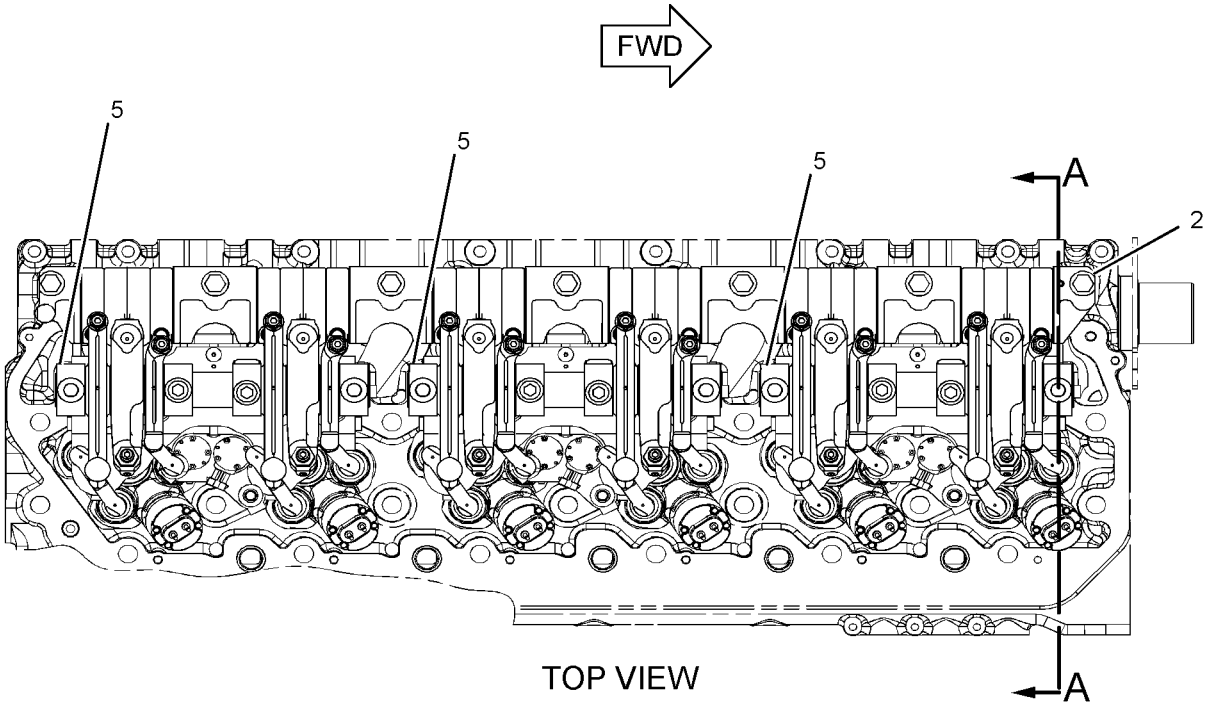

TOP VIEW

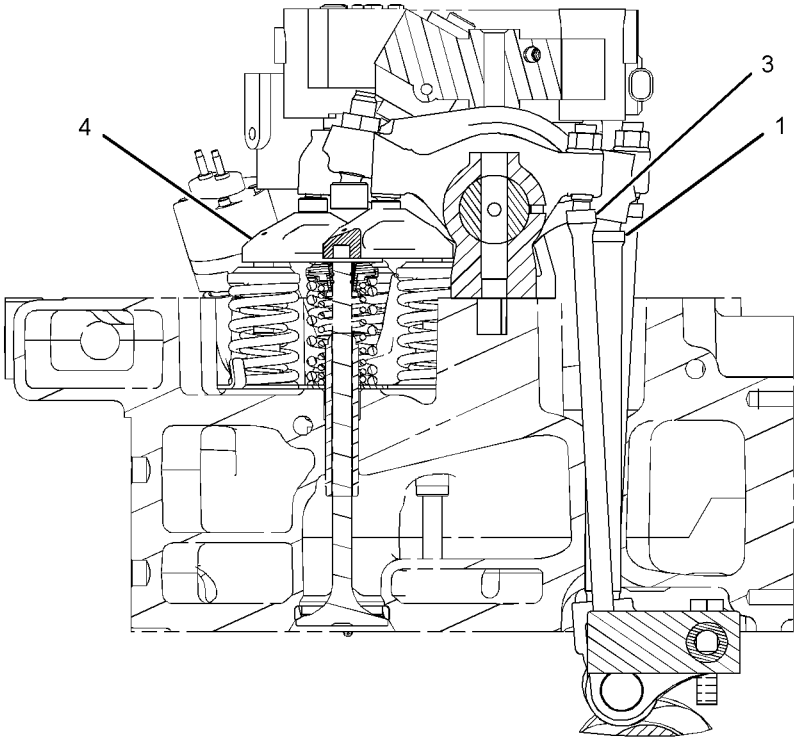

SECTION A-A

GRAPHIC #1 **<END>** g01291144

247-9664 BASE GP-OIL FILTER–ENGINE

S/N: MHX1304-UP

PART OF 247-9665 BASE GP-OIL FILTER

ALSO AN ATTACHMENT

SMCS-1306, 751F **i04001240**

NOTE	REF NO	GRAPHIC REF	PART NUMBER	QTY	PART NAME 1 2 3 4 5 6 (PRODUCT LEVEL)	SEE PAGE
	1	1	**4N-8150**	2	SPRING	
	2	1	**7C-3081**	1	SPACER (6.88X9.53X50-MM THK)	
	3	1	**7C-3082**	1	RETAINER	
	4	1	**7C-3083**	1	SEAT-RELIEF VALVE SPRING	
	5	1	**7C-3954**	1	SPRING AS	
	6	1	**8C-3445**	1	CAP-DUST	
	7	1	**9M-0853**	2	PLUNGER-VALVE	
	8	1	**224-3405**	1	VALVE AS (OIL PUMP BYPASS)	
	9	1	**251-6668**	1	BASE AS	
		1	**2P-4304**	1	STUD-HOLLOW	
		1	**3B-0623**	1	PLUG-CUP	
		1	**3P-1896**	2	PLUG-CUP	
		1	**7W-6390**	1	STUD-FILTER BASE	
	10	1	**1A-2170**	1	SPRING-RETAINER	
	11	1	**321-8649**	1	VALVE AS-FLUID SAMPLING (ENGINE OIL)	
	11A	1	**214-7566**	1	SEAL-O-RING	
		1	**8C-3446**	1	VALVE-FLUID SAMPLING (ENGINE OIL)	
	12	1	*183-3407*	1	PLUG AS	
	12A	1	**214-7568**	1	SEAL-O-RING	
		1	**9S-8004**	1	PLUG-O-RING	
	13	1	*319-6234*	3	PLUG AS	
					(EACH INCLUDES)	
	13A	1	**238-5084**	1	SEAL-O-RING	
		1	**9S-9334**	1	PLUG-O-RING	
M	14	1	**6V-8359**	1	BOLT (M6X1X70-MM)	

M-METRIC PART

247-9664 **BASE GP-OIL FILTER** *(contd.)* **i04001240**

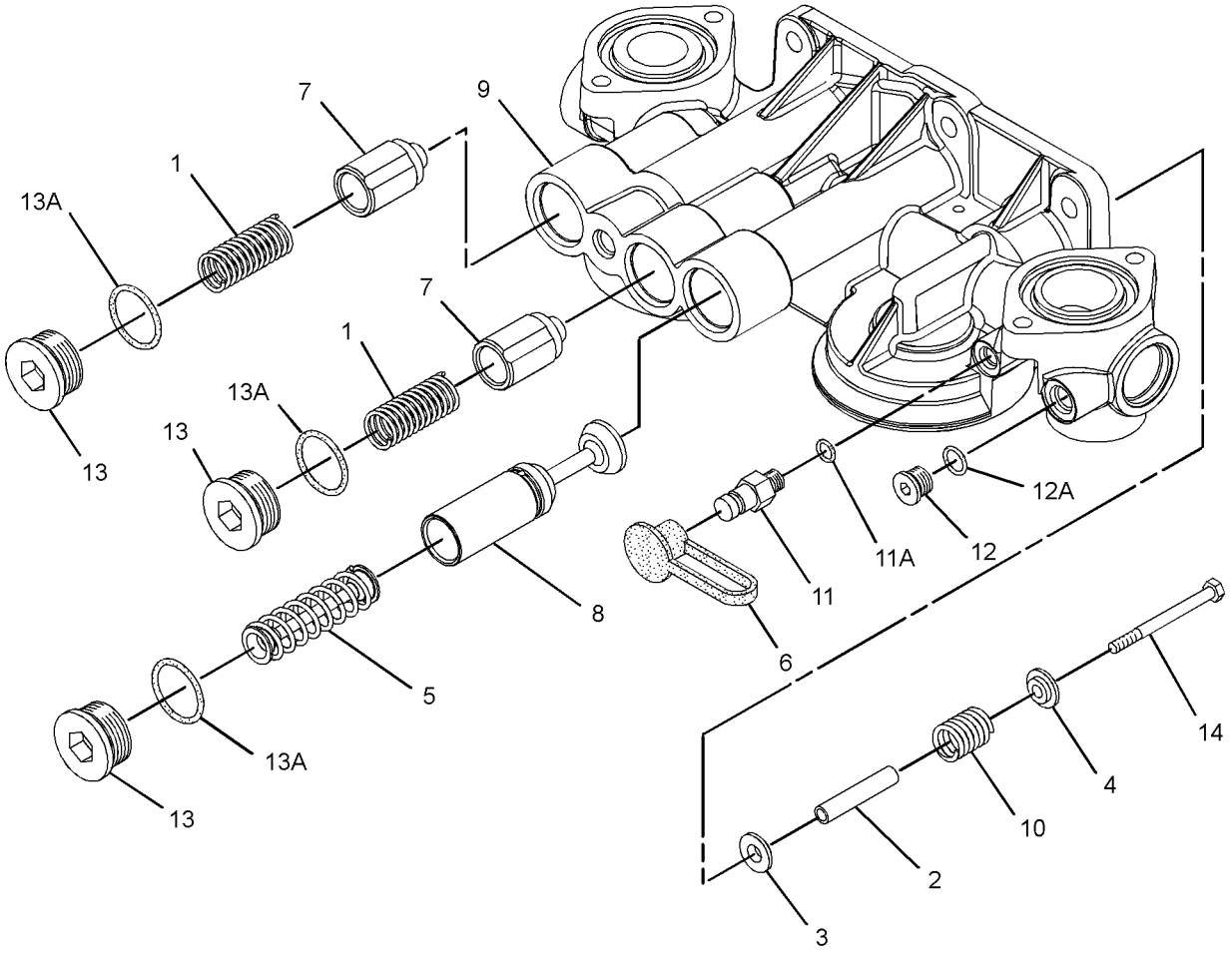

GRAPHIC #1 **<END>** g02235993

247-9665 BASE GP-OIL FILTER–ENGINE

S/N: MHX1304-UP
PART OF 227-5359, 231-0876, 349-4462 ENGINE AR-COMPLETE
CANNOT BE USED WITH RH STARTER GPS
ALSO AN ATTACHMENT

SMCS-1306, 751F **i03997505**

NOTE	REF NO	GRAPHIC REF	PART NUMBER	QTY	PART NAME 1 2 3 4 5 6 (PRODUCT LEVEL)	SEE PAGE
M	1	1	**134-5245**	6	BOLT (M10X1.5X30-MM)	
	2	1	**227-4892**	1	GASKET	
Y	3	1	*247-9664*	1	BASE GP-OIL FILTER (ENGINE)	103
	4	1	**113-5304**	2	SEAL-O-RING	
	5	1	**6V-5839**	6	WASHER (11X21X2.5-MM THK)	

M-METRIC PART
Y-SEPARATE ILLUSTRATION

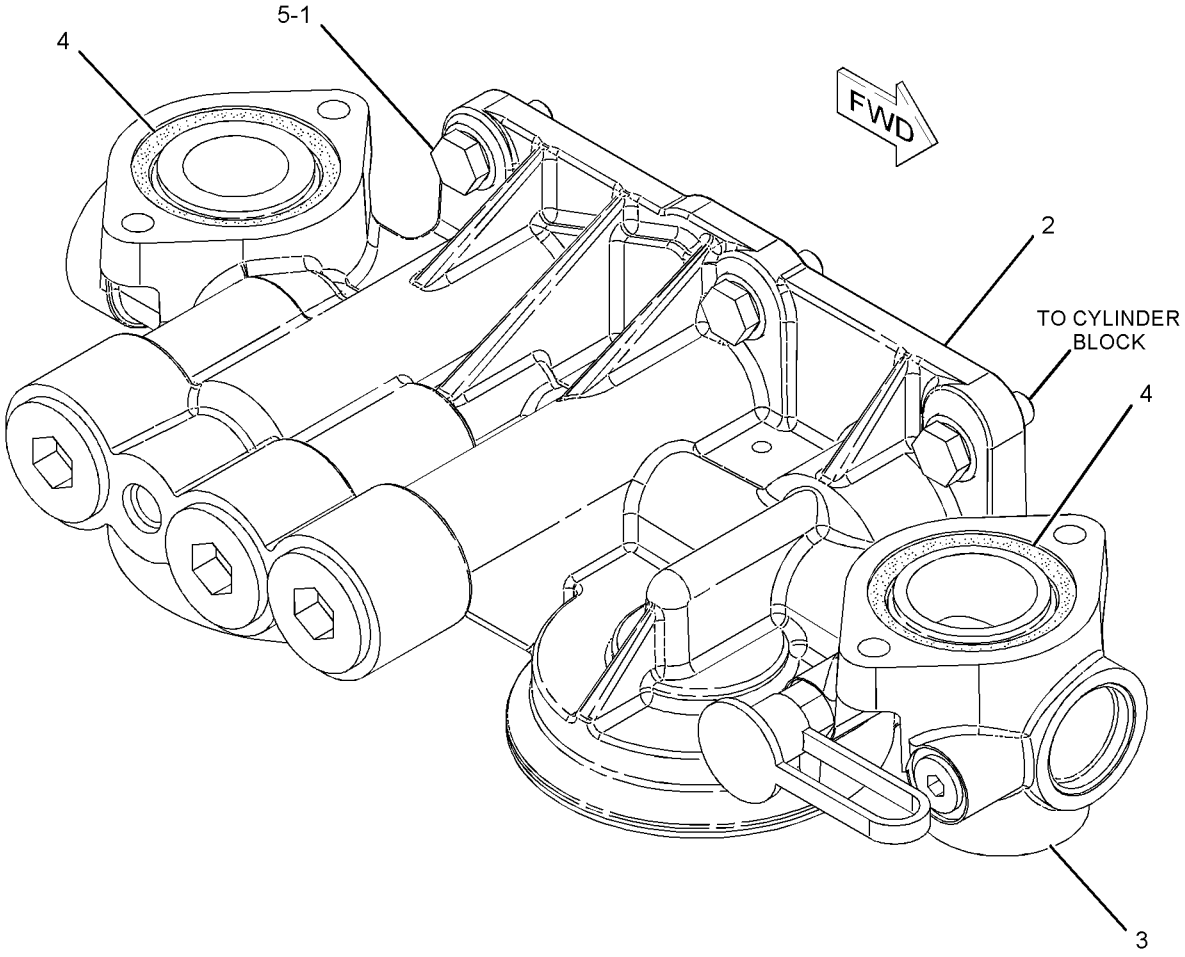

GRAPHIC #1 **<END>** g01118311

267-0007 BREATHER GP–CRANKCASE

S/N: MHX2761-UP
SHORT
PART OF 227-5359, 231-0876, 349-4462 ENGINE AR-COMPLETE
ALSO AN ATTACHMENT

SMCS-1317 **i02285535**

NOTE	REF NO	GRAPHIC REF	PART NUMBER	QTY	PART NAME 1 2 3 4 5 6 (PRODUCT LEVEL)	SEE PAGE
	1	1	**9Y-1758**	1	GASKET (CRANKCASE BREATHER)	
	2	1	**9Y-4357**	1	BREATHER AS (CRANKCASE)	
M	3	1	**8T-0275**	4	BOLT (M6X1X50-MM)	
	4	1	**9X-8267**	4	WASHER (6.6X12X2-MM THK)	

M-METRIC PART

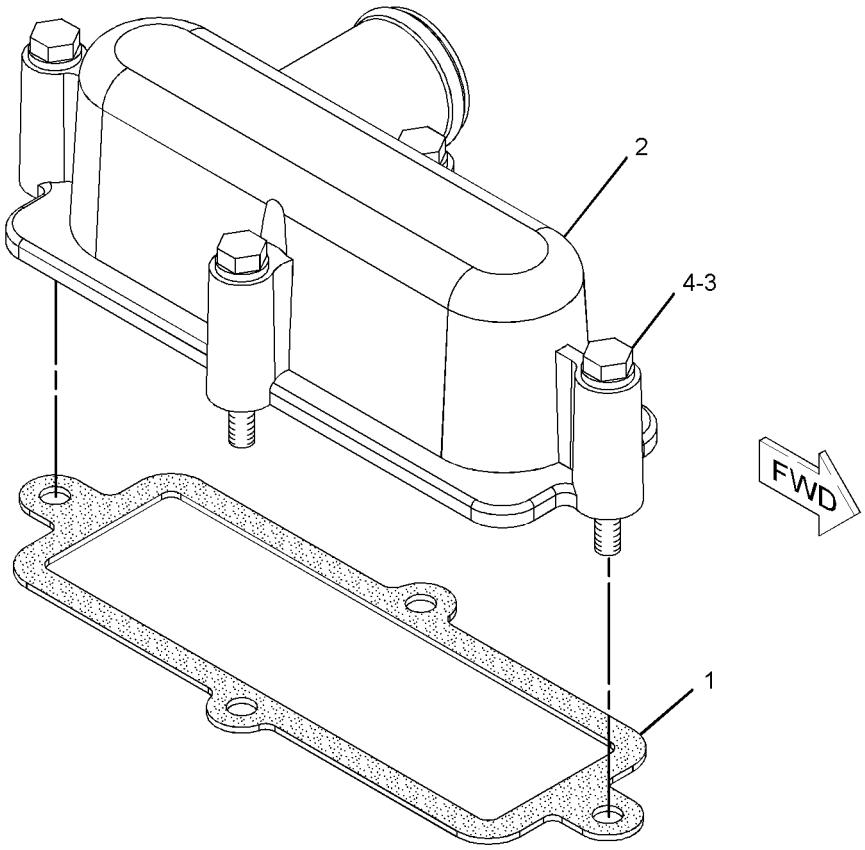

GRAPHIC #1 **<END>** g01145028

267-0008 BREATHER GP–CRANKCASE

S/N: MHX1214-2760
TALL
PART OF 227-5359, 231-0876 ENGINE AR-COMPLETE
ALSO AN ATTACHMENT

SMCS-1317 **i02284649**

NOTE	REF NO	GRAPHIC REF	PART NUMBER	QTY	PART NAME 1 2 3 4 5 6 (PRODUCT LEVEL)	SEE PAGE
	1	1,1	**9Y-1758**	2	GASKET (CRANKCASE BREATHER)	
	2	1	**9Y-4357**	1	BREATHER AS (CRANKCASE)	
	3	1	**221-3934**	1	SPACER	
M	4	1	**6V-8359**	4	BOLT (M6X1X70-MM)	
	5	1	**9X-8267**	4	WASHER (6.6X12X2-MM THK)	

M-METRIC PART

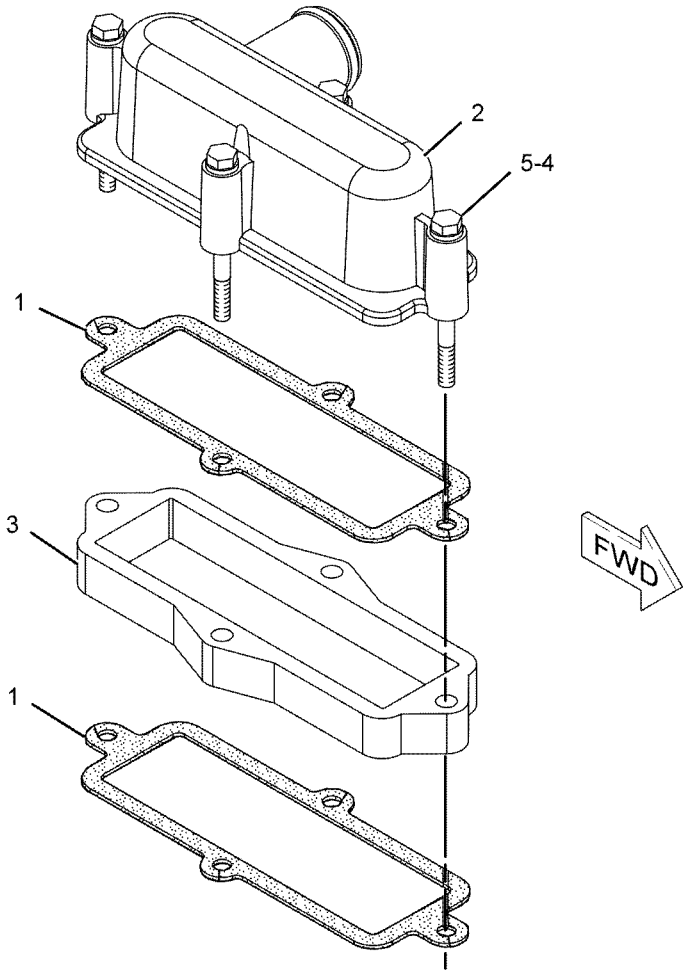

GRAPHIC #1 **<END>** g01143760

LUBRICATION SYSTEM

267-0008 BREATHER GP–CRANKCASE

S/N: MHX1304-2760

TALL

PART OF 231-0876 ENGINE AR-COMPLETE

SMCS-1317 **i02869411**

NOTE	REF NO	GRAPHIC REF	PART NUMBER	QTY	PART NAME 1 2 3 4 5 6 (PRODUCT LEVEL)	SEE PAGE
C	1	1	**9Y-1758**	1	GASKET	
C	2	1	**290-8568**	1	BREATHER AS (CRANKCASE)	
CM	3	1	**8T-0275**	4	BOLT (M6X1X50-MM)	
	4	1	**9X-8267**	4	WASHER (6.6X12X2-MM THK)	

C-CHANGE FROM PREVIOUS TYPE
M-METRIC PART

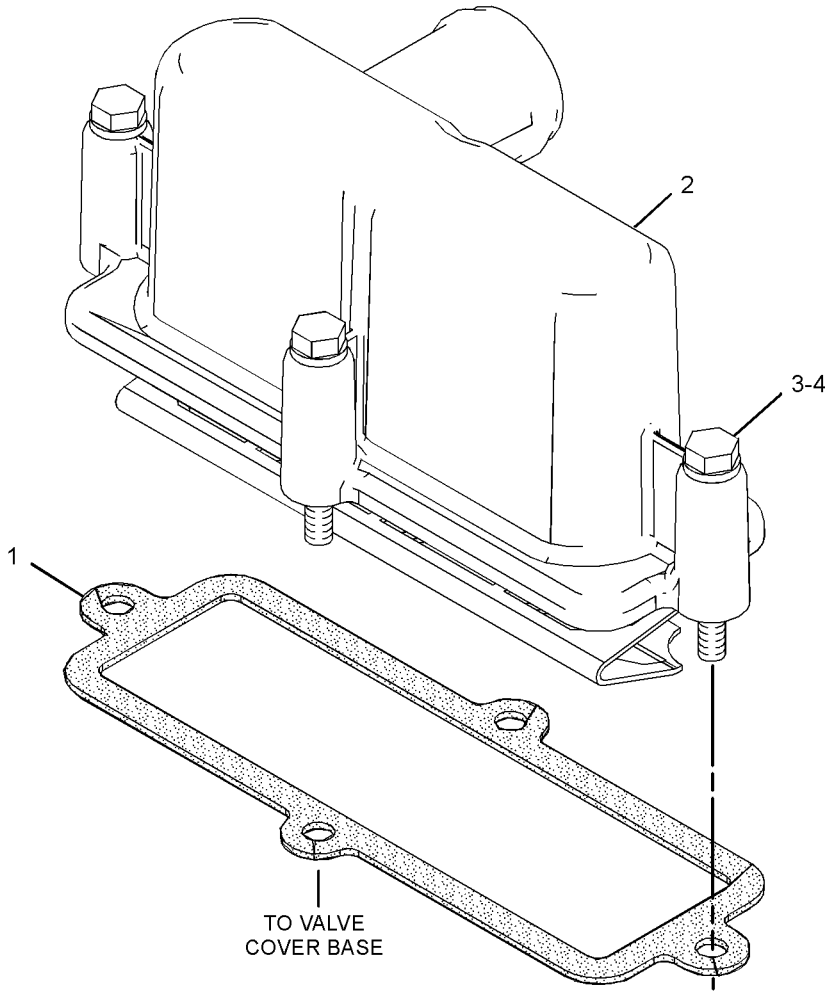

GRAPHIC #1 **<END>** g01430854

117-2786 COVER GP-OIL FILTER BASE–ENGINE

S/N: MHX1214-UP
NO BYPASS
PART OF 227-5359, 231-0876, 349-4462 ENGINE AR-COMPLETE
ALSO AN ATTACHMENT

SMCS-1306 **i01008840**

NOTE	REF NO	GRAPHIC REF	PART NUMBER	QTY	PART NAME 1 2 3 4 5 6 (PRODUCT LEVEL)	SEE PAGE
	1	1	**7C-9542**	1	COVER-FILTER BASE	
	2	1	**5S-9134**	1	SEAL-O-RING	

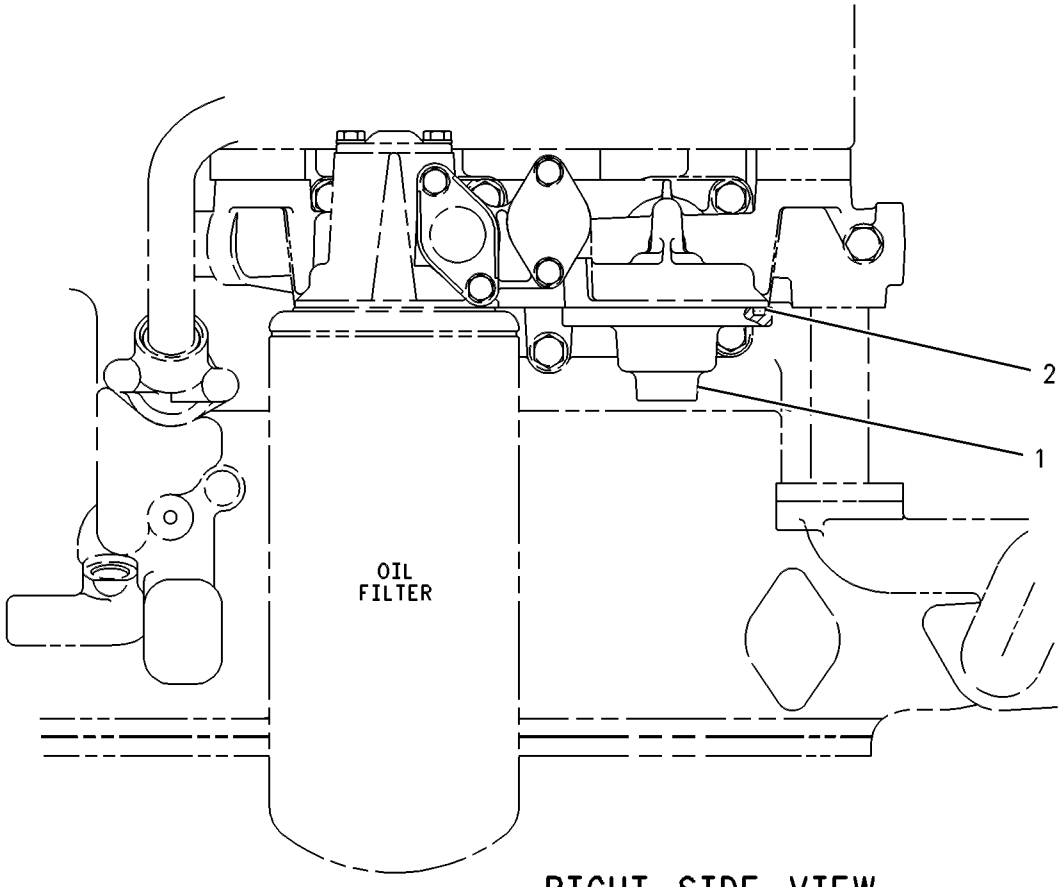

RIGHT SIDE VIEW

GRAPHIC #1 **<END>** g00251382

LUBRICATION SYSTEM

231-0151 FILLER GP-ENGINE OIL

S/N: MHX3605-UP
LEFT FRONT
PART OF 227-5359, 231-0876, 349-4462 ENGINE AR-COMPLETE
ALSO AN ATTACHMENT

SMCS-1316, 7513 **i03565665**

NOTE	REF NO	GRAPHIC REF	PART NUMBER	QTY	PART NAME 1 2 3 4 5 6 (PRODUCT LEVEL)	SEE PAGE
	1	1	**241-5645**	1	CAP AS-ENGINE OIL FILLER	
	2	1	**7C-1445**	3	COVER	
	3	1	**264-4288**	1	TUBE-OIL FILLER	
	4	1	**061-9455**	4	SEAL-O-RING	
M	5	1	**6V-3940**	6	BOLT (M8X1.25X25-MM)	
M	6	1	**6V-5217**	2	BOLT (M8X1.25X20-MM)	
	7	1	**9M-1974**	8	WASHER-HARD (8.8X16X2-MM THK)	

M-METRIC PART

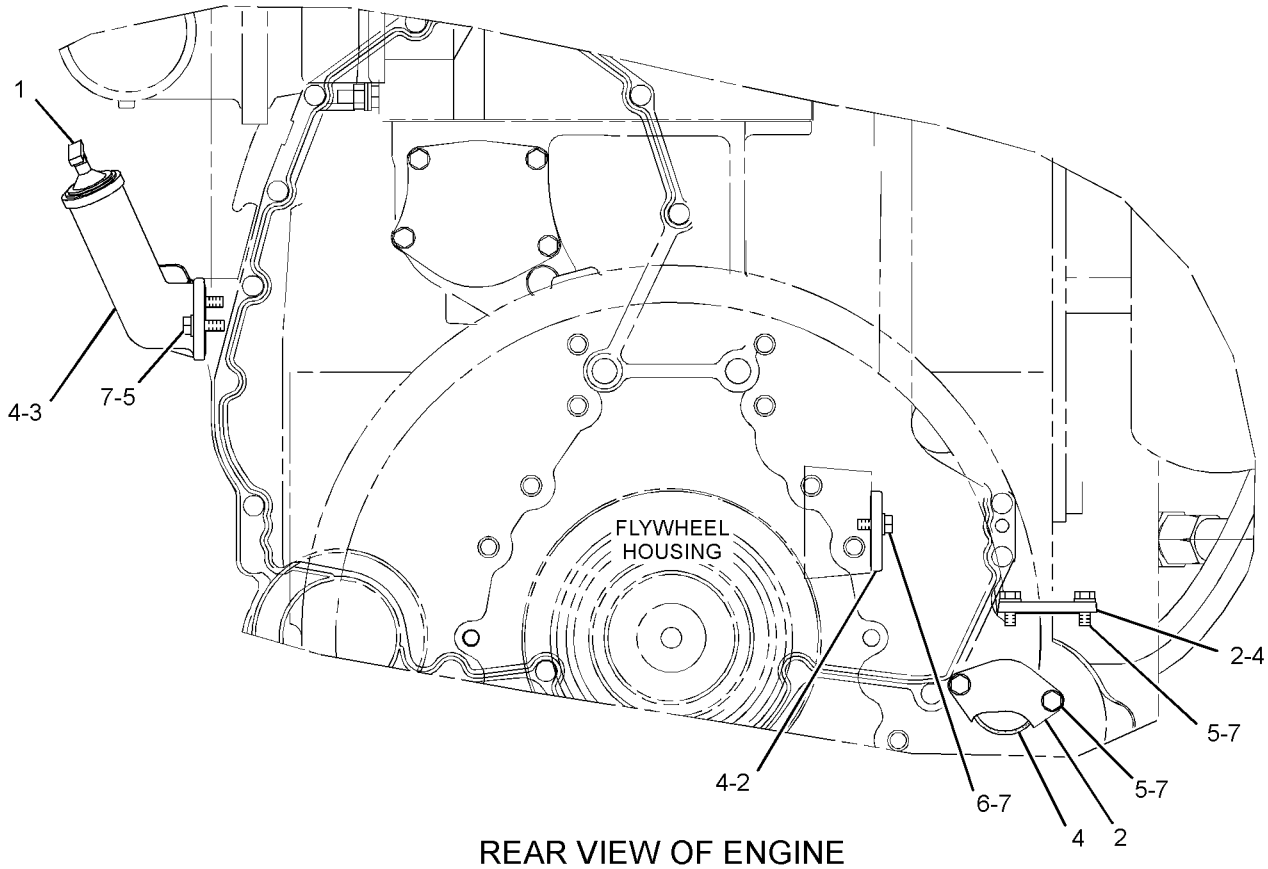

REAR VIEW OF ENGINE

GRAPHIC #1 **<END>** g01337470

244-8676 FILLER GP-ENGINE OIL–LEFT FRONT

S/N: MHX1304-3604
PART OF 227-5359, 231-0876 ENGINE AR-COMPLETE
ALSO AN ATTACHMENT

SMCS-1316, 7513 **i02921201**

NOTE	REF NO	GRAPHIC REF	PART NUMBER	QTY	PART NAME 1 2 3 4 5 6 (PRODUCT LEVEL)	SEE PAGE
	1	1	**068-4497**	1	CAP-OIL FILLER (ENGINE)	
	2	1	**7C-1445**	3	COVER	
	3	1	**264-4288**	1	TUBE-OIL FILLER	
	4	1	**061-9455**	4	SEAL-O-RING	
M	5	1	**6V-3940**	6	BOLT (M8X1.25X25-MM)	
M	6	1	**6V-5217**	2	BOLT (M8X1.25X20-MM)	
	7	1	**9M-1974**	8	WASHER-HARD (8.8X16X2-MM THK)	

M-METRIC PART

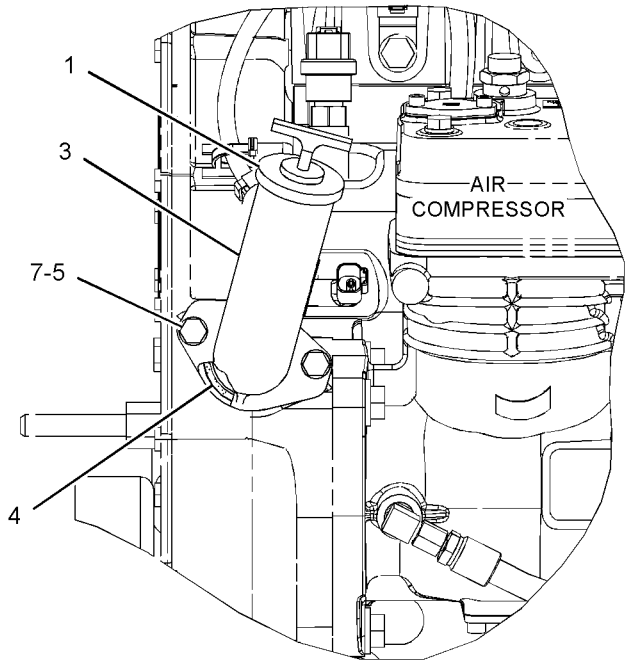

LEFT SIDE VIEW OF ENGINE

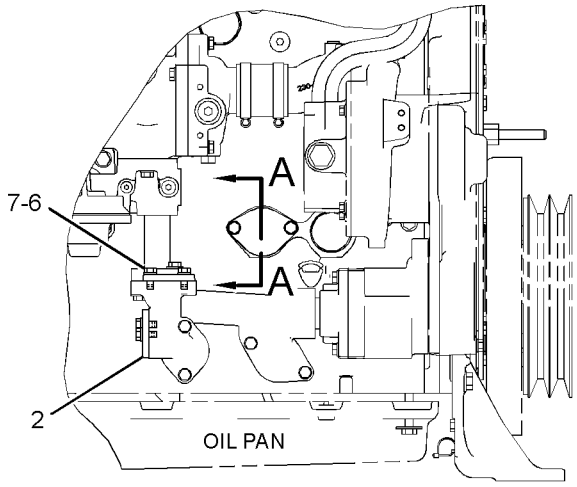

RIGHT SIDE VIEW OF ENGINE

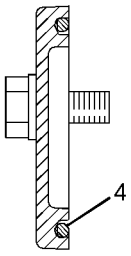

SECTION A-A

GRAPHIC #1 **<END>** g01309634

231-3492 FILTER GP-ENGINE OIL

S/N: MHX2761-UP
PROVIDES PRIMARY ADVANCED EFFICIENCY OIL FILTER
PART OF 227-5359, 231-0876, 349-4462 ENGINE AR-COMPLETE
ALSO AN ATTACHMENT

SMCS-1306, 1308 **i02021373**

NOTE	REF NO	GRAPHIC REF	PART NUMBER	QTY	PART NAME 1 2 3 4 5 6 (PRODUCT LEVEL)	SEE PAGE
	1	1	**1R-1808**	1	FILTER-ENGINE OIL (ADVANCED EFFICIENCY)	

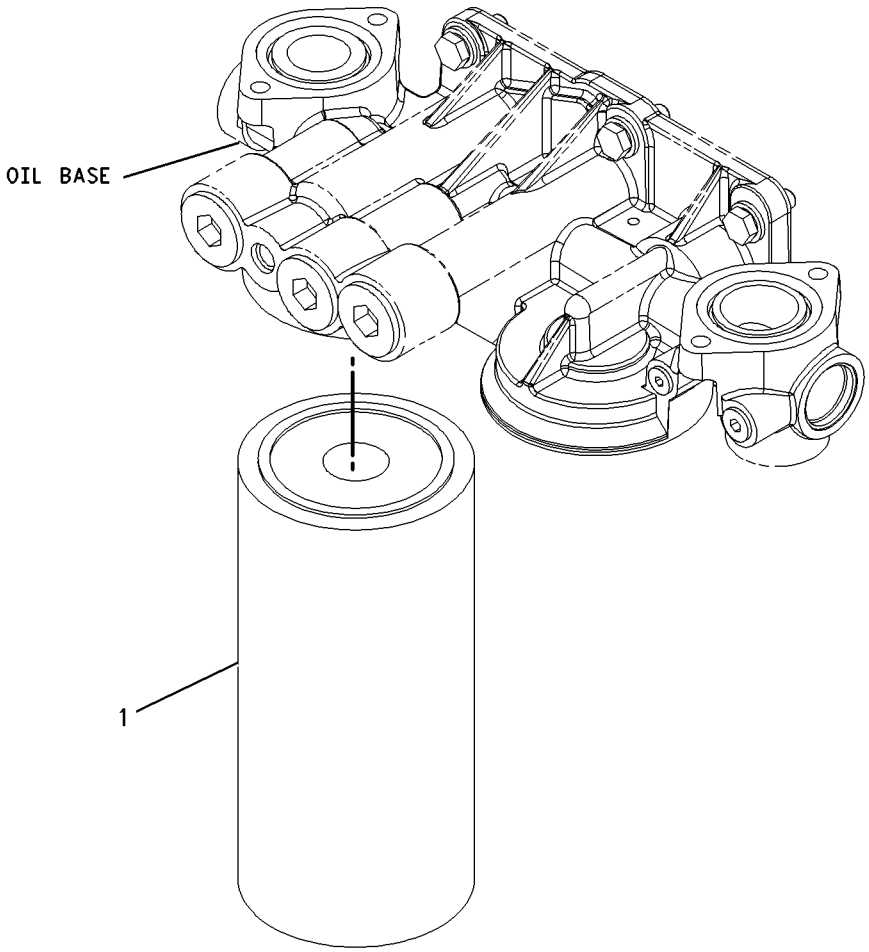

GRAPHIC #1 **<END>** g00951313

262-0925 FILTER GP-ENGINE OIL

S/N: MHX1304-2760
PART OF 227-5359, 231-0876 ENGINE AR-COMPLETE
ALSO AN ATTACHMENT

SMCS-1306, 1308 **i02397024**

NOTE	REF NO	GRAPHIC REF	PART NUMBER	QTY	PART NAME 1 2 3 4 5 6 (PRODUCT LEVEL)	SEE PAGE
	1	1	**1R-1808**	1	FILTER-ENGINE OIL (ADVANCED EFFICIENCY)	
	2	1	**6F-6405**	1	SPACER (0.438X0.75X0.375-IN THK)	
	3	1	**8C-3445**	1	CAP-DUST	
	4	1	**102-5828**	1	COVER	
	5	1	**102-5829**	1	ADAPTER	
	6	1	*164-5596*	1	TEE AS	
		1	**5K-9090**	1	SEAL-O-RING	
		1	**7M-8485**	1	SEAL-O-RING	
		1	**8C-6515**	1	TEE	
	7	1	**190-1106**	1	BASE AS-OIL FILTER	
		1	**2P-4304**	1	STUD-HOLLOW	
	8	1	**262-0922**	1	PLATE AS	
	9	1	**262-0923**	1	TUBE AS	
	10	1	**262-0924**	1	TUBE AS	
	11	1	**264-0034**	1	BRACKET AS	
	12	1	**138-7500**	4	SPACER (11X25X50-MM THK)	
	13	1	*148-8335*	1	CONNECTOR AS	
		1	**5K-9090**	1	SEAL-O-RING	
		1	**6V-8635**	1	CONNECTOR	
		1	**7M-8485**	1	SEAL-O-RING	
	14	1	*148-8357*	2	ELBOW AS	
					(EACH INCLUDES)	
		1	**5K-9090**	1	SEAL-O-RING	
		1	**6V-9008**	1	ELBOW	
		1	**7M-8485**	1	SEAL-O-RING	
	15	1	*164-4180*	1	PLUG AS	
		1	**7M-8485**	1	SEAL-O-RING	
		1	**9S-4181**	1	PLUG-O-RING	
	16	1	**198-4777**	2	WASHER-HARD (11X25X10-MM THK)	
	17	1	**3J-1907**	1	SEAL-O-RING	
	18	1	**3J-7354**	1	SEAL-O-RING	
	19	1	**5M-7087**	2	CLAMP-TUBE	
	20	1	**5P-9617**	1	ADAPTER	
M	21	1	**6V-1820**	2	BOLT (M10X1.5X30-MM)	
	22	1	**6V-3908**	2	SEAL-O-RING	
	23	1	**6V-5839**	4	WASHER (11X21X2.5-MM THK)	
	24	1	**8C-3446**	1	VALVE-FLUID SAMPLING	
M	25	1	**8T-0643**	4	BOLT (M10X1.5X80-MM)	
	26	1	**8T-4121**	5	WASHER-HARD (11X21X2.5-MM THK)	
M	27	1	**8T-4196**	5	BOLT (M10X1.5X35-MM)	

M-METRIC PART

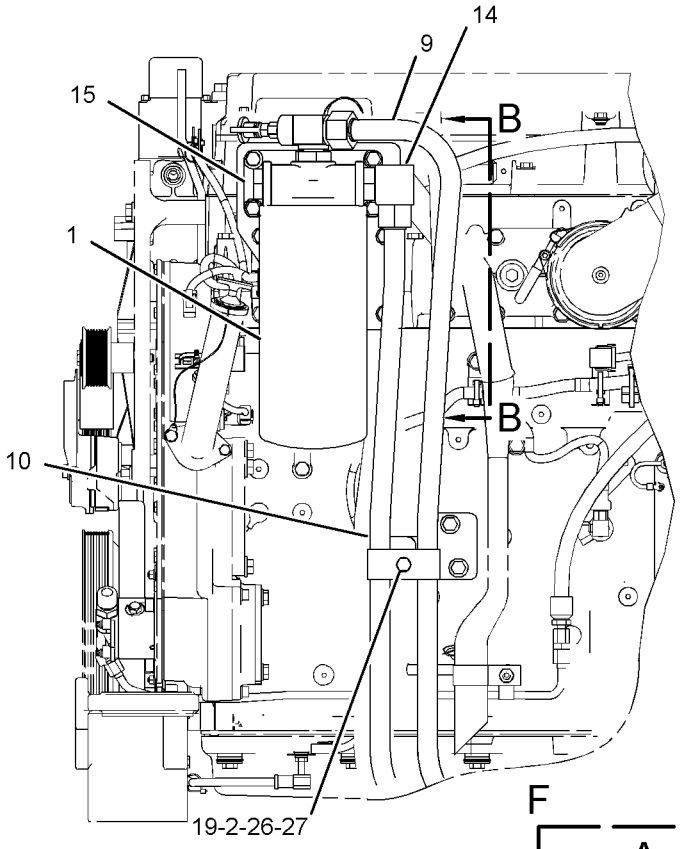

LEFT SIDE VIEW

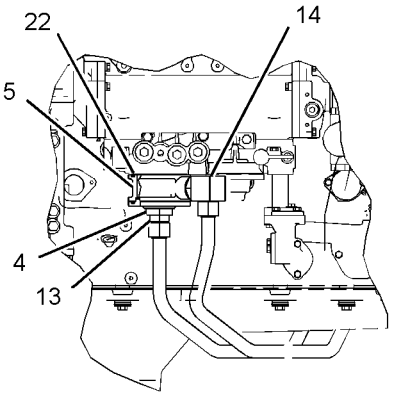

VIEW C-C

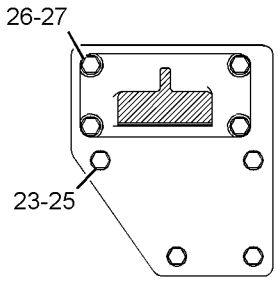

SECTION A-A

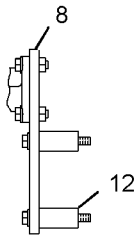

VIEW B-B

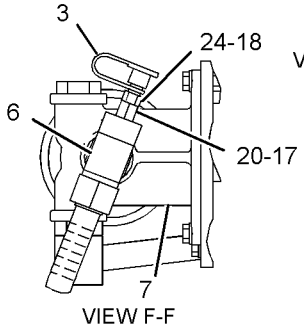

VIEW F-F

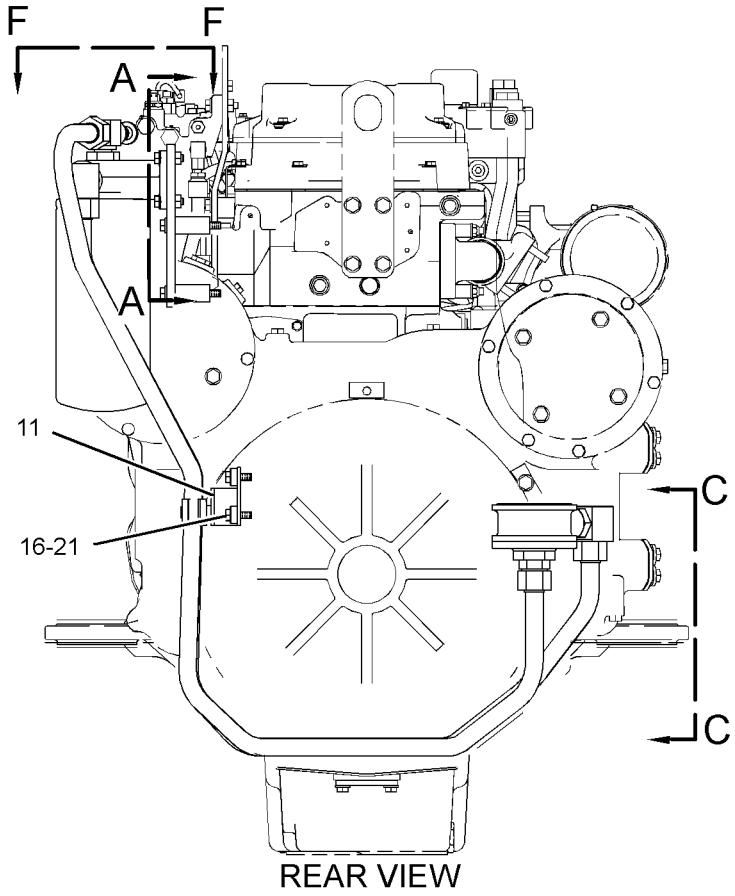

REAR VIEW

GRAPHIC #1 **<END>** g01198167

LUBRICATION SYSTEM

291-6299 FILTER GP-ENGINE OIL

S/N: R9H1-UP

PART OF 349-2556 COMMON AR

SMCS-1306, 1308 **i04011423**

NOTE	REF NO	GRAPHIC REF	PART NUMBER	QTY	PART NAME 1 2 3 4 5 6 (PRODUCT LEVEL)	SEE PAGE
	2	1	**8C-3445**	1	CAP-DUST	
	3	1	**102-5828**	1	COVER	
	4	1	**102-5829**	1	ADAPTER	
	5	1	**138-7500**	4	SPACER (11X25X50-MM THK)	
	6	1	*164-5596*	1	TEE AS	
		1	**8C-6515**	1	TEE	
		1	**5K-9090**	1	SEAL-O-RING	
		1	**7M-8485**	1	SEAL-O-RING	
	7	1	**275-6631**	1	BASE AS-OIL FILTER (ENGINE)	
		1	**2P-4304**	1	STUD-HOLLOW	
	8	1	**262-0922**	1	PLATE AS	
M		1	**8T-3490**	4	NUT-WELD (M10X1.5-THD)	
	9	1	**262-0923**	1	TUBE AS	
	10	1	**262-0924**	1	TUBE AS	
	11	1	**264-0034**	1	BRACKET AS	
	12	1	*148-8335*	1	CONNECTOR AS	
		1	**6V-8635**	1	CONNECTOR	
		1	**5K-9090**	1	SEAL-O-RING	
		1	**7M-8485**	1	SEAL-O-RING	
	13	1	*148-8357*	2	ELBOW AS	
					(EACH INCLUDES)	
		1	**6V-9008**	1	ELBOW	
		1	**5K-9090**	1	SEAL-O-RING	
		1	**7M-8485**	1	SEAL-O-RING	
	14	1	*164-4180*	1	PLUG AS	
		1	**9S-4181**	1	PLUG-O-RING	
		1	**7M-8485**	1	SEAL-O-RING	
	15	1	**198-4777**	3	WASHER-HARD (11X25X10-MM THK)	
	16	1	**3J-1907**	1	SEAL-O-RING	
	17	1	**3J-7354**	1	SEAL-O-RING	
	18	1	**5M-7087**	2	CLAMP-TUBE	
	19	1	**6V-3908**	2	SEAL-O-RING	
	20	1	**8C-3446**	1	VALVE-FLUID SAMPLING	
	21	1	**8C-6712**	1	ELBOW	
	22	1	**8T-4121**	9	WASHER-HARD (11X21X2.5-MM THK)	
M	23	1	**8T-4172**	4	BOLT (M10X1.5X80-MM)	
M	24	1	**8T-4195**	2	BOLT (M10X1.5X30-MM)	
M	25	1	**8T-4196**	5	BOLT (M10X1.5X35-MM)	

M-METRIC PART

291-6299 **FILTER GP-ENGINE OIL** *(contd.)* **i04011423**

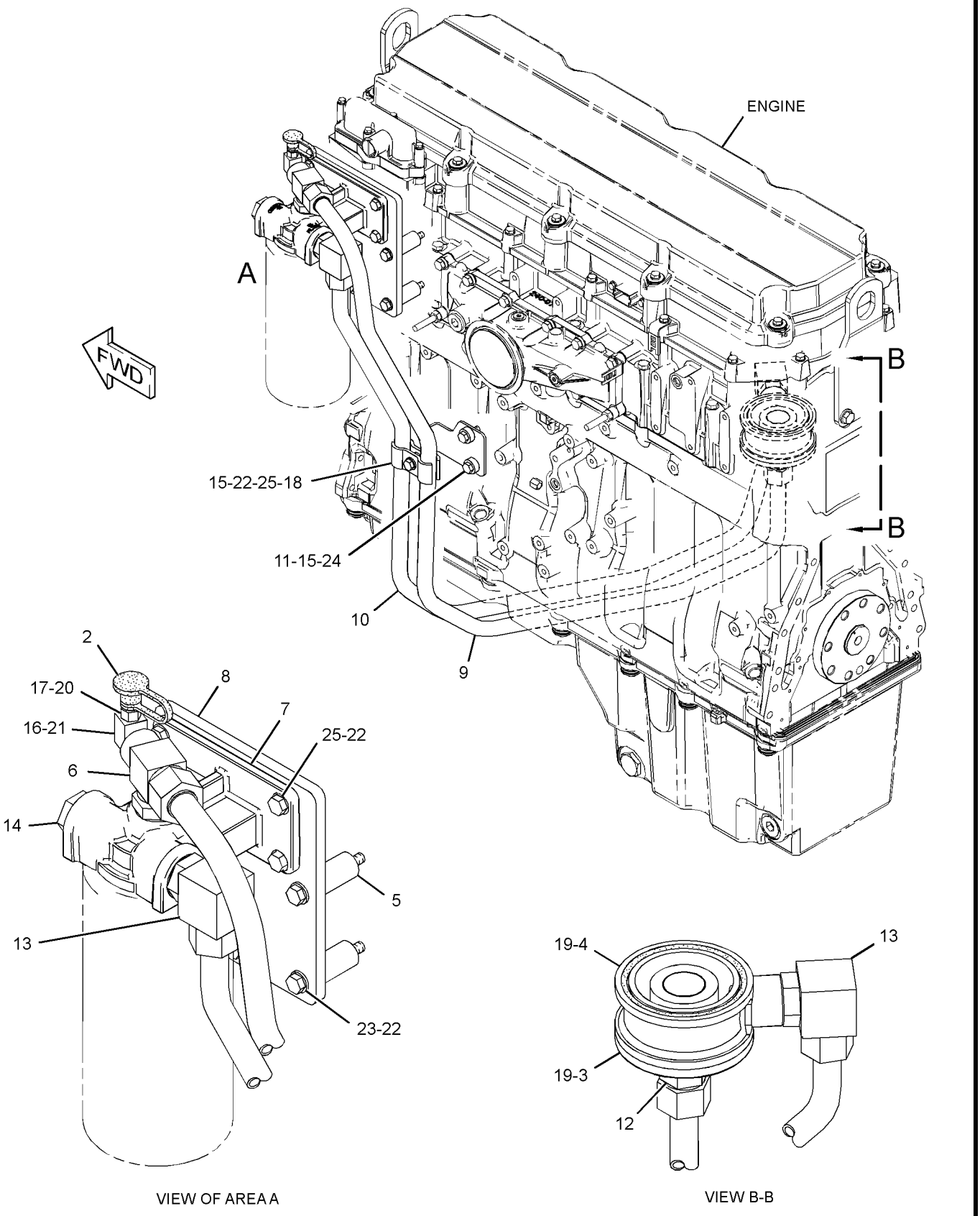

GRAPHIC #1 **<END>** g02211773

258-4484 FUMES DISPOSAL GP

S/N: MHX1304-UP
PART OF 227-5359, 231-0876, 349-4462 ENGINE AR-COMPLETE
ALSO AN ATTACHMENT

SMCS-1317 **i02870201**

NOTE	REF NO	GRAPHIC REF	PART NUMBER	QTY	PART NAME 1 2 3 4 5 6 (PRODUCT LEVEL)	SEE PAGE
	1	1	**9M-2904**	1	CLAMP-HOSE	
	2	1	**224-5539**	1	HOSE-FUMES DISPOSAL	
M	3	1	**8T-4133**	1	NUT (M10X1.5-THD)	
	4	1	**8T-4121**	1	WASHER-HARD (11X21X2.5-MM THK)	
	5	1	**7L-3203**	1	CLIP	

M-METRIC PART

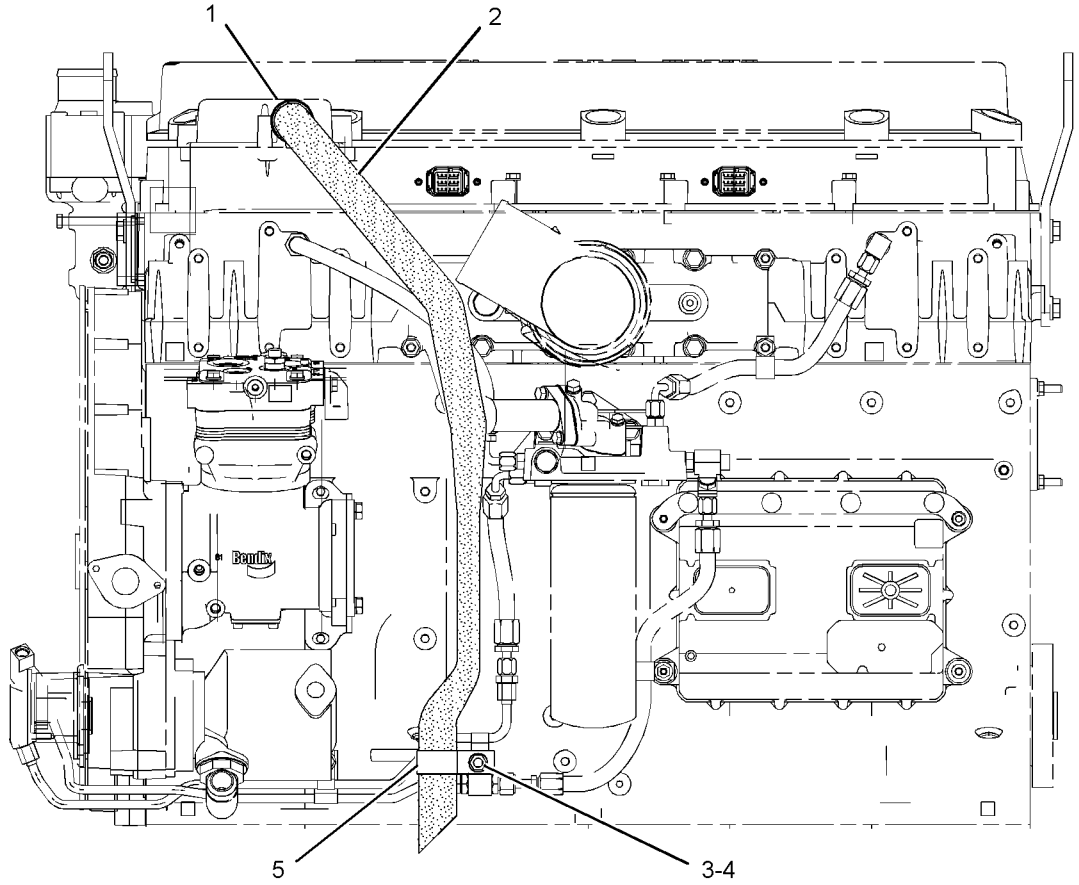

LEFT SIDE VIEW

GRAPHIC #1 g01086224

<END>

262-0596 GAUGE GP-OIL LEVEL (DIPSTICK)—ENGINE

S/N: MHX1214-2151
PART OF 227-5359, 231-0876 ENGINE AR-COMPLETE
ALSO AN ATTACHMENT

SMCS-1326 **i02284229**

NOTE	REF NO	GRAPHIC REF	PART NUMBER	QTY	PART NAME 1 2 3 4 5 6 (PRODUCT LEVEL)	SEE PAGE
J	1	1	**209-7309**	3	PLUG	
	2	1	**262-0595**	1	GAUGE AS-OIL LEVEL (DIPSTICK) (ENGINE)	
	3	1	**268-3299**	1	TUBE AS	
	4	1	**212-0431**	1	STUD	
	5	1	**3P-0647**	1	SEAL-O-RING	
	6	1	**6V-5839**	1	WASHER (11X21X2.5-MM THK)	

J-USE TO PLUG OPTIONAL DIPSTICK LOCATIONS

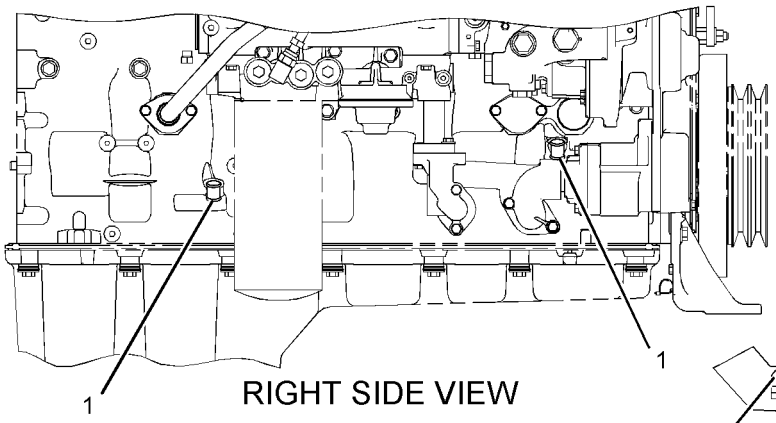

RIGHT SIDE VIEW

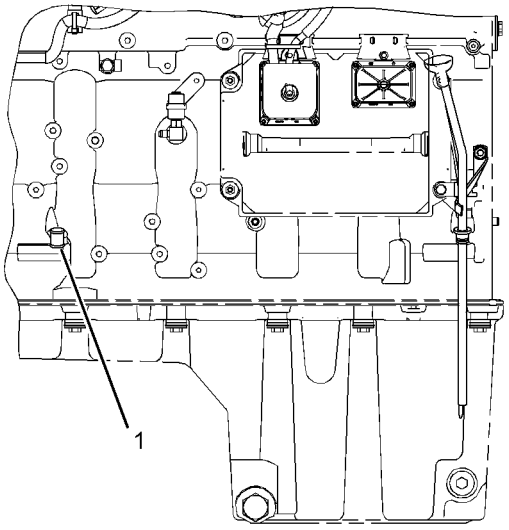

LEFT SIDE VIEW

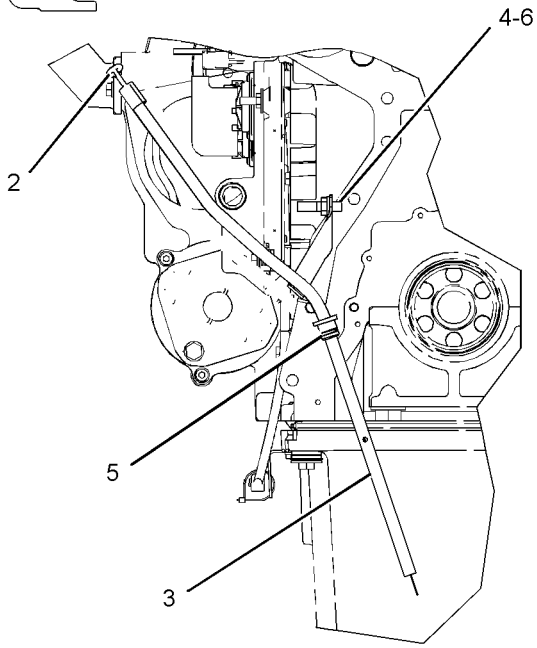

REAR VIEW

GRAPHIC #1 **<END>** g01143835

262-0596 GAUGE GP-OIL LEVEL (DIPSTICK)—ENGINE

S/N: MHX2152-UP

PART OF 227-5359, 231-0876, 349-4462 ENGINE AR-COMPLETE

ALSO AN ATTACHMENT

SMCS-1326 **i03997817**

NOTE	REF NO	GRAPHIC REF	PART NUMBER	QTY	PART NAME 1 2 3 4 5 6 (PRODUCT LEVEL)	SEE PAGE
J	1	1	**209-7309**	3	PLUG	
	2	1	**262-0595**	1	GAUGE AS-OIL LEVEL (DIPSTICK) (ENGINE)	
	3	1	**268-3299**	1	TUBE AS	
CM	4	1	**101-3129**	1	STUD (M10X1.5-THD)	
	5	1	**228-4947**	1	SEAL-O-RING	
	6	1	**6V-5839**	1	WASHER (11X21X2.5-MM THK)	

C-CHANGE FROM PREVIOUS TYPE
J-USE TO PLUG OPTIONAL DIPSTICK LOCATIONS
M-METRIC PART

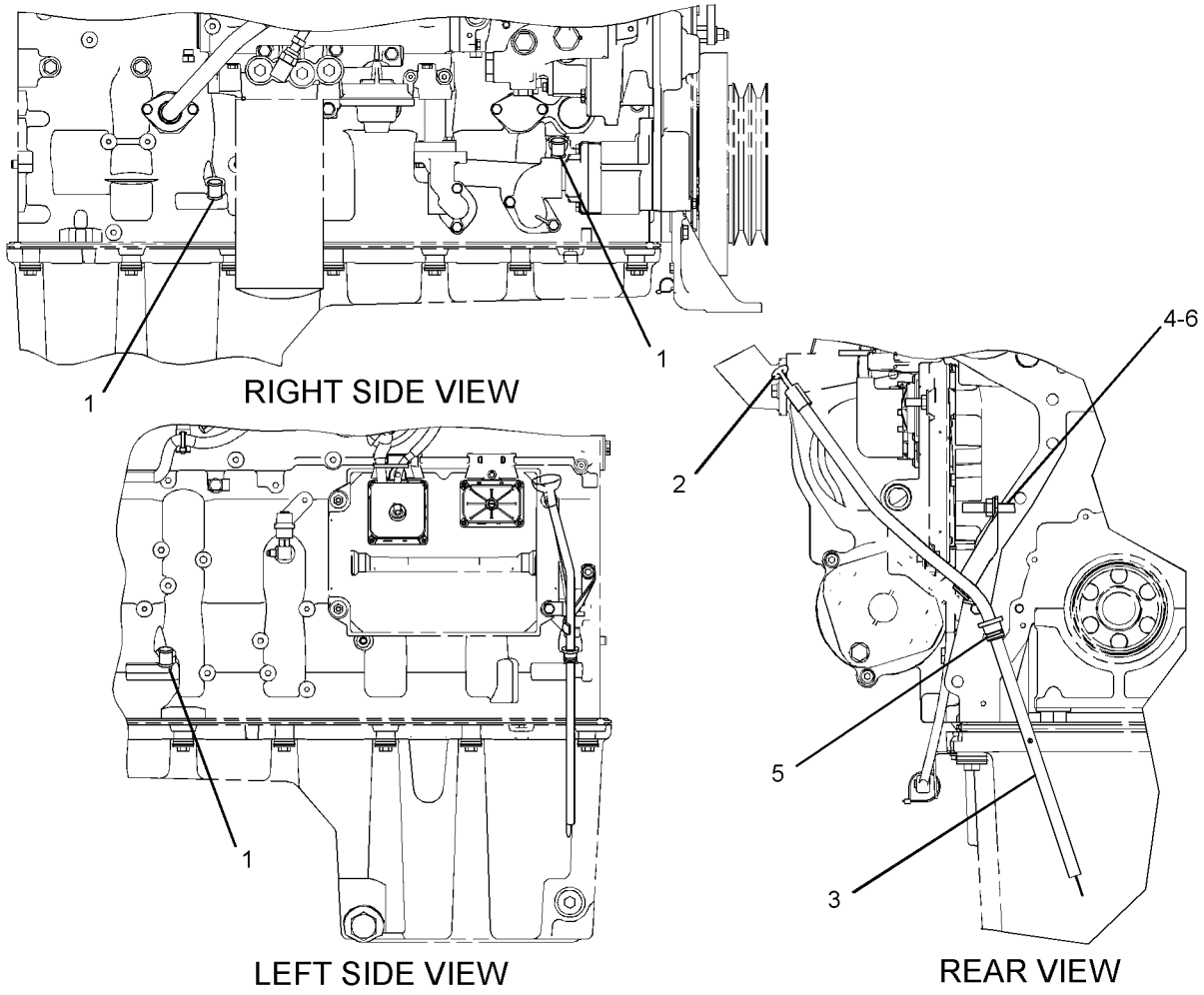

GRAPHIC #1 **<END>** g01282291

LUBRICATION SYSTEM

224-8170 LINES GP-TURBOCHARGER OIL

S/N: MHX1214-UP

PART OF 227-5359, 231-0876, 349-4462 ENGINE AR-COMPLETE

ALSO AN ATTACHMENT

SMCS-1052, 1307 **i03794634**

NOTE	REF NO	GRAPHIC REF	PART NUMBER	QTY	PART NAME 1 2 3 4 5 6 (PRODUCT LEVEL)	SEE PAGE
	1	1	**197-8418**	1	GASKET	
	2	1	**197-8419**	1	GASKET	
	3	1	**224-8171**	1	HOSE AS (SUPPLY)	
	4	1	**224-8172**	1	TUBE AS (DRAIN)	
	5	1	**228-7090**	1	SEAL-O-RING	
	6	1	**225-6948**	1	SEAL-O-RING	
	7	1	**214-7568**	1	SEAL-O-RING	
M	8	1	**6V-5218**	6	BOLT (M8X1.25X35-MM)	
	9	1	**9M-1974**	6	WASHER-HARD (8.8X16X2-MM THK)	
	10	1	**8T-6876**	1	ELBOW	

M-METRIC PART

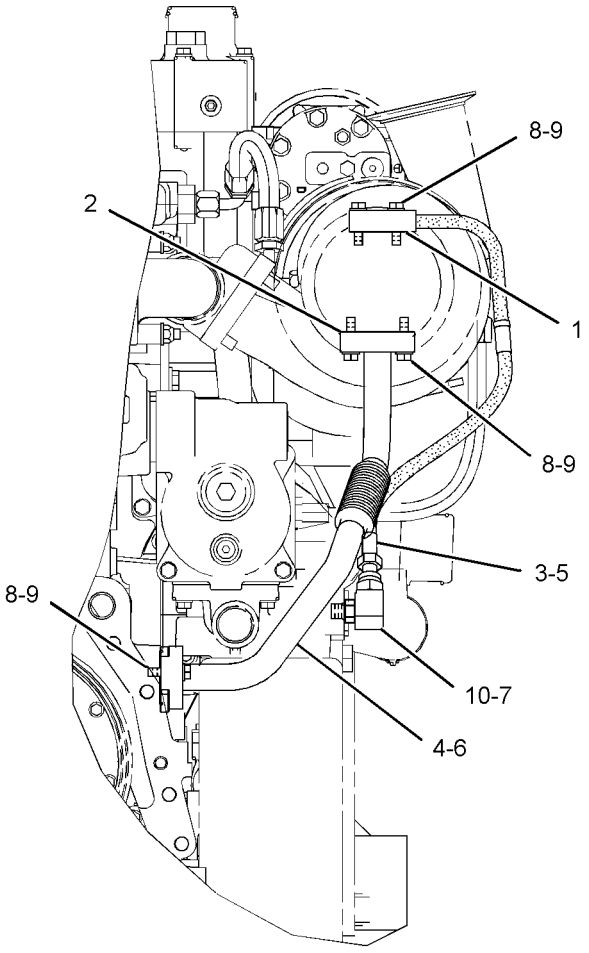

REAR VIEW

<END>

GRAPHIC #1 g01060502

292-9680 OIL CHANGE GP-HIGH SPEED—ENGINE

S/N: R9H1-UP

PART OF 349-2556 COMMON AR

SMCS-1325 **i02644928**

NOTE	REF NO	GRAPHIC REF	PART NUMBER	QTY	PART NAME 1 2 3 4 5 6 (PRODUCT LEVEL)	SEE PAGE
	1	1	**2V-2043**	1	NUT-BULKHEAD (1-5/8-12-THD)	
	2	1	**110-8827**	1	FITTING (QUICK DISCONNECT, MALE)	
		1	**110-8826**	1	CAP-DUST	
	3	1	**229-5431**	1	ADAPTER	
	4	1	**292-9681**	1	BRACKET	
I	5	1	**292-9761**	1	HOSE AS	
	6	1	**061-9458**	1	SEAL-O-RING	
	7	1	*148-8360*	1	ELBOW AS	
		1	**6V-9182**	1	ELBOW	
		1	**6V-9746**	1	SEAL-O-RING	
		1	**7M-8485**	1	SEAL-O-RING	
	8	1	**5K-9090**	1	SEAL-O-RING	
	9	1	**8T-4121**	2	WASHER-HARD (11X21X2.5-MM THK)	
M	10	1	**8T-4136**	2	BOLT (M10X1.5X25-MM)	

I-REFER TO HYDRAULIC INFORMATION SYSTEM
M-METRIC PART

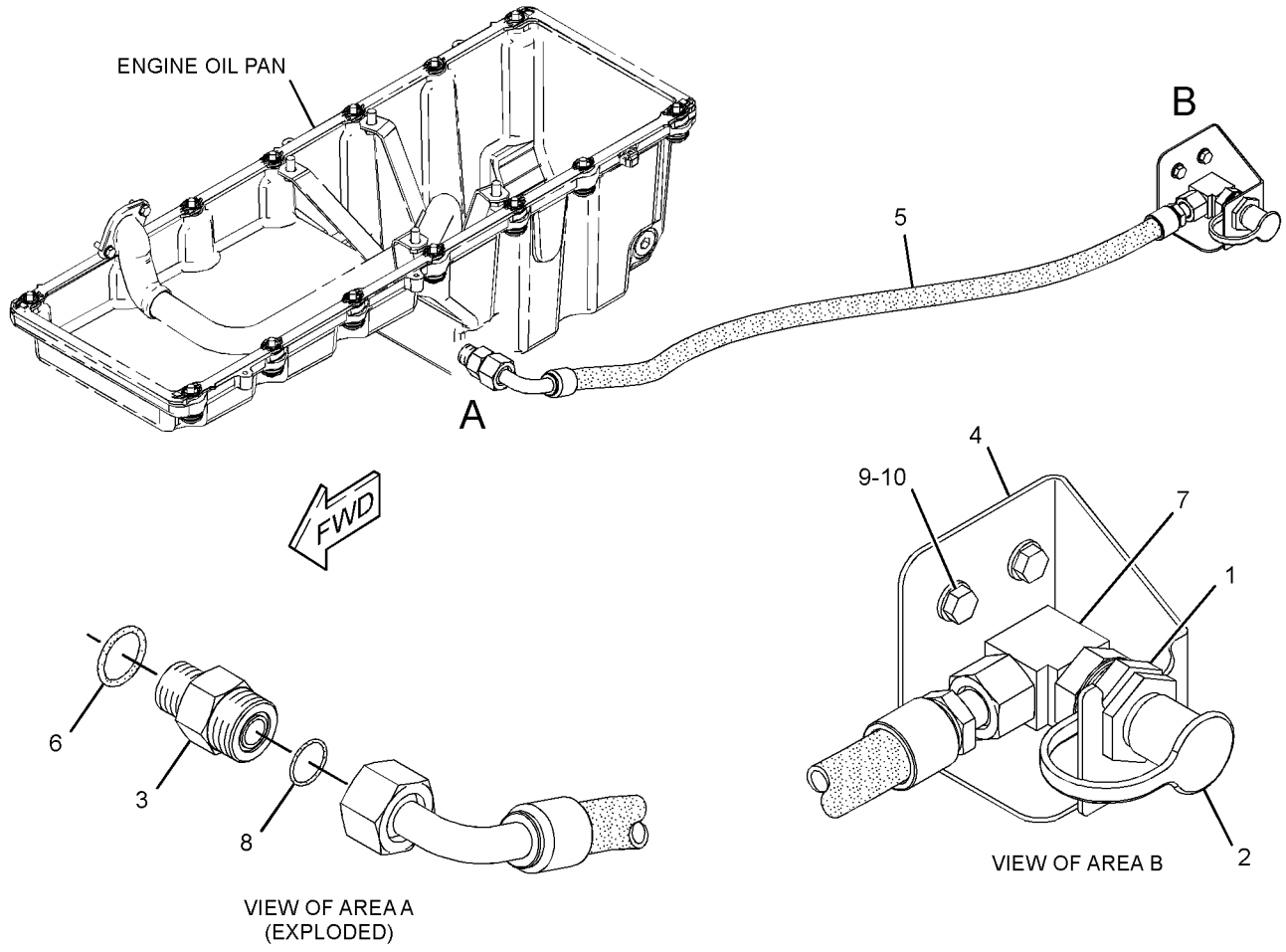

GRAPHIC #1 **<END>** g01328767

LUBRICATION SYSTEM

233-5220 PUMP GP-ENGINE OIL*R

S/N: MHX1304-UP

PART OF 233-5221 PUMP GP-ENGINE OIL

ALSO AN ATTACHMENT

SMCS-1304, 1315 **i03681550**

NOTE	REF NO	GRAPHIC REF	PART NUMBER	QTY	PART NAME 1 2 3 4 5 6 (PRODUCT LEVEL)	SEE PAGE
	1	1	**9Y-8076**	1	SHAFT AS-OIL PUMP (8-TEETH) (ENGINE)	
	2	1	**6D-7146**	1	SEAL-O-RING	
M	3	1	**6V-2317**	4	BOLT (M8X1.25X30-MM)	
	4	1	**9M-1974**	4	WASHER-HARD (8.8X16X2-MM THK)	
	5	1	**9Y-8075**	1	SHAFT AS-OIL PUMP (8-TEETH) (ENGINE)	

M-METRIC PART

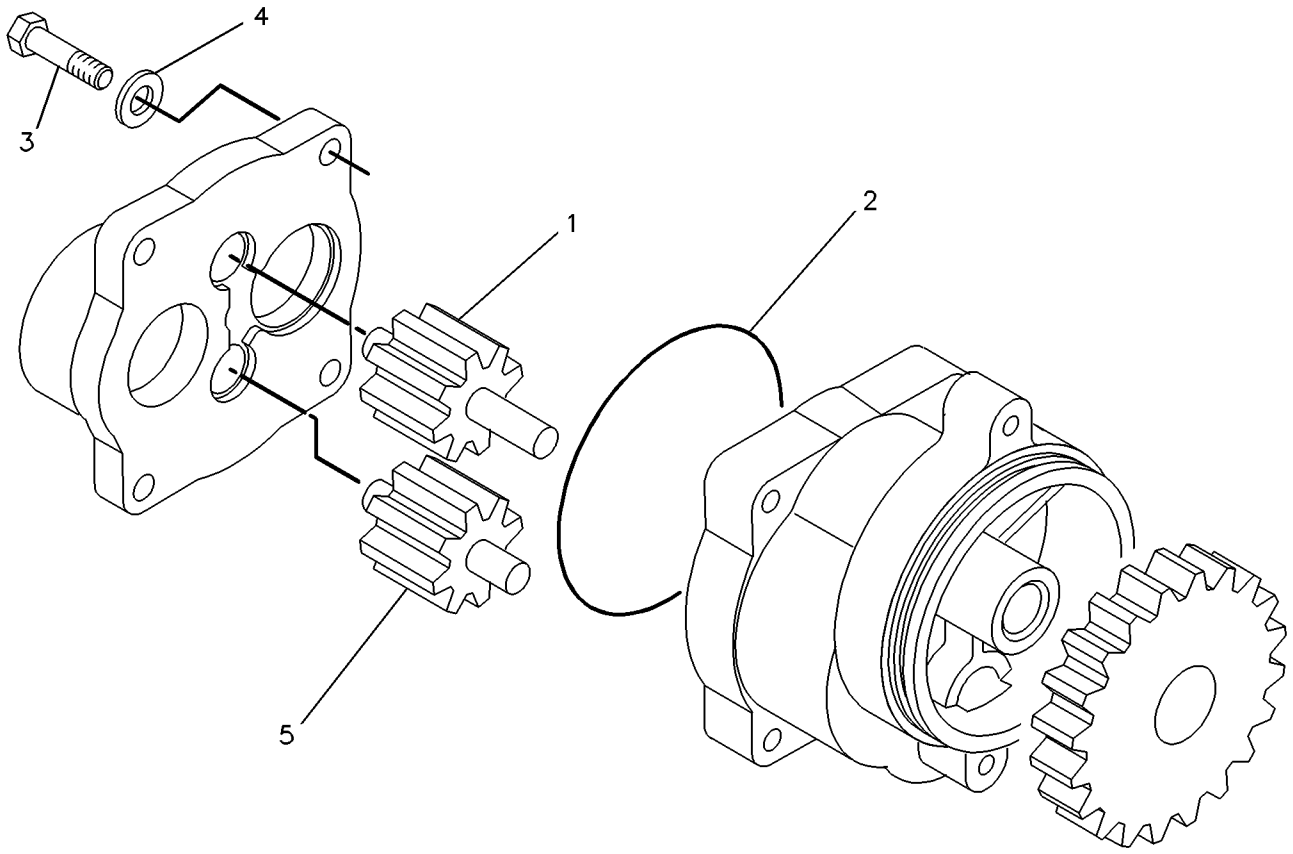

GRAPHIC #1 **<END>** g00228139

233-5221 PUMP GP-ENGINE OIL

S/N: MHX1304-UP
CONTAINS ALL LINES AND FASTENERS
PART OF 231-0877, 267-0009, 286-5804, 301-2265, 359-0362 ENGINE AR-CORE
ALSO AN ATTACHMENT

SMCS-1304, 1315 **i03821113**

NOTE	REF NO	GRAPHIC REF	PART NUMBER	QTY	PART NAME 1 2 3 4 5 6 (PRODUCT LEVEL)	SEE PAGE
	1	1	**7C-1821**	1	COUPLING	
	2	1	**7C-1822**	1	COUPLING	
YR	3	1	**233-5220**	1	PUMP GP-ENGINE OIL	122
	4	1	**235-1448**	1	TUBE AS	
	5	1	**235-1451**	1	ELBOW-OIL PUMP	
	6	1	**346-4897**	1	SEAL-O-RING	
	8	1	**3E-6788**	1	SEAL-O-RING	
	9	1	**5P-8068**	2	SEAL-O-RING	
	10	1	**6V-3834**	1	SEAL-O-RING	
	11	1	**6V-5134**	3	SEAL-O-RING	
M	12	1	**6V-2317**	2	BOLT (M8X1.25X30-MM)	
M	13	1	**6V-5221**	5	BOLT (M8X1.25X80-MM)	
M	14	1	**7X-0870**	1	BOLT (M8X1.25X140-MM)	
	15	1	**8J-4351**	1	SEAL-O-RING	
	16	1	**9M-1974**	8	WASHER-HARD (8.8X16X2-MM THK)	

M-METRIC PART
R-REMFG PART MAY BE AVAILABLE
Y-SEPARATE ILLUSTRATION

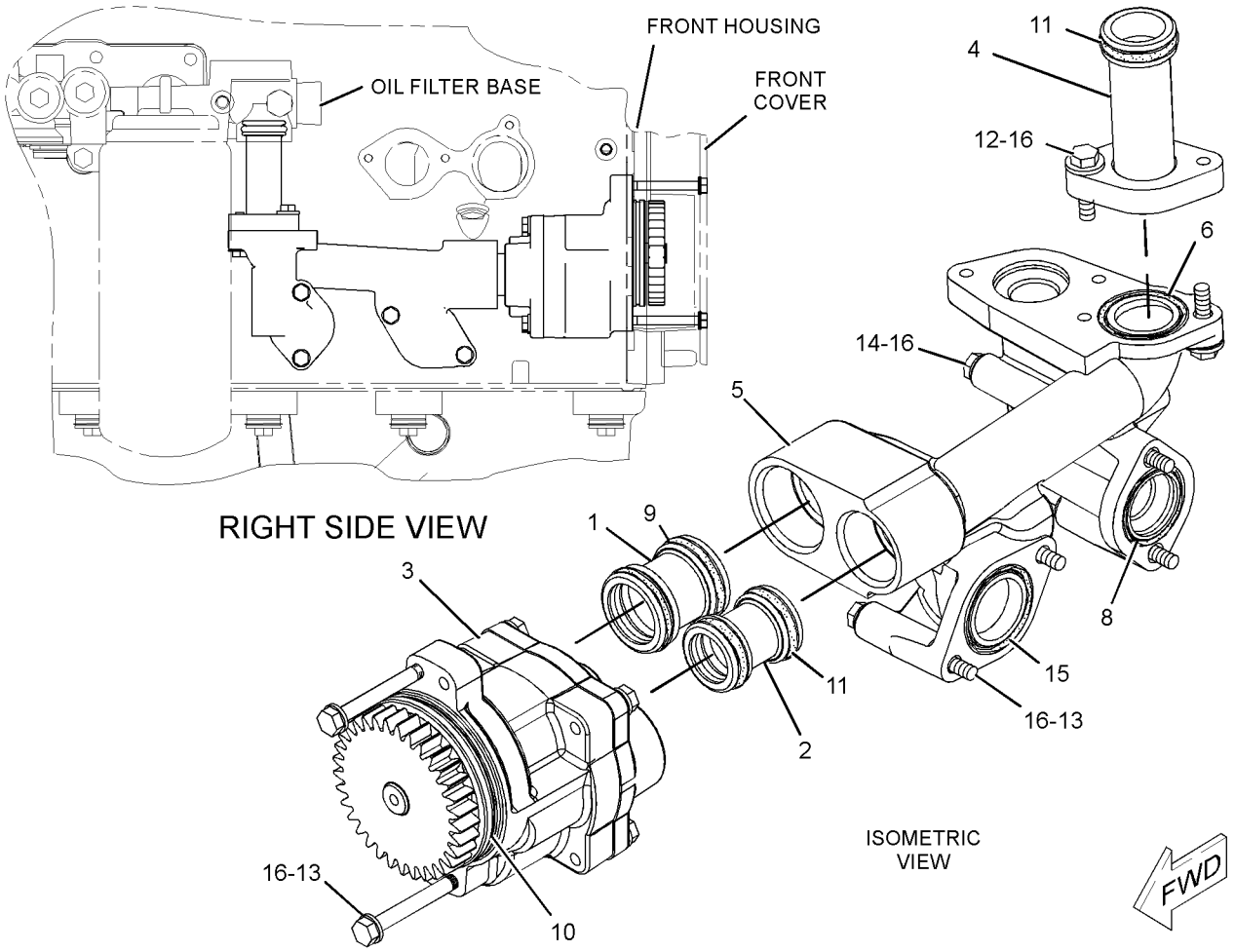

GRAPHIC #1 **<END>** g01246677

231-0152 COOLER GP-ENGINE OIL

S/N: MHX1304-4540
PART OF 227-5359, 231-0876 ENGINE AR-COMPLETE
ALSO AN ATTACHMENT

SMCS-1378 **i02499879**

NOTE	REF NO	GRAPHIC REF	PART NUMBER	QTY	PART NAME 1 2 3 4 5 6 (PRODUCT LEVEL)	SEE PAGE
	1	1	**8E-9571**	1	WASHER-HARD (8.8X16X7-MM THK)	
	2	1	**224-2675**	1	SEAL	
	3	1	**224-5757**	1	HOSE	
	4	1	**224-6360**	2	SEAL	
	5	1	**8T-4984**	2	CLAMP-HOSE	
	6	1	**230-4518**	1	ELBOW	
	7	1	**230-4519**	1	BONNET (OIL COOLER)	
R	8	1	**236-8745**	1	CORE AS-OIL COOLER (ENGINE)	
	9	1	**3J-7354**	1	SEAL-O-RING	
M	10	1	**6V-2317**	5	BOLT (M8X1.25X30-MM)	
	11	1	**6V-4589**	1	SEAL-O-RING	
	12	1	**6V-5049**	1	SEAL-O-RING	
M	13	1	**6V-5219**	5	BOLT (M8X1.25X40-MM)	
M	14	1	**6V-5221**	1	BOLT (M8X1.25X80-MM)	
	15	1	**9M-1974**	10	WASHER-HARD (8.8X16X2-MM THK)	
	16	1	**9S-8002**	1	PLUG-O-RING (7/16-20-THD)	
	17	1	**9S-4191**	1	PLUG-O-RING (9/16-18-THD)	
	18	1	**9S-8006**	1	PLUG-O-RING (7/8-14-THD)	

M-METRIC PART
R-REMFG PART MAY BE AVAILABLE

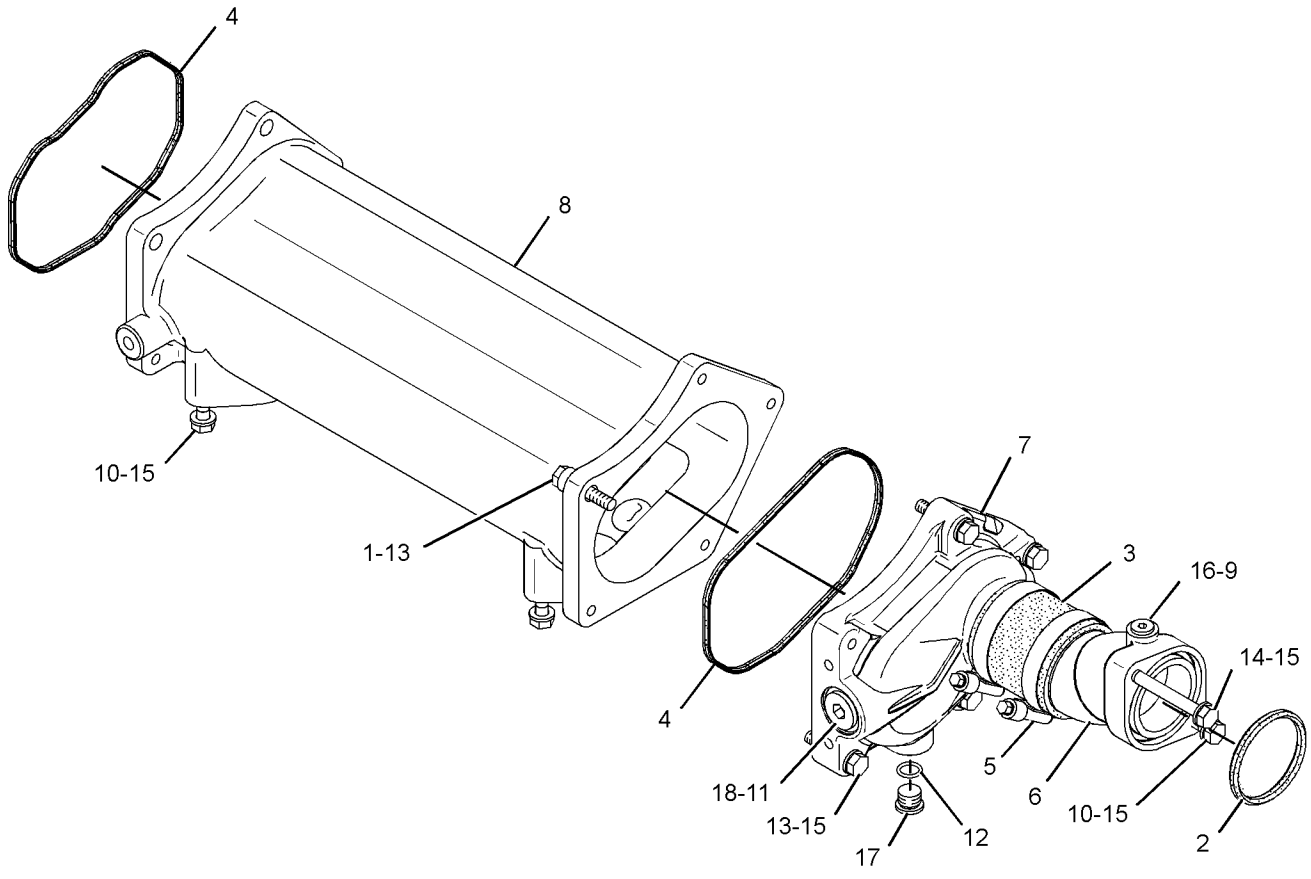

GRAPHIC #1 **<END>** g01259762

COOLING SYSTEM

231-0152 COOLER GP-ENGINE OIL

S/N: MHX4541-UP

PART OF 227-5359, 231-0876, 349-4462 ENGINE AR-COMPLETE

ALSO AN ATTACHMENT

SMCS-1378 **i03909359**

NOTE	REF NO	GRAPHIC REF	PART NUMBER	QTY	PART NAME 1 2 3 4 5 6 (PRODUCT LEVEL)	SEE PAGE
C	1	1	**131-6645**	1	HOSE	
	2	1	**230-4518**	1	ELBOW	
R	3	1	**236-8745**	1	CORE AS-OIL COOLER (ENGINE)	
	4	1	**341-1429**	2	SEAL (FRONT)	
	5	1	**349-3313**	1	BONNET	
	6	1	*353-5124*	1	PLUG AS (7/16-20-THD)	
		1	**6V-3250**	1	SEAL-O-RING	
		1	**9S-8004**	1	PLUG-O-RING	
	7	1	*353-5125*	1	PLUG AS (9/16-18-THD)	
		1	**6V-3251**	1	SEAL-O-RING	
		1	**9S-8006**	1	PLUG-O-RING	
	8	1	**224-2675**	1	SEAL	
	9	1	*304-8008*	1	PLUG AS	
		1	**6V-9027**	1	SEAL-O-RING	
		1	**9S-8002**	1	PLUG-O-RING	
	10	1	**335-9214**	2	CLAMP-BAND	
M	11	1	**6V-2317**	5	BOLT (M8X1.25X30-MM)	
M	12	1	**6V-5219**	5	BOLT (M8X1.25X40-MM)	
M	13	1	**6V-5221**	1	BOLT (M8X1.25X80-MM)	
	14	1	**8E-9571**	1	WASHER-HARD (8.8X16X7-MM THK)	
	15	1	**9M-1974**	10	WASHER-HARD (8.8X16X2-MM THK)	

C-CHANGE FROM PREVIOUS TYPE
M-METRIC PART
R-REMFG PART MAY BE AVAILABLE

231-0152 **COOLER GP-ENGINE OIL** *(contd.)* **i03909359**

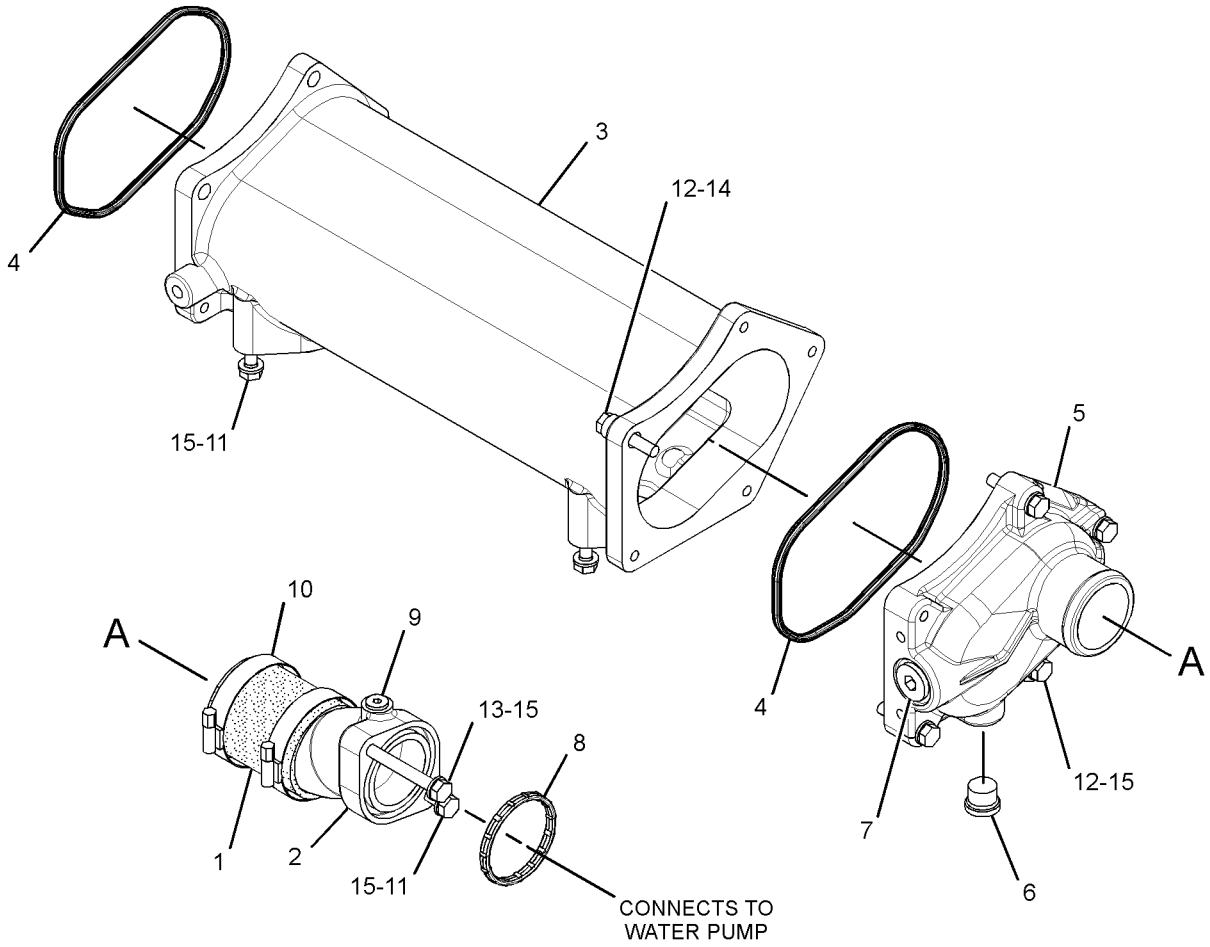

GRAPHIC #1 **<END>** g02143861

COOLING SYSTEM

249-7363 COOLING AR

S/N: R9H1-UP

PART OF 349-2556 COMMON AR

SMCS-1350 **i04037062**

NOTE	REF NO	GRAPHIC REF	PART NUMBER	QTY	PART NAME 1 2 3 4 5 6 (PRODUCT LEVEL)	SEE PAGE
	1	1	**169-3471**	8	WASHER (22X60X20-MM THK)	
Y	2	1	*249-7364*	1	AFTERCOOLER GP-AIR	148
Y	3	1	*249-7365*	1	COOLER GP-HYDRAULIC OIL	554
Y	4	1	*249-7366*	1	FAN & MOTOR GP (HYDRAULIC)	129
Y	5	1	*249-7367*	1	RADIATOR GP	145
Y	6	1	*249-7368*	1	MOUNTING GP-FAN DRIVE	70
Y	7	1	*277-2166*	1	ADAPTER GP-FAST FILL FUEL	158
Y	8	1	*274-1691*	1	GUARD GP-FAN (LOWER)	132
M	9	1	**8T-4187**	8	BOLT (M20X2.5X80-MM)	

M-METRIC PART
Y-SEPARATE ILLUSTRATION

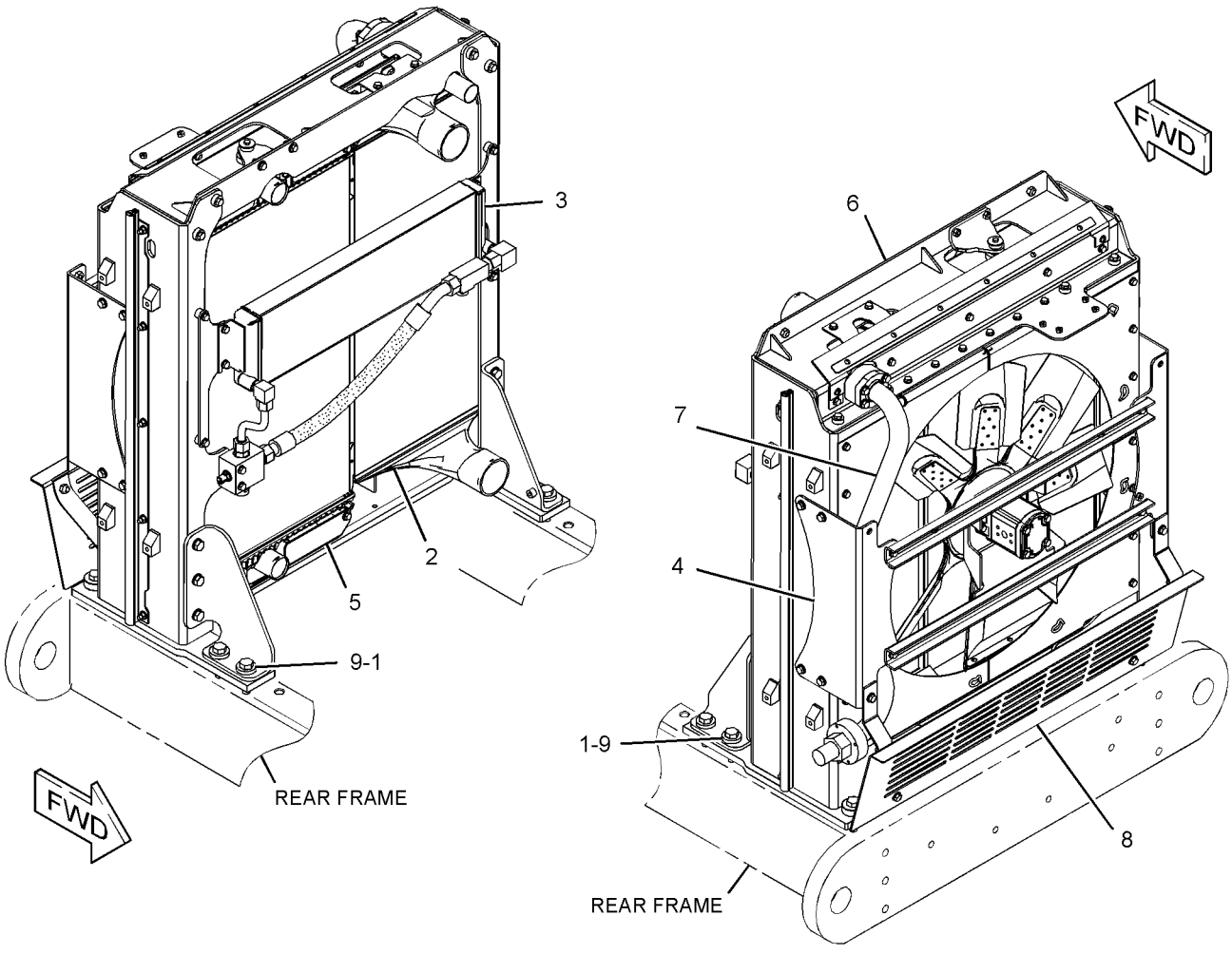

GRAPHIC #1 **<END>** g01322349

249-7366 FAN & MOTOR GP—HYDRAULIC

S/N: R9H1-UP

PART OF 249-7363 COOLING AR

SMCS-1356, 1386 **i03759849**

NOTE	REF NO	GRAPHIC REF	PART NUMBER	QTY	PART NAME 1 2 3 4 5 6 (PRODUCT LEVEL)	SEE PAGE
	1	1	**244-5401**	1	SPIDER AS-FAN	
	2	1	**248-0409**	1	ADAPTER-FAN	
	3	1	*263-3996*	1	SUPPORT GP-FAN	
M	3A	1	**8T-4139**	12	BOLT (M12X1.75X30-MM)	
	3B	1	**8T-4223**	12	WASHER-HARD (13.5X25.5X3-MM THK)	
	3C	1	**263-3999**	2	BRACKET AS	
					(EACH INCLUDES)	
M		1	**8T-3490**	1	NUT-WELD (M10X1.5-THD)	
M		1	**8T-3597**	4	NUT-WELD (M12X1.75-THD)	
	3D	1	**263-4002**	1	SUPPORT AS	
M		1	**8T-3490**	3	NUT-WELD (M10X1.5-THD)	
M		1	**8Y-4489**	1	BOSS (M10X1.5-THD)	
Y	4	1	*263-4007*	1	GUARD GP-FAN	131
	5	1	**5P-8245**	1	WASHER-HARD (13.5X25.5X3-MM THK)	
	6	1	**6B-6684**	1	NUT-FULL (1/2-20-THD)	
	7	1	**7X-7729**	2	WASHER (11X25X3-MM THK)	
	8	1	**8T-4121**	6	WASHER-HARD (11X21X2.5-MM THK)	
M	9	1	**8T-4136**	6	BOLT (M10X1.5X25-MM)	
CM	10	1	**8T-4186**	2	BOLT (M10X1.5X40-MM)	
CJ	11	1	**322-8602**	1	MOTOR GP-GEAR	
D	12	1	**5P-8292**		SEAL (0.7-M)	
E	13	1	**266-8568**		SEAL-BULK (47-CM)	
					AVAILABLE REPAIR KIT(S):	
J			**350-0149**	1	KIT-SEAL	
					(INCLUDES BACKUP RINGS, RETAINING RINGS, SHAFT SEALS, SQUARE SEALS, PRESSURE SEALS & SEAL-O-RING)	

C-CHANGE FROM PREVIOUS TYPE
D-ORDER BY THE METER
E-ORDER BY THE CENTIMETER
J-KIT MARKED J SERVICES PART(S) MARKED J
M-METRIC PART
Y-SEPARATE ILLUSTRATION

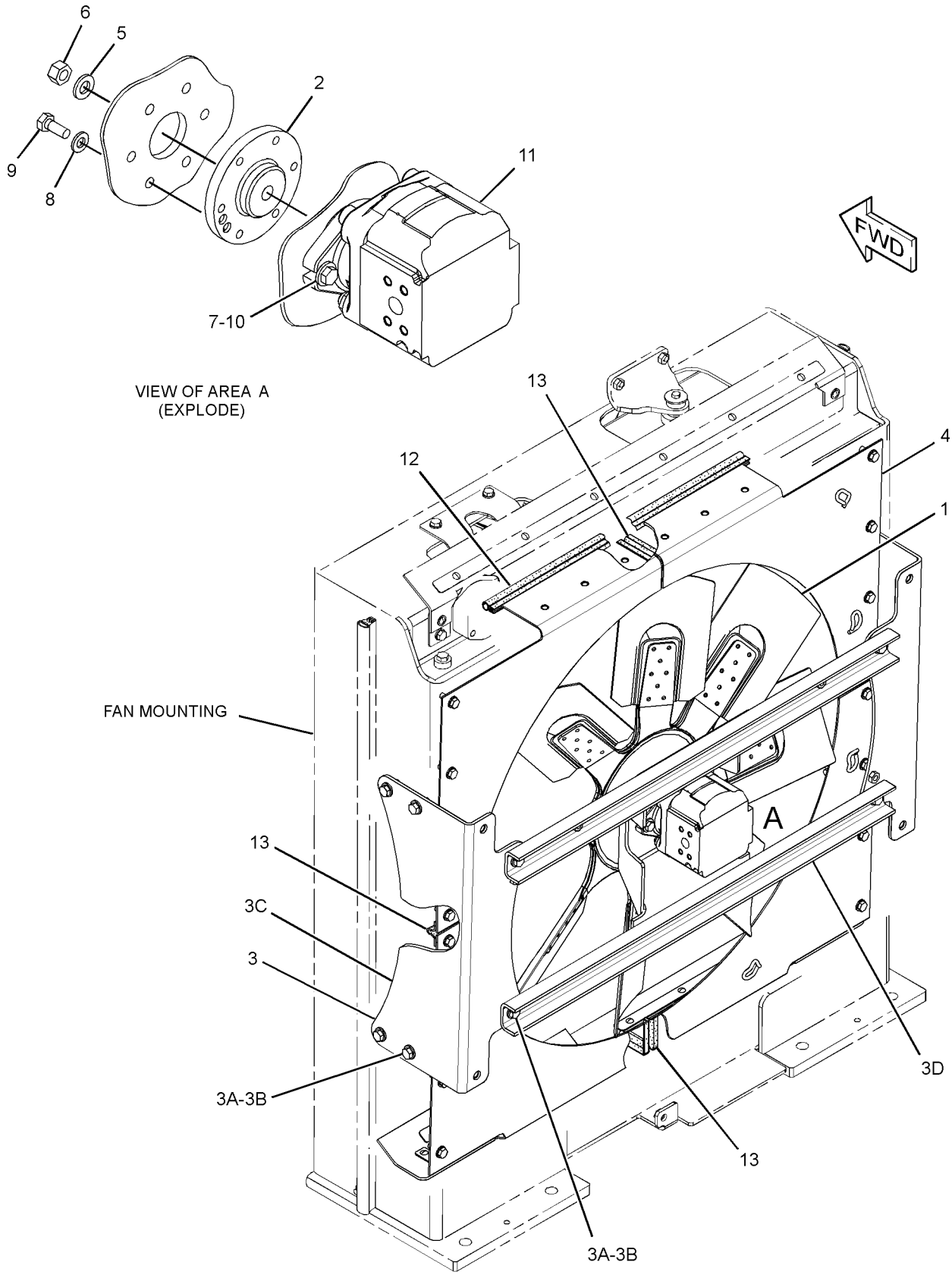

GRAPHIC #1

<END>

g02047116

263-4007 GUARD GP-FAN

S/N: R9H1-UP

PART OF 249-7366 FAN & MOTOR GP

SMCS-1360 **i02585234**

NOTE	REF NO	GRAPHIC REF	PART NUMBER	QTY	PART NAME 1 2 3 4 5 6 (PRODUCT LEVEL)	SEE PAGE
	1	1	**266-7713**	1	STRIP	
	2	1	**272-2956**	1	STRIP	
	3	1	**272-2957**	2	STRIP	
	4	1	**272-2971**	1	BAFFLE	
	5	1	**272-2972**	1	BAFFLE	
	6	1	**274-6832**	1	SHIELD AS-FAN	
		1	**7T-1099**	2	LINK	
M		1	**8T-3490**	3	NUT-WELD (M10X1.5-THD)	
	7	1	**274-6833**	1	SHIELD AS-FAN	
M		1	**8T-3490**	3	NUT-WELD (M10X1.5-THD)	
	8	1	**277-2388**	1	SHIELD AS-FAN	
		1	**7T-1099**	1	LINK	
	9	1	**277-2389**	1	SHIELD AS-FAN	
		1	**7T-1099**	2	LINK	
	10	1	**6V-4604**	14	RIVET-POP	
	11	1	**8T-4121**	24	WASHER-HARD (11X21X2.5-MM THK)	
M	12	1	**8T-4195**	24	BOLT (M10X1.5X30-MM)	

M-METRIC PART

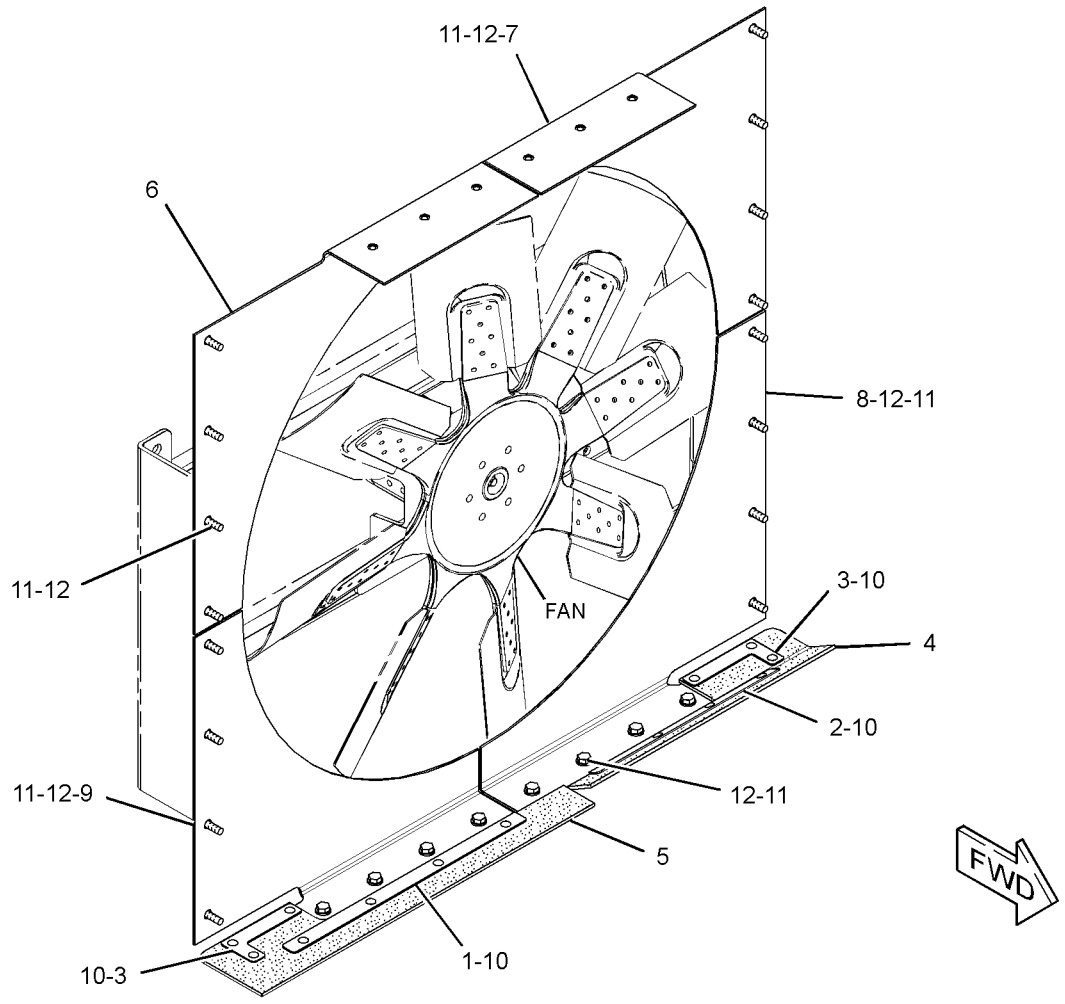

GRAPHIC #1 **<END>** g01325772

COOLING SYSTEM

274-1691 GUARD GP-FAN–LOWER

S/N: R9H1-UP

PART OF 249-7363 COOLING AR

SMCS-1360 **i02585227**

NOTE	REF NO	GRAPHIC REF	PART NUMBER	QTY	PART NAME 1 2 3 4 5 6 (PRODUCT LEVEL)	SEE PAGE
	1	1	**272-2960**	1	BRACKET AS	
M		1	**8T-3597**	2	NUT-WELD (M12X1.75-THD)	
	2	1	**272-2962**	1	BRACKET AS	
M		1	**8T-3597**	2	NUT-WELD (M12X1.75-THD)	
	3	1	**272-2970**	1	PLATE	
M	4	1	**8T-4139**	8	BOLT (M12X1.75X30-MM)	
	5	1	**8T-4223**	8	WASHER-HARD (13.5X25.5X3-MM THK)	

M-METRIC PART

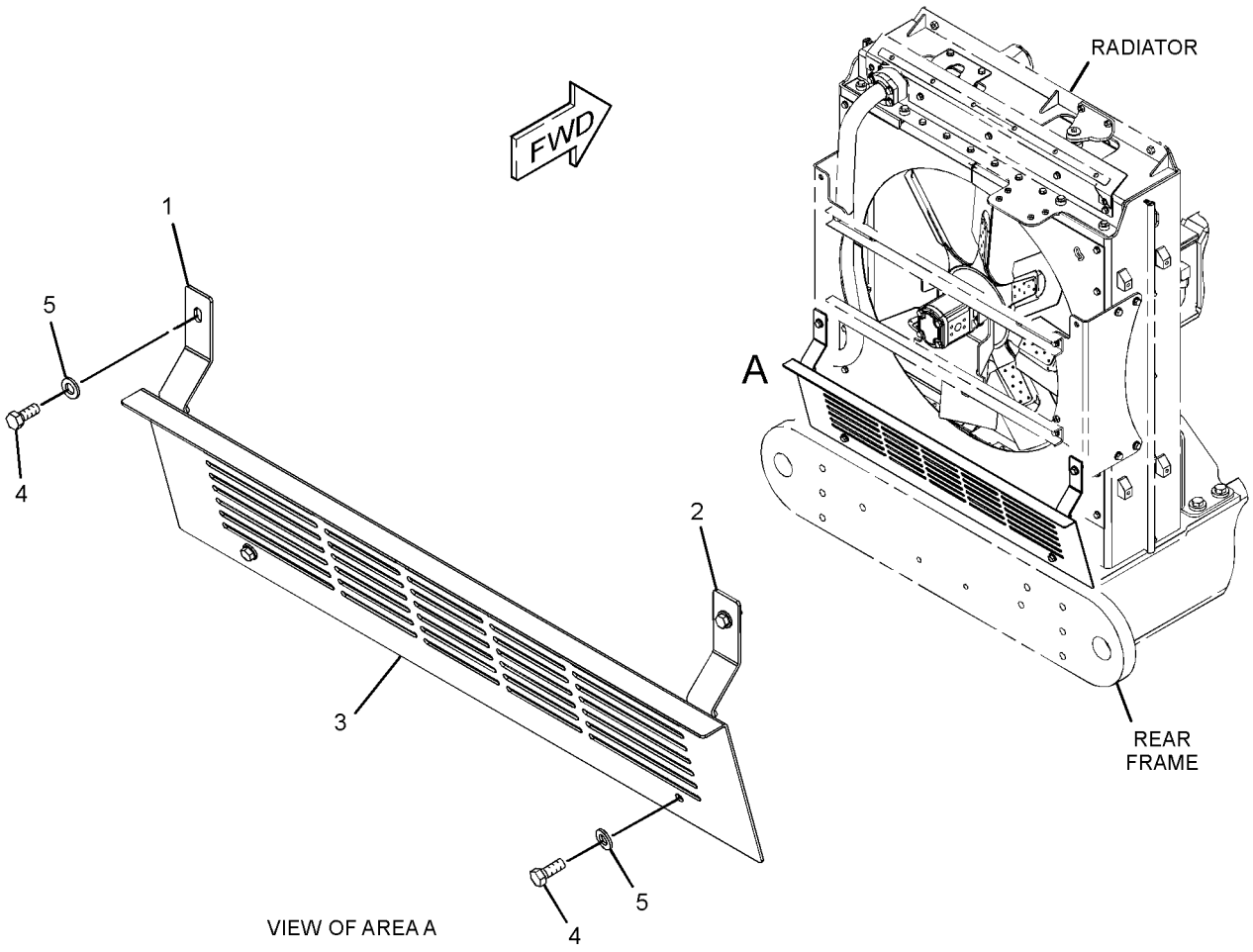

GRAPHIC #1 **<END>** g01313641

243-1667 LINES GP-WATER—SINGLE WATER REGULATOR

S/N: MHX1214-UP

PART OF 227-5359, 231-0876, 349-4462 ENGINE AR-COMPLETE

ALSO AN ATTACHMENT

SMCS-1380 **i03997502**

NOTE	REF NO	GRAPHIC REF	PART NUMBER	QTY	PART NAME 1 2 3 4 5 6 (PRODUCT LEVEL)	SEE PAGE
	1	1	**224-6361**	1	SEAL (TEMPERATURE REGULATOR)	
	2	1	**227-5075**	1	SEAL (TEMPERATURE REGULATOR HOUSING)	
	3	1	**238-6721**	1	BASE	
	4	1	**238-6728**	1	TUBE-BYPASS	
	5	1	**238-6730**	1	HOUSING AS-REGULATOR	
		1	**3S-9643**	1	SEAL-LIP TYPE (WATER TEMPERATURE REGULATOR)	
	6	1	**239-8135**	1	VALVE AS-VENT (TEMPERATURE REGULATOR) (WATER LINES)	
		1	**9X-7380**	1	SEAL-O-RING	
	7	1	**248-5513**	1	REGULATOR-TEMPERATURE (92-DEG C) (COOLANT)	
	8	1	**230-2603**	4	BOLT (M8X1.25X90-MM)	
M	9	1	**8T-0292**	4	BOLT (M8X1.25X90-MM)	
	10	1	*353-5140*	2	PLUG AS	
					(EACH INCLUDES)	
		1	**6V-5063**	1	SEAL-O-RING	
		1	**9S-8008**	1	PLUG-O-RING	
	11	1	**9M-1974**	4	WASHER-HARD (8.8X16X2-MM THK)	
	12	1	*353-5126*	3	PLUG AS	
					(EACH INCLUDES)	
		1	**6V-6609**	1	SEAL-O-RING	
		1	**9S-8005**	1	PLUG-O-RING	
	13	1	*304-8008*	2	PLUG AS	
					(EACH INCLUDES)	
		1	**6V-9027**	1	SEAL-O-RING	
		1	**9S-8002**	1	PLUG-O-RING	
	14	1	**7L-6580**	2	SEAL-O-RING	

M-METRIC PART

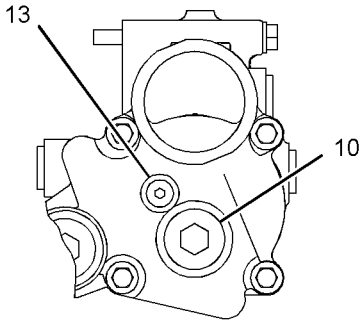

VIEW C-C

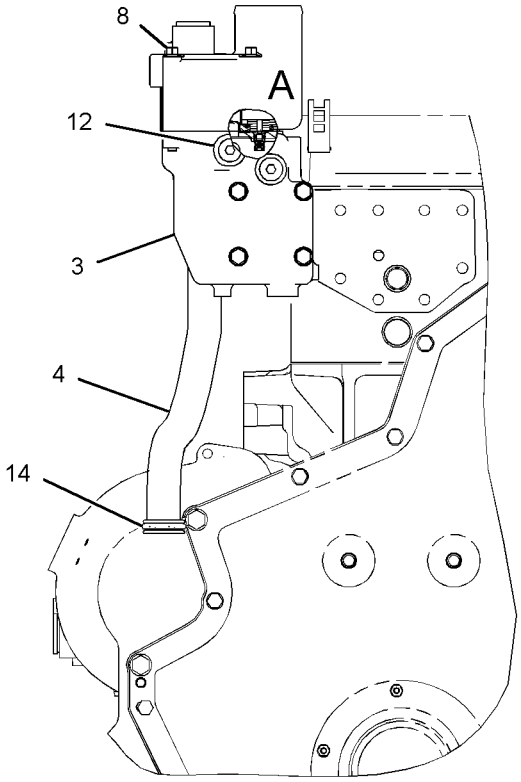

FRONT VIEW OF ENGINE

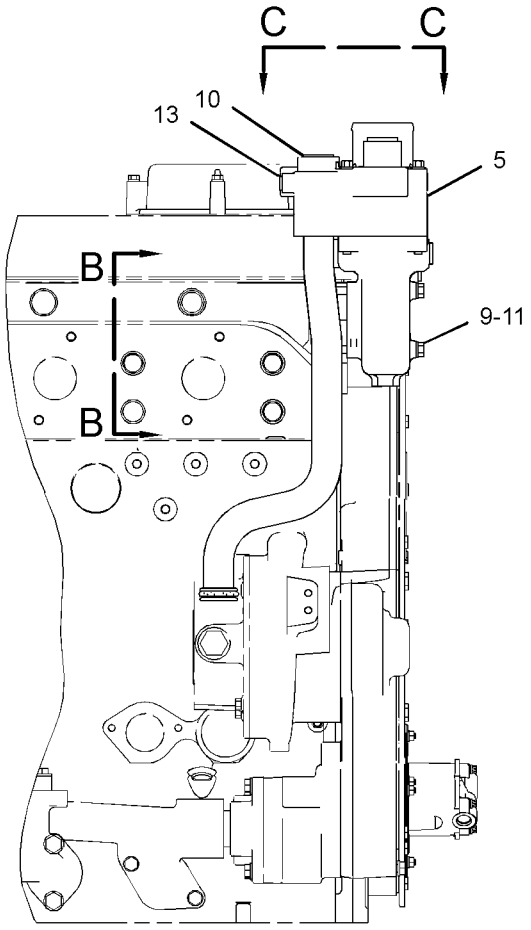

RIGHT SIDE VIEW OF ENGINE

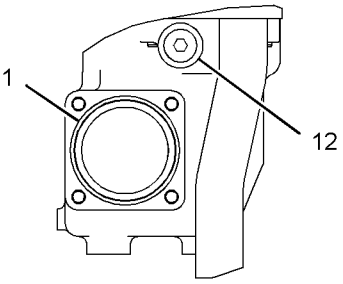

VIEW B-B

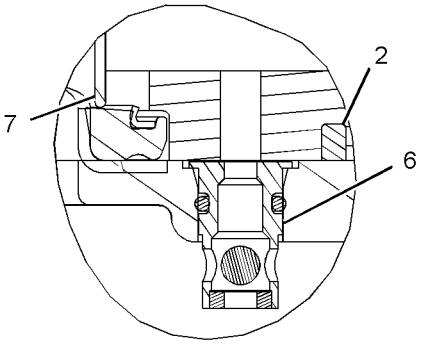

VIEW OF AREA A

GRAPHIC #1 **<END>** g02224234

COOLING SYSTEM

249-7325 LINES GP-WATER

S/N: R9H1-UP

PART OF 349-2556 COMMON AR

SMCS-1380 **i02975784**

NOTE	REF NO	GRAPHIC REF	PART NUMBER	QTY	PART NAME 1 2 3 4 5 6 (PRODUCT LEVEL)	SEE PAGE
	1	1	**5D-1026**	1	CLAMP-BAND	
	2	1	**8F-8151**	1	VALVE-SHUTOFF	
E	3	1	**5P-1262**		HOSE (16-CM EACH)	
	4	1	**157-0670**	1	CAP-DUST	
	5	1	**163-2919**	1	HOSE	
	6	1	**255-5415**	1	BRACKET AS	
	7	1	**260-6612**	1	TUBE AS	
	8	1	**260-6613**	1	TUBE AS	
	9	1	**291-6388**	1	HOSE	
	10	1	**138-7500**	1	SPACER (11X25X50-MM THK)	
	11	1	**154-9025**	1	VALVE-FLUID SAMPLING (ENGINE COOLANT)	
	12	1	**208-6054**	4	CLAMP	
	13	1	**209-4575**	2	CLAMP	
	14	1	**6V-1581**	2	CLIP (SLOT)	
	15	1	**6V-1582**	2	CLIP (TAB)	
	16	1	**8T-4121**	2	WASHER-HARD (11X21X2.5-MM THK)	
	17	1	**8T-4123**	2	WASHER (22X35X3.5-MM THK)	
M	18	1	**8T-4172**	1	BOLT (M10X1.5X80-MM)	
M	19	1	**8T-4195**	1	BOLT (M10X1.5X30-MM)	
M	20	1	**8T-4780**	2	BOLT (M20X2.5X30-MM)	
E	21	1	**5P-0767**		HOSE (71-CM)	
	22	1	**209-4577**	2	CLAMP	
	23	1	**8C-0620**	8	PROTECTOR-THREAD	

E-ORDER BY THE CENTIMETER
M-METRIC PART

249-7325 **LINES GP-WATER** *(contd.)* **i02975784**

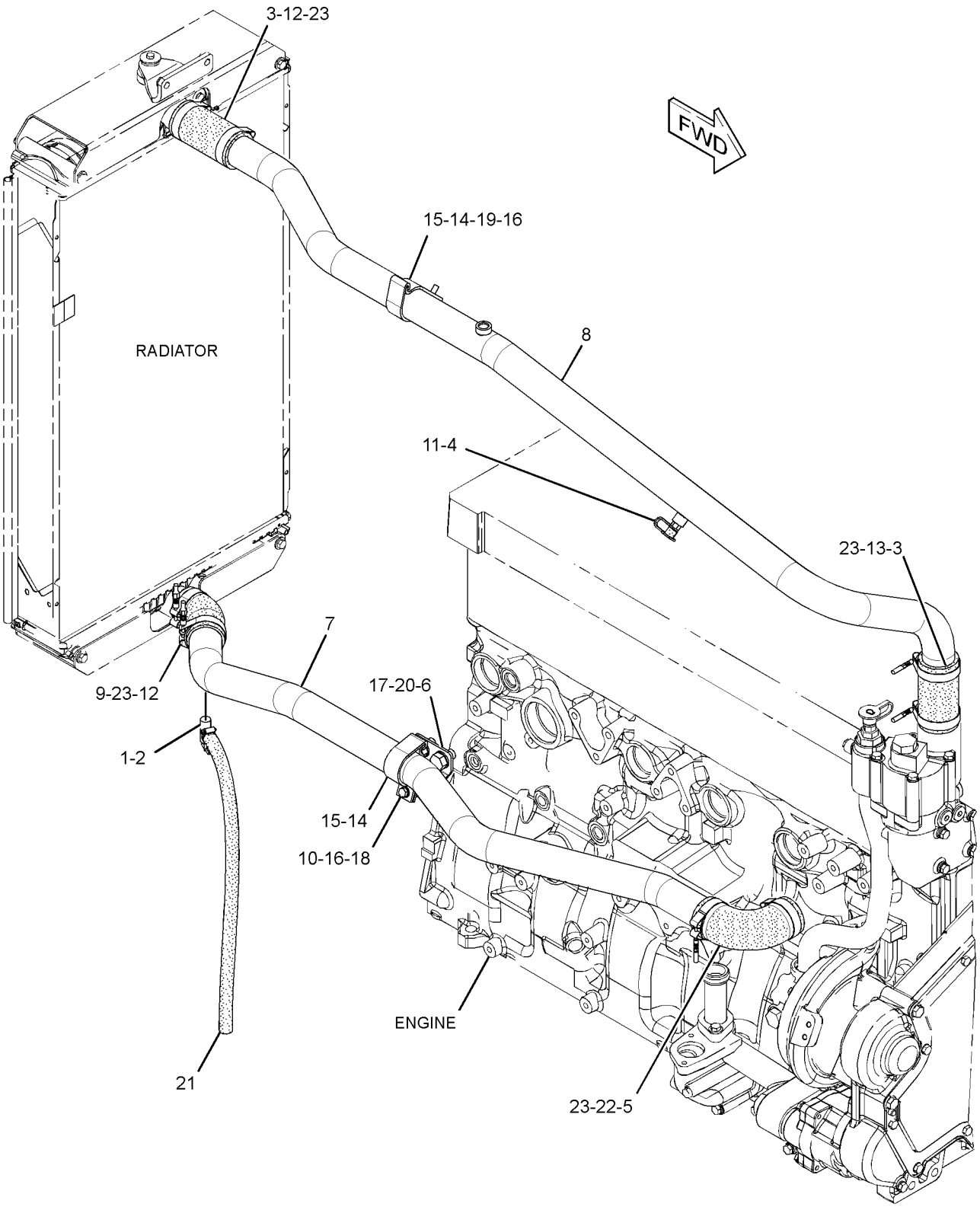

GRAPHIC #1 **<END>** g01523873

255-2396 LINES GP-WATER—PUMP HOUSING

S/N: MHX1304-6253
PART OF 227-5359, 231-0876 ENGINE AR-COMPLETE
ALSO AN ATTACHMENT

SMCS-1380 **i03997816**

NOTE	REF NO	GRAPHIC REF	PART NUMBER	QTY	PART NAME 1 2 3 4 5 6 (PRODUCT LEVEL)	SEE PAGE
	1	1	**255-2395**	1	ELBOW-WATER PUMP	
	2	1	*353-5140*	2	PLUG AS	
					(EACH INCLUDES)	
	2A	1	**6V-5063**	1	SEAL-O-RING	
		1	**9S-8008**	1	PLUG-O-RING	
M	3	1	**6V-3940**	3	BOLT (M8X1.25X25-MM)	
	4	1	**9M-1974**	3	WASHER-HARD (8.8X16X2-MM THK)	

M-METRIC PART

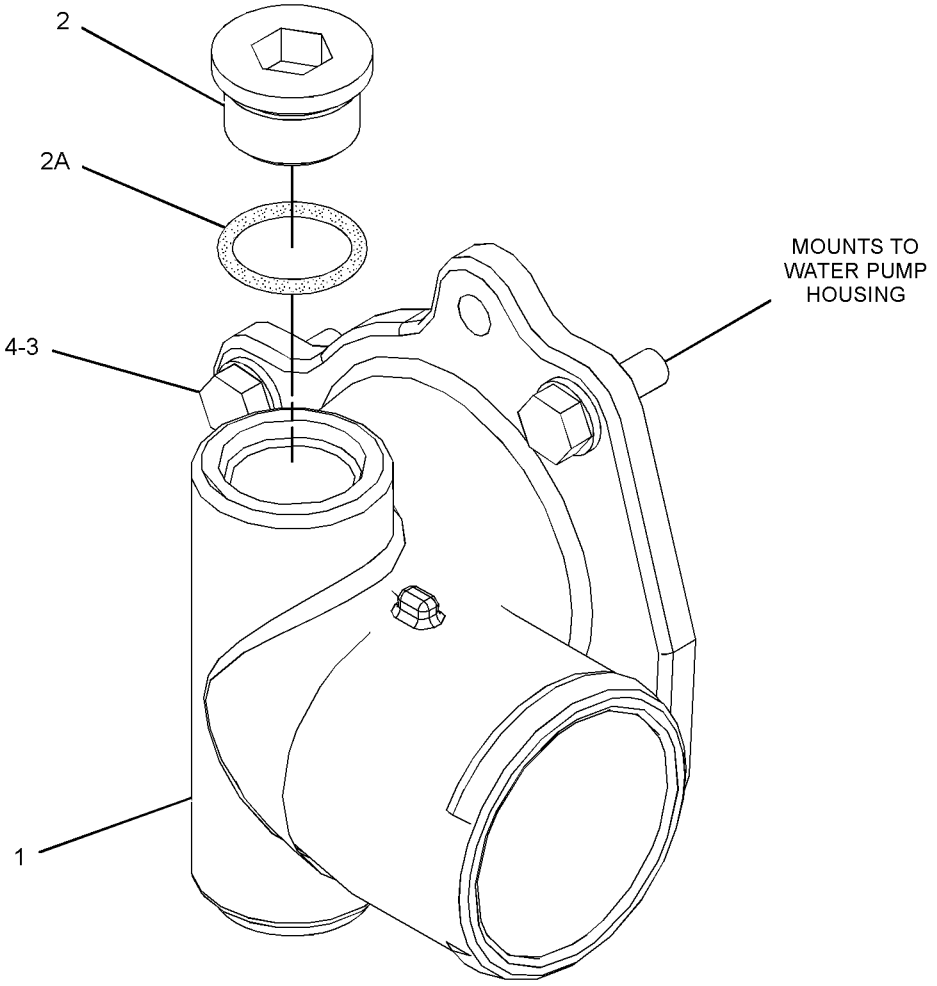

GRAPHIC #1 **<END>** g02224513

319-5079 LINES GP-WATER

S/N: MHX6254-UP
PART OF 231-0876, 349-4462 ENGINE AR-COMPLETE
ALSO AN ATTACHMENT

SMCS-1380 **i03997818**

NOTE	REF NO	GRAPHIC REF	PART NUMBER	QTY	PART NAME 1 2 3 4 5 6 (PRODUCT LEVEL)	SEE PAGE
	1	1	**255-2395**	1	ELBOW-WATER PUMP	
	2	1	*353-5140*	1	PLUG AS	
	2A	1	**6V-5063**	1	SEAL-O-RING	
		1	**9S-8008**	1	PLUG-O-RING	
	3	1	**5P-1230**	1	CONNECTOR	
M	4	1	**6V-3940**	3	BOLT (M8X1.25X25-MM)	
	5	1	**6V-5063**	1	SEAL-O-RING	
	6	1	**9M-1974**	3	WASHER-HARD (8.8X16X2-MM THK)	

M-METRIC PART

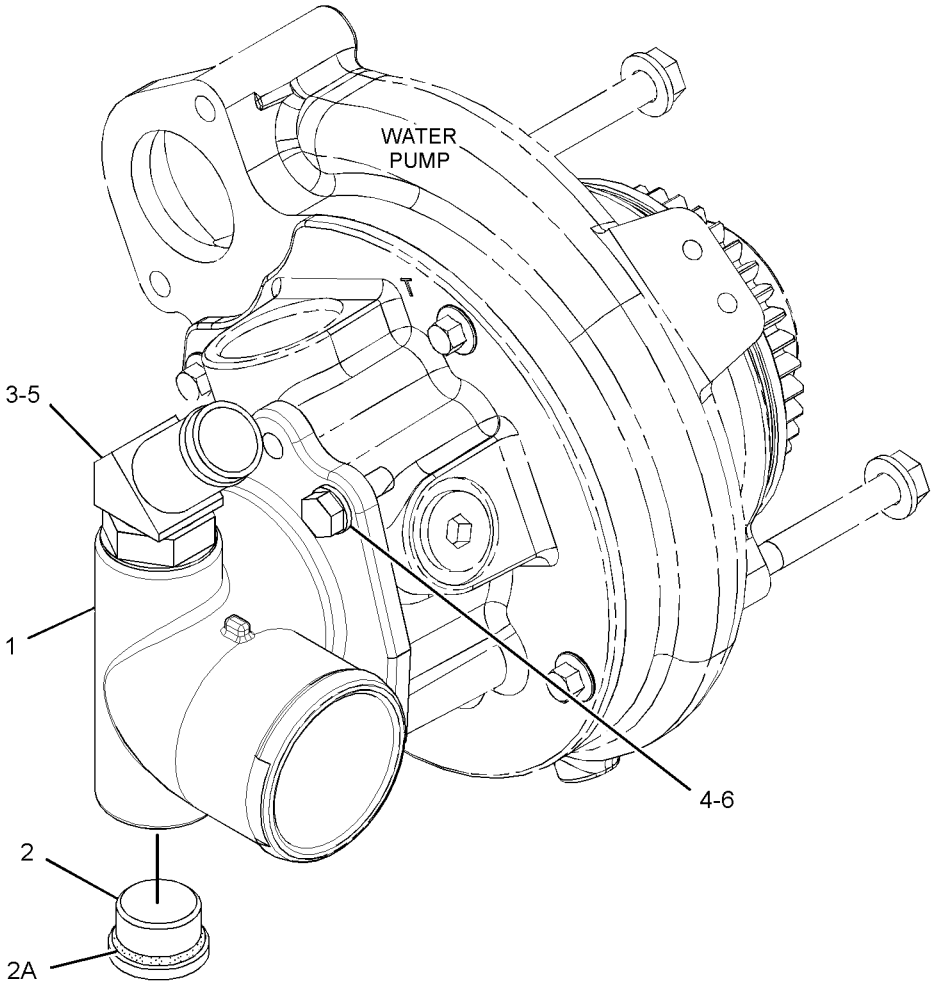

GRAPHIC #1 **<END>** g02225254

223-9147 PUMP GP-WATER

S/N: MHX1304-UP
PART OF 228-5811 PUMP GP-WATER
ALSO AN ATTACHMENT

SMCS-1361 **i02663391**

NOTE	REF NO	GRAPHIC REF	PART NUMBER	QTY	PART NAME 1 2 3 4 5 6 (PRODUCT LEVEL)	SEE PAGE
	1	1	**128-0317**	1	SEAL GP (WATER PUMP)	
	2	1	**176-6994**	1	WASHER	
	4	1	**222-3904**	1	GEAR (35-TEETH)	
	5	1	**223-9143**	1	IMPELLER	
	6	1	**223-9144**	1	SHAFT-PUMP	
	7	1	**223-9145**	1	HOUSING-PUMP	
	8	1	**1B-3867**	2	BALL BEARING	
	9	1	**8C-3100**	1	SEAL-LIP TYPE	
M	10	1	**8T-9515**	1	BOLT-SOCKET HEAD (M10X1.5X40-MM)	
	11	1	**8T-9598**	1	RING-RETAINING	

M-METRIC PART

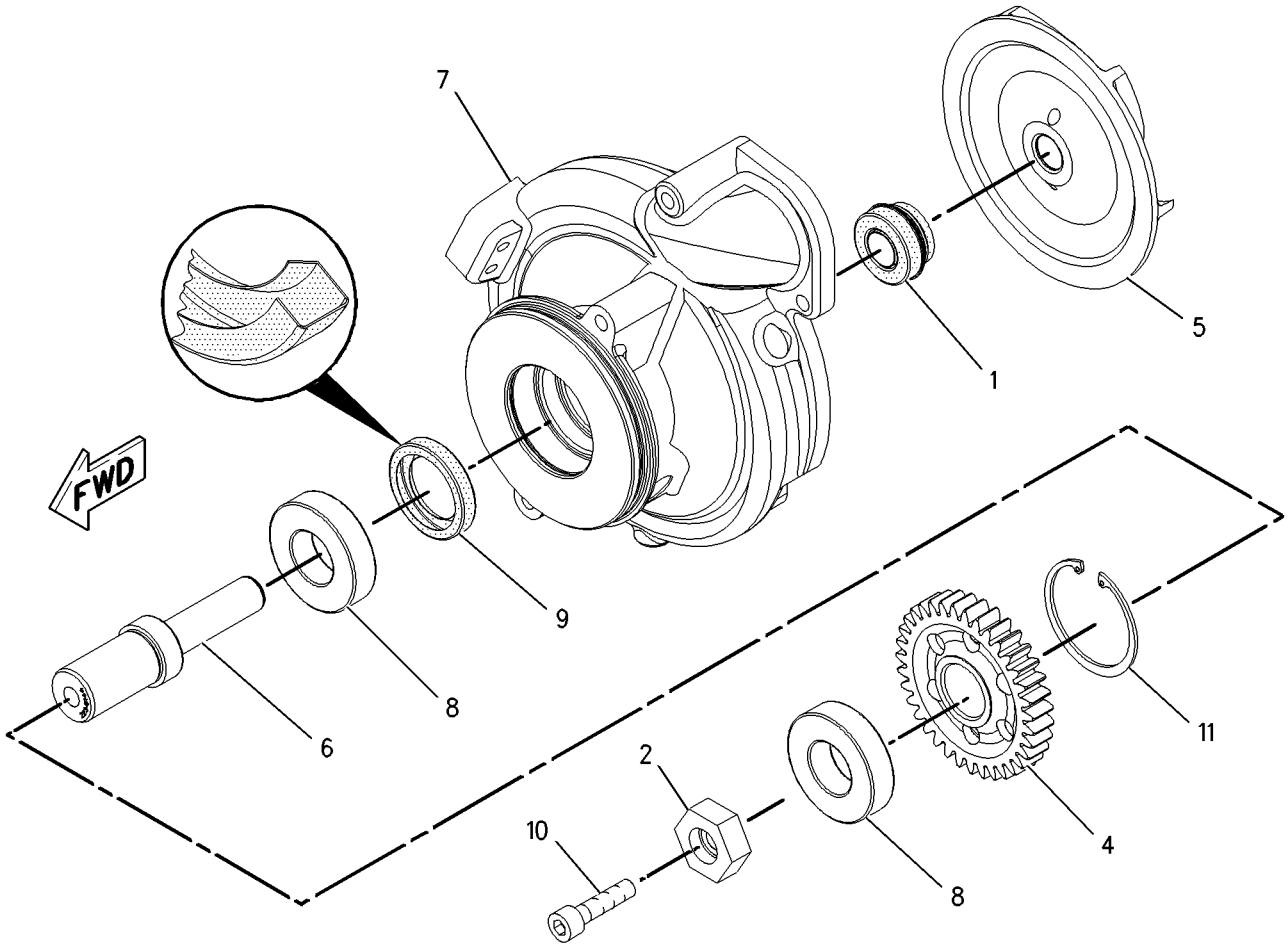

GRAPHIC #1 **<END>** g00950215

228-5811 PUMP GP-WATER*R

S/N: MHX1304-UP
PART OF 228-5812 PUMP GP-WATER
ALSO AN ATTACHMENT

SMCS-1361 **i02090986**

NOTE	REF NO	GRAPHIC REF	PART NUMBER	QTY	PART NAME 1 2 3 4 5 6 (PRODUCT LEVEL)	SEE PAGE
	1	1	**208-9281**	4	BOLT-FLANGE HEAD (M8X1.25X20-MM)	
Y	2	1	**223-9147**	1	PUMP GP-WATER	139
	3	1	**225-7003**	1	SEAL-O-RING	
	4	1	**228-5810**	1	COVER	
	5	1	**229-8810**	1	SEAL	
	6	1	**6V-3251**	1	SEAL-O-RING	
	7	1	**9S-4190**	1	PLUG-O RING	

Y-SEPARATE ILLUSTRATION

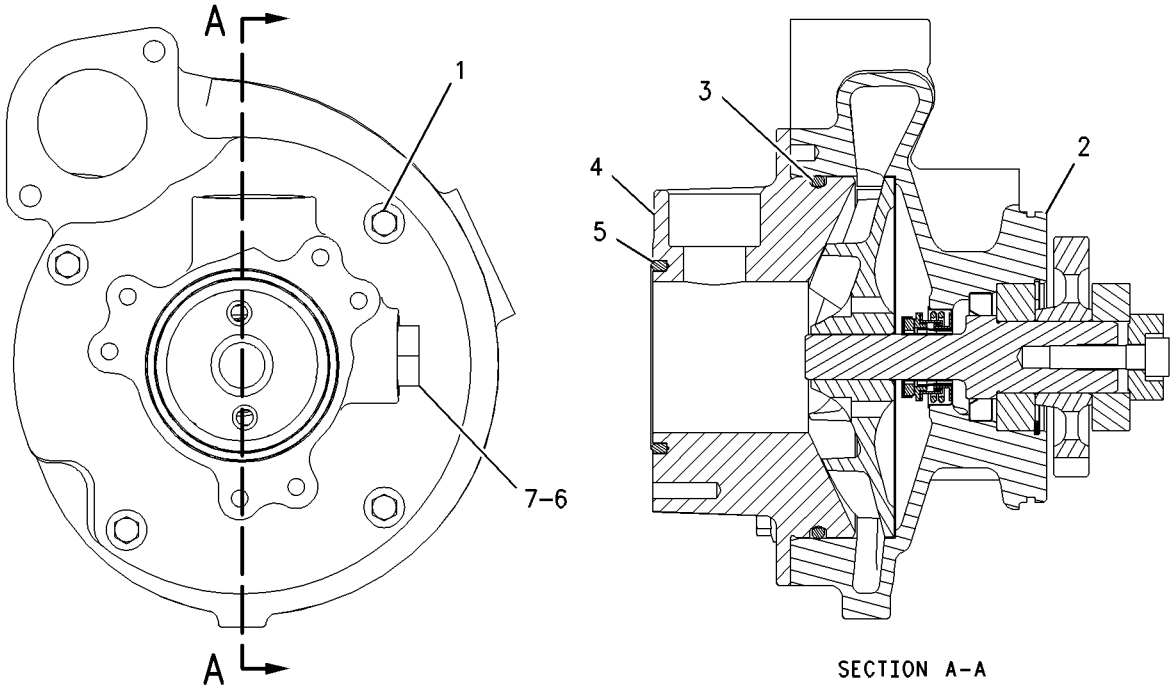

GRAPHIC #1 **<END>** g00950338

228-5812 PUMP GP-WATER

S/N: MHX1304-UP
PART OF 231-0877, 267-0009 ENGINE AR-CORE
ALSO AN ATTACHMENT
TYPE 1

SMCS-1361 **i02667435**

NOTE	REF NO	GRAPHIC REF	PART NUMBER	QTY	PART NAME 1 2 3 4 5 6 (PRODUCT LEVEL)	SEE PAGE
YR	1	1	**228-5811**	1	PUMP GP-WATER	140
	2	1	**6V-5839**	2	WASHER (11X21X2.5-MM THK)	
	3	1	**6V-7350**	1	SEAL-O-RING	
M	4	1	**8T-0643**	2	BOLT (M10X1.5X80-MM)	

M-METRIC PART
R-REMFG PART MAY BE AVAILABLE
Y-SEPARATE ILLUSTRATION

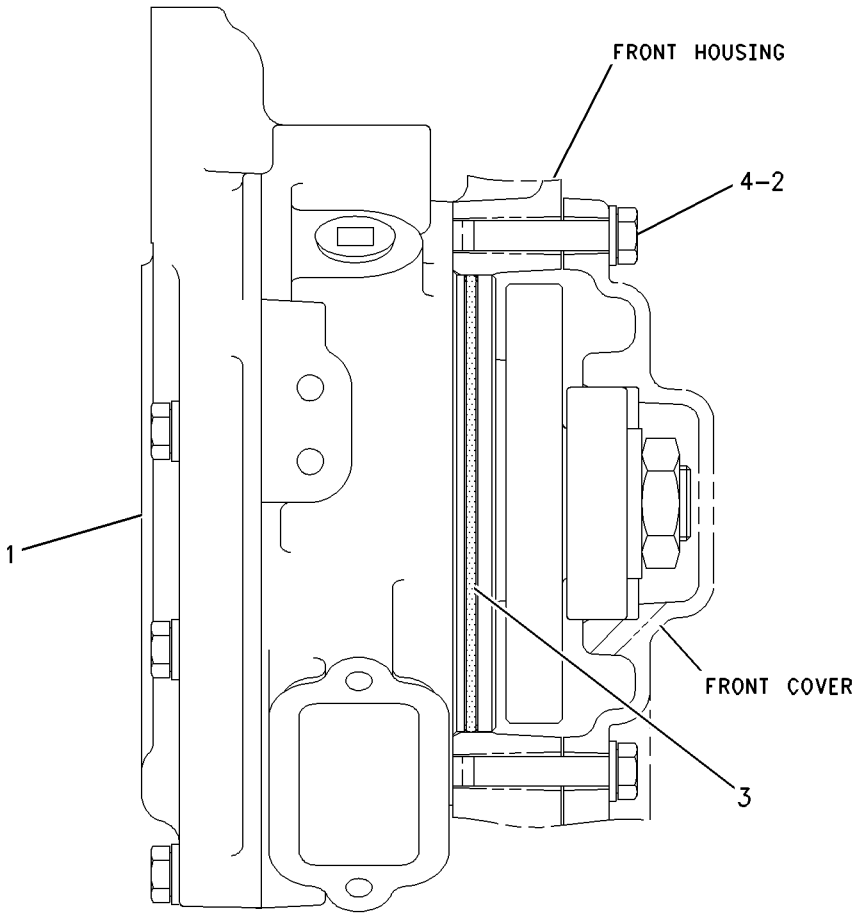

RIGHT SIDE VIEW

GRAPHIC #1 **<END>** g00942142

228-5812 PUMP GP-WATER

S/N: MHX1304-UP
PART OF 231-0877, 286-5804, 301-2265, 359-0362 ENGINE AR-CORE
ALSO AN ATTACHMENT
TYPE 2

SMCS-1361 **i02663393**

NOTE	REF NO	GRAPHIC REF	PART NUMBER	QTY	PART NAME 1 2 3 4 5 6 (PRODUCT LEVEL)	SEE PAGE
CYR	1	1	**292-9252**	1	PUMP GP-WATER	143
	2	1	**6V-5839**	2	WASHER (11X21X2.5-MM THK)	
	3	1	**6V-7350**	1	SEAL-O-RING	
M	4	1	**8T-0643**	2	BOLT (M10X1.5X80-MM)	

C-CHANGE FROM PREVIOUS TYPE
M-METRIC PART
R-REMFG PART MAY BE AVAILABLE
Y-SEPARATE ILLUSTRATION

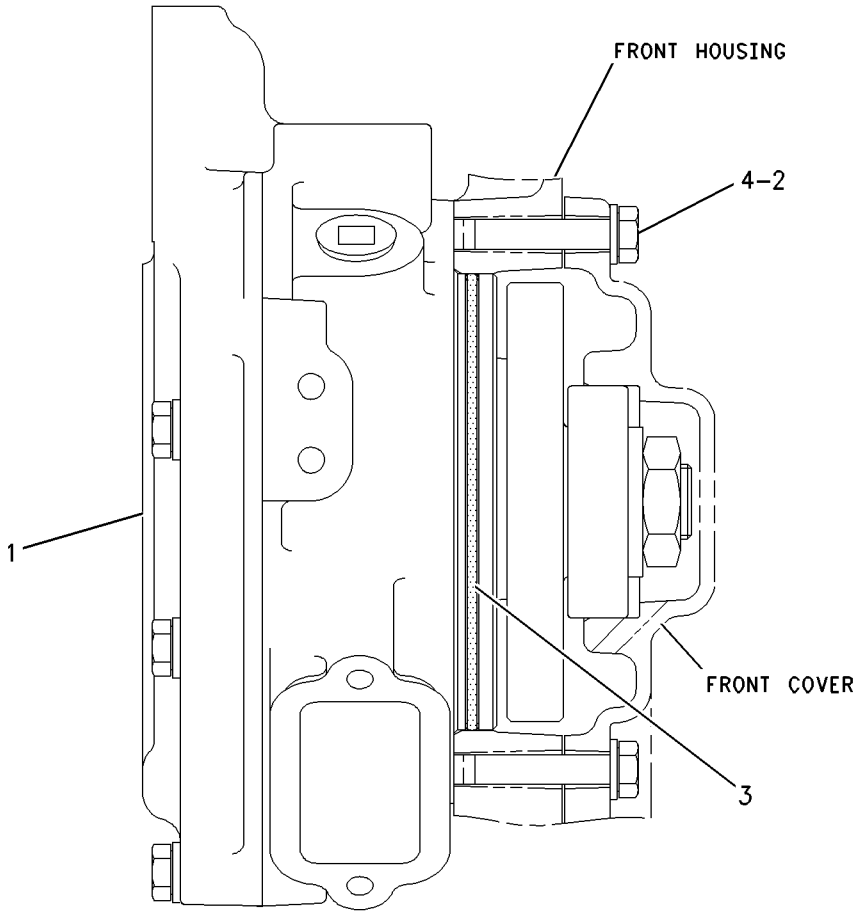

RIGHT SIDE VIEW

GRAPHIC #1 **<END>** g00942142

292-9252 PUMP GP-WATER*R

S/N: MHX1304-UP
PART OF 228-5812 PUMP GP-WATER
ALSO AN ATTACHMENT

SMCS-1361 **i03883054**

NOTE	REF NO	GRAPHIC REF	PART NUMBER	QTY	PART NAME 1 2 3 4 5 6 (PRODUCT LEVEL)	SEE PAGE
	1	1	**208-9281**	4	BOLT-FLANGE HEAD (M8X1.25X20-MM)	
Y	2	1	**293-0818**	1	PUMP GP-WATER	144
	3	1	**225-7003**	1	SEAL-O-RING	
	4	1	**228-5810**	1	COVER	
	5	1	**229-8810**	1	SEAL	
	6	1	*353-5125*	1	PLUG AS	
		1	**6V-3251**	1	SEAL-O-RING	
		1	**9S-8006**	1	PLUG-O-RING	

Y-SEPARATE ILLUSTRATION

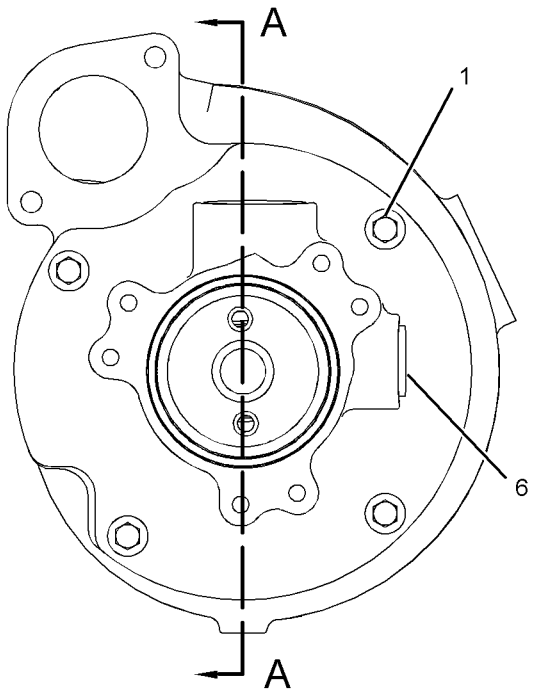

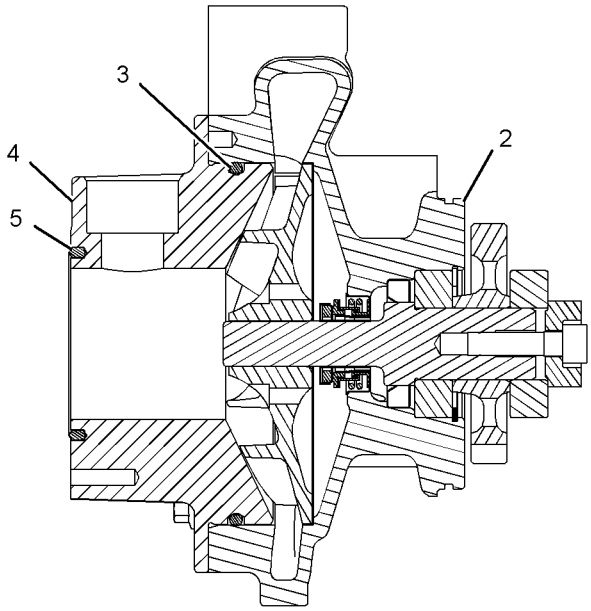

SECTION A-A

GRAPHIC #1 **<END>** g02128624

COOLING SYSTEM

293-0818 PUMP GP-WATER

S/N: MHX1304-UP
PART OF 292-9252 PUMP GP-WATER
ALSO AN ATTACHMENT

SMCS-1361 **i03596455**

NOTE	REF NO	GRAPHIC REF	PART NUMBER	QTY	PART NAME 1 2 3 4 5 6 (PRODUCT LEVEL)	SEE PAGE
	1	1	**6V-9666**	1	WASHER-HARD	
	2	1	**128-0317**	1	SEAL GP (WATER PUMP)	
	3	1	**203-3831**	1	PLUG-CUP	
	4	1	**223-9143**	1	IMPELLER	
	5	1	**223-9145**	1	HOUSING-PUMP	
	6	1	**291-6905**	1	SHAFT-WATER PUMP	
	7	1	**292-1200**	1	GEAR-WATER PUMP (35-TEETH)	
	8	1	**1B-3867**	2	BALL BEARING	
M	9	1	**6V-5842**	1	BOLT (M10X1.5X40-MM)	
	10	1	**8C-3100**	1	SEAL-LIP TYPE	
	11	1	**8T-9598**	1	RING-RETAINING	

M-METRIC PART

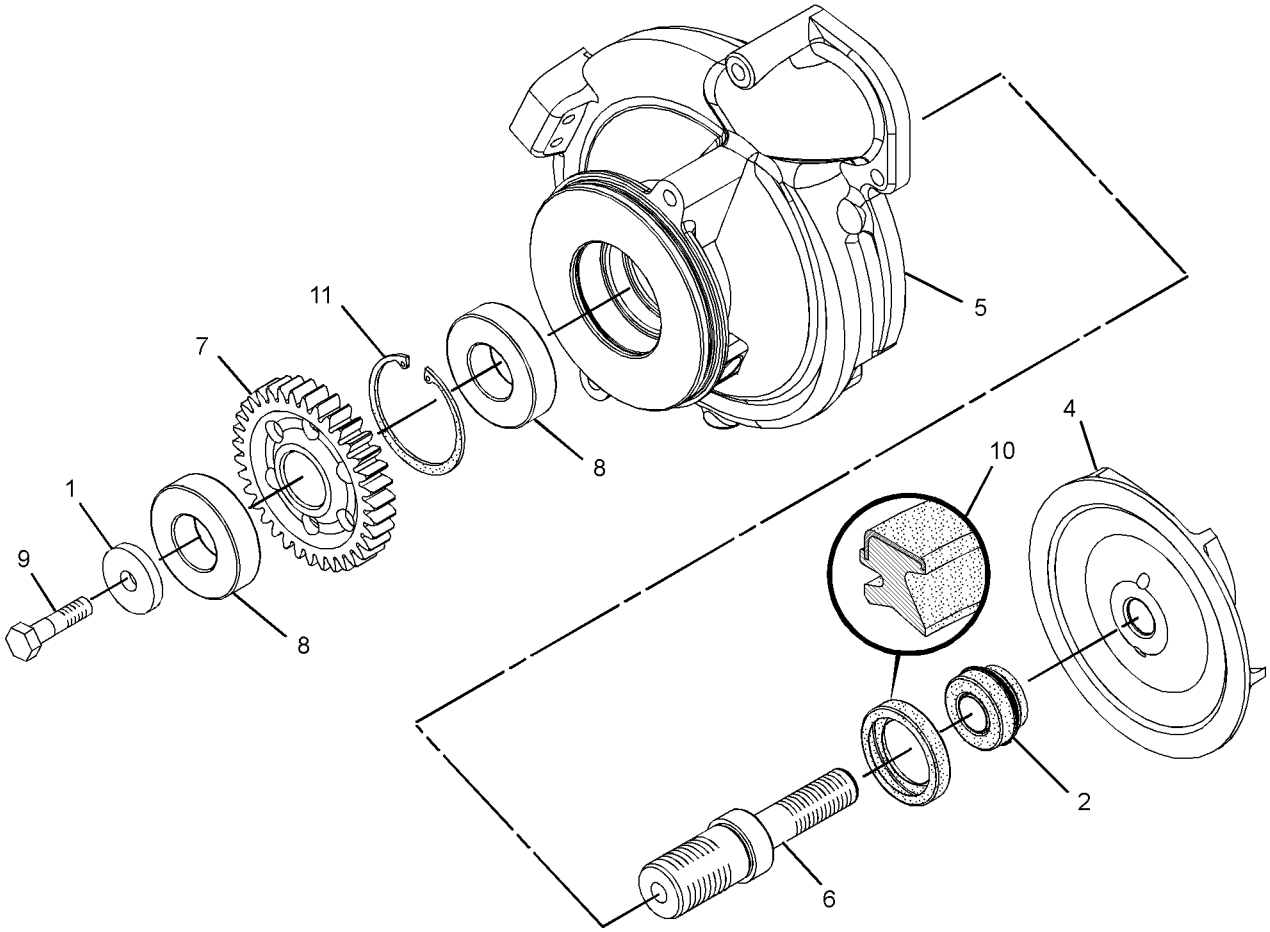

GRAPHIC #1 **<END>** g01324739

COOLING SYSTEM

249-7367 RADIATOR GP

S/N: R9H1-UP

PART OF 249-7363 COOLING AR

SMCS-1353 **i02585231**

NOTE	REF NO	GRAPHIC REF	PART NUMBER	QTY	PART NAME 1 2 3 4 5 6 (PRODUCT LEVEL)	SEE PAGE
	1	1	**121-3307**	1	MOUNT AS-RESILIENT (RUBBER)	
M	2	1	**174-4181**	1	WASHER-HARD (8.5X40X3-MM THK)	
	3	1	**243-2289**	2	MOUNT AS (RUBBER)	
	4	1	**256-5311**	1	CORE AS-RADIATOR	
	5	1	**263-3960**	1	BRACKET AS	
M		1	**8T-3490**	2	NUT-WELD (M10X1.5-THD)	
	6	1	**263-3962**	1	BRACKET AS	
	7	1	**263-3994**	1	BRACKET AS	
M	8	1	**7X-2546**	4	BOLT (M10X1.5X180-MM)	
	9	1	**7X-7729**	8	WASHER (11X25X3-MM THK)	
M	10	1	**8T-4133**	4	NUT (M10X1.5-THD)	
M	11	1	**8T-4196**	2	BOLT (M10X1.5X35-MM)	
	12	1	**8T-4226**	2	WASHER-PLATED (10.5X45X3-MM THK)	
	13	1	**8T-6765**	1	PLUG-PIPE	
M	14	1	**8T-6912**	1	BOLT (M8X1.25X50-MM)	
D	15	1	**5P-8309**		SEAL (1.1-M EACH)	

D-ORDER BY THE METER
M-METRIC PART

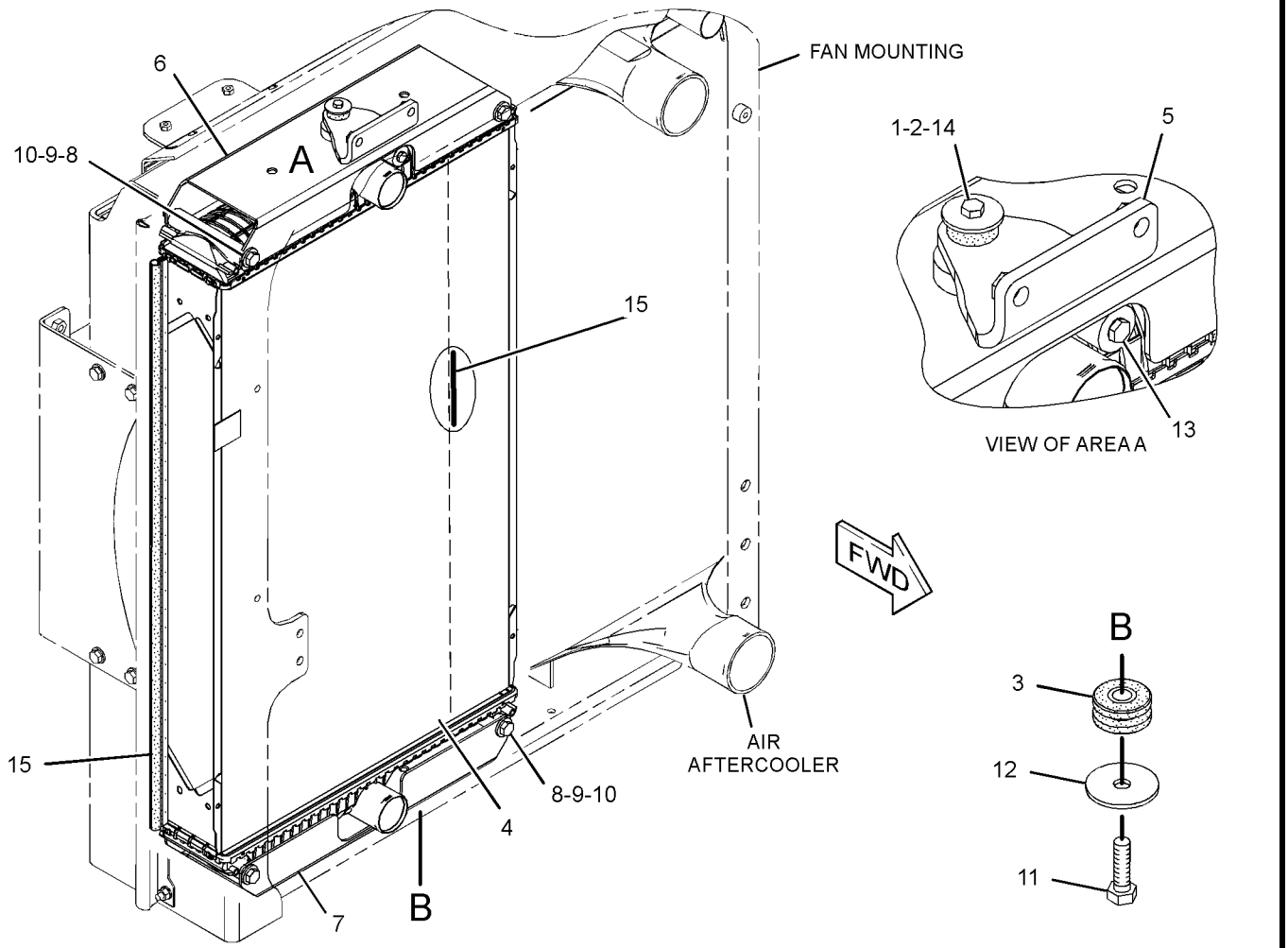

GRAPHIC #1 **<END>** g01326917

COOLING SYSTEM

257-7500 TANK GP-COOLANT

S/N: R9H1-UP

PART OF 349-2556 COMMON AR

SMCS-1354, 1377 **i04018813**

NOTE	REF NO	GRAPHIC REF	PART NUMBER	QTY	PART NAME 1 2 3 4 5 6 (PRODUCT LEVEL)	SEE PAGE
C	1	1	**6S-8620**	1	CLAMP-HOSE	
	2	1	**8W-1253**	2	SPACER (11.06X15.88X60-MM THK)	
	3	1	**9R-5008**	3	SPACER (11X20X6-MM THK)	
C	4	1	**101-2810**	1	PLATE	
C	5	1	*150-3026*	1	ELBOW AS	
		1	**6V-4292**	1	ELBOW	
		1	**3K-0360**	1	SEAL-O-RING	
C	6	1	*338-0718*	1	TANK GP-COOLANT	
	6A	1	**336-9202**	1	TANK-COOLANT	
	6B	1	**345-1237**	1	CAP AS-COOLANT TANK (COOLANT TANK)	
C	7	1	**349-6281**	1	BRACKET AS	
M		1	**8T-3490**	2	NUT-WELD (M10X1.5-THD)	
	8	1	**133-9229**	3	CLIP	
	9	1	**151-8190**	1	CLAMP	
	10	1	**5D-1026**	2	CLAMP-BAND	
C	11	1	**6D-4244**	2	CLIP	
	12	1	**7D-7233**	2	CLIP	
	13	1	**8T-1117**	2	CLAMP-HOSE	
C	14	1	**8T-4121**	16	WASHER-HARD (11X21X2.5-MM THK)	
CM	15	1	**8T-4133**	5	NUT (M10X1.5-THD)	
CM	16	1	**8T-4136**	7	BOLT (M10X1.5X25-MM)	
CM	17	1	**8T-4137**	4	BOLT (M10X1.5X20-MM)	
M	18	1	**8T-4196**	2	BOLT (M10X1.5X35-MM)	
M	19	1	**8T-4198**	2	BOLT (M10X1.5X100-MM)	
	20	1	**8T-7934**	4	WASHER-HARD (11X21X5-MM THK)	
	21	1	**9M-8406**	2	CLIP	
E	22	1	**9X-2133**		HOSE (69-CM)	
E	23	1	**5P-1251**		HOSE (152-CM)	
E	24	1	**6V-8523**		HOSE (234-CM)	

C-CHANGE FROM PREVIOUS TYPE
E-ORDER BY THE CENTIMETER
M-METRIC PART

257-7500 **TANK GP-COOLANT** *(contd.)* **i04018813**

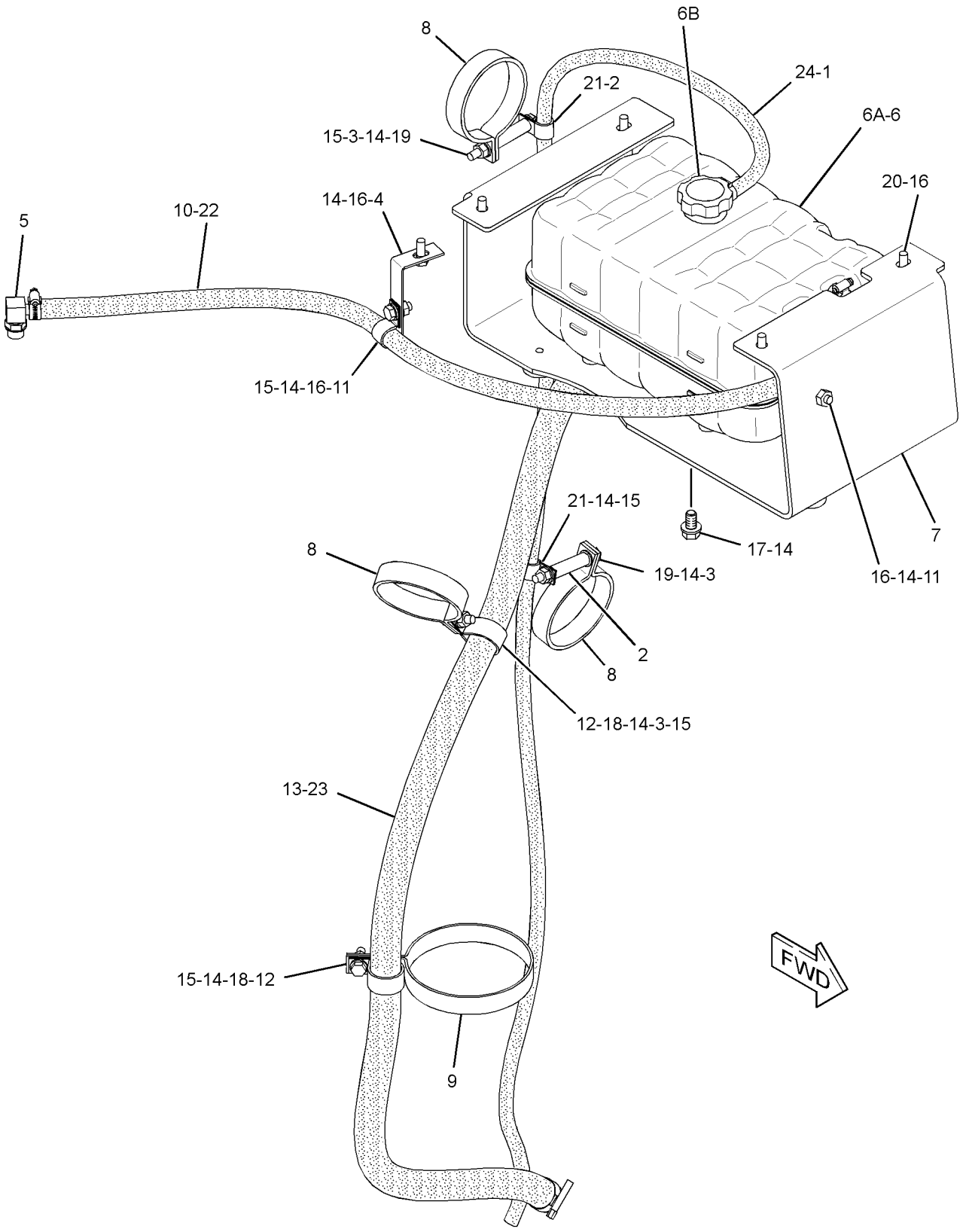

GRAPHIC #1 **<END>** g02219355

AIR INLET AND EXHAUST SYSTEM

249-7364 AFTERCOOLER GP-AIR

S/N: R9H1-UP

PART OF 249-7363 COOLING AR

SMCS-1063, 1064, 1079 **i02585187**

NOTE	REF NO	GRAPHIC REF	PART NUMBER	QTY	PART NAME 1 2 3 4 5 6 (PRODUCT LEVEL)	SEE PAGE
	1	1	**121-3307**	2	MOUNT AS-RESILIENT	
	2	1	**240-9977**	2	BOSS	
	3	1	**260-0354**	1	CORE AS-AFTERCOOLER	
	4	1	**263-3993**	1	BRACKET AS	
M		1	**8T-3490**	2	NUT-WELD (M10X1.5-THD)	
	5	1	**198-4777**	2	WASHER-HARD (11X25X10-MM THK)	
	6	1	**7X-7729**	2	WASHER (11X25X3-MM THK)	
	7	1	**8T-4121**	2	WASHER-HARD (11X21X2.5-MM THK)	
M	8	1	**8T-4196**	4	BOLT (M10X1.5X35-MM)	
	9	1	**8T-4226**	2	WASHER-PLATED (10.5X45X3-MM THK)	
M	10	1	**8T-6870**	2	BOLT (M8X1.25X70-MM)	

M-METRIC PART

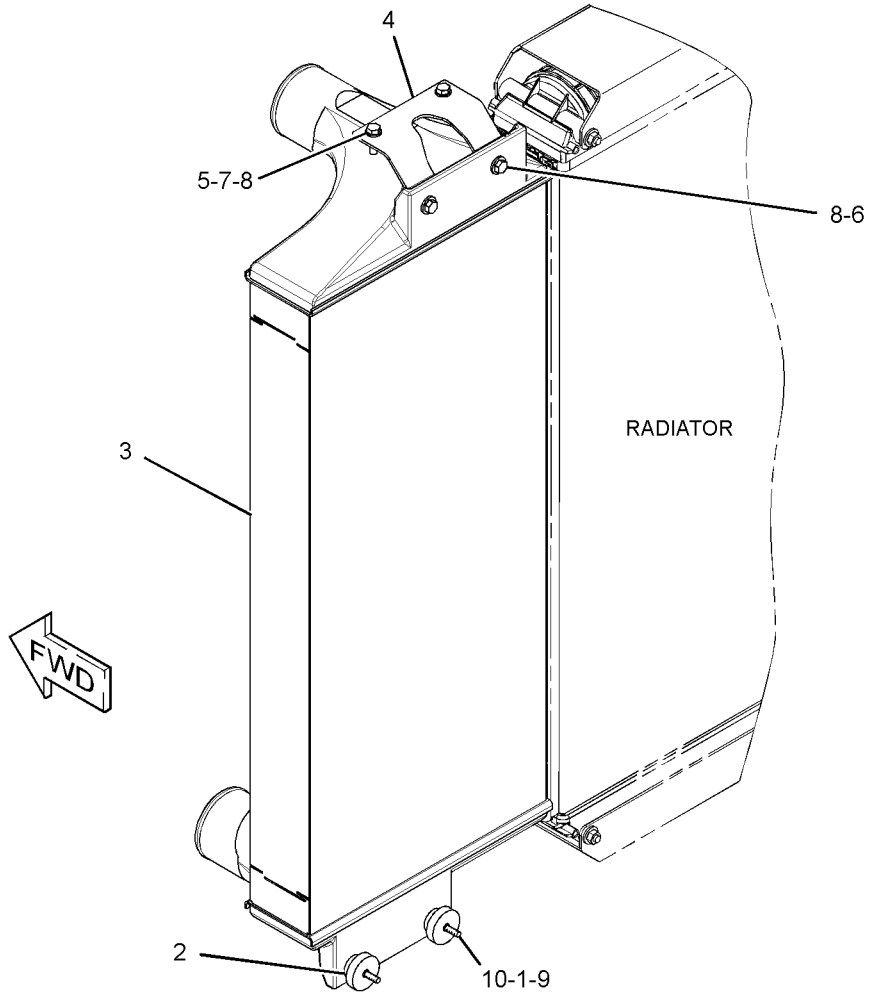

GRAPHIC #1 **<END>** g01322045

AIR INLET AND EXHAUST SYSTEM

249-7319 AIR CLEANER GP

S/N: R9H1-UP

PART OF 349-2556 COMMON AR

SMCS-1051, 1054 **i03605600**

NOTE	REF NO	GRAPHIC REF	PART NUMBER	QTY	PART NAME 1 2 3 4 5 6 (PRODUCT LEVEL)	SEE PAGE
	1	1	**5P-2230**	2	CLAMP-HOSE	
C	2	1	**8T-4988**	1	CLAMP-HOSE	
	3	1	**245-3816**	1	CAP AS-AIR CLEANER	
Y	4	1	**250-0366**	1	AIR CLEANER GP	150
	5	1	**275-0660**	1	PIPE-EXTENSION	
	6	1	**326-9380**	1	HOSE	
C	7	1	**309-8747**	1	HOSE	
CM	8	1	**099-3649**	2	BOLT (M8X1.25X40-MM)	
	9	1	**220-4126**	1	CLAMP	
C	10	1	**237-0226**	1	CLAMP	
	11	1	**7X-0613**	4	WASHER-HARD (8.8X25.5X5-MM THK)	
CM	12	1	**7X-0818**	2	BOLT (M8X1.25X45-MM)	

C-CHANGE FROM PREVIOUS TYPE
M-METRIC PART
Y-SEPARATE ILLUSTRATION

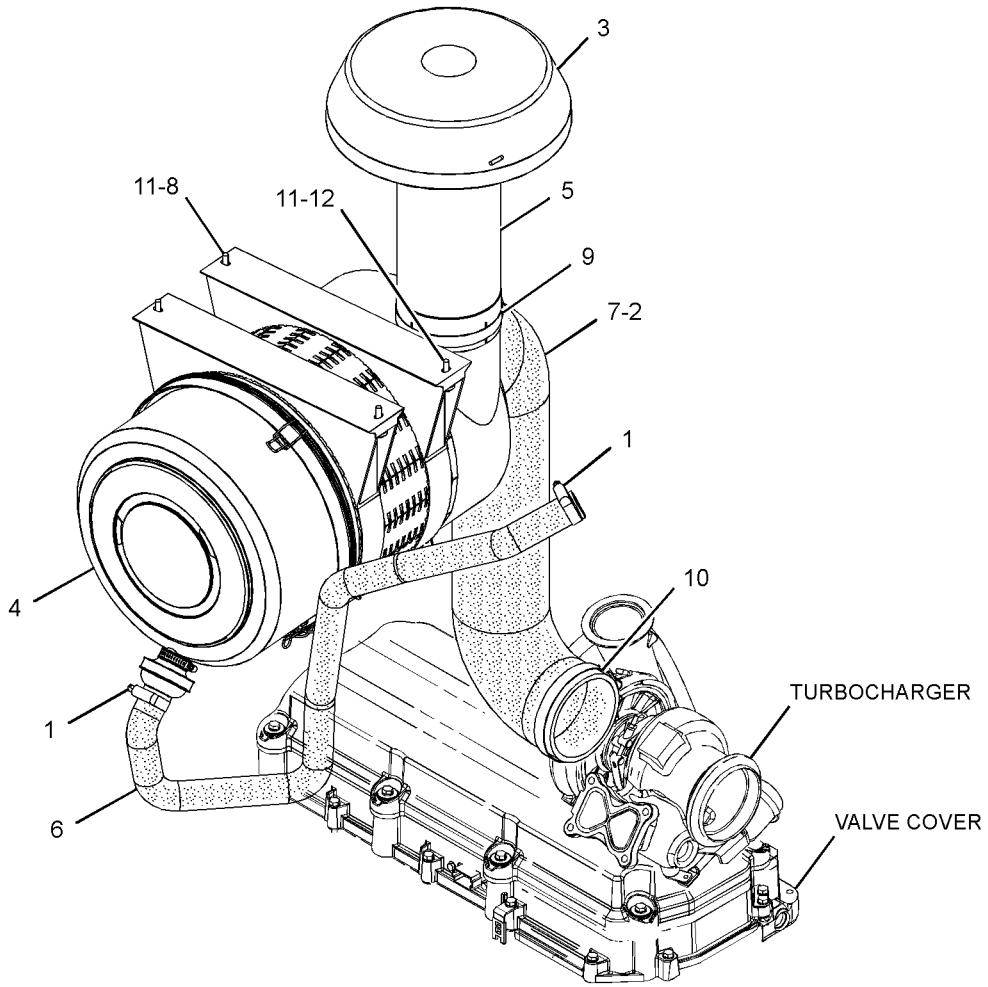

GRAPHIC #1 **<END>** g02076774

AIR INLET AND EXHAUST SYSTEM

250-0366 AIR CLEANER GP

S/N: R9H1-UP

PART OF 249-7319 AIR CLEANER GP

SMCS-1051, 1054 **i02549660**

NOTE	REF NO	GRAPHIC REF	PART NUMBER	QTY	PART NAME 1 2 3 4 5 6 (PRODUCT LEVEL)	SEE PAGE
	1	1	**245-3818**	1	FILTER ELEMENT AS-AIR (PRIMARY)	
	2	1	**245-3819**	1	FILTER ELEMENT AS-AIR (SECONDARY)	
	3	1	**246-4617**	2	BRACKET AS	
	4	1	**247-9730**	1	VALVE AS-CHECK (AIR CLEANER)	
	5	1	**262-0569**	1	COVER AS	

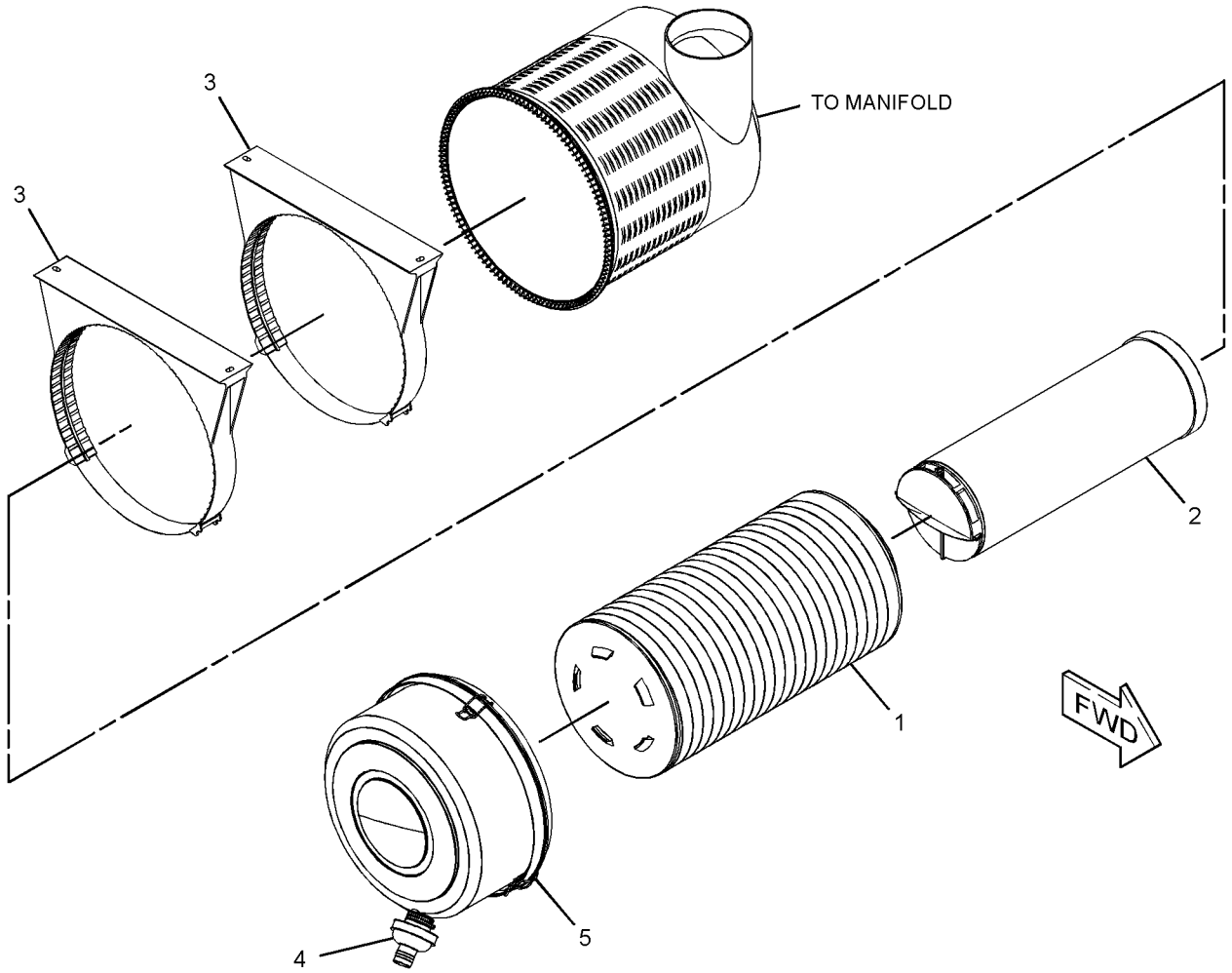

GRAPHIC #1 **<END>** g01278467

AIR INLET AND EXHAUST SYSTEM

249-7322 LINES GP-AIR

S/N: R9H1-UP

PART OF 349-2556 COMMON AR

SMCS-1071 **i03753084**

NOTE	REF NO	GRAPHIC REF	PART NUMBER	QTY	PART NAME 1 2 3 4 5 6 (PRODUCT LEVEL)	SEE PAGE
	1	1	**7E-8630**	3	HOSE-AIR INLET	
	2	1	**9R-5008**	2	SPACER (11X20X6-MM THK)	
	3	1	**127-0929**	1	CLAMP	
	4	1	**129-6400**	1	ADAPTER	
	5	1	**260-1863**	1	TUBE	
	6	1	**260-1864**	1	TUBE	
	7	1	**274-1707**	1	HOSE	
	8	1	**298-2011**	1	SPACER (11X30X30-MM THK)	
	9	1	**133-9229**	2	CLIP	
	10	1	**346-4791**	8	CLAMP-BAND	
	11	1	**7X-7729**	2	WASHER (11X25X3-MM THK)	
	12	1	**8C-3089**	1	SEAL-O-RING	
M	13	1	**8T-4186**	1	BOLT (M10X1.5X40-MM)	
M	14	1	**8T-5005**	1	BOLT (M10X1.5X70-MM)	

M-METRIC PART

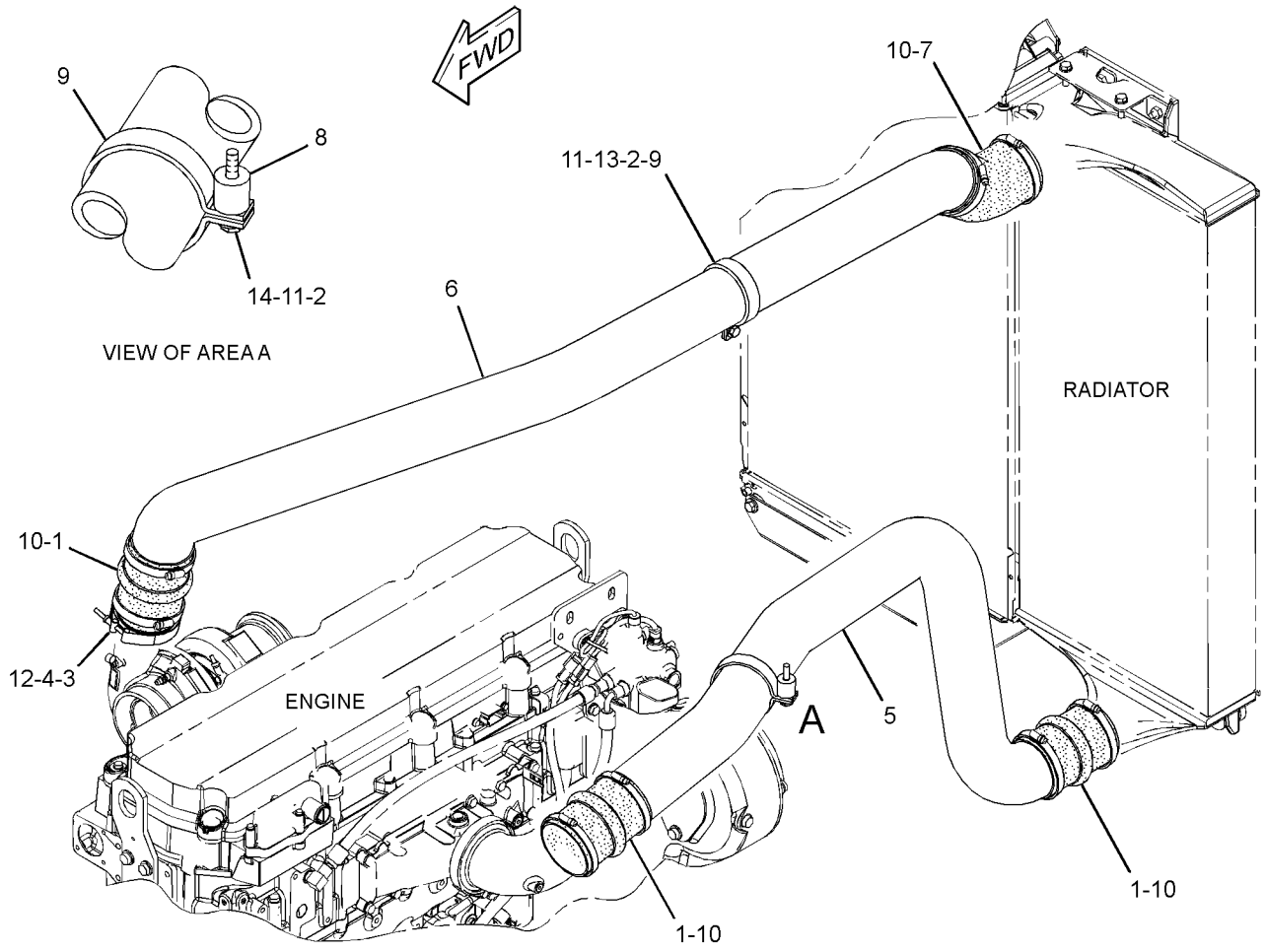

GRAPHIC #1 **<END>** g02086154

AIR INLET AND EXHAUST SYSTEM

268-6686 LINES GP-AIR–INLET

S/N: MHX1304-UP
PROVIDES REAR FACING AIR INLET ELBOW
PART OF 227-5359, 231-0876, 349-4462 ENGINE AR-COMPLETE
ALSO AN ATTACHMENT

SMCS-1071 **i03992050**

NOTE	REF NO	GRAPHIC REF	PART NUMBER	QTY	PART NAME 1 2 3 4 5 6 (PRODUCT LEVEL)	SEE PAGE
	1	1	**203-0351**	1	ELBOW-AIR	
	2	1	**248-4840**	1	CAP-PROTECTIVE	
	3	1	**248-4841**	1	CLAMP-BAND	
	4	1	*307-2671*	1	PLUG AS	
	4A	1	**214-7566**	1	SEAL-O-RING	
		1	**9S-8002**	1	PLUG-O-RING	

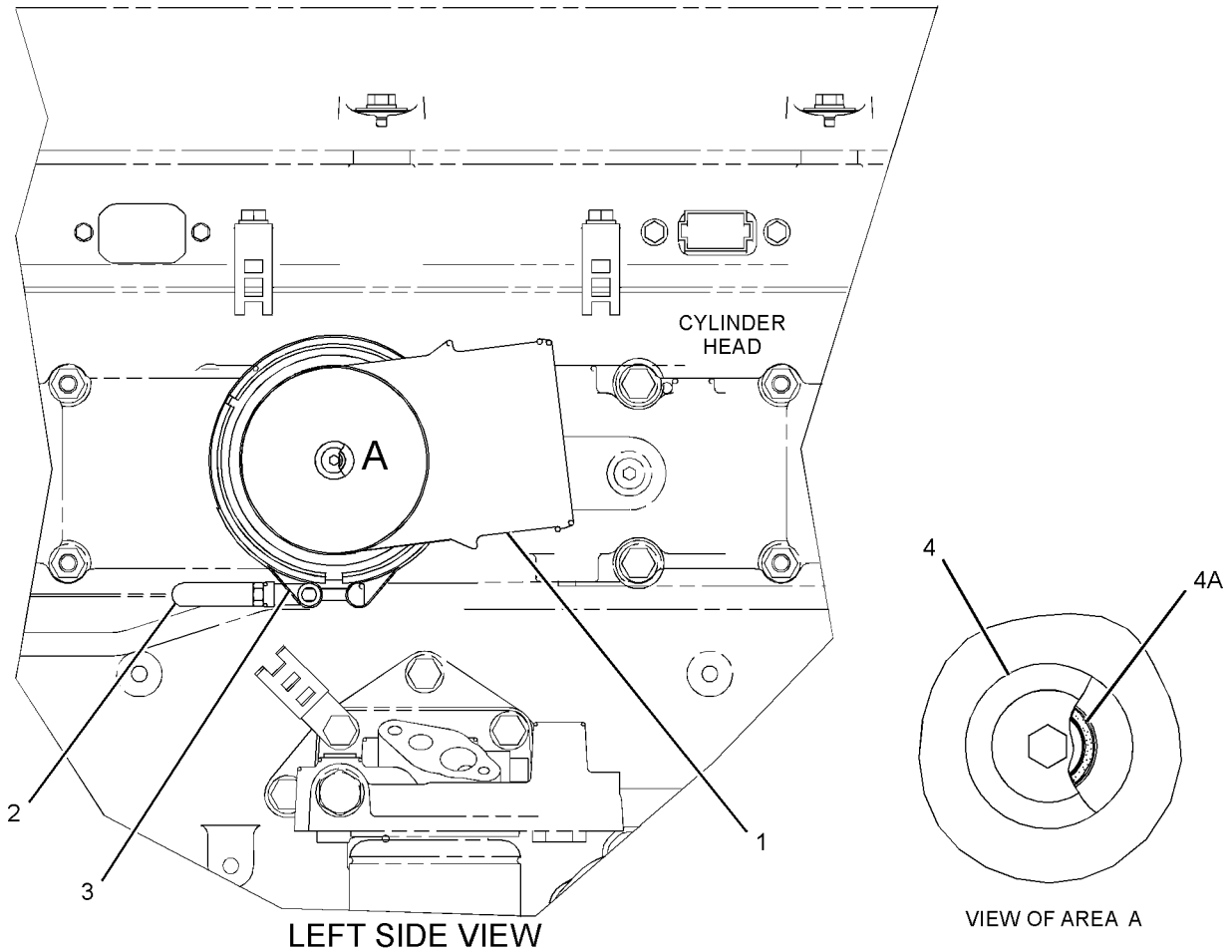

GRAPHIC #1 **<END>** g01160770

247-2833 MANIFOLD GP-EXHAUST

S/N: MHX1214-UP
PROVIDES A LOW STRESS FOOT CENTER SECTION
PART OF 227-5359, 231-0876, 349-4462 ENGINE AR-COMPLETE
ALSO AN ATTACHMENT

SMCS-1059 **i03798766**

NOTE	REF NO	GRAPHIC REF	PART NUMBER	QTY	PART NAME 1 2 3 4 5 6 (PRODUCT LEVEL)	SEE PAGE
	1	1	**4P-4369**	12	SPACER (12X19X23.5-MM THK)	
	2	1	**283-2238**	6	GASKET	
	3	1	**247-2834**	1	MANIFOLD-EXHAUST (CENTER)	
	4	1	**231-9030**	2	MANIFOLD-EXHAUST (END)	
M	5	1	**116-3715**	12	STUD-TAPERLOCK (M10X1.5X85-MM)	
M	6	1	**9X-6620**	12	LOCKNUT (M10X1.5-THD)	
	7	1	**6V-5839**	12	WASHER (11X21X2.5-MM THK)	
M	8	1	**9X-8281**	4	STUD-TAPERLOCK (M10X1.5X45-MM)	

M-METRIC PART

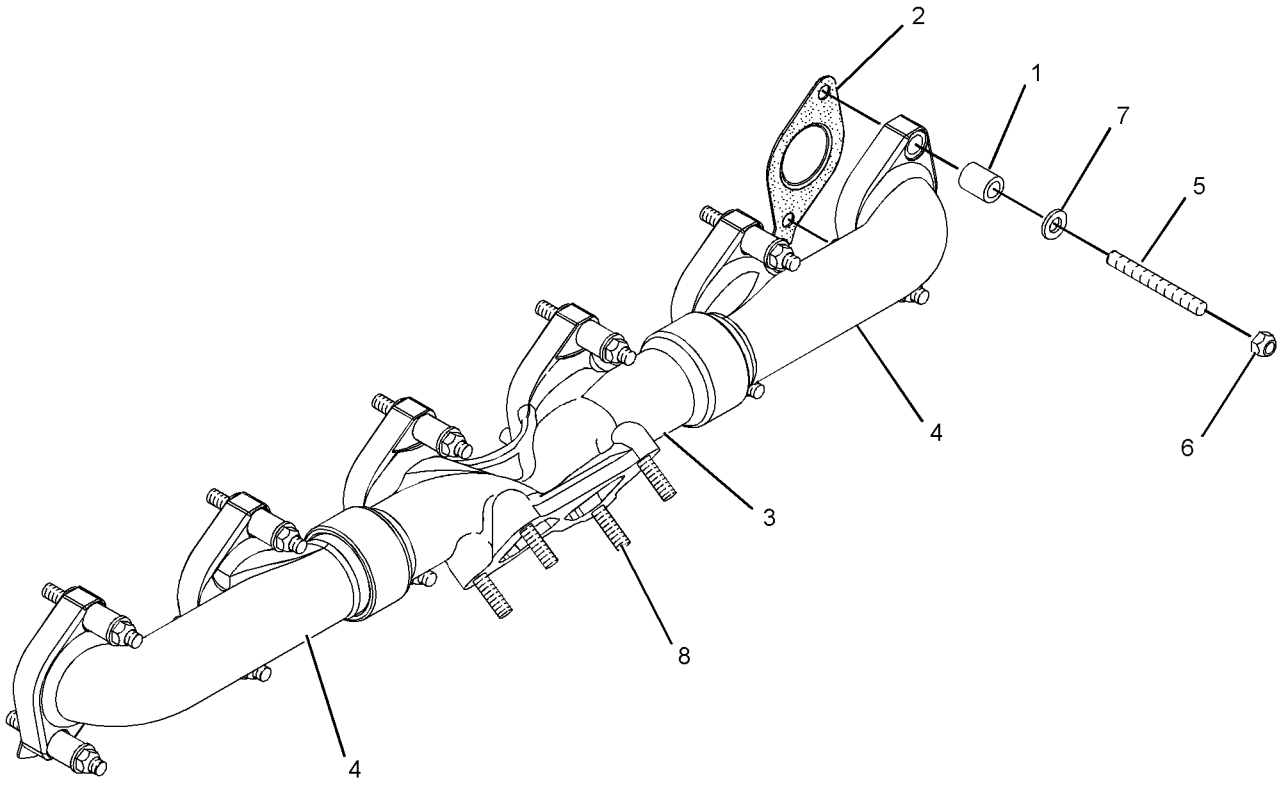

GRAPHIC #1 **<END>** g01256828

AIR INLET AND EXHAUST SYSTEM

222-3092 MANIFOLD GP-INLET

S/N: MHX1214-UP

PART OF 227-5359, 231-0876, 349-4462 ENGINE AR-COMPLETE

ALSO AN ATTACHMENT

SMCS-1058 **i03997494**

NOTE	REF NO	GRAPHIC REF	PART NUMBER	QTY	PART NAME 1 2 3 4 5 6 (PRODUCT LEVEL)	SEE PAGE
	1	1	**121-5908**	1	STUD (M10X1.5X30-MM)	
	2	1	**281-2925**	1	MANIFOLD-INLET	
	3	1	**230-3518**	1	GASKET-MANIFOLD	
	4	1	**132-5789**	1	CLIP	
	5	1	*183-3407*	2	PLUG AS	
					(EACH INCLUDES)	
	5A	1	**214-7568**	1	SEAL-O-RING	
		1	**9S-8004**	1	PLUG-O-RING	
M	6	1	**176-9237**	1	BOLT-SPECIAL	
M	7	1	**6V-3822**	10	BOLT (M10X1.5X35-MM)	
	8	1	**6V-6353**	1	SEAL-O-RING	
	9	1	**6V-5839**	12	WASHER (11X21X2.5-MM THK)	

M-METRIC PART

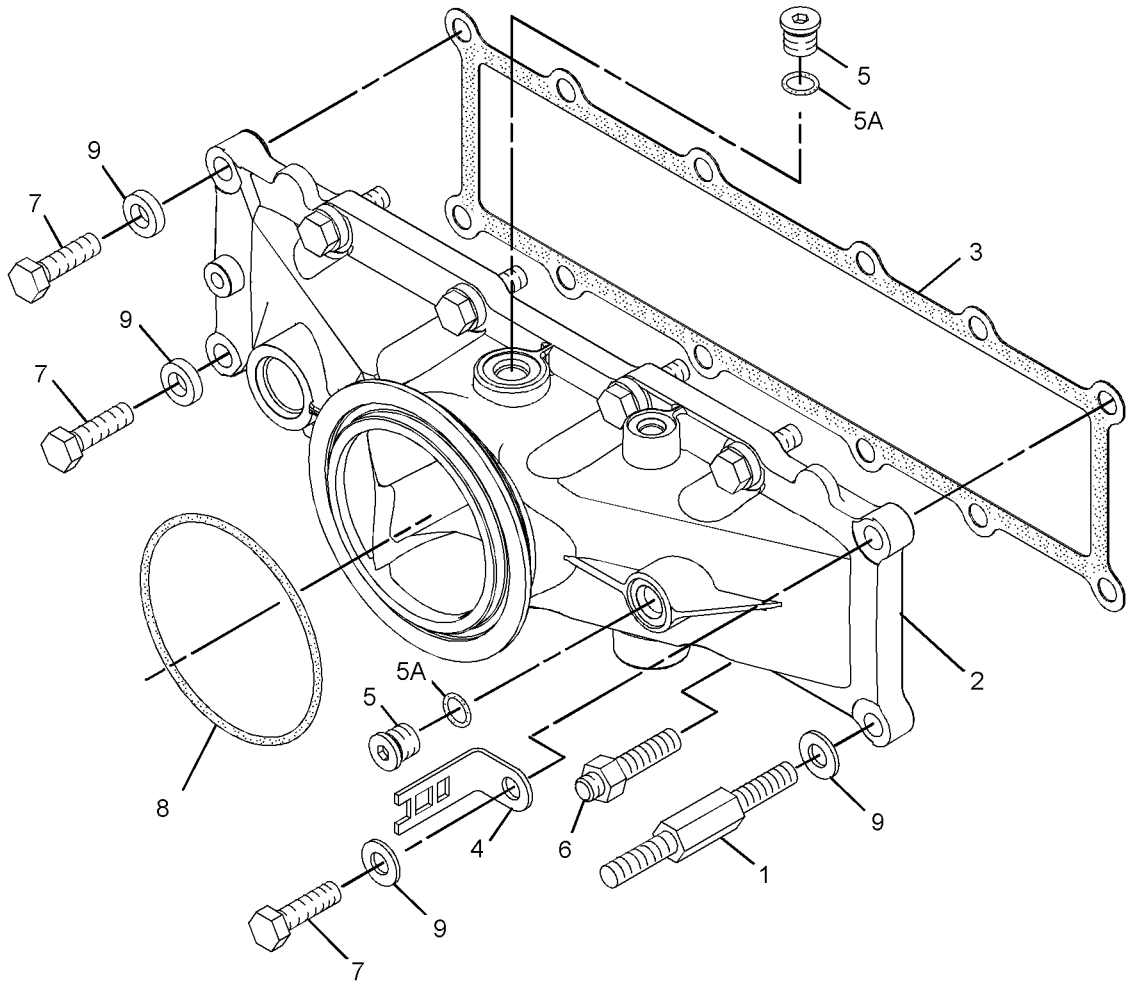

GRAPHIC #1 **<END>** g02176902

AIR INLET AND EXHAUST SYSTEM

249-7327 MUFFLER GP

S/N: R9H1-UP

PART OF 349-2556 COMMON AR

SMCS-1062 **i03743941**

NOTE	REF NO	GRAPHIC REF	PART NUMBER	QTY	PART NAME 1 2 3 4 5 6 (PRODUCT LEVEL)	SEE PAGE
	1	1	**141-1480**	1	CLAMP AS	
	2	1	**259-5824**	1	BRACKET AS	
	3	1	**259-7079**	1	TUBE	
	4	1	**260-1570**	1	BRACKET AS	
M		1	**8T-3490**	5	NUT-WELD (M10X1.5-THD)	
	5	1	**284-8576**	1	BRACKET AS	
M		1	**159-9541**	2	NUT-WELD (M10X1.5-THD)	
	6	1	**297-1711**	1	MUFFLER AS	
	7	1	**299-8231**	1	EJECTOR AS	
	8	1	**198-4777**	15	WASHER-HARD (11X25X10-MM THK)	
	9	1	**241-9265**	1	CLAMP-MUFFLER	
M	10	1	**8T-4133**	2	NUT (M10X1.5-THD)	
M	11	1	**8T-4185**	2	BOLT (M10X1.5X50-MM)	
M	12	1	**8T-4186**	3	BOLT (M10X1.5X40-MM)	
M	13	1	**8T-4195**	4	BOLT (M10X1.5X30-MM)	
M	14	1	**8T-4196**	4	BOLT (M10X1.5X35-MM)	
	15	1	**9N-1941**	1	CLAMP-V-BAND	

M-METRIC PART

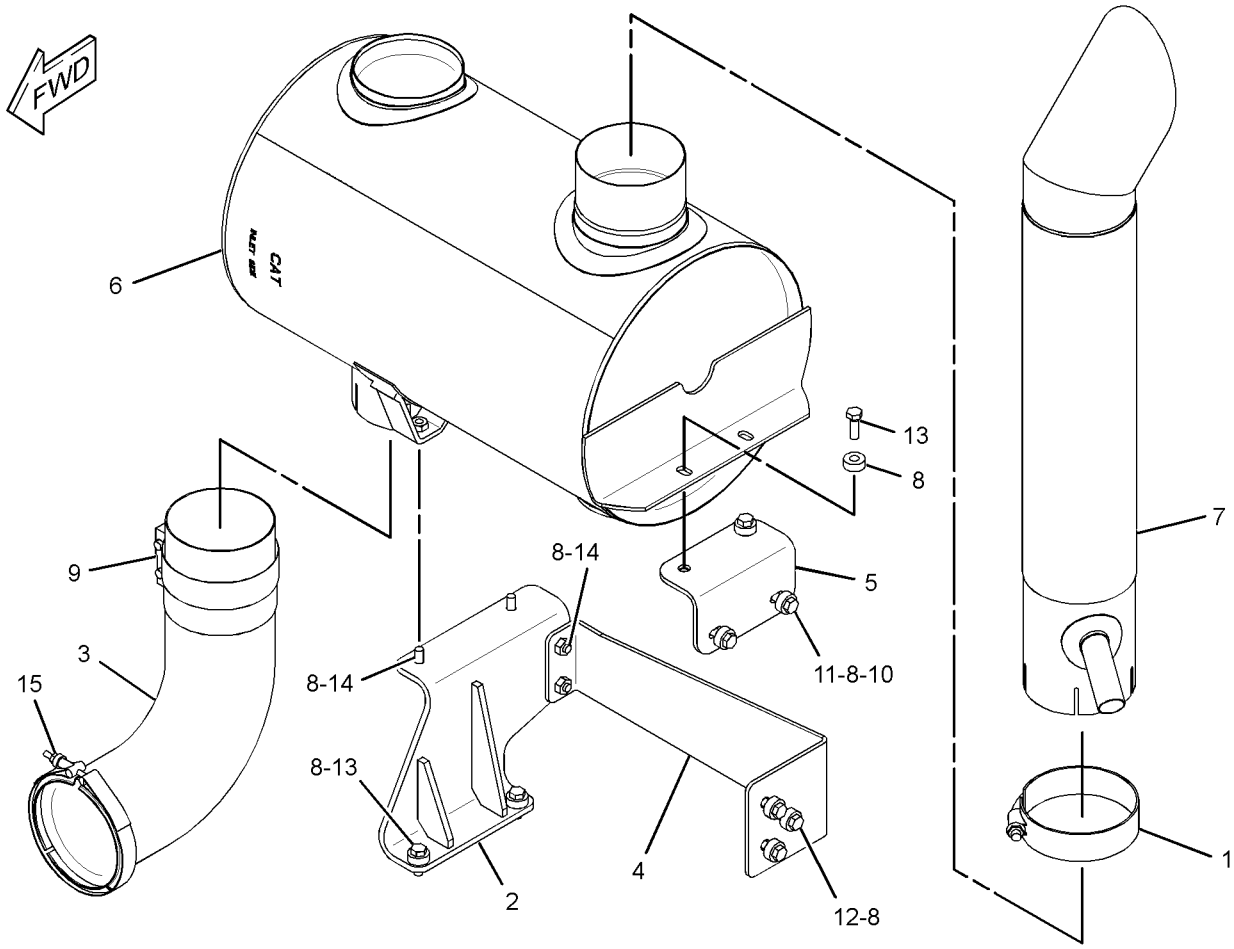

GRAPHIC #1 **<END>** g02088994

AIR INLET AND EXHAUST SYSTEM

248-5352 TURBOCHARGER GP*R

S/N: MHX1214-UP
PART OF 256-6004 TURBOCHARGER GP
ALSO AN ATTACHMENT

SMCS-1052, 1053 **i04020800**

NOTE	REF NO	GRAPHIC REF	PART NUMBER	QTY	PART NAME 1 2 3 4 5 6 (PRODUCT LEVEL)	SEE PAGE
	1	1	**115-7087**	1	BOLT (M6X0.04X10.4-MM)	
	2	1	**1W-9311**	1	CLAMP AS-TURBINE	
	3	1	**161-6958**	1	CLIP-HOSE	
	4	1	**161-6963**	2	CLAMP	
	5	1	**239-5858**	1	CLAMP AS-COMPRESSOR	
E	6	1	**242-3360**		HOSE (52-CM)	
R	7	1	**257-4323**	1	CARTRIDGE GP-TURBOCHARGER	
EF			**258-4524**		SLEEVE (40-CM)	

E-ORDER BY THE CENTIMETER
F-NOT SHOWN
R-REMFG PART MAY BE AVAILABLE

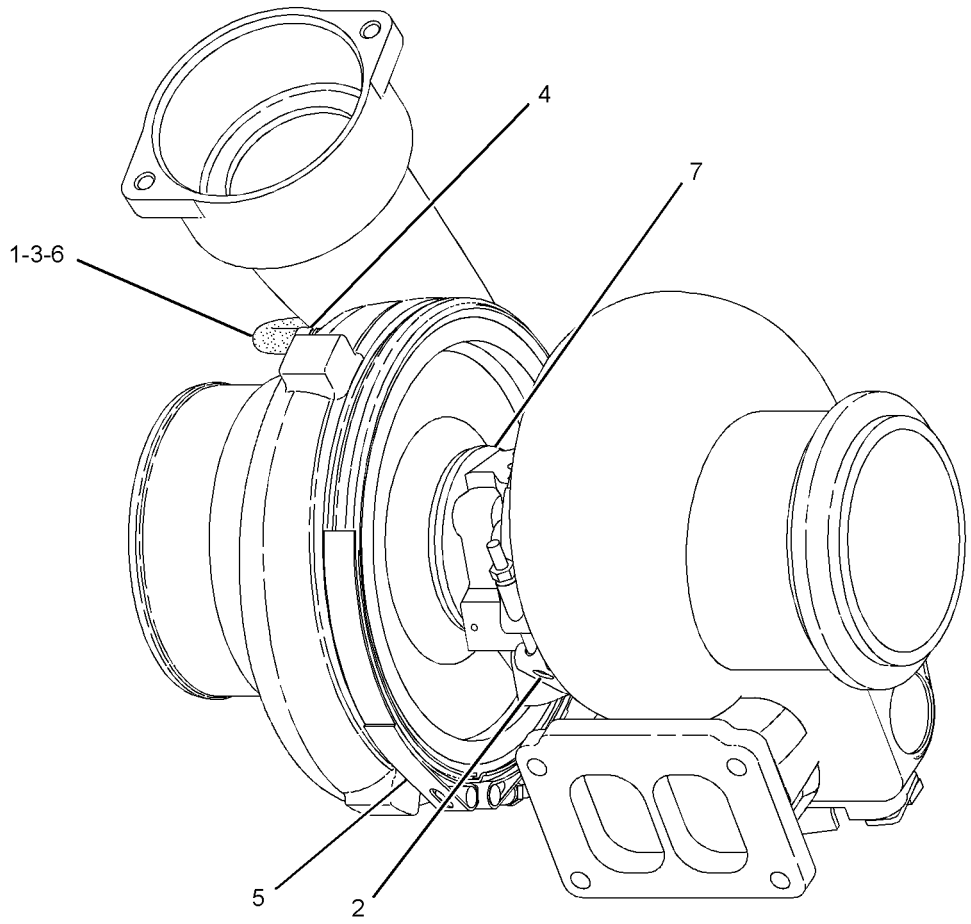

GRAPHIC #1 **<END>** g01121145

256-6004 TURBOCHARGER GP

S/N: MHX1214-UP
PART OF 227-5359, 231-0876, 349-4462 ENGINE AR-COMPLETE
ALSO AN ATTACHMENT

SMCS-1052, 1053 **i03834355**

NOTE	REF NO	GRAPHIC REF	PART NUMBER	QTY	PART NAME 1 2 3 4 5 6 (PRODUCT LEVEL)	SEE PAGE
	1	1	**274-6851**	1	GASKET-TURBOCHARGER	
YR	2	1	**248-5352**	1	TURBOCHARGER GP	156
M	3	1	**9X-6620**	4	LOCKNUT (M10X1.5-THD)	

M-METRIC PART
R-REMFG PART MAY BE AVAILABLE
Y-SEPARATE ILLUSTRATION

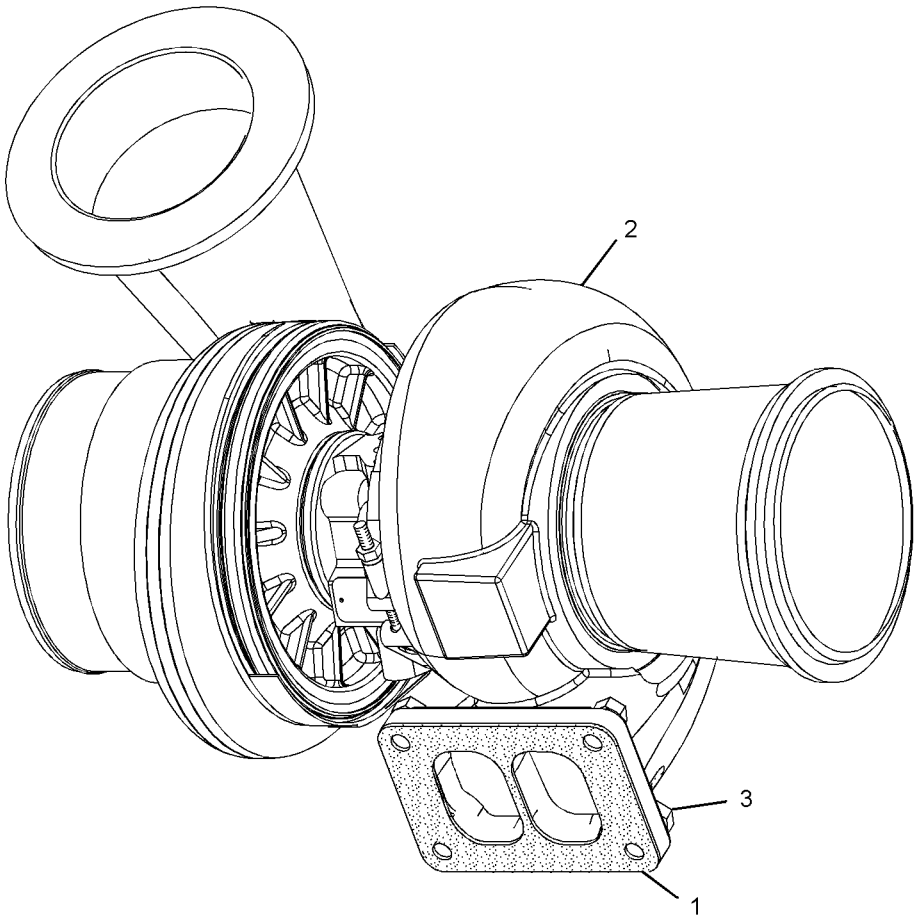

GRAPHIC #1 **<END>** g01199831

FUEL SYSTEM

277-2166 ADAPTER GP-FAST FILL FUEL

S/N: R9H1-UP

PART OF 249-7363 COOLING AR

SMCS-1710 **i02686248**

NOTE	REF NO	GRAPHIC REF	PART NUMBER	QTY	PART NAME 1 2 3 4 5 6 (PRODUCT LEVEL)	SEE PAGE
	1	1	**124-2463**	1	ADAPTER-FAST FILL FUEL	
	2	1	**277-2159**	1	TUBE AS	
	3	1	**130-3374**	1	CLIP	
	4	1	**4P-0489**	1	SPACER (11X25X26.8-MM THK)	
	5	1	**1P-4582**	2	FLANGE-HALF	
	6	1	**4J-0527**	1	SEAL-O-RING	
	7	1	**8T-4121**	1	WASHER-HARD (11X21X2.5-MM THK)	
M	8	1	**8T-4183**	4	BOLT (M12X1.75X40-MM)	
M	9	1	**8T-4185**	1	BOLT (M10X1.5X50-MM)	
	10	1	**8T-4223**	4	WASHER-HARD (13.5X25.5X3-MM THK)	

M-METRIC PART

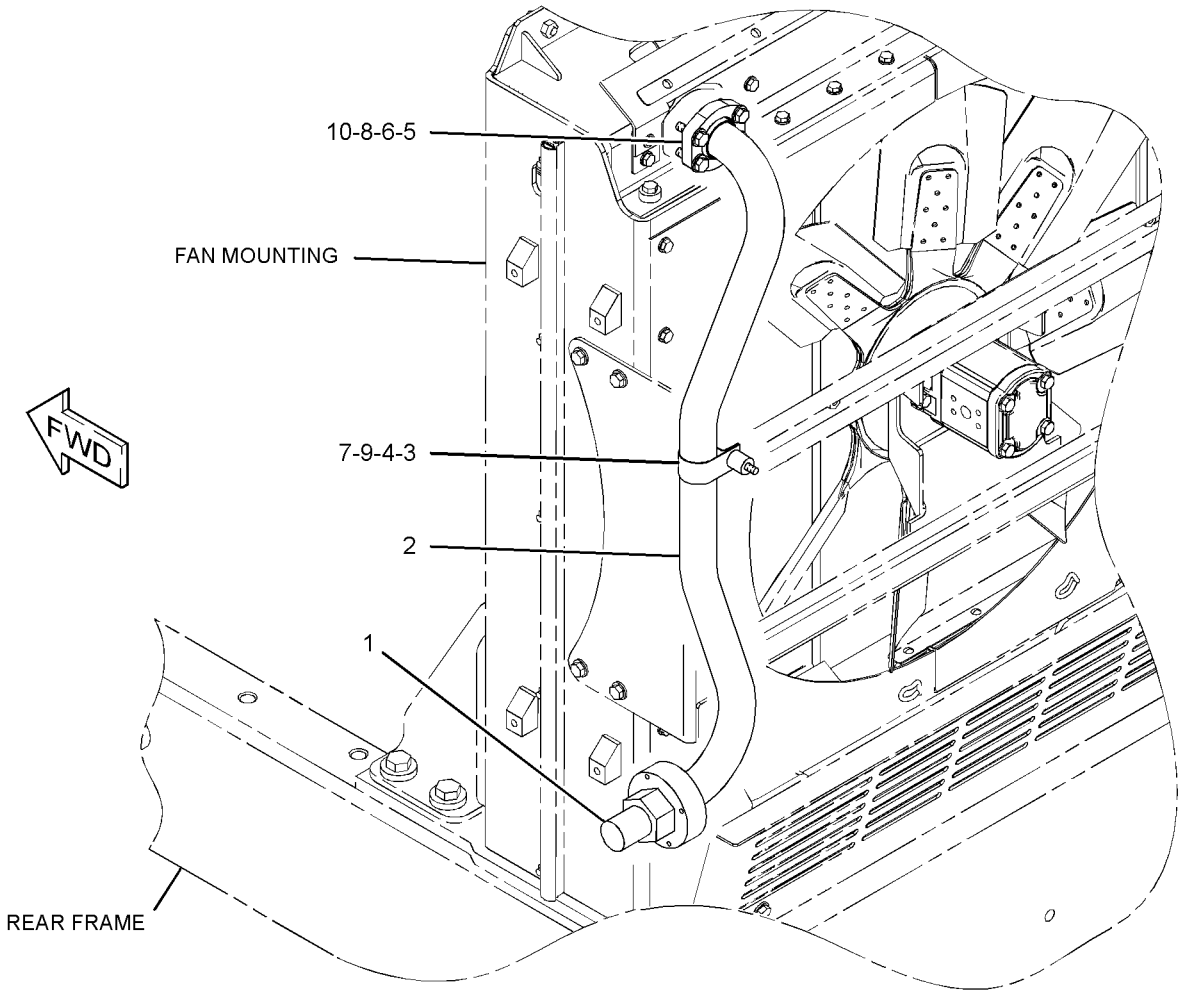

GRAPHIC #1 **<END>** g01318315

254-4998 FILTER GP-FUEL

S/N: MHX1304-2151
PART OF 227-5359, 231-0876 ENGINE AR-COMPLETE
ALSO AN ATTACHMENT
TYPE 1

SMCS-1261 **i02700056**

NOTE	REF NO	GRAPHIC REF	PART NUMBER	QTY	PART NAME 1 2 3 4 5 6 (PRODUCT LEVEL)	SEE PAGE
	1	1	**3S-2093**	3	STRAP-CABLE	
Y	2	1	*197-8391*	1	SENSOR GP-TEMPERATURE (FUEL)	311
	3	1	**227-3812**	1	HARNESS AS-SENSOR (FUEL SENSOR)	
		1	**102-8803**	1	KIT-RECEPTACLE (3-PIN)	
					(INCLUDES RECEPTACLE AS AND WEDGE)	
		1	**102-8806**	1	KIT-RECEPTACLE (8-PIN)	
					(INCLUDES RECEPTACLE AS AND WEDGE)	
		1	**8T-8737**	1	PLUG-SEAL	
		1	**155-2270**	2	KIT-CONNECTING PLUG (2-PIN)	
					(EACH INCLUDES PLUG AS AND WEDGE)	
Y	4	1	*233-6742*	1	VALVE GP-CHECK (FUEL)	197
	5	1	**237-9310**	1	BASE AS	
		1	**9S-4167**	1	STUD-HOLLOW (1-14X1.47-IN)	
Y	6	1	*239-2396*	1	SENSOR GP-PRESSURE (FUEL)	297
	7	1	**252-5738**	1	BRACKET AS	
Y	8	1	**258-0883**	1	SWITCH GP-PRESSURE (FUEL)	331
	9	1	**030-7947**	1	ELBOW	
	10	1	**030-8188**	2	CONNECTOR	
	11	1	**1R-0762**	1	FILTER-FUEL (ADVANCED EFFICIENCY)	
	12	1	**212-0431**	1	STUD (M10X1.5-THD)	
	13	1	**3J-1907**	3	SEAL-O-RING	
	14	1	**3K-0360**	3	SEAL-O-RING	
	15	1	**4J-5477**	1	SEAL-O-RING	
	16	1	**5P-6944**	1	ADAPTER	
M	17	1	**6V-4248**	3	BOLT (M10X1.5X25-MM)	
	18	1	**6V-5048**	1	SEAL-O-RING	
	19	1	**6V-5049**	2	SEAL-O-RING	
	20	1	**6V-5839**	6	WASHER (11X21X2.5-MM THK)	
M	21	1	**6V-5842**	2	BOLT (M10X1.5X40-MM)	
	22	1	**6V-8641**	1	CONNECTOR	
	23	1	**6V-9828**	1	CAP AS	
	24	1	**9S-4185**	2	PLUG-O-RING	
	25	1	**9X-0261**	1	ADAPTER	

M-METRIC PART
Y-SEPARATE ILLUSTRATION

254-4998 **FILTER GP-FUEL** *(contd.)* **i02700056**

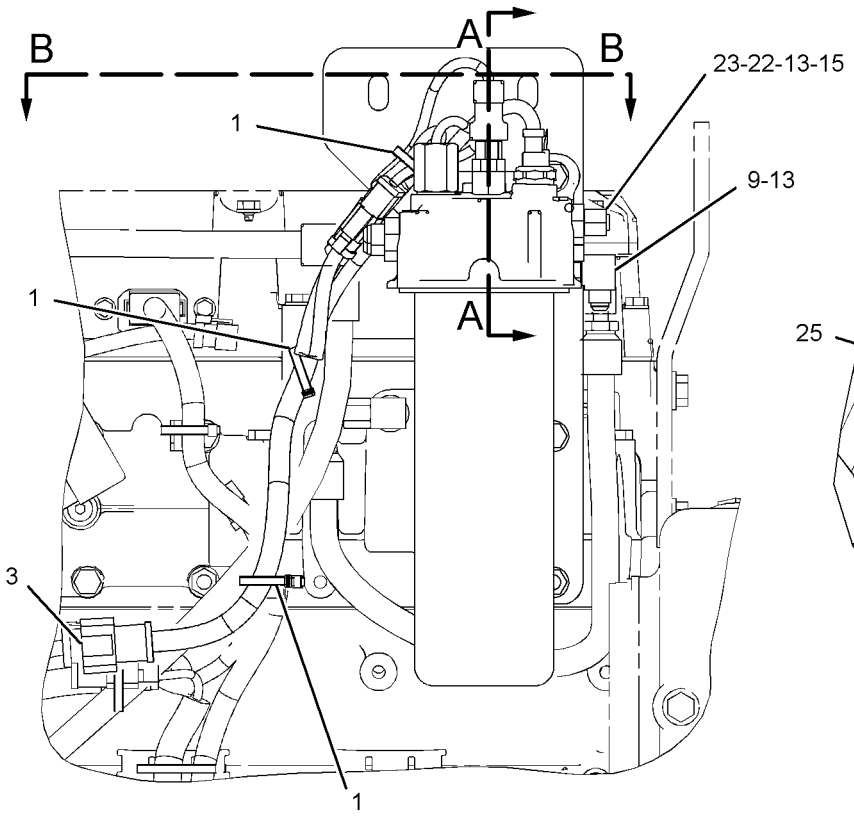

LEFT SIDE VIEW

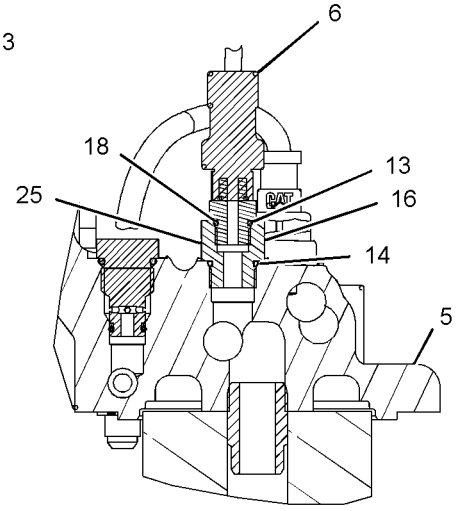

SECTION A-A

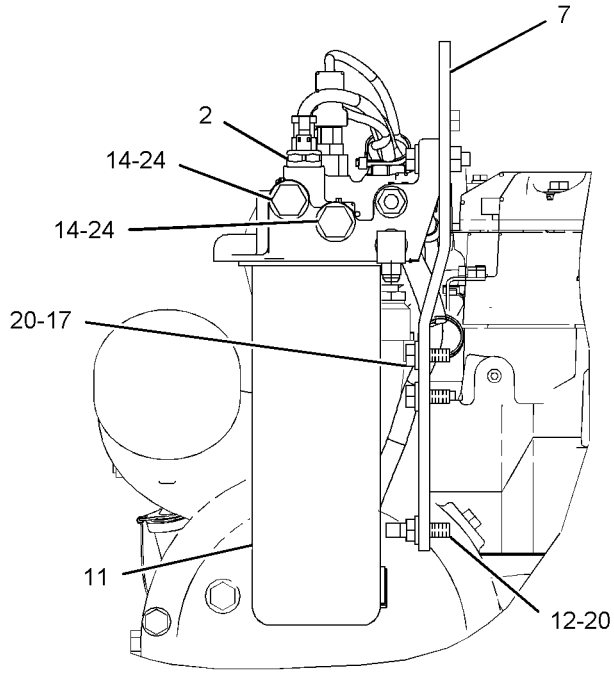

REAR VIEW

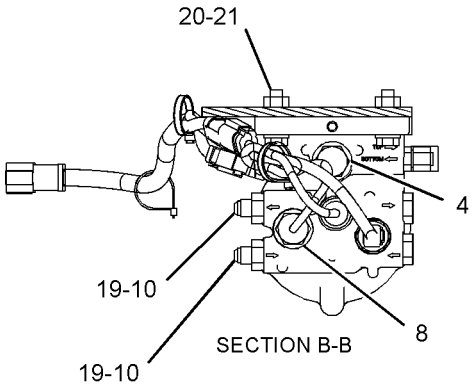

SECTION B-B

GRAPHIC #1 **<END>** g01143608

254-4998 FILTER GP-FUEL

S/N: MHX1304-2151
PART OF 227-5359, 231-0876 ENGINE AR-COMPLETE
ALSO AN ATTACHMENT
TYPE 2

SMCS-1261 **i02700055**

NOTE	REF NO	GRAPHIC REF	PART NUMBER	QTY	PART NAME 1 2 3 4 5 6 (PRODUCT LEVEL)	SEE PAGE
C	1	1	**3S-2093**	4	STRAP-CABLE	
CY	2	1	*123-0783*	1	VALVE GP-FLUID SAMPLING	199
Y	3	1	*197-8391*	1	SENSOR GP-TEMPERATURE (FUEL)	311
	4	1	**227-3812**	1	HARNESS AS-SENSOR (FUEL SENSOR)	
		1	**102-8803**	1	KIT-RECEPTACLE (3-PIN)	
					(INCLUDES RECEPTACLE AS AND WEDGE)	
		1	**102-8806**	1	KIT-RECEPTACLE (8-PIN)	
					(INCLUDES RECEPTACLE AS AND WEDGE)	
		1	**8T-8737**	1	PLUG-SEAL	
		1	**155-2270**	2	KIT-CONNECTING PLUG (2-PIN)	
					(EACH INCLUDES PLUG AS AND WEDGE)	
Y	5	1	*233-6742*	1	VALVE GP-CHECK (FUEL)	197
	6	1	**237-9310**	1	BASE AS	
		1	**9S-4167**	1	STUD-HOLLOW (1-14X1.47-IN)	
Y	7	1	*239-2396*	1	SENSOR GP-PRESSURE (FUEL)	297
	8	1	**252-5738**	1	BRACKET AS	
Y	9	1	**258-0883**	1	SWITCH GP-PRESSURE (FUEL)	331
	10	1	**030-7947**	1	ELBOW	
	11	1	**030-8188**	2	CONNECTOR	
C	12	1	*148-8313*	1	ADAPTER AS	
		1	**3K-0360**	1	SEAL-O-RING	
		1	**5P-6944**	1	ADAPTER	
	13	1	**1R-0762**	1	FILTER-FUEL (ADVANCED EFFICIENCY)	
	14	1	**212-0431**	1	STUD (M10X1.5-THD)	
	15	1	**3J-1907**	3	SEAL-O-RING	
C	16	1	**3K-0360**	2	SEAL-O-RING	
	17	1	**4J-5477**	1	SEAL-O-RING	
C	18	1	**4P-7581**	1	CLIP	
	19	1	**5P-6944**	1	ADAPTER	
M	20	1	**6V-4248**	3	BOLT (M10X1.5X25-MM)	
	21	1	**6V-5048**	1	SEAL-O-RING	
	22	1	**6V-5049**	2	SEAL-O-RING	
C	23	1	**6V-5839**	7	WASHER (11X21X2.5-MM THK)	
M	24	1	**6V-5842**	2	BOLT (M10X1.5X40-MM)	
CM	25	1	**6V-8212**	1	BOLT (M10X1.5X16-MM)	
	26	1	**6V-8641**	1	CONNECTOR	
	27	1	**6V-9828**	1	CAP AS	
C	28	1	**9S-4185**	1	PLUG-O-RING	
	29	1	**9X-0261**	1	ADAPTER	

C-CHANGE FROM PREVIOUS TYPE
M-METRIC PART
Y-SEPARATE ILLUSTRATION

254-4998 **FILTER GP-FUEL** *(contd.)* **i02700055**

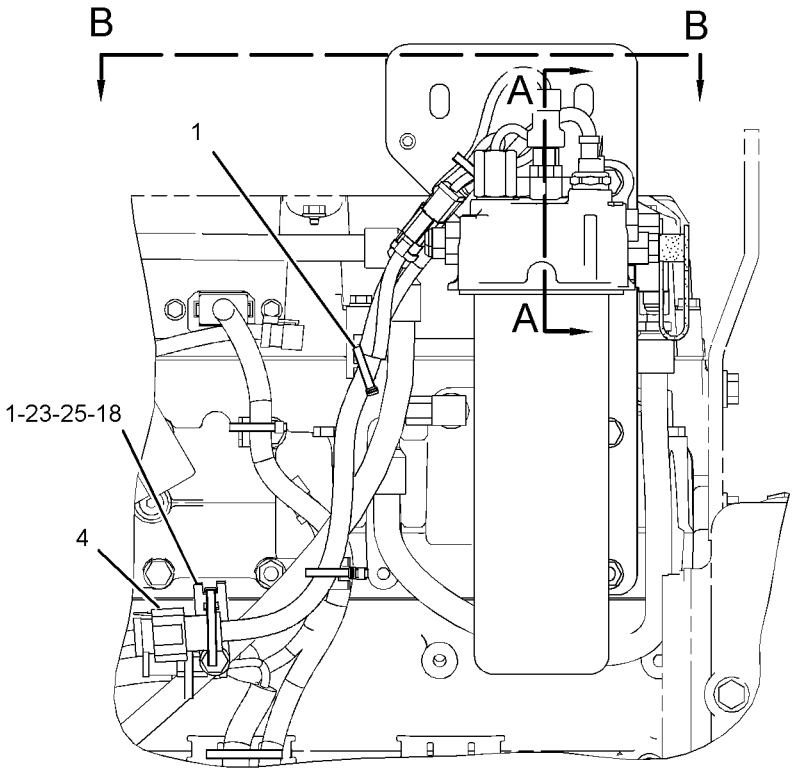

LEFT SIDE VIEW OF ENGINE

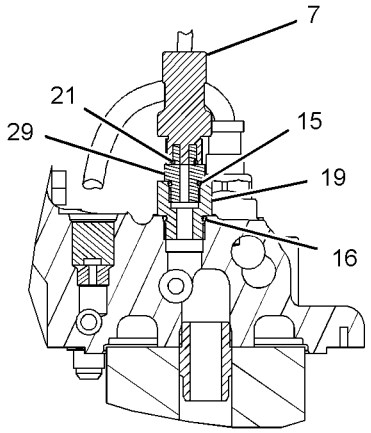

SECTION A-A

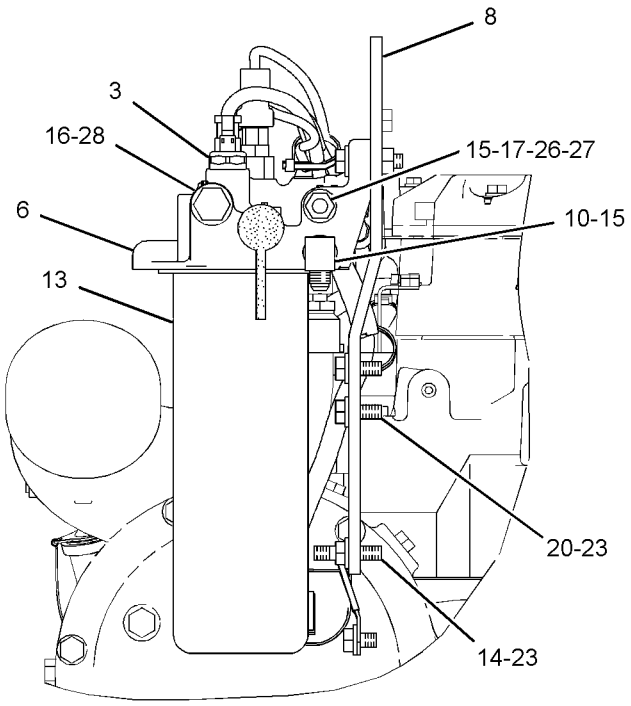

REAR VIEW OF ENGINE

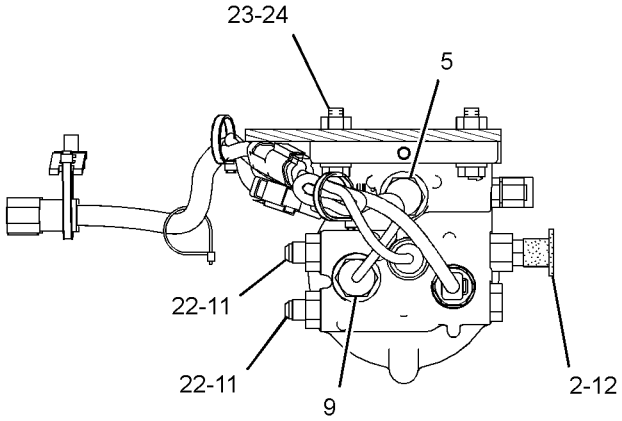

SECTION B-B

GRAPHIC #1 **<END>** g01308593

254-4998 FILTER GP-FUEL

S/N: MHX1304-2151
PART OF 227-5359, 231-0876 ENGINE AR-COMPLETE
ALSO AN ATTACHMENT
TYPE 3

SMCS-1261 **i02643431**

NOTE	REF NO	GRAPHIC REF	PART NUMBER	QTY	PART NAME 1 2 3 4 5 6 (PRODUCT LEVEL)	SEE PAGE
	1	1	**3S-2093**	4	STRAP-CABLE	
Y	2	1	*123-0783*	1	VALVE GP-FLUID SAMPLING	199
CY	3	1	*234-5013*	1	SENSOR GP-TEMPERATURE (FUEL)	314
C	4	1	**276-3091**	1	HARNESS AS-SENSOR (FUEL SENSOR)	
		1	**102-8803**	1	KIT-RECEPTACLE (3-PIN)	
					(INCLUDES RECEPTACLE AS & WEDGE)	
		1	**102-8806**	1	KIT-RECEPTACLE (8-PIN)	
					(INCLUDES RECEPTACLE AS & WEDGE)	
		1	**114-8844**		SLEEVE-PLASTIC (60-CM)	
		1	**230-4011**	1	PLUG AS-CONNECTOR (2-PIN)	
		1	**230-4012**	1	RECEPTACLE AS-CONNECTOR (2-PIN)	
Y	5	1	*233-6742*	1	VALVE GP-CHECK (FUEL)	197
	6	1	**237-9310**	1	BASE AS	
		1	**9S-4167**	1	STUD-HOLLOW (1-14X1.47-IN)	
Y	7	1	*239-2396*	1	SENSOR GP-PRESSURE (FUEL)	297
	8	1	**252-5738**	1	BRACKET AS	
CY	9	1	**275-1253**	1	SWITCH GP-PRESSURE	332
	10	1	**030-7947**	1	ELBOW	
	11	1	**030-8188**	2	CONNECTOR	
	12	1	*148-8313*	1	ADAPTER AS	
		1	**3K-0360**	1	SEAL-O-RING	
		1	**5P-6944**	1	ADAPTER	
	13	1	**1R-0762**	1	FILTER-FUEL (ADVANCED EFFICIENCY)	
	14	1	**212-0431**	1	STUD (M10X1.5-THD)	
	15	1	**3J-1907**	3	SEAL-O-RING	
	16	1	**3K-0360**	2	SEAL-O-RING	
	17	1	**4J-5477**	1	SEAL-O-RING	
	18	1	**4P-7581**	1	CLIP	
	19	1	**5P-6944**	1	ADAPTER	
M	20	1	**6V-4248**	3	BOLT (M10X1.5X25-MM)	
	21	1	**6V-5048**	1	SEAL-O-RING	
	22	1	**6V-5049**	2	SEAL-O-RING	
	23	1	**6V-5839**	7	WASHER (11X21X2.5-MM THK)	
M	24	1	**6V-5842**	2	BOLT (M10X1.5X40-MM)	
M	25	1	**6V-8212**	1	BOLT (M10X1.5X16-MM)	
	26	1	**6V-8641**	1	CONNECTOR	
	27	1	**6V-9828**	1	CAP AS	
	28	1	**9S-4185**	1	PLUG-O-RING	
	29	1	**9X-0261**	1	ADAPTER	

C-CHANGE FROM PREVIOUS TYPE
M-METRIC PART
Y-SEPARATE ILLUSTRATION

254-4998 **FILTER GP-FUEL** *(contd.)* **i02643431**

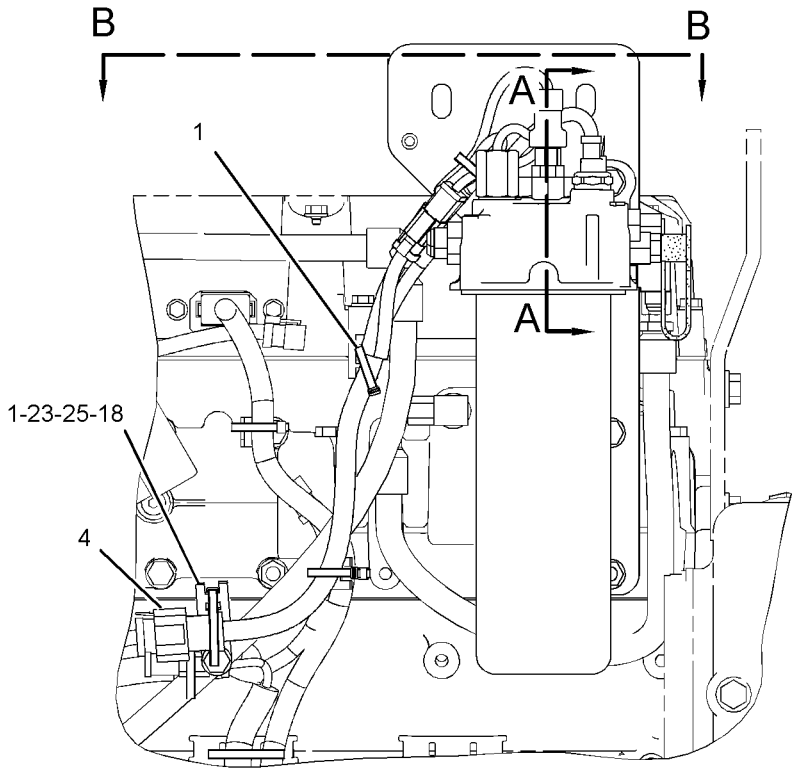

LEFT SIDE VIEW OF ENGINE

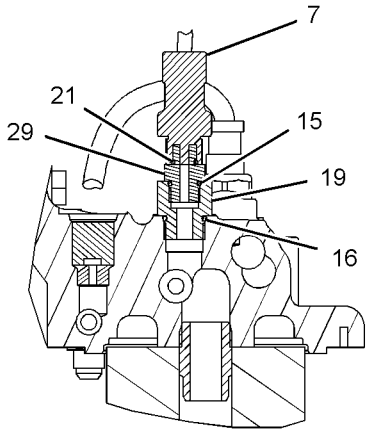

SECTION A-A

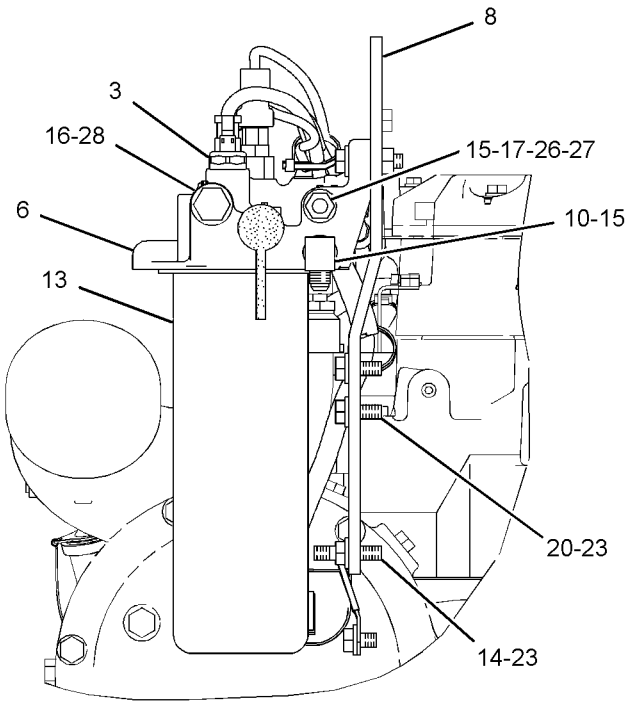

REAR VIEW OF ENGINE

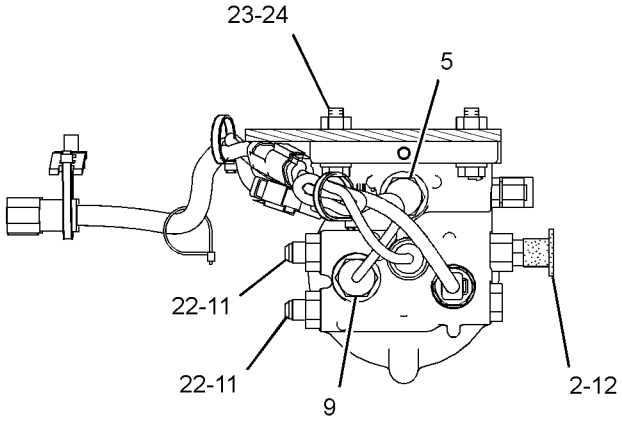

SECTION B-B

GRAPHIC #1 **<END>** g01308593

254-4998 FILTER GP-FUEL

S/N: MHX2152-9843
PART OF 227-5359, 231-0876 ENGINE AR-COMPLETE
ALSO AN ATTACHMENT

SMCS-1261 **i02975264**

NOTE	REF NO	GRAPHIC REF	PART NUMBER	QTY	PART NAME 1 2 3 4 5 6 (PRODUCT LEVEL)	SEE PAGE
	1	1	**3S-2093**	4	STRAP-CABLE	
Y	2	1	*123-0783*	1	VALVE GP-FLUID SAMPLING (FUEL)	199
Y	3	1	*234-5013*	1	SENSOR GP-TEMPERATURE (FUEL)	314
	4	1	**276-3091**	1	HARNESS AS-SENSOR (FUEL)	
		1	**102-8803**	1	KIT-RECEPTACLE (3-PIN)	
					(INCLUDES RECEPTACLE AS & WEDGE)	
		1	**102-8806**	1	KIT-RECEPTACLE (8-PIN)	
					(INCLUDES RECEPTACLE AS & WEDGE)	
		1	**114-8844**		SLEEVE-PLASTIC (60-CM)	
		1	**230-4011**	1	PLUG AS-CONNECTOR (2-PIN)	
		1	**230-4012**	1	RECEPTACLE AS-CONNECTOR (2-PIN)	
Y	5	1	*233-6742*	1	VALVE GP-CHECK (FUEL)	197
	6	1	**237-9310**	1	BASE AS	
		1	**9S-4167**	1	STUD-HOLLOW (1-14X1.47-IN)	
Y	7	1	*239-2396*	1	SENSOR GP-PRESSURE (FUEL)	297
	8	1	**252-5738**	1	BRACKET AS	
M		1	**8T-3490**	2	NUT-WELD (M10X1.5-THD)	
Y	9	1	**275-1253**	1	SWITCH GP-PRESSURE (FUEL)	332
	10	1	**030-7947**	1	ELBOW	
	11	1	**030-8188**	2	CONNECTOR	
	12	1	*148-8313*	1	ADAPTER AS	
		1	**3K-0360**	1	SEAL-O-RING	
		1	**5P-6944**	1	ADAPTER	
	13	1	**1R-0762**	1	FILTER-FUEL (ADVANCED EFFICIENCY)	
C	15	1	**3J-1907**	2	SEAL-O-RING	
	16	1	**3K-0360**	2	SEAL-O-RING	
	17	1	**4J-5477**	1	SEAL-O-RING	
	18	1	**4P-7581**	1	CLIP	
CM	20	1	**6V-4248**	4	BOLT (M10X1.5X25-MM)	
	21	1	**6V-5048**	1	SEAL-O-RING	
	22	1	**214-7568**	2	SEAL-O-RING	
	23	1	**6V-5839**	7	WASHER (11X21X2.5-MM THK)	
M	24	1	**6V-5842**	2	BOLT (M10X1.5X40-MM)	
M	25	1	**6V-8212**	1	BOLT (M10X1.5X16-MM)	
	26	1	**6V-8641**	1	CONNECTOR	
	27	1	**6V-9828**	1	CAP AS	
	28	1	*148-8411*	1	PLUG AS	
		1	**3K-0360**	1	SEAL-O-RING	
		1	**9S-4185**	1	PLUG-O-RING	
C	29	1	**235-3595**	1	ADAPTER	
	30	1	**8T-0119**	1	ELBOW	

C-CHANGE FROM PREVIOUS TYPE
M-METRIC PART
Y-SEPARATE ILLUSTRATION

254-4998 **FILTER GP-FUEL** *(contd.)* **i02975264**

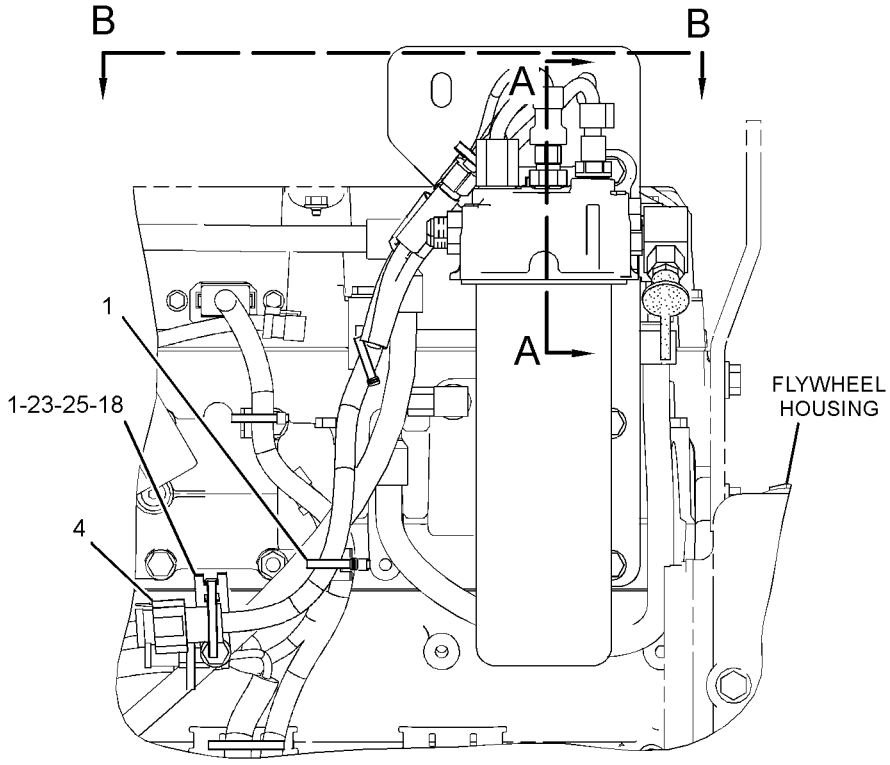

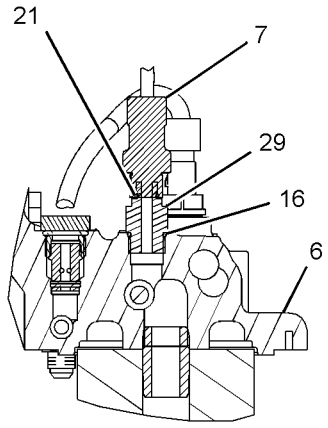

SECTION A-A

LEFT SIDE VIEW OF ENGINE

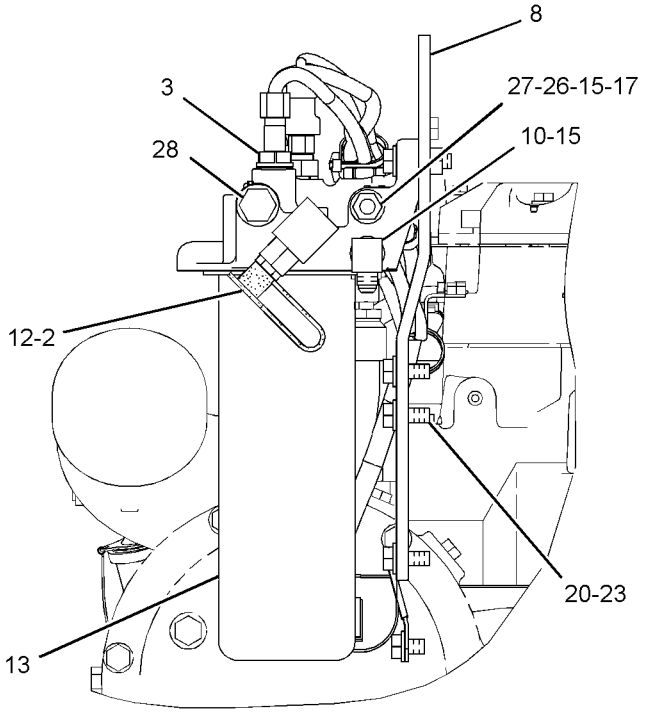

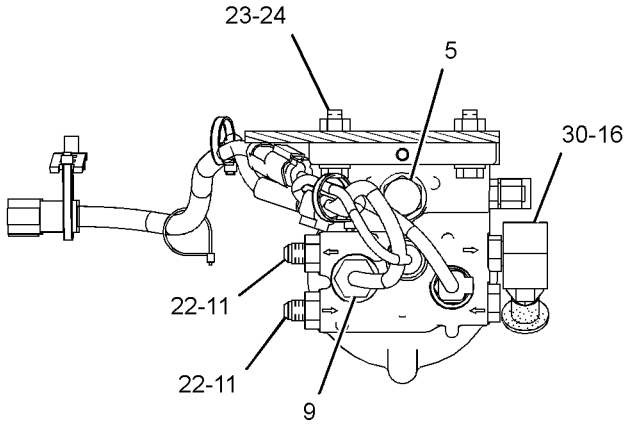

SECTION B-B

REAR VIEW OF ENGINE

GRAPHIC #1 **<END>** g01623287

FUEL SYSTEM

356-8382 FILTER GP-FUEL

S/N: MHX9844-UP

PROVIDES A FILTER GP-FUEL WITH SENSORS AND HARNESS WITH AMPSEAL CONNECTORS

PART OF 231-0876, 349-4462 ENGINE AR-COMPLETE

ALSO AN ATTACHMENT

SMCS-1261 **i04020802**

NOTE	REF NO	GRAPHIC REF	PART NUMBER	QTY	PART NAME 1 2 3 4 5 6 (PRODUCT LEVEL)	SEE PAGE
	1	1	**3S-2093**	4	STRAP-CABLE	
Y	2	1	*123-0783*	1	VALVE GP-FLUID SAMPLING (FUEL)	199
Y	3	1	*233-6742*	1	VALVE GP-CHECK (FUEL)	197
Y	4	1	*234-5013*	1	SENSOR GP-TEMPERATURE (FUEL)	314
	5	1	**235-3595**	1	ADAPTER	
	6	1	**237-9310**	1	BASE AS	
		1	**9S-4167**	1	STUD-HOLLOW (1-14X1.47-IN)	
	7	1	**252-5738**	1	BRACKET AS	
Y	8	1	**275-1253**	1	SWITCH GP-PRESSURE (FUEL)	332
Y	9	1	*276-9067*	1	SENSOR GP-PRESSURE (FUEL)	302
	10	1	**357-0673**	1	HARNESS AS-SENSOR	
		1	**102-8806**	1	KIT-RECEPTACLE (8-PIN)	
					(INCLUDES RECEPTACLE AS & WEDGE)	
		1	**8T-8737**	1	PLUG-SEAL	
		1	**9X-3402**	5	SOCKET-CONNECTOR (16-GA TO 18-GA)	
					—OR—	
		1	**126-1768**	5	SOCKET-CONNECTOR (14-GA)	
		1	**9X-3401**	9	PIN-CONNECTOR (16-GA TO 18-GA)	
					—OR—	
		1	**126-1767**	9	PIN-CONNECTOR (14-GA TO 16-GA)	
		1	**230-4011**	1	PLUG AS-CONNECTOR (2-PIN)	
		1	**264-7029**	1	SEAL-CONNECTOR	
		1	**230-4012**	1	RECEPTACLE AS-CONNECTOR (2-PIN)	
		1	**237-0227**	1	PLUG AS-CONNECTOR (3-PIN)	
		1	**264-7030**	1	SEAL-CONNECTOR	
E		1	**289-5150**		SLEEVE (13-CM)	
	11	1	*191-7805*	1	ELBOW AS	
		1	**030-7947**	1	ELBOW	
		1	**214-7568**	1	SEAL-O-RING	
	12	1	**1R-0762**	1	FILTER-FUEL (ADVANCED EFFICIENCY)	
	13	1	**238-5080**	1	SEAL-O-RING	
	14	1	*307-2673*	1	PLUG AS	
		1	**9S-8005**	1	PLUG-O-RING	
		1	**238-5080**	1	SEAL-O-RING	
	15	1	*321-8671*	2	CONNECTOR AS	
					(EACH INCLUDES)	
		1	**030-8188**	1	CONNECTOR	
		1	**238-5080**	1	SEAL-O-RING	
	16	1	*321-8675*	1	CONNECTOR AS	
		1	**6V-8641**	1	CONNECTOR	
		1	**214-7568**	1	SEAL-O-RING	
		1	**228-7088**	1	SEAL-O-RING	
	17	1	*330-9732*	1	ADAPTER AS	
		1	**5P-6944**	1	ADAPTER	
		1	**238-5080**	1	SEAL-O-RING	
	18	1	*335-3976*	1	ELBOW AS	
		1	**8T-0119**	1	ELBOW	
		1	**238-5080**	1	SEAL-O-RING	
	19	1	**4P-7581**	1	CLIP	
M	20	1	**6V-4248**	4	BOLT (M10X1.5X25-MM)	
	21	1	**6V-5839**	7	WASHER (11X21X2.5-MM THK)	
M	22	1	**6V-5842**	2	BOLT (M10X1.5X40-MM)	
M	23	1	**6V-8212**	1	BOLT (M10X1.5X16-MM)	
	24	1	**6V-9828**	1	CAP AS	

356-8382 **FILTER GP-FUEL** *(contd.)* **i04020802**

E-ORDER BY THE CENTIMETER
M-METRIC PART
Y-SEPARATE ILLUSTRATION

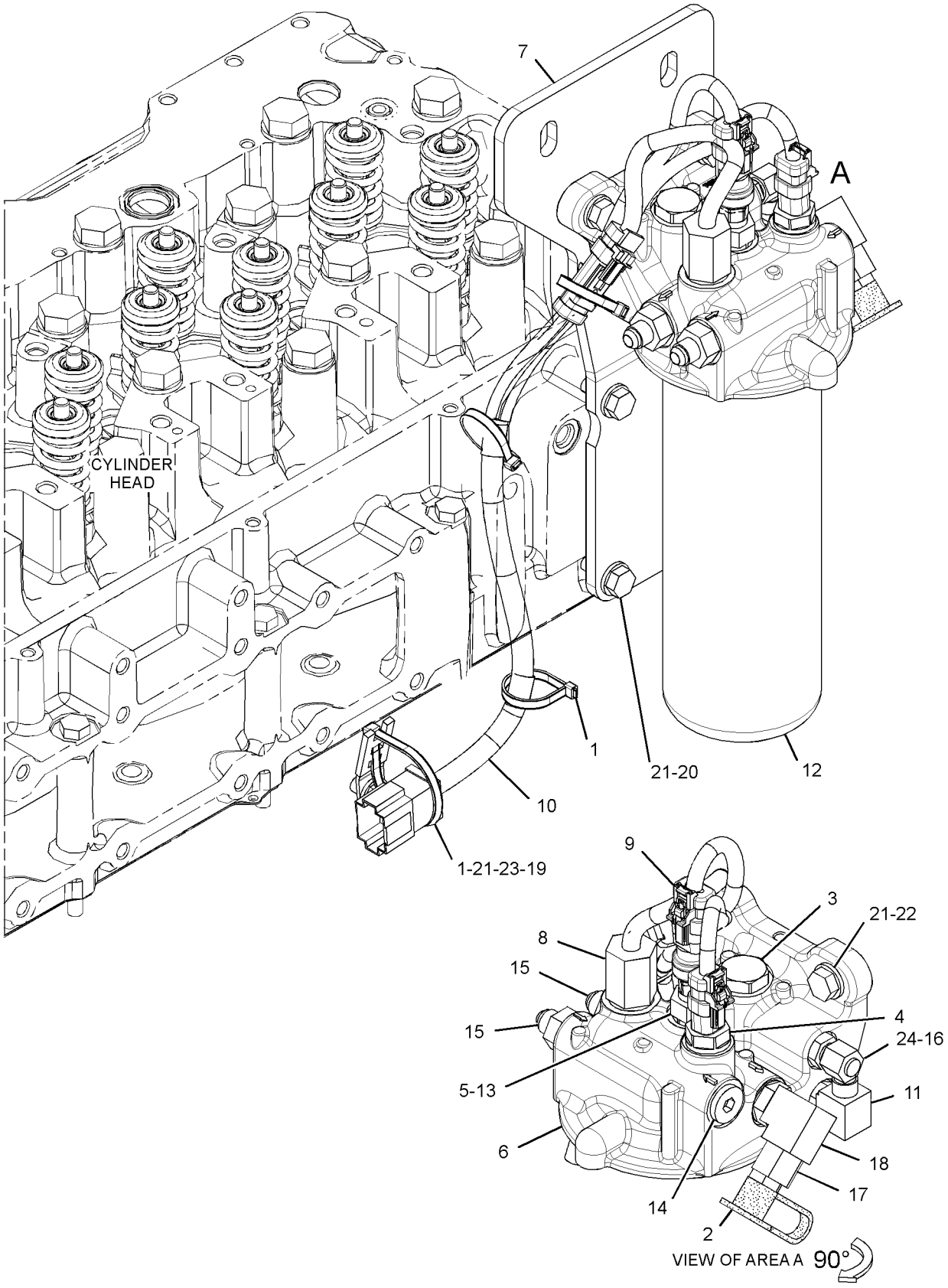

GRAPHIC #1 **<END>** g02231200

174-9570 FILTER GP-WATER SEP & FUEL–PRIMARY

S/N: R9H1-UP

PART OF 190-8977 PUMP GP-FUEL PRM & WATER SEP

SMCS-1261, 1263 **i03671378**

NOTE	REF NO	GRAPHIC REF	PART NUMBER	QTY	PART NAME 1 2 3 4 5 6 (PRODUCT LEVEL)	SEE PAGE
	1	1	**326-1644**	1	FILTER AS-WATER SEP & FUEL (PRIMARY)	
	1A	1	**220-8678**	1	SEAL-RING (FUEL, WATER SEPARATOR)	
	2	1	**343-5527**	1	BOWL AS	
	2A	1	**3J-1907**	1	SEAL-O-RING	
	2B	1	**5F-9144**	1	SEAL-O-RING	
	2C	1	**8F-7219**	1	SEAL-O-RING	
	2D	1	**9S-8004**	1	PLUG-O-RING	

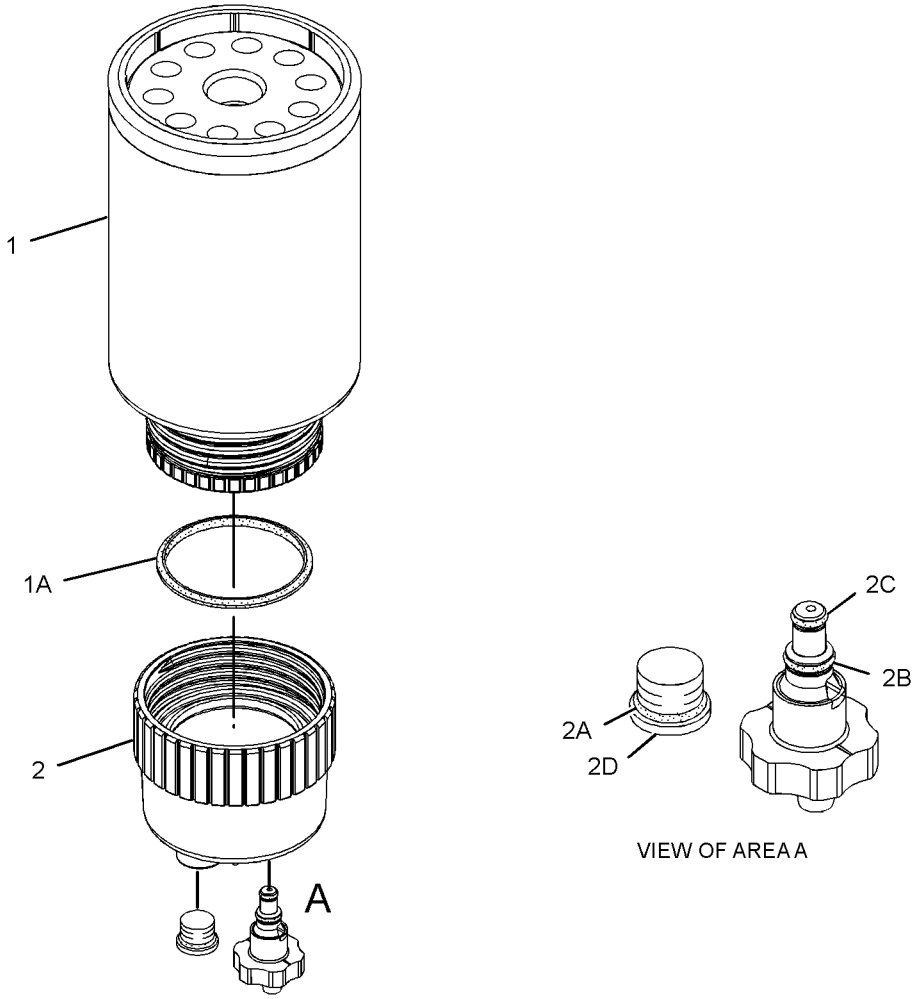

GRAPHIC #1 **<END>** g01960053

FUEL SYSTEM

249-0713 INJECTOR GP-FUEL*R

S/N: MHX1304-UP
PART OF 253-1461 PUMP GP-FUEL INJECTION
ALSO AN ATTACHMENT

SMCS-1251, 1254, 1290, 1713 **i02144582**

NOTE	REF NO	GRAPHIC REF	PART NUMBER	QTY	PART NAME 1 2 3 4 5 6 (PRODUCT LEVEL)	SEE PAGE
	1	1	**9X-7317**	1	SEAL-O-RING	
	2	1	**230-3728**	1	SEAL-O-RING	
	3	1	**230-3775**	1	SEAL-O-RING	

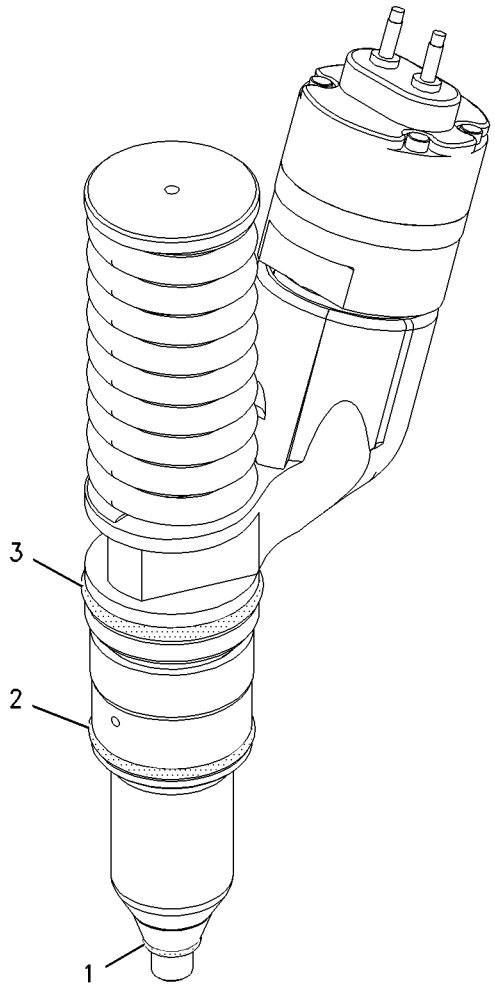

GRAPHIC #1 **<END>** g00914176

254-4999 LINES GP-FUEL

S/N: MHX1304-2760
PART OF 227-5359, 231-0876 ENGINE AR-COMPLETE
ALSO AN ATTACHMENT

SMCS-1274 **i02283889**

NOTE	REF NO	GRAPHIC REF	PART NUMBER	QTY	PART NAME 1 2 3 4 5 6 (PRODUCT LEVEL)	SEE PAGE
I	1	1	**6P-5353**	1	HOSE AS	
	2	1	**7C-8246**	2	SPACER (10.5X20X24-MM THK)	
	3	1	**9C-5344**	1	SPACER (10.5X20X18-MM THK)	
	4	1	**9Y-2700**	1	SPACER (11X20X42-MM THK)	
I	5	1	**153-9086**	1	HOSE AS	
M	6	1	**175-9079**	1	ROD-LINK	
I	7	1	**177-4950**	1	HOSE AS	
	8	1	**244-1420**	1	TUBE AS	
	9	1	**030-7942**	1	ELBOW	
	10	1	**030-7947**	2	ELBOW	
	11	1	**067-2551**	1	CLIP	
	12	1	*148-8318*	1	CONNECTOR AS	
		1	**3K-0360**	1	SEAL-O-RING	
		1	**6V-8397**	1	SEAL-O-RING	
		1	**6V-8634**	1	CONNECTOR	
	13	1	**3J-1907**	3	SEAL-O-RING	
M	14	1	**6V-5230**	1	BOLT (M10X1.5X60-MM)	
	15	1	**6V-5839**	3	WASHER (11X21X2.5-MM THK)	
M	16	1	**6V-5842**	1	BOLT (M10X1.5X40-MM)	
	17	1	**7H-7055**	2	CLIP	
	18	1	**7K-4129**	1	UNION-FLARED	
	19	1	**8M-2773**	1	CLIP	
	20	1	**8T-4121**	1	WASHER-HARD (11X21X2.5-MM THK)	
M	21	1	**8T-4137**	1	BOLT (M10X1.5X20-MM)	

I-REFER TO HYDRAULIC INFORMATION SYSTEM
M-METRIC PART

254-4999 **LINES GP-FUEL** *(contd.)* **i02283889**

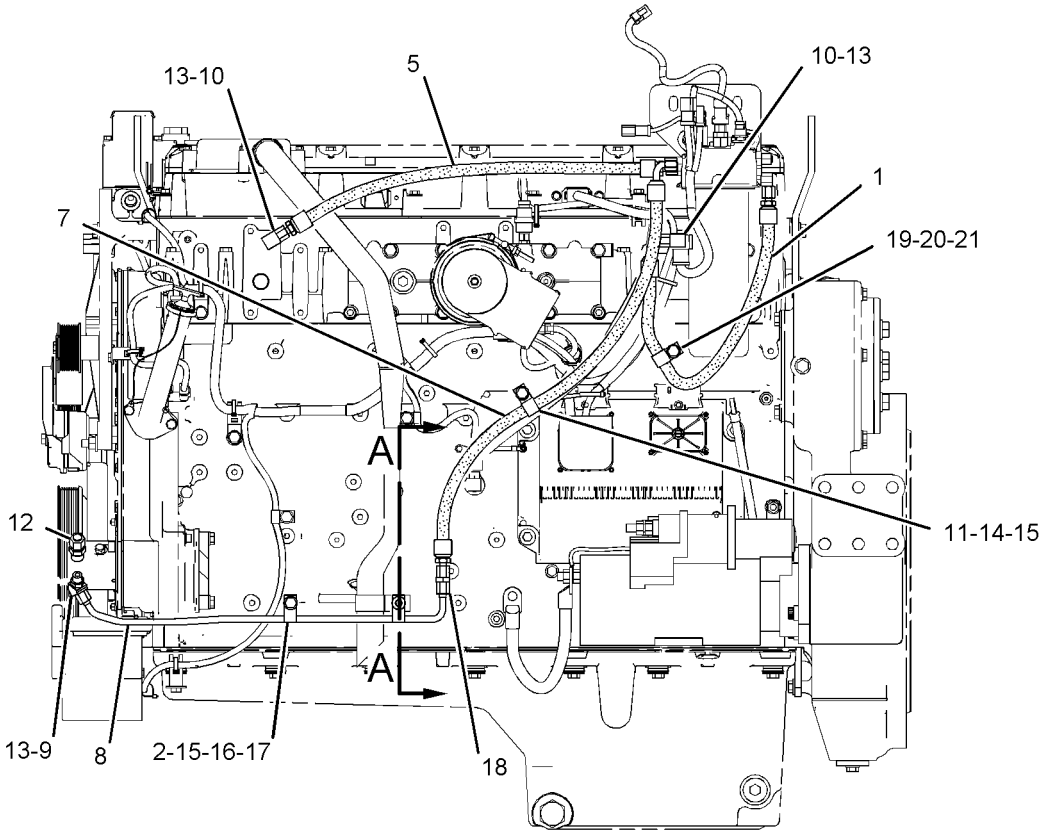

LEFT SIDE VIEW

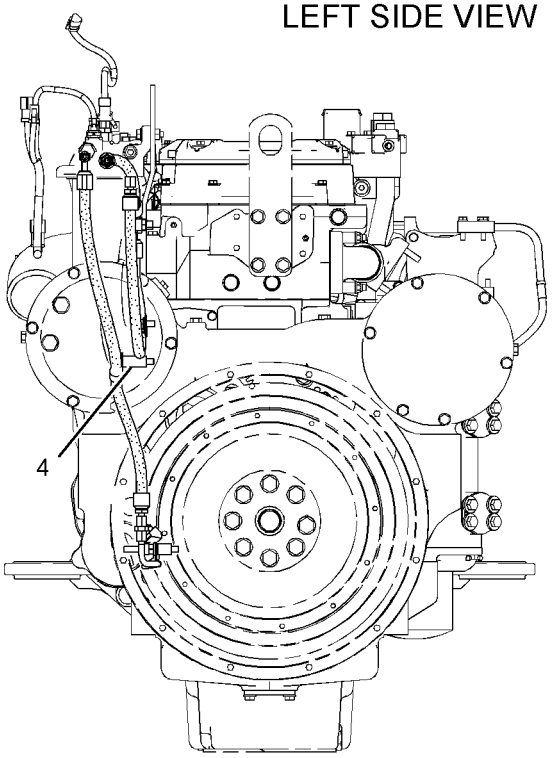

REAR VIEW

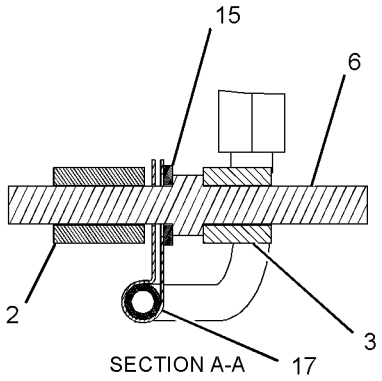

SECTION A-A

GRAPHIC #1 **<END>** g01143833

277-3628 LINES GP-FUEL—FAST FILL SYSTEM

S/N: R9H1-UP

PART OF 349-2556 COMMON AR

SMCS-1274 **i04026436**

NOTE	REF NO	GRAPHIC REF	PART NUMBER	QTY	PART NAME 1 2 3 4 5 6 (PRODUCT LEVEL)	SEE PAGE
	1	1	**9D-0630**	1	CAP-DUST	
	2	1	**127-1664**	4	CLAMP	
	3	1	**193-0598**	1	BOLT-WING	
I	4	1	**277-0690**	1	HOSE AS	
	5	1	**277-0742**	1	VALVE-DRAIN	
	6	1	**277-2156**	1	TUBE	
	7	1	**291-9821**	1	PLATE AS	
	8	1	**315-6717**	1	PLATE AS	
	9	1	**315-6718**	1	COVER AS	
	10	1	**1P-4278**	2	CLAMP-HOSE	
	11	1	**4D-7735**	1	CLIP	
	12	1	**5K-9090**	1	SEAL-O-RING	
	13	1	**5P-1076**	1	WASHER-HARD (13.5X30X4-MM THK)	
	14	1	**5P-2369**	1	CLIP	
	15	1	**5P-4116**	1	WASHER-HARD (8.8X20.5X2-MM THK)	
	16	1	**5P-8131**	1	GROMMET	
	17	1	**246-2641**	1	PADLOCK GP	
		1	**5P-8500**	1	KEY	
	18	1	**6V-2686**	1	CLIP	
	19	1	**6V-8400**	1	SEAL-O-RING	
	20	1	**6V-9172**	1	NUT (1-7/16-12-THD)	
	21	1	**6V-9833**	1	CAP AS	
	22	1	**7X-7729**	2	WASHER (11X25X3-MM THK)	
C	23	1	**8T-4121**	3	WASHER-HARD (11X21X2.5-MM THK)	
M	24	1	**8T-4133**	1	NUT (M10X1.5-THD)	
M	25	1	**8T-4136**	1	BOLT (M10X1.5X25-MM)	
M	26	1	**8T-4179**	2	BOLT (M12X1.75X20-MM)	
M	27	1	**8T-4195**	1	BOLT (M10X1.5X30-MM)	
	28	1	**8T-4223**	2	WASHER-HARD (13.5X25.5X3-MM THK)	
	29	1	**8T-4224**	4	WASHER-HARD (8.8X16X2-MM THK)	
	30	1	**8T-4896**	1	WASHER-HARD (10.2X18.5X2.5-MM THK)	
M	31	1	**8T-4956**	1	BOLT (M12X1.75X35-MM)	
	32	1	**9D-6196**	1	CLIP (SLOT)	
	33	1	**9D-6197**	1	CLIP (TAB)	
	34	1	**9K-0700**	1	GROMMET	
	35	1	**9X-2317**	1	UNION	
M	36	1	**9X-6277**	4	BOLT (M8X1.25X60-MM)	
E	37	1	**5P-1293**		HOSE (15-CM)	
E	37A	1	**5P-1293**		HOSE (16.5-CM)	
E	38	1	**5P-1442**		HOSE (93-CM)	
C	39	1	**6V-2235**	1	CLIP	
CM	40	1	**8T-4186**	1	BOLT (M10X1.5X40-MM)	
C	41	1	**9C-5344**	1	SPACER (10.5X20X18-MM THK)	
C	42	1	**127-4471**	1	CLAMP-HOSE	
CG	43	1	**9X-2360**		HOSE (8.5-IN)	

C-CHANGE FROM PREVIOUS TYPE
E-ORDER BY THE CENTIMETER
G-ORDER BY THE INCH
I-REFER TO HYDRAULIC INFORMATION SYSTEM
M-METRIC PART

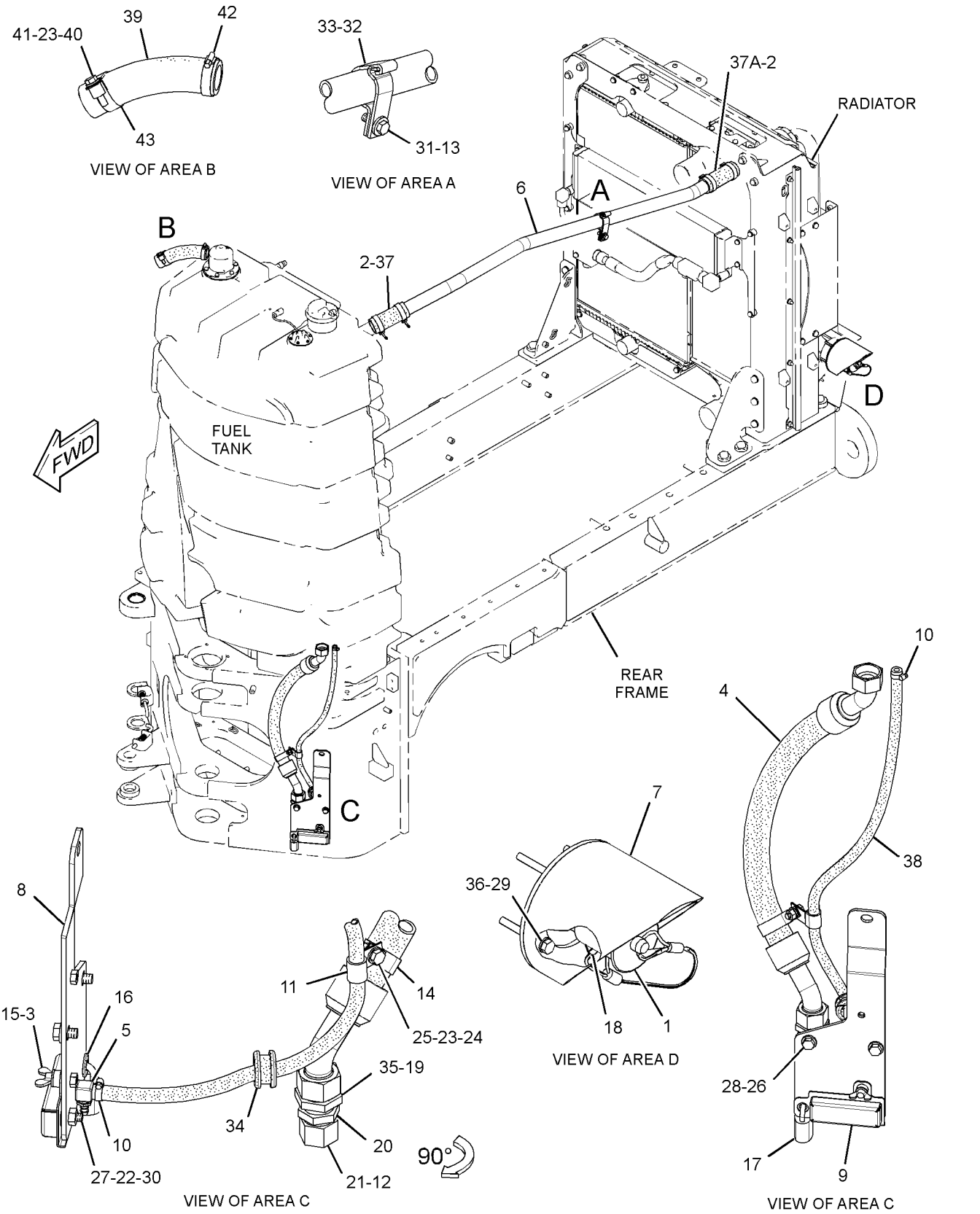

GRAPHIC #1 **<END>** g02237194

FUEL SYSTEM

289-4112 LINES GP-FUEL

S/N: MHX2761-4643
PART OF 227-5359, 231-0876 ENGINE AR-COMPLETE
ALSO AN ATTACHMENT

SMCS-1274 **i02764743**

NOTE	REF NO	GRAPHIC REF	PART NUMBER	QTY	PART NAME 1 2 3 4 5 6 (PRODUCT LEVEL)	SEE PAGE
	1	1	**7C-8246**	1	SPACER (10.5X20X24-MM THK)	
	2	1	**9C-5344**	1	SPACER (10.5X20X18-MM THK)	
	3	1	**9Y-2700**	1	SPACER (11X20X42-MM THK)	
I	4	1	**153-7950**	1	HOSE AS	
I	5	1	**160-9447**	1	HOSE AS	
I	6	1	**160-9449**	1	HOSE AS	
M	7	1	**175-9079**	1	ROD-LINK	
	8	1	**030-7947**	3	ELBOW	
	9	1	**067-2551**	1	CLIP	
	10	1	*148-8318*	1	CONNECTOR AS	
		1	**6V-8634**	1	CONNECTOR	
	10A	1	**3K-0360**	1	SEAL-O-RING	
	10B	1	**6V-8397**	1	SEAL-O-RING	
	11	1	*148-8374*	1	ELBOW AS	
		1	**6V-8723**	1	ELBOW	
	11A	1	**3K-0360**	1	SEAL-O-RING	
	11B	1	**6V-8397**	1	SEAL-O-RING	
	12	1	**3J-1907**	3	SEAL-O-RING	
M	13	1	**6V-5230**	1	BOLT (M10X1.5X60-MM)	
	14	1	**6V-5839**	2	WASHER (11X21X2.5-MM THK)	
	15	1	**6V-9829**	1	CAP AS	

I-REFER TO HYDRAULIC INFORMATION SYSTEM
M-METRIC PART

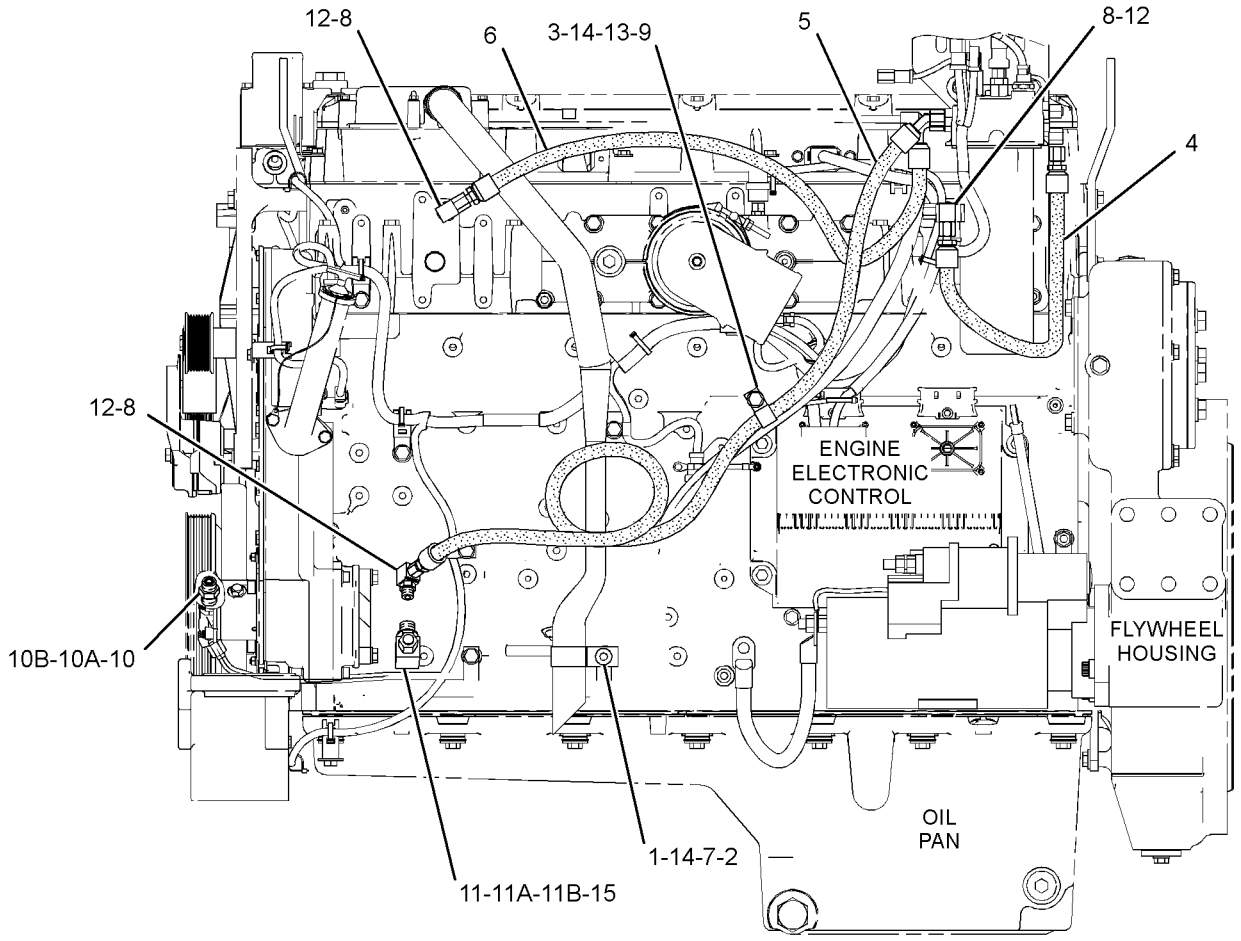

LEFT SIDE VIEW OF ENGINE

GRAPHIC #1 **<END>** g01427291

289-4112 LINES GP-FUEL

S/N: MHX4644-5693
PART OF 227-5359, 231-0876 ENGINE AR-COMPLETE
ALSO AN ATTACHMENT

SMCS-1274 **i03265017**

NOTE	REF NO	GRAPHIC REF	PART NUMBER	QTY	PART NAME 1 2 3 4 5 6 (PRODUCT LEVEL)	SEE PAGE
	1	1	**7C-8246**	1	SPACER (10.5X20X24-MM THK)	
	3	1	**9Y-2700**	1	SPACER (11X20X42-MM THK)	
I	4	1	**153-7950**	1	HOSE AS	
I	5	1	**160-9447**	1	HOSE AS	
I	6	1	**160-9449**	1	HOSE AS	
C	7	1	**301-6343**	1	STUD	
	8	1	**030-7947**	3	ELBOW	
	9	1	**067-2551**	1	CLIP	
	11	1	*148-8374*	1	ELBOW AS	
		1	**6V-8723**	1	ELBOW	
	11A	1	**3K-0360**	1	SEAL-O-RING	
	11B	1	**6V-8397**	1	SEAL-O-RING	
	12	1	**3J-1907**	3	SEAL-O-RING	
M	13	1	**6V-5230**	1	BOLT (M10X1.5X60-MM)	
	14	1	**6V-5839**	2	WASHER (11X21X2.5-MM THK)	
	15	1	**6V-9829**	1	CAP AS	

C-CHANGE FROM PREVIOUS TYPE
I-REFER TO HYDRAULIC INFORMATION SYSTEM
M-METRIC PART

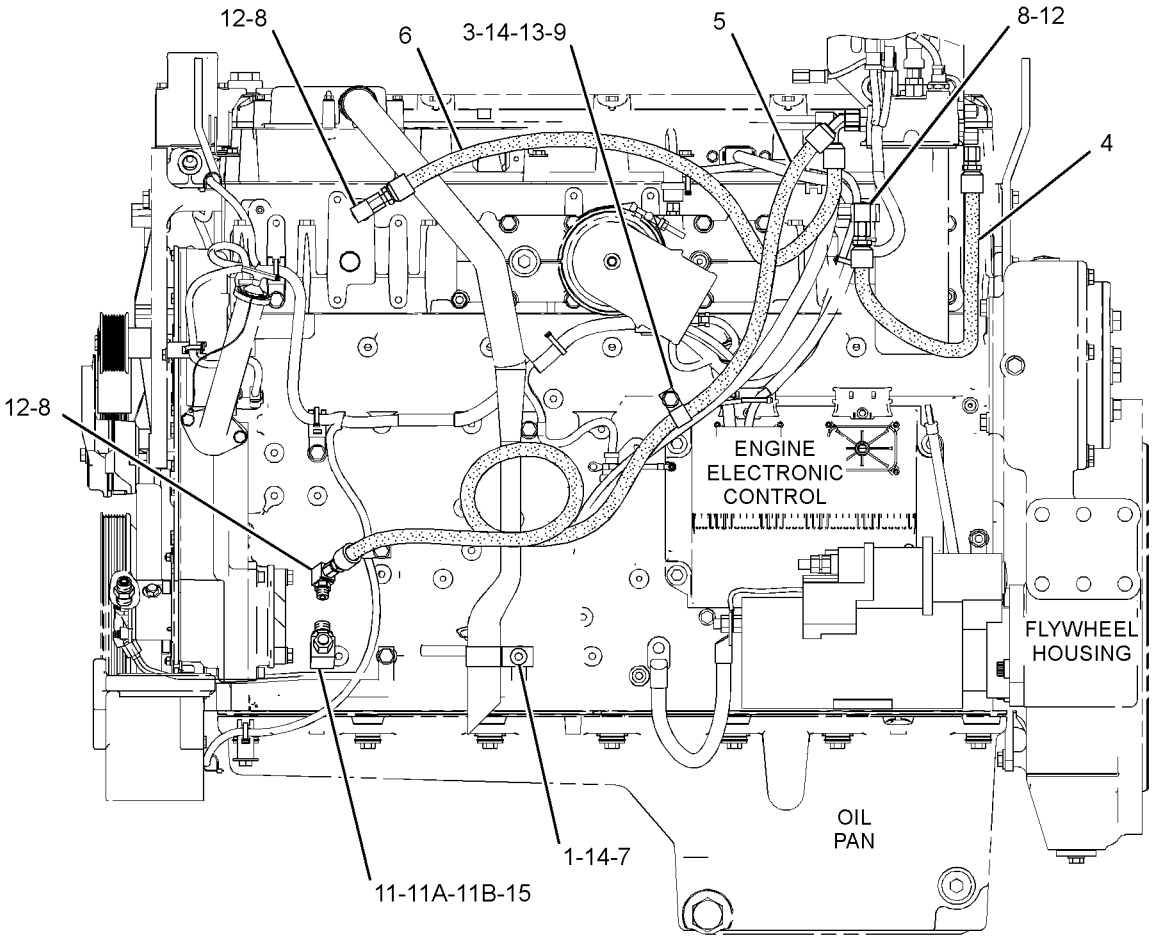

LEFT SIDE VIEW OF ENGINE

GRAPHIC #1 **<END>** g01672299

FUEL SYSTEM

289-4112 LINES GP-FUEL

S/N: MHX5694-10490
PART OF 227-5359, 231-0876 ENGINE AR-COMPLETE
ALSO AN ATTACHMENT

SMCS-1274 **i03293252**

NOTE	REF NO	GRAPHIC REF	PART NUMBER	QTY	PART NAME 1 2 3 4 5 6 (PRODUCT LEVEL)	SEE PAGE
	1	1	**7C-8246**	1	SPACER (10.5X20X24-MM THK)	
C	3	1	**108-3612**	1	SPACER (11.13X19.05X53-MM THK)	
I	4	1	**153-7950**	1	HOSE AS	
CI	5	1	**136-9141**	1	HOSE AS-FUEL	
CI	6	1	**285-2237**	1	HOSE AS	
	7	1	**301-6343**	1	STUD	
	8	1	**030-7947**	3	ELBOW	
	9	1	**067-2551**	1	CLIP	
	11	1	*148-8374*	1	ELBOW AS	
		1	**6V-8723**	1	ELBOW	
		1	**3K-0360**	1	SEAL-O-RING	
		1	**6V-8397**	1	SEAL-O-RING	
	12	1	**3J-1907**	3	SEAL-O-RING	
CM	13	1	**6V-7981**	1	BOLT (M10X1.5X70-MM)	
	14	1	**6V-5839**	2	WASHER (11X21X2.5-MM THK)	
	15	1	**6V-9829**	1	CAP AS	

C-CHANGE FROM PREVIOUS TYPE
I-REFER TO HYDRAULIC INFORMATION SYSTEM
M-METRIC PART

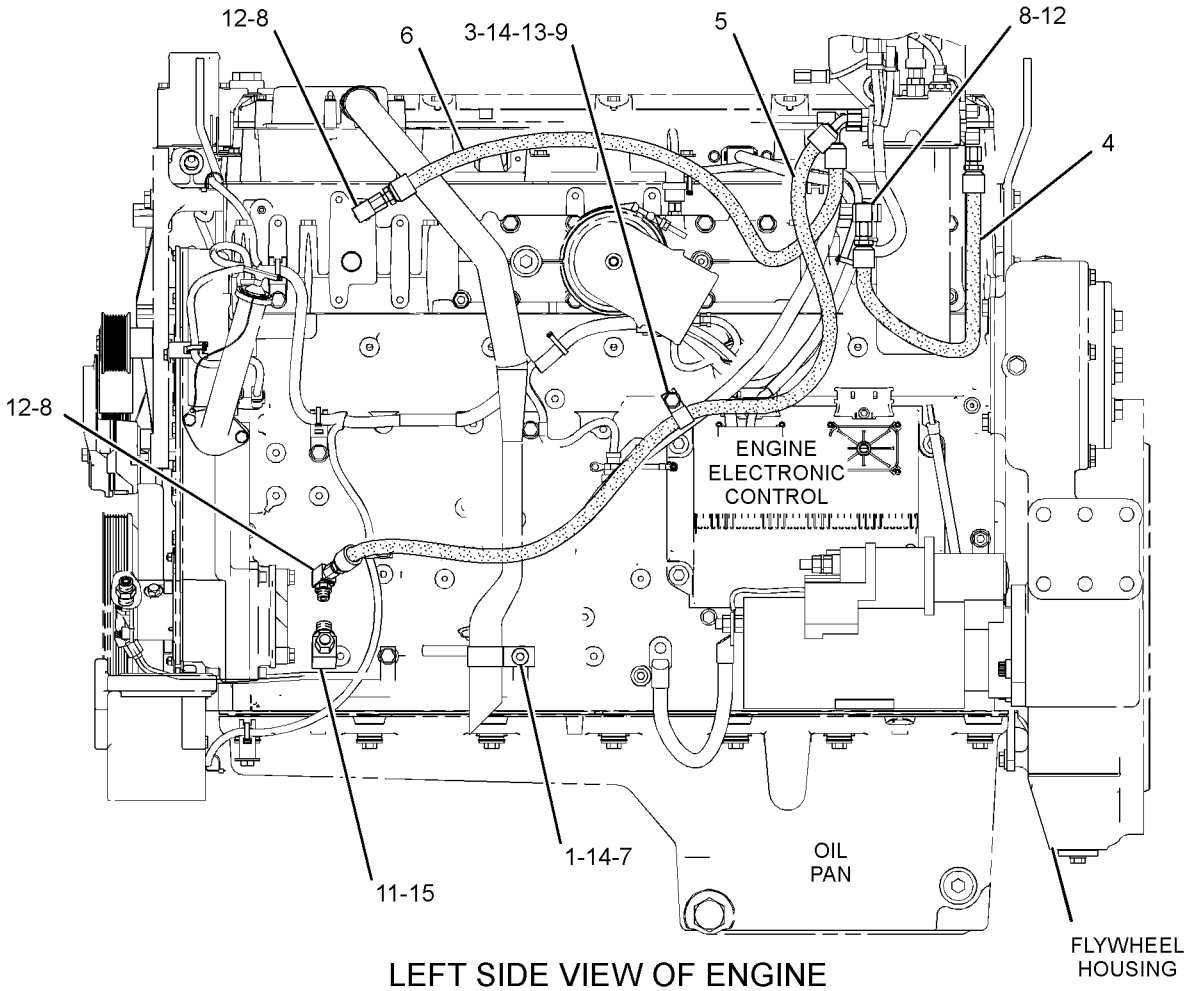

LEFT SIDE VIEW OF ENGINE

GRAPHIC #1 **<END>** g01679964

289-4112 LINES GP-FUEL

S/N: MHX10491-UP

PART OF 227-5359, 231-0876, 349-4462 ENGINE AR-COMPLETE

ALSO AN ATTACHMENT

SMCS-1274 **i04024245**

NOTE	REF NO	GRAPHIC REF	PART NUMBER	QTY	PART NAME 1 2 3 4 5 6 (PRODUCT LEVEL)	SEE PAGE
I	1	1	**136-9141**	1	HOSE AS-FUEL	
I	2	1	**153-7950**	1	HOSE AS	
C	3	1	**203-3768**	1	SPACER (11X16X60-MM THK)	
I	4	1	**285-2237**	1	HOSE AS	
M	5	1	**175-9079**	1	ROD-LINK	
C	6	1	*191-7805*	3	ELBOW AS	
					(EACH INCLUDES)	
		1	**030-7947**	1	ELBOW	
		1	**214-7568**	1	SEAL-O-RING	
C	7	1	*329-5511*	1	ELBOW AS	
		1	**6V-8723**	1	ELBOW	
		1	**228-7089**	1	SEAL-O-RING	
		1	**238-5080**	1	SEAL-O-RING	
	8	1	**6V-5839**	2	WASHER (11X21X2.5-MM THK)	
	9	1	**9R-2860**	1	SPACER (11X16.5X11-MM THK)	
	10	1	**6Y-1352**	1	SPACER (10.5X20X27-MM THK)	
C	11	1	**7V-6571**	1	GROMMET	
CM	12	1	**8T-0643**	1	BOLT (M10X1.5X80-MM)	
C	13	1	**8T-1889**	1	CLIP (SLOT)	
C	14	1	**8T-1890**	1	CLIP (TAB)	

C-CHANGE FROM PREVIOUS TYPE
I-REFER TO HYDRAULIC INFORMATION SYSTEM
M-METRIC PART

289-4112 **LINES GP-FUEL** *(contd.)* **i04024245**

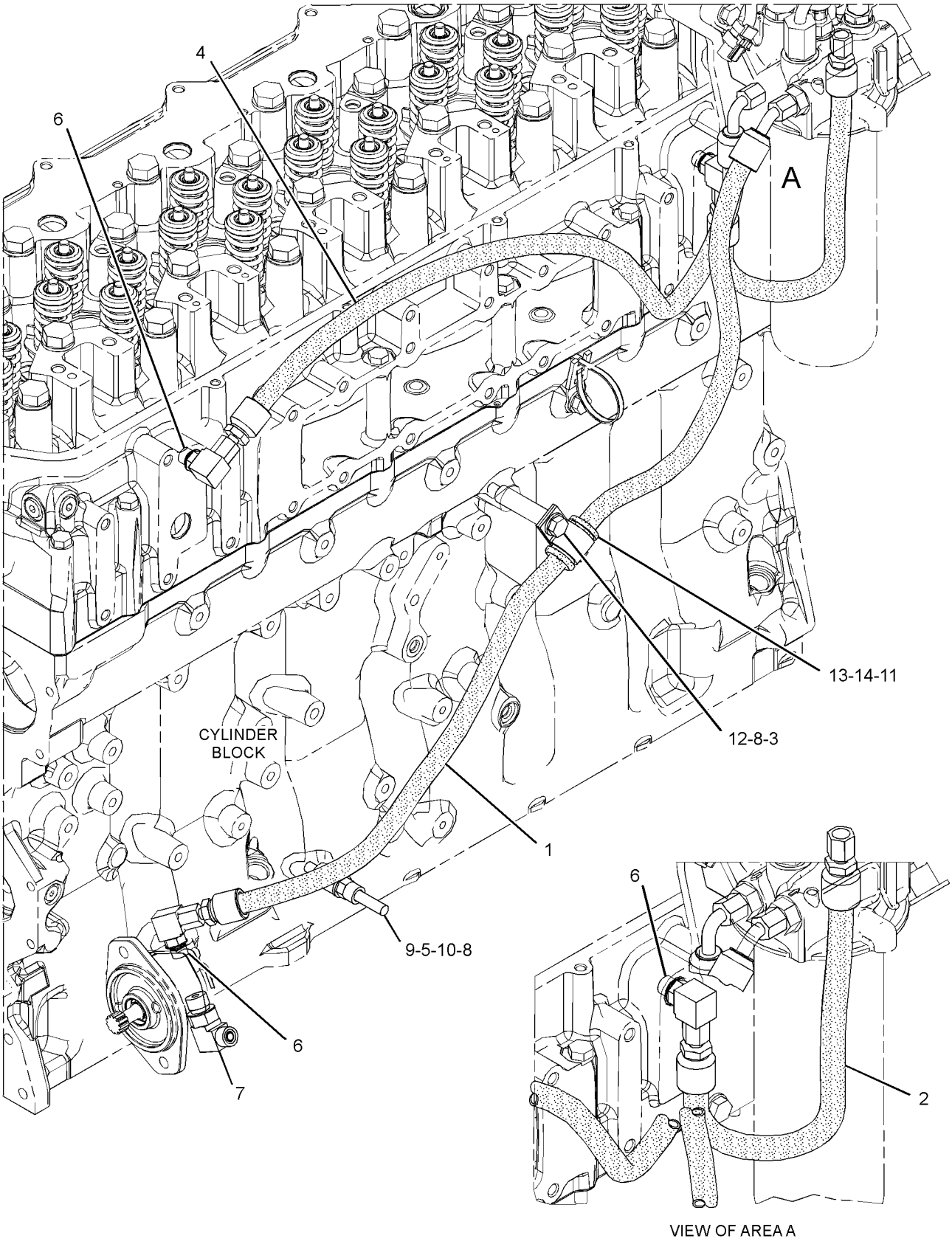

GRAPHIC #1 **<END>** g02231293

253-1461 PUMP GP-FUEL INJECTION

S/N: MHX1304-UP

PART OF 231-0877, 267-0009, 286-5804, 301-2265, 359-0362 ENGINE AR-CORE

ALSO AN ATTACHMENT

SMCS-1251, 1290 **i02099142**

NOTE	REF NO	GRAPHIC REF	PART NUMBER	QTY	PART NAME 1 2 3 4 5 6 (PRODUCT LEVEL)	SEE PAGE
	1	1	**224-4991**	1	CLAMP-INJECTOR	
Y	2	1	**249-0713**	1	INJECTOR GP-FUEL	170
M	3	1	**8T-0644**	1	BOLT (M10X1.50X90-MM)	

M-METRIC PART
Y-SEPARATE ILLUSTRATION

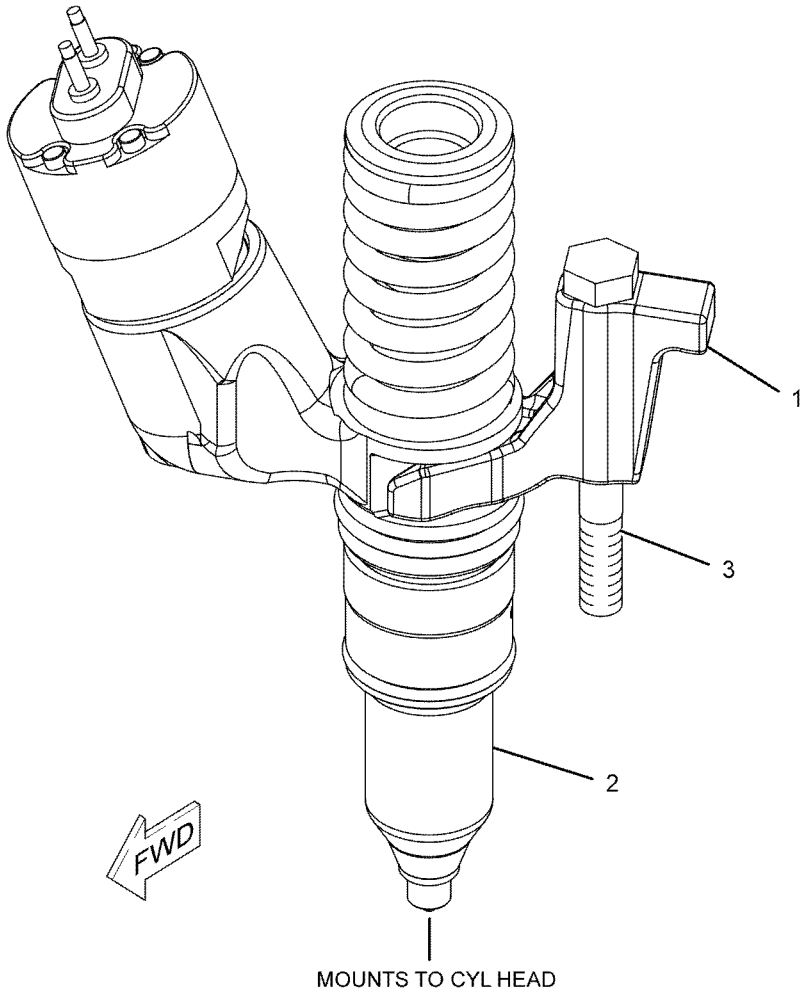

GRAPHIC #1 **<END>** g01065170

FUEL SYSTEM

249-7324 PUMP GP-FUEL PRIMING

S/N: R9H1-UP

PART OF 349-2556 COMMON AR

SMCS-1258 **i03995059**

NOTE	REF NO	GRAPHIC REF	PART NUMBER	QTY	PART NAME 1 2 3 4 5 6 (PRODUCT LEVEL)	SEE PAGE
	1	1	**3S-2093**	7	STRAP-CABLE	
	2	1	**8T-9655**	6	MOUNT-ISOLATION	
C	3	1	**9L-1566**	1	SUPPORT	
	4	1	**9R-5008**	1	SPACER (11X20X6-MM THK)	
	5	1	**9X-9365**	1	BRACKET	
	6	1	*161-9916*	1	ADAPTER AS	
		1	**6V-7420**	1	ADAPTER	
		1	**2M-9780**	1	SEAL-O-RING	
Y	7	1	**190-8977**	1	PUMP GP-FUEL PRM & WATER SEP (PRIMARY FUEL FILTER)	185
	8	1	**191-1782**	1	SPACER (8.5X12.7X38.2-MM THK)	
	9	1	**191-1783**	2	SPACER (8.5X12.7X87.3-MM THK)	
	10	1	*194-2903*	1	ELBOW AS	
		1	**8T-0119**	1	ELBOW	
		1	**3K-0360**	1	SEAL-O-RING	
	11	1	**266-9363**	1	HARNESS AS-SENSOR	
		1	**102-8806**	1	KIT-RECEPTACLE (8-PIN)	
					(INCLUDES RECEPTACLE AS & WEDGE)	
		1	**8T-8737**	2	PLUG-SEAL	
E		1	**114-8844**		SLEEVE-PLASTIC (40-CM)	
		1	**180-9339**	7	PIN-CONNECTOR (14-GA TO 18-GA)	
		1	**180-9340**	7	SOCKET-CONNECTOR (14-GA TO 18-GA)	
		1	**155-2265**	1	KIT-CONNECTING PLUG (8-PIN)	
					(INCLUDES PLUG AS, WEDGE & INTERFACE SEAL)	
		1	**180-9339**	7	PIN-CONNECTOR (14-GA TO 18-GA)	
		1	**180-9340**	7	SOCKET-CONNECTOR (14-GA TO 18-GA)	
I	12	1	**271-3844**	1	HOSE AS	
	13	1	**283-6906**	1	BRACKET AS	
	14	1	**283-6910**	1	BRACKET AS	
	15	1	**283-9806**	1	BRACKET	
CI	16	1	**350-9171**	1	HOSE AS	
	17	1	**298-2011**	1	SPACER (11X30X30-MM THK)	
I	18	1	**314-9284**	2	HOSE AS	
	19	1	**030-8276**	2	ELBOW-FLARED	
	20	1	**133-9229**	1	CLIP	
C	21	1	*148-8340*	1	CONNECTOR AS	
		1	**6V-8639**	1	CONNECTOR	
		1	**3K-0360**	1	SEAL-O-RING	
		1	**6V-8398**	1	SEAL-O-RING	
	22	1	*148-8345*	1	CONNECTOR AS	
		1	**6V-8638**	1	CONNECTOR	
		1	**2M-9780**	1	SEAL-O-RING	
		1	**6V-8398**	1	SEAL-O-RING	
	23	1	*164-5619*	2	PLUG AS	
					(EACH INCLUDES)	
		1	**9S-8006**	1	PLUG-O-RING	
		1	**2M-9780**	1	SEAL-O-RING	
	24	1	**198-4777**	17	WASHER-HARD (11X25X10-MM THK)	
	25	1	**1F-7854**	1	SPACER (11.01X19.05X49.21-MM THK)	
	26	1	*268-1605*	1	ELBOW AS	
		1	**8T-1686**	1	ELBOW	
		1	**228-7090**	1	SEAL-O-RING	
		1	**238-5080**	1	SEAL-O-RING	
	27	1	**281-5882**	1	VALVE-BALL	
	28	1	**3J-1907**	2	SEAL-O-RING	
	29	1	**3K-0360**	1	SEAL-O-RING	

249-7324 **PUMP GP-FUEL PRIMING** *(contd.)* **i03995059**

NOTE	REF NO	GRAPHIC REF	PART NUMBER	QTY	PART NAME 1 2 3 4 5 6 (PRODUCT LEVEL)	SEE PAGE
	30	1	**3S-8665**	1	CLIP	
C	31	1	**4D-7735**	5	CLIP	
	32	1	**4P-7428**	1	CLIP	
	33	1	**4P-7581**	1	CLIP	
	34	1	**4S-1962**	2	CLIP	
	35	1	**5P-2369**	1	CLIP	
	36	1	**6D-4247**	2	CLIP	
	37	1	**6V-8397**	1	SEAL-O-RING	
	38	1	**7X-0579**	3	WASHER-HARD (8.8X25.5X2-MM THK)	
M	39	1	**7X-2539**	2	BOLT (M8X1.25X110-MM)	
	40	1	**7X-7729**	1	WASHER (11X25X3-MM THK)	
	41	1	**8M-2770**	2	CLIP	
C	42	1	**8T-4121**	20	WASHER-HARD (11X21X2.5-MM THK)	
CM	43	1	**8T-4133**	9	NUT (M10X1.5-THD)	
CM	44	1	**8T-4136**	5	BOLT (M10X1.5X25-MM)	
M	45	1	**8T-4137**	1	BOLT (M10X1.5X20-MM)	
M	46	1	**8T-4182**	3	BOLT (M10X1.5X45-MM)	
M	47	1	**8T-4186**	4	BOLT (M10X1.5X40-MM)	
M	48	1	**8T-4196**	7	BOLT (M10X1.5X35-MM)	
M	49	1	**8T-5005**	2	BOLT (M10X1.5X70-MM)	
M	50	1	**8T-6466**	3	BOLT (M10X1.5X60-MM)	
M	51	1	**8T-6869**	1	BOLT (M8X1.25X60-MM)	
E	52	1	**8C-6959**		HOSE (147-CM)	
	53	1	**5L-4504**	1	CLIP	
	54	1	**9G-7101**	1	SPACER (10.5X20X30-MM THK)	

C-CHANGE FROM PREVIOUS TYPE
E-ORDER BY THE CENTIMETER
I-REFER TO HYDRAULIC INFORMATION SYSTEM
M-METRIC PART
Y-SEPARATE ILLUSTRATION

249-7324 **PUMP GP-FUEL PRIMING** *(contd.)* **i03995059**

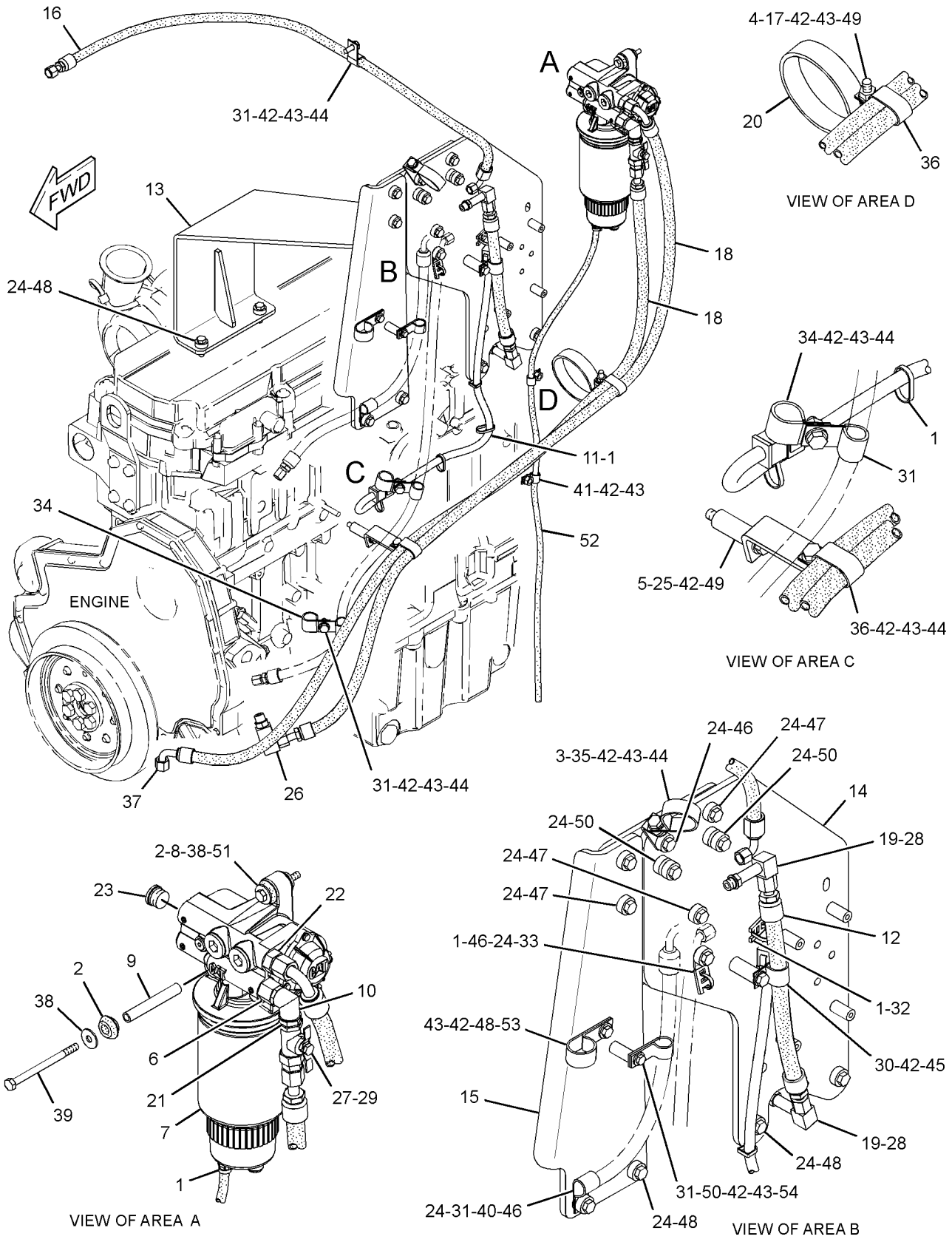

GRAPHIC #1 **<END>** g02191416

190-8977 PUMP GP-FUEL PRM & WATER SEP

S/N: R9H1-UP

PART OF 249-7324 PUMP GP-FUEL PRIMING

SMCS-1258, 1261, 1263 **i04014532**

NOTE	REF NO	GRAPHIC REF	PART NUMBER	QTY	PART NAME 1 2 3 4 5 6 (PRODUCT LEVEL)	SEE PAGE
Y	1	1	*174-9570*	1	FILTER GP-WATER SEP & FUEL (PRIMARY)	169
	2	1	**190-8970**	1	PUMP AS-FUEL PRIMING	

Y-SEPARATE ILLUSTRATION

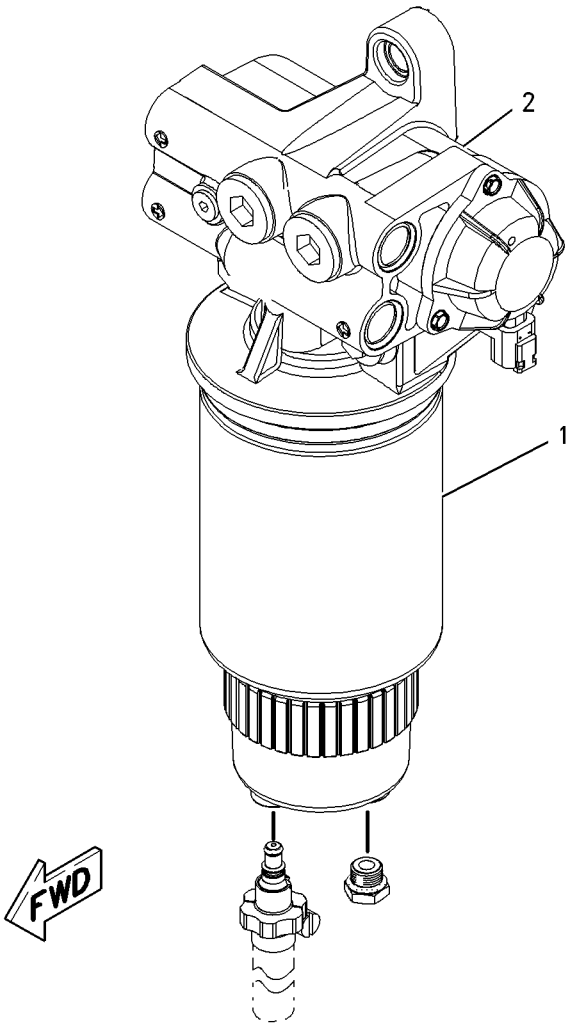

GRAPHIC #1 **<END>** g00904493

145-1695 PUMP GP-FUEL TRANSFER

S/N: MHX2761-3604
PART OF 231-0877 ENGINE AR-CORE
AN ATTACHMENT
TYPE 1

SMCS-1256 **i02652292**

NOTE	REF NO	GRAPHIC REF	PART NUMBER	QTY	PART NAME 1 2 3 4 5 6 (PRODUCT LEVEL)	SEE PAGE
	1	1	**1W-2152**	1	COVER	
	2	1	**9L-1633**	1	GASKET-DRIVE	
	3	1	**092-2570**	2	WASHER-SEALING	
C	4	1	**295-9259**	1	PUMP GP-FUEL TRANSFER	
	5	1	**107-5769**	1	SEAL-O-RING	
	6	1	**6V-5839**	2	WASHER (11X21X2.5-MM THK)	
M	7	1	**8T-1159**	4	BOLT-SOCKET HEAD (M10X1.5X25-MM)	

C-CHANGE FROM PREVIOUS TYPE
M-METRIC PART

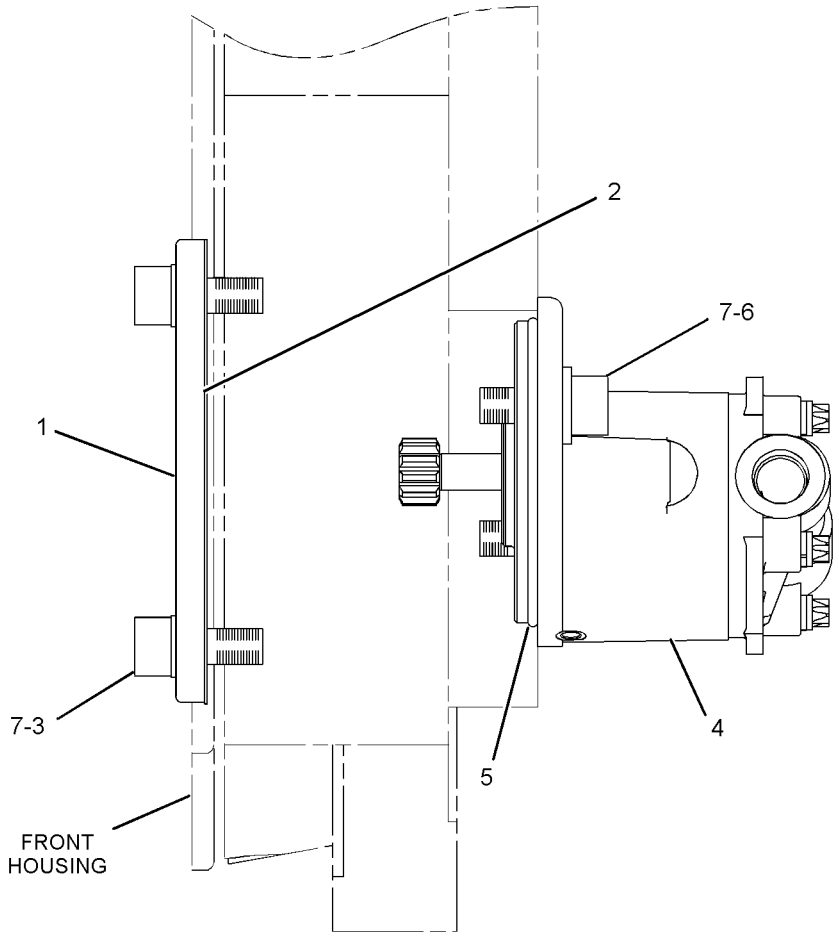

LEFT SIDE VIEW OF ENGINE

GRAPHIC #1 **<END>** g01336314

145-1695 PUMP GP-FUEL TRANSFER

S/N: MHX2761-3604
PART OF 231-0877 ENGINE AR-CORE
ALSO AN ATTACHMENT
TYPE 2

SMCS-1256 **i02916205**

NOTE	REF NO	GRAPHIC REF	PART NUMBER	QTY	PART NAME 1 2 3 4 5 6 (PRODUCT LEVEL)	SEE PAGE
	1	1	**9L-1633**	1	GASKET-DRIVE	
	2	1	**092-2570**	2	WASHER-SEALING	
	3	1	**296-3447**	1	COVER	
C	4	1	**316-6863**	1	PUMP GP-FUEL TRANSFER	
	5	1	**107-5769**	1	SEAL-O-RING	
M	6	1	**115-6929**	4	BOLT-12 POINT HEAD (M10X1.5X25-MM)	
	7	1	**6V-5839**	2	WASHER (11X21X2.5-MM THK)	

C-CHANGE FROM PREVIOUS TYPE
M-METRIC PART

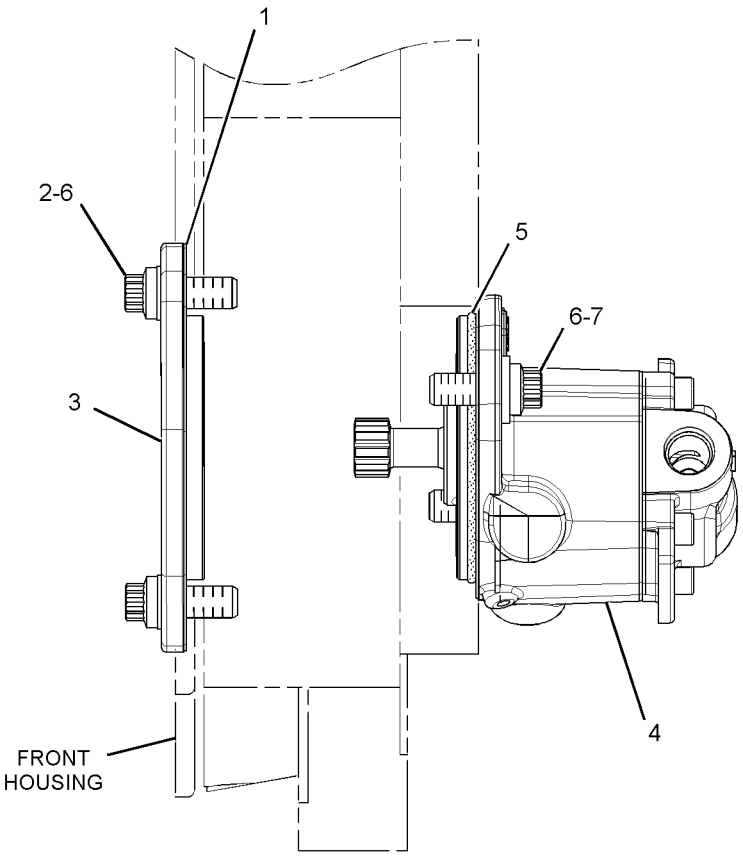

LEFT SIDE VIEW OF ENGINE

GRAPHIC #1 **<END>** g01633213

227-5723 PUMP GP-FUEL TRANSFER

S/N: MHX1304-2556
PART OF 231-0877, 267-0009 ENGINE AR-CORE
ALSO AN ATTACHMENT

SMCS-1256 **i02406861**

NOTE	REF NO	GRAPHIC REF	PART NUMBER	QTY	PART NAME 1 2 3 4 5 6 (PRODUCT LEVEL)	SEE PAGE
	1	1	**266-2522**	1	PUMP GP-FUEL TRANSFER	
	2	1	**5P-4889**	1	SEAL-O-RING	
	3	1	**5M-2894**	2	WASHER-HARD (10.2X18.5X2.5-MM THK)	
M	4	1	**136-4183**	2	BOLT-12 POINT HEAD (M10X1.5X30-MM)	

M-METRIC PART

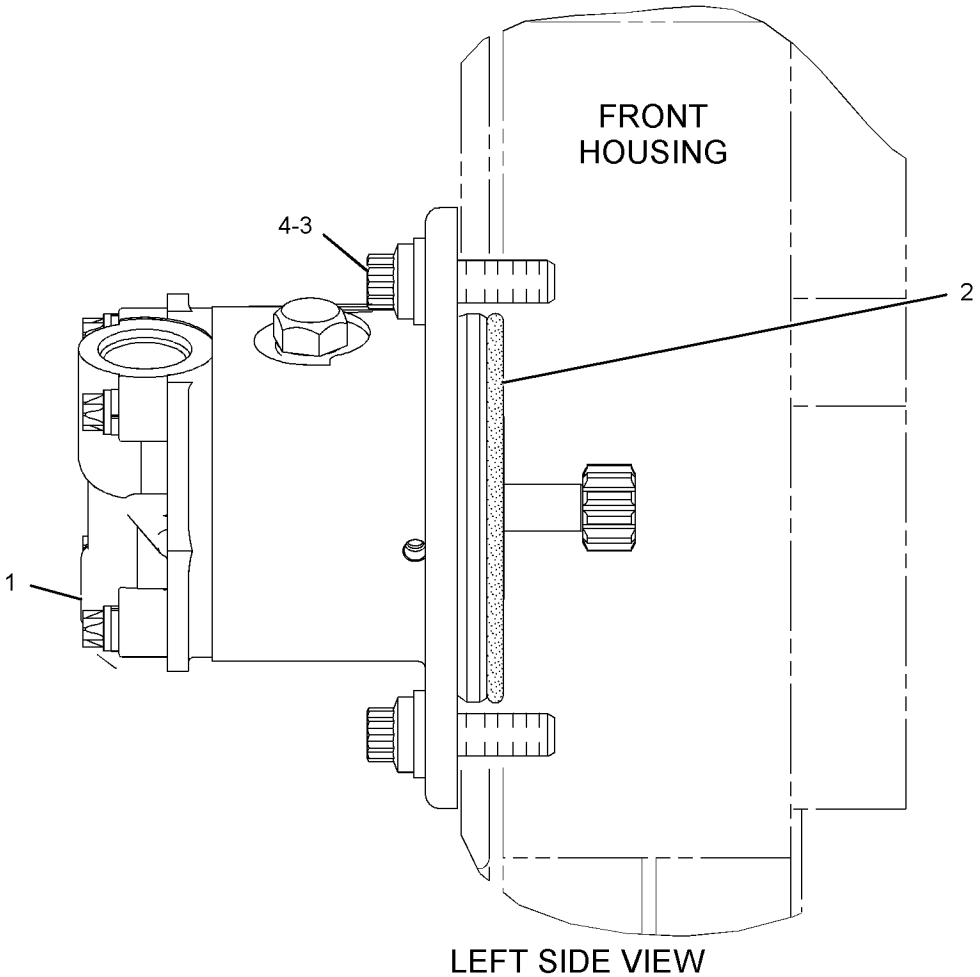

LEFT SIDE VIEW

GRAPHIC #1 **<END>** g01101661

227-5723 PUMP GP-FUEL TRANSFER

S/N: MHX2557-2760
PART OF 231-0877, 267-0009 ENGINE AR-CORE
ALSO AN ATTACHMENT

SMCS-1256 **i02676574**

NOTE	REF NO	GRAPHIC REF	PART NUMBER	QTY	PART NAME 1 2 3 4 5 6 (PRODUCT LEVEL)	SEE PAGE
C	1	1	**295-9260**	1	PUMP GP-FUEL TRANSFER	
M	2	1	**136-4183**	2	BOLT-12 POINT HEAD (M10X1.5X30-MM)	
	3	1	**5M-2894**	2	WASHER-HARD (10.2X18.5X2.5-MM THK)	
	4	1	**5P-4889**	1	SEAL-O-RING	

C-CHANGE FROM PREVIOUS TYPE
M-METRIC PART

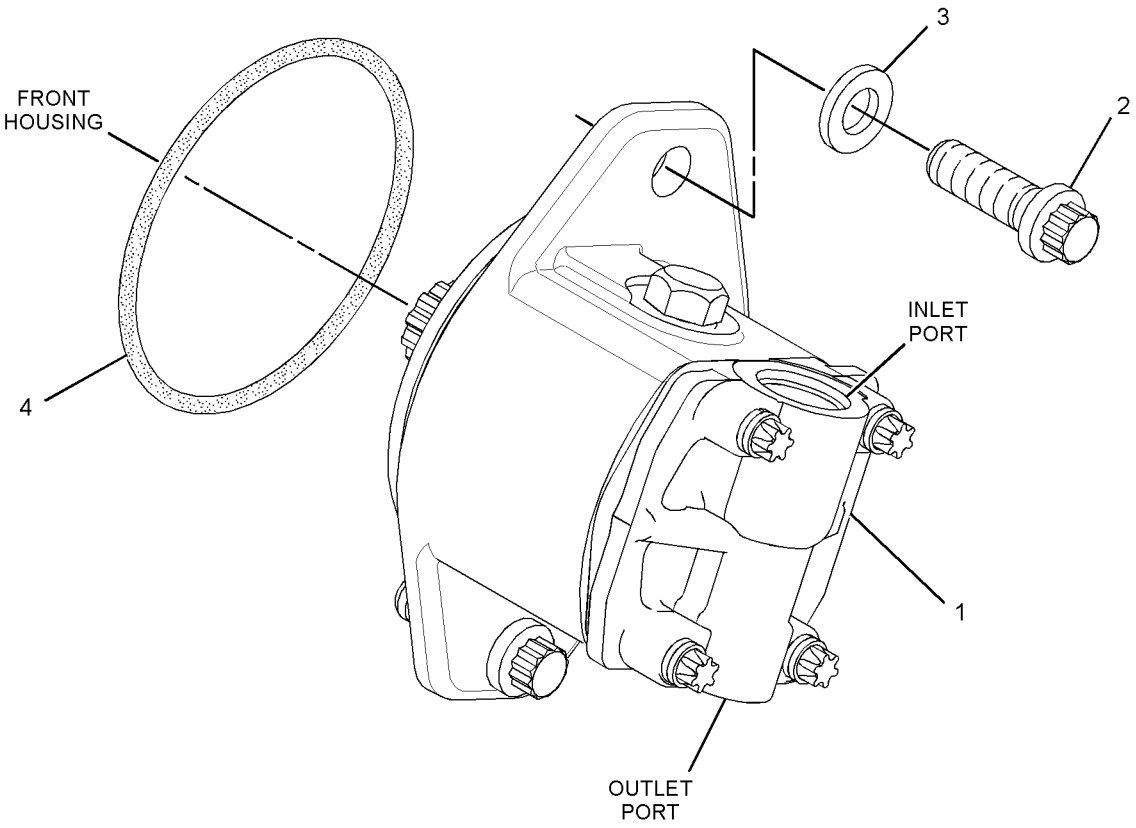

GRAPHIC #1 **<END>** g01345008

284-2824 PUMP GP-FUEL TRANSFER

S/N: MHX3605-4476
PART OF 231-0877, 286-5804 ENGINE AR-CORE
ALSO AN ATTACHMENT

SMCS-1256 **i02961348**

NOTE	REF NO	GRAPHIC REF	PART NUMBER	QTY	PART NAME 1 2 3 4 5 6 (PRODUCT LEVEL)	SEE PAGE
	1	1	**296-3447**	1	COVER	
CY	2	1	**295-9259**	1	PUMP GP-FUEL TRANSFER	191
	3	1	**107-5769**	1	SEAL-O-RING	
CM	4	1	**136-4183**	4	BOLT-12 POINT HEAD (M10X1.5X30-MM)	
	5	1	**5P-4889**	1	SEAL-O-RING	
C	6	1	**6V-5839**	4	WASHER (11X21X2.5-MM THK)	

C-CHANGE FROM PREVIOUS TYPE
M-METRIC PART
Y-SEPARATE ILLUSTRATION

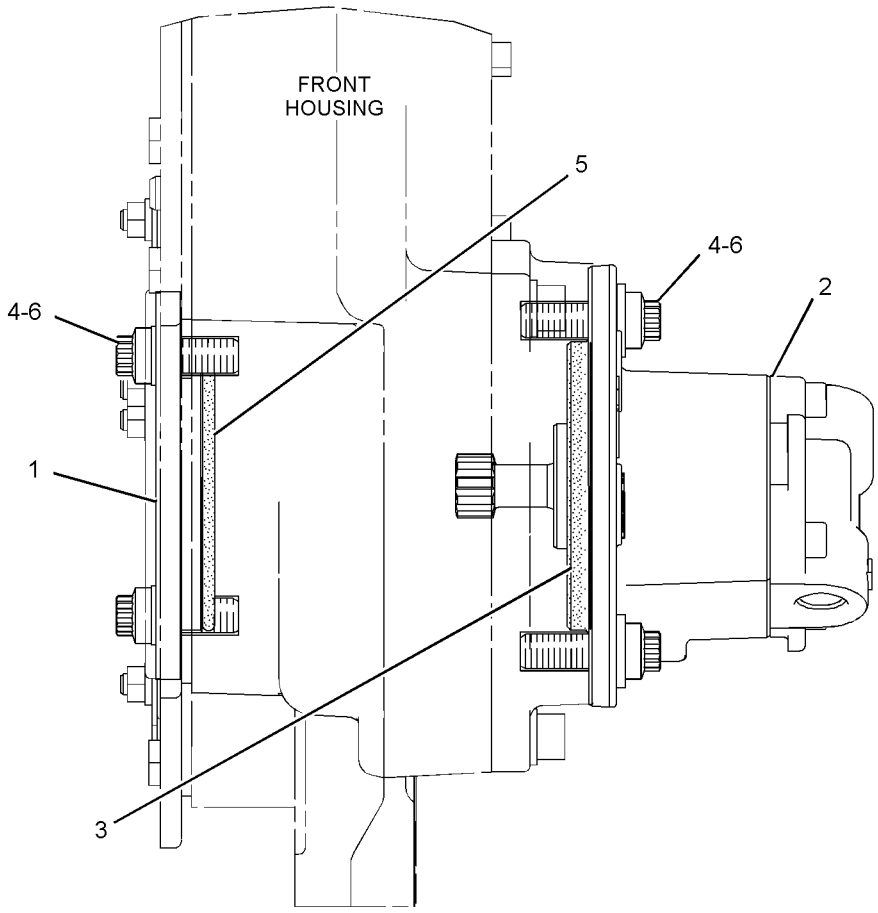

LEFT SIDE VIEW OF ENGINE

GRAPHIC #1 **<END>** g01358133

295-9259 PUMP GP-FUEL TRANSFER

S/N: MHX3605-3944, 4477-6079
PART OF 284-2824, 301-2262 PUMP GP-FUEL TRANSFER
ALSO AN ATTACHMENT

SMCS-1256 **i02707080**

NOTE	REF NO	GRAPHIC REF	PART NUMBER	QTY	PART NAME 1 2 3 4 5 6 (PRODUCT LEVEL)	SEE PAGE
					(NO SERVICED PARTS)	

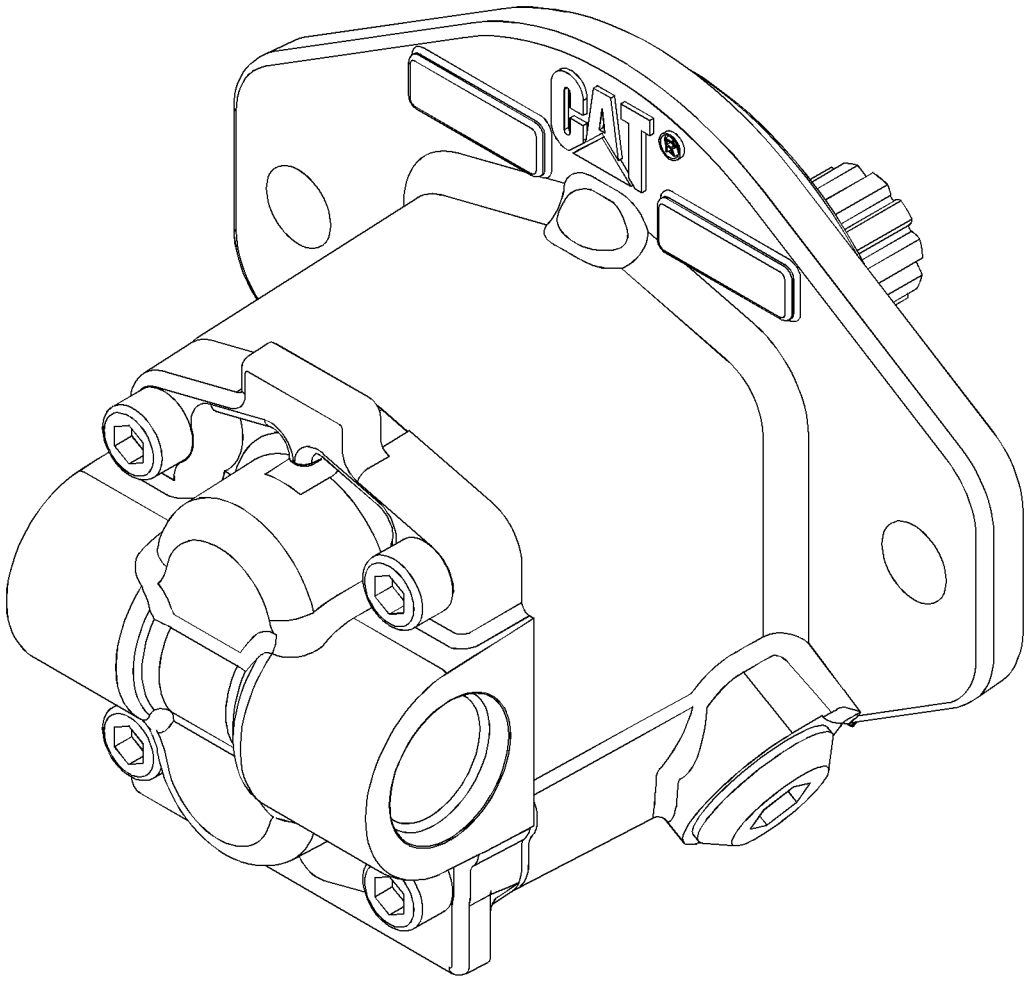

GRAPHIC #1 **<END>** g01357970

301-2262 PUMP GP-FUEL TRANSFER

S/N: MHX4477-4714
PART OF 231-0877, 301-2265 ENGINE AR-CORE
ALSO AN ATTACHMENT

SMCS-1256 **i02906253**

NOTE	REF NO	GRAPHIC REF	PART NUMBER	QTY	PART NAME 1 2 3 4 5 6 (PRODUCT LEVEL)	SEE PAGE
	1	1	**296-3447**	1	COVER	
Y	2	1	*295-9259*	1	PUMP GP-FUEL TRANSFER	191
	3	1	**107-5769**	1	SEAL-O-RING	
M	4	1	**136-4183**	4	BOLT-12 POINT HEAD (M10X1.5X30-MM)	
	5	1	**5P-4889**	1	SEAL-O-RING	
	6	1	**6V-5839**	4	WASHER (11X21X2.5-MM THK)	

M-METRIC PART
Y-SEPARATE ILLUSTRATION

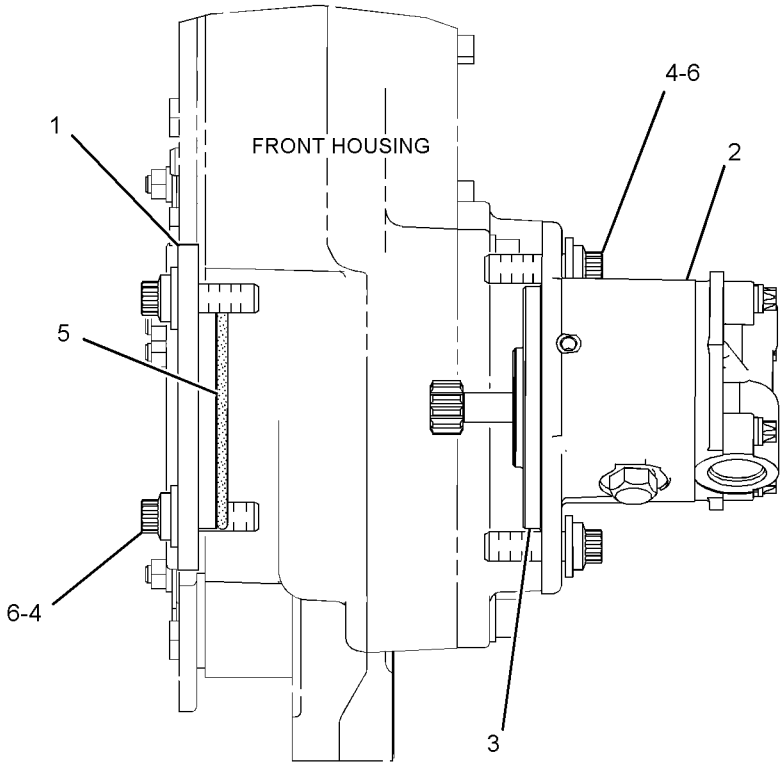

LEFT SIDE VIEW OF ENGINE

GRAPHIC #1 **<END>** g01401201

301-2262 PUMP GP-FUEL TRANSFER

S/N: MHX4715-5849
PART OF 231-0877, 301-2265 ENGINE AR-CORE
ALSO AN ATTACHMENT

SMCS-1256 **i02900115**

NOTE	REF NO	GRAPHIC REF	PART NUMBER	QTY	PART NAME 1 2 3 4 5 6 (PRODUCT LEVEL)	SEE PAGE
	1	1	**296-3447**	1	COVER	
C	2	1	**231-3946**	1	PUMP GP-FUEL TRANSFER	
	3	1	**107-5769**	1	SEAL-O-RING	
M	4	1	**136-4183**	4	BOLT-12 POINT HEAD (M10X1.5X30-MM)	
	5	1	**5P-4889**	1	SEAL-O-RING	
	6	1	**6V-5839**	4	WASHER (11X21X2.5-MM THK)	

C-CHANGE FROM PREVIOUS TYPE
M-METRIC PART

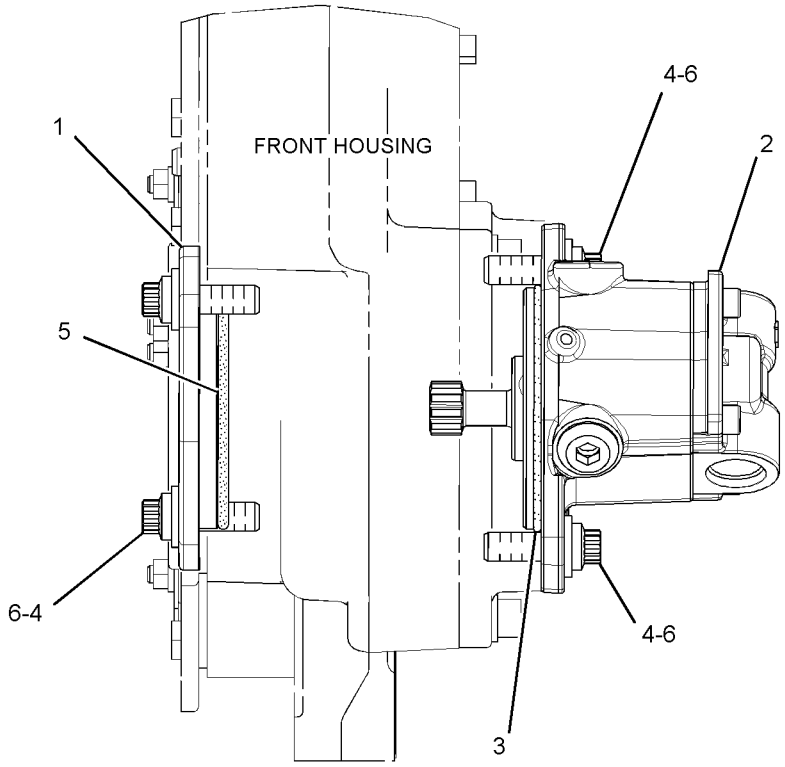

LEFT SIDE VIEW OF ENGINE

GRAPHIC #1 **<END>** g01457936

301-2262 PUMP GP-FUEL TRANSFER

S/N: MHX5850-UP

PART OF 231-0876 ENGINE AR-COMPLETE, 231-0877, 301-2265 ENGINE AR-CORE

ALSO AN ATTACHMENT

SMCS-1256 **i03016035**

NOTE	REF NO	GRAPHIC REF	PART NUMBER	QTY	PART NAME 1 2 3 4 5 6 (PRODUCT LEVEL)	SEE PAGE
	1	1	**296-3447**	1	COVER	
C	2	1	**316-6863**	1	PUMP GP-FUEL TRANSFER	
	3	1	**107-5769**	1	SEAL-O-RING	
M	4	1	**136-4183**	4	BOLT-12 POINT HEAD (M10X1.5X30-MM)	
	5	1	**5P-4889**	1	SEAL-O-RING	
	6	1	**6V-5839**	4	WASHER (11X21X2.5-MM THK)	

C-CHANGE FROM PREVIOUS TYPE
M-METRIC PART

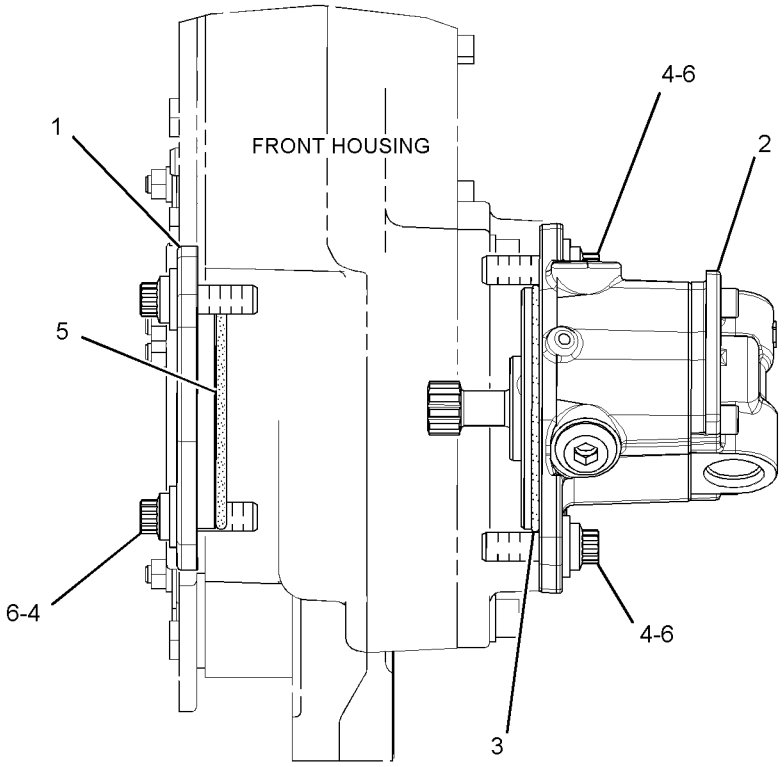

LEFT SIDE VIEW OF ENGINE

GRAPHIC #1 **<END>** g01457936

FUEL SYSTEM

250-0161 TANK GP-FUEL

S/N: R9H1-UP

PART OF 349-2556 COMMON AR

SMCS-1273 **i03279716**

NOTE	REF NO	GRAPHIC REF	PART NUMBER	QTY	PART NAME 1 2 3 4 5 6 (PRODUCT LEVEL)	SEE PAGE
J	1	1	**7X-7700**	1	CAP AS-FILLER (FUEL TANK)	
		1	**9X-8600**	1	SEAL-O-RING	
	2	1	**9M-7958**	4	CLAMP-HOSE	
	3	1	*164-5597*	1	CONNECTOR AS	
		1	**6V-8397**	1	SEAL-O-RING	
		1	**8C-6868**	1	CONNECTOR	
	4	1	**199-9907**	1	STRAINER-FUEL	
	5	1	**277-4844**	1	GASKET	
	6	1	**208-0800**	1	GASKET	
	7	1	**251-1217**	1	HOSE AS	
	8	1	**265-7031**	1	TANK AS-FUEL	
Y	9	1	**271-8741**	1	VALVE GP-FUEL SHUTOFF (FAST FILL)	200
	10	1	**271-8752**	1	CONNECTOR	
	11	1	**277-6993**	1	SENDER AS-FUEL LEVEL (WITH GAUGE)	
		1	**6C-3060**	1	GASKET	
		1	**283-9504**	1	KIT-DIAL SENSOR (FUEL LEVEL GAUGE)	
					(INCLUDES SENSOR AS, RECEPTACLE KIT, PINS & SCREWS)	
	12	1	**288-6228**	1	TUBE	
	13	1	**299-8018**	1	VENT AS	
	14	1	**329-3707**	1	SCREW-PAN HEAD (6X0.375-IN)	
	15	1	**117-3050**	1	ADAPTER	
	16	1	**306-8127**	1	ADAPTER	
	17	1	*208-1629*	1	ELBOW AS	
		1	**2T-2396**	1	ELBOW	
		1	**6V-8398**	1	SEAL-O-RING	
	18	1	**4B-4863**	6	WASHER (4.7X11X1.2-MM THK)	
	19	1	**5P-2618**	2	CONNECTOR	
M	21	1	**8T-0309**	4	SCREW-MACHINE (M4X0.7X10-MM)	
M	22	1	**8T-4189**	6	BOLT (M8X1.25X20-MM)	
M	23	1	**8T-4908**	12	BOLT (M8X1.25X25-MM)	
M	24	1	**8T-9405**	6	BOLT-SOCKET HEAD (M4X0.7X16-MM)	
	25	1	**9M-1974**	18	WASHER-HARD (8.8X16X2-MM THK)	
	26	1	**1J-9671**	2	SEAL-O-RING	
					AVAILABLE REPAIR KIT(S):	
J			**9X-2205**	1	KIT-CAP FILTER (FUEL TANK)	
					(INCLUDES FILTER AS, VALVE, GASKETS & SCREWS)	

J-KIT MARKED J SERVICES PART MARKED J
M-METRIC PART
Y-SEPARATE ILLUSTRATION

250-0161 **TANK GP-FUEL** *(contd.)* **i03279716**

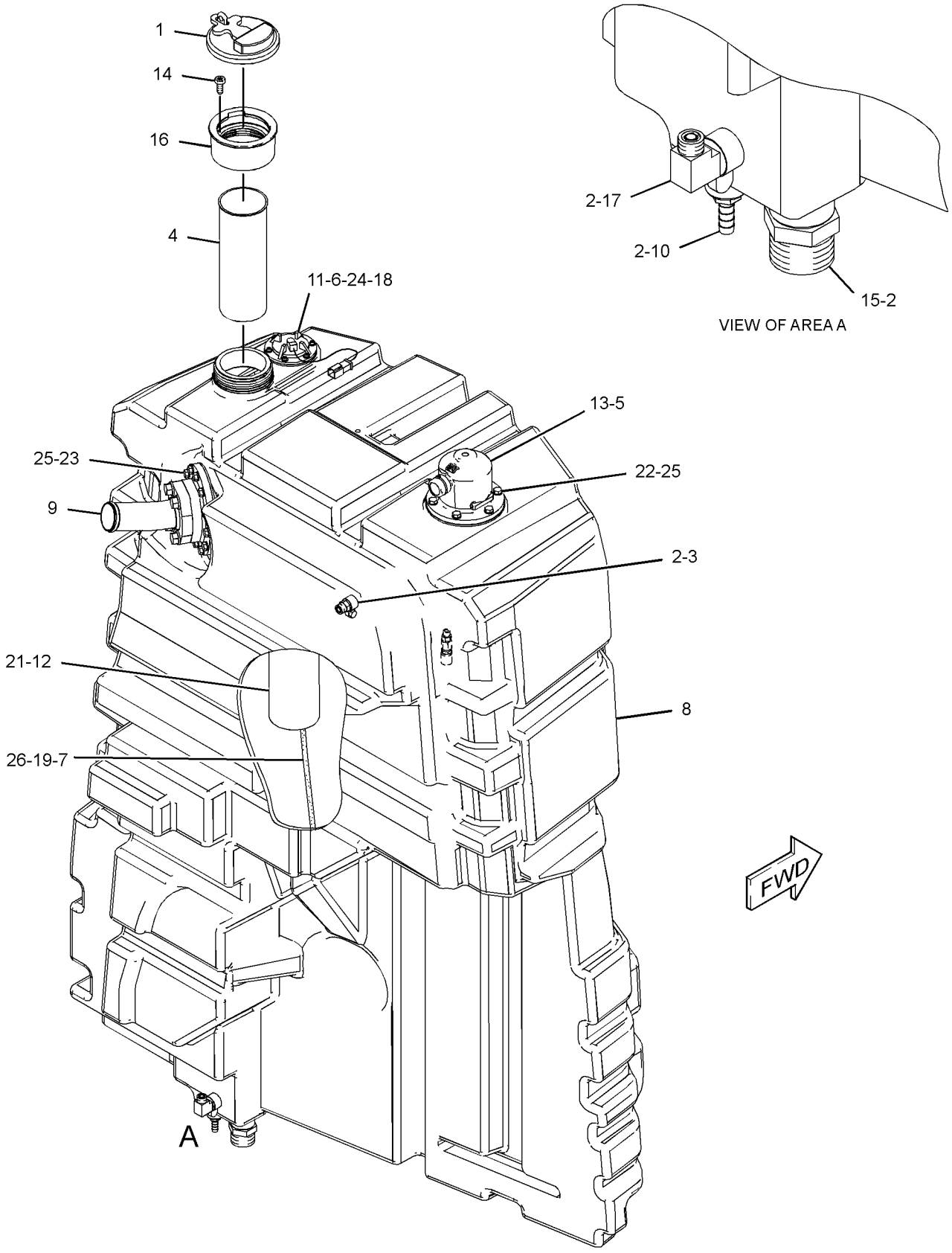

GRAPHIC #1 **<END>** g01941213

233-6742 VALVE GP-CHECK–FUEL

S/N: MHX1214-UP
PART OF 254-4998, 356-8382 FILTER GP-FUEL
ALSO AN ATTACHMENT

SMCS-1250, 1274 **i03808154**

NOTE	REF NO	GRAPHIC REF	PART NUMBER	QTY	PART NAME 1 2 3 4 5 6 (PRODUCT LEVEL)	SEE PAGE
CY	1	1	**281-2725**	1	VALVE GP-CHECK (FUEL)	198
	2	1	**238-5081**	1	SEAL-O-RING	

C-CHANGE FROM PREVIOUS TYPE
Y-SEPARATE ILLUSTRATION

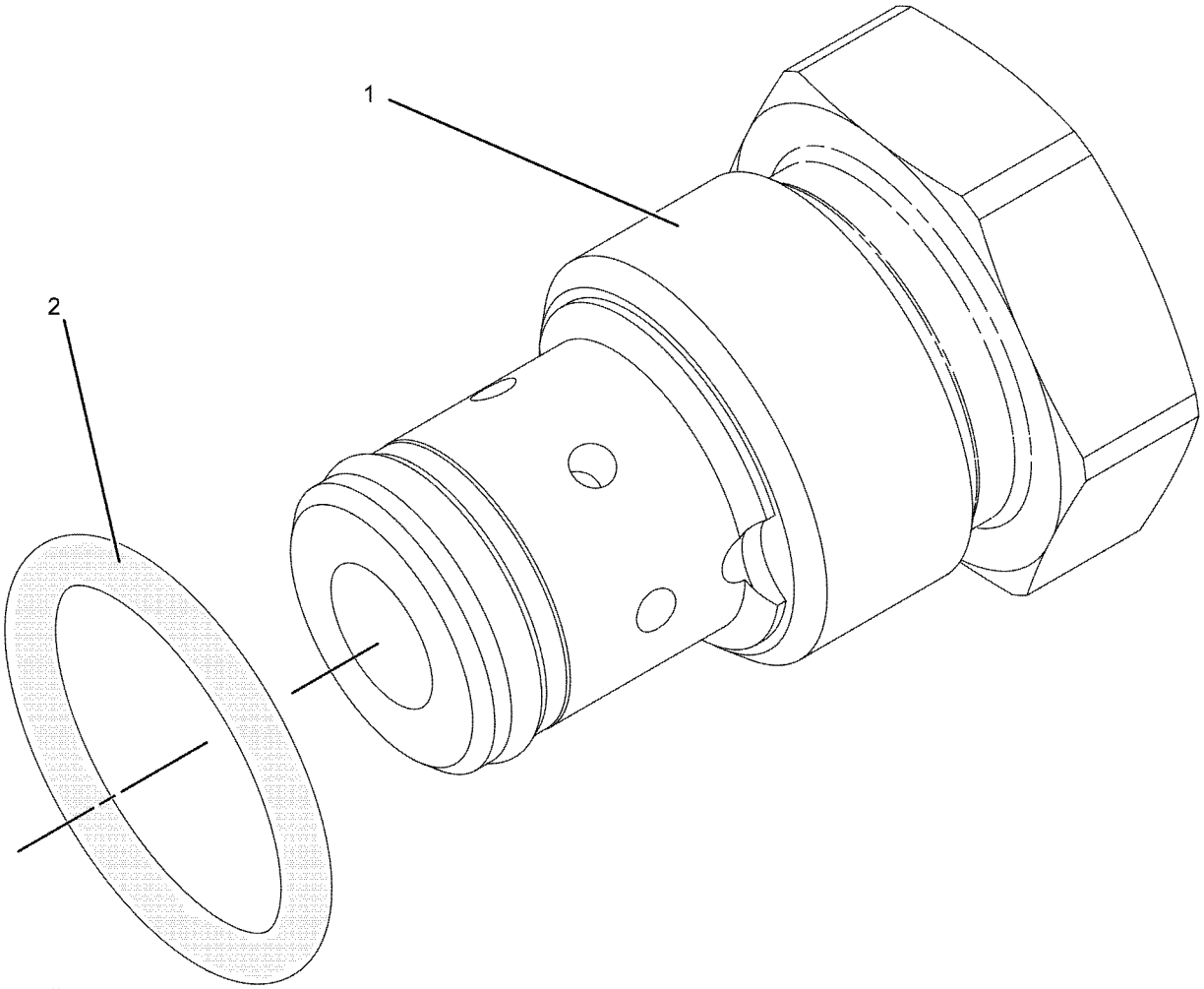

GRAPHIC #1 **<END>** g01031823

281-2725 VALVE GP-CHECK–FUEL

S/N: MHX1214-UP
PART OF 233-6742 VALVE GP-CHECK
ALSO AN ATTACHMENT

SMCS-1250, 1274 **i02444582**

NOTE	REF NO	GRAPHIC REF	PART NUMBER	QTY	PART NAME 1 2 3 4 5 6 (PRODUCT LEVEL)	SEE PAGE
	1	1	**6V-6923**	1	RING-BACKUP	
	2	1	**033-6033**	1	SEAL-O-RING	

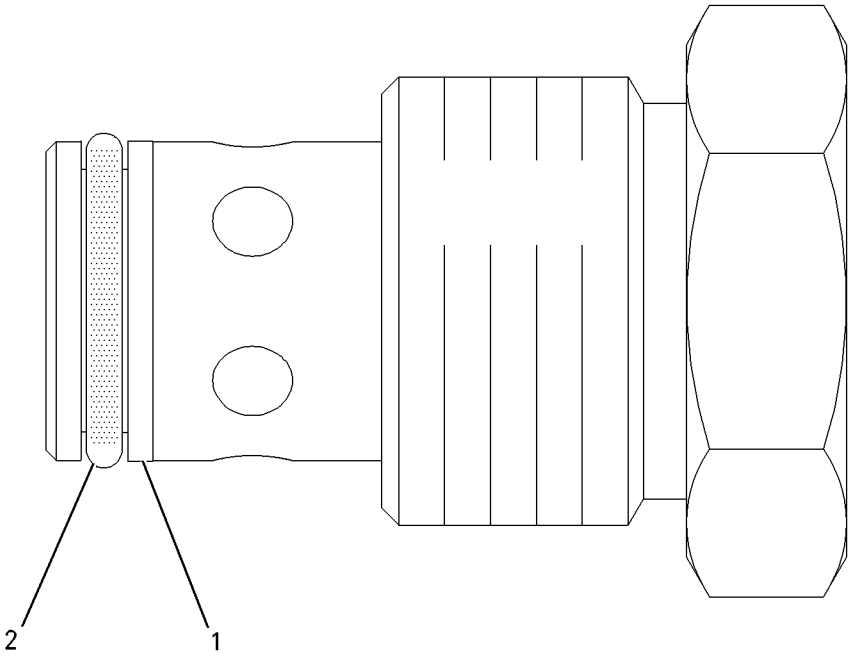

GRAPHIC #1 **<END>** g00864141

123-0783 VALVE GP-FLUID SAMPLING–FUEL

S/N: MHX1214-UP
QUICK DISCONNECT FUEL CONNECTION
PART OF 254-4998, 356-8382 FILTER GP-FUEL
ALSO AN ATTACHMENT

SMCS-1280 **i03785011**

NOTE	REF NO	GRAPHIC REF	PART NUMBER	QTY	PART NAME 1 2 3 4 5 6 (PRODUCT LEVEL)	SEE PAGE
	1	1	**6V-3965**	1	FITTING (QUICK DISCONNECT)	
	2	1	**6V-0852**	1	CAP-DUST	
	3	1	**214-7568**	1	SEAL-O-RING	

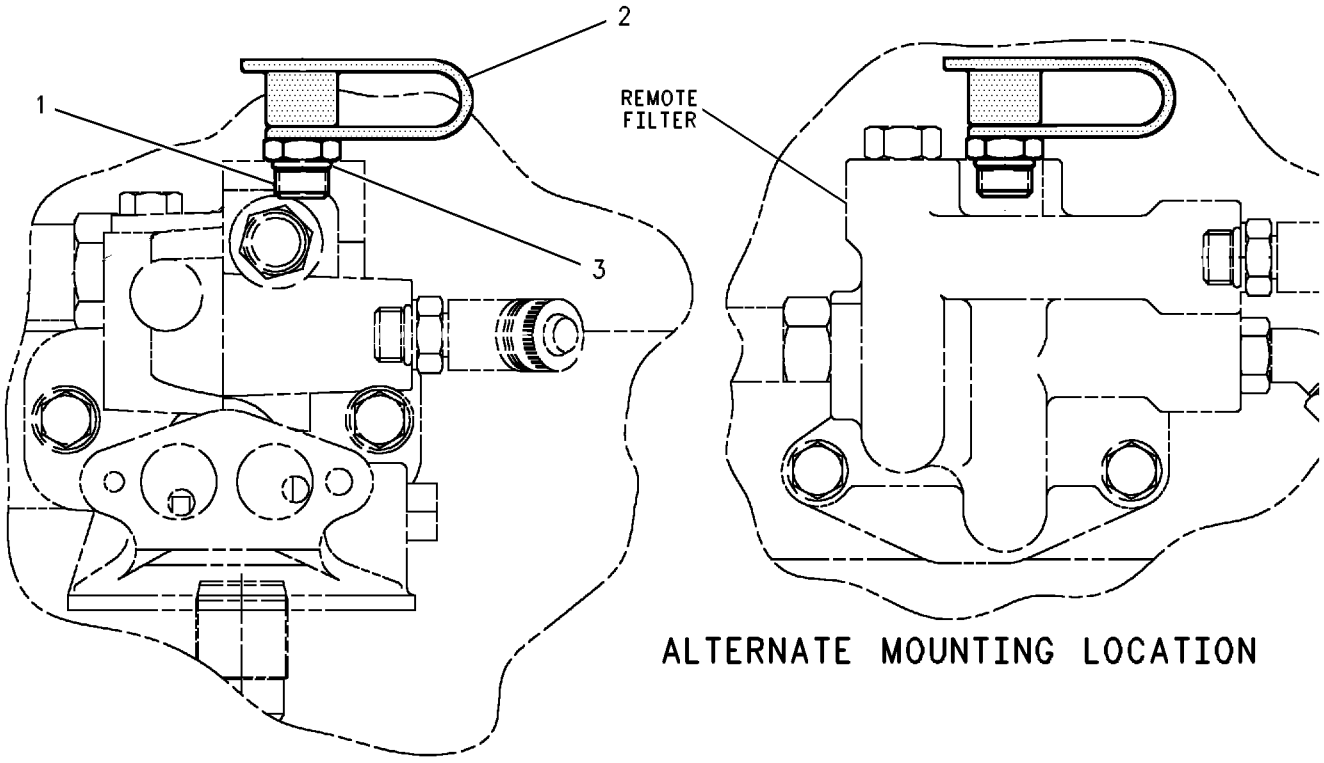

GRAPHIC #1 **<END>** g00609530

271-8741 VALVE GP-FUEL SHUTOFF–FAST FILL

S/N: R9H1-UP

PART OF 250-0161 TANK GP-FUEL

SMCS-1273, 1274 **i02657512**

NOTE	REF NO	GRAPHIC REF	PART NUMBER	QTY	PART NAME 1 2 3 4 5 6 (PRODUCT LEVEL)	SEE PAGE
	1	1	**250-3865**	1	VALVE AS-SHUTOFF (FAST FILL FUEL)	
	2	1	**271-8739**	1	TUBE AS	
	3	1	**276-3276**	1	GASKET	
	5	1	**1P-4582**	2	FLANGE-HALF	
	6	1	**4J-0527**	1	SEAL-O-RING	
	8	1	**8T-4223**	4	WASHER-HARD (13.5X25.5X3-MM THK)	
	9	1	**8T-8919**	4	BOLT (1/2-13X1.75-IN)	

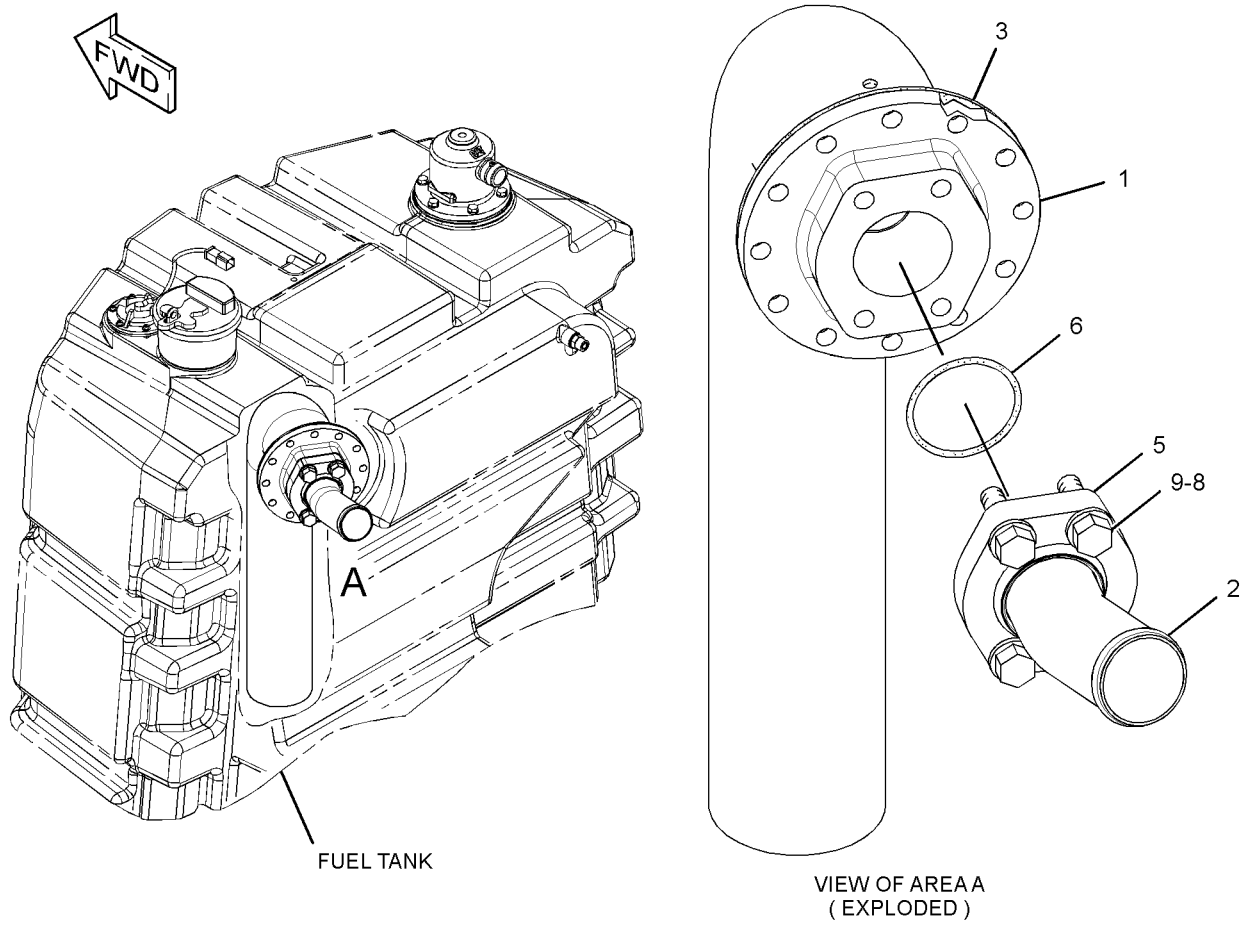

GRAPHIC #1 **<END>** g01335122

3E-6328 ALARM GP–ACTION

S/N: R9H1-UP
24-VOLT
PART OF 351-7026 WIRING GP-CAB

SMCS-7400, 7402, 7407 **i03540520**

NOTE	REF NO	GRAPHIC REF	PART NUMBER	QTY	PART NAME 1 2 3 4 5 6 (PRODUCT LEVEL)	SEE PAGE
	1	1	**102-8802**	1	KIT-RECEPTACLE (2-PIN)	
					(INCLUDES RECEPTACLE AS & WEDGE)	
	2	1	**186-3735**	2	PIN-CONNECTOR (16-GA TO 18-GA)	

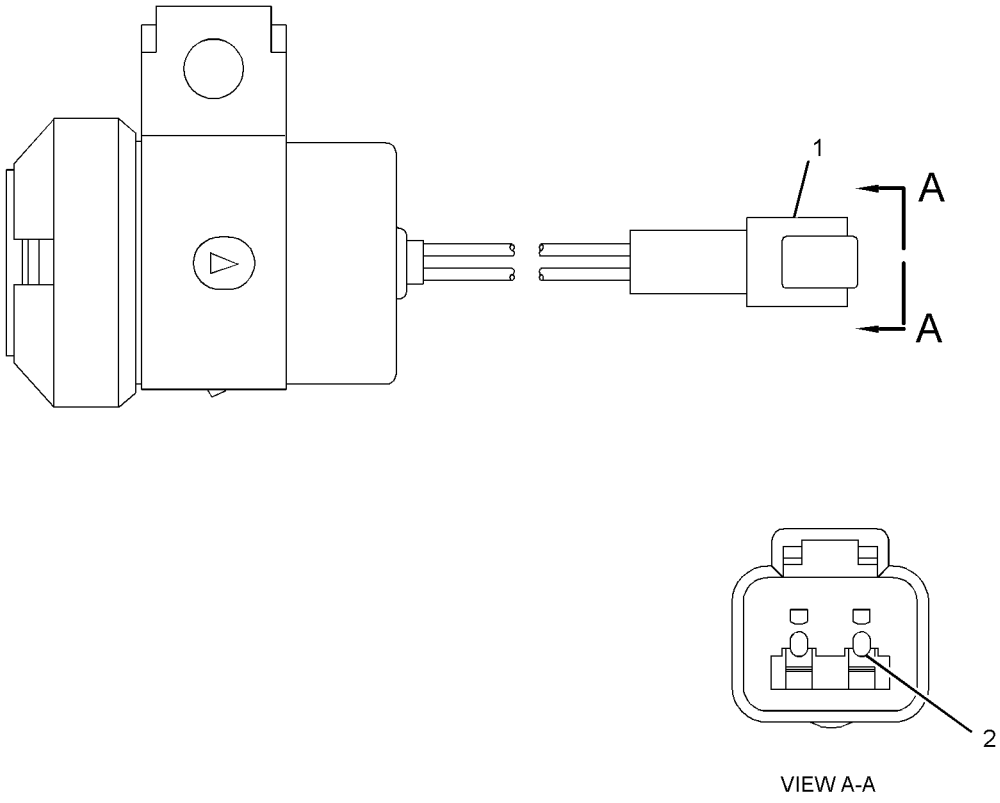

VIEW A-A

GRAPHIC #1 **<END>** g01342739

ELECTRICAL AND STARTING SYSTEM

257-8027 BATTERY GP–EXTREME-DUTY

S/N: R9H1-UP

PART OF 349-2556 COMMON AR

SMCS-1401 **i03795641**

NOTE	REF NO	GRAPHIC REF	PART NUMBER	QTY	PART NAME 1 2 3 4 5 6 (PRODUCT LEVEL)	SEE PAGE
	1	1	**3S-2093**	8	STRAP-CABLE	
Y	2	1	**7N-0718**	1	SWITCH GP-DISCONNECT (BATTERY)	323
	3	1	**8S-2634**	1	COVER AS	
	4	1	**9G-2758**	1	LOCKOUT-SWITCH (BATTERY DISCONNECT)	
	5	1	**153-5710**	2	BATTERY (12-VOLT, 1400-CCA)	
	6	1	**188-3959**	1	BRACKET	
	8	1	**236-2340**	1	CABLE AS-BATTERY (JUMPER)	
E		1	**159-8049**		CABLE (00-GA, RED) (17-CM)	
		1	**9G-0002**	1	COVER AS-TERMINAL (RED)	
		1	**9G-0005**	1	COVER AS-TERMINAL (BLACK)	
		1	**8C-5918**	1	TERMINAL AS (NEGATIVE)	
		1	**8T-9756**	1	TERMINAL AS (POSITIVE)	
					(EACH TERMINAL AS INCLUDES)	
		1	**1M-6119**	1	BOLT (5/16-18X1.375-IN)	
		1	**1M-6120**	1	NUT (5/16-18-THD)	
	9	1	**246-1670**	1	BAR	
	10	1	**260-1888**	1	CABLE AS	
E		1	**159-8049**		CABLE (00-GA, RED) (67-CM)	
		1	**1S-7251**	2	TERMINAL-CABLE (00-GA, 1/2-IN SCREW)	
		1	**8N-0869**	1	COVER-TERMINAL (RED)	
	11	1	**260-1889**	1	CABLE AS	
E		1	**159-8050**		CABLE (00-GA, BLACK) (170-CM)	
		1	**4D-1248**	1	TERMINAL (00-GA, 3/8-IN SCREW)	
		1	**7N-5274**	1	COVER-TERMINAL (BLACK)	
		1	**3S-6050**	1	TERMINAL AS-BATTERY (NEGATIVE)	
		1	**1M-6119**	1	BOLT (5/16-18X1.375-IN)	
		1	**1M-6120**	1	NUT (5/16-18-THD)	
	12	1	**263-6886**	1	CABLE AS	
E		1	**159-8049**		CABLE (00-GA, RED) (33-CM)	
		1	**1S-7251**	1	TERMINAL-CABLE (00-GA, 1/2-IN SCREW)	
		1	**8N-0869**	1	COVER-TERMINAL (RED)	
		1	**8N-1725**	1	COVER AS-TERMINAL (RED)	
		1	**3S-6049**	1	TERMINAL AS-BATTERY (POSITIVE)	
		1	**1M-6119**	1	BOLT (5/16-18X1.375-IN)	
		1	**1M-6120**	1	NUT (5/16-18-THD)	
	13	1	**263-6890**	1	RECEPTACLE AS-AUXILIARY START	
		1	**1S-7251**	1	TERMINAL-CABLE (00-GA, 1/2-IN SCREW)	
		1	**1S-7252**	1	TERMINAL-CABLE (00-GA, 3/8-IN SCREW)	
D		1	**6V-2722**		TUBE-HEAT SHRINK (0.1-M)	
E		1	**159-8049**		CABLE (00-GA, RED) (43-CM)	
E		1	**159-8050**		CABLE (00-GA, BLACK) (26-CM)	
	14	1	**263-6891**	1	HOLD-DOWN AS	
	15	1	**272-7239**	1	BLOCK AS-JUNCTION	
	16	1	**293-2257**	1	COVER-TERMINAL	
	17	1	**113-8373**	4	SCREW-BUTTON HEAD (10-32X0.75-IN)	
	18	1	**134-3344**	1	STRAP AS	
	19	1	**245-8842**	1	CLIP	
M	20	1	**5A-3604**	4	BOLT-SOCKET HEAD (M8X1.25X25-MM)	
	21	1	**5P-4116**	4	WASHER-HARD (8.8X20.5X2-MM THK)	
	22	1	**6V-8188**	5	NUT (1/2-13-THD)	
	23	1	**8C-6358**	1	BLOCK AS-JUNCTION (BATTERY)	
M	24	1	**8T-0389**	2	LOCKNUT (M10X1.5-THD)	
	25	1	**8T-4121**	12	WASHER-HARD (11X21X2.5-MM THK)	
M	26	1	**8T-4136**	2	BOLT (M10X1.5X25-MM)	
M	27	1	**8T-4137**	5	BOLT (M10X1.5X20-MM)	
M	28	1	**8T-4139**	2	BOLT (M12X1.75X30-MM)	

257-8027 **BATTERY GP** ***(contd.)*** **i03795641**

NOTE	REF NO	GRAPHIC REF	PART NUMBER	QTY	PART NAME 1 2 3 4 5 6 (PRODUCT LEVEL)	SEE PAGE
M	29	1	**8T-4179**	1	BOLT (M12X1.75X20-MM)	
M	30	1	**8T-4185**	2	BOLT (M10X1.5X50-MM)	
M	31	1	**8T-4191**	1	BOLT (M10X1.5X16-MM)	
	32	1	**8T-4223**	7	WASHER-HARD (13.5X25.5X3-MM THK)	
	33	1	**9M-8406**	8	CLIP	
	34	1	**9R-6414**	2	ROD	

D-ORDER BY THE METER
E-ORDER BY THE CENTIMETER
M-METRIC PART
Y-SEPARATE ILLUSTRATION

257-8027 **BATTERY GP** ***(contd.)*** **i03795641**

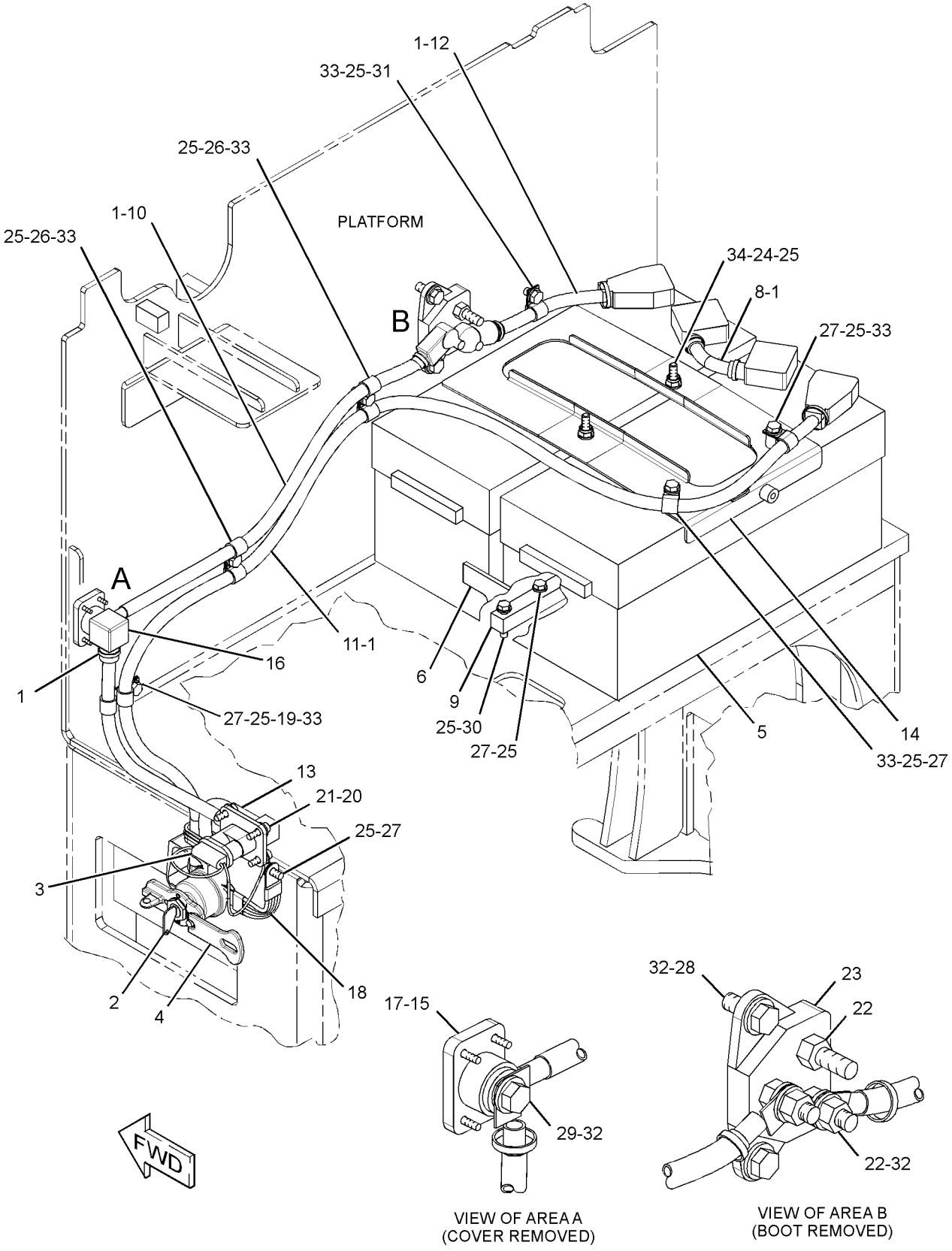

GRAPHIC #1

<END>

g02073513

248-1488 BRACKET GP-MOUNTING–SONIC SENSOR

S/N: R9H1-UP

PART OF 286-0132, 286-0133 SENSOR GP-SONIC

SMCS-0635, 7010 **i03070592**

NOTE	REF NO	GRAPHIC REF	PART NUMBER	QTY	PART NAME 1 2 3 4 5 6 (PRODUCT LEVEL)	SEE PAGE
	1	1	**096-4836**	1	PIN-COTTER	
	2	1	**1B-2578**	2	NUT (3/8-16-THD)	
	3	1	**5P-1075**	1	WASHER-HARD (10.2X22.5X3-MM THK)	
	4	1	**289-0488**	1	HANDLE AS	
	5	1	**289-0487**	1	HANDLE AS	

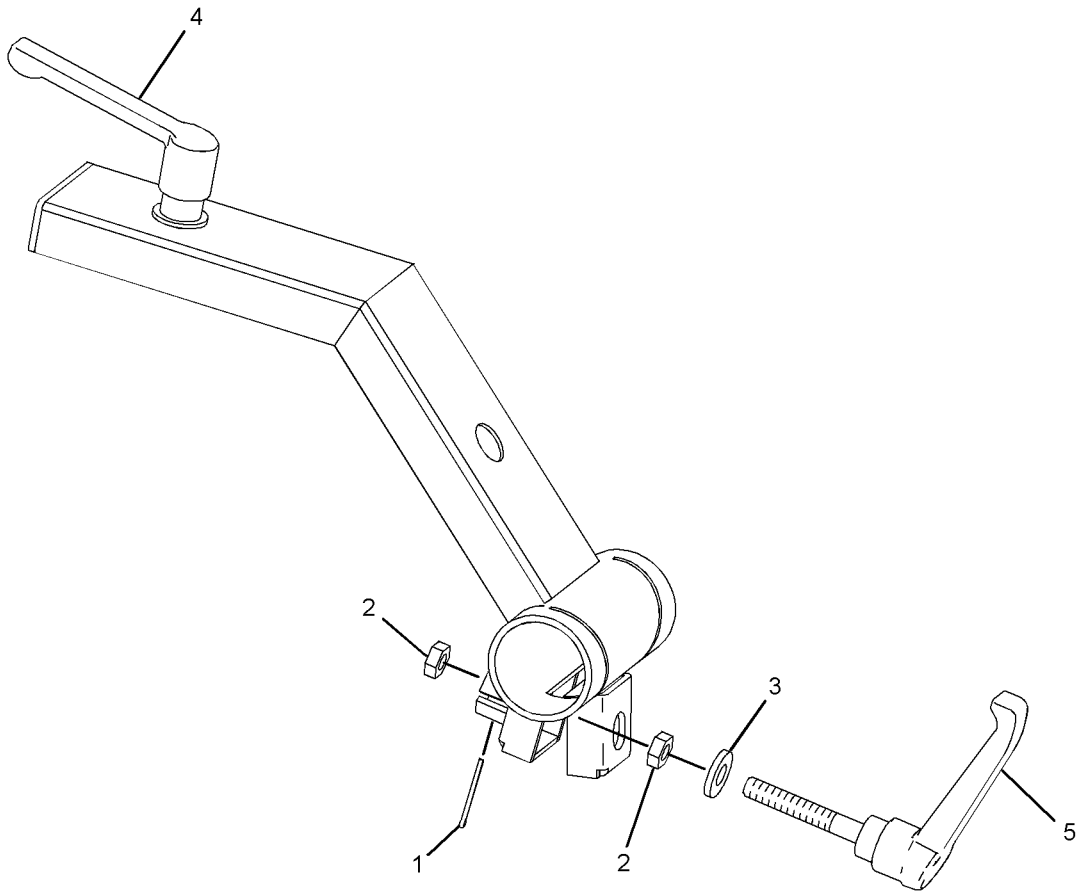

GRAPHIC #1 **<END>** g01393795

265-8937 BRACKET GP-MOUNTING–FUSE PANEL

S/N: R9H1-UP

PART OF 351-7026 WIRING GP-CAB

SMCS-0635, 7010 **i02571591**

NOTE	REF NO	GRAPHIC REF	PART NUMBER	QTY	PART NAME 1 2 3 4 5 6 (PRODUCT LEVEL)	SEE PAGE
	1	1	**114-6658**	4	WASHER (6.5X17X1-MM THK)	
	2	1	**265-8932**	1	PLATE AS	
	3	1	**265-8933**	1	PLATE AS	
	4	1	**265-8934**	1	PLATE	
	5	1	**265-8936**	1	FILM-FUSE PANEL (FUSE IDENTIFICATION)	
M	6	1	**5C-9553**	4	BOLT (M6X1X16-MM)	
M	7	1	**9X-2044**	4	SCREW-TRUSS HEAD (M6X1X16-MM)	
	8	1	**9X-8256**	4	WASHER (6.6X12X2-MM THK)	

M-METRIC PART

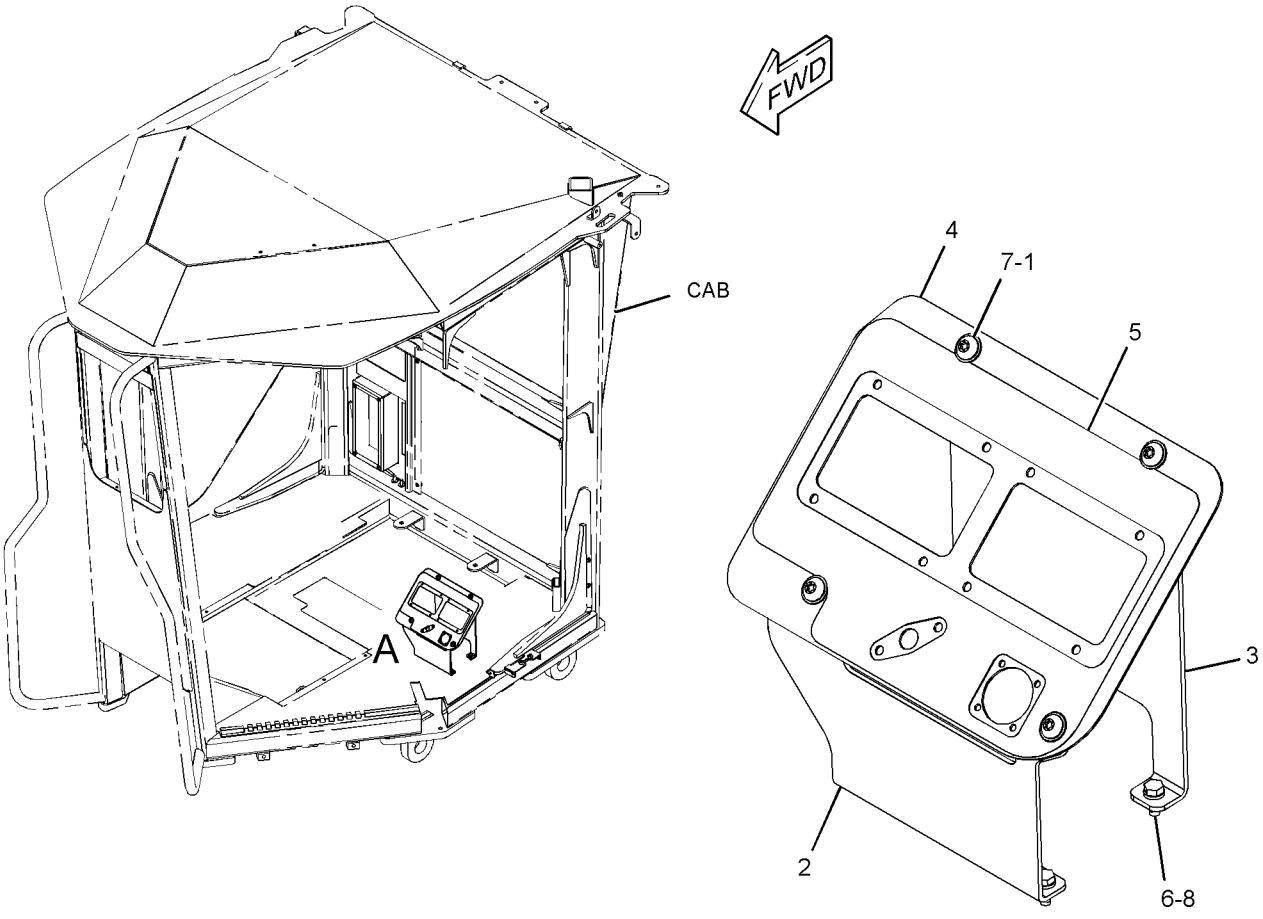

VIEW OF AREA A

GRAPHIC #1 **<END>** g01289329

272-2286 BRACKET GP-MOUNTING–MAST

S/N: R9H1-UP

PART OF 292-7971, 292-7972 RECEIVER AR-SATELLITE, 323-8139 SENSOR AR-GRADE

SMCS-0635, 7010 **i03753210**

NOTE	PART NUMBER	QTY	PART NAME 1 2 3 4 5 6 (PRODUCT LEVEL)	SEE PAGE
	248-1503	1	BRACKET GP-MOUNTING	
	7X-0343	4	BOLT (5/8-11X1.25-IN)	
	7X-0366	3	BOLT (3/4-10X2-IN)	
	8T-4122	4	WASHER-HARD (17X32X3.5-MM THK)	
	8T-4994	3	WASHER-HARD (20X36.5X3.5-MM THK)	
	254-9136	1	CABLE-COILED (RECEIVER)	
	252-8744	1	FILM-WARNING (BLADE, DO NOT CLIMB, READ OMM)	

<END>

279-3360 CAMERA AR

S/N: R9H1-UP

AN ATTACHMENT

SMCS-7348 **i02620346**

NOTE	PART NUMBER	QTY	PART NAME 1 2 3 4 5 6 (PRODUCT LEVEL)	SEE PAGE
Y	*278-0668*	1	DISPLAY GP-CAMERA (WORK AREA VISUAL SYSTEM)	729
Y	*259-6726*	1	WIRING GP-CAMERA (REAR VIEW)	353

Y-SEPARATE ILLUSTRATION

<END>

241-7601 CONNECTION GP-ELECTRICAL

S/N: MHX1304-UP
PROVIDES ADDITIONAL 8-MM GROUND STUD BELOW ECM
PART OF 227-5359, 231-0876, 349-4462 ENGINE AR-COMPLETE
ALSO AN ATTACHMENT

SMCS-1408, 4459, 7553 **i01986748**

NOTE	REF NO	GRAPHIC REF	PART NUMBER	QTY	PART NAME 1 2 3 4 5 6 (PRODUCT LEVEL)	SEE PAGE
M	1	1	**9X-2097**	1	STUD (M8X1.25-THD)	
M	2	1	**5C-7261**	1	NUT (M8X1.25-THD)	
	3	1	**6V-3964**	1	WASHER-HARD (8.8X25.5X5-MM THK)	
	4	1	**8T-4224**	2	WASHER-HARD (8.8X16X2-MM THK)	

M-METRIC PART

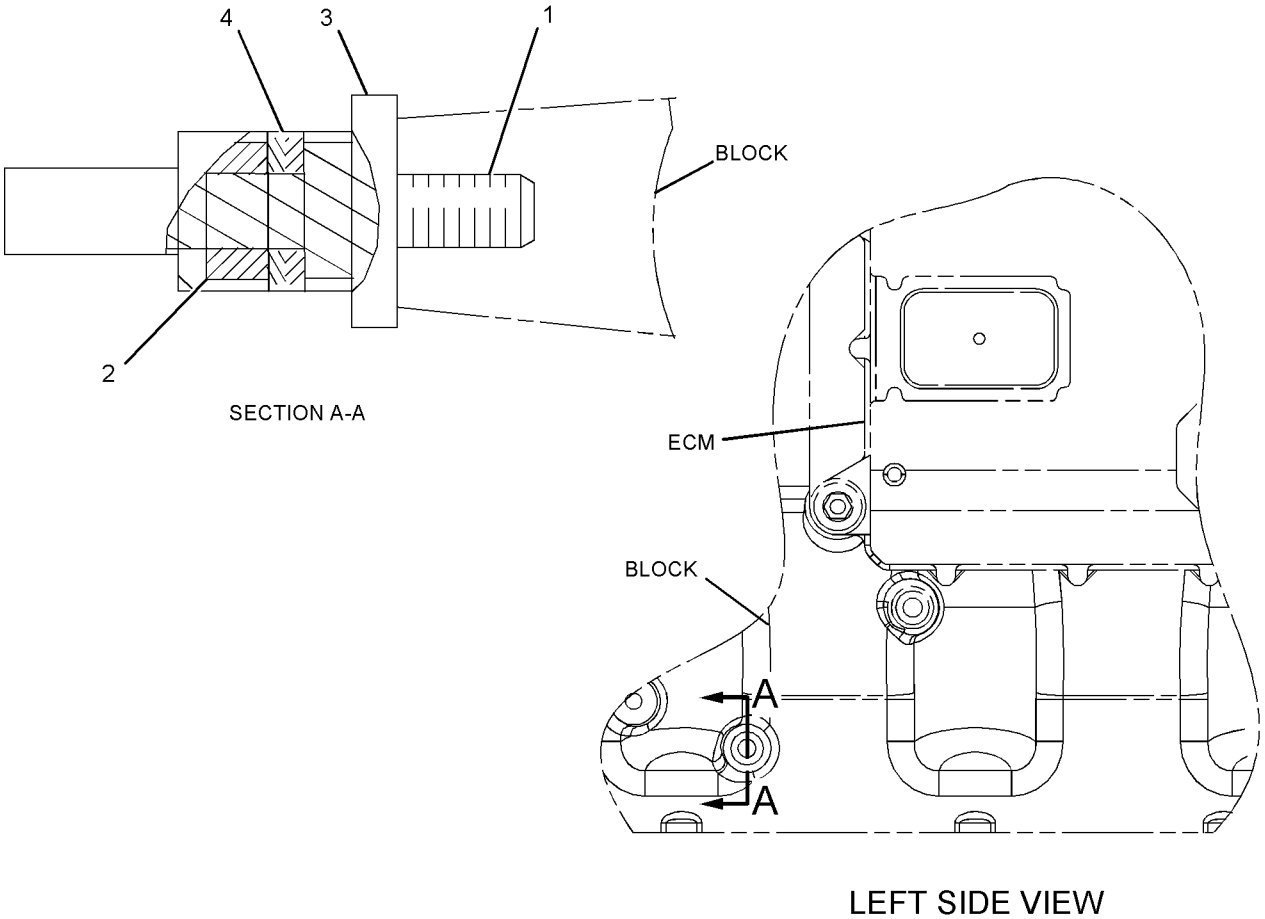

GRAPHIC #1 **<END>** g01015601

233-6191 CONTROL & MTG GP-ENGINE ELEK

S/N: MHX1304-2987
PART OF 227-5359, 231-0876 ENGINE AR-COMPLETE
ALSO AN ATTACHMENT

SMCS-1901 **i03553821**

NOTE	REF NO	GRAPHIC REF	PART NUMBER	QTY	PART NAME 1 2 3 4 5 6 (PRODUCT LEVEL)	SEE PAGE
	1	1	**8T-9655**	8	MOUNT-ISOLATION	
M	2	1	**9X-2098**	2	STUD-TAPERLOCK (BOLT)	
Y	3	1	**226-7473**	1	CONTROL GP-ENGINE ELECTRONIC	213
	5	1	**233-0891**	2	BRACKET AS	
					(EACH INCLUDES)	
M		1	**232-1693**	1	BOLT-FLANGE HEAD (M6X1X35-MM)	
	6	1	**6I-1418**	4	SPACER (8.2X12.7X28.7-MM THK)	
M	7	1	**8T-0276**	2	BOLT (M8X1.25X45-MM)	
	8	1	**9N-0869**	4	WASHER-HARD (8.8X25.5X2-MM THK)	

M-METRIC PART
Y-SEPARATE ILLUSTRATION

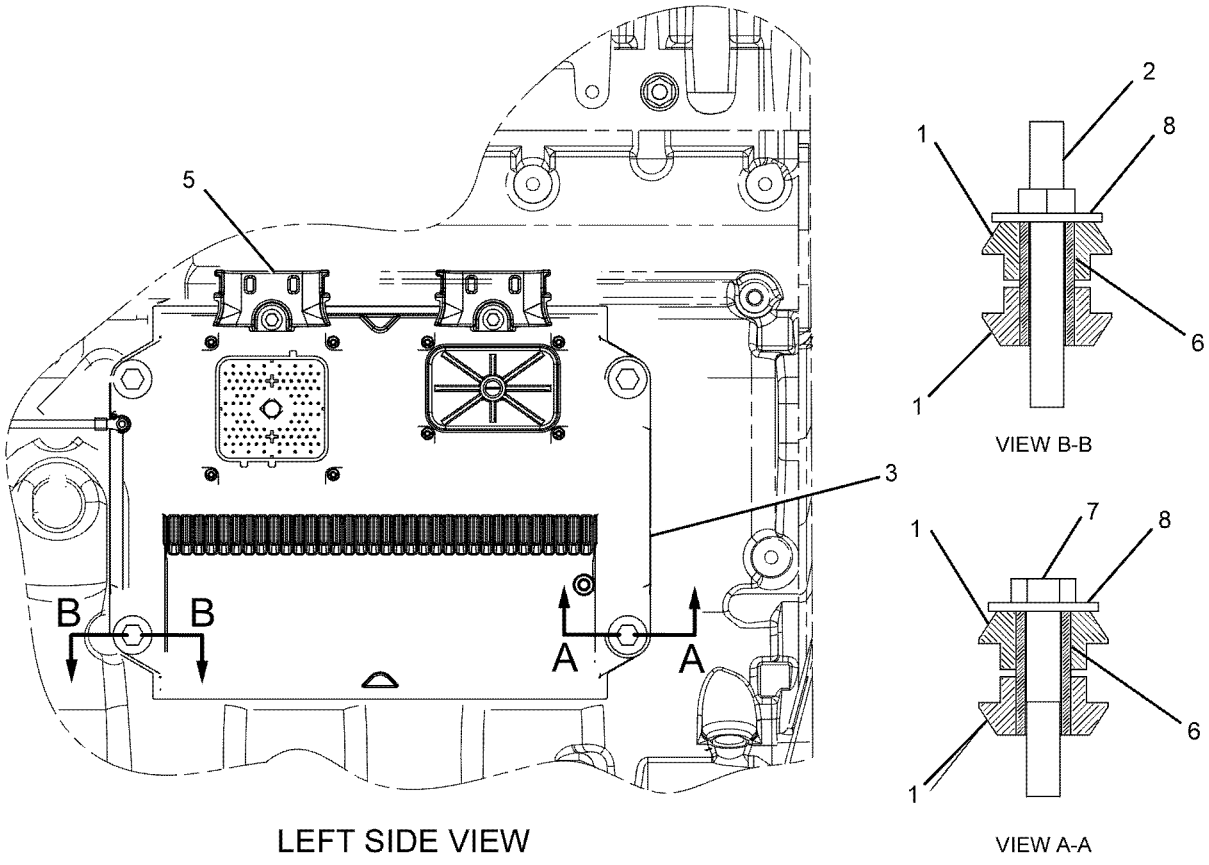

GRAPHIC #1 **<END>** g01094987

233-6191 CONTROL & MTG GP-ENGINE ELEK

S/N: MHX2988-UP

PART OF 227-5359, 231-0876, 349-4462 ENGINE AR-COMPLETE

ALSO AN ATTACHMENT

SMCS-1901 **i03554000**

NOTE	REF NO	GRAPHIC REF	PART NUMBER	QTY	PART NAME 1 2 3 4 5 6 (PRODUCT LEVEL)	SEE PAGE
	1	1	**8T-9655**	8	MOUNT-ISOLATION	
CM	2	1	**9X-2098**	4	STUD-TAPERLOCK (BOLT)	
Y	3	1	**226-7473**	1	CONTROL GP-ENGINE ELECTRONIC	213
	5	1	**233-0891**	2	BRACKET AS	
					(EACH INCLUDES)	
M		1	**232-1693**	1	BOLT-FLANGE HEAD (M6X1X35-MM)	
	6	1	**6I-1418**	4	SPACER (8.2X12.7X28.7-MM THK)	
	7	1	**9N-0869**	4	WASHER-HARD (8.8X25.5X2-MM THK)	

C-CHANGE FROM PREVIOUS TYPE
M-METRIC PART
Y-SEPARATE ILLUSTRATION

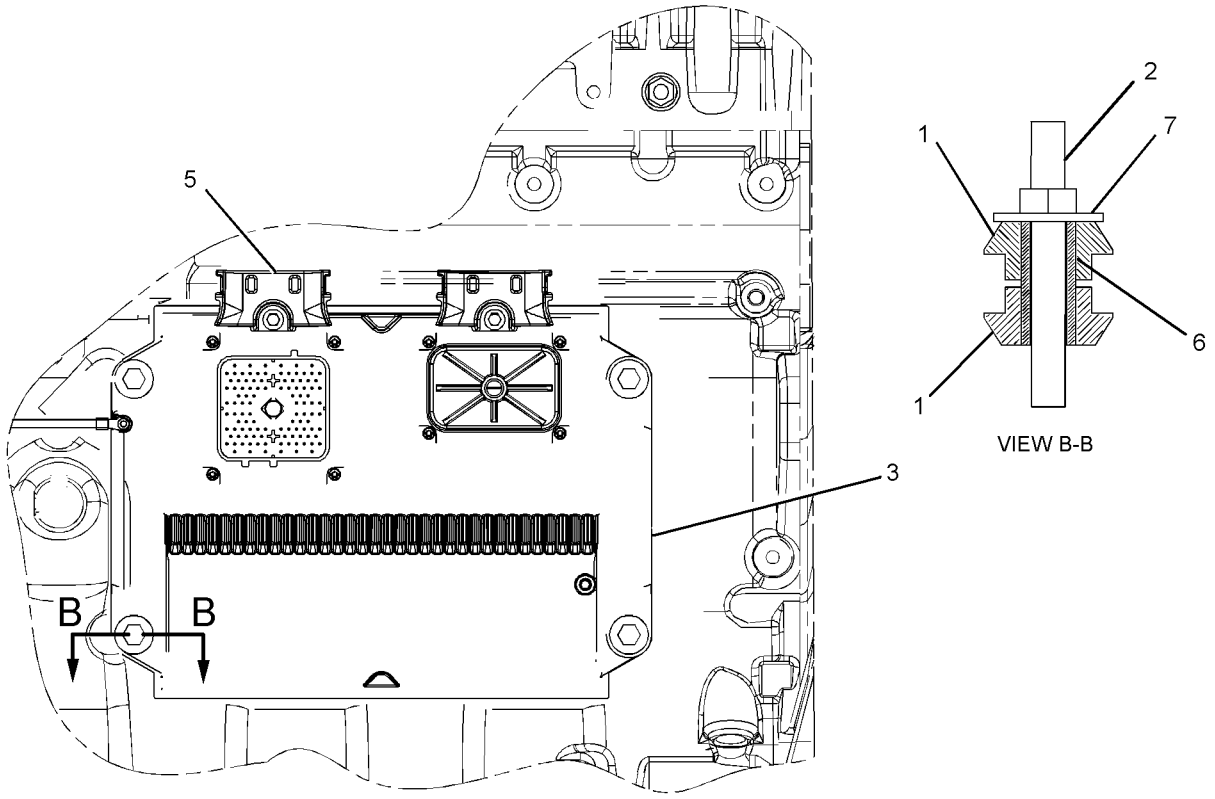

LEFT SIDE VIEW

GRAPHIC #1 **<END>** g01308133

ELECTRICAL AND STARTING SYSTEM

233-3145 CONTROL & MTG GP-IMPLEMENT

S/N: R9H1-UP

PART OF 233-3107 CAB AR

SMCS-5700, 5701 **i03904740**

NOTE	REF NO	GRAPHIC REF	PART NUMBER	QTY	PART NAME 1 2 3 4 5 6 (PRODUCT LEVEL)	SEE PAGE
	1	1	**6I-1418**	8	SPACER (8.2X12.7X28.7-MM THK)	
	2	1	**8T-9655**	16	MOUNT-ISOLATION	
Y	3	1	*275-8969*	1	CONTROL GP-UNPROGRAMMED (IMPLEMENT 2)	216
Y	4	1	*275-8970*	1	CONTROL GP-UNPROGRAMMED (IMPLEMENT 1)	216
	5	1	**324-8176**	1	BRACKET	
	6	1	**5P-4116**	8	WASHER-HARD (8.8X20.5X2-MM THK)	
M	7	1	**7X-0818**	8	BOLT (M8X1.25X45-MM)	
	8	1	**8T-4224**	2	WASHER-HARD (8.8X16X2-MM THK)	

M-METRIC PART
Y-SEPARATE ILLUSTRATION

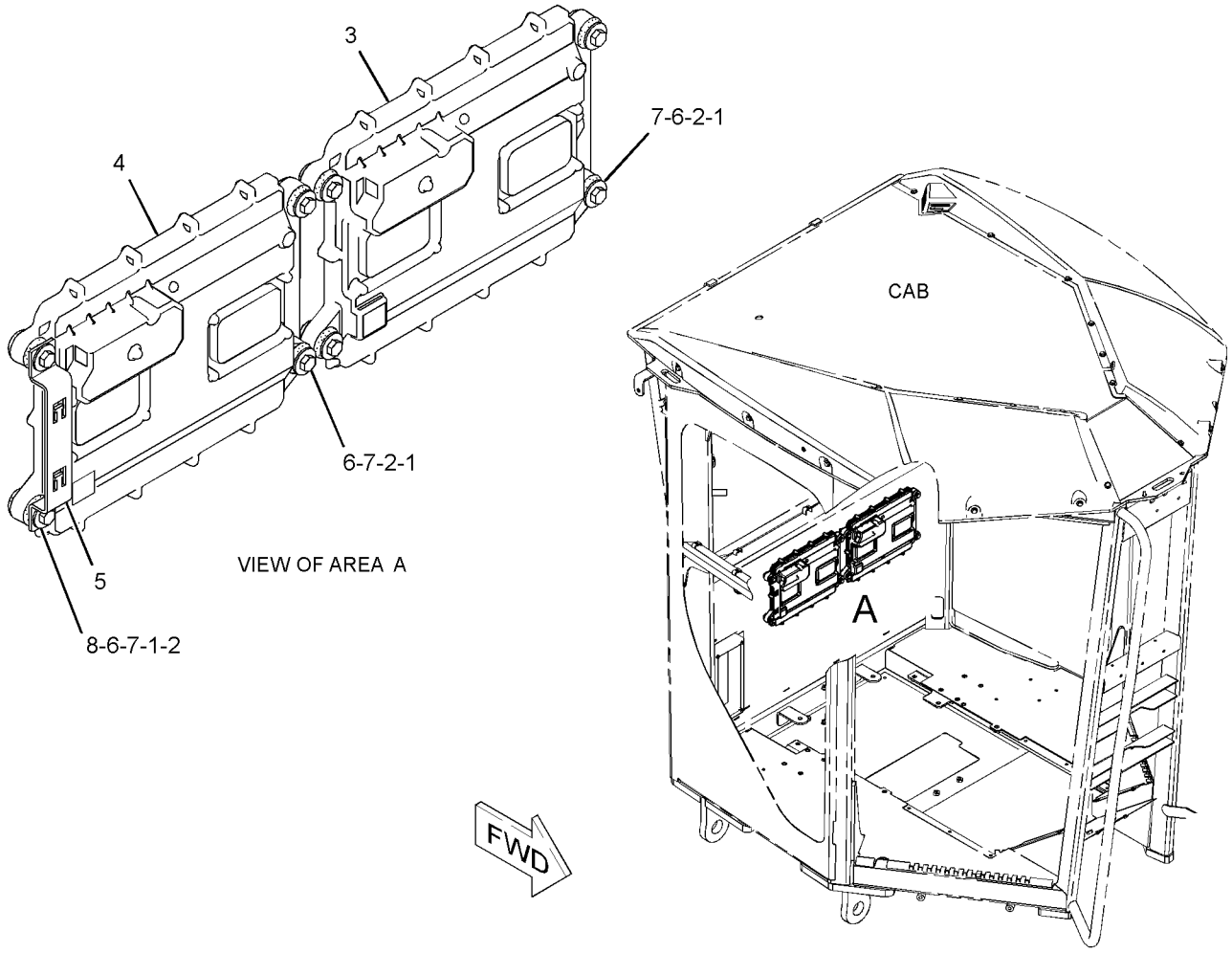

GRAPHIC #1 **<END>** g02149080

ELECTRICAL AND STARTING SYSTEM

226-7473 CONTROL GP-ENGINE ELECTRONIC

S/N: MHX1304-UP

PART OF 233-6191 CONTROL & MTG GP-ENGINE ELEK

ALSO AN ATTACHMENT

SMCS-1901 **i03137825**

NOTE	REF NO	GRAPHIC REF	PART NUMBER	QTY	PART NAME 1 2 3 4 5 6 (PRODUCT LEVEL)	SEE PAGE
R	1	1	**262-2878**	1	CONTROL GP-UNPROGRAMMED (ENGINE)	

R-REMFG PART MAY BE AVAILABLE

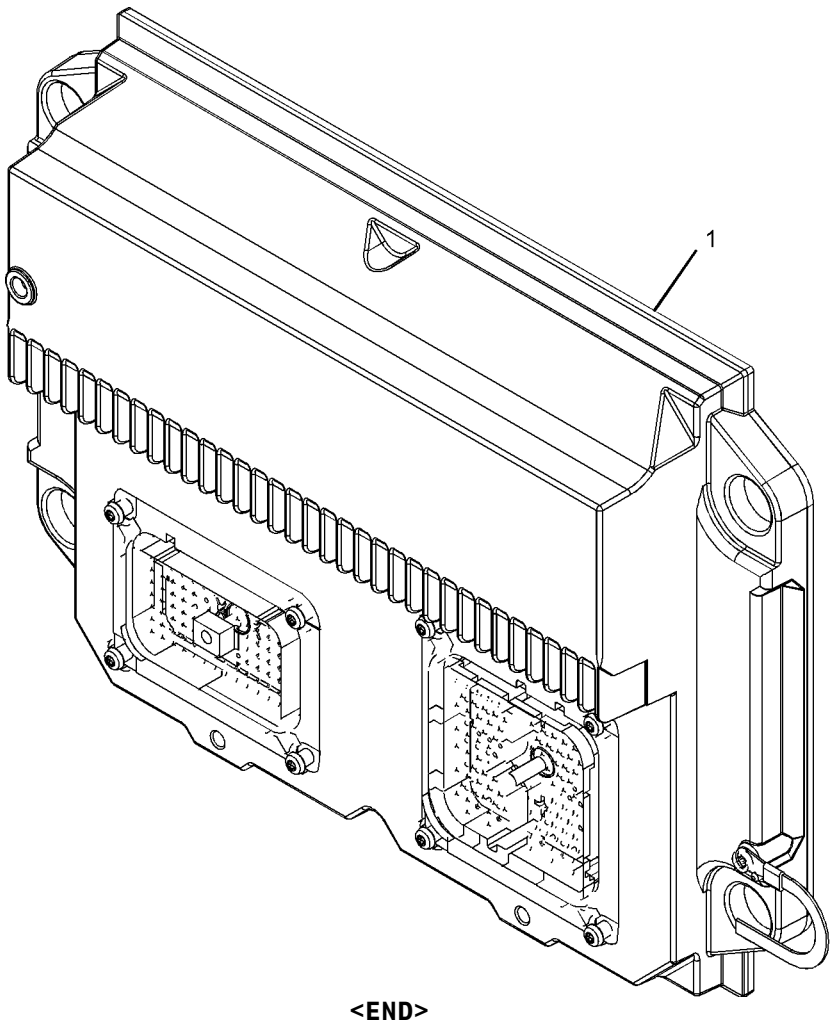

GRAPHIC #1 **<END>** g01101798

ELECTRICAL AND STARTING SYSTEM

299-0876 CONTROL GP-IMPLEMENT

S/N: R9H1-UP

PART OF 261-0096 CONTROL AR-HYDRAULIC

AN ATTACHMENT

SMCS-5700, 5701 **i04003955**

NOTE	REF NO	GRAPHIC REF	PART NUMBER	QTY	PART NAME 1 2 3 4 5 6 (PRODUCT LEVEL)	SEE PAGE
	1	1	**230-4012**	1	RECEPTACLE AS-CONNECTOR (2-PIN)	
	2	1	**358-4931**	1	CONTROL AS-PROPORTIONAL (REAR IMPLEMENT)	
		1	**8T-8737**	1	PLUG-SEAL	
		1	**9X-3401**	5	PIN-CONNECTOR (16-GA TO 18-GA)	
		1	**281-3136**	1	RECEPTACLE AS-CONNECTOR (6-PIN)	
	3	1	**279-5308**	1	LAMP AS-LED (24-VOLT, GREEN)	
		1	**186-3735**	2	PIN-CONNECTOR (16-GA TO 18-GA)	
	4	1	**358-4932**	1	CONTROL AS-PROPORTIONAL (FRONT IMPLEMENT)	
		1	**8T-8737**	1	PLUG-SEAL	
		1	**9X-3401**	5	PIN-CONNECTOR (16-GA TO 18-GA)	
		1	**281-3137**	1	RECEPTACLE AS-CONNECTOR (6-PIN)	
	5	1	**281-0431**	1	PLATE AS	
	6	1	**286-0274**	1	FILM-INSTRUCTION (FLOAT/NO FLOAT)	
	7	1	**299-0877**	1	BRACKET	
Y	8	1	*299-0881*	1	MOUNTING GP-CONTROL (WITH ENCLOSURE)	762
M	9	1	**127-2170**	2	SCREW-TRUSS HEAD (M8X1.25X20-MM)	
M	10	1	**225-3109**	3	SCREW-TRUSS HEAD (M4X0.7X14-MM)	
E	11	1	**282-0808**		SLEEVE (31-CM)	

E-ORDER BY THE CENTIMETER
M-METRIC PART
Y-SEPARATE ILLUSTRATION

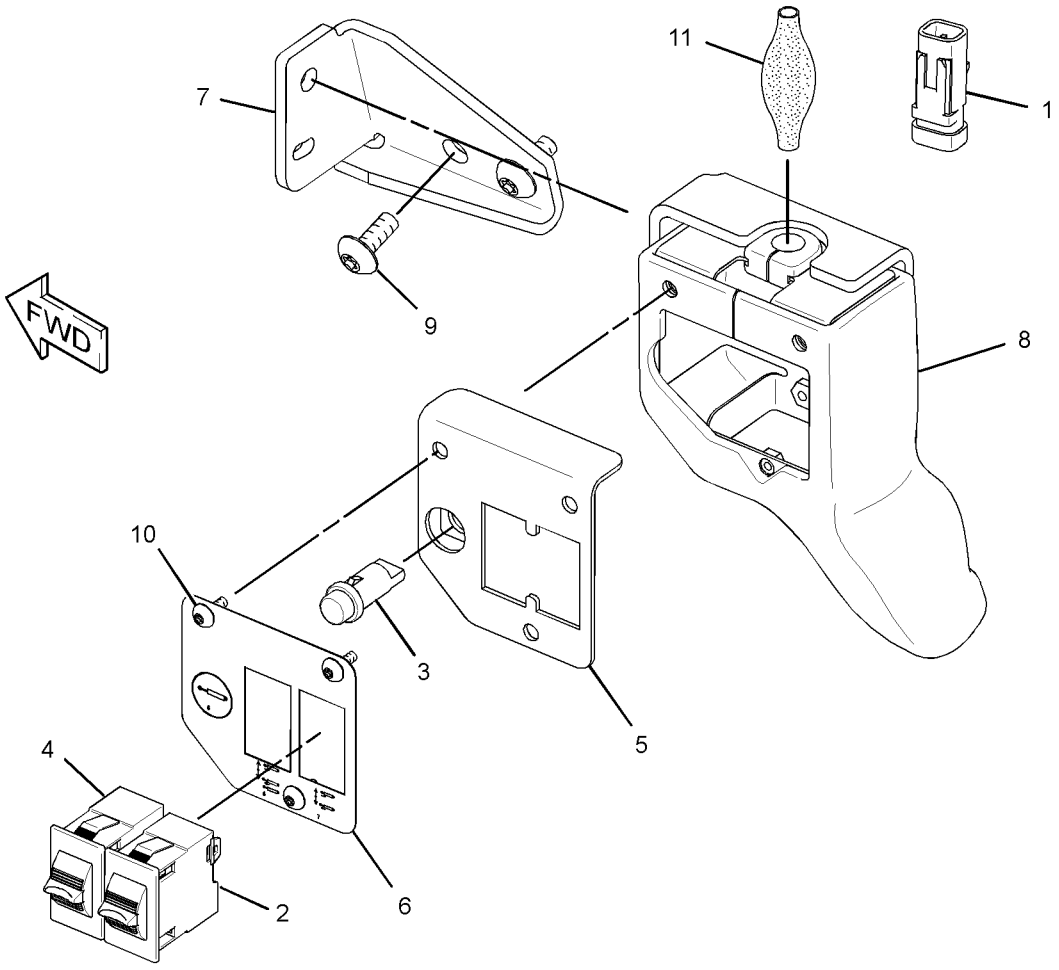

GRAPHIC #1 **<END>** g01636367

275-8969 CONTROL GP-UNPROGRAMMED–IMPLEMENT 2

S/N: R9H1-UP

PART OF 233-3145 CONTROL & MTG GP-IMPLEMENT

SMCS-7610 **i03027249**

NOTE	PART NUMBER	QTY	PART NAME 1 2 3 4 5 6 (PRODUCT LEVEL)	SEE PAGE
R	**304-5687**	1	CONTROL GP-UNPROGRAMMED (IMPLEMENT 2)	

R-REMFG PART MAY BE AVAILABLE

<END>

275-8970 CONTROL GP-UNPROGRAMMED–IMPLEMENT 1

S/N: R9H1-UP

PART OF 233-3145 CONTROL & MTG GP-IMPLEMENT

SMCS-7610 **i03817490**

NOTE	PART NUMBER	QTY	PART NAME 1 2 3 4 5 6 (PRODUCT LEVEL)	SEE PAGE
R	**304-5687**	1	CONTROL GP-UNPROGRAMMED (IMPLEMENT 1)	

R-REMFG PART MAY BE AVAILABLE

<END>

233-3134 CONVERTER GP-ELECTRICAL–RADIO

S/N: R9H1-UP
PART OF 352-3820 OPTION AR-CAB
AN ATTACHMENT

SMCS-1421 **i02193584**

NOTE	REF NO	GRAPHIC REF	PART NUMBER	QTY	PART NAME 1 2 3 4 5 6 (PRODUCT LEVEL)	SEE PAGE
	1	1	**184-3579**	1	CONVERTER-POWER (20-AMPERE)	
M	2	1	**174-8131**	4	SCREW-TRUSS HEAD (M4X0.7X12-MM)	
	3	1	**8T-0328**	4	WASHER-HARD (5.5X10X1-MM THK)	

M-METRIC PART

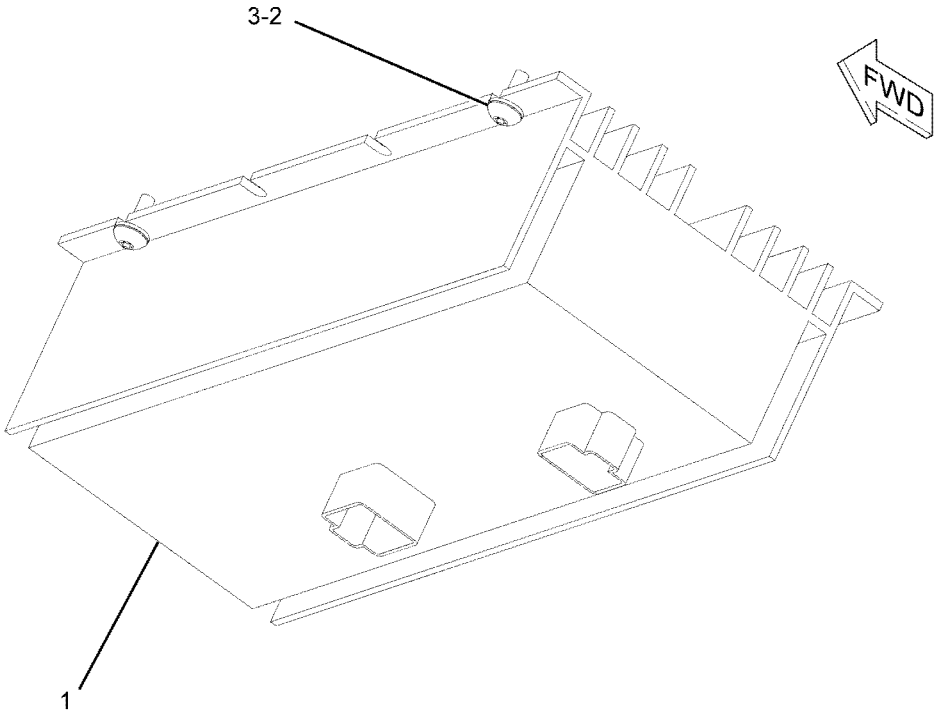

GRAPHIC #1 **<END>** g01110748

ELECTRICAL AND STARTING SYSTEM

233-3135 CONVERTER GP-ELECTRICAL

S/N: R9H1-UP

PART OF 233-3107 CAB AR

SMCS-1421 **i02713600**

NOTE	REF NO	GRAPHIC REF	PART NUMBER	QTY	PART NAME 1 2 3 4 5 6 (PRODUCT LEVEL)	SEE PAGE
	1	1	**117-2311**	1	SOCKET-AUXILIARY POWER (12-VOLT) (AUXILIARY)	
	2	1	**169-2876**	1	FILM-IDENTIFICATION (POWER RECEPTACLE, 12-VOLT)	
	3	1	**209-0381**	1	CONVERTER-POWER (24-VOLT TO 12-VOLT)	
M	4	1	**174-8131**	4	SCREW-TRUSS HEAD (M4X0.7X12-MM)	
	5	1	**8T-0328**	4	WASHER-HARD (5.5X10X1-MM THK)	

M-METRIC PART

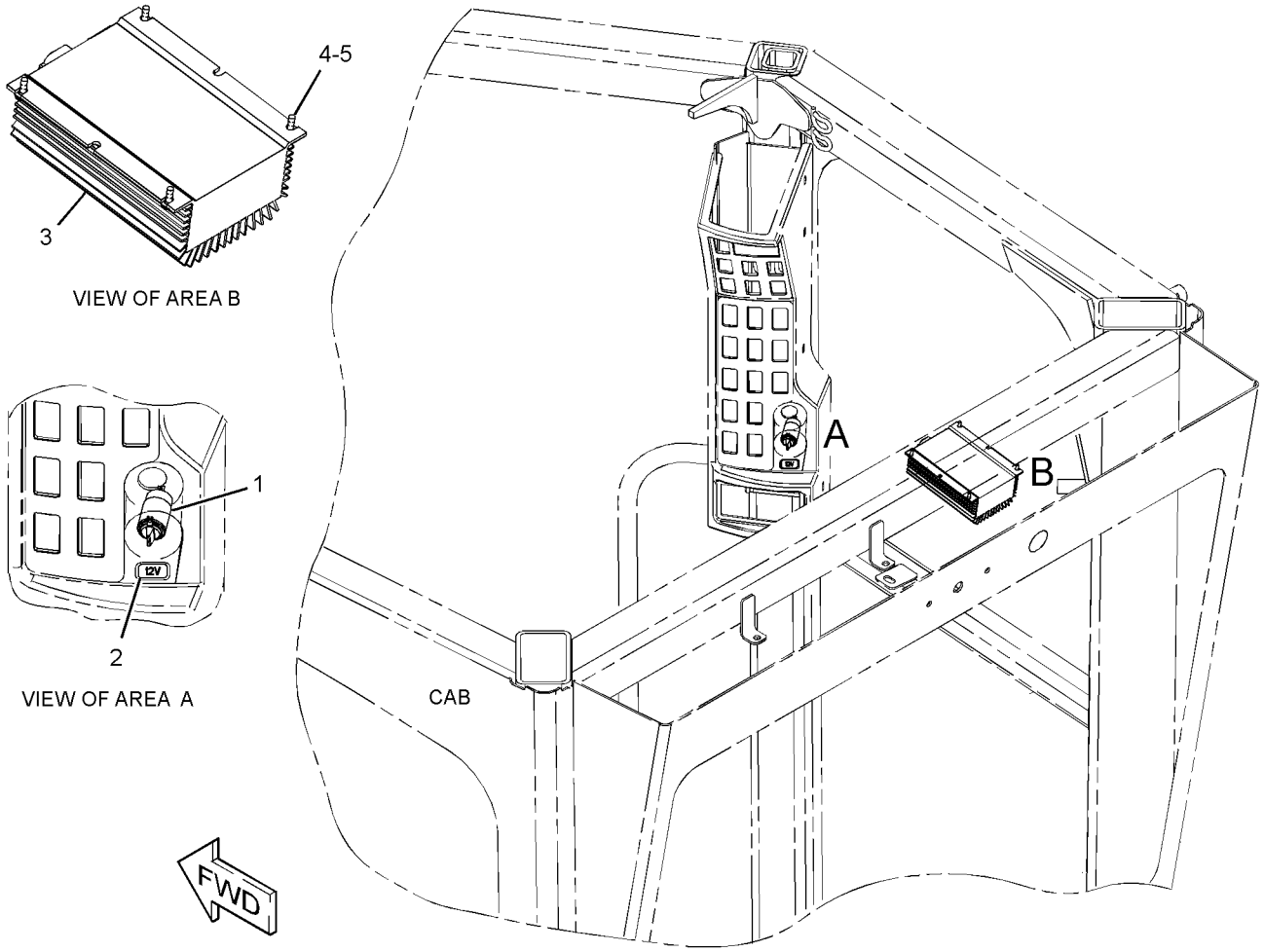

GRAPHIC #1 **<END>** g01372060

262-1421 ELECTRONICS GP-COMMUNICATION–PRODUCT LINK 300

S/N: R9H1-UP

PART OF 235-6188 INSTALLATION AR-COMMUNICATION AN ATTACHMENT

SMCS-7606, 7610, 7620 **i03915092**

NOTE	PART NUMBER	QTY	PART NAME 1 2 3 4 5 6 (PRODUCT LEVEL)	SEE PAGE
	355-5105	1	SOFTWARE GP-COMMUNICATION	
			-OR-	
	355-9764	1	SERVICE GP-COMMUNICATION	
			(OPTIONAL SERVICE REPLACEMENT)(INCLUDES CONTROL GP & SOFTWARE)	
	7X-6315	1	STRAP AS-GROUND	
	126-7574	1	SCREW-PAN HEAD (8-32X9.52-MM)	
	134-4126	1	WASHER (4.52X8.28X0.76-MM THK)	

<END>

250-9257 ELECTRONICS GP-IMPLEMENT

S/N: R9H1-UP

PART OF 233-3107 CAB AR

SMCS-5701, 7610, 7620 **i03992254**

NOTE	PART NUMBER	QTY	PART NAME 1 2 3 4 5 6 (PRODUCT LEVEL)	SEE PAGE
	358-7810	1	SOFTWARE GP-IMPLEMENT	
			-OR-	
	358-7811	1	SERVICE GP-IMPLEMENT	
			(OPTIONAL SERVICE REPLACEMENT)(INCLUDES CONTROL GP & SOFTWARE)	

<END>

250-9258 ELECTRONICS GP-IMPLEMENT–IMPLEMENT 2

S/N: R9H1-UP

PART OF 233-3107 CAB AR

SMCS-5701, 7610, 7620 **i03644922**

NOTE	PART NUMBER	QTY	PART NAME 1 2 3 4 5 6 (PRODUCT LEVEL)	SEE PAGE
	349-6967	1	SOFTWARE GP-IMPLEMENT	
			-OR-	
	349-6988	1	SERVICE GP-IMPLEMENT	
			(OPTIONAL SERVICE REPLACEMENT)(INCLUDES CONTROL GP & SOFTWARE)	

<END>

250-9259 ELECTRONICS GP-IMPLEMENT–IMPLEMENT 3

S/N: R9H1-UP

PART OF 261-0097, 261-0098, 340-4395 CONTROL AR-HYDRAULIC

AN ATTACHMENT

SMCS-5701, 7610, 7620 **i03655182**

NOTE	PART NUMBER	QTY	PART NAME 1 2 3 4 5 6 (PRODUCT LEVEL)	SEE PAGE
	349-6967	1	SOFTWARE GP-IMPLEMENT	
			-OR-	
	349-6988	1	SERVICE GP-IMPLEMENT	
			(OPTIONAL SERVICE REPLACEMENT)(INCLUDES CONTROL GP & SOFTWARE)	

<END>

250-9254 ELECTRONICS GP-MONITOR–DUTCH, ENGLISH, FRENCH, GERMAN, PORTUGUESE, SPANISH

S/N: R9H1-UP

PART OF 302-4219, 302-4220, 302-4221, 302-4222, 302-4223, 302-4224, 302-5136 PLATE & FILM GP

AN ATTACHMENT

SMCS-7490, 7610, 7620 **i03988775**

NOTE	PART NUMBER	QTY	PART NAME 1 2 3 4 5 6 (PRODUCT LEVEL)	SEE PAGE
	360-7545	1	SOFTWARE GP-MONITOR (MESSENGER)	
			-OR-	
	360-7546	1	SERVICE GP-MONITOR (MESSENGER)	
			(OPTIONAL SERVICE REPLACEMENT)(INCLUDES CONTROL GP & SOFTWARE)	

<END>

275-9650 ELECTRONICS GP-MONITOR–MESSENGER

S/N: R9H1-UP

PART OF 351-7026 WIRING GP-CAB

SMCS-7490, 7610, 7620 **i03812870**

NOTE	PART NUMBER	QTY	PART NAME 1 2 3 4 5 6 (PRODUCT LEVEL)	SEE PAGE
	308-3869	1	CONTROL GP-UNPRGMED MONITOR (MESSENGER)	

<END>

302-0359 ELECTRONICS GP-MONITOR–DANISH, ENGLISH, FINNISH, NORWEGIAN, PORTUGUESE, SWEDISH

S/N: R9H1-UP

PART OF 302-4225, 302-4226, 302-4227, 302-4228 PLATE & FILM GP

AN ATTACHMENT

SMCS-7490, 7610, 7620 **i03988779**

NOTE	PART NUMBER	QTY	PART NAME 1 2 3 4 5 6 (PRODUCT LEVEL)	SEE PAGE
	360-7547	1	SOFTWARE GP-MONITOR (MESSENGER)	
			-OR-	
	360-7548	1	SERVICE GP-MONITOR (MESSENGER)	
			(OPTIONAL SERVICE REPLACEMENT) (INCLUDES CONTROL GP & SOFTWARE)	

<END>

302-0360 ELECTRONICS GP-MONITOR–
ENGLISH, GREEK, HEBREW, ITALIAN, PORTUGUESE, TURKISH
S/N: R9H1-UP
PART OF 302-4229, 302-4230, 302-4231, 302-4232 PLATE & FILM GP
AN ATTACHMENT

SMCS-7490, 7610, 7620 **i03995965**

NOTE	PART NUMBER	QTY	PART NAME 1 2 3 4 5 6 (PRODUCT LEVEL)	SEE PAGE
	360-7549	1	SOFTWARE GP-MONITOR	
			-OR-	
	360-7550	1	SERVICE GP-MONITOR	
			(OPTIONAL SERVICE REPLACEMENT) (INCLUDES CONTROL GP & SOFTWARE)	

<END>

302-0361 ELECTRONICS GP-MONITOR–
ARABIC, CHINESE, ENGLISH, PORTUGUESE, RUSSIAN
S/N: R9H1-UP
PART OF 302-4233, 302-4234, 302-4235 PLATE & FILM GP
AN ATTACHMENT

SMCS-7490, 7610, 7620 **i03995968**

NOTE	PART NUMBER	QTY	PART NAME 1 2 3 4 5 6 (PRODUCT LEVEL)	SEE PAGE
	360-7551	1	SOFTWARE GP-MONITOR	
			-OR-	
	360-7552	1	SERVICE GP-MONITOR	
			(OPTIONAL SERVICE REPLACEMENT)(INCLUDES CONTROL GP & SOFTWARE)	

<END>

302-0362 ELECTRONICS GP-MONITOR–
ENGLISH, PORTUGUESE, ROMANIAN, SLOVENIAN
S/N: R9H1-UP
PART OF 302-4236, 302-4237 PLATE & FILM GP
AN ATTACHMENT

SMCS-7490, 7610, 7620 **i03995969**

NOTE	PART NUMBER	QTY	PART NAME 1 2 3 4 5 6 (PRODUCT LEVEL)	SEE PAGE
	360-7553	1	SOFTWARE GP-MONITOR	
			-OR-	
	360-7554	1	SERVICE GP-MONITOR	
			(OPTIONAL SERVICE REPLACEMENT)(INCLUDES CONTROL GP & SOFTWARE)	

<END>

ELECTRICAL AND STARTING SYSTEM

310-3221 ELECTRONICS GP-POWER TRAIN

S/N: DZM300-UP
PART OF 253-8407 TRANSMISSION AR

SMCS-4800, 4808, 7610, 7620 **i03992363**

NOTE	PART NUMBER	QTY	PART NAME 1 2 3 4 5 6 (PRODUCT LEVEL)	SEE PAGE
	358-6192	1	SOFTWARE GP-POWER TRAIN	
			-OR-	
	358-6193	1	SERVICE GP-POWER TRAIN	
			(OPTIONAL SERVICE REPLACEMENT)(INCLUDES CONTROL GP & SOFTWARE)	

<END>

261-0117 GRADE CONTROL AR—ACCUGRADE

S/N: R9H1-UP
FOR USE WITH MOTOR GRADER TIER 3
AN ATTACHMENT

SMCS-7220 **i02902484**

NOTE	PART NUMBER	QTY	PART NAME 1 2 3 4 5 6 (PRODUCT LEVEL)	SEE PAGE
Y	*307-0155*	1	GRADE CONTROL GP (ACCUGRADE)	224
Y	*250-0895*	1	WIRING GP-GRADE CONTROL	369

Y-SEPARATE ILLUSTRATION

<END>

323-8140 GRADE CONTROL AR—CD610

S/N: R9H1-UP
FOR USE WITH ACCUGRADE ARRANGEMENT
FIELD INSTALLATION

SMCS-7220 **i03795951**

NOTE	PART NUMBER	QTY	PART NAME 1 2 3 4 5 6 (PRODUCT LEVEL)	SEE PAGE
Y	*292-0309*	1	DISPLAY GP-MONITOR (CD610)	732
Y	*249-7789*	1	SENSOR & MOUNTING GP (ACCUGRADE)	284
Y	*253-1967*	1	WIRING GP-MONITOR (CD610)	376
	324-2694	1	FASTENER GP-SENSOR (ANGLE)	
M	**5C-2890**	4	NUT (M6X1-THD)	
M	**9X-2537**	4	BOLT-SOCKET HEAD (M6X1X70-MM)	
	9X-8256	8	WASHER (6.6X12X2-MM THK)	
	061-6665	2	BOLT (1/2-13X1.25-IN)	
	186-0359	1	CLIP	

M-METRIC PART
Y-SEPARATE ILLUSTRATION

<END>

317-6526 GRADE CONTROL AR-LASER–

ADVANCED TRACKING SYSTEM

S/N: R9H1-UP

FIELD INSTALLATION

SMCS-7220 **i03910928**

NOTE	PART NUMBER	QTY	PART NAME 1 2 3 4 5 6 (PRODUCT LEVEL)	SEE PAGE
Y	**226-2333**	1	MAST GP (LASER RECEIVER)	268
Y	**234-9970**	1	MOUNTING GP-RECEIVER (MAST)	278
Y	**295-9880**	1	TARGET GP-LASER	342
	248-1503	1	BRACKET GP-MOUNTING	
	7X-0343	4	BOLT (5/8-11X1.25-IN)	
	7X-0366	3	BOLT (3/4-10X2-IN)	
	8T-4122	4	WASHER-HARD (17X32X3.5-MM THK)	
	8T-4994	3	WASHER-HARD (20X36.5X3.5-MM THK)	
	248-1496	1	RISER AS (MAST)	
	3B-4512	1	LOCKWASHER	
	9S-1362	1	BOLT (3/4-16X2-IN)	
	231-0049	1	CABLE-COILED (MAST)	

Y-SEPARATE ILLUSTRATION

<END>

307-0155 GRADE CONTROL GP–ACCUGRADE

S/N: R9H1-UP
PART OF 261-0117 GRADE CONTROL AR
AN ATTACHMENT

SMCS-7220 **i03934451**

NOTE	REF NO	GRAPHIC REF	PART NUMBER	QTY	PART NAME 1 2 3 4 5 6 (PRODUCT LEVEL)	SEE PAGE
Y	1	1	**283-7960**	1	POWER SUPPLY GP (GRADE CONTROL)	280
CY	2	1	**314-3323**	1	PANEL GP-CONTROL (ACCUGRADE) (LH)	769
Y	3	1	**319-1617**	1	PANEL GP-CONTROL (ACCUGRADE) (RH)	770

C-CHANGE FROM PREVIOUS TYPE
Y-SEPARATE ILLUSTRATION

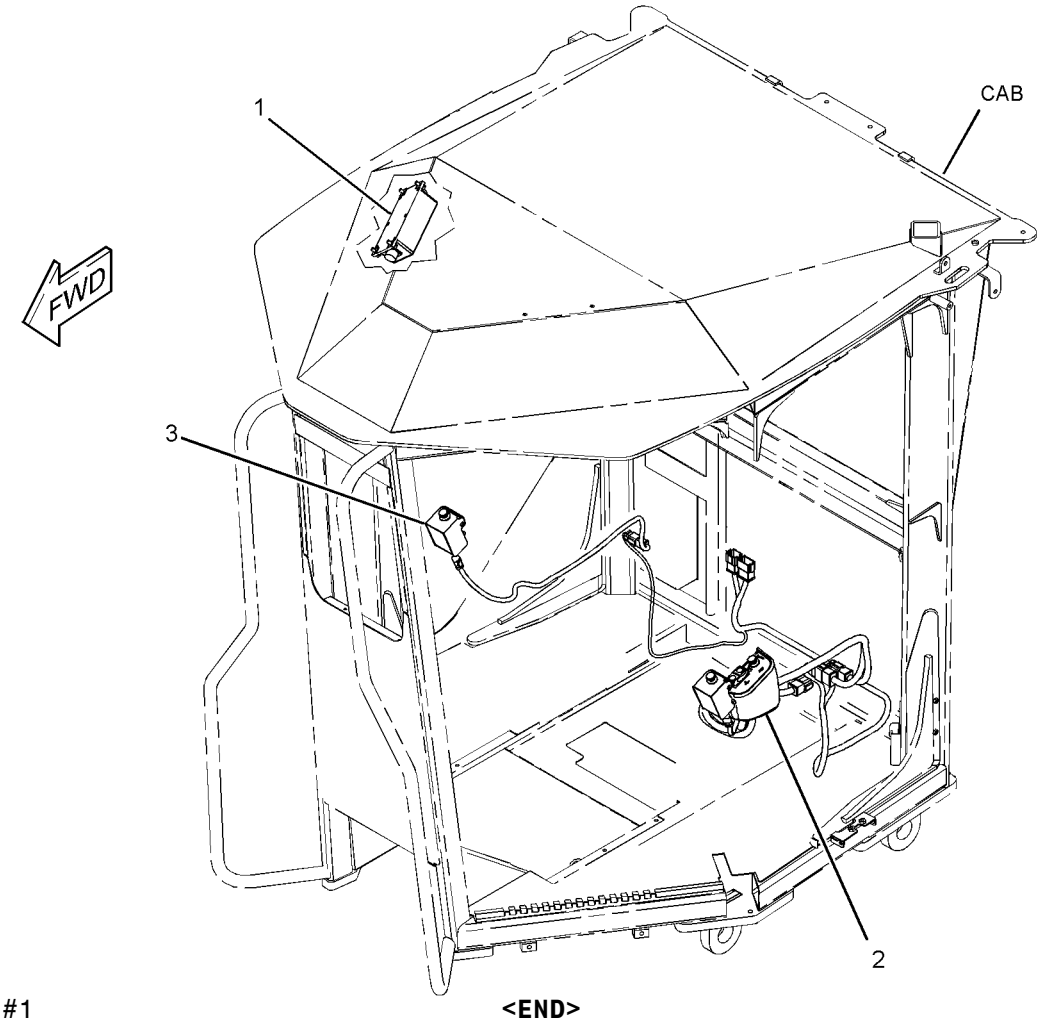

GRAPHIC #1 **<END>** g01536713

249-5511 HEATER GP-JACKET WATER

S/N: R9H1-UP
240-VOLT, 1250-WATT
CANNOT BE USED WITH 249-5516—PAGE 226
AN ATTACHMENT

SMCS-1383 **i02193537**

NOTE	REF NO	GRAPHIC REF	PART NUMBER	QTY	PART NAME 1 2 3 4 5 6 (PRODUCT LEVEL)	SEE PAGE
	1	1	**127-8609**	1	CORD AS-HEATER ELEMENT (240-VOLT, 15-AMPERE)	
	2	1	**249-5508**	1	ELEMENT AS-JACKET WATER HEATER (240-VOLT, 1250-WATT)	
	2A	1	**7M-8485**	1	SEAL-O-RING	
	2B	1	**133-6517**	1	CAP AS-DUST	

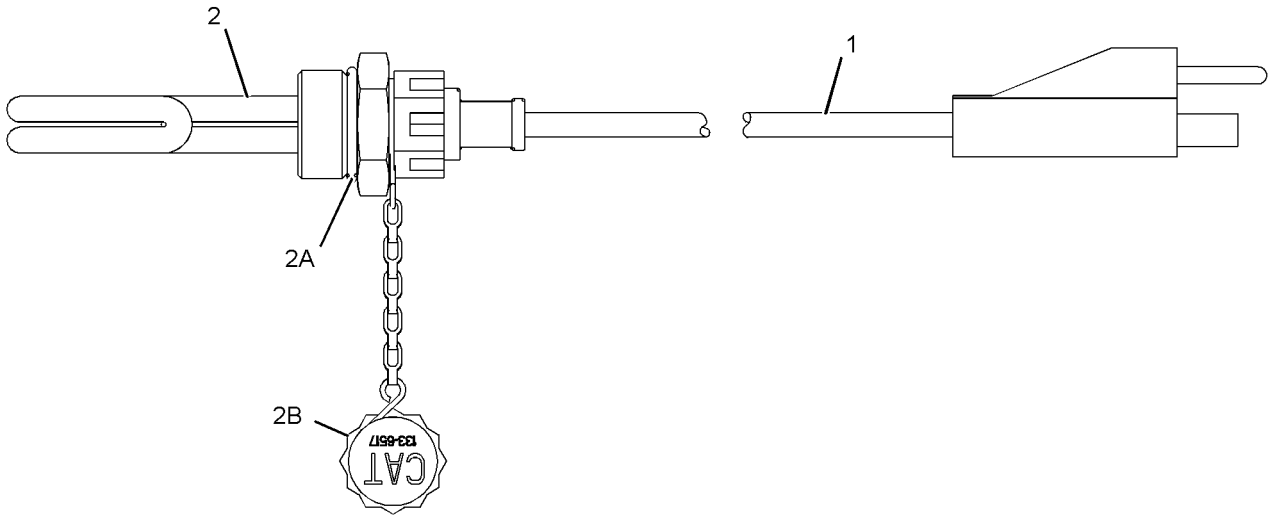

GRAPHIC #1 **<END>** g01112849

249-5516 HEATER GP-JACKET WATER

S/N: R9H1-UP
120-VOLT, 1250-WATT
CANNOT BE USED WITH 249-5511—PAGE 225
AN ATTACHMENT

SMCS-1383 **i02567081**

NOTE	REF NO	GRAPHIC REF	PART NUMBER	QTY	PART NAME 1 2 3 4 5 6 (PRODUCT LEVEL)	SEE PAGE
	1	1	**239-7342**	1	ELEMENT AS-JACKET WATER HEATER (120-VOLT, 1250-WATT)	
	1A	1	**7M-8485**	1	SEAL-O-RING	
	1B	1	**133-6517**	1	CAP AS-DUST	
	2	1	**7X-6312**	1	CORD AS-HEATER ELEMENT (120-VOLT, 15-AMPERE)	

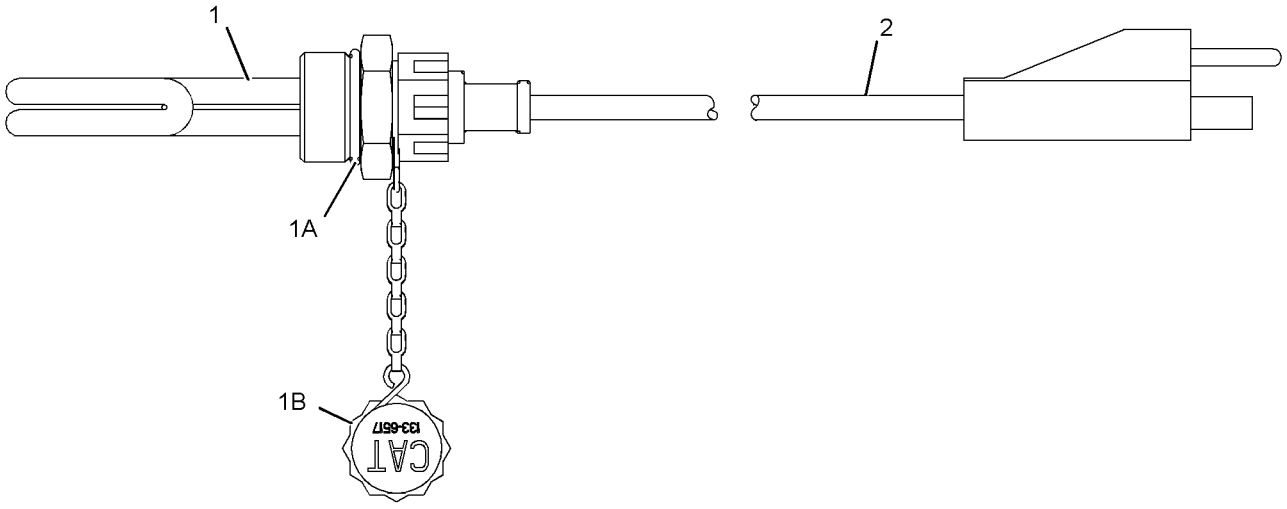

GRAPHIC #1 **<END>** g01112866

235-6188 INSTALLATION AR-COMMUNICATION–
PRODUCT LINK 321SR
S/N: R9H1-UP
AN ATTACHMENT

SMCS-7606 **i04002853**

NOTE	REF NO	GRAPHIC REF	PART NUMBER	QTY	PART NAME 1 2 3 4 5 6 (PRODUCT LEVEL)	SEE PAGE
	1	1	**8C-5607**	8	MOUNT-ISOLATION	
	2	1	**8C-5608**	4	SPACER (6.5X9.5X25.4-MM THK)	
	3	1	**261-9391**	1	HARNESS AS-POWER (PRODUCT LINK RADIO)	
		1	**102-8801**	1	KIT-RECEPTACLE (12-PIN)	
					(INCLUDES RECEPTACLE AS & WEDGE)	
		1	**155-2255**	1	KIT-CONNECTING PLUG (12-PIN)	
					(INCLUDES PLUG AS, WEDGE, & INTERFACE SEAL)	
		1	**160-7690**	1	PLUG AS-CONNECTOR (70-PIN)	
		1	**9X-6772**	2	STRAP-CABLE	
		1	**126-1774**	1	COVER-CONNECTOR	
	4	1	**284-8533**	1	ANTENNA AS	
		1	**301-0589**	1	ANTENNA (FLEXIBLE)	
Y	5	1	**336-3545**	1	RADIO GP-COMMUNICATION (PRODUCT LINK 121SR)	281
	6	1	**272-8325**	1	PLATE AS	
	7	1	**272-8326**	1	PLATE AS	
Y	8	1	**262-1421**	1	ELECTRONICS GP-COMMUNICATION (PRODUCT LINK 300)	219
M	10	1	**8T-2947**	4	BOLT (M6X1X45-MM)	
M	11	1	**8T-4138**	8	BOLT (M6X1X20-MM)	
	12	1	**9X-6165**	4	WASHER (6.5X22X2.5-MM THK)	
	13	1	**9X-8256**	8	WASHER (6.6X12X2-MM THK)	
	14	1	**3S-2093**	1	STRAP-CABLE	

M-METRIC PART
Y-SEPARATE ILLUSTRATION

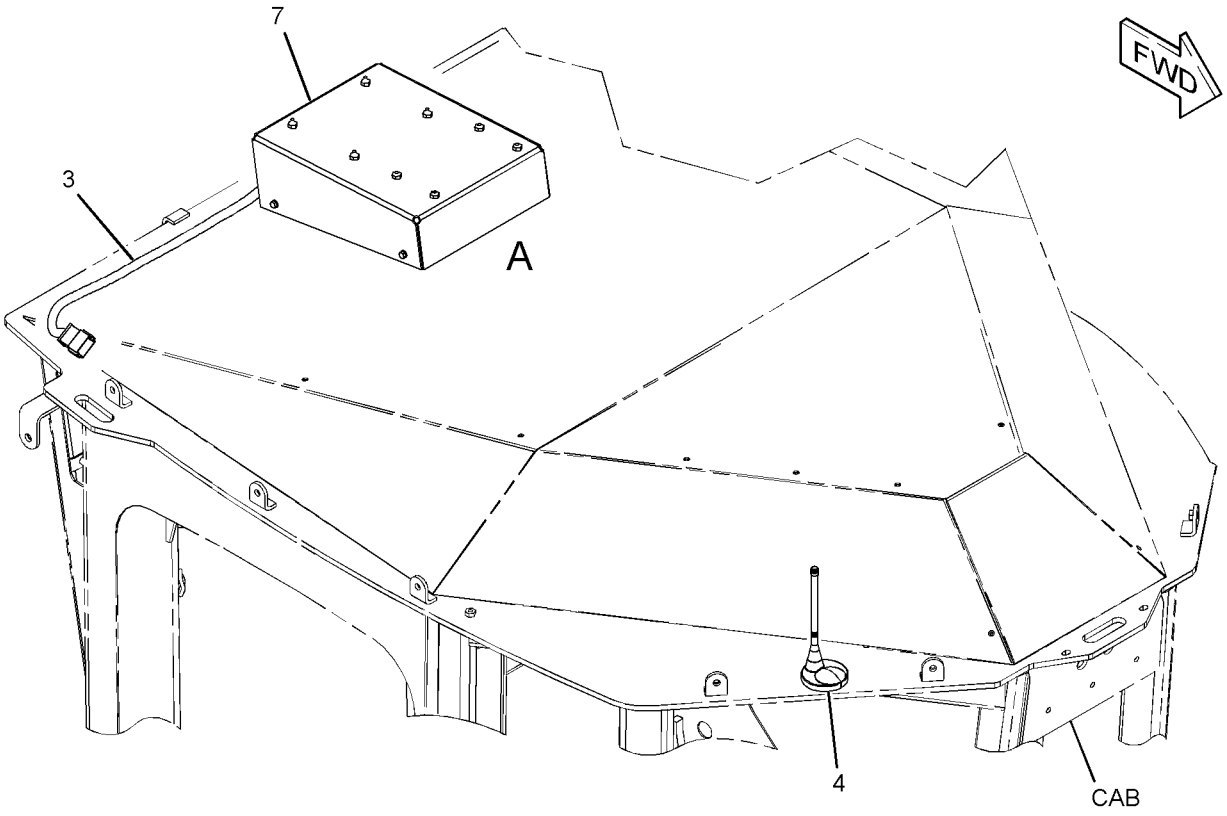

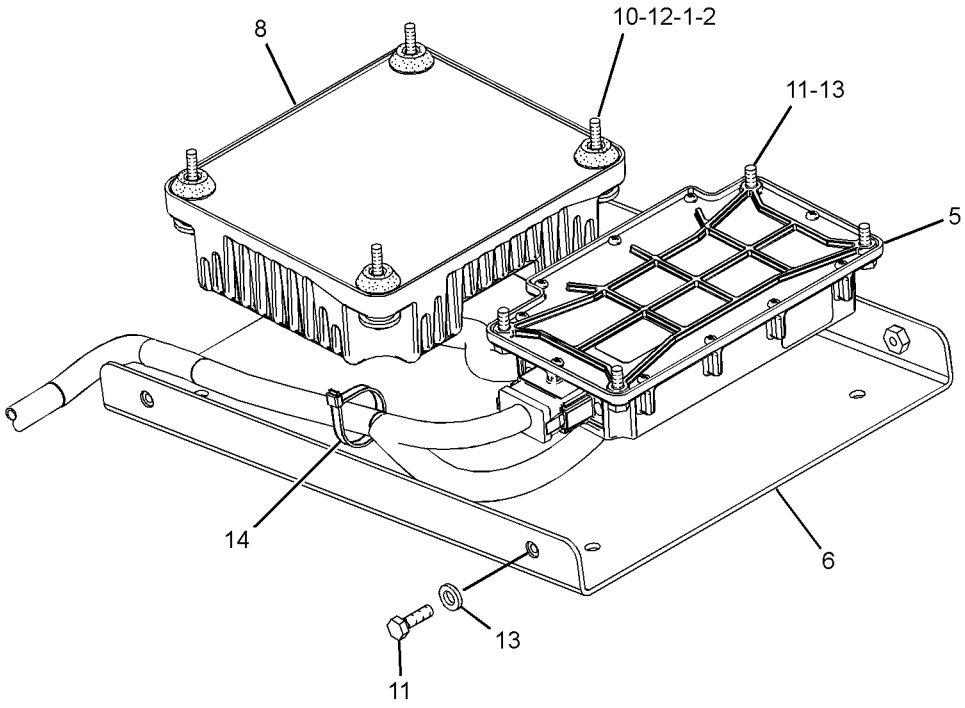

VIEW OF AREA A
(COVER REMOVED)

GRAPHIC #1 **<END>** g02218694

233-3126 INSTALLATION GP-LIGHTING

S/N: R9H1-UP
PART OF 352-3817 SNOW AR-MOTOR GRADER
AN ATTACHMENT

SMCS-1429, 7553 **i03893951**

NOTE	REF NO	GRAPHIC REF	PART NUMBER	QTY	PART NAME 1 2 3 4 5 6 (PRODUCT LEVEL)	SEE PAGE
	1	1	**8K-1433**	1	GROMMET	
Y	2	1	**234-4326**	2	LAMP GP-FLOOD (24-VOLT) (WORK LIGHTS)	238
	3	1	*354-8028*	1	SWITCH GP-LIGHT (FOG LIGHT, REAR)	
		1	**284-3619**	1	SWITCH AS-ROCKER (24-VOLT) (FOG LIGHT, REAR)	
Y	4	1	*290-2016*	1	MOUNTING GP-LAMP	272

Y-SEPARATE ILLUSTRATION

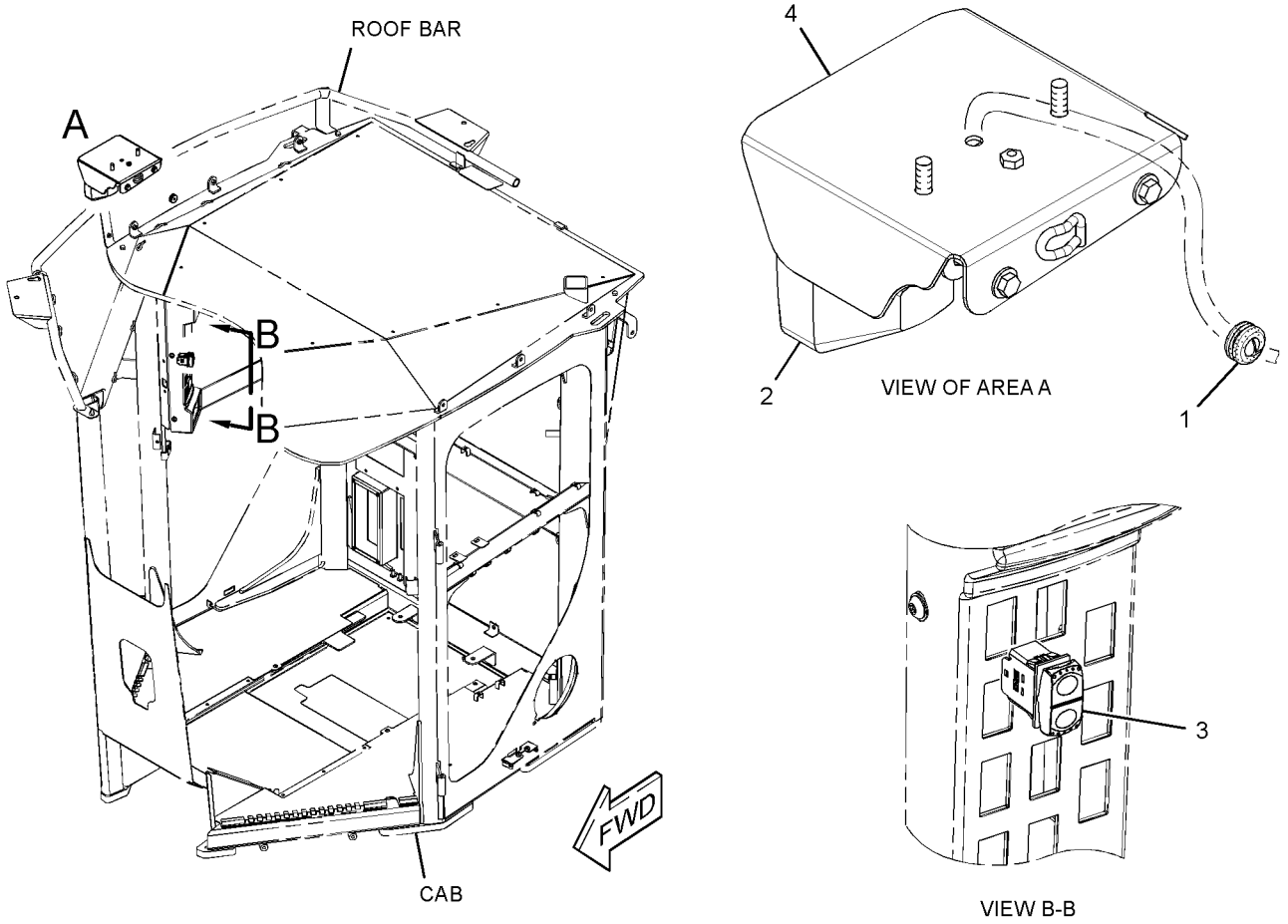

GRAPHIC #1 **<END>** g01872035

ELECTRICAL AND STARTING SYSTEM

238-8827 INSTALLATION GP-SECURITY

S/N: R9H1-UP

AN ATTACHMENT

SMCS-7631 **i03895661**

NOTE	REF NO	GRAPHIC REF	PART NUMBER	QTY	PART NAME 1 2 3 4 5 6 (PRODUCT LEVEL)	SEE PAGE
	1	1	**102-8803**	1	KIT-RECEPTACLE (3-PIN)	
					(INCLUDES RECEPTACLE AS & WEDGE)	
	2	1	**3S-2093**	2	STRAP-CABLE	
	3	1	**198-5389**	1	FILM-IDENTIFICATION (IGNITION SWITCH)	
	4	1	**205-0826**	1	FILM-INSTRUCTION (MACHINE SECURITY, CONSOLE)	
J	5	1	**206-5162**	2	KEY AS-ELECTRONIC (SECURITY)	
	6	1	**206-5208**	1	COIL AS (EXCITER)	
		1	**102-8802**	2	KIT-RECEPTACLE (2-PIN)	
					(EACH INCLUDES RECEPTACLE AS & WEDGE)	
		1	**205-8257**	1	COIL AS (EXCITER)	
	7	1	**218-0404**	1	MODULE GP-INTERFACE (KEY) (MACHINE SECURITY SYSTEM)	
	8	1	**219-6314**	2	KEY RING (IDENTIFICATION)	
	11	1	**238-8813**	1	HARNESS AS-CHASSIS (MACHINE SECURITY SYSTEM)	
		1	**8T-8729**	6	PIN-CONNECTOR (16-GA TO 18-GA)	
		1	**8T-8730**	10	SOCKET-CONNECTOR (16-GA TO 18-GA)	
		1	**8T-8737**	2	PLUG-SEAL	
		1	**102-8805**	1	KIT-RECEPTACLE (6-PIN)	
					(INCLUDES RECEPTACLE AS & WEDGE)	
		1	**155-2265**	1	KIT-CONNECTING PLUG (8-PIN)	
		1	**155-2270**	2	KIT-CONNECTING PLUG (2-PIN)	
					(EACH PLUG KIT INCLUDES PLUG AS,WEDGE,& INTERFACE SEAL)	
	12	1	**242-3282**	1	LAMP AS-LED (24-VOLT, RED)	
	14	1	**204-0813**	2	BOLT (M6X1X40-MM)	
	15	1	**102-8802**	1	KIT-RECEPTACLE (2-PIN)	
					(INCLUDES RECEPTACLE AS & WEDGE)	
	16	1	**8C-5607**	4	MOUNT-ISOLATION	
	17	1	**8C-5608**	2	SPACER (6.5X9.5X25.4-MM THK)	
	18	1	**9X-6165**	4	WASHER (6.5X22X2.5-MM THK)	

J-REQUIRES CORPORATE KEY

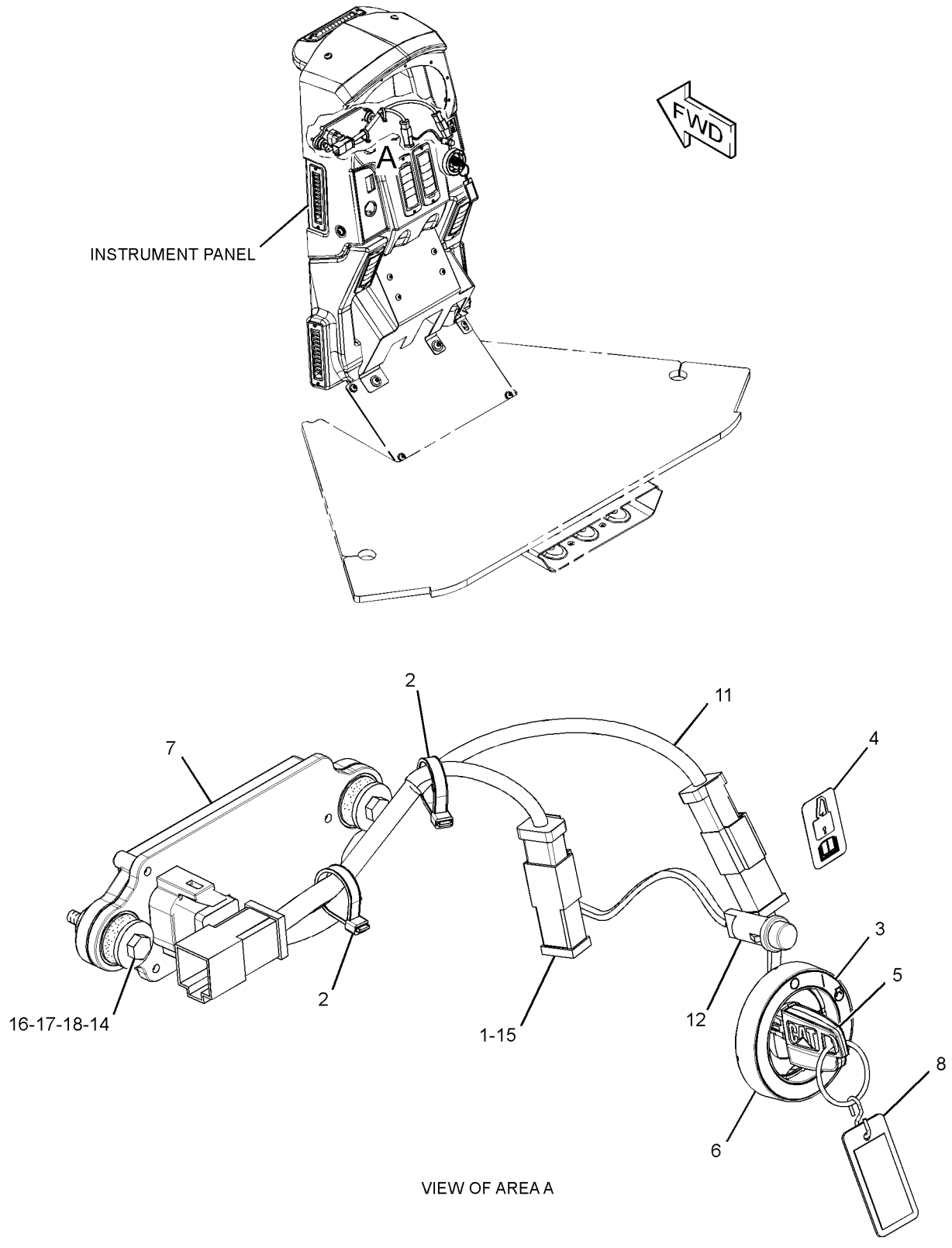

GRAPHIC #1 **<END>** g01444538

310-2078 INSTALLATION GP-WARNING BEACON

S/N: R9H1-UP
PART OF 352-3817 SNOW AR-MOTOR GRADER
AN ATTACHMENT

SMCS-1408, 1429, 1431, 7553 **i03894753**

NOTE	REF NO	GRAPHIC REF	PART NUMBER	QTY	PART NAME 1 2 3 4 5 6 (PRODUCT LEVEL)	SEE PAGE
	1	1	**237-9736**	1	SWITCH AS-ROCKER (WARNING BEACON)	
	2	1	**310-2088**	1	PLATE AS	

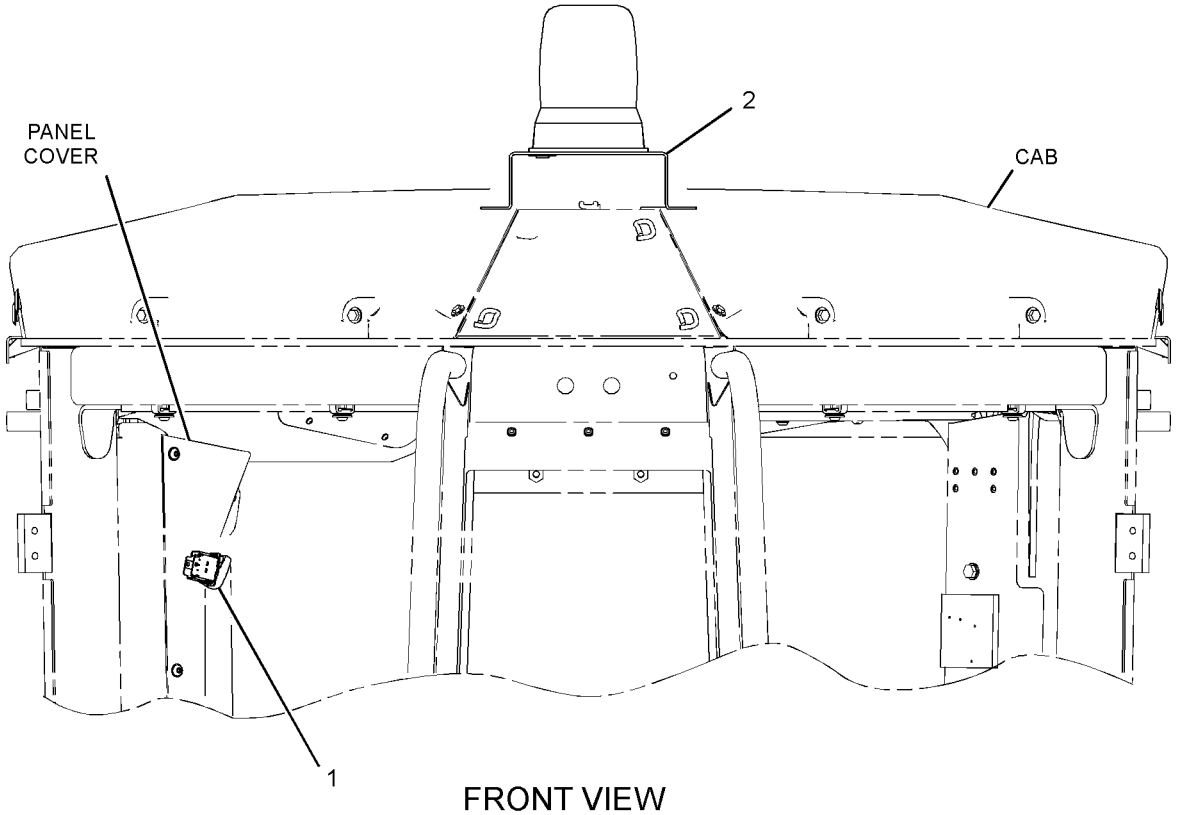

FRONT VIEW

GRAPHIC #1 **<END>** g01832313

261-1502 LAMP GP

S/N: R9H1-UP
24 VOLT
PART OF 250-0902, 257-8028 WIRING GP-REAR LIGHTING
AN ATTACHMENT

SMCS-1429 **i02556523**

NOTE	REF NO	GRAPHIC REF	PART NUMBER	QTY	PART NAME 1 2 3 4 5 6 (PRODUCT LEVEL)	SEE PAGE
	1	1	**264-5346**	1	LENS	
	2	1	**9X-4493**	1	LAMP (24-VOLT, 21-WATT)	
	3	1	**186-3735**	2	PIN-CONNECTOR (16-GA TO 18-GA)	
	4	1	**102-8802**	1	KIT-RECEPTACLE (2-PIN)	
					(INCLUDES RECEPTACLE AS & WEDGE)	

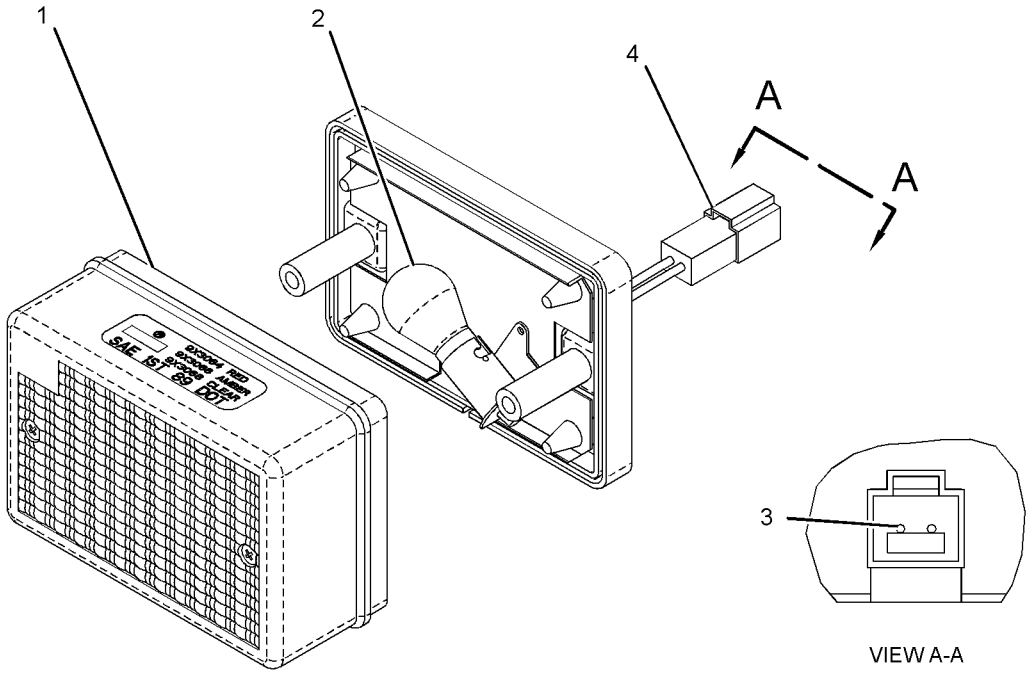

GRAPHIC #1 **<END>** g01279825

3E-6389 LAMP GP-DOME—WITH SWITCH

S/N: R9H1-UP
24-VOLT
PART OF 294-0995 LINER GP-CAB

SMCS-1433 **i03205534**

NOTE	REF NO	GRAPHIC REF	PART NUMBER	QTY	PART NAME 1 2 3 4 5 6 (PRODUCT LEVEL)	SEE PAGE
	1	1	**7N-9943**	1	LAMP (24-VOLT) (DOME)	
	2	1	**102-8803**	1	KIT-RECEPTACLE (3-PIN)	
					(INCLUDES RECEPTACLE AS & WEDGE)	
	3	1	**186-3735**	3	PIN-CONNECTOR (16-GA TO 18-GA)	
	4	1	**7T-0020**	1	LENS-DOME LAMP	

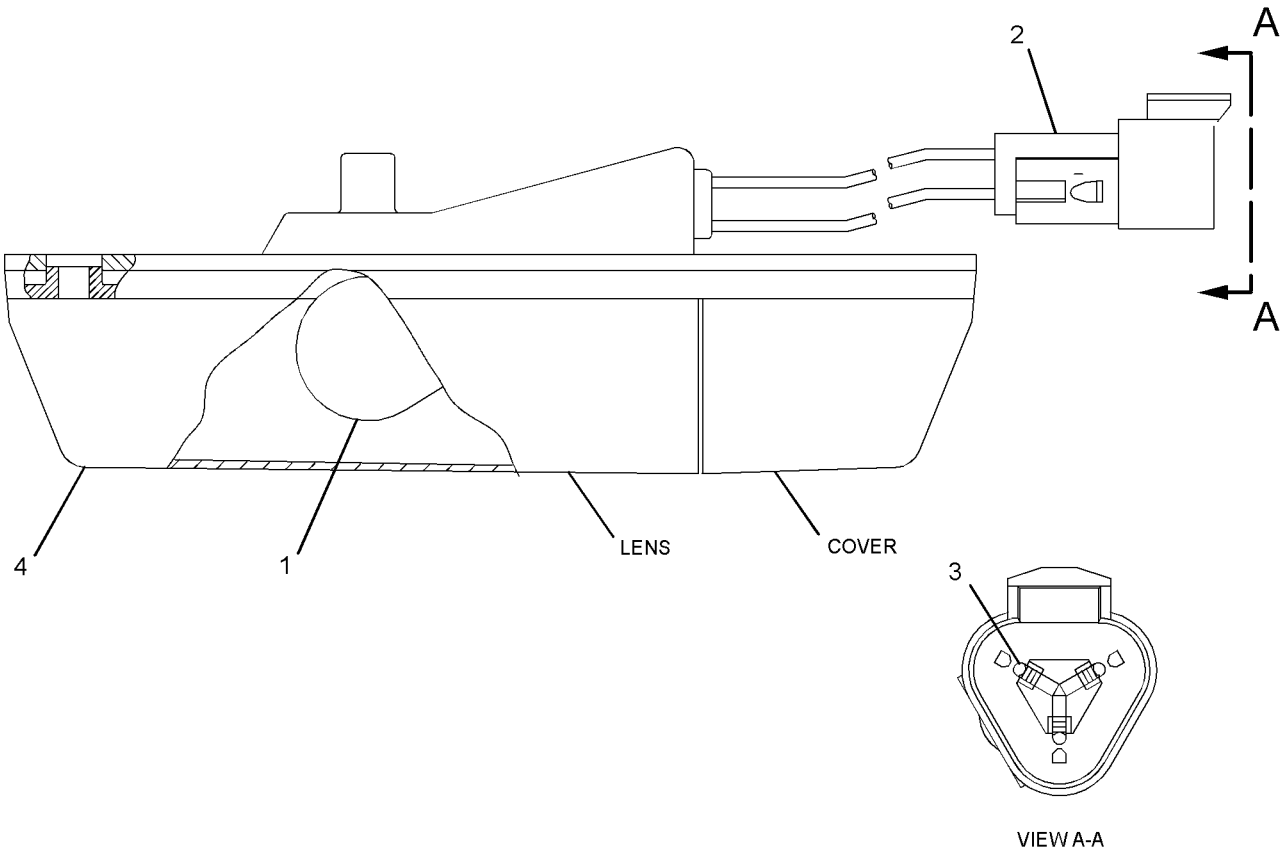

GRAPHIC #1 **<END>** g01270113

147-0319 LAMP GP-FLOOD

S/N: R9H1-UP
24-VOLT, 70-WATT
PART OF 261-0133, 261-0137 LIGHTING GP-FLOOD
AN ATTACHMENT

SMCS-1434 **i03792112**

NOTE	REF NO	GRAPHIC REF	PART NUMBER	QTY	PART NAME 1 2 3 4 5 6 (PRODUCT LEVEL)	SEE PAGE
	1	1	**351-9918**	1	LAMP-HALOGEN (24-VOLT, 70-WATT)	
	2	1	**158-0250**	1	BODY AS-LAMP	
	3	1	**336-7235**	1	LENS AS (FLOODLIGHT)	
	4	1	**158-0252**	1	BEZEL	
	5	1	**188-8849**	2	CLAMP	

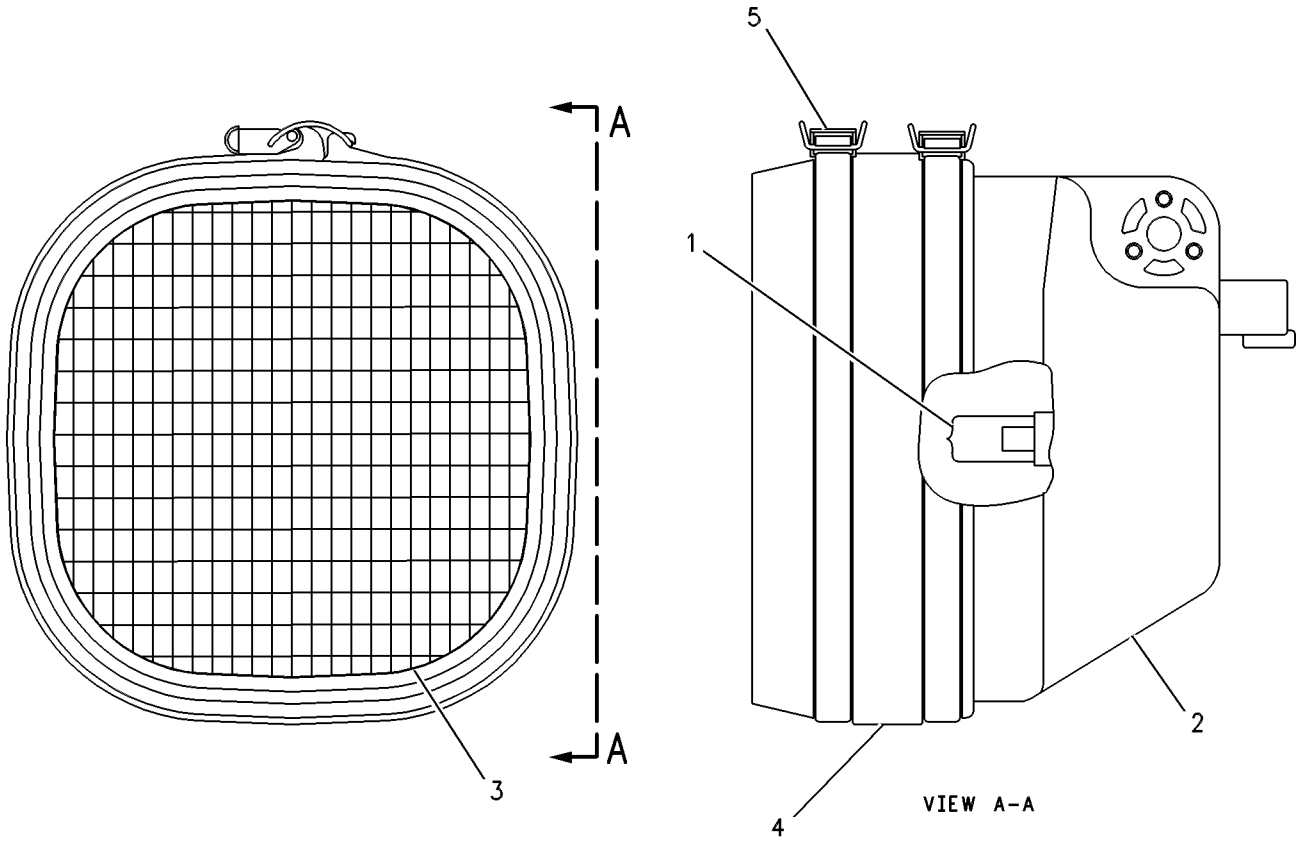

GRAPHIC #1 **<END>** g00458549

153-2073 LAMP GP-FLOOD

S/N: R9H1-UP
24-VOLT
PART OF 260-1905, 260-1907 LIGHTING GP-FLOOD
AN ATTACHMENT

SMCS-1434 **i04000923**

NOTE	REF NO	GRAPHIC REF	PART NUMBER	QTY	PART NAME 1 2 3 4 5 6 (PRODUCT LEVEL)	SEE PAGE
	1	1	**351-9918**	1	LAMP-HALOGEN (24-VOLT, 70-WATT)	
	2	1	**158-0250**	1	BODY AS-LAMP	
	3	1	**336-7235**	1	LENS AS (FLOODLIGHT)	
	4	1	**158-0252**	1	BEZEL	
	5	1	**188-8849**	2	CLAMP	

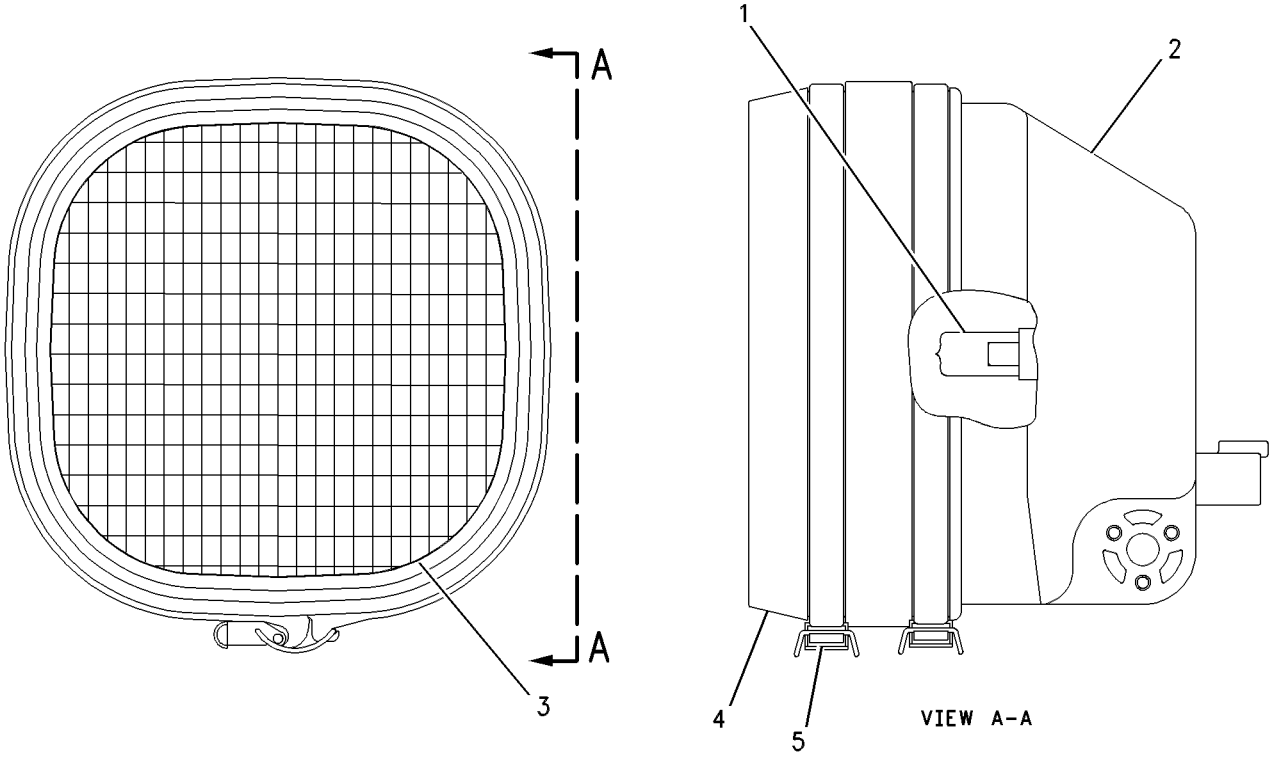

GRAPHIC #1 **<END>** g00449633

219-6488 LAMP GP-FLOOD

S/N: R9H1-UP
24-VOLT
PART OF 291-4038 LIGHTING GP-FLOOD
ALSO AN ATTACHMENT

SMCS-1434 **i02956329**

NOTE	REF NO	GRAPHIC REF	PART NUMBER	QTY	PART NAME 1 2 3 4 5 6 (PRODUCT LEVEL)	SEE PAGE
	1	1	**9X-3463**	1	LAMP-HALOGEN (24-VOLT, 70-WATT)	
M	2	1	**8T-6912**	1	BOLT (M8X1.25X50-MM)	
M	3	1	**6V-9189**	1	LOCKNUT (M8X1.25-THD)	
	4	1	**8T-4224**	2	WASHER-HARD (8.8X16X2-MM THK)	
	5	1	**9X-4244**	2	SCREW-SPECIAL (M4X1.79X25-MM)	
	7	1	**202-6611**	1	LENS AS	
	8	1	**175-4292**	1	BODY AS	
	9	1	**164-7556**	1	BRACKET (LAMP RETAINING)	
	10	1	**175-4291**	1	BRACKET AS	

M-METRIC PART

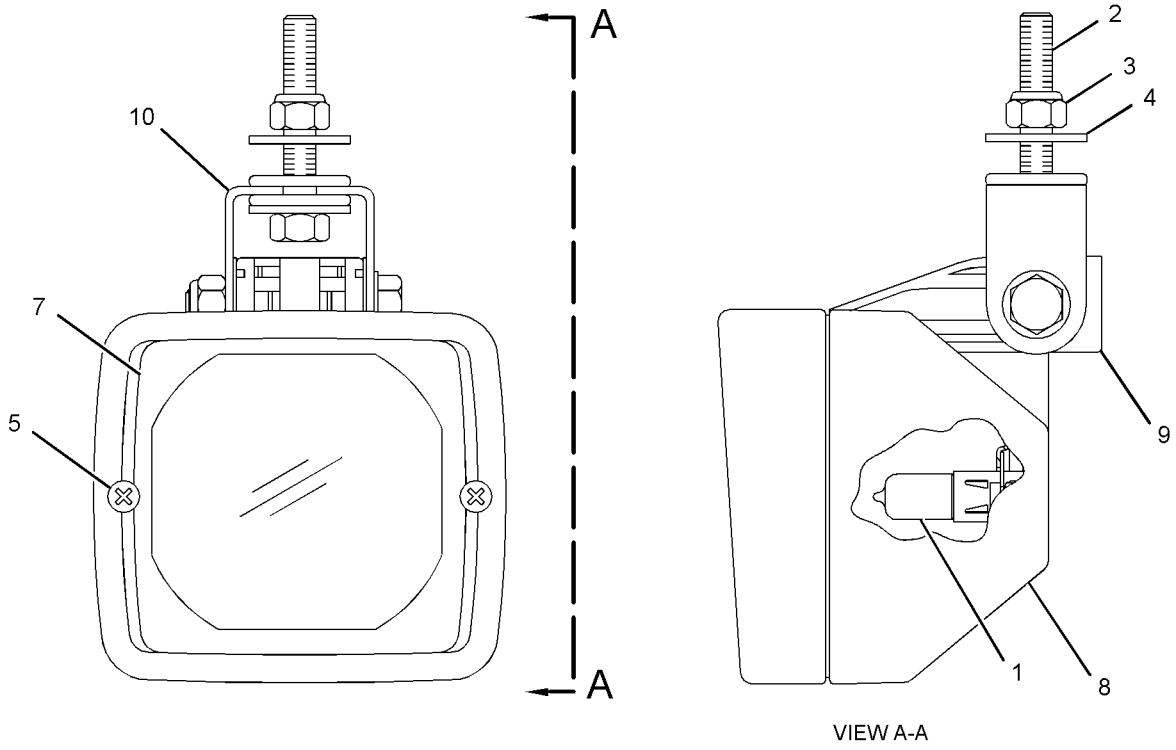

VIEW A-A

GRAPHIC #1 **<END>** g01475061

234-4326 LAMP GP-FLOOD

S/N: R9H1-UP
24-VOLT
PART OF 233-3126 INSTALLATION GP-LIGHTING
AN ATTACHMENT

SMCS-1434 **i02809625**

NOTE	REF NO	GRAPHIC REF	PART NUMBER	QTY	PART NAME 1 2 3 4 5 6 (PRODUCT LEVEL)	SEE PAGE
	1	1	**9X-3463**	1	LAMP-HALOGEN (24-VOLT, 70-WATT)	
M	2	1	**8T-0389**	1	LOCKNUT (M10X1.5-THD)	
	3	1	**9X-4244**	2	SCREW-SPECIAL (M4X1.79X25-MM)	
	4	1	**202-6611**	1	LENS AS	
	5	1	**234-7730**	1	BODY AS	
	6	1	**164-7556**	1	BRACKET (LAMP RETAINING)	
	7	1	**234-7731**	1	BRACKET AS	
	8	1	**8T-4121**	1	WASHER-HARD (11X21X2.5-MM THK)	

M-METRIC PART

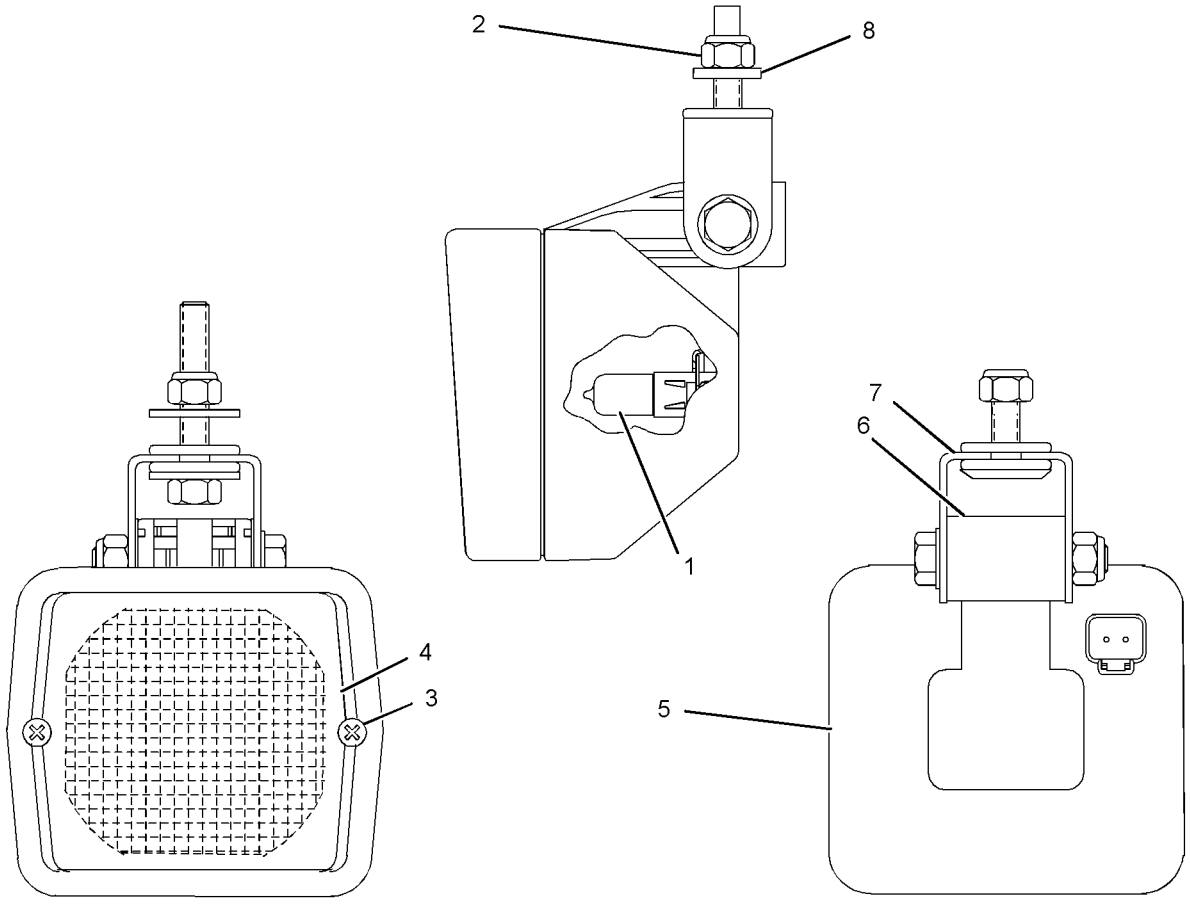

GRAPHIC #1 **<END>** g01270966

283-8144 LAMP GP-FLOOD–HID

S/N: R9H1-UP
24-VOLT
PART OF 260-1906, 260-1908, 261-0134, 261-0136 LIGHTING GP-FLOOD
AN ATTACHMENT

SMCS-1434 **i03587246**

NOTE	REF NO	GRAPHIC REF	PART NUMBER	QTY	PART NAME 1 2 3 4 5 6 (PRODUCT LEVEL)	SEE PAGE
	1	1	**277-3082**	1	LENS AS (HID)	
	2	1	**290-8160**	1	LAMP (24-VOLT, HID)	
M	3	1	**8T-4186**	1	BOLT (M10X1.5X40-MM)	
	4	1	**8T-4121**	1	WASHER-HARD (11X21X2.5-MM THK)	
M	5	1	**120-9027**	4	SCREW-PAN HEAD (M3X0.5X16-MM)	
M	6	1	**5P-8347**	1	BOLT (M8X1.25X70-MM)	
M	7	1	**6V-9189**	1	LOCKNUT (M8X1.25-THD)	
	8	1	**290-8996**	1	BRACKET	
	9	1	**229-9974**	1	BEZEL	
	10	1	**319-7384**	1	BALLAST AS (24-VOLT, 35-WATT, HID)	

M-METRIC PART

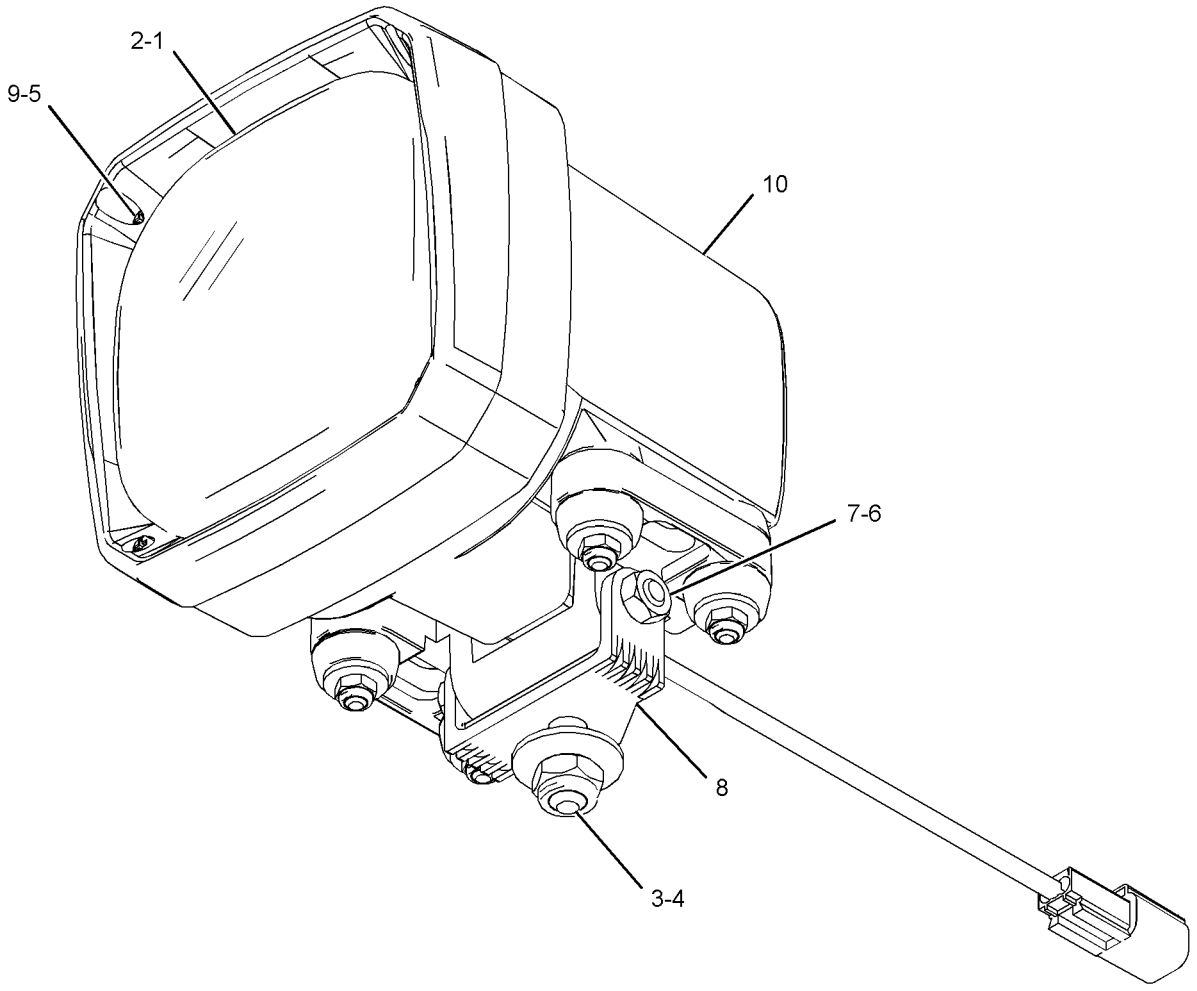

GRAPHIC #1 **<END>** g01316918

283-8145 LAMP GP-FLOOD–HID

S/N: R9H1-UP
24-VOLT, 35-WATT
PART OF 250-1097 LIGHTING GP-FLOOD
AN ATTACHMENT

SMCS-1434 **i03623749**

NOTE	REF NO	GRAPHIC REF	PART NUMBER	QTY	PART NAME 1 2 3 4 5 6 (PRODUCT LEVEL)	SEE PAGE
	1	1	**277-3082**	1	LENS AS	
	2	1	**290-8160**	1	LAMP (24-VOLT, HID)	
M	3	1	**8T-4186**	1	BOLT (M10X1.5X40-MM)	
	4	1	**8T-4121**	1	WASHER-HARD (11X21X2.5-MM THK)	
M	5	1	**120-9027**	4	SCREW-PAN HEAD (M3X0.5X16-MM)	
M	6	1	**5P-8347**	1	BOLT (M8X1.25X70-MM)	
M	7	1	**6V-9189**	1	LOCKNUT (M8X1.25-THD)	
	8	1	**290-8996**	1	BRACKET	
	9	1	**229-9974**	1	BEZEL	
	10	1	**319-7384**	1	BALLAST AS (24-VOLT, 35-WATT, HID)	

M-METRIC PART

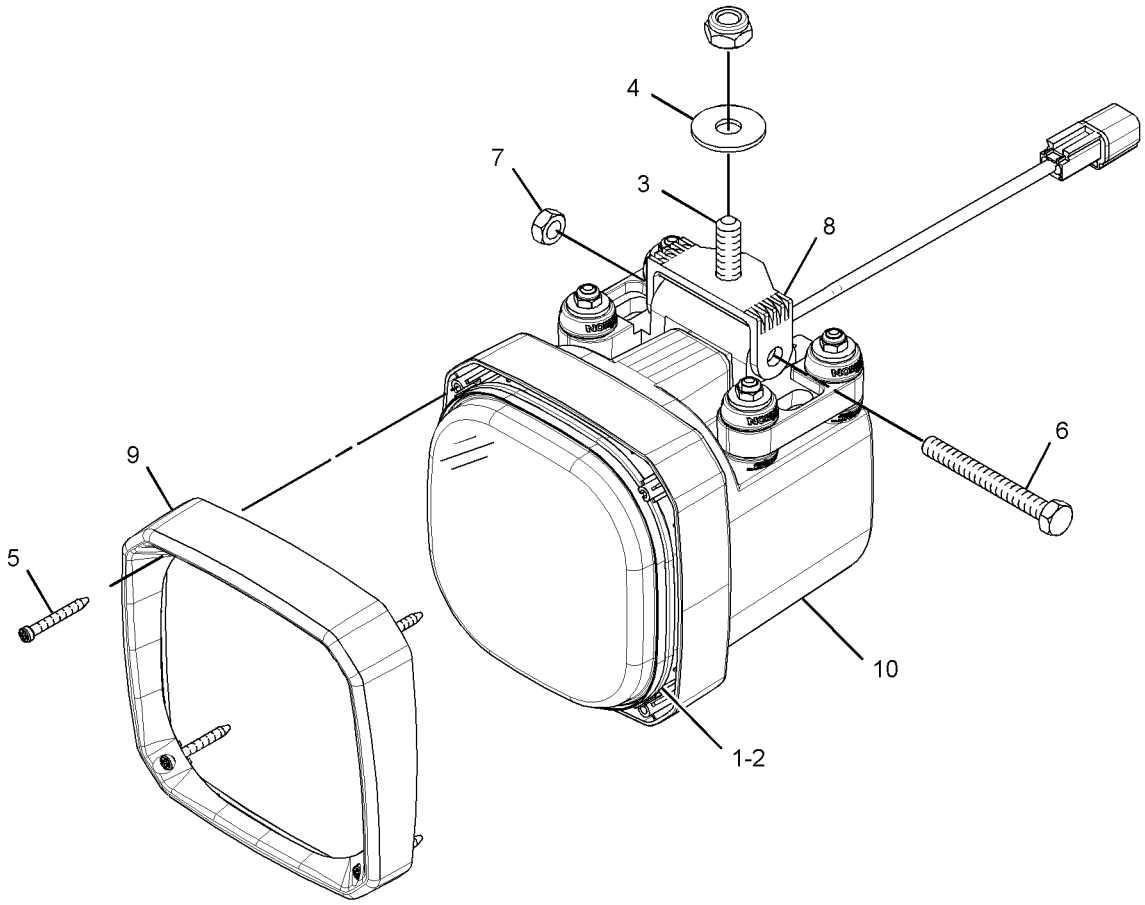

GRAPHIC #1 **<END>** g02004652

315-1251 LAMP GP-FLOOD–CAB ROOF, REAR

S/N: R9H1-UP
24-VOLT, 65-WATT
PART OF 291-4038 LIGHTING GP-FLOOD
ALSO AN ATTACHMENT

SMCS-1434 **i02982440**

NOTE	REF NO	GRAPHIC REF	PART NUMBER	QTY	PART NAME 1 2 3 4 5 6 (PRODUCT LEVEL)	SEE PAGE
	1	1	**9X-3463**	1	LAMP-HALOGEN (24-VOLT, 70-WATT)	
	2	1	**9X-4244**	2	SCREW-SPECIAL (M4X1.79X25-MM)	
	3	1	**202-6614**	1	LENS AS	
	4	1	**175-4292**	1	BODY AS	
	5	1	**164-7556**	1	BRACKET (LAMP RETAINING)	
M	6	1	**8T-6912**	1	BOLT (M8X1.25X50-MM)	
M	7	1	**6V-9189**	1	LOCKNUT (M8X1.25-THD)	
	8	1	**8T-4224**	2	WASHER-HARD (8.8X16X2-MM THK)	
	9	1	**317-7684**	1	BRACKET AS	

M-METRIC PART

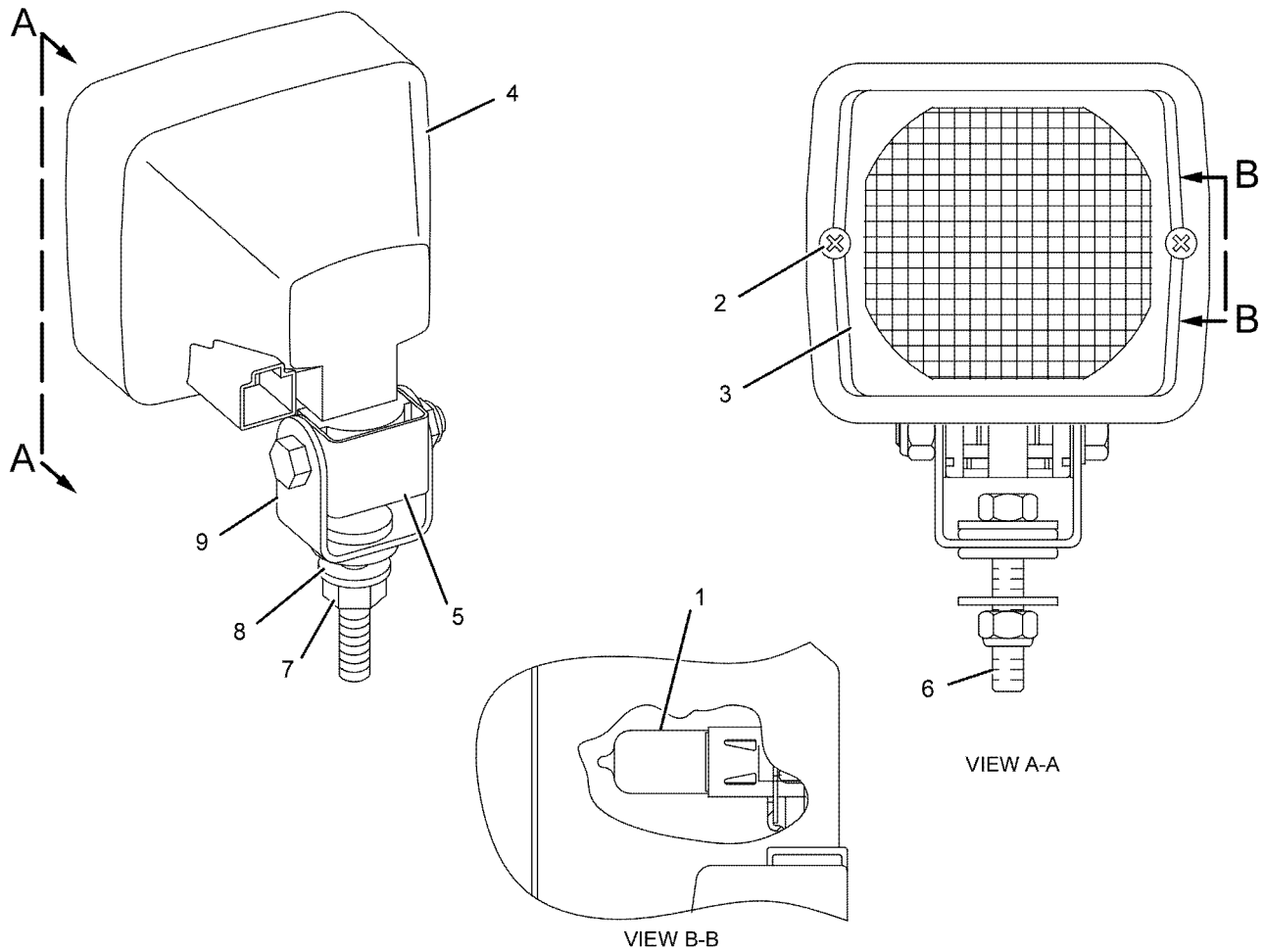

GRAPHIC #1 **<END>** g01071978

319-7379 LAMP GP-FLOOD–HID

S/N: R9H1-UP
24-VOLT
PART OF 291-4039 LIGHTING GP-FLOOD
AN ATTACHMENT

SMCS-1434 **i03026801**

NOTE	REF NO	GRAPHIC REF	PART NUMBER	QTY	PART NAME 1 2 3 4 5 6 (PRODUCT LEVEL)	SEE PAGE
	1	1	**291-2943**	1	LENS	
	2	1	**290-8160**	1	LAMP (24-VOLT, HID)	
	3	1	**8T-4121**	1	WASHER-HARD (11X21X2.5-MM THK)	
	4	1	**9X-4244**	2	SCREW-SPECIAL	
	5	1	**291-2939**	1	BRACKET	
	6	1	**229-9974**	1	BEZEL	
	7	1	**319-7384**	1	BALLAST AS (24-VOLT, 35-WATT, HID)	
M	8	1	**6V-7744**	1	LOCKNUT (M10X1.5-THD)	
M	9	1	**8T-4189**	1	BOLT (M8X1.25X20-MM)	
M	10	1	**6V-9189**	1	LOCKNUT (M8X1.25-THD)	

M-METRIC PART

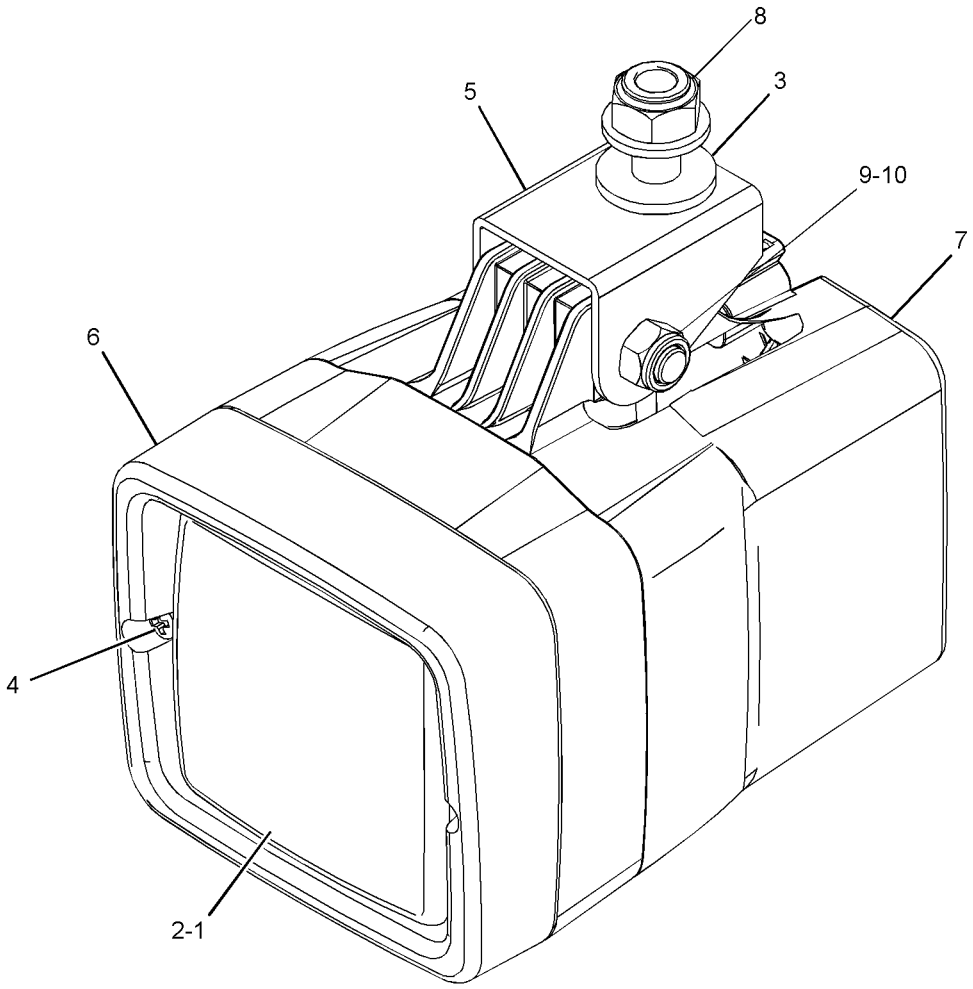

GRAPHIC #1 **<END>** g01528657

319-7380 LAMP GP-FLOOD–HID

S/N: R9H1-UP
24-VOLT, 35-WATT
PART OF 291-4039 LIGHTING GP-FLOOD
AN ATTACHMENT

SMCS-1434 **i03030193**

NOTE	REF NO	GRAPHIC REF	PART NUMBER	QTY	PART NAME 1 2 3 4 5 6 (PRODUCT LEVEL)	SEE PAGE
	1	1	**291-2943**	1	LENS	
	2	1	**290-8160**	1	LAMP (24-VOLT, HID)	
	3	1	**8T-4121**	2	WASHER-HARD (11X21X2.5-MM THK)	
	4	1	**9X-4244**	2	SCREW-SPECIAL (M4X1.79X25-MM)	
	5	1	**317-7685**	1	BRACKET	
	6	1	**229-9974**	1	BEZEL (HID)	
	7	1	**319-7384**	1	BALLAST AS (24-VOLT, 35-WATT, HID)	
M	8	1	**6V-7744**	1	LOCKNUT (M10X1.5-THD)	
M	9	1	**8T-4189**	1	BOLT (M8X1.25X20-MM)	
M	10	1	**6V-9189**	1	LOCKNUT (M8X1.25-THD)	

M-METRIC PART

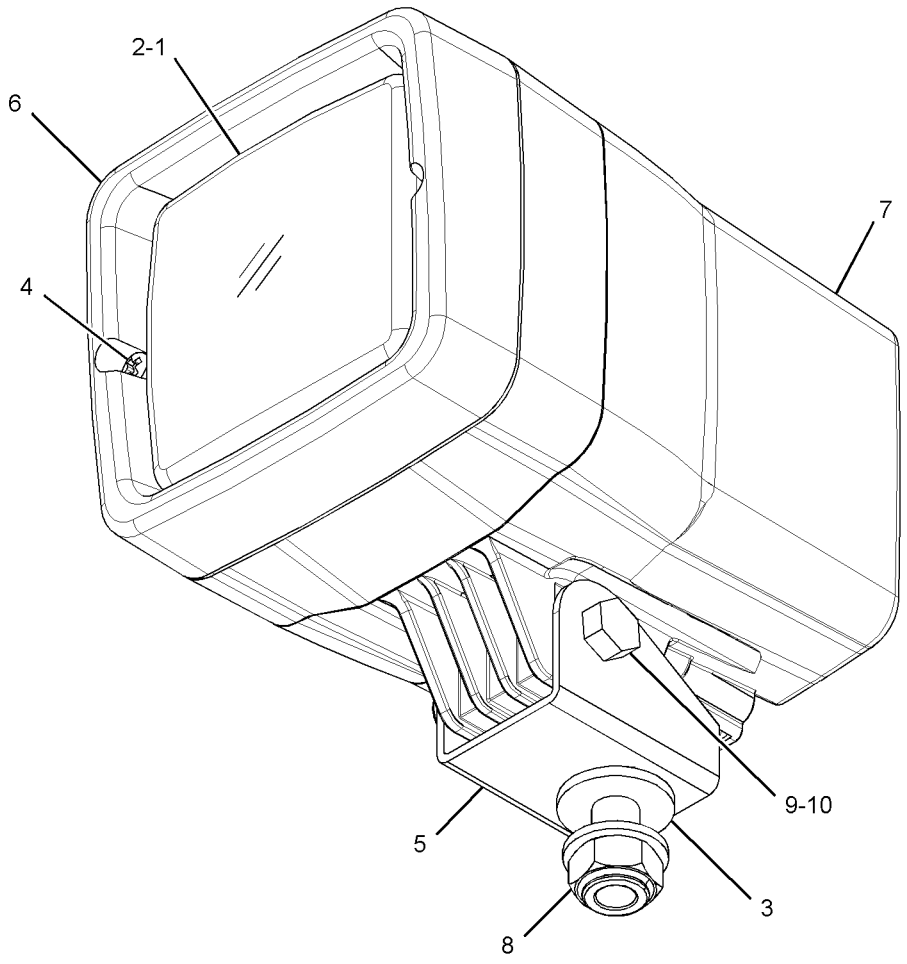

GRAPHIC #1 **<END>** g01428424

319-7381 LAMP GP-FLOOD–HID

S/N: R9H1-UP
24-VOLT
PART OF 291-4039 LIGHTING GP-FLOOD
AN ATTACHMENT

SMCS-1434 **i03030623**

NOTE	REF NO	GRAPHIC REF	PART NUMBER	QTY	PART NAME 1 2 3 4 5 6 (PRODUCT LEVEL)	SEE PAGE
	1	1	**291-2941**	1	LENS	
	2	1	**290-8160**	1	LAMP (24-VOLT, HID)	
	3	1	**8T-4121**	2	WASHER-HARD (11X21X2.5-MM THK)	
	4	1	**9X-4244**	2	SCREW-SPECIAL	
	5	1	**291-2939**	1	BRACKET	
	6	1	**229-9974**	1	BEZEL	
	7	1	**319-7384**	1	BALLAST AS (24-VOLT, 35-WATT, HID)	
M	8	1	**6V-7744**	1	LOCKNUT (M10X1.5-THD)	
M	9	1	**8T-4189**	1	BOLT (M8X1.25X20-MM)	
M	10	1	**6V-9189**	1	LOCKNUT (M8X1.25-THD)	

M-METRIC PART

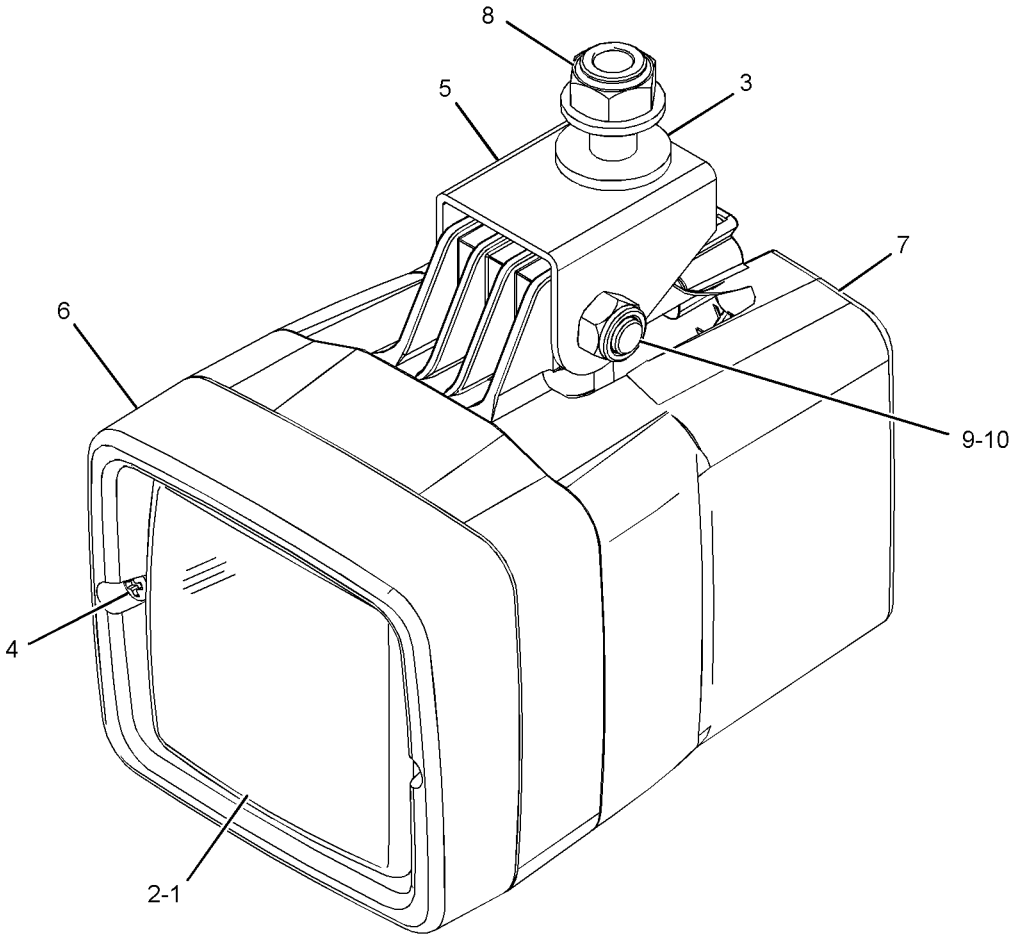

GRAPHIC #1 **<END>** g01539737

161-3509 LAMP GP-HEAD–LOW BEAM

S/N: R9H1-UP
24-VOLT, 70-WATT
PART OF 261-0135 LIGHTING GP-FLOOD
AN ATTACHMENT

SMCS-1429 **i03412724**

NOTE	REF NO	GRAPHIC REF	PART NUMBER	QTY	PART NAME 1 2 3 4 5 6 (PRODUCT LEVEL)	SEE PAGE
	1	1	**9X-3463**	1	LAMP-HALOGEN (24-VOLT, 70-WATT) (LOW BEAM)	
	2	1	**158-0250**	1	BODY AS-LAMP	
	3	1	**162-2077**	1	LENS AS (HEADLIGHT, LOW BEAM)	
	4	1	**158-0252**	1	BEZEL	
	5	1	**188-8849**	2	CLAMP	

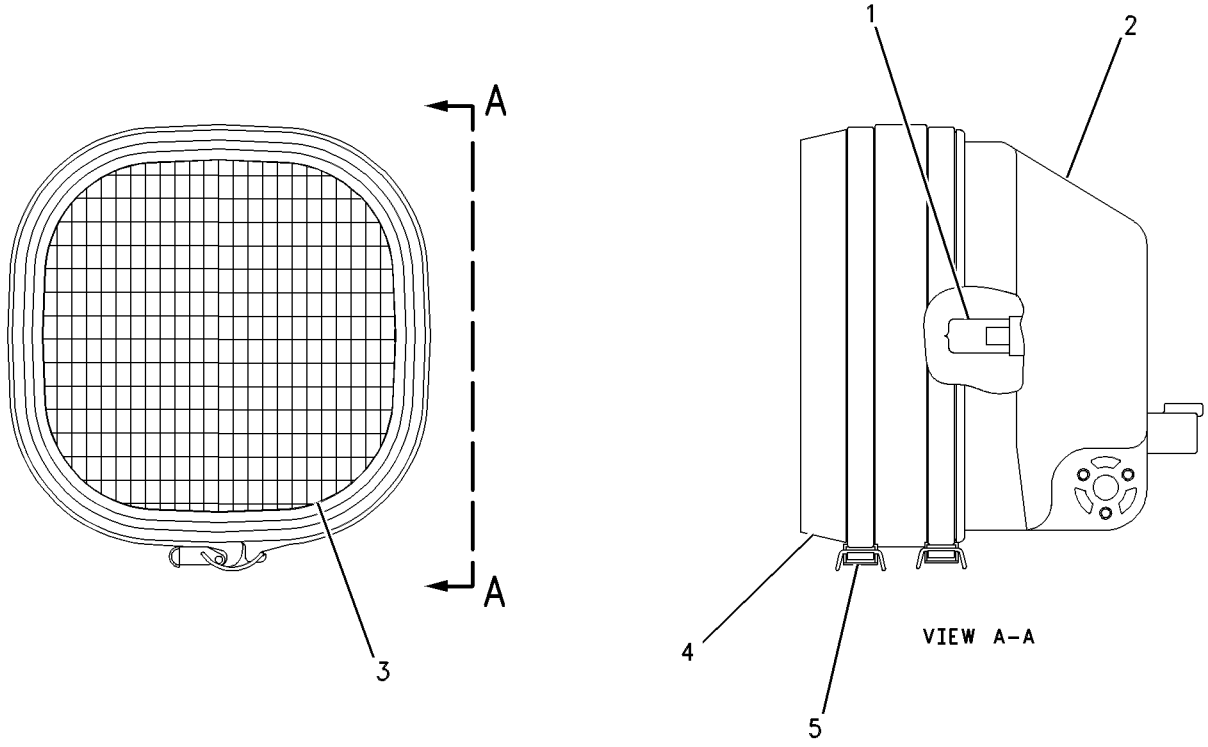

GRAPHIC #1 **<END>** g00514339

290-5749 LAMP GP-HEAD

S/N: R9H1-UP
24-VOLT
PART OF 291-4038 LIGHTING GP-FLOOD
ALSO AN ATTACHMENT

SMCS-1429 **i02715986**

NOTE	REF NO	GRAPHIC REF	PART NUMBER	QTY	PART NAME 1 2 3 4 5 6 (PRODUCT LEVEL)	SEE PAGE
	1	1	**308-2129**	1	BRACKET-LIGHT	
M	2	1	**3E-9854**	1	BOLT (M8X1.25X20-MM)	
M	3	1	**6V-9189**	2	LOCKNUT (M8X1.25-THD)	
M	4	1	**8C-5748**	1	BOLT (M8X1.25X55-MM)	
	5	1	**8T-4224**	1	WASHER-HARD (8.8X16X2-MM THK)	
	6	1	**9X-3463**	1	LAMP-HALOGEN (24-VOLT, 70-WATT)	

M-METRIC PART

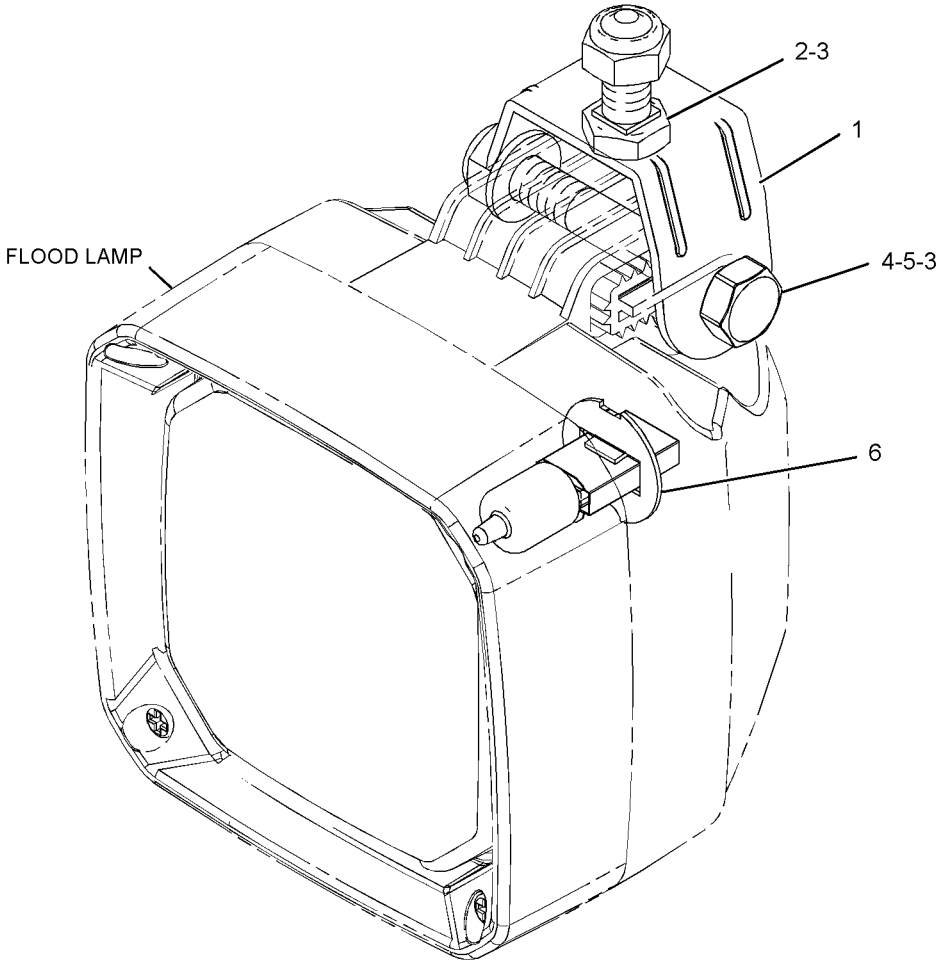

GRAPHIC #1 **<END>** g01364236

259-9287 LAMP GP-HEAD & SIGNAL–LH

S/N: R9H1-UP
24-VOLT
PART OF 260-1909, 260-1910 MOUNTING GP-LIGHTING
AN ATTACHMENT

SMCS-1429, 1430 **i04004497**

NOTE	REF NO	GRAPHIC REF	PART NUMBER	QTY	PART NAME 1 2 3 4 5 6 (PRODUCT LEVEL)	SEE PAGE
	1	1	**228-6053**	1	BODY AS	
	2	1	**228-6054**	1	BEZEL	
	3	1	**348-7240**	1	LENS AS (HEADLIGHT)	
	4	1	**272-9850**	1	LENS AS (TURN SIGNAL)	
	5	1	**228-6056**	6	SCREW (4-32X1.26-IN)	
	6	1	**9X-3465**	1	LAMP (24-VOLT, 75/70-WATT)	
	7	1	**130-3515**	1	LAMP (24-VOLT, 5-WATT)	
M	8	1	**8T-0389**	1	LOCKNUT (M10X1.5-THD)	
	9	1	**100-3253**	1	SPACER (SPHERICAL)	
	10	1	**100-3254**	1	SPACER (SPHERICAL)	
	11	1	**100-3255**	2	WASHER (SPHERICAL)	
	12	1	**102-8805**	1	KIT-RECEPTACLE (6-PIN)	
					(INCLUDES RECEPTACLE AS & WEDGE)	
	13	1	**8T-8729**	5	PIN-CONNECTOR (16-GA TO 18-GA)	
	14	1	**8T-8737**	1	PLUG-SEAL	

M-METRIC PART

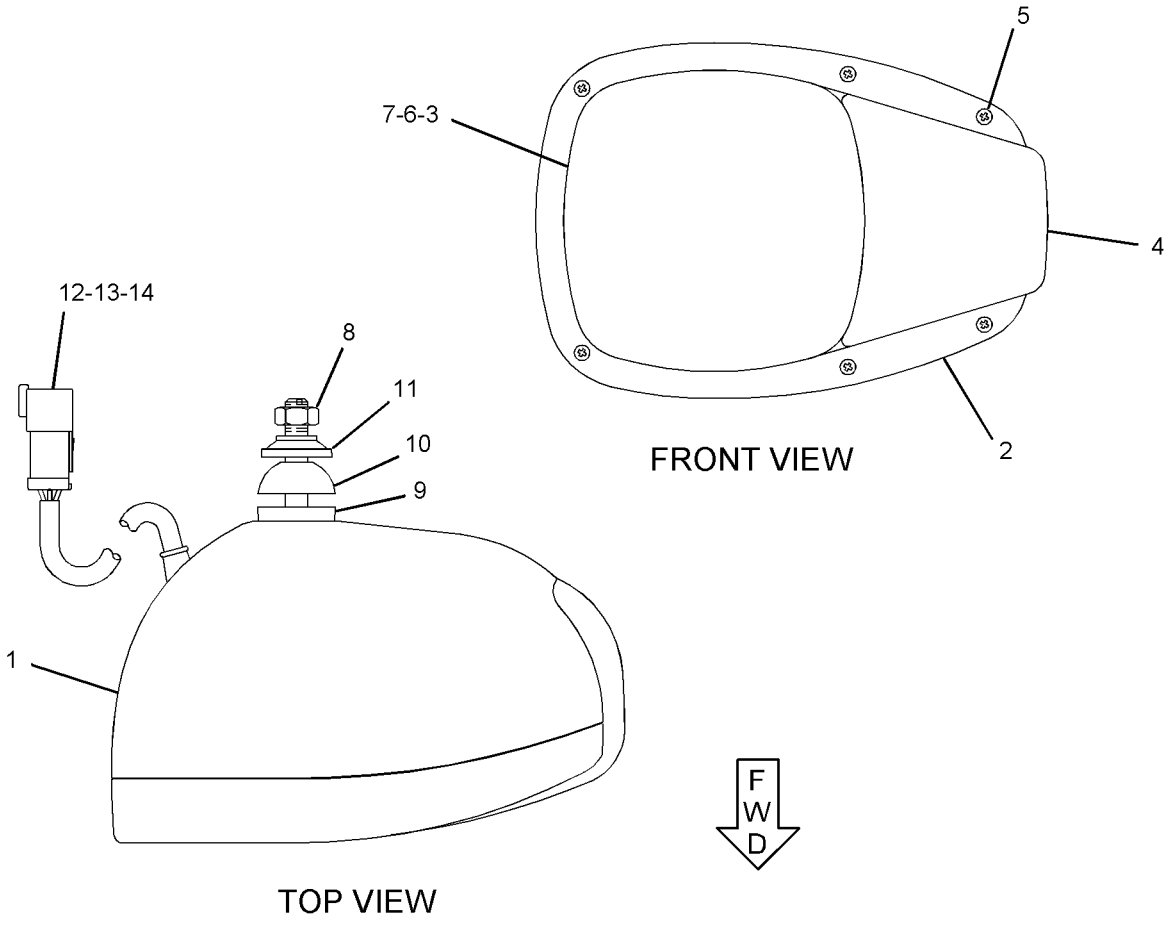

GRAPHIC #1 **<END>** g02149088

259-9288 LAMP GP-HEAD & SIGNAL–RH

S/N: R9H1-UP
24-VOLT
PART OF 260-1909, 260-1910 MOUNTING GP-LIGHTING
AN ATTACHMENT

SMCS-1429, 1430 **i03960010**

NOTE	REF NO	GRAPHIC REF	PART NUMBER	QTY	PART NAME 1 2 3 4 5 6 (PRODUCT LEVEL)	SEE PAGE
	1	1	**228-6053**	1	BODY AS	
	2	1	**228-6054**	1	BEZEL	
	3	1	**348-7240**	1	LENS AS (HEADLIGHT)	
	4	1	**272-9850**	1	LENS AS (TURN SIGNAL)	
	5	1	**228-6056**	6	SCREW (4-32X1.26-IN)	
	6	1	**9X-3465**	1	LAMP (24-VOLT, 75/70-WATT)	
	7	1	**130-3515**	1	LAMP (24-VOLT, 5-WATT)	
M	8	1	**8T-0389**	1	LOCKNUT (M10X1.5-THD)	
	9	1	**100-3253**	1	SPACER (SPHERICAL)	
	10	1	**100-3254**	1	SPACER (SPHERICAL)	
	11	1	**100-3255**	2	WASHER (SPHERICAL)	
	12	1	**102-8805**	1	KIT-RECEPTACLE (6-PIN)	
					(INCLUDES RECEPTACLE AS & WEDGE)	
	13	1	**8T-8729**	5	PIN-CONNECTOR (16-GA TO 18-GA)	
	14	1	**8T-8737**	1	PLUG-SEAL	

M-METRIC PART

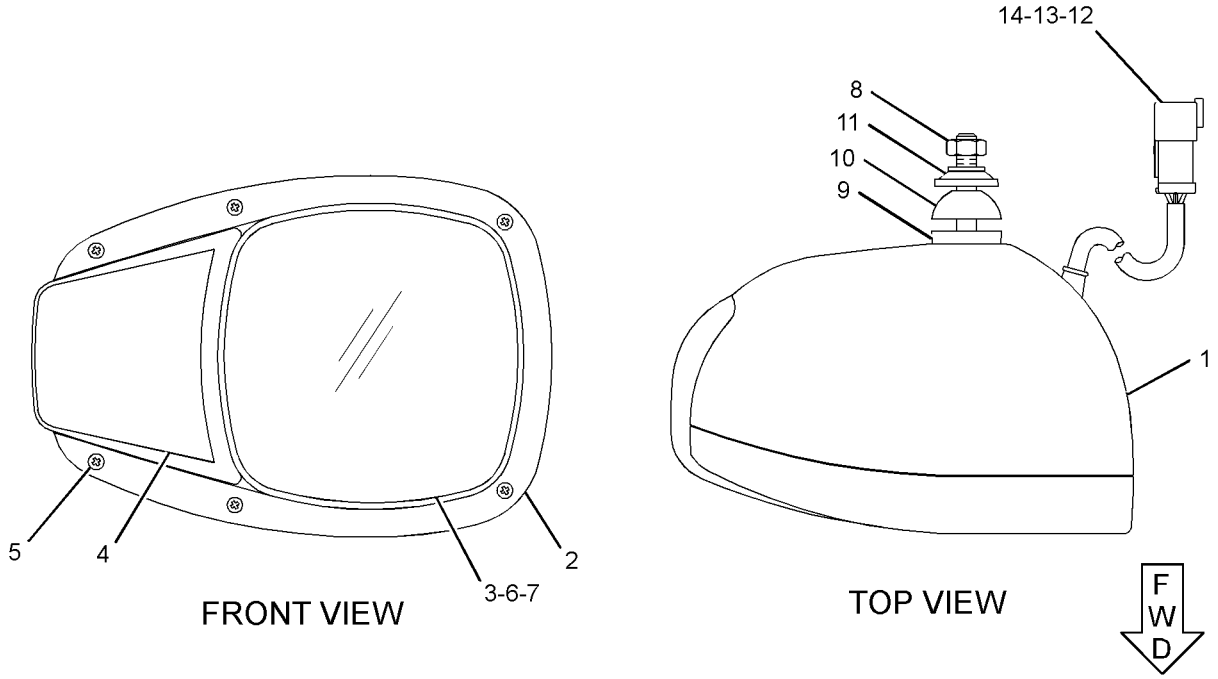

GRAPHIC #1 **<END>** g01259951

201-5464 LAMP GP-SIGNAL–TURN

S/N: R9H1-UP
12-VOLT, 24-VOLT
PART OF 250-0902 WIRING GP-REAR LIGHTING
AN ATTACHMENT

SMCS-1430, 1432 **i03364123**

NOTE	REF NO	GRAPHIC REF	PART NUMBER	QTY	PART NAME 1 2 3 4 5 6 (PRODUCT LEVEL)	SEE PAGE
	1	1	**102-8802**	1	KIT-RECEPTACLE (2-PIN)	
					(INCLUDES RECEPTACLE AS & WEDGE)	
	2	1	**186-3735**	2	PIN-CONNECTOR (16-GA TO 18-GA)	

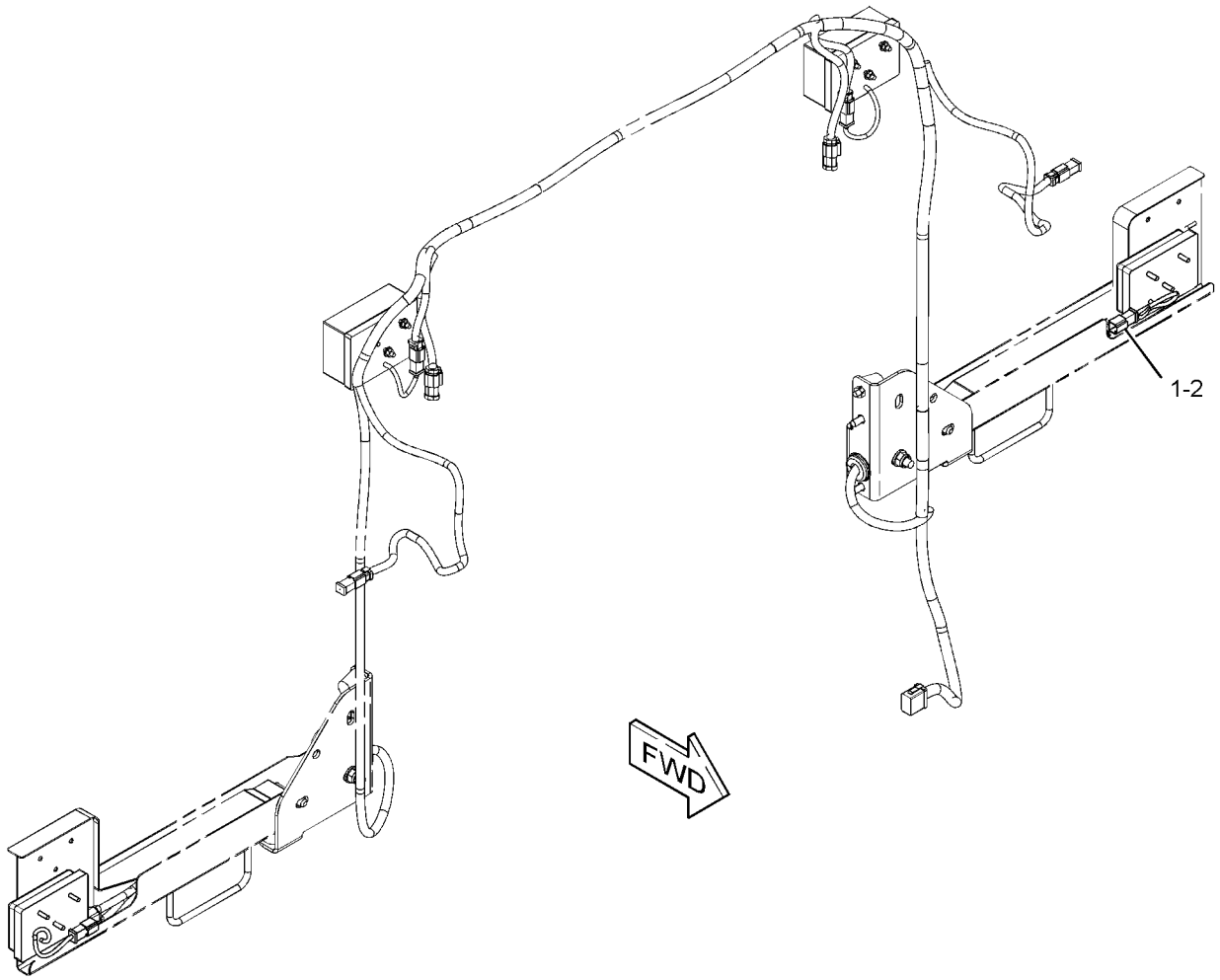

GRAPHIC #1 **<END>** g01792295

334-8049 LAMP GP-SIGNAL–STOP, TAIL

S/N: R9H1-UP
12-VOLT TO 24-VOLT
PART OF 250-0902, 257-8028 WIRING GP-REAR LIGHTING
AN ATTACHMENT

SMCS-1430, 1432 **i03361044**

NOTE	REF NO	GRAPHIC REF	PART NUMBER	QTY	PART NAME 1 2 3 4 5 6 (PRODUCT LEVEL)	SEE PAGE
	1	1	**102-8803**	1	KIT-RECEPTACLE (3-PIN)	
					(INCLUDES RECEPTACLE AS & WEDGE)	
	2	1	**186-3735**	3	PIN-CONNECTOR (16-GA TO 18-GA)	

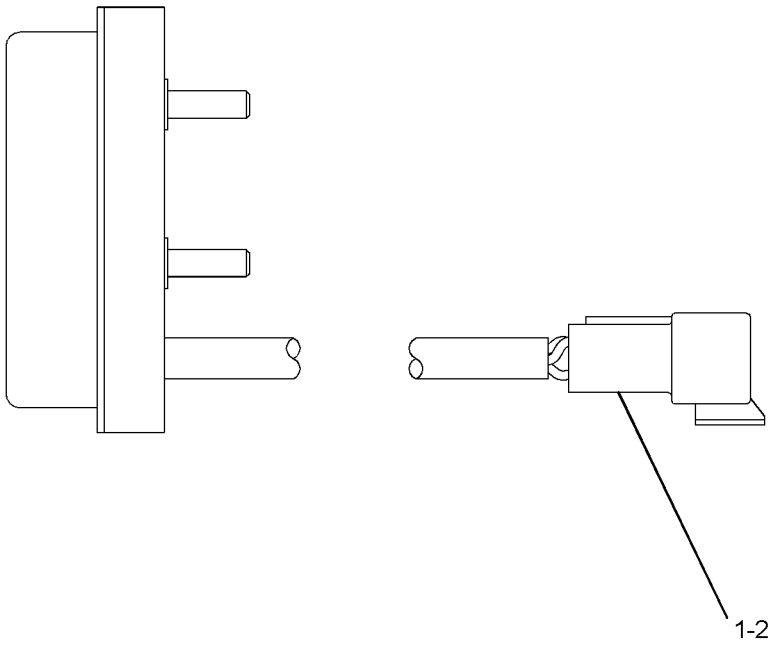

GRAPHIC #1 **<END>** g01213248

284-3757 LAMP GP-WARNING BEACON–AMBER, STROBE

S/N: R9H1-UP
12-VOLT, 24-VOLT
AN ATTACHMENT

SMCS-1431 **i02733504**

NOTE	REF NO	GRAPHIC REF	PART NUMBER	QTY	PART NAME 1 2 3 4 5 6 (PRODUCT LEVEL)	SEE PAGE
	1	1	**102-8802**	1	KIT-RECEPTACLE (2-PIN)	
					(INCLUDES RECEPTACLE AS & WEDGE)	
	2	1	**186-3735**	2	PIN-CONNECTOR (16-GA TO 18-GA)	

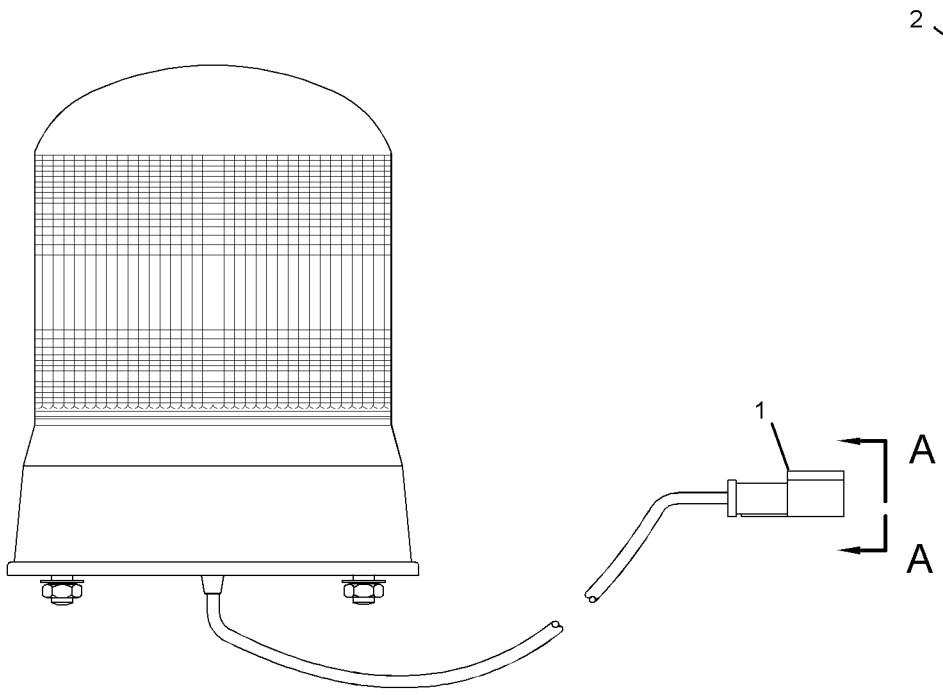

GRAPHIC #1 **<END>** g01373385

ELECTRICAL AND STARTING SYSTEM

338-1132 LAMP GP-WARNING BEACON–AMBER, STROBE

S/N: R9H1-UP

FIELD INSTALLATION

SMCS-1431 **i03950358**

NOTE	REF NO	GRAPHIC REF	PART NUMBER	QTY	PART NAME 1 2 3 4 5 6 (PRODUCT LEVEL)	SEE PAGE
	1	1	**102-8802**	1	KIT-RECEPTACLE (2-PIN)	
					(INCLUDES RECEPTACLE AS AND WEDGE)	
C	2	1	**8T-8729**	2	PIN-CONNECTOR (16-GA TO 18-GA)	
	3	1	**356-7515**	1	LENS	
CE	4	1	**9X-1386**		SLEEVE (44-CM)	

C-CHANGE FROM PREVIOUS TYPE
E-ORDER BY THE CENTIMETER

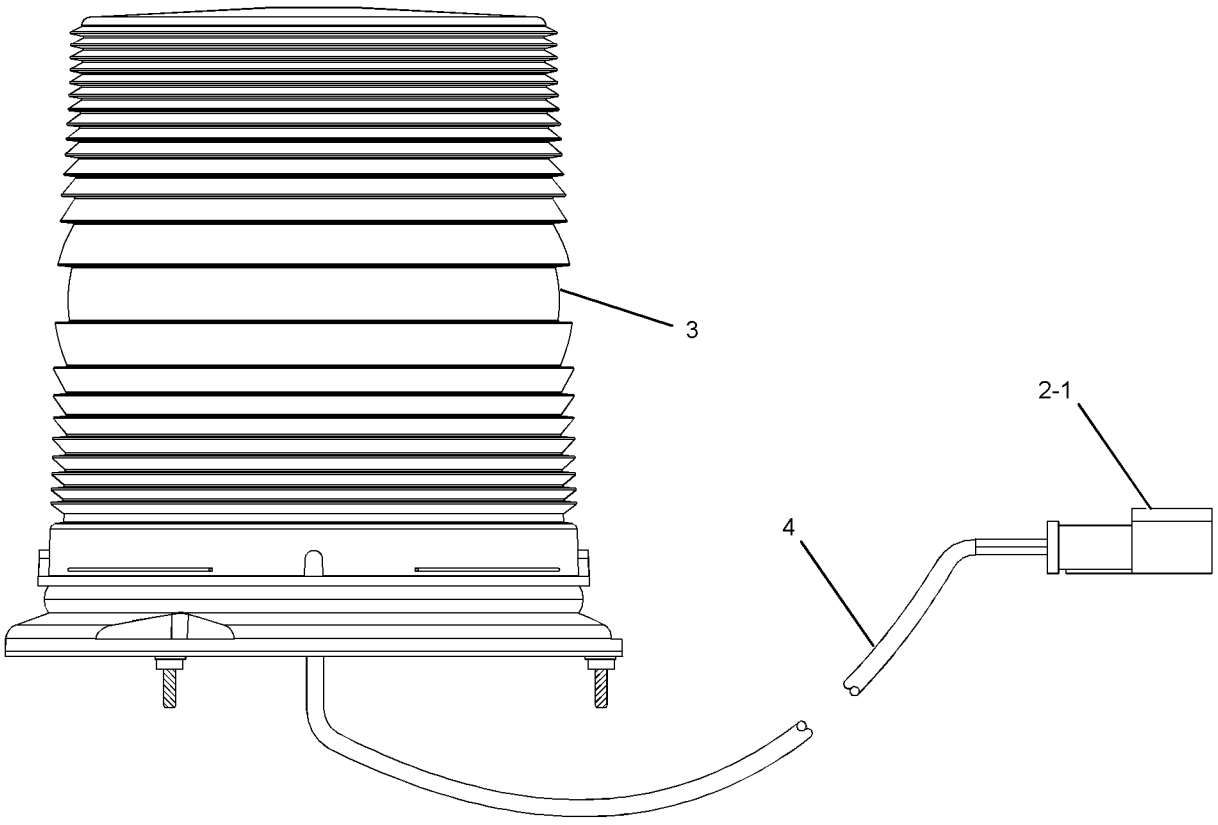

GRAPHIC #1 **<END>** g02193876

250-1097 LIGHTING GP-FLOOD

S/N: R9H1-UP
PART OF 352-3822, 359-2894 OPTION AR-LIGHTING
CANNOT BE USED WITH 261-0137—PAGE 265
AN ATTACHMENT

SMCS-1434 **i02377136**

NOTE	REF NO	GRAPHIC REF	PART NUMBER	QTY	PART NAME 1 2 3 4 5 6 (PRODUCT LEVEL)	SEE PAGE
	1	1	**243-1352**	2	BRACKET AS	
Y	2	1	**283-8145**	2	LAMP GP-FLOOD (24-VOLT, 35-WATT, HID)	240
	3	1	**130-5300**	2	CLIP	
	4	1	**5P-9085**	2	CLIP	
	5	1	**7G-7053**	2	GROMMET	
	6	1	**8T-4121**	4	WASHER-HARD (11X21X2.5-MM THK)	
M	7	1	**8T-4136**	4	BOLT (M10X1.5X25-MM)	

M-METRIC PART
Y-SEPARATE ILLUSTRATION

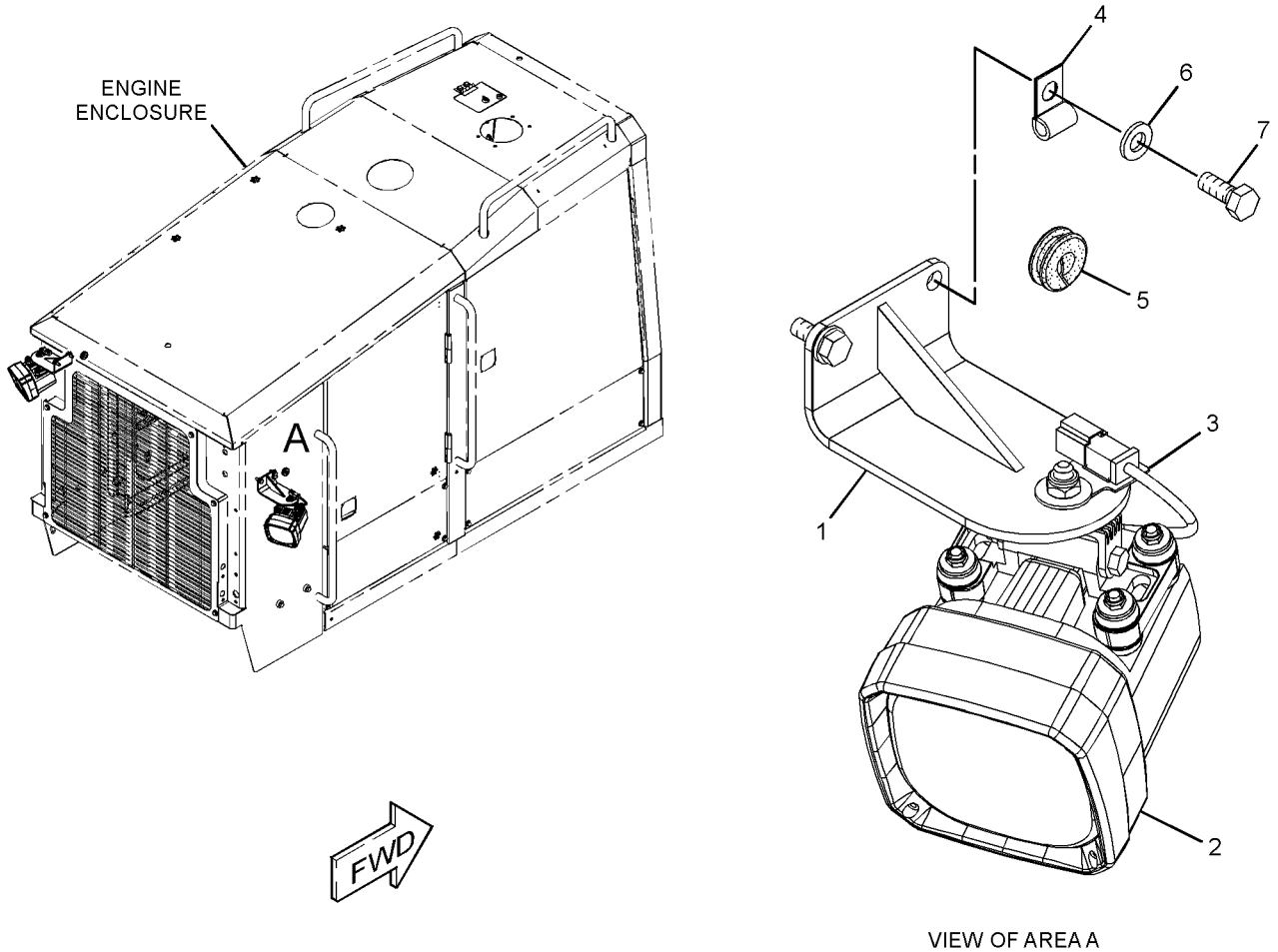

VIEW OF AREA A

GRAPHIC #1 **<END>** g01312610

260-1905 LIGHTING GP-FLOOD—BLADE

S/N: R9H1-UP
PART OF 352-3821, 359-2893 OPTION AR-LIGHTING
CANNOT BE USED WITH 260-1906—PAGE 255
AN ATTACHMENT

SMCS-1434 **i04037139**

NOTE	REF NO	GRAPHIC REF	PART NUMBER	QTY	PART NAME 1 2 3 4 5 6 (PRODUCT LEVEL)	SEE PAGE
	1	1	**140-1088**	2	BRACKET AS	
					(EACH INCLUDES)	
M		1	**8T-3490**	1	NUT-WELD (M10X1.5-THD)	
Y	2	1	**153-2073**	2	LAMP GP-FLOOD (24-VOLT) (WORK LIGHTS)	236
M	3	1	**5C-7261**	2	NUT (M8X1.25-THD)	
C	4	1	**8T-4121**	2	WASHER-HARD (11X21X2.5-MM THK)	
M	5	1	**8T-4136**	2	BOLT (M10X1.5X25-MM)	
	6	1	**8T-4224**	4	WASHER-HARD (8.8X16X2-MM THK)	
M	7	1	**8T-6869**	2	BOLT (M8X1.25X60-MM)	

C-CHANGE FROM PREVIOUS TYPE
M-METRIC PART
Y-SEPARATE ILLUSTRATION

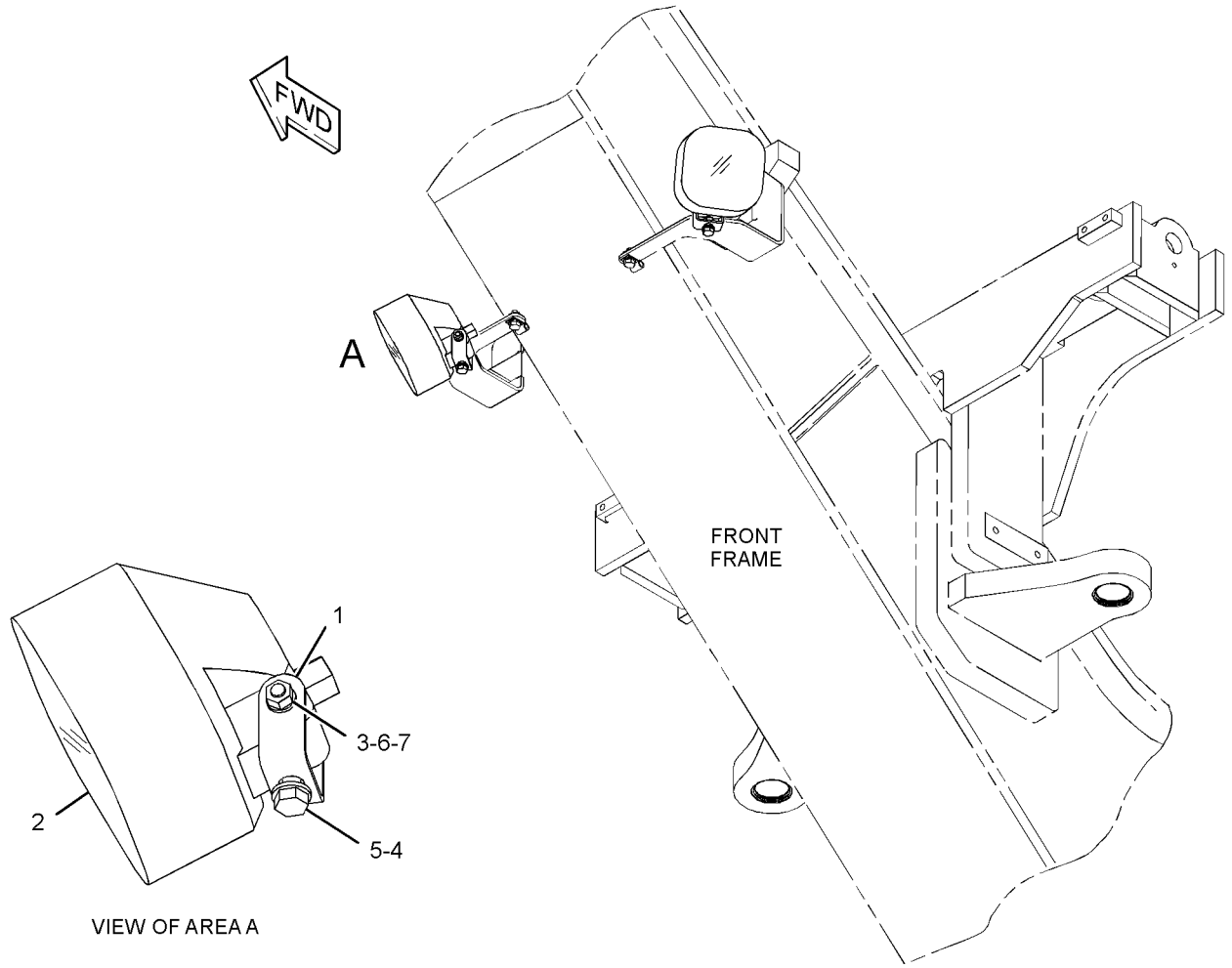

GRAPHIC #1 **<END>** g01386489

260-1906 LIGHTING GP-FLOOD

S/N: R9H1-UP
PART OF 352-3822, 359-2894 OPTION AR-LIGHTING
CANNOT BE USED WITH 260-1905—PAGE 254
AN ATTACHMENT

SMCS-1434 **i03599320**

NOTE	REF NO	GRAPHIC REF	PART NUMBER	QTY	PART NAME 1 2 3 4 5 6 (PRODUCT LEVEL)	SEE PAGE
CY	1	1	**283-8144**	2	LAMP GP-FLOOD (24-VOLT, 35-WATT, HID)	239
C	2	1	**130-5300**	2	CLIP	

C-CHANGE FROM PREVIOUS TYPE
Y-SEPARATE ILLUSTRATION

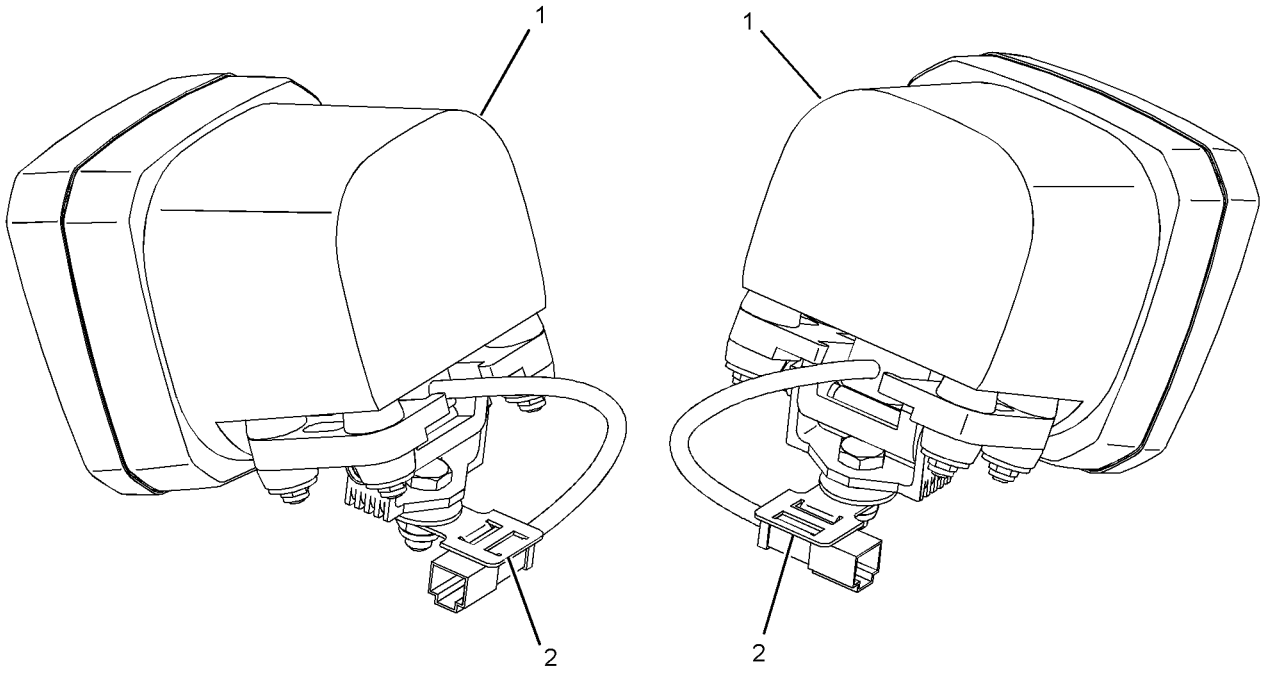

MOUNTS TO
FRONT FRAME

GRAPHIC #1 **<END>** g01946619

260-1907 LIGHTING GP-FLOOD—SIDE

S/N: R9H1-UP
PART OF 352-3821, 359-2893 OPTION AR-LIGHTING
CANNOT BE USED WITH 260-1908—PAGE 258
AN ATTACHMENT

SMCS-1434 **i04037148**

NOTE	REF NO	GRAPHIC REF	PART NUMBER	QTY	PART NAME 1 2 3 4 5 6 (PRODUCT LEVEL)	SEE PAGE
	1	1	**3S-2093**	8	STRAP-CABLE	
	2	1	**140-1088**	2	BRACKET AS	
					(EACH INCLUDES)	
M		1	**8T-3490**	1	NUT-WELD (M10X1.5-THD)	
Y	3	1	**153-2073**	2	LAMP GP-FLOOD (24-VOLT) (TANDEM)	236
	4	1	**258-8452**	2	PLATE	
	5	1	**258-8453**	2	PLATE	
	6	1	**270-3420**	2	HARNESS AS-LIGHTING	
					(EACH INCLUDES)	
		1	**155-2270**	2	KIT-CONNECTING PLUG (2-PIN)	
					(EACH INCLUDES PLUG AS, WEDGE, & INTERFACE SEAL)	
	7	1	**288-5530**	2	BRACKET	
	8	1	**309-6984**	1	PLATE AS	
		1	**7T-1099**	2	LINK	
	9	1	**092-9741**	2	GROMMET	
	10	1	**4P-8134**	2	CLIP	
M	11	1	**5C-7261**	2	NUT (M8X1.25-THD)	
M	12	1	**7X-2555**	4	BOLT (M16X2X80-MM)	
	13	1	**8T-4121**	6	WASHER-HARD (11X21X2.5-MM THK)	
M	14	1	**8T-4132**	4	NUT (M16X2-THD)	
M	15	1	**8T-4136**	6	BOLT (M10X1.5X25-MM)	
	16	1	**8T-4224**	4	WASHER-HARD (8.8X16X2-MM THK)	
M	17	1	**8T-6869**	2	BOLT (M8X1.25X60-MM)	
	18	1	**9X-8257**	8	WASHER (17.5X30X3.5-MM THK)	

M-METRIC PART
Y-SEPARATE ILLUSTRATION

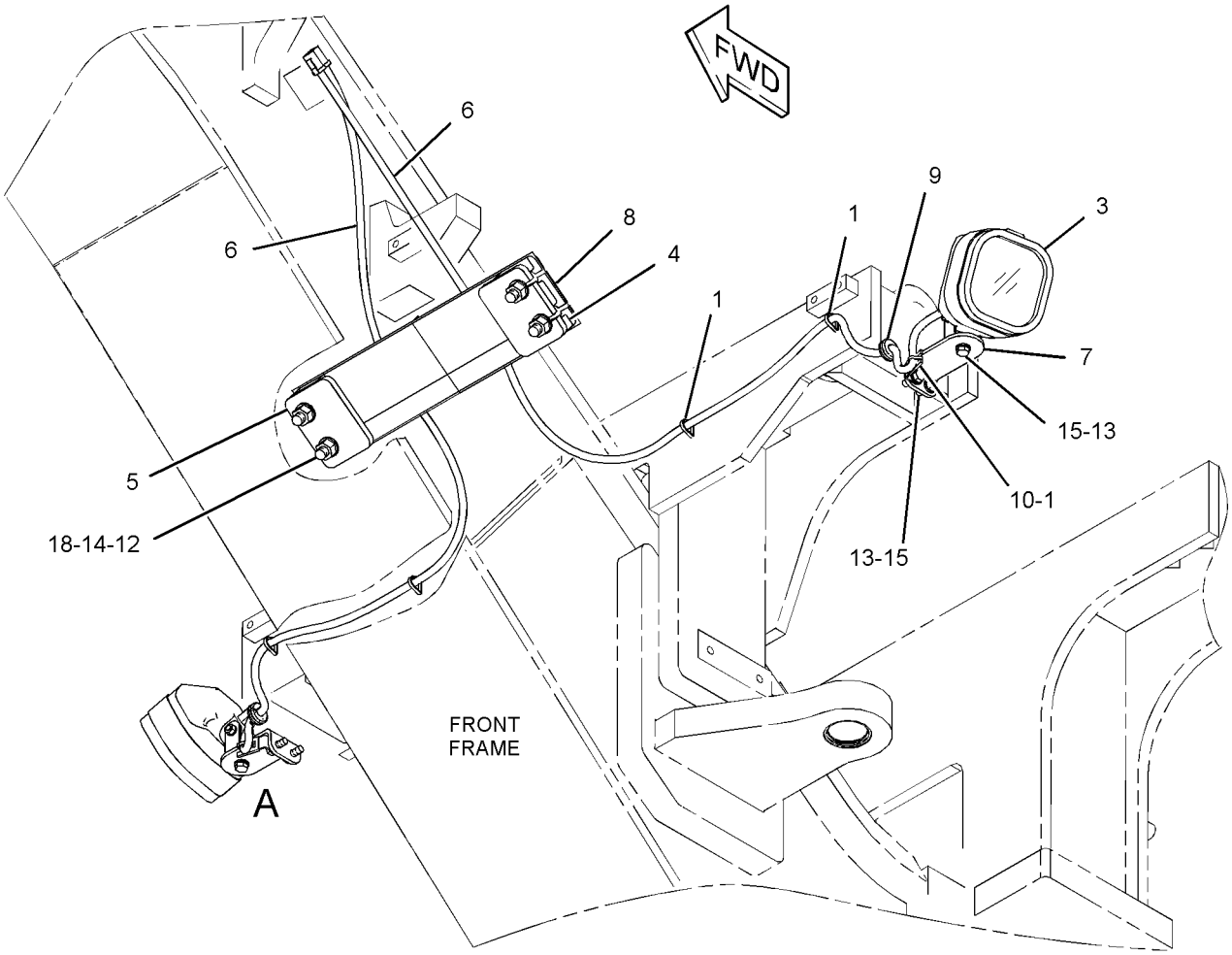

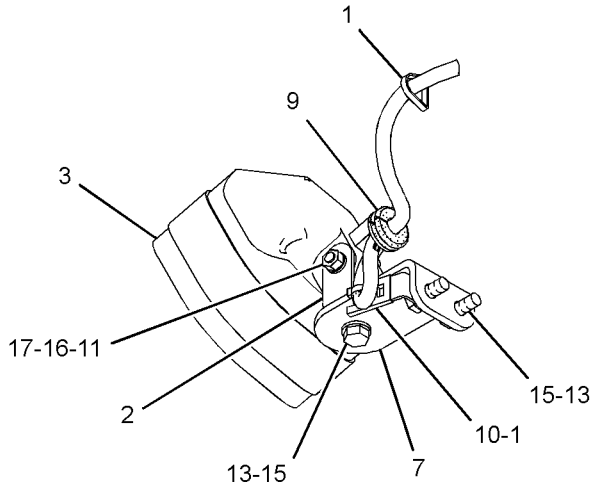

VIEW OF AREA A

GRAPHIC #1 **<END>** g01415155

260-1908 LIGHTING GP-FLOOD

S/N: R9H1-UP
PART OF 352-3822, 359-2894 OPTION AR-LIGHTING
CANNOT BE USED WITH 260-1907—PAGE 256
AN ATTACHMENT

SMCS-1434 **i02771692**

NOTE	REF NO	GRAPHIC REF	PART NUMBER	QTY	PART NAME 1 2 3 4 5 6 (PRODUCT LEVEL)	SEE PAGE
	1	1	**3S-2093**	8	STRAP-CABLE	
	2	1	**258-8452**	2	PLATE	
	3	1	**258-8453**	2	PLATE	
	4	1	**270-3420**	2	HARNESS AS-LIGHTING (FLOODLIGHTS)	
					(EACH INCLUDES)	
		1	**155-2270**	2	KIT-CONNECTING PLUG (2-PIN)	
					(EACH INCLUDES PLUG AS, WEDGE, & INTERFACE SEAL)	
Y	5	1	**283-8144**	2	LAMP GP-FLOOD (24-VOLT, 35-WATT, HID)	239
	6	1	**288-5530**	2	BRACKET	
	7	1	**309-6984**	1	PLATE AS	
		1	**7T-1099**	2	LINK	
	8	1	**092-9741**	2	GROMMET	
	9	1	**130-5300**	2	CLIP	
M	10	1	**7X-2555**	4	BOLT (M16X2X80-MM)	
	11	1	**8T-4121**	4	WASHER-HARD (11X21X2.5-MM THK)	
M	12	1	**8T-4132**	4	NUT (M16X2-THD)	
M	13	1	**8T-4136**	4	BOLT (M10X1.5X25-MM)	
	14	1	**9X-8257**	8	WASHER (17.5X30X3.5-MM THK)	

M-METRIC PART
Y-SEPARATE ILLUSTRATION

260-1908 **LIGHTING GP-FLOOD** *(contd.)* **i02771692**

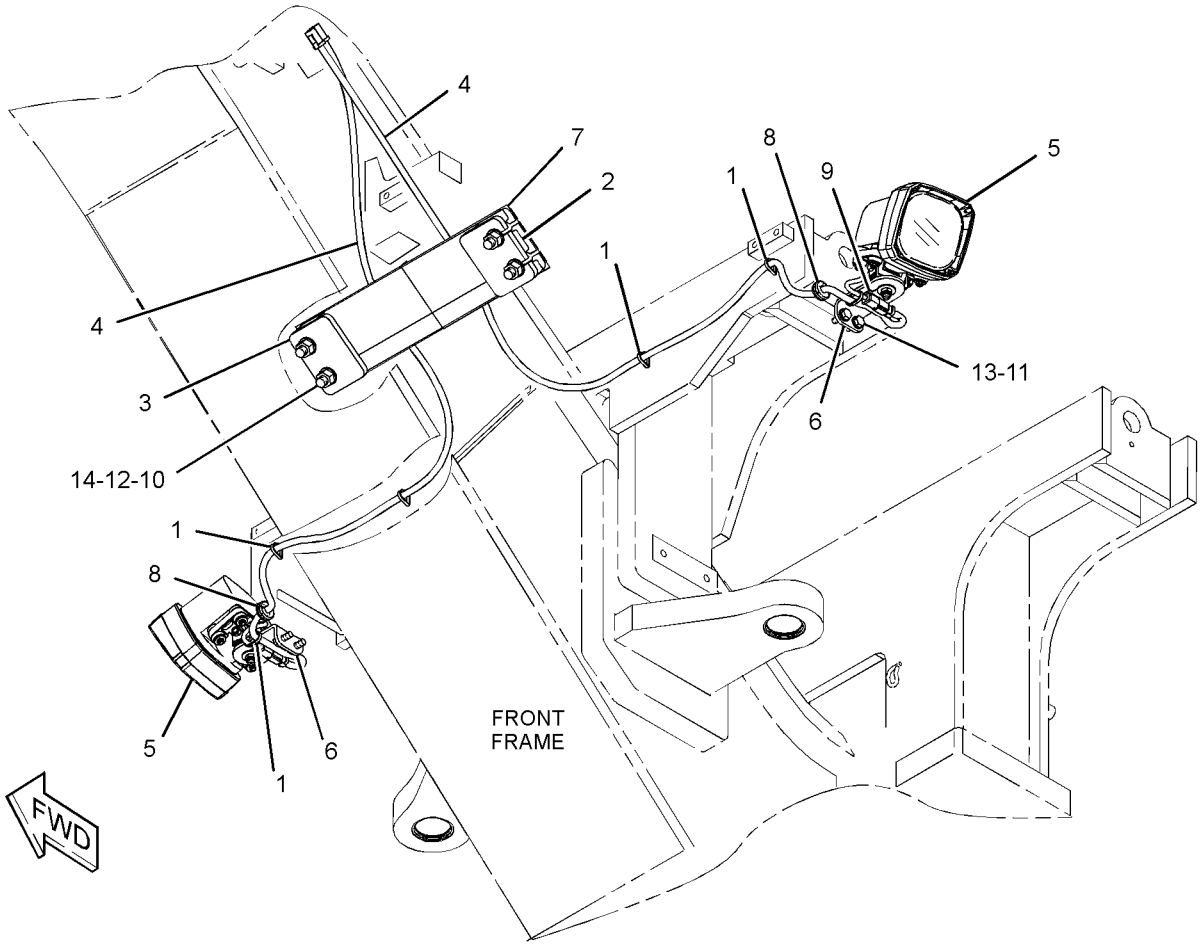

GRAPHIC #1 **<END>** g01415137

261-0133 LIGHTING GP-FLOOD

S/N: R9H1-UP
PART OF 352-3821, 359-2893 OPTION AR-LIGHTING
CANNOT BE USED WITH 261-0134—PAGE 261
AN ATTACHMENT

SMCS-1434 **i03211228**

NOTE	REF NO	GRAPHIC REF	PART NUMBER	QTY	PART NAME 1 2 3 4 5 6 (PRODUCT LEVEL)	SEE PAGE
	1	1	**9X-9365**	2	BRACKET	
	2	1	**140-1088**	2	BRACKET AS	
					(EACH INCLUDES)	
		1	**115-0617**	1	BRACKET	
M		1	**8T-3490**	1	NUT-WELD (M10X1.5-THD)	
	3	1	**133-6934**	2	SPACER (11X20X25-MM THK)	
Y	4	1	**147-0319**	2	LAMP GP-FLOOD (24-VOLT, 65-WATT) (FRONT FRAME)	235
M	5	1	**5C-7261**	2	NUT (M8X1.25-THD)	
	6	1	**8T-4121**	4	WASHER-HARD (11X21X2.5-MM THK)	
M	7	1	**8T-4136**	2	BOLT (M10X1.5X25-MM)	
M	8	1	**8T-4182**	2	BOLT (M10X1.5X45-MM)	
	9	1	**8T-4224**	4	WASHER-HARD (8.8X16X2-MM THK)	
M	10	1	**8T-6869**	2	BOLT (M8X1.25X60-MM)	

M-METRIC PART
Y-SEPARATE ILLUSTRATION

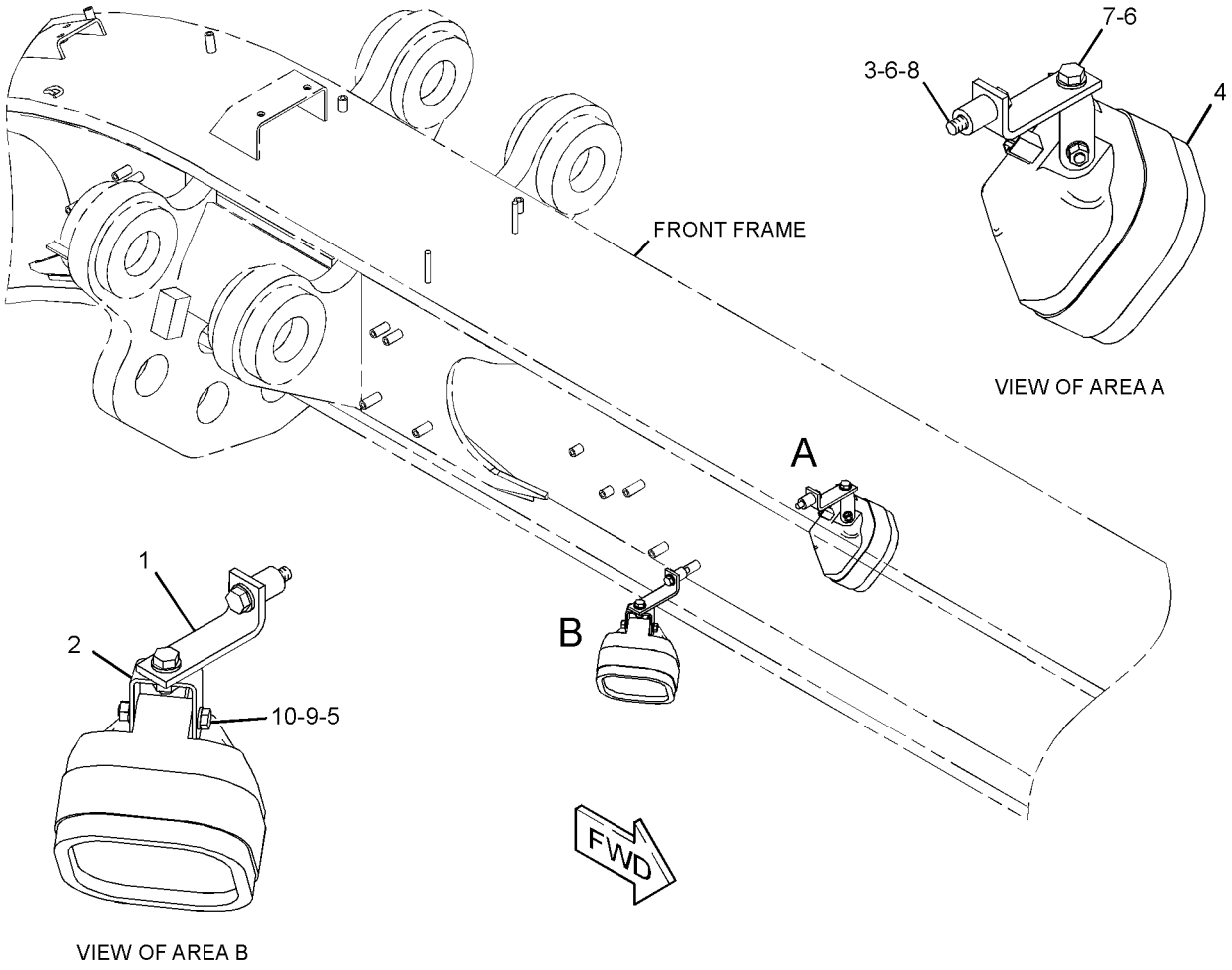

GRAPHIC #1 **<END>** g01293477

261-0134 LIGHTING GP-FLOOD–TOE

S/N: R9H1-UP
PART OF 352-3822, 359-2894 OPTION AR-LIGHTING
CANNOT BE USED WITH 261-0133–PAGE 260
AN ATTACHMENT

SMCS-1434 **i03599524**

NOTE	REF NO	GRAPHIC REF	PART NUMBER	QTY	PART NAME 1 2 3 4 5 6 (PRODUCT LEVEL)	SEE PAGE
	1	1	**243-1352**	2	BRACKET AS	
CY	2	1	**283-8144**	2	LAMP GP-FLOOD (24-VOLT, 35-WATT, HID)	239
C	3	1	**130-5300**	2	CLIP	
C	4	1	**8T-4121**	4	WASHER-HARD (11X21X2.5-MM THK)	
M	5	1	**8T-4137**	4	BOLT (M10X1.5X20-MM)	

C-CHANGE FROM PREVIOUS TYPE
M-METRIC PART
Y-SEPARATE ILLUSTRATION

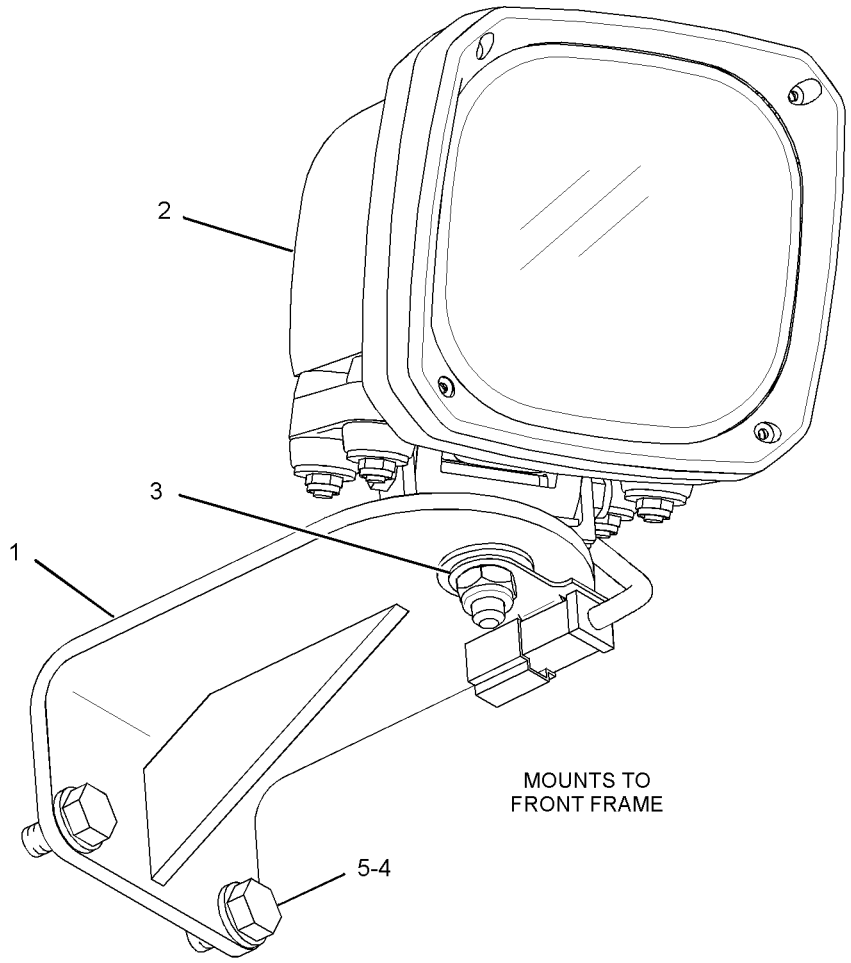

GRAPHIC #1 **<END>** g01946635

261-0135 LIGHTING GP-FLOOD

S/N: R9H1-UP
PART OF 352-3810 OPTION AR-LIGHTING
CANNOT BE USED WITH 261-0136—PAGE 264
AN ATTACHMENT

SMCS-1434 **i04040000**

NOTE	REF NO	GRAPHIC REF	PART NUMBER	QTY	PART NAME 1 2 3 4 5 6 (PRODUCT LEVEL)	SEE PAGE
	1	1	**9X-9365**	2	BRACKET	
	2	1	**140-1088**	2	BRACKET AS	
					(EACH INCLUDES)	
M		1	**8T-3490**	1	NUT-WELD (M10X1.5-THD)	
Y	3	1	**161-3509**	2	LAMP GP-HEAD (24-VOLT) (LOW BEAM)	245
	4	1	**270-3422**	2	HARNESS AS-LIGHTING	
					(EACH INCLUDES)	
		1	**102-8802**	1	KIT-RECEPTACLE (2-PIN)	
					(INCLUDES RECEPTACLE AS & WEDGE)	
		1	**155-2270**	1	KIT-CONNECTING PLUG (2-PIN)	
					(INCLUDES PLUG AS, WEDGE, & INTERFACE SEAL)	
M	5	1	**5C-7261**	2	NUT (M8X1.25-THD)	
	6	1	**5P-9085**	4	CLIP	
	7	1	**8T-4121**	8	WASHER-HARD (11X21X2.5-MM THK)	
M	8	1	**8T-4136**	2	BOLT (M10X1.5X25-MM)	
M	9	1	**8T-4137**	6	BOLT (M10X1.5X20-MM)	
	10	1	**8T-4224**	4	WASHER-HARD (8.8X16X2-MM THK)	
M	11	1	**8T-6869**	2	BOLT (M8X1.25X60-MM)	

M-METRIC PART
Y-SEPARATE ILLUSTRATION

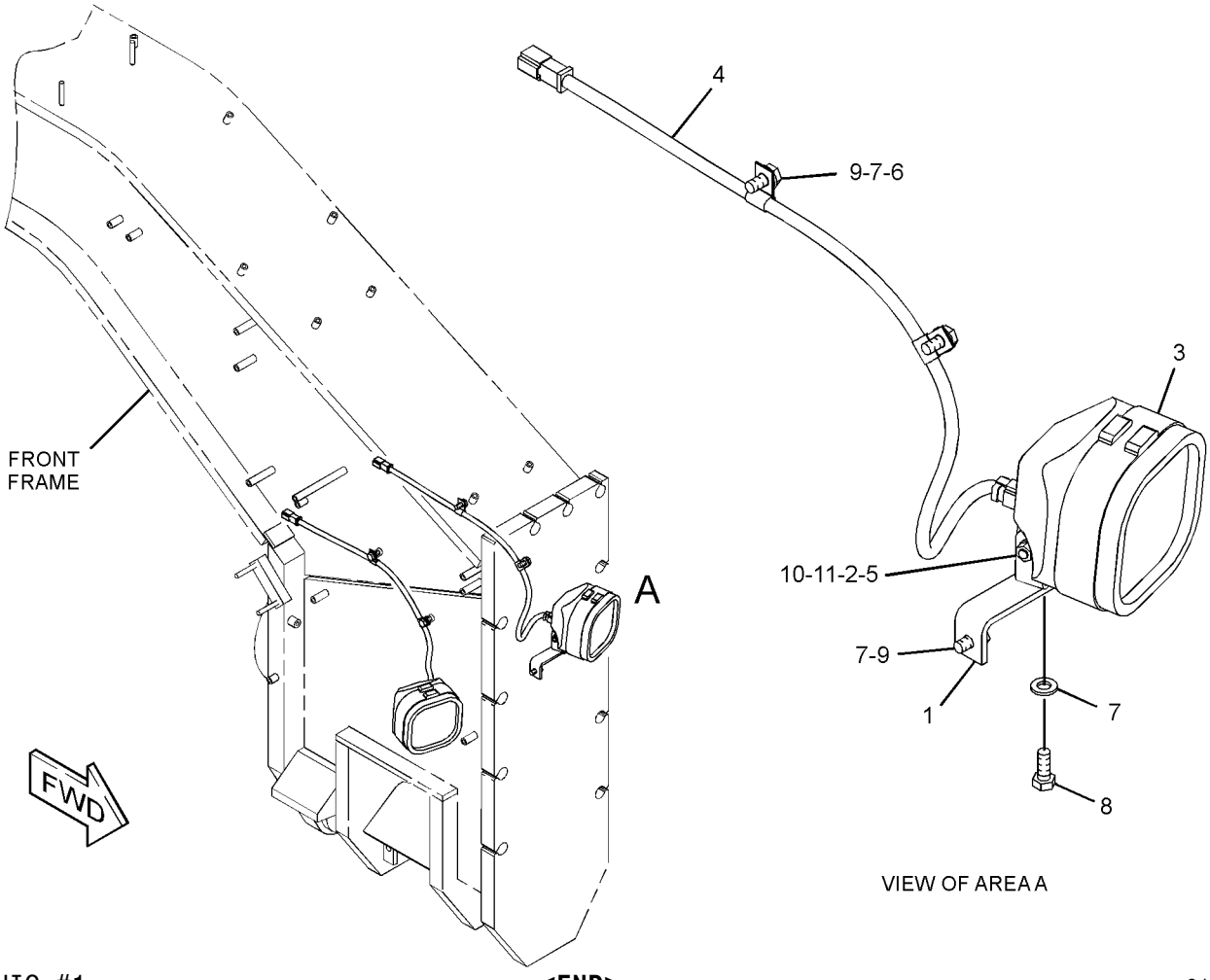

GRAPHIC #1 **<END>** g01312786

261-0136 LIGHTING GP-FLOOD–HID

S/N: R9H1-UP
PART OF 352-3811 OPTION AR-LIGHTING
CANNOT BE USED WITH 261-0135–PAGE 262
AN ATTACHMENT

SMCS-1434 **i03599590**

NOTE	REF NO	GRAPHIC REF	PART NUMBER	QTY	PART NAME 1 2 3 4 5 6 (PRODUCT LEVEL)	SEE PAGE
	1	1	**243-1352**	2	BRACKET AS	
	2	1	**270-3422**	2	HARNESS AS-LIGHTING	
					(EACH INCLUDES)	
		1	**9W-0844**	2	SOCKET-CONNECTOR (14-GA)	
		1	**9W-0852**	2	PIN-CONNECTOR (14-GA TO 16-GA)	
		1	**102-8802**	1	KIT-RECEPTACLE (2-PIN)	
					(INCLUDES RECEPTACLE AS & WEDGE)	
		1	**155-2270**	1	KIT-CONNECTING PLUG (2-PIN)	
					(INCLUDES PLUG AS, WEDGE, & INTERFACE SEAL)	
CY	3	1	**283-8144**	2	LAMP GP-FLOOD (24-VOLT, 35-WATT, HID)	239
C	4	1	**130-5300**	2	CLIP	
	5	1	**5P-9085**	4	CLIP	
	6	1	**8T-4121**	8	WASHER-HARD (11X21X2.5-MM THK)	
M	7	1	**8T-4137**	8	BOLT (M10X1.5X20-MM)	

C-CHANGE FROM PREVIOUS TYPE
M-METRIC PART
Y-SEPARATE ILLUSTRATION

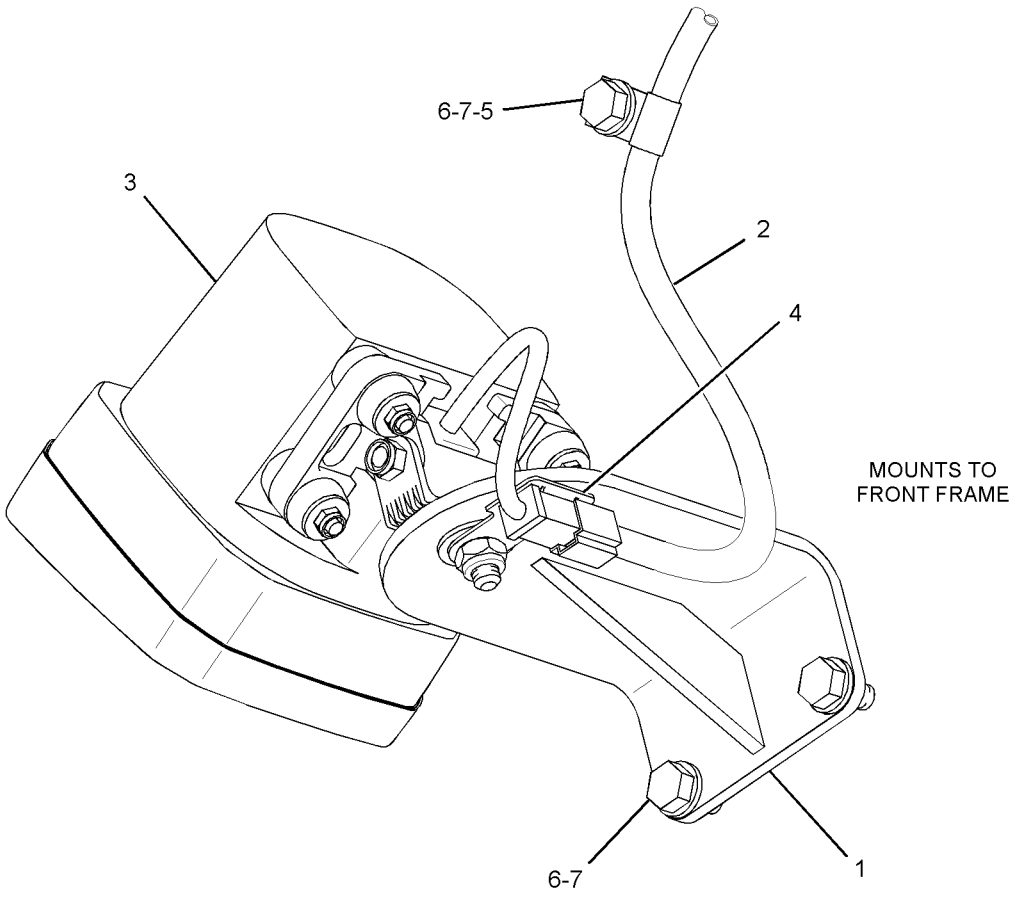

GRAPHIC #1 **<END>** g01946643

261-0137 LIGHTING GP-FLOOD

S/N: R9H1-UP
PART OF 352-3821, 359-2893 OPTION AR-LIGHTING
AN ATTACHMENT

SMCS-1434 **i03211284**

NOTE	REF NO	GRAPHIC REF	PART NUMBER	QTY	PART NAME 1 2 3 4 5 6 (PRODUCT LEVEL)	SEE PAGE
	1	1	**9X-9365**	2	BRACKET	
	2	1	**140-1088**	2	BRACKET AS	
M		1	**8T-3490**	1	NUT-WELD (M10X1.5-THD)	
Y	3	1	**147-0319**	2	LAMP GP-FLOOD (24-VOLT, 65-WATT) (REAR FRAME)	235
M	4	1	**5C-7261**	2	NUT (M8X1.25-THD)	
	5	1	**7G-7053**	2	GROMMET	
	6	1	**8T-4121**	4	WASHER-HARD (11X21X2.5-MM THK)	
M	7	1	**8T-4136**	4	BOLT (M10X1.5X25-MM)	
	8	1	**8T-4224**	4	WASHER-HARD (8.8X16X2-MM THK)	
M	9	1	**8T-6869**	2	BOLT (M8X1.25X60-MM)	

M-METRIC PART
Y-SEPARATE ILLUSTRATION

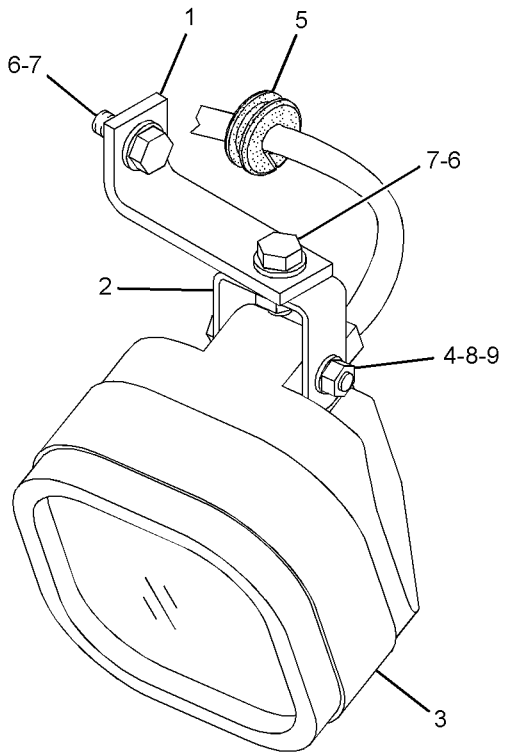

VIEW OF AREA A

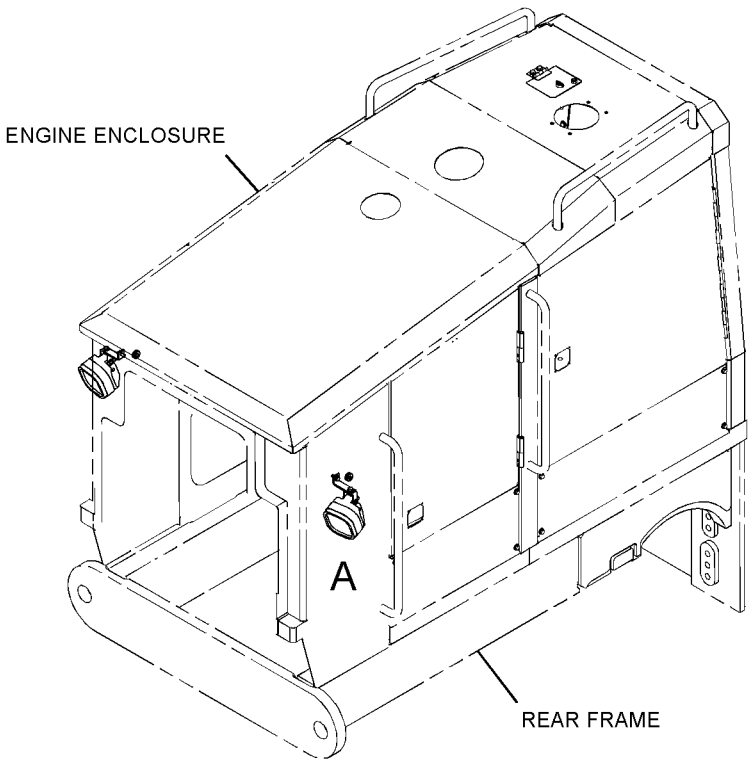

GRAPHIC #1 **<END>** g01322518

291-4038 LIGHTING GP-FLOOD—CAB ROOF

S/N: R9H1-UP
PART OF 349-2556 COMMON AR, 352-3810 OPTION AR-LIGHTING
CANNOT BE USED WITH 291-4039—PAGE 267
ALSO AN ATTACHMENT

SMCS-1434 **i04033113**

NOTE	REF NO	GRAPHIC REF	PART NUMBER	QTY	PART NAME 1 2 3 4 5 6 (PRODUCT LEVEL)	SEE PAGE
CY	1	1	**219-6488**	2	LAMP GP-FLOOD (24-VOLT) (CAB ROOF, FRONT)	237
Y	2	1	**290-5749**	2	LAMP GP-HEAD (24-VOLT) (HIGH BEAM)	246
CY	3	1	**315-1251**	2	LAMP GP-FLOOD (24-VOLT) (CAB ROOF, REAR)	241
	4	1	**249-5480**	1	SWITCH AS-ROCKER (CAB FLOODLIGHTS)	

C-CHANGE FROM PREVIOUS TYPE
Y-SEPARATE ILLUSTRATION

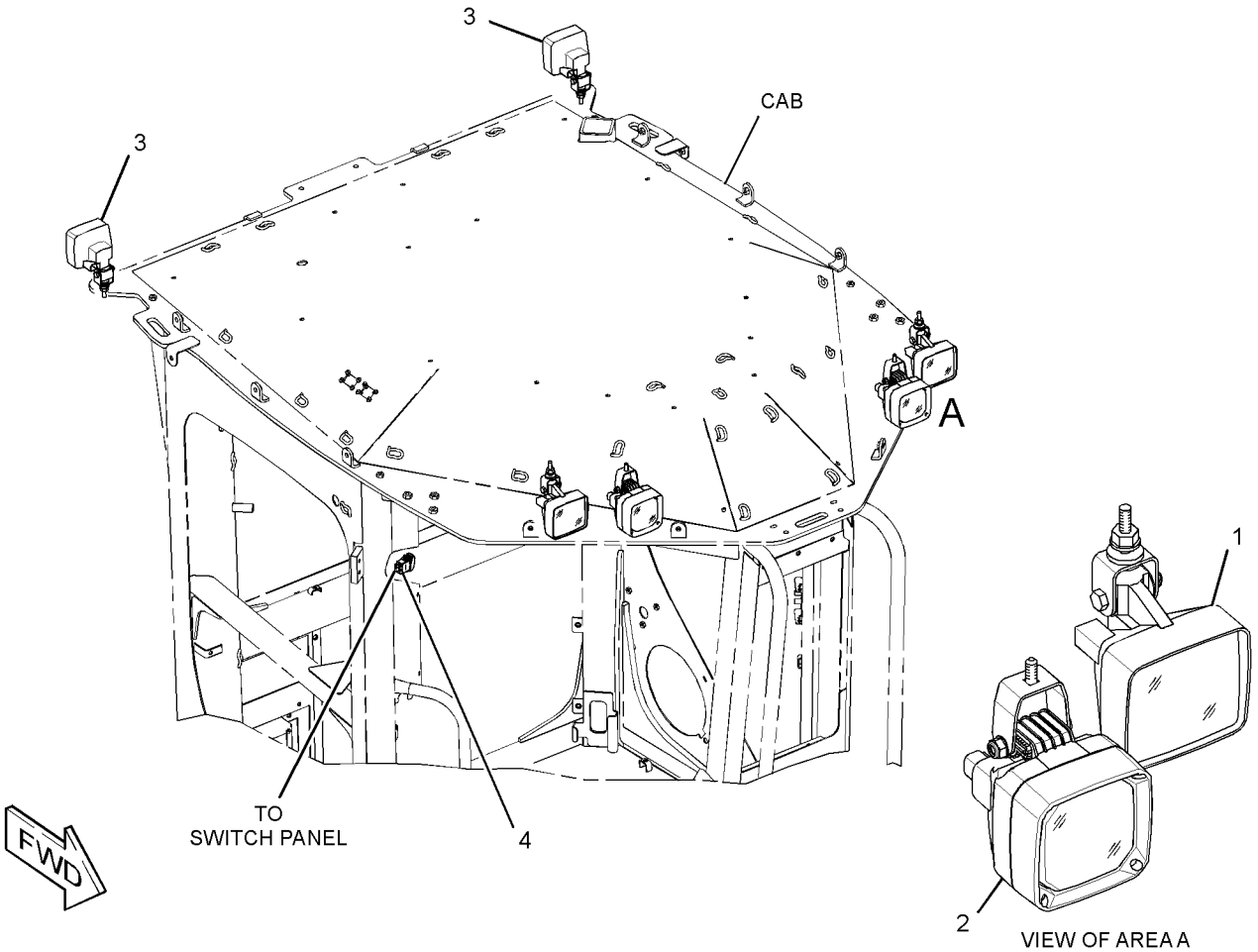

GRAPHIC #1 **<END>** g01528460

291-4039 LIGHTING GP-FLOOD–CAB

S/N: R9H1-UP
PART OF 352-3811 OPTION AR-LIGHTING
CANNOT BE USED WITH 291-4038–PAGE 266
AN ATTACHMENT

SMCS-1434 **i02913325**

NOTE	REF NO	GRAPHIC REF	PART NUMBER	QTY	PART NAME 1 2 3 4 5 6 (PRODUCT LEVEL)	SEE PAGE
	1	1	**249-5480**	1	SWITCH AS-ROCKER (FLOODLIGHTS)	
Y	2	1	**319-7380**	2	LAMP GP-FLOOD (24-VOLT, HID)	243
Y	3	1	**319-7381**	2	LAMP GP-FLOOD (24-VOLT, HID)	244
Y	4	1	**319-7379**	2	LAMP GP-FLOOD (24-VOLT, HID)	242

Y-SEPARATE ILLUSTRATION

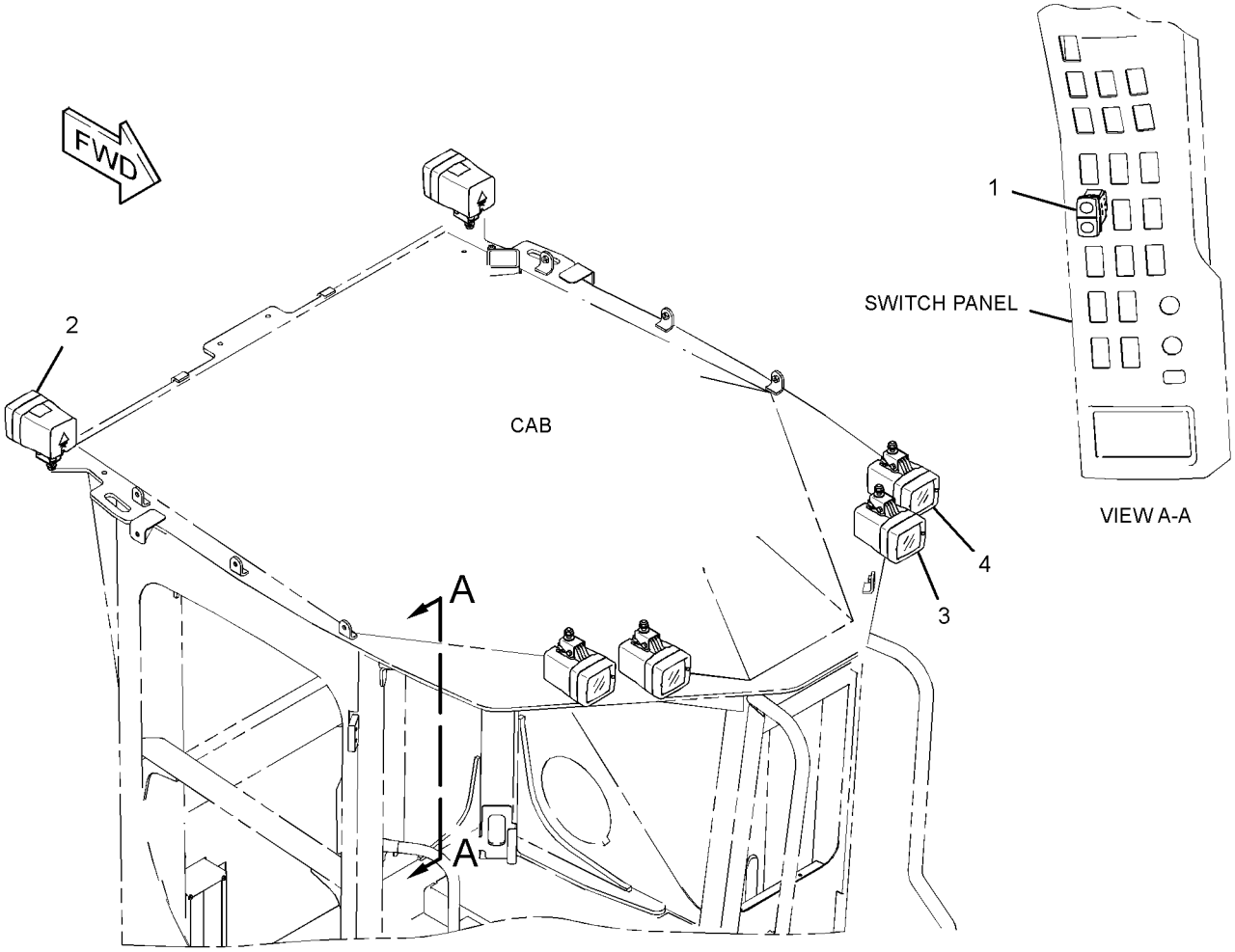

GRAPHIC #1 **<END>** g01517226

ELECTRICAL AND STARTING SYSTEM

298-0602 LIGHTING GP-ROADING

S/N: R9H1-UP
AN ATTACHMENT

SMCS-1429 **i02623609**

NOTE	PART NUMBER	QTY	PART NAME 1 2 3 4 5 6 (PRODUCT LEVEL)	SEE PAGE
Y	*260-1910*	1	MOUNTING GP-LIGHTING	275
Y	*233-3124*	1	SWITCH GP-ROADING (LIGHTS)	333
Y	*250-0902*	1	WIRING GP-REAR LIGHTING (STOP, TAIL, TURN, BACKUP)	389

Y-SEPARATE ILLUSTRATION

<END>

298-0603 LIGHTING GP-ROADING—SNOW REMOVAL

S/N: R9H1-UP
PART OF 352-3817 SNOW AR-MOTOR GRADER
AN ATTACHMENT

SMCS-1429 **i02623614**

NOTE	PART NUMBER	QTY	PART NAME 1 2 3 4 5 6 (PRODUCT LEVEL)	SEE PAGE
Y	*260-1909*	1	MOUNTING GP-LIGHTING (SNOW REMOVAL)	273
Y	*233-3124*	1	SWITCH GP-ROADING (LIGHTS)	333
Y	*250-0902*	1	WIRING GP-REAR LIGHTING (STOP, TAIL, TURN, BACKUP)	389

Y-SEPARATE ILLUSTRATION

<END>

226-2333 MAST GP—LASER RECEIVER

S/N: R9H1-UP
PART OF 317-6526 GRADE CONTROL AR-LASER, 292-0281 MAST GP, 292-0310 RECEIVER AR-LASER

SMCS-7220, 79NS **i03588632**

NOTE	PART NUMBER	QTY	PART NAME 1 2 3 4 5 6 (PRODUCT LEVEL)	SEE PAGE
	256-5732	1	HARNESS AS-WIRING (MAST)	
	256-4580	1	MOTOR AS	
	256-4579	1	SCREW AS	
	256-5720	1	SWITCH AS (UPPER LIMIT)	
	256-5721	1	SWITCH AS (LOWER LIMIT)	
	256-4581	1	BUSHING	
	256-4582	1	GEAR (141-TEETH)	
	256-5722	1	GEAR (15-TEETH)	
	260-6480	1	RING-SNAP	
	260-6478	1	SEAL-O-RING	
	256-5719	1	SEAL-WIPER	
			AVAILABLE REPAIR KIT(S):	
	295-8930	1	KIT-CIRCUIT BOARD	
			(INCLUDES BOARD AS, SCREWS, LOCKWASHERS, LOCTITE & GREASE)	
A	**245-4747**	1	KIT-ADAPTER (MAST)	
			(INCLUDES ADAPTER, BOLTS & WASHER)	
			(FOR USE WITH LR400 RECEIVER)	

A-NOT PART OF THIS GROUP

<END>

292-0281 MAST GP–LASER RECEIVER

S/N: R9H1-UP

PART OF 292-0301 RECEIVER AR-LASER

SMCS-7220, 79NS **i03091092**

NOTE	PART NUMBER	QTY	PART NAME 1 2 3 4 5 6 (PRODUCT LEVEL)	SEE PAGE
Y	**226-2333**	1	MAST GP (LASER RECEIVER)	268
Y	*292-0302*	1	MOUNTING GP-MAST (LASER RECEIVER)	277
Y	**234-9970**	1	MOUNTING GP-RECEIVER (MAST)	278

Y-SEPARATE ILLUSTRATION

<END>

117-3915 MOTOR GP-ELECTRIC–SECONDARY STEERING

S/N: R9H1-UP
24-VOLT
PART OF 292-5072 PUMP & MOTOR GP-SEC STEERING

SMCS-5927 **i01441397**

NOTE	REF NO	GRAPHIC REF	PART NUMBER	QTY	PART NAME 1 2 3 4 5 6 (PRODUCT LEVEL)	SEE PAGE
	1	1	**6V-8801**	2	NUT (3/8-16 THD)	
	2	1	**7X-0608**	2	WASHER-HARD (10.2X16X2-MM THK)	

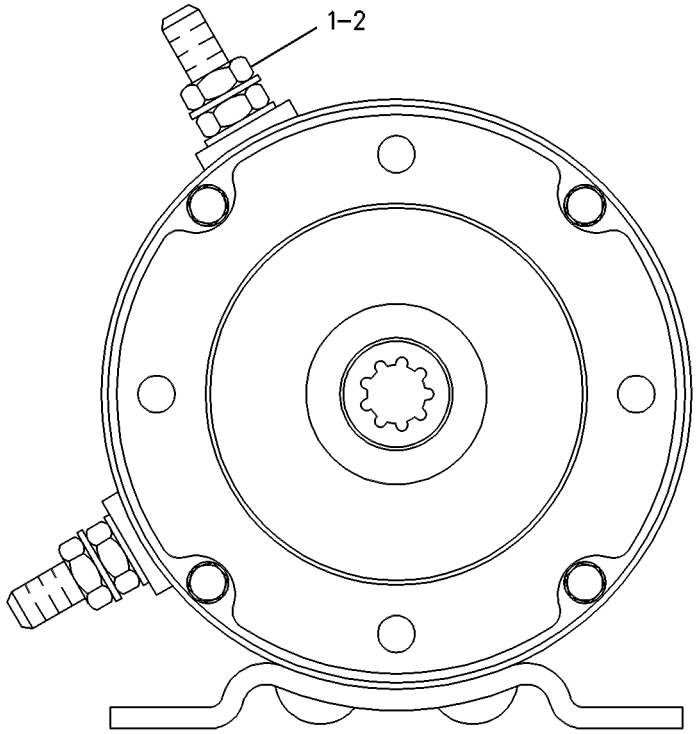

GRAPHIC #1 **<END>** g00085784

170-5335 MOTOR GP-ELECTRIC—CIRCULATING FAN

S/N: R9H1-UP
27-VOLT
PART OF 170-5334 FAN GP-CIRCULATING
AN ATTACHMENT

SMCS-5927 **i02427690**

NOTE	REF NO	GRAPHIC REF	PART NUMBER	QTY	PART NAME 1 2 3 4 5 6 (PRODUCT LEVEL)	SEE PAGE
	1	1	**102-8802**	1	KIT-RECEPTACLE (2-PIN)	
					(INCLUDES RECEPTACLE AS & WEDGE)	
	2	1	**9W-0852**	2	PIN-CONNECTOR (14-GA TO 16-GA)	

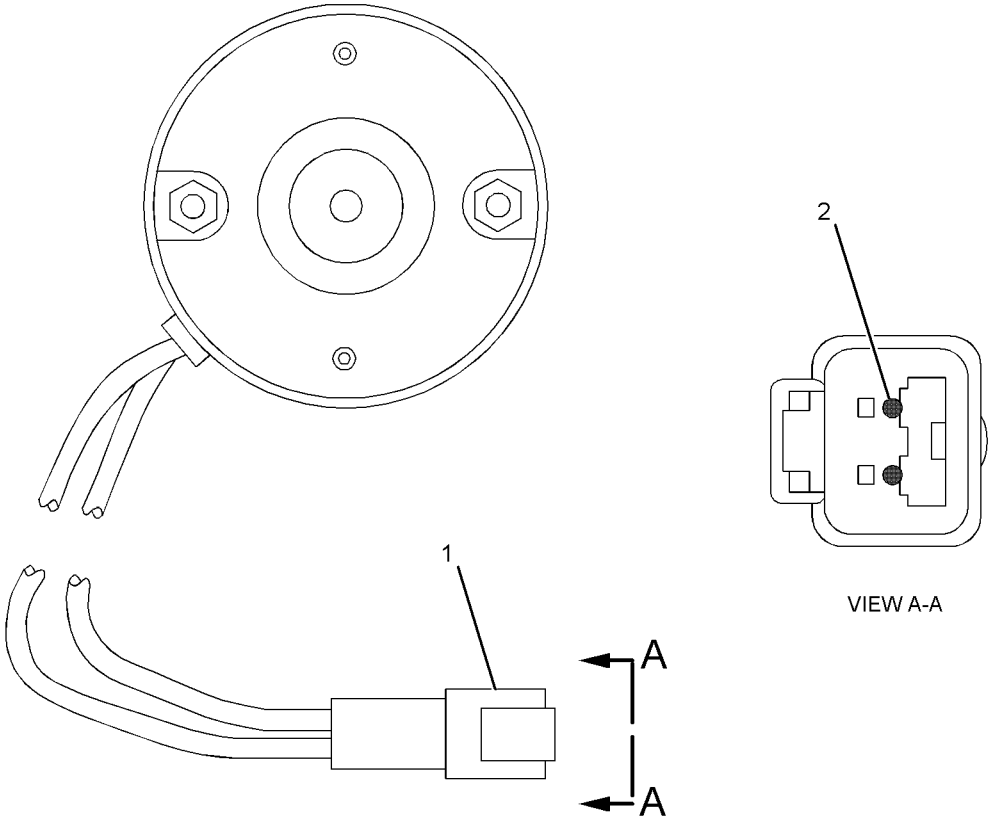

GRAPHIC #1 **<END>** g01224350

290-2016 MOUNTING GP-LAMP

S/N: R9H1-UP

PART OF 233-3126 INSTALLATION GP-LIGHTING

AN ATTACHMENT

SMCS-1429 **i02568560**

NOTE	REF NO	GRAPHIC REF	PART NUMBER	QTY	PART NAME 1 2 3 4 5 6 (PRODUCT LEVEL)	SEE PAGE
	1	1	**114-6658**	1	WASHER (6.5X17X1-MM THK)	
	2	1	**290-2015**	1	PLATE AS	
	3	1	**290-2018**	1	PLATE AS	
	4	1	**5P-4116**	2	WASHER-HARD (8.8X20.5X2-MM THK)	
M	5	1	**8T-6912**	2	BOLT (M8X1.25X50-MM)	
M	6	1	**9X-2043**	1	SCREW-TRUSS HEAD (M6X1X14-MM)	

M-METRIC PART

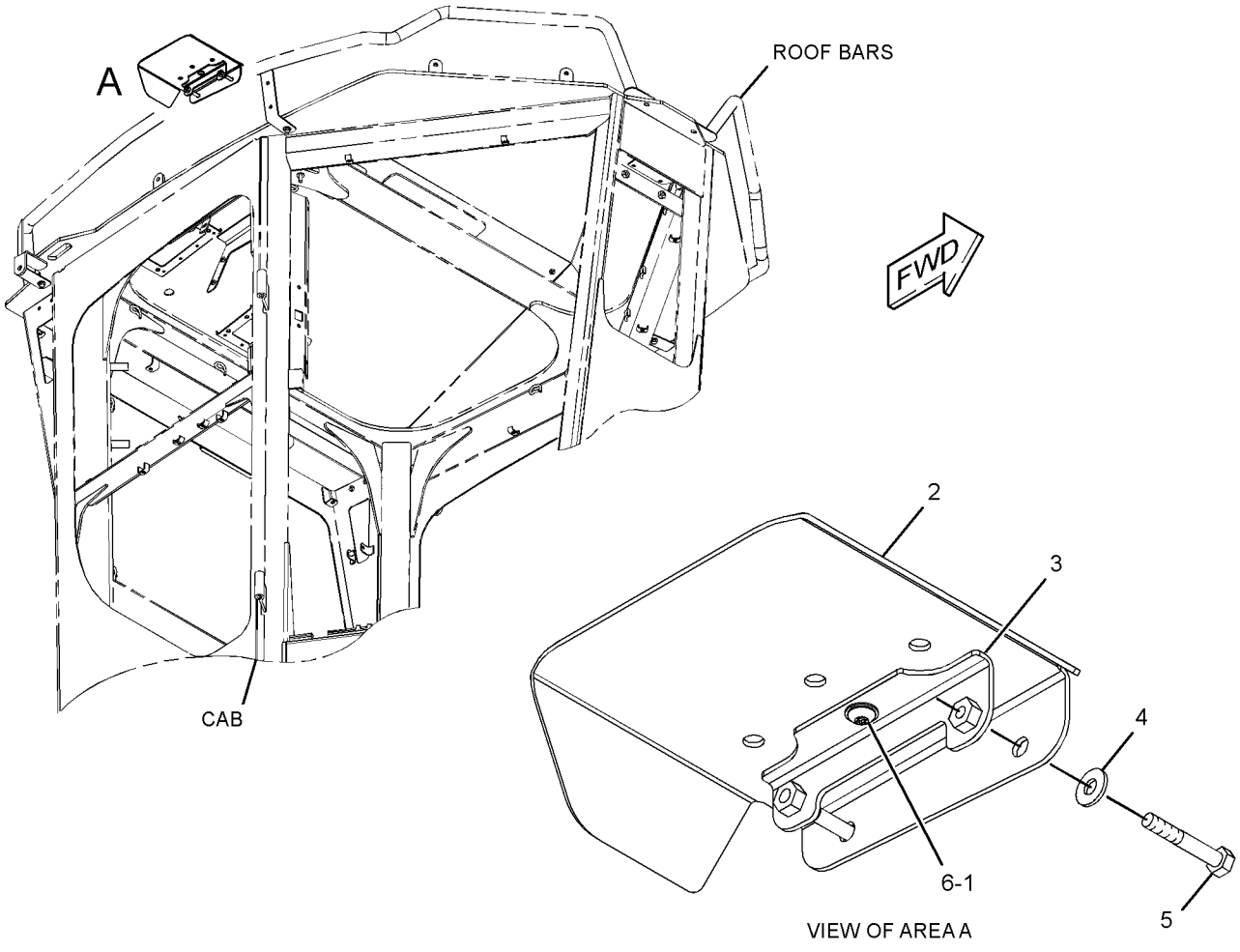

GRAPHIC #1 **<END>** g01289677

260-1909 MOUNTING GP-LIGHTING—SNOW REMOVAL

S/N: R9H1-UP
PART OF 298-0603 LIGHTING GP-ROADING
CANNOT BE USED WITH 260-1910—PAGE 275
AN ATTACHMENT

SMCS-1429 **i02959800**

NOTE	REF NO	GRAPHIC REF	PART NUMBER	QTY	PART NAME 1 2 3 4 5 6 (PRODUCT LEVEL)	SEE PAGE
	1	1	**2G-0617**	2	CLAMP	
	2	1	**2G-0988**	2	CAP	
	3	1	**3K-9520**	3	GROMMET	
	4	1	**137-9410**	2	CLAMP	
	5	1	**236-2335**	1	HARNESS AS-FRONT LIGHTING	
		1	**102-8802**	1	KIT-RECEPTACLE (2-PIN)	
		1	**102-8805**	1	KIT-RECEPTACLE (6-PIN)	
					(EACH INCLUDES RECEPTACLE AS & WEDGE)	
		1	**155-2274**	2	KIT-CONNECTING PLUG (6-PIN)	
					(EACH INCLUDES PLUG AS, WEDGE, & INTERFACE SEAL)	
	6	1	**310-7636**	1	TUBE	
Y	7	1	**259-9287**	1	LAMP GP-HEAD & SIGNAL (24-VOLT, LH)	247
Y	8	1	**259-9288**	1	LAMP GP-HEAD & SIGNAL (24-VOLT, RH)	248
	9	1	**284-8379**	1	BRACKET	
	10	1	**130-5300**	2	CLIP	
	11	1	**130-5301**	2	CLIP	
	12	1	**5K-3294**	1	CLIP	
	13	1	**5P-9135**	1	GROMMET	
	14	1	**8T-4121**	4	WASHER-HARD (11X21X2.5-MM THK)	
M	15	1	**8T-4133**	2	NUT (M10X1.5-THD)	
M	16	1	**8T-4195**	2	BOLT (M10X1.5X30-MM)	
	17	1	**8T-4223**	4	WASHER-HARD (13.5X25.5X3-MM THK)	
M	18	1	**8T-5412**	4	BOLT (M12X1.75X140-MM)	
	19	1	**310-7637**	1	BRACKET	

M-METRIC PART
Y-SEPARATE ILLUSTRATION

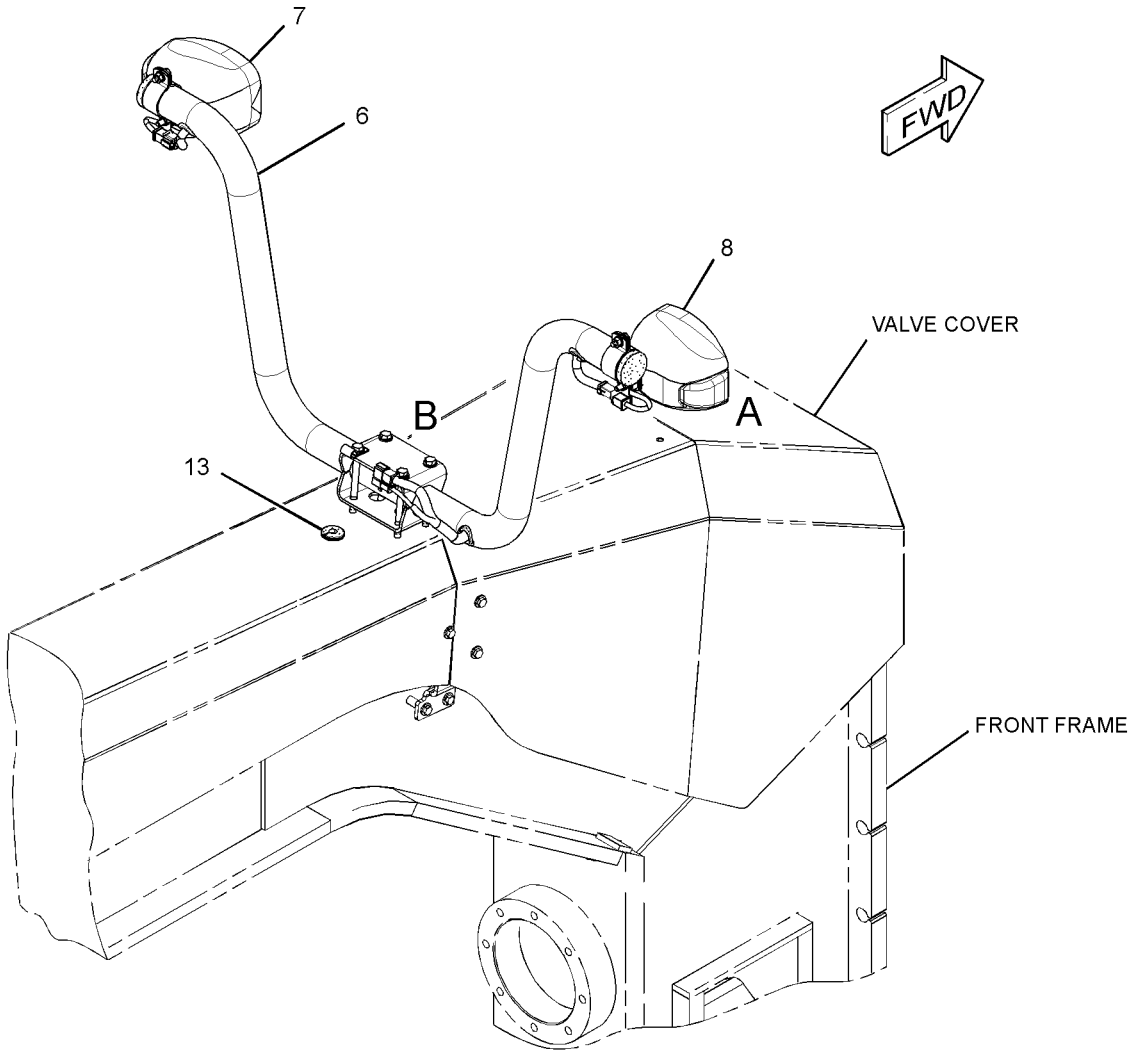

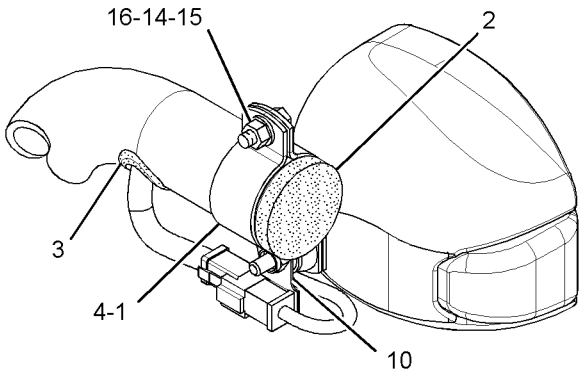

VIEW OF AREA A

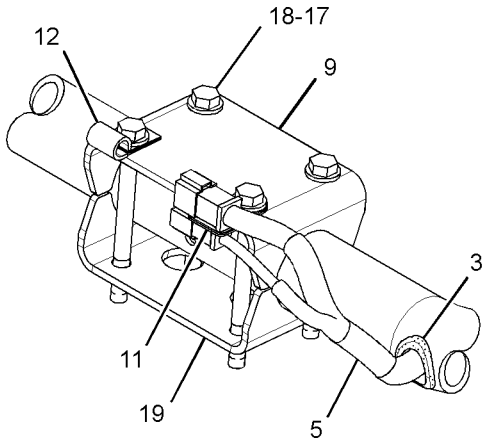

VIEW OF AREA B

GRAPHIC #1 **<END>** g01502584

260-1910 MOUNTING GP-LIGHTING

S/N: R9H1-UP
PART OF 298-0602 LIGHTING GP-ROADING
CANNOT BE USED WITH 260-1909—PAGE 273
AN ATTACHMENT

SMCS-1429 **i04000001**

NOTE	REF NO	GRAPHIC REF	PART NUMBER	QTY	PART NAME 1 2 3 4 5 6 (PRODUCT LEVEL)	SEE PAGE
	1	1	**2G-0617**	2	CLAMP	
	2	1	**2G-0988**	2	CAP	
	3	1	**3K-9520**	3	GROMMET	
	4	1	**137-9410**	2	CLAMP	
	5	1	**236-2335**	1	HARNESS AS-FRONT LIGHTING	
		1	**8T-8737**	3	PLUG-SEAL	
		1	**9W-0844**	10	SOCKET-CONNECTOR (14-GA)	
		1	**9W-0852**	7	PIN-CONNECTOR (14-GA TO 16-GA)	
E		1	**114-8843**		SLEEVE-PLASTIC (80-CM)	
E		1	**119-3662**		TUBE-HEAT SHRINK (10.85-MM DIA) (20-CM)	
		1	**102-8802**	1	KIT-RECEPTACLE (2-PIN)	
		1	**102-8805**	1	KIT-RECEPTACLE (6-PIN)	
					(EACH INCLUDES RECEPTACLE AS & WEDGE)	
		1	**155-2274**	2	KIT-CONNECTING PLUG (6-PIN)	
					(EACH INCLUDES PLUG AS, WEDGE, & INTERFACE SEAL)	
Y	6	1	**259-9287**	1	LAMP GP-HEAD & SIGNAL (24-VOLT, LH)	247
Y	7	1	**259-9288**	1	LAMP GP-HEAD & SIGNAL (24-VOLT, RH)	248
	8	1	**300-6497**	1	TUBE	
	9	1	**284-8379**	1	BRACKET	
	10	1	**130-5300**	2	CLIP	
	11	1	**130-5301**	2	CLIP	
	12	1	**5K-3294**	1	CLIP	
	13	1	**5P-9135**	1	GROMMET	
	14	1	**8T-4121**	4	WASHER-HARD (11X21X2.5-MM THK)	
M	15	1	**8T-4133**	2	NUT (M10X1.5-THD)	
M	16	1	**8T-4195**	2	BOLT (M10X1.5X30-MM)	
	17	1	**8T-4223**	4	WASHER-HARD (13.5X25.5X3-MM THK)	
M	18	1	**8T-5412**	4	BOLT (M12X1.75X140-MM)	
	19	1	**310-7637**	1	BRACKET	

E-ORDER BY THE CENTIMETER
M-METRIC PART
Y-SEPARATE ILLUSTRATION

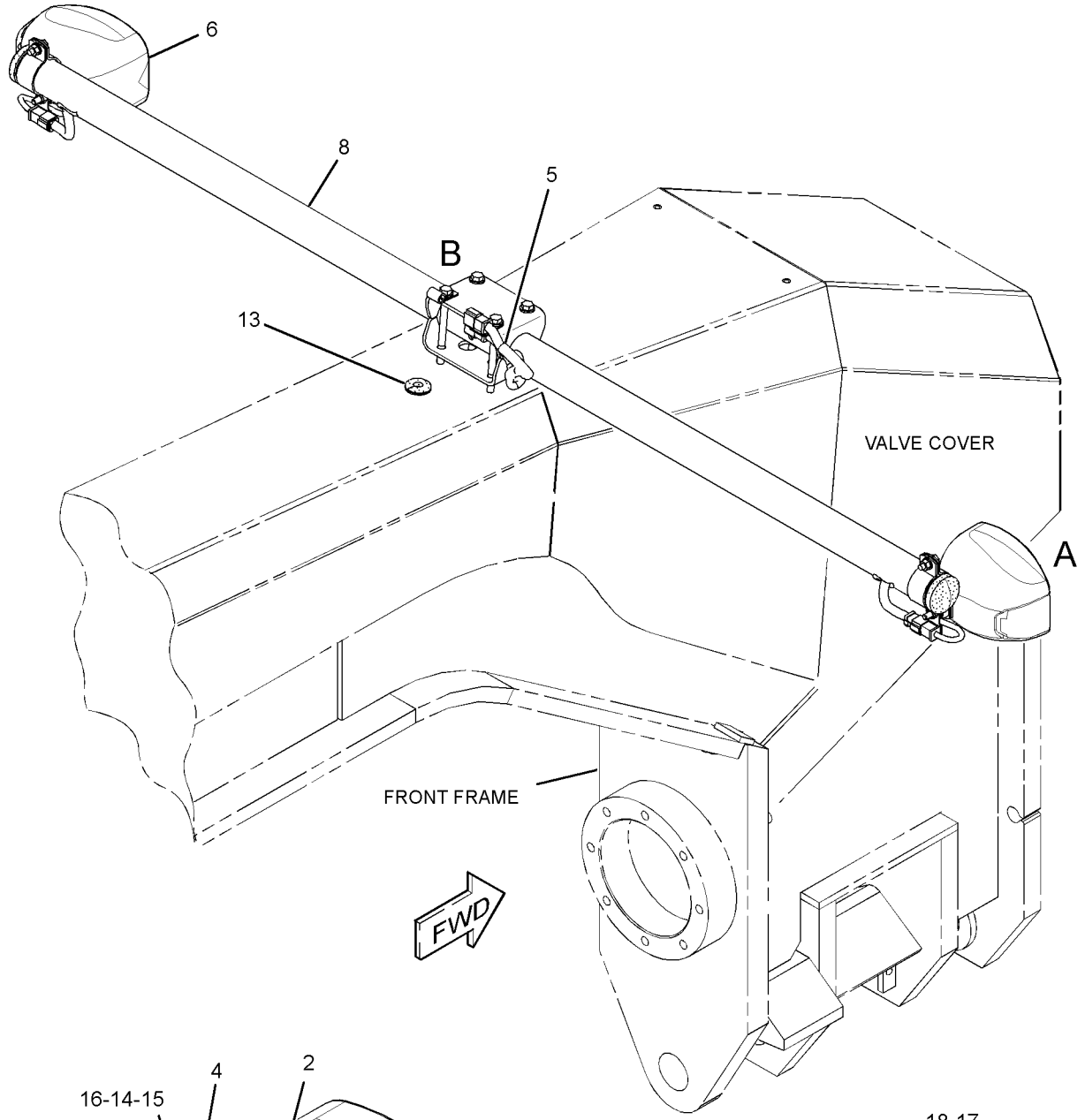

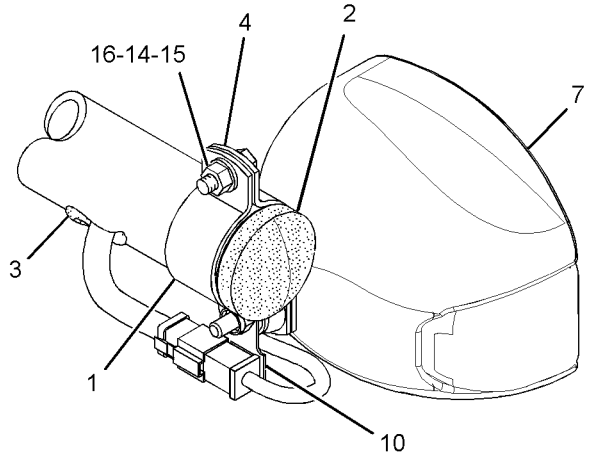

VIEW OF AREA A

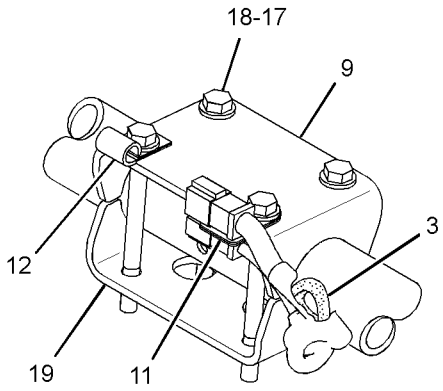

VIEW OF AREA B

GRAPHIC #1 **<END>** g02191534

292-0302 MOUNTING GP-MAST—LASER RECEIVER

S/N: R9H1-UP

PART OF 292-0281 MAST GP, 292-0310 RECEIVER AR-LASER

SMCS-79NS **i02622638**

NOTE	PART NUMBER	QTY	PART NAME 1 2 3 4 5 6 (PRODUCT LEVEL)	SEE PAGE
M	**8T-4648**	4	BOLT (M12X1.75X70-MM)	
	237-7552	3	FILM-WARNING (LASER TRANSMITTER)	
	252-8744	1	FILM-WARNING (BLADE, DO NOT CLIMB, READ OMM)	
M	**8T-4244**	4	NUT (M12X1.75-THD)	
	8T-4223	8	WASHER-HARD (13.5X25.5X3-MM THK)	

M-METRIC PART

<END>

292-0908 MOUNTING GP-MAST—LASER RECEIVER

S/N: R9H1-UP

PART OF 292-0301 RECEIVER AR-LASER

SMCS-79NS **i02674350**

NOTE	PART NUMBER	QTY	PART NAME 1 2 3 4 5 6 (PRODUCT LEVEL)	SEE PAGE
	231-0049	1	CABLE-COILED (MAST)	
	248-1503	1	BRACKET GP-MOUNTING	
	7X-0343	4	BOLT (5/8-11X1.25-IN)	
	7X-0366	3	BOLT (3/4-10X2-IN)	
	8T-4122	4	WASHER-HARD (17X32X3.5-MM THK)	
	8T-4994	3	WASHER-HARD (20X36.5X3.5-MM THK)	
	248-1496	1	RISER AS (MAST)	
	3B-4512	1	LOCKWASHER	
	9S-1362	1	BOLT (3/4-16X2-IN)	

<END>

234-9970 MOUNTING GP-RECEIVER–MAST

S/N: R9H1-UP

PART OF 317-6526 GRADE CONTROL AR-LASER, 292-0281 MAST GP, 292-0310 RECEIVER AR-LASER

SMCS-7009, 7010 **i02294016**

NOTE	REF NO	GRAPHIC REF	PART NUMBER	QTY	PART NAME 1 2 3 4 5 6 (PRODUCT LEVEL)	SEE PAGE
	1	2	**253-8967**	1	ROD-THREADED	
	2	2	**253-8969**	1	BRACKET	
	3	2	**237-4132**	4	MOUNT-FLEXIBLE	
	4	1	**237-4133**	2	GASKET	
	5	1	**237-4134**	1	CLAMP	
	6	1	**237-4135**	1	MOUNT-FLEXIBLE	
	7	2	**237-7252**	1	BOLT (3/4-16X1.25-IN)	
	8	2	**3B-4508**	4	LOCKWASHER	
	9	2	**3B-4512**	1	LOCKWASHER	
	10	2	**4M-6425**	2	BOLT (5/16-18X1-IN)	
	11	2	**5W-1437**	2	LOCKWASHER	
	12	2	**8T-9383**	2	BOLT (1/2-13X0.75-IN)	
	13	2	**9B-0453**	2	LOCKWASHER	
	14	2	**253-8981**	4	ROD-THREADED	
	15	2	**6V-8188**	6	NUT (1/2-13-THD)	

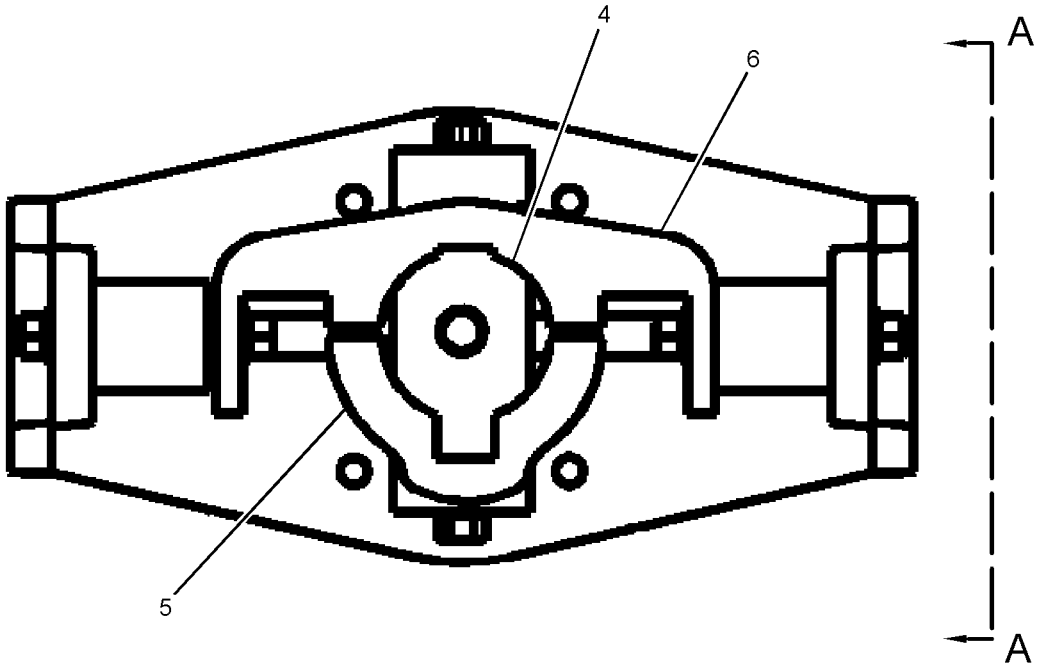

REFER TO ALL ILLUSTRATIONS OF THIS GROUP FOR AUXILIARY VIEWS

GRAPHIC #1 g01186401

234-9970 **MOUNTING GP-RECEIVER** *(contd.)* **i02294016**

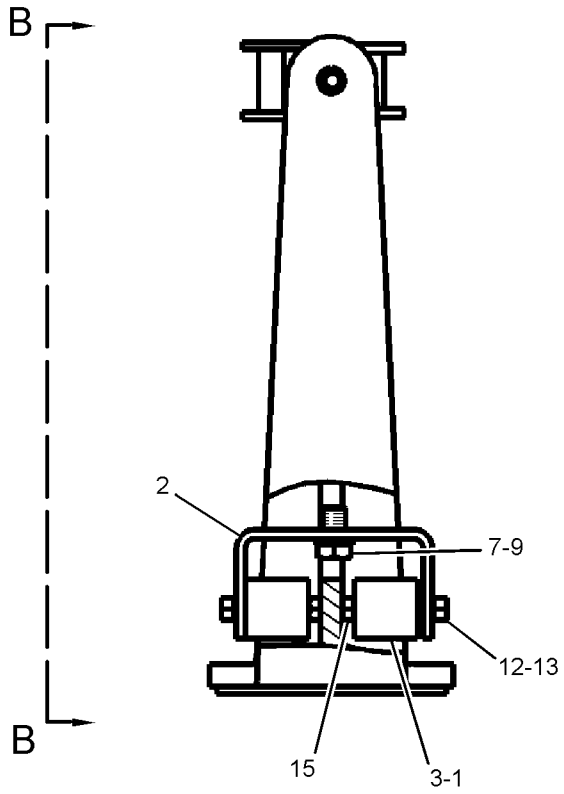

VIEW A-A

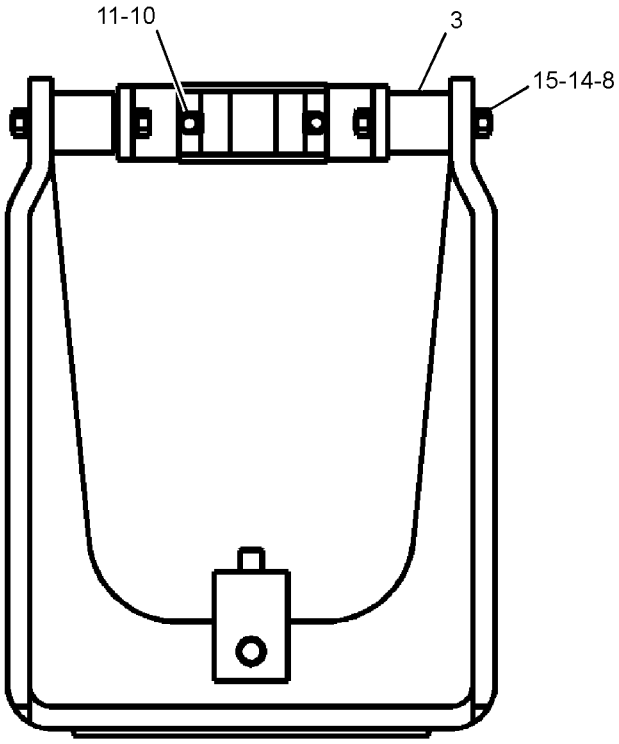

VIEW B-B

GRAPHIC #2 **<END>** g01186365

283-7960 POWER SUPPLY GP–GRADE CONTROL

S/N: R9H1-UP

PART OF 307-0155 GRADE CONTROL GP

AN ATTACHMENT

SMCS-5201, 7220 **i02756636**

NOTE	REF NO	GRAPHIC REF	PART NUMBER	QTY	PART NAME 1 2 3 4 5 6 (PRODUCT LEVEL)	SEE PAGE
	1	1	**226-9169**	1	MODULE AS-POWER SUPPLY	
	2	1	**8T-4224**	4	WASHER-HARD (8.8X16X2-MM THK)	
M	3	1	**8T-4189**	4	BOLT (M8X1.25X20-MM)	

M-METRIC PART

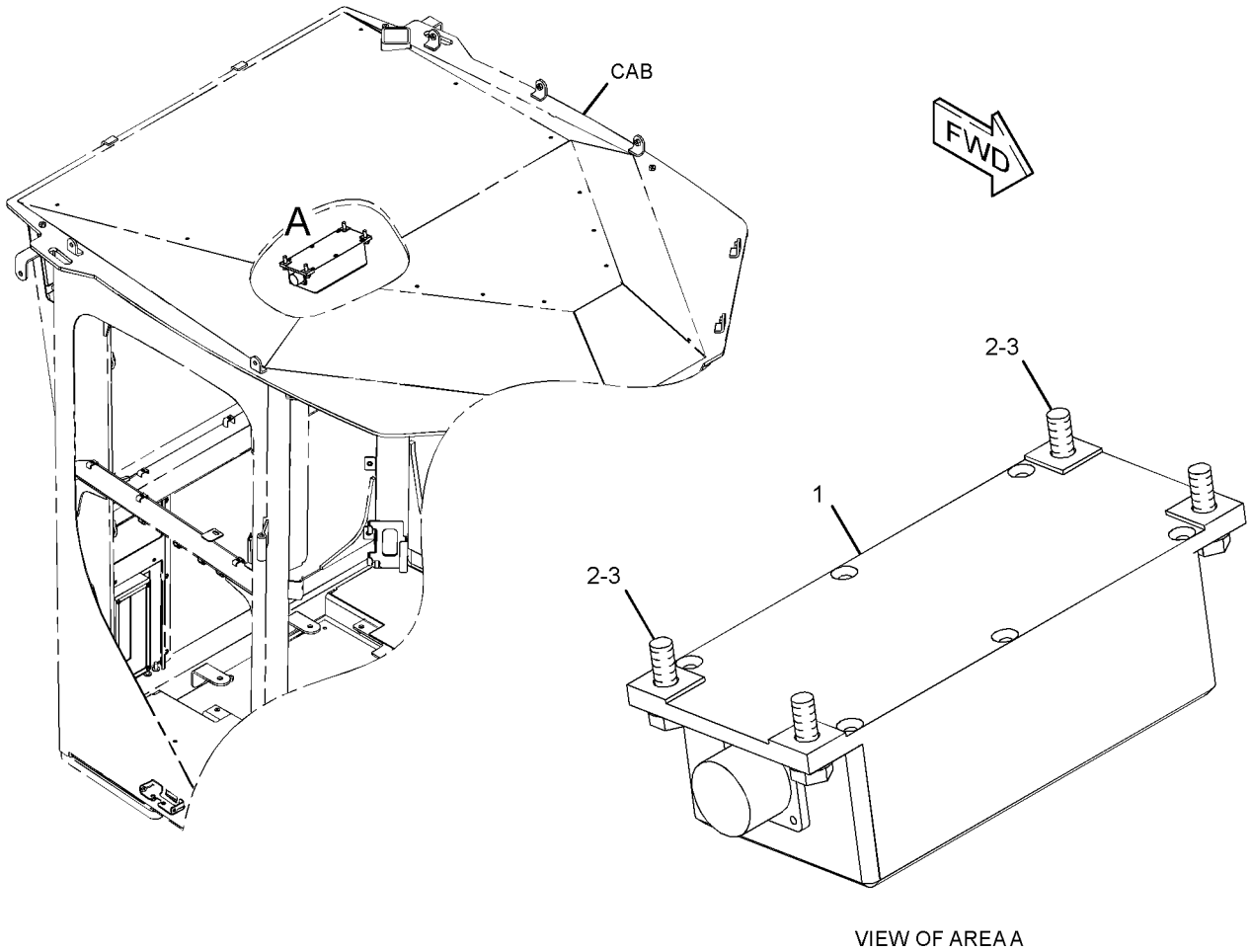

VIEW OF AREA A

GRAPHIC #1 **<END>** g01288314

336-3545 RADIO GP-COMMUNICATION—PRODUCT LINK 121SR

S/N: R9H1-UP
PART OF 235-6188 INSTALLATION AR-COMMUNICATION
AN ATTACHMENT

SMCS-733T **i03729461**

NOTE	PART NUMBER	QTY	PART NAME 1 2 3 4 5 6 (PRODUCT LEVEL)	SEE PAGE
	336-3566	1	SOFTWARE GP-COMMUNICATION (PRODUCT LINK 121SR)	

<END>

292-0301 RECEIVER AR-LASER—ACCUGRADE, SINGLE

S/N: R9H1-UP
FOR USE WITH MOTOR GRADER
FIELD INSTALLATION

SMCS-7009 **i04040580**

NOTE	PART NUMBER	QTY	PART NAME 1 2 3 4 5 6 (PRODUCT LEVEL)	SEE PAGE
Y	*292-0281*	1	MAST GP (LASER RECEIVER)	269
Y	*292-0908*	1	MOUNTING GP-MAST (LASER RECEIVER)	277
Y	*292-0285*	1	RECEIVER GP-LASER	282
	235-4587	1	CASE-PLASTIC	

Y-SEPARATE ILLUSTRATION

<END>

292-0310 RECEIVER AR-LASER—ACCUGRADE, DUAL

S/N: R9H1-UP
FOR USE WITH MOTOR GRADER
FIELD INSTALLATION

SMCS-7009 **i04042904**

NOTE	PART NUMBER	QTY	PART NAME 1 2 3 4 5 6 (PRODUCT LEVEL)	SEE PAGE
Y	**226-2333**	2	MAST GP (LASER RECEIVER)	268
Y	*292-0302*	2	MOUNTING GP-MAST (LASER RECEIVER)	277
Y	**234-9970**	2	MOUNTING GP-RECEIVER (MAST)	278
Y	*292-0285*	2	RECEIVER GP-LASER (ACCUGRADE, DUAL)	282
	248-1503	2	BRACKET GP-MOUNTING	
			(EACH INCLUDES)	
	7X-0343	4	BOLT (5/8-11X1.25-IN)	
	7X-0366	3	BOLT (3/4-10X2-IN)	
	8T-4122	4	WASHER-HARD (17X32X3.5-MM THK)	
	8T-4994	3	WASHER-HARD (20X36.5X3.5-MM THK)	
	248-1496	2	RISER AS (MAST)	
			(EACH INCLUDES)	
	3B-4512	1	LOCKWASHER	
	9S-1362	1	BOLT (3/4-16X2-IN)	
	231-0049	2	CABLE-COILED (MAST)	
	235-4587	1	CASE-PLASTIC	

Y-SEPARATE ILLUSTRATION

<END>

292-7971 RECEIVER AR-SATELLITE–ACCUGRADE, SINGLE GNSS, MS992

S/N: R9H1-UP

FIELD INSTALLATION

SMCS-7010 **i04041187**

NOTE	PART NUMBER	QTY	PART NAME 1 2 3 4 5 6 (PRODUCT LEVEL)	SEE PAGE
Y	*272-2286*	1	BRACKET GP-MOUNTING (MAST)	207
Y	*292-0292*	1	RECEIVER GP-SATELLITE (ACCUGRADE, SINGLE GNSS, MS992)	283
	271-6373	1	MAST AS	
	248-1502	1	RISER (ANGLE)	
	3E-9861	4	LOCKNUT (5/8-11-THD)	
	7X-0347	4	BOLT (5/8-11X2.25-IN)	
	8T-4122	8	WASHER-HARD (17X32X3.5-MM THK)	

Y-SEPARATE ILLUSTRATION

<END>

292-7972 RECEIVER AR-SATELLITE–ACCUGRADE, DUAL GNSS, MS992

S/N: R9H1-UP

FIELD INSTALLATION

SMCS-7010 **i04041188**

NOTE	PART NUMBER	QTY	PART NAME 1 2 3 4 5 6 (PRODUCT LEVEL)	SEE PAGE
Y	*272-2286*	1	BRACKET GP-MOUNTING (MAST)	207
Y	*292-0291*	1	RECEIVER GP-SATELLITE (ACCUGRADE, DUAL GNSS, MS992)	283
	271-6373	1	MAST AS	
	248-1502	1	RISER (ANGLE)	
	3E-9861	4	LOCKNUT (5/8-11-THD)	
	7X-0347	4	BOLT (5/8-11X2.25-IN)	
	8T-4122	8	WASHER-HARD (17X32X3.5-MM THK)	

Y-SEPARATE ILLUSTRATION

<END>

292-0285 RECEIVER GP-LASER–ACCUGRADE, DUAL

S/N: R9H1-UP

PART OF 292-0301, 292-0310 RECEIVER AR-LASER

SMCS-7009 **i03768195**

NOTE	PART NUMBER	QTY	PART NAME 1 2 3 4 5 6 (PRODUCT LEVEL)	SEE PAGE
	342-9559	1	RECEIVER AS-LASER	
	276-0764	1	CABLE-COILED (LASER RECEIVER)	

<END>

292-0291 RECEIVER GP-SATELLITE–
ACCUGRADE, DUAL GNSS, MS992
S/N: R9H1-UP

PART OF 292-7972 RECEIVER AR-SATELLITE, 323-8139 SENSOR AR-GRADE

SMCS-7010 **i03939430**

NOTE	PART NUMBER	QTY	PART NAME 1 2 3 4 5 6 (PRODUCT LEVEL)	SEE PAGE
	252-9628	2	MOUNTING GP-RECEIVER (TARGET)	
			(EACH INCLUDES)	
	8R-1803	5	WASHER (10.5X18X1-MM THK)	
M	**8T-9388**	4	BOLT (M10X1.5X25-MM)	
	113-0693	5	LOCKWASHER	
	289-8449	1	HANDLE AS	
	353-2794	2	RECEIVER AS-SATELLITE (GNSS, MS992)	
	255-0939	1	CASE-PLASTIC (RECEIVER)	
	286-3017	2	HANDLE (RECEIVER)	

M-METRIC PART

<END>

292-0292 RECEIVER GP-SATELLITE–
ACCUGRADE, SINGLE GNSS, MS992
S/N: R9H1-UP

PART OF 292-7971 RECEIVER AR-SATELLITE

SMCS-7010 **i03939432**

NOTE	PART NUMBER	QTY	PART NAME 1 2 3 4 5 6 (PRODUCT LEVEL)	SEE PAGE
	252-9628	1	MOUNTING GP-RECEIVER (TARGET)	
	8R-1803	5	WASHER (10.5X18X1-MM THK)	
M	**8T-9388**	4	BOLT (M10X1.5X25-MM)	
	113-0693	5	LOCKWASHER	
	289-8449	1	HANDLE AS	
	353-2794	1	RECEIVER AS-SATELLITE (GNSS, MS992)	
	255-0939	1	CASE-PLASTIC (RECEIVER)	
	286-3017	1	HANDLE (RECEIVER)	

M-METRIC PART

<END>

249-7789 SENSOR & MOUNTING GP

S/N: R9H1-UP

PART OF 323-8140 GRADE CONTROL AR, 262-2017, 323-8139 SENSOR AR-GRADE

SMCS-1408, 1439, 1906, 1907, 1912, 1917, 1923, 1924, 7400 **i03091096**

NOTE	PART NUMBER	QTY	PART NAME 1 2 3 4 5 6 (PRODUCT LEVEL)	SEE PAGE
	244-1714	1	SENSOR GP-POSITION (BLADE ROTATION)	
	269-3277	1	RING	
	284-5170	1	SOFTWARE (ROTATION SENSOR)	
	276-6146	2	SENSOR AS-ANGLE (AS400TC) (ANGLE)	
	255-0941	1	BRACKET AS-SENSOR	
	269-3303	3	SCREW (M6X1-THD)	
	269-3304	3	SPACER-SPECIAL	
	250-2172	1	KIT-BRACKET	
			(INCLUDES BOLTS & WASHER-HARD)	

<END>

295-9879 SENSOR & MOUNTING GP

S/N: R9H1-UP

AN ATTACHMENT

SMCS-1408, 1439, 1906, 1907, 1912, 1917, 1923, 1924, 7400 **i02922405**

NOTE	PART NUMBER	QTY	PART NAME 1 2 3 4 5 6 (PRODUCT LEVEL)	SEE PAGE
M	**8T-3844**	2	BOLT (M6X1X70-MM)	
M	**143-6020**	2	BOLT-SOCKET HEAD (M6X1X75-MM)	
M	**5C-2890**	2	NUT (M6X1-THD)	
	276-6146	1	SENSOR AS-ANGLE	
	9X-8256	2	WASHER (6.6X12X2-MM THK)	

M-METRIC PART

<END>

336-4806 SENSOR & MOUNTING GP

S/N: R9H1-UP

FIELD INSTALLATION

SMCS-1408, 1439, 1906, 1907, 1912, 1917, 1923, 1924, 7400 **i03421165**

NOTE	PART NUMBER	QTY	PART NAME 1 2 3 4 5 6 (PRODUCT LEVEL)	SEE PAGE
	276-6146	1	SENSOR AS-ANGLE (AS400TC)	
	6B-5310	1	BOLT (3/4-16X3.25-IN)	
	7X-0265	2	BOLT (1/4-20X2.75-IN)	
	7X-0346	3	BOLT (5/8-11X2-IN)	
	7X-0349	1	BOLT (5/8-11X3-IN)	
	254-9951	1	CABLE-COILED (ANGLE SENSOR)	
	7X-0448	1	NUT (5/8-11-THD)	
	336-4808	1	PLATE-MOUNTING	
	5P-8248	1	WASHER-HARD (20X36.5X3.5-MM THK)	
	8T-4122	5	WASHER-HARD (17X32X3.5-MM THK)	
	8T-4205	2	WASHER-HARD (7.2X14.5X2-MM THK)	

<END>

276-8491 SENSOR & MTG GP-POSITION–

VARIABLE BLADE FLOAT

S/N: R9H1-UP

PART OF 276-8498 PANEL GP-CONTROL

AN ATTACHMENT

SMCS-1408, 4806, 7400 **i02662279**

NOTE	REF NO	GRAPHIC REF	PART NUMBER	QTY	PART NAME 1 2 3 4 5 6 (PRODUCT LEVEL)	SEE PAGE
	1	1	**112-0858**	4	BEARING	
	2	1	**127-3008**	2	SPRING	
	3	1	**142-2527**	4	GASKET	
Y	4	1	**219-2392**	2	SENSOR GP-POSITION (VARIABLE BLADE FLOAT)	292
	5	1	**244-2710**	2	BLOCK	
	6	1	**244-2711**	2	SHAFT	
	7	1	**249-4099**	2	PLATE	
	8	1	**276-8492**	1	PLATE AS	
M		1	**6V-9632**	4	NUT-WELD (M6X1-THD)	
		1	**091-4537**	4	BOSS-THREADED (M6X1-THD)	
	9	1	**276-9617**	2	DETENT	
	10	1	**127-4838**	2	SETSCREW-SOCKET (8-32X0.375-IN)	
	11	1	**1M-6718**	2	BALL	
M	12	1	**3T-0849**	4	BOLT-SOCKET HEAD (M6X1X25-MM)	
	13	1	**8T-0328**	4	WASHER-HARD (5.5X10X1-MM THK)	
	14	1	**8T-5410**	2	SEAL-LIP TYPE	
M	15	1	**8T-6699**	4	BOLT-SOCKET HEAD (M5X0.8X35-MM)	
	16	1	**8T-7566**	4	PIN-SPRING	
	17	1	**9X-8256**	4	WASHER (6.6X12X2-MM THK)	

M-METRIC PART
Y-SEPARATE ILLUSTRATION

276-8491 SENSOR & MTG GP-POSITION *(contd.)* **i02662279**

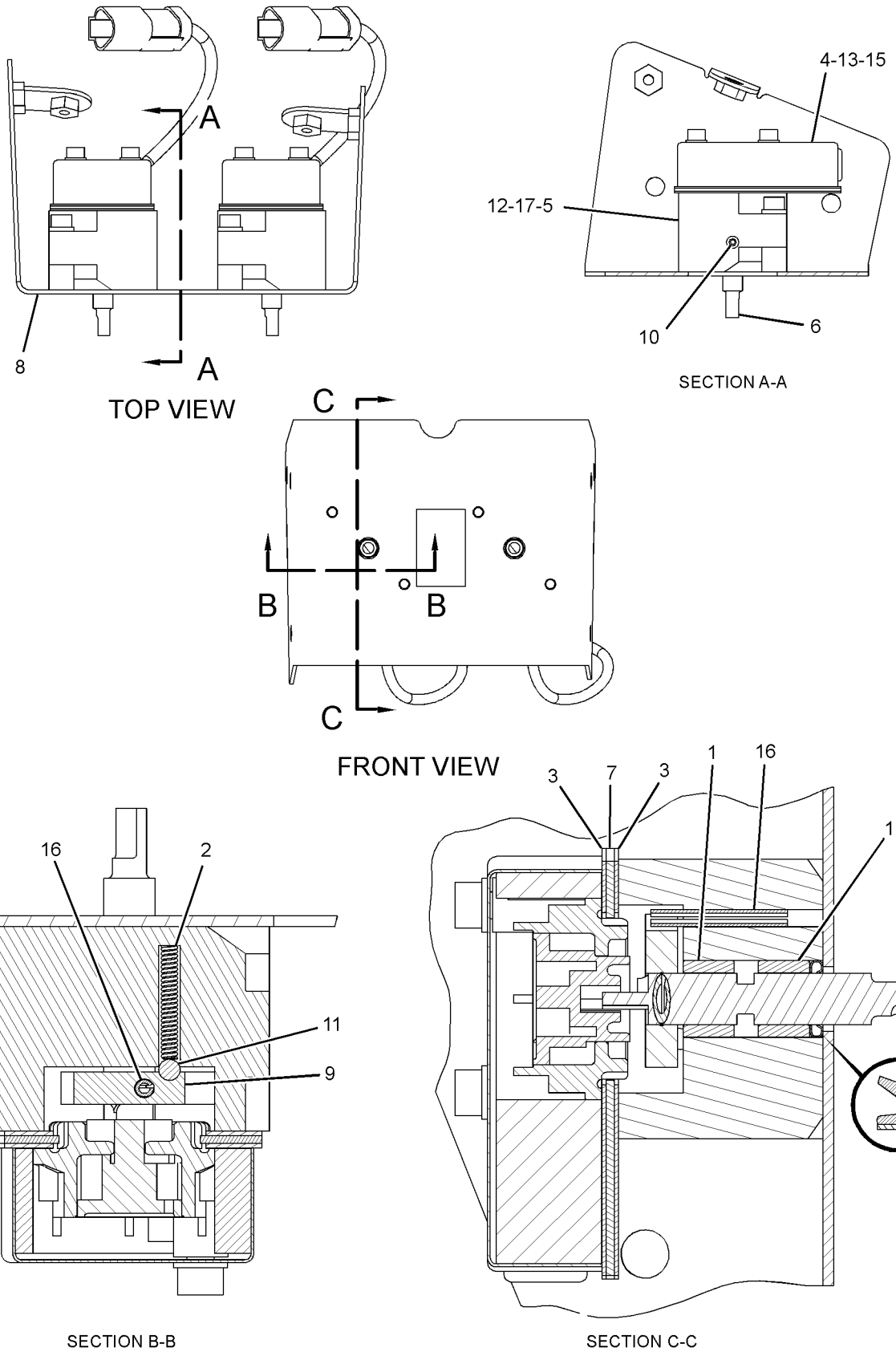

GRAPHIC #1 **<END>** g01316794

287-6156 SENSOR & MTG GP-POSITION

S/N: R9H1-UP

PART OF 260-1870 WIRING GP-REAR

SMCS-1408, 4806, 7400 **i02835913**

NOTE	REF NO	GRAPHIC REF	PART NUMBER	QTY	PART NAME 1 2 3 4 5 6 (PRODUCT LEVEL)	SEE PAGE
	1	1	**6V-0894**	2	SEAL-O-RING	
	2	1	**116-0118**	1	CLIP	
CY	3	1	**266-1467**	2	SENSOR GP-POSITION (ROTARY) (ARTICULATION)	293
	4	1	**166-0690**	2	BLOCK AS-MOUNTING	
	5	1	**287-6155**	2	LEVER	
	6	1	**301-2311**	1	BRACKET AS	
M		1	**8T-3490**	2	NUT-WELD (M10X1.5-THD)	
	7	1	**130-5300**	1	CLIP	
	8	1	**2F-7888**	4	SCREW-MACHINE (10-32X1.25-IN)	
	9	1	**3B-4619**	2	PIN-COTTER	
	10	1	**4B-4274**	4	WASHER (5.5X13X1.2-MM THK)	
	11	1	**4M-5281**	4	BOLT (1/4-20X0.75-IN)	
	12	1	**8T-4121**	2	WASHER-HARD (11X21X2.5-MM THK)	
M	13	1	**8T-4137**	2	BOLT (M10X1.5X20-MM)	
	14	1	**8T-4205**	4	WASHER-HARD (7.2X14.5X2-MM THK)	

C-CHANGE FROM PREVIOUS TYPE
M-METRIC PART
Y-SEPARATE ILLUSTRATION

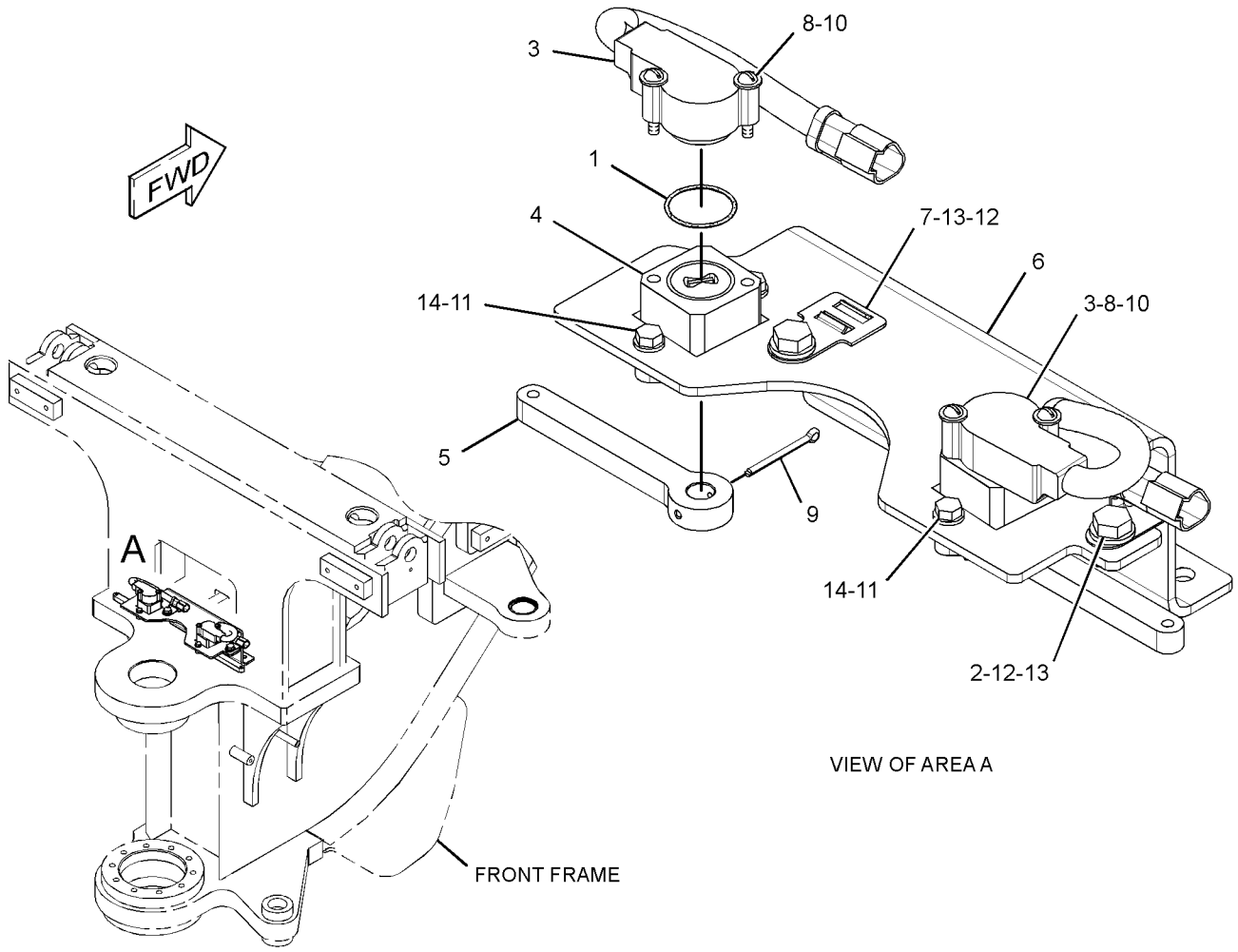

GRAPHIC #1 **<END>** g01415724

262-2017 SENSOR AR-GRADE

S/N: R9H1-UP
FOR USE WITH M SERIES MOTOR GRADER
FIELD INSTALLATION

SMCS-5953, 6060 **i03645916**

NOTE	PART NUMBER	QTY	PART NAME 1 2 3 4 5 6 (PRODUCT LEVEL)	SEE PAGE
Y	*249-7789*	1	SENSOR & MOUNTING GP (ACCUGRADE)	284
	324-2694	1	FASTENER GP-SENSOR (ANGLE)	
	061-6665	2	BOLT (1/2-13X1.25-IN)	
M	**9X-2537**	4	BOLT-SOCKET HEAD (M6X1X70-MM)	
	186-0359	1	CLIP	
M	**5C-2890**	4	NUT (M6X1-THD)	
	9X-8256	8	WASHER (6.6X12X2-MM THK)	

M-METRIC PART
Y-SEPARATE ILLUSTRATION

<END>

323-8139 SENSOR AR-GRADE–CD700

S/N: R9H1-UP
FOR USE WITH ACCUGRADE
FIELD INSTALLATION

SMCS-5953, 6060 **i04040313**

NOTE	PART NUMBER	QTY	PART NAME 1 2 3 4 5 6 (PRODUCT LEVEL)	SEE PAGE
Y	*272-2286*	2	BRACKET GP-MOUNTING (MAST)	207
Y	*286-0134*	1	DISPLAY GP-MONITOR (CD700)	730
Y	**286-9124**	3	DISPLAY GP-MONITOR (LIGHT BAR)	731
Y	*292-0291*	1	RECEIVER GP-SATELLITE (ACCUGRADE, DUAL GNSS, MS992)	283
Y	*249-7789*	1	SENSOR & MOUNTING GP (ACCUGRADE)	284
Y	*253-1964*	1	WIRING GP-MONITOR (CD700)	374
	324-2694	1	FASTENER GP-SENSOR (ANGLE)	
M	**5C-2890**	4	NUT (M6X1-THD)	
M	**9X-2537**	4	BOLT-SOCKET HEAD (M6X1X70-MM)	
	9X-8256	8	WASHER (6.6X12X2-MM THK)	
	061-6665	2	BOLT (1/2-13X1.25-IN)	
	186-0359	1	CLIP	
	271-6373	2	MAST AS	
	248-1502	2	RISER (ANGLE)	
	3E-9861	4	LOCKNUT (5/8-11-THD)	
	7X-0347	4	BOLT (5/8-11X2.25-IN)	
	8T-4122	8	WASHER-HARD (17X32X3.5-MM THK)	

M-METRIC PART
Y-SEPARATE ILLUSTRATION

<END>

231-1975 SENSOR GP-ENGINE

S/N: MHX1304-9843
PART OF 227-5359, 231-0876 ENGINE AR-COMPLETE
ALSO AN ATTACHMENT

SMCS-1052, 1087, 1439, 1906, 1912, 1917, 1923, 1924, 1925

i03554041

NOTE	REF NO	GRAPHIC REF	PART NUMBER	QTY	PART NAME 1 2 3 4 5 6 (PRODUCT LEVEL)	SEE PAGE
	1	1	**9X-0262**	1	ADAPTER	
Y	2	1	**230-7149**	1	SENSOR GP-SPEED (TIMING, CRANKSHAFT)	306
	3	1	**234-4355**	1	ADAPTER-O-RING	
Y	4	1	*239-2395*	1	SENSOR GP-PRESSURE (ATMOSPHERIC AIR)	296
Y	5	1	*239-2396*	1	SENSOR GP-PRESSURE (ENGINE OIL)	297
Y	6	1	*239-2397*	1	SENSOR GP-SPEED (TIMING, CAMSHAFT)	307
CY	7	1	*274-7395*	1	SENSOR GP-TEMPERATURE (AIR INLET MANIFOLD)	315
CY	8	1	*274-7396*	1	SENSOR GP-TEMPERATURE (COOLANT, WATER)	316
	9	1	**164-9609**	1	ELBOW	
Y	10	1	*239-5674*	1	SENSOR GP-PRESSURE (AIR INLET MANIFOLD)	299
	11	1	**6V-5048**	2	SEAL-O-RING	
	12	1	**6V-5049**	1	SEAL-O-RING	
M	13	1	**6V-5215**	2	BOLT (M8X1.25X16-MM)	
	14	1	**9M-1974**	2	WASHER-HARD (8.8X16X2-MM THK)	

C-CHANGE FROM PREVIOUS TYPE
M-METRIC PART
Y-SEPARATE ILLUSTRATION

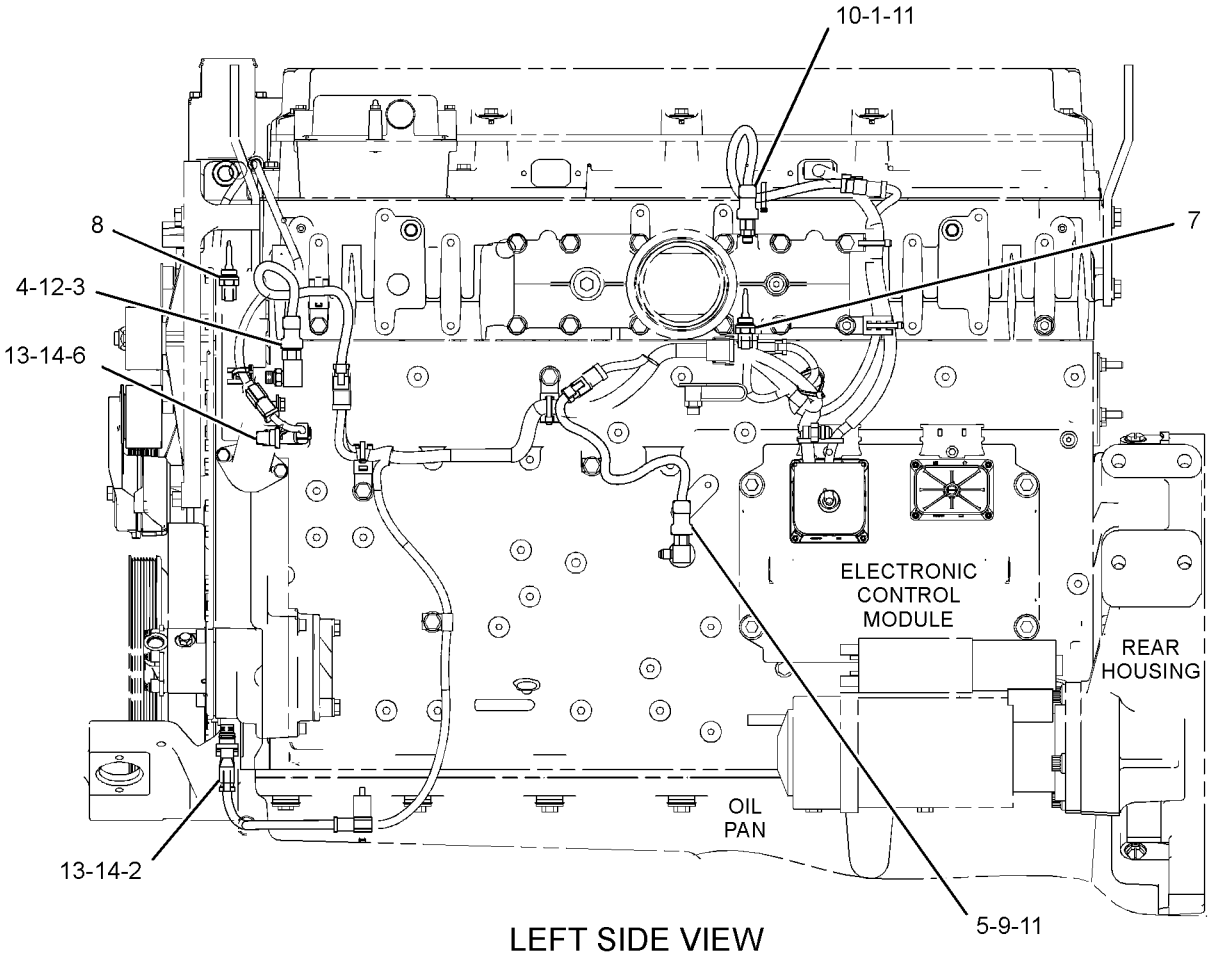

LEFT SIDE VIEW

GRAPHIC #1

<END>

g01274929

357-0523 SENSOR GP-ENGINE

S/N: MHX9844-UP

PART OF 231-0876, 349-4462 ENGINE AR-COMPLETE, 359-0362 ENGINE AR-CORE

ALSO AN ATTACHMENT

SMCS-1052, 1087, 1439, 1906, 1912, 1917, 1923, 1924, 1925

i04039994

NOTE	REF NO	GRAPHIC REF	PART NUMBER	QTY	PART NAME 1 2 3 4 5 6 (PRODUCT LEVEL)	SEE PAGE
	1	1	**234-4355**	1	ADAPTER-O-RING	
Y	2	1	*234-5012*	1	SENSOR GP-TEMPERATURE (COOLANT)	313
Y	3	1	*234-5013*	1	SENSOR GP-TEMPERATURE (INTAKE AIR MANIFOLD)	314
Y	4	1	*249-0096*	1	SENSOR GP-PRESSURE (INTAKE AIR MANIFOLD)	300
Y	5	1	*276-8548*	1	SENSOR GP-PRESSURE (ATMOSPHERIC)	301
Y	6	1	*276-9067*	1	SENSOR GP-PRESSURE (ENGINE OIL)	302
Y	7	1	*300-9805*	1	SENSOR GP-SPEED (PRIMARY, TIMING)	308
Y	8	1	*300-9806*	1	SENSOR GP-SPEED (SECONDARY, TIMING)	309
	9	1	**164-9609**	1	ELBOW	
	10	1	**214-7566**	1	SEAL-O-RING	
	11	1	**214-7568**	1	SEAL-O-RING	
M	12	1	**6V-5215**	2	BOLT (M8X1.25X16-MM)	
	13	1	**9M-1974**	2	WASHER-HARD (8.8X16X2-MM THK)	

M-METRIC PART
Y-SEPARATE ILLUSTRATION

357-0523 **SENSOR GP-ENGINE** *(contd.)* **i04039994**

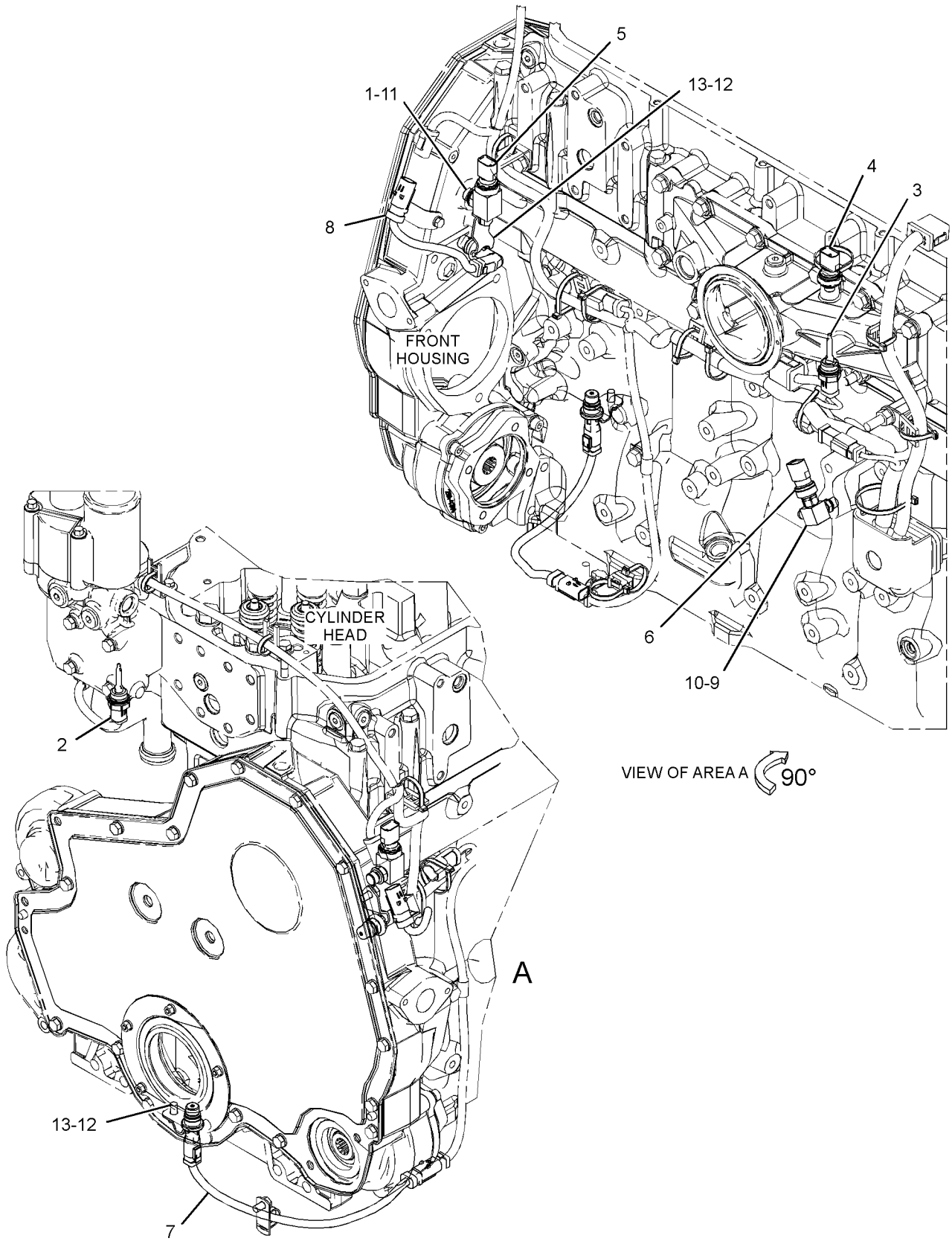

GRAPHIC #1 **<END>** g02232113

219-2392 SENSOR GP-POSITION

S/N: R9H1-UP
PART OF 276-8491 SENSOR & MTG GP-POSITION
AN ATTACHMENT

SMCS-1408, 3168, 3175, 4269, 4809 **i01816866**

NOTE	REF NO	GRAPHIC REF	PART NUMBER	QTY	PART NAME 1 2 3 4 5 6 (PRODUCT LEVEL)	SEE PAGE
	1	1	**102-8803**	1	KIT-RECEPTACLE (3-PIN)	
					(INCLUDES RECEPTACLE AS & WEDGE)	
	2	1	**186-3735**	3	PIN-CONNECTOR (16-GA TO 18-GA)	
	3	1	**3E-3371**	1	WEDGE-RECEPTACLE LOCK (3-PIN)	

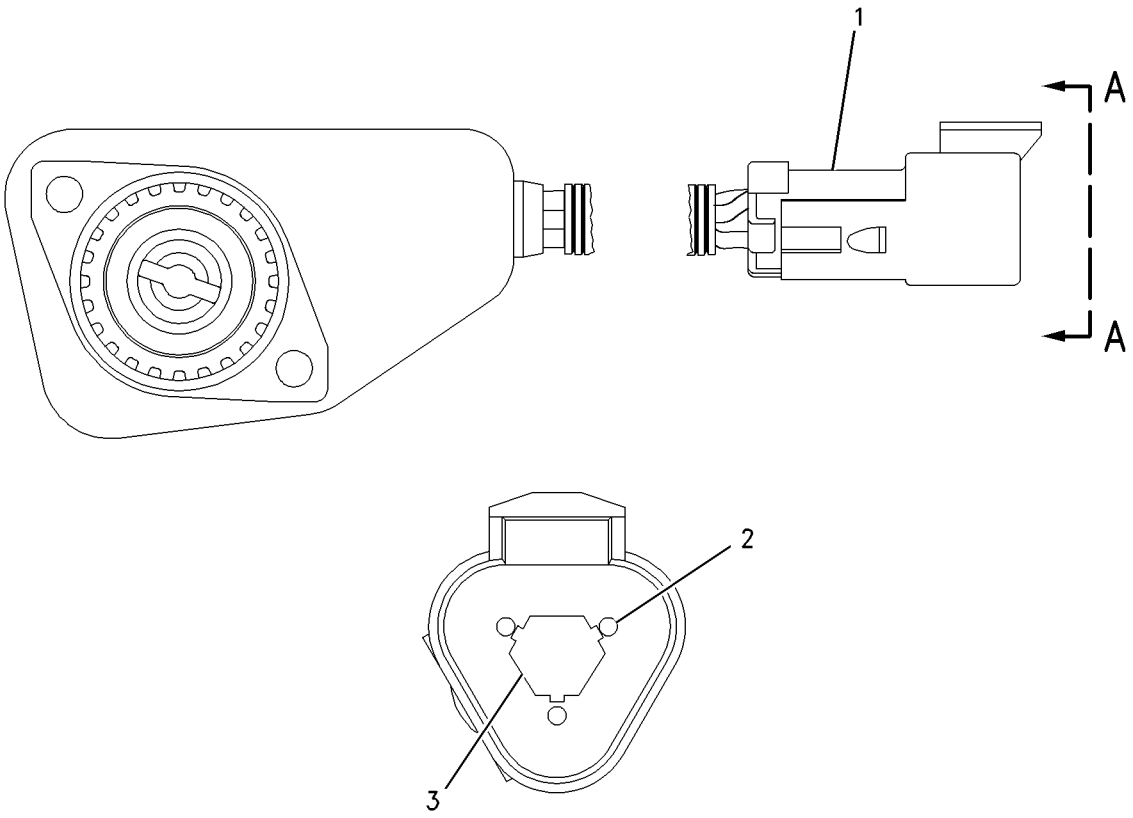

VIEW A-A

GRAPHIC #1 **<END>** g00931978

266-1467 SENSOR GP-POSITION–ROTARY

S/N: R9H1-UP

PART OF 265-8943 PEDAL GP-BRAKE, XMSN & GOV, 287-6156 SENSOR & MTG GP-POSITION

SMCS-1408, 3168, 3175, 4269, 4809 **i03371123**

NOTE	REF NO	GRAPHIC REF	PART NUMBER	QTY	PART NAME 1 2 3 4 5 6 (PRODUCT LEVEL)	SEE PAGE
	1	1	**9X-3401**	3	PIN-CONNECTOR (16-GA TO 18-GA)	
					–OR–	
		1	**126-1767**	3	PIN-CONNECTOR (14-GA TO 16-GA)	
	2	1	**102-8803**	1	KIT-RECEPTACLE (3-PIN)	
					(INCLUDES RECEPTACLE AS & WEDGE)	

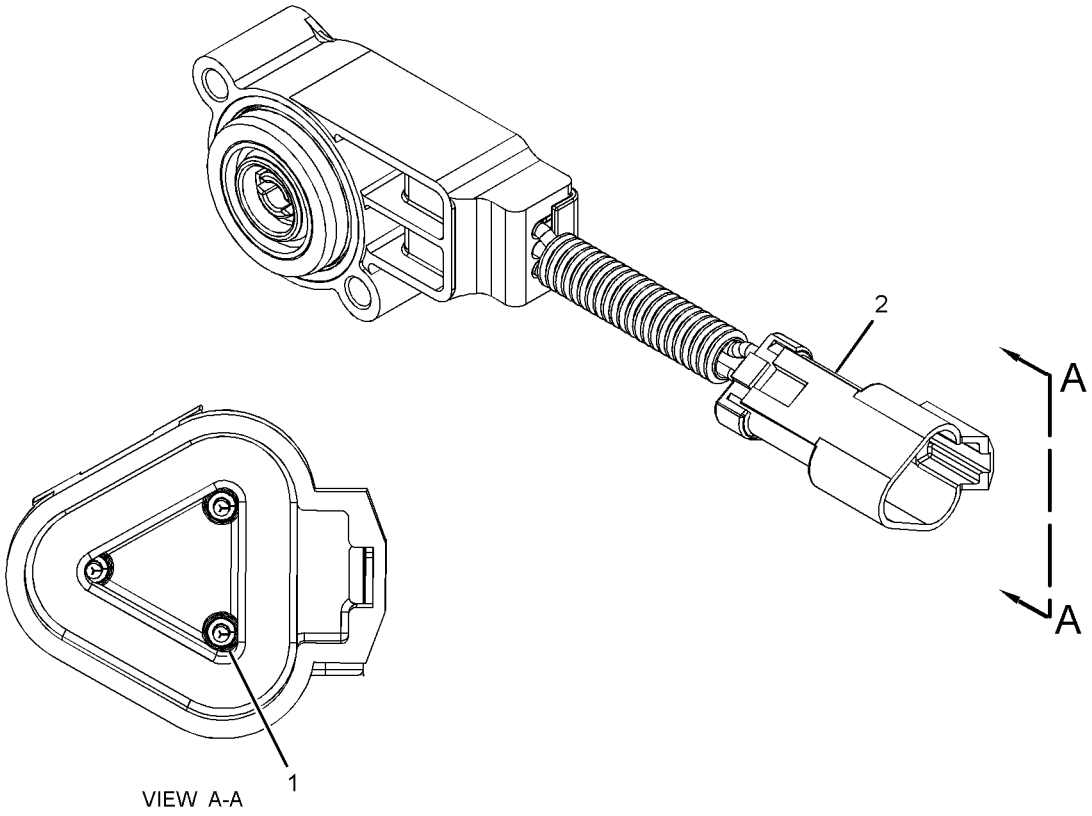

GRAPHIC #1 **<END>** g01740694

194-6722 SENSOR GP-PRESSURE

S/N: MHX1304-UP
PART OF 239-2395 SENSOR GP-PRESSURE
ALSO AN ATTACHMENT

SMCS-1052, 1058, 1408, 1718, 1907, 1912, 1916, 1917, 1923, 1924, 1925, 3175, 4351, 4352, 7400, 7494 **i03698115**

NOTE	REF NO	GRAPHIC REF	PART NUMBER	QTY	PART NAME 1 2 3 4 5 6 (PRODUCT LEVEL)	SEE PAGE
E	1	1	**9X-1813**		SLEEVE (34-CM)	
	2	1	**155-2260**	1	KIT-CONNECTING PLUG (3-PIN)	
					(INCLUDES PLUG AS, WEDGE & INTERFACE SEAL)	
	3	1	**180-9340**	3	SOCKET-CONNECTOR (14-GA TO 18-GA)	

E-ORDER BY THE CENTIMETER

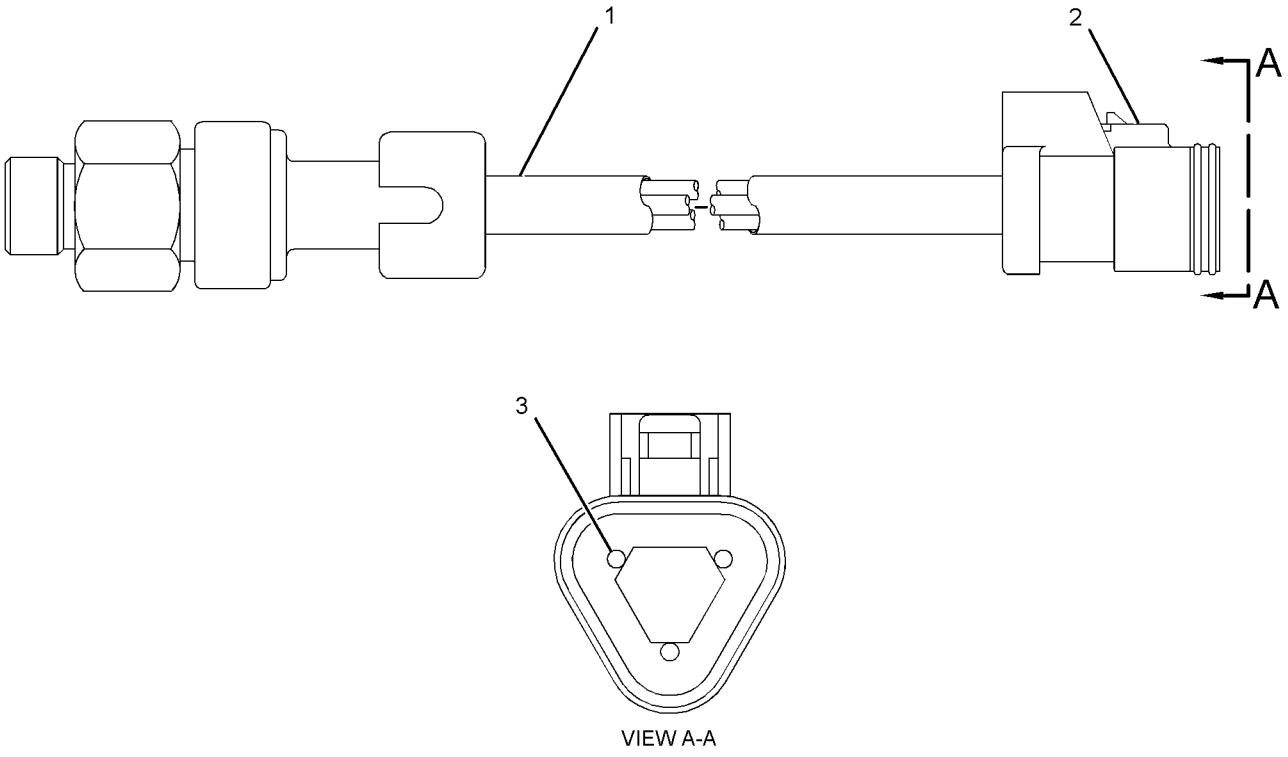

VIEW A-A

GRAPHIC #1 **<END>** g01991395

194-6725 SENSOR GP-PRESSURE

S/N: MHX1214-UP
PART OF 239-2396 SENSOR GP-PRESSURE
ALSO AN ATTACHMENT

SMCS-1052, 1058, 1408, 1718, 1907, 1912, 1916, 1917, 1923, 1924, 1925, 3175, 4351, 4352, 7400, 7494

i03642385

NOTE	REF NO	GRAPHIC REF	PART NUMBER	QTY	PART NAME 1 2 3 4 5 6 (PRODUCT LEVEL)	SEE PAGE
E	1	1	**9X-1813**		SLEEVE (34-CM)	
	2	1	**155-2260**	1	KIT-CONNECTING PLUG (3-PIN)	
					(INCLUDES PLUG AS, INTERFACE SEAL & WEDGE)	
	3	1	**180-9340**	3	SOCKET-CONNECTOR (14-GA TO 18-GA)	

E-ORDER BY THE CENTIMETER

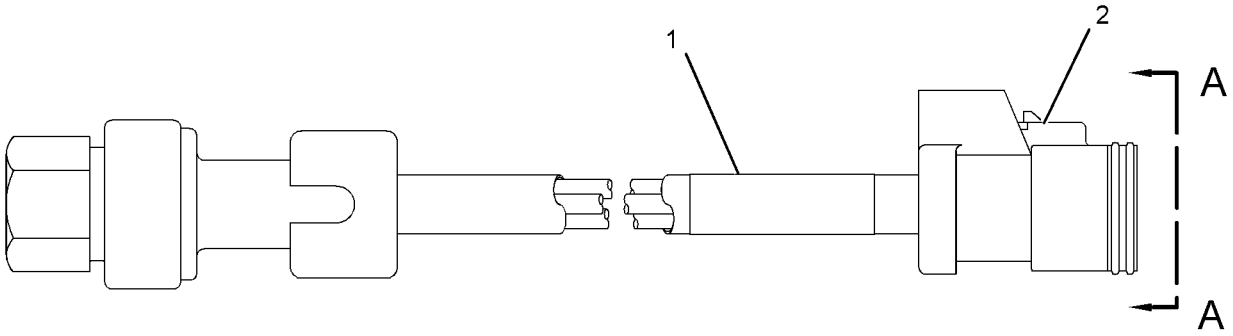

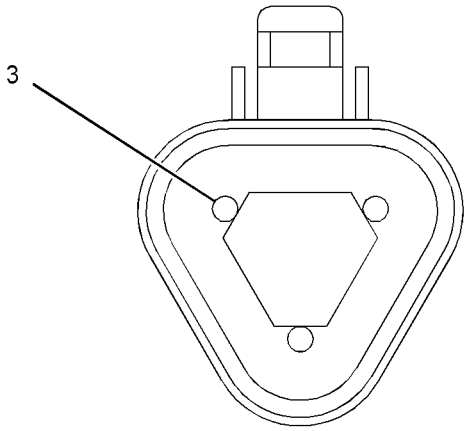

VIEW A-A

GRAPHIC #1

<END>

g01662003

239-2395 SENSOR GP-PRESSURE

S/N: MHX1304-UP
PART OF 231-1975 SENSOR GP-ENGINE
ALSO AN ATTACHMENT

SMCS-1052, 1058, 1408, 1718, 1907, 1912, 1916, 1917, 1923, 1924, 1925, 3175, 4351, 4352, 7400, 7494 **i03993925**

NOTE	REF NO	GRAPHIC REF	PART NUMBER	QTY	PART NAME 1 2 3 4 5 6 (PRODUCT LEVEL)	SEE PAGE
Y	1	1	**194-6722**	1	SENSOR GP-PRESSURE (ATMOSPHERIC)	294
	2	1	**214-7568**	1	SEAL-O-RING	

Y-SEPARATE ILLUSTRATION

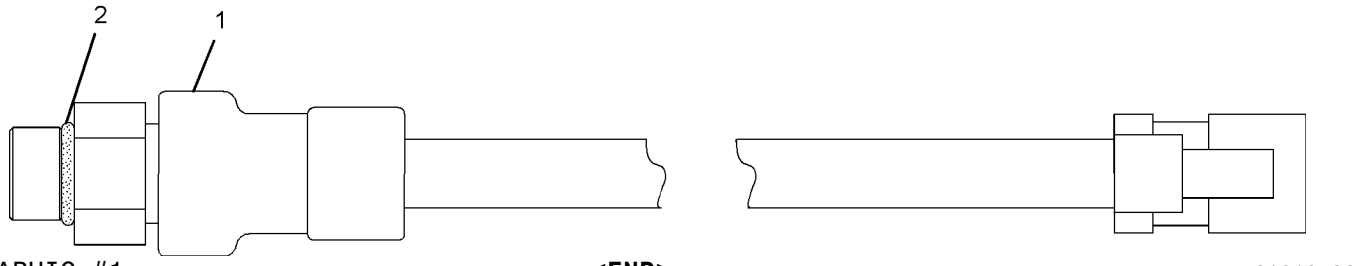

GRAPHIC #1 **<END>** g01019702

239-2396 SENSOR GP-PRESSURE

S/N: MHX1214-UP

PART OF 254-4998 FILTER GP-FUEL, 231-1975 SENSOR GP-ENGINE

ALSO AN ATTACHMENT

SMCS-1052, 1058, 1408, 1718, 1907, 1912, 1916, 1917, 1923, 1924, 1925, 3175, 4351, 4352, 7400, 7494

i03821338

NOTE	REF NO	GRAPHIC REF	PART NUMBER	QTY	PART NAME 1 2 3 4 5 6 (PRODUCT LEVEL)	SEE PAGE
Y	1	1	**194-6725**	1	SENSOR GP-PRESSURE	295
	2	1	**214-7566**	1	SEAL-O-RING	

Y-SEPARATE ILLUSTRATION

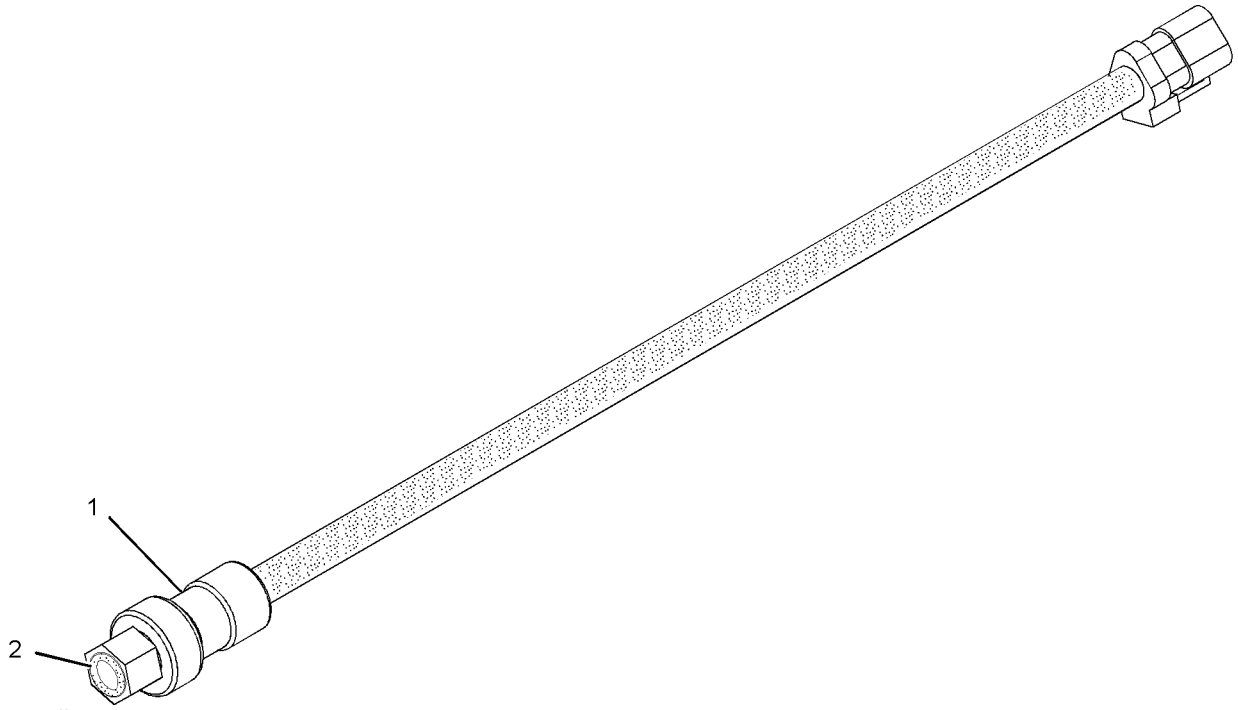

GRAPHIC #1

<END>

g01019323

239-3478 SENSOR GP-PRESSURE

S/N: MHX1304-UP
PART OF 239-5674 SENSOR GP-PRESSURE
ALSO AN ATTACHMENT

SMCS-1052, 1058, 1408, 1718, 1907, 1912, 1916, 1917, 1923, 1924, 1925, 3175, 4351, 4352, 7400, 7494

i03570562

NOTE	REF NO	GRAPHIC REF	PART NUMBER	QTY	PART NAME 1 2 3 4 5 6 (PRODUCT LEVEL)	SEE PAGE
	1	1	**102-8803**	1	KIT-RECEPTACLE (3-PIN)	
					(INCLUDES RECEPTACLE AS & WEDGE)	
	2	1	**180-9339**	3	PIN-CONNECTOR (14-GA TO 18-GA)	
E	3	1	**9X-1813**		SLEEVE (34-CM)	

E-ORDER BY THE CENTIMETER

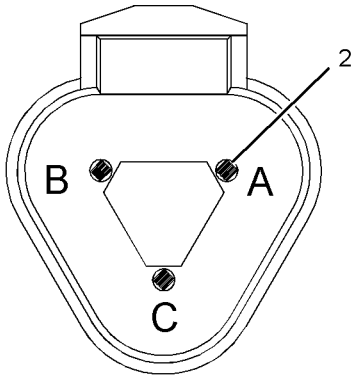

VIEW A-A

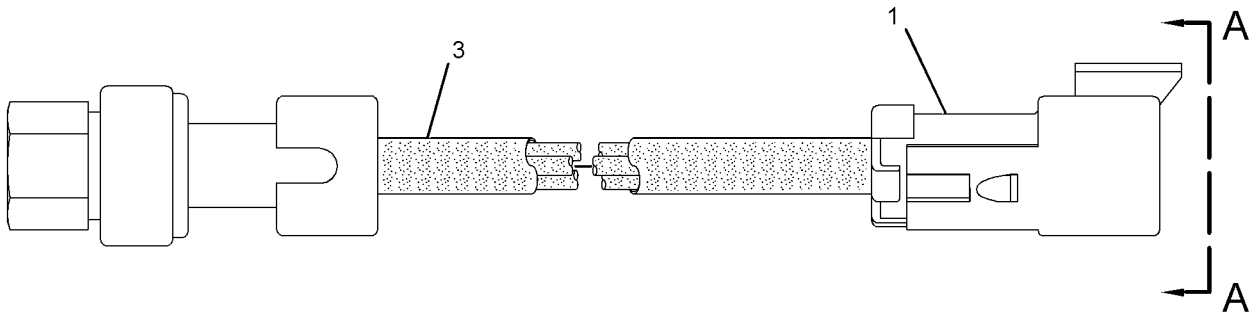

GRAPHIC #1 **<END>** g01896473

239-5674 SENSOR GP-PRESSURE

S/N: MHX1304-UP
PART OF 231-1975 SENSOR GP-ENGINE
ALSO AN ATTACHMENT

SMCS-1052, 1058, 1408, 1718, 1907, 1912, 1916, 1917, 1923, 1924, 1925, 3175, 4351, 4352, 7400, 7494 **i03821202**

NOTE	REF NO	GRAPHIC REF	PART NUMBER	QTY	PART NAME 1 2 3 4 5 6 (PRODUCT LEVEL)	SEE PAGE
Y	1	1	**239-3478**	1	SENSOR GP-PRESSURE	298
	2	1	**214-7566**	1	SEAL-O-RING	

Y-SEPARATE ILLUSTRATION

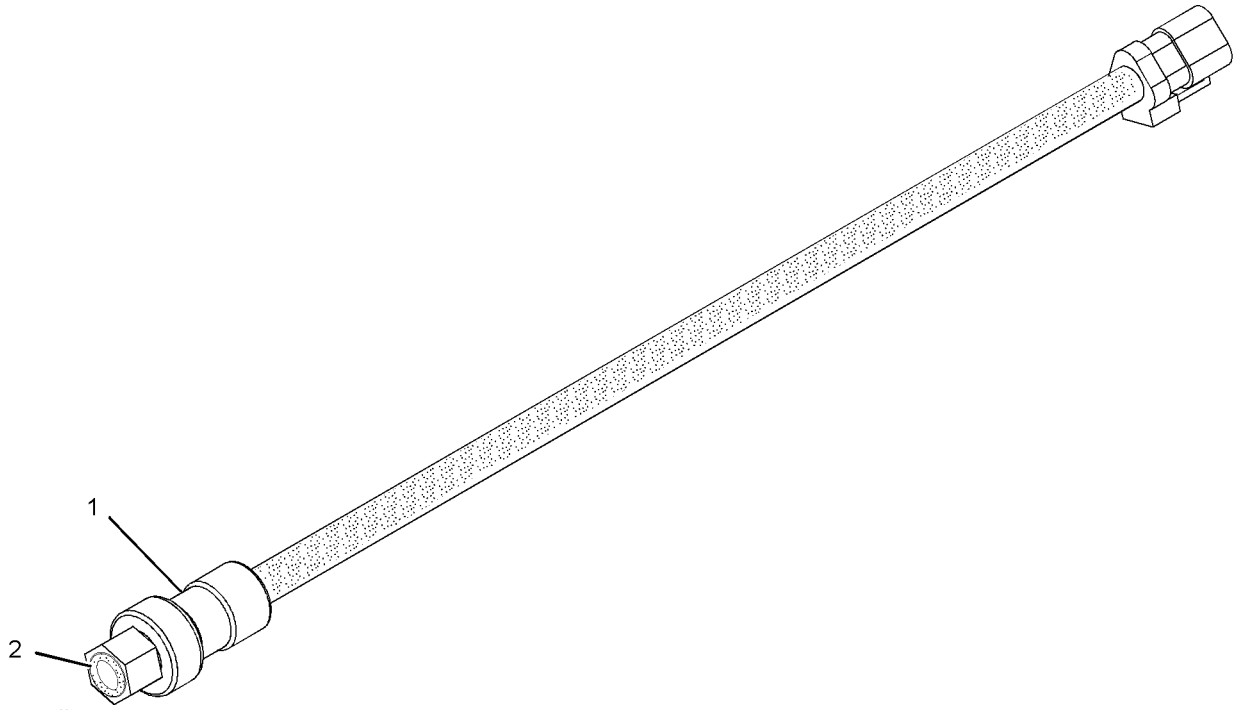

GRAPHIC #1 **<END>** g01019323

249-0096 SENSOR GP-PRESSURE

S/N: MHX9844-UP
PART OF 357-0523 SENSOR GP-ENGINE
ALSO AN ATTACHMENT

SMCS-1052, 1058, 1408, 1718, 1907, 1912, 1916, 1917, 1923, 1924, 1925, 3175, 4351, 4352, 7400, 7494

i03821357

NOTE	REF NO	GRAPHIC REF	PART NUMBER	QTY	PART NAME 1 2 3 4 5 6 (PRODUCT LEVEL)	SEE PAGE
	1	1	**274-6718**	1	SENSOR GP-PRESSURE	
	2	1	**214-7566**	1	SEAL-O-RING	

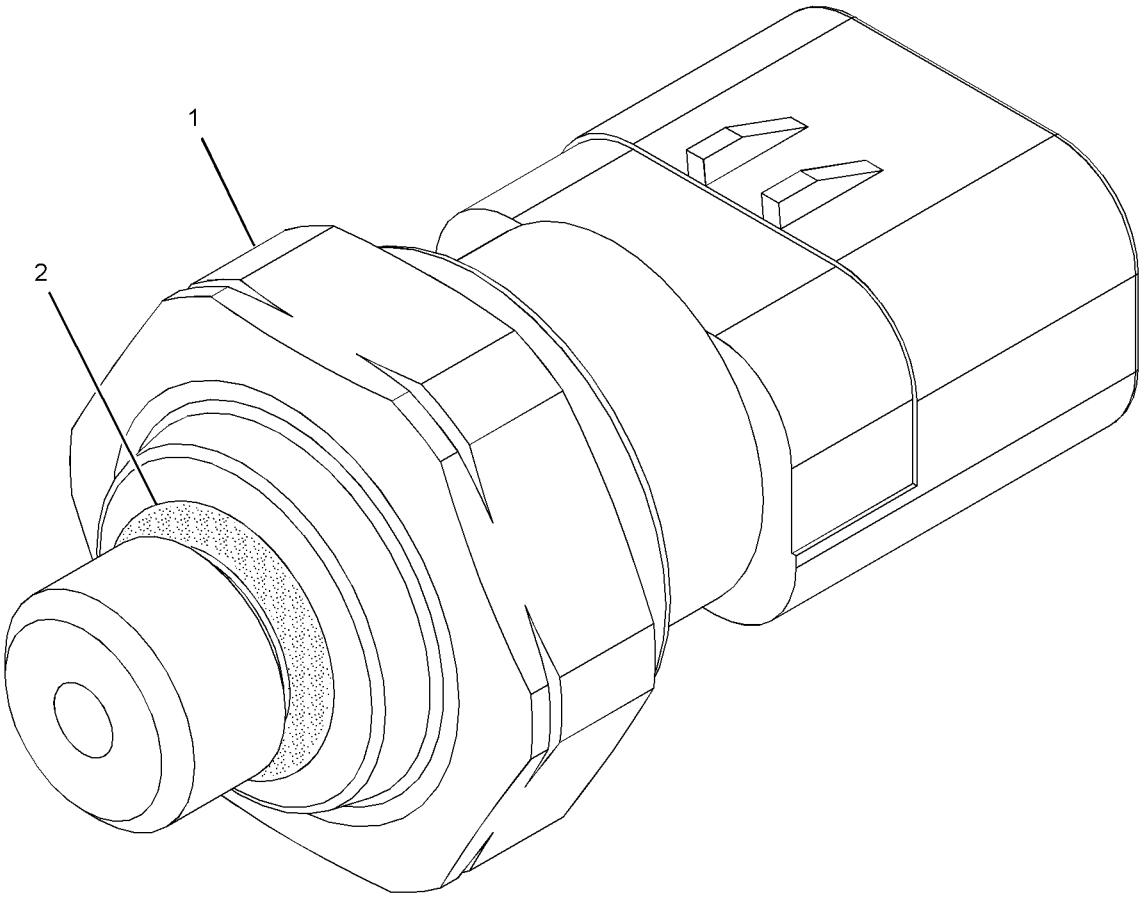

GRAPHIC #1

<END>

g01224445

276-8548 SENSOR GP-PRESSURE

S/N: MHX9844-UP
AMPSEAL CONNECTOR
PART OF 357-0523 SENSOR GP-ENGINE
ALSO AN ATTACHMENT

SMCS-1052, 1058, 1408, 1718, 1907, 1912, 1916, 1917, 1923, 1924, 1925, 3175, 4351, 4352, 7400, 7494

i03784732

NOTE	REF NO	GRAPHIC REF	PART NUMBER	QTY	PART NAME 1 2 3 4 5 6 (PRODUCT LEVEL)	SEE PAGE
	1	1	**274-6717**	1	SENSOR-PRESSURE	
	2	1	**214-7568**	1	SEAL-O-RING	

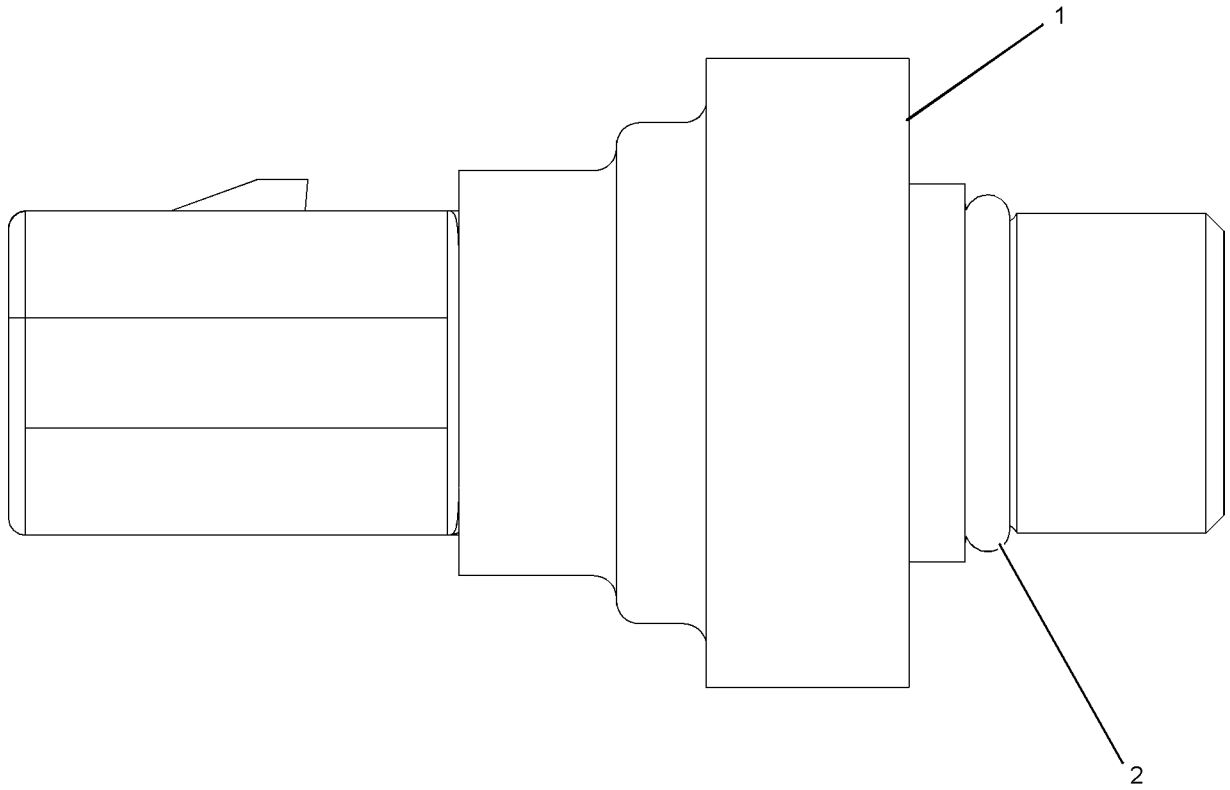

GRAPHIC #1

<END>

g01064278

276-9067 SENSOR GP-PRESSURE

S/N: MHX9844-UP
AMPSEAL CONNECTOR
PART OF 356-8382 FILTER GP-FUEL, 357-0523 SENSOR GP-ENGINE
ALSO AN ATTACHMENT

SMCS-1052, 1058, 1408, 1718, 1907, 1912, 1916, 1917, 1923, 1924, 1925, 3175, 4351, 4352, 7400, 7494 **i03920338**

NOTE	REF NO	GRAPHIC REF	PART NUMBER	QTY	PART NAME 1 2 3 4 5 6 (PRODUCT LEVEL)	SEE PAGE
	1	1	**274-6719**	1	SENSOR GP-PRESSURE	
		1	**3J-7354**	1	SEAL-O-RING	
		1	**237-0227**	1	PLUG AS-CONNECTOR (3-PIN)	
	2	1	**214-7566**	1	SEAL-O-RING	

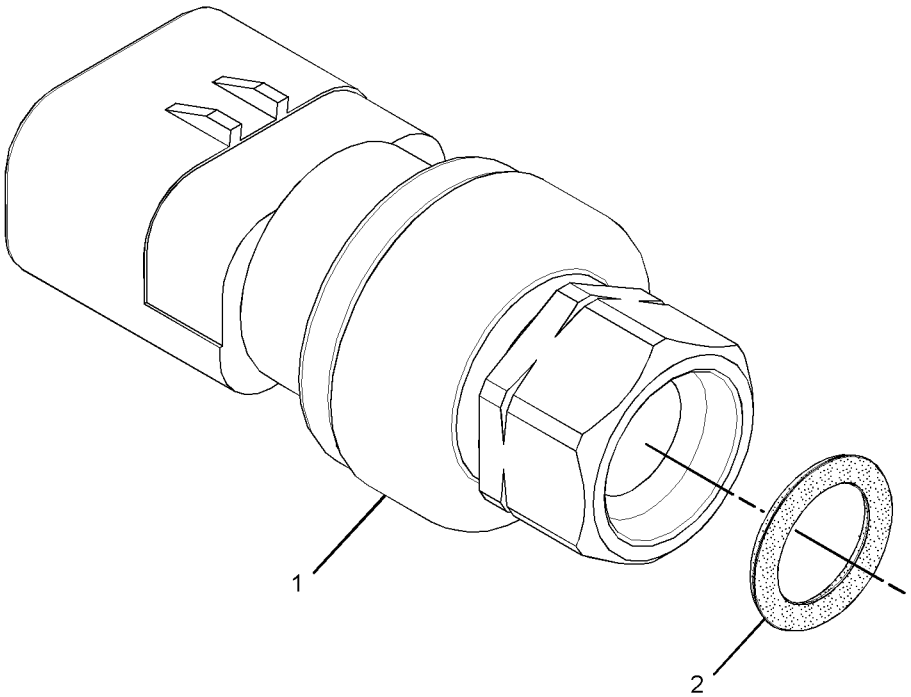

GRAPHIC #1 **<END>** g01994176

286-0132 SENSOR GP-SONIC

S/N: R9H1-UP
FOR USE WITH M SERIES MOTOR GRADER
FIELD INSTALLATION

SMCS-1408, 5645 **i04034989**

NOTE	PART NUMBER	QTY	PART NAME 1 2 3 4 5 6 (PRODUCT LEVEL)	SEE PAGE
Y	**248-1488**	2	BRACKET GP-MOUNTING (SONIC SENSOR)	205
Y	**321-1458**	1	FASTENER GP-SENSOR (SONIC)	489
Y	**321-1456**	1	SENSOR GP-SONIC (ST400C)	304
	248-1487	2	ROD	

Y-SEPARATE ILLUSTRATION

<END>

286-0133 SENSOR GP-SONIC

S/N: R9H1-UP
FOR USE WITH M SERIES MOTOR GRADER
FIELD INSTALLATION

SMCS-1408, 5645 **i04034993**

NOTE	PART NUMBER	QTY	PART NAME 1 2 3 4 5 6 (PRODUCT LEVEL)	SEE PAGE
Y	**248-1488**	1	BRACKET GP-MOUNTING (SONIC SENSOR)	205
Y	**321-1458**	1	FASTENER GP-SENSOR (SONIC)	489
Y	**321-1455**	1	SENSOR GP-SONIC (ST400C)	303
	248-1487	1	ROD	

Y-SEPARATE ILLUSTRATION

<END>

321-1455 SENSOR GP-SONIC

S/N: R9H1-UP
PART OF 286-0133 SENSOR GP-SONIC

SMCS-1408, 5645 **i03091101**

NOTE	PART NUMBER	QTY	PART NAME 1 2 3 4 5 6 (PRODUCT LEVEL)	SEE PAGE
	253-8330	1	SENSOR AS-SONIC (ST400)	
	258-7593	1	KIT-FOAM (POLYURETHANE)	
			(INCLUDES FOAMS)	
	258-7598	1	KIT-FOAM (STAINLESS STEEL,POLYURETHANE)	
			(INCLUDES BAR, BOLT, LOCTITE & FOAMS)	
	293-0773	1	SOFTWARE	
	248-1497	1	CABLE-COILED (SENSOR)	
	256-6944	1	CASE-CARRYING	

<END>

ELECTRICAL AND STARTING SYSTEM

321-1456 SENSOR GP-SONIC

S/N: R9H1-UP

PART OF 286-0132 SENSOR GP-SONIC

SMCS-1408, 5645 **i03091102**

NOTE	PART NUMBER	QTY	PART NAME 1 2 3 4 5 6 (PRODUCT LEVEL)	SEE PAGE
	253-8330	2	SENSOR AS-SONIC (ST400)	
			(EACH INCLUDES)	
	258-7593	1	KIT-FOAM	
			(INCLUDES FOAM)	
	258-7598	1	KIT-FOAM	
			(INCLUDES BAR-REFERENCE, BOLTS, FOAM, & LOCKTITE)	
	248-1497	2	CABLE-COILED (SENSOR)	
	256-6944	1	CASE-CARRYING	

<END>

ELECTRICAL AND STARTING SYSTEM

191-8303 SENSOR GP-SPEED

S/N: DZM1-UP

PART OF 253-8428 CONTROL GP-TRANSMISSION HYD

SMCS-1907, 1912, 3141, 3175, 4803, 7493 **i04046312**

NOTE	REF NO	GRAPHIC REF	PART NUMBER	QTY	PART NAME 1 2 3 4 5 6 (PRODUCT LEVEL)	SEE PAGE
	1		**137-6645**	1	PAD	
	2		**133-0260**	1	BRACKET	

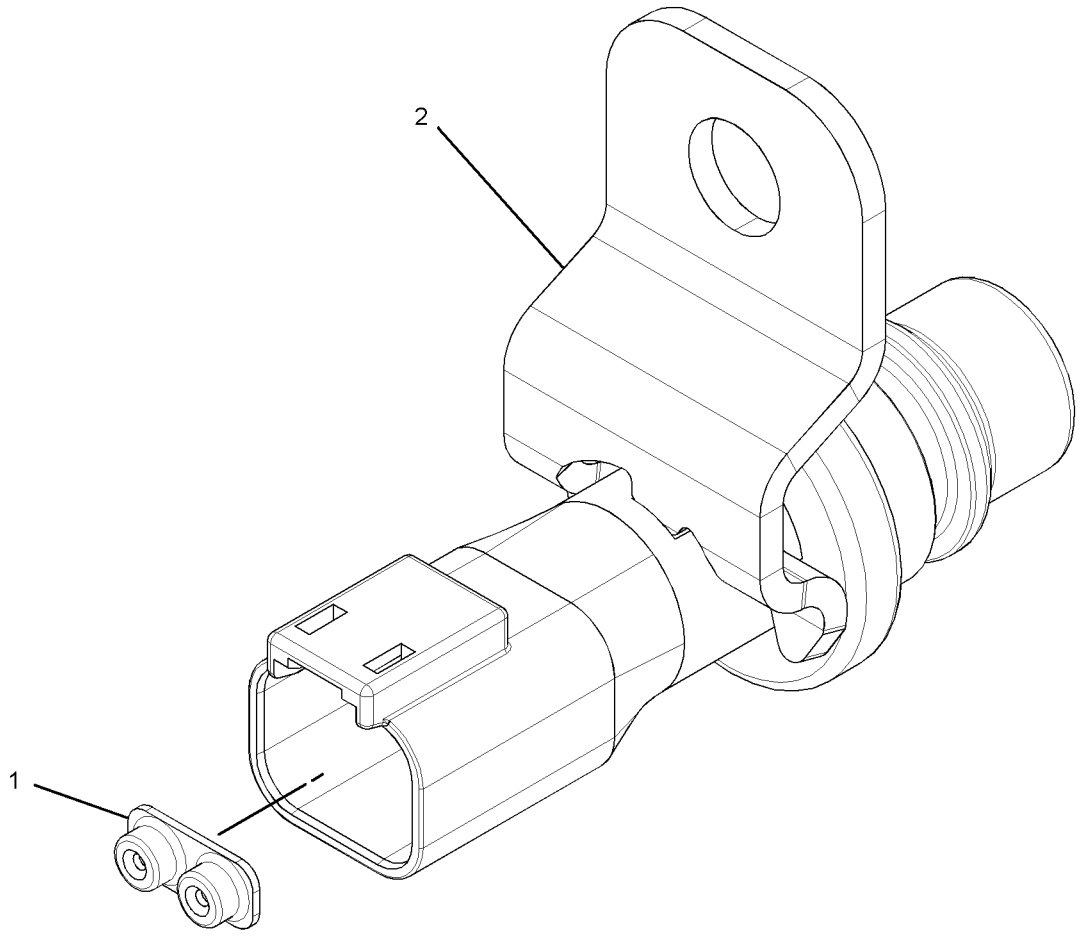

GRAPHIC #1 **<END>** g01699415

230-7149 SENSOR GP-SPEED

S/N: MHX1304-UP
PART OF 231-1975 SENSOR GP-ENGINE
ALSO AN ATTACHMENT

SMCS-1907, 1912, 3141, 3175, 4803, 7493 **i03574642**

NOTE	REF NO	GRAPHIC REF	PART NUMBER	QTY	PART NAME 1 2 3 4 5 6 (PRODUCT LEVEL)	SEE PAGE
	1	1	**201-6615**	1	SENSOR GP-SPEED	
	2	1	**228-4947**	1	SEAL-O-RING	

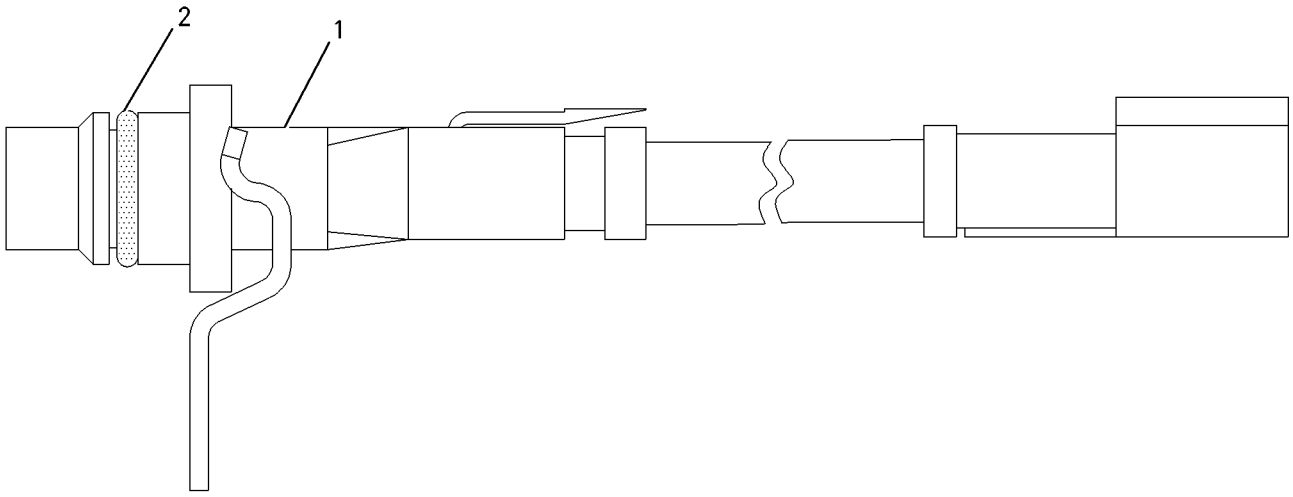

GRAPHIC #1 **<END>** g01007584

239-2397 SENSOR GP-SPEED

S/N: MHX1304-UP
PART OF 231-1975 SENSOR GP-ENGINE
ALSO AN ATTACHMENT

SMCS-1907, 1912, 3141, 3175, 4803, 7493 **i03574654**

NOTE	REF NO	GRAPHIC REF	PART NUMBER	QTY	PART NAME 1 2 3 4 5 6 (PRODUCT LEVEL)	SEE PAGE
	1	1	**228-4947**	1	SEAL-O-RING	
	2	1	**201-6616**	1	SENSOR GP-SPEED	

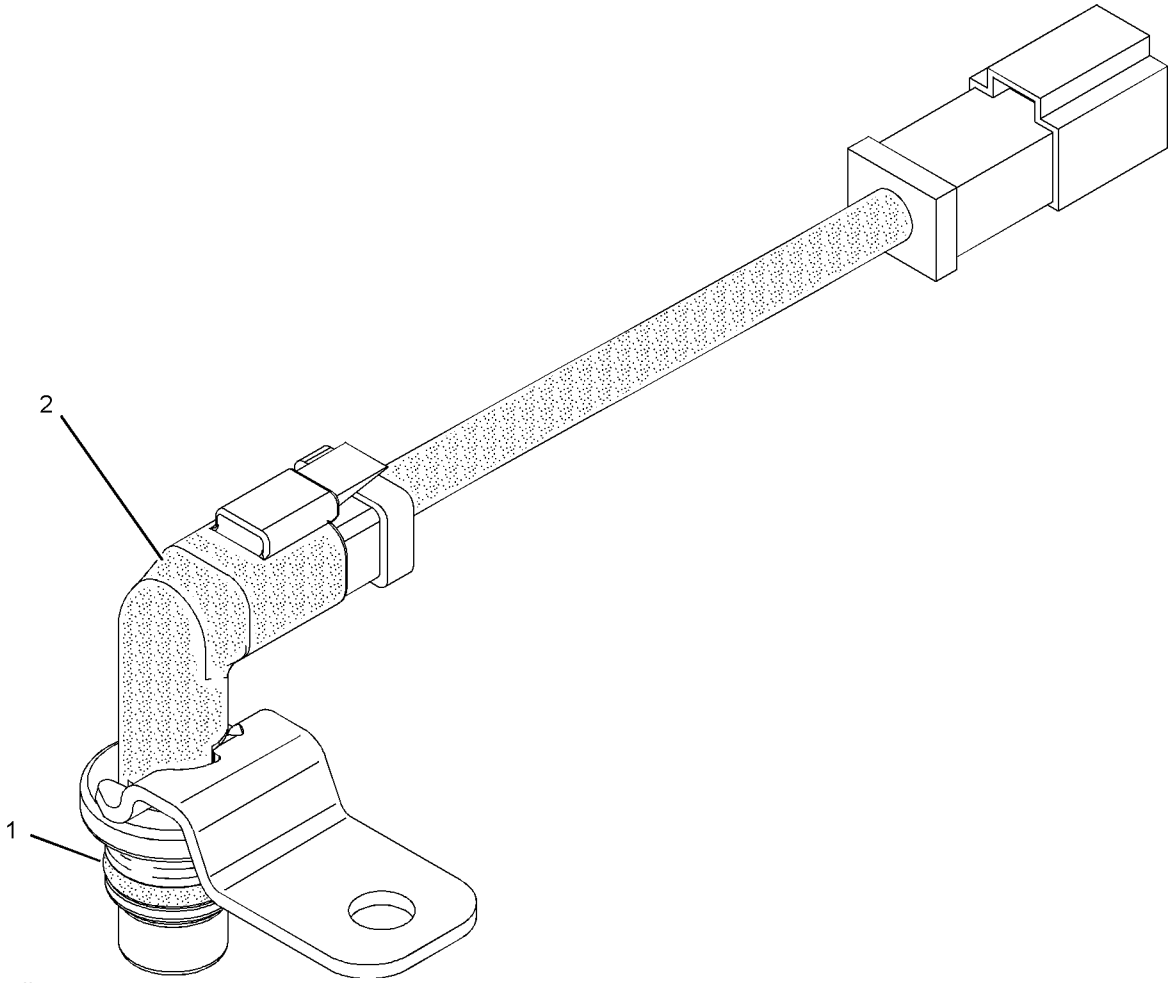

GRAPHIC #1 **<END>** g01019337

300-9805 SENSOR GP-SPEED

S/N: MHX9844-UP
PART OF 357-0523 SENSOR GP-ENGINE
ALSO AN ATTACHMENT

SMCS-1907, 1912, 3141, 3175, 4803, 7493 **i03953716**

NOTE	REF NO	GRAPHIC REF	PART NUMBER	QTY	PART NAME 1 2 3 4 5 6 (PRODUCT LEVEL)	SEE PAGE
	1	1	**228-4947**	1	SEAL-O-RING	
	2	1	**279-9828**	1	SENSOR GP-SPEED (CRANKSHAFT)	

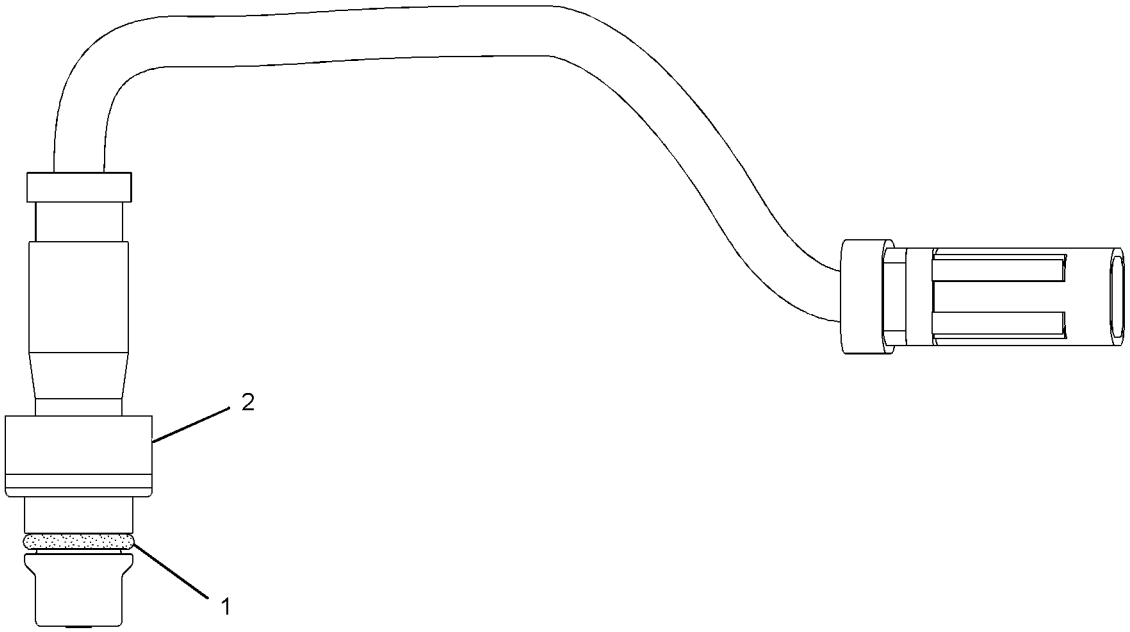

GRAPHIC #1 **<END>** g02168513

300-9806 SENSOR GP-SPEED

S/N: MHX9844-UP
PART OF 357-0523 SENSOR GP-ENGINE
ALSO AN ATTACHMENT

SMCS-1907, 1912, 3141, 3175, 4803, 7493 **i03354549**

NOTE	REF NO	GRAPHIC REF	PART NUMBER	QTY	PART NAME 1 2 3 4 5 6 (PRODUCT LEVEL)	SEE PAGE
	1	1	**228-4947**	1	SEAL-O-RING	
	2	1	**279-9829**	1	SENSOR GP-SPEED (CAM GEAR)	

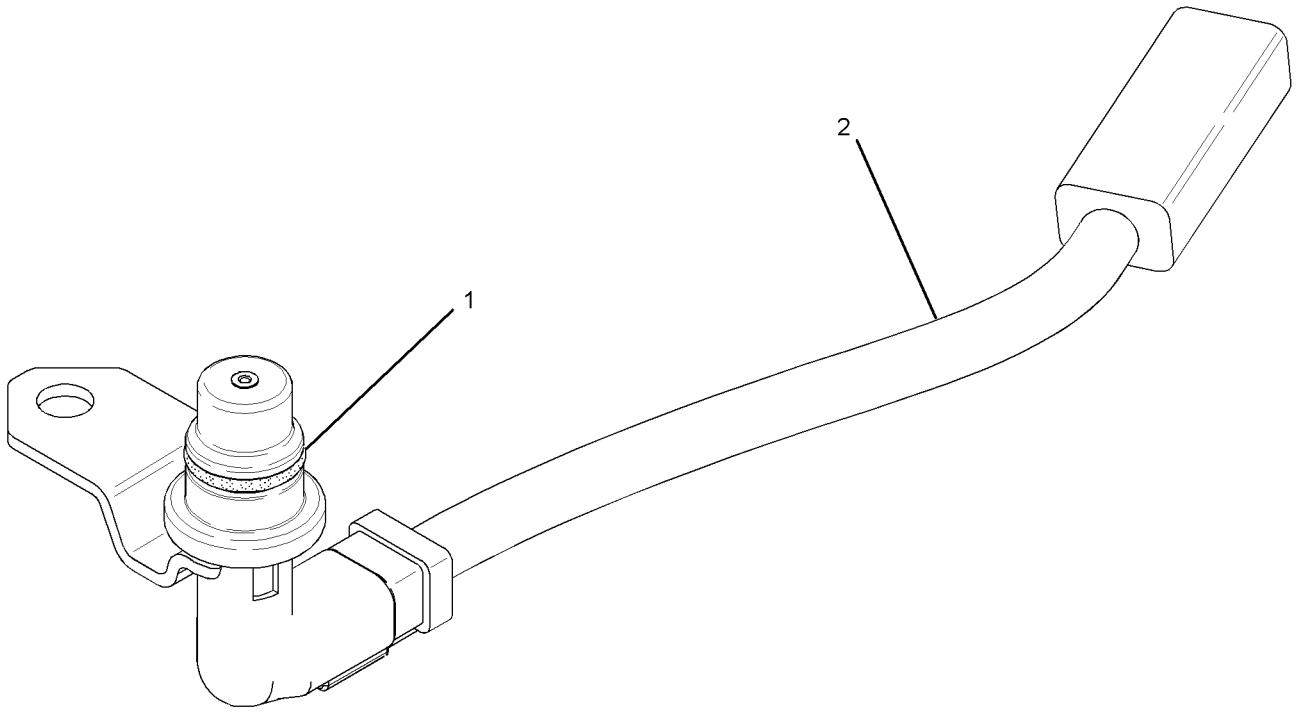

GRAPHIC #1 **<END>** g01333640

191-6587 SENSOR GP-TEMPERATURE

S/N: R9H1-UP

PART OF 250-0890 WIRING GP-FRONT

SMCS-1087, 1439, 1906, 1919, 1921, 1922, 1928, 1929, 192T, 1932, 301T, 3194, 3290, 429T, 509T, 7344 **i03817529**

NOTE	REF NO	GRAPHIC REF	PART NUMBER	QTY	PART NAME 1 2 3 4 5 6 (PRODUCT LEVEL)	SEE PAGE
J	1	1	**153-5043**		SLEEVE (2-DM)	
	2	1	**155-2270**	1	KIT-CONNECTING PLUG (2-PIN)	
					(INCLUDES PLUG AS, WEDGE & INTERFACE SEAL)	
	3	1	**180-9340**	2	SOCKET-CONNECTOR (14-GA TO 18-GA)	
J-ORDER BY THE DECIMETER						

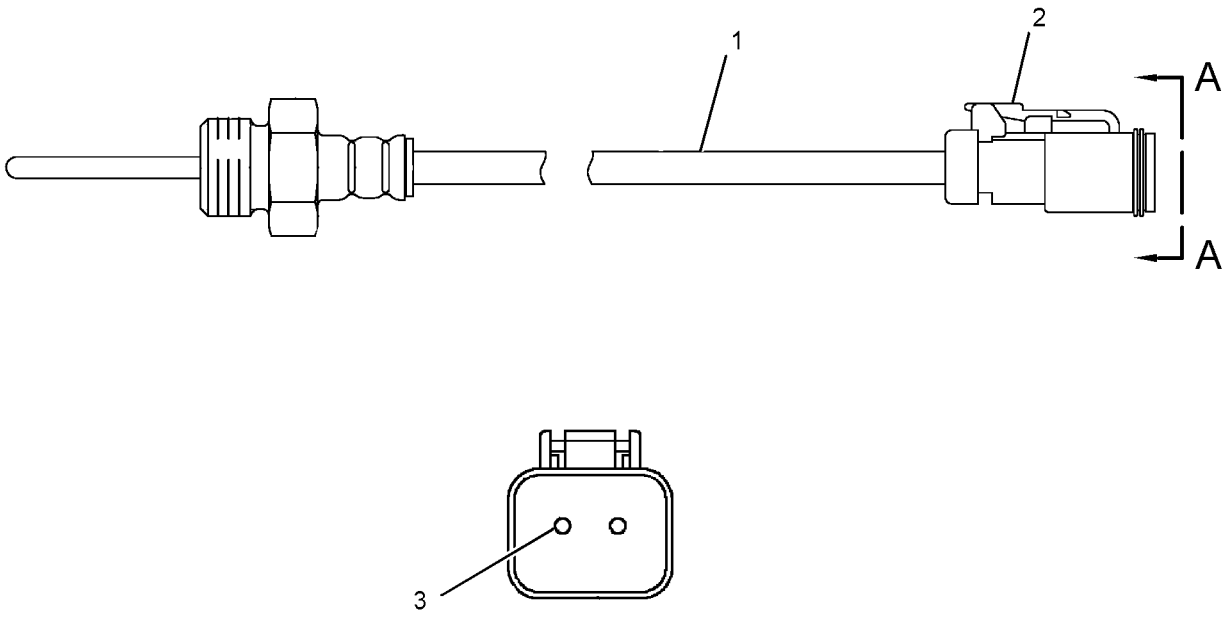

VIEW A-A

GRAPHIC #1 **<END>** g02069919

197-8391 SENSOR GP-TEMPERATURE

S/N: MHX1214-2151
PART OF 254-4998 FILTER GP-FUEL
AN ATTACHMENT

SMCS-1087, 1439, 1906, 1919, 1921, 1922, 1928, 1929, 192T, 1932, 301T, 3194, 3290, 429T, 509T, 7344

i02938842

NOTE	REF NO	GRAPHIC REF	PART NUMBER	QTY	PART NAME 1 2 3 4 5 6 (PRODUCT LEVEL)	SEE PAGE
	1	1	**130-9811**	1	SENSOR GP-TEMPERATURE	
		1	**137-6645**	1	PAD	
	2	1	**8L-2786**	1	SEAL-O-RING	

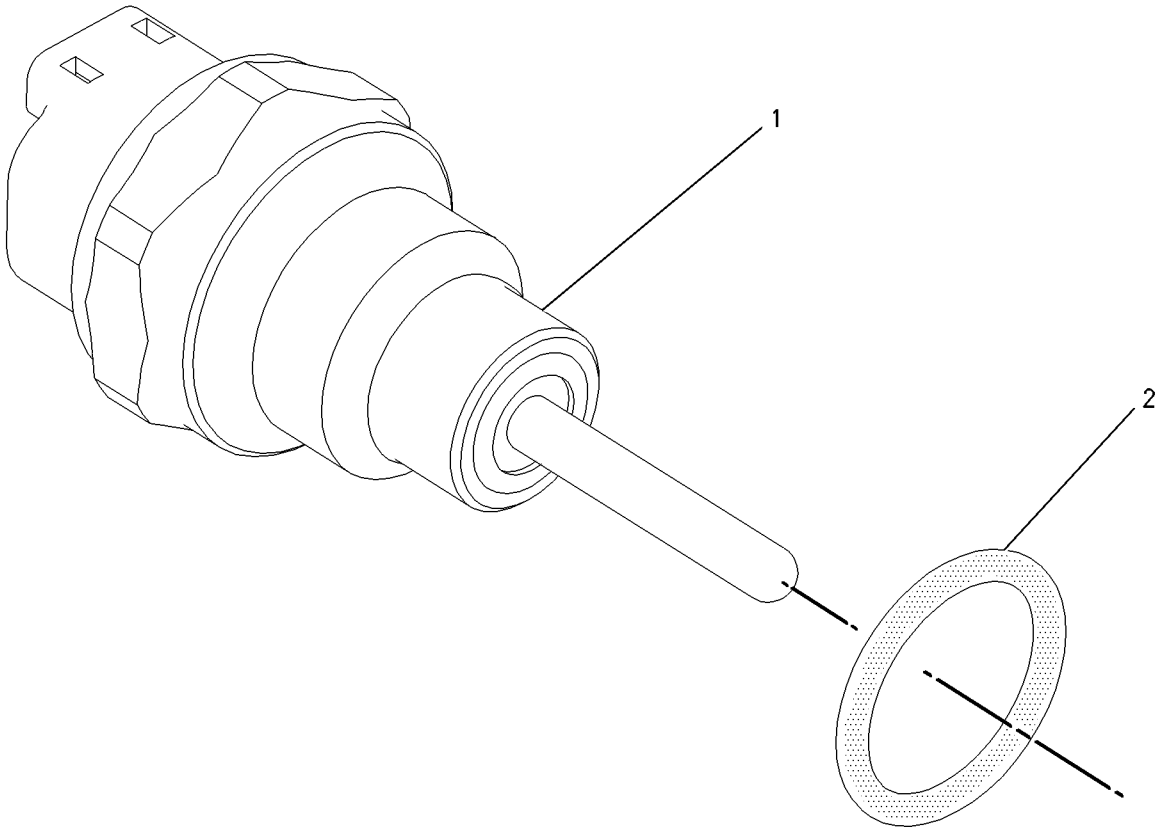

GRAPHIC #1

<END>

g00856011

197-8391 SENSOR GP-TEMPERATURE

S/N: MHX1304-2151

PART OF 254-4998 FILTER GP-FUEL

SMCS-1087, 1439, 1906, 1919, 1921, 1922, 1928, 1929, 192T, 1932, 301T, 3194, 3290, 429T, 509T, 7344 **i03836399**

NOTE	REF NO	GRAPHIC REF	PART NUMBER	QTY	PART NAME 1 2 3 4 5 6 (PRODUCT LEVEL)	SEE PAGE
C	1	1	**264-4297**	1	SENSOR GP-TEMPERATURE	
		1	**137-6645**	1	PAD	
	2	1	**238-5080**	1	SEAL-O-RING	

C-CHANGE FROM PREVIOUS TYPE

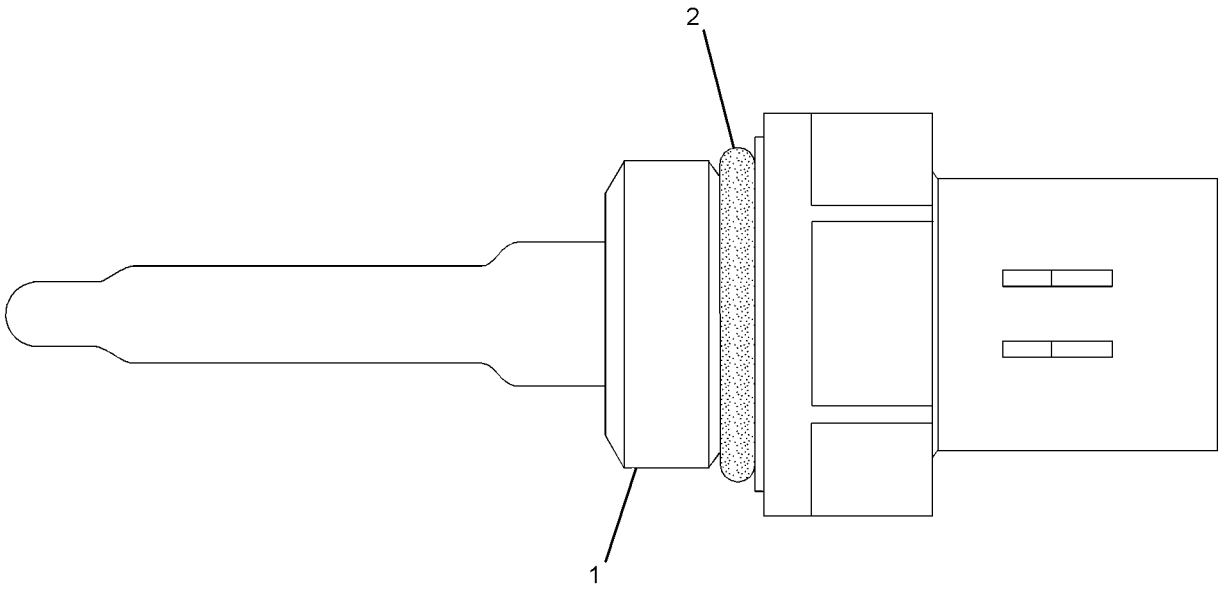

GRAPHIC #1 **<END>** g01164268

234-5012 SENSOR GP-TEMPERATURE

S/N: MHX9844-UP
PART OF 357-0523 SENSOR GP-ENGINE
ALSO AN ATTACHMENT

SMCS-1087, 1439, 1906, 1919, 1921, 1922, 1928, 1929, 192T, 1932, 301T, 3194, 3290, 429T, 509T, 7344 **i02660829**

NOTE	REF NO	GRAPHIC REF	PART NUMBER	QTY	PART NAME 1 2 3 4 5 6 (PRODUCT LEVEL)	SEE PAGE
	1	1	**256-6453**	1	SENSOR AS-TEMPERATURE	
	2	1	**6V-6609**	1	SEAL-O-RING	

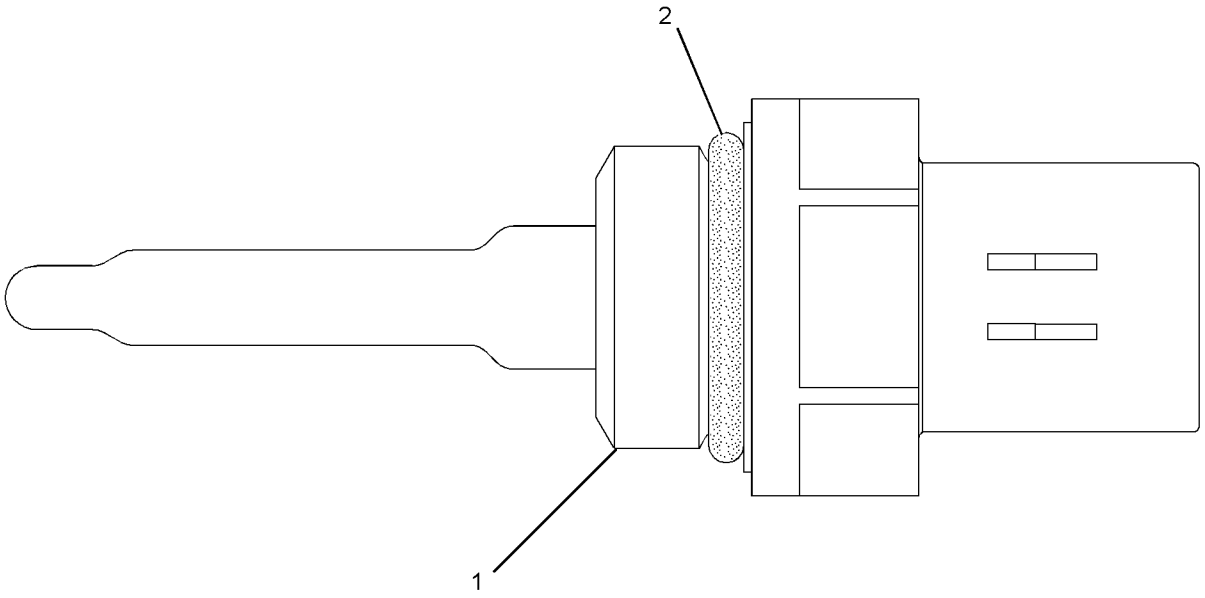

GRAPHIC #1 **<END>** g01164284

234-5013 SENSOR GP-TEMPERATURE

S/N: MHX1304-UP

PART OF 254-4998, 356-8382 FILTER GP-FUEL, 357-0523 SENSOR GP-ENGINE

ALSO AN ATTACHMENT

SMCS-1087, 1439, 1906, 1919, 1921, 1922, 1928, 1929, 192T, 1932, 301T, 3194, 3290, 429T, 509T, 7344 **i03603728**

NOTE	REF NO	GRAPHIC REF	PART NUMBER	QTY	PART NAME 1 2 3 4 5 6 (PRODUCT LEVEL)	SEE PAGE
	1	1	**256-6453**	1	SENSOR AS-TEMPERATURE	
	2	1	**238-5080**	1	SEAL-O-RING	

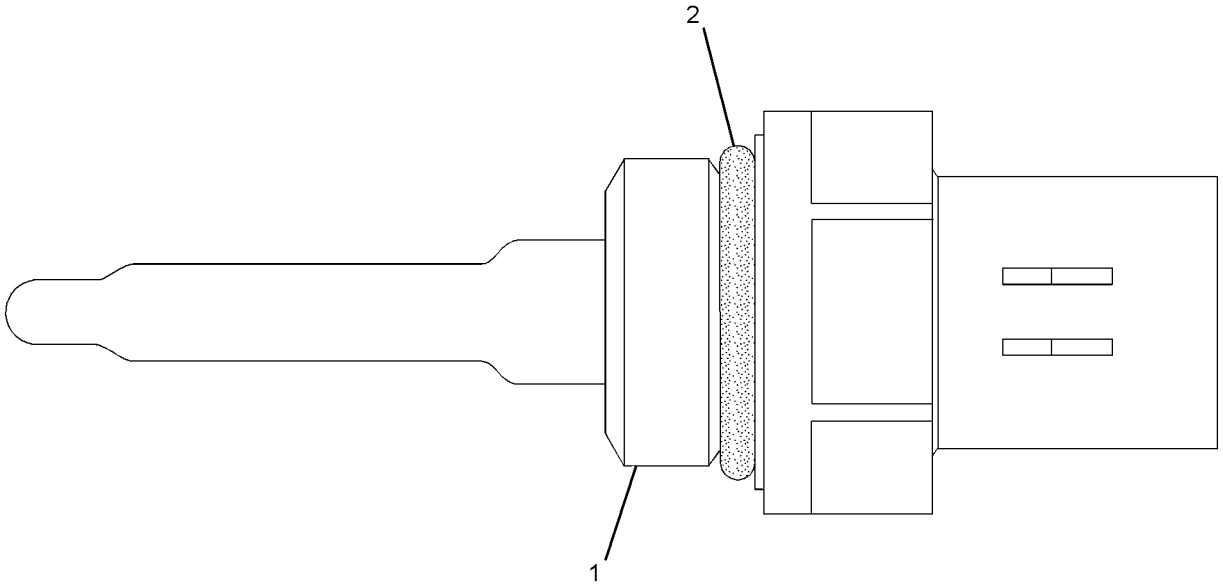

GRAPHIC #1 **<END>** g01164268

274-7395 SENSOR GP-TEMPERATURE

S/N: MHX1214-UP
PART OF 231-1975 SENSOR GP-ENGINE
ALSO AN ATTACHMENT

SMCS-1087, 1439, 1906, 1919, 1921, 1922, 1928, 1929, 192T, 1932, 301T, 3194, 3290, 429T, 509T, 7344 **i03886183**

NOTE	REF NO	GRAPHIC REF	PART NUMBER	QTY	PART NAME 1 2 3 4 5 6 (PRODUCT LEVEL)	SEE PAGE
	1	1	**264-4297**	1	SENSOR GP-TEMPERATURE	
		1	**137-6645**	1	PAD	
	2	1	**238-5080**	1	SEAL-O-RING	

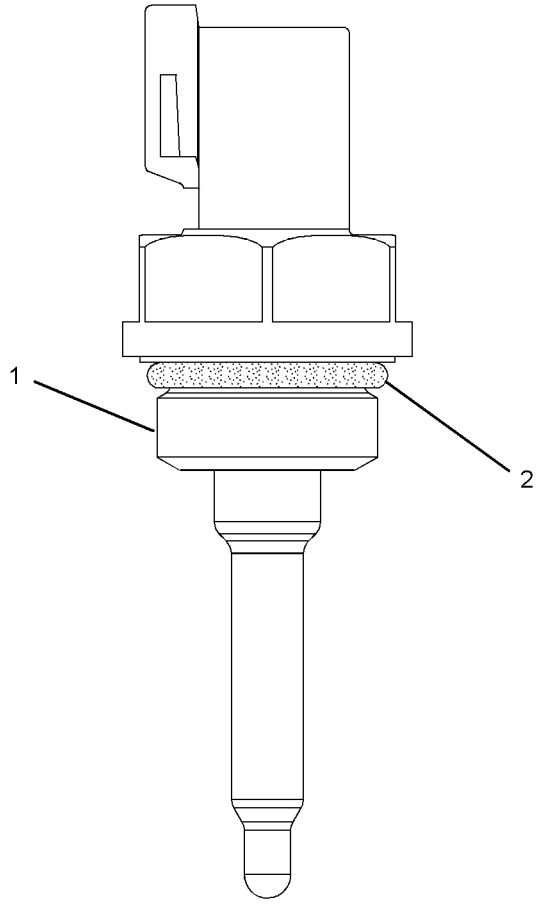

GRAPHIC #1 **<END>** g01353734

274-7396 SENSOR GP-TEMPERATURE

S/N: MHX1214-UP
PART OF 231-1975 SENSOR GP-ENGINE
ALSO AN ATTACHMENT

SMCS-1087, 1439, 1906, 1919, 1921, 1922, 1928, 1929, 192T, 1932, 301T, 3194, 3290, 429T, 509T, 7344 **i03442340**

NOTE	REF NO	GRAPHIC REF	PART NUMBER	QTY	PART NAME 1 2 3 4 5 6 (PRODUCT LEVEL)	SEE PAGE
	1	1	**264-4297**	1	SENSOR GP-TEMPERATURE	
		1	**137-6645**	1	PAD	
	2	1	**6V-6609**	1	SEAL-O-RING	

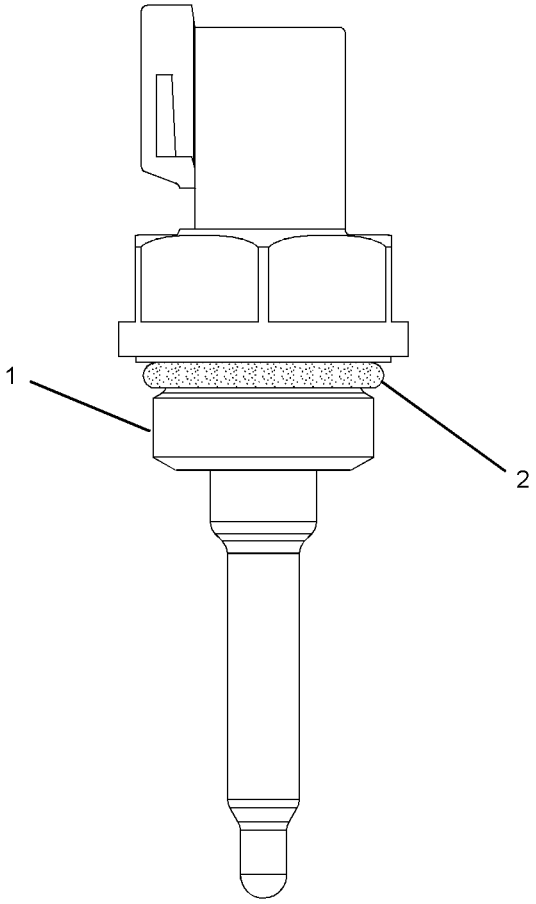

GRAPHIC #1 **<END>** g01353734

249-7310 STARTING AID GP-ETHER

S/N: R9H1-UP

PART OF 349-2556 COMMON AR

SMCS-1456 **i02957265**

NOTE	REF NO	GRAPHIC REF	PART NUMBER	QTY	PART NAME 1 2 3 4 5 6 (PRODUCT LEVEL)	SEE PAGE
	1	1	**5P-5528**	1	ADAPTER-O-RING	
	2	1	**7N-2059**	1	CLAMP AS	
	4	1	**230-0917**	1	FITTING AS	
		1	**236-4545**	1	NUT-SLEEVE (5/16-24-THD)	
Y	5	1	**239-1134**	1	VALVE GP-ETHER STARTING (24-VOLT)	343
	6	1	**252-1607**	1	ATOMIZER AS	
		1	**236-4545**	1	NUT-SLEEVE (5/16-24-THD)	
	8	1	**6V-2686**	1	CLIP	
	9	1	**6V-5048**	1	SEAL-O-RING	
M	12	1	**8T-4189**	4	BOLT (M8X1.25X20-MM)	
	14	1	**8T-4224**	4	WASHER-HARD (8.8X16X2-MM THK)	
D	15	1	**5P-5630**		TUBE (0.5-M)	
A			**7N-0296**	1	CYLINDER AS-ETHER (MUST BE PROCURED LOCALLY FROM YOUR CATERPILLAR DEALER)	

A-NOT PART OF THIS GROUP
D-ORDER BY THE METER
M-METRIC PART
Y-SEPARATE ILLUSTRATION

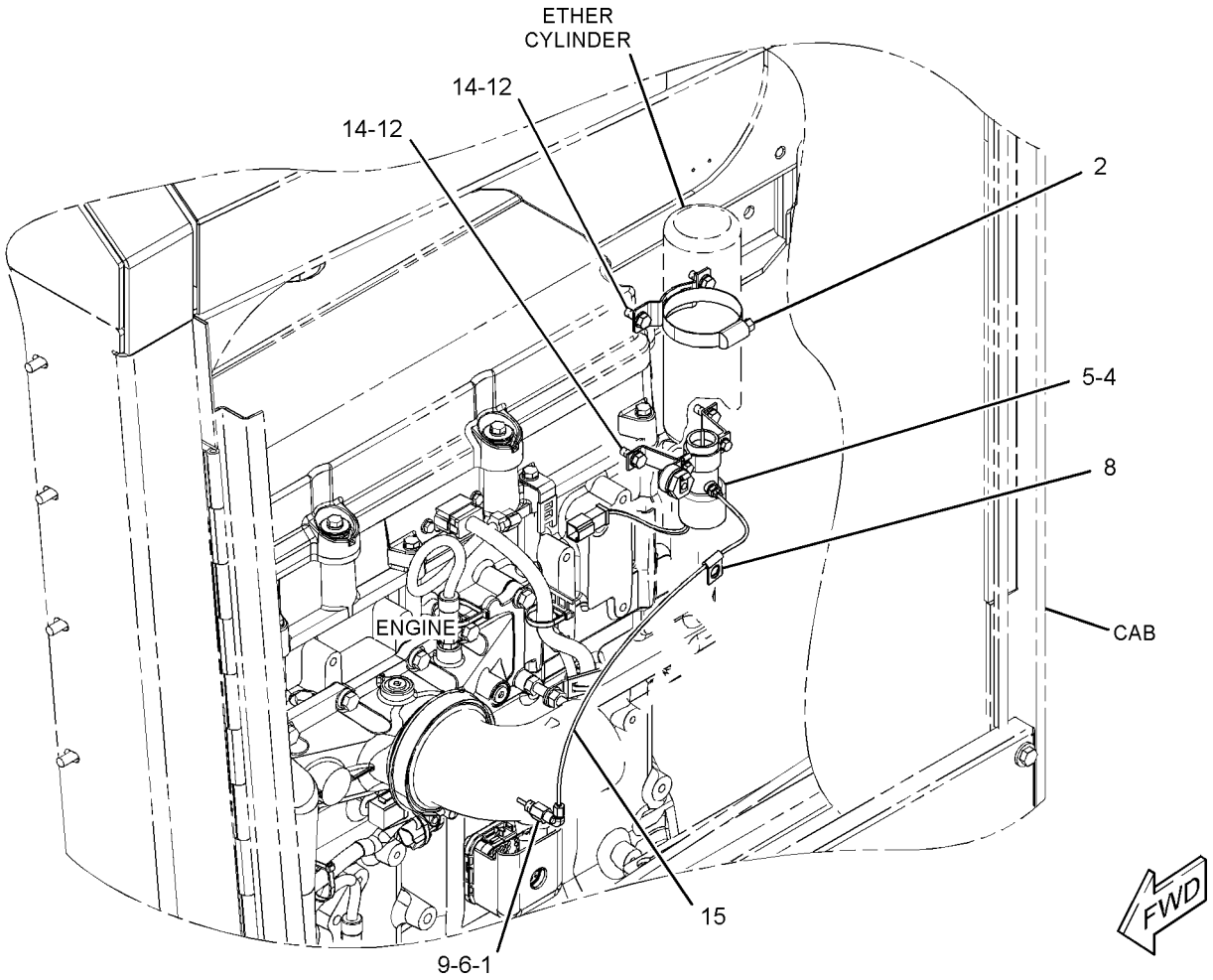

GRAPHIC #1 **<END>** g01502591

207-1556 STARTING MOTOR GP-ELECTRIC*R

S/N: MHX1304-2760
24-VOLT
PART OF 248-0716 STARTING MOTOR GP-ELECTRIC
ALSO AN ATTACHMENT

SMCS-1453 **i03629299**

NOTE	REF NO	GRAPHIC REF	PART NUMBER	QTY	PART NAME 1 2 3 4 5 6 (PRODUCT LEVEL)	SEE PAGE
	1	1	**3T-3434**	6	PLUG	
	2	1	**7T-3279**	1	HOUSING AS	
	3	1	**8T-8566**	1	TERMINAL AS	
	4	1	**6V-8188**	4	NUT (1/2-13-THD)	
	5	1	**7X-0562**	4	WASHER-HARD (13.5X19X0.8-MM THK)	
	6	1	**3T-3422**	1	WIRE AS	
	7	1	**7T-3278**	1	HOLDER AS-BRUSH	
	8	1	**7T-3277**	1	COIL AS-FIELD	
	9	1	**7T-3454**	1	INSULATOR	
	10	1	**283-1107**	1	KIT-CONNECTOR (STARTING MOTOR)	
					(INCLUDES CONNECTORS, BOLT & TERMINAL-STARTER)	
	11	1	**7T-3451**	1	KIT-INSULATOR (TERMINAL)	
					(INCLUDES INSULATORS & GROMMET)	
	12	1	**8T-8569**	1	INSULATOR-TERMINAL	
	13	1	**5S-7349**	4	BOLT (1/4-20X0.5-IN)	
	14	1	**8T-4205**	4	WASHER-HARD (7.2X14.5X2-MM THK)	
	15	1	**8H-1141**	4	SHOE-POLE	
	16	1	**3R-8797**	8	SCREW & WASHER AS (3/8-24X0.72-IN)	
	17	1	**7T-3276**	1	ARMATURE AS (24-VOLT)	
	18	1	**3E-7775**	1	HOUSING AS	
	19	1	**4M-1831**	1	PLUG-LEVER HOUSING	
	20	1	**7L-2894**	1	GASKET	
	21	1	**0S-1597**	5	BOLT (1/4-28X1-IN)	
	22	1	**6N-3826**	1	DRIVE AS-MOTOR	
	23	1	**7T-3974**	1	HOUSING AS-DRIVE	
	24	1	**7X-3373**	6	BOLT (5/16-18X0.88-IN)	
	25	1	**250-8279**	1	KIT-SOLENOID (24-VOLT)	
					(INCLUDES SOLENOID AS, BOLT, NUTS, COVER & CONNECTORS)	
	26	1	**6V-8378**	3	NUT (10-32-THD)	
	27	1	**8F-1434**	2	LOCKWASHER	
	28	1	**8T-0328**	3	WASHER-HARD (5.5X10X1-MM THK)	
	29	1	**9X-4824**	1	COVER-STARTING MOTOR	
	30	1	**8T-9884**	1	KIT-INSULATOR (STARTING MOTOR)	
					(INCLUDES INSULATORS & BUSHING)	
	31	1	**8C-3655**	1	KIT-BRUSH (STARTING MOTOR)	
					(INCLUDES BRUSHES, SPRINGS, SCREWS, SCREW ASSEMBLIES & SEAL)	
	32	1	**7T-3268**	1	KIT-LEVER (STARTING MOTOR)	
					(INCLUDES LEVER ASSEMBLIES, SEAL, NUT, GASKET & RETAINER)	
					AVAILABLE REPAIR KIT(S):	
			7T-3267	1	KIT-BUSHING (STARTING MOTOR)	
					(INCLUDES BUSHINGS, WICKS, CUPS, SEALS, GASKET, SCREW AS, WASHERS, SPACER & NUT)	

207-1556 STARTING MOTOR GP-ELECTRIC *(contd.)* i03629299

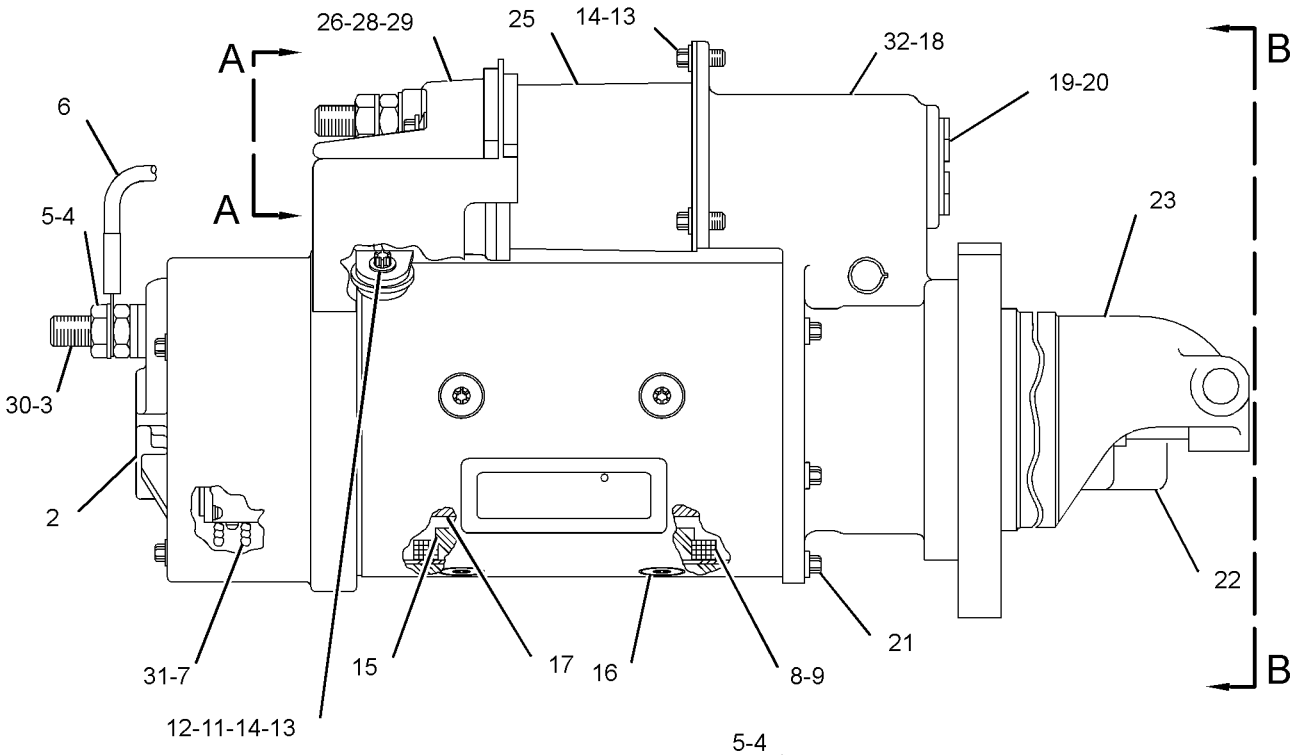

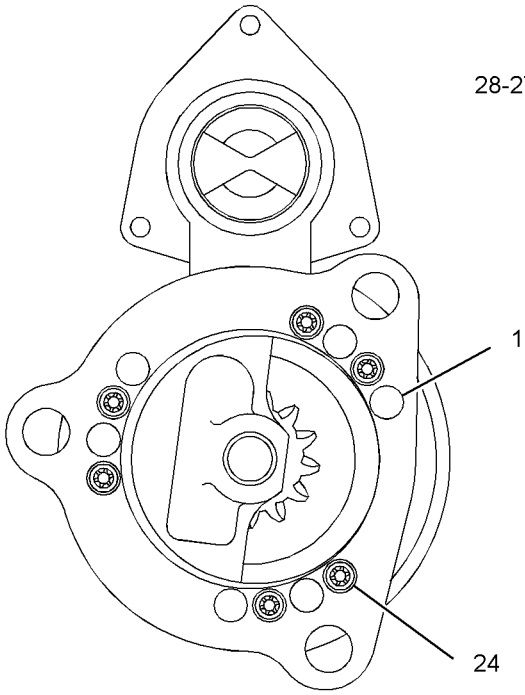

VIEW B-B

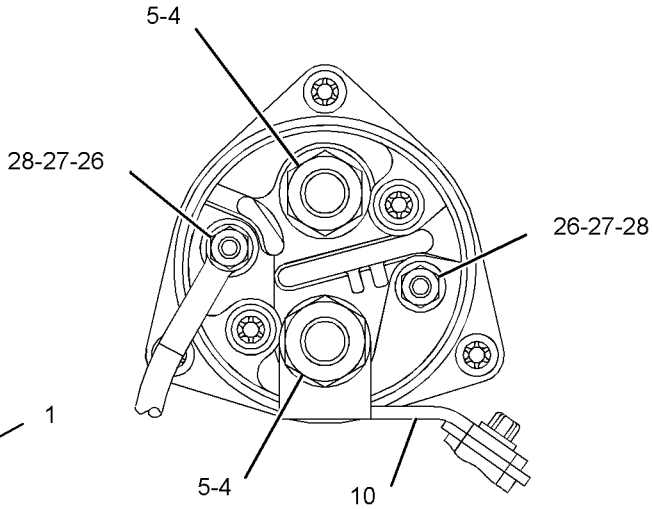

VIEW A-A

GRAPHIC #1 **<END>** g01478692

248-0716 STARTING MOTOR GP-ELECTRIC

S/N: MHX1304-2760
24-VOLT, 42-MT SERIES
PART OF 227-5359, 231-0876 ENGINE AR-COMPLETE
ALSO AN ATTACHMENT

SMCS-1453 **i02159966**

NOTE	REF NO	GRAPHIC REF	PART NUMBER	QTY	PART NAME 1 2 3 4 5 6 (PRODUCT LEVEL)	SEE PAGE
	1	1	**4H-7869**	1	GASKET	
	2	1	**8Y-9603**	1	CABLE AS-STARTING MOTOR	
		1	**1S-7251**	1	TERMINAL-CABLE (00-GA, 1/2-IN SCREW)	
		1	**1S-7252**	1	TERMINAL-CABLE (00-GA, 3/8-IN SCREW)	
E		1	**5P-0747**	28	CABLE (00-GA, BLACK)	
YR	3	1	**207-1556**	1	STARTING MOTOR GP-ELECTRIC (24-VOLT)	318
	4	1	**220-0771**	3	BOLT-12 POINT HEAD (M16X2X45-MM)	

E-ORDER BY THE CENTIMETER
R-REMFG PART MAY BE AVAILABLE
Y-SEPARATE ILLUSTRATION

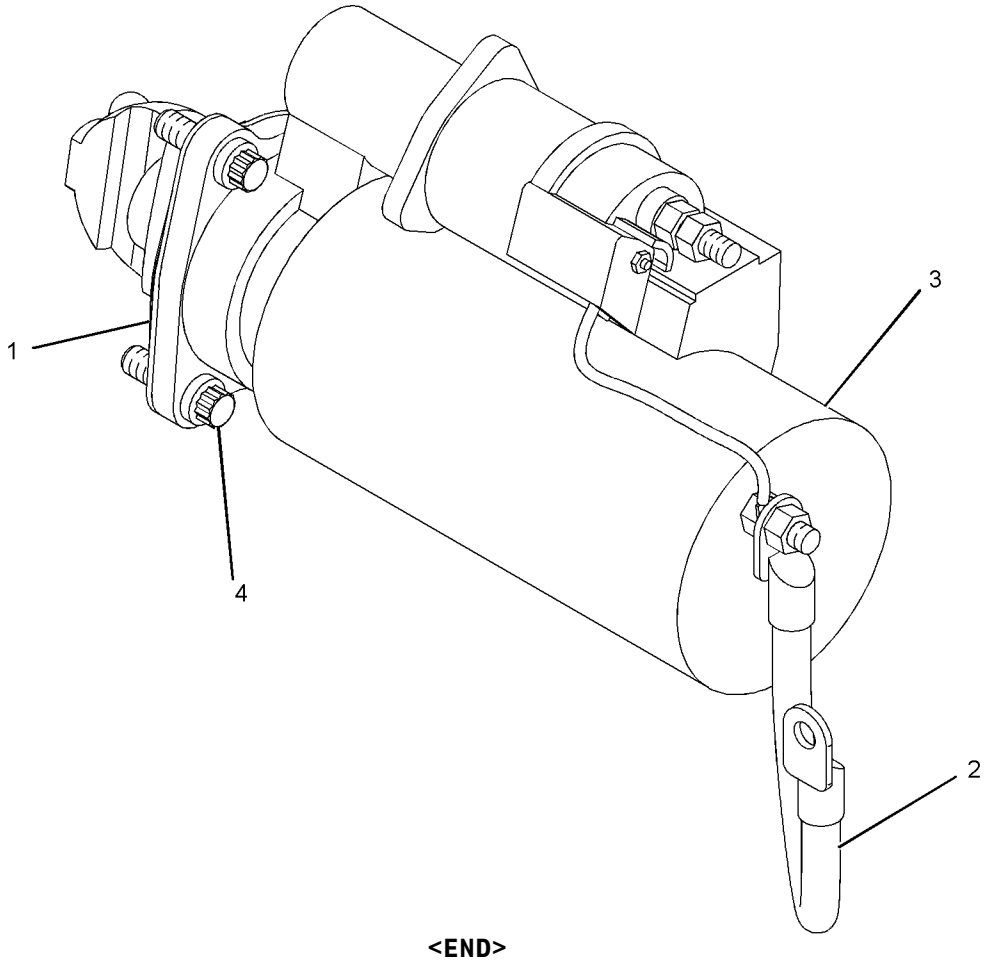

GRAPHIC #1 **<END>** g01097831

238-8825 SUPPORT GP-LIGHT–CAB ROOF

S/N: R9H1-UP
PART OF 349-2556 COMMON AR
FOR USE WITH 233-3126–PAGE 229

SMCS-1429, 1434 **i02663310**

NOTE	REF NO	GRAPHIC REF	PART NUMBER	QTY	PART NAME 1 2 3 4 5 6 (PRODUCT LEVEL)	SEE PAGE
	1	1	**244-2713**	1	BAR AS (RH)	
	2	1	**244-2714**	1	BAR AS (LH)	
	3	1	**290-2014**	1	TUBE AS	
	4	1	**5P-4116**	8	WASHER-HARD (8.8X20.5X2-MM THK)	
	5	1	**8T-4224**	4	WASHER-HARD (8.8X16X2-MM THK)	
M	6	1	**8T-4908**	12	BOLT (M8X1.25X25-MM)	

M-METRIC PART

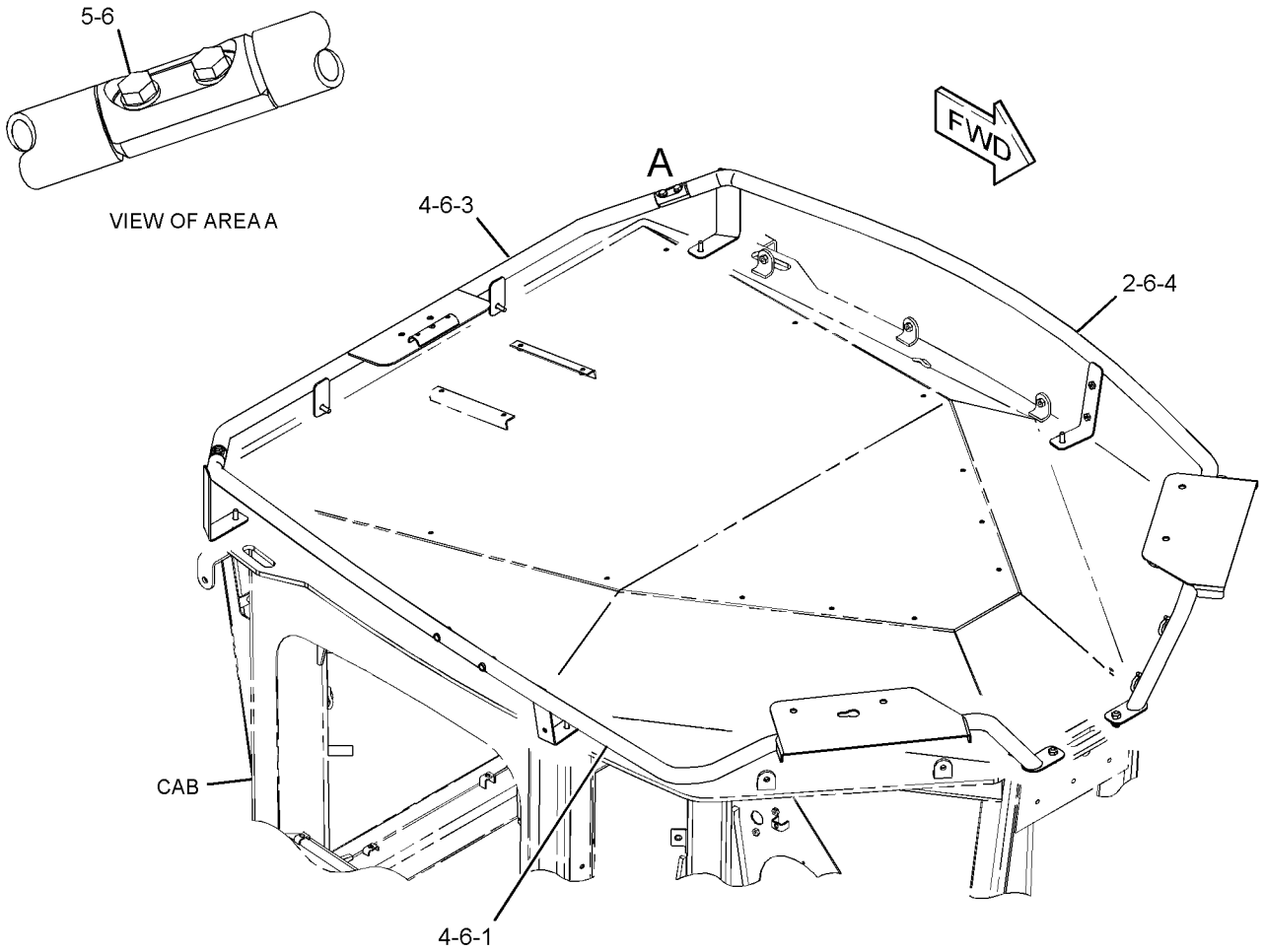

GRAPHIC #1 **<END>** g01297815

164-7577 SWITCH GP-BYPASS

S/N: R9H1-UP; DZM1601-UP

PART OF 333-9310 BASE GP-OIL FILTER

SMCS-1408, 1435 **i03948449**

NOTE	REF NO	GRAPHIC REF	PART NUMBER	QTY	PART NAME 1 2 3 4 5 6 (PRODUCT LEVEL)	SEE PAGE
E	1	1	**9X-1813**		SLEEVE (19-CM)	
	2	1	**102-8802**	1	KIT-RECEPTACLE (2-PIN)	
					(INCLUDES RECEPTACLE AS & WEDGE)	
	3	1	**186-3735**	2	PIN-CONNECTOR (16-GA TO 18-GA)	
	4	1	**3D-2824**	1	SEAL-O-RING	

E-ORDER BY THE CENTIMETER

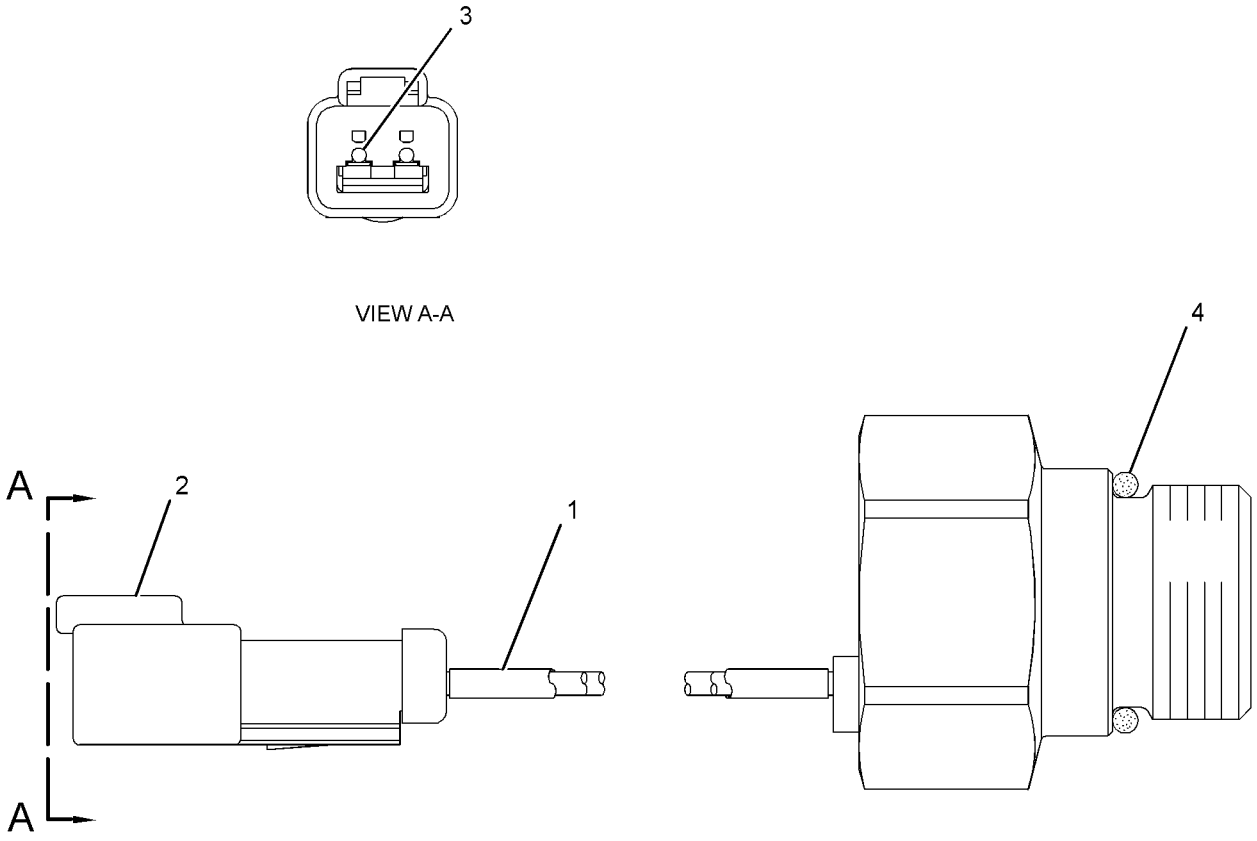

GRAPHIC #1 **<END>** g02157795

7N-0718 SWITCH GP-DISCONNECT–BATTERY

S/N: R9H1-UP
12-VOLT
PART OF 257-8027 BATTERY GP

SMCS-1411 **i02459121**

NOTE	REF NO	GRAPHIC REF	PART NUMBER	QTY	PART NAME 1 2 3 4 5 6 (PRODUCT LEVEL)	SEE PAGE
	1	1	**8H-5306**	1	KEY (BATTERY DISCONNECT)	
	2	1	**8H-5303**	1	NUT (3/4-16-THD)	
	3	1	**2H-3922**	2	LOCKWASHER	
	4	1	**9F-5644**	2	LOCKWASHER	
	5	1	**6F-7045**	2	NUT-FULL (3/8-24-THD)	

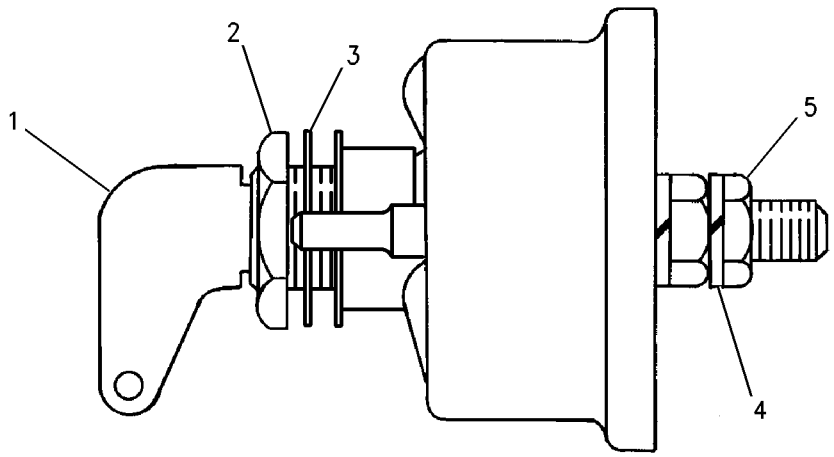

GRAPHIC #1 **<END>** g00715584

238-8763 SWITCH GP-LIGHT–WORK LIGHT

S/N: R9H1-UP

PART OF 233-3107 CAB AR, 352-3821, 352-3822 OPTION AR-LIGHTING

ALSO AN ATTACHMENT

SMCS-1429, 1430, 7332 **i02556076**

NOTE	PART NUMBER	QTY	PART NAME 1 2 3 4 5 6 (PRODUCT LEVEL)	SEE PAGE
	249-5488	1	SWITCH AS-ROCKER (WORK LIGHT)	

<END>

171-3759 SWITCH GP-LIMIT–BRAKE PEDAL, XMSN MDL CONT

S/N: R9H1-UP

PART OF 265-8943 PEDAL GP-BRAKE, XMSN & GOV

SMCS-1435, 7332 **i03110481**

NOTE	REF NO	GRAPHIC REF	PART NUMBER	QTY	PART NAME 1 2 3 4 5 6 (PRODUCT LEVEL)	SEE PAGE
	2	1	**144-1636**	3	PIN-CONNECTOR (14-GA TO 18-GA)	
	3	1	**3E-3377**	1	WEDGE-RECEPTACLE LOCK (4-PIN)	
	4	1	**102-8804**	1	KIT-RECEPTACLE (4-PIN)	
					(INCLUDES RECEPTACLE AS AND WEDGE)	
BE	5	1	**9X-1386**		SLEEVE	
BE	6	1	**125-7874**		TUBE-HEAT SHRINK (5.72-MM DIA)	
BD	7	1	**6V-1614**		TUBE-HEAT SHRINK (9.52-MM DIA)	
BD	8	1	**5P-5677**		WIRE (18-GA, BLACK)	
	9	1	**9G-3695**	1	PLUG-SEAL	

B-USE AS REQUIRED
D-ORDER BY THE METER
E-ORDER BY THE CENTIMETER

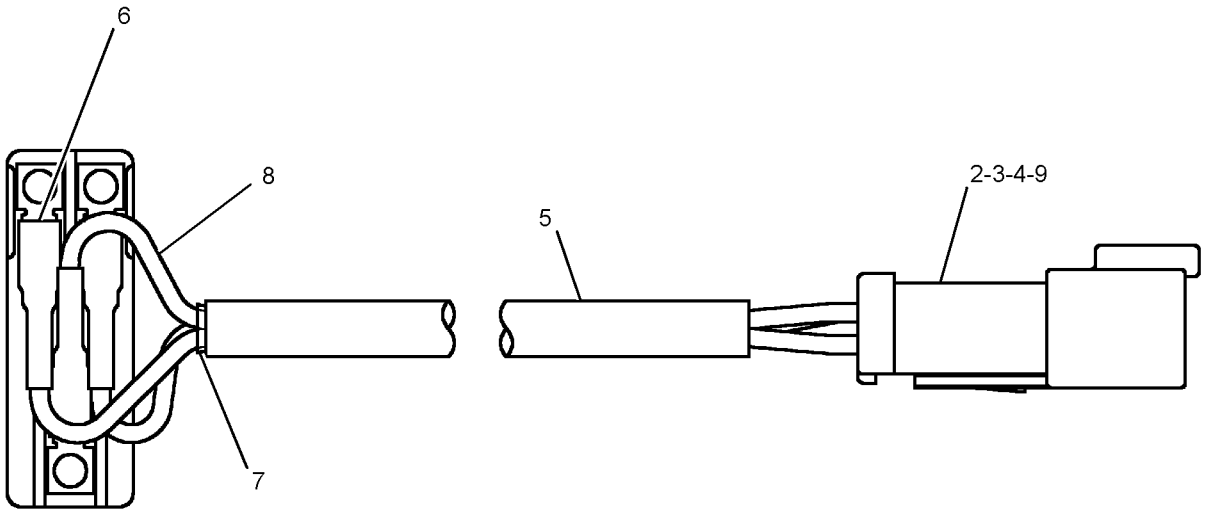

GRAPHIC #1 **<END>** g01231938

118-3534 SWITCH GP-MAGNETIC

S/N: R9H1-UP
24-VOLT
PART OF 260-1871 WIRING GP-POWER RECEPTACLE

SMCS-7499 **i04020911**

NOTE	PART NUMBER	QTY	PART NAME 1 2 3 4 5 6 (PRODUCT LEVEL)	SEE PAGE
Y	*175-2308*	1	SWITCH GP-MAGNETIC (24-VOLT) (START RELAY)	327
			—OR—	
Y	*175-2309*	1	SWITCH GP-MAGNETIC (24-VOLT) (START RELAY)	328

Y-SEPARATE ILLUSTRATION

<END>

175-2308 SWITCH GP-MAGNETIC

S/N: R9H1-UP
24-VOLT
PART OF 118-3534 SWITCH GP-MAGNETIC

SMCS-7499 **i03371288**

NOTE	REF NO	GRAPHIC REF	PART NUMBER	QTY	PART NAME 1 2 3 4 5 6 (PRODUCT LEVEL)	SEE PAGE
	1	1	**102-8802**	1	KIT-RECEPTACLE (2-PIN)	
					(INCLUDES RECEPTACLE AS & WEDGE)	
	2	1	**186-3735**	2	PIN-CONNECTOR (16-GA TO 18-GA)	
	3	1	**1H-3338**	2	LOCKWASHER (EXTERNAL TOOTH)	
	4	1	**012-0380**	2	LOCKWASHER	
M	5	1	**5C-2890**	2	NUT (M6X1-THD)	
E	6	1	**9X-1813**		SLEEVE (16-CM)	

E-ORDER BY THE CENTIMETER
M-METRIC PART

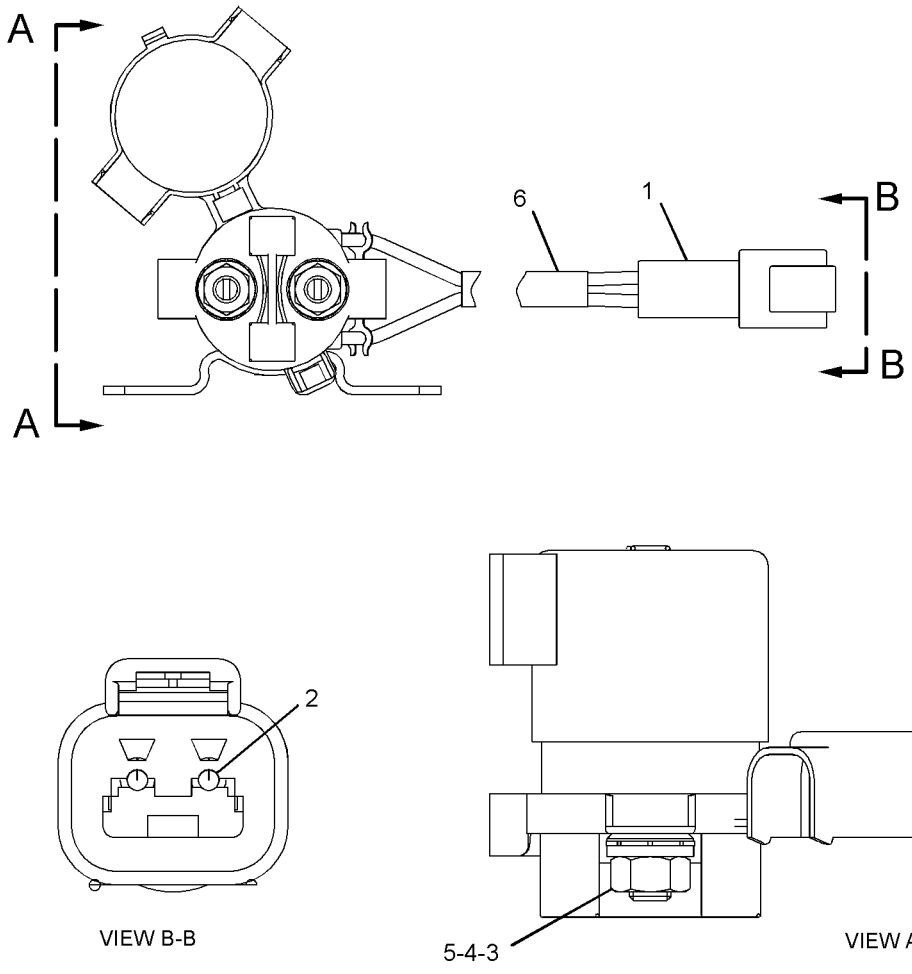

GRAPHIC #1 **<END>** g01266266

175-2309 SWITCH GP-MAGNETIC

S/N: R9H1-UP
24-VOLT
PART OF 118-3534 SWITCH GP-MAGNETIC

SMCS-7499 **i03371361**

NOTE	REF NO	GRAPHIC REF	PART NUMBER	QTY	PART NAME 1 2 3 4 5 6 (PRODUCT LEVEL)	SEE PAGE
	1	1	**117-9081**	1	SWITCH AS-MAGNETIC (START RELAY)	
	1A	1	**1H-3338**	2	LOCKWASHER (EXTERNAL TOOTH)	
M	1B	1	**5C-2890**	2	NUT (M6X1-THD)	
	1C	1	**012-0380**	2	LOCKWASHER	
	2	1	**102-8802**	1	KIT-RECEPTACLE (2-PIN)	
					(INCLUDES RECEPTACLE AS & WEDGE)	
	3	1	**186-3735**	2	PIN-CONNECTOR (16-GA TO 18-GA)	
E	4	1	**9X-1813**		SLEEVE (16-CM)	

E-ORDER BY THE CENTIMETER
M-METRIC PART

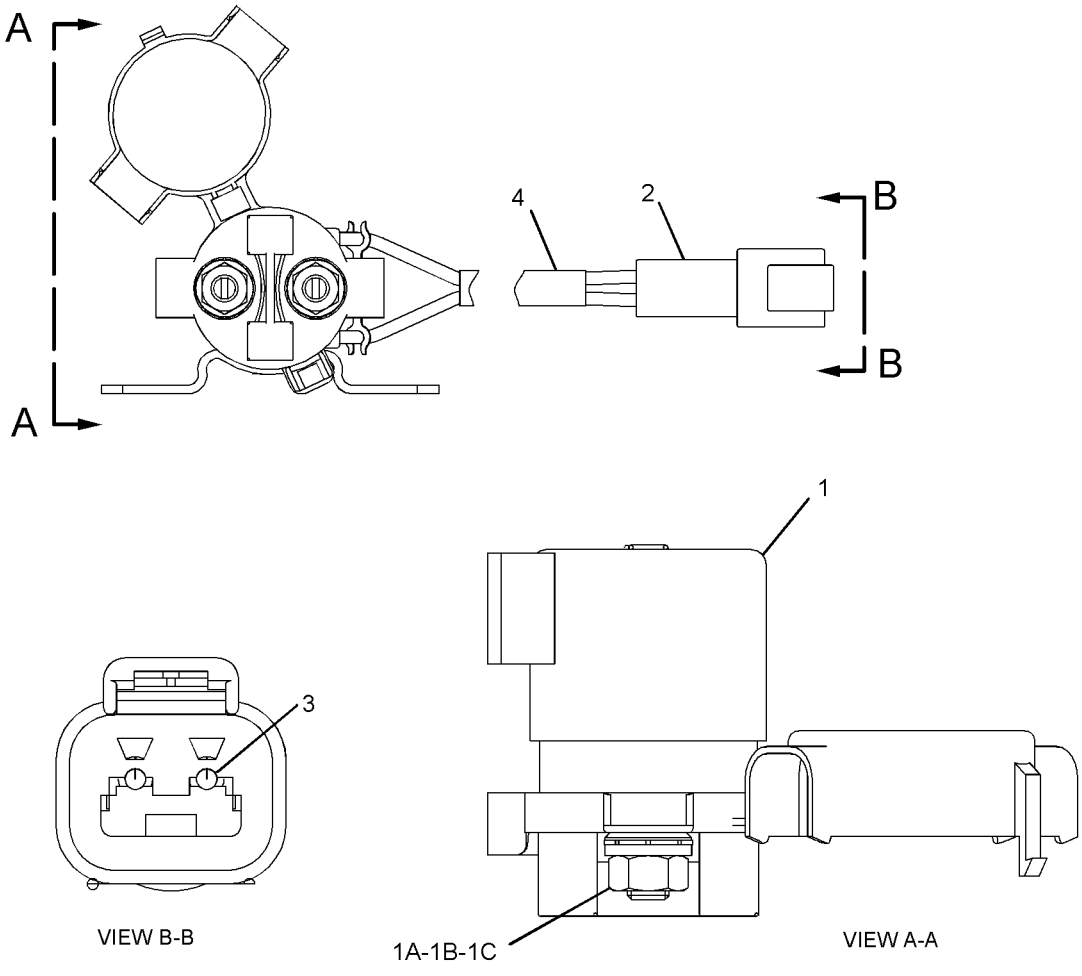

GRAPHIC #1 **<END>** g01266277

179-0006 SWITCH GP-MAGNETIC

S/N: R9H1-UP
24-VOLT TO 32-VOLT
PART OF 260-1872 WIRING GP-SECONDARY STEERING

SMCS-7499 **i02605913**

NOTE	REF NO	GRAPHIC REF	PART NUMBER	QTY	PART NAME 1 2 3 4 5 6 (PRODUCT LEVEL)	SEE PAGE
	1	1	**7X-0620**	2	WASHER-HARD (5.5X13X1.6-MM THK)	
	2	1	**8F-1434**	2	LOCKWASHER	
	3	1	**6V-8378**	2	NUT (10-32-THD)	
	4	1	**4L-6499**	2	WASHER (0.38X0.88X0.06-IN THK)	
	5	1	**4D-1326**	2	LOCKWASHER	
	6	1	**1B-2578**	2	NUT (3/8-16-THD)	

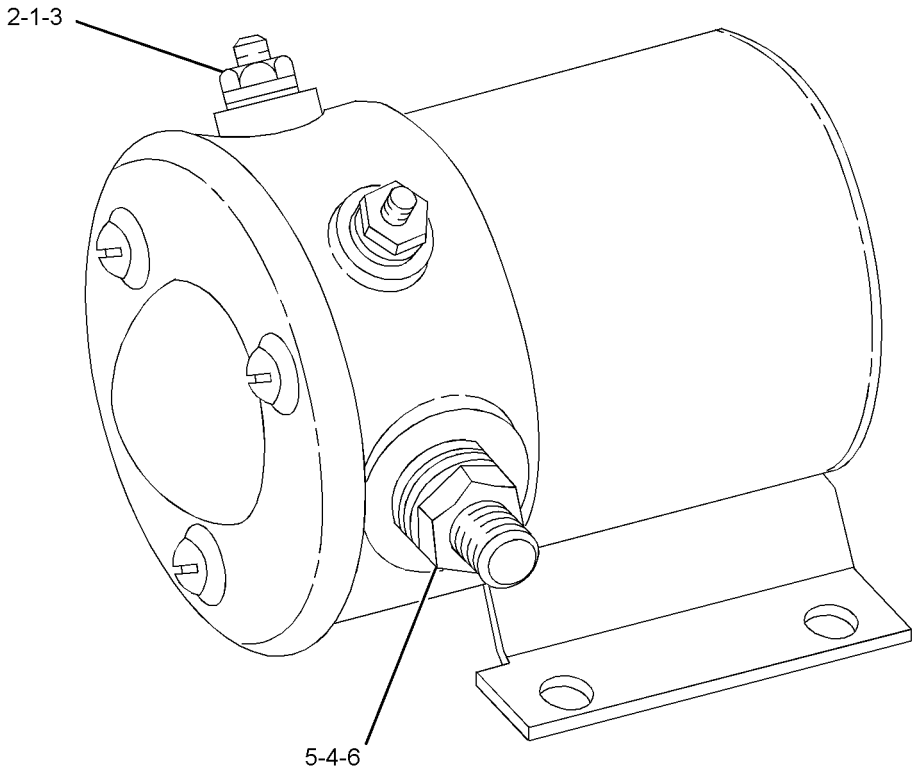

GRAPHIC #1 **<END>** g01132022

241-8368 SWITCH GP-MAGNETIC

S/N: R9H1-UP
24-VOLT
PART OF 260-1871 WIRING GP-POWER RECEPTACLE

SMCS-7499 **i03570587**

NOTE	REF NO	GRAPHIC REF	PART NUMBER	QTY	PART NAME 1 2 3 4 5 6 (PRODUCT LEVEL)	SEE PAGE
	1	1	**155-2270**	1	KIT-CONNECTING PLUG (2-PIN)	
					(INCLUDES PLUG AS, WEDGE & INTERFACE SEAL)	
	2	1	**4F-2294**	2	NUT-JAM (5/16-24-THD)	
	3	1	**186-3736**	2	SOCKET-CONNECTOR (16-GA TO 18-GA)	

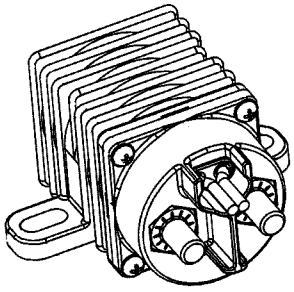

ISOMETRIC VIEW

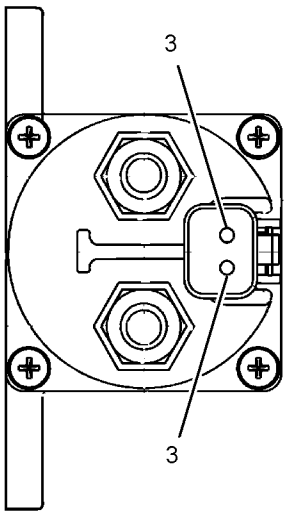

VIEW A-A

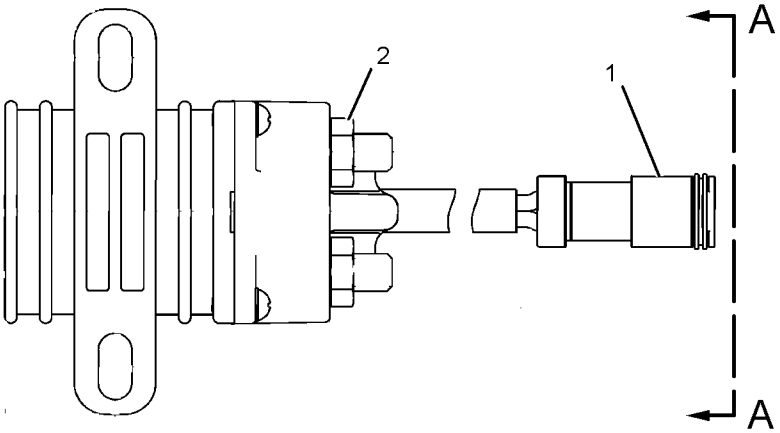

GRAPHIC #1 **<END>** g01077362

258-0883 SWITCH GP-PRESSURE–FUEL

S/N: MHX1304-UP
PART OF 254-4998 FILTER GP-FUEL
ALSO AN ATTACHMENT

SMCS-1435 **i03540160**

NOTE	REF NO	GRAPHIC REF	PART NUMBER	QTY	PART NAME 1 2 3 4 5 6 (PRODUCT LEVEL)	SEE PAGE
	1	1	**102-8802**	1	KIT-RECEPTACLE (2-PIN)	
					(INCLUDES RECEPTACLE AS & WEDGE)	
	2	1	**9X-7737**	1	SEAL-O-RING	
	3	1	**186-3735**	2	PIN-CONNECTOR (16-GA TO 18-GA)	
E	4	1	**9X-1813**		SLEEVE (14-CM)	
	5	1	**6V-4589**	1	SEAL-O-RING	

E-ORDER BY THE CENTIMETER

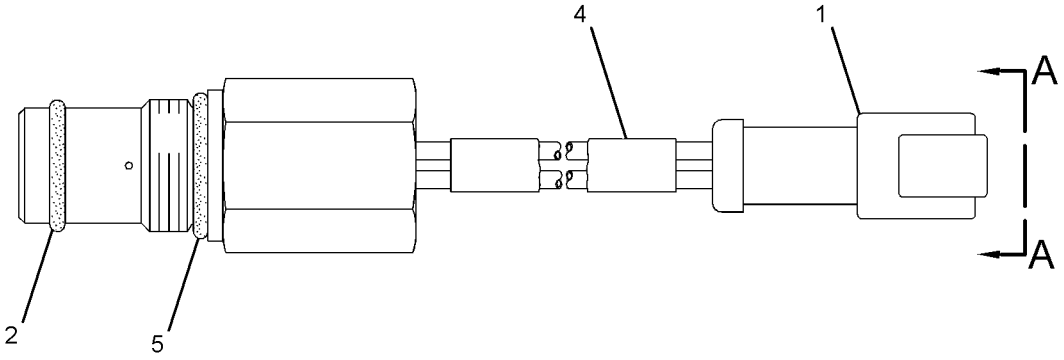

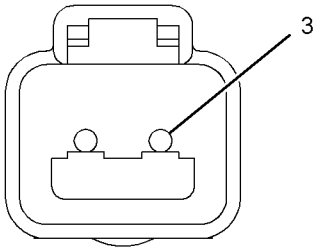

VIEW A-A

GRAPHIC #1 **<END>** g01862835

275-1253 SWITCH GP-PRESSURE

S/N: MHX1304-UP
AMPSEAL CONNECTOR
PART OF 254-4998, 356-8382 FILTER GP-FUEL
ALSO AN ATTACHMENT

SMCS-1435 **i03524880**

NOTE	REF NO	GRAPHIC REF	PART NUMBER	QTY	PART NAME 1 2 3 4 5 6 (PRODUCT LEVEL)	SEE PAGE
	1	1	**230-4011**	1	PLUG AS-CONNECTOR (2-PIN)	
			264-7029	1	SEAL-CONNECTOR	
E	2	1	**9X-1813**		SLEEVE (14-CM)	
	3	1	**6V-4589**	1	SEAL-O-RING	
	4	1	**9X-7737**	1	SEAL-O-RING	
	5	1	**144-1636**	2	PIN-CONNECTOR (14-GA TO 18-GA)	

E-ORDER BY THE CENTIMETER

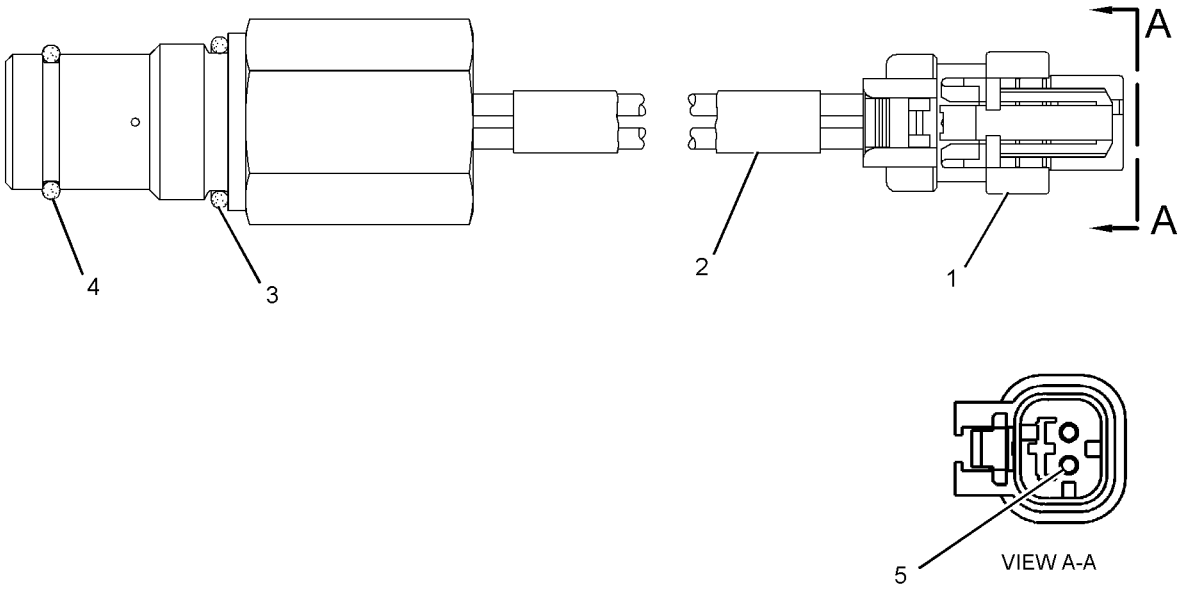

GRAPHIC #1 **<END>** g01238534

233-3124 SWITCH GP-ROADING

S/N: R9H1-UP

PART OF 298-0602, 298-0603 LIGHTING GP-ROADING

AN ATTACHMENT

SMCS-7332 **i02976031**

NOTE	REF NO	GRAPHIC REF	PART NUMBER	QTY	PART NAME 1 2 3 4 5 6 (PRODUCT LEVEL)	SEE PAGE
	1	1	**236-4616**	1	SWITCH AS-ROCKER (HAZARD)	
	2	1	**249-5479**	1	SWITCH AS-ROCKER (24-VOLT) (HEADLIGHT DIMMER)	
	3	1	**249-5482**	1	SWITCH AS-ROCKER (24-VOLT) (TURN SIGNAL)	
	4	1	**249-5486**	1	SWITCH AS-ROCKER (HEADLIGHTS, TAIL LIGHTS)	

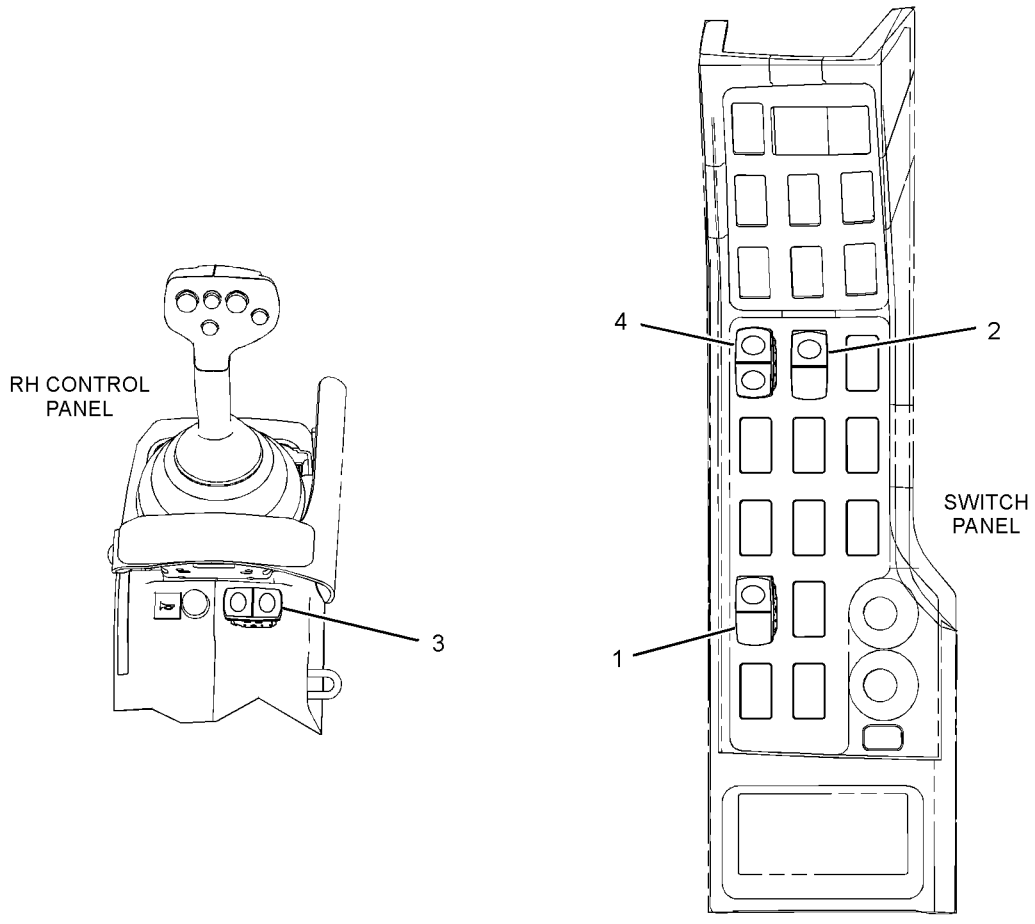

GRAPHIC #1 **<END>** g01469931

329-3730 SWITCH GP-ROADING

S/N: R9H1-UP
PART OF 348-3537 CONTROL AR-HYDRAULIC
AN ATTACHMENT

SMCS-7332 **i03317255**

NOTE	REF NO	GRAPHIC REF	PART NUMBER	QTY	PART NAME 1 2 3 4 5 6 (PRODUCT LEVEL)	SEE PAGE
	1	1	**293-9136**	1	SWITCH AS-ROCKER (24-VOLT)	

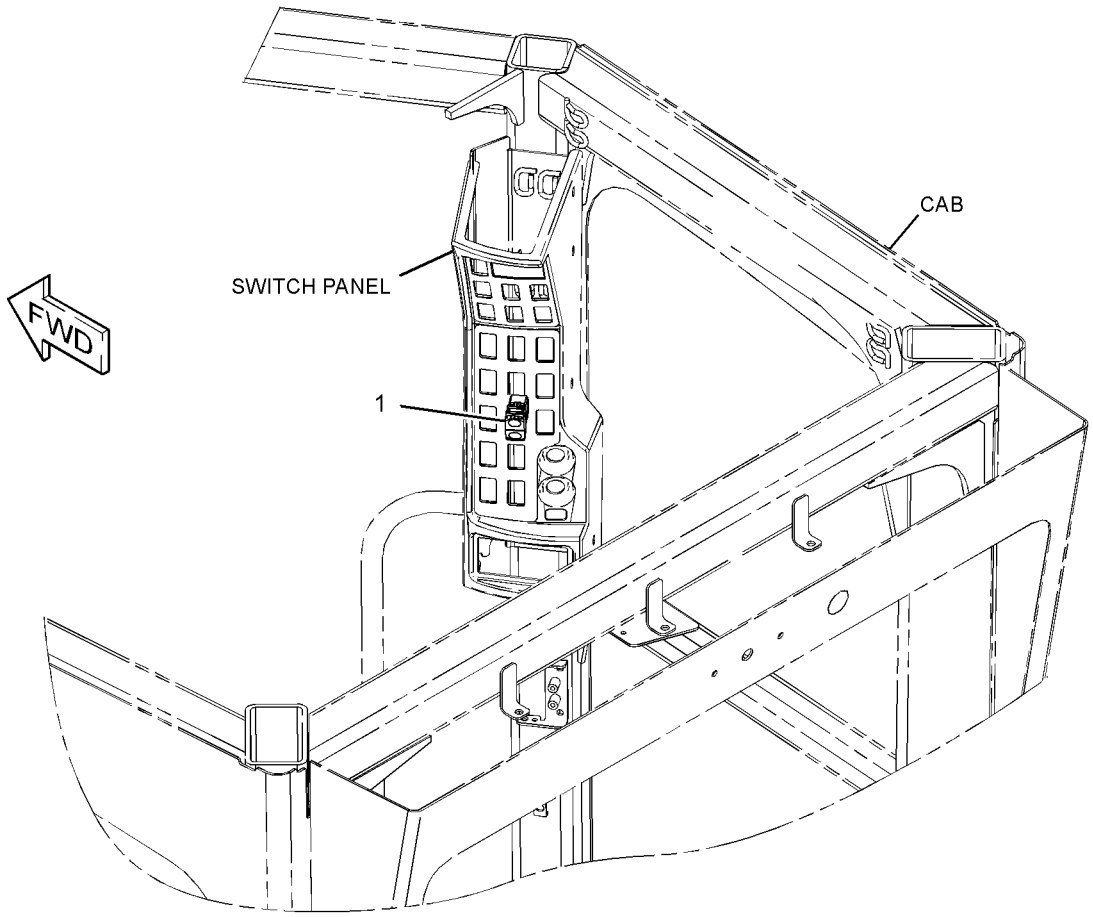

GRAPHIC #1 **<END>** g01907614

238-8824 SWITCH GP-ROCKER–AUTOSHIFT

S/N: R9H1-UP
PART OF 251-2006 AUTOSHIFT AR
AN ATTACHMENT

SMCS-7332 **i02615592**

NOTE	REF NO	GRAPHIC REF	PART NUMBER	QTY	PART NAME 1 2 3 4 5 6 (PRODUCT LEVEL)	SEE PAGE
	1	1	**102-8802**	1	KIT-RECEPTACLE (2-PIN)	
					(INCLUDES RECEPTACLE AS & WEDGE)	
	2	1	**249-5478**	1	SWITCH AS-ROCKER (AUTOSHIFT)	
	3	1	**250-2299**	1	LAMP AS-LED (24-VOLT, GREEN)	

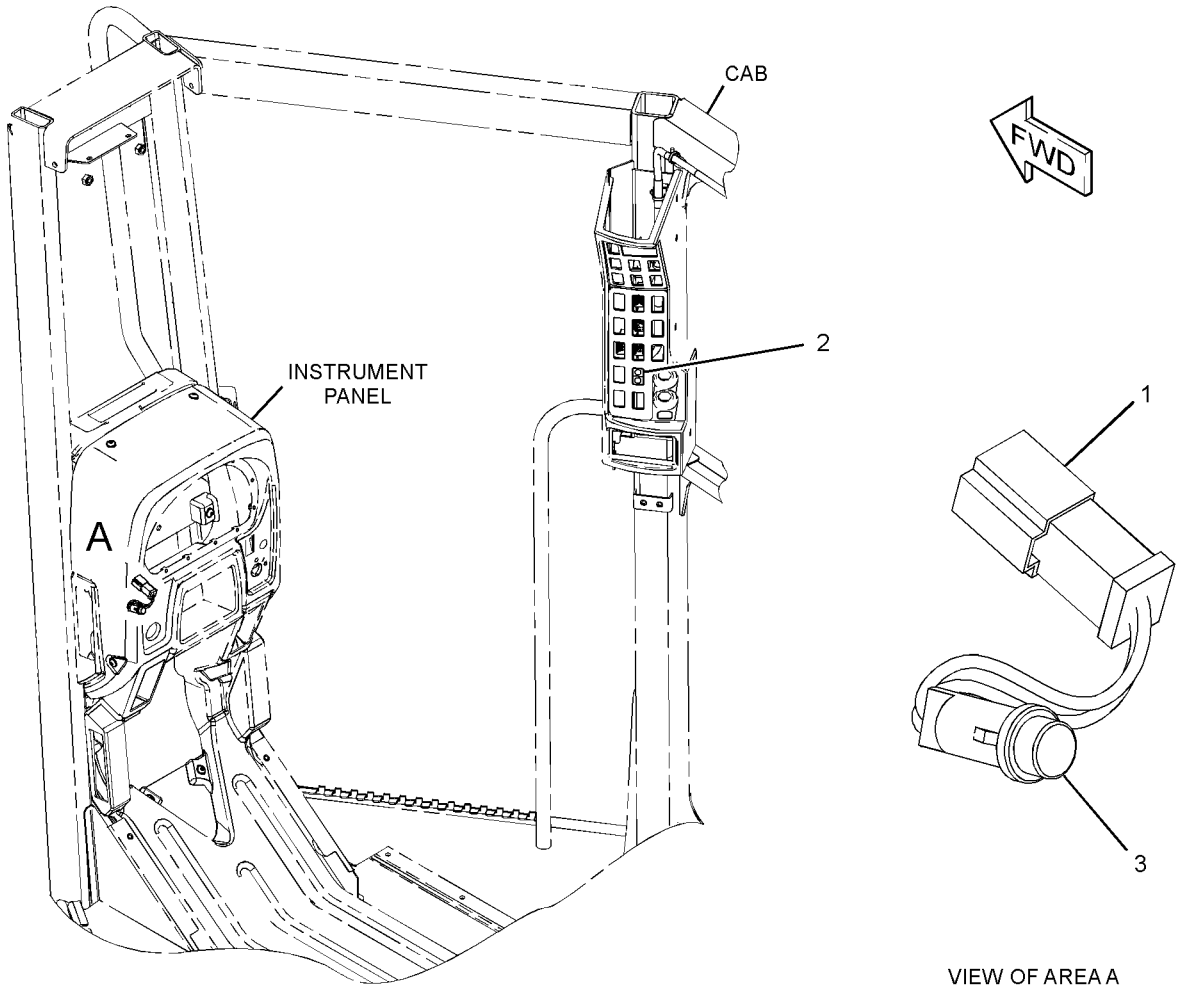

GRAPHIC #1 **<END>** g01313358

ELECTRICAL AND STARTING SYSTEM

278-0685 SWITCH GP-ROCKER—ENGINE BRAKE

S/N: R9H1-UP
PART OF 276-1279 ENGINE AR-COMPLETE
ALSO AN ATTACHMENT

SMCS-7332 **i02675567**

NOTE	REF NO	GRAPHIC REF	PART NUMBER	QTY	PART NAME 1 2 3 4 5 6 (PRODUCT LEVEL)	SEE PAGE
	1	1	**278-8040**	1	SWITCH AS-ROCKER (ENGINE COMPRESSION BRAKE)	

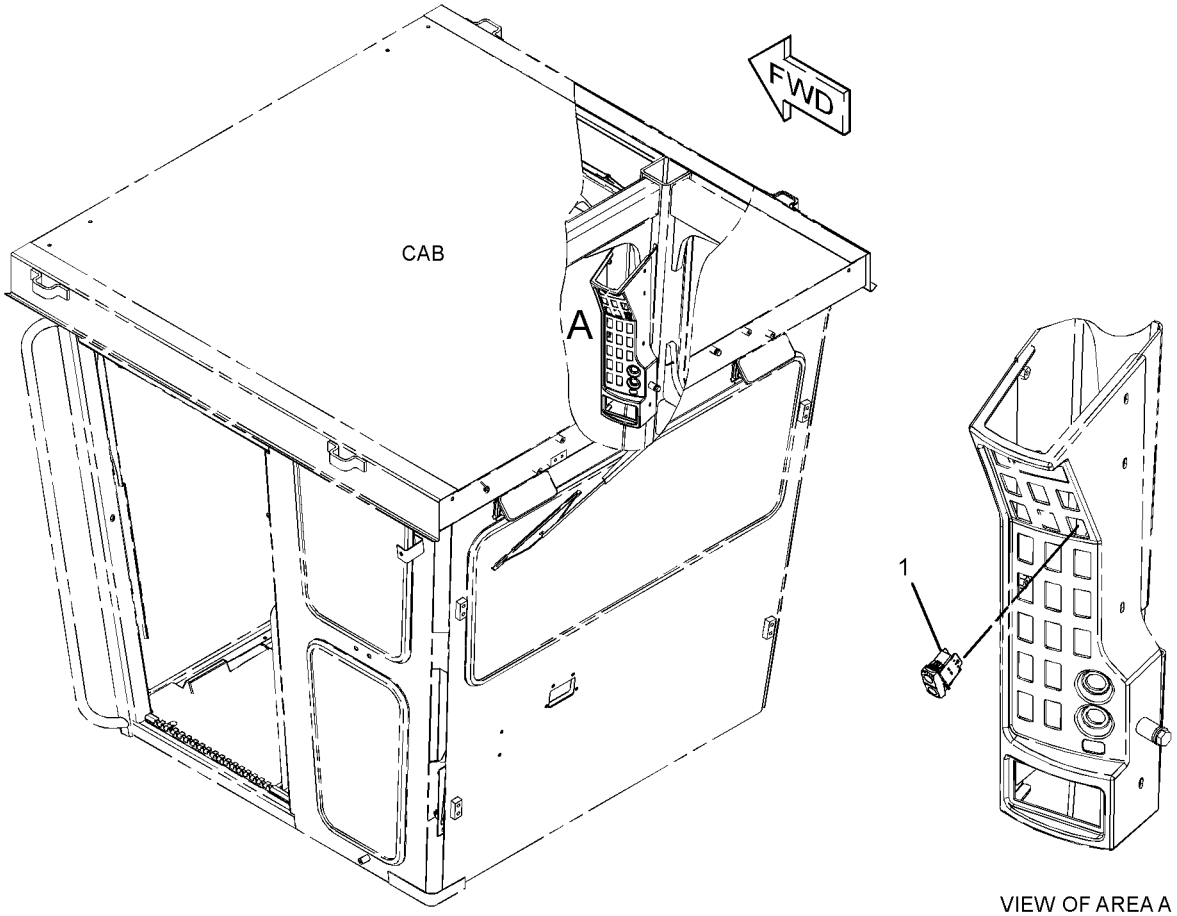

VIEW OF AREA A
(EXPLODED)

GRAPHIC #1 **<END>** g01317352

321-6987 SWITCH GP-ROCKER

S/N: R9H1-UP

PART OF 354-8463, 366-3374 CONTROL AR-HYDRAULIC AN ATTACHMENT

SMCS-7332 **i03378642**

NOTE	REF NO	GRAPHIC REF	PART NUMBER	QTY	PART NAME 1 2 3 4 5 6 (PRODUCT LEVEL)	SEE PAGE
	1	1	**249-5487**	1	SWITCH AS-ROCKER (BLADE CUSHION)	

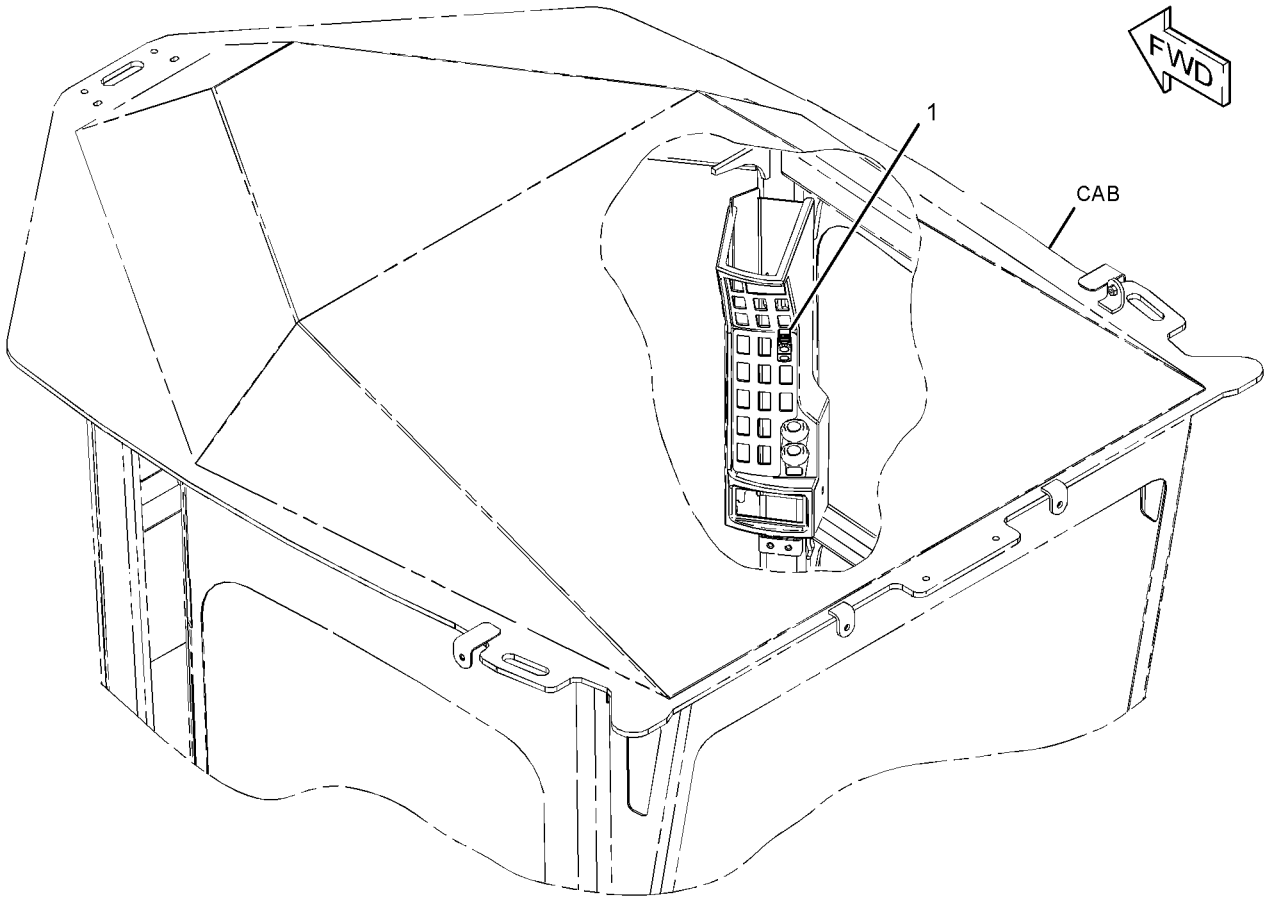

GRAPHIC #1 **<END>** g01747874

343-1824 SWITCH GP-ROCKER—HEATED MIRRORS

S/N: R9H1-UP
PART OF 233-3296 MIRROR GP-REAR VIEW
AN ATTACHMENT

SMCS-7332 **i03546519**

NOTE	REF NO	GRAPHIC REF	PART NUMBER	QTY	PART NAME 1 2 3 4 5 6 (PRODUCT LEVEL)	SEE PAGE
	1	1	**236-4630**	1	SWITCH AS-ROCKER (HEATED MIRRORS)	
	2	1	**297-0760**	1	RELAY AS (24-VDC, 20-AMPERE) (HEATED MIRROR TIMER)	
M	3	1	**5C-9553**	1	BOLT (M6X1X16-MM)	
	4	1	**9X-8256**	1	WASHER (6.6X12X2-MM THK)	

M-METRIC PART

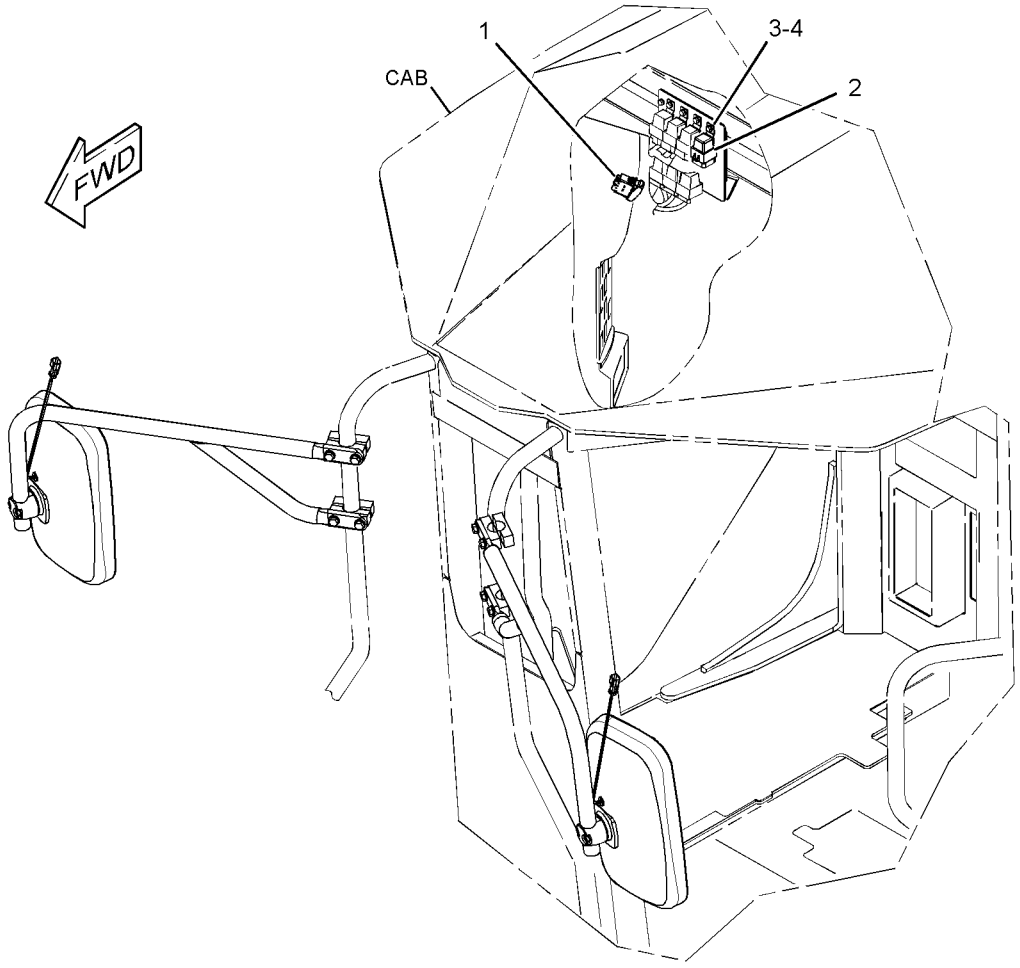

GRAPHIC #1 **<END>** g01923033

275-7741 SWITCH GP-WIPER—INTERMITTENT

S/N: R9H1-UP
24-VOLT
PART OF 275-7764 SWITCH GP-WIPER

SMCS-7305, 7332 **i02895040**

NOTE	REF NO	GRAPHIC REF	PART NUMBER	QTY	PART NAME 1 2 3 4 5 6 (PRODUCT LEVEL)	SEE PAGE
	1	1	**6V-8369**	1	NUT (7/16-28-THD)	
	2	1	**2H-3920**	1	LOCKWASHER	
	3	1	**8T-8737**	2	PLUG-SEAL	
	4	1	**186-3735**	6	PIN-CONNECTOR (16-GA TO 18-GA)	
	5	1	**102-8806**	1	KIT-RECEPTACLE (8-PIN)	
					(INCLUDES RECEPTACLE AS & WEDGE)	

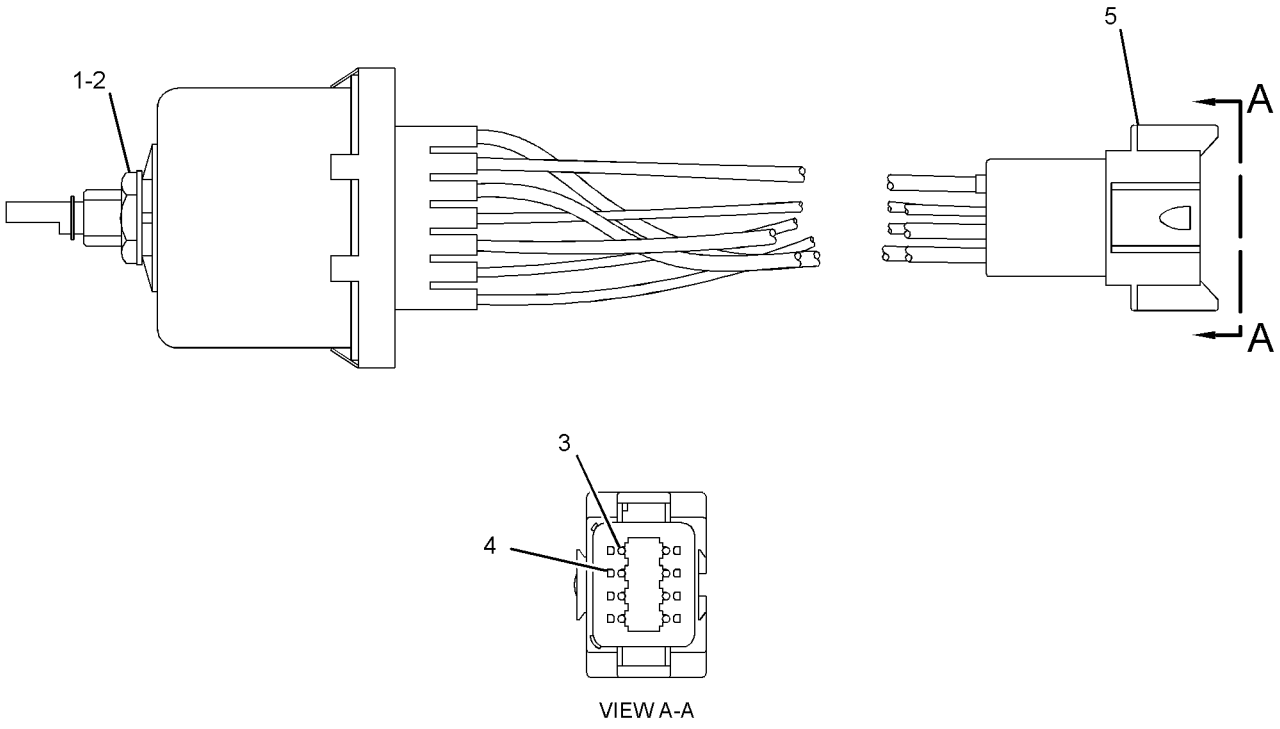

GRAPHIC #1 **<END>** g01445891

275-7764 SWITCH GP-WIPER—INTERMITTENT

S/N: R9H1-UP
24-VOLT
PART OF 351-7026 WIRING GP-CAB

SMCS-7305, 7332 **i02980144**

NOTE	REF NO	GRAPHIC REF	PART NUMBER	QTY	PART NAME 1 2 3 4 5 6 (PRODUCT LEVEL)	SEE PAGE
Y	1	1	**275-7741**	1	SWITCH GP-WIPER (24-VOLT, INTERMITTENT)	339
	2	1	**7T-9302**	1	KNOB AS-WIPER SWITCH	
		1	**014-0816**	1	SETSCREW (8-32X0.5-IN)	

Y-SEPARATE ILLUSTRATION

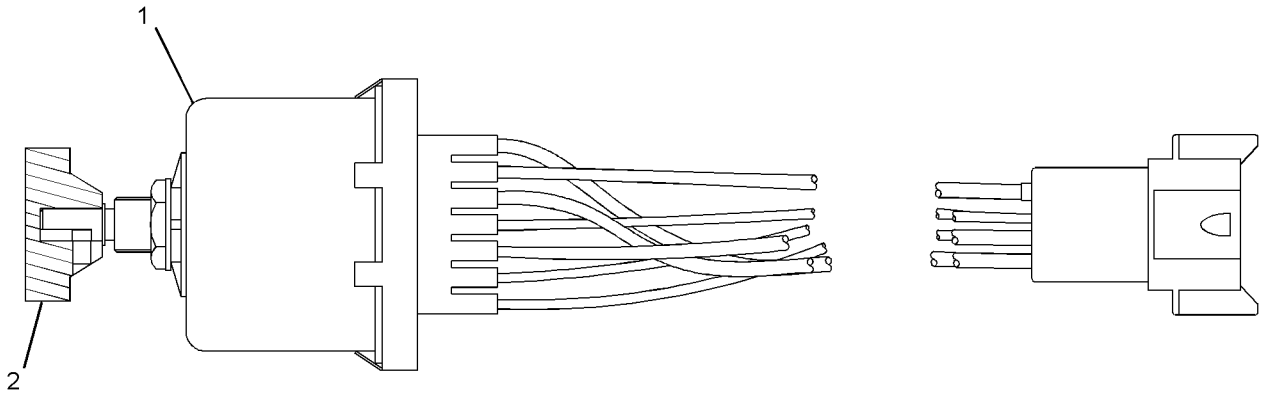

GRAPHIC #1 **<END>** g01516002

256-2907 TARGET GP-LASER

S/N: R9H1-UP

PART OF 295-9880 TARGET GP-LASER

SMCS-7009 **i03778209**

NOTE	REF NO	GRAPHIC REF	PART NUMBER	QTY	PART NAME 1 2 3 4 5 6 (PRODUCT LEVEL)	SEE PAGE
	1	1	**291-1915**	1	TARGET AS-LASER	
	2	1	**275-3378**	1	SPACER (16.7X38.1X12.7-MM THK)	
	3	1	**7X-0345**	1	BOLT (5/8-11X1.75-IN)	
	4	1	**7M-4672**	1	WASHER (0.656X1.31X0.109-IN THK)	
	5	1	**8T-9368**	4	BOLT (1/4-20X2.25-IN)	
	6	1	**9X-6165**	8	WASHER (6.5X22X2.5-MM THK)	
	7	1	**8C-5607**	8	MOUNT-ISOLATION	
	8	1	**8C-5608**	4	SPACER (6.5X9.5X25.4-MM THK)	
	9	1	**275-4012**	4	BUSHING	
	10	1	**6V-8185**	4	NUT (1/4-20-THD)	
	11	1	**5P-4115**	4	WASHER-HARD (7.2X19X2-MM THK)	
	12	1	**252-9628**	1	MOUNTING GP-RECEIVER (TARGET)	
	12A	1	**113-0693**	1	LOCKWASHER	
	12B	1	**8R-1803**	1	WASHER (10.5X18X1-MM THK)	
	12C	1	**289-8449**	1	HANDLE AS	
	13	1	**264-3171**	1	PLATE-SHOCK	

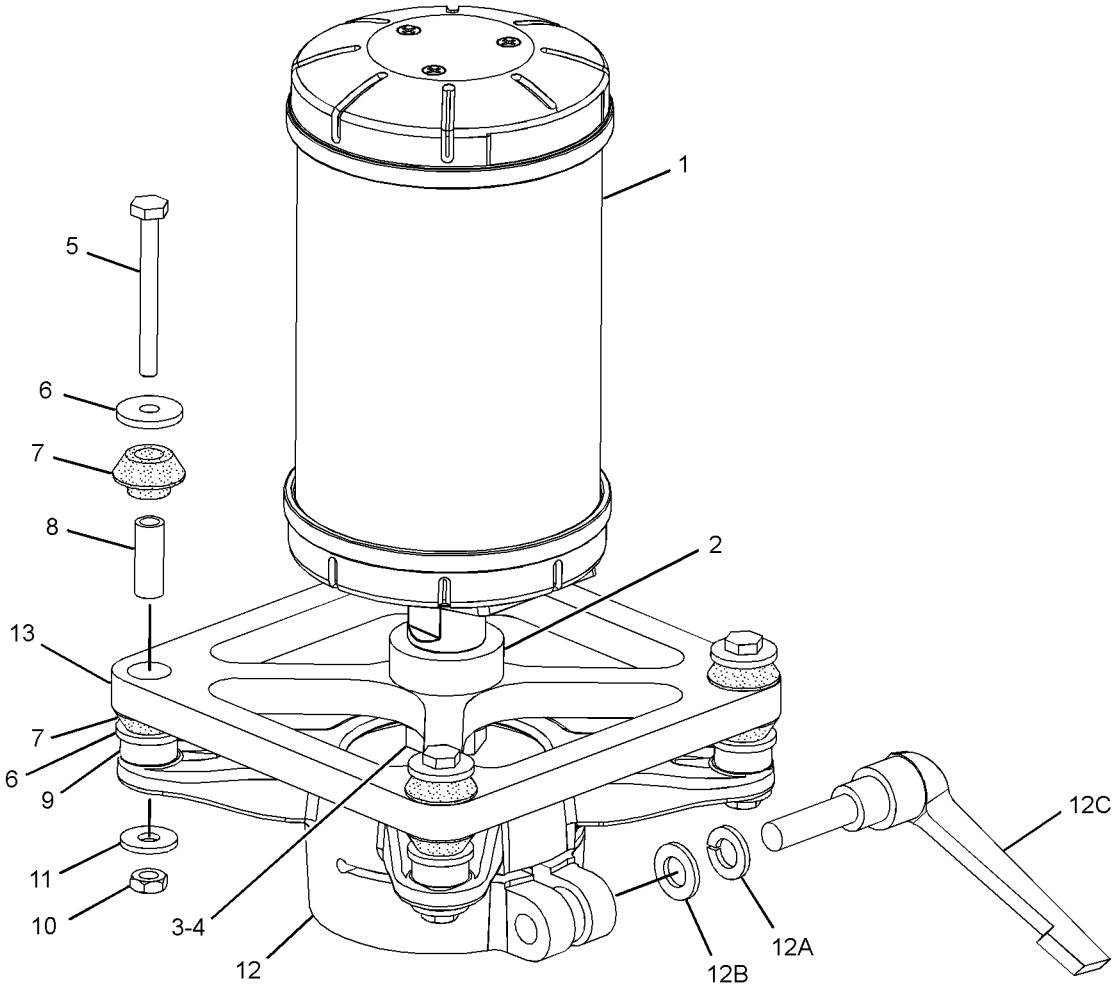

GRAPHIC #1 **<END>** g02059833

295-9880 TARGET GP-LASER

S/N: R9H1-UP

PART OF 317-6526 GRADE CONTROL AR-LASER

FIELD INSTALLATION

SMCS-7009 **i03910854**

NOTE	PART NUMBER	QTY	PART NAME 1 2 3 4 5 6 (PRODUCT LEVEL)	SEE PAGE
Y	*256-2907*	1	TARGET GP-LASER (GRADE CONTROL)	341
	275-3376	1	BLOCK	
	276-0764	1	CABLE-COILED (LASER RECEIVER)	
	244-1719	1	CASE-CARRYING	
	252-8744	1	FILM-WARNING (BLADE, DO NOT CLIMB, READ OMM)	

Y-SEPARATE ILLUSTRATION

<END>

239-1134 VALVE GP-ETHER STARTING

S/N: R9H1-UP
24-VOLT
PART OF 249-7310 STARTING AID GP-ETHER

SMCS-1456 **i03894416**

NOTE	REF NO	GRAPHIC REF	PART NUMBER	QTY	PART NAME 1 2 3 4 5 6 (PRODUCT LEVEL)	SEE PAGE
	1	1	**7N-9801**	1	GASKET	
	2	1	**102-8802**	1	KIT-RECEPTACLE (2-PIN)	
					(INCLUDES RECEPTACLE AS & WEDGE)	
	3	1	**8T-8729**	2	PIN-CONNECTOR (16-GA TO 18-GA)	
	4	1	**358-4889**	1	FILTER (ETHER START)	

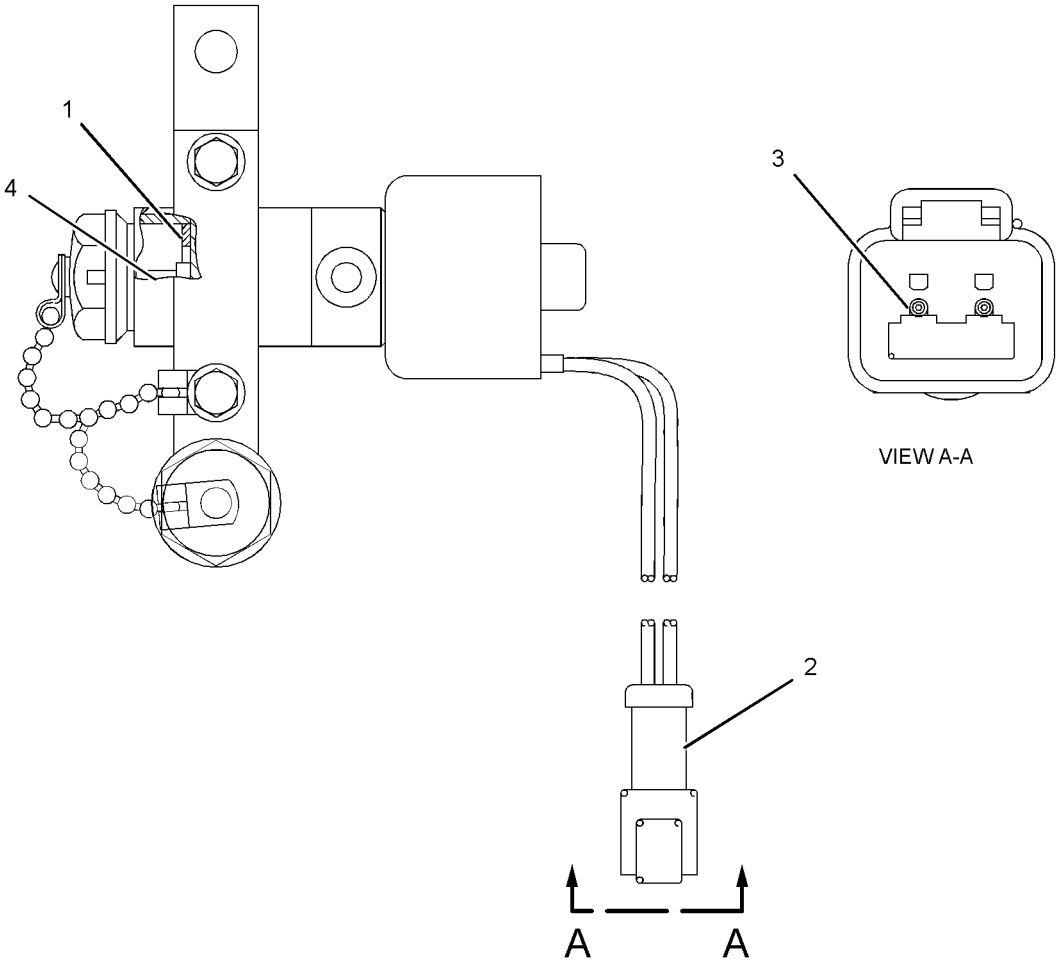

GRAPHIC #1 **<END>** g02138138

257-7224 WARNING GP-BACKUP

S/N: R9H1-UP

PART OF 349-2556 COMMON AR

SMCS-7406 **i02179481**

NOTE	REF NO	GRAPHIC REF	PART NUMBER	QTY	PART NAME 1 2 3 4 5 6 (PRODUCT LEVEL)	SEE PAGE
	1	1	**3S-2093**	1	STRAP-CABLE	
	2	1	**213-9100**	1	ALARM GP	
BE		1	**9X-1813**		SLEEVE	
		1	**102-8802**	1	KIT-RECEPTACLE (2-PIN)	
					(INCLUDES RECEPTACLE AS & WEDGE)	
	3	1	**5P-4116**	4	WASHER-HARD (8.8X20.5X2-MM THK)	
M	4	1	**8T-4189**	4	BOLT (M8X1.25X20-MM)	

B-USE AS REQUIRED
E-ORDER BY THE CENTIMETER
M-METRIC PART

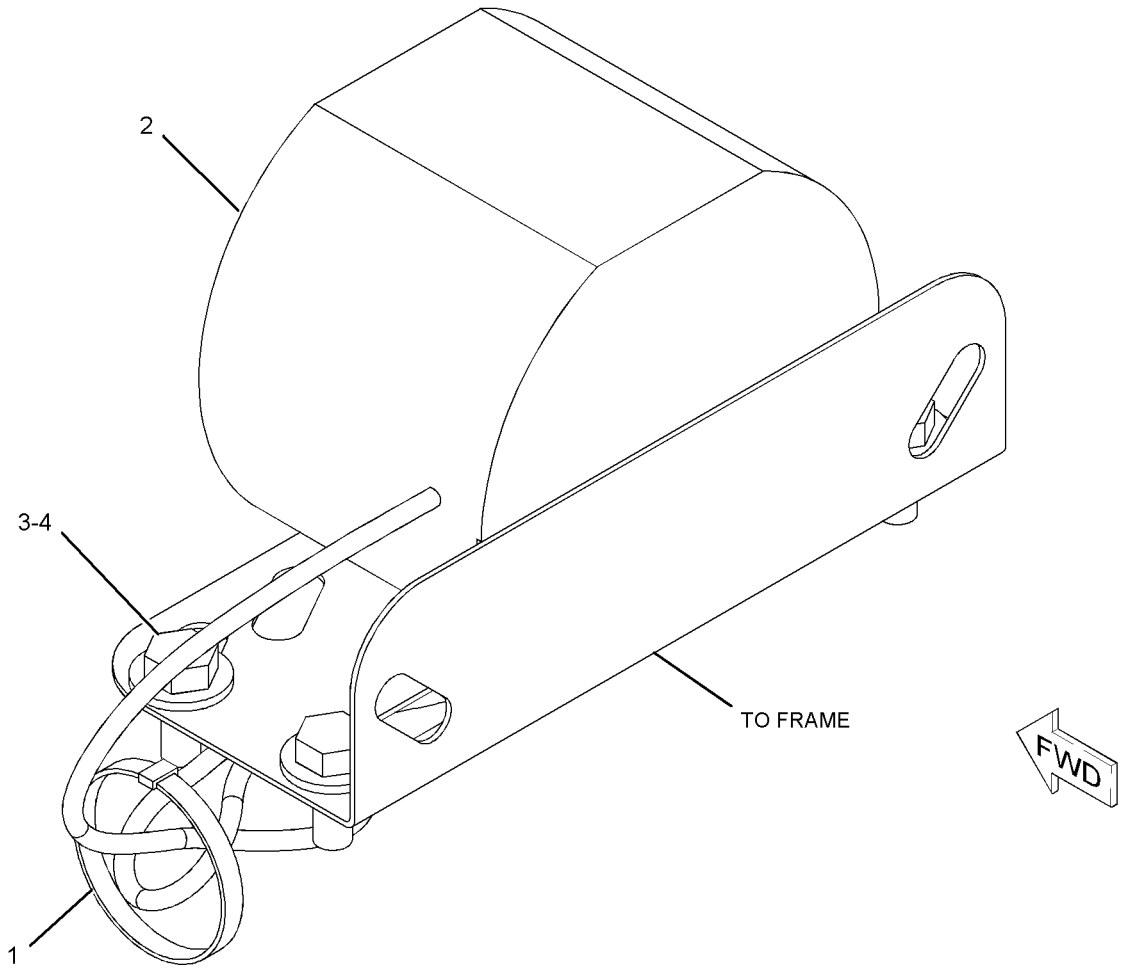

GRAPHIC #1 **<END>** g01109906

351-7026 WIRING GP-CAB

S/N: R9H1-UP

PART OF 233-3107 CAB AR

SMCS-1408, 7301 **i04040017**

NOTE	REF NO	GRAPHIC REF	PART NUMBER	QTY	PART NAME 1 2 3 4 5 6 (PRODUCT LEVEL)	SEE PAGE
	1	2	**102-8802**	2	KIT-RECEPTACLE (2-PIN)	
					(EACH INCLUDES RECEPTACLE AS & WEDGE)	
	2	3	**3E-5239**	1	RELAY AS (24-VOLT) (BLADE FLOOD LAMP TWO)	
	2A	3	**3E-5239**	1	RELAY AS (24-VOLT) (CONDENSER FAN TWO)	
	2B	3	**3E-5239**	1	RELAY AS (24-VOLT) (CONDENSER FAN ONE)	
	2C	3	**3E-5239**	1	RELAY AS (24-VOLT) (HEADLIGHT DIMMER)	
	2D	3	**3E-5239**	1	RELAY AS (24-VOLT) (CAB FLOODLIGHTS TWO)	
	2E	3	**3E-5239**	1	RELAY AS (24-VOLT) (CAB FLOODLIGHTS, REAR)	
	2F	2	**3E-5239**	1	RELAY AS (24-VOLT) (ACCUGRADE)	
	2G	2	**3E-5239**	1	RELAY AS (24-VOLT) (AIR CLEANER)	
	2H	2	**3E-5239**	1	RELAY AS (24-VOLT) (CAB FLOODLIGHTS ONE)	
	2J	2	**3E-5239**	1	RELAY AS (24-VOLT) (HORN)	
	2K	2	**3E-5239**	1	RELAY AS (24-VOLT) (POSITION LAMP, LH)	
	2L	2	**3E-5239**	1	RELAY AS (24-VOLT) (DIFFERENTIAL LOCK)	
	2M	2	**3E-5239**	1	RELAY AS (24-VOLT) (BLADE FLOOD LAMP ONE)	
	2N	2	**3E-5239**	1	RELAY AS (24-VOLT) (A/C FAN, HIGH SPEED)	
	2P	2	**3E-5239**	1	RELAY AS (24-VOLT) (REAR FLOODLIGHT)	
	2R	2	**3E-5239**	1	RELAY AS (24-VOLT) (POSITION LAMP, RH)	
	2S	2	**3E-5239**	1	RELAY AS (24-VOLT) (BACKLIGHT)	
	2T	3	**3E-5239**	1	RELAY AS (24-VOLT) (HEADLIGHTS)	
Y	3	2	**3E-6328**	1	ALARM GP (24-VOLT) (CATERPILLAR MONITORING SYSTEM)	201
	4	3	**6T-1999**	1	HOUSING AS (CIGAR LIGHTER)	
	5	1	**7U-4891**	8	SCREW (10-32X1-IN)	
	6	1	**9W-1441**	17	FUSE (15-AMPERE)	
	7	1	**9W-1442**	19	FUSE (10-AMPERE)	
	8	1	**9W-1446**	4	FUSE (20-AMPERE)	
	10	2	**092-4924**	1	PLUG-BUTTON	
	11	2	**110-7887**	1	SWITCH AS-START (KEY)	
		2	**7T-6799**	1	NUT-MOUNTING (1-32-THD)	
		2	**102-8804**	1	KIT-RECEPTACLE (4-PIN)	
					(INCLUDES RECEPTACLE AS & WEDGE)	
		2	**186-3735**	4	PIN-CONNECTOR (16-GA TO 18-GA)	
	12	2	**170-1821**	1	SWITCH AS-PUSH BUTTON (HORN)	
		2	**6F-0253**	1	LOCKWASHER	
		2	**8T-8729**	2	PIN-CONNECTOR (16-GA TO 18-GA)	
		2	**172-3511**	1	NUT (5/8-24-THD)	
	13	1	**180-9900**	1	CAP AS	
	14	1	**189-2512**	1	PLATE	
	15	2	**195-7988**	1	GASKET	
	16	2	**222-7890**	1	SWITCH AS-ROCKER (PARKING BRAKE)	
	17	2,3	**228-6089**	16	PLUG (ROCKER SWITCH)	
	18	3	**229-2580**	1	SWITCH AS-ROCKER (THROTTLE LOCK SET)	
	19	2	**236-4615**	1	SWITCH AS-ROCKER (SECONDARY STEERING)	
	20	2	**246-4311**	1	GUARD (SWITCH)	
	21	3	**249-5486**	1	SWITCH AS-ROCKER (HEADLIGHTS, TAIL LIGHTS)	
	22	3	**249-5493**	1	SWITCH AS-ROCKER (THROTTLE LOCK ON, OFF)	
	23	3	**252-5224**	1	FLASHER AS	
	24	2	**253-3485**	1	PLATE	
	25	2	**253-3489**	2	PLATE	
	26	2	**262-4961**	1	PLATE	
Y	27	1	**265-8937**	1	BRACKET GP-MOUNTING (FUSE PANEL)	206
Y	28	3	*275-9650*	1	ELECTRONICS GP-MONITOR (MESSENGER)	220
	29	2	**279-5308**	1	LAMP AS-LED (24-VOLT, GREEN)	
	30	3	**280-4244**	1	SWITCH AS-ROCKER (24-VOLT) (CENTERSHIFT PIN)	
	31	3	**284-3623**	1	SWITCH AS-ROCKER (HYDRAULIC LOCKOUT)	

351-7026 **WIRING GP-CAB** ***(contd.)*** **i04040017**

NOTE	REF NO	GRAPHIC REF	PART NUMBER	QTY	PART NAME 1 2 3 4 5 6 (PRODUCT LEVEL)	SEE PAGE
	32	2,3	**286-0323**	5	GASKET	
	33	2	**288-1402**	1	GASKET	
	34	1	**296-4925**	1	HARNESS AS-CONTROL	
		1	**102-8804**	1	KIT-RECEPTACLE (4-PIN)	
		1	**102-8806**	1	KIT-RECEPTACLE (8-PIN)	
		1	**102-8801**	1	KIT-RECEPTACLE (12-PIN)	
		1	**190-7614**	1	KIT-RECEPTACLE (12-PIN)	
					(EACH KIT INCLUDES RECEPTACLE AS & WEDGE)	
		1	**3R-9965**	1	PLUG AS-CONNECTOR (8-PIN)	
		1	**6D-5257**	1	PLUG AS-CONNECTOR (8-PIN)	
		1	**8T-8729**	18	PIN-CONNECTOR (16-GA TO 18-GA)	
		1	**8T-8730**	8	SOCKET-CONNECTOR (16-GA TO 18-GA)	
		1	**8T-8737**	69	PLUG-SEAL	
		1	**9W-0844**	7	SOCKET-CONNECTOR (14-GA)	
		1	**9W-0852**	7	PIN-CONNECTOR (14-GA TO 16-GA)	
		1	**9X-1054**	1	PLUG AS-CONNECTOR (4-PIN)	
		1	**9X-1056**	4	TERMINAL-RECEPTACLE (14-GA TO 16-GA)	
		1	**9X-3401**	4	PIN-CONNECTOR (16-GA TO 18-GA)	
		1	**9X-3402**	14	SOCKET-CONNECTOR (16-GA TO 18-GA)	
		1	**9X-7145**	1	RECEPTACLE AS-CONNECTOR (24-PIN)	
		1	**9X-7146**	1	PLUG AS-CONNECTOR (24-PIN)	
		1	**3E-4367**	1	RING-RETAINING	
M		1	**3E-8558**	1	BOLT (M5X0.8X39.37-MM)	
		1	**9X-3265**	2	SEAL-CONNECTOR (24-PIN)	
E		1	**119-3662**		TUBE-HEAT SHRINK (10.85-MM DIA) (26-CM)	
E		1	**125-7875**		TUBE-HEAT SHRINK (7.44-MM DIA) (30-CM)	
		1	**155-2255**	2	KIT-CONNECTING PLUG (12-PIN)	
		1	**155-2256**	1	KIT-CONNECTING PLUG (12-PIN)	
		1	**155-2271**	1	KIT-CONNECTING PLUG (4-PIN)	
		1	**174-0503**	1	KIT-CONNECTING PLUG (3-PIN)	
					(EACH KIT INCLUDES PLUG AS, WEDGE & INTERFACE SEAL)	
E		1	**1P-0810**		TAPE-ELECTRICAL (229-CM)	
Y	35	2	*357-9151*	1	CONTROL & MTG GP-JOYSTICK	719
	37	2	**313-2152**	1	MODULE GP-DISPLAY	
	38	2	**320-9861**	2	GASKET	
	39	2	**337-0072**	1	PLATE AS	
	40	3	**337-8764**	1	PLATE AS	
	41	1	**351-5962**	1	HARNESS AS-CAB (MAIN)	
		1	**102-8802**	6	KIT-RECEPTACLE (2-PIN)	
		1	**102-8803**	2	KIT-RECEPTACLE (3-PIN)	
		1	**102-8804**	4	KIT-RECEPTACLE (4-PIN)	
		1	**102-8805**	3	KIT-RECEPTACLE (6-PIN)	
		1	**102-8806**	2	KIT-RECEPTACLE (8-PIN)	
		1	**102-8801**	1	KIT-RECEPTACLE (12-PIN)	
		1	**166-5229**	2	KIT-RECEPTACLE (12-PIN)	
		1	**190-7615**	3	KIT-RECEPTACLE (12-PIN)	
		1	**194-4254**	2	KIT-RECEPTACLE (8-PIN)	
					(EACH KIT INCLUDES RECEPTACLE AS & WEDGE)	
		1	**3E-5226**	2	CONNECTOR-SOCKET	
		1	**3E-5519**	1	PLUG AS-CONNECTOR (5-PIN)	
		1	**3S-2093**	8	STRAP-CABLE	
		1	**5P-4571**	14	TERMINAL-BLADE (14-GA TO 16-GA)	
		1	**7G-7917**	2	PLUG-SEAL	
		1	**7G-7919**	3	PLUG-SEAL	
		1	**7R-2751**	2	PLUG-CONNECTOR	
		1	**7T-0094**	5	SOCKET-CONNECTOR (12-GA TO 14-GA)	
		1	**9X-0196**	7	WIRE AS	
		1	**5P-4571**	1	TERMINAL-BLADE (14-GA TO 16-GA)	
		1	**7X-6222**	1	PLUG AS-CONNECTOR (24-PIN)	

351-7026 **WIRING GP-CAB** ***(contd.)*** **i04040017**

NOTE	REF NO	GRAPHIC REF	PART NUMBER	QTY	PART NAME 1 2 3 4 5 6 (PRODUCT LEVEL)	SEE PAGE
		1	**3E-4367**	1	RING-RETAINING	
M		1	**3E-8558**	1	BOLT (M5X0.8X39.37-MM)	
		1	**9X-3265**	2	SEAL-CONNECTOR (24-PIN)	
		1	**8C-6354**	1	CAP-RECEPTACLE	
		1	**8N-1517**	1	RECEPTACLE AS-CONNECTOR (25-PIN)	
		1	**8N-1522**	1	NUT (2-1/4-16-THD)	
		1	**8N-1540**	4	PIN-CONNECTOR (12-GA TO 14-GA)	
		1	**8N-1548**	2	PIN-CONNECTOR (4-GA)	
		1	**8T-8737**	383	PLUG-SEAL	
		1	**9R-9806**	10	TERMINAL-BLADE (18-GA TO 20-GA)	
		1	**9W-1951**	1	RECEPTACLE-CONNECTOR (9-PIN)	
		1	**9W-2032**	1	TERMINAL-BLADE (10-GA TO 12-GA)	
		1	**9W-2033**	27	TERMINAL-BLADE (14-GA TO 16-GA)	
		1	**9X-0145**	1	RECEPTACLE AS-CONNECTOR (24-PIN)	
		1	**9X-1054**	16	PLUG AS-CONNECTOR (4-PIN)	
		1	**9X-1055**	2	TERMINAL-RECEPTACLE (12-GA)	
		1	**9X-1056**	29	TERMINAL-RECEPTACLE (14-GA TO 16-GA)	
		1	**9X-3402**	21	SOCKET-CONNECTOR (16-GA TO 18-GA)	
		1	**9X-6856**	14	PIN-CONNECTOR (16-GA TO 18-GA)	
		1	**100-5041**	38	TERMINAL-RECEPTACLE (18-GA TO 20-GA)	
		1	**103-0213**	2	RECEPTACLE AS-CONNECTOR (70-PIN)	
E		1	**119-3662**		TUBE-HEAT SHRINK (10.85-MM DIA) (13-CM)	
E		1	**125-7874**		TUBE-HEAT SHRINK (5.72-MM DIA) (775-CM)	
E		1	**125-7875**		TUBE-HEAT SHRINK (7.44-MM DIA) (170-CM)	
		1	**9X-3402**	383	SOCKET-CONNECTOR (16-GA TO 18-GA)	
		1	**126-1774**	4	COVER-CONNECTOR	
		1	**9G-4343**	2	TERMINAL-RING (4-GA, 1/4-IN SCREW)	
		1	**2L-8069**	3	TERMINAL-RING (2-GA TO 10-GA, 3/8-IN SCREW)	
		1	**2L-8079**	3	TERMINAL-RING (14-GA TO 16-GA, 3/8-IN SCREW)	
		1	**128-5016**	4	SEAL-CABLE	
		1	**5P-5618**	1	TERMINAL-BLADE (10-GA TO 12-GA)	
		1	**5P-4571**	3	TERMINAL-BLADE (14-GA TO 16-GA)	
		1	**097-7234**	2	TERMINAL-BLADE (18-GA TO 22-GA)	
		1	**131-1475**	1	TERMINAL AS	
		1	**2L-8065**	2	TERMINAL-RING (10-GA TO 12-GA, NO. 8 SCREW)	
		1	**2L-8067**	1	TERMINAL-RING (10-GA TO 12-GA, 1/4-IN SCREW)	
		1	**2L-8069**	2	TERMINAL-RING (2-GA TO 10-GA, 3/8-IN SCREW)	
		1	**2L-8079**	6	TERMINAL-RING (14-GA TO 16-GA, 3/8-IN SCREW)	
		1	**134-2540**	4	RESISTOR AS-CONNECTION (3-PIN)	
		1	**144-1636**	206	PIN-CONNECTOR (14-GA TO 18-GA)	
		1	**147-1445**	2	PLUG AS-CONNECTOR (70-PIN)	
		1	**147-1446**	2	PLUG AS-CONNECTOR (70-PIN)	
					(EACH PLUG AS INCLUDES)	
		1	**159-9322**	1	SEAL-O-RING	
		1	**155-2255**	5	KIT-CONNECTING PLUG (12-PIN)	
		1	**155-2256**	2	KIT-CONNECTING PLUG (12-PIN)	
		1	**155-2257**	3	KIT-CONNECTING PLUG (12-PIN)	
		1	**155-2265**	9	KIT-CONNECTING PLUG (8-PIN)	
		1	**155-2260**	11	KIT-CONNECTING PLUG (3-PIN)	
		1	**155-2270**	10	KIT-CONNECTING PLUG (2-PIN)	
		1	**155-2271**	9	KIT-CONNECTING PLUG (4-PIN)	
		1	**155-2274**	8	KIT-CONNECTING PLUG (6-PIN)	
					(EACH KIT INCLUDES PLUG AS, WEDGE & INTERFACE SEAL)	
		1	**177-9648**	2	KIT-CONNECTING PLUG (2-PIN)	
		1	**177-9656**	1	KIT-CONNECTING PLUG (4-PIN)	
					(EACH KIT INCLUDES PLUG AS & WEDGE)	

351-7026 **WIRING GP-CAB** *(contd.)* **i04040017**

NOTE	REF NO	GRAPHIC REF	PART NUMBER	QTY	PART NAME 1 2 3 4 5 6 (PRODUCT LEVEL)	SEE PAGE
		1	**185-1860**	133	SEAL-WIRE	
		1	**185-1861**	13	SEAL-WIRE	
		1	**189-3158**	1	SUPPRESSOR-ARC	
		1	**200-8788**	6	SEAL (FUSE BLOCK)	
		1	**202-5397**	74	PLUG	
		1	**245-7434**	22	KIT-CONNECTING PLUG (10-PIN)	
					(EACH KIT INCLUDES PLUG CONNECTOR, WIRE ASSEMBLIES & PLUGS)	
		1	**230-4011**	1	PLUG AS-CONNECTOR (2-PIN)	
		1	**264-7029**	1	SEAL-CONNECTOR	
		1	**230-4012**	1	RECEPTACLE AS-CONNECTOR (2-PIN)	
		1	**230-5011**	1	RECEPTACLE AS-CONNECTOR (6-PIN)	
		1	**230-5010**	1	PLUG AS-CONNECTOR (6-PIN)	
		1	**239-7352**	1	PLUG AS-CONNECTOR (6-PIN)	
					(EACH PLUG AS INCLUDES)	
		1	**264-7032**	1	SEAL-CONNECTOR	
		1	**239-7353**	1	RECEPTACLE AS-CONNECTOR (6-PIN)	
		1	**250-9819**	3	BLOCK AS-FUSE	
		1	**151-1398**	1	KIT-TERMINAL (LOCK)	
		1	**250-9830**	1	BLOCK AS-FUSE	
		1	**161-7338**	1	COVER	
		1	**200-8788**	1	SEAL (FUSE BLOCK)	
		1	**1H-3244**	2	LOCKWASHER	
		1	**6V-8185**	2	NUT (1/4-20-THD)	
		1	**8T-4205**	2	WASHER-HARD (7.2X14.5X2-MM THK)	
	42	1,3	**351-5963**	1	HARNESS AS-LIGHTING	
		1,3	**102-8802**	14	KIT-RECEPTACLE (2-PIN)	
		1,3	**102-8801**	1	KIT-RECEPTACLE (12-PIN)	
					(EACH KIT INCLUDES RECEPTACLE AS & WEDGE)	
		1,3	**8T-8737**	44	PLUG-SEAL	
E		1,3	**125-7874**		TUBE-HEAT SHRINK (5.72-MM DIA) (25-CM)	
E		1,3	**125-7875**		TUBE-HEAT SHRINK (7.44-MM DIA) (15-CM)	
		1,3	**9X-3402**	56	SOCKET-CONNECTOR (16-GA TO 18-GA)	
		1,3	**155-2255**	2	KIT-CONNECTING PLUG (12-PIN)	
		1,3	**155-2265**	1	KIT-CONNECTING PLUG (8-PIN)	
		1,3	**155-2270**	14	KIT-CONNECTING PLUG (2-PIN)	
					(EACH KIT INCLUDES PLUG AS, WEDGE & INTERFACE SEAL)	
	43	1,2,3	**096-6166**	52	WASHER-HARD (4.5X9X1-MM THK)	
	44	2,3	**130-5300**	5	CLIP	
M	45	1	**155-4098**	4	SCREW-BUTTON HEAD (M3X0.5X1-MM)	
	46	2	**156-6175**	1	CLIP	
M	47	2,3	**162-2165**	51	BOLT-SOCKET HEAD (M4X0.7X16-MM)	
	48	1	**1H-4393**	2	LOCKWASHER	
	49	2	**246-9371**	1	COVER-RELAY (HEATED MIRROR)	
Y	50	3	**275-7764**	1	SWITCH GP-WIPER (24-VOLT, INTERMITTENT) (FRONT WIPER)	340
Y	50A	3	**275-7764**	1	SWITCH GP-WIPER (24-VOLT, INTERMITTENT) (DOOR WIPER, LH)	340
Y	50B	3	**275-7764**	1	SWITCH GP-WIPER (24-VOLT, INTERMITTENT) (DOOR WIPER, RH)	340
	52	1,2,3	**3S-2093**	65	STRAP-CABLE	
M	53	2,3	**5C-9553**	27	BOLT (M6X1X16-MM)	
	54	2	**5P-4115**	1	WASHER-HARD (7.2X19X2-MM THK)	
	55	1	**6T-3644**	1	CIRCUIT BREAKER AS (20-AMPERE) (CAB)	
	56	1,2,3	**7K-1181**	37	STRAP-CABLE	
	57	1	**7U-4892**	2	SCREW (8-32X0.75-IN)	
	58	3	**8N-2353**	1	KNOB AS-LIGHTER (24-VOLT)	
	59	1	**8T-0328**	2	WASHER-HARD (5.5X10X1-MM THK)	
	60	2,3	**8T-4121**	4	WASHER-HARD (11X21X2.5-MM THK)	

351-7026 **WIRING GP-CAB** ***(contd.)*** **i04040017**

NOTE	REF NO	GRAPHIC REF	PART NUMBER	QTY	PART NAME 1 2 3 4 5 6 (PRODUCT LEVEL)	SEE PAGE
M	61	2,3	**8T-4133**	4	NUT (M10X1.5-THD)	
M	62	3	**8T-4189**	2	BOLT (M8X1.25X20-MM)	
	63	3	**8T-4224**	2	WASHER-HARD (8.8X16X2-MM THK)	
M	64	2	**9X-1046**	12	SCREW (M4X0.7X18-MM)	
	65	2,3	**9X-8256**	26	WASHER (6.6X12X2-MM THK)	

E-ORDER BY THE CENTIMETER
M-METRIC PART
Y-SEPARATE ILLUSTRATION

REFER TO ALL ILLUSTRATIONS OF
THIS GROUP FOR AUXILIARY VIEWS

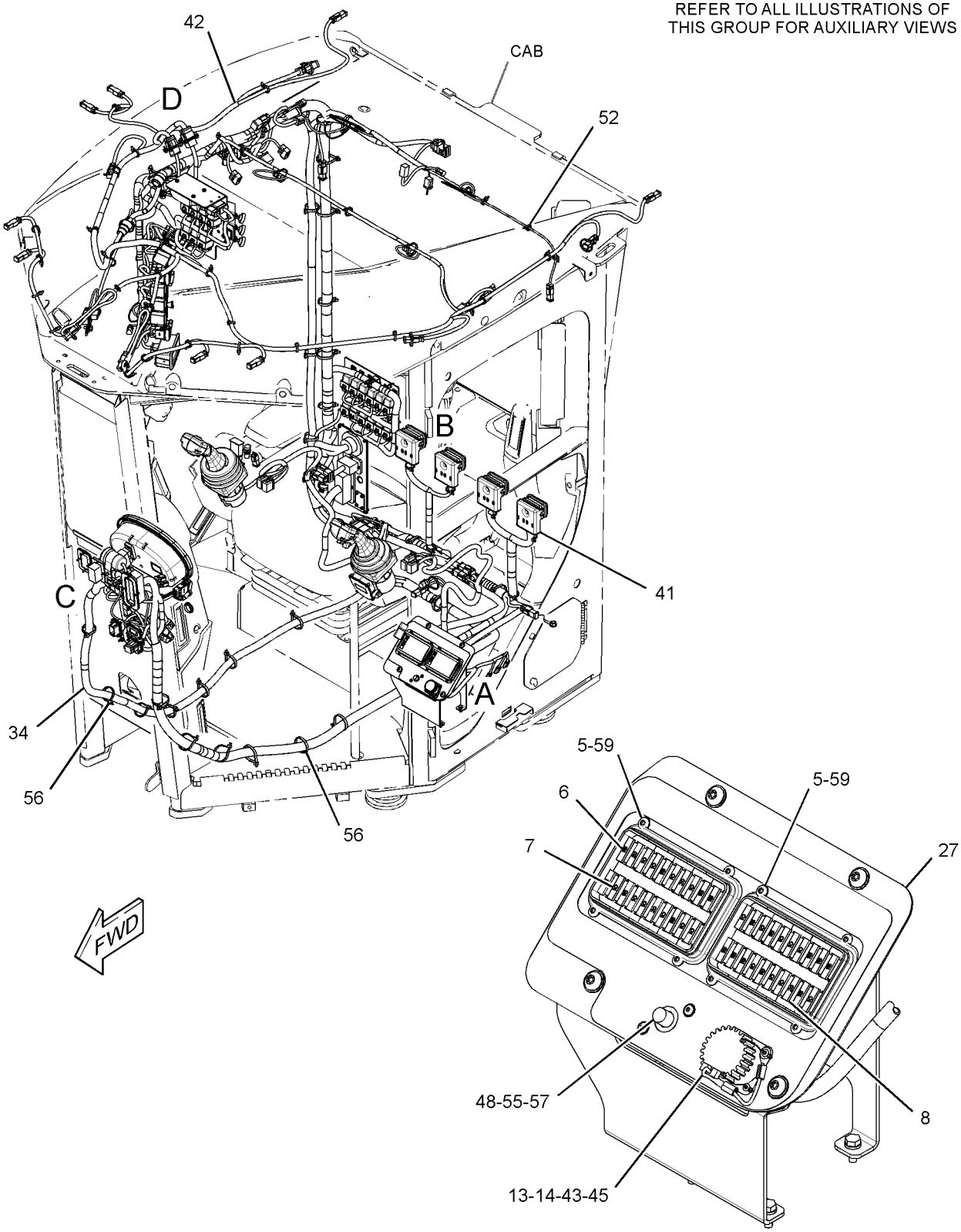

VIEW OF AREA A
(COVERS REMOVED FOR CLARITY)

GRAPHIC #1

g02155341

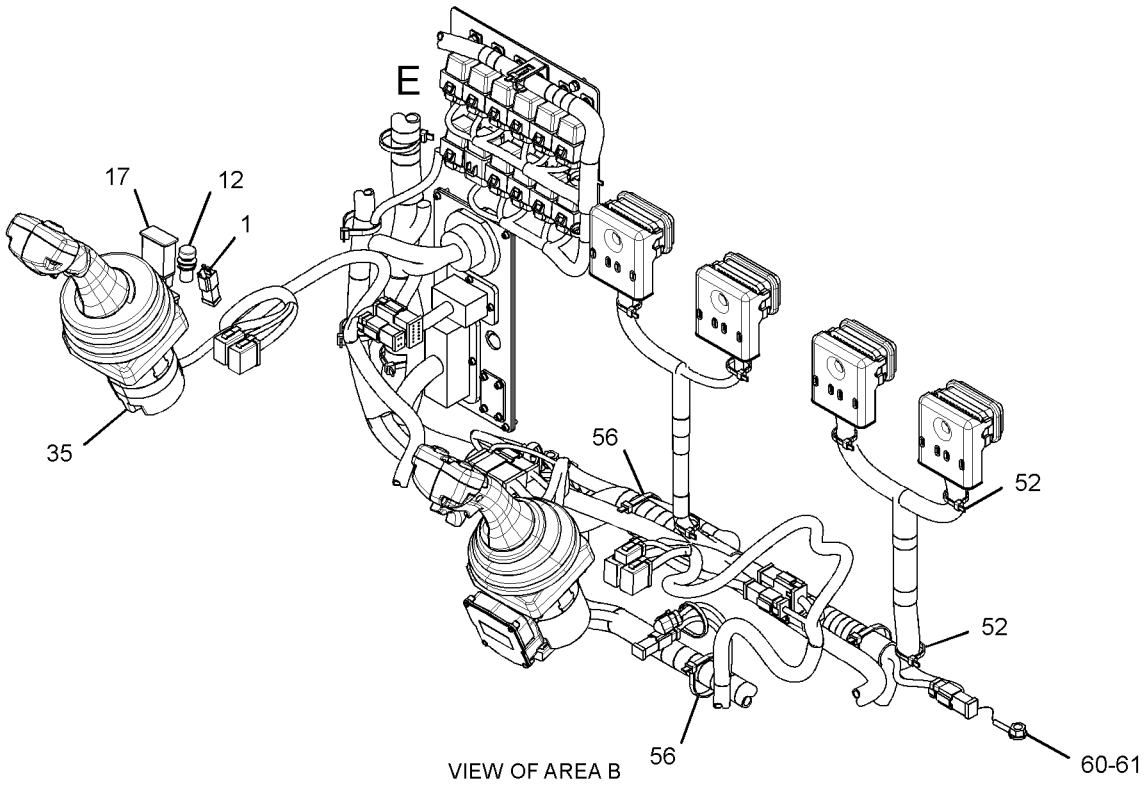

VIEW OF AREA B

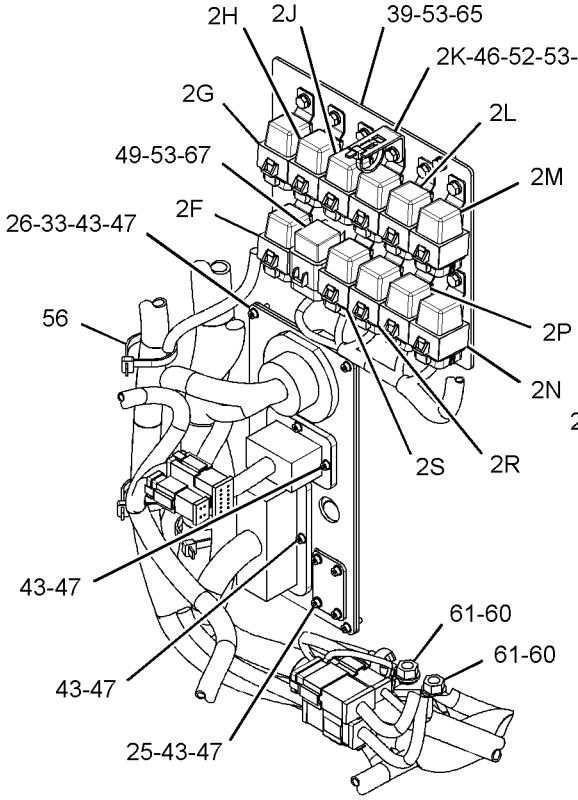

VIEW OF AREA E

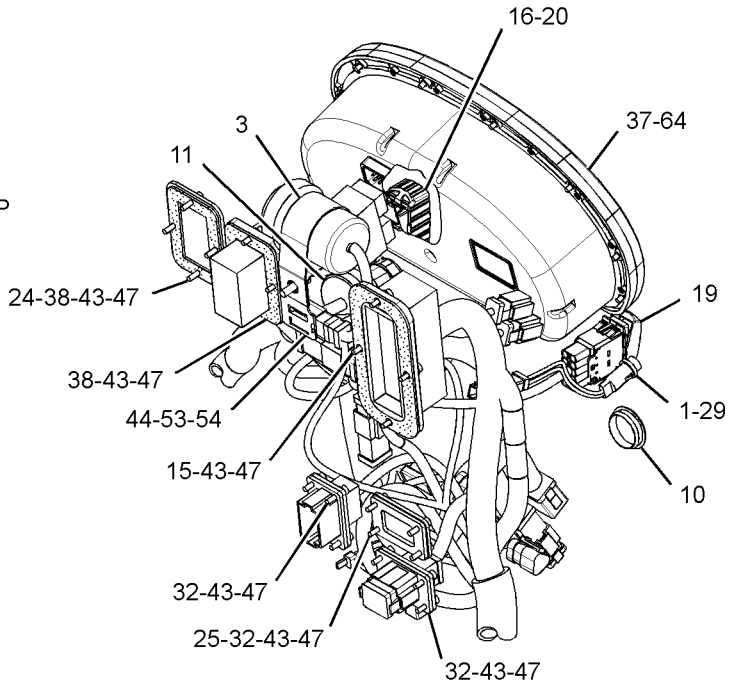

VIEW OF AREA C

GRAPHIC #2

g02208873

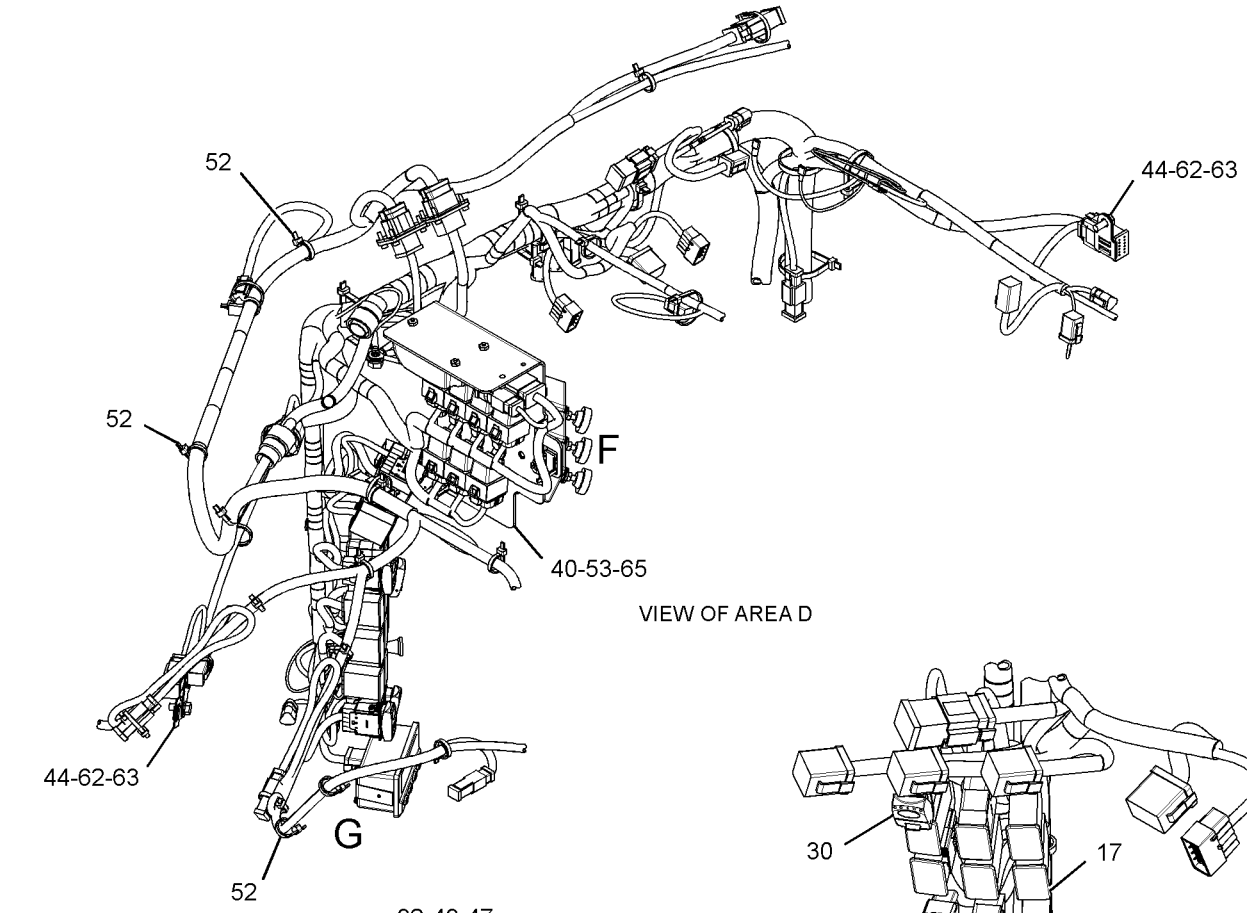

VIEW OF AREA D

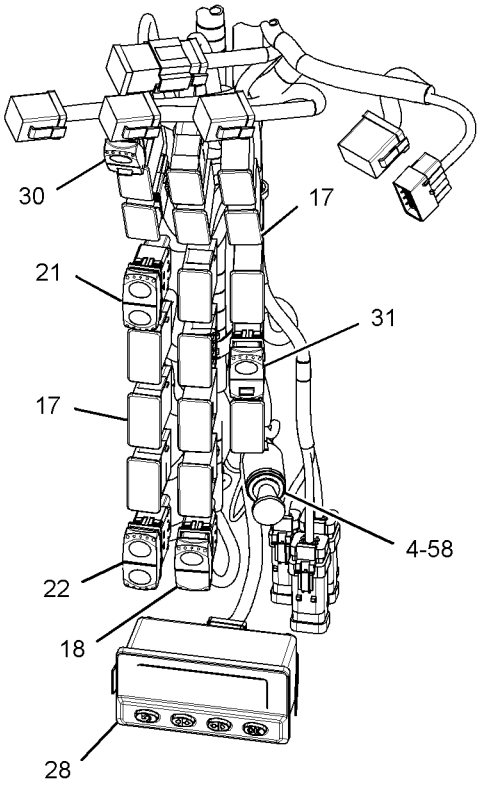

VIEW OF AREA G 90°

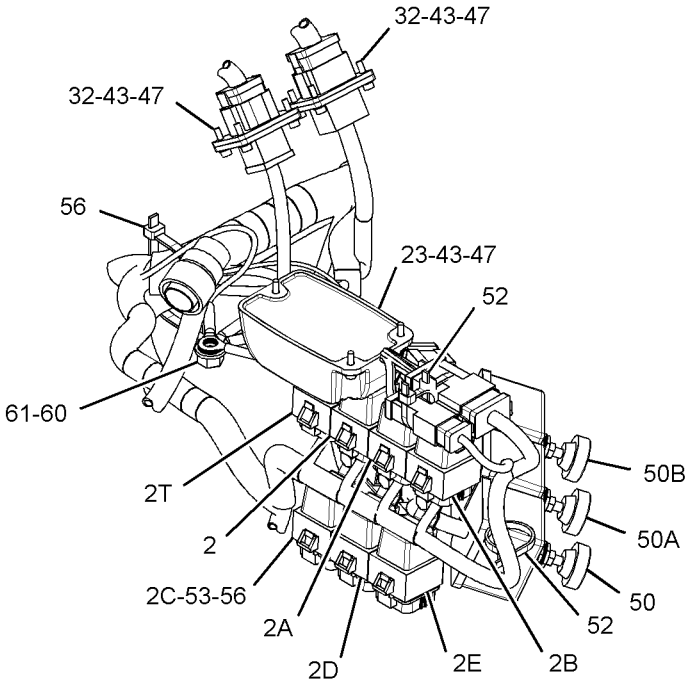

VIEW OF AREA F
(PARTS REMOVED FOR CLARITY)

GRAPHIC #3 **<END>** g02155345

259-6726 WIRING GP-CAMERA—REAR VIEW

S/N: R9H1-UP
PART OF 279-3360 CAMERA AR
AN ATTACHMENT

SMCS-1408, 7348 **i04014090**

NOTE	REF NO	GRAPHIC REF	PART NUMBER	QTY	PART NAME 1 2 3 4 5 6 (PRODUCT LEVEL)	SEE PAGE
	1	1	**3S-2093**	13	STRAP-CABLE	
J	2	1	**347-1668**	1	CAMERA GP (115-DEG, COLOR) (REAR VIEW)	
	3	1	**251-8248**	1	CABLE AS-COMMUNICATION (CAMERA)	
	4	1	**259-6728**	1	PLATE AS	
	5	1	**261-3223**	1	CABLE AS-COAXIAL (3-M)	
	6	1	**268-8082**	1	COVER	
M	7	1	**5C-2890**	2	NUT (M6X1-THD)	
M	8	1	**5C-9553**	4	BOLT (M6X1X16-MM)	
	9	1	**5P-8439**	2	GROMMET	
	10	1	**5P-8525**	1	GROMMET	
M	11	1	**6V-7357**	4	BOLT (M6X1X25-MM)	
	12	1	**7K-1181**	15	STRAP-CABLE	
	13	1	**8M-2772**	2	CLIP	
	14	1	**8T-4121**	1	WASHER-HARD (11X21X2.5-MM THK)	
M	15	1	**8T-4137**	1	BOLT (M10X1.5X20-MM)	
M	16	1	**8T-4970**	2	BOLT (M6X1X14-MM)	
	17	1	**9G-1307**	1	GROMMET	
	18	1	**9X-2026**	2	WASHER (6.5X17X1-MM THK)	
	19	1	**9X-8256**	8	WASHER (6.6X12X2-MM THK)	
					AVAILABLE REPAIR KIT(S):	
J			**251-4162**	1	KIT-BRACKET (CAMERA) (CAMERA)	
					(INCLUDES BOLTS, NUTS, BRACKET, GASKET, & ALLENKEY)	

J-KIT MARKED J SERVICES PART(S) MARKED J
M-METRIC PART

259-6726 **WIRING GP-CAMERA** *(contd.)* **i04014090**

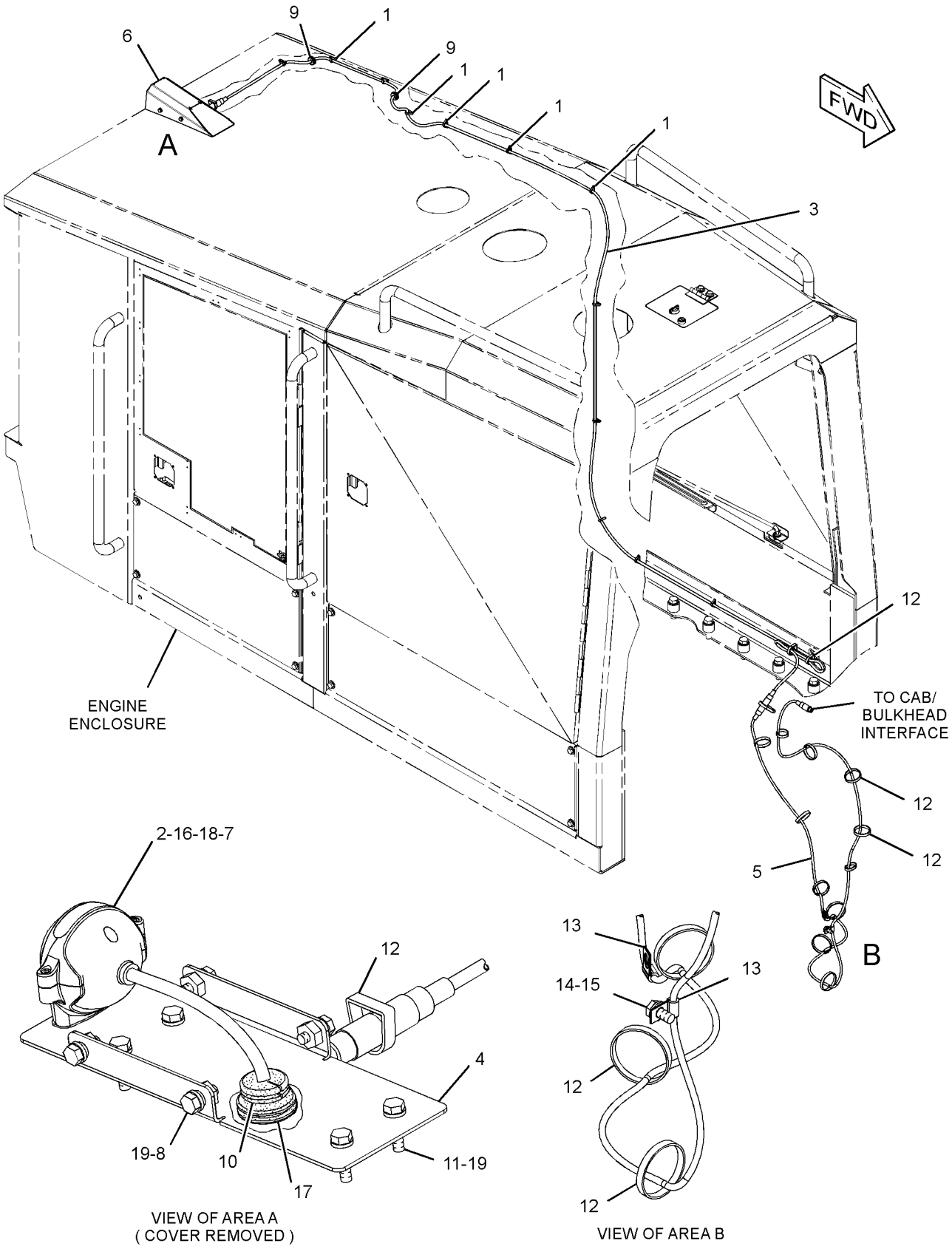

GRAPHIC #1 **<END>** g01318679

219-7462 WIRING GP-ELECTRONIC CONTROL

S/N: MHX1304-4886
PART OF 227-5359, 231-0876 ENGINE AR-COMPLETE
ALSO AN ATTACHMENT

SMCS-1408, 1900 **i03873447**

NOTE	REF NO	GRAPHIC REF	PART NUMBER	QTY	PART NAME 1 2 3 4 5 6 (PRODUCT LEVEL)	SEE PAGE
	1	1	**3S-2093**	16	STRAP-CABLE	
	2	1	**4P-5918**	1	CLIP	
M	3	1	**9X-2097**	1	STUD (M8X1.25-THD)	
	4	1	**206-2423**	1	SADDLE	
	5	1	**219-7461**	1	HARNESS AS-ENGINE (ELECTRONIC CONTROL MODULE)	
		1	**102-8802**	1	KIT-RECEPTACLE (2-PIN)	
		1	**102-8803**	2	KIT-RECEPTACLE (3-PIN)	
					(EACH KIT INCLUDES RECEPTACLE AS & WEDGE)	
		1	**3S-2093**	2	STRAP-CABLE	
		1	**8T-8737**	81	PLUG-SEAL	
		1	**105-1797**	1	MOUNT	
		1	**155-2255**	1	KIT-CONNECTING PLUG (12-PIN)	
		1	**155-2265**	1	KIT-CONNECTING PLUG (8-PIN)	
		1	**155-2260**	1	KIT-CONNECTING PLUG (3-PIN)	
		1	**155-2270**	5	KIT-CONNECTING PLUG (2-PIN)	
					(EACH KIT INCLUDES PLUG AS, WEDGE & INTERFACE SEAL)	
		1	**180-9340**	62	SOCKET-CONNECTOR (14-GA TO 18-GA)	
		1	**180-9339**	6	PIN-CONNECTOR (14-GA TO 18-GA)	
		1	**211-6807**	1	COVER (CONNECTOR)	
		1	**264-5732**	1	PLUG AS-CONNECTOR (120-PIN)	
		1	**288-7324**	1	SEAL-CONNECTOR	
E		1	**125-7874**		TUBE-HEAT SHRINK (5.72-MM DIA) (5-CM)	
E		1	**125-7875**		TUBE-HEAT SHRINK (7.44-MM DIA) (15-CM)	
	6	1	**303-5952**	1	STRAP-CABLE	
	7	1	**132-5789**	2	CLIP	
	8	1	**156-6175**	2	CLIP	
M	10	1	**2Y-5829**	1	NUT (M10X1.5-THD)	
	11	1	**4P-7581**	3	CLIP	
	12	1	**5P-9085**	1	CLIP	
M	13	1	**6V-3918**	1	BOLT (M8X1.25X50-MM)	
	14	1	**6V-5839**	5	WASHER (11X21X2.5-MM THK)	
M	15	1	**6V-8212**	4	BOLT (M10X1.5X16-MM)	
M	16	1	**6V-8836**	2	BOLT (M6X1X14-MM)	
M	18	1	**8T-0642**	1	BOLT (M8X1.25X14-MM)	
	19	1	**9M-1974**	1	WASHER-HARD (8.8X16X2-MM THK)	
	20	1	**9X-8267**	2	WASHER (6.6X12X2-MM THK)	

E-ORDER BY THE CENTIMETER
M-METRIC PART

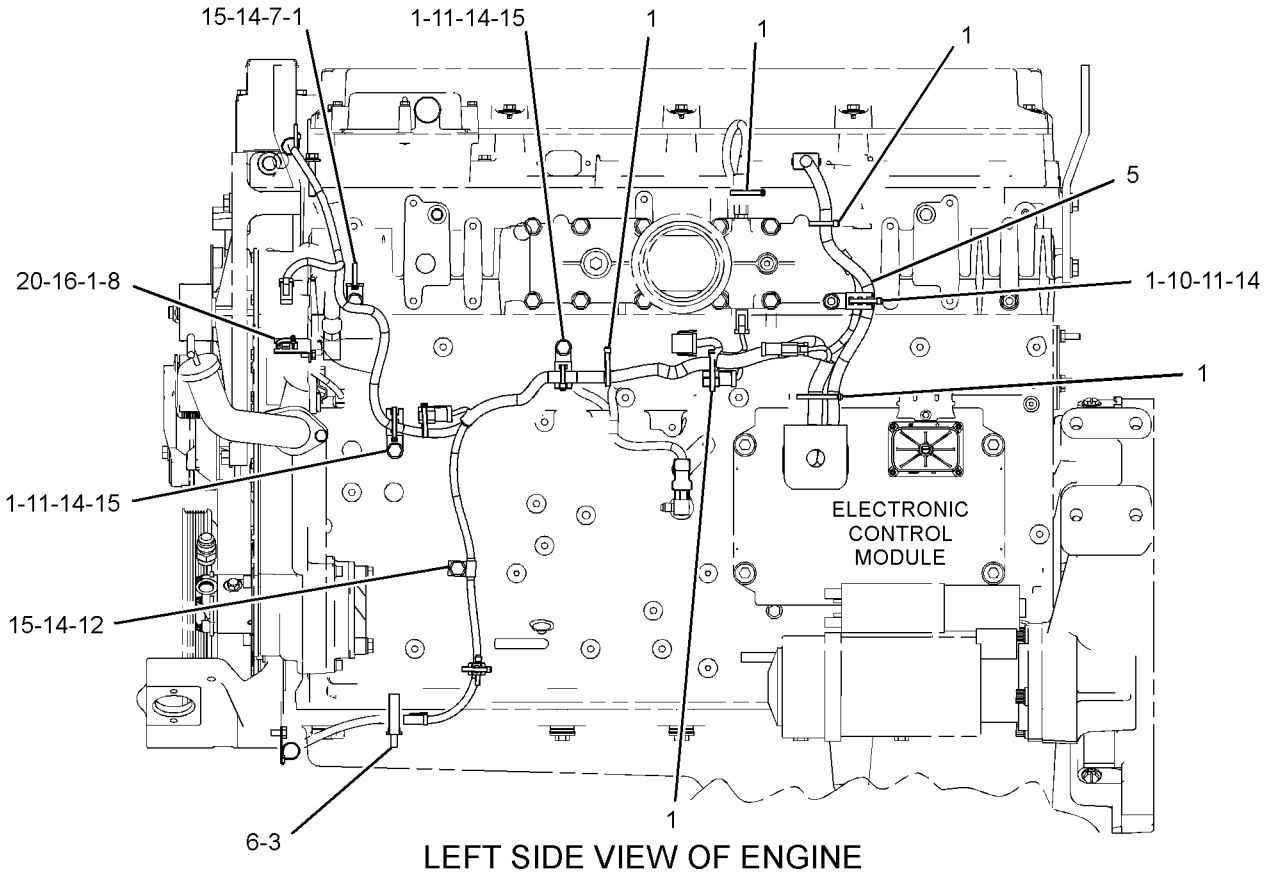

LEFT SIDE VIEW OF ENGINE

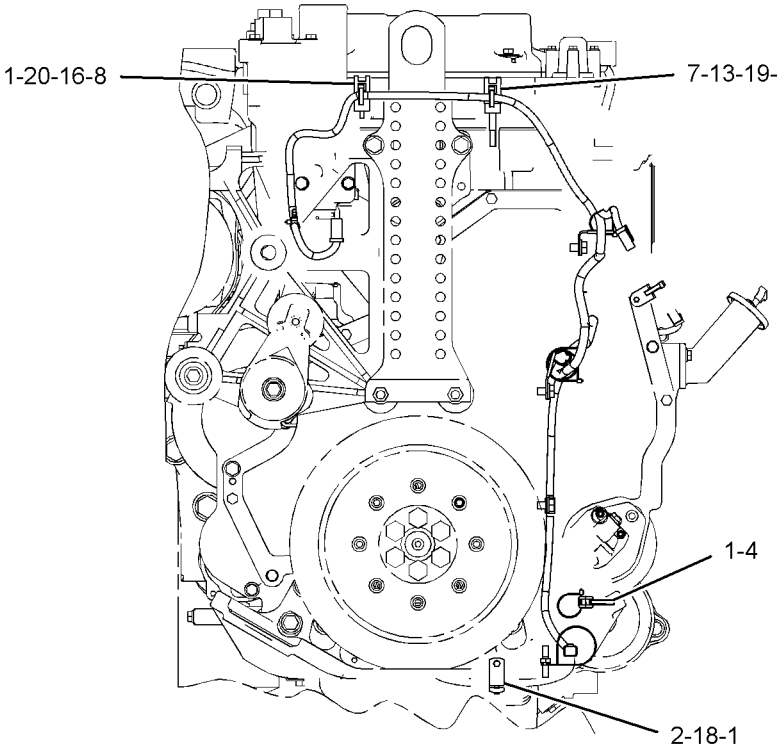

FRONT VIEW OF ENGINE

GRAPHIC #1 **<END>** g02118073

238-8828 WIRING GP-ELECTRONIC CONTROL–

HYDRAULIC IMPLEMENT

S/N: R9H1-UP

PART OF 261-0097, 261-0098, 340-4395 CONTROL AR-HYDRAULIC AN ATTACHMENT

SMCS-1408, 1900 **i02957214**

NOTE	REF NO	GRAPHIC REF	PART NUMBER	QTY	PART NAME 1 2 3 4 5 6 (PRODUCT LEVEL)	SEE PAGE
	1	1	**3S-2093**	3	STRAP-CABLE	
	2	1	**6I-1418**	4	SPACER (8.2X12.7X28.7-MM THK)	
	3	1	**8T-9655**	8	MOUNT-ISOLATION	
	4	1	**235-6183**	1	HARNESS AS-CONTROL (HYDRAULIC ELECTRONIC)	
		1	**3S-2093**	5	STRAP-CABLE	
		1	**126-1774**	2	COVER-CONNECTOR	
		1	**147-1445**	1	PLUG AS-CONNECTOR (7O-PIN)	
		1	**147-1446**	1	PLUG AS-CONNECTOR (7O-PIN)	
		1	**155-2272**	1	PLUG AS-CONNECTOR (4-PIN)	
		1	**190-7613**	1	RECEPTACLE AS-CONNECTOR (12-PIN)	
		1	**102-8804**	1	KIT-RECEPTACLE (4-PIN)	
		1	**166-5229**	1	KIT-RECEPTACLE (12-PIN)	
					(EACH INCLUDES RECEPTACLE AS & WEDGE)	
R	5	1	**262-1408**	1	CONTROL GP-UNPROGRAMMED (HYDRAULIC ELECTRONIC)	
	6	1	**286-0323**	1	GASKET	
	7	1	**5P-4116**	4	WASHER-HARD (8.8X2O.5X2-MM THK)	
M	8	1	**8T-0285**	4	SCREW-MACHINE (M4XO.7X12-MM)	
	9	1	**8T-0328**	4	WASHER-HARD (5.5X10X1-MM THK)	
M	10	1	**8T-6912**	4	BOLT (M8X1.25X5O-MM)	

M-METRIC PART
R-REMFG PART MAY BE AVAILABLE

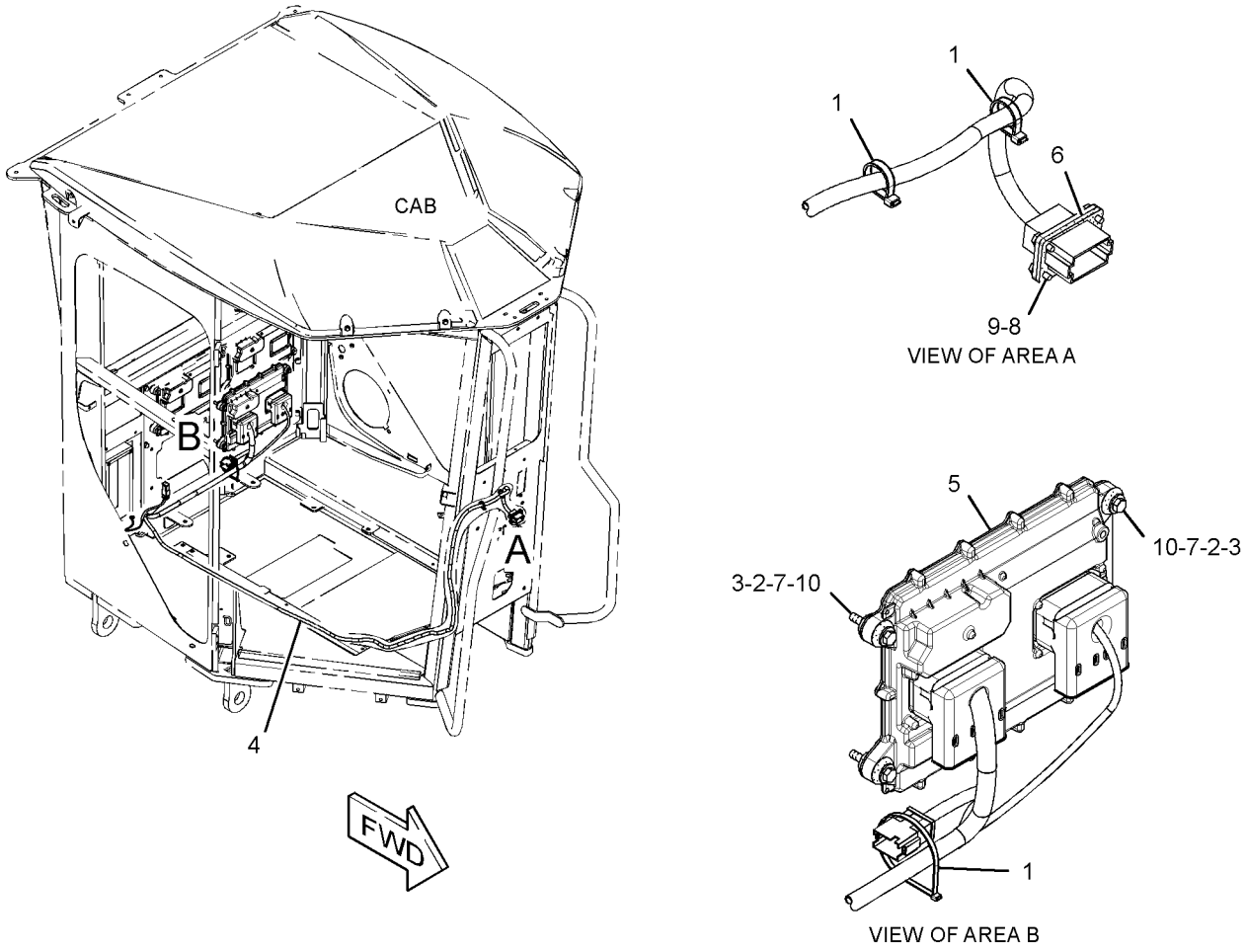

GRAPHIC #1 **<END>** g01525207

306-8172 WIRING GP-ELECTRONIC CONTROL

S/N: MHX4887-5381
PART OF 227-5359, 231-0876 ENGINE AR-COMPLETE
ALSO AN ATTACHMENT

SMCS-1408, 1900 **i02764527**

NOTE	REF NO	GRAPHIC REF	PART NUMBER	QTY	PART NAME 1 2 3 4 5 6 (PRODUCT LEVEL)	SEE PAGE
	1	1	**3S-2093**	15	STRAP-CABLE	
	2	1	**4P-5918**	1	CLIP	
M	3	1	**9X-2097**	1	STUD (M8X1.25-THD)	
	4	1	**219-7461**	1	HARNESS AS-ENGINE (ELECTRONIC CONTROL MODULE)	
	5	1	**130-5300**	1	CLIP	
	6	1	**132-5789**	2	CLIP	
	7	1	**156-6175**	2	CLIP	
M	8	1	**2Y-5829**	1	NUT (M10X1.5-THD)	
	9	1	**4P-7581**	3	CLIP	
	10	1	**5P-9085**	1	CLIP	
M	11	1	**6V-3918**	1	BOLT (M8X1.25X50-MM)	
	12	1	**6V-5839**	5	WASHER (11X21X2.5-MM THK)	
M	13	1	**6V-8212**	4	BOLT (M10X1.5X16-MM)	
M	14	1	**6V-8836**	2	BOLT (M6X1X14-MM)	
M	15	1	**8T-0642**	1	BOLT (M8X1.25X14-MM)	
	16	1	**9M-1974**	2	WASHER-HARD (8.8X16X2-MM THK)	
	17	1	**9X-8267**	2	WASHER (6.6X12X2-MM THK)	

M-METRIC PART

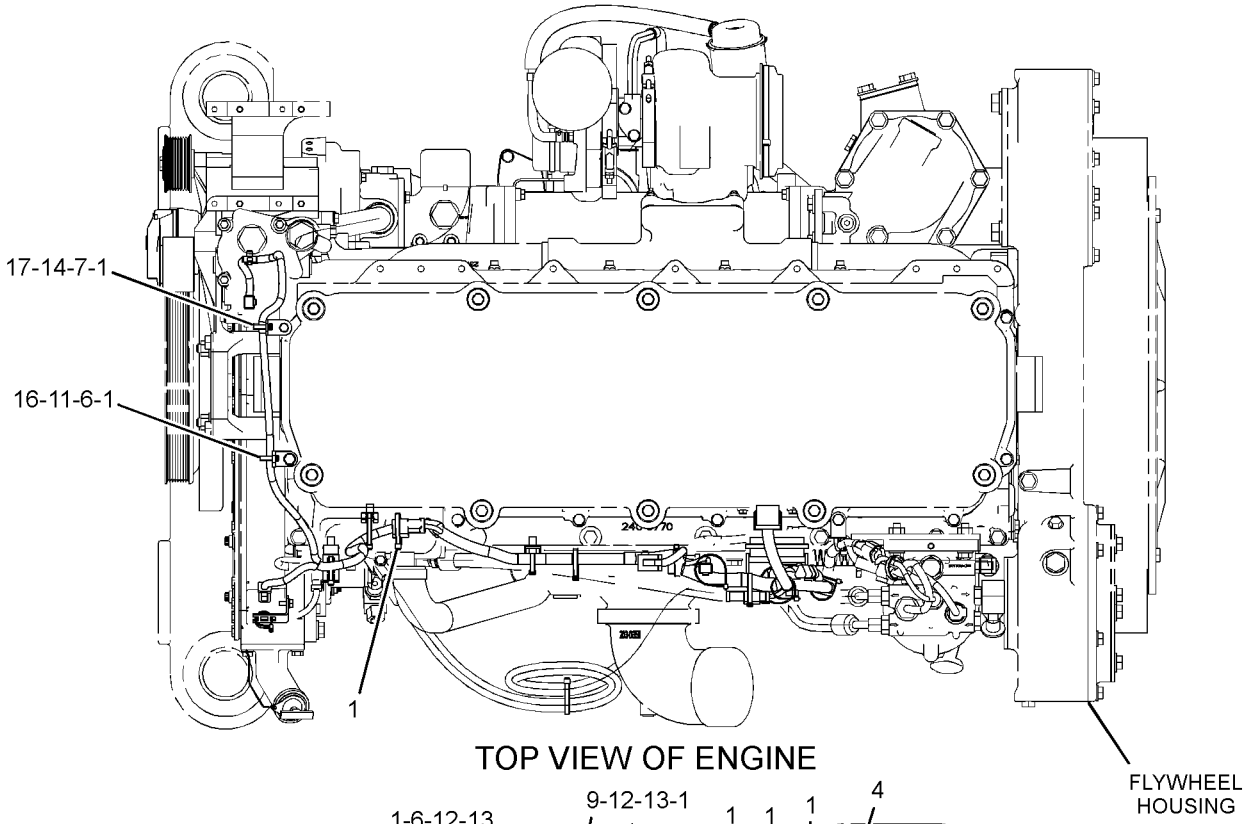

TOP VIEW OF ENGINE

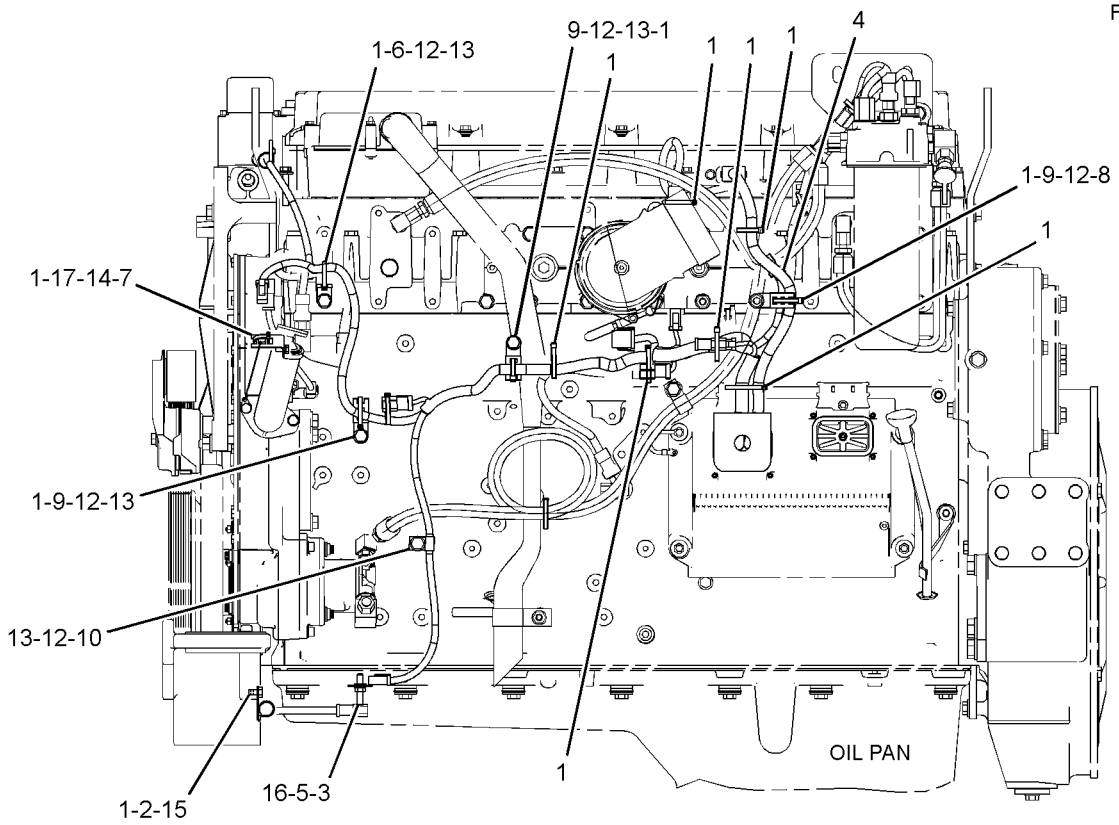

LEFT SIDE VIEW OF ENGINE

GRAPHIC #1 **<END>** g01398127

306-8172 WIRING GP-ELECTRONIC CONTROL

S/N: MHX5382-9843
PART OF 227-5359, 231-0876 ENGINE AR-COMPLETE
ALSO AN ATTACHMENT

SMCS-1408, 1900 **i02984580**

NOTE	REF NO	GRAPHIC REF	PART NUMBER	QTY	PART NAME 1 2 3 4 5 6 (PRODUCT LEVEL)	SEE PAGE
C	1	1	**3S-2093**	14	STRAP-CABLE	
	2	1	**4P-5918**	1	CLIP	
M	3	1	**9X-2097**	1	STUD (M8X1.25-THD)	
	4	1	**219-7461**	1	HARNESS AS-ENGINE (ELECTRONIC CONTROL MODULE)	
	5	1	**130-5300**	1	CLIP	
	6	1	**132-5789**	2	CLIP	
	7	1	**156-6175**	2	CLIP	
M	8	1	**2Y-5829**	1	NUT (M10X1.5-THD)	
	9	1	**4P-7581**	3	CLIP	
	10	1	**5P-9085**	1	CLIP	
M	11	1	**6V-3918**	1	BOLT (M8X1.25X50-MM)	
	12	1	**6V-5839**	5	WASHER (11X21X2.5-MM THK)	
M	13	1	**6V-8212**	4	BOLT (M10X1.5X16-MM)	
M	14	1	**6V-8836**	2	BOLT (M6X1X14-MM)	
M	15	1	**8T-0642**	1	BOLT (M8X1.25X14-MM)	
	16	1	**9M-1974**	2	WASHER-HARD (8.8X16X2-MM THK)	
	17	1	**9X-8267**	2	WASHER (6.6X12X2-MM THK)	

C-CHANGE FROM PREVIOUS TYPE
M-METRIC PART

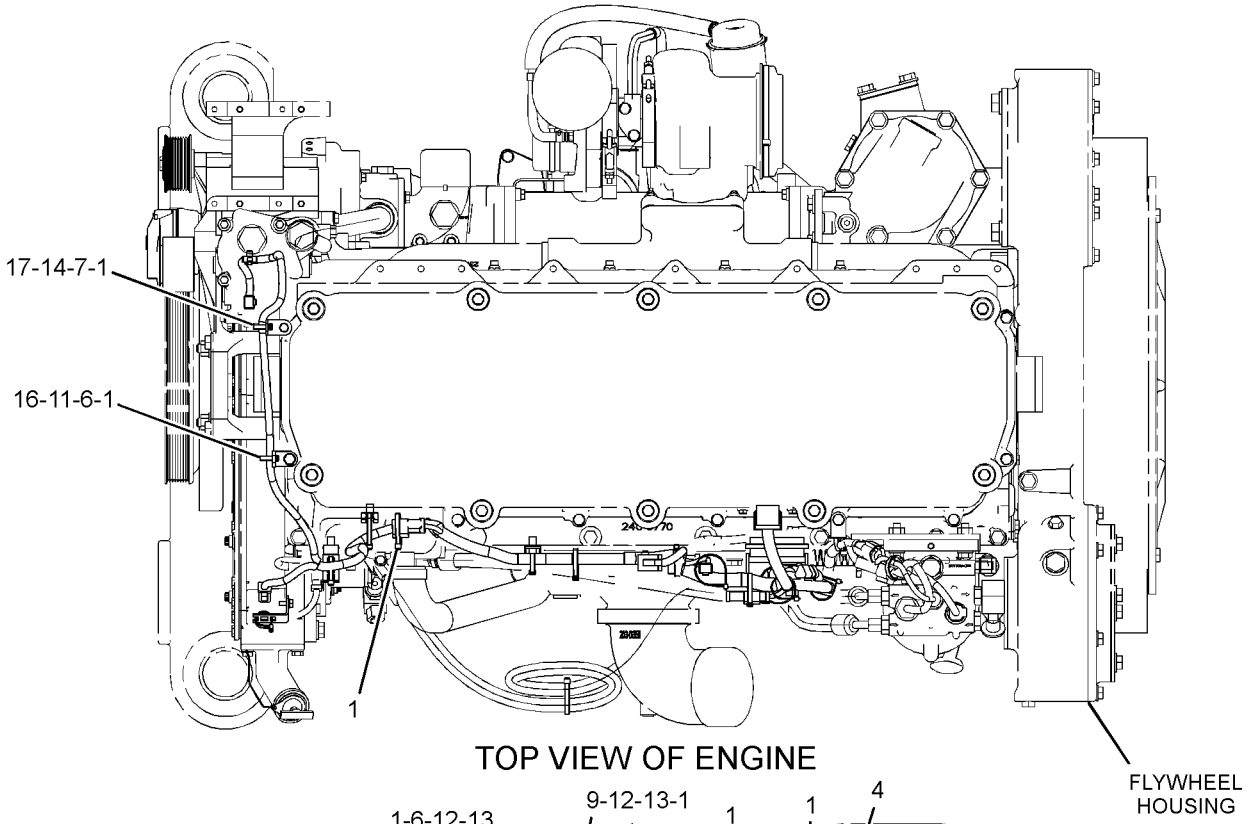

TOP VIEW OF ENGINE

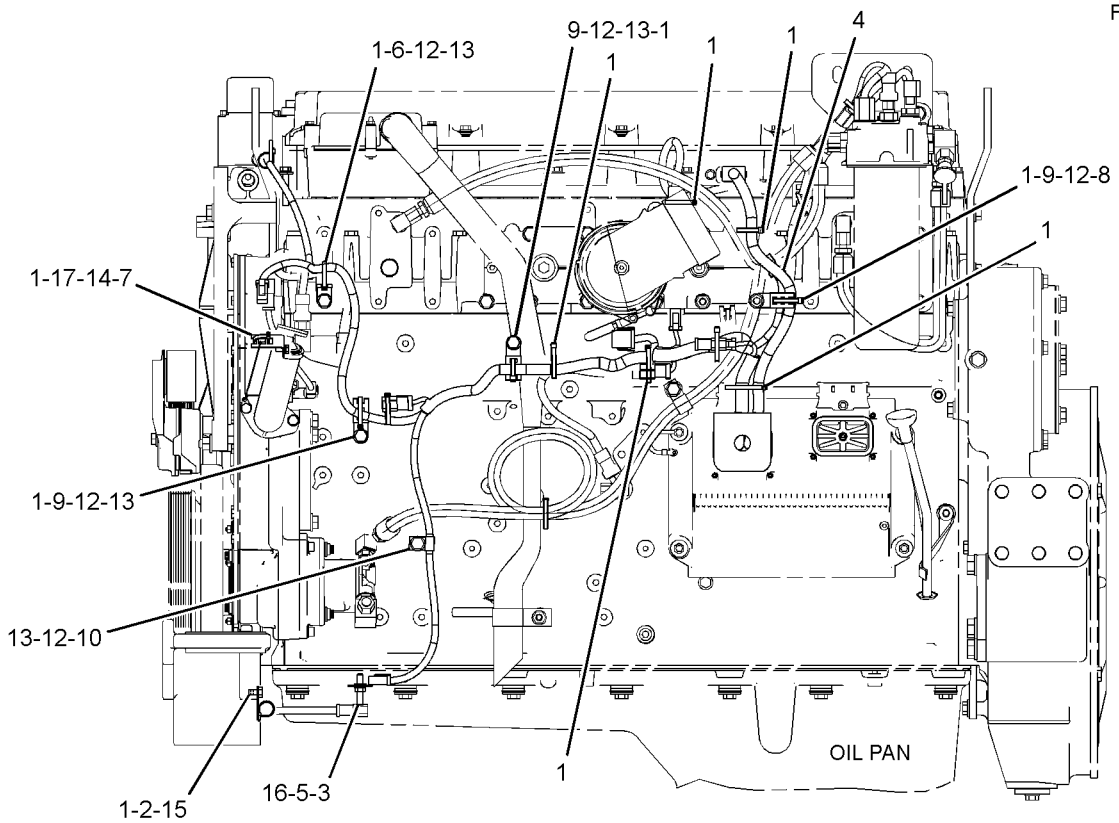

LEFT SIDE VIEW OF ENGINE

GRAPHIC #1 **<END>** g01596350

ELECTRICAL AND STARTING SYSTEM

357-0524 WIRING GP-ELECTRONIC CONTROL

S/N: MHX9844-UP
PART OF 231-0876, 349-4462 ENGINE AR-COMPLETE
FOR USE WITH 357-0523—PAGE 290
ALSO AN ATTACHMENT

SMCS-1408, 1900 **i04004060**

NOTE	REF NO	GRAPHIC REF	PART NUMBER	QTY	PART NAME 1 2 3 4 5 6 (PRODUCT LEVEL)	SEE PAGE
	1	1	**3S-2093**	13	STRAP-CABLE	
	2	1	**4P-5918**	1	CLIP	
M	3	1	**9X-2097**	1	STUD (M8X1.25-THD)	
	4	1	**354-0048**	1	HARNESS AS-ENGINE (WIRING)	
		1	**102-8802**	1	KIT-RECEPTACLE (2-PIN)	
					(INCLUDES RECEPTACLE AS & WEDGE)	
		1	**155-2255**	1	KIT-CONNECTING PLUG (12-PIN)	
					(INCLUDES PLUG AS, INNERFACE SEAL, & WEDGE)	
		1	**155-2270**	1	KIT-CONNECTING PLUG (2-PIN)	
					(INCLUDES PLUG AS, INNERFACE SEAL, & WEDGE)	
		1	**155-2265**	1	KIT-CONNECTING PLUG (8-PIN)	
					(INCLUDES PLUG AS, INNERFACE SEAL, & WEDGE)	
		1	**3S-2093**	2	STRAP-CABLE	
		1	**8T-8737**	93	PLUG-SEAL	
		1	**105-1797**	1	MOUNT	
E		1	**125-7875**		TUBE-HEAT SHRINK (7.44-MM DIA) (15-CM)	
		1	**9X-3402**	68	SOCKET-CONNECTOR (16-GA TO 18-GA)	
					—OR—	
		1	**126-1768**	68	SOCKET-CONNECTOR (14-GA)	
		1	**211-6807**	1	COVER (CONNECTOR)	
		1	**230-4011**	4	PLUG AS-CONNECTOR (2-PIN)	
					(EACH INCLUDES)	
		1	**264-7029**	1	SEAL-CONNECTOR	
		1	**230-4013**	1	PLUG AS-CONNECTOR (3-PIN)	
		1	**264-7030**	1	SEAL-CONNECTOR	
		1	**237-0227**	2	PLUG AS-CONNECTOR (3-PIN)	
					(EACH INCLUDES)	
		1	**264-7030**	1	SEAL-CONNECTOR	
		1	**264-5732**	1	PLUG AS-CONNECTOR (120-PIN)	
		1	**288-7324**	1	SEAL-CONNECTOR	
	5	1	**132-5789**	2	CLIP	
	6	1	**156-6175**	2	CLIP	
M	7	1	**2Y-5829**	1	NUT (M10X1.5-THD)	
	8	1	**4P-7581**	5	CLIP	
M	9	1	**6V-3918**	1	BOLT (M8X1.25X50-MM)	
	10	1	**6V-5839**	5	WASHER (11X21X2.5-MM THK)	
M	11	1	**6V-8212**	4	BOLT (M10X1.5X16-MM)	
M	12	1	**6V-8836**	2	BOLT (M6X1X14-MM)	
M	13	1	**8T-0642**	1	BOLT (M8X1.25X14-MM)	
	14	1	**9M-1974**	2	WASHER-HARD (8.8X16X2-MM THK)	
	15	1	**9X-8267**	2	WASHER (6.6X12X2-MM THK)	

E-ORDER BY THE CENTIMETER
M-METRIC PART

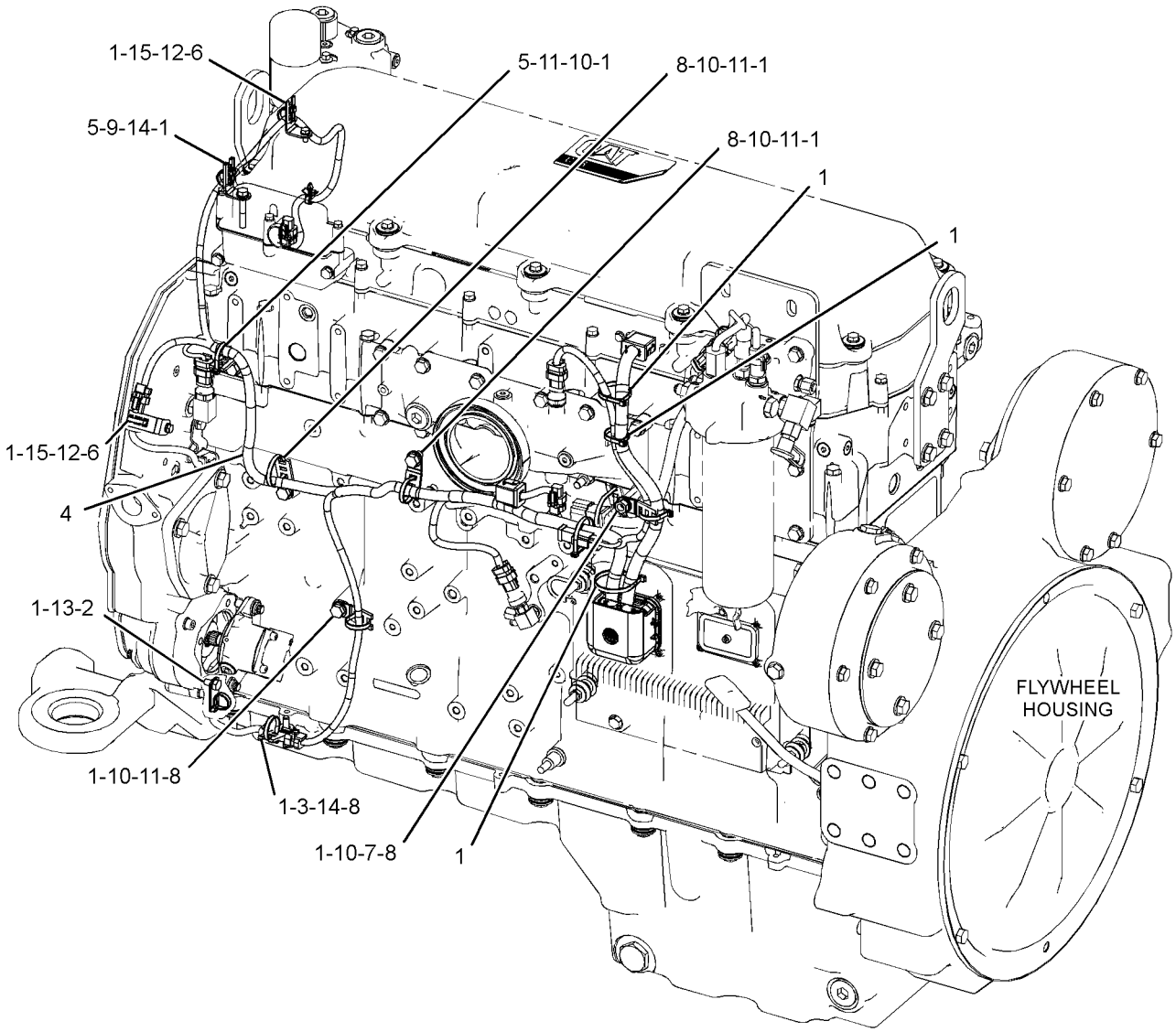

GRAPHIC #1 **<END>** g02223674

ELECTRICAL AND STARTING SYSTEM

250-0890 WIRING GP-FRONT

S/N: R9H1-UP

PART OF 349-2556 COMMON AR

SMCS-1408 **i04011770**

NOTE	REF NO	GRAPHIC REF	PART NUMBER	QTY	PART NAME 1 2 3 4 5 6 (PRODUCT LEVEL)	SEE PAGE
	1	1	**3E-3636**	1	SWITCH AS-BALL (CENTERSHIFT INDICATOR)	
		1	**102-8804**	1	KIT-RECEPTACLE (4-PIN)	
					(INCLUDES RECEPTACLE AS & WEDGE)	
		1	**8T-8729**	4	PIN-CONNECTOR (16-GA TO 18-GA)	
C	2	1	**3S-2093**	19	STRAP-CABLE	
C	3	1	**7K-1181**	21	STRAP-CABLE	
	4	1	**9X-9365**	1	BRACKET	
C	5	1	**116-0118**	4	CLIP	
	6	1	**140-0860**	1	STRAP AS-GROUND	
Y	7	1	**191-6587**	1	SENSOR GP-TEMPERATURE (STEERING OIL)	310
	8	1	**240-7193**	1	RESISTOR AS (500-OHM, 2-WATT)	
		1	**102-8802**	1	KIT-RECEPTACLE (2-PIN)	
					(INCLUDES RECEPTACLE AS & WEDGE)	
		1	**9X-3401**	2	PIN-CONNECTOR (16-GA TO 18-GA)	
	9	1	**309-4094**	1	BRACKET AS	
	10	1	**309-9812**	1	BRACKET AS	
	11	1	**309-9814**	1	BRACKET AS	
					(EACH BRACKET AS INCLUDES)	
M		1	**8T-3490**	1	NUT-WELD (M10X1.5-THD)	
	12	1	**347-1355**	1	HARNESS AS-FRONT CHASSIS	
		1	**102-8802**	17	KIT-RECEPTACLE (2-PIN)	
		1	**102-8803**	1	KIT-RECEPTACLE (3-PIN)	
		1	**102-8804**	1	KIT-RECEPTACLE (4-PIN)	
		1	**102-8805**	2	KIT-RECEPTACLE (6-PIN)	
					(EACH RECEPTACLE KIT INCLUDES RECEPTACLE AS & WEDGE)	
E		1	**5P-1425**		HOSE (107-CM)	
D		1	**6V-2722**		TUBE-HEAT SHRINK (0.2-M)	
		1	**8T-8729**	2	PIN-CONNECTOR (16-GA TO 18-GA)	
		1	**8T-8730**	113	SOCKET-CONNECTOR (16-GA TO 18-GA)	
		1	**8T-8737**	78	PLUG-SEAL	
		1	**9W-0844**	25	SOCKET-CONNECTOR (14-GA)	
		1	**9W-0852**	6	PIN-CONNECTOR (14-GA TO 16-GA)	
		1	**9X-3401**	6	PIN-CONNECTOR (16-GA TO 18-GA)	
		1	**9X-3402**	18	SOCKET-CONNECTOR (16-GA TO 18-GA)	
		1	**9X-4391**	1	PLUG AS-CONNECTOR (70-PIN)	
E		1	**119-3662**		TUBE-HEAT SHRINK (10.85-MM DIA) (39-CM)	
E		1	**125-7874**		TUBE-HEAT SHRINK (5.72-MM DIA) (25-CM)	
E		1	**125-7875**		TUBE-HEAT SHRINK (7.44-MM DIA) (25-CM)	
		1	**2L-8069**	1	TERMINAL-RING (2-GA TO 10-GA, 3/8-IN SCREW)	
		1	**2L-8079**	1	TERMINAL-RING (14-GA TO 16-GA, 3/8-IN SCREW)	
		1	**155-2255**	1	KIT-CONNECTING PLUG (12-PIN)	
		1	**155-2270**	35	KIT-CONNECTING PLUG (2-PIN)	
		1	**155-2271**	2	KIT-CONNECTING PLUG (4-PIN)	
		1	**155-2274**	3	KIT-CONNECTING PLUG (6-PIN)	
		1	**155-2265**	1	KIT-CONNECTING PLUG (8-PIN)	
		1	**155-2260**	1	KIT-CONNECTING PLUG (3-PIN)	
					(EACH PLUG KIT INCLUDES PLUG AS, WEDGE & INTERFACE SEAL)	
C	13	1	**355-5085**	2	PLATE AS	
					(EACH INCLUDES)	
M		1	**8T-3490**	2	NUT-WELD (M10X1.5-THD)	
C		1	**130-5300**	6	CLIP	
C	14	1	**355-5086**	2	COVER	

250-0890 **WIRING GP-FRONT** *(contd.)* **i04011770**

NOTE	REF NO	GRAPHIC REF	PART NUMBER	QTY	PART NAME 1 2 3 4 5 6 (PRODUCT LEVEL)	SEE PAGE
C	15	1	**355-5087**	1	HARNESS AS-SENSOR (STEERING CYLINDER POSITION, LH) (STEERING, RH)	
		1	**102-8804**	1	KIT-RECEPTACLE (4-PIN)	
					(INCLUDES RECEPTACLE AS & WEDGE)	
		1	**8T-8737**	2	PLUG-SEAL	
		1	**9X-3401**	3	PIN-CONNECTOR (16-GA TO 18-GA)	
		1	**9X-3402**	3	SOCKET-CONNECTOR (16-GA TO 18-GA)	
		1	**155-2271**	1	KIT-CONNECTING PLUG (4-PIN)	
					(INCLUDES PLUG AS, WEDGE & INTERFACE SEAL)	
E		1	**232-0895**		CONDUIT-FLEXIBLE (9.6-MM ID) (96-CM)	
C	16	1	**355-5088**	1	HARNESS AS-SENSOR (STEERING CYLINDER POSITION, RH)	
		1	**8T-8737**	2	PLUG-SEAL	
		1	**9X-3402**	6	SOCKET-CONNECTOR (16-GA TO 18-GA)	
		1	**155-2271**	2	KIT-CONNECTING PLUG (4-PIN)	
					(INCLUDES PLUG AS, WEDGE & INTERFACE SEAL)	
E		1	**232-0893**		CONDUIT-FLEXIBLE (6.2-MM ID) (71-CM)	
	17	1	**104-6202**	2	CLIP	
C	18	1	**130-5300**	6	CLIP	
C	19	1	**132-5789**	2	CLIP	
	20	1	**3J-1907**	2	SEAL-O-RING	
	21	1	**4K-8864**	4	CLIP	
C	22	1	**4P-7581**	5	CLIP	
	23	1	**4S-1962**	1	CLIP	
C	24	1	**5P-9085**	4	CLIP	
	25	1	**6D-4244**	5	CLIP	
	26	1	**6D-4246**	5	CLIP	
	27	1	**6K-8178**	1	CLIP	
	28	1	**7X-3391**	4	WASHER-HARD (13.5X32X6-MM THK)	
B	29	1	**8F-1974**	10	SHIM (0.13-MM THK)	
C	30	1	**8M-2770**	8	CLIP	
C	31	1	**8T-4121**	41	WASHER-HARD (11X21X2.5-MM THK)	
M	32	1	**8T-4133**	3	NUT (M10X1.5-THD)	
M	33	1	**8T-4136**	11	BOLT (M10X1.5X25-MM)	
CM	34	1	**8T-4137**	26	BOLT (M10X1.5X20-MM)	
M	35	1	**8T-4139**	4	BOLT (M12X1.75X30-MM)	
M	36	1	**8T-4195**	1	BOLT (M10X1.5X30-MM)	

B-USE AS REQUIRED
C-CHANGE FROM PREVIOUS TYPE
D-ORDER BY THE METER
E-ORDER BY THE CENTIMETER
M-METRIC PART
Y-SEPARATE ILLUSTRATION

250-0890 **WIRING GP-FRONT** *(contd.)* **i04011770**

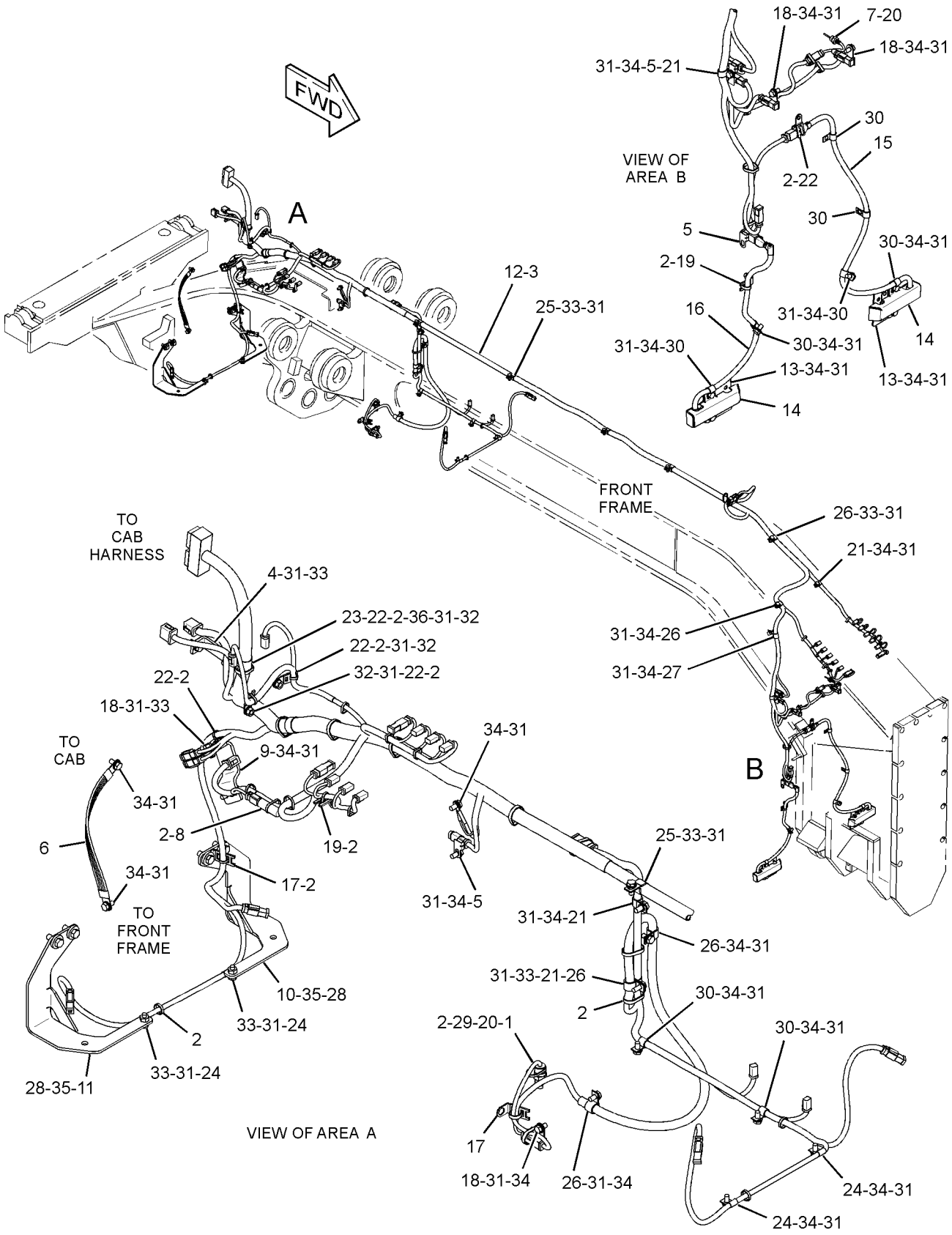

GRAPHIC #1 **<END>** g02207699

250-0899 WIRING GP-FRONT

S/N: R9H1-UP

PART OF 261-0097, 261-0098, 340-4395 CONTROL AR-HYDRAULIC AN ATTACHMENT

SMCS-1408 **i02771587**

NOTE	REF NO	GRAPHIC REF	PART NUMBER	QTY	PART NAME 1 2 3 4 5 6 (PRODUCT LEVEL)	SEE PAGE
C	1	1	**3S-2093**	1	STRAP-CABLE	
	2	1	**260-1882**	1	HARNESS AS-VALVE	
		1	**102-8802**	8	KIT-RECEPTACLE (2-PIN)	
					(EACH INCLUDES RECEPTACLE AS & WEDGE)	
		1	**155-2256**	1	KIT-CONNECTING PLUG (12-PIN)	
		1	**155-2270**	8	KIT-CONNECTING PLUG (2-PIN)	
					(EACH INCLUDES PLUG AS, WEDGE, & INTERFACE SEAL)	
	3	1	**033-8248**	2	CLIP	
	4	1	**4D-9517**	6	CLIP	
	5	1	**7K-1181**	10	STRAP-CABLE	

C-CHANGE FROM PREVIOUS TYPE

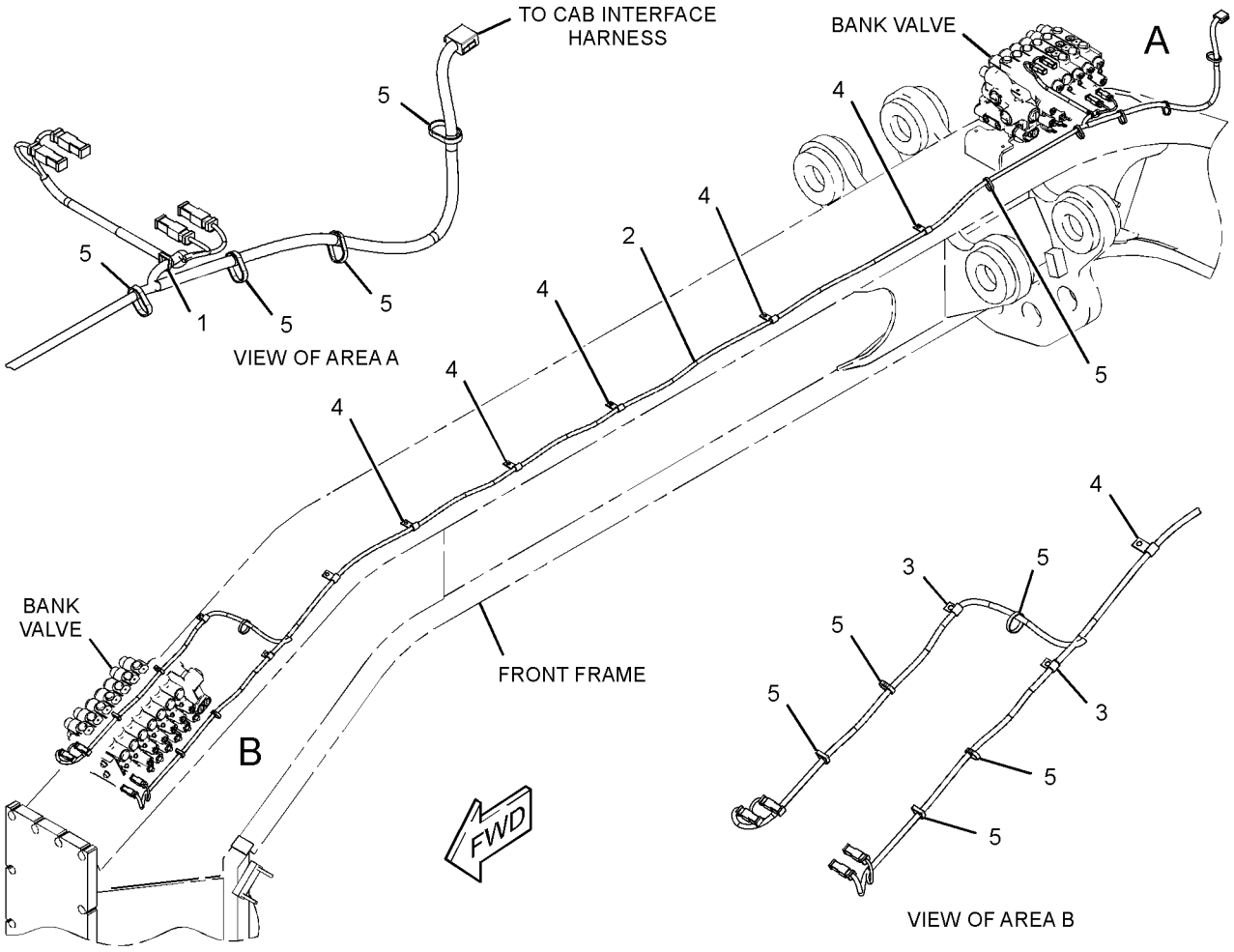

GRAPHIC #1 **<END>** g01415241

ELECTRICAL AND STARTING SYSTEM

250-0895 WIRING GP-GRADE CONTROL

S/N: R9H1-UP

PART OF 261-0117 GRADE CONTROL AR

AN ATTACHMENT

SMCS-1408 **i03753219**

NOTE	REF NO	GRAPHIC REF	PART NUMBER	QTY	PART NAME 1 2 3 4 5 6 (PRODUCT LEVEL)	SEE PAGE
	1	1,2	**6D-3033**	16	SCREW-SOCKET HEAD (4-40X0.5-IN)	
	2	1	**6V-7555**	2	STRAP-CABLE	
	3	1,2	**132-8487**	4	NUT-RING	
	4	2	**236-2356**	1	HARNESS AS-SENSOR (ANGLE)	
		2	**243-5362**	1	CAP-DUST	
		2	**102-8804**	1	KIT-RECEPTACLE (4-PIN)	
					(INCLUDES RECEPTACLE AS & WEDGE)	
G		2	**9X-2383**		HOSE (50-IN)	
E		2	**8T-5346**		TUBE-HEAT SHRINK (19.1-MM DIA) (10-CM)	
		2	**9X-3401**	4	PIN-CONNECTOR (16-GA TO 18-GA)	
		2	**9X-4385**	1	PLUG AS-CONNECTOR (6-PIN)	
E		2	**114-8843**		SLEEVE-PLASTIC (20-CM)	
E		2	**125-7875**		TUBE-HEAT SHRINK (7.44-MM DIA) (5-CM)	
	5	1,2	**236-8826**	4	BOSS (1-1/8-18X0.708-IN)	
	6	2	**243-3250**	1	HARNESS AS-SENSOR (ROTATION)	
		2	**243-5362**	1	CAP-DUST	
		2	**155-2271**	1	KIT-CONNECTING PLUG (4-PIN)	
					(INCLUDES PLUG AS, WEDGE & INTERFACE SEAL)	
E		2	**114-8844**		SLEEVE-PLASTIC (40-CM)	
		2	**9X-3402**	4	SOCKET-CONNECTOR (16-GA TO 18-GA)	
		2	**9X-4385**	1	PLUG AS-CONNECTOR (6-PIN)	
E		2	**125-7875**		TUBE-HEAT SHRINK (7.44-MM DIA) (5-CM)	
	7	1	**251-1133**	1	TUBE	
	8	2	**255-3482**	1	BRACKET	
	9	1	**261-3753**	2	BRACKET AS	
	10	1	**263-6893**	1	HARNESS AS-WIRING (FRAME)	
		1	**7R-3029**	4	CAP-DUST	
		1	**243-5362**	1	CAP-DUST	
		1	**228-3323**	4	CLIP-SPRING	
		1	**174-0503**	1	KIT-CONNECTING PLUG (3-PIN)	
					(INCLUDES PLUG AS, WEDGE & INTERFACE SEAL)	
		1	**102-8804**	1	KIT-RECEPTACLE (4-PIN)	
					(INCLUDES RECEPTACLE AS & WEDGE)	
		1	**9W-0852**	2	PIN-CONNECTOR (14-GA TO 16-GA)	
		1	**9X-3401**	2	PIN-CONNECTOR (16-GA TO 18-GA)	
		1	**8T-8737**	15	PLUG-SEAL	
		1	**9X-4385**	1	PLUG AS-CONNECTOR (6-PIN)	
		1	**9X-7146**	1	PLUG AS-CONNECTOR (24-PIN)	
		1	**8T-8730**	2	SOCKET-CONNECTOR (16-GA TO 18-GA)	
		1	**9W-0844**	4	SOCKET-CONNECTOR (14-GA)	
		1	**9X-3402**	6	SOCKET-CONNECTOR (16-GA TO 18-GA)	
B		1	**1P-0810**	1	TAPE-ELECTRICAL	
E		1	**119-3662**		TUBE-HEAT SHRINK (10.85-MM DIA) (39-CM)	
E		1	**125-7875**		TUBE-HEAT SHRINK (7.44-MM DIA) (115-CM)	
		1	**3E-3377**	1	WEDGE-RECEPTACLE LOCK (4-PIN)	
	11	1	**263-6894**	1	HARNESS AS-WIRING (BLADE)	
E		1	**5P-1424**		HOSE (326-CM)	
		1	**102-8804**	2	KIT-RECEPTACLE (4-PIN)	
					(EACH KIT INCLUDES RECEPTACLE AS & WEDGE)	
		1	**155-2271**	3	KIT-CONNECTING PLUG (4-PIN)	
		1	**174-0503**	1	KIT-CONNECTING PLUG (3-PIN)	
					(EACH PLUG KIT INCLUDES PLUG AS, WEDGE & INTERFACE SEAL)	

250-0895 WIRING GP-GRADE CONTROL *(contd.)* i03753219

NOTE	REF NO	GRAPHIC REF	PART NUMBER	QTY	PART NAME 1 2 3 4 5 6 (PRODUCT LEVEL)	SEE PAGE
		1	**8T-8729**	2	PIN-CONNECTOR (16-GA TO 18-GA)	
		1	**9X-3401**	2	PIN-CONNECTOR (16-GA TO 18-GA)	
		1	**8T-8737**	9	PLUG-SEAL	
		1	**8T-8730**	2	SOCKET-CONNECTOR (16-GA TO 18-GA)	
		1	**9W-0844**	2	SOCKET-CONNECTOR (14-GA)	
		1	**9X-3402**	6	SOCKET-CONNECTOR (16-GA TO 18-GA)	
E		1	**8T-2225**		TUBE-HEAT SHRINK (25.4-MM DIA) (20-CM)	
E		1	**125-7875**		TUBE-HEAT SHRINK (7.44-MM DIA) (30-CM)	
	12	1	**327-3871**	1	BRACKET (LH)	
	13	2	**327-3872**	1	BRACKET (RH)	
	14	1	**288-5508**	1	BRACKET AS (LH)	
	15	2	**288-5509**	1	BRACKET AS (RH)	
	16	1,2	**033-8248**	6	CLIP	
	17	2	**130-5300**	3	CLIP	
C	18	2	**8T-4994**	4	WASHER-HARD (20X36.5X3.5-MM THK)	
C	19	2	**1K-6870**	1	LOCKNUT (3/4-10-THD)	
	20	1,2	**134-2540**	2	RESISTOR AS-CONNECTION (3-PIN)	
	21	2	**147-0385**	1	CLIP	
M	22	1,2	**188-9644**	4	SCREW-FLAT HEAD (M8X1.25X25-MM)	
	23	1,2	**226-4192**	8	WASHER-HARD (21.5X35X8-MM THK)	
C	24	2	**5P-4135**	1	BOLT (3/4-10X8-IN)	
	25	1,2	**2J-3506**	4	NUT-FULL (3/4-10-THD)	
	26	1	**4D-7794**	3	CLIP	
	27	1	**4K-8864**	2	CLIP	
	28	2	**4P-7429**	2	CLIP	
	29	2	**4P-7581**	1	CLIP	
	30	1,2	**1J-6762**	4	BOLT-PLOW (3/4-10X3-IN)	
	31	2	**6D-4244**	8	CLIP	
C	32	1,2	**7K-1181**	27	STRAP-CABLE	
M	33	1,2	**7X-2563**	4	BOLT (M20X2.5X60-MM)	
M	34	2	**7Y-0589**	2	BOLT (M12X1.75X90-MM)	
	35	1,2	**8C-6857**	4	BOLT (3/4-10X2.75-IN)	
	36	1	**8M-2770**	1	CLIP	
	37	1,2	**8M-2773**	4	CLIP	
C	38	1,2	**8T-4121**	14	WASHER-HARD (11X21X2.5-MM THK)	
	39	1,2	**8T-4123**	8	WASHER (22X35X3.5-MM THK)	
M	41	1	**8T-4136**	4	BOLT (M10X1.5X25-MM)	
M	42	1,2	**8T-4137**	10	BOLT (M10X1.5X20-MM)	
	44	2	**8T-4223**	3	WASHER-HARD (13.5X25.5X3-MM THK)	
M	45	2	**8T-4244**	2	NUT (M12X1.75-THD)	
	46	2	**9M-8406**	2	CLIP	
M	47	2	**8T-4192**	1	BOLT (M12X1.75X25-MM)	
	48	2	**4P-7428**	1	CLIP	

B-USE AS REQUIRED
C-CHANGE FROM PREVIOUS TYPE
E-ORDER BY THE CENTIMETER
G-ORDER BY THE INCH
M-METRIC PART

250-0895 WIRING GP-GRADE CONTROL *(contd.)* i03753219

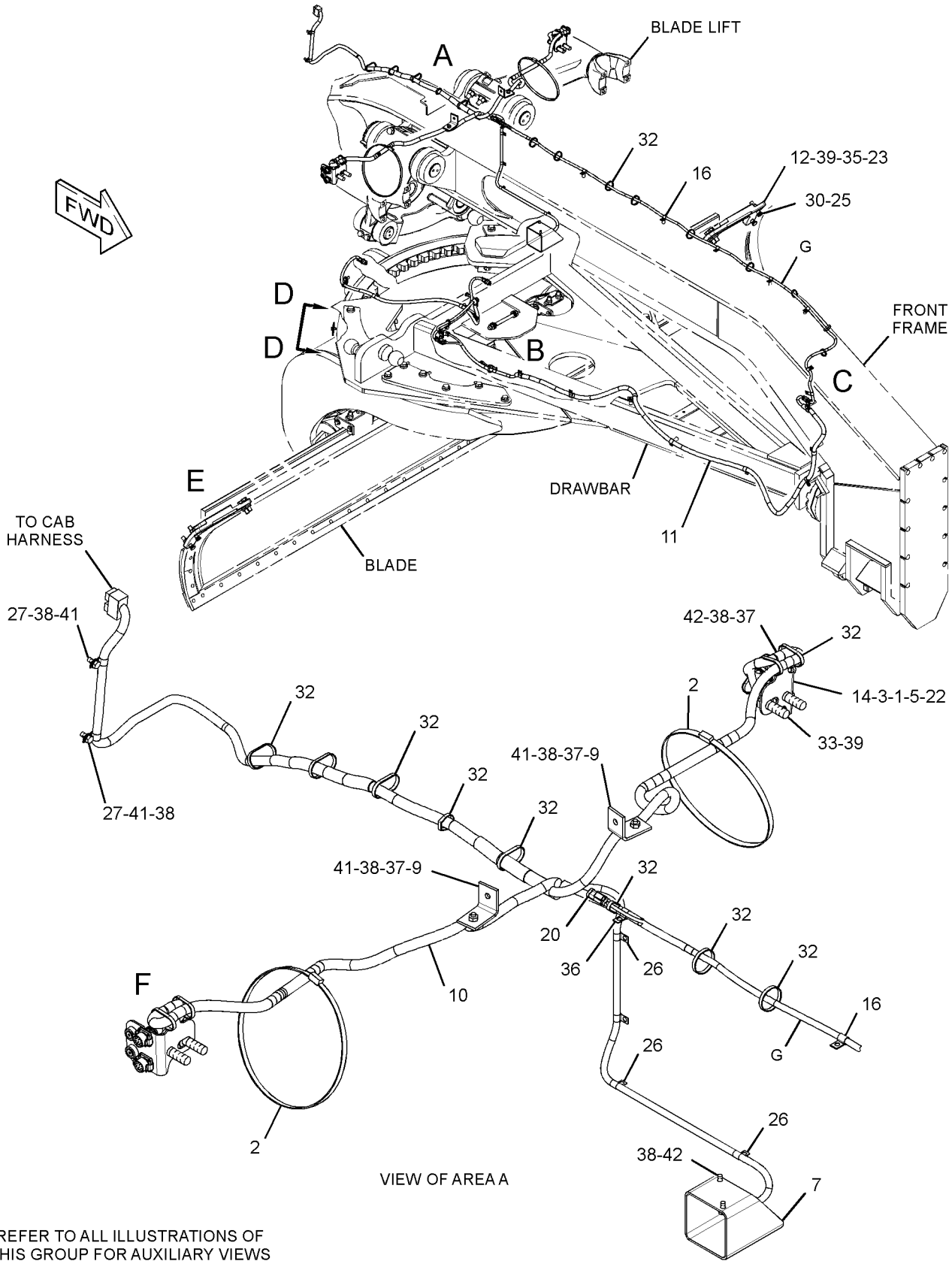

REFER TO ALL ILLUSTRATIONS OF
THIS GROUP FOR AUXILIARY VIEWS

GRAPHIC #1 g02059887

250-0895 WIRING GP-GRADE CONTROL *(contd.)* i03753219

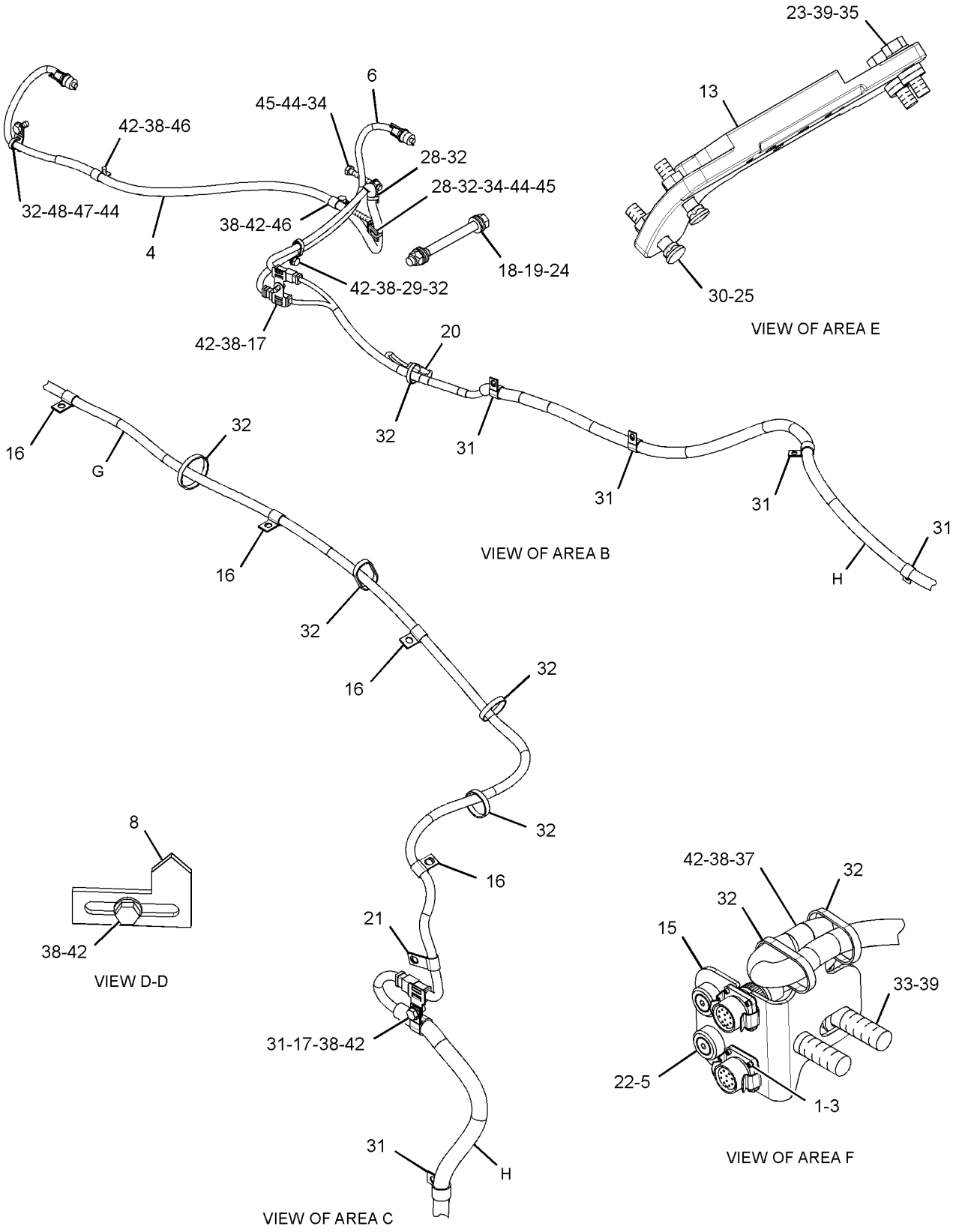

GRAPHIC #2 **<END>** g02059885

250-1096 WIRING GP-LUBRICATION

S/N: R9H1-UP

PART OF 269-6941 LUBRICATION AR-AUTOMATIC

AN ATTACHMENT

SMCS-1408 **i02619951**

NOTE	REF NO	GRAPHIC REF	PART NUMBER	QTY	PART NAME 1 2 3 4 5 6 (PRODUCT LEVEL)	SEE PAGE
	1	1	**3J-1907**	1	SEAL-O-RING	
	2	1	**3S-2093**	3	STRAP-CABLE	
	3	1	**221-3405**	1	SENSOR GP-PRESSURE (VARIABLE DISPLACEMENT PUMP OIL)	
		1	**180-9340**	1	SOCKET-CONNECTOR (14-GA TO 18-GA)	
		1	**155-2260**	1	KIT-CONNECTING PLUG (3-PIN)	
					(INCLUDES PLUG AS, WEDGE, & INTERFACE SEAL)	
	4	1	**260-1876**	1	HARNESS AS-WIRING	
		1	**155-2270**	2	KIT-CONNECTING PLUG (2-PIN)	
		1	**155-2260**	1	KIT-CONNECTING PLUG (3-PIN)	
					(EACH INCLUDES PLUG AS, WEDGE, & INTERFACE SEAL)	
	5	1	**5P-9085**	2	CLIP	
	6	1	**8T-4121**	2	WASHER-HARD (11X21X2.5-MM THK)	
M	7	1	**8T-4137**	2	BOLT (M10X1.5X20-MM)	

M-METRIC PART

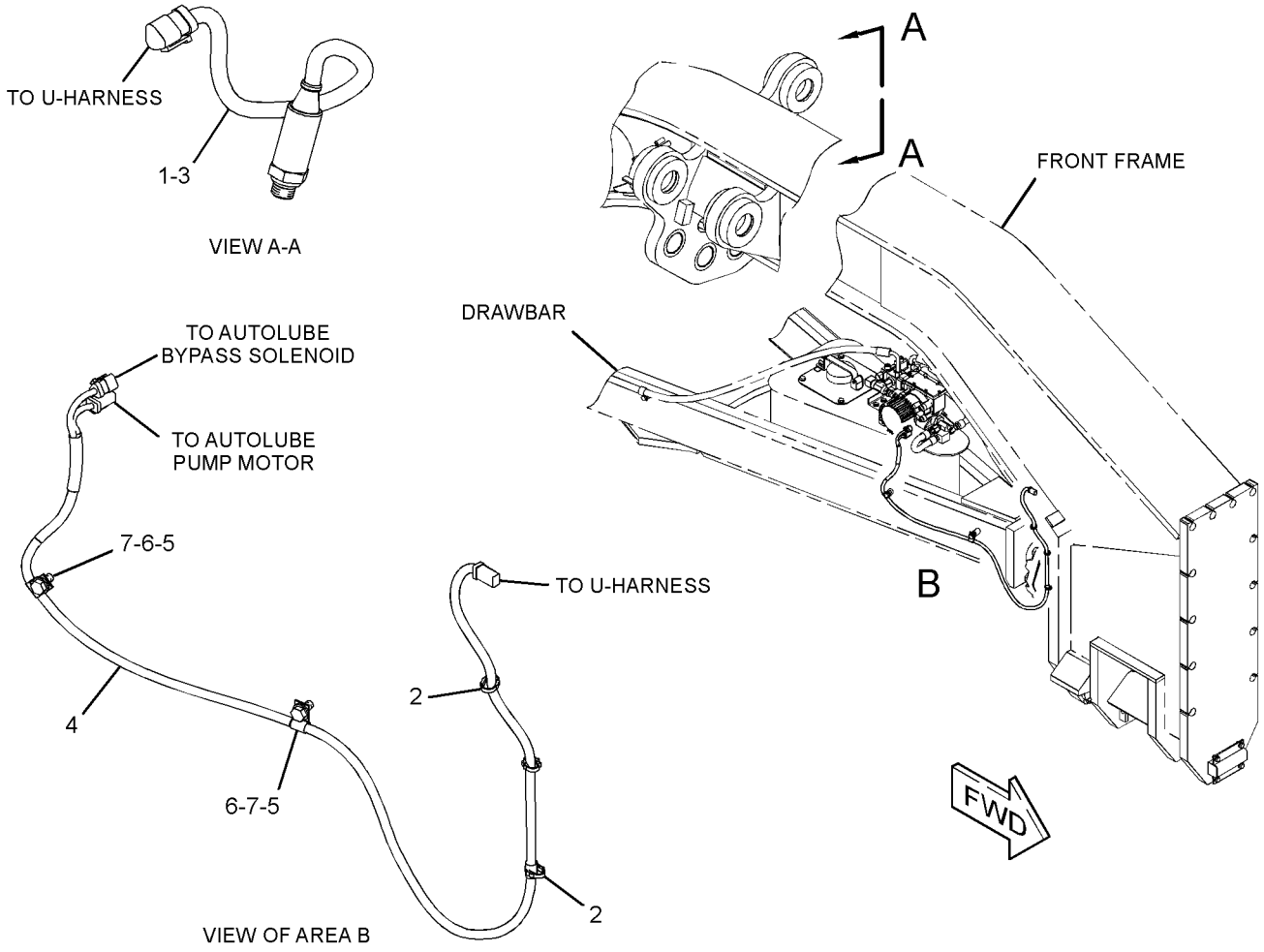

GRAPHIC #1 **<END>** g01319040

ELECTRICAL AND STARTING SYSTEM

253-1964 WIRING GP-MONITOR

S/N: R9H1-UP

PART OF 292-7975, 331-7530 DISPLAY AR-MONITOR, 323-8139 SENSOR AR-GRADE

SMCS-1408 **i02902266**

NOTE	REF NO	GRAPHIC REF	PART NUMBER	QTY	PART NAME 1 2 3 4 5 6 (PRODUCT LEVEL)	SEE PAGE
	1	1	**7K-1181**	1	STRAP-CABLE	
	2	1	**140-7480**	1	BRACKET-MOUNTING	
	3	1	**167-8610**	1	BRACKET AS	
	4	1	**222-9151**	2	WASHER-HARD (11X32X5-MM THK)	
	5	1	**245-8334**	2	KNOB	
	6	1	**252-5190**	1	HARNESS AS-FRONT CHASSIS	
		1	**102-8801**	1	KIT-RECEPTACLE (12-PIN)	
					(INCLUDES RECEPTACLE AS & WEDGE)	
		1	**248-5358**	1	PLUG AS-CONNECTOR (39-PIN)	
		1	**155-2255**	1	KIT-CONNECTING PLUG (12-PIN)	
					(INCLUDES PLUG AS, WEDGE, & INTERFACE SEAL)	
	7	1	**253-1963**	1	BRACKET AS	
	8	1	**253-7461**	1	HARNESS AS-RADIO	
		1	**190-7614**	1	KIT-RECEPTACLE (12-PIN)	
					(INCLUDES RECEPTACLE AS & WEDGE)	
		1	**167-8987**	1	PLUG AS-CONNECTOR (8-PIN)	
	9	1	**273-1719**	1	BRACKET AS	
	10	1	**273-5924**	1	KNOB	
	11	1	**295-8369**	1	PLATE	
	12	1	**295-8370**	1	BRACKET AS	
		1	**7T-1099**	2	LINK	
M		1	**6V-9632**	1	NUT-WELD (M6X1-THD)	
M		1	**8T-3490**	2	NUT-WELD (M10X1.5-THD)	
M		1	**9X-2032**	4	NUT-WELD (M4X0.7-THD)	
	13	1	**295-8381**	1	PLATE AS	
	14	1	**296-1067**	1	HARNESS AS-WIRING (LIGHT BAR)	
		1	**102-8804**	1	KIT-RECEPTACLE (4-PIN)	
					(INCLUDES RECEPTACLE AS & WEDGE)	
		1	**230-5008**	3	PLUG AS-CONNECTOR (4-PIN)	
	15	1	**300-7909**	1	BRACKET AS	
		1	**205-7047**	2	INSERT-THREADED (M4X0.7-THD)	
	16	1	**114-6658**	2	WASHER (6.5X17X1-MM THK)	
	17	1	**096-6166**	6	WASHER-HARD (4.5X9X1-MM THK)	
	18	1	**117-8929**	1	WASHER (6.6X22X2-MM THK)	
	19	1	**130-5300**	2	CLIP	
	20	1	**204-0813**	3	BOLT (M6X1X40-MM)	
	21	1	**3B-4610**	2	PIN-COTTER	
	22	1	**4L-7125**	4	LOCKWASHER	
M	23	1	**5C-7261**	2	NUT (M8X1.25-THD)	
	24	1	**5P-4116**	6	WASHER-HARD (8.8X20.5X2-MM THK)	
	25	1	**5P-6419**	1	GROMMET	
	26	1	**5S-7349**	2	BOLT (1/4-20X0.5-IN)	
	27	1	**6B-8193**	2	PIN-CLEVIS	
M	28	1	**7X-2537**	2	BOLT (M8X1.25X35-MM)	
	29	1	**8C-5607**	6	MOUNT-ISOLATION	
	30	1	**8C-5608**	3	SPACER (6.5X9.5X25.4-MM THK)	
	31	1	**8T-4205**	2	WASHER-HARD (7.2X14.5X2-MM THK)	
	32	1	**8T-4224**	4	WASHER-HARD (8.8X16X2-MM THK)	
M	33	1	**8T-4908**	2	BOLT (M8X1.25X25-MM)	
M	34	1	**8T-7852**	6	BOLT (M4X0.7X10-MM)	
M	35	1	**9X-1046**	6	SCREW (M4X0.7X18-MM)	
M	36	1	**9X-2045**	2	SCREW-TRUSS HEAD (M6X1X20-MM)	
	37	1	**9X-6165**	3	WASHER (6.5X22X2.5-MM THK)	
D	38	1	**5P-7657**		SEAL (0.2-M)	

D-ORDER BY THE METER
M-METRIC PART

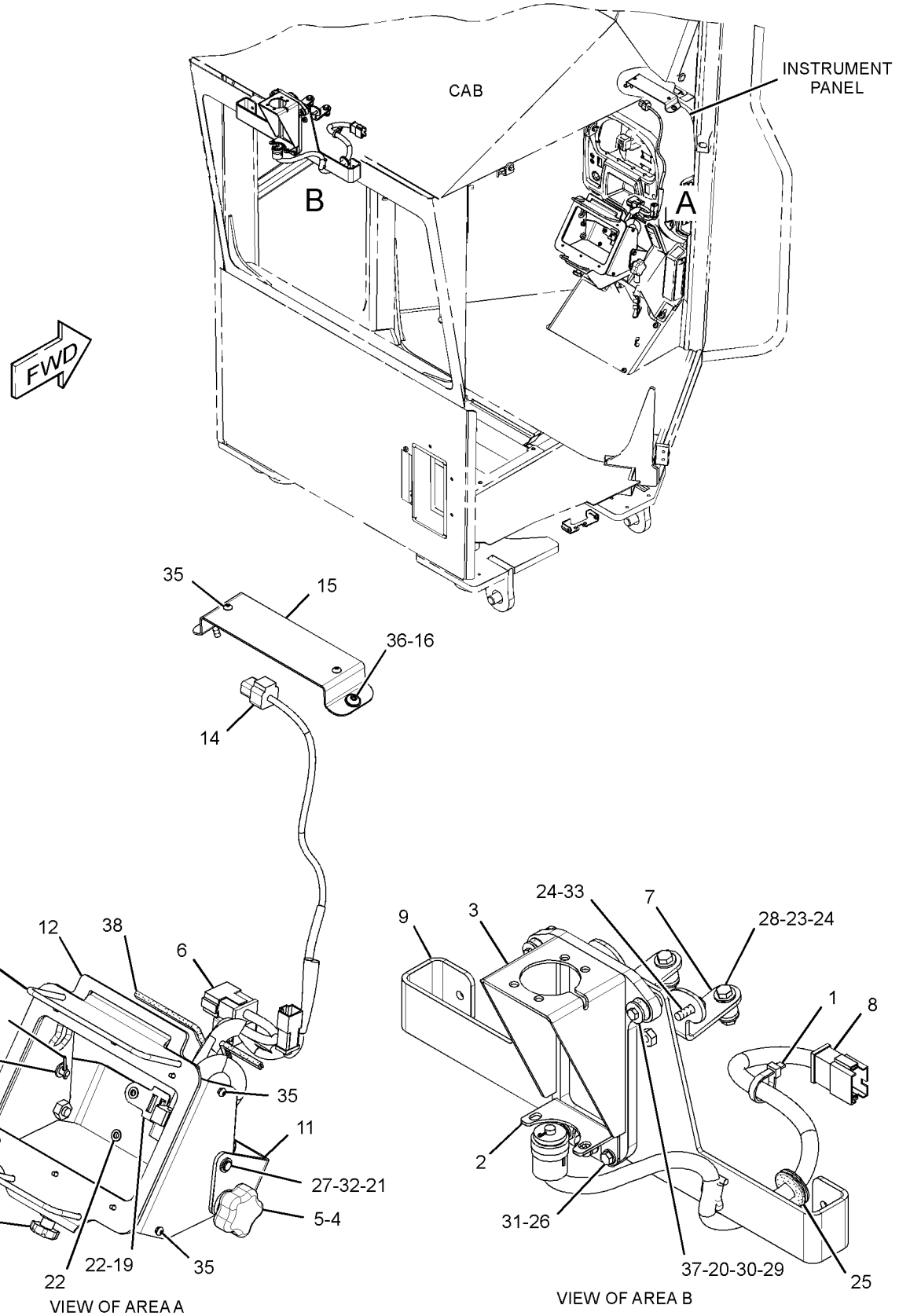

GRAPHIC #1 **<END>** g01524819

253-1967 WIRING GP-MONITOR

S/N: R9H1-UP

PART OF 292-7980 DISPLAY AR-MONITOR, 323-8140 GRADE CONTROL AR

SMCS-1408 **i03495740**

NOTE	REF NO	GRAPHIC REF	PART NUMBER	QTY	PART NAME 1 2 3 4 5 6 (PRODUCT LEVEL)	SEE PAGE
	1	1	**095-0817**	2	LOCKWASHER	
	2	1	**167-8712**	1	ALARM	
	3	1	**167-8713**	1	BAFFLE AS	
	4	1	**167-8714**	1	WIRE AS	
	5	1	**248-2284**	2	KNOB-CONTROL	
	6	1	**251-0077**	1	BRACKET AS	
M		1	**8T-3490**	1	NUT-WELD (M10X1.5-THD)	
	7	1	**251-9571**	1	BRACKET AS	
M		1	**8T-3490**	1	NUT-WELD (M10X1.5-THD)	
	8	1	**295-8963**	1	PLATE	
	9	1	**296-4922**	1	HARNESS AS-MONITOR	
		1	**102-8801**	1	KIT-RECEPTACLE (12-PIN)	
					(INCLUDES RECEPTACLE AS & WEDGE)	
		1	**9X-6772**	2	STRAP-CABLE	
		1	**126-1774**	1	COVER-CONNECTOR	
		1	**147-1444**	1	PLUG AS-CONNECTOR (70-PIN)	
		1	**155-2255**	1	KIT-CONNECTING PLUG (12-PIN)	
		1	**155-2270**	1	KIT-CONNECTING PLUG (2-PIN)	
					(EACH INCLUDES PLUG AS, WEDGE, & INTERFACE SEAL)	
	10	1	**130-5300**	3	CLIP	
	11	1	**4L-7125**	4	LOCKWASHER	
	12	1	**8T-4121**	2	WASHER-HARD (11X21X2.5-MM THK)	
M	13	1	**8T-4171**	4	BOLT (M6X1X12-MM)	
	14	1	**8T-4205**	4	WASHER-HARD (7.2X14.5X2-MM THK)	
D	15	1	**5P-7657**		SEAL (0.2-M)	

D-ORDER BY THE METER
M-METRIC PART

253-1967 **WIRING GP-MONITOR** *(contd.)* **i03495740**

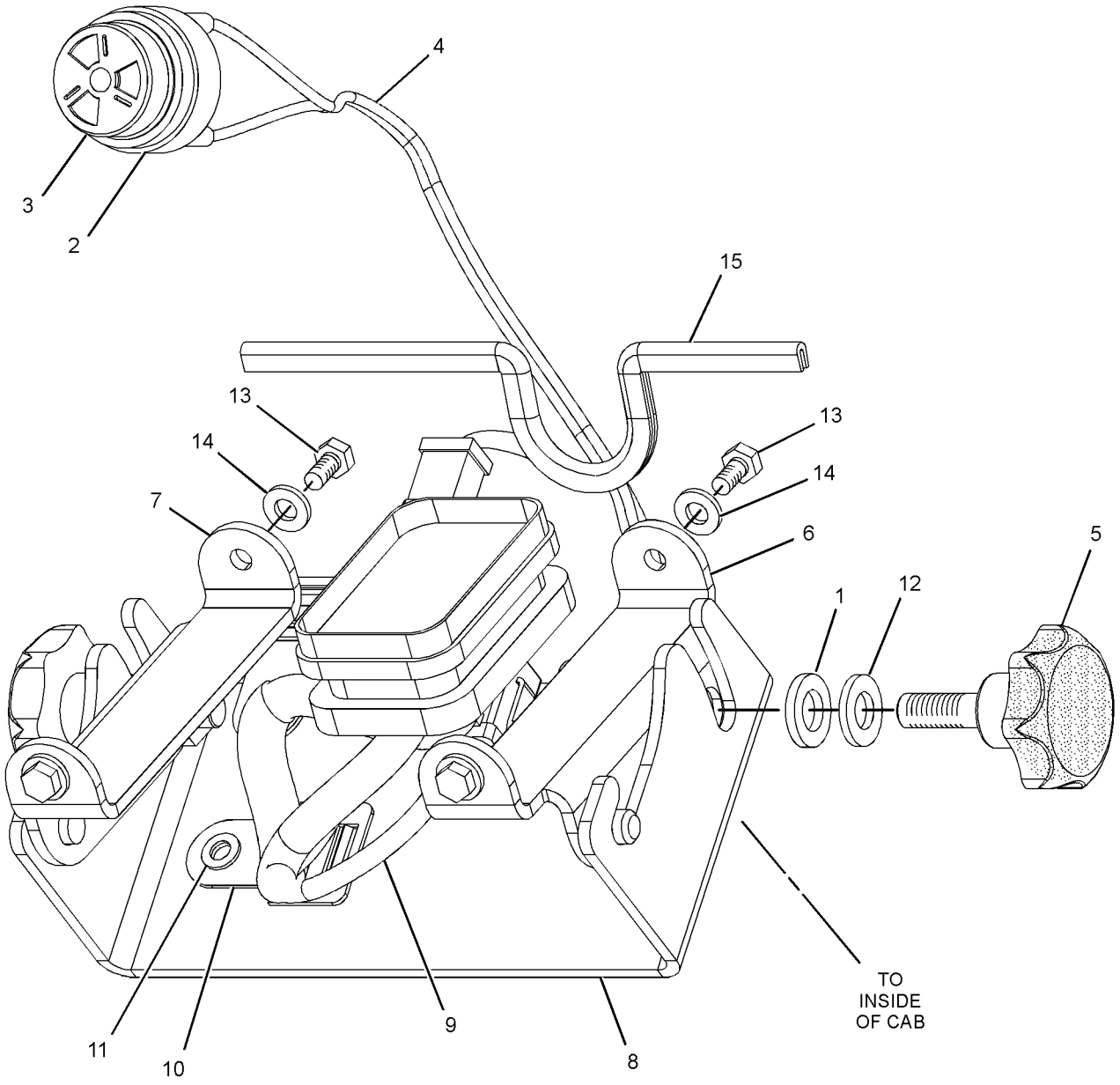

GRAPHIC #1 **<END>** g01332375

ELECTRICAL AND STARTING SYSTEM

260-1871 WIRING GP-POWER RECEPTACLE–

CIRCUIT BREAKER PANEL

S/N: R9H1-UP

PART OF 349-2556 COMMON AR

SMCS-1408, 1420, 1463 **i03496501**

NOTE	REF NO	GRAPHIC REF	PART NUMBER	QTY	PART NAME 1 2 3 4 5 6 (PRODUCT LEVEL)	SEE PAGE
	1	1	**2G-8767**	6	WASHER (10.5X60X3-MM THK)	
	2	1	**3S-2093**	5	STRAP-CABLE	
	3	1	**6G-2256**	3	CLAMP	
	4	1	**6G-2263**	3	SPACER (10.5X19X28.5-MM THK)	
Y	5	2	**118-3534**	1	SWITCH GP-MAGNETIC (24-VOLT) (STARTER RELAY)	326
	6	1	**134-3355**	1	STRAP AS	
	7	1	**153-2447**	1	BRACKET AS	
	8	2	**171-2210**	1	CIRCUIT BREAKER AS (80-AMPERE) (MAIN)	
	8A	2	**171-2210**	1	CIRCUIT BREAKER AS (80-AMPERE) (LOAD)	
	9	2	**171-2215**	1	CIRCUIT BREAKER AS (150-AMPERE) (ALTERNATOR)	
					(EACH CIRCUIT BREAKER AS INCLUDES)	
		2	**6V-8187**	2	NUT (1/4-28-THD)	
		2	**8T-4205**	2	WASHER-HARD (7.2X14.5X2-MM THK)	
		2	**253-2111**	2	LOCKWASHER	
Y	10	2	**241-8368**	1	SWITCH GP-MAGNETIC (24-VOLT) (MAIN RELAY)	330
	11	2	**249-4364**	2	SPACER	
	12	2	**263-6885**	1	BRACKET AS	
	13	2	**266-9353**	1	BRACKET AS	
	14	1	**266-9357**	1	CABLE AS	
B		1	**1P-0810**		TAPE-ELECTRICAL	
		1	**1S-7252**	1	TERMINAL-CABLE (00-GA, 3/8-IN SCREW)	
		1	**9G-8909**	1	COVER-TERMINAL (BLACK)	
		1	**030-1706**	1	TERMINAL-RING (00-GA, 1/4-IN SCREW)	
E		1	**159-8050**		CABLE (00-GA, BLACK) (76-CM)	
	15	2	**313-9200**	1	BLOCK AS-FUSE	
M		2	**5C-7261**	1	NUT (M8X1.25-THD)	
		2	**7X-0608**	1	WASHER-HARD (10.2X16X2-MM THK)	
		2	**9F-5644**	1	LOCKWASHER	
	16	2	**272-7239**	1	BLOCK AS-JUNCTION	
	17	2	**272-9710**	1	COVER	
	18	2	**287-6152**	1	STRAP	
	19	1	**288-5520**	1	CABLE AS	
		1	**1S-7251**	1	TERMINAL-CABLE (00-GA, 1/2-IN SCREW)	
		1	**8N-0869**	1	COVER-TERMINAL (RED)	
		1	**8T-8827**	1	BOOT (RED)	
E		1	**159-8049**		CABLE (00-GA, RED) (238-CM)	
	20	2	**288-5521**	1	WIRE AS	
	21	2	**288-5522**	1	WIRE AS	
	22	1	**288-5524**	1	CABLE AS	
		1	**1S-7252**	1	TERMINAL-CABLE (00-GA, 3/8-IN SCREW)	
E		1	**159-8050**		CABLE (00-GA, BLACK) (78-CM)	
	23	2	**288-5525**	1	HARNESS AS-PANEL	
	24	2	**288-5526**	1	PLATE	
	25	2	**322-2924**	1	BAR-BUS	
	26	2	**288-5528**	1	CABLE AS	
		2	**1S-7251**	1	TERMINAL-CABLE (00-GA, 1/2-IN SCREW)	
		2	**8T-8827**	1	BOOT (RED)	
		2	**030-1706**	1	TERMINAL-RING (00-GA, 1/4-IN SCREW)	
E		2	**159-8049**		CABLE (00-GA, RED) (41-CM)	
M	27	1	**085-8091**	3	BOLT (M10X1.5X55-MM)	
	28	2	**113-8373**	10	SCREW-BUTTON HEAD (10-32X0.75-IN)	
	29	2	**130-5300**	2	CLIP	
	30	1	**245-8842**	1	CLIP	
	31	2	**4B-4274**	6	WASHER (5.5X13X1.2-MM THK)	
	32	2	**4S-1962**	2	CLIP	

260-1871 **WIRING GP-POWER RECEPTACLE** *(contd.)* **i03496501**

NOTE	REF NO	GRAPHIC REF	PART NUMBER	QTY	PART NAME 1 2 3 4 5 6 (PRODUCT LEVEL)	SEE PAGE
M	33	2	**5C-2890**	5	NUT (M6X1-THD)	
M	34	1,2	**5C-7261**	2	NUT (M8X1.25-THD)	
	35	2	**5P-4115**	2	WASHER-HARD (7.2X19X2-MM THK)	
	36	1	**5P-4116**	2	WASHER-HARD (8.8X20.5X2-MM THK)	
	37	2	**6D-4244**	4	CLIP	
	38	2	**6V-1889**	1	CLIP	
	39	2	**6V-8188**	1	NUT (1/2-13-THD)	
	40	2	**7K-1181**	4	STRAP-CABLE	
	41	2	**7X-0608**	1	WASHER-HARD (10.2X16X2-MM THK)	
M	42	2	**174-8131**	4	SCREW-TRUSS HEAD (M4X0.7X12-MM)	
M	43	2	**8T-0389**	1	LOCKNUT (M10X1.5-THD)	
	44	1,2	**8T-4121**	30	WASHER-HARD (11X21X2.5-MM THK)	
M	45	2	**8T-4133**	1	NUT (M10X1.5-THD)	
M	46	1,2	**8T-4136**	8	BOLT (M10X1.5X25-MM)	
M	47	1,2	**8T-4137**	16	BOLT (M10X1.5X20-MM)	
M	48	2	**8T-4138**	1	BOLT (M6X1X20-MM)	
M	49	2	**8T-4179**	2	BOLT (M12X1.75X20-MM)	
M	50	2	**8T-4186**	3	BOLT (M10X1.5X40-MM)	
	51	2	**8T-4205**	4	WASHER-HARD (7.2X14.5X2-MM THK)	
	52	2	**8T-4223**	4	WASHER-HARD (13.5X25.5X3-MM THK)	
	53	2	**9F-5644**	1	LOCKWASHER	
	54	1,2	**9M-8406**	11	CLIP	
	55	2	**8T-4224**	4	WASHER-HARD (8.8X16X2-MM THK)	
M	56	2	**8T-4189**	4	BOLT (M8X1.25X20-MM)	
	57	2	**336-4867**	1	PLATE AS	

B-USE AS REQUIRED
E-ORDER BY THE CENTIMETER
M-METRIC PART
Y-SEPARATE ILLUSTRATION

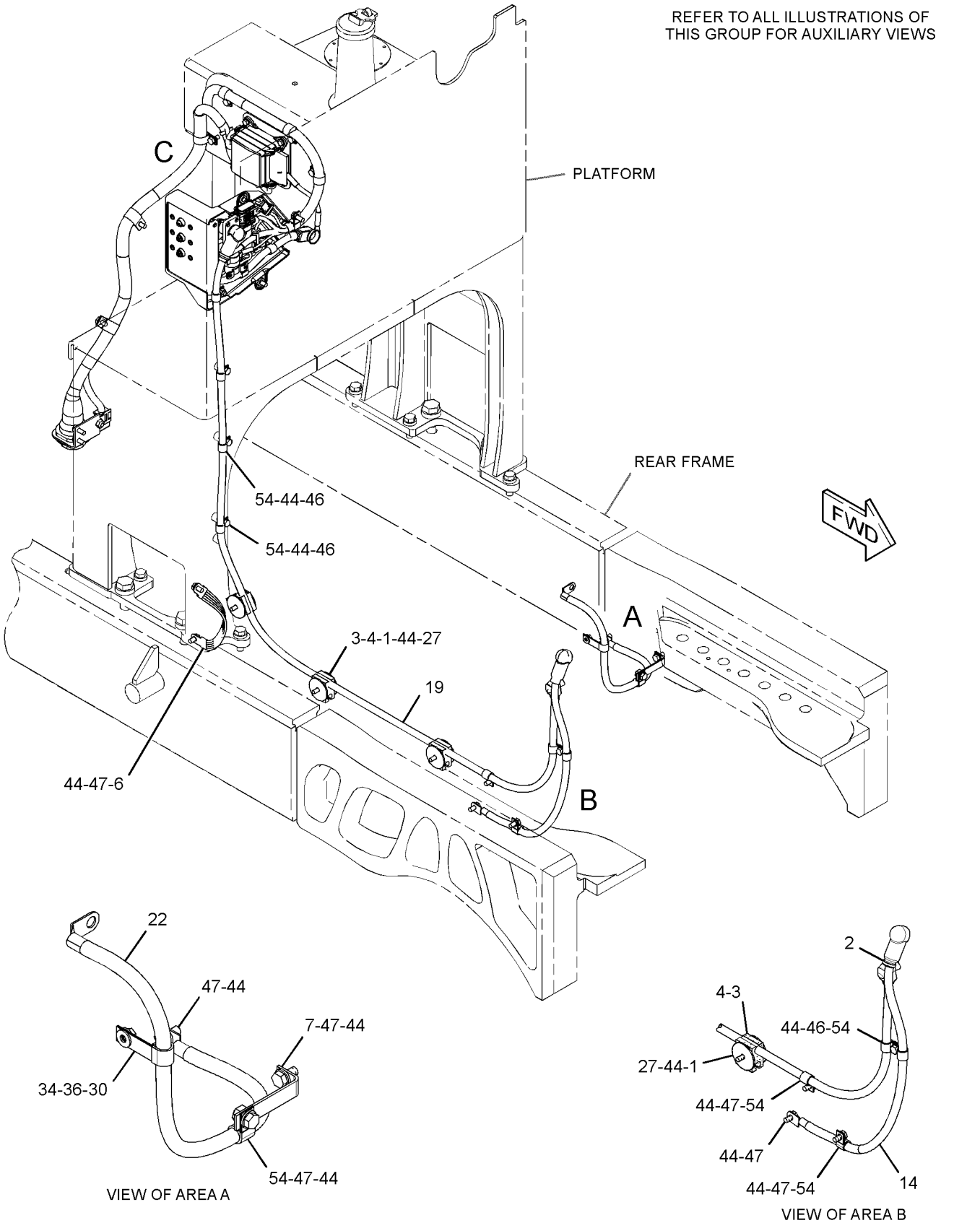

GRAPHIC #1

g01844615

260-1871 **WIRING GP-POWER RECEPTACLE** *(contd.)* **i03496501**

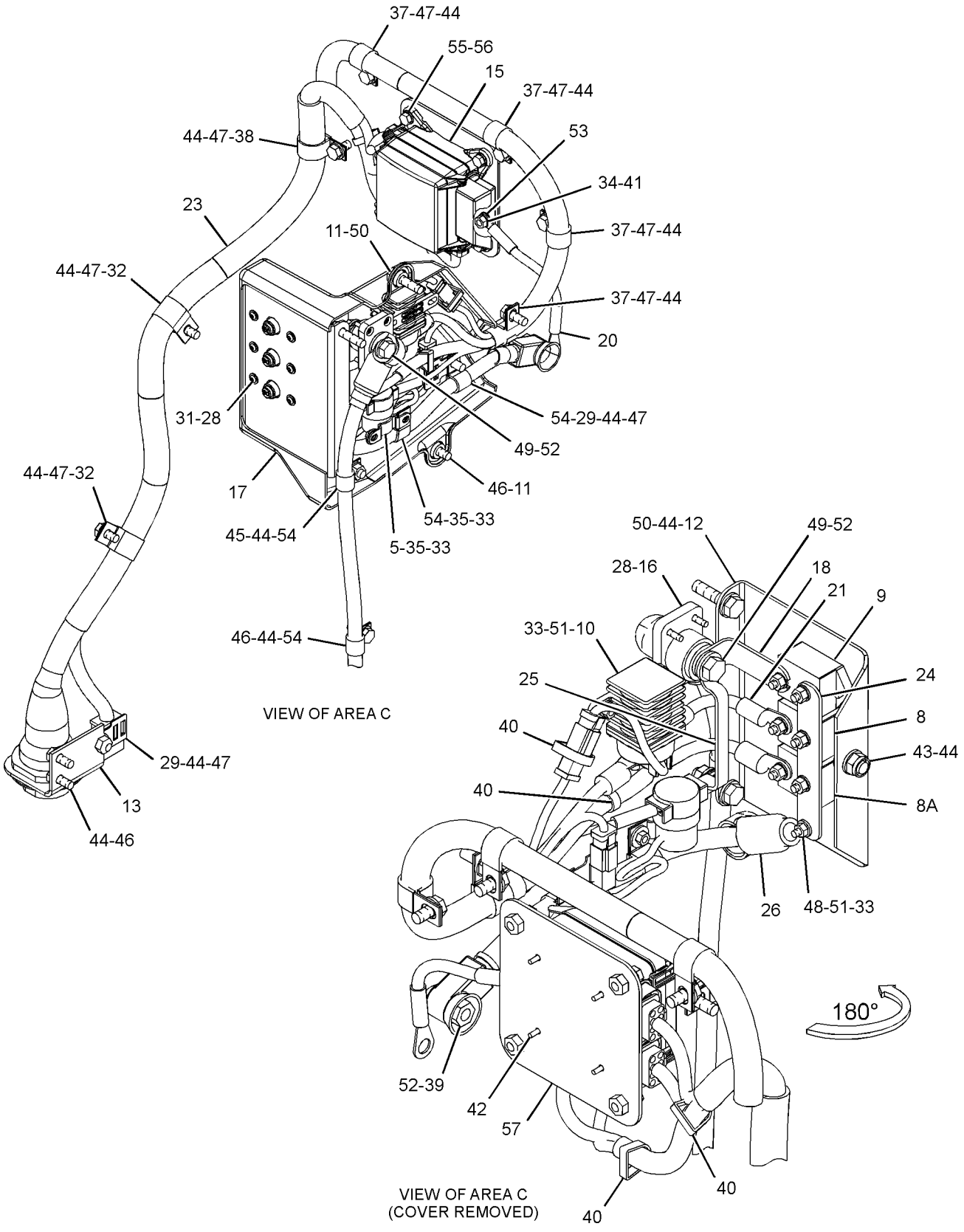

GRAPHIC #2 **<END>** g01844616

ELECTRICAL AND STARTING SYSTEM

260-1870 WIRING GP-REAR

S/N: R9H1-UP

PART OF 349-2556 COMMON AR

SMCS-1408 **i04011772**

NOTE	REF NO	GRAPHIC REF	PART NUMBER	QTY	PART NAME 1 2 3 4 5 6 (PRODUCT LEVEL)	SEE PAGE
C	1	1,2,3	**3S-2093**	28	STRAP-CABLE	
	2	1,3	**9X-9365**	1	BRACKET	
	3	3	**114-5333**	1	SWITCH AS-PRESSURE (COMPRESSOR, HIGH SIDE)	
		3	**102-8802**	1	KIT-RECEPTACLE (2-PIN)	
					(INCLUDES RECEPTACLE AS & WEDGE)	
		3	**8T-8729**	2	PIN-CONNECTOR (16-GA TO 18-GA)	
E		3	**9X-1386**		SLEEVE (25-CM)	
	4	2	**134-3355**	1	STRAP AS	
	5	3	**353-4515**	1	SWITCH GP-TOGGLE (GROUND LEVEL SHUTDOWN)	
		3	**102-8803**	1	KIT-RECEPTACLE (3-PIN)	
					(INCLUDES RECEPTACLE AS & WEDGE)	
		3	**8T-8729**	3	PIN-CONNECTOR (16-GA TO 18-GA)	
E		3	**112-4550**		SLEEVE (19-CM)	
		3	**271-2178**	1	SWITCH AS-TOGGLE (GROUND LEVEL SHUTDOWN)	
		3	**6T-3631**	2	NUT-HEX (15/32-32-THD)	
		3	**6T-3632**	1	LOCKWASHER	
		3	**6T-3633**	1	RING-LOCKING	
	6	3	**149-6371**	1	SWITCH AS-PRESSURE (COMPRESSOR, LOW SIDE)	
		3	**102-8802**	1	KIT-RECEPTACLE (2-PIN)	
					(INCLUDES RECEPTACLE AS & WEDGE)	
		3	**8T-8729**	2	PIN-CONNECTOR (16-GA TO 18-GA)	
	7	1,3	**189-3158**	2	SUPPRESSOR-ARC	
	8	1	**193-3973**	2	STRAP-CABLE	
C	9	3	**274-6717**	1	SENSOR-PRESSURE (TURBOCHARGER INLET)	
	10	1	**204-8000**	2	MOUNTING-CABLE TIE	
	11	3	**240-7193**	1	RESISTOR AS (500-OHM, 2-WATT)	
		3	**102-8802**	1	KIT-RECEPTACLE (2-PIN)	
					(INCLUDES RECEPTACLE AS & WEDGE)	
		3	**186-3735**	1	PIN-CONNECTOR (16-GA TO 18-GA)	
	12	1	**256-8730**	1	PLATE AS	
C	13	1	**358-3851**	1	HARNESS AS-SWITCH	
		1	**102-8801**	1	KIT-RECEPTACLE (12-PIN)	
		1	**8T-8729**	11	PIN-CONNECTOR (16-GA TO 18-GA)	
		1	**8T-8730**	8	SOCKET-CONNECTOR (16-GA TO 18-GA)	
		1	**8T-8737**	4	PLUG-SEAL	
		1	**9X-4998**	1	SOCKET (14-GA TO 16-GA)	
E		1	**125-7874**		TUBE-HEAT SHRINK (5.72-MM DIA) (10-CM)	
		1	**155-2270**	4	KIT-CONNECTING PLUG (2-PIN)	
		1	**230-4013**	1	PLUG AS-CONNECTOR (3-PIN)	
		1	**264-7030**	1	SEAL-CONNECTOR	
	14	1	**263-6888**	1	HARNESS AS-PUMP	
		1	**102-8802**	1	KIT-RECEPTACLE (2-PIN)	
					(INCLUDES RECEPTACLE AS & WEDGE)	
		1	**9W-0844**	2	SOCKET-CONNECTOR (14-GA)	
		1	**9W-0852**	2	PIN-CONNECTOR (14-GA TO 16-GA)	
		1	**155-2270**	1	KIT-CONNECTING PLUG (2-PIN)	
					(INCLUDES PLUG AS, WEDGE & INTERFACE SEAL)	
	15	2	**263-6889**	1	HARNESS AS-SWITCH (FUEL LEVEL)	
		2	**102-8802**	1	KIT-RECEPTACLE (2-PIN)	
					(INCLUDES RECEPTACLE AS & WEDGE)	
		2	**8T-8729**	2	PIN-CONNECTOR (16-GA TO 18-GA)	
		2	**8T-8730**	2	SOCKET-CONNECTOR (16-GA TO 18-GA)	
		2	**155-2270**	1	KIT-CONNECTING PLUG (2-PIN)	
					(INCLUDES PLUG AS, WEDGE & INTERFACE SEAL)	
	16	2	**272-9709**	1	BRACKET AS	
Y	17	2	*287-6156*	1	SENSOR & MTG GP-POSITION (ARTICULATION)	287

260-1870 **WIRING GP-REAR** ***(contd.)*** **i04011772**

NOTE	REF NO	GRAPHIC REF	PART NUMBER	QTY	PART NAME 1 2 3 4 5 6 (PRODUCT LEVEL)	SEE PAGE
	18	2	**288-5510**	1	HARNESS AS-REAR CHASSIS (ARTICULATION)	
		2	**7G-7917**	4	PLUG-SEAL	
		2	**7G-7919**	6	PLUG-SEAL	
E		2	**7X-2639**		TUBE-HEAT SHRINK (50.8-MM DIA) (20-CM)	
		2	**7X-6222**	1	PLUG AS-CONNECTOR (24-PIN)	
		2	**3E-4367**	1	RING-RETAINING	
M		2	**3E-8558**	1	BOLT (M5X0.8X39.37-MM)	
		2	**9X-3265**	2	SEAL-CONNECTOR (24-PIN)	
		2	**8N-1518**	2	PLUG AS-CONNECTOR (25-PIN)	
		2	**8N-1521**	2	BELL AS-END	
		2	**9X-6857**	28	SOCKET-CONNECTOR (16-GA TO 18-GA)	
		2	**8N-1541**	8	SOCKET-CONNECTOR (12-GA TO 14-GA)	
		2	**8N-1549**	4	SOCKET-CONNECTOR (4-GA)	
		2	**8T-8730**	128	SOCKET-CONNECTOR (16-GA TO 18-GA)	
		2	**8T-8737**	20	PLUG-SEAL	
		2	**9W-0844**	24	SOCKET-CONNECTOR (14-GA)	
		2	**9X-3402**	14	SOCKET-CONNECTOR (16-GA TO 18-GA)	
		2	**9X-4391**	1	PLUG AS-CONNECTOR (70-PIN)	
		2	**3E-4367**	1	RING-RETAINING	
M		2	**3E-8557**	1	BOLT (M5X0.8X39.37-MM)	
		2	**9X-5615**	2	SEAL (INTERFACE, 70-PIN)	
		2	**9X-6772**	2	STRAP-CABLE	
E		2	**119-3662**		TUBE-HEAT SHRINK (10.85-MM DIA) (26-CM)	
		2	**155-2255**	1	KIT-CONNECTING PLUG (12-PIN)	
		2	**155-2260**	2	KIT-CONNECTING PLUG (3-PIN)	
		2	**155-2270**	2	KIT-CONNECTING PLUG (2-PIN)	
					(EACH KIT INCLUDES PLUG AS, WEDGE & INTERFACE SEAL)	
		2	**160-7689**	1	PLUG AS-CONNECTOR (70-PIN)	
		2	**159-9322**	1	SEAL-O-RING	
E		2	**1P-0810**		TAPE-ELECTRICAL (84-CM)	
E		2	**233-9494**		CONDUIT (47-MM OD) (67-CM)	
C	19	1	**357-6277**	1	HARNESS AS-REAR	
		1	**102-8802**	2	KIT-RECEPTACLE (2-PIN)	
		1	**102-8801**	2	KIT-RECEPTACLE (12-PIN)	
					(EACH RECEPTACLE KIT INCLUDES RECEPTACLE AS & WEDGE)	
		1	**7G-7917**	6	PLUG-SEAL	
		1	**7G-7919**	5	PLUG-SEAL	
		1	**8N-1517**	1	RECEPTACLE AS-CONNECTOR (25-PIN)	
		1	**8N-1518**	1	PLUG AS-CONNECTOR (25-PIN)	
		1	**8N-1521**	2	BELL AS-END	
		1	**8N-1523**	1	LOCKWASHER	
		1	**9X-6856**	15	PIN-CONNECTOR (16-GA TO 18-GA)	
		1	**9X-6857**	11	SOCKET-CONNECTOR (16-GA TO 18-GA)	
		1	**8N-1540**	4	PIN-CONNECTOR (12-GA TO 14-GA)	
		1	**8N-1541**	4	SOCKET-CONNECTOR (12-GA TO 14-GA)	
		1	**8N-1545**	1	SOCKET-CONNECTOR (8-GA)	
		1	**8N-1548**	2	PIN-CONNECTOR (4-GA)	
		1	**8N-1549**	2	SOCKET-CONNECTOR (4-GA)	
		1	**8T-8729**	63	PIN-CONNECTOR (16-GA TO 18-GA)	
		1	**8T-8730**	51	SOCKET-CONNECTOR (16-GA TO 18-GA)	
		1	**8T-8737**	100	PLUG-SEAL	
		1	**9W-0844**	7	SOCKET-CONNECTOR (14-GA)	
		1	**9W-0852**	14	PIN-CONNECTOR (14-GA TO 16-GA)	
		1	**9X-3401**	9	PIN-CONNECTOR (16-GA TO 18-GA)	
		1	**9X-3402**	132	SOCKET-CONNECTOR (16-GA TO 18-GA)	
		1	**9X-6772**	8	STRAP-CABLE	
E		1	**119-3662**		TUBE-HEAT SHRINK (10.85-MM DIA) (52-CM)	
E		1	**125-7874**		TUBE-HEAT SHRINK (5.72-MM DIA) (55-CM)	

260-1870 **WIRING GP-REAR** *(contd.)* **i04011772**

NOTE	REF NO	GRAPHIC REF	PART NUMBER	QTY	PART NAME 1 2 3 4 5 6 (PRODUCT LEVEL)	SEE PAGE
E		1	**125-7875**		TUBE-HEAT SHRINK (7.44-MM DIA) (20-CM)	
		1	**126-1768**	20	SOCKET-CONNECTOR (14-GA)	
		1	**126-1774**	3	COVER-CONNECTOR	
		1	**2L-8049**	1	TERMINAL-RING (6-GA, NO. 10 SCREW)	
					—OR—	
		1	**2L-8057**	1	TERMINAL-RING (8-GA, NO. 10 SCREW)	
		1	**2L-8052**	2	TERMINAL-RING (6-GA, 3/8-IN SCREW)	
		1	**2L-8069**	3	TERMINAL-RING (2-GA TO 10-GA, 3/8-IN SCREW)	
		1	**2L-8079**	1	TERMINAL-RING (14-GA TO 16-GA, 3/8-IN SCREW)	
		1	**147-1445**	1	PLUG AS-CONNECTOR (70-PIN)	
		1	**159-9322**	1	SEAL-O-RING	
		1	**147-1446**	1	PLUG AS-CONNECTOR (70-PIN)	
		1	**159-9322**	1	SEAL-O-RING	
		1	**7N-9017**	1	TERMINAL-RING (18-GA TO 22-GA, NO. 10 SCREW)	
		1	**155-2255**	4	KIT-CONNECTING PLUG (12-PIN)	
		1	**155-2270**	11	KIT-CONNECTING PLUG (2-PIN)	
		1	**155-2274**	1	KIT-CONNECTING PLUG (6-PIN)	
		1	**174-0503**	1	KIT-CONNECTING PLUG (3-PIN)	
		1	**155-2260**	1	KIT-CONNECTING PLUG (3-PIN)	
					(EACH PLUG KIT CONTAINS PLUG AS, WEDGE & INTERFACE SEAL)	
		1	**160-7689**	1	PLUG AS-CONNECTOR (70-PIN)	
		1	**159-9322**	1	SEAL-O-RING	
		1	**214-4208**	1	RECEPTACLE AS-CONNECTOR (70-PIN)	
		1	**237-0227**	2	PLUG AS-CONNECTOR (3-PIN)	
					(EACH INCLUDES)	
		1	**264-7030**	1	SEAL-CONNECTOR	
	20	2	**288-5535**	1	BRACKET AS	
	21	2	**301-5180**	2	LINK AS	
					(EACH INCLUDES)	
		2	**6F-0612**	1	NUT-JAM (1/4-28-THD)	
		2	**8S-7048**	1	ROD END	
		2	**9L-3334**	1	NUT-PLATED (1/4-28-THD, LH)	
		2	**036-7232**	1	ROD END	
	22	1,2,3	**130-5300**	13	CLIP	
	23	1,3	**132-5789**	8	CLIP	
	24	3	**133-6934**	2	SPACER (11X20X25-MM THK)	
	25	3	**134-2540**	1	RESISTOR AS-CONNECTION (3-PIN)	
	26	1,2	**143-0273**	2	CLAMP	
	27	3	**3E-5169**	1	GUARD-SWITCH	
	28	3	**3J-1907**	1	SEAL-O-RING	
	29	3	**4D-7388**	1	CLIP	
	30	2,3	**4P-7581**	4	CLIP	
	31	3	**4S-1962**	5	CLIP	
	32	2	**4S-4455**	1	CLIP	
	33	1	**5K-3294**	1	CLIP	
	34	1,3	**5P-4116**	2	WASHER-HARD (8.8X20.5X2-MM THK)	
	35	2	**5P-4325**	1	CLIP	
	36	2	**5P-7470**	2	CLIP (SLOT)	
	37	2	**5P-7471**	2	CLIP (TAB)	
	38	2	**5P-7703**	2	GROMMET	
	39	2	**5P-9085**	1	CLIP	
	40	1	**5P-9297**	3	CLIP	
	41	1	**6D-4244**	1	CLIP	
	42	1,2,3	**7D-7233**	12	CLIP	
	43	2	**7G-7053**	1	GROMMET	
	44	1,2,3	**7K-1181**	22	STRAP-CABLE	
	45	1	**8M-2770**	1	CLIP	

260-1870 **WIRING GP-REAR** ***(contd.)*** **i04011772**

NOTE	REF NO	GRAPHIC REF	PART NUMBER	QTY	PART NAME 1 2 3 4 5 6 (PRODUCT LEVEL)	SEE PAGE
	46	1,2,3	**8T-4121**	49	WASHER-HARD (11X21X2.5-MM THK)	
M	47	3	**8T-4133**	1	NUT (M10X1.5-THD)	
M	48	1,2,3	**8T-4136**	12	BOLT (M10X1.5X25-MM)	
M	49	1,2,3	**8T-4137**	27	BOLT (M10X1.5X20-MM)	
M	50	2	**8T-4138**	6	BOLT (M6X1X20-MM)	
M	51	1	**8T-4179**	1	BOLT (M12X1.75X20-MM)	
M	52	1	**8T-4182**	1	BOLT (M10X1.5X45-MM)	
M	53	3	**8T-4185**	2	BOLT (M10X1.5X50-MM)	
M	54	1	**8T-4189**	1	BOLT (M8X1.25X20-MM)	
M	55	1,2,3	**8T-4191**	5	BOLT (M10X1.5X16-MM)	
M	56	1,3	**8T-4200**	2	BOLT (M8X1.25X16-MM)	
	57	2	**8T-4205**	2	WASHER-HARD (7.2X14.5X2-MM THK)	
	58	1	**8T-4223**	1	WASHER-HARD (13.5X25.5X3-MM THK)	
	59	1	**8T-4224**	1	WASHER-HARD (8.8X16X2-MM THK)	
BM	60	3	**8T-6912**	1	BOLT (M8X1.25X50-MM)	
	61	1	**9C-5344**	1	SPACER (10.5X20X18-MM THK)	
	62	3	**9X-7378**	2	SEAL-O-RING	
	63	2	**9X-8250**	1	CLIP	
	64	2	**9X-8256**	4	WASHER (6.6X12X2-MM THK)	

B-USE AS REQUIRED
C-CHANGE FROM PREVIOUS TYPE
E-ORDER BY THE CENTIMETER
M-METRIC PART
Y-SEPARATE ILLUSTRATION

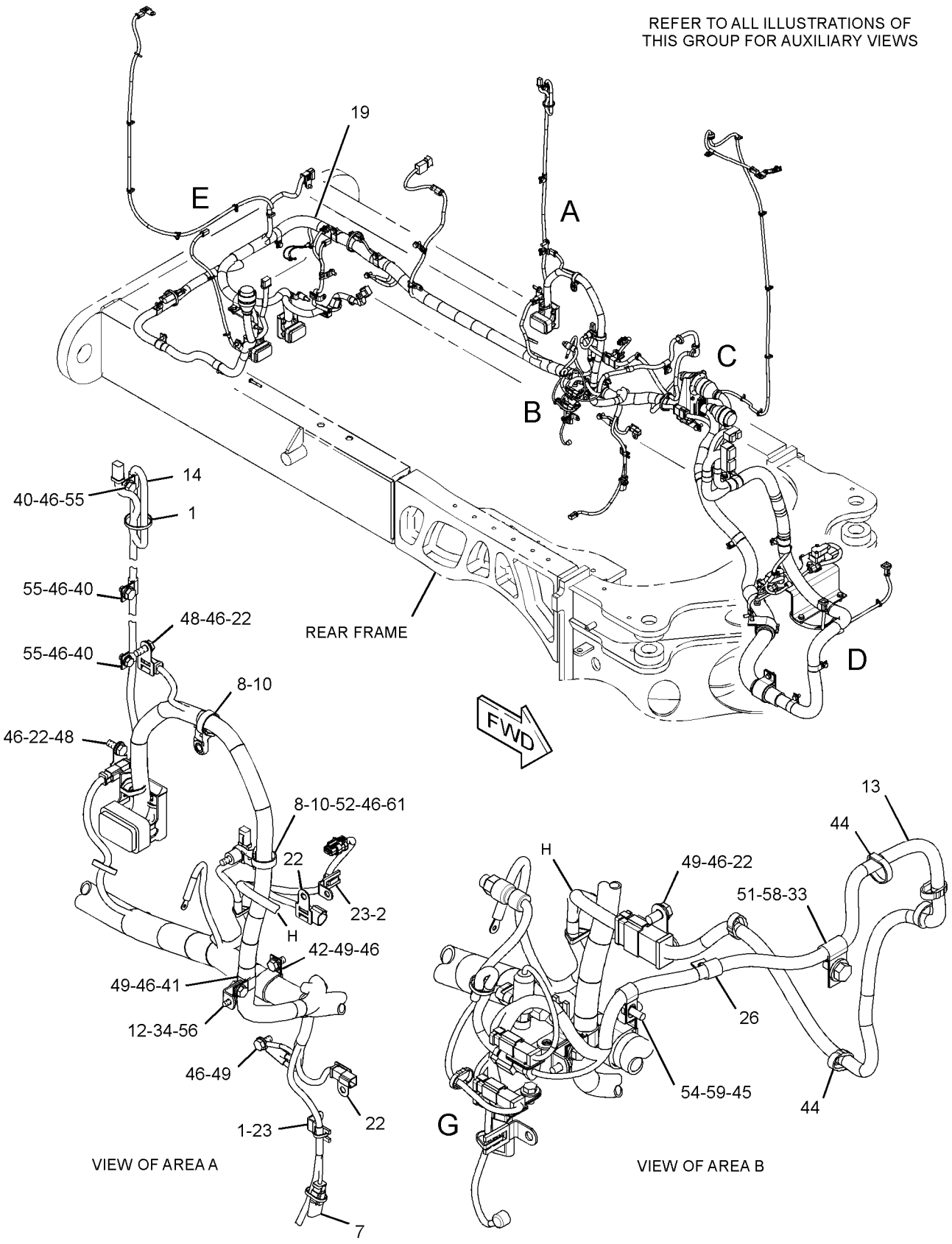

GRAPHIC #1 g02157924

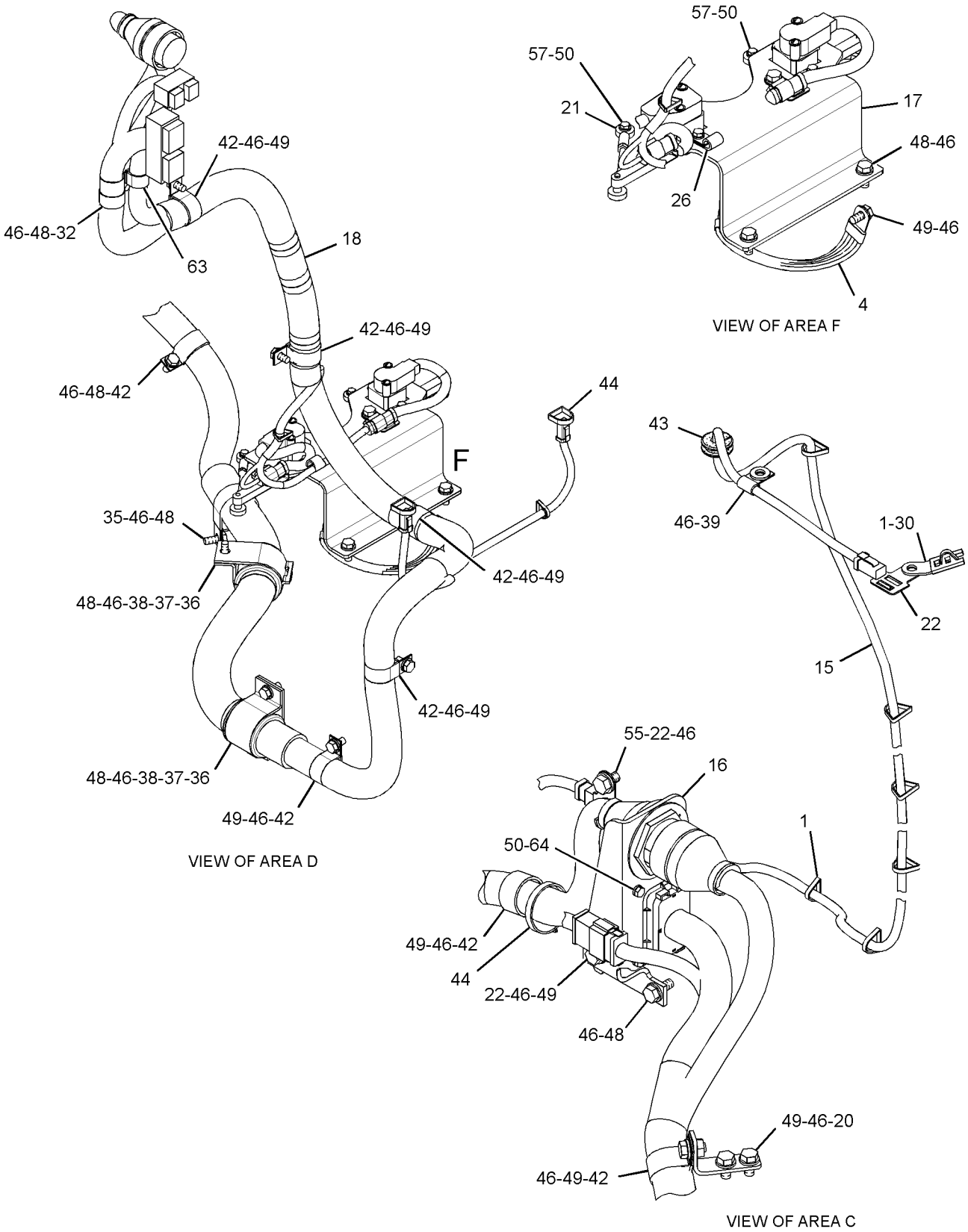

GRAPHIC #2

g01635534

260-1870 **WIRING GP-REAR** *(contd.)* **i04011772**

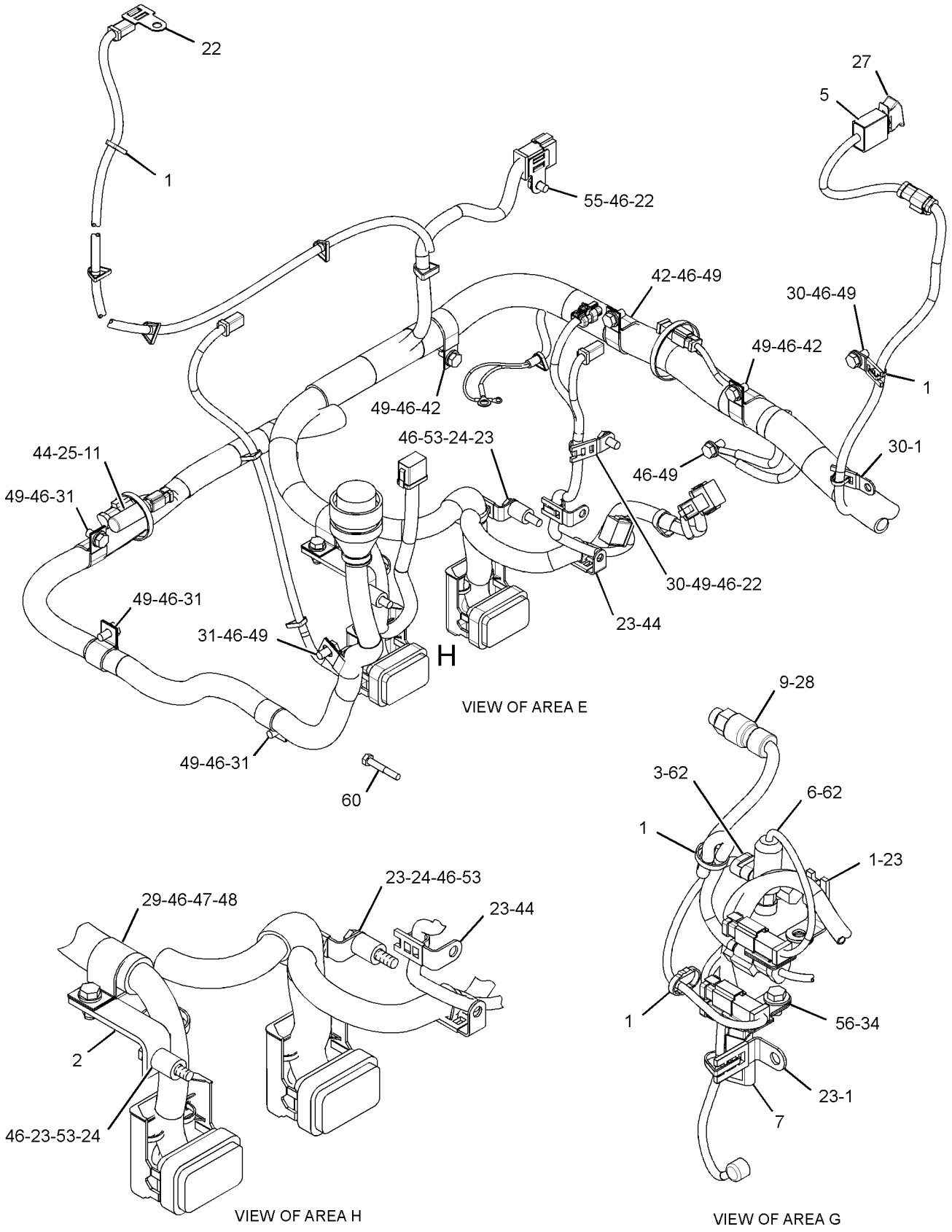

GRAPHIC #3 **<END>** g02157949

250-0902 WIRING GP-REAR LIGHTING–
STOP, TAIL, TURN, BACKUP
S/N: R9H1-UP
PART OF 298-0602, 298-0603 LIGHTING GP-ROADING
AN ATTACHMENT

SMCS-1408, 1429 **i03895570**

NOTE	REF NO	GRAPHIC REF	PART NUMBER	QTY	PART NAME 1 2 3 4 5 6 (PRODUCT LEVEL)	SEE PAGE
	1	1	**3S-2093**	21	STRAP-CABLE	
	2	1	**7X-2393**	4	BUMPER-CONICAL	
	3	1	**9S-1316**	2	SPRING	
CY	4	1	**334-8049**	2	LAMP GP-SIGNAL (12-VOLT, 24-VOLT, STOP, TAIL)	250
Y	5	1	**201-5464**	2	LAMP GP-SIGNAL (12-VOLT, 24-VOLT, TURN)	249
	6	1	**245-2810**	1	BRACKET AS (RH)	
	7	1	**245-2811**	1	BRACKET AS (LH)	
	8	1	**245-2812**	1	ARM AS (RH)	
		1	**5D-9629**	2	ROD	
	9	1	**245-2813**	1	ARM AS (LH)	
		1	**5D-9629**	3	ROD	
	10	1	**245-2814**	2	ROD	
Y	11	1	**261-1502**	2	LAMP GP (24-VOLT)	233
	12	1	**288-5514**	1	HARNESS AS-REAR LIGHTING	
		1	**102-8802**	4	KIT-RECEPTACLE (2-PIN)	
		1	**102-8803**	4	KIT-RECEPTACLE (3-PIN)	
					(EACH KIT INCLUDES RECEPTACLE AS & WEDGE)	
		1	**8T-8730**	14	SOCKET-CONNECTOR (16-GA TO 18-GA)	
		1	**8T-8737**	24	PLUG-SEAL	
		1	**9W-0844**	18	SOCKET-CONNECTOR (14-GA)	
E		1	**119-3662**		TUBE-HEAT SHRINK (10.85-MM DIA) (13-CM)	
E		1	**125-7875**		TUBE-HEAT SHRINK (7.44-MM DIA) (25-CM)	
		1	**155-2255**	1	KIT-CONNECTING PLUG (12-PIN)	
		1	**155-2260**	4	KIT-CONNECTING PLUG (3-PIN)	
		1	**155-2270**	6	KIT-CONNECTING PLUG (2-PIN)	
					(EACH KIT INCLUDES PLUG AS, WEDGE & INTERFACE SEAL)	
B	13	1	**292-9390**	2	FILM-WARNING (HAND CRUSH HAZARD, STAY BACK) (ENGLISH)	
B	14	1	**292-9391**	2	FILM-WARNING (HAND CRUSH HAZARD, STAY BACK) (ALL OTHER LANGUAGES EXCEPT ENG)	
	15	1	**117-9409**	2	GROMMET	
M	16	1	**129-3180**	2	LOCKNUT (M12X1.75-THD)	
	17	1	**3B-5301**	2	PIN-COTTER	
M	18	1	**5C-2890**	18	NUT (M6X1-THD)	
	20	1	**7X-7729**	4	WASHER (11X25X3-MM THK)	
M	21	1	**8T-4136**	4	BOLT (M10X1.5X25-MM)	
M	22	1	**8T-4176**	2	BOLT (M12X1.75X90-MM)	
	23	1	**8T-4205**	18	WASHER-HARD (7.2X14.5X2-MM THK)	
	24	1	**8T-4223**	6	WASHER-HARD (13.5X25.5X3-MM THK)	
	25	1	**132-0338**	8	WASHER-PLASTIC (13X31.7X0.8-MM THK)	

B-USE AS REQUIRED
C-CHANGE FROM PREVIOUS TYPE
E-ORDER BY THE CENTIMETER
M-METRIC PART
Y-SEPARATE ILLUSTRATION

250-0902 **WIRING GP-REAR LIGHTING** *(contd.)* **i03895570**

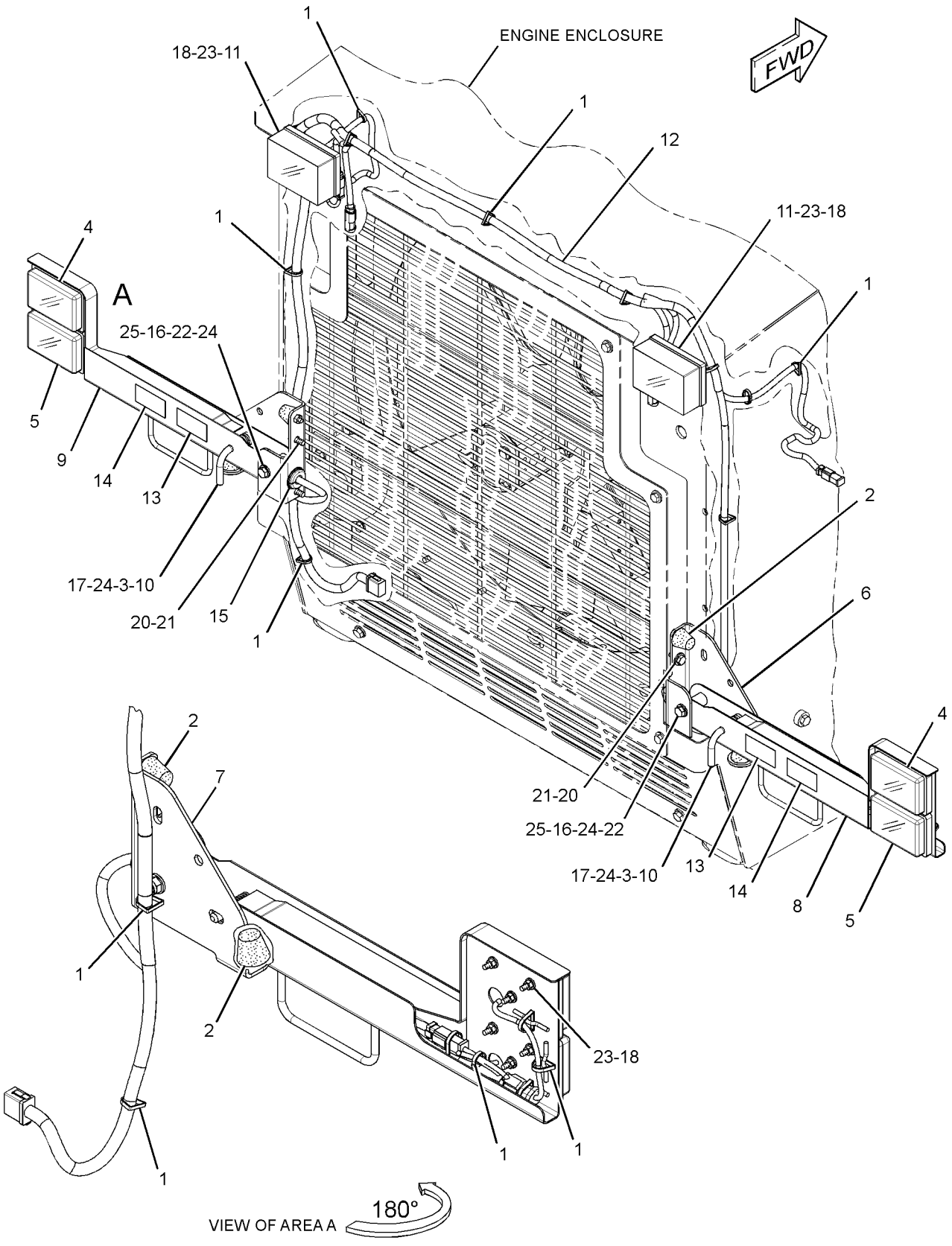

GRAPHIC #1 **<END>** g02182175

257-8028 WIRING GP-REAR LIGHTING

S/N: R9H1-UP

CANNOT BE USED WITH 250-0902—PAGE 389

AN ATTACHMENT

SMCS-1408, 1429 **i03631903**

NOTE	REF NO	GRAPHIC REF	PART NUMBER	QTY	PART NAME 1 2 3 4 5 6 (PRODUCT LEVEL)	SEE PAGE
	1	1	**3S-2093**	20	STRAP-CABLE	
CY	2	1	**334-8049**	2	LAMP GP-SIGNAL (12-VOLT, 24-VOLT, STOP, TAIL)	250
	3	1	**236-1928**	1	BRACKET AS	
	4	1	**239-6379**	1	BRACKET AS	
Y	5	1	**261-1502**	2	LAMP GP (24-VOLT)	233
	6	1	**288-5514**	1	HARNESS AS-REAR LIGHTING	
		1	**102-8802**	4	KIT-RECEPTACLE (2-PIN)	
		1	**102-8803**	4	KIT-RECEPTACLE (3-PIN)	
					(EACH KIT INCLUDES RECEPTACLE AS & WEDGE)	
		1	**8T-8730**	14	SOCKET-CONNECTOR (16-GA TO 18-GA)	
		1	**8T-8737**	24	PLUG-SEAL	
		1	**9W-0844**	18	SOCKET-CONNECTOR (14-GA)	
E		1	**119-3662**		TUBE-HEAT SHRINK (10.85-MM DIA) (13-CM)	
E		1	**125-7875**		TUBE-HEAT SHRINK (7.44-MM DIA) (25-CM)	
		1	**155-2255**	1	KIT-CONNECTING PLUG (12-PIN)	
		1	**155-2260**	4	KIT-CONNECTING PLUG (3-PIN)	
		1	**155-2270**	6	KIT-CONNECTING PLUG (2-PIN)	
					(EACH KIT INCLUDES PLUG AS, WEDGE, & INTERFACE SEAL)	
	7	1	**4P-7581**	1	CLIP	
M	8	1	**5C-2890**	12	NUT (M6X1-THD)	
M	9	1	**5C-7261**	1	NUT (M8X1.25-THD)	
	10	1	**7K-1181**	1	STRAP-CABLE	
	11	1	**8T-4121**	6	WASHER-HARD (11X21X2.5-MM THK)	
M	12	1	**8T-4172**	6	BOLT (M10X1.5X80-MM)	
	13	1	**8T-4205**	12	WASHER-HARD (7.2X14.5X2-MM THK)	
	14	1	**8T-4224**	1	WASHER-HARD (8.8X16X2-MM THK)	

C-CHANGE FROM PREVIOUS TYPE
E-ORDER BY THE CENTIMETER
M-METRIC PART
Y-SEPARATE ILLUSTRATION

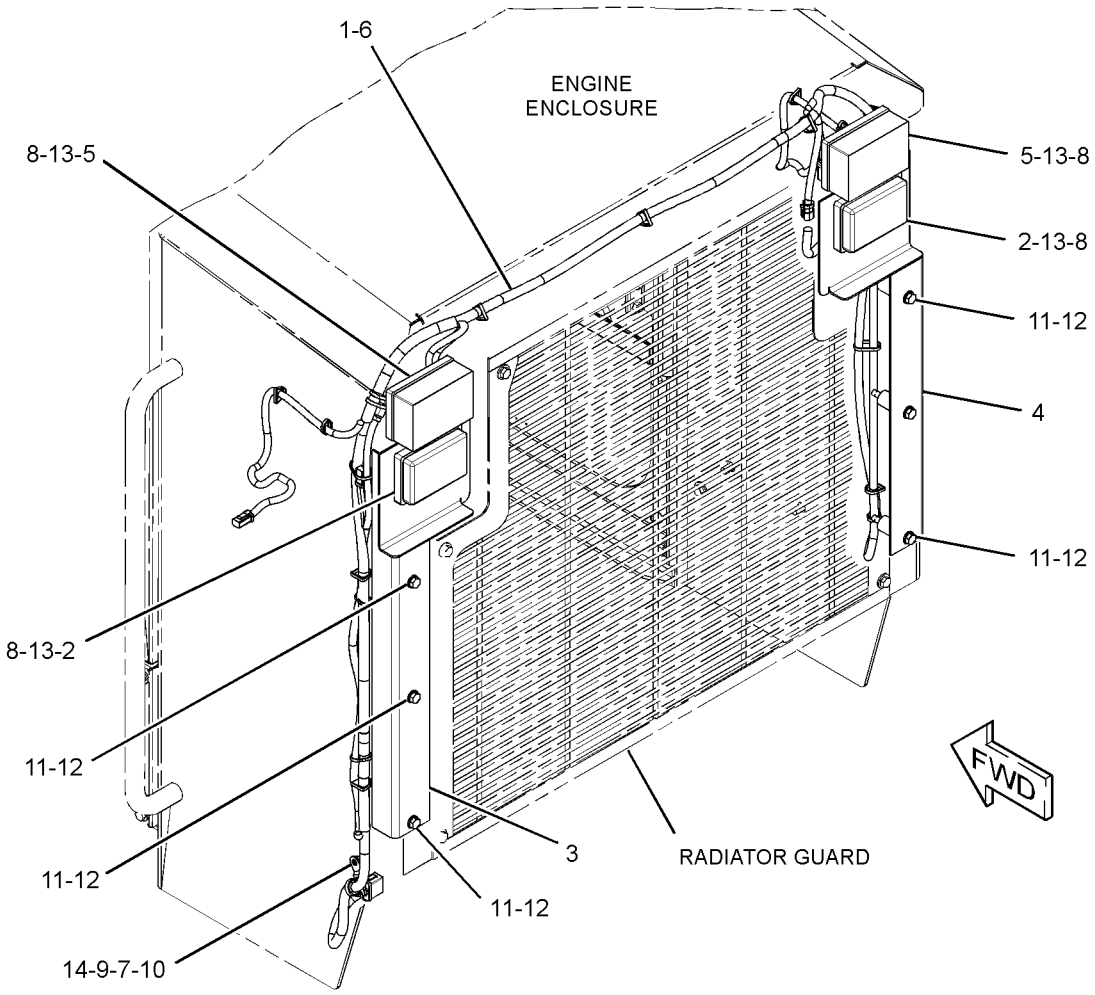

GRAPHIC #1 **<END>** g01336361

260-1872 WIRING GP-SECONDARY STEERING

S/N: R9H1-UP

PART OF 349-2556 COMMON AR

SMCS-1408, 4334 **i02610177**

NOTE	REF NO	GRAPHIC REF	PART NUMBER	QTY	PART NAME 1 2 3 4 5 6 (PRODUCT LEVEL)	SEE PAGE
	1	1	**2G-8767**	2	WASHER (10.5X60X3-MM THK)	
	2	1	**3S-2093**	13	STRAP-CABLE	
	3	1	**6G-2256**	1	CLAMP	
	4	1	**6G-2263**	1	SPACER (10.5X19X28.5-MM THK)	
	5	1	**9X-9365**	1	BRACKET	
	6	1	**189-3158**	1	SUPPRESSOR-ARC	
	7	1	**268-6609**	1	CABLE AS	
		1	**1S-7252**	2	TERMINAL-CABLE (00-GA, 3/8-IN SCREW)	
		1	**6V-2722**	1	TUBE-HEAT SHRINK	
E		1	**5P-0747**		CABLE (00-GA, BLACK) (28-CM)	
		1	**9G-8909**	2	COVER-TERMINAL (BLACK)	
	8	1	**283-5827**	1	CABLE AS	
		1	**1S-7252**	1	TERMINAL-CABLE (00-GA, 3/8-IN SCREW)	
		1	**8T-8827**	1	BOOT (RED)	
E		1	**159-8049**		CABLE (00-GA, RED) (343-CM)	
	9	1	**283-5828**	1	CABLE AS	
		1	**1S-7252**	2	TERMINAL-CABLE (00-GA, 3/8-IN SCREW)	
		1	**8T-8827**	2	BOOT (RED)	
E		1	**159-8049**		CABLE (00-GA, RED) (39-CM)	
	10	1	**288-5512**	1	HARNESS AS-PUMP	
		1	**155-2270**	2	KIT-CONNECTING PLUG (2-PIN)	
					(EACH INCLUDES PLUG AS, WEDGE, & INTERFACE SEAL)	
Y	11	1	**179-0006**	1	SWITCH GP-MAGNETIC (24-VOLT TO 32-VOLT) (HYD TANK FILL PUMP/MOTOR RELAY)	329
	12	1	**245-8842**	1	CLIP	
M	13	1	**5C-9553**	4	BOLT (M6X1X16-MM)	
	14	1	**7K-1181**	1	STRAP-CABLE	
	15	1	**8T-4121**	10	WASHER-HARD (11X21X2.5-MM THK)	
M	16	1	**8T-4133**	1	NUT (M10X1.5-THD)	
M	17	1	**8T-4136**	2	BOLT (M10X1.5X25-MM)	
M	18	1	**8T-4137**	6	BOLT (M10X1.5X20-MM)	
M	19	1	**8T-4185**	1	BOLT (M10X1.5X50-MM)	
	20	1	**9M-8406**	8	CLIP	
	21	1	**9X-8256**	4	WASHER (6.6X12X2-MM THK)	

E-ORDER BY THE CENTIMETER
M-METRIC PART
Y-SEPARATE ILLUSTRATION

260-1872 **WIRING GP-SECONDARY STEERING** *(contd.)* **i02610177**

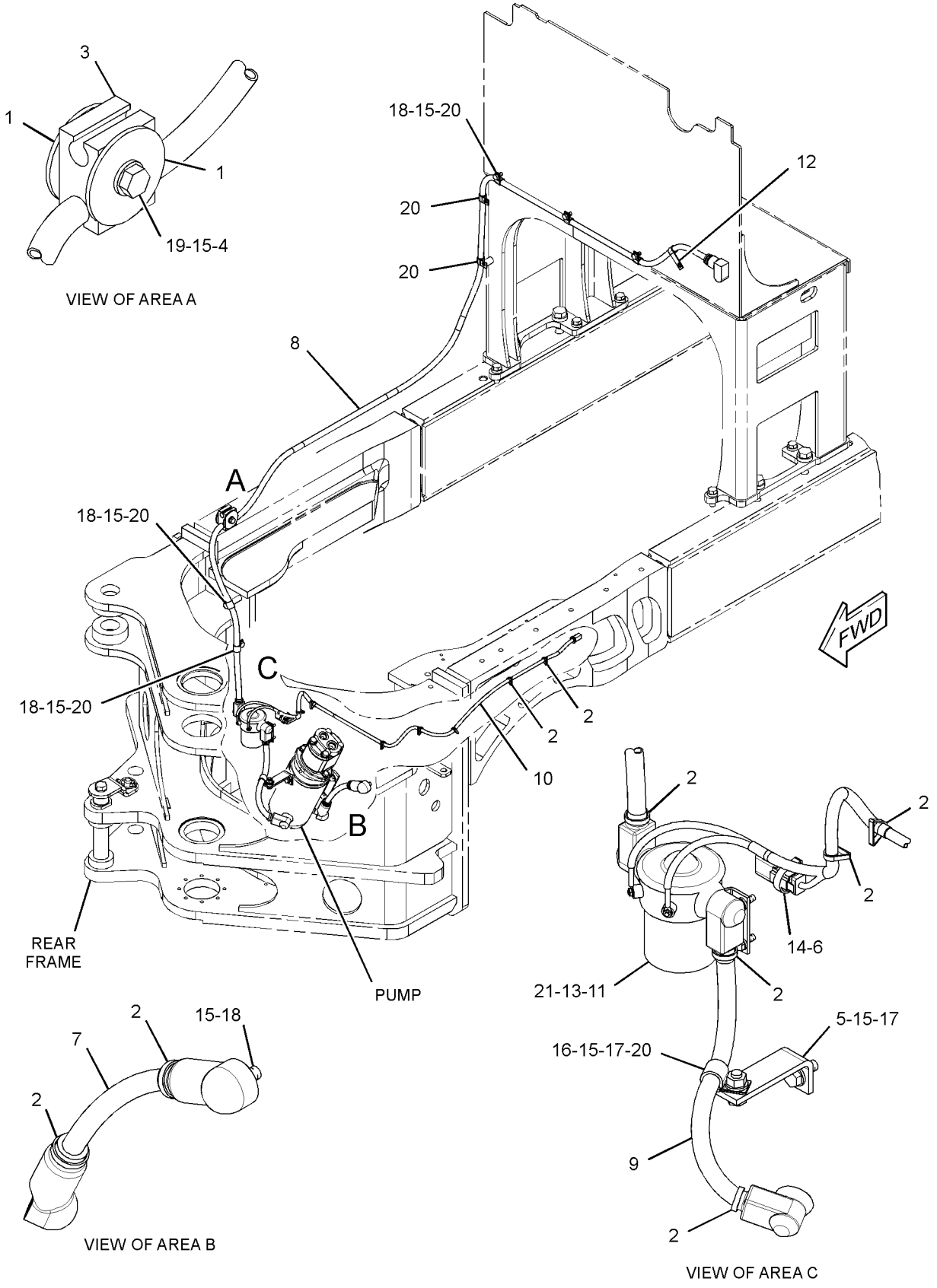

GRAPHIC #1 **<END>** g01326243

250-0900 WIRING GP-SENSOR—VARIABLE BLADE FLOAT

S/N: R9H1-UP

PART OF 271-3652, 366-3375 FLOAT AR-BLADE

AN ATTACHMENT

SMCS-1408 **i02619925**

NOTE	REF NO	GRAPHIC REF	PART NUMBER	QTY	PART NAME 1 2 3 4 5 6 (PRODUCT LEVEL)	SEE PAGE
	1	1	**133-6934**	1	SPACER (11X20X25-MM THK)	
	2	1	**260-1884**	1	HARNESS AS-SOLENOID	
		1	**102-8805**	1	KIT-RECEPTACLE (6-PIN)	
					(INCLUDES RECEPTACLE AS & WEDGE)	
		1	**155-2270**	4	KIT-CONNECTING PLUG (2-PIN)	
					(EACH INCLUDES PLUG AS, WEDGE, & INTERFACE SEAL)	
	3	1	**4P-7581**	1	CLIP	
	4	1	**4P-8134**	4	CLIP	
	5	1	**7K-1181**	13	STRAP-CABLE	
	6	1	**8T-4121**	2	WASHER-HARD (11X21X2.5-MM THK)	
M	7	1	**8T-4137**	1	BOLT (M10X1.5X20-MM)	
M	8	1	**8T-4182**	1	BOLT (M10X1.5X45-MM)	

M-METRIC PART

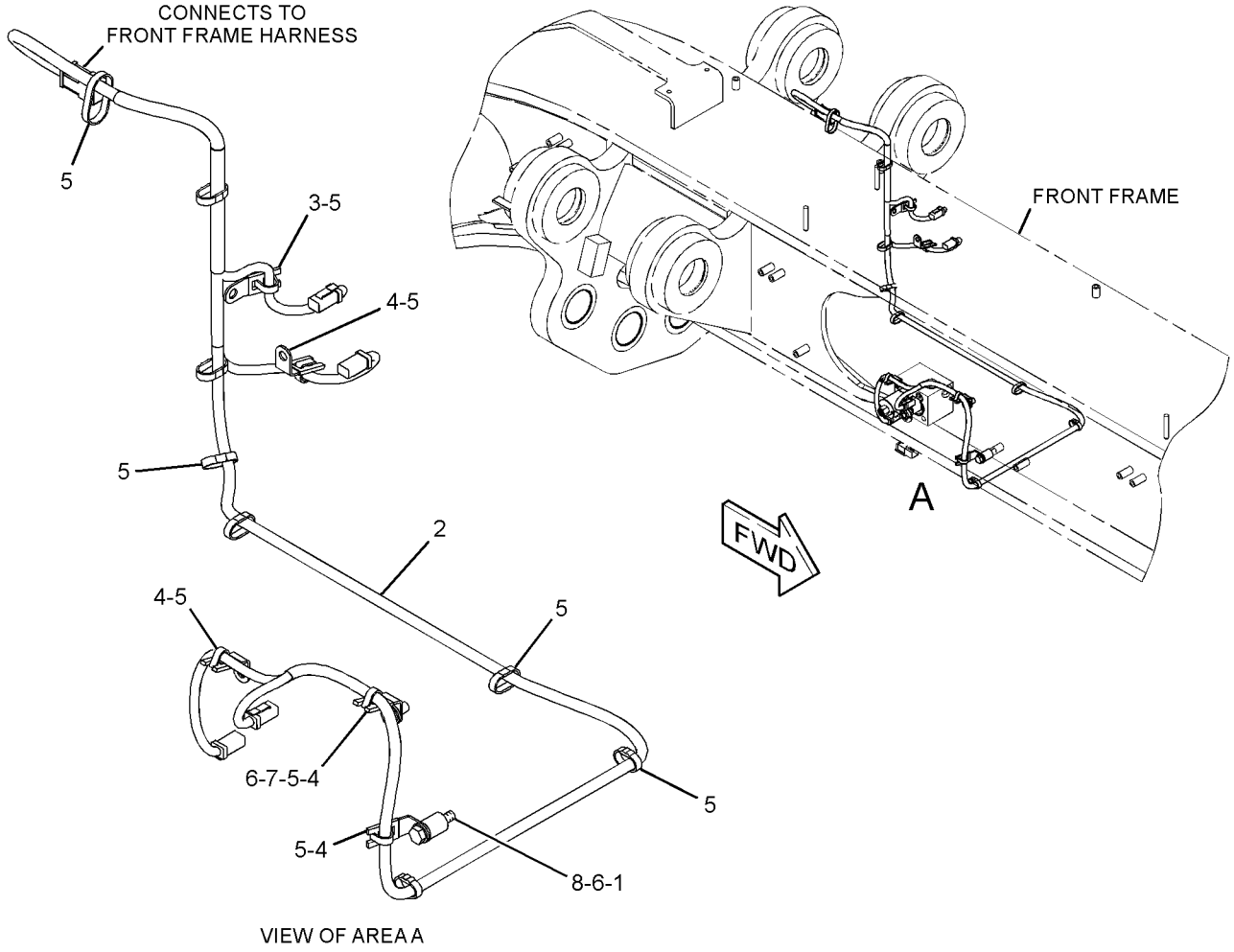

GRAPHIC #1 **<END>** g01316605

230-0961 WIRING GP-UNIT INJECTOR

S/N: MHX1214-UP

PART OF 267-0009, 286-5804, 301-2265 ENGINE AR-CORE AN ATTACHMENT

SMCS-1408 **i03574019**

NOTE	REF NO	GRAPHIC REF	PART NUMBER	QTY	PART NAME 1 2 3 4 5 6 (PRODUCT LEVEL)	SEE PAGE
	1	1	**3S-2093**	1	STRAP-CABLE	
	2	1	**7E-6508**	6	CAP AS	
	3	1	**230-0960**	1	HARNESS AS-ENGINE (UNIT INJECTOR)	
		1	**172-6063**	1	RECEPTACLE AS	
		1	**3S-2093**	2	STRAP-CABLE	
		1	**103-8133**	1	KIT-RECEPTACLE (12-PIN)	
					(INCLUDES A RECEPTACLE AS & WEDGE)	
	4	1	**237-9960**	1	CLIP	
	5	1	**4P-8525**	4	SPACER (9X16X30-MM THK)	
	6	1	**2V-3216**	4	CLIP	
	7	1	**5P-0537**	7	WASHER-HARD (7.2X14.5X2-MM THK)	
M	8	1	**6V-7728**	4	BOLT (M6X1X45-MM)	
M	9	1	**6V-8214**	2	BOLT (M6X1X20-MM)	
M	10	1	**6V-8836**	1	BOLT (M6X1X14-MM)	

M-METRIC PART

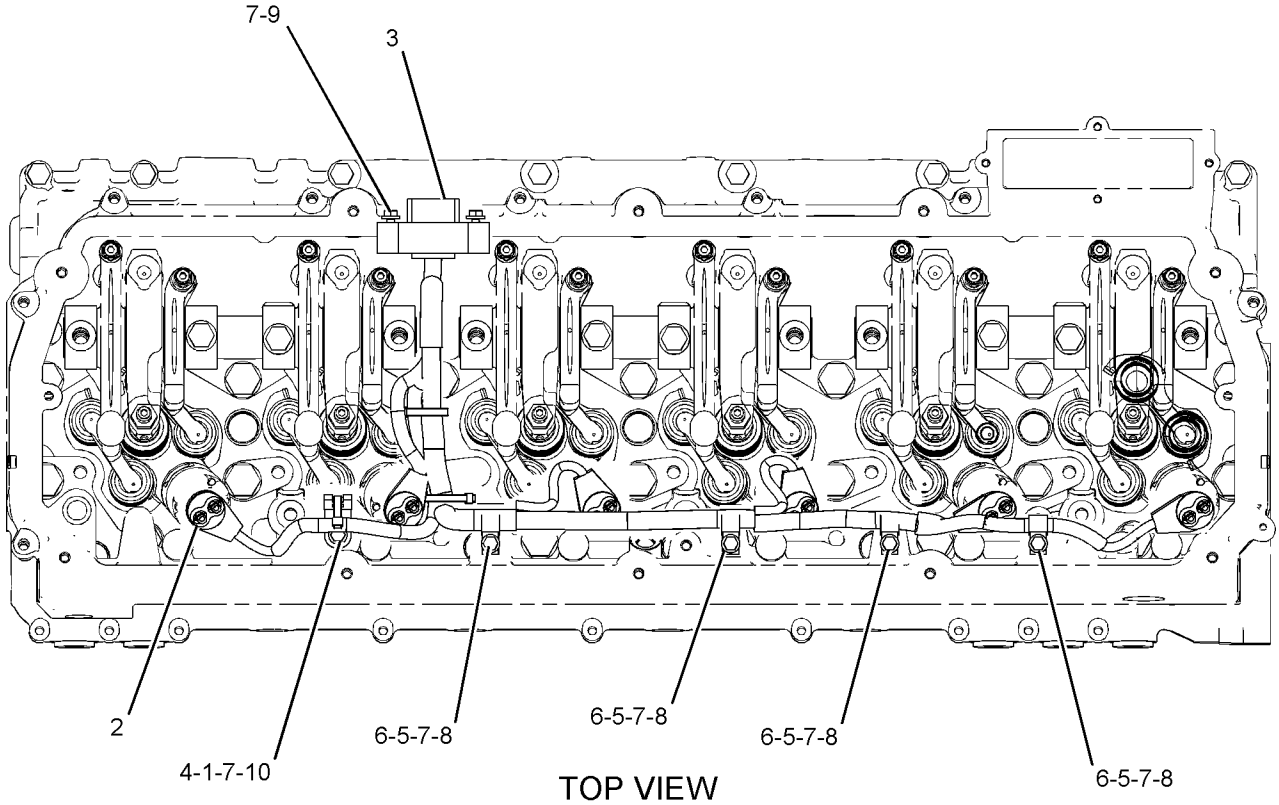

TOP VIEW

GRAPHIC #1

<END>

g01064811

257-4183 WIRING GP-UNIT INJECTOR

S/N: R9H1-UP

FOR USE AS SERVICE REPAIR FOR INJECTOR HARNESSES WITH THE 7E-6513 CONNECTOR

FIELD INSTALLATION

SMCS-1408 **i03691128**

NOTE	REF NO	GRAPHIC REF	PART NUMBER	QTY	PART NAME 1 2 3 4 5 6 (PRODUCT LEVEL)	SEE PAGE
					(NO SERVICED PARTS)	

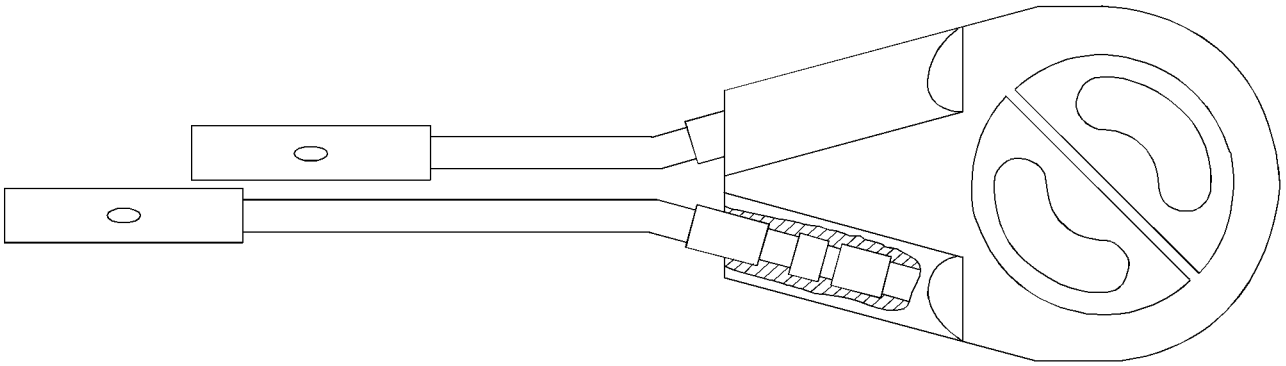

GRAPHIC #1 **<END>** g01986713

267-3088 WIRING GP-UNIT INJECTOR

S/N: MHX1304-UP
PART OF 231-0877, 359-0362 ENGINE AR-CORE
ALSO AN ATTACHMENT

SMCS-1408 **i02397002**

NOTE	REF NO	GRAPHIC REF	PART NUMBER	QTY	PART NAME 1 2 3 4 5 6 (PRODUCT LEVEL)	SEE PAGE
	1	1	**3S-2093**	1	STRAP-CABLE	
	2	1	**7E-6508**	6	CAP AS	
	3	1	**237-9960**	1	CLIP	
	4	1	**267-3089**	1	HARNESS AS-WIRING	
		1	**3E-5180**	1	WEDGE-RECEPTACLE LOCK (12-PIN)	
		1	**3E-7990**	1	RECEPTACLE AS-CONNECTOR (12-PIN)	
		1	**3S-2093**	4	STRAP-CABLE	
		1	**241-5682**	9	CLIP	
	5	1	**117-1802**	4	DOWEL-HOLLOW	
	6	1	**2V-3216**	4	CLIP	
	7	1	**5P-0537**	7	WASHER-HARD (7.2X14.5X2-MM THK)	
M	8	1	**6V-7728**	4	BOLT (M6X1X45-MM)	
M	9	1	**6V-8214**	2	BOLT (M6X1X20-MM)	
M	10	1	**6V-8836**	1	BOLT (M6X1X14-MM)	

M-METRIC PART

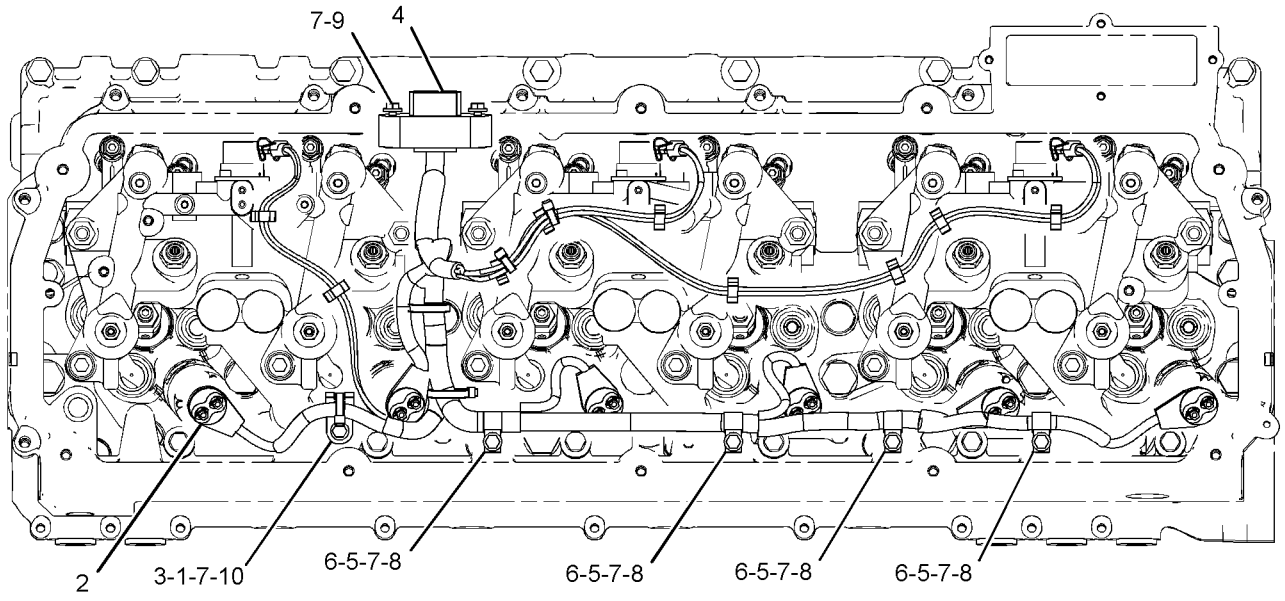

TOP VIEW

GRAPHIC #1 **<END>** g01199793

251-2006 AUTOSHIFT AR

S/N: R9H1-UP
PART OF 352-3817 SNOW AR-MOTOR GRADER
AN ATTACHMENT

SMCS-3168 **i02377185**

NOTE	PART NUMBER	QTY	PART NAME 1 2 3 4 5 6 (PRODUCT LEVEL)	SEE PAGE
Y	*238-8824*	1	SWITCH GP-ROCKER (AUTOSHIFT)	335
	214-2470	1	CONFIGURATION-PREMIUM	
			(DLR INSTALL CONFIG: SEE IRM: EES03-01)	

Y-SEPARATE ILLUSTRATION

<END>

POWER TRAIN

284-5026 AXLE GP-REAR

S/N: R9H1-UP

PART OF 349-5188 POWER TRAIN AR

SMCS-3278, 3282, 4068 **i02857614**

NOTE	REF NO	GRAPHIC REF	PART NUMBER	QTY	PART NAME 1 2 3 4 5 6 (PRODUCT LEVEL)	SEE PAGE
	1	1	**215-9665**	1	SHIM PACK (INCLUDES 12-SHIMS)	
B	2	1	**215-9666**	1	SHIM PACK (INCLUDES 11-SHIMS)	
	3	1	**224-2323**	1	BEARING-THRUST	
	4	1	**248-0833**	1	DRAIN GP-ECOLOGY (REAR AXLE)	
		1	**259-7138**	1	PLUG	
		1	**3S-9233**	1	SEAL-O-RING	
		1	**5L-4759**	1	SEAL-O-RING	
Y	5	1	*250-8204*	1	GEAR GP-BEVEL & PINION	440
M	6	1	**266-4616**	54	STUD (M20X2.5X240-MM)	
	7	1	**309-3888**	2	GEAR-SUN	
	8	1	**273-8664**	1	PISTON	
	9	1	**273-8666**	1	SEAL-D-RING	
	10	1	**273-8667**	1	SEAL-D-RING	
	11	1	**317-1009**	2	WASHER (18X35X8-MM THK)	
	12	1	**280-4438**	2	PLUG	
Y	13	1	**284-5028**	1	DRIVE GP-FINAL (RH)	433
Y	14	1	**284-5030**	1	DRIVE GP-FINAL (LH)	435
	15	1	**285-2074**	1	TUBE AS	
	16	1	**287-8265**	1	HOUSING AS	
		1	**5P-8245**	4	WASHER-HARD (13.5X25.5X3-MM THK)	
M		1	**8T-3957**	4	BOLT-SOCKET HEAD (M12X1.75X30-MM)	
M		1	**160-8749**	4	BOLT (M12X1.75X60-MM)	
	17	1	**288-5962**	2	SHAFT-AXLE	
	18	1	**290-2544**	6	DOWEL	
	19	1	**290-4050**	1	TUBE AS	
	20	1	*148-8369*	1	ELBOW AS	
		1	**6V-8628**	1	ELBOW	
		1	**3J-7354**	1	SEAL-O-RING	
		1	**4J-5477**	1	SEAL-O-RING	
	21	1	**198-4769**	54	WASHER (22X40X10-MM THK)	
	22	1	**215-8209**	1	BEARING-SPECIAL RACE	
	23	1	**2D-0591**	2	RING-RETAINING	
	24	1	**3H-4192**	2	RING-RETAINING	
	25	1	**4J-5351**	2	SEAL-O-RING	
	26	1	**4K-1388**	2	SEAL-O-RING	
	27	1	**4K-6804**	1	SEAL-O-RING	
M	28	1	**6V-3532**	8	BOLT (M20X2.5X60-MM)	
M	29	1	**6V-7742**	54	NUT-FULL (M20X2.5-THD)	
	30	1	**6V-8397**	2	SEAL-O-RING	
	31	1	**6V-9168**	2	NUT (11/16-16-THD)	
	32	1	**7M-8485**	1	SEAL-O-RING	
M	33	1	**8T-0088**	8	BOLT (M16X2X65-MM)	
	34	1	**8T-3282**	8	WASHER-HARD (22X35X3.5-MM THK)	
	35	1	**9X-8268**	8	WASHER (17.5X30X3.5-MM THK)	

B-USE AS REQUIRED
M-METRIC PART
Y-SEPARATE ILLUSTRATION

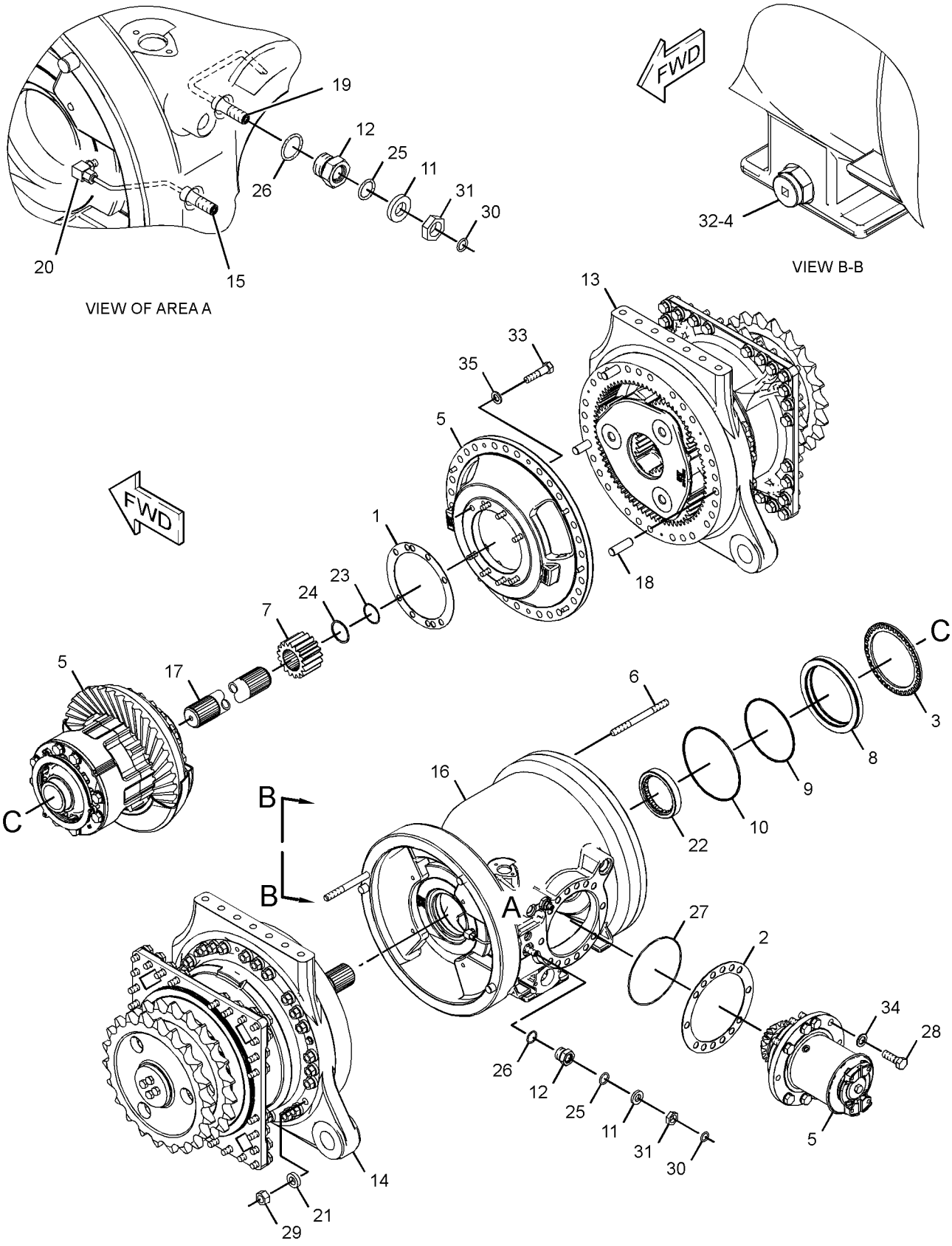

GRAPHIC #1 **<END>** g01318179

333-9310 BASE GP-OIL FILTER—POWER TRAIN

S/N: R9H1-UP; DZM1601-UP

PART OF 333-6432 FILTER GP-OIL

SMCS-3004, 3067 **i03607279**

NOTE	REF NO	GRAPHIC REF	PART NUMBER	QTY	PART NAME 1 2 3 4 5 6 (PRODUCT LEVEL)	SEE PAGE
	1	1	**3T-9549**	1	ADAPTER	
	2	1	**7G-4998**	1	SPOOL-BYPASS	
Y	3	1	**164-7577**	1	SWITCH GP-BYPASS (POWER TRAIN OIL FILTER)	322
	4	1	**334-2679**	1	SPRING	
	5	1	**334-2680**	1	SPRING	
	6	1	**5P-7815**	1	SEAL-O-RING	
	7	1	**5P-7701**	1	SEAL-O-RING	
	8	1	**9S-9334**	1	PLUG-O-RING	

Y-SEPARATE ILLUSTRATION

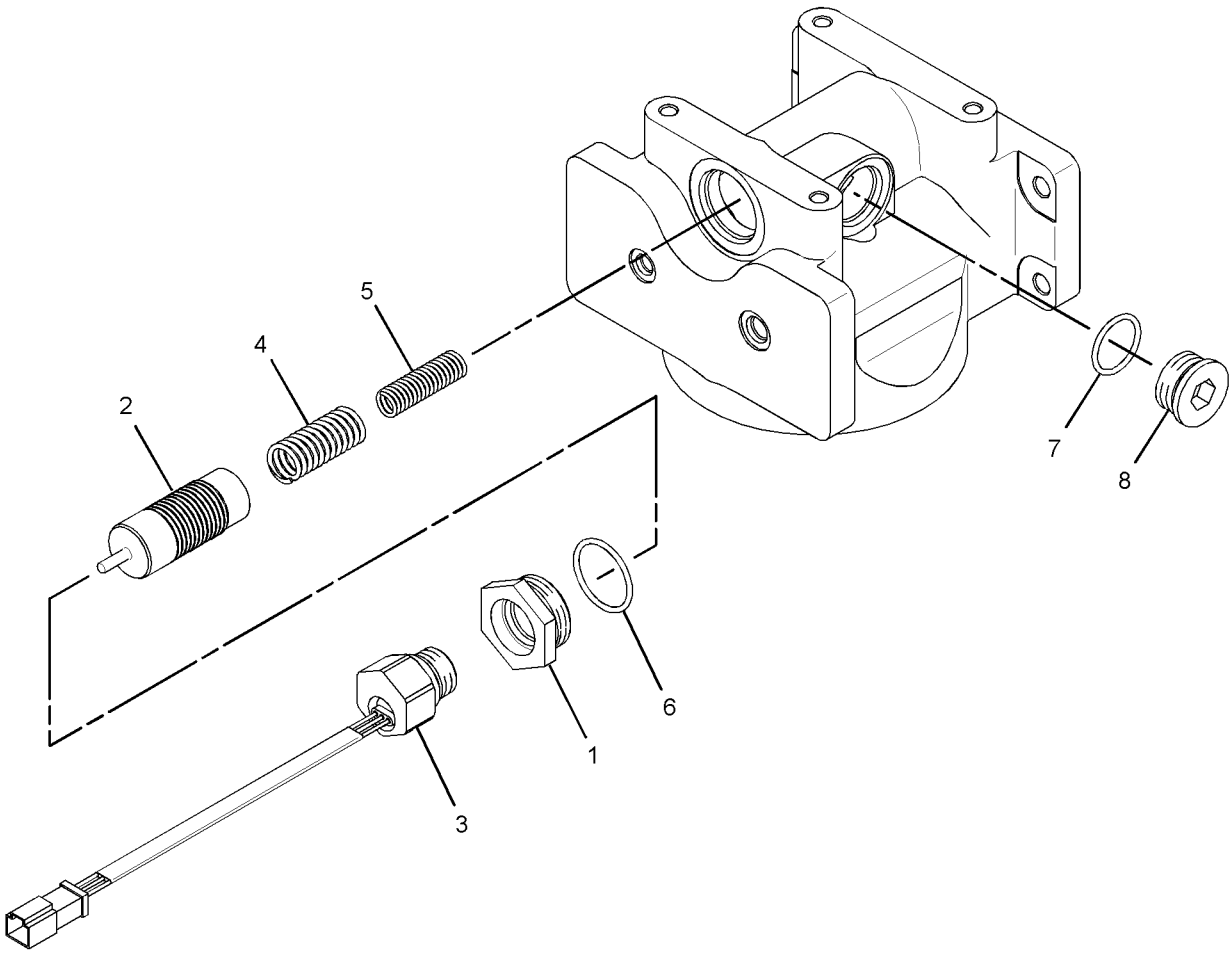

GRAPHIC #1 **<END>** g01721773

272-8011 CARRIER GP-FINAL DRIVE

S/N: R9H1-UP

PART OF 284-5028, 284-5030 DRIVE GP-FINAL

SMCS-4050 **i02638880**

NOTE	REF NO	GRAPHIC REF	PART NUMBER	QTY	PART NAME 1 2 3 4 5 6 (PRODUCT LEVEL)	SEE PAGE
	1	1	**2D-6516**	6	BEARING AS-ROLLER	
	2	1	**264-8231**	1	CARRIER	
	3	1	**269-5767**	3	SHAFT	
	4	1	**269-8417**	3	GEAR-PLANETARY (29-TEETH)	
	5	1	**272-4978**	3	SPACER (111.07X89X2.56-MM THK)	
	6	1	**273-2457**	3	RETAINER	
	7	1	**3E-4353**	6	WASHER-HARD (11X25X3-MM THK)	
M	8	1	**6V-7732**	6	BOLT (M10X1.5X25-MM)	
	9	1	**8X-8378**	6	WASHER (85.32X131.80X2.92-MM THK)	

M-METRIC PART

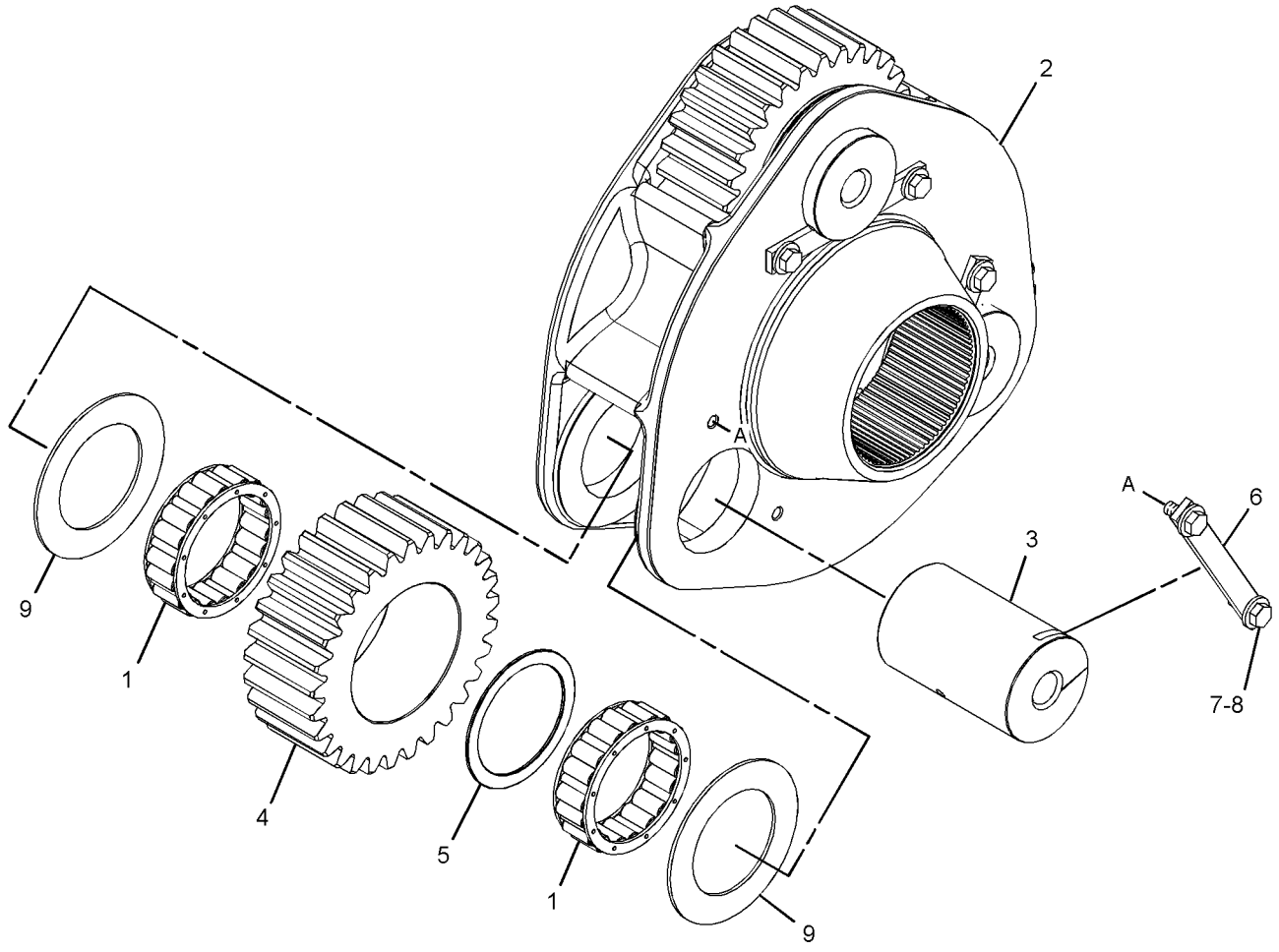

GRAPHIC #1 **<END>** g01323840

POWER TRAIN

253-8429 CASE & PARTS GP-TRANSMISSION

S/N: DZM1-UP

PART OF 253-8407 TRANSMISSION AR

SMCS-3064 **i03747920**

NOTE	REF NO	GRAPHIC REF	PART NUMBER	QTY	PART NAME 1 2 3 4 5 6 (PRODUCT LEVEL)	SEE PAGE
	1	1	**250-0951**	1	RACE-BEARING (OUTER)	
	2	1	**250-0953**	1	RACE-BEARING (OUTER)	
	3	1	**1T-0043**	1	BALL BEARING	
	4	1	**2H-6489**	1	RACE-BEARING OUTER	
	5	1	**2S-3029**	1	BALL BEARING	
	6	1	**5P-2304**	2	RACE & ROLLER AS (OUTER)	
	7	1	**6K-4718**	1	BEARING (OUTER)	
	8	1	**8E-5157**	4	RACE-BEARING OUTER	
	9	1	**1T-0205**	1	RING-SNAP	
	10	1	**8T-0707**	1	RING-RETAINING (INTERNAL)	
	12	1	**6V-0852**	1	CAP-DUST	
	13	1	**6V-1720**	1	PLATE-SERIAL NUMBER (TRANSMISSION)	
	14	1	**9W-1454**	4	COVER	
	15	1	**9W-6465**	1	RETAINER-BEARING	
	16	1	**9W-7038**	1	RING-SNAP	
	17	1	**145-8039**	3	LOCK	
	18	1	**188-2162**	1	COVER	
	19	1	**197-4977**	1	PLUG AS	
		1	**5P-4483**	1	PLUG-O-RING	
		1	**7M-8485**		SEAL-O-RING	
	20	1	**233-8134**	1	GEAR AS (44-TEETH)	
		1	**4K-8603**	1	PLUG-CUP	
	21	1	**251-6673**	1	FILTER-MAGNETIC (TRANSMISSION SUMP)	
	22	1	**251-6674**	1	SCREEN-SUCTION (TRANSMISSION SUMP)	
	23	1	**253-5303**	1	GUARD	
	24	1	**253-5322**	1	GUARD	
	25	1	**284-2421**	1	COVER AS-TRANSMISSION	
		1	**7T-6496**	1	PLUG	
		1	**5M-7937**	2	DOWEL	
	26	1	**347-8616**	1	CASE AS-TRANSMISSION	
		1	**6Y-3083**	6	PLUG	
		1	**7T-6496**	2	PLUG	
		1	**8M-6521**	2	DOWEL	
	27	1	**290-3263**	1	PLATE	
	28	1	**345-1999**	1	PLATE AS	
	29	1	**299-8905**	1	PLATE AS	
	30	1	**306-4148**	1	GEAR (38-TEETH)	
	31	1	*148-8309*	1	ADAPTER AS	
		1	**2P-8421**	1	ADAPTER-O-RING	
		1	**3D-2824**	1	SEAL-O-RING	
	32	1	*148-8406*	6	PLUG AS	
					(EACH INCLUDES)	
		1	**9S-9334**	1	PLUG-O-RING	
		1	**7M-8485**	1	SEAL-O-RING	
	33	1	*148-8409*	6	PLUG AS	
					(EACH INCLUDES)	
		1	**9S-8008**	1	PLUG-O-RING	
		1	**3D-2824**	1	SEAL-O-RING	
M	34	1	**160-8492**	1	BOLT (M10X1.5X85-MM)	
	35	1	*164-5567*	1	COUPLER AS-QUICK DISCONNECT (MALE)	
		1	**6V-3965**	1	FITTING (QUICK DISCONNECT)	
		1	**3J-1907**	1	SEAL-O-RING	
	36	1	*164-5619*	5	PLUG AS	
					(EACH INCLUDES)	
		1	**9S-8006**	1	PLUG-O-RING	
		1	**2M-9780**	1	SEAL-O-RING	

253-8429 **CASE & PARTS GP-TRANSMISSION** *(contd.)* **i03747920**

NOTE	REF NO	GRAPHIC REF	PART NUMBER	QTY	PART NAME 1 2 3 4 5 6 (PRODUCT LEVEL)	SEE PAGE
	37	1	*183-7262*	2	PLUG AS	
					(EACH INCLUDES)	
		1	**9S-8010**	1	PLUG	
		1	**2S-4078**	1	SEAL-O-RING	
	38	1	**1B-5170**	1	PLUG-PIPE	
	39	1	**263-7429**	1	TUBE AS	
	40	1	**3K-0715**	1	SEAL-O-RING	
	41	1	**4J-8996**	1	SEAL-O-RING	
	42	1	**5F-3092**	1	SEAL-O-RING	
	43	1	**5P-3863**	4	SEAL-O-RING	
	44	1	*165-4929*	2	PLUG AS (TRANSMISSION DRAIN)	
					(EACH INCLUDES)	
		1	**5P-4484**	1	PLUG-MAGNETIC	
		1	**7M-8485**	1	SEAL-O-RING	
M	45	1	**6V-1820**	1	BOLT (M10X1.5X30-MM)	
M	46	1	**6V-3940**	4	BOLT (M8X1.25X25-MM)	
M	47	1	**6V-8212**	1	BOLT (M10X1.5X16-MM)	
M	49	1	**8C-3210**	2	BOLT (M6X1X16-MM)	
	50	1	**8M-4992**	1	SEAL-O-RING	
	51	1	**8T-4121**	50	WASHER-HARD (11X21X2.5-MM THK)	
M	52	1	**8T-4137**	7	BOLT (M10X1.5X20-MM)	
M	53	1	**8T-4178**	43	BOLT (M10X1.5X90-MM)	
M	54	1	**8T-4189**	4	BOLT (M8X1.25X20-MM)	
M	55	1	**8T-4908**	12	BOLT (M8X1.25X25-MM)	
	56	1	**9M-1974**	1	WASHER-HARD (8.8X16X2-MM THK)	
	57	1	**9X-8256**	2	WASHER (6.6X12X2-MM THK)	
B	58	1	**1U-8846**		SEALANT-GASKET	

B-USE AS REQUIRED
M-METRIC PART

253-8429 **CASE & PARTS GP-TRANSMISSION** *(contd.)* **i03747920**

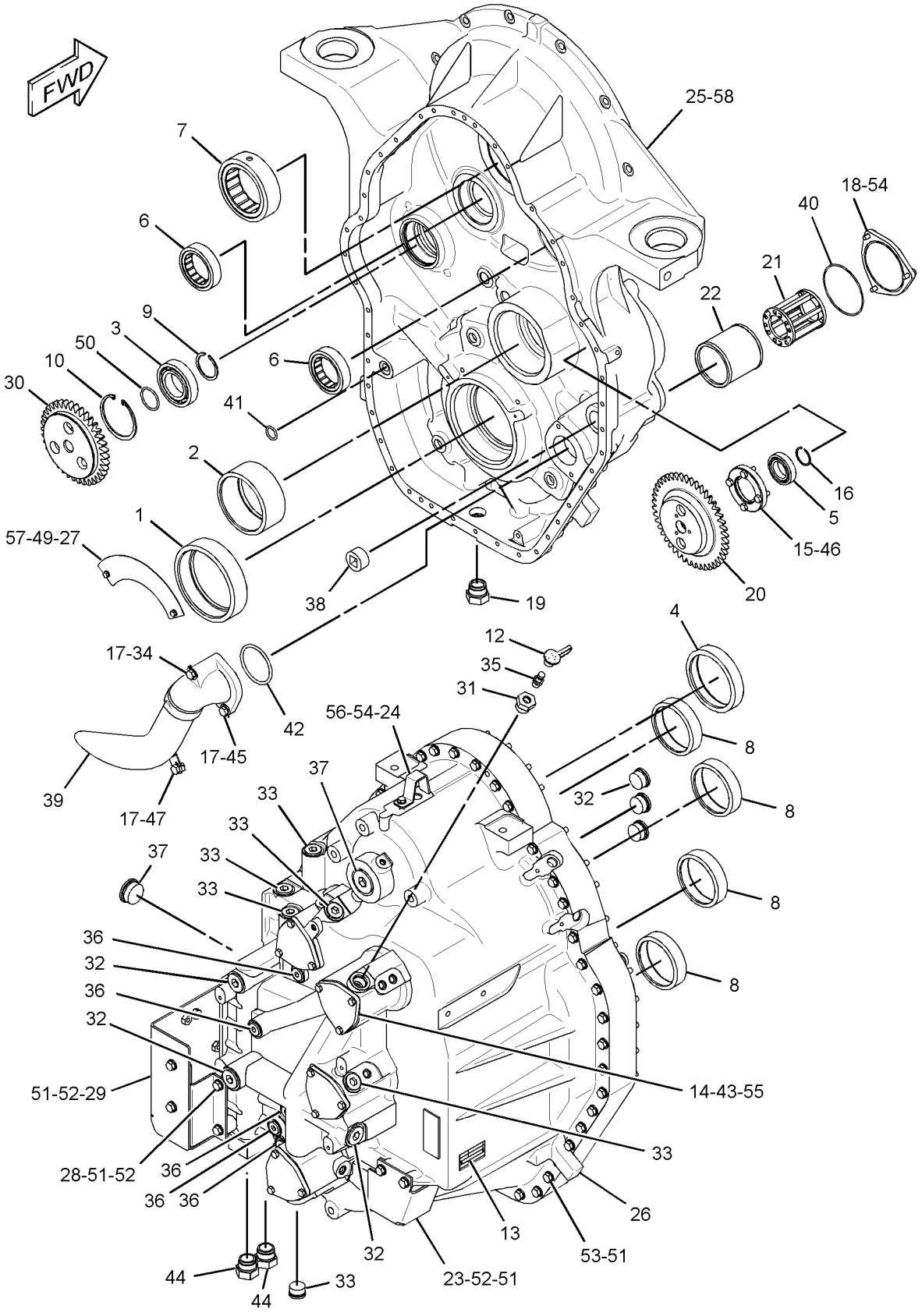

GRAPHIC #1 **<END>** g02088537

6G-1740 CHAIN GP-DRIVE

S/N: R9H1-UP
TANDEM
PART OF 349-5188 POWER TRAIN AR

SMCS-3261, 4063 **i00817372**

NOTE	REF NO	GRAPHIC REF	PART NUMBER	QTY	PART NAME 1 2 3 4 5 6 (PRODUCT LEVEL)	SEE PAGE
	1	1	**6G-1601**	4	CHAIN GP	
					(EACH INCLUDES)	
	2	1	**6G-1602**	1	LINK-CONNECTING (MASTER)	

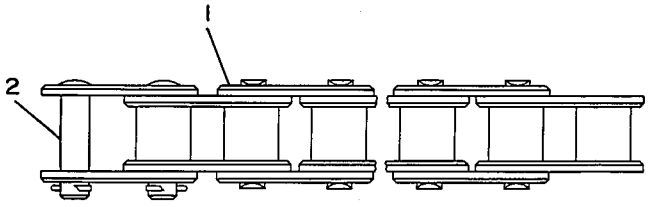

GRAPHIC #1 **<END>** g00108248

246-8728 CLUTCH GP-TRANSMISSION–FORWARD

S/N: DZM1-UP

PART OF 253-8407 TRANSMISSION AR

SMCS-3063, 3155, 3170 **i03025210**

NOTE	REF NO	GRAPHIC REF	PART NUMBER	QTY	PART NAME 1 2 3 4 5 6 (PRODUCT LEVEL)	SEE PAGE
	1	1	**4D-7889**	2	RING	
	2	1	**5P-3114**	2	SEAL-O-RING	
	3	1	**6I-8911**	16	DISC-FRICTION	
	4	1	**6Y-1119**	1	CARRIER-SEAL	
	5	1	**7G-4822**	3	RING-SEAL	
	6	1	**7T-4897**	1	DISC-THRUST	
	7	1	**8E-8319**	4	DISC-THRUST	
	8	1	**8F-3469**	4	SEAL-O-RING	
	9	1	**9F-8477**	2	RING-METAL SEAL	
	10	1	**9W-2029**	1	RACE-THRUST BEARING	
	11	1	**161-8313**	2	RING-SEAL	
	12	1	**165-0488**	2	RING-SEAL	
	13	1	**246-8749**	2	PISTON	
	14	1	**263-1649**	2	SLIDER	
	15	1	**246-8772**	1	SPACER (61X95.25X43.46-MM THK)	
	16	1	**246-8793**	2	RING-RETAINING	
	17	1	**246-8794**	2	RETAINER	
	18	1	**246-8800**	2	SPRING-WAVE	
	19	1	**248-2222**	2	PLATE-END	
	20	1	**248-2226**	16	PLATE-SEPARATOR	
	21	1	**258-7562**	1	GEAR (50-TEETH)	
	22	1	**258-7561**	1	GEAR (43-TEETH)	
	23	1	**307-4611**	1	SHAFT AS	
	23A	1	**1P-0604**	1	PLUG-CUP	
	24	1	**140-8010**	1	BEARING AS	
	25	1	**5H-8985**	1	PIN-SPRING	
M	26	1	**6V-1819**	2	BOLT (M10X1.5X100-MM)	
	27	1	**8E-1263**	2	BEARING-ROLLER	
	28	1	**8E-6558**	1	RACE-ROLLER BEARING	

M-METRIC PART

246-8728 **CLUTCH GP-TRANSMISSION** *(contd.)* **i03025210**

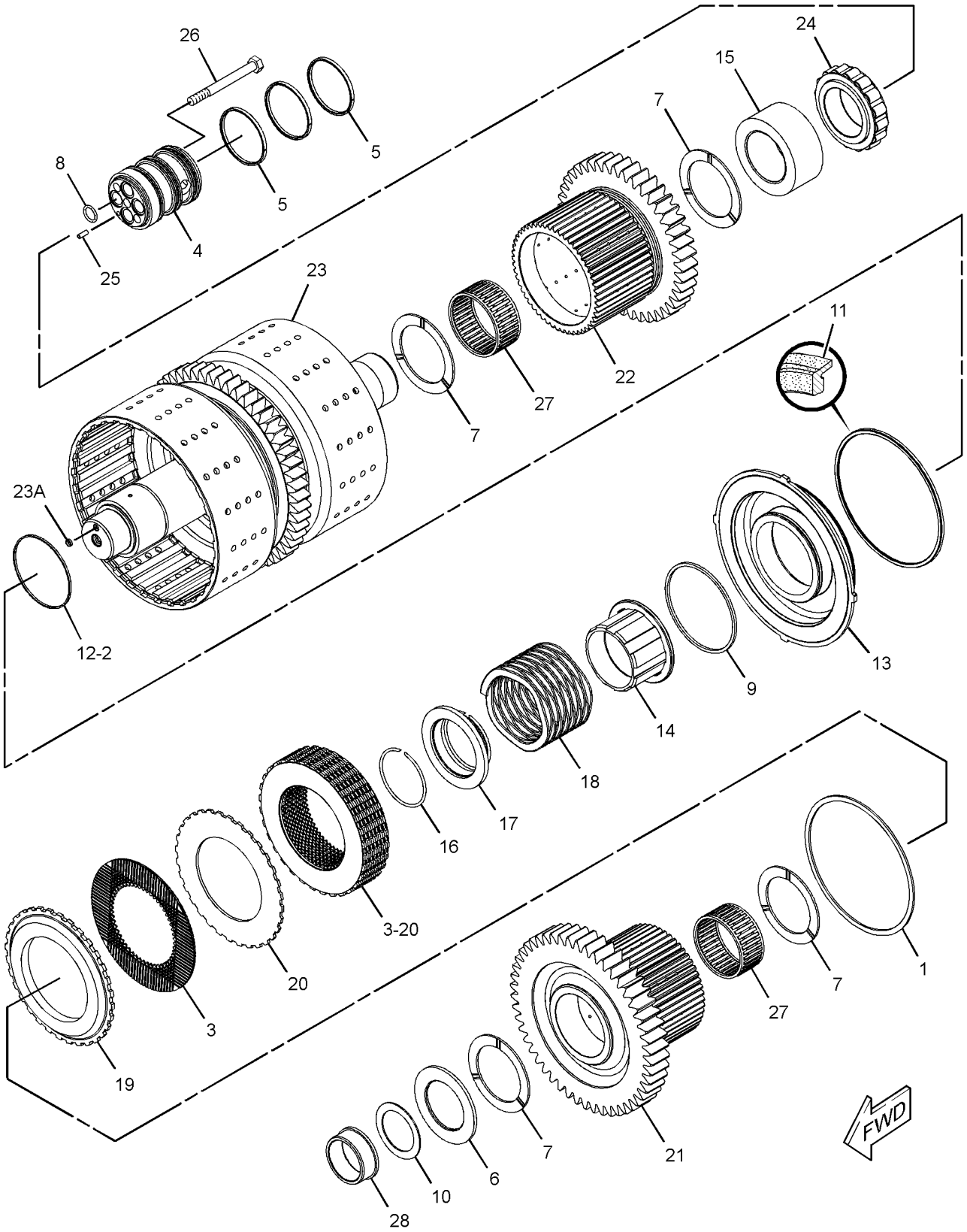

GRAPHIC #1 **<END>** g01532413

246-8731 CLUTCH GP-TRANSMISSION–REVERSE, SECOND

S/N: DZM1-UP

PART OF 253-8407 TRANSMISSION AR

SMCS-3063, 3155, 3170 **i02655795**

NOTE	REF NO	GRAPHIC REF	PART NUMBER	QTY	PART NAME 1 2 3 4 5 6 (PRODUCT LEVEL)	SEE PAGE
	1	2	**140-8010**	1	BEARING AS	
	2	1	**8E-1263**	1	BEARING-ROLLER	
	3	2	**8E-6558**	1	RACE-ROLLER BEARING	
	4	1	**5P-3114**	2	SEAL-O-RING	
	5	1	**6I-8912**	12	DISC-FRICTION	
	6	2	**6Y-1119**	1	CARRIER-SEAL	
	7	2	**7G-4822**	3	RING-SEAL	
	8	2	**7T-4897**	1	DISC-THRUST	
	9	2	**8E-0401**	12	PLATE-CLUTCH	
	10	1	**8E-8319**	4	DISC-THRUST	
	11	1,2	**8F-3469**	4	SEAL-O-RING	
	12	2	**9F-8477**	1	RING-METAL SEAL	
	13	1	**9W-2029**	1	RACE-THRUST BEARING	
	14	2	**161-8313**	2	RING-SEAL	
	15	1,2	**165-0367**	2	PLATE-END	
	16	1	**165-0488**	2	RING-SEAL	
	17	2	**246-8747**	1	PISTON	
	18	2	**246-8748**	1	PISTON	
	19	1	**263-1649**	1	SLIDER	
	20	2	**246-8757**	1	GEAR (25-TEETH)	
	21	1,2	**246-8793**	2	RING-RETAINING	
	22	1	**246-8794**	2	RETAINER	
	23	2	**246-8800**	1	SPRING-WAVE	
	24	2	**246-8801**	1	SPRING-WAVE	
	25	2	**246-8804**	1	SPACER (61X82.55X54.24-MM THK)	
	26	2	**258-7564**	1	GEAR (52-TEETH)	
	27	1	**282-7842**	1	SHAFT AS	
		1	**1P-0604**	1	PLUG-CUP	
	28	2	**280-6895**	1	GEAR AS	
		2	**258-7563**	1	GEAR (35-TEETH)	
		2	**6Y-1895**	1	BEARING-SLEEVE	
	29	2	**291-0996**	1	SPACER AS	
	30	2	**5H-8985**	1	PIN-SPRING	
	31	2	**6V-1586**	2	RING-RETAINING	
M	32	1	**6V-1819**	2	BOLT (M10X1.5X100-MM)	
	33	1	**263-1650**	1	SLIDER	

M-METRIC PART

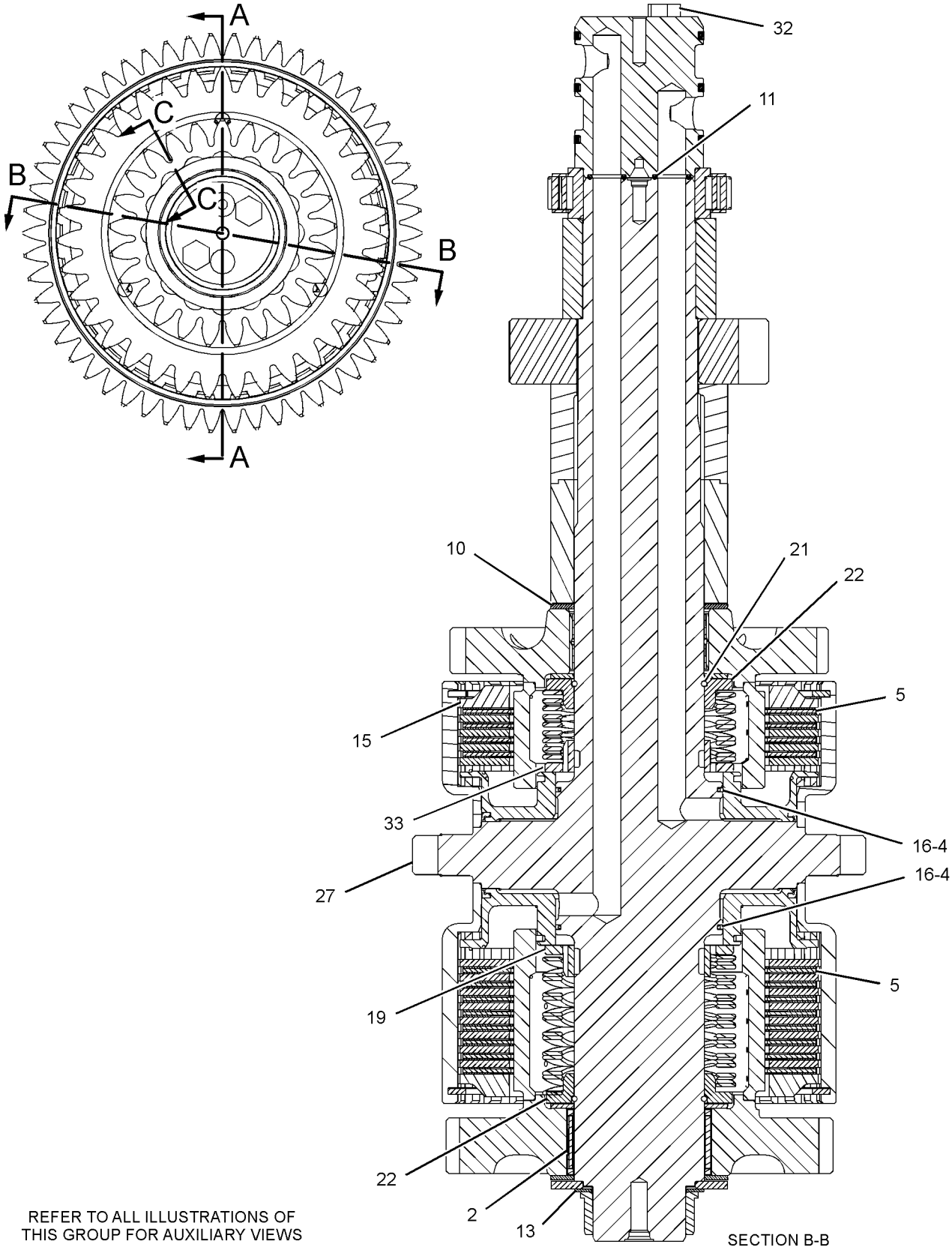

REFER TO ALL ILLUSTRATIONS OF THIS GROUP FOR AUXILIARY VIEWS

GRAPHIC #1

g01156483

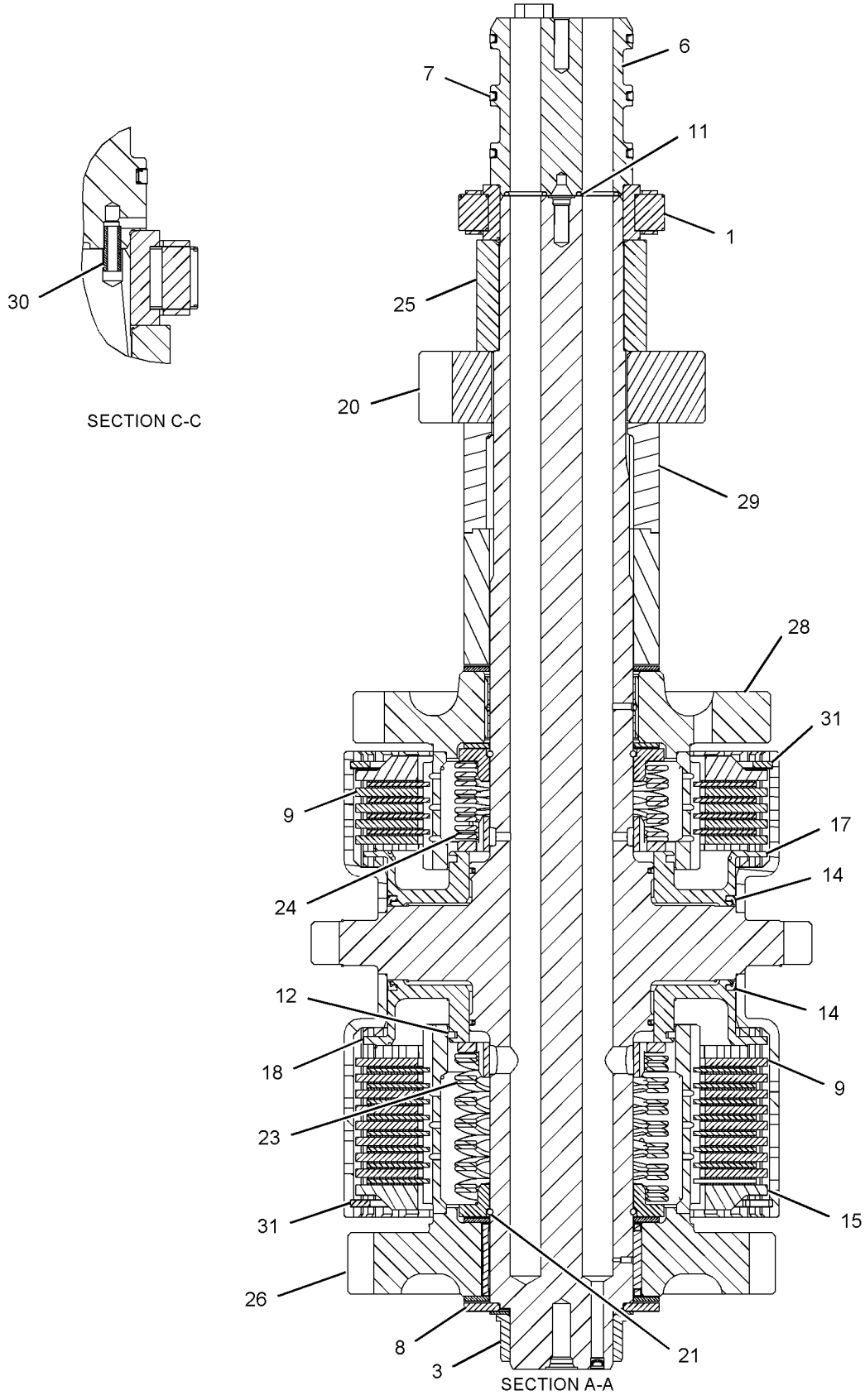

GRAPHIC #2 **<END>** g01108977

246-8734 CLUTCH GP-TRANSMISSION–1ST, 3RD

S/N: DZM1-UP

PART OF 253-8407 TRANSMISSION AR

SMCS-3063, 3155, 3170 **i03894855**

NOTE	REF NO	GRAPHIC REF	PART NUMBER	QTY	PART NAME 1 2 3 4 5 6 (PRODUCT LEVEL)	SEE PAGE
	1	1	**250-0952**	1	BEARING AS-ROLLER	
	2	1	**140-8010**	1	BEARING AS	
	3	1	**5P-3114**	2	SEAL-O-RING	
	4	1	**6I-8912**	12	DISC-FRICTION	
	5	1	**6Y-1119**	1	CARRIER-SEAL	
	6	1	**7G-4822**	3	RING-SEAL	
	7	1	**7T-4897**	1	DISC-THRUST	
	8	1	**8E-0401**	12	PLATE-CLUTCH	
	9	1	**8E-8319**	4	DISC-THRUST	
	10	1	**8F-3469**	4	SEAL-O-RING	
	11	1	**161-8313**	2	RING-SEAL	
	12	1	**165-0367**	2	PLATE-END	
	13	1	**165-0488**	2	RING-SEAL	
	14	1	**323-3935**	1	SHAFT AS	
	15	1	**246-8747**	1	PISTON	
	16	1	**246-8748**	1	PISTON	
	17	1	**263-1649**	1	SLIDER	
	18	1	**323-3933**	1	GEAR	
	19	1	**246-8764**	1	GEAR (56-TEETH)	
	20	1	**246-8793**	2	RING-RETAINING	
	21	1	**246-8794**	2	RETAINER	
	22	1	**246-8800**	1	SPRING-WAVE	
	23	1	**246-8801**	1	SPRING-WAVE	
	25	1	**280-6896**	1	GEAR AS (54-TEETH)	
	25A	1	**6Y-2419**	1	BEARING-SLEEVE	
	25B	1	**258-7566**	1	GEAR	
	26	1	**280-6897**	1	GEAR AS (68-TEETH)	
	26A	1	**6Y-2419**	1	BEARING-SLEEVE	
	26B	1	**258-7565**	1	GEAR	
	27	1	**5H-8985**	1	PIN-SPRING	
	28	1	**6V-1586**	2	RING-RETAINING	
M	29	1	**6V-1819**	2	BOLT (M10X1.5X100-MM)	
	30	1	**263-1650**	1	SLIDER	

M-METRIC PART

246-8734 **CLUTCH GP-TRANSMISSION** *(contd.)* **i03894855**

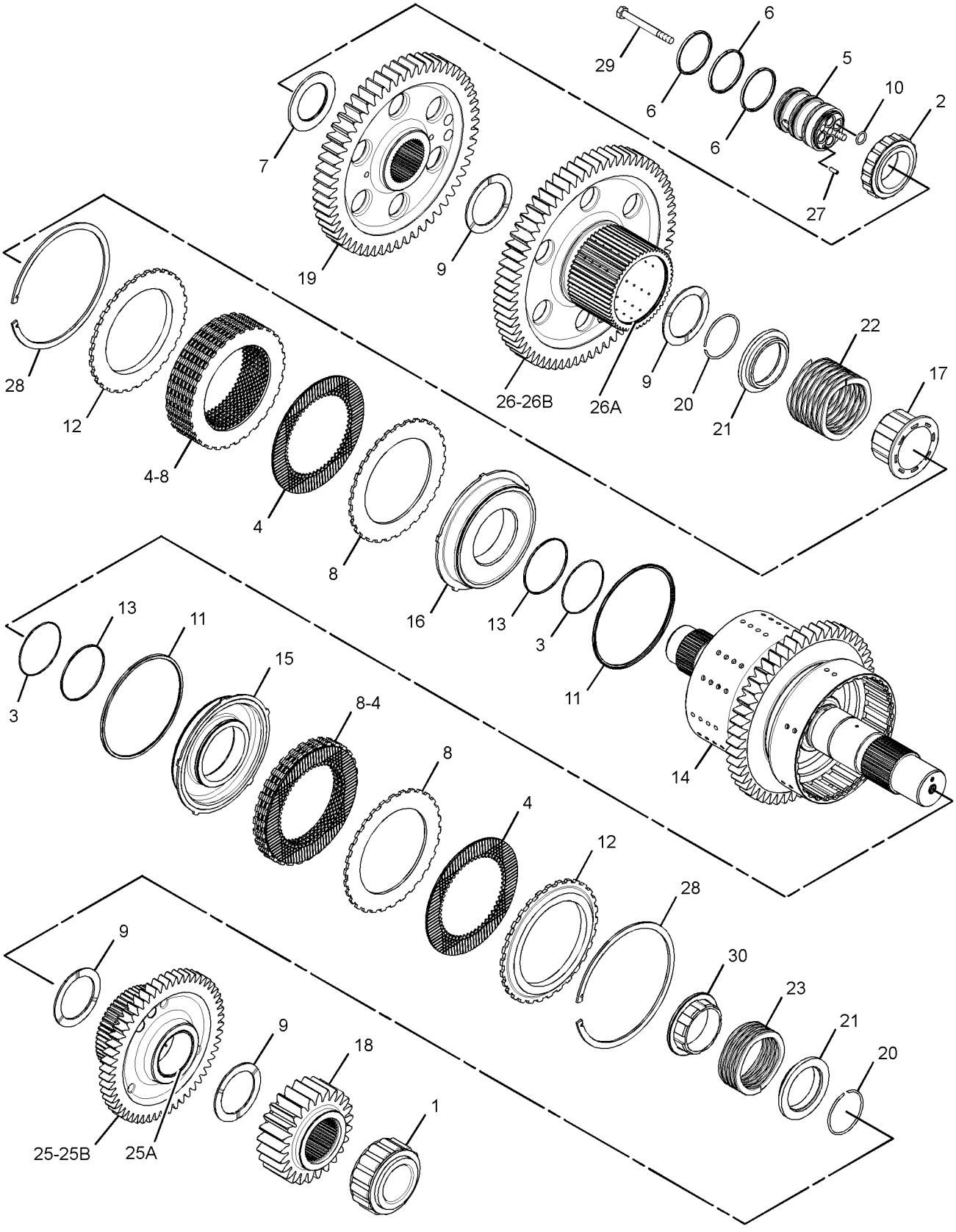

GRAPHIC #1 **<END>** g02138596

246-8737 CLUTCH GP-TRANSMISSION–HIGH, LOW

S/N: DZM1-UP

PART OF 253-8407 TRANSMISSION AR

SMCS-3063, 3155, 3170 **i03898472**

NOTE	REF NO	GRAPHIC REF	PART NUMBER	QTY	PART NAME 1 2 3 4 5 6 (PRODUCT LEVEL)	SEE PAGE
	1	2	**140-8010**	1	BEARING AS	
	2	1	**6B-5154**	1	BEARING AS-ROLLER	
	3	1	**4D-7889**	1	RING	
	4	1,2	**5P-3114**	2	SEAL-O-RING	
	5	1	**6I-8911**	8	DISC-FRICTION	
	6	2	**6I-8912**	4	DISC-FRICTION	
	7	2	**6Y-1119**	1	CARRIER-SEAL	
	8	2	**7G-4822**	3	RING-SEAL	
	9	2	**8E-0401**	4	PLATE-CLUTCH	
	10	2	**8E-8319**	2	DISC-THRUST	
	11	2	**8F-3469**	4	SEAL-O-RING	
	12	2	**161-8313**	1	RING-SEAL	
	13	2	**165-0367**	1	PLATE-END	
	14	1,2	**165-0488**	2	RING-SEAL	
	15	1	**246-8738**	1	SHAFT AS	
M		1	**201-9331**	1	SETSCREW (M12X1.75X19.5-MM)	
		1	**1P-0604**	1	PLUG-CUP	
	16	2	**246-8747**	1	PISTON	
	17	1	**246-8774**	2	DISC-THRUST	
	18	2	**246-8793**	1	RING-RETAINING	
	19	2	**246-8794**	1	RETAINER	
	20	1	**246-8795**	1	RING-RETAINING	
	21	1	**246-8796**	1	RETAINER	
	22	1	**246-8797**	1	SEAL-PISTON	
	23	1,2	**246-8800**	2	SPRING-WAVE	
	24	1	**248-2222**	1	PLATE-END	
	25	1	**248-2226**	8	PLATE-SEPARATOR	
	26	1	**254-0312**	1	PISTON	
	27	2	**260-7596**	1	ROTOR	
	28	2	**263-1649**	1	SLIDER	
	29	1	**273-2827**	1	SPACER (75.5X110X1.7-MM THK)	
	30	1	**280-6898**	1	GEAR AS	
		1	**246-8761**	2	BUSHING	
	31	2	**280-6899**	1	GEAR AS	
		2	**9W-6467**	2	BUSHING	
	32	2	**5H-8985**	1	PIN-SPRING	
	33	2	**6V-1586**	1	RING-RETAINING	
M	34	2	**6V-1819**	2	BOLT (M10X1.5X100-MM)	

M-METRIC PART

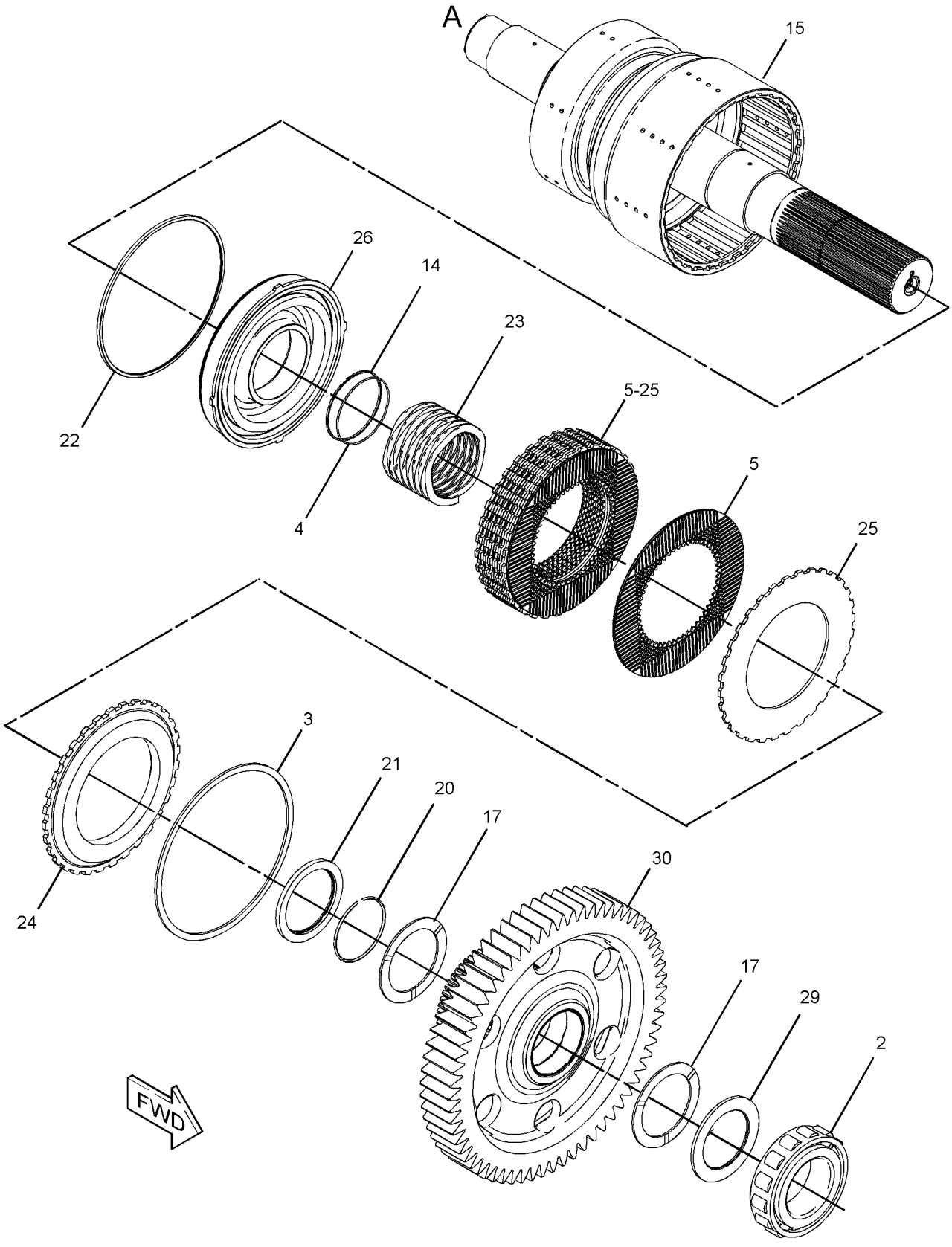

GRAPHIC #1 g01267624

246-8737 **CLUTCH GP-TRANSMISSION** *(contd.)* **i03898472**

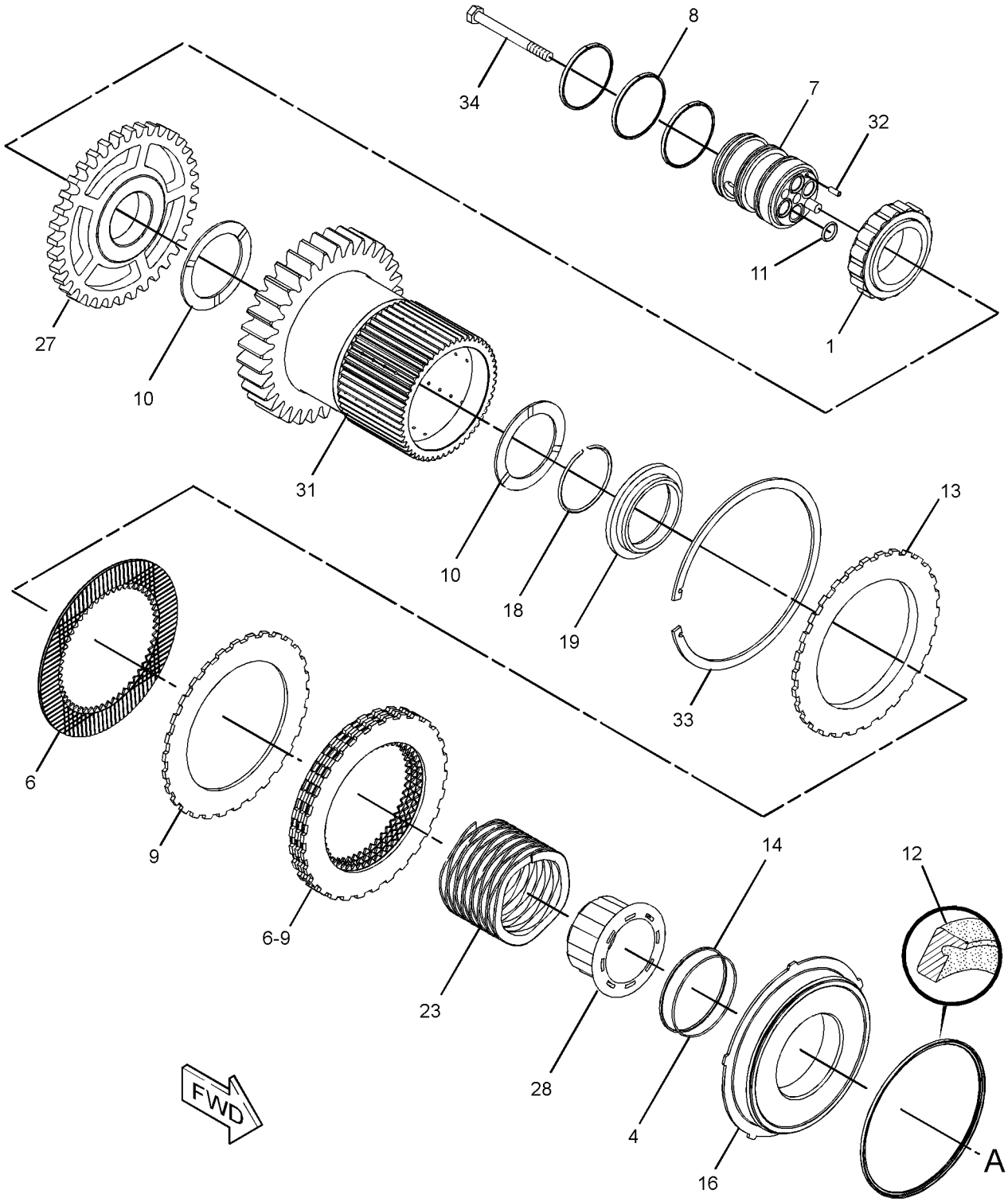

GRAPHIC #2 **<END>** g01964254

288-9614 CONTROL GP-DIFFERENTIAL LOCK

S/N: R9H1-UP

PART OF 349-2556 COMMON AR

SMCS-3264 **i02771740**

NOTE	REF NO	GRAPHIC REF	PART NUMBER	QTY	PART NAME 1 2 3 4 5 6 (PRODUCT LEVEL)	SEE PAGE
	1	1	**6V-0852**	1	CAP-DUST	
	2	1	*164-5567*	1	COUPLER AS-QUICK DISCONNECT (MALE)	
		1	**6V-3965**	1	FITTING (QUICK DISCONNECT)	
		1	**3J-1907**	1	SEAL-O-RING	
Y	3	1	**250-2139**	1	VALVE & MTG GP-SOLENOID (DIFFERENTIAL LOCK)	458
I	4	1	**282-3197**	1	HOSE AS	
	5	1	**288-9681**	1	TUBE AS	
	6	1	**288-9682**	1	TUBE AS	
	7	1	**291-8099**	1	PLATE AS	
M		1	**8T-3490**	2	NUT-WELD (M10X1.5-THD)	
	8	1	*148-8318*	1	CONNECTOR AS	
		1	**6V-8634**	1	CONNECTOR	
		1	**3K-0360**	1	SEAL-O-RING	
		1	**6V-8397**	1	SEAL-O-RING	
	9	1	*148-8325*	1	CONNECTOR AS	
		1	**6V-8641**	1	CONNECTOR	
		1	**3J-1907**	1	SEAL-O-RING	
		1	**4J-5477**	1	SEAL-O-RING	
	10	1	*148-8368*	1	ELBOW AS	
		1	**6V-8627**	1	ELBOW	
		1	**3J-1907**	1	SEAL-O-RING	
		1	**4J-5477**	1	SEAL-O-RING	
	11	1	*148-8378*	1	ELBOW AS	
		1	**6V-8724**	1	ELBOW	
		1	**3J-1907**	1	SEAL-O-RING	
		1	**6V-8397**	1	SEAL-O-RING	
	12	1	**3J-1907**	1	SEAL-O-RING	
	13	1	**4S-1962**	1	CLIP	
	14	1	**5P-9299**	3	CLIP	
	15	1	**6V-8397**	1	SEAL-O-RING	
	16	1	**7D-7233**	2	CLIP	
	17	1	**7X-2459**	1	TEE-O-RING	
	18	1	**8T-4121**	8	WASHER-HARD (11X21X2.5-MM THK)	
M	19	1	**8T-4133**	3	NUT (M10X1.5-THD)	
M	20	1	**8T-4136**	3	BOLT (M10X1.5X25-MM)	
M	21	1	**8T-5005**	2	BOLT (M10X1.5X70-MM)	

I-REFER TO HYDRAULIC INFORMATION SYSTEM
M-METRIC PART
Y-SEPARATE ILLUSTRATION

288-9614 **CONTROL GP-DIFFERENTIAL LOCK** *(contd.)* **i02771740**

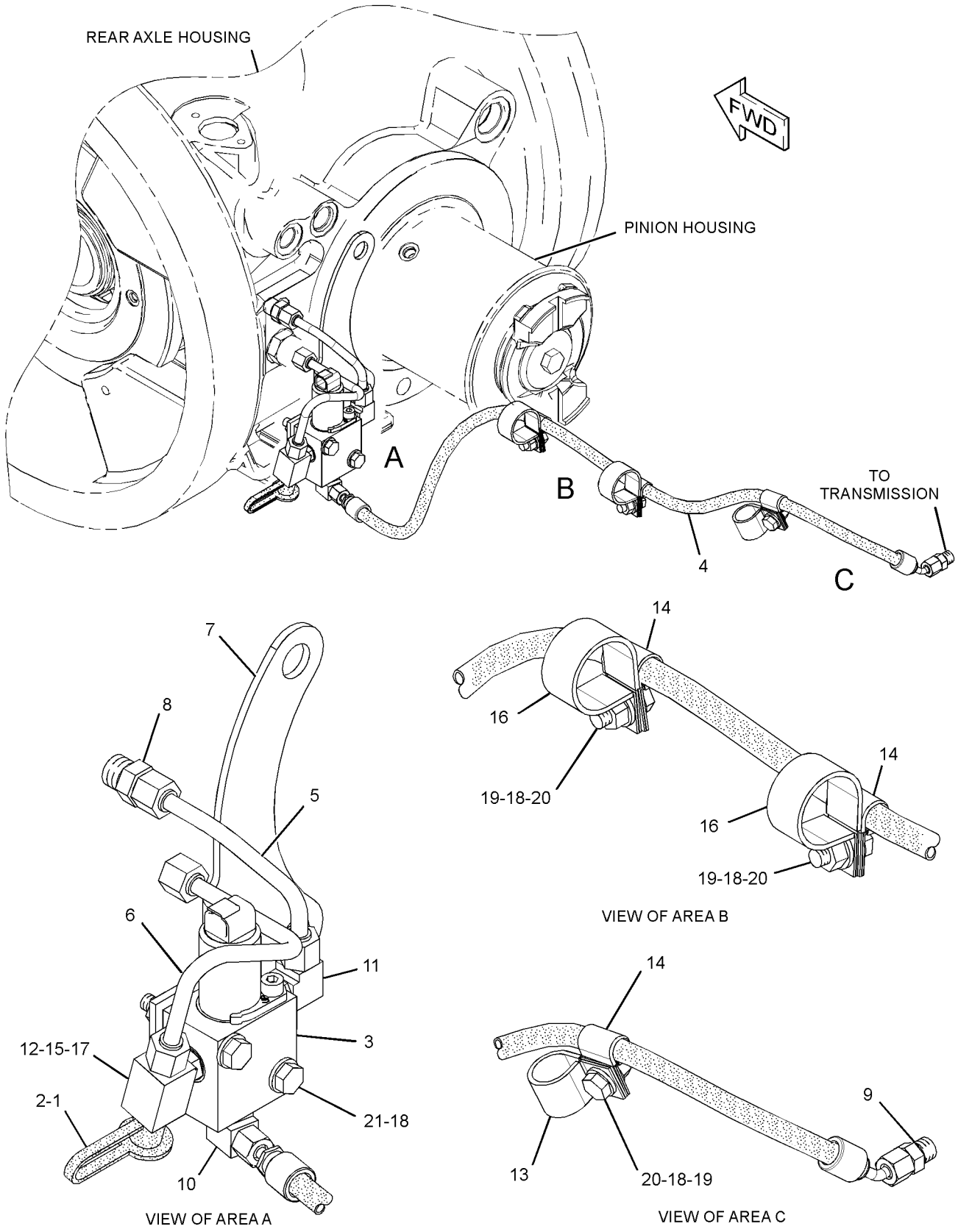

GRAPHIC #1 **<END>** g01402487

356-2980 CONTROL GP-DIFFERENTIAL LOCK

S/N: R9H1-UP

PART OF 349-5188 POWER TRAIN AR

SMCS-3264 **i03961090**

NOTE	REF NO	GRAPHIC REF	PART NUMBER	QTY	PART NAME 1 2 3 4 5 6 (PRODUCT LEVEL)	SEE PAGE
	1	1	*164-5567*	1	COUPLER AS-QUICK DISCONNECT (MALE)	
		1	**6V-3965**	1	FITTING (QUICK DISCONNECT)	
		1	**214-7568**	1	SEAL-O-RING	
	2	1	**288-9681**	1	TUBE AS	
	3	1	**288-9682**	1	TUBE AS	
	4	1	**291-8099**	1	PLATE AS	
	5	1	*148-8318*	1	CONNECTOR AS	
		1	**6V-8634**	1	CONNECTOR	
		1	**3K-0360**	1	SEAL-O-RING	
		1	**6V-8397**	1	SEAL-O-RING	
	6	1	*148-8368*	1	ELBOW AS	
		1	**6V-8627**	1	ELBOW	
		1	**3J-1907**	1	SEAL-O-RING	
		1	**4J-5477**	1	SEAL-O-RING	
	7	1	*148-8378*	1	ELBOW AS	
		1	**6V-8724**	1	ELBOW	
		1	**3J-1907**	1	SEAL-O-RING	
		1	**6V-8397**	1	SEAL-O-RING	
Y	8	1	**250-2139**	1	VALVE & MTG GP-SOLENOID (DIFFERENTIAL LOCK)	458
	9	1	**3J-1907**	1	SEAL-O-RING	
	10	1	**6V-0852**	1	CAP-DUST	
	11	1	**6V-8397**	1	SEAL-O-RING	
	12	1	**7X-2459**	1	TEE-O-RING	
	13	1	**8T-4121**	2	WASHER-HARD (11X21X2.5-MM THK)	
M	14	1	**8T-5005**	2	BOLT (M10X1.5X70-MM)	

M-METRIC PART
Y-SEPARATE ILLUSTRATION

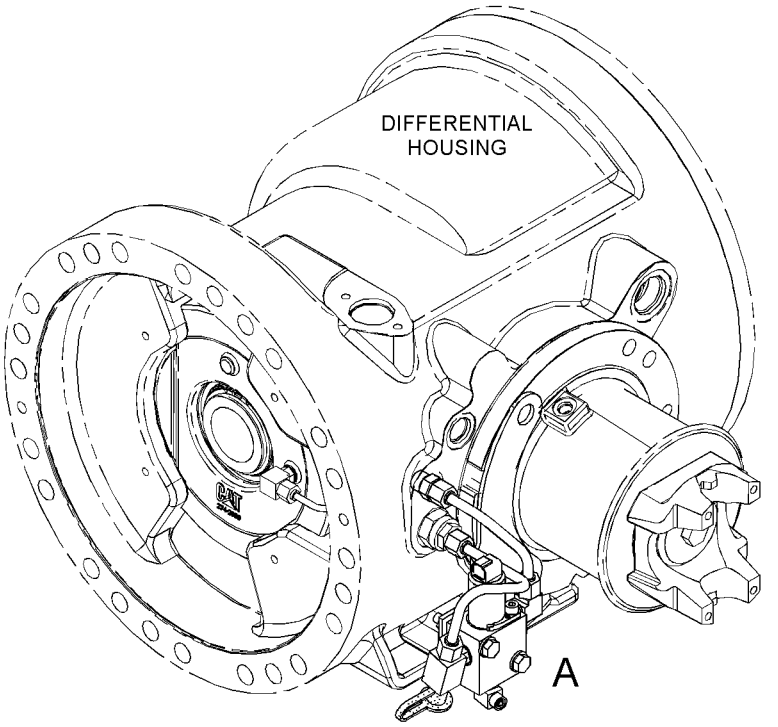

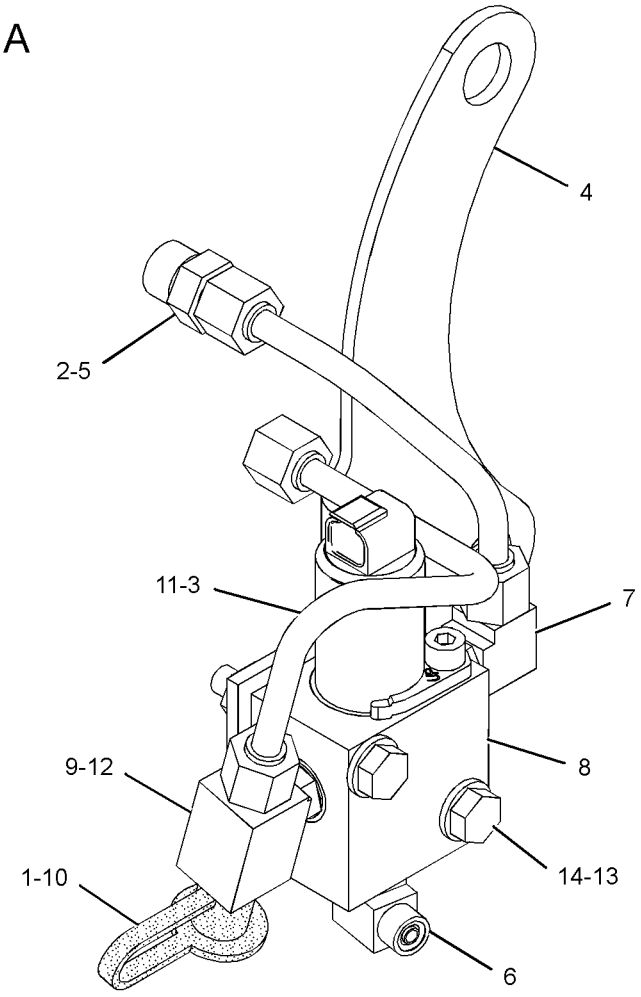

VIEW OF AREA A

GRAPHIC #1 **<END>** g02230416

POWER TRAIN

253-8428 CONTROL GP-TRANSMISSION HYD

S/N: DZM1-UP

PART OF 253-8407 TRANSMISSION AR

SMCS-3073, 3167 **i03877573**

NOTE	REF NO	GRAPHIC REF	PART NUMBER	QTY	PART NAME 1 2 3 4 5 6 (PRODUCT LEVEL)	SEE PAGE
	1	1	**2P-1692**	1	SEAL-O-RING	
	2	1	**3K-0360**	1	SEAL-O-RING	
	3	1,2	**3S-2093**	24	STRAP-CABLE	
	4	1	**6V-0852**	8	CAP-DUST	
	6	1	**6D-7889**	8	SEAL-O-RING	
	7	1	**148-1925**	1	VALVE-RELIEF	
	8	2	**155-5114**	3	SPACER-SPECIAL	
Y	9	2	**191-8303**	2	SENSOR GP-SPEED (TRANSMISSION OUTPUT, LOW)	305
	10	2	**191-8304**	3	SENSOR GP-SPEED (TRANSMISSION OUTPUT, HIGH)	
					(EACH SENSOR GP-SPEED INCLUDES)	
		2	**137-6645**	1	PAD	
	11	1	**356-0841**	1	SWITCH AS-PRESSURE (PARKING BRAKE)	
		1	**102-8803**	1	KIT-RECEPTACLE (3-PIN)	
					(INCLUDES RECEPTACLE AS & WEDGE)	
		1	**9X-3401**	3	PIN-CONNECTOR (16-GA TO 18-GA)	
E		1	**9X-1813**		SLEEVE (15-CM)	
	12	1	**238-0112**	1	SENSOR GP-TEMPERATURE (TRANSMISSION OIL)	
Y	13	1	**244-3114**	8	VALVE GP-MODULATING (24-VOLT) (TRANSMISSION CLUTCH)	459
	14	2	**247-4993**	1	SPACER	
	15	1	**352-5517**	1	VALVE GP-SOLENOID (24-VOLT) (PARKING BRAKE)	
		1	**286-8172**	1	KIT-SEAL (SOLENOID VALVE)	
					(INCLUDES O-RINGS)	
		1	**245-1181**	1	FLANGE	
	16	2	**253-5306**	1	HARNESS AS-SENSOR	
E		2	**114-8843**		SLEEVE-PLASTIC (120-CM)	
E		2	**114-8844**		SLEEVE-PLASTIC (20-CM)	
		2	**9X-3402**	12	SOCKET-CONNECTOR (16-GA TO 18-GA)	
		2	**144-1636**	12	PIN-CONNECTOR (14-GA TO 18-GA)	
E		2	**1P-0810**		TAPE-ELECTRICAL (36-CM)	
		2	**102-8801**	1	KIT-RECEPTACLE (12-PIN)	
					(INCLUDES RECEPTACLE AS & WEDGE)	
		2	**155-2270**	6	KIT-CONNECTING PLUG (2-PIN)	
					(EACH INCLUDES PLUG AS, WEDGE & INTERFACE SEAL)	
	17	1	**253-5323**	1	HARNESS AS-TRANSMISSION	
		1	**8T-8737**	2	PLUG-SEAL	
E		1	**114-8843**		SLEEVE-PLASTIC (240-CM)	
E		1	**114-8844**		SLEEVE-PLASTIC (20-CM)	
E		1	**119-3662**		TUBE-HEAT SHRINK (10.85-MM DIA) (13-CM)	
E		1	**125-7874**		TUBE-HEAT SHRINK (5.72-MM DIA) (5-CM)	
		1	**9X-3402**	23	SOCKET-CONNECTOR (16-GA TO 18-GA)	
		1	**144-1636**	16	PIN-CONNECTOR (14-GA TO 18-GA)	
E		1	**1P-0810**		TAPE-ELECTRICAL (36-CM)	
		1	**102-8805**	1	KIT-RECEPTACLE (6-PIN)	
		1	**102-8801**	1	KIT-RECEPTACLE (12-PIN)	
					(EACH INCLUDES RECEPTACLE AS & WEDGE)	
		1	**155-2260**	1	KIT-CONNECTING PLUG (3-PIN)	
		1	**155-2270**	9	KIT-CONNECTING PLUG (2-PIN)	
					(EACH INCLUDES PLUG AS, WEDGE & INTERFACE SEAL)	
		1	**230-4011**	1	PLUG AS-CONNECTOR (2-PIN)	
		1	**264-7029**	1	SEAL-CONNECTOR	
Y	18	1	**257-5026**	1	VALVE GP-RELIEF (TRANSMISSION CONTROL VALVE)	460
	19	1	**260-7595**	1	VALVE-RELIEF	
R	20	2	**304-5687**	1	CONTROL GP-UNPROGRAMMED (TRANSMISSION)	

253-8428 **CONTROL GP-TRANSMISSION HYD** *(contd.)* **i03877573**

NOTE	REF NO	GRAPHIC REF	PART NUMBER	QTY	PART NAME 1 2 3 4 5 6 (PRODUCT LEVEL)	SEE PAGE
	21	2	**288-5507**	1	PLATE AS	
	22	1	**290-4134**	1	VALVE-RELIEF	
	23	2	**117-1385**	5	SEAL-O-RING	
	24	1,2	**130-5300**	5	CLIP	
	25	1,2	**132-5789**	10	CLIP	
	26	1	**2H-1142**	1	RING-RETAINING	
	27	1	**2K-8199**	1	SEAL-O-RING	
	29	2	**4P-7428**	1	CLIP	
	30	1	**4P-7429**	3	CLIP	
	31	1,2	**4P-7581**	8	CLIP	
	32	2	**4P-7582**	1	CLIP	
M	33	1	**5P-8347**	2	BOLT (M8X1.25X70-MM)	
	34	1	**6F-6672**	1	SEAL-O-RING	
M	35	1,2	**6V-5215**	6	BOLT (M8X1.25X16-MM)	
M	36	2	**6V-5222**	3	BOLT (M8X1.25X85-MM) (M8X1.25X85-MM)	
	37	1,2	**6V-5839**	3	WASHER (11X21X2.5-MM THK)	
M	38	1,2	**6V-8212**	3	BOLT (M10X1.5X16-MM)	
	39	1	**6V-9028**	1	SEAL-O-RING	
M	40	2	**8C-5748**	1	BOLT (M8X1.25X55-MM)	
M	41	1	**8T-0100**	20	BOLT (M8X1.25X60-MM)	
M	42	1	**8T-1158**	1	BOLT-SOCKET HEAD (M8X1.25X20-MM)	
	43	2	**8T-9655**	8	MOUNT-ISOLATION	
	44	1,2	**9M-1974**	29	WASHER-HARD (8.8X16X2-MM THK)	
	45	2	**9N-0869**	4	WASHER-HARD (8.8X25.5X2-MM THK)	
	46	1	**9X-4609**	1	SEAL-O-RING	
	47	2	**4K-8864**	1	CLIP	
	48	1	*165-4931*	3	ELBOW AS	
					(EACH INCLUDES)	
		1	**6V-8077**	1	ELBOW	
		1	**3J-1907**	1	SEAL-O-RING	

E-ORDER BY THE CENTIMETER
M-METRIC PART
R-REMFG PART MAY BE AVAILABLE
Y-SEPARATE ILLUSTRATION

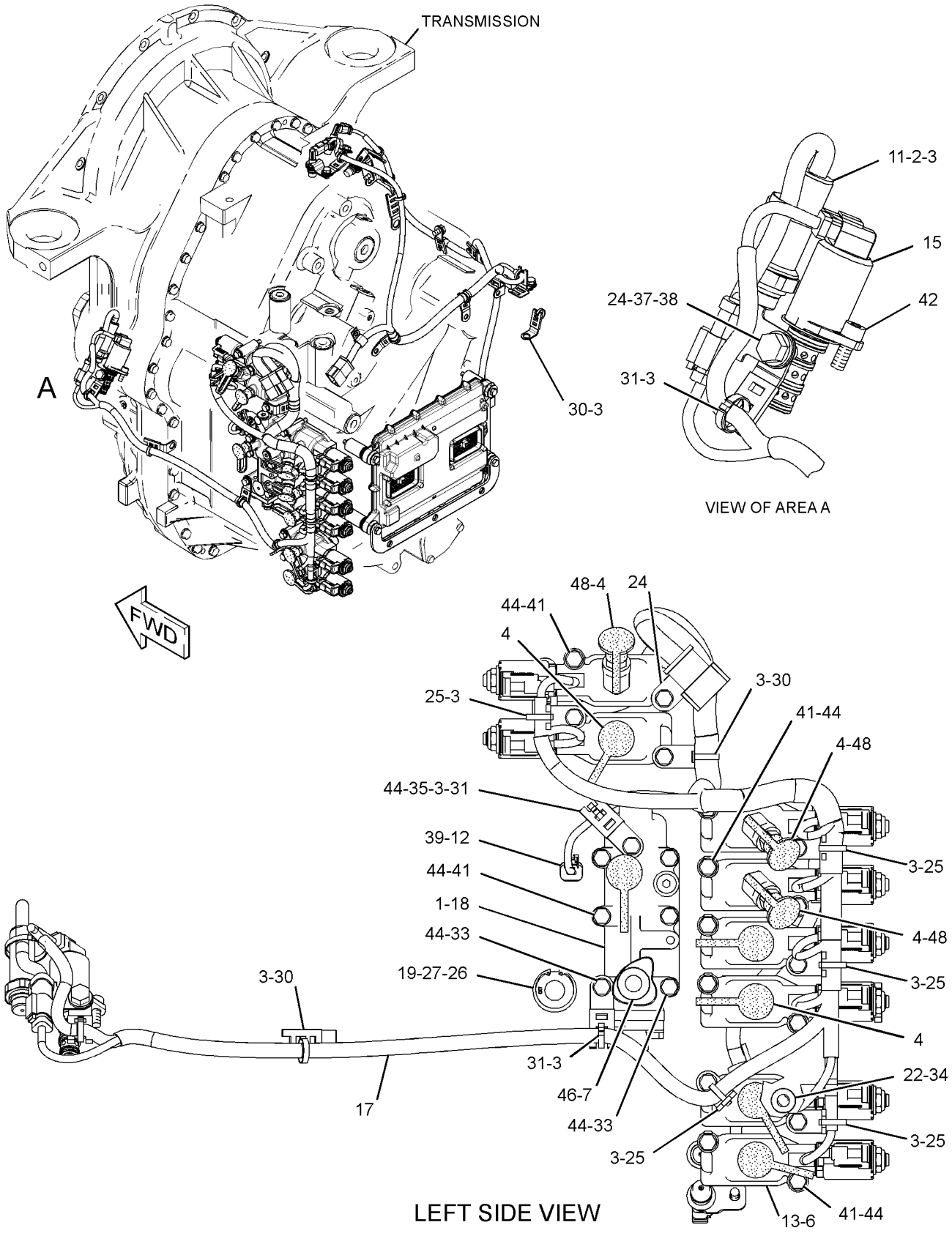

GRAPHIC #1

g01620846

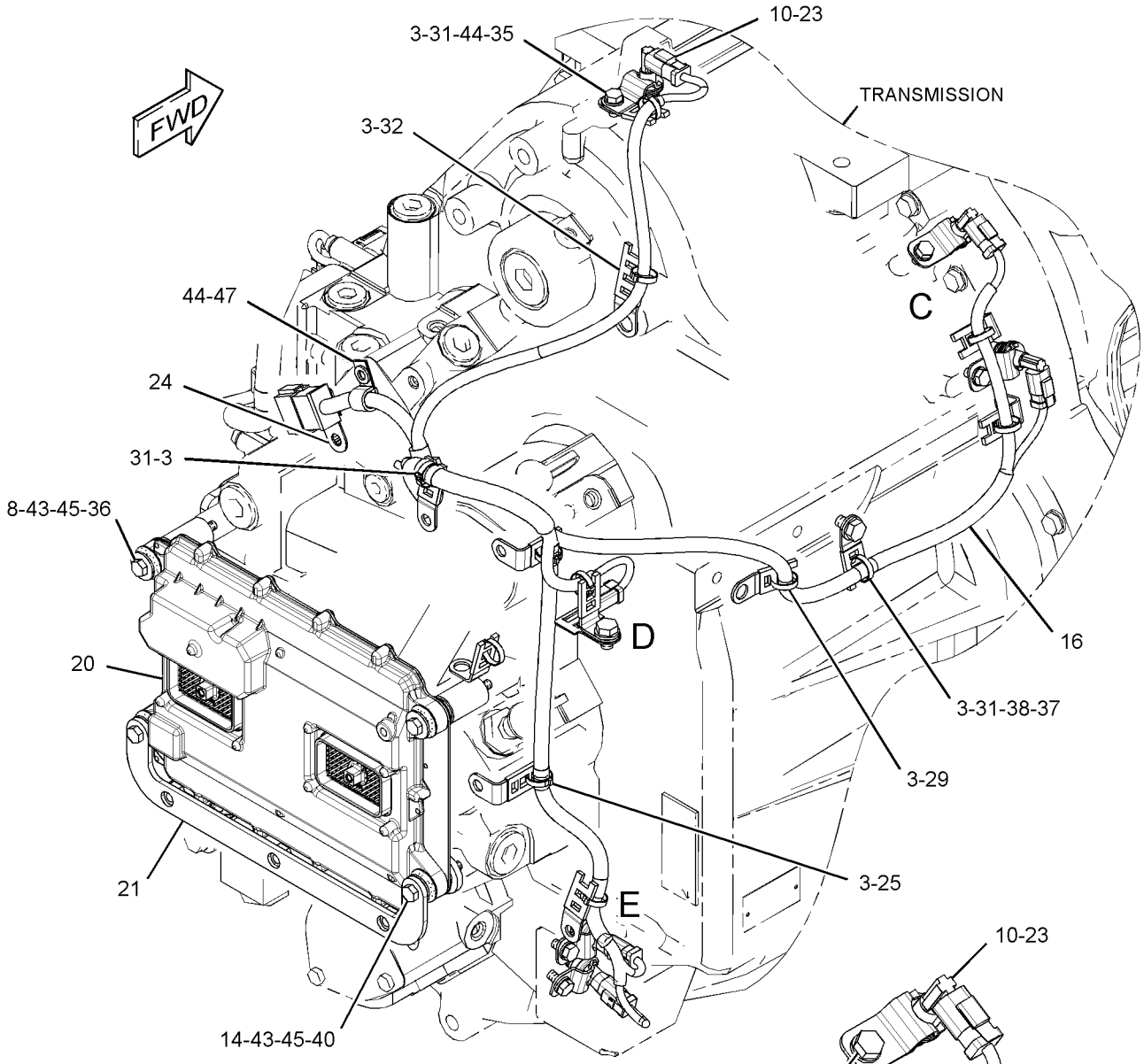

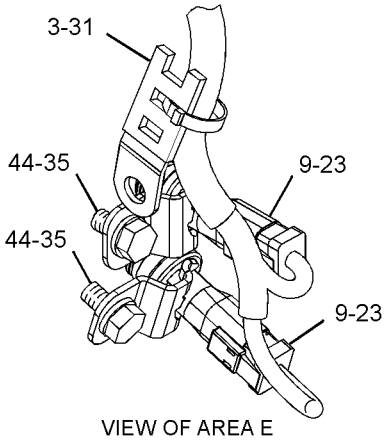

VIEW OF AREA E

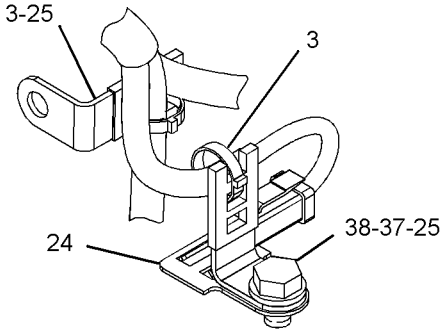

VIEW OF AREA D

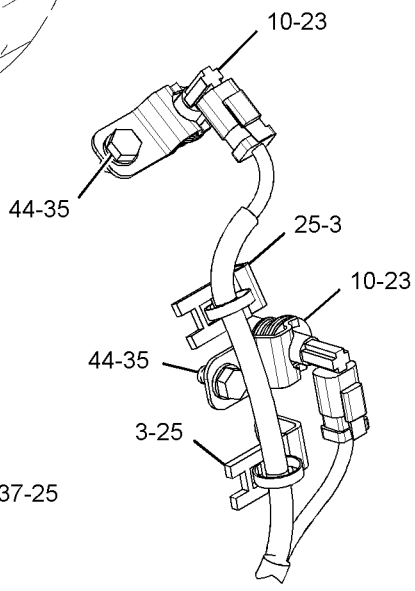

VIEW OF AREA C

GRAPHIC #2

<END>

g01620847

240-5403 COOLER GP-TRANSMISSION OIL

S/N: MHX1304-UP

PART OF 227-5359, 231-0876, 349-4462 ENGINE AR-COMPLETE

ALSO AN ATTACHMENT

SMCS-1375 **i04003981**

NOTE	REF NO	GRAPHIC REF	PART NUMBER	QTY	PART NAME 1 2 3 4 5 6 (PRODUCT LEVEL)	SEE PAGE
	1	1	**2S-0795**	2	GASKET	
	2	1	**8E-9571**	2	WASHER-HARD (8.8X16X7-MM THK)	
	3	1	**8M-9307**	1	PLUG (TRANSMISSION OIL COOLER)	
	4	1	**8S-4304**	1	BONNET-XMSN OIL COOLER	
	5	1	**124-5043**	1	COUPLING	
	6	1	**349-3309**	1	ELBOW	
	7	1	**231-3178**	1	BRACKET	
	8	1	**244-1987**	1	BRACKET	
R	9	1	**250-2313**	1	CORE AS (TRANSMISSION OIL COOLER)	
	10	1	*353-5144*	1	PLUG AS	
		1	**9S-9334**	1	PLUG-O-RING	
		1	**6V-5064**	1	SEAL-O-RING	
	11	1	*353-5124*	1	PLUG AS	
		1	**9S-8004**	1	PLUG-O-RING	
		1	**6V-3250**	1	SEAL-O-RING	
	12	1	**2N-5243**	2	SEAL-O-RING	
	13	1	**3E-4353**	4	WASHER-HARD (11X25X3-MM THK)	
	14	1	**5P-8245**	12	WASHER-HARD (13.5X25.5X3-MM THK)	
M	15	1	**6A-5591**	8	BOLT (M12X1.75X25-MM)	
	16	1	**6F-7062**	1	WASHER (12.7X19.05X1.83-MM THK)	
M	17	1	**6V-1820**	4	BOLT (M10X1.5X30-MM)	
M	18	1	**6V-3668**	6	BOLT (M12X1.75X30-MM)	
M	19	1	**6V-3823**	2	BOLT (M12X1.75X60-MM)	
M	20	1	**6V-5219**	5	BOLT (M8X1.25X40-MM)	
	21	1	**8E-7366**	2	GASKET	
M	22	1	**6V-7673**	4	BOLT (M12X1.75X50-MM)	
	23	1	**8T-4223**	6	WASHER-HARD (13.5X25.5X3-MM THK)	
M	24	1	**6V-8004**	2	BOLT (M12X1.75X120-MM)	
	25	1	**8X-6166**	2	COVER	
	26	1	**9M-1974**	3	WASHER-HARD (8.8X16X2-MM THK)	

M-METRIC PART
R-REMFG PART MAY BE AVAILABLE

240-5403 **COOLER GP-TRANSMISSION OIL** *(contd.)* **i04003981**

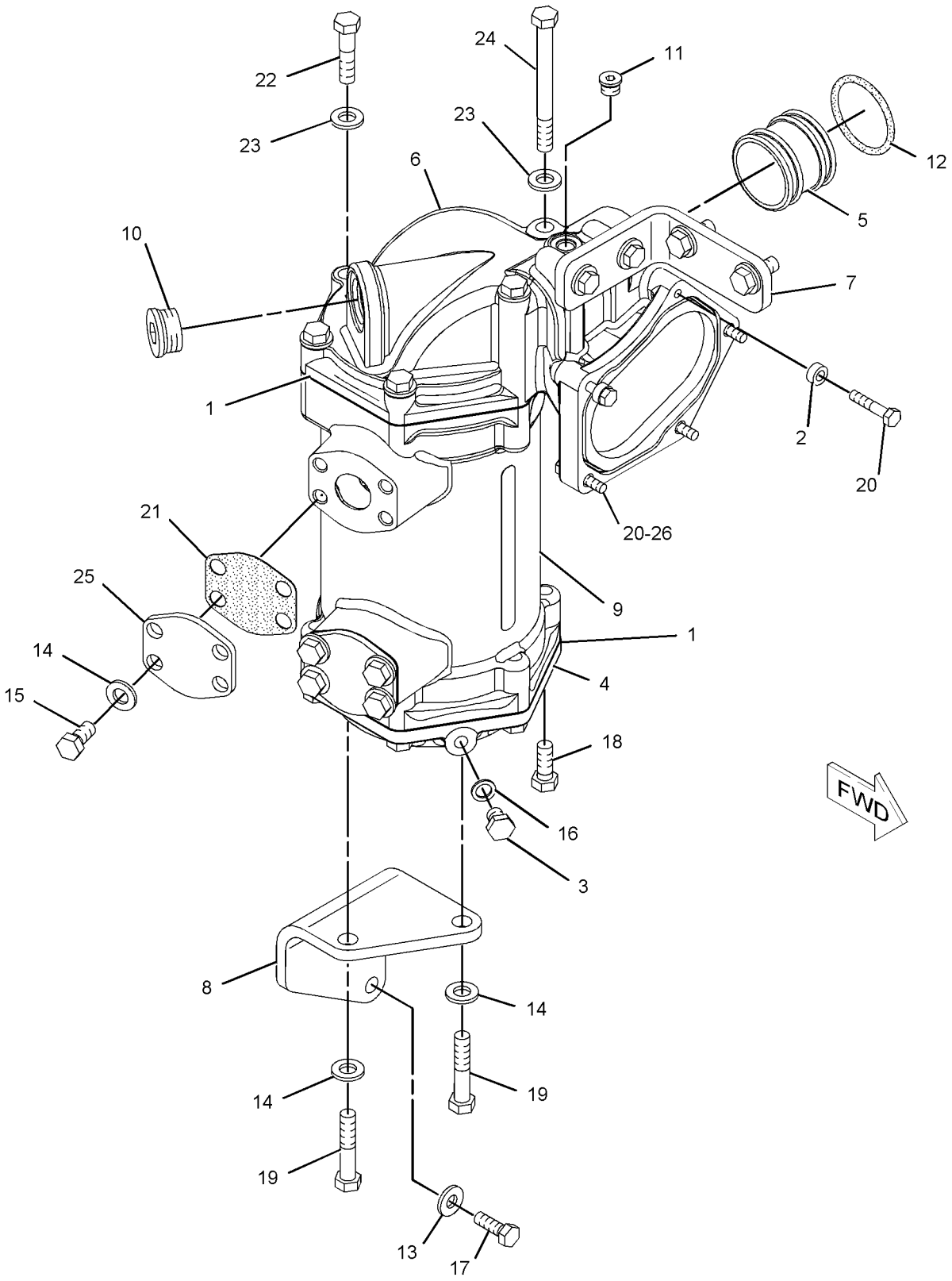

GRAPHIC #1 **<END>** g01143619

250-0154 COUPLING GP-TORSIONAL

S/N: R9H1-UP

PART OF 349-2556 COMMON AR

SMCS-3252, 3279 **i03646675**

NOTE	REF NO	GRAPHIC REF	PART NUMBER	QTY	PART NAME 1 2 3 4 5 6 (PRODUCT LEVEL)	SEE PAGE
	1	1	**268-8794**	1	COUPLING AS	
		1	**1A-2029**	12	BOLT (3/8-16X1.125-IN)	
		1	**9S-8752**	12	NUT-FULL (3/8-16-THD)	
		1	**244-6849**	12	SPRING (33-MM ODX46-MM LG)	
		1	**244-6850**	8	SPRING (23-MM ODX46-MM LG)	
		1	**244-6851**	4	SPRING (23-MM ODX34-MM LG)	
	2	1	**165-3929**	12	BOLT (3/8-16X1.5-IN)	
	3	1	**5J-4715**	12	WASHER (10.3X20.6X4.2-MM THK)	

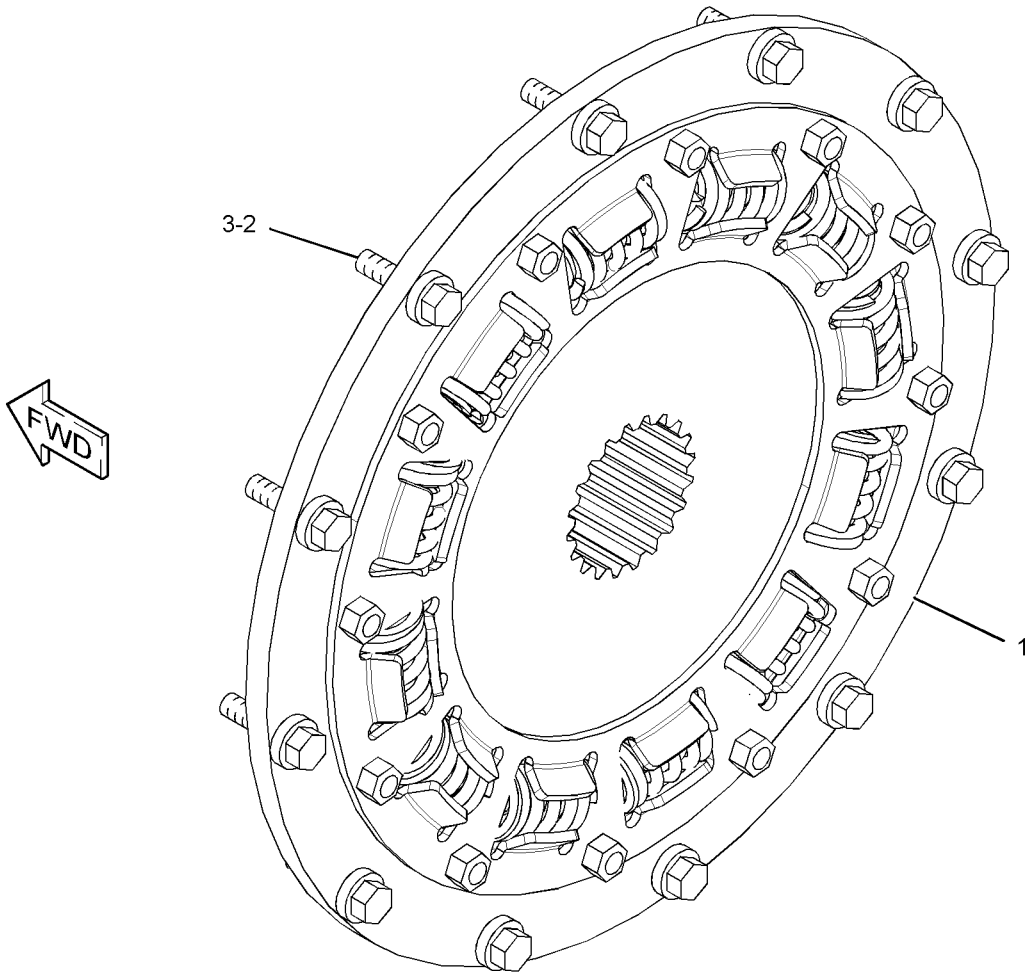

GRAPHIC #1 **<END>** g01402321

260-9479 COVER GP-SHIPPING

S/N: DZM1-UP

PART OF 253-8407 TRANSMISSION AR

SMCS-3030, 3064 **i02662788**

NOTE	REF NO	GRAPHIC REF	PART NUMBER	QTY	PART NAME 1 2 3 4 5 6 (PRODUCT LEVEL)	SEE PAGE
	1	1	**117-2927**	1	COVER-SHIPPING	
	2	1	**126-1773**	2	CAP-CONNECTOR	
	3	1	**175-3721**	1	COVER	
	6	1	**4M-0189**	1	SEAL-O-RING	
	7	1	**5P-0597**	1	CLAMP-HOSE	
	8	1	**8T-8737**	30	PLUG-SEAL	
	9	1	**155-2258**	2	WEDGE-PLUG LOCK (12-PIN)	
	10	1	**155-2263**	1	WEDGE-PLUG LOCK (6-PIN)	
	11	1	**276-9496**	1	PLUG-EXPANSION	
	12	1	*148-8406*	2	PLUG AS	
					(EACH INCLUDES)	
		1	**7M-8485**	1	SEAL-O-RING	
		1	**9S-9334**	1	PLUG-O-RING	
	13	1	*148-8407*	2	PLUG AS	
					(EACH INCLUDES)	
		1	**3J-1907**	1	SEAL-O-RING	
		1	**9S-4191**	1	PLUG-O-RING	
	14	1	*148-8408*	1	PLUG AS	
		1	**3D-2824**	1	SEAL-O-RING	
		1	**9S-4183**	1	PLUG-O-RING	
	15	1	**155-2255**	2	KIT-CONNECTING PLUG (12-PIN)	
					(EACH INCLUDES PLUG AS, WEDGE & INTERFACE SEAL)	
	16	1	**155-2274**	1	KIT-CONNECTING PLUG (6-PIN)	
	17	1	**1S-3725**	2	COVER	
	18	1	**1S-3730**	1	COVER	
	19	1	**5P-8245**	14	WASHER-HARD (13.5X25.5X3-MM THK)	
M	20	1	**6V-3823**	10	BOLT (M12X1.75X60-MM)	
M	21	1	**6V-8149**	10	NUT (M12X1.75-THD)	
	22	1	**8E-7365**	1	GASKET	
	23	1	**8E-7366**	2	GASKET	
M	24	1	**8T-0293**	4	BOLT (M12X1.75X20-MM)	
M	25	1	**8T-4137**	8	BOLT (M10X1.5X20-MM)	
M	26	1	**8T-4139**	4	BOLT (M12X1.75X30-MM)	
	27	1	**9H-0846**	1	SEAL-O-RING	

M-METRIC PART

260-9479 **COVER GP-SHIPPING** *(contd.)* **i02662788**

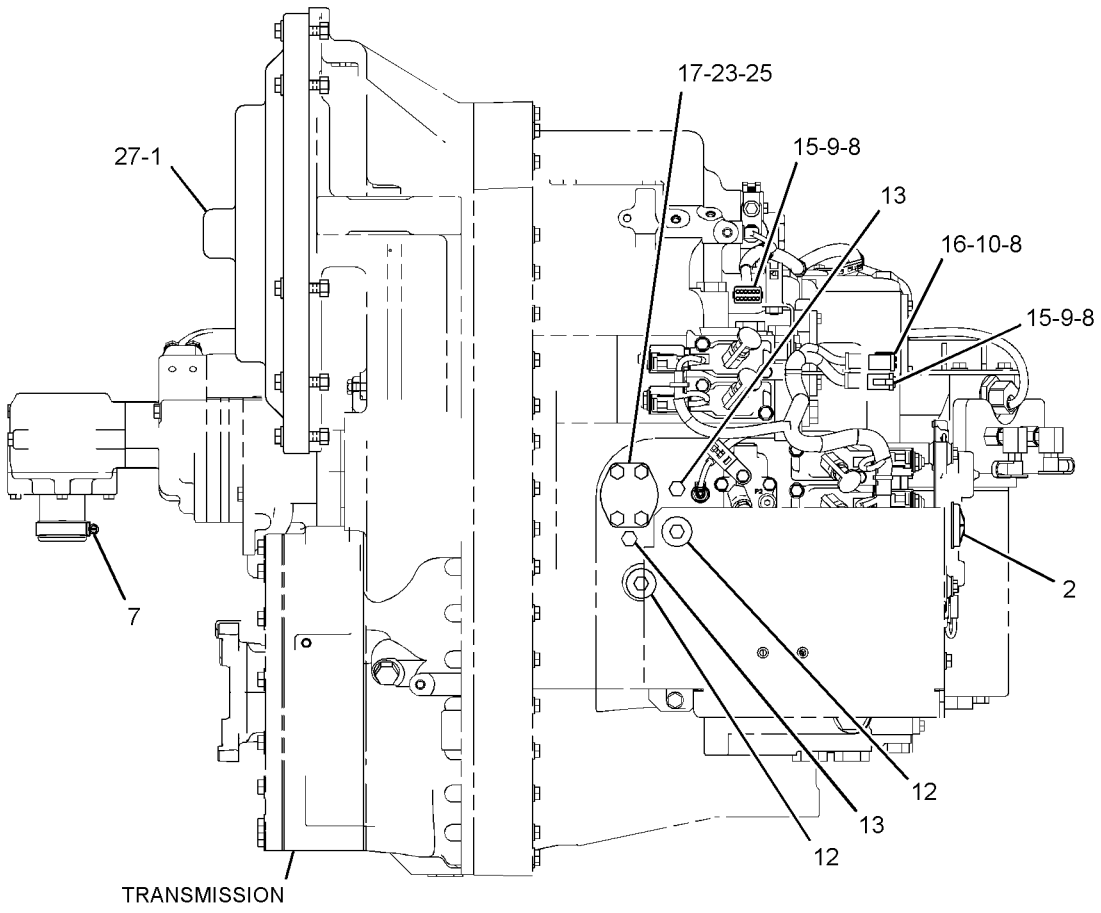

LEFT SIDE VIEW

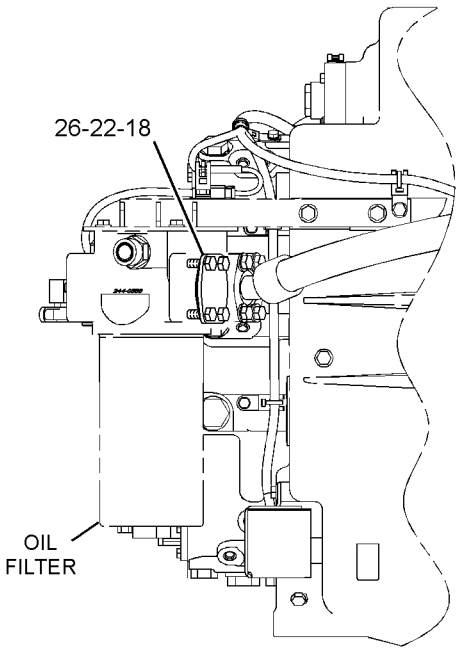

RIGHT SIDE VIEW

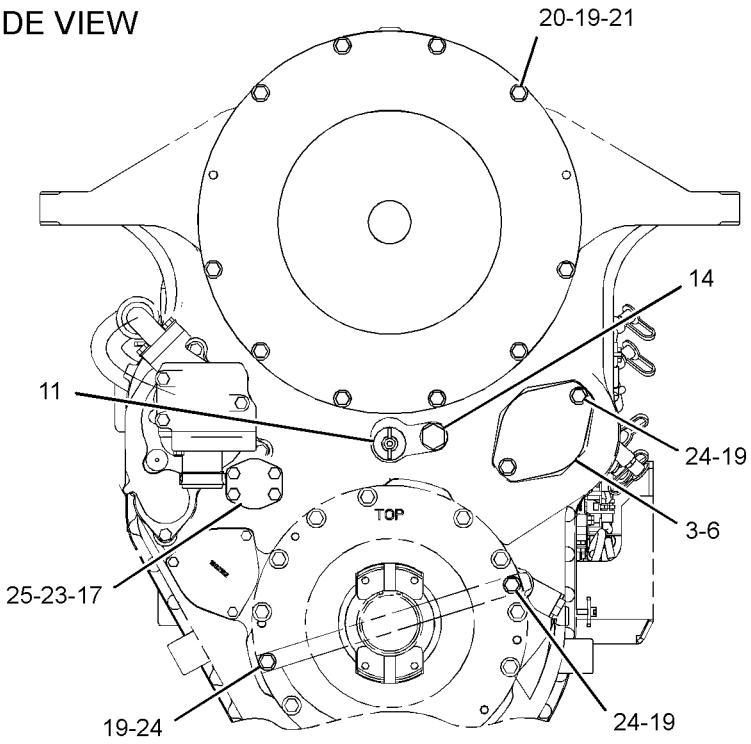

FRONT VIEW

GRAPHIC #1 **<END>** g01306989

287-8262 DIFFERENTIAL GP

S/N: R9H1-UP

PART OF 250-8204 GEAR GP-BEVEL & PINION

SMCS-3258 **i02770335**

NOTE	REF NO	GRAPHIC REF	PART NUMBER	QTY	PART NAME 1 2 3 4 5 6 (PRODUCT LEVEL)	SEE PAGE
	1	1	**148-7841**	3	SPRING	
	2	1	**217-4541**	10	DISC-FRICTION	
	3	1	**306-5633**	1	GEAR-DIFFERENTIAL	
	4	1	**306-5637**	4	PINION	
	5	1	**267-7340**	1	PLATE-THRUST	
	6	1	**267-7347**	1	RING-THRUST	
	7	1	**270-1778**	10	PLATE-SEPARATOR	
	8	1	**272-0353**	3	DOWEL	
	9	1	**272-1491**	1	WASHER-THRUST	
	10	1	**306-5632**	1	GEAR	
	11	1	**305-3347**	2	WASHER-THRUST	
	12	1	**287-8261**	1	CASE AS-DIFFERENTIAL	
M	12A	1	**6V-8569**	8	BOLT (M20X2.5X200-MM)	
	12B	1	**8T-3282**	8	WASHER-HARD (22X35X3.5-MM THK)	
Z	12C	1		1	CASE-DIFFERENTIAL (LOCK)	
Z	12D	1		1	CASE-DIFFERENTIAL (GEAR)	
Z	12E	1		1	CASE-DIFFERENTIAL (REACTION)	
	13	1	**306-5624**	1	SPIDER	
	14	1	**305-3348**	4	WASHER-THRUST	
	15	1	**293-5370**	4	BEARING-SLEEVE	
	16	1	**5F-9144**	3	SEAL-O-RING	

M-METRIC PART
Z-NOT SERVICED SEPARATELY

287-8262 DIFFERENTIAL GP *(contd.)* **i02770335**

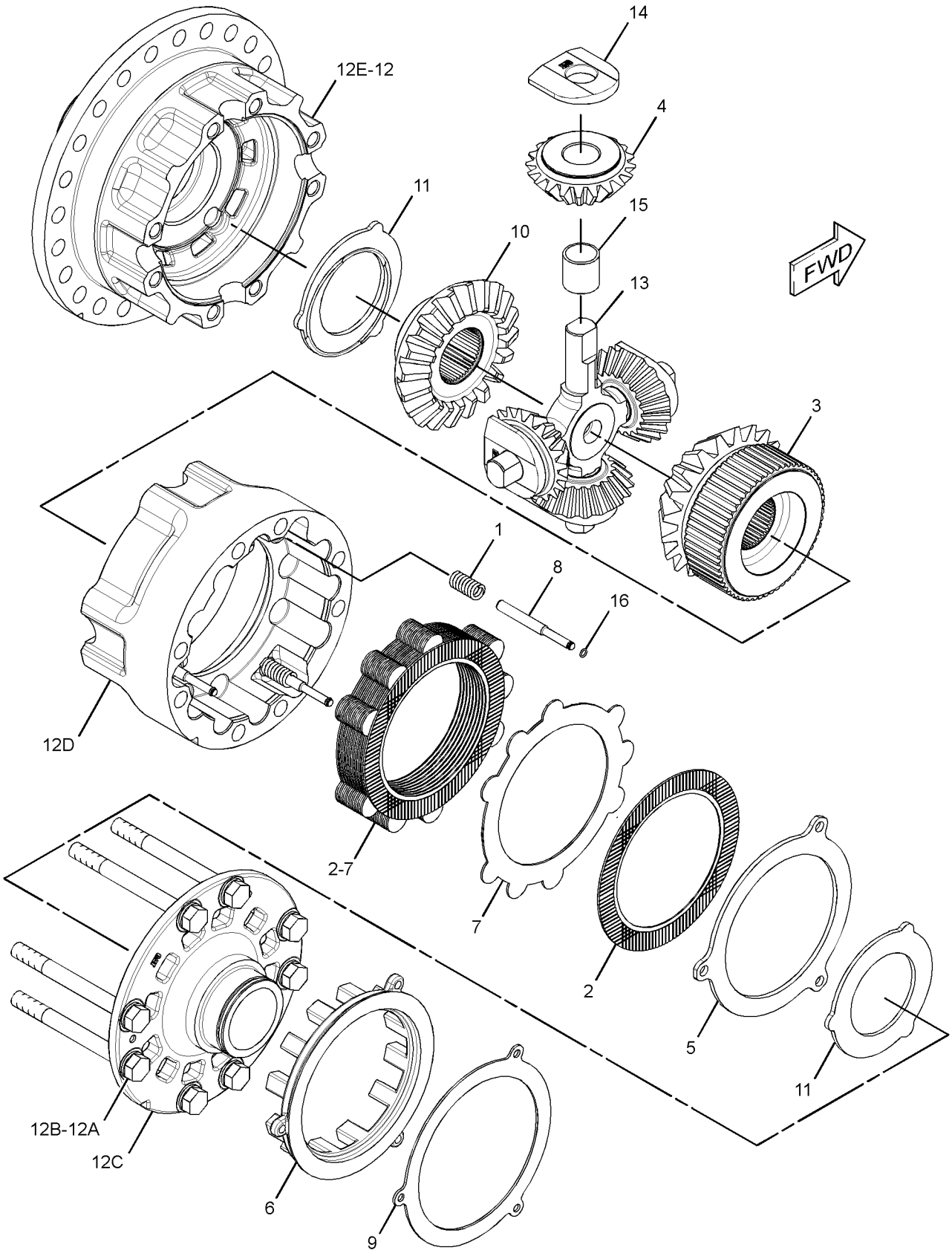

GRAPHIC #1 **<END>** g01318326

284-5028 DRIVE GP-FINAL–RH

S/N: R9H1-UP

PART OF 284-5026 AXLE GP-REAR

SMCS-4050 **i04016095**

NOTE	REF NO	GRAPHIC REF	PART NUMBER	QTY	PART NAME 1 2 3 4 5 6 (PRODUCT LEVEL)	SEE PAGE
	1	1	**6G-3208**	1	WASHER-THRUST (395.12X449.53X6.97-MM THK)	
	2	1	**8D-2256**	1	CONE-BEARING	
	3	1	**9K-1171**	2	CUP-BEARING	
	4	1	**9K-1172**	1	CONE-BEARING	
	5	1	**219-2436**	2	RING-WEAR	
	6	1	**264-7961**	2	SPROCKET	
	7	1	**265-2829**	1	SHAFT-DRIVE	
Y	8	1	**272-8011**	1	CARRIER GP-FINAL DRIVE	403
	9	1	**273-2455**	1	RETAINER	
	10	1	**273-2456**	1	RETAINER	
B	11	1	**273-2460**	1	SHIM PACK (INCLUDES 10-SHIMS)	
B	12	1	**273-7305**	2	SHIM (0.5-MM THK)	
B	13	1	**273-7306**	5	SHIM (0.12-MM THK)	
B	14	1	**273-7307**	5	SHIM (0.18-MM THK)	
	15	1	**284-5029**	1	HOUSING	
	16	1	**324-9280**	1	GEAR-RING (79-TEETH)	
	17	1	**290-2543**	3	DOWEL	
	18	1	**291-6875**	1	HOUSING	
M	19	1	**103-6169**	4	BOLT-SELF-LOCKING (M16X2X60-MM)	
	20	1	**133-2905**	1	RING-RETAINING	
M	21	1	**160-8510**	16	BOLT-SELF-LOCKING (M20X2.5X60-MM)	
	23	1	**5P-8245**	3	WASHER-HARD (13.5X25.5X3-MM THK)	
M	24	1	**6V-5845**	20	BOLT (M20X2.5X70-MM)	
	25	1	**330-7853**	1	SEAL-LIP TYPE	
	26	1	**8D-2311**	1	SEAL-LIP TYPE	
	27	1	**8D-4771**	1	SEAL-O-RING	
M	28	1	**8T-0372**	3	BOLT (M12X1.75X90-MM)	
	29	1	**8T-3282**	20	WASHER-HARD (22X35X3.5-MM THK)	
	30	1	**9F-2247**	1	PLUG-PIPE	
	31	1	**4E-5685**	28	SPACER (20.5X35X16-MM THK)	
M	32	1	**178-2991**	12	BOLT-SELF-LOCKING (M20X2.5X70-MM)	
	33	1	**328-9667**	1	WASHER-THRUST (395.1X443.5X7-MM THK)	

B-USE AS REQUIRED
M-METRIC PART
Y-SEPARATE ILLUSTRATION

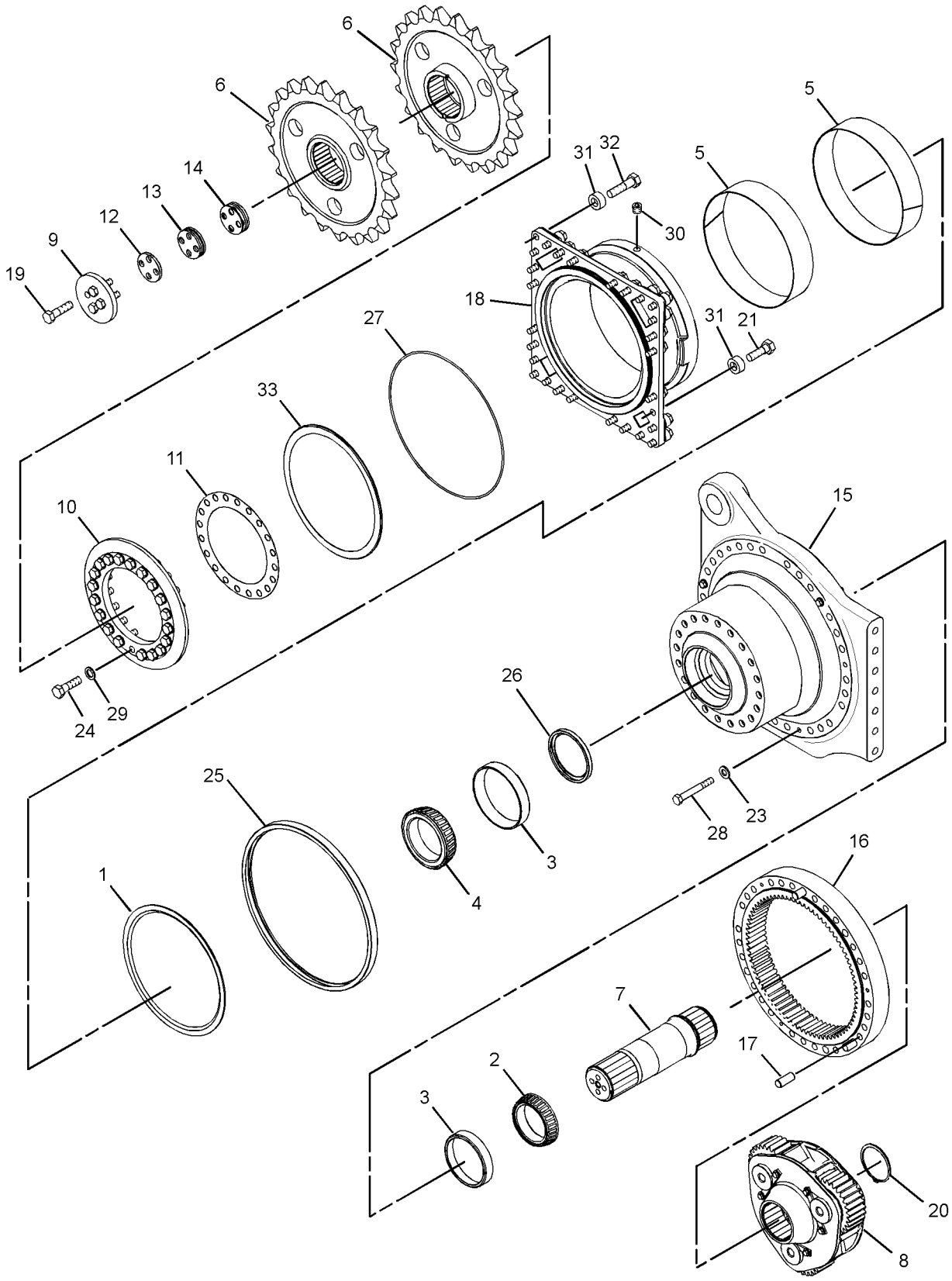

GRAPHIC #1 **<END>** g02194453

284-5030 DRIVE GP-FINAL–LH

S/N: R9H1-UP

PART OF 284-5026 AXLE GP-REAR

SMCS-4050 **i04032449**

NOTE	REF NO	GRAPHIC REF	PART NUMBER	QTY	PART NAME 1 2 3 4 5 6 (PRODUCT LEVEL)	SEE PAGE
	1	1	**6G-3208**	1	WASHER-THRUST (395.12X449.53X6.97-MM THK)	
	2	1	**8D-2256**	1	CONE-BEARING	
	3	1	**9K-1171**	2	CUP-BEARING	
	4	1	**9K-1172**	1	CONE-BEARING	
	5	1	**219-2436**	2	RING-WEAR	
	6	1	**264-7961**	2	SPROCKET	
	7	1	**265-2829**	1	SHAFT-DRIVE	
Y	8	1	**272-8011**	1	CARRIER GP-FINAL DRIVE	403
	9	1	**273-2455**	1	RETAINER	
	10	1	**273-2456**	1	RETAINER	
B	11	1	**273-2460**	1	SHIM PACK (INCLUDES 10-SHIMS)	
B	12	1	**273-7305**	2	SHIM (0.5-MM THK) (0.5-MM THK)	
B	13	1	**273-7306**	5	SHIM (0.12-MM THK) (0.12-MM THK)	
B	14	1	**273-7307**	5	SHIM (0.18-MM THK) (0.18-MM THK)	
	15	1	**284-5031**	1	HOUSING	
	16	1	**324-9280**	1	GEAR-RING (79-TEETH)	
	17	1	**290-2543**	3	DOWEL	
	18	1	**291-6875**	1	HOUSING	
M	19	1	**103-6169**	4	BOLT-SELF-LOCKING (M16X2X60-MM)	
	20	1	**133-2905**	1	RING-RETAINING	
M	21	1	**160-8510**	16	BOLT-SELF-LOCKING (M20X2.5X60-MM)	
	23	1	**5P-8245**	3	WASHER-HARD (13.5X25.5X3-MM THK)	
M	24	1	**6V-5845**	20	BOLT (M20X2.5X70-MM)	
	25	1	**330-7853**	1	SEAL-LIP TYPE	
	26	1	**8D-2311**	1	SEAL-LIP TYPE	
	27	1	**8D-4771**	1	SEAL-O-RING	
M	28	1	**8T-0372**	3	BOLT (M12X1.75X90-MM)	
	29	1	**8T-3282**	20	WASHER-HARD (22X35X3.5-MM THK)	
	30	1	**9F-2247**	1	PLUG-PIPE	
	31	1	**4E-5685**	28	SPACER (20.5X35X16-MM THK)	
M	32	1	**178-2991**	12	BOLT-SELF-LOCKING (M20X2.5X70-MM)	
	33	1	**328-9667**	1	WASHER-THRUST (395.1X443.5X7-MM THK)	

B-USE AS REQUIRED
M-METRIC PART
Y-SEPARATE ILLUSTRATION

284-5030 DRIVE GP-FINAL *(contd.)* i04032449

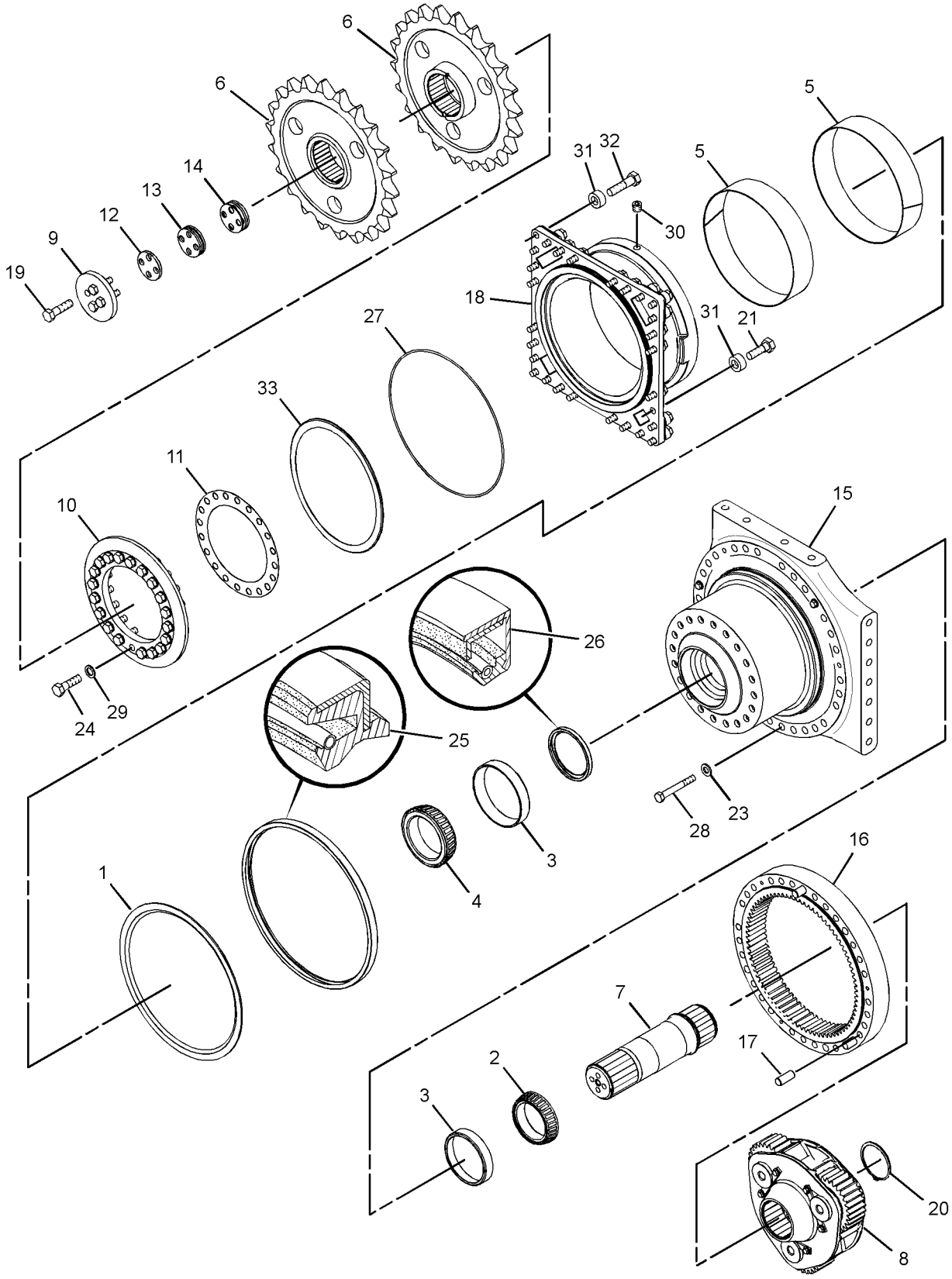

GRAPHIC #1 **<END>** g02227776

349-6144 FILLER GP-POWER TRAIN OIL

S/N: R9H1-UP

PART OF 349-2556 COMMON AR

SMCS-3005, 3081, 7513 **i03909279**

NOTE	REF NO	GRAPHIC REF	PART NUMBER	QTY	PART NAME 1 2 3 4 5 6 (PRODUCT LEVEL)	SEE PAGE
	1	1	**9G-5127**	1	BREATHER (POWER TRAIN OIL)	
	2	1	**254-3286**	1	GAUGE AS-OIL LEVEL (DIPSTICK) (POWER TRAIN OIL)	
	3	1	**295-7918**	1	TUBE AS	
	4	1	**3N-2945**	1	GASKET	
	5	1	**7J-8611**	1	ELBOW-PIPE	
	6	1	**8T-4121**	2	WASHER-HARD (11X21X2.5-MM THK)	
M	7	1	**8T-4196**	2	BOLT (M10X1.5X35-MM)	

M-METRIC PART

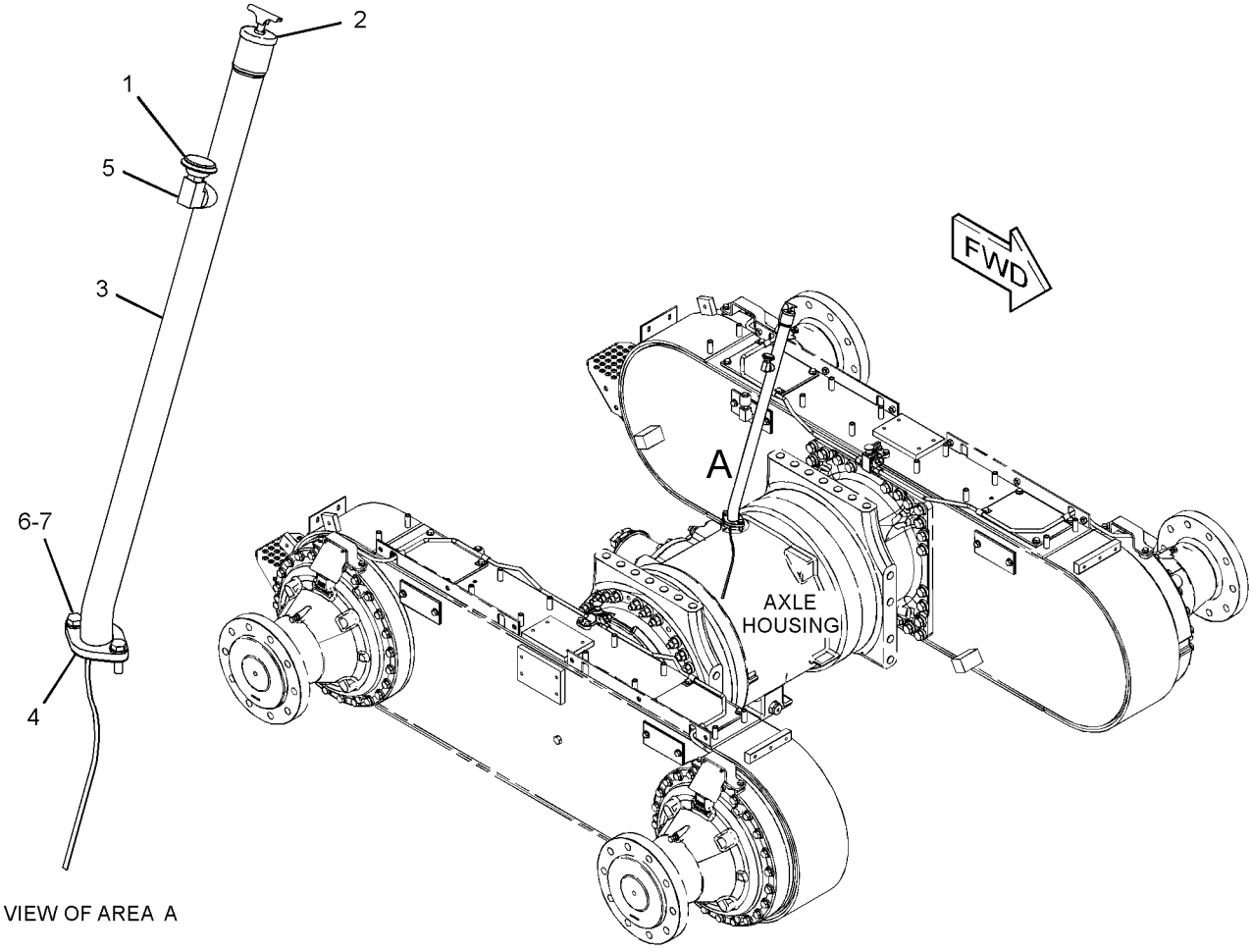

GRAPHIC #1 **<END>** g02209073

253-7939 FILTER GP-OIL–TRANSMISSION

S/N: DZM1601-UP

PART OF 253-8407 TRANSMISSION AR

SMCS-3004, 3067 **i03390825**

NOTE	REF NO	GRAPHIC REF	PART NUMBER	QTY	PART NAME 1 2 3 4 5 6 (PRODUCT LEVEL)	SEE PAGE
	1	1	**257-9850**	1	BRACKET AS	
CY	2	1	*333-6432*	1	FILTER GP-OIL	439
	3	1	**8T-4121**	4	WASHER-HARD (11X21X2.5-MM THK)	
M	4	1	**8T-4184**	2	BOLT (M12X1.75X45-MM)	
M	5	1	**8T-4195**	4	BOLT (M10X1.5X30-MM)	
	6	1	**8T-4223**	2	WASHER-HARD (13.5X25.5X3-MM THK)	

C-CHANGE FROM PREVIOUS TYPE
M-METRIC PART
Y-SEPARATE ILLUSTRATION

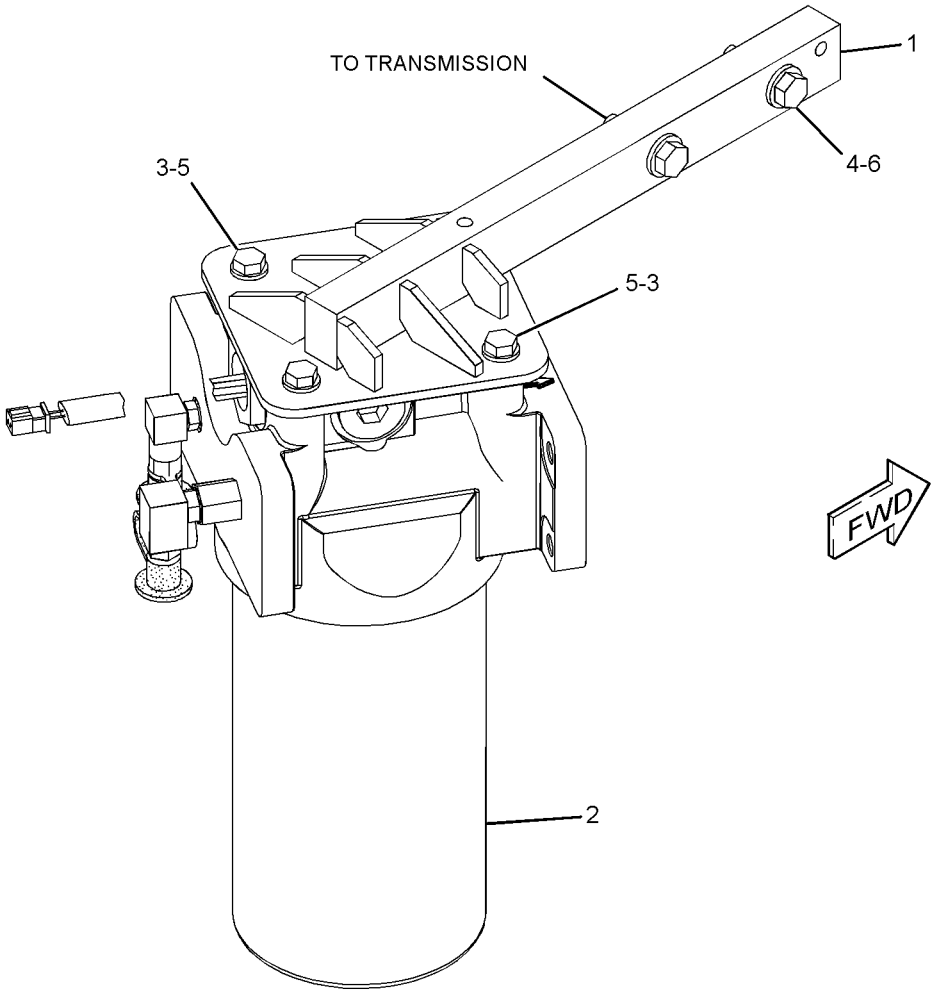

GRAPHIC #1 **<END>** g01336245

333-6432 FILTER GP-OIL–TRANSMISSION

S/N: R9H1-UP; DZM1601-UP
PART OF 253-7939 FILTER GP-OIL
ALSO FIELD INSTALLATION

SMCS-3004, 3067 **i03784089**

NOTE	REF NO	GRAPHIC REF	PART NUMBER	QTY	PART NAME 1 2 3 4 5 6 (PRODUCT LEVEL)	SEE PAGE
	1	1	**6V-0852**	1	CAP-DUST	
	2	1	**8C-3447**	1	CAP-DUST	
	3	1	**124-8909**	1	ELBOW	
	4	1	**321-5967**	1	HOUSING GP-FILTER	
		1	**9S-8004**	1	PLUG-O-RING	
		1	**214-7568**	1	SEAL-O-RING	
	5	1	**328-3655**	1	FILTER ELEMENT AS-OIL (ADVANCED EFFICIENCY) (TRANSMISSION)	
Y	6	1	**333-9310**	1	BASE GP-OIL FILTER	402
	7	1	**214-7568**	3	SEAL-O-RING	
	8	1	**6V-5048**	2	SEAL-O-RING	
	9	1	**6V-0484**	1	ADAPTER-O-RING	
	10	1	**6V-3965**	1	FITTING (QUICK DISCONNECT)	
	11	1	**7W-7381**	1	FITTING-OUTLET	
	12	1	**8C-3446**	1	VALVE-FLUID SAMPLING	
	13	1	**130-0229**	1	SEAL-O-RING	
	14	1	**8L-2786**	1	SEAL-O-RING	
	15	1	**3P-1932**	1	ADAPTER	

Y-SEPARATE ILLUSTRATION

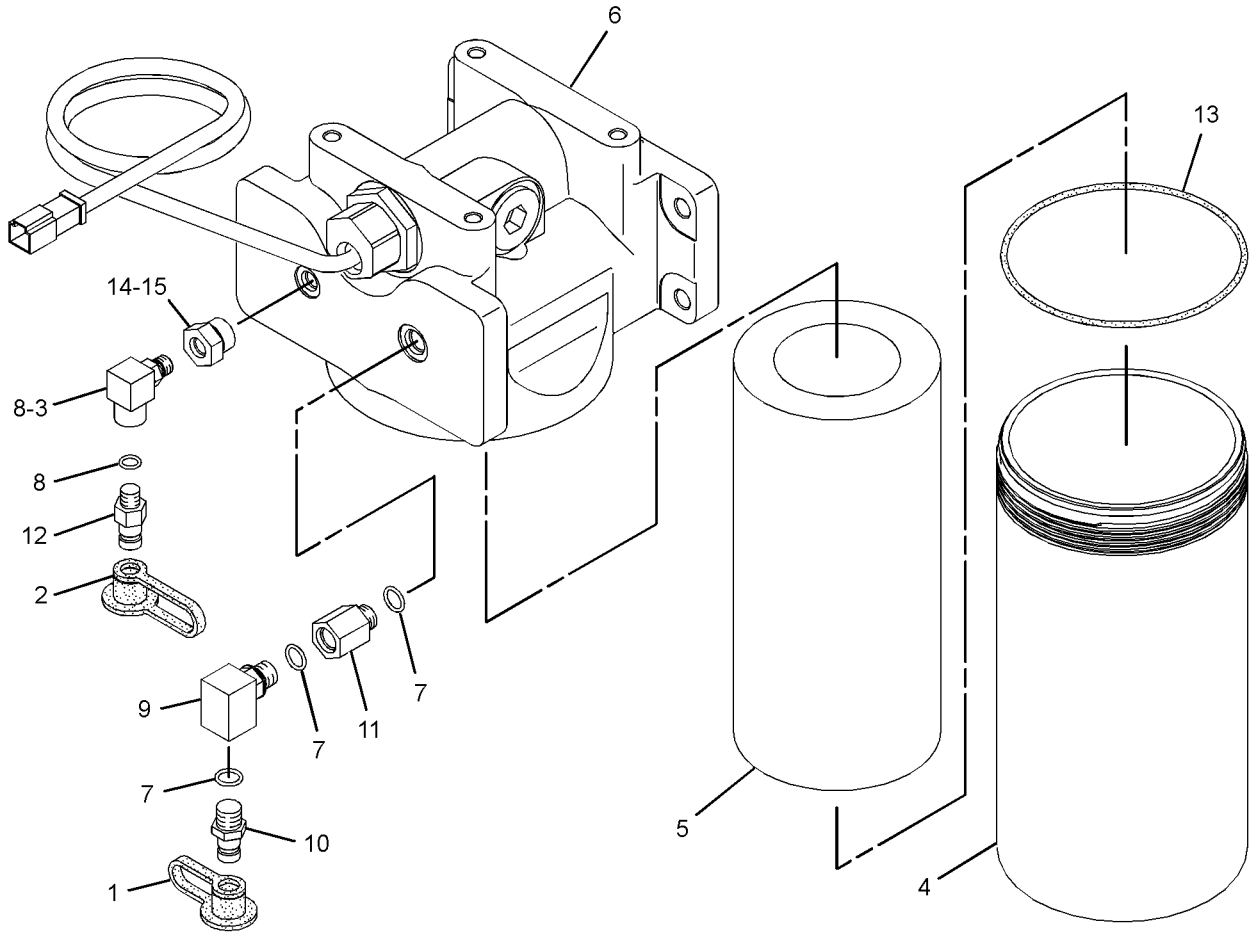

GRAPHIC #1 **<END>** g02099694

250-8204 GEAR GP-BEVEL & PINION

S/N: R9H1-UP

PART OF 284-5026 AXLE GP-REAR

SMCS-3254, 3256 **i03628431**

NOTE	REF NO	GRAPHIC REF	PART NUMBER	QTY	PART NAME 1 2 3 4 5 6 (PRODUCT LEVEL)	SEE PAGE
	1	1	**000-9262**	1	CONE-TAPERED	
	2	1	**8B-6511**	1	CUP-BEARING	
	3	1	**132-6597**	1	CONE-BEARING	
	4	1	**132-6598**	1	CUP-BEARING	
	5	1	**215-8200**	1	BEARING AS	
	6	1	**215-9664**	1	LOCKNUT AS	
		1	**159-3046**	4	BOLT (M8X1.25X20-MM)	
	7	1	**219-4681**	1	SHROUD	
	8	1	**253-5413**	1	YOKE AS	
	9	1	**254-7973**	1	GEAR SET-BEVEL	
	10	1	**264-0575**	1	SEAL-LIP TYPE	
B	11	1	**271-8528**	1	SHIM PACK (INCLUDES 18-SHIMS)	
	12	1	**271-8529**	1	RETAINER	
	13	1	**274-5365**	1	HOUSING-PINION	
Y	14	1	**287-8262**	1	DIFFERENTIAL GP	431
M	15	1	**5A-3604**	3	BOLT-SOCKET HEAD (M8X1.25X25-MM)	
	16	1	**215-8207**	1	RACE-ROLLER BEARING	
	17	1	**219-7569**	24	BOLT (M20X2.5X45-MM)	
	18	1	**278-4876**	1	RING-RETAINING	
	19	1	**2H-3933**	1	SEAL-O-RING	
M	20	1	**286-9155**	1	BOLT-SELF-LOCKING (M16X2X120-MM)	
	21	1	**8T-3282**	24	WASHER-HARD (22X35X3.5-MM THK)	

B-USE AS REQUIRED
M-METRIC PART
Y-SEPARATE ILLUSTRATION

250-8204 **GEAR GP-BEVEL & PINION** *(contd.)* **i03628431**

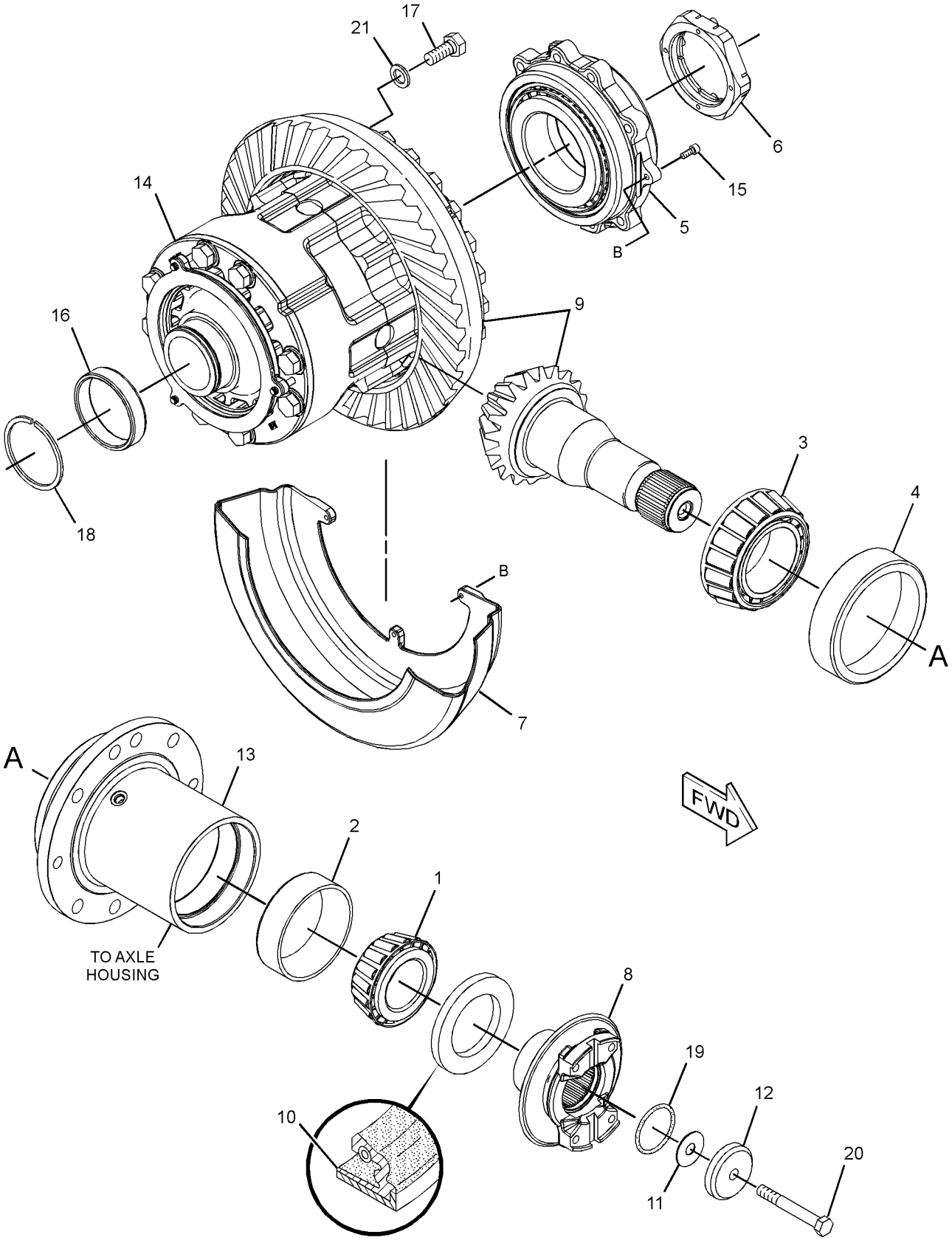

GRAPHIC #1 **<END>** g01321598

249-6548 LINES GP-LUBRICATION–PUMP DRIVE

S/N: R9H1-UP

PART OF 349-2556 COMMON AR

SMCS-5057, 7517 **i02370390**

NOTE	REF NO	GRAPHIC REF	PART NUMBER	QTY	PART NAME 1 2 3 4 5 6 (PRODUCT LEVEL)	SEE PAGE
I	1	1	**265-3700**	1	HOSE AS	
	2	1	**265-3701**	1	BRACKET AS	
	3	1	*148-8336*	2	CONNECTOR AS	
					(EACH INCLUDES)	
		1	**6V-8636**	1	CONNECTOR	
		1	**3J-1907**	1	SEAL-O-RING	
		1	**6V-8397**	1	SEAL-O-RING	
	4	1	*148-8367*	1	ELBOW AS	
		1	**6V-9850**	1	ELBOW	
		1	**6V-8397**	1	SEAL-O-RING	
	5	1	**8M-2773**	1	CLIP	
	6	1	**8T-4121**	1	WASHER-HARD (11X21X2.5-MM THK)	
M	7	1	**8T-4137**	1	BOLT (M10X1.5X20-MM)	

I-REFER TO HYDRAULIC INFORMATION SYSTEM
M-METRIC PART

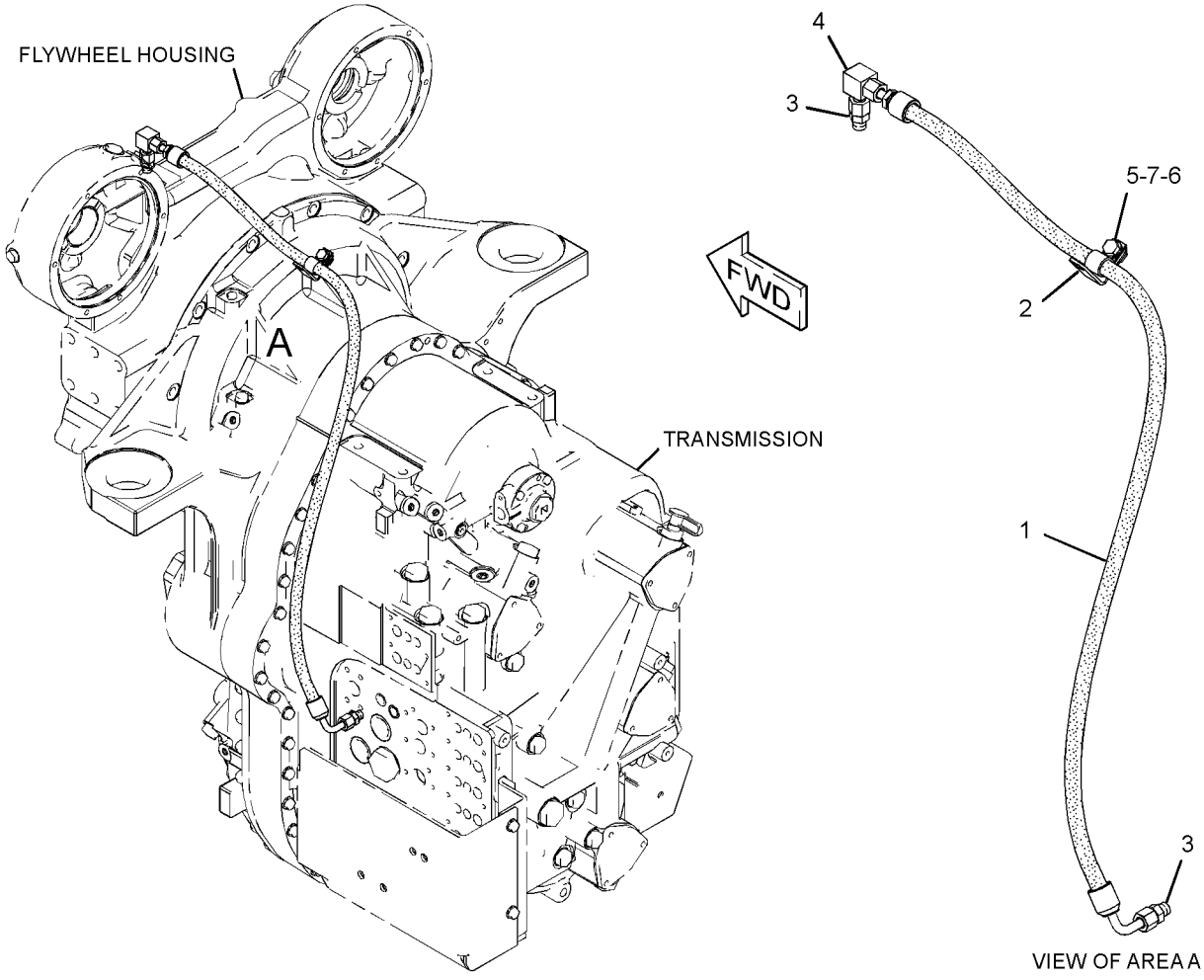

GRAPHIC #1 **<END>** g01293153

253-7931 LINES GP-TRANSMISSION OIL

S/N: DZM1-UP

PART OF 253-8407 TRANSMISSION AR

SMCS-3154 **i02534586**

NOTE	REF NO	GRAPHIC REF	PART NUMBER	QTY	PART NAME 1 2 3 4 5 6 (PRODUCT LEVEL)	SEE PAGE
I	1	1	**280-6900**	1	HOSE AS	
	2	1	**1P-4579**	2	FLANGE-HALF	
	3	1	**4J-0522**	1	SEAL-O-RING	
	4	1	**4J-0524**	1	SEAL-O-RING	
	5	1	**1P-4578**	2	FLANGE-HALF	
	6	1	**8T-4121**	4	WASHER-HARD (11X21X2.5-MM THK)	
M	7	1	**8T-4184**	4	BOLT (M12X1.75X45-MM)	
M	8	1	**8T-4196**	4	BOLT (M10X1.5X35-MM)	
	9	1	**8T-4223**	4	WASHER-HARD (13.5X25.5X3-MM THK)	

I-REFER TO HYDRAULIC INFORMATION SYSTEM
M-METRIC PART

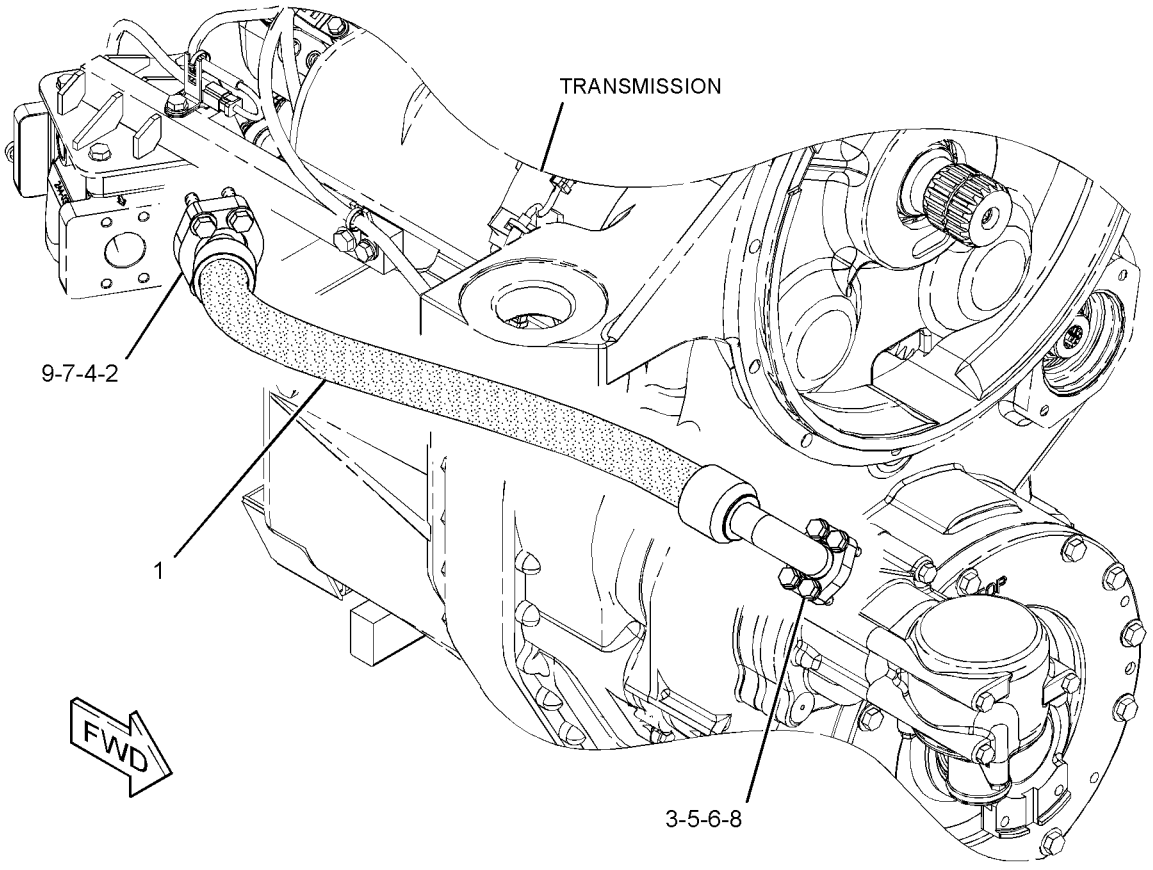

GRAPHIC #1 **<END>** g01206902

POWER TRAIN

288-9615 LINES GP-TRANSMISSION OIL

S/N: R9H1-UP

PART OF 349-2556 COMMON AR

SMCS-3154 **i03910611**

NOTE	REF NO	GRAPHIC REF	PART NUMBER	QTY	PART NAME 1 2 3 4 5 6 (PRODUCT LEVEL)	SEE PAGE
	1	1	**328-3655**	1	FILTER ELEMENT AS-OIL (ADVANCED EFFICIENCY) (POWER TRAIN)	
	2	2	**6G-2168**	1	BLOCK	
	3	2	**9M-7958**	2	CLAMP-HOSE	
	4	2	**141-2307**	2	CLAMP-HOSE	
	5	2	**210-4458**	1	ELBOW	
	7	2	**280-1766**	1	SLEEVE	
I	8	2	**285-0347**	1	HOSE AS	
	9	2	**287-5839**	1	TUBE AS	
I	10	1	**288-9675**	1	HOSE AS	
I	11	2	**288-9679**	1	HOSE AS	
	12	1	**289-8558**	1	TUBE AS	
	13	1	**292-0232**	1	TUBE AS	
I	14	2	**292-0889**	1	HOSE AS	
	15	2	**292-8741**	1	BRACKET AS	
M		2	**8T-3490**	1	NUT-WELD (M10X1.5-THD)	
	16	2	**293-0381**	1	PLATE AS	
M		2	**8T-3490**	1	NUT-WELD (M10X1.5-THD)	
	17	1	**293-0382**	1	BRACKET AS	
M		1	**8T-3490**	1	NUT-WELD (M10X1.5-THD)	
	18	2	*169-5864*	2	STEM AS	
					(EACH INCLUDES)	
		2	**069-4269**	1	STEM	
	18A	2	**3D-2824**	1	SEAL-O-RING	
	19	2	*148-8323*	1	CONNECTOR AS	
		2	**6V-9875**	1	CONNECTOR	
		2	**2S-4078**	1	SEAL-O-RING	
		2	**5K-9090**	1	SEAL-O-RING	
	20	1	*148-8335*	2	CONNECTOR AS	
					(EACH INCLUDES)	
		1	**6V-8635**	1	CONNECTOR	
		1	**5K-9090**	1	SEAL-O-RING	
		1	**7M-8485**	1	SEAL-O-RING	
	21	2	*148-8336*	1	CONNECTOR AS	
		2	**6V-8636**	1	CONNECTOR	
		2	**3J-1907**	1	SEAL-O-RING	
		2	**6V-8397**	1	SEAL-O-RING	
	22	2	*148-8382*	1	ELBOW AS	
		2	**8T-0404**	1	ELBOW	
		2	**3D-2824**	1	SEAL-O-RING	
		2	**7J-9108**	1	SEAL-O-RING	
	23	2	*148-8416*	2	REDUCER AS	
					(EACH INCLUDES)	
		2	**6V-8939**	1	REDUCER-O-RING	
		2	**6V-8398**	1	SEAL-O-RING	
	24	2	*148-8446*	1	TEE AS-SWIVEL	
		2	**6V-9838**	1	TEE-SWIVEL	
		2	**7J-9108**	2	SEAL-O-RING	
	25	2	*153-6236*	1	REDUCER AS	
		2	**6V-8946**	1	REDUCER	
		2	**6V-9746**	2	SEAL-O-RING	
	26	2	*153-6262*	1	UNION AS	
		2	**6V-8734**	1	UNION	
		2	**5K-9090**	2	SEAL-O-RING	
	27	2	**165-4854**	2	SEAL-O-RING	
	28	1	**302-5636**	1	TUBE AS	

288-9615 **LINES GP-TRANSMISSION OIL** *(contd.)* **i03910611**

NOTE	REF NO	GRAPHIC REF	PART NUMBER	QTY	PART NAME 1 2 3 4 5 6 (PRODUCT LEVEL)	SEE PAGE
I	29	2	**302-5697**	1	HOSE AS	
	30	1	**319-1904**	1	TUBE AS	
	31	1	**1P-3704**	1	SEAL-RECTANGULAR	
	32	2	**1P-4578**	2	FLANGE-HALF	
	33	2	**1P-4579**	2	FLANGE-HALF	
	34	2	**1S-9799**	1	SEAL-O-RING	
	36	1,2	**4J-0522**	4	SEAL-O-RING	
	37	2	**4J-0524**	1	SEAL-O-RING	
C	38	1,2	**4S-1962**	2	CLIP	
	39	1	**5K-9090**	1	SEAL-O-RING	
	40	2	**5P-2369**	1	CLIP	
	41	1	**205-8125**	1	CLIP	
	42	2	**6J-2680**	1	SEAL-O-RING	
	43	2	**6V-8400**	1	SEAL-O-RING	
	44	2	**9X-6581**	2	NUT-O-RING SEAL (1-14-THD)	
C	47	1,2	**8T-4121**	20	WASHER-HARD (11X21X2.5-MM THK)	
CM	48	1,2	**8T-4136**	6	BOLT (M10X1.5X25-MM)	
M	49	2	**8T-4137**	3	BOLT (M10X1.5X20-MM)	
M	50	2	**8T-4172**	4	BOLT (M10X1.5X80-MM)	
M	51	1	**8T-4182**	4	BOLT (M10X1.5X45-MM)	
M	52	1	**8T-4183**	8	BOLT (M12X1.75X40-MM)	
M	53	2	**8T-4184**	4	BOLT (M12X1.75X45-MM)	
	54	1,2	**8T-4223**	14	WASHER-HARD (13.5X25.5X3-MM THK)	
M	55	2	**8T-4956**	2	BOLT (M12X1.75X35-MM)	
E	56	2	**8I-1362**		HOSE (74-CM)	
	57	2	**309-6994**	1	HOSE	
	58	1	**173-1437**	2	FLANGE-HALF	
C	59	1,2	**5P-9299**	3	CLIP	
C	60	2	**7D-7233**	2	CLIP	
CM	61	1,2	**8T-4133**	3	NUT (M10X1.5-THD)	
C	62	1	*148-8325*	1	CONNECTOR AS	
		1	**6V-8641**	1	CONNECTOR	
		1	**4J-5477**	1	SEAL-O-RING	
		1	**3J-1907**	1	SEAL-O-RING	
CI	63	1	**282-3197**	1	HOSE AS	

C-CHANGE FROM PREVIOUS TYPE
E-ORDER BY THE CENTIMETER
I-REFER TO HYDRAULIC INFORMATION SYSTEM
M-METRIC PART

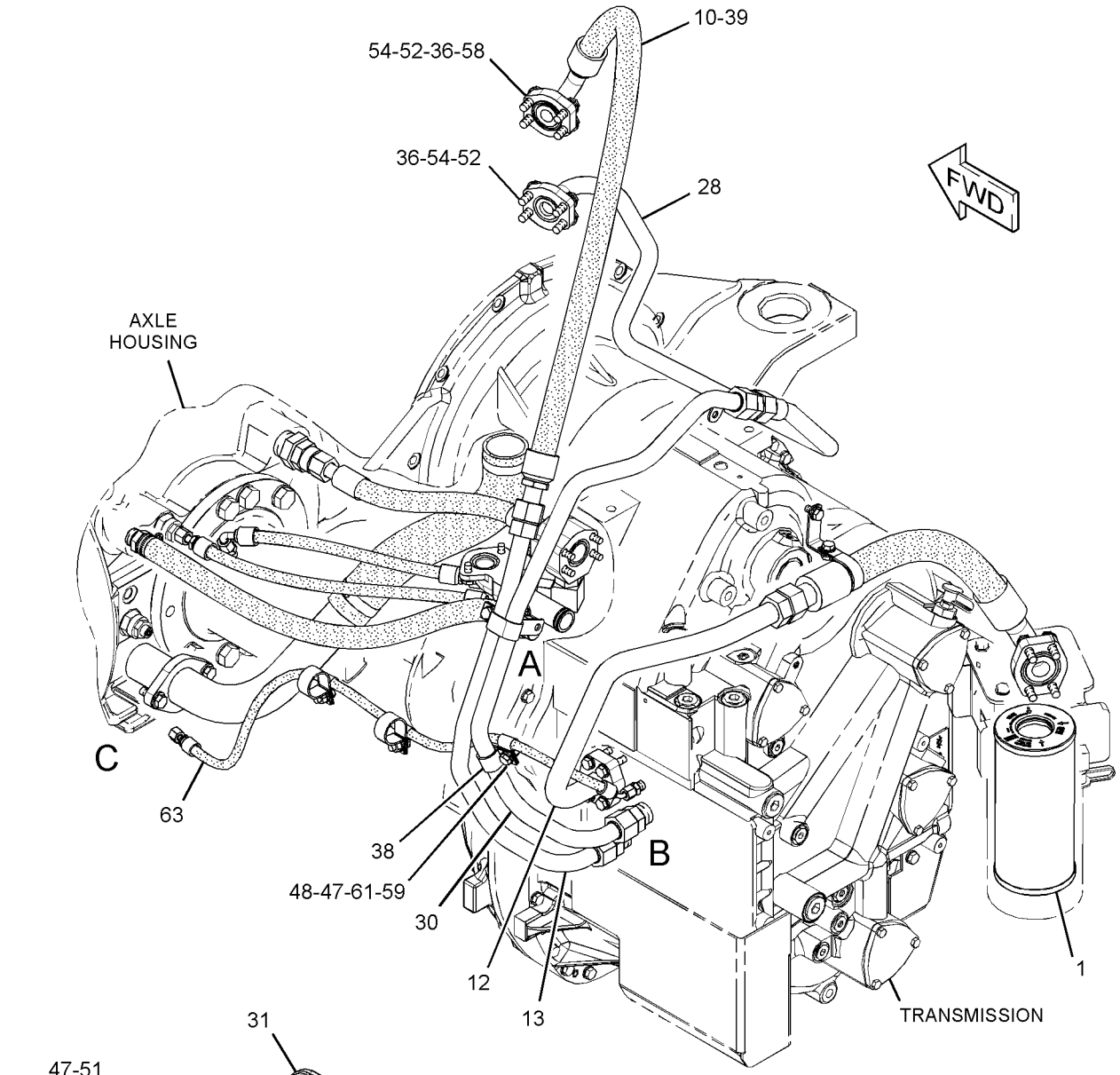

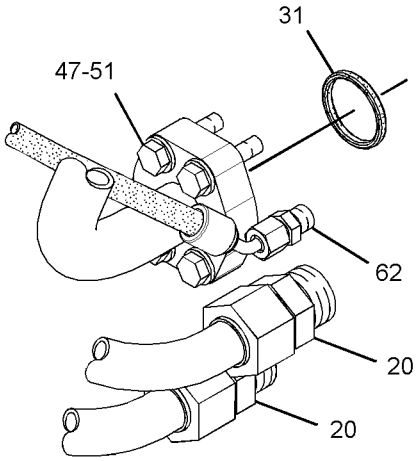

VIEW OF AREA B

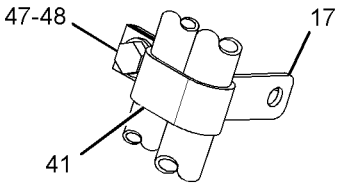

VIEW OF AREA A

REFER TO ALL ILLUSTRATIONS OF
THIS GROUP FOR AUXILIARY VIEWS

GRAPHIC #1

g02211235

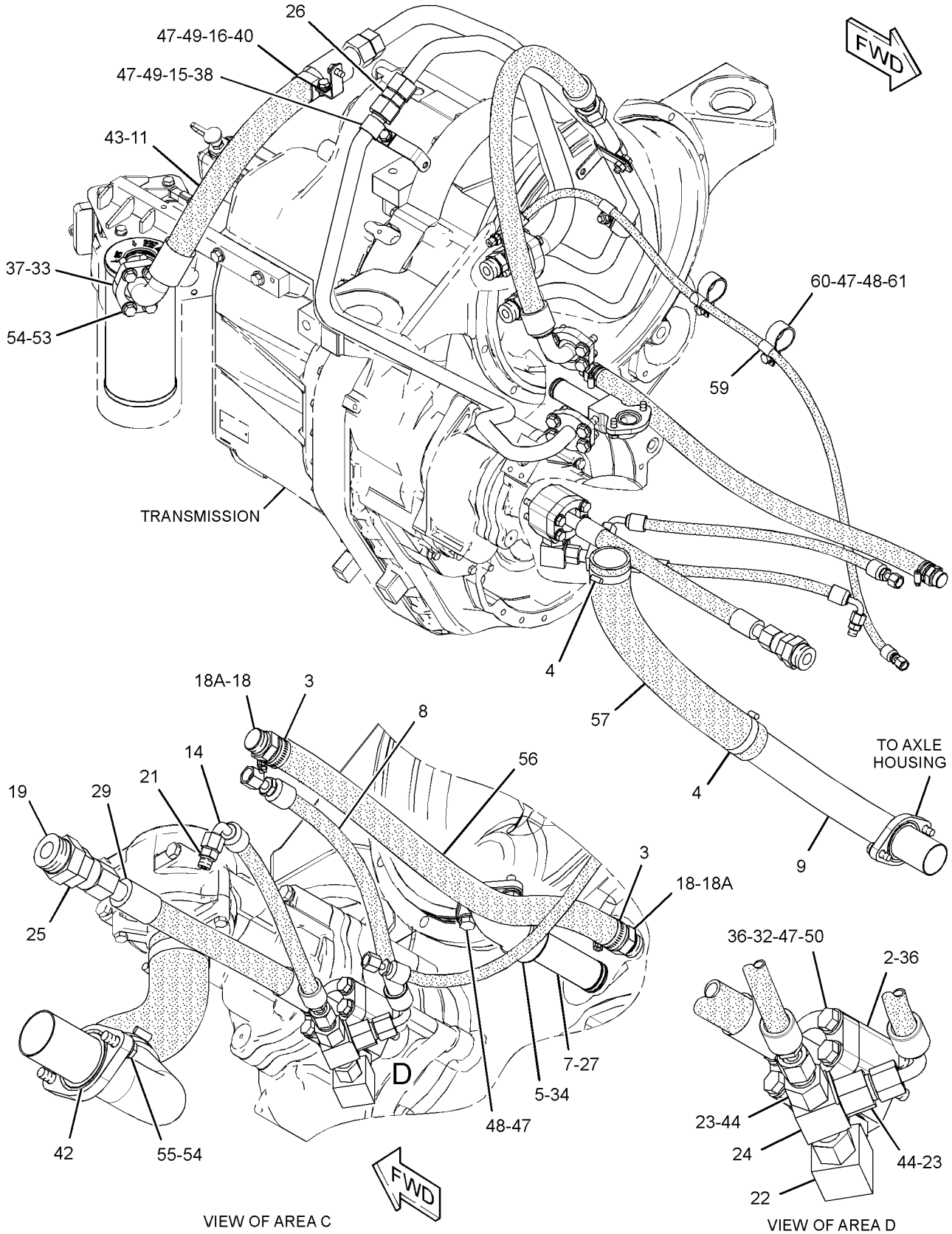

GRAPHIC #2 **<END>** g02211236

250-8213 MOUNTING GP-WHEEL

S/N: R9H1-UP

PART OF 349-2556 COMMON AR

SMCS-4201 **i02585614**

NOTE	PART NUMBER	QTY	PART NAME 1 2 3 4 5 6 (PRODUCT LEVEL)	SEE PAGE
	280-3616	60	BOLT (M30X3.5X70-MM)	
	282-0882	60	WASHER-HARD (33X56X6-MM THK)	

<END>

349-5188 POWER TRAIN AR

S/N: R9H1-UP

PART OF 349-2556 COMMON AR

SMCS-3000, 4000 **i03909276**

NOTE	PART NUMBER	QTY	PART NAME 1 2 3 4 5 6 (PRODUCT LEVEL)	SEE PAGE
Y	**284-5026**	1	AXLE GP-REAR	400
Y	*6G-1740*	1	CHAIN GP-DRIVE (TANDEM)	407
Y	*356-2980*	1	CONTROL GP-DIFFERENTIAL LOCK	420
Y	*356-2976*	1	LINES GP-SERVICE BRAKE	545
Y	*285-0604*	1	TANDEM & COVER GP	455
Y	*285-0609*	1	WHEEL AR	466
	349-6143	1	FILLER GP-POWER TRAIN OIL	
	3N-2945	1	GASKET	
	305-3333	1	TUBE AS	

Y-SEPARATE ILLUSTRATION

<END>

246-8065 PUMP GP-GEAR

S/N: DZM1-UP
2-SECTION
PART OF 253-8407 TRANSMISSION AR

SMCS-3066, 3115, 3203, 5073 **i02178257**

NOTE	REF NO	GRAPHIC REF	PART NUMBER	QTY	PART NAME 1 2 3 4 5 6 (PRODUCT LEVEL)	SEE PAGE
Y	1	1	**246-8066**	1	PUMP GP-GEAR	450
	2	1	**112-1574**	1	SEAL-O-RING	
	3	1	**4F-7952**	1	SEAL-O-RING	
M	4	1	**6V-5230**	2	BOLT (M10X1.5X60-MM)	
M	5	1	**8C-2926**	1	BOLT (M10X1.5X140-MM)	

M-METRIC PART
Y-SEPARATE ILLUSTRATION

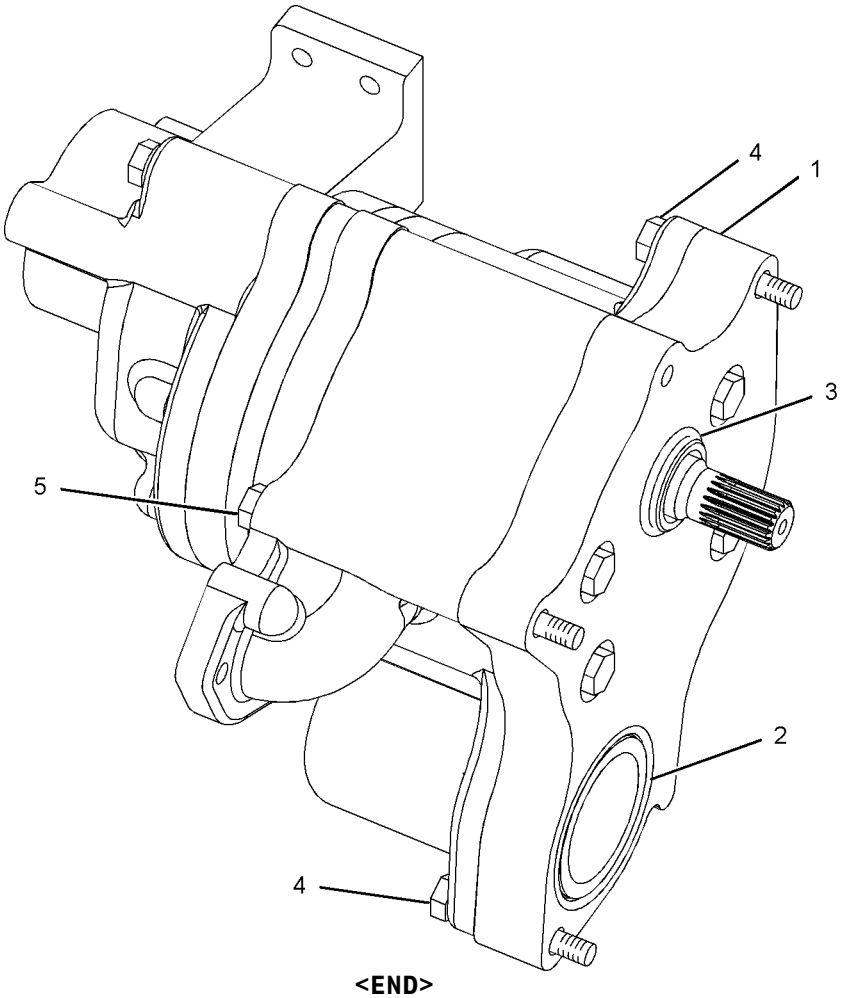

GRAPHIC #1 **<END>** g01102956

246-8066 PUMP GP-GEAR

S/N: DZM1-UP
2-SECTION
PART OF 246-8065 PUMP GP-GEAR

SMCS-3066, 3115, 3203, 5073 **i02976076**

NOTE	REF NO	GRAPHIC REF	PART NUMBER	QTY	PART NAME 1 2 3 4 5 6 (PRODUCT LEVEL)	SEE PAGE
	1	1	**3S-0004**	5	WASHER (0.406X0.728X0.09-IN THK)	
	2	1	**3T-3663**	4	GEAR (8-TEETH)	
	3	1	**6Y-5010**	8	WASHER (10.16X19X0.84-MM THK)	
	5	1	**9W-3273**	1	SPACER (OIL PUMP)	
	6	1	**231-6565**	2	BODY AS (OIL PUMP)	
	7	1	**246-8068**	1	MANIFOLD AS	
		1	**1M-3909**	2	BEARING-SLEEVE	
	8	1	**246-8071**	1	BODY AS	
		1	**1M-3909**	2	BEARING-SLEEVE	
	9	1	**246-8073**	1	COVER AS	
		1	**8M-8489**	2	DOWEL	
		1	**9M-4370**	2	BEARING	
		1	**9N-4155**	1	ADAPTER	
	10	1	**246-8075**	1	GEAR AS (8-TEETH)	
	11	1	**246-8078**	1	GEAR AS (8-TEETH)	
	13	1	**112-1574**	1	SEAL-O-RING	
	14	1	**1B-8705**	2	KEY-WOODRUFF	
	15	1	**161-8068**	5	SEAL-O-RING	
M	16	1	**7X-0474**	1	BOLT (M10X1.5X220-MM)	
M	17	1	**7X-2546**	4	BOLT (M10X1.5X180-MM)	

M-METRIC PART

246-8066 PUMP GP-GEAR *(contd.)* **i02976076**

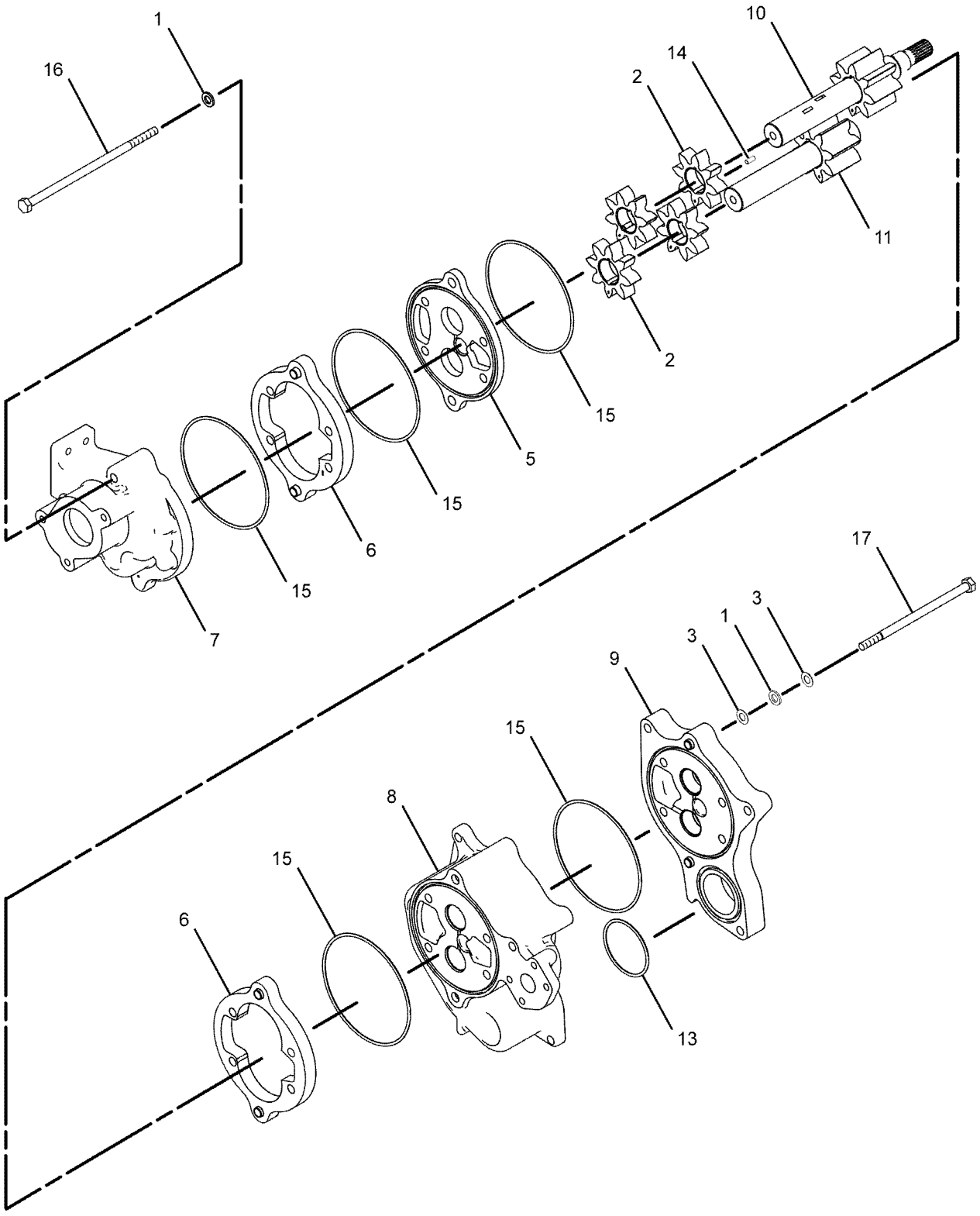

GRAPHIC #1 **<END>** g01103191

316-5385 SCREEN GP-MAGNETIC

S/N: DZM1601-UP

PART OF 253-8407 TRANSMISSION AR

SMCS-3067 **i03345760**

NOTE	REF NO	GRAPHIC REF	PART NUMBER	QTY	PART NAME 1 2 3 4 5 6 (PRODUCT LEVEL)	SEE PAGE
	1	1	**251-6673**	1	FILTER-MAGNETIC (TRANSMISSION CHARGING)	
	2	1	**251-6674**	1	SCREEN-SUCTION (TRANSMISSION CHARGING)	
	3	1	**316-5382**	1	COVER AS	
	4	1	**316-5384**	1	HOUSING-FILTER	
	5	1	**3E-6785**	1	SEAL-O-RING	
	6	1	**5P-4892**	1	SEAL-O-RING	
M	7	1	**6V-5219**	3	BOLT (M8X1.25X40-MM)	
M	8	1	**8T-6408**	3	BOLT (M10X1.5X160-MM)	

M-METRIC PART

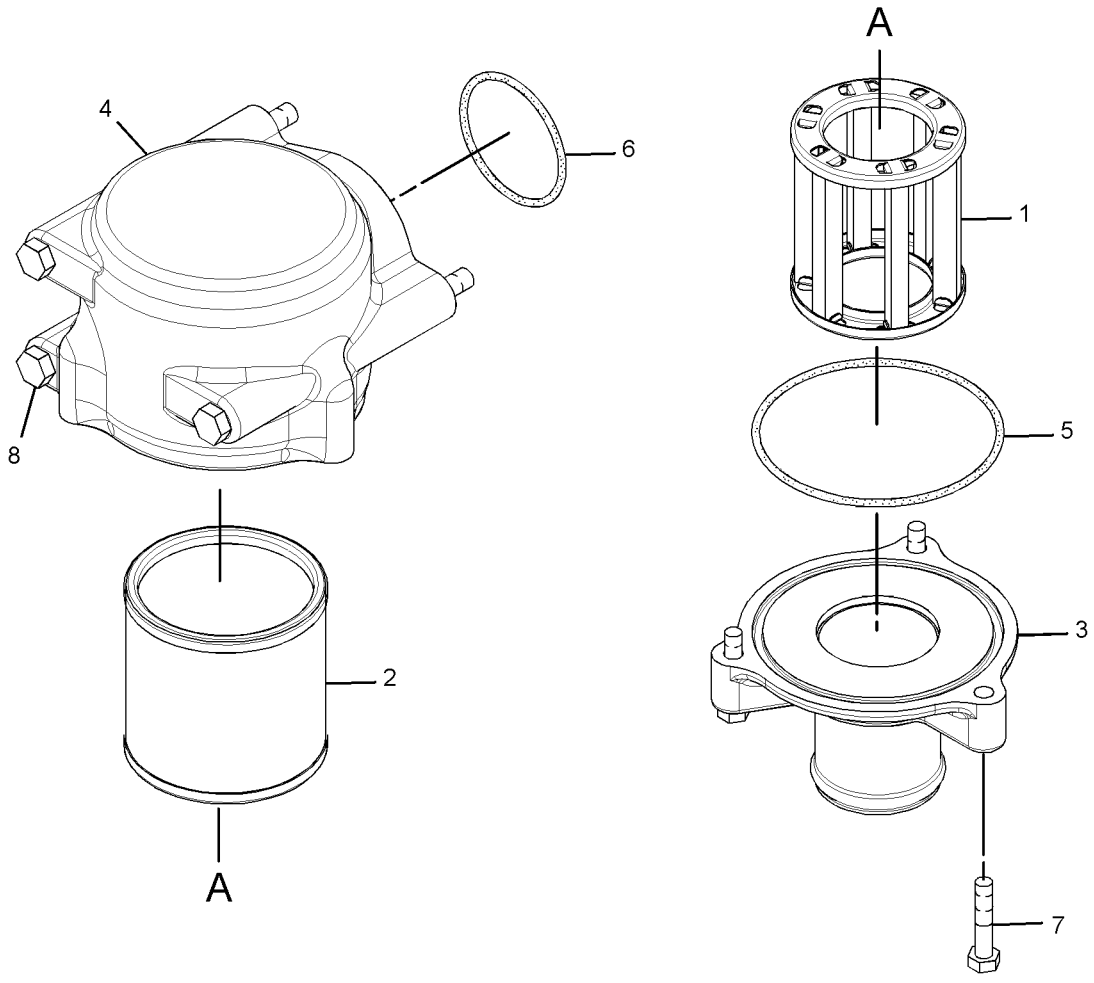

GRAPHIC #1 **<END>** g01935942

250-8212 SHAFT GP-DRIVE

S/N: R9H1-UP

PART OF 349-2556 COMMON AR

SMCS-3253 **i03091563**

NOTE	REF NO	GRAPHIC REF	PART NUMBER	QTY	PART NAME 1 2 3 4 5 6 (PRODUCT LEVEL)	SEE PAGE
	1	1	**254-3304**	1	UNIVERSAL JOINT GP	
	1A	1	**2T-3013**	2	SPIDER & BEARING GP	
M	1B	1	**6V-3823**	8	BOLT (M12X1.75X60-MM)	
	1C	1	**254-3305**	1	SHAFT	
M	2	1	**290-7514**	8	BOLT (M12X1.75X60-MM)	

M-METRIC PART

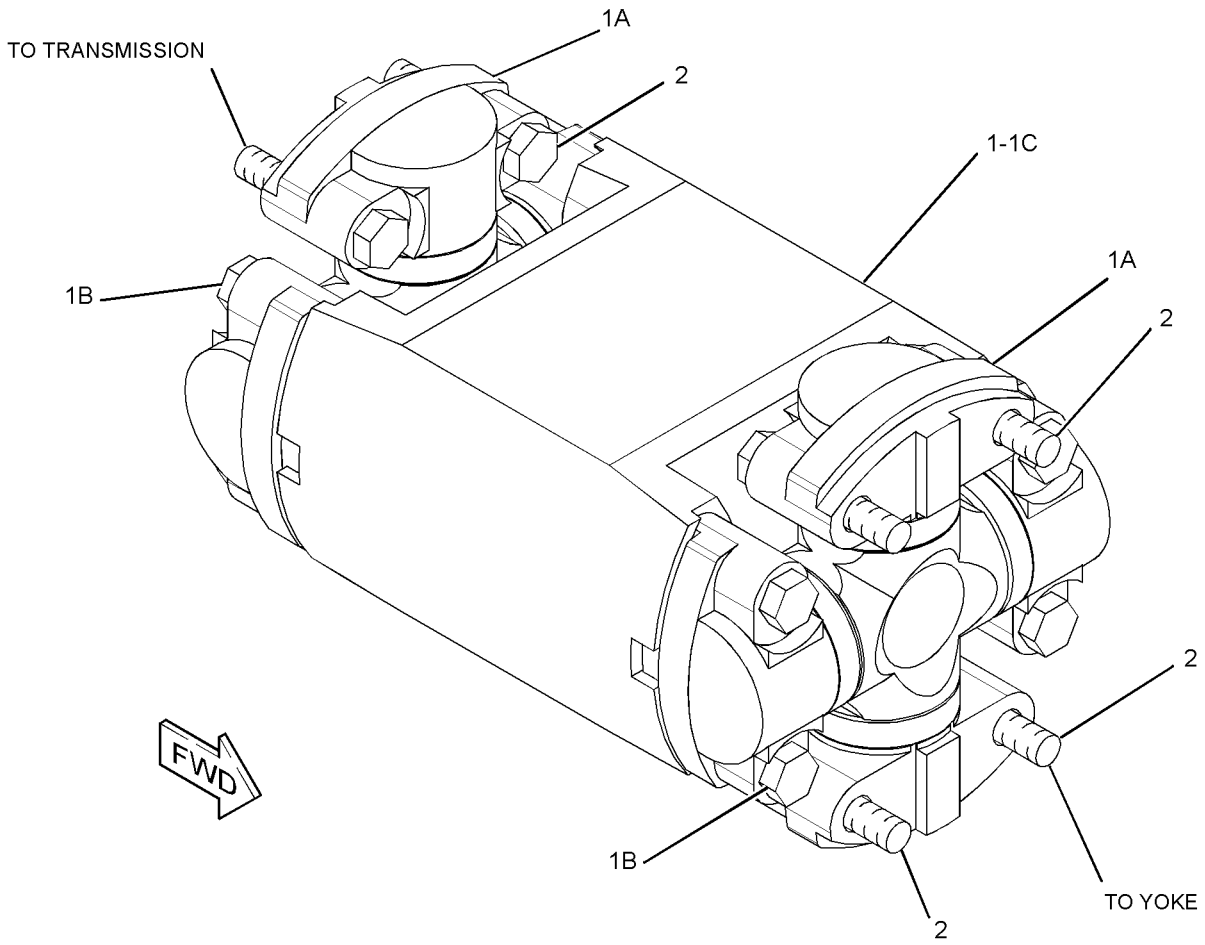

GRAPHIC #1 **<END>** g01329509

253-5307 SHAFT GP-INPUT

S/N: DZM1-UP

PART OF 253-8407 TRANSMISSION AR

SMCS-3063 **i02861005**

NOTE	REF NO	GRAPHIC REF	PART NUMBER	QTY	PART NAME 1 2 3 4 5 6 (PRODUCT LEVEL)	SEE PAGE
	1	1	**251-1545**	1	RACE-BEARING	
	2	1	**2H-6490**	1	BEARING-INNER	
	3	1	**3T-4377**	1	SEAL-RING	
	4	1	**246-8773**	1	SPACER (76X97.55X44.75-MM THK)	
	5	1	**305-2230**	1	SHAFT	
	6	1	**246-8746**	1	GEAR (38-TEETH)	
	7	1	**246-8752**	1	GEAR (45-TEETH)	

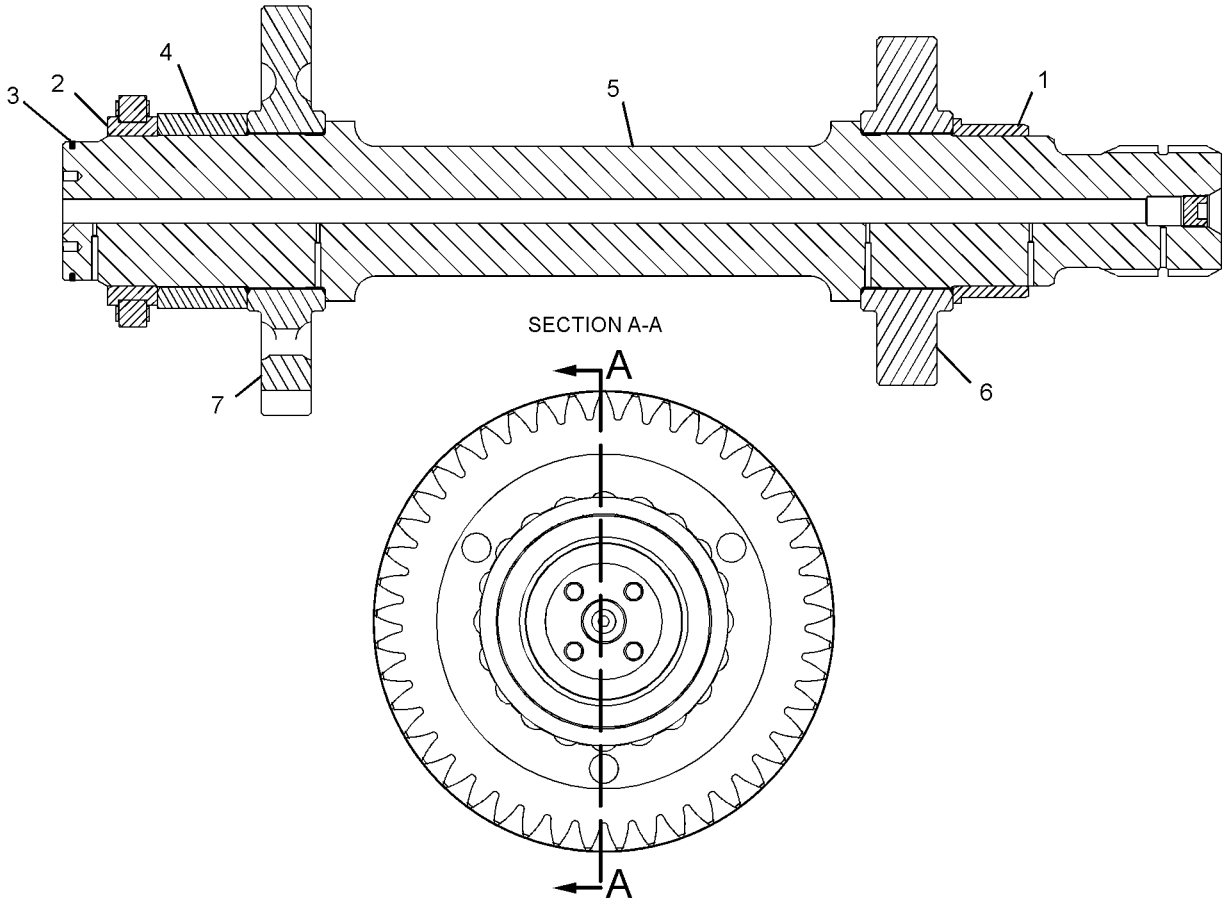

GRAPHIC #1 **<END>** g01285917

285-0604 TANDEM & COVER GP

S/N: R9H1-UP

PART OF 349-5188 POWER TRAIN AR

SMCS-4062, 4064 **i04040023**

NOTE	REF NO	GRAPHIC REF	PART NUMBER	QTY	PART NAME 1 2 3 4 5 6 (PRODUCT LEVEL)	SEE PAGE
	1	1	**2G-9796**	4	GASKET	
C	2	1	**7H-3171**	2	PLUG-PIPE	
	3	1	**264-1176**	4	COVER	
	4	1	**266-9727**	8	GASKET	
C	5	1	**266-9728**	6	COVER	
	6	1	**285-0605**	1	HOUSING AS (RH)	
M		1	**8T-6911**	12	BOSS-WELD (M12X1.75X50-MM)	
		1	**264-1172**	1	STEP AS	
M		1	**8T-3597**	4	NUT-WELD (M12X1.75-THD)	
	7	1	**285-0606**	1	HOUSING AS (LH)	
M		1	**8T-6911**	12	BOSS-WELD (M12X1.75X50-MM)	
		1	**264-1172**	1	STEP AS	
M		1	**8T-3597**	4	NUT-WELD (M12X1.75-THD)	
	8	1	**2M-9780**	2	SEAL-O-RING	
	9	1	**3K-0360**	2	SEAL-O-RING	
C	10	1	**304-8032**	2	PLUG-MAGNETIC	
M	11	1	**311-8290**	32	BOLT (M12X1.75X25-MM)	
	12	1	**8T-4223**	32	WASHER-HARD (13.5X25.5X3-MM THK)	
	13	1	**9S-4190**	2	PLUG-O-RING	
C	14	1	**266-9729**	2	BREATHER GP	
		1	**4H-6112**	1	BREATHER (TANDEM)	
		1	**6B-5072**	1	BUSHING-REDUCING	
		1	**002-6453**	1	ELBOW	

C-CHANGE FROM PREVIOUS TYPE
M-METRIC PART

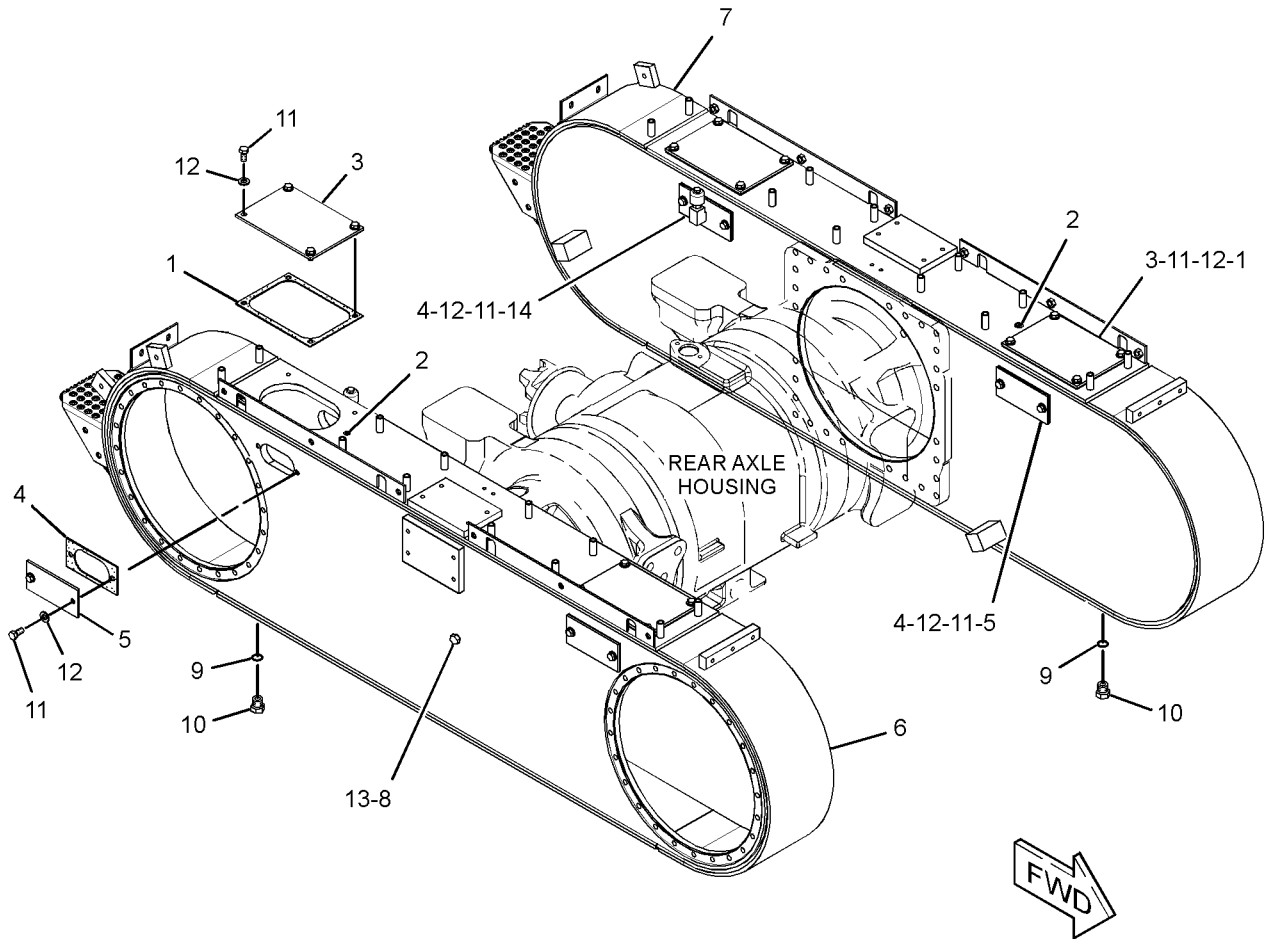

GRAPHIC #1 **<END>** g02125832

253-8407 TRANSMISSION AR*R

S/N: DZM1601-UP

PART OF 349-2556 COMMON AR

SMCS-3030 **i04033151**

NOTE	PART NUMBER	QTY	PART NAME 1 2 3 4 5 6 (PRODUCT LEVEL)	SEE PAGE
Y	*253-8427*	1	BRAKE GP-PARKING	538
Y	*253-8429*	1	CASE & PARTS GP-TRANSMISSION	404
Y	*246-8728*	1	CLUTCH GP-TRANSMISSION (FORWARD)	408
Y	*246-8731*	1	CLUTCH GP-TRANSMISSION (REVERSE, SECOND)	410
Y	*246-8734*	1	CLUTCH GP-TRANSMISSION (1ST, 3RD)	413
Y	*246-8737*	1	CLUTCH GP-TRANSMISSION (HIGH, LOW)	415
Y	*253-8428*	1	CONTROL GP-TRANSMISSION HYD	422
Y	*260-9479*	1	COVER GP-SHIPPING (TRANSMISSION)	429
Y	*310-3221*	1	ELECTRONICS GP-POWER TRAIN	222
Y	*253-7939*	1	FILTER GP-OIL (TRANSMISSION)	438
Y	*253-7931*	1	LINES GP-TRANSMISSION OIL	443
Y	*246-8065*	1	PUMP GP-GEAR	449
Y	*316-5385*	1	SCREEN GP-MAGNETIC	452
Y	*253-5307*	1	SHAFT GP-INPUT	454

Y-SEPARATE ILLUSTRATION

<END>

250-2139 VALVE & MTG GP-SOLENOID—DIFFERENTIAL LOCK

S/N: R9H1-UP

PART OF 288-9614, 356-2980 CONTROL GP-DIFFERENTIAL LOCK

SMCS-5479 **i02787799**

NOTE	REF NO	GRAPHIC REF	PART NUMBER	QTY	PART NAME 1 2 3 4 5 6 (PRODUCT LEVEL)	SEE PAGE
M	1	1	**8T-1158**	1	BOLT-SOCKET HEAD (M8X1.25X20-MM)	
	2	1	**245-1181**	1	FLANGE	
	3	1	**245-3555**	1	VALVE GP-SOLENOID (DIFFERENTIAL LOCK)	
		1	**245-1811**	1	COVER-BASE	
		1	**245-1912**	1	KIT-SEAL (SOLENOID VALVE)	
					(INCLUDES SEAL-O-RINGS)	
	4	1	**250-2138**	1	MANIFOLD	

M-METRIC PART

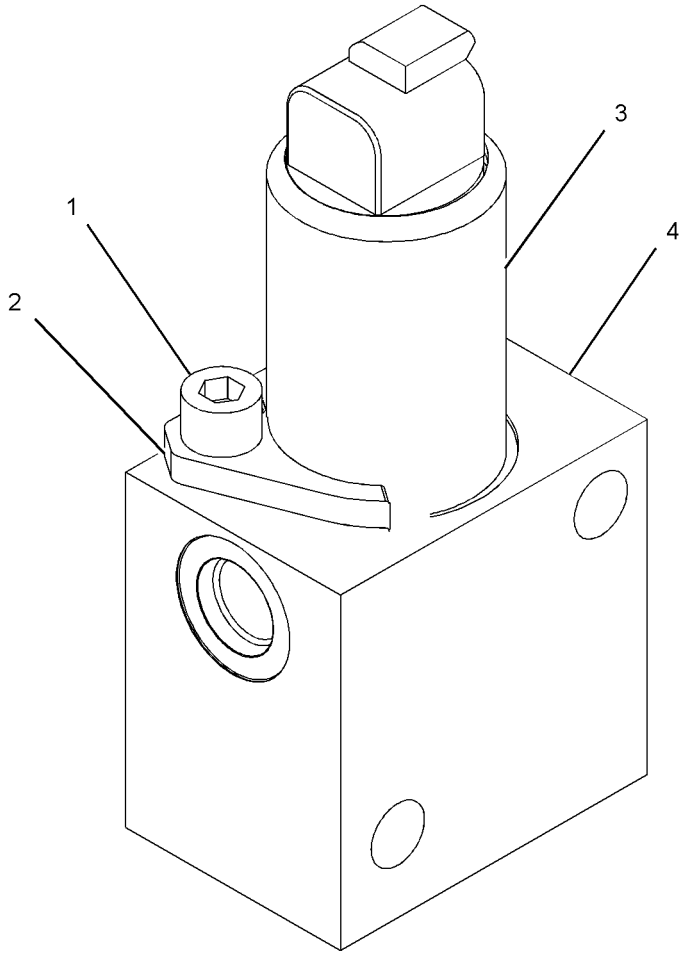

GRAPHIC #1 **<END>** g01109363

244-3114 VALVE GP-MODULATING—TRANSMISSION CLUTCH

S/N: DZM1-UP
24-VOLT
PART OF 253-8428 CONTROL GP-TRANSMISSION HYD

SMCS-3139 **i03435880**

NOTE	REF NO	GRAPHIC REF	PART NUMBER	QTY	PART NAME 1 2 3 4 5 6 (PRODUCT LEVEL)	SEE PAGE
	1	1	**6V-3965**	1	FITTING (QUICK DISCONNECT)	
	2	1	**323-9531**	1	COIL AS (24-VOLT)	
	3	1	**214-7568**	1	SEAL-O-RING	
	4	1	**164-2108**	1	WASHER (13.03X25.4X2.38-MM THK)	
	5	1	**218-2373**	1	NUT (1/2-28-THD)	
					PARTS SHOWN IN GRAPHIC(S) WITHOUT A REFERENCE NUMBER ARE NOT SERVICED SEPARATELY	

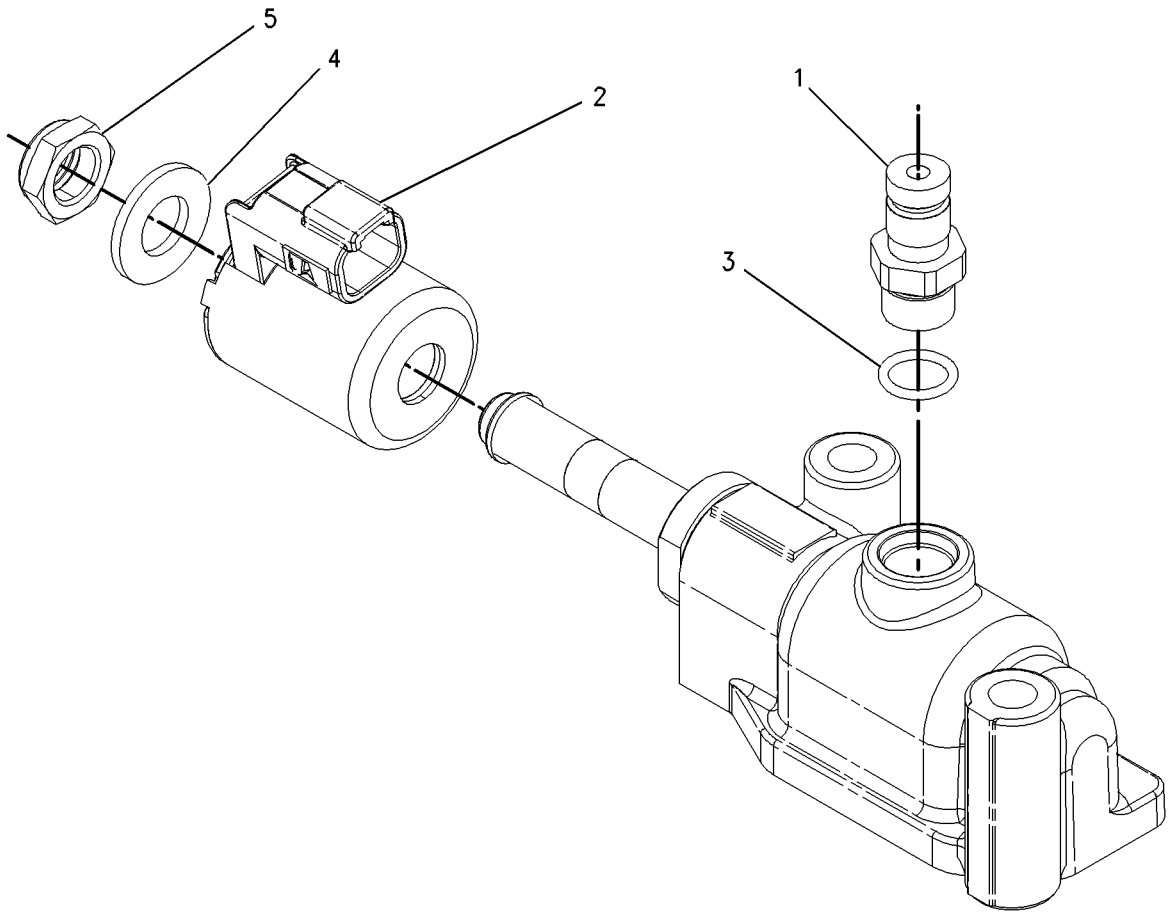

GRAPHIC #1 **<END>** g00919065

257-5026 VALVE GP-RELIEF—TRANSMISSION CONTROL VALVE

S/N: DZM1-UP

PART OF 253-8428 CONTROL GP-TRANSMISSION HYD

SMCS-3133 **i03321161**

NOTE	REF NO	GRAPHIC REF	PART NUMBER	QTY	PART NAME 1 2 3 4 5 6 (PRODUCT LEVEL)	SEE PAGE
	1	1	**2S-4663**	1	SEAL-O-RING	
	2	1	**2S-5835**	1	PISTON-LOAD	
	4	1	*241-6218*	1	PLUG AS	
		1	**9S-8005**	1	PLUG-O-RING	
		1	**3K-0360**	1	SEAL-O-RING	
	5	1	**4M-5905**	1	SCREW-ADJUSTMENT (5/16-18X1-IN)	
	6	1	**6V-0852**	1	CAP-DUST	
	7	1	*164-5567*	1	COUPLER AS-QUICK DISCONNECT (MALE)	
		1	**3J-1907**	1	SEAL-O-RING	
		1	**6V-3965**	1	FITTING (QUICK DISCONNECT)	
	10	1	**8E-1143**	1	SLUG	
	11	1	**8M-5253**	1	SEAL-O-RING	
	12	1	**9M-2110**	1	COVER-ADJUSTMENT	
	13	1	**115-4550**	1	COVER	
	14	1	**172-7966**	1	BODY	
	15	1	**172-7968**	1	SPOOL AS	
		1	**3D-8317**	1	RING-RETAINING	
		1	**4B-9880**	1	BALL	
		1	**4M-2381**	1	SPRING	
		1	**9U-8669**	1	RETAINER	
	16	1	**174-7449**	1	SPRING	
M	18	1	**6V-3940**	2	BOLT (M8X1.25X25-MM)	
M	19	1	**6V-5218**	2	BOLT (M8X1.25X35-MM)	
	20	1	**9M-1974**	2	WASHER-HARD (8.8X16X2-MM THK)	
	21	1	*162-0177*	1	PLUG AS	
		1	**3J-1907**	1	SEAL-O-RING	
		1	**9S-8004**	1	PLUG-O-RING	
	22	1	*165-4931*	1	ELBOW AS	
		1	**3J-1907**	1	SEAL-O-RING	
		1	**6V-8077**	1	ELBOW	

M-METRIC PART

257-5026 VALVE GP-RELIEF *(contd.)* **i03321161**

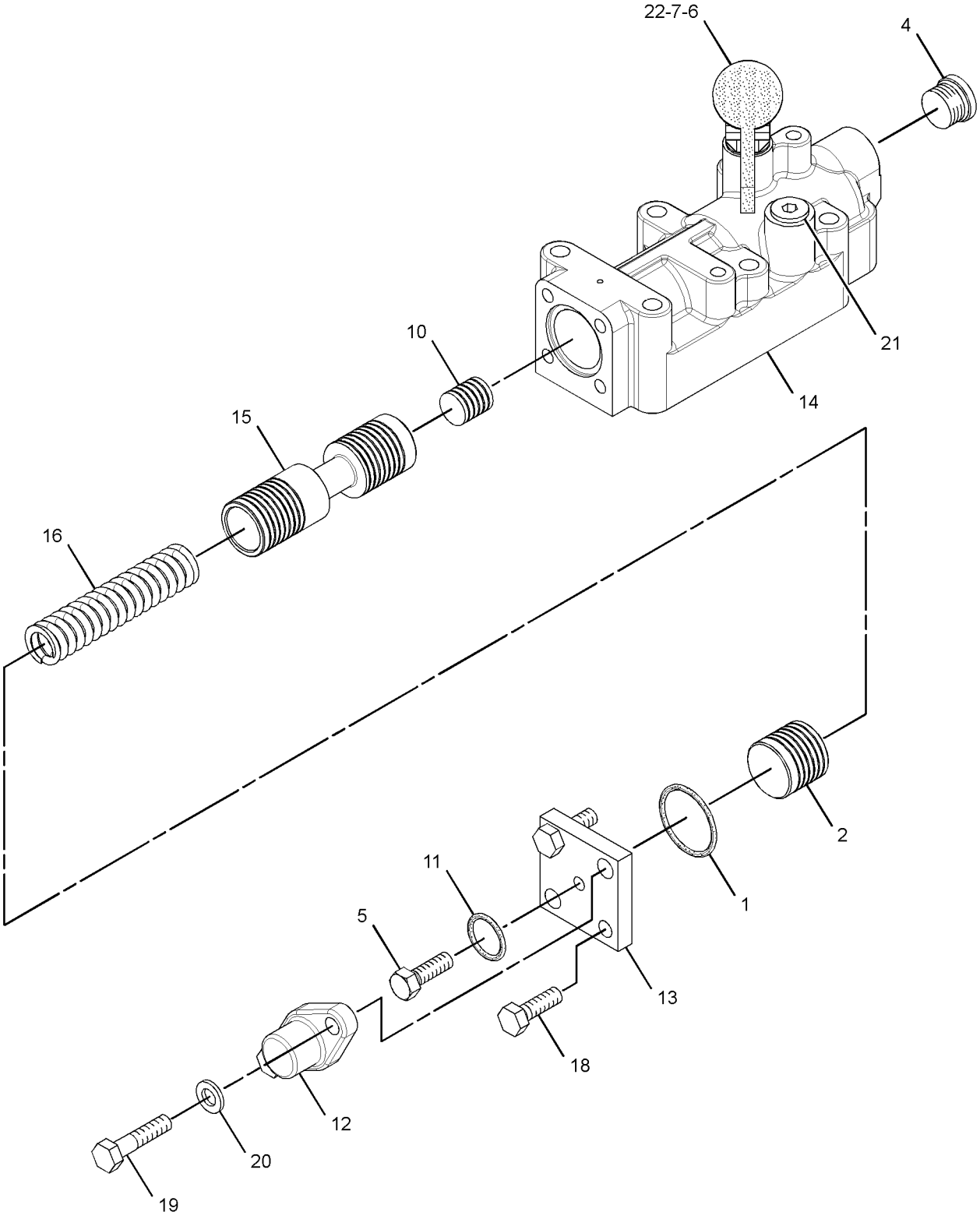

GRAPHIC #1 **<END>** g01923797

152-3988 WHEEL & TIRE AR

S/N: R9H1-UP

AN ATTACHMENT

SMCS-4200 **i00708582**

NOTE	PART NUMBER	QTY	PART NAME 1 2 3 4 5 6 (PRODUCT LEVEL)	SEE PAGE
Y	*142-6433*	6	WHEEL & TIRE GP	463

Y-SEPARATE ILLUSTRATION

<END>

152-4008 WHEEL & TIRE AR

S/N: R9H1-UP

AN ATTACHMENT

SMCS-4200 **i00708584**

NOTE	PART NUMBER	QTY	PART NAME 1 2 3 4 5 6 (PRODUCT LEVEL)	SEE PAGE
Y	*142-6438*	6	WHEEL & TIRE GP	463

Y-SEPARATE ILLUSTRATION

<END>

191-2313 WHEEL & TIRE AR

S/N: R9H1-UP

AN ATTACHMENT

SMCS-4200 **i01828971**

NOTE	PART NUMBER	QTY	PART NAME 1 2 3 4 5 6 (PRODUCT LEVEL)	SEE PAGE
Y	*191-2312*	6	WHEEL & TIRE GP	464

Y-SEPARATE ILLUSTRATION

<END>

196-4928 WHEEL & TIRE AR

S/N: R9H1-UP

AN ATTACHMENT

SMCS-4200 **i01828951**

NOTE	PART NUMBER	QTY	PART NAME 1 2 3 4 5 6 (PRODUCT LEVEL)	SEE PAGE
Y	*196-4927*	6	WHEEL & TIRE GP	464

Y-SEPARATE ILLUSTRATION

<END>

256-3325 WHEEL & TIRE AR

S/N: R9H1-UP

AN ATTACHMENT

SMCS-4200 **i02386686**

NOTE	PART NUMBER	QTY	PART NAME 1 2 3 4 5 6 (PRODUCT LEVEL)	SEE PAGE
Y	*256-3314*	6	WHEEL & TIRE GP	465

Y-SEPARATE ILLUSTRATION

<END>

310-7336 WHEEL & TIRE AR

S/N: R9H1-UP
AN ATTACHMENT

SMCS-4200 **i02836964**

NOTE	PART NUMBER	QTY	PART NAME 1 2 3 4 5 6 (PRODUCT LEVEL)	SEE PAGE
Y	*310-7318*	6	WHEEL & TIRE GP	465

Y-SEPARATE ILLUSTRATION

<END>

142-6433 WHEEL & TIRE GP

S/N: R9H1-UP
19.5X25
PART OF 152-3988 WHEEL & TIRE AR
AN ATTACHMENT

SMCS-4200 **i04004202**

NOTE	PART NUMBER	QTY	PART NAME 1 2 3 4 5 6 (PRODUCT LEVEL)	SEE PAGE
Y	*226-1885*	1	WHEEL GP	468
	2D-2443	1	SEAL-O-RING	
	354-1627	1	TIRE (23.1-R25)	
	2G-6595	1	VALVE GP-TIRE	
	9K-7951	1	CAP-VALVE (STEM)	
	6F-3930	1	CORE-VALVE	
	7D-5252	1	SPUD AS	
	2D-2508	1	GROMMET	
	2D-2509	1	LOCKNUT (11/16-16-THD)	
	2D-2507	1	SPUD	

Y-SEPARATE ILLUSTRATION

<END>

142-6438 WHEEL & TIRE GP

S/N: R9H1-UP
PART OF 152-4008 WHEEL & TIRE AR
AN ATTACHMENT

SMCS-4200 **i01830201**

NOTE	PART NUMBER	QTY	PART NAME 1 2 3 4 5 6 (PRODUCT LEVEL)	SEE PAGE
	2D-2443	1	SEAL-O-RING	
	140-8636	1	TIRE (23.5-R25) (23.5 R25 * RL-5K)	
	2G-6595	1	VALVE GP-TIRE	
	9K-7951	1	CAP-VALVE (STEM)	
	6F-3930	1	CORE-VALVE	
	7D-5252	1	SPUD AS	
	2D-2508	1	GROMMET	
	2D-2509	1	LOCKNUT (11/16-16-THD)	
	2D-2507	1	SPUD	
	226-1885	1	WHEEL GP	
	7D-7469	1	RING-LOCK	
	226-1886	1	FLANGE AS	
	228-0902	1	RIM AS (19.5X25)	

<END>

191-2312 WHEEL & TIRE GP

S/N: R9H1-UP
(19.5 X 25)
PART OF 191-2313 WHEEL & TIRE AR
AN ATTACHMENT

SMCS-4200 **i01828969**

NOTE	PART NUMBER	QTY	PART NAME 1 2 3 4 5 6 (PRODUCT LEVEL)	SEE PAGE
	2D-2443	1	SEAL-O-RING	
	165-6162	1	TIRE (23.5-R25) (23.5 R25 * L3)	
	2G-6595	1	VALVE GP-TIRE	
	9K-7951	1	CAP-VALVE (STEM)	
	6F-3930	1	CORE-VALVE	
	7D-5252	1	SPUD AS	
	2D-2507	1	SPUD	
	2D-2508	1	GROMMET	
	2D-2509	1	LOCKNUT (11/16-16-THD)	
	226-1885	1	WHEEL GP	
	226-1886	1	FLANGE AS	
	228-0902	1	RIM AS (19.5X25)	
	7D-7469	1	RING-LOCK	

<END>

196-4927 WHEEL & TIRE GP

S/N: R9H1-UP
(19.5 X 25)
PART OF 196-4928 WHEEL & TIRE AR
AN ATTACHMENT

SMCS-4200 **i01828953**

NOTE	PART NUMBER	QTY	PART NAME 1 2 3 4 5 6 (PRODUCT LEVEL)	SEE PAGE
	2D-2443	1	SEAL-O-RING	
	102-4559	1	TIRE (23.5-R25)	
	2G-6595	1	VALVE GP-TIRE	
	9K-7951	1	CAP-VALVE (STEM)	
	6F-3930	1	CORE-VALVE	
	7D-5252	1	SPUD AS	
	2D-2508	1	GROMMET	
	2D-2509	1	LOCKNUT (11/16-16-THD)	
	2D-2507	1	SPUD	
	226-1885	1	WHEEL GP	
	7D-7469	1	RING-LOCK	
	226-1886	1	FLANGE AS	
	228-0902	1	RIM AS (19.5X25)	

<END>

256-3314 WHEEL & TIRE GP

S/N: R9H1-UP
PART OF 256-3325 WHEEL & TIRE AR
AN ATTACHMENT

SMCS-4200 **i04024249**

NOTE	PART NUMBER	QTY	PART NAME 1 2 3 4 5 6 (PRODUCT LEVEL)	SEE PAGE
Y	*256-3235*	1	WHEEL GP	469
	6C-8882	1	TIRE (23.5-R25)	

Y-SEPARATE ILLUSTRATION

<END>

310-7318 WHEEL & TIRE GP

S/N: R9H1-UP
PART OF 310-7336 WHEEL & TIRE AR
AN ATTACHMENT

SMCS-4200 **i02836967**

NOTE	PART NUMBER	QTY	PART NAME 1 2 3 4 5 6 (PRODUCT LEVEL)	SEE PAGE
Y	*150-5144*	1	WHEEL GP	467
	196-7867	1	TIRE (23.5-R25)	

Y-SEPARATE ILLUSTRATION

<END>

151-0288 WHEEL AR

S/N: R9H1-UP
AN ATTACHMENT

SMCS-4208 **i01022133**

NOTE	PART NUMBER	QTY	PART NAME 1 2 3 4 5 6 (PRODUCT LEVEL)	SEE PAGE
Y	*150-5144*	6	WHEEL GP	467

Y-SEPARATE ILLUSTRATION

<END>

POWER TRAIN

285-0609 WHEEL AR

S/N: R9H1-UP

PART OF 349-5188 POWER TRAIN AR

SMCS-4208 **i02611427**

NOTE	REF NO	GRAPHIC REF	PART NUMBER	QTY	PART NAME 1 2 3 4 5 6 (PRODUCT LEVEL)	SEE PAGE
Y	1	1	*286-0681*	2	WHEEL GP (BRAKE, FRONT TANDEM)	470
Y	2	1	*286-0682*	2	WHEEL GP (BRAKE, REAR TANDEM)	472

Y-SEPARATE ILLUSTRATION

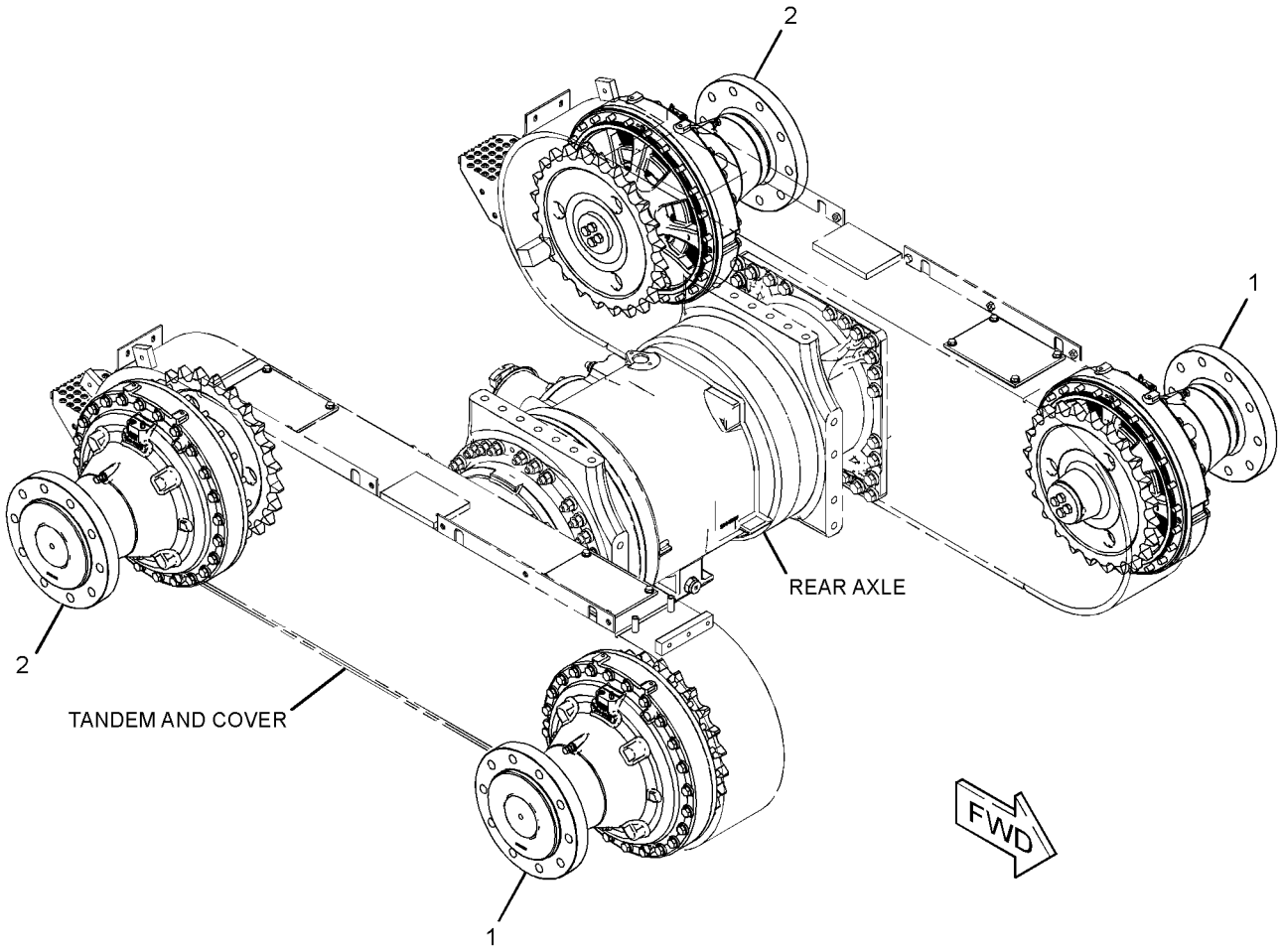

GRAPHIC #1 **<END>** g01308081

150-5144 WHEEL GP

S/N: R9H1-UP
PART OF 310-7318 WHEEL & TIRE GP, 151-0288 WHEEL AR
AN ATTACHMENT

SMCS-4006, 4201, 4208 **i02668877**

NOTE	PART NUMBER	QTY	PART NAME 1 2 3 4 5 6 (PRODUCT LEVEL)	SEE PAGE
Y	*226-1885*	1	WHEEL GP	468
	2D-2443	1	SEAL-O-RING	
	2G-6595	1	VALVE GP-TIRE	
	6F-3930	1	CORE-VALVE	
	9K-7951	1	CAP-VALVE (STEM)	
	7D-5252	1	SPUD AS	
	2D-2507	1	SPUD	
	2D-2508	1	GROMMET	
	2D-2509	1	LOCKNUT (11/16-16-THD)	

Y-SEPARATE ILLUSTRATION

<END>

226-1885 WHEEL GP

S/N: R9H1-UP
(19.5X25)
PART OF 142-6433 WHEEL & TIRE GP, 150-5144 WHEEL GP
AN ATTACHMENT

SMCS-4006, 4201, 4208 **i02229527**

NOTE	REF NO	GRAPHIC REF	PART NUMBER	QTY	PART NAME 1 2 3 4 5 6 (PRODUCT LEVEL)	SEE PAGE
	1	1	**7D-7469**	1	RING-LOCK	
	2	1	**226-1886**	1	FLANGE AS	
	3	1	**228-0902**	1	RIM AS (19.5X25)	

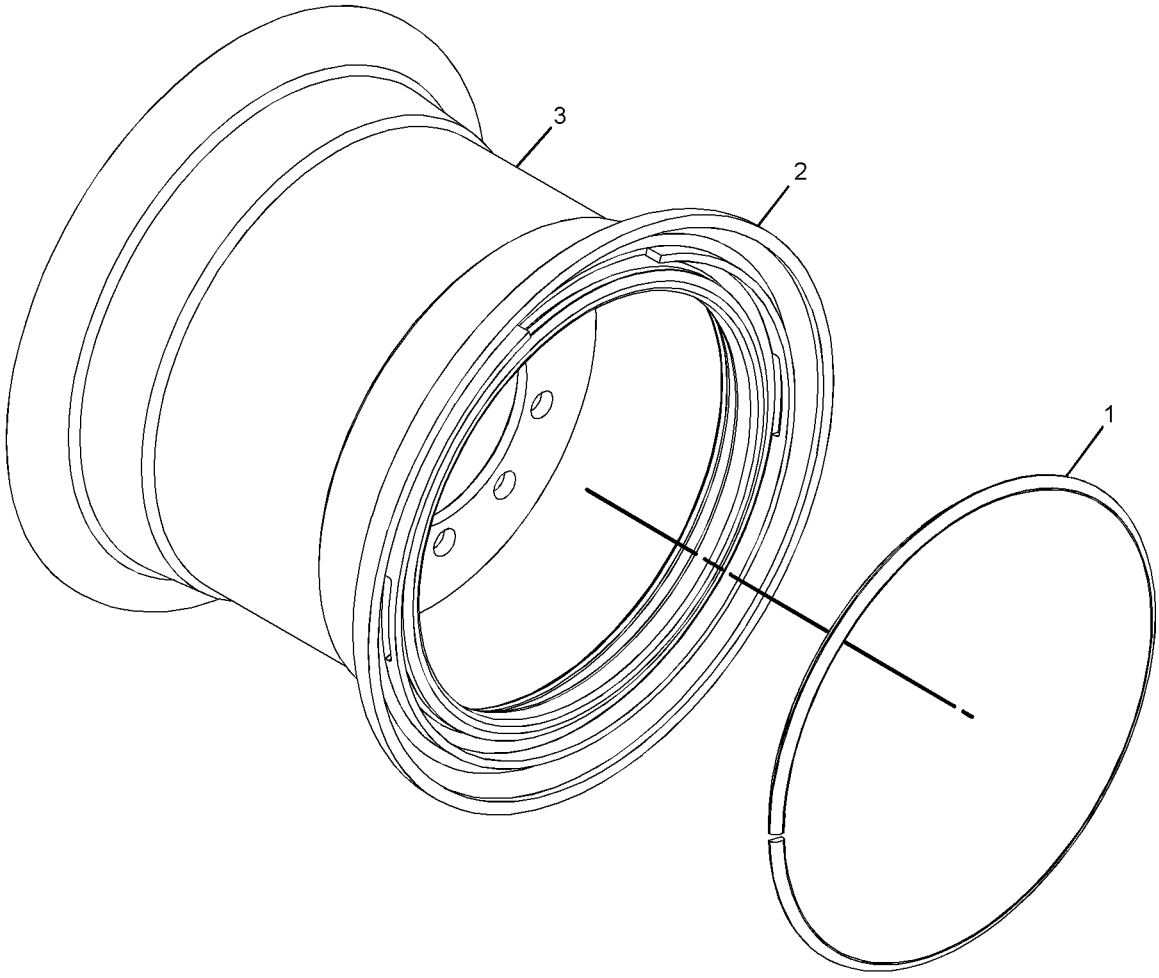

GRAPHIC #1 **<END>** g01151567

256-3234 WHEEL GP

S/N: R9H1-UP
(19.5X25)
PART OF 256-3235 WHEEL GP
AN ATTACHMENT

SMCS-4006, 4201, 4208 **i02386627**

NOTE	PART NUMBER	QTY	PART NAME 1 2 3 4 5 6 (PRODUCT LEVEL)	SEE PAGE
	226-1886	1	FLANGE AS	
	256-3233	1	RIM AS (19.5X25)	
	7D-7469	1	RING-LOCK	

<END>

256-3235 WHEEL GP

S/N: R9H1-UP
PART OF 256-3314 WHEEL & TIRE GP
AN ATTACHMENT

SMCS-4006, 4201, 4208 **i02386625**

NOTE	PART NUMBER	QTY	PART NAME 1 2 3 4 5 6 (PRODUCT LEVEL)	SEE PAGE
Y	*256-3234*	1	WHEEL GP	469
	2D-2443	1	SEAL-O-RING	
	2G-6595	1	VALVE GP-TIRE (TIRE INFLATION)	
	9K-7951	1	CAP-VALVE (STEM)	
	6F-3930	1	CORE-VALVE	
	7D-5252	1	SPUD AS	
	2D-2507	1	SPUD	
	2D-2508	1	GROMMET	
	2D-2509	1	LOCKNUT (11/16-16-THD)	

Y-SEPARATE ILLUSTRATION

<END>

286-0681 WHEEL GP–BRAKE, FRONT TANDEM

S/N: R9H1-UP

PART OF 285-0609 WHEEL AR

SMCS-4006, 4201, 4208 **i03875466**

NOTE	REF NO	GRAPHIC REF	PART NUMBER	QTY	PART NAME 1 2 3 4 5 6 (PRODUCT LEVEL)	SEE PAGE
	1	1	**1B-3937**	1	CUP-BEARING	
	2	1	**1B-4043**	1	CONE-BEARING	
	3	1	**5H-3701**	1	SCREW-PURGE	
	4	1	**6T-3377**	1	SEAL GP-DUO-CONE	
		1	**5P-3401**	2	RING-TORIC	
	5	1	**8S-9075**	1	CONE-BEARING	
	6	1	**8S-9076**	1	CUP-BEARING	
	7	1	**9D-1584**	1	SPACER	
	8	1	**110-7149**	1	RING-RETAINING	
	9	1	**136-2967**	1	SEAL-O-RING	
	10	1	**220-4335**	1	SEAL-BRAKE	
	11	1	**220-4336**	1	SEAL-BRAKE	
	12	1	**257-1702**	1	PISTON	
	13	1	**351-0925**	13	DISC-FRICTION	
	14	1	**262-5105**	1	HUB-BRAKE	
	15	1	**264-7962**	1	SPROCKET	
	16	1	**266-6050**	4	DOWEL	
	17	1	**270-6941**	1	RETAINER	
B	18	1	**270-6942**	4	SHIM (0.12-MM THK)	
B	19	1	**270-6943**	1	SHIM (0.18-MM THK)	
B	20	1	**270-6944**	4	SHIM (0.5-MM THK)	
B	21	1	**284-8959**	2	WASHER (13X22X2-MM THK)	
B	22	1	**284-8960**	1	WASHER (13X22X0.5-MM THK)	
	23	1	**284-9556**	4	SPACER-SPECIAL	
	24	1	**284-9557**	14	PLATE	
	25	1	**286-0683**	1	HOUSING	
R	26	1	**286-0684**	1	SPINDLE	
M	27	1	**286-9155**	24	BOLT-SELF-LOCKING (M16X2X120-MM)	
	28	1	**288-3883**	4	SPRING	
	29	1	**290-3922**	1	COMPENSATOR	
	30	1	**295-2590**	1	COVER	
	31	1	**296-8274**	4	DOWEL	
M	32	1	**103-6169**	4	BOLT-SELF-LOCKING (M16X2X60-MM)	
	33	1	**198-4768**	24	WASHER-HARD (17.5X32X8-MM THK)	
M	34	1	**4I-0755**	1	NUT (M12X1.25-THD)	
	35	1	**8F-9538**	1	SEAL-O-RING	
M	36	1	**8T-1159**	4	BOLT-SOCKET HEAD (M10X1.5X25-MM)	

B-USE AS REQUIRED
M-METRIC PART
R-REMFG PART MAY BE AVAILABLE

286-0681 **WHEEL GP** *(contd.)* **i03875466**

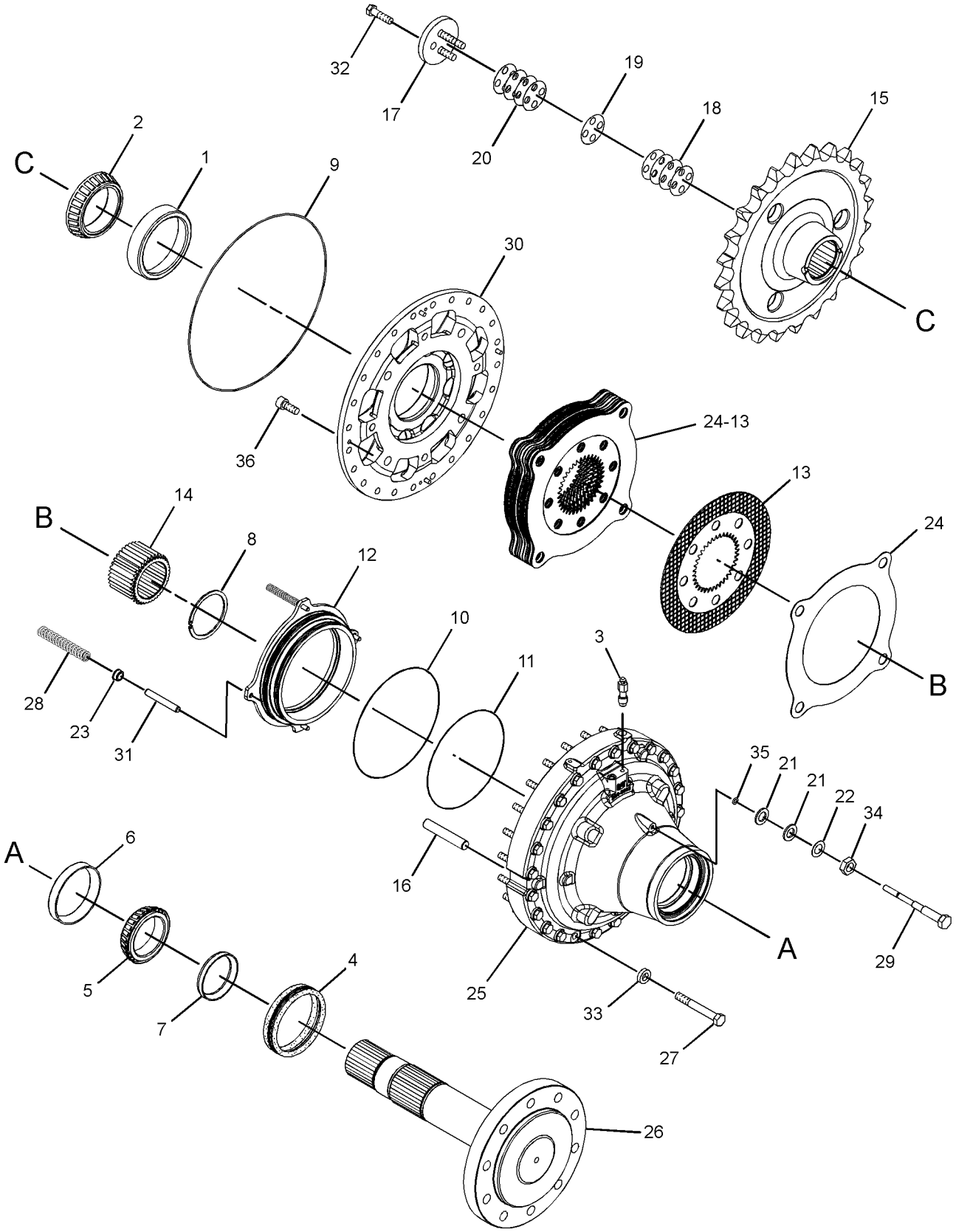

GRAPHIC #1 **<END>** g01317360

286-0682 WHEEL GP–BRAKE, REAR TANDEM

S/N: R9H1-UP

PART OF 285-0609 WHEEL AR

SMCS-4006, 4201, 4208 **i03880488**

NOTE	REF NO	GRAPHIC REF	PART NUMBER	QTY	PART NAME 1 2 3 4 5 6 (PRODUCT LEVEL)	SEE PAGE
	1	1	**1B-3937**	1	CUP-BEARING	
	2	1	**1B-4043**	1	CONE-BEARING	
	3	1	**5H-3701**	1	SCREW-PURGE	
	4	1	**6T-3377**	1	SEAL GP-DUO-CONE	
	4A	1	**5P-3401**	2	RING-TORIC	
Z	4B	1		2	SEAL-RING	
	5	1	**8S-9075**	1	CONE-BEARING	
	6	1	**8S-9076**	1	CUP-BEARING	
	7	1	**9D-1584**	1	SPACER	
	8	1	**110-7149**	1	RING-RETAINING	
	9	1	**136-2967**	1	SEAL-O-RING	
	10	1	**220-4335**	1	SEAL-BRAKE	
	11	1	**220-4336**	1	SEAL-BRAKE	
	12	1	**257-1702**	1	PISTON	
	13	1	**351-0925**	13	DISC-FRICTION	
	14	1	**262-5105**	1	HUB-BRAKE	
	15	1	**264-7962**	1	SPROCKET	
	16	1	**266-6050**	4	DOWEL	
	17	1	**270-6941**	1	RETAINER	
B	18	1	**270-6942**	4	SHIM (0.12-MM THK)	
B	19	1	**270-6943**	1	SHIM (0.18-MM THK)	
B	20	1	**270-6944**	4	SHIM (0.5-MM THK)	
B	21	1	**284-8959**	2	WASHER (13X22X2-MM THK)	
B	22	1	**284-8960**	1	WASHER (13X22X0.5-MM THK)	
	23	1	**284-9556**	4	SPACER-SPECIAL	
	24	1	**284-9557**	14	PLATE	
	25	1	**286-0683**	1	HOUSING	
R	26	1	**286-0684**	1	SPINDLE	
M	27	1	**286-9155**	24	BOLT-SELF-LOCKING (M16X2X120-MM)	
	28	1	**288-3883**	4	SPRING	
	29	1	**290-3922**	1	COMPENSATOR	
	30	1	**295-2590**	1	COVER	
	31	1	**296-8274**	4	DOWEL	
M	32	1	**103-6169**	4	BOLT-SELF-LOCKING (M16X2X60-MM)	
	33	1	**198-4768**	24	WASHER-HARD (17.5X32X8-MM THK)	
M	34	1	**4I-0755**	1	NUT (M12X1.25-THD)	
	35	1	**8F-9538**	1	SEAL-O-RING	
M	36	1	**8T-1159**	4	BOLT-SOCKET HEAD (M10X1.5X25-MM)	

B-USE AS REQUIRED
M-METRIC PART
R-REMFG PART MAY BE AVAILABLE
Z-NOT SERVICED SEPARATELY

286-0682 **WHEEL GP** *(contd.)* **i03880488**

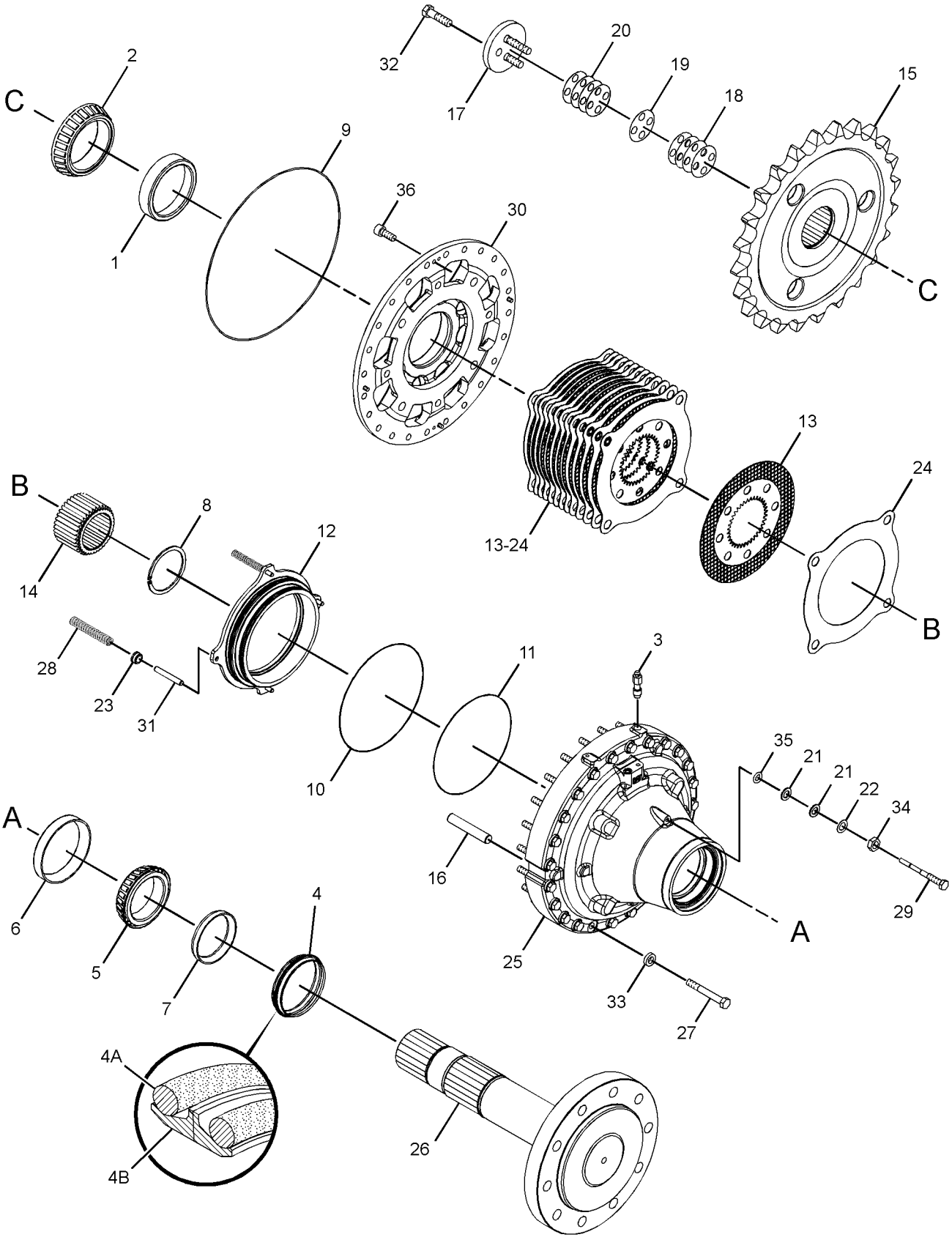

GRAPHIC #1 **<END>** g01331248

251-1202 AXLE AR-FRONT—NON ALL WHEEL DRIVE

S/N: R9H1-UP

PART OF 349-2556 COMMON AR

SMCS-4303, 4305, 4313, 5225 **i02374088**

NOTE	REF NO	GRAPHIC REF	PART NUMBER	QTY	PART NAME 1 2 3 4 5 6 (PRODUCT LEVEL)	SEE PAGE
Y	1	1	*250-2282*	1	AXLE GP-FRONT	476
Y	2	1	*288-6307*	1	MOUNTING GP-AXLE (FRONT)	514

Y-SEPARATE ILLUSTRATION

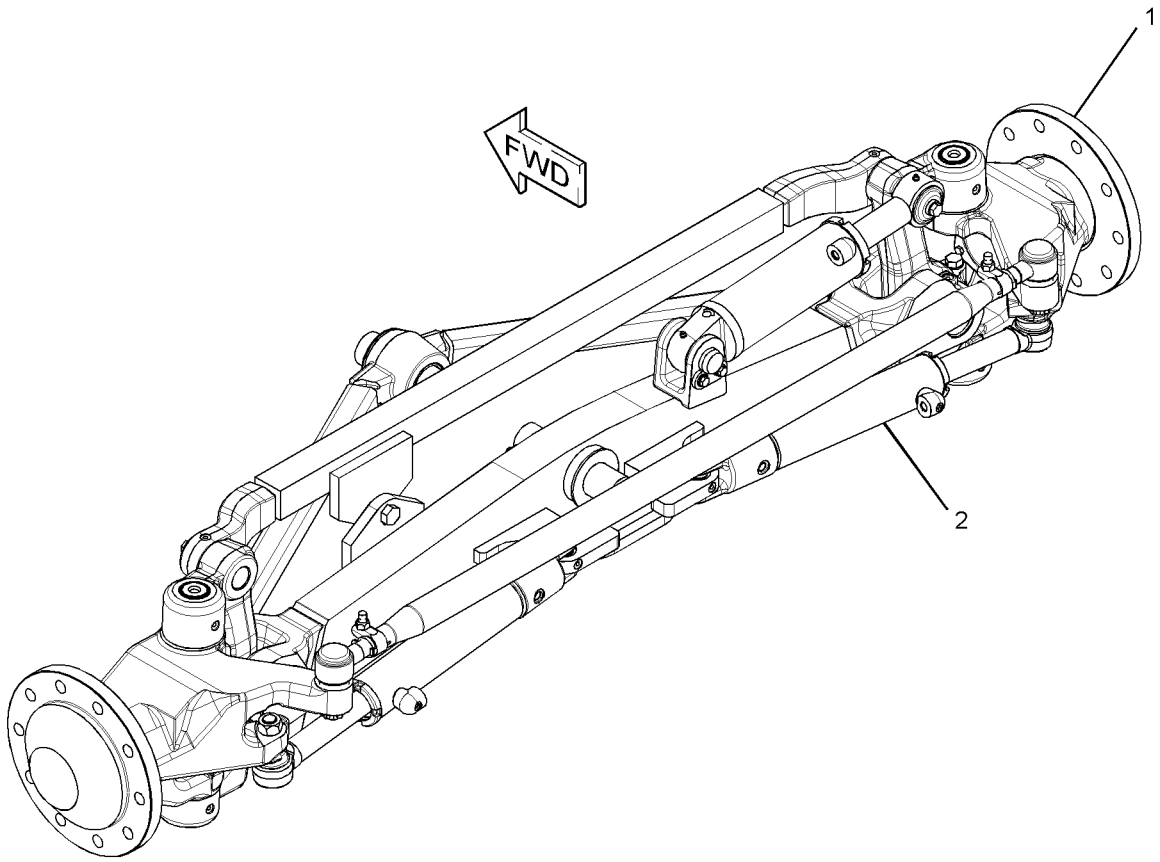

GRAPHIC #1 **<END>** g01316869

264-1144 AXLE AS-FRONT—NON ALL WHEEL DRIVE

S/N: R9H1-UP

PART OF 250-2282 AXLE GP-FRONT

SMCS-4305, 4313, 5225 **i02606070**

NOTE	REF NO	GRAPHIC REF	PART NUMBER	QTY	PART NAME 1 2 3 4 5 6 (PRODUCT LEVEL)	SEE PAGE
	1	1	**2D-8652**	2	BEARING	
	2	1	**2G-8607**	4	BEARING-SLEEVE	
	3	1	**8J-5778**	4	BEARING-SLEEVE	
	4	1	**264-1145**	1	AXLE AS-FRONT	
		1	**8W-6486**	1	BRACKET	
	5	1	**5P-8847**	4	SEAL-LIP TYPE	
	6	1	**7K-9206**	4	SEAL-LIP TYPE	

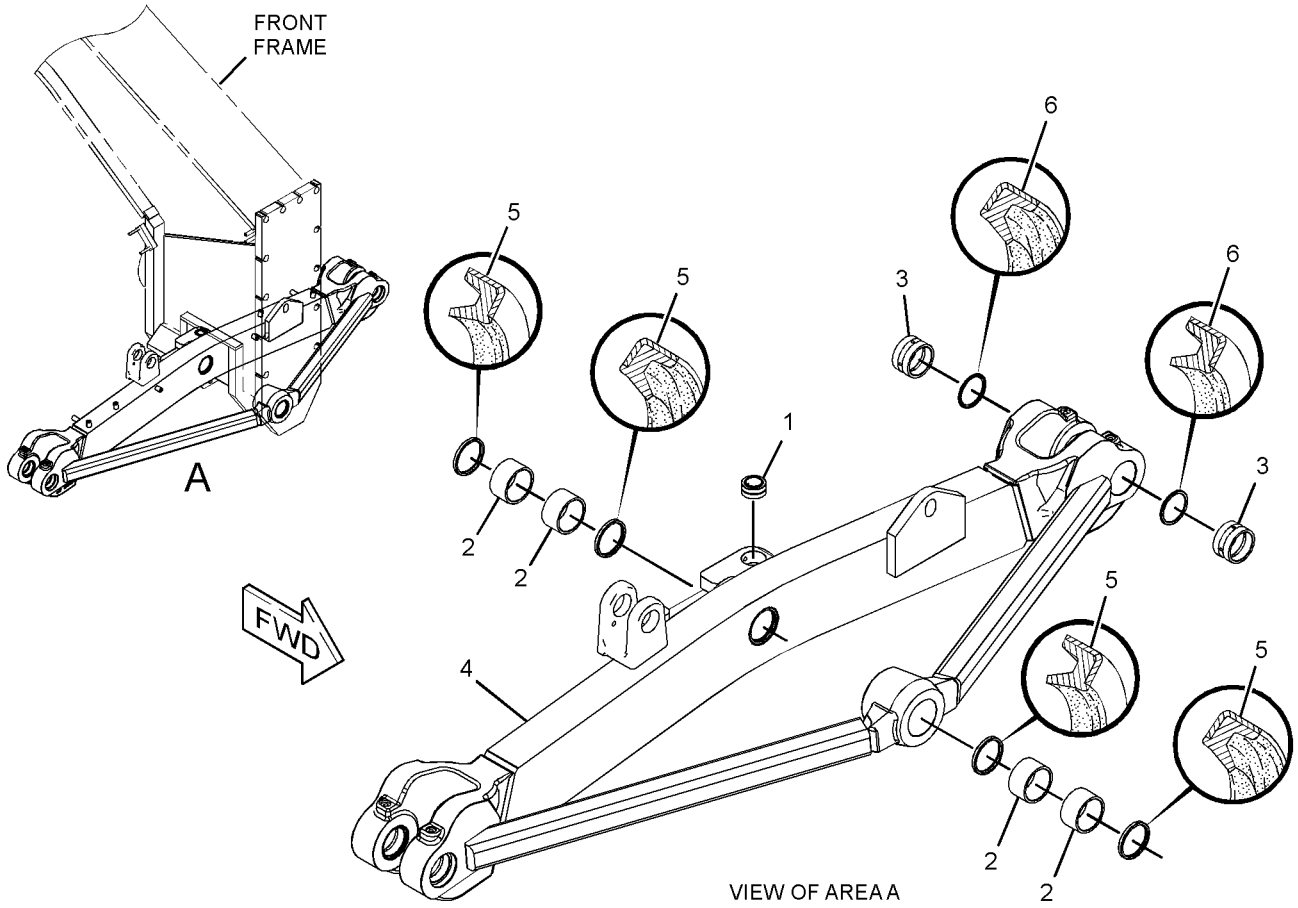

GRAPHIC #1 **<END>** g01315948

FRAME AND BODY

250-2282 AXLE GP-FRONT

S/N: R9H1-UP

PART OF 251-1202 AXLE AR-FRONT

SMCS-4305, 4313, 5225 **i04040028**

NOTE	REF NO	GRAPHIC REF	PART NUMBER	QTY	PART NAME 1 2 3 4 5 6 (PRODUCT LEVEL)	SEE PAGE
	1	1	**1P-7834**	2	CUP-BEARING	
	2	1	**1P-7835**	2	CONE-BEARING	
	3	1	**2G-5667**	3	RETAINER	
	4	1	**2G-8615**	4	WASHER-THRUST (2.015X3.625X0.11-IN THK)	
	5	1	**2G-8626**	2	WASHER-THRUST (2.02X3.63X0.16-IN THK)	
	6	1	**2G-8741**	4	RING-METAL SEAL	
	7	1	**2G-8777**	4	SEAL	
	8	1	**3B-8489**	10	FITTING-GREASE	
	9	1	**4I-5480**	4	WASHER (11X72X3-MM THK)	
	10	1	**5T-0908**	2	COVER	
	11	1	**8D-1817**	2	CUP-BEARING	
	12	1	**8D-1819**	2	CONE-BEARING	
	13	1	**8D-1822**	2	RETAINER	
	14	1	**8L-5516**	2	SEAL GP-DUO-CONE	
Y	15	1	*249-6545*	1	CYLINDER & MTG GP-WHEEL LEAN	562
	16	1	**257-9799**	2	PIN	
Y	17	1	*264-1144*	1	AXLE AS-FRONT	475
	18	1	**264-1150**	1	ARM AS (LH)	
		1	**264-1152**	1	PIN	
		1	**2G-7106**	1	BUSHING	
		1	**2G-8738**	1	BUSHING	
	19	1	**264-1153**	1	ARM AS (RH)	
		1	**264-1155**	1	PIN	
		1	**2G-7106**	1	BUSHING	
		1	**2G-8738**	1	BUSHING	
	20	1	**311-1932**	1	HOUSING (LH)	
	21	1	**311-1933**	1	HOUSING (RH)	
	22	1	**264-1158**	1	BAR AS	
		1	**2G-8635**	2	BUSHING	
Y	23	1	*264-1160*	1	CYLINDER & MTG GP-STEERING	561
	24	1	**264-1161**	2	SPINDLE	
Y	25	1	*264-1163*	1	LINK GP-STEERING	509
	26	1	**264-1167**	2	PIN	
	27	1	**264-1168**	2	PIN	
	28	1	**297-2539**	2	LOCK	
	29	1	*164-5619*	2	PLUG AS	
	30	1	**198-4768**	3	WASHER-HARD (17.5X32X8-MM THK)	
	31	1	**266-7315**	2	WASHER-HARD (22X65X6-MM THK)	
	32	1	**3B-4629**	2	PIN-COTTER	
	33	1	**5P-8843**	4	SEAL-LIP TYPE	
	34	1	**5P-8890**	2	SEAL-LIP TYPE	
M	35	1	**6V-5696**	6	BOLT (M12X1.75X80-MM)	
M	36	1	**6V-5844**	3	BOLT (M16X2X35-MM)	
	37	1	**6V-8237**	2	WASHER (26X44X4-MM THK)	
M	38	1	**7X-0851**	2	NUT (M24X3-THD)	
M	39	1	**7X-2561**	4	BOLT (M20X2.5X35-MM)	
	40	1	**7X-7729**	4	WASHER (11X25X3-MM THK)	
	41	1	**8F-8733**	2	SEAL-O-RING	
M	42	1	**8T-0667**	2	BOLT (M24X3X100-MM)	
M	43	1	**8T-4137**	4	BOLT (M10X1.5X20-MM)	
	44	1	**9M-2092**	4	SEAL-O-RING	
M	45	1	**9X-2125**	4	BOLT-LOCKING (M10X1.5X25-MM)	
	46	1	**2G-3868**	6	SHIM (0.13-MM THK)	
	47	1	**3B-8486**	2	FITTING-GREASE	

M-METRIC PART
Y-SEPARATE ILLUSTRATION

250-2282 **AXLE GP-FRONT** *(contd.)* **i04040028**

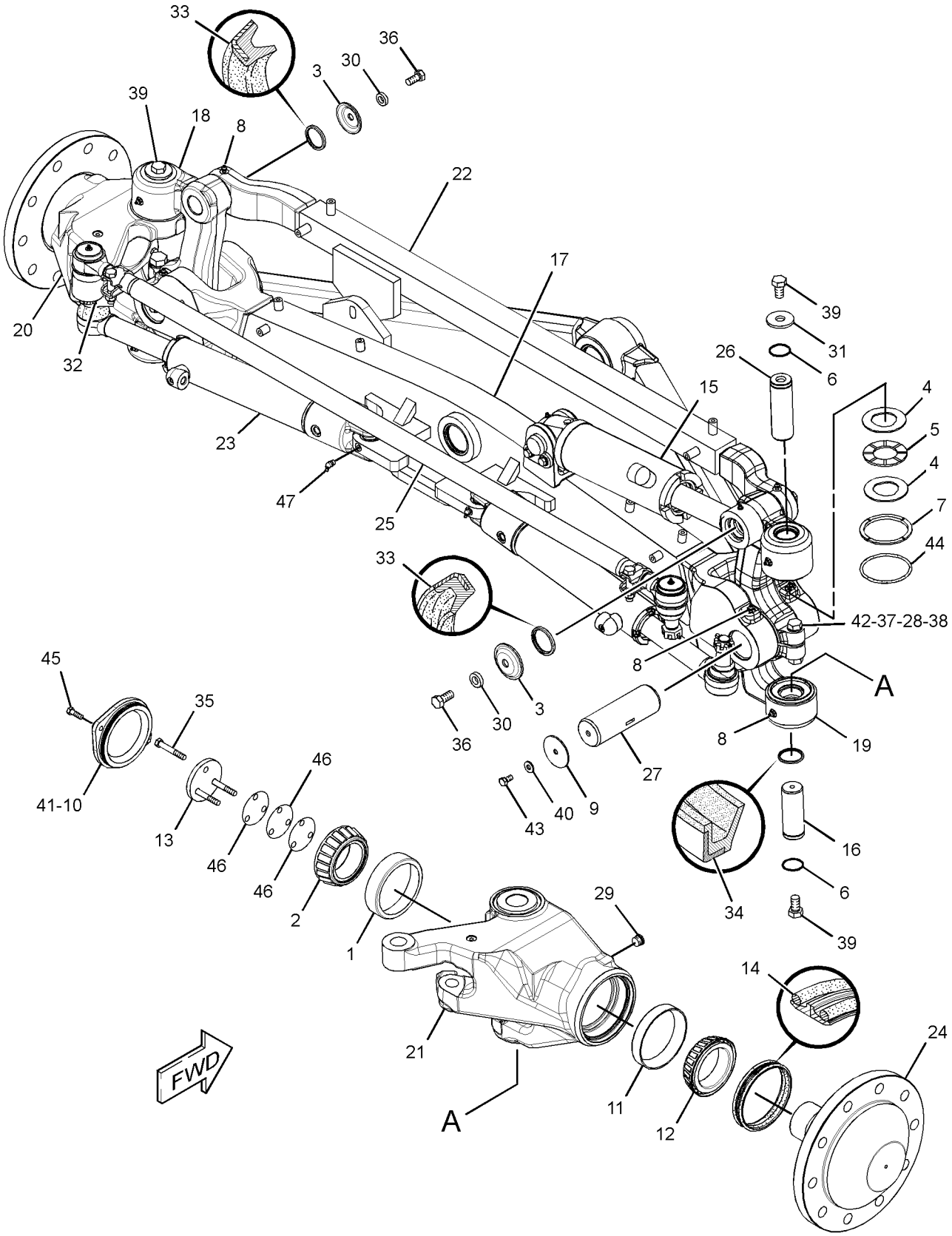

GRAPHIC #1 **<END>** g01550074

FRAME AND BODY

250-0159 COVER GP-CONTROL VALVE

S/N: R9H1-UP

PART OF 349-2556 COMMON AR

SMCS-7150 **i02922363**

NOTE	REF NO	GRAPHIC REF	PART NUMBER	QTY	PART NAME 1 2 3 4 5 6 (PRODUCT LEVEL)	SEE PAGE
	1	1	**264-1466**	1	BRACKET AS	
	2	2	**264-1469**	2	BRACKET AS	
	3	2	**264-1480**	1	BRACKET AS	
	4	2	**264-1481**	1	BRACKET AS	
	5	2	**267-8669**	1	COVER AS (RH)	
	6	2	**267-8671**	1	COVER AS (LH)	
M		2	**8T-3490**	6	NUT-WELD (M10X1.5-THD)	
	7	2	**278-4890**	1	PLATE AS (RH)	
	8	2	**278-4891**	1	PLATE AS (LH)	
	9	1	**290-3491**	1	COVER AS	
	10	2	**304-7787**	2	BRACKET AS	
					(EACH INCLUDES)	
M		2	**8T-3490**	1	NUT-WELD (M10X1.5-THD)	
	11	1	**310-2654**	1	COVER	
C	12	2	**310-5233**	1	BRACKET AS	
M		2	**8T-3490**	3	NUT-WELD (M10X1.5-THD)	
C	13	2	**310-5234**	1	BRACKET AS	
M		2	**8T-3490**	3	NUT-WELD (M10X1.5-THD)	
C	14	2	**310-5238**	1	PLATE AS	
M		2	**8T-3490**	6	NUT-WELD (M10X1.5-THD)	
M		2	**8T-3597**	4	NUT-WELD (M12X1.75-THD)	
C	15	2	**315-0056**	1	COVER AS	
M		2	**8T-3490**	2	NUT-WELD (M10X1.5-THD)	
C	16	1	**315-6626**	1	COVER AS	
M		1	**8T-3490**	3	NUT-WELD (M10X1.5-THD)	
C	17	1	**316-2555**	1	COVER AS	
M		1	**8T-3490**	3	NUT-WELD (M10X1.5-THD)	
C	18	1,2	**198-4777**	64	WASHER-HARD (11X25X10-MM THK)	
C	19	2	**7X-7729**	24	WASHER (11X25X3-MM THK)	
C	20	1,2	**8T-4121**	5	WASHER-HARD (11X21X2.5-MM THK)	
CM	21	2	**8T-4136**	8	BOLT (M10X1.5X25-MM)	
CM	22	1,2	**8T-4137**	19	BOLT (M10X1.5X20-MM)	
CM	23	2	**8T-4186**	10	BOLT (M10X1.5X40-MM)	
CM	24	1,2	**8T-4195**	54	BOLT (M10X1.5X30-MM)	

C-CHANGE FROM PREVIOUS TYPE
M-METRIC PART

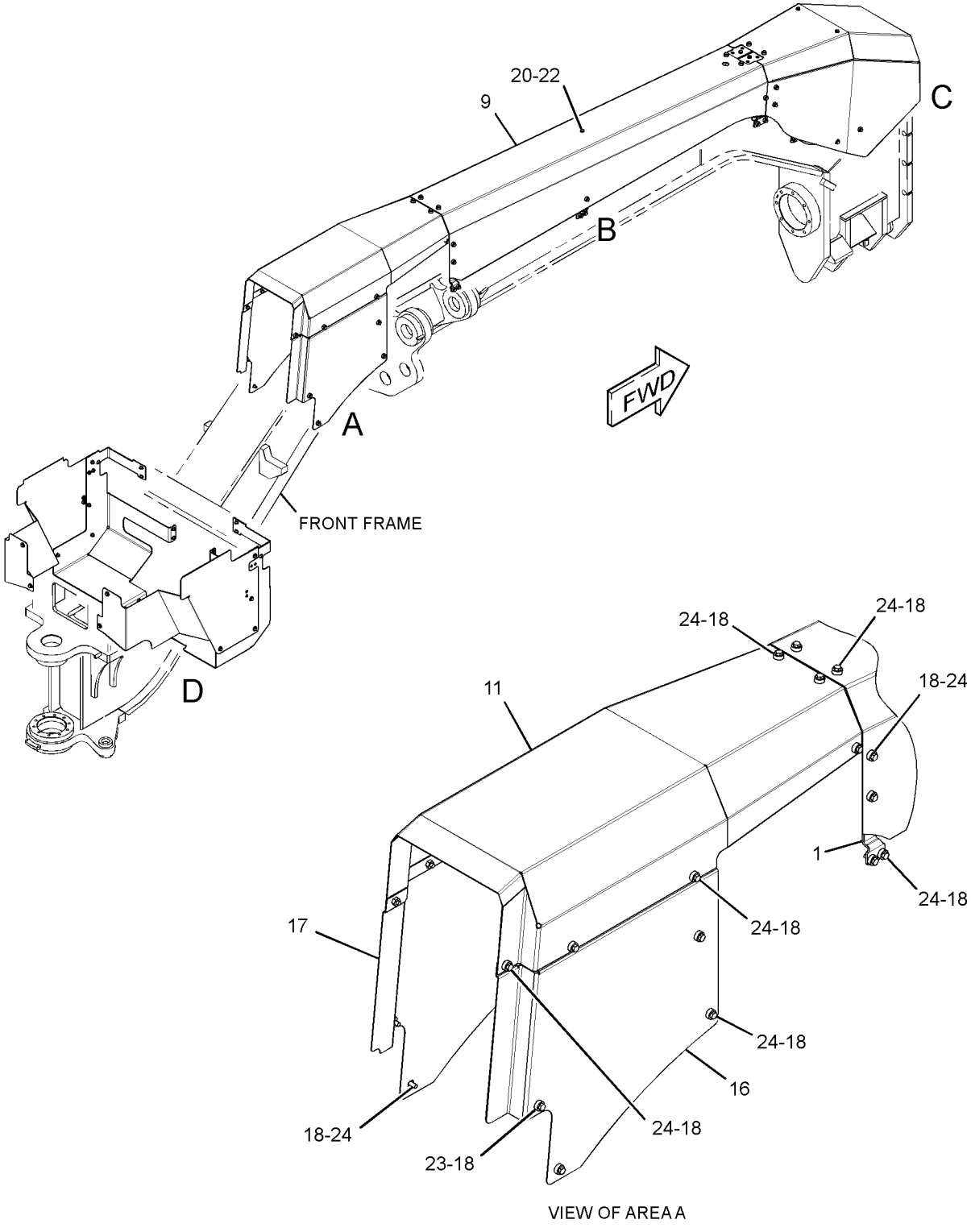

REFER TO ALL ILLUSTRATIONS OF
THIS GROUP FOR AUXILIARY VIEWS

GRAPHIC #1 g01462787

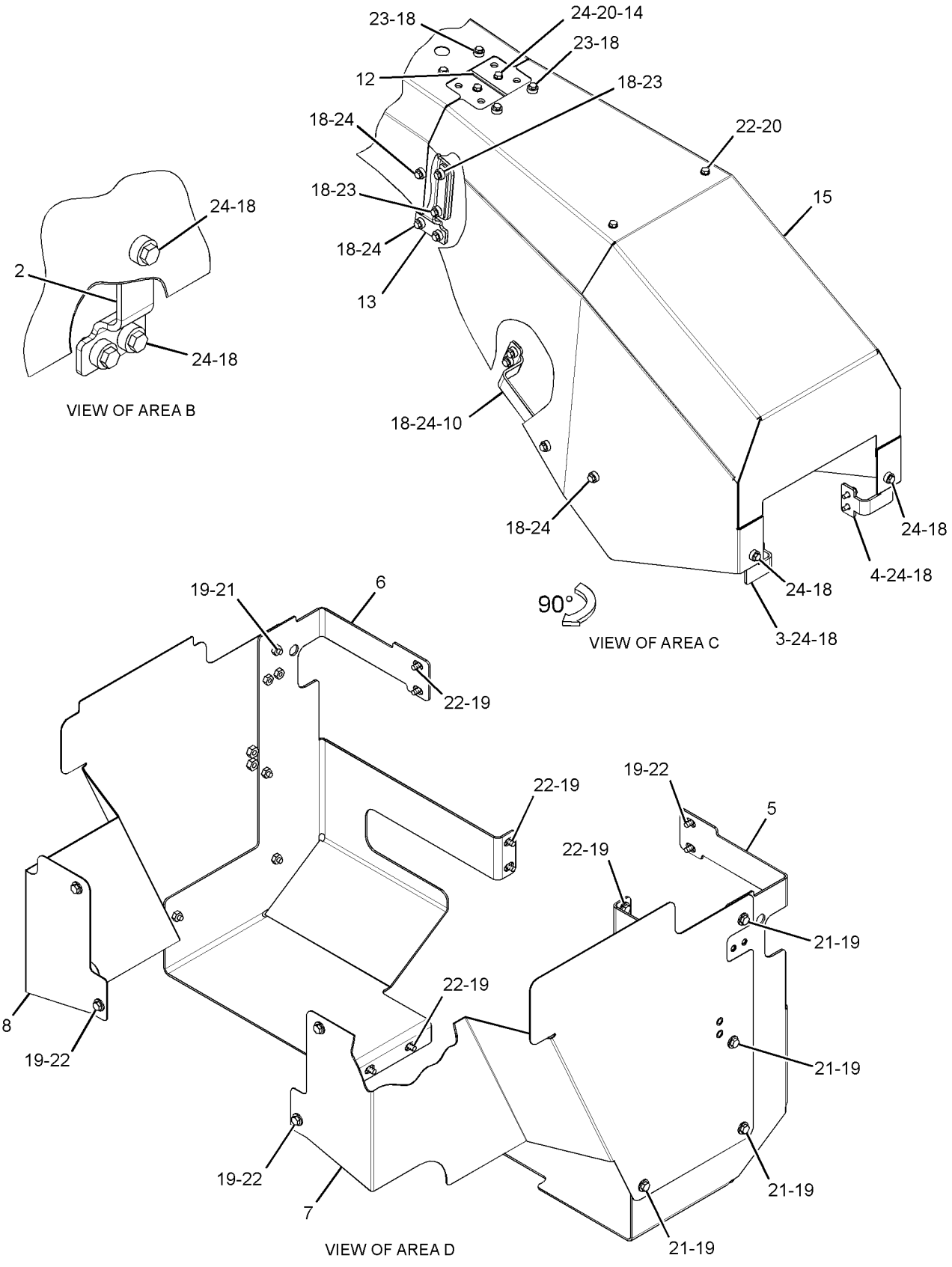

GRAPHIC #2 **<END>** g01462788

344-0053 COVER GP-PROTECTION–
HYDRAULIC OIL COOLER, SNOW
S/N: R9H1-UP
PART OF 352-3808 OPTION AR-COLD WEATHER
AN ATTACHMENT

SMCS-7315, 795C **i03629771**

NOTE	REF NO	GRAPHIC REF	PART NUMBER	QTY	PART NAME 1 2 3 4 5 6 (PRODUCT LEVEL)	SEE PAGE
	1	1	**199-4318**	4	TURNBUCKLE	
	2	1	**344-0051**	1	COVER AS	
	3	1	**344-1772**	1	BRACKET	
	4	1	**344-1773**	1	BRACKET	
	5	1	**6K-3273**	8	RIVET-POP	
	6	1	**7X-7729**	4	WASHER (11X25X3-MM THK)	
M	7	1	**8T-4195**	4	BOLT (M10X1.5X30-MM)	

M-METRIC PART

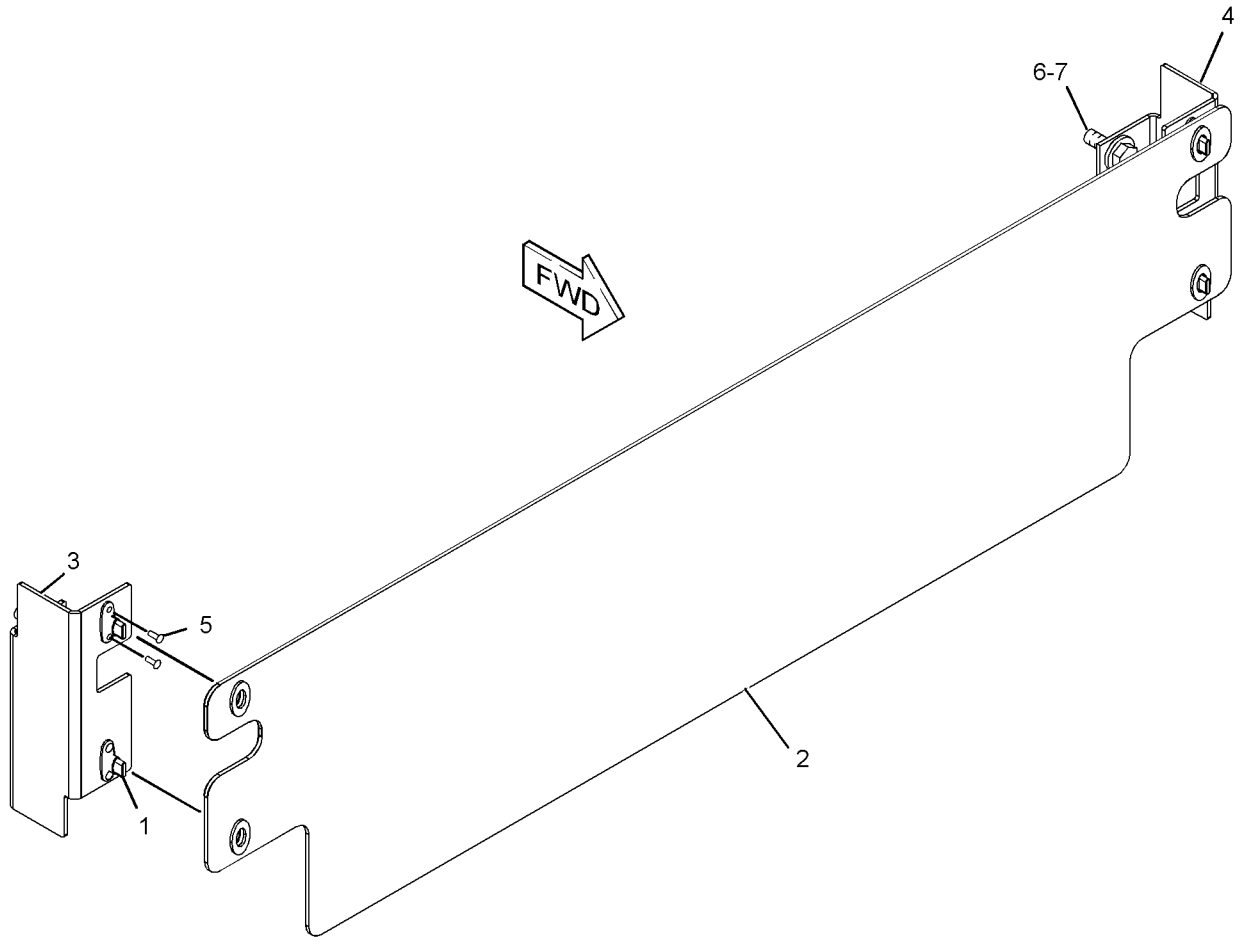

GRAPHIC #1 **<END>** g01952390

FRAME AND BODY

250-0160 ENCLOSURE GP-ENGINE

S/N: R9H1-UP

PART OF 349-2556 COMMON AR

SMCS-7263 **i03980657**

NOTE	REF NO	GRAPHIC REF	PART NUMBER	QTY	PART NAME 1 2 3 4 5 6 (PRODUCT LEVEL)	SEE PAGE
	1	2,3	**7X-1387**	8	WASHER (10.26X22.22X1.9-MM THK)	
	3	2,3	**227-3101**	2	STRIKER AS	
	4	2,3	**227-3103**	2	PLATE	
	5	1,2	**245-2827**	4	HANDRAIL	
	6	2	**255-5044**	1	GUARD AS	
	7	1	**265-3924**	1	SUPPORT AS	
		1	**7T-1099**	1	LINK	
M		1	**8T-3490**	6	NUT-WELD (M10X1.5-THD)	
	8	1	**265-3927**	1	PLATE	
	10	1	**265-9360**	1	HOOD AS	
		1	**7T-1099**	7	LINK	
M		1	**6V-9632**	4	NUT-WELD (M6X1-THD)	
M		1	**8T-3490**	10	NUT-WELD (M10X1.5-THD)	
	11	2	**272-7248**	1	HINGE AS	
	12	1	**272-7250**	1	HINGE AS	
	13	1	**274-9263**	2	HANDRAIL	
	14	2,3	**277-0750**	2	PLATE	
	15	2,3	**286-1605**	2	PLATE	
	16	2	**291-8094**	1	BRACKET AS	
	17	2	**291-8095**	1	BRACKET AS	
					(EACH BRACKET AS INCLUDES)	
		2	**7T-1099**	4	LINK	
		2	**087-5841**	1	PLATE	
		2	**130-5300**	2	CLIP	
M		2	**8T-3490**	9	NUT-WELD (M10X1.5-THD)	
	18	2,3	**291-8500**	2	ROD AS	
	19	3	**291-8501**	2	ROD AS	
C	20	2,3	**326-0610**	4	LATCH AS	
					(EACH INCLUDES)	
M		2,3	**5C-2890**	4	NUT (M6X1-THD)	
		2,3	**8C-3398**	4	LOCKWASHER	
M		2,3	**160-8499**	2	NUT (M12X1.5-THD)	
		2,3	**326-0612**	2	WASHER-TAB	
	21	2,3	**295-3839**	4	PAWL	
	22	1	**300-1379**	1	PLATE	
	23	1,2	**321-3884**	2	HINGE AS	
	24	2	**321-4351**	1	DOOR AS-ACCESS	
	25	2	**321-5665**	1	PANEL AS	
	26	1	**321-5666**	1	PANEL AS	
	27	1	**321-6974**	1	DOOR AS-ACCESS	
	28	2	**322-0439**	1	FRAME AS	
	29	1	**322-0440**	1	FRAME AS	
	30	1	**322-0444**	1	PANEL AS-ENCLOSURE	
	31	2	**322-0445**	1	PANEL AS	
	32	2	**322-0446**	1	DOOR AS-ACCESS	
	33	1	**322-0447**	1	DOOR AS-ACCESS	
	34	1	**198-4777**	26	WASHER-HARD (11X25X10-MM THK)	
	35	3	**3B-4615**	12	PIN-COTTER	
	36	2,3	**5P-8439**	4	GROMMET	
	37	1,2,3	**7X-7729**	56	WASHER (11X25X3-MM THK)	
	38	2,3	**8T-4121**	4	WASHER-HARD (11X21X2.5-MM THK)	
M	39	1,2	**8T-4136**	32	BOLT (M10X1.5X25-MM)	
M	40	1,2	**8T-4186**	16	BOLT (M10X1.5X40-MM)	
M	41	1,2,3	**8T-4189**	26	BOLT (M8X1.25X20-MM)	
M	42	2,3	**8T-4195**	8	BOLT (M10X1.5X30-MM)	
M	43	1	**8T-4196**	26	BOLT (M10X1.5X35-MM)	

250-0160 **ENCLOSURE GP-ENGINE** *(contd.)* **i03980657**

NOTE	REF NO	GRAPHIC REF	PART NUMBER	QTY	PART NAME 1 2 3 4 5 6 (PRODUCT LEVEL)	SEE PAGE
	44	1,2,3	**8T-4224**	38	WASHER-HARD (8.8X16X2-MM THK)	
M	45	1,2,3	**8T-4908**	12	BOLT (M8X1.25X25-MM)	
C	46	1	**353-9488**	1	HOOD AS	
C	47	1	*354-5783*	1	DOOR GP-ACCESS	
H		1	**275-0572**	1	LATCH AS	
		1	**319-2305**	1	CAM-LATCH	
		1	**354-5779**	1	DOOR AS-ACCESS	
		1	**1V-8284**	1	HINGE	

C-CHANGE FROM PREVIOUS TYPE
H-REQUIRES CORPORATE KEY
M-METRIC PART

250-0160 **ENCLOSURE GP-ENGINE** *(contd.)* **i03980657**

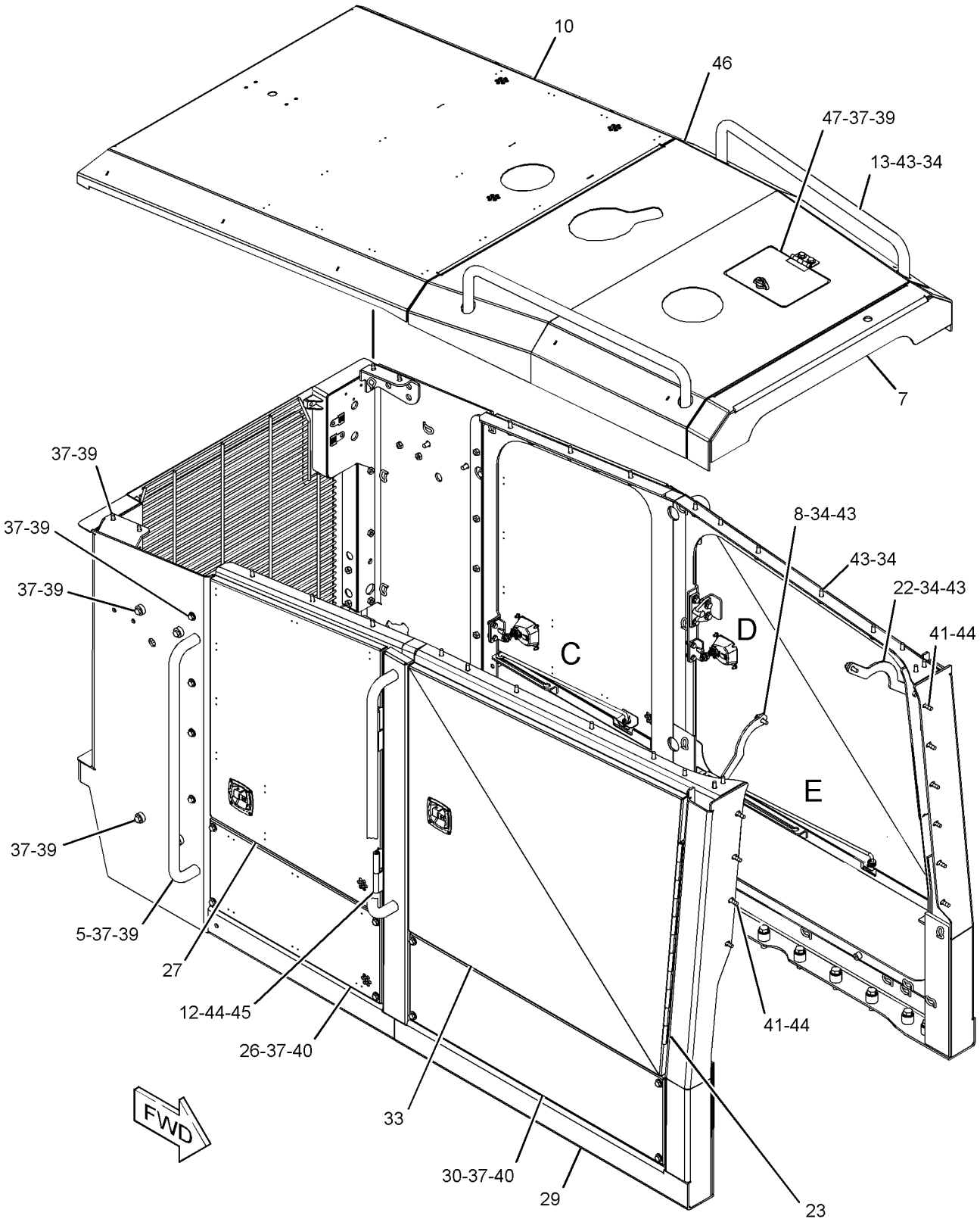

REFER TO ALL ILLUSTRATIONS OF
THIS GROUP FOR AUXILIARY VIEWS

GRAPHIC #1 g02229093

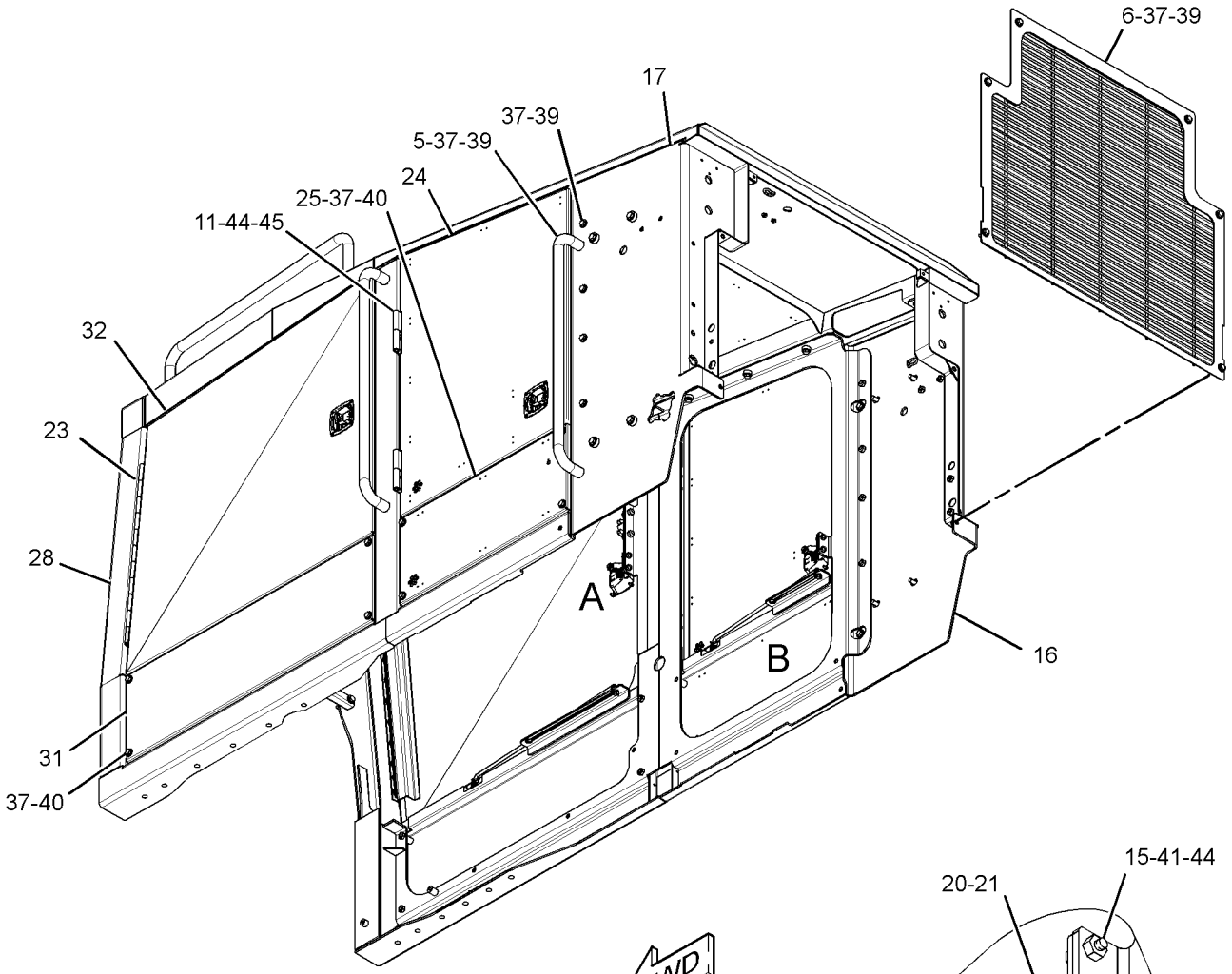

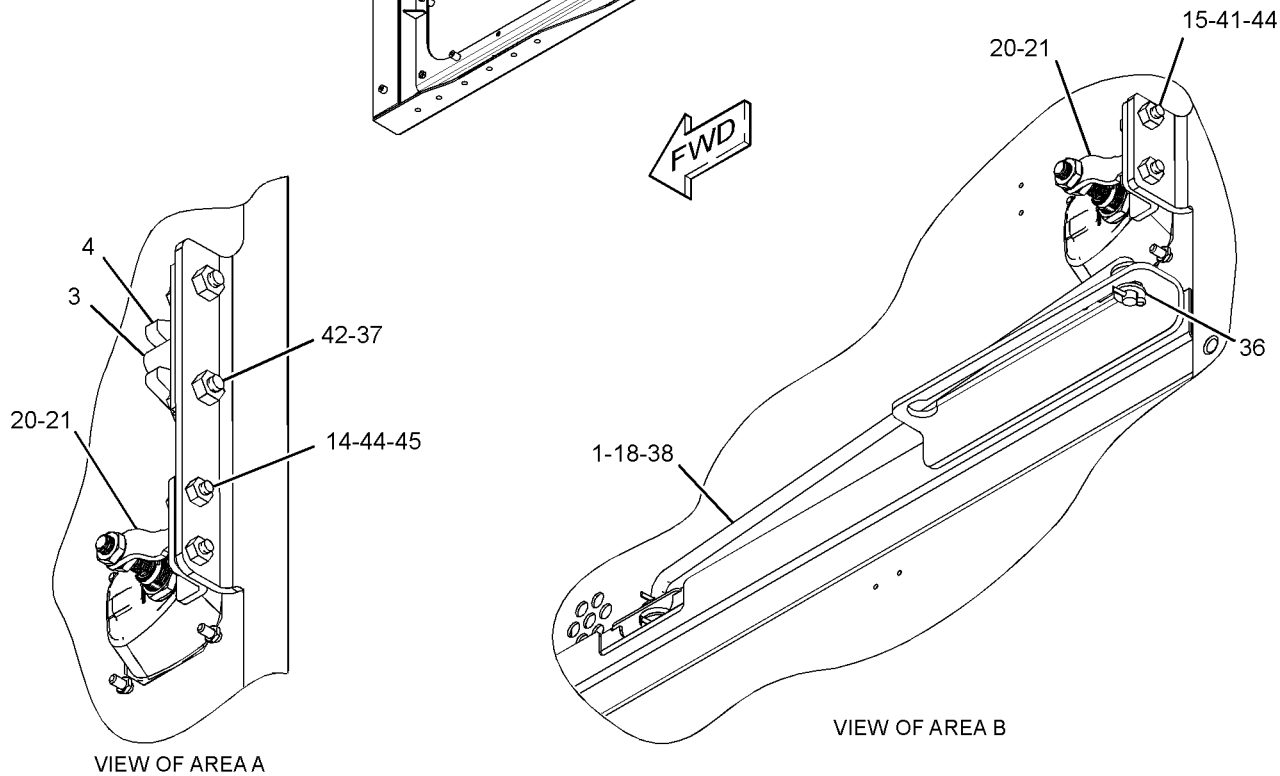

GRAPHIC #2

g02160699

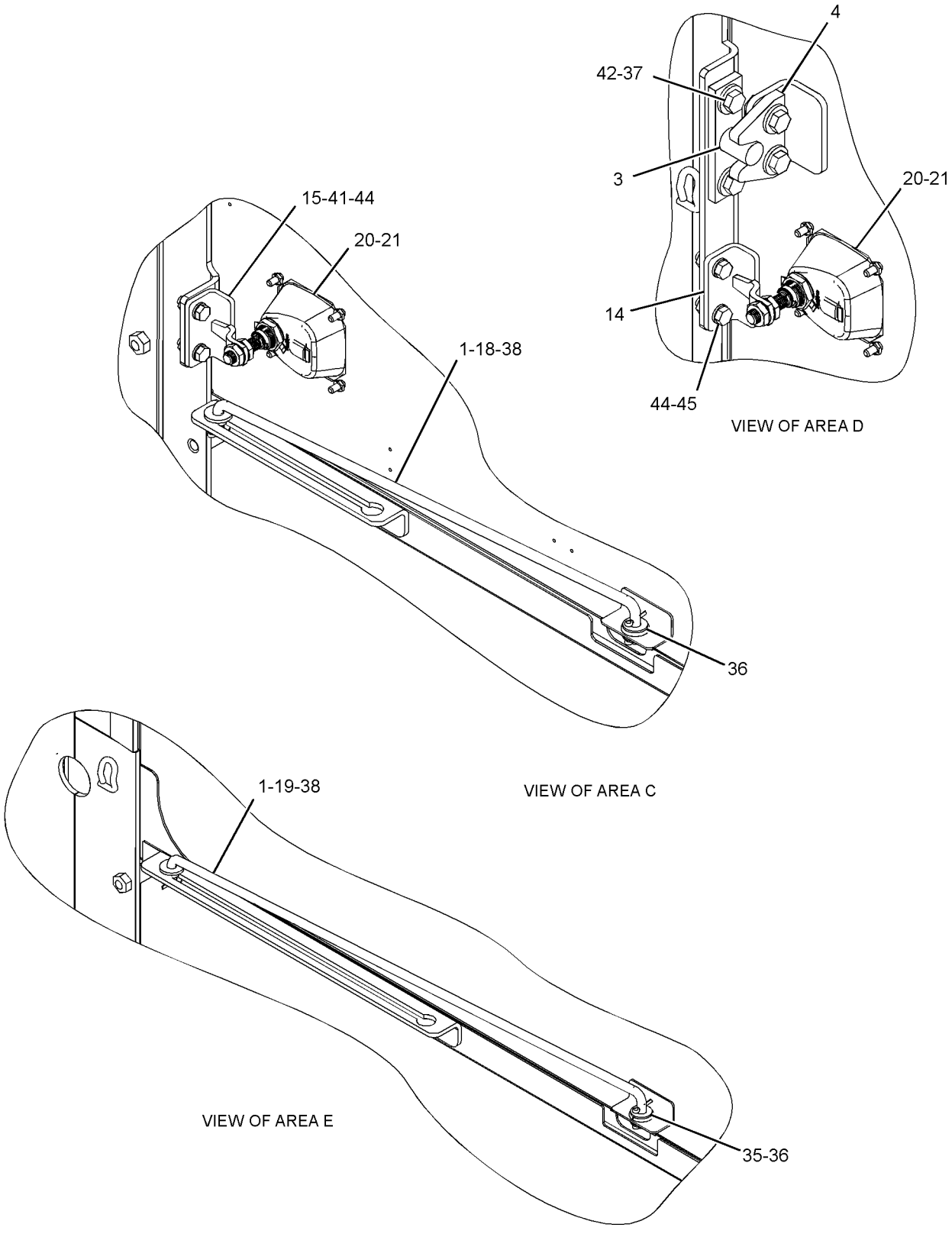

GRAPHIC #3 **<END>** g02160700

FRAME AND BODY

318-2140 FASTENER GP-ENCLOSURE

S/N: R9H1-UP

PART OF 349-2556 COMMON AR

SMCS-7263, 7553 **i03430422**

NOTE	REF NO	GRAPHIC REF	PART NUMBER	QTY	PART NAME 1 2 3 4 5 6 (PRODUCT LEVEL)	SEE PAGE
	1	1	**8X-1904**	12	SPACER (20X35X26-MM THK)	
	2	1	**302-9124**	1	BAR	
	3	1	**198-4778**	8	WASHER-HARD (13.5X30X12-MM THK)	
	4	1	**7X-0591**	12	WASHER-HARD (17X29X3-MM THK)	
	5	1	**7X-7729**	14	WASHER (11X25X3-MM THK)	
M	6	1	**8T-4137**	4	BOLT (M10X1.5X20-MM)	
M	7	1	**8T-4138**	4	BOLT (M6X1X20-MM)	
M	8	1	**8T-4140**	12	BOLT (M16X2X60-MM)	
M	9	1	**8T-4196**	8	BOLT (M10X1.5X35-MM)	
M	10	1	**8T-4956**	8	BOLT (M12X1.75X35-MM)	
M	11	1	**8T-6466**	2	BOLT (M10X1.5X60-MM)	
	12	1	**9D-3767**	3	PLUG-BUTTON	
	13	1	**9X-8256**	4	WASHER (6.6X12X2-MM THK)	

M-METRIC PART

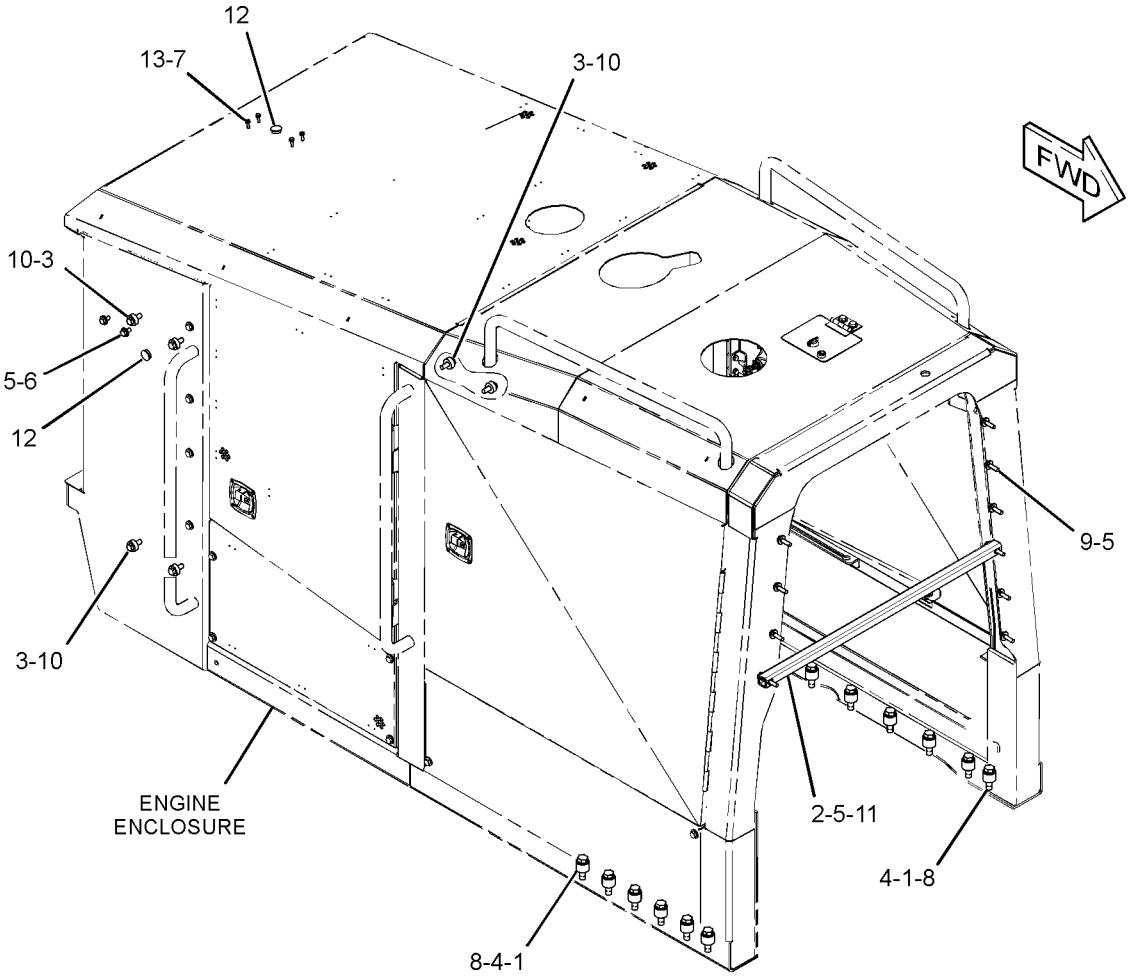

GRAPHIC #1 **<END>** g01786597

248-1484 FASTENER GP-SENSOR

S/N: R9H1-UP

PART OF 321-1458 FASTENER GP-SENSOR

SMCS-5645, 7268, 7553 **i04035019**

NOTE	REF NO	GRAPHIC REF	PART NUMBER	QTY	PART NAME 1 2 3 4 5 6 (PRODUCT LEVEL)	SEE PAGE
	1	1	**8T-9389**	2	BOLT (1/2-13X2.75-IN)	
	2	1	**8T-8917**	2	BOLT (1/2-13X1.25-IN)	
	3	1	**5S-7385**	2	LOCKWASHER	
	4	1	**6V-8188**	2	NUT (1/2-13-THD)	
	5	1	**5P-1076**	2	WASHER-HARD (13.5X30X4-MM THK)	

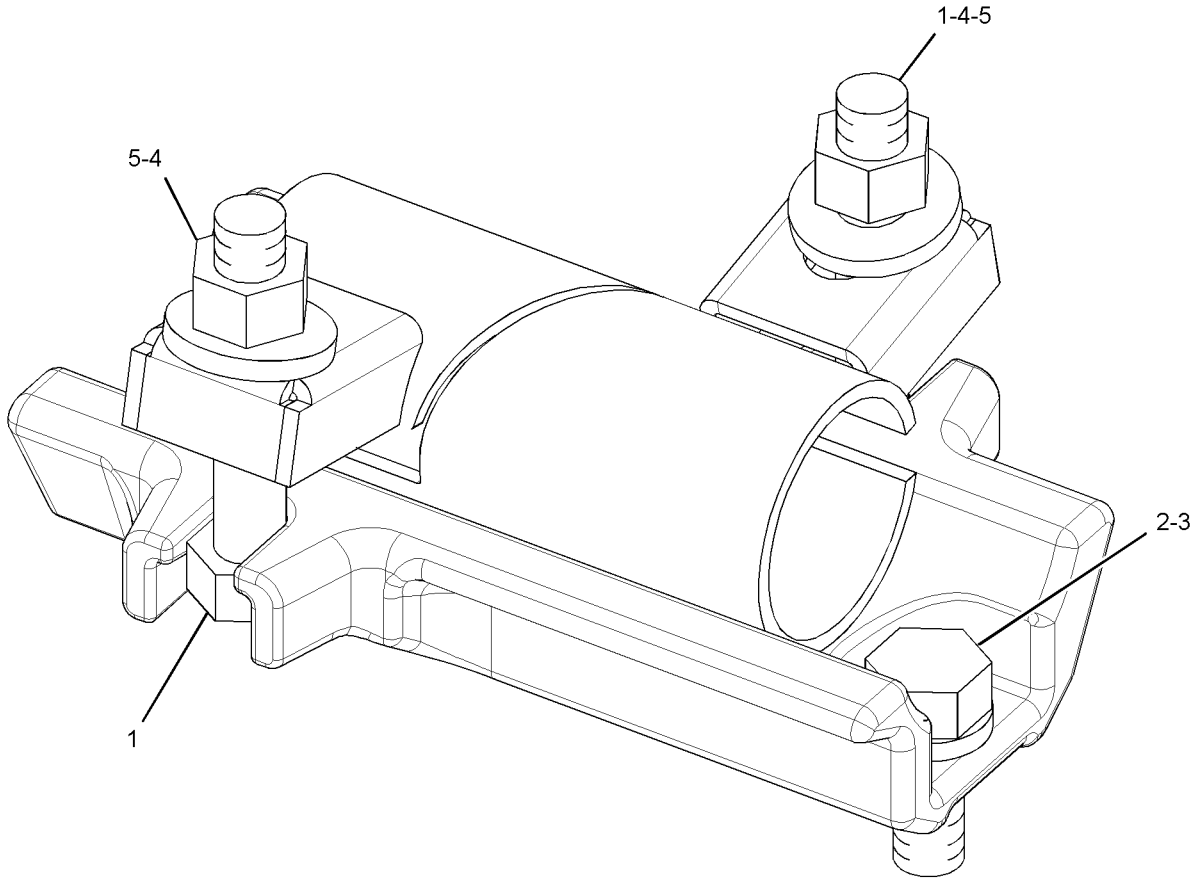

GRAPHIC #1 **<END>** g01455682

321-1458 FASTENER GP-SENSOR–SONIC

S/N: R9H1-UP

PART OF 286-0132, 286-0133 SENSOR GP-SONIC

SMCS-5645, 7268, 7553 **i03004696**

NOTE	PART NUMBER	QTY	PART NAME 1 2 3 4 5 6 (PRODUCT LEVEL)	SEE PAGE
Y	**248-1484**	2	FASTENER GP-SENSOR	488
	8T-8917	4	BOLT (1/2-13X1.25-IN)	
	3B-4507	4	LOCKWASHER	

Y-SEPARATE ILLUSTRATION

<END>

FRAME AND BODY

328-5399 FENDER & SUPPORT GP–REAR

S/N: R9H1-UP

AN ATTACHMENT

SMCS-7252 **i03381072**

NOTE	REF NO	GRAPHIC REF	PART NUMBER	QTY	PART NAME 1 2 3 4 5 6 (PRODUCT LEVEL)	SEE PAGE
	1	1	**271-5129**	6	PLATE	
	2	1	**271-5390**	2	HANDRAIL	
	3	1	**277-1998**	2	PLATE	
	4	1	**277-1999**	2	PLATE	
	5	1	**292-2560**	2	BRACKET AS	
	6	1	**292-2564**	2	TUBE AS	
	7	1	**329-8825**	2	PLATE AS	
	8	1	**329-8829**	2	PLATE AS	
	9	1	**329-8834**	2	CHANNEL AS	
	10	1	**329-8836**	2	PLATE AS	
	11	1	**329-8840**	2	PLATE AS	
	12	1	**329-8843**	4	PLATE AS	
	13	1	**329-8845**	2	PLATE AS	
	14	1	**329-8847**	2	PLATE AS	
	15	1	**329-8849**	2	PLATE	
	16	1	**329-8850**	2	PLATE	
	17	1	**329-8851**	1	BRACKET AS	
	18	1	**332-9268**	1	BRACKET AS	
	19	1	**198-4778**	36	WASHER-HARD (13.5X30X12-MM THK)	
M	20	1	**238-0251**	12	SCREW-BUTTON HEAD (M10X1.5X25-MM)	
	21	1	**7X-0605**	20	WASHER-HARD (13X28X1.6-MM THK)	
M	22	1	**7X-2549**	4	BOLT (M12X1.75X100-MM)	
	23	1	**7X-7729**	48	WASHER (11X25X3-MM THK)	
	24	1	**8T-4121**	16	WASHER-HARD (11X21X2.5-MM THK)	
M	25	1	**8T-4133**	8	NUT (M10X1.5-THD)	
M	26	1	**8T-4136**	16	BOLT (M10X1.5X25-MM)	
M	27	1	**8T-4139**	2	BOLT (M12X1.75X30-MM)	
M	28	1	**8T-4183**	28	BOLT (M12X1.75X40-MM)	
M	29	1	**8T-4194**	8	BOLT (M12X1.75X50-MM)	
M	30	1	**8T-4195**	28	BOLT (M10X1.5X30-MM)	
	31	1	**8T-4223**	2	WASHER-HARD (13.5X25.5X3-MM THK)	
M	32	1	**8T-4648**	10	BOLT (M12X1.75X70-MM)	
M	33	1	**8T-6868**	8	BOLT (M12X1.75X80-MM)	

M-METRIC PART

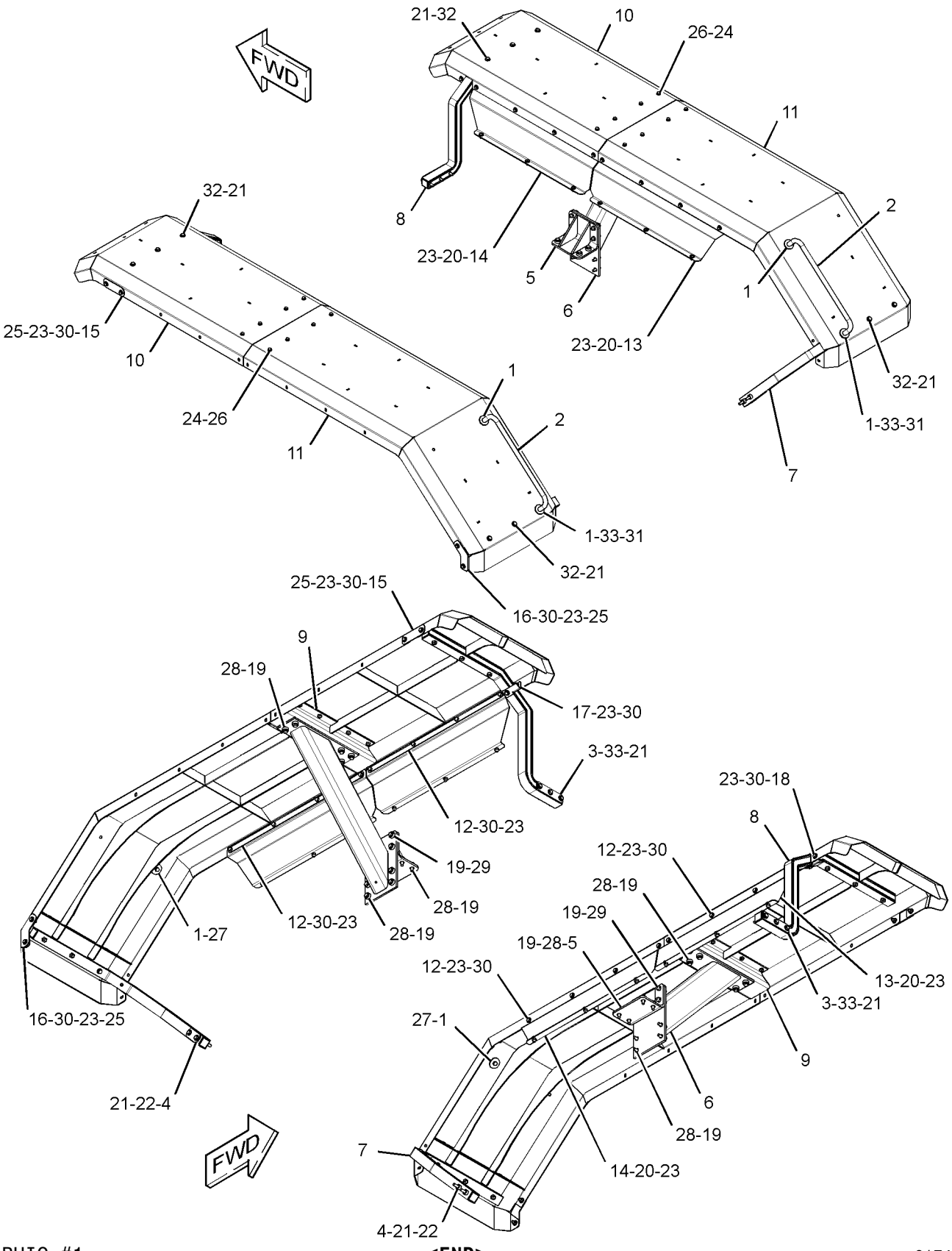

GRAPHIC #1

<END>

g01749834

FRAME AND BODY

286-1301 FRAME GP-FRONT

S/N: R9H1-UP

PART OF 349-2556 COMMON AR

SMCS-7050, 7051 **i02890130**

NOTE	REF NO	GRAPHIC REF	PART NUMBER	QTY	PART NAME 1 2 3 4 5 6 (PRODUCT LEVEL)	SEE PAGE
	1	1	**9D-0498**	5	BUSHING-TERMINAL	
	2	1	**277-5435**	2	BEARING	
	3	1	**286-1302**	1	FRAME AS	
	4	1	**308-3540**	1	PLATE AS	
		1	**7T-1099**	5	LINK	
M		1	**8T-3490**	5	NUT-WELD (M10X1.5-THD)	
M		1	**9R-2672**	2	BOSS-THREADED (M10X1.5-THD)	
	5	1	**309-4183**	1	PLATE AS	
M		1	**8T-3490**	2	NUT-WELD (M10X1.5-THD)	
	6	1	**309-4184**	1	PLATE AS	
M		1	**8T-3490**	2	NUT-WELD (M10X1.5-THD)	
	7	1	**309-4186**	1	PLATE	
	8	1	**309-4187**	1	PLATE	
	9	1	**198-4777**	12	WASHER-HARD (11X25X10-MM THK)	
	10	1	**198-4780**	4	WASHER-HARD (17.5X32X8-MM THK)	
	11	1	**8D-8572**	4	BUSHING	
M	12	1	**8T-4185**	2	BOLT (M10X1.5X50-MM)	
M	13	1	**8T-4186**	6	BOLT (M10X1.5X40-MM)	
M	14	1	**8T-4196**	4	BOLT (M10X1.5X35-MM)	
M	15	1	**8T-4193**	2	BOLT (M16X2X50-MM)	
	16	1	**9D-6584**	4	SEAL-LIP TYPE	
	17	1	**9D-6591**	8	SEAL-LIP TYPE	

M-METRIC PART

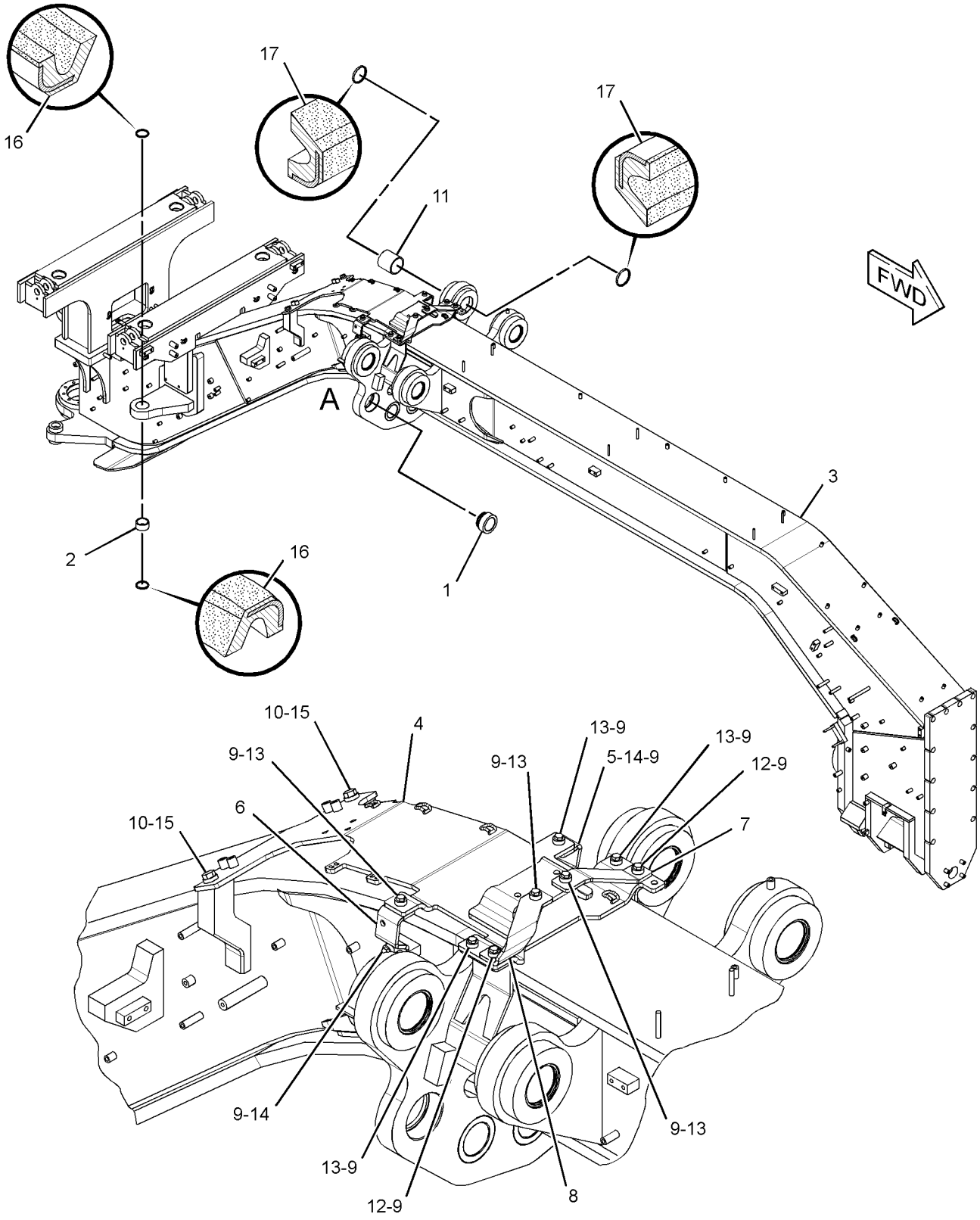

VIEW OF AREA A

GRAPHIC #1 **<END>** g01407464

FRAME AND BODY

284-6068 FRAME GP-REAR

S/N: R9H1-UP

PART OF 349-2556 COMMON AR

SMCS-7050, 7051 **i02611412**

NOTE	REF NO	GRAPHIC REF	PART NUMBER	QTY	PART NAME 1 2 3 4 5 6 (PRODUCT LEVEL)	SEE PAGE
	1	1	**8D-3791**	1	PIN	
	2	1	**284-6069**	1	FRAME AS	
	3	1	**292-5658**	1	PLATE	
	4	1	**292-5659**	1	PIN	
	5	1	**8T-4123**	1	WASHER (22X35X3.5-MM THK)	
M	6	1	**8T-5460**	1	BOLT (M20X2.5X40-MM)	

M-METRIC PART

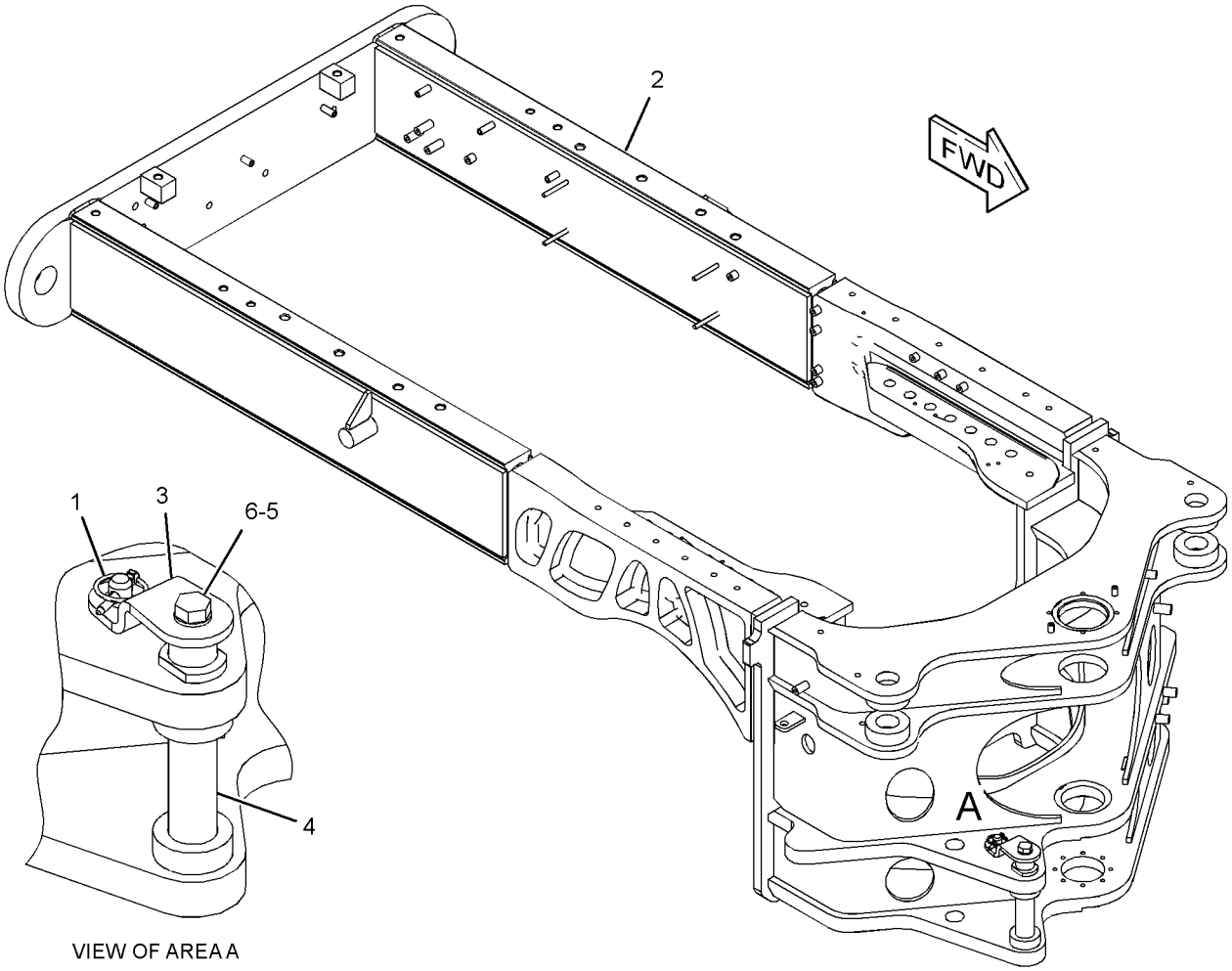

VIEW OF AREA A

GRAPHIC #1 **<END>** g01321391

FRAME AND BODY

285-2259 GUARD GP-BOTTOM

S/N: R9H1-UP
PART OF 352-3815 OPTION AR-REGIONAL
AN ATTACHMENT

SMCS-7153 **i02620544**

NOTE	REF NO	GRAPHIC REF	PART NUMBER	QTY	PART NAME 1 2 3 4 5 6 (PRODUCT LEVEL)	SEE PAGE
	1	1	**7D-7496**	2	PIN AS	
	2	1	**8W-6626**	2	CAP	
	3	1	**259-2569**	1	SUPPORT AS	
	4	1	**290-3029**	1	PLATE AS	
		1	**8Y-3925**	4	BOSS (3/8-16X1.2-IN)	
	5	1	**290-3031**	1	GUARD AS	
	6	1	**299-1427**	1	PLATE	
	7	1	**7X-7729**	2	WASHER (11X25X3-MM THK)	
	8	1	**8K-0530**	2	PIN-CABLE SOCKET	
	9	1	**8T-4121**	4	WASHER-HARD (11X21X2.5-MM THK)	
M	10	1	**8T-4136**	2	BOLT (M10X1.5X25-MM)	
M	11	1	**8T-4139**	8	BOLT (M12X1.75X30-MM)	
M	12	1	**8T-4175**	4	BOLT (M16X2X90-MM)	
M	13	1	**8T-4185**	4	BOLT (M10X1.5X50-MM)	
	14	1	**8T-4223**	8	WASHER-HARD (13.5X25.5X3-MM THK)	
	15	1	**9X-8257**	4	WASHER (17.5X30X3.5-MM THK)	

M-METRIC PART

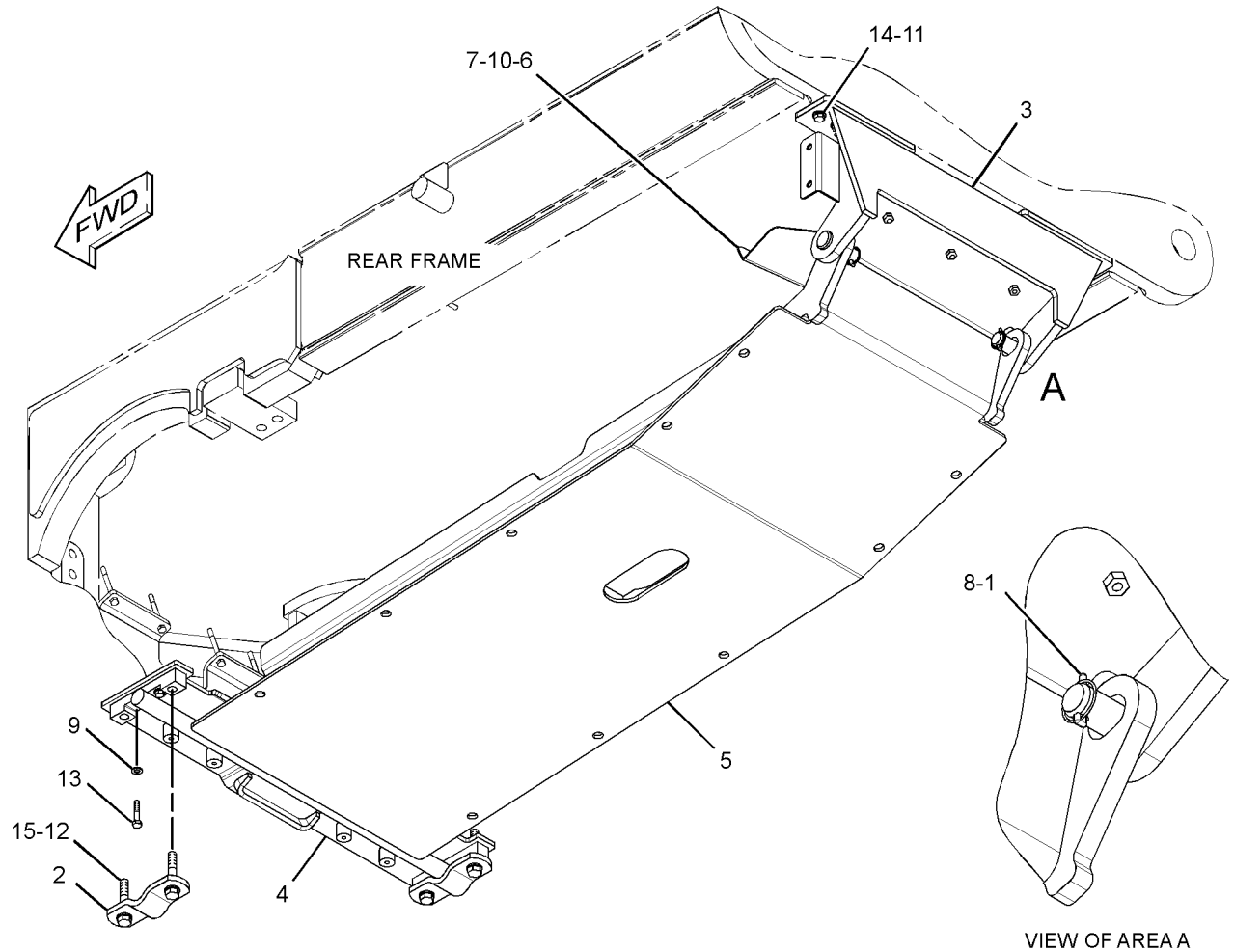

VIEW OF AREA A

GRAPHIC #1 **<END>** g01317295

FRAME AND BODY

257-4941 GUARD GP-DEBRIS

S/N: R9H1-UP
PART OF 352-3808 OPTION AR-COLD WEATHER
AN ATTACHMENT

SMCS-7158 **i03430503**

NOTE	REF NO	GRAPHIC REF	PART NUMBER	QTY	PART NAME 1 2 3 4 5 6 (PRODUCT LEVEL)	SEE PAGE
	1	1	**199-4318**	54	TURNBUCKLE	
	2	1	**257-7669**	1	GUARD AS-SCREEN (RADIATOR, TOP)	
	3	1	**322-9746**	1	COVER AS-ACCESS (RH)	
	4	1	**322-9747**	1	COVER AS-ACCESS (LH)	
	5	1	**322-9748**	1	COVER AS-PANEL	
	6	1	**322-9749**	1	COVER AS-PANEL	
M	7	1	**7Y-5288**	108	SCREW-PAN HEAD (4X10-MM)	

M-METRIC PART

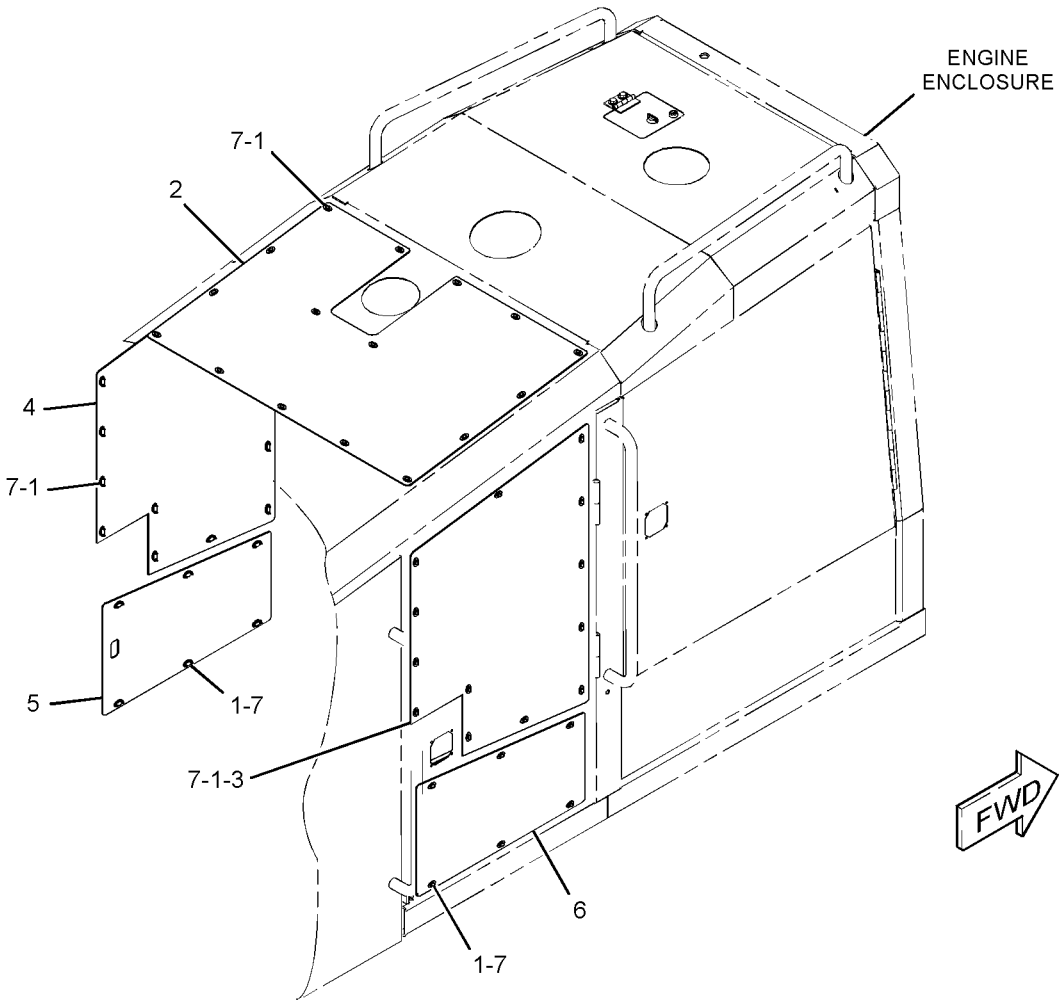

GRAPHIC #1

<END>

g01929576

250-2283 HITCH GP-ARTICULATING

S/N: R9H1-UP

PART OF 349-2556 COMMON AR

SMCS-7057, 7100 **i02373260**

NOTE	REF NO	GRAPHIC REF	PART NUMBER	QTY	PART NAME 1 2 3 4 5 6 (PRODUCT LEVEL)	SEE PAGE
	1	1	**4V-3044**	1	PLATE-LOCK	
	2	1	**5K-3489**	1	SHIM PACK (INCLUDES 18-SHIMS)	
	3	1	**5K-3490**	1	SPACER	
	4	1	**5K-3491**	1	SPACER	
	5	1	**5K-3492**	1	SHIM PACK (INCLUDES 19-SHIMS)	
	6	1	**5K-3495**	1	COLLAR	
	7	1	**5K-3501**	1	CAP-UPPER	
	8	1	**5K-3929**	1	BEARING AS-ROLLER	
	9	1	**6G-0174**	1	COVER	
	10	1	**276-2632**	1	PIN	
	11	1	**276-2633**	1	PIN-LOWER	
	12	1	**276-2634**	1	CAP-LOWER	
	13	1	**1J-2150**	2	SEAL-LIP TYPE	
	14	1	**3K-6454**	2	SEAL-LIP TYPE	
	15	1	**5K-3494**	1	BEARING-SLEEVE	
	16	1	**5K-3496**	1	BEARING-SLEEVE	
	17	1	**5P-8245**	24	WASHER-HARD (13.5X25.5X3-MM THK)	
	18	1	**5P-8247**	4	WASHER-HARD (17X32X3.5-MM THK)	
M	19	1	**8T-0375**	4	BOLT (M16X2X45-MM)	
M	20	1	**8T-4183**	8	BOLT (M12X1.75X40-MM)	
M	21	1	**8T-4184**	2	BOLT (M12X1.75X45-MM)	
M	22	1	**8T-4910**	4	BOLT (M12X1.75X60-MM)	
M	23	1	**8T-5092**	10	BOLT (M12X1.75X150-MM)	

M-METRIC PART

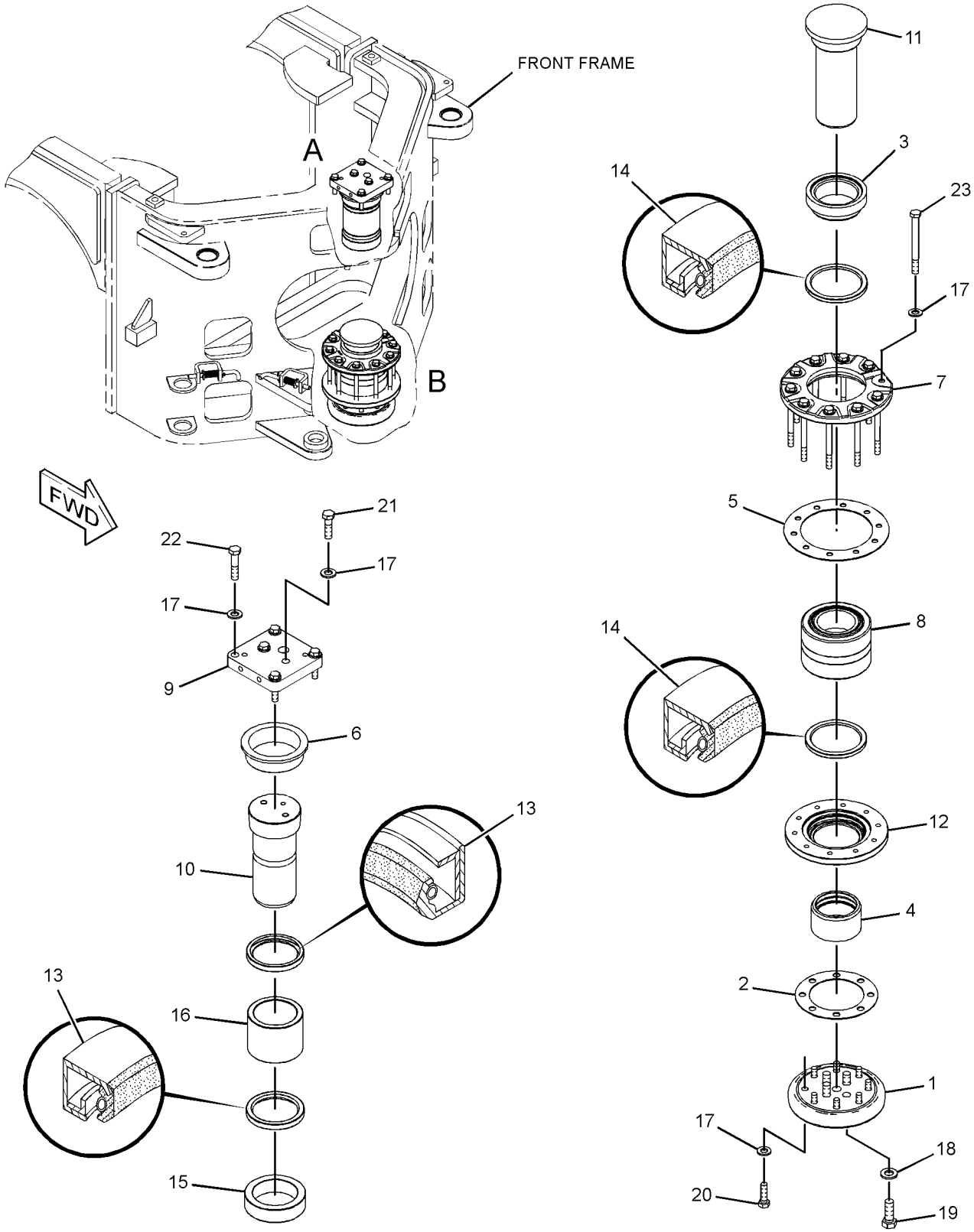

VIEW OF AREA A
(EXPLODED)

VIEW OF AREA B
(EXPLODED)

GRAPHIC #1

<END>

g01323488

252-0978 HITCH GP-TOWING

S/N: R9H1-UP
PART OF 296-3529 RIPPER AR
CANNOT BE USED WITH 264-3058—PAGE 801
AN ATTACHMENT

SMCS-7100 **i02614260**

NOTE	REF NO	GRAPHIC REF	PART NUMBER	QTY	PART NAME 1 2 3 4 5 6 (PRODUCT LEVEL)	SEE PAGE
	1	1	**266-6479**	1	HITCH AS	
M	2	1	**6V-5845**	2	BOLT (M20X2.5X70-MM)	
	3	1	**6V-8237**	6	WASHER (26X44X4-MM THK)	
M	4	1	**8T-0380**	6	BOLT (M24X3X60-MM)	
	5	1	**8T-3282**	2	WASHER-HARD (22X35X3.5-MM THK)	

M-METRIC PART

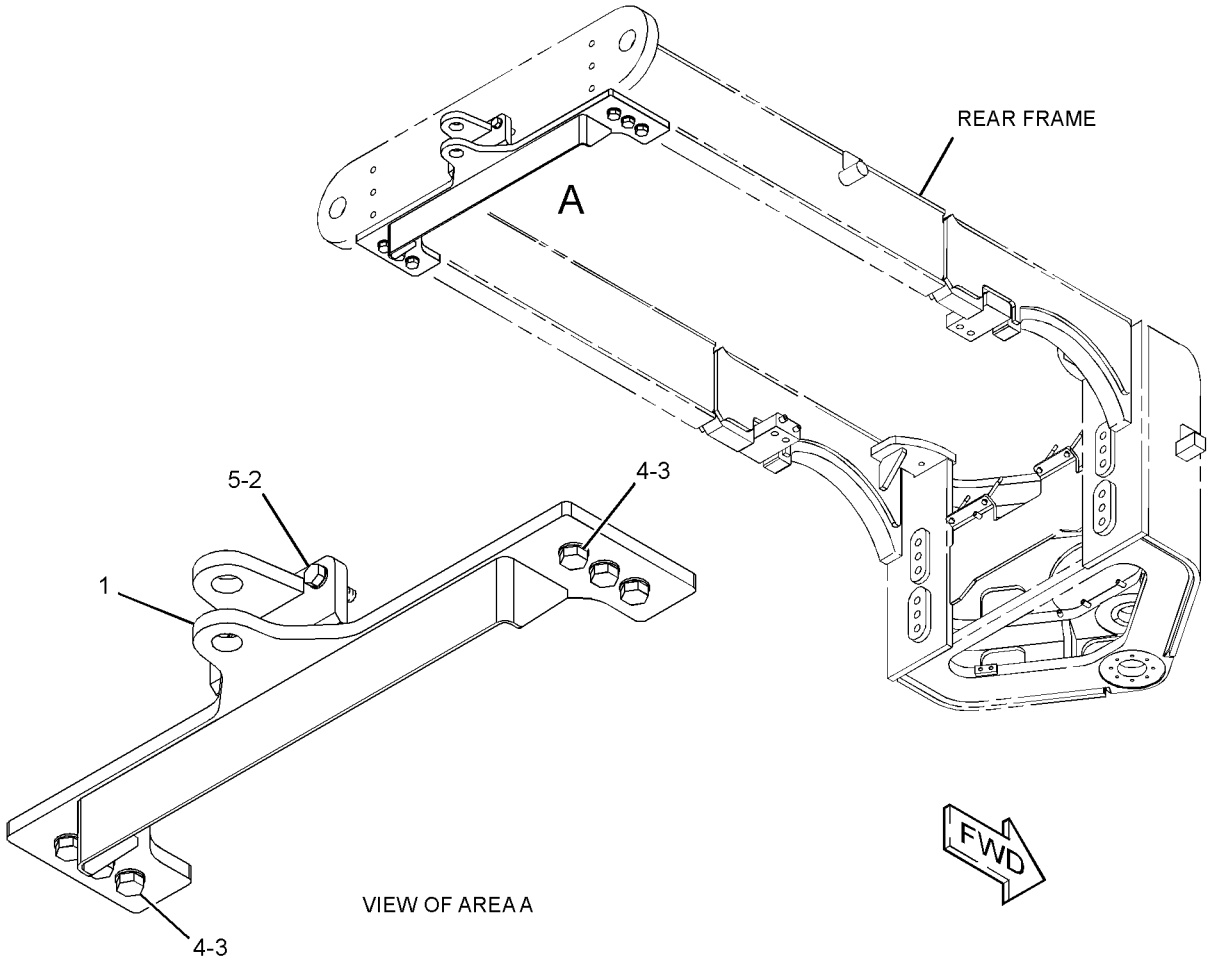

GRAPHIC #1 **<END>** g01328421

250-0172 INSULATION GP-SOUND SUPPR–ENGINE ENCLOSURE

S/N: R9H1-UP
PART OF 352-3815 OPTION AR-REGIONAL
AN ATTACHMENT

SMCS-1801, 7076, 7261 **i02377606**

NOTE	REF NO	GRAPHIC REF	PART NUMBER	QTY	PART NAME 1 2 3 4 5 6 (PRODUCT LEVEL)	SEE PAGE
	1	1	**261-1065**	2	INSULATION	
	2	1	**261-1067**	1	INSULATION	
	3	1	**261-1068**	1	INSULATION	

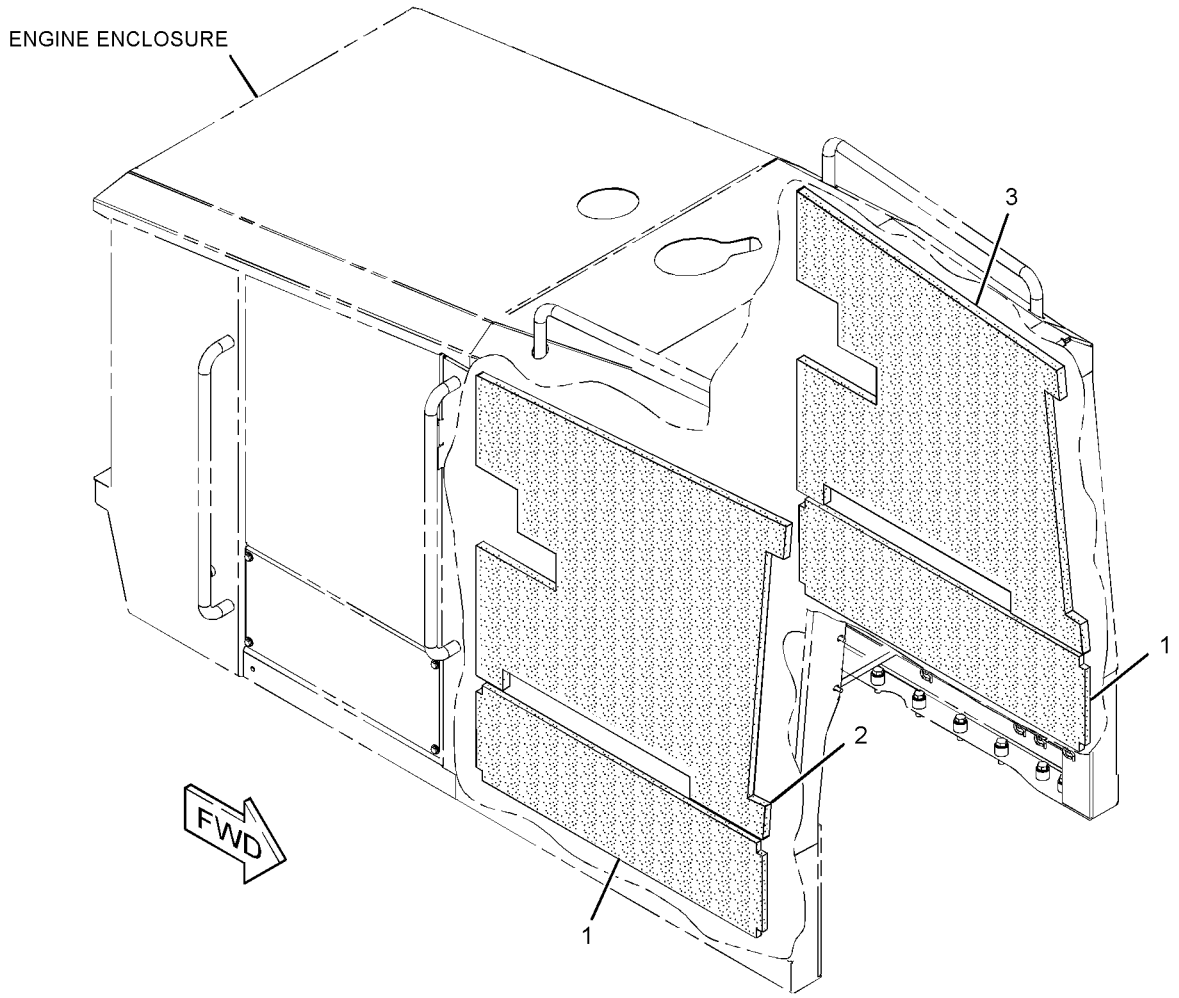

GRAPHIC #1 **<END>** g01324168

FRAME AND BODY

283-7773 LINES GP-AUTOMATIC LUBRICATION

S/N: R9H1-UP

PART OF 269-6941 LUBRICATION AR-AUTOMATIC

AN ATTACHMENT

SMCS-7510 **i03879474**

NOTE	REF NO	GRAPHIC REF	PART NUMBER	QTY	PART NAME 1 2 3 4 5 6 (PRODUCT LEVEL)	SEE PAGE
C	1	3,4	**2D-1683**	5	FITTING	
	2	4	**8T-0082**	1	TEE	
	3	3,4	**9R-5008**	2	SPACER (11X20X6-MM THK)	
	4	2	**033-2177**	1	TEE-PIPE	
	5	1	*105-7167*	1	FITTING GP	
		1	**6V-8397**	2	SEAL-O-RING	
		1	**8T-5890**	1	UNION	
	6	2	**108-3589**	2	SPACER	
	7	2	**194-5336**	2	SWIVEL AS	
	8	2	*197-6355*	1	ELBOW AS	
		2	**3E-7449**	1	ELBOW	
		2	**6V-8398**	1	SEAL-O-RING	
	9	2	**269-5351**	1	BRACKET	
Y	10	2	**272-1346**	1	PUMP GP-LUBRICATION	516
I	11	1	**283-7759**	1	HOSE AS	
I	12	1	**285-3375**	1	HOSE AS	
	13	1	**286-2237**	1	TUBE AS	
I	14	2	**288-8594**	1	HOSE AS	
	15	2	**291-6268**	1	FILM-IDENTIFICATION (LUBRICATION POINTS, LH)	
	16	2	**291-6269**	1	FILM-IDENTIFICATION (LUBRICATION POINTS, RH)	
C	17	3	**336-9512**	1	FILM-IDENTIFICATION (LUBRICATION POINTS)	
	18	2	**291-6271**	1	FILM-IDENTIFICATION (LUBRICATION, HITCH PIN)	
C	19	1,3,4	**292-4311**	6	FITTING-SWIVEL	
I	20	3	**292-8790**	1	HOSE AS	
I	21	1	**294-0670**	1	HOSE AS	
	22	2	**294-0672**	1	TUBE AS	
	23	2,4	**294-0673**	1	TUBE AS	
I	24	3,4	**294-0675**	2	HOSE AS	
I	25	4	**294-0676**	1	HOSE AS	
I	26	3	**294-0677**	1	HOSE AS	
I	27	3	**294-0678**	1	HOSE AS	
I	28	3,4	**294-0679**	2	HOSE AS	
I	29	4	**294-0681**	1	HOSE AS	
I	30	3	**294-0683**	1	HOSE AS	
I	31	4	**294-0684**	1	HOSE AS	
I	32	3,4	**294-0687**	3	HOSE AS	
I	33	4	**294-0689**	1	HOSE AS	
I	34	3	**294-0690**	2	HOSE AS	
	35	3,4	**294-0691**	2	BLOCK	
	36	3,4	**302-8255**	2	ADAPTER	
	37	2	**303-4429**	1	BRACKET AS	
M		2	**8T-3490**	5	NUT-WELD (M10X1.5-THD)	
	38	4	**303-5976**	1	GUARD AS	
Y	39	2	*312-3657*	1	VALVE GP-LUBE DISTRIBUTION (11-INJECTOR)	526
Y	40	2	*312-3658*	1	VALVE GP-LUBE DISTRIBUTION (11-INJECTOR)	527
CY	41	3	*333-0677*	1	VALVE GP-LUBE DISTRIBUTION (4-INJECTOR)	529
Y	42	2	*312-3686*	1	VALVE GP-LUBE DISTRIBUTION (2-INJECTOR)	528
I	43	1,4	**318-9831**	1	HOSE AS	
	44	3,4	**091-9035**	2	SPACER (11X25X20-MM THK)	
	45	3,4	**133-3260**	2	SPACER (11X19X10-MM THK)	
	46	4	**133-6934**	5	SPACER (11X20X25-MM THK)	
	47	3	*148-8370*	1	ELBOW AS	
		3	**6V-9851**	1	ELBOW	
		3	**6V-8398**	1	SEAL-O-RING	
	48	2	*148-8427*	1	TEE AS	

283-7773 LINES GP-AUTOMATIC LUBRICATION *(contd.)* i03879474

NOTE	REF NO	GRAPHIC REF	PART NUMBER	QTY	PART NAME 1 2 3 4 5 6 (PRODUCT LEVEL)	SEE PAGE
		2	**8T-6895**	1	TEE-UNION	
		2	**6V-8398**	3	SEAL-O-RING	
	49	2,4	*148-8454*	1	TEE AS	
		2,4	**6V-8789**	1	TEE	
		2,4	**6V-8398**	3	SEAL-O-RING	
	50	1	*155-3502*	1	ADAPTER AS	
		1	**3E-7403**	1	ADAPTER	
		1	**6V-8398**	1	SEAL-O-RING	
	51	4	*164-5572*	1	UNION AS	
		4	**6V-8398**	2	SEAL-O-RING	
		4	**6V-8731**	1	UNION	
	52	2	*169-4279*	1	CONNECTOR AS	
		2	**6V-8398**	1	SEAL-O-RING	
		2	**8C-6872**	1	CONNECTOR	
	53	2	*171-6728*	1	ELBOW AS	
		2	**3K-0360**	1	SEAL-O-RING	
		2	**8T-0249**	1	ELBOW	
I	54	4	**274-1568**	1	HOSE AS	
I	55	3	**282-7895**	1	HOSE AS	
	56	4	**283-0823**	1	HOSE AS	
	57	2	*287-7292*	1	TEE AS	
		2	**6V-8398**	1	SEAL-O-RING	
		2	**110-2218**	1	TEE-SWIVEL	
I	58	3	**294-0674**	1	HOSE AS	
I	59	2,3	**295-9188**	2	HOSE AS	
I	60	4	**296-0662**	1	HOSE AS	
	61	4	**309-9892**	1	TUBE AS	
	62	3,4	**311-8412**	2	HOSE AS	
I	63	2	**311-8413**	1	HOSE AS	
	64	2	**3B-7263**	1	NIPPLE-PIPE	
	65	2	**3B-7733**	1	FITTING	
	66	4	**3E-4321**	1	CLIP	
C	67	3,4	**4D-8123**	3	CLIP	
	68	3,4	**4M-8973**	11	ELBOW	
	69	3,4	**5M-6214**	4	PLUG-PIPE	
	70	2	**5P-1076**	8	WASHER-HARD (13.5X30X4-MM THK)	
	71	3,4	**5P-7466**	2	CLIP (SLOT)	
	72	3,4	**5P-7467**	2	CLIP (TAB)	
C	73	1,2,3,4	**5P-9085**	29	CLIP	
	74	3,4	**6D-4244**	14	CLIP	
	75	2	**6D-4636**	1	CLIP	
	76	3	**6K-6967**	1	ADAPTER-PIPE	
	77	4	**6V-8398**	2	SEAL-O-RING	
	78	1	**6V-9168**	1	NUT (11/16-16-THD)	
	79	2	**6V-9169**	1	NUT-BULKHEAD (13/16-16-THD)	
	80	1	**6V-9829**	1	CAP AS	
	81	2	**8B-4884**	2	ELBOW	
C	82	3,4	**8L-5008**	7	ELBOW-PIPE	
	83	2,3,4	**8M-2770**	8	CLIP	
C	84	1,2,3,4	**8T-4121**	77	WASHER-HARD (11X21X2.5-MM THK)	
M	85	3,4	**8T-4133**	5	NUT (M10X1.5-THD)	
M	86	2,3,4	**8T-4136**	7	BOLT (M10X1.5X25-MM)	
CM	87	1,2,3,4	**8T-4137**	42	BOLT (M10X1.5X20-MM)	
M	88	3,4	**8T-4182**	3	BOLT (M10X1.5X45-MM)	
M	89	3,4	**8T-4185**	6	BOLT (M10X1.5X50-MM)	
M	90	2	**8T-4194**	4	BOLT (M12X1.75X50-MM)	
M	91	2,3,4	**8T-4195**	14	BOLT (M10X1.5X30-MM)	

283-7773 LINES GP-AUTOMATIC LUBRICATION *(contd.)* i03879474

NOTE	REF NO	GRAPHIC REF	PART NUMBER	QTY	PART NAME 1 2 3 4 5 6 (PRODUCT LEVEL)	SEE PAGE
	92	2	**8T-4224**	1	WASHER-HARD (8.8X16X2-MM THK)	
M	93	2	**8T-6912**	1	BOLT (M8X1.25X50-MM)	
I	94	2	**8W-4991**	1	HOSE AS	
I	95	1	**8X-5561**	1	HOSE AS	
I	96	2	**9R-0717**	1	HOSE AS	
	97	1	**9X-8250**	4	CLIP	
E	98	3,4	**7I-1024**		GUARD-HOSE (81-CM EACH)	
E	98A	3	**7I-1024**		GUARD-HOSE (82-CM)	
E	98B	4	**7I-1024**		GUARD-HOSE (66-CM)	
C	99	3,4	**9X-8582**	4	CLIP	
CI	100	3	**309-7651**	1	HOSE AS	

C-CHANGE FROM PREVIOUS TYPE
E-ORDER BY THE CENTIMETER
I-REFER TO HYDRAULIC INFORMATION SYSTEM
M-METRIC PART
Y-SEPARATE ILLUSTRATION

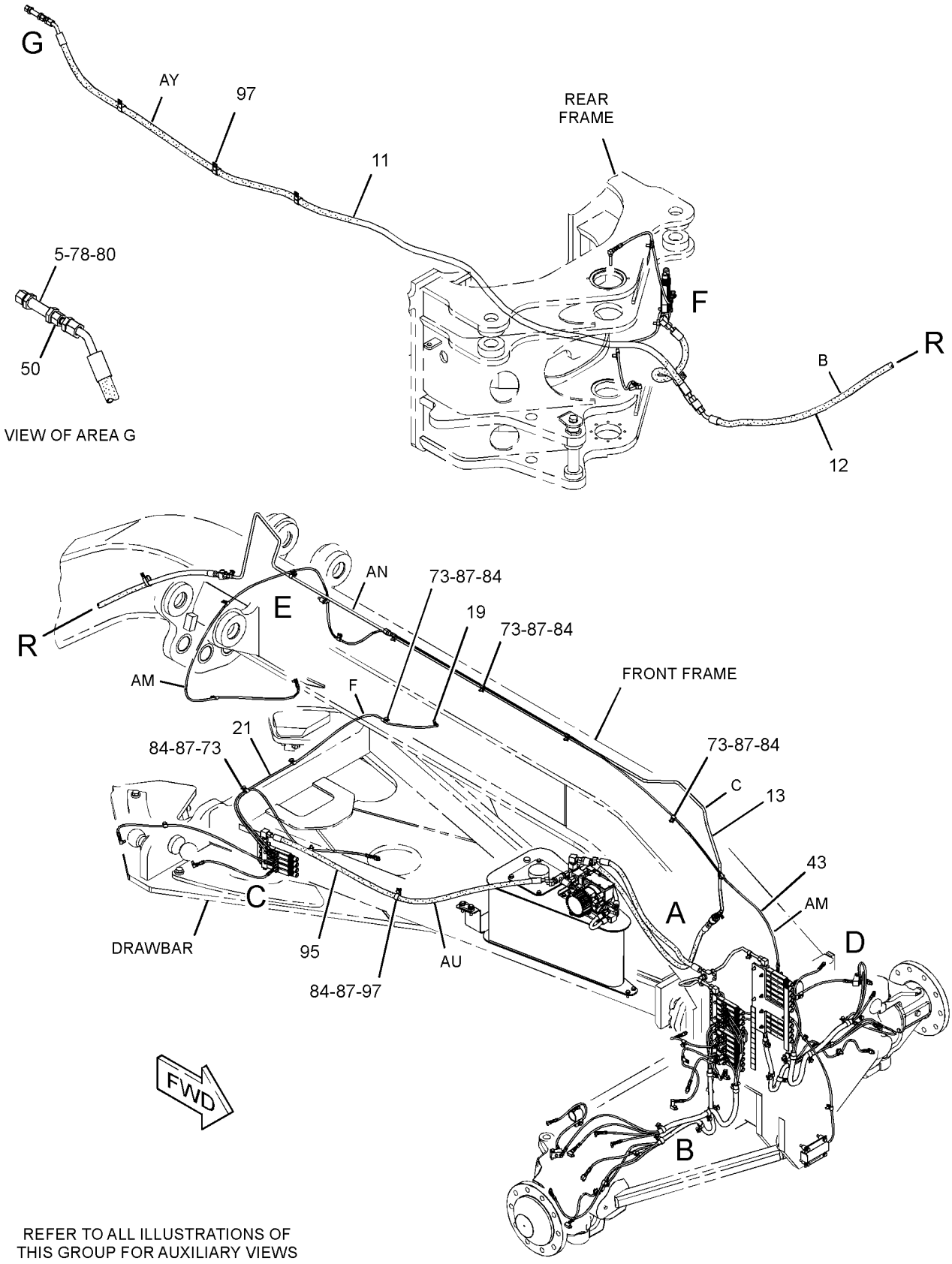

REFER TO ALL ILLUSTRATIONS OF
THIS GROUP FOR AUXILIARY VIEWS

GRAPHIC #1

g02174061

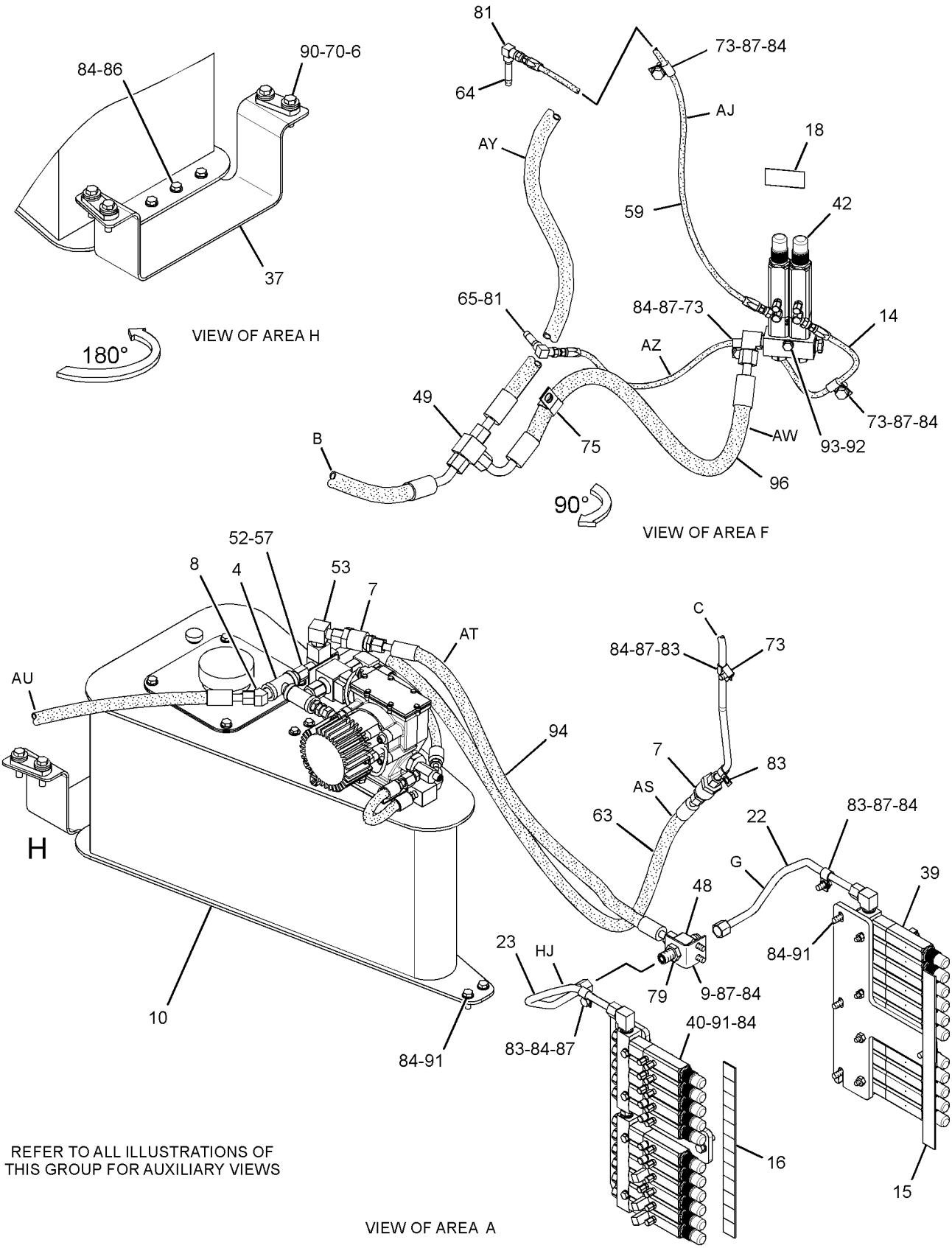

GRAPHIC #2

g02174057

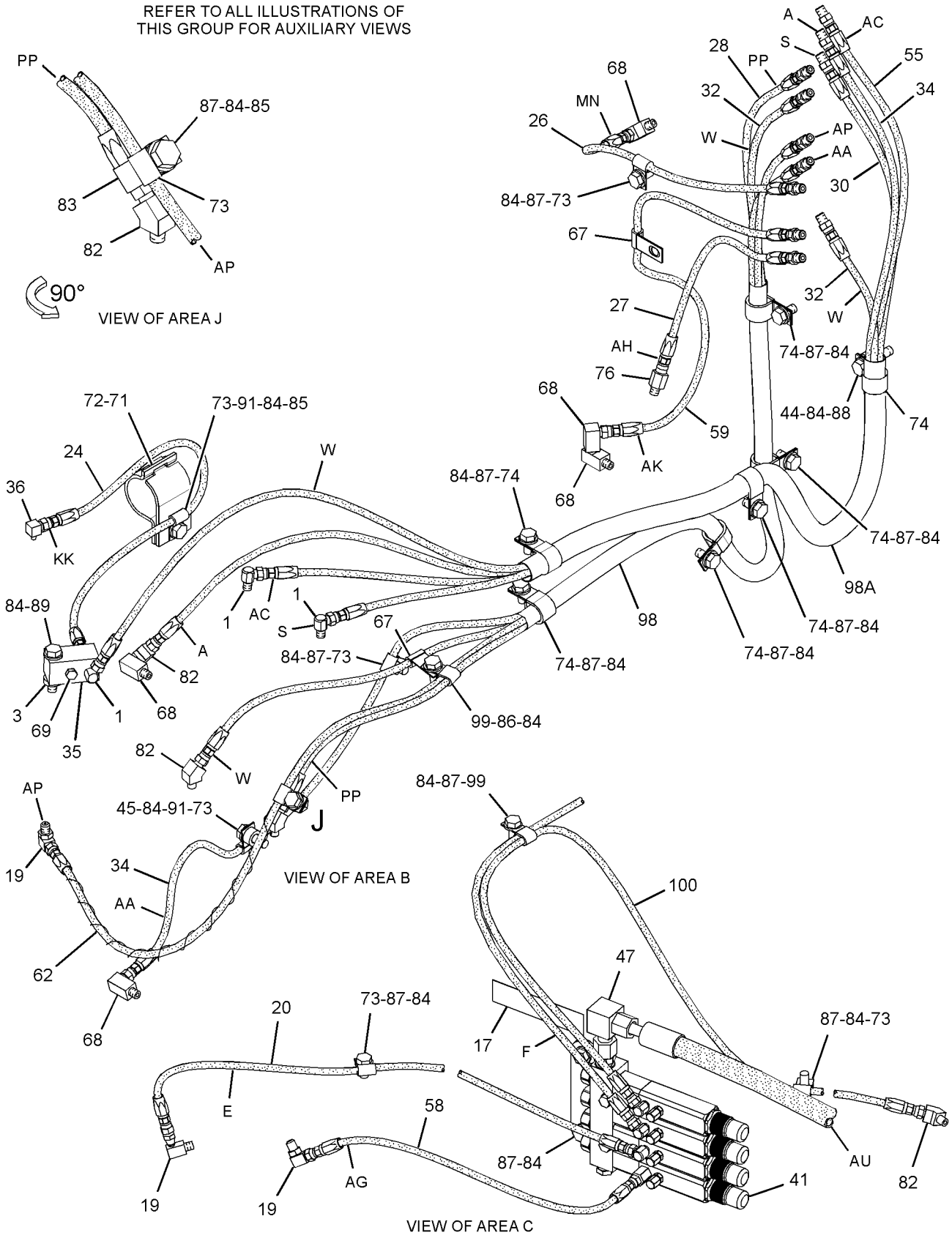

GRAPHIC #3

g02174058

283-7773 **LINES GP-AUTOMATIC LUBRICATION** *(contd.)* **i03879474**

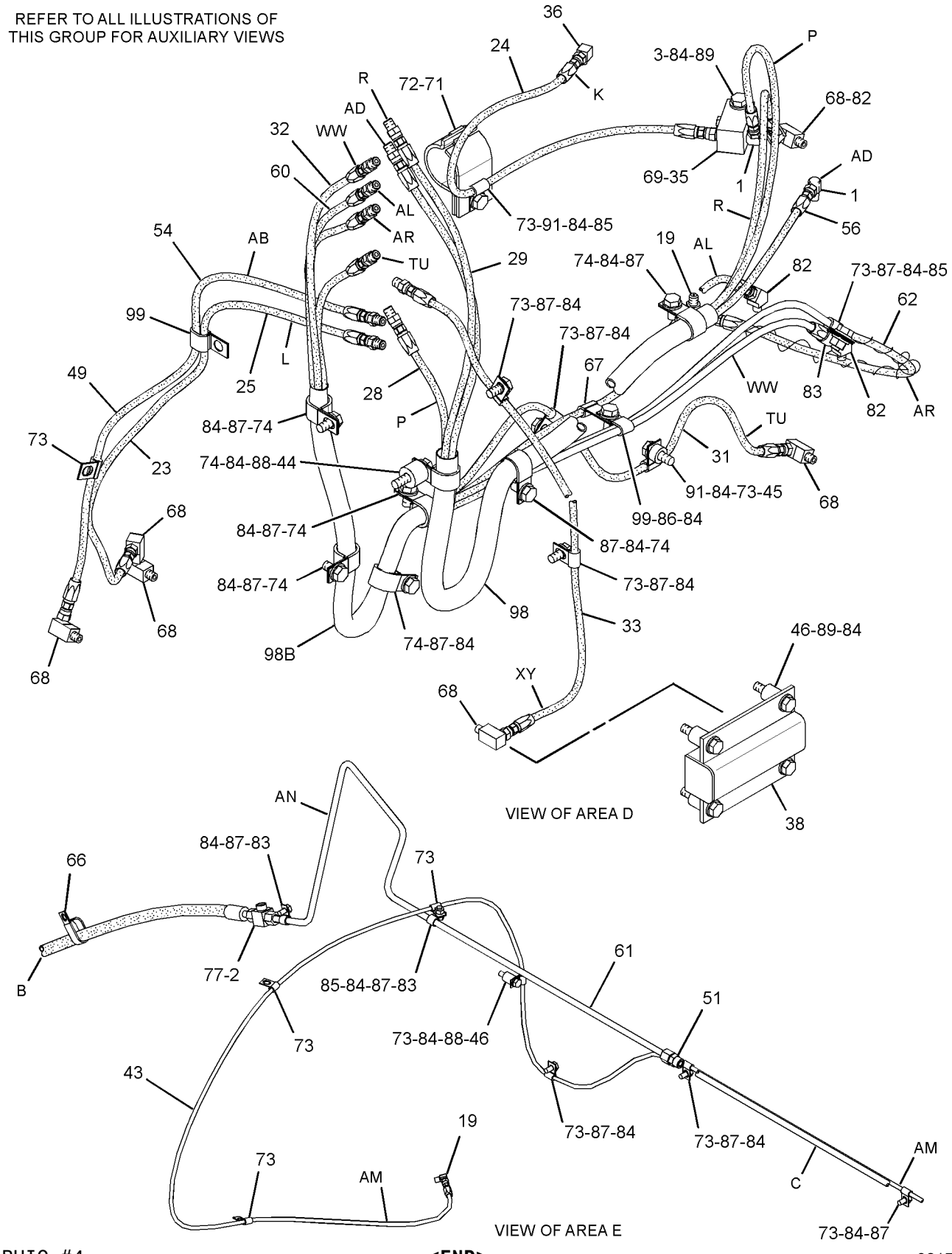

GRAPHIC #4 **<END>** g02174063

283-7765 LINES GP-LUBRICATION

S/N: R9H1-UP

CANNOT BE USED WITH 283-7773—PAGE 501

AN ATTACHMENT

SMCS-7510, 7540 **i02830979**

NOTE	REF NO	GRAPHIC REF	PART NUMBER	QTY	PART NAME 1 2 3 4 5 6 (PRODUCT LEVEL)	SEE PAGE
	1	1	**5D-0269**	2	ELBOW	
	2	1	**283-7740**	1	HOSE AS	
	3	1	**285-0344**	1	HOSE AS	
	4	1	**002-0639**	1	ADAPTER-PIPE	
	5	1	**3B-7263**	1	NIPPLE-PIPE	
	6	1	**3B-7896**	1	ELBOW-STREET	
	7	1	**3B-8485**	2	FITTING-GREASE	
	8	1	**4D-8123**	3	CLIP	
	9	1	**3B-7733**	1	FITTING (NIPPLE-PIPE)	
	10	1	**5P-9085**	1	CLIP	
	11	1	**8T-4121**	4	WASHER-HARD (11X21X2.5-MM THK)	
M	12	1	**8T-4137**	4	BOLT (M10X1.5X20-MM)	

M-METRIC PART

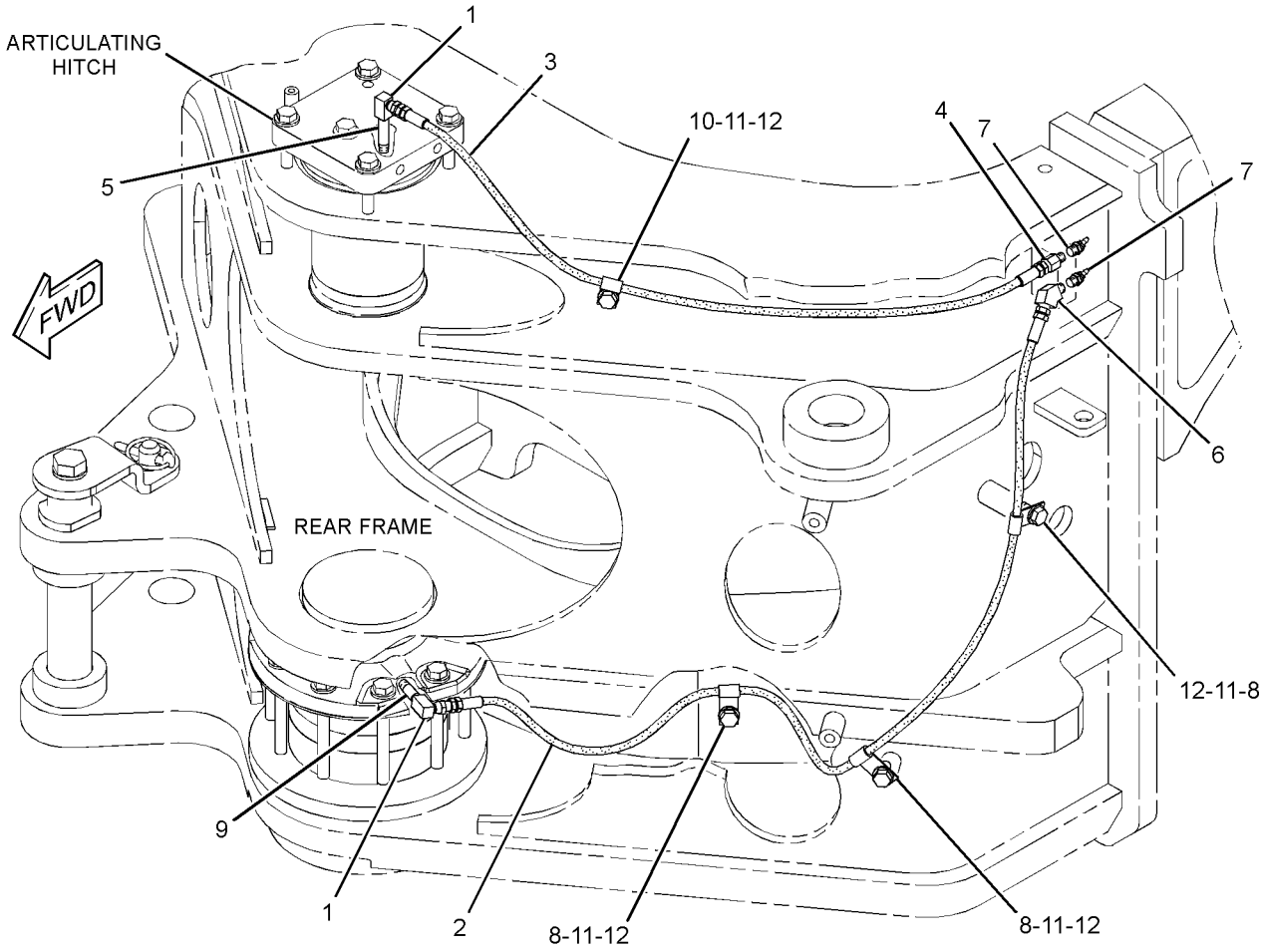

GRAPHIC #1 **<END>** g01418296

264-1163 LINK GP-STEERING—NON ALL WHEEL DRIVE

S/N: R9H1-UP

PART OF 250-2282 AXLE GP-FRONT

SMCS-4305 **i02675725**

NOTE	REF NO	GRAPHIC REF	PART NUMBER	QTY	PART NAME 1 2 3 4 5 6 (PRODUCT LEVEL)	SEE PAGE
	1	1	**264-1164**	1	ROD	
	2	1	**274-6809**	2	CLAMP	
	3	1	**274-6810**	1	TIE ROD GP (LH)	
		1	**1D-0906**	1	NUT-SLOTTED	
		1	**199-7819**	1	SEAL-BOOT	
	4	1	**274-6811**	1	TIE ROD GP (RH)	
		1	**1D-0906**	1	NUT-SLOTTED	
		1	**199-7819**	1	SEAL-BOOT	
M	5	1	**8T-0281**	2	BOLT (M16X2X80-MM)	
M	6	1	**8T-4778**	2	LOCKNUT (M16X2-THD)	

M-METRIC PART

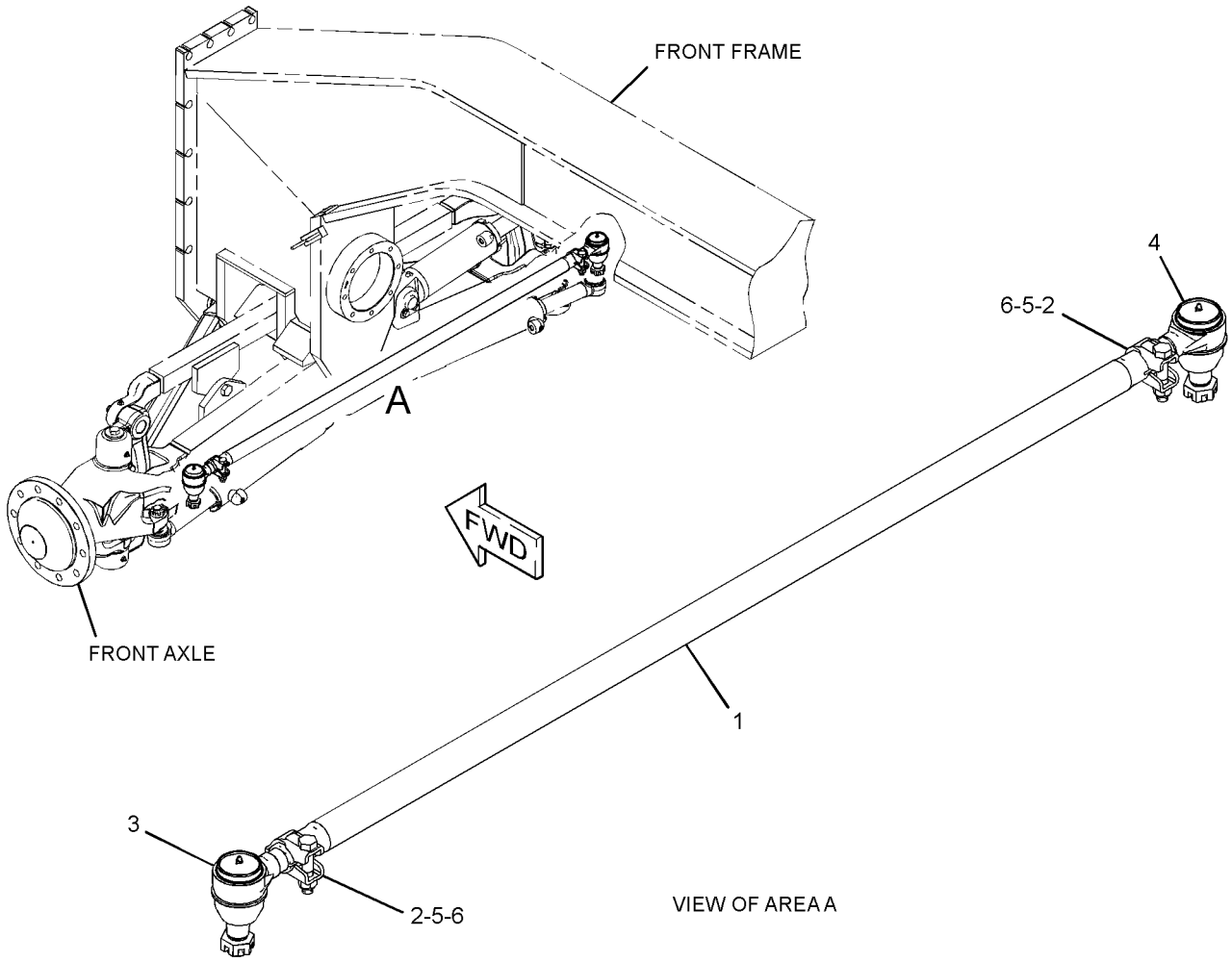

GRAPHIC #1 **<END>** g01334076

269-6941 LUBRICATION AR-AUTOMATIC

S/N: R9H1-UP

AN ATTACHMENT

SMCS-7540 **i02644906**

NOTE	PART NUMBER	QTY	PART NAME 1 2 3 4 5 6 (PRODUCT LEVEL)	SEE PAGE
Y	*283-7773*	1	LINES GP-AUTOMATIC LUBRICATION	501
Y	*250-1096*	1	WIRING GP-LUBRICATION	373

Y-SEPARATE ILLUSTRATION

<END>

308-3535 LUBRICATION AR-AUTOMATIC—WIPER

S/N: R9H1-UP

FOR USE WITH 264-3058—PAGE 801, 269-6941—PAGE 510

AN ATTACHMENT

SMCS-7540 **i02970461**

NOTE	REF NO	GRAPHIC REF	PART NUMBER	QTY	PART NAME 1 2 3 4 5 6 (PRODUCT LEVEL)	SEE PAGE
C	1	1	**2D-1683**	1	FITTING	
	2	1	**269-5348**	1	VALVE AS-LUBE DISTRIBUTION (3-INJECTOR)	
		1	**8X-1106**	3	FITTING AS-GREASE (1/8-27-THD)	
		1	**307-3245**	3	INJECTOR	
	3	1	**288-7949**	1	HOSE AS	
	4	1	**288-7953**	1	HOSE AS	
	5	1	**291-8043**	1	PLATE AS	
M		1	**8T-3612**	2	NUT-WELD (M8X1.25-THD)	
I	6	1	**294-0668**	1	HOSE AS	
C	7	1	*155-3502*	1	ADAPTER AS	
		1	**3E-7403**	1	ADAPTER	
		1	**6V-8398**	1	SEAL-O-RING	
	8	1	*171-6731*	1	CONNECTOR AS	
		1	**6V-8398**	1	SEAL-O-RING	
		1	**8C-6871**	1	CONNECTOR	
I	9	1	**288-7952**	1	HOSE AS	
	10	1	**3J-5390**	1	PLUG	
C	11	1	**4M-8973**	4	ELBOW	
	12	1	**5P-9085**	2	CLIP	
	13	1	**6K-6967**	1	ADAPTER-PIPE	
	14	1	**8T-4121**	4	WASHER-HARD (11X21X2.5-MM THK)	
M	15	1	**8T-4137**	4	BOLT (M10X1.5X20-MM)	
	16	1	**8T-4224**	2	WASHER-HARD (8.8X16X2-MM THK)	
M	17	1	**8T-6912**	2	BOLT (M8X1.25X50-MM)	

C-CHANGE FROM PREVIOUS TYPE
I-REFER TO HYDRAULIC INFORMATION SYSTEM
M-METRIC PART

308-3535 **LUBRICATION AR-AUTOMATIC** *(contd.)* **i02970461**

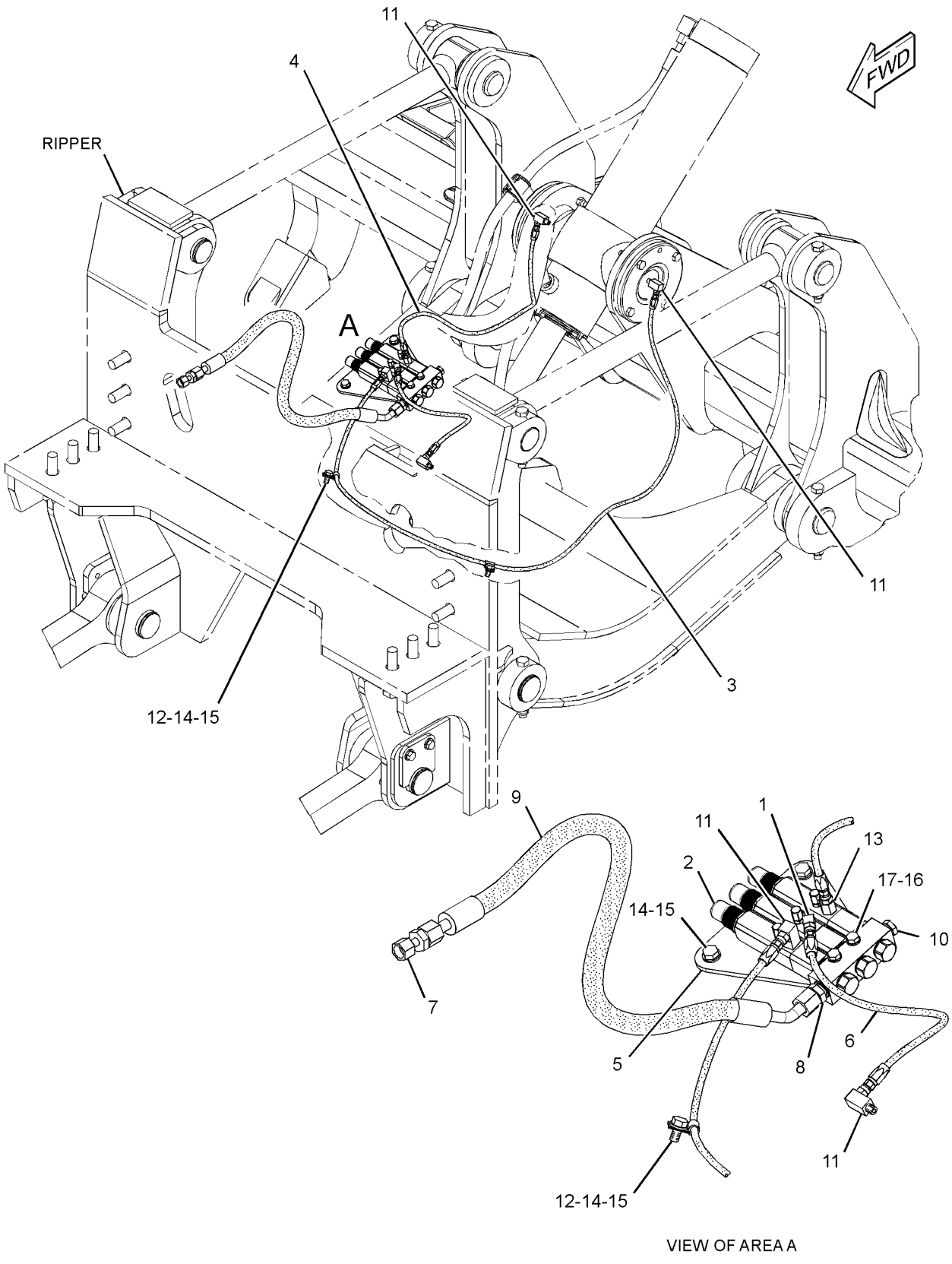

VIEW OF AREA A

GRAPHIC #1 **<END>** g01523123

284-5038 MOUNTING GP-AXLE–REAR

S/N: R9H1-UP

PART OF 349-2556 COMMON AR

SMCS-3268, 3278 **i02611413**

NOTE	REF NO	GRAPHIC REF	PART NUMBER	QTY	PART NAME 1 2 3 4 5 6 (PRODUCT LEVEL)	SEE PAGE
	1	1	**294-9836**	8	SPACER (26X81X29-MM THK)	
M	2	1	**112-3931**	22	BOLT (M24X3X120-MM)	
	3	1	**267-3507**	22	WASHER-HARD (26X47X12-MM THK)	

M-METRIC PART

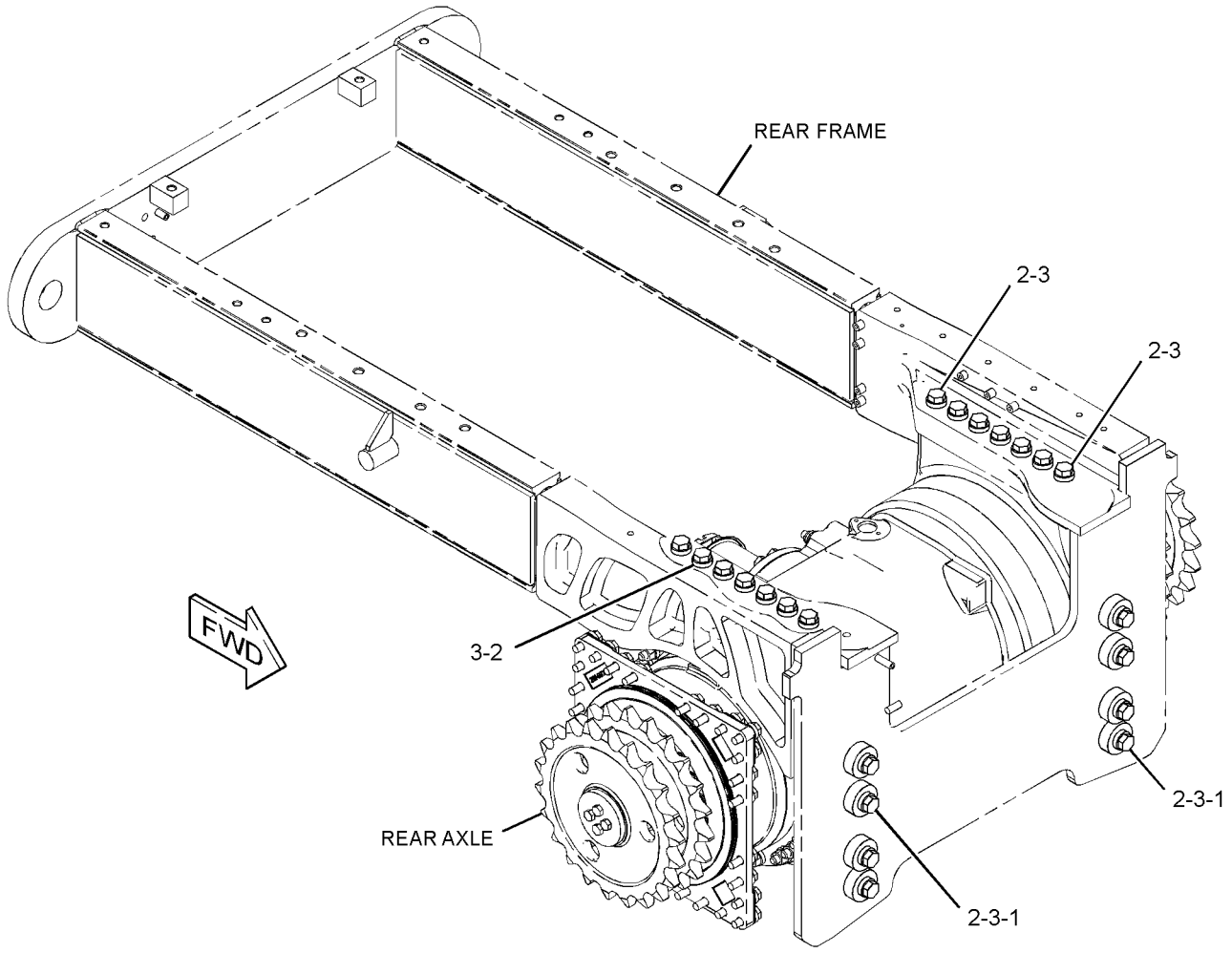

GRAPHIC #1 **<END>** g01307865

288-6307 MOUNTING GP-AXLE–FRONT

S/N: R9H1-UP

PART OF 251-1202 AXLE AR-FRONT

SMCS-3268, 3278 **i02640452**

NOTE	REF NO	GRAPHIC REF	PART NUMBER	QTY	PART NAME 1 2 3 4 5 6 (PRODUCT LEVEL)	SEE PAGE
	1	1	**2G-5668**	2	WASHER (2.781X5X0.188-IN THK)	
	2	1	**2G-5669**	2	WASHER (71X127X1.5)	
	3	1	**3B-8489**	2	FITTING-GREASE (PIN)	
	4	1	**110-7721**	1	PIN	
	5	1	**110-7722**	1	PIN	
	6	1	**250-0492**	2	BOLT (M12X1.75X115-MM) (M12X1.75X115-MM)	
M	7	1	**6V-7687**	2	LOCKNUT (M12X1.75-THD)	

M-METRIC PART

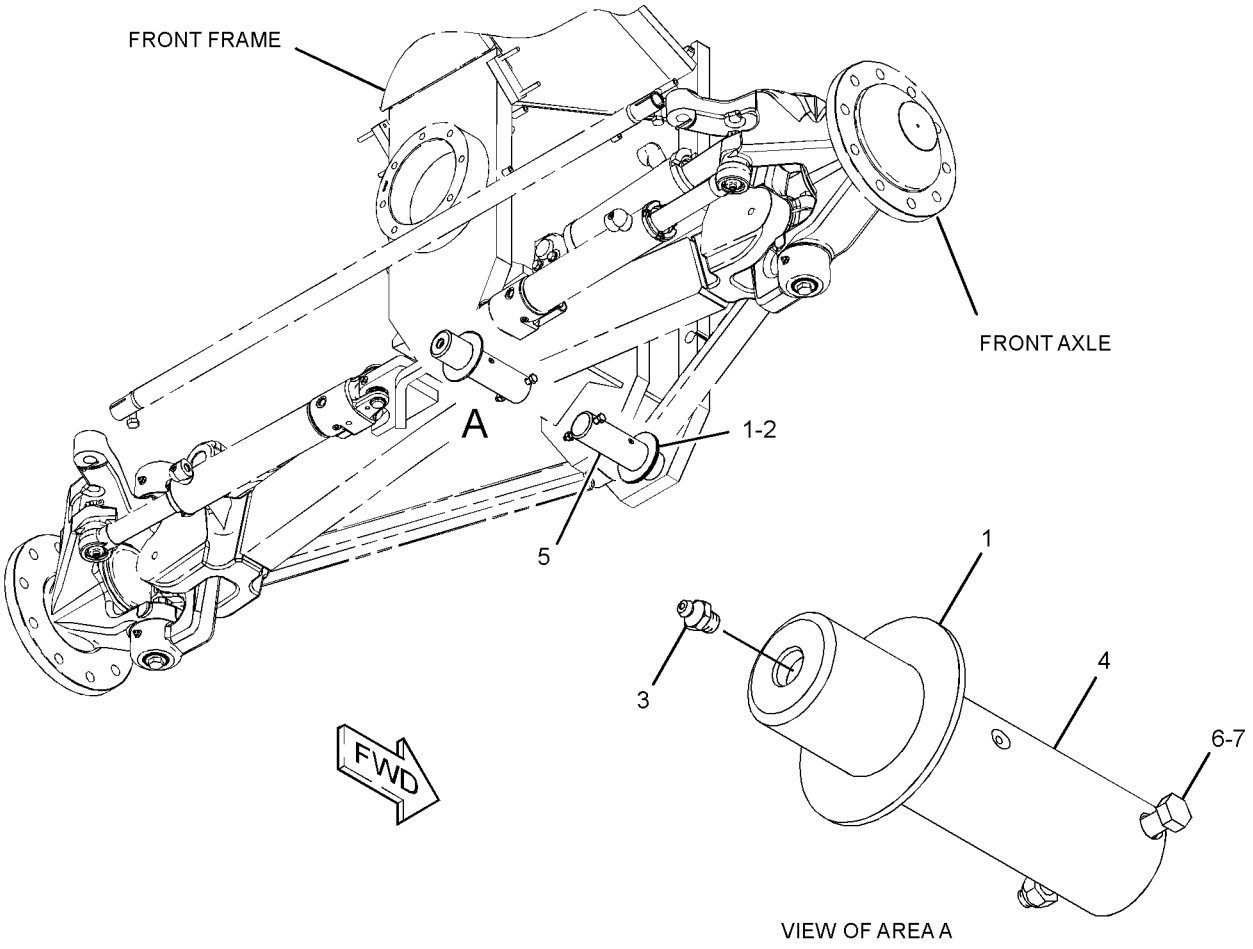

GRAPHIC #1 **<END>** g01328379

249-6554 MOUNTING GP-VALVE–IMPLEMENT, STEERING

S/N: R9H1-UP

PART OF 349-2556 COMMON AR

SMCS-5051 **i02837096**

NOTE	REF NO	GRAPHIC REF	PART NUMBER	QTY	PART NAME 1 2 3 4 5 6 (PRODUCT LEVEL)	SEE PAGE
	1	1	**5B-9627**	3	WASHER (10.3X19X5-MM THK)	
	2	1	**269-5369**	1	PLATE AS	
	3	1	**270-5411**	1	PLATE AS	
M		1	**8T-3490**	3	NUT-WELD (M10X1.5-THD)	
	4	1	**8T-4121**	9	WASHER-HARD (11X21X2.5-MM THK)	
M	5	1	**8T-4136**	2	BOLT (M10X1.5X25-MM)	
M	6	1	**8T-4137**	4	BOLT (M10X1.5X20-MM)	
M	7	1	**8T-4908**	3	BOLT (M8X1.25X25-MM)	
M	8	1	**8T-4195**	3	BOLT (M10X1.5X30-MM)	

M-METRIC PART

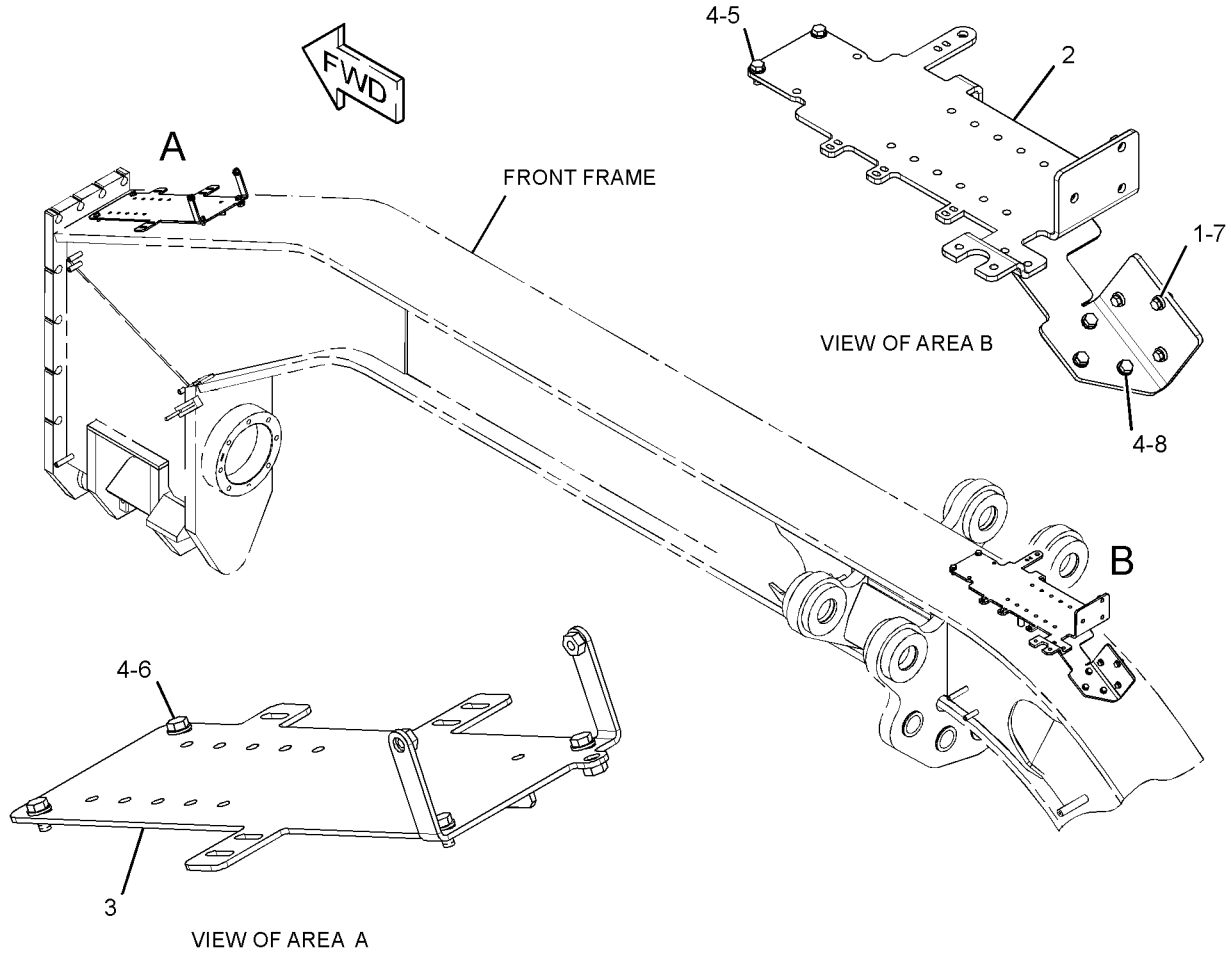

GRAPHIC #1 **<END>** g01417823

FRAME AND BODY

272-1346 PUMP GP-LUBRICATION

S/N: R9H1-UP

PART OF 283-7773 LINES GP-AUTOMATIC LUBRICATION

AN ATTACHMENT

SMCS-7516, 7540 **i03001679**

NOTE	REF NO	GRAPHIC REF	PART NUMBER	QTY	PART NAME 1 2 3 4 5 6 (PRODUCT LEVEL)	SEE PAGE
	1	1	**3S-2093**	1	STRAP-CABLE	
	2	1	**8X-2318**	1	GASKET	
	3	1	**8X-2321**	1	VALVE GP-CHECK	
	4	1	**9X-2474**	1	ADAPTER	
	5	1	**033-2177**	1	TEE-PIPE	
	6	1	**178-8063**	1	BREATHER	
	7	1	**189-4393**	1	ADAPTER-UNION	
	8	1	**304-4248**	1	TANK AS-LUBRICATION OIL	
	9	1	**304-4255**	1	GASKET	
	10	1	**304-4257**	1	PLATE AS	
	11	1	**304-4258**	1	GASKET	
	12	1	**304-4259**	1	PLATE	
	13	1	**304-4264**	1	PUMP AS-LUBRICATION	
		1	**309-7648**	1	MOTOR AS	
I	14	1	**304-4266**	1	HOSE AS	
I	15	1	**304-4267**	1	HOSE AS	
	16	1	**304-4273**	2	ADAPTER	
	17	1	**304-4275**	1	PLATE	
	18	1	**304-4277**	1	SOLENOID	
	19	1	**003-9163**	1	ELBOW	
	20	1	**114-3399**	1	NIPPLE-PIPE	
	21	1	**130-5300**	2	CLIP	
	23	1	**290-2688**	1	GASKET	
	24	1	**3M-7045**	1	PLUG	
	25	1	**4P-7581**	1	CLIP	
M	26	1	**5C-9553**	4	BOLT (M6X1X16-MM)	
	27	1	**5N-4439**	1	CAP-PIPE	
	28	1	**5P-4116**	2	WASHER-HARD (8.8X20.5X2-MM THK)	
	29	1	**6V-8397**	1	SEAL-O-RING	
	30	1	**8C-6868**	2	CONNECTOR	
	32	1	**8T-4121**	5	WASHER-HARD (11X21X2.5-MM THK)	
M	33	1	**8T-4136**	4	BOLT (M10X1.5X25-MM)	
M	34	1	**8T-4137**	1	BOLT (M10X1.5X20-MM)	
M	35	1	**8T-4189**	2	BOLT (M8X1.25X20-MM)	
M	36	1	**8T-4195**	4	BOLT (M10X1.5X30-MM)	
	37	1	**9L-3560**	2	ELBOW	
	38	1	**9X-8256**	4	WASHER (6.6X12X2-MM THK)	
	39	1	**152-0199**	1	ADAPTER	
	40	1	**3D-2824**	1	SEAL-O-RING	
	41	1	**9S-8008**	1	PLUG-O-RING	

I-REFER TO HYDRAULIC INFORMATION SYSTEM
M-METRIC PART

272-1346 **PUMP GP-LUBRICATION** *(contd.)* **i03001679**

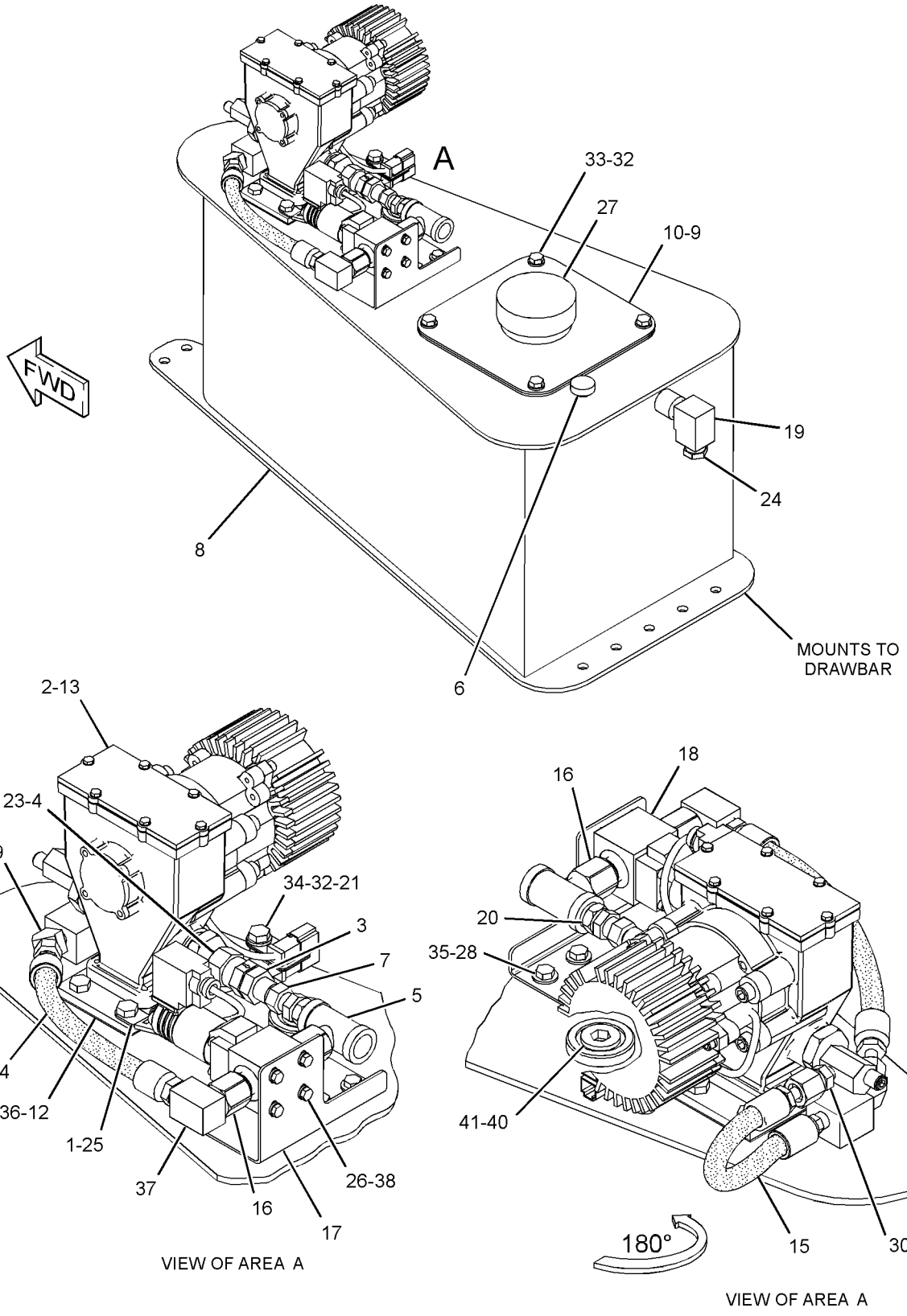

GRAPHIC #1 **<END>** g01525741

296-0011 REFLECTOR GP—MACHINE

S/N: R9H1-UP
PART OF 352-3815 OPTION AR-REGIONAL
AN ATTACHMENT

SMCS-7430 **i02808212**

NOTE	REF NO	GRAPHIC REF	PART NUMBER	QTY	PART NAME 1 2 3 4 5 6 (PRODUCT LEVEL)	SEE PAGE
	1	1	**313-5270**	8	REFLECTOR (AMBER) (AMBER)	
	2	1	**313-5271**	2	REFLECTOR (RED)	

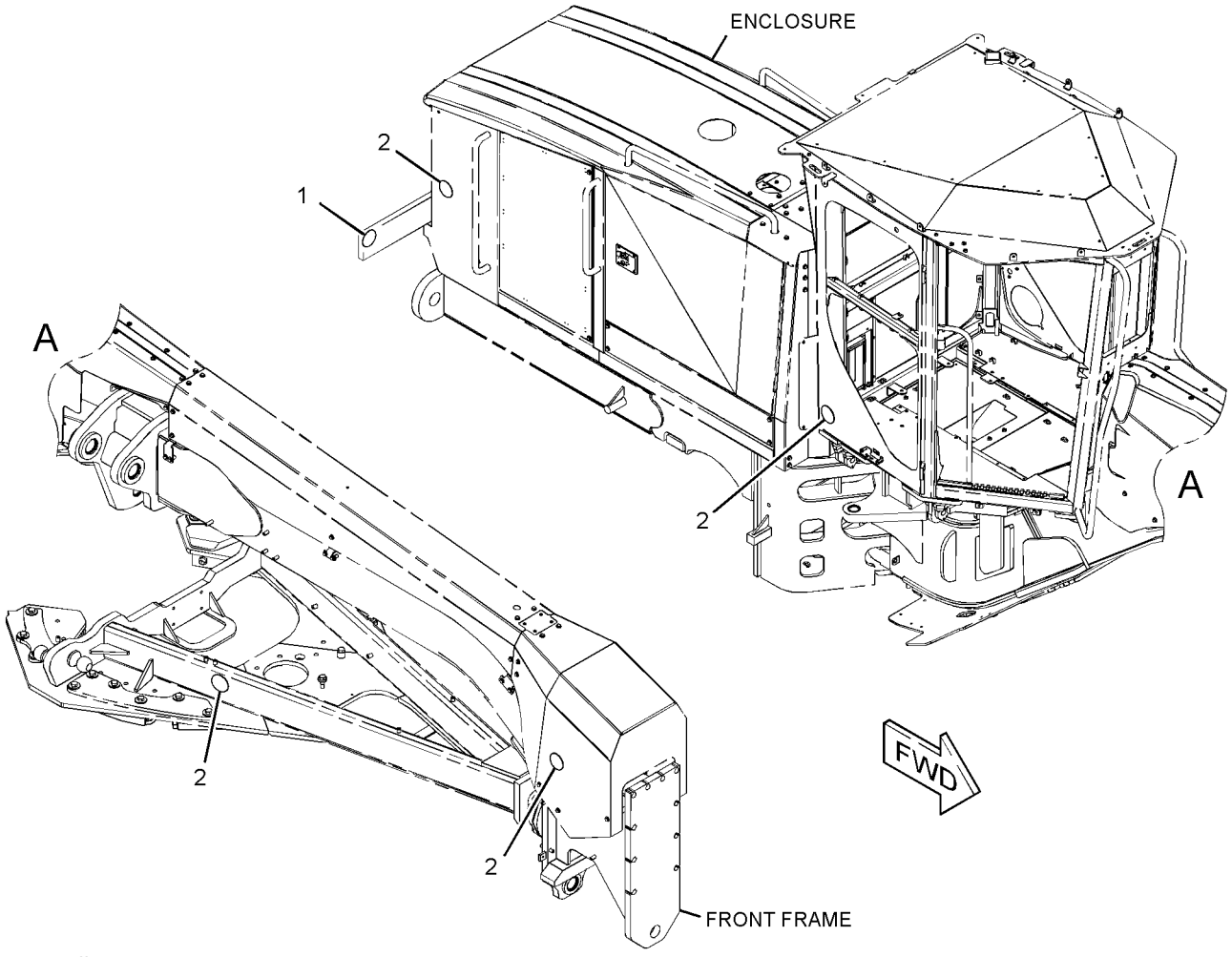

GRAPHIC #1 **<END>** g01336501

296-0012 REFLECTOR GP–RIPPER

S/N: R9H1-UP
PART OF 352-3815 OPTION AR-REGIONAL
AN ATTACHMENT

SMCS-7430 **i02831655**

NOTE	REF NO	GRAPHIC REF	PART NUMBER	QTY	PART NAME 1 2 3 4 5 6 (PRODUCT LEVEL)	SEE PAGE
	1	1	**313-5270**	2	REFLECTOR (AMBER)	

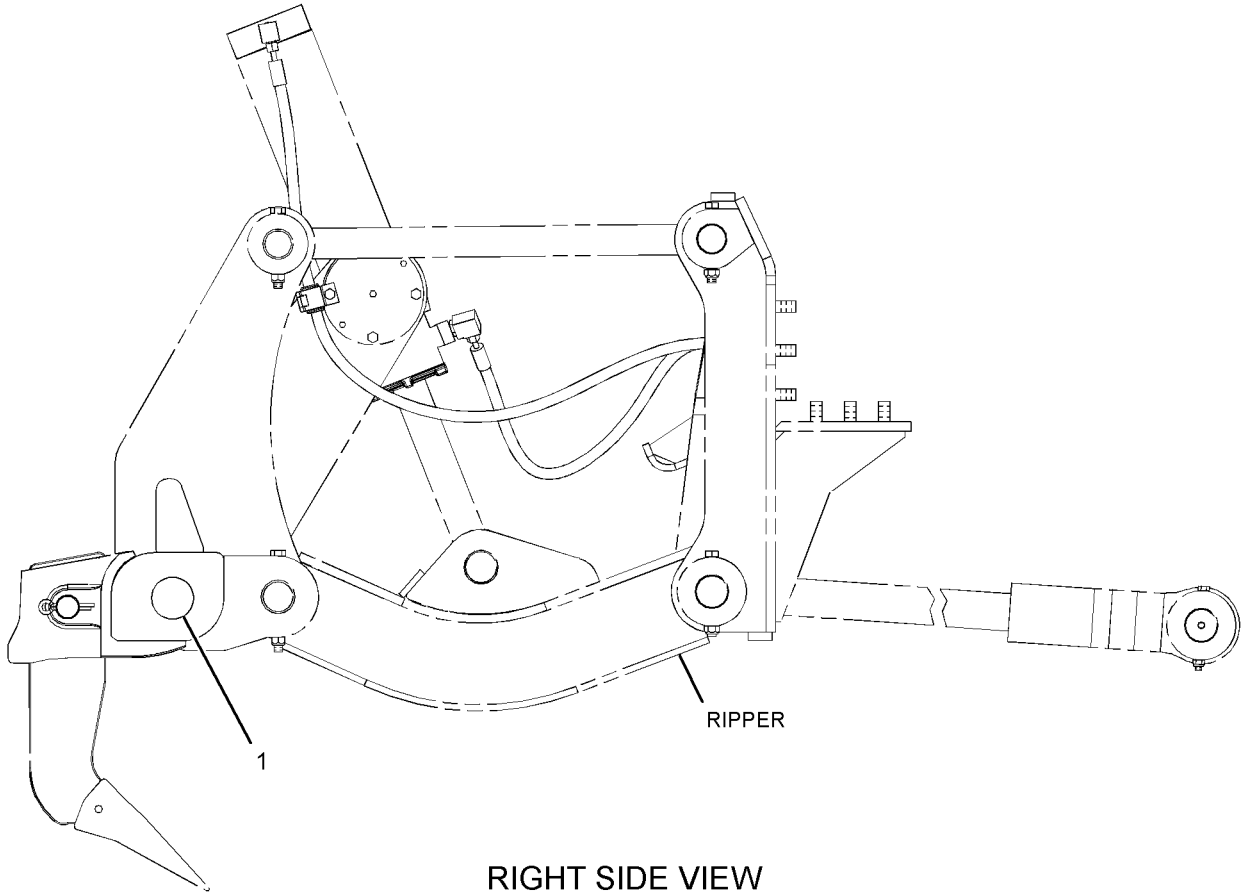

RIGHT SIDE VIEW

GRAPHIC #1 **<END>** g01336382

FRAME AND BODY

250-0162 SERVICE CENTER AR

S/N: R9H1-UP

PART OF 349-2556 COMMON AR

SMCS-7513 **i02837230**

NOTE	REF NO	GRAPHIC REF	PART NUMBER	QTY	PART NAME 1 2 3 4 5 6 (PRODUCT LEVEL)	SEE PAGE
B	1	1	**225-0313**	1	FILM-WARNING (JUMP START, READ OMM, U.S.)	
					—OR—	
B		1	**225-0312**	1	FILM-WARNING (JUMP START, READ OMM, INTL)	
	2	1	**250-0173**	1	PLATFORM AS	
Y	3	1	*250-3507*	1	FILTER & MTG GP-HYDRAULIC	576
Y	4	1	*293-4267*	1	TANK & MTG GP-HYDRAULIC	651
	5	1	**198-4780**	6	WASHER-HARD (17.5X32X8-MM THK)	
	6	1	**198-4782**	4	WASHER-HARD (26X47X12-MM THK)	
M	7	1	**7X-2489**	4	BOLT (M24X3X100-MM)	
M	8	1	**8T-4193**	6	BOLT (M16X2X50-MM)	

B-USE AS REQUIRED
M-METRIC PART
Y-SEPARATE ILLUSTRATION

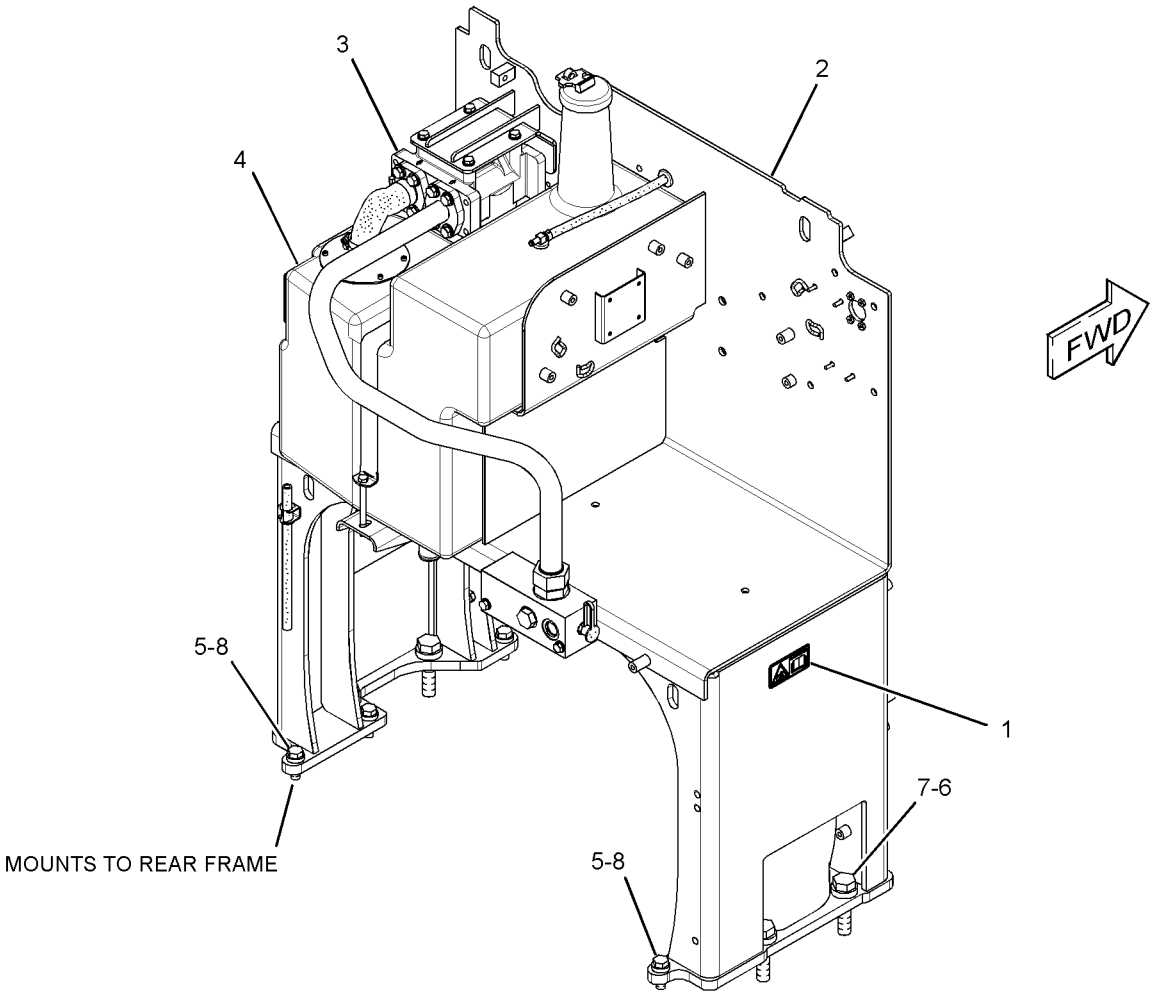

GRAPHIC #1 **<END>** g01316422

FRAME AND BODY

275-2190 SHIELD GP-ENGINE COMPARTMENT

S/N: R9H1-UP
AN ATTACHMENT

SMCS-7263 **i02620072**

NOTE	REF NO	GRAPHIC REF	PART NUMBER	QTY	PART NAME 1 2 3 4 5 6 (PRODUCT LEVEL)	SEE PAGE
	1	1	**269-2259**	1	PLATE AS	
	2	1	**275-2187**	1	COVER	
	3	1	**275-2188**	1	COVER	
	4	1	**275-2189**	1	COVER	
	5	1	**277-8574**	1	PLATE	
	6	1	**292-8615**	2	PLATE	
	7	1	**292-8617**	2	PLATE	
	8	1	**7X-7729**	14	WASHER (11X25X3-MM THK)	
M	9	1	**8T-4136**	10	BOLT (M10X1.5X25-MM)	
M	10	1	**8T-4195**	4	BOLT (M10X1.5X30-MM)	

M-METRIC PART

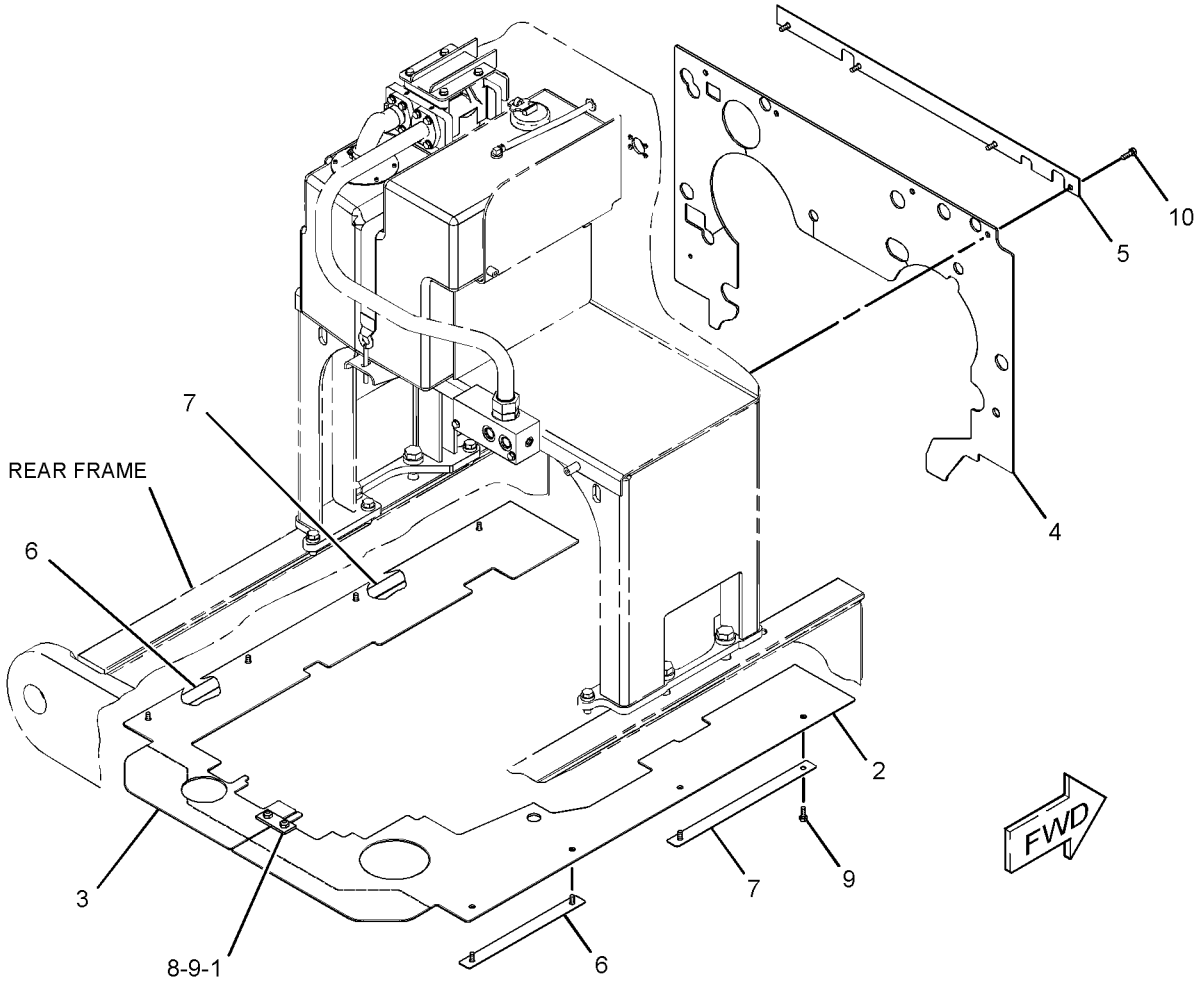

GRAPHIC #1 **<END>** g01316902

291-9790 STEP GP

S/N: R9H1-UP
PART OF 260-3769 WALKWAY GP
AN ATTACHMENT

SMCS-7254 **i02859864**

NOTE	REF NO	GRAPHIC REF	PART NUMBER	QTY	PART NAME 1 2 3 4 5 6 (PRODUCT LEVEL)	SEE PAGE
	1	1	**255-2322**	6	PLATE	
	2	1	**255-2323**	6	PLATE	
	3	1	**255-2328**	2	RAIL	
	4	1	**263-1775**	2	TUBE	
	5	1	**291-9812**	3	STEP AS	
	6	1	**291-9814**	1	STEP AS	
	7	1	**303-8685**	1	BRACKET	
	8	1	**206-5143**	30	BOLT (M12X1.75X42.5-MM)	
M	9	1	**6V-7687**	34	LOCKNUT (M12X1.75-THD)	
	10	1	**7J-8673**	4	PIPE	
	11	1	**7X-0605**	36	WASHER-HARD (13X28X1.6-MM THK)	
M	12	1	**8T-4176**	4	BOLT (M12X1.75X90-MM)	
	13	1	**7X-0590**	2	WASHER-HARD (13.5X44.5X6-MM THK)	

M-METRIC PART

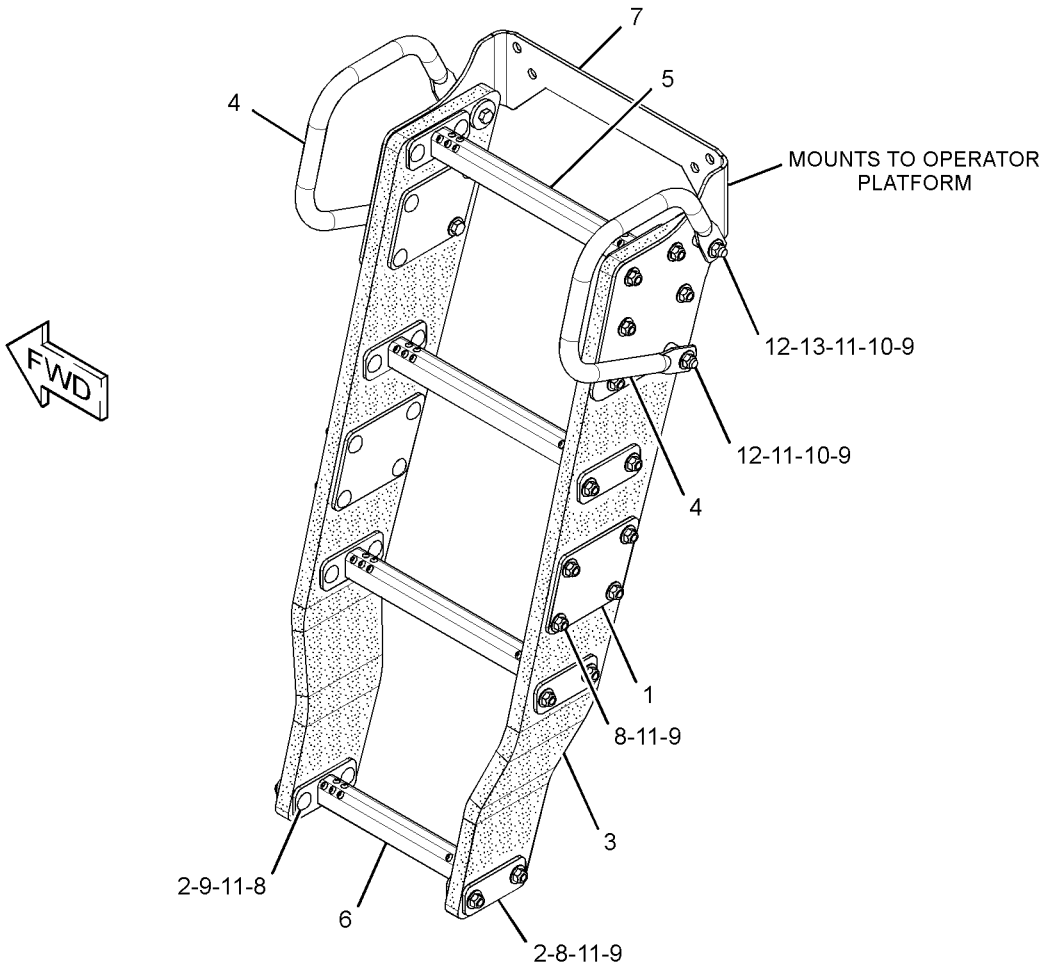

GRAPHIC #1 **<END>** g01441055

FRAME AND BODY

312-6371 STEP GP–RH

S/N: R9H1-UP
PART OF 352-3813 OPTION AR-LADDER
AN ATTACHMENT

SMCS-7254 **i03586744**

NOTE	REF NO	GRAPHIC REF	PART NUMBER	QTY	PART NAME 1 2 3 4 5 6 (PRODUCT LEVEL)	SEE PAGE
	1	1	**4V-9804**	8	PLATE	
	2	1	**141-4043**	2	SUPPORT-STEP (RUBBER)	
	3	1	**244-2729**	2	STEP	
	4	1	**311-7500**	1	PLATE AS	
		1	**244-2729**	2	STEP	
	5	1	**1D-4689**	4	BOLT (1/2-13X1.75-IN)	
	6	1	**1D-4691**	4	BOLT-CARRIAGE (1/2-13X2.5-IN)	
	7	1	**1D-4692**	4	BOLT-CARRIAGE (1/2-13X2.75-IN)	
	8	1	**1K-6872**	16	LOCKNUT (1/2-13-THD)	
	9	1	**5P-1076**	3	WASHER-HARD (13.5X30X4-MM THK)	
	10	1	**8T-4223**	16	WASHER-HARD (13.5X25.5X3-MM THK)	
M	11	1	**8T-4956**	3	BOLT (M12X1.75X35-MM)	
	12	1	**1B-2709**	4	BOLT-CARRIAGE (1/2-13X3.2-IN)	
	13	1	**311-1956**	2	HANDHOLD	

M-METRIC PART

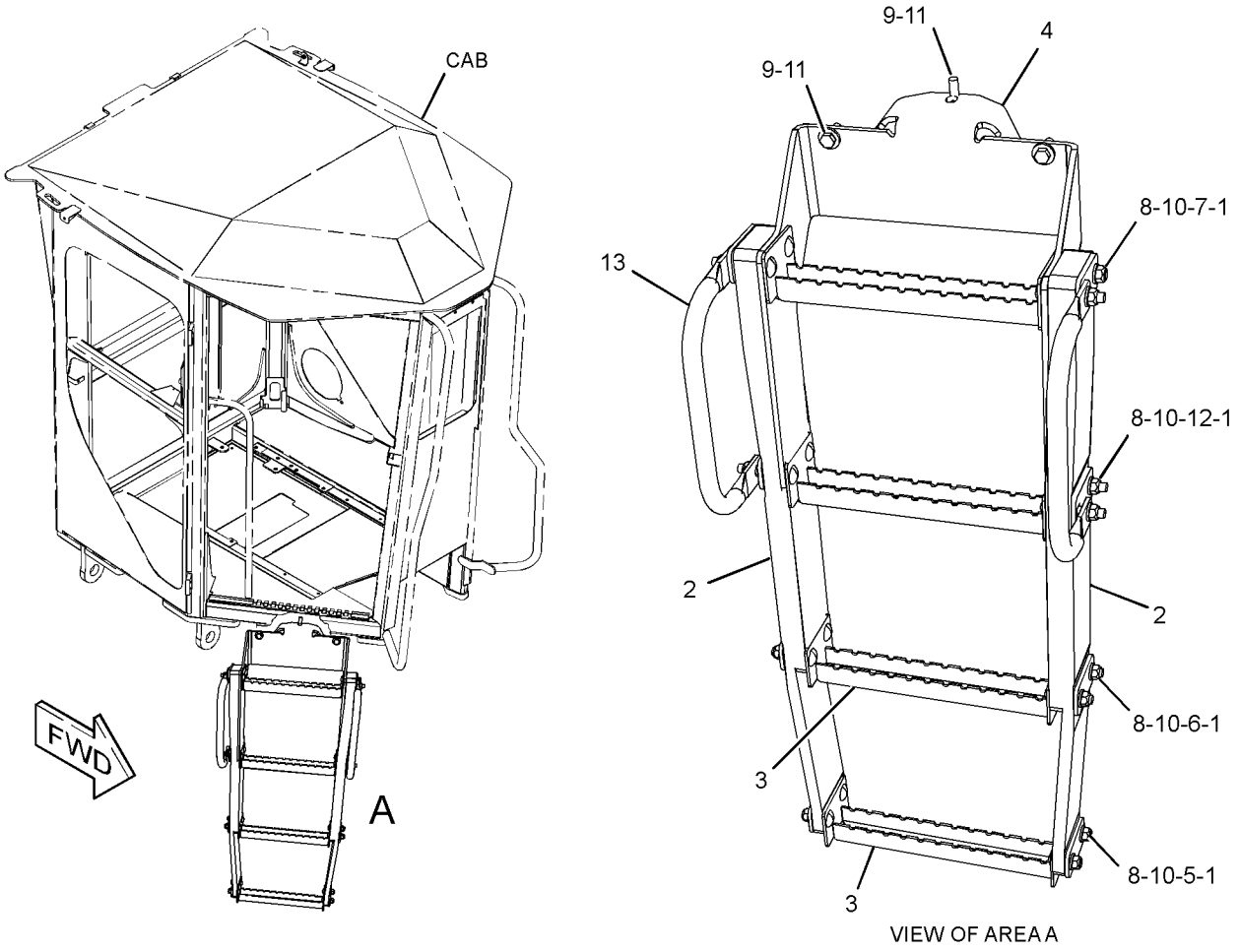

VIEW OF AREA A

GRAPHIC #1 **<END>** g01945749

314-4860 STEP GP–LH

S/N: R9H1-UP
PART OF 352-3813 OPTION AR-LADDER
AN ATTACHMENT

SMCS-7254 **i03586580**

NOTE	REF NO	GRAPHIC REF	PART NUMBER	QTY	PART NAME 1 2 3 4 5 6 (PRODUCT LEVEL)	SEE PAGE
	1	1	**4V-9804**	8	PLATE	
	2	1	**141-4043**	2	SUPPORT-STEP (RUBBER)	
	3	1	**244-2729**	2	STEP	
	4	1	**311-7500**	1	PLATE AS	
		1	**244-2729**	2	STEP	
	5	1	**1D-4689**	4	BOLT (1/2-13X1.75-IN)	
	6	1	**1D-4691**	4	BOLT-CARRIAGE (1/2-13X2.5-IN)	
	7	1	**1D-4692**	4	BOLT-CARRIAGE (1/2-13X2.75-IN)	
	8	1	**1K-6872**	16	LOCKNUT (1/2-13-THD)	
	9	1	**5P-1076**	3	WASHER-HARD (13.5X30X4-MM THK)	
	10	1	**8T-4223**	16	WASHER-HARD (13.5X25.5X3-MM THK)	
M	11	1	**8T-4956**	3	BOLT (M12X1.75X35-MM)	
	12	1	**1B-2709**	4	BOLT-CARRIAGE (1/2-13X3.2-IN)	
	13	1	**311-1956**	2	HANDHOLD	

M-METRIC PART

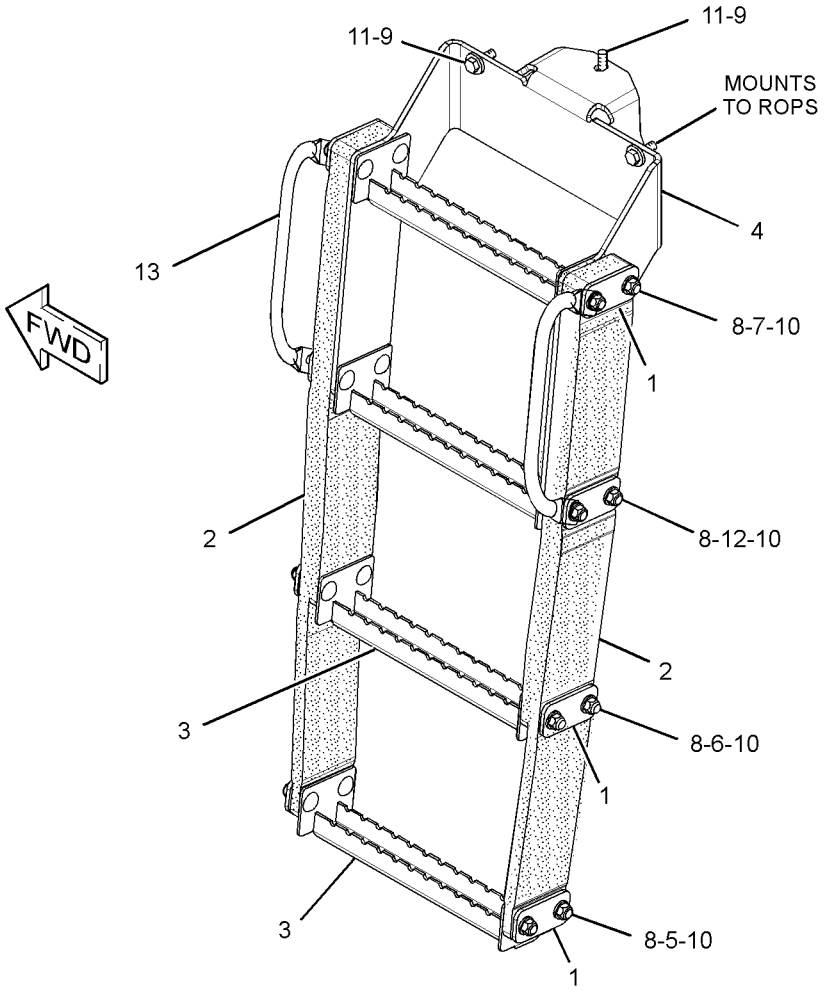

GRAPHIC #1 **<END>** g01945413

FRAME AND BODY

273-3001 SUPPORT GP-FUEL TANK

S/N: R9H1-UP

PART OF 349-2556 COMMON AR

SMCS-1273 **i03877576**

NOTE	REF NO	GRAPHIC REF	PART NUMBER	QTY	PART NAME 1 2 3 4 5 6 (PRODUCT LEVEL)	SEE PAGE
	1	1	**273-3010**	1	PLATE	
	2	1	**273-3011**	1	PLATE	
	3	1	**273-6311**	1	SUPPORT AS	
M		1	**8T-3490**	8	NUT-WELD (M10X1.5-THD)	
	4	1	**273-6312**	1	SUPPORT AS	
M		1	**8T-3490**	12	NUT-WELD (M10X1.5-THD)	
	5	1	**281-6805**	1	PLATE	
	6	1	**281-6806**	1	PLATE	
	7	1	**315-7826**	1	BRACKET AS	
M		1	**8T-3490**	18	NUT-WELD (M10X1.5-THD)	
	8	1	**292-4578**	1	PLATE AS	
M		1	**8T-3490**	2	NUT-WELD (M10X1.5-THD)	
	9	1	**198-4777**	6	WASHER-HARD (11X25X10-MM THK)	
	10	1	**198-4780**	4	WASHER-HARD (17.5X32X8-MM THK)	
M	11	1	**8T-4193**	4	BOLT (M16X2X50-MM)	
	12	1	**7X-7729**	24	WASHER (11X25X3-MM THK)	
M	13	1	**8T-4186**	11	BOLT (M10X1.5X40-MM)	
M	14	1	**8T-4195**	17	BOLT (M10X1.5X30-MM)	
M	15	1	**8T-4196**	2	BOLT (M10X1.5X35-MM)	
M	16	1	**6V-7744**	7	LOCKNUT (M10X1.5-THD)	

M-METRIC PART

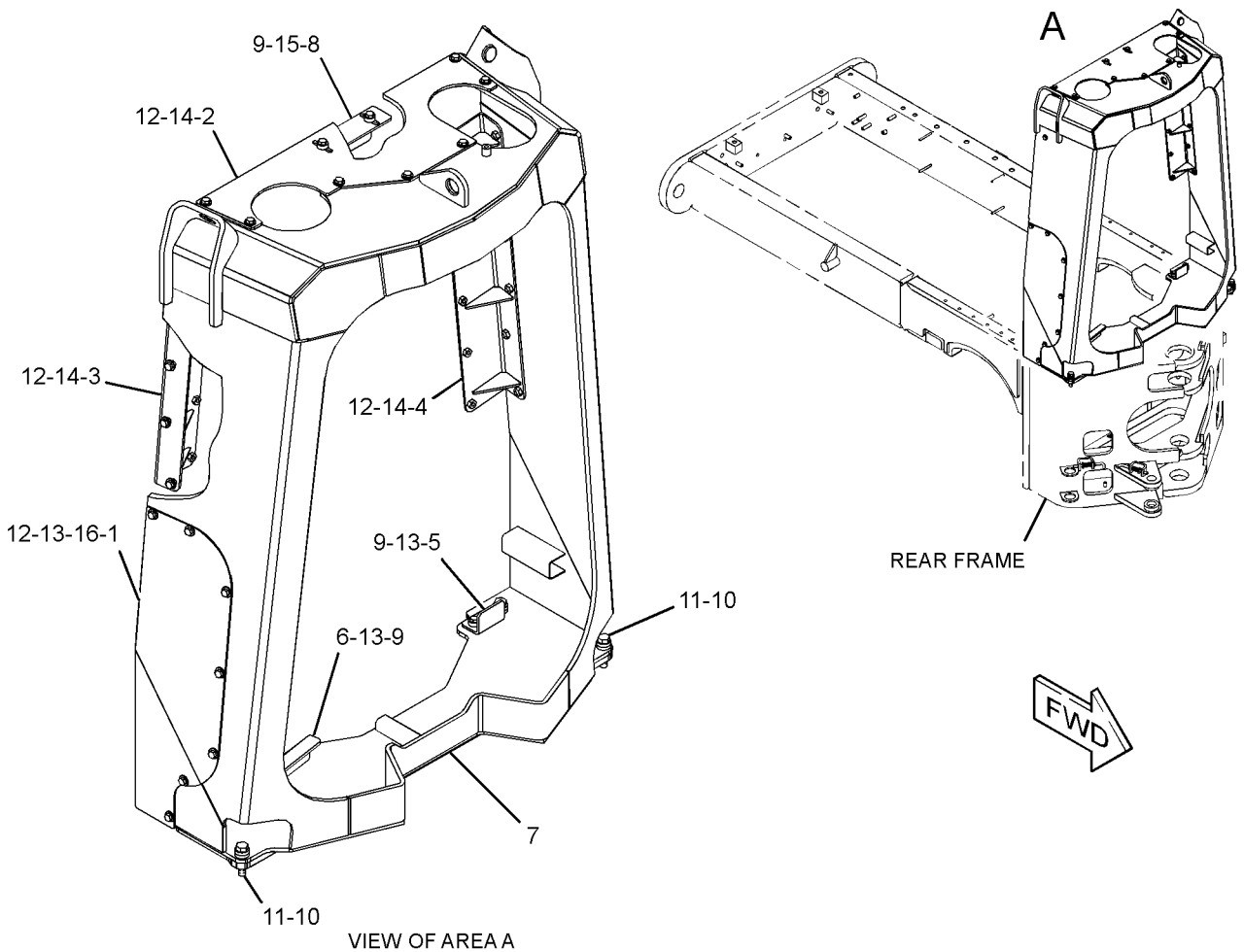

VIEW OF AREA A

GRAPHIC #1 **<END>** g02152493

312-3657 VALVE GP-LUBE DISTRIBUTION–11-INJECTOR

S/N: R9H1-UP
PART OF 283-7773 LINES GP-AUTOMATIC LUBRICATION
AN ATTACHMENT

SMCS-7540 **i02848991**

NOTE	REF NO	GRAPHIC REF	PART NUMBER	QTY	PART NAME 1 2 3 4 5 6 (PRODUCT LEVEL)	SEE PAGE
	1	1	**2D-1683**	8	FITTING	
	2	1	*208-1629*	1	ELBOW AS	
		1	**2T-2396**	1	ELBOW	
		1	**6V-8398**	1	SEAL-O-RING	
	3	1	**269-5353**	1	VALVE AS-LUBE DISTRIBUTION (5-INJECTOR)	
		1	**8X-1106**	5	FITTING AS-GREASE (1/8-27-THD)	
		1	**307-3245**	5	INJECTOR	
	4	1	**292-4086**	1	INJECTOR AS	
		1	**8X-1106**	6	FITTING AS-GREASE (1/8-27-THD)	
		1	**307-3245**	6	INJECTOR	
	5	1	**303-5013**	1	PLATE AS	
M		1	**8T-3612**	2	NUT-WELD (M8X1.25-THD)	
	6	1	**004-6683**	1	FITTING	
	7	1	**3J-5390**	1	PLUG	
	8	1	**4M-8973**	3	ELBOW	
M	9	1	**5C-7261**	2	NUT (M8X1.25-THD)	
	10	1	**8T-4224**	6	WASHER-HARD (8.8X16X2-MM THK)	
M	11	1	**8T-6869**	4	BOLT (M8X1.25X60-MM)	

M-METRIC PART

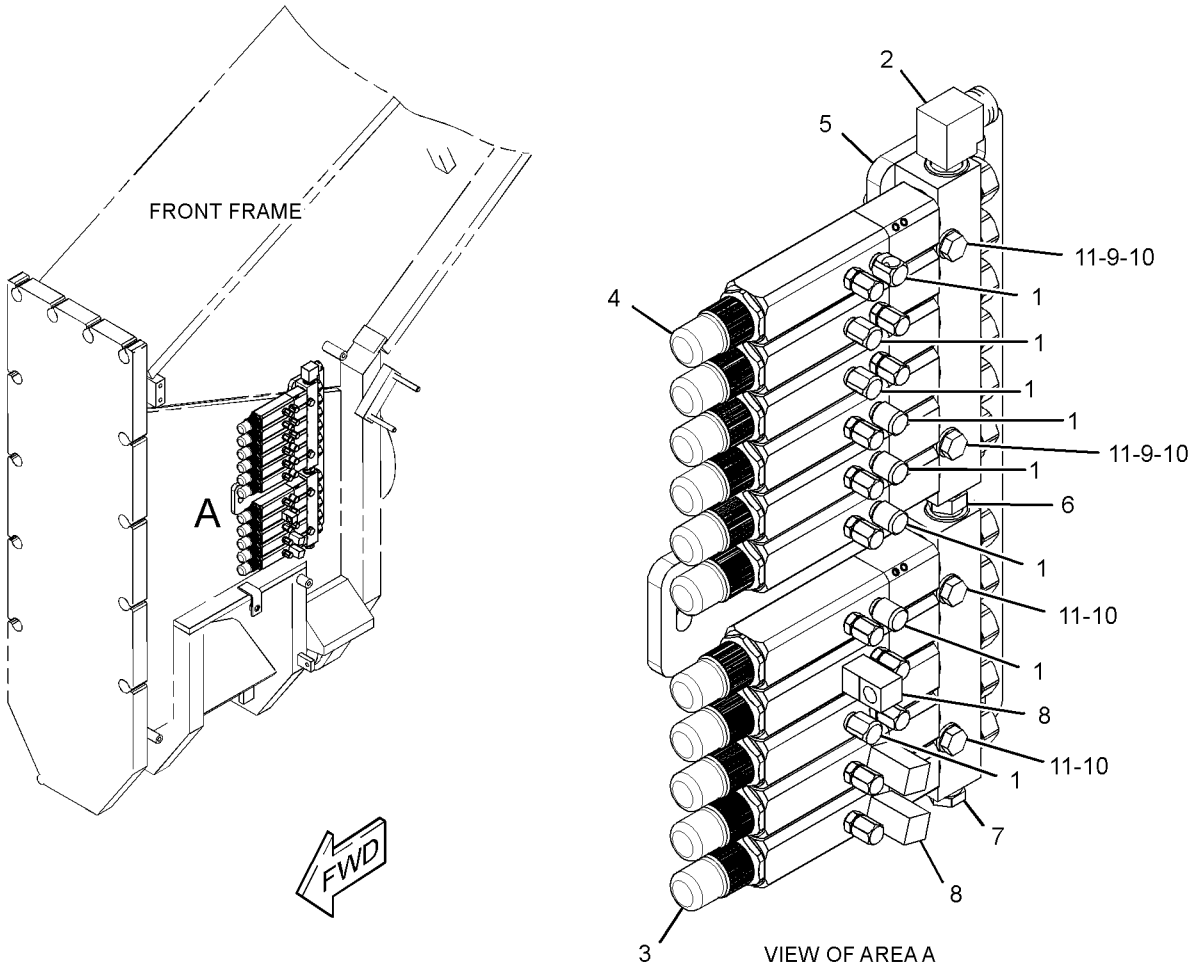

GRAPHIC #1 **<END>** g01422618

312-3658 VALVE GP-LUBE DISTRIBUTION–11-INJECTOR

S/N: R9H1-UP

PART OF 283-7773 LINES GP-AUTOMATIC LUBRICATION

AN ATTACHMENT

SMCS-7540 **i02848994**

NOTE	REF NO	GRAPHIC REF	PART NUMBER	QTY	PART NAME 1 2 3 4 5 6 (PRODUCT LEVEL)	SEE PAGE
	1	1	**2D-1683**	8	FITTING	
	2	1	*208-1629*	1	ELBOW AS	
		1	**2T-2396**	1	ELBOW	
		1	**6V-8398**	1	SEAL-O-RING	
	3	1	**269-5353**	1	VALVE AS-LUBE DISTRIBUTION (5-INJECTOR)	
		1	**8X-1106**	5	FITTING AS-GREASE (1/8-27-THD)	
		1	**307-3245**	5	INJECTOR	
	4	1	**292-4086**	1	INJECTOR AS	
		1	**8X-1106**	6	FITTING AS-GREASE (1/8-27-THD)	
		1	**307-3245**	6	INJECTOR	
	5	1	**303-5014**	1	PLATE AS	
M		1	**8T-3612**	2	NUT-WELD (M8X1.25-THD)	
	6	1	**004-6683**	1	FITTING	
	7	1	**3J-5390**	1	PLUG	
	8	1	**4M-8973**	3	ELBOW	
M	9	1	**5C-7261**	2	NUT (M8X1.25-THD)	
	10	1	**8T-4224**	6	WASHER-HARD (8.8X16X2-MM THK)	
M	11	1	**8T-6869**	4	BOLT (M8X1.25X60-MM)	

M-METRIC PART

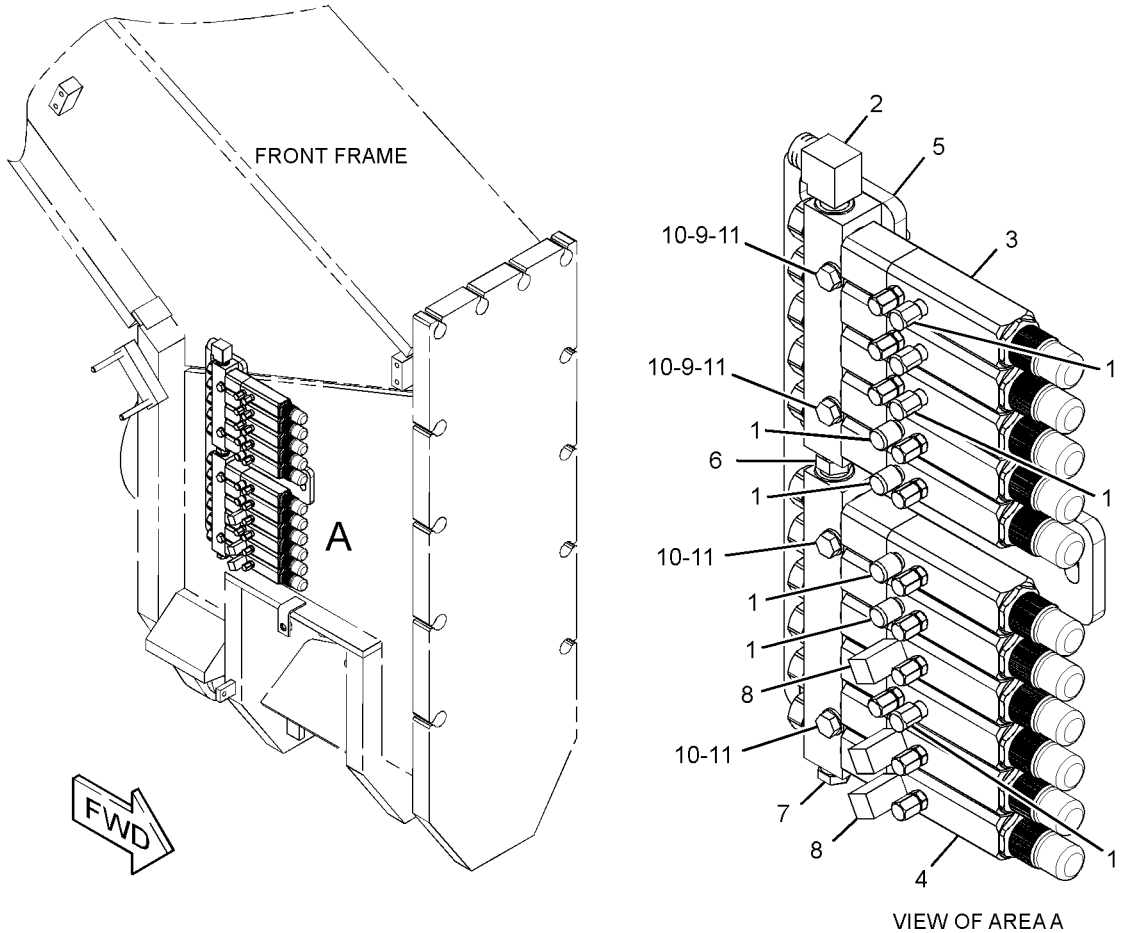

GRAPHIC #1 **<END>** g01422935

312-3686 VALVE GP-LUBE DISTRIBUTION–2-INJECTOR

S/N: R9H1-UP
PART OF 283-7773 LINES GP-AUTOMATIC LUBRICATION
AN ATTACHMENT

SMCS-7540 **i02848996**

NOTE	REF NO	GRAPHIC REF	PART NUMBER	QTY	PART NAME 1 2 3 4 5 6 (PRODUCT LEVEL)	SEE PAGE
	1	1	**2D-1683**	2	FITTING	
	2	1	*208-1629*	1	ELBOW AS	
		1	**2T-2396**	1	ELBOW	
		1	**6V-8398**	1	SEAL-O-RING	
	3	1	**269-5346**	1	INJECTOR AS-GREASE (2-INJECTOR)	
		1	**8X-1106**	2	FITTING AS-GREASE (1/8-27-THD)	
		1	**307-3245**	2	INJECTOR	
	4	1	**3J-5390**	1	PLUG	

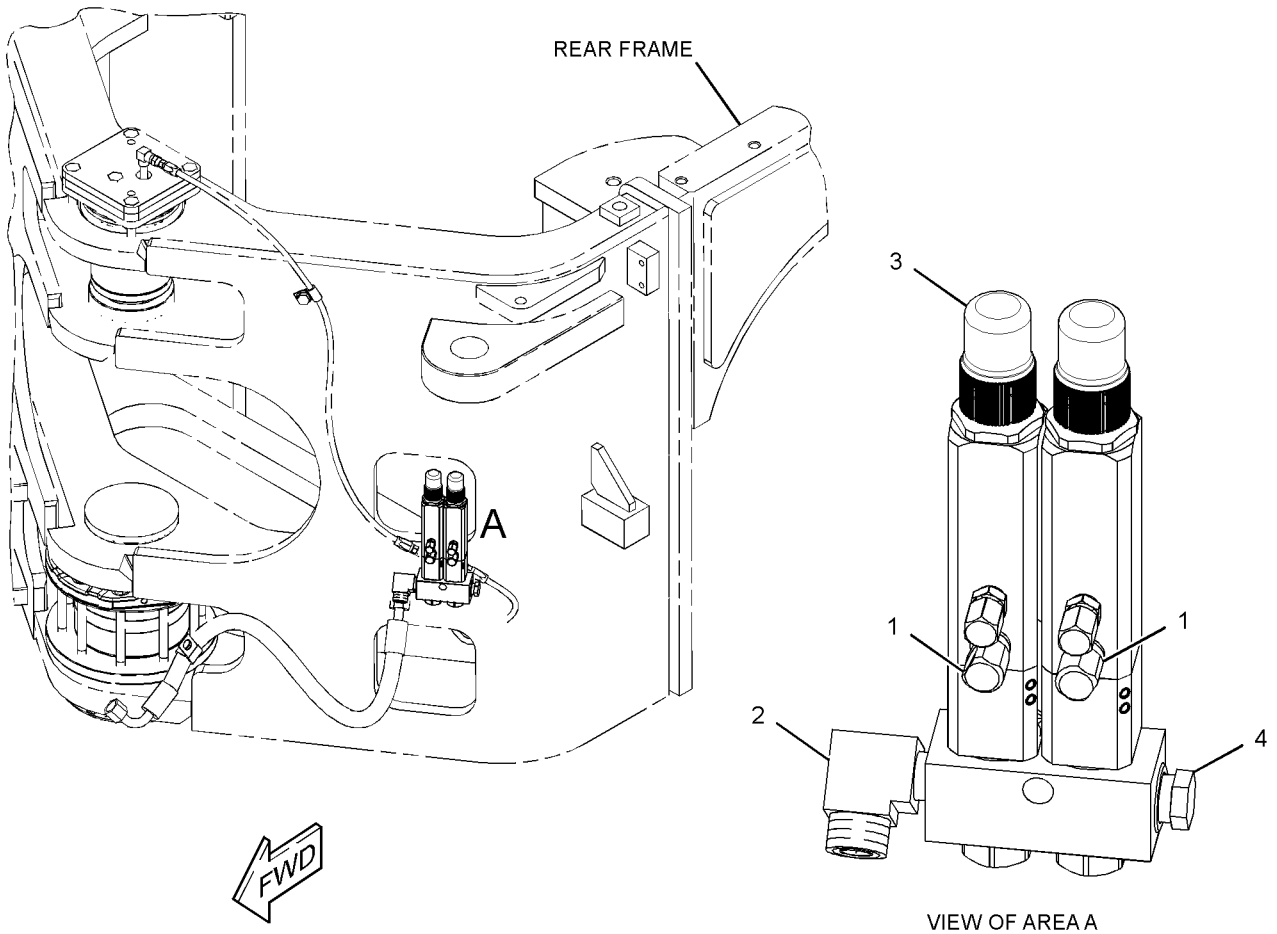

GRAPHIC #1 **<END>** g01440566

333-0677 VALVE GP-LUBE DISTRIBUTION–4-INJECTOR

S/N: R9H1-UP

PART OF 283-7773 LINES GP-AUTOMATIC LUBRICATION

AN ATTACHMENT

SMCS-7540 **i03879472**

NOTE	REF NO	GRAPHIC REF	PART NUMBER	QTY	PART NAME 1 2 3 4 5 6 (PRODUCT LEVEL)	SEE PAGE
	1	1	**2D-1683**	3	FITTING	
	2	1	**269-5352**	1	VALVE AS-LUBE DISTRIBUTION (4-INJECTOR)	
		1	**8X-1106**	4	FITTING AS-GREASE (1/8-27-THD)	
		1	**307-3245**	4	INJECTOR	
		1	**8X-1106**	1	FITTING AS-GREASE (1/8-27-THD)	
	3	1	**333-0676**	1	PLATE AS	
M		1	**8T-3612**	2	NUT-WELD (M8X1.25-THD)	
	4	1	*171-6731*	1	CONNECTOR AS	
		1	**6V-8398**	1	SEAL-O-RING	
		1	**8C-6871**	1	CONNECTOR	
	5	1	**3J-5390**	1	PLUG	
	6	1	**6K-6967**	1	ADAPTER-PIPE	
	7	1	**8T-4224**	2	WASHER-HARD (8.8X16X2-MM THK)	
M	8	1	**8T-6912**	2	BOLT (M8X1.25X50-MM)	

M-METRIC PART

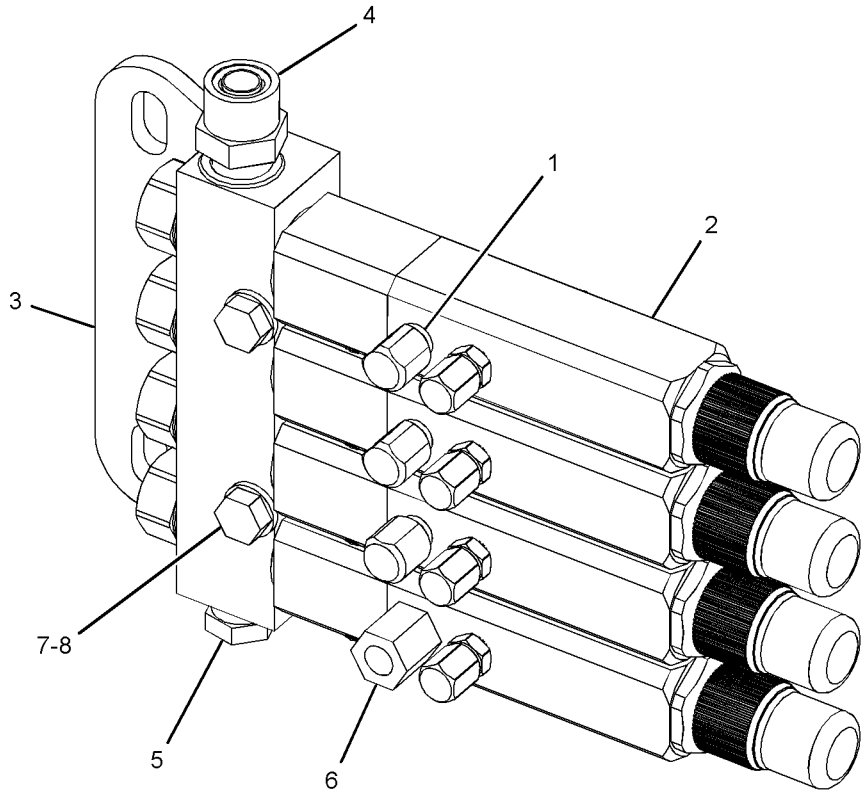

GRAPHIC #1 **<END>** g02175408

FRAME AND BODY

260-3769 WALKWAY GP

S/N: R9H1-UP

AN ATTACHMENT

SMCS-7255 **i02657668**

NOTE	REF NO	GRAPHIC REF	PART NUMBER	QTY	PART NAME 1 2 3 4 5 6 (PRODUCT LEVEL)	SEE PAGE
	1	2	**2G-9524**	2	LATCH	
	2	2	**8W-1784**	2	STOP	
	3	1	**269-4799**	1	SUPPORT AS	
	4	1	**269-4839**	2	ANGLE	
	5	1	**269-4922**	1	SUPPORT AS	
Y	6	1	*274-9254*	1	MOUNTING GP-PLATFORM	763
	7	1	**276-7286**	1	HANDRAIL	
	8	1	**276-7338**	1	HANDRAIL	
	9	2	**291-9773**	1	SUPPORT AS (LH)	
	10	2	**291-9774**	1	SUPPORT AS (RH)	
	11	2	**291-9777**	1	PLATFORM AS-OPERATOR	
	12	2	**291-9778**	1	PLATFORM AS-OPERATOR	
		2	**9F-6445**	1	NUT-WELD (1/4-20-THD)	
M		2	**9X-2032**	2	NUT-WELD (M4X0.7-THD)	
	13	2	**291-9779**	1	PLATFORM AS-OPERATOR	
	14	2	**291-9780**	1	PLATFORM AS-OPERATOR	
Y	15	1	*291-9790*	2	STEP GP (RH, LH)	522
	16	2	**294-5140**	1	PLATE	
	17	2	**294-5141**	1	ANGLE	
	18	1	**301-6785**	1	TUBE	
	19	1	**301-6786**	1	TUBE	
M	20	2	**170-5632**	8	BOLT (M4X0.7X16-MM)	
	21	2	**3B-4617**	4	PIN-COTTER	
	22	2	**7X-0599**	4	WASHER-HARD (13X20X2-MM THK)	
	23	1	**7X-7729**	6	WASHER (11X25X3-MM THK)	
	24	2	**8T-0328**	8	WASHER-HARD (5.5X10X1-MM THK)	
M	25	1	**8T-4137**	6	BOLT (M10X1.5X20-MM)	
M	26	2	**8T-4192**	4	BOLT (M12X1.75X25-MM)	
	27	2	**8T-4223**	4	WASHER-HARD (13.5X25.5X3-MM THK)	

M-METRIC PART
Y-SEPARATE ILLUSTRATION

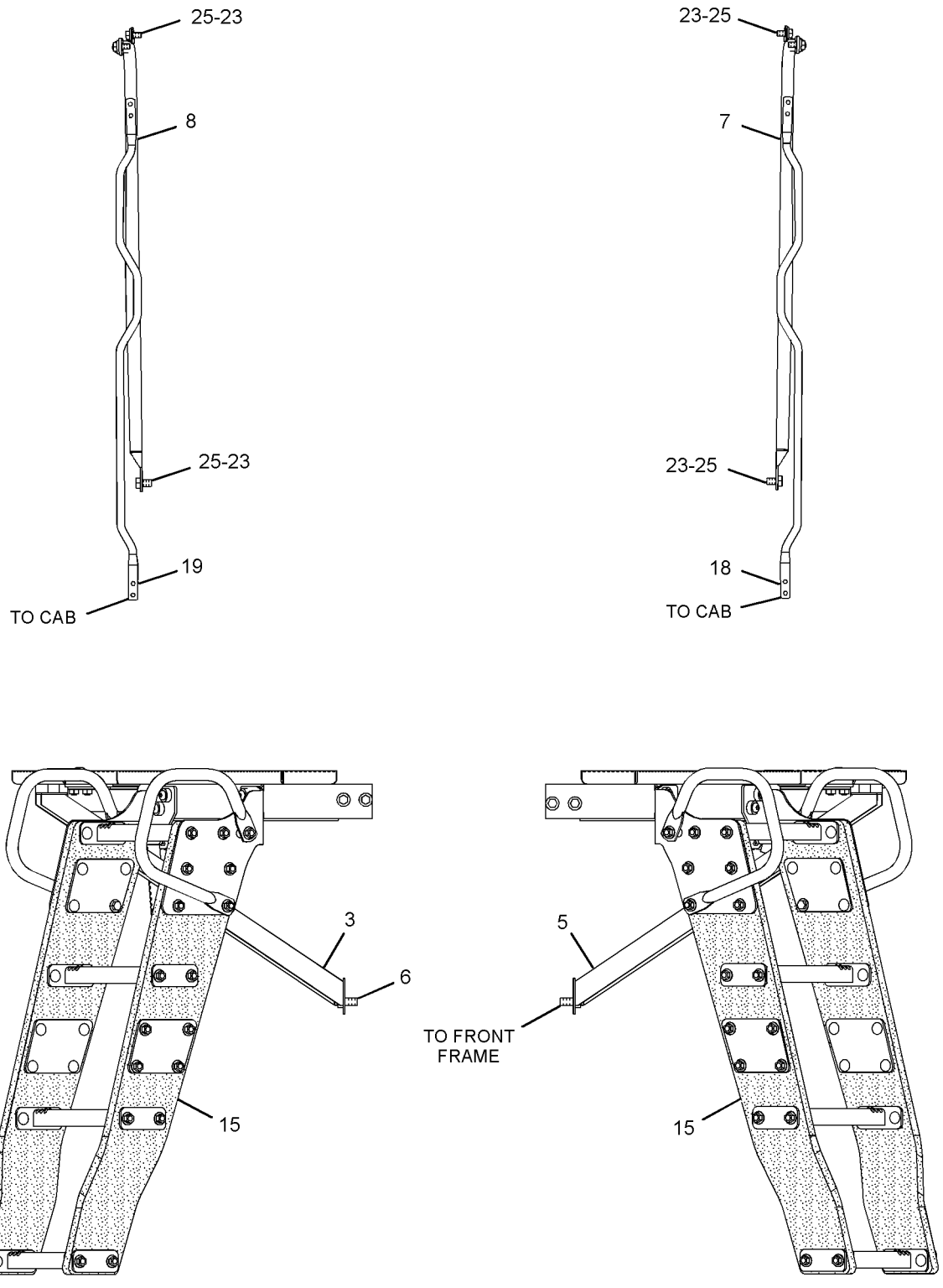

FRONT VIEW

REFER TO ALL ILLUSTRATIONS OF
THIS GROUP FOR AUXILIARY VIEWS

GRAPHIC #1

g01336447

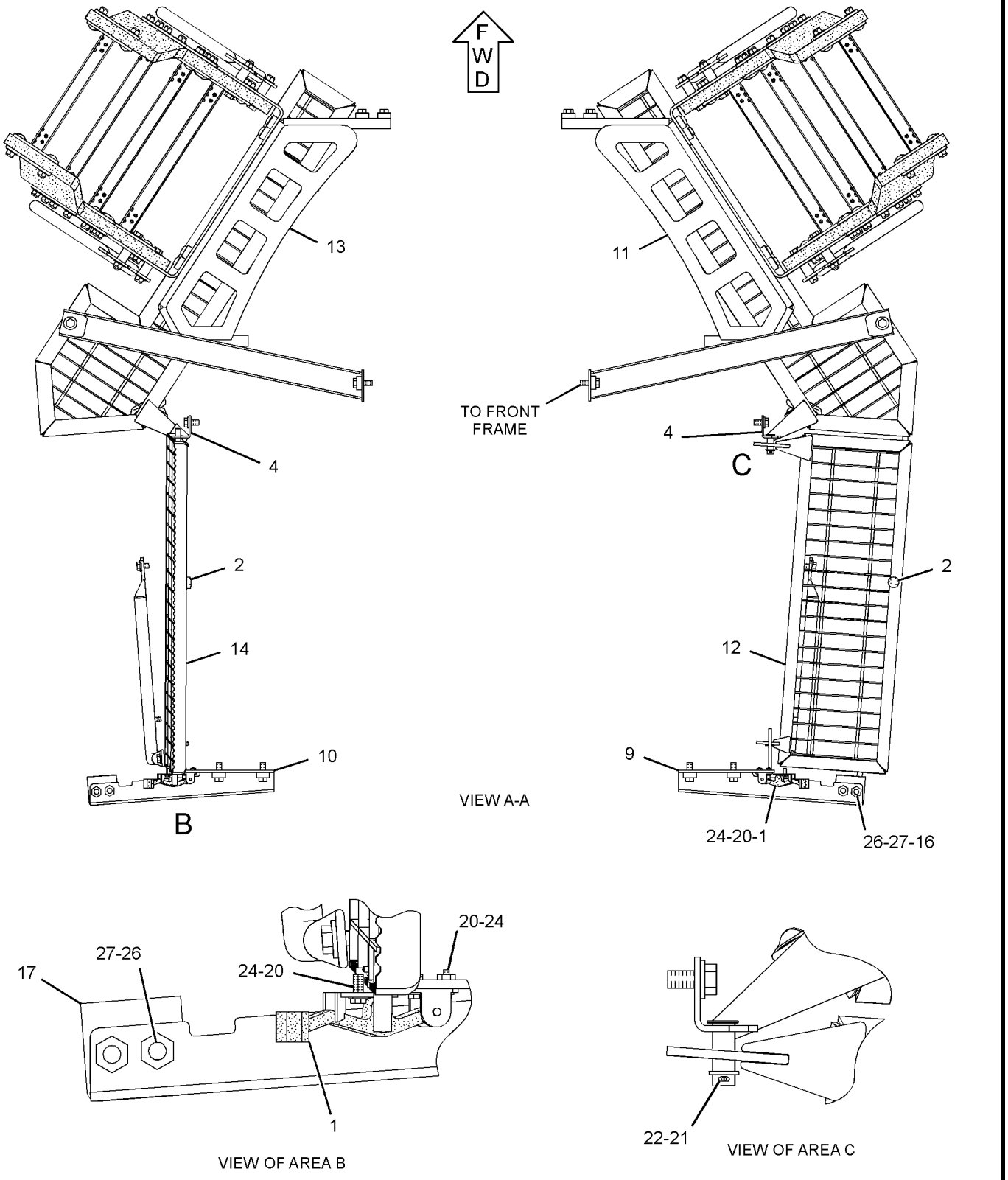

GRAPHIC #2 **<END>** g01336479

FRAME AND BODY

262-7898 WALKWAY GP–TANDEM

S/N: R9H1-UP

PART OF 349-2556 COMMON AR

SMCS-7255 **i02657682**

NOTE	REF NO	GRAPHIC REF	PART NUMBER	QTY	PART NAME 1 2 3 4 5 6 (PRODUCT LEVEL)	SEE PAGE
	1	1	**301-9270**	2	PLATE	
	2	1	**273-0350**	2	PLATE AS	
					(EACH INCLUDES)	
M		1	**8T-3490**	2	NUT-WELD (M10X1.5-THD)	
	3	1	**274-6866**	12	BRACKET AS	
					(EACH INCLUDES)	
M		1	**8T-3490**	2	NUT-WELD (M10X1.5-THD)	
M	4	1	**238-0251**	28	SCREW-BUTTON HEAD (M10X1.5X25-MM)	
	5	1	**5P-1076**	24	WASHER-HARD (13.5X30X4-MM THK)	
	6	1	**8T-4121**	28	WASHER-HARD (11X21X2.5-MM THK)	
M	7	1	**8T-4192**	24	BOLT (M12X1.75X25-MM)	

M-METRIC PART

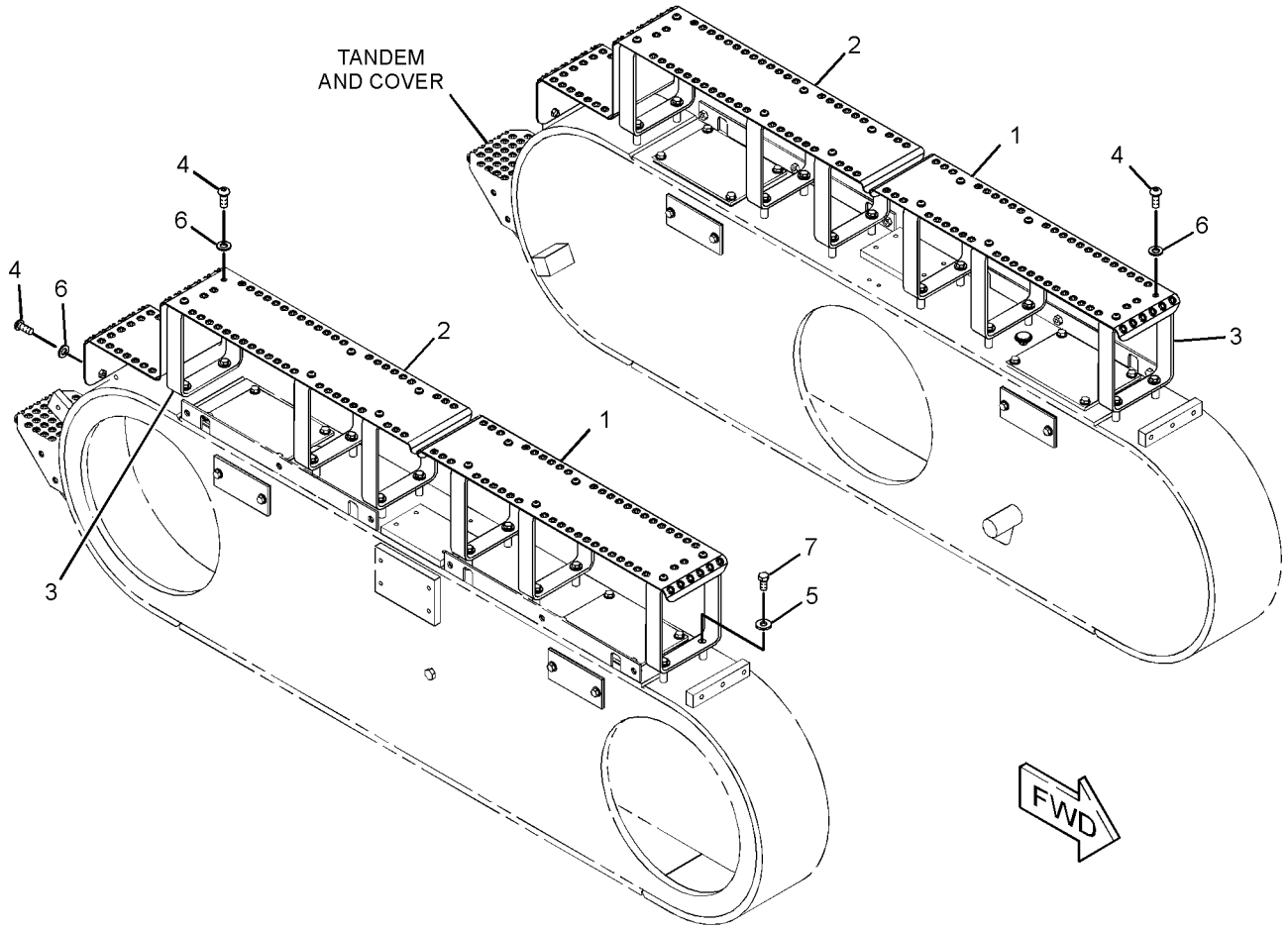

GRAPHIC #1 **<END>** g01312352

BRAKING SYSTEM

357-1088 ACCUMULATOR & MTG GP-BRAKE

S/N: R9H1-UP

AN ATTACHMENT

SMCS-4263 **i04038210**

NOTE	REF NO	GRAPHIC REF	PART NUMBER	QTY	PART NAME 1 2 3 4 5 6 (PRODUCT LEVEL)	SEE PAGE
	1	1	**8B-6561**	2	SPACER (5.56X22.22X55.58-MM THK)	
Y	2	1	*260-9428*	2	ACCUMULATOR GP-BRAKE (CHARGED)	535
	3	1	**273-2939**	1	BRACKET AS	
M		1	**8T-3490**	2	NUT-WELD (M10X1.5-THD)	
	4	1	**273-2940**	2	CLAMP	
M	5	1	**8T-0355**	2	BOLT (M10X1.5X110-MM)	
	6	1	**8T-4121**	6	WASHER-HARD (11X21X2.5-MM THK)	
M	7	1	**8T-4196**	4	BOLT (M10X1.5X35-MM)	

M-METRIC PART
Y-SEPARATE ILLUSTRATION

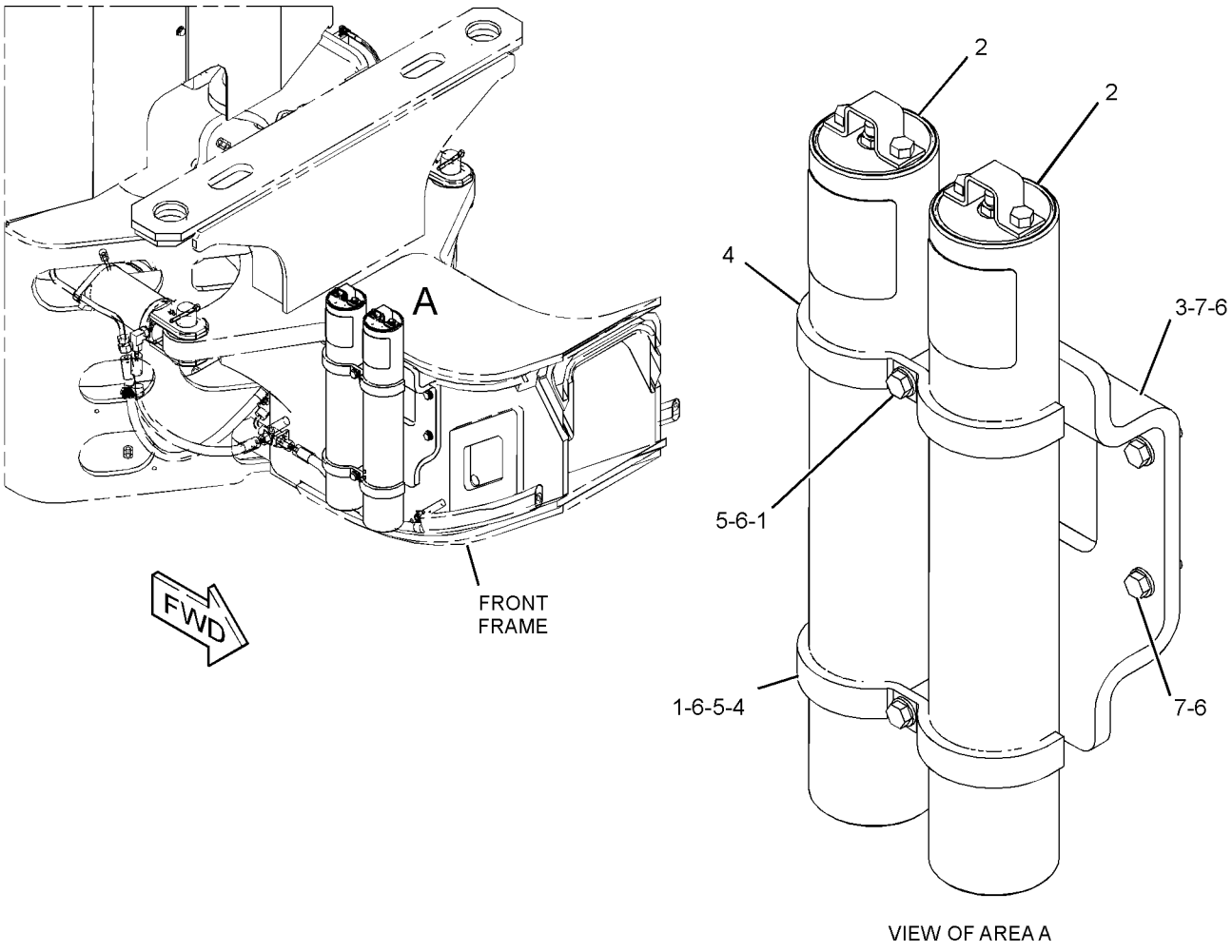

VIEW OF AREA A

GRAPHIC #1 **<END>** g02230255

260-9428 ACCUMULATOR GP-BRAKE–CHARGED

S/N: R9H1-UP

PART OF 357-1088 ACCUMULATOR & MTG GP-BRAKE

AN ATTACHMENT

SMCS-4263, 4264 **i02370400**

NOTE	REF NO	GRAPHIC REF	PART NUMBER	QTY	PART NAME 1 2 3 4 5 6 (PRODUCT LEVEL)	SEE PAGE
	1	1	**158-2336**	1	VALVE-GAS (BRAKE)	
	2	1	**111-9110**	1	PROTECTOR-GAS VALVE	
	3	1	**1J-9671**	1	SEAL-O-RING	
	4	1	**5M-3062**	2	BOLT (3/8-16X0.75-IN)	
F			**241-0037**	1	FILM-WARNING (HIGH PRESSURE, READ OMM)	
					AVAILABLE REPAIR KIT(S):	
			203-1558	1	KIT-SEAL (BRAKE ACCUMULATOR)	
					(INCLUDES SEALS, END CAPS, & GAS VALVE)	

F-NOT SHOWN

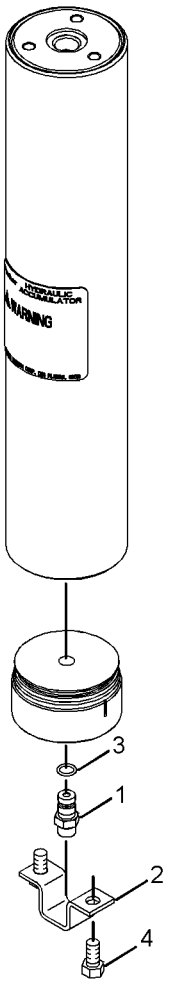

GRAPHIC #1 **<END>** g01302330

348-9263 ACCUMULATOR GP-BRAKE–CHARGED

S/N: R9H1-UP
PART OF 357-1089 ACCUMULATOR GP-BRAKE
AN ATTACHMENT

SMCS-4263, 4264 **i04004036**

NOTE	REF NO	GRAPHIC REF	PART NUMBER	QTY	PART NAME 1 2 3 4 5 6 (PRODUCT LEVEL)	SEE PAGE
	1	1	**158-2336**	1	VALVE-GAS	
	2	1	**111-9110**	1	PROTECTOR-GAS VALVE	
	3	1	**1J-9671**	1	SEAL-O-RING	
	4	1	**5M-3062**	2	BOLT (3/8-16XO.75-IN)	
	5	1	**241-0037**	1	FILM-WARNING (HIGH PRESSURE, READ OMM)	
					AVAILABLE REPAIR KIT(S):	
			203-1558	1	KIT-SEAL (ACCUMULATOR)	

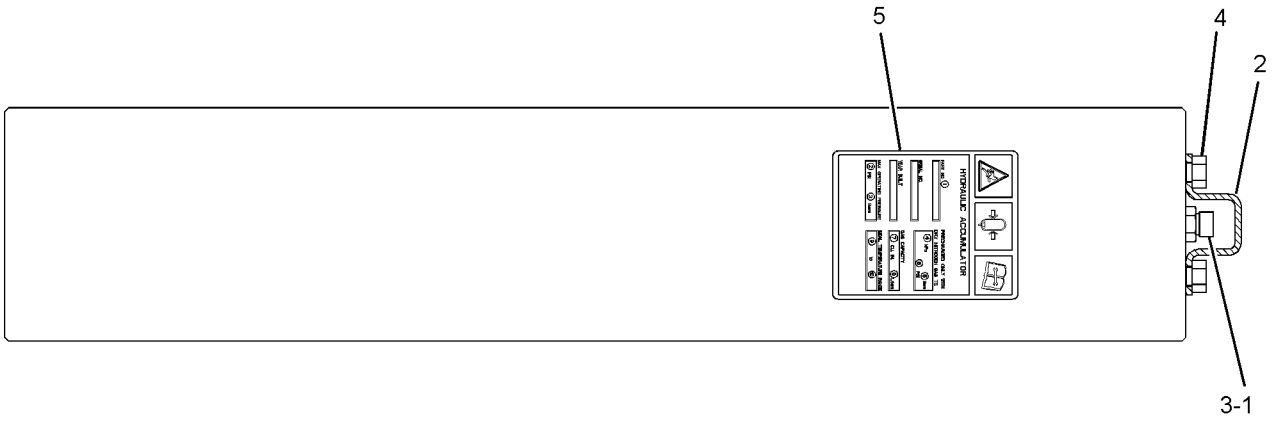

GRAPHIC #1 **<END>** g02213573

357-1089 ACCUMULATOR GP-BRAKE–BRAKE ACCUMULATOR CHARGE

S/N: R9H1-UP

PART OF 352-3815 OPTION AR-REGIONAL

AN ATTACHMENT

SMCS-4263, 4264 **i04004030**

NOTE	REF NO	GRAPHIC REF	PART NUMBER	QTY	PART NAME 1 2 3 4 5 6 (PRODUCT LEVEL)	SEE PAGE
	1	1	**8B-6561**	2	SPACER (5.56X22.22X55.58-MM THK)	
	2	1	**273-2939**	1	BRACKET AS	
M		1	**8T-3490**	2	NUT-WELD (M10X1.5-THD)	
	3	1	**273-2940**	2	CLAMP	
Y	4	1	*348-9263*	2	ACCUMULATOR GP-BRAKE (CHARGED)	536
M	5	1	**8T-0355**	2	BOLT (M10X1.5X110-MM)	
	6	1	**8T-4121**	6	WASHER-HARD (11X21X2.5-MM THK)	
M	7	1	**8T-4196**	4	BOLT (M10X1.5X35-MM)	

M-METRIC PART
Y-SEPARATE ILLUSTRATION

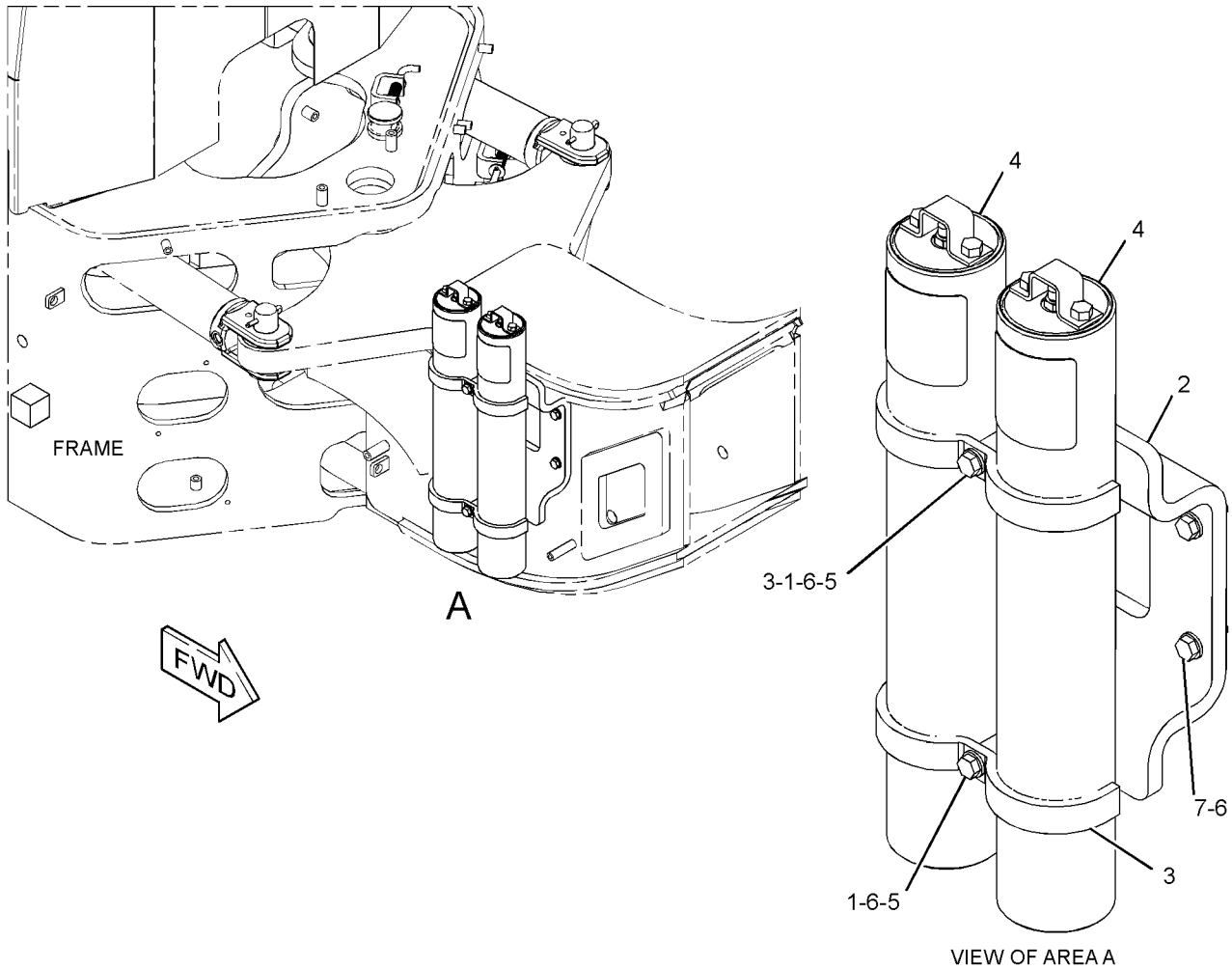

GRAPHIC #1 **<END>** g02217693

BRAKING SYSTEM

253-8427 BRAKE GP-PARKING

S/N: DZM1544-UP

PART OF 253-8407 TRANSMISSION AR

SMCS-3077, 4267 **i03960429**

NOTE	REF NO	GRAPHIC REF	PART NUMBER	QTY	PART NAME 1 2 3 4 5 6 (PRODUCT LEVEL)	SEE PAGE
	1	1	**133-4292**	1	SEAL-LIP TYPE	
	2	1	**171-9375**	1	SEAL-O-RING	
	3	1	**187-3369**	4	SPRING	
C	4	1	**188-0633**	1	SEAL-BRAKE	
	5	1	**241-3722**	1	FILM-WARNING (RECOIL SPRING)	
	6	1	**246-8743**	1	YOKE AS	
		1	**2H-4145**	1	SEAL-O-RING	
		1	**172-6423**	1	CUP-DUST	
	7	1	**246-8776**	1	PISTON	
	8	1	**246-8777**	1	SEAL-BRAKE	
	9	1	**343-8739**	8	DISC-FRICTION	
	10	1	**246-8780**	9	PLATE-CLUTCH	
	11	1	**246-8781**	1	HUB	
	12	1	**297-2828**	1	HOUSING AS-BRAKE	
		1	**9W-6068**	1	PLUG	
		1	**124-1555**	3	PLUG	
	13	1	**297-2830**	1	PLATE AS	
		1	**5M-7937**	2	DOWEL	
	14	1	**095-0930**	1	RING-RETAINING (EXTERNAL)	
M	15	1	**129-3181**	3	BOLT-SOCKET HEAD (M10X1.5X55-MM)	
	16	1	**315-6094**	3	DOWEL	
	17	1	*162-0177*	1	PLUG AS	
		1	**3J-1907**	1	SEAL-O-RING	
		1	**9S-8004**	1	PLUG-O-RING	
	18	1	**4J-8996**	1	SEAL-O-RING	
	19	1	**6V-5759**	2	SEAL-O-RING	
	20	1	**7X-0605**	12	WASHER-HARD (13X28X1.6-MM THK)	
M	21	1	**8T-5092**	12	BOLT (M12X1.75X150-MM)	
	22	1	**1U-8846**	1	SEALANT-GASKET	

C-CHANGE FROM PREVIOUS TYPE
M-METRIC PART

253-8427 **BRAKE GP-PARKING** *(contd.)* **i03960429**

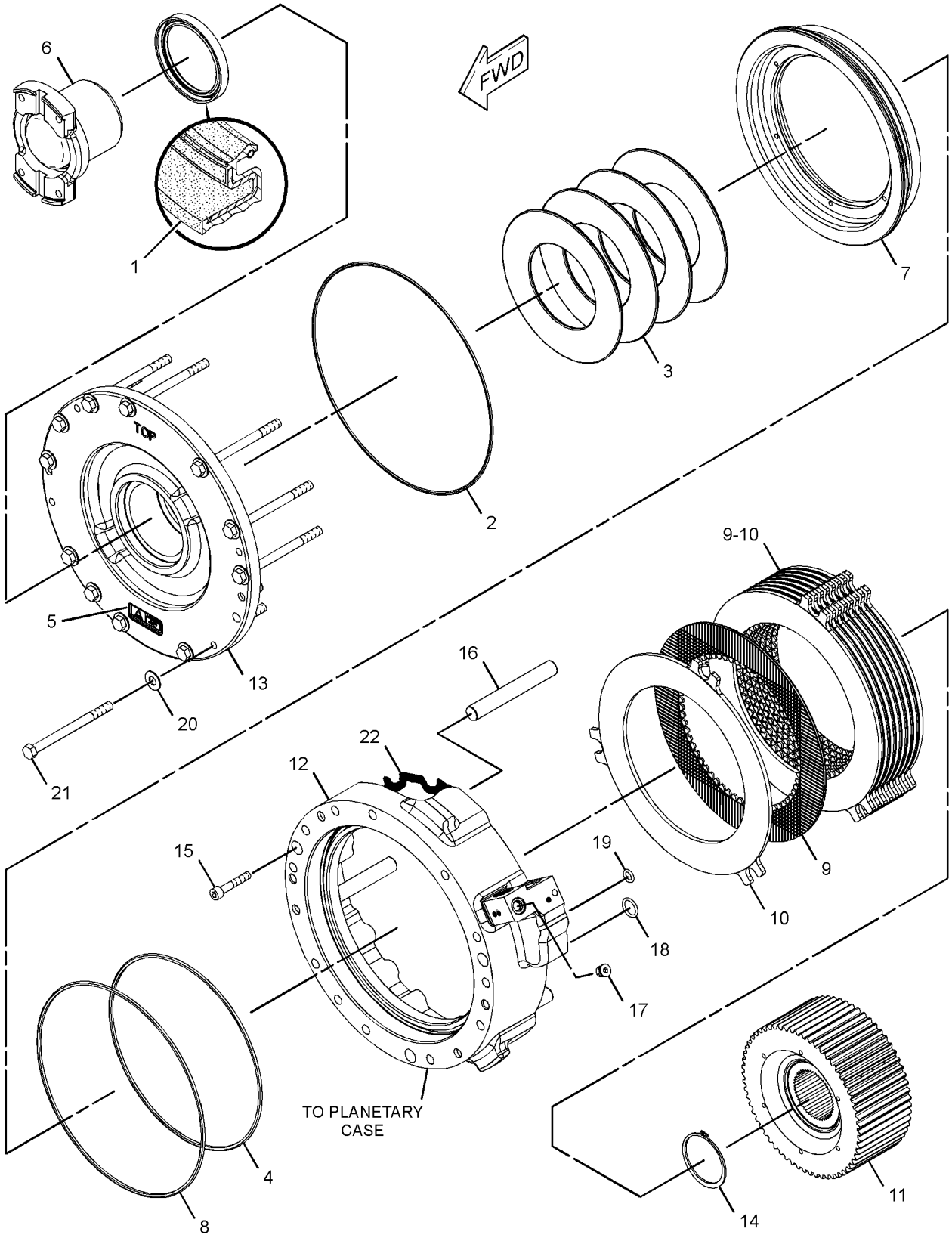

GRAPHIC #1 **<END>** g01293718

BRAKING SYSTEM

265-8942 CONTROL GP-SERVICE BRAKE

S/N: R9H1-UP

PART OF 233-3107 CAB AR

SMCS-4265, 4269 **i04018815**

NOTE	REF NO	GRAPHIC REF	PART NUMBER	QTY	PART NAME 1 2 3 4 5 6 (PRODUCT LEVEL)	SEE PAGE
Y	1	1	**346-6901**	1	PEDAL GP-BRAKE, XMSN & GOV	775
	2	1	**249-4089**	1	TUBE AS	
	3	1	**249-4091**	6	BLOCK	
	4	1	**273-4137**	1	TUBE AS	
	5	1	**328-7075**	1	TUBE AS	
	6	1	**273-4139**	1	TUBE AS	
	7	1	**328-7076**	1	TUBE AS	
	8	1	**273-4141**	1	TUBE AS	
	9	1	**281-9356**	3	PLATE	
	10	1	*148-8364*	5	ELBOW AS	
					(EACH INCLUDES)	
		1	**6V-8625**	1	ELBOW	
		1	**3K-0360**	1	SEAL-O-RING	
		1	**6V-8398**	1	SEAL-O-RING	
	11	1	*148-8428*	1	TEE AS	
		1	**6V-8782**	1	TEE	
		1	**3K-0360**	1	SEAL-O-RING	
		1	**6V-8398**	2	SEAL-O-RING	
M	12	1	**8T-4186**	6	BOLT (M10X1.5X40-MM)	
M	13	1	**8T-6466**	3	BOLT (M10X1.5X60-MM)	
	14	1	**8T-4121**	9	WASHER-HARD (11X21X2.5-MM THK)	

M-METRIC PART
Y-SEPARATE ILLUSTRATION

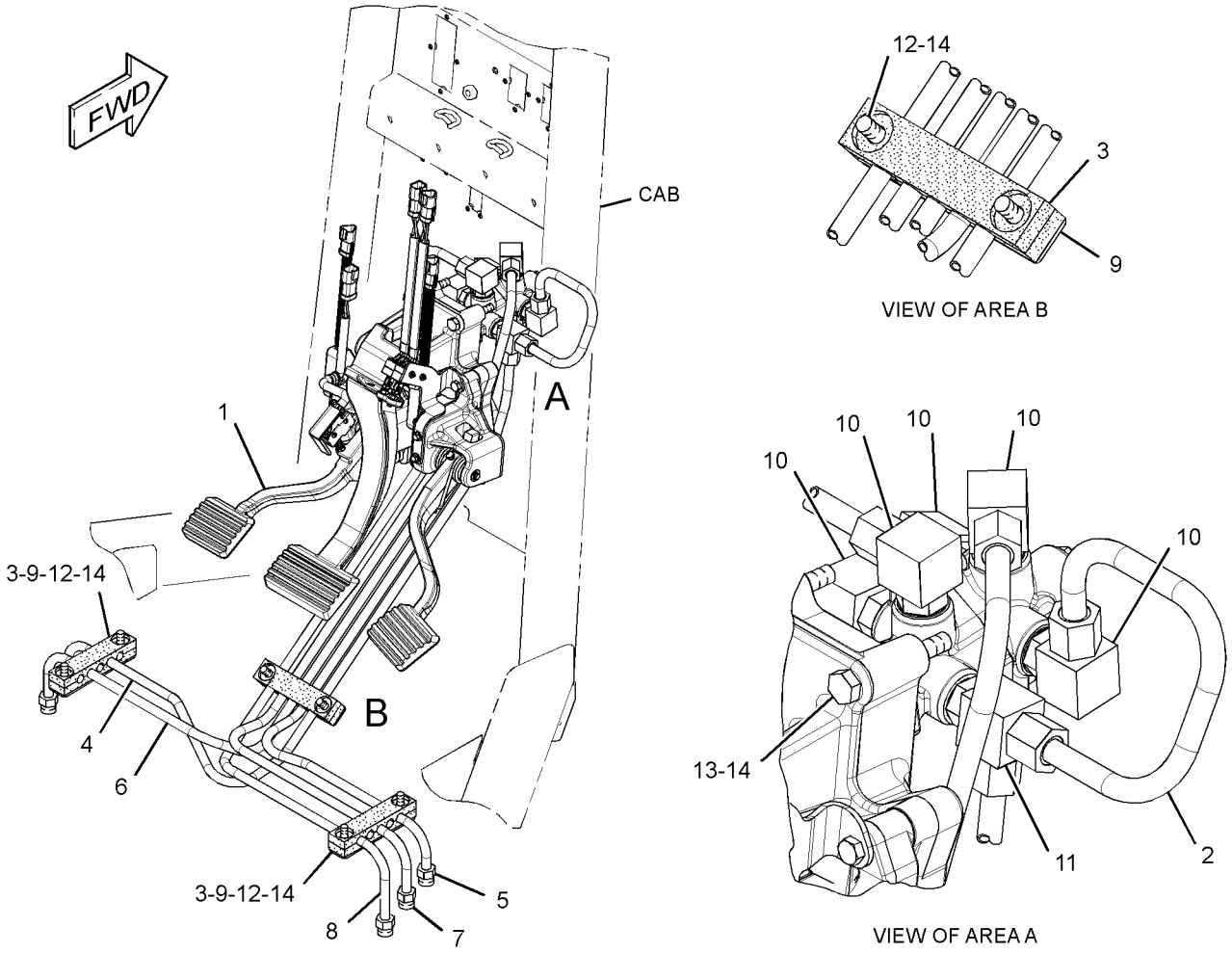

GRAPHIC #1 **<END>** g01865575

BRAKING SYSTEM

356-2953 CONTROL GP-SERVICE BRAKE

S/N: R9H1-UP

PART OF 349-2556 COMMON AR

SMCS-4265, 4269 **i04011230**

NOTE	REF NO	GRAPHIC REF	PART NUMBER	QTY	PART NAME 1 2 3 4 5 6 (PRODUCT LEVEL)	SEE PAGE
	1	2	**273-4131**	2	BRACKET AS	
M		2	**8T-3490**	1	NUT-WELD (M10X1.5-THD)	
I	2	1	**283-7742**	1	HOSE AS	
I	3	1	**283-7743**	1	HOSE AS	
I	4	1	**283-7744**	1	HOSE AS	
I	5	1,2	**285-3374**	2	HOSE AS	
I	6	2	**285-9298**	1	HOSE AS	
I	7	2	**285-9299**	1	HOSE AS	
I	8	1,2	**303-1927**	2	HOSE AS	
	9	2	**133-6934**	1	SPACER (11X20X25-MM THK)	
	10	1	*148-8336*	1	CONNECTOR AS	
		1	**3J-1907**	1	SEAL-O-RING	
		1	**6V-8397**	1	SEAL-O-RING	
		1	**6V-8636**	1	CONNECTOR	
	11	2	*148-8340*	1	CONNECTOR AS	
		2	**3K-0360**	1	SEAL-O-RING	
		2	**6V-8398**	1	SEAL-O-RING	
		2	**6V-8639**	1	CONNECTOR	
	12	2	*148-8364*	1	ELBOW AS	
		2	**3K-0360**	1	SEAL-O-RING	
		2	**6V-8398**	1	SEAL-O-RING	
		2	**6V-8625**	1	ELBOW	
	13	2	*150-4037*	2	TEE AS	
					(EACH INCLUDES)	
		2	**6V-8398**	2	SEAL-O-RING	
		2	**6V-9844**	1	TEE-SWIVEL	
	14	1	*153-6241*	1	ELBOW AS	
		1	**6V-8398**	1	SEAL-O-RING	
		1	**8C-8989**	1	ELBOW	
	15	1	*153-6252*	1	CONNECTOR AS	
		1	**6V-8398**	1	SEAL-O-RING	
		1	**7M-8485**	1	SEAL-O-RING	
		1	**9X-8408**	1	CONNECTOR	
	16	1	*164-5624*	1	ELBOW AS	
		1	**3J-1907**	1	SEAL-O-RING	
		1	**6V-8398**	1	SEAL-O-RING	
		1	**9X-2085**	1	ELBOW	
	17	1,2	**1S-0994**	2	CLIP	
	18	1	**4S-1962**	1	CLIP	
	19	2	**5K-5338**	3	CLIP	
	20	1,2	**6D-4246**	8	CLIP	
	21	1,2	**6V-8397**	4	SEAL-O-RING	
	22	1,2	**6V-8994**	2	UNION	
	23	1,2	**6V-9168**	2	NUT (11/16-16-THD)	
	24	1,2	**8T-4121**	15	WASHER-HARD (11X21X2.5-MM THK)	
M	25	1	**8T-4133**	1	NUT (M10X1.5-THD)	
M	26	1,2	**8T-4136**	8	BOLT (M10X1.5X25-MM)	
M	27	2	**8T-4137**	4	BOLT (M10X1.5X20-MM)	
M	28	2	**8T-4138**	1	BOLT (M6X1X20-MM)	
M	29	2	**8T-4185**	1	BOLT (M10X1.5X50-MM)	

I-REFER TO HYDRAULIC INFORMATION SYSTEM
M-METRIC PART

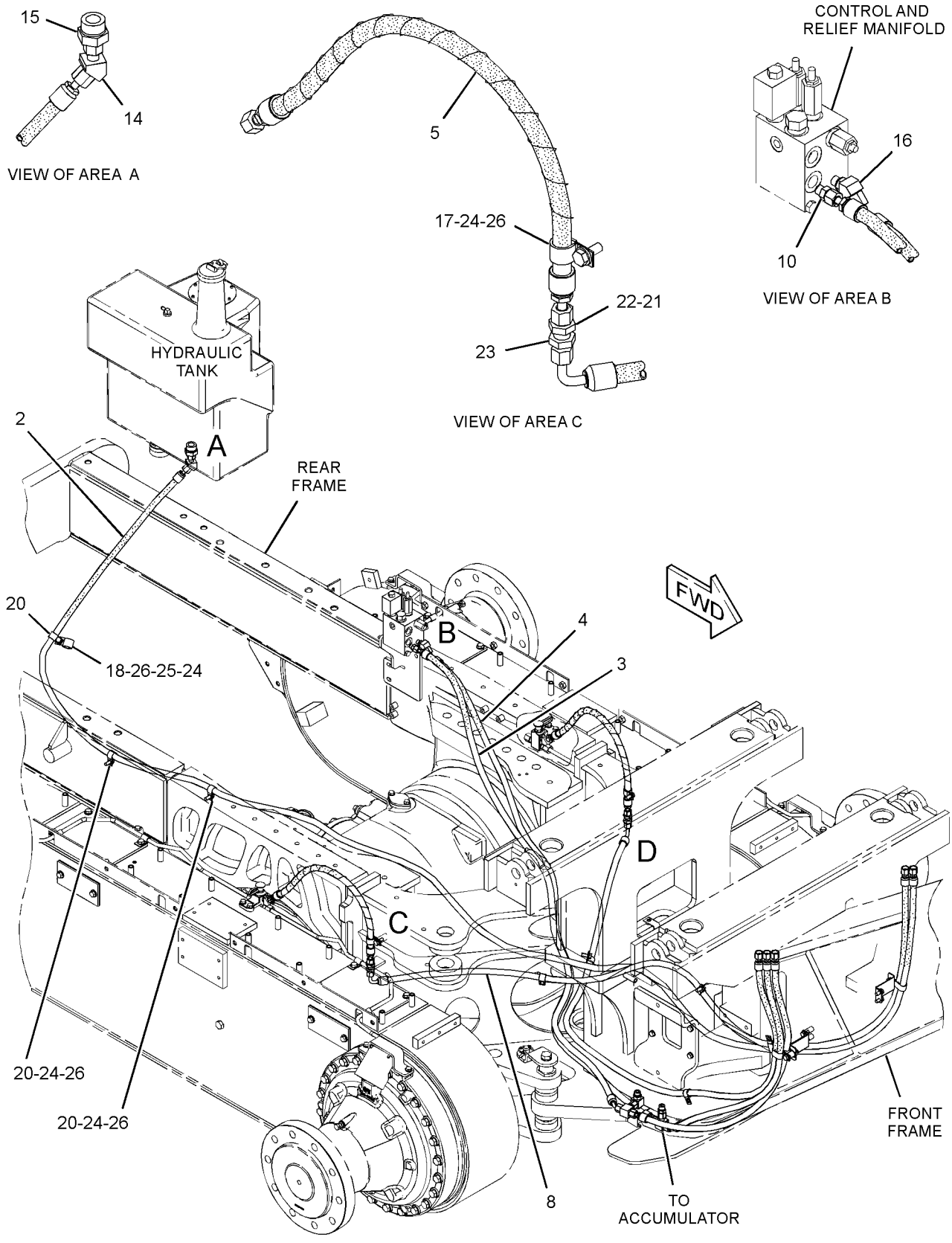

GRAPHIC #1

g02213693

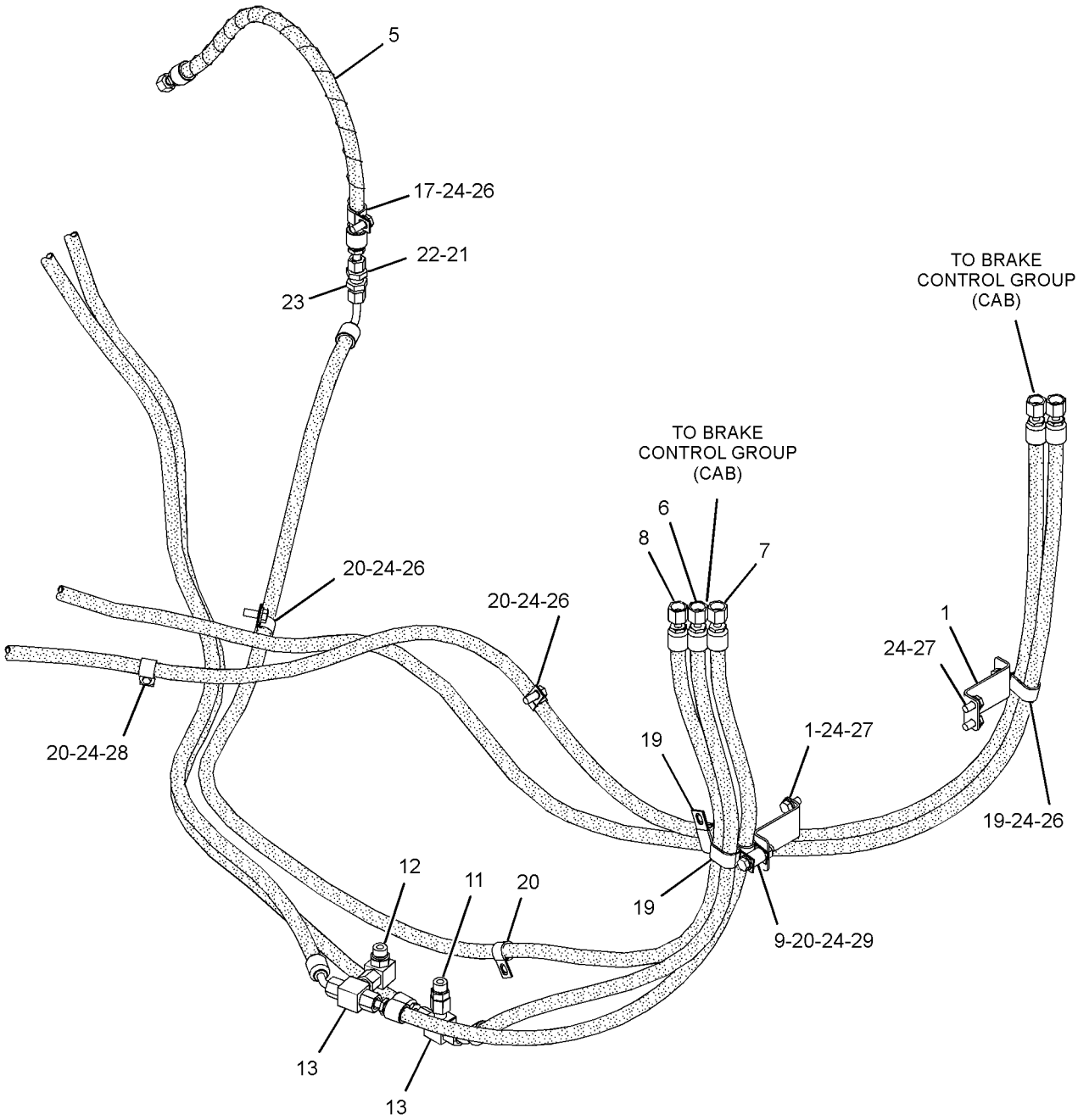

VIEW OF AREA D

GRAPHIC #2 **<END>** g02213713

BRAKING SYSTEM

356-2976 LINES GP-SERVICE BRAKE

S/N: R9H1-UP

PART OF 349-5188 POWER TRAIN AR

SMCS-4257 **i03946072**

NOTE	REF NO	GRAPHIC REF	PART NUMBER	QTY	PART NAME 1 2 3 4 5 6 (PRODUCT LEVEL)	SEE PAGE
	1	1	**246-3314**	2	BLOCK	
	2	1	**286-2231**	2	TUBE AS	
	3	1	**286-2232**	2	TUBE AS	
	4	1	**292-8740**	4	GUARD	
	5	1	*148-8353*	2	ELBOW AS	
					(EACH INCLUDES)	
		1	**3J-1907**	1	SEAL-O-RING	
		1	**6V-8397**	1	SEAL-O-RING	
		1	**6V-9001**	1	ELBOW	
	6	1	*148-8407*	2	PLUG AS	
					(EACH INCLUDES)	
		1	**3J-1907**	1	SEAL-O-RING	
		1	**9S-4191**	1	PLUG-O-RING	
	7	1	*150-4043*	4	CONNECTOR AS	
					(EACH INCLUDES)	
		1	**3J-1907**	1	SEAL-O-RING	
		1	**6V-8398**	1	SEAL-O-RING	
		1	**6V-9873**	1	CONNECTOR	
	8	1	*164-5567*	2	COUPLER AS-QUICK DISCONNECT (MALE)	
					(EACH INCLUDES)	
		1	**6V-3965**	1	FITTING (QUICK DISCONNECT)	
		1	**214-7568**	1	SEAL-O-RING	
	9	1	*164-5624*	4	ELBOW AS	
					(EACH INCLUDES)	
		1	**3J-1907**	1	SEAL-O-RING	
		1	**6V-8398**	1	SEAL-O-RING	
		1	**9X-2085**	1	ELBOW	
	10	1	**5K-3294**	8	CLIP	
	11	1	**6V-0852**	2	CAP-DUST	
	12	1	**8T-4121**	12	WASHER-HARD (11X21X2.5-MM THK)	
M	13	1	**8T-4195**	12	BOLT (M10X1.5X30-MM)	

M-METRIC PART

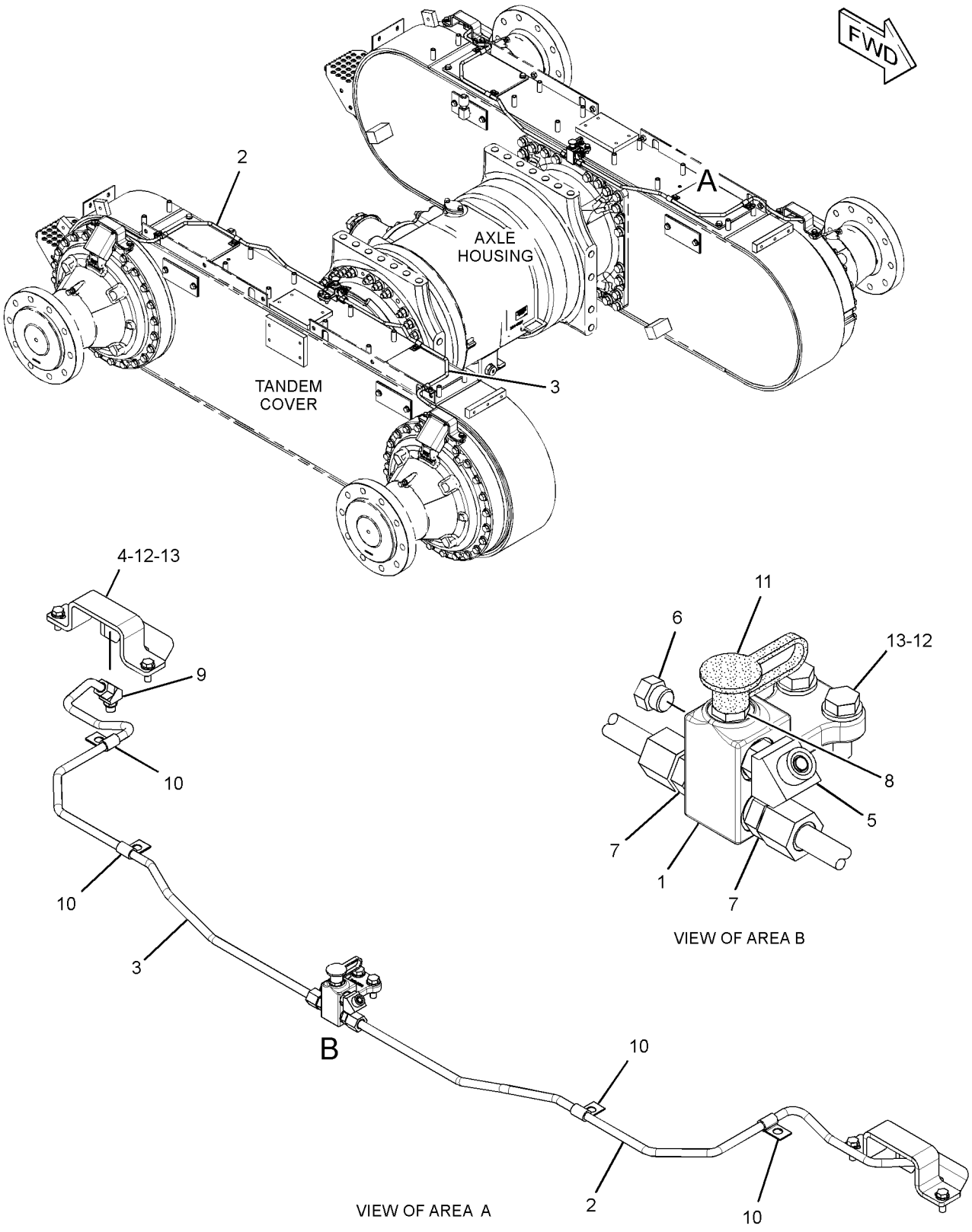

GRAPHIC #1 **<END>** g02194814

219-8035 ACCUMULATOR GP-BLADE CUSHION–CHARGED

S/N: R9H1-UP

PART OF 287-7454 LINES GP-ACCUMULATOR, 277-6005 LINES GP-HYDRAULIC AN ATTACHMENT

SMCS-5077 **i02619821**

NOTE	REF NO	GRAPHIC REF	PART NUMBER	QTY	PART NAME 1 2 3 4 5 6 (PRODUCT LEVEL)	SEE PAGE
	1	1	**222-2367**	1	VALVE AS-GAS (HYDRAULIC ACCUMULATOR)	
		1	**190-3850**	1	CORE	
F			**241-0037**	1	FILM-WARNING (HIGH PRESSURE, READ OMM)	
					AVAILABLE REPAIR KIT(S):	
			170-0493	1	KIT-SEAL (HYDRAULIC ACCUMULATOR)	
					(KIT INCLUDES BACKUP WASHERS, PISTON SEALS, O-RINGS, & PISTON RING)	

F-NOT SHOWN

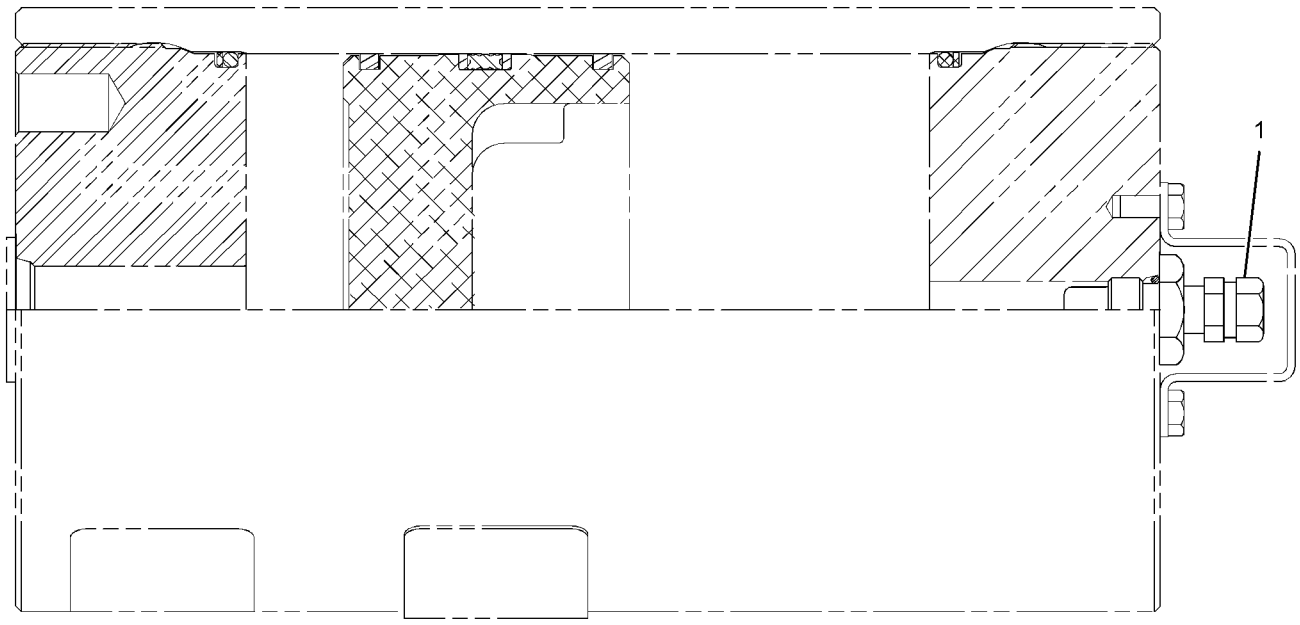

GRAPHIC #1 **<END>** g01313792

160-9413 ACCUMULATOR GP-HYDRAULIC

S/N: R9H1-UP
PART OF 366-3383 LINES GP-ACCUMULATOR, 366-3384 LINES GP-HYDRAULIC
FIELD REPLACEMENT ORDER 179-9399 ACCUMULATOR GP
AN ATTACHMENT

SMCS-5077 **i02817422**

NOTE	REF NO	GRAPHIC REF	PART NUMBER	QTY	PART NAME 1 2 3 4 5 6 (PRODUCT LEVEL)	SEE PAGE
	1	1	**222-2367**	1	VALVE AS-GAS	
		1	**190-3850**	1	CORE	
	2	1	**111-9110**	1	PROTECTOR-GAS VALVE	
	3	1	**1J-9671**	1	SEAL-O-RING	
	4	1	**5M-3062**	2	BOLT (3/8-16X0.75-IN)	
	5	1	**241-0037**	1	FILM-WARNING (HIGH PRESSURE, READ OMM)	
					AVAILABLE REPAIR KIT(S):	
			170-0493	1	KIT-SEAL (HYDRAULIC ACCUMULATOR)	
					(INCLUDES SEAL-O-RINGS, BACKUP WASHERS,PISTON RINGS & SEAL PISTON)	

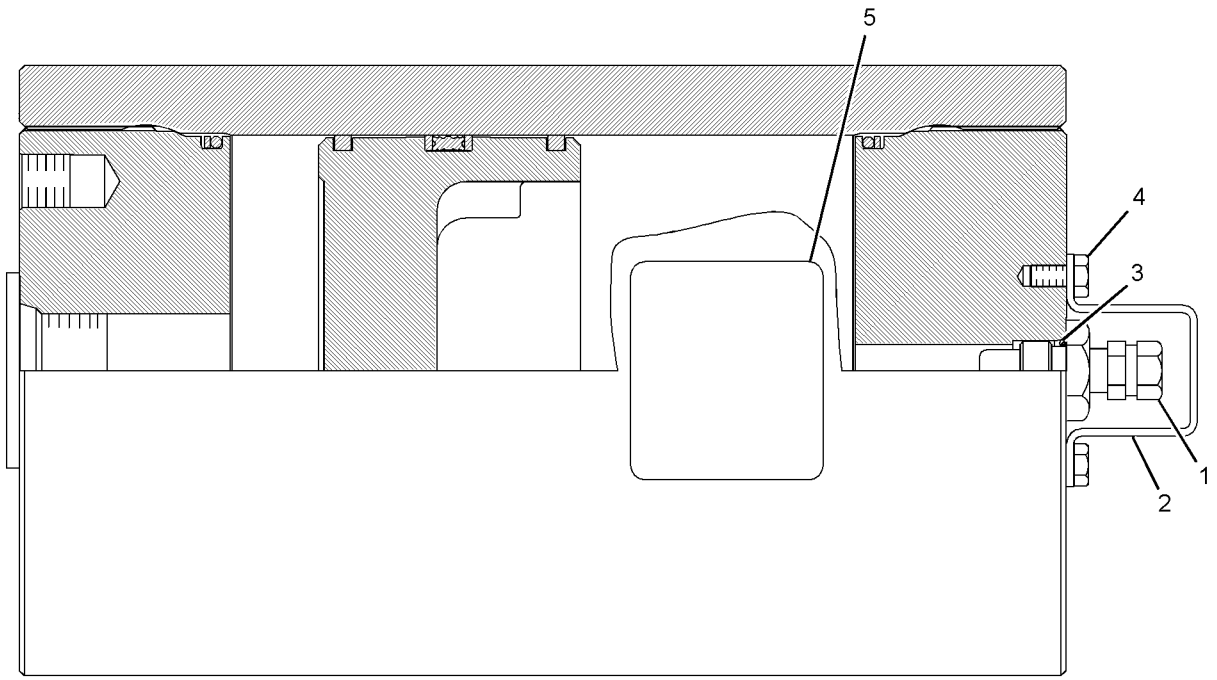

GRAPHIC #1 **<END>** g01421467

249-2308 BASE GP-OIL FILTER–HYDRAULIC TANK RETURN

S/N: R9H1-UP

PART OF 249-2307 FILTER GP-OIL

SMCS-5068 **i03635785**

NOTE	REF NO	GRAPHIC REF	PART NUMBER	QTY	PART NAME 1 2 3 4 5 6 (PRODUCT LEVEL)	SEE PAGE
	1	1	**7G-4998**	1	SPOOL-BYPASS	
	2	1	**7M-1297**	1	SPRING	
	4	1	**5P-7815**	1	SEAL-O-RING	
	5	1	**5P-7701**	1	SEAL-O-RING	
	6	1	**9S-8010**	1	PLUG	
	7	1	**9S-9334**	1	PLUG-O-RING	

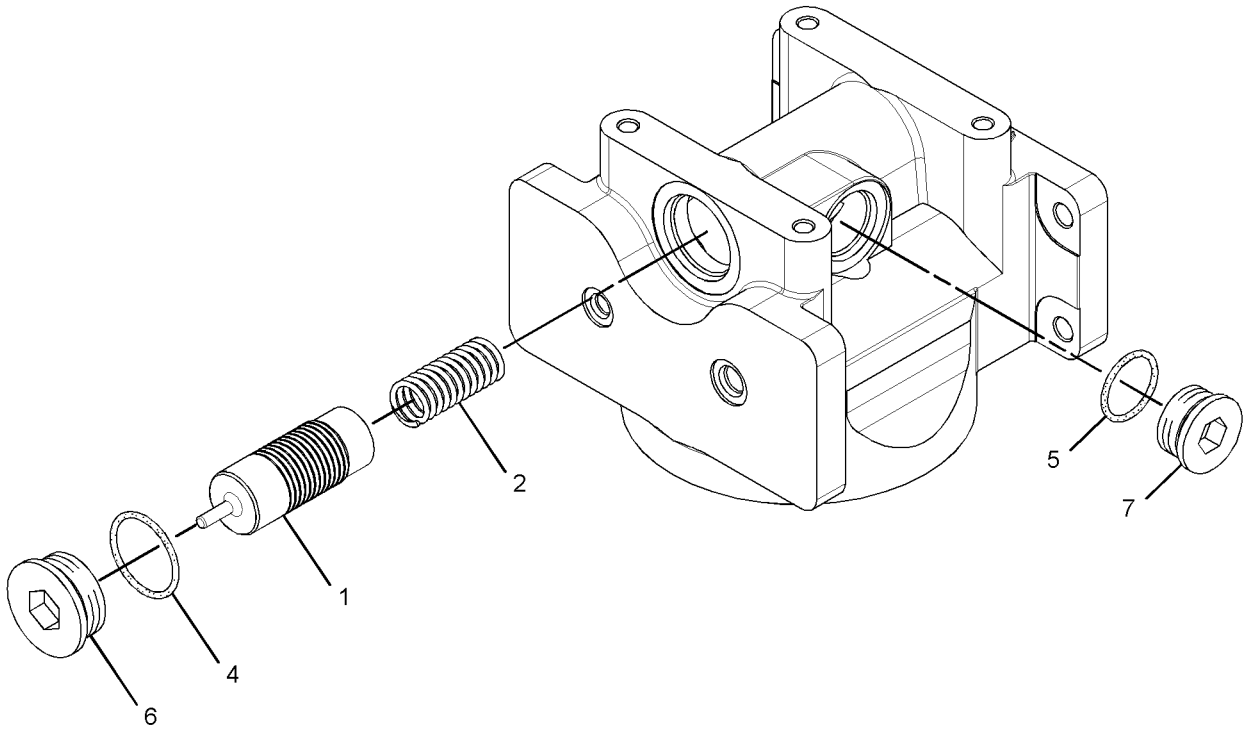

GRAPHIC #1 **<END>** g01442612

251-1089 CONTROL AR-HYDRAULIC

S/N: R9H1-UP
AN ATTACHMENT

SMCS-5050 **i02377143**

NOTE	PART NUMBER	QTY	PART NAME 1 2 3 4 5 6 (PRODUCT LEVEL)	SEE PAGE
Y	**261-3278**	1	VALVE GP-BANK 3 (REAR)	653
Y	**261-3272**	1	VALVE GP-BANK 5 (FRONT)	655
M	**8T-4136**	8	BOLT (M10X1.5X25-MM)	
	8T-4121	8	WASHER-HARD (11X21X2.5-MM THK)	

M-METRIC PART
Y-SEPARATE ILLUSTRATION

<END>

251-2035 CONTROL AR-HYDRAULIC—RIPPER

S/N: R9H1-UP
PART OF 352-3819 OPTION AR-WORK TOOL
CANNOT BE USED WITH 340-4395—PAGE 552
AN ATTACHMENT

SMCS-5050 **i02833682**

NOTE	PART NUMBER	QTY	PART NAME 1 2 3 4 5 6 (PRODUCT LEVEL)	SEE PAGE
Y	*299-0874*	1	CONTROL GP-ELECTROHYDRAULIC (RIPPER)	721
Y	*283-7770*	1	LINES GP-RIPPER	616
Y	**261-3281**	1	VALVE GP-BANK 4 (REAR)	654
Y	**261-3272**	1	VALVE GP-BANK 5 (FRONT)	655
M	**8T-4136**	8	BOLT (M10X1.5X25-MM)	
	8T-4121	8	WASHER-HARD (11X21X2.5-MM THK)	

M-METRIC PART
Y-SEPARATE ILLUSTRATION

<END>

261-0096 CONTROL AR-HYDRAULIC—FRONT LIFT, RIPPER

S/N: R9H1-UP
CANNOT BE USED WITH 251-1089—PAGE 550, 251-2035—PAGE 550, 261-0097—PAGE 551, 261-0098—PAGE 551
AN ATTACHMENT

SMCS-5050 **i02833689**

NOTE	PART NUMBER	QTY	PART NAME 1 2 3 4 5 6 (PRODUCT LEVEL)	SEE PAGE
Y	*299-0876*	1	CONTROL GP-IMPLEMENT (AUXILIARY)	214
Y	*283-7770*	1	LINES GP-RIPPER	616
Y	**261-3281**	1	VALVE GP-BANK 4 (REAR)	654
Y	**261-3273**	1	VALVE GP-BANK 6 (FRONT)	656
M	**8T-4136**	8	BOLT (M10X1.5X25-MM)	
	8T-4121	8	WASHER-HARD (11X21X2.5-MM THK)	

M-METRIC PART
Y-SEPARATE ILLUSTRATION

<END>

261-0097 CONTROL AR-HYDRAULIC–
RIPPER, WING MAST, WING TILT
S/N: R9H1-UP

CANNOT BE USED WITH 251-1089–PAGE 550, 251-2035–PAGE 550, 261-0096–PAGE 550, 261-0098–PAGE 551

AN ATTACHMENT

SMCS-5050 **i02833690**

NOTE	PART NUMBER	QTY	PART NAME 1 2 3 4 5 6 (PRODUCT LEVEL)	SEE PAGE
Y	*233-3147*	1	CONTROL GP-ELECTROHYDRAULIC (WITH AUXILIARY LEVER)	719
Y	*299-0874*	1	CONTROL GP-ELECTROHYDRAULIC (RIPPER)	721
Y	*250-9259*	1	ELECTRONICS GP-IMPLEMENT (IMPLEMENT 3)	220
Y	*283-7770*	1	LINES GP-RIPPER	616
Y	**261-3272**	1	VALVE GP-BANK 5 (FRONT)	655
Y	**261-3283**	1	VALVE GP-BANK 6 (REAR)	658
Y	*238-8828*	1	WIRING GP-ELECTRONIC CONTROL (HYDRAULIC IMPLEMENT)	357
Y	*250-0899*	1	WIRING GP-FRONT	368
M	**8T-4136**	8	BOLT (M10X1.5X25-MM)	
	8T-4121	8	WASHER-HARD (11X21X2.5-MM THK)	

M-METRIC PART
Y-SEPARATE ILLUSTRATION

<END>

261-0098 CONTROL AR-HYDRAULIC–
DOZER ANGLE, FRONT LIFT, RIPPER, WING MAST, WING TILT
S/N: R9H1-UP

CANNOT BE USED WITH 251-1089–PAGE 550, 251-2035–PAGE 550, 261-0096–PAGE 550, 261-0097–PAGE 551, 340-4395–PAGE 552

AN ATTACHMENT

SMCS-5050 **i02833691**

NOTE	PART NUMBER	QTY	PART NAME 1 2 3 4 5 6 (PRODUCT LEVEL)	SEE PAGE
Y	*233-3147*	1	CONTROL GP-ELECTROHYDRAULIC (WITH AUXILIARY LEVER)	719
Y	*299-0874*	1	CONTROL GP-ELECTROHYDRAULIC (RIPPER)	721
Y	*250-9259*	1	ELECTRONICS GP-IMPLEMENT (IMPLEMENT 3)	220
Y	*283-7770*	1	LINES GP-RIPPER	616
Y	**261-3283**	1	VALVE GP-BANK 6 (REAR)	658
Y	**261-3274**	1	VALVE GP-BANK 7 (FRONT)	661
Y	*238-8828*	1	WIRING GP-ELECTRONIC CONTROL (HYDRAULIC IMPLEMENT)	357
Y	*250-0899*	1	WIRING GP-FRONT	368
M	**8T-4136**	8	BOLT (M10X1.5X25-MM)	
	8T-4121	8	WASHER-HARD (11X21X2.5-MM THK)	

M-METRIC PART
Y-SEPARATE ILLUSTRATION

<END>

340-4395 CONTROL AR-HYDRAULIC–FRONT LIFT, WING MAST, WING TILT, RIPPER

S/N: R9H1-UP

CANNOT BE USED WITH 251-1089–PAGE 550, 261-0096–PAGE 550, 261-0097–PAGE 551, 261-0098–PAGE 551

AN ATTACHMENT

SMCS-5050 **i03459450**

NOTE	PART NUMBER	QTY	PART NAME 1 2 3 4 5 6 (PRODUCT LEVEL)	SEE PAGE
Y	*233-3147*	1	CONTROL GP-ELECTROHYDRAULIC (WITH AUXILIARY LEVER)	719
Y	*299-0874*	1	CONTROL GP-ELECTROHYDRAULIC	721
Y	*250-9259*	1	ELECTRONICS GP-IMPLEMENT (IMPLEMENT 3)	220
Y	*283-7770*	1	LINES GP-RIPPER	616
Y	**261-3273**	1	VALVE GP-BANK 6 (FRONT)	656
Y	**291-9518**	1	VALVE GP-BANK 6 (REAR FRAME) (REAR FRAME)	660
Y	*238-8828*	1	WIRING GP-ELECTRONIC CONTROL (HYDRAULIC IMPLEMENT)	357
Y	*250-0899*	1	WIRING GP-FRONT	368
M	**8T-4136**	8	BOLT (M10X1.5X25-MM)	
	8T-4121	8	WASHER-HARD (11X21X2.5-MM THK)	

M-METRIC PART
Y-SEPARATE ILLUSTRATION

<END>

348-3537 CONTROL AR-HYDRAULIC–AUTO DIFF LOCK POSITION

S/N: R9H1-UP

PART OF 352-3819 OPTION AR-WORK TOOL

AN ATTACHMENT

SMCS-5050 **i04040035**

NOTE	PART NUMBER	QTY	PART NAME 1 2 3 4 5 6 (PRODUCT LEVEL)	SEE PAGE
Y	*329-3730*	1	SWITCH GP-ROADING (DIFFERENTIAL LOCK)	334
J	*333-2694*	1	CONFIGURATION-PREMIUM	

J-DLR INSTALL CONFIG: SEE IRM: EE S03-01
Y-SEPARATE ILLUSTRATION

<END>

354-8463 CONTROL AR-HYDRAULIC

S/N: R9H1-UP

AN ATTACHMENT

SMCS-5050 **i03879217**

NOTE	PART NUMBER	QTY	PART NAME 1 2 3 4 5 6 (PRODUCT LEVEL)	SEE PAGE
Y	*287-7454*	1	LINES GP-ACCUMULATOR	581
Y	*321-6987*	1	SWITCH GP-ROCKER (BLADE CUSHION)	337

Y-SEPARATE ILLUSTRATION

<END>

HYDRAULIC SYSTEM

366-3374 CONTROL AR

S/N: R9H1-UP

AN ATTACHMENT

SMCS-5050 **i04025610**

NOTE	PART NUMBER	QTY	PART NAME 1 2 3 4 5 6 (PRODUCT LEVEL)	SEE PAGE
Y	*366-3383*	1	LINES GP-ACCUMULATOR	588
Y	*321-6987*	1	SWITCH GP-ROCKER (BLADE CUSHION)	337

Y-SEPARATE ILLUSTRATION

<END>

HYDRAULIC SYSTEM

249-7365 COOLER GP-HYDRAULIC OIL

S/N: R9H1-UP

PART OF 249-7363 COOLING AR

SMCS-1374 **i03157480**

NOTE	REF NO	GRAPHIC REF	PART NUMBER	QTY	PART NAME 1 2 3 4 5 6 (PRODUCT LEVEL)	SEE PAGE
I	1	1	**192-7231**	1	HOSE AS	
	2	1	**239-8530**	1	CORE AS-OIL COOLER (HYDRAULIC)	
	3	1	*241-6208*	1	ELBOW AS	
		1	**119-6220**	1	ELBOW	
		1	**2M-9780**	1	SEAL-O-RING	
		1	**5K-9090**	1	SEAL-O-RING	
	4	1	**264-4297**	1	SENSOR GP-TEMPERATURE (HYDRAULIC OIL)	
		1	**137-6645**	1	PAD	
	5	1	**266-1595**	1	VALVE GP-CHECK (HYDRAULIC OIL COOLER BYPASS)	
		1	**5K-9090**	1	SEAL-O-RING	
		1	**7M-8485**	1	SEAL-O-RING	
	6	1	**275-0645**	1	TUBE AS	
	7	1	**278-7448**	1	BRACKET AS	
M		1	**8T-3490**	2	NUT-WELD (M10X1.5-THD)	
	8	1	**278-7452**	1	BRACKET AS	
M		1	**8T-3490**	2	NUT-WELD (M10X1.5-THD)	
	9	1	**291-1348**	1	BLOCK	
	10	1	**139-1802**	1	TEE-SWIVEL-ORFS	
	11	1	*148-8327*	1	CONNECTOR AS	
		1	**6V-8637**	1	CONNECTOR	
		1	**3D-2824**	1	SEAL-O-RING	
		1	**6V-9746**	1	SEAL-O-RING	
	12	1	*148-8335*	1	CONNECTOR AS	
		1	**6V-8635**	1	CONNECTOR	
		1	**5K-9090**	1	SEAL-O-RING	
		1	**7M-8485**	1	SEAL-O-RING	
	13	1	*148-8388*	1	ELBOW AS	
		1	**6V-8629**	1	ELBOW (FACE SEAL)	
		1	**2M-9780**	1	SEAL-O-RING	
		1	**6V-9746**	1	SEAL-O-RING	
	14	1	**3K-0360**	1	SEAL-O-RING	
	15	1	**6V-9746**	2	SEAL-O-RING	
	16	1	**8T-4121**	6	WASHER-HARD (11X21X2.5-MM THK)	
M	17	1	**8T-4136**	4	BOLT (M10X1.5X25-MM)	
M	18	1	**8T-4137**	4	BOLT (M10X1.5X20-MM)	
M	19	1	**8T-4172**	2	BOLT (M10X1.5X80-MM)	
	20	1	**7X-7729**	4	WASHER (11X25X3-MM THK)	

I-REFER TO HYDRAULIC INFORMATION SYSTEM
M-METRIC PART

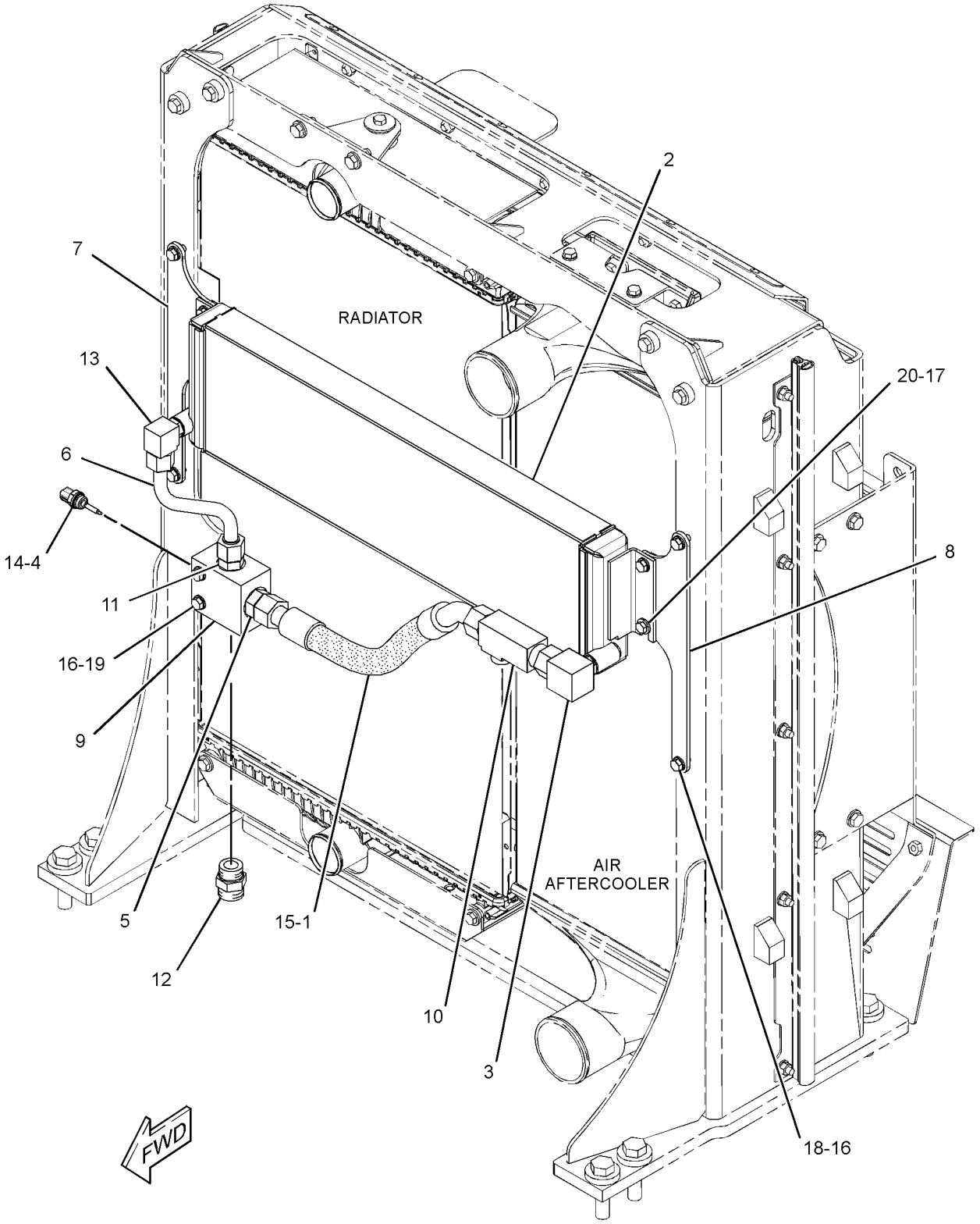

GRAPHIC #1 **<END>** g01625734

HYDRAULIC SYSTEM

283-7764 CYLINDER & MTG GP-ARTICULATION

S/N: R9H1-UP

PART OF 349-2556 COMMON AR

SMCS-5265 **i02913104**

NOTE	REF NO	GRAPHIC REF	PART NUMBER	QTY	PART NAME 1 2 3 4 5 6 (PRODUCT LEVEL)	SEE PAGE
	1	1	**4T-3658**	2	TUBE	
BC	2	1	**1K-7081**	16	WASHER (2-17/64X3-1/2X0.032-IN THK)	
	3	1	**277-8758**	2	PIN AS	
Y	4	1	**290-8074**	2	CYLINDER GP-ARTICULATION	563
	5	1	**316-6136**	1	PIN AS	
	6	1	**170-3093**	2	BUSHING	
	7	1	**3B-5317**	2	PIN-COTTER	
	8	1	**5P-1076**	2	WASHER-HARD (13.5X30X4-MM THK)	
M	9	1	**7X-2553**	2	BOLT (M16X2X40-MM)	
M	10	1	**8T-4139**	2	BOLT (M12X1.75X30-MM)	
	11	1	**7X-0515**	2	WASHER-HARD (17X35X5-MM THK)	
	12	1	**316-6137**	1	PIN AS	

B-USE AS REQUIRED
C-CHANGE FROM PREVIOUS TYPE
M-METRIC PART
Y-SEPARATE ILLUSTRATION

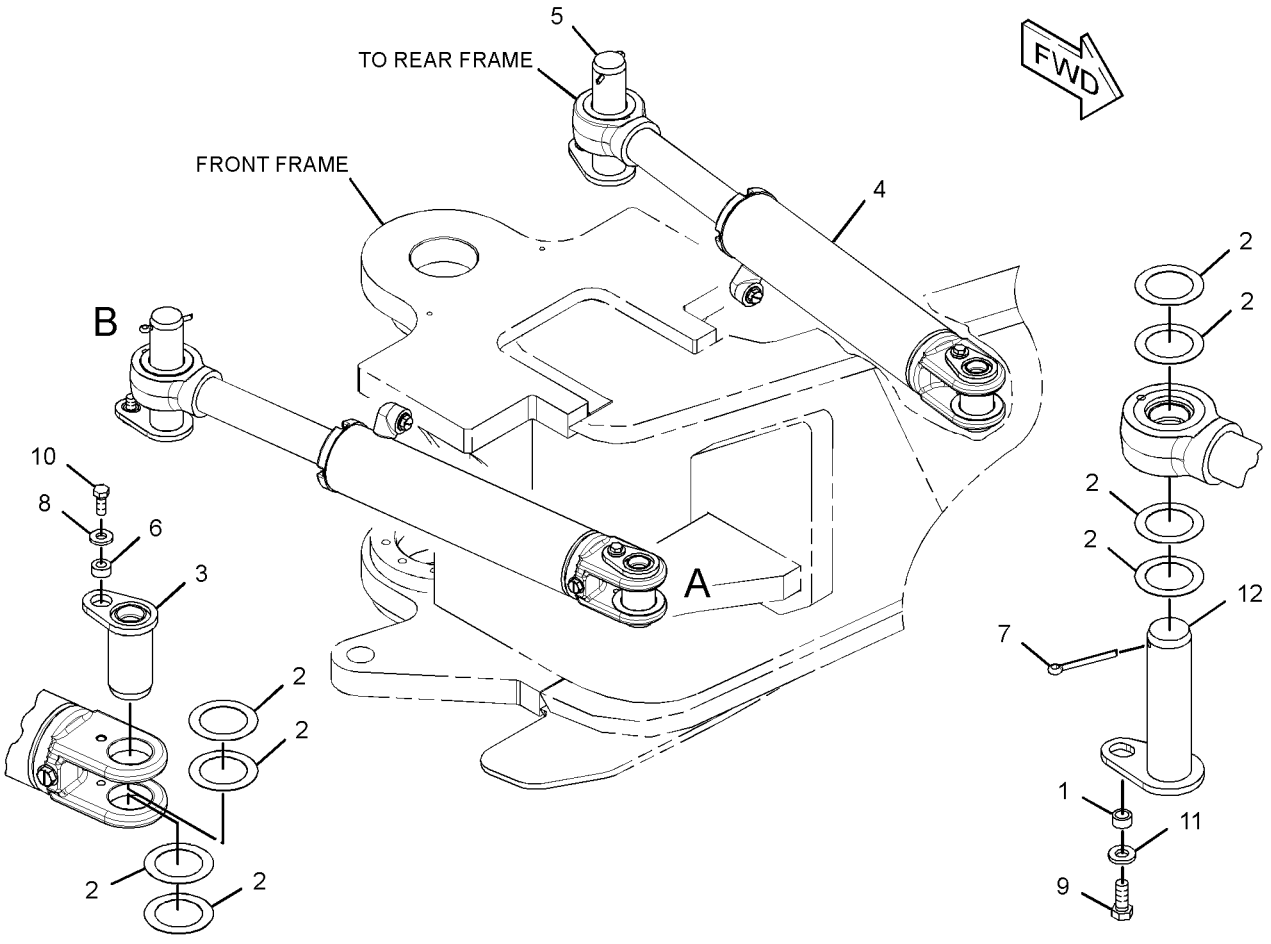

GRAPHIC #1 **<END>** g01457947

261-2372 CYLINDER & MTG GP-BLADE LIFT

S/N: R9H1-UP

PART OF 349-2556 COMMON AR

SMCS-5102 **i02753109**

NOTE	REF NO	GRAPHIC REF	PART NUMBER	QTY	PART NAME 1 2 3 4 5 6 (PRODUCT LEVEL)	SEE PAGE
	1	1	**2G-9101**	2	CAP	
	2	1	**310-5479**	8	SHIM (0.5-MM THK)	
	3	1	**3B-8485**	2	FITTING-GREASE	
	4	1	**310-5480**	4	INSERT	
Y	5	1	**270-7538**	2	CYLINDER GP-LIFT (BLADE)	567
	6	1	**273-4130**	4	CAP AS	
					(EACH INCLUDES)	
	6A	1	**8D-8888**	1	BEARING	
	6B	1	**9D-6586**	1	SEAL-LIP TYPE	
M	7	1	**112-3929**	4	BOLT (M24X3X100-MM)	
	8	1	**225-0098**	8	BOLT (M20X2.5X140-MM)	
	9	1	**267-3506**	4	WASHER-HARD (26X44X4-MM THK)	
	10	1	**267-3508**	16	WASHER-HARD (22X35X3.5-MM THK)	

M-METRIC PART
Y-SEPARATE ILLUSTRATION

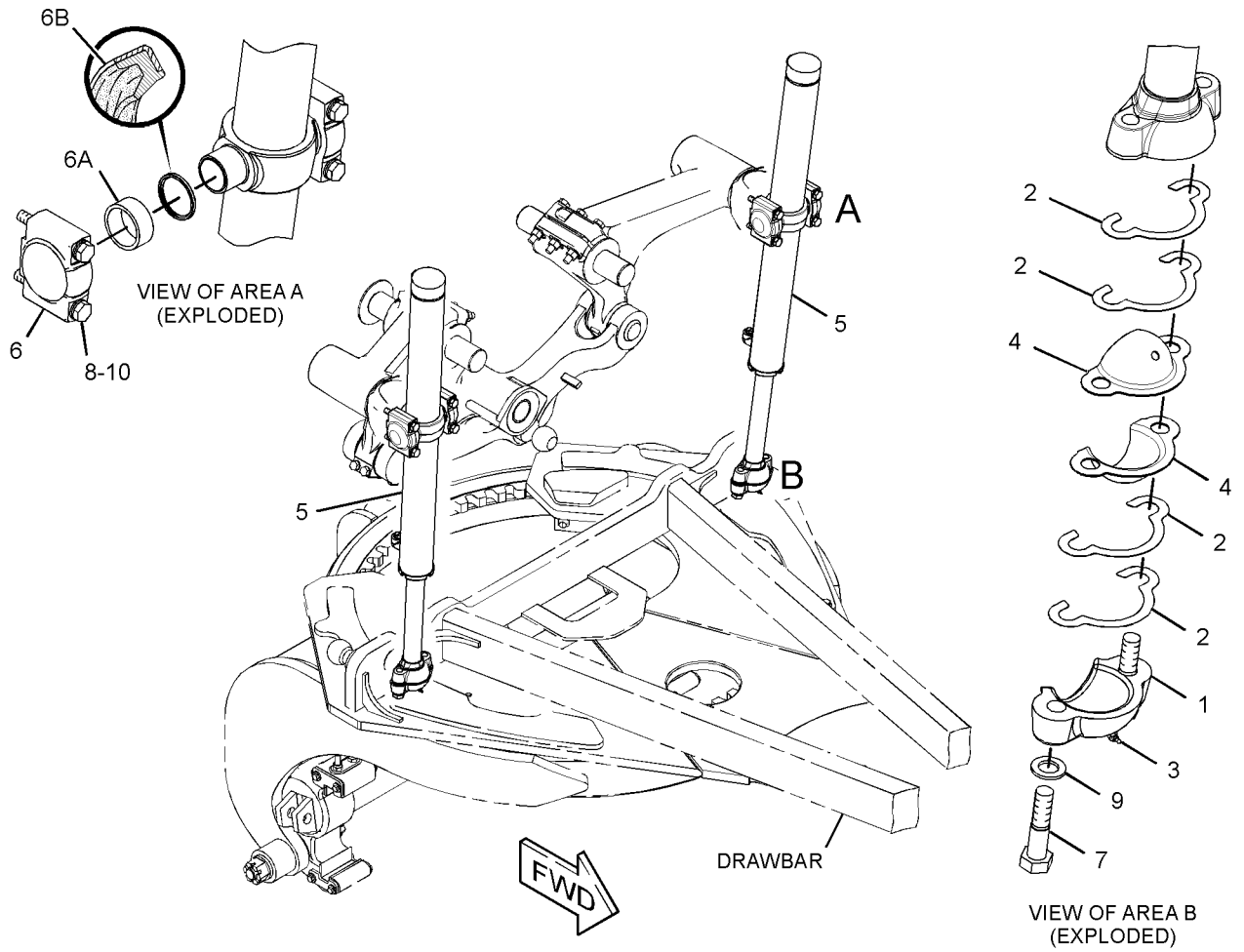

GRAPHIC #1 **<END>** g01338476

HYDRAULIC SYSTEM

260-3646 CYLINDER & MTG GP-BLADE TIP

S/N: R9H1-UP

PART OF 349-2556 COMMON AR

SMCS-5106 **i02610184**

NOTE	REF NO	GRAPHIC REF	PART NUMBER	QTY	PART NAME 1 2 3 4 5 6 (PRODUCT LEVEL)	SEE PAGE
	1	1	**8W-8513**	2	PIN AS	
Y	2	1	**9T-8944**	1	CYLINDER GP-BLADE TIP	564
	3	1	**248-9337**	2	SPACER (39X75X20-MM THK)	
	4	1	**5P-1076**	2	WASHER-HARD (13.5X30X4-MM THK)	
M	5	1	**8T-4192**	2	BOLT (M12X1.75X25-MM)	

M-METRIC PART
Y-SEPARATE ILLUSTRATION

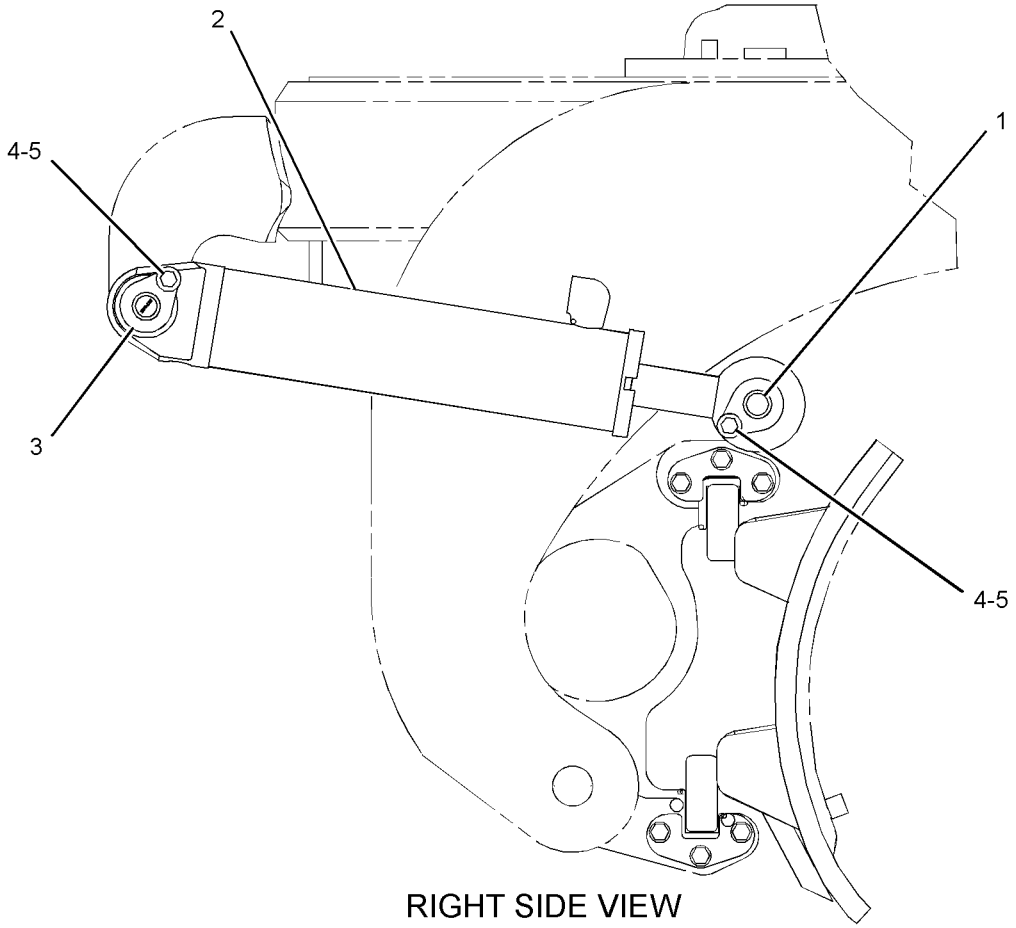

RIGHT SIDE VIEW

GRAPHIC #1 **<END>** g01308119

261-2373 CYLINDER & MTG GP-CENTERSHIFT

S/N: R9H1-UP

PART OF 349-2556 COMMON AR

SMCS-5223 **i02753115**

NOTE	REF NO	GRAPHIC REF	PART NUMBER	QTY	PART NAME 1 2 3 4 5 6 (PRODUCT LEVEL)	SEE PAGE
	1	1	**2G-9101**	2	CAP	
	2	1	**310-5479**	8	SHIM (0.5-MM THK)	
	3	1	**3B-8485**	2	FITTING-GREASE	
	4	1	**310-5480**	4	INSERT	
Y	5	1	**262-1905**	1	CYLINDER GP-CENTERSHIFT	566
M	6	1	**112-3929**	4	BOLT (M24X3X100-MM)	
	7	1	**267-3506**	4	WASHER-HARD (26X44X4-MM THK)	

M-METRIC PART
Y-SEPARATE ILLUSTRATION

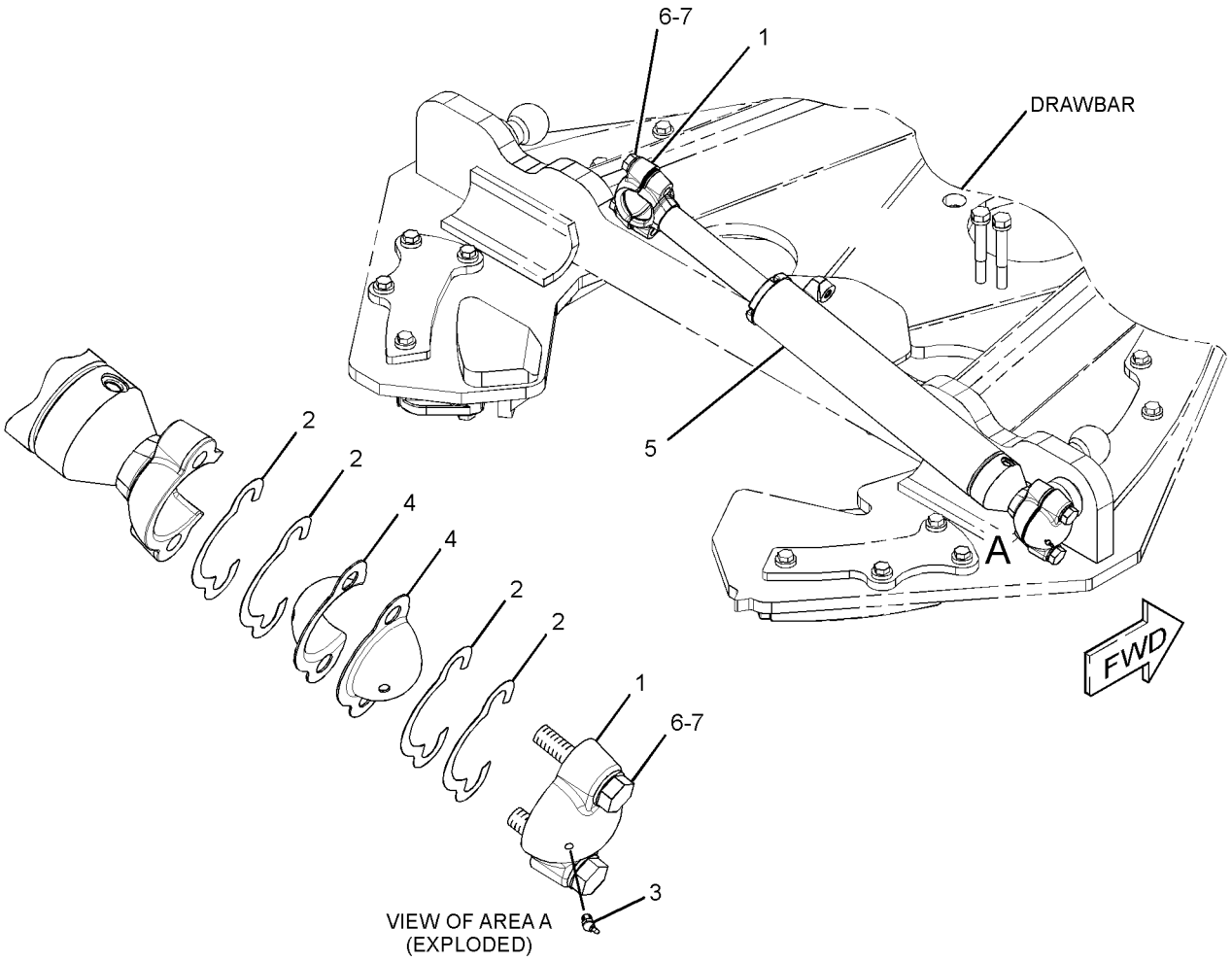

GRAPHIC #1 **<END>** g01318051

257-6804 CYLINDER & MTG GP-SIDESHIFT

S/N: R9H1-UP

PART OF 349-2556 COMMON AR

SMCS-5229 **i02564589**

NOTE	REF NO	GRAPHIC REF	PART NUMBER	QTY	PART NAME 1 2 3 4 5 6 (PRODUCT LEVEL)	SEE PAGE
	1	1	**253-4676**	1	BRACKET	
Y	2	1	**257-5083**	1	CYLINDER GP-SIDESHIFT	569
	3	1	**1H-4478**	1	PIN	
	4	1	**3B-4647**	2	PIN-COTTER	
	5	1	**5T-8417**	1	PIN	
M	6	1	**166-1880**	4	BOLT (M20X2.5X75-MM)	
	7	1	**283-1578**	4	WASHER-HARD	

M-METRIC PART
Y-SEPARATE ILLUSTRATION

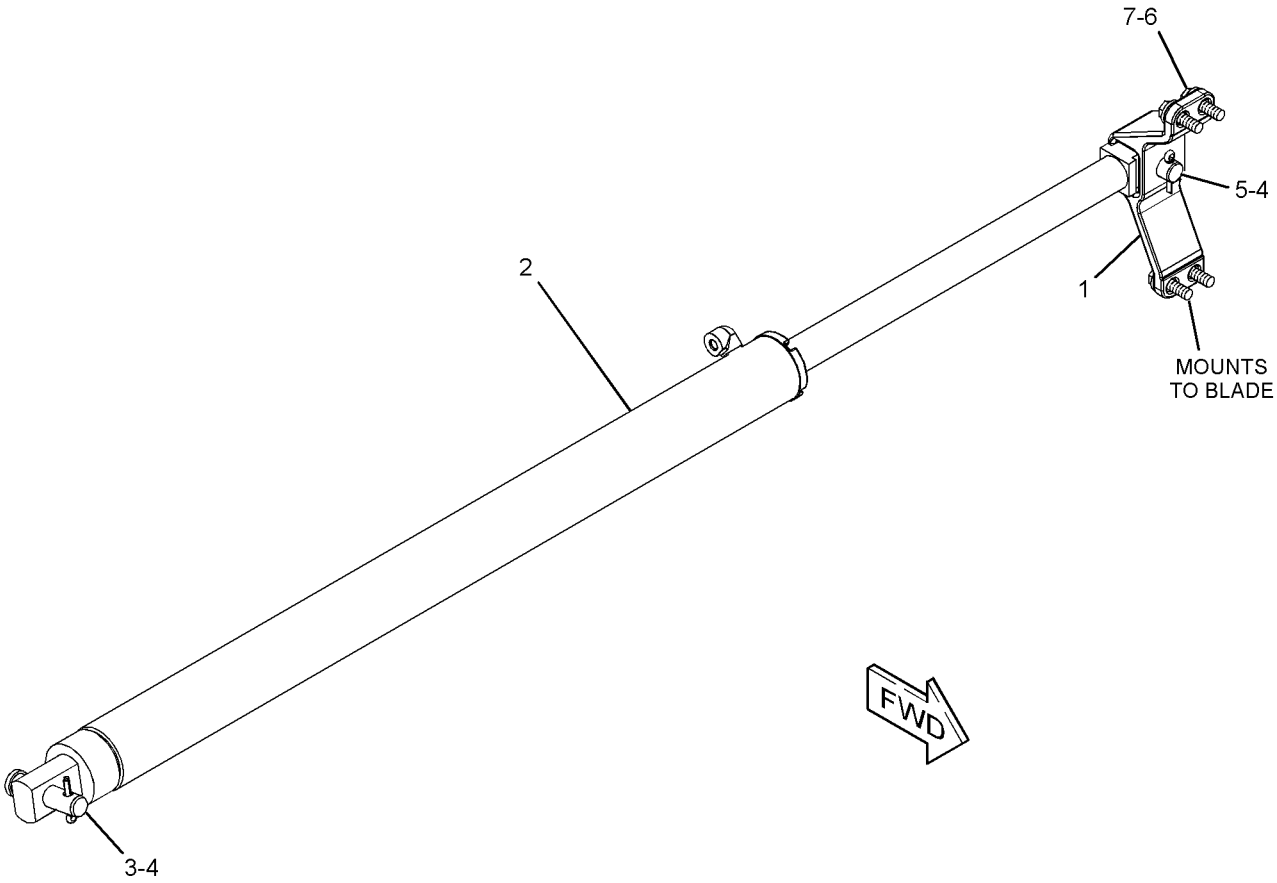

GRAPHIC #1 **<END>** g01156038

264-1160 CYLINDER & MTG GP-STEERING–

NON ALL WHEEL DRIVE

S/N: R9H1-UP

PART OF 250-2282 AXLE GP-FRONT

SMCS-4303 **i02374087**

NOTE	REF NO	GRAPHIC REF	PART NUMBER	QTY	PART NAME 1 2 3 4 5 6 (PRODUCT LEVEL)	SEE PAGE
	1	1	**249-3505**	2	RACE-BEARING	
	2	1	**257-2758**	2	PIN AS	
	3	1	**258-9981**	2	SPACER (32.16X38.1X8.65-MM THK)	
	4	1	**260-6117**	2	BALL STUD	
YR	5	1	**267-3863**	2	CYLINDER GP-STEERING	570
	6	1	**285-0612**	2	CAP AS-DUST	
					(EACH INCLUDES)	
		1	**1F-1517**	1	BOSS	
	7	1	**294-9580**	2	SEAL-BOOT	
	8	1	**1D-0906**	2	NUT-SLOTTED	
	9	1	**3B-4629**	2	PIN-COTTER	
	10	1	**3B-8489**	2	FITTING-GREASE	
	11	1	**3J-8500**	2	RING-RETAINING	
	12	1	**4F-8824**	2	SEAL-O-RING	
	13	1	**8T-4121**	2	WASHER-HARD (11X21X2.5-MM THK)	
M	14	1	**8T-4137**	2	BOLT (M10X1.5X20-MM)	

M-METRIC PART
R-REMFG PART MAY BE AVAILABLE
Y-SEPARATE ILLUSTRATION

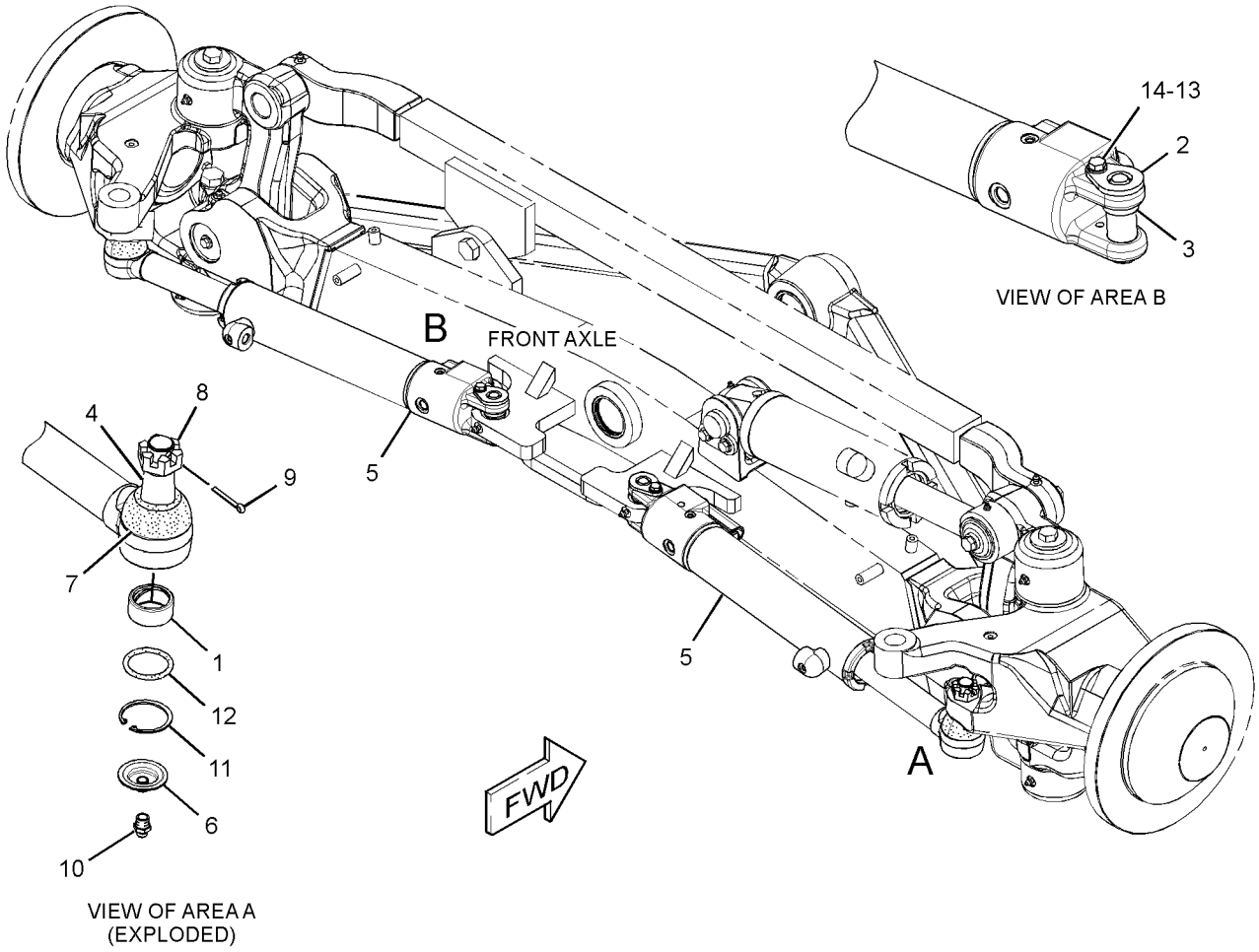

GRAPHIC #1 **<END>** g01319275

HYDRAULIC SYSTEM

249-6545 CYLINDER & MTG GP-WHEEL LEAN–

NON ALL WHEEL DRIVE

S/N: R9H1-UP

PART OF 250-2282 AXLE GP-FRONT

SMCS-5211 **i02651759**

NOTE	REF NO	GRAPHIC REF	PART NUMBER	QTY	PART NAME 1 2 3 4 5 6 (PRODUCT LEVEL)	SEE PAGE
	1	1	**2G-8611**	1	PIN	
	2	1	**6G-7187**	1	LOCK	
Y	3	1	**289-3054**	1	CYLINDER GP-WHEEL LEAN	572
	4	1	**3B-8489**	2	FITTING-GREASE	
	5	1	**5P-8245**	2	WASHER-HARD (13.5X25.5X3-MM THK)	
	6	1	**5P-8843**	4	SEAL-LIP TYPE	
M	7	1	**6V-3668**	2	BOLT (M12X1.75X30-MM)	

M-METRIC PART
Y-SEPARATE ILLUSTRATION

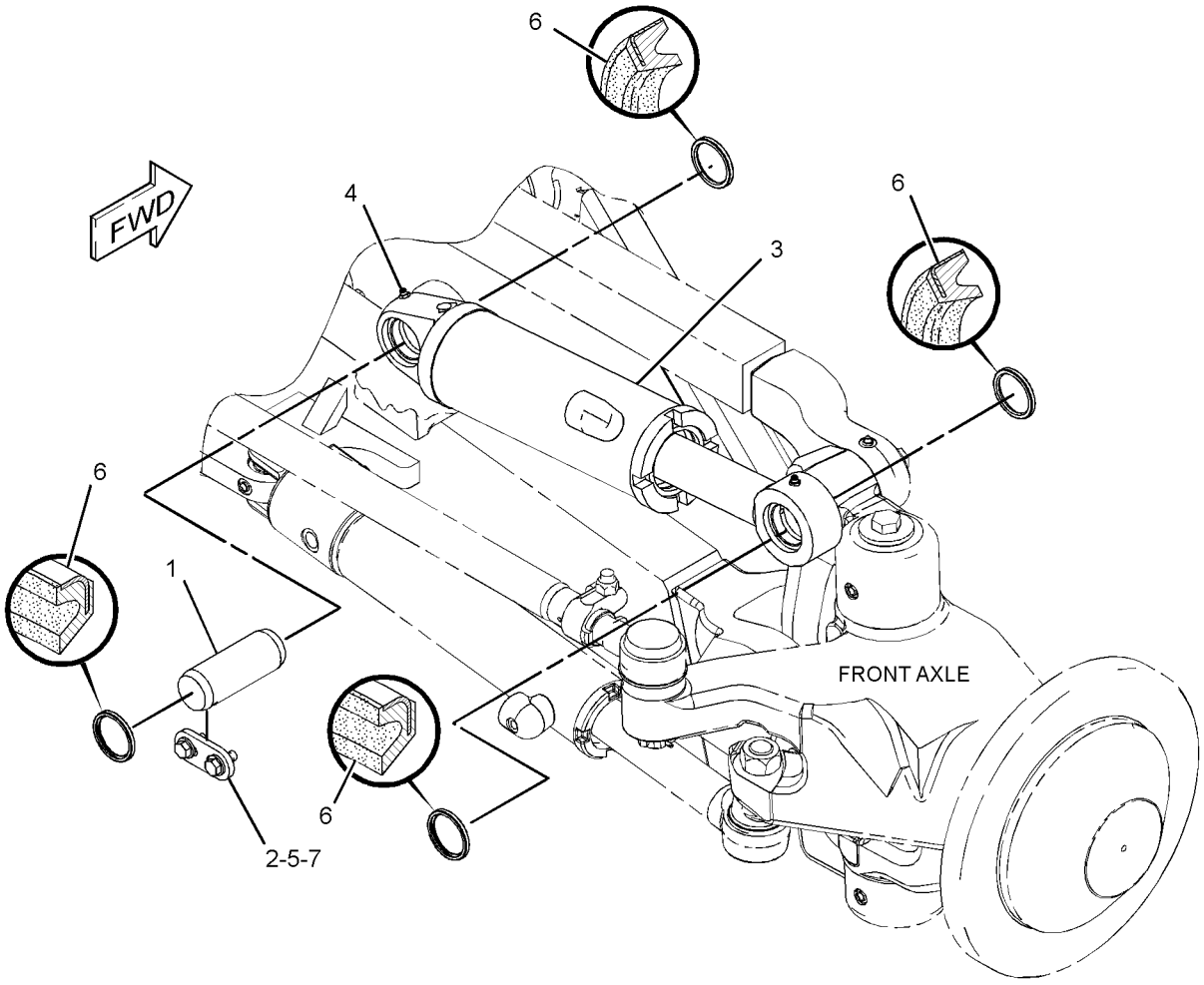

GRAPHIC #1 **<END>** g01315891

290-8074 CYLINDER GP-ARTICULATION

S/N: R9H1-UP
101.6-MM (4-IN) BORE X 375-MM (14.8-IN) STROKE
PART OF 283-7764 CYLINDER & MTG GP-ARTICULATION

SMCS-5265 **i02610580**

NOTE	REF NO	GRAPHIC REF	PART NUMBER	QTY	PART NAME 1 2 3 4 5 6 (PRODUCT LEVEL)	SEE PAGE
	1	1	**142-5893**	1	PISTON	
	2	1	**172-9981**	1	HEAD	
	3	1	**263-1058**	1	CYLINDER AS	
	4	1	**290-8075**	1	ROD AS	
		1	**3G-2582**	1	BEARING	
	5	1	**167-2201**	1	SEAL AS-BUFFER	
	6	1	**167-2312**	1	SEAL-U-CUP	
M	7	1	**173-9683**	1	BOLT (M30X3.5X90-MM)	
	8	1	**175-7900**	1	SEAL-O-RING	
	9	1	**225-3281**	1	SEAL-WIPER	
	10	1	**2K-6830**	1	RING-BACKUP	
	11	1	**5J-5402**	1	SEAL AS	
	12	1	**6J-2797**	1	RING-WEAR	
	13	1	**8T-0785**	1	RING-WEAR	
	14	1	**9X-8399**	1	WASHER (33X56X6-MM THK)	

M-METRIC PART

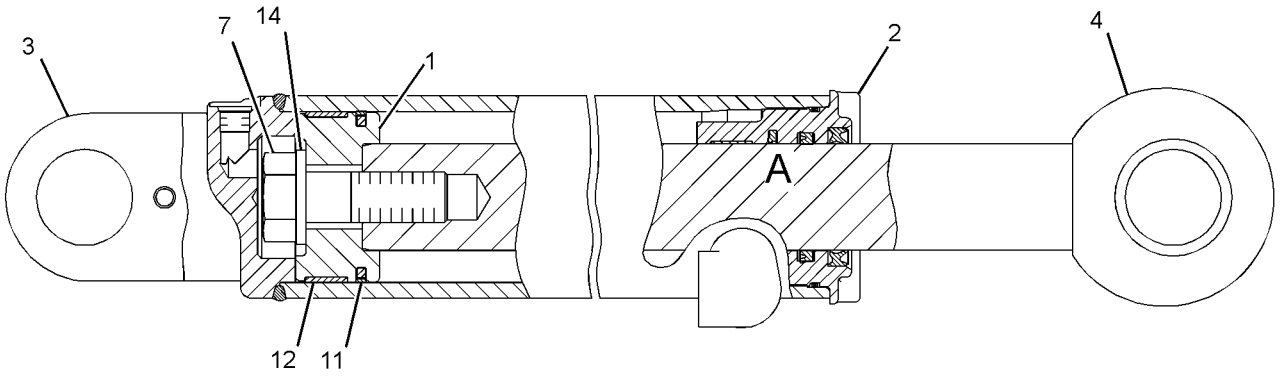

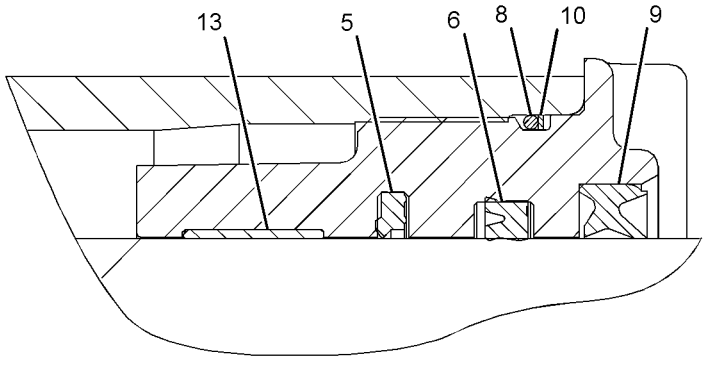

VIEW OF AREA A

GRAPHIC #1 **<END>** g01314453

9T-8944 CYLINDER GP-BLADE TIP

S/N: R9H1-UP
101.6-MM (4-IN) BORE X 355.5-MM (9.03-IN) STROKE
PART OF 260-3646 CYLINDER & MTG GP-BLADE TIP

SMCS-5106 **i03852559**

NOTE	REF NO	GRAPHIC REF	PART NUMBER	QTY	PART NAME 1 2 3 4 5 6 (PRODUCT LEVEL)	SEE PAGE
	1	1	**9T-8943**	1	CYLINDER AS	
		1	**4D-0298**	1	BEARING	
M	2	1	**173-9683**	1	BOLT (M30X3.5X90-MM)	
	3	1	**3S-7023**	1	WASHER (34X57X6-MM THK)	
	4	1	**9T-3133**	1	PISTON	
	5	1	**5J-5402**	1	SEAL AS	
	6	1	**6J-2797**	1	RING-WEAR	
R	7	1	**6E-1049**	1	ROD AS	
		1	**4D-0298**	1	BEARING	
	8	1	**4T-5613**	1	RING-WEAR	
	9	1	**289-2935**	1	SEAL AS	
	10	1	**289-2946**	1	SEAL-U-CUP	
	11	1	**308-1845**	1	SEAL-WIPER	
	12	1	**175-7900**	1	SEAL-O-RING	
	13	1	**2K-6830**	1	RING-BACKUP	
	14	1	**6E-0775**	1	HEAD	
		1	**229-9382**		SEAL-WIPER	

M-METRIC PART
R-REMFG PART MAY BE AVAILABLE

9T-8944 CYLINDER GP-BLADE TIP *(contd.)* i03852559

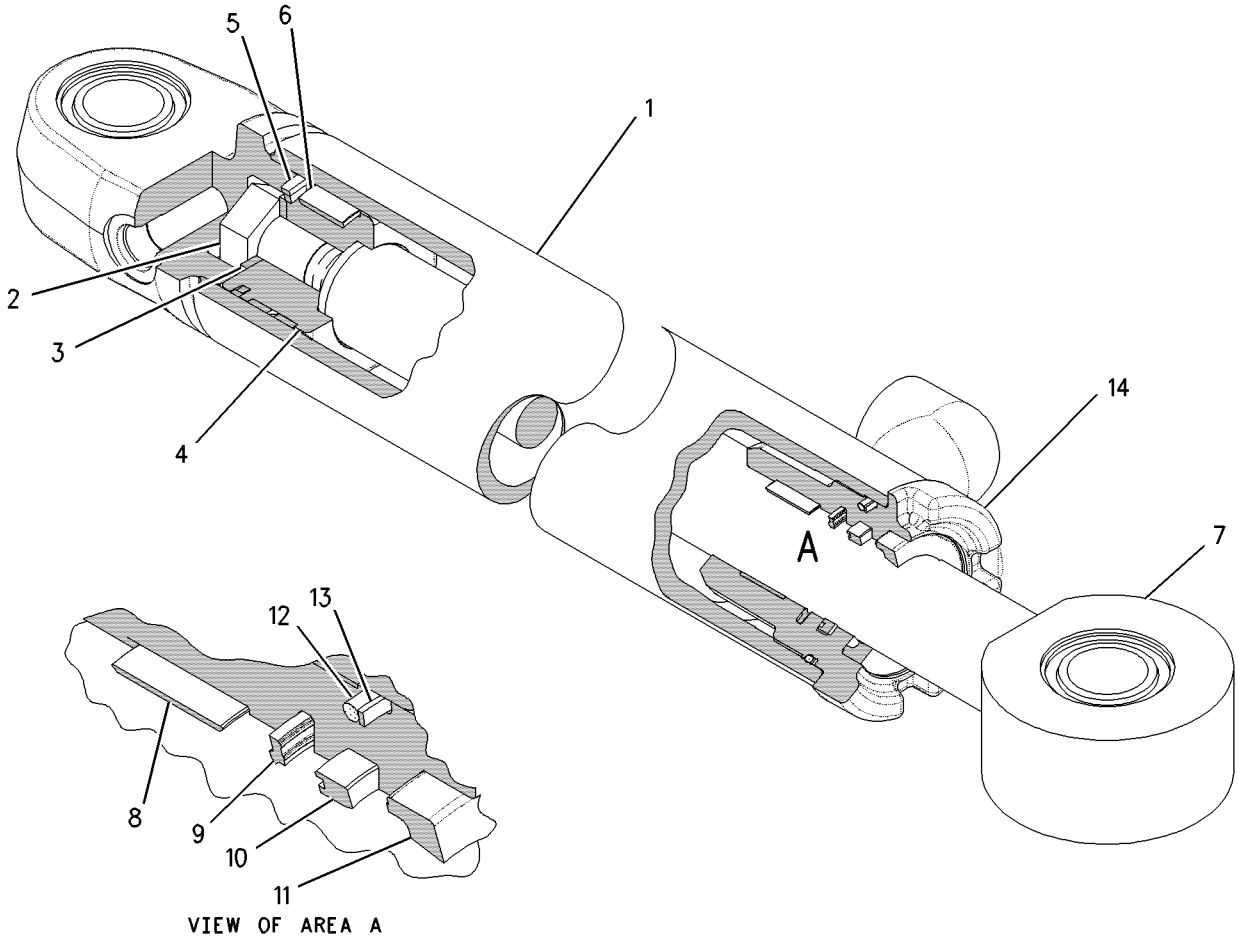

GRAPHIC #1 **<END>** g00785755

HYDRAULIC SYSTEM

262-1905 CYLINDER GP-CENTERSHIFT

S/N: R9H1-UP
101.6-MM (4-IN) BORE X 479.6-MM (18.9-IN) STROKE
PART OF 261-2373 CYLINDER & MTG GP-CENTERSHIFT

SMCS-5223 **i02374292**

NOTE	REF NO	GRAPHIC REF	PART NUMBER	QTY	PART NAME 1 2 3 4 5 6 (PRODUCT LEVEL)	SEE PAGE
	1	1	**9T-3051**	1	PISTON	
	2	1	**172-9981**	1	HEAD	
	3	1	**262-1924**	1	ROD AS	
	4	1	**262-1929**	1	CYLINDER AS	
	5	1	**167-2201**	1	SEAL AS-BUFFER	
	6	1	**167-2312**	1	SEAL-U-CUP	
M	7	1	**173-9683**	1	BOLT (M30X3.5X90-MM)	
	8	1	**175-7900**	1	SEAL-O-RING	
	9	1	**225-3281**	1	SEAL-WIPER	
	10	1	**2K-6830**	1	RING-BACKUP	
	11	1	**3S-7023**	1	WASHER (34X57X6-MM THK)	
	12	1	**5J-5402**	1	SEAL AS	
		1	**5J-5400**	1	SEAL	
		1	**5J-5401**	1	RING-EXPANDER	
	13	1	**6J-2797**	1	RING-WEAR	
	14	1	**8T-0785**	1	RING-WEAR	

M-METRIC PART

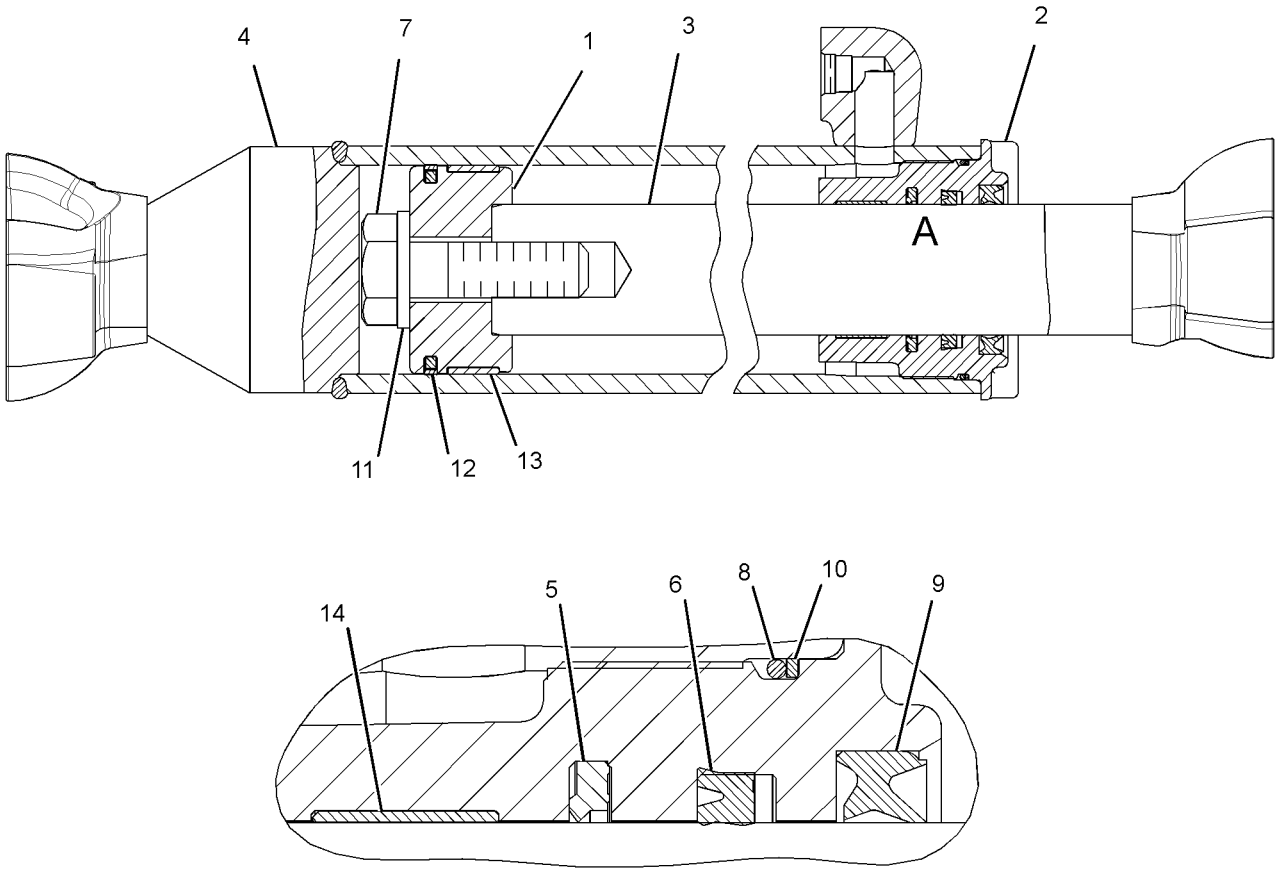

VIEW OF AREA A

GRAPHIC #1 **<END>** g01314427

HYDRAULIC SYSTEM

270-7538 CYLINDER GP-LIFT

S/N: R9H1-UP
101.6-MM (4-IN) BORE X 1117.6-MM (44-IN) STROKE
PART OF 261-2372 CYLINDER & MTG GP-BLADE LIFT

SMCS-5102 **i02374214**

NOTE	REF NO	GRAPHIC REF	PART NUMBER	QTY	PART NAME 1 2 3 4 5 6 (PRODUCT LEVEL)	SEE PAGE
	1	1	**9T-3051**	1	PISTON	
	2	1	**9T-3109**	1	CYLINDER AS	
		1	**8J-5654**	2	BEARING-SLEEVE	
	3	1	**172-9981**	1	HEAD	
	4	1	**262-1923**	1	ROD AS	
	5	1	**167-2201**	1	SEAL AS-BUFFER	
	6	1	**167-2312**	1	SEAL-U-CUP	
	7	1	**175-7900**	1	SEAL-O-RING	
	8	1	**225-3281**	1	SEAL-WIPER	
	9	1	**2K-6830**	1	RING-BACKUP	
	10	1	**3S-7023**	1	WASHER (34X57X6-MM THK)	
	11	1	**5J-5402**	1	SEAL AS	
	12	1	**6J-2797**	1	RING-WEAR	
M	13	1	**8C-3411**	1	BOLT (M30X3.5X90-MM)	
	14	1	**8T-0785**	1	RING-WEAR	

M-METRIC PART

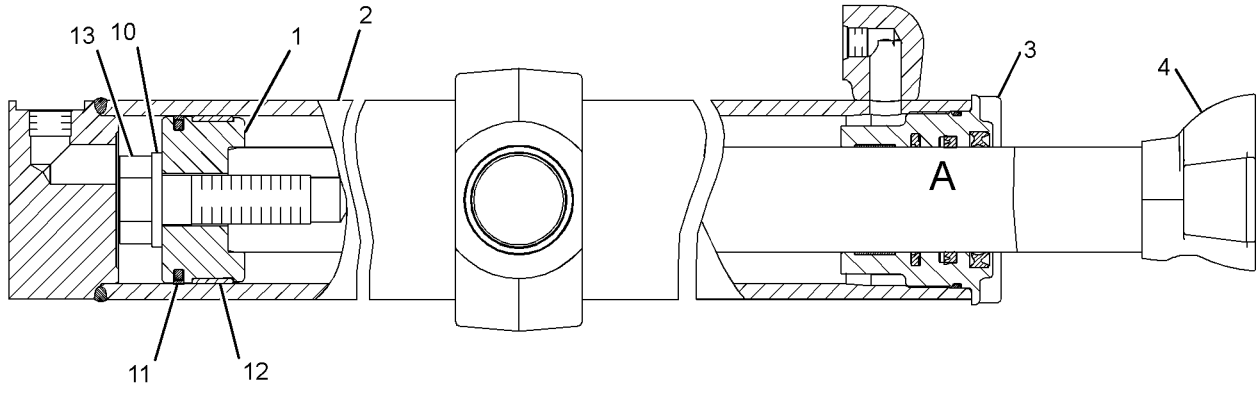

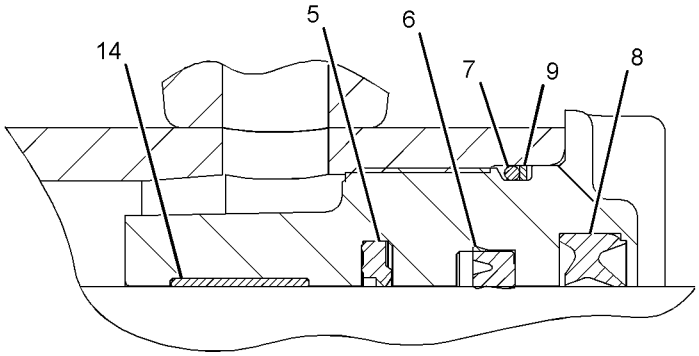

VIEW OF AREA A

GRAPHIC #1 **<END>** g01314498

HYDRAULIC SYSTEM

113-5264 CYLINDER GP-RIPPER

S/N: R9H1-UP
127-MM (3.23-IN) BORE X 495-MM (12.6-IN) STROKE
PART OF 264-3058, 296-3529 RIPPER AR
AN ATTACHMENT

SMCS-5352, 5356 **i04021042**

NOTE	REF NO	GRAPHIC REF	PART NUMBER	QTY	PART NAME 1 2 3 4 5 6 (PRODUCT LEVEL)	SEE PAGE
	1	1	**114-4776**	1	CYLINDER AS	
	2	1	**5J-5731**	1	LOCKNUT (1-3/4-12-THD)	
	3	1	**4J-4630**	1	RING-WEAR	
	4	1	**9X-7264**	1	SEAL AS	
	5	1	**6E-2314**	1	PISTON	
	6	1	**175-7904**	1	SEAL-O-RING	
	7	1	**2K-4096**	1	RING-BACKUP	
	8	1	**121-3395**	1	HEAD	
	9	1	**345-7209**	1	ROD AS	
	9A	1	**2K-4507**	1	BUSHING	
	10	1	**225-3281**	1	SEAL-WIPER	
	11	1	**167-2312**	1	SEAL-U-CUP	
	12	1	**167-2201**	1	SEAL AS-BUFFER	
	13	1	**8T-0785**	1	RING-WEAR	

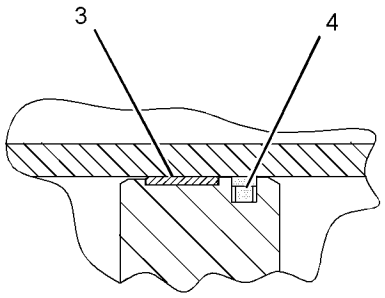

VIEW OF AREA B

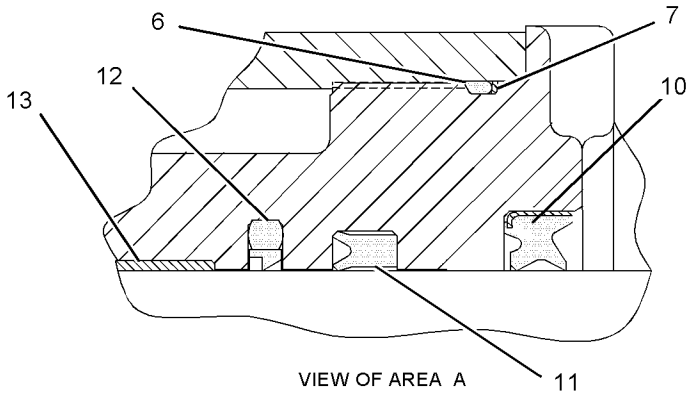

VIEW OF AREA A

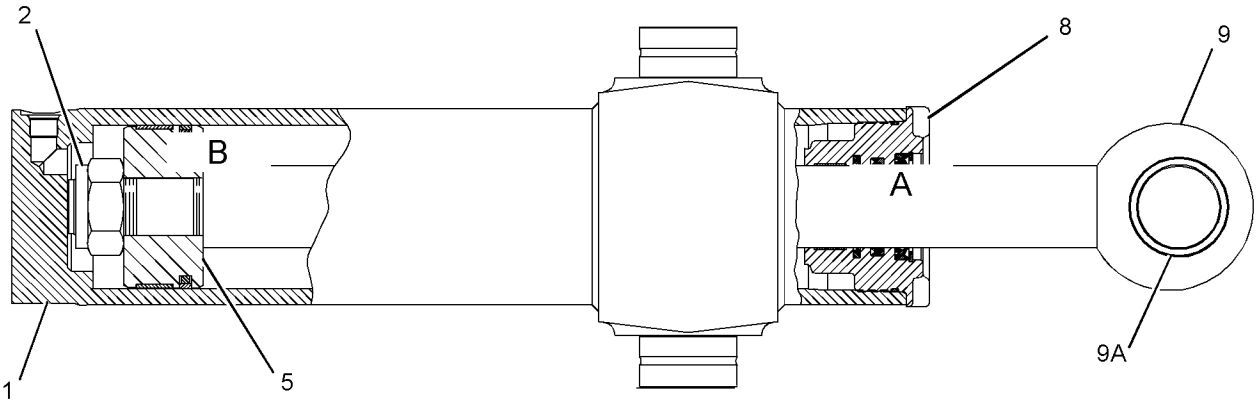

GRAPHIC #1

<END>

g01077049

257-5083 CYLINDER GP-SIDESHIFT

S/N: R9H1-UP
101.6-MM (2.58-IN) BORE X 1531.9 (38.91-IN) STROKE
PART OF 257-6804 CYLINDER & MTG GP-SIDESHIFT

SMCS-5229 **i02183151**

NOTE	REF NO	GRAPHIC REF	PART NUMBER	QTY	PART NAME 1 2 3 4 5 6 (PRODUCT LEVEL)	SEE PAGE
	1	1	**9T-3051**	1	PISTON	
	2	1	**172-9981**	1	HEAD	
	3	1	**257-5085**	1	ROD AS	
	4	1	**167-2201**	1	SEAL AS-BUFFER	
	5	1	**167-2312**	1	SEAL-U-CUP	
M	6	1	**173-9683**	1	BOLT (M30X3.5X90-MM)	
	7	1	**175-7900**	1	SEAL-O-RING	
	8	1	**225-3281**	1	SEAL-WIPER	
	9	1	**257-5084**	1	CYLINDER AS	
	10	1	**2K-6830**	1	RING-BACKUP	
	11	1	**5J-5402**	1	SEAL AS	
	12	1	**6J-2797**	1	RING-WEAR	
	13	1	**8T-0785**	1	RING-WEAR	
	14	1	**9X-8399**	1	WASHER (33X56X6-MM THK)	

M-METRIC PART

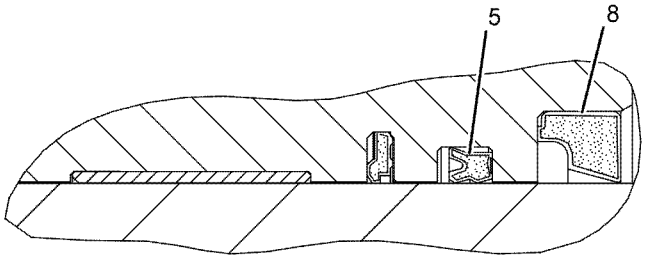

VIEW OF AREA A

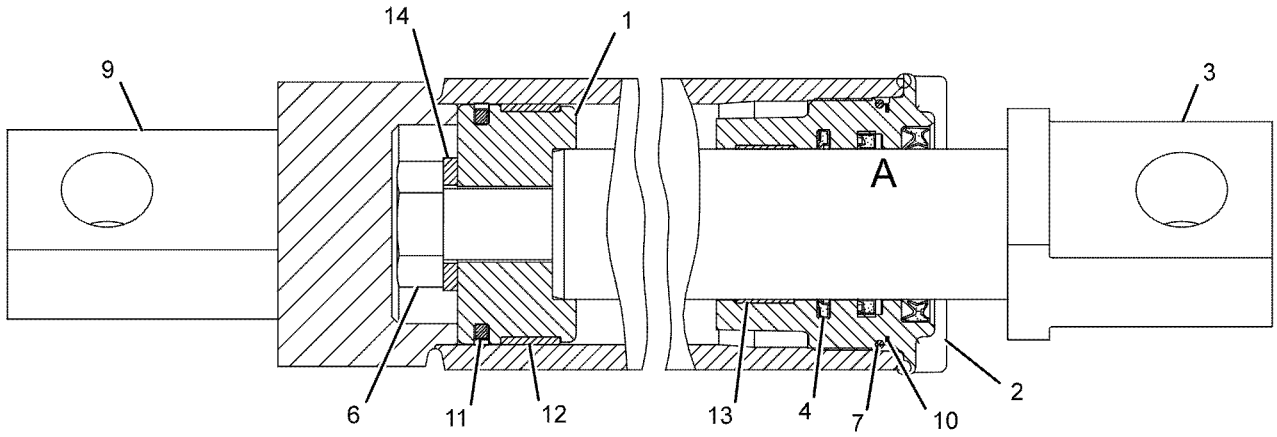

GRAPHIC #1 **<END>** g01105376

HYDRAULIC SYSTEM

267-3863 CYLINDER GP-STEERING—NON ALL WHEEL DRIVE*R

S/N: R9H1-UP

76.2-MM (3-IN) BORE X 316-MM (12.44-IN) STROKE

PART OF 264-1160 CYLINDER & MTG GP-STEERING

SMCS-4303 **i04032453**

NOTE	REF NO	GRAPHIC REF	PART NUMBER	QTY	PART NAME 1 2 3 4 5 6 (PRODUCT LEVEL)	SEE PAGE
	1	1	**8T-8737**	1	PLUG-SEAL	
	2	1	**102-2244**	1	GROMMET	
	3	1	**151-7038**	1	HEAD	
	4	1	**212-0907**	1	PLATE-CONNECTOR	
	5	1	**214-6480**	1	PISTON	
	6	1	**217-3311**	1	MAGNET	
	7	1	**242-9514**	1	CARRIER	
	8	1	**242-9515**	1	RING-RETAINING	
	9	1	**267-3864**	1	CYLINDER AS-STEERING	
		1	**148-2592**	1	BOSS AS	
		1	**1N-5999**	1	PLUG-O-RING	
		1	**7J-0204**	1	SEAL-O-RING	
	10	1	**267-3865**	1	ROD AS	
	11	1	**276-1816**	1	GUARD	
J	12	1	**289-2935**	1	SEAL AS	
J	13	1	**289-2946**	1	SEAL-U-CUP	
J	14	1	**188-2199**	1	SEAL-O-RING	
J	15	1	**1H-7339**	1	SEAL-O-RING	
J	16	1	**215-1942**	1	RING-BACKUP	
J	17	1	**223-3353**	1	RING-WEAR	
J	18	1	**308-1845**	1	SEAL-WIPER	
	19	1	**267-5257**	1	SENSOR GP-POSITION (STEERING CYLINDER)	
		1	**9X-3401**	3	PIN-CONNECTOR (16-GA TO 18-GA)	
	20	1	**102-8804**	1	KIT-RECEPTACLE (4-PIN)	
					(INCLUDES RECEPTACLE AS & WEDGE)	
	21	1	**3V-2431**	2	WASHER (10.2X16X2-MM THK)	
	22	1	**4S-5565**	2	BOLT (3/8-16X0.875-IN)	
J	23	1	**4T-5613**	1	RING-WEAR	
	24	1	**5J-4561**	1	LOCKNUT (1-14-THD)	
J	25	1	**6J-1972**	1	SEAL AS	
J	26	1	**6J-5731**	1	RING-BACKUP	
	27	1	**8T-5070**	1	SETSCREW-SOCKET (3/8-16X0.5-IN)	
E	29	1	**9X-1386**		SLEEVE (8.5-CM)	
E	29A	1	**9X-1386**		SLEEVE (3.0-CM)	
	30	1	*162-0177*	1	PLUG AS	
		1	**3J-1907**	1	SEAL-O-RING	
		1	**9S-8004**	1	PLUG-O-RING	
					AVAILABLE REPAIR KIT(S):	
J			**307-6273**	1	KIT-SEAL (HYDRAULIC CYLINDER)	
					(INCLUDES RINGS, O-RINGS & SEALS)	

E-ORDER BY THE CENTIMETER
J-KIT MARKED J SERVICES PARTS MARKED J

267-3863 CYLINDER GP-STEERING *(contd.)* **i04032453**

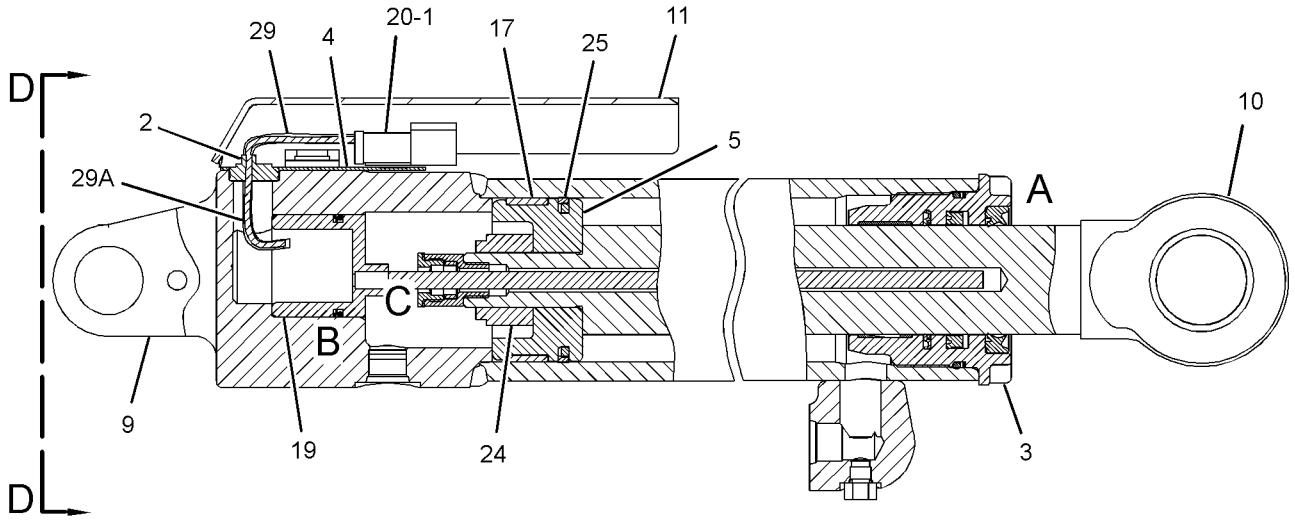

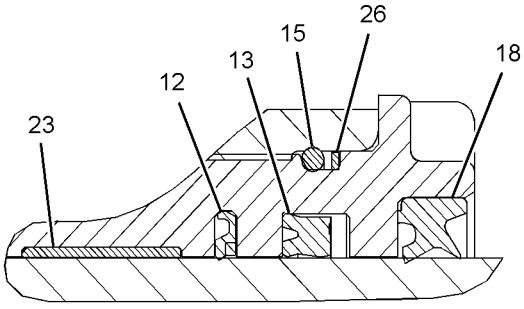

VIEW OF AREA A

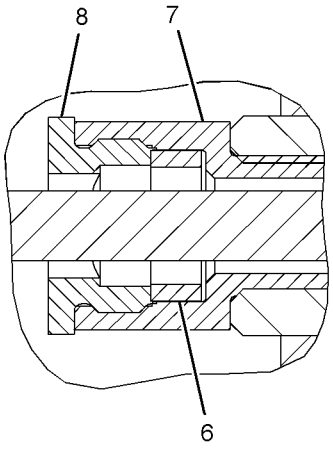

VIEW OF AREA C

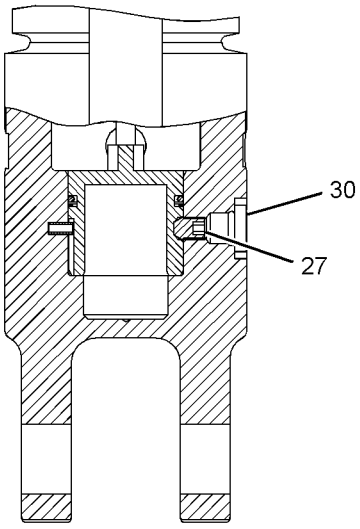

SECTION E-E

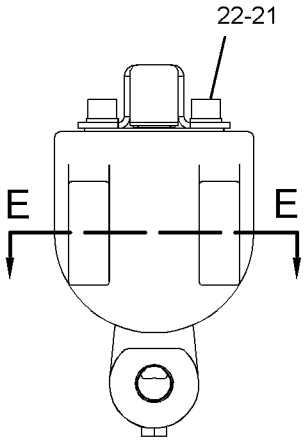

VIEW D-D

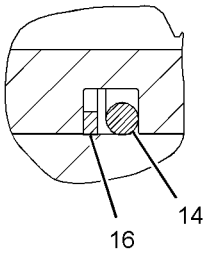

VIEW OF AREA B

GRAPHIC #1 **<END>** g02208734

HYDRAULIC SYSTEM

289-3054 CYLINDER GP-WHEEL LEAN—NON ALL WHEEL DRIVE

S/N: R9H1-UP

101.6-MM (4.0-IN) BORE X 174.8-MM (6.88-IN) STROKE

PART OF 249-6545 CYLINDER & MTG GP-WHEEL LEAN

SMCS-5211 **i02651760**

NOTE	REF NO	GRAPHIC REF	PART NUMBER	QTY	PART NAME 1 2 3 4 5 6 (PRODUCT LEVEL)	SEE PAGE
	1	1	**289-3055**	1	CYLINDER AS	
	1A	1	**2G-8635**	1	BEARING-SLEEVE	
M	2	1	**173-9683**	1	BOLT (M30X3.5X90-MM)	
	3	1	**3S-7023**	1	WASHER (34X57X6-MM THK)	
	4	1	**5J-5402**	1	SEAL AS	
	5	1	**6J-2797**	1	RING-WEAR	
	6	1	**9T-5927**	1	PISTON	
	7	1	**9X-4611**	1	SEAL-O-RING	
	8	1	**2K-6830**	1	RING-BACKUP	
	9	1	**6E-4977**	1	HEAD	
R	10	1	**121-9247**	1	ROD AS	
	10A	1	**2G-8635**	1	BEARING-SLEEVE	
	11	1	**231-3538**	1	SEAL-WIPER	
	12	1	**167-2307**	1	SEAL-U-CUP	
	13	1	**167-2200**	1	SEAL AS	
	14	1	**8T-4958**	1	RING-WEAR	

M-METRIC PART
R-REMFG PART MAY BE AVAILABLE

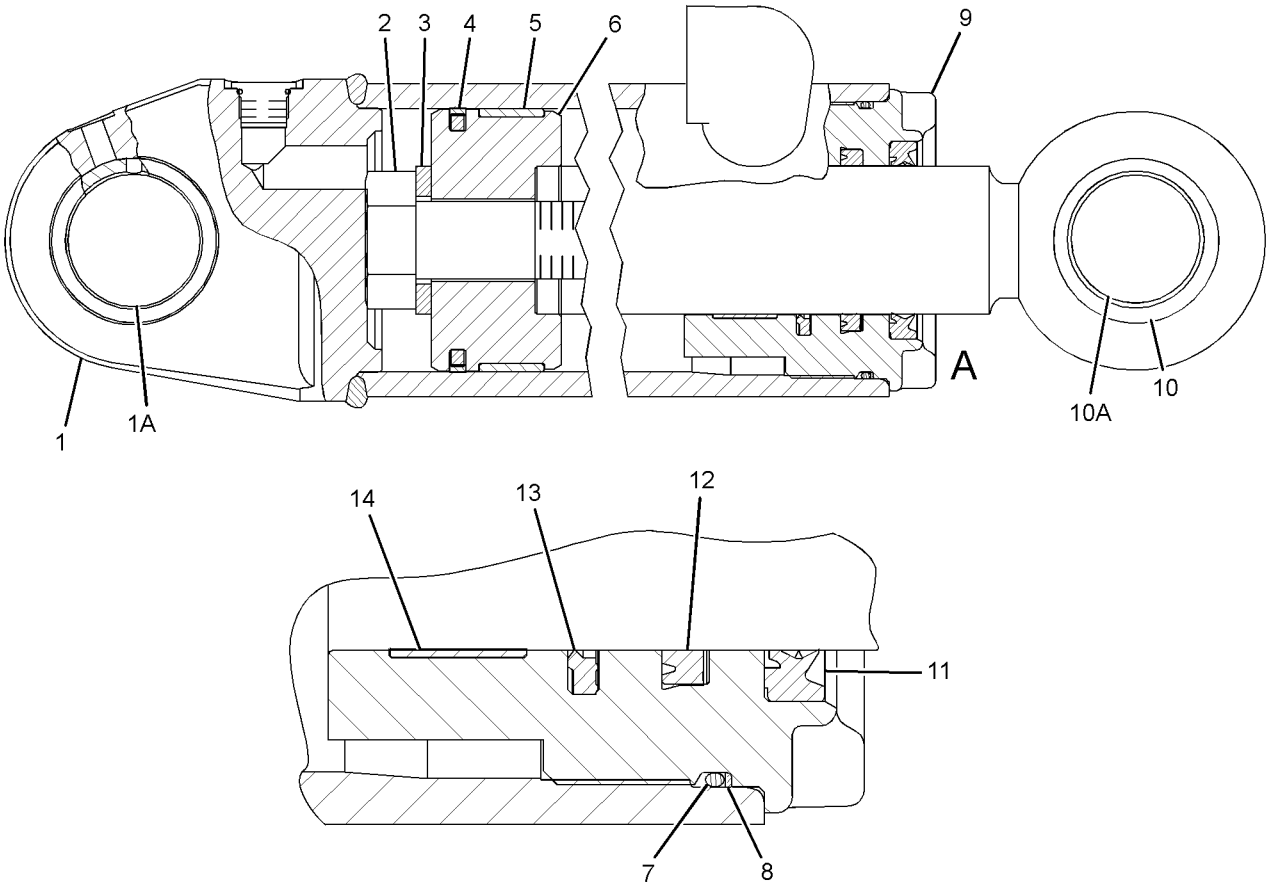

VIEW OF AREA A

GRAPHIC #1 **<END>** g01341779

HYDRAULIC SYSTEM

265-6725 DRIVE GP-CIRCLE

S/N: R9H1-UP

PART OF 349-2556 COMMON AR

SMCS-5207 **i03900661**

NOTE	REF NO	GRAPHIC REF	PART NUMBER	QTY	PART NAME 1 2 3 4 5 6 (PRODUCT LEVEL)	SEE PAGE
	1	1	**1A-1415**	1	NUT (1-7/8-12-THD)	
	2	1	**2G-0339**	1	WASHER-SPECIAL (1.906X3.25X0.06-MM THK)	
	3	1	**2G-0478**	10	DISC-FRICTION	
	4	1	**4D-8186**	1	PLUG-PIPE	
R	5	1	**5K-5288**	2	SEAL GP-DUO-CONE	
					(EACH INCLUDES)	
		1	**5K-5129**	2	RING-SEALING	
	6	1	**5T-8059**	1	WORM-CIRCLE DRIVE	
	7	1	**5T-8060**	1	ADAPTER	
	8	1	**6G-1536**	1	SPACER (69.88X90X13-MM THK)	
	9	1	**6G-1539**	1	COVER	
	10	1	**6G-5542**	2	SPACER (119.2X178X9.3-MM THK)	
	11	1	**6G-6122**	1	SPRING-DISC	
	12	1	**6Y-7953**	11	DISC-FRICTION	
	13	1	**8D-3984**	2	CONE-BEARING	
	14	1	**8D-3986**	2	CUP-BEARING	
BC	15	1	**8D-4523**	2	SHIM (0.01-MM THK)	
	16	1	**8D-7333**	1	COLLAR	
	17	1	**8W-6179**	1	WASHER-THRUST	
	18	1	**8X-4028**	1	GEAR-WORM (36-TEETH)	
	19	1	**9D-0089**	1	CAGE AS	
	19A	1	**7J-2604**	1	BUSHING	
	20	1	**9D-1491**	1	COUPLING	
Y	21	1	**9T-5977**	1	MOTOR GP-GEROTOR	639
	22	1	**261-8555**	1	PINION-CIRCLE DRIVE	
	23	1	**265-6723**	1	HOUSING AS-DRIVE	
	23A	1	**3J-2333**	2	BUSHING	
	23B	1	**4D-4823**	4	STUD-TAPERLOCK (5/8-11-THD)	
	23C	1	**292-4252**	4	STUD-TAPERLOCK (M24-THD)	
	24	1	**278-1416**	1	ADAPTER	
BC	25	1	**307-1959**	6	SHIM (0.13-MM THK)	
BC	26	1	**307-1960**	1	SHIM (0.25-MM THK)	
C	27	1	**307-1961**	1	PLATE	
BC	28	1	**307-1962**	4	SHIM (0.5-MM THK)	
C	29	1	**307-1965**	1	SHAFT-PINION DRIVE	
C	30	1	**0S-1585**	8	BOLT (1/2-13X1.5-IN)	
	31	1	**0S-1594**	4	BOLT (3/8-16X1-IN)	
	32	1	**2J-3118**	4	BOLT-LOCKING (3/8-16X1.25-IN)	
	33	1	**2B-0858**	2	PLUG-PIPE	
	34	1	**2D-6533**	1	SEAL-O-RING	
	35	1	**2D-8009**	1	SEAL-O-RING	
	36	1	**2H-3931**	1	SEAL-O-RING	
	37	1	**4H-6996**	1	PIN-SPRING	
	38	1	**4K-0367**	4	NUT-FULL (5/8-11-THD)	
	39	1	**5K-7143**	2	BOLT-SELF-LOCKING (1/2-13X1.5-IN)	
	40	1	**5M-2894**	8	WASHER-HARD (10.2X18.5X2.5-MM THK)	
C	41	1	**5P-8245**	10	WASHER-HARD (13.5X25.5X3-MM THK)	
	42	1	**5P-8247**	4	WASHER-HARD (17X32X3.5-MM THK)	
	43	1	**5S-7379**	4	BOLT (3/8-16X0.875-IN)	
	44	1	**6G-5538**	1	COVER	
	45	1	**6G-5539**	1	GASKET	
CM	46	1	**6V-5686**	3	BOLT (M16X2X50-MM)	
BC	47	1	**8D-4522**	4	SHIM (0.005-MM THK)	
C	48	1	**8D-5054**	3	WASHER-HARD (17X30X3-MM THK)	
	49	1	**8D-7341**	1	GASKET	
	50	1	**8D-7343**	1	WASHER-THRUST (3.12X4.62X0.09-MM THK)	

265-6725 DRIVE GP-CIRCLE *(contd.)* i03900661

NOTE	REF NO	GRAPHIC REF	PART NUMBER	QTY	PART NAME 1 2 3 4 5 6 (PRODUCT LEVEL)	SEE PAGE
	51	1	**8D-7424**	1	SPACER (48X81X6-MM THK)	
	52	1	**8T-0336**	1	FITTING-PRESSURE RELIEF	
	53	1	**8T-4896**	4	WASHER-HARD (10.2X18.5X2.5-MM THK)	
	54	1	**9D-0088**	1	COVER	

B-USE AS REQUIRED
C-CHANGE FROM PREVIOUS TYPE
M-METRIC PART
R-REMFG PART MAY BE AVAILABLE
Y-SEPARATE ILLUSTRATION

265-6725 DRIVE GP-CIRCLE *(contd.)* i03900661

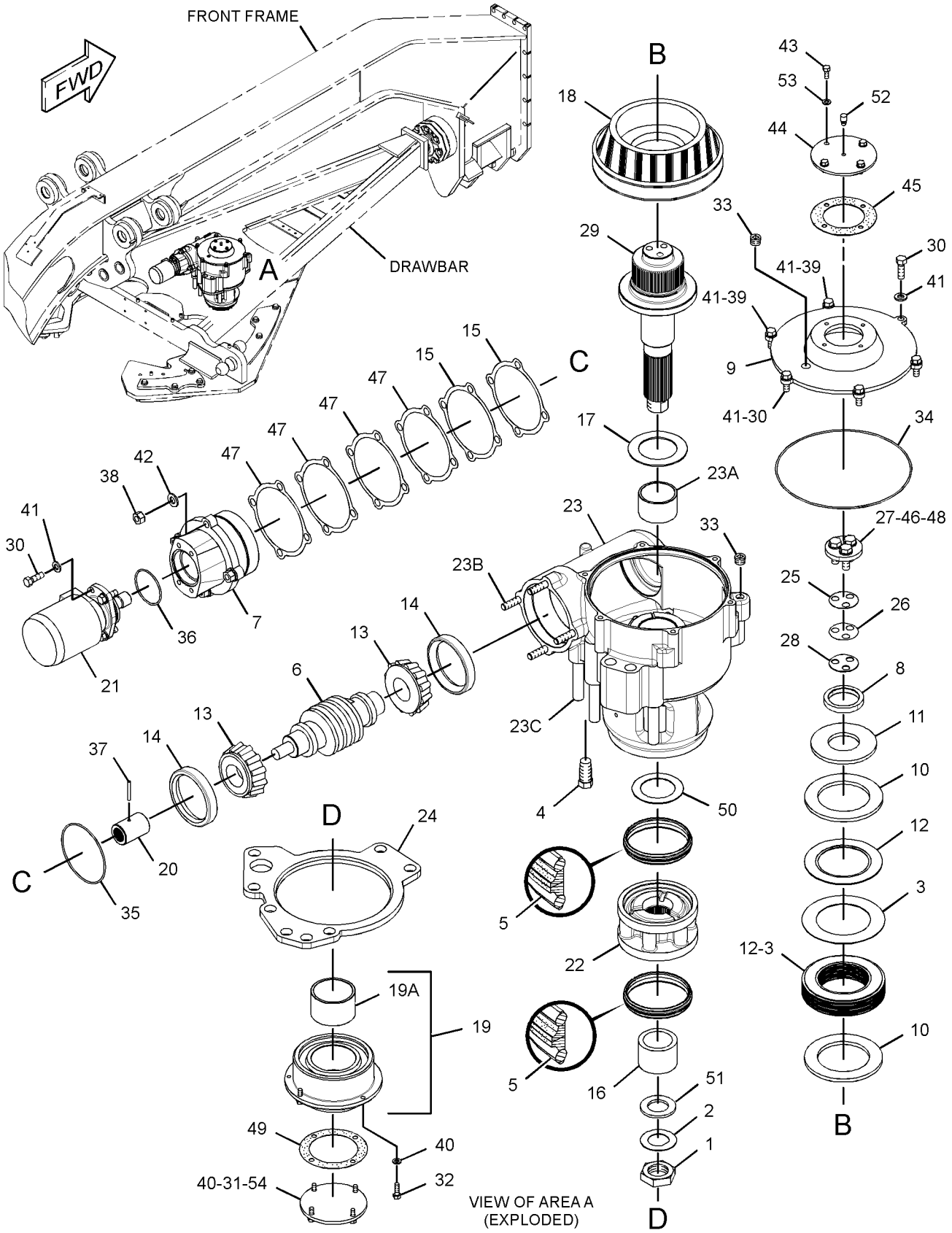

GRAPHIC #1 **<END>** g02051055

HYDRAULIC SYSTEM

250-3507 FILTER & MTG GP-HYDRAULIC

S/N: R9H1-UP

PART OF 250-0162 SERVICE CENTER AR

SMCS-5068 **i03745012**

NOTE	REF NO	GRAPHIC REF	PART NUMBER	QTY	PART NAME 1 2 3 4 5 6 (PRODUCT LEVEL)	SEE PAGE
	1	1	**6V-0852**	1	CAP-DUST	
	2	1	*164-5567*	1	COUPLER AS-QUICK DISCONNECT (MALE)	
		1	**6V-3965**	1	FITTING (QUICK DISCONNECT)	
		1	**3J-1907**	1	SEAL-O-RING	
	3	1	**242-0407**	1	VALVE-DRAIN (HYDRAULIC FILTER)	
	4	1	**245-7603**	1	TUBE AS	
	5	1	**245-8964**	1	BLOCK	
Y	6	1	**249-2307**	1	FILTER GP-OIL (HYDRAULIC TANK RETURN)	579
	7	1	**257-8897**	1	HOSE-MOLDED	
	8	1	*148-8408*	2	PLUG AS	
					(EACH INCLUDES)	
		1	**9S-4183**	1	PLUG-O-RING	
		1	**3D-2824**	1	SEAL-O-RING	
	9	1	*156-4283*	1	CONNECTOR AS	
		1	**8T-7926**	1	CONNECTOR	
		1	**6K-6307**	1	SEAL-O-RING	
		1	**8T-0315**	1	SEAL-O-RING	
	10	1	**294-9701**	1	TUBE AS	
	11	1	**294-9702**	1	TUBE AS	
	12	1	**4J-0524**	2	SEAL-O-RING	
M	13	1	**7X-2543**	2	BOLT (M10X1.5X120-MM)	
	14	1	**8T-4121**	8	WASHER-HARD (11X21X2.5-MM THK)	
M	15	1	**8T-4133**	2	NUT (M10X1.5-THD)	
M	16	1	**8T-4183**	8	BOLT (M12X1.75X40-MM)	
M	17	1	**8T-4195**	4	BOLT (M10X1.5X30-MM)	
	18	1	**8T-4223**	8	WASHER-HARD (13.5X25.5X3-MM THK)	
	19	1	**8T-6703**	4	CLAMP-HOSE	
	20	1	**8X-5489**	1	SLEEVE	
G	21	1	**122-6908**		HOSE-HYDRAULIC (6.3-IN)	
E	22	1	**9X-2023**		HOSE (31-CM)	
	23	1	*165-4931*	1	ELBOW AS	
		1	**6V-8077**	1	ELBOW	
		1	**3J-1907**	1	SEAL-O-RING	

E-ORDER BY THE CENTIMETER
G-ORDER BY THE INCH
M-METRIC PART
Y-SEPARATE ILLUSTRATION

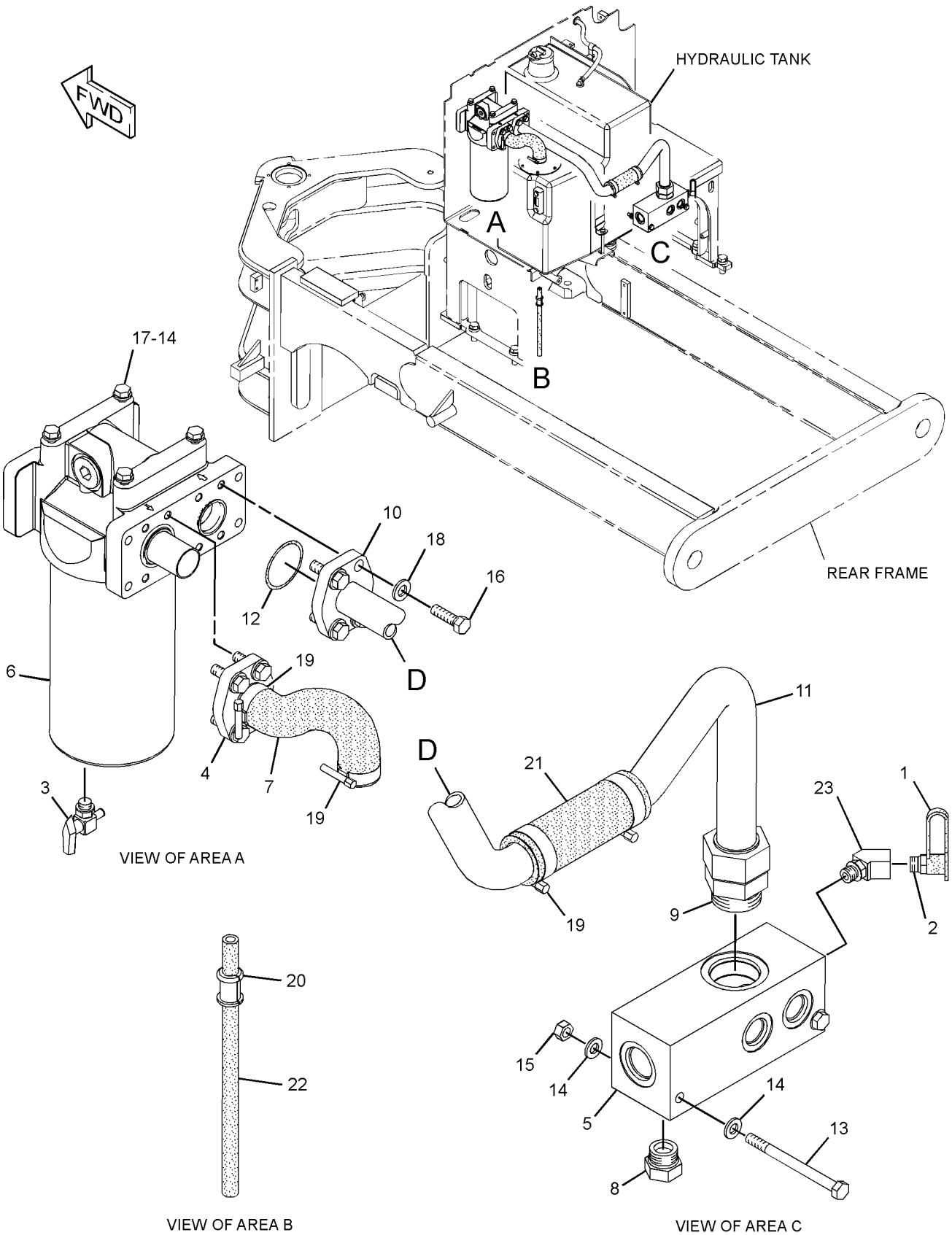

GRAPHIC #1 **<END>** g01420411

191-9784 FILTER GP-OIL–IMPLEMENT PILOT OIL

S/N: R9H1-UP

PART OF 283-7735 LINES GP-SECONDARY STEERING

SMCS-5068, 5093 **i03911357**

NOTE	REF NO	GRAPHIC REF	PART NUMBER	QTY	PART NAME 1 2 3 4 5 6 (PRODUCT LEVEL)	SEE PAGE
	1	1	**1G-8878**	1	FILTER-OIL (ADVANCED EFFICIENCY) (PRIMARY)	
	2	1	**7X-8549**	1	SWITCH AS-PRESSURE (FILTER BYPASS)	
		1	**3J-1907**	1	SEAL-O-RING	
	3	1	**8C-3451**	1	CAP-DUST	
	4	1	**183-7264**	1	VALVE AS-FLUID SAMPLING (FILTER OIL)	
	5	1	**3J-1907**	1	SEAL-O-RING	

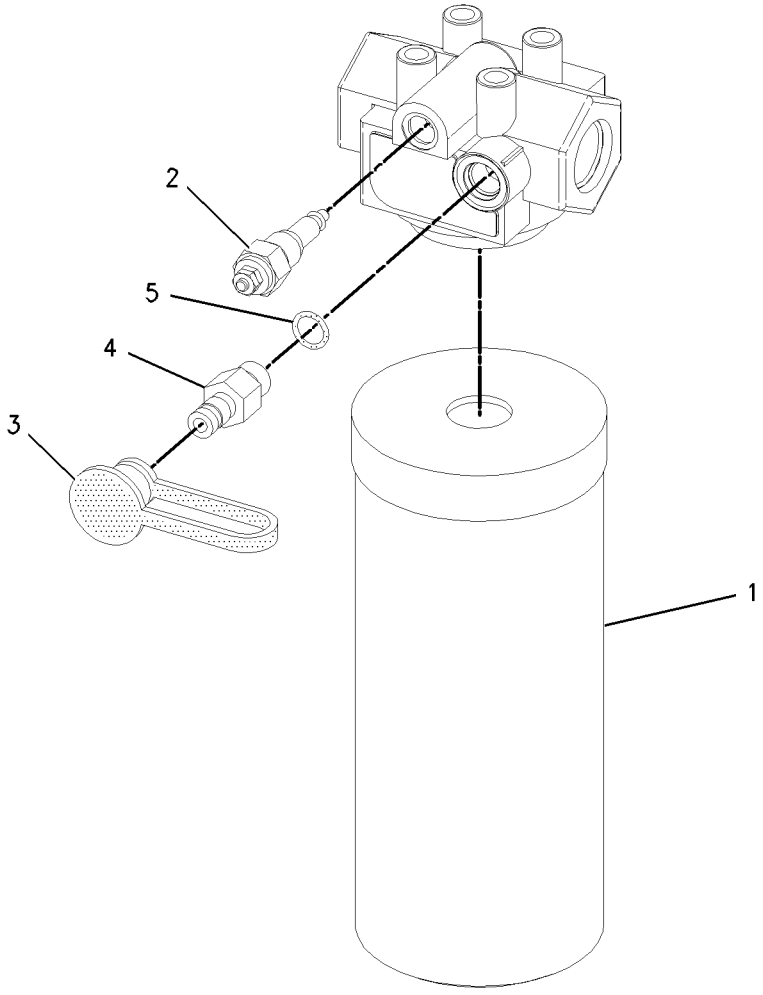

GRAPHIC #1 **<END>** g00977327

249-2307 FILTER GP-OIL–HYDRAULIC TANK RETURN

S/N: R9H1-UP

PART OF 250-3507 FILTER & MTG GP-HYDRAULIC

SMCS-5068, 5093 **i03797265**

NOTE	REF NO	GRAPHIC REF	PART NUMBER	QTY	PART NAME 1 2 3 4 5 6 (PRODUCT LEVEL)	SEE PAGE
	1	1	**338-3540**	1	FILTER ELEMENT-OIL (ULTRA HIGH EFFICIENCY) (HYDRAULIC TANK)	
C	2	1	**321-5967**	1	HOUSING GP-FILTER (OIL)	
		1	**9S-8004**	1	PLUG-O-RING	
		1	**214-7568**	1	SEAL-O-RING	
Y	3	1	*249-2308*	1	BASE GP-OIL FILTER (HYDRAULIC TANK RETURN)	549
	4	1	**214-7568**	1	SEAL-O-RING	
	5	1	**6V-5048**	1	SEAL-O-RING	
	6	1	**9S-4185**	1	PLUG-O-RING	
	7	1	**9S-4191**	1	PLUG-O-RING	
	8	1	**130-0229**	1	SEAL-O-RING	
F			**8L-2786**	1	SEAL-O-RING	

C-CHANGE FROM PREVIOUS TYPE
F-NOT SHOWN
Y-SEPARATE ILLUSTRATION

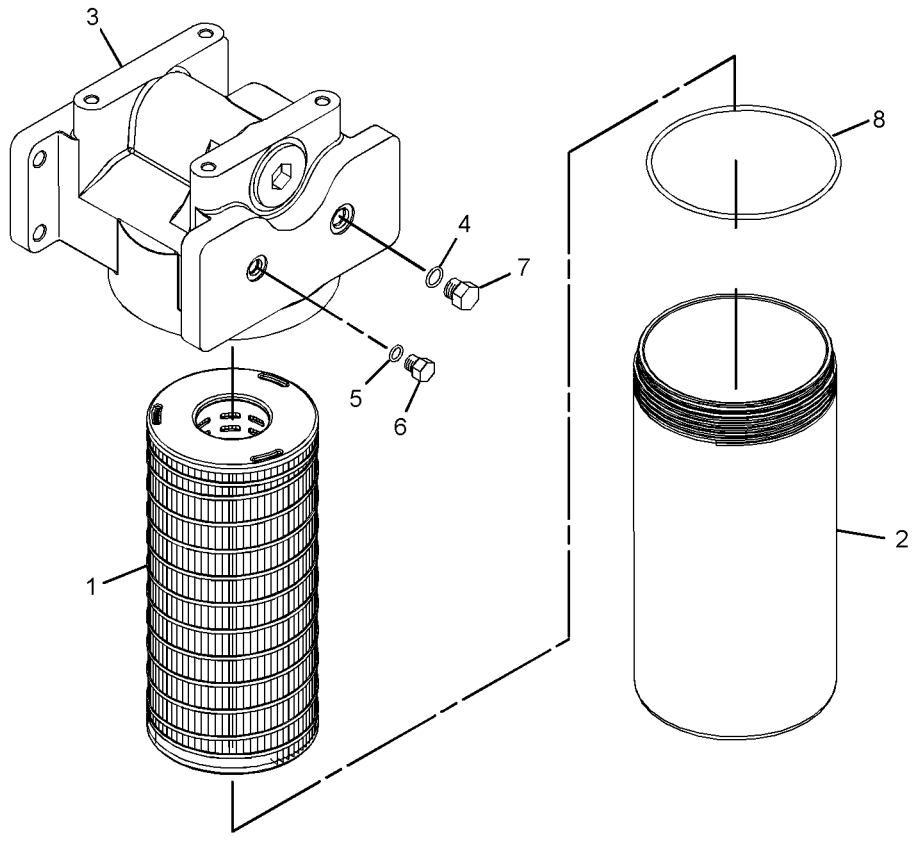

GRAPHIC #1 **<END>** g01447672

HYDRAULIC SYSTEM

271-3652 FLOAT AR-BLADE

S/N: R9H1-UP

AN ATTACHMENT

SMCS-5241 **i03243541**

NOTE	PART NUMBER	QTY	PART NAME 1 2 3 4 5 6 (PRODUCT LEVEL)	SEE PAGE
Y	*277-6005*	1	LINES GP-HYDRAULIC (BLADE CUSHION)	597
Y	*276-8498*	1	PANEL GP-CONTROL (VARIABLE BLADE FLOAT)	767
Y	*250-0900*	1	WIRING GP-SENSOR (VARIABLE BLADE FLOAT)	395
Y-SEPARATE ILLUSTRATION				

<END>

366-3375 FLOAT AR-BLADE

S/N: R9H1-UP

AN ATTACHMENT

SMCS-5241 **i04025589**

NOTE	PART NUMBER	QTY	PART NAME 1 2 3 4 5 6 (PRODUCT LEVEL)	SEE PAGE
Y	*366-3384*	1	LINES GP-HYDRAULIC	605
Y	*276-8498*	1	PANEL GP-CONTROL (VARIABLE BLADE FLOAT)	767
Y	*250-0900*	1	WIRING GP-SENSOR (VARIABLE BLADE FLOAT)	395
Y-SEPARATE ILLUSTRATION				

<END>

252-8226 HYDRAULIC AR–BIODEGRADABLE HYDRAULIC OIL

S/N: R9H1-UP

AN ATTACHMENT

SMCS-5050 **i02614266**

NOTE	PART NUMBER	QTY	PART NAME 1 2 3 4 5 6 (PRODUCT LEVEL)	SEE PAGE
	141-6968	1	FILM-IDENTIFICATION (BIODEGRADABLE HYDRAULIC OIL)	
			(NEAR IMPLEMENT OIL FILL)	

<END>

HYDRAULIC SYSTEM

287-7454 LINES GP-ACCUMULATOR

S/N: R9H1-UP

PART OF 354-8463 CONTROL AR-HYDRAULIC

AN ATTACHMENT

SMCS-5057, 5077 **i03563222**

NOTE	REF NO	GRAPHIC REF	PART NUMBER	QTY	PART NAME 1 2 3 4 5 6 (PRODUCT LEVEL)	SEE PAGE
	1	3	**4N-5091**	2	SPACER (0.53X1X3.375-IN THK)	
	2	4	**8W-3989**	2	CLAMP	
	3	4	**8W-3990**	2	CLAMP	
	4	4	**8W-3991**	2	JUNCTION BLOCK	
	5	3	**9M-4594**	6	SPACER (0.406X0.875X0.75-IN THK)	
	6	2	**102-7886**	1	SLEEVE	
	7	1,4	**107-0211**	4	CLAMP	
	8	2	**5P-0599**	1	CLAMP-BAND	
	9	3	**162-7449**	2	CLAMP	
	10	3	*171-6466*	2	UNION AS	
					(EACH INCLUDES)	
		3	**5P-9810**	1	UNION	
		3	**3D-2824**	2	SEAL-O-RING	
Y	11	3	*219-8035*	2	ACCUMULATOR GP-BLADE CUSHION (CHARGED) (BLADE CUSHION)	547
	12	2	**246-6341**	3	CLAMP	
	13	3	**246-6342**	12	CLAMP	
Y	14	3	**253-1320**	2	MANIFOLD GP-CONTROL (BLADE CUSHION)	631
	15	3	**259-5418**	2	BLOCK	
	16	3	**259-5419**	2	PLATE	
	17	3	**259-5898**	2	BLOCK	
	18	2	**269-9517**	1	TUBE AS	
	19	2	**269-9518**	1	TUBE AS	
	20	2	**341-2114**	1	TUBE AS	
	21	4	**269-9521**	1	GUIDE AS-HOSE	
M		4	**8T-3490**	2	NUT-WELD (M10X1.5-THD)	
	22	3	**269-9522**	5	TUBE AS	
	23	3	**269-9523**	5	TUBE AS	
	24	2	**273-9589**	1	BLOCK	
	25	3	**274-8312**	1	PLATE AS	
M		3	**8T-3490**	1	NUT-WELD (M10X1.5-THD)	
M		3	**8T-3597**	2	NUT-WELD (M12X1.75-THD)	
I	26	3	**286-2243**	1	HOSE AS	
I	27	3	**286-2244**	1	HOSE AS	
I	28	3	**288-4543**	1	HOSE AS	
I	29	3	**288-4544**	1	HOSE AS	
I	30	3	**288-4545**	1	HOSE AS	
I	31	3	**288-4546**	1	HOSE AS	
I	32	3	**288-5211**	1	HOSE AS	
I	33	3	**288-5364**	1	HOSE AS	
I	34	3	**288-6112**	1	HOSE AS	
I	35	3	**288-6113**	1	HOSE AS	
	36	2	**341-2115**	1	TUBE AS	
M	38	1,3,4	**096-4883**	10	LOCKNUT (M10X1.5-THD)	
	39	2	**100-4336**	2	CLIP	
I	40	2	**113-0981**	1	HOSE AS	
I	41	2	**115-8428**	1	HOSE AS	
	42	3	**133-6934**	1	SPACER (11X20X25-MM THK)	
I	43	2	**136-2617**	1	HOSE AS	
	44	3,4	*148-8318*	5	CONNECTOR AS	
					(EACH INCLUDES)	
		3,4	**6V-8634**	1	CONNECTOR (SEAL)	
		3,4	**3K-0360**	1	SEAL-O-RING	
		3,4	**6V-8397**	1	SEAL-O-RING	

287-7454 LINES GP-ACCUMULATOR *(contd.)* i03563222

NOTE	REF NO	GRAPHIC REF	PART NUMBER	QTY	PART NAME 1 2 3 4 5 6 (PRODUCT LEVEL)	SEE PAGE
	45	3	*148-8328*	2	CONNECTOR AS	
					(EACH INCLUDES)	
		3	**6V-8633**	1	CONNECTOR	
		3	**3D-2824**	1	SEAL-O-RING	
		3	**6V-8398**	1	SEAL-O-RING	
	46	1,2,4	*148-8340*	8	CONNECTOR AS	
					(EACH INCLUDES)	
		1,2,4	**6V-8639**	1	CONNECTOR (SEAL)	
		1,2,4	**3K-0360**	1	SEAL-O-RING	
		1,2,4	**6V-8398**	1	SEAL-O-RING	
	47	3	*148-8342*	10	CONNECTOR AS	
					(EACH INCLUDES)	
		3	**6V-8632**	1	CONNECTOR	
		3	**3K-0360**	1	SEAL-O-RING	
		3	**7J-9108**	1	SEAL-O-RING	
	48	2	*148-8345*	1	CONNECTOR AS	
		2	**6V-8638**	1	CONNECTOR (O-RING)	
		2	**2M-9780**	1	SEAL-O-RING	
		2	**6V-8398**	1	SEAL-O-RING	
	49	2	*148-8358*	1	ELBOW AS	
		2	**6V-8624**	1	ELBOW (FACE SEAL)	
		2	**2M-9780**	1	SEAL-O-RING	
		2	**6V-8398**	1	SEAL-O-RING	
	50	2,4	*148-8363*	5	ELBOW AS	
					(EACH INCLUDES)	
		2,4	**6V-9876**	1	ELBOW	
		2,4	**3K-0360**	1	SEAL-O-RING	
		2,4	**6V-8397**	1	SEAL-O-RING	
	51	2,4	*148-8364*	3	ELBOW AS (FACE SEAL)	
					(EACH INCLUDES)	
		2,4	**6V-8625**	1	ELBOW (90-DEG)	
		2,4	**3K-0360**	1	SEAL-O-RING	
		2,4	**6V-8398**	1	SEAL-O-RING	
	52	2,4	*148-8370*	2	ELBOW AS	
					(EACH INCLUDES)	
		2,4	**6V-9851**	1	ELBOW (SWIVEL)	
		2,4	**6V-8398**	1	SEAL-O-RING	
	53	4	*148-8371*	1	ELBOW AS	
		4	**8C-8988**	1	ELBOW (SWIVEL)	
		4	**6V-8397**	1	SEAL-O-RING	
	54	2,4	*148-8374*	6	ELBOW AS (90-DEG)	
					(EACH INCLUDES)	
		2,4	**6V-8723**	1	ELBOW (90-DEG)	
		2,4	**3K-0360**	1	SEAL-O-RING	
		2,4	**6V-8397**	1	SEAL-O-RING	
	55	2	*148-8381*	2	ELBOW AS	
					(EACH INCLUDES)	
		2	**8T-5429**	1	ELBOW	
		2	**3D-2824**	1	SEAL-O-RING	
		2	**6V-8398**	1	SEAL-O-RING	
	56	1	*148-8436*	2	TEE AS	
					(EACH INCLUDES)	
		1	**6V-8775**	1	TEE-FACE SEAL	
		1	**3K-0360**	1	SEAL-O-RING	
		1	**6V-8398**	2	SEAL-O-RING	
	57	3	*148-8444*	2	TEE AS-SWIVEL	
					(EACH INCLUDES)	
		3	**6V-9837**	1	TEE-SWIVEL	
		3	**6V-8398**	2	SEAL-O-RING	

287-7454 **LINES GP-ACCUMULATOR** *(contd.)* **i03563222**

NOTE	REF NO	GRAPHIC REF	PART NUMBER	QTY	PART NAME 1 2 3 4 5 6 (PRODUCT LEVEL)	SEE PAGE
	58	4	*164-5605*	2	CONNECTOR AS	
					(EACH INCLUDES)	
		4	**8T-0076**	1	CONNECTOR	
		4	**3K-0360**	1	SEAL-O-RING	
		4	**6V-8397**	1	SEAL-O-RING	
	59	4	*164-5608*	1	CONNECTOR AS	
		4	**8T-1687**	1	CONNECTOR	
		4	**3K-0360**	1	SEAL-O-RING	
		4	**6V-8398**	1	SEAL-O-RING	
	60	2,3,4	**1S-0994**	6	CLIP	
I	61	1	**237-0364**	1	HOSE AS	
I	62	1	**239-9779**	1	HOSE AS	
I	63	2	**245-5793**	1	HOSE AS	
I	64	2	**250-5613**	1	HOSE AS	
Y	65	4	**260-6502**	1	SWIVEL GP (CIRCLE DRIVE)	649
I	66	2	**276-4672**	1	HOSE AS	
I	67	2	**282-5967**	1	HOSE AS	
	68	4	**3B-4628**	2	PIN-COTTER	
	69	2	**3E-4321**	1	CLIP	
	70	1	**3G-8047**	2	GROMMET	
	71	1,2	**3G-8054**	3	CLIP (TAB)	
	72	1,2	**3G-8057**	3	CLIP (SLOT)	
	73	3	**5P-1076**	3	WASHER-HARD (13.5X30X4-MM THK)	
	74	1	**5P-7464**	2	CLIP (SLOT)	
	75	1	**5P-7465**	2	CLIP (TAB)	
I	76	2	**5T-9686**	2	HOSE AS	
	77	2,3,4	**6D-4246**	12	CLIP	
	78	2	**6V-0974**	1	GROMMET	
	79	1	**6V-1249**	2	GROMMET	
	80	1,3	**6V-8398**	12	SEAL-O-RING	
	81	4	**6V-8801**	4	NUT (3/8-16-THD)	
	82	4	**7X-0605**	4	WASHER-HARD (13X28X1.6-MM THK)	
	83	4	**8D-9092**	1	PIN	
	84	1,2,3, 4	**8T-4121**	48	WASHER-HARD (11X21X2.5-MM THK)	
M	85	2,4	**8T-4133**	3	NUT (M10X1.5-THD)	
M	86	1,2	**8T-4136**	6	BOLT (M10X1.5X25-MM)	
M	87	1,2,3	**8T-4137**	13	BOLT (M10X1.5X20-MM)	
M	88	3	**8T-4139**	3	BOLT (M12X1.75X30-MM)	
M	89	3	**8T-4186**	6	BOLT (M10X1.5X40-MM)	
M	90	4	**8T-4195**	6	BOLT (M10X1.5X30-MM)	
M	91	1	**8T-4196**	2	BOLT (M10X1.5X35-MM)	
M	92	2	**8T-4198**	1	BOLT (M10X1.5X100-MM)	
	93	3	**8T-4223**	2	WASHER-HARD (13.5X25.5X3-MM THK)	
	94	4	**8T-4896**	8	WASHER-HARD (10.2X18.5X2.5-MM THK)	
	95	4	**8T-4994**	2	WASHER-HARD (20X36.5X3.5-MM THK)	
M	96	3	**8T-5001**	2	BOLT (M12X1.75X130-MM)	
M	97	3	**8T-6466**	1	BOLT (M10X1.5X60-MM)	
M	98	4	**8T-6868**	4	BOLT (M12X1.75X80-MM)	
	99	4	**8T-7008**	2	BOLT (3/8-16X3-IN)	
I	100	2	**8W-2543**	1	HOSE AS	
	101	4	**9B-7237**	2	BOLT (3/8-16X1.25-IN)	
	102	1,2,3, 4	**9X-8250**	8	CLIP	
	103	2	**5P-9299**	2	CLIP	
I	104	2	**341-2780**	1	HOSE AS	
I	105	2	**341-2781**	1	HOSE AS	

I-REFER TO HYDRAULIC INFORMATION SYSTEM
M-METRIC PART
Y-SEPARATE ILLUSTRATION

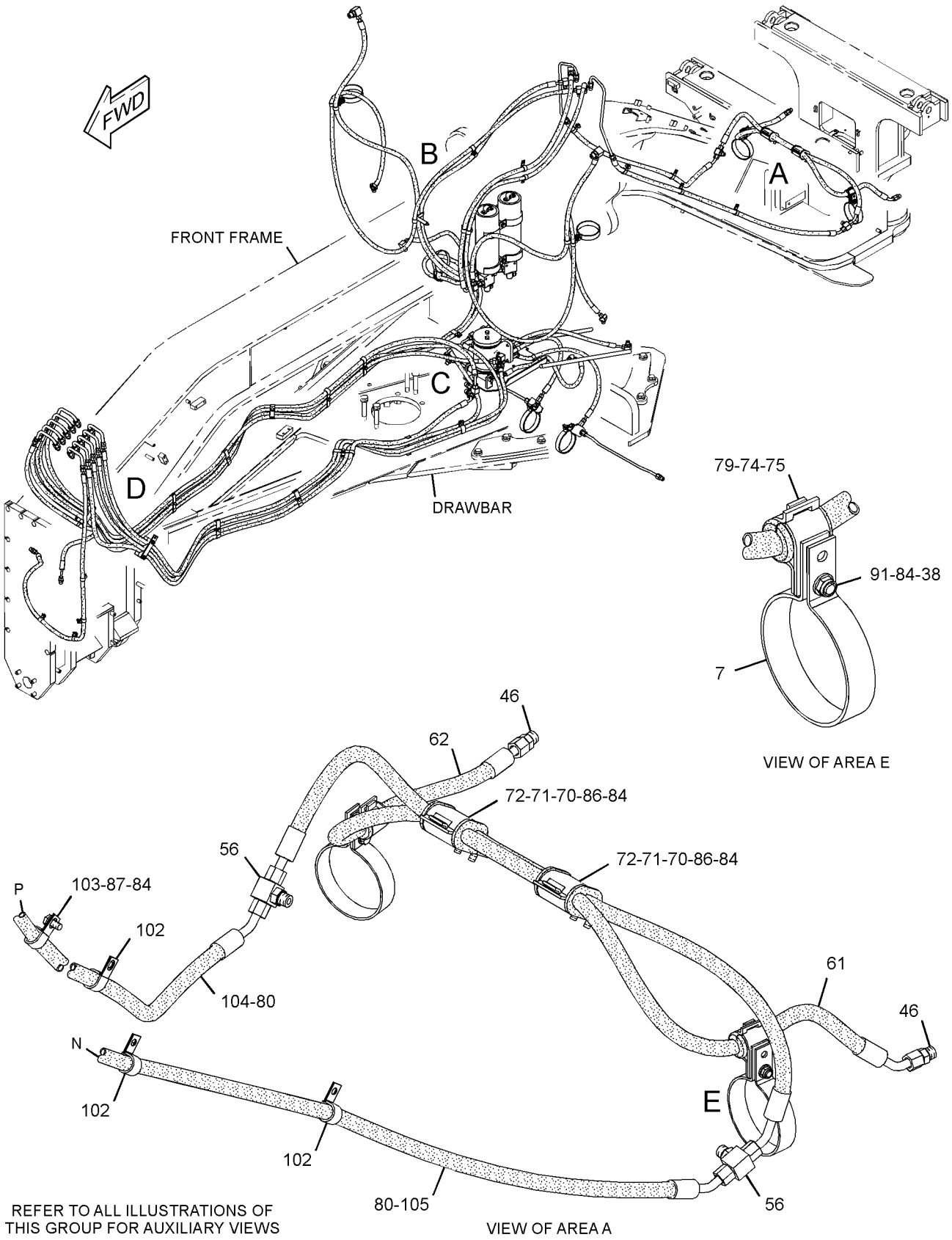

GRAPHIC #1

g01896163

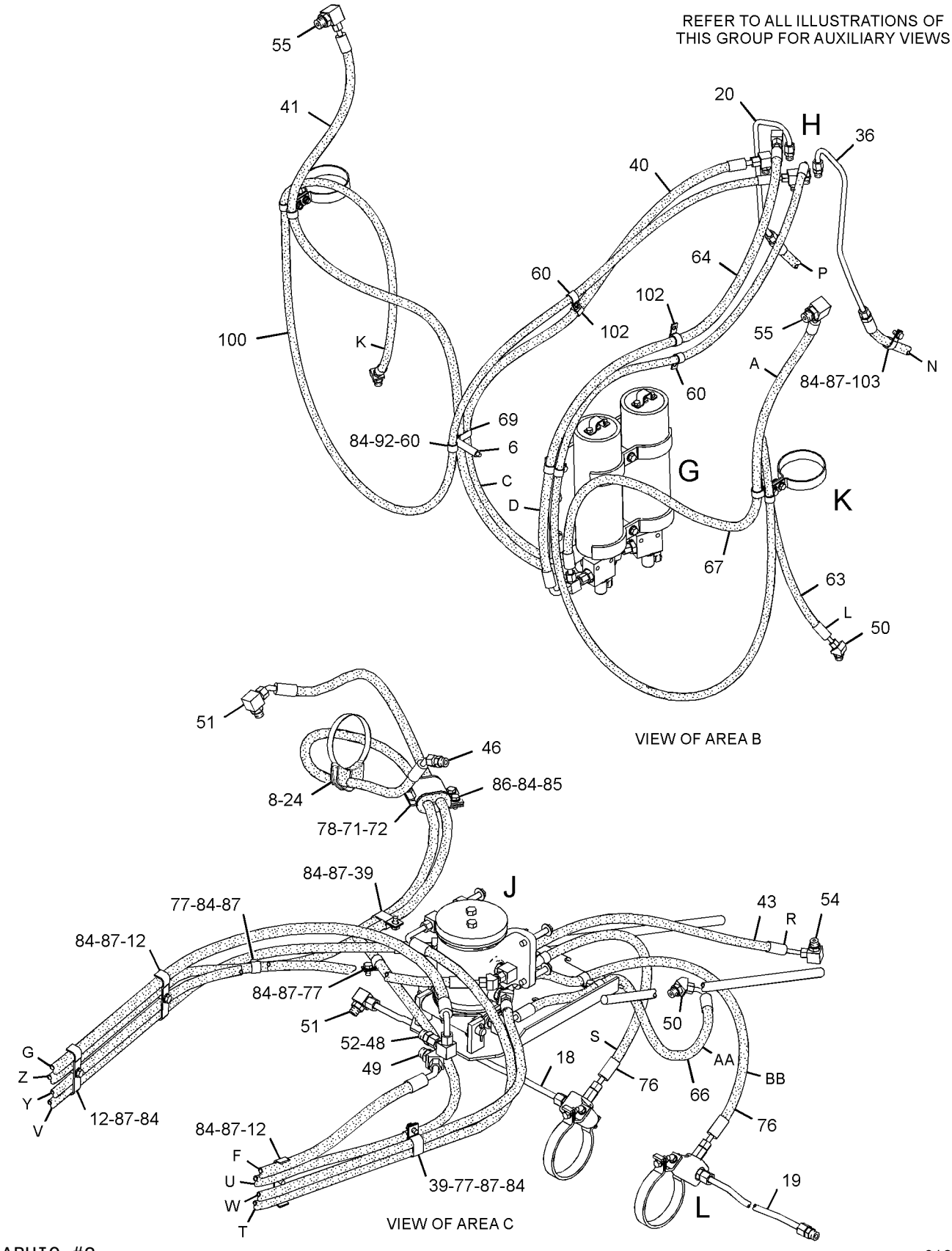

GRAPHIC #2

g01896155

287-7454 **LINES GP-ACCUMULATOR** *(contd.)* **i03563222**

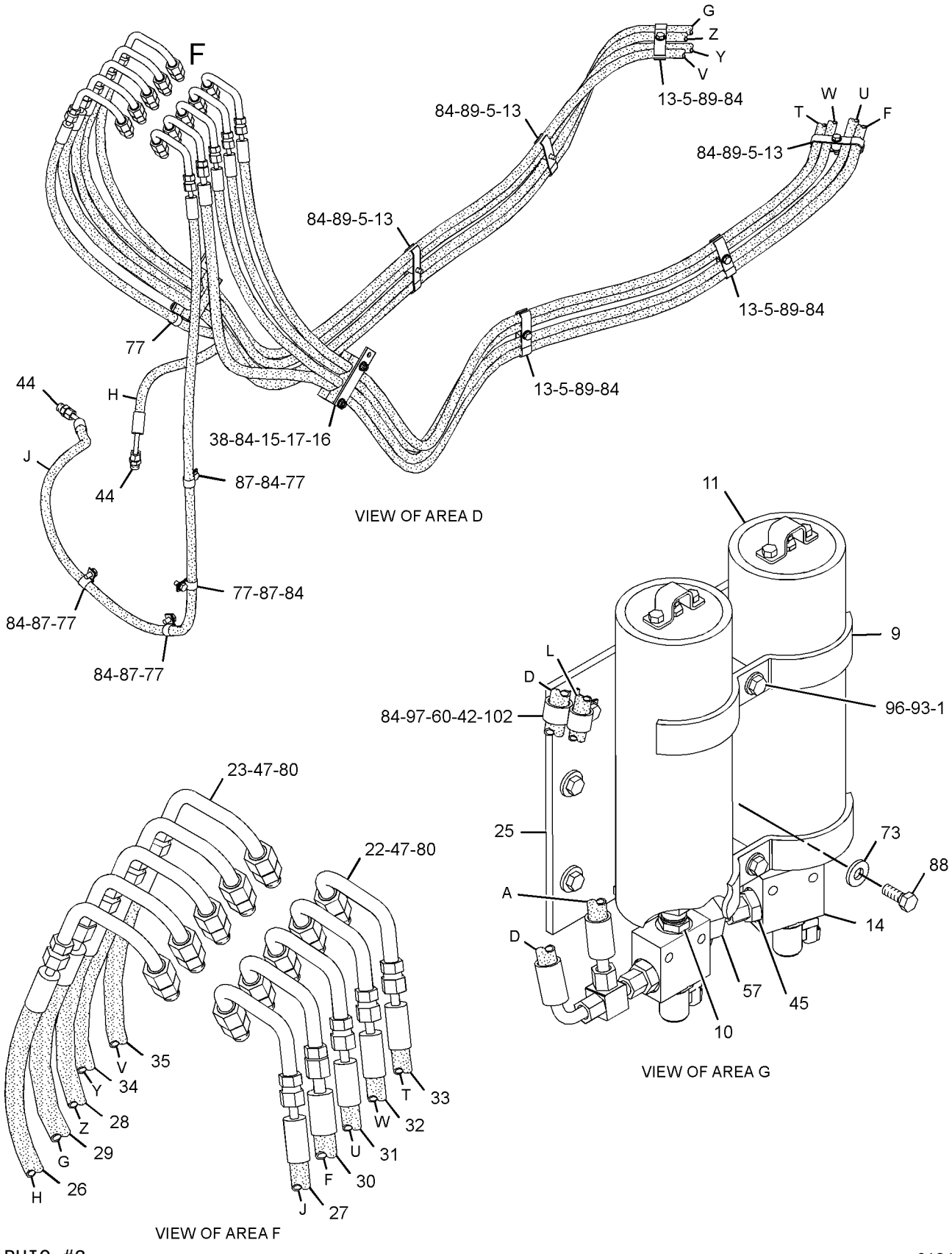

GRAPHIC #3

g01347958

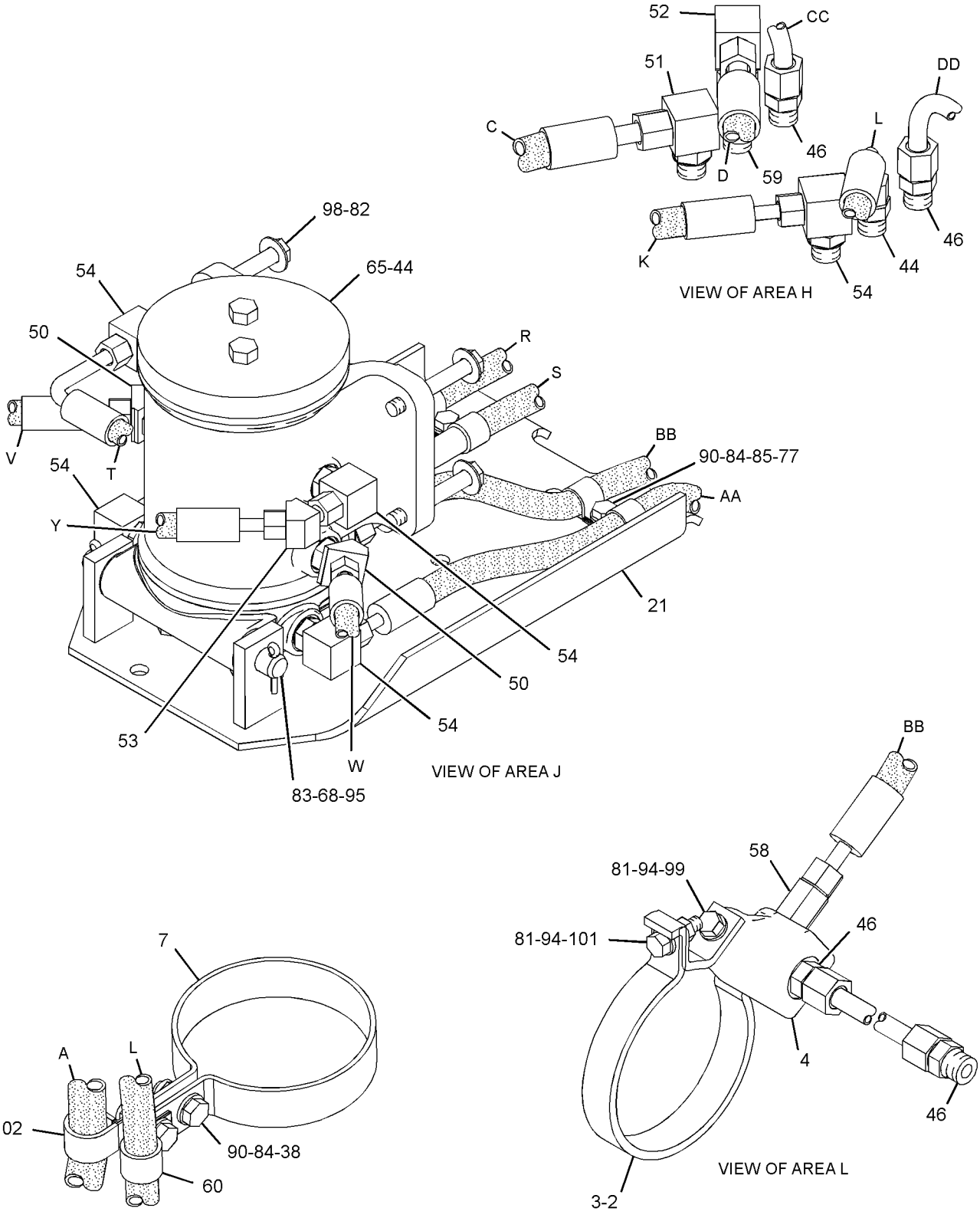

GRAPHIC #4 **<END>** g01347954

HYDRAULIC SYSTEM

366-3383 LINES GP-ACCUMULATOR

S/N: R9H1-UP

PART OF 366-3374 CONTROL AR-HYDRAULIC

AN ATTACHMENT

SMCS-5057, 5077 **i04024469**

NOTE	REF NO	GRAPHIC REF	PART NUMBER	QTY	PART NAME 1 2 3 4 5 6 (PRODUCT LEVEL)	SEE PAGE
	1	3	**4N-5091**	2	SPACER (0.53X1X3.375-IN THK)	
	2	2	**5P-0599**	1	CLAMP-BAND	
	3	2	**8W-3989**	2	CLAMP	
	4	2	**8W-3990**	2	CLAMP	
	5	2	**8W-3991**	2	JUNCTION BLOCK	
	6	1,2	**9M-4594**	6	SPACER (0.406X0.875X0.75-IN THK)	
	7	3	**102-7886**	1	SLEEVE	
	8	3,4	**107-0211**	4	CLAMP	
I	9	3	**113-0981**	1	HOSE AS	
I	10	3	**115-8428**	1	HOSE AS	
	11	3	**133-6934**	1	SPACER (11X20X25-MM THK)	
I	12	2	**136-2617**	1	HOSE AS	
Y	13	3	*160-9413*	2	ACCUMULATOR GP-HYDRAULIC (BLADE CUSHION)	548
	14	3	**162-7449**	2	CLAMP	
	15	4	*171-6466*	2	UNION AS	
					(EACH INCLUDES)	
		4	**3D-2824**	2	SEAL-O-RING	
		4	**5P-9810**	1	UNION	
I	16	3	**245-5793**	1	HOSE AS	
	17	2	**246-6341**	3	CLAMP	
	18	1,2	**246-6342**	12	CLAMP	
I	19	3	**250-5613**	1	HOSE AS	
	20	1	**259-5418**	2	BLOCK	
	21	1	**259-5419**	2	PLATE	
	22	1	**259-5898**	2	BLOCK	
	23	2	**269-9517**	1	TUBE AS	
	24	2	**269-9518**	1	TUBE AS	
	25	2	**269-9521**	1	GUIDE AS-HOSE	
M		2	**8T-3490**	2	NUT-WELD (M10X1.5-THD)	
	26	4	**269-9522**	5	TUBE AS	
	27	4	**269-9523**	5	TUBE AS	
	28	2	**273-9589**	1	BLOCK	
	29	3	**274-8312**	1	PLATE AS	
M		3	**8T-3490**	1	NUT-WELD (M10X1.5-THD)	
M		3	**8T-3597**	2	NUT-WELD (M12X1.75-THD)	
I	30	2	**276-4672**	1	HOSE AS	
I	31	3	**282-5967**	1	HOSE AS	
I	32	1	**286-2243**	1	HOSE AS	
I	33	1	**286-2244**	1	HOSE AS	
I	34	1	**288-4543**	1	HOSE AS	
I	35	1	**288-4544**	1	HOSE AS	
I	36	1	**288-4545**	1	HOSE AS	
I	37	1	**288-4546**	1	HOSE AS	
I	38	1	**288-5211**	1	HOSE AS	
I	39	1	**288-5364**	1	HOSE AS	
I	40	1	**288-6112**	1	HOSE AS	
I	41	1	**288-6113**	1	HOSE AS	
Y	42	4	**322-3798**	2	MANIFOLD GP-CONTROL	632
I	43	4	**354-8468**	1	HOSE AS	
I	44	4	**354-8469**	1	HOSE AS	
	45	2	**100-4336**	2	CLIP	
	46	1,3	*148-8318*	5	CONNECTOR AS	
					(EACH INCLUDES)	
		1,3	**3K-0360**	1	SEAL-O-RING	
		1,3	**6V-8397**	1	SEAL-O-RING	

366-3383 **LINES GP-ACCUMULATOR** *(contd.)* **i04024469**

NOTE	REF NO	GRAPHIC REF	PART NUMBER	QTY	PART NAME 1 2 3 4 5 6 (PRODUCT LEVEL)	SEE PAGE
		1,3	**6V-8634**	1	CONNECTOR	
	47	4	*148-8328*	2	CONNECTOR AS	
					(EACH INCLUDES)	
		4	**3D-2824**	1	SEAL-O-RING	
		4	**6V-8398**	1	SEAL-O-RING	
		4	**6V-8633**	1	CONNECTOR	
	48	2,4	*148-8340*	6	CONNECTOR AS	
					(EACH INCLUDES)	
		2,4	**3K-0360**	1	SEAL-O-RING	
		2,4	**6V-8398**	1	SEAL-O-RING	
		2,4	**6V-8639**	1	CONNECTOR	
	49	4	*148-8342*	10	CONNECTOR AS	
					(EACH INCLUDES)	
		4	**3K-0360**	1	SEAL-O-RING	
		4	**6V-8632**	1	CONNECTOR	
		4	**7J-9108**	1	SEAL-O-RING	
	50	2	*148-8345*	1	CONNECTOR AS	
		2	**2M-9780**	1	SEAL-O-RING	
		2	**6V-8398**	1	SEAL-O-RING	
		2	**6V-8638**	1	CONNECTOR	
	51	2	*148-8358*	1	ELBOW AS	
		2	**2M-9780**	1	SEAL-O-RING	
		2	**6V-8398**	1	SEAL-O-RING	
		2	**6V-8624**	1	ELBOW	
	52	2,3	*148-8363*	5	ELBOW AS	
					(EACH INCLUDES)	
		2,3	**3K-0360**	1	SEAL-O-RING	
		2,3	**6V-8397**	1	SEAL-O-RING	
		2,3	**6V-9876**	1	ELBOW	
	53	2,3,4	*148-8364*	5	ELBOW AS	
					(EACH INCLUDES)	
		2,3,4	**3K-0360**	1	SEAL-O-RING	
		2,3,4	**6V-8398**	1	SEAL-O-RING	
		2,3,4	**6V-8625**	1	ELBOW	
	54	2,3	*148-8370*	2	ELBOW AS	
					(EACH INCLUDES)	
		2,3	**6V-8398**	1	SEAL-O-RING	
		2,3	**6V-9851**	1	ELBOW	
	55	2	*148-8371*	1	ELBOW AS	
		2	**6V-8397**	1	SEAL-O-RING	
		2	**8C-8988**	1	ELBOW	
	56	2,3	*148-8374*	6	ELBOW AS	
					(EACH INCLUDES)	
		2,3	**3K-0360**	1	SEAL-O-RING	
		2,3	**6V-8397**	1	SEAL-O-RING	
		2,3	**6V-8723**	1	ELBOW	
	57	3	*148-8381*	2	ELBOW AS	
					(EACH INCLUDES)	
		3	**3D-2824**	1	SEAL-O-RING	
		3	**6V-8398**	1	SEAL-O-RING	
		3	**8T-5429**	1	ELBOW	
	58	4	*148-8436*	2	TEE AS	
					(EACH INCLUDES)	
		4	**3K-0360**	1	SEAL-O-RING	
		4	**6V-8398**	2	SEAL-O-RING	
		4	**6V-8775**	1	TEE-FACE SEAL	
	59	4	*148-8444*	2	TEE AS-SWIVEL	
					(EACH INCLUDES)	
		4	**6V-8398**	2	SEAL-O-RING	

366-3383 **LINES GP-ACCUMULATOR** *(contd.)* **i04024469**

NOTE	REF NO	GRAPHIC REF	PART NUMBER	QTY	PART NAME 1 2 3 4 5 6 (PRODUCT LEVEL)	SEE PAGE
		4	**6V-9837**	1	TEE-SWIVEL	
	60	4	*153-6241*	2	ELBOW AS	
					(EACH INCLUDES)	
		4	**6V-8398**	1	SEAL-O-RING	
		4	**8C-8989**	1	ELBOW	
	61	2	*164-5605*	2	CONNECTOR AS	
					(EACH INCLUDES)	
		2	**3K-0360**	1	SEAL-O-RING	
		2	**6V-8397**	1	SEAL-O-RING	
		2	**8T-0076**	1	CONNECTOR	
	62	3	*164-5608*	1	CONNECTOR AS	
		3	**3K-0360**	1	SEAL-O-RING	
		3	**6V-8398**	1	SEAL-O-RING	
		3	**8T-1687**	1	CONNECTOR	
	63	3	**1S-0994**	6	CLIP	
I	64	4	**237-0364**	1	HOSE AS	
I	65	4	**239-9779**	1	HOSE AS	
Y	66	2	**260-6502**	1	SWIVEL GP (CIRCLE DRIVE)	649
	67	2	**3B-4628**	2	PIN-COTTER	
	68	3	**3E-4321**	1	CLIP	
	69	4	**3G-8047**	2	GROMMET	
	70	2,4	**3G-8054**	3	CLIP (TAB)	
	71	2,4	**3G-8057**	3	CLIP (SLOT)	
	72	3	**5P-1076**	3	WASHER-HARD (13.5X30X4-MM THK)	
	73	4	**5P-7464**	2	CLIP (SLOT)	
	74	4	**5P-7465**	2	CLIP (TAB)	
I	75	2	**5T-9686**	2	HOSE AS	
	76	4	**6D-4244**	5	CLIP	
	77	1,2	**6D-4246**	12	CLIP	
	78	2	**6V-0974**	1	GROMMET	
	79	4	**6V-1249**	2	GROMMET	
	80	4	**6V-8398**	10	SEAL-O-RING	
	81	2	**6V-8801**	4	NUT (3/8-16-THD)	
	82	3	**7X-0605**	4	WASHER-HARD (13X28X1.6-MM THK)	
	83	2	**8D-9092**	1	PIN	
M	84	1,3,4	**8T-0389**	10	LOCKNUT (M10X1.5-THD)	
	85	1,2,3, 4	**8T-4121**	48	WASHER-HARD (11X21X2.5-MM THK)	
M	86	2	**8T-4133**	3	NUT (M10X1.5-THD)	
M	87	2,4	**8T-4136**	6	BOLT (M10X1.5X25-MM)	
M	88	1,2,4	**8T-4137**	13	BOLT (M10X1.5X20-MM)	
M	89	3	**8T-4139**	3	BOLT (M12X1.75X30-MM)	
M	90	1,2	**8T-4186**	6	BOLT (M10X1.5X40-MM)	
M	91	2,3	**8T-4195**	6	BOLT (M10X1.5X30-MM)	
M	92	4	**8T-4196**	2	BOLT (M10X1.5X35-MM)	
M	93	3	**8T-4198**	1	BOLT (M10X1.5X100-MM)	
	94	3	**8T-4223**	2	WASHER-HARD (13.5X25.5X3-MM THK)	
	95	2	**8T-4896**	8	WASHER-HARD (10.2X18.5X2.5-MM THK)	
	96	2	**8T-4994**	2	WASHER-HARD (20X36.5X3.5-MM THK)	
M	97	3	**8T-5001**	2	BOLT (M12X1.75X130-MM)	
M	98	3	**8T-6466**	1	BOLT (M10X1.5X60-MM)	
M	99	3	**8T-6868**	4	BOLT (M12X1.75X80-MM)	
	100	2	**8T-7008**	2	BOLT (3/8-16X3-IN)	
I	101	3	**8W-2543**	1	HOSE AS	
	102	2	**9B-7237**	2	BOLT (3/8-16X1.25-IN)	
	103	3	**9X-8250**	5	CLIP	

I-REFER TO HYDRAULIC INFORMATION SYSTEM
M-METRIC PART
Y-SEPARATE ILLUSTRATION

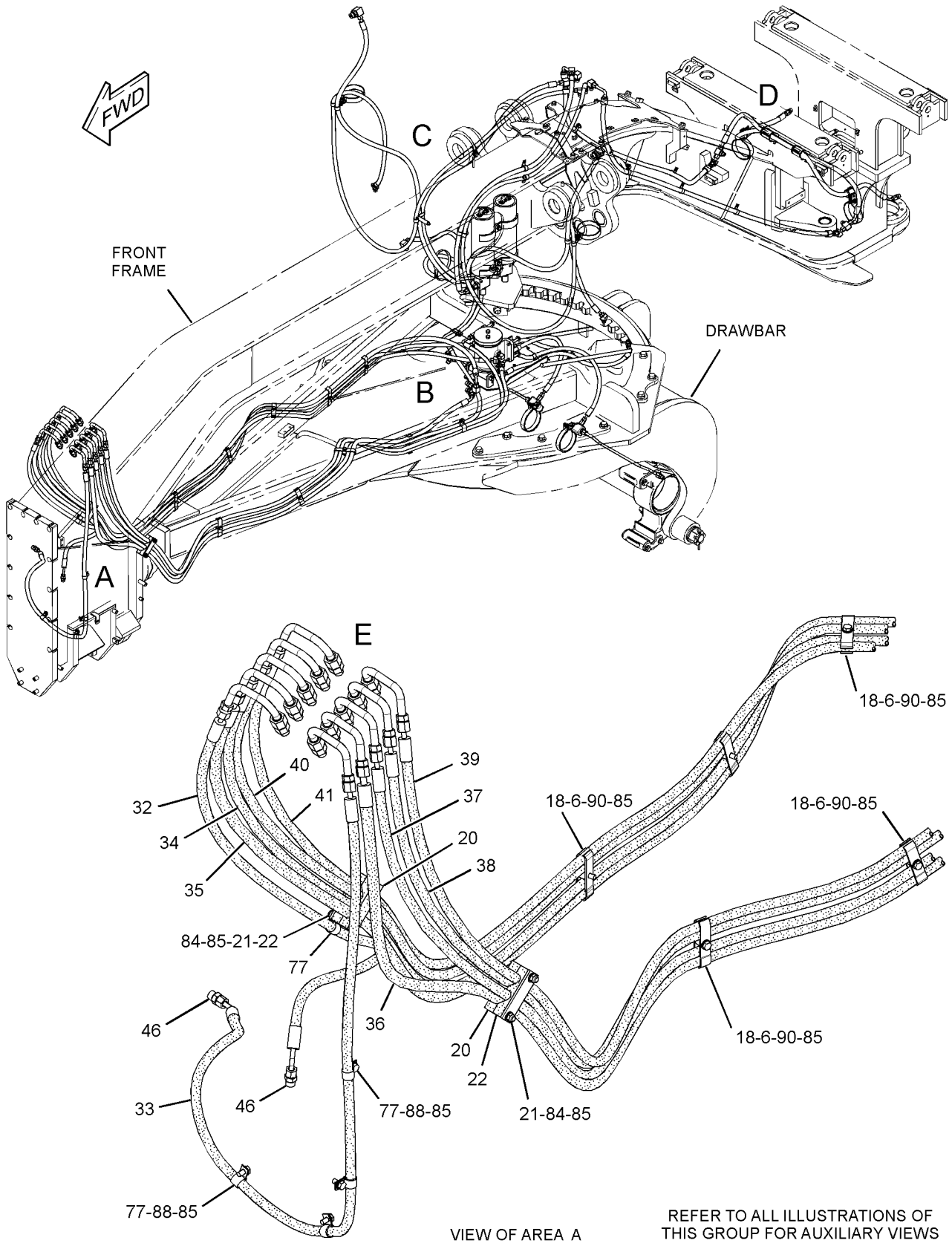

GRAPHIC #1

g02223293

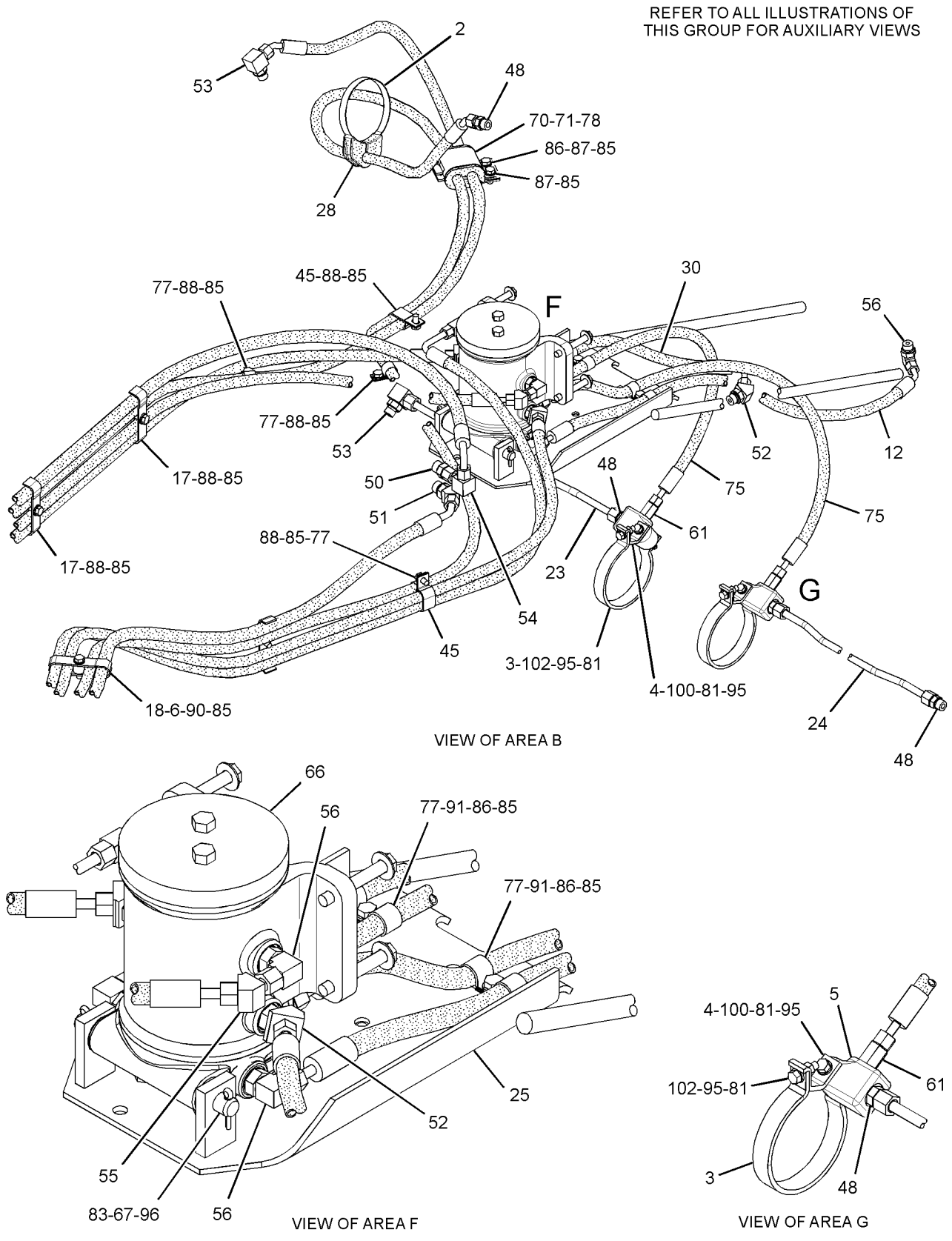

GRAPHIC #2

g02223313

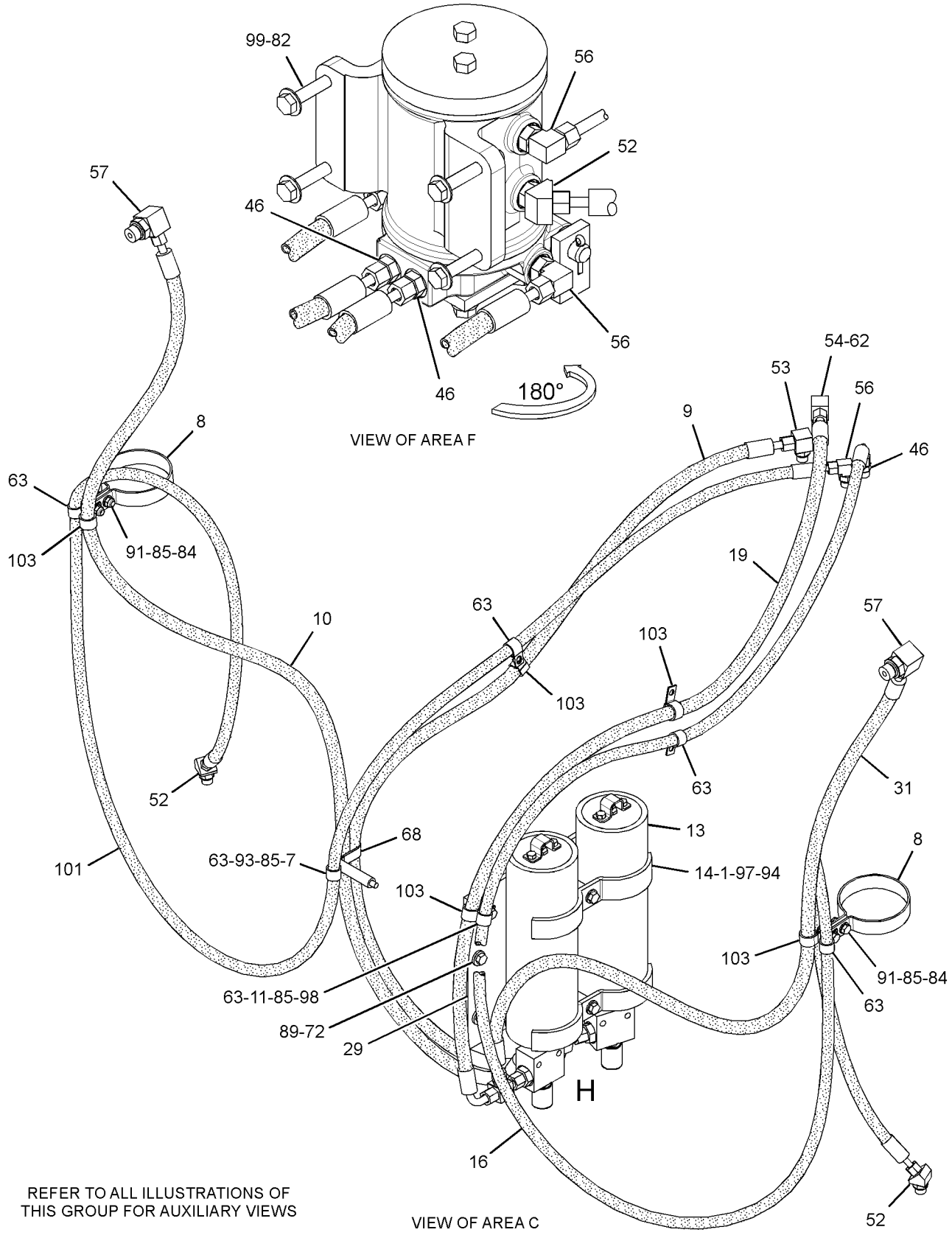

GRAPHIC #3

g02223333

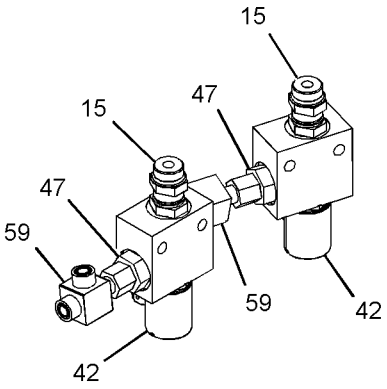

VIEW OF AREA H
(PARTS REMOVED FOR CLARITY)

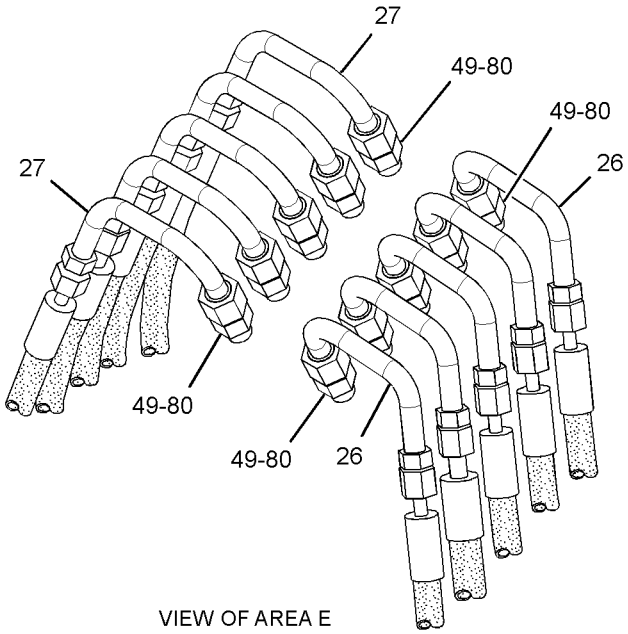

VIEW OF AREA E

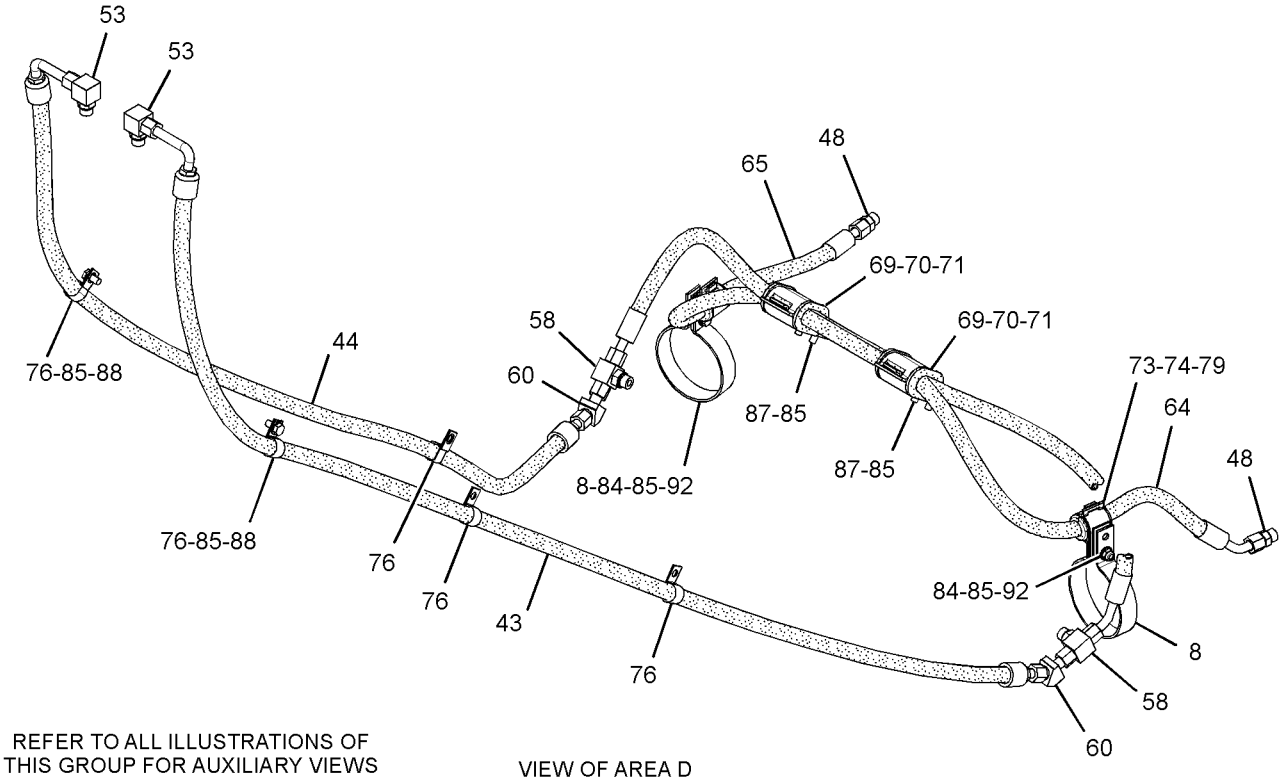

REFER TO ALL ILLUSTRATIONS OF
THIS GROUP FOR AUXILIARY VIEWS

VIEW OF AREA D

GRAPHIC #4

<END>

g02223334

HYDRAULIC SYSTEM

249-6531 LINES GP-CENTERSHIFT LOCK

S/N: R9H1-UP

PART OF 349-2556 COMMON AR

SMCS-5057, 5221 **i03367961**

NOTE	REF NO	GRAPHIC REF	PART NUMBER	QTY	PART NAME 1 2 3 4 5 6 (PRODUCT LEVEL)	SEE PAGE
	1	1	**110-5266**	1	ORIFICE	
CI	2	1	**141-9889**	1	HOSE AS	
I	3	1	**318-8184**	1	HOSE AS	
	4	1	**328-8411**	1	TUBE AS	
	5	1	**133-6934**	1	SPACER (11X20X25-MM THK)	
	6	1	*148-8336*	2	CONNECTOR AS	
					(EACH INCLUDES)	
		1	**6V-8636**	1	CONNECTOR	
		1	**6V-8397**	1	SEAL-O-RING	
		1	**3J-1907**	1	SEAL-O-RING	
C	7	1	*148-8367*	2	ELBOW AS	
					(EACH INCLUDES)	
		1	**6V-9850**	1	ELBOW	
		1	**6V-8397**	1	SEAL-O-RING	
	8	1	*148-8374*	1	ELBOW AS	
		1	**6V-8723**	1	ELBOW	
		1	**3K-0360**	1	SEAL-O-RING	
		1	**6V-8397**	1	SEAL-O-RING	
	9	1	*148-8378*	1	ELBOW AS	
		1	**6V-8724**	1	ELBOW	
		1	**3J-1907**	1	SEAL-O-RING	
		1	**6V-8397**	1	SEAL-O-RING	
	10	1	**3J-1907**	1	SEAL-O-RING	
	11	1	**4S-4456**	2	CLIP	
	12	1	**5S-7379**	1	BOLT (3/8-16X0.875-IN)	
	13	1	**6V-8397**	1	SEAL-O-RING	
	14	1	**8M-2773**	3	CLIP	
	15	1	**8T-4121**	6	WASHER-HARD (11X21X2.5-MM THK)	
M	16	1	**8T-4133**	2	NUT (M10X1.5-THD)	
M	17	1	**8T-4136**	2	BOLT (M10X1.5X25-MM)	
M	18	1	**8T-4137**	1	BOLT (M10X1.5X20-MM)	
M	19	1	**8T-4182**	1	BOLT (M10X1.5X45-MM)	
	20	1	**8T-4896**	1	WASHER-HARD (10.2X18.5X2.5-MM THK)	
	21	1	**9M-8406**	2	CLIP	
CY	22	1	**6E-4701**	1	VALVE GP-CHECK	663
C	23	1	**132-2453**	1	UNION	

C-CHANGE FROM PREVIOUS TYPE
I-REFER TO HYDRAULIC INFORMATION SYSTEM
M-METRIC PART
Y-SEPARATE ILLUSTRATION

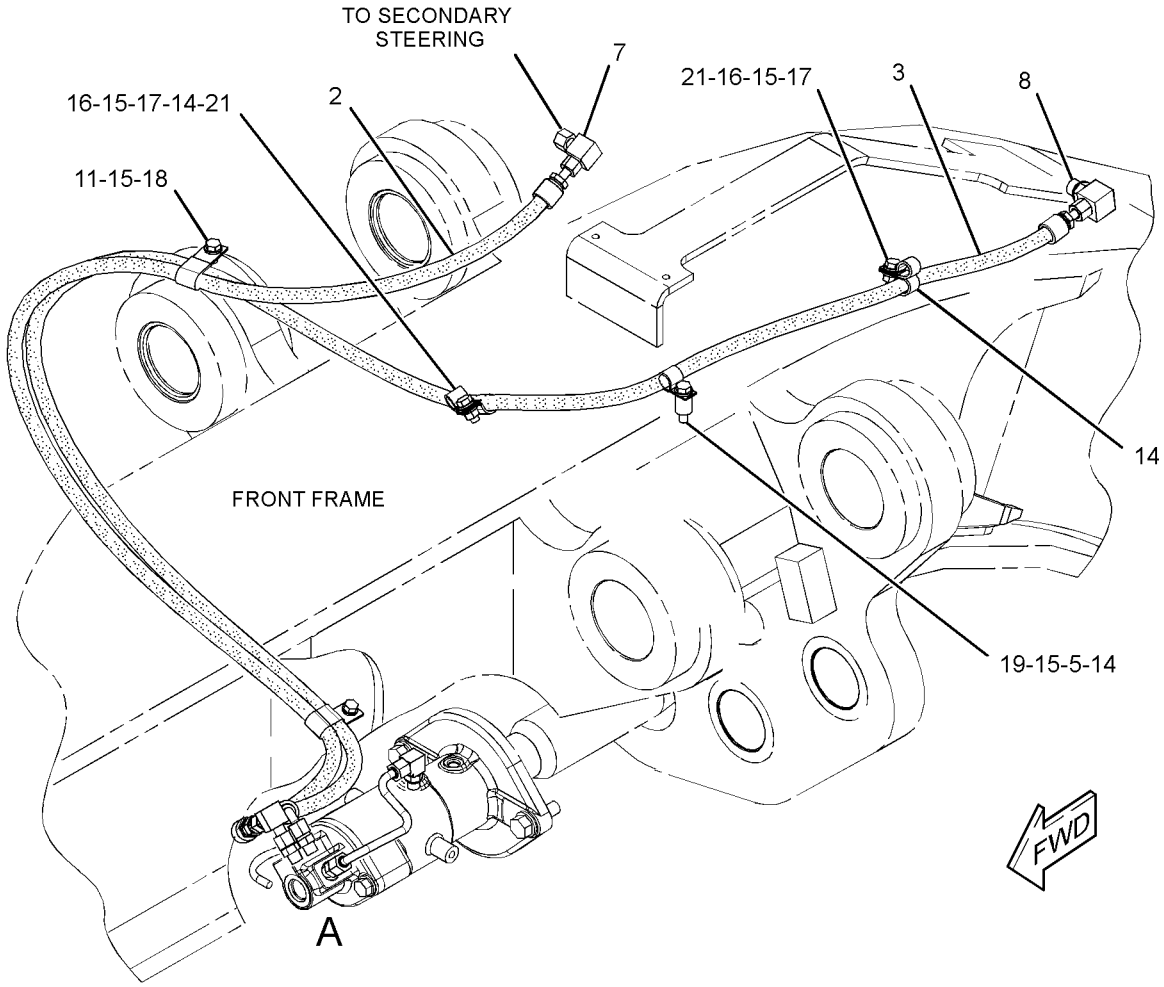

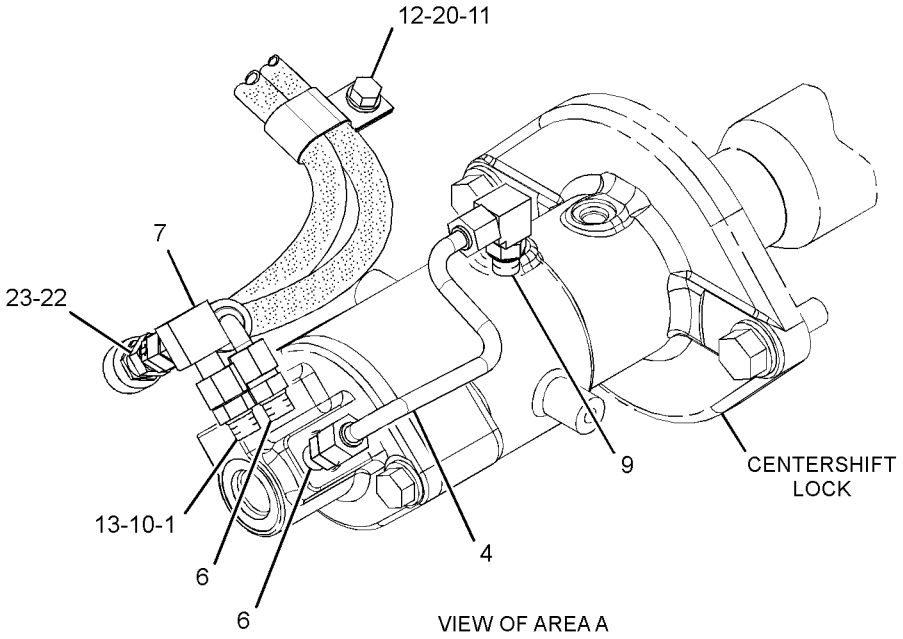

VIEW OF AREA A

GRAPHIC #1 **<END>** g01927857

HYDRAULIC SYSTEM

277-6005 LINES GP-HYDRAULIC—BLADE CUSHION

S/N: R9H1-UP

PART OF 271-3652 FLOAT AR-BLADE

AN ATTACHMENT

SMCS-5057 **i04041112**

NOTE	REF NO	GRAPHIC REF	PART NUMBER	QTY	PART NAME 1 2 3 4 5 6 (PRODUCT LEVEL)	SEE PAGE
	1	2	**4N-5091**	2	SPACER (0.53X1X3.375-IN THK)	
	2	3	**8W-3989**	2	CLAMP	
	3	3	**8W-3990**	2	CLAMP	
	4	3	**8W-3991**	2	JUNCTION BLOCK	
	5	1,3	**9M-4594**	6	SPACER (0.406X0.875X0.75-IN THK)	
	6	2,4	**107-0211**	4	CLAMP	
I	7	2	**133-4820**	1	HOSE AS	
	8	3	**5P-0599**	1	CLAMP-BAND	
	9	2	**162-7449**	2	CLAMP	
	10	2	*171-6466*	2	UNION AS	
					(EACH INCLUDES)	
		2	**5P-9810**	1	UNION	
		2	**3D-2824**	2	SEAL-O-RING	
I	11	2	**193-5319**	1	HOSE AS	
CY	12	2	*219-8035*	2	ACCUMULATOR GP-BLADE CUSHION (CHARGED)	547
	13	3	**246-6341**	3	CLAMP	
	14	1,3	**246-6342**	12	CLAMP	
Y	15	2	**322-3798**	2	MANIFOLD GP-CONTROL (BLADE CUSHION)	632
	16	1	**259-5418**	2	BLOCK	
	17	1	**259-5419**	2	PLATE	
	18	1	**259-5898**	2	BLOCK	
	19	3	**269-9517**	1	TUBE AS	
	20	3	**269-9518**	1	TUBE AS	
I	21	4	**354-8469**	1	HOSE AS	
	22	3	**269-9521**	1	GUIDE AS-HOSE	
M		3	**8T-3490**	2	NUT-WELD (M10X1.5-THD)	
	23	4	**269-9522**	5	TUBE AS	
	24	4	**269-9523**	5	TUBE AS	
I	25	4	**270-1178**	1	HOSE AS	
	26	3	**273-9589**	1	BLOCK	
	27	2	**274-8312**	1	PLATE AS	
M		2	**8T-3490**	1	NUT-WELD (M10X1.5-THD)	
M		2	**8T-3597**	2	NUT-WELD (M12X1.75-THD)	
Y	28	2,4	**279-6521**	2	VALVE GP-SOLENOID & MANIFOLD (BLADE CUSHION)	699
I	29	4	**288-4543**	1	HOSE AS	
I	30	4	**288-4544**	1	HOSE AS	
I	31	4	**288-4545**	1	HOSE AS	
I	32	4	**288-4546**	1	HOSE AS	
I	33	4	**288-5211**	1	HOSE AS	
I	34	4	**288-5364**	1	HOSE AS	
I	35	4	**288-6112**	1	HOSE AS	
I	36	4	**288-6113**	1	HOSE AS	
I	37	2	**288-9673**	1	HOSE AS	
I	39	4	**294-3622**	1	HOSE AS	
I	41	4	**354-8468**	1	HOSE AS	
	42	3	**100-4336**	2	CLIP	
	43	2	**133-6934**	1	SPACER (11X20X25-MM THK)	
I	44	3	**136-2617**	1	HOSE AS	
I	45	2	**146-0124**	1	HOSE AS	
	46	1,2,3,4	*148-8318*	8	CONNECTOR AS	
					(EACH INCLUDES)	
		1,2,3,4	**6V-8634**	1	CONNECTOR	

277-6005 **LINES GP-HYDRAULIC** ***(contd.)*** **i04041112**

NOTE	REF NO	GRAPHIC REF	PART NUMBER	QTY	PART NAME 1 2 3 4 5 6 (PRODUCT LEVEL)	SEE PAGE
		1,2,3,4	**3K-0360**	1	SEAL-O-RING	
		1,2,3,4	**6V-8397**	1	SEAL-O-RING	
	47	2	*148-8328*	2	CONNECTOR AS	
					(EACH INCLUDES)	
		2	**6V-8633**	1	CONNECTOR	
		2	**3D-2824**	1	SEAL-O-RING	
		2	**6V-8398**	1	SEAL-O-RING	
	48	2,3,4	*148-8340*	8	CONNECTOR AS	
					(EACH INCLUDES)	
		2,3,4	**6V-8639**	1	CONNECTOR	
		2,3,4	**3K-0360**	1	SEAL-O-RING	
		2,3,4	**6V-8398**	1	SEAL-O-RING	
	49	4	*148-8342*	10	CONNECTOR AS	
					(EACH INCLUDES)	
		4	**6V-8632**	1	CONNECTOR	
		4	**3K-0360**	1	SEAL-O-RING	
		4	**7J-9108**	1	SEAL-O-RING	
	50	3	*148-8345*	1	CONNECTOR AS	
		3	**6V-8638**	1	CONNECTOR	
		3	**2M-9780**	1	SEAL-O-RING	
		3	**6V-8398**	1	SEAL-O-RING	
	51	3	*148-8358*	1	ELBOW AS	
		3	**6V-8624**	1	ELBOW	
		3	**2M-9780**	1	SEAL-O-RING	
		3	**6V-8398**	1	SEAL-O-RING	
	52	2,3	*148-8363*	5	ELBOW AS	
					(EACH INCLUDES)	
		2,3	**6V-9876**	1	ELBOW	
		2,3	**3K-0360**	1	SEAL-O-RING	
		2,3	**6V-8397**	1	SEAL-O-RING	
	53	2,3,4	*148-8364*	8	ELBOW AS	
					(EACH INCLUDES)	
		2,3,4	**6V-8625**	1	ELBOW	
		2,3,4	**3K-0360**	1	SEAL-O-RING	
		2,3,4	**6V-8398**	1	SEAL-O-RING	
	54	2,3	*148-8370*	2	ELBOW AS	
					(EACH INCLUDES)	
		2,3	**6V-9851**	1	ELBOW	
		2,3	**6V-8398**	1	SEAL-O-RING	
	55	3	*148-8371*	1	ELBOW AS	
		3	**8C-8988**	1	ELBOW	
		3	**6V-8397**	1	SEAL-O-RING	
	56	2,3	*148-8374*	7	ELBOW AS	
					(EACH INCLUDES)	
		2,3	**6V-8723**	1	ELBOW	
		2,3	**3K-0360**	1	SEAL-O-RING	
		2,3	**6V-8397**	1	SEAL-O-RING	
	57	2	*148-8381*	2	ELBOW AS	
					(EACH INCLUDES)	
		2	**8T-5429**	1	ELBOW	
		2	**3D-2824**	1	SEAL-O-RING	
		2	**6V-8398**	1	SEAL-O-RING	
	58	4	*148-8436*	2	TEE AS	
					(EACH INCLUDES)	
		4	**6V-8775**	1	TEE-FACE SEAL	
		4	**3K-0360**	1	SEAL-O-RING	
		4	**6V-8398**	2	SEAL-O-RING	

277-6005 **LINES GP-HYDRAULIC** *(contd.)* **i04041112**

NOTE	REF NO	GRAPHIC REF	PART NUMBER	QTY	PART NAME 1 2 3 4 5 6 (PRODUCT LEVEL)	SEE PAGE
	59	2	*148-8444*	2	TEE AS-SWIVEL	
					(EACH INCLUDES)	
		2	**6V-9837**	1	TEE-SWIVEL	
		2	**6V-8398**	2	SEAL-O-RING	
	60	3	*164-5605*	2	CONNECTOR AS	
					(EACH INCLUDES)	
		3	**8T-0076**	1	CONNECTOR	
		3	**3K-0360**	1	SEAL-O-RING	
		3	**6V-8397**	1	SEAL-O-RING	
I	61	4	**237-0364**	1	HOSE AS	
I	62	4	**239-9779**	1	HOSE AS	
I	63	2	**241-9657**	1	HOSE AS	
I	64	2	**245-0723**	1	HOSE AS	
I	65	2	**250-5613**	1	HOSE AS	
Y	66	3	**260-6502**	1	SWIVEL GP (CIRCLE DRIVE)	649
I	67	3	**276-4672**	1	HOSE AS	
I	68	2	**279-8969**	1	HOSE AS	
	69	2	**1S-0994**	5	CLIP	
	70	3	**3B-4628**	2	PIN-COTTER	
	71	4	**3G-8047**	2	GROMMET	
	72	3,4	**3G-8054**	3	CLIP (TAB)	
	73	3,4	**3G-8057**	3	CLIP (SLOT)	
	74	2	**5P-1076**	3	WASHER-HARD (13.5X30X4-MM THK)	
	75	4	**5P-7464**	2	CLIP (SLOT)	
	76	4	**5P-7465**	2	CLIP (TAB)	
I	77	3	**5T-9686**	2	HOSE AS	
	78	1,3	**6D-4246**	12	CLIP	
	79	4	**6D-4244**	5	CLIP	
	80	3	**6V-0974**	1	GROMMET	
	81	4	**6V-1249**	2	GROMMET	
	82	4	**6V-8398**	10	SEAL-O-RING	
	83	3	**6V-8801**	4	NUT (3/8-16-THD)	
	84	3	**7X-0605**	4	WASHER-HARD (13X28X1.6-MM THK)	
	85	3	**8D-9092**	1	PIN	
	86	1,2,3, 4	**8T-4121**	52	WASHER-HARD (11X21X2.5-MM THK)	
M	87	3	**8T-4133**	3	NUT (M10X1.5-THD)	
M	88	3,4	**8T-4136**	6	BOLT (M10X1.5X25-MM)	
M	89	1,3,4	**8T-4137**	13	BOLT (M10X1.5X20-MM)	
M	90	2	**8T-4139**	3	BOLT (M12X1.75X30-MM)	
M	91	2,4	**8T-4178**	4	BOLT (M10X1.5X90-MM)	
M	92	2	**8T-4185**	1	BOLT (M10X1.5X50-MM)	
M	93	1,3	**8T-4186**	6	BOLT (M10X1.5X40-MM)	
M	94	2,3	**8T-4195**	7	BOLT (M10X1.5X30-MM)	
M	95	4	**8T-4196**	2	BOLT (M10X1.5X35-MM)	
	96	2	**8T-4223**	2	WASHER-HARD (13.5X25.5X3-MM THK)	
	97	3	**8T-4896**	8	WASHER-HARD (10.2X18.5X2.5-MM THK)	
	98	3	**8T-4994**	2	WASHER-HARD (20X36.5X3.5-MM THK)	
M	99	2	**8T-5001**	2	BOLT (M12X1.75X130-MM)	
M	100	3	**8T-6868**	4	BOLT (M12X1.75X80-MM)	
	101	3	**8T-7008**	2	BOLT (3/8-16X3-IN)	
I	102	2	**8W-0220**	1	HOSE AS	
I	103	2	**8X-9145**	1	HOSE AS	
	104	3	**9B-7237**	2	BOLT (3/8-16X1.25-IN)	
	105	2	**9X-8250**	6	CLIP	
M	106	1,2,4	**8T-0389**	10	LOCKNUT (M10X1.5-THD)	
	107	4	*153-6241*	2	ELBOW AS	
					(EACH INCLUDES)	
		4	**6V-8398**	1	SEAL-O-RING	
		4	**8C-8989**	1	ELBOW	

C-CHANGE FROM PREVIOUS TYPE
I-REFER TO HYDRAULIC INFORMATION SYSTEM
M-METRIC PART
Y-SEPARATE ILLUSTRATION

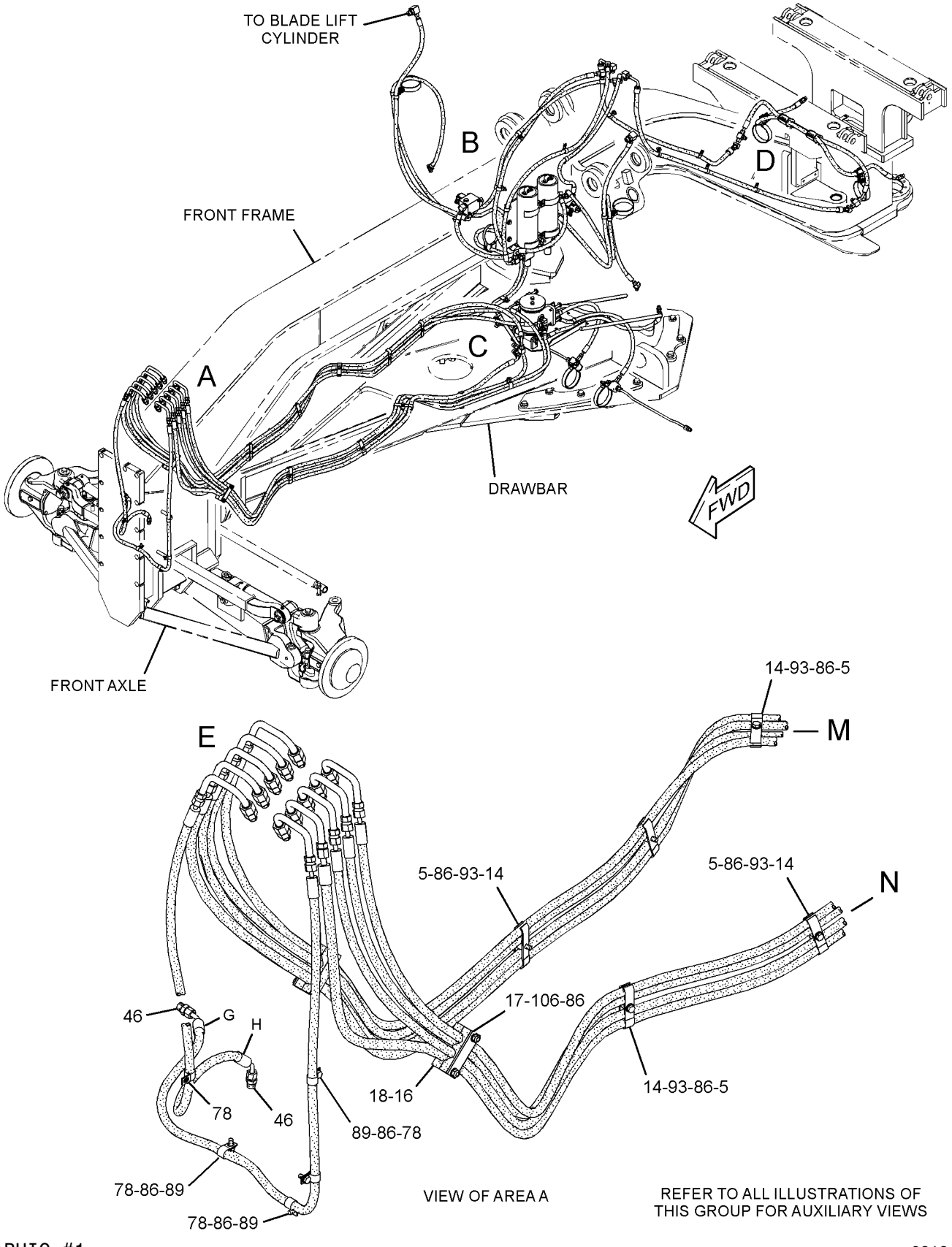

GRAPHIC #1

g02184095

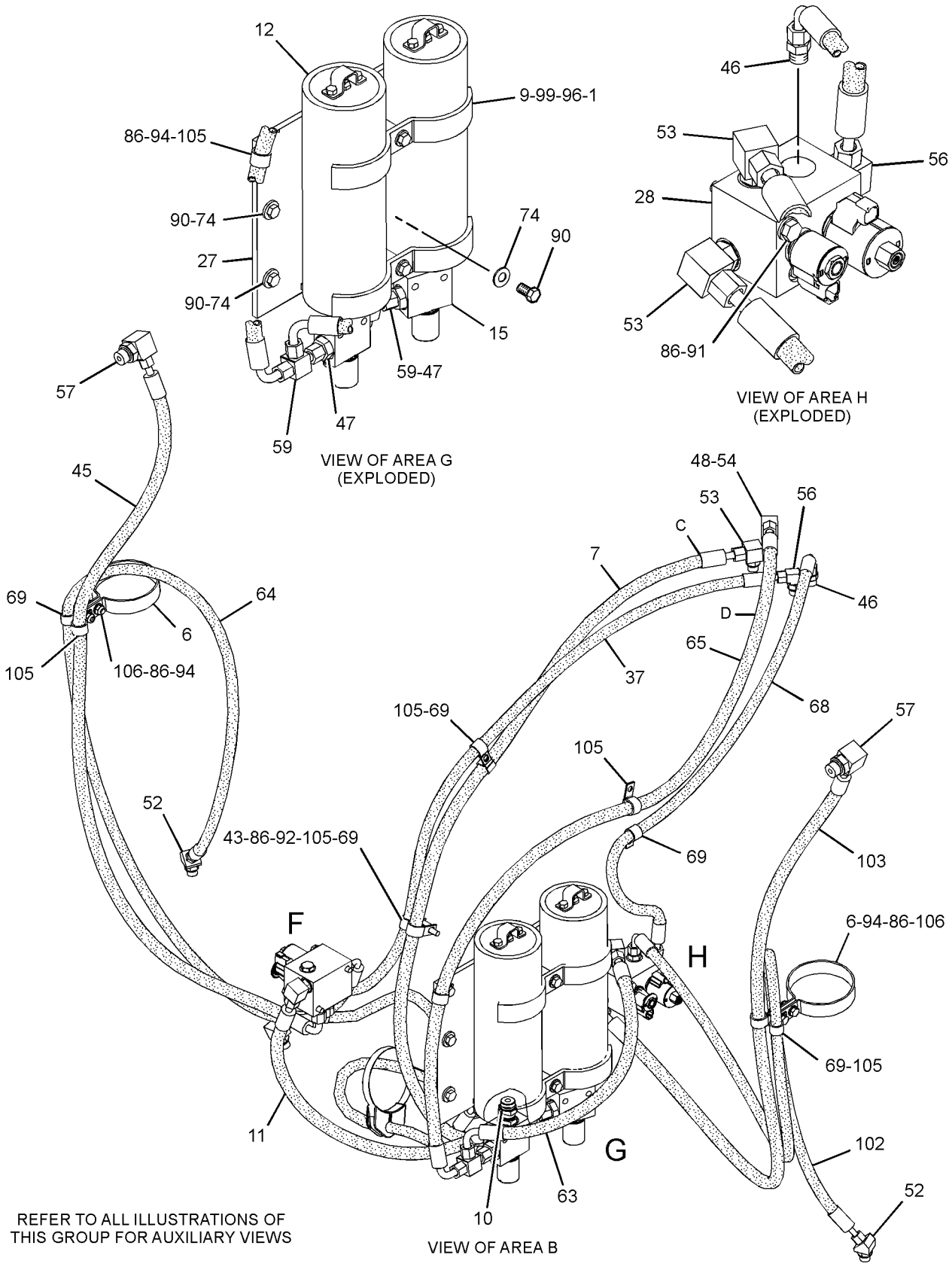

GRAPHIC #2

g02184097

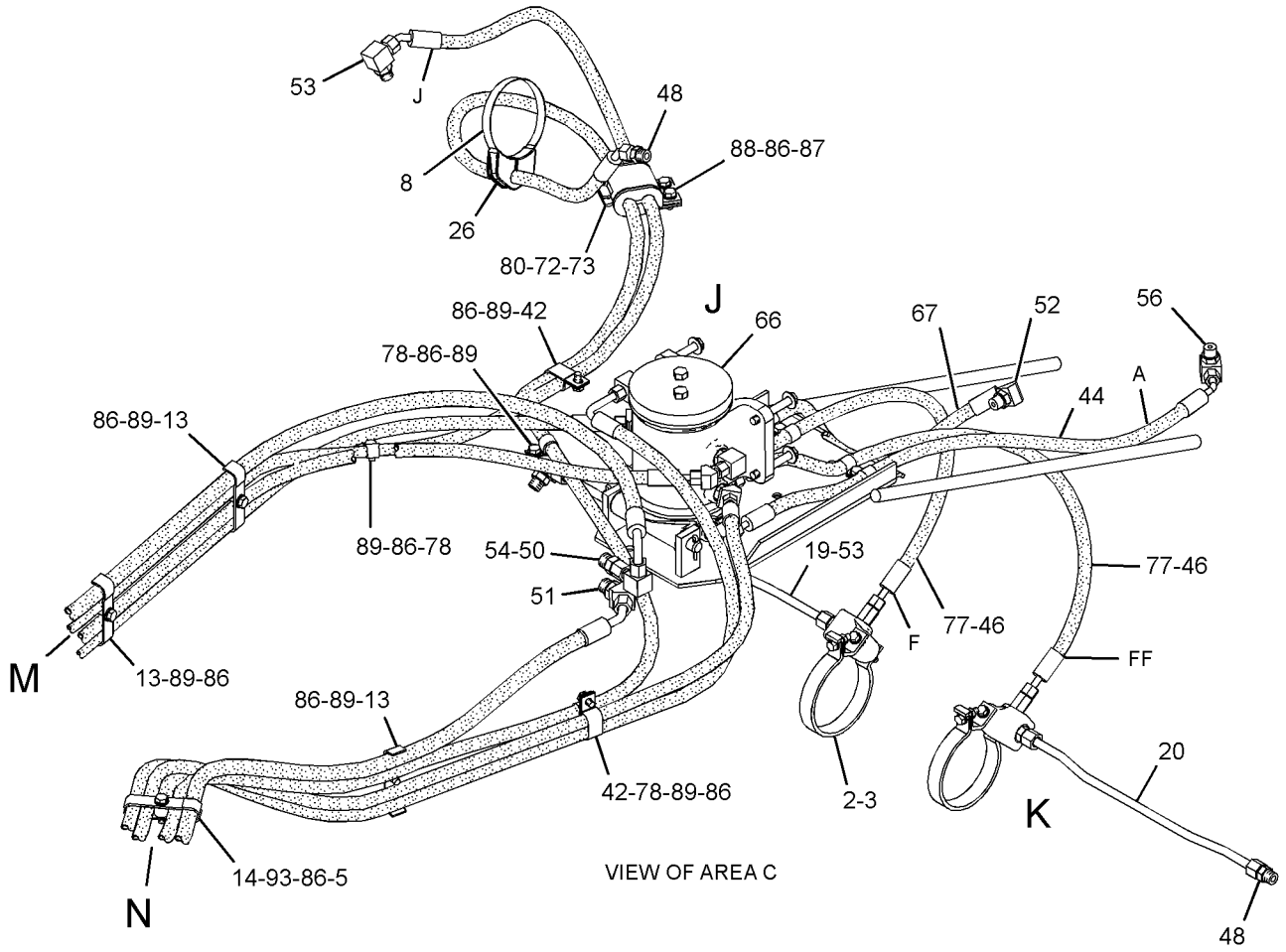

VIEW OF AREA C

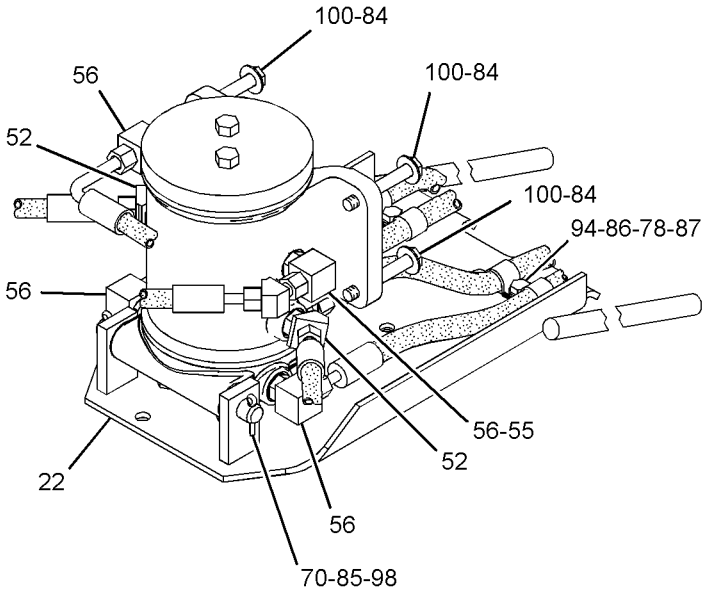

VIEW OF AREA J

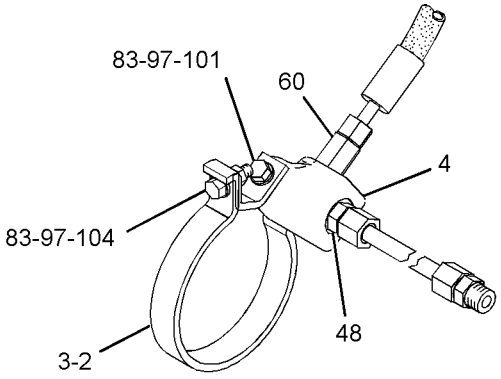

VIEW OF AREA K

GRAPHIC #3 g01410458

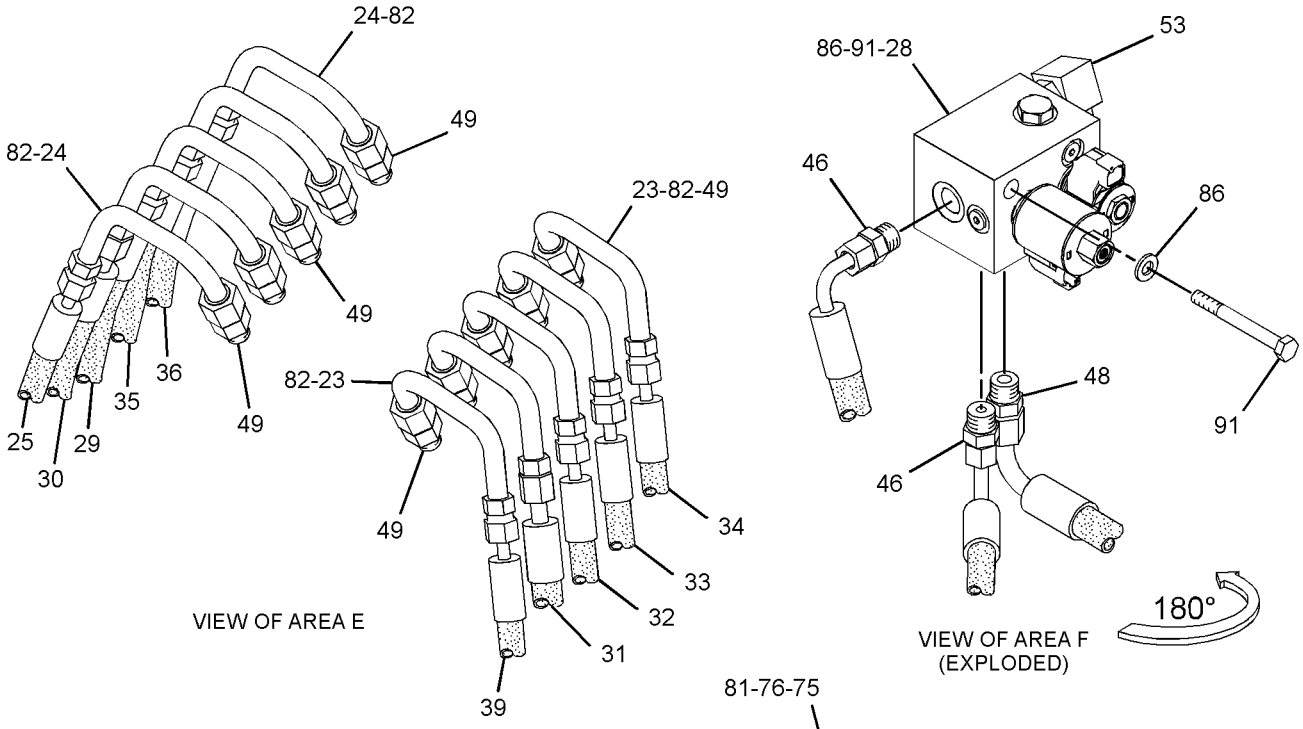

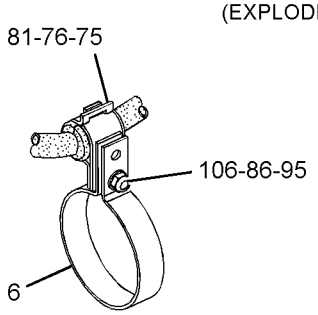

VIEW OF AREA L

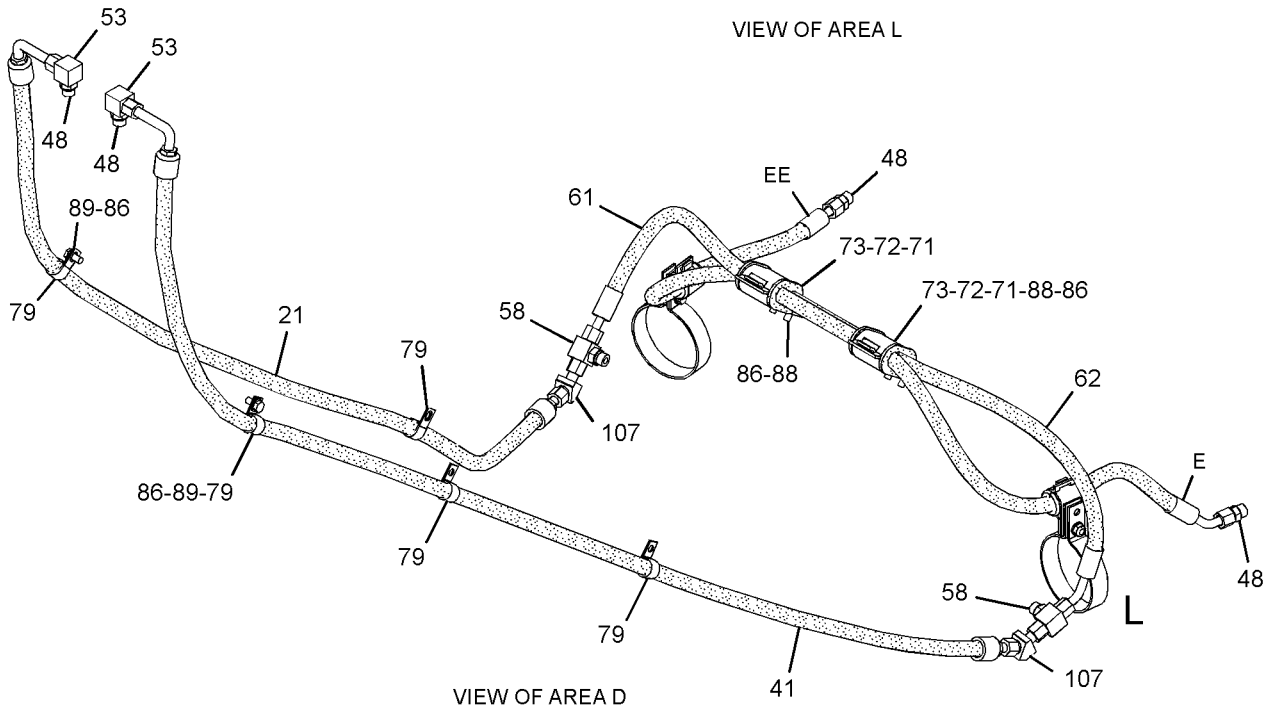

VIEW OF AREA D

GRAPHIC #4 **<END>** g02184099

HYDRAULIC SYSTEM

366-3384 LINES GP-HYDRAULIC—BLADE

S/N: R9H1-UP

PART OF 366-3375 FLOAT AR-BLADE

AN ATTACHMENT

SMCS-5057 **i04024444**

NOTE	REF NO	GRAPHIC REF	PART NUMBER	QTY	PART NAME 1 2 3 4 5 6 (PRODUCT LEVEL)	SEE PAGE
	1	4	**4N-5091**	2	SPACER (0.53X1X3.375-IN THK)	
	2	1	**5P-0599**	1	CLAMP-BAND	
	3	1	**8W-3989**	2	CLAMP	
	4	1	**8W-3990**	2	CLAMP	
	5	1	**8W-3991**	2	JUNCTION BLOCK	
	6	1,3	**9M-4594**	6	SPACER (0.406X0.875X0.75-IN THK)	
	7	2,4	**107-0211**	4	CLAMP	
I	8	4	**133-4820**	1	HOSE AS	
	9	4	**133-6934**	1	SPACER (11X20X25-MM THK)	
I	10	1	**136-2617**	1	HOSE AS	
Y	11	4	*160-9413*	2	ACCUMULATOR GP-HYDRAULIC (BLADE CUSHION)	548
	12	4	**162-7449**	2	CLAMP	
	13	2	*171-6466*	2	UNION AS	
					(EACH INCLUDES)	
		2	**3D-2824**	2	SEAL-O-RING	
		2	**5P-9810**	1	UNION	
I	14	4	**193-5319**	1	HOSE AS	
I	15	4	**241-9657**	1	HOSE AS	
	16	1	**246-6341**	3	CLAMP	
	17	1,3	**246-6342**	12	CLAMP	
I	18	4	**250-5613**	1	HOSE AS	
	19	3	**259-5418**	2	BLOCK	
	20	3	**259-5419**	2	PLATE	
	21	3	**259-5898**	2	BLOCK	
	22	1	**269-9517**	1	TUBE AS	
	23	1	**269-9518**	1	TUBE AS	
	24	1	**269-9521**	1	GUIDE AS-HOSE	
M		1	**8T-3490**	2	NUT-WELD (M10X1.5-THD)	
	25	2	**269-9522**	5	TUBE AS	
	26	2	**269-9523**	5	TUBE AS	
I	27	3	**270-1178**	1	HOSE AS	
	28	1	**273-9589**	1	BLOCK	
	29	4	**274-8312**	1	PLATE AS	
M		4	**8T-3490**	1	NUT-WELD (M10X1.5-THD)	
M		4	**8T-3597**	2	NUT-WELD (M12X1.75-THD)	
I	30	1	**276-4672**	1	HOSE AS	
Y	31	2,4	**279-6521**	2	VALVE GP-SOLENOID & MANIFOLD	699
I	32	3	**288-4543**	1	HOSE AS	
I	33	3	**288-4544**	1	HOSE AS	
I	34	3	**288-4545**	1	HOSE AS	
I	35	3	**288-4546**	1	HOSE AS	
I	36	3	**288-5211**	1	HOSE AS	
I	37	3	**288-5364**	1	HOSE AS	
I	38	3	**288-6112**	1	HOSE AS	
I	39	3	**288-6113**	1	HOSE AS	
I	40	4	**288-9673**	1	HOSE AS	
I	41	3	**294-3622**	1	HOSE AS	
Y	42	2	**322-3798**	2	MANIFOLD GP-CONTROL	632
I	43	2	**354-8468**	1	HOSE AS	
I	44	2	**354-8469**	1	HOSE AS	
	45	1	**100-4336**	2	CLIP	
I	46	4	**146-0124**	1	HOSE AS	
	47	2,3,4	*148-8318*	8	CONNECTOR AS	
					(EACH INCLUDES)	
		2,3,4	**3K-0360**	1	SEAL-O-RING	

366-3384 **LINES GP-HYDRAULIC** *(contd.)* **i04024444**

NOTE	REF NO	GRAPHIC REF	PART NUMBER	QTY	PART NAME 1 2 3 4 5 6 (PRODUCT LEVEL)	SEE PAGE
		2,3,4	**6V-8397**	1	SEAL-O-RING	
		2,3,4	**6V-8634**	1	CONNECTOR	
	48	2	*148-8328*	2	CONNECTOR AS	
					(EACH INCLUDES)	
		2	**3D-2824**	1	SEAL-O-RING	
		2	**6V-8398**	1	SEAL-O-RING	
		2	**6V-8633**	1	CONNECTOR	
	49	1,2,4	*148-8340*	8	CONNECTOR AS	
					(EACH INCLUDES)	
		1,2,4	**3K-0360**	1	SEAL-O-RING	
		1,2,4	**6V-8398**	1	SEAL-O-RING	
		1,2,4	**6V-8639**	1	CONNECTOR	
	50	2	*148-8342*	10	CONNECTOR AS	
					(EACH INCLUDES)	
		2	**3K-0360**	1	SEAL-O-RING	
		2	**6V-8632**	1	CONNECTOR	
		2	**7J-9108**	1	SEAL-O-RING	
	51	1	*148-8345*	1	CONNECTOR AS	
		1	**2M-9780**	1	SEAL-O-RING	
		1	**6V-8398**	1	SEAL-O-RING	
		1	**6V-8638**	1	CONNECTOR	
	52	1	*148-8358*	1	ELBOW AS	
		1	**2M-9780**	1	SEAL-O-RING	
		1	**6V-8398**	1	SEAL-O-RING	
		1	**6V-8624**	1	ELBOW	
	53	1,4	*148-8363*	5	ELBOW AS	
					(EACH INCLUDES)	
		1,4	**3K-0360**	1	SEAL-O-RING	
		1,4	**6V-8397**	1	SEAL-O-RING	
		1,4	**6V-9876**	1	ELBOW	
	54	1,2,4	*148-8364*	8	ELBOW AS	
					(EACH INCLUDES)	
		1,2,4	**3K-0360**	1	SEAL-O-RING	
		1,2,4	**6V-8398**	1	SEAL-O-RING	
		1,2,4	**6V-8625**	1	ELBOW	
	55	1,4	*148-8370*	2	ELBOW AS	
					(EACH INCLUDES)	
		1,4	**6V-8398**	1	SEAL-O-RING	
		1,4	**6V-9851**	1	ELBOW	
	56	1	*148-8371*	1	ELBOW AS	
		1	**6V-8397**	1	SEAL-O-RING	
		1	**8C-8988**	1	ELBOW	
	57	1,4	*148-8374*	7	ELBOW AS	
					(EACH INCLUDES)	
		1,4	**3K-0360**	1	SEAL-O-RING	
		1,4	**6V-8397**	1	SEAL-O-RING	
		1,4	**6V-8723**	1	ELBOW	
	58	4	*148-8381*	2	ELBOW AS	
					(EACH INCLUDES)	
		4	**3D-2824**	1	SEAL-O-RING	
		4	**6V-8398**	1	SEAL-O-RING	
		4	**8T-5429**	1	ELBOW	
	59	2	*148-8436*	2	TEE AS	
					(EACH INCLUDES)	
		2	**3K-0360**	1	SEAL-O-RING	
		2	**6V-8398**	2	SEAL-O-RING	
		2	**6V-8775**	1	TEE-FACE SEAL	
	60	2	*148-8444*	2	TEE AS-SWIVEL	
					(EACH INCLUDES)	

366-3384 **LINES GP-HYDRAULIC** *(contd.)* **i04024444**

NOTE	REF NO	GRAPHIC REF	PART NUMBER	QTY	PART NAME 1 2 3 4 5 6 (PRODUCT LEVEL)	SEE PAGE
		2	**6V-8398**	2	SEAL-O-RING	
		2	**6V-9837**	1	TEE-SWIVEL	
	61	2	*153-6241*	2	ELBOW AS	
					(EACH INCLUDES)	
		2	**6V-8398**	1	SEAL-O-RING	
		2	**8C-8989**	1	ELBOW	
	62	1	*164-5605*	2	CONNECTOR AS	
					(EACH INCLUDES)	
		1	**3K-0360**	1	SEAL-O-RING	
		1	**6V-8397**	1	SEAL-O-RING	
		1	**8T-0076**	1	CONNECTOR	
I	63	2	**237-0364**	1	HOSE AS	
I	64	2	**239-9779**	1	HOSE AS	
I	65	4	**245-0723**	1	HOSE AS	
Y	66	1	**260-6502**	1	SWIVEL GP (CIRCLE DRIVE)	649
I	67	4	**279-8969**	1	HOSE AS	
	68	4	**1S-0994**	5	CLIP	
	69	1	**3B-4628**	2	PIN-COTTER	
	70	2	**3G-8047**	2	GROMMET	
	71	1,2	**3G-8054**	3	CLIP (TAB)	
	72	1,2	**3G-8057**	3	CLIP (SLOT)	
	73	4	**5P-1076**	3	WASHER-HARD (13.5X30X4-MM THK)	
	74	2	**5P-7464**	2	CLIP (SLOT)	
	75	2	**5P-7465**	2	CLIP (TAB)	
I	76	1	**5T-9686**	2	HOSE AS	
	77	2	**6D-4244**	5	CLIP	
	78	1,3	**6D-4246**	12	CLIP	
	79	1	**6V-0974**	1	GROMMET	
	80	2	**6V-1249**	2	GROMMET	
	81	2	**6V-8398**	10	SEAL-O-RING	
	82	1	**6V-8801**	4	NUT (3/8-16-THD)	
	83	4	**7X-0605**	4	WASHER-HARD (13X28X1.6-MM THK)	
	84	1	**8D-9092**	1	PIN	
M	85	2,3,4	**8T-0389**	10	LOCKNUT (M10X1.5-THD)	
	86	1,2,3, 4	**8T-4121**	52	WASHER-HARD (11X21X2.5-MM THK)	
M	87	1	**8T-4133**	3	NUT (M10X1.5-THD)	
M	88	1,2	**8T-4136**	6	BOLT (M10X1.5X25-MM)	
M	89	1,2,3	**8T-4137**	13	BOLT (M10X1.5X20-MM)	
M	90	4	**8T-4139**	3	BOLT (M12X1.75X30-MM)	
M	91	2,4	**8T-4178**	4	BOLT (M10X1.5X90-MM)	
M	92	4	**8T-4185**	1	BOLT (M10X1.5X50-MM)	
M	93	1,3	**8T-4186**	6	BOLT (M10X1.5X40-MM)	
M	94	1,4	**8T-4195**	7	BOLT (M10X1.5X30-MM)	
M	95	2	**8T-4196**	2	BOLT (M10X1.5X35-MM)	
	96	4	**8T-4223**	2	WASHER-HARD (13.5X25.5X3-MM THK)	
	97	1	**8T-4896**	8	WASHER-HARD (10.2X18.5X2.5-MM THK)	
	98	1	**8T-4994**	2	WASHER-HARD (20X36.5X3.5-MM THK)	
M	99	4	**8T-5001**	2	BOLT (M12X1.75X130-MM)	
M	100	4	**8T-6868**	4	BOLT (M12X1.75X80-MM)	
	101	1	**8T-7008**	2	BOLT (3/8-16X3-IN)	
I	102	4	**8W-0220**	1	HOSE AS	
I	103	4	**8X-9145**	1	HOSE AS	
	104	1	**9B-7237**	2	BOLT (3/8-16X1.25-IN)	
	105	4	**9X-8250**	6	CLIP	

I-REFER TO HYDRAULIC INFORMATION SYSTEM
M-METRIC PART
Y-SEPARATE ILLUSTRATION

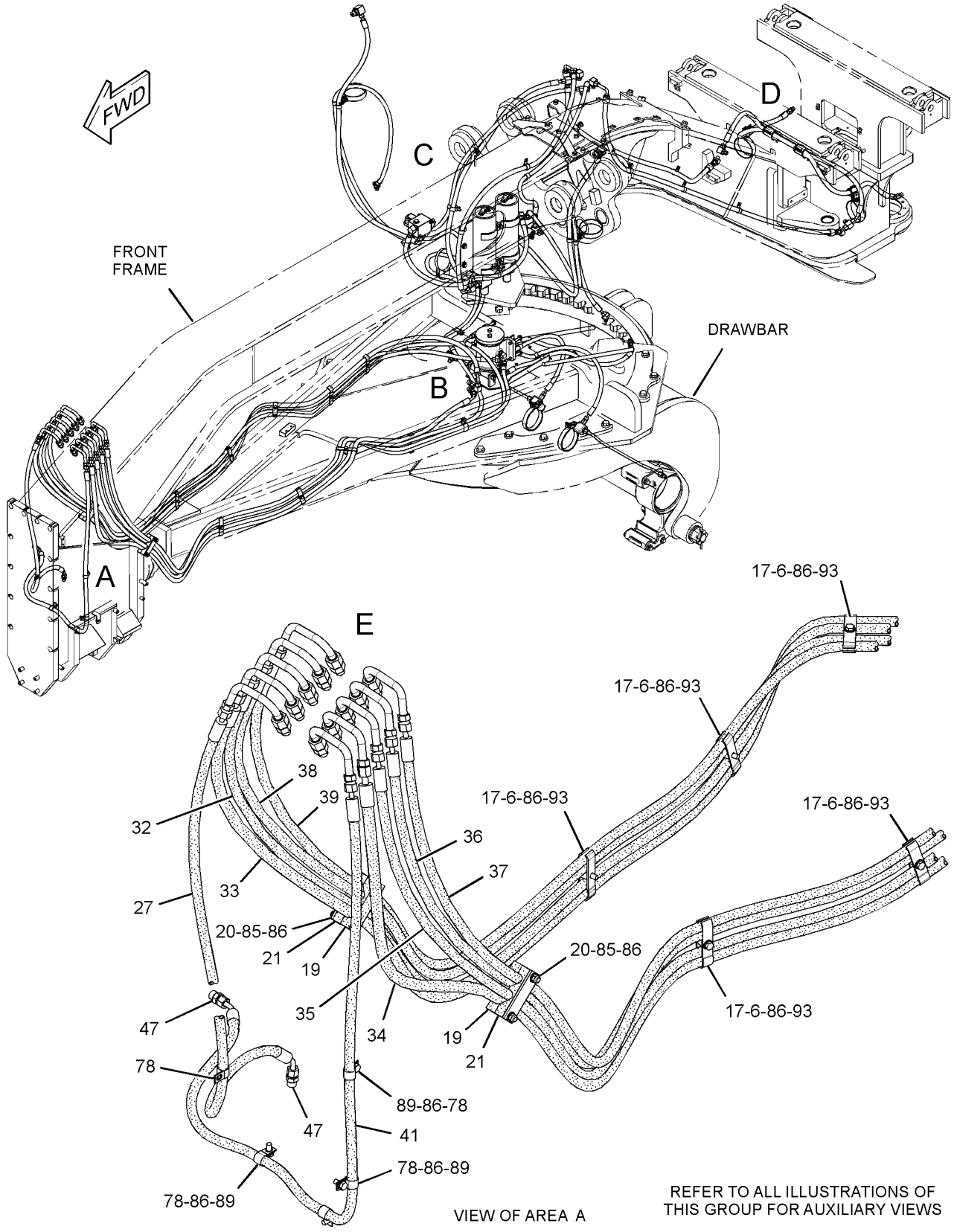

GRAPHIC #1

g02220974

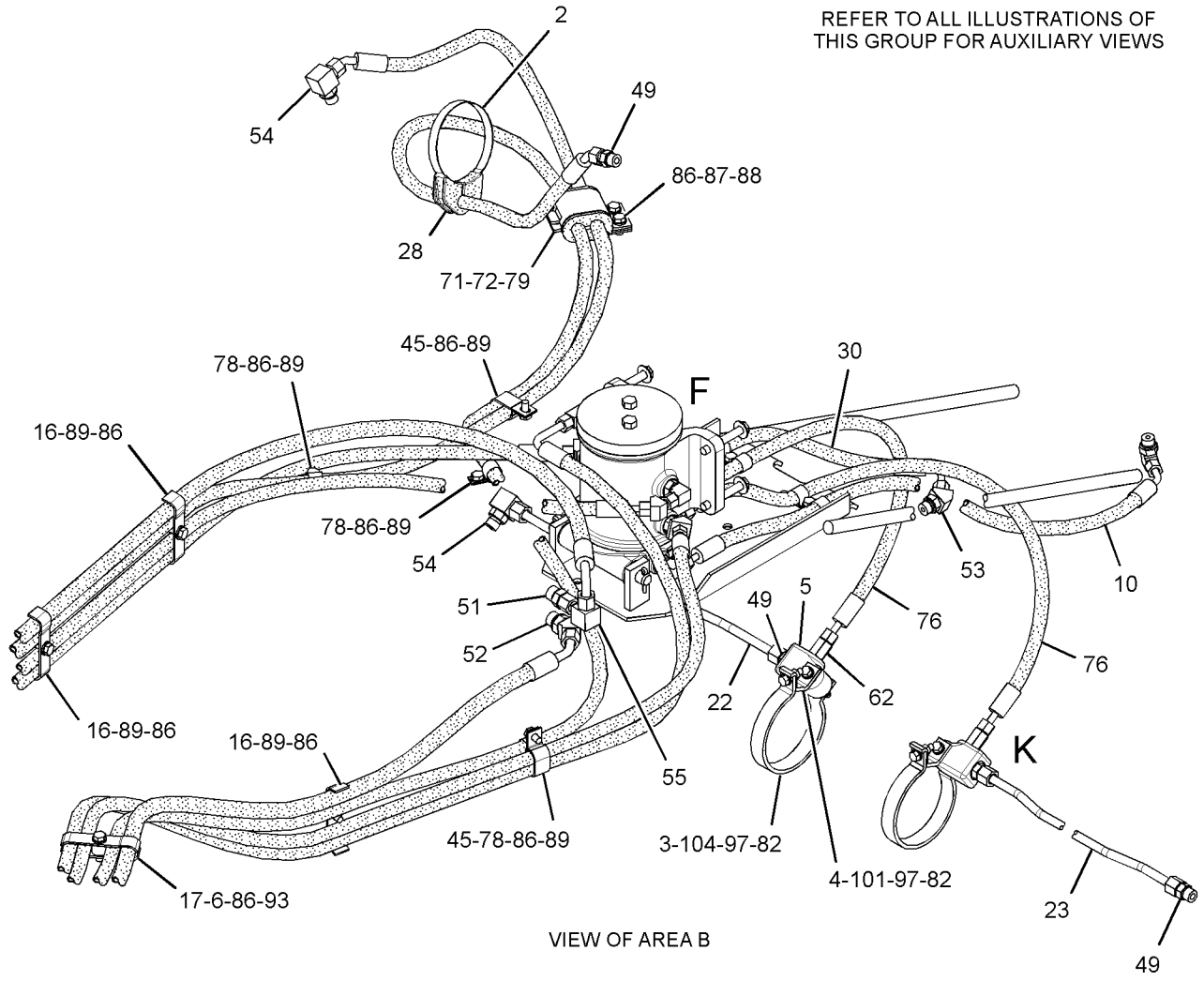

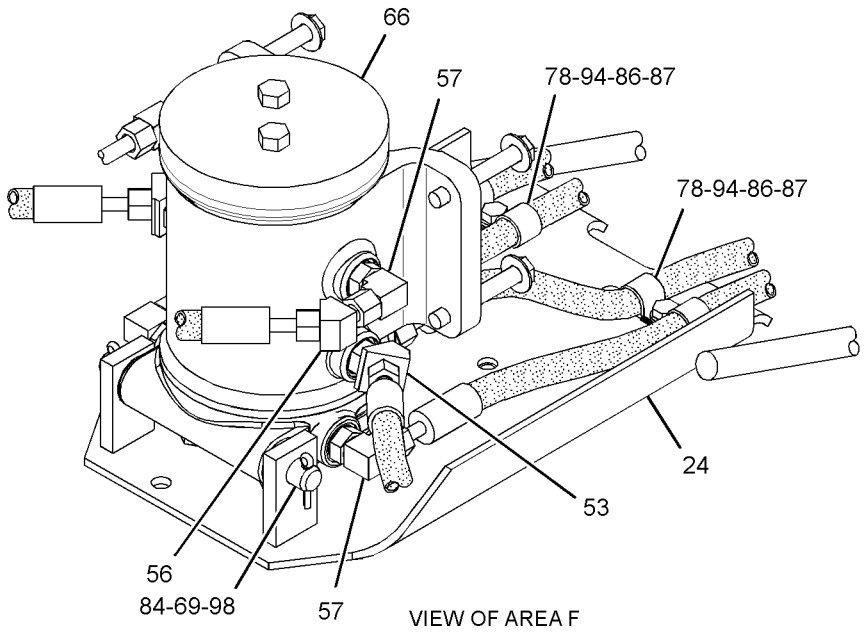

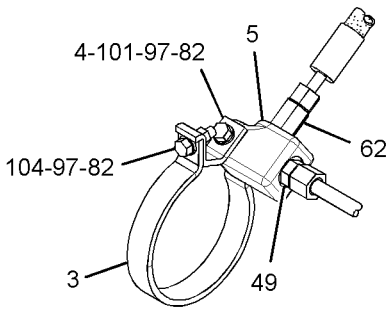

GRAPHIC #2

g02220993

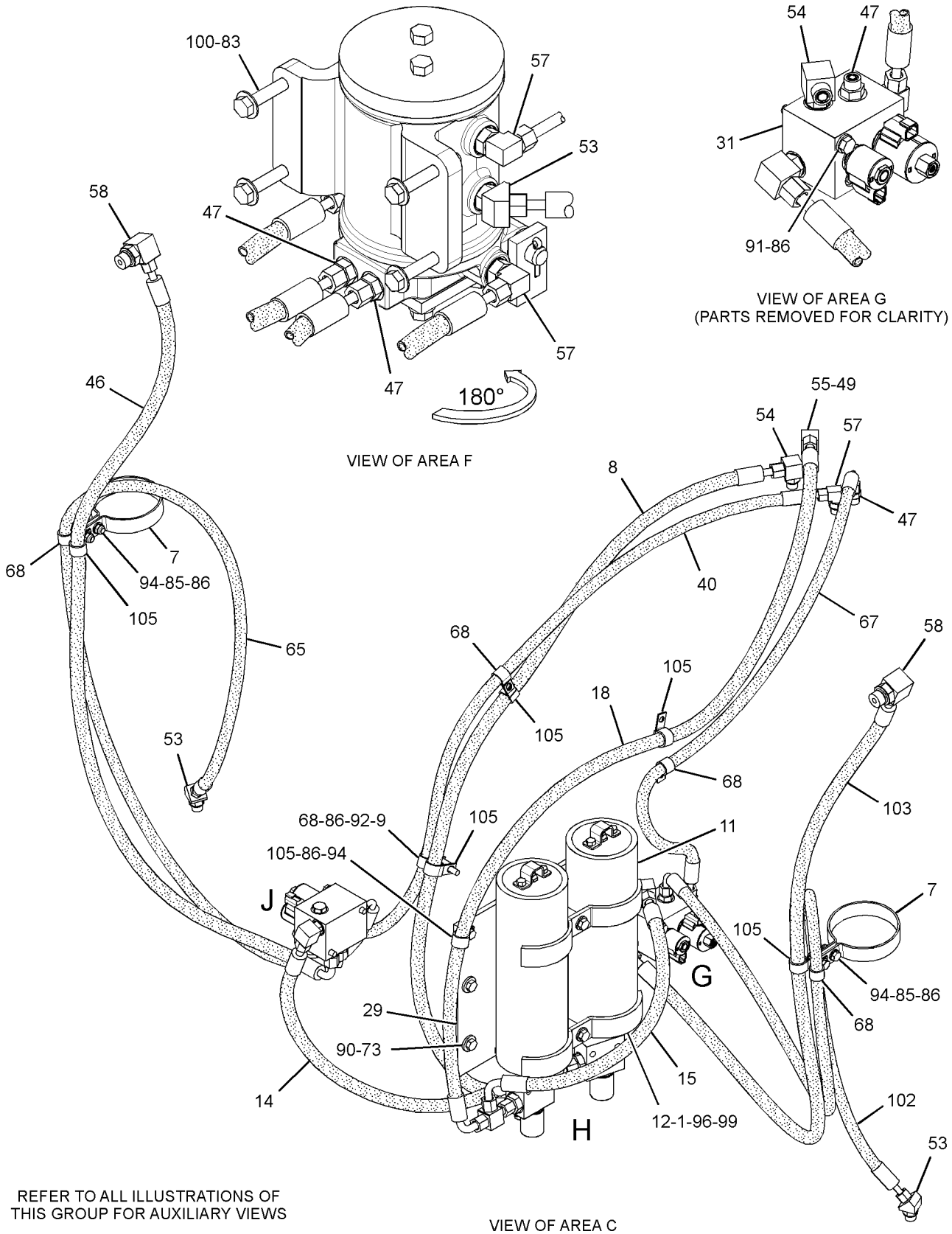

REFER TO ALL ILLUSTRATIONS OF
THIS GROUP FOR AUXILIARY VIEWS

GRAPHIC #3

g02221013

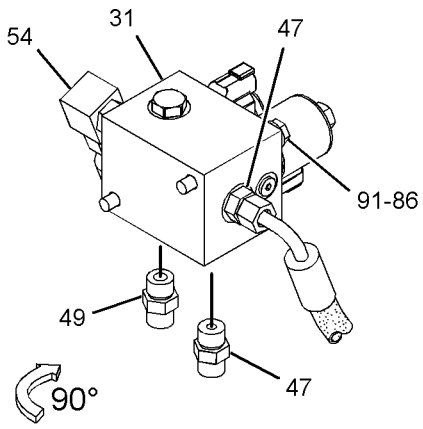

VIEW OF AREA J
(PARTS REMOVED FOR CLARITY)

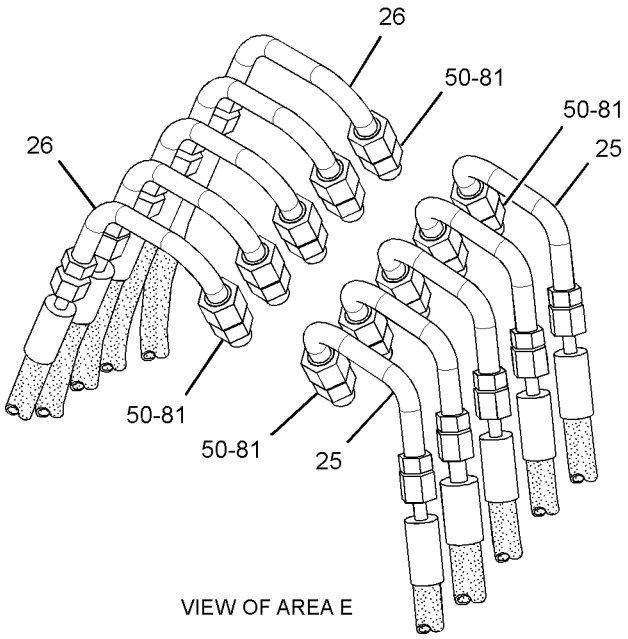

VIEW OF AREA E

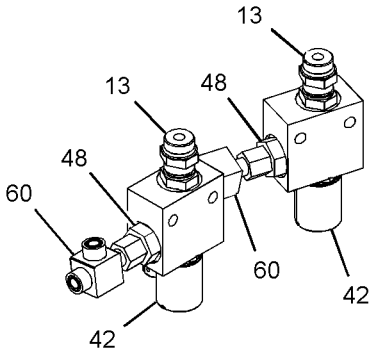

VIEW OF AREA H
(PARTS REMOVED FOR CLARITY)

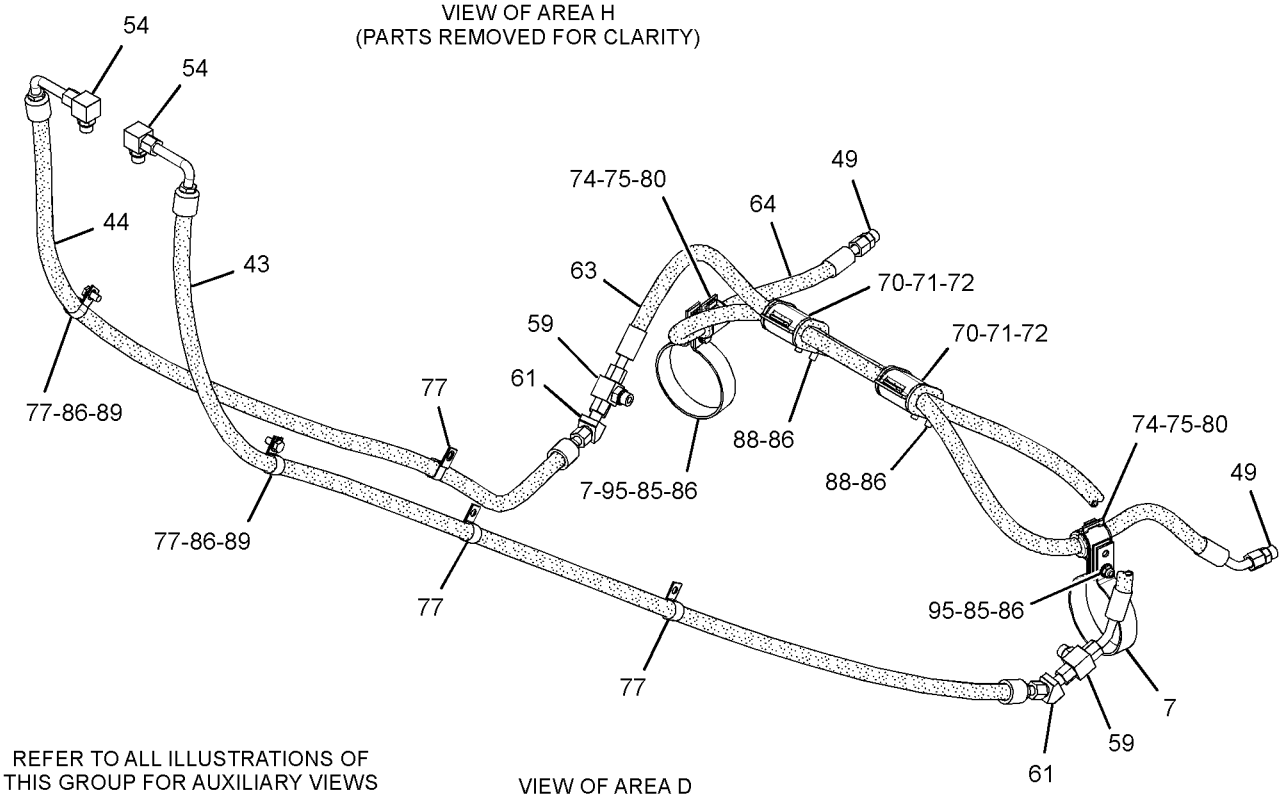

REFER TO ALL ILLUSTRATIONS OF
THIS GROUP FOR AUXILIARY VIEWS

VIEW OF AREA D

GRAPHIC #4

<END>

g02221034

HYDRAULIC SYSTEM

283-7734 LINES GP-HYDRAULIC FAN

S/N: R9H1-UP

PART OF 349-2556 COMMON AR

SMCS-1386, 1387, 5057 **i03995796**

NOTE	REF NO	GRAPHIC REF	PART NUMBER	QTY	PART NAME 1 2 3 4 5 6 (PRODUCT LEVEL)	SEE PAGE
	1	1	*148-8430*	1	TEE AS	
		1	**7X-0873**	1	TEE	
		1	**6V-9746**	1	SEAL-O-RING	
CY	2	1	**353-2604**	1	MANIFOLD GP-CONTROL (BRAKE, HYDRAULIC FAN)	633
	3	1	**283-1524**	1	PLATE AS	
M		1	**8T-3490**	1	NUT-WELD (M10X1.5-THD)	
	4	1	**304-5097**	1	TUBE AS	
I	5	1	**304-5107**	1	HOSE AS	
I	6	1	**317-3146**	1	HOSE AS	
I	7	1	**319-1452**	1	HOSE AS	
I	8	1	**346-6830**	1	HOSE AS	
	9	1	*148-8322*	2	CONNECTOR AS	
					(EACH INCLUDES)	
		1	**6V-8640**	1	CONNECTOR	
		1	**2M-9780**	1	SEAL-O-RING	
		1	**6V-9746**	1	SEAL-O-RING	
	10	1	*148-8328*	1	CONNECTOR AS	
		1	**6V-8633**	1	CONNECTOR	
		1	**6V-8398**	1	SEAL-O-RING	
		1	**3D-2824**	1	SEAL-O-RING	
	11	1	*148-8339*	1	CONNECTOR AS	
		1	**6V-8716**	1	CONNECTOR	
		1	**6V-9746**	1	SEAL-O-RING	
		1	**7M-8485**	1	SEAL-O-RING	
	12	1	*148-8361*	1	ELBOW AS	
		1	**6V-9200**	1	ELBOW	
		1	**3J-7354**	1	SEAL-O-RING	
		1	**6V-8397**	1	SEAL-O-RING	
	13	1	*148-8365*	1	ELBOW AS	
		1	**8T-6876**	1	ELBOW	
		1	**3J-1907**	1	SEAL-O-RING	
		1	**6V-8398**	1	SEAL-O-RING	
	14	1	*148-8378*	1	ELBOW AS	
		1	**6V-8724**	1	ELBOW	
		1	**3J-1907**	1	SEAL-O-RING	
		1	**6V-8397**	1	SEAL-O-RING	
	15	1	*148-8392*	1	ELBOW AS	
		1	**6V-9852**	1	ELBOW	
		1	**7J-9108**	1	SEAL-O-RING	
	16	1	**149-7738**	8	CLIP	
	17	1	*150-4043*	1	CONNECTOR AS	
		1	**6V-9873**	1	CONNECTOR	
		1	**3J-1907**	1	SEAL-O-RING	
		1	**6V-8398**	1	SEAL-O-RING	
	18	1	*153-6241*	1	ELBOW AS	
		1	**8C-8989**	1	ELBOW	
		1	**6V-8398**	1	SEAL-O-RING	
	19	1	*171-6723*	1	ELBOW AS	
		1	**8T-8899**	1	ELBOW	
		1	**6V-9746**	1	SEAL-O-RING	
	20	1	**1S-0994**	7	CLIP	
I	21	1	**213-2009**	1	HOSE AS	
I	22	1	**282-3196**	1	HOSE AS	
	23	1	**2A-2677**	1	SPACER (10.7X17.14X19.05-MM THK)	
	24	1	**302-3908**	1	SPACER (11X20X30-MM THK)	
	25	1	**4J-0520**	2	SEAL-O-RING	

283-7734 **LINES GP-HYDRAULIC FAN** *(contd.)* **i03995796**

NOTE	REF NO	GRAPHIC REF	PART NUMBER	QTY	PART NAME 1 2 3 4 5 6 (PRODUCT LEVEL)	SEE PAGE
	26	1	**4J-5267**	1	SEAL-O-RING	
	27	1	**4S-1962**	6	CLIP	
	28	1	**5K-9090**	1	SEAL-O-RING	
	29	1	**5P-7854**	1	CLIP	
	30	1	**5P-9297**	1	CLIP	
	31	1	**5S-7382**	4	BOLT (3/8-16X1.375-IN)	
	32	1	**6D-4244**	2	CLIP	
	33	1	**6D-4246**	1	CLIP	
	34	1	**7D-7233**	2	CLIP	
	35	1	**8C-3205**	2	FLANGE-HALF	
	36	1	**8C-3206**	4	FLANGE-HALF	
	37	1	**8T-4121**	30	WASHER-HARD (11X21X2.5-MM THK)	
M	38	1	**8T-4133**	11	NUT (M10X1.5-THD)	
M	39	1	**8T-4136**	3	BOLT (M10X1.5X25-MM)	
M	40	1	**8T-4137**	7	BOLT (M10X1.5X20-MM)	
M	41	1	**8T-4186**	1	BOLT (M10X1.5X40-MM)	
M	42	1	**8T-4195**	4	BOLT (M10X1.5X30-MM)	
M	43	1	**8T-4196**	9	BOLT (M10X1.5X35-MM)	
	44	1	**8T-4896**	4	WASHER-HARD (10.2X18.5X2.5-MM THK)	
M	45	1	**8T-5436**	2	BOLT (M10X1.5X130-MM)	
M	46	1	**8T-6466**	1	BOLT (M10X1.5X60-MM)	
	47	1	**9X-8250**	1	CLIP	
	48	1	**6V-0852**	1	CAP-DUST	
	49	1	*148-8408*	1	PLUG AS	
		1	**9S-4183**	1	PLUG-O-RING	
		1	**3D-2824**	1	SEAL-O-RING	
	50	1	*164-5567*	1	COUPLER AS-QUICK DISCONNECT (MALE)	
		1	**6V-3965**	1	FITTING (QUICK DISCONNECT)	
		1	**214-7568**	1	SEAL-O-RING	

C-CHANGE FROM PREVIOUS TYPE
I-REFER TO HYDRAULIC INFORMATION SYSTEM
M-METRIC PART
Y-SEPARATE ILLUSTRATION

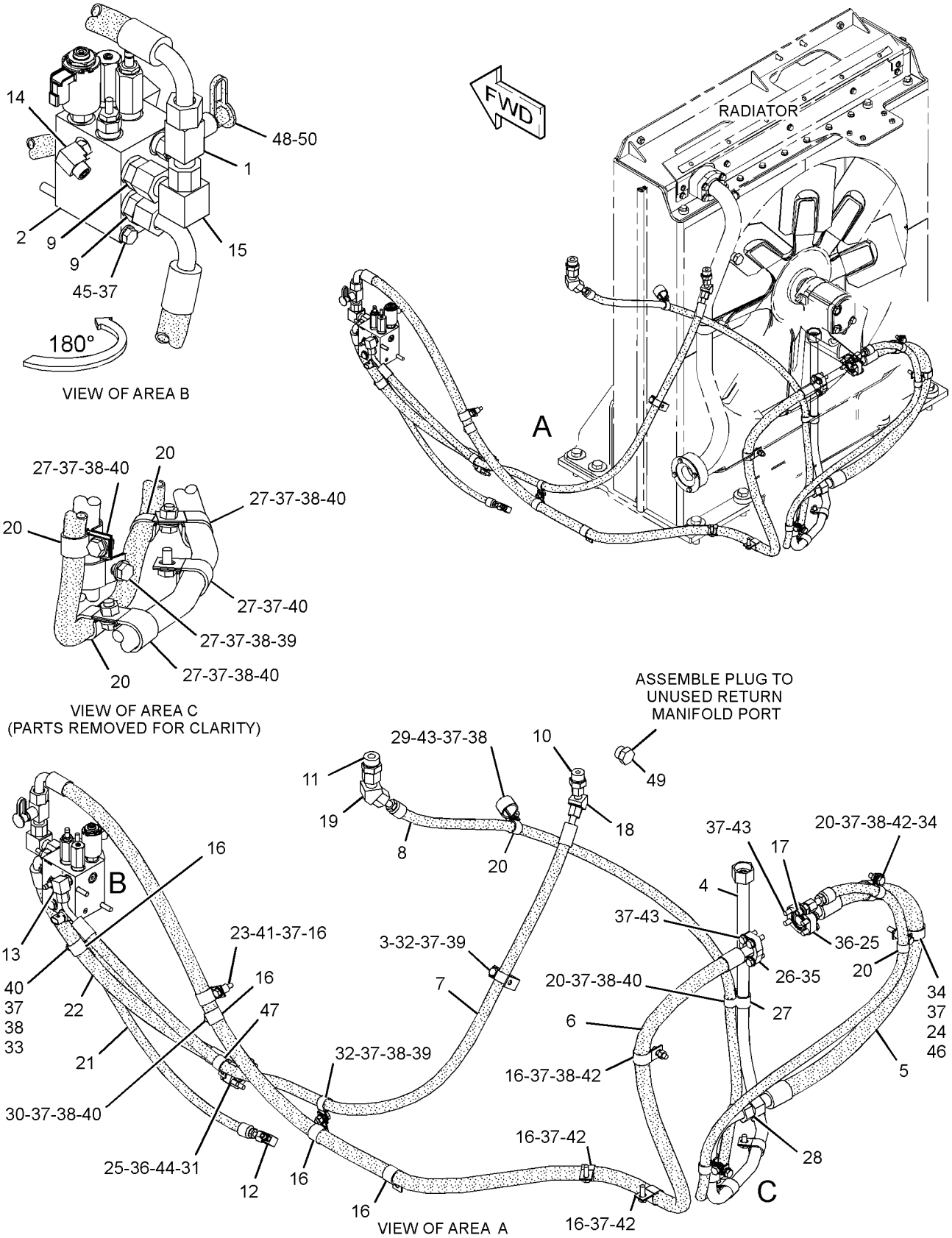

GRAPHIC #1 **<END>** g02178601

266-5813 LINES GP-RIPPER

S/N: R9H1-UP
PART OF 264-3058, 296-3529 RIPPER AR
AN ATTACHMENT

SMCS-5057 **i02657707**

NOTE	REF NO	GRAPHIC REF	PART NUMBER	QTY	PART NAME 1 2 3 4 5 6 (PRODUCT LEVEL)	SEE PAGE
I	1	1	**8X-5561**	1	HOSE AS	
I	2	1	**108-2407**	1	HOSE AS	
	3	1	**2M-9780**	2	SEAL-O-RING	
	4	1	**5P-7464**	1	CLIP (SLOT)	
	5	1	**5P-7465**	1	CLIP (TAB)	
	6	1	**6V-1249**	1	GROMMET	
	7	1	**6V-8398**	2	SEAL-O-RING	
	8	1	**6V-8624**	1	ELBOW (45-DEG)	
	9	1	**6V-8721**	1	ELBOW (90-DEG)	

I-REFER TO HYDRAULIC INFORMATION SYSTEM

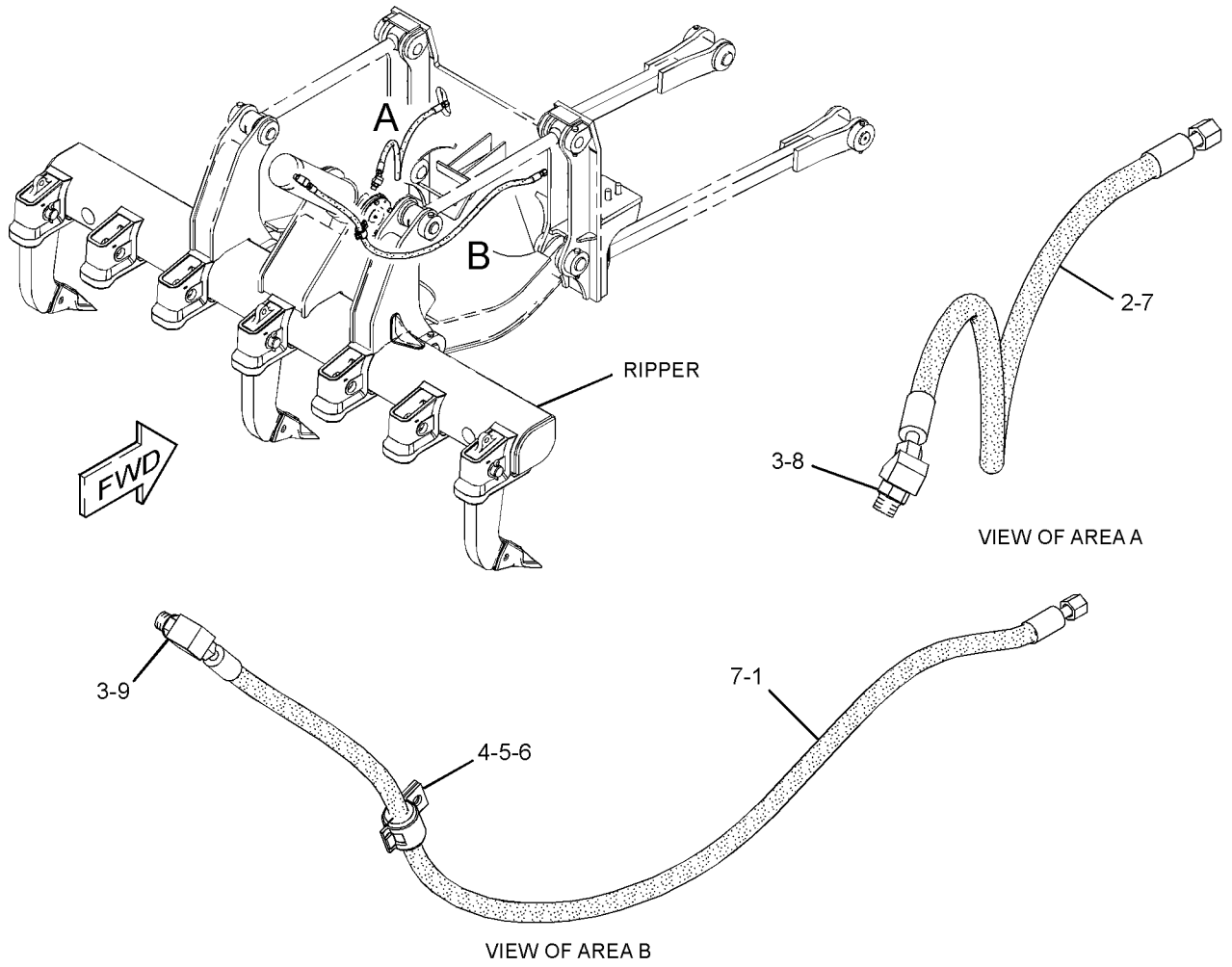

GRAPHIC #1 **<END>** g01324767

HYDRAULIC SYSTEM

283-7770 LINES GP-RIPPER

S/N: R9H1-UP
PART OF 251-2035, 261-0096, 261-0097, 261-0098, 340-4395 CONTROL
AR-HYDRAULIC
AN ATTACHMENT

SMCS-5057 **i02713292**

NOTE	REF NO	GRAPHIC REF	PART NUMBER	QTY	PART NAME 1 2 3 4 5 6 (PRODUCT LEVEL)	SEE PAGE
	1	1	*105-7167*	2	FITTING GP	
					(EACH INCLUDES)	
		1	**8T-5890**	1	UNION	
		1	**6V-8397**	2	SEAL-O-RING	
	2	1	**270-0531**	1	TUBE AS	
I	3	1	**283-7757**	1	HOSE AS	
	4	1	**292-2314**	1	TUBE AS	
	5	1	*148-8340*	2	CONNECTOR AS	
					(EACH INCLUDES)	
		1	**6V-8639**	1	CONNECTOR	
		1	**3K-0360**	1	SEAL-O-RING	
		1	**6V-8398**	1	SEAL-O-RING	
	6	1	*155-3502*	2	ADAPTER AS	
					(EACH INCLUDES)	
		1	**3E-7403**	1	ADAPTER	
		1	**6V-8398**	1	SEAL-O-RING	
I	7	1	**305-8618**	1	HOSE AS	
	8	1	**3E-4321**	1	CLIP	
	9	1	**5P-9299**	2	CLIP	
	10	1	**6D-4246**	5	CLIP	
	11	1	**6V-8398**	2	SEAL-O-RING	
	12	1	**6V-9168**	2	NUT (11/16-16-THD)	
	13	1	**6V-9829**	2	CAP AS	
	14	1	**6V-9830**	2	CAP AS	
	15	1	**8T-4121**	1	WASHER-HARD (11X21X2.5-MM THK)	
M	16	1	**8T-4136**	1	BOLT (M10X1.5X25-MM)	
M	17	1	**8T-4137**	1	BOLT (M10X1.5X20-MM)	

I-REFER TO HYDRAULIC INFORMATION SYSTEM
M-METRIC PART

283-7770 **LINES GP-RIPPER** *(contd.)* **i02713292**

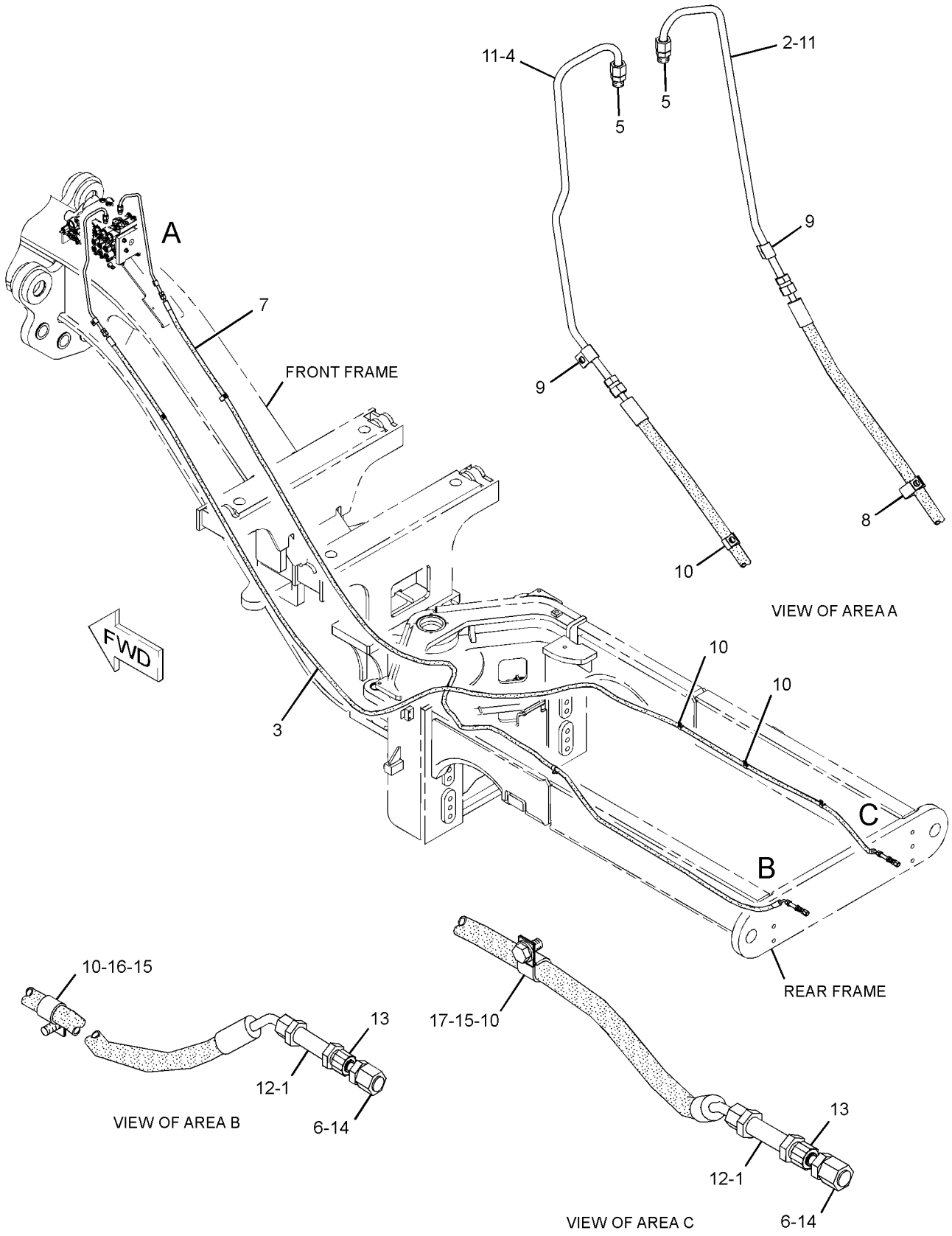

GRAPHIC #1 **<END>** g01370520

HYDRAULIC SYSTEM

283-7735 LINES GP-SECONDARY STEERING

S/N: R9H1-UP

PART OF 349-2556 COMMON AR

SMCS-4304 **i03927391**

NOTE	REF NO	GRAPHIC REF	PART NUMBER	QTY	PART NAME 1 2 3 4 5 6 (PRODUCT LEVEL)	SEE PAGE
	1	4	**5D-1026**	1	CLAMP-BAND	
	2	4	**5P-4868**	2	CLAMP-HOSE	
	3	2	**6R-7605**	1	VALVE-SHUTTLE	
	4	4	**6V-0852**	1	CAP-DUST	
	5	4	**6V-7238**	1	VALVE-SHUTOFF (HYDRAULIC OIL)	
	6	3	**6W-6672**	4	SPACER (10.5X20X38-MM THK)	
	7	4	*148-8423*	1	TEE AS	
		4	**8T-3311**	1	TEE	
		4	**3J-1907**	1	SEAL-O-RING	
		4	**4J-5477**	1	SEAL-O-RING	
Y	8	4	**191-9784**	1	FILTER GP-OIL (IMPLEMENT PILOT OIL)	578
	9	3,4	**193-9230**	2	VALVE GP-CHECK (STEERING OIL FILTER)	
					(EACH INCLUDES)	
		3,4	**3D-2824**	1	SEAL-O-RING	
		3,4	**6V-9746**	1	SEAL-O-RING	
	10	3	*197-8940*	1	CONNECTOR AS	
		3	**8T-1576**	1	CONNECTOR	
		3	**2M-9780**	1	SEAL-O-RING	
		3	**7J-9108**	1	SEAL-O-RING	
	11	4	**246-3352**	1	TUBE AS	
	12	1,2	*250-1420*	2	CONNECTOR AS	
					(EACH INCLUDES)	
		1,2	**250-1419**	1	CONNECTOR	
		1,2	**3K-0360**	1	SEAL-O-RING	
		1,2	**7J-9108**	1	SEAL-O-RING	
	13	2	**250-5623**	1	TUBE AS	
	14	4	**254-4476**	1	BRACKET AS	
	15	2	**254-4486**	1	BLOCK	
	16	3	**255-3631**	1	VALVE GP-CHECK (STEERING LINES PRESSURE)	
		3	**2S-4078**	1	SEAL-O-RING	
		3	**6V-8400**	1	SEAL-O-RING	
CY	17	3	**353-2605**	1	MANIFOLD GP-CONTROL (IMPLEMENT, STEERING)	635
	18	4	**266-8804**	1	PLATE	
	19	2	**269-9486**	1	TUBE AS	
I	20	2	**109-9771**	1	HOSE AS	
	21	2	**269-9490**	1	TUBE AS	
	22	2	**345-2889**	1	TUBE AS	
	23	2	**270-6721**	2	BLOCK	
	24	2	**270-6722**	2	BLOCK	
	25	4	**272-0354**	1	HOSE	
	26	1	**272-6836**	3	PLATE	
	27	2	**272-6840**	2	PLATE	
	28	2	**272-6841**	2	PLATE	
I	29	4	**302-6548**	1	HOSE AS	
	30	3	**275-6332**	1	PLATE	
	31	2	**282-8527**	1	TUBE AS	
	32	1	**282-8528**	1	TUBE AS	
	33	1	**283-1518**	1	TUBE AS	
	34	2	**283-1519**	1	TUBE AS	
	35	1	**283-1520**	1	TUBE AS	
	36	2	**283-1521**	1	TUBE AS	
	37	1	**283-1522**	1	TUBE AS	
I	38	1	**283-7748**	1	HOSE AS	
I	39	1	**283-7749**	1	HOSE AS	
I	40	1	**273-4244**	1	HOSE AS	
	41	3	**283-9777**	1	BRACKET AS	

283-7735 LINES GP-SECONDARY STEERING *(contd.)* i03927391

NOTE	REF NO	GRAPHIC REF	PART NUMBER	QTY	PART NAME 1 2 3 4 5 6 (PRODUCT LEVEL)	SEE PAGE
M		3	**8T-4178**	2	BOLT (M10X1.5X90-MM)	
	42	3	**283-9778**	1	BRACKET AS	
M		3	**8T-4178**	2	BOLT (M10X1.5X90-MM)	
M		3	**8T-3490**	1	NUT-WELD (M10X1.5-THD)	
	43	3	**283-9781**	1	BRACKET AS	
M		3	**7X-2544**	2	BOLT (M10X1.5X104-MM)	
	44	3	**283-9911**	1	PLATE AS	
M		3	**7X-2543**	2	BOLT (M10X1.5X120-MM)	
M		3	**8T-6685**	2	BOLT (M10X1.5X110-MM)	
M		3	**8T-3490**	1	NUT-WELD (M10X1.5-THD)	
	45	4	**285-0332**	1	TUBE AS	
	46	4	**285-0333**	1	TUBE AS	
	47	4	**285-0335**	1	TUBE AS	
	48	3	**285-0349**	1	PLATE	
	49	3	**285-0350**	1	BLOCK	
	50	3	**285-0351**	1	BLOCK	
	51	3	**285-0352**	1	BLOCK	
	52	3	**285-0355**	1	BLOCK	
	53	3	**285-0356**	1	BLOCK	
	54	3	**285-0357**	1	BLOCK	
	55	3	**285-0358**	1	BLOCK	
	56	3	**285-0359**	1	BLOCK	
	57	3	**285-0360**	1	BLOCK	
	58	4	**285-3381**	1	TUBE AS	
I	59	4	**306-5143**	1	HOSE AS	
	60	3	**286-0667**	1	BRACKET AS	
		3	**7T-1099**	1	LINK	
M		3	**8T-3490**	4	NUT-WELD (M10X1.5-THD)	
	61	4	**286-0669**	1	BRACKET AS	
		4	**7T-1099**	1	LINK	
M		4	**8T-3490**	2	NUT-WELD (M10X1.5-THD)	
I	62	4	**286-2245**	1	HOSE AS	
	63	3	**287-1867**	1	BLOCK	
	64	3	**287-1868**	1	BLOCK	
	65	3	**287-1869**	1	BLOCK	
	66	3	**287-1870**	1	BLOCK	
	67	3	**287-1871**	1	BLOCK	
	68	3	**287-1872**	1	PLATE	
	69	4	**287-1874**	1	PLATE	
	70	3	**288-0408**	1	BRACKET AS	
M		3	**7Y-8763**	1	BOSS (M10X1.5X25-MM)	
M		3	**8Y-4489**	1	BOSS (M10X1.5-THD)	
	71	1	**319-1885**	1	TUBE AS	
	72	3	**288-1421**	1	PLATE	
	73	3	**288-3559**	1	BLOCK	
	74	3	**288-3560**	1	BLOCK	
	75	3	**288-3561**	1	PLATE	
	76	3	**288-6075**	1	BRACKET AS	
M		3	**8T-5030**	2	BOLT (M10X1.5X120-MM)	
I	77	4	**288-8599**	1	HOSE AS	
	78	3	**288-9560**	1	BLOCK	
I	79	1	**319-1877**	1	HOSE AS	
	80	2	**288-9685**	1	TUBE AS	
	81	2	**288-9686**	1	TUBE AS	
	83	2	**288-9688**	1	TUBE AS	
	84	2	**288-9689**	1	TUBE AS	
	85	3	**288-9795**	1	BLOCK	
	86	3	**289-1176**	1	PLATE AS	
M		3	**8T-3490**	1	NUT-WELD (M10X1.5-THD)	

283-7735 LINES GP-SECONDARY STEERING *(contd.)* i03927391

NOTE	REF NO	GRAPHIC REF	PART NUMBER	QTY	PART NAME 1 2 3 4 5 6 (PRODUCT LEVEL)	SEE PAGE
	87	3	**289-1177**	1	PLATE AS	
M		3	**8T-6462**	1	BOSS-WELD (M10X1.5X25-MM OAL)	
	88	1	**289-2029**	6	BLOCK	
	89	3	**289-2052**	1	BLOCK	
	90	3	**289-2053**	1	BLOCK	
	91	3	**289-2054**	1	BLOCK	
	92	3	**289-2055**	1	BLOCK	
	93	2	**289-2056**	2	BLOCK	
	94	2	**289-2057**	2	BLOCK	
	95	2	**289-2058**	2	BLOCK	
	96	2	**289-2059**	2	BLOCK	
	97	3	**289-2060**	1	BLOCK	
	98	3	**289-2061**	1	BLOCK	
	99	4	**289-2062**	2	BLOCK	
	100	4	**289-2063**	2	BLOCK	
	101	1	**289-2422**	1	TUBE AS	
	102	4	**306-4420**	1	PLATE	
	103	2	**290-4328**	2	PLATE AS	
					(EACH INCLUDES)	
M		2	**8T-6685**	2	BOLT (M10X1.5X110-MM)	
	104	3	**290-4329**	1	PLATE AS	
M		3	**8T-5436**	2	BOLT (M10X1.5X130-MM)	
	105	3	**290-4330**	1	PLATE AS	
M		3	**7X-2545**	2	BOLT (M10X1.5X150-MM)	
	106	2	**290-4331**	2	PLATE AS	
					(EACH INCLUDES)	
M		2	**8T-4198**	2	BOLT (M10X1.5X100-MM)	
	107	3	**292-0840**	1	PLATE AS	
M		3	**9R-2613**	1	BOSS-WELD (M10X1.5X25-MM)	
M	108	1,2,3,4	**096-4883**	34	LOCKNUT (M10X1.5-THD)	
M	109	4	**096-9259**	4	BOLT (M14X2X60-MM)	
	110	2	*148-8315*	1	CONNECTOR AS	
		2	**6V-8642**	1	CONNECTOR	
		2	**2M-9780**	1	SEAL-O-RING	
		2	**7J-9108**	1	SEAL-O-RING	
	111	4	*148-8322*	1	CONNECTOR AS	
		4	**6V-8640**	1	CONNECTOR	
		4	**2M-9780**	1	SEAL-O-RING	
		4	**6V-9746**	1	SEAL-O-RING	
	112	2	*148-8361*	1	ELBOW AS	
		2	**6V-9200**	1	ELBOW	
		2	**3J-7354**	1	SEAL-O-RING	
		2	**6V-8397**	1	SEAL-O-RING	
	113	4	*148-8327*	1	CONNECTOR AS	
		4	**6V-8637**	1	CONNECTOR	
		4	**3D-2824**	1	SEAL-O-RING	
		4	**6V-9746**	1	SEAL-O-RING	
	114	2	*148-8329*	2	CONNECTOR AS	
					(EACH INCLUDES)	
		2	**8T-6453**	1	CONNECTOR	
		2	**4K-1388**	1	SEAL-O-RING	
		2	**5K-9090**	1	SEAL-O-RING	
	115	1,2	*148-8335*	6	CONNECTOR AS	
					(EACH INCLUDES)	
		1,2	**6V-8635**	1	CONNECTOR	
		1,2	**5K-9090**	1	SEAL-O-RING	
		1,2	**7M-8485**	1	SEAL-O-RING	
	116	1,2	*148-8336*	5	CONNECTOR AS	
					(EACH INCLUDES)	

283-7735 LINES GP-SECONDARY STEERING *(contd.)* i03927391

NOTE	REF NO	GRAPHIC REF	PART NUMBER	QTY	PART NAME 1 2 3 4 5 6 (PRODUCT LEVEL)	SEE PAGE
		1,2	**6V-8636**	1	CONNECTOR	
		1,2	**3J-1907**	1	SEAL-O-RING	
		1,2	**6V-8397**	1	SEAL-O-RING	
	117	4	*148-8339*	1	CONNECTOR AS	
		4	**6V-8716**	1	CONNECTOR	
		4	**6V-9746**	1	SEAL-O-RING	
		4	**7M-8485**	1	SEAL-O-RING	
	118	2	*148-8340*	2	CONNECTOR AS	
					(EACH INCLUDES)	
		2	**6V-8639**	1	CONNECTOR	
		2	**3K-0360**	1	SEAL-O-RING	
		2	**6V-8398**	1	SEAL-O-RING	
	119	2	*148-8342*	1	CONNECTOR AS	
		2	**6V-8632**	1	CONNECTOR	
		2	**3K-0360**	1	SEAL-O-RING	
		2	**7J-9108**	1	SEAL-O-RING	
	120	3	*148-8391*	1	ELBOW AS	
		3	**8T-8987**	1	ELBOW	
		3	**2S-4078**	1	SEAL-O-RING	
		3	**5K-9090**	1	SEAL-O-RING	
	121	2	*148-8368*	1	ELBOW AS	
		2	**6V-8627**	1	ELBOW	
		2	**3J-1907**	1	SEAL-O-RING	
		2	**4J-5477**	1	SEAL-O-RING	
	122	4	*148-8373*	1	ELBOW AS	
		4	**8C-3364**	1	ELBOW	
		4	**6V-8400**	1	SEAL-O-RING	
		4	**7M-8485**	1	SEAL-O-RING	
	123	4	*148-8388*	1	ELBOW AS	
		4	**6V-8629**	1	ELBOW	
		4	**2M-9780**	1	SEAL-O-RING	
		4	**6V-9746**	1	SEAL-O-RING	
	124	2	*148-8390*	1	ELBOW AS	
		2	**6V-8626**	1	ELBOW	
		2	**2M-9780**	1	SEAL-O-RING	
		2	**7J-9108**	1	SEAL-O-RING	
	125	4	*148-8392*	1	ELBOW AS	
		4	**6V-9853**	1	ELBOW	
		4	**6V-9746**	1	SEAL-O-RING	
	126	1,2	*148-8393*	2	ELBOW AS	
					(EACH INCLUDES)	
		1,2	**6V-9852**	1	ELBOW	
		1,2	**7J-9108**	1	SEAL-O-RING	
	127	4	*148-8444*	1	TEE AS-SWIVEL	
		4	**6V-9837**	1	TEE-SWIVEL	
		4	**6V-8398**	2	SEAL-O-RING	
	128	2	*148-8446*	1	TEE AS-SWIVEL	
		2	**6V-9838**	1	TEE-SWIVEL	
		2	**7J-9108**	2	SEAL-O-RING	
	129	3	*148-8449*	1	TEE AS-SWIVEL	
		3	**6V-9839**	1	TEE-SWIVEL	
		3	**6V-9746**	2	SEAL-O-RING	
	130	2	*150-4031*	2	TEE AS	
					(EACH INCLUDES)	
		2	**6V-9845**	1	TEE-SWIVEL	
		2	**7J-9108**	2	SEAL-O-RING	
	131	1	*150-4048*	1	ELBOW AS	
		1	**6V-8722**	1	ELBOW	
		1	**3K-0360**	1	SEAL-O-RING	

283-7735 **LINES GP-SECONDARY STEERING** *(contd.)* **i03927391**

NOTE	REF NO	GRAPHIC REF	PART NUMBER	QTY	PART NAME 1 2 3 4 5 6 (PRODUCT LEVEL)	SEE PAGE
		1	**7J-9108**	1	SEAL-O-RING	
	132	4	*153-6232*	1	ELBOW AS	
		4	**8T-0120**	1	ELBOW	
		4	**3D-2824**	1	SEAL-O-RING	
		4	**7J-9108**	1	SEAL-O-RING	
	133	1	*153-6233*	2	UNION AS	
					(EACH INCLUDES)	
		1	**6V-8732**	1	UNION	
		1	**7J-9108**	2	SEAL-O-RING	
	134	4	*153-6256*	1	ELBOW AS	
		4	**8C-7563**	1	ELBOW	
		4	**7J-9108**	1	SEAL-O-RING	
	135	1	*153-6262*	2	UNION AS	
					(EACH INCLUDES)	
		1	**6V-8734**	1	UNION	
		1	**5K-9090**	2	SEAL-O-RING	
	136	2	*156-4282*	1	REDUCER AS	
		2	**6V-8938**	1	REDUCER-O-RING	
		2	**6V-8397**	1	SEAL-O-RING	
	137	1	**164-5570**	1	UNION AS	
		1	**6V-8730**	1	UNION (FACE SEAL)	
		1	**6V-8397**	2	SEAL-O-RING	
	138	4	*164-8908*	1	CONNECTOR AS	
		4	**8T-0077**	1	CONNECTOR	
		4	**3K-0360**	1	SEAL-O-RING	
		4	**6V-8398**	1	SEAL-O-RING	
	139	1,2,4	**174-5907**	4	CLIP	
	140	4	*184-2420*	1	ADAPTER AS	
		4	**3E-7401**	1	ADAPTER	
		4	**6V-8397**	1	SEAL-O-RING	
	141	4	**1P-3705**	1	SEAL-RECTANGULAR	
	142	1	**1P-4582**	2	FLANGE-HALF	
I	143	1	**283-7746**	1	HOSE AS	
	145	4	**3K-0360**	1	SEAL-O-RING	
	146	2	**4J-0520**	2	SEAL-O-RING	
	147	1	**4J-0527**	1	SEAL-O-RING	
	148	1	**4S-1962**	1	CLIP	
	149	4	**5H-8848**	1	SEAL-O-RING	
	151	4	**5P-7854**	2	CLIP	
	152	4	**6D-4244**	1	CLIP	
	153	4	**6D-4246**	1	CLIP	
	154	1	**6V-1228**	1	CLIP	
	156	4	**6V-8400**	1	SEAL-O-RING	
	157	4	**6V-9168**	1	NUT (11/16-16-THD)	
	158	4	**6V-9746**	1	SEAL-O-RING	
	160	1,2,3,4	**7D-7233**	6	CLIP	
	161	2	**7J-9108**	1	SEAL-O-RING	
	162	1	**7X-7729**	6	WASHER (11X25X3-MM THK)	
	163	2	**8C-3206**	4	FLANGE-HALF	
	164	4	**8R-0721**	1	SPACER (11X16X35-MM THK)	
	165	1,2,3,4	**8T-4121**	94	WASHER-HARD (11X21X2.5-MM THK)	
	166	4	**8T-4123**	2	WASHER (22X35X3.5-MM THK)	
M	167	1,3,4	**8T-4133**	6	NUT (M10X1.5-THD)	
M	168	2,3,4	**8T-4136**	27	BOLT (M10X1.5X25-MM)	
M	169	1,2,3,4	**8T-4137**	10	BOLT (M10X1.5X20-MM)	
M	170	3	**8T-4178**	2	BOLT (M10X1.5X90-MM)	
M	171	3	**8T-4195**	5	BOLT (M10X1.5X30-MM)	

283-7735 LINES GP-SECONDARY STEERING *(contd.)* i03927391

NOTE	REF NO	GRAPHIC REF	PART NUMBER	QTY	PART NAME 1 2 3 4 5 6 (PRODUCT LEVEL)	SEE PAGE
M	172	2,3	**8T-4196**	10	BOLT (M10X1.5X35-MM)	
	173	1,4	**8T-4223**	8	WASHER-HARD (13.5X25.5X3-MM THK)	
M	174	4	**8T-4780**	2	BOLT (M20X2.5X30-MM)	
M	175	4	**8T-4956**	4	BOLT (M12X1.75X35-MM)	
M	176	3	**8T-5005**	4	BOLT (M10X1.5X70-MM)	
M	177	4	**8T-6466**	1	BOLT (M10X1.5X60-MM)	
	178	4	**8T-6703**	2	CLAMP-HOSE	
M	179	3	**8T-7338**	3	BOLT (M16X2X45-MM)	
	180	1	**5P-2566**	4	BOLT (1/2-13X1.5-IN)	
	181	2	**9M-8406**	1	CLIP	
	182	2	**9S-1350**	1	CLIP	
	183	2	**9X-6581**	1	NUT-O-RING SEAL (1-14-THD)	
	184	3	**9X-8257**	3	WASHER (17.5X30X3.5-MM THK)	
M	185	1	**231-0336**	2	STUD-TAPERLOCK (M10X1.5X70-MM)	
E	186	4	**5P-0743**		HOSE (21-CM)	
G	187	4	**122-6908**		HOSE-HYDRAULIC (24-IN)	
	188	3	**300-7926**	1	BLOCK	
	189	1	**242-6099**	1	CLIP	
	190	1	**205-8125**	1	CLIP	
	191	4	**7X-0510**	4	WASHER-HARD (15.5X29X3-MM THK)	
	192	2	**8W-1253**	1	SPACER (11.06X15.88X60-MM THK)	
	193	2	**223-3490**	1	CLIP	
	194	4	**4S-4455**	2	CLIP	
M	196	2	**8T-4172**	1	BOLT (M10X1.5X80-MM)	
	197	4	*164-5567*	1	COUPLER AS-QUICK DISCONNECT (MALE)	
		4	**6V-3965**	1	FITTING (QUICK DISCONNECT)	
		4	**3J-1907**	1	SEAL-O-RING	

C-CHANGE FROM PREVIOUS TYPE
E-ORDER BY THE CENTIMETER
G-ORDER BY THE INCH
I-REFER TO HYDRAULIC INFORMATION SYSTEM
M-METRIC PART
Y-SEPARATE ILLUSTRATION

283-7735 **LINES GP-SECONDARY STEERING** *(contd.)* **i03927391**

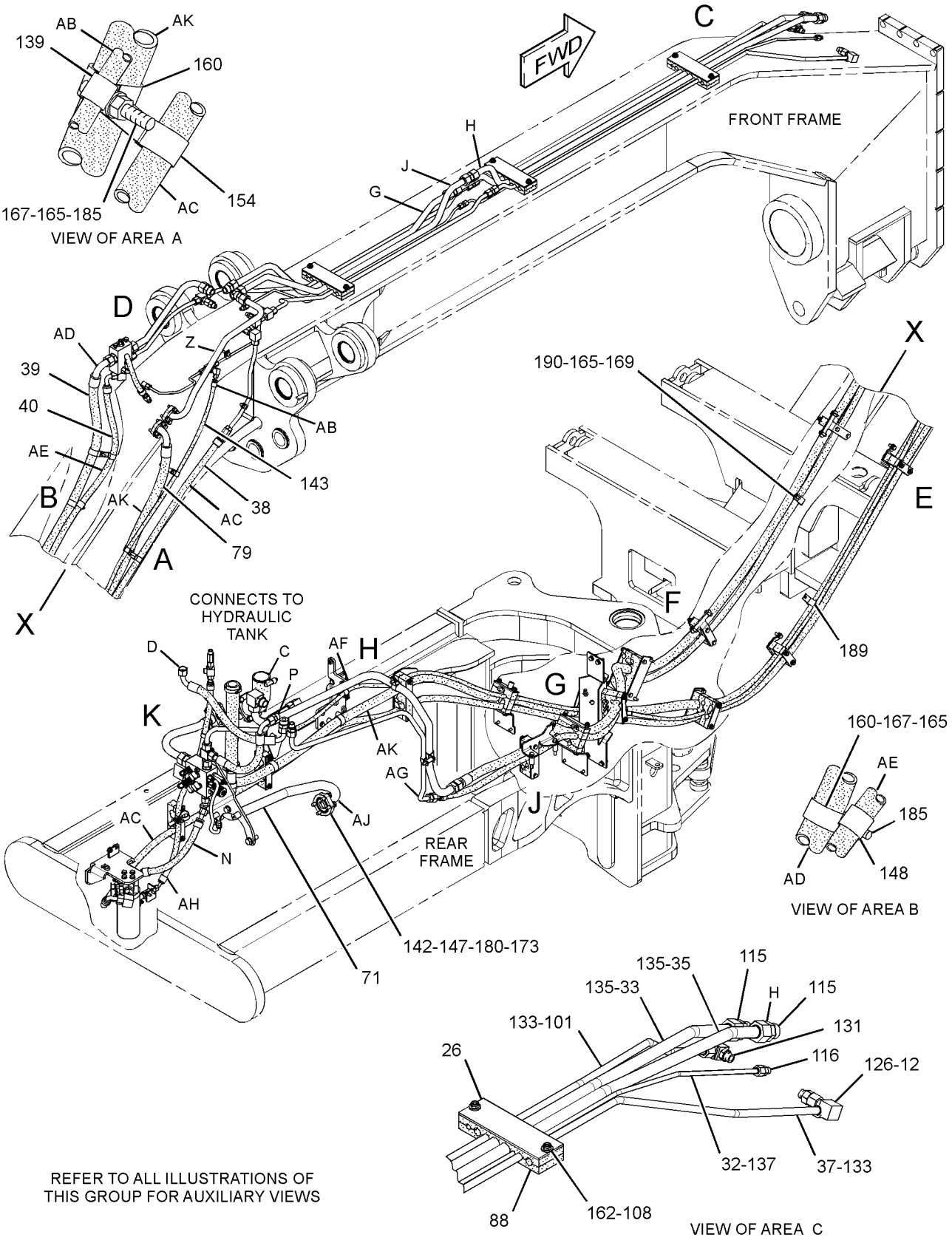

GRAPHIC #1 g02126232

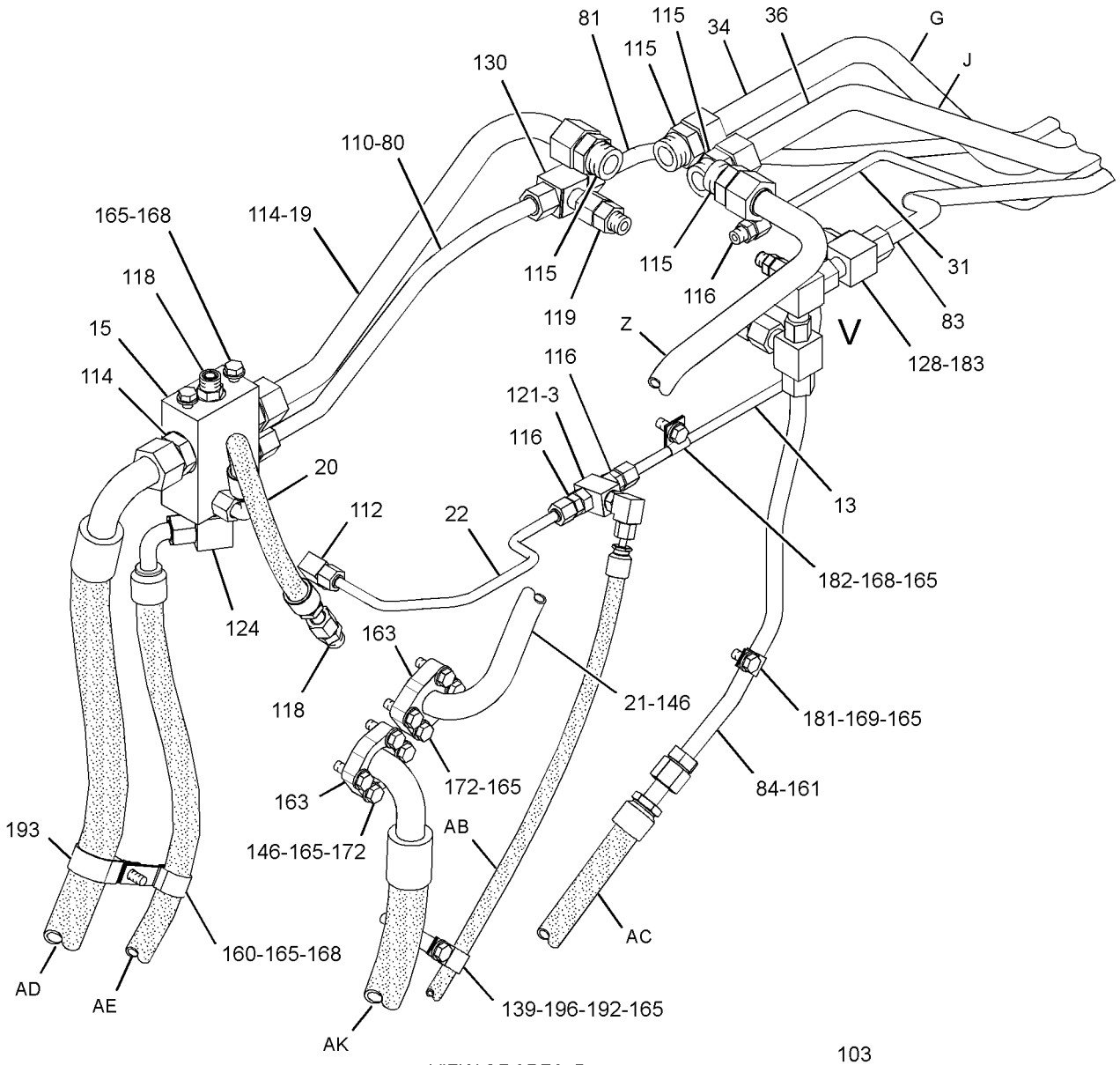

VIEW OF AREA D

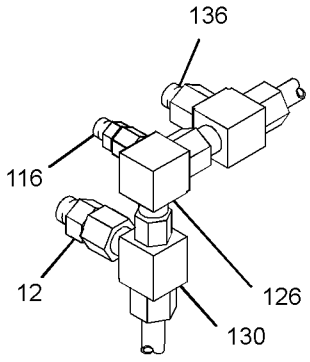

VIEW OF AREA V

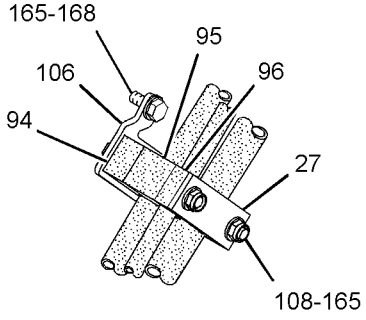

VIEW OF AREA E

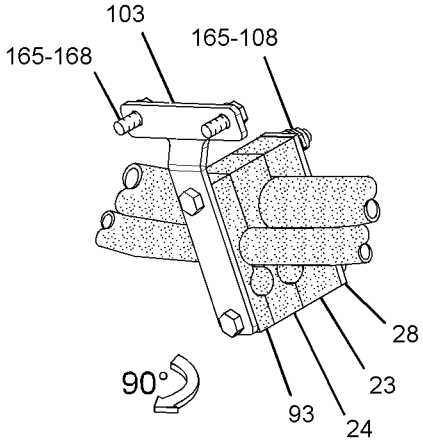

VIEW OF AREA F

GRAPHIC #2

g02126231

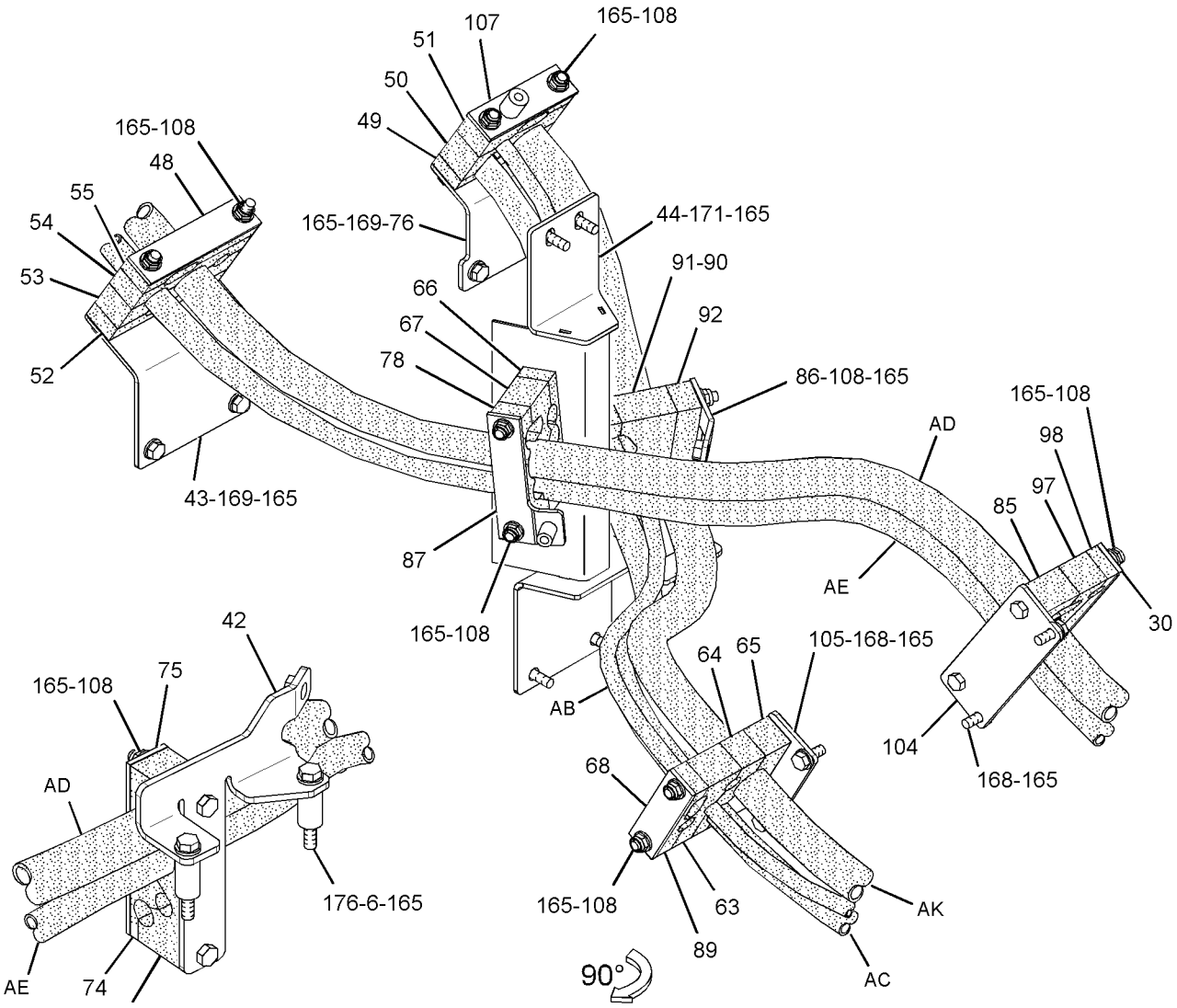

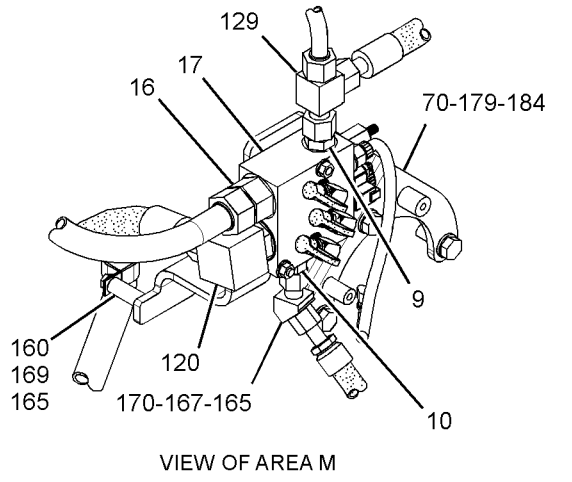

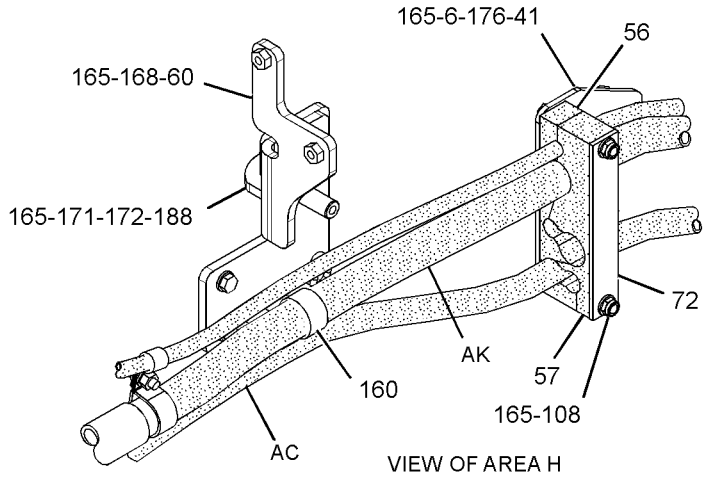

GRAPHIC #3

g01620518

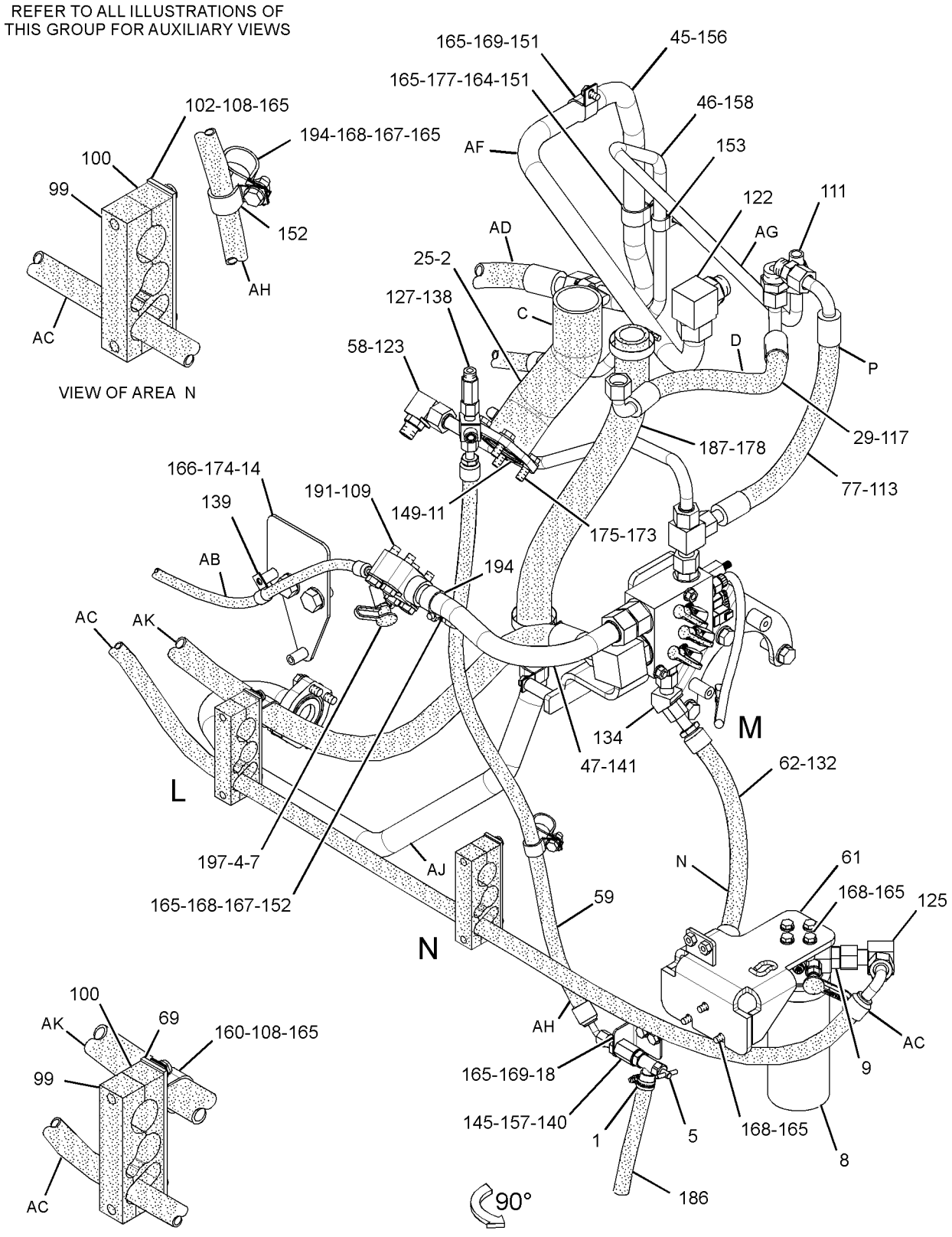

GRAPHIC #4

<END>

g01617995

HYDRAULIC SYSTEM

283-7767 LINES GP-SECONDARY STEERING

S/N: R9H1-UP

PART OF 349-2556 COMMON AR

SMCS-4304 **i02904046**

NOTE	REF NO	GRAPHIC REF	PART NUMBER	QTY	PART NAME 1 2 3 4 5 6 (PRODUCT LEVEL)	SEE PAGE
	1	1	**9T-1013**	1	VALVE AS-CHECK	
		1	**3K-0360**	1	SEAL-O-RING	
		1	**6V-8398**	1	SEAL-O-RING	
	2	1	**9T-8071**	1	VALVE GP-RELIEF (SECONDARY STEERING)	
I	3	1	**301-4178**	1	HOSE AS	
I	4	1	**283-7752**	1	HOSE AS	
I	5	1	**285-9296**	1	HOSE AS	
I	6	1	**288-9680**	1	HOSE AS	
	7	1	*153-6230*	2	CONNECTOR AS	
					(EACH INCLUDES)	
		1	**8T-9386**	1	CONNECTOR	
		1	**2M-9780**	1	SEAL-O-RING	
		1	**5K-9090**	1	SEAL-O-RING	
	8	1	*148-8354*	1	ELBOW AS	
		1	**6V-9002**	1	ELBOW	
		1	**3K-0360**	1	SEAL-O-RING	
		1	**6V-8398**	1	SEAL-O-RING	
	9	1	*148-8364*	1	ELBOW AS	
		1	**6V-8625**	1	ELBOW	
		1	**3K-0360**	1	SEAL-O-RING	
		1	**6V-8398**	1	SEAL-O-RING	
	10	1	*148-8428*	1	TEE AS	
		1	**6V-8782**	1	TEE	
		1	**3K-0360**	1	SEAL-O-RING	
		1	**6V-8398**	2	SEAL-O-RING	
C	11	1	**7D-7233**	3	CLIP	
	13	1	*155-7321*	1	ADAPTER AS	
		1	**6V-1722**	1	ADAPTER-O-RING	
		1	**3D-2824**	1	SEAL-O-RING	
	16	1	**5P-7854**	1	CLIP	
	17	1	**6D-4244**	1	CLIP	
	18	1	**8T-4121**	7	WASHER-HARD (11X21X2.5-MM THK)	
M	19	1	**8T-4133**	2	NUT (M10X1.5-THD)	
CM	20	1	**8T-4136**	3	BOLT (M10X1.5X25-MM)	
M	22	1	**8T-4182**	2	BOLT (M10X1.5X45-MM)	
	24	1	**3E-4321**	1	CLIP	
	25	1	**177-1061**	2	ELBOW AS	
					(EACH INCLUDES)	
		1	**142-0038**	1	ELBOW	
		1	**5K-9090**	1	SEAL-O-RING	

C-CHANGE FROM PREVIOUS TYPE
I-REFER TO HYDRAULIC INFORMATION SYSTEM
M-METRIC PART

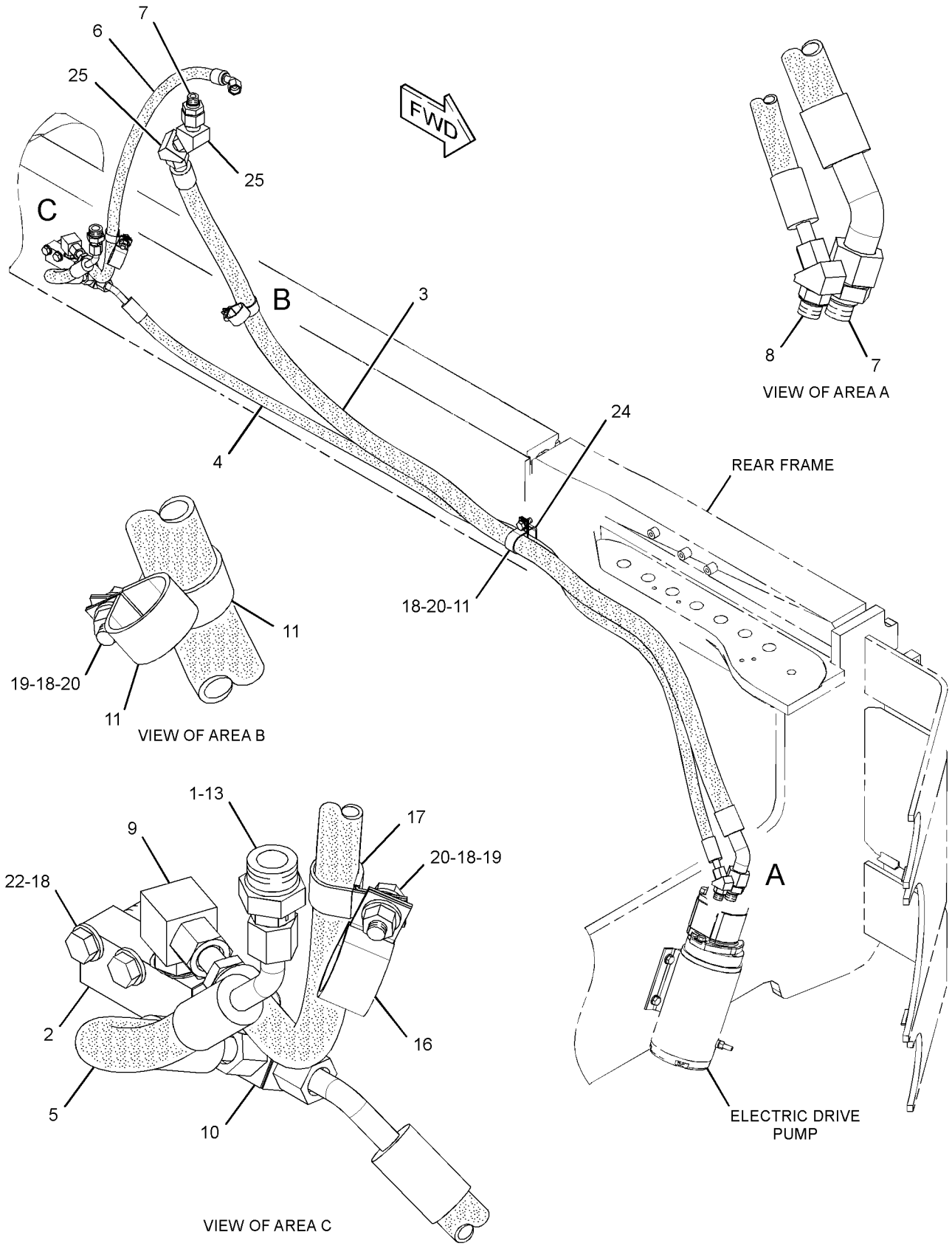

GRAPHIC #1 **<END>** g01446554

HYDRAULIC SYSTEM

249-6537 LOCK GP-CENTERSHIFT

S/N: R9H1-UP

PART OF 349-2556 COMMON AR

SMCS-5221 **i03124041**

NOTE	REF NO	GRAPHIC REF	PART NUMBER	QTY	PART NAME 1 2 3 4 5 6 (PRODUCT LEVEL)	SEE PAGE
	1	1	**2H-3931**	1	SEAL-O-RING	
	2	1	**4T-8054**	1	SEAL AS	
	3	1	**8X-3749**	1	PISTON	
	4	1	**9D-6584**	1	SEAL-LIP TYPE	
	5	1	**328-8313**	1	CAP	
Y	6	1	**152-8346**	1	VALVE GP-SOLENOID (24-VOLT) (CENTERSHIFT LOCK)	696
	7	1	**167-2307**	1	SEAL-U-CUP	
	8	1	**271-7839**	1	CYLINDER	
	9	1	**271-7840**	1	PIN	
	10	1	**5P-8247**	1	WASHER-HARD (17X32X3.5-MM THK)	
	11	1	**7X-0346**	2	BOLT (5/8-11X2-IN)	
	12	1	**8T-4122**	2	WASHER-HARD (17X32X3.5-MM THK)	
	13	1	**8T-4223**	2	WASHER-HARD (13.5X25.5X3-MM THK)	
	14	1	**8T-8917**	2	BOLT (1/2-13X1.25-IN)	
	15	1	**9X-8880**	1	BOLT (5/8-11X2-IN)	

Y-SEPARATE ILLUSTRATION

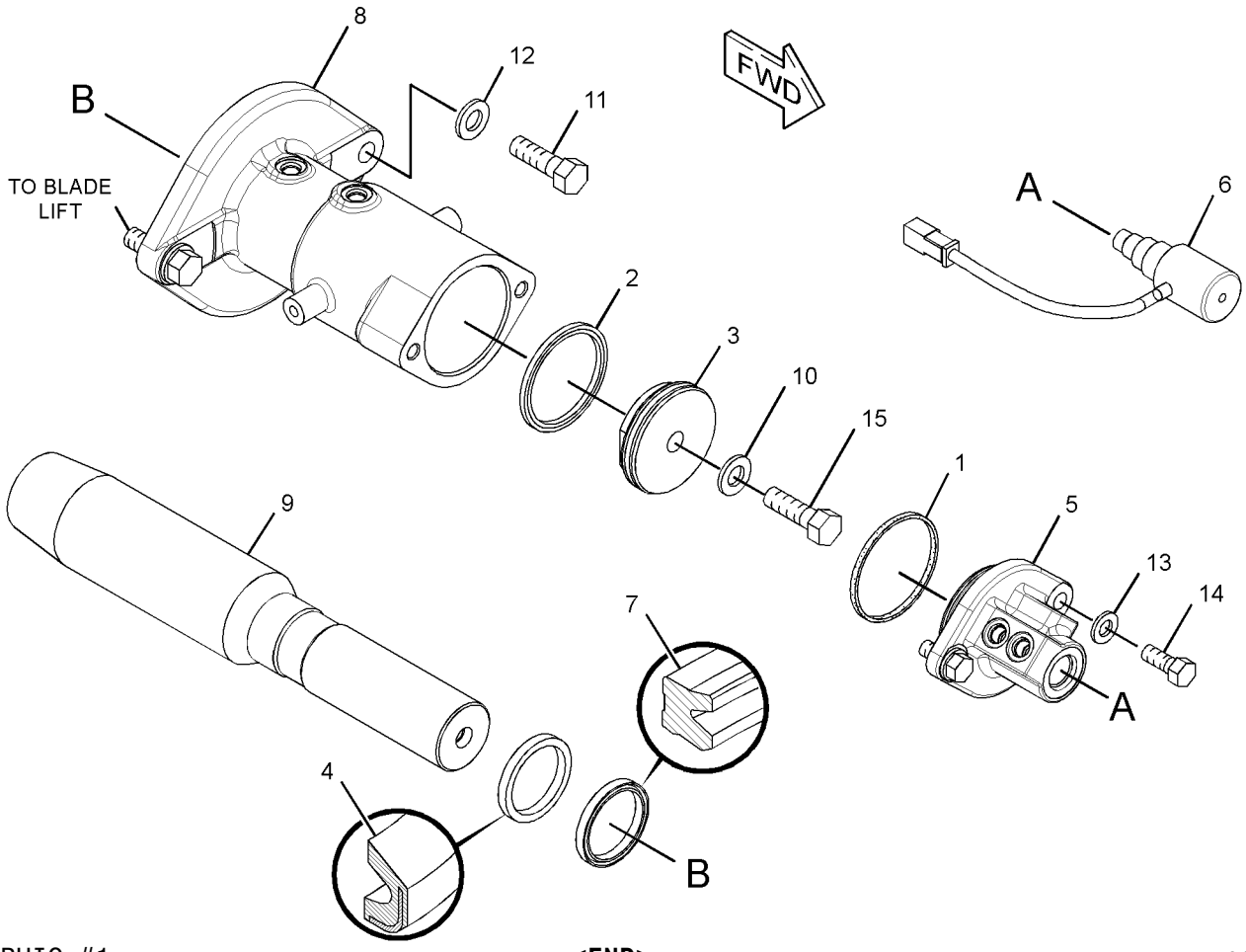

GRAPHIC #1 **<END>** g01475223

HYDRAULIC SYSTEM

253-1320 MANIFOLD GP-CONTROL

S/N: R9H1-UP
PART OF 287-7454 LINES GP-ACCUMULATOR
AN ATTACHMENT

SMCS-5051, 5069, 5264, 5467, 5479 **i02459848**

NOTE	REF NO	GRAPHIC REF	PART NUMBER	QTY	PART NAME 1 2 3 4 5 6 (PRODUCT LEVEL)	SEE PAGE
	1	1	**253-1319**	1	MANIFOLD	
	2	1	**244-8686**	1	VALVE GP-SOLENOID (24-VOLT) (BLADE CUSHION)	
		1	**249-0981**	1	COIL AS	

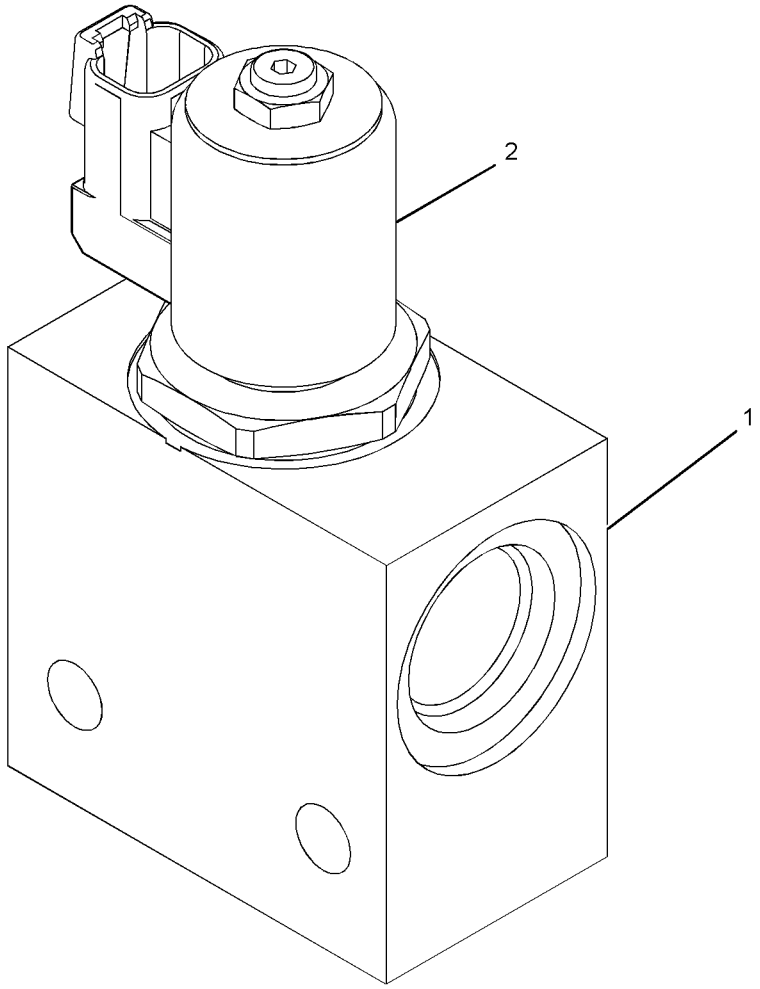

GRAPHIC #1 **<END>** g01227961

HYDRAULIC SYSTEM

322-3798 MANIFOLD GP-CONTROL–ACCUMULATOR

S/N: R9H1-UP

PART OF 366-3383 LINES GP-ACCUMULATOR, 277-6005, 366-3384 LINES GP-HYDRAULIC AN ATTACHMENT

SMCS-5051, 5069, 5264, 5467, 5479 **i03902329**

NOTE	REF NO	GRAPHIC REF	PART NUMBER	QTY	PART NAME 1 2 3 4 5 6 (PRODUCT LEVEL)	SEE PAGE
	1	1	**253-1319**	1	MANIFOLD	
	2	1	**320-8117**	1	VALVE GP-SOLENOID (HYDRAULIC ACCUMULATOR)	
		1	**257-5022**	1	COIL AS	

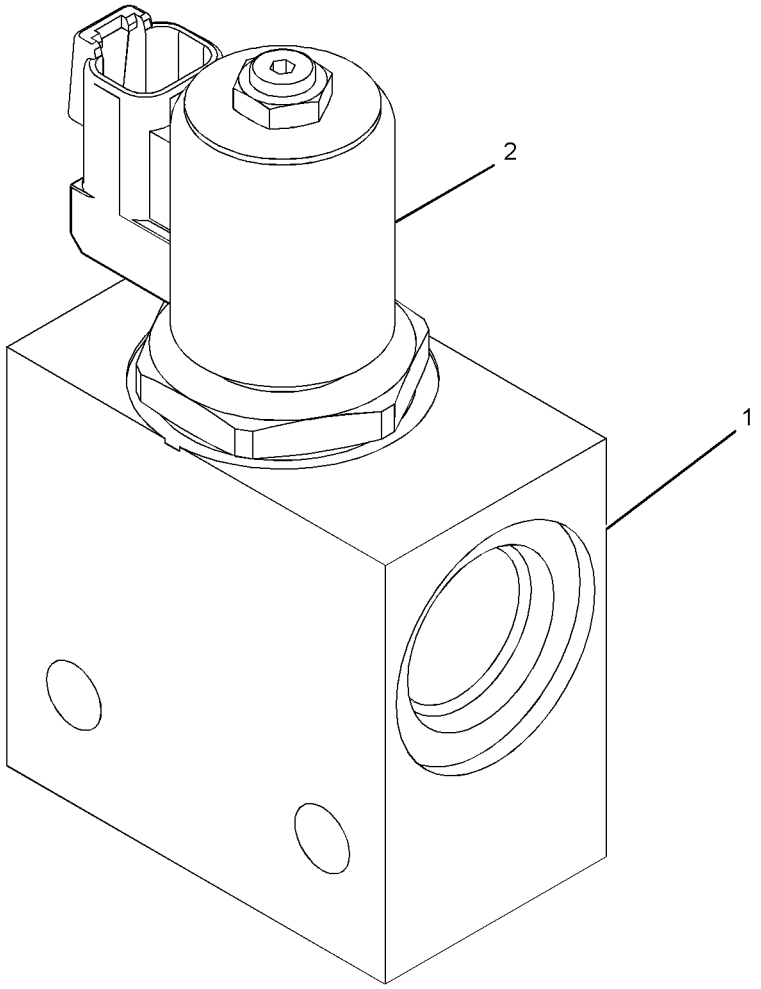

GRAPHIC #1 **<END>** g01227961

HYDRAULIC SYSTEM

353-2604 MANIFOLD GP-CONTROL

S/N: R9H1-UP

PART OF 283-7734 LINES GP-HYDRAULIC FAN

SMCS-5051, 5069, 5264, 5467, 5479 **i03995800**

NOTE	REF NO	GRAPHIC REF	PART NUMBER	QTY	PART NAME 1 2 3 4 5 6 (PRODUCT LEVEL)	SEE PAGE
P	1	1	**282-5396**	1	KIT-VALVE (BRAKE ACCUMULATOR)	
					(INCLUDES SEAL-O-RINGS & BACK-UP RINGS)	
Y	2	1	**251-8330**	1	VALVE GP-RELIEF (BRAKE ACCUMULATOR)	694
J	3	1	**239-0618**	1	VALVE GP-SHUTTLE (HYDRAULIC FAN)	
		1	**3H-0442**	1	SEAL-O-RING	
Y	4	1	**277-2132**	1	VALVE GP-DIVERTER (FAN DRIVE)	690
	5	1	**9S-8001**	3	PLUG-O-RING	
	6	1	**4J-7533**	3	SEAL-O-RING	
	7	1	**9S-8004**	1	PLUG-O-RING	
	8	1	**3J-1907**	1	SEAL-O-RING	
Y	9	1	**257-8414**	1	VALVE GP-SHUTTLE (BRAKE ACCUMULATOR)	695
	10	1	**296-5270**	1	SENSOR GP-PRESSURE	
N	11	1	**348-0421**	1	VALVE GP-CHECK (BRAKE, HYDRAULIC FAN)	
Y	12	1	**189-8627**	1	VALVE GP-SOLENOID (HYDRAULIC FAN)	697
	13	1	**6E-5066**	1	SCREEN (CONTROL MANIFOLD)	
	14	1	**280-0947**	1	PLUG-ORIFICE	
	15	1	**266-1602**	1	PLUG-ORIFICE	
	16	1	**1J-9671**	1	SEAL-O-RING	
					AVAILABLE REPAIR KIT(S):	
P			**200-6282**	1	KIT-SEAL (DIVERTER VALVE)	
					(INCLUDES SEAL-O-RINGS & BACK-UP RINGS)	
J			**239-5195**	1	KIT-SEAL (SHUTTLE VALVE)	
					(INCLUDES SEAL-O-RINGS & BACK-UP RING)	
N			**189-2102**	1	KIT-SEAL (SOLENOID VALVE)	
					(INCLUDES SEAL-O-RING & BACK-UP RINGS)	

J-KIT MARKED J SERVICES PART(S) MARKED J
N-KIT MARKED N SERVICES PART(S) MARKED N
P-KIT MARKED P SERVICES PART(S) MARKED P
Y-SEPARATE ILLUSTRATION

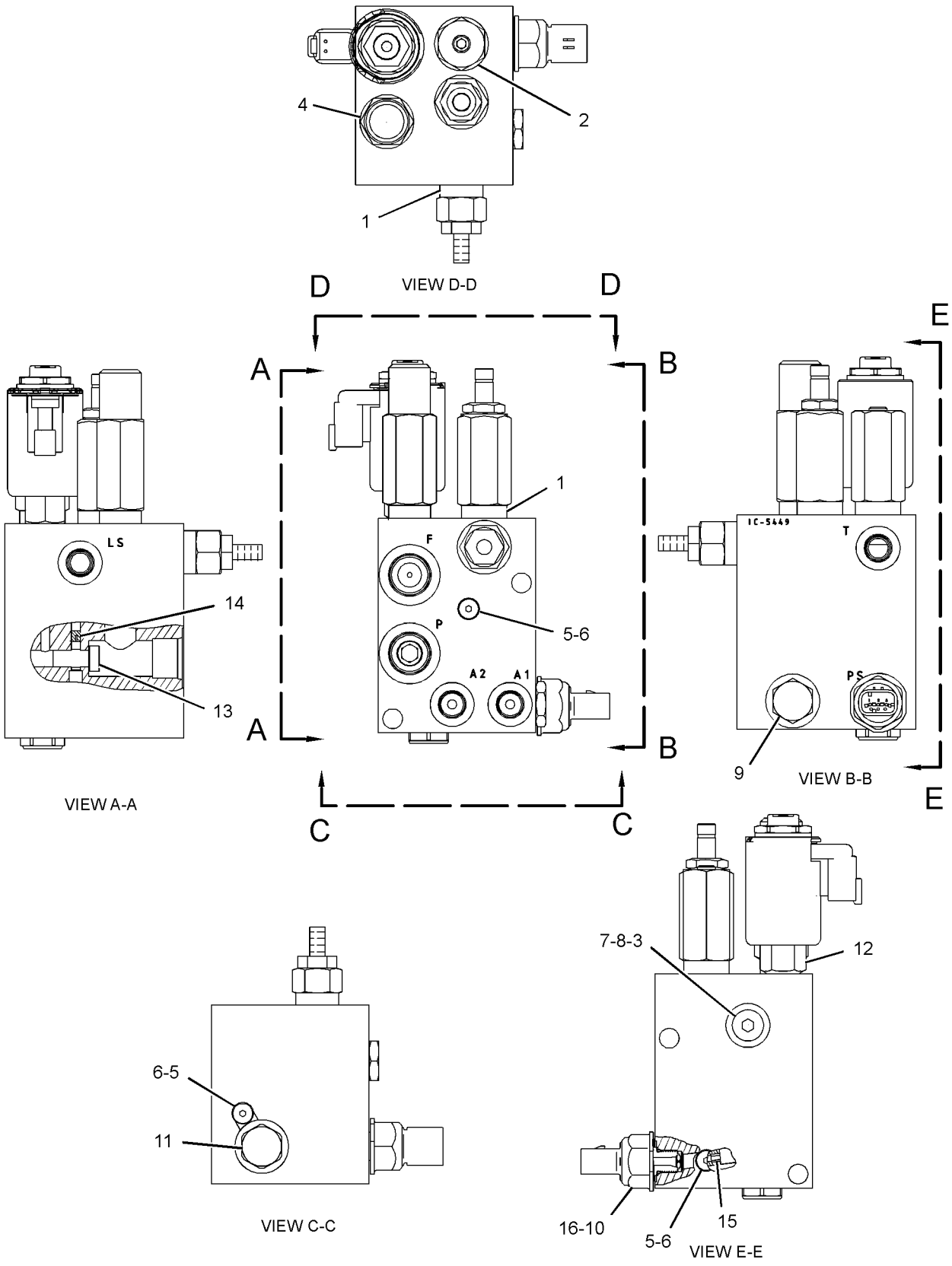

GRAPHIC #1 **<END>** g02177928

353-2605 MANIFOLD GP-CONTROL–IMPLEMENT, STEERING

S/N: R9H1-UP

PART OF 283-7735 LINES GP-SECONDARY STEERING

SMCS-5051, 5069, 5264, 5467, 5479 **i03926336**

NOTE	REF NO	GRAPHIC REF	PART NUMBER	QTY	PART NAME 1 2 3 4 5 6 (PRODUCT LEVEL)	SEE PAGE
	1	1	**9S-8003**	1	PLUG	
Y	2	1	**133-5330**	1	VALVE GP-RELIEF (MAIN)	693
Y	3	1	**252-8038**	1	VALVE GP-PRESSURE REDUCING (PRIMARY STEERING)	691
	4	1	**252-0741**	1	VALVE GP-SOLENOID (IMPLEMENT PILOT OIL)	
		1	**156-5970**	1	NUT (1/2-20-THD)	
		1	**252-0745**	1	COIL AS	
	5	1	**296-5270**	1	SENSOR GP-PRESSURE (SECONDARY STEERING)	
	6	1	**6V-0852**	2	CAP-DUST	
	7	1	**6V-3965**	2	FITTING (QUICK DISCONNECT)	
	8	1	**3J-1907**	4	SEAL-O-RING	
	9	1	**6V-0484**	2	ADAPTER-O-RING	
	10	1	**8C-3446**	1	VALVE-FLUID SAMPLING	
	11	1	**126-8440**	2	SEAL-O-RING	
	12	1	**151-5145**	1	ELBOW	
	13	1	**1J-9671**	2	SEAL-O-RING	
	14	1	**8C-3451**	1	CAP-DUST	

Y-SEPARATE ILLUSTRATION

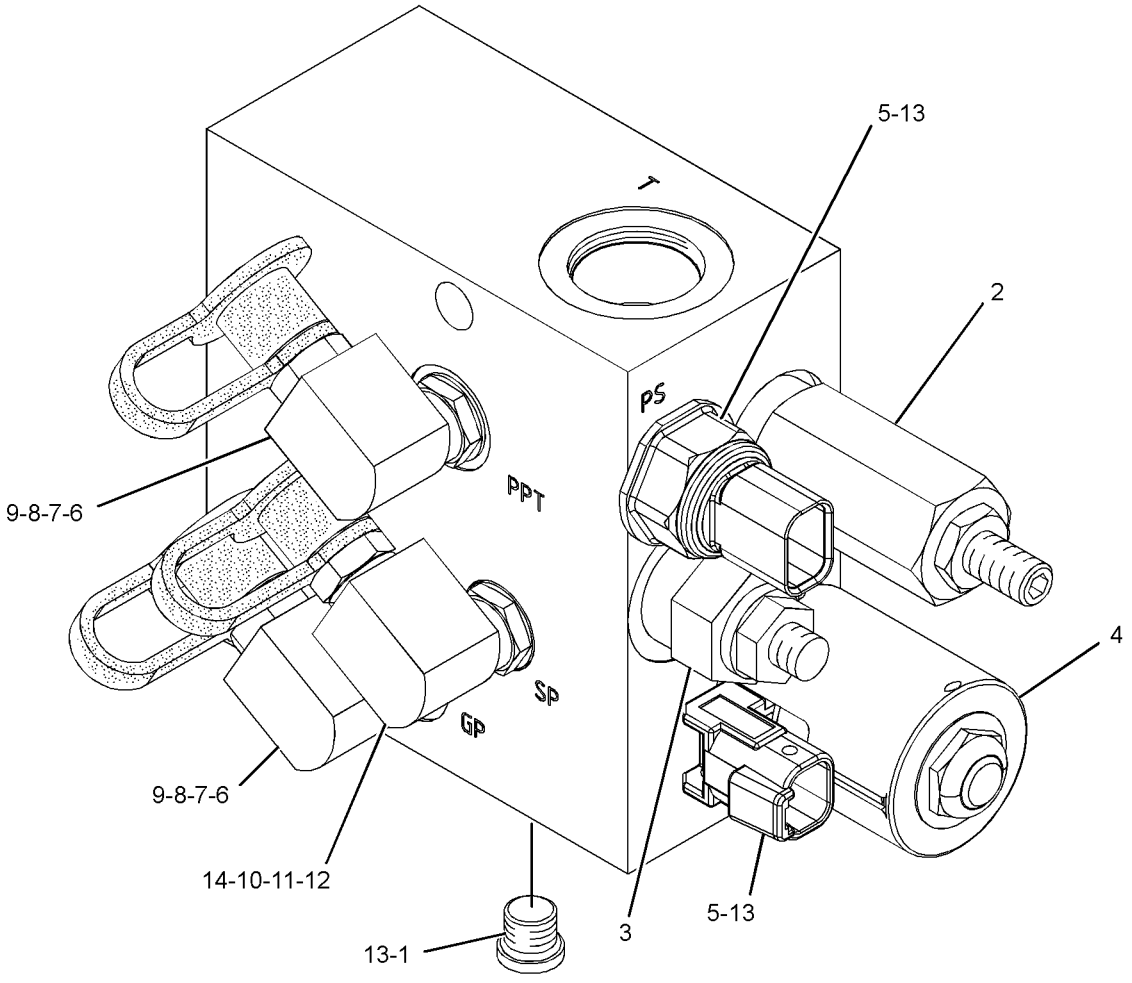

GRAPHIC #1 **<END>** g02158270

HYDRAULIC SYSTEM

292-2033 MANIFOLD GP-VALVE–INLET

S/N: R9H1-UP

PART OF 261-3272 VALVE GP-BANK 5, 261-3273 VALVE GP-BANK 6, 261-3274 VALVE GP-BANK 7

AN ATTACHMENT

SMCS-5264 **i03543607**

NOTE	REF NO	GRAPHIC REF	PART NUMBER	QTY	PART NAME 1 2 3 4 5 6 (PRODUCT LEVEL)	SEE PAGE
	1	1	**259-0309**	1	MANIFOLD-INLET	
	2	1	**301-4568**	1	ORIFICE	
	3	1	*148-8407*	2	PLUG AS	
					(EACH INCLUDES)	
		1	**9S-4191**	1	PLUG-O-RING	
		1	**3J-1907**	1	SEAL-O-RING	
	4	1	*148-8411*	4	PLUG AS	
					(EACH INCLUDES)	
		1	**9S-4185**	1	PLUG-O-RING	
		1	**3K-0360**	1	SEAL-O-RING	
	5	1	*173-3993*	5	PLUG AS	
					(EACH INCLUDES)	
		1	**9S-8001**	1	PLUG-O-RING	
		1	**4J-7533**	1	SEAL-O-RING	

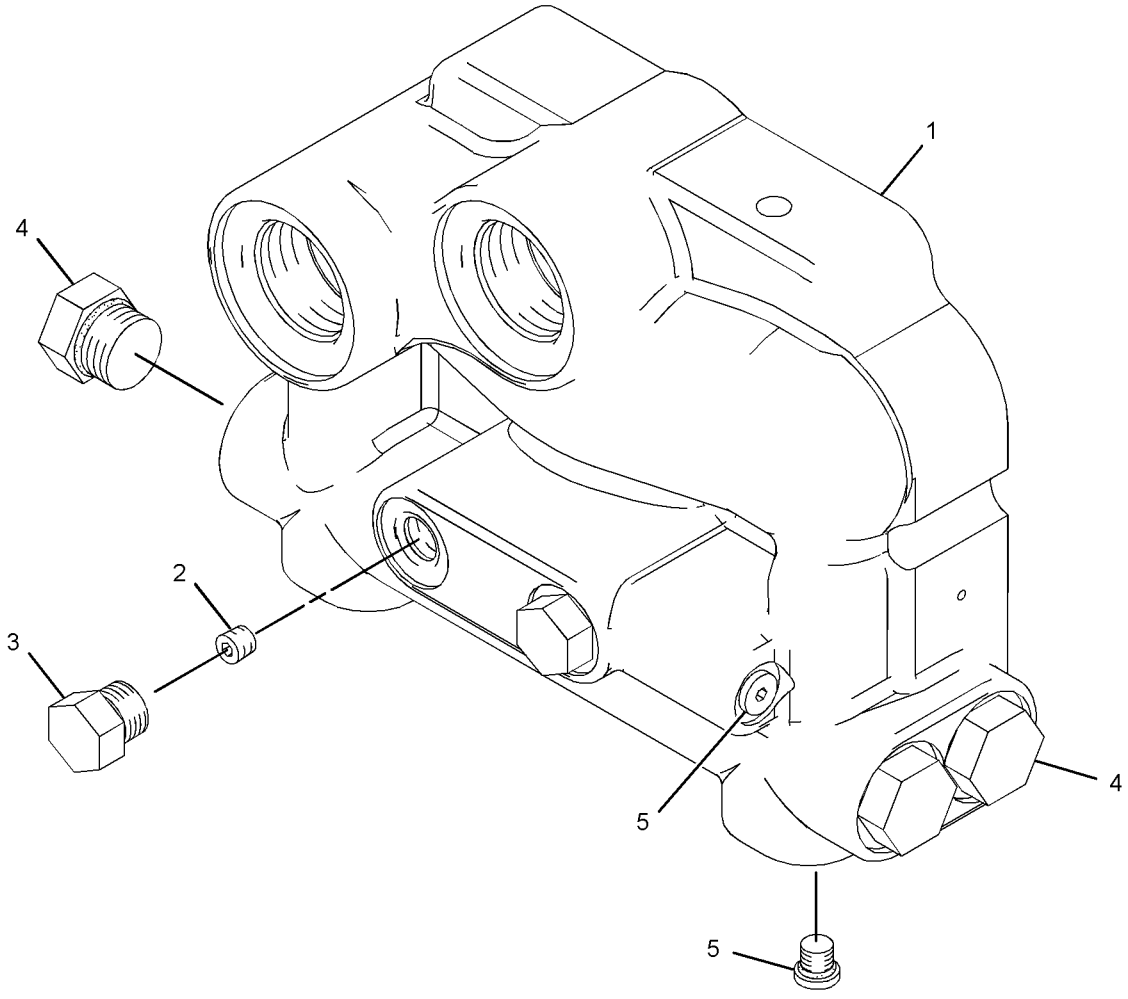

GRAPHIC #1 **<END>** g01860858

292-2034 MANIFOLD GP-VALVE–INLET

S/N: R9H1-UP

PART OF 261-3278 VALVE GP-BANK 3, 261-3281 VALVE GP-BANK 4, 261-3283, 291-9518 VALVE GP-BANK 6

AN ATTACHMENT

SMCS-5264 **i04036915**

NOTE	REF NO	GRAPHIC REF	PART NUMBER	QTY	PART NAME 1 2 3 4 5 6 (PRODUCT LEVEL)	SEE PAGE
	1	1	**096-3831**	1	ORIFICE	
H	3	1	**361-3059**	1	VALVE GP-RELIEF (MAIN)	
	4	1	**259-0310**	1	MANIFOLD-INLET	
	6	1	*148-8407*	3	PLUG AS	
					(EACH INCLUDES)	
		1	**9S-4191**	1	PLUG-O-RING	
		1	**3J-1907**	1	SEAL-O-RING	
	7	1	*148-8411*	4	PLUG AS	
					(EACH INCLUDES)	
		1	**9S-4185**	1	PLUG-O-RING	
		1	**3K-0360**	1	SEAL-O-RING	
	8	1	*173-3993*	4	PLUG AS	
					(EACH INCLUDES)	
		1	**9S-8001**	1	PLUG-O-RING	
		1	**4J-7533**	1	SEAL-O-RING	
	9	1	*183-7263*	1	PLUG AS	
		1	**9S-8002**	1	PLUG-O-RING	
		1	**3J-7354**	1	SEAL-O-RING	
					AVAILABLE REPAIR KIT(S):	
H			**133-5545**	1	KIT-SEAL (RELIEF VALVE)	

H-KIT MARKED H SERVICES PART(S) MARKED H

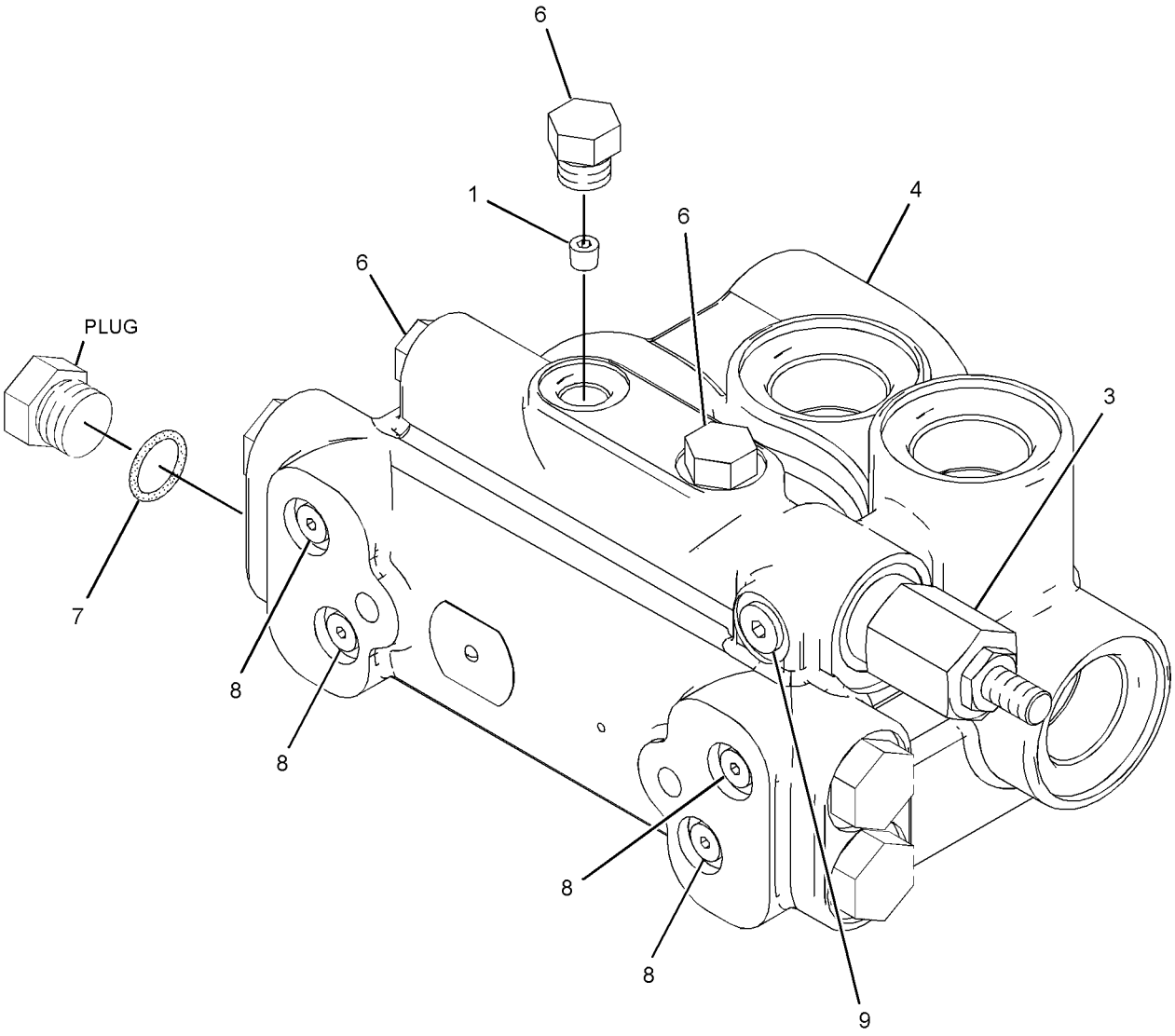

GRAPHIC #1 **<END>** g02239161

HYDRAULIC SYSTEM

9T-5977 MOTOR GP-GEROTOR

S/N: R9H1-UP

PART OF 265-6725 DRIVE GP-CIRCLE

SMCS-5082 **i02291910**

NOTE	REF NO	GRAPHIC REF	PART NUMBER	QTY	PART NAME 1 2 3 4 5 6 (PRODUCT LEVEL)	SEE PAGE
	1	1	**7X-4733**	1	SEAL-LIP TYPE	
	2	1	**9T-8070**	1	HOUSING AS	
	3	1	**6Y-2934**	1	BEARING-ROLLER	
	4	1	**6Y-2933**	2	RING-THRUST	
	5	1	**6Y-2932**	1	BEARING-THRUST	
	6	1	**8T-1698**	1	BEARING AS-NEEDLE	
	7	1	**9T-9071**	1	SHIM	
	8	1	**9T-8058**	1	BACKUP	
	9	1	**9T-8059**	1	SEAL	
	10	1	**9T-8057**	1	SHAFT	
	11	1	**6Y-2935**	1	BEARING	
	12	1	**9T-8053**	5	SEAL	
	13	1	**9T-8055**	1	LINK	
	14	1	**9T-8061**	1	PLATE	
	15	1	**9T-8062**	1	ROTOR SET	
	16	1	**9T-8065**	1	MANIFOLD	
	17	1	**9J-4963**	1	RING	
	18	1	**9T-8069**	1	PLATE AS	
	19	1	**9T-8067**	1	COVER	
	20	1	**9T-8052**	7	BOLT (3/8-24X4.375-IN)	
					AVAILABLE REPAIR KIT(S):	
			9T-9072	1	KIT-SEAL (MOTOR)	
					(INCLUDES SEALS, BACKUP RING, SHIM & GREASE PACK)	

9T-5977 MOTOR GP-GEROTOR *(contd.)* i02291910

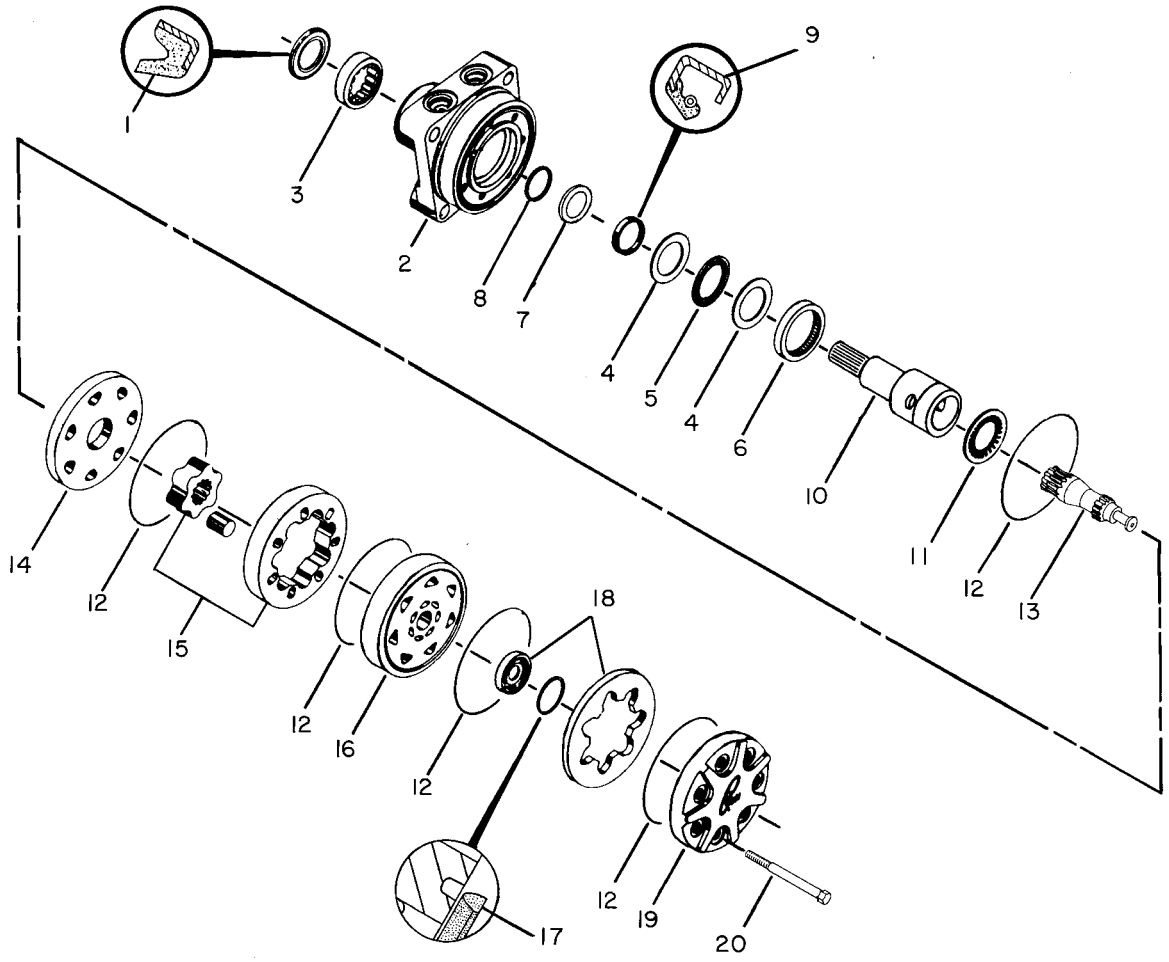

GRAPHIC #1 **<END>** g00082184

HYDRAULIC SYSTEM

292-5072 PUMP & MOTOR GP-SEC STEERING

S/N: R9H1-UP

PART OF 283-7774 PUMP & MTG GP-SECONDARY STEER

SMCS-4324 **i02611109**

NOTE	REF NO	GRAPHIC REF	PART NUMBER	QTY	PART NAME 1 2 3 4 5 6 (PRODUCT LEVEL)	SEE PAGE
Y	1	1	**117-3915**	1	MOTOR GP-ELECTRIC (SECONDARY STEERING)	270
	2	1	**117-5268**	1	GASKET	
	3	1	**123-8914**	1	PUMP (SECONDARY STEERING)	
					AVAILABLE REPAIR KIT(S):	
			269-1014	1	KIT-SEAL (SECONDARY STEERING PUMP)	
					(INCLUDES RETAINING RING, SHAFT SEAL, BACK-UP RINGS, E-RINGS, & O-RINGS)	

Y-SEPARATE ILLUSTRATION

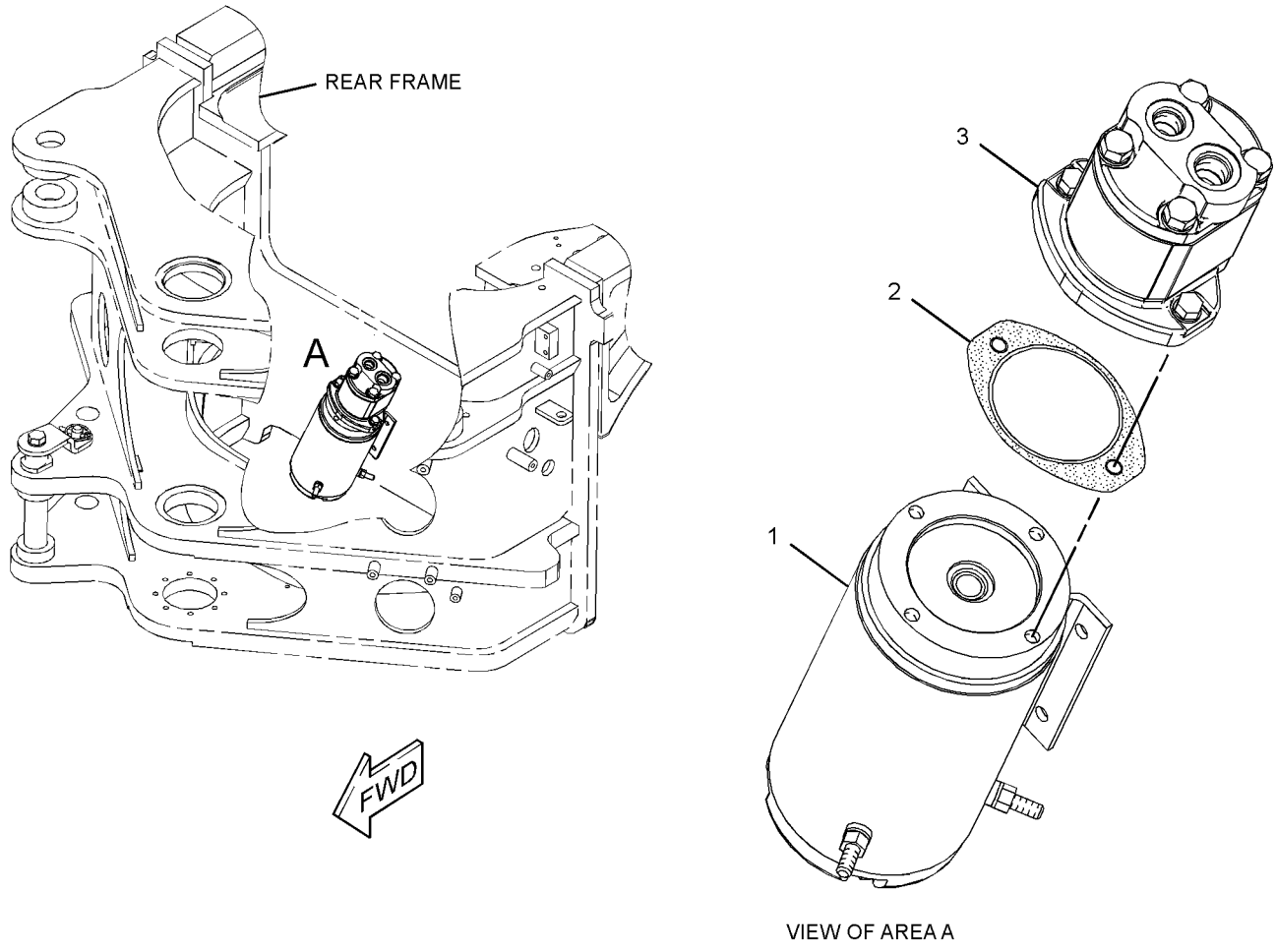

VIEW OF AREA A

GRAPHIC #1 **<END>** g01328432

HYDRAULIC SYSTEM

249-6534 PUMP & MTG GP-HYDRAULIC FAN–BRAKE

S/N: R9H1-UP

PART OF 349-2556 COMMON AR

SMCS-1387 **i02846996**

NOTE	REF NO	GRAPHIC REF	PART NUMBER	QTY	PART NAME 1 2 3 4 5 6 (PRODUCT LEVEL)	SEE PAGE
J	1	1	**257-6832**	1	PUMP GP-PISTON (BRAKE, HYDRAULIC FAN)	
		1	**3G-3734**	2	SEAL-LIP TYPE	
		1	**284-3799**	1	VALVE GP-COMPENSATING (PUMP GP)	
	2	1	**1H-6227**	1	SEAL-O-RING	
M	3	1	**8T-4139**	2	BOLT (M12X1.75X30-MM)	
	4	1	**8T-4223**	2	WASHER-HARD (13.5X25.5X3-MM THK)	
					AVAILABLE REPAIR KIT(S):	
			295-8491	1	KIT-SEAL (PUMP GP)	
					(INCLUDES O-RINGS, SHAFT SEAL, RETAINING RING, & BACK-UP WASHER)	

J-KIT MARKED J SERVICES PART(S) MARKED J
M-METRIC PART

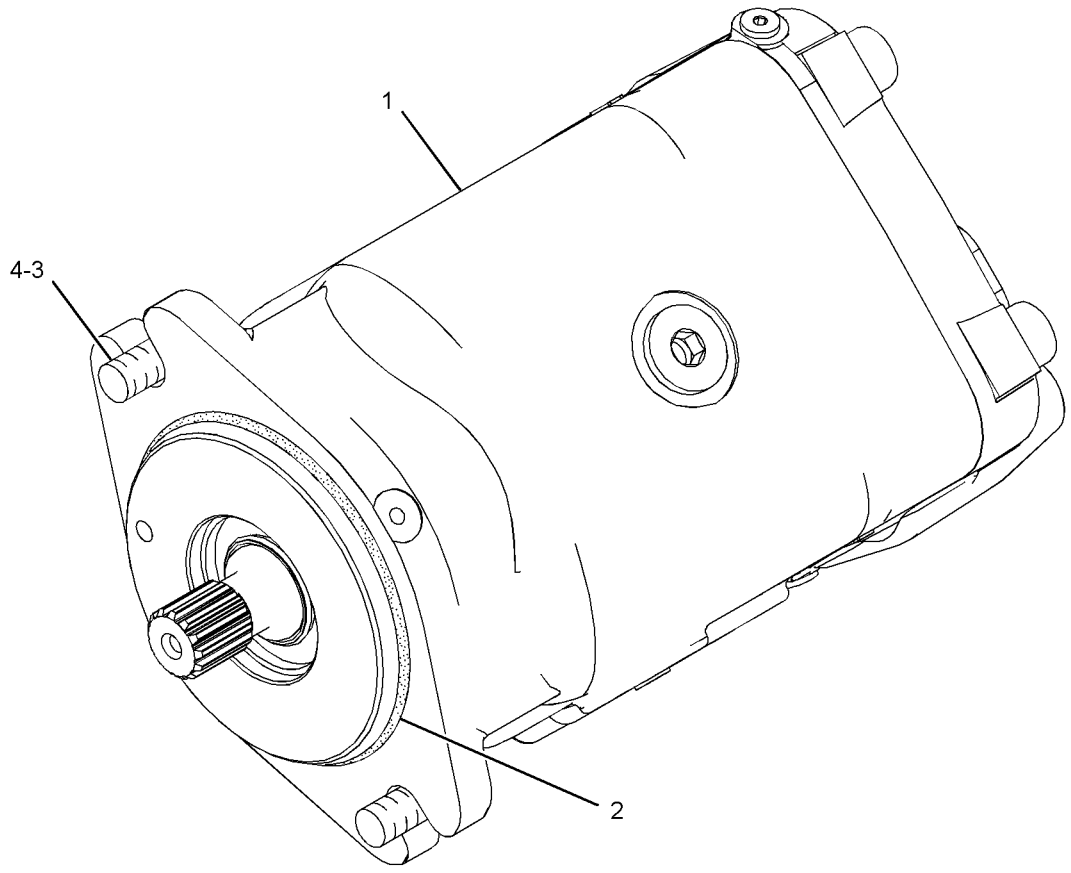

GRAPHIC #1 **<END>** g01313363

249-6532 PUMP & MTG GP-PISTON

S/N: R9H1-UP

PART OF 349-2556 COMMON AR

SMCS-5070 **i02370320**

NOTE	REF NO	GRAPHIC REF	PART NUMBER	QTY	PART NAME 1 2 3 4 5 6 (PRODUCT LEVEL)	SEE PAGE
Y	1	1	**246-4486**	1	PUMP GP-PISTON (IMPLEMENT, STEERING)	645
	2	1	**5P-1076**	4	WASHER-HARD (13.5X30X4-MM THK)	
M	3	1	**8T-4956**	4	BOLT (M12X1.75X35-MM)	
	4	1	**9X-7371**	1	SEAL-O-RING	

M-METRIC PART
Y-SEPARATE ILLUSTRATION

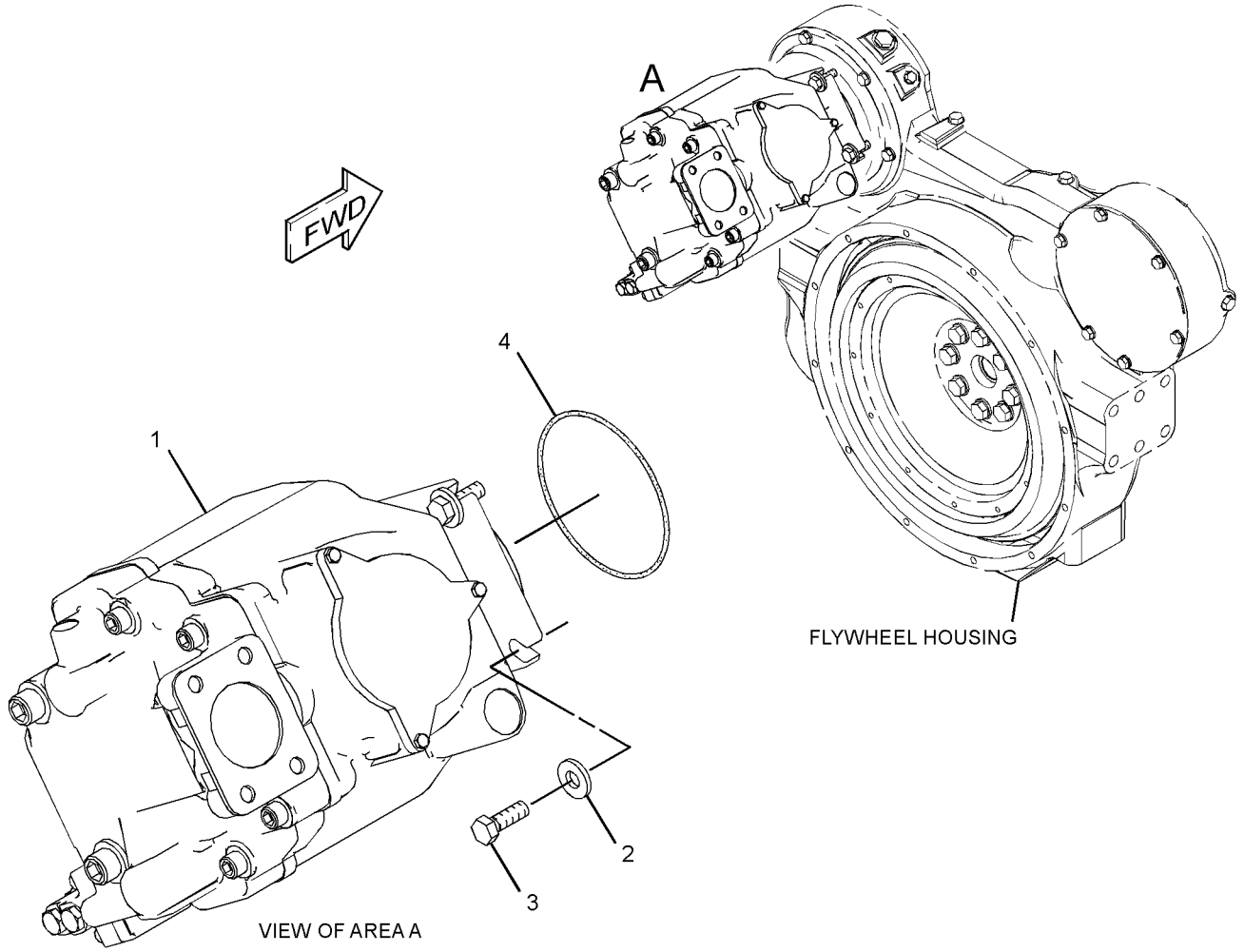

GRAPHIC #1 **<END>** g01323545

HYDRAULIC SYSTEM

283-7774 PUMP & MTG GP-SECONDARY STEER

S/N: R9H1-UP

PART OF 349-2556 COMMON AR

SMCS-4324 **i02657761**

NOTE	REF NO	GRAPHIC REF	PART NUMBER	QTY	PART NAME 1 2 3 4 5 6 (PRODUCT LEVEL)	SEE PAGE
Y	1	1	**292-5072**	1	PUMP & MOTOR GP-SEC STEERING	641
	2	1	**8T-4896**	4	WASHER-HARD (10.2X18.5X2.5-MM THK)	
M	3	1	**8T-4137**	4	BOLT (M10X1.5X20-MM)	

M-METRIC PART
Y-SEPARATE ILLUSTRATION

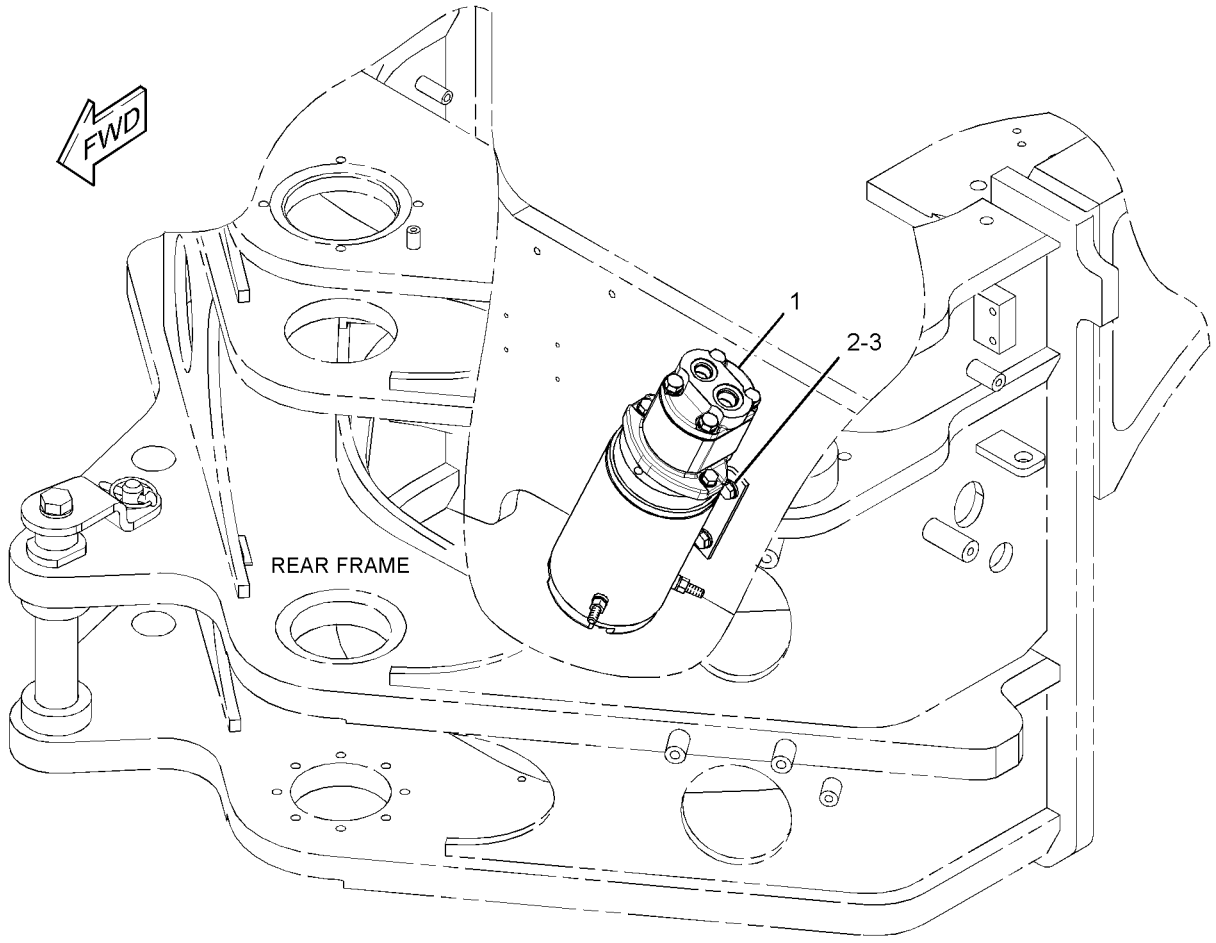

GRAPHIC #1 **<END>** g01317675

246-4486 PUMP GP-PISTON—IMPLEMENT, STEERING*R

S/N: R9H1-UP

PART OF 249-6532 PUMP & MTG GP-PISTON

SMCS-5070 **i04040049**

NOTE	REF NO	GRAPHIC REF	PART NUMBER	QTY	PART NAME 1 2 3 4 5 6 (PRODUCT LEVEL)	SEE PAGE
	1	1	**6E-4232**	1	SHAFT	
	2	1	**6E-4237**	1	BEARING	
	3	1	**6E-4224**	1	PLUG-SWASHPLATE	
	4	1	**033-6036**	1	SEAL-O-RING	
	5	1	**9S-4190**	1	PLUG-O-RING	
	6	1	**9T-1699**	1	SPRING	
	7	1	**9T-1710**	1	POPPET	
	8	1	**9T-1636**	1	SEAT	
	9	1	**6E-4227**	1	COVER	
M	10	1	**6V-8837**	3	BOLT (M6X1X16-MM)	
	11	1	**4F-4097**	1	SEAL-O-RING	
	12	1	**6E-4236**	1	BEARING	
M	13	1	**3E-4302**	2	SCREW-FLAT HEAD (M4X0.7X10-MM)	
	14	1	**8T-5039**	3	SEAL-O-RING	
	15	1	**095-0888**	2	PIN-SPRING	
M	16	1	**8T-0343**	4	BOLT-SOCKET HEAD (M12X1.75X55-MM)	
M	17	1	**095-0705**	2	BOLT-SOCKET HEAD (M16X2X100-MM)	
Y	18	1	**271-6847**	1	VALVE GP-PUMP CONTROL (PRESSURE, FLOW COMPENSATOR)	692
	19	1	**7K-8877**	1	CONE-BEARING	
M	20	1	**6V-8337**	4	BOLT-SOCKET HEAD (M8X1.25X35-MM)	
	21	1	**033-6027**	1	SEAL-O-RING	
	22	1	**7K-8876**	1	CUP-BEARING	
	23	1	**6E-4213**	1	KIT-BIAS PISTON (HYDRAULIC PISTON PUMP)	
					(INCLUDES SPRING, ROD, PISTON, & PACKING)	
	24	1	**6E-4214**	1	SPRING-BIAS	
Y	25	1	**6E-4216**	1	ROTATING GP-PUMP (IMPLEMENT, STEERING)	647
	26	1	**6E-4225**	1	GASKET	
	27	1	**7L-9061**	2	SEAL-O-RING	
	28	1	**3E-7417**	3	PLUG	
	29	1	**8T-7876**	3	SEAL-O-RING	
	30	1	**6E-4233**	1	PLATE-VALVE-RH	
	31	1	**005-0471**	1	CONE-BEARING	
	32	1	**005-0469**	1	CUP-BEARING	
B	33	1	**103-6282**	1	SHIM PACK (INCLUDES 17-SHIMS)	
	34	1	**9T-1652**	1	PIN	
	35	1	**6E-4215**	1	KIT-PISTON (HYDRAULIC PISTON PUMP)	
					(INCLUDES PACKING, ROD, & PISTON)	
Y	36	1	**184-1527**	1	SWASHPLATE GP (IMPLEMENT, STEERING PUMP)	648
	37	1	**6L-8797**	2	RING-RETAINING	
	38	1	**9X-7547**	2	SEAL-LIP TYPE	

B-USE AS REQUIRED
M-METRIC PART
Y-SEPARATE ILLUSTRATION

246-4486 PUMP GP-PISTON *(contd.)* i04040049

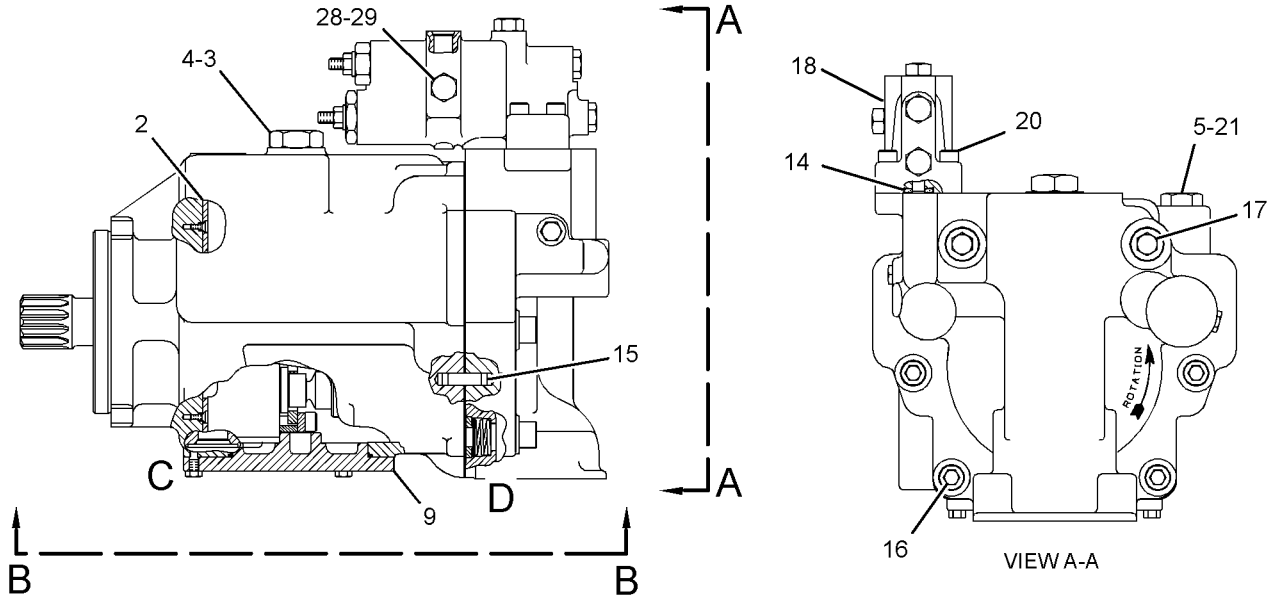

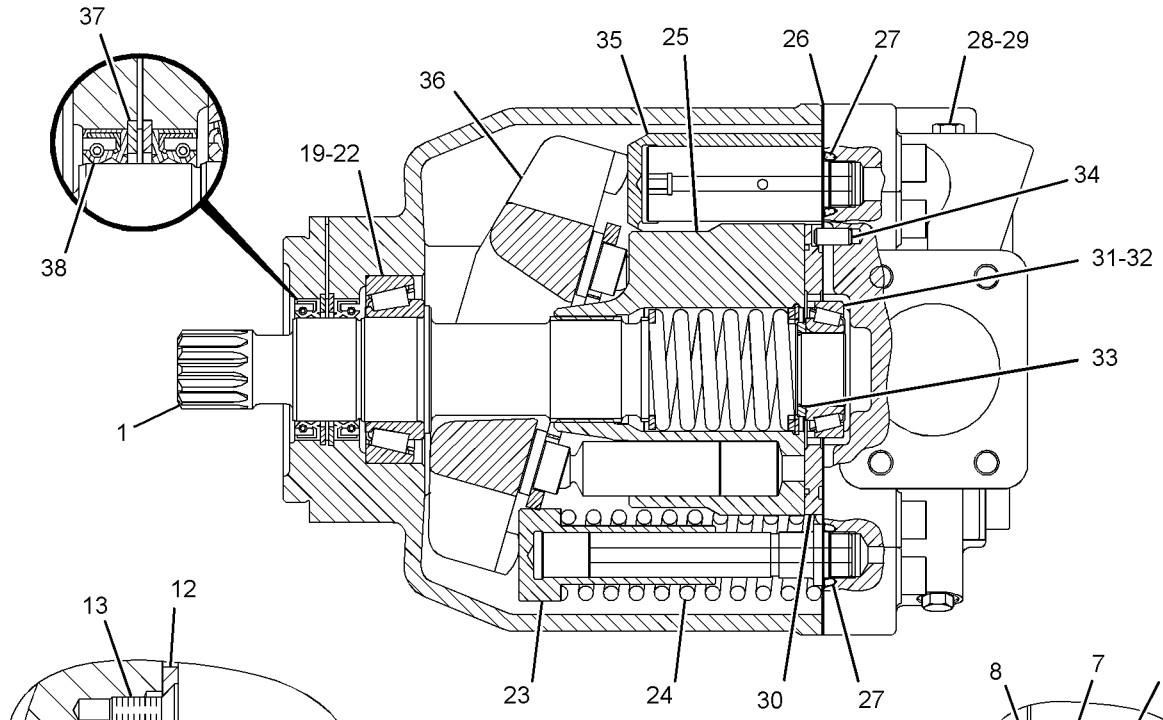

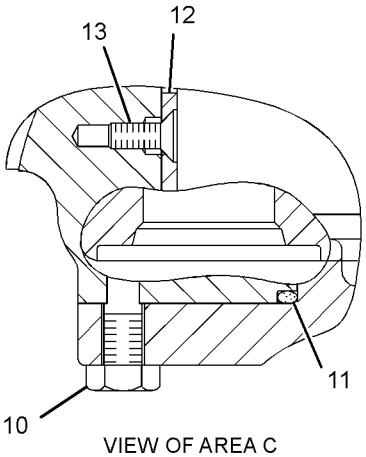

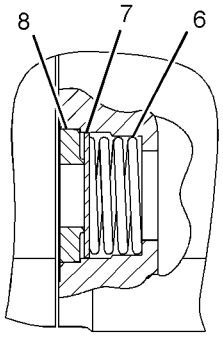

GRAPHIC #1 **<END>** g01339308

HYDRAULIC SYSTEM

6E-4216 ROTATING GP-PUMP–IMPLEMENT, STEERING

S/N: R9H1-UP

PART OF 246-4486 PUMP GP-PISTON

SMCS-5070 **i02351999**

NOTE	REF NO	GRAPHIC REF	PART NUMBER	QTY	PART NAME 1 2 3 4 5 6 (PRODUCT LEVEL)	SEE PAGE
	1	1	**9T-4906**	1	RING-RETAINING	
	2	1	**6E-4219**	1	GUIDE	
M	3	1	**6V-5192**	4	BOLT-SOCKET HEAD (M8X1.25X30-MM)	
	4	1	**6E-4218**	2	PLATE-SPACER	
	5	1	**6E-4217**	2	PLATE-LIMITER	
	6	1	**9T-8452**	9	PISTON	
	7	1	**9T-8445**	1	GUIDE	
	8	1	**9T-8446**	1	SPRING	
	9	1	**9T-8448**	1	BARREL	
	10	1	**9T-8450**	1	PLATE-RETAINING	

M-METRIC PART

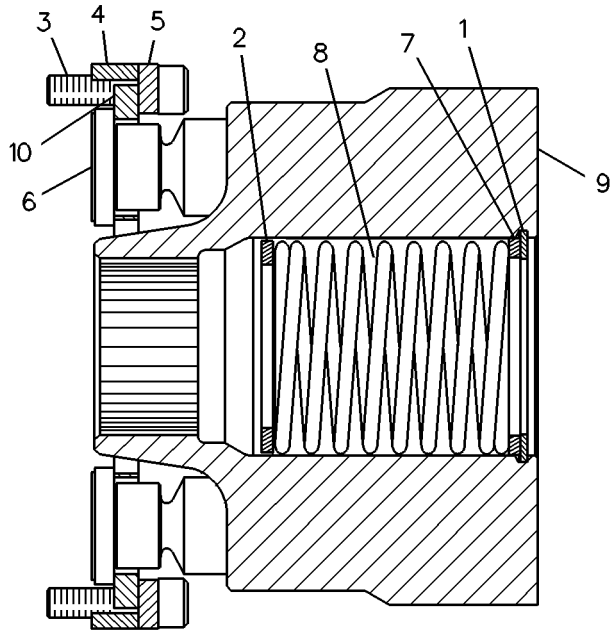

GRAPHIC #1 **<END>** g00083062

HYDRAULIC SYSTEM

184-1527 SWASHPLATE GP

S/N: R9H1-UP

PART OF 246-4486 PUMP GP-PISTON

SMCS-5070 **i01247539**

NOTE	PART NUMBER	QTY	PART NAME 1 2 3 4 5 6 (PRODUCT LEVEL)	SEE PAGE
	1H-3937	2	PIN	
	167-1801	2	STOP-SWASHPLATE	

<END>

260-6502 SWIVEL GP—CIRCLE DRIVE

S/N: R9H1-UP

PART OF 287-7454, 366-3383 LINES GP-ACCUMULATOR, 277-6005, 366-3384 LINES GP-HYDRAULIC

AN ATTACHMENT

SMCS-5060 **i02348806**

NOTE	REF NO	GRAPHIC REF	PART NUMBER	QTY	PART NAME 1 2 3 4 5 6 (PRODUCT LEVEL)	SEE PAGE
B	1	1	**5J-1246**	6	SHIM (0.13-MM THK)	
	2	1	**8J-2331**	7	SEAL	
	3	1	**173-1008**	1	ROTOR	
	4	1	**173-1009**	1	RETAINER	
	5	1	**223-0580**	1	COVER	
	7	1	**260-6501**	1	BODY	
	8	1	**173-1007**	2	SEAL	
	9	1	**1P-3700**	4	SEAL-RECTANGULAR	
	10	1	**2H-3928**	7	SEAL-O-RING	
	11	1	**4J-9964**	2	SEAL	
	12	1	**5P-2566**	6	BOLT (1/2-13X1.5-IN)	
	13	1	**8T-4223**	4	WASHER-HARD (13.5X25.5X3-MM THK)	

B-USE AS REQUIRED

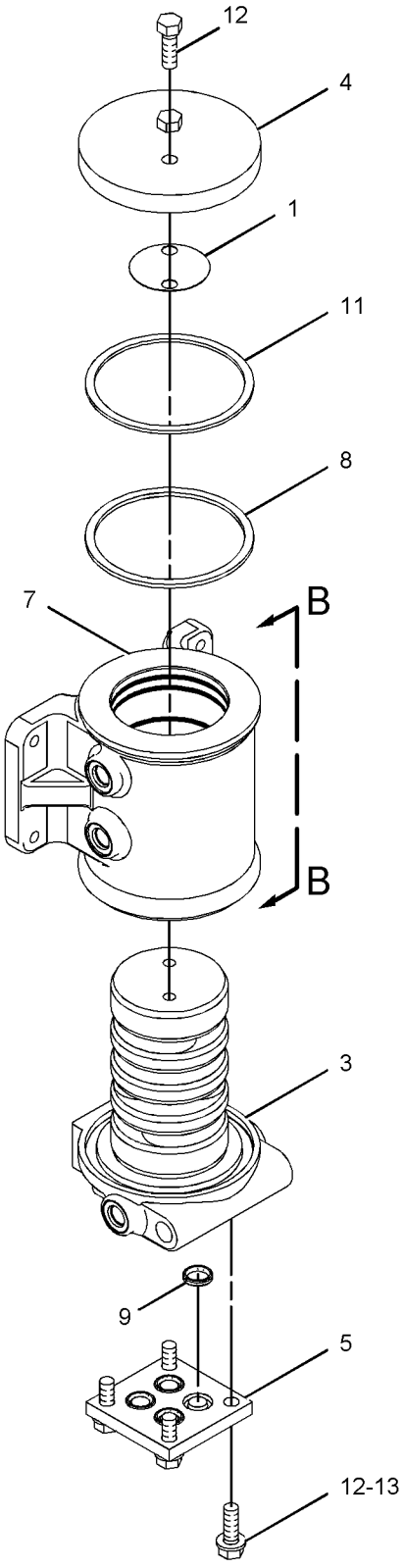

VIEW OF AREA A

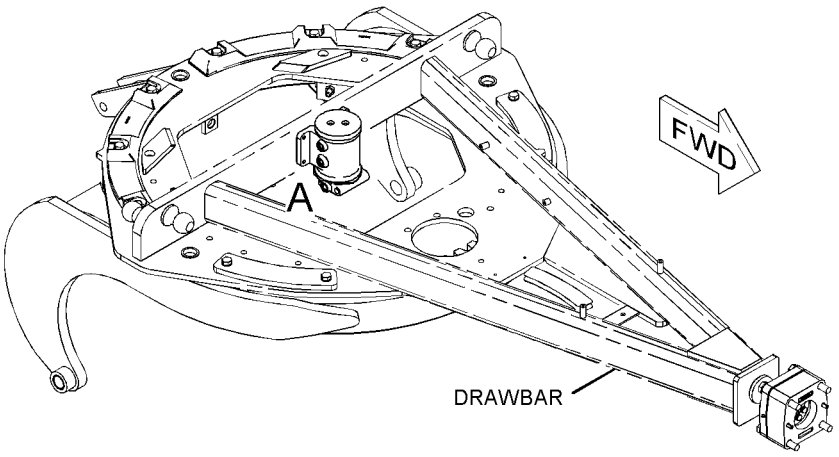

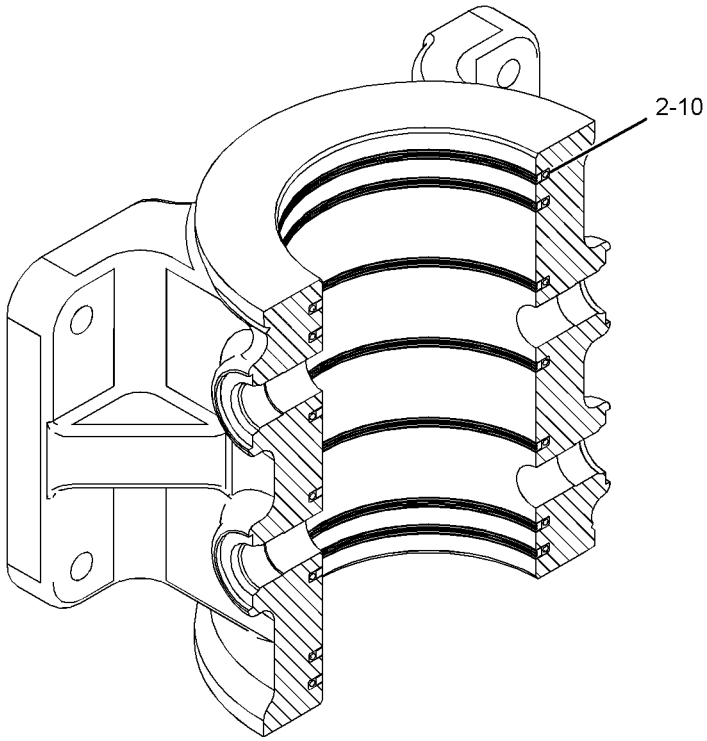

SECTION B-B

GRAPHIC #1 **<END>** g01142114

HYDRAULIC SYSTEM

293-4267 TANK & MTG GP-HYDRAULIC

S/N: R9H1-UP

PART OF 250-0162 SERVICE CENTER AR

SMCS-4332, 5056, 5068 **i02657765**

NOTE	REF NO	GRAPHIC REF	PART NUMBER	QTY	PART NAME 1 2 3 4 5 6 (PRODUCT LEVEL)	SEE PAGE
	1	1	**1P-4278**	3	CLAMP-HOSE	
	2	1	**9R-9925**	1	FILTER ELEMENT-BREATHER (HYDRAULIC TANK)	
	3	1	**250-2784**	1	STRAP AS	
Y	4	1	*275-6574*	1	TANK GP-HYDRAULIC	652
	5	1	**6D-3479**	3	CLIP	
	6	1	**7X-4780**	1	GROMMET	
M	7	1	**8T-0389**	1	LOCKNUT (M10X1.5-THD)	
	8	1	**8T-4121**	5	WASHER-HARD (11X21X2.5-MM THK)	
M	9	1	**8T-4137**	2	BOLT (M10X1.5X20-MM)	
M	10	1	**8T-4195**	1	BOLT (M10X1.5X30-MM)	
E	11	1	**5P-1442**		HOSE (95-CM)	
E	11A	1	**5P-1442**		HOSE (16-CM)	
M	12	1	**8T-4136**	1	BOLT (M10X1.5X25-MM)	

E-ORDER BY THE CENTIMETER
M-METRIC PART
Y-SEPARATE ILLUSTRATION

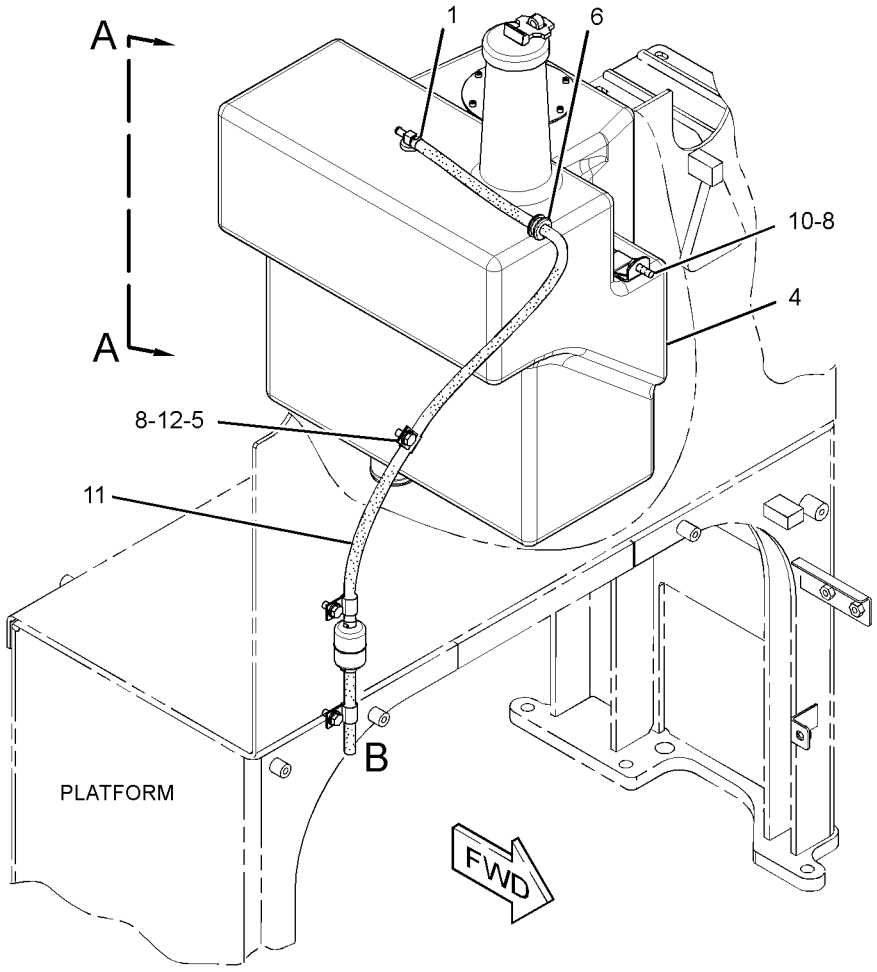

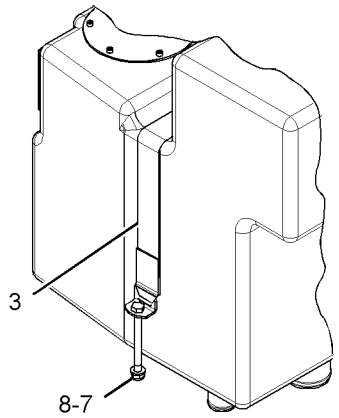

VIEW A-A

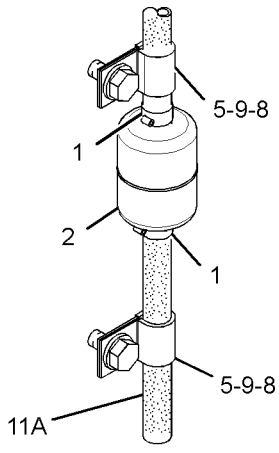

VIEW OF AREA B

GRAPHIC #1 **<END>** g01335593

HYDRAULIC SYSTEM

275-6574 TANK GP-HYDRAULIC

S/N: R9H1-UP

PART OF 293-4267 TANK & MTG GP-HYDRAULIC

SMCS-4332, 5056, 5068 **i04040052**

NOTE	REF NO	GRAPHIC REF	PART NUMBER	QTY	PART NAME 1 2 3 4 5 6 (PRODUCT LEVEL)	SEE PAGE
	1	1	**6W-5698**	1	GROMMET	
	2	1	**142-8928**	1	ELBOW	
	3	1	**142-8937**	1	CAP AS-FILLER (HYDRAULIC TANK)	
	4	1	**250-3443**	1	TUBE AS	
	5	1	**265-5644**	1	GAUGE GP-SIGHT (HYDRAULIC TANK OIL)	
	6	1	**275-6575**	1	TANK AS-HYDRAULIC	
M	7	1	**125-3298**	6	BOLT-SOCKET HEAD (M5X0.8X12-MM)	
	8	1	**132-3056**	1	SEAL-O-RING	
	9	1	**206-8818**	1	STRAINER (HYDRAULIC OIL)	

M-METRIC PART

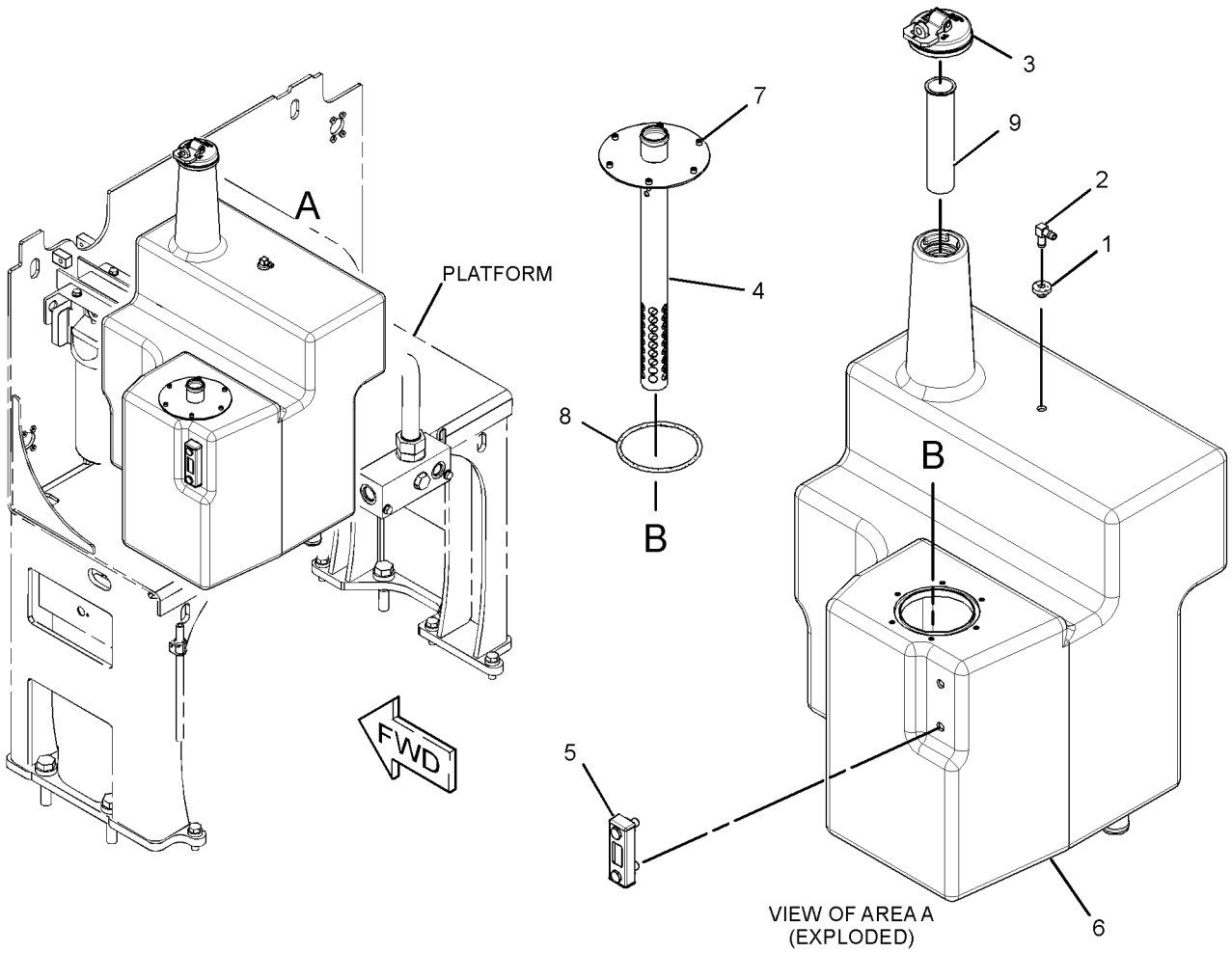

GRAPHIC #1 **<END>** g01523102

261-3278 VALVE GP-BANK 3–REAR

S/N: R9H1-UP
PART OF 251-1089 CONTROL AR-HYDRAULIC
AN ATTACHMENT

SMCS-5051 **i04040054**

NOTE	REF NO	GRAPHIC REF	PART NUMBER	QTY	PART NAME 1 2 3 4 5 6 (PRODUCT LEVEL)	SEE PAGE
	2	1	**243-3662**	4	SEAL-INTEGRAL	
	3	1	**249-5636**	4	ROD	
Y	4	1	**259-6912**	1	VALVE GP-CONTROL (ARTICULATION)	674
Y	5	1	**261-3268**	1	VALVE GP-CONTROL (BLADE LIFT, RH)	682
Y	5A	1	**261-3268**	1	VALVE GP-CONTROL (BLADE LIFT, LH)	682
	6	1	**273-1871**	1	COVER	
Y	8	1	**292-2034**	1	MANIFOLD GP-VALVE (INLET)	637
	9	1	*292-9221*	1	PLUG AS	
		1	**292-9220**	1	PLUG	
		1	**294-8055**	1	SEAL-O-RING	
	10	1	*148-8411*	6	PLUG AS	
					(EACH INCLUDES)	
		1	**3K-0360**	1	SEAL-O-RING	
		1	**9S-4185**	1	PLUG-O-RING	
	11	1	**8T-4121**	4	WASHER-HARD (11X21X2.5-MM THK)	
M	12	1	**8T-4133**	4	NUT (M10X1.5-THD)	

M-METRIC PART
Y-SEPARATE ILLUSTRATION

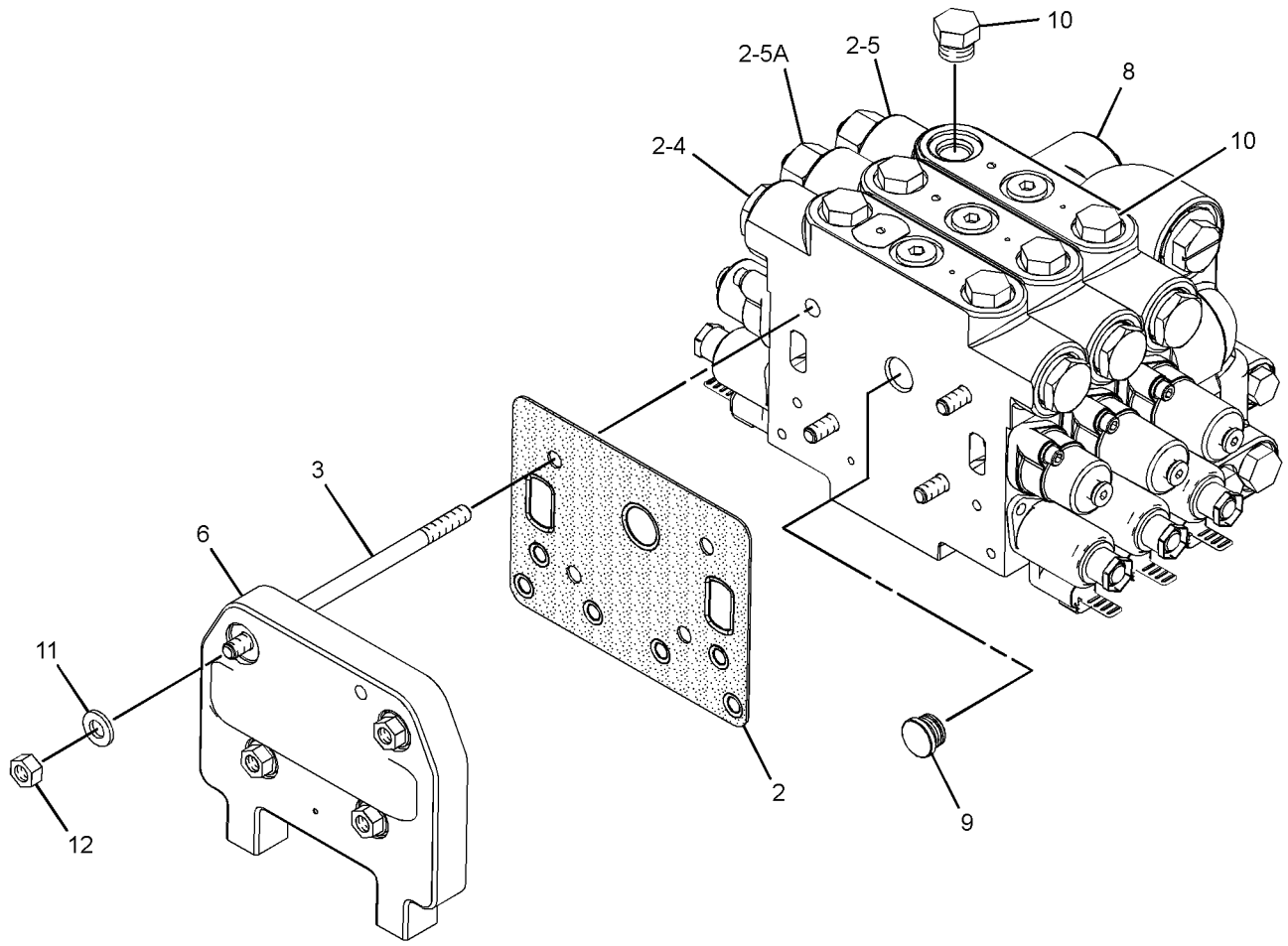

GRAPHIC #1 **<END>** g01328873

HYDRAULIC SYSTEM

261-3281 VALVE GP-BANK 4—REAR

S/N: R9H1-UP
PART OF 251-2035, 261-0096 CONTROL AR-HYDRAULIC
AN ATTACHMENT

SMCS-5051 **i04041195**

NOTE	REF NO	GRAPHIC REF	PART NUMBER	QTY	PART NAME 1 2 3 4 5 6 (PRODUCT LEVEL)	SEE PAGE
	2	1	**243-3662**	5	SEAL-INTEGRAL	
	3	1	**248-6175**	4	ROD	
Y	4	1	**259-6912**	1	VALVE GP-CONTROL (ARTICULATION)	674
Y	5	1	**259-6913**	1	VALVE GP-CONTROL (RIPPER)	676
Y	6	1	**261-3268**	1	VALVE GP-CONTROL (BLADE LIFT, RH)	682
Y	6A	1	**261-3268**	1	VALVE GP-CONTROL (BLADE LIFT, LH)	682
	7	1	**273-1871**	1	COVER	
Y	9	1	**292-2034**	1	MANIFOLD GP-VALVE (INLET)	637
	10	1	*292-9221*	1	PLUG AS	
		1	**292-9220**	1	PLUG	
		1	**294-8055**	1	SEAL-O-RING	
	11	1	*148-8411*	8	PLUG AS	
					(EACH INCLUDES)	
		1	**3K-0360**	1	SEAL-O-RING	
		1	**9S-4185**	1	PLUG-O-RING	
	12	1	**8T-4121**	4	WASHER-HARD (11X21X2.5-MM THK)	
M	13	1	**8T-4133**	4	NUT (M10X1.5-THD)	

M-METRIC PART
Y-SEPARATE ILLUSTRATION

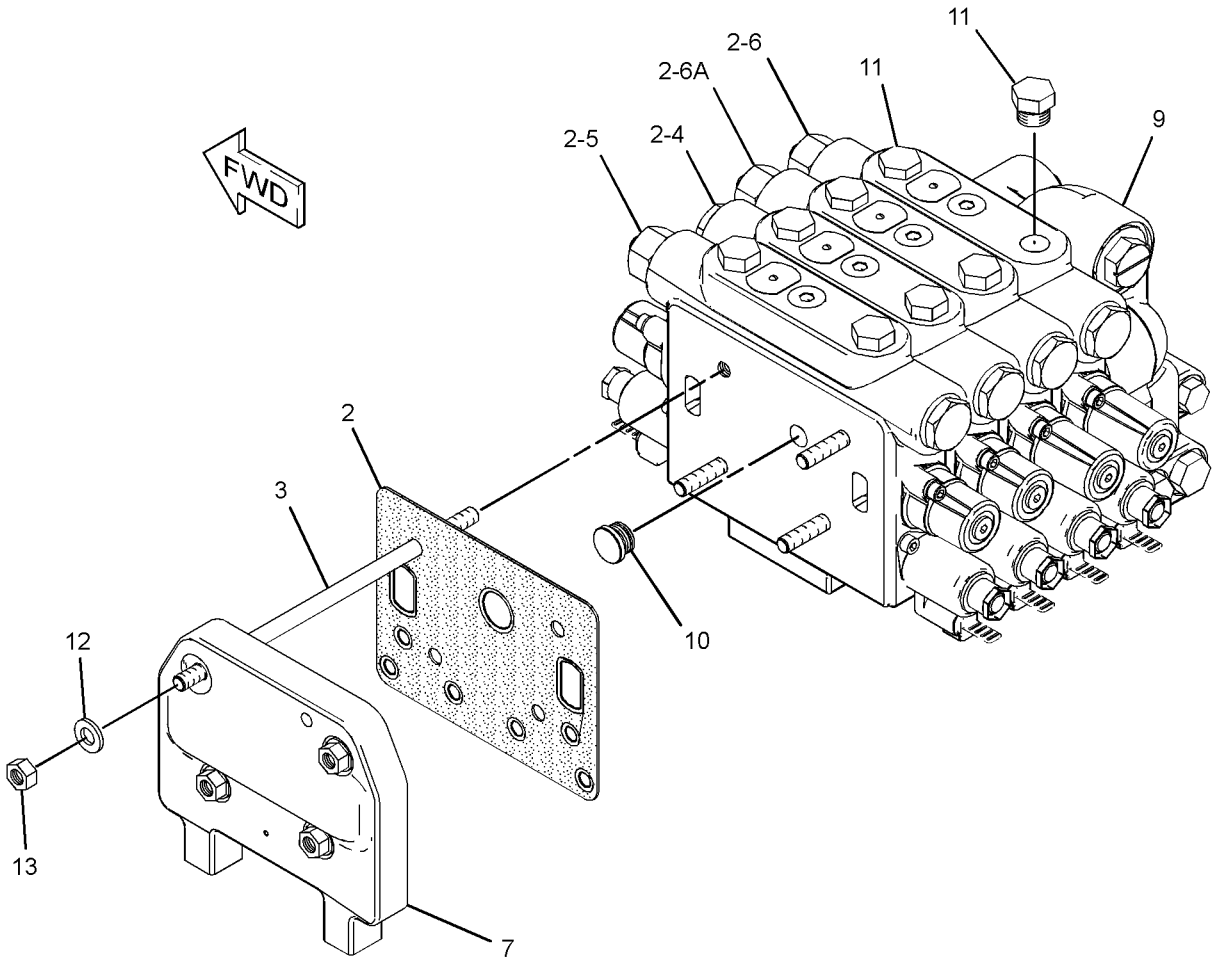

GRAPHIC #1 **<END>** g01328884

HYDRAULIC SYSTEM

261-3272 VALVE GP-BANK 5–FRONT

S/N: R9H1-UP

PART OF 251-1089, 251-2035, 261-0097 CONTROL AR-HYDRAULIC

AN ATTACHMENT

SMCS-5051 **i04041196**

NOTE	REF NO	GRAPHIC REF	PART NUMBER	QTY	PART NAME 1 2 3 4 5 6 (PRODUCT LEVEL)	SEE PAGE
	2	1	**243-3662**	6	SEAL-INTEGRAL	
	3	1	**248-6174**	4	ROD	
Y	4	1	**259-6896**	1	VALVE GP-CONTROL (BLADE TIP)	664
Y	5	1	**259-6903**	1	VALVE GP-CONTROL (SIDESHIFT)	666
Y	6	1	**259-6907**	1	VALVE GP-CONTROL (CIRCLE DRIVE)	668
Y	7	1	**261-3270**	1	VALVE GP-CONTROL (CENTERSHIFT)	684
Y	8	1	**261-3271**	1	VALVE GP-CONTROL (WHEEL LEAN)	686
	9	1	**273-1871**	1	COVER	
Y	11	1	**292-2033**	1	MANIFOLD GP-VALVE (INLET)	636
	12	1	*292-9221*	1	PLUG AS	
		1	**292-9220**	1	PLUG	
		1	**294-8055**	1	SEAL-O-RING	
	13	1	*148-8411*	10	PLUG AS	
					(EACH INCLUDES)	
		1	**9S-4185**	1	PLUG-O-RING	
		1	**3K-0360**	1	SEAL-O-RING	
	14	1	**8T-4121**	4	WASHER-HARD (11X21X2.5-MM THK)	
M	15	1	**8T-4133**	4	NUT (M10X1.5-THD)	

M-METRIC PART
Y-SEPARATE ILLUSTRATION

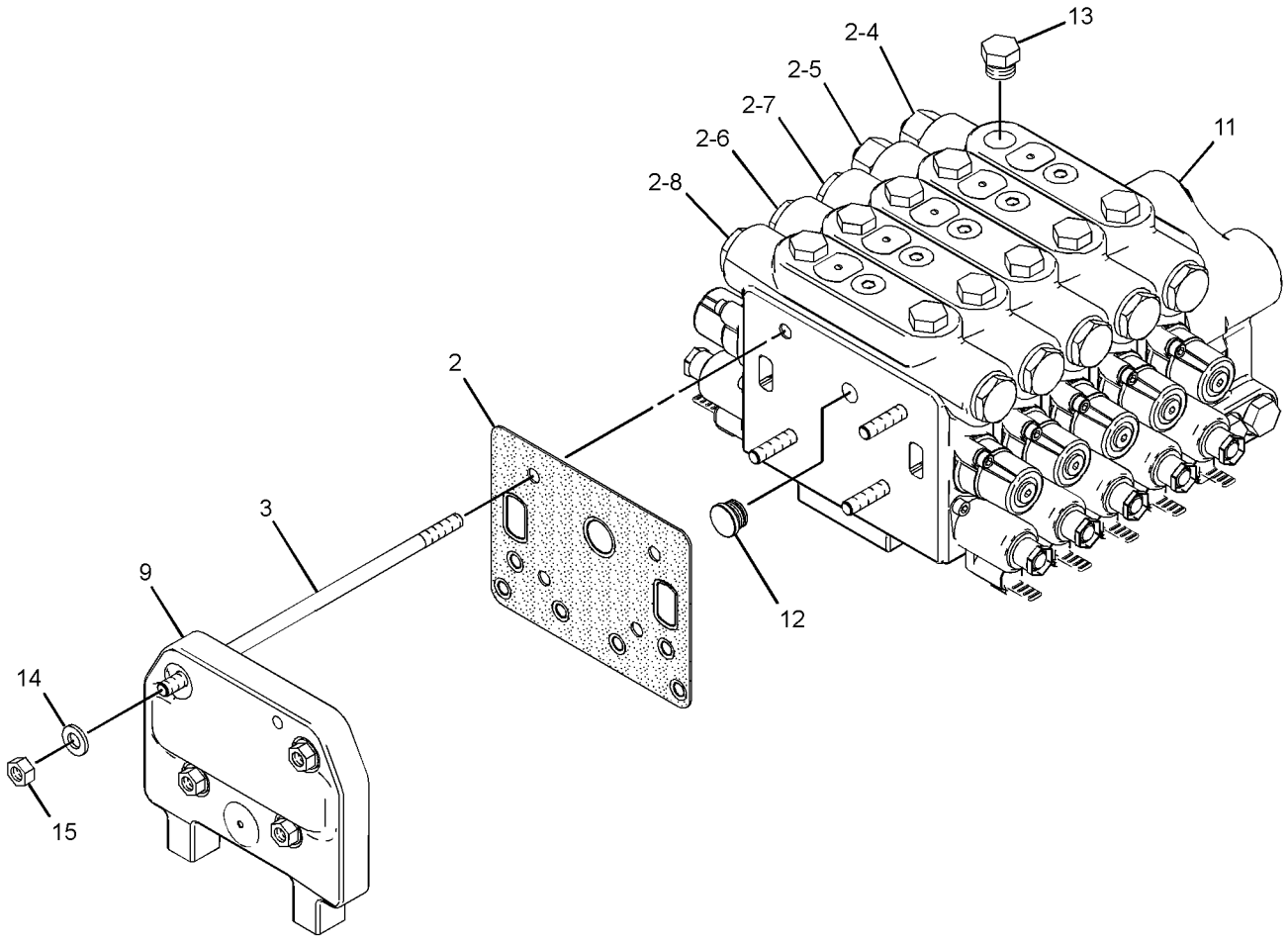

GRAPHIC #1 **<END>** g01327213

HYDRAULIC SYSTEM

261-3273 VALVE GP-BANK 6—FRONT

S/N: R9H1-UP

PART OF 261-0096, 340-4395 CONTROL AR-HYDRAULIC

AN ATTACHMENT

SMCS-5051 **i04041197**

NOTE	REF NO	GRAPHIC REF	PART NUMBER	QTY	PART NAME 1 2 3 4 5 6 (PRODUCT LEVEL)	SEE PAGE
	2	1	**243-3662**	7	SEAL-INTEGRAL	
	3	1	**249-5334**	4	ROD	
Y	4	1	**259-6896**	1	VALVE GP-CONTROL (BLADE TIP)	664
Y	5	1	**259-6903**	1	VALVE GP-CONTROL (SIDESHIFT)	666
Y	6	1	**259-6907**	1	VALVE GP-CONTROL (CIRCLE DRIVE)	668
Y	7	1	**259-6909**	1	VALVE GP-CONTROL (BULLDOZER LIFT, PLOW)	670
Y	8	1	**261-3270**	1	VALVE GP-CONTROL (CENTERSHIFT)	684
Y	9	1	**261-3271**	1	VALVE GP-CONTROL (WHEEL LEAN)	686
	10	1	**273-1871**	1	COVER	
Y	12	1	**292-2033**	1	MANIFOLD GP-VALVE (INLET)	636
	13	1	*292-9221*	1	PLUG AS	
		1	**9S-4185**	1	PLUG-O-RING	
		1	**3K-0360**	1	SEAL-O-RING	
	14	1	*148-8411*	12	PLUG AS	
					(EACH INCLUDES)	
		1	**9S-4185**	1	PLUG-O-RING	
		1	**3K-0360**	1	SEAL-O-RING	
	15	1	**8T-4121**	4	WASHER-HARD (11X21X2.5-MM THK)	
M	16	1	**8T-4133**	4	NUT (M10X1.5-THD)	

M-METRIC PART
Y-SEPARATE ILLUSTRATION

261-3273 VALVE GP-BANK 6 *(contd.)* **i04041197**

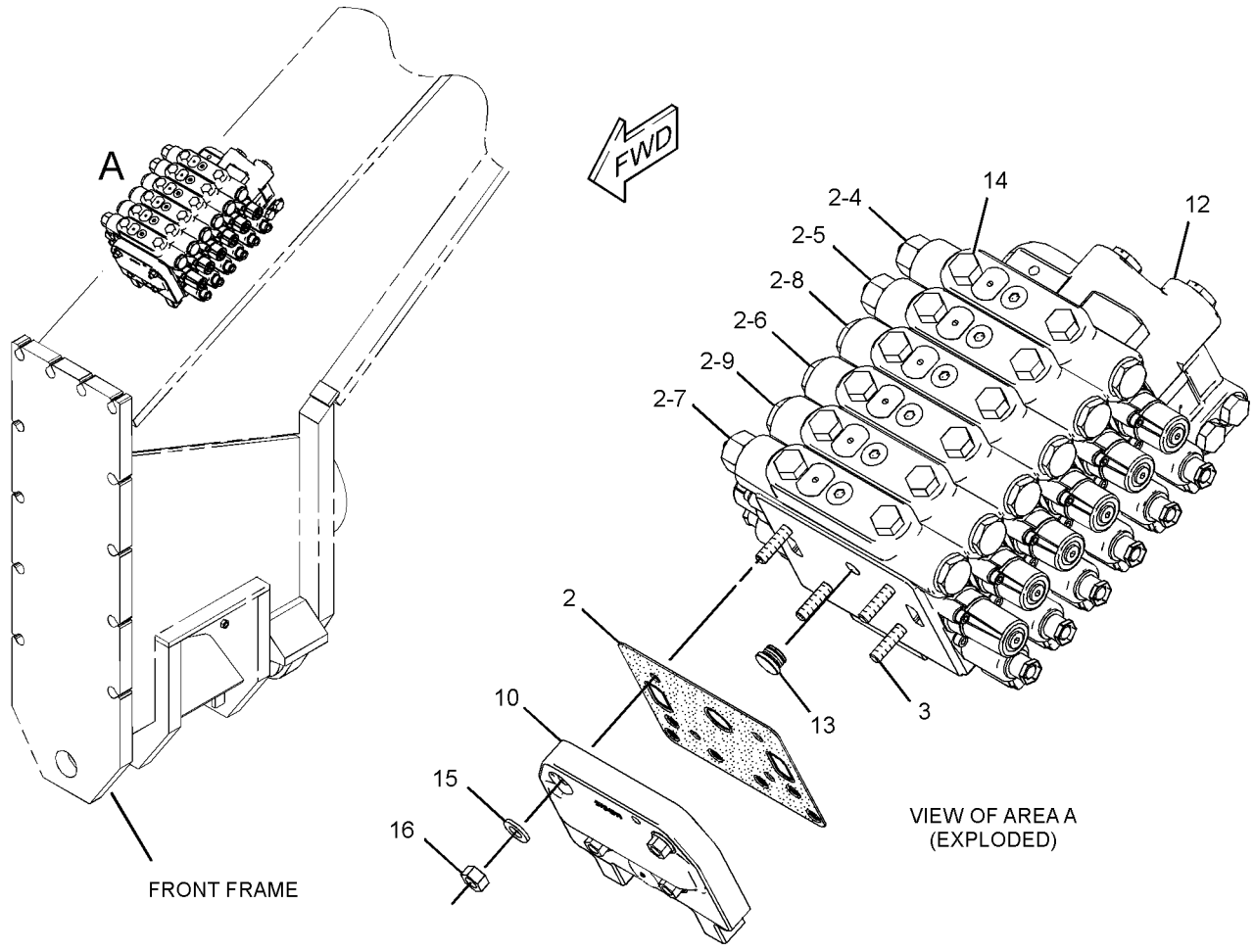

GRAPHIC #1 **<END>** g01318922

HYDRAULIC SYSTEM

261-3283 VALVE GP-BANK 6—REAR

S/N: R9H1-UP

PART OF 261-0097, 261-0098 CONTROL AR-HYDRAULIC

AN ATTACHMENT

SMCS-5051 **i02617199**

NOTE	REF NO	GRAPHIC REF	PART NUMBER	QTY	PART NAME 1 2 3 4 5 6 (PRODUCT LEVEL)	SEE PAGE
	2	1	**243-3662**	7	SEAL-INTEGRAL	
	3	1	**249-5334**	4	ROD	
Y	4	1	**259-6912**	1	VALVE GP-CONTROL (ARTICULATION)	674
Y	5	1	**259-6913**	1	VALVE GP-CONTROL (RIPPER)	676
Y	6	1	**259-6914**	1	VALVE GP-CONTROL (WING LIFT)	678
Y	7	1	**259-6915**	1	VALVE GP-CONTROL (WING TILT)	680
Y	8	1	**261-3268**	1	VALVE GP-CONTROL (BLADE LIFT, LH)	682
Y	8A	1	**261-3268**	1	VALVE GP-CONTROL (BLADE LIFT, RH)	682
	9	1	**273-1871**	1	COVER	
Y	11	1	**292-2034**	1	MANIFOLD GP-VALVE	637
	12	1	*292-9221*	1	PLUG AS	
		1	**292-9220**	1	PLUG	
		1	**294-8055**	1	SEAL-O-RING	
	13	1	*148-8411*	12	PLUG AS	
					(EACH INCLUDES)	
		1	**9S-4185**	1	PLUG-O-RING	
		1	**3K-0360**	1	SEAL-O-RING	
	14	1	**8T-4121**	4	WASHER-HARD (11X21X2.5-MM THK)	
M	15	1	**8T-4133**	4	NUT (M10X1.5-THD)	

M-METRIC PART
Y-SEPARATE ILLUSTRATION

261-3283 VALVE GP-BANK 6 *(contd.)* **i02617199**

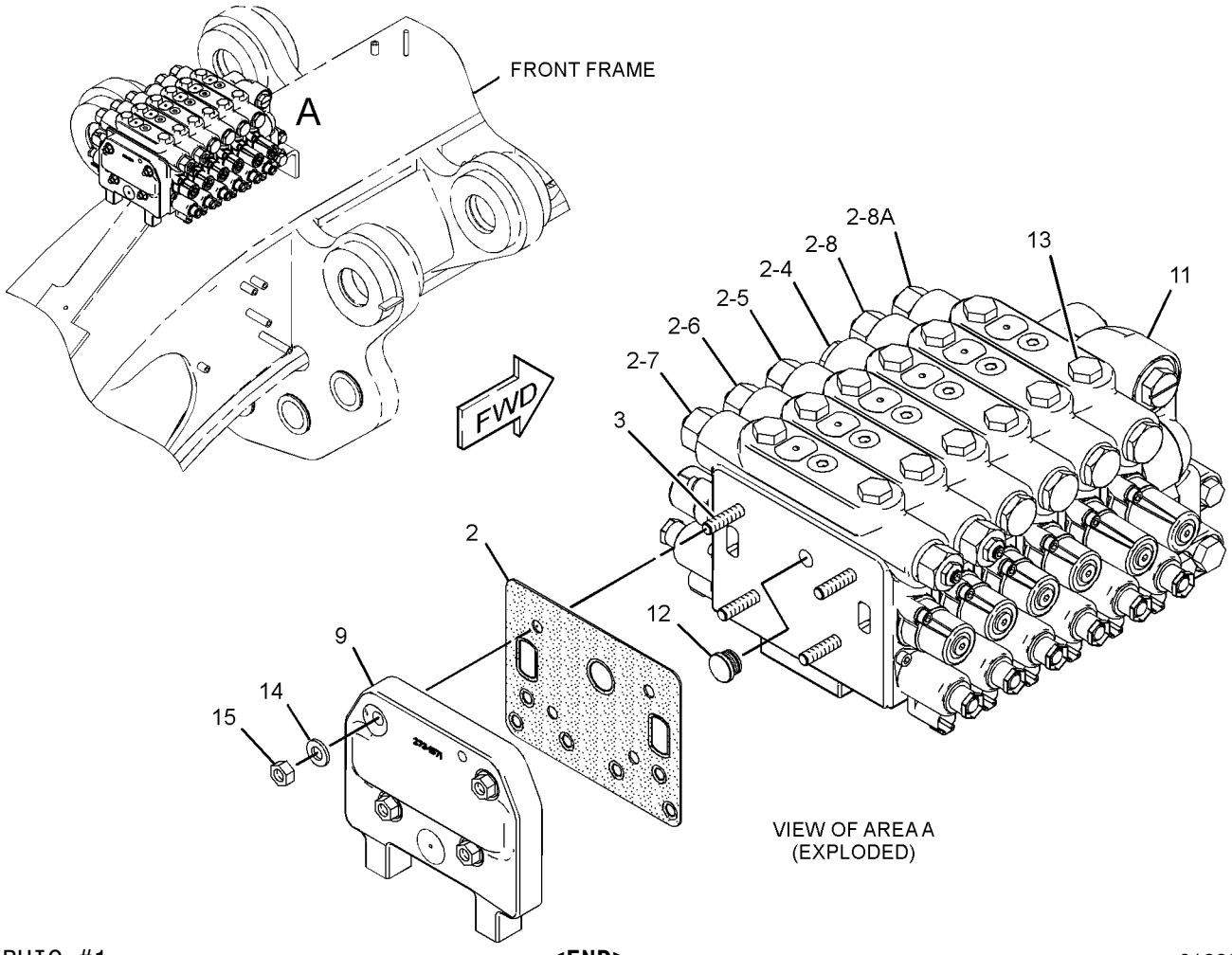

GRAPHIC #1 **<END>** g01328335

HYDRAULIC SYSTEM

291-9518 VALVE GP-BANK 6—REAR

S/N: R9H1-UP
PART OF 340-4395 CONTROL AR-HYDRAULIC
AN ATTACHMENT

SMCS-5051 **i04041198**

NOTE	REF NO	GRAPHIC REF	PART NUMBER	QTY	PART NAME 1 2 3 4 5 6 (PRODUCT LEVEL)	SEE PAGE
	2	1	**243-3662**	7	SEAL-INTEGRAL	
	3	1	**249-5334**	4	ROD	
Y	4	1	**261-3268**	2	VALVE GP-CONTROL (BLADE LIFT)	682
Y	5	1	**259-6912**	1	VALVE GP-CONTROL (ARTICULATION)	674
Y	6	1	**259-6913**	1	VALVE GP-CONTROL (RIPPER)	676
Y	7	1	**259-6914**	1	VALVE GP-CONTROL (WING LIFT)	678
	8	1	**273-1871**	1	COVER	
Y	9	1	**290-0594**	1	VALVE GP-CONTROL (WING TILT)	688
Y	10	1	**292-2034**	1	MANIFOLD GP-VALVE (INLET)	637
	11	1	*292-9221*	1	PLUG AS	
		1	**292-9220**	1	PLUG	
		1	**294-8055**	1	SEAL-O-RING	
	13	1	*148-8411*	12	PLUG AS	
					(EACH INCLUDES)	
		1	**9S-4185**	1	PLUG-O-RING	
		1	**3K-0360**	1	SEAL-O-RING	
	14	1	**8T-4121**	4	WASHER-HARD (11X21X2.5-MM THK)	
M	15	1	**8T-4133**	4	NUT (M10X1.5-THD)	

M-METRIC PART
Y-SEPARATE ILLUSTRATION

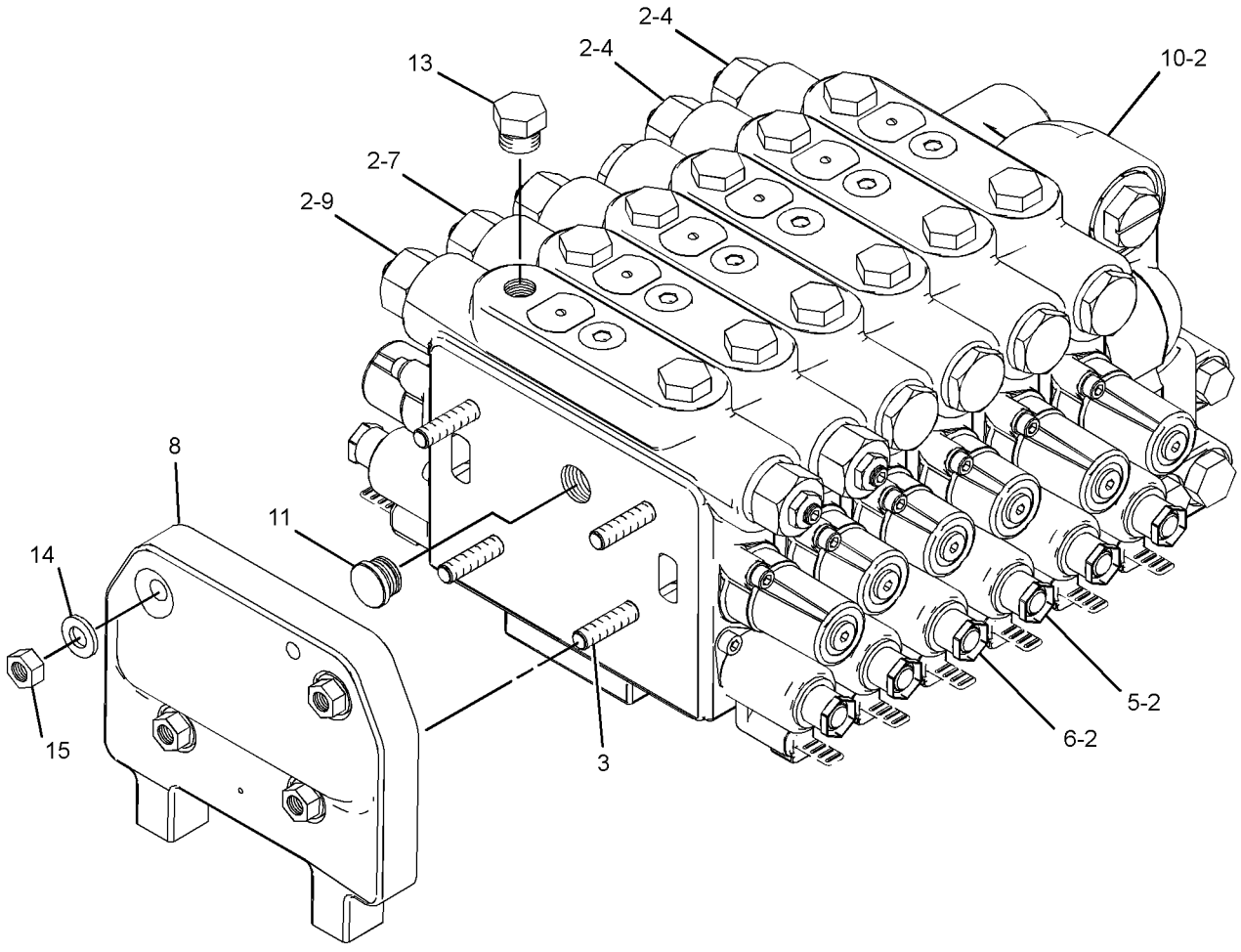

GRAPHIC #1 **<END>** g01306517

261-3274 VALVE GP-BANK 7–FRONT

S/N: R9H1-UP
PART OF 261-0098 CONTROL AR-HYDRAULIC
AN ATTACHMENT

SMCS-5051 **i02627770**

NOTE	REF NO	GRAPHIC REF	PART NUMBER	QTY	PART NAME 1 2 3 4 5 6 (PRODUCT LEVEL)	SEE PAGE
	2	1	**243-3662**	8	SEAL-INTEGRAL	
	3	1	**246-3193**	4	ROD	
Y	4	1	**259-6896**	1	VALVE GP-CONTROL (BLADE TIP)	664
Y	5	1	**259-6903**	1	VALVE GP-CONTROL (SIDESHIFT)	666
Y	6	1	**259-6907**	1	VALVE GP-CONTROL (CIRCLE DRIVE)	668
Y	7	1	**259-6909**	1	VALVE GP-CONTROL (BULLDOZER LIFT, PLOW)	670
Y	8	1	**259-6910**	1	VALVE GP-CONTROL (PLOW ANGLE)	672
Y	9	1	**261-3270**	1	VALVE GP-CONTROL (CENTERSHIFT)	684
Y	10	1	**261-3271**	1	VALVE GP-CONTROL (WHEEL LEAN)	686
	11	1	**273-1871**	1	COVER	
Y	13	1	**292-2033**	1	MANIFOLD GP-VALVE	636
	14	1	*292-9221*	1	PLUG AS	
		1	**292-9220**	1	PLUG	
		1	**294-8055**	1	SEAL-O-RING	
	15	1	*148-8411*	14	PLUG AS	
					(EACH INCLUDES)	
		1	**9S-4185**	1	PLUG-O-RING	
		1	**3K-0360**	1	SEAL-O-RING	
	16	1	**8T-4121**	4	WASHER-HARD (11X21X2.5-MM THK)	
M	17	1	**8T-4133**	4	NUT (M10X1.5-THD)	

M-METRIC PART
Y-SEPARATE ILLUSTRATION

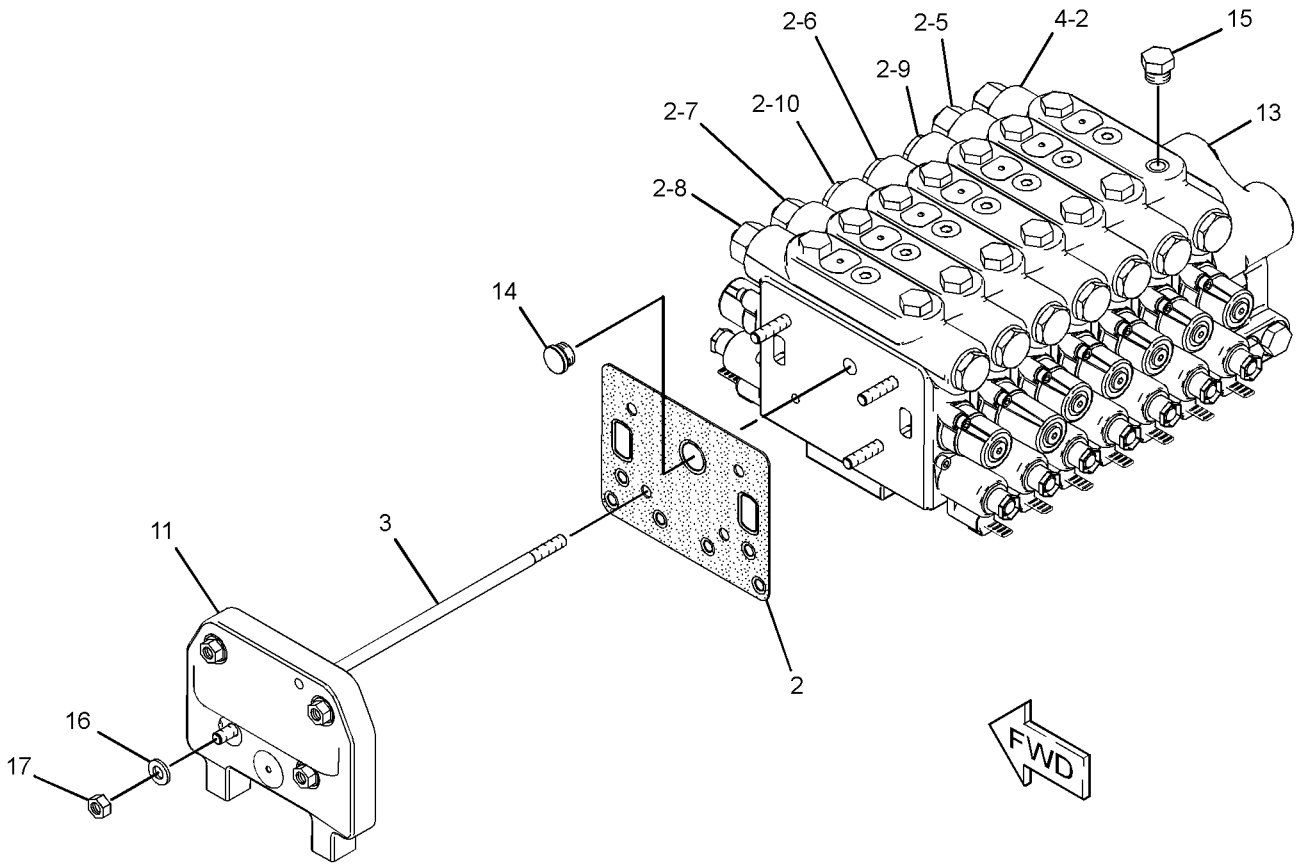

GRAPHIC #1 **<END>** g01327219

6E-4701 VALVE GP-CHECK

S/N: R9H1-UP

PART OF 249-6531 LINES GP-CENTERSHIFT LOCK

SMCS-5067 **i03619401**

NOTE	REF NO	GRAPHIC REF	PART NUMBER	QTY	PART NAME 1 2 3 4 5 6 (PRODUCT LEVEL)	SEE PAGE
	1	1	**3J-1907**	1	SEAL-O-RING	
	2	1	**6V-8397**	1	SEAL-O-RING	

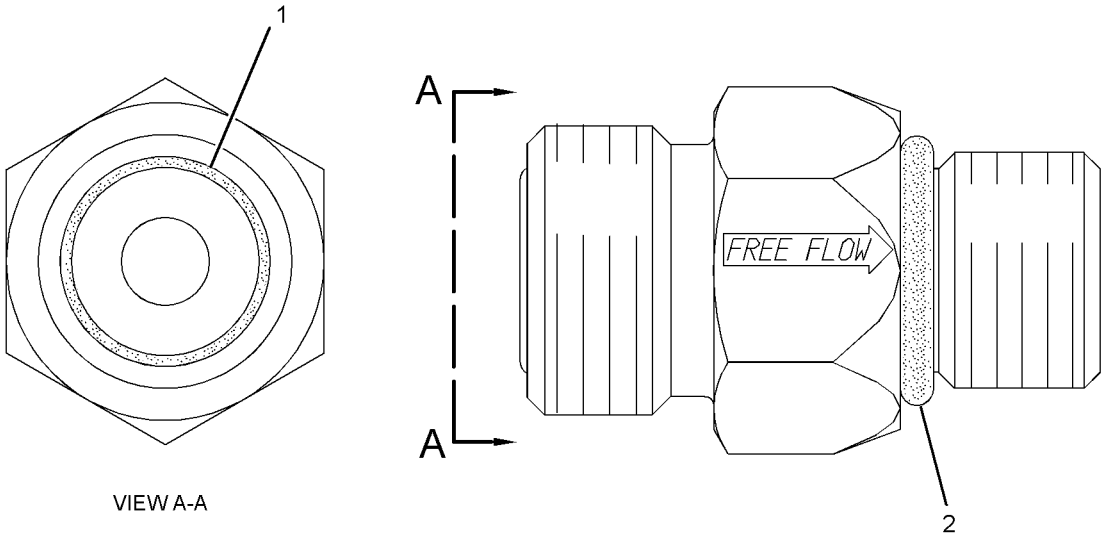

VIEW A-A

GRAPHIC #1 **<END>** g01944653

HYDRAULIC SYSTEM

259-6896 VALVE GP-CONTROL—BLADE TIP

S/N: R9H1-UP

PART OF 261-3272 VALVE GP-BANK 5, 261-3273 VALVE GP-BANK 6, 261-3274 VALVE GP-BANK 7

AN ATTACHMENT

SMCS-5051 **i03887790**

NOTE	REF NO	GRAPHIC REF	PART NUMBER	QTY	PART NAME 1 2 3 4 5 6 (PRODUCT LEVEL)	SEE PAGE
M	1	1	**8T-0267**	2	BOLT-SOCKET HEAD (M6X1X12-MM)	
	2	1	**6E-3007**	1	SPRING	
	3	1	**148-2557**	6	PLUG	
	4	1	**106-3659**	1	PISTON	
	5	1	**212-4961**	1	SPRING	
	6	1	**242-9264**	1	PLUG-ORIFICE	
	7	1	**243-2965**	1	SPOOL	
	8	1	**244-2579**	1	PLUG	
	9	1	**254-3937**	1	STEM	
J	10	1	**318-3115**	1	VALVE GP-CHECK (BLADE TIP)	
		1	**3K-0360**	1	SEAL-O-RING	
		1	**6V-5326**	1	SEAL-O-RING	
		1	**6V-6580**	1	SEAL-O-RING	
J	11	1	**318-3040**	1	VALVE GP-CHECK & RELIEF (BLADE TIP)	
		1	**9X-7745**	1	SEAL-O-RING	
		1	**6V-5326**	1	SEAL-O-RING	
		1	**6V-6580**	1	SEAL-O-RING	
	12	1	**284-4601**	2	RETAINER	
	13	1	**284-4602**	2	RETAINER	
Y	14	1	**278-1799**	2	VALVE GP-SOLENOID (BLADE TIP)	698
	15	1	**251-1668**	2	COVER-SPRING	
	16	1	**284-3555**	2	SPRING	
M	19	1	**136-4192**	4	BOLT (M6X1X35-MM)	
	20	1	*148-8395*	1	PLUG AS	
		1	**9S-8005**	1	PLUG-O-RING	
		1	**3K-0360**	1	SEAL-O-RING	
	21	1	*183-7263*	3	PLUG AS	
					(EACH INCLUDES)	
		1	**9S-8002**	1	PLUG-O-RING	
		1	**3J-7354**	1	SEAL-O-RING	
	22	1	**3K-0360**	1	SEAL-O-RING	
	23	1	**3S-9233**	2	SEAL-O-RING	
	24	1	**4J-7533**	1	SEAL-O-RING	
	25	1	**5B-9318**	1	BALL	
					PARTS SHOWN IN GRAPHIC(S) WITHOUT A REFERENCE NUMBER ARE NOT SERVICED SEPARATELY	
					AVAILABLE REPAIR KIT(S):	
J			**325-2588**	1	KIT-SEAL (BLADE TIP)	
					(INCLUDES SEAL RINGS & BACKUP RINGS)	

J-KIT MARKED J SERVICES PARTS MARKED J
M-METRIC PART
Y-SEPARATE ILLUSTRATION

259-6896 VALVE GP-CONTROL *(contd.)* **i03887790**

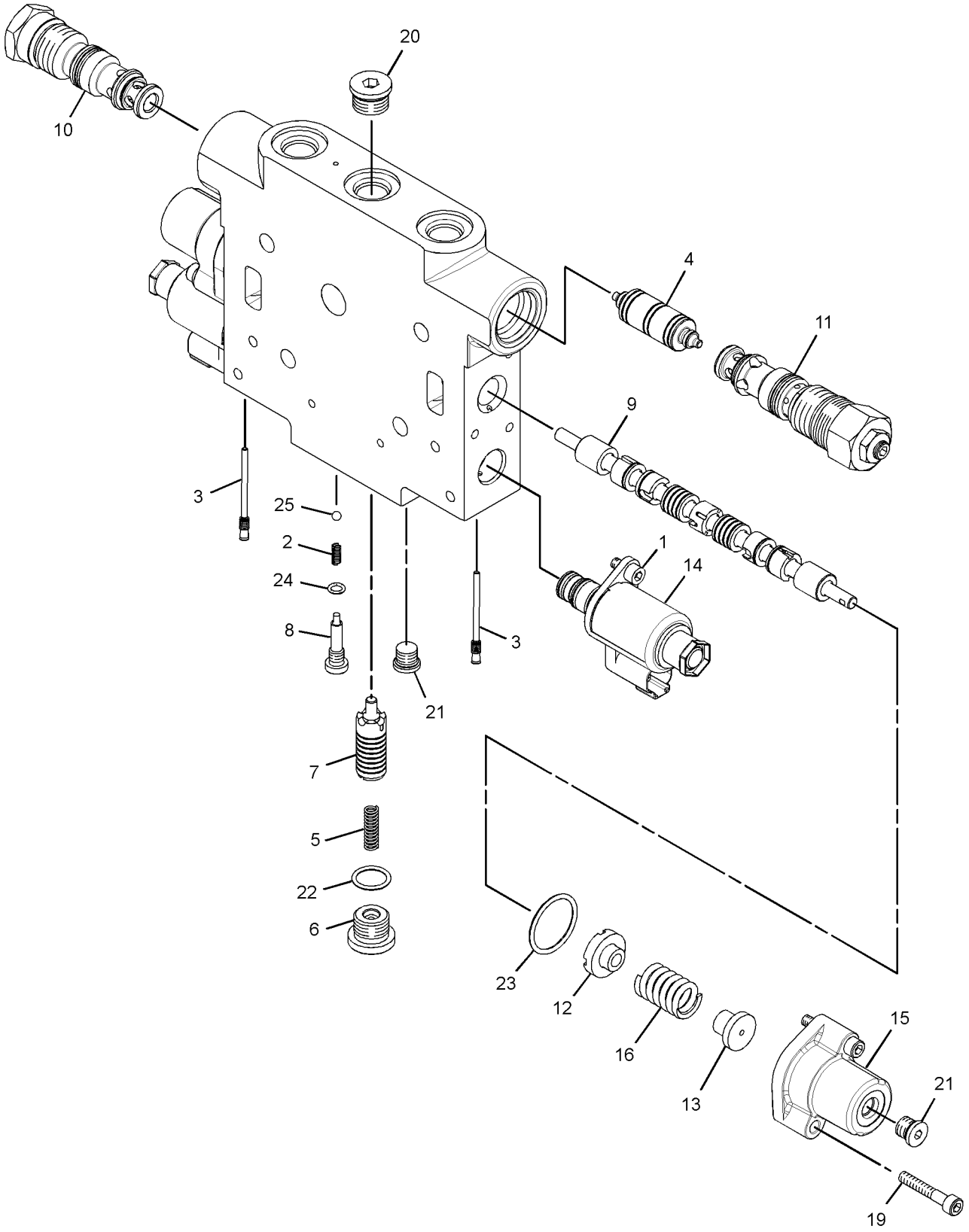

GRAPHIC #1 **<END>** g01635155

HYDRAULIC SYSTEM

259-6903 VALVE GP-CONTROL—SIDESHIFT

S/N: R9H1-UP

PART OF 261-3272 VALVE GP-BANK 5, 261-3273 VALVE GP-BANK 6, 261-3274 VALVE GP-BANK 7

AN ATTACHMENT

SMCS-5051 **i03887811**

NOTE	REF NO	GRAPHIC REF	PART NUMBER	QTY	PART NAME 1 2 3 4 5 6 (PRODUCT LEVEL)	SEE PAGE
M	1	1	**8T-0267**	2	BOLT-SOCKET HEAD (M6X1X12-MM)	
	2	1	**6E-3007**	1	SPRING	
	3	1	**148-2557**	6	PLUG	
	4	1	**106-3659**	1	PISTON	
	5	1	**212-4961**	1	SPRING	
	6	1	**242-9264**	1	PLUG-ORIFICE	
	7	1	**243-2965**	1	SPOOL	
	8	1	**244-2579**	1	PLUG	
	9	1	**254-3939**	1	STEM	
J	10	1	**318-3115**	1	VALVE GP-CHECK (SIDESHIFT)	
		1	**9X-7745**	1	SEAL-O-RING	
		1	**6V-5326**	1	SEAL-O-RING	
		1	**6V-6580**	1	SEAL-O-RING	
J	11	1	**318-3040**	1	VALVE GP-CHECK & RELIEF (SIDESHIFT)	
		1	**9X-7745**	1	SEAL-O-RING	
		1	**6V-5326**	1	SEAL-O-RING	
		1	**6V-6580**	1	SEAL-O-RING	
	12	1	**284-4601**	2	RETAINER	
	13	1	**284-4602**	2	RETAINER	
Y	14	1	**278-1799**	2	VALVE GP-SOLENOID (SIDESHIFT)	698
	15	1	**251-1668**	2	COVER-SPRING	
	16	1	**284-3555**	2	SPRING	
M	19	1	**136-4192**	4	BOLT (M6X1X35-MM)	
	20	1	*148-8395*	1	PLUG AS	
		1	**9S-8005**	1	PLUG-O-RING	
		1	**3K-0360**	1	SEAL-O-RING	
	21	1	*183-7263*	3	PLUG AS	
					(EACH INCLUDES)	
		1	**9S-8002**	1	PLUG-O-RING	
		1	**3J-7354**	1	SEAL-O-RING	
	22	1	**3K-0360**	1	SEAL-O-RING	
	23	1	**3S-9233**	2	SEAL-O-RING	
	24	1	**4J-7533**	1	SEAL-O-RING	
	25	1	**5B-9318**	1	BALL	
					PARTS SHOWN IN GRAPHIC(S) WITHOUT A REFERENCE NUMBER ARE NOT SERVICED SEPARATELY	
					AVAILABLE REPAIR KIT(S):	
J			**325-2588**	1	KIT-SEAL (SIDESHIFT)	
					(INCLUDES SEAL RINGS & BACKUP RINGS)	

J-KIT MARKED J SERVICES PART(S) MARKED J
M-METRIC PART
Y-SEPARATE ILLUSTRATION

259-6903 VALVE GP-CONTROL *(contd.)* **i03887811**

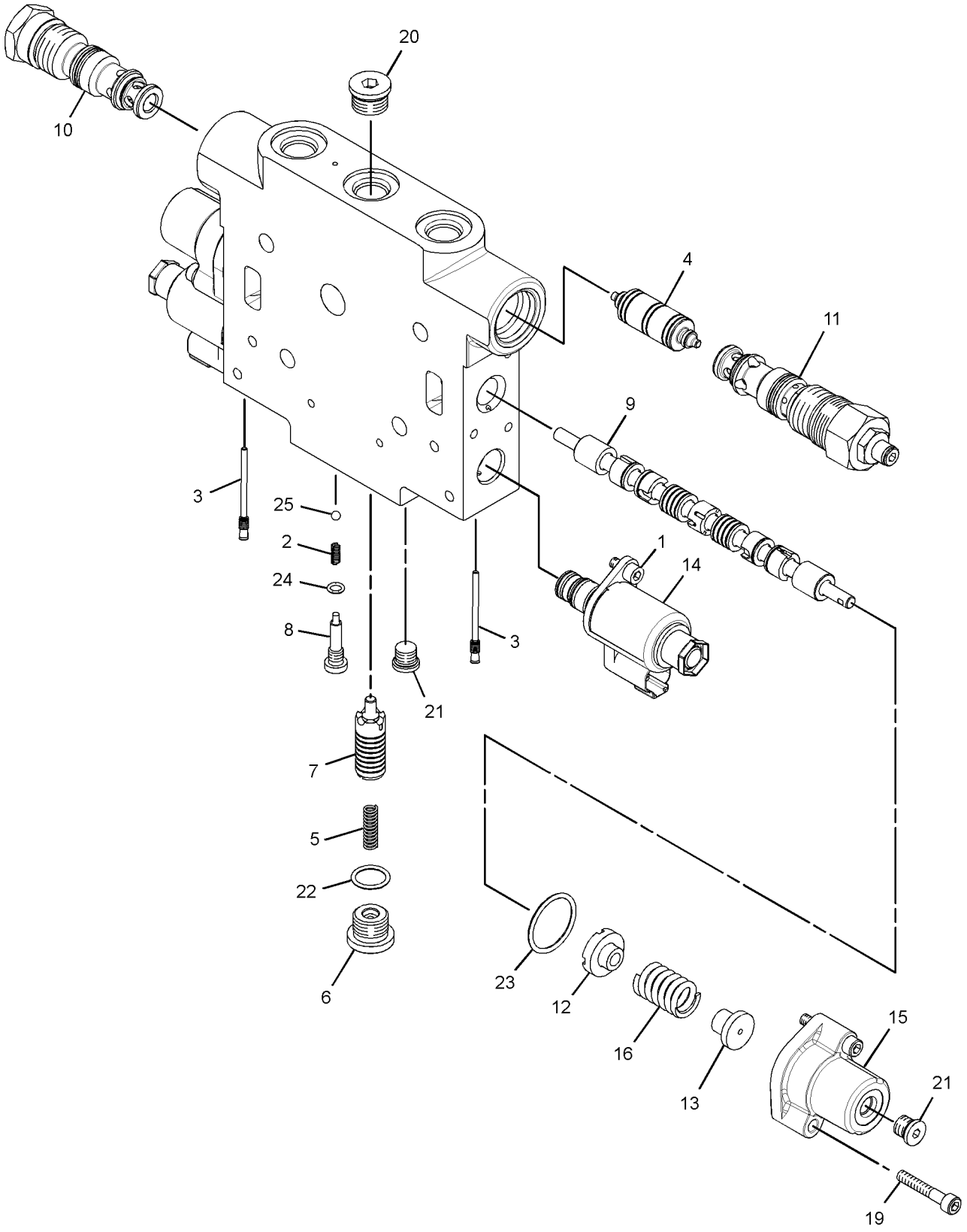

GRAPHIC #1 **<END>** g02148861

HYDRAULIC SYSTEM

259-6907 VALVE GP-CONTROL—CIRCLE DRIVE

S/N: R9H1-UP

PART OF 261-3272 VALVE GP-BANK 5, 261-3273 VALVE GP-BANK 6, 261-3274 VALVE GP-BANK 7

AN ATTACHMENT

SMCS-5051 **i03887829**

NOTE	REF NO	GRAPHIC REF	PART NUMBER	QTY	PART NAME 1 2 3 4 5 6 (PRODUCT LEVEL)	SEE PAGE
	1	1	**6L-9716**	1	PLUG-PIPE	
	2	1	**6E-3007**	1	SPRING	
	3	1	**148-2557**	6	PLUG	
	4	1	**106-3659**	1	PISTON	
	5	1	**212-4961**	1	SPRING	
	6	1	**242-9264**	1	PLUG-ORIFICE	
	7	1	**243-2965**	1	SPOOL	
	8	1	**244-2579**	1	PLUG	
J	9	1	**318-3115**	2	VALVE GP-CHECK (CIRCLE DRIVE)	
					(EACH INCLUDES)	
		1	**3K-0360**	1	SEAL-O-RING	
		1	**6V-5326**	1	SEAL-O-RING	
		1	**6V-6580**	1	SEAL-O-RING	
	10	1	**284-4601**	2	RETAINER	
	11	1	**284-4602**	2	RETAINER	
Y	12	1	**278-1799**	2	VALVE GP-SOLENOID (CIRCLE DRIVE)	698
	13	1	**251-1668**	2	COVER-SPRING	
	15	1	**284-3555**	2	SPRING	
M	18	1	**136-4192**	4	BOLT (M6X1X35-MM)	
	19	1	*148-8395*	1	PLUG AS	
		1	**9S-8005**	1	PLUG-O-RING	
		1	**3K-0360**	1	SEAL-O-RING	
	20	1	*183-7263*	3	PLUG AS	
					(EACH INCLUDES)	
		1	**9S-8002**	1	PLUG-O-RING	
		1	**3J-7354**	1	SEAL-O-RING	
	21	1	**3K-0360**	1	SEAL-O-RING	
	22	1	**3S-9233**	2	SEAL-O-RING	
	23	1	**4J-7533**	1	SEAL-O-RING	
	24	1	**5B-9318**	1	BALL	
M	25	1	**8T-0267**	2	BOLT-SOCKET HEAD (M6X1X12-MM)	
					AVAILABLE REPAIR KIT(S):	
J			**325-2588**	1	KIT-SEAL (CIRCLE DRIVE)	
					(INCLUDES SEAL-O-RINGS & RING-BACKUPS)	

J-KIT MARKED J SERVICES PART(S) MARKED J
M-METRIC PART
Y-SEPARATE ILLUSTRATION

259-6907 VALVE GP-CONTROL *(contd.)* **i03887829**

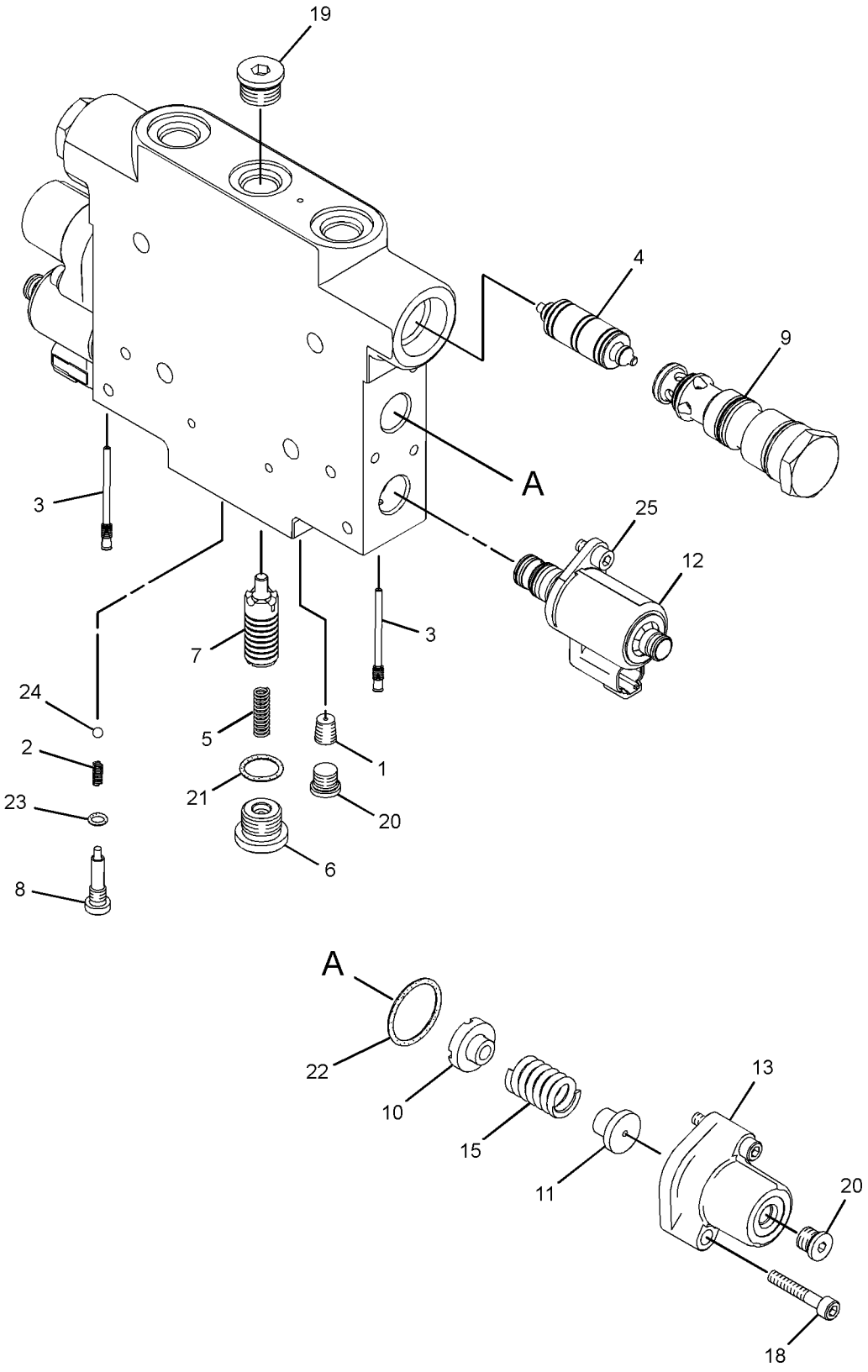

GRAPHIC #1 **<END>** g01635273

HYDRAULIC SYSTEM

259-6909 VALVE GP-CONTROL—BULLDOZER LIFT, PLOW

S/N: R9H1-UP

PART OF 261-3273 VALVE GP-BANK 6, 261-3274 VALVE GP-BANK 7

AN ATTACHMENT

SMCS-5051 **i03887853**

NOTE	REF NO	GRAPHIC REF	PART NUMBER	QTY	PART NAME 1 2 3 4 5 6 (PRODUCT LEVEL)	SEE PAGE
M	1	1	**8T-0267**	2	BOLT-SOCKET HEAD (M6X1X12-MM)	
	2	1	**6E-3007**	1	SPRING	
	3	1	**148-2557**	6	PLUG	
	4	1	**106-3660**	2	PISTON	
	5	1	**212-4961**	1	SPRING	
	6	1	**242-9264**	1	PLUG-ORIFICE	
	7	1	**243-2965**	1	SPOOL	
	8	1	**244-2579**	1	PLUG	
	9	1	**245-9054**	1	STEM	
J	10	1	**318-3115**	1	VALVE GP-CHECK (BULLDOZER LIFT, PLOW)	
		1	**9X-7745**	1	SEAL-O-RING	
		1	**6V-5326**	1	SEAL-O-RING	
		1	**6V-6580**	1	SEAL-O-RING	
J	11	1	**318-3052**	1	VALVE GP-CHECK & RELIEF (BULLDOZER LIFT, PLOW)	
		1	**3K-0360**	1	SEAL-O-RING	
		1	**6V-5326**	1	SEAL-O-RING	
		1	**6V-6580**	1	SEAL-O-RING	
	12	1	**284-4601**	2	RETAINER	
	13	1	**284-4602**	2	RETAINER	
Y	14	1	**278-1799**	2	VALVE GP-SOLENOID (BULLDOZER LIFT, PLOW)	698
	15	1	**251-1668**	1	COVER-SPRING	
	16	1	**251-1669**	1	COVER-SPRING	
	17	1	**284-3555**	1	SPRING	
	18	1	**284-3556**	1	SPRING	
M	21	1	**136-4192**	4	BOLT (M6X1X35-MM)	
	22	1	*148-8395*	1	PLUG AS	
		1	**3K-0360**	1	SEAL-O-RING	
		1	**9S-8005**	1	PLUG-O-RING	
	23	1	*183-7263*	3	PLUG AS	
					(EACH INCLUDES)	
		1	**3J-7354**	1	SEAL-O-RING	
		1	**9S-8002**	1	PLUG-O-RING	
	24	1	**3K-0360**	1	SEAL-O-RING	
	25	1	**3S-9233**	2	SEAL-O-RING	
	26	1	**4J-7533**	1	SEAL-O-RING	
	27	1	**5B-9318**	1	BALL	
					AVAILABLE REPAIR KIT(S):	
J			**325-2588**	2	KIT-SEAL (BULLDOZER LIFT, PLOW)	
					(INCLUDES SEAL RINGS & BACKUP RINGS)	

J-KIT MARKED J SERVICES PARTS MARKED J
M-METRIC PART
Y-SEPARATE ILLUSTRATION

259-6909 VALVE GP-CONTROL *(contd.)* **i03887853**

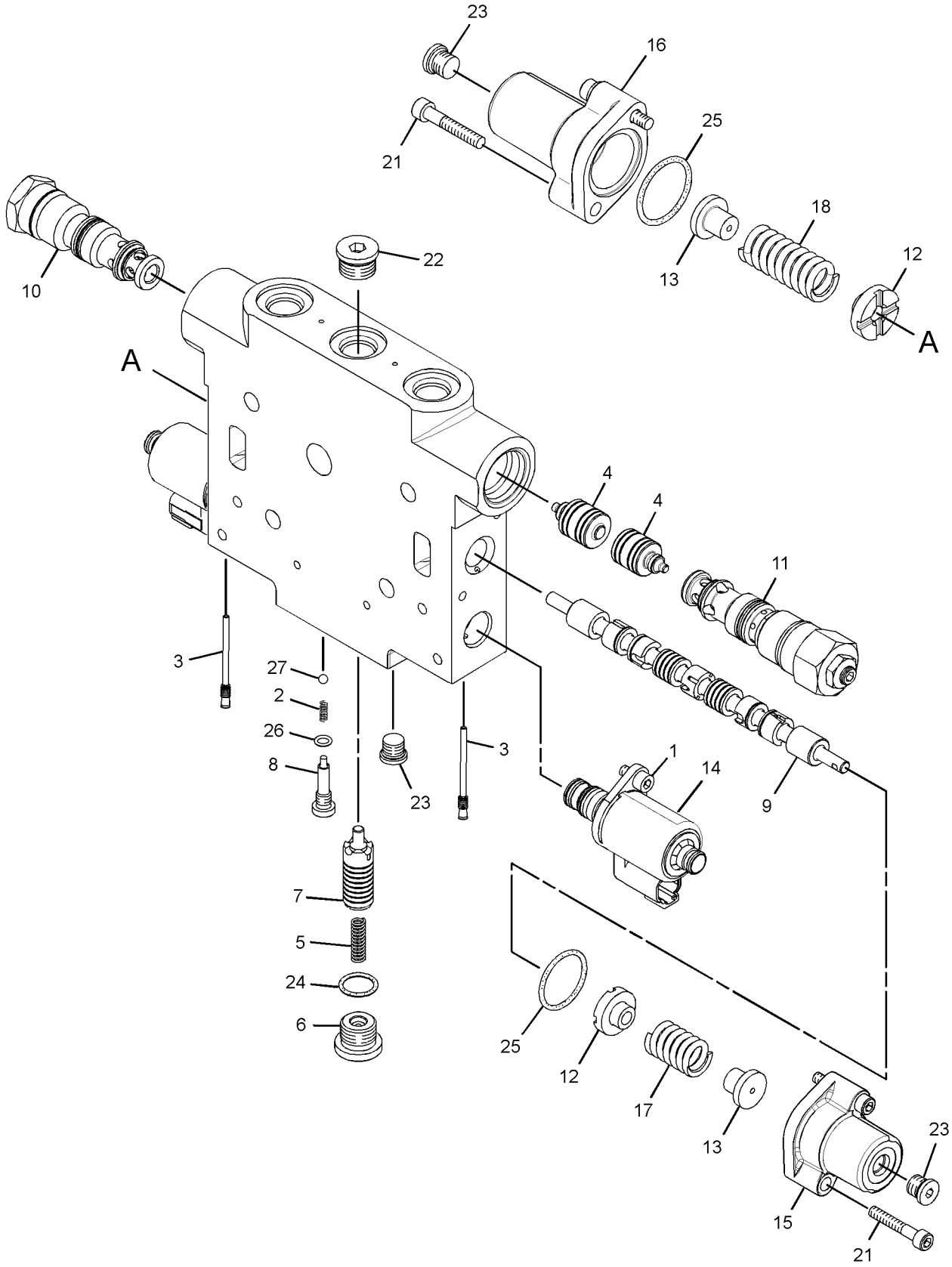

GRAPHIC #1 **<END>** g01635096

HYDRAULIC SYSTEM

259-6910 VALVE GP-CONTROL—PLOW, BULLDOZER LIFT

S/N: R9H1-UP
PART OF 261-3274 VALVE GP-BANK 7
AN ATTACHMENT

SMCS-5051 **i03887869**

NOTE	REF NO	GRAPHIC REF	PART NUMBER	QTY	PART NAME 1 2 3 4 5 6 (PRODUCT LEVEL)	SEE PAGE
M	1	1	**8T-0267**	2	BOLT-SOCKET HEAD (M6X1X12-MM)	
	2	1	**6E-3007**	1	SPRING	
	3	1	**148-2557**	6	PLUG	
	4	1	**106-3659**	1	PISTON	
	5	1	**212-4961**	1	SPRING	
	6	1	**242-9264**	1	PLUG-ORIFICE	
	7	1	**243-2965**	1	SPOOL	
	8	1	**244-2579**	1	PLUG	
	9	1	**245-9055**	1	STEM	
J	10	1	**318-3115**	1	VALVE GP-CHECK (PLOW ANGLE)	
J		1	**9X-7745**	1	SEAL-O-RING	
J		1	**6V-5326**	1	SEAL-O-RING	
J		1	**6V-6580**	1	SEAL-O-RING	
J	11	1	**318-3040**	1	VALVE GP-CHECK & RELIEF (PLOW ANGLE)	
J		1	**9X-7745**	1	SEAL-O-RING	
J		1	**6V-5326**	1	SEAL-O-RING	
J		1	**6V-6580**	1	SEAL-O-RING	
	12	1	**284-4601**	2	RETAINER	
	13	1	**284-4602**	2	RETAINER	
Y	14	1	**278-1799**	2	VALVE GP-SOLENOID (PLOW ANGLE)	698
	15	1	**251-1668**	2	COVER-SPRING	
	16	1	**284-3555**	2	SPRING	
M	19	1	**136-4192**	4	BOLT (M6X1X35-MM)	
	20	1	*148-8395*	1	PLUG AS	
		1	**9S-8005**	1	PLUG-O-RING	
		1	**3K-0360**	1	SEAL-O-RING	
	21	1	*183-7263*	3	PLUG AS	
					(EACH INCLUDES)	
		1	**9S-8002**	1	PLUG-O-RING	
		1	**3J-7354**	1	SEAL-O-RING	
	22	1	**3K-0360**	1	SEAL-O-RING	
	23	1	**3S-9233**	2	SEAL-O-RING	
	24	1	**4J-7533**	1	SEAL-O-RING	
	25	1	**5B-9318**	1	BALL	
					PARTS SHOWN IN GRAPHIC(S) WITHOUT A REFERENCE NUMBER ARE NOT SERVICED SEPARATELY	
					AVAILABLE REPAIR KIT(S):	
J			**325-2588**	1	KIT-SEAL (PLOW ANGLE)	
					(INCLUDES SEAL-O-RINGS & BACKUP RINGS)	

J-KIT MARKED J SERVICES PART(S) MARKED J
M-METRIC PART
Y-SEPARATE ILLUSTRATION

259-6910 VALVE GP-CONTROL *(contd.)* **i03887869**

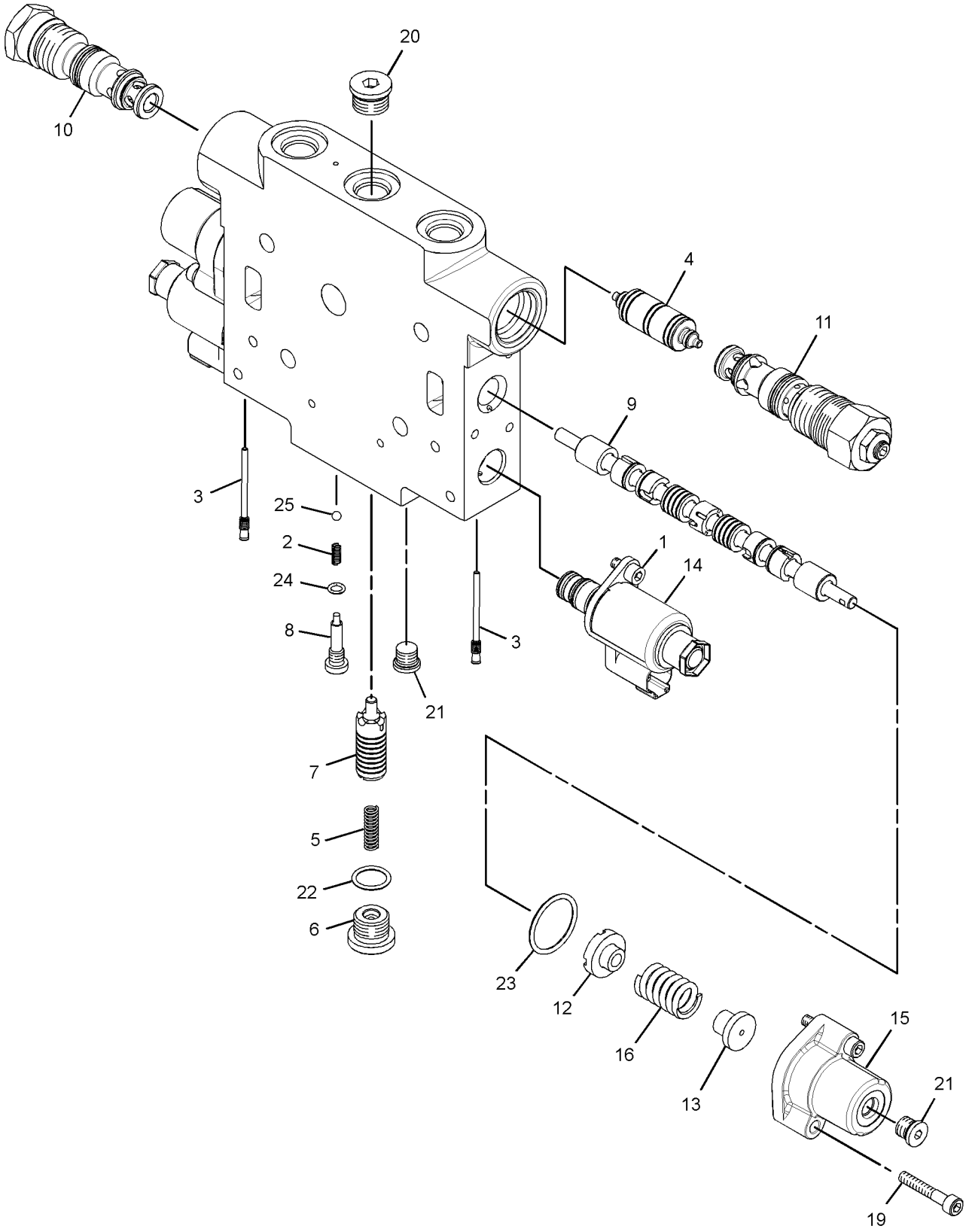

GRAPHIC #1 **<END>** g01635155

HYDRAULIC SYSTEM

259-6912 VALVE GP-CONTROL—ARTICULATION

S/N: R9H1-UP

PART OF 261-3278 VALVE GP-BANK 3, 261-3281 VALVE GP-BANK 4, 261-3283, 291-9518 VALVE GP-BANK 6

AN ATTACHMENT

SMCS-5051 **i03887990**

NOTE	REF NO	GRAPHIC REF	PART NUMBER	QTY	PART NAME 1 2 3 4 5 6 (PRODUCT LEVEL)	SEE PAGE
M	1	1	**8T-0267**	2	BOLT-SOCKET HEAD (M6X1X12-MM)	
	2	1	**6E-3007**	1	SPRING	
	3	1	**148-2557**	6	PLUG	
	4	1	**106-3659**	1	PISTON	
	5	1	**212-4961**	1	SPRING	
	6	1	**242-9264**	1	PLUG-ORIFICE	
	7	1	**243-2965**	1	SPOOL	
	8	1	**244-2579**	1	PLUG	
J	9	1	**321-6908**	2	VALVE GP-CHECK (ARTICULATION)	
					(EACH INCLUDES)	
		1	**9X-7745**	1	SEAL-O-RING	
		1	**6V-5326**	1	SEAL-O-RING	
		1	**6V-6580**	1	SEAL-O-RING	
	10	1	**284-4601**	2	RETAINER	
	11	1	**284-4602**	2	RETAINER	
Y	12	1	**278-1799**	2	VALVE GP-SOLENOID (ARTICULATION)	698
	13	1	**251-1668**	2	COVER-SPRING	
	14	1	**303-7503**	1	STEM	
	15	1	**284-3555**	2	SPRING	
M	18	1	**136-4192**	4	BOLT (M6X1X35-MM)	
	19	1	*148-8395*	1	PLUG AS	
		1	**9S-8005**	1	PLUG-O-RING	
		1	**3K-0360**	1	SEAL-O-RING	
	20	1	*183-7263*	3	PLUG AS	
					(EACH INCLUDES)	
		1	**9S-8002**	1	PLUG-O-RING	
		1	**3J-7354**	1	SEAL-O-RING	
	21	1	**3K-0360**	1	SEAL-O-RING	
	22	1	**3S-9233**	2	SEAL-O-RING	
	23	1	**4J-7533**	1	SEAL-O-RING	
	24	1	**5B-9318**	1	BALL	
					PARTS SHOWN IN GRAPHIC(S) WITHOUT A REFERENCE NUMBER ARE NOT SERVICED SEPARATELY	
					AVAILABLE REPAIR KIT(S):	
J			**325-2588**	1	KIT-SEAL	
					(INCLUDES SEAL-O-RINGS & BACKUP RINGS)	

J-KIT MARKED J SERVICES PART(S) MARKED J
M-METRIC PART
Y-SEPARATE ILLUSTRATION

259-6912 VALVE GP-CONTROL *(contd.)* **i03887990**

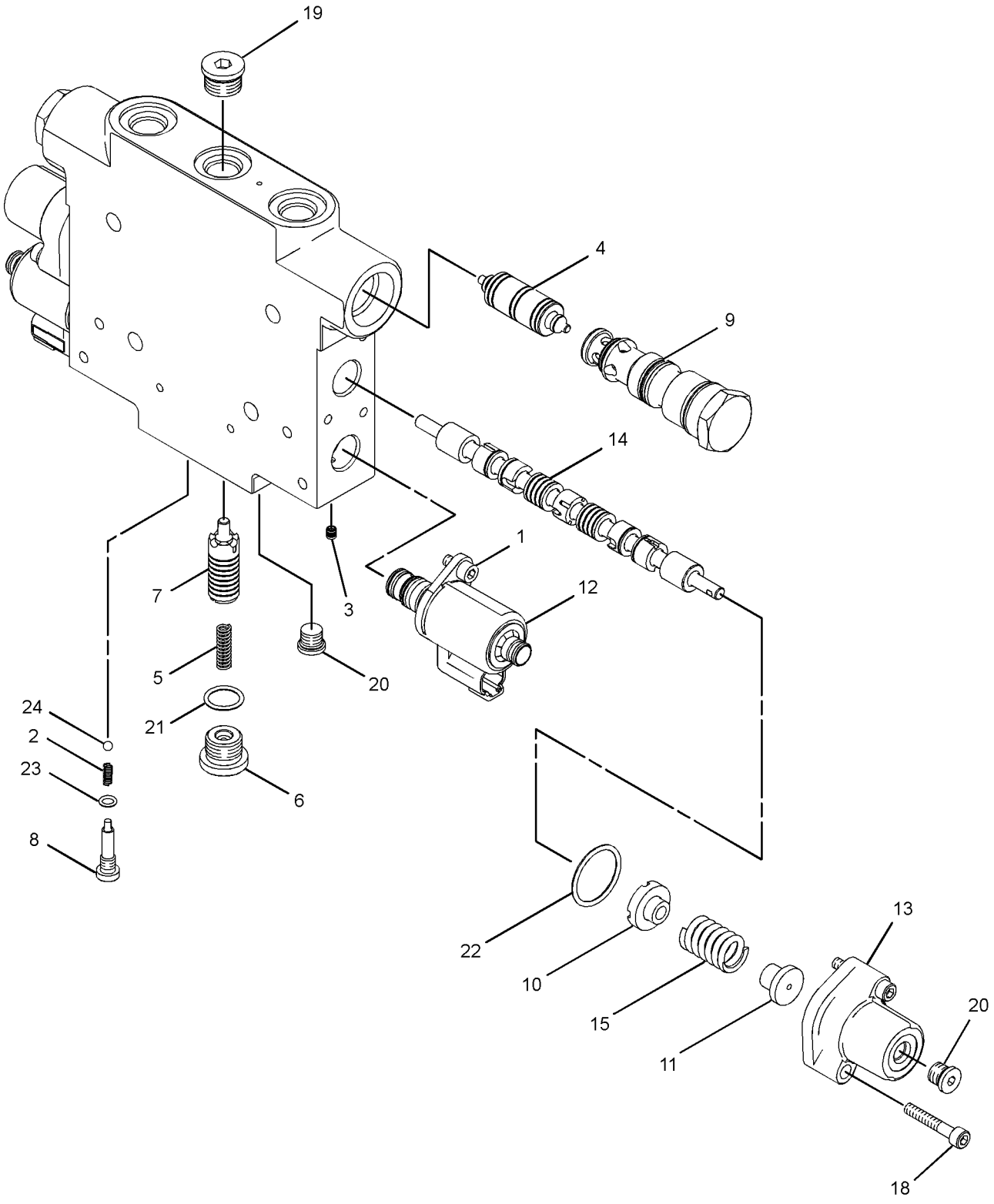

GRAPHIC #1 **<END>** g01633673

HYDRAULIC SYSTEM

259-6913 VALVE GP-CONTROL–RIPPER

S/N: R9H1-UP

PART OF 261-3281 VALVE GP-BANK 4, 261-3283, 291-9518 VALVE GP-BANK 6

AN ATTACHMENT

SMCS-5051 **i03887991**

NOTE	REF NO	GRAPHIC REF	PART NUMBER	QTY	PART NAME 1 2 3 4 5 6 (PRODUCT LEVEL)	SEE PAGE
M	1	1	**8T-0267**	2	BOLT-SOCKET HEAD (M6X1X12-MM)	
	2	1	**6E-3007**	1	SPRING	
	3	1	**148-2557**	6	PLUG	
	4	1	**106-3659**	1	PISTON	
	5	1	**212-4961**	1	SPRING	
	6	1	**242-9264**	1	PLUG-ORIFICE	
	7	1	**243-2965**	1	SPOOL	
	8	1	**244-2579**	1	PLUG	
J	9	1	**318-3115**	1	VALVE GP-CHECK (RIPPER)	
J		1	**9X-7745**	1	SEAL-O-RING	
J		1	**6V-5326**	1	SEAL-O-RING	
J		1	**6V-6580**	1	SEAL-O-RING	
J	10	1	**318-3040**	1	VALVE GP-CHECK & RELIEF (WING LIFT)	
J		1	**9X-7745**	1	SEAL-O-RING	
J		1	**6V-5326**	1	SEAL-O-RING	
J		1	**6V-6580**	1	SEAL-O-RING	
	11	1	**284-4601**	2	RETAINER	
	12	1	**284-4602**	2	RETAINER	
Y	13	1	**278-1799**	2	VALVE GP-SOLENOID (RIPPER)	698
	14	1	**251-1668**	2	COVER-SPRING	
	15	1	**254-3950**	1	STEM	
	16	1	**284-3555**	2	SPRING	
M	19	1	**136-4192**	4	BOLT (M6X1X35-MM)	
	20	1	*148-8395*	1	PLUG AS	
		1	**9S-8005**	1	PLUG-O-RING	
		1	**3K-0360**	1	SEAL-O-RING	
	21	1	*183-7263*	3	PLUG AS	
					(EACH INCLUDES)	
		1	**9S-8002**	1	PLUG-O-RING	
		1	**3J-7354**	1	SEAL-O-RING	
	22	1	**3K-0360**	1	SEAL-O-RING	
	23	1	**3S-9233**	2	SEAL-O-RING	
	24	1	**4J-7533**	1	SEAL-O-RING	
	25	1	**5B-9318**	1	BALL	
					AVAILABLE REPAIR KIT(S):	
J			**325-2588**	1	KIT-SEAL (RIPPER)	
					(INCLUDES SEAL-O-RINGS & BACKUP RINGS)	

J-KIT MARKED J SERVICES PARTS MARKED J
M-METRIC PART
Y-SEPARATE ILLUSTRATION

259-6913 VALVE GP-CONTROL *(contd.)* **i03887991**

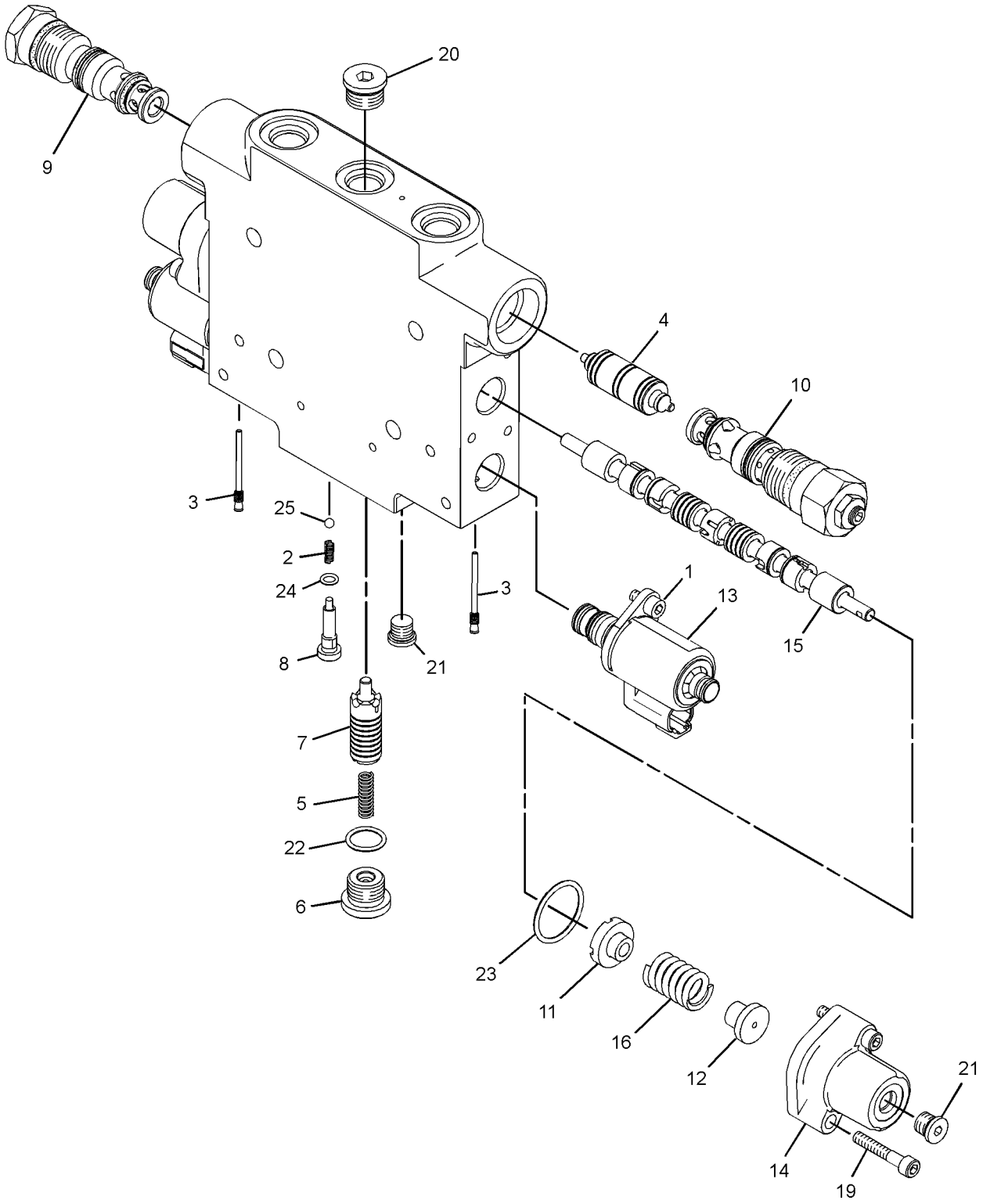

GRAPHIC #1 **<END>** g01632253

HYDRAULIC SYSTEM

259-6914 VALVE GP-CONTROL—WING LIFT

S/N: R9H1-UP

PART OF 261-3283, 291-9518 VALVE GP-BANK 6

AN ATTACHMENT

SMCS-5051 **i03888049**

NOTE	REF NO	GRAPHIC REF	PART NUMBER	QTY	PART NAME 1 2 3 4 5 6 (PRODUCT LEVEL)	SEE PAGE
M	1	1	**8T-0267**	2	BOLT-SOCKET HEAD (M6X1X12-MM)	
	2	1	**6E-3007**	1	SPRING	
	3	1	**148-2557**	6	PLUG	
	4	1	**106-3659**	1	PISTON	
	5	1	**212-4961**	1	SPRING	
	6	1	**242-9264**	1	PLUG-ORIFICE	
	7	1	**243-2965**	1	SPOOL	
	8	1	**244-2579**	1	PLUG	
	9	1	**245-9055**	1	STEM	
J	10	1	**318-3040**	2	VALVE GP-CHECK & RELIEF (WING LIFT)	
					(EACH INCLUDES)	
		1	**9X-7745**	1	SEAL-O-RING	
		1	**6V-5326**	1	SEAL-O-RING	
		1	**6V-6580**	1	SEAL-O-RING	
	11	1	**284-4601**	2	RETAINER	
	12	1	**284-4602**	2	RETAINER	
Y	13	1	**278-1799**	2	VALVE GP-SOLENOID (WING LIFT)	698
	14	1	**251-1668**	2	COVER-SPRING	
	15	1	**284-3555**	2	SPRING	
M	18	1	**136-4192**	4	BOLT (M6X1X35-MM)	
	19	1	*148-8395*	1	PLUG AS	
		1	**3K-0360**	1	SEAL-O-RING	
		1	**9S-8005**	1	PLUG-O-RING	
	20	1	*183-7263*	3	PLUG AS	
					(EACH INCLUDES)	
		1	**3J-7354**	1	SEAL-O-RING	
		1	**9S-8002**	1	PLUG-O-RING	
	21	1	**3K-0360**	1	SEAL-O-RING	
	22	1	**3S-9233**	2	SEAL-O-RING	
	23	1	**4J-7533**	1	SEAL-O-RING	
	24	1	**5B-9318**	1	BALL	
					PARTS SHOWN IN GRAPHIC(S) WITHOUT A REFERENCE NUMBER ARE NOT SERVICED SEPARATELY	
					AVAILABLE REPAIR KIT(S):	
J			**325-2588**	1	KIT-SEAL (WING LIFT)	
					(INCLUDES SEAL-O-RINGS & BACKUP RINGS)	

J-KIT MARKED J SERVICES PART MARKED J
M-METRIC PART
Y-SEPARATE ILLUSTRATION

259-6914 VALVE GP-CONTROL *(contd.)* **i03888049**

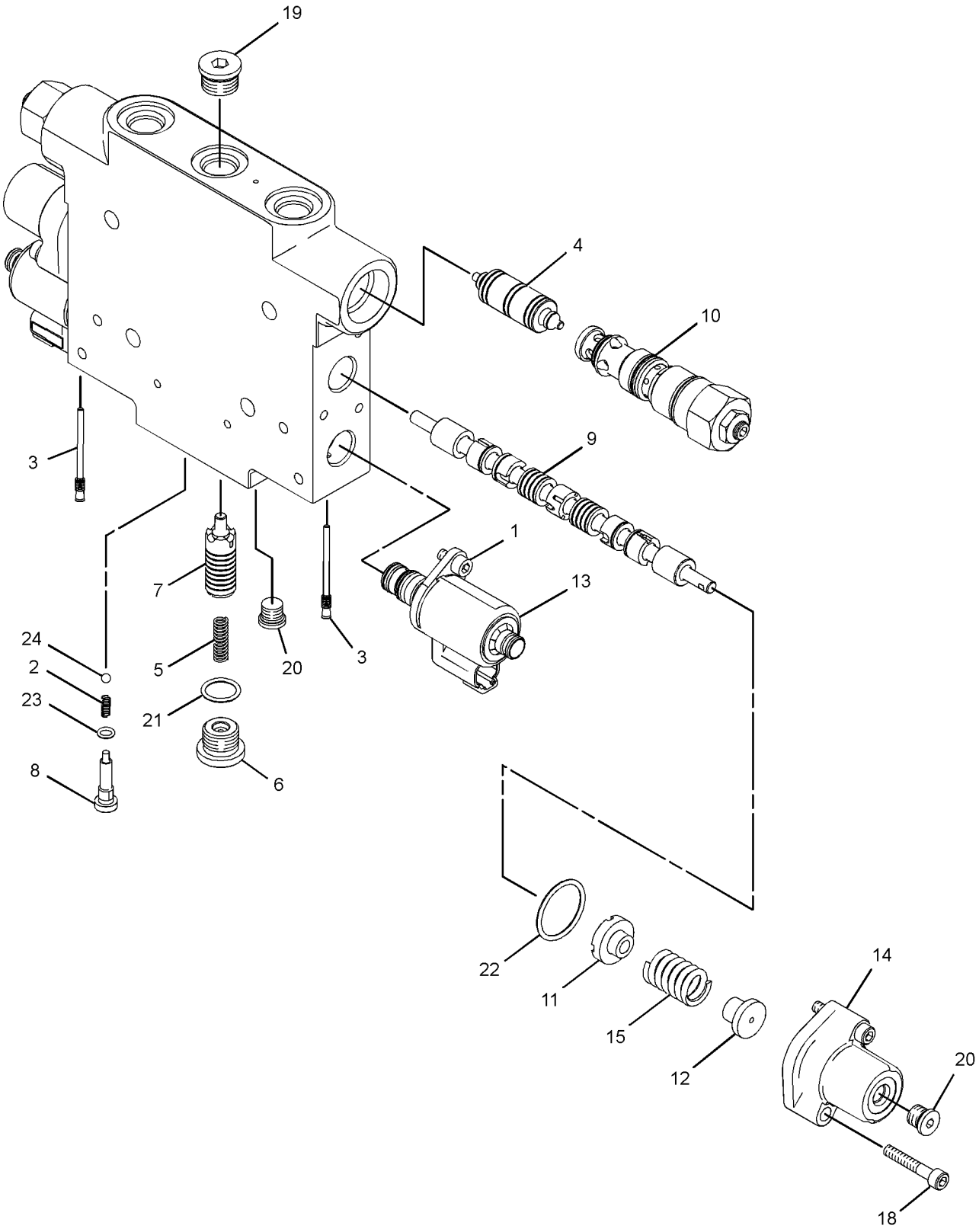

GRAPHIC #1 **<END>** g01632294

HYDRAULIC SYSTEM

259-6915 VALVE GP-CONTROL–WING TILT

S/N: R9H1-UP

PART OF 261-3283 VALVE GP-BANK 6

AN ATTACHMENT

SMCS-5051 **i03888112**

NOTE	REF NO	GRAPHIC REF	PART NUMBER	QTY	PART NAME 1 2 3 4 5 6 (PRODUCT LEVEL)	SEE PAGE
M	1	1	**8T-0267**	2	BOLT-SOCKET HEAD (M6X1X12-MM)	
	2	1	**6E-3007**	1	SPRING	
	3	1	**148-2557**	6	PLUG	
	4	1	**106-3659**	1	PISTON	
	5	1	**212-4961**	1	SPRING	
	6	1	**242-9264**	1	PLUG-ORIFICE	
	7	1	**243-2965**	1	SPOOL	
	8	1	**244-2579**	1	PLUG	
J	9	1	**318-3040**	2	VALVE GP-CHECK & RELIEF (WING TILT)	
					(EACH INCLUDES)	
		1	**9X-7745**	1	SEAL-O-RING	
		1	**6V-5326**	1	SEAL-O-RING	
		1	**6V-6580**	1	SEAL-O-RING	
	10	1	**284-4601**	2	RETAINER	
	11	1	**284-4602**	2	RETAINER	
Y	12	1	**278-1799**	2	VALVE GP-SOLENOID (WING TILT)	698
	13	1	**251-1668**	2	COVER-SPRING	
	14	1	**254-3951**	1	STEM	
	15	1	**284-3555**	2	SPRING	
M	18	1	**136-4192**	4	BOLT (M6X1X35-MM)	
	19	1	*148-8395*	1	PLUG AS	
		1	**3K-0360**	1	SEAL-O-RING	
		1	**9S-8005**	1	PLUG-O-RING	
	20	1	*183-7263*	3	PLUG AS	
					(EACH INCLUDES)	
		1	**3J-7354**	1	SEAL-O-RING	
		1	**9S-8002**	1	PLUG-O-RING	
	21	1	**3K-0360**	1	SEAL-O-RING	
	22	1	**3S-9233**	2	SEAL-O-RING	
	23	1	**4J-7533**	1	SEAL-O-RING	
	24	1	**5B-9318**	1	BALL	
					AVAILABLE REPAIR KIT(S):	
J			**325-2588**	1	KIT-SEAL (WING TILT)	
					(INCLUDES SEAL-O-RINGS & BACKUP RINGS)	

J-KIT MARKED J SERVICES PART MARKED J
M-METRIC PART
Y-SEPARATE ILLUSTRATION

259-6915 VALVE GP-CONTROL *(contd.)* **i03888112**

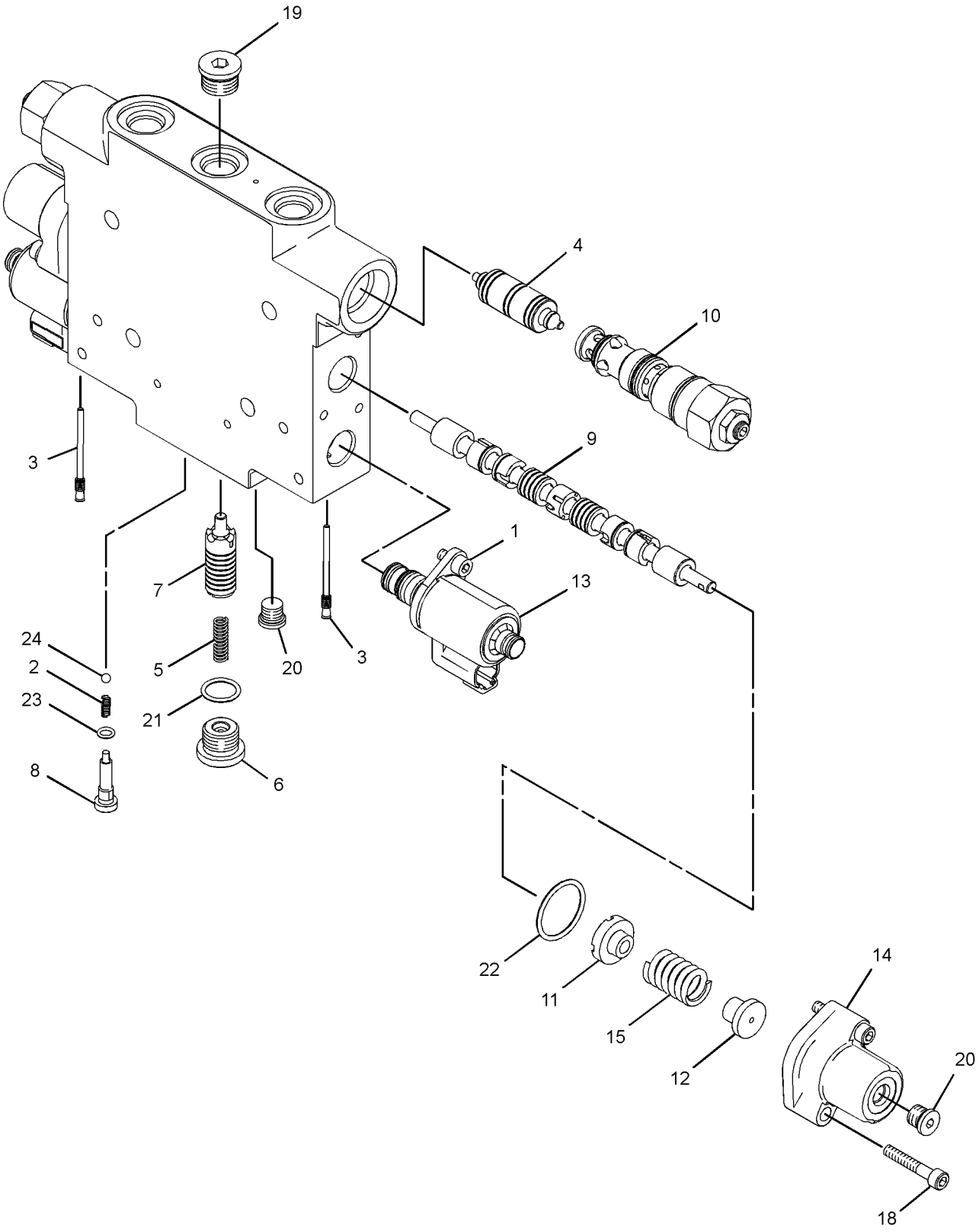

GRAPHIC #1 **<END>** g01632294

HYDRAULIC SYSTEM

261-3268 VALVE GP-CONTROL—BLADE LIFT

S/N: R9H1-UP

PART OF 261-3278 VALVE GP-BANK 3, 261-3281 VALVE GP-BANK 4, 261-3283, 291-9518 VALVE GP-BANK 6

AN ATTACHMENT

SMCS-5051 **i03888130**

NOTE	REF NO	GRAPHIC REF	PART NUMBER	QTY	PART NAME 1 2 3 4 5 6 (PRODUCT LEVEL)	SEE PAGE
M	1	1	**8T-0267**	2	BOLT-SOCKET HEAD (M6X1X12-MM)	
	2	1	**6E-3007**	1	SPRING	
	3	1	**148-2557**	6	PLUG	
	4	1	**106-3660**	2	PISTON	
M	5	1	**136-4192**	4	BOLT (M6X1X35-MM)	
	6	1	**212-4961**	1	SPRING	
	7	1	**242-9264**	1	PLUG-ORIFICE	
	8	1	**243-2965**	1	SPOOL	
	9	1	**244-2579**	1	PLUG	
J	10	1	**318-3115**	1	VALVE GP-CHECK (BLADE LIFT)	
		1	**6V-6580**	1	SEAL-O-RING	
		1	**9X-7745**	1	SEAL-O-RING	
		1	**6V-5326**	1	SEAL-O-RING	
J	11	1	**318-3052**	1	VALVE GP-CHECK & RELIEF (BLADE LIFT)	
		1	**6V-6580**	1	SEAL-O-RING	
		1	**9X-7745**	1	SEAL-O-RING	
		1	**6V-5326**	1	SEAL-O-RING	
	12	1	**251-1668**	1	COVER-SPRING	
	13	1	**251-1669**	1	COVER-SPRING	
Y	16	1	**278-1799**	2	VALVE GP-SOLENOID (BLADE LIFT)	698
	17	1	**284-3555**	1	SPRING	
	18	1	**284-3556**	1	SPRING	
	19	1	**284-4601**	2	RETAINER	
	20	1	**284-4602**	2	RETAINER	
	21	1	**297-4276**	1	STEM	
	22	1	*148-8395*	1	PLUG AS	
		1	**9S-8005**	1	PLUG-O-RING	
		1	**3K-0360**	1	SEAL-O-RING	
	23	1	*183-7263*	3	PLUG AS	
					(EACH INCLUDES)	
		1	**9S-8002**	1	PLUG-O-RING	
		1	**3J-7354**	1	SEAL-O-RING	
	24	1	**3K-0360**	1	SEAL-O-RING	
	25	1	**3S-9233**	2	SEAL-O-RING	
	26	1	**4J-7533**	1	SEAL-O-RING	
	27	1	**5B-9318**	1	BALL	
					AVAILABLE REPAIR KIT(S):	
J			**325-2588**	2	KIT-SEAL (BLADE LIFT)	
					(INCLUDES SEAL-O-RINGS & RING-BACKUPS)	

J-KIT MARKED J SERVICES PART(S) MARKED J
M-METRIC PART
Y-SEPARATE ILLUSTRATION

261-3268 VALVE GP-CONTROL *(contd.)* **i03888130**

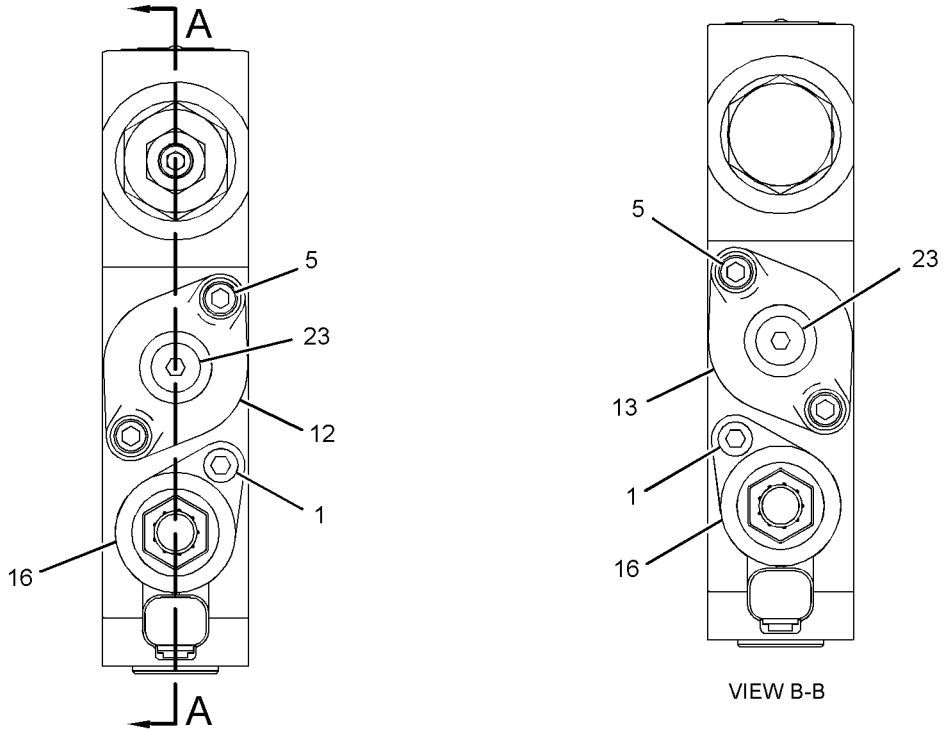

GRAPHIC #1 **<END>** g01625745

HYDRAULIC SYSTEM

261-3270 VALVE GP-CONTROL—CENTERSHIFT

S/N: R9H1-UP

PART OF 261-3272 VALVE GP-BANK 5, 261-3273 VALVE GP-BANK 6, 261-3274 VALVE GP-BANK 7

AN ATTACHMENT

SMCS-5051 **i03888132**

NOTE	REF NO	GRAPHIC REF	PART NUMBER	QTY	PART NAME 1 2 3 4 5 6 (PRODUCT LEVEL)	SEE PAGE
M	1	1	**8T-0267**	2	BOLT-SOCKET HEAD (M6X1X12-MM)	
	2	1	**6E-3007**	1	SPRING	
	3	1	**148-2557**	6	PLUG	
	4	1	**106-3659**	1	PISTON	
	5	1	**212-4961**	1	SPRING	
	6	1	**242-9264**	1	PLUG-ORIFICE	
	7	1	**243-2965**	1	SPOOL	
	8	1	**244-2579**	1	PLUG	
J	9	1	**318-3115**	2	VALVE GP-CHECK (CENTERSHIFT)	
					(EACH INCLUDES)	
J		1	**9X-7745**	1	SEAL-O-RING	
J		1	**6V-5326**	1	SEAL-O-RING	
J		1	**6V-6580**	1	SEAL-O-RING	
	10	1	**251-1668**	2	COVER-SPRING	
	12	1	**261-3259**	1	STEM	
Y	14	1	**278-1799**	2	VALVE GP-SOLENOID (CENTERSHIFT)	698
	15	1	**284-3555**	2	SPRING	
	16	1	**284-4601**	2	RETAINER	
	17	1	**284-4602**	2	RETAINER	
M	18	1	**136-4192**	4	BOLT (M6X1X35-MM)	
	19	1	*148-8395*	1	PLUG AS	
		1	**9S-8005**	1	PLUG-O-RING	
		1	**3K-0360**	1	SEAL-O-RING	
	20	1	*183-7263*	3	PLUG AS	
					(EACH INCLUDES)	
		1	**9S-8002**	1	PLUG-O-RING	
		1	**3J-7354**	1	SEAL-O-RING	
	21	1	**3K-0360**	1	SEAL-O-RING	
	22	1	**3S-9233**	2	SEAL-O-RING	
	23	1	**4J-7533**	1	SEAL-O-RING	
	24	1	**5B-9318**	1	BALL	
					AVAILABLE REPAIR KIT(S):	
J			**325-2588**	1	KIT-SEAL (CENTERSHIFT)	
					(INCLUDES SEAL-O-RINGS & RING-BACKUPS)	

J-KIT MARKED J SERVICES PART(S) MARKED J
M-METRIC PART
Y-SEPARATE ILLUSTRATION

261-3270 VALVE GP-CONTROL *(contd.)* **i03888132**

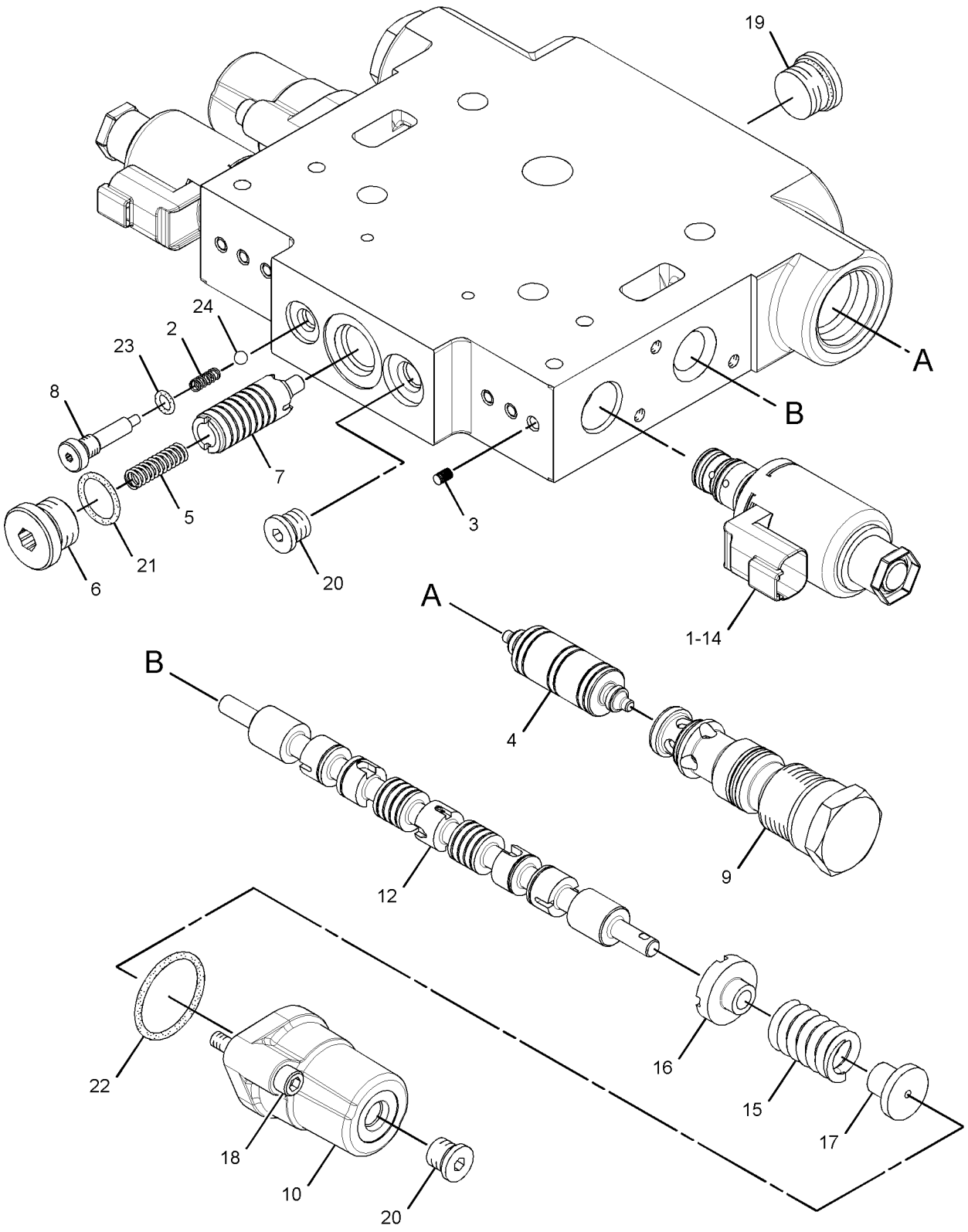

GRAPHIC #1 **<END>** g01623166

HYDRAULIC SYSTEM

261-3271 VALVE GP-CONTROL—WHEEL LEAN

S/N: R9H1-UP

PART OF 261-3272 VALVE GP-BANK 5, 261-3273 VALVE GP-BANK 6, 261-3274 VALVE GP-BANK 7

AN ATTACHMENT

SMCS-5051 **i03888134**

NOTE	REF NO	GRAPHIC REF	PART NUMBER	QTY	PART NAME 1 2 3 4 5 6 (PRODUCT LEVEL)	SEE PAGE
M	1	1	**8T-0267**	2	BOLT-SOCKET HEAD (M6X1X12-MM)	
	2	1	**6E-3007**	1	SPRING	
	3	1	**148-2557**	6	PLUG	
	4	1	**106-3659**	1	PISTON	
	5	1	**212-4961**	1	SPRING	
	6	1	**242-9264**	1	PLUG-ORIFICE	
	7	1	**243-2965**	1	SPOOL	
	8	1	**244-2579**	1	PLUG	
J	9	1	**318-3115**	2	VALVE GP-CHECK (WHEEL LEAN)	
		1	**9X-7745**	1	SEAL-O-RING	
		1	**6V-5326**	1	SEAL-O-RING	
		1	**6V-6580**	1	SEAL-O-RING	
	10	1	**251-1668**	2	COVER-SPRING	
	12	1	**261-3264**	1	STEM	
Y	14	1	**278-1799**	2	VALVE GP-SOLENOID (WHEEL LEAN)	698
	15	1	**284-3555**	2	SPRING	
	16	1	**284-4601**	2	RETAINER	
	17	1	**284-4602**	2	RETAINER	
M	18	1	**136-4192**	4	BOLT (M6X1X35-MM)	
	19	1	*148-8395*	1	PLUG AS	
		1	**3K-0360**	1	SEAL-O-RING	
		1	**9S-8005**	1	PLUG-O-RING	
	20	1	*183-7263*	3	PLUG AS	
					(EACH INCLUDES)	
		1	**3J-7354**	1	SEAL-O-RING	
		1	**9S-8002**	1	PLUG-O-RING	
	21	1	**3K-0360**	1	SEAL-O-RING	
	22	1	**3S-9233**	2	SEAL-O-RING	
	23	1	**4J-7533**	1	SEAL-O-RING	
	24	1	**5B-9318**	1	BALL	
					AVAILABLE REPAIR KIT(S):	
J			**325-2588**	1	KIT-SEAL	
					(INCLUDES SEAL-O-RINGS & RING BACKUPS)	

J-KIT MARKED J SERVICES PART(S) MARKED J
M-METRIC PART
Y-SEPARATE ILLUSTRATION

261-3271 VALVE GP-CONTROL *(contd.)* **i03888134**

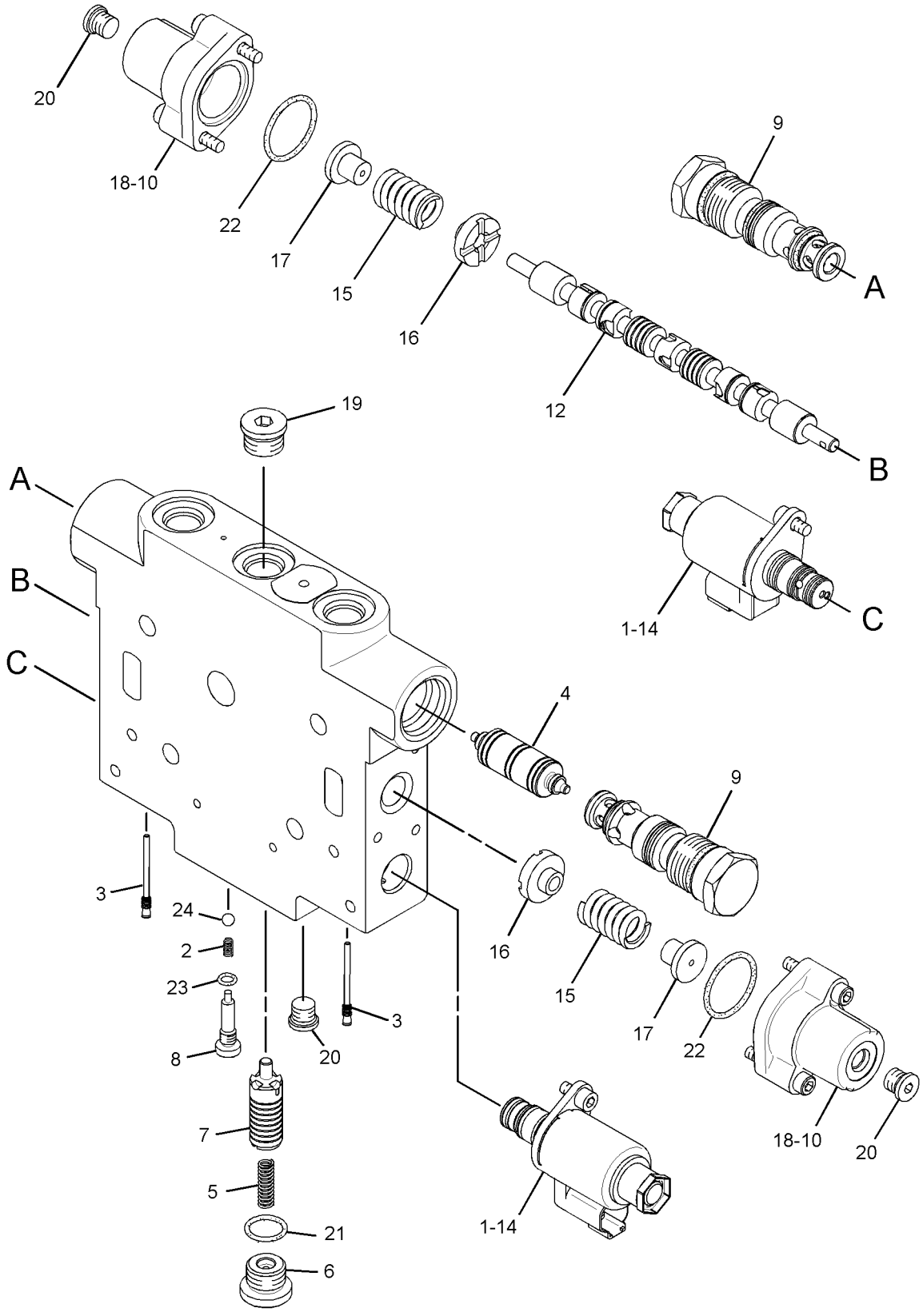

GRAPHIC #1 **<END>** g01632373

HYDRAULIC SYSTEM

290-0594 VALVE GP-CONTROL—WING TILT

S/N: R9H1-UP
PART OF 291-9518 VALVE GP-BANK 6
AN ATTACHMENT

SMCS-5051 **i03889781**

NOTE	REF NO	GRAPHIC REF	PART NUMBER	QTY	PART NAME 1 2 3 4 5 6 (PRODUCT LEVEL)	SEE PAGE
M	1	1	**8T-0267**	2	BOLT-SOCKET HEAD (M6X1X12-MM)	
	2	1	**6E-3007**	1	SPRING	
	3	1	**148-2557**	6	PLUG	
	4	1	**106-3660**	2	PISTON	
	5	1	**212-4961**	1	SPRING	
	6	1	**242-9264**	1	PLUG-ORIFICE	
	7	1	**243-2965**	1	SPOOL	
	8	1	**244-2579**	1	PLUG	
J	9	1	**318-3040**	2	VALVE GP-CHECK & RELIEF (WING TILT)	
					(EACH INCLUDES)	
		1	**6V-6580**	1	SEAL-O-RING	
		1	**3K-0360**	1	SEAL-O-RING	
		1	**6V-5326**	1	SEAL-O-RING	
	10	1	**251-1668**	1	COVER-SPRING	
	11	1	**251-1669**	1	COVER-SPRING	
Y	13	1	**278-1799**	2	VALVE GP-SOLENOID (BLADE FLOAT, WING TILT)	698
	14	1	**284-3555**	1	SPRING	
	15	1	**284-3556**	1	SPRING	
	16	1	**284-4601**	2	RETAINER	
	17	1	**284-4602**	2	RETAINER	
M	20	1	**136-4192**	4	BOLT (M6X1X35-MM)	
	21	1	*148-8395*	1	PLUG AS	
		1	**9S-8005**	1	PLUG-O-RING	
		1	**3K-0360**	1	SEAL-O-RING	
	22	1	*183-7263*	3	PLUG AS	
					(EACH INCLUDES)	
		1	**9S-8002**	1	PLUG-O-RING	
		1	**3J-7354**	1	SEAL-O-RING	
	23	1	**3K-0360**	1	SEAL-O-RING	
	24	1	**3S-9233**	2	SEAL-O-RING	
	25	1	**4J-7533**	1	SEAL-O-RING	
	26	1	**5B-9318**	1	BALL	
					PARTS SHOWN IN GRAPHIC(S) WITHOUT A REFERENCE NUMBER ARE NOT SERVICED SEPARATELY	
					AVAILABLE REPAIR KIT(S):	
J			**325-2588**	1	KIT-SEAL (WING TILT)	
					(INCLUDES SEAL-O-RINGS & BACKUP RINGS)	

J-KIT MARKED J SERVICES PARTS MARKED J
M-METRIC PART
Y-SEPARATE ILLUSTRATION

290-0594 VALVE GP-CONTROL *(contd.)* i03889781

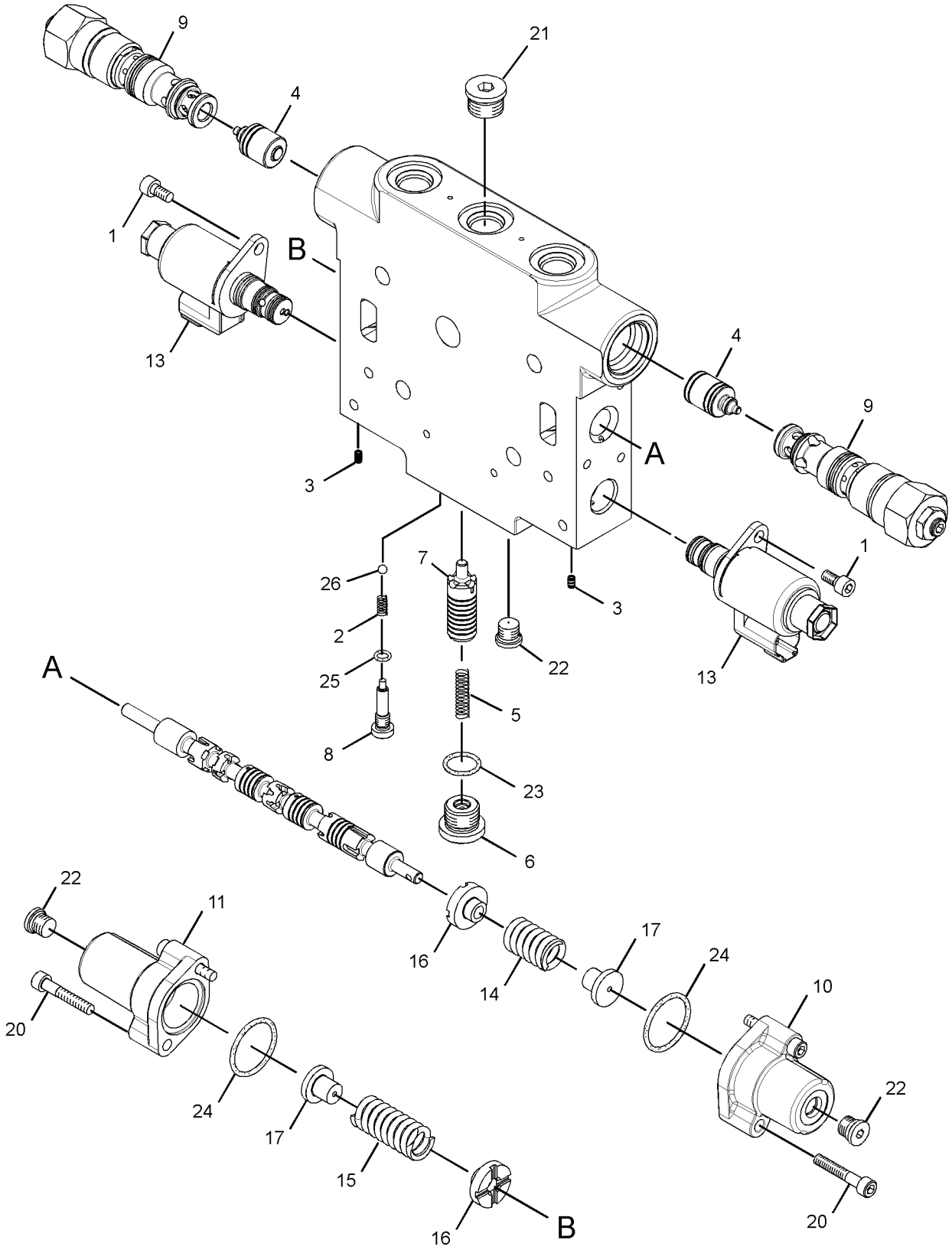

GRAPHIC #1 **<END>** g01896236

HYDRAULIC SYSTEM

277-2132 VALVE GP-DIVERTER–FAN DRIVE

S/N: R9H1-UP

PART OF 353-2604 MANIFOLD GP-CONTROL

SMCS-5066 **i02855869**

NOTE	REF NO	GRAPHIC REF	PART NUMBER	QTY	PART NAME 1 2 3 4 5 6 (PRODUCT LEVEL)	SEE PAGE
J	1	1	**2M-9780**	1	SEAL-O-RING	
J	2	1	**6V-5142**	1	SEAL-O-RING	
J	3	1	**169-1617**	2	RING-BACKUP	
J	4	1	**095-1751**	1	SEAL-O-RING	
J	5	1	**169-1616**	2	RING-BACKUP	
					AVAILABLE REPAIR KIT(S):	
J			**200-6282**		KIT-SEAL (DIVERTER VALVE) (HYDRAULIC FAN FLUID FLOW)	
J-(KIT MARKED J INCLUDES PART(S) MARKED J)						

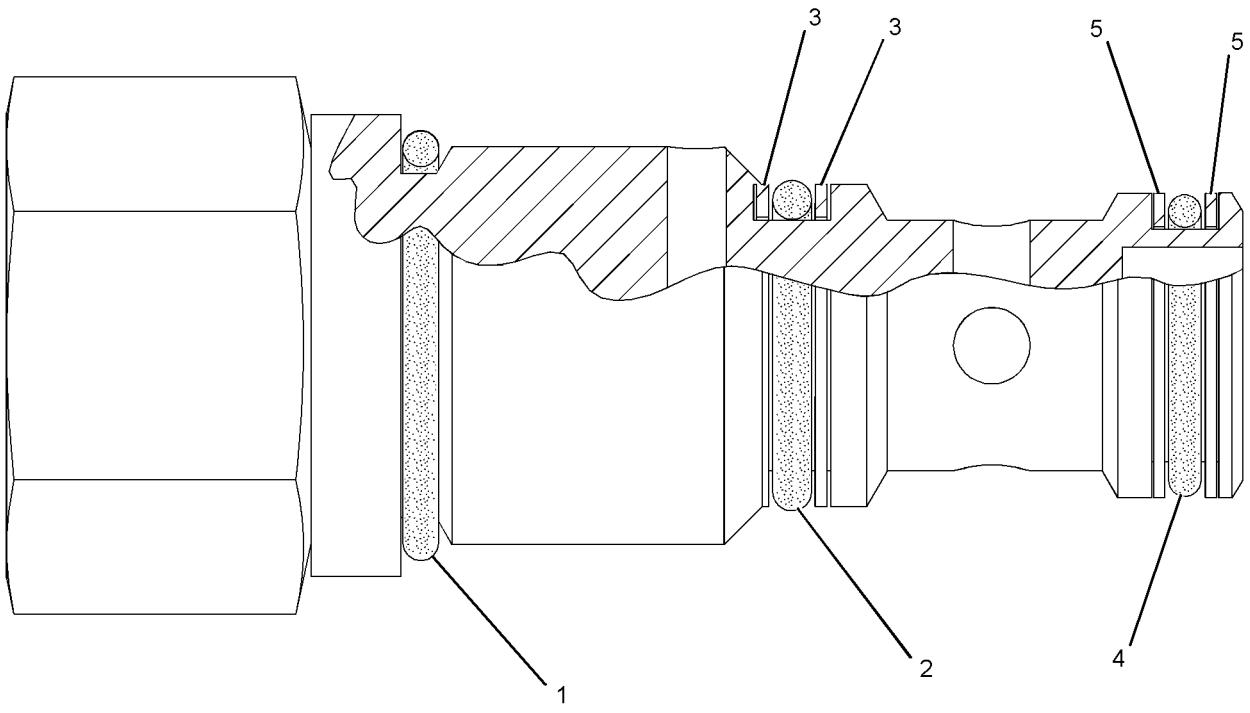

GRAPHIC #1 **<END>** g01109584

HYDRAULIC SYSTEM

252-8038 VALVE GP-PRESSURE REDUCING

S/N: R9H1-UP

PART OF 353-2605 MANIFOLD GP-CONTROL

SMCS-5117 **i02148309**

NOTE	REF NO	GRAPHIC REF	PART NUMBER	QTY	PART NAME 1 2 3 4 5 6 (PRODUCT LEVEL)	SEE PAGE
	1	1	**2M-9780**	1	SEAL-O-RING	
	2	1	**6V-3505**	1	RING-BACKUP	
	3	1	**8C-3132**	1	SEAL-O-RING	
	4	1	**6E-0410**	1	SEAL-O-RING	
	5	1	**5P-2199**	1	RING-BACKUP	

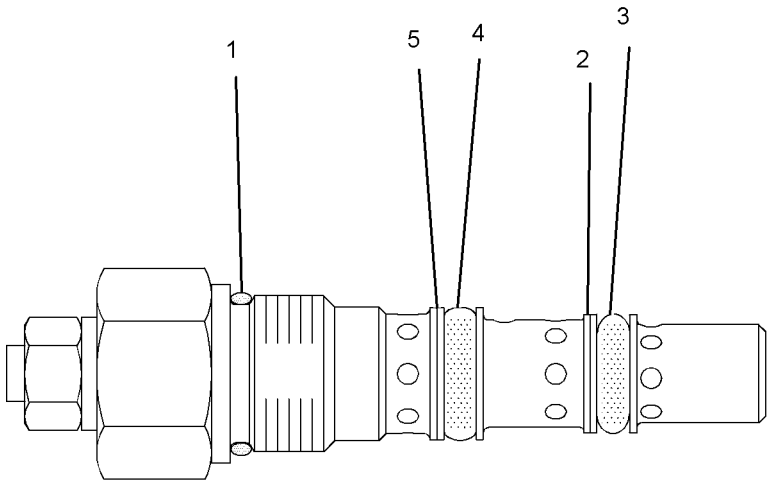

GRAPHIC #1 **<END>** g01089904

HYDRAULIC SYSTEM

271-6847 VALVE GP-PUMP CONTROL–
PRESSURE, FLOW COMPENSATOR
S/N: R9H1-UP
PART OF 246-4486 PUMP GP-PISTON

SMCS-5455 **i02901450**

NOTE	REF NO	GRAPHIC REF	PART NUMBER	QTY	PART NAME 1 2 3 4 5 6 (PRODUCT LEVEL)	SEE PAGE
	1	1	**6E-4229**	1	BODY-COMPENSATOR	
	2	1	**9S-4191**	1	PLUG-O-RING	
	3	1	**3J-1907**	3	SEAL-O-RING	
	4	1	**6E-4241**	1	SPOOL-MARGIN	
	5	1	**9T-2186**	2	PLUG	
	6	1	**6E-4239**	1	SPOOL-CUTOFF	
	7	1	**6E-4230**	2	GUIDE-SPRING	
	8	1	**6E-4228**	1	SPRING (CUTOFF)	
	9	1	**6E-6140**	1	PLUG-COMPENSATOR	
	10	1	**033-6036**	1	SEAL-O-RING	
	11	1	**6E-6141**	2	LOCKNUT-SEALING (M8X1.25-THD)	
M	12	1	**9X-8914**	2	SETSCREW-SOCKET (M8X1.25X45-MM)	
	13	1	**6E-6142**	1	PLUG-MARGIN	
	14	1	**033-6027**	1	SEAL-O-RING	
	15	1	**6E-4246**	1	SPRING-MARGIN	
	16	1	**6E-4318**	1	PIN-SPRING STOP	
	17	1	**6E-4242**	2	GUIDE-SPRING	

M-METRIC PART

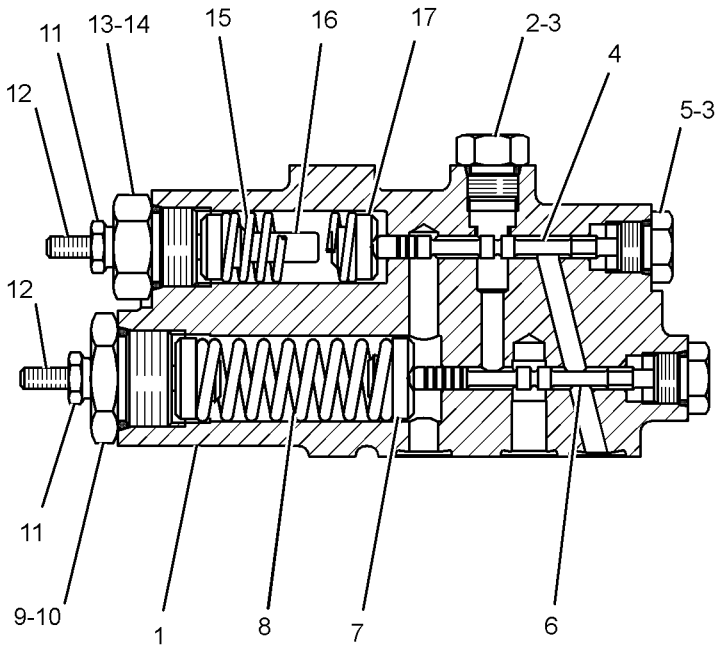

GRAPHIC #1 **<END>** g01287415

HYDRAULIC SYSTEM

133-5330 VALVE GP-RELIEF

S/N: R9H1-UP

PART OF 353-2605 MANIFOLD GP-CONTROL

SMCS-4322, 5069, 5072, 5117 **i02783578**

NOTE	REF NO	GRAPHIC REF	PART NUMBER	QTY	PART NAME 1 2 3 4 5 6 (PRODUCT LEVEL)	SEE PAGE
J	1	1	**161-6149**	1	SEAL-O-RING	
J	2	1	**161-6161**	2	RING-BACKUP	
J	3	1	**2M-9780**	1	SEAL-O-RING	
					AVAILABLE REPAIR KIT(S):	
J			**133-5545**	1	KIT-SEAL (RELIEF VALVE)	
					(INCLUDES SEAL RINGS & BACK-UP RING)	

J-KIT MARKED J INCLUDES PART(S) MARKED J

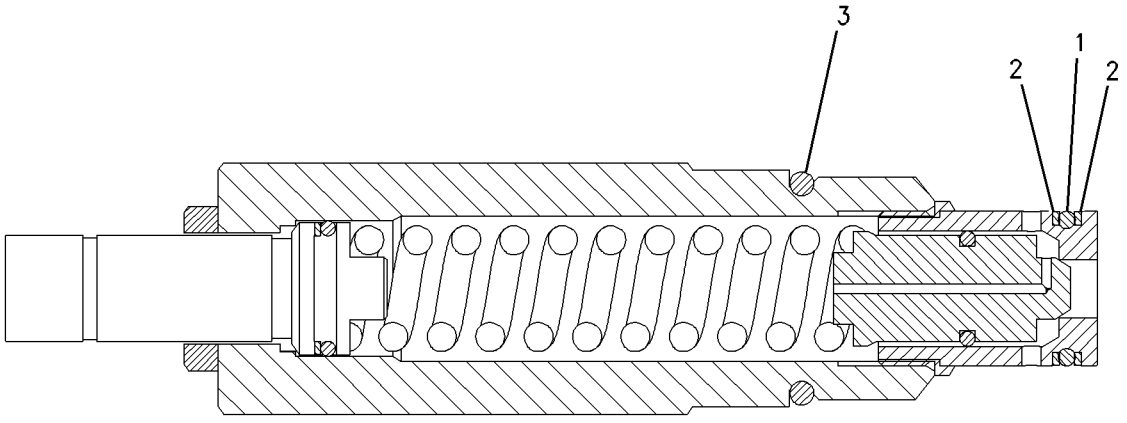

GRAPHIC #1 **<END>** g00705020

HYDRAULIC SYSTEM

251-8330 VALVE GP-RELIEF

S/N: R9H1-UP

PART OF 353-2604 MANIFOLD GP-CONTROL

SMCS-4322, 5069, 5072, 5117 **i02786180**

NOTE	REF NO	GRAPHIC REF	PART NUMBER	QTY	PART NAME 1 2 3 4 5 6 (PRODUCT LEVEL)	SEE PAGE
J	1	1	**2M-9780**	1	SEAL-O-RING	
J	2	1	**161-6149**	1	SEAL-O-RING	
J	3	1	**161-6161**	2	RING-BACKUP	
					AVAILABLE REPAIR KIT(S):	
			133-5545	1	KIT-SEAL (RELIEF VALVE)	
					KIT INCLUDES SEAL-O-RINGS & BACK-UP RINGS	
J-KIT MARKED J INCLUDES PART(S) MARKED J						

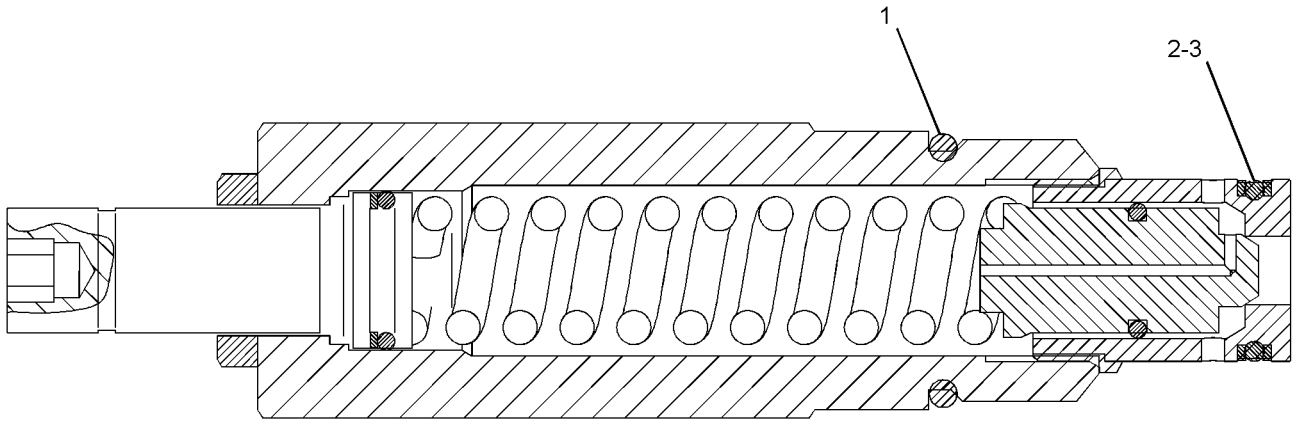

GRAPHIC #1 **<END>** g01113664

257-8414 VALVE GP-SHUTTLE–BRAKE ACCUMULATOR

S/N: R9H1-UP

PART OF 353-2604 MANIFOLD GP-CONTROL

FIELD REPLACEMENT FOR 213-4555 VALVE GP-SHUTTLE

SMCS-5079 **i02179242**

NOTE	REF NO	GRAPHIC REF	PART NUMBER	QTY	PART NAME 1 2 3 4 5 6 (PRODUCT LEVEL)	SEE PAGE
	1	1	**3K-0360**	1	SEAL-O-RING	
	2	1	**161-6149**	1	SEAL-O-RING	
	3	1	**095-1750**	1	SEAL-O-RING	
	4	1	**161-6161**	1	RING-BACKUP	
	5	1	**187-0541**	1	RING-BACKUP	

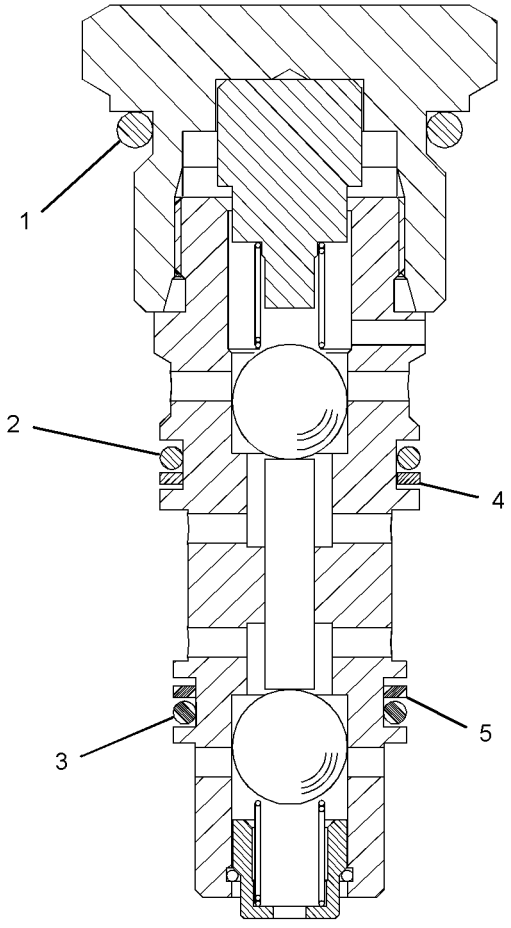

GRAPHIC #1 **<END>** g01104191

152-8346 VALVE GP-SOLENOID

S/N: R9H1-UP
24-VOLT
PART OF 249-6537 LOCK GP-CENTERSHIFT

SMCS-5479 **i03744046**

NOTE	REF NO	GRAPHIC REF	PART NUMBER	QTY	PART NAME 1 2 3 4 5 6 (PRODUCT LEVEL)	SEE PAGE
	1	1	**218-9894**	1	COIL AS (24-VOLT)	
	1A	1	**102-8802**	1	KIT-RECEPTACLE (2-PIN)	
					(INCLUDES RECEPTACLE AS AND WEDGE)	
	1B	1	**8T-8729**	2	PIN-CONNECTOR (16-GA TO 18-GA)	
	1C	1	**1S-9593**	2	STRAP-CABLE	
	2	1	**170-7485**	1	SPOOL AS-VALVE	
	2A	1	**111-0343**	1	LOCKNUT (5/16-18-THD)	
	2B	1	**8C-9987**	1	WASHER (8.3X28X2.5-MM THK)	
					AVAILABLE REPAIR KIT(S):	
			109-3036	1	KIT-SEAL	
					(INCLUDES SEALS & RINGS)	

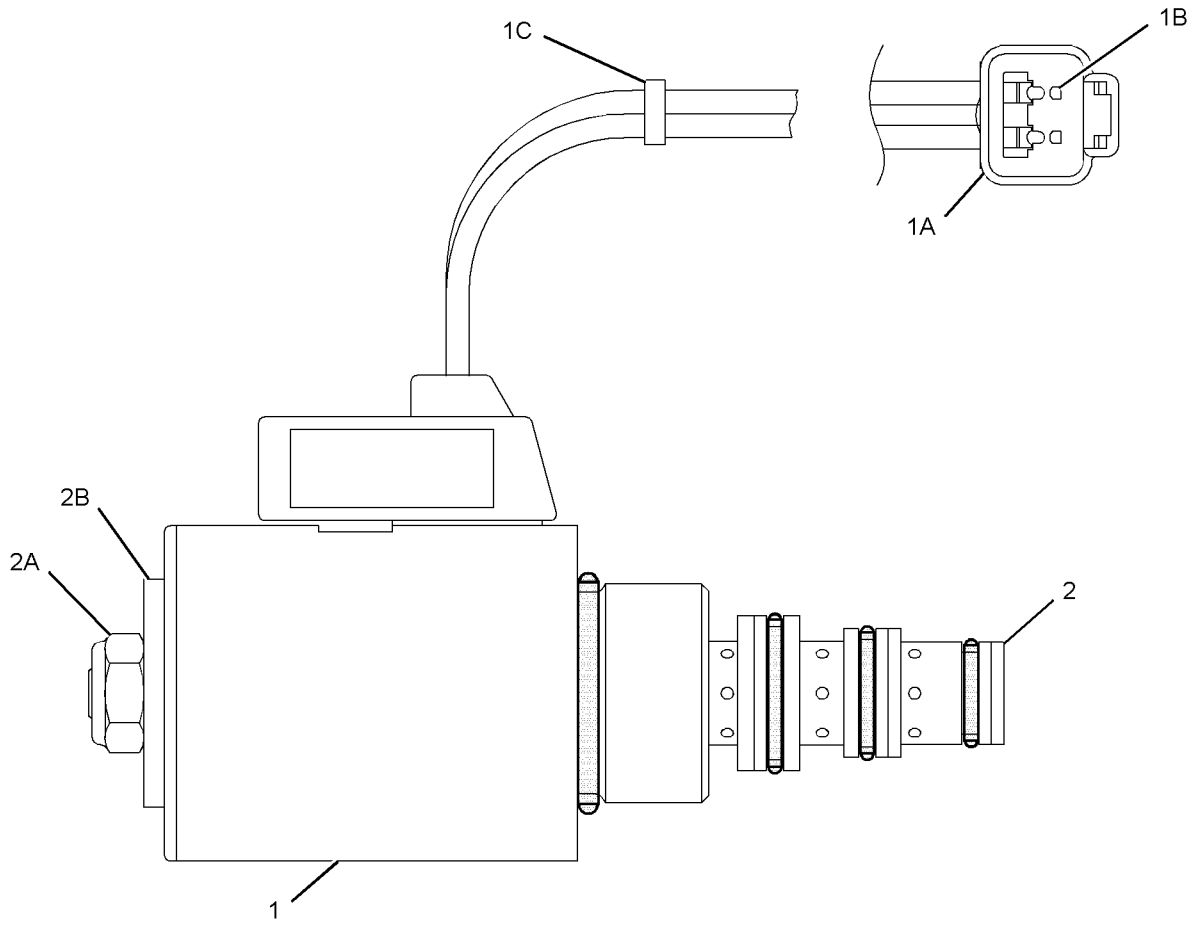

GRAPHIC #1 **<END>** g01965381

HYDRAULIC SYSTEM

189-8627 VALVE GP-SOLENOID

S/N: R9H1-UP
24-VOLT
PART OF 353-2604 MANIFOLD GP-CONTROL

SMCS-5479 **i03621222**

NOTE	REF NO	GRAPHIC REF	PART NUMBER	QTY	PART NAME 1 2 3 4 5 6 (PRODUCT LEVEL)	SEE PAGE
	1	1	**312-8629**	1	COIL AS	
	2	1	**191-9247**	1	WASHER (19.15X31.65X2.36-MM THK)	
	3	1	**198-2914**	1	NUT (3/4-32-THD)	
					PARTS SHOWN IN GRAPHIC(S) WITHOUT A REFERENCE NUMBER ARE NOT SERVICED SEPARATELY	

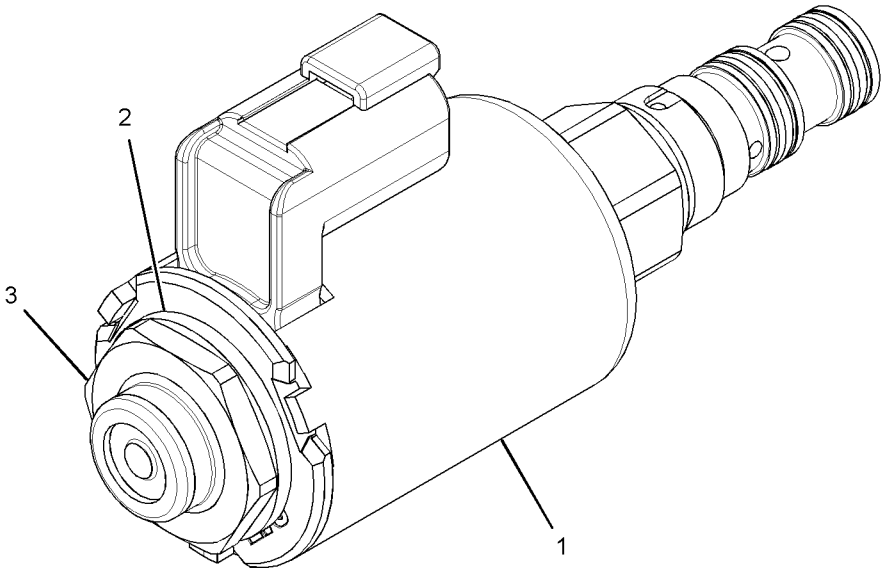

GRAPHIC #1 **<END>** g01947439

HYDRAULIC SYSTEM

278-1799 VALVE GP-SOLENOID

S/N: R9H1-UP

PART OF 259-6896, 259-6903, 259-6907, 259-6909, 259-6910, 259-6912, 259-6913, 259-6914, 259-6915, 261-3268, 261-3270, 261-3271, 290-0594 VALVE GP-CONTROL

AN ATTACHMENT

SMCS-5479 **i02558898**

NOTE	REF NO	GRAPHIC REF	PART NUMBER	QTY	PART NAME 1 2 3 4 5 6 (PRODUCT LEVEL)	SEE PAGE
	1	1	**8C-6711**	1	NUT-RETAINER (1/2-20-THD)	
	2	1	**226-9622**	1	COIL AS-SOLENOID (24-VOLT)	
	3	1	**4K-2039**	1	SEAL-O-RING	
	4	1	**5L-4758**	1	SEAL-O-RING	
	5	1	**6F-4855**	1	SEAL-O-RING	

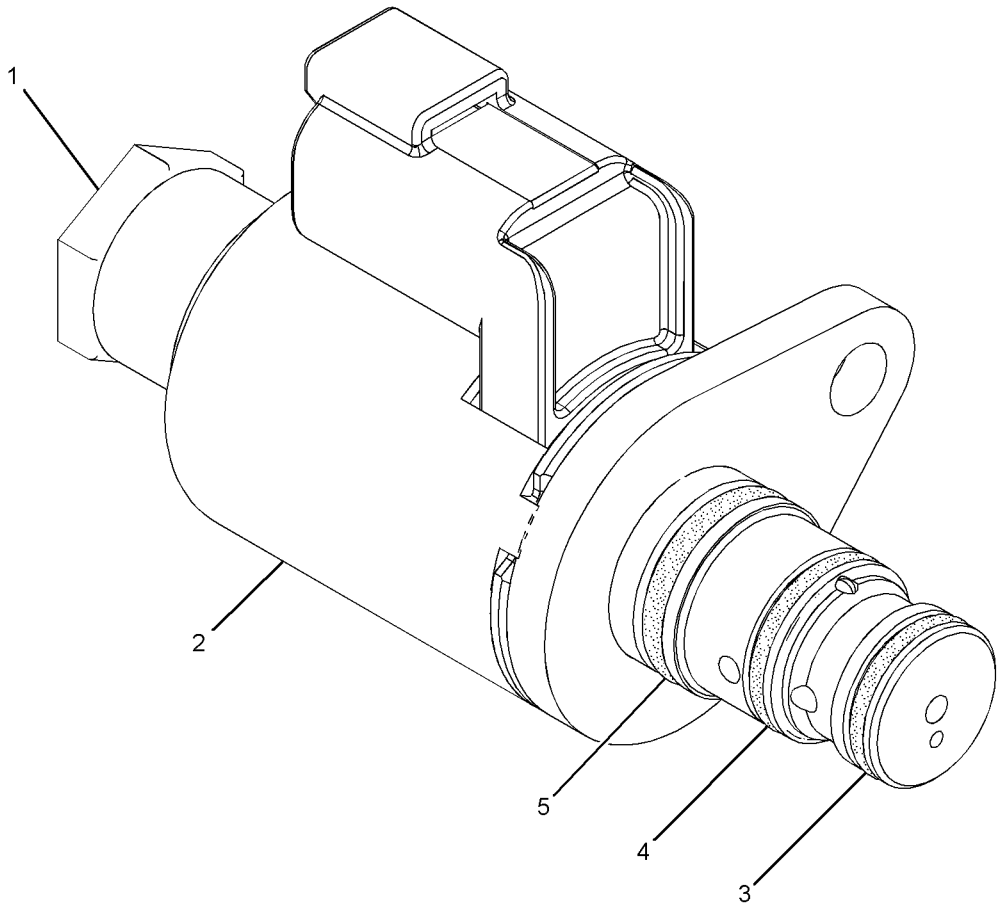

GRAPHIC #1 **<END>** g01281815

279-6521 VALVE GP-SOLENOID & MANIFOLD–BLADE CUSHION

S/N: R9H1-UP
PART OF 277-6005, 366-3384 LINES GP-HYDRAULIC
AN ATTACHMENT

SMCS-5264, 5479 **i03809530**

NOTE	REF NO	GRAPHIC REF	PART NUMBER	QTY	PART NAME 1 2 3 4 5 6 (PRODUCT LEVEL)	SEE PAGE
	1	1	**263-1392**	1	VALVE GP-CHECK	
	2	1	**283-9570**	1	VALVE GP-SOLENOID (BLADE CUSHION)	
		1	**3K-0360**	1	SEAL-O-RING	
		1	**030-6121**	1	RING-BACKUP	
		1	**161-6154**	1	SEAL-O-RING	
		1	**187-8191**	1	COIL AS	
	3	1	**283-9557**	1	VALVE GP-SOLENOID (BLADE CUSHION)	
		1	**250-6148**	1	COIL AS (24-VOLT)	
					PARTS SHOWN IN GRAPHIC(S) WITHOUT A REFERENCE NUMBER ARE NOT SERVICED SEPARATELY	

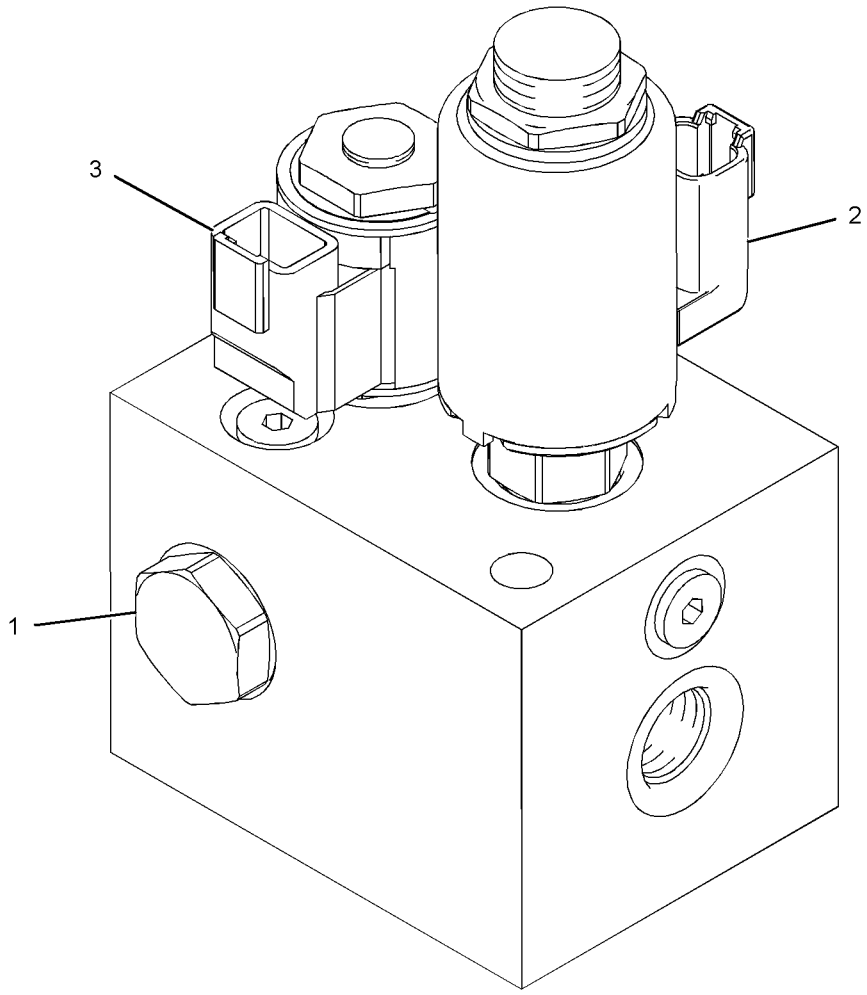

GRAPHIC #1 **<END>** g02064335

IMPLEMENTS

281-4299 CIRCLE & BEAM AS

S/N: R9H1-UP

PART OF 259-4500 CIRCLE GP

SMCS-6153, 6154 **i03768471**

NOTE	REF NO	GRAPHIC REF	PART NUMBER	QTY	PART NAME 1 2 3 4 5 6 (PRODUCT LEVEL)	SEE PAGE
	2	1	**6G-4911**	2	BOSS	
	3	1	**8X-4893**	2	BLOCK	
	5	1	**8X-4895**	1	PLATE	
	6	1	**8X-4897**	1	BEAM-BLADE	
	7	1	**8X-4898**	1	BEAM-BLADE	
	10	1	**256-7143**	1	BRACKET AS	
M		1	**159-9539**	2	NUT-WELD (M6X1-THD)	
	11	1	**281-4297**	1	BRACKET AS	
	12	1	**281-9451**	2	PLATE	
M	14	1	**9C-8895**	1	BOSS-TAPPED (M10X1.5-THD)	
	15	1	**9R-4595**	1	BOSS (M12X1.75X30-MM)	
M	16	1	**9R-9866**	1	BOSS-THREADED (M10X1.5-THD)	

M-METRIC PART

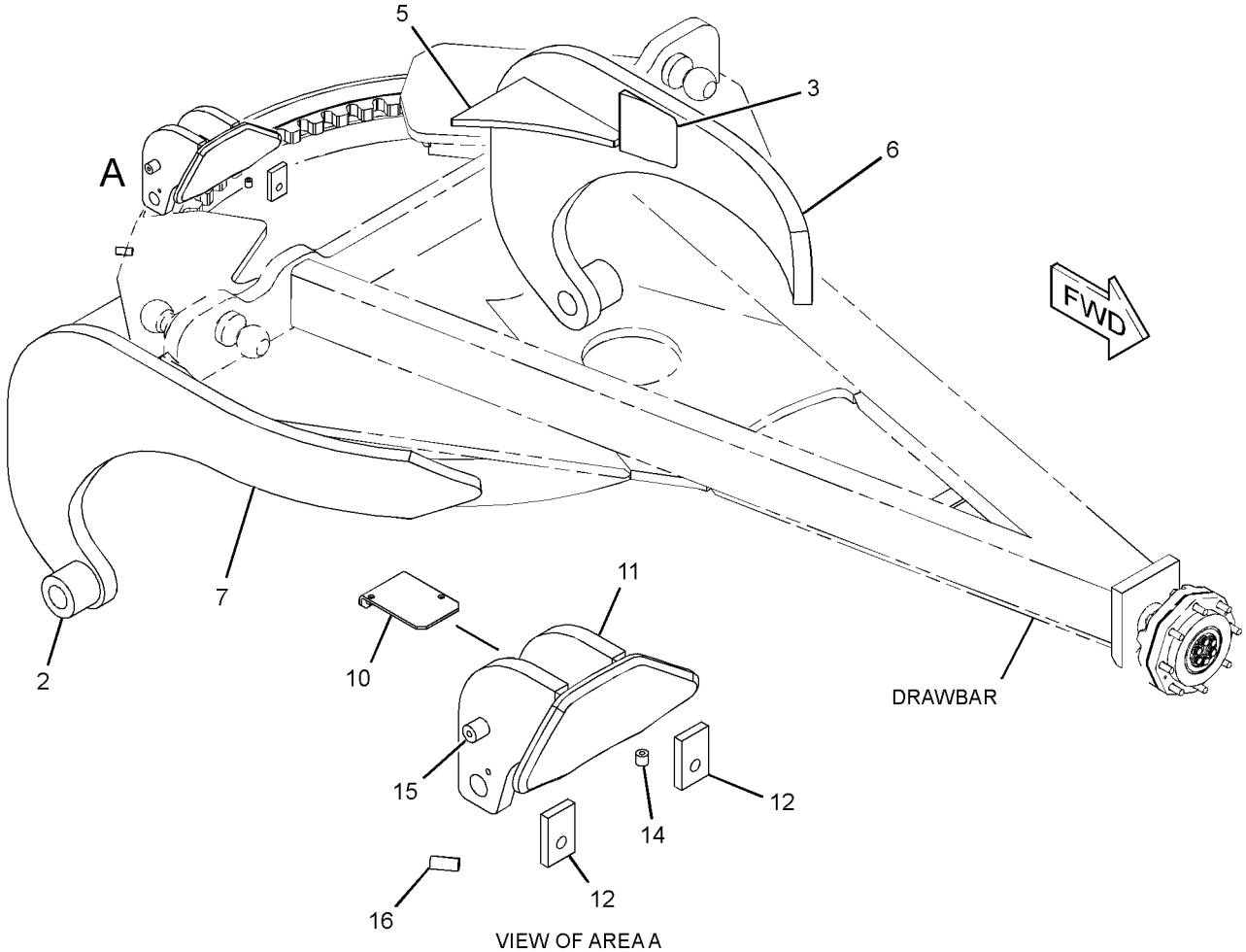

GRAPHIC #1

<END>

g02141266

IMPLEMENTS

259-4500 CIRCLE GP

S/N: R9H1-UP

PART OF 349-2556 COMMON AR

SMCS-6152, 6154, 6155 **i02374132**

NOTE	REF NO	GRAPHIC REF	PART NUMBER	QTY	PART NAME 1 2 3 4 5 6 (PRODUCT LEVEL)	SEE PAGE
	1	1	**6G-4831**	2	SHAFT	
	2	1	**243-6700**	1	BRACKET AS	
	3	1	**252-7089**	2	STRIP-WEAR	
	4	1	**253-4627**	2	STRIP-WEAR	
	5	1	**253-4628**	2	STRIP-WEAR	
	6	1	**253-4629**	4	RETAINER	
	7	1	**253-4635**	2	PLATE AS	
B	8	1	**253-4643**	2	SHIM (2-MM THK)	
	9	1	**269-8248**	4	RETAINER	
Y	10	1	**281-4299**	1	CIRCLE & BEAM AS	700
	11	1	**285-6124**	16	WASHER-HARD (16X35X5-MM THK)	
	12	1	**285-6125**	16	BOLT (M14X2-MM-THD)	
M	13	1	**129-2220**	4	SETSCREW-SOCKET	
	14	1	**4J-1888**	4	PIN-COTTER	
	15	1	**5F-3715**	4	NUT-SLOTTED HEX (2-12-THD)	
M	16	1	**6V-7688**	6	LOCKNUT (M20X2.5-THD)	
	17	1	**7Y-0725**	8	WASHER-HARD (52X92X8-MM THK)	
M	18	1	**8T-8555**	2	SETSCREW-SOCKET (M20X2.5-THD)	
	19	1	**8W-4167**	8	BEARING-SLEEVE	

B-USE AS REQUIRED
M-METRIC PART
Y-SEPARATE ILLUSTRATION

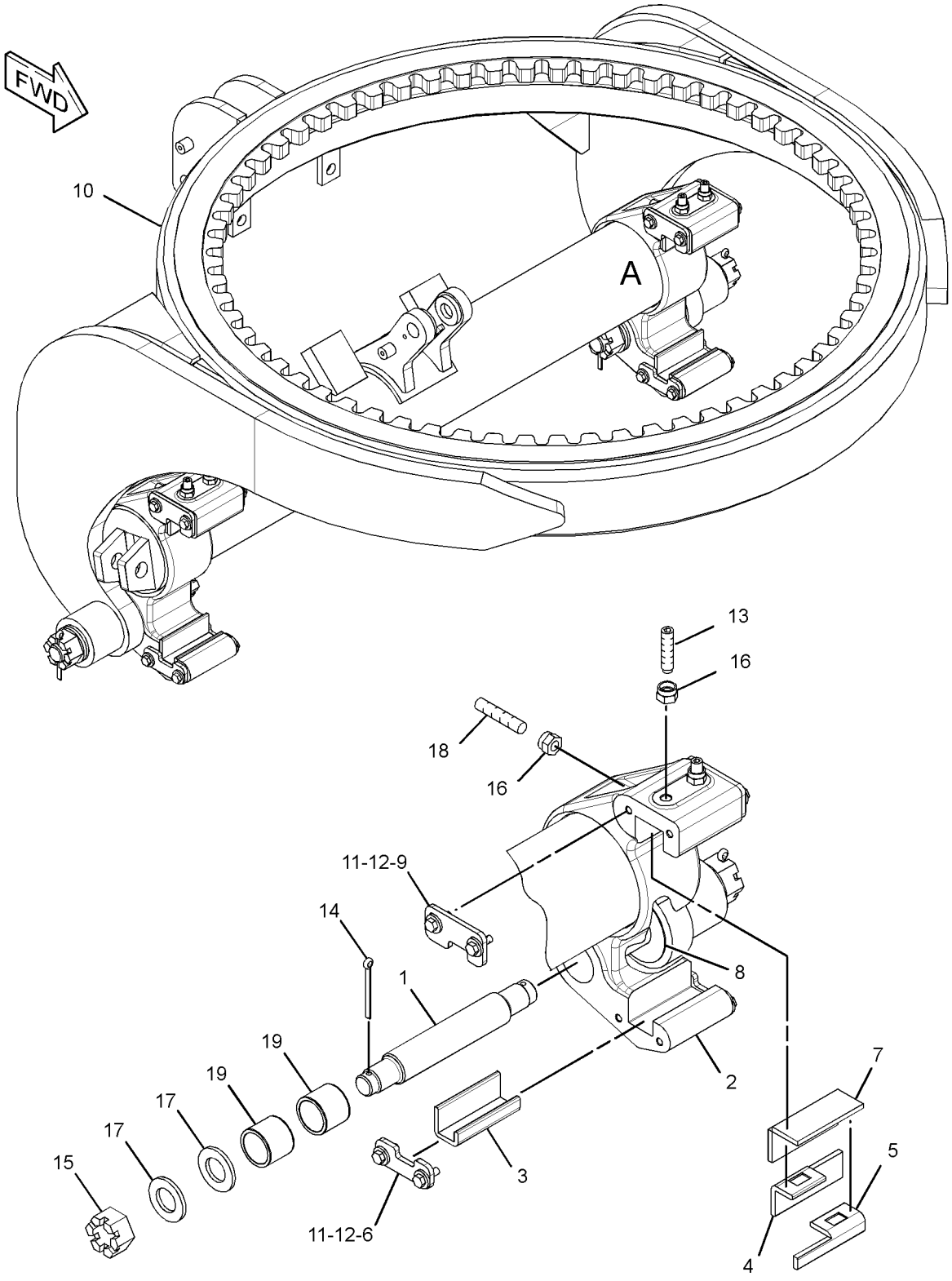

VIEW OF AREA A
(EXPLODED)

GRAPHIC #1 **<END>** g01317357

257-4930 DRAWBAR GP

S/N: R9H1-UP

PART OF 349-2556 COMMON AR

SMCS-6153 **i03935401**

NOTE	REF NO	GRAPHIC REF	PART NUMBER	QTY	PART NAME 1 2 3 4 5 6 (PRODUCT LEVEL)	SEE PAGE
	1	1	**3B-8489**	1	FITTING-GREASE	
	2	1	**6G-4896**	1	BALL	
	3	1	**6K-6444**	2	SPACER (0.906X1.625X1.31-IN THK)	
	4	1	**308-6303**	6	STRIP-WEAR	
	5	1	**268-5743**	2	PLATE	
BC	6	1	**185-7115**	114	SHIM (0.5-MM THK)	
	7	1	**308-6304**	6	SHOE-CIRCLE GUIDE	
	8	1	**257-4931**	1	DRAWBAR AS	
		1	**178-3088**	3	STUD-BALL	
M		1	**8Y-4489**	1	BOSS (M10X1.5-THD)	
M		1	**9C-8895**	3	BOSS-TAPPED (M10X1.5-THD)	
M		1	**9R-2672**	19	BOSS-THREADED (M10X1.5-THD)	
		1	**185-7120**	1	SHAFT AS	
		1	**278-1407**	1	PLATE AS	
M		1	**6V-8224**	2	NUT-WELD (M10X1.5-THD)	
B	9	1	**257-4932**	36	SHIM (0.25-MM THK)	
BC	10	1	**302-6343**	6	PLATE	
C	11	1	**302-6331**	6	STRIP-WEAR	
	12	1	**259-4468**	1	CAP	
	13	1	**259-4469**	1	ADAPTER	
B	14	1	**259-4470**	1	SHIM (0.12-MM THK)	
B	15	1	**259-4471**	3	SHIM (0.25-MM THK)	
B	16	1	**259-4472**	3	SHIM (0.76-MM THK)	
B	17	1	**259-4473**	2	SHIM (1.52-MM THK)	
	18	1	**278-1415**	2	PLATE	
	19	1	**283-1578**	20	WASHER-HARD (22X45X10-MM THK)	
	20	1	**288-3717**	18	WASHER-HARD (26X52X6-MM THK)	
	21	1	**292-5889**	12	SETSCREW (1-8X3.25-IN)	
	22	1	**292-9277**	4	WASHER-HARD (26X40X8-MM THK)	
M	23	1	**106-4175**	22	BOLT (M20X2.5X60-MM)	
M	24	1	**112-3926**	8	BOLT (M20X2.5X110-MM)	
M	25	1	**112-3928**	18	BOLT (M24X3X130-MM)	
M	26	1	**116-2434**	4	BOLT (M24X3X170-MM)	
	27	1	**267-3506**	4	WASHER-HARD (26X44X4-MM THK)	
	28	1	**267-3508**	8	WASHER-HARD (22X35X3.5-MM THK)	
M	29	1	**268-8262**	4	NUT (M24X3-THD)	
	30	1	**1D-6306**	12	NUT (1-8-THD)	
M	31	1	**8T-1160**	2	BOLT-SOCKET HEAD (M10X1.5X50-MM)	
	32	1	**9S-8892**	6	BOLT-12 POINT HEAD (3/4-16X3.5-IN)	
BC	33	1	**302-6333**	6	PLATE	

B-USE AS REQUIRED
C-CHANGE FROM PREVIOUS TYPE
M-METRIC PART

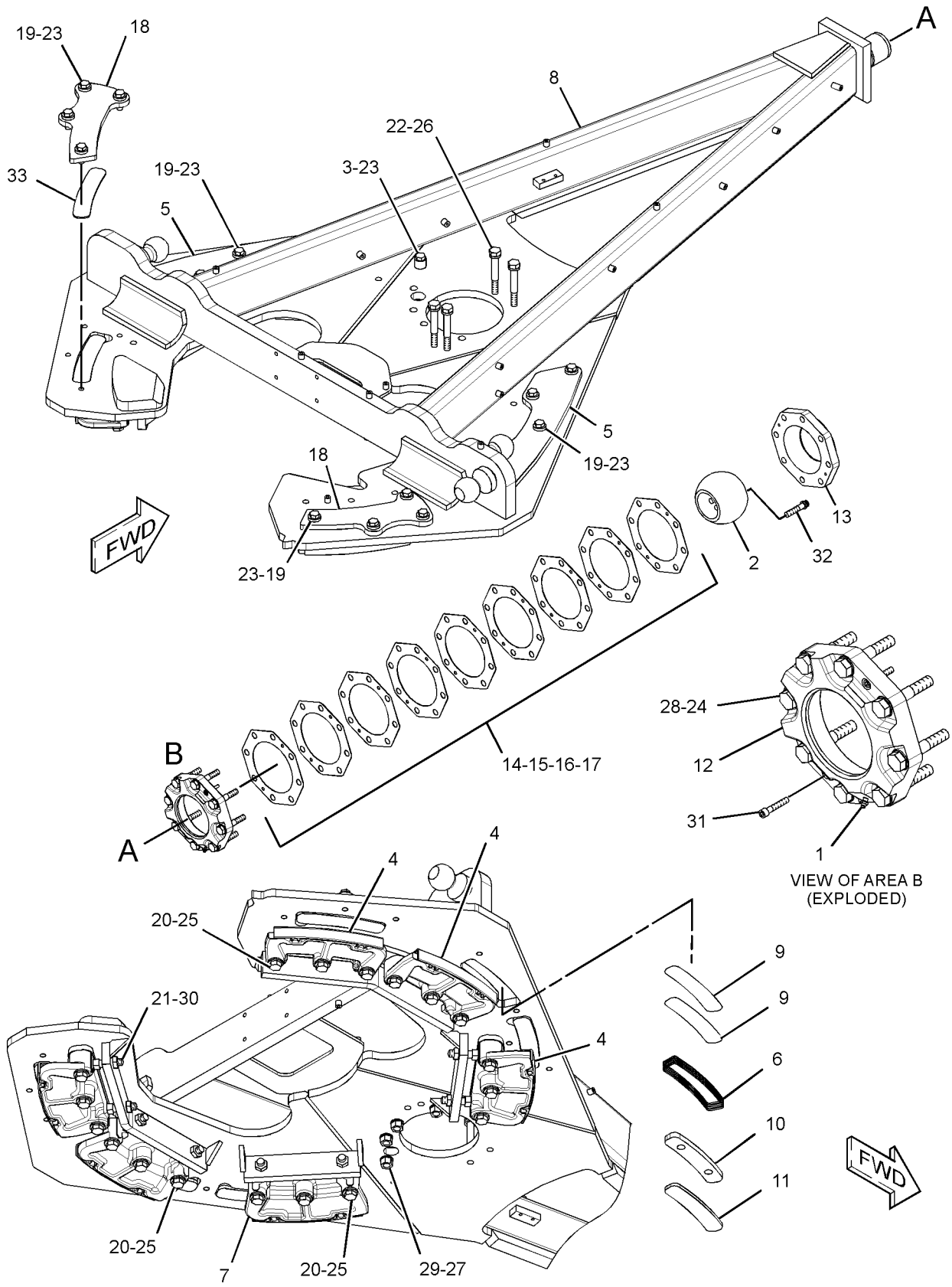

GRAPHIC #1 **<END>** g01435214

265-6738 PLATE GP-PUSH

S/N: R9H1-UP
PART OF 352-3819 OPTION AR-WORK TOOL
AN ATTACHMENT

SMCS-6077 **i02386835**

NOTE	REF NO	GRAPHIC REF	PART NUMBER	QTY	PART NAME 1 2 3 4 5 6 (PRODUCT LEVEL)	SEE PAGE
	1	1	**265-6737**	1	PLATE AS	
		1	**5J-7333**	2	HOOK	
M	2	1	**112-3928**	10	BOLT (M24X3X130-MM)	
	3	1	**267-3507**	20	WASHER-HARD (26X47X12-MM THK)	
M	4	1	**268-8262**	10	NUT (M24X3-THD)	

M-METRIC PART

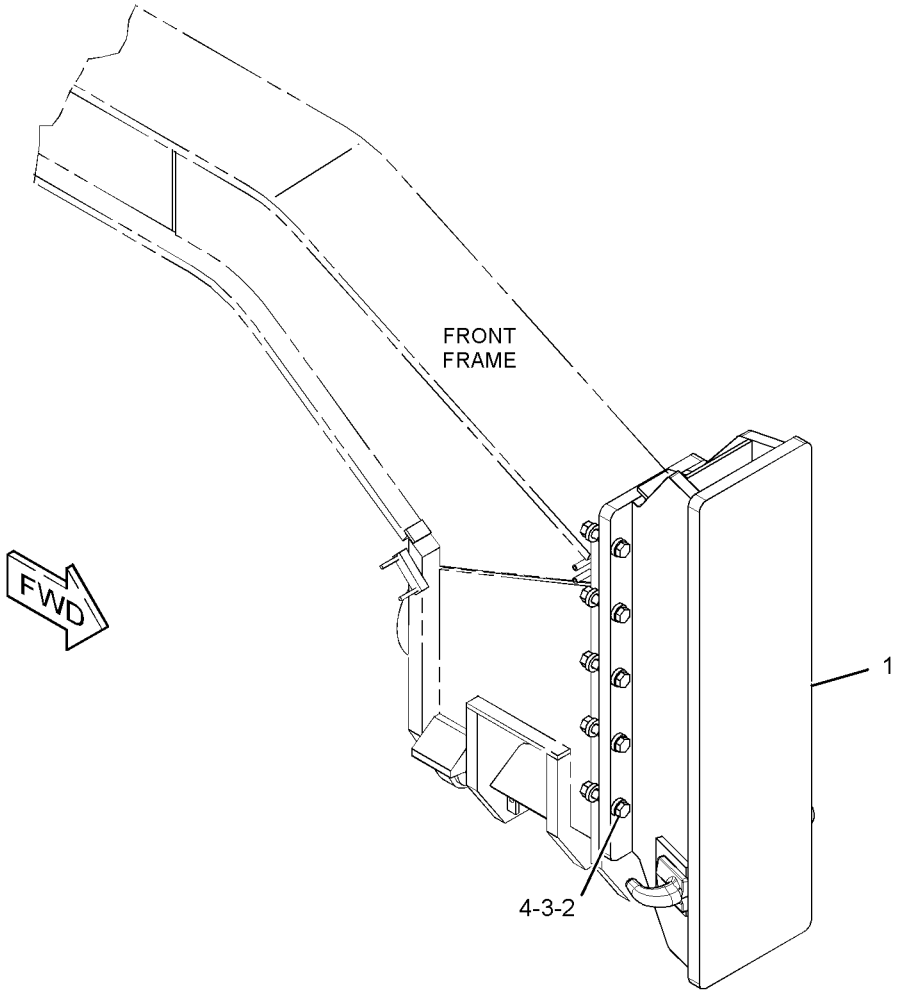

GRAPHIC #1 **<END>** g01313888

OPERATOR STATION

274-1525 AIR CONDITIONER & MOUNTING GP

S/N: R9H1-UP

PART OF 267-5033 AIR CONDITIONER GP

SMCS-7320 **i03112963**

NOTE	REF NO	GRAPHIC REF	PART NUMBER	QTY	PART NAME 1 2 3 4 5 6 (PRODUCT LEVEL)	SEE PAGE
	1	1	**249-0410**	2	GASKET	
	2	1	**249-0411**	1	GASKET	
	3	1	**249-0937**	1	DUCT	
Y	4	1	**263-2555**	1	AIR CONDITIONER GP	707
	5	1	**265-7454**	1	GASKET	
	6	1	**266-3753**	2	SPACER (11X25X39.8-MM)	
	7	1	**267-5032**	2	FITTING-DRAIN	
	8	1	**118-5619**	2	SCREW-FLAT HEAD (6-20X1-IN)	
	9	1	**145-6669**	2	SCREW-SELF-TAPPING (10X0.75-IN)	
	10	1	**8T-4121**	4	WASHER-HARD (11X21X2.5-MM THK)	
M	11	1	**8T-4172**	2	BOLT (M10X1.5X80-MM)	
M	12	1	**8T-4196**	2	BOLT (M10X1.5X35-MM)	
D	13	1	**5P-5637**		SEAL (0.5-M)	
D	14	1	**5P-5927**		SEAL (0.44-M)	
D	14A	1	**5P-5927**		SEAL (0.23-M EACH)	
D	14B	1	**5P-5927**		SEAL (0.37-M)	
	15	1	**5P-5643**		SEAL (0.5-M)	

D-ORDER BY THE METER
M-METRIC PART
Y-SEPARATE ILLUSTRATION

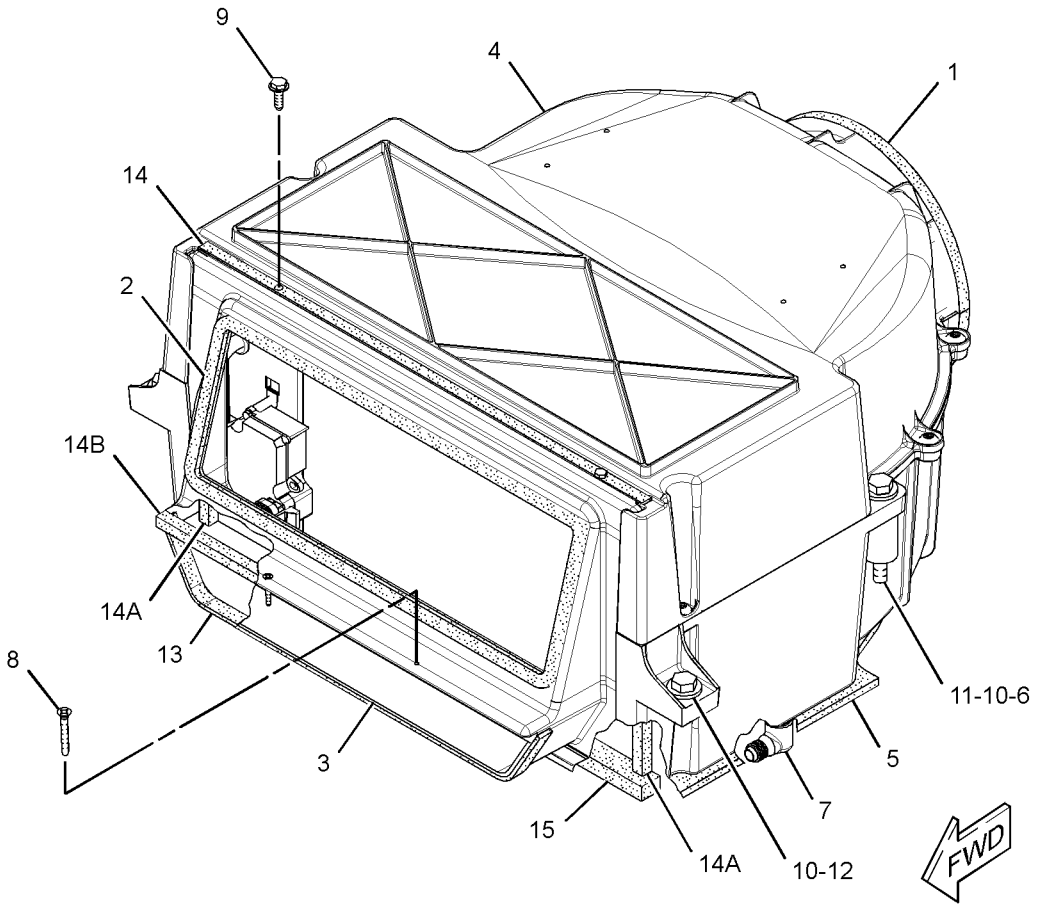

GRAPHIC #1 **<END>** g01434407

OPERATOR STATION

263-2555 AIR CONDITIONER GP

S/N: R9H1-UP

PART OF 274-1525 AIR CONDITIONER & MOUNTING GP

SMCS-7320 **i03789414**

NOTE	REF NO	GRAPHIC REF	PART NUMBER	QTY	PART NAME 1 2 3 4 5 6 (PRODUCT LEVEL)	SEE PAGE
	1	1	**3E-5464**	1	THERMOSTAT (HVAC) (REFRIGERANT)	
	2	1	**6T-6708**	2	WASHER (7X28.6X4.1-MM THK)	
	3	1	**125-9740**	1	RESISTOR	
C	4	1	**133-9012**	2	FUSE (15-AMPERE)	
	5	1	**249-0938**	1	CASE	
	6	1	**263-2553**	1	CASE AS	
	7	1	**263-9466**	1	PLATE	
	8	1	**265-7434**	1	SEAL	
	9	1	**265-7435**	1	GASKET	
C	10	1	**273-0338**	1	PLUG	
C	11	1	**273-0339**	1	PLUG	
	12	1	**276-9015**	1	HARNESS AS-MOTOR (HVAC)	
		1	**177-9645**	1	KIT-RECEPTACLE (2-PIN)	
		1	**102-8806**	1	KIT-RECEPTACLE (8-PIN)	
					(EACH KIT INCLUDES RECEPTACLE AS & WEDGE)	
		1	**7T-0093**	2	PIN-CONNECTOR (12-GA TO 14-GA)	
		1	**8T-8729**	4	PIN-CONNECTOR (16-GA TO 18-GA)	
		1	**8T-8737**	1	PLUG-SEAL	
		1	**9W-0852**	3	PIN-CONNECTOR (14-GA TO 16-GA)	
		1	**100-6674**	3	SEAL-CONNECTOR	
		1	**118-5125**	1	CLIP	
E		1	**119-3662**		TUBE-HEAT SHRINK (10.85-MM DIA) (7-CM)	
E		1	**125-7875**		TUBE-HEAT SHRINK (7.44-MM DIA) (5-CM)	
		1	**5P-5618**	3	TERMINAL-BLADE (10-GA TO 12-GA)	
		1	**5P-4571**	5	TERMINAL-BLADE (14-GA TO 16-GA)	
		1	**2L-8067**	2	TERMINAL-RING (10-GA TO 12-GA, 1/4-IN SCREW)	
Y	13	1	*278-1154*	1	COIL GP-EVAPORATOR & HEATER	716
	14	1	**278-3354**	1	FILM-INSTRUCTION (HVAC WATER, DRAINING, FILLING)	
C	15	1	**322-6674**	1	PLATE	
C	16	1	**322-6675**	1	PLATE	
C	17	1	**324-6125**	1	FAN & MOTOR AS (24-VOLT, A/C, HEATER)	
		1	**1F-7958**	1	NUT-FULL (1/2-13-THD)	
C	18	1	**328-8755**	1	WIRE AS	
CM	19	1	**129-3178**	5	LOCKNUT (M6X1-THD)	
C	20	1	**132-5793**	2	SCREW-WASHER HD (4-40X0.25-IN)	
M	21	1	**141-9784**	1	BOLT (M6X1X190-MM)	
	22	1	**5P-8524**	1	GROMMET	
	23	1	**6L-7159**	2	SCREW-MACHINE (8-32X0.313-IN)	
	24	1	**6V-1668**	2	WASHER (6.5X29.1X3-MM THK)	
C	25	1	**8T-4205**	10	WASHER-HARD (7.2X14.5X2-MM THK)	
	26	1	**9X-2038**	4	WASHER (7X19X2-MM THK)	
CM	27	1	**9X-2044**	14	SCREW-TRUSS HEAD (M6X1X16-MM)	
D	28	1	**5P-7070**		INSULATION-STRIP (0.2-M EACH)	

C-CHANGE FROM PREVIOUS TYPE
D-ORDER BY THE METER
E-ORDER BY THE CENTIMETER
M-METRIC PART
Y-SEPARATE ILLUSTRATION

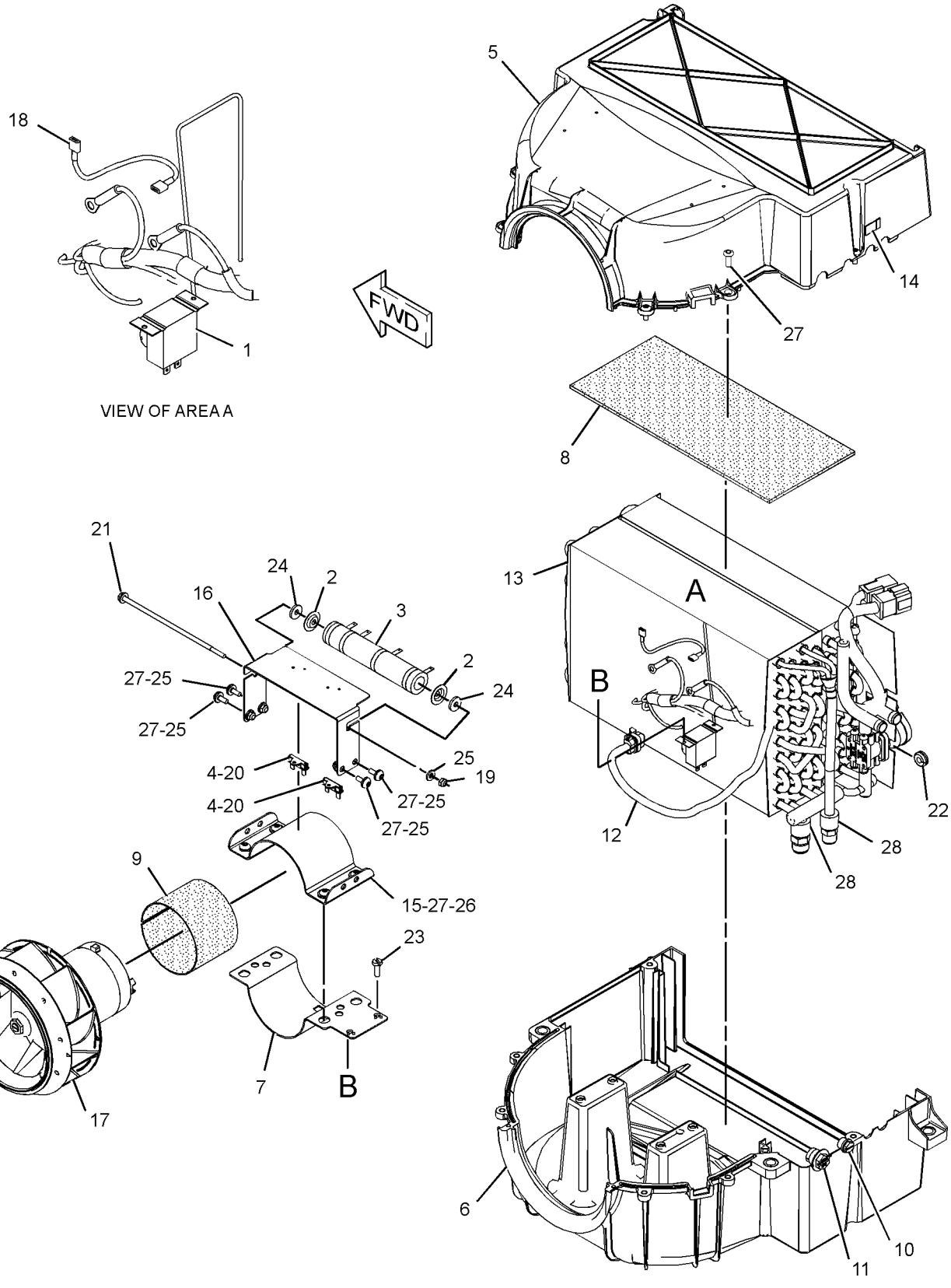

GRAPHIC #1 **<END>** g02105014

OPERATOR STATION

267-5033 AIR CONDITIONER GP

S/N: R9H1-UP

PART OF 233-3107 CAB AR

SMCS-7320 **i04010769**

NOTE	REF NO	GRAPHIC REF	PART NUMBER	QTY	PART NAME 1 2 3 4 5 6 (PRODUCT LEVEL)	SEE PAGE
Y	1	1	*274-1525*	1	AIR CONDITIONER & MOUNTING GP	706
C	2	1	*300-4231*	1	CONTROL GP-AIR & TEMPERATURE (AIR CONDITIONER)	
M		1	**9X-2045**	2	SCREW-TRUSS HEAD (M6X1X20-MM)	
		1	**248-4220**	1	PANEL AS (AIR CONDITIONER, HEATER CONT)	
		1	**271-7312**	1	KNOB (TEMPERATURE CONTROL)	
		1	**285-7415**	1	KNOB (BLOWER FAN SPEED)	
		1	**284-3662**	1	SWITCH AS-ROCKER (24-VOLT)	
Y	3	1	*244-2701*	1	DUCT & FILTER GP-CAB AIR	739
Y	4	1	*267-5034*	1	AIR CONDITIONER GP	710
Y	5	1	*273-1878*	1	LINES GP-HEATER	750

C-CHANGE FROM PREVIOUS TYPE
M-METRIC PART
Y-SEPARATE ILLUSTRATION

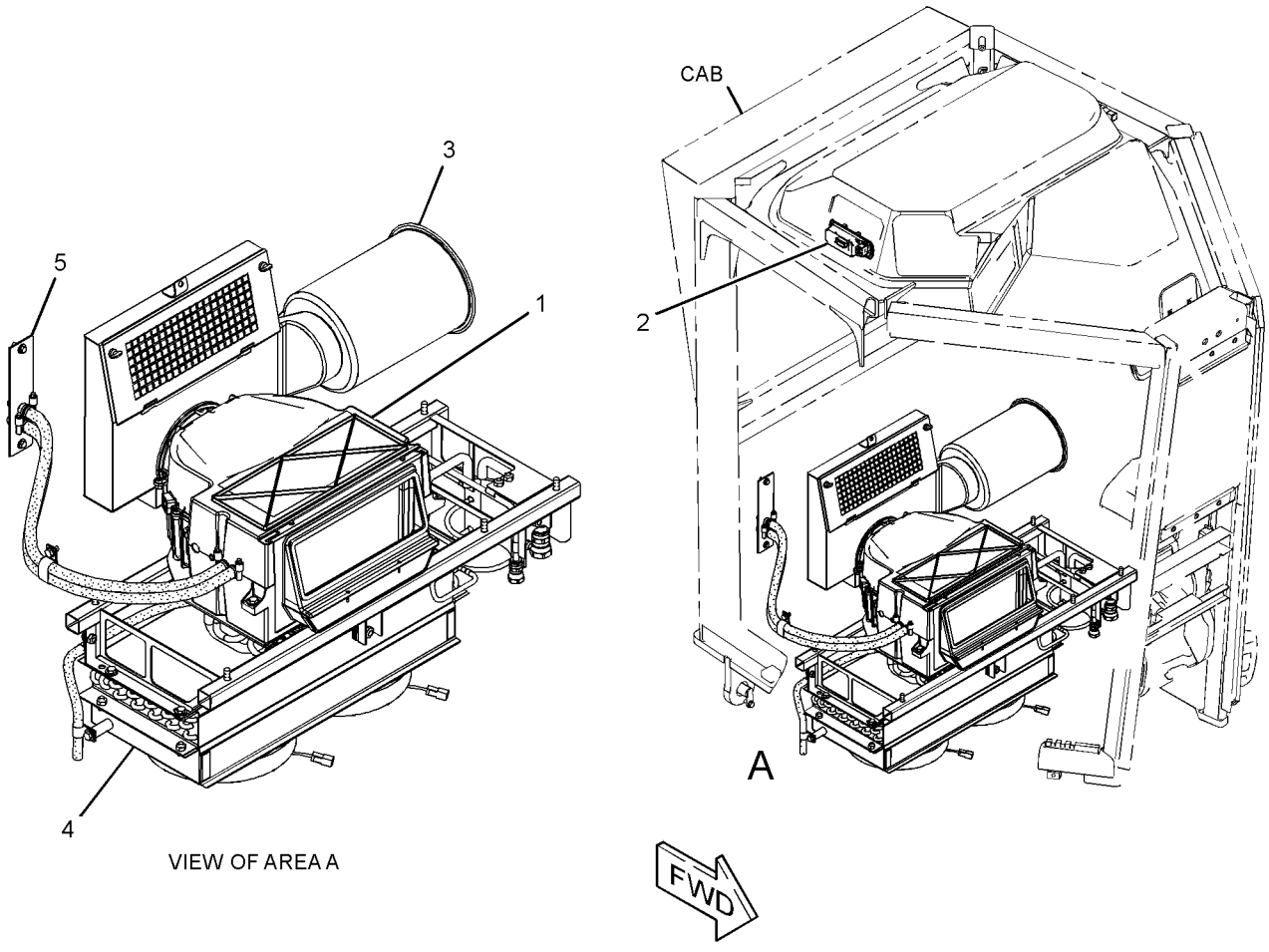

VIEW OF AREA A

GRAPHIC #1 **<END>** g02215334

OPERATOR STATION

267-5034 AIR CONDITIONER GP

S/N: R9H1-UP

PART OF 267-5033 AIR CONDITIONER GP

SMCS-7320 **i02890391**

NOTE	REF NO	GRAPHIC REF	PART NUMBER	QTY	PART NAME 1 2 3 4 5 6 (PRODUCT LEVEL)	SEE PAGE
	1	1	**5D-1026**	2	CLAMP-BAND	
Y	2	1	**274-1527**	1	AIR CONDITIONER GP	711
	3	1	**1S-0994**	2	CLIP	
M	4	1	**8T-4192**	6	BOLT (M12X1.75X25-MM)	
	5	1	**8T-4223**	6	WASHER-HARD (13.5X25.5X3-MM THK)	
	6	1	**9X-7381**	1	SEAL-O-RING	
	7	1	**9X-7382**	1	SEAL-O-RING	
E	8	1	**9X-2133**		HOSE (50-CM EACH)	

E-ORDER BY THE CENTIMETER
M-METRIC PART
Y-SEPARATE ILLUSTRATION

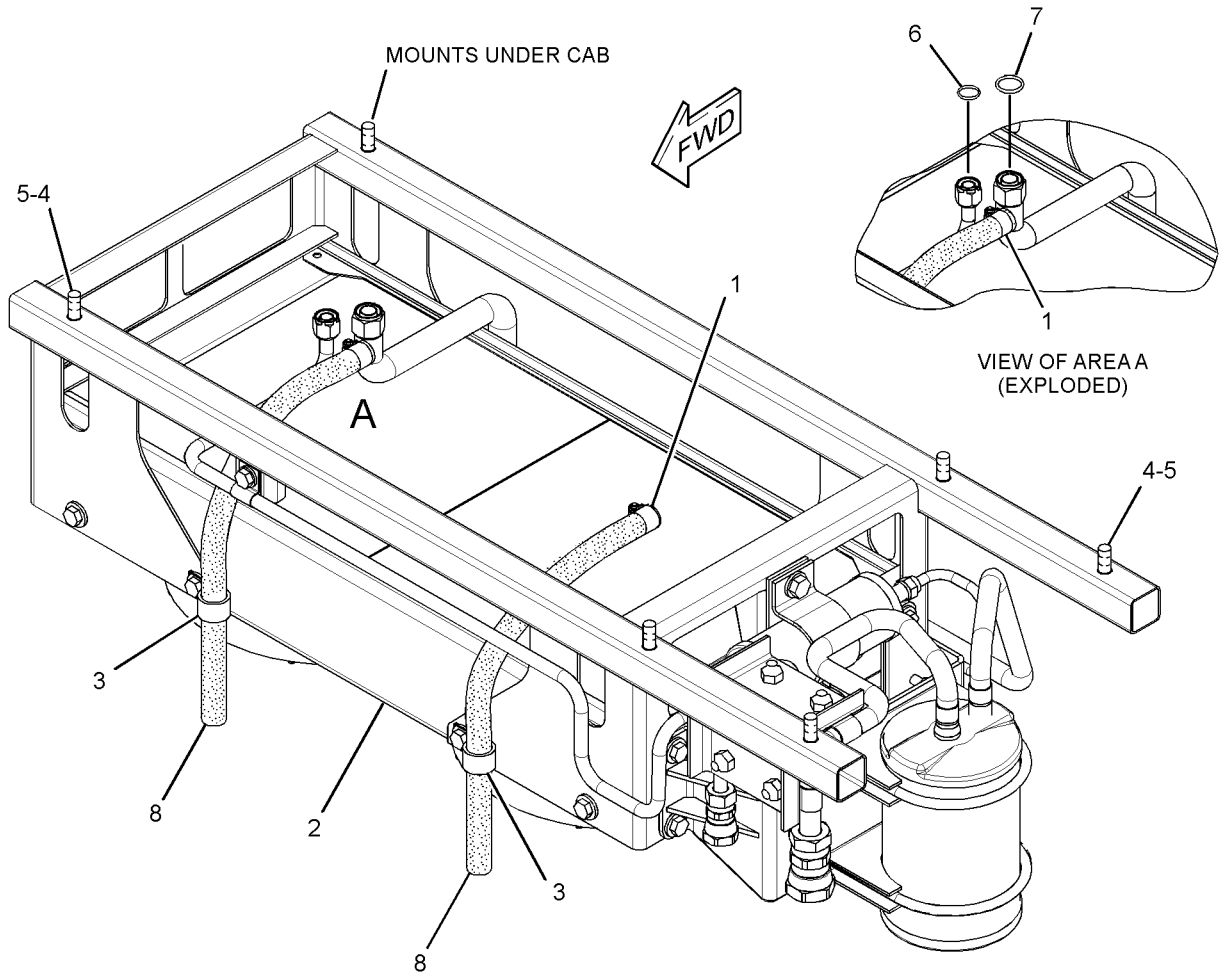

GRAPHIC #1 **<END>** g01342486

OPERATOR STATION

274-1527 AIR CONDITIONER GP

S/N: R9H1-UP

PART OF 267-5034 AIR CONDITIONER GP

SMCS-7320 **i02886658**

NOTE	REF NO	GRAPHIC REF	PART NUMBER	QTY	PART NAME 1 2 3 4 5 6 (PRODUCT LEVEL)	SEE PAGE
	1	1	**5P-3929**	1	COUPLING AS-REFRIGERANT	
		1	**8F-9206**	1	SEAL-O-RING	
		1	**107-4397**	1	VALVE AS (LOW SIDE)	
	2	1	**5P-3948**	1	COUPLING AS-REFRIGERANT	
		1	**7F-8607**	1	SEAL-O-RING	
		1	**107-4399**	1	VALVE AS (HIGH SIDE)	
	3	1	**6U-5219**	2	U-CLAMP AS	
					(EACH INCLUDES)	
		1	**5P-1075**	2	WASHER-HARD (10.2X22.5X3-MM THK)	
		1	**6V-8801**	2	NUT (3/8-16-THD)	
	4	1	**166-5816**	2	FAN AS (5-BLADE)	
	5	1	**257-3227**	1	DRYER AS-REFRIGERANT	
		1	**189-1707**	1	ORIFICE AS-AIR CONDITIONER	
	6	1	**273-0942**	1	ACCUMULATOR-REFRIGERANT	
	7	1	**274-1522**	1	ADAPTER	
	8	1	**274-1523**	1	ADAPTER	
	9	1	**283-0597**	1	TUBE AS	
	10	1	**283-0599**	1	BRACKET AS	
	11	1	**283-0600**	1	SUPPORT AS	
M		1	**8T-3490**	8	NUT-WELD (M10X1.5-THD)	
	12	1	**283-0601**	1	COVER AS	
M		1	**6V-9632**	14	NUT-WELD (M6X1-THD)	
M		1	**8T-3490**	12	NUT-WELD (M10X1.5-THD)	
	13	1	**283-0602**	1	CONDENSER AS-REFRIGERANT	
	14	1	**1F-7567**	1	CLIP	
	15	1	**3P-9847**	1	CLIP	
	16	1	**4B-0418**	3	CLIP	
	17	1	**5K-9660**	4	CLIP	
	18	1	**7X-7729**	14	WASHER (11X25X3-MM THK)	
	19	1	**8T-4121**	6	WASHER-HARD (11X21X2.5-MM THK)	
M	20	1	**8T-4136**	20	BOLT (M10X1.5X25-MM)	
M	21	1	**8T-4138**	13	BOLT (M6X1X20-MM)	
	22	1	**9X-7381**	1	SEAL-O-RING	
	23	1	**9X-7382**	1	SEAL-O-RING	
	24	1	**9X-7383**	1	SEAL-O-RING	
	25	1	**9X-7384**	1	SEAL-O-RING	
	26	1	**9X-8256**	13	WASHER (6.6X12X2-MM THK)	
D	27	1	**5P-7070**		INSULATION-STRIP (0.5-M)	
D	27A	1	**5P-7070**		INSULATION-STRIP (0.6-M)	
					AVAILABLE REPAIR KIT(S):	
			283-0598	1	KIT-TUBE (AIR CONDITIONER)	
					(INCLUDES COPPER TUBES, & FITTINGS)	

D-ORDER BY THE METER
M-METRIC PART

274-1527 AIR CONDITIONER GP *(contd.)* i02886658

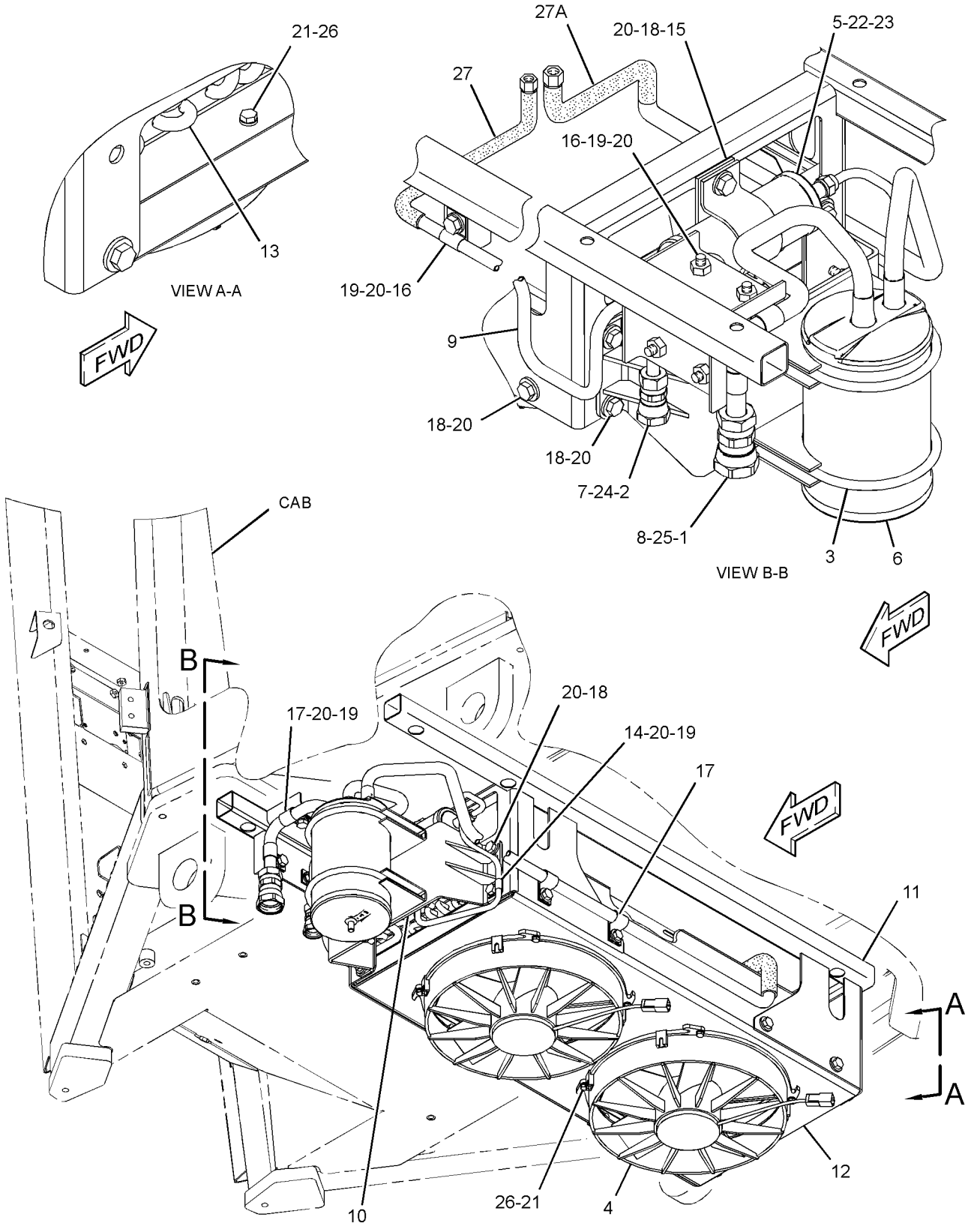

GRAPHIC #1 **<END>** g01631976

OPERATOR STATION

292-0609 ARMREST GP–RH

S/N: R9H1-UP

PART OF 342-8961 SUPPORT GP-CONTROL

SMCS-7307 **i03001760**

NOTE	REF NO	GRAPHIC REF	PART NUMBER	QTY	PART NAME 1 2 3 4 5 6 (PRODUCT LEVEL)	SEE PAGE
	1	1	**233-3278**	1	BRACKET AS (RH)	
M		1	**6V-9632**	2	NUT-WELD (M6X1-THD)	
	2	1	**253-8868**	1	PIN-SPRING	
	3	1	**283-7980**	1	CUSHION AS	
M	4	1	**3E-8020**	4	SCREW-TRUSS HEAD (M6X1X25-MM)	
	5	1	**122-7666**	1	SPRING	
	6	1	**8C-8430**	1	SETSCREW-SOCKET (NO 10X0.95-IN)	
	7	1	**292-0611**	2	BUSHING	
	8	1	**292-0612**	1	BUSHING	
	9	1	**292-0614**	1	ROD	
	10	1	**292-0618**	1	KNOB	

M-METRIC PART

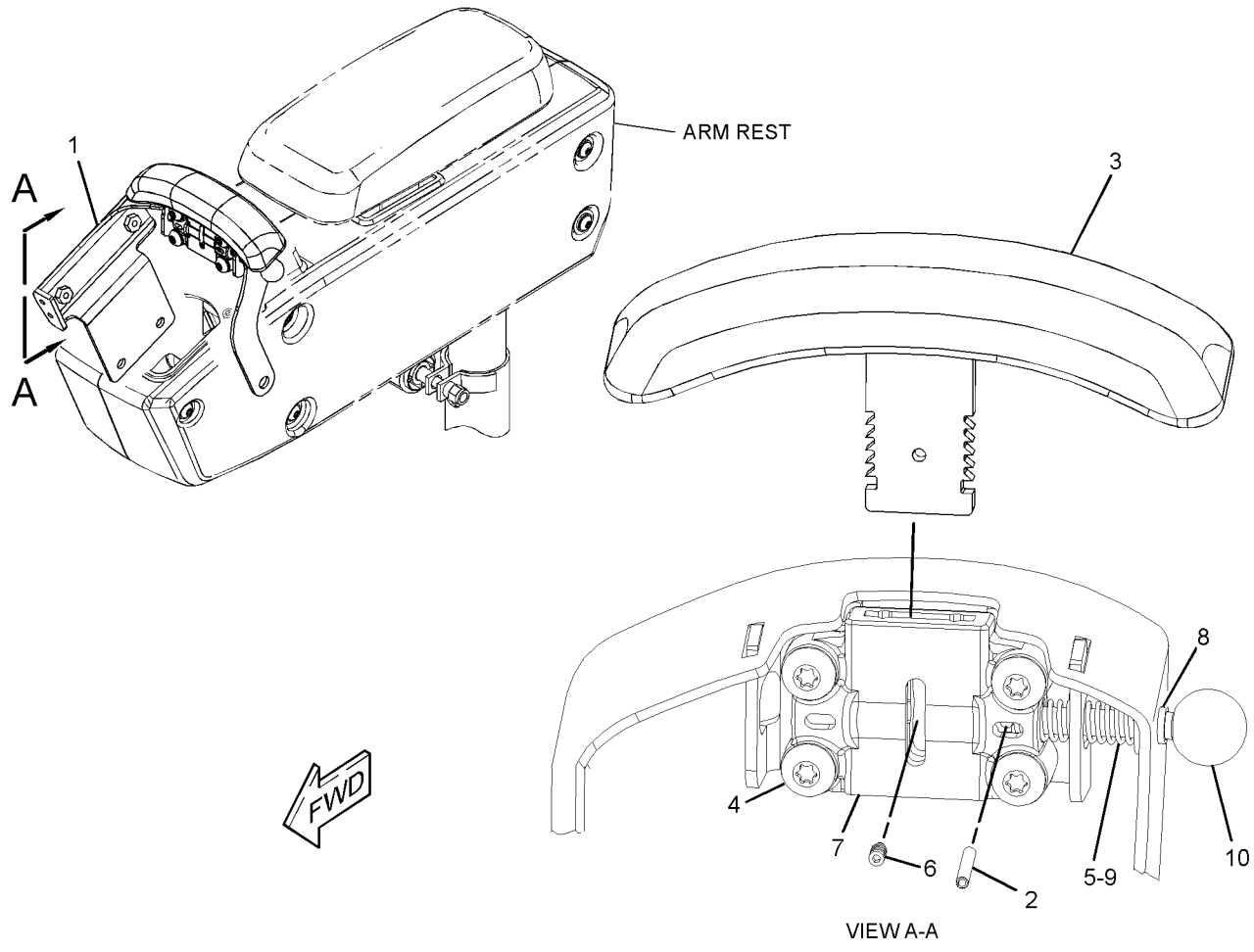

GRAPHIC #1 **<END>** g01391688

OPERATOR STATION

292-0617 ARMREST GP–LH

S/N: R9H1-UP

PART OF 342-8961 SUPPORT GP-CONTROL

SMCS-7307 **i03001749**

NOTE	REF NO	GRAPHIC REF	PART NUMBER	QTY	PART NAME 1 2 3 4 5 6 (PRODUCT LEVEL)	SEE PAGE
	1	1	**233-3277**	1	BRACKET AS (LH)	
M		1	**6V-9632**	2	NUT-WELD (M6X1-THD)	
	2	1	**253-8868**	1	PIN-SPRING	
	3	1	**283-7980**	1	CUSHION AS	
M	4	1	**3E-8020**	4	SCREW-TRUSS HEAD (M6X1X25-MM)	
	5	1	**8C-8430**	1	SETSCREW-SOCKET (NO 10X0.95-IN)	
	6	1	**122-7666**	1	SPRING	
	7	1	**292-0611**	2	BUSHING	
	8	1	**292-0612**	1	BUSHING	
	9	1	**292-0614**	1	ROD	
	10	1	**292-0618**	1	KNOB	

M-METRIC PART

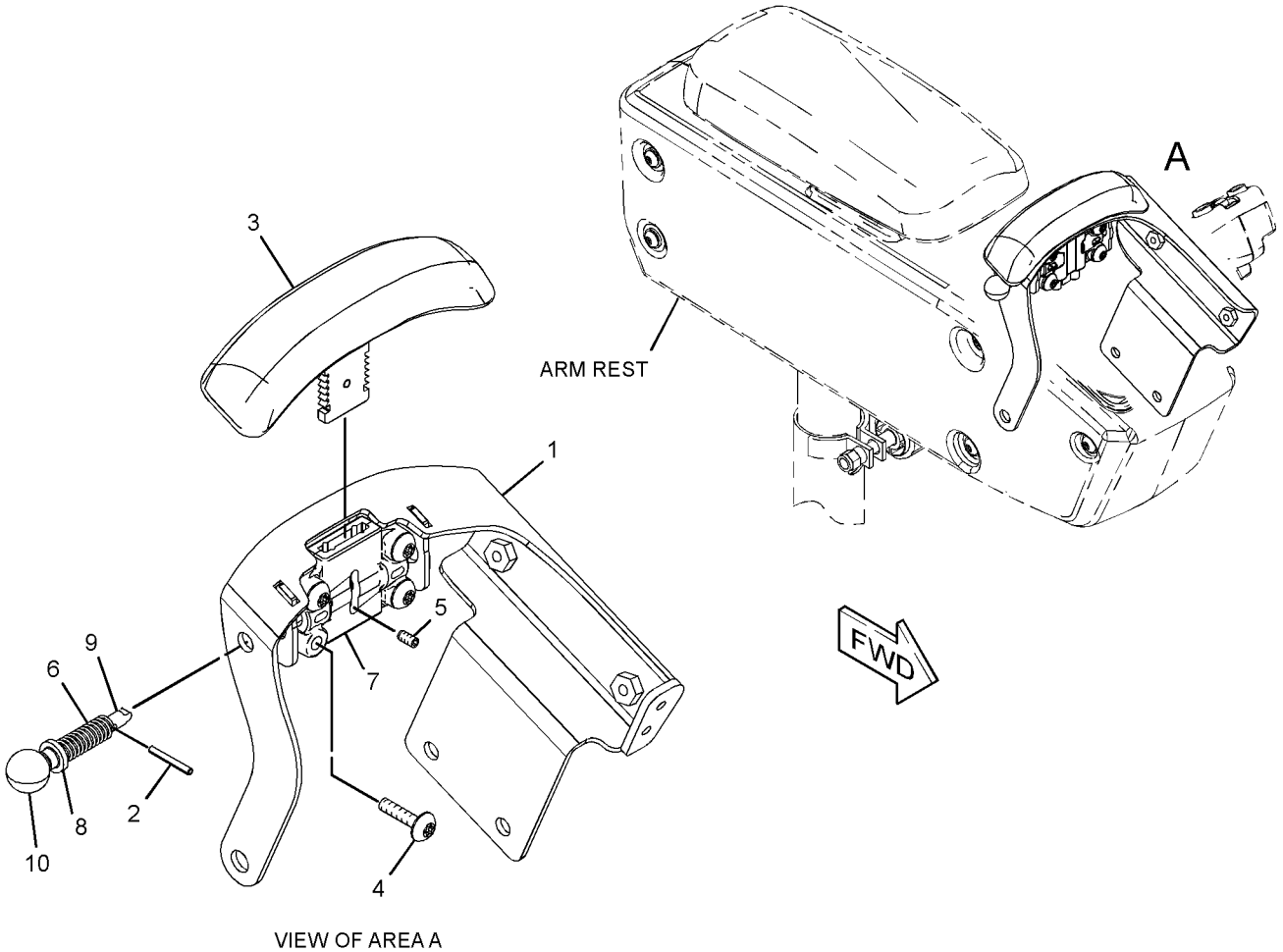

VIEW OF AREA A

GRAPHIC #1 **<END>** g01523630

OPERATOR STATION

233-3107 CAB AR

S/N: R9H1-UP

PART OF 349-2556 COMMON AR

SMCS-7301 **i04040055**

NOTE	PART NUMBER	QTY	PART NAME 1 2 3 4 5 6 (PRODUCT LEVEL)	SEE PAGE
Y	*267-5033*	1	AIR CONDITIONER GP	709
Y	*233-3145*	1	CONTROL & MTG GP-IMPLEMENT	212
Y	*342-8961*	1	SUPPORT GP-CONTROL	783
Y	*265-8942*	1	CONTROL GP-SERVICE BRAKE	540
Y	*233-3135*	1	CONVERTER GP-ELECTRICAL	218
Y	*283-7959*	1	COVER GP-CAB	726
Y	*294-1023*	1	DOOR GP-CAB (LH)	733
Y	*250-9257*	1	ELECTRONICS GP-IMPLEMENT (IMPLEMENT 1)	219
Y	*250-9258*	1	ELECTRONICS GP-IMPLEMENT (IMPLEMENT 2)	219
Y	*294-0995*	1	LINER GP-CAB	746
Y	*233-3208*	1	MIRROR GP-REAR VIEW (INTERIOR)	757
Y	*293-4200*	1	PANEL GP-CAB (HVAC)	764
Y	**233-3280**	1	PANEL GP-INSTRUMENT (FRONT CONSOLE)	772
Y	*233-3133*	1	ROOF GP-CAB	778
Y	*238-8763*	1	SWITCH GP-LIGHT (WORK LIGHT)	324
Y	*294-0994*	1	WINDOW GP-CAB (FRONT)	786
Y	*233-3138*	1	WIPER & WASHER GP-WINDOW (FRONT)	788
Y	*351-7026*	1	WIRING GP-CAB	345
	311-3383	1	CAB AS-ROPS	
	267-3181	1	FILM-CERTIFICATION (OPS, READ OMM)	
			(ON THE FRONT RH CORNER OF THE ROPS ASSEMBLY)	
M	**096-3216**	2	SETSCREW-SOCKET (M12X1.75X12-MM)	

M-METRIC PART
Y-SEPARATE ILLUSTRATION

<END>

OPERATOR STATION

278-1154 COIL GP-EVAPORATOR & HEATER–

AIR CONDITIONER, HEATER

S/N: R9H1-UP

PART OF 263-2555 AIR CONDITIONER GP

SMCS-7309, 7343 **i02853483**

NOTE	REF NO	GRAPHIC REF	PART NUMBER	QTY	PART NAME 1 2 3 4 5 6 (PRODUCT LEVEL)	SEE PAGE
	1	1	**131-3093**	1	BUSHING	
	2	1	**238-8839**	1	CORE AS-HEATER	
	3	1	**238-8841**	1	VALVE AS-CONTROL	
	4	1	**245-1596**	1	ACTUATOR	
	5	1	**248-2924**	2	SPACER (4.3X9.5X19.1-MM THK)	
	6	1	**248-6772**	11	SCREW-MACHINE (8-16X7.75-IN)	
	7	1	**263-2548**	1	COIL AS-EVAPORATOR	
	8	1	**281-2588**	4	SCREW	
M	9	1	**281-2590**	2	BOLT (M4X0.7X30-MM)	
	10	1	**4D-2297**	2	SEAL-O-RING	
	11	1	**168-9866**	2	NUT-SPEED	

M-METRIC PART

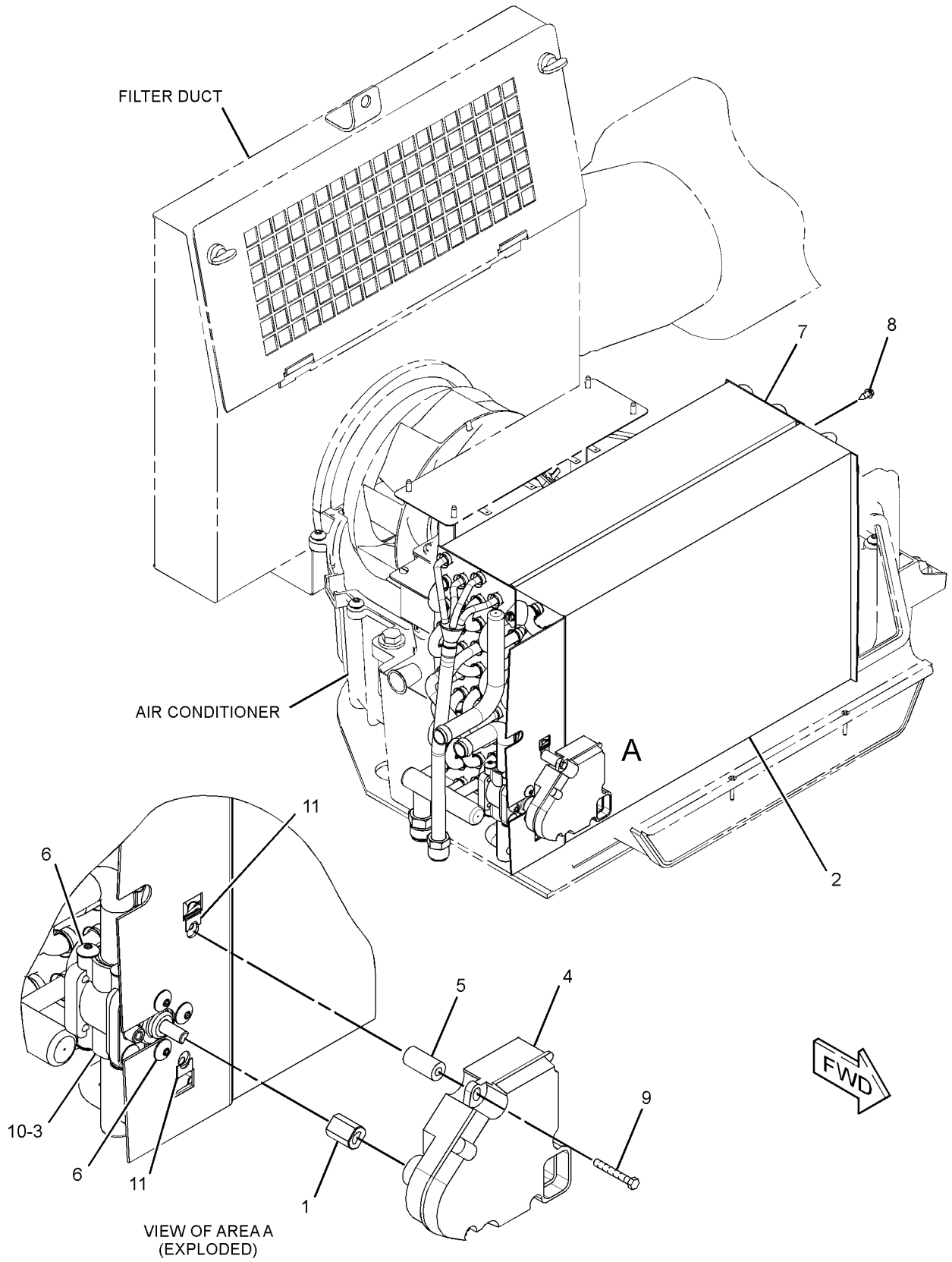

GRAPHIC #1 **<END>** g01426252

OPERATOR STATION

183-5106 COMPRESSOR GP-REFRIGERANT

S/N: R9H1-UP

PART OF 258-0651 DRIVE GP-ACCESSORY

SMCS-1802 **i03811331**

NOTE	REF NO	GRAPHIC REF	PART NUMBER	QTY	PART NAME 1 2 3 4 5 6 (PRODUCT LEVEL)	SEE PAGE
	1	1	**180-9339**	2	PIN-CONNECTOR (14-GA TO 18-GA)	
	2	1	**102-8802**	1	KIT-RECEPTACLE (2-PIN)	
					(INCLUDES RECEPTACLE AS & WEDGE)	
	3	1	**314-4018**	1	VALVE AS-PRESSURE RELIEF (REFRIGERANT COMPRESSOR)	
	4	1	**7T-4532**	1	PLUG AS	
	5	1	**9X-7385**	2	SEAL-O-RING	

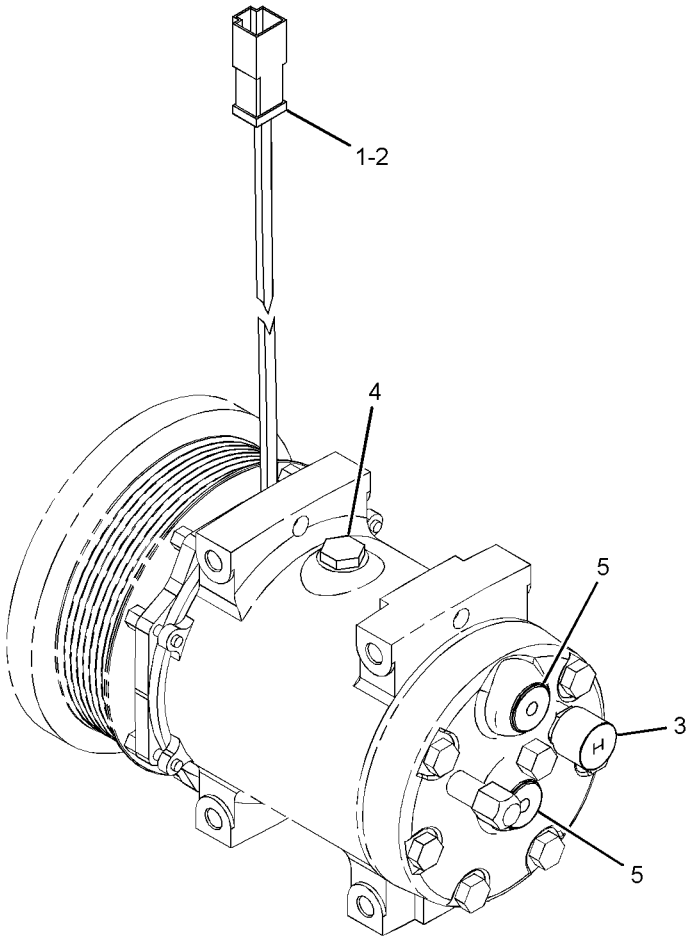

GRAPHIC #1 **<END>** g01419732

OPERATOR STATION

357-9151 CONTROL & MTG GP-JOYSTICK

S/N: R9H1-UP

PART OF 351-7026 WIRING GP-CAB

SMCS-5063, 5705 **i04015812**

NOTE	PART NUMBER	QTY	PART NAME 1 2 3 4 5 6 (PRODUCT LEVEL)	SEE PAGE
Y	**360-2987**	1	CONTROL GP-JOYSTICK (LH)	725
Y	**348-6995**	1	CONTROL GP-JOYSTICK (RH)	722
M	**9X-2546**	8	BOLT (M6X1X20-MM)	

M-METRIC PART
Y-SEPARATE ILLUSTRATION

<END>

233-3147 CONTROL GP-ELECTROHYDRAULIC–

WITH AUXILIARY LEVER

S/N: R9H1-UP

PART OF 261-0097, 261-0098, 340-4395 CONTROL AR-HYDRAULIC

AN ATTACHMENT

SMCS-5702, 5705 **i03360341**

NOTE	PART NUMBER	QTY	PART NAME 1 2 3 4 5 6 (PRODUCT LEVEL)	SEE PAGE
Y	**272-8442**	1	CONTROL GP-ELECTROHYDRAULIC (WITH AUXILIARY LEVER)	720
	334-7786	1	HARNESS AS-SENSOR	
M	**5C-9553**	1	BOLT (M6X1X16-MM)	
	7X-0018	2	BOLT (1/4-20X3.25-IN)	
	9X-8256	1	WASHER (6.6X12X2-MM THK)	
	5P-4116	2	WASHER-HARD (8.8X20.5X2-MM THK)	

M-METRIC PART
Y-SEPARATE ILLUSTRATION

<END>

OPERATOR STATION

272-8442 CONTROL GP-ELECTROHYDRAULIC–

WITH AUXILIARY LEVER

S/N: R9H1-UP

PART OF 233-3147 CONTROL GP-ELECTROHYDRAULIC

AN ATTACHMENT

SMCS-5702, 5705 **i03496429**

NOTE	REF NO	GRAPHIC REF	PART NUMBER	QTY	PART NAME 1 2 3 4 5 6 (PRODUCT LEVEL)	SEE PAGE
	1	1	**247-0737**	1	CONTROL GP-JOYSTICK (ELECTRONIC CONTROL)	
	1A	1	**292-8705**	1	BOOT	
	2	1	**292-8706**	1	CONTROL GP-ELECTROHYDRAULIC	
	2A	1	**8T-8737**	1	PLUG-SEAL	
	2B	1	**9X-3401**	11	PIN-CONNECTOR (16-GA TO 18-GA)	
	2C	1	**190-7615**	1	KIT-RECEPTACLE (12-PIN)	
					(INCLUDES RECEPTACLE AS & WEDGE)	
	2D	1	**281-4655**	1	FILM-INSTRUCTION (AUXILIARY)	
	3	1	**292-8703**	1	PALMREST	
	4	1	**292-8054**	1	BRACKET	
	5	1	**102-8801**	1	KIT-RECEPTACLE (12-PIN)	
					(INCLUDES RECEPTACLE AS & WEDGE)	

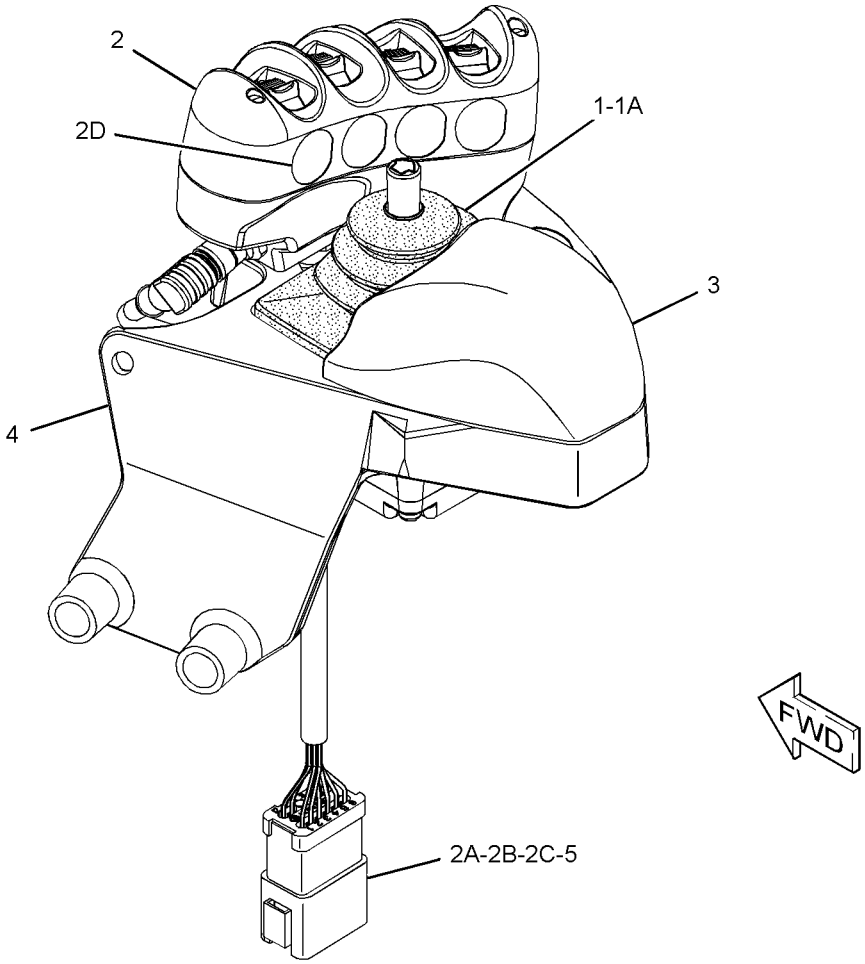

GRAPHIC #1 **<END>** g01373975

OPERATOR STATION

299-0874 CONTROL GP-ELECTROHYDRAULIC

S/N: R9H1-UP

PART OF 251-2035, 261-0097, 261-0098, 340-4395 CONTROL AR-HYDRAULIC AN ATTACHMENT

SMCS-5702, 5705 **i04003094**

NOTE	REF NO	GRAPHIC REF	PART NUMBER	QTY	PART NAME 1 2 3 4 5 6 (PRODUCT LEVEL)	SEE PAGE
	1	1	**358-4931**	1	CONTROL AS-PROPORTIONAL	
		1	**8T-8737**	1	PLUG-SEAL	
		1	**9X-3401**	5	PIN-CONNECTOR (16-GA TO 18-GA)	
		1	**281-3136**	1	RECEPTACLE AS-CONNECTOR (6-PIN)	
	2	1	**281-0431**	1	PLATE AS	
	3	1	**286-0277**	1	FILM-INSTRUCTION (NO FLOAT)	
	4	1	**299-0877**	1	BRACKET	
Y	5	1	*299-0881*	1	MOUNTING GP-CONTROL (WITH ENCLOSURE)	762
M	6	1	**127-2170**	2	SCREW-TRUSS HEAD (M8X1.25X20-MM)	
M	7	1	**225-3109**	3	SCREW-TRUSS HEAD (M4X0.7X14-MM)	

M-METRIC PART
Y-SEPARATE ILLUSTRATION

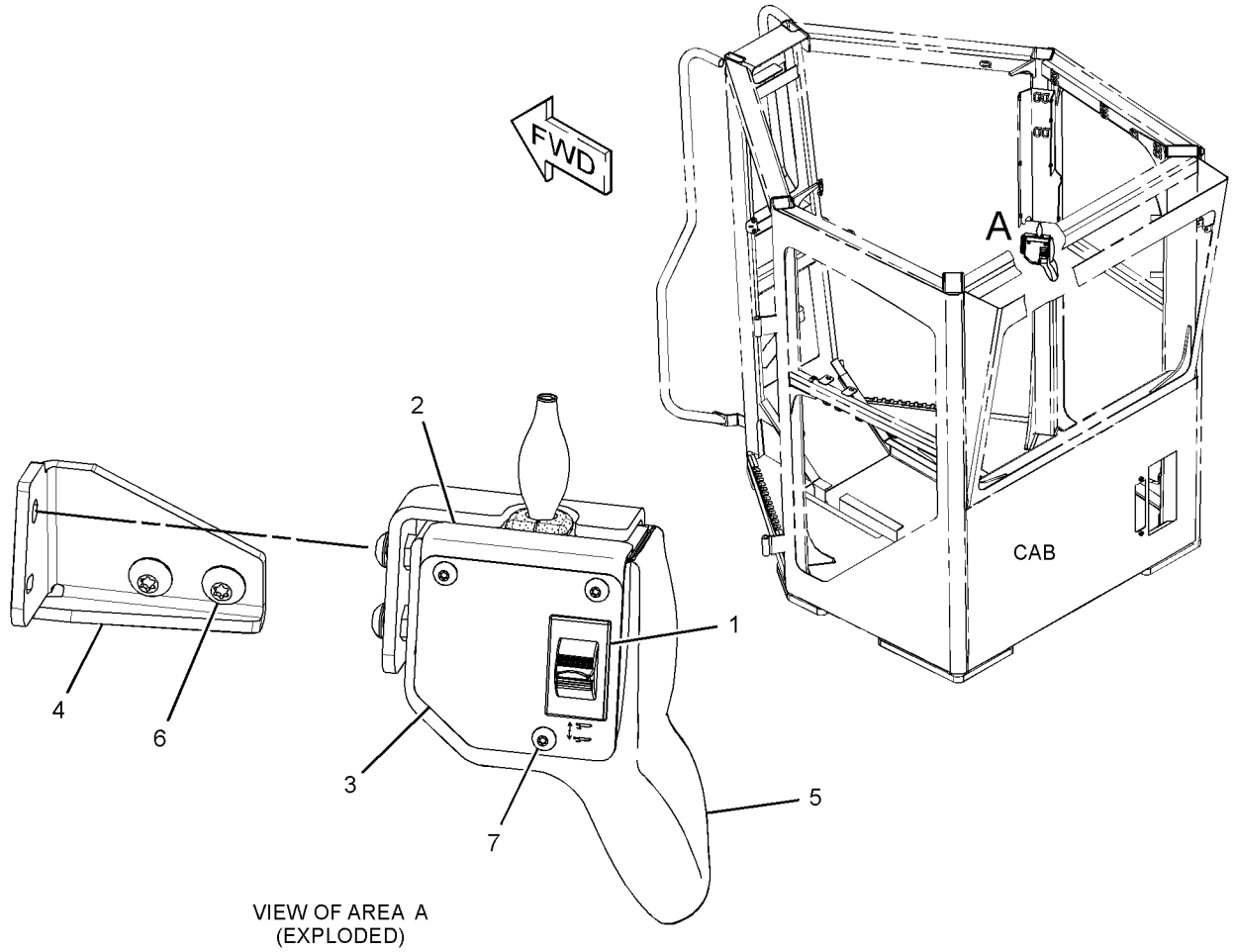

VIEW OF AREA A
(EXPLODED)

GRAPHIC #1 **<END>** g01522148

OPERATOR STATION

348-6995 CONTROL GP-JOYSTICK–RH

S/N: R9H1-UP

PART OF 357-9151 CONTROL & MTG GP-JOYSTICK

SMCS-3168, 4343, 5063, 5705 **i03973593**

NOTE	REF NO	GRAPHIC REF	PART NUMBER	QTY	PART NAME 1 2 3 4 5 6 (PRODUCT LEVEL)	SEE PAGE
	1	1	**169-0705**	9	SEAL	
	2	1	**174-3091**	1	KIT-RECEPTACLE (12-PIN)	
					(INCLUDES RECEPTACLE AS & WEDGE)	
	3	1	**247-0733**	1	BOOT	
	4	1	**9X-3401**	15	PIN-CONNECTOR (16-GA TO 18-GA)	
	5	1	**8T-8737**	9	PLUG-SEAL	
	6	1	**271-2811**	1	KIT-RECEPTACLE (12-PIN)	
					(INCLUDES RECEPTACLE AS & WEDGE)	

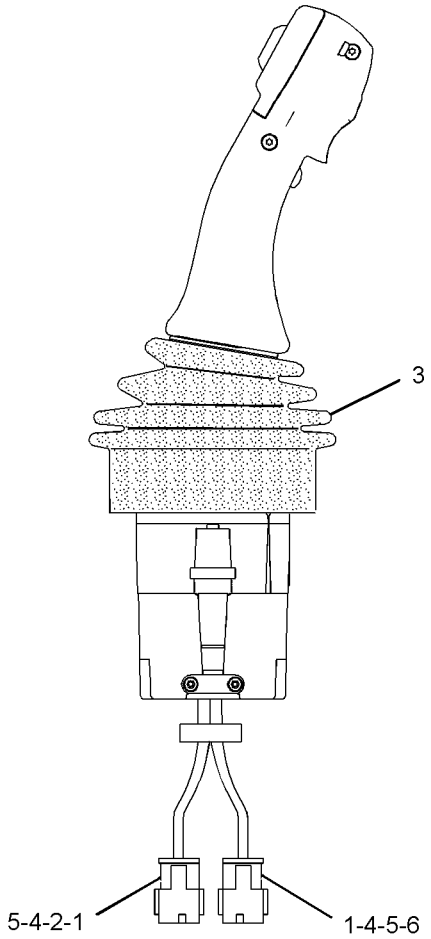

RIGHT SIDE VIEW

GRAPHIC #1

<END>

g02071482

OPERATOR STATION

356-3607 CONTROL GP-JOYSTICK–LH

S/N: R9H1-UP
AN ATTACHMENT

SMCS-3168, 4343, 5063, 5705 **i03814130**

NOTE	REF NO	GRAPHIC REF	PART NUMBER	QTY	PART NAME 1 2 3 4 5 6 (PRODUCT LEVEL)	SEE PAGE
	1	1	**169-0705**	5	SEAL	
	2	1	**174-3091**	1	KIT-RECEPTACLE (12-PIN)	
					(INCLUDES RECEPTACLE AS & WEDGE)	
	3	1	**247-0733**	1	BOOT	
	4	1	**9X-3401**	23	PIN-CONNECTOR (16-GA TO 18-GA)	
	5	1	**8T-8737**	5	PLUG-SEAL	
	6	1	**271-2811**	1	KIT-RECEPTACLE (12-PIN)	
	7	1	**151-9274**	1	KIT-RECEPTACLE (4-PIN)	
					(EACH KIT INCLUDES RECEPTACLE AS & WEDGE)	
	8	1	**342-9971**	1	SWITCH AS (FORWARD, NEUTRAL, REVERSE)	

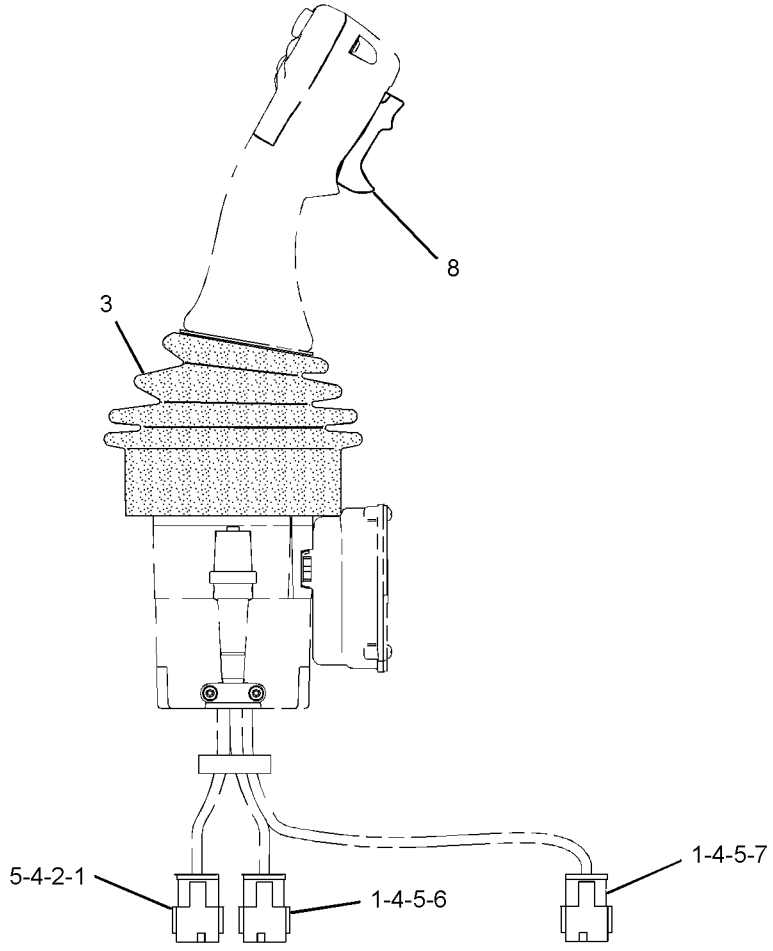

GRAPHIC #1 **<END>** g02031514

OPERATOR STATION

356-3609 CONTROL GP-JOYSTICK–RH

S/N: R9H1-UP

AN ATTACHMENT

SMCS-3168, 4343, 5063, 5705 **i03814180**

NOTE	REF NO	GRAPHIC REF	PART NUMBER	QTY	PART NAME 1 2 3 4 5 6 (PRODUCT LEVEL)	SEE PAGE
	1	1	**169-0705**	9	SEAL	
	2	1	**174-3091**	1	KIT-RECEPTACLE (12-PIN)	
					(INCLUDES RECEPTACLE AS & WEDGE)	
	3	1	**247-0733**	1	BOOT	
	4	1	**9X-3401**	15	PIN-CONNECTOR (16-GA TO 18-GA)	
	5	1	**8T-8737**	9	PLUG-SEAL	
	6	1	**271-2811**	1	KIT-RECEPTACLE (12-PIN)	
					(INCLUDES RECEPTACLE AS & WEDGE)	

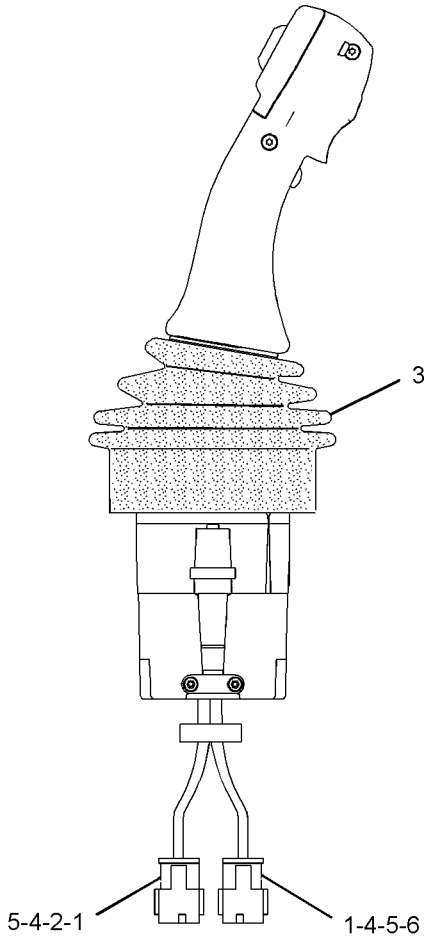

RIGHT SIDE VIEW

GRAPHIC #1 **<END>** g02071482

OPERATOR STATION

360-2987 CONTROL GP-JOYSTICK

S/N: R9H1-UP

PART OF 357-9151 CONTROL & MTG GP-JOYSTICK

SMCS-3168, 4343, 5063, 5705 **i04015815**

NOTE	REF NO	GRAPHIC REF	PART NUMBER	QTY	PART NAME 1 2 3 4 5 6 (PRODUCT LEVEL)	SEE PAGE
	1	1	**169-0705**	5	SEAL	
	2	1	**174-3091**	1	KIT-RECEPTACLE (12-PIN)	
					(INCLUDES RECEPTACLE AS & WEDGE)	
	3	1	**247-0733**	1	BOOT	
	4	1	**9X-3401**	23	PIN-CONNECTOR (16-GA TO 18-GA)	
	5	1	**8T-8737**	5	PLUG-SEAL	
	6	1	**271-2811**	1	KIT-RECEPTACLE (12-PIN)	
	7	1	**151-9274**	1	KIT-RECEPTACLE (4-PIN)	
					(EACH RECEPTACLE KIT INCLUDES RECEPTACLE AS & WEDGE)	
	8	1	**342-9971**	1	SWITCH AS (FORWARD, NEUTRAL, REVERSE)	

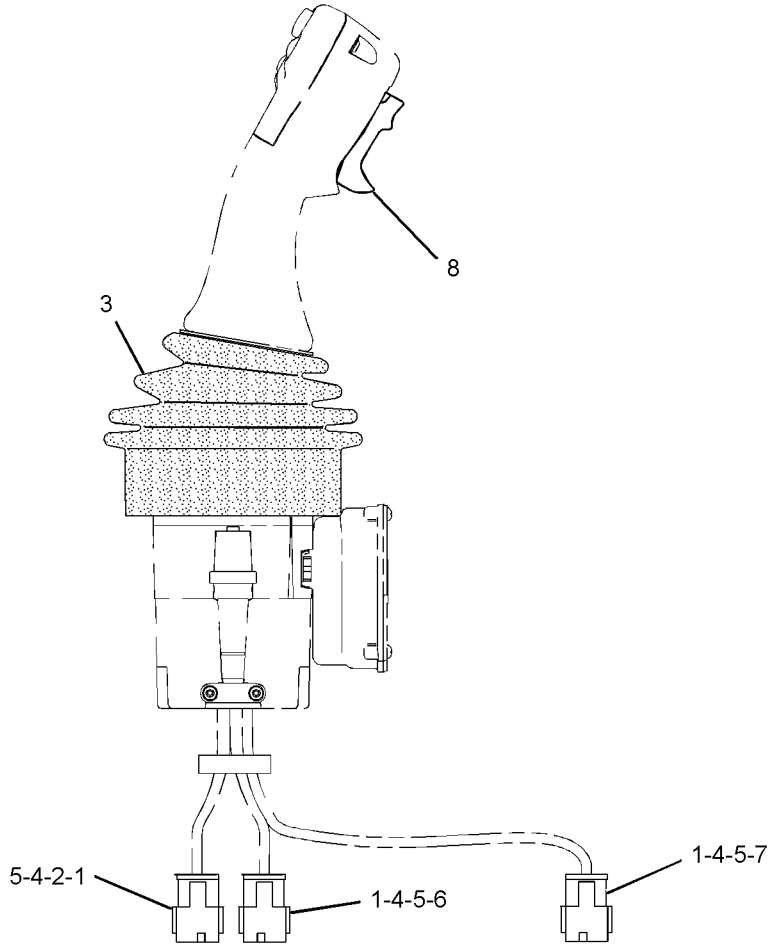

GRAPHIC #1 **<END>** g02031514

OPERATOR STATION

283-7959 COVER GP-CAB

S/N: R9H1-UP

PART OF 233-3107 CAB AR

SMCS-7301 **i02609994**

NOTE	REF NO	GRAPHIC REF	PART NUMBER	QTY	PART NAME 1 2 3 4 5 6 (PRODUCT LEVEL)	SEE PAGE
	1	1	**283-7958**	1	COVER	
	2	1	**300-1711**	1	PLATE AS	
		1	**7T-1099**	1	LINK	
		1	**283-7957**	1	PLATE	
	3	1	**5P-4116**	3	WASHER-HARD (8.8X20.5X2-MM THK)	
M	4	1	**8T-4908**	3	BOLT (M8X1.25X25-MM)	

M-METRIC PART

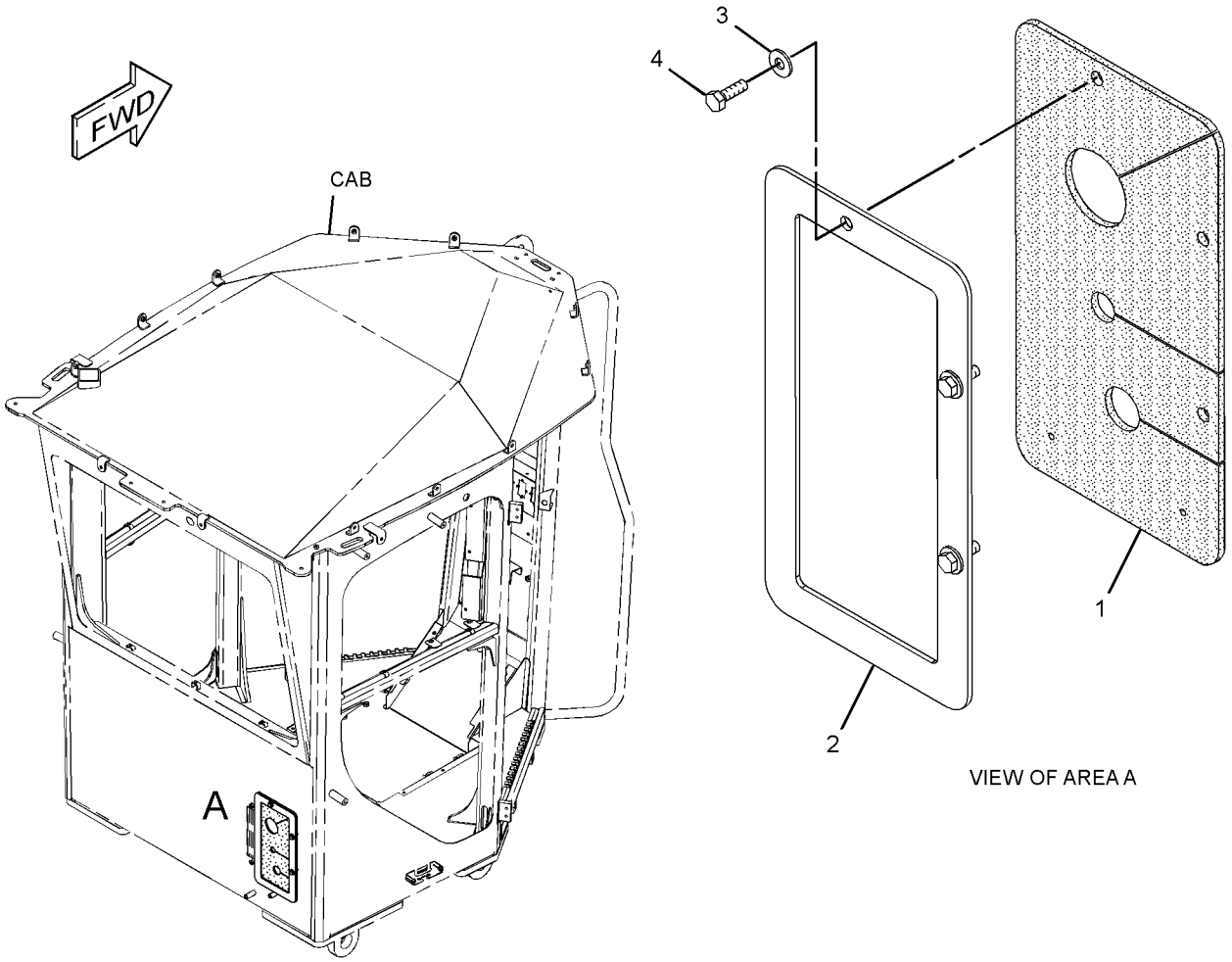

GRAPHIC #1 **<END>** g01312458

OPERATOR STATION

252-1805 CUSHION GP-ARM

S/N: R9H1-UP

PART OF 233-3224, 233-3225 SUPPORT GP-CONTROL

SMCS-7307 **i02748414**

NOTE	REF NO	GRAPHIC REF	PART NUMBER	QTY	PART NAME 1 2 3 4 5 6 (PRODUCT LEVEL)	SEE PAGE
	1	1	**233-3245**	1	PLATE	
	2	1	**233-3272**	1	CUSHION AS	
M	3	1	**5C-9553**	2	BOLT (M6X1X16-MM)	
	4	1	**9X-8256**	2	WASHER (6.6X12X2-MM THK)	

M-METRIC PART

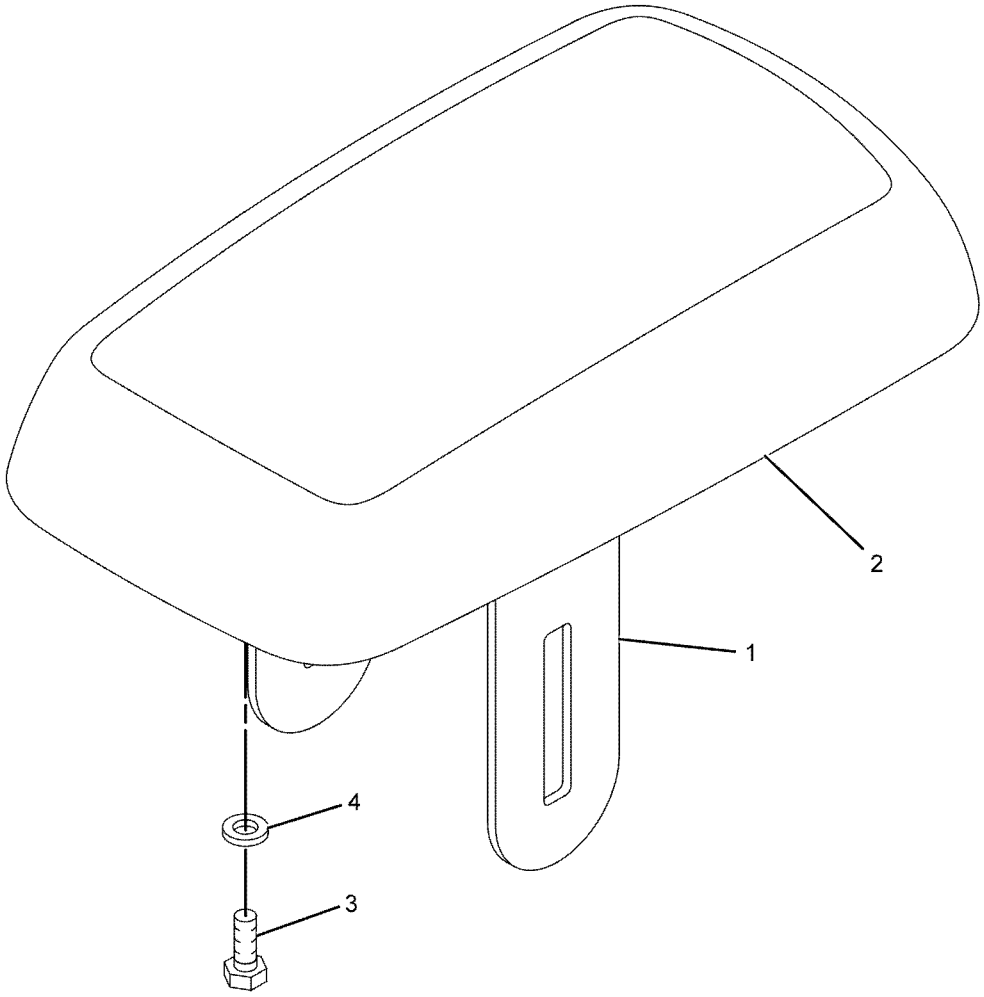

GRAPHIC #1 **<END>** g01109286

OPERATOR STATION

292-7975 DISPLAY AR-MONITOR—CD700

S/N: R9H1-UP
FOR USE WITH M SERIES MOTOR GRADER
FIELD INSTALLATION

SMCS-7490 **i04035054**

NOTE	PART NUMBER	QTY	PART NAME 1 2 3 4 5 6 (PRODUCT LEVEL)	SEE PAGE
Y	*286-0134*	1	DISPLAY GP-MONITOR (CD700)	730
Y	**286-9124**	3	DISPLAY GP-MONITOR (LIGHT BAR)	731
Y	*253-1964*	1	WIRING GP-MONITOR (CD700)	374

Y-SEPARATE ILLUSTRATION

<END>

292-7980 DISPLAY AR-MONITOR—CD610

S/N: R9H1-UP
FOR USE WITH M SERIES MOTOR GRADER
FIELD INSTALLATION

SMCS-7490 **i03245379**

NOTE	PART NUMBER	QTY	PART NAME 1 2 3 4 5 6 (PRODUCT LEVEL)	SEE PAGE
Y	**292-0309**	1	DISPLAY GP-MONITOR (CD610)	732
Y	**253-1967**	1	WIRING GP-MONITOR (CD610)	376

Y-SEPARATE ILLUSTRATION

<END>

331-7530 DISPLAY AR-MONITOR

S/N: R9H1-UP
FIELD INSTALLATION

SMCS-7490 **i04040099**

NOTE	PART NUMBER	QTY	PART NAME 1 2 3 4 5 6 (PRODUCT LEVEL)	SEE PAGE
Y	**286-9124**	3	DISPLAY GP-MONITOR (LIGHT BAR)	731
Y	*253-1964*	1	WIRING GP-MONITOR (CD700)	374

Y-SEPARATE ILLUSTRATION

<END>

OPERATOR STATION

278-0668 DISPLAY GP-CAMERA—WORK AREA VISUAL SYSTEM

S/N: R9H1-UP
PART OF 279-3360 CAMERA AR
AN ATTACHMENT

SMCS-7347 **i04037168**

NOTE	REF NO	GRAPHIC REF	PART NUMBER	QTY	PART NAME 1 2 3 4 5 6 (PRODUCT LEVEL)	SEE PAGE
	1	1	**3S-2093**	10	STRAP-CABLE	
	2	1	**333-8153**	1	CONNECTOR GP-ELECTRONIC	
	3	1	**263-5033**	1	PLATE	
	4	1	**251-8248**	1	CABLE AS-COMMUNICATION (CAMERA)	
	5	1	**261-3224**	1	MODULE GP-DISPLAY (WORK AREA VISUAL SYSTEM)	
		1	**280-2691**	1	CABLE AS	
		1	**8T-8737**	1	PLUG-SEAL	
		1	**102-8805**	1	KIT-RECEPTACLE (6-PIN)	
					(INCLUDES RECEPTACLE AS, & WEDGE)	
		1	**8T-8729**	5	PIN-CONNECTOR (16-GA TO 18-GA)	
	6	1	**9X-8267**	4	WASHER (6.6X12X2-MM THK)	
M	7	1	**8T-2226**	4	SCREW-MACHINE (M5X0.8X10-MM)	
M	8	1	**3E-8020**	1	SCREW-TRUSS HEAD (M6X1X25-MM)	

M-METRIC PART

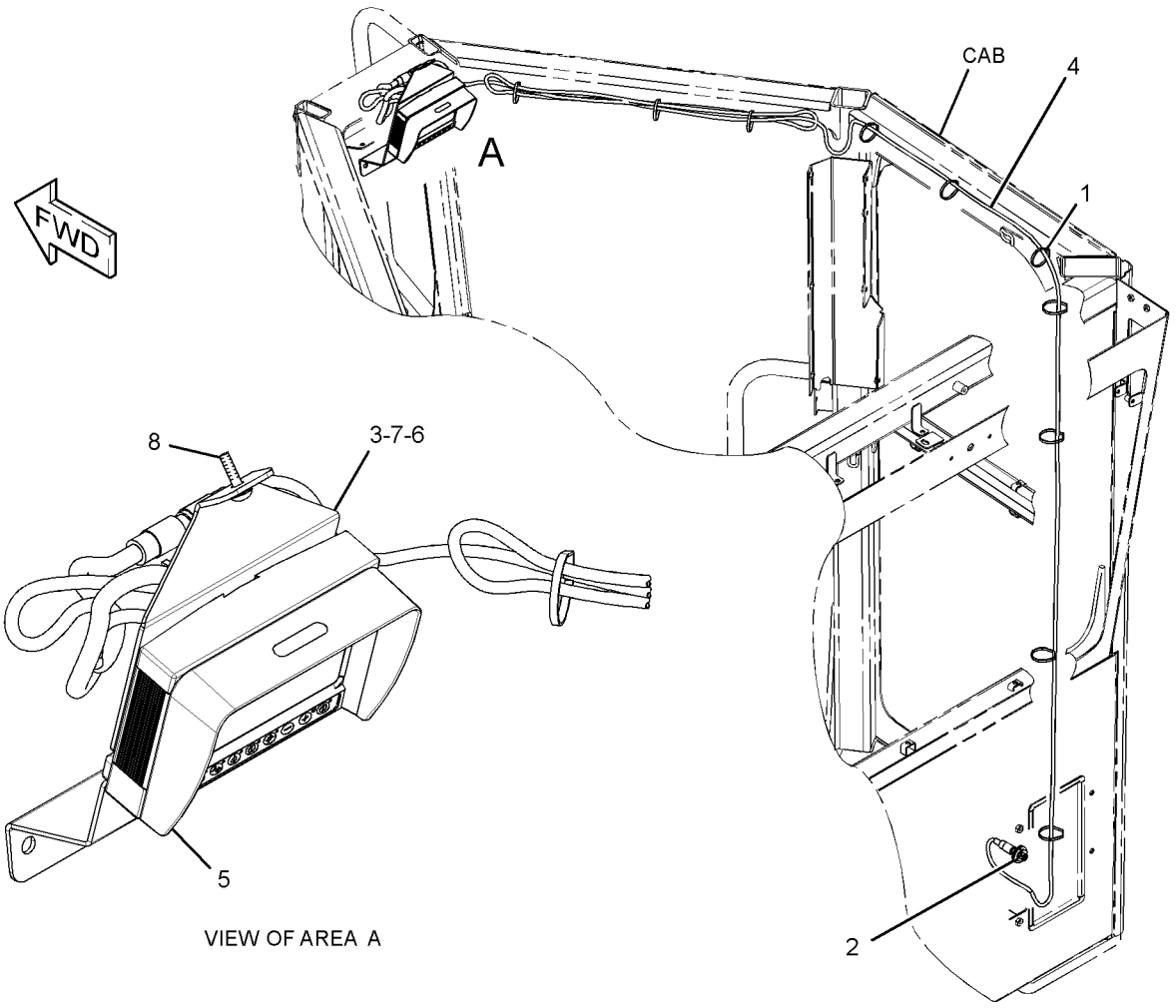

VIEW OF AREA A

GRAPHIC #1 **<END>** g01554198

OPERATOR STATION

286-0134 DISPLAY GP-MONITOR—CD700C

S/N: R9H1-UP

PART OF 292-7975 DISPLAY AR-MONITOR, 323-8139 SENSOR AR-GRADE

SMCS-7490 **i04036776**

NOTE	PART NUMBER	QTY	PART NAME 1 2 3 4 5 6 (PRODUCT LEVEL)	SEE PAGE
R	**244-1716**	1	DISPLAY GP-MONITOR (CD700C)	
	283-4426	1	CARD AS-MEMORY (FLASH)	
	194-8031	1	ADAPTER (COMPACT)	
M	**8T-4171**	6	BOLT (M6X1X12-MM)	
	292-0311	1	CASE-CARRYING	
M	**8T-0285**	6	SCREW-MACHINE (M4X0.7X12-MM)	
	9X-8256	6	WASHER (6.6X12X2-MM THK)	
	096-6166	6	WASHER-HARD (4.5X9X1-MM THK)	

M-METRIC PART
R-REMFG PART MAY BE AVAILABLE

<END>

OPERATOR STATION

286-9124 DISPLAY GP-MONITOR—LIGHT BAR

S/N: R9H1-UP

PART OF 292-7975, 331-7530 DISPLAY AR-MONITOR, 323-8139 SENSOR AR-GRADE

SMCS-7490 **i02618892**

NOTE	REF NO	GRAPHIC REF	PART NUMBER	QTY	PART NAME 1 2 3 4 5 6 (PRODUCT LEVEL)	SEE PAGE
	1	1	**230-5009**	1	RECEPTACLE AS-CONNECTOR (4-PIN)	
	2	1	**9X-3402**	3	SOCKET-CONNECTOR (16-GA TO 18-GA)	
	3	1	**8T-8737**	1	PLUG-SEAL	

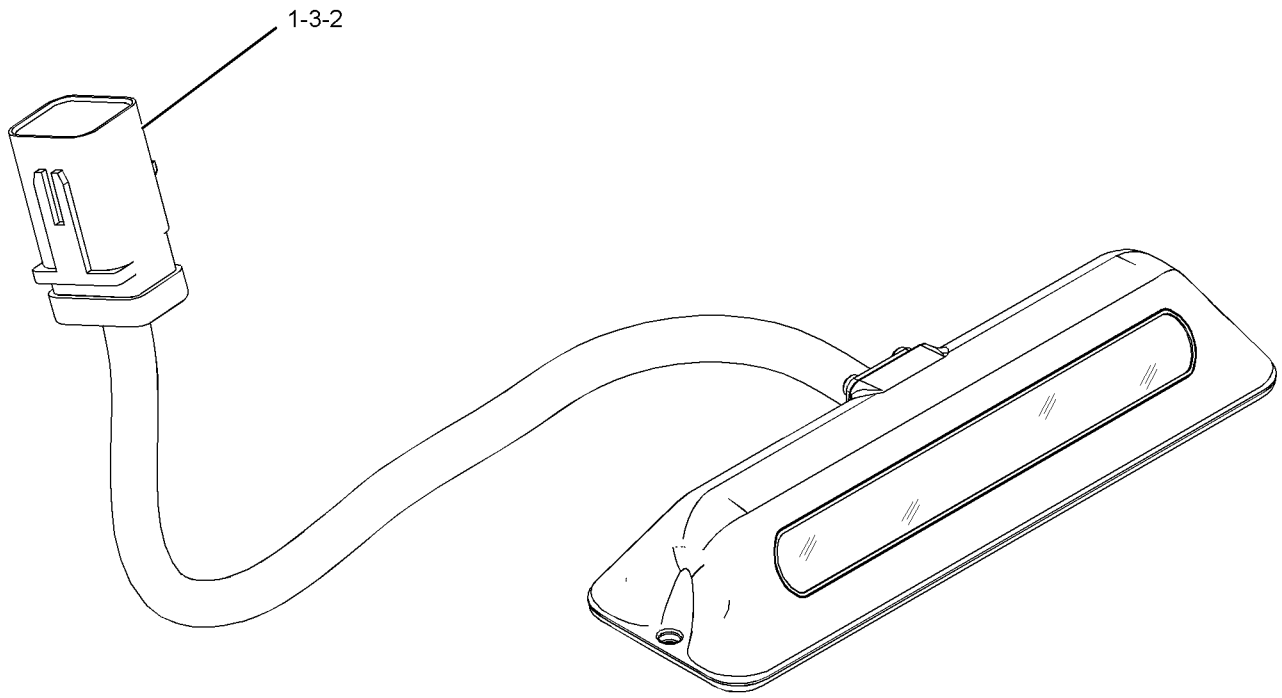

GRAPHIC #1 **<END>** g01313338

OPERATOR STATION

292-0309 DISPLAY GP-MONITOR—CD610

S/N: R9H1-UP

PART OF 292-7980 DISPLAY AR-MONITOR, 323-8140 GRADE CONTROL AR

SMCS-7490 **i04025329**

NOTE	PART NUMBER	QTY	PART NAME 1 2 3 4 5 6 (PRODUCT LEVEL)	SEE PAGE
	283-9530	1	DISPLAY GP-MONITOR (CD610)	
	346-4372	1	SOFTWARE	
M	**7X-2619**	6	BOLT (M6X1X10-MM)	
	292-0311	1	CASE-CARRYING	
	8T-4205	6	WASHER-HARD (7.2X14.5X2-MM THK)	

M-METRIC PART

<END>

OPERATOR STATION

294-1023 DOOR GP-CAB–LH

S/N: R9H1-UP

PART OF 233-3107 CAB AR

SMCS-7308 **i03586480**

NOTE	REF NO	GRAPHIC REF	PART NUMBER	QTY	PART NAME 1 2 3 4 5 6 (PRODUCT LEVEL)	SEE PAGE
	1	2	**6V-7636**	2	PIN AS-SPRING	
C	3	2	**4E-8722**	5	NUT (RETAINER)	
M	4	2	**184-0983**	1	NUT-HEX FLANGE (M12X1.75-THD)	
J	5	2	**252-1862**	1	HANDLE AS (PULL)	
	6	2	**252-1863**	1	GASKET	
	9	1	**261-1731**	1	BOOT	
	10	1	**261-5524**	1	COVER AS	
	13	2	**269-2890**	1	CLEVIS	
	14	2	**269-2892**	1	PIN	
	15	2	**269-2893**	1	CLIP	
	16	2	**272-1623**	1	BELLCRANK AS	
	17	2	**285-3692**	1	SPACER	
	18	2	**294-1021**	1	DOOR AS (LH)	
Y	19	2	*295-1114*	1	WIPER GP-WINDOW (DOOR, LH)	792
	20	2	**295-1200**	2	HINGE (LH)	
	21	2	**295-1201**	1	GLASS (DOOR, LH)	
	22	2	**295-1202**	1	LINKAGE AS (LH)	
	23	2	**295-5648**	1	PLATE	
	24	2	**295-5665**	1	BRACKET AS	
	25	2	**295-6393**	1	COVER (LH)	
	26	2	**328-4984**	1	LATCH AS-DOOR (LH)	
	27	1	**295-6406**	1	LATCH AS (LH)	
	28	2	**296-2991**	1	BRACKET	
	29	2	**296-4040**	1	STRIKER AS	
	30	2	**296-4109**	1	COVER	
	31	2	**296-4924**	1	HARNESS AS-WINDOW WIPER	
		2	**102-8805**	1	KIT-RECEPTACLE (6-PIN)	
					(INCLUDES RECEPTACLE AS & WEDGE)	
		2	**186-3735**	1	PIN-CONNECTOR (16-GA TO 18-GA)	
		2	**186-3736**	1	SOCKET-CONNECTOR (16-GA TO 18-GA)	
		2	**8T-8737**	2	PLUG-SEAL	
		2	**9W-0844**	4	SOCKET-CONNECTOR (14-GA)	
		2	**9W-0852**	4	PIN-CONNECTOR (14-GA TO 16-GA)	
E		2	**144-0195**		HOSE (95-CM)	
		2	**155-2274**	1	KIT-CONNECTING PLUG (6-PIN)	
					(INCLUDES PLUG AS, WEDGE, & INTERFACE SEAL)	
		2	**297-4169**	2	GROMMET	
	32	2	**297-4169**	1	GROMMET	
C	33	1,2	**114-6658**	4	WASHER (6.5X17X1-MM THK)	
	34	1	**109-5008**	1	BUMPER-CONICAL	
M	35	2	**3E-8020**	4	SCREW-TRUSS HEAD (M6X1X25-MM)	
M	36	1	**5C-7261**	1	NUT (M8X1.25-THD)	
M	37	2	**9X-2125**	4	BOLT-LOCKING (M10X1.5X25-MM)	
	38	2	**8T-4121**	4	WASHER-HARD (11X21X2.5-MM THK)	
M	39	1	**8T-7547**	2	BOLT (M8X1.25X30-MM)	
CM	40	1,2	**9X-2043**	13	SCREW-TRUSS HEAD (M6X1X14-MM)	
CM	41	2	**9X-2044**	4	SCREW-TRUSS HEAD (M6X1X16-MM)	
BH	42	2	**328-5492**		SEAL (50-DM)	
C	43	1	**299-1021**	1	LEVER AS	
		1	**8T-7971**	2	WASHER-HARD (13.5X25.5X5-MM THK)	
M		1	**9X-2044**	2	SCREW-TRUSS HEAD (M6X1X16-MM)	
		1	**114-6658**	2	WASHER (6.5X17X1-MM THK)	
		1	**115-9345**	1	KNOB-CONTROL	
C	44	1	**299-1660**	1	CABLE AS	
		1	**7S-9930**	2	RING-RETAINING	
		1	**159-0052**	2	PIN-CLEVIS	

294-1023 **DOOR GP-CAB** *(contd.)* **i03586480**

NOTE	REF NO	GRAPHIC REF	PART NUMBER	QTY	PART NAME 1 2 3 4 5 6 (PRODUCT LEVEL)	SEE PAGE
	45	2	**110-7524**	8	BUTTON	
BE	46	2	**331-9731**		SEAL (4-CM)	
	47	2	**3S-2093**	3	STRAP-CABLE	
	48	2	**214-9186**	6	BUTTON	
	49	2	**7X-0605**	1	WASHER-HARD (13X28X1.6-MM THK)	

B-USE AS REQUIRED
C-CHANGE FROM PREVIOUS TYPE
E-ORDER BY THE CENTIMETER
H-ORDER BY THE DECIMETER
J-J-REQUIRES CORPORATE KEY
M-METRIC PART
Y-SEPARATE ILLUSTRATION

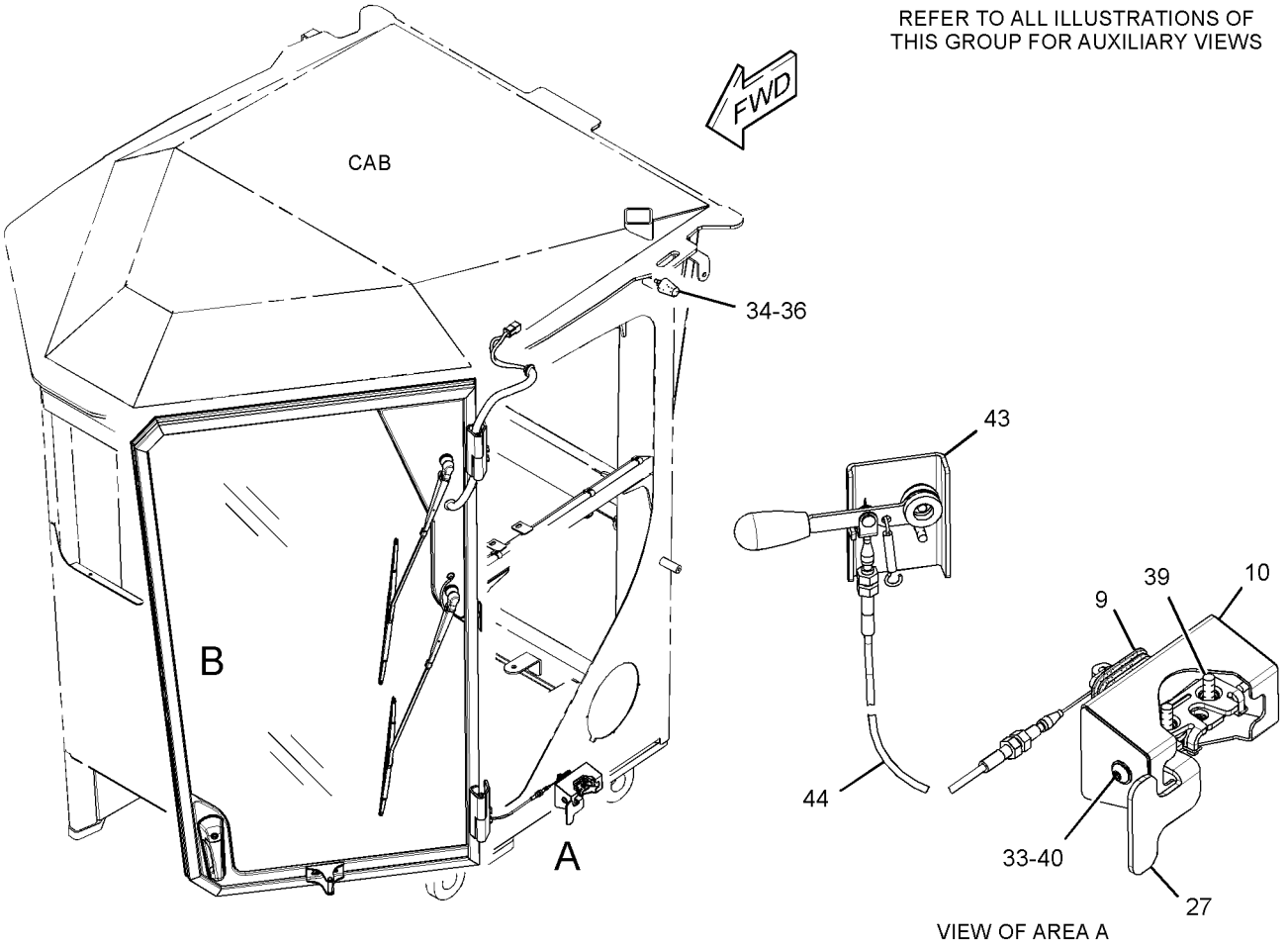

GRAPHIC #1

g01593833

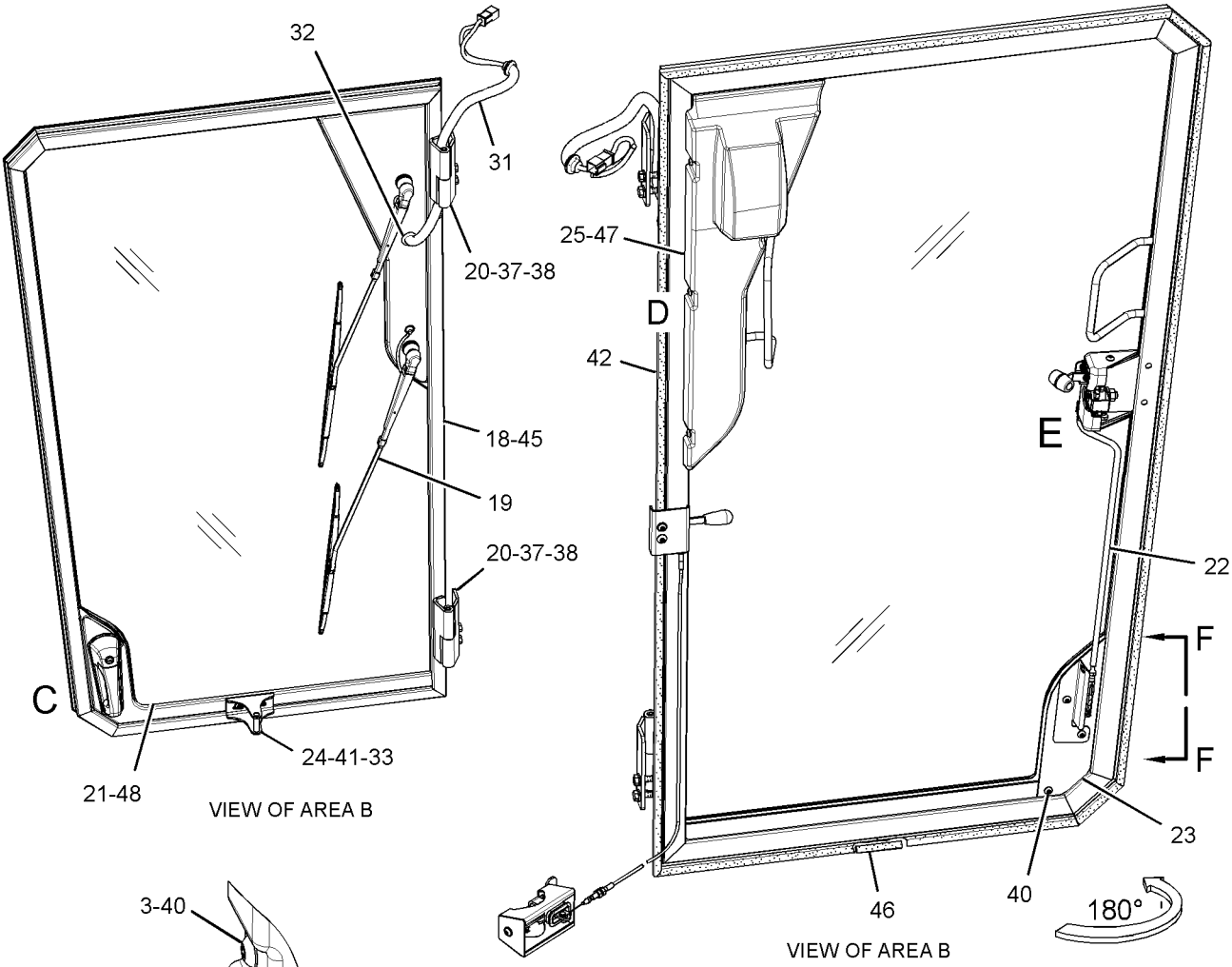

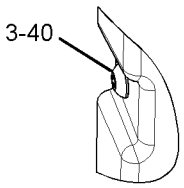

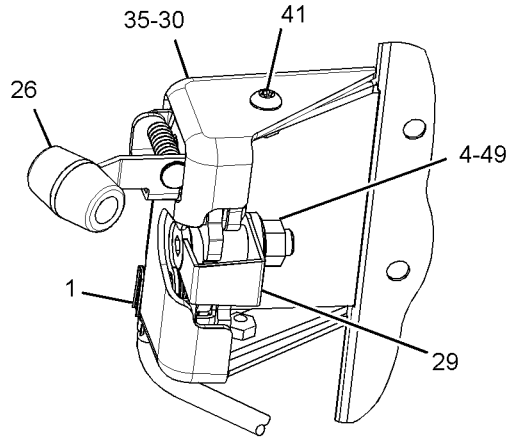

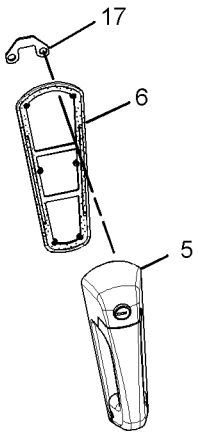

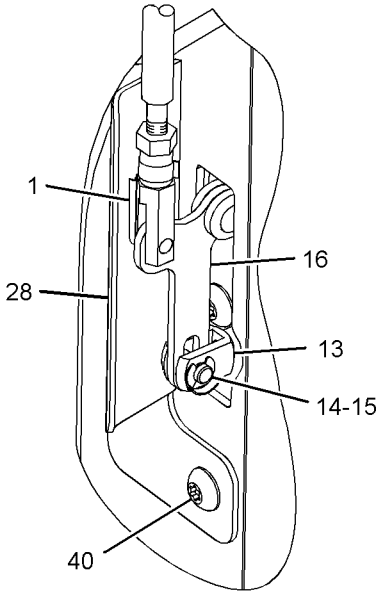

GRAPHIC #2 **<END>** g01938934

OPERATOR STATION

294-1024 DOOR GP-CAB—RH

S/N: R9H1-UP

PART OF 349-2556 COMMON AR

SMCS-7308 **i03586565**

NOTE	REF NO	GRAPHIC REF	PART NUMBER	QTY	PART NAME 1 2 3 4 5 6 (PRODUCT LEVEL)	SEE PAGE
C	1	2	**4E-8722**	5	NUT (RETAINER)	
	2	2	**6V-7636**	2	PIN AS-SPRING	
M	3	2	**184-0983**	1	NUT-HEX FLANGE (M12X1.75-THD)	
J	4	1	**252-1862**	1	HANDLE AS	
	5	1	**252-1863**	1	GASKET	
	6	1	**261-1731**	1	BOOT	
	7	1	**261-5524**	1	COVER AS	
	8	2	**269-2890**	1	CLEVIS	
	9	2	**269-2892**	1	PIN	
	10	2	**269-2893**	1	CLIP	
	11	2	**272-1623**	1	BELLCRANK AS	
	12	1	**285-3692**	1	SPACER	
	13	1	**294-1022**	1	DOOR AS (RH)	
		1	**7T-1099**	5	LINK	
	14	1	**295-1043**	2	HINGE (RH)	
	15	2	**295-1049**	1	LINKAGE AS (RH)	
	16	1	**295-1050**	1	GLASS (DOOR, RH)	
Y	17	1	*295-1113*	1	WIPER GP-WINDOW (DOOR, RH)	790
	18	2	**295-5648**	1	PLATE	
	19	2	**295-5649**	1	BRACKET	
	20	1	**295-5665**	1	BRACKET AS	
	21	2	**295-6390**	1	COVER	
	22	2	**295-6391**	1	COVER (RH)	
	23	2	**328-4985**	1	LATCH AS-DOOR (RH)	
	24	1	**295-6405**	1	LATCH AS (RH)	
	25	2	**296-4040**	1	STRIKER AS	
	26	1	**296-4924**	1	HARNESS AS-WINDOW WIPER	
	27	2	**297-4169**	1	GROMMET	
C	28	1	**299-1020**	1	LEVER AS	
		1	**8T-7971**	2	WASHER-HARD (13.5X25.5X5-MM THK)	
M		1	**9X-2044**	2	SCREW-TRUSS HEAD (M6X1X16-MM)	
		1	**114-6658**	2	WASHER (6.5X17X1-MM THK)	
		1	**115-9345**	1	KNOB-CONTROL	
C	29	1	**299-1660**	1	CABLE AS	
		1	**7S-9930**	2	RING-RETAINING	
		1	**159-0052**	2	PIN-CLEVIS	
C	30	1	**114-6658**	4	WASHER (6.5X17X1-MM THK)	
	31	1	**109-5008**	1	BUMPER-CONICAL	
M	32	2	**3E-8020**	4	SCREW-TRUSS HEAD (M6X1X25-MM)	
M	33	1	**5C-7261**	1	NUT (M8X1.25-THD)	
M	34	1	**9X-2125**	4	BOLT-LOCKING (M10X1.5X25-MM)	
	35	1	**8T-4121**	4	WASHER-HARD (11X21X2.5-MM THK)	
M	36	1	**8T-7547**	2	BOLT (M8X1.25X30-MM)	
CM	37	1,2	**9X-2043**	13	SCREW-TRUSS HEAD (M6X1X14-MM)	
CM	38	1,2	**9X-2044**	4	SCREW-TRUSS HEAD (M6X1X16-MM)	
H	39	2	**328-5492**		SEAL (50-DM)	
	40	1	**110-7524**	8	BUTTON	
E	41	2	**331-9731**		SEAL (4-CM)	
	42	2	**3S-2093**	4	STRAP-CABLE	
	43	2	**7X-0605**	1	WASHER-HARD (13X28X1.6-MM THK)	
	44	1	**214-9186**	6	BUTTON	

C-CHANGE FROM PREVIOUS TYPE
E-ORDER BY THE CENTIMETER
H-ORDER BY THE DECIMETER
J-(REQUIRES CORPORATE KEY)
M-METRIC PART
Y-SEPARATE ILLUSTRATION

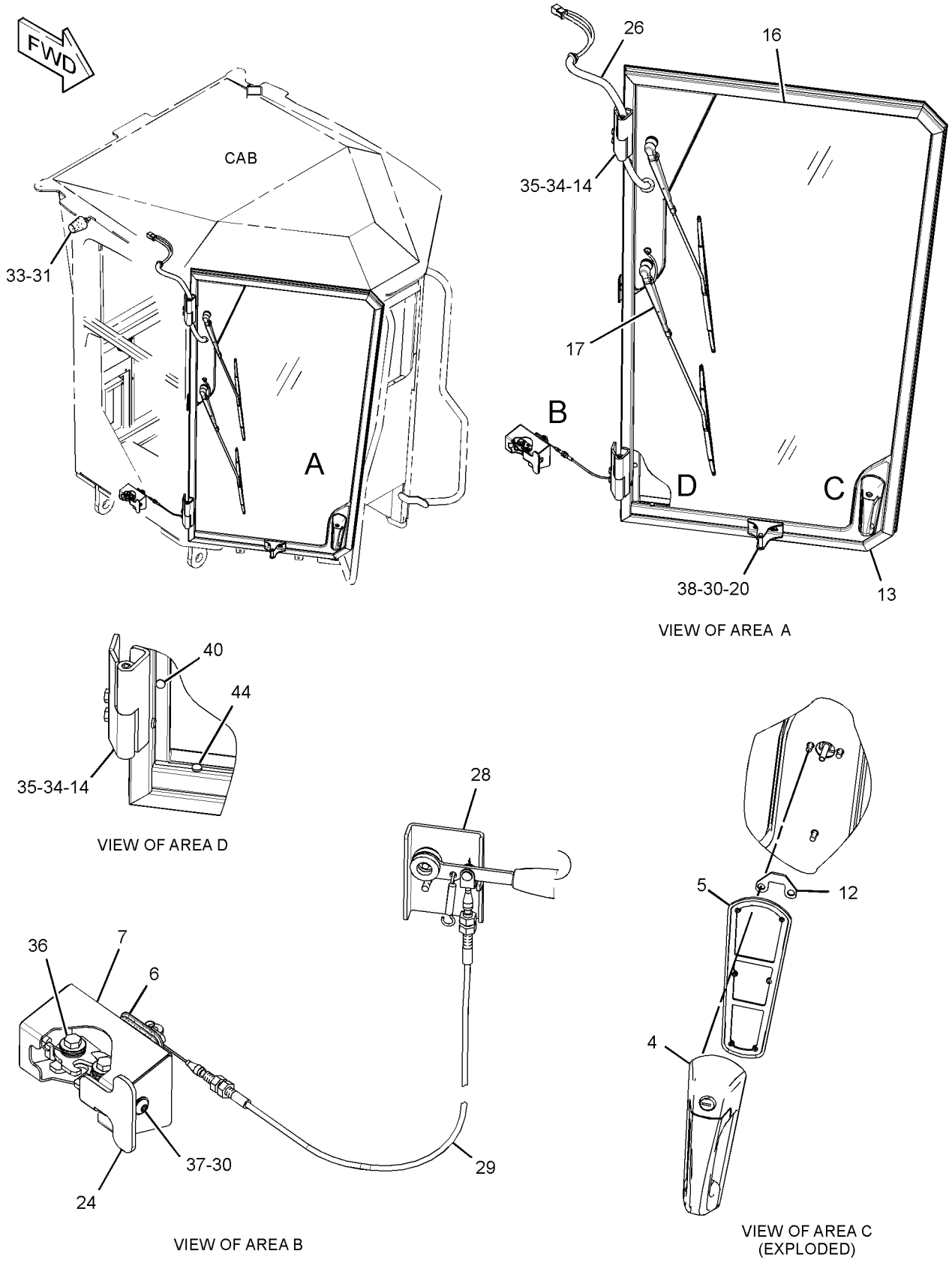

GRAPHIC #1

g02100936

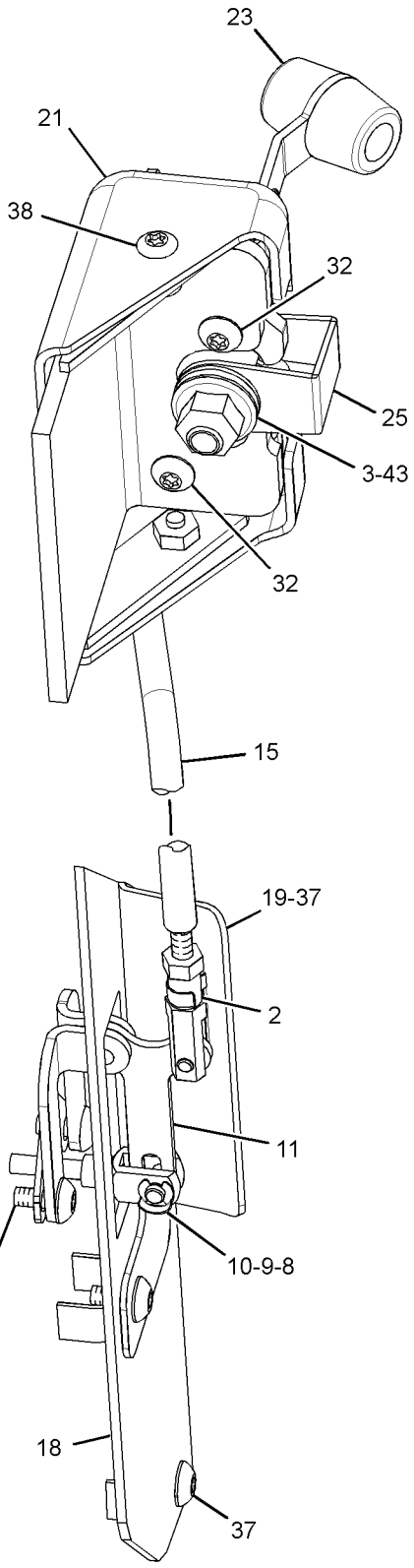

VIEW F-F

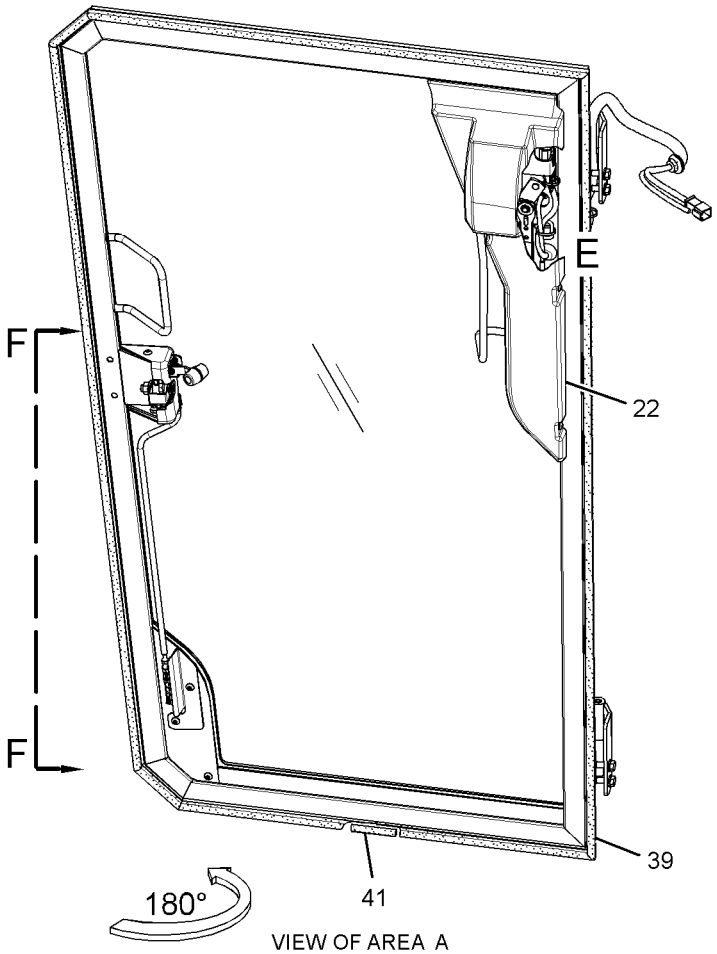

VIEW OF AREA A

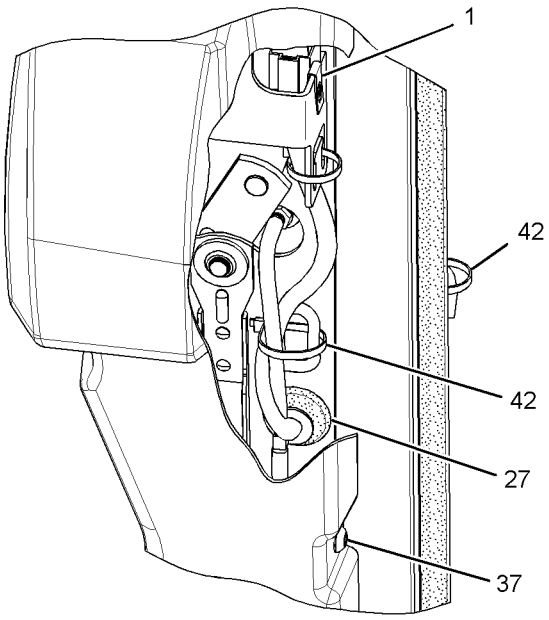

VIEW OF AREA E

GRAPHIC #2 **<END>** g02100938

OPERATOR STATION

244-2701 DUCT & FILTER GP-CAB AIR

S/N: R9H1-UP

PART OF 267-5033 AIR CONDITIONER GP

SMCS-7337, 7342, 734D **i02905893**

NOTE	REF NO	GRAPHIC REF	PART NUMBER	QTY	PART NAME 1 2 3 4 5 6 (PRODUCT LEVEL)	SEE PAGE
	1	1	**2R-2376**	2	WASHER (7X16X0.8-MM THK)	
	2	1	**149-1912**	1	FILTER ELEMENT-CAB AIR (CAB HEATER, AIR CONDITIONER)	
					—OR—	
		1	**220-8800**	1	FILTER ELEMENT-CAB AIR (ACTIVATED CHARCOAL)	
	3	1	**211-2660**	1	FILTER ELEMENT-AIR (CAB HEATER, AIR CONDITIONER)	
	4	1	**297-4139**	1	DUCT	
	5	1	**297-4140**	1	DUCT	
	6	1	**274-2384**	1	DUCT AS	
	7	1	**274-2385**	1	COVER	
	8	1	**274-2392**	2	THUMBSCREW	
	9	1	**5P-4115**	1	WASHER-HARD (7.2X19X2-MM THK)	
M	10	1	**6V-6317**	2	BOLT (M10X1.5X20-MM)	
M	11	1	**8T-0640**	1	BOLT (M6X1X30-MM)	
	12	1	**8T-4121**	2	WASHER-HARD (11X21X2.5-MM THK)	

M-METRIC PART

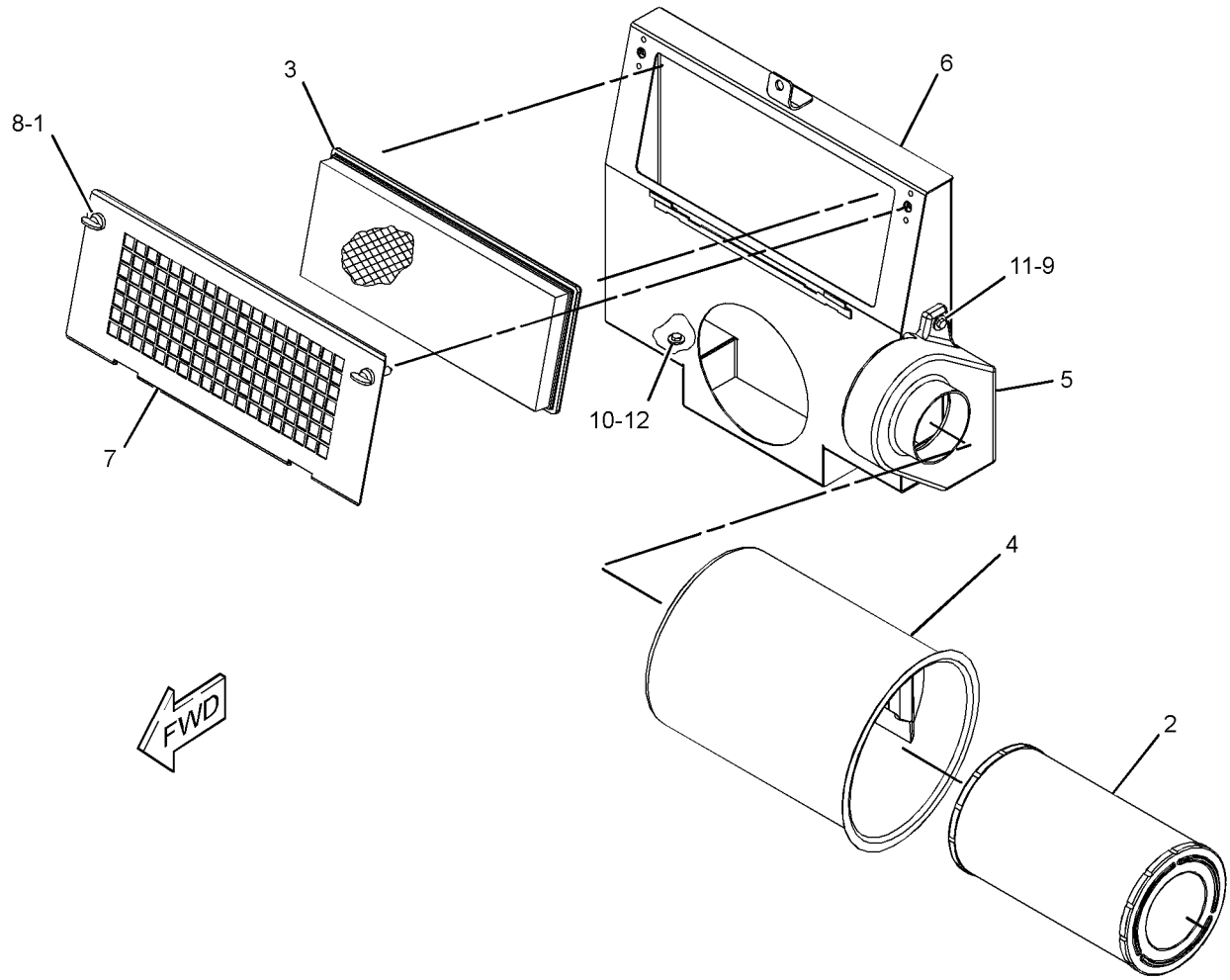

GRAPHIC #1 **<END>** g01332128

OPERATOR STATION

170-5334 FAN GP-CIRCULATING—DEFROST

S/N: R9H1-UP
24-VOLT
PART OF 233-3137 FAN GP-CIRCULATING
AN ATTACHMENT

SMCS-7316 **i03935812**

NOTE	REF NO	GRAPHIC REF	PART NUMBER	QTY	PART NAME 1 2 3 4 5 6 (PRODUCT LEVEL)	SEE PAGE
	1	1	**1B-2713**	1	BOLT (1/4-20X1.75-IN)	
	2	1	**3D-8747**	1	BRACKET	
	3	1	**3D-8748**	1	FAN AS (4-BLADE)	
	4	1	**3D-8749**	1	GUARD	
	5	1	**3T-6774**	1	GROMMET	
	6	1	**9X-9689**	1	BASE-FAN	
	7	1	**135-1979**	1	BRACKET	
Y	8	1	**170-5335**	1	MOTOR GP-ELECTRIC (24-VDC, CIRCULATING FAN)	271
	9	1	**031-4155**	1	LOCKNUT (5/16-18-THD)	
	10	1	**1M-1230**	2	NUT & LOCK AS (10-32-THD)	
	11	1	**2D-6235**	1	LOCKNUT (1/4-20-THD)	
	12	1	**3D-8752**	1	LOCKNUT (5/16-24-THD)	
	13	1	**4M-0061**	1	BOLT (5/16-18X0.75-IN)	
	14	1	**5P-0537**	4	WASHER-HARD (7.2X14.5X2-MM THK)	
	15	1	**6G-5987**	1	BRACKET	
	16	1	**7L-8316**	1	SETSCREW-SOCKET (10-32X2.54-IN)	
	17	1	**7T-0582**	1	BOLT	
	18	1	**9M-1974**	3	WASHER-HARD (8.8X16X2-MM THK)	
	19	1	**9T-5241**	2	WASHER (9.53X18X1-MM THK)	

Y-SEPARATE ILLUSTRATION

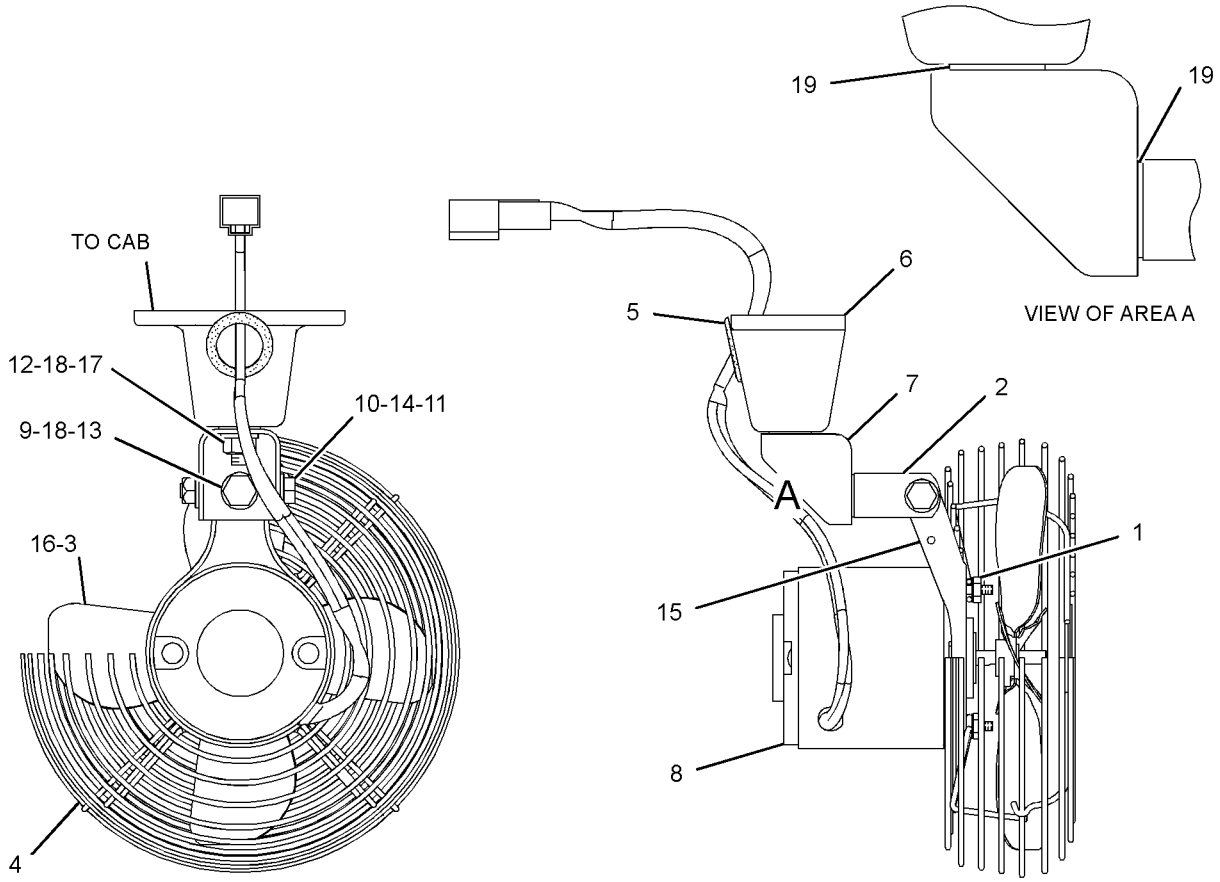

FRONT VIEW

LEFT SIDE VIEW

GRAPHIC #1 **<END>** g01240125

OPERATOR STATION

233-3137 FAN GP-CIRCULATING

S/N: R9H1-UP
WITH SWITCH
PART OF 352-3820 OPTION AR-CAB
AN ATTACHMENT

SMCS-7316 **i04033313**

NOTE	REF NO	GRAPHIC REF	PART NUMBER	QTY	PART NAME 1 2 3 4 5 6 (PRODUCT LEVEL)	SEE PAGE
	1	1	**7T-4003**	1	RESISTOR	
Y	2	1	**170-5334**	1	FAN GP-CIRCULATING (FRONT DEFROSTER)	740
	3	1	**236-4611**	1	SWITCH AS-ROCKER (FAN BLOWER SPEED)	
	4	1	**325-9400**	1	PLATE AS	
M	5	1	**7X-2536**	2	BOLT (M8X1.25X14-MM)	
	6	1	**8T-4224**	2	WASHER-HARD (8.8X16X2-MM THK)	
M	7	1	**9X-1046**	2	SCREW (M4X0.7X18-MM)	
M	8	1	**9X-2045**	4	SCREW-TRUSS HEAD (M6X1X20-MM)	

M-METRIC PART
Y-SEPARATE ILLUSTRATION

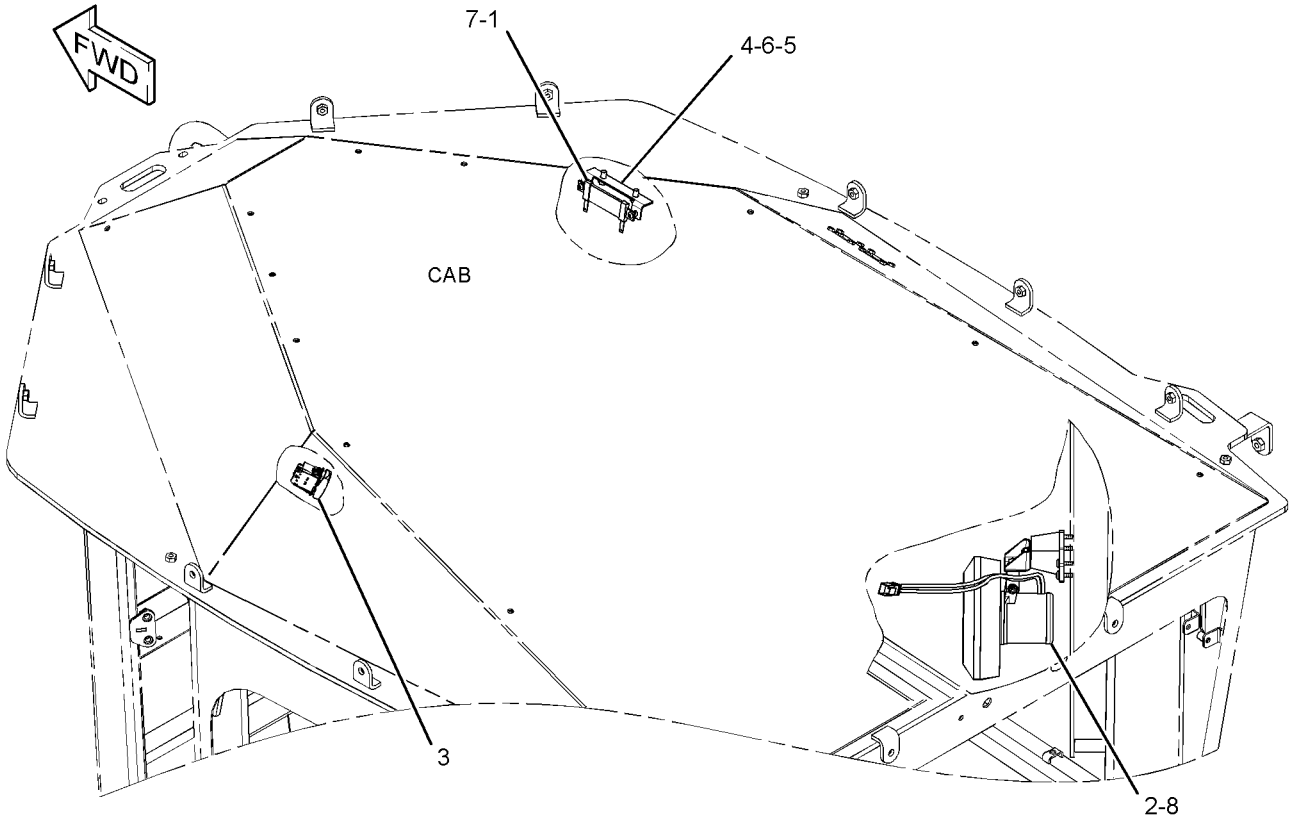

GRAPHIC #1 **<END>** g01862475

OPERATOR STATION

300-1275 HORN GP-AIR

S/N: R9H1-UP
PART OF 352-3819 OPTION AR-WORK TOOL
CANNOT BE USED WITH 300-1274—PAGE 745
AN ATTACHMENT

SMCS-7402 **i02623733**

NOTE	REF NO	GRAPHIC REF	PART NUMBER	QTY	PART NAME 1 2 3 4 5 6 (PRODUCT LEVEL)	SEE PAGE
	1	1	**3S-2093**	5	STRAP-CABLE	
	2	1	**146-5804**	1	HORN AS	
		1	**102-8802**	2	KIT-RECEPTACLE (2-PIN)	
					(EACH INCLUDES RECEPTACLE AS & WEDGE)	
		1	**186-3735**	2	PIN-CONNECTOR (16-GA TO 18-GA)	
	3	1	**297-3246**	1	BRACKET AS	
M		1	**8T-3597**	2	NUT-WELD (M12X1.75-THD)	
	4	1	**300-7693**	1	HARNESS AS-ALARM	
		1	**102-8802**	1	KIT-RECEPTACLE (2-PIN)	
					(INCLUDES RECEPTACLE AS & WEDGE)	
		1	**155-2270**	1	KIT-CONNECTING PLUG (2-PIN)	
					(INCLUDES PLUG AS, WEDGE, & INTERFACE SEAL)	
	5	1	**130-5301**	1	CLIP	
	6	1	**4P-7429**	1	CLIP	
	7	1	**4P-7581**	4	CLIP	
	8	1	**8T-4121**	4	WASHER-HARD (11X21X2.5-MM THK)	
M	9	1	**8T-4136**	2	BOLT (M10X1.5X25-MM)	
M	10	1	**8T-4137**	2	BOLT (M10X1.5X20-MM)	
M	11	1	**8T-4139**	2	BOLT (M12X1.75X30-MM)	
	12	1	**8T-4223**	2	WASHER-HARD (13.5X25.5X3-MM THK)	

M-METRIC PART

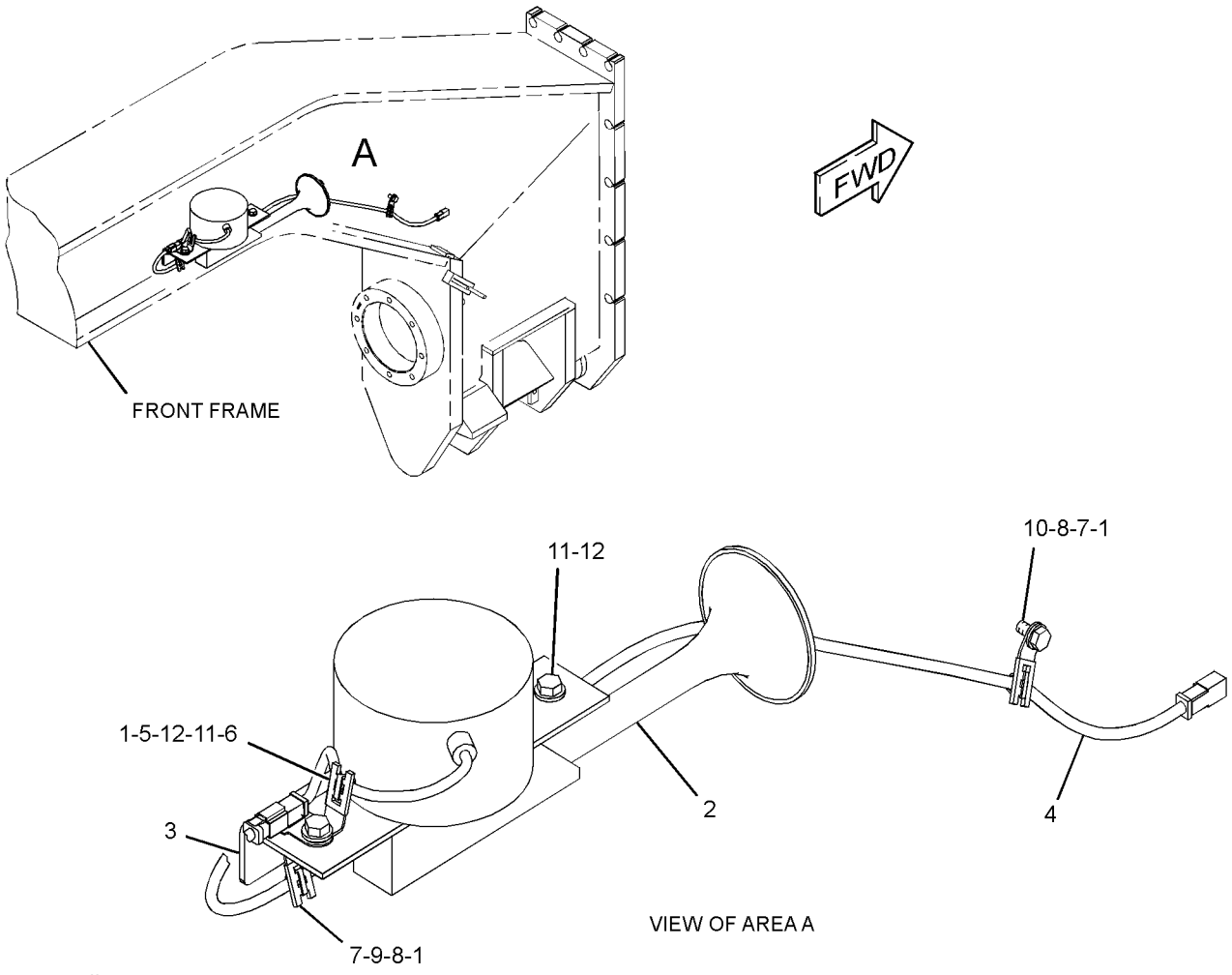

GRAPHIC #1 **<END>** g01323487

OPERATOR STATION

300-1274 HORN GP-ELECTRIC

S/N: R9H1-UP

CANNOT BE USED WITH 300-1275—PAGE 743

AN ATTACHMENT

SMCS-7402 **i02623724**

NOTE	REF NO	GRAPHIC REF	PART NUMBER	QTY	PART NAME 1 2 3 4 5 6 (PRODUCT LEVEL)	SEE PAGE
	1	1	**174-7875**	1	HORN AS (24-VOLT, HIGH TONE)	
	2	1	**8T-4121**	1	WASHER-HARD (11X21X2.5-MM THK)	
M	3	1	**8T-4137**	1	BOLT (M10X1.5X20-MM)	

M-METRIC PART

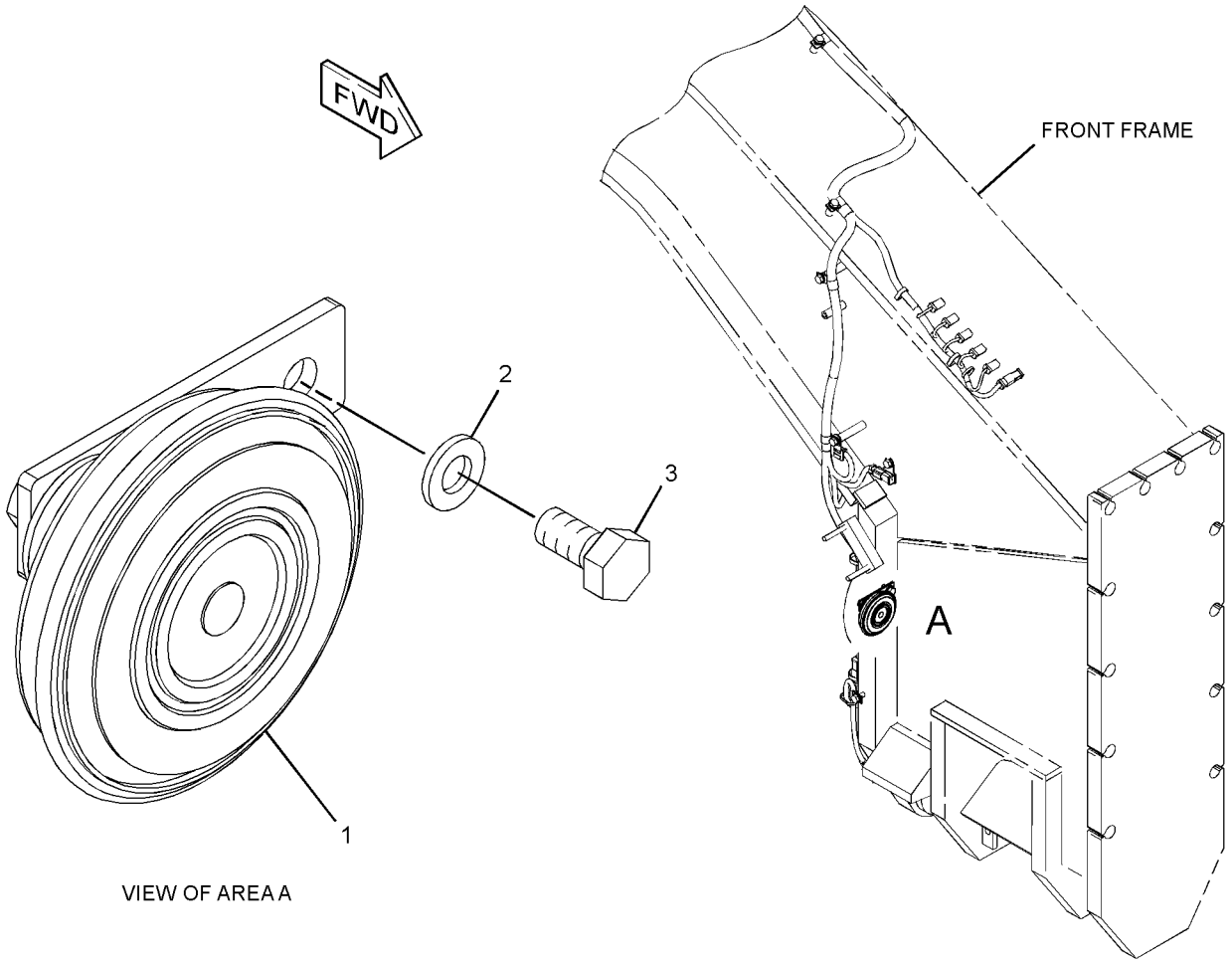

GRAPHIC #1 **<END>** g01322517

OPERATOR STATION

294-0995 LINER GP-CAB

S/N: R9H1-UP

PART OF 233-3107 CAB AR

SMCS-7329 **i03823771**

NOTE	REF NO	GRAPHIC REF	PART NUMBER	QTY	PART NAME 1 2 3 4 5 6 (PRODUCT LEVEL)	SEE PAGE
Y	1	1	**3E-6389**	1	LAMP GP-DOME (24-VOLT) (CAB, RH, LH)	234
	2	1	**5T-1625**	1	PLATE AS	
	3	1	**9F-8125**	3	LOCKWASHER (EXTERNAL TOOTH)	
	4	1	**101-0003**	2	FASTENER	
	5	1	**114-6658**	15	WASHER (6.5X17X1-MM THK)	
	6	1	**4E-8722**	24	NUT (RETAINER)	
	7	1	**250-8335**	2	LAMP AS (24-VOLT) (IMPLEMENT CONTROL)	
					(EACH INCLUDES)	
		1	**102-8802**	1	KIT-RECEPTACLE (2-PIN)	
					(INCLUDES RECEPTACLE AS & WEDGE)	
		1	**186-3735**	2	PIN-CONNECTOR (16-GA TO 18-GA)	
	8	1	**263-2573**	1	FILM-INSTRUCTION (WIPER)	
	9	1	**297-4151**	1	COVER	
	10	1	**272-8327**	1	PLATE	
	11	1	**274-2399**	1	COVER	
	12	1	**276-9622**	1	PLATE	
	13	1	**294-0986**	1	LINER AS-CAB	
		1	**174-5763**	18	CLIP	
	14	1	**294-0992**	1	PLATE	
	15	1	**294-0993**	1	PLATE	
	16	1	**297-4171**	1	COVER	
	17	1	**033-4814**	3	SCREW (10-32X1-IN)	
	18	1	**096-6166**	6	WASHER-HARD (4.5X9X1-MM THK)	
	19	1	**101-2867**	9	WASHER-HARD (7.2X25X2-MM THK)	
	20	1	**9K-5635**	10	SCREW-TAPPING (8-18X1-IN)	
M	21	1	**9X-2044**	4	SCREW-TRUSS HEAD (M6X1X16-MM)	
M	22	1	**9X-2045**	20	SCREW-TRUSS HEAD (M6X1X20-MM)	
	23	1	**131-5171**	1	CLIP	

M-METRIC PART
Y-SEPARATE ILLUSTRATION

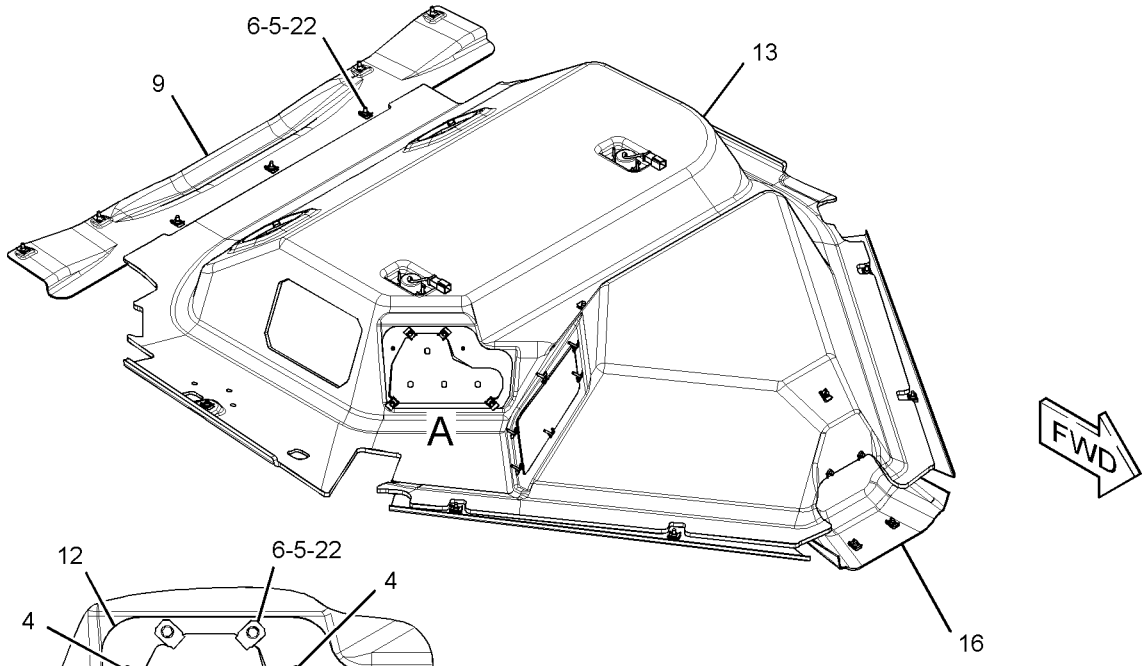

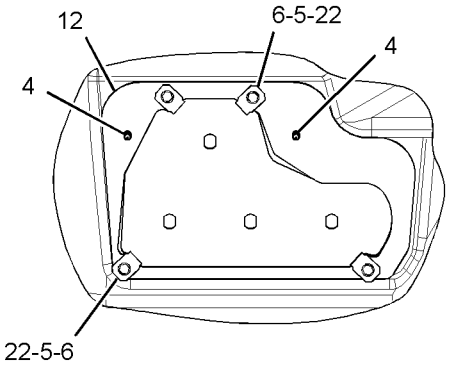

VIEW OF AREA A

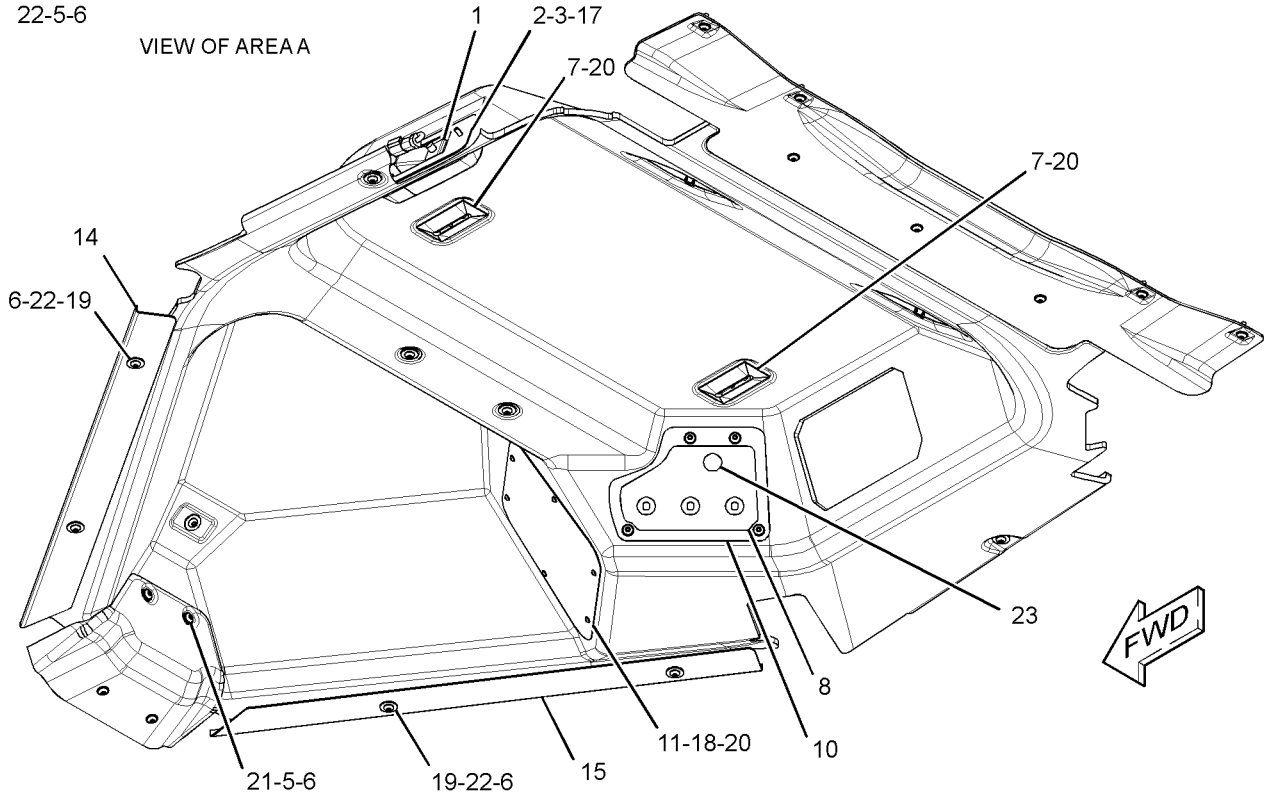

GRAPHIC #1 **<END>** g01886595

OPERATOR STATION

283-7769 LINES GP-AIR CONDITIONER

S/N: R9H1-UP

PART OF 349-2556 COMMON AR

SMCS-1808, 7320 **i02762733**

NOTE	REF NO	GRAPHIC REF	PART NUMBER	QTY	PART NAME 1 2 3 4 5 6 (PRODUCT LEVEL)	SEE PAGE
	1	1	**1P-6356**	1	PLATE	
	2	1	**5P-3928**	1	COUPLING AS-REFRIGERANT (SELF SEALING)	
		1	**107-4395**	1	VALVE AS	
		1	**107-4396**	1	GASKET	
	3	1	**7K-3176**	1	COUPLING AS-REFRIGERANT (SELF SEALING)	
		1	**107-4393**	1	VALVE AS	
		1	**107-4394**	1	GASKET	
I	4	1	**307-2079**	1	HOSE AS	
I	5	1	**283-7756**	1	HOSE AS	
	6	1	**290-7022**	1	FITTING AS (AIR CONDITIONER)	
		1	**3E-4051**	1	CAP-SEAL (REFRIGERANT, LOW SIDE)	
		1	**3E-4057**	1	VALVE AS	
		1	**172-4880**	1	CAP-SEAL	
		1	**180-7180**	1	CORE-VALVE	
M	7	1	**085-8091**	1	BOLT (M10X1.5X55-MM)	
	8	1	**144-8344**	1	SPACER (11X19X20-MM THK)	
	9	1	**3E-6811**	1	FITTING AS-AIR CONDITIONER	
		1	**3E-4052**	1	CAP-SEAL (HIGH SIDE CHARGE PORT)	
		1	**3E-4058**	1	VALVE AS	
	10	1	**4D-7735**	1	CLIP	
	11	1	**5P-1075**	1	WASHER-HARD (10.2X22.5X3-MM THK)	
	12	1	**6D-4246**	1	CLIP	
	13	1	**8T-4121**	2	WASHER-HARD (11X21X2.5-MM THK)	
M	14	1	**8T-4136**	1	BOLT (M10X1.5X25-MM)	
M	15	1	**8T-4182**	1	BOLT (M10X1.5X45-MM)	
	16	1	**9X-7381**	1	SEAL-O-RING	
	17	1	**9X-7382**	1	SEAL-O-RING	
	18	1	**9X-8250**	1	CLIP	
	19	1	**223-3490**	1	CLIP	
	20	1	**9X-7385**	2	SEAL-O-RING	
	21	1	**9X-7383**	1	SEAL-O-RING	
	22	1	**9X-7384**	1	SEAL-O-RING	

I-REFER TO HYDRAULIC INFORMATION SYSTEM
M-METRIC PART

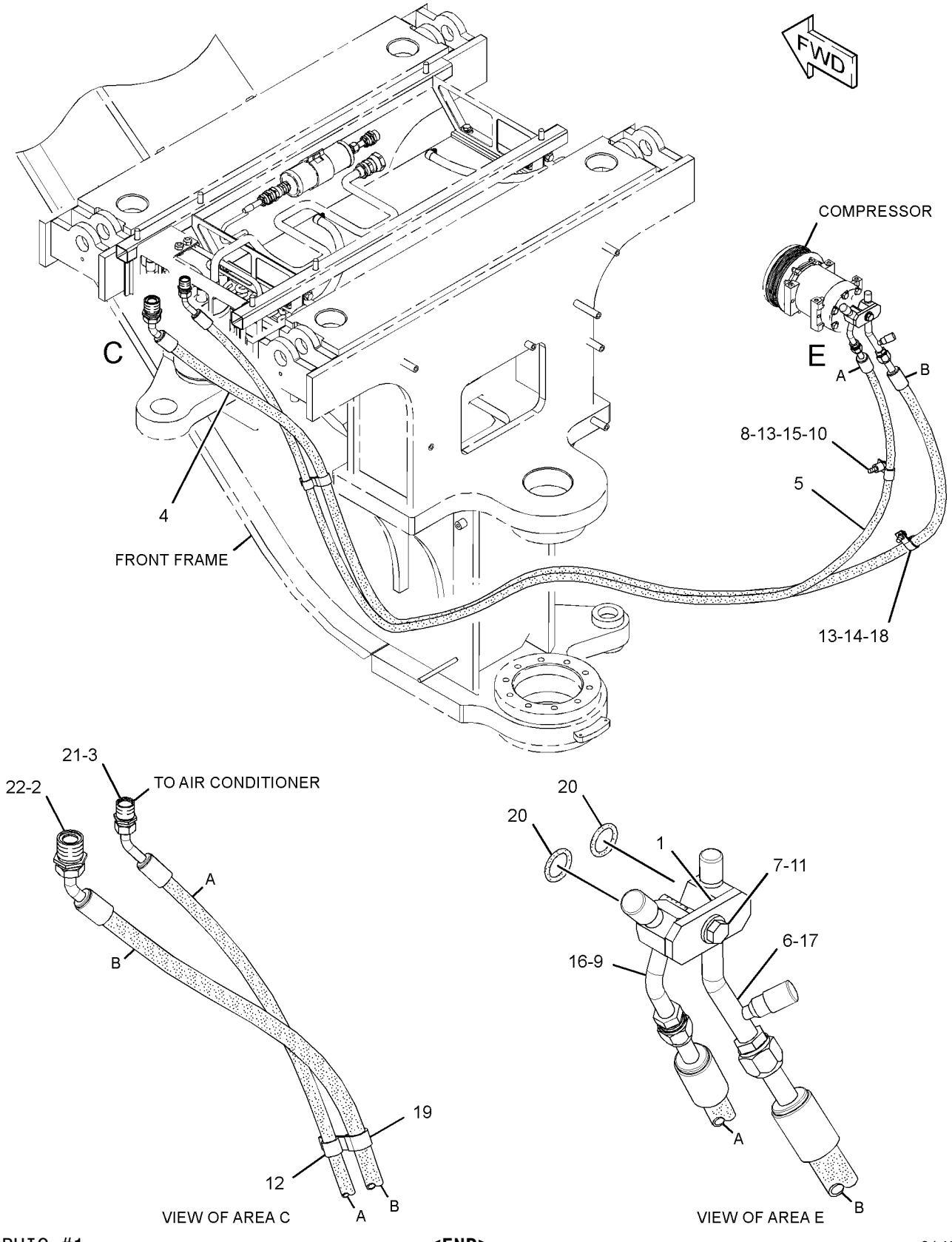

GRAPHIC #1 **<END>** g01450953

OPERATOR STATION

273-1878 LINES GP-HEATER

S/N: R9H1-UP

PART OF 267-5033 AIR CONDITIONER GP

SMCS-1812, 7304 **i02472390**

NOTE	REF NO	GRAPHIC REF	PART NUMBER	QTY	PART NAME 1 2 3 4 5 6 (PRODUCT LEVEL)	SEE PAGE
	1	1	**9X-2488**	4	CLAMP-HOSE	
	2	1	**273-0343**	1	PLATE AS	
		1	**273-0344**	1	PLATE	
	3	1	**278-3354**	1	FILM-INSTRUCTION (HVAC WATER, DRAINING, FILLING)	
	4	1	**5P-4116**	2	WASHER-HARD (8.8X20.5X2-MM THK)	
	5	1	**6D-1641**	1	CLIP	
	6	1	**8T-4121**	1	WASHER-HARD (11X21X2.5-MM THK)	
M	7	1	**8T-4137**	1	BOLT (M10X1.5X20-MM)	
M	8	1	**8T-4908**	2	BOLT (M8X1.25X25-MM)	
E	9	1	**136-1953**		HOSE (172-CM)	
D	10	1	**5P-5637**		SEAL (0.7-M)	

D-ORDER BY THE METER
E-ORDER BY THE CENTIMETER
M-METRIC PART

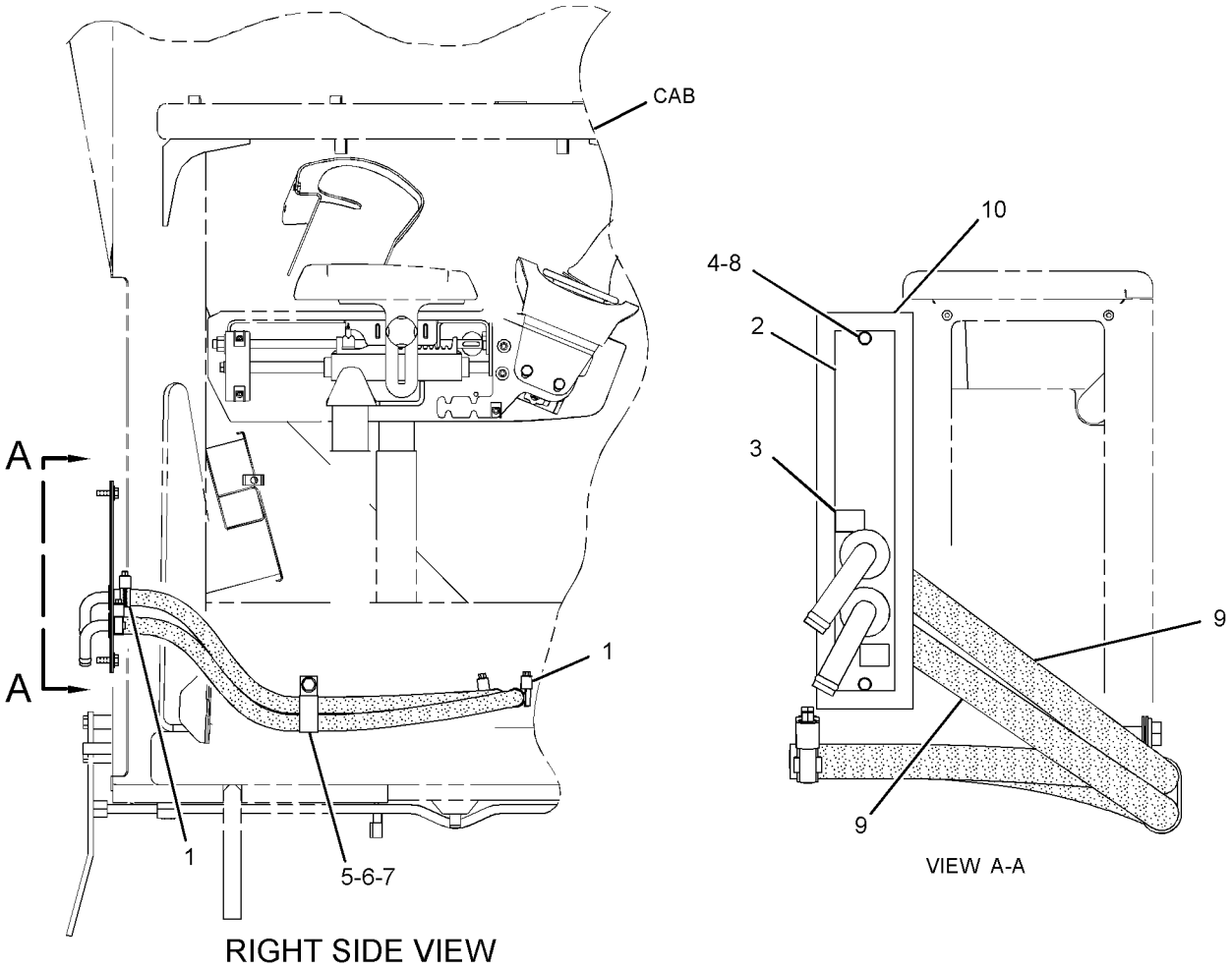

RIGHT SIDE VIEW

VIEW A-A

GRAPHIC #1 **<END>** g01259573

OPERATOR STATION

283-7768 LINES GP-HEATER

S/N: R9H1-UP

PART OF 349-2556 COMMON AR

SMCS-1812, 7304 **i04011775**

NOTE	REF NO	GRAPHIC REF	PART NUMBER	QTY	PART NAME 1 2 3 4 5 6 (PRODUCT LEVEL)	SEE PAGE
C	1	1	**124-6257**	4	CLAMP-HOSE	
	3	1	**090-0744**	1	ELBOW	
C	5	1	**355-9341**	1	TUBE AS	
	6	1	**288-0460**	2	PLATE AS	
					(EACH INCLUDES)	
M		1	**8T-3490**	1	NUT-WELD (M10X1.5-THD)	
	7	1	**288-5161**	1	BRACKET AS	
M		1	**8T-3490**	2	NUT-WELD (M10X1.5-THD)	
	8	1	**141-3983**	1	SPACER (11X19X48-MM THK)	
	9	1	*148-8342*	1	CONNECTOR AS	
		1	**6V-8632**	1	CONNECTOR	
		1	**3K-0360**	1	SEAL-O-RING	
		1	**7J-9108**	1	SEAL-O-RING	
	10	1	*148-8393*	1	ELBOW AS	
		1	**6V-9852**	1	ELBOW	
		1	**7J-9108**	1	SEAL-O-RING	
	12	1	**3D-2824**	1	SEAL-O-RING	
	13	1	**6D-1641**	3	CLIP	
	14	1	**6V-1228**	1	CLIP	
	16	1	**8T-4121**	7	WASHER-HARD (11X21X2.5-MM THK)	
M	17	1	**8T-4136**	2	BOLT (M10X1.5X25-MM)	
M	18	1	**8T-4137**	4	BOLT (M10X1.5X20-MM)	
M	19	1	**8T-4172**	1	BOLT (M10X1.5X80-MM)	
M	20	1	**8T-4189**	2	BOLT (M8X1.25X20-MM)	
	21	1	**8T-4224**	2	WASHER-HARD (8.8X16X2-MM THK)	
	22	1	**9M-8406**	1	CLIP	
	23	1	**9X-8250**	3	CLIP	
E	24	1	**5P-0767**		HOSE (367-CM)	
E	24A	1	**5P-0767**		HOSE (347-CM)	

C-CHANGE FROM PREVIOUS TYPE
E-ORDER BY THE CENTIMETER
M-METRIC PART

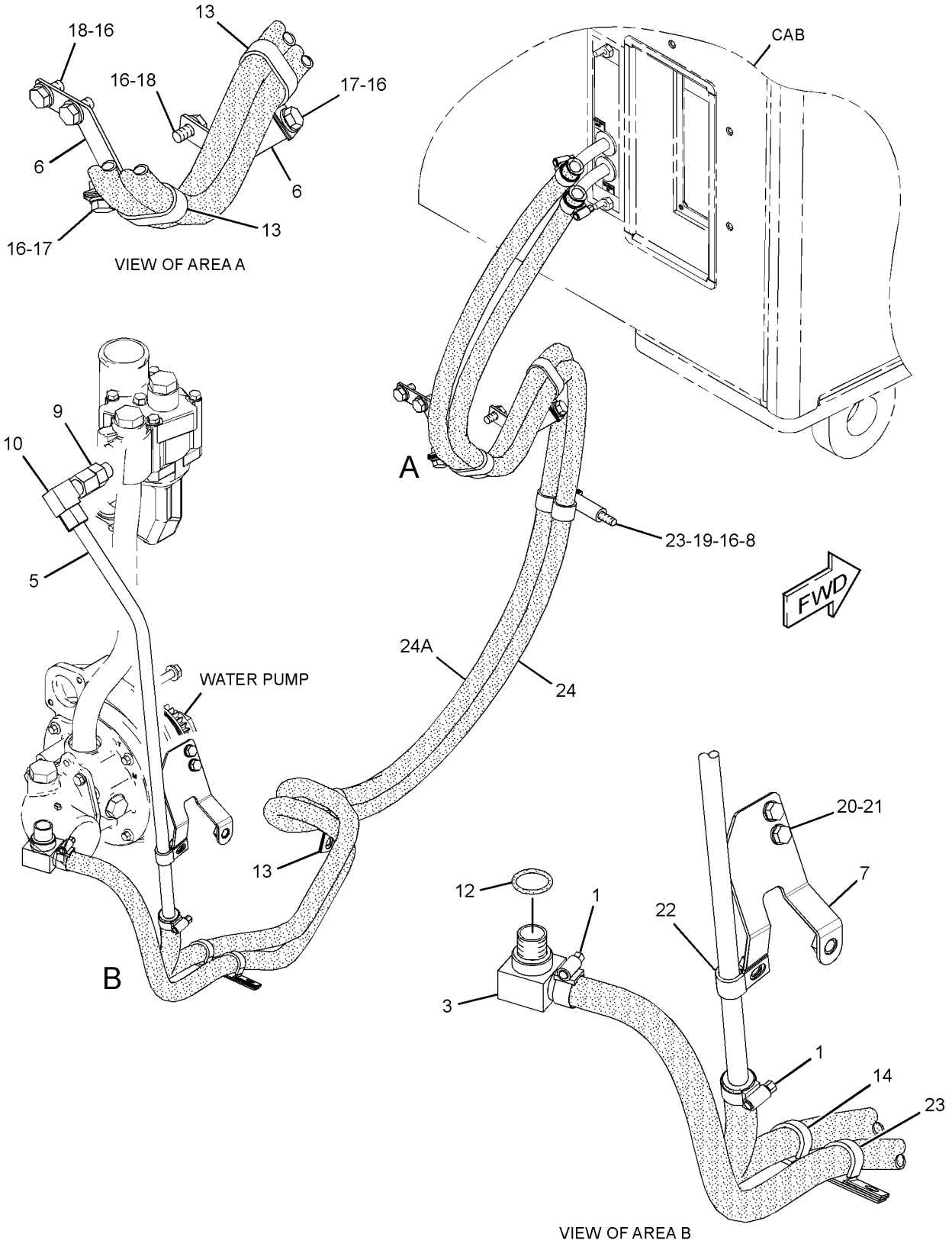

GRAPHIC #1 **<END>** g02209133

OPERATOR STATION

6V-1970 LITERATURE GP

S/N: R9H1-UP

PART OF 349-2556 COMMON AR

SMCS-0374, 0375 **i02831417**

NOTE	PART NUMBER	QTY	PART NAME 1 2 3 4 5 6 (PRODUCT LEVEL)	SEE PAGE
	5P-8500	2	KEY (LITERATURE COMPARTMENT)	
	5P-7958	1	SLEEVE-CABLE SPLICE	

<END>

OPERATOR STATION

351-4490 MIRROR GP

S/N: R9H1-UP
PART OF 352-3815 OPTION AR-REGIONAL
AN ATTACHMENT

SMCS-7319 **i03910730**

NOTE	REF NO	GRAPHIC REF	PART NUMBER	QTY	PART NAME 1 2 3 4 5 6 (PRODUCT LEVEL)	SEE PAGE
	1	1	**123-4586**	8	BLOCK	
	2	1	**185-3874**	1	MIRROR AS	
	3	1	**291-9154**	8	BLOCK	
	4	1	**339-6543**	2	MIRROR AS	
	5	1	**340-7076**	2	MIRROR AS	
	6	1	**351-4424**	1	ARM AS (RH)	
	7	1	**351-4425**	1	ARM AS (LH)	
	8	1	**351-4483**	2	BLOCK	
	9	1	**351-4484**	2	BLOCK	
	10	1	**351-4485**	2	BRACKET	
	11	1	**360-1598**	1	TUBE	
	12	1	**351-4489**	4	TUBE	
	13	1	**351-4491**	1	TUBE AS	
	14	1	**214-0647**	2	MIRROR AS	
	15	1	**264-3637**	4	BOLT (M10X1.5X55-MM)	
	16	1	**323-3730**	4	BOLT	
	17	1	**3K-6060**	4	LOCKNUT (3/8-16-THD)	
	18	1	**5S-7379**	2	BOLT (3/8-16X0.875-IN)	
	19	1	**7V-7584**	2	ANGLE	
	20	1	**7X-7729**	4	WASHER (11X25X3-MM THK)	
	21	1	**8T-4121**	20	WASHER-HARD (11X21X2.5-MM THK)	
M	22	1	**8T-4133**	4	NUT (M10X1.5-THD)	
M	23	1	**8T-4182**	4	BOLT (M10X1.5X45-MM)	
M	24	1	**8T-4185**	4	BOLT (M10X1.5X50-MM)	
M	25	1	**8T-4189**	2	BOLT (M8X1.25X20-MM)	
	26	1	**8T-4224**	3	WASHER-HARD (8.8X16X2-MM THK)	
	27	1	**8T-4896**	2	WASHER-HARD (10.2X18.5X2.5-MM THK)	
M	28	1	**8T-6466**	8	BOLT (M10X1.5X60-MM)	
M	29	1	**8T-7547**	1	BOLT (M8X1.25X30-MM)	

M-METRIC PART

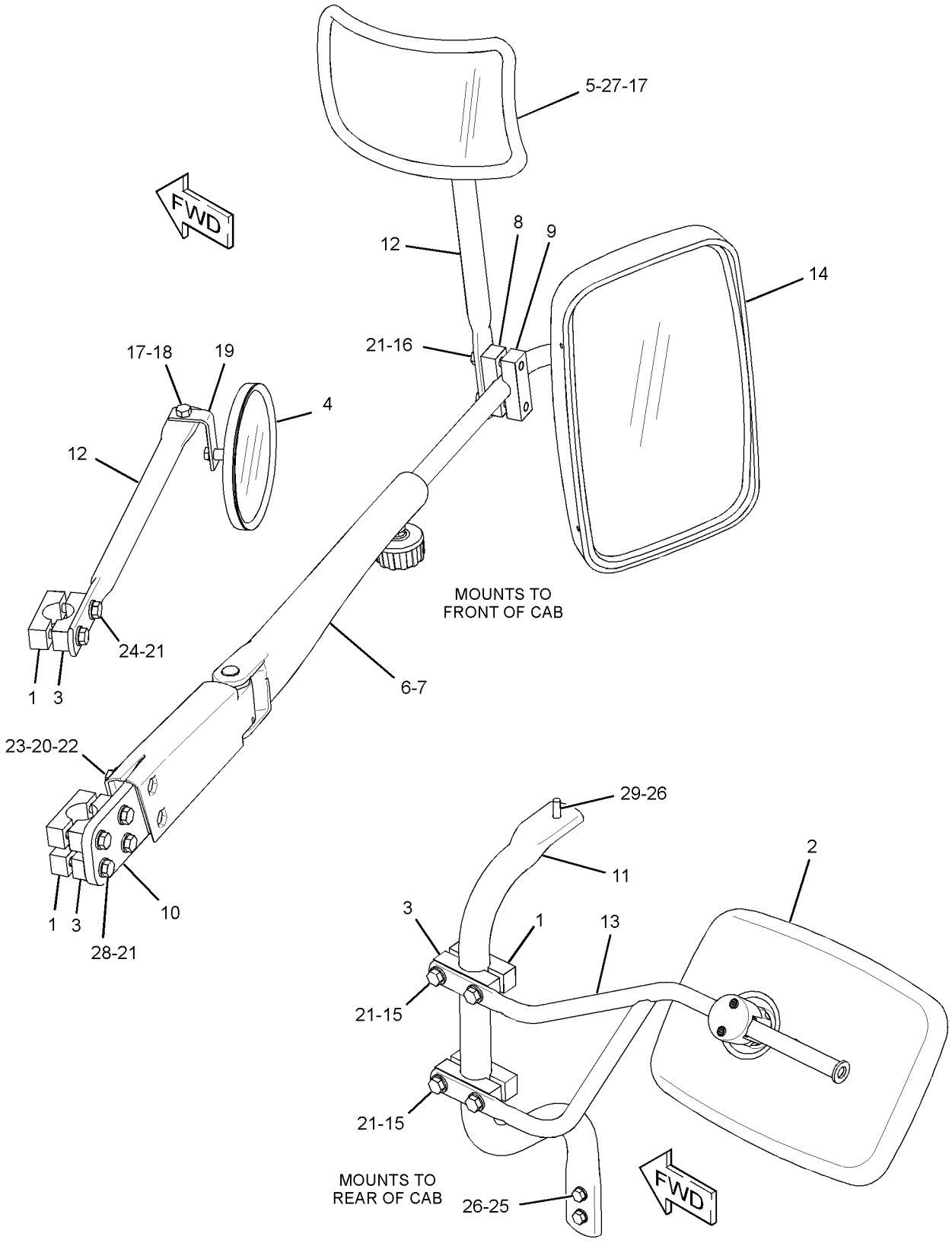

GRAPHIC #1 **<END>** g02213394

OPERATOR STATION

105-9659 MIRROR GP-REAR VIEW—INTERIOR

S/N: R9H1-UP

PART OF 233-3208 MIRROR GP-REAR VIEW

SMCS-7319 **i01901909**

NOTE	REF NO	GRAPHIC REF	PART NUMBER	QTY	PART NAME 1 2 3 4 5 6 (PRODUCT LEVEL)	SEE PAGE
	1	1	**9P-9388**	1	KNOB (MIRROR ADJUSTMENT)	
	2	1	**5P-6874**	1	MIRROR (REAR VIEW)	
	3	1	**5K-9179**	1	BOLT-ROUND HEAD (3/8-16X11-IN)	
	4	1	**6Y-5113**	1	BRACKET	
	5	1	**8T-4121**	2	WASHER-HARD (11X21X2.5-MM THK)	
M	6	1	**8T-4195**	2	BOLT (M10X1.5X30-MM)	

M-METRIC PART

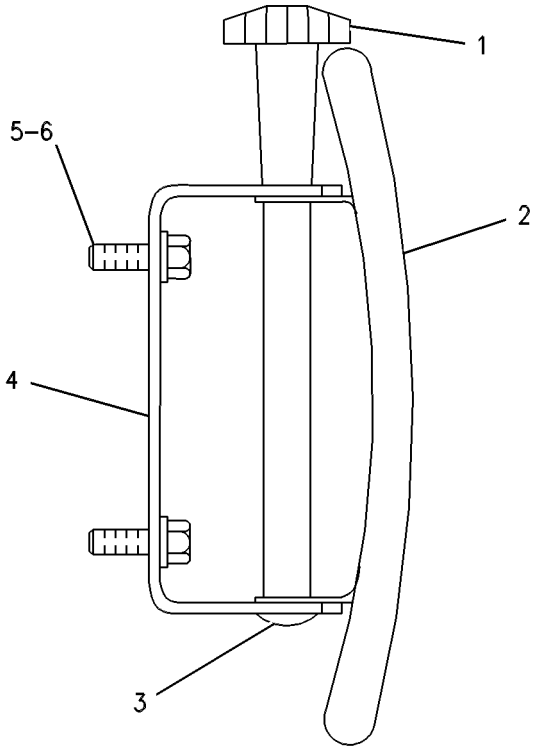

GRAPHIC #1 **<END>** g00254288

OPERATOR STATION

233-3208 MIRROR GP-REAR VIEW—INTERIOR

S/N: R9H1-UP

PART OF 233-3107 CAB AR

SMCS-7319 **i03786952**

NOTE	PART NUMBER	QTY	PART NAME 1 2 3 4 5 6 (PRODUCT LEVEL)	SEE PAGE
Y	*105-9659*	1	MIRROR GP-REAR VIEW (INTERIOR)	756

Y-SEPARATE ILLUSTRATION

<END>

OPERATOR STATION

233-3295 MIRROR GP-REAR VIEW—EXTERIOR

S/N: R9H1-UP
PART OF 352-3819 OPTION AR-WORK TOOL
CANNOT BE USED WITH 233-3296—PAGE 759
AN ATTACHMENT

SMCS-7319 **i03301620**

NOTE	REF NO	GRAPHIC REF	PART NUMBER	QTY	PART NAME 1 2 3 4 5 6 (PRODUCT LEVEL)	SEE PAGE
	1	1	**123-4586**	4	BLOCK	
	2	1	**291-9154**	4	BLOCK	
	3	1	**259-4758**	2	MIRROR AS	
	4	1	**265-8941**	2	TUBE AS	
	5	1	**8T-4121**	8	WASHER-HARD (11X21X2.5-MM THK)	
M	6	1	**189-5358**	8	BOLT (M10X1.5X60-MM)	

M-METRIC PART

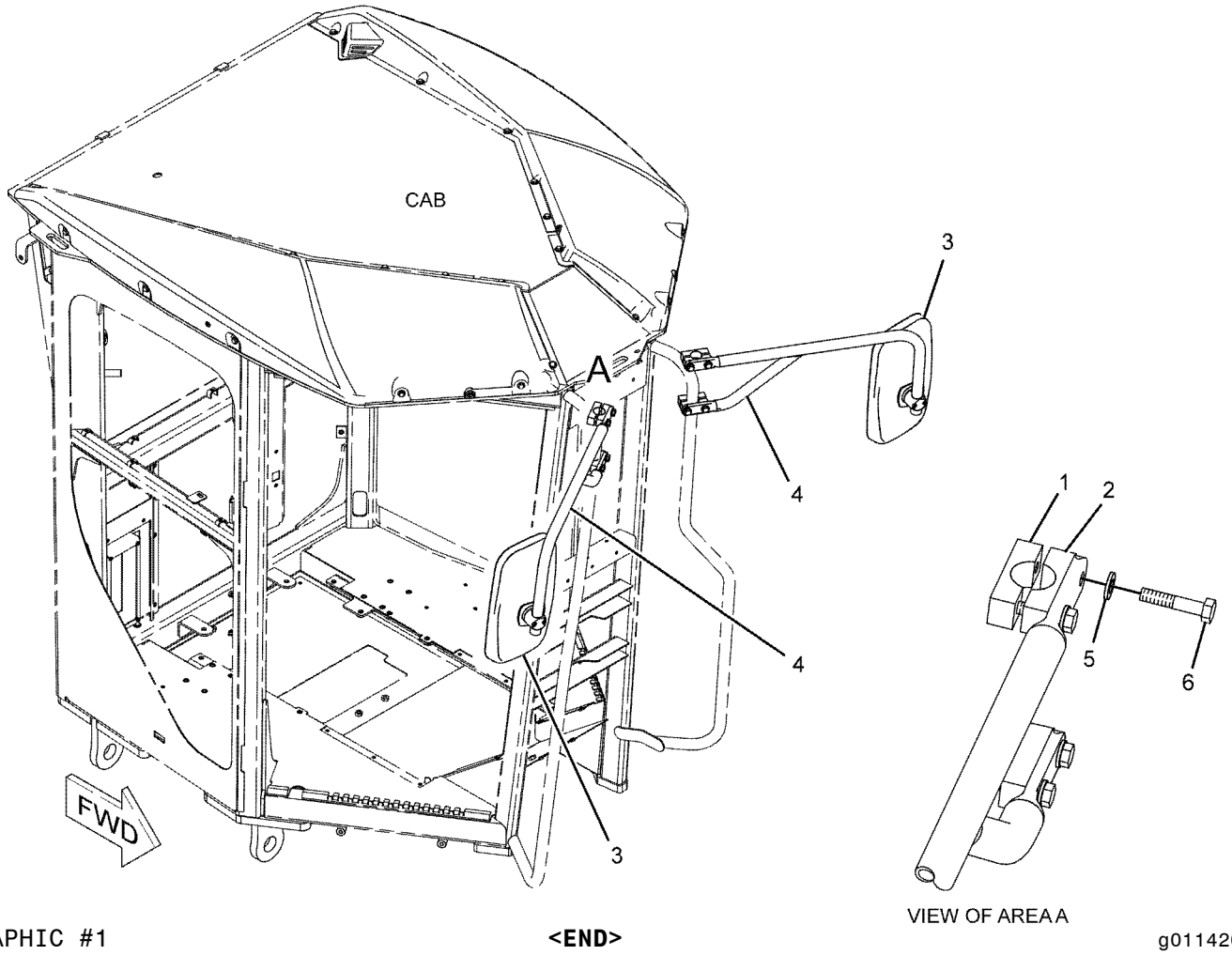

GRAPHIC #1 **<END>** g01142028

233-3296 MIRROR GP-REAR VIEW—EXTERIOR, HEATED

S/N: R9H1-UP

CANNOT BE USED WITH 233-3295—PAGE 758

AN ATTACHMENT

SMCS-7319 **i04021803**

NOTE	REF NO	GRAPHIC REF	PART NUMBER	QTY	PART NAME 1 2 3 4 5 6 (PRODUCT LEVEL)	SEE PAGE
	1	1	**123-4586**	4	BLOCK	
	2	1	**291-9154**	4	BLOCK	
CY	3	1	*343-1824*	1	SWITCH GP-ROCKER (HEATED MIRRORS)	338
	4	1	**259-4759**	2	MIRROR AS	
					(EACH INCLUDES)	
		1	**102-8802**	1	KIT-RECEPTACLE (2-PIN)	
					(INCLUDES RECEPTACLE AS & WEDGE)	
		1	**8T-8729**	2	PIN-CONNECTOR (16-GA TO 18-GA)	
	5	1	**265-8941**	2	TUBE AS	
	6	1	**8T-4121**	8	WASHER-HARD (11X21X2.5-MM THK)	
M	7	1	**189-5358**	8	BOLT (M10X1.5X60-MM)	

C-CHANGE FROM PREVIOUS TYPE
M-METRIC PART
Y-SEPARATE ILLUSTRATION

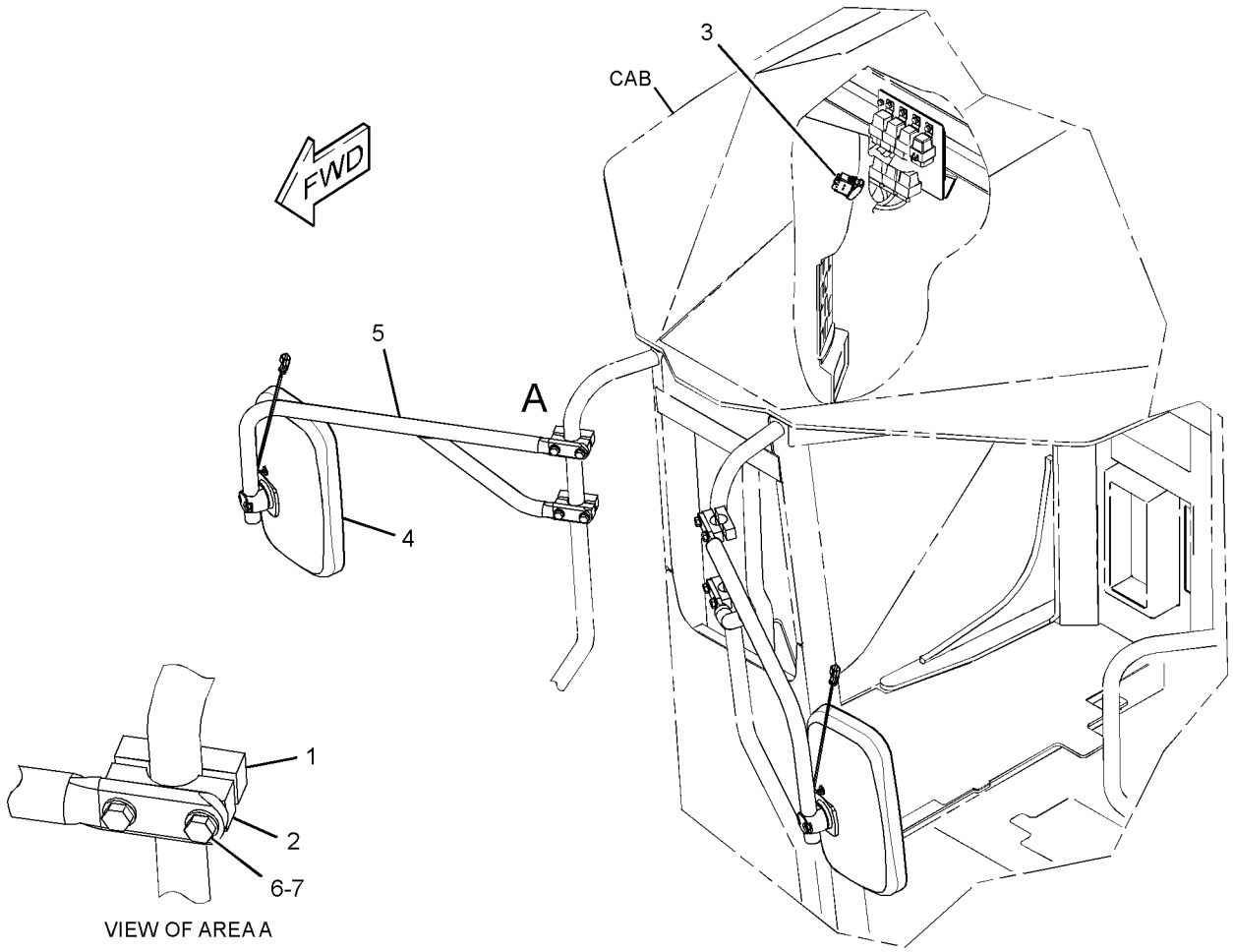

GRAPHIC #1 **<END>** g01874816

OPERATOR STATION

295-1120 MOTOR GP-WINDOW WIPER—FRONT

S/N: R9H1-UP
24-VOLT
PART OF 233-3138 WIPER & WASHER GP-WINDOW

SMCS-7305 **i03115001**

NOTE	REF NO	GRAPHIC REF	PART NUMBER	QTY	PART NAME 1 2 3 4 5 6 (PRODUCT LEVEL)	SEE PAGE
	1	1	**135-0611**	1	MOTOR GP-WINDOW WIPER (24-VOLT, 2-SPEED) (FRONT)	
	2	1	**206-5823**	2	CAP (MOTOR)	
	3	1	**3F-9556**	2	LOCKWASHER	
M	4	1	**5C-7261**	2	NUT (M8X1.25-THD)	

M-METRIC PART

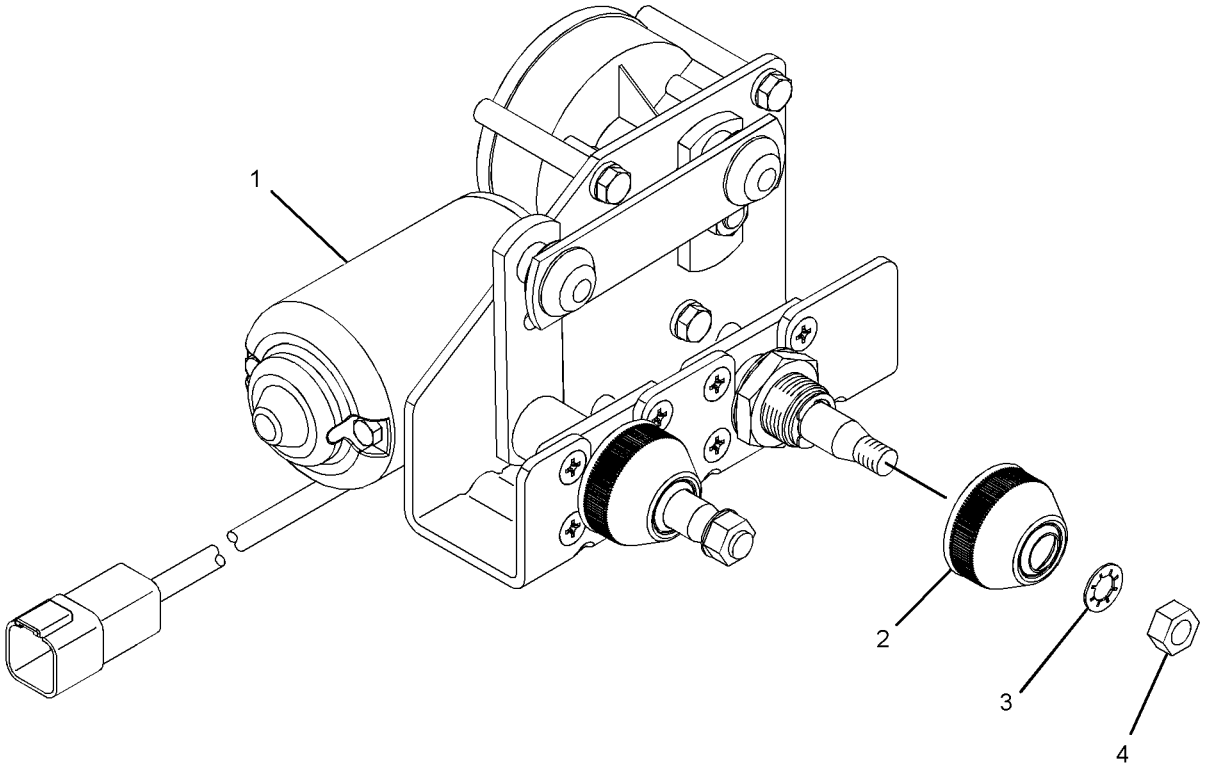

GRAPHIC #1 **<END>** g01315464

OPERATOR STATION

233-3122 MOUNTING GP-ANTENNA–RADIO

S/N: R9H1-UP

PART OF 349-2556 COMMON AR

SMCS-7338 **i02532706**

NOTE	REF NO	GRAPHIC REF	PART NUMBER	QTY	PART NAME 1 2 3 4 5 6 (PRODUCT LEVEL)	SEE PAGE
	1	1	**6T-7695**	2	SPEAKER AS-RADIO	
	2	1	**7K-1181**	1	STRAP-CABLE	
	3	1	**8E-1118**	1	ANTENNA AS	
	4	1	**101-3055**	2	COVER-SPEAKER	
	5	1	**109-8981**	1	CABLE AS-COAXIAL	
	6	1	**9K-5635**	8	SCREW-TAPPING (8-18X1-IN)	

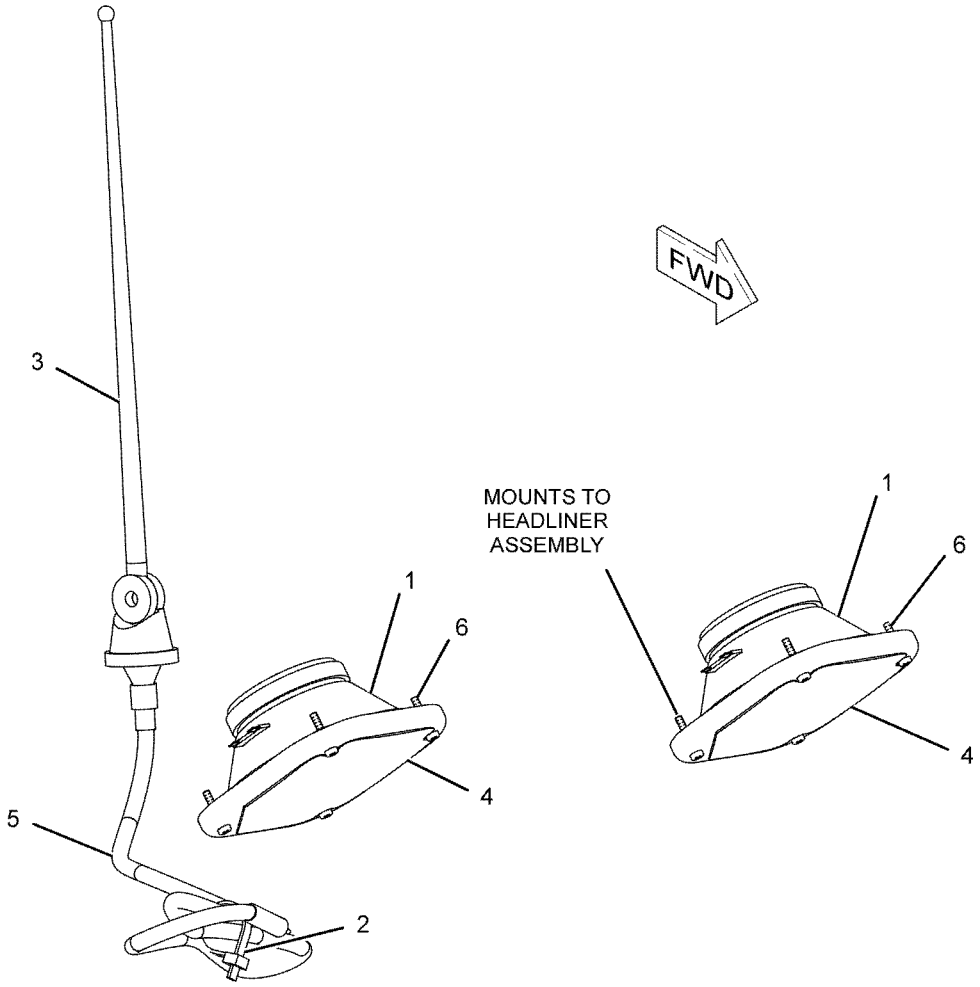

GRAPHIC #1 **<END>** g01114364

OPERATOR STATION

299-0881 MOUNTING GP-CONTROL—WITH ENCLOSURE

S/N: R9H1-UP

PART OF 299-0874 CONTROL GP-ELECTROHYDRAULIC, 299-0876 CONTROL GP-IMPLEMENT AN ATTACHMENT

SMCS-5063 **i02980293**

NOTE	REF NO	GRAPHIC REF	PART NUMBER	QTY	PART NAME 1 2 3 4 5 6 (PRODUCT LEVEL)	SEE PAGE
	1	1	**251-2247**	1	GROMMET	
	2	1	**281-0387**	1	PLATE	
	3	1	**281-0390**	1	GRIP	
	4	1	**299-1030**	1	ENCLOSURE AS	
M	5	1	**225-3109**	2	SCREW-TRUSS HEAD (M4X0.7X14-MM)	
M	6	1	**9X-2043**	2	SCREW-TRUSS HEAD (M6X1X14-MM)	
E	7	1	**282-0808**		SLEEVE (31-CM)	

E-ORDER BY THE CENTIMETER
M-METRIC PART

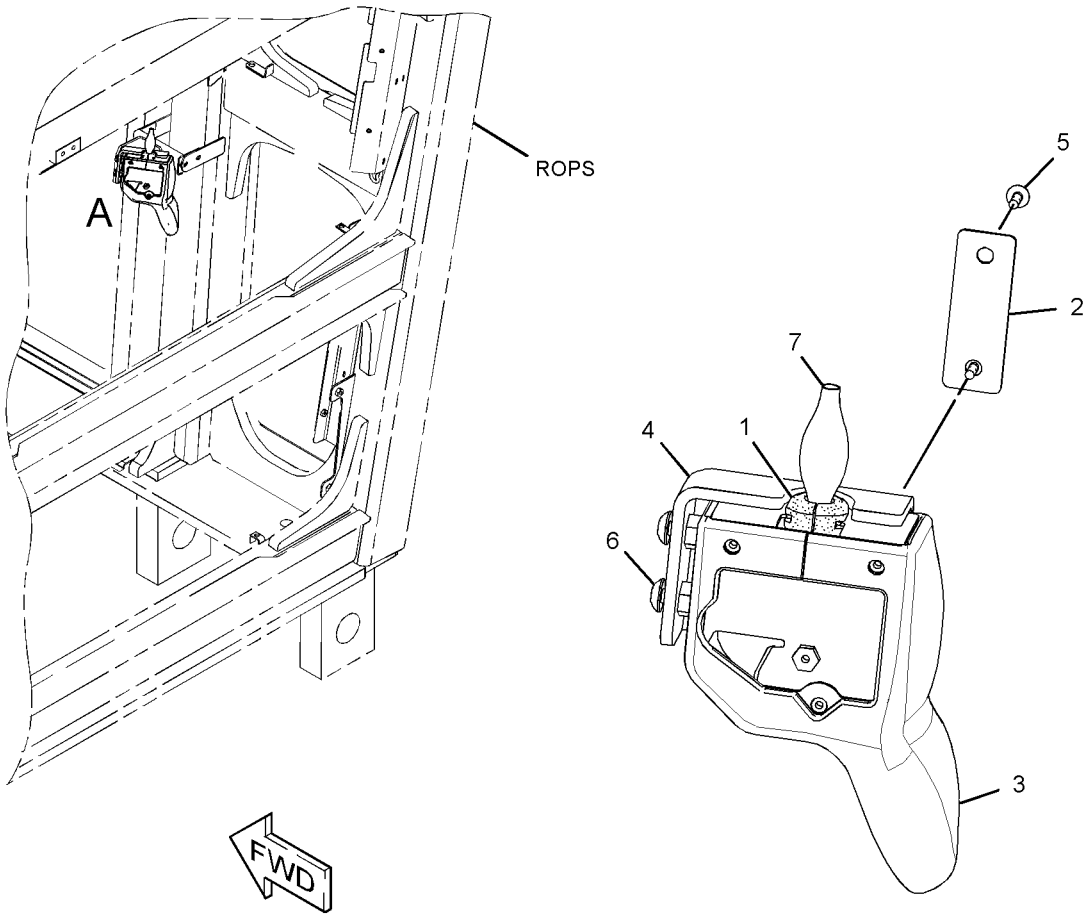

VIEW OF AREA A

GRAPHIC #1 **<END>** g01523875

OPERATOR STATION

274-9254 MOUNTING GP-PLATFORM

S/N: R9H1-UP
PART OF 260-3769 WALKWAY GP
AN ATTACHMENT

SMCS-7253 **i02866227**

NOTE	REF NO	GRAPHIC REF	PART NUMBER	QTY	PART NAME 1 2 3 4 5 6 (PRODUCT LEVEL)	SEE PAGE
	1	1	**198-4778**	20	WASHER-HARD (13.5X30X12-MM THK)	
	2	1	**284-3615**	8	SCREW-HEX SOCKET (M12X1.75X35-MM)	
M	3	1	**8T-4192**	4	BOLT (M12X1.75X25-MM)	
	4	1	**8T-4223**	4	WASHER-HARD (13.5X25.5X3-MM THK)	
M	5	1	**8T-4956**	16	BOLT (M12X1.75X35-MM)	

M-METRIC PART

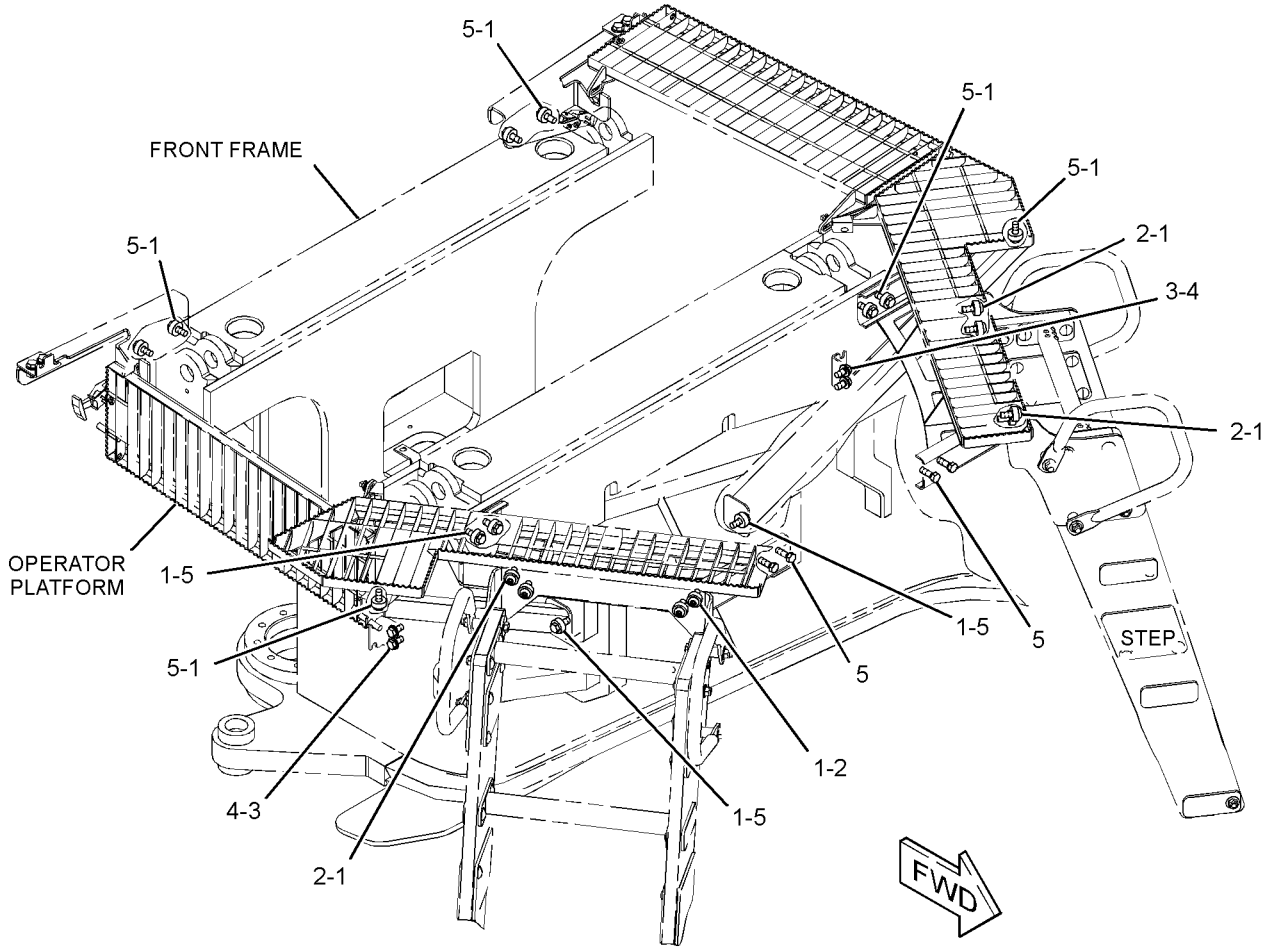

GRAPHIC #1 **<END>** g01429500

OPERATOR STATION

293-4200 PANEL GP-CAB–HVAC

S/N: R9H1-UP

PART OF 233-3107 CAB AR

SMCS-7301 **i04012689**

NOTE	REF NO	GRAPHIC REF	PART NUMBER	QTY	PART NAME 1 2 3 4 5 6 (PRODUCT LEVEL)	SEE PAGE
C	1	2	**2R-2376**	1	WASHER (7X16X0.8-MM THK)	
	2	2	**2V-2015**	1	NUT-SPEED	
	3	2	**4E-8722**	8	NUT (RETAINER)	
	4	2	**6V-8928**	1	HOOK-COAT	
	5	2	**8Y-6379**	1	KIT-HAMMER (CAB WINDOW)	
					(INCLUDES BRACKET & HAMMER)	
	6	2	**8Y-6388**	4	LOUVER AS-VENT	
	7	1	**9U-8263**	1	COVER	
C	8	1,2	**114-6658**	23	WASHER (6.5X17X1-MM THK)	
	9	1	**144-4107**	2	FASTENER	
	10	2	**164-8474**	2	LOUVER AS-VENT	
	11	2	**171-4047**	4	LOUVER AS-VENT	
	12	1	**190-8505**	1	ASHTRAY	
	13	2	**228-6089**	1	PLUG (ROCKER SWITCH)	
	14	1	**249-4097**	1	PLATE AS	
	15	2	**263-2576**	1	PLATE AS	
	16	2	**265-8935**	1	COVER	
	17	2	**274-2392**	1	SCREW-THUMB	
	18	2	**294-1002**	1	PLENUM (LOWER, RH)	
	19	2	**294-1004**	1	PLENUM (LOWER, LH)	
	20	1	**297-4131**	1	SUPPORT AS	
M		1	**6V-9632**	3	NUT-WELD (M6X1-THD)	
M		1	**8T-3490**	4	NUT-WELD (M10X1.5-THD)	
	21	2	**297-4133**	1	COVER AS	
	22	2	**297-4145**	1	COVER AS	
	23	2	**297-4149**	1	PLATE	
	24	2	**297-4153**	1	COVER	
	25	1	**297-4160**	1	COVER AS-PANEL (SWITCH)	
		1	**297-4161**	1	FILM-IDENTIFICATION (LOWER) (SWITCH PANEL)	
		1	**297-4162**	1	FILM-IDENTIFICATION (UPPER) (SWITCH PANEL)	
	26	2	**297-4170**	1	INSULATION	
	27	1	**303-9456**	1	CUP HOLDER	
	28	2	**308-8620**	1	PANEL AS (LH)	
C	29	2	**325-1258**	1	PLENUM (UPPER, RH)	
C	30	2	**325-1260**	1	PLENUM (UPPER, LH)	
C	32	2	**333-3751**	1	PANEL AS (RH)	
C	33	2	**343-6499**	1	COVER AS (RH)	
M		2	**6V-9632**	1	NUT-WELD (M6X1-THD)	
M		2	**8T-3612**	2	NUT-WELD (M8X1.25-THD)	
M		2	**9X-2032**	1	NUT-WELD (M4X0.7-THD)	
C	34	2	**343-6500**	1	COVER AS (LH)	
CM	35	1	**096-3216**	2	SETSCREW-SOCKET (M12X1.75X12-MM)	
	36	2	**101-2867**	6	WASHER-HARD (7.2X25X2-MM THK)	
	37	2	**104-2091**	16	SCREW-FLAT HEAD (6-20X0.5-IN)	
M	38	2	**111-4627**	6	SCREW-MACHINE (M6X1X30-MM)	
	39	1	**205-7048**	2	INSERT-THREADED (M6X1-THD)	
CM	40	1	**3E-8020**	4	SCREW-TRUSS HEAD (M6X1X25-MM)	
C	41	2	**6K-3273**	1	RIVET-POP	
	42	2	**6V-5839**	4	WASHER (11X21X2.5-MM THK)	
M	43	2	**6V-8212**	4	BOLT (M10X1.5X16-MM)	
	44	2	**7G-4824**	1	STRAP	
C	45	2	**8C-9660**	6	WASHER (4.6X7.9X0.8-MM THK)	
	46	2	**8E-7791**	1	STRAP	
	47	1	**8R-3695**	1	GROMMET	
	48	1	**8T-4121**	6	WASHER-HARD (11X21X2.5-MM THK)	
M	49	1	**8T-4195**	6	BOLT (M10X1.5X30-MM)	

OPERATOR STATION

293-4200 **PANEL GP-CAB** *(contd.)* **i04012689**

NOTE	REF NO	GRAPHIC REF	PART NUMBER	QTY	PART NAME 1 2 3 4 5 6 (PRODUCT LEVEL)	SEE PAGE
C	50	2	**9N-1995**	3	RIVET-POP	
C	51	2	**9X-2038**	6	WASHER (7X19X2-MM THK)	
M	52	1	**9X-2043**	7	SCREW-TRUSS HEAD (M6X1X14-MM)	
CM	53	2	**9X-2044**	12	SCREW-TRUSS HEAD (M6X1X16-MM)	
CM	54	1,2	**9X-2045**	9	SCREW-TRUSS HEAD (M6X1X20-MM)	
D	55	2	**5P-5927**		SEAL (0.9-M)	
D	56	2	**8T-6936**		SEAL (0.5-M EACH)	

C-CHANGE FROM PREVIOUS TYPE
D-ORDER BY THE METER
M-METRIC PART

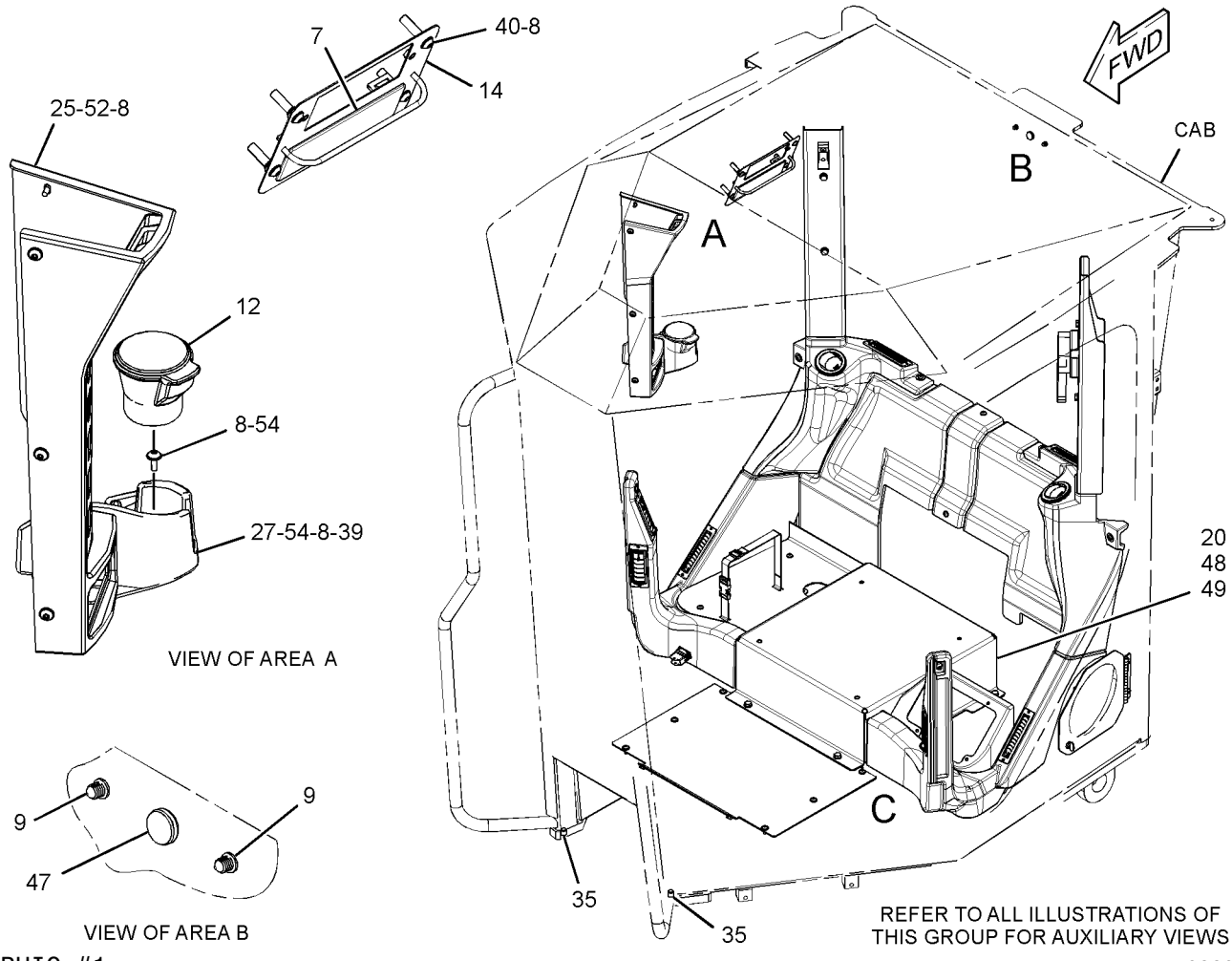

GRAPHIC #1 g02209314

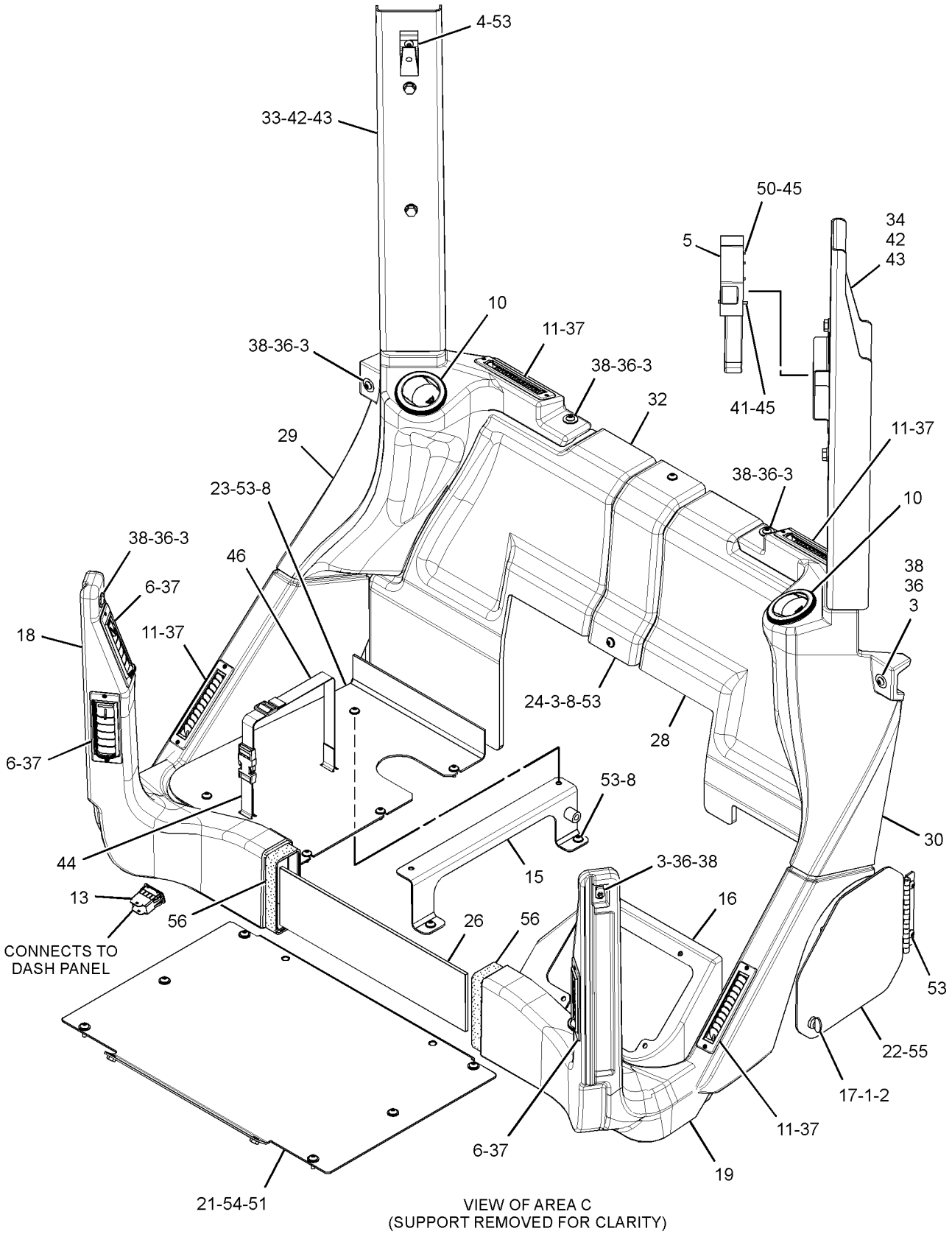

GRAPHIC #2 **<END>** g02211053

OPERATOR STATION

276-8498 PANEL GP-CONTROL—VARIABLE BLADE FLOAT

S/N: R9H1-UP

PART OF 271-3652, 366-3375 FLOAT AR-BLADE

AN ATTACHMENT

SMCS-7332, 7451 **i03893550**

NOTE	REF NO	GRAPHIC REF	PART NUMBER	QTY	PART NAME 1 2 3 4 5 6 (PRODUCT LEVEL)	SEE PAGE
	1	1	**110-6109**	2	KNOB-CONTROL (VARIABLE BLADE FLOAT)	
	2	1	**114-6658**	8	WASHER (6.5X17X1-MM THK)	
Y	3	1	**276-8491**	1	SENSOR & MTG GP-POSITION (VARIABLE BLADE FLOAT)	285
	4	1	**297-4157**	1	PANEL-COVER	
	5	1	**276-8495**	1	PLATE AS	
M		1	**6V-9632**	7	NUT-WELD (M6X1-THD)	
	6	1	**297-4158**	1	PLATE	
	7	1	**276-8500**	1	FILM-IDENTIFICATION (VARIABLE BLADE FLOAT)	
	8	1	**278-4210**	1	SWITCH AS-ROCKER (VARIABLE BLADE FLOAT)	
M	9	1	**7X-2533**	3	BOLT (M6X1X35-MM)	
M	10	1	**9X-2043**	4	SCREW-TRUSS HEAD (M6X1X14-MM)	
M	11	1	**9X-2044**	4	SCREW-TRUSS HEAD (M6X1X16-MM)	
	12	1	**250-2299**	1	LAMP AS-LED (24-VOLT, GREEN)	
	13	1	**102-8802**	1	KIT-RECEPTACLE (2-PIN)	
					(INCLUDES RECEPTACLE AS & WEDGE)	
	14	1	**9X-8256**	3	WASHER (6.6X12X2-MM THK)	

M-METRIC PART
Y-SEPARATE ILLUSTRATION

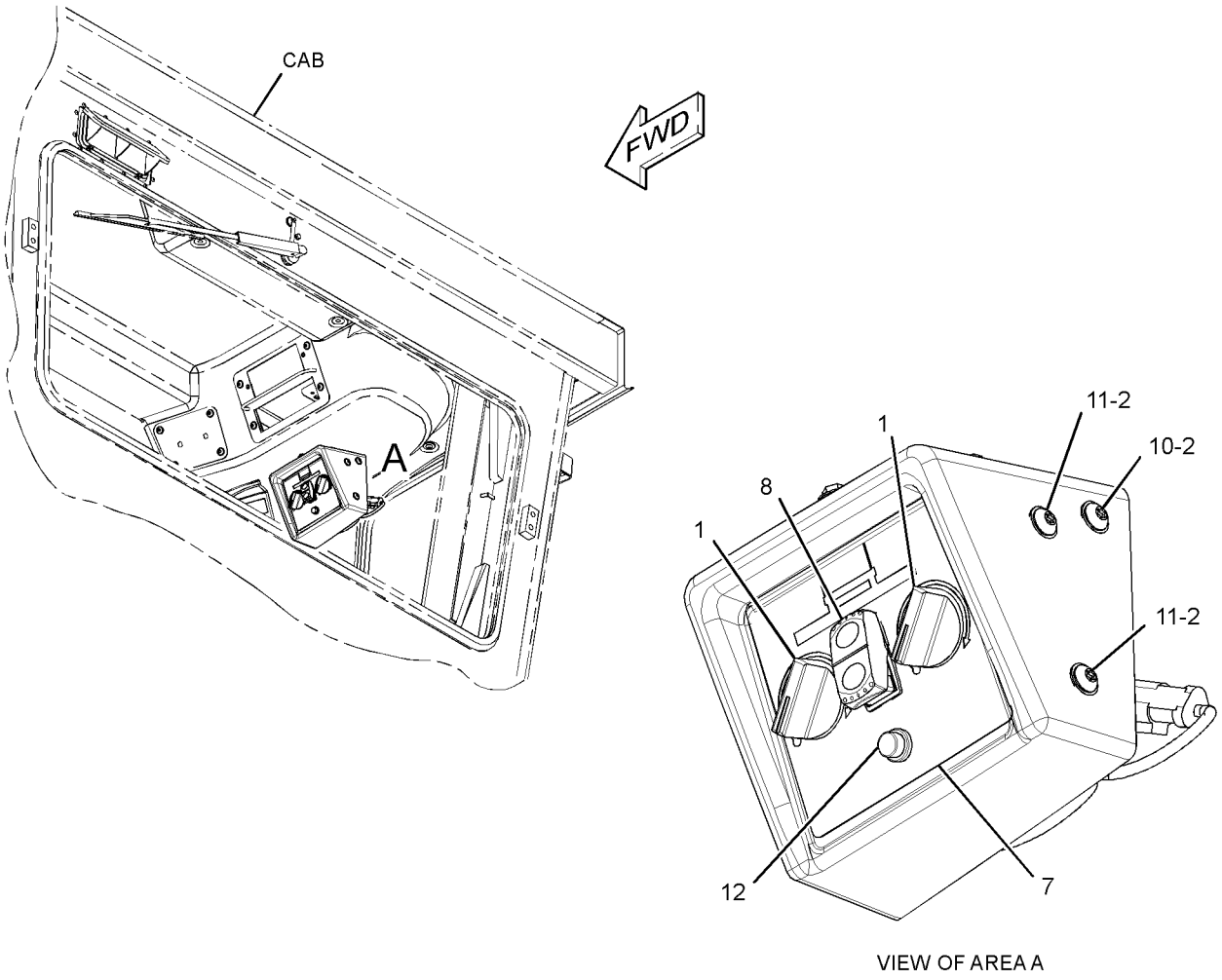

VIEW OF AREA A

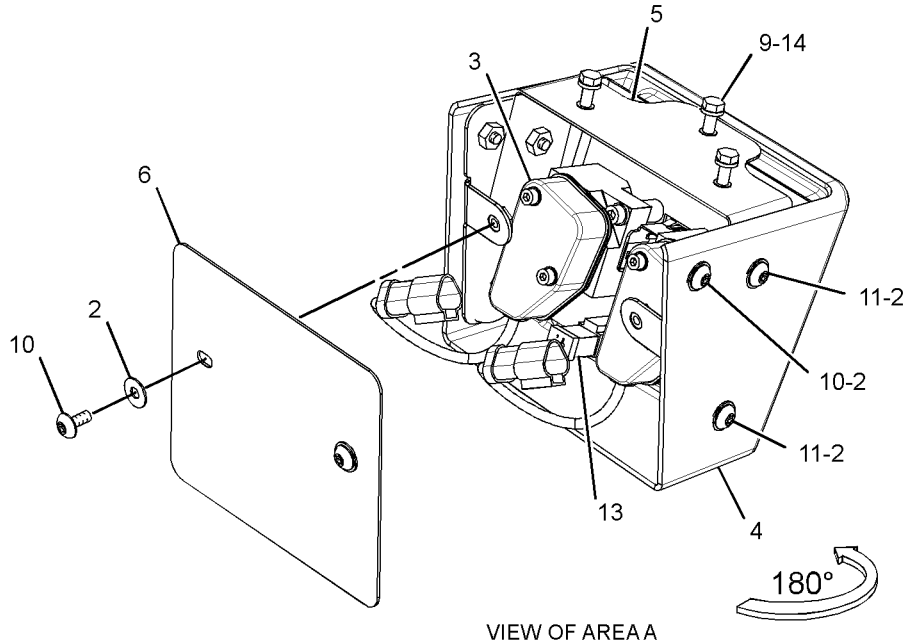

VIEW OF AREA A

GRAPHIC #1 **<END>** g02218353

314-3323 PANEL GP-CONTROL–ACCUGRADE, LH

S/N: R9H1-UP

PART OF 307-0155 GRADE CONTROL GP

AN ATTACHMENT

SMCS-7332, 7451 **i03002421**

NOTE	REF NO	GRAPHIC REF	PART NUMBER	QTY	PART NAME 1 2 3 4 5 6 (PRODUCT LEVEL)	SEE PAGE
	1	1	**249-5483**	1	SWITCH AS-ROCKER (24-VOLT) (BLADE OFFSET, LH)	
	1A	1	**249-5483**	1	SWITCH AS-ROCKER (24-VOLT) (BLADE OFFSET, RH)	
	2	1	**302-9089**	1	BRACKET AS (LH)	
		1	**7T-1099**	1	LINK	
M		1	**159-9539**	2	NUT-WELD (M6X1-THD)	
	3	1	**302-9090**	1	COVER	
	4	1	**307-0016**	1	FILM-IDENTIFICATION (PANEL SWITCHES)	
	5	1	**253-1789**	1	SWITCH AS-PUSH BUTTON (AUTO/MANUAL SIDESHIFT)	
		1	**3E-3371**	1	WEDGE-RECEPTACLE LOCK (3-PIN)	
		1	**6F-0253**	1	LOCKWASHER	
		1	**102-8803**	1	KIT-RECEPTACLE (3-PIN)	
					(INCLUDES RECEPTACLE AS & WEDGE)	
		1	**172-3511**	1	NUT (5/8-24-THD)	
		1	**186-3735**	1	PIN-CONNECTOR (16-GA TO 18-GA)	
M	6	1	**5C-9553**	2	BOLT (M6X1X16-MM)	
M	7	1	**9X-2044**	2	SCREW-TRUSS HEAD (M6X1X16-MM)	
	8	1	**9X-8256**	4	WASHER (6.6X12X2-MM THK)	

M-METRIC PART

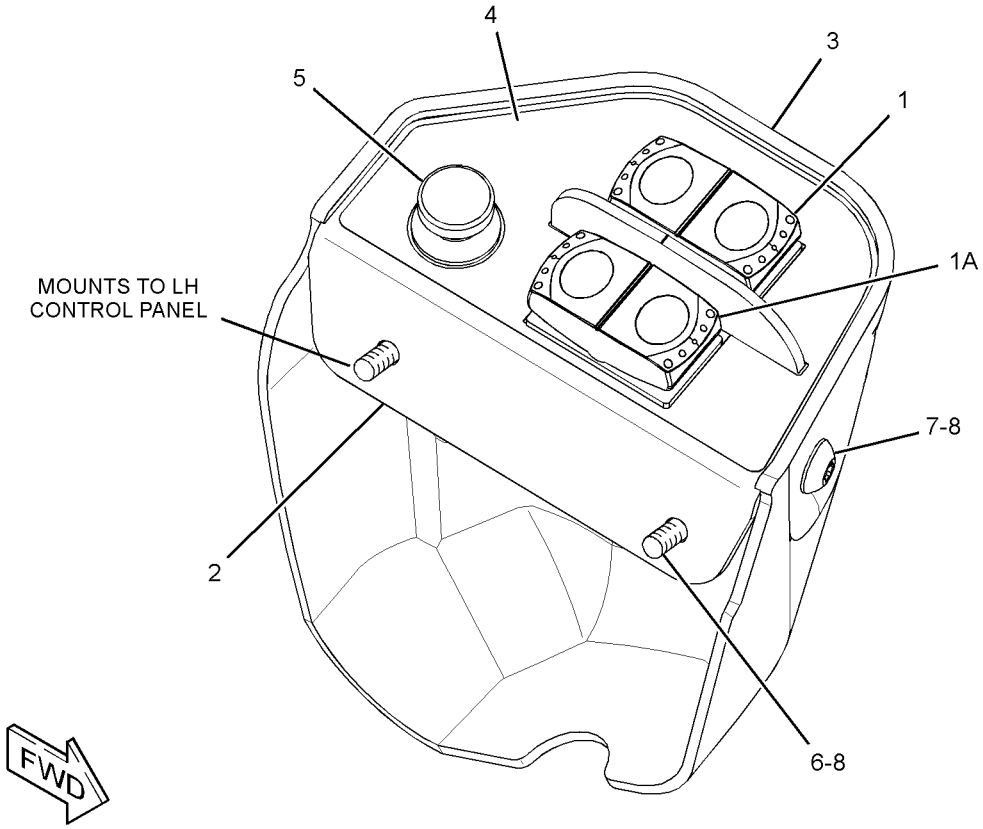

GRAPHIC #1 **<END>** g01525433

OPERATOR STATION

319-1617 PANEL GP-CONTROL–ACCUGRADE

S/N: R9H1-UP
PART OF 307-0155 GRADE CONTROL GP
AN ATTACHMENT

SMCS-7332, 7451 **i04040349**

NOTE	REF NO	GRAPHIC REF	PART NUMBER	QTY	PART NAME 1 2 3 4 5 6 (PRODUCT LEVEL)	SEE PAGE
	1	1	**251-2247**	2	GROMMET	
	2	1	**302-9088**	2	BRACKET AS	
	3	1	**306-9214**	1	FILM-INSTRUCTION (BLADE CONTROL, LH)	
	4	1	**306-9215**	1	FILM-INSTRUCTION (BLADE CONTROL, RH)	
	5	1	**307-0150**	2	BRACKET AS	
	6	1	**311-4911**	1	HARNESS AS-SWITCH (GRADE CONTROL)	
	7	1	**321-9712**	1	HARNESS AS-PANEL	
	8	1	**253-1789**	2	SWITCH AS-PUSH BUTTON (BLADE CONTROL)	
					(EACH INCLUDES)	
		1	**6F-0253**	1	LOCKWASHER	
		1	**102-8803**	1	KIT-RECEPTACLE (3-PIN)	
					(INCLUDES RECEPTACLE AS & WEDGE)	
		1	**172-3511**	1	NUT (5/8-24-THD)	
		1	**186-3735**	3	PIN-CONNECTOR (16-GA TO 18-GA)	
M	9	1	**8C-7581**	6	SCREW-MACHINE (M4X0.7X8-MM)	
M	10	1	**9X-2042**	4	SCREW-TRUSS HEAD (M6X1X12-MM)	

M-METRIC PART

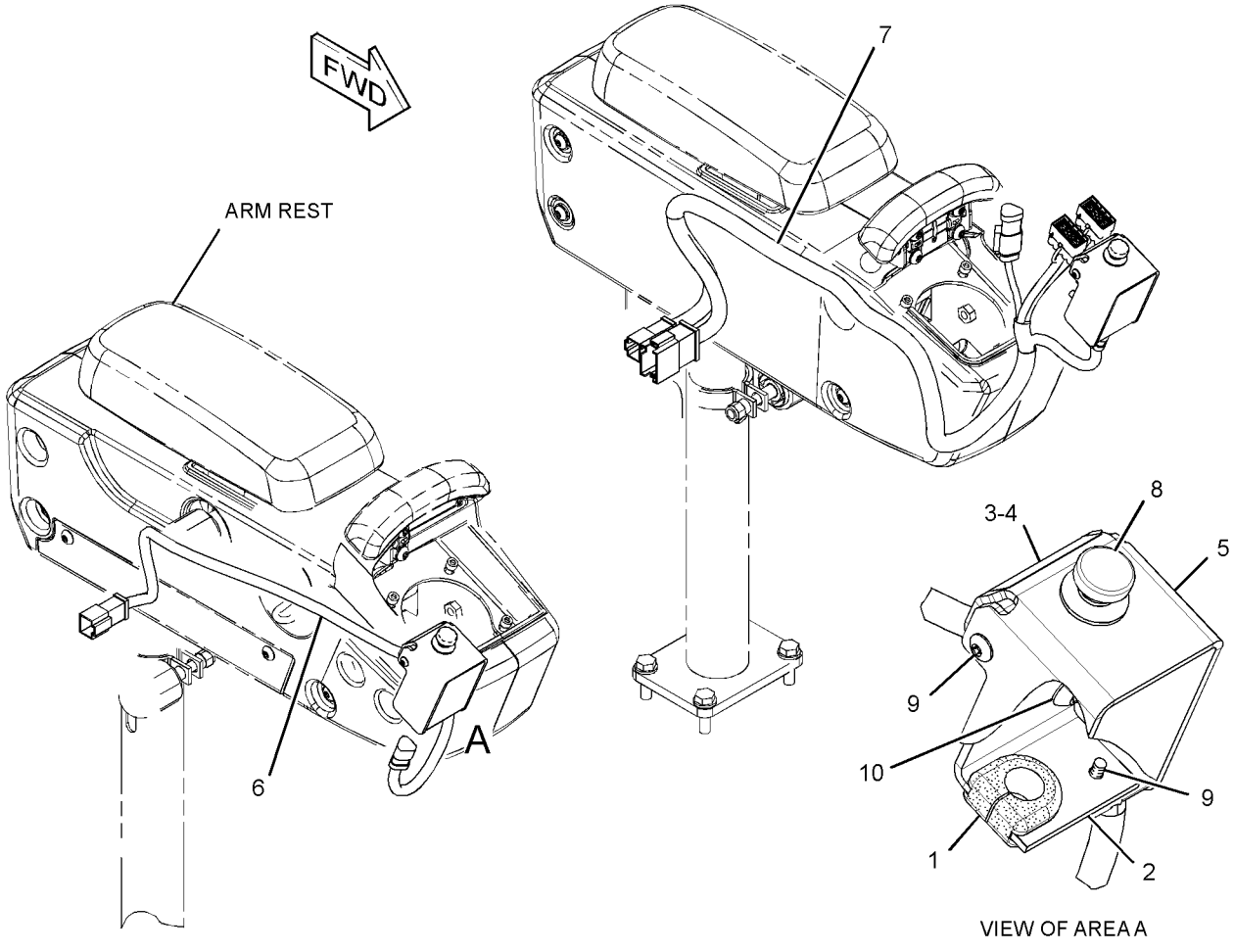

VIEW OF AREA A

GRAPHIC #1 **<END>** g01523161

OPERATOR STATION

322-3834 PANEL GP-CONTROL

S/N: R9H1-UP

FIELD INSTALLATION

SMCS-7332, 7451 **i03116197**

NOTE	REF NO	GRAPHIC REF	PART NUMBER	QTY	PART NAME 1 2 3 4 5 6 (PRODUCT LEVEL)	SEE PAGE
	1	1	**3S-2093**	4	STRAP-CABLE	
	2	1	**251-2247**	2	GROMMET	
	3	1	**302-9088**	2	BRACKET AS	
	4	1	**306-9214**	1	FILM-INSTRUCTION (LH, BLADE CONTROL)	
	5	1	**306-9215**	1	FILM-INSTRUCTION (BLADE CONTROL, RH)	
	6	1	**307-0150**	2	BRACKET AS	
	7	1	**253-1789**	2	SWITCH AS-PUSH BUTTON (BLADE CONTROL)	
					(EACH INCLUDES)	
		1	**6F-0253**	1	LOCKWASHER	
		1	**102-8803**	1	KIT-RECEPTACLE (3-PIN)	
					(INCLUDES RECEPTACLE AS & WEDGE)	
		1	**172-3511**	1	NUT (5/8-24-THD)	
		1	**186-3735**	1	PIN-CONNECTOR (16-GA TO 18-GA)	
M	8	1	**8C-7581**	6	SCREW-MACHINE (M4X0.7X8-MM)	
	9	1	**4P-7581**	2	CLIP	
M	10	1	**9X-2042**	4	SCREW-TRUSS HEAD (M6X1X12-MM)	
	11	1	**321-6706**	1	HARNESS AS-PANEL (GRADE CONTROL)	

M-METRIC PART

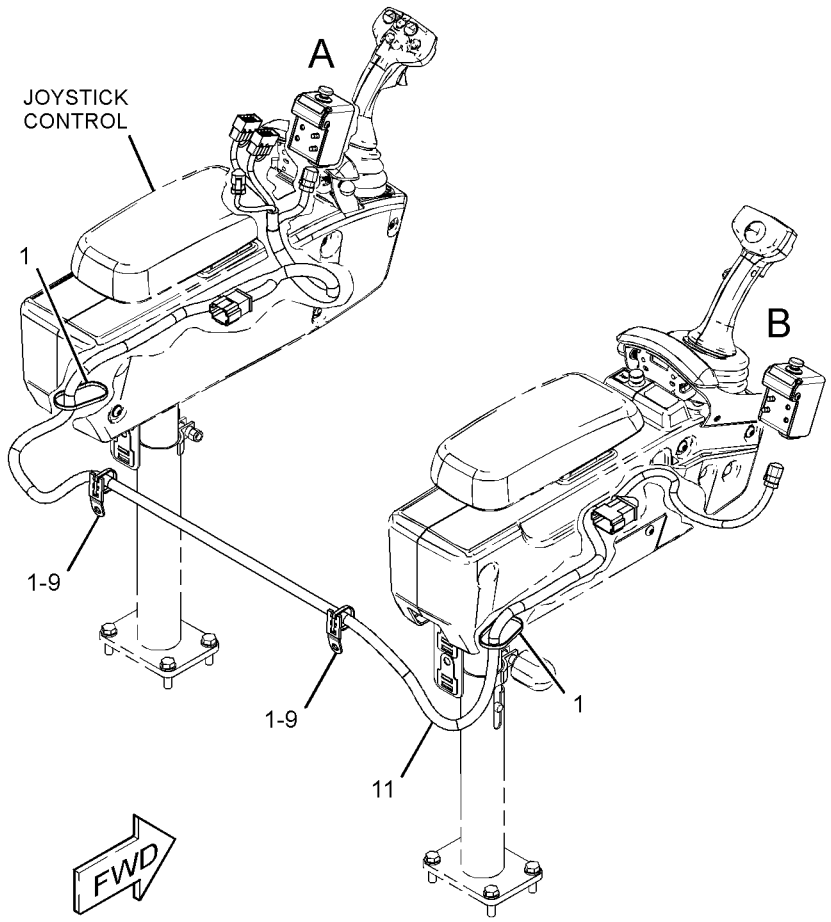

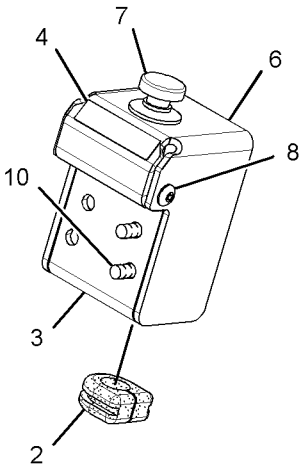

VIEW OF AREA A

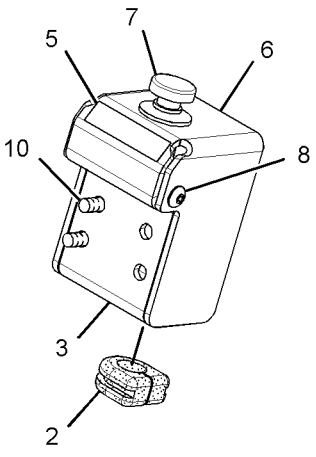

VIEW OF AREA B

GRAPHIC #1 **<END>** g01523916

OPERATOR STATION

233-3280 PANEL GP-INSTRUMENT

S/N: R9H1-UP

PART OF 233-3107 CAB AR

SMCS-7450, 7451 **i04011749**

NOTE	REF NO	GRAPHIC REF	PART NUMBER	QTY	PART NAME 1 2 3 4 5 6 (PRODUCT LEVEL)	SEE PAGE
	1	1	**171-4047**	5	LOUVER AS-VENT	
	2	1	**8Y-6388**	2	LOUVER AS-VENT	
	3	1	**251-2252**	1	PANEL AS	
	4	1	**252-1825**	1	FILM-IDENTIFICATION (DASH, LH)	
	5	1	**252-1826**	1	FILM-IDENTIFICATION (DASH, RH)	
	6	1	**260-3041**	1	COVER	
	8	1	**297-4134**	1	PLENUM	
	9	1	**297-4143**	1	PLENUM AS	
	10	1	**297-4152**	1	COVER AS	
M		1	**6V-9632**	4	NUT-WELD (M6X1-THD)	
	11	1	**297-4154**	1	COVER	
	12	1	**312-4153**	1	BRACKET AS	
M		1	**6V-9632**	2	NUT-WELD (M6X1-THD)	
	13	1	**114-6658**	9	WASHER (6.5X17X1-MM THK)	
	14	1	**101-2867**	4	WASHER-HARD (7.2X25X2-MM THK)	
	15	1	**104-2091**	14	SCREW-FLAT HEAD (6-20X0.5-IN)	
	16	1	**197-5107**	2	SCREW-TRUSS HEAD (M6X1X60-MM)	
	17	1	**9X-2038**	2	WASHER (7X19X2-MM THK)	
M	18	1	**6V-8225**	2	NUT (M6X1-THD)	
M	19	1	**127-2170**	2	SCREW-TRUSS HEAD (M8X1.25X20-MM)	
	20	1	**9N-0869**	2	WASHER-HARD (8.8X25.5X2-MM THK)	
M	21	1	**9X-2043**	6	SCREW-TRUSS HEAD (M6X1X14-MM)	
M	22	1	**9X-2044**	5	SCREW-TRUSS HEAD (M6X1X16-MM)	
M	24	1	**9X-2046**	2	SCREW-TRUSS HEAD (M6X1X35-MM)	
M	25	1	**9X-2045**	2	SCREW-TRUSS HEAD (M6X1X20-MM)	

M-METRIC PART

233-3280 PANEL GP-INSTRUMENT *(contd.)* i04011749

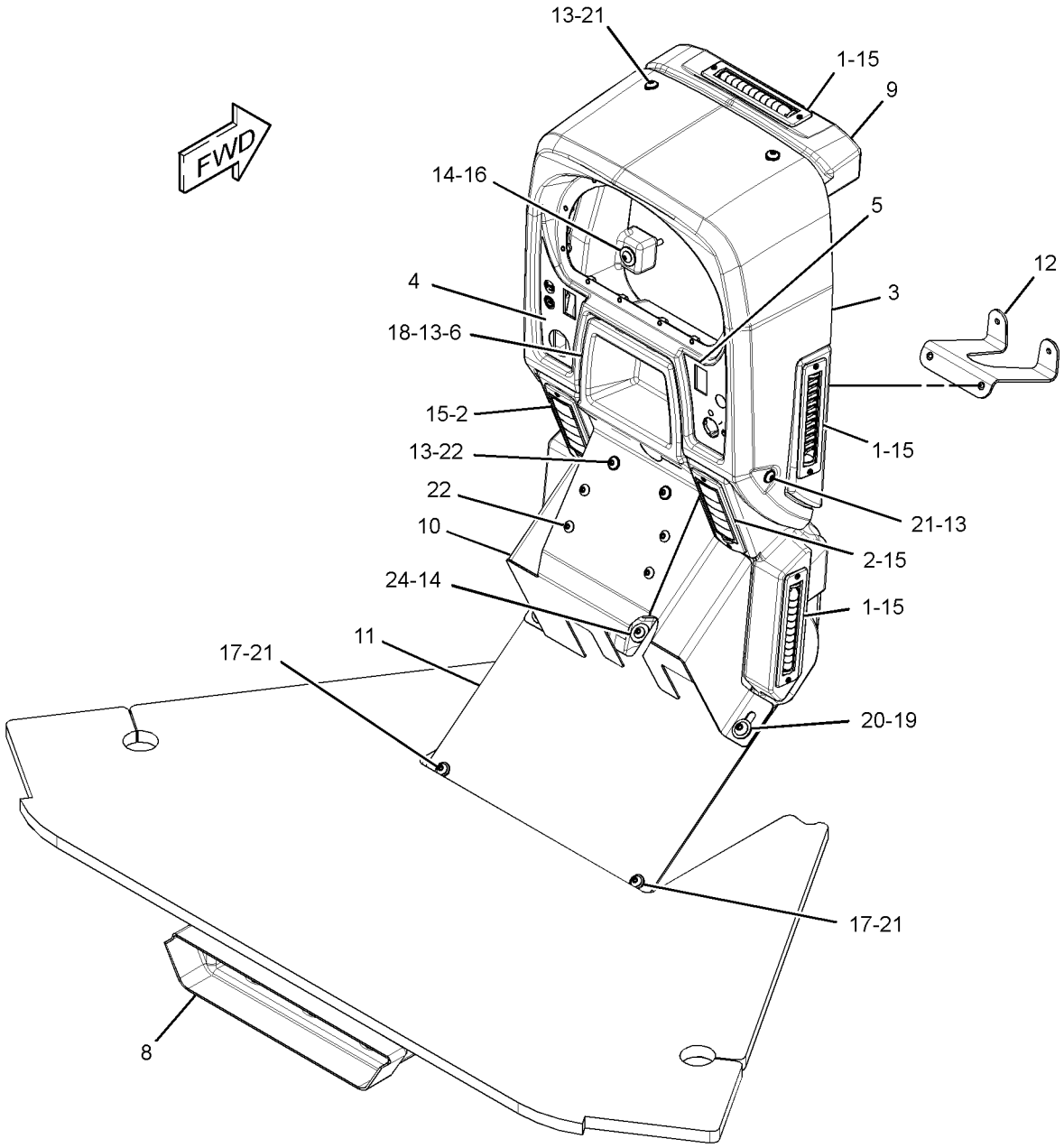

GRAPHIC #1 **<END>** g02189834

OPERATOR STATION

265-8943 PEDAL GP-BRAKE, XMSN & GOV

S/N: R9H1-UP

PART OF 346-6901 PEDAL GP-BRAKE, XMSN & GOV

SMCS-1265, 3191, 4269 **i03787033**

NOTE	REF NO	GRAPHIC REF	PART NUMBER	QTY	PART NAME 1 2 3 4 5 6 (PRODUCT LEVEL)	SEE PAGE
CY	1	1	**266-1467**	1	SENSOR GP-POSITION (ROTARY)	293
CY	1A	1	**266-1467**	1	SENSOR GP-POSITION (ROTARY) (XMSN MODULATOR CONTROL)	293
Y	2	1	**171-3759**	1	SWITCH GP-LIMIT (BRAKE PEDAL)	325
Y	2A	1	**171-3759**	1	SWITCH GP-LIMIT (XMSN MODULATOR CONTROL)	325
	3	1	**189-0135**	1	SWITCH AS-LIMIT (BRAKE LIGHT)	
		1	**186-3735**	3	PIN-CONNECTOR (16-GA TO 18-GA)	
		1	**102-8803**	1	KIT-RECEPTACLE (3-PIN)	
					(INCLUDES RECEPTACLE AS & WEDGE)	

C-CHANGE FROM PREVIOUS TYPE
Y-SEPARATE ILLUSTRATION

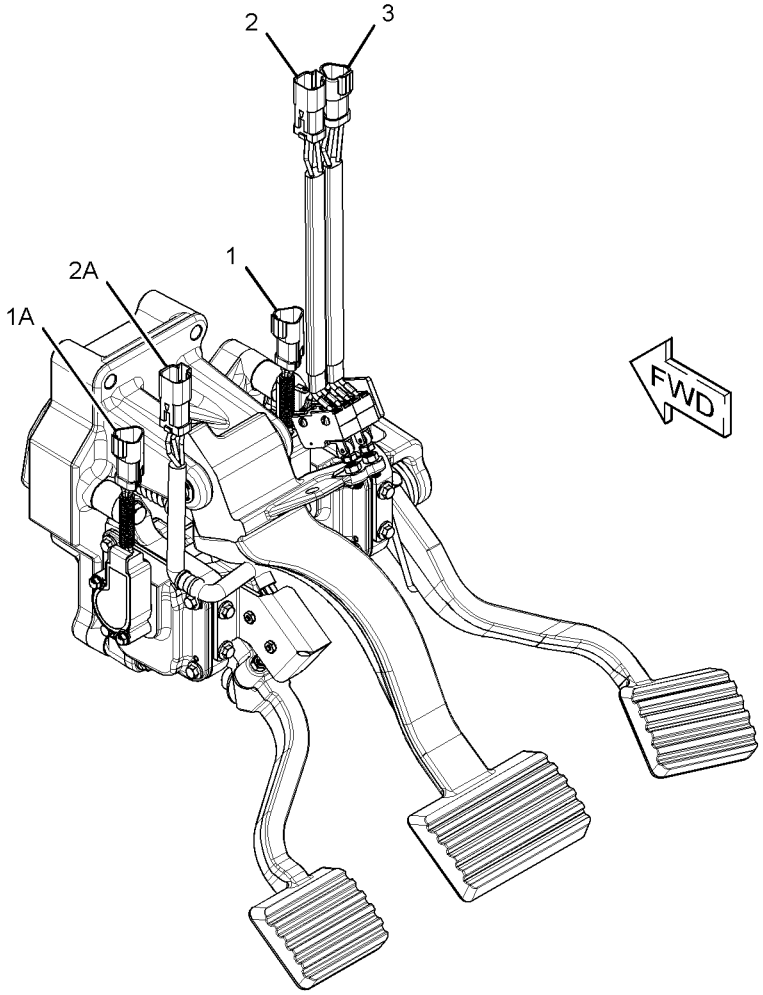

GRAPHIC #1 **<END>** g01429967

346-6901 PEDAL GP-BRAKE, XMSN & GOV

S/N: R9H1-UP

PART OF 265-8942 CONTROL GP-SERVICE BRAKE

SMCS-1265, 3191, 4269 **i04024809**

NOTE	REF NO	GRAPHIC REF	PART NUMBER	QTY	PART NAME 1 2 3 4 5 6 (PRODUCT LEVEL)	SEE PAGE
	1	1	**355-7411**	1	VALVE GP-BRAKE CONTROL	
Y	2	1	**265-8943**	1	PEDAL GP-BRAKE, XMSN & GOV	774
					AVAILABLE REPAIR KIT(S):	
			360-4432	1	KIT-REPAIR	
					(INCLUDES RINGS, CUP & BOOT)	

Y-SEPARATE ILLUSTRATION

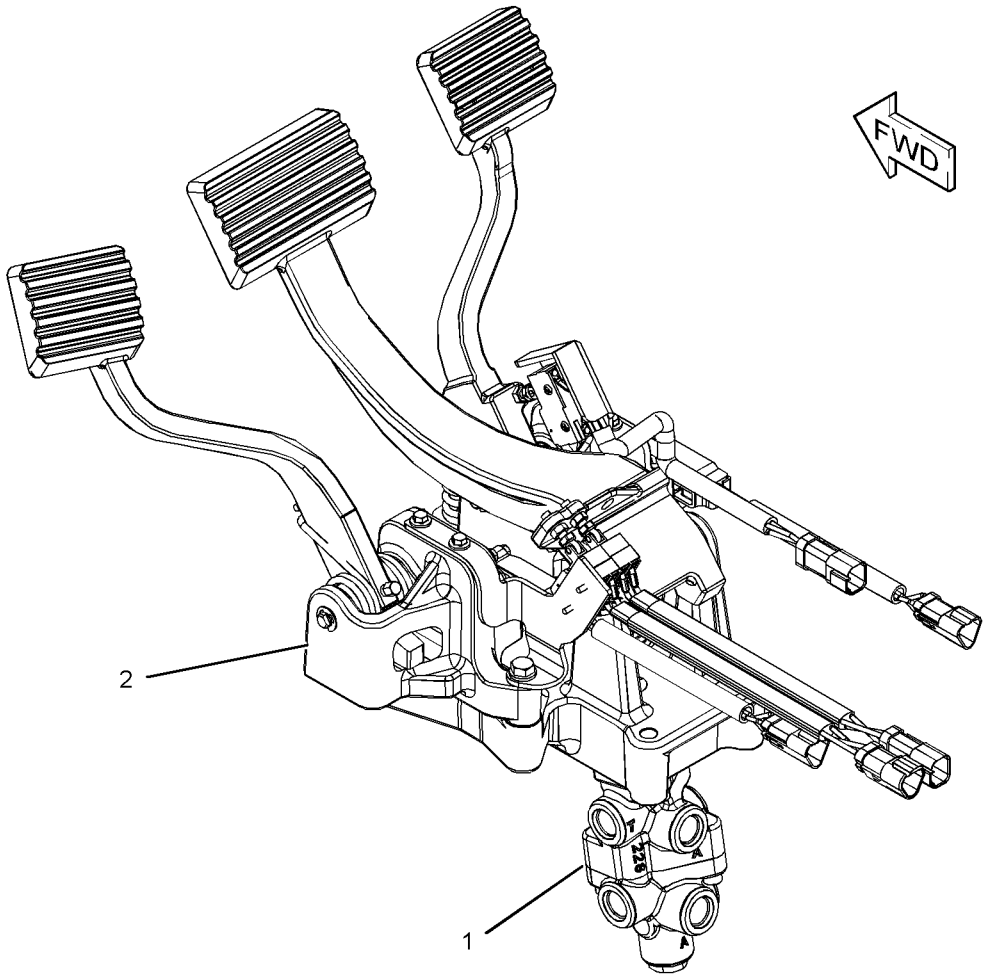

GRAPHIC #1 **<END>** g02221555

OPERATOR STATION

233-3123 RADIO GP–AM/FM/WB

S/N: R9H1-UP
PART OF 352-3820 OPTION AR-CAB
AN ATTACHMENT

SMCS-7338 **i03572366**

NOTE	REF NO	GRAPHIC REF	PART NUMBER	QTY	PART NAME 1 2 3 4 5 6 (PRODUCT LEVEL)	SEE PAGE
	1	1	**136-5490**	1	BUSHING (RADIO MOUNT)	
	2	1	**200-5728**	1	HARNESS AS-RADIO	
		1	**172-8037**	1	CONNECTOR (RADIO)	
		1	**186-3735**	7	PIN-CONNECTOR (16-GA TO 18-GA)	
		1	**8T-8737**	1	PLUG-SEAL	
		1	**160-3518**	1	KIT-RECEPTACLE (8-PIN)	
					(INCLUDES RECEPTACLE AS & WEDGE)	
Y	3	1	**331-5292**	1	RADIO GP (AM/FM/WB)	777

Y-SEPARATE ILLUSTRATION

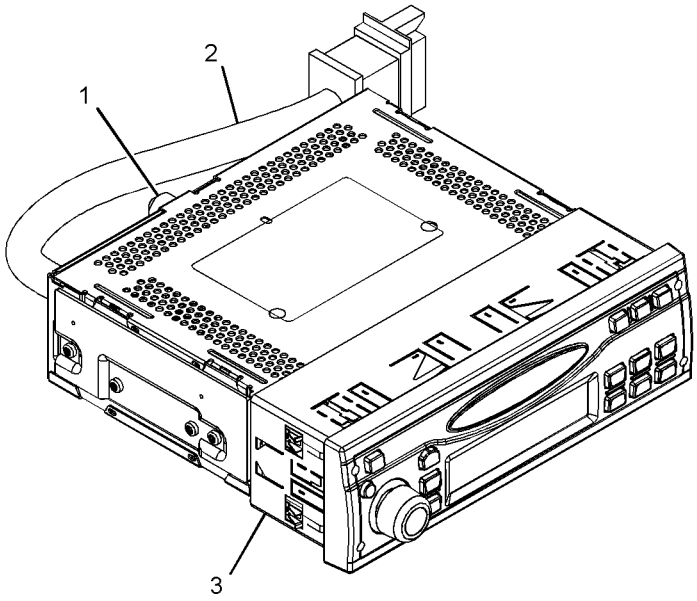

GRAPHIC #1 **<END>** g01813816

OPERATOR STATION

331-5292 RADIO GP–AM, FM

S/N: R9H1-UP
PART OF 233-3123 RADIO GP
FOR USE WITH INSTALLATION GP-RADIO
AN ATTACHMENT

SMCS-7338 **i03466464**

NOTE	REF NO	GRAPHIC REF	PART NUMBER	QTY	PART NAME 1 2 3 4 5 6 (PRODUCT LEVEL)	SEE PAGE
	1	1	**192-7054**	1	SLEEVE	

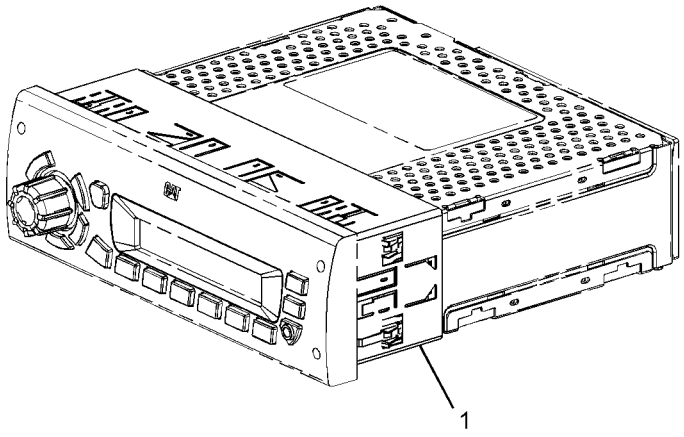

GRAPHIC #1 **<END>** g01813076

OPERATOR STATION

233-3133 ROOF GP-CAB

S/N: R9H1-UP

PART OF 233-3107 CAB AR

SMCS-7301 **i03895666**

NOTE	REF NO	GRAPHIC REF	PART NUMBER	QTY	PART NAME 1 2 3 4 5 6 (PRODUCT LEVEL)	SEE PAGE
	1	1	**8T-5401**	1	PLUG-BUTTON	
	2	1	**233-3209**	1	PANEL (LH)	
	3	1	**249-4073**	1	PANEL (RH)	
C	4	1	**338-9240**	22	INSERT-THREADED	
C	5	1	**9R-2620**	3	PLUG	
C	6	1	**5P-4115**	22	WASHER-HARD (7.2X19X2-MM THK)	
C	7	1	**7X-0579**	10	WASHER-HARD (8.8X25.5X2-MM THK)	
CM	8	1	**8T-4138**	22	BOLT (M6X1X20-MM)	
M	9	1	**8T-4189**	10	BOLT (M8X1.25X20-MM)	

C-CHANGE FROM PREVIOUS TYPE
M-METRIC PART

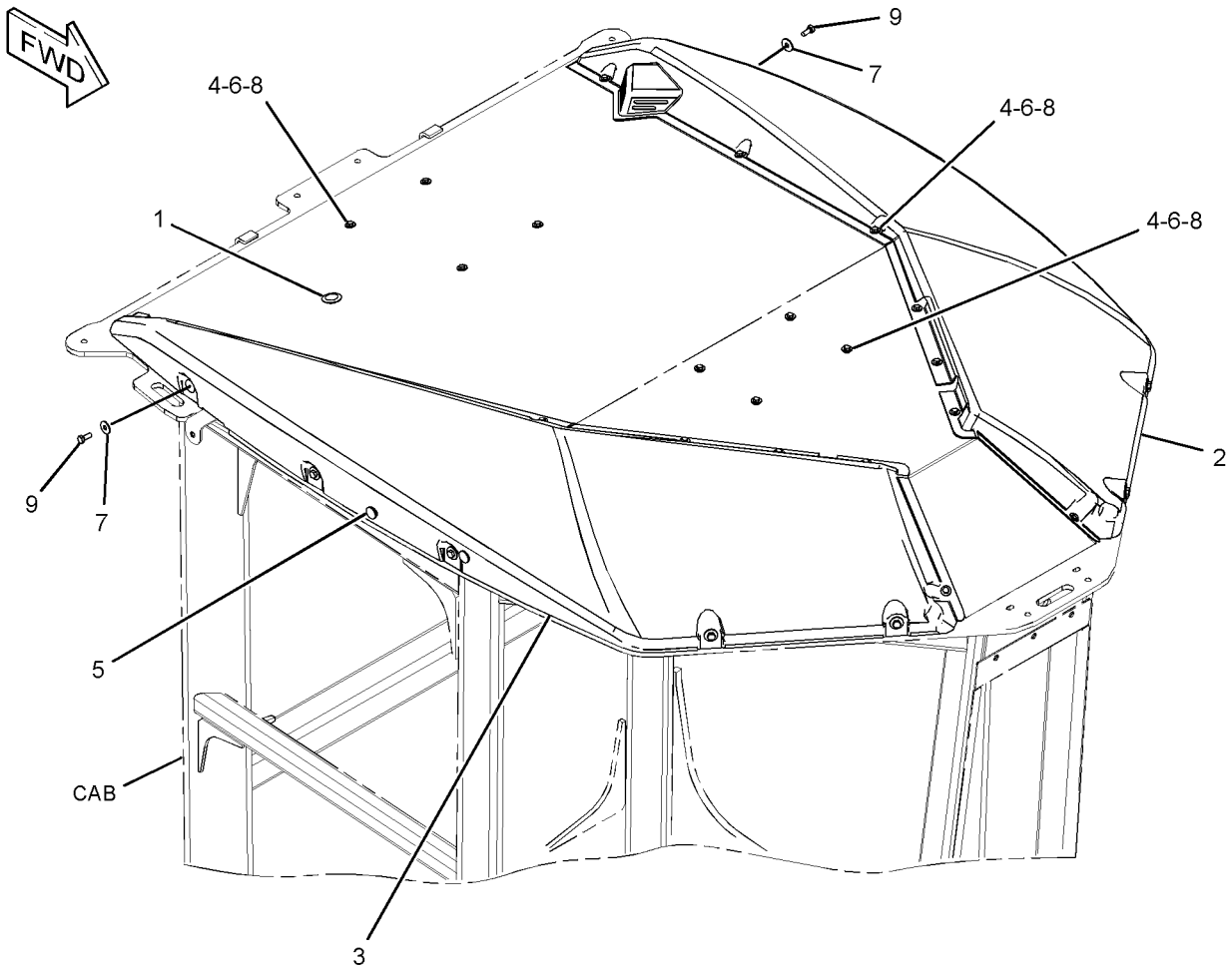

GRAPHIC #1 **<END>** g01626964

OPERATOR STATION

233-3224 SUPPORT GP-CONTROL—JOYSTICK, LH

S/N: R9H1-UP

PART OF 342-8961 SUPPORT GP-CONTROL

SMCS-4343, 6150 **i04003673**

NOTE	REF NO	GRAPHIC REF	PART NUMBER	QTY	PART NAME 1 2 3 4 5 6 (PRODUCT LEVEL)	SEE PAGE
	1	1	**8X-1386**	1	SPACER (12.2X23X22-MM THK)	
	2	1	**4E-8722**	10	NUT (RETAINER)	
	3	1	**233-3227**	1	SUPPORT AS (LH)	
	4	1	**233-3248**	2	BUSHING	
	5	1	**233-3252**	1	SHAFT AS	
	6	1	**360-6938**	1	SUPPORT AS (LH)	
		1	**3K-6060**	1	LOCKNUT (3/8-16-THD)	
		1	**4B-4280**	1	WASHER (13.5X27X2.5-MM THK)	
		1	**241-3720**	1	FILM-WARNING (RECOIL SPRING)	
		1	**295-2275**	1	KNOB AS (HEIGHT ADJUSTMENT)	
Y	7	1	**252-1805**	1	CUSHION GP-ARM	727
	8	1	**252-1807**	1	SUPPORT AS (LH)	
		1	**3G-0622**	2	RING-RETAINING	
M		1	**9X-2044**	2	SCREW-TRUSS HEAD (M6X1X16-MM)	
		1	**7X-0605**	2	WASHER-HARD (13X28X1.6-MM THK)	
		1	**114-6658**	2	WASHER (6.5X17X1-MM THK)	
		1	**294-1001**	1	PLATE AS	
M		1	**6V-9632**	2	NUT-WELD (M6X1-THD)	
	9	1	**253-3482**	1	KNOB AS (ARMREST ADJUSTMENT)	
	10	1	**253-3483**	1	PLATE AS	
	11	1	**253-3484**	2	WASHER (13X46X3.5-MM THK)	
	12	1	**272-8329**	1	BRACKET	
	13	1	**308-4358**	1	PLATE AS	
		1	**130-5300**	4	CLIP	
M	14	1	**5C-9553**	2	BOLT (M6X1X16-MM)	
	15	1	**7J-5925**	1	PIN-COTTER	
	16	1	**7X-0578**	2	WASHER-HARD (10.2X32X2.5-MM THK)	
	17	1	**8T-4224**	7	WASHER-HARD (8.8X16X2-MM THK)	
M	18	1	**8T-4908**	7	BOLT (M8X1.25X25-MM)	
M	19	1	**9X-2043**	2	SCREW-TRUSS HEAD (M6X1X14-MM)	
	20	1	**9X-8256**	2	WASHER (6.6X12X2-MM THK)	
D	21	1	**8T-6936**		SEAL (0.1-M EACH)	

D-ORDER BY THE METER
M-METRIC PART
Y-SEPARATE ILLUSTRATION

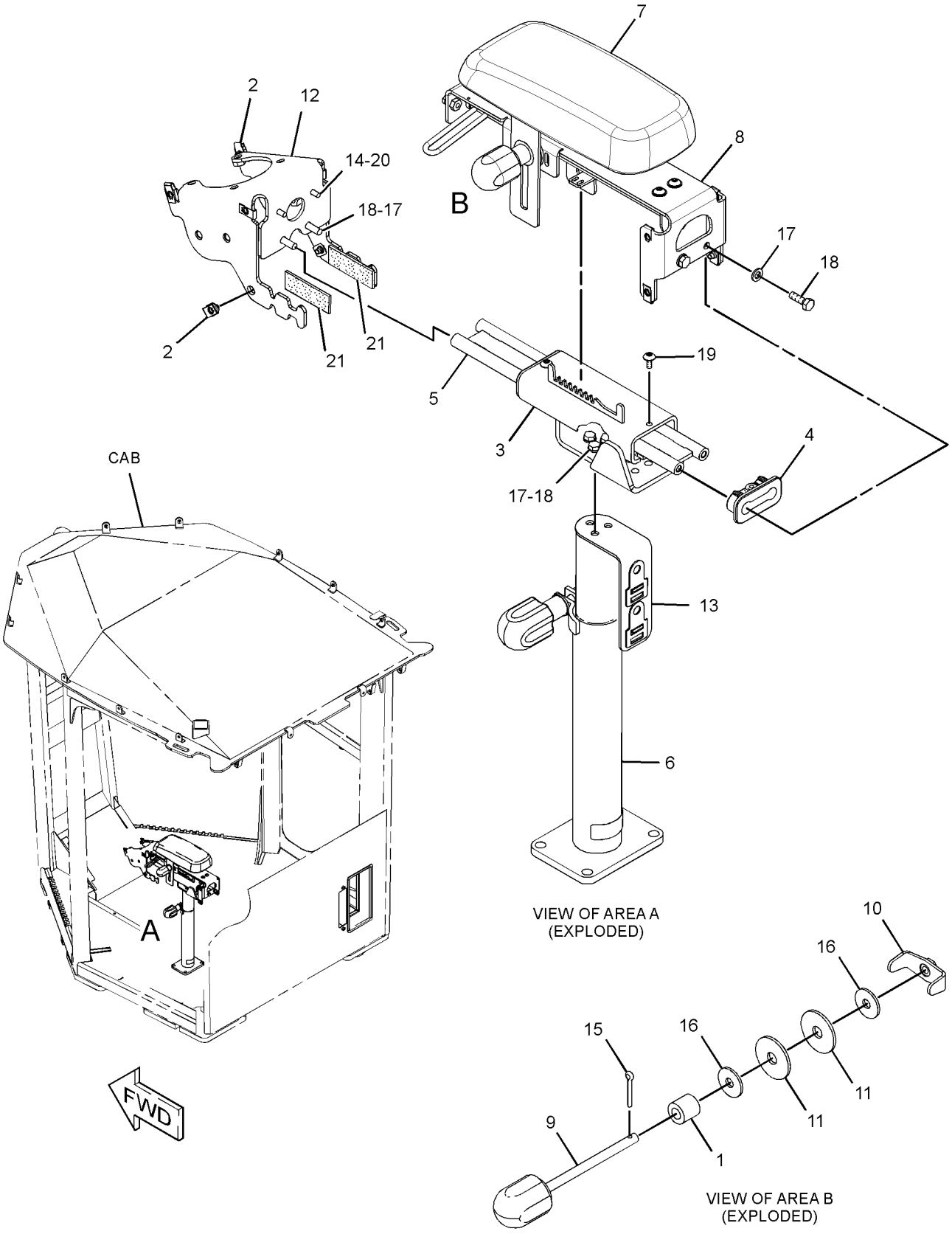

GRAPHIC #1 **<END>** g02219293

OPERATOR STATION

233-3225 SUPPORT GP-CONTROL—JOYSTICK, RH

S/N: R9H1-UP

PART OF 342-8961 SUPPORT GP-CONTROL

SMCS-4343, 6150 **i04004010**

NOTE	REF NO	GRAPHIC REF	PART NUMBER	QTY	PART NAME 1 2 3 4 5 6 (PRODUCT LEVEL)	SEE PAGE
	1	1	**8X-1386**	1	SPACER (12.2X23X22-MM THK)	
	2	1	**4E-8722**	10	NUT (RETAINER) (M6-THD)	
	3	1	**233-3226**	1	SUPPORT AS (RH)	
	4	1	**233-3248**	2	BUSHING	
	5	1	**233-3252**	1	SHAFT AS	
	6	1	**360-6937**	1	SUPPORT AS (RH)	
	6A	1	**3K-6060**	1	LOCKNUT (3/8-16-THD)	
	6B	1	**4B-4280**	1	WASHER (13.5X27X2.5-MM THK)	
	6C	1	**241-3720**	1	FILM-WARNING (RECOIL SPRING)	
	6D	1	**295-2275**	1	KNOB AS (HYDRAULIC CONTROL SUPPORT)	
	7	1	**233-3275**	1	BRACKET	
Y	8	1	**252-1805**	1	CUSHION GP-ARM	727
	9	1	**252-1808**	1	SUPPORT AS (RH)	
	9A	1	**3G-0622**	2	RING-RETAINING	
	9B	1	**7X-0605**	2	WASHER-HARD (13X28X1.6-MM THK)	
M	9C	1	**9X-2044**	2	SCREW-TRUSS HEAD (M6X1X16-MM)	
	9D	1	**114-6658**	2	WASHER (6.5X17X1-MM THK)	
	9E	1	**294-1001**	1	PLATE AS	
M		1	**6V-9632**	2	NUT-WELD (M6X1-THD)	
	10	1	**253-3482**	1	KNOB AS (ARMREST ADJUSTMENT)	
	11	1	**253-3483**	1	PLATE AS	
	12	1	**253-3484**	2	WASHER (13X46X3.5-MM THK)	
M	13	1	**5C-9553**	2	BOLT (M6X1X16-MM)	
	14	1	**7J-5925**	1	PIN-COTTER	
	15	1	**7X-0578**	2	WASHER-HARD (10.2X32X2.5-MM THK)	
	16	1	**8T-4224**	7	WASHER-HARD (8.8X16X2-MM THK)	
M	17	1	**8T-4908**	7	BOLT (M8X1.25X25-MM)	
M	18	1	**9X-2043**	2	SCREW-TRUSS HEAD (M6X1X14-MM)	
	19	1	**9X-8256**	2	WASHER (6.6X12X2-MM THK)	
	20	1	**308-4358**	1	PLATE AS	
		1	**130-5300**	4	CLIP	
D	21	1	**8T-6936**		SEAL (0.1-M EACH)	

D-ORDER BY THE METER
M-METRIC PART
Y-SEPARATE ILLUSTRATION

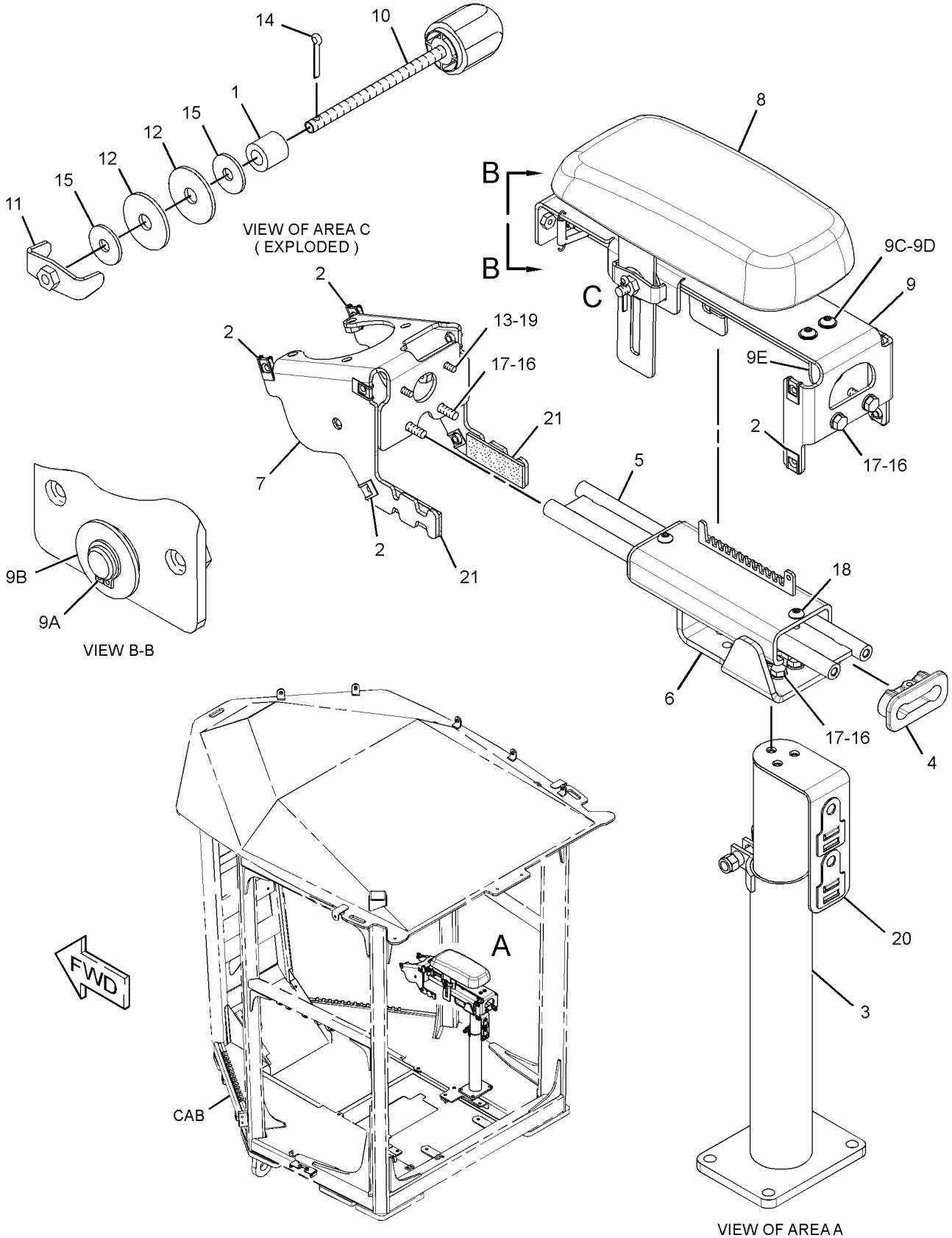

GRAPHIC #1 **<END>** g01426560

OPERATOR STATION

342-8961 SUPPORT GP-CONTROL—OPERATOR PLATFORM

S/N: R9H1-UP

PART OF 233-3107 CAB AR

SMCS-4343, 6150 **i03655405**

NOTE	REF NO	GRAPHIC REF	PART NUMBER	QTY	PART NAME 1 2 3 4 5 6 (PRODUCT LEVEL)	SEE PAGE
	1	1	**140-5945**	1	FILM-IDENTIFICATION (HORN)	
Y	2	1	*233-3224*	1	SUPPORT GP-CONTROL (JOYSTICK, LH)	779
Y	3	1	*233-3225*	1	SUPPORT GP-CONTROL (JOYSTICK, RH)	781
	4	1	**251-2247**	2	GROMMET	
	5	1	**251-2272**	1	COVER	
	6	1	**251-2273**	1	COVER	
	7	1	**251-2274**	1	COVER	
	8	1	**251-2275**	1	COVER	
	9	1	**280-7477**	1	FILM-INSTRUCTION (OPERATOR CONSOLE, LH)	
	10	1	**280-7478**	1	FILM-INSTRUCTION (OPERATOR CONSOLE, RH)	
Y	11	1	*292-0609*	1	ARMREST GP (RH)	713
Y	12	1	*292-0617*	1	ARMREST GP (LH)	714
	13	1	**297-4147**	1	COVER (LH)	
	14	1	**297-4148**	1	COVER (RH)	
	15	1	**312-1714**	1	FILM-INSTRUCTION (ADJUSTMENT CONTROL)	
	16	1	**114-6658**	20	WASHER (6.5X17X1-MM THK)	
	17	1	**6V-5839**	8	WASHER (11X21X2.5-MM THK)	
M	18	1	**8T-4196**	8	BOLT (M10X1.5X35-MM)	
M	19	1	**8T-4200**	6	BOLT (M8X1.25X16-MM)	
	20	1	**8T-4224**	6	WASHER-HARD (8.8X16X2-MM THK)	
M	21	1	**9X-2044**	20	SCREW-TRUSS HEAD (M6X1X16-MM)	
M	22	1	**9X-2045**	4	SCREW-TRUSS HEAD (M6X1X20-MM)	
E	23	1	**116-8376**		SEAL (6-CM EACH)	
E	23A	1	**116-8376**		SEAL (17-CM EACH)	

E-ORDER BY THE CENTIMETER
M-METRIC PART
Y-SEPARATE ILLUSTRATION

342-8961 **SUPPORT GP-CONTROL** *(contd.)* **i03655405**

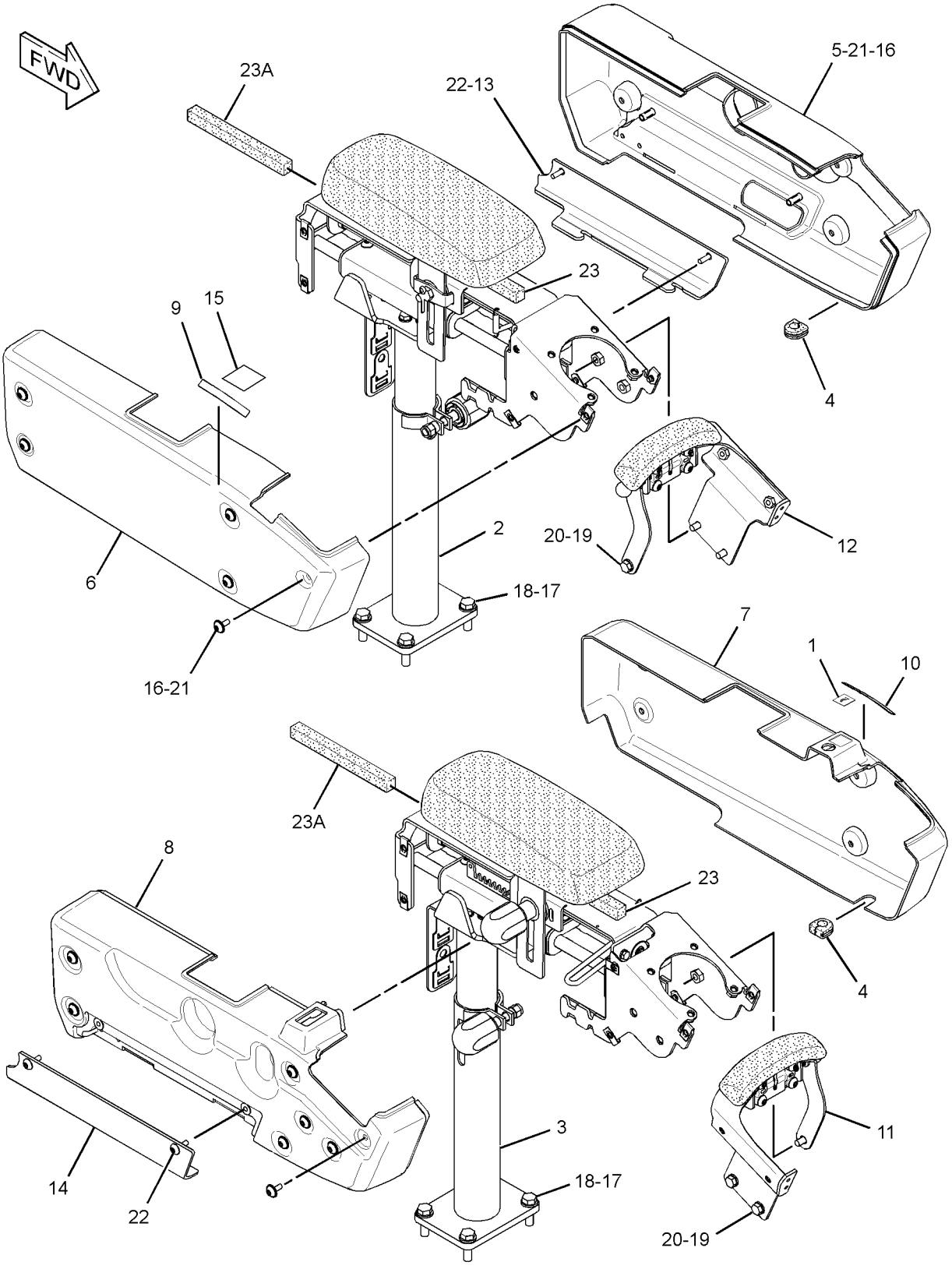

GRAPHIC #1 **<END>** g02028870

OPERATOR STATION

248-3164 TANK GP-WINDOW WASHER

S/N: R9H1-UP

3 PUMPS

PART OF 233-3138 WIPER & WASHER GP-WINDOW

SMCS-7306 **i03744197**

NOTE	REF NO	GRAPHIC REF	PART NUMBER	QTY	PART NAME 1 2 3 4 5 6 (PRODUCT LEVEL)	SEE PAGE
	1	1	**6W-5698**	1	GROMMET	
	2	1	**7T-8890**	3	PUMP AS-WASHER	
	3	1	**254-0079**	1	TANK-WASHER	
	4	1	**261-3345**	1	CONNECTOR	
	5	1	**267-8715**	7	PLUG	
	6	1	**321-5236**	4	PLUG	
E	7	1	**144-0195**		HOSE (10-CM EACH)	

E-ORDER BY THE CENTIMETER

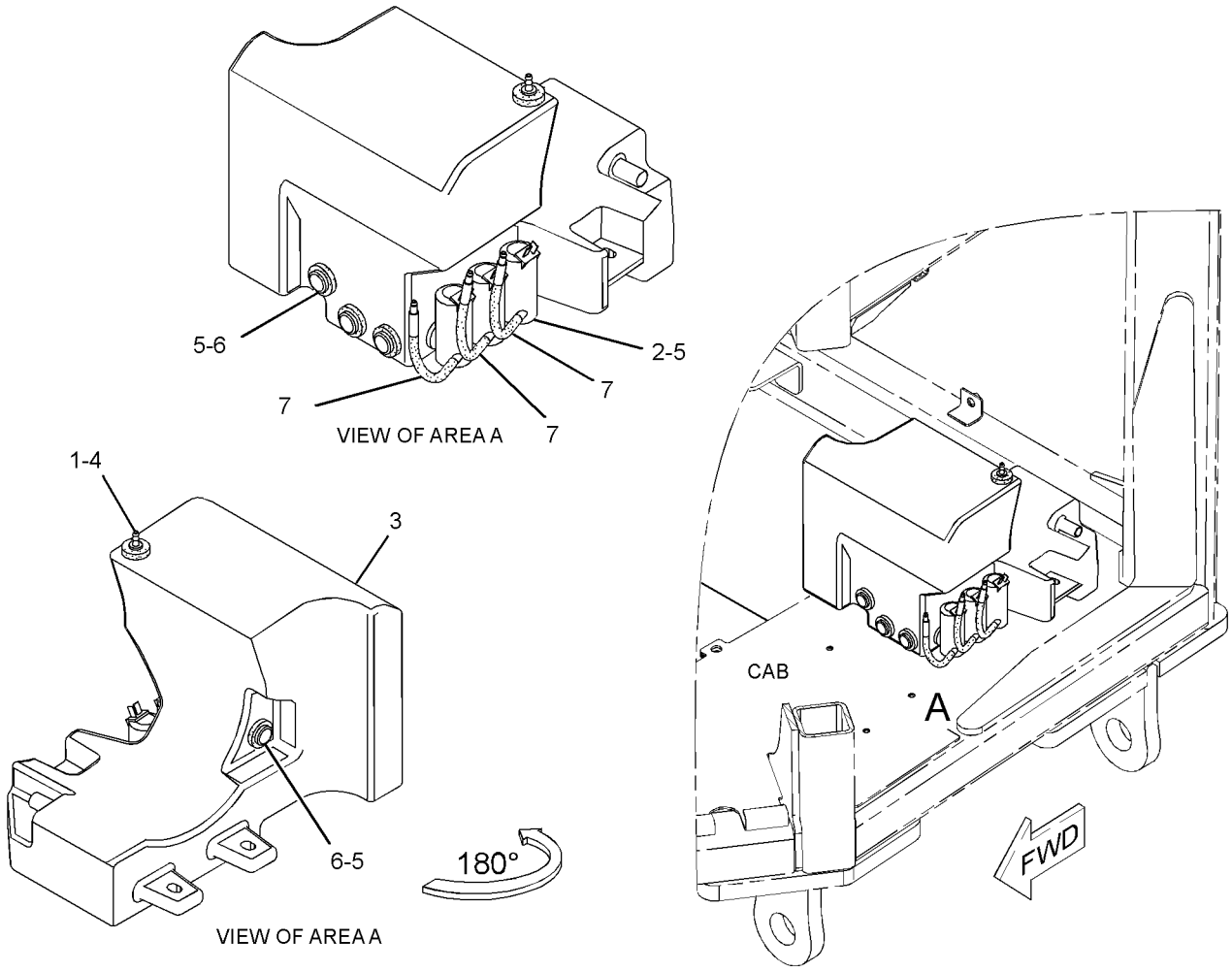

GRAPHIC #1 **<END>** g01523194

OPERATOR STATION

294-0994 WINDOW GP-CAB–FRONT

S/N: R9H1-UP

PART OF 233-3107 CAB AR

SMCS-7310 **i04014349**

NOTE	REF NO	GRAPHIC REF	PART NUMBER	QTY	PART NAME 1 2 3 4 5 6 (PRODUCT LEVEL)	SEE PAGE
	1	1	**114-6658**	6	WASHER (6.5X17X1-MM THK)	
	2	1	**294-1012**	1	GLASS-FRONT	
	3	1	**294-1018**	2	BRACKET	
M	4	1	**9X-2045**	6	SCREW-TRUSS HEAD (M6X1X20-MM)	
E	5	1	**294-1015**		SEAL (25-CM EACH)	
CE	6	1	**294-1014**		SEAL-GLASS (185-CM)	

C-CHANGE FROM PREVIOUS TYPE
E-ORDER BY THE CENTIMETER
M-METRIC PART

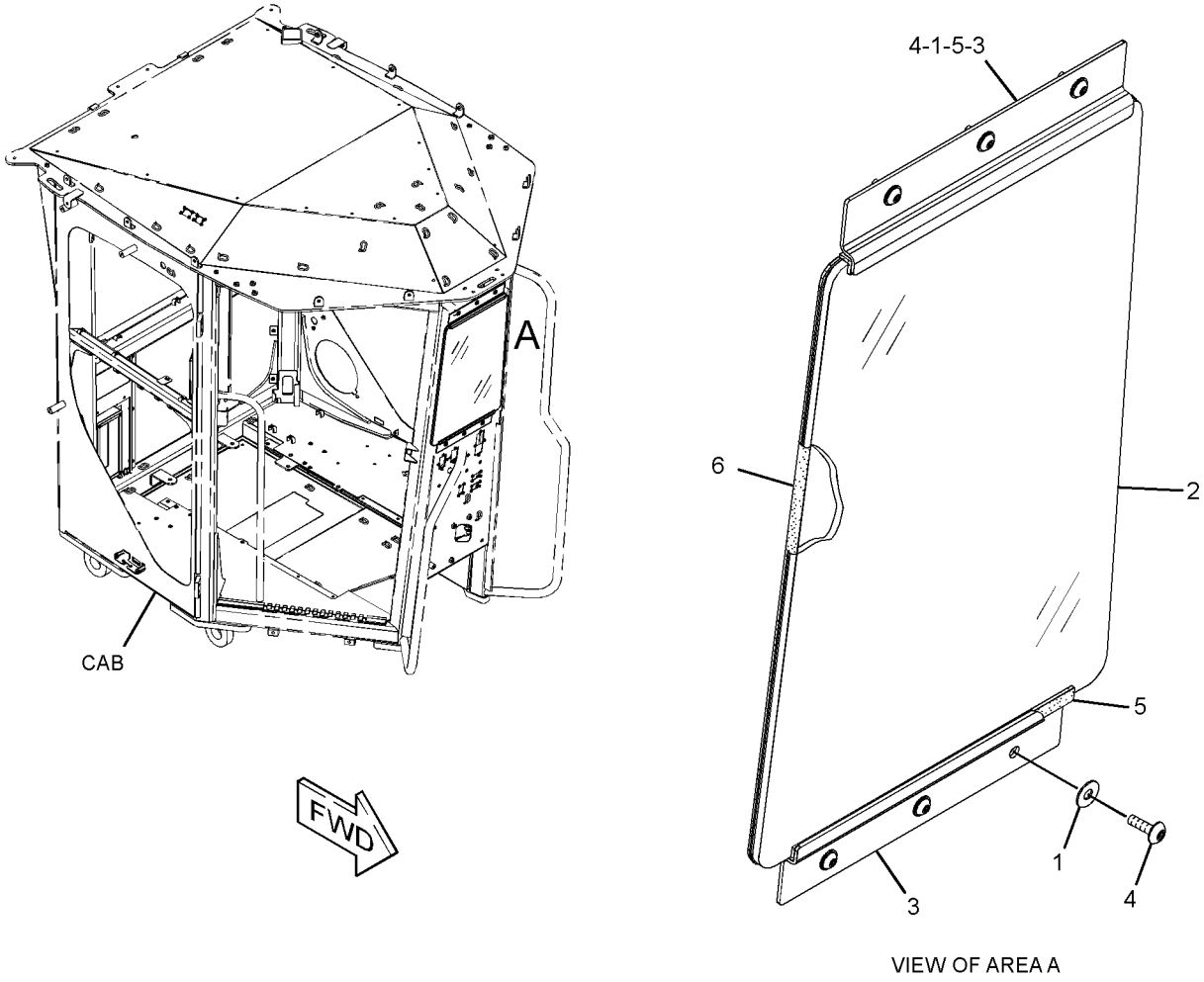

VIEW OF AREA A

GRAPHIC #1 **<END>** g02189636

OPERATOR STATION

300-1870 WINDOW GP-CAB—SIDE, REAR, RH, LH

S/N: R9H1-UP

AN ATTACHMENT

SMCS-7310 **i02970603**

NOTE	REF NO	GRAPHIC REF	PART NUMBER	QTY	PART NAME 1 2 3 4 5 6 (PRODUCT LEVEL)	SEE PAGE
	1	1	**233-3235**	1	GLASS-REAR	
	2	1	**300-1871**	1	GLASS (RH)	
	3	1	**300-1872**	1	GLASS (LH)	
E	4	1	**3E-3000**		SEAL (387-CM)	
E	4A	1	**3E-3000**		SEAL (392-CM EACH)	

E-ORDER BY THE CENTIMETER

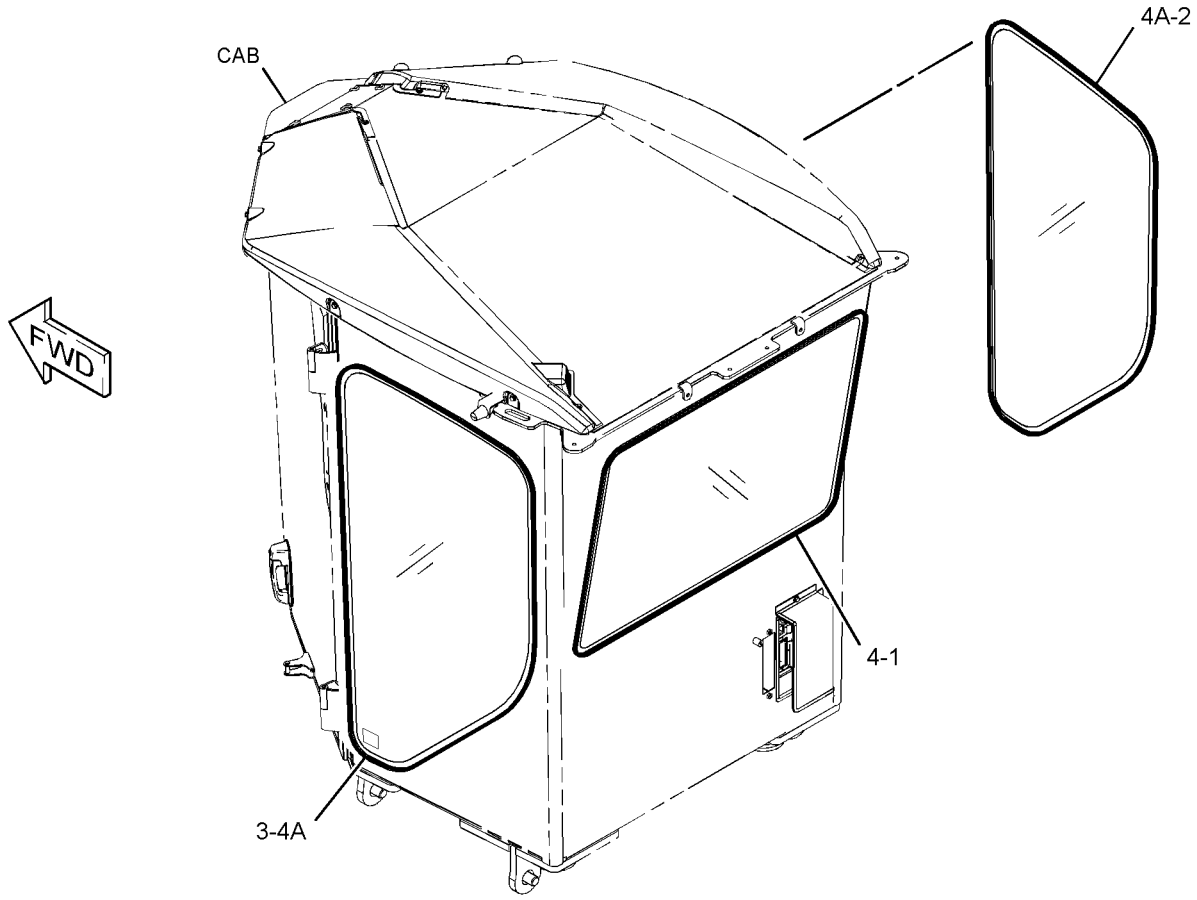

GRAPHIC #1 **<END>** g01523877

OPERATOR STATION

233-3138 WIPER & WASHER GP-WINDOW—FRONT

S/N: R9H1-UP

PART OF 233-3107 CAB AR

SMCS-7305, 7306 **i02748814**

NOTE	REF NO	GRAPHIC REF	PART NUMBER	QTY	PART NAME 1 2 3 4 5 6 (PRODUCT LEVEL)	SEE PAGE
B	1	1	**3S-2093**	15	STRAP-CABLE (PLASTIC)	
	2	1	**3V-3263**	2	CONNECTOR (HOSE)	
	3	1	**5D-1026**	2	CLAMP-BAND	
	4	1	**6V-5853**	1	BLADE AS-WIPER (450-MM) (FRONT)	
	5	1	**8T-5400**	1	CONNECTOR AS	
	6	1	**8V-7162**	1	CABLE	
	7	1	**114-6658**	3	WASHER (6.5X17X1-MM THK)	
	8	1	**180-0149**	3	TUBE	
	9	1	**204-2581**	3	VALVE AS-CHECK	
	10	1	**248-2621**	1	ARM GP-WINDOW WIPER (WINDOW WASHER, WIPER)	
		1	**136-3188**	3	CLIP	
		1	**136-3191**	1	NOZZLE AS-WASHER	
E		1	**194-5171**		HOSE (55-CM)	
Y	11	1	**248-3164**	1	TANK GP-WINDOW WASHER	785
	12	1	**253-4115**	1	SPOUT	
	13	1	**276-3884**	1	CAP-VENTED (WASHER TANK)	
Y	14	1	**295-1120**	1	MOTOR GP-WINDOW WIPER (FRONT)	760
	15	1	**101-2867**	3	WASHER-HARD (7.2X25X2-MM THK)	
M	16	1	**9X-2044**	3	SCREW-TRUSS HEAD (M6X1X16-MM)	
M	17	1	**9X-2046**	3	SCREW-TRUSS HEAD (M6X1X35-MM)	
E	18	1	**153-2817**		HOSE (37-CM)	
E	19	1	**144-0195**		HOSE (240-CM)	
E	19A	1	**144-0195**		HOSE (370-CM)	
E	19B	1	**144-0195**		HOSE (93-CM)	
E	19C	1	**144-0195**		HOSE (348-CM)	

B-USE AS REQUIRED
E-ORDER BY THE CENTIMETER
M-METRIC PART
Y-SEPARATE ILLUSTRATION

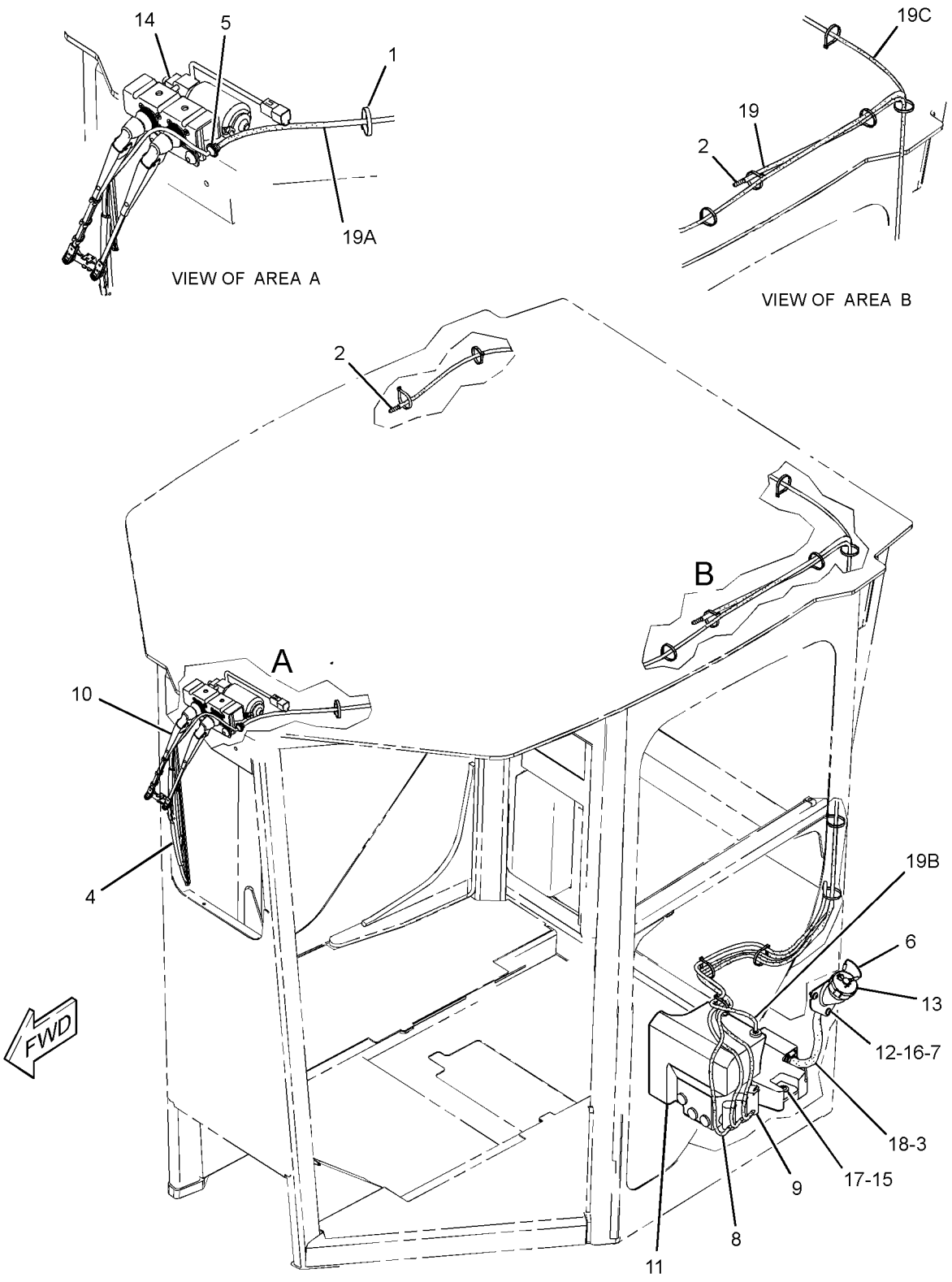

GRAPHIC #1 **<END>** g01316079

OPERATOR STATION

295-1113 WIPER GP-WINDOW—DOOR, RH

S/N: R9H1-UP

PART OF 294-1024 DOOR GP-CAB

SMCS-7305 **i03869174**

NOTE	REF NO	GRAPHIC REF	PART NUMBER	QTY	PART NAME 1 2 3 4 5 6 (PRODUCT LEVEL)	SEE PAGE
	1	1	**3S-2093**	3	STRAP-CABLE	
	2	1	**5C-8811**	1	BLADE AS-WIPER (500-MM) (UPPER DOOR WINDOW, RH)	
	3	1	**6V-5851**	1	BLADE AS-WIPER (400-MM) (LOWER DOOR WINDOW, RH)	
	4	1	**8T-5400**	2	CONNECTOR AS	
	5	1	**135-0611**	1	MOTOR GP-WINDOW WIPER (24-VOLT, 2-SPEED) (DOOR, RH)	
	6	1	**256-9448**	1	ARM GP-WINDOW WIPER (UPPER DOOR WINDOW, RH)	
		1	**305-9195**	1	NOZZLE AS-WASHER	
E		1	**194-5171**		HOSE (24-CM)	
	7	1	**295-1115**	1	LINKAGE GP-WIPER (DOOR, RH)	
		1	**3F-9556**	2	LOCKWASHER	
M		1	**5C-7261**	2	NUT (M8X1.25-THD)	
		1	**206-5823**	2	CAP	
	8	1	**295-1117**	1	ARM GP-WINDOW WIPER (LOWER DOOR WINDOW, RH)	
		1	**305-9195**	1	NOZZLE AS-WASHER	
E		1	**194-5171**		HOSE (29-CM)	
	9	1	**306-9501**	2	SPACER (20.5X39X19-MM THK)	
	10	1	**3F-9556**	1	LOCKWASHER	
M	11	1	**5C-7261**	1	NUT (M8X1.25-THD)	
	12	1	**6K-9632**	1	TEE	
	13	1	**8T-0087**	3	LOCKWASHER	
M	14	1	**8T-4970**	3	BOLT (M6X1X14-MM)	
E	15	1	**144-0195**		HOSE (12.5-CM EACH)	
	16	1	**7Y-3474**	1	VALVE AS-CHECK (WINDOW WASHER)	

E-ORDER BY THE CENTIMETER
M-METRIC PART

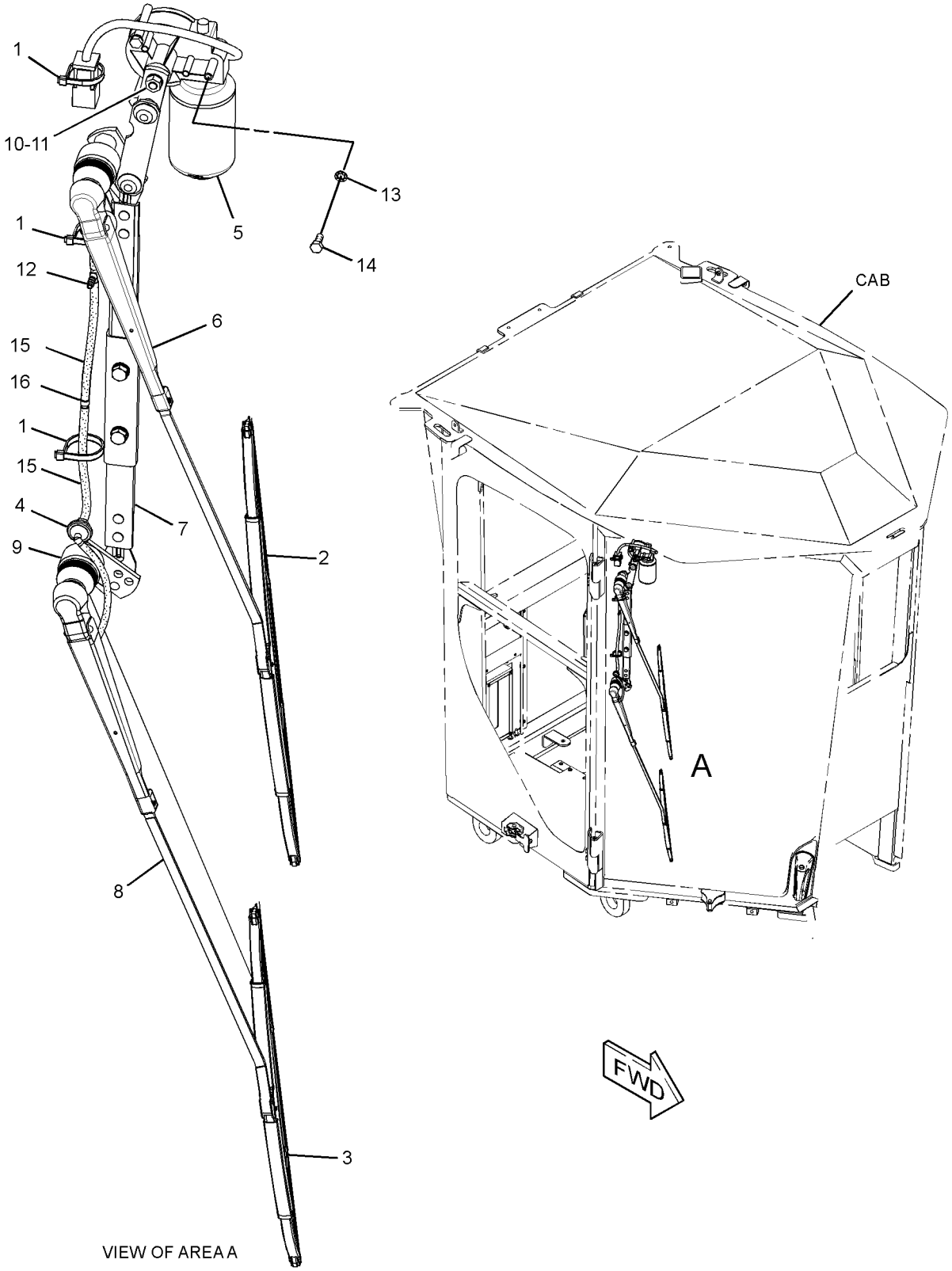

GRAPHIC #1 **<END>** g02115636

OPERATOR STATION

295-1114 WIPER GP-WINDOW—DOOR, LH

S/N: R9H1-UP

PART OF 294-1023 DOOR GP-CAB

SMCS-7305 **i03894490**

NOTE	REF NO	GRAPHIC REF	PART NUMBER	QTY	PART NAME 1 2 3 4 5 6 (PRODUCT LEVEL)	SEE PAGE
	1	1	**3S-2093**	3	STRAP-CABLE	
	2	1	**5C-8811**	1	BLADE AS-WIPER (500-MM) (UPPER DOOR WINDOW, LH)	
	3	1	**6V-5851**	1	BLADE AS-WIPER (400-MM) (LOWER DOOR WINDOW, LH)	
	4	1	**8T-5400**	2	CONNECTOR AS	
	5	1	**222-5376**	1	MOTOR GP-WINDOW WIPER (24-VOLT, 2-SPEED) (LH)	
		1	**102-8805**	1	KIT-RECEPTACLE (6-PIN)	
					(INCLUDES RECEPTACLE AS & WEDGE)	
		1	**186-3735**	5	PIN-CONNECTOR (16-GA TO 18-GA)	
		1	**8T-8737**	1	PLUG-SEAL	
	6	1	**295-1116**	1	LINKAGE GP-WIPER (LH)	
		1	**3F-9556**	2	LOCKWASHER	
M		1	**5C-7261**	2	NUT (M8X1.25-THD)	
		1	**206-5823**	2	CAP	
	7	1	**295-1119**	1	ARM GP-WINDOW WIPER (LOWER DOOR WINDOW, LH)	
		1	**305-9194**	1	NOZZLE AS-WASHER	
E		1	**194-5171**		HOSE (29-CM)	
	8	1	**306-9501**	2	SPACER (20.5X39X19-MM THK)	
	9	1	**295-1118**	1	ARM GP-WINDOW WIPER (UPPER DOOR WINDOW, LH)	
		1	**305-9194**	1	NOZZLE AS-WASHER	
E		1	**194-5171**		HOSE (33-CM)	
	10	1	**3F-9556**	1	LOCKWASHER	
M	11	1	**5C-7261**	1	NUT (M8X1.25-THD)	
	12	1	**6K-9632**	1	TEE	
	13	1	**8T-0087**	3	LOCKWASHER	
M	14	1	**8T-4970**	3	BOLT (M6X1X14-MM)	
E	15	1	**144-0195**		HOSE (12.5-CM EACH)	
	16	1	**7Y-3474**	1	VALVE AS-CHECK (WINDOW WASHER)	

E-ORDER BY THE CENTIMETER
M-METRIC PART

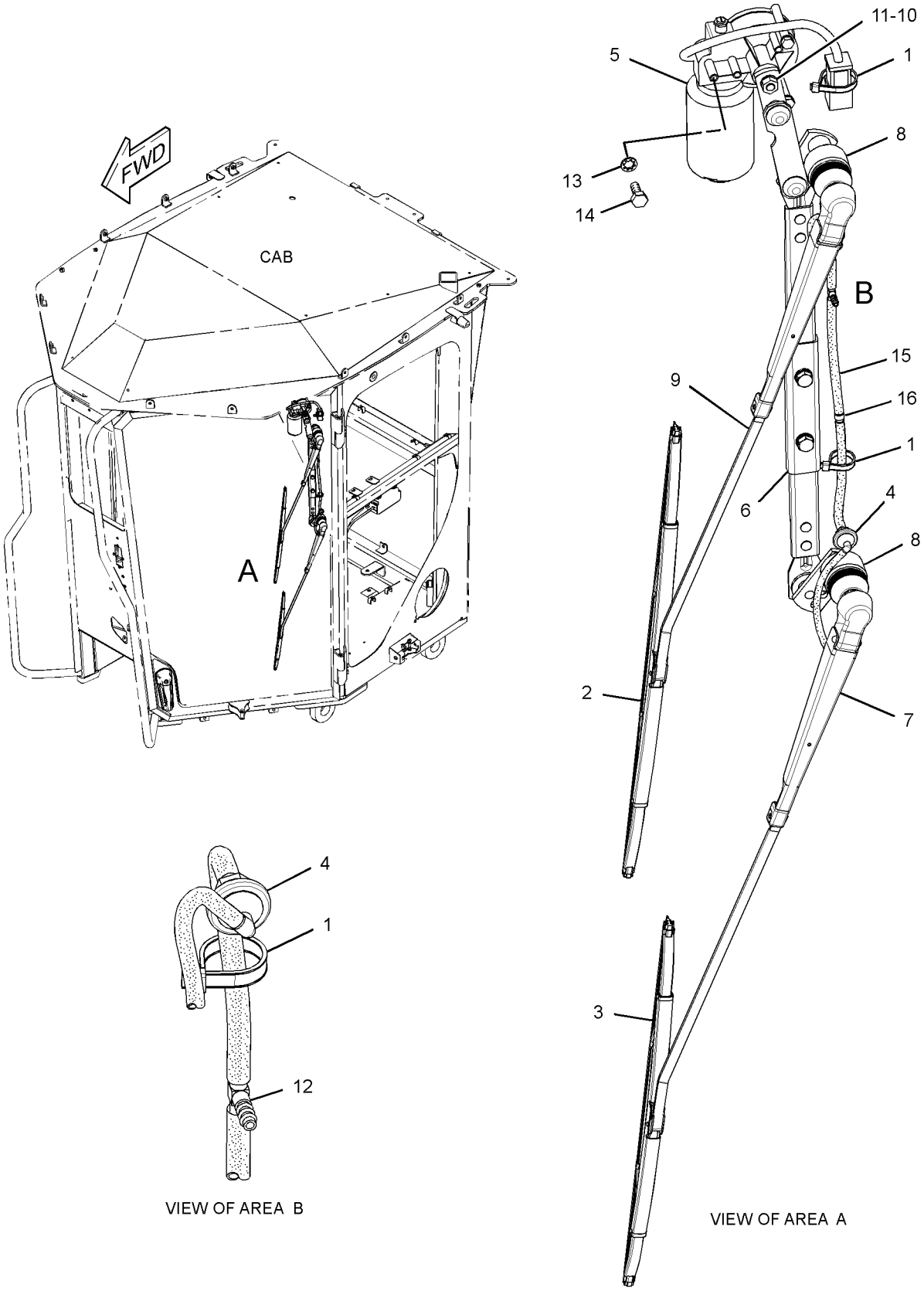

GRAPHIC #1 **<END>** g02116541

WORK TOOLS

257-3466 BIT GP-END

S/N: R9H1-UP

PART OF 349-2556 COMMON AR

SMCS-6804 **i02608536**

NOTE	REF NO	GRAPHIC REF	PART NUMBER	QTY	PART NAME 1 2 3 4 5 6 (PRODUCT LEVEL)	SEE PAGE
	1	1	**8E-5530**	2	BIT-END	
	2	1	**1J-6762**	4	BOLT-PLOW (3/4-10X3-IN)	
	3	1	**2J-3506**	10	NUT-FULL (3/4-10-THD)	
	4	1	**5F-8933**	6	BOLT-PLOW (3/4-10X3.75-IN)	

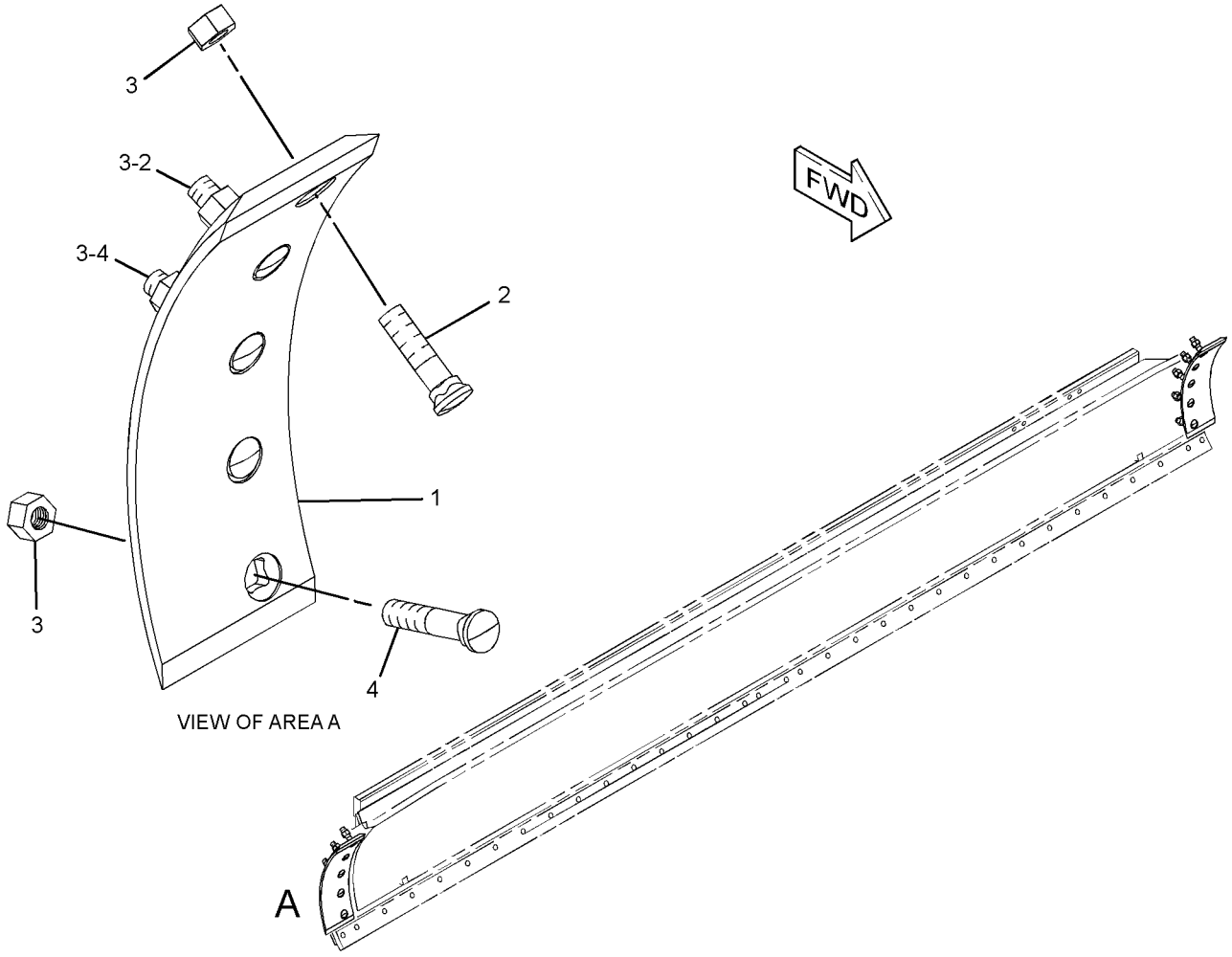

GRAPHIC #1 **<END>** g01312153

WORK TOOLS

249-9170 BLADE GP

S/N: R9H1-UP

PART OF 349-2556 COMMON AR

SMCS-6151 **i02372033**

NOTE	REF NO	GRAPHIC REF	PART NUMBER	QTY	PART NAME 1 2 3 4 5 6 (PRODUCT LEVEL)	SEE PAGE
	1	1	**253-4670**	1	MOLDBOARD AS	

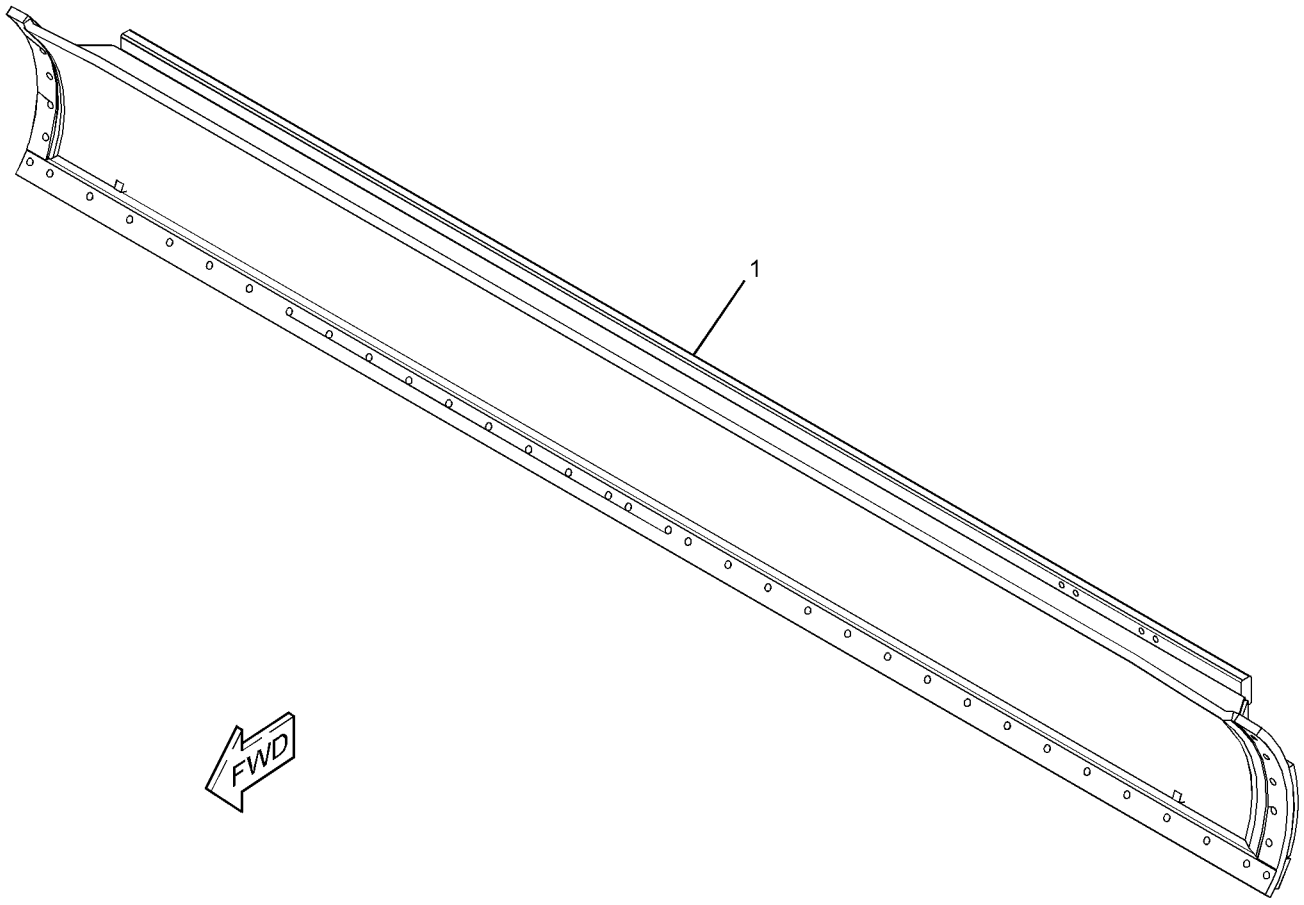

GRAPHIC #1 **<END>** g01311714

257-3462 EDGE GP-CUTTING—CURVED

S/N: R9H1-UP
25-MM THK
CANNOT BE USED WITH 257-3464—PAGE 797
AN ATTACHMENT

SMCS-6801 **i02579612**

NOTE	REF NO	GRAPHIC REF	PART NUMBER	QTY	PART NAME 1 2 3 4 5 6 (PRODUCT LEVEL)	SEE PAGE
	1	1	**4T-2236**	2	EDGE-CUTTING	
	2	1	**2J-3506**	34	NUT-FULL (3/4-10-THD)	
	3	1	**5F-8933**	14	BOLT-PLOW (3/4-10X3.75-IN)	
	4	1	**5J-4771**	20	BOLT-PLOW (3/4-10X2.75-IN)	

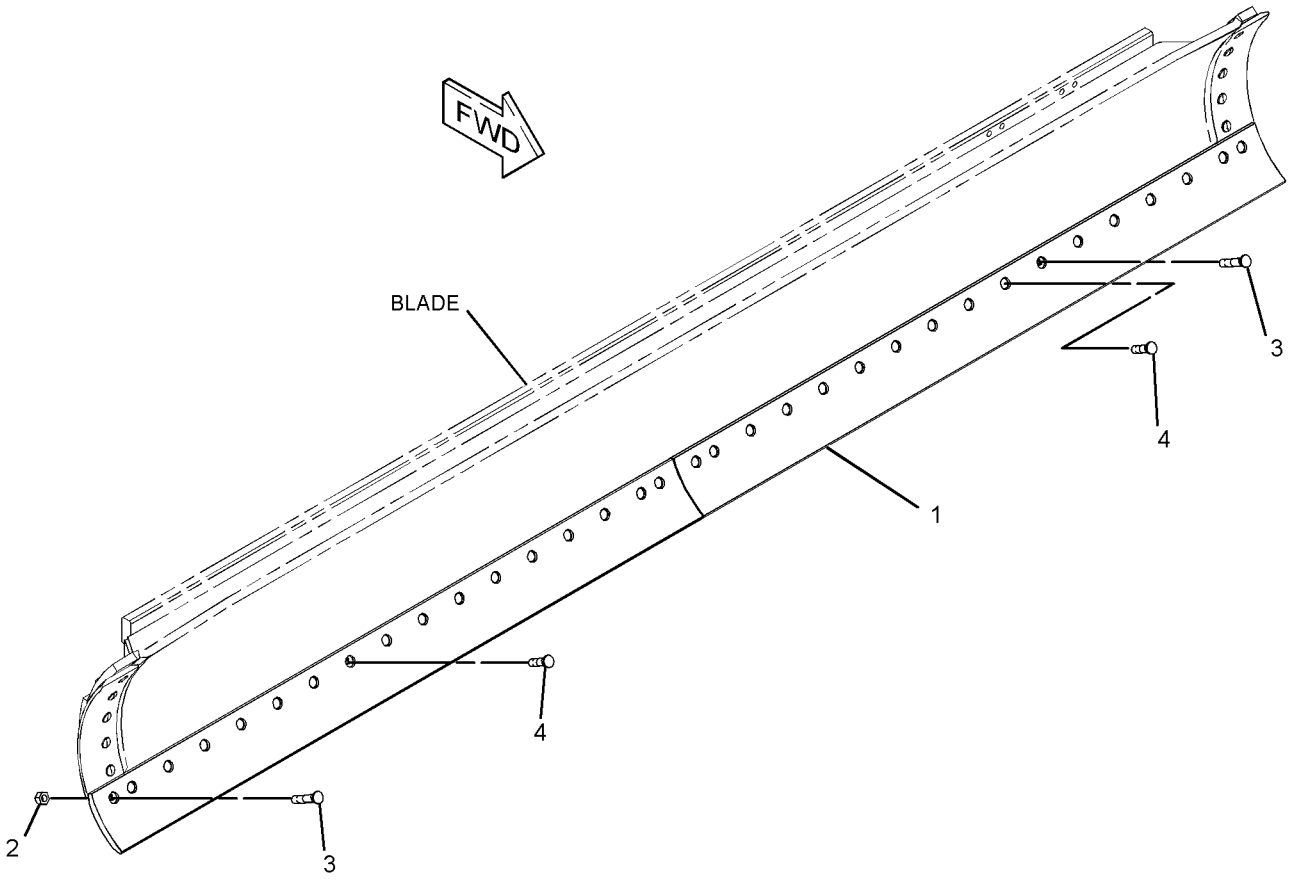

GRAPHIC #1 **<END>** g01316455

257-3464 EDGE GP-CUTTING—STRAIGHT

S/N: R9H1-UP
35-MM THK
CANNOT BE USED WITH 257-3462—PAGE 796
AN ATTACHMENT

SMCS-6801 **i02579613**

NOTE	REF NO	GRAPHIC REF	PART NUMBER	QTY	PART NAME 1 2 3 4 5 6 (PRODUCT LEVEL)	SEE PAGE
	1	1	**1J-6762**	20	BOLT-PLOW (3/4-10X3-IN)	
	2	1	**2J-3506**	34	NUT-FULL (3/4-10-THD)	
	3	1	**4T-8317**	2	EDGE-CUTTING	
	4	1	**5F-8933**	14	BOLT-PLOW (3/4-10X3.75-IN)	

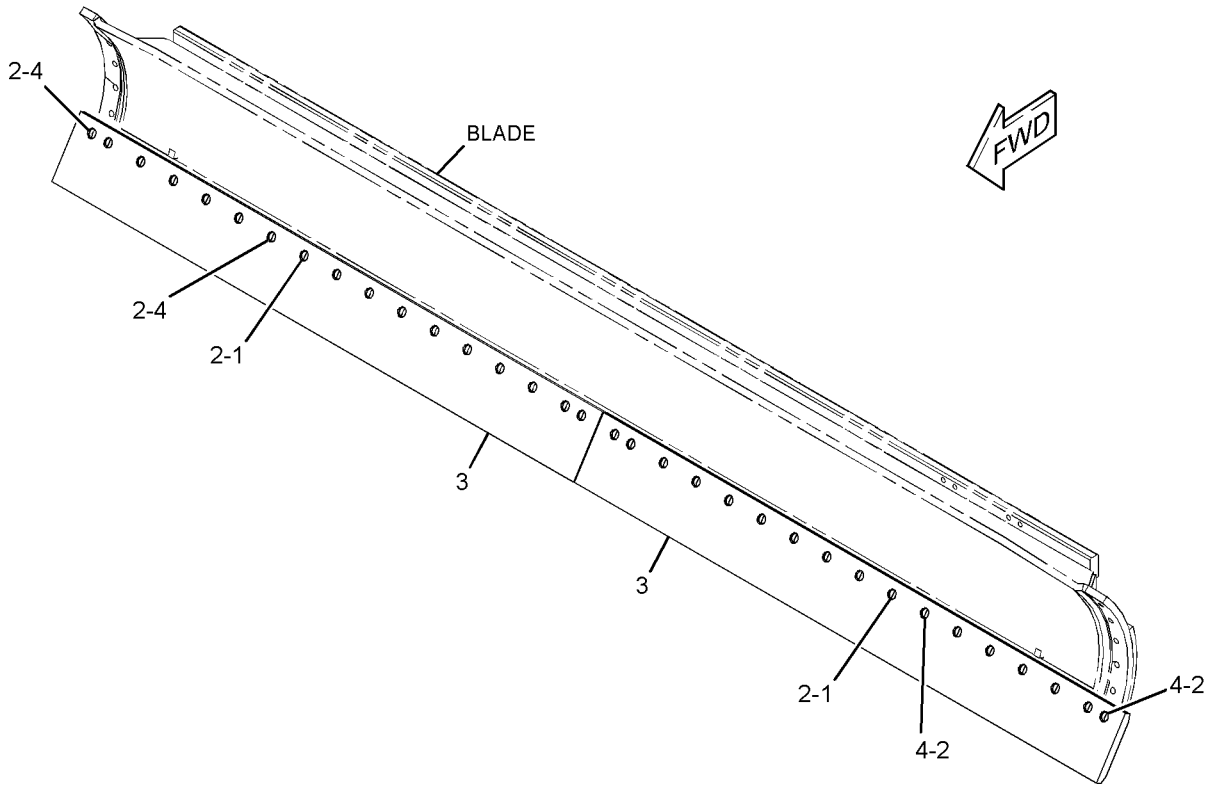

GRAPHIC #1 **<END>** g01311733

WORK TOOLS

265-6710 LIFT GP-BLADE

S/N: R9H1-UP

PART OF 349-2556 COMMON AR

SMCS-6151 **i02975718**

NOTE	REF NO	GRAPHIC REF	PART NUMBER	QTY	PART NAME 1 2 3 4 5 6 (PRODUCT LEVEL)	SEE PAGE
	1	1	**8D-3329**	2	PIN	
	2	1	**265-1099**	2	PIN	
	3	1	**265-6713**	1	ARM AS (RH)	
		1	**8D-3309**	1	BEARING-SLEEVE	
		1	**8D-3311**	1	BEARING-SLEEVE	
M	4	1	**288-0735**	1	BOLT (M12X1.75X60-MM)	
	5	1	**2G-3983**	1	PLATE	
	6	1	**279-6632**	1	WASHER (13.5X25.5X3-MM THK)	
M	7	1	**189-3925**	4	BOLT (M20X2.5X170-MM)	
	8	1	**8T-3282**	8	WASHER-HARD (22X35X3.5-MM THK)	
	9	1	**265-1098**	2	LOCK	
	10	1	*323-8851*	1	BAR AS	
	10A	1	**8D-9507**	4	BEARING-SLEEVE	
	10B	1	**9D-3313**	2	BEARING-SLEEVE	
	10C	1	**9D-3333**	1	RING-RETAINING	
	11	1	**265-6714**	1	ARM AS (LH)	
		1	**8D-3309**	1	BEARING-SLEEVE	
		1	**8D-3311**	1	BEARING-SLEEVE	
M	12	1	**6V-7742**	4	NUT-FULL (M20X2.5-THD)	
M	13	1	**7X-0851**	6	NUT (M24X3-THD)	
M	14	1	**8T-0674**	6	BOLT (M24X3X180-MM)	
	15	1	**6V-8237**	12	WASHER (26X44X4-MM THK)	
	16	1	**265-6717**	2	RETAINER	
M	17	1	**7X-2563**	4	BOLT (M20X2.5X60-MM)	
B	18	1	**265-6718**	8	SHIM (0.13-MM THK)	
B	19	1	**265-6719**	6	SHIM (0.25-MM THK)	
B	20	1	**265-6720**	2	SHIM (0.5-MM THK)	
	21	1	**8D-3308**	2	SEAL	
	22	1	**5H-5672**	2	SEAL-O-RING	
	23	1	**8D-3268**	2	WASHER (93.68X133.35X2.39-MM THK)	
	24	1	**8D-3269**	4	WASHER (3.635X5.25X0.075-IN THK)	
	25	1	**8D-3267**	4	WASHER (4.265X5.84X0.075-IN THK)	
	26	1	**8D-3266**	2	WASHER (109X149X2.39-MM THK)	
	27	1	**8D-3307**	2	SEAL	
	28	1	**2S-8439**	2	SEAL-O-RING	
	29	1	**265-6716**	2	YOKE AS	
					(EACH INCLUDES)	
	29A	1	**2G-8234**	1	RING	
	30	1	**9D-6588**	8	SEAL-LIP TYPE	
	31	1	**8D-3245**	8	WASHER (3.515X7X0.075-IN THK)	
	32	1	**8D-3244**	4	WASHER (90.47X177.8X2.39-MM THK)	
	33	1	**8D-3247**	4	WASHER (71.42X152.4X2.39-MM THK)	
B	34	1	**8D-3251**	10	WASHER (70X151X1.22-MM THK)	
B	35	1	**8D-3252**	10	WASHER (70X151X0.76-MM THK)	
	36	1	**8T-4123**	4	WASHER (22X35X3.5-MM THK)	
	37	1	**265-1097**	2	LOCK	
	38	1	**9D-6589**	1	SEAL-LIP TYPE	

B-USE AS REQUIRED
M-METRIC PART

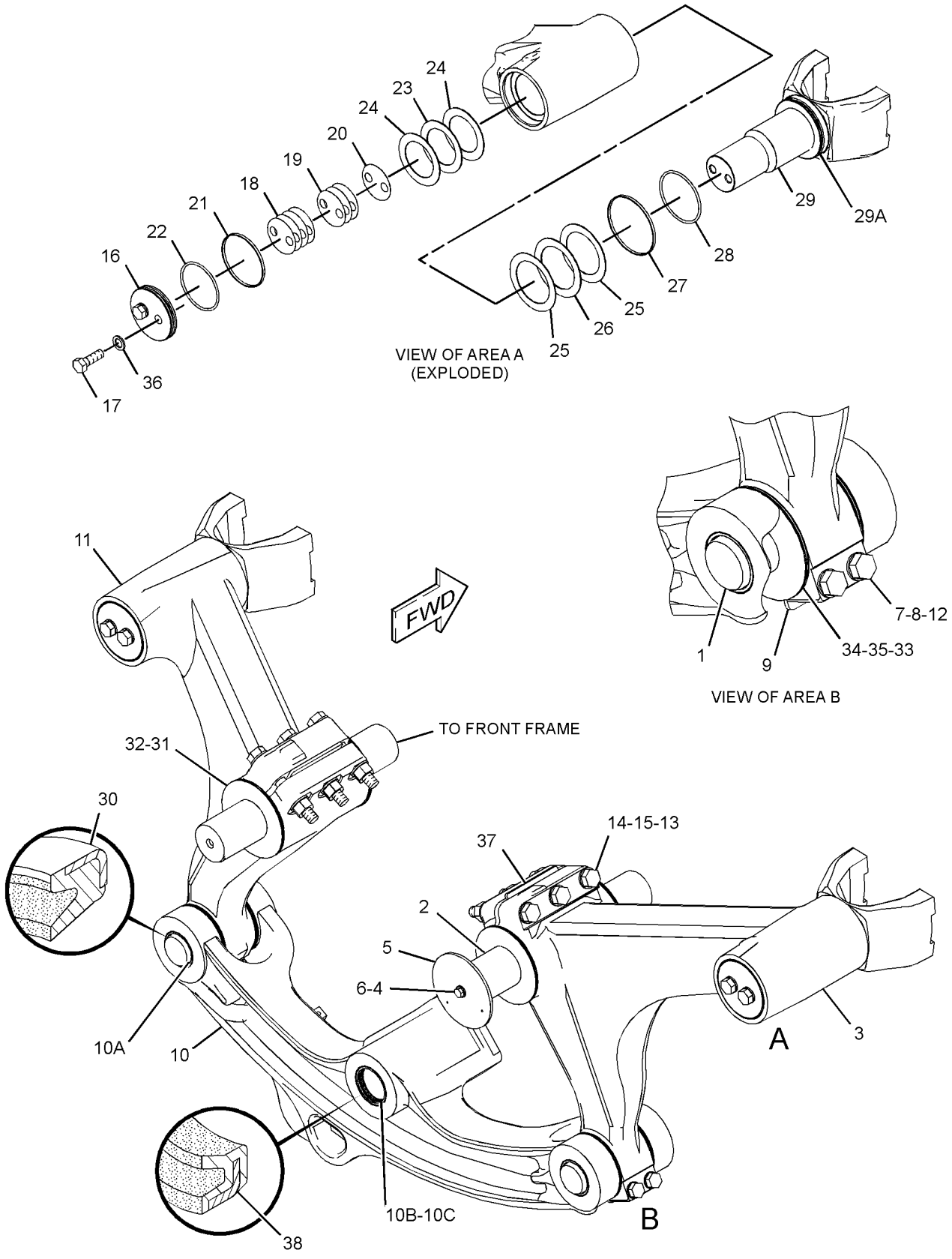

GRAPHIC #1 **<END>** g01312176

WORK TOOLS

264-3062 MOUNTING GP-RIPPER

S/N: R9H1-UP
PART OF 264-3058, 296-3529 RIPPER AR
AN ATTACHMENT

SMCS-6324 **i02617763**

NOTE	REF NO	GRAPHIC REF	PART NUMBER	QTY	PART NAME 1 2 3 4 5 6 (PRODUCT LEVEL)	SEE PAGE
	1	1	**6K-0715**	2	PIN	
	2	1	**8B-9840**	12	SPACER (1.125X2X1-IN THK)	
	3	1	**8J-9607**	2	PIN	
	4	1	**8J-9608**	2	PIN	
	5	1	**120-9875**	2	CAM AS	
	6	1	**266-5814**	1	PLATE AS	
	7	1	**276-3176**	2	PLATE	
	8	1	**293-4455**	2	LINK AS	
	9	1	**293-7854**	2	RETAINER	
	10	1	**293-7855**	2	PIN	
M	11	1	**112-3929**	12	BOLT (M24X3X100-MM)	
M	12	1	**176-5311**	4	LOCKNUT (M16X2-THD)	
	13	1	**267-3506**	12	WASHER-HARD (26X44X4-MM THK)	
M	14	1	**6V-7687**	2	LOCKNUT (M12X1.75-THD)	
M	15	1	**7X-2557**	4	BOLT (M16X2X140-MM)	
	16	1	**8T-4223**	4	WASHER-HARD (13.5X25.5X3-MM THK)	
M	17	1	**8T-4910**	4	BOLT (M12X1.75X60-MM)	
M	18	1	**8T-5092**	2	BOLT (M12X1.75X150-MM)	

M-METRIC PART

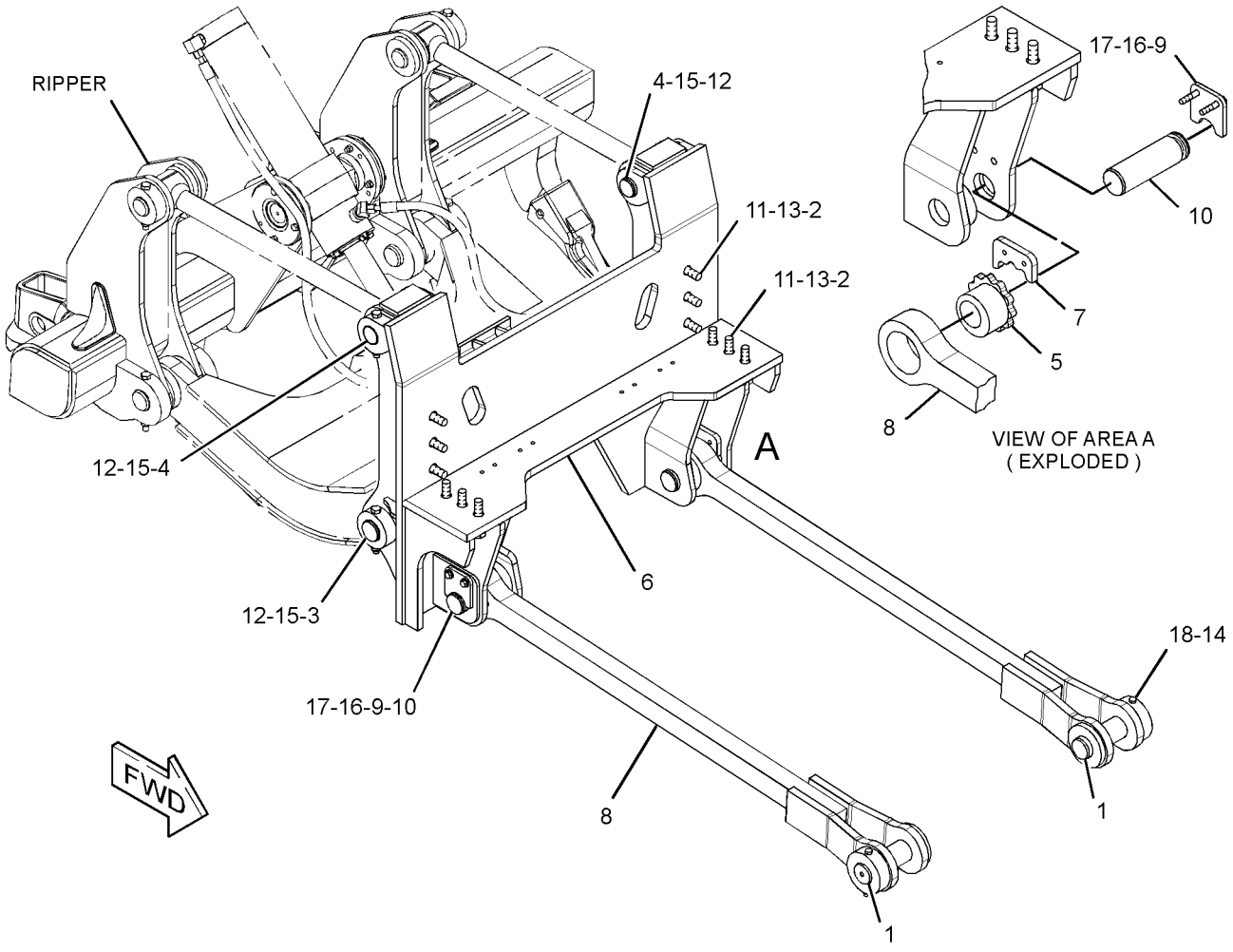

GRAPHIC #1 **<END>** g01318082

WORK TOOLS

264-3058 RIPPER AR

S/N: R9H1-UP
PART OF 352-3819 OPTION AR-WORK TOOL
AN ATTACHMENT

SMCS-6325 **i02617742**

NOTE	REF NO	GRAPHIC REF	PART NUMBER	QTY	PART NAME 1 2 3 4 5 6 (PRODUCT LEVEL)	SEE PAGE
Y	1	1	**113-5264**	1	CYLINDER GP-RIPPER	568
Y	2	1	*264-3062*	1	MOUNTING GP-RIPPER	800
Y	3	1	*266-5813*	1	LINES GP-RIPPER	615
Y	4	1	*293-4456*	1	RIPPER GP	803

Y-SEPARATE ILLUSTRATION

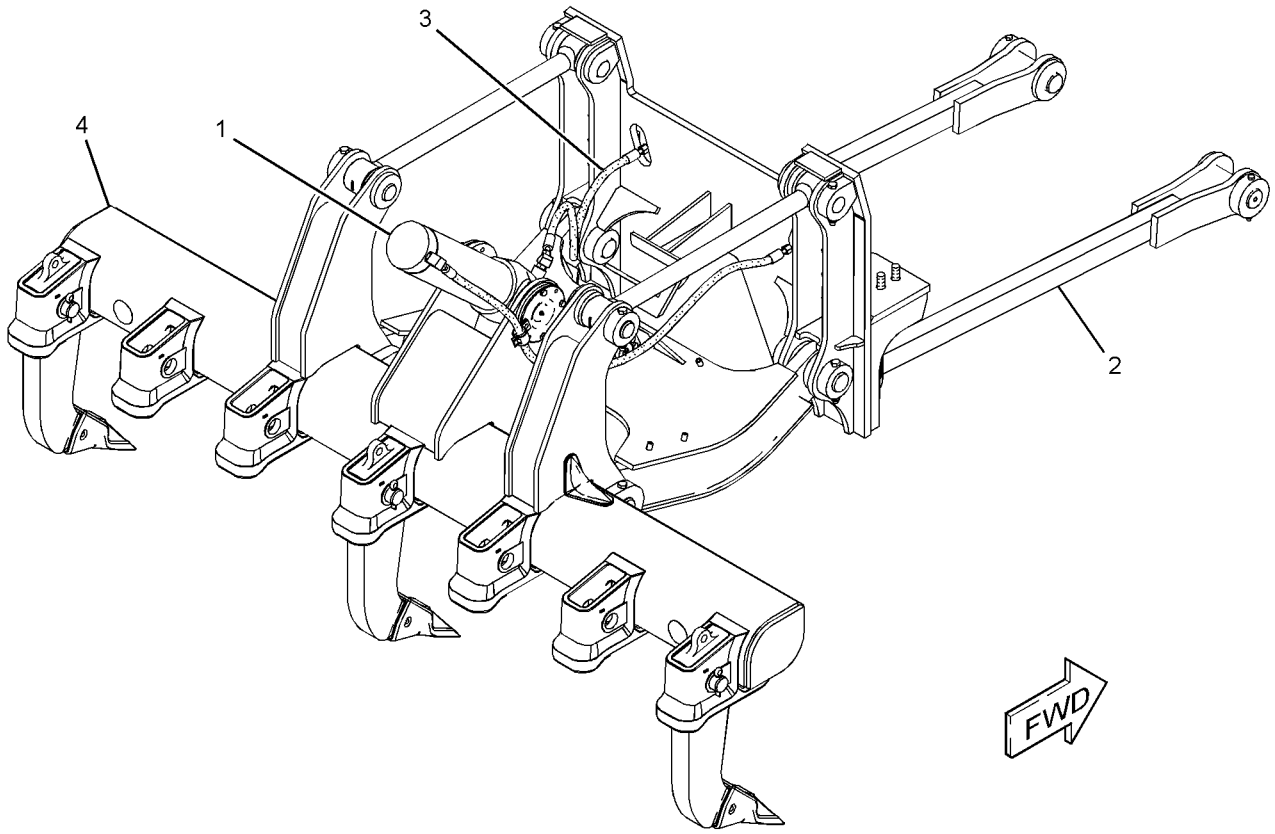

GRAPHIC #1 **<END>** g01317514

WORK TOOLS

296-3529 RIPPER AR

S/N: R9H1-UP

AN ATTACHMENT

SMCS-6325 **i02852048**

NOTE	PART NUMBER	QTY	PART NAME 1 2 3 4 5 6 (PRODUCT LEVEL)	SEE PAGE
Y	**113-5264**	1	CYLINDER GP-RIPPER	568
Y	*252-0978*	1	HITCH GP-TOWING	499
Y	*266-5813*	1	LINES GP-RIPPER	615
Y	*264-3062*	1	MOUNTING GP-RIPPER	800
Y	*293-4456*	1	RIPPER GP	803

Y-SEPARATE ILLUSTRATION

<END>

WORK TOOLS

293-4456 RIPPER GP

S/N: R9H1-UP
PART OF 264-3058, 296-3529 RIPPER AR
AN ATTACHMENT

SMCS-6325 **i02657766**

NOTE	REF NO	GRAPHIC REF	PART NUMBER	QTY	PART NAME 1 2 3 4 5 6 (PRODUCT LEVEL)	SEE PAGE
	1	1	**2K-0703**	1	BAR	
	2	1	**3B-8489**	3	FITTING-GREASE	
	3	1	**3K-8510**	1	PIN	
	4	1	**4K-3004**	2	BEARING-TRUNNION SUPPLEMENTARY	
Y	5	1	**8J-2189**	3	TOOTH GP-RIPPER	805
	6	1	**8J-5050**	1	CARRIAGE AS	
		1	**2K-4315**	4	BOSS	
		1	**5K-7748**	7	HOLDER-BIT	
		1	**2K-4309**	1	REINFORCEMENT (RH)	
		1	**2K-4310**	1	REINFORCEMENT (LH)	
	7	1	**9J-2880**	2	LINK AS	
					(EACH INCLUDES)	
		1	**3G-2582**	2	BEARING	
		1	**5K-0267**	1	LINK-UPPER	
	8	1	**190-5386**	2	FILM-STRIPE (ROUND RED REFLECTIVE)	
	9	1	**293-4471**	1	LINK AS	
		1	**3G-2580**	4	BEARING	
M	10	1	**6V-7687**	8	LOCKNUT (M12X1.75-THD)	
M	11	1	**7X-2557**	2	BOLT (M16X2X140-MM)	
	12	1	**8J-9607**	2	PIN	
	13	1	**8J-9608**	2	PIN	
M	14	1	**8T-4192**	2	BOLT (M12X1.75X25-MM)	
M	15	1	**8T-4778**	4	LOCKNUT (M16X2-THD)	
M	16	1	**8T-4910**	7	BOLT (M12X1.75X60-MM)	
M	17	1	**8T-6385**	2	BOLT (M16X2X180-MM)	
	18	1	**9D-6584**	8	SEAL-LIP TYPE	
	19	1	**9D-6585**	8	SEAL-LIP TYPE	
M	20	1	**8T-4648**	1	BOLT (M12X1.75X70-MM)	

M-METRIC PART
Y-SEPARATE ILLUSTRATION

293-4456 **RIPPER GP** *(contd.)* **i02657766**

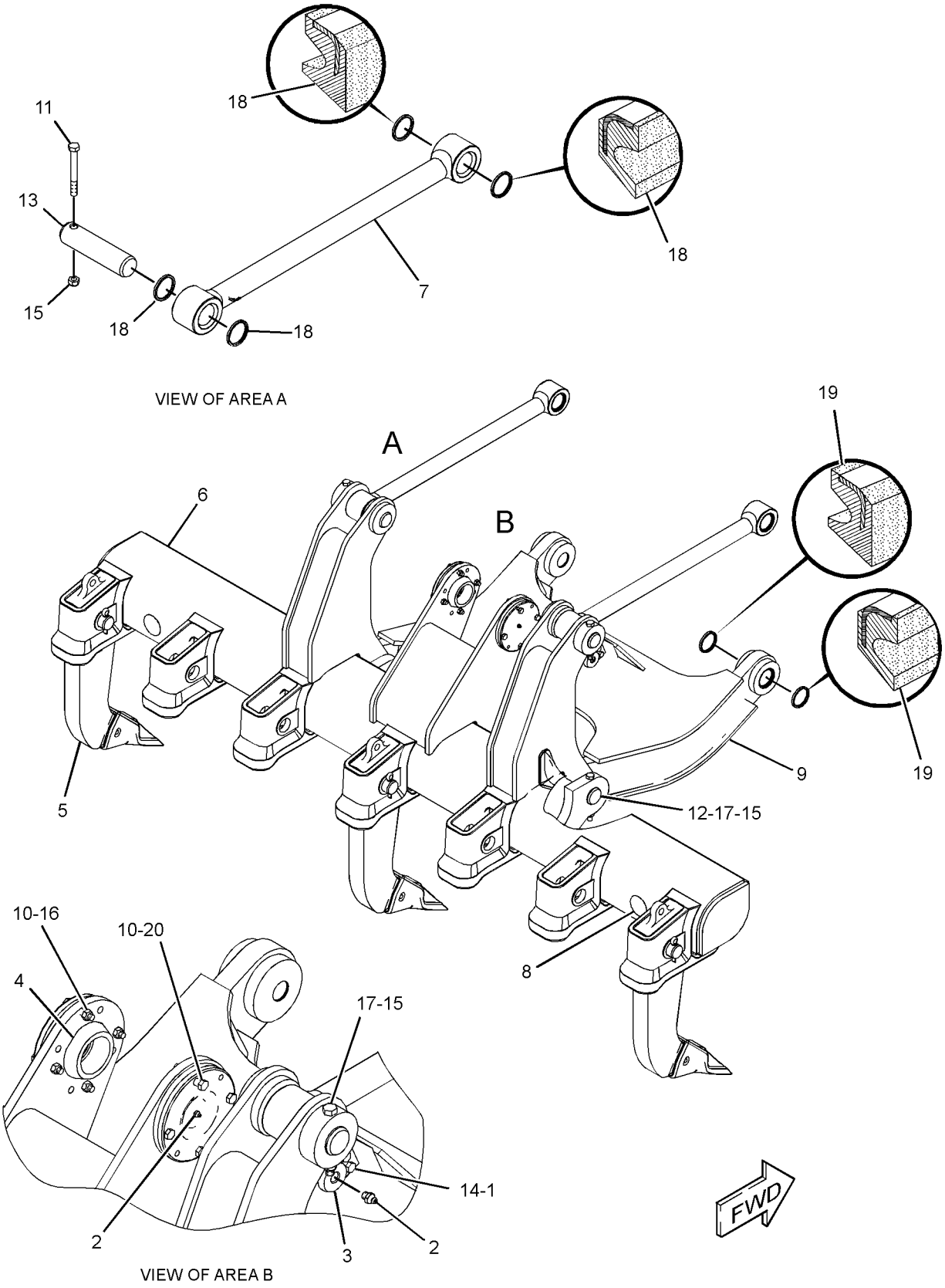

GRAPHIC #1 **<END>** g01335529

WORK TOOLS

8J-2189 TOOTH GP-RIPPER

S/N: R9H1-UP
PART OF 293-4456 RIPPER GP
AN ATTACHMENT

SMCS-6808 **i01169199**

NOTE	REF NO	GRAPHIC REF	PART NUMBER	QTY	PART NAME 1 2 3 4 5 6 (PRODUCT LEVEL)	SEE PAGE
	1	1	**3B-5325**	2	PIN-COTTER	
	2	1	**8J-2190**	1	PIN	
	3	1	**9J-3139**	1	SHANK-RIPPER	
C	4	1	**114-0358**	1	PIN	
C		1	**114-0359**	1	RETAINER AS	
	5	1	**6Y-0359**	1	TIP-RIPPER	

C-CHANGE FROM PREVIOUS TYPE

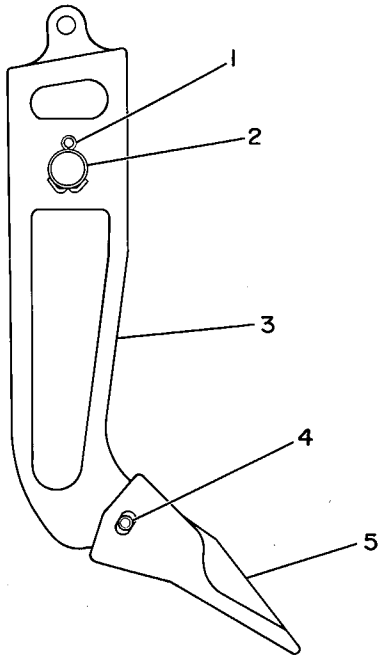

GRAPHIC #1 **<END>** g00081660

249-7321 FILM GP—VARIABLE HORSEPOWER

S/N: R9H1-UP
AN ATTACHMENT

SMCS-0375, 7000, 7405, 7557 **i02655235**

NOTE	PART NUMBER	QTY	PART NAME 1 2 3 4 5 6 (PRODUCT LEVEL)	SEE PAGE
	115-5852	1	PLATE & FILM GP (ENGINE INFORMATION)	
			ON LEFT SIDE OF CYLINDER BLOCK TOWARDS REAR	
	280-1033	2	FILM-IDENTIFICATION (VARIABLE HORSEPOWER)	
			1-ON EACH SIDE OF ENGINE ENCLOSURE	

<END>

249-7328 FILM GP—VHP PLUS

S/N: R9H1-UP
PART OF 352-3817 SNOW AR-MOTOR GRADER
AN ATTACHMENT

SMCS-0375, 7000, 7405, 7557 **i02655242**

NOTE	PART NUMBER	QTY	PART NAME 1 2 3 4 5 6 (PRODUCT LEVEL)	SEE PAGE
	115-5852	1	PLATE & FILM GP (ENGINE INFORMATION)	
			ON LEFT SIDE OF CYLINDER BLOCK	
	280-1034	2	FILM-IDENTIFICATION (VARIABLE HORSEPOWER PLUS)	
			ON ENGINE ENCLOSURE (1 EACH SIDE)	
	249-6751	1	CONFIGURATION-PREMIUM	
			DLR INSTALL CONFIG: SEE IRM: EES03-01	

<END>

SERVICE EQUIPMENT AND SUPPLIES

261-8618 FILM GP

S/N: R9H1-UP

PART OF 251-1219, 298-5632 PLATE & FILM GP

AN ATTACHMENT

SMCS-0375, 7000, 7405, 7557 **i03795653**

NOTE	REF NO	GRAPHIC REF	PART NUMBER	QTY	PART NAME 1 2 3 4 5 6 (PRODUCT LEVEL)	SEE PAGE
	1	1	**253-0861**	2	FILM-INFORMATION (CAT POWER, ACERT TECHNOLOGY)	
	2	1	**280-1033**	2	FILM-IDENTIFICATION (VARIABLE HORSEPOWER)	
	3	1	**281-2002**	1	FILM-IDENTIFICATION (CATERPILLAR, REAR)	
	4	1	**281-2003**	1	FILM-IDENTIFICATION (CAT HOOD, LH)	
	5	1	**281-2004**	1	FILM-IDENTIFICATION (CAT HOOD, RH)	
	6	1	**281-2005**	2	FILM-IDENTIFICATION (16M)	

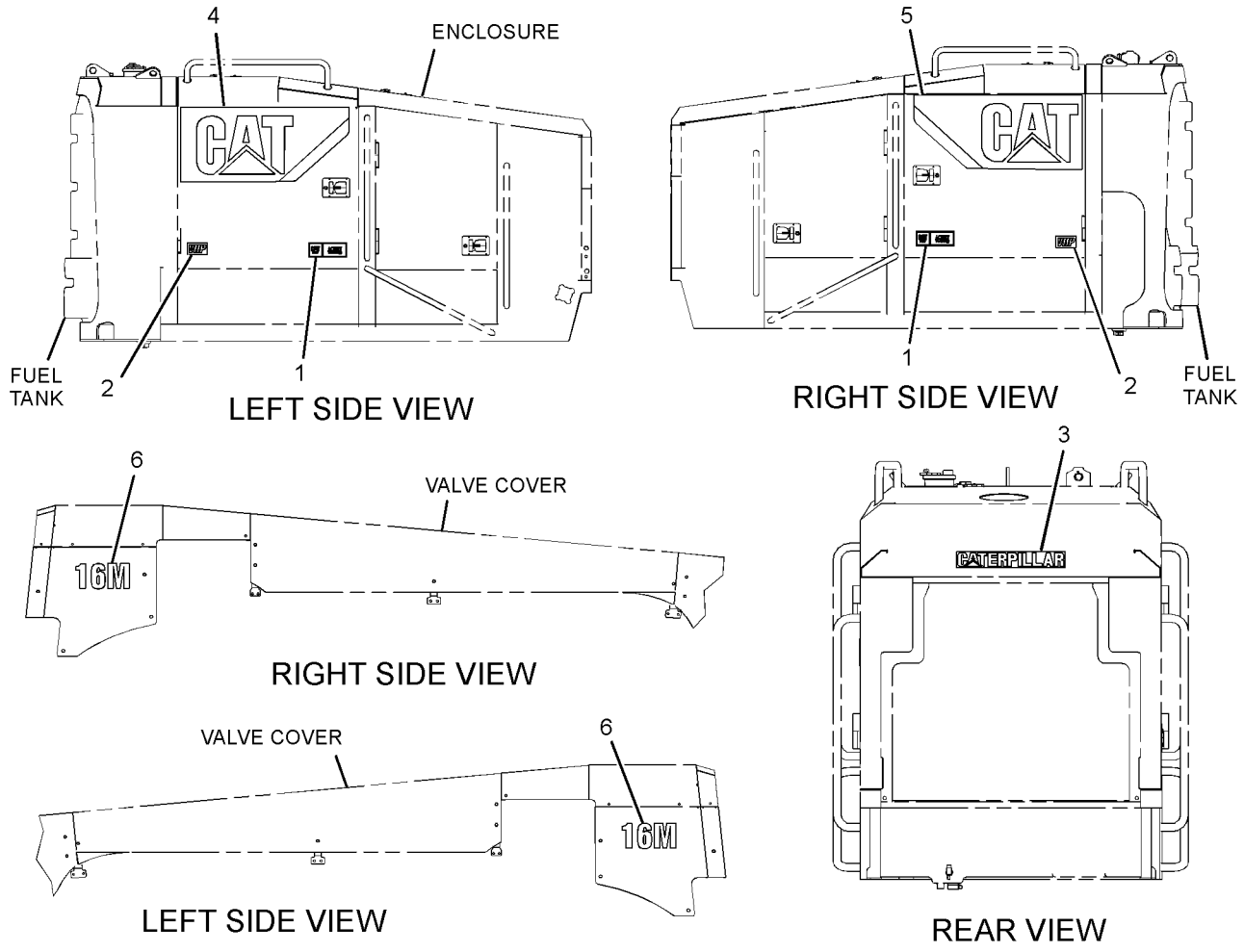

GRAPHIC #1 **<END>** g02073633

267-3184 FILM GP-INTERNATIONAL

S/N: R9H1-UP

PART OF 302-4220, 302-4221, 302-4222, 302-4223, 302-4224, 302-4225, 302-4226, 302-4227, 302-4228, 302-4229, 302-4230, 302-4231, 302-4232, 302-4233, 302-4234, 302-4235, 302-4236, 302-4237, 302-5136 PLATE & FILM GP AN ATTACHMENT

SMCS-7557 **i03157454**

NOTE	REF NO	GRAPHIC REF	PART NUMBER	QTY	PART NAME 1 2 3 4 5 6 (PRODUCT LEVEL)	SEE PAGE
	1	1	**100-5612**	1	FILM-INSTRUCTION (ALTERNATE EXIT, REMOVE WINDOW)	
	2	1	**219-0302**	1	FILM-WARNING (NO WELD, NO DRILL, READ OMM)	
	3	1	**224-0554**	1	FILM-WARNING (UNIVERSAL, READ OMM, INTL)	
	4	1	**227-7391**	1	FILM-WARNING (SEAT BELT, INTERNATIONAL)	
	5	1	**249-6688**	1	FILM-WARNING (CRUSH HAZARD, READ MANUAL)	
	6	1	**307-0047**	1	FILM-INFORMATION (PRODUCT LINK, READ OMM)	
	7	1	**260-7653**	1	FILM-WARNING (PRODUCT LINK 300, INTL)	

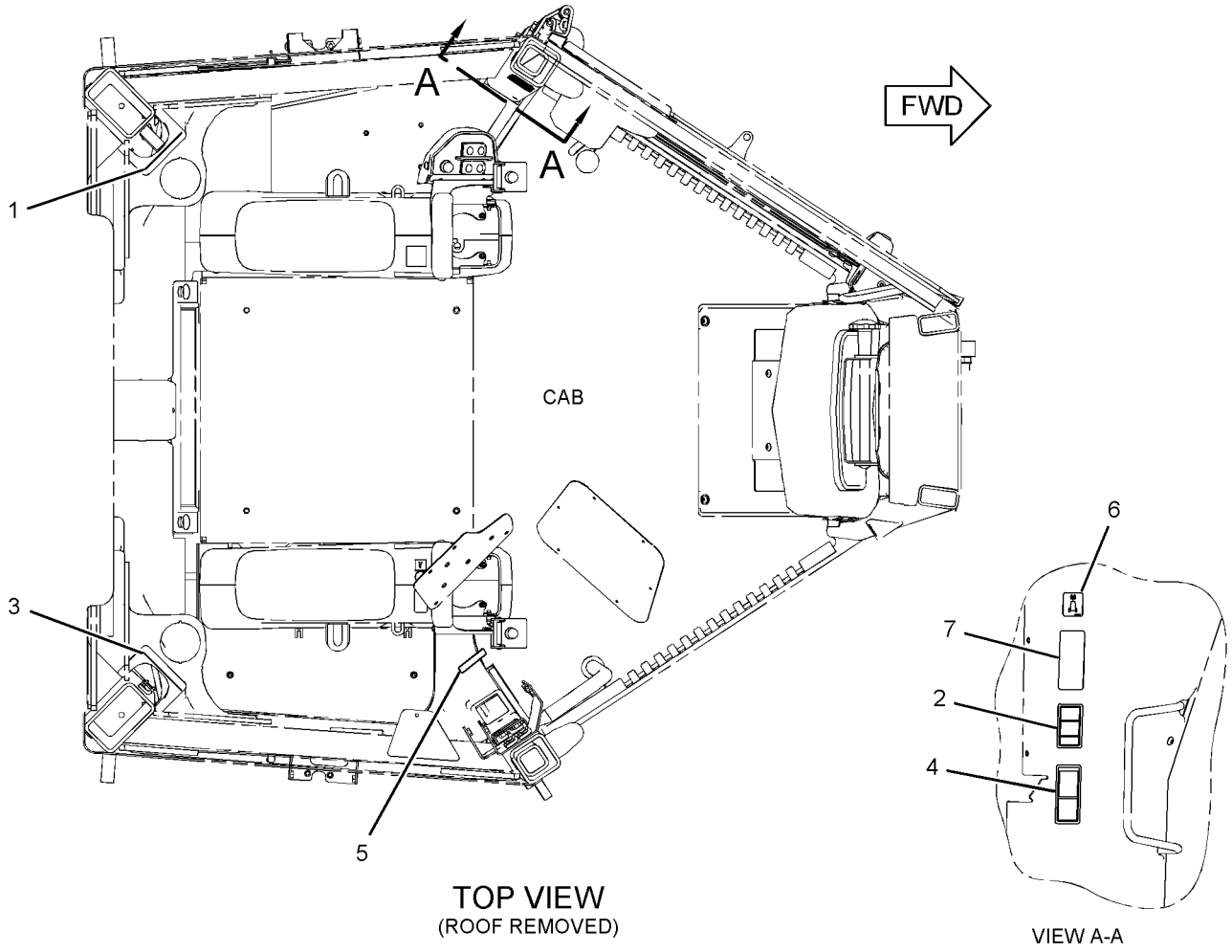

TOP VIEW
(ROOF REMOVED)

VIEW A-A

GRAPHIC #1 **<END>** g01636402

SERVICE EQUIPMENT AND SUPPLIES

267-3183 FILM GP-U.S.

S/N: R9H1-UP
PART OF 302-4219 PLATE & FILM GP
AN ATTACHMENT

SMCS-7557 **i03151500**

NOTE	REF NO	GRAPHIC REF	PART NUMBER	QTY	PART NAME 1 2 3 4 5 6 (PRODUCT LEVEL)	SEE PAGE
	1	1	**100-5612**	1	FILM-INSTRUCTION (ALTERNATE EXIT, REMOVE WINDOW)	
	2	1	**219-0302**	1	FILM-WARNING (NO WELD, NO DRILL, READ OMM)	
	3	1	**225-3305**	1	FILM-WARNING (UNIVERSAL, READ OMM, U.S.)	
	4	1	**227-7390**	1	FILM-WARNING (SEAT BELT)	
	5	1	**249-6687**	1	FILM-WARNING (CRUSH HAZARD)	
	6	1	**260-7652**	1	FILM-WARNING (PRODUCT LINK 300, U.S.)	
	7	1	**307-0047**	1	FILM-INFORMATION (PRODUCT LINK, READ OMM)	

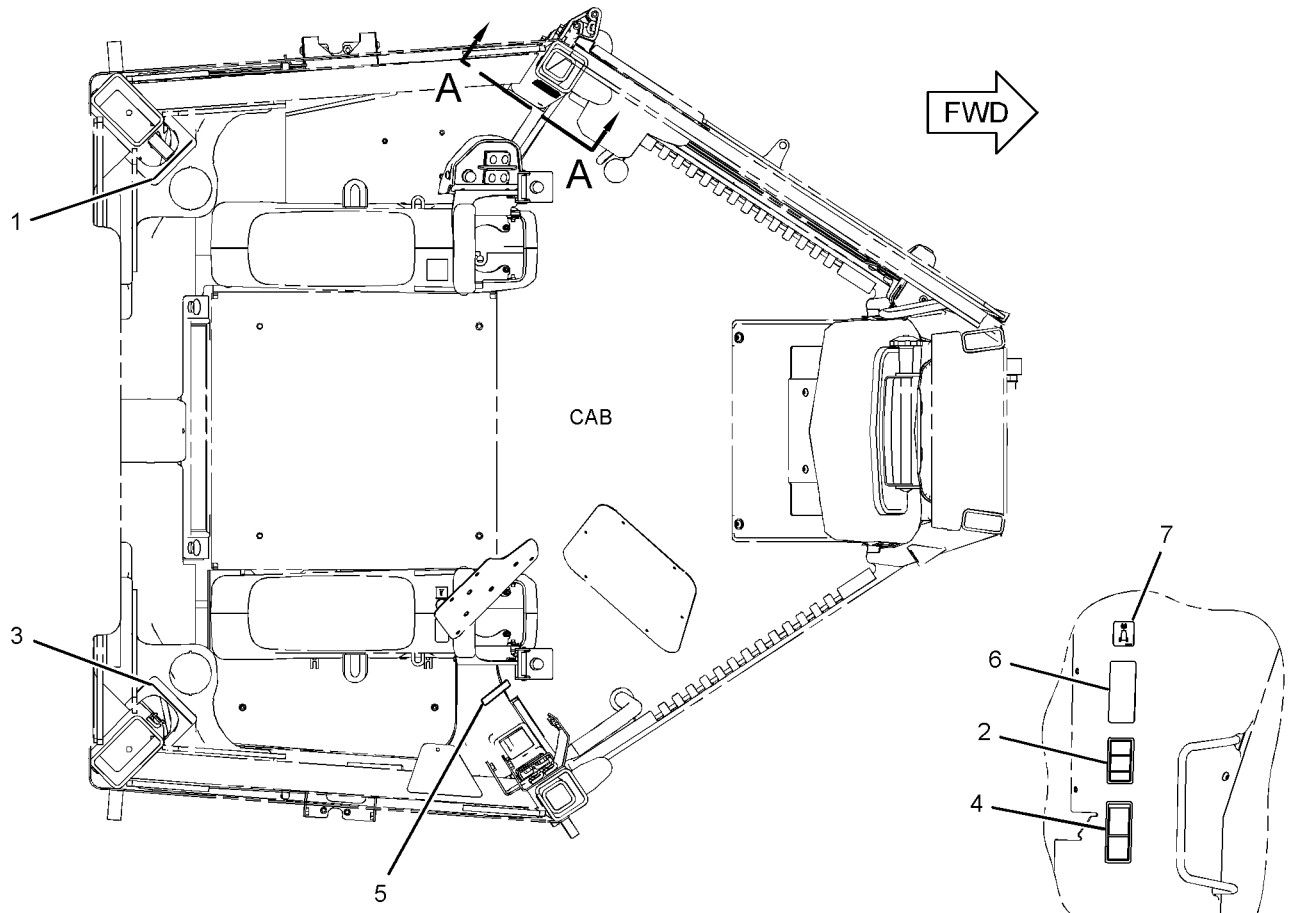

TOP VIEW
(ROOF REMOVED)

VIEW A-A

GRAPHIC #1 **<END>** g01631994

SERVICE EQUIPMENT AND SUPPLIES

251-1219 PLATE & FILM GP

S/N: R9H1-UP

PART OF 302-4219 PLATE & FILM GP

AN ATTACHMENT

SMCS-7405, 7557 **i04014451**

NOTE	REF NO	GRAPHIC REF	PART NUMBER	QTY	PART NAME 1 2 3 4 5 6 (PRODUCT LEVEL)	SEE PAGE
	1	1	**5P-1174**	1	FILM-IDENTIFICATION (TRANSMISSION OIL FILL CAP)	
	2	1	**5P-1175**	1	FILM-IDENTIFICATION (ENGINE OIL FILL)	
	3	1	**5T-4330**	1	PLATE-IDENTIFICATION (CENTERSHIFT INDICATOR)	
	4	1	**109-0361**	1	FILM-INSTRUCTION (ENGINE SHUTDOWN)	
	5	1	**129-7680**	1	FILM-INSTRUCTION (HYDRAULIC TANK OIL DRAIN)	
	6	1	**134-7258**	1	FILM-INFORMATION (EXTENDED LIFE COOLANT)	
	7	1	**146-6747**	1	FILM-INFORMATION (24-VOLT)	
	8	2	**159-3590**	1	FILM-IDENTIFICATION (WATER SEPARATOR)	
	9	2	**190-5386**	2	FILM-STRIPE (ROUND RED REFLECTIVE)	
	10	1	**209-5776**	1	FILM-INFORMATION (ENGINE COOLANT)	
	11	1	**225-4150**	1	PLATE-SERVICE INFORMATION (MACHINE)	
	12	1	**226-1242**	2	FILM-WARNING (CRUSH HAZARD, STAY BACK, U.S.)	
	13	1	**226-1275**	1	FILM-WARNING (CRUSH HAZARD, READ OMM, U.S.)	
	14	1	**243-5289**	2	FILM-IDENTIFICATION (LIFT POINT)	
	15	1	**261-4377**	1	FILM-IDENTIFICATION (FILL, DRAIN)	
	16	1	**158-7864**	1	FILM-IDENTIFICATION (HYDRAULIC OIL)	
	17	2	**239-4990**	2	FILM-WARNING (HIGH PRESSURE CYLINDER)	
	18	1	**239-6989**	1	PLATE-SERIAL NUMBER (MACHINE)	
	19	1	**248-5245**	2	FILM-INFORMATION (LIFT EYE, TIE-DOWN LOCATION)	
	20	1	**3E-1552**	1	FILM-INSTRUCTION (TRANSMISSION FILTER)	
	21	1	**249-8575**	1	FILM-WARNING (NO DRILL, WELD, READ OMM)	
	23	1	**252-2157**	2	FILM-INFORMATION (TIE-DOWN)	
	24	1	**3F-5535**	2	SCREW-DRIVE (NO 10X0.375-IN)	
Y	25	1	*261-8618*	1	FILM GP	807
	26	1	**263-6901**	1	FILM-WARNING (HOT FLUID)	
	27	2	**275-3292**	1	FILM-IDENTIFICATION (GREASE POINT)	
	28	1	**277-0618**	1	FILM-IDENTIFICATION (FUSES)	
	29	2	**293-3822**	1	FILM-IDENTIFICATION (ARTICULATION LOCK)	
E	32	2	**117-9978**		FILM-STRIPE (RED) (82-CM)	
	33	1	**313-9557**	1	FILM-FUSE PANEL (IDENTIFICATION)	
	34	2	**329-5706**	2	FILM-WARNING (COLD START, READ OMM)	
	35	2	**329-5707**	1	FILM-IDENTIFICATION (OIL GRADE, READ OMM)	
FJ			**246-2641**	3	PADLOCK GP	
					(EACH INCLUDES)	
F			**5P-8500**	1	KEY	
					(ONE PADLOCK FOR EACH OF THE FOLLOWING COMPONENTS)	
					(1-ON HYDRAULIC TANK)	
					(1-ON FUEL TANK)	
					(1-ON BATTERY)	
AF			**3N-3790**	1	PLATE-SERIAL NUMBER (ENGINE)	
					(ON LOWER RH REAR CORNER OF CYLINDER BLOCK)	

A-NOT PART OF THIS GROUP
E-ORDER BY THE CENTIMETER
F-NOT SHOWN
J-SHIPPED IN TOOL BOX
Y-SEPARATE ILLUSTRATION

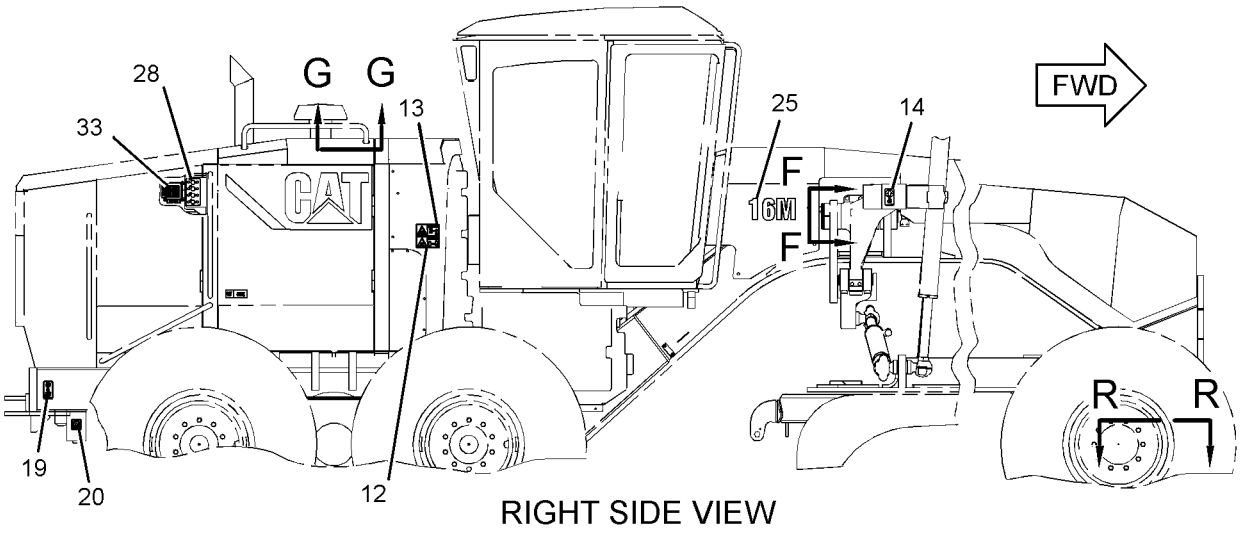

RIGHT SIDE VIEW

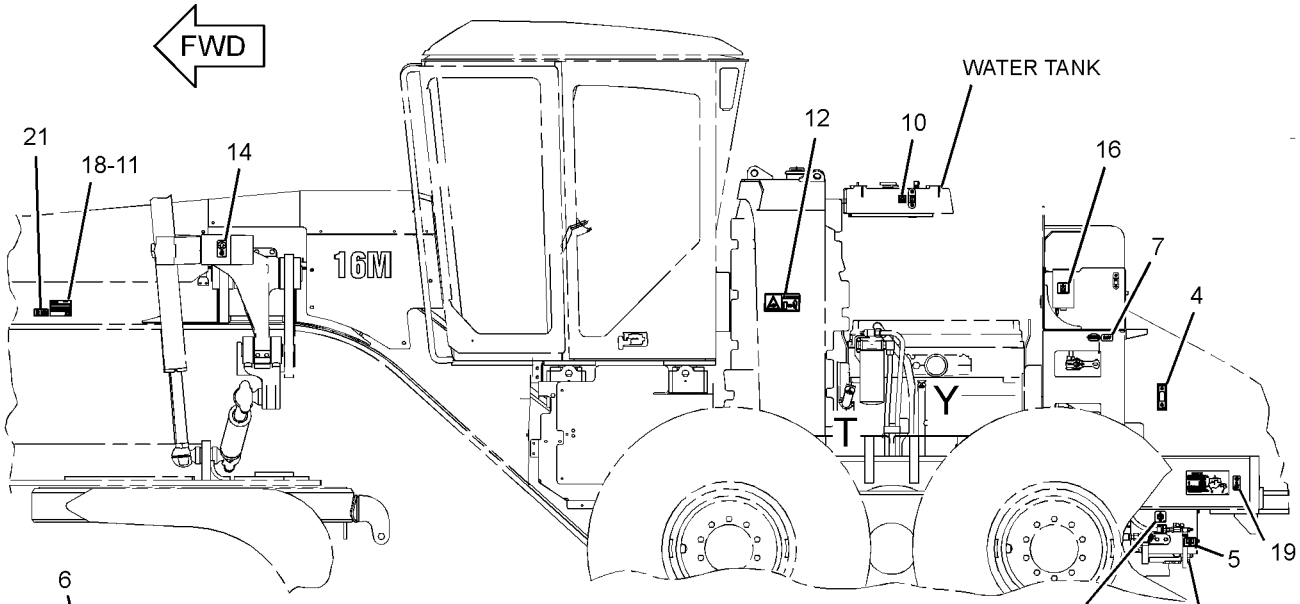

LEFT SIDE VIEW

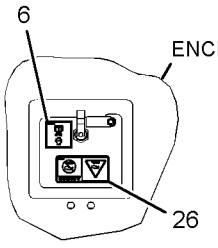

VIEW G-G

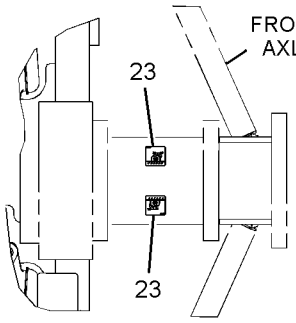

VIEW R-R

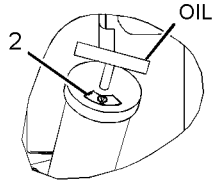

VIEW OF AREA T

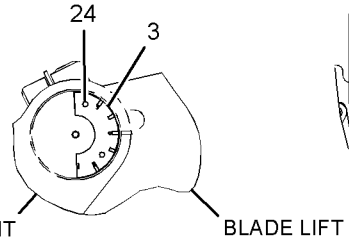

VIEW F-F

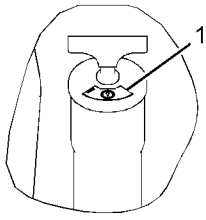

VIEW OF AREA Y

GRAPHIC #1

g01602933

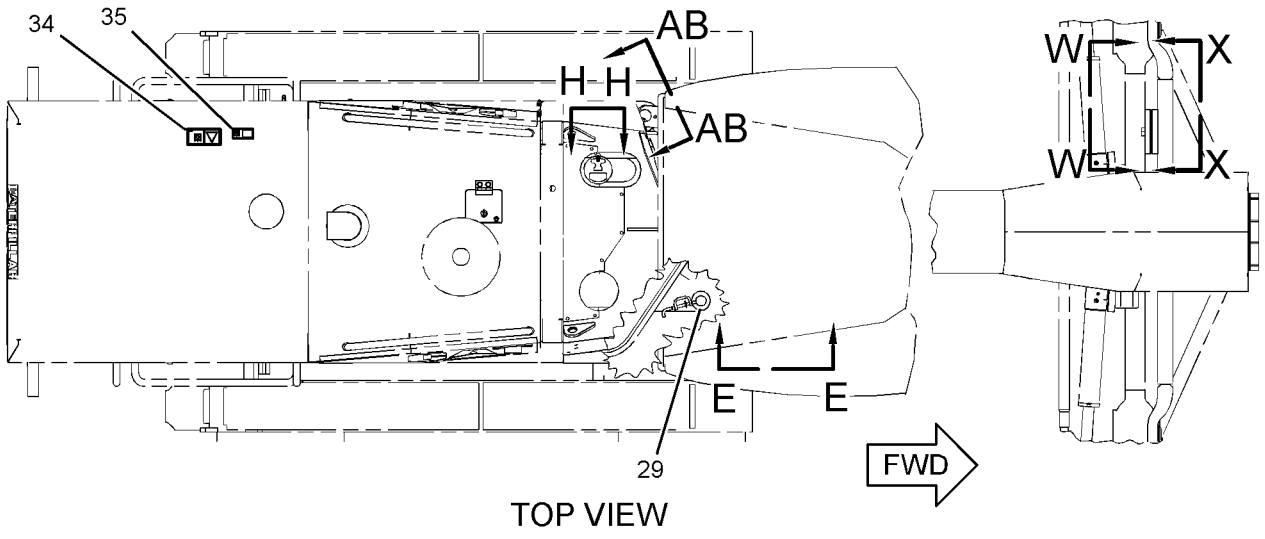

TOP VIEW

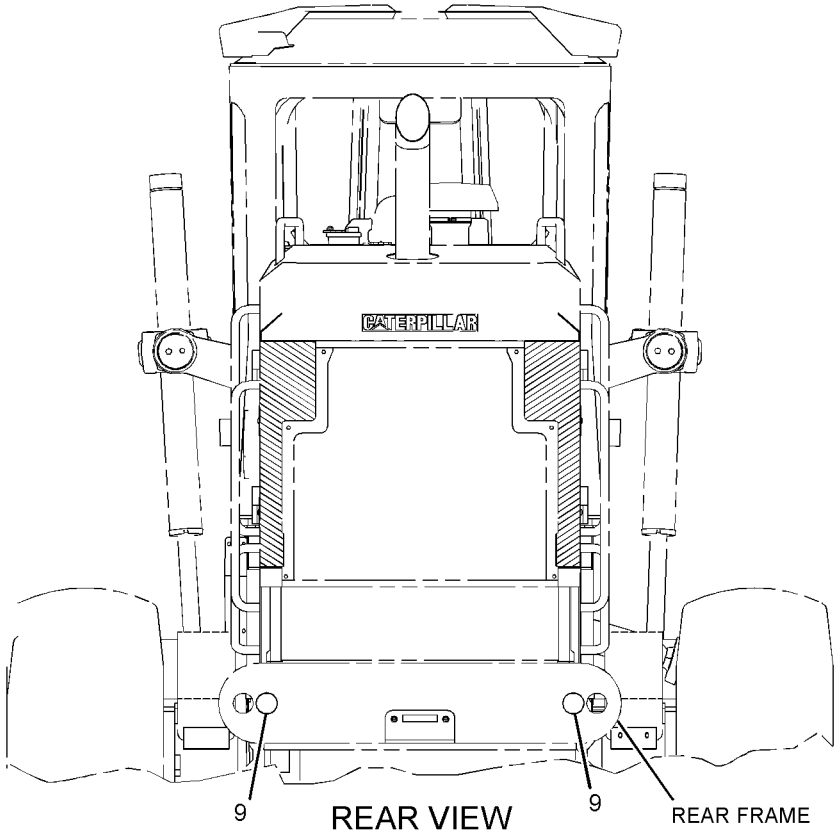

REAR VIEW

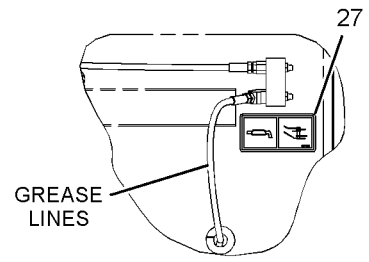

VIEW H-H

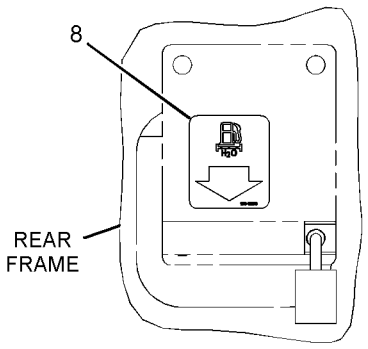

VIEW AB-AB

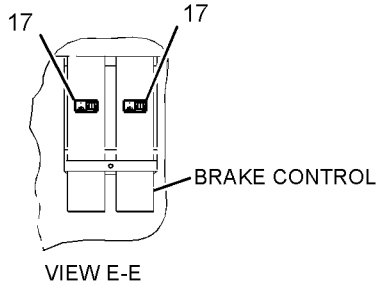

VIEW E-E

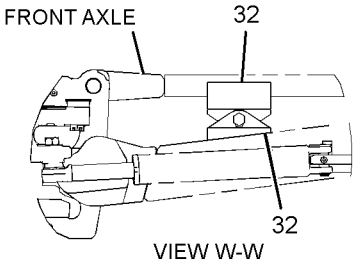

VIEW W-W

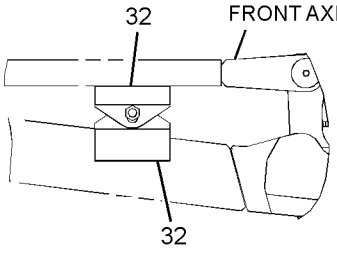

VIEW X-X

GRAPHIC #2 **<END>** g01629978

SERVICE EQUIPMENT AND SUPPLIES

298-5632 PLATE & FILM GP

S/N: R9H1-UP

PART OF 302-4220, 302-4221, 302-4222, 302-4223, 302-4224, 302-4225, 302-4226, 302-4227, 302-4228, 302-4229, 302-4230, 302-4231, 302-4232, 302-4233, 302-4234, 302-4235, 302-4236, 302-4237, 302-5136 PLATE & FILM GP AN ATTACHMENT

SMCS-7405, 7557 **i04015813**

NOTE	REF NO	GRAPHIC REF	PART NUMBER	QTY	PART NAME 1 2 3 4 5 6 (PRODUCT LEVEL)	SEE PAGE
	1	1	**3E-1552**	1	FILM-INSTRUCTION (TRANSMISSION FILTER)	
	2	1	**5P-1174**	1	FILM-IDENTIFICATION (TRANSMISSION OIL FILL CAP)	
	3	1	**5P-1175**	1	FILM-IDENTIFICATION (ENGINE OIL FILL)	
	4	1	**5T-4330**	1	PLATE-IDENTIFICATION (CENTERSHIFT INDICATOR)	
	5	1	**109-0361**	1	FILM-INSTRUCTION (ENGINE SHUTDOWN)	
	6	1	**129-7680**	1	FILM-INSTRUCTION (HYDRAULIC TANK OIL DRAIN)	
	7	1	**134-7258**	1	FILM-INFORMATION (EXTENDED LIFE COOLANT)	
	8	1	**146-6747**	1	FILM-INFORMATION (24-VOLT)	
	9	1	**158-7864**	1	FILM-IDENTIFICATION (HYDRAULIC OIL)	
	10	2	**159-3590**	1	FILM-IDENTIFICATION (WATER SEPARATOR)	
	11	2	**190-5386**	2	FILM-STRIPE (ROUND RED REFLECTIVE)	
	12	1	**209-5776**	1	FILM-INFORMATION (ENGINE COOLANT)	
	13	1	**225-4150**	1	PLATE-SERVICE INFORMATION (MACHINE)	
	14	1	**226-1240**	2	FILM-WARNING (CRUSH HAZARD, STAY BACK, INTL)	
	15	1	**226-1274**	1	FILM-WARNING (CRUSH HAZARD, READ OMM, INTL)	
	19	2	**239-4991**	2	FILM-WARNING (HIGH PRESSURE CYLINDER)	
	20	1	**239-6989**	1	PLATE-SERIAL NUMBER (MACHINE)	
	21	1	**243-5289**	2	FILM-IDENTIFICATION (LIFT POINT)	
	22	1	**248-5245**	2	FILM-INFORMATION (LIFT EYE, TIE-DOWN LOCATION)	
	24	1	**249-8575**	1	FILM-WARNING (NO DRILL, WELD, READ OMM)	
	25	1	**252-2157**	2	FILM-INFORMATION (TIE-DOWN)	
	27	1	**261-4377**	1	FILM-IDENTIFICATION (FILL, DRAIN)	
Y	28	1	*261-8618*	1	FILM GP	807
	29	1	**263-6902**	1	FILM-WARNING (HOT FLUID)	
	30	2	**275-3292**	1	FILM-IDENTIFICATION (GREASE POINT)	
	31	1	**277-0618**	1	FILM-IDENTIFICATION (FUSES)	
	32	2	**293-3822**	1	FILM-IDENTIFICATION (ARTICULATION LOCK)	
	33	1	**3F-5535**	2	SCREW-DRIVE (NO 10X0.375-IN)	
E	37	2	**117-9978**		FILM-STRIPE (RED) (21-CM EACH)	
	38	1	**313-9557**	1	FILM-FUSE PANEL (IDENTIFICATION)	
	39	2	**329-5706**	2	FILM-WARNING (COLD START, READ OMM)	
	40	2	**329-5707**	1	FILM-IDENTIFICATION (OIL GRADE, READ OMM)	
F			**241-3720**	1	FILM-WARNING (RECOIL SPRING)	
					(AT BOTTOM OF PARKING BRAKE HOUSING)	
F			**222-7944**	2	FILM-WARNING (DO NOT OPERATE, READ OMM, INTL)	
					(ON RH & LH SIDE OF THE ENGINE VALVE COVER)	
FJ			**246-2641**	3	PADLOCK GP	
					(EACH INCLUDES)	
			5P-8500	1	KEY	
					(ONE PADLOCK FOR EACH OF THE FOLLOWING COMPONENTS)	
					(1-ON HYDRAULIC TANK)	
					(1-ON FUEL TANK)	
					(1-ON BATTERY)	
AF			**3N-3790**	1	PLATE-SERIAL NUMBER (ENGINE)	
					(ON NO.6 ROD POCKET ON RH SIDE OF CYLINDER BLOCK SIDE,65-MM FROM REAR FACE OF BLOCK & 185-MM FROM BOTTOM FACE OF BLOCK)	

A-NOT PART OF THIS GROUP
E-ORDER BY THE CENTIMETER
F-NOT SHOWN
J-SHIPPED IN TOOLBOX
Y-SEPARATE ILLUSTRATION

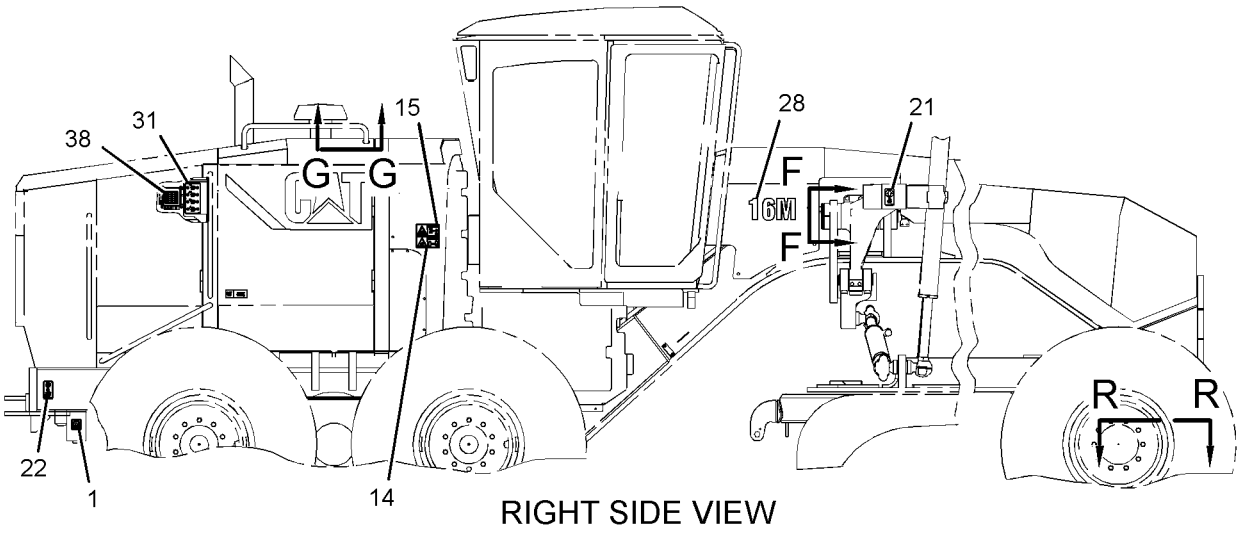

RIGHT SIDE VIEW

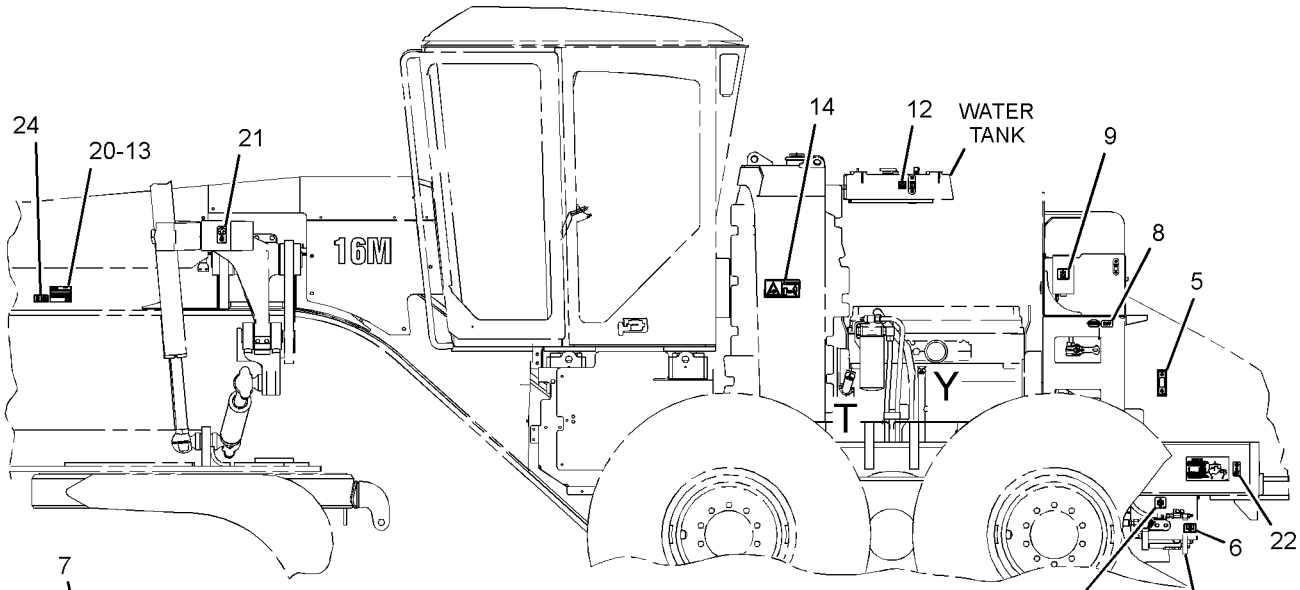

LEFT SIDE VIEW

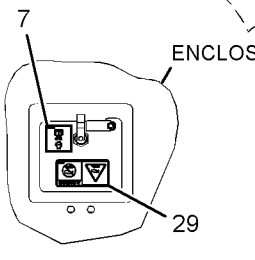

VIEW G-G

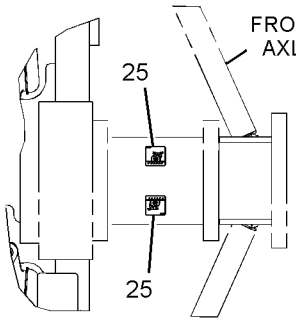

VIEW R-R

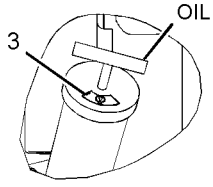

VIEW OF AREA T

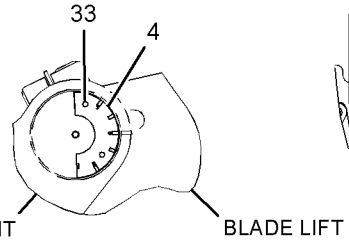

VIEW F-F

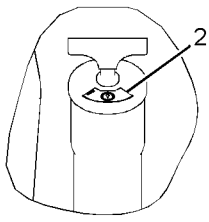

VIEW OF AREA Y

GRAPHIC #1

g01445318

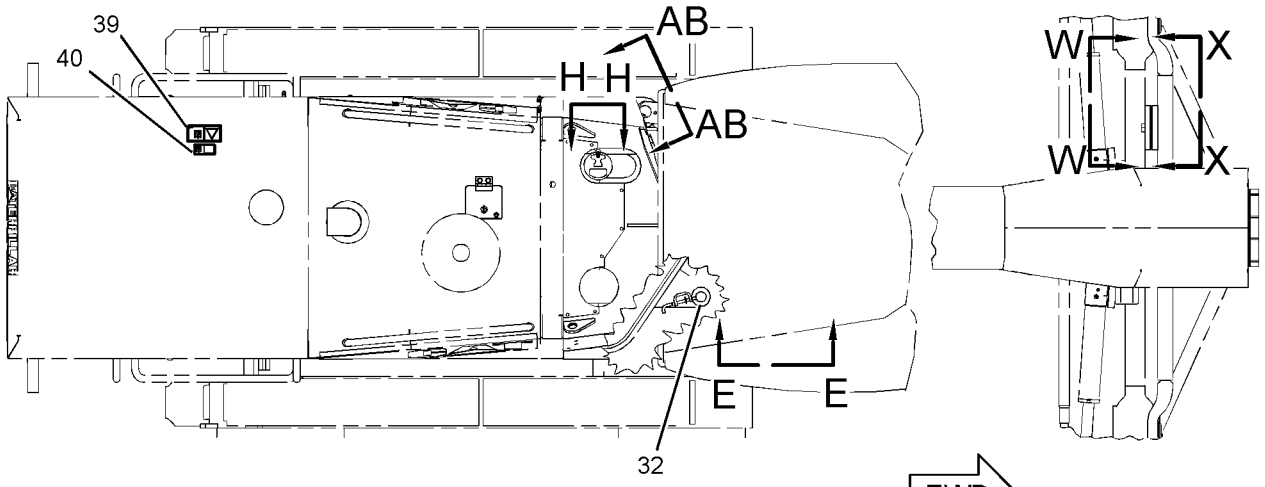

TOP VIEW

FWD

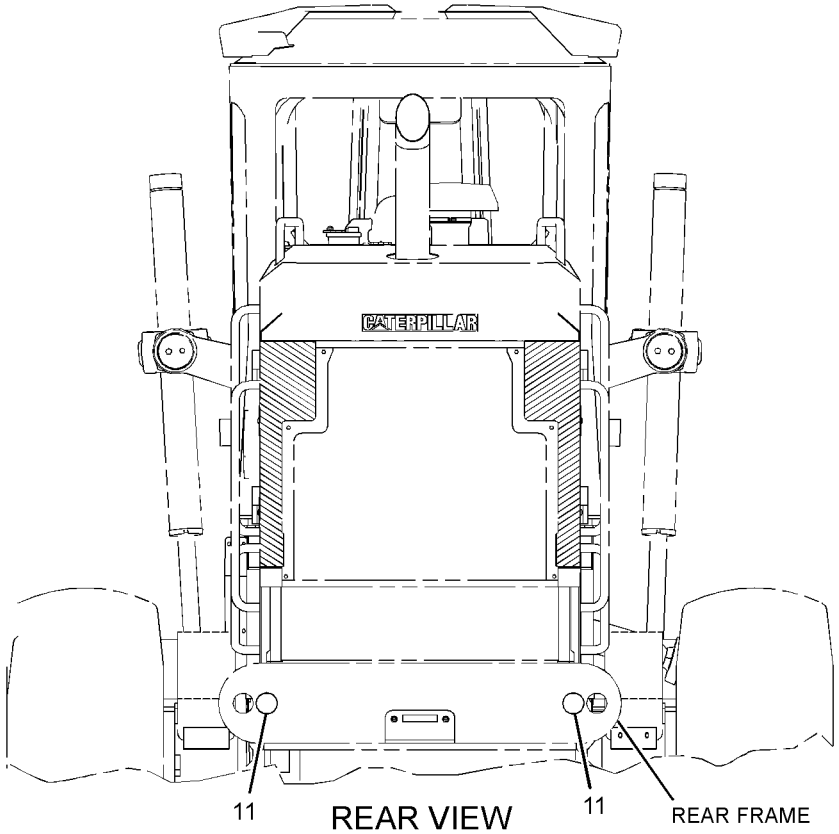

REAR VIEW

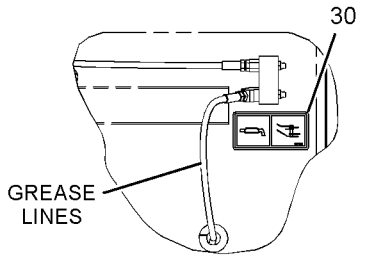

VIEW H-H

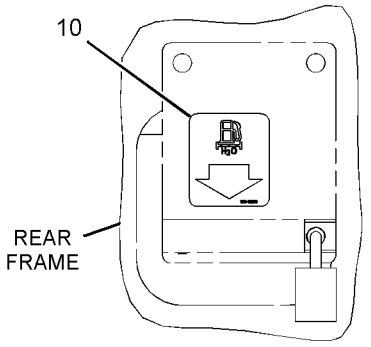

VIEW AB-AB

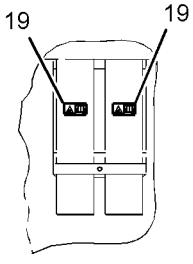

VIEW E-E

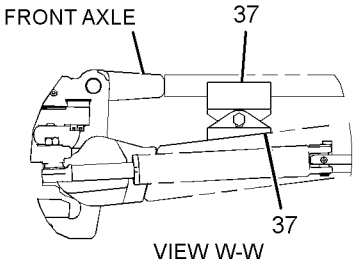

VIEW W-W

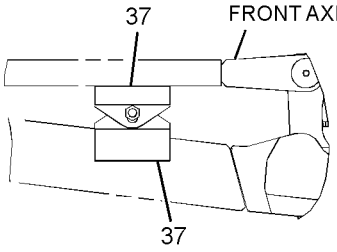

VIEW X-X

GRAPHIC #2

<END>

g01929696

302-4219 PLATE & FILM GP—ENGLISH, WITH MONITOR SOFTWARE

S/N: R9H1-UP
AN ATTACHMENT

SMCS-7405, 7557 **i02650467**

NOTE	PART NUMBER	QTY	PART NAME 1 2 3 4 5 6 (PRODUCT LEVEL)	SEE PAGE
Y	*250-9254*	1	ELECTRONICS GP-MONITOR	220
Y	*267-3183*	1	FILM GP-U.S.	809
Y	*251-1219*	1	PLATE & FILM GP	810
Y-SEPARATE ILLUSTRATION				

<END>

302-4220 PLATE & FILM GP— PORTUGESE, WITH MONITOR SOFTWARE

S/N: R9H1-UP
AN ATTACHMENT

SMCS-7405, 7557 **i02655499**

NOTE	PART NUMBER	QTY	PART NAME 1 2 3 4 5 6 (PRODUCT LEVEL)	SEE PAGE
Y	*250-9254*	1	ELECTRONICS GP-MONITOR	220
Y	*267-3184*	1	FILM GP-INTERNATIONAL	808
Y	*298-5632*	1	PLATE & FILM GP	813
Y-SEPARATE ILLUSTRATION				

<END>

302-4221 PLATE & FILM GP—SPANISH, WITH MONITOR SOFTWARE

S/N: R9H1-UP
AN ATTACHMENT

SMCS-7405, 7557 **i02655500**

NOTE	PART NUMBER	QTY	PART NAME 1 2 3 4 5 6 (PRODUCT LEVEL)	SEE PAGE
Y	*250-9254*	1	ELECTRONICS GP-MONITOR	220
Y	*267-3184*	1	FILM GP-INTERNATIONAL	808
Y	*298-5632*	1	PLATE & FILM GP	813
Y-SEPARATE ILLUSTRATION				

<END>

302-4222 PLATE & FILM GP—FRENCH, WITH MONITOR SOFTWARE

S/N: R9H1-UP
AN ATTACHMENT

SMCS-7405, 7557 **i02655501**

NOTE	PART NUMBER	QTY	PART NAME 1 2 3 4 5 6 (PRODUCT LEVEL)	SEE PAGE
Y	*250-9254*	1	ELECTRONICS GP-MONITOR	220
Y	*267-3184*	1	FILM GP-INTERNATIONAL	808
Y	*298-5632*	1	PLATE & FILM GP	813
Y-SEPARATE ILLUSTRATION				

<END>

302-4223 PLATE & FILM GP—GERMAN, WITH MONITOR SOFTWARE

S/N: R9H1-UP

AN ATTACHMENT

SMCS-7405, 7557 **i02655502**

NOTE	PART NUMBER	QTY	PART NAME 1 2 3 4 5 6 (PRODUCT LEVEL)	SEE PAGE
Y	*250-9254*	1	ELECTRONICS GP-MONITOR	220
Y	*267-3184*	1	FILM GP-INTERNATIONAL	808
Y	*298-5632*	1	PLATE & FILM GP	813

Y-SEPARATE ILLUSTRATION

<END>

302-4224 PLATE & FILM GP—DUTCH, WITH MONITOR SOFTWARE

S/N: R9H1-UP

AN ATTACHMENT

SMCS-7405, 7557 **i02655504**

NOTE	PART NUMBER	QTY	PART NAME 1 2 3 4 5 6 (PRODUCT LEVEL)	SEE PAGE
Y	*250-9254*	1	ELECTRONICS GP-MONITOR	220
Y	*267-3184*	1	FILM GP-INTERNATIONAL	808
Y	*298-5632*	1	PLATE & FILM GP	813

Y-SEPARATE ILLUSTRATION

<END>

302-4225 PLATE & FILM GP—DANISH, WITH MONITOR SOFTWARE

S/N: R9H1-UP

AN ATTACHMENT

SMCS-7405, 7557 **i02655505**

NOTE	PART NUMBER	QTY	PART NAME 1 2 3 4 5 6 (PRODUCT LEVEL)	SEE PAGE
Y	*302-0359*	1	ELECTRONICS GP-MONITOR	220
Y	*267-3184*	1	FILM GP-INTERNATIONAL	808
Y	*298-5632*	1	PLATE & FILM GP	813

Y-SEPARATE ILLUSTRATION

<END>

302-4226 PLATE & FILM GP—FINNISH, WITH MONITOR SOFTWARE

S/N: R9H1-UP

AN ATTACHMENT

SMCS-7405, 7557 **i02655506**

NOTE	PART NUMBER	QTY	PART NAME 1 2 3 4 5 6 (PRODUCT LEVEL)	SEE PAGE
Y	*302-0359*	1	ELECTRONICS GP-MONITOR	220
Y	*267-3184*	1	FILM GP-INTERNATIONAL	808
Y	*298-5632*	1	PLATE & FILM GP	813

Y-SEPARATE ILLUSTRATION

<END>

302-4227 PLATE & FILM GP—SWEDISH, WITH MONITOR SOFTWARE

S/N: R9H1-UP

AN ATTACHMENT

SMCS-7405, 7557 **i02655507**

NOTE	PART NUMBER	QTY	PART NAME 1 2 3 4 5 6 (PRODUCT LEVEL)	SEE PAGE
Y	*302-0359*	1	ELECTRONICS GP-MONITOR	220
Y	*267-3184*	1	FILM GP-INTERNATIONAL	808
Y	*298-5632*	1	PLATE & FILM GP	813
Y-SEPARATE ILLUSTRATION				

<END>

302-4228 PLATE & FILM GP— NORWEGIAN, WITH MONITOR SOFTWARE

S/N: R9H1-UP

AN ATTACHMENT

SMCS-7405, 7557 **i02655508**

NOTE	PART NUMBER	QTY	PART NAME 1 2 3 4 5 6 (PRODUCT LEVEL)	SEE PAGE
Y	*302-0359*	1	ELECTRONICS GP-MONITOR	220
Y	*267-3184*	1	FILM GP-INTERNATIONAL	808
Y	*298-5632*	1	PLATE & FILM GP	813
Y-SEPARATE ILLUSTRATION				

<END>

302-4229 PLATE & FILM GP—ITALIAN, WITH MONITOR SOFTWARE

S/N: R9H1-UP

AN ATTACHMENT

SMCS-7405, 7557 **i02655509**

NOTE	PART NUMBER	QTY	PART NAME 1 2 3 4 5 6 (PRODUCT LEVEL)	SEE PAGE
Y	*302-0360*	1	ELECTRONICS GP-MONITOR	221
Y	*267-3184*	1	FILM GP-INTERNATIONAL	808
Y	*298-5632*	1	PLATE & FILM GP	813
Y-SEPARATE ILLUSTRATION				

<END>

302-4230 PLATE & FILM GP—GREEK, WITH MONITOR SOFTWARE

S/N: R9H1-UP

AN ATTACHMENT

SMCS-7405, 7557 **i02655510**

NOTE	PART NUMBER	QTY	PART NAME 1 2 3 4 5 6 (PRODUCT LEVEL)	SEE PAGE
Y	*302-0360*	1	ELECTRONICS GP-MONITOR	221
Y	*267-3184*	1	FILM GP-INTERNATIONAL	808
Y	*298-5632*	1	PLATE & FILM GP	813
Y-SEPARATE ILLUSTRATION				

<END>

302-4231 PLATE & FILM GP—HEBREW, WITH MONITOR SOFTWARE

S/N: R9H1-UP

AN ATTACHMENT

SMCS-7405, 7557 **i02655511**

NOTE	PART NUMBER	QTY	PART NAME 1 2 3 4 5 6 (PRODUCT LEVEL)	SEE PAGE
Y	*302-0360*	1	ELECTRONICS GP-MONITOR	221
Y	*267-3184*	1	FILM GP-INTERNATIONAL	808
Y	*298-5632*	1	PLATE & FILM GP	813

Y-SEPARATE ILLUSTRATION

<END>

302-4232 PLATE & FILM GP—TURKISH, WITH MONITOR SOFTWARE

S/N: R9H1-UP

AN ATTACHMENT

SMCS-7405, 7557 **i02655512**

NOTE	PART NUMBER	QTY	PART NAME 1 2 3 4 5 6 (PRODUCT LEVEL)	SEE PAGE
Y	*302-0360*	1	ELECTRONICS GP-MONITOR	221
Y	*267-3184*	1	FILM GP-INTERNATIONAL	808
Y	*298-5632*	1	PLATE & FILM GP	813

Y-SEPARATE ILLUSTRATION

<END>

302-4233 PLATE & FILM GP—RUSSIAN, WITH MONITOR SOFTWARE

S/N: R9H1-UP

AN ATTACHMENT

SMCS-7405, 7557 **i02655513**

NOTE	PART NUMBER	QTY	PART NAME 1 2 3 4 5 6 (PRODUCT LEVEL)	SEE PAGE
Y	*302-0361*	1	ELECTRONICS GP-MONITOR	221
Y	*267-3184*	1	FILM GP-INTERNATIONAL	808
Y	*298-5632*	1	PLATE & FILM GP	813

Y-SEPARATE ILLUSTRATION

<END>

302-4234 PLATE & FILM GP—ARABIC, WITH MONITOR SOFTWARE

S/N: R9H1-UP

AN ATTACHMENT

SMCS-7405, 7557 **i02655514**

NOTE	PART NUMBER	QTY	PART NAME 1 2 3 4 5 6 (PRODUCT LEVEL)	SEE PAGE
Y	*302-0361*	1	ELECTRONICS GP-MONITOR	221
Y	*267-3184*	1	FILM GP-INTERNATIONAL	808
Y	*298-5632*	1	PLATE & FILM GP	813

Y-SEPARATE ILLUSTRATION

<END>

302-4235 PLATE & FILM GP—CHINESE, WITH MONITOR SOFTWARE

S/N: R9H1-UP

AN ATTACHMENT

SMCS-7405, 7557 **i02655515**

NOTE	PART NUMBER	QTY	PART NAME 1 2 3 4 5 6 (PRODUCT LEVEL)	SEE PAGE
Y	*302-0361*	1	ELECTRONICS GP-MONITOR	221
Y	*267-3184*	1	FILM GP-INTERNATIONAL	808
Y	*298-5632*	1	PLATE & FILM GP	813

Y-SEPARATE ILLUSTRATION

<END>

302-4236 PLATE & FILM GP—ROMANIAN, WITH MONITOR SOFTWARE

S/N: R9H1-UP

AN ATTACHMENT

SMCS-7405, 7557 **i02655516**

NOTE	PART NUMBER	QTY	PART NAME 1 2 3 4 5 6 (PRODUCT LEVEL)	SEE PAGE
Y	*302-0362*	1	ELECTRONICS GP-MONITOR	221
Y	*267-3184*	1	FILM GP-INTERNATIONAL	808
Y	*298-5632*	1	PLATE & FILM GP	813

Y-SEPARATE ILLUSTRATION

<END>

302-4237 PLATE & FILM GP—SLOVENIAN, WITH MONITOR SOFTWARE

S/N: R9H1-UP

AN ATTACHMENT

SMCS-7405, 7557 **i02655517**

NOTE	PART NUMBER	QTY	PART NAME 1 2 3 4 5 6 (PRODUCT LEVEL)	SEE PAGE
Y	*302-0362*	1	ELECTRONICS GP-MONITOR	221
Y	*267-3184*	1	FILM GP-INTERNATIONAL	808
Y	*298-5632*	1	PLATE & FILM GP	813

Y-SEPARATE ILLUSTRATION

<END>

302-5136 PLATE & FILM GP—BRITISH, WITH MONITOR SOFTWARE

S/N: R9H1-UP

AN ATTACHMENT

SMCS-7405, 7557 **i02655496**

NOTE	PART NUMBER	QTY	PART NAME 1 2 3 4 5 6 (PRODUCT LEVEL)	SEE PAGE
Y	*250-9254*	1	ELECTRONICS GP-MONITOR	220
Y	*267-3184*	1	FILM GP-INTERNATIONAL	808
Y	*298-5632*	1	PLATE & FILM GP	813

Y-SEPARATE ILLUSTRATION

<END>

MEMORANDA

PART NUMBER INDEX

Part	Page
0	
0L-1026	65
0S-1585	573
0S-1594	573
0S-1597	318
1	
1A-1415	573
1A-2029	428
1A-2170	103
1B-2578	205
	329
1B-2709	523
	524
1B-2713	740
1B-3867	139
	144
1B-3937	470
	472
1B-4043	470
	472
1B-5170	405
1B-8705	22
	450
1D-0906	509
	561
1D-4689	523
	524
1D-4691	523
	524
1D-4692	523
	524
1D-6306	703
1F-1517	561
1F-7567	711
1F-7854	182
1F-7958	707
1G-8878	578
1H-3244	348
1H-3338	327
	328
1H-3937	648
1H-4393	348
1H-4478	560
1H-6227	642
1H-7339	26
	570
1J-2150	497
1J-6762	370
	794
	797
1J-9671	59
	195
	535
	536
	548
	633
	635
1K-6870	370
1K-6872	523
	524
1K-7081	556
1M-1230	740
1M-3909	450
1M-6119	202
1M-6120	202
1M-6718	285
1N-5999	570
1P-0604	408
	410
	415
1P-0810	346
	369
	378
	383
	422
1P-3700	649
1P-3704	445
1P-3705	622
1P-4278	173
	651
1P-4578	443
	445
1P-4579	443
	445
1P-4582	158
	200
	622
1P-6356	748
1P-7834	476
1P-7835	476
1R-0762	159
	161
	163
	165
	167
1R-1808	112
	113
1S-0994	542
	583
	590
	599
	607
	612
	710
1S-3725	429
1S-3730	429
1S-7251	202
	320
	378
1S-7252	202
	320
	378
	393
1S-9593	696
1S-9799	445
1T-0043	404
1T-0205	404
1U-8846	59
	61
	405
	538
1V-8284	483
1W-2152	186
1W-4738	56
	57
	58
1W-4741	56
	57
	58
1W-4746	56
	57
	58
1W-9311	156
2	
2A-1162	59
	61
2A-2677	612
2A-4429	44
	46
2B-0858	573
2D-0591	400
2D-1683	501
	511
	526
	527
	528
	529
2D-2443	463
	464
	467
	469
2D-2507	463
	464
	467
	469
2D-2508	463
	464
	467
	469
2D-2509	463
	464
	467
	469
2D-6235	740
2D-6516	403
2D-6533	573
2D-6642	90
	91
2D-8009	573
2D-8652	475
2F-7888	287
2G-0339	573
2G-0478	573
2G-0617	273
	275
2G-0988	273
	275
2G-3868	476
2G-3983	798
2G-5667	476
2G-5668	514
2G-5669	514
2G-6595	463
	464
	467
	469
2G-7106	476
2G-8234	798
2G-8607	475
2G-8611	562
2G-8615	476
2G-8626	476
2G-8635	476
	572
2G-8738	476
2G-8741	476
2G-8767	378
	393
2G-8777	476
2G-9101	557
	559
2G-9524	530
2G-9796	455
2H-1142	423
2H-3920	339
2H-3922	323
2H-3928	649
2H-3931	573
	630
2H-3933	440
2H-4145	538
2H-6489	404
2H-6490	454
2J-3118	573
2J-3506	370
	794
	796
	797
2K-0703	803
2K-4096	568
2K-4309	803
2K-4310	803
2K-4315	803
2K-4507	568
2K-6830	563
	564
	566
	567
	569
	572
2K-8199	423
2L-8049	384
2L-8052	384
2L-8057	384
2L-8065	347
2L-8067	347
	707
2L-8069	347
	365
	384
2L-8079	347
	365
	384
2M-9780	182
	404
	455
	554
	582
	589
	598
	606
	612
	615

► **PRIMARY REFERENCE**

PART NUMBER INDEX

Part	Page	Part	Page	Part	Page	Part	Page
	618		590	3E-4321	502		590
	620		599		583		599
	621		607		590		607
	628	3B-4629	476		616	3G-8054	583
	690		561		628		590
	691	3B-4647	560	3E-4352	76		599
	693	3B-5301	389		78		607
	694	3B-5317	556		80	3G-8057	583
2N-5243	426	3B-5325	805	3E-4353	403		590
2P-1692	422	3B-7263	502		426		599
2P-4304	103		508	3E-4367	346		607
	113	3B-7733	502		347	3H-0442	633
	115		508		383	3H-4192	400
2P-8421	404	3B-7896	508	3E-4887	67	3H-7654	18
2R-2376	739	3B-8485	508	3E-4888	67	3J-1907	59
	764		557	3E-5169	384		113
2S-0795	426		559	3E-5180	398		115
2S-3029	404	3B-8486	476	3E-5226	346		159
2S-4078	405	3B-8489	476	3E-5239	345		161
	444		514	3E-5464	707		163
	618		561	3E-5519	346		165
	621		562	3E-6328	▶201		169
2S-4663	460		703		345		171
2S-5658	52		803	3E-6389	▶234		175
2S-5835	460	3D-2824	85		746		177
2S-8439	798		322	3E-6785	452		178
2T-2396	195		404	3E-6788	123		182
	526		429	3E-6811	748		366
	527		444	3E-7401	622		373
	528		516	3E-7403	502		384
2T-3013	453		554		511		404
2V-2015	764		576		616		418
2V-2043	121		581	3E-7417	645		420
2V-3216	396		582	3E-7449	501		423
	398		588	3E-7775	318		429
2Y-5829	87		589	3E-7990	398		442
	88		597	3E-8016	63		444
	93		598		74		445
	94		605	3E-8020	713		460
	355		606		714		538
	359		612		729		542
	361		613		733		545
	363		618		736		570
			620		764		576
3			622	3E-8557	383		578
			628	3E-8558	346		595
			751		347		612
3B-0623	35	3D-8317	460		383		618
	37	3D-8747	740	3E-9854	246		621
	38	3D-8748	740	3E-9861	282		623
	41	3D-8749	740		288		633
	42	3D-8752	740	3F-5535	810		635
	82	3E-1552	810		813		636
	103		813	3F-5792	59		637
3B-4507	489	3E-3000	787		61		663
3B-4508	278	3E-3371	292	3F-9556	760		692
3B-4512	223		769		790	3J-2333	573
	277	3E-3377	325		792	3J-5390	511
	278		369	3G-0622	779		526
	281	3E-3636	365		781		527
3B-4610	374	3E-4051	748	3G-2580	803		528
3B-4615	482	3E-4052	748	3G-2582	563		529
3B-4617	530	3E-4057	748		803	3J-7354	59
3B-4619	287	3E-4058	748	3G-3734	642		113
3B-4628	583	3E-4302	645	3G-8047	583		115

▶ **PRIMARY REFERENCE**

PART NUMBER INDEX

Part	Page	Part	Page	Part	Page	Part	Page
	125		661		393		748
	302		664		396	4D-7794	370
	400		666		398	4D-7889	408
	612		668		422		415
	620		670		516	4D-8123	502
	637		672		729		508
	664		674		734	4D-8186	573
	666		676		736	4D-9517	368
	668		678		743	4E-5685	433
	670		680		771		435
	672		682		788	4E-8722	733
	674		684		790		736
	676		686		792		746
	678		688	3S-6049	202		764
	680		695	3S-6050	202		779
	682		699	3S-6605	89		781
	684		751		92	4F-2294	330
	686	3K-0715	405	3S-7023	564	4F-4097	645
	688	3K-6060	754		566	4F-5695	34
3J-8500	561		779		567	4F-6024	56
3K-0360	59		781		572		57
	146	3K-6454	497	3S-8665	183		58
	159	3K-8460	59	3S-9233	400	4F-7952	449
	161	3K-8510	803		664	4F-8824	561
	163	3K-9520	273		666	4H-6112	455
	165		275		668	4H-6996	573
	171	3M-7045	516		670	4H-7869	320
	175	3N-2945	437		672	4I-0755	470
	177		448		674		472
	178	3N-3790	810		676	4I-5480	476
	182		813		678	4J-0520	612
	418	3P-0647	118		680		622
	420	3P-1896	103		682	4J-0522	443
	422	3P-1932	439		684		445
	455	3P-9847	711		686	4J-0524	443
	460	3R-8797	318		688		445
	502	3R-9965	346	3S-9643	133		576
	540	3S-0004	450	3T-0849	285	4J-0527	158
	542	3S-2093	159	3T-3422	318		200
	554		161	3T-3434	318		622
	581		163	3T-3663	450	4J-1888	701
	582		165	3T-4377	454	4J-4630	568
	583		167	3T-6774	740	4J-5267	613
	588		182	3T-9549	402	4J-5351	400
	589		202	3V-2431	570	4J-5477	159
	590		227	3V-3263	788		161
	595		230				163
	598		256				165
	599		258	**4**			400
	605		344				418
	606		346	4B-0418	711		420
	607		348	4B-4274	287		445
	616		353		378		618
	618		355	4B-4280	779		621
	621		357		781	4J-7533	633
	622		359	4B-4863	195		636
	628		361	4B-9880	460		637
	636		363	4D-0298	564		664
	637		365	4D-1248	202		666
	653		368	4D-1326	329		668
	654		373	4D-2297	716		670
	655		378	4D-4823	573		672
	656		382	4D-7388	384		674
	658		389	4D-7735	173		676
	660		391		183		678

► **PRIMARY REFERENCE**

PART NUMBER INDEX

Part	Page
	680
	682
	684
	686
	688
4J-8996	405
	538
4J-9964	649
4K-0367	573
4K-1388	400
	620
4K-2039	698
4K-3004	803
4K-6804	400
4K-8603	404
4K-8864	366
	370
	423
4L-6499	329
4L-7125	374
	376
4M-0061	740
4M-0189	59
	61
	429
4M-1831	318
4M-2381	460
4M-5281	287
4M-5905	460
4M-6425	278
4M-6480	23
4M-8973	502
	511
	526
	527
4N-1114	24
	25
4N-1230	56
	57
	58
4N-5091	581
	588
	597
	605
4N-8150	103
4P-0489	158
4P-1650	26
4P-4369	153
4P-5918	355
	359
	361
	363
4P-7428	183
	370
	423
4P-7429	370
	423
	743
4P-7581	161
	163
	165
	167
	183
	355
	359
	361
	363
	366
	370
	384
	391
	395
	423
	516
	743
	771
4P-7582	423
4P-8134	256
	395
4P-8525	396
4S-1962	183
	366
	378
	384
	418
	445
	542
	613
	622
4S-4455	384
	623
4S-4456	595
4S-5565	570
4T-2236	796
4T-3658	556
4T-5613	564
	570
4T-8054	630
4T-8317	797
4V-3044	497
4V-9804	523
	524
5A-3604	202
	440
5B-9318	664
	666
	668
	670
	672
	674
	676
	678
	680
	682
	684
	686
	688
5B-9627	515
5C-2890	222
	284
	288
	327
	328
	353
	379
	389
	391
	482
5C-7261	208
	254
	256
	260
	262
	265
	374
	378
	379
	391
	526
	527
	733
	736
	760
	790
	792
5C-8811	790
	792
5C-9553	206
	338
	348
	353
	393
	516
	719
	727
	769
	779
	781
5D-0269	508
5D-1026	135
	146
	618
	710
	788
5D-9629	389
5F-0304	59
	61
5F-3092	405
5F-3715	701
5F-8933	794
	796
	797
5F-9144	169
	431
5H-3701	470
	472
5H-5672	798
5H-8848	622
5H-8985	408
	410
	413
	415
5J-1246	649
5J-4561	570
5J-4715	428
5J-4771	796
5J-5400	566
5J-5401	566
5J-5402	563
	564
	566
	567
	569
	572
5J-5731	568
5J-7333	705
5K-0267	803
5K-3294	273
	275
	384
	545
5K-3489	497
5K-3490	497
5K-3491	497
5K-3492	497
5K-3494	497
5K-3495	497
5K-3496	497
5K-3501	497
5K-3929	497
5K-5129	573
5K-5288	573
5K-5338	542
5K-7143	573
5K-7748	803
5K-9090	113
	115
	121
	173
	444
	445
	554
	613
	620
	621
	622
	628
5K-9179	756
5K-9660	711
5L-4504	183
5L-4758	698
5L-4759	400
5L-4763	65
5M-2894	188
	189
	573
5M-3062	535
	536
	548
5M-6214	502
5M-7087	113
	115
5M-7937	404
	538
5N-4439	516
5P-0537	396
	398
	740
5P-0597	429
5P-0599	581
	588
	597
	605
5P-0743	623
5P-0747	320
	393

5

PART NUMBER INDEX

Part	Page
5P-0767	135
	751
5P-1075	205
	711
	748
5P-1076	70
	97
	173
	488
	502
	523
	524
	533
	556
	558
	583
	590
	599
	607
	643
5P-1174	810
	813
5P-1175	810
	813
5P-1230	138
5P-1251	146
5P-1262	135
5P-1293	173
5P-1424	369
5P-1425	365
5P-1442	173
	651
5P-2199	691
5P-2230	149
5P-2304	404
5P-2369	173
	183
	445
5P-2566	623
	649
5P-2618	195
5P-3114	408
	410
	413
	415
5P-3401	470
	472
5P-3863	405
5P-3928	748
5P-3929	711
5P-3948	711
5P-4115	70
	341
	348
	379
	739
	778
5P-4116	97
	173
	202
	212
	272
	321
	344
	357
	374
	379
	384
	516
	719
	726
	750
5P-4135	370
5P-4325	384
5P-4483	404
5P-4484	405
5P-4571	346
	347
	707
5P-4868	618
5P-4889	188
	189
	190
	192
	193
	194
5P-4892	452
5P-5528	317
5P-5598	44
	46
5P-5618	347
	707
5P-5630	317
5P-5637	706
	750
5P-5643	706
5P-5677	325
5P-5678	19
5P-5927	706
	765
5P-6419	374
5P-6727	63
5P-6874	756
5P-6944	159
	161
	163
	165
	167
5P-7070	707
	711
5P-7464	583
	590
	599
	607
	615
5P-7465	583
	590
	599
	607
	615
5P-7466	502
5P-7467	502
5P-7470	384
5P-7471	384
5P-7657	374
	376
5P-7701	402
	549
5P-7703	384
5P-7815	402
5P-7854	613
	622
	628
5P-7958	753
5P-8068	123
5P-8131	173
5P-8211	74
5P-8245	27
	51
	59
	61
	66
	69
	74
	96
	129
	400
	426
	429
	433
	435
	497
	562
	573
5P-8246	59
	61
5P-8247	54
	497
	573
	630
5P-8248	284
5P-8292	129
5P-8309	70
	145
5P-8347	21
	239
	240
	423
5P-8439	353
	482
5P-8500	173
	753
	810
	813
5P-8524	707
5P-8525	353
5P-8843	476
	562
5P-8847	475
5P-8890	476
5P-9085	253
	262
	264
	355
	359
	361
	366
	373
	384
	502
	508
	511
5P-9135	273
	275
5P-9297	384
	613
5P-9299	418
	445
	583
	616
5P-9617	113
5P-9810	581
	588
	597
	605
5S-7349	318
	374
5S-7379	573
	595
	754
5S-7382	613
5S-7385	488
5S-9134	109
5T-0908	476
5T-1625	746
5T-4330	810
	813
5T-8059	573
5T-8060	573
5T-8417	560
5T-9686	583
	590
	599
	607
5W-1437	278
6A-5591	59
	61
	74
	426
6B-5072	455
6B-5154	415
6B-5310	284
6B-6684	129
6B-8193	374
6C-3060	195
6C-8882	465
6D-1641	750
	751
6D-3033	369
6D-3479	651
6D-4244	146
	366
	370
	379
	384
	502
	590
	599
	607
	613
	622
	628
6D-4246	366
	542
	583

6

► **PRIMARY REFERENCE**

PART NUMBER INDEX

Part	Page	Part	Page	Part	Page	Part	Page
	590		464	6N-8863	74		63
	599		467	6P-5353	171		122
	607		469	6R-7605	618		123
	613	6F-4855	698	6S-8620	146		125
	616	6F-6405	113	6T-1999	345		126
	622	6F-6672	423	6T-3377	470	6V-2686	173
	748	6F-7045	323		472		317
6D-4247	183	6F-7062	426	6T-3631	382	6V-2722	202
6D-4636	502	6G-0174	497	6T-3632	382		365
6D-5257	346	6G-1536	573	6T-3633	382		393
6D-7146	122	6G-1539	573	6T-3644	348	6V-3250	126
6D-7889	422	6G-1601	407	6T-6708	707		426
6E-0410	691	6G-1602	407	6T-7695	761	6V-3251	85
6E-0775	564	6G-1740	▶407	6U-5219	711		126
6E-1049	564		448	6V-0484	439		140
6E-2314	568	6G-2168	444		635		143
6E-3007	664	6G-2256	378	6V-0852	199	6V-3505	691
	666		393		404	6V-3532	400
	668	6G-2263	378		418	6V-3535	63
	670		393		420	6V-3536	30
	672	6G-3208	433		422	6V-3538	35
	674		435		439		37
	676	6G-4831	701		460	6V-3668	66
	678	6G-4896	703		545		426
	680	6G-4911	700		576		562
	682	6G-5538	573		613	6V-3822	154
	684	6G-5539	573		618	6V-3823	426
	686	6G-5542	573		635		429
	688	6G-5987	740	6V-0894	287		453
6E-4213	645	6G-6122	573	6V-0974	583	6V-3834	123
6E-4214	645	6G-7187	562		590	6V-3908	113
6E-4215	645	6I-1418	209		599		115
6E-4216	645		211		607	6V-3918	19
	▶647		212	6V-1228	622		20
6E-4217	647		357		751		355
6E-4218	647	6I-8911	408	6V-1249	583		359
6E-4219	647		415		590		361
6E-4224	645	6I-8912	410		599		363
6E-4225	645		413		607	6V-3940	110
6E-4227	645		415		615		111
6E-4228	692	6J-1972	570	6V-1581	135		137
6E-4229	692	6J-2680	445	6V-1582	135		138
6E-4230	692	6J-2797	563	6V-1586	410		405
6E-4232	645		564		413		460
6E-4233	645		566		415	6V-3964	208
6E-4236	645		567	6V-1614	325	6V-3965	199
6E-4237	645		569	6V-1668	707		404
6E-4239	692		572	6V-1720	404		418
6E-4241	692	6J-5731	570	6V-1722	628		420
6E-4242	692	6K-0715	800	6V-1819	408		439
6E-4246	692	6K-3273	481		410		459
6E-4318	692		764		413		460
6E-4701	595	6K-4718	404		415		545
	▶663	6K-6307	576	6V-1820	26		576
6E-4977	572	6K-6444	703		56		613
6E-5066	633	6K-6967	502		57		623
6E-6140	692		511		58		635
6E-6141	692		529		113	6V-4248	23
6E-6142	692	6K-8178	366		405		159
6F-0253	345	6K-9632	790		426		161
	769		792	6V-1889	379		163
	770	6L-7159	707	6V-1970	1		165
	771	6L-8797	645		▶753		167
6F-0612	384	6L-9716	668	6V-2235	173	6V-4249	74
6F-3930	463	6N-3826	318	6V-2317	51	6V-4292	146

▶ **PRIMARY REFERENCE**

PART NUMBER INDEX

Part	Page
6V-4429	24
	25
6V-4589	125
	331
	332
6V-4604	70
	131
6V-5048	37
	159
	161
	163
	165
	289
	317
	439
	579
6V-5049	38
	125
	159
	161
	163
	289
6V-5063	38
	41
	42
	44
	46
	133
	137
	138
6V-5064	426
6V-5134	123
6V-5142	690
6V-5192	63
	647
6V-5215	289
	290
	423
6V-5217	22
	110
	111
6V-5218	120
	460
6V-5219	63
	125
	126
	426
	452
6V-5221	20
	123
	125
	126
6V-5222	423
6V-5230	171
	175
	177
	449
6V-5326	664
	666
	668
	670
	672
	674
	676
	678
	680
	682
	684
	686
	688
6V-5684	59
	61
6V-5686	573
6V-5696	96
	476
6V-5759	538
6V-5839	23
	26
	51
	56
	57
	58
	105
	113
	118
	119
	141
	142
	153
	154
	159
	161
	163
	165
	167
	171
	175
	177
	186
	187
	190
	192
	193
	194
	355
	359
	361
	363
	423
	764
	783
6V-5842	51
	144
	159
	161
	163
	165
	167
	171
6V-5843	65
6V-5844	59
	61
	476
6V-5845	433
	435
	499
6V-5851	790
	792
6V-5853	788
6V-6317	51
	58
	739
6V-6353	154
6V-6580	664
	666
	668
	670
	672
	674
	676
	678
	680
	682
	684
	686
	688
6V-6609	85
	133
	313
	316
6V-6923	198
6V-7238	618
6V-7350	141
	142
6V-7357	353
6V-7420	182
6V-7555	369
6V-7636	733
	736
6V-7673	56
	57
	58
	426
6V-7687	514
	522
	800
	803
6V-7688	701
6V-7727	59
	61
6V-7728	396
	398
6V-7732	403
6V-7742	400
	798
6V-7744	242
	243
	244
	525
6V-7981	178
6V-8004	426
6V-8077	423
	460
	576
6V-8149	18
	51
	429
6V-8185	341
	348
6V-8187	378
6V-8188	202
	278
	318
	379
	488
6V-8197	27
6V-8212	161
	163
	165
	167
	355
	359
	361
	363
	405
	423
	764
6V-8214	396
	398
6V-8224	703
6V-8225	63
	772
6V-8237	476
	499
	798
6V-8337	645
6V-8359	103
	107
6V-8369	339
6V-8378	318
	329
6V-8397	171
	175
	177
	178
	183
	195
	400
	418
	420
	442
	444
	501
	516
	542
	545
	581
	582
	583
	588
	589
	590
	595
	598
	599
	606
	607
	612
	616
	620
	621
	622
	663
6V-8398	182
	195
	444
	501
	502

► **PRIMARY REFERENCE**

PART NUMBER INDEX

Part	Page
	511
	526
	527
	528
	529
	540
	542
	545
	582
	583
	589
	590
	598
	599
	606
	607
	612
	615
	616
	621
	622
	628
6V-8400	173
	445
	618
	621
	622
6V-8523	146
6V-8569	431
6V-8624	582
	589
	598
	606
	615
6V-8625	540
	542
	582
	589
	598
	606
	628
6V-8626	621
6V-8627	418
	420
	621
6V-8628	400
6V-8629	554
	621
6V-8632	582
	589
	598
	606
	621
	751
6V-8633	582
	589
	598
	606
	612
6V-8634	171
	175
	418
	420
	581
	589
	597
	606
6V-8635	113
	115
	444
	554
	620
6V-8636	442
	444
	542
	595
	621
6V-8637	554
	620
6V-8638	182
	582
	589
	598
	606
6V-8639	182
	542
	582
	589
	598
	606
	616
	621
	622
6V-8640	612
	620
6V-8641	159
	161
	163
	165
	167
	418
	445
6V-8642	620
6V-8716	612
	621
6V-8721	615
6V-8722	621
6V-8723	175
	177
	178
	179
	582
	589
	595
	598
	606
6V-8724	418
	420
	595
	612
6V-8730	622
6V-8731	502
6V-8732	622
6V-8734	444
	622
6V-8775	582
	589
	598
	606
6V-8782	540
	628
6V-8789	502
6V-8801	270
	583
	590
	599
	607
	711
6V-8836	355
	359
	361
	363
	396
	398
6V-8837	645
6V-8928	764
6V-8938	622
6V-8939	444
6V-8946	444
6V-8994	542
6V-9001	545
6V-9002	628
6V-9008	113
	115
6V-9027	126
	133
6V-9028	423
6V-9168	400
	502
	542
	616
	622
6V-9169	502
6V-9172	173
6V-9182	121
6V-9189	237
	239
	240
	241
	242
	243
	244
	246
6V-9200	612
	620
6V-9632	285
	374
	482
	711
	713
	714
	764
	767
	772
	779
	781
6V-9666	144
6V-9746	121
	444
	554
	612
	618
	620
	621
	622
6V-9828	159
6V-9829	175
	177
	178
	502
	616
6V-9830	616
6V-9833	173
6V-9837	582
	590
	599
	607
	621
6V-9838	444
	621
6V-9839	621
6V-9844	542
6V-9845	621
6V-9850	442
	595
6V-9851	501
	582
	589
	598
	606
6V-9852	612
	621
	751
6V-9853	621
6V-9873	545
	612
6V-9875	444
6V-9876	582
	589
	598
	606
6W-5698	652
	785
6W-6672	618
6Y-0359	805
6Y-1119	408
	410
	413
	415
6Y-1352	179
6Y-1895	410
6Y-2419	413
6Y-2932	639
6Y-2933	639
6Y-2934	639
6Y-2935	639
6Y-3083	404
6Y-5010	450
6Y-5113	756
6Y-7953	573
6Y-9960	67
7C-1445	110
	111

7

PART NUMBER INDEX

Part	Page	Part	Page	Part	Page	Part	Page
7C-1821	123		612		256		590
7C-1822	123		618		258		599
7C-3081	103		620		374		607
7C-3082	103		621		482		734
7C-3083	103		622		492		736
7C-3954	103		751		619		779
7C-7851	55	7K-1181	348		726		781
7C-7852	55		353		736	7X-0608	270
7C-8246	171		365		769		378
	175		368	7T-3267	318		379
	177		370	7T-3268	318	7X-0613	149
	178		374	7T-3276	318	7X-0620	329
7C-9542	109		379	7T-3277	318	7X-0818	149
7D-5252	463		384	7T-3278	318		212
	464		391	7T-3279	318	7X-0851	476
	467		393	7T-3451	318		798
	469		395	7T-3454	318	7X-0870	123
7D-7233	146		761	7T-3974	318	7X-0873	612
	384	7K-3176	748	7T-4003	742	7X-1387	482
	418	7K-4129	171	7T-4532	718	7X-2393	389
	445	7K-8876	645	7T-4897	408	7X-2459	418
	613	7K-8877	645		410		420
	622	7K-9206	475		413	7X-2489	520
	628	7L-2894	318	7T-6496	404	7X-2533	767
7D-7469	463	7L-3203	117	7T-6799	345	7X-2536	742
	464	7L-6580	133	7T-8890	785	7X-2537	374
	468	7L-8316	740	7T-9302	340	7X-2538	49
	469	7L-9061	645	7U-4891	345	7X-2539	183
7D-7496	495	7M-1297	549	7U-4892	348	7X-2543	576
7E-6508	396	7M-4672	341	7V-6571	179		619
	398	7M-8485	113	7V-7584	754	7X-2544	619
7E-7977	44		115	7W-6390	103	7X-2545	620
	46		121	7W-7381	439	7X-2546	145
7E-7978	44		225	7X-0018	719		450
	46		226	7X-0265	284	7X-2549	490
7E-8630	151		400	7X-0343	207	7X-2553	70
7F-8607	711		404		223		556
7G-4822	408		405		277	7X-2555	256
	410		429		281		258
	413		444	7X-0345	341	7X-2557	800
	415		542	7X-0346	284		803
7G-4824	764		554		630	7X-2561	476
7G-4998	402		612	7X-0347	282	7X-2563	370
	549		620		288		798
7G-7053	253		621	7X-0349	284	7X-2619	732
	265	7N-0296	317	7X-0366	207	7X-2639	383
	384	7N-0718	202		223	7X-3373	318
7G-7917	346		►323		277	7X-3391	366
	383	7N-2059	317		281	7X-4733	639
7G-7919	346	7N-5274	202	7X-0448	284	7X-4780	651
	383	7N-5683	35	7X-0474	450	7X-6222	346
7H-3171	455		37	7X-0510	623		383
7H-7055	171	7N-9017	384	7X-0515	556	7X-6312	226
7I-1024	503	7N-9801	343	7X-0562	318	7X-6315	219
7J-0204	570	7N-9943	234	7X-0578	779	7X-7700	195
7J-2604	573	7R-2751	346		781	7X-7729	49
7J-5925	779	7R-3029	369	7X-0579	183		70
	781	7S-9930	733		778		97
7J-8611	437		736	7X-0590	522		129
7J-8673	522	7T-0020	234	7X-0591	487		145
7J-9108	444	7T-0093	707	7X-0599	530		148
	582	7T-0094	346	7X-0605	490		151
	589	7T-0582	740		522		173
	598	7T-1099	70		538		183
	606		131		583		389

► **PRIMARY REFERENCE**

PART NUMBER INDEX

Part	Page
	476
	478
	481
	482
	487
	490
	495
	521
	525
	530
	554
	622
	711
	754
7X-8549	578
7Y-0589	370
7Y-0725	701
7Y-3474	790
	792
7Y-5288	496
7Y-8763	619
8	
8B-4884	502
8B-6511	440
8B-6561	534
	537
8B-9840	800
8C-0620	135
8C-2926	449
8C-3089	151
8C-3100	139
	144
8C-3132	691
8C-3205	613
8C-3206	613
	622
8C-3210	405
8C-3364	621
8C-3398	482
8C-3411	567
8C-3445	103
	113
	115
8C-3446	103
	113
	115
	439
	635
8C-3447	439
8C-3451	578
	635
8C-3655	318
8C-5607	227
	230
	341
	374
8C-5608	227
	230
	341
	374
8C-5748	246
	423
8C-5918	202
8C-6354	347
8C-6358	202
8C-6515	113
	115
8C-6711	698
8C-6712	115
8C-6857	370
8C-6868	195
	516
8C-6871	511
	529
8C-6872	502
8C-6959	183
8C-7563	622
8C-7581	770
	771
8C-8430	713
	714
8C-8478	67
8C-8988	582
	589
	598
	606
8C-8989	542
	590
	599
	607
	612
8C-9660	764
8C-9987	696
8D-1817	476
8D-1819	476
8D-1822	476
8D-2256	433
	435
8D-2311	433
	435
8D-3244	798
8D-3245	798
8D-3247	798
8D-3251	798
8D-3252	798
8D-3266	798
8D-3267	798
8D-3268	798
8D-3269	798
8D-3307	798
8D-3308	798
8D-3309	798
8D-3311	798
8D-3329	798
8D-3791	494
8D-3984	573
8D-3986	573
8D-4522	573
8D-4523	573
8D-4771	433
	435
8D-5054	573
8D-7333	573
8D-7341	573
8D-7343	573
8D-7424	574
8D-8572	492
8D-8888	557
8D-9092	583
	590
	599
	607
8D-9507	798
8E-0401	410
	413
	415
8E-1118	761
8E-1143	460
8E-1263	408
	410
8E-5157	404
8E-5530	794
8E-6558	408
	410
8E-7365	429
8E-7366	426
	429
8E-7791	764
8E-8319	408
	410
	413
	415
8E-8439	65
8E-9571	125
	126
	426
8F-1434	318
	329
8F-1974	366
8F-3469	408
	410
	413
	415
8F-7219	169
8F-8151	135
8F-8733	476
8F-9206	711
8F-9538	470
	472
8H-1141	318
8H-5303	323
8H-5306	323
8H-9789	63
8I-1362	445
8J-2189	803
	▶805
8J-2190	805
8J-2331	649
8J-4351	123
8J-5050	803
8J-5654	567
8J-5778	475
8J-9607	800
	803
8J-9608	800
	803
8K-0530	495
8K-1433	229
8L-2777	90
	91
8L-2786	311
	439
	579
8L-5008	502
8L-5516	476
8M-2770	183
	366
	370
	384
	502
8M-2772	353
8M-2773	171
	370
	442
	595
8M-4992	405
8M-5253	460
8M-6521	404
8M-8489	450
8M-9307	426
8M-9315	61
8N-0869	202
	378
8N-1517	347
	383
8N-1518	383
8N-1521	383
8N-1522	347
8N-1523	383
8N-1540	347
	383
8N-1541	383
8N-1545	383
8N-1548	347
	383
8N-1549	383
8N-1725	202
8N-2353	348
8R-0721	622
8R-1803	283
	341
8R-3695	764
8R-8088	49
8S-2634	202
8S-4304	426
8S-7048	384
8S-9075	470
	472
8S-9076	470
	472
8T-0076	583
	590
	599
	607
8T-0077	622
8T-0082	501
8T-0087	790
	792
8T-0088	400
8T-0100	76
	78
	80
	423
8T-0119	165
	167
	182
8T-0120	622

▶ **PRIMARY REFERENCE**

PART NUMBER INDEX

Part	Page	Part	Page	Part	Page	Part	Page
8T-0226	59	8T-0646	51		554		348
	61	8T-0667	476		581		353
8T-0249	502	8T-0674	798		588		366
8T-0267	664	8T-0707	404		597		370
	666	8T-0785	563		605		373
	668		566		612		376
	670		567		619		379
	672		568		711		385
	674		569		751		391
	676	8T-1117	146		764		393
	678	8T-1158	423	8T-3597	70		395
	680		458		129		405
	682	8T-1159	186		132		418
	684		470		455		420
	686		472		478		437
	688	8T-1160	703		581		438
8T-0275	106	8T-1576	618		588		442
	108	8T-1686	182		597		443
8T-0276	209	8T-1687	583		605		445
8T-0281	53		590		743		478
	55	8T-1698	639	8T-3612	49		482
	509	8T-1889	179		70		490
8T-0285	357	8T-1890	179		97		495
	730	8T-2225	370		511		502
8T-0292	133	8T-2226	729		526		508
8T-0293	429	8T-2947	227		527		511
8T-0309	195	8T-3282	400		529		515
8T-0315	576		431		764		516
8T-0328	217		433	8T-3844	284		533
	218		435	8T-3957	400		534
	285		440	8T-4121	49		537
	318		499		51		540
	348		798		70		542
	357	8T-3311	618		113		545
	530	8T-3490	70		115		550
8T-0336	574		97		117		551
8T-0338	22		115		121		552
8T-0343	645		129		129		554
8T-0355	534		131		131		561
	537		145		135		576
8T-0360	55		146		146		583
8T-0372	433		148		148		590
	435		155		158		595
8T-0375	497		165		171		599
8T-0380	499		254		173		607
8T-0389	202		256		183		613
	238		260		202		616
	247		262		238		622
	248		265		239		628
	379		287		240		651
	590		365		242		653
	599		374		243		654
	607		376		244		655
	651		418		253		656
8T-0404	444		444		254		658
8T-0640	739		478		256		660
8T-0642	355		482		258		661
	359		492		260		706
	361		501		261		711
	363		515		262		733
8T-0643	113		525		264		736
	141		533		265		739
	142		534		273		743
	179		537		275		745
8T-0644	181		542		287		748

► **PRIMARY REFERENCE**

PART NUMBER INDEX

Part	Page	Part	Page	Part	Page	Part	Page
	750		173		476		607
	751		183		478		619
	754		202		487		622
	756		253		502	8T-4179	173
	758		254		508		203
	759		256		511		379
	764		258		515		385
8T-4122	207		260		516	8T-4182	49
	223		262		530		183
	277		265		542		260
	281		366		554		385
	282		370		561		395
	284		379		583		445
	288		385		590		502
	630		389		595		595
8T-4123	67		393		599		628
	135		418		607		748
	370		445		613		754
	494		478		616	8T-4183	57
	622		482		622		67
	798		490		644		70
8T-4132	256		495		651		158
	258		502		743		445
8T-4133	49		515		745		490
	70		516		750		497
	117		521		751		576
	145		542	8T-4138	227	8T-4184	438
	146		550		379		443
	155		551		385		445
	173		552		487		497
	183		554		542	8T-4185	155
	273		583		711		158
	275		590		778		203
	349		595	8T-4139	129		385
	366		599		132		393
	379		607		202		492
	385		613		366		495
	393		616		429		502
	418		622		490		542
	445		628		495		599
	490		651		556		607
	502		711		583		754
	542		743		590	8T-4186	129
	576		748		599		151
	583		751		607		155
	590	8T-4137	146		642		173
	595		171		743		183
	599		183	8T-4140	487		239
	607		202	8T-4171	376		240
	613		261		730		379
	622		262	8T-4172	49		478
	628		264		115		482
	653		287		135		492
	654		353		391		525
	655		366		445		540
	656		370		554		583
	658		373		623		590
	660		379		706		599
	661		385		751		607
	754		393	8T-4175	495		613
8T-4136	70		395	8T-4176	389	8T-4187	128
	97		405		522	8T-4189	97
	121		429	8T-4178	51		195
	129		442		405		242
	146		445		599		243

PART NUMBER INDEX

Part	Page	Part	Page	Part	Page	Part	Page
	244		183		607		195
	280		437		623		321
	317		443		630		374
	344		482		642		405
	349		487		649		483
	379		492		710		515
	385		525		743		726
	405		534		763		750
	482		537		800		779
	516		583	8T-4224	28		781
	751		590		29	8T-4910	497
	754		599		49		800
	778		607		173		803
8T-4191	203		613		208	8T-4956	70
	385		623		212		97
8T-4192	370		706		237		173
	530		783		241		445
	533	8T-4198	146		246		487
	558		583		254		523
	710		590		256		524
	763		620		260		623
	803	8T-4200	385		262		643
8T-4193	492		783		265		763
	520	8T-4205	284		280	8T-4958	572
	525		287		317	8T-4970	353
8T-4194	67		318		321		790
	490		348		349		792
	502		374		374	8T-4984	125
8T-4195	70		376		379	8T-4988	149
	97		378		385	8T-4994	207
	115		379		391		223
	131		385		483		277
	135		389		503		281
	155		391		511		370
	173		707		526		583
	273		732		527		590
	275	8T-4222	51		529		599
	366	8T-4223	57		742		607
	438		129		751	8T-5001	583
	478		132		754		590
	481		158		779		599
	482		173		781		607
	490		200		783	8T-5005	151
	502		203	8T-4226	145		183
	515		273		148		418
	516		275	8T-4244	277		420
	521		277		370		623
	525		370	8T-4648	277	8T-5030	619
	545		379		490	8T-5039	645
	576		385		803	8T-5070	570
	583		389	8T-4778	509	8T-5092	497
	590		426		803		538
	599		438	8T-4780	135		800
	607		443		623	8T-5346	369
	613		445	8T-4896	173	8T-5400	788
	622		455		574		790
	651		490		583		792
	756		495		590	8T-5401	778
	764		523		595	8T-5410	285
8T-4196	113		524		599	8T-5412	273
	115		530		607		275
	145		576		613	8T-5429	582
	146		583		644		589
	148		590		754		598
	155		599	8T-4908	97		606

► **PRIMARY REFERENCE**

PART NUMBER INDEX

Part	Page
8T-5436	613
	620
8T-5460	494
8T-5878	67
8T-5890	501
	616
8T-6385	803
8T-6408	452
8T-6453	620
8T-6462	620
8T-6466	183
	487
	540
	583
	590
	613
	623
	754
8T-6685	49
	619
	620
8T-6699	285
8T-6703	576
	623
8T-6765	145
8T-6868	490
	583
	590
	599
	607
8T-6869	183
	254
	256
	260
	262
	265
	526
	527
8T-6870	148
8T-6876	120
	612
8T-6895	502
8T-6911	455
8T-6912	28
	29
	145
	237
	241
	272
	357
	385
	503
	511
	529
8T-6936	765
	779
	781
8T-7008	583
	590
	599
	607
8T-7058	18
8T-7338	623
8T-7547	733
	736
	754
8T-7566	285
8T-7852	374
8T-7876	645
8T-7926	576
8T-7934	146
8T-7971	67
	733
	736
8T-8555	701
8T-8566	318
8T-8569	318
8T-8729	230
	247
	248
	252
	343
	345
	346
	365
	370
	382
	383
	696
	707
	729
	759
8T-8730	230
	346
	365
	369
	370
	382
	383
	389
	391
8T-8737	159
	161
	167
	182
	214
	230
	247
	248
	275
	339
	346
	347
	348
	355
	363
	365
	366
	369
	370
	382
	383
	389
	391
	422
	429
	570
	707
	720
	721
	722
	723
	724
	725
	729
	731
	733
	776
	792
8T-8827	378
	393
8T-8899	612
8T-8917	488
	489
	630
8T-8919	200
8T-8987	621
8T-9368	341
8T-9383	278
8T-9386	628
8T-9388	283
8T-9389	488
8T-9405	195
8T-9515	139
8T-9598	139
	144
8T-9655	182
	209
	211
	212
	357
	423
8T-9756	202
8T-9884	318
8V-7162	788
8W-0220	599
	607
8W-1253	146
	623
8W-1784	530
8W-2543	583
	590
8W-3989	581
	588
	597
	605
8W-3990	581
	588
	597
	605
8W-3991	581
	588
	597
	605
8W-4167	701
8W-4991	503
8W-6179	573
8W-6486	475
8W-6626	495
8W-8513	558
8X-1106	511
	526
	527
	528
	529
8X-1386	779
	781
8X-1904	487
8X-2318	516
8X-2321	516
8X-3749	630
8X-4028	573
8X-4893	700
8X-4895	700
8X-4897	700
8X-4898	700
8X-5489	576
8X-5561	503
	615
8X-6166	426
8X-8378	403
8X-9145	599
	607
8Y-3925	495
8Y-4489	70
	129
	619
	703
8Y-6379	764
8Y-6388	764
	772
8Y-9603	320
9B-0453	278
9B-7237	583
	590
	599
	607
9C-5344	171
	173
	175
	385
9C-8895	700
	703
9D-0088	574
9D-0089	573
9D-0498	492
9D-0630	173
9D-1491	573
9D-1584	470
	472
9D-3313	798
9D-3333	798
9D-3767	487
9D-6196	173
9D-6197	173
9D-6584	492
	630
	803
9D-6585	803
9D-6586	557
9D-6588	798
9D-6589	798
9D-6591	492
9F-2247	433
	435
9F-5644	323

9

PART NUMBER INDEX

Part	Page	Part	Page	Part	Page	Part	Page
	378		460		165		133
	379		740		579		167
9F-6445	530	9M-2092	476		636		460
9F-8125	746	9M-2110	460		637		664
9F-8477	408	9M-2904	117		653		666
	410	9M-4370	450		654		668
9G-0002	202	9M-4594	581		655		670
9G-0005	202		588		656		672
9G-1307	353		597		658		674
9G-2758	202		605		660		676
9G-3695	325	9M-7958	195		661		678
9G-4343	347		444	9S-4190	140		680
9G-5127	437	9M-8406	146		455		682
9G-7101	183		203		645		684
9G-8909	378		370	9S-4191	59		686
	393		379		125		688
9H-0846	429		393		429	9S-8006	85
9J-2880	803		595		545		125
9J-3139	805		623		579		126
9J-4963	639		751		636		143
9K-0700	173	9N-0869	209		637		182
9K-1171	433		211		692		404
	435		423	9S-8001	633	9S-8008	38
9K-1172	433		772		636		41
	435	9N-1941	155		637		42
9K-5635	746	9N-1995	765	9S-8002	35		44
	761	9N-4155	450		37		46
9K-7951	463	9P-9388	756		83		85
	464	9R-0717	503		125		133
	467	9R-2613	620		126		137
	469	9R-2620	778		133		138
9L-1566	182	9R-2672	492		152		404
9L-1633	186		703		637		516
	187	9R-2821	70		664	9S-8010	405
9L-3334	384	9R-2860	179		666		549
9L-3560	516	9R-4595	700		668	9S-8752	428
9L-8493	85	9R-5008	146		670	9S-8892	703
9M-0853	103		151		672	9S-9334	74
9M-1974	19		182		674		103
	20		501		676		402
	21	9R-6414	203		678		404
	22	9R-9806	347		680		426
	51	9R-9866	70		682		429
	63		700		684		549
	74	9R-9925	651		686	9T-1013	628
	110	9S-1316	389		688	9T-1636	645
	111	9S-1350	623	9S-8003	635	9T-1652	645
	120	9S-1362	223	9S-8004	38	9T-1699	645
	122		277		41	9T-1710	645
	123		281		42	9T-2186	692
	125	9S-4167	159		84	9T-3051	566
	126		161		103		567
	133		163		126		569
	137		165		154	9T-3109	567
	138		167		169	9T-3133	564
	195	9S-4181	113		426	9T-4906	647
	289		115		439	9T-5241	740
	290	9S-4182	37		460	9T-5927	572
	355		59		538	9T-5977	573
	359	9S-4183	429		570		▶639
	361		576		579	9T-8052	639
	363		613		633	9T-8053	639
	405	9S-4185	159	9S-8005	59	9T-8055	639
	423		161		84	9T-8057	639
	426		163		85	9T-8058	639

▶ **PRIMARY REFERENCE**

PART NUMBER INDEX

Part	Page	Part	Page	Part	Page	Part	Page
9T-8059	639	9X-1046	349	9X-2053	54		241
9T-8061	639		374	9X-2085	542		242
9T-8062	639		742		545		243
9T-8065	639	9X-1054	346	9X-2097	208		244
9T-8067	639		347		355	9X-4385	369
9T-8069	639	9X-1055	347		359	9X-4391	365
9T-8070	639	9X-1056	346		361		383
9T-8071	628		347		363	9X-4493	233
9T-8445	647	9X-1386	252	9X-2098	209	9X-4609	423
9T-8446	647		325		211	9X-4611	572
9T-8448	647		382	9X-2125	476	9X-4824	318
9T-8450	647		570		733	9X-4998	382
9T-8452	647	9X-1813	294		736	9X-5615	383
9T-8943	564		295	9X-2133	146	9X-6165	227
9T-8944	558		298		710		230
	▶564		322	9X-2205	195		341
9T-9071	639		327	9X-2317	173		374
9T-9072	639		328	9X-2360	173	9X-6269	70
9U-8263	764		331	9X-2383	369	9X-6277	173
9U-8669	460		332	9X-2474	516	9X-6451	74
9W-0844	264		344	9X-2488	750	9X-6581	445
	275		422	9X-2537	222		623
	346	9X-2023	576		288	9X-6620	153
	365	9X-2026	353	9X-2546	719		157
	369	9X-2027	48	9X-3265	346	9X-6772	227
	370	9X-2032	374		347		376
	382		530		383		383
	383		764	9X-3401	167	9X-6856	347
	389	9X-2038	707		214		383
	391		765		293	9X-6857	383
	733		772		346	9X-7145	346
9W-0852	264	9X-2042	770		365	9X-7146	346
	271		771		366		369
	275	9X-2043	272		369	9X-7264	568
	346		733		370	9X-7317	170
	365		736		383	9X-7371	643
	369		762		422	9X-7378	35
	382		765		570		37
	383		767		720		385
	707		772		721	9X-7380	133
	733		779		722	9X-7381	710
9W-1441	345		781		723		711
9W-1442	345	9X-2044	206		724		748
9W-1446	345		707		725	9X-7382	710
9W-1454	404		733	9X-3402	167		711
9W-1951	347		736		346		748
9W-2029	408		746		347	9X-7383	711
	410		765		348		748
9W-2032	347		767		363	9X-7384	711
9W-2033	347		769		365		748
9W-3273	450		772		366	9X-7385	718
9W-6068	538		779		369		748
9W-6465	404		781		370	9X-7430	38
9W-6467	415		783		383		41
9W-6582	67		788		422		42
9W-6584	67	9X-2045	374		731	9X-7547	645
9W-7038	404		709	9X-3463	237	9X-7737	331
9W-8095	67		742		238		332
9W-9930	67		746		241	9X-7745	664
9X-0145	347		765		245		666
9X-0196	346		772		246		670
9X-0261	159		783	9X-3465	247		672
	161		786		248		674
	163	9X-2046	772	9X-4244	237		676
9X-0262	289		788		238		678

▶ **PRIMARY REFERENCE**

PART NUMBER INDEX

Part	Page
	680
	682
	684
	686
9X-8250	385
	503
	583
	590
	599
	607
	613
	748
	751
9X-8256	63
	206
	222
	227
	284
	285
	288
	338
	349
	353
	385
	393
	405
	487
	516
	711
	719
	727
	730
	767
	769
	779
	781
9X-8257	70
	256
	258
	495
	623
9X-8258	67
9X-8267	59
	61
	106
	107
	108
	355
	359
	361
	363
	729
9X-8268	24
	25
	59
	61
	400
9X-8281	153
9X-8399	563
	569
9X-8408	542
9X-8582	503
9X-8600	195
9X-8880	630
9X-8914	692
9X-9365	182
	260
	262
	265
	365
	382
	393
9X-9689	740
9Y-0810	30
9Y-0821	30
9Y-1758	106
	107
	108
9Y-2700	171
	175
	177
9Y-4357	106
	107
9Y-6089	24
	25
9Y-8075	122
9Y-8076	122
0	
000-9262	440
002-0639	508
002-6453	455
003-9163	516
004-6683	526
	527
005-0469	645
005-0471	645
012-0380	327
	328
014-0816	340
030-1706	378
030-6121	699
030-7942	171
030-7947	159
	161
	163
	165
	167
	171
	175
	177
	178
	179
030-8188	159
	161
	163
	165
	167
030-8276	182
031-4155	740
033-2177	501
	516
033-4814	746
033-6027	645
	692
033-6033	198
033-6036	645
	692
033-8248	368
	370
036-7232	384
061-6665	222
	288
061-9455	110
	111
061-9458	74
	121
067-2551	171
	175
	177
	178
068-4497	111
069-4269	444
085-8091	378
	748
087-5841	482
090-0744	751
091-4537	285
091-9035	501
092-2570	186
	187
092-4924	345
092-9741	256
	258
095-0705	645
095-0817	376
095-0888	645
095-0930	538
095-1750	695
095-1751	690
096-3216	715
	764
096-3831	637
096-4836	205
096-4883	581
	620
096-6166	348
	374
	730
	746
096-9259	620
097-7234	347
099-3649	149
1	
100-3253	247
	248
100-3254	247
	248
100-3255	247
	248
100-4336	581
	588
	597
	605
100-5041	347
100-5421	95
100-5612	808
	809
100-6674	707
101-0003	746
101-2810	146
101-2867	746
	764
	772
	788
101-3055	761
101-3129	119
101-3934	59
	61
102-2244	570
102-4559	464
102-5828	113
	115
102-5829	113
	115
102-7886	581
	588
102-8801	227
	346
	348
	374
	376
	382
	383
	422
	720
102-8802	201
	230
	233
	249
	251
	252
	262
	264
	271
	273
	275
	322
	327
	328
	331
	335
	343
	344
	345
	346
	348
	355
	363
	365
	368
	382
	383
	389
	391
	696
	718
	743
	746
	759
	767
102-8803	159
	161
	163
	165

► **PRIMARY REFERENCE**

PART NUMBER INDEX

Part	Page	Part	Page	Part	Page	Part	Page
	230		666		559		11
	234		668		800		▶82
	250		672	112-3931	513	117-1385	423
	292		674	112-4550	382	117-1802	398
	293		676	112-9736	70	117-2311	218
	298		678	113-0693	283	117-2766	6
	346		680		341		8
	355		684	113-0981	581		11
	365		686		588		▶48
	382	106-3660	670	113-5264	▶568	117-2771	6
	389		682		801		8
	391		688		802		11
	422	106-4175	703	113-5304	105		▶53
	769	107-0211	581	113-8373	202	117-2786	6
	770		588		378		8
	771		597	114-0358	805		11
	774		605	114-0359	805		▶109
102-8804	325	107-3953	67	114-3399	516	117-2927	429
	345	107-4393	748	114-4776	568	117-3050	195
	346	107-4394	748	114-5333	382	117-3915	▶270
	357	107-4395	748	114-6658	206		641
	365	107-4396	748		272	117-5268	641
	366	107-4397	711		374	117-8801	27
	369	107-4399	711		733		63
	374	107-5769	186		736	117-8929	374
	570		187		746	117-9081	328
102-8805	230		190		764	117-9409	389
	247		192		767	117-9978	810
	248		193		772		813
	273		194		779	118-3534	▶326
	275	107-6280	95		781		378
	346	108-2407	615		783	118-5125	707
	365	108-3589	501		786	118-5619	706
	395	108-3612	178		788	119-3662	275
	422	109-0361	810	114-8843	275		346
	729		813		369		347
	733	109-3036	696		422		365
	792	109-5008	733	114-8844	163		369
102-8806	159		736		165		383
	161	109-8981	761		182		389
	163	109-9771	618		369		391
	165	110-2218	502		422		422
	167	110-5266	595	115-0617	260		707
	182	110-6109	767	115-2972	76	119-6220	554
	339	110-7149	470		78	120-9027	239
	346		472		80		240
	707	110-7524	734	115-2973	76	120-9875	800
103-0213	347		736		78	121-3307	145
103-6169	433	110-7721	514		80		148
	435	110-7722	514	115-4550	460	121-3395	568
	470	110-7887	345	115-5852	806	121-5908	154
	472	110-8826	121	115-6929	187	121-9247	572
103-6282	645	110-8827	121	115-7087	156	122-6908	576
103-8133	396	111-0343	696	115-8428	581		623
104-2091	764	111-4627	764		588	122-7666	713
	772	111-9110	535	115-9345	733		714
104-3560	34		536		736	123-0764	69
104-6202	366		548	116-0118	287	123-0783	161
105-1797	355	112-0858	285		365		163
	363	112-1574	449	116-1089	76		165
105-7167	501		450	116-2434	703		167
	616	112-3926	703	116-3715	153		▶199
105-9659	▶756	112-3928	703	116-8376	783	123-4586	754
	757		705	117-0165	6		758
106-3659	664	112-3929	557		9		759

▶ **PRIMARY REFERENCE**

PART NUMBER INDEX

Part	Page	Part	Page	Part	Page	Part	Page
123-8914	641	128-0402	30	133-0260	305		680
124-1555	538	128-0403	30	133-2905	433		682
124-2463	158	128-5016	347		435		684
124-5043	426	129-2220	701	133-3260	501		686
124-6257	751	129-2893	65	133-4292	538		688
124-7792	49	129-3178	707	133-4820	597	136-4307	6
124-8909	439	129-3180	389		605		8
125-3298	652	129-3181	538	133-5330	635		▶26
125-7874	325	129-6400	151		▶693	136-5490	776
	347	129-7680	810	133-5545	637	136-9141	178
	348		813		693		179
	355	130-0229	439		694	137-6645	305
	365		579	133-6517	225		311
	382	130-3374	158		226		312
	383	130-3515	247	133-6934	260		315
	422		248		384		316
125-7875	346	130-5300	253		395		422
	347		255		501		554
	348		258		542	137-9410	273
	355		261		581		275
	363		264		588	138-7500	113
	365		273		595		115
	369		275		597		135
	370		287		605	139-1802	554
	384		348	133-9012	707	140-0860	365
	389		359	133-9229	146	140-1088	254
	391		361		151		256
	707		365		182		260
125-9740	707		366	134-2540	347		262
126-1767	167		370		370		265
	293		374		384	140-5945	783
126-1768	167		376	134-3344	202	140-7480	374
	363		378	134-3355	378	140-8010	408
	384		384		382		410
126-1773	429		423	134-4126	219		413
126-1774	227		482	134-5245	105		415
	347		516	134-7258	810	140-8636	463
	357		779		813	141-1480	155
	376		781	135-0611	760	141-2307	444
	384	130-5301	273		790	141-3983	751
126-7574	219		275	135-1979	740	141-4043	523
126-8440	635		743	136-1953	750		524
127-0929	151	130-9811	311	136-2617	581	141-6968	580
127-1664	173	131-1475	347		588	141-9784	707
127-2170	214	131-3093	716		597	141-9889	595
	721	131-3718	22		605	142-0038	628
	772	131-5171	746	136-2967	470	142-2527	285
127-3008	285	131-6645	126		472	142-5893	563
127-4471	173	132-0338	389	136-3188	788	142-6433	462
127-4838	285	132-2453	595	136-3191	788		▶463
127-8609	225	132-3056	652	136-4183	48	142-6438	462
128-0317	139	132-5789	19		188		▶463
	144		20		189	142-8928	652
128-0382	30		154		190	142-8937	652
128-0383	30		355		192	143-0273	384
128-0384	30		359		193	143-6020	284
128-0385	30		361		194	144-0195	733
128-0395	76		363	136-4192	664		785
	78		366		666		788
	80		384		668		790
128-0396	76		423		670		792
	78	132-5793	707		672	144-1636	325
	80	132-6597	440		674		332
128-0400	30	132-6598	440		676		347
128-0401	30	132-8487	369		678		422

▶ **PRIMARY REFERENCE**

PART NUMBER INDEX

Part	Page
144-4107	764
144-8344	748
145-1695	12
	▶186
	▶187
145-2901	49
145-6669	706
145-8039	404
146-0124	597
	605
146-1680	67
146-5804	743
146-6747	810
	813
147-0319	▶235
	260
	265
147-0385	370
147-1444	376
147-1445	347
	357
	384
147-1446	347
	357
	384
148-1925	422
148-2557	664
	666
	668
	670
	672
	674
	676
	678
	680
	682
	684
	686
	688
148-2592	570
148-7841	431
148-8309	404
148-8313	161
	163
	165
148-8315	620
148-8318	171
	175
	418
	420
	581
	588
	597
	605
148-8322	612
	620
148-8323	444
148-8325	418
	445
148-8327	554
	620
148-8328	582
	589
	598
	606
	612
148-8329	620
148-8335	113
	115
	444
	554
	620
148-8336	442
	444
	542
	595
	620
148-8339	612
	621
148-8340	182
	542
	582
	589
	598
	606
	616
	621
148-8342	582
	589
	598
	606
	621
	751
148-8345	182
	582
	589
	598
	606
148-8353	545
148-8354	628
148-8357	113
	115
148-8358	582
	589
	598
	606
148-8360	121
148-8361	612
	620
148-8363	582
	589
	598
	606
148-8364	540
	542
	582
	589
	598
	606
	628
148-8365	612
148-8367	442
	595
148-8368	418
	420
	621
148-8369	400
148-8370	501
	582
	589
	598
	606
	612
148-8371	582
	589
	598
	606
148-8373	621
148-8374	175
	177
	178
	582
	589
	595
	598
	606
148-8378	418
	420
	595
	612
148-8381	582
	589
	598
	606
148-8382	444
148-8388	554
	621
148-8390	621
148-8391	621
148-8392	612
	621
148-8393	621
	751
148-8395	59
	664
	666
	668
	670
	672
	674
	676
	678
	680
	682
	684
	686
	688
148-8405	59
148-8406	404
	429
148-8407	59
	429
	545
	636
	637
148-8408	429
	576
	613
148-8409	404
148-8411	165
	636
	637
	653
	654
	655
	656
	658
	660
	661
148-8416	444
148-8423	618
148-8427	501
148-8428	540
	628
148-8430	612
148-8436	582
	589
	598
	606
148-8444	582
	589
	599
	606
	621
148-8446	444
	621
148-8449	621
148-8454	502
149-1912	739
149-6371	382
149-7738	612
150-3026	146
150-4031	621
150-4037	542
150-4043	545
	612
150-4048	621
150-5144	465
	▶467
151-0288	▶465
151-1398	348
151-5145	635
151-7038	570
151-8190	146
151-9274	723
	725
152-0199	516
152-3988	▶462
152-4008	▶462
152-8346	630
	▶696
153-2073	▶236
	254
	256
153-2447	378
153-2817	788
153-5043	310
153-5710	202
153-6230	628
153-6232	622
153-6233	622
153-6236	444
153-6241	542
	590
	599
	607
	612
153-6252	542
153-6256	622
153-6262	444
	622

▶ **PRIMARY REFERENCE**

PART NUMBER INDEX

Part	Page	Part	Page	Part	Page	Part	Page
153-7950	175		383		384		590
	177		384	160-7690	227		599
	178		389	160-8184	56		607
	179		391		57	164-5608	583
153-9086	171		393		58		590
154-3358	56		395	160-8229	76	164-5619	182
	57		422	160-8492	404		404
	58		743	160-8499	482		476
154-9025	135	155-2271	346	160-8510	433	164-5624	542
155-2255	227		347		435		545
	346		365	160-8749	400	164-7556	237
	347		366	160-9413	▶548		238
	348		369		588		241
	355	155-2272	357		605	164-7577	▶322
	363	155-2274	273	160-9447	175		402
	365		275		177	164-8474	764
	374		347	160-9449	175	164-8908	622
	376		365		177	164-9609	289
	383		384	161-3509	▶245		290
	384		429		262	165-0367	410
	389		733	161-6149	693		413
	391	155-3502	502		694		415
	429		511		695	165-0488	408
155-2256	346		616	161-6154	699		410
	347	155-3624	59	161-6161	693		413
	368	155-4098	348		694		415
155-2257	347	155-5114	422		695	165-3929	428
155-2258	429	155-7321	628	161-6958	156	165-4854	444
155-2260	294	156-4282	622	161-6963	156	165-4929	405
	295	156-4283	576	161-7338	348	165-4931	423
	347	156-5970	635	161-8068	450		460
	355	156-6175	348	161-8313	408		576
	365		355		410	165-6162	464
	373		359		413	166-0690	287
	383		361		415	166-1880	560
	384		363	161-9916	182	166-2904	38
	389	157-0670	135	162-0177	460		41
	391	158-0250	235		538		42
	422		236		570	166-5229	346
155-2263	429		245	162-2077	245		357
155-2265	182	158-0252	235	162-2165	348	166-5816	711
	230		236	162-7449	581	167-1801	648
	347		245		588	167-2200	572
	348	158-2336	535		597	167-2201	563
	355		536		605		566
	363	158-7864	810	163-2478	44		567
	365		813		46		568
155-2270	159	159-0052	733	163-2919	135		569
	161		736	164-2108	459	167-2307	572
	230	159-3046	440	164-4180	113		630
	256	159-3590	810		115	167-2312	563
	258		813	164-5567	404		566
	262	159-8049	202		418		567
	264		378		420		568
	310		393		460		569
	330	159-8050	202		545	167-8125	48
	347		378		576	167-8610	374
	348	159-9322	347		613	167-8712	376
	355		383		623	167-8713	376
	363		384	164-5570	622	167-8714	376
	365	159-9539	700	164-5572	502	167-8987	374
	368		769	164-5596	113	168-9866	716
	373	159-9541	155		115	169-0705	722
	376	160-3518	776	164-5597	195		723
	382	160-7689	383	164-5605	583		724

▶ **PRIMARY REFERENCE**

PART NUMBER INDEX

Part	Page	Part	Page	Part	Page	Part	Page
	725	174-4181	145		▶718	188-2199	570
169-1616	690	174-5763	746	183-7262	405	188-3959	202
169-1617	690	174-5907	622	183-7263	637	188-8849	235
169-2876	218	174-7449	460		664		236
169-3471	128	174-7875	745		666		245
169-4166	63	174-8131	217		668	188-9644	370
169-4279	502		218		670	189-0135	774
169-5864	444		379		672	189-1707	711
170-0493	547	174-9527	67		674	189-2102	633
	548	174-9570	▶169		676	189-2512	345
170-1821	345		185		678	189-3158	348
170-3093	556	175-2308	326		680		382
170-5334	▶740		▶327		682		393
	742	175-2309	326		684	189-3925	798
170-5335	▶271		▶328		686	189-4393	516
	740	175-3721	59		688	189-5358	758
170-5632	530		61	183-7264	578		759
170-7485	696		429	184-0983	733	189-8627	633
171-2210	378	175-4291	237		736		▶697
171-2215	378	175-4292	237	184-1527	645	190-1106	113
171-3759	▶325		241		▶648	190-3850	547
	774	175-7900	563	184-2420	622		548
171-4047	764		564	184-3579	217	190-5386	803
	772		566	185-1860	348		810
171-6466	581		567	185-1861	348		813
	588		569	185-3874	754	190-7613	357
	597	175-7904	568	185-7115	703	190-7614	346
	605	175-9079	171	185-7120	703		374
171-6723	612		175	186-0359	222	190-7615	346
171-6728	502		179		288		720
171-6731	511	176-5311	800	186-3735	201	190-8505	764
	529	176-6994	139		214	190-8970	185
171-9375	538	176-9237	154		233	190-8977	182
172-3511	345	177-1061	628		234		▶185
	769	177-4950	171		249	191-1782	182
	770	177-9645	707		250	191-1783	182
	771	177-9648	347		251	191-2312	462
172-4880	748	177-9656	347		292		▶464
172-6063	396	178-2991	433		322	191-2313	▶462
172-6423	538		435		327	191-2857	59
172-7966	460	178-3088	703		328		61
172-7968	460	178-8063	516		331	191-6587	▶310
172-8037	776	179-0006	▶329		339		365
172-9981	563		393		345	191-7805	167
	566	179-0092	48		382		179
	567	180-0149	788		733	191-8303	▶305
	569	180-1538	19		743		422
173-1007	649	180-7180	748		746	191-8304	422
173-1008	649	180-9339	182		769	191-9247	697
173-1009	649		298		770	191-9784	▶578
173-1437	445		355		771		618
173-3993	636		718		774	192-7054	777
	637	180-9340	182		776	192-7231	554
173-9683	563		294		792	193-0598	173
	564		295	186-3736	330	193-3973	382
	566		310		733	193-5319	597
	569		355	187-0541	695		605
	572		373	187-3369	538	193-9230	618
174-0503	346	180-9900	345	187-8191	699	194-2903	182
	369	183-3407	84	187-8194	56	194-4254	346
	384		103		57	194-5171	788
174-3091	722		154	187-8969	33		790
	723	183-4365	87	187-8972	30		792
	724		88	188-0633	538	194-5336	501
	725	183-5106	49	188-2162	404	194-6722	▶294

▶ **PRIMARY REFERENCE**

PART NUMBER INDEX

Part	Page
	296
194-6725	▶295
	297
194-8031	730
195-7988	345
196-4927	462
	▶464
196-4928	▶462
196-7867	465
197-4977	404
197-5107	772
197-6355	501
197-8391	159
	161
	▶311
	▶312
197-8418	120
197-8419	120
197-8940	618
197-9257	76
	78
197-9326	76
	78
	80
197-9327	76
	78
	80
197-9330	34
197-9642	51
198-2914	697
198-4768	470
	472
	476
198-4769	400
198-4777	113
	115
	148
	155
	182
	478
	482
	492
	525
198-4778	70
	487
	490
	763
198-4780	492
	520
	525
198-4782	67
	520
198-4963	43
	47
	▶52
198-5389	230
199-4318	481
	496
199-7819	509
199-9907	195
200-5728	776
200-6282	633
	690
200-8788	348
201-5464	▶249
	389
201-6615	306
201-6616	307
201-9331	415
202-5397	348
202-6611	237
	238
202-6614	241
202-7475	65
203-0351	152
203-1558	535
	536
203-3768	179
203-3831	144
204-0813	230
	374
204-2581	788
204-8000	382
205-0826	230
205-3236	5
205-7047	374
205-7048	764
205-8125	445
	623
205-8257	230
206-2423	355
206-5143	522
206-5162	230
206-5208	230
206-5823	760
	790
	792
206-8818	652
207-1556	▶318
	320
207-8103	6
	9
	11
	▶86
207-8107	86
207-8572	32
208-0800	195
208-1629	195
	526
	527
	528
208-6054	135
208-9281	140
	143
209-0381	218
209-4575	135
209-4577	135
209-5776	810
	813
209-7309	118
	119
210-1743	74
210-1746	74
210-4458	444
210-4460	52
211-0587	30
211-0588	30
211-2660	739
211-6807	355
	363
211-7895	51
212-0431	118
	159
	161
	163
212-0907	570
212-4961	664
	666
	668
	670
	672
	674
	676
	678
	680
	682
	684
	686
	688
212-7728	28
	29
213-1585	53
213-2009	612
213-9100	344
214-0586	44
214-0647	754
214-2470	399
214-4208	384
214-6480	570
214-7566	35
	83
	103
	152
	290
	297
	299
	300
	302
214-7568	41
	42
	84
	103
	120
	154
	165
	167
	179
	199
	290
	296
	301
	420
	439
	459
	545
	579
	613
214-9186	734
	736
215-1942	570
215-8200	440
215-8207	440
215-8209	400
215-9664	440
215-9665	400
215-9666	400
216-5540	▶23
	59
	61
217-3311	570
217-3673	74
217-3674	74
217-4541	431
217-5900	23
218-0404	230
218-2373	459
218-7270	55
218-7272	8
	12
	13
	14
	15
	▶63
218-9894	696
219-0302	808
	809
219-2392	285
	▶292
219-2436	433
	435
219-4458	76
219-4681	440
219-6314	230
219-6488	▶237
	266
219-7440	6
	9
	11
	▶69
219-7461	355
	359
	361
219-7462	7
	9
	▶355
219-7569	440
219-8035	▶547
	581
	597
220-0771	320
220-3373	63
220-4126	149
220-4335	470
	472
220-4336	470
	472
220-6390	6
	8
	▶24
220-8678	169
220-8800	739
221-3405	373
221-3934	107
221-9357	63
221-9392	43
	47

2

▶ **PRIMARY REFERENCE**

PART NUMBER INDEX

Part	Page
222-2367	547
	548
222-2899	51
222-3088	12
	13
	14
	15
	16
	▶55
222-3092	6
	9
	11
	▶154
222-3902	55
222-3904	139
222-3905	55
222-3907	22
222-5376	792
222-7890	345
222-7944	813
222-9151	374
223-0580	649
223-3353	570
223-3490	623
	748
223-3875	9
	12
	13
	14
	15
	▶83
223-6546	32
223-7463	12
	13
	14
	15
	16
	▶22
223-7468	22
223-7471	22
223-7852	63
223-9143	139
	144
223-9144	139
223-9145	139
	144
223-9147	▶139
	140
223-9150	78
	80
224-0554	808
224-0880	6
	8
	11
	▶66
224-1270	38
	41
	42
224-2323	400
224-2675	125
	126
224-3028	44
224-3030	44
	46
224-3117	99
224-3125	44
	46
224-3405	103
224-3881	12
	13
	14
	15
	16
	▶30
224-4140	66
224-4418	89
	92
224-4441	44
	46
224-4991	181
224-5539	117
224-5757	125
224-6360	125
224-6361	133
224-8170	6
	9
	11
	▶120
224-8171	120
224-8172	120
225-0098	557
225-0312	520
225-0313	520
225-3109	214
	721
	762
225-3281	563
	566
	567
	568
	569
225-3305	809
225-4148	5
225-4150	810
	813
225-6948	120
225-7003	140
	143
226-1240	813
226-1242	810
226-1274	813
226-1275	810
226-1885	463
	464
	467
	▶468
226-1886	463
	464
	468
	469
226-2333	223
	▶268
	269
	281
226-4192	370
226-4755	63
226-6478	76
226-7473	209
	211
	▶213
226-9169	280
226-9622	698
227-0838	59
	61
	▶95
227-2574	6
	8
	11
	▶27
227-3101	482
227-3103	482
227-3812	159
	161
227-4892	105
227-5075	133
227-5359	▶6
227-5723	12
	13
	▶188
	▶189
227-7390	809
227-7391	808
227-9545	6
	9
	11
	▶84
228-0902	463
	464
	468
228-3323	369
228-4947	119
	306
	307
	308
	309
228-5810	140
	143
228-5811	▶140
	141
228-5812	12
	13
	14
	15
	16
	▶141
	▶142
228-6053	247
	248
228-6054	247
	248
228-6056	247
	248
228-6089	345
	764
228-7088	167
228-7089	179
228-7090	120
	182
229-2580	345
229-2614	6
	8
	11
	▶28
229-5279	90
229-5431	121
229-5684	22
229-5711	28
	29
229-8083	9
	12
	▶72
229-8084	13
	14
	15
	▶73
229-8810	140
	143
229-9382	564
229-9974	239
	240
	242
	243
	244
230-0917	317
230-0960	396
230-0961	13
	14
	15
	▶396
230-2603	133
230-3518	154
230-3728	170
230-3775	170
230-4011	163
	165
	167
	332
	348
	363
	422
230-4012	163
	165
	167
	214
	348
230-4013	363
	382
230-4518	125
	126
230-4519	125
230-5008	374
230-5009	731
230-5010	348
230-5011	348
230-7149	289
	▶306
231-0049	223
	277
	281
231-0151	6
	8
	11
	▶110
231-0152	6
	8
	11
	▶125
	▶126
231-0309	7
	9

▶ **PRIMARY REFERENCE**

PART NUMBER INDEX

Part	Page	Part	Page	Part	Page	Part	Page
	11		781	236-8745	125		399
	17	233-3272	727		126	238-8825	2
231-0336	623	233-3275	781	236-8826	369		▶321
231-0876	▶8	233-3277	714	237-0226	149	238-8827	▶230
	10	233-3278	713	237-0227	167	238-8828	▶357
231-0877	8	233-3280	715		302		551
	11		▶772		363		552
	▶12	233-3295	5		384	238-8839	716
231-1975	7		▶758	237-0364	583	238-8841	716
	9	233-3296	▶759		590	238-8962	6
	▶289	233-5220	▶122		599		9
231-3178	426		123		607		11
231-3492	6	233-5221	12	237-4132	278		▶85
	8		13	237-4133	278	239-0618	633
	11		14	237-4134	278	239-1134	317
	▶112		15	237-4135	278		▶343
231-3538	572		16	237-4376	▶65	239-2395	289
231-3946	193		▶123		99		▶296
231-6565	450	233-6191	6		101	239-2396	159
231-9030	153		8	237-6469	99		161
232-0893	366		11	237-7252	278		163
232-0895	366		▶209	237-7253	99		165
232-1693	209		▶211		101		289
	211	233-6742	159	237-7552	277		▶297
233-0891	209		161	237-9310	159	239-2397	289
	211		163		161		▶307
233-3107	1		165		163	239-3478	▶298
	▶715		167		165		299
233-3122	1		▶197		167	239-4990	810
	▶761	233-8134	404	237-9736	232	239-4991	813
233-3123	2	233-9494	383	237-9960	396	239-5195	633
	▶776	234-4326	229		398	239-5674	289
233-3124	268		▶238	238-0112	422		▶299
	▶333	234-4355	289	238-0251	490	239-5858	156
233-3126	5		290		533	239-6379	391
	▶229	234-5012	290	238-2717	76	239-6989	810
233-3133	715		▶313		78		813
	▶778	234-5013	163	238-2723	12	239-7342	226
233-3134	2		165		13	239-7352	348
	▶217		167		14	239-7353	348
233-3135	▶218		290		15	239-8135	133
	715		▶314		▶76	239-8530	554
233-3137	2	234-7730	238		▶78	239-9779	583
	▶742	234-7731	238	238-2949	8		590
233-3138	715	234-9970	223		▶59		599
	▶788		269	238-5080	84		607
233-3145	▶212		▶278		167	240-2636	65
	715		281		179	240-3277	74
233-3147	551	235-1448	123		182	240-3279	6
	552	235-1451	123		312		9
	▶719	235-3595	165		314		11
233-3208	715		167		315		▶74
	▶757	235-4587	281	238-5081	197	240-5403	6
233-3209	778	235-6183	357	238-5084	74		8
233-3224	▶779	235-6188	▶227		103		11
	783	236-1928	391	238-6721	133		▶426
233-3225	▶781	236-2335	273	238-6728	133	240-7193	365
	783		275	238-6730	133		382
233-3226	781	236-2340	202	238-6777	72	240-7271	12
233-3227	779	236-2356	369	238-8763	3		13
233-3235	787	236-4545	317		4		15
233-3245	727	236-4611	742		▶324		16
233-3248	779	236-4615	345		715		▶35
	781	236-4616	333	238-8813	230	240-7272	12
233-3252	779	236-4630	338	238-8824	▶335		13

▶ **PRIMARY REFERENCE**

PART NUMBER INDEX

Part	Page
	14
	15
	16
	▶99
	▶101
240-7679	12
	13
	14
	15
	▶43
240-8460	87
240-8461	▶87
	89
240-8462	88
240-8463	▶88
	89
240-9977	148
241-0037	535
	536
	547
	548
241-0835	▶89
	99
241-0844	90
241-0845	89
	▶90
241-0847	73
	89
	92
241-3720	779
	781
	813
241-3722	538
241-5645	110
241-5682	398
241-6208	554
241-6218	460
241-7601	6
	8
	11
	▶208
241-8368	▶330
	378
241-9265	155
241-9657	599
	605
242-0407	576
242-1401	89
	92
242-1811	52
242-3282	230
242-3360	156
242-6099	623
242-7418	89
	92
242-9264	664
	666
	668
	670
	672
	674
	676
	678
	680
	682
	684
	686
	688
242-9514	570
242-9515	570
243-1352	253
	261
	264
243-1557	51
243-1667	6
	9
	11
	▶133
243-2289	145
243-2965	664
	666
	668
	670
	672
	674
	676
	678
	680
	682
	684
	686
	688
243-3250	369
243-3662	653
	654
	655
	656
	658
	660
	661
243-5289	810
	813
243-5362	369
243-6700	701
243-6717	30
244-1420	171
244-1714	284
244-1716	730
244-1719	342
244-1987	426
244-2579	664
	666
	668
	670
	672
	674
	676
	678
	680
	682
	684
	686
	688
244-2701	709
	▶739
244-2710	285
244-2711	285
244-2713	321
244-2714	321
244-2729	523
	524
244-3114	422
	▶459
244-5401	129
244-6849	428
244-6850	428
244-6851	428
244-8676	6
	8
	▶111
244-8686	631
245-0723	599
	607
245-1181	422
	458
245-1596	716
245-1811	458
245-1912	458
245-2810	389
245-2811	389
245-2812	389
245-2813	389
245-2814	389
245-2827	482
245-3555	458
245-3816	149
245-3818	150
245-3819	150
245-4747	268
245-5793	583
	588
245-6095	90
	91
245-7434	348
245-7603	576
245-8334	374
245-8842	202
	378
	393
245-8964	576
245-9054	670
245-9055	672
	678
246-1670	202
246-2641	173
	810
	813
246-3144	30
246-3193	661
246-3314	545
246-3352	618
246-4311	345
246-4486	643
	▶645
246-4617	150
246-6341	581
	588
	597
	605
246-6342	581
	588
	597
	605
246-8065	▶449
	457
246-8066	449
	▶450
246-8068	450
246-8071	450
246-8073	450
246-8075	450
246-8078	450
246-8728	▶408
	457
246-8731	▶410
	457
246-8734	▶413
	457
246-8737	▶415
	457
246-8738	415
246-8743	538
246-8746	454
246-8747	410
	413
	415
246-8748	410
	413
246-8749	408
246-8752	454
246-8757	410
246-8761	415
246-8764	413
246-8772	408
246-8773	454
246-8774	415
246-8776	538
246-8777	538
246-8780	538
246-8781	538
246-8793	408
	410
	413
	415
246-8794	408
	410
	413
	415
246-8795	415
246-8796	415
246-8797	415
246-8800	408
	410
	413
	415
246-8801	410
	413
246-8804	410
246-9371	348
247-0733	722
	723
	724
	725
247-0737	720
247-2833	6
	9
	11
	▶153
247-2834	153
247-4993	422

▶ **PRIMARY REFERENCE**

PART NUMBER INDEX

Part	Page	Part	Page	Part	Page	Part	Page
247-9664	▶103	249-2308	▶549	249-7365	128	250-3507	520
	105		579		▶554		▶576
247-9665	6	249-3505	561	249-7366	128	250-3865	200
	8	249-4073	778		▶129	250-5613	583
	11	249-4089	540	249-7367	128		588
	▶105	249-4091	540		▶145		599
247-9730	150	249-4097	764	249-7368	▶70		605
248-0409	129	249-4099	285		128	250-5623	618
248-0716	7	249-4364	378	249-7789	222	250-5757	49
	9	249-5334	656		▶284	250-6148	699
	▶320		658		288	250-7012	96
248-0833	400		660	249-8575	810	250-7017	7
248-1484	▶488	249-5478	335		813		9
	489	249-5479	333	249-9170	1		11
248-1487	303	249-5480	266		▶795		▶96
248-1488	▶205		267	250-0154	1	250-8204	400
	303	249-5482	333		▶428		▶440
248-1496	223	249-5483	769	250-0159	1	250-8212	2
	277	249-5486	333		▶478		▶453
	281		345	250-0160	1	250-8213	1
248-1497	303	249-5487	337		▶482		▶448
	304	249-5488	324	250-0161	2	250-8279	318
248-1502	282	249-5493	345		▶195	250-8335	746
	288	249-5508	225	250-0162	2	250-9254	▶220
248-1503	207	249-5511	▶225		▶520		817
	223	249-5516	▶226	250-0172	5		818
	277	249-5636	653		▶500		821
	281	249-6531	1	250-0173	520	250-9257	▶219
248-2222	408		▶595	250-0366	149		715
	415	249-6532	1		▶150	250-9258	▶219
248-2226	408		▶643	250-0492	514		715
	415	249-6534	1	250-0890	2	250-9259	▶220
248-2284	376		▶642		▶365		551
248-2621	788	249-6537	1	250-0895	222		552
248-2924	716		▶630		▶369	250-9819	348
248-3164	▶785	249-6545	476	250-0899	▶368	250-9830	348
	788		▶562		551	251-0077	376
248-4220	709	249-6548	1		552	251-1005	65
248-4840	152		▶442	250-0900	▶395	251-1089	▶550
248-4841	152	249-6554	1		580	251-1133	369
248-5245	810		▶515	250-0902	268	251-1202	1
	813	249-6687	809		▶389		▶474
248-5352	▶156	249-6688	808	250-0951	404	251-1217	195
	157	249-6751	806	250-0952	413	251-1219	▶810
248-5358	374	249-7310	2	250-0953	404		817
248-5513	133		▶317	250-1096	▶373	251-1545	454
248-6174	655	249-7319	1		510	251-1668	664
248-6175	654		▶149	250-1097	4		666
248-6661	19	249-7321	▶806		▶253		668
248-6662	8	249-7322	1	250-1419	618		670
	12		▶151	250-1420	618		672
	▶18	249-7324	2	250-2138	458		674
248-6772	716		▶182	250-2139	418		676
248-9337	558	249-7325	1		420		678
249-0096	290		▶135		▶458		680
	▶300	249-7326	1	250-2172	284		682
249-0410	706		▶67	250-2282	474		684
249-0411	706	249-7327	1		▶476		686
249-0713	▶170		▶155	250-2283	1		688
	181	249-7328	5		▶497	251-1669	670
249-0937	706		▶806	250-2299	335		682
249-0938	707	249-7363	1		767		688
249-0981	631		▶128	250-2313	426	251-2006	5
249-2307	576	249-7364	128	250-2784	651		▶399
	▶579		▶148	250-3443	652	251-2035	5

▶ **PRIMARY REFERENCE**

PART NUMBER INDEX

Part	Page
	▶550
251-2247	762
	770
	771
	783
251-2252	772
251-2272	783
251-2273	783
251-2274	783
251-2275	783
251-4162	353
251-4314	63
251-4812	56
251-6668	103
251-6673	404
	452
251-6674	404
	452
251-8248	353
	729
251-8330	633
	▶694
251-9571	376
252-0741	635
252-0745	635
252-0978	▶499
	802
252-1607	317
252-1805	▶727
	779
	781
252-1807	779
252-1808	781
252-1825	772
252-1826	772
252-1862	733
	736
252-1863	733
	736
252-2157	810
	813
252-5188	54
252-5190	374
252-5224	345
252-5738	159
	161
	163
	165
	167
252-6185	6
	8
	11
	▶54
252-7089	701
252-7802	46
252-8038	635
	▶691
252-8226	▶580
252-8744	207
	277
	342
252-9628	283
	341
253-0861	807
253-1319	631
253-1320	581
	▶631
253-1461	12
	13
	14
	15
	16
	▶181
253-1789	769
	770
	771
253-1963	374
253-1964	288
	▶374
	728
253-1967	222
	▶376
	728
253-2111	378
253-3482	779
	781
253-3483	779
	781
253-3484	779
	781
253-3485	345
253-3489	345
253-3996	49
253-4115	788
253-4627	701
253-4628	701
253-4629	701
253-4635	701
253-4643	701
253-4670	795
253-4676	560
253-5303	404
253-5306	422
253-5307	▶454
	457
253-5322	404
253-5323	422
253-5413	440
253-7461	374
253-7931	▶443
	457
253-7939	▶438
	457
253-8330	303
	304
253-8407	2
	▶457
253-8427	457
	▶538
253-8428	▶422
	457
253-8429	▶404
	457
253-8868	713
	714
253-8967	278
253-8969	278
253-8981	278
254-0079	785
254-0312	415
254-3286	437
254-3304	453
254-3305	453
254-3937	664
254-3939	666
254-3944	38
	41
	42
254-3950	676
254-3951	680
254-4476	618
254-4486	618
254-4998	6
	8
	▶159
	▶161
	▶163
	▶165
254-4999	6
	8
	▶171
254-7973	440
254-9136	207
254-9951	284
255-0939	283
255-0941	284
255-1281	49
255-2322	522
255-2323	522
255-2328	522
255-2395	137
	138
255-2396	6
	9
	▶137
255-3482	369
255-3631	618
255-5044	482
255-5415	135
256-2907	▶341
	342
256-3233	469
256-3234	469
256-3235	465
	▶469
256-3314	462
	▶465
256-3325	▶462
256-4579	268
256-4580	268
256-4581	268
256-4582	268
256-5311	145
256-5719	268
256-5720	268
256-5721	268
256-5722	268
256-5732	268
256-6004	7
	9
	11
	▶157
256-6453	313
	314
256-6944	303
	304
256-7143	700
256-8730	382
256-9448	790
256-9651	54
257-1702	470
	472
257-2015	63
257-2758	561
257-3227	711
257-3462	▶796
257-3464	▶797
257-3466	1
	▶794
257-4095	43
	▶44
257-4183	▶397
257-4323	156
257-4930	1
	▶703
257-4931	703
257-4932	703
257-4941	2
	▶496
257-5022	632
257-5026	422
	▶460
257-5083	560
	▶569
257-5084	569
257-5085	569
257-6804	1
	▶560
257-6832	642
257-7224	2
	▶344
257-7500	2
	▶146
257-7669	496
257-8027	1
	▶202
257-8028	▶391
257-8414	633
	▶695
257-8897	576
257-9799	476
257-9839	59
257-9850	438
258-0651	1
	▶49
258-0883	159
	161
	▶331
258-4484	6
	8
	11
	▶117
258-4524	156
258-7561	408
258-7562	408
258-7563	410
258-7564	410
258-7565	413
258-7566	413

▶ **PRIMARY REFERENCE**

PART NUMBER INDEX

Part	Page
258-7593	303
	304
258-7598	303
	304
258-8452	256
	258
258-8453	256
	258
258-8721	90
	91
258-9981	561
259-0309	636
259-0310	637
259-2569	495
259-4468	703
259-4469	703
259-4470	703
259-4471	703
259-4472	703
259-4473	703
259-4500	1
	▶701
259-4758	758
259-4759	759
259-5418	581
	588
	597
	605
259-5419	581
	588
	597
	605
259-5824	155
259-5898	581
	588
	597
	605
259-6726	207
	▶353
259-6728	353
259-6896	655
	656
	661
	▶664
259-6903	655
	656
	661
	▶666
259-6907	655
	656
	661
	▶668
259-6909	656
	661
	▶670
259-6910	661
	▶672
259-6912	653
	654
	658
	660
	▶674
259-6913	654
	658
	660
	▶676
259-6914	658
	660
	▶678
259-6915	658
	▶680
259-7079	155
259-7138	400
259-9287	▶247
	273
	275
259-9288	▶248
	273
	275
260-0251	▶91
	92
260-0252	▶92
	101
260-0354	148
260-0723	49
260-0915	91
260-1406	6
	8
	11
	▶51
260-1570	155
260-1863	151
260-1864	151
260-1870	2
	▶382
260-1871	2
	▶378
260-1872	2
	▶393
260-1876	373
260-1882	368
260-1884	395
260-1888	202
260-1889	202
260-1905	3
	4
	▶254
260-1906	4
	▶255
260-1907	3
	4
	▶256
260-1908	4
	▶258
260-1909	268
	▶273
260-1910	268
	▶275
260-3041	772
260-3646	1
	▶558
260-3769	▶530
260-4855	38
	41
	42
260-6117	561
260-6478	268
260-6480	268
260-6501	649
260-6502	583
	590
	599
	607
	▶649
260-6612	135
260-6613	135
260-6908	67
260-7524	93
	94
260-7595	422
260-7596	415
260-7652	809
260-7653	808
260-9428	534
	▶535
260-9479	▶429
	457
261-0096	▶550
261-0097	▶551
261-0098	▶551
261-0117	▶222
261-0133	3
	4
	▶260
261-0134	4
	▶261
261-0135	3
	▶262
261-0136	3
	▶264
261-0137	3
	4
	▶265
261-1065	500
261-1067	500
261-1068	500
261-1502	▶233
	389
	391
261-1506	16
	▶80
261-1731	733
	736
261-2290	92
	▶93
261-2291	93
261-2293	94
261-2294	92
	▶94
261-2372	1
	▶557
261-2373	1
	▶559
261-3223	353
261-3224	729
261-3231	8
	▶56
261-3246	56
	57
	58
261-3259	684
261-3264	686
261-3268	653
	654
	658
	660
261-3270	655
	656
	661
	▶684
261-3271	655
	656
	661
	▶686
261-3272	550
	551
	▶655
261-3273	550
	552
	▶656
261-3274	551
	▶661
261-3278	550
	▶653
261-3281	550
	▶654
261-3283	551
	▶658
261-3345	785
261-3753	369
261-4377	810
	813
261-5524	733
	736
261-8555	573
261-8618	▶807
	810
	813
261-9391	227
262-0569	150
262-0595	118
	119
262-0596	6
	8
	11
	▶118
	▶119
262-0922	113
	115
262-0923	113
	115
262-0924	113
	115
262-0925	6
	8
	▶113
262-1408	357
262-1421	▶219
	227
262-1905	559
	▶566
262-1923	567
262-1924	566
262-1929	566
262-2017	▶288
262-2878	213
262-4961	345
262-5105	470
	472

▶ **PRIMARY REFERENCE**

PART NUMBER INDEX

Part	Page
262-5528	67
262-5842	70
262-5843	70
262-7898	2
	▶533
263-1058	563
263-1392	699
263-1649	408
	410
	413
	415
263-1650	410
	413
263-1775	522
263-2548	716
263-2553	707
263-2555	706
	▶707
263-2573	746
263-2576	764
263-3960	145
263-3962	145
263-3963	70
263-3968	70
263-3971	70
263-3993	148
263-3994	145
263-3996	129
263-3999	129
263-4002	129
263-4007	129
	▶131
263-4920	38
	42
263-5033	729
263-6885	378
263-6886	202
263-6888	382
263-6889	382
263-6890	202
263-6891	202
263-6893	369
263-6894	369
263-6901	810
263-6902	813
263-7429	405
263-9466	707
264-0034	113
	115
264-0575	440
264-1144	▶475
	476
264-1145	475
264-1150	476
264-1152	476
264-1153	476
264-1155	476
264-1158	476
264-1160	476
	▶561
264-1161	476
264-1163	476
	▶509
264-1164	509
264-1167	476
264-1168	476
264-1172	455
264-1176	455
264-1466	478
264-1469	478
264-1480	478
264-1481	478
264-3058	5
	▶801
264-3062	▶800
	801
	802
264-3171	341
264-3637	754
264-4288	110
	111
264-4297	312
	315
	316
	554
264-5346	233
264-5732	355
	363
264-7021	49
264-7029	167
	332
	348
	363
	422
264-7030	167
	363
	382
	384
264-7032	348
264-7961	433
	435
264-7962	470
	472
264-8231	403
265-1097	798
265-1098	798
265-1099	798
265-1113	76
	78
	80
265-1313	76
265-2829	433
	435
265-3244	18
265-3700	442
265-3701	442
265-3924	482
265-3927	482
265-5644	652
265-6710	1
	▶798
265-6713	798
265-6714	798
265-6716	798
265-6717	798
265-6718	798
265-6719	798
265-6720	798
265-6723	573
265-6725	1
	▶573
265-6737	705
265-6738	5
	▶705
265-7031	195
265-7434	707
265-7435	707
265-7454	706
265-8932	206
265-8933	206
265-8934	206
265-8935	764
265-8936	206
265-8937	▶206
	345
265-8941	758
	759
265-8942	▶540
	715
265-8943	▶774
	775
265-9360	482
266-0482	57
266-0483	57
266-1467	287
	▶293
	774
266-1595	554
266-1602	633
266-2522	188
266-3753	706
266-4296	2
266-4616	400
266-5813	▶615
	801
	802
266-5814	800
266-6050	470
	472
266-6479	499
266-7315	476
266-7713	131
266-8568	129
266-8804	618
266-9353	378
266-9357	378
266-9363	182
266-9727	455
266-9728	455
266-9729	455
267-0007	6
	8
	11
	▶106
267-0008	6
	8
	▶107
	▶108
267-0009	6
	▶13
267-0010	12
	13
	14
	15
	16
	▶19
	▶20
267-3088	12
	16
	▶398
267-3089	398
267-3181	715
267-3183	▶809
	817
267-3184	▶808
	817
	818
	819
	820
	821
267-3506	557
	559
	703
	800
267-3507	513
	705
267-3508	557
	703
267-3863	561
	▶570
267-3864	570
267-3865	570
267-5032	706
267-5033	▶709
	715
267-5034	709
	▶710
267-5257	570
267-7340	431
267-7347	431
267-8669	478
267-8671	478
267-8715	785
268-1605	182
268-2953	38
	41
	42
268-3299	118
	119
268-5743	703
268-6609	393
268-6686	6
	8
	11
	▶152
268-8082	353
268-8262	703
	705
268-8794	428
269-1014	641
269-2259	521
269-2860	65
269-2862	65
269-2864	65
269-2890	733
269-2892	733
	736
269-2893	733
	736

▶ **PRIMARY REFERENCE**

PART NUMBER INDEX

Part	Page	Part	Page	Part	Page	Part	Page
269-3277	284	271-3652	▶580	273-0344	750	274-2399	746
269-3303	284	271-3844	182	273-0350	533	274-4490	91
269-3304	284	271-5129	490	273-0942	711	274-5365	440
269-4799	530	271-5390	490	273-1719	374	274-6717	301
269-4839	530	271-6373	282	273-1871	653		382
269-4922	530		288		654	274-6718	300
269-5346	528	271-6847	645		655	274-6719	302
269-5348	511		▶692		656	274-6809	509
269-5351	501	271-7312	709		658	274-6810	509
269-5352	529	271-7839	630		660	274-6811	509
269-5353	526	271-7840	630		661	274-6832	131
	527	271-8528	440	273-1878	709	274-6833	131
269-5369	515	271-8529	440		▶750	274-6851	157
269-5767	403	271-8739	200	273-2455	433	274-6866	533
269-6941	▶510	271-8741	195		435	274-7395	289
269-8248	701		▶200	273-2456	433		▶315
269-8417	403	271-8752	195		435	274-7396	289
269-9486	618	272-0353	431	273-2457	403		▶316
269-9490	618	272-0354	618	273-2460	433	274-8312	581
269-9517	581	272-0389	20		435		588
	588	272-1346	501	273-2827	415		597
	597		▶516	273-2939	534		605
	605	272-1491	431		537	274-9254	530
269-9518	581	272-1623	733	273-2940	534		▶763
	588		736		537	274-9263	482
	597	272-1889	49	273-3001	2	275-0572	483
	605	272-2286	▶207		▶525	275-0645	554
269-9521	581		282	273-3010	525	275-0660	149
	588		288	273-3011	525	275-1253	163
	597	272-2956	131	273-4130	557		165
	605	272-2957	131	273-4131	542		167
269-9522	581	272-2958	70	273-4137	540		▶332
	588	272-2960	132	273-4139	540	275-2187	521
	597	272-2962	132	273-4141	540	275-2188	521
	605	272-2967	70	273-4244	618	275-2189	521
269-9523	581	272-2970	132	273-5924	374	275-2190	▶521
	588	272-2971	131	273-6311	525	275-3292	810
	597	272-2972	131	273-6312	525		813
	605	272-3206	70	273-7305	433	275-3376	342
270-0531	616	272-3239	70		435	275-3378	341
270-1178	597	272-3266	70	273-7306	433	275-4012	341
	605	272-4978	403		435	275-6332	618
270-1778	431	272-6836	618	273-7307	433	275-6574	651
270-3420	256	272-6840	618		435		▶652
	258	272-6841	618	273-8664	400	275-6575	652
270-3422	262	272-7239	202	273-8666	400	275-6631	115
	264		378	273-8667	400	275-7741	▶339
270-5411	515	272-7248	482	273-9589	581		340
270-6721	618	272-7250	482		588	275-7764	▶340
270-6722	618	272-8011	▶403		597		348
270-6941	470		433		605	275-8969	212
	472		435	274-1522	711		▶216
270-6942	470	272-8325	227	274-1523	711	275-8970	212
	472	272-8326	227	274-1525	▶706		▶216
270-6943	470	272-8327	746		709	275-9650	▶220
	472	272-8329	779	274-1527	710		345
270-6944	470	272-8442	719		▶711	276-0764	282
	472		▶720	274-1568	502		342
270-7538	557	272-9709	382	274-1691	128	276-1279	1
	▶567	272-9710	378		▶132		▶10
271-2178	382	272-9850	247	274-1707	151	276-1816	570
271-2811	722		248	274-2384	739	276-2632	497
	723	273-0338	707	274-2385	739	276-2633	497
	724	273-0339	707	274-2392	739	276-2634	497
	725	273-0343	750		764	276-3091	163

▶ **PRIMARY REFERENCE**

PART NUMBER INDEX

Part	Page	Part	Page	Part	Page	Part	Page
	165	277-8758	556		721	283-7746	622
276-3165	5	278-0668	207	281-2002	807	283-7748	618
	▶97		▶729	281-2003	807	283-7749	618
276-3176	800	278-0685	10	281-2004	807	283-7752	628
276-3276	200		▶336	281-2005	807	283-7756	748
276-3884	788	278-1154	707	281-2588	716	283-7757	616
276-4672	583		▶716	281-2590	716	283-7759	501
	588	278-1407	703	281-2725	197	283-7764	1
	599	278-1415	703		▶198		▶556
	605	278-1416	573	281-2925	154	283-7765	▶508
276-6146	284	278-1799	664	281-3136	214	283-7767	1
276-7222	78		666		721		▶628
	80		668	281-3137	214	283-7768	1
276-7286	530		670	281-4297	700		▶751
276-7338	530		672	281-4299	▶700	283-7769	1
276-8491	▶285		674		701		▶748
	767		676	281-4655	720	283-7770	550
276-8492	285		678	281-5882	182		551
276-8495	767		680	281-6805	525		552
276-8498	580		682	281-6806	525		▶616
	▶767		684	281-9356	540	283-7773	▶501
276-8500	767		686	281-9451	700		510
276-8548	290		688	282-0808	214	283-7774	1
	▶301		▶698		762		▶644
276-9015	707	278-3354	707	282-0882	448	283-7957	726
276-9067	167		750	282-3196	612	283-7958	726
	290	278-4210	767	282-3197	418	283-7959	715
	▶302	278-4876	440		445		▶726
276-9496	429	278-4890	478	282-5396	633	283-7960	224
276-9617	285	278-4891	478	282-5967	583		▶280
276-9622	746	278-7093	63		588	283-7980	713
277-0618	810	278-7448	554	282-7842	410		714
	813	278-7452	554	282-7895	502	283-8144	▶239
277-0690	173	278-8040	336	282-8527	618		255
277-0742	173	279-3360	▶207	282-8528	618		258
277-0750	482	279-5308	214	283-0597	711		261
277-1998	490		345	283-0598	711		264
277-1999	490	279-6521	597	283-0599	711	283-8145	▶240
277-2132	633		605	283-0600	711		253
	▶690		▶699	283-0601	711	283-9504	195
277-2156	173	279-6632	798	283-0602	711	283-9530	732
277-2159	158	279-8969	599	283-0823	502	283-9557	699
277-2166	128		607	283-1107	318	283-9570	699
	▶158	279-9828	308	283-1518	618	283-9777	618
277-2388	131	279-9829	309	283-1519	618	283-9778	619
277-2389	131	280-0947	633	283-1520	618	283-9781	619
277-3082	239	280-1033	806	283-1521	618	283-9806	182
	240		807	283-1522	618	283-9911	619
277-3628	1	280-1034	806	283-1524	612	284-2421	404
	▶173	280-1766	444	283-1578	560	284-2824	12
277-4434	61	280-2691	729		703		14
277-4435	6	280-3616	448	283-2238	153		▶190
	11	280-4244	345	283-4426	730	284-3555	664
	▶61	280-4438	400	283-5827	393		666
277-4844	195	280-6895	410	283-5828	393		668
277-5425	6	280-6896	413	283-6906	182		670
	11	280-6897	413	283-6910	182		672
	▶57	280-6898	415	283-7734	1		674
	▶58	280-6899	415		▶612		676
277-5435	492	280-6900	443	283-7735	1		678
277-6005	580	280-7477	783		▶618		680
	▶597	280-7478	783	283-7740	508		682
277-6993	195	281-0387	762	283-7742	542		684
277-8283	58	281-0390	762	283-7743	542		686
277-8574	521	281-0431	214	283-7744	542		688

▶ **PRIMARY REFERENCE**

PART NUMBER INDEX

Part	Page	Part	Page	Part	Page	Part	Page
284-3556	670	285-0347	444	286-2245	619		597
	682	285-0349	619	286-3017	283		605
	688	285-0350	619	286-5804	6	288-5364	581
284-3615	763	285-0351	619		▶14		588
284-3619	229	285-0352	619	286-8172	422		597
284-3623	345	285-0355	619	286-9124	288		605
284-3662	709	285-0356	619		728	288-5507	423
284-3757	▶251	285-0357	619		▶731	288-5508	370
284-3799	642	285-0358	619	286-9155	440	288-5509	370
284-4601	664	285-0359	619		470	288-5510	383
	666	285-0360	619		472	288-5512	393
	668	285-0604	448	287-0513	70	288-5514	389
	670		▶455	287-0514	70		391
	672	285-0605	455	287-1867	619	288-5520	378
	674	285-0606	455	287-1868	619	288-5521	378
	676	285-0609	448	287-1869	619	288-5522	378
	678		▶466	287-1870	619	288-5524	378
	680	285-0612	561	287-1871	619	288-5525	378
	682	285-0823	27	287-1872	619	288-5526	378
	684	285-2074	400	287-1874	619	288-5528	378
	686	285-2237	178	287-3049	74	288-5530	256
	688		179	287-3089	67		258
284-4602	664	285-2259	5	287-5839	444	288-5535	384
	666		▶495	287-6152	378	288-5962	400
	668	285-3374	542	287-6155	287	288-6075	619
	670	285-3375	501	287-6156	▶287	288-6112	581
	672	285-3381	619		382		588
	674	285-3692	733	287-7292	502		597
	676		736	287-7454	552		605
	678	285-6124	701		▶581	288-6113	581
	680	285-6125	701	287-8261	431		588
	682	285-7415	709	287-8262	▶431		597
	684	285-9296	628		440		605
	686	285-9298	542	287-8265	400	288-6228	195
	688	285-9299	542	287-8357	58	288-6307	474
284-5026	▶400	286-0132	▶303	288-0408	619		▶514
	448	286-0133	▶303	288-0460	751	288-7324	355
284-5028	400	286-0134	288	288-0735	798		363
	▶433		728	288-1402	346	288-7949	511
284-5029	433		▶730	288-1421	619	288-7952	511
284-5030	400	286-0274	214	288-3559	619	288-7953	511
	▶435	286-0277	721	288-3560	619	288-8594	501
284-5031	435	286-0323	346	288-3561	619	288-8599	619
284-5038	1		357	288-3717	703	288-9560	619
	▶513	286-0667	619	288-3883	470	288-9614	1
284-5170	284	286-0669	619		472		▶418
284-6068	1	286-0681	466	288-4543	581	288-9615	1
	▶494		▶470		588		▶444
284-6069	494	286-0682	466		597	288-9673	597
284-8379	273		▶472		605		605
	275	286-0683	470	288-4544	581	288-9675	444
284-8533	227		472		588	288-9679	444
284-8576	155	286-0684	470		597	288-9680	628
284-8959	470		472		605	288-9681	418
	472	286-1301	1	288-4545	581		420
284-8960	470		▶492		588	288-9682	418
	472	286-1302	492		597		420
284-9556	470	286-1605	482		605	288-9685	619
	472	286-2231	545	288-4546	581	288-9686	619
284-9557	470	286-2232	545		588	288-9688	619
	472	286-2237	501		597	288-9689	619
285-0332	619	286-2243	581		605	288-9795	619
285-0333	619		588	288-5161	751	289-0487	205
285-0335	619	286-2244	581	288-5211	581	289-0488	205
285-0344	508		588		588	289-1176	619

▶ **PRIMARY REFERENCE**

PART NUMBER INDEX

Part	Page	Part	Page	Part	Page	Part	Page
289-1177	620		240		281		658
289-2029	620		242	292-0309	222		660
289-2052	620		243		728		661
289-2053	620		244		▶732	292-9221	653
289-2054	620	290-8568	108	292-0310	▶281		654
289-2055	620	290-8996	239	292-0311	730		655
289-2056	620		240		732		656
289-2057	620	291-0996	410	292-0484	78		658
289-2058	620	291-1348	554		80		660
289-2059	620	291-1915	341	292-0609	▶713		661
289-2060	620	291-2939	242		783	292-9252	142
289-2061	620		244	292-0611	713		▶143
289-2062	620	291-2941	244		714	292-9277	703
289-2063	620	291-2943	242	292-0612	713	292-9390	389
289-2422	620		243		714	292-9391	389
289-2935	564	291-4038	1	292-0614	713	292-9680	1
	570		3		714		▶121
289-2946	564		▶266	292-0617	▶714	292-9681	121
	570	291-4039	3		783	292-9761	121
289-3054	562		▶267	292-0618	713	293-0381	444
	▶572	291-6268	501		714	293-0382	444
289-3055	572	291-6269	501	292-0840	620	293-0773	303
289-4112	6	291-6271	501	292-0889	444	293-0818	143
	8	291-6299	1	292-0908	▶277		▶144
	11		▶115		281	293-2257	202
	▶175	291-6388	135	292-1200	144	293-3822	810
	▶177	291-6875	433	292-2033	▶636		813
	▶178		435		655	293-4200	715
	▶179	291-6905	144		656		▶764
289-5150	167	291-8043	511		661	293-4267	520
289-8449	283	291-8094	482	292-2034	▶637		▶651
	341	291-8095	482		653	293-4455	800
289-8558	444	291-8099	418		654	293-4456	801
290-0594	660		420		658		802
	▶688	291-8500	482		660		▶803
290-2014	321	291-8501	482	292-2314	616	293-4471	803
290-2015	272	291-9154	754	292-2560	490	293-5370	431
290-2016	229		758	292-2564	490	293-5895	49
	▶272		759	292-4086	526	293-5896	49
290-2018	272	291-9518	552		527	293-7854	800
290-2543	433		▶660	292-4252	573	293-7855	800
	435	291-9773	530	292-4311	501	293-9136	334
290-2544	400	291-9774	530	292-4578	525	293-9397	32
290-2688	516	291-9777	530	292-4819	97	294-0668	511
290-3029	495	291-9778	530	292-5072	▶641	294-0670	501
290-3031	495	291-9779	530		644	294-0672	501
290-3263	404	291-9780	530	292-5658	494	294-0673	501
290-3491	478	291-9790	▶522	292-5659	494	294-0674	502
290-3785	28		530	292-5889	703	294-0675	501
290-3922	470	291-9812	522	292-7971	▶282	294-0676	501
	472	291-9814	522	292-7972	▶282	294-0677	501
290-4050	400	291-9821	173	292-7975	▶728	294-0678	501
290-4134	423	292-0232	444	292-7980	▶728	294-0679	501
290-4328	620	292-0281	▶269	292-8054	720	294-0681	501
290-4329	620		281	292-8615	521	294-0683	501
290-4330	620	292-0285	281	292-8617	521	294-0684	501
290-4331	620		▶282	292-8703	720	294-0687	501
290-5749	▶246	292-0291	282	292-8705	720	294-0689	501
	266		▶283	292-8706	720	294-0690	501
290-7022	748		288	292-8740	545	294-0691	501
290-7514	453	292-0292	282	292-8741	444	294-0986	746
290-8074	556		▶283	292-8790	501	294-0992	746
	▶563	292-0301	▶281	292-9220	653	294-0993	746
290-8075	563	292-0302	269		654	294-0994	715
290-8160	239		▶277		655		▶786

▶ **PRIMARY REFERENCE**

PART NUMBER INDEX

Part	Page
294-0995	715
	▶746
294-1001	779
	781
294-1002	764
294-1004	764
294-1012	786
294-1014	786
294-1015	786
294-1018	786
294-1021	733
294-1022	736
294-1023	715
	▶733
294-1024	1
	▶736
294-3622	597
	605
294-5140	530
294-5141	530
294-8055	653
	654
	655
	658
	660
	661
294-9580	561
294-9701	576
294-9702	576
294-9836	513
295-1043	736
295-1049	736
295-1050	736
295-1113	736
	▶790
295-1114	733
	▶792
295-1115	790
295-1116	792
295-1117	790
295-1118	792
295-1119	792
295-1120	▶760
	788
295-1200	733
295-1201	733
295-1202	733
295-2275	779
	781
295-2590	470
	472
295-3839	482
295-5648	733
	736
295-5649	736
295-5665	733
	736
295-6390	736
295-6391	736
295-6393	733
295-6405	736
295-6406	733
295-7918	437
295-8369	374
295-8370	374
295-8381	374
295-8491	642
295-8930	268
295-8963	376
295-9188	502
295-9259	186
	190
	▶191
	192
295-9260	189
295-9879	▶284
295-9880	223
	▶342
296-0011	5
	▶518
296-0012	5
	▶519
296-0662	502
296-1067	374
296-2991	733
296-3447	187
	190
	192
	193
	194
296-3529	▶802
296-4040	733
	736
296-4109	733
296-4922	376
296-4924	733
	736
296-4925	346
296-5270	633
	635
296-8274	470
	472
297-0760	338
297-1711	155
297-2539	476
297-2828	538
297-2830	538
297-3246	743
297-4131	764
297-4133	764
297-4134	772
297-4139	739
297-4140	739
297-4143	772
297-4145	764
297-4147	783
297-4148	783
297-4149	764
297-4151	746
297-4152	772
297-4153	764
297-4154	772
297-4157	767
297-4158	767
297-4160	764
297-4161	764
297-4162	764
297-4169	733
	736
297-4170	764
297-4171	746
297-4276	682
298-0602	▶268
298-0603	5
	▶268
298-2011	151
	182
298-5444	97
298-5446	97
298-5447	97
298-5448	97
298-5455	97
298-5456	97
298-5458	97
298-5632	▶813
	817
	818
	819
	820
	821
298-7472	97
298-7473	97
298-7474	97
299-0874	550
	551
	552
	▶721
299-0876	▶214
	550
299-0877	214
	721
299-0881	214
	721
	▶762
299-1020	736
299-1021	733
299-1030	762
299-1427	495
299-1660	733
	736
299-3418	97
299-3419	97
299-3420	97
299-3421	97
299-3422	97
299-8018	195
299-8231	155
299-8905	404
300-1274	▶745
300-1275	5
	▶743
300-1379	482
300-1711	726
300-1870	▶787
300-1871	787
300-1872	787
300-3086	80
300-4231	709
300-6497	275
300-7693	743
300-7909	374
300-7926	623
300-9805	290
	▶308
300-9806	290
	▶309
301-0589	227
301-2262	9
	12
	15
	▶192
	▶193
	▶194
301-2265	6
	▶15
301-2311	287
301-4178	628
301-4568	636
301-5180	384
301-6343	177
	178
301-6785	530
301-6786	530
301-9270	533
302-0359	▶220
	818
	819
302-0360	▶221
	819
	820
302-0361	▶221
	820
	821
302-0362	▶221
	821
302-3908	612
302-4219	▶817
302-4220	▶817
302-4221	▶817
302-4222	▶817
302-4223	▶818
302-4224	▶818
302-4225	▶818
302-4226	▶818
302-4227	▶819
302-4228	▶819
302-4229	▶819
302-4230	▶819
302-4231	▶820
302-4232	▶820
302-4233	▶820
302-4234	▶820
302-4235	▶821
302-4236	▶821
302-4237	▶821
302-4537	49
302-5136	▶821
302-5636	444
302-5697	445
302-6331	703
302-6333	703
302-6343	703
302-6548	618
302-8255	501
302-9088	770
	771

3

▶ **PRIMARY REFERENCE**

PART NUMBER INDEX

Part	Page	Part	Page	Part	Page	Part	Page
302-9089	769	306-9214	770	310-5233	478		194
302-9090	769		771	310-5234	478	317-1009	400
302-9124	487	306-9215	770	310-5238	478	317-3146	612
303-1382	▶32		771	310-5479	557	317-6526	▶223
	33	306-9501	790		559	317-7684	241
303-1383	▶33		792	310-5480	557	317-7685	243
	34	307-0016	769		559	318-2140	1
303-1384	▶34	307-0047	808	310-7318	463		▶487
	35		809		▶465	318-3040	664
	37	307-0150	770	310-7336	▶463		666
303-1927	542		771	310-7636	273		672
303-3363	14	307-0155	222	310-7637	273		676
	▶37		▶224		275		678
303-4429	501	307-1959	573	311-1932	476		680
303-5013	526	307-1960	573	311-1933	476		688
303-5014	527	307-1961	573	311-1956	523	318-3052	670
303-5952	355	307-1962	573		524		682
303-5976	501	307-1965	573	311-3383	715	318-3115	664
303-7503	674	307-2079	748	311-4911	770		666
303-8685	522	307-2671	35	311-7500	523		668
303-9456	764		83		524		670
304-4248	516		152	311-8290	455		672
304-4255	516	307-2673	84	311-8412	502		676
304-4257	516		167	311-8413	502		682
304-4258	516	307-3245	511	312-1714	783		684
304-4259	516		526	312-3657	501		686
304-4264	516		527		▶526	318-8184	595
304-4266	516		528	312-3658	501	318-9831	501
304-4267	516		529		▶527	319-0270	101
304-4273	516	307-4611	408	312-3686	501	319-0271	101
304-4275	516	307-6273	570		▶528	319-1452	612
304-4277	516	308-1845	564	312-4153	772	319-1617	224
304-5097	612		570	312-6371	3		▶770
304-5107	612	308-2129	246		▶523	319-1877	619
304-5687	216	308-3535	▶511	312-8629	697	319-1885	619
	422	308-3540	492	313-2152	346	319-1904	445
304-7787	478	308-3869	220	313-3997	30	319-2305	483
304-8008	126	308-4358	779	313-5270	518	319-5079	9
	133		781		519		11
304-8032	455	308-6303	703	313-5271	518		▶138
305-0617	▶46	308-6304	703	313-9200	378	319-6234	74
	47	308-6358	▶38	313-9557	810		103
305-0618	12		44		813	319-7379	▶242
	15	308-8620	764	314-3323	224		267
	16	309-3888	400		▶769	319-7380	▶243
	▶47	309-4094	365	314-4018	718		267
305-2230	454	309-4183	492	314-4860	3	319-7381	▶244
305-3333	448	309-4184	492		▶524		267
305-3347	431	309-4186	492	314-9284	182	319-7384	239
305-3348	431	309-4187	492	315-0056	478		240
305-8618	616	309-6984	256	315-1251	▶241		242
305-9194	792		258		266		243
305-9195	790	309-6994	445	315-6094	538		244
306-4148	404	309-7648	516	315-6626	478	320-8117	632
306-4420	620	309-7651	503	315-6717	173	320-9861	346
306-5143	619	309-8747	149	315-6718	173	321-1455	▶303
306-5624	431	309-9812	365	315-7826	525	321-1456	303
306-5632	431	309-9814	365	316-2555	478		▶304
306-5633	431	309-9892	502	316-5382	452	321-1458	303
306-5637	431	310-2078	5	316-5384	452		▶489
306-8127	195		▶232	316-5385	▶452	321-3884	482
306-8172	7	310-2088	232		457	321-4351	482
	9	310-2654	478	316-6136	556	321-5236	785
	▶359	310-3221	▶222	316-6137	556	321-5639	21
	▶361		457	316-6863	187	321-5665	482

▶ **PRIMARY REFERENCE**

PART NUMBER INDEX

Part	Page
321-5666	482
321-5967	439
	579
321-6706	771
321-6908	674
321-6974	482
321-6987	▶337
	552
	553
321-7866	59
321-8649	103
321-8671	167
321-8675	167
321-9712	770
322-0329	78
	80
322-0439	482
322-0440	482
322-0444	482
322-0445	482
322-0446	482
322-0447	482
322-2924	378
322-3798	588
	597
	605
	▶632
322-3834	▶771
322-6674	707
322-6675	707
322-8602	129
322-9746	496
322-9747	496
322-9748	496
322-9749	496
323-1682	8
	11
	▶25
323-3730	754
323-3933	413
323-3935	413
323-8139	▶288
323-8140	▶222
323-8851	798
323-9531	459
324-2694	222
	288
324-6125	707
324-8176	212
324-9280	433
	435
325-1258	764
325-1260	764
325-2588	664
	666
	668
	670
	672
	674
	676
	678
	680
	682
	684
	686
	688
325-4505	20
	▶21
325-9400	742
326-0610	482
326-0612	482
326-1352	80
326-1644	169
326-9380	149
327-3871	370
327-3872	370
328-3655	439
	444
328-4984	733
328-4985	736
328-5399	▶490
328-5492	733
	736
328-7075	540
328-7076	540
328-8313	630
328-8411	595
328-8755	707
328-9667	433
	435
329-3061	63
329-3707	195
329-3730	▶334
	552
329-5511	179
329-5706	810
	813
329-5707	810
	813
329-8825	490
329-8829	490
329-8834	490
329-8836	490
329-8840	490
329-8843	490
329-8845	490
329-8847	490
329-8849	490
329-8850	490
329-8851	490
330-7853	433
	435
330-9732	167
331-5007	38
	41
	42
331-5008	38
	41
	42
331-5009	38
	41
	42
331-5010	38
	41
	42
331-5011	38
	41
	42
331-5292	776
	▶777
331-7530	▶728
331-9731	734
	736
332-2152	46
332-3707	21
332-9268	490
333-0676	529
333-0677	501
	▶529
333-2694	552
333-3751	764
333-6432	438
	▶439
333-8153	729
333-9310	▶402
	439
334-2679	402
334-2680	402
334-7786	719
334-8049	▶250
	389
	391
335-3976	167
335-9214	126
336-3545	227
	▶281
336-3566	281
336-4806	▶284
336-4808	284
336-4867	379
336-7235	235
	236
336-9202	146
336-9512	501
337-0072	346
337-8764	346
338-0718	146
338-1132	▶252
338-3540	579
338-9240	778
339-6543	754
340-4395	▶552
340-7076	754
341-1429	126
341-2114	581
341-2115	581
341-2780	583
341-2781	583
342-4397	▶41
342-8961	715
	▶783
342-9559	282
342-9971	723
	725
343-1824	▶338
	759
343-5527	169
343-6499	764
343-6500	764
343-8739	538
344-0051	481
344-0053	2
	▶481
344-1772	481
344-1773	481
344-7561	28
344-7562	29
345-1237	146
345-1999	404
345-2889	618
345-3752	▶42
	46
345-7209	568
346-4372	732
346-4791	151
346-4897	123
346-6830	612
346-6901	540
	▶775
347-1355	365
347-1668	353
347-8616	404
348-0421	633
348-3537	5
	▶552
348-6995	719
	▶722
348-7240	247
	248
348-7889	49
348-9263	▶536
	537
349-2556	▶1
349-3309	426
349-3313	126
349-4462	▶11
349-5188	1
	▶448
349-6143	448
349-6144	1
	▶437
349-6281	146
349-6967	219
	220
349-6988	219
	220
350-0149	129
350-9171	182
351-0925	470
	472
351-4424	754
351-4425	754
351-4483	754
351-4484	754
351-4485	754
351-4489	754
351-4490	5
	▶754
351-4491	754
351-5962	346
351-5963	348
351-7026	▶345
	715
351-9918	235
	236
352-3808	▶2
	5
352-3810	▶3
352-3811	▶3
352-3813	▶3

▶ **PRIMARY REFERENCE**

PART NUMBER INDEX

Part	Page
352-3815	▶5
352-3817	▶5
352-3819	▶5
352-3820	▶2
352-3821	▶3
352-3822	▶4
352-5517	422
353-2604	612
	▶633
353-2605	618
	▶635
353-2794	283
353-4515	382
353-5124	126
	426
353-5125	126
	143
353-5126	133
353-5140	46
	133
	137
	138
353-5144	426
353-9488	483
354-0048	363
354-1627	463
354-5779	483
354-5783	483
354-8028	229
354-8463	▶552
354-8468	588
	597
	605
354-8469	588
	597
	605
355-5085	365
355-5086	365
355-5087	366
355-5088	366
355-5105	219
355-7194	8
	▶29
355-7411	775
355-9341	751
355-9764	219
356-0841	422
356-0955	63
356-2953	1
	▶542
356-2976	448
	▶545
356-2980	▶420
	448
356-3607	▶723
356-3609	▶724
356-7515	252
356-8382	8
	11
	▶167
357-0523	9
	11
	16
	▶290
357-0524	9
	11
	▶363
357-0673	167
357-1088	▶534
357-1089	5
	▶537
357-6277	383
357-9151	346
	▶719
358-3851	382
358-4889	343
358-4931	214
	721
358-4932	214
358-6192	222
358-6193	222
358-7810	219
358-7811	219
359-0362	▶16
	17
359-0363	8
	▶17
359-2893	▶4
359-2894	▶4
360-1598	754
360-2987	719
	▶725
360-4432	775
360-6937	781
360-6938	779
360-7545	220
360-7546	220
360-7547	220
360-7548	220
360-7549	221
360-7550	221
360-7551	221
360-7552	221
360-7553	221
360-7554	221
361-3059	637
366-3374	▶553
366-3375	▶580
366-3383	553
	▶588
366-3384	580
	▶605

▶ PRIMARY REFERENCE



© 2010 CATERPILLAR
ALL RIGHTS
RESERVED

CAT, CATERPILLAR, THEIR RESPECTIVE LOGOS, “CATERPILLAR YELLOW” AND THE POWER EDGE TRADE DRESS, AS WELL AS CORPORATE AND PRODUCT IDENTITY USED HEREIN, ARE TRADEMARKS OF CATERPILLAR AND MAY NOT BE USED WITHOUT PERMISSION.

PRINTED IN
U.S.A.