SEBP7270
July 2015

RUTHZIL TRATOR COMERCIAL DE PEÇAS LTDA 11 97083-6812 ROLANDO CITRANGULO

Parts Manual

16M Series 3 Motor Grader

E9Y1-Up (Machine)
TXX1-Up (Engine)
DM31-Up (Transmission)

Powered By C13 Engine

Product and Dealer Information

Note: For product identification plate locations, see the section “Product Identification Information” in the Operation and Maintenance Manual.

Delivery Date: _____

Product Information

Model: _____

Product Identification Number: _____

Engine Serial Number: _____

Transmission Serial Number: _____

Generator Serial Number: _____

Attachment Serial Numbers: _____

Attachment Information: _____

Customer Equipment Number: _____

Dealer Equipment Number: _____

Dealer Information

Name: _____ Branch: _____

Address: _____

_____

_____

	Dealer Contact	Phone Number	Hours
Sales:	_____	_____	_____
Parts:	_____	_____	_____
Service:	_____	_____	_____

MEMORANDA

TABLE OF CONTENTS

NAME	PAGE
GENERAL INFORMATION	**A6**
REPAIR ALTERNATIVES	**A9**
SUPPLEMENTAL COOLANT ADDITIVES	A10
MAINTENANCE PARTS	**A11**
INDEX	**A15**
MACHINE ARRANGEMENT	**1**
STRUCTURE AR	1
COMMON AR	1
OPTION AR-CAB	1
OPTION AR-HYDRAULIC	2
OPTION AR-LADDER	2
OPTION AR-LIGHTING	4
SPECIAL AR	4
ENGINE ARRANGEMENT	**5**
ENGINE AR	5
ENGINE AR-COMPLETE	6
ENGINE AR-CORE	9
INSTALLATION AR-ENGINE	9
BASIC ENGINE	**10**
ACTUATOR AS-VALVE	10
ACTUATOR GP-VALVE	11
BASE GP-VALVE COVER	12
CAMSHAFT GP	14
COVER GP-CYLINDER BLOCK	16
COVER GP-FLYWHEEL HOUSING	17
COVER GP-FRONT HOUSING	18
COVER GP-SOUND SUPPRESSION	20
COVER GP-VALVE MECHANISM	21
CRANKSHAFT GP	22
CYLINDER BLOCK AS	24
CYLINDER BLOCK GP	27
CYLINDER HEAD AS	29
CYLINDER HEAD GP	31
DAMPER GP	34
FASTENER GP-CYLINDER HEAD	35
FLYWHEEL GP	36
GEAR GP-REAR	37
HOUSING GP-FLYWHEEL	38
HOUSING GP-FRONT	40
LIFTER GP-VALVE	42
LIFTING GP-ENGINE	43
MOUNTING GP-ALTERNATOR & COMPR	44
MOUNTING GP-ENGINE & XMSN	46
MOUNTING GP-FAN DRIVE	48
MOUNTING GP-VALVE MECHANISM	49
PAN GP-OIL	50
PISTON & ROD GP	53
PLUG GP-CYLINDER BLOCK	55
PLUG GP-ENGINE	59
ROCKER ARM GP	60
SEAL GP-CRANKSHAFT	64
SUPPORT GP-ENGINE	65
VALVE MECHANISM GP	66
LUBRICATION SYSTEM	**68**
BREATHER GP	68
FILLER GP-ENGINE OIL	69
FILTER GP-ENGINE OIL	73
FUMES DISPOSAL GP	75
GAUGE GP-OIL LEVEL (DIPSTICK)	76
LINES GP-TURBOCHARGER OIL	79
OIL CHANGE GP-HIGH SPEED	80
PUMP GP-ENGINE OIL	81
COOLING SYSTEM	**84**
COOLER GP-ENGINE OIL	84
COOLING AR	85
FAN GP-SUCTION	86
HOUSING & REGULATOR GP	88
LINES GP-WATER	89
PLUG GP-ENGINE OIL COOLER	94
PLUG GP-WATER LINES	95
PUMP GP-WATER	97
RADIATOR GP	100
TANK GP-COOLANT	101
AIR INLET AND EXHAUST SYSTEM	**103**
AFTERCOOLER GP-AIR	103
AIR CLEANER GP	104
BRACKET GP-SUPPORT	106
LINES GP-AIR	107
MANIFOLD GP-EXHAUST	110
MANIFOLD GP-INLET	111
MUFFLER GP	112
PRECLEANER AS	114
TURBOCHARGER GP	115
FUEL SYSTEM	**117**
BASE GP-FUEL FILTER	117
FILTER & LINES GP-FUEL	118
FILTER GP-FUEL	120
FILTER GP-WATER SEP & FUEL	121
INJECTOR GP-FUEL	122
LINES GP-FUEL	123
MOUNTING GP-FUEL FILTER	131
PUMP GP-FUEL INJECTION	132
PUMP GP-FUEL PRM & WATER SEP	133
PUMP GP-FUEL TRANSFER	134
REGULATOR GP-FUEL PRESSURE	136
TANK AR-FUEL	138
TANK GP-FUEL	140
VALVE GP-CHECK	142

TABLE OF CONTENTS

NAME	PAGE
VALVE GP-FLUID SAMPLING	143
ELECTRICAL AND STARTING SYSTEM	144
ALARM GP	144
ALTERNATOR GP-CHARGING	145
APPLICATION GP-MONITOR	149
BATTERY & WIRING GP	150
BOX & MTG GP-OBJECT DETECTION	155
BOX GP-OBJECT DETECTION	156
CAMERA GP	157
CONTROL & MTG GP-ELECTRONIC	158
CONTROL & MTG GP-IMPLEMENT	159
CONTROL GP-COMMUNICATION	160
CONVERTER GP-ELECTRICAL	164
ELECTRICAL AR	167
ELECTRONICS GP-COMMUNICATION	168
ELECTRONICS GP-IMPLEMENT	169
ELECTRONICS GP-MACHINE	169
ELECTRONICS GP-MONITOR	170
ELECTRONICS GP-POWER TRAIN	171
GRADE CONTROL GP	172
HARNESS AS-CAB	173
HARNESS AS-CONTROL	177
HARNESS AS-ENGINE	178
HARNESS AS-FRONT	179
HARNESS AS-FUEL TANK	181
HARNESS AS-LIGHTING	181
HARNESS AS-RADIO	182
HARNESS AS-REAR	183
HARNESS AS-REAR LIGHTING	186
HARNESS AS-SENSOR	187
HARNESS AS-SOLENOID	190
HARNESS AS-SWITCH	191
HARNESS AS-THERMOSTAT	192
HARNESS AS-TRANSMISSION	193
HARNESS AS-VALVE	193
HARNESS AS-WIRING	194
HEATER GP-JACKET WATER	197
INSTALLATION AR-COMMUNICATION	199
INSTALLATION GP-SECURITY	200
INSTALLATION GP-WARNING BEACON	202
KIT-RETROFIT	203
LAMP GP-DOME	205
LAMP GP-FLOOD	206
LAMP GP-HEAD	211
LAMP GP-HEAD & SIGNAL	213
LAMP GP-WARNING BEACON	215
LIGHTING AR-FLOOD	216
LIGHTING AR-ROADING	216
LIGHTING GP-FLOOD	218
LIGHTING GP-FLOOD & HEAD	227
LIGHTING GP-ROADING	228
MOTOR GP-ELECTRIC	230
MOUNTING GP-LIGHTING	231
MOUNTING GP-WIRING	235
PLATE AS-BRUSH	236
POWER SUPPLY GP	237
RADIO GP-COMMUNICATION	238
SENSOR & MOUNTING GP	240
SENSOR & MTG GP-POSITION	241
SENSOR GP-COOLANT LEVEL	242
SENSOR GP-ENGINE	243
SENSOR GP-POSITION	245
SENSOR GP-PRESSURE	246
SENSOR GP-SPEED	249
SENSOR GP-TEMPERATURE	254
STARTING AID GP-ETHER	257
STARTING MOTOR GP-ELECTRIC	259
SWITCH AS-TOGGLE	264
SWITCH GP-BYPASS	265
SWITCH GP-DISCONNECT	266
SWITCH GP-LIMIT	267
SWITCH GP-MAGNETIC	268
SWITCH GP-ROADING	270
SWITCH GP-WIPER	272
WIRING GP-ALTERNATOR	274
WIRING GP-BLADE	278
WIRING GP-CAB	280
WIRING GP-CAMERA	286
WIRING GP-ELECTRONIC CONTROL	288
WIRING GP-FRONT	292
WIRING GP-GRADE CONTROL	299
WIRING GP-LUBRICATION	303
WIRING GP-PANEL	304
WIRING GP-REAR	307
WIRING GP-REAR LIGHTING	317
WIRING GP-SENSOR	324
WIRING GP-UNIT INJECTOR	327
POWER TRAIN	**328**
AXLE AR-FRONT	328
AXLE AR-FIXED & OSCILLATING	328
AXLE GP-FRONT	329
AXLE GP-REAR	333
CARRIER GP-FINAL DRIVE	335
CASE & PARTS GP-PLANETARY	336
CHAIN GP-DRIVE	340
CLUTCH GP-TRANSMISSION	341
CONTROL GP-DIFFERENTIAL LOCK	350
CONTROL GP-TRANSMISSION HYD	352
COOLER GP-TRANSMISSION OIL	355
COUPLING GP-TORSIONAL	357
COVER GP-SHIPPING	358
DIFFERENTIAL & BEVEL GEAR GP	360

TABLE OF CONTENTS

NAME	PAGE
DIFFERENTIAL GP	362
DRIVE GP-FINAL	364
FILLER GP-POWER TRAIN OIL	366
FILTER GP-OIL	367
GEAR GP-FRONT	370
LINES GP-TRANSMISSION OIL	371
MOTOR GP-PISTON	375
MOUNTING GP-WHEEL	376
POWER TRAIN AR	376
PUMP GP-GEAR	377
ROTATING GP-PUMP	380
SCREEN GP-MAGNETIC	382
SHAFT GP-DRIVE	383
SHAFT GP-INPUT	384
SWASHPLATE GP	385
TANDEM & COVER GP	386
TRANSMISSION AR	388
UNIVERSAL JOINT GP	389
VALVE & MTG GP-SOLENOID	392
VALVE GP-MODULATING	393
VALVE GP-RELIEF	398
VALVE GP-SOLENOID	400
WHEEL & TIRE AR	401
WHEEL & TIRE GP	402
WHEEL AR	404
WHEEL GP	405
FRAME AND BODY	**408**
BUMPER GP-FRONT	408
COVER GP-ACCESS	409
COVER GP-CONTROL VALVE	410
DOOR GP-ACCESS	414
ENCLOSURE AR	424
ENCLOSURE GP-ENGINE	425
FASTENER GP-ENCLOSURE	429
FASTENER GP-HANDRAIL	431
FENDER & SUPPORT GP	434
FENDER GP-REAR	436
FRAME AR	439
FRAME GP-FRONT	440
FRAME GP-REAR	441
GUARD GP-AXLE	442
GUARD GP-BOTTOM	443
GUARD GP-DEBRIS	444
HANDHOLD GP	445
HANDRAIL GP	447
HITCH GP-ARTICULATING	455
HITCH GP-TOWING	457
HOOD GP	458
LADDER AR	459
LADDER GP	460
LINES GP-AUTOMATIC LUBRICATION	463
LINES GP-LUBRICATION	471
LINK GP-STEERING	473
LUBRICATION AR-AUTOMATIC	474
MOUNTING GP-AXLE	477
MOUNTING GP-VALVE	479
PANEL GP-SOUND SUPPRESSION	480
PLATE GP-PUSH	481
PUMP GP-LUBRICATION	482
SHIELD GP-ENGINE COMPARTMENT	483
STEP GP	484
SUPPORT GP-PLATFORM	487
SUPPORT GP-RADIATOR	488
SUPPRESSION GP-SOUND	491
TANK & PUMP GP-LUBRICATION	493
VALVE GP-LUBE DISTRIBUTION	496
WALKWAY GP	505
BRAKING SYSTEM	**511**
ACCUMULATOR & MTG GP-BRAKE	511
ACCUMULATOR GP	514
ACCUMULATOR GP-BRAKE	516
BRAKE GP-PARKING	520
BRAKE GP-SERVICE	522
CONTROL GP-SERVICE BRAKE	526
LINES GP-SERVICE BRAKE	528
HYDRAULIC SYSTEM	**535**
ACCUMULATOR & MTG GP-HYDRAULIC	535
ACCUMULATOR AR-BLADE CUSHION	537
ACCUMULATOR GP-HYDRAULIC	538
BASE GP-OIL FILTER	540
CONTROL AR-HYDRAULIC	545
COOLER GP-HYDRAULIC OIL	546
CYLINDER & MTG GP-ARTICULATION	547
CYLINDER & MTG GP-BLADE LIFT	549
CYLINDER & MTG GP-BLADE TIP	551
CYLINDER & MTG GP-CENTERSHIFT	552
CYLINDER & MTG GP-SIDESHIFT	553
CYLINDER & MTG GP-STEERING	554
CYLINDER & MTG GP-WHEEL LEAN	556
CYLINDER GP-ARTICULATION	557
CYLINDER GP-BLADE TIP	558
CYLINDER GP-CENTERSHIFT	559
CYLINDER GP-LIFT	561
CYLINDER GP-RIPPER	562
CYLINDER GP-SIDESHIFT	563
CYLINDER GP-STEERING	565
CYLINDER GP-WHEEL LEAN	569
DRIVE GP-CIRCLE	571
FILTER & MTG GP-HYDRAULIC	575
FILTER GP-OIL	576
FLOAT AR-BLADE	578
HYDRAULIC AR	578

TABLE OF CONTENTS

NAME	PAGE
LINES GP-ACCUMULATOR	579
LINES GP-CENTERSHIFT LOCK	587
LINES GP-HYDRAULIC FAN	589
LINES GP-IMPLEMENT	591
LINES GP-PUMP	594
LINES GP-RIPPER	602
LINES GP-SECONDARY STEERING	605
LINES GP-STEERING	606
LOCK GP-CENTERSHIFT	609
MANIFOLD GP-CONTROL	610
MANIFOLD GP-HYDRAULIC	615
MANIFOLD GP-VALVE	617
MOTOR GP-GEROTOR	620
PUMP & MOTOR GP-SEC STEERING	622
PUMP & MTG GP-PISTON	624
PUMP & MTG GP-SECONDARY STEER	625
PUMP GP-PISTON	626
SWIVEL GP	631
TANK & MTG GP-HYDRAULIC	633
TANK GP-HYDRAULIC	634
VALVE & MOUNTING GP	636
VALVE GP-BANK 4	637
VALVE GP-BANK 5	638
VALVE GP-BANK 6	639
VALVE GP-BANK 7	640
VALVE GP-BYPASS	641
VALVE GP-CONTROL	642
VALVE GP-PRESSURE REDUCING	666
VALVE GP-PUMP CONTROL	668
VALVE GP-SOLENOID	669
VALVE GP-SOLENOID & MANIFOLD	672
VALVE GP-STEERING	673
IMPLEMENTS	**674**
CIRCLE & BEAM AS	674
CIRCLE GP	675
DRAWBAR GP	677
OPTION AR	680
MOLDBOARD GP	680
OPERATOR STATION	**681**
AIR CONDITIONER & MOUNTING GP	681
AIR CONDITIONER AR	682
AIR CONDITIONER GP	683
ARMREST GP	685
BRACKET GP-MOUNTING	687
CAB AR	689
CAB GP	690
COIL GP-EVAPORATOR & HEATER	692
COMPRESSOR GP-REFRIGERANT	694
CONDENSER & MTG GP-REFRIGERANT	696
CONDENSER GP-REFRIGERANT	697
CONTROL & MTG GP-JOYSTICK	699
CONTROL GP-AIR & TEMPERATURE	701
CONTROL GP-ELECTROHYDRAULIC	702
CONTROL GP-JOYSTICK	705
COVER GP-CAB	709
CUSHION GP-ARM	710
DISPLAY GP-CAMERA	711
DOOR GP-CAB	712
DUCT & FILTER GP-CAB AIR	733
FAN GP-CIRCULATING	734
HORN GP-AIR	738
HORN GP-ELECTRIC	739
INSTALLATION GP-CAB	740
INSTALLATION GP-CONTROLS	741
INSTALLATION GP-RADIO	742
KIT-HANDLE	744
KIT-SEAT AIR COMPRESSOR	745
KIT-SEAT CUSHION	747
KIT-SHOCK ABSORBER	750
LINER GP-CAB	752
LINES GP-AIR CONDITIONER	754
LINES GP-HEATER	755
LITERATURE GP	757
MIRROR GP	758
MIRROR GP-REAR VIEW	760
MONITOR AR-PAYLOAD	765
MOTOR GP-WINDOW WIPER	766
MOUNTING GP-ANTENNA	768
MOUNTING GP-CAB	769
MOUNTING GP-CONTROL	771
MOUNTING GP-PLATFORM	772
PAN GP-BACKREST	776
PANEL GP-CONTROL	777
PANEL GP-INSTRUMENT	782
PEDAL GP-BRAKE, XMSN & GOV	784
PLATFORM AR	786
PLATFORM GP-OPERATOR	787
RADIO GP	794
SEAT & MOUNTING GP	796
SEAT BELT GP	799
SEAT GP	800
SEAT GP-SUSPENSION	804
SUPPORT GP-CONTROL	809
SUSPENSION GP-SEAT	815
TANK GP-WINDOW WASHER	821
TRIM GP-CAB	822
WINDOW GP-CAB	826
WINDOW GP-VENT	829
WIPER & WASHER GP-WINDOW	830
WIPER GP-WINDOW	832
WORK TOOLS	**838**
BIT GP-END	838

TABLE OF CONTENTS

NAME	PAGE
EDGE GP-CUTTING	839
EXTENSION GP-BLADE	841
LIFT GP-BLADE	843
MOUNTING GP-RIPPER	845
RIPPER AR	846
RIPPER GP	847
TOOTH GP-RIPPER	849
SERVICE EQUIPMENT AND SUPPLIES	850
FILM GP	850
FILM GP-U.S.	856
PLATE & FILM GP	857
PART NUMBER INDEX	**B1**

GENERAL INFORMATION

1. MACHINE IDENTIFICATION

Cat machines are identified by Product Identification Numbers (PIN). Some components included in a machine may be identified by Serial Numbers (S/N). Typical components that will be serialized include engines, transmissions, bulldozers, and rippers. The machine and engine are further identified by arrangement numbers and in some cases modification numbers. These numbers are shown on the product identification plate(s) and on the master plate in the operator's compartment.

Cat dealers need all of these numbers to determine accurate parts identification.

Effective First Quarter 2001 the Cat Product Identification Number (PIN) changed from 8 to 17 characters. In an effort to provide uniform equipment identification, Caterpillar and other construction equipment manufacturers are moving to comply with the latest version of the product identification numbering standard. Non-road machine PINs are defined by ISO 10261. The new PIN format will apply to all Cat machines and generator sets. The PIN plates and frame marking will display the 17 character PIN. The new format will look like the following:

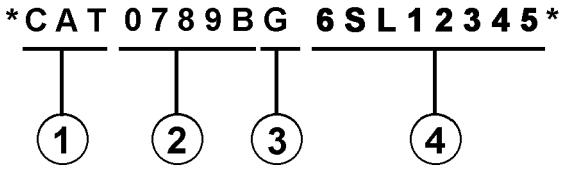

Where:

1. Caterpillar's World Manufacturing Code (characters 1-3)

2. Machine Descriptor (characters 4-8)

3. Check Character (character 9)

4. Machine Indicator Section (MIS) or Product Sequence Number (characters 10-17). These were previously referred to as the Serial Number.

Machines and generator sets produced before First Quarter 2001 will maintain their 8 character PIN format.

Components such as engines, transmissions, axles, etc. and work tools will continue to use an 8 character Serial Number (S/N).

2. ORDERING PARTS

⚠ WARNING

When replacement parts are required for this product Caterpillar recommends using Caterpillar replacement parts or parts with equivalent specifications including, but not limited to, physical dimensions, type, strength and material.

Failure to heed this warning can lead to premature failures, product damage, personal injury or death.

Quality Cat replacement parts are available from Cat dealers throughout the world. Their parts inventories are up to date and include all parts normally required to protect your investment in Cat machines. Dealers may offer repair kits or remanufactured parts to allow selection of the most effective repair alternative for a particular situation. When ordering parts, your order should specify the quantity, part number, part name, and the serial number/product identification number of the machine for which the parts are needed.

3. PARTS MANUAL ORGANIZATION

Product information in this manual is presented as "information elements" that represent all of the components for the specific model. Engine Arrangement and Seat Group are examples of information elements. The information elements are organized alphabetically by part name and secondarily by part number within each major section of the manual.

4. TABLE OF CONTENTS

A table of contents (TOC) is found at the beginning of the manual. The TOC lists each section of the manual with a complete list of all information elements organized as they appear in the manual. Page numbers are provided for quick reference to detailed parts identification illustrations and serviceable consist lists.

5. MAINTENANCE PARTS INDEX

The Maintenance Parts Index, located near the beginning of the manual, references most frequently used maintenance part numbers, providing description, quantity, usage and page number. This information is organized alphabetically by part description.

6. INDEX

The index located near the front of the manual is an alphabetical listing of all information elements included in the manual. Page numbers are provided for quick reference to detailed parts identification illustrations and serviceable consist lists.

7. PART NUMBER INDEX

A numerical index listing all part numbers and the corresponding page number(s) appears at the back of the manual.

8. CAPTIONS

Captions located at the beginning of each information element identify the part number and part name along with additional descriptive information. PIN and S/N information found in each caption should be used to select correct information for a specific machine. Field replacement options, identification of optional attachment components, and where used ("part of") information is also provided.

The first line of a caption is shown in larger type font to indicate the beginning of an information element. Captions for additional pages that may be required to illustrate an information element will be shown in standard type font and will include the term *(contd.)* .

9. NON-SERVICED PARTS

In some instances it is necessary to display non-serviced parts that are a link to a lower level serviceable consist lists. These non-serviced part numbers are shown in *italic* type indicating that they are not available.

10. PARTS LIST REFERENCE NUMBERS

Numbers shown in the Ref No column correspond to numbers used in the associated graphic(s). An alphabetic suffix may be added to a reference number to identify lower level consist items. Numbers shown in the Graphic Ref column refer to the graphic number identifier displayed in the lower left corner of each illustration. The Graphic Ref number may be used in combination with the item Ref No to determine the correct part number. There may be intentional omission of a Ref No in a consist list as information is updated to reflect the latest serviceable part numbers.

11. INDENTED PART NAMES

When a part name is indented in a parts list, it is part of (included in) the group or assembly under which it is indented.

12. ILLUSTRATION REFERENCE LETTERS

When necessary, illustrations contain reference letters (A, B, C etc.) that are intended to track lines and harnesses from one point to another. They are also used to show where to reconnect illustrations that have been separated.

13. ABBREVIATIONS AND SYMBOLS

O.D. – Outside Diameter
I.D. – Inside Diameter
A – Not Part Of This Group
B – Use As Required
C – Change From Previous Type
D – Order By The Meter
E – Order By The Centimeter
F – Not Shown
G – Order By The Inch
I – Refer To Hydraulic Information System
M – Metric Part
R – Remfg Part May Be Available
Y – Separate Illustration
Z – Not Serviced Separately

14. DESCRIPTION OF TYPE CHANGES

Type - A type is defined as any configuration change that requires an additional Information Element for an Arrangement, Group, or Assembly. If serial number breaks for types are not available, a type # (Type 1, Type 2, etc.) will be displayed in the caption. These "type" changes are identified with a "C" note (change from previous type) in the Parts List. Only the "types" that apply to this Parts Manual will be included. Additional types may exist causing "C" notes to appear on an Information Element when no other types are shown.

15.<END>

This symbol indicates the end of an information element.

NOTE:

Continuing improvement and advancement of product design may cause changes to your machine which may not be included in this publication. Whenever a question arises regarding your Cat product or this publication, please consult your Cat dealer for the latest available information.

FRAME AND BODY

8E-3299 PLATFORM GP-CAB

PIN 3SK1-00999

SMCS-7283 100090751

NOTE	REF NO	GRAPHIC REF	PART NUMBER	QTY	PART NAME 1 2 3 4 5 6 (PRODUCT LEVEL)	SEE PAGE
	1	1	3T-3963	1	PLATE AS	
	2	1	6M-3982	25	BOLT (3/8-16X.75DIN)	
	3	1	5P-1078	41	WASHER-HARD (3MM THK)	
	4	1	9F-1444	2	SUPPORT AS-FOOT	
	5	1	7P-2229	19	BOLT (1/2-13X1IN)	
		1	5P-[illegible]	19	WASHER-HARD (4MM THK)	
	6	1	8E-8136	1	COVER AS-LH	
		1	9F-2979	6	NUT-WELD (3/8-16 THD)	
		1	1F-8188	1	CLIP	
	7	1	7S-3411	4	COVER	
	8		6J-0488	19	SCREW-HEAD (3/8-16X.875IN)	
	9	1	[illegible]-0474	1	COVER	
		1	8E-8976	1	GASKET	
	10	1	8E-3249	1	[illegible]	
		1	8E-3250	1	GASKET	
	11	1	3T-3935	1	HANDHOLD	
	12	1	8E-8978	1	COVER AS	
		1	9F-2979	8	NUT-WELD (3/8-16 THD)	
		1	8E-8979	1	GASKET	
	13	1	7T-0131	1	FLOORPLATE AS	
		1	1F-0748	4	NUT-WELD (1/2-13 THD)	
	14	1	7V-8067	1	PLUG-BUTTON	
	15	1	7T-0136	1	PLATE AS	
		1	9F-2979	5	NUT-WELD (3/8-16 THD)	
	16	1	7T-8066	1	COVER	
		1	7T-0779	1	GASKET	
	17	1	3T-3951	1	PLATE AS	
	18	1	6T-9364	4	BOLT (1/4-20X.625IN)	
M		1	6T-4236	4	WASHER-HARD (2MM THK)	
	19	1	6T-8464	1	FLOOR MAT	
	20	1	8E-8946	1	MODULE AS-OPERATOR	
	21	1	3T-3934	1	HANDHOLD	
	22	1	9F-8571	2	PLUG	
	23	2	6T-9364	4	BOLT (1/4-20X.625IN)	
M		2	6T-4236	4	WASHER-HARD (2MM THK)	
	24	2	6M-3982	17	BOLT (3/8-16X.75DIN)	
	25	2	5P-1078	21	WASHER-HARD (3MM THK)	
	26	2	7T-0136	1	SEAL	
	27	2	7X-0378	2	BOLT (3/4-10X5IN)	
		2	7X-0682	2	WASHER-HARD (6MM THK)	
	28	2	3T-3462	2	PLATE	
	29	2	3T-8280	1	PLATE AS	
		2	7S-4828	6	SPACER	
	30	2	3T-8281	1	SEAL	
	31	2	7S-8917	1	GASKET	
	32	2	7S-8916	1	COVER AS	
		2	2S-2376	2	WASHER	
		2	6P-8626	2	SCREW-KNURLED	
	33	2	9W-3429	1	COVER	
	34	2	8E-8697	1	COVER	
	35	2	9D-3931	8	SCREW-SOCKET HEAD	
	36	2	9W-3142	8	MOUNTING	
	37	2	9W-9927	2	PLATE	
	38	2	7X-0290	2	BOLT (7/8-9X5IN)	
		2	7X-0572	2	WASHER-HARD	
	39	2	4L-6454	4	BOLT (3/8-16X1.0IN)	
	40	2	3T-4788	1	COVER	

FRAME AND BODY

8E-3299 PLATFORM GP-CAB (contd.)

100090751

NOTE	REF NO	GRAPHIC REF	PART NUMBER	QTY	PART NAME 1 2 3 4 5 6 (PRODUCT LEVEL)	SEE PAGE
	41	2	8E-2516	1	COVER	
	42	2	7T-0134	1	PLATE	
	43	2	7T-0138	1	GASKET	
	44	2	7S-8724	1	GASKET	
	45	2	7S-8723	1	COVER	
	46	2	6V-1960	2	PLUG-BUTTON	

M-METRIC PART

FRAME AND BODY

8E-3299 PLATFORM GP-CAB (contd.)

100090751

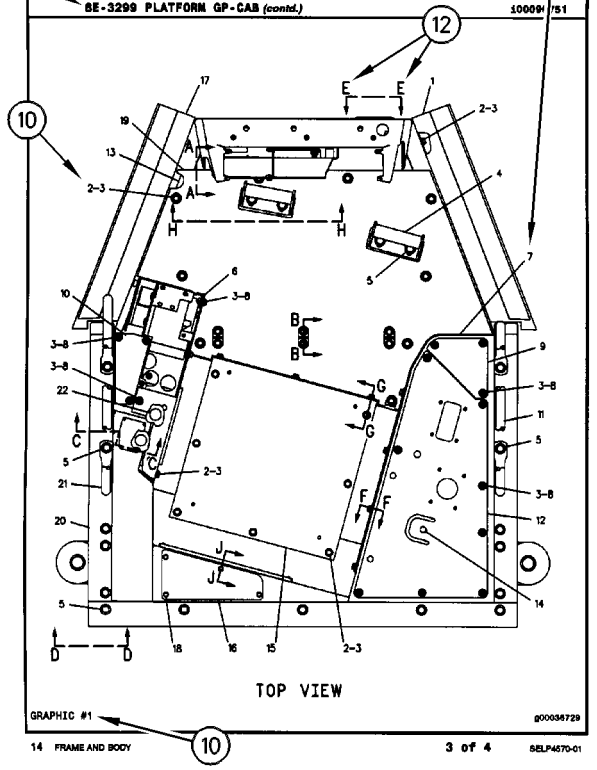

FRAME AND BODY

8E-3299 PLATFORM GP-CAB (contd.)

100090751

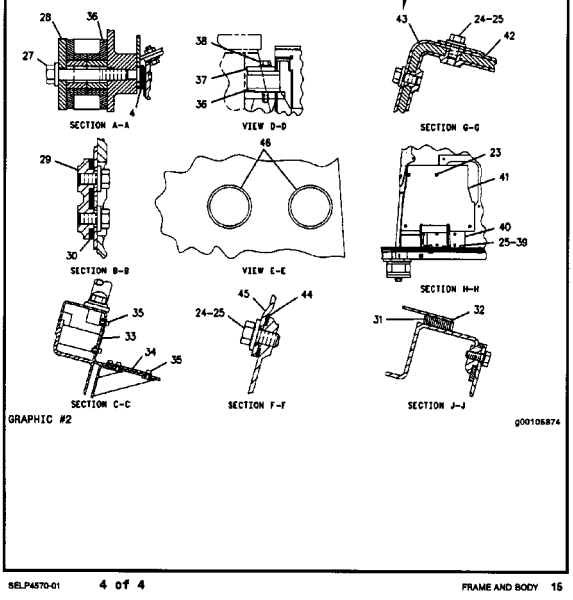

REMANUFACTURED COMPONENTS

As an option when making repairs consider Cat Remanufactured Components. Components that are available through the Cat Remanufactured Program are identified three ways in the parts book:

- with the letter R in the note field of the parts list
- with an R* at the beginning of the first line of the caption
- with an *R at the end of the first line of the caption

Typical components included in the Remanufacturing Program include:

ALTERNATORS
CONNECTING RODS
CRANKSHAFTS - UNDERSIZE
CRANKSHAFTS - UPGRADE TO NEW
CYLINDER HEADS
ELECTRONIC CONTROL MODULES (ECM)
ELECTRONIC SENSORS
FUEL INJECTORS
FUEL NOZZLES
FUEL PUMPS
GOVERNORS
OIL PUMPS
PISTONS
SHORT BLOCKS
STARTERS
TURBOCHARGERS - COMPLETE
TURBOCHARGER CARTRIDGES
WATER PUMPS

Cat Remanufactured engines for many engine arrangements are also available.

SUPPLEMENTAL COOLANT ADDITIVES

CUSTOMER BENEFITS:

Protects against cavitation, foam, erosion, corrosion, and scale buildup in cooling systems.

- Provides measured coolant conditioner.

DESCRIPTION:

Additives deplete from the coolant with normal operation. For this reason, Supplemental Coolant Additives (SCA) must be added to all heavy duty coolants at regular intervals. In addition, when not using a fully formulated, pre-charged antifreeze, like Cat DEAC, an initial charge of SCA must be added to the cooling system. The amount of SCA added to the system is dependent on the capacity of the system.

The SCA for initial fill is provided as a liquid. SCA's for maintenance intervals are available in liquid form and as a spin-on element. (No Spin-on available for 3600 Family of Engines)

NOTE:

The amount of SCA added at initial fill is not the same as the amount added at maintenance intervals.

The coolant additive elements can be used with any ethylene or propylene glycol type antifreeze which meets ASTM D4985 or ASTM D5345 Specifications.

NOTE:

For use with standard heavy duty coolant only, not for use with Extended Life Coolant.

PARTS NEEDED:

Cooling System Capacity		Liquid SCA at Initial Fill	Liquid SCA at Maintenance*	Spin-on SCA Maintenance Element*
Liters	Gallons			
22-30	(6-8)	3P-2044 (1)	6V-3542 (1)	111-2370 (1)
30-38	(8-10)	3P-2044 (1) 6V-3542 (1)	111-2372 (1)	111-2369 (1)
38-49	(10-13)	3P-2044 (1) 8T-1589 (1)	111-2372 (1)	111-2369 (1)
49-64	(13-17)	3P-2044 (2)	8T-1589 (1)	9N-3368 (1)
64-83	(17-22)	3P-2044 (2) 8T-1589 (1)	111-2372 (1) 6V-3542 (1)	111-2371 (1)
83-114	(22-30)	3P-2044 (3) 8T-1589 (1)	3P-2044 (1)	9N-3718 (1)
114-163	(30-43)	3P-2044 (5)	3P-2044 (1) 6V-3542 (1)	111-2371 (2)
163-242	(43-64)	3P-2044 (8)	3P-2044 (2)	9N-3718 (2)

** Normal maintenance period is 250 hrs. See your Operation and Maintenance Manual for complete coolant maintenance instructions.*

( ) Indicates quantity required.

MAINTENANCE PARTS

DESCRIPTION	PART NUMBER	QTY	WHERE USED	PAGE
AIR INLET AND EXHAUST SYSTEM				
FILTER ELEMENT AS-AIR (PRIMARY)	6I-2509	1	AIR CLEANER GP	105
FILTER ELEMENT AS-AIR (SECONDARY)	6I-2510	1	AIR CLEANER GP	105
SCREEN (AIR CLEANER)	350-5811	2	PRECLEANER AS	114
BASIC ENGINE				
PLUG-DRAIN (MAGNETIC)	9X-6451	2	PAN GP-OIL	50
PLUG-DRAIN (MAGNETIC) (ENGINE OIL)	9X-6451	2	PAN GP-OIL	52
SEAL-INTEGRAL	223-7852	1	HOUSING GP-FRONT	40
SEAL-VALVE COVER	229-5711	1	COVER GP-VALVE MECHANISM	21
BRAKING SYSTEM				
INDICATOR (BRAKE, REAR)	381-0837	1	BRAKE GP-SERVICE	522
		1	BRAKE GP-SERVICE	524
COOLING SYSTEM				
CAP AS (COOLANT)	475-4942	1	TANK GP-COOLANT	101
REGULATOR-WATER TEMPERATURE (92-DEG C)	367-7900	2	HOUSING & REGULATOR GP	88
SEAL-LIP TYPE (WATER TEMPERATURE REGULATOR)	3S-9643	2	HOUSING & REGULATOR GP	88
ELECTRICAL AND STARTING SYSTEM				
BATTERY GP (12-VOLT, MAINTENANCE FREE, WET)	153-5710	2	BATTERY & WIRING GP	150
BELT-SERPENTINE (ALTERNATOR)	374-8493	1	ALTERNATOR GP-CHARGING	147
		1	ALTERNATOR GP-CHARGING	148
CAP AS	180-9900	2	WIRING GP-CAB	280
CAP AS-FILLER (BATTERY) (NEGATIVE)	123-1373	6	BATTERY & WIRING GP	150
CAP AS-FILLER (BATTERY) (POSITIVE)	461-5232	6	BATTERY & WIRING GP	150
CIRCUIT BREAKER AS (20-AMPERE)	288-3687	1	BATTERY & WIRING GP	150
CIRCUIT BREAKER AS (25-AMPERE)	280-2711	1	WIRING GP-CAB	280
CIRCUIT BREAKER AS (80-AMPERE)	171-2210	2	BATTERY & WIRING GP	150
FILTER (ETHER START)	358-4889	1	STARTING AID GP-ETHER	257
FLASHER AS (12/24-VOLT)	431-8735	1	WIRING GP-CAB	281
FUSE (10-AMPERE)	113-8490	22	WIRING GP-CAB	280
		3	WIRING GP-PANEL	304
FUSE (15-AMPERE)	113-8491	30	WIRING GP-CAB	280
		3	WIRING GP-PANEL	304
FUSE (175-AMPERE)	239-8107	1	WIRING GP-ALTERNATOR	276
FUSE (20-AMPERE)	113-8492	6	WIRING GP-CAB	280
		2	WIRING GP-PANEL	304
FUSE (30-AMPERE)	124-3548	2	WIRING GP-PANEL	304
FUSE (300-AMPERE)	326-8116	1	WIRING GP-ALTERNATOR	274

MAINTENANCE PARTS

DESCRIPTION	PART NUMBER	QTY	WHERE USED	PAGE
KEY (BATTERY DISCONNECT)	8H-5306	1	SWITCH GP-DISCONNECT	266
KEY AS-ELECTRONIC (SECURITY)	206-5162	2	INSTALLATION GP-SECURITY	200
LAMP (24-VOLT, 5-WATT)	130-3515	1	LAMP GP-HEAD & SIGNAL	213
		1	LAMP GP-HEAD & SIGNAL	214
LAMP (24-VOLT, 75/70-WATT)	9X-3465	1	LAMP GP-HEAD & SIGNAL	213
		1	LAMP GP-HEAD & SIGNAL	214
LAMP (24-VOLT) (DOME LIGHT)	7N-9943	1	LAMP GP-DOME	205
LAMP-HALOGEN (24-VOLT, 70-WATT)	351-9918	1	LAMP GP-FLOOD	206
		1	LAMP GP-FLOOD	207
		1	LAMP GP-FLOOD	208
		1	LAMP GP-FLOOD	209
		1	LAMP GP-HEAD	212
LAMP-HALOGEN (24-VOLT, 70-WATT) (LOW BEAM)	351-9918	1	LAMP GP-HEAD	211
FRAME AND BODY				
BREATHER (GREASE TANK)	178-8063	1	TANK & PUMP GP-LUBRICATION	493
CAP AS (UPPER)	370-3205	1	HITCH GP-ARTICULATING	455
FUEL SYSTEM				
CAP AS-FUEL (LOCKABLE, VENTED)	349-7059	1	TANK GP-FUEL	140
CAP-DUST	388-4327	1	TANK AR-FUEL	138
FILTER AS-WATER SEP & FUEL (PRIMARY)	326-1644	1	FILTER GP-WATER SEP & FUEL	121
FILTER-FUEL (ADVANCED EFFICIENCY)	1R-0749	2	BASE GP-FUEL FILTER	117
PLUG AS-DRAIN	248-0833	1	TANK GP-FUEL	140
STRAINER-FUEL (FUEL TANK)	9P-7121	1	TANK GP-FUEL	140
HYDRAULIC SYSTEM				
CAP AS-DUST	285-0612	2	CYLINDER & MTG GP-STEERING	554
CAP AS-FILLER (LOCKABLE)	142-8937	1	TANK GP-HYDRAULIC	634
FILTER ELEMENT AS-OIL (HYDRAULIC)	389-1076	1	FILTER GP-OIL	577
FILTER ELEMENT-BREATHER	9R-9925	1	TANK & MTG GP-HYDRAULIC	633
FILTER ELEMENT-OIL (ULTRA HIGH EFFICIENCY) (HYDRAULIC TANK)	338-3540	1	FILTER GP-OIL	576
SCREEN	6E-5066	2	MANIFOLD GP-CONTROL	613
SEAL-INTEGRAL	372-0918	5	VALVE GP-BANK 4	637
		6	VALVE GP-BANK 5	638
		7	VALVE GP-BANK 6	639
		8	VALVE GP-BANK 7	640
STRAINER	206-8818	1	TANK GP-HYDRAULIC	634
LUBRICATION SYSTEM				
BREATHER AS (CRANKCASE)	290-8568	1	BREATHER GP	68
CAP AS-ENGINE OIL FILLER	385-1450	1	FILLER GP-ENGINE OIL	69
		1	FILLER GP-ENGINE OIL	72

DESCRIPTION	PART NUMBER	QTY	WHERE USED	PAGE
FILTER-ENGINE OIL (ADVANCED EFFICIENCY)	1R-1808	1	FILTER GP-ENGINE OIL	73
OPERATOR STATION				
BLADE AS-WIPER (400-MM)	6V-5851	2	WIPER GP-WINDOW	833
		1	WIPER GP-WINDOW	836
		1	WIPER GP-WINDOW	837
BLADE AS-WIPER (450-MM) (FRONT, UPPER)	6V-5853	1	WIPER & WASHER GP-WINDOW	830
BLADE AS-WIPER (500-MM)	146-6433	1	WIPER GP-WINDOW	835
	5C-8811	1	WIPER GP-WINDOW	836
		1	WIPER GP-WINDOW	837
CAP-VENTED (WASHER TANK)	276-3884	1	WIPER & WASHER GP-WINDOW	830
DRYER AS-REFRIGERANT (IN-LINE) (AIR CONDITIONER)	257-3226	1	CONDENSER GP-REFRIGERANT	697
FILTER ELEMENT-AIR (CAB HEATER, AIR CONDITIONER)	211-2660	1	DUCT & FILTER GP-CAB AIR	733
FILTER ELEMENT-CAB AIR (ACTIVATED CHARCOAL)	220-8800	1	DUCT & FILTER GP-CAB AIR	733
FILTER ELEMENT-CAB AIR (CAB HEATER, AIR CONDITIONER)	149-1912	1	DUCT & FILTER GP-CAB AIR	733
FUSE (15-AMPERE) (AIR CONDITIONER)	133-9012	2	AIR CONDITIONER GP	683
LAMP AS (24-VOLT) (IMPLEMENT CONTROL)	250-8335	2	LINER GP-CAB	752
LAMP AS-LED (24-VOLT, GREEN)	250-2299	1	PANEL GP-CONTROL	777
SEAL-INTEGRAL (1/2-IN)	327-0282	1	LINES GP-AIR CONDITIONER	754
SEAL-INTEGRAL (3/4-IN)	327-0283	1	LINES GP-AIR CONDITIONER	754
SEAT BELT GP	385-8717	1	CAB AR	689
SEAT BELT GP (RETRACT, LOWER) (RETRACT, LOWER)	381-4538	1	SEAT BELT GP	799
POWER TRAIN				
BREATHER (TANDEM)	4H-6112	1	TANDEM & COVER GP	386
BREATHER AS (POWER TRAIN OIL)	9G-5127	1	FILLER GP-POWER TRAIN OIL	366
CAP-DUST (TRANSMISSION OIL)	8C-3447	1	FILTER GP-OIL	368
FILTER ELEMENT AS-OIL (ADVANCED EFFICIENCY)	328-3655	1	FILTER GP-OIL	368
FILTER ELEMENT AS-OIL (ADVANCED EFFICIENCY) (TRANSMISSION)	328-3655	1	LINES GP-TRANSMISSION OIL	372
FILTER-MAGNETIC (TRANSMISSION SUMP)	251-6673	1	CASE & PARTS GP-PLANETARY	336
FILTER-MAGNETIC (TRANSMISSION)	251-6673	1	SCREEN GP-MAGNETIC	382
PLUG AS-DRAIN (AXLE, REAR)	248-0833	1	AXLE GP-REAR	333
PLUG AS-MAGNETIC (AXLE OIL DRAIN)	165-4929	2	CASE & PARTS GP-PLANETARY	336
PLUG-MAGNETIC	5P-4484	1	CASE & PARTS GP-PLANETARY	336
PLUG-MAGNETIC (DRAIN, HYDRAULIC OIL)	304-8032	2	TANDEM & COVER GP	386
SCREEN-SUCTION	251-6674	1	SCREEN GP-MAGNETIC	382

MAINTENANCE PARTS

DESCRIPTION	PART NUMBER	QTY	WHERE USED	PAGE
SCREEN-SUCTION (TRANSMISSION SUMP)	251-6674	1	CASE & PARTS GP-PLANETARY	336

INDEX

NAME PAGE

A

ACCUMULATOR & MTG GP-BRAKE 511
512
ACCUMULATOR & MTG GP-BRAKE–COLD WEATHER 513
ACCUMULATOR & MTG GP-HYDRAULIC–BLADE LIFT 535
536
ACCUMULATOR AR-BLADE CUSHION 537
ACCUMULATOR GP-BRAKE–CHARGED 516
517
ACCUMULATOR GP-BRAKE–UNCHARGED 518
519
ACCUMULATOR GP-HYDRAULIC 538
ACCUMULATOR GP-HYDRAULIC–CHARGED . . . 539
ACCUMULATOR GP–CHARGED 514
ACCUMULATOR GP–UNCHARGED 515
ACCUMULATOR-REFRIGERANT 697
ACTUATOR AS-VALVE 10
ACTUATOR GP-VALVE 11
AFTERCOOLER GP-AIR 103
AIR CLEANER GP 104
105
AIR CONDITIONER & MOUNTING GP 681
AIR CONDITIONER AR 682
AIR CONDITIONER GP 683
ALARM GP 144
ALTERNATOR GP-CHARGING 145
146
147
148
APPLICATION GP-IMPLEMENT (HYDRAULIC ELECTRONIC) 288
APPLICATION GP-MONITOR–PL631 SATELLITE 149
APPLICATION GP-MONITOR–PL641I CELLULAR 149
APPLICATION GP-MONITOR–PLE601 NETWORK MANAGER 149
ARM GP-WINDOW WIPER (FRONT, UPPER) . . 830
ARM GP-WINDOW WIPER (LOWER) 836
837
ARM GP-WINDOW WIPER (UPPER) 836
837
ARMREST GP–LH 686
ARMREST GP–RH 685
AXLE AR-FIXED & OSCILLATING 328
AXLE AR-FRONT 328
AXLE GP-FRONT 329
AXLE GP-REAR 333

B

BASE GP-FUEL FILTER 117
BASE GP-OIL FILTER 540
542
543
544
BASE GP-OIL FILTER–ENGINE 541
BASE GP-VALVE COVER 12
13
BATTERY & WIRING GP 150
BATTERY GP (12-VOLT, MAINTENANCE FREE, WET) 150
BELT-SERPENTINE (ALTERNATOR) 147
148
BIT GP-END 838
BLADE AS-WIPER (400-MM) 833
836
837
BLADE AS-WIPER (450-MM) (FRONT, UPPER) 830
BLADE AS-WIPER (500-MM) 835
836
837
BOX & MTG GP-OBJECT DETECTION 155
BOX GP-OBJECT DETECTION–RADAR 156
BRACKET GP-MOUNTING–CLEAN EMISSIONS MODULE, LH 688
BRACKET GP-MOUNTING–CLEAN EMISSIONS MODULE, RH 687
BRACKET GP-SUPPORT 106
BRAKE GP-PARKING 520
BRAKE GP-SERVICE–FRONT 522
BRAKE GP-SERVICE–REAR 524
BREATHER (GREASE TANK) 493
BREATHER (TANDEM) 386
BREATHER AS (CRANKCASE) 68
BREATHER AS (POWER TRAIN OIL) 366
BREATHER GP (TANDEM) 386
BREATHER GP–CRANKCASE 68
BUMPER GP-FRONT 408

C

CAB AR 689
CAB GP 690
691
CAMERA GP–WORK AREA VISUAL SYSTEM, REAR 157
CAMSHAFT GP 14
15
CAP AS 280
CAP AS (COOLANT) 101
CAP AS (UPPER) 455
CAP AS-DUST 554
CAP AS-ENGINE OIL FILLER 69
72
CAP AS-FILLER (BATTERY) (NEGATIVE) 150
CAP AS-FILLER (BATTERY) (POSITIVE) 150
CAP AS-FILLER (LOCKABLE) 634
CAP AS-FUEL (LOCKABLE, VENTED) 140
CAP GP-PROTECTION 609
CAP-DUST 138
CAP-DUST (TRANSMISSION OIL) 368
CAP-PUSH BUTTON (YELLOW) (AUTOMATIC, MANUAL) 707
708

INDEX

NAME	PAGE
CAP-PUSH BUTTON (YELLOW) (NOT USED)	707 708
CAP-VENTED (WASHER TANK)	830
CARRIER GP-FINAL DRIVE	335
CARTRIDGE GP-TURBOCHARGER	115
CASE & PARTS GP-PLANETARY	336
CHAIN GP-DRIVE	340
CIRCLE & BEAM AS	674
CIRCLE GP	675
CIRCUIT BREAKER AS (20-AMPERE)	150
CIRCUIT BREAKER AS (25-AMPERE)	280
CIRCUIT BREAKER AS (80-AMPERE)	150
CLUTCH GP-TRANSMISSION–FIRST, THIRD	345
CLUTCH GP-TRANSMISSION–FORWARD	341
CLUTCH GP-TRANSMISSION–HIGH, LOW	347
CLUTCH GP-TRANSMISSION–REVERSE, 2ND	343
COIL GP-EVAPORATOR & HEATER–AIR CONDITIONER	692
COMMON AR	1
COMPRESSOR GP-REFRIGERANT	694 695
CONDENSER & MTG GP-REFRIGERANT	696
CONDENSER GP-REFRIGERANT	697
CONNECTION AS	287 711
CONTROL & MTG GP-ELECTRONIC	158
CONTROL & MTG GP-IMPLEMENT	159
CONTROL & MTG GP-JOYSTICK	700
CONTROL & MTG GP-JOYSTICK–OPERATOR PLATFORM	699
CONTROL AR-HYDRAULIC–DOZER ANGLE, FRONT LIFT, RIPPER, WING MAST, WING TILT	545
CONTROL AR-HYDRAULIC–RIPPER	545
CONTROL GP-AIR & TEMPERATURE	701
CONTROL GP-AIR & TEMPERATURE (AIR CONDITIONER)	682
CONTROL GP-COMMUNICATION–PLE631 SATELLITE	160
CONTROL GP-COMMUNICATION–PLE641 CELLULAR	162
CONTROL GP-DIFFERENTIAL LOCK	350
CONTROL GP-ELECTROHYDRAULIC	702 703
CONTROL GP-ELECTROHYDRAULIC–AUXILIARY CONTROL	704
CONTROL GP-ELECTROHYDRAULIC–WITH AUXILIARY LEVER	702
CONTROL GP-ELECTRONIC	765
CONTROL GP-JOYSTICK (ELECTRONIC CONTROL)	702
CONTROL GP-JOYSTICK–LH	706 707
CONTROL GP-JOYSTICK–RH	705 708
CONTROL GP-MACHINE (IMPLEMENT 2)	159
CONTROL GP-SERVICE BRAKE	526
CONTROL GP-TRANSMISSION HYD	352
CONTROL GP-UNPROGRAMMED	158
CONTROL GP-UNPROGRAMMED (HYDRAULIC ELECTRONIC)	288
CONTROL GP-UNPROGRAMMED (IMPLEMENT 1)	159
CONTROL GP-UNPROGRAMMED (NETWORK MANAGER)	168
CONTROL GP-UNPROGRAMMED (TRANSMISSION)	352
CONVERTER GP-ELECTRICAL	164
CONVERTER GP-ELECTRICAL–RADIO	165
COOLER GP-ENGINE OIL	84
COOLER GP-HYDRAULIC OIL	546
COOLER GP-TRANSMISSION OIL	355
COOLING AR	85
CORE AS (TRANSMISSION OIL)	355
CORE AS-AFTERCOOLER	103
CORE AS-OIL COOLER (ENGINE)	84
CORE AS-OIL COOLER (HYDRAULIC OIL)	546
CORE AS-RADIATOR	100
COUPLING GP-TORSIONAL	357
COVER GP-ACCESS	409
COVER GP-CAB	709
COVER GP-CONTROL VALVE	410 412
COVER GP-CYLINDER BLOCK	16
COVER GP-FLYWHEEL HOUSING	17
COVER GP-FRONT HOUSING	18 19
COVER GP-SHIPPING–TRANSMISSION	358
COVER GP-SOUND SUPPRESSION	20
COVER GP-VALVE MECHANISM	21
CRANKSHAFT GP	22
CUSHION GP-ARM	710
CYLINDER & MTG GP-ARTICULATION	547
CYLINDER & MTG GP-BLADE LIFT	549
CYLINDER & MTG GP-BLADE TIP	551
CYLINDER & MTG GP-CENTERSHIFT	552
CYLINDER & MTG GP-SIDESHIFT	553
CYLINDER & MTG GP-STEERING	554
CYLINDER & MTG GP-WHEEL LEAN–NON ALL WHEEL DRIVE	556
CYLINDER BLOCK AS	24 25 26
CYLINDER BLOCK GP	27
CYLINDER GP-ARTICULATION	557
CYLINDER GP-BLADE TIP	558
CYLINDER GP-CENTERSHIFT	559
CYLINDER GP-LIFT	561
CYLINDER GP-RIPPER	562
CYLINDER GP-SIDESHIFT	563
CYLINDER GP-STEERING	565 567
CYLINDER GP-WHEEL LEAN–NON ALL WHEEL DRIVE	569
CYLINDER HEAD AS	29
CYLINDER HEAD GP	31 32

INDEX

NAME PAGE

D

DAMPER GP 34
DIFFERENTIAL & BEVEL GEAR GP 360
DIFFERENTIAL GP 362
DISPLAY GP-CAMERA 711
DOOR GP-ACCESS–LH 414
420
422
DOOR GP-ACCESS–RH 416
418
423
DOOR GP-CAB–LH 716
DOOR GP-CAB–PLATFORM, LH 722
DOOR GP-CAB–PLATFORM, RH 729
DOOR GP-CAB–RH 712
719
725
DRAWBAR GP 677
DRIVE GP-CIRCLE 571
DRIVE GP-FINAL 364
DRYER AS-REFRIGERANT (IN-LINE) (AIR CONDITIONER) 697
DUCT & FILTER GP-CAB AIR 733

E

EDGE GP-CUTTING–CURVED 839
EDGE GP-CUTTING–STRAIGHT 840
ELECTRICAL AR 167
ELECTRONICS GP-COMMUNICATION (PLE601 NETWORK MANAGER) 149
ELECTRONICS GP-COMMUNICATION–PLE601 NETWORK MANAGER 168
ELECTRONICS GP-IMPLEMENT 169
ELECTRONICS GP-IMPLEMENT–MASTER 169
ELECTRONICS GP-IMPLEMENT–STEERING 169
ELECTRONICS GP-MACHINE 169
ELECTRONICS GP-MONITOR 170
ELECTRONICS GP-MONITOR–CELLULAR 170
ELECTRONICS GP-MONITOR–NETWORK MANAGER 170
ELECTRONICS GP-MONITOR–PL631 SATELLITE 171
ELECTRONICS GP-POWER TRAIN 171
ENCLOSURE AR 424
ENCLOSURE GP-ENGINE 425
427
ENGINE AR 5
ENGINE AR-COMPLETE 6
7
ENGINE AR-CORE 9
EXTENSION GP-BACKREST (CLOTH) 800
802
805
EXTENSION GP-BLADE–LH 841
EXTENSION GP-BLADE–RH 842

NAME PAGE

F

FAN GP-CIRCULATING–DEFROST 736
FAN GP-CIRCULATING–FRONT DEFROSTER 734
FAN GP-SUCTION 86
FASTENER GP-CYLINDER HEAD 35
FASTENER GP-ENCLOSURE 429
FASTENER GP-HANDRAIL 433
FASTENER GP-HANDRAIL–FENDER 431
FENDER & SUPPORT GP–REAR 434
FENDER GP-REAR 436
FILLER GP-ENGINE OIL 69
70
71
72
FILLER GP-POWER TRAIN OIL 328
366
FILM GP 850
851
853
FILM GP-U.S. 856
FILM GP–INTERNATIONAL 852
FILM-CERTIFICATION (PL631) 239
FILM-IDENTIFICATION (CAT) 765
FILM-IDENTIFICATION (EMS) 823
FILM-IDENTIFICATION (GRADE CONTROL) 741
861
865
FILM-IDENTIFICATION (GREASE POINT) 471
FILM-IDENTIFICATION (HORN) 699
FILM-IDENTIFICATION (IGNITION SWITCH) 200
765
FILM-IDENTIFICATION (INSTRUCTION) 741
FILM-IDENTIFICATION (LIGHTING) 223
FILM-IDENTIFICATION (LUBRICATION POINTS, CYLINDER) 466
475
FILM-IDENTIFICATION (LUBRICATION POINTS, LH) 463
FILM-IDENTIFICATION (LUBRICATION POINTS, RH) 463
FILM-IDENTIFICATION (LUBRICATION, HITCH PIN) 469
FILM-IDENTIFICATION (OPERATOR CONTROLS, LH) 811
FILM-IDENTIFICATION (OPERATOR CONTROLS, RH) 809
FILM-IDENTIFICATION (PANEL SWITCHES) 779
FILM-IDENTIFICATION (ROUND RED REFLECTIVE) 457
847
FILM-IDENTIFICATION (VARIABLE BLADE FLOAT) 777
FILM-IDENTIFICATION (VIMS) 822
FILM-INFORMATION (24-VOLT) 865
FILM-INFORMATION (ENGINE OIL GRADE) 572
FILM-INFORMATION (LIFT EYE, TIE-DOWN LOCATION) 865
FILM-INFORMATION (PL641 CELLULAR) 238

INDEX

NAME PAGE

FILM-INFORMATION (PRODUCT LINK, READ OMM). 852 856
FILM-INFORMATION (SECURITY SYSTEM) 200
FILM-INFORMATION (SERIAL NUMBER) 239
FILM-INFORMATION (TIE-DOWN). 865
FILM-INSTRUCTION (AUXILIARY). 702
FILM-INSTRUCTION (BLADE CONTROL, LH). . . 780
FILM-INSTRUCTION (BLADE CONTROL, RH) . . 780
FILM-INSTRUCTION (ENGINE SHUTDOWN). . . . 223 305
FILM-INSTRUCTION (HVAC WATER, DRAINING, FILLING) 683 755
FILM-INSTRUCTION (MACHINE SECURITY, CONSOLE). 200
FILM-INSTRUCTION (NO FLOAT). 703
FILM-INSTRUCTION (SEAT ADJUSTMENT) 815 818
FILM-INSTRUCTION (WIPER). 752
FILM-WARNING (CRUSH HAZARD). 856
FILM-WARNING (EXPLOSION HAZARD, READ OMM). 168
FILM-WARNING (HIGH PRESSURE, READ OMM). 514 515 516 517 518 519 538 539
FILM-WARNING (PRODUCT LINK 300, U.S.) . . . 856
FILM-WARNING (RECOIL SPRING) 520
FILTER (ETHER START). 257
FILTER & LINES GP-FUEL–PRIMARY FUEL, WATER SEPARATOR. 118
FILTER & MTG GP-HYDRAULIC 575
FILTER AS-WATER SEP & FUEL (PRIMARY). 121
FILTER ELEMENT AS-AIR (PRIMARY). 105
FILTER ELEMENT AS-AIR (SECONDARY) 105
FILTER ELEMENT AS-OIL (ADVANCED EFFICIENCY). 368
FILTER ELEMENT AS-OIL (ADVANCED EFFICIENCY) (TRANSMISSION) 372
FILTER ELEMENT AS-OIL (HYDRAULIC) 577
FILTER ELEMENT-AIR (CAB HEATER, AIR CONDITIONER). 733
FILTER ELEMENT-BREATHER 633
FILTER ELEMENT-CAB AIR (ACTIVATED CHARCOAL) 733
FILTER ELEMENT-CAB AIR (CAB HEATER, AIR CONDITIONER). 733
FILTER ELEMENT-OIL (ULTRA HIGH EFFICIENCY) (HYDRAULIC TANK) 576
FILTER GP-ENGINE OIL 73
FILTER GP-FUEL. 120
FILTER GP-OIL. 367 576

NAME PAGE

FILTER GP-OIL–HYDRAULIC, TRANSMISSION 368 577
FILTER GP-WATER SEP & FUEL 121
FILTER-ENGINE OIL (ADVANCED EFFICIENCY). 73
FILTER-FUEL (ADVANCED EFFICIENCY) 117
FILTER-MAGNETIC (TRANSMISSION SUMP) . . . 336
FILTER-MAGNETIC (TRANSMISSION). 382
FINAL DRIVE GP 364
FLASHER AS (12/24-VOLT) 281
FLOAT AR-BLADE. 578
FLOOR MAT AS 822
FLYWHEEL GP 36
FRAME AR 439
FRAME GP-FRONT. 440
FRAME GP-REAR 441
FUMES DISPOSAL GP 75
FUSE (10-AMPERE) 280 304
FUSE (15-AMPERE) 280 304
FUSE (15-AMPERE) (AIR CONDITIONER). 683
FUSE (175-AMPERE) 276
FUSE (20-AMPERE) 280 304
FUSE (30-AMPERE) 304
FUSE (300-AMPERE) 274

G

GAUGE AS (POWER TRAIN OIL) 366
GAUGE GP-OIL LEVEL (DIPSTICK) 634
GAUGE GP-OIL LEVEL (DIPSTICK)–LEFT REAR. 76 78
GAUGE-OIL LEVEL (DIPSTICK) 482
GAUGE-SIGHT (COOLANT) 101
GEAR GP-FRONT 370
GEAR GP-REAR 37
GRADE CONTROL GP–ACCUGRADE. 172
GUARD GP-AXLE 442
GUARD GP-BOTTOM 443
GUARD GP-DEBRIS 444

H

HANDHOLD GP 425 445 446
HANDHOLD GP (GRAB) 505
HANDRAIL GP 2 3 447 450 451 454 786
HANDRAIL GP–FENDER 449

INDEX

NAME PAGE

HANDRAIL GP–FENDER, LH 448
HANDRAIL GP–PLATFORM, RH 453
HARNESS AS-CAB 174
HARNESS AS-CAB (POWER) 281
HARNESS AS-CAB–CAMERA 173
HARNESS AS-CAB–ROOF 173
HARNESS AS-CHASSIS 160
162
200
725
729
HARNESS AS-CONTROL 177
HARNESS AS-CONTROL (CAB) 288
HARNESS AS-CONTROL (GRADE) 280
HARNESS AS-CONTROL–DRAWBAR 177
HARNESS AS-ENGINE 178
179
327
HARNESS AS-FRONT 179
180
HARNESS AS-FRONT LIGHTING 231
233
HARNESS AS-FUEL TANK–FUEL SENDER 181
HARNESS AS-HEATER 808
HARNESS AS-HEATER (SEAT) 807
HARNESS AS-LIGHTING 218
228
HARNESS AS-LIGHTING–LADDER 181
HARNESS AS-LIGHTING–STOP, TAIL, TURN, BACKUP 182
HARNESS AS-MOTOR (HVAC) 683
HARNESS AS-OPERATOR CONTROLS 305
HARNESS AS-PANEL 780
HARNESS AS-RADIO 182
HARNESS AS-RADIO (AUXILIARY) 742
795
HARNESS AS-RADIO (BLUETOOTH) 742
795
HARNESS AS-REAR 183
184
185
186
HARNESS AS-REAR LIGHTING–REAR FRAME 186
HARNESS AS-REAR LIGHTING–RIGHT SIDE, REAR 187
HARNESS AS-REAR–RADIATOR 184
HARNESS AS-SENSOR 187
188
189
HARNESS AS-SENSOR–ROTATION SENSOR 190
HARNESS AS-SOLENOID 191
HARNESS AS-SOLENOID (STEERING VALVE) 194
HARNESS AS-SOLENOID–STEERING VALVE 190
HARNESS AS-SWITCH 191
HARNESS AS-SWITCH (SEAT HEATER) 802
HARNESS AS-THERMOSTAT 192
HARNESS AS-TRANSMISSION 193
HARNESS AS-VALVE–AUXILIARY 193
HARNESS AS-VALVE–STEERING 194
HARNESS AS-WINDOW WIPER 280
712
716
719
722
832
HARNESS AS-WIRING 195
203
204
HARNESS AS-WIRING (ECM) 741
HARNESS AS-WIRING (POWER MODULE, LH) 172
HARNESS AS-WIRING (POWER MODULE, RH) 172
HARNESS AS-WIRING (RADIO) 165
HARNESS AS-WIRING (SEAT AIR COMPRESSOR) 815
818
HARNESS AS-WIRING–CONSOLE, RH 196
HARNESS AS-WIRING–DOWN FORCE 194
HARNESS AS-WIRING–FUEL 194
HARNESS AS-WIRING–YW ADAPTER 196
HEATER GP-JACKET WATER 197
198
HITCH GP-ARTICULATING 455
HITCH GP-TOWING 457
HOOD GP 458
HORN GP-AIR 738
HORN GP-ELECTRIC 739
HOUSING & REGULATOR GP 88
HOUSING GP-FILTER (HYDRAULIC) 368
HOUSING GP-FILTER (OIL) 576
HOUSING GP-FLYWHEEL 38
HOUSING GP-FRONT 40
HYDRAULIC AR 578

I

INDICATOR (BRAKE, REAR) 522
524
INDICATOR-LEVEL (MACHINE) 740
INJECTOR GP-FUEL 122
INSTALLATION AR-COMMUNICATION–PRODUCT LINK ELITE CELLULAR 199
INSTALLATION AR-COMMUNICATION–PRODUCT LINK ELITE SATELLITE 199
INSTALLATION AR-ENGINE 9
INSTALLATION GP-CAB 740
INSTALLATION GP-CONTROLS–JOYSTICK 741
INSTALLATION GP-RADIO–AM/FM/WB/CD/XM/USB/ BLUETOOTH 742
INSTALLATION GP-SECURITY 200
INSTALLATION GP-WARNING BEACON 202

K

KEY (BATTERY DISCONNECT) 266

INDEX

NAME	PAGE
KEY AS-ELECTRONIC (SECURITY)	200
KIT-HANDLE	744
KIT-RETROFIT	203, 204
KIT-SEAL (MOTOR)	620
KIT-SEAT AIR COMPRESSOR	745, 746
KIT-SEAT CUSHION–CLOTH	747, 748
KIT-SEAT CUSHION–DELUXE	749
KIT-SHOCK ABSORBER	750

L

NAME	PAGE
LADDER AR	459
LADDER GP	460, 461
LADDER GP–WINDOW WASHER	462
LAMP (24-VOLT, 5-WATT)	213, 214
LAMP (24-VOLT, 75/70-WATT)	213, 214
LAMP (24-VOLT) (DOME LIGHT)	205
LAMP AS (24-VOLT) (IMPLEMENT CONTROL)	752
LAMP AS-LED (24-VOLT, GREEN)	777
LAMP GP-DOME	205
LAMP GP-FLOOD	206, 207, 208, 209
LAMP GP-FLOOD (24-VOLT) (CAB)	227
LAMP GP-FLOOD–LED	210
LAMP GP-HEAD	211, 212
LAMP GP-HEAD (24-VOLT)	227
LAMP GP-HEAD & SIGNAL–LH	213
LAMP GP-HEAD & SIGNAL–RH	214
LAMP GP-SIGNAL (24-VOLT) (STOP, TAIL LIGHTS)	319, 321
LAMP GP-SIGNAL (BACKUP)	315, 317, 319, 321
LAMP GP-SIGNAL (STOP, TAIL, TURN)	315, 317
LAMP GP-WARNING BEACON–STROBE	215
LAMP-HALOGEN (24-VOLT, 70-WATT)	206, 207, 208, 209, 212
LAMP-HALOGEN (24-VOLT, 70-WATT) (LOW BEAM)	211
LIFT GP-BLADE	843
LIFTER GP-VALVE–MECHANISM	42
LIFTING GP-ENGINE	43
LIGHTING AR-FLOOD	216
LIGHTING AR-ROADING	216, 217
LIGHTING GP-FLOOD	225
LIGHTING GP-FLOOD & HEAD–LED	227
LIGHTING GP-FLOOD–ACCESS LIGHTS	223
LIGHTING GP-FLOOD–ENCLOSURE	226
LIGHTING GP-FLOOD–WORK LIGHTS	219, 221
LIGHTING GP-FLOOD–WORK LIGHTS, FRONT	218
LIGHTING GP-ROADING–WORK LIGHTS, FRONT	228
LINER GP-CAB	752
LINES GP-ACCUMULATOR–ARTICULATION	579
LINES GP-ACCUMULATOR–BLADE LIFT	584
LINES GP-ACCUMULATOR–CIRCLE, DRAWBAR, MOLDBOARD	581
LINES GP-AIR	107
LINES GP-AIR CONDITIONER	754
LINES GP-AIR–ATAAC	108
LINES GP-AUTOMATIC LUBRICATION–CIRCLE, DRAWBAR, MOLDBOARD	466
LINES GP-AUTOMATIC LUBRICATION–FRONT AXLE	463
LINES GP-AUTOMATIC LUBRICATION–REAR	469
LINES GP-CENTERSHIFT LOCK	587
LINES GP-FUEL	123, 125, 127, 129
LINES GP-HEATER	755, 756
LINES GP-HYDRAULIC FAN	589
LINES GP-IMPLEMENT–BLADE LIFT	591
LINES GP-LUBRICATION	471
LINES GP-PUMP	598
LINES GP-PUMP–FRONT	594
LINES GP-RIPPER	602, 604
LINES GP-SECONDARY STEERING	605
LINES GP-SERVICE BRAKE	528, 533
LINES GP-STEERING	606
LINES GP-TRANSMISSION OIL	371, 372
LINES GP-TURBOCHARGER OIL	79
LINES GP-WATER	90, 91, 92
LINES GP-WATER–PUMP HOUSING	89
LINK GP-STEERING	473
LITERATURE GP	757
LITERATURE GP (STANDARD CAB)	1
LOCK GP-CENTERSHIFT	609
LUBRICATION AR-AUTOMATIC	474
LUBRICATION AR-AUTOMATIC–RIPPER	475

INDEX

NAME PAGE

M

MANIFOLD GP-CONTROL 611 613
MANIFOLD GP-CONTROL–BLADE CUSHION . . . 610
MANIFOLD GP-EXHAUST 110
MANIFOLD GP-HYDRAULIC 615 616
MANIFOLD GP-INLET 111
MANIFOLD GP-VALVE–FRONT 617 618
MIRROR GP 758
MIRROR GP-REAR VIEW 763 764
MIRROR GP-REAR VIEW–EXTERIOR 762
MIRROR GP-REAR VIEW–INTERIOR 760 761
MODULE GP-DISPLAY (INSTRUMENT CLUSTER) 765
MODULE GP-DISPLAY (WORK AREA VISUAL SYSTEM) 711
MODULE GP-INTERFACE 169
MODULE GP-RELAY DRIVER 280
MOLDBOARD GP 680
MONITOR AR-PAYLOAD 765
MOTOR GP-ELEC HYD PUMP 622
MOTOR GP-ELECTRIC–CIRCULATING FAN 230
MOTOR GP-GEROTOR 620
MOTOR GP-PISTON–HYDRAULIC FAN 375
MOTOR GP-WINDOW WIPER 766
MOTOR GP-WINDOW WIPER (24-VOLT, 2-SPEED) 836 837
MOTOR GP-WINDOW WIPER (24-VOLT, 2-SPEED) (FRONT) 766
MOTOR GP-WINDOW WIPER (LH) 833
MOTOR GP-WINDOW WIPER (RH) 833
MOTOR GP-WINDOW WIPER–REAR 767
MOUNTING GP-ALTERNATOR & COMPR 44 45
MOUNTING GP-ANTENNA–RADIO 768
MOUNTING GP-AXLE 478
MOUNTING GP-AXLE–FRONT 477
MOUNTING GP-CAB 769
MOUNTING GP-CAB–FIRE SUPPRESSION 770
MOUNTING GP-CONTROL 771
MOUNTING GP-ENGINE & XMSN 46
MOUNTING GP-FAN DRIVE 48
MOUNTING GP-FUEL FILTER 131
MOUNTING GP-LIGHTING 233
MOUNTING GP-LIGHTING–SNOW REMOVAL . . 231
MOUNTING GP-PLATFORM 772 773
MOUNTING GP-PLATFORM–WINDOW CLEANING 774
MOUNTING GP-RIPPER 845
MOUNTING GP-VALVE 479
MOUNTING GP-VALVE MECHANISM 49
MOUNTING GP-WHEEL 376
MOUNTING GP-WIRING 235
MUFFLER GP 112

O

OIL CHANGE GP-HIGH SPEED 80
OPTION AR-CAB–AM/FM/WB/CD/XM/USB/ BLUETOOTH 1
OPTION AR-CAB–BLUETOOTH 2
OPTION AR-HYDRAULIC 2
OPTION AR-LADDER 2
OPTION AR-LADDER–ENCLOSURE 3
OPTION AR-LADDER–PLATFORM 3
OPTION AR-LIGHTING–FIRE SUPPRESSION 3
OPTION AR–CIRCLE, DRAWBAR, MOLDBOARD 680

P

PADLOCK GP 138 719 722 729 861 865
PAN GP-BACKREST–LUMBAR 776
PAN GP-OIL 50
PAN GP-OIL–REAR SUMP 52
PANEL GP-CONTROL–GRADE CONTROL, LH 779
PANEL GP-CONTROL–GRADE CONTROL, RH 780
PANEL GP-CONTROL–VARIABLE BLADE FLOAT 777
PANEL GP-INSTRUMENT 782
PANEL GP-SOUND SUPPRESSION 480
PANEL GP-SOUND SUPPRESSION (RH) 427
PEDAL GP-BRAKE, XMSN & GOV 784 785
PISTON & ROD GP 53
PLATE & FILM GP 857 858 860 861 865 870
PLATE AS-BRUSH 236
PLATE GP-PUSH 481
PLATE-SERIAL NUMBER (TRANSMISSION) 336
PLATFORM AR 786
PLATFORM GP-OPERATOR–LH 790
PLATFORM GP-OPERATOR–RH 787
PLATFORM GP-OPERATOR–WINDOW WASHER 792 793
PLUG AS-DRAIN 140
PLUG AS-DRAIN (AXLE, REAR) 333
PLUG AS-MAGNETIC (AXLE OIL DRAIN) 336
PLUG GP-CYLINDER BLOCK 56 58
PLUG GP-CYLINDER BLOCK–OIL GALLERY, END 55

INDEX

NAME PAGE

PLUG GP-CYLINDER BLOCK–OIL GALLERY, RH 57
PLUG GP-ENGINE 59
PLUG GP-ENGINE OIL COOLER 94
PLUG GP-WATER LINES 95
96
PLUG-DRAIN (MAGNETIC) 50
PLUG-DRAIN (MAGNETIC) (ENGINE OIL) 52
PLUG-MAGNETIC 336
PLUG-MAGNETIC (DRAIN, HYDRAULIC OIL) . . . 386
POWER SUPPLY GP–GRADE CONTROL 237
POWER TRAIN AR 376
PRECLEANER AS 114
PUMP & MOTOR GP-SEC STEERING 622
PUMP & MTG GP-PISTON 624
PUMP & MTG GP-SECONDARY STEER 625
PUMP GP-ENGINE OIL 81
82
PUMP GP-FUEL INJECTION 132
PUMP GP-FUEL PRM & WATER SEP 133
PUMP GP-FUEL TRANSFER 134
135
PUMP GP-GEAR 377
378
PUMP GP-LUBRICATION 482
PUMP GP-PISTON 628
PUMP GP-PISTON–BRAKE, HYDRAULIC FAN 626
PUMP GP-WATER 97
98
99

R

RADIATOR GP 100
RADIO GP (AM/FM/USB/BLUETOOTH) 794
RADIO GP-COMMUNICATION (PL631 SATELLITE) 149
RADIO GP-COMMUNICATION–PL631 SATELLITE 239
RADIO GP-COMMUNICATION–PL641I CELLULAR 238
RADIO GP–AM/FM/USB/BLUETOOTH 794
RADIO GP–AM/FM/WB/CD/XM/USB/ BLUETOOTH 795
REGULATOR GP-FUEL PRESSURE 136
137
REGULATOR-WATER TEMPERATURE (92-DEG C) 88
RELAY AS (24-VOLT) 270
280
304
725
RELAY AS (24-VOLT) (BREAK OUT) 281
RELAY AS (24-VOLT) (DEFROSTER FAN) 736
RELAY AS (24-VOLT) (FAN SPEED) 736
RELAY AS (24-VOLT) (HEATED WINDOW) 827
RELAY AS (24-VOLT) (WINDOW WIPER) 729
RIPPER AR 846
RIPPER AR–AUTOLUBE 846
RIPPER GP 847
ROCKER ARM GP 63
ROCKER ARM GP–EXHAUST 61
ROCKER ARM GP–INLET 62
ROCKER ARM GP–UNIT INJECTOR 60
ROTATING GP-PUMP 380
381

S

SCREEN 613
SCREEN (AIR CLEANER) 114
SCREEN GP-MAGNETIC 382
SCREEN-SUCTION 382
SCREEN-SUCTION (TRANSMISSION SUMP) . . . 336
SEAL GP-CRANKSHAFT (FRONT) 40
SEAL GP-CRANKSHAFT–REAR 64
SEAL GP-DUO-CONE 522
524
SEAL-INTEGRAL 40
637
638
639
640
SEAL-INTEGRAL (1/2-IN) 754
SEAL-INTEGRAL (3/4-IN) 754
SEAL-LIP TYPE (WATER TEMPERATURE REGULATOR) 88
SEAL-VALVE COVER 21
SEAT & MOUNTING GP 796
797
798
SEAT BELT GP 689
799
SEAT BELT GP (RETRACT, LOWER) (RETRACT, LOWER) 799
SEAT GP (CLOTH) 808
SEAT GP-SUSPENSION 804
SEAT GP-SUSPENSION–CLOTH 805
SEAT GP-SUSPENSION–CLOTH, HEATED 807
SEAT GP-SUSPENSION–CLOTH, HEATED, AIR 808
SEAT GP–CLOTH, HEATED 800
802
SENDER AS-FUEL LEVEL 140
SENSOR & MOUNTING GP 240
SENSOR & MTG GP-POSITION 241
SENSOR & MTG GP-POSITION (VARIABLE BLADE FLOAT) 777
SENSOR AS (SPOOL) 644
SENSOR AS-ANGLE (AS400TC) (BLADE SLOPE) 325
SENSOR AS-ANGLE (AS400TC) (MAINFALL) . . . 325
SENSOR AS-TEMPERATURE (HYDRAULIC FAN OIL) 589
SENSOR GP-COOLANT LEVEL 101
242
SENSOR GP-ENGINE 243
SENSOR GP-OBJECT DETECTION (RADAR) . . 240
SENSOR GP-POSITION 245

INDEX

NAME	PAGE
SENSOR GP-POSITION (ROTARY)	784
SENSOR GP-POSITION (ROTARY) (ARTICULATION)	310
SENSOR GP-POSITION (ROTARY) (XMSN MODULATOR CONTROL)	784
SENSOR GP-POSITION (STEERING CYLINDER)	565 567
SENSOR GP-POSITION (VARIABLE BLADE FLOAT)	241
SENSOR GP-PRESSURE	246 247 248
SENSOR GP-PRESSURE (AIR FILTER)	308
SENSOR GP-PRESSURE (ATMOSPHERIC)	243
SENSOR GP-PRESSURE (AUTOLUBE)	303
SENSOR GP-PRESSURE (BRAKE CHARGE)	308
SENSOR GP-PRESSURE (FUEL)	117 246
SENSOR GP-PRESSURE (MAIN HYDRAULIC PUMP)	310
SENSOR GP-PRESSURE (OIL PRESSURE)	243
SENSOR GP-PRESSURE (SERVICE BRAKE)	308
SENSOR GP-PRESSURE (TRANSMISSION OIL)	310 352
SENSOR GP-SPEED	249 250 251 252 253
SENSOR GP-SPEED (CAMSHAFT)	243
SENSOR GP-SPEED (CRANKSHAFT)	243
SENSOR GP-SPEED (TRANSMISSION INPUT)	352
SENSOR GP-SPEED (TRANSMISSION INTERMEDIATE 1)	352
SENSOR GP-SPEED (TRANSMISSION INTERMEDIATE 2)	352
SENSOR GP-SPEED (TRANSMISSION INTERMEDIATE 3)	352
SENSOR GP-SPEED (TRANSMISSION OUTPUT 2)	250
SENSOR GP-SPEED (TRANSMISSION OUTPUT)	352
SENSOR GP-TEMPERATURE	254 255 256
SENSOR GP-TEMPERATURE (COOLANT)	243
SENSOR GP-TEMPERATURE (FUEL)	117
SENSOR GP-TEMPERATURE (STEERING OIL)	292
SENSOR GP-TEMPERATURE (TRANSMISSION OIL)	352
SENSOR-ROTARY	325
SENSOR-TEMPERATURE	255 256
SENSOR-TEMPERATURE (AMBIENT AIR)	308
SHAFT GP-DRIVE	383
SHAFT GP-INPUT	384
SHIELD GP-ENGINE COMPARTMENT	483
SOFTWARE GP-IMPLEMENT	169
SOFTWARE GP-MACHINE	169
SOFTWARE GP-MONITOR	170 171 239
SOFTWARE GP-MONITOR (CELLULAR)	238
SOFTWARE GP-MONITOR (INSTRUMENT PANEL)	170
SOFTWARE GP-MONITOR (TELEMATICS)	170
SOFTWARE GP-POWER TRAIN	171
SOLENOID AS-STARTING MOTOR (24-VOLT)	260
SPECIAL AR	4
STARTING AID GP-ETHER	257
STARTING MOTOR GP-ELECTRIC	259 262 263
STARTING MOTOR GP-ELECTRIC (24-VOLT)	263
STEP GP	485 486
STEP GP–LH	484
STRAINER	634
STRAINER-FUEL (FUEL TANK)	140
STRUCTURE AR	1
SUPPORT GP-CONTROL	813
SUPPORT GP-CONTROL–JOYSTICK, LH	811
SUPPORT GP-CONTROL–JOYSTICK, RH	809
SUPPORT GP-ENGINE	65
SUPPORT GP-PLATFORM	487
SUPPORT GP-RADIATOR	488
SUPPRESSION GP-SOUND	491
SUSPENSION GP-SEAT–AIR	815 818
SWASHPLATE GP	385
SWITCH AS (FORWARD, NEUTRAL, REVERSE)	706
SWITCH AS-BALL (CENTERSHIFT INDICATOR)	292
SWITCH AS-LIMIT (BRAKE LIGHT)	784
SWITCH AS-LIQUID LEVEL (ENGINE OIL)	50
SWITCH AS-PRESSURE (COMPRESSOR, LOW SIDE)	310
SWITCH AS-PRESSURE (HIGH, LOW) (COMPRESSOR, HIGH SIDE)	310
SWITCH AS-PRESSURE (HYDRAULIC OIL)	368 577
SWITCH AS-PUSH BUTTON (AUTO/MANUAL SIDESHIFT)	779
SWITCH AS-PUSH BUTTON (BLADE CONTROL)	780
SWITCH AS-PUSH BUTTON (HORN)	280
SWITCH AS-ROCKER (24-VOLT) (AIR CONDITIONER ON, OFF)	701
SWITCH AS-ROCKER (24-VOLT) (BLADE OFFSET, LH)	779
SWITCH AS-ROCKER (24-VOLT) (BLADE OFFSET, RH)	779
SWITCH AS-ROCKER (24-VOLT) (IMPLEMENT LOCKOUT)	281

INDEX

NAME PAGE

SWITCH AS-ROCKER (24-VOLT) (JOYSTICK CONTROL RAISE, LOWER) . . . 280
SWITCH AS-ROCKER (24-VOLT) (TURN SIGNAL) . . . 270
SWITCH AS-ROCKER (FLOODLIGHT) . . . 225
SWITCH AS-ROCKER (HAZARD) . . . 270 281
SWITCH AS-ROCKER (PARKING BRAKE) . . . 281
SWITCH AS-ROCKER (VARIABLE BLADE FLOAT) . . . 777
SWITCH AS-START . . . 765
SWITCH AS-TOGGLE . . . 264
SWITCH AS-TOGGLE (ACCESS LIGHTS) . . . 223
SWITCH AS-TOGGLE (DOOR RELEASE, REMOTE) . . . 264
SWITCH AS-TOGGLE (ENGINE COMPARTMENT LIGHTS) . . . 226
SWITCH AS-TOGGLE (ENGINE COMPARTMENT) . . . 226
SWITCH AS-TOGGLE (GROUND LEVEL SHUTDOWN) . . . 223 305
SWITCH GP-BYPASS–OIL FILTER BYPASS . . . 265
SWITCH GP-DISCONNECT–BATTERY . . . 266
SWITCH GP-LIMIT . . . 267
SWITCH GP-MAGNETIC . . . 268 269
SWITCH GP-ROADING–LIGHTS . . . 270
SWITCH GP-WIPER . . . 273
SWITCH GP-WIPER (24-VOLT) . . . 273
SWITCH GP-WIPER–CAB . . . 272
SWITCH-ROCKER (24-VOLT) (HEATED SEAT) . . . 800
SWITCH-TEMPERATURE (HVAC) (REFRIGERANT) . . . 683
SWIVEL GP . . . 631 632

T

TANDEM & COVER GP . . . 386
TANK & MTG GP-HYDRAULIC . . . 633
TANK & PUMP GP-LUBRICATION . . . 493 495
TANK AR-FUEL . . . 138
TANK GP-COOLANT . . . 101
TANK GP-FUEL . . . 140
TANK GP-HYDRAULIC . . . 634
TANK GP-WINDOW WASHER . . . 821
TIE ROD GP (LH) . . . 473
TIE ROD GP (RH) . . . 473
TOOTH GP-RIPPER . . . 849
TRANSMISSION AR . . . 388
TRIM GP-CAB–HVAC . . . 822
TURBOCHARGER GP . . . 115
TURBOCHARGER GP–FRONT EXHAUST TURBOCHARGER . . . 116

NAME PAGE

U

UNIVERSAL JOINT GP . . . 389 390 391

V

VALVE & MOUNTING GP . . . 636
VALVE & MTG GP-SOLENOID . . . 392
VALVE & MTG GP-SOLENOID (DIFFERENTIAL LOCK) . . . 350
VALVE AS-FLOW CONTROL . . . 482
VALVE AS-FLUID SAMPLING (COOLANT) . . . 92
VALVE AS-FLUID SAMPLING (ENGINE OIL) . . . 73
VALVE AS-FLUID SAMPLING (HYDRAULIC OIL) . . . 598
VALVE AS-PRESSURE REDUCING . . . 482
VALVE AS-PRESSURE RELIEF (REFRIGERANT COMPRESSOR) . . . 694
VALVE GP-ACCUMULATOR CHARGING . . . 514 515 516 518 538
VALVE GP-ACCUMULATOR CHARGING (BRAKE) . . . 517 519
VALVE GP-ACCUMULATOR CHARGING (HYDRAULIC ACCUMULATOR) . . . 539
VALVE GP-BANK 4–REAR . . . 637
VALVE GP-BANK 5–FRONT . . . 638
VALVE GP-BANK 6–REAR . . . 639
VALVE GP-BANK 7–FRONT . . . 640
VALVE GP-BYPASS . . . 641
VALVE GP-CHECK . . . 493 652
VALVE GP-CHECK (ARTICULATION) . . . 660
VALVE GP-CHECK (BLADE LIFT) . . . 662
VALVE GP-CHECK (BLADE TIP) . . . 654
VALVE GP-CHECK (BRAKE ACCUMULATOR PRESSURE) . . . 613
VALVE GP-CHECK (BULLDOZER LIFT, PLOW) . . . 650
VALVE GP-CHECK (CENTERSHIFT) . . . 664
VALVE GP-CHECK (SECONDARY STEERING) . . . 611
VALVE GP-CHECK (SIDESHIFT) . . . 656
VALVE GP-CHECK & RELIEF (BLADE LIFT) . . . 662
VALVE GP-CHECK & RELIEF (BLADE TIP) . . . 654
VALVE GP-CHECK & RELIEF (BULLDOZER LIFT, PLOW) . . . 650
VALVE GP-CHECK & RELIEF (LINE, LIFT) . . . 648
VALVE GP-CHECK & RELIEF (LINE, TILT) . . . 646
VALVE GP-CHECK & RELIEF (RIPPER) . . . 652
VALVE GP-CHECK & RELIEF (SIDESHIFT) . . . 656
VALVE GP-CHECK–FUEL . . . 142
VALVE GP-CONTROL–ARTICULATION . . . 660
VALVE GP-CONTROL–BLADE LIFT . . . 662
VALVE GP-CONTROL–BLADE TIP . . . 654

INDEX

NAME PAGE

VALVE GP-CONTROL–CENTER SHIFT 664
VALVE GP-CONTROL–CIRCLE DRIVE 658
VALVE GP-CONTROL–PLOW LIFT 650
VALVE GP-CONTROL–PRIORITY 642
VALVE GP-CONTROL–RIPPER 652
VALVE GP-CONTROL–SIDE SHIFT 656
VALVE GP-CONTROL–STEERING 644
VALVE GP-CONTROL–WING LIFT 648
VALVE GP-CONTROL–WING TILT 646
VALVE GP-ETHER STARTING 257
VALVE GP-FLUID SAMPLING 143
VALVE GP-LUBE DISTRIBUTION 504
VALVE GP-LUBE DISTRIBUTION–2-INJECTOR 496
VALVE GP-LUBE DISTRIBUTION–3-INJECTOR 497
VALVE GP-LUBE DISTRIBUTION–4-INJECTOR 498
501
VALVE GP-LUBE DISTRIBUTION–5-INJECTOR 499
VALVE GP-LUBE DISTRIBUTION–6-INJECTOR 500
VALVE GP-LUBE DISTRIBUTION–FRONT AXLE 502
VALVE GP-LUBE DISTRIBUTION–FRONT AXLE OIL 503
VALVE GP-MODULATING 393
394
395
396
397
VALVE GP-PRESSURE REDUCING 666
667
VALVE GP-PRIORITY (BRAKE, HYDRAULIC FAN PRIORITY) 613
VALVE GP-PUMP CONTROL 668
VALVE GP-RELIEF 337
398
VALVE GP-RELIEF (BRAKE ACCUMULATOR CHARGE) 613
VALVE GP-RELIEF (MAIN) 611
VALVE GP-RELIEF (MAIN) 618
VALVE GP-RELIEF (SECONDARY STEERING) 611
VALVE GP-SHUTOFF 92
VALVE GP-SHUTOFF (IMPLEMENT PILOT OIL) 636
VALVE GP-SHUTOFF (MANUAL) (FUEL SUPPLY) 123
VALVE GP-SHUTTLE (BRAKE ACCUMULATOR) 613
VALVE GP-SHUTTLE (IMPLEMENT PILOT OIL) 636
VALVE GP-SHUTTLE (STEERING) 644
VALVE GP-SOLENOID 400
669
670
671

NAME PAGE

VALVE GP-SOLENOID (24-VOLT) (BRAKE ACCUMULATOR CHARGE) 613
VALVE GP-SOLENOID (BLADE CUSHION) 672
VALVE GP-SOLENOID (BLADE TIP) 654
VALVE GP-SOLENOID (CENTERSHIFT LOCK) 609
VALVE GP-SOLENOID (DIFFERENTIAL LOCK) 392
VALVE GP-SOLENOID (HYDRAULIC ACCUMULATOR) 610
VALVE GP-SOLENOID (HYDRAULIC FAN) 613
VALVE GP-SOLENOID (IMPLEMENT PILOT OIL) 636
VALVE GP-SOLENOID (PILOT) 644
VALVE GP-SOLENOID (STEERING) 642
644
VALVE GP-SOLENOID & MANIFOLD 672
VALVE GP-STEERING 673
VALVE GP-TIRE 402
403
404
405
VALVE GP-TIRE (TIRE INFLATION) 407
VALVE MECHANISM GP 66

W

WALKWAY GP 505
507
WALKWAY GP–LH 510
WALKWAY GP–RH 509
WATER SEP & FUEL PRM PUMP GP 133
WHEEL & TIRE AR 401
402
WHEEL & TIRE GP 402
403
404
WHEEL AR 404
WHEEL GP 405
406
407
WINDOW GP-CAB–FRONT 826
827
WINDOW GP-VENT 829
WIPER & WASHER GP-WINDOW–FRONT 830
WIPER GP-WINDOW 833
WIPER GP-WINDOW–CAB 832
WIPER GP-WINDOW–DOOR, LH 837
WIPER GP-WINDOW–DOOR, RH 836
WIPER GP-WINDOW–REAR 835
WIRING GP-ALTERNATOR 274
276
WIRING GP-BLADE–DOWN FORCE 278
WIRING GP-CAB 280
WIRING GP-CAMERA 287
WIRING GP-CAMERA–REAR VISION 286
WIRING GP-ELECTRONIC CONTROL 288
290
WIRING GP-FRONT 292
WIRING GP-FRONT–FRONT IMPLEMENT 298

INDEX

NAME	PAGE
WIRING GP-GRADE CONTROL	299
WIRING GP-LUBRICATION	303
WIRING GP-PANEL	304
	305
WIRING GP-REAR	310
	315
WIRING GP-REAR LIGHTING	317
	319
	321
WIRING GP-REAR–RIGHT SIDE, REAR	307
WIRING GP-REAR–SERVICE CENTER	308
WIRING GP-SENSOR	324
	325
WIRING GP-SENSOR–SECONDARY FUEL FILTER	326
WIRING GP-UNIT INJECTOR	327

MACHINE ARRANGEMENT

375-3500 STRUCTURE AR

S/N: E9Y1-UP

PART OF 386-1317 COMMON AR

SMCS-7000 **i06144060**

NOTE	PART NUMBER	QTY	PART NAME 1 2 3 4 5 6 (PRODUCT LEVEL)	SEE PAGE
Y	*375-3450*	1	COVER GP-CONTROL VALVE	412
Y	*375-3460*	1	ENCLOSURE AR	424
Y	*375-3440*	1	TANK AR-FUEL	138
Y - SEPARATE ILLUSTRATION				

<END>

386-1317 COMMON AR

S/N: E9Y1-UP

SMCS-7000 **i06147650**

NOTE	PART NUMBER	QTY	PART NAME 1 2 3 4 5 6 (PRODUCT LEVEL)	SEE PAGE
Y	*385-8720*	1	CAB AR	689
Y	*375-3500*	1	CHASSIS AR	1
Y	*388-1485*	1	COOLING AR	85
Y	*370-8430*	1	ELECTRICAL AR	167
Y	*370-2944*	1	FRAME AR	439
Y	*371-3796*	1	HYDRAULIC AR	578
Y	*381-2717*	1	INSTALLATION AR-ENGINE	9
Y	*6V-1970*	1	LITERATURE GP (STANDARD CAB)	757
Y	*437-7839*	1	PLATE & FILM GP	865
Y	*371-6317*	1	POWER TRAIN AR	376
Y	*370-2227*	1	SPECIAL AR	4
Y	*381-0675*	1	TRANSMISSION AR	388
Y - SEPARATE ILLUSTRATION				

<END>

450-1651 OPTION AR-CAB—AM/FM/WB/CD/XM/USB/BLUETOOTH

S/N: E9Y1-UP

CANNOT BE USED WITH 450-1652—PAGE: 2

AN ATTACHMENT

SMCS-7301 **i06092728**

NOTE	PART NUMBER	QTY	PART NAME 1 2 3 4 5 6 (PRODUCT LEVEL)	SEE PAGE
Y	*361-3136*	1	CONVERTER GP-ELECTRICAL (RADIO)	165
Y	*421-7814*	1	FAN GP-CIRCULATING	736
Y	*396-9062*	1	RADIO GP (AM/FM/WB/CD/XM/USB/BLUETOOTH)	795
	360-0116	1	SHADE AS-SUN	
Y - SEPARATE ILLUSTRATION				

<END>

MACHINE ARRANGEMENT

450-1652 OPTION AR-CAB—BLUETOOTH

S/N: E9Y1-UP
CANNOT BE USED WITH 450-1651—PAGE: 1
AN ATTACHMENT

SMCS-7301 **i06204468**

NOTE	PART NUMBER	QTY	PART NAME 1 2 3 4 5 6 (PRODUCT LEVEL)	SEE PAGE
Y	*361-3136*	1	CONVERTER GP-ELECTRICAL (RADIO)	165
Y	*421-7814*	1	FAN GP-CIRCULATING	736
Y	*477-1254*	1	INSTALLATION GP-RADIO	742
	360-0116	1	SHADE AS-SUN	

Y - SEPARATE ILLUSTRATION

<END>

390-2819 OPTION AR-HYDRAULIC

S/N: E9Y1-UP
AN ATTACHMENT

SMCS-7000 **i06125941**

NOTE	PART NUMBER	QTY	PART NAME 1 2 3 4 5 6 (PRODUCT LEVEL)	SEE PAGE
Y	*375-3404*	1	GUARD GP-DEBRIS	444

Y - SEPARATE ILLUSTRATION

<END>

352-3813 OPTION AR-LADDER

S/N: E9Y1-UP
PART OF 375-3405, 462-6400 OPTION AR-LADDER
AN ATTACHMENT

SMCS-7000 **i04968089**

NOTE	PART NUMBER	QTY	PART NAME 1 2 3 4 5 6 (PRODUCT LEVEL)	SEE PAGE
Y	*314-4860*	2	STEP GP (LH)	484

Y - SEPARATE ILLUSTRATION

<END>

375-3405 OPTION AR-LADDER

S/N: E9Y1-UP
FOR USE WITH 386-1309—PAGE: 690
CANNOT BE USED WITH 375-3406—PAGE: 786, 375-3407—PAGE: 3, 462-6400—PAGE: 3
AN ATTACHMENT

SMCS-7000 **i06199664**

NOTE	PART NUMBER	QTY	PART NAME 1 2 3 4 5 6 (PRODUCT LEVEL)	SEE PAGE
Y	*479-6537*	1	BUMPER GP-FRONT	408
Y	*356-5163*	1	HANDRAIL GP	447
Y	*352-3813*	1	OPTION AR-LADDER	2
Y	*435-1952*	1	STEP GP	485
Y	*375-3422*	1	WALKWAY GP	505
Y	*448-9280*	1	WIRING GP-PANEL	305

Y - SEPARATE ILLUSTRATION

<END>

375-3407 OPTION AR-LADDER–PLATFORM

S/N: E9Y1-UP

CANNOT BE USED WITH 351-4490–PAGE: 758, 370-8504–PAGE: 221, 370-8503–PAGE: 219, 375-3402–PAGE: 434, 375-3405–PAGE: 2, 375-3405–PAGE: 2, 351-4490–PAGE: 758, 421-7813–PAGE: 763

AN ATTACHMENT

SMCS-7000 **i06155151**

NOTE	PART NUMBER	QTY	PART NAME 1 2 3 4 5 6 (PRODUCT LEVEL)	SEE PAGE
Y	*479-6537*	1	BUMPER GP-FRONT	408
Y	*383-8150*	1	FENDER GP-REAR	436
Y	*428-6017*	1	HANDHOLD GP	445
Y	*383-8170*	1	HANDRAIL GP	449
Y	*385-1260*	1	LADDER GP	459
Y	*370-8510*	1	LIGHTING GP-FLOOD	223
Y	*446-9427*	1	MIRROR GP-REAR VIEW	764
Y	*370-3080*	1	MOUNTING GP-PLATFORM	772
Y	*386-0540*	1	PLATFORM AR	786
Y	*383-8180*	1	WALKWAY GP	507

Y - SEPARATE ILLUSTRATION

<END>

462-6400 OPTION AR-LADDER–ENCLOSURE

S/N: E9Y1-UP

FOR USE WITH 386-1310–PAGE: 690

CANNOT BE USED WITH 375-3405–PAGE: 2, 375-3402–PAGE: 434

AN ATTACHMENT

SMCS-7000 **i06155336**

NOTE	PART NUMBER	QTY	PART NAME 1 2 3 4 5 6 (PRODUCT LEVEL)	SEE PAGE
Y	*383-8150*	1	FENDER GP-REAR	436
Y	*356-5163*	1	HANDRAIL GP	447
Y	*383-8170*	1	HANDRAIL GP	449
Y	*476-8830*	1	HANDRAIL GP	451
Y	*385-1260*	1	LADDER GP	459
Y	*370-8510*	1	LIGHTING GP-FLOOD	223
Y	*370-3080*	1	MOUNTING GP-PLATFORM	772
Y	*352-3813*	1	OPTION AR-LADDER	2
Y	*383-8180*	1	WALKWAY GP	507

Y - SEPARATE ILLUSTRATION

<END>

MACHINE ARRANGEMENT

435-8504 OPTION AR-LIGHTING–FIRE SUPPRESSION

S/N: E9Y1-UP

AN ATTACHMENT

SMCS-7000 **i06160774**

NOTE	PART NUMBER	QTY	PART NAME 1 2 3 4 5 6 (PRODUCT LEVEL)	SEE PAGE
Y	*428-6026*	1	MOUNTING GP-CAB	770
	437-8820	1	PLATE AS	
M	**8T-3490**	4	NUT-WELD (M10X1.5-THD)	
M	**8T-3597**	12	NUT-WELD (M12X1.75-THD)	
	352-6010		FILM-IDENTIFICATION (CAT)	

M - METRIC PART
Y - SEPARATE ILLUSTRATION

<END>

370-2227 SPECIAL AR

S/N: E9Y1-UP

PART OF 386-1317 COMMON AR

SMCS-7000 **i06144084**

NOTE	PART NUMBER	QTY	PART NAME 1 2 3 4 5 6 (PRODUCT LEVEL)	SEE PAGE
Y	*390-9852*	1	CIRCLE GP	675
Y	*425-8674*	1	DRAWBAR GP	677
Y	**454-4691**	1	DRIVE GP-CIRCLE	571
Y	*265-6710*	1	LIFT GP-BLADE	843

Y - SEPARATE ILLUSTRATION

<END>

ENGINE ARRANGEMENT

394-1172 ENGINE AR

S/N: TXX1-UP
12.5 LITRE. 16M3 MOTOR GRADER
FOR USE WITH BRAKE
PART OF 383-2065 ENGINE AR-COMPLETE
AN ATTACHMENT

SMCS-1000 **i05417143**

NOTE	PART NUMBER	QTY	PART NAME 1 2 3 4 5 6 (PRODUCT LEVEL)	SEE PAGE
Y	*376-4249*	1	ENGINE AR-CORE	9
Y	*375-3577*	1	PLATE & FILM GP	858
			—OR—	
Y	*442-5255*	1	PLATE & FILM GP	870
	398-1367		ELECTRONICS GP-ENGINE RATINGS	

Y - SEPARATE ILLUSTRATION

<END>

422-0047 ENGINE AR

S/N: TXX1-UP
PART OF 422-0048 ENGINE AR-COMPLETE
AN ATTACHMENT

SMCS-1000 **i05306348**

NOTE	PART NUMBER	QTY	PART NAME 1 2 3 4 5 6 (PRODUCT LEVEL)	SEE PAGE
Y	*376-4249*	1	ENGINE AR-CORE	9
Y	*375-3577*	1	PLATE & FILM GP	858
	422-8052	1	ELECTRONICS GP-ENGINE RATINGS	

Y - SEPARATE ILLUSTRATION

<END>

ENGINE ARRANGEMENT

383-2065 ENGINE AR-COMPLETE

S/N: TXX1-UP

FOR USE WITH 422-0048–PAGE: 7

AN ATTACHMENT

SMCS-1000 **i06112070**

NOTE	PART NUMBER	QTY	PART NAME 1 2 3 4 5 6 (PRODUCT LEVEL)	SEE PAGE
Y	*346-5752*	1	ACTUATOR GP-VALVE	11
Y	*342-6070*	1	BASE GP-OIL FILTER (ENGINE)	541
Y	*366-8297*	1	BRACKET GP-SUPPORT	106
Y	*267-0008*	1	BREATHER GP (CRANKCASE)	68
Y	*424-0286*	1	COMPRESSOR GP-REFRIGERANT	695
Y	*397-9348*	1	CONTROL & MTG GP-ELECTRONIC	158
Y	*347-1267*	1	COVER GP-CYLINDER BLOCK	16
Y	*227-2574*	1	COVER GP-FRONT HOUSING	18
Y	*355-7194*	1	COVER GP-VALVE MECHANISM	21
Y	*424-7963*	1	DAMPER GP	34
Y	*394-1172*	1	ENGINE AR	5
Y	*439-0403*	1	FILLER GP-ENGINE OIL	70
Y	*384-3141*	1	FILTER GP-FUEL	120
Y	*438-9577*	1	FLYWHEEL GP	36
Y	*393-9078*	1	FUMES DISPOSAL GP	75
Y	*385-7050*	1	GAUGE GP-OIL LEVEL (DIPSTICK)	76
Y	*394-5447*	1	GEAR GP-REAR	37
Y	*277-4435*	1	HOUSING GP-FLYWHEEL	38
Y	*218-7272*	1	HOUSING GP-FRONT	40
Y	*224-0880*	1	LIFTING GP-ENGINE	43
Y	*237-9756*	1	LINES GP-AIR (90-DEG)	107
Y	*384-0183*	1	LINES GP-FUEL	125
Y	*397-2401*	1	LINES GP-TURBOCHARGER OIL	79
Y	*423-2422*	1	LINES GP-WATER	91
Y	*380-8509*	1	MANIFOLD GP-EXHAUST	110
Y	*340-7244*	1	MANIFOLD GP-INLET	111
Y	*386-3935*	1	STARTING MOTOR GP-ELECTRIC	262
Y	*369-8994*	1	MOUNTING GP-ALTERNATOR & COMPR	44
Y	*346-8842*	1	MOUNTING GP-CONTROL	771
Y	*219-7440*	1	MOUNTING GP-FAN DRIVE	48
Y	*349-6100*	1	MOUNTING GP-FUEL FILTER	131
Y	*229-8083*	1	MOUNTING GP-VALVE MECHANISM	49
Y	*439-5036*	1	MOUNTING GP-WIRING	235
Y	*391-0306*	1	PAN GP-OIL	52
Y	*117-0165*	1	PLUG GP-CYLINDER BLOCK (OIL GALLERY, END)	55
Y	*223-3875*	1	PLUG GP-CYLINDER BLOCK (TIMING, CRANKSHAFT)	56
Y	*227-9545*	1	PLUG GP-CYLINDER BLOCK (OIL GALLERY, RH)	57
Y	*398-6932*	1	PLUG GP-CYLINDER BLOCK (FRONT, LH)	58
Y	*269-6164*	1	PLUG GP-ENGINE	59
Y	*349-2641*	1	PLUG GP-ENGINE OIL COOLER	94
Y	*384-5510*	1	PLUG GP-WATER LINES	96
Y	*305-6163*	1	PUMP GP-FUEL TRANSFER	134
Y	*250-7017*	1	SUPPORT GP-ENGINE	65
Y	*378-7691*	1	TURBOCHARGER GP	116
Y	*417-0980*	1	WIRING GP-ELECTRONIC CONTROL	290
Y	*417-4431*	1	WIRING GP-SENSOR	326
Y	*349-6154*	1	WIRING GP-SENSOR	324
Y	*370-3254*	1	WIRING GP-UNIT INJECTOR	327
			PLEASE USE THE GASKET KIT LINK IN SIS OR CONTACT YOUR LOCAL DEALER FOR THE LATEST GASKET KIT INFORMATION	

Y - SEPARATE ILLUSTRATION

<END>

ENGINE ARRANGEMENT

422-0048 ENGINE AR-COMPLETE

S/N: TXX1-UP

CANNOT BE USED WITH 383-2065—PAGE: 6, 385-7557—PAGE: 545

AN ATTACHMENT

SMCS-1000 **i06138081**

NOTE	PART NUMBER	QTY	PART NAME 1 2 3 4 5 6 (PRODUCT LEVEL)	SEE PAGE
Y	*346-5752*	1	ACTUATOR GP-VALVE	11
Y	*342-6070*	1	BASE GP-OIL FILTER (ENGINE)	541
			S/N: TXX1-590	
Y	*474-4621*	1	BASE GP-OIL FILTER (ENGINE)	544
			S/N: TXX591-UP	
Y	*366-8297*	1	BRACKET GP-SUPPORT	106
Y	*267-0008*	1	BREATHER GP (CRANKCASE)	68
Y	*424-0286*	1	COMPRESSOR GP-REFRIGERANT	695
Y	*397-9348*	1	CONTROL & MTG GP-ELECTRONIC	158
Y	*347-1267*	1	COVER GP-CYLINDER BLOCK	16
Y	*227-2574*	1	COVER GP-FRONT HOUSING	18
			S/N: TXX1-590	
Y	*453-5500*	1	COVER GP-FRONT HOUSING	19
			S/N: TXX591-UP	
Y	*355-7194*	1	COVER GP-VALVE MECHANISM	21
Y	*424-7963*	1	DAMPER GP	34
Y	*422-0047*	1	ENGINE AR	5
Y	*439-0403*	1	FILLER GP-ENGINE OIL	70
			S/N: TXX1-590	
Y	*453-5346*	1	FILLER GP-ENGINE OIL	71
			S/N: TXX591-UP	
Y	*384-3141*	1	FILTER GP-FUEL	120
Y	*438-9577*	1	FLYWHEEL GP	36
Y	*393-9078*	1	FUMES DISPOSAL GP	75
Y	*385-7050*	1	GAUGE GP-OIL LEVEL (DIPSTICK)	76
Y	*394-5447*	1	GEAR GP-REAR	37
Y	*277-4435*	1	HOUSING GP-FLYWHEEL	38
Y	*218-7272*	1	HOUSING GP-FRONT	40
Y	*224-0880*	1	LIFTING GP-ENGINE	43
Y	*237-9756*	1	LINES GP-AIR (90-DEG)	107
Y	*384-0183*	1	LINES GP-FUEL	125
			S/N: TXX1-590	
Y	*469-5839*	1	LINES GP-FUEL	129
			S/N: TXX591-UP	
Y	*397-2401*	1	LINES GP-TURBOCHARGER OIL	79
Y	*423-2422*	1	LINES GP-WATER	91
Y	*380-8509*	1	MANIFOLD GP-EXHAUST	110
Y	*340-7244*	1	MANIFOLD GP-INLET	111
Y	*386-3935*	1	STARTING MOTOR GP-ELECTRIC	262
			S/N: TXX1-590	
Y	*467-2009*	1	STARTING MOTOR GP-ELECTRIC	263
			S/N: TXX591-UP	
Y	*369-8994*	1	MOUNTING GP-ALTERNATOR & COMPR	44
			S/N: TXX1-590	
Y	*453-5919*	1	MOUNTING GP-ALTERNATOR & COMPR	45
			S/N: TXX591-UP	
Y	*346-8842*	1	MOUNTING GP-CONTROL	771
Y	*219-7440*	1	MOUNTING GP-FAN DRIVE	48
Y	*349-6100*	1	MOUNTING GP-FUEL FILTER	131
Y	*229-8083*	1	MOUNTING GP-VALVE MECHANISM	49
Y	*439-5036*	1	MOUNTING GP-WIRING	235
Y	*391-0306*	1	PAN GP-OIL	52
			S/N: TXX1-590	
Y	*382-9882*	1	PAN GP-OIL	50
			S/N: TXX591-UP	
Y	*117-0165*	1	PLUG GP-CYLINDER BLOCK (OIL GALLERY, END)	55
Y	*223-3875*	1	PLUG GP-CYLINDER BLOCK (TIMING, CRANKSHAFT)	56
Y	*227-9545*	1	PLUG GP-CYLINDER BLOCK (OIL GALLERY, RH)	57

422-0048 **ENGINE AR-COMPLETE (*contd.*)** **i06138081**

NOTE	PART NUMBER	QTY	PART NAME 1 2 3 4 5 6 (PRODUCT LEVEL)	SEE PAGE
Y	*398-6932*	1	PLUG GP-CYLINDER BLOCK (FRONT, LH)	58
Y	*269-6164*	1	PLUG GP-ENGINE	59
Y	*349-2641*	1	PLUG GP-ENGINE OIL COOLER	94
Y	*384-5510*	1	PLUG GP-WATER LINES	96
Y	*305-6163*	1	PUMP GP-FUEL TRANSFER	134
Y	*250-7017*	1	SUPPORT GP-ENGINE	65
Y	*378-7691*	1	TURBOCHARGER GP	116
Y	*417-0980*	1	WIRING GP-ELECTRONIC CONTROL	290
Y	*349-6154*	1	WIRING GP-SENSOR	324
Y	*417-4431*	1	WIRING GP-SENSOR	326
Y	*370-3254*	1	WIRING GP-UNIT INJECTOR	327
			PLEASE USE THE GASKET KIT LINK IN SIS OR CONTACT YOUR LOCAL DEALER FOR THE LATEST GASKET KIT INFORMATION	

Y - SEPARATE ILLUSTRATION

<END>

ENGINE ARRANGEMENT

376-4249 ENGINE AR-CORE

S/N: TXX1-UP

PART OF 394-1172, 422-0047 ENGINE AR

AN ATTACHMENT

SMCS-1000 **i05858218**

NOTE	PART NUMBER	QTY	PART NAME 1 2 3 4 5 6 (PRODUCT LEVEL)	SEE PAGE
Y	*349-5294*	1	BASE GP-VALVE COVER	13
Y	*355-1288*	1	CAMSHAFT GP	15
Y	*224-3881*	1	CRANKSHAFT GP	22
YR	*240-7271*	1	CYLINDER BLOCK GP	27
Y	*356-2069*	1	CYLINDER HEAD GP	31
Y	*222-3088*	1	GEAR GP-FRONT	370
Y	*452-9086*	6	PISTON & ROD GP	53
Y	*233-5221*	1	PUMP GP-ENGINE OIL	82
Y	*253-1461*	6	PUMP GP-FUEL INJECTION	132
Y	*332-0984*	1	PUMP GP-WATER	97
Y	*379-6636*	1	SENSOR GP-ENGINE	243
Y	*240-7272*	1	VALVE MECHANISM GP	66

R - REMFG PART MAY BE AVAILABLE
Y - SEPARATE ILLUSTRATION

<END>

381-2717 INSTALLATION AR-ENGINE

S/N: E9Y1-UP

PART OF 386-1317 COMMON AR

SMCS-1000 **i06147649**

NOTE	PART NUMBER	QTY	PART NAME 1 2 3 4 5 6 (PRODUCT LEVEL)	SEE PAGE
Y	*383-4897*	1	AIR CLEANER GP	104
Y	*446-7734*	1	COUPLING GP-TORSIONAL	357
Y	*439-5516*	1	FILTER GP-ENGINE OIL	73
Y	*383-4888*	1	FILTER & LINES GP-FUEL	118
Y	*383-4893*	1	LINES GP-AIR (ATAAC)	108
Y	*441-0768*	1	LINES GP-WATER	92
Y	*383-4890*	1	MOUNTING GP-ENGINE & XMSN	46
Y	*383-4877*	1	MUFFLER GP	112
Y	*384-5612*	1	OIL CHANGE GP-HIGH SPEED	80
Y	*383-4895*	1	STARTING AID GP-ETHER	257
Y	*383-4870*	1	TANK GP-COOLANT	101

Y - SEPARATE ILLUSTRATION

<END>

367-3835 ACTUATOR AS-VALVE*R

S/N: TXX1-UP
24 VOLT. CAT BRAKE
PART OF 346-5752 ACTUATOR GP-VALVE
AN ATTACHMENT

SMCS-1130 **i05365655**

NOTE	REF NO	GRAPHIC REF	PART NUMBER	QTY	PART NAME 1 2 3 4 5 6 (PRODUCT LEVEL)	SEE PAGE
M	1	1	**230-9498**	2	SCREW (M8X1X17-MM)	
M	2	1	**099-0822**	2	BOLT-SOCKET HEAD (M5X0.8X10-MM)	
	3	1	**236-6021**	2	NUT-JAM (M8X1-THD)	
	4	1	**250-9378**	1	VALVE AS-BRAKE	

M - METRIC PART

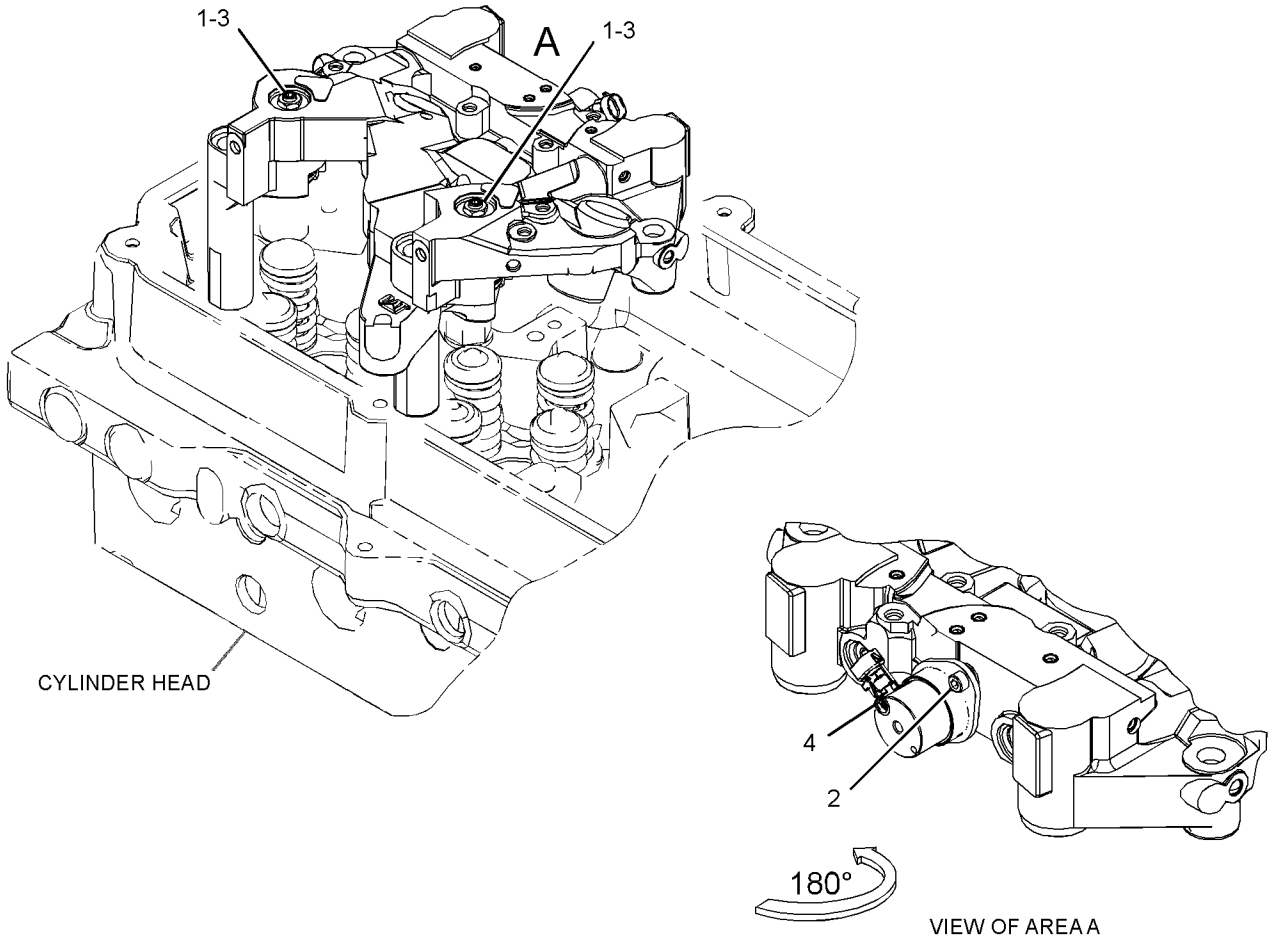

GRAPHIC #1 **<END>** g03396080

346-5752 ACTUATOR GP-VALVE

S/N: TXX1-UP
FOR USE WITH 24-VOLT CAT BRAKE
CANNOT BE USED WITH VVA APPLICATIONS
PART OF 383-2065, 422-0048 ENGINE AR-COMPLETE
AN ATTACHMENT

SMCS-1130 **i05787716**

NOTE	REF NO	GRAPHIC REF	PART NUMBER	QTY	PART NAME 1 2 3 4 5 6 (PRODUCT LEVEL)	SEE PAGE
YR	1	1	**367-3835**	3	ACTUATOR AS-VALVE	10
	2	1	**3H-7654**	6	WASHER-HARD (13.5X22.5X3-MM THK)	
M	3	1	**6V-8149**	6	NUT (M12X1.75-THD)	
M	4	1	**8T-7058**	6	BOLT-SOCKET HEAD (M12X1.75X140-MM)	

M - METRIC PART
R - REMFG PART MAY BE AVAILABLE
Y - SEPARATE ILLUSTRATION

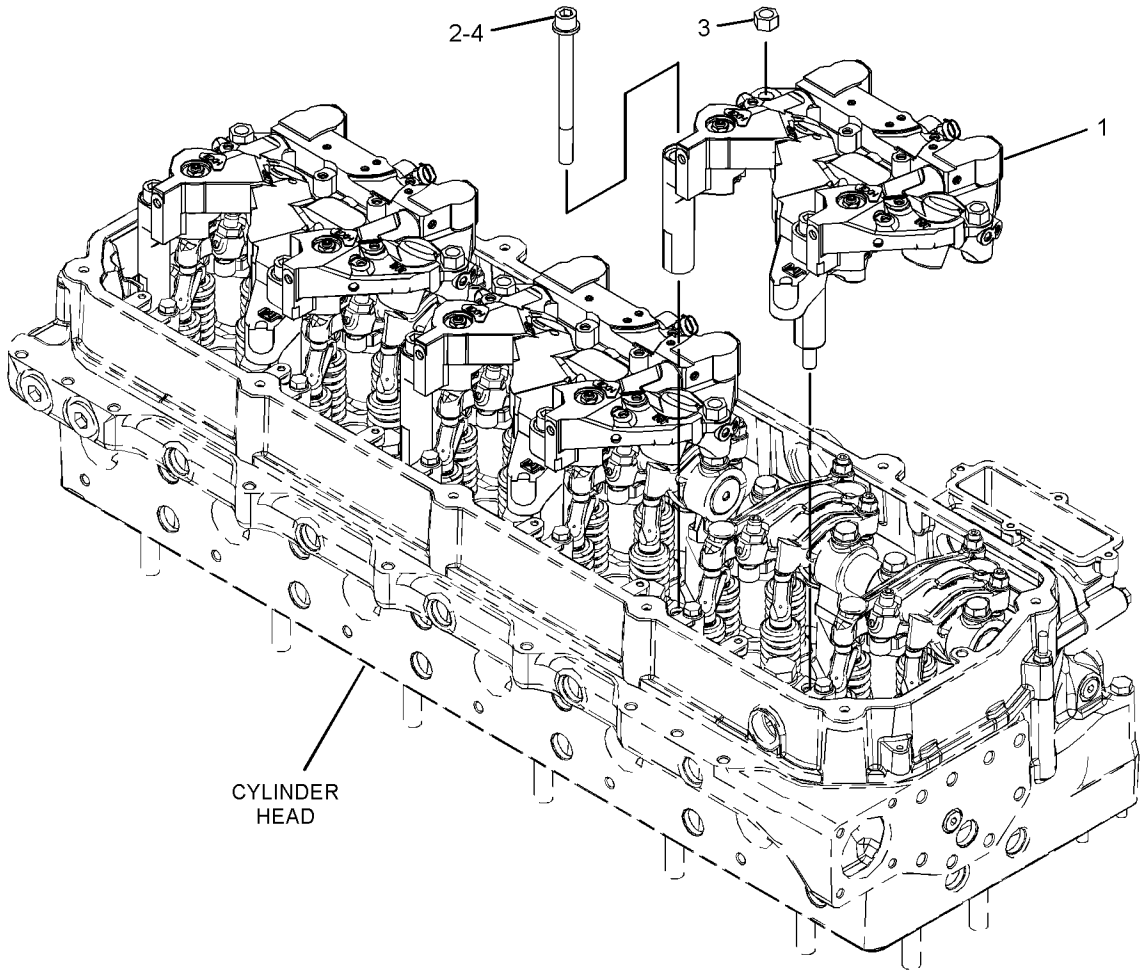

GRAPHIC #1 **<END>** g02630830

339-7863 BASE GP-VALVE COVER

S/N: TXX1-UP

PART OF 349-5294 BASE GP-VALVE COVER

AN ATTACHMENT

SMCS-1120 **i04377629**

NOTE	REF NO	GRAPHIC REF	PART NUMBER	QTY	PART NAME 1 2 3 4 5 6 (PRODUCT LEVEL)	SEE PAGE
	1	1	**321-5639**	1	SEAL	
	2	1	**332-3707**	1	ADAPTER	
	3	1	**9M-1974**	2	WASHER-HARD (8.8X16X2-MM THK)	
M	4	1	**5P-8347**	2	BOLT (M8X1.25X70-MM)	

M - METRIC PART

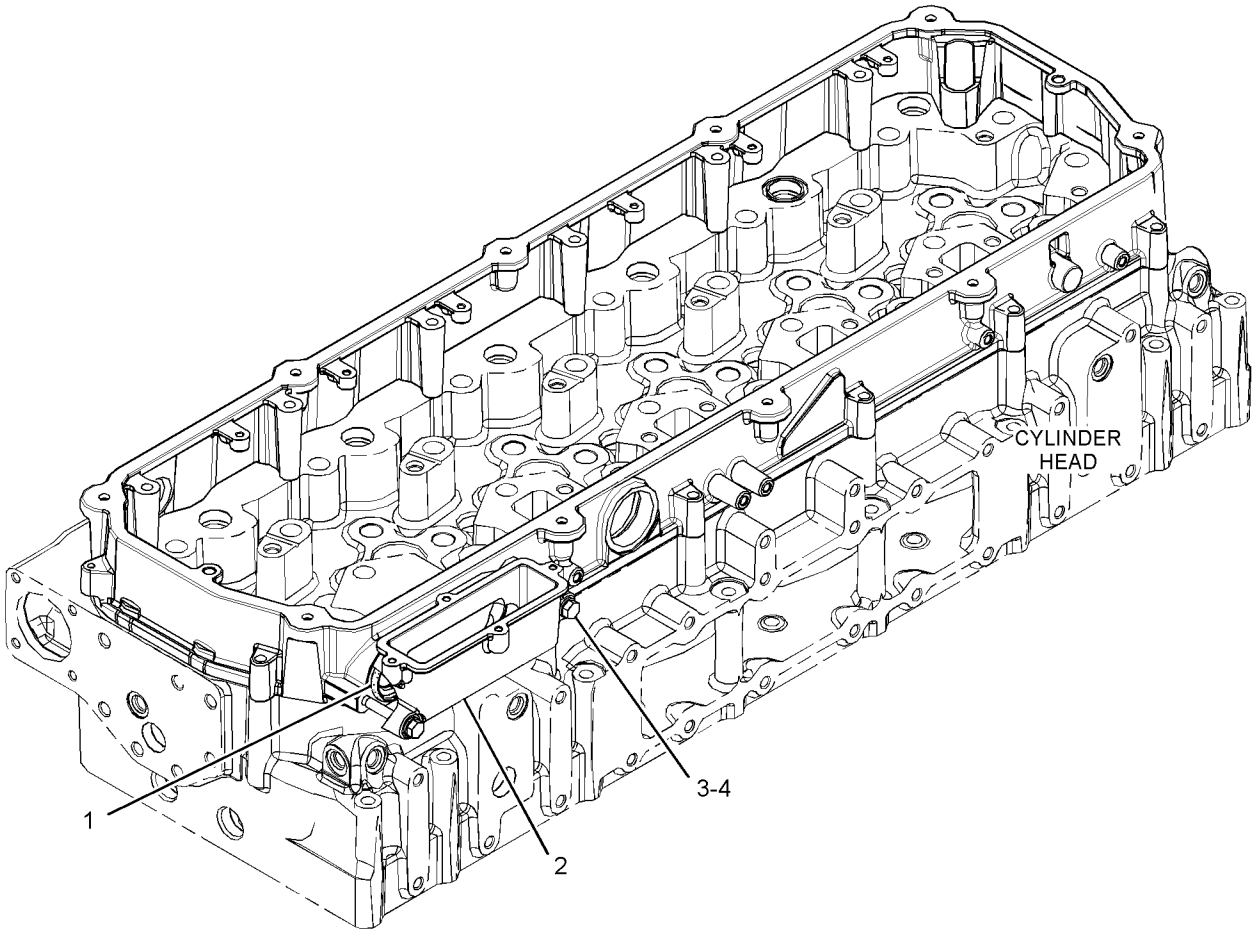

GRAPHIC #1 **<END>** g02599736

349-5294 BASE GP-VALVE COVER

S/N: TXX1-UP
PART OF 376-4249 ENGINE AR-CORE
AN ATTACHMENT

SMCS-1120 **i05208620**

NOTE	REF NO	GRAPHIC REF	PART NUMBER	QTY	PART NAME 1 2 3 4 5 6 (PRODUCT LEVEL)	SEE PAGE
	1	1	**272-0389**	1	SEAL	
Y	2	1	**339-7863**	1	BASE GP-VALVE COVER	12
	3	1	**211-3445**	2	STUD (M8X1.25-THD)	
M	4	1	**6V-3918**	6	BOLT (M8X1.25X50-MM)	
M	5	1	**6V-5221**	6	BOLT (M8X1.25X80-MM)	
	6	1	**9M-1974**	14	WASHER-HARD (8.8X16X2-MM THK)	

M - METRIC PART
Y - SEPARATE ILLUSTRATION

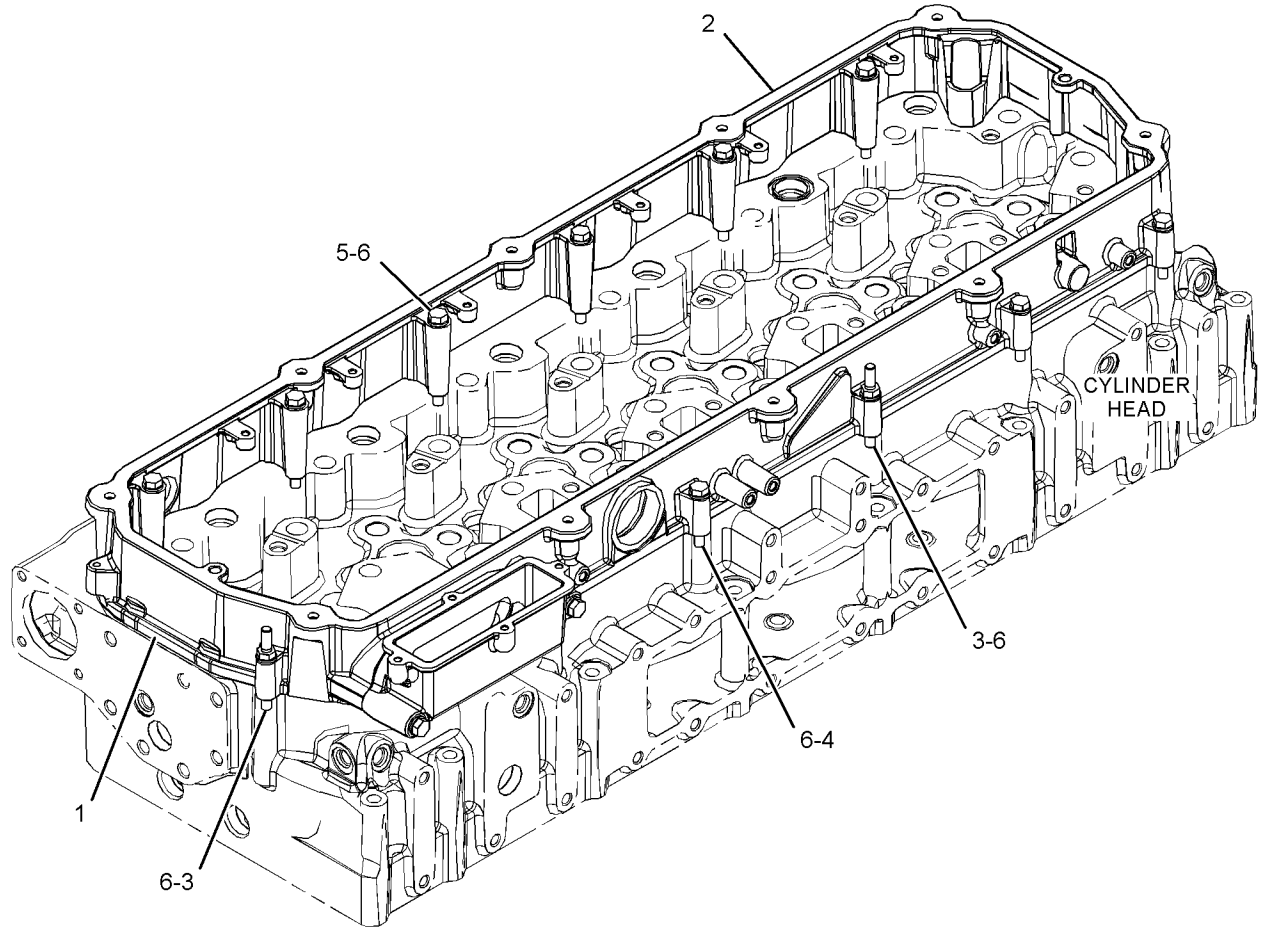

GRAPHIC #1 **<END>** g03380750

355-1287 CAMSHAFT GP

S/N: TXX1-UP
PART OF 355-1288 CAMSHAFT GP
AN ATTACHMENT

SMCS-1210 **i04377622**

NOTE	REF NO	GRAPHIC REF	PART NUMBER	QTY	PART NAME 1 2 3 4 5 6 (PRODUCT LEVEL)	SEE PAGE
	1	1	**344-9038**	1	CAMSHAFT	
	2	1	**223-7471**	1	PLATE-THRUST	
	3	1	**222-3907**	1	GEAR (96-TEETH)	
	4	1	**1B-8705**	1	KEY-WOODRUFF	

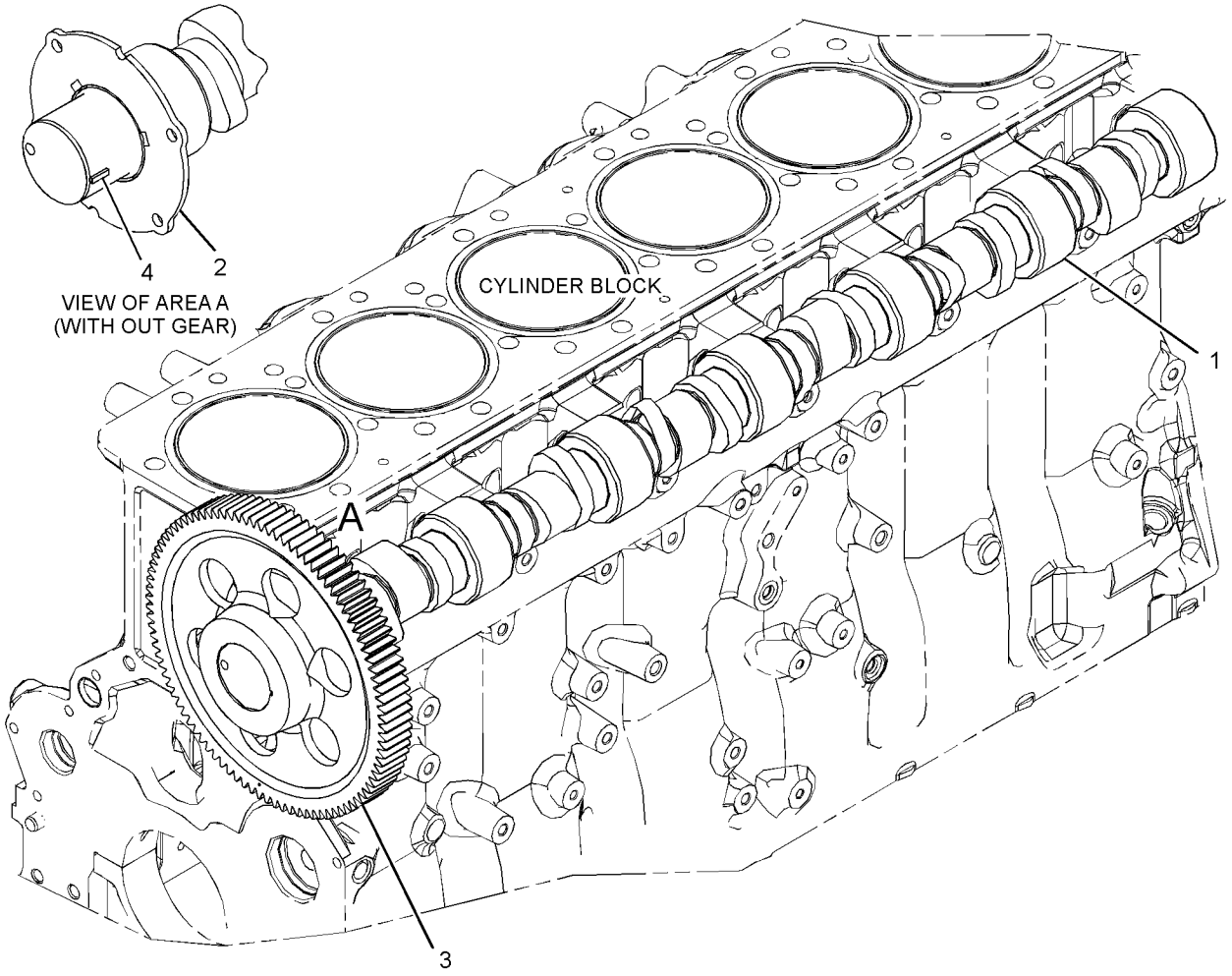

GRAPHIC #1 **<END>** g02653160

355-1288 CAMSHAFT GP

S/N: TXX1-UP
PART OF 376-4249 ENGINE AR-CORE
AN ATTACHMENT

SMCS-1210 **i04377621**

NOTE	REF NO	GRAPHIC REF	PART NUMBER	QTY	PART NAME 1 2 3 4 5 6 (PRODUCT LEVEL)	SEE PAGE
	1	1	**229-5684**	1	COVER	
Y	2	1	*355-1287*	1	CAMSHAFT GP	14
	3	1	**131-3718**	1	SEAL-O-RING	
M	4	1	**6V-5217**	4	BOLT (M8X1.25X20-MM)	
M	5	1	**8T-0338**	4	BOLT-SOCKET HEAD (M8X1.25X45-MM)	
	6	1	**9M-1974**	4	WASHER-HARD (8.8X16X2-MM THK)	

M - METRIC PART
Y - SEPARATE ILLUSTRATION

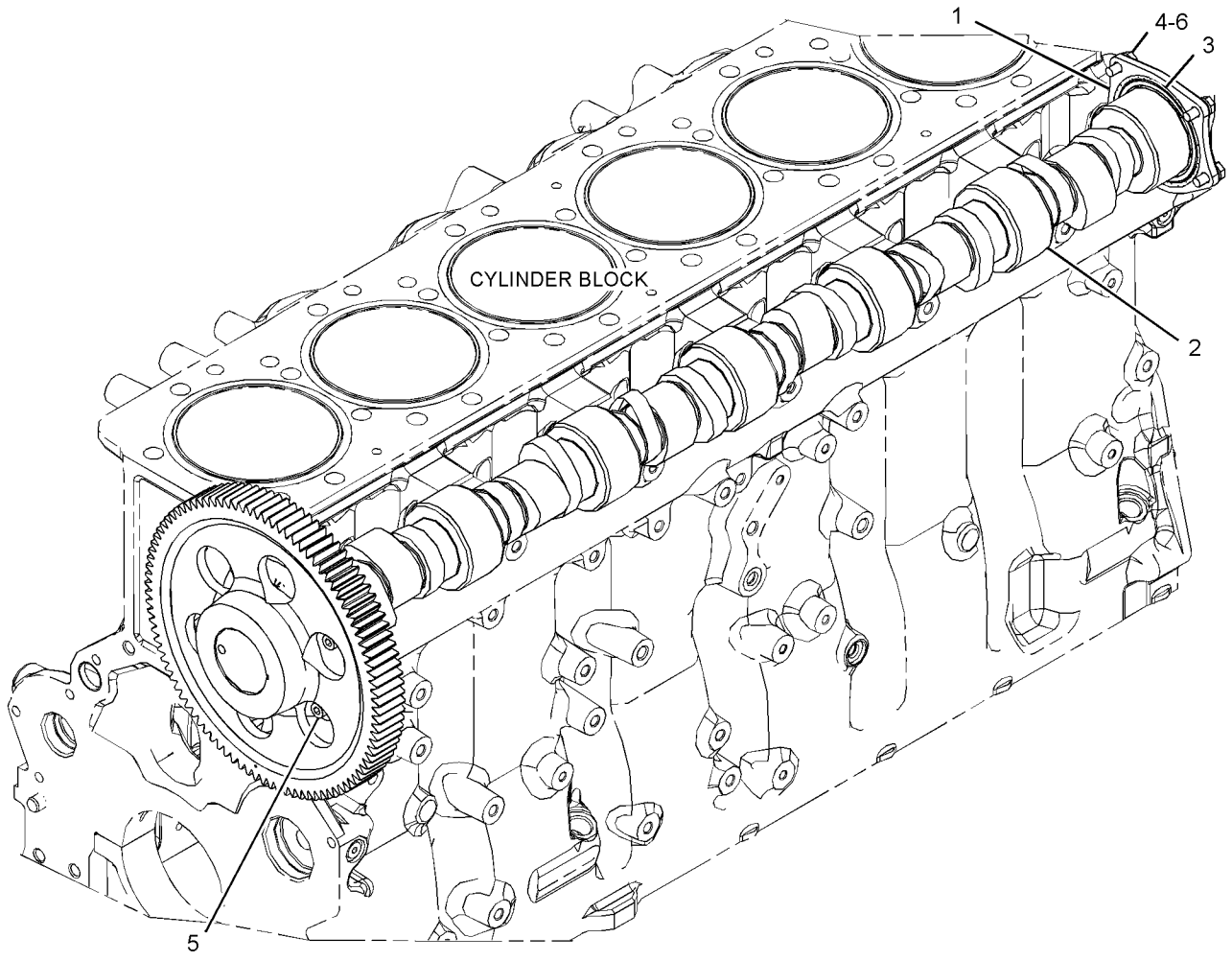

GRAPHIC #1 **<END>** g02584597

347-1267 COVER GP-CYLINDER BLOCK

S/N: TXX1-UP

PROVIDES COVERS FOR THE ENGINE OIL PUMP MANIFOLD WHEN NOT REQUIRED FOR OIL FILLERS

PART OF 383-2065, 422-0048 ENGINE AR-COMPLETE

AN ATTACHMENT

SMCS-1201 **i05863976**

NOTE	REF NO	GRAPHIC REF	PART NUMBER	QTY	PART NAME 1 2 3 4 5 6 (PRODUCT LEVEL)	SEE PAGE
	1	1	**7C-1445**	3	COVER	
	2	1	**061-9455**	3	SEAL-O-RING	
M	3	1	**6V-3940**	4	BOLT (M8X1.25X25-MM)	
M	4	1	**6V-5217**	2	BOLT (M8X1.25X20-MM)	
	5	1	**9M-1974**	6	WASHER-HARD (8.8X16X2-MM THK)	

M - METRIC PART

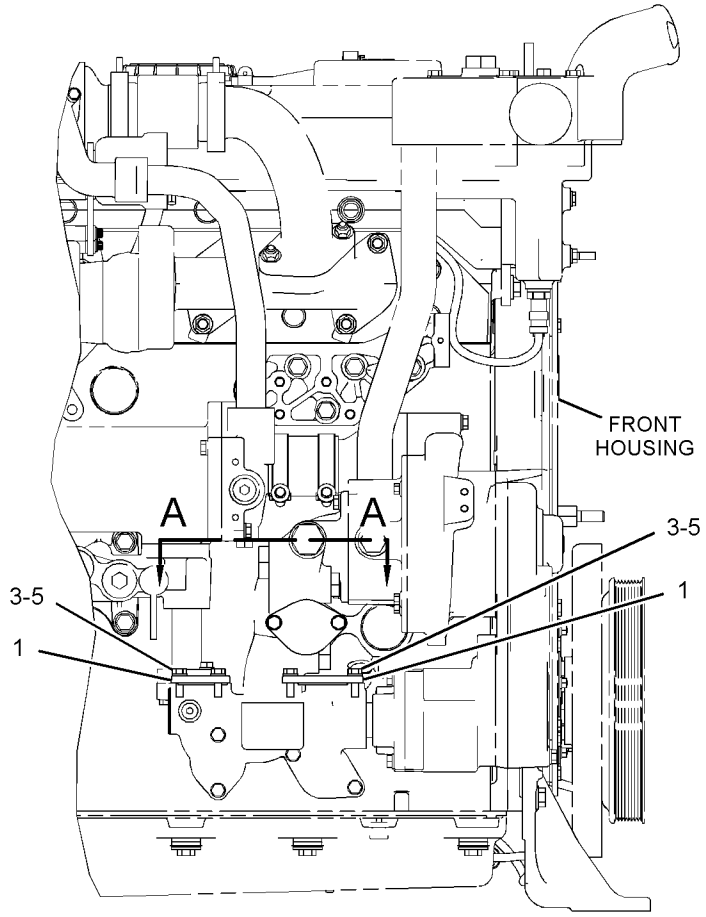

RIGHT SIDE VIEW OF ENGINE

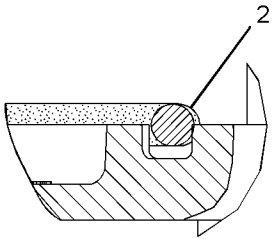

VIEW OF AREA B

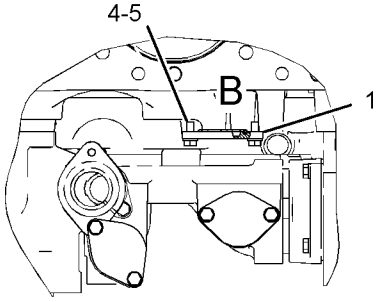

VIEW A-A

GRAPHIC #1 **<END>** g02178251

216-5540 COVER GP-FLYWHEEL HOUSING

S/N: TXX1-UP
PART OF 277-4435 HOUSING GP-FLYWHEEL
AN ATTACHMENT

SMCS-1157 **i05904602**

NOTE	REF NO	GRAPHIC REF	PART NUMBER	QTY	PART NAME 1 2 3 4 5 6 (PRODUCT LEVEL)	SEE PAGE
	1	1	**217-5900**	1	COVER	
	2	1	**4M-6480**	1	GASKET	
M	3	1	**6V-4248**	2	BOLT (M10X1.5X25-MM)	
	4	1	**6V-5839**	2	WASHER (11X21X2.5-MM THK)	

M - METRIC PART

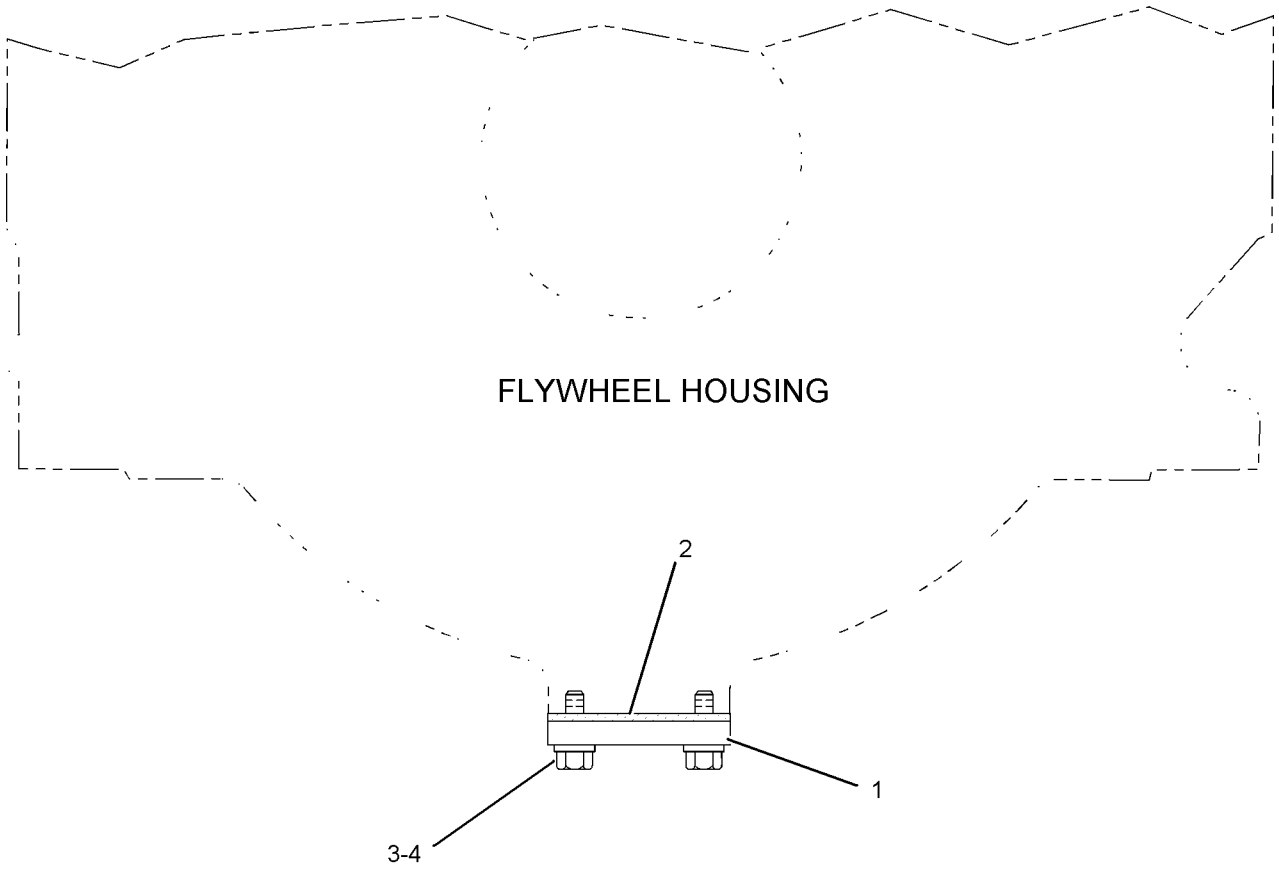

GRAPHIC #1 **<END>** g01020213

227-2574 COVER GP-FRONT HOUSING

S/N: TXX1-UP
PROVIDES COVER WHEN AIR COMPRESSOR IS NOT USED
PART OF 383-2065, 422-0048 ENGINE AR-COMPLETE
AN ATTACHMENT

SMCS-1151, 1166 **i05863979**

NOTE	REF NO	GRAPHIC REF	PART NUMBER	QTY	PART NAME 1 2 3 4 5 6 (PRODUCT LEVEL)	SEE PAGE
	1	1	**285-0823**	1	COVER	
M	2	1	**6V-8197**	3	BOLT (M12X1.75X40-MM)	
	3	1	**117-8801**	1	SEAL-O-RING	
	4	1	**5P-8245**	3	WASHER-HARD (13.5X25.5X3-MM THK)	

M - METRIC PART

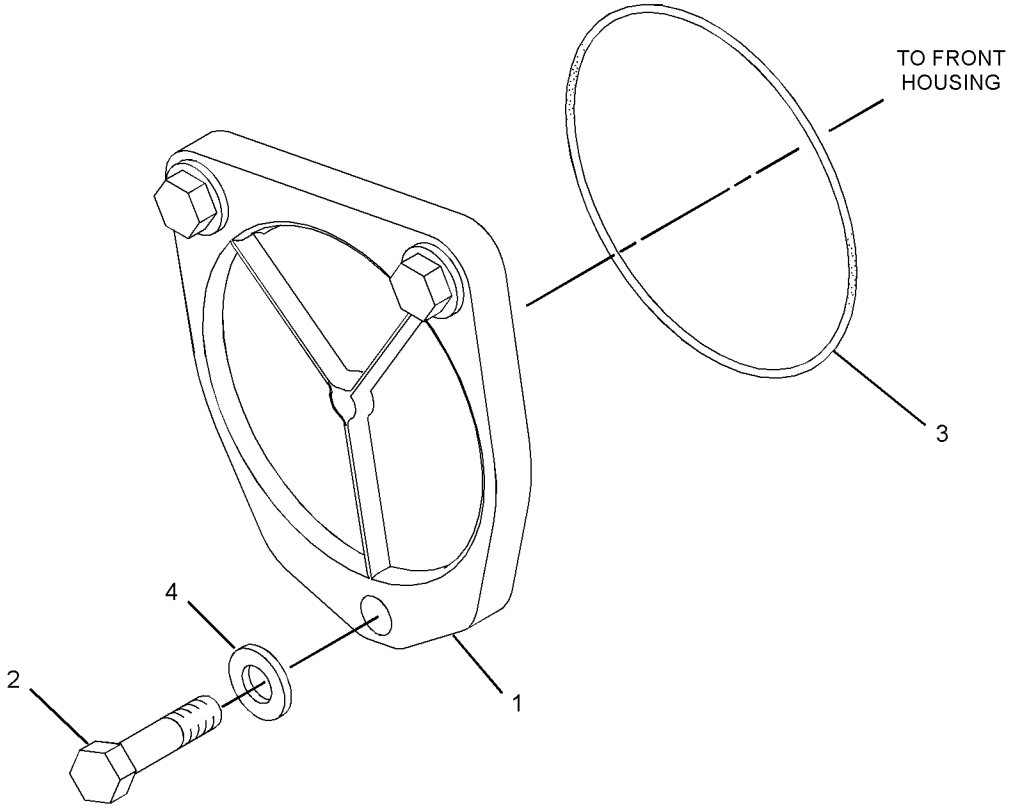

GRAPHIC #1 **<END>** g01345052

453-5500 COVER GP-FRONT HOUSING

S/N: TXX591-UP
PART OF 422-0048 ENGINE AR-COMPLETE
AN ATTACHMENT

SMCS-1151, 1166

i06138559

NOTE	REF NO	GRAPHIC REF	PART NUMBER	QTY	PART NAME 1 2 3 4 5 6 (PRODUCT LEVEL)	SEE PAGE
	1	1	**285-0823**	1	COVER	
	2	1	**439-4704**	1	BRACKET AS	
M		1	**8T-3490**	1	NUT-WELD (M10X1.5-THD)	
	3	1	**117-8801**	1	SEAL-O-RING	
	4	1	**5P-8245**	3	WASHER-HARD (13.5X25.5X3-MM THK)	
M	5	1	**6V-5684**	2	BOLT (M12X1.75X45-MM)	
M	6	1	**6V-8197**	1	BOLT (M12X1.75X40-MM)	

M - METRIC PART

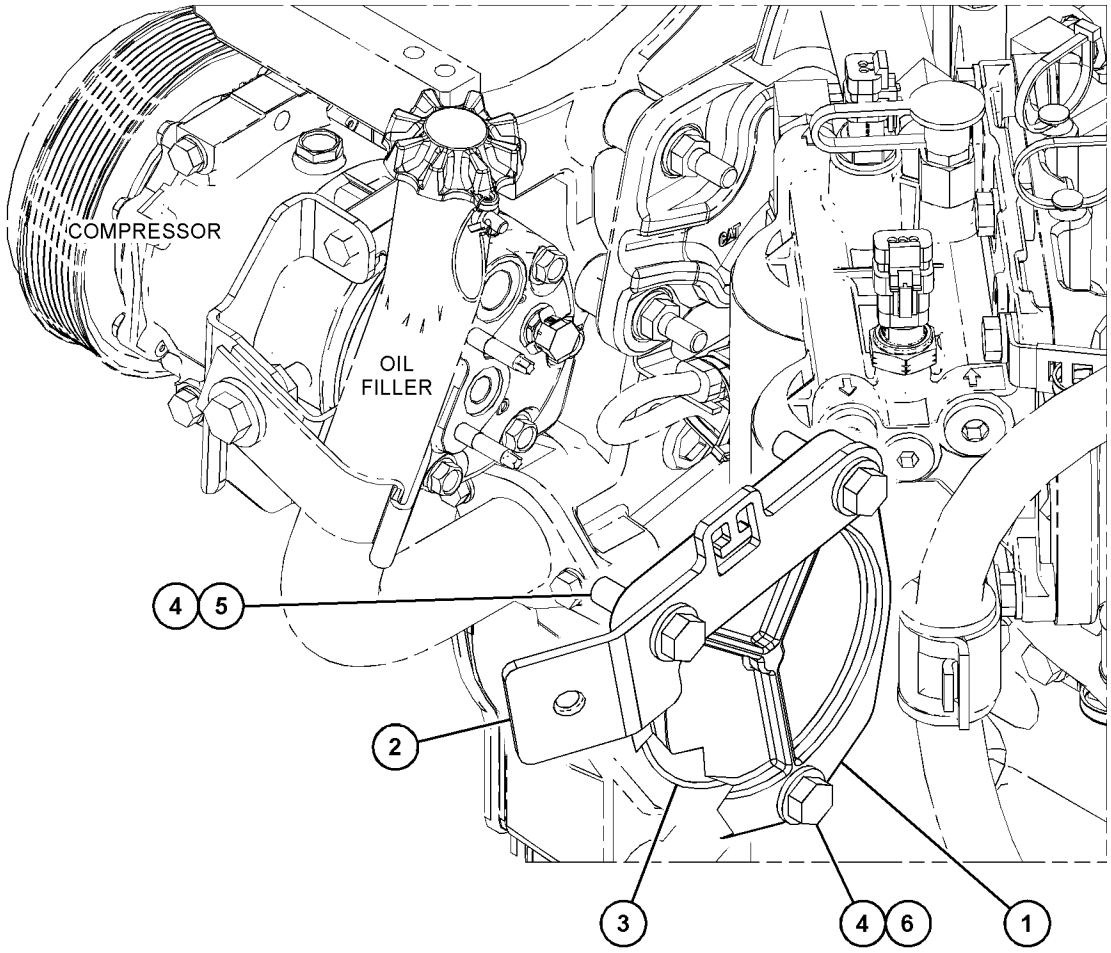

GRAPHIC #1

<END>

g03835112

421-2485 COVER GP-SOUND SUPPRESSION

S/N: E9Y1-UP

PART OF 375-3401 SUPPRESSION GP-SOUND

AN ATTACHMENT

SMCS-1801 **i06155255**

NOTE	REF NO	GRAPHIC REF	PART NUMBER	QTY	PART NAME 1 2 3 4 5 6 (PRODUCT LEVEL)	SEE PAGE
	1	1	**478-9936**	1	INSULATION	
	2	1	**479-1806**	1	COVER AS (LH)	
		1	**1V-8284**	1	HINGE	
	3	1	**275-4236**	1	SCREW-WING (M12X1.75X40-MM)	
	4	1	**3B-4611**	1	PIN-COTTER	
	5	1	**7X-0584**	1	WASHER-HARD (13.5X20.5X2-MM THK)	

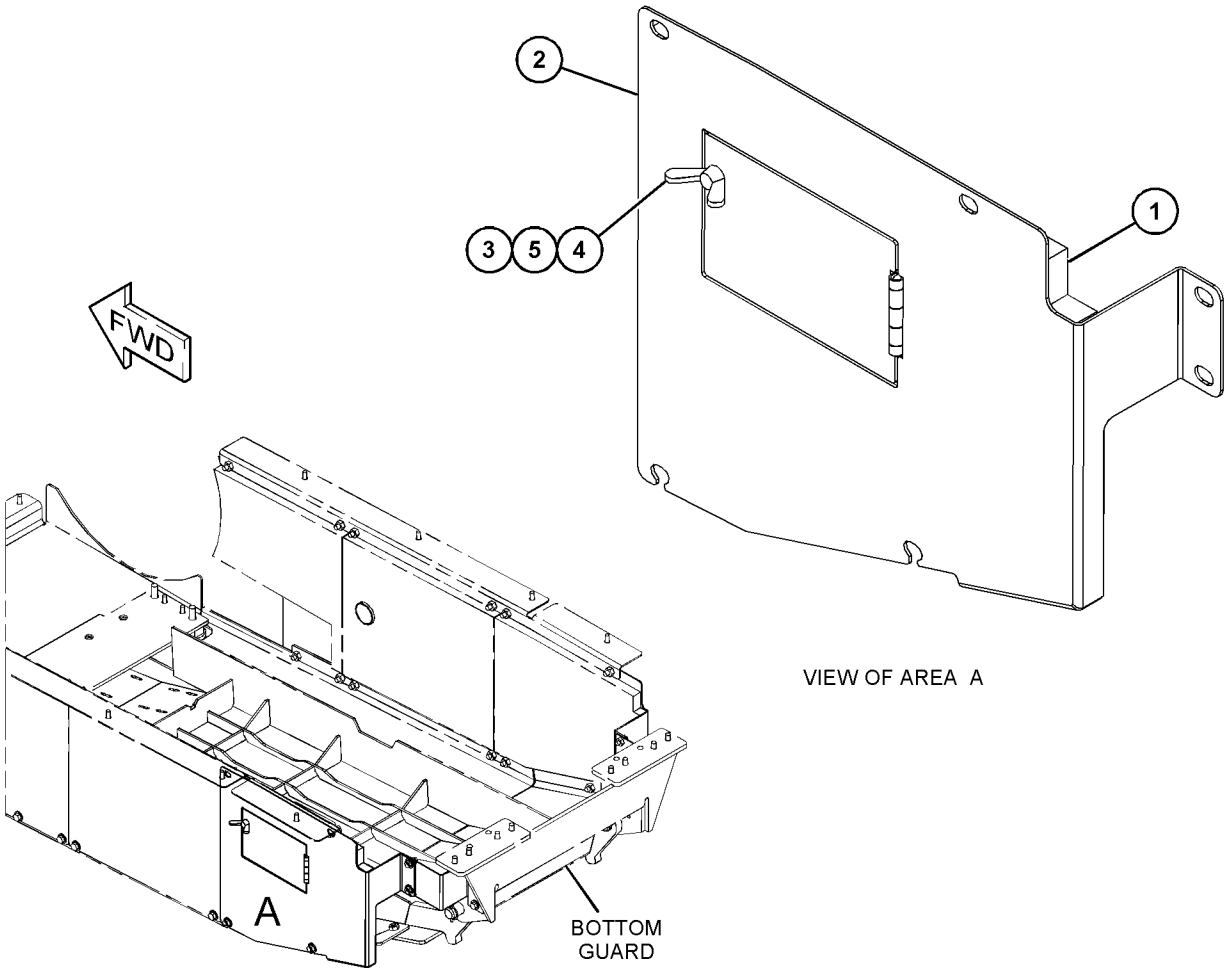

VIEW OF AREA A

GRAPHIC #1 **<END>** g03834809

355-7194 COVER GP-VALVE MECHANISM

S/N: TXX1-UP

PART OF 383-2065, 422-0048 ENGINE AR-COMPLETE

AN ATTACHMENT

SMCS-1107, 1120

i05596710

NOTE	REF NO	GRAPHIC REF	PART NUMBER	QTY	PART NAME 1 2 3 4 5 6 (PRODUCT LEVEL)	SEE PAGE
	1	1	**212-7728**	10	ISOLATOR AS	
	2	1	**229-5711**	1	SEAL-VALVE COVER	
	3	1	**344-7562**	1	COVER-VALVE	
	4	1	**8T-4224**	10	WASHER-HARD (8.8X16X2-MM THK)	
M	5	1	**8T-6912**	10	BOLT (M8X1.25X50-MM)	

M - METRIC PART

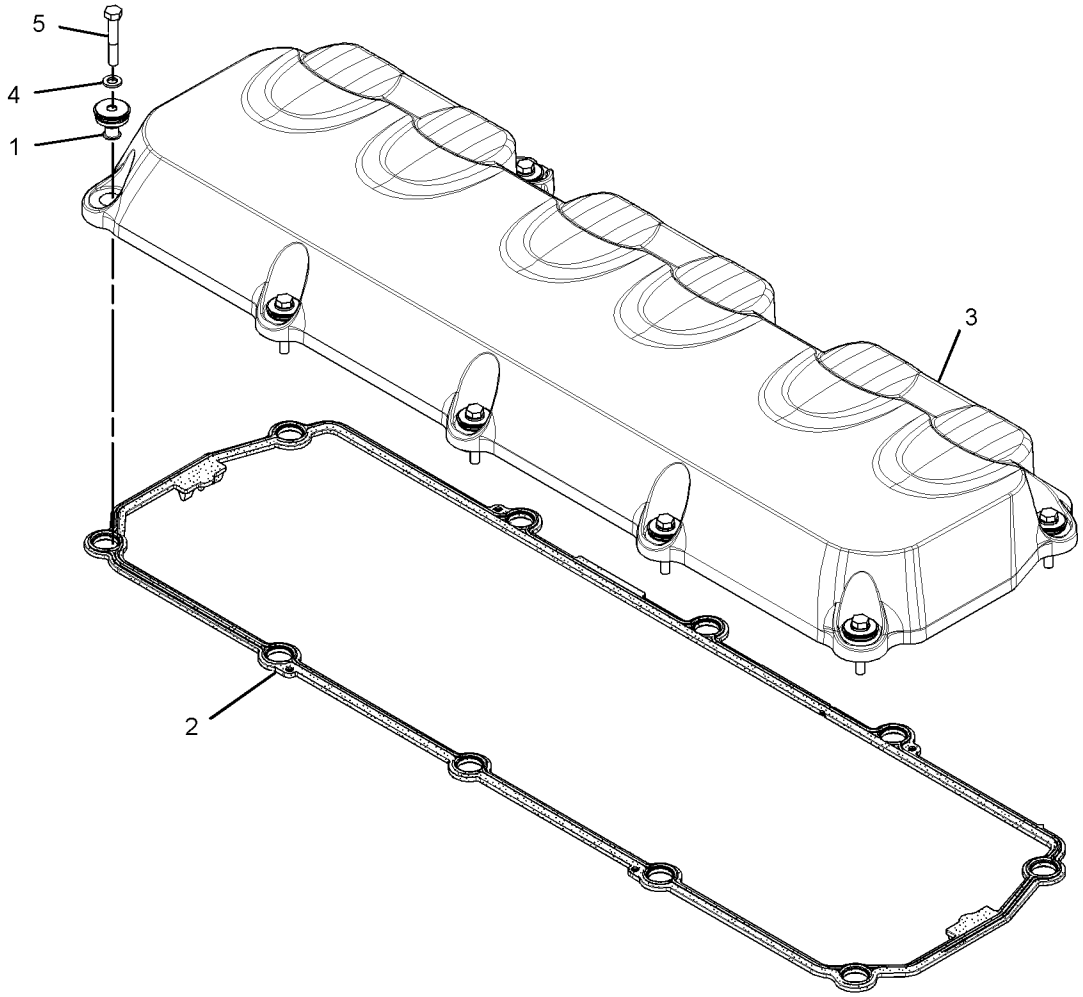

GRAPHIC #1 **<END>** g02224493

224-3881 CRANKSHAFT GP

S/N: TXX1-UP
PART OF 376-4249 ENGINE AR-CORE
AN ATTACHMENT

SMCS-1202, 1203, 1204, 1232 **i05843769**

NOTE	REF NO	GRAPHIC REF	PART NUMBER	QTY	PART NAME 1 2 3 4 5 6 (PRODUCT LEVEL)	SEE PAGE
J	1	1	**211-0587**	4	BEARING-MAIN (STANDARD)	
AB		1	**128-0400**		BEARING-MAIN (0.51-MM US)	
AB		1	**128-0401**		BEARING-MAIN (0.76-MM US)	
AB		1	**128-0402**		BEARING-MAIN (0.51-MM OS)	
AB		1	**128-0403**		BEARING-MAIN (0.51-MM OS, 0.51-MM US)	
J	2	1	**211-0588**	3	BEARING-MAIN (STANDARD)	
AB		1	**128-0382**		BEARING-MAIN (0.51-MM US)	
AB		1	**128-0383**		BEARING-MAIN (0.76-MM US)	
AB		1	**128-0384**		BEARING-MAIN (0.51-MM OS)	
AB		1	**128-0385**		BEARING-MAIN (0.51-MM OS, 0.51-MM US)	
R	3	1	**313-3997**	1	CRANKSHAFT AS	
		1	**6V-3536**	1	DOWEL	
		1	**9Y-0810**	1	SLEEVE-WEAR (REAR)	
		1	**9Y-0821**	1	SLEEVE (FRONT)	
		1	**187-8972**	1	GEAR-CRANKSHAFT (48-TEETH)	
J	4	1	**246-3144**	2	PLATE-THRUST	
					AVAILABLE REPAIR KIT(S):	
J			**243-6717**	1	KIT-CRANKSHAFT BEARING (STANDARD)	
					(INCLUDES MAIN BEARINGS & THRUST PLATES)	

A - NOT PART OF THIS GROUP
B - USE AS REQUIRED
J - KIT MARKED J INCLUDES PARTS MARKED J
R - REMFG PART MAY BE AVAILABLE

224-3881 **CRANKSHAFT GP (*contd.*)** **i05843769**

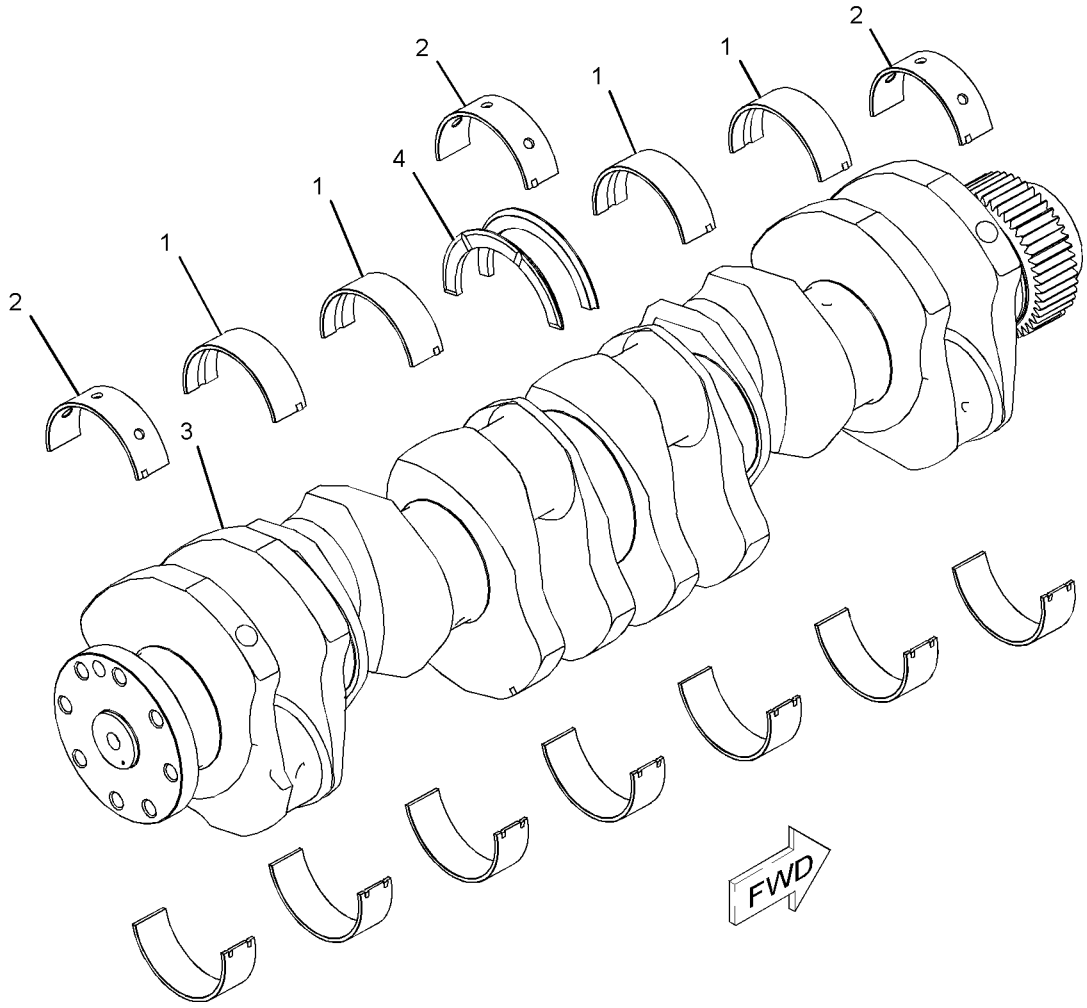

GRAPHIC #1 **<END>** g01101434

303-1382 CYLINDER BLOCK AS

S/N: TXX1-UP

PART OF 303-1383 CYLINDER BLOCK AS

AN ATTACHMENT

SMCS-1201 **i03562880**

NOTE	REF NO	GRAPHIC REF	PART NUMBER	QTY	PART NAME 1 2 3 4 5 6 (PRODUCT LEVEL)	SEE PAGE
	1	1	**223-6546**	14	BOLT (M18X2.5X170-MM)	
	2	1	**293-9397**	14	WASHER-HARD (19X34X3.5-MM THK)	
	3	1	**207-8572**	7	CAP-BEARING	

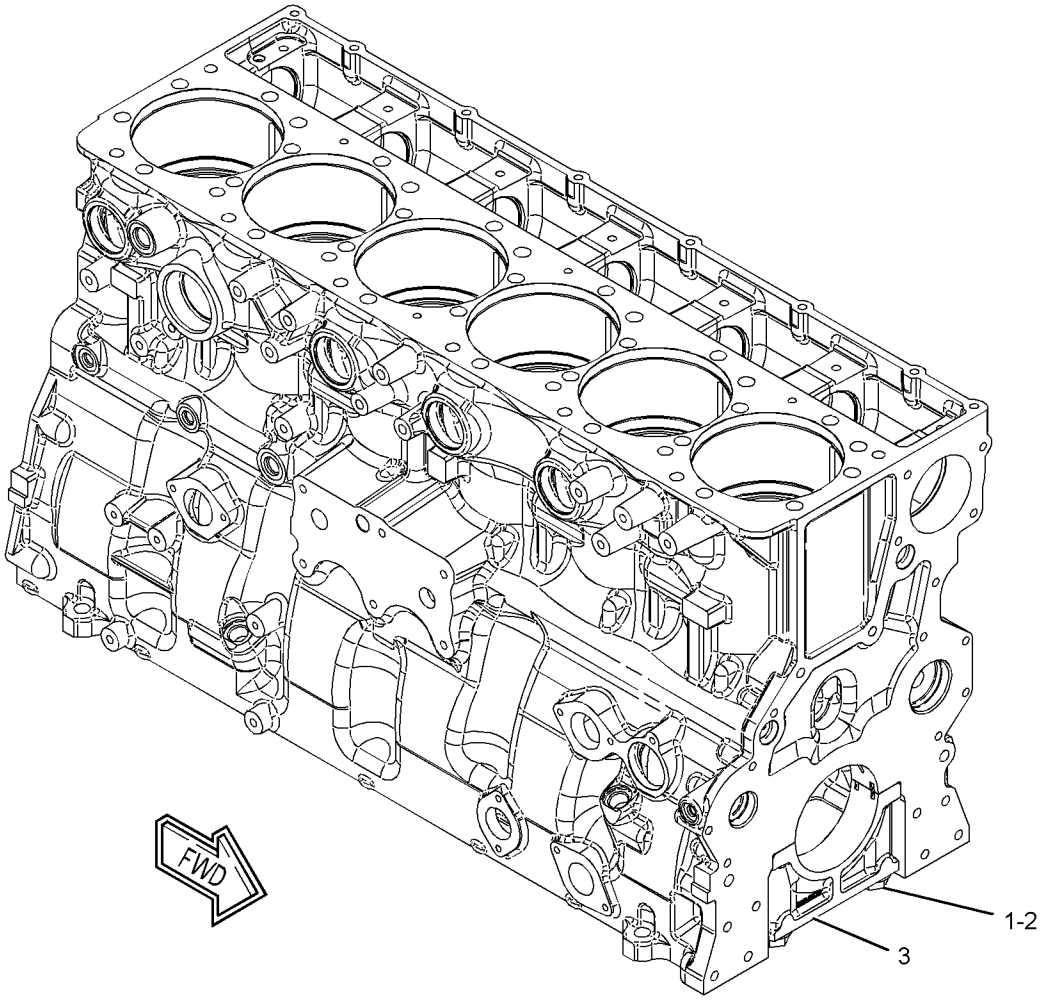

GRAPHIC #1 **<END>** g01338467

303-1383 CYLINDER BLOCK AS

S/N: TXX1-UP
PART OF 303-1384 CYLINDER BLOCK AS
AN ATTACHMENT

SMCS-1201 **i02662418**

NOTE	REF NO	GRAPHIC REF	PART NUMBER	QTY	PART NAME 1 2 3 4 5 6 (PRODUCT LEVEL)	SEE PAGE
	1	1	**187-8969**	7	BEARING	
Y	2	1	*303-1382*	1	CYLINDER BLOCK AS	24

Y - SEPARATE ILLUSTRATION

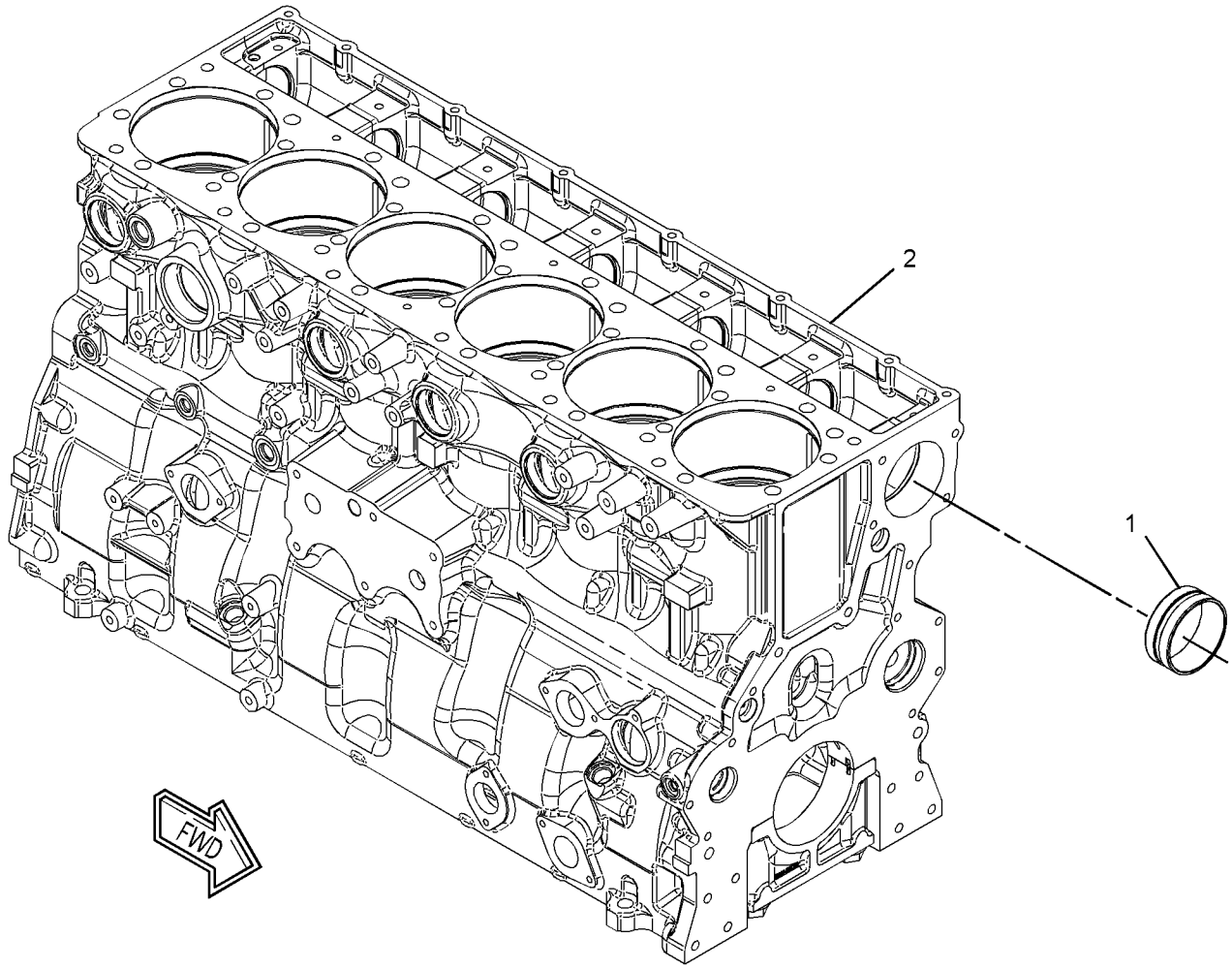

GRAPHIC #1 **<END>** g01338428

303-1384 CYLINDER BLOCK AS*R

S/N: TXX1-UP

PART OF 240-7271 CYLINDER BLOCK GP

AN ATTACHMENT

SMCS-1201 **i05401424**

NOTE	REF NO	GRAPHIC REF	PART NUMBER	QTY	PART NAME 1 2 3 4 5 6 (PRODUCT LEVEL)	SEE PAGE
	1	1	**4F-5695**	5	PLUG-CUP	
	2	1	**437-1409**	6	SEAL-LINER	
	3	1	**197-9330**	6	LINER-CYLINDER BLOCK	
YR	4	1	**303-1383**	1	CYLINDER BLOCK AS	25

R - REMFG PART MAY BE AVAILABLE
Y - SEPARATE ILLUSTRATION

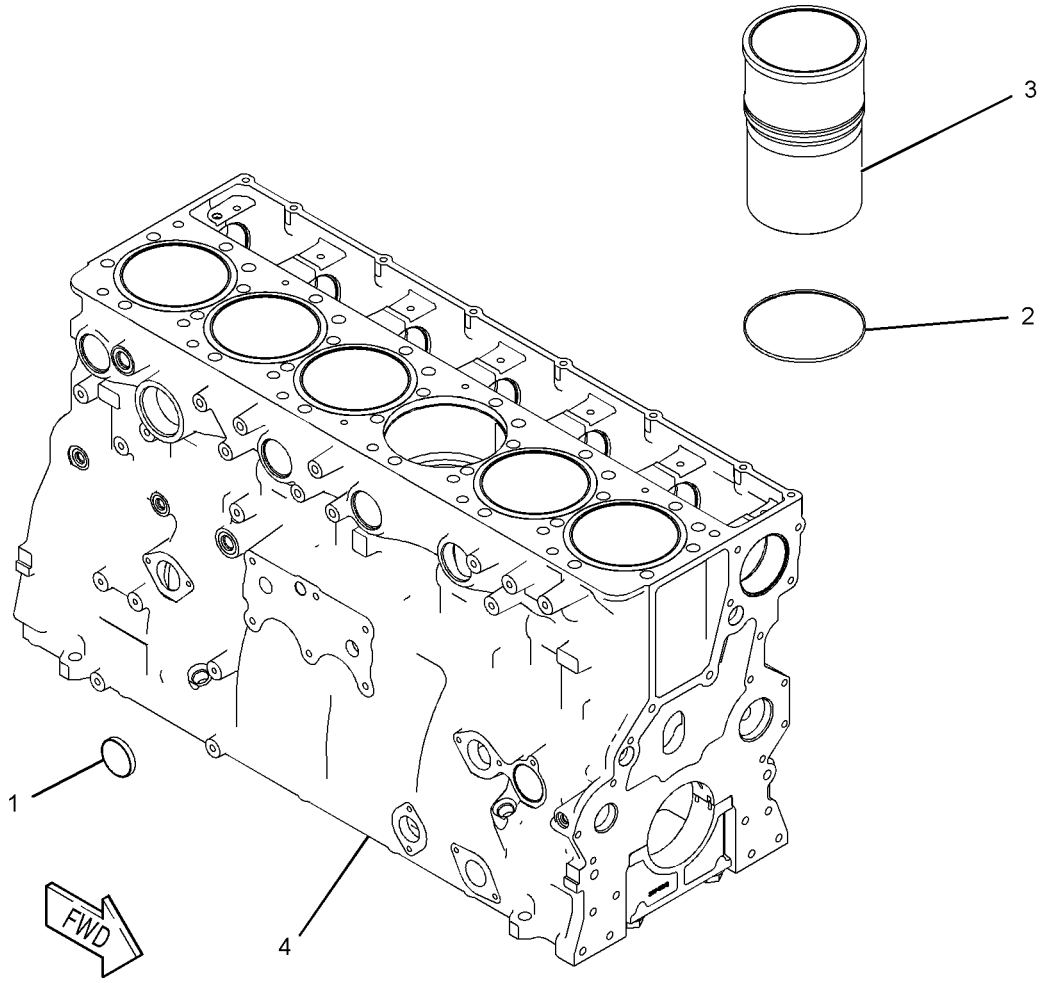

GRAPHIC #1 **<END>** g01009480

240-7271 CYLINDER BLOCK GP*R

S/N: TXX1-UP

PART OF 376-4249 ENGINE AR-CORE

AN ATTACHMENT

SMCS-1201 **i05327563**

NOTE	REF NO	GRAPHIC REF	PART NUMBER	QTY	PART NAME 1 2 3 4 5 6 (PRODUCT LEVEL)	SEE PAGE
	1	1	**3B-0623**	3	PLUG-CUP	
CYR	2	1	**303-1384**	1	CYLINDER BLOCK AS	26
	3	1	*396-0393*	3	PLUG AS	
					(EACH INCLUDES)	
		1	**214-7566**	1	SEAL-O-RING	
		1	**360-3677**	1	PLUG	
	4	1	**6V-3538**	2	DOWEL	
	5	1	**7N-5683**	6	DOWEL	

C - CHANGE FROM PREVIOUS TYPE
R - REMFG PART MAY BE AVAILABLE
Y - SEPARATE ILLUSTRATION

240-7271 **CYLINDER BLOCK GP (*contd.*)** **i05327563**

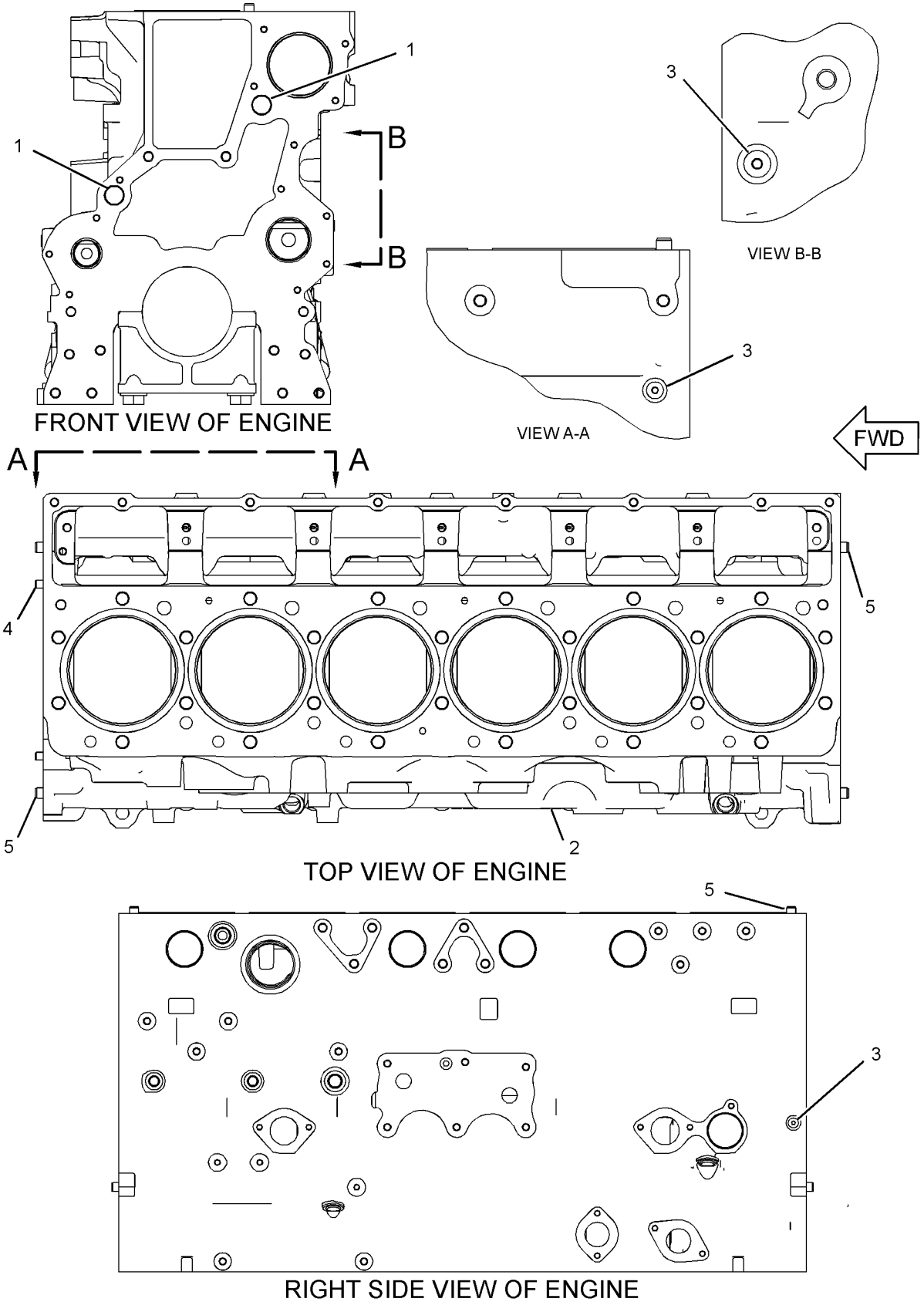

GRAPHIC #1 **<END>** g03320217

345-3752 CYLINDER HEAD AS

S/N: TXX1-UP

PART OF 356-2070 CYLINDER HEAD GP

AN ATTACHMENT

SMCS-1100 **i05313897**

NOTE	REF NO	GRAPHIC REF	PART NUMBER	QTY	PART NAME 1 2 3 4 5 6 (PRODUCT LEVEL)	SEE PAGE
	1	1	**224-1270**	12	INSERT-VALVE SEAT (EXHAUST) (STANDARD)	
AB			**254-3944**		INSERT-VALVE SEAT (0.51-MM OS)	
AB			**331-5010**		INSERT-VALVE SEAT (0.13-MM OS)	
AB			**331-5011**		INSERT-VALVE SEAT (0.26-MM OS)	
	2	1	**260-4855**	12	INSERT-VALVE SEAT (INLET) (STANDARD)	
AB			**331-5007**		INSERT-VALVE SEAT (0.13-MM OS, INLET)	
AB			**331-5008**		INSERT-VALVE SEAT (0.26-MM OS, INLET)	
AB			**331-5009**		INSERT-VALVE SEAT (0.51-MM OS, INLET)	
	3	1	**263-4920**	6	SLEEVE-INJECTOR (INLET)	
	4	1	**268-2953**	24	GUIDE-VALVE	
	6	1	**166-2904**	12	SEAL-O-RING	
	7	1	**9X-7430**	6	SEAL-O-RING	
	8	1	**3B-0623**	35	PLUG-CUP	
	9	1	*353-5140*	1	PLUG AS	
		1	**6V-5063**	1	SEAL-O-RING	
		1	**9S-8008**	1	PLUG	
	10	1	*183-3407*	7	PLUG AS	
					(EACH INCLUDES)	
		1	**9S-8004**	1	PLUG	
		1	**214-7568**	1	SEAL-O-RING	

A - NOT PART OF THIS GROUP
B - USE AS REQUIRED

345-3752 **CYLINDER HEAD AS (*contd.*)** **i05313897**

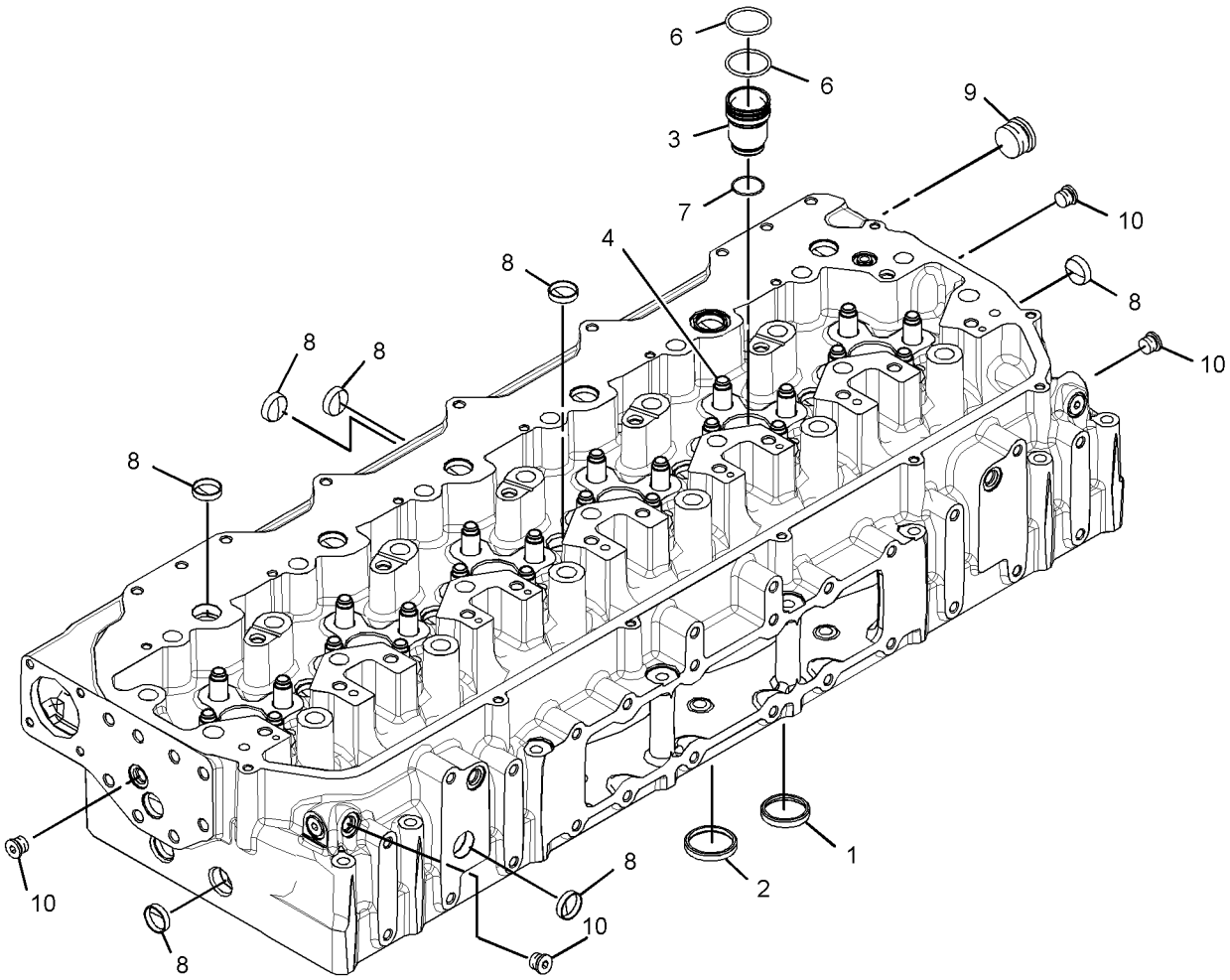

GRAPHIC #1 **<END>** g03369916

356-2069 CYLINDER HEAD GP

S/N: TXX1-UP
PART OF 376-4249 ENGINE AR-CORE
AN ATTACHMENT

SMCS-1100 **i04377620**

NOTE	REF NO	GRAPHIC REF	PART NUMBER	QTY	PART NAME 1 2 3 4 5 6 (PRODUCT LEVEL)	SEE PAGE
Y	1	1	*198-4963*	1	FASTENER GP-CYLINDER HEAD	35
	2	1	**221-9392**	1	GASKET (CYLINDER HEAD)	
Y	3	1	*356-2070*	1	CYLINDER HEAD GP	32

Y - SEPARATE ILLUSTRATION

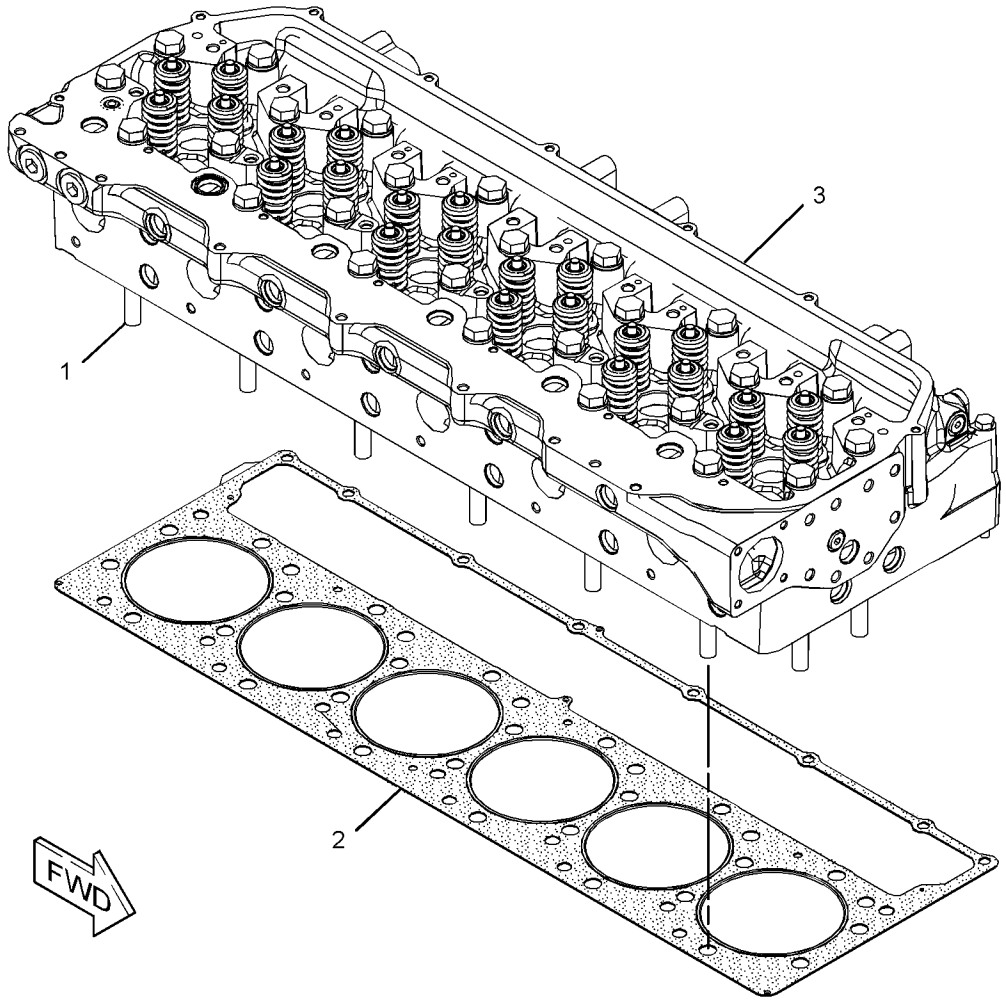

GRAPHIC #1 **<END>** g02582416

356-2070 CYLINDER HEAD GP

S/N: TXX1-UP

PART OF 356-2069 CYLINDER HEAD GP

AN ATTACHMENT

SMCS-1100 **i04377618**

NOTE	REF NO	GRAPHIC REF	PART NUMBER	QTY	PART NAME 1 2 3 4 5 6 (PRODUCT LEVEL)	SEE PAGE
	1	1	**2A-4429**	48	LOCK-RETAINER	
	2	1	**7E-7977**	24	ROTOCOIL AS	
					(EACH INCLUDES)	
		1	**7C-8581**	1	ROTOCOIL AS	
		1	**7E-7978**	1	SHIELD	
	3	1	**163-2478**	24	SEAL-VALVE STEM	
	4	1	**224-3125**	12	BASE	
	5	1	**224-4441**	24	SPRING	
	6	1	**248-1467**	12	VALVE-EXHAUST	
	7	1	**252-7802**	12	VALVE-INLET	
Y	8	1	**345-3752**	1	CYLINDER HEAD AS	29
	9	1	*353-5140*	2	PLUG AS	
					(EACH INCLUDES)	
		1	**6V-5063**	1	SEAL-O-RING	
		1	**9S-8008**	1	PLUG	
	10	1	**332-2152**	24	SPRING-VALVE	
	11	1	**5P-5598**	1	SEAL-O-RING	

Y - SEPARATE ILLUSTRATION

356-2070 **CYLINDER HEAD GP (*contd.*)** **i04377618**

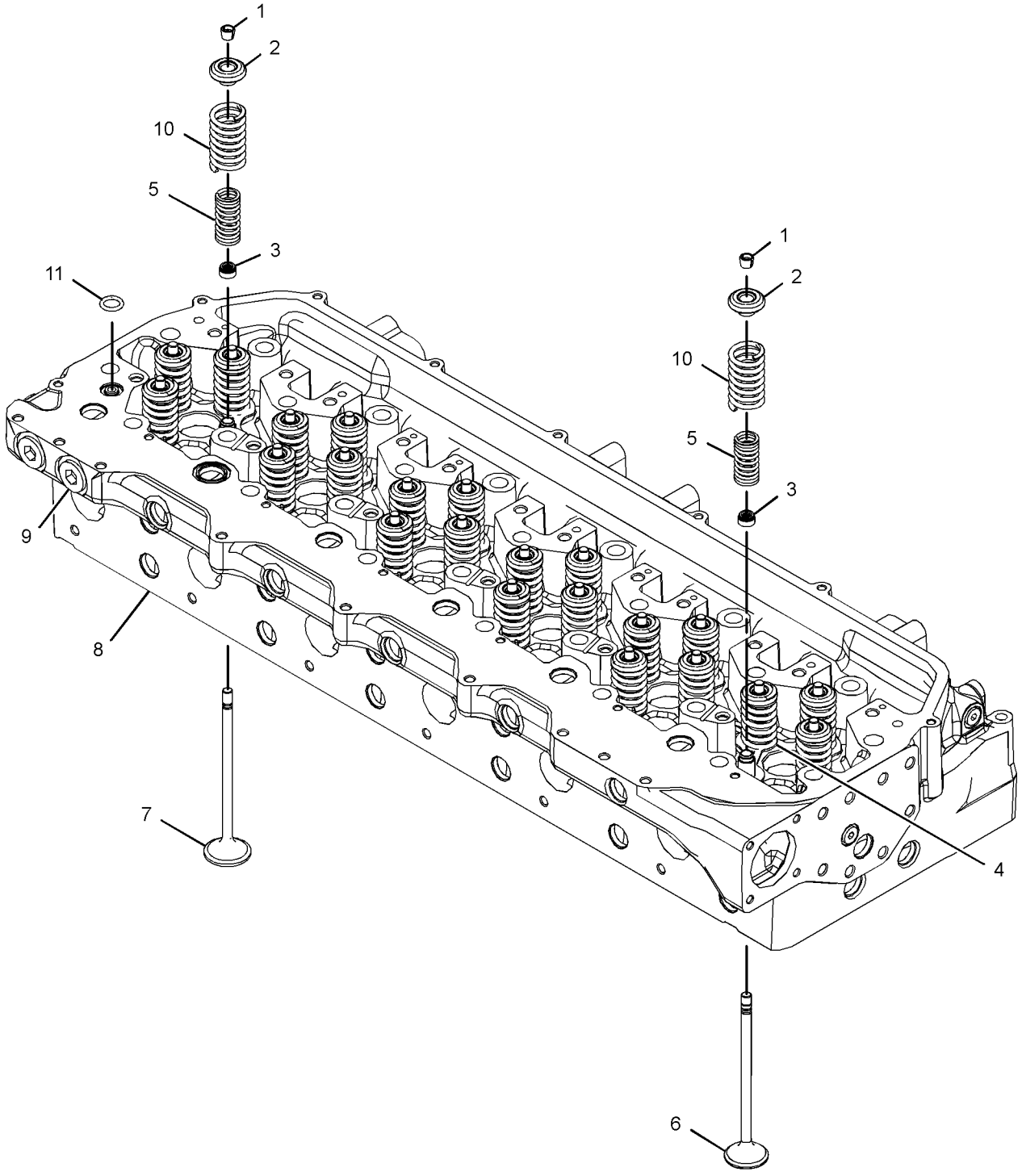

GRAPHIC #1 **<END>** g02582717

424-7963 DAMPER GP

S/N: TXX1-UP
8-RIB BELT DRIVEN COMPONENTS
PART OF 383-2065, 422-0048 ENGINE AR-COMPLETE
AN ATTACHMENT

SMCS-1205 **i05188102**

NOTE	REF NO	GRAPHIC REF	PART NUMBER	QTY	PART NAME 1 2 3 4 5 6 (PRODUCT LEVEL)	SEE PAGE
	1	1	**352-3557**	1	DAMPER AS	
	2	1	**380-5455**	1	PULLEY (8-GROOVE)	
M	3	1	**8T-4174**	6	BOLT (M16X2X120-MM)	
	4	1	**9X-8268**	6	WASHER (17.5X30X3.5-MM THK)	

M - METRIC PART

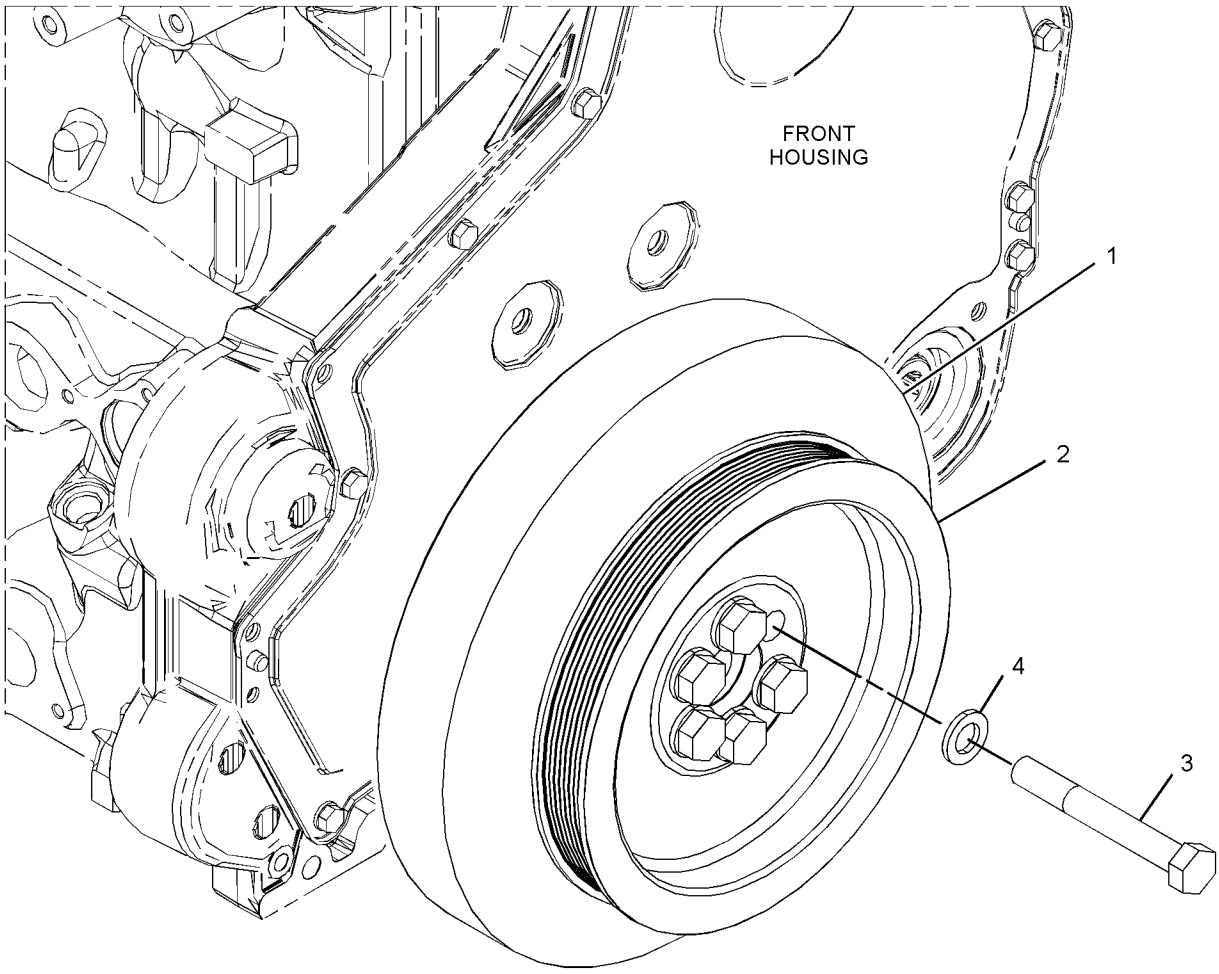

GRAPHIC #1 **<END>** g03565317

198-4963 FASTENER GP-CYLINDER HEAD

S/N: TXX1-UP
PART OF 356-2069 CYLINDER HEAD GP
AN ATTACHMENT

SMCS-1100 **i04756519**

NOTE	REF NO	GRAPHIC REF	PART NUMBER	QTY	PART NAME 1 2 3 4 5 6 (PRODUCT LEVEL)	SEE PAGE
M	1	1	**242-1811**	26	BOLT-CYLINDER HEAD (M16X2X220-MM)	
	2	1	**210-4460**	8	BOLT (M10X1.5X130-MM)	
	3	1	**2S-5658**	26	WASHER-HARD (17X29X3-MM THK)	

M - METRIC PART

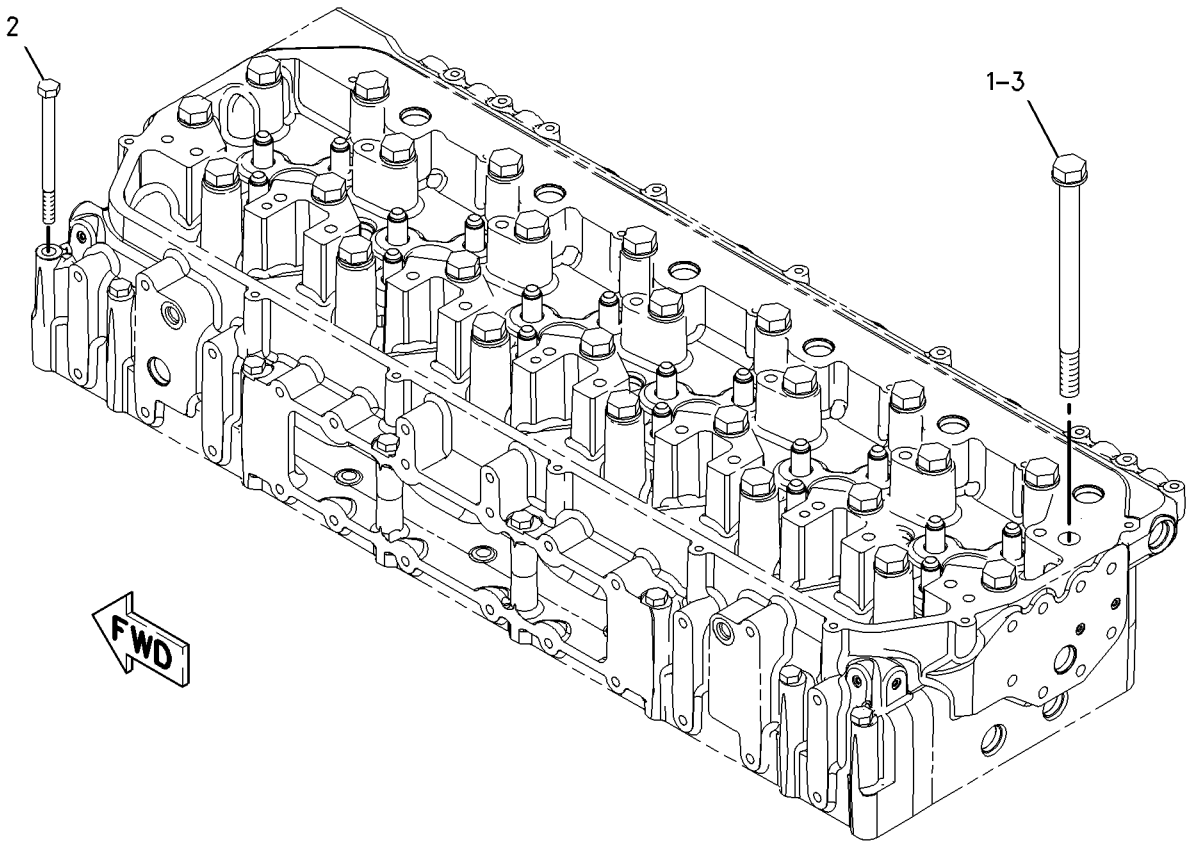

GRAPHIC #1 **<END>** g00949755

438-9577 FLYWHEEL GP

S/N: TXX1-UP

PART OF 383-2065, 422-0048 ENGINE AR-COMPLETE

AN ATTACHMENT

SMCS-1156, 1158

i05436519

NOTE	REF NO	GRAPHIC REF	PART NUMBER	QTY	PART NAME 1 2 3 4 5 6 (PRODUCT LEVEL)	SEE PAGE
M	1	1	**9X-2053**	8	BOLT (M16X2X100-MM)	
	2	1	**438-9578**	1	FLYWHEEL AS	
	2A	1	**4N-2514**	1	GEAR (113-TEETH)	
	3	1	**5P-8247**	8	WASHER-HARD (17X32X3.5-MM THK)	

M - METRIC PART

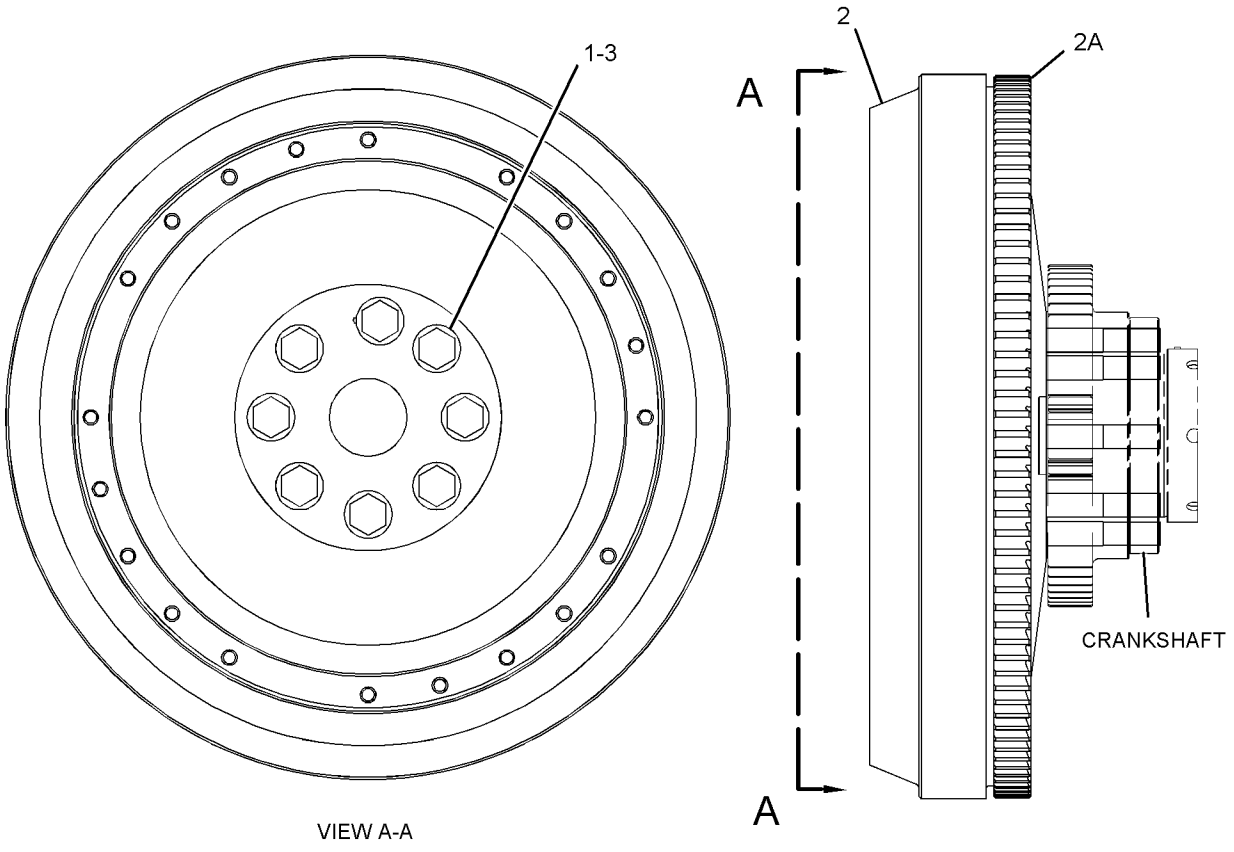

VIEW A-A

GRAPHIC #1

<END>

g03505877

394-5447 GEAR GP-REAR

S/N: TXX1-UP
PART OF 383-2065, 422-0048 ENGINE AR-COMPLETE
AN ATTACHMENT

SMCS-1204, 1206 **i06133277**

NOTE	REF NO	GRAPHIC REF	PART NUMBER	QTY	PART NAME 1 2 3 4 5 6 (PRODUCT LEVEL)	SEE PAGE
	1	1	**1W-4741**	1	GEAR AS-IDLER (70-TEETH)	
		1	**1W-4738**	1	BUSHING	
	2	1	**1W-4746**	1	RETAINER-GEAR	
	3	1	**154-3358**	1	GEAR-ADAPTER (68-TEETH)	
	4	1	**287-8357**	1	GEAR AS-DRIVE (64-TEETH)	
		1	**4F-6024**	1	PIN	
	5	1	**391-8361**	1	ADAPTER AS	
		1	**160-8184**	1	BUSHING	
	6	1	**277-8283**	1	COVER	
	8	1	**4N-1230**	2	SEAL-O-RING	
M	9	1	**6V-1820**	6	BOLT (M10X1.5X30-MM)	
	10	1	**6V-5839**	12	WASHER (11X21X2.5-MM THK)	
M	11	1	**6V-7673**	3	BOLT (M12X1.75X50-MM)	
M	12	1	**6V-6317**	6	BOLT (M10X1.5X20-MM)	

M - METRIC PART

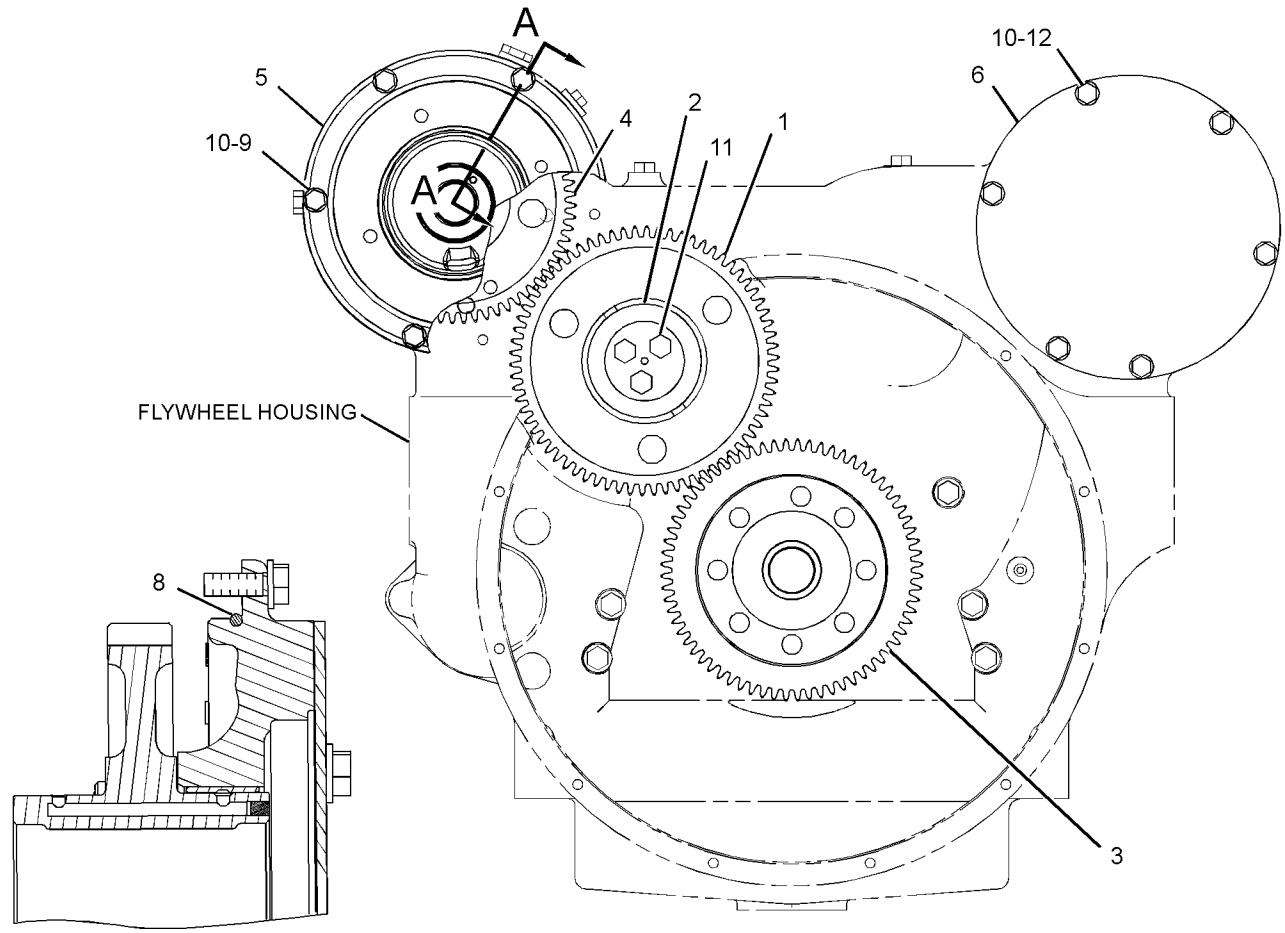

SECTION A-A

REAR VIEW OF ENGINE

GRAPHIC #1 **<END>** g03822011

277-4435 HOUSING GP-FLYWHEEL

S/N: TXX1-UP

PART OF 383-2065, 422-0048 ENGINE AR-COMPLETE

AN ATTACHMENT

SMCS-1157 **i06060309**

NOTE	REF NO	GRAPHIC REF	PART NUMBER	QTY	PART NAME 1 2 3 4 5 6 (PRODUCT LEVEL)	SEE PAGE
	1	1	**175-3721**	1	COVER	
Y	2	1	*227-0838*	1	SEAL GP-CRANKSHAFT	64
	3	1	**460-4062**	1	HOUSING AS-FLYWHEEL	
	3A	1	**2A-1162**	1	GASKET	
	3B	1	**5F-0304**	1	PLUG	
	3C	1	**8M-9315**	1	BUSHING	
	4	1	**101-3934**	1	COVER	
M	5	1	**191-2857**	4	BOLT (M14X2X70-MM)	
Y	6	1	*216-5540*	1	COVER GP-FLYWHEEL HOUSING	17
	7	1	**3F-5792**	1	SEAL-O-RING	
	8	1	**4M-0189**	1	SEAL-O-RING	
	10	1	**5P-8245**	4	WASHER-HARD (13.5X25.5X3-MM THK)	
	11	1	**5P-8246**	11	WASHER-HARD (15.5X29X3-MM THK)	
M	12	1	**6A-5591**	2	BOLT (M12X1.75X25-MM)	
M	14	1	**6V-5684**	2	BOLT (M12X1.75X45-MM)	
M	16	1	**6V-5844**	2	BOLT (M16X2X35-MM)	
M	17	1	**6V-7727**	9	BOLT (M6X1X16-MM)	
M	18	1	**8T-0226**	7	BOLT (M14X2X45-MM)	
	19	1	**9X-8267**	9	WASHER (6.6X12X2-MM THK)	
	20	1	**9X-8268**	2	WASHER (17.5X30X3.5-MM THK)	
BF			**1U-8846**	10	SEALANT-GASKET	

B - USE AS REQUIRED
F - NOT SHOWN
M - METRIC PART
Y - SEPARATE ILLUSTRATION

277-4435 **HOUSING GP-FLYWHEEL (*contd.*)** **i06060309**

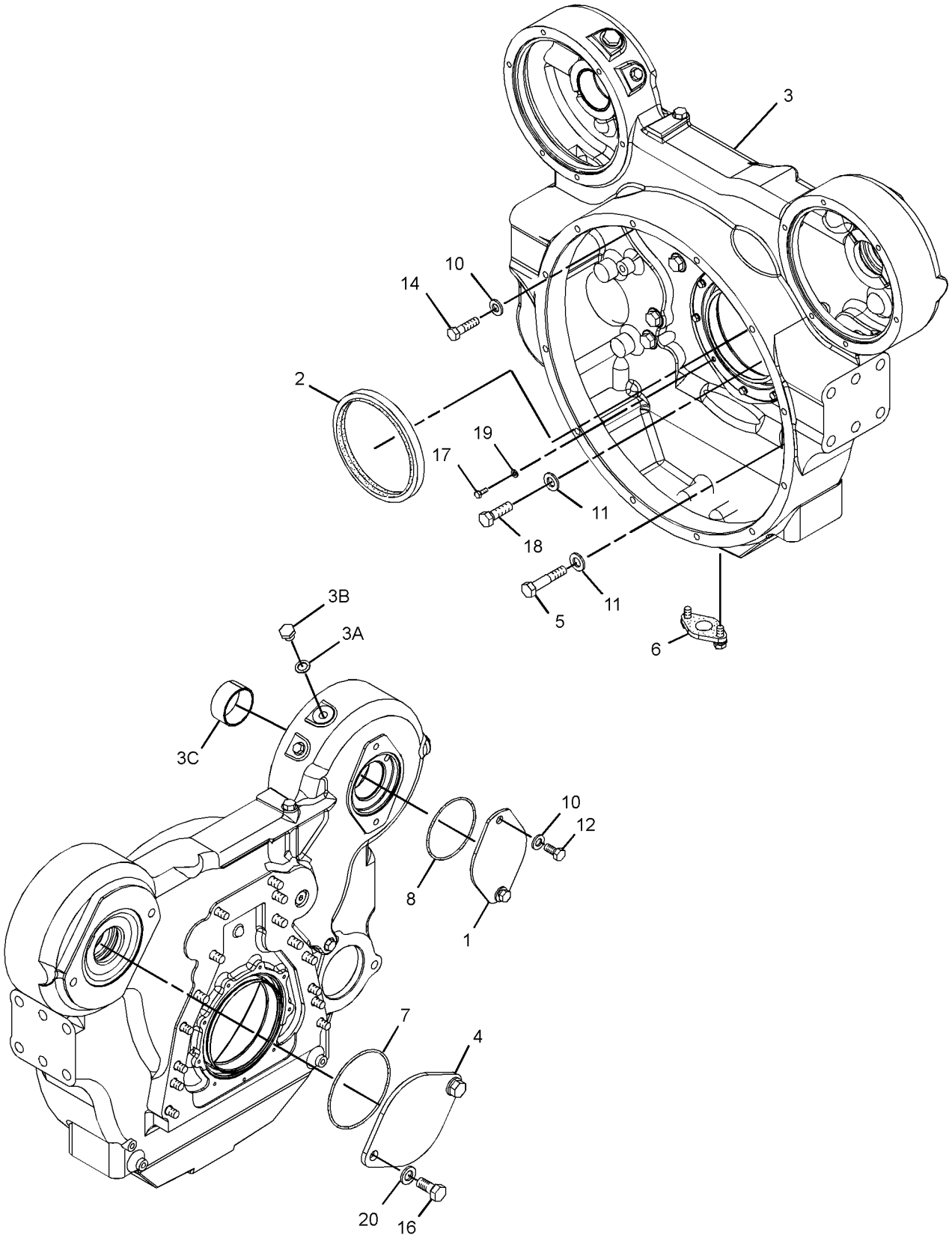

GRAPHIC #1 **<END>** g01637342

218-7272 HOUSING GP-FRONT

S/N: TXX1-UP

PART OF 383-2065, 422-0048 ENGINE AR-COMPLETE

AN ATTACHMENT

SMCS-1151, 1162, 1206

i05468542

NOTE	REF NO	GRAPHIC REF	PART NUMBER	QTY	PART NAME 1 2 3 4 5 6 (PRODUCT LEVEL)	SEE PAGE
	1	1	*356-0955*	1	GEAR AS-DRIVE	
		1	**5P-6727**	1	BALL BEARING	
		1	**8H-9789**	1	BALL BEARING	
		1	**221-9357**	1	GEAR-AUXILIARY DRIVE (40-TEETH)	
	2	1	**9M-1974**	30	WASHER-HARD (8.8X16X2-MM THK)	
	3	1	**251-4314**	1	ADAPTER	
	4	1	**439-4636**	1	COVER AS	
	5	1	**9X-8256**	5	WASHER (6.6X12X2-MM THK)	
	6	1	**257-2015**	1	GASKET	
	7	1	**223-7852**	1	SEAL-INTEGRAL	
	8	1	**226-4755**	1	SEAL GP-CRANKSHAFT (FRONT)	
		1	**169-4166**	1	SEAL GP-CRANKSHAFT (FRONT)	
		1	**220-3373**	1	SEAL-RING	
	9	1	**329-3061**	1	HOUSING AS-FRONT	
	9A	1	**6V-3535**	2	DOWEL	
	10	1	**117-8801**	1	SEAL-O-RING	
M	11	1	**6V-2317**	17	BOLT (M8X1.25X30-MM)	
M	12	1	**6V-5192**	3	BOLT-SOCKET HEAD (M8X1.25X30-MM)	
M	13	1	**6V-5219**	9	BOLT (M8X1.25X40-MM)	
M	14	1	**6V-8225**	5	NUT (M6X1-THD)	
M	15	1	**3E-8016**	1	BOLT-SELF-LOCKING (M8X1.25X25-MM)	

M - METRIC PART

218-7272 **HOUSING GP-FRONT (*contd.*)** **i05468542**

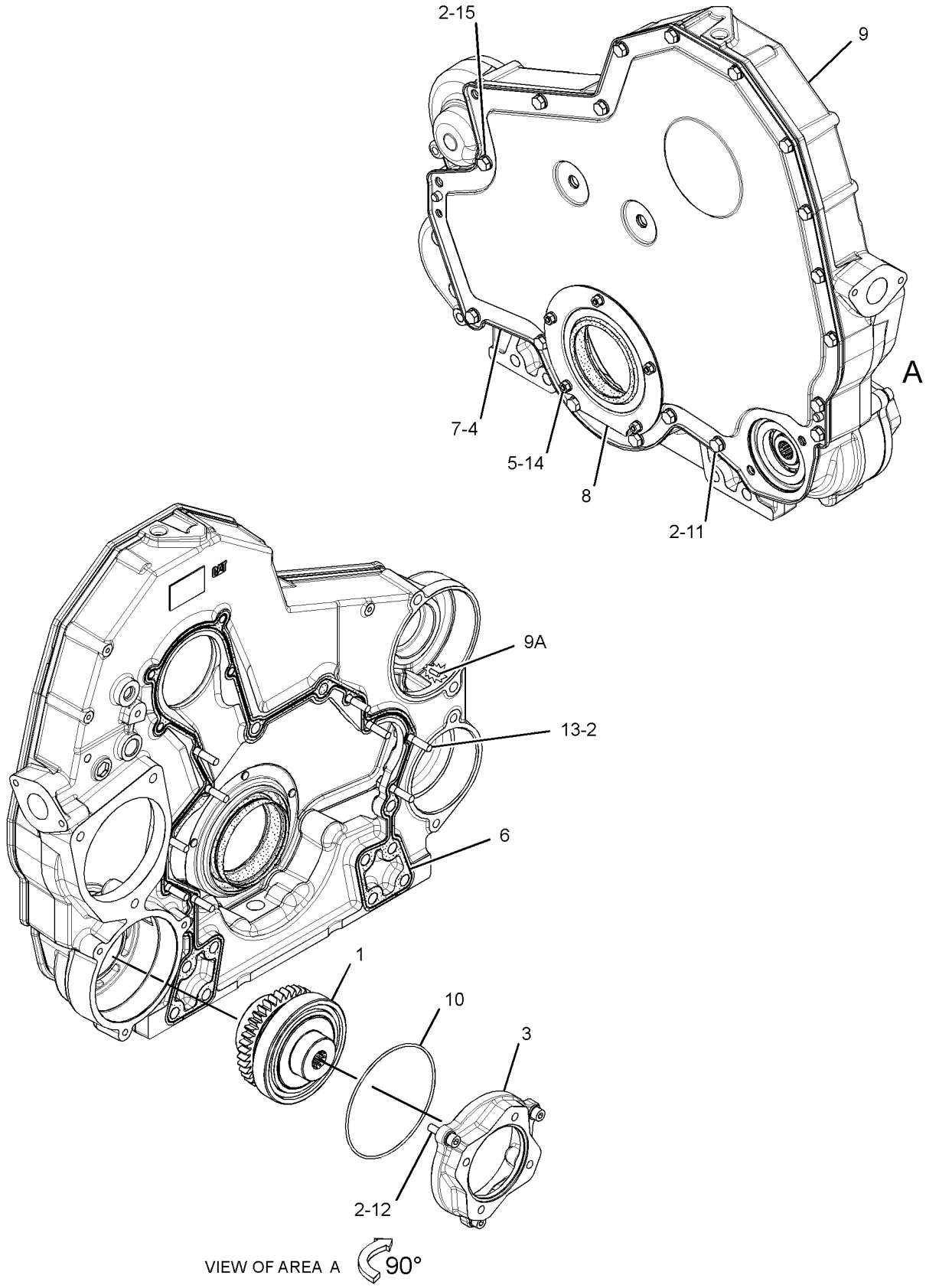

GRAPHIC #1 **<END>** g02218914

237-4376 LIFTER GP-VALVE—MECHANISM

S/N: TXX1-UP

PART OF 240-7272 VALVE MECHANISM GP

AN ATTACHMENT

SMCS-1209 **i03596460**

NOTE	REF NO	GRAPHIC REF	PART NUMBER	QTY	PART NAME 1 2 3 4 5 6 (PRODUCT LEVEL)	SEE PAGE
	1	1	**202-7475**	6	LIFTER AS-UNIT INJECTOR	
	2	1	**251-1005**	12	LIFTER AS-VALVE	
	3	1	**269-2862**	5	BRACKET AS (INTERMEDIATE)	
					(EACH INCLUDES)	
		1	**129-2893**	1	DOWEL	
	4	1	**269-2860**	1	BRACKET AS (FRONT)	
		1	**129-2893**	1	DOWEL	
	5	1	**240-2636**	1	SHAFT AS	
	5A	1	**0L-1026**	2	PLUG-CUP	
	6	1	**269-2864**	1	BRACKET AS (REAR)	
	6A	1	**5L-4763**	1	PIN-SPRING	
M	7	1	**6V-5843**	7	BOLT (M10X1.5X45-MM)	
	8	1	**8E-8439**	1	DOWEL	

M - METRIC PART

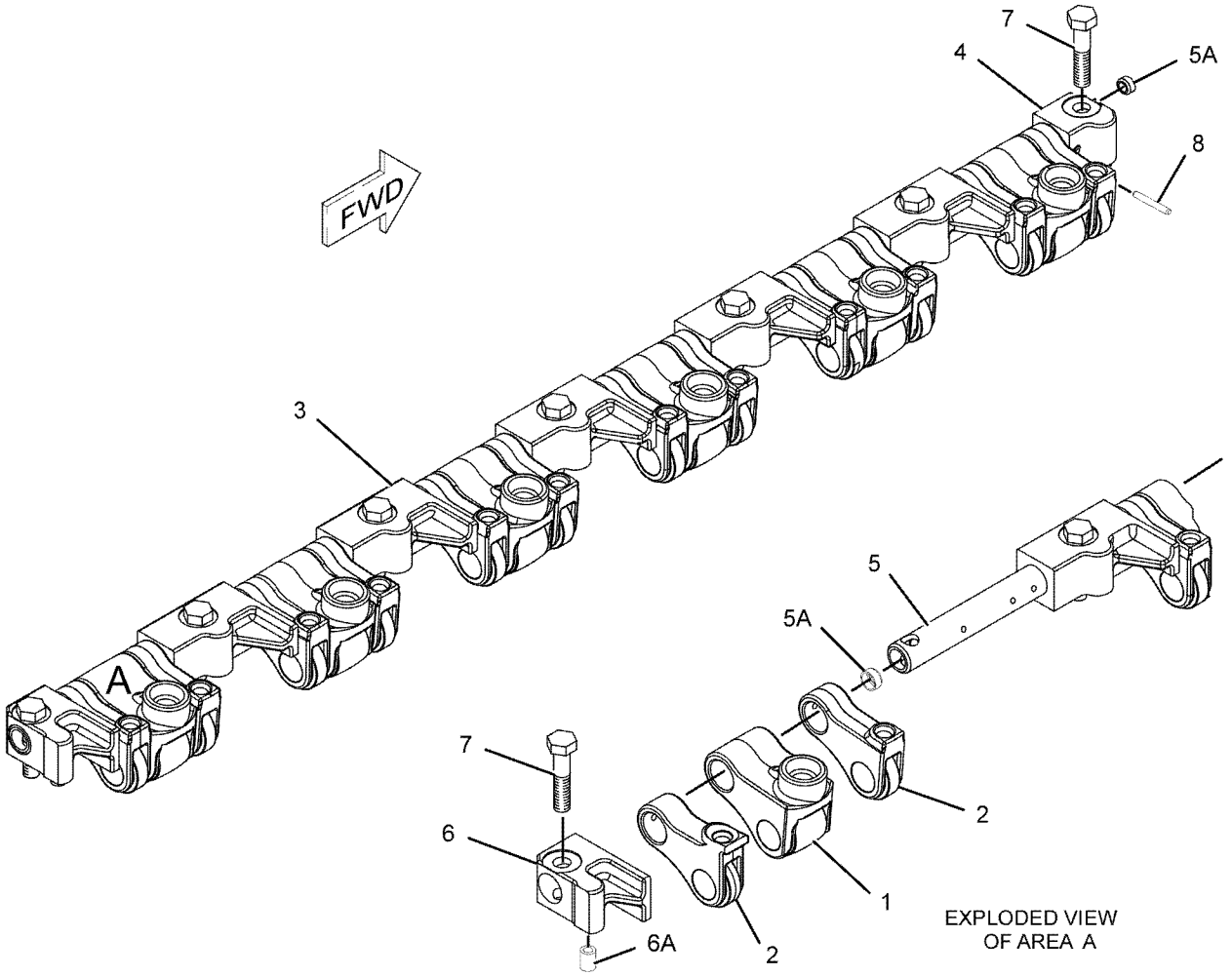

GRAPHIC #1 **<END>** g01119838

224-0880 LIFTING GP-ENGINE

S/N: TXX1-UP
PART OF 383-2065, 422-0048 ENGINE AR-COMPLETE
AN ATTACHMENT

SMCS-1122 **i05922018**

NOTE	REF NO	GRAPHIC REF	PART NUMBER	QTY	PART NAME 1 2 3 4 5 6 (PRODUCT LEVEL)	SEE PAGE
	1	1	**224-4140**	2	EYE-LIFTING	
	2	1	**5P-8245**	8	WASHER-HARD (13.5X25.5X3-MM THK)	
M	3	1	**6V-3668**	8	BOLT (M12X1.75X30-MM)	

M - METRIC PART

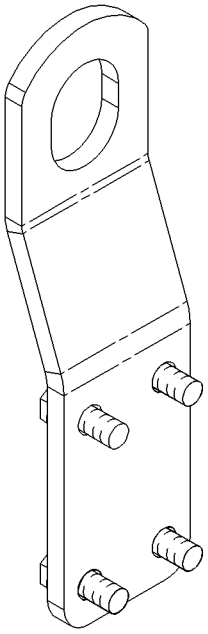

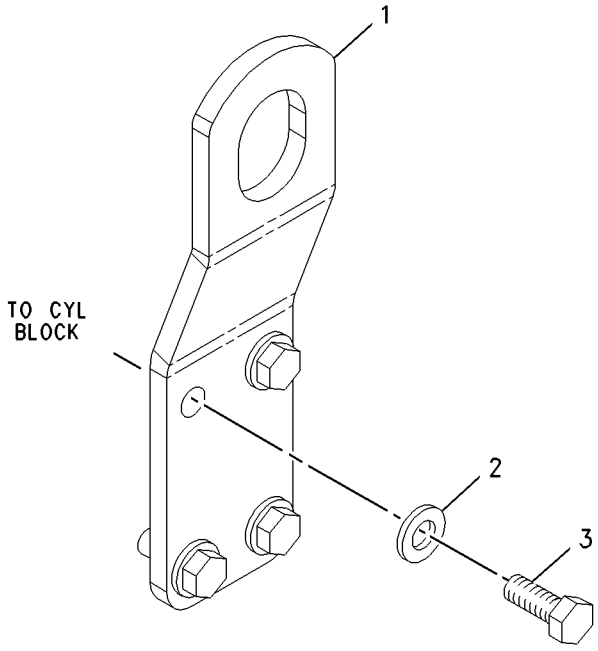

GRAPHIC #1 **<END>** g00950265

369-8994 MOUNTING GP-ALTERNATOR & COMPR

S/N: TXX1-UP

PART OF 383-2065, 422-0048 ENGINE AR-COMPLETE

AN ATTACHMENT

SMCS-1405, 1802 **i04892007**

NOTE	REF NO	GRAPHIC REF	PART NUMBER	QTY	PART NAME 1 2 3 4 5 6 (PRODUCT LEVEL)	SEE PAGE
	1	1	**243-2310**	2	COVER	
	2	1	**333-1207**	1	IDLER AS	
	3	1	**336-4953**	1	TENSIONER-BELT	
	4	1	**279-2589**	1	PULLEY AS-IDLER (8-GROOVE)	
	5	1	**391-0151**	1	BRACKET-SUPPORT	
	6	1	**391-0152**	1	BRACKET-SUPPORT	
	7	1	**5P-8245**	4	WASHER-HARD (13.5X25.5X3-MM THK)	
M	8	1	**6V-3822**	2	BOLT (M10X1.5X35-MM)	
M	9	1	**6V-4249**	2	BOLT (M10X1.5X50-MM)	
	10	1	**6V-5839**	5	WASHER (11X21X2.5-MM THK)	
M	11	1	**6V-7981**	1	BOLT (M10X1.5X70-MM)	
M	12	1	**6V-8149**	2	NUT (M12X1.75-THD)	
M	13	1	**7X-0909**	2	BOLT (M12X1.75X140-MM)	

M - METRIC PART

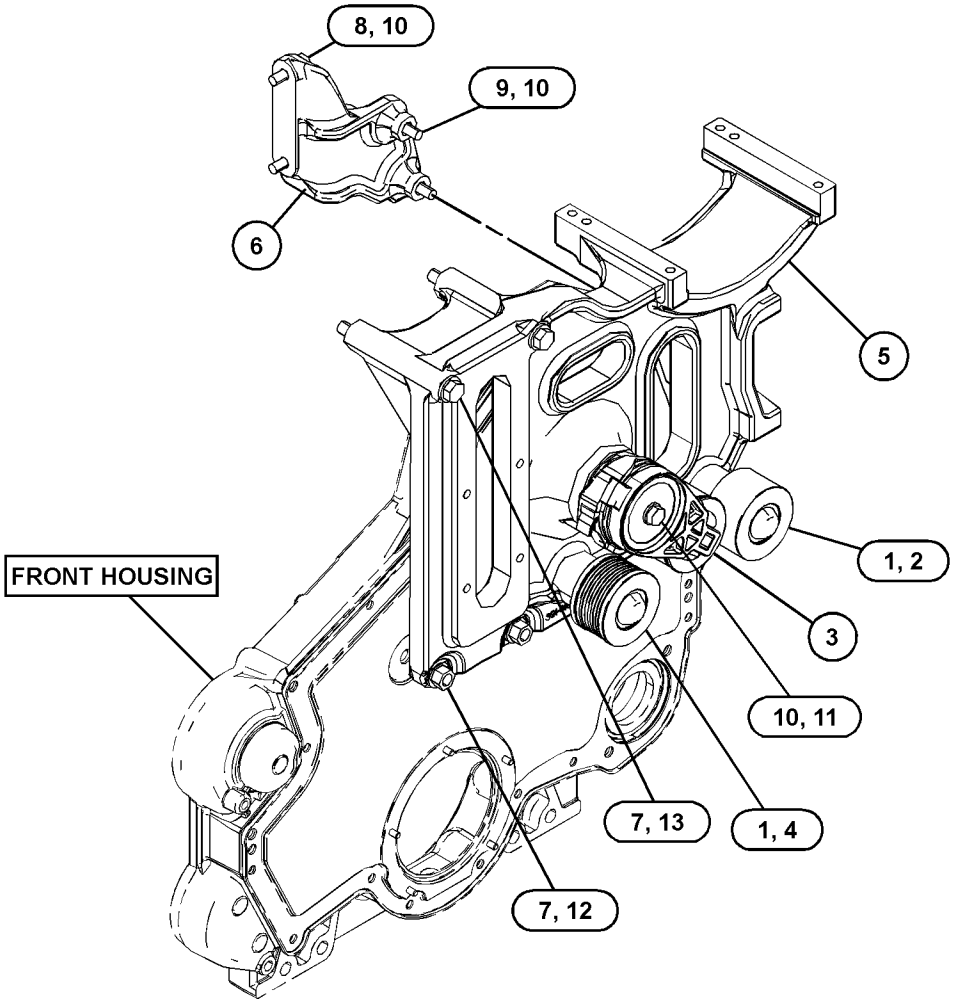

GRAPHIC #1 **<END>** g03247676

453-5919 MOUNTING GP-ALTERNATOR & COMPR

S/N: TXX591-UP
PART OF 422-0048 ENGINE AR-COMPLETE
AN ATTACHMENT

SMCS-1405, 1802

i06138560

NOTE	REF NO	GRAPHIC REF	PART NUMBER	QTY	PART NAME 1 2 3 4 5 6 (PRODUCT LEVEL)	SEE PAGE
	1	1	**243-2310**	2	COVER	
	2	1	**333-1207**	1	IDLER AS	
	3	1	**336-4953**	1	TENSIONER-BELT	
	4	1	**279-2589**	1	PULLEY AS-IDLER (8-GROOVE)	
	5	1	**391-0151**	1	BRACKET-SUPPORT	
	6	1	**391-0152**	1	BRACKET-SUPPORT	
M	7	1	**287-3049**	2	STUD (M10X1.5X50-MM)	
	8	1	**5P-8245**	4	WASHER-HARD (13.5X25.5X3-MM THK)	
M	9	1	**6V-3822**	2	BOLT (M10X1.5X35-MM)	
	10	1	**6V-5839**	5	WASHER (11X21X2.5-MM THK)	
M	11	1	**6V-7981**	1	BOLT (M10X1.5X70-MM)	
M	12	1	**6V-8149**	2	NUT (M12X1.75-THD)	
M	13	1	**7X-0909**	2	BOLT (M12X1.75X140-MM)	

M - METRIC PART

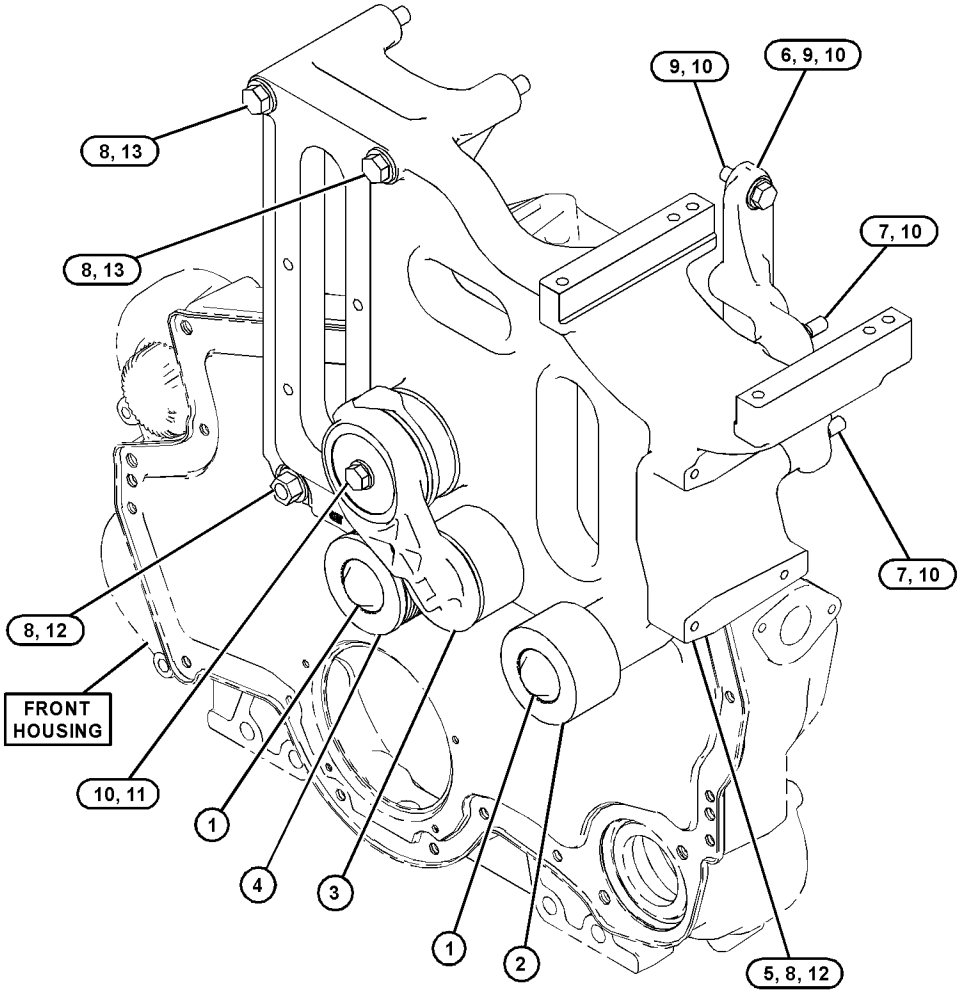

GRAPHIC #1

<END>

g03827160

383-4890 MOUNTING GP-ENGINE & XMSN

S/N: E9Y1-UP

PART OF 381-2717 INSTALLATION AR-ENGINE

SMCS-1152, 1153, 1154, 3082 **i06139761**

NOTE	REF NO	GRAPHIC REF	PART NUMBER	QTY	PART NAME 1 2 3 4 5 6 (PRODUCT LEVEL)	SEE PAGE
	1	1	**146-1680**	2	WASHER (32X155X4-MM THK)	
	2	1	*174-9527*	2	MOUNT AS	
					(EACH INCLUDES)	
		1	**9W-6582**	1	SLEEVE	
		1	**9W-6584**	1	WASHER (20.5X114X10-MM THK)	
		1	**9W-9930**	1	MOUNT AS	
	3	1	*262-5528*	2	MOUNT AS	
					(EACH INCLUDES)	
		1	**3E-4887**	1	SLEEVE	
		1	**3E-4888**	1	WASHER (32X144X12-MM THK)	
		1	**6Y-9960**	1	MOUNT AS	
		1	**9W-8095**	1	PAD-REBOUND	
	4	1	**383-4711**	1	SUPPORT AS (RH)	
		1	**1A-2610**	2	DOWEL	
	5	1	**383-4713**	1	SUPPORT AS (LH)	
		1	**1A-2610**	2	DOWEL	
	6	1	**267-3507**	8	WASHER-HARD (26X47X12-MM THK)	
	7	1	**339-1911**	2	BOLT (M20X2.5X125-MM)	
M	8	1	**7X-2577**	8	BOLT (M24X3X90-MM)	
M	9	1	**7X-2585**	2	BOLT (M30X3.5X160-MM)	
	10	1	**8T-4123**	2	WASHER (3.62X5.75X0.375-MM THK)	
M	11	1	**8T-4183**	10	BOLT (M12X1.75X40-MM)	
M	12	1	**8T-4194**	2	BOLT (M12X1.75X50-MM)	
	13	1	**8T-7971**	12	WASHER-HARD (13.5X25.5X5-MM THK)	
	14	1	**9X-8258**	2	WASHER (33X56X6-MM THK)	

M - METRIC PART

383-4890 **MOUNTING GP-ENGINE & XMSN (*contd.*)** **i06139761**

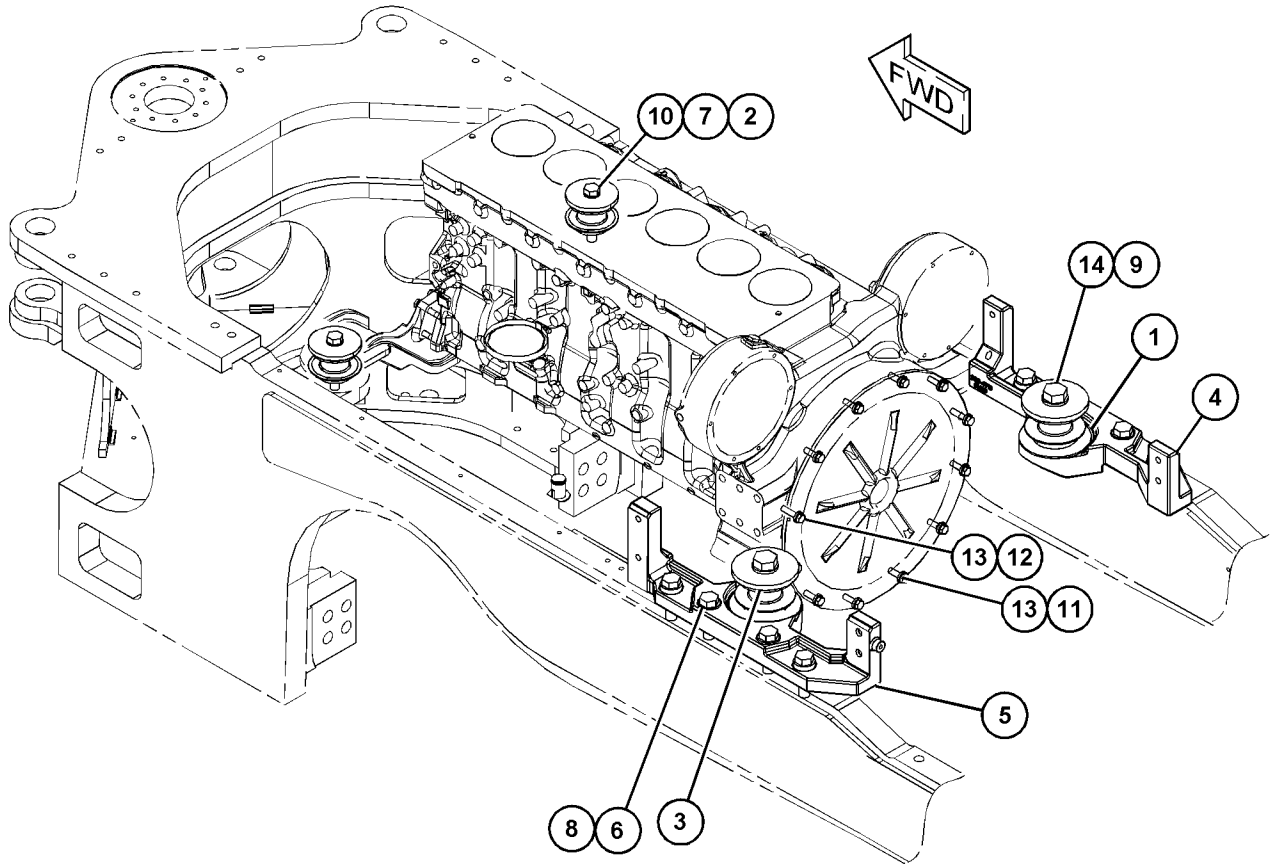

GRAPHIC #1 **<END>** g03823584

219-7440 MOUNTING GP-FAN DRIVE

S/N: TXX1-UP
52-MM
PART OF 383-2065, 422-0048 ENGINE AR-COMPLETE
AN ATTACHMENT

SMCS-1359 **i05922024**

NOTE	REF NO	GRAPHIC REF	PART NUMBER	QTY	PART NAME 1 2 3 4 5 6 (PRODUCT LEVEL)	SEE PAGE
M	1	1	**123-0764**	2	STUD-TAPERLOCK (M12X1.75X138.7-MM)	
	2	1	**5P-8245**	2	WASHER-HARD (13.5X25.5X3-MM THK)	

M - METRIC PART

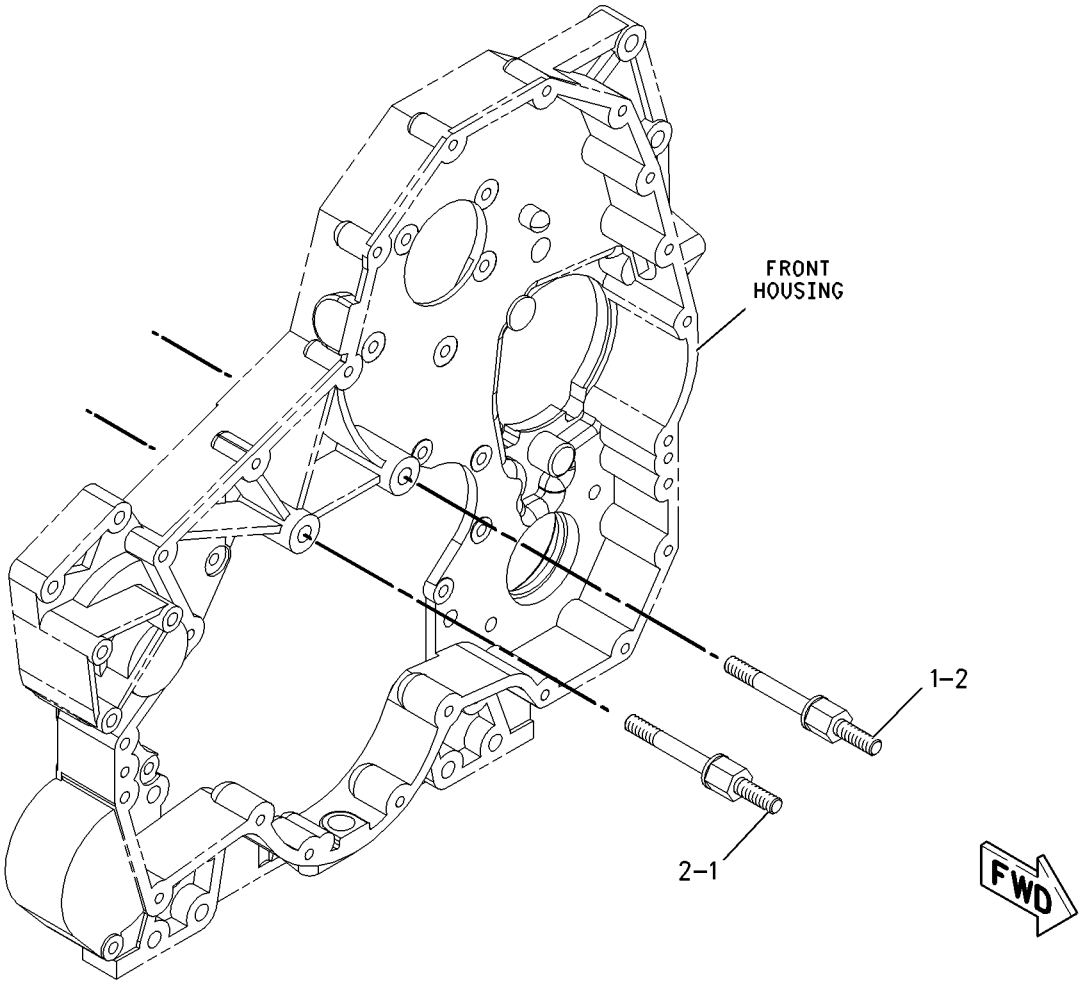

GRAPHIC #1 **<END>** g00948687

229-8083 MOUNTING GP-VALVE MECHANISM

S/N: TXX1-UP
VARIABLE VALVE ACTUATOR
CANNOT BE USED WITH NON VARIABLE VALVE ACTUATOR VALVE COVERS
PART OF 383-2065, 422-0048 ENGINE AR-COMPLETE
AN ATTACHMENT

SMCS-1102, 1107, 1154 **i02061483**

NOTE	REF NO	GRAPHIC REF	PART NUMBER	QTY	PART NAME 1 2 3 4 5 6 (PRODUCT LEVEL)	SEE PAGE
	1	1	**238-6777**	6	STUD AS	

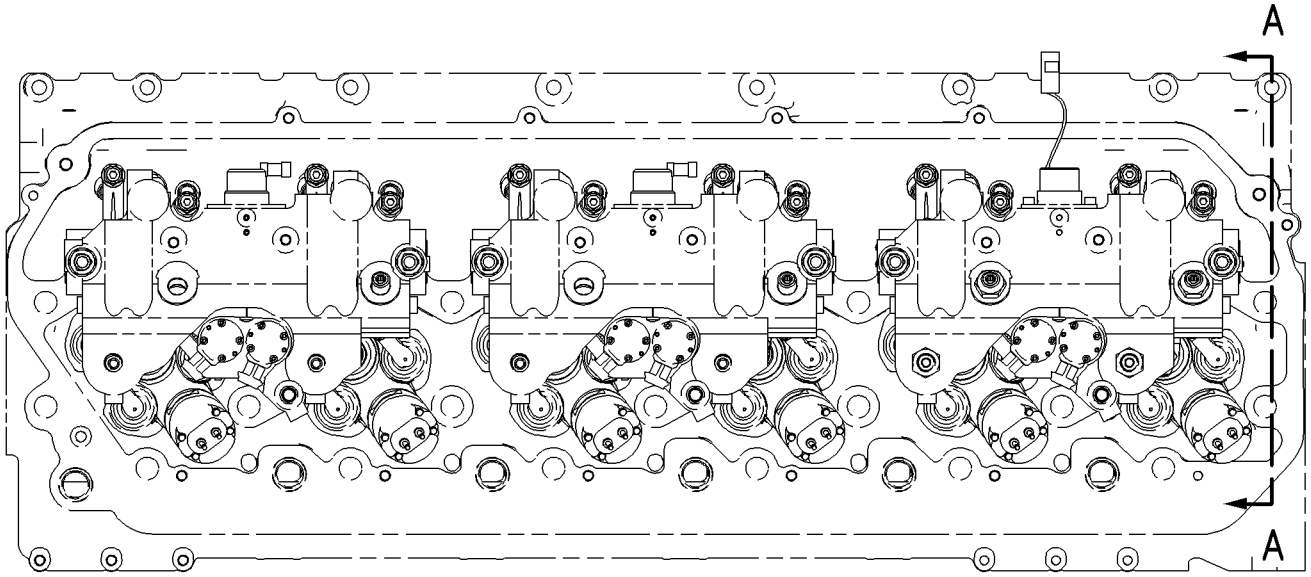

TOP VIEW

FWD

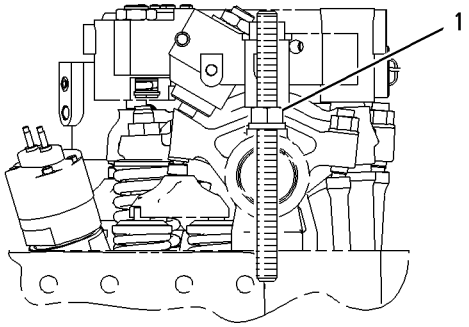

VIEW A-A

GRAPHIC #1 **<END>** g00950793

382-9882 PAN GP-OIL

S/N: TXX591-UP
PART OF 422-0048 ENGINE AR-COMPLETE
AN ATTACHMENT

SMCS-1302 **i06138550**

NOTE	REF NO	GRAPHIC REF	PART NUMBER	QTY	PART NAME 1 2 3 4 5 6 (PRODUCT LEVEL)	SEE PAGE
	1	1	**3S-2093**	1	STRAP-CABLE	
	2	1	**9X-6451**	2	PLUG-DRAIN (MAGNETIC)	
	3	1	**061-9458**	2	SEAL-O-RING	
	4	1	**210-1746**	1	BELL AS-SUCTION	
		1	**210-1743**	1	ELBOW	
	5	1	**217-3673**	1	SEAL-ISOLATION	
	6	1	**382-9881**	1	PAN-OIL	
	7	1	*389-3728*	2	PLUG AS	
					(EACH INCLUDES)	
		1	**360-3684**	1	PLUG-O-RING	
		1	**238-5084**	1	SEAL-O-RING	
	8	1	**213-0677**	1	SWITCH AS-LIQUID LEVEL (ENGINE OIL)	
		1	**102-8802**	1	KIT-RECEPTACLE (2-PIN)	
					(INCLUDES RECEPTACLE AS AND WEDGE)	
		1	**9X-3401**	2	PIN-CONNECTOR (16-GA TO 18-GA)	
					—OR—	
		1	**126-1767**	2	PIN-CONNECTOR (14-GA TO 16-GA)	
	9	1	**238-5082**	1	SEAL-O-RING	
	10	1	**217-3674**	14	FASTENER AS	
M	11	1	**287-3049**	6	STUD (M10X1.5X50-MM)	
M	12	1	**3E-8016**	2	BOLT-SELF-LOCKING (M8X1.25X25-MM)	
	13	1	**5P-8211**	1	SEAL-O-RING	
	14	1	**5P-8245**	4	WASHER-HARD (13.5X25.5X3-MM THK)	
M	15	1	**6A-5591**	4	BOLT (M12X1.75X25-MM)	
	16	1	**6N-8863**	14	WASHER (10.2X32X2.5-MM THK)	
M	17	1	**6V-4249**	8	BOLT (M10X1.5X50-MM)	
	18	1	**9M-1974**	2	WASHER-HARD (8.8X16X2-MM THK)	

M - METRIC PART

382-9882 **PAN GP-OIL (*contd.*)** **i06138550**

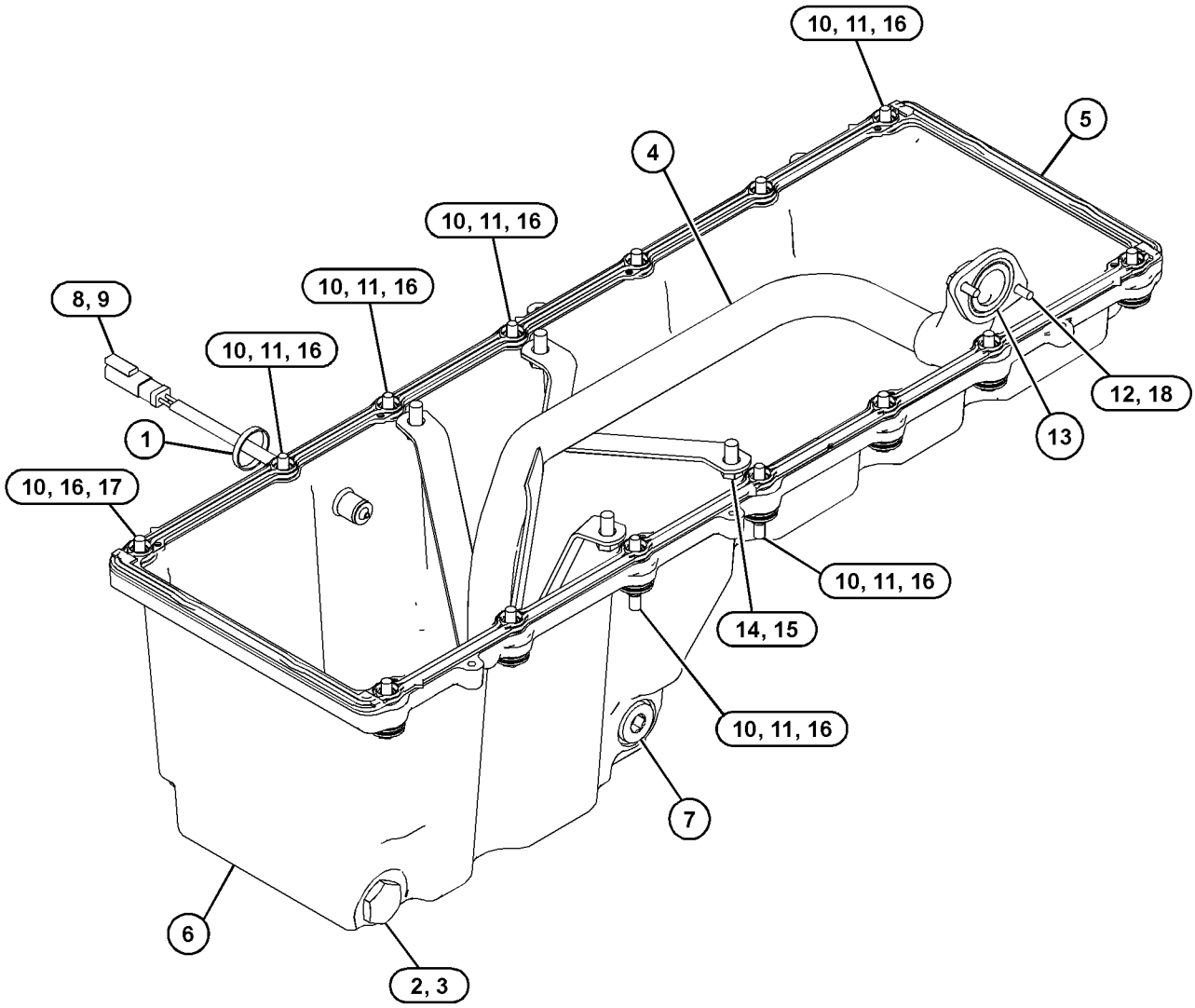

GRAPHIC #1 **<END>** g03829383

391-0306 PAN GP-OIL–REAR SUMP

S/N: TXX1-UP

PART OF 383-2065, 422-0048 ENGINE AR-COMPLETE

AN ATTACHMENT

SMCS-1302 **i05378174**

NOTE	REF NO	GRAPHIC REF	PART NUMBER	QTY	PART NAME 1 2 3 4 5 6 (PRODUCT LEVEL)	SEE PAGE
	1	1	**9X-6451**	2	PLUG-DRAIN (MAGNETIC) (ENGINE OIL)	
	2	1	**210-1746**	1	BELL AS-SUCTION	
		1	**210-1743**	1	ELBOW	
	3	1	**217-3673**	1	SEAL-ISOLATION	
	4	1	**240-3277**	1	PAN-OIL	
	5	1	**061-9458**	2	SEAL-O-RING	
	6	1	**217-3674**	14	FASTENER AS	
M	7	1	**287-3049**	5	STUD (M10X1.5X50-MM)	
	8	1	*389-3728*	2	PLUG AS	
					(EACH INCLUDES)	
		1	**360-3684**	1	PLUG-O-RING	
		1	**238-5084**	1	SEAL-O-RING	
M	9	1	**3E-8016**	2	BOLT-SELF-LOCKING (M8X1.25X25-MM)	
	10	1	**5P-8211**	1	SEAL-O-RING	
	11	1	**5P-8245**	4	WASHER-HARD (13.5X25.5X3-MM THK)	
M	12	1	**6A-5591**	4	BOLT (M12X1.75X25-MM)	
	13	1	**6N-8863**	14	WASHER (10.2X32X2.5-MM THK)	
M	14	1	**6V-4249**	9	BOLT (M10X1.5X50-MM)	
	15	1	**9M-1974**	2	WASHER-HARD (8.8X16X2-MM THK)	

M - METRIC PART

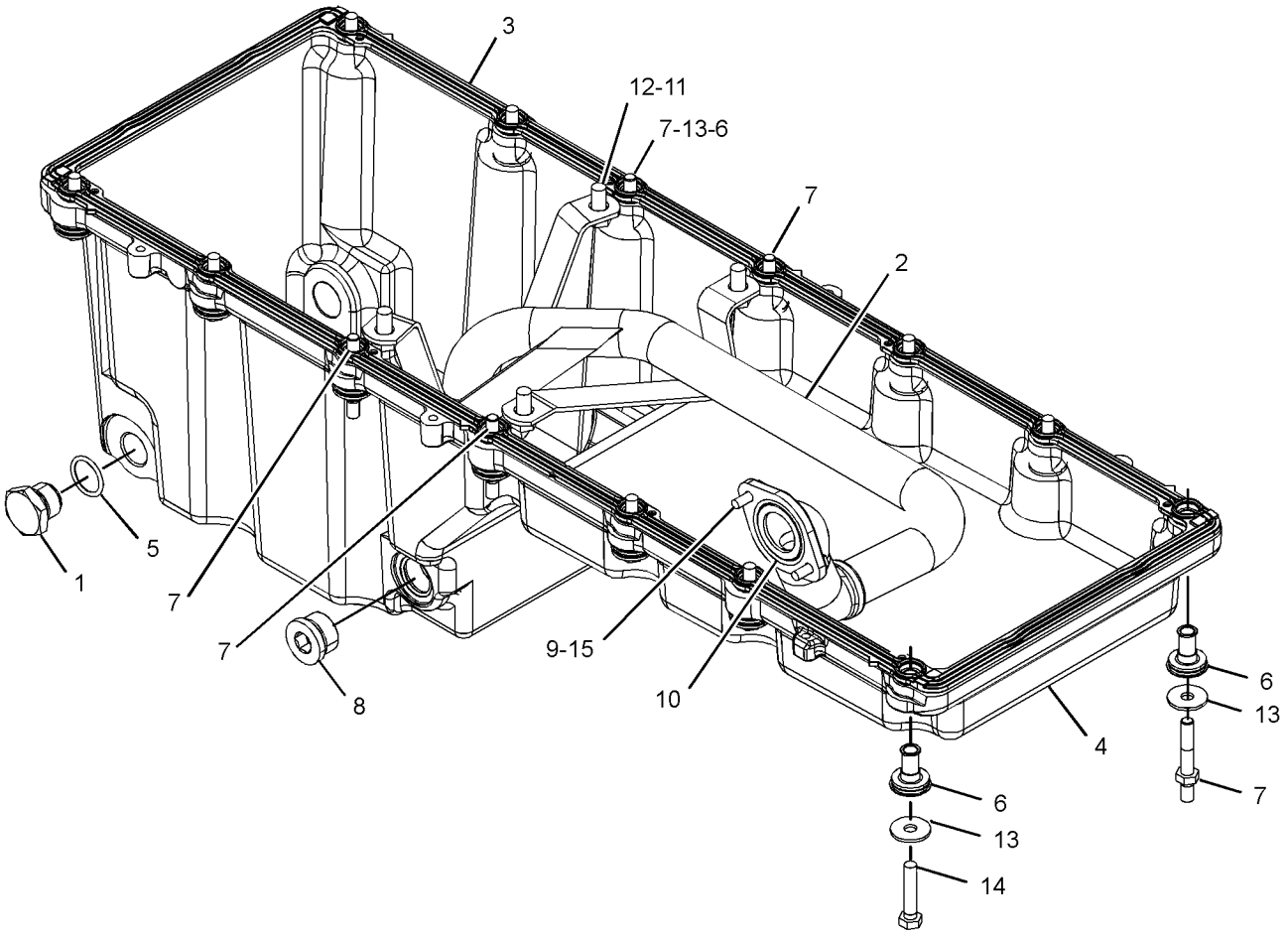

GRAPHIC #1 **<END>** g03476334

452-9086 PISTON & ROD GP

S/N: TXX1-UP
PART OF 376-4249 ENGINE AR-CORE
AN ATTACHMENT

SMCS-1225 **i05698673**

NOTE	REF NO	GRAPHIC REF	PART NUMBER	QTY	PART NAME 1 2 3 4 5 6 (PRODUCT LEVEL)	SEE PAGE
	1	1	**292-0484**	1	BEARING-CONNECTING ROD (STANDARD)	
	2	1	**331-6025**	1	RING-PISTON	
	3	1	**197-9326**	2	RETAINER	
	4	1	**197-9327**	1	PIN-PISTON	
R	5	1	**223-9150**	1	ROD AS-CONNECTING	
	5A	1	**115-2972**	1	BEARING-CONNECTING ROD	
M	5B	1	**115-2973**	2	BOLT-CONNECTING ROD	
	6	1	**276-7222**	1	TUBE AS-OIL JET	
	7	1	**415-7459**	1	RING-PISTON (TOP)	
	8	1	**265-1113**	1	RING-PISTON (OIL CONTROL)	
	9	1	**388-2310**	1	BODY AS-PISTON	
	10	1	**3E-4352**	1	WASHER-HARD (8.8X20.5X2.5-MM THK)	
M	11	1	**8T-0100**	1	BOLT (M8X1.25X60-MM)	

M - METRIC PART
R - REMFG PART MAY BE AVAILABLE

452-9086 **PISTON & ROD GP (*contd.*)** **i05698673**

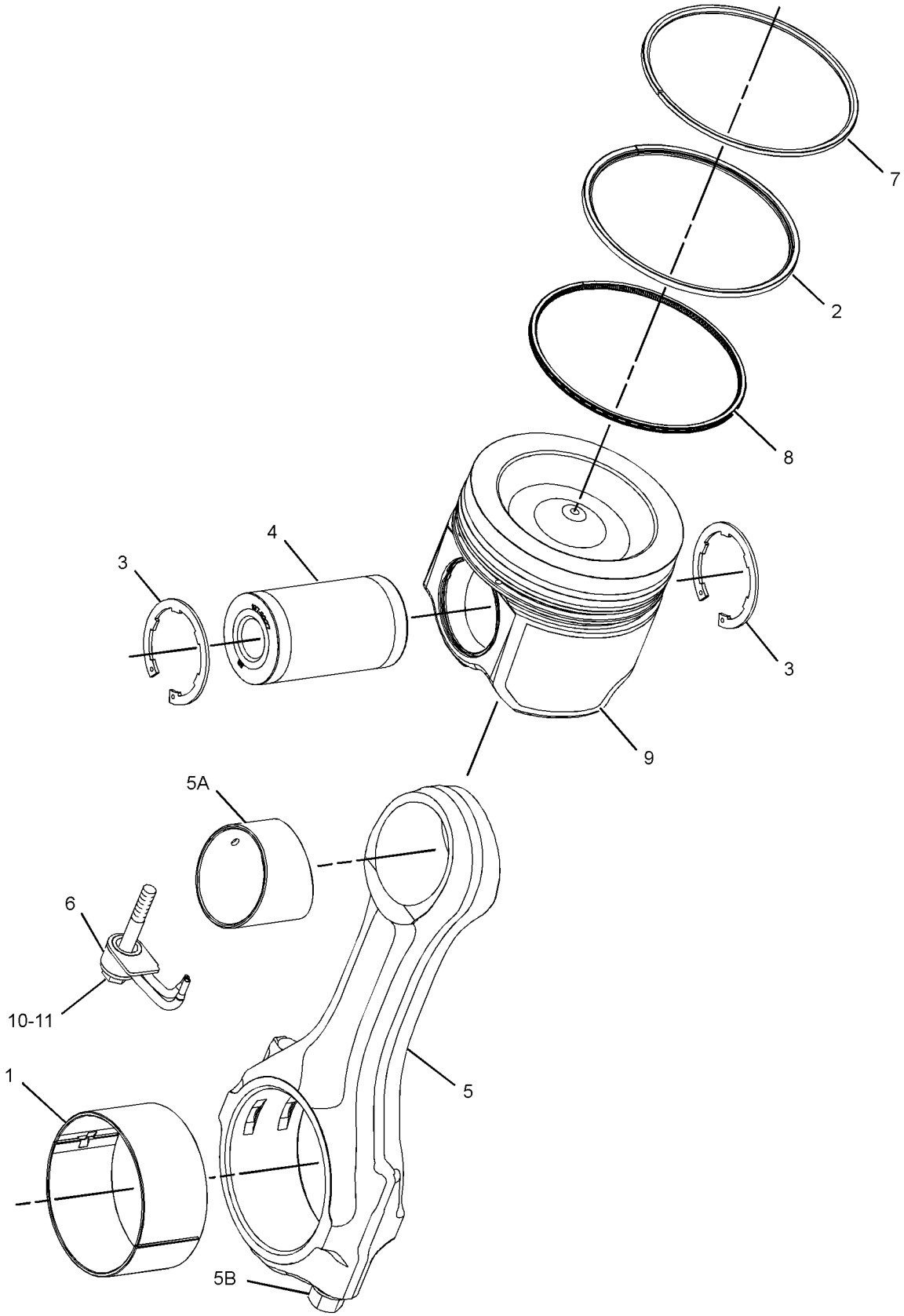

GRAPHIC #1 **<END>** g01172921

117-0165 PLUG GP-CYLINDER BLOCK–OIL GALLERY, END

S/N: TXX1-UP

PART OF 383-2065, 422-0048 ENGINE AR-COMPLETE

AN ATTACHMENT

SMCS-1201 **i01534512**

NOTE	REF NO	GRAPHIC REF	PART NUMBER	QTY	PART NAME 1 2 3 4 5 6 (PRODUCT LEVEL)	SEE PAGE
	1	1	**3B-0623**	1	PLUG-CUP	

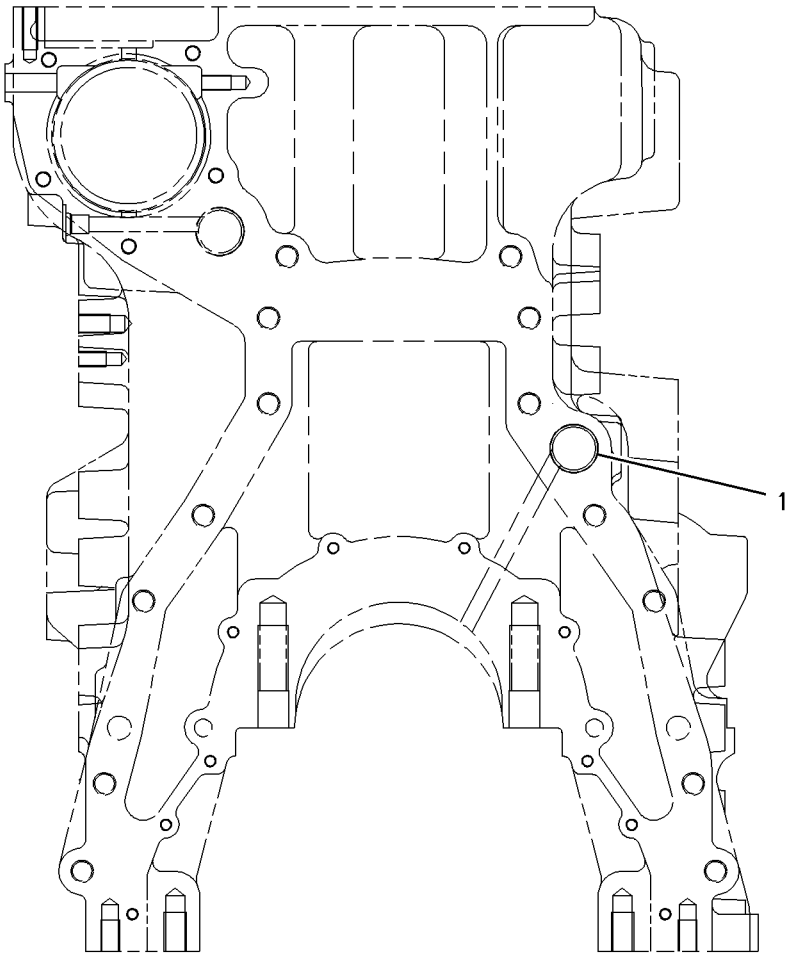

REAR VIEW

GRAPHIC #1 **<END>** g00796766

223-3875 PLUG GP-CYLINDER BLOCK

S/N: TXX1-UP

PART OF 383-2065, 422-0048 ENGINE AR-COMPLETE

AN ATTACHMENT

SMCS-1201 **i05863984**

NOTE	REF NO	GRAPHIC REF	PART NUMBER	QTY	PART NAME 1 2 3 4 5 6 (PRODUCT LEVEL)	SEE PAGE
	1	1	*307-2671*	1	PLUG AS	
		1	**9S-8002**	1	PLUG	
		1	**214-7566**	1	SEAL-O-RING	

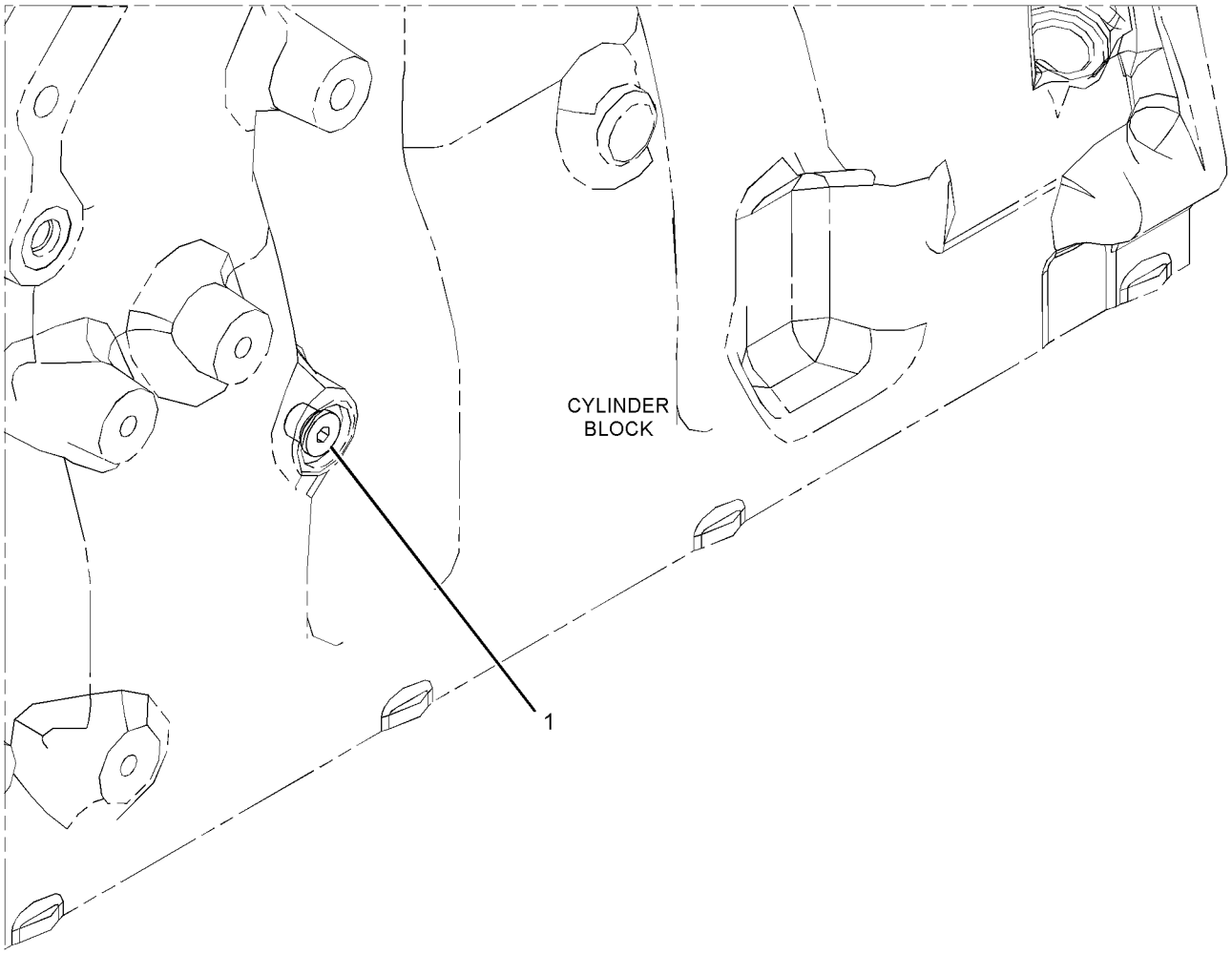

GRAPHIC #1 **<END>** g02218974

227-9545 PLUG GP-CYLINDER BLOCK–OIL GALLERY, RH

S/N: TXX1-UP
PART OF 383-2065, 422-0048 ENGINE AR-COMPLETE
AN ATTACHMENT

SMCS-1201 **i05922015**

NOTE	REF NO	GRAPHIC REF	PART NUMBER	QTY	PART NAME 1 2 3 4 5 6 (PRODUCT LEVEL)	SEE PAGE
	1	1	*183-3407*	2	PLUG AS	
					(EACH INCLUDES)	
		1	**9S-8004**	1	PLUG	
	1A	1	**214-7568**	1	SEAL-O-RING	
	2	1	*307-2673*	1	PLUG AS	
		1	**9S-8005**	1	PLUG-O-RING	
	2A	1	**238-5080**	1	SEAL-O-RING	

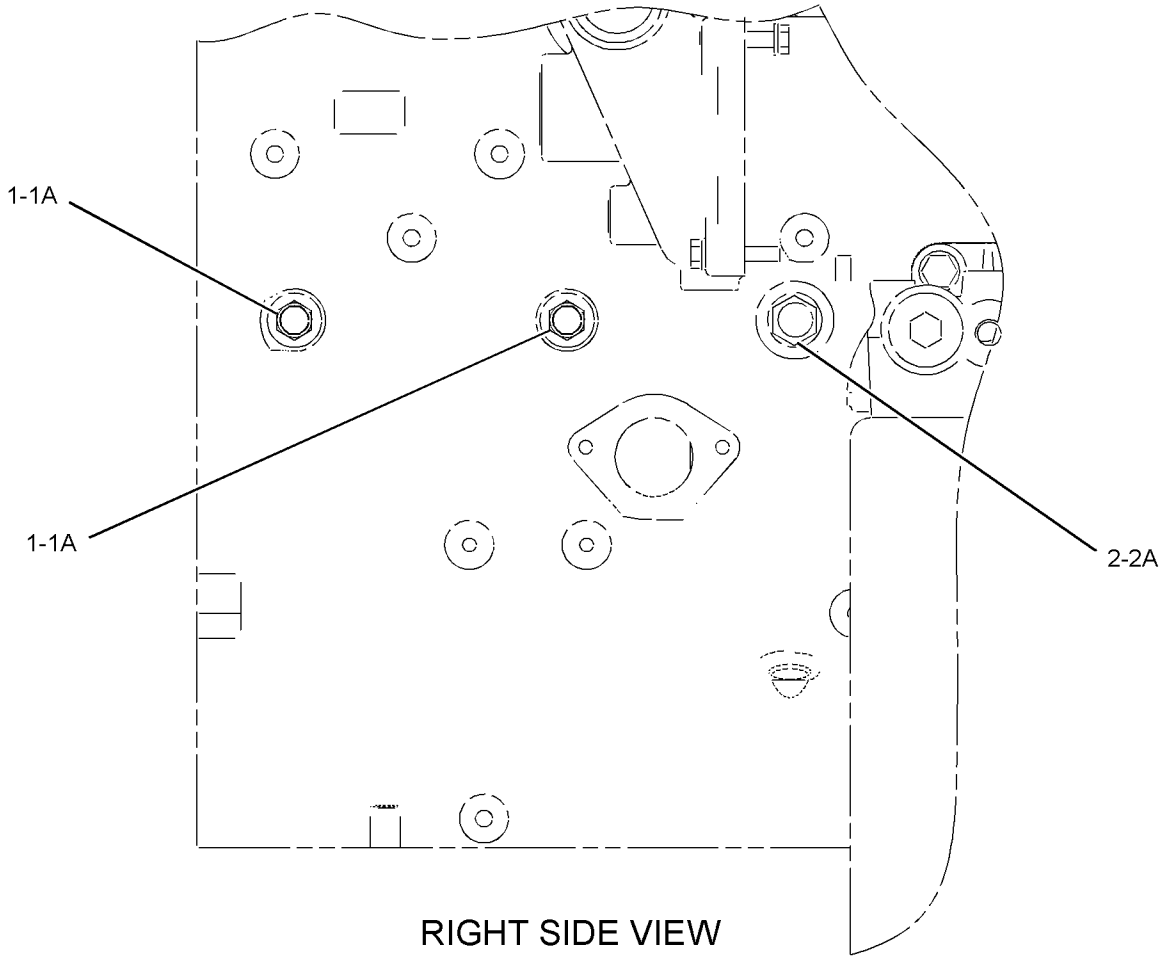

RIGHT SIDE VIEW

GRAPHIC #1 **<END>** g02083373

398-6932 PLUG GP-CYLINDER BLOCK

S/N: TXX1-UP

PROVIDES A PLUG FOR PORT ON LH SIDE FRONT OF BLOCK

CANNOT BE USED WITH FILTER GP-FUMES WITH LH FRONT OCV DRAIN LINE, GAUGE GP-OIL LEVEL WITH LH FRONT TUBE AS-GAUGE

PART OF 383-2065, 422-0048 ENGINE AR-COMPLETE

AN ATTACHMENT

SMCS-1201 **i05921960**

NOTE	REF NO	GRAPHIC REF	PART NUMBER	QTY	PART NAME 1 2 3 4 5 6 (PRODUCT LEVEL)	SEE PAGE
	1	1	**209-7309**	1	PLUG	

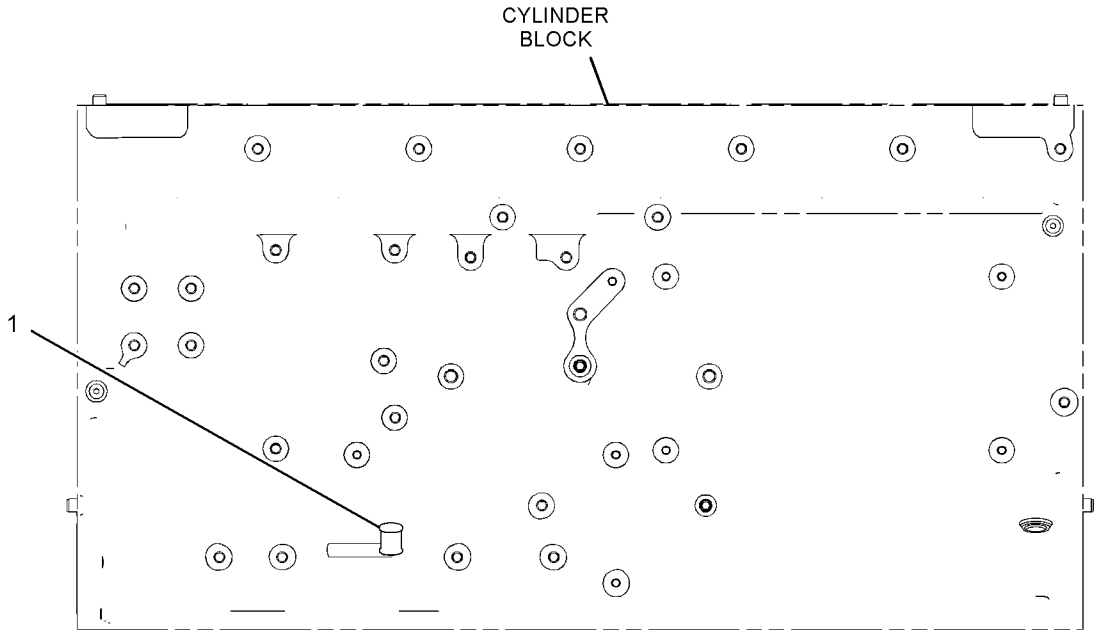

LEFT SIDE VIEW OF ENGINE

GRAPHIC #1 **<END>** g02986817

269-6164 PLUG GP-ENGINE

S/N: TXX1-UP
PART OF 383-2065, 422-0048 ENGINE AR-COMPLETE
AN ATTACHMENT

SMCS-1000, 1201 **i05856591**

NOTE	REF NO	GRAPHIC REF	PART NUMBER	QTY	PART NAME 1 2 3 4 5 6 (PRODUCT LEVEL)	SEE PAGE
	1	1	*315-9859*	1	PLUG AS	
		1	**9S-8008**	1	PLUG	
		1	**238-5082**	1	SEAL-O-RING	
	2	1	*353-5125*	1	PLUG AS	
		1	**6V-3251**	1	SEAL-O-RING	
		1	**9S-8006**	1	PLUG	
	3	1	*353-5126*	1	PLUG AS	
		1	**6V-6609**	1	SEAL-O-RING	
		1	**9S-8005**	1	PLUG-O-RING	

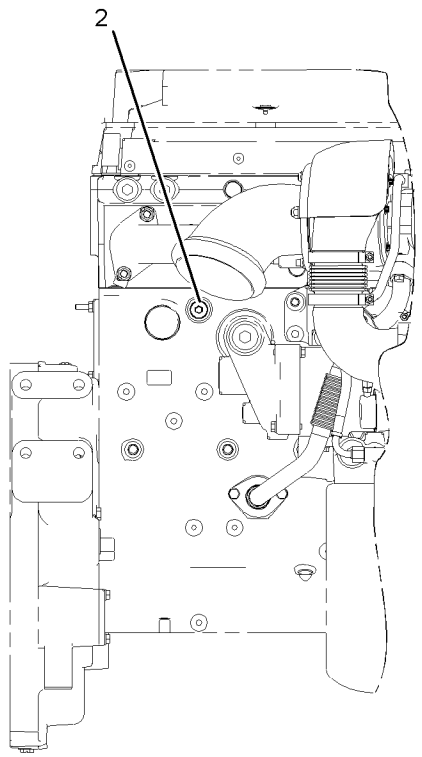

RIGHT SIDE VIEW

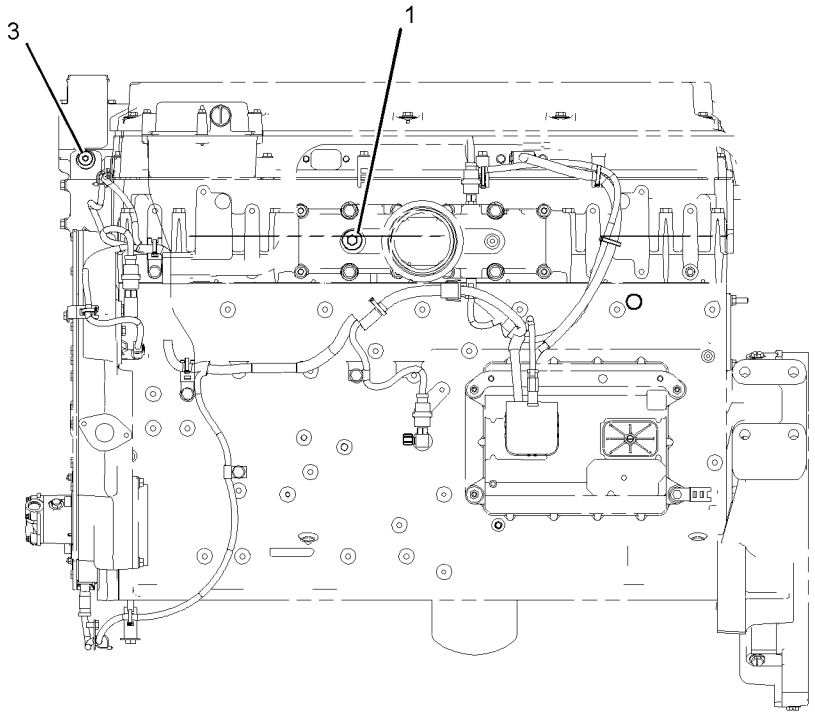

LEFT SIDE VIEW

GRAPHIC #1 **<END>** g02177128

260-0251 ROCKER ARM GP—UNIT INJECTOR

S/N: TXX1-UP
PART OF 396-4102 ROCKER ARM GP
AN ATTACHMENT

SMCS-1102, 1123

i02343172

NOTE	REF NO	GRAPHIC REF	PART NUMBER	QTY	PART NAME 1 2 3 4 5 6 (PRODUCT LEVEL)	SEE PAGE
	1	1	**258-8721**	1	BUTTON	
	2	1	**274-4490**	1	SCREW-ADJUSTMENT	
R	3	1	**260-0915**	1	ROCKER ARM AS (UNIT INJECTOR)	
		1	**2D-6642**	1	BALL	
	4	1	**8L-2777**	1	SEAL-O-RING	
	5	1	**245-6095**	1	NUT-HEX THIN (M12X1.5-THD)	

R - REMFG PART MAY BE AVAILABLE

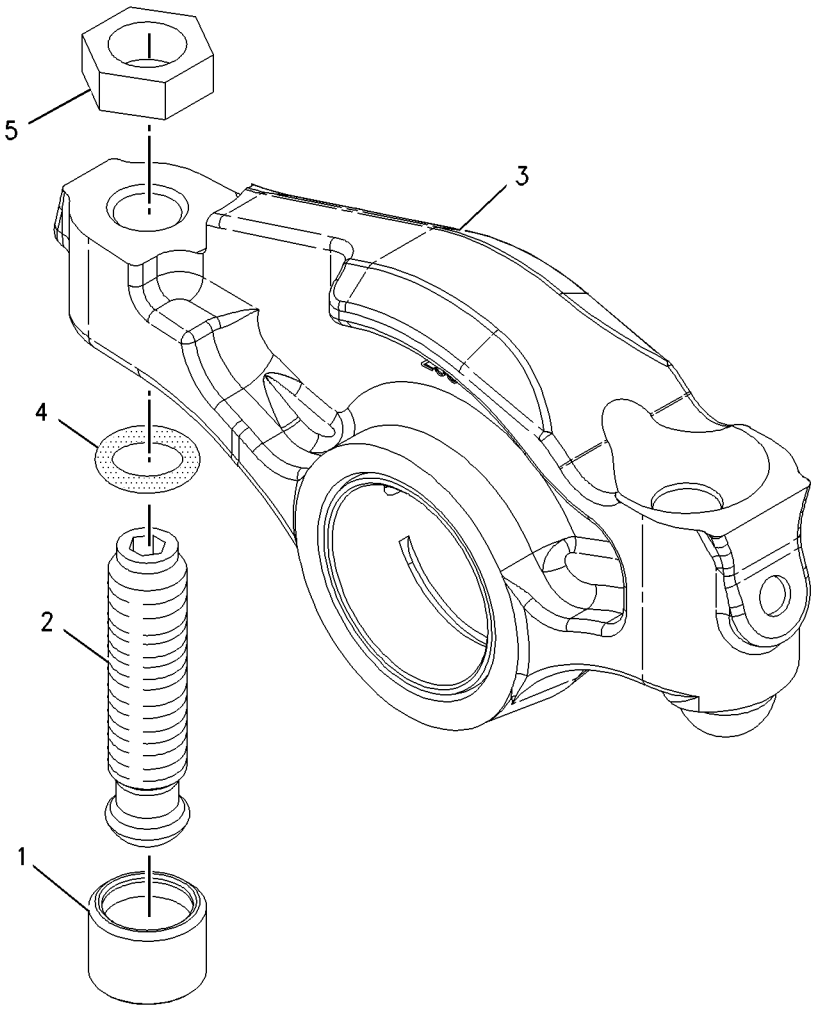

GRAPHIC #1

<END>

g01007579

261-2294 ROCKER ARM GP–EXHAUST

S/N: TXX1-UP
PART OF 396-4102 ROCKER ARM GP
AN ATTACHMENT

SMCS-1102, 1123

i02663356

NOTE	REF NO	GRAPHIC REF	PART NUMBER	QTY	PART NAME 1 2 3 4 5 6 (PRODUCT LEVEL)	SEE PAGE
M	1	1	**260-7524**	1	SCREW-VALVE ADJUSTMENT (M10X1.5-THD)	
R	2	1	**261-2293**	1	ROCKER ARM AS (EXHAUST)	
M	3	1	**2Y-5829**	1	NUT (M10X1.5-THD)	

M - METRIC PART
R - REMFG PART MAY BE AVAILABLE

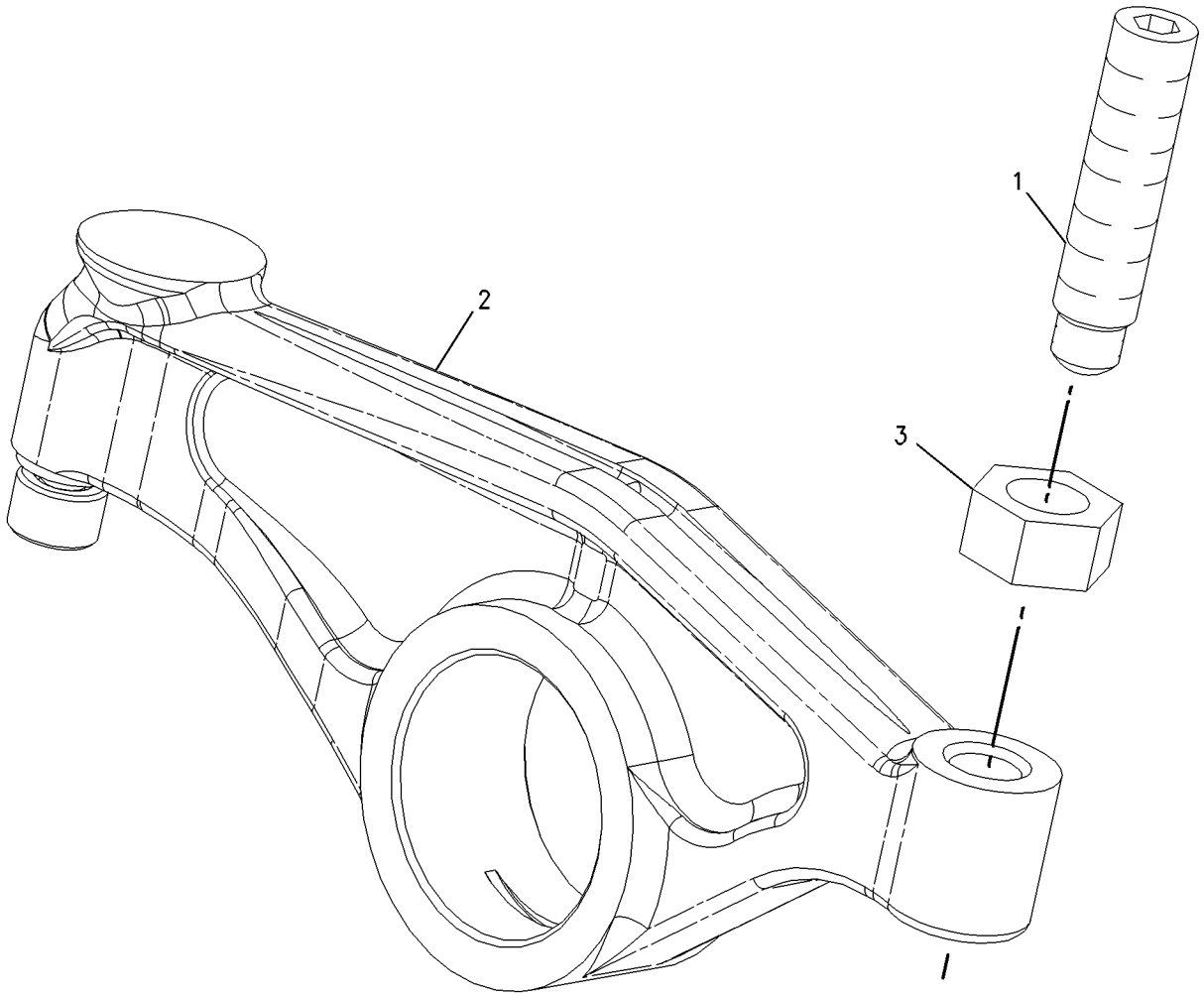

GRAPHIC #1

<END>

g00956228

385-4639 ROCKER ARM GP–INLET

S/N: TXX1-UP
PART OF 396-4102 ROCKER ARM GP
AN ATTACHMENT

SMCS-1102, 1123

i04930151

NOTE	REF NO	GRAPHIC REF	PART NUMBER	QTY	PART NAME 1 2 3 4 5 6 (PRODUCT LEVEL)	SEE PAGE
M	1	1	**260-7524**	1	SCREW-VALVE ADJUSTMENT (M10X1.5-THD)	
M	2	1	**2Y-5829**	1	NUT (M10X1.5-THD)	
R	3	1	**385-5474**	1	ROCKER ARM AS	

M - METRIC PART
R - REMFG PART MAY BE AVAILABLE

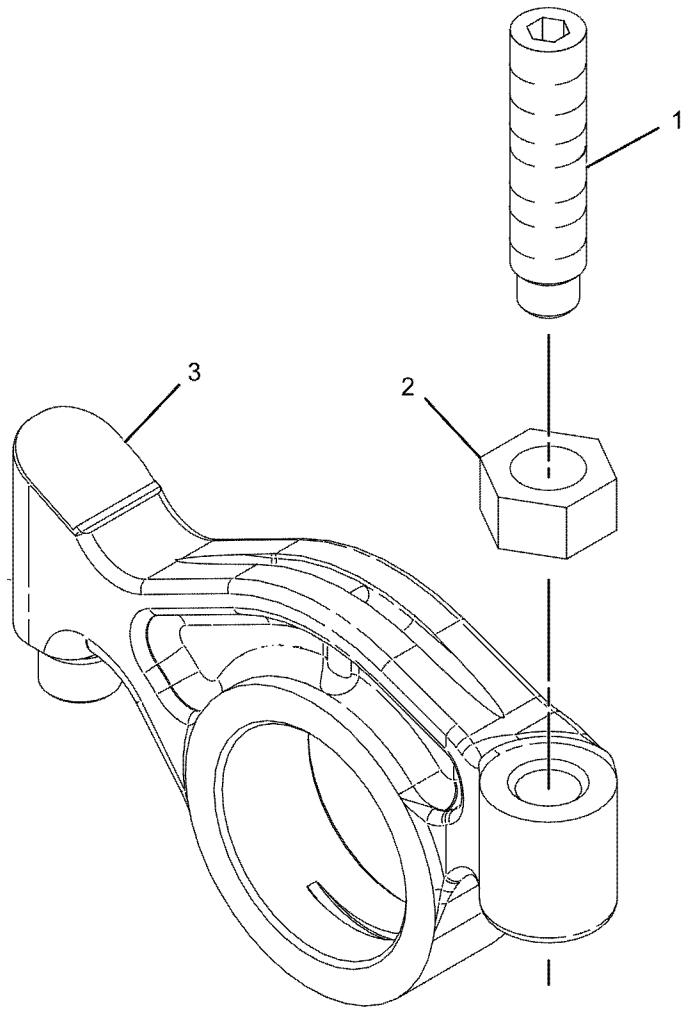

GRAPHIC #1

<END>

g01030820

396-4102 ROCKER ARM GP

S/N: TXX1-UP
PART OF 240-7272 VALVE MECHANISM GP
AN ATTACHMENT

SMCS-1102, 1123 **i04915600**

NOTE	REF NO	GRAPHIC REF	PART NUMBER	QTY	PART NAME 1 2 3 4 5 6 (PRODUCT LEVEL)	SEE PAGE
	1	1	**224-4418**	1	SHAFT AS	
	1A	1	**3S-6605**	2	PLUG-CUP	
	2	1	**242-1401**	2	BASE AS	
	3	1	**242-7418**	1	BASE	
Y	4	1	*260-0251*	2	ROCKER ARM GP (UNIT INJECTOR)	60
Y	5	1	*385-4639*	2	ROCKER ARM GP (INLET)	62
Y	6	1	*261-2294*	2	ROCKER ARM GP (EXHAUST)	61
	7	1	**241-0847**	2	BOLT (M12X1.75X93-MM)	

Y - SEPARATE ILLUSTRATION

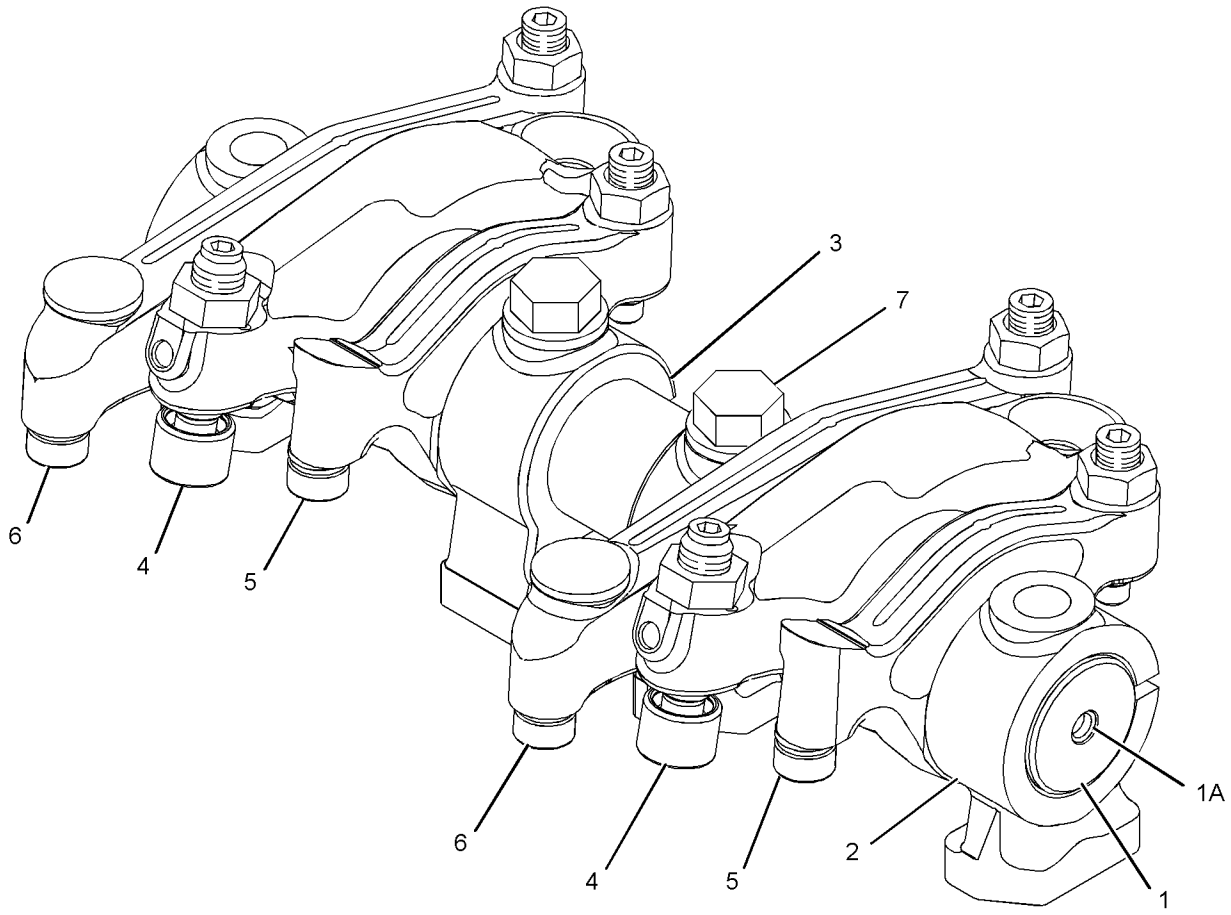

GRAPHIC #1 **<END>** g01207508

227-0838 SEAL GP-CRANKSHAFT–REAR

S/N: TXX1-UP
COUNTER CLOCKWISE ROTATION
PART OF 277-4435 HOUSING GP-FLYWHEEL
AN ATTACHMENT

SMCS-1160, 1161 **i05625598**

NOTE	REF NO	GRAPHIC REF	PART NUMBER	QTY	PART NAME 1 2 3 4 5 6 (PRODUCT LEVEL)	SEE PAGE
	1	1	**100-5421**	1	SEAL GP-CRANKSHAFT	
C	2	1	**444-2269**	1	SEAL-RING	

C - CHANGE FROM PREVIOUS TYPE

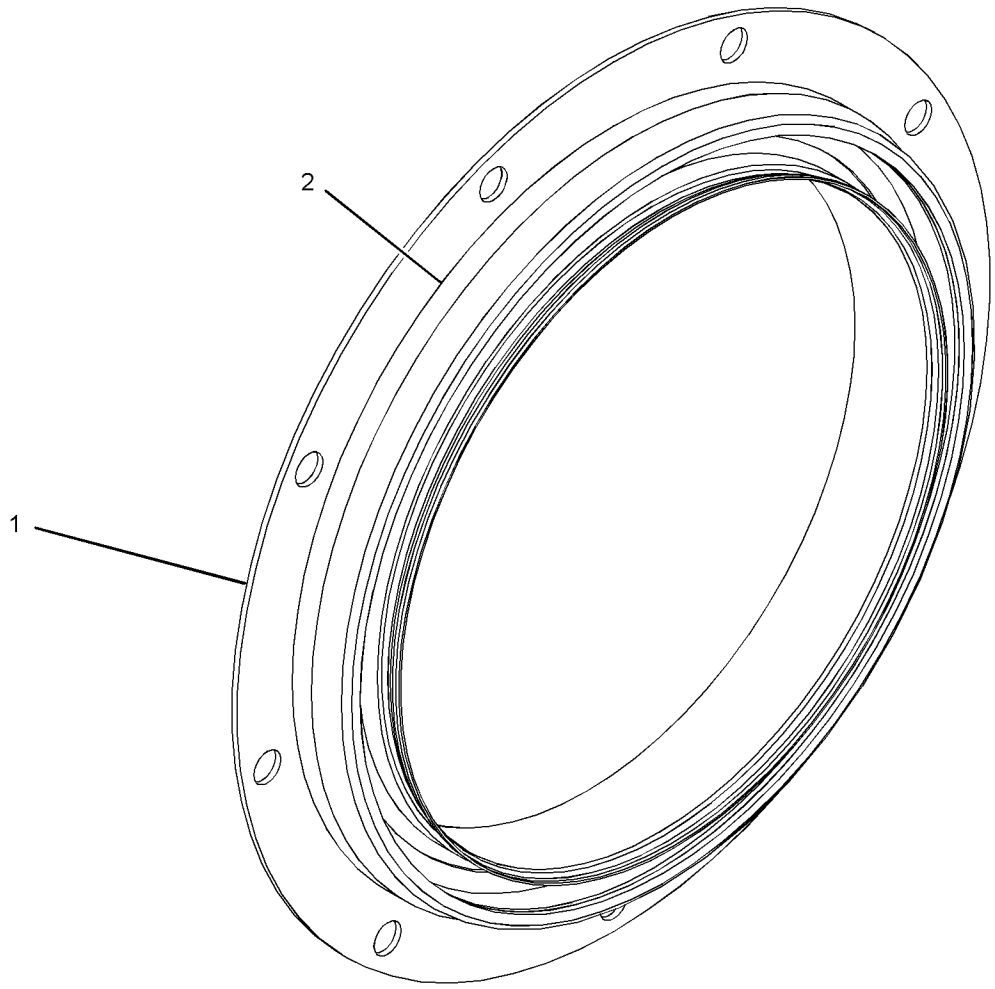

GRAPHIC #1 **<END>** g03581455

250-7017 SUPPORT GP-ENGINE

S/N: TXX1-UP
PART OF 383-2065, 422-0048 ENGINE AR-COMPLETE
AN ATTACHMENT

SMCS-1152, 1153, 1154

i05289628

NOTE	REF NO	GRAPHIC REF	PART NUMBER	QTY	PART NAME 1 2 3 4 5 6 (PRODUCT LEVEL)	SEE PAGE
	1	1	**250-7012**	1	SUPPORT	
	2	1	**5P-8245**	8	WASHER-HARD (13.5X25.5X3-MM THK)	
M	3	1	**6V-5696**	8	BOLT (M12X1.75X80-MM)	

M - METRIC PART

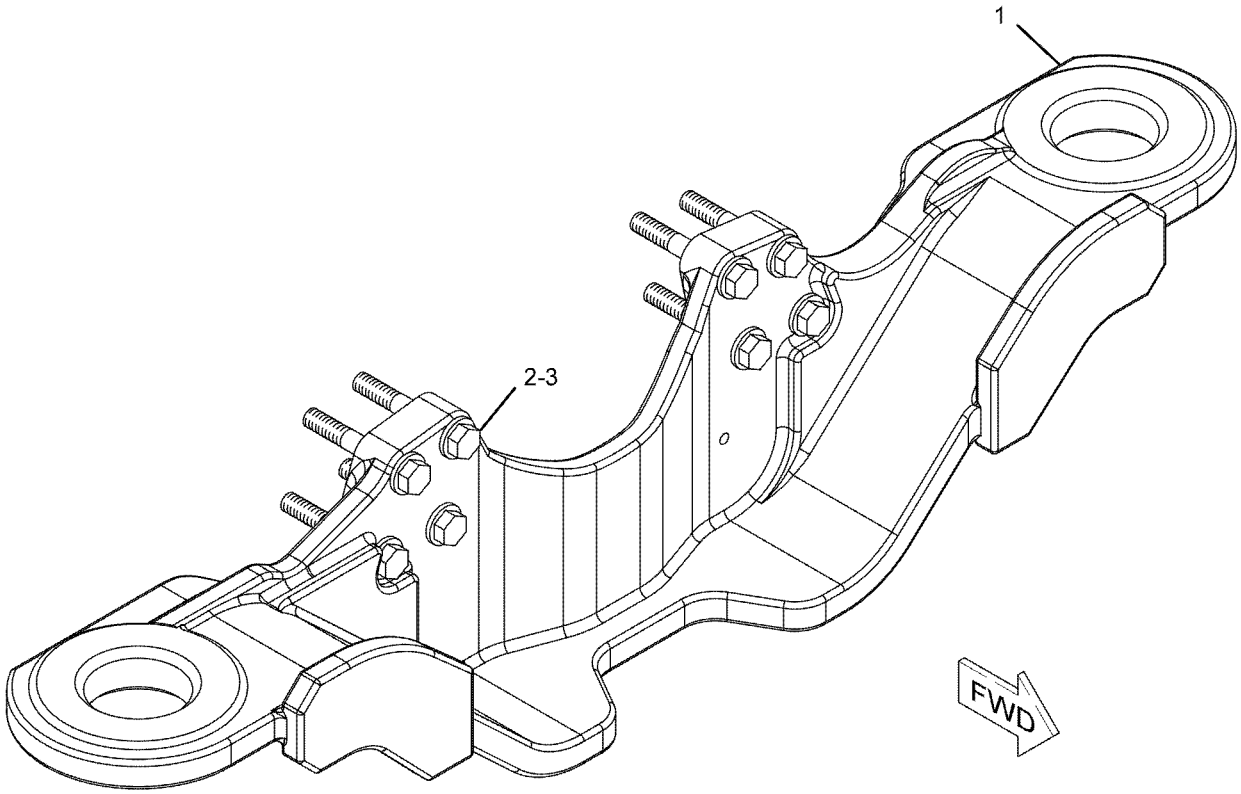

GRAPHIC #1

<END>

g01143638

240-7272 VALVE MECHANISM GP

S/N: TXX1-UP

PART OF 376-4249 ENGINE AR-CORE

AN ATTACHMENT

SMCS-1102 **i05327555**

NOTE	REF NO	GRAPHIC REF	PART NUMBER	QTY	PART NAME 1 2 3 4 5 6 (PRODUCT LEVEL)	SEE PAGE
	1	1	**319-0271**	6	PUSHROD-INJECTOR	
Y	2	1	*237-4376*	1	LIFTER GP-VALVE (MECHANISM)	42
	3	1	**319-0270**	12	PUSHROD-VALVE	
	4	1	**237-7253**	12	BRIDGE-VALVE	
CY	5	1	*396-4102*	3	ROCKER ARM GP	63

C - CHANGE FROM PREVIOUS TYPE
Y - SEPARATE ILLUSTRATION

240-7272 **VALVE MECHANISM GP (*contd.*)** **i05327555**

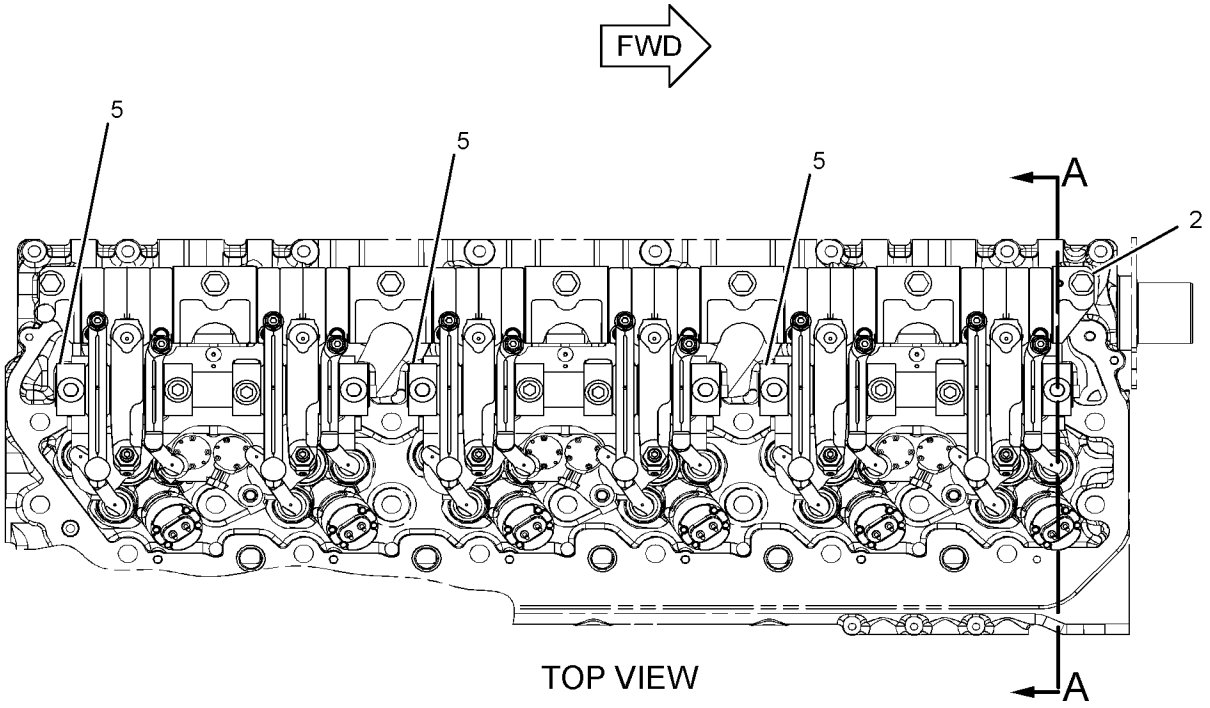

TOP VIEW

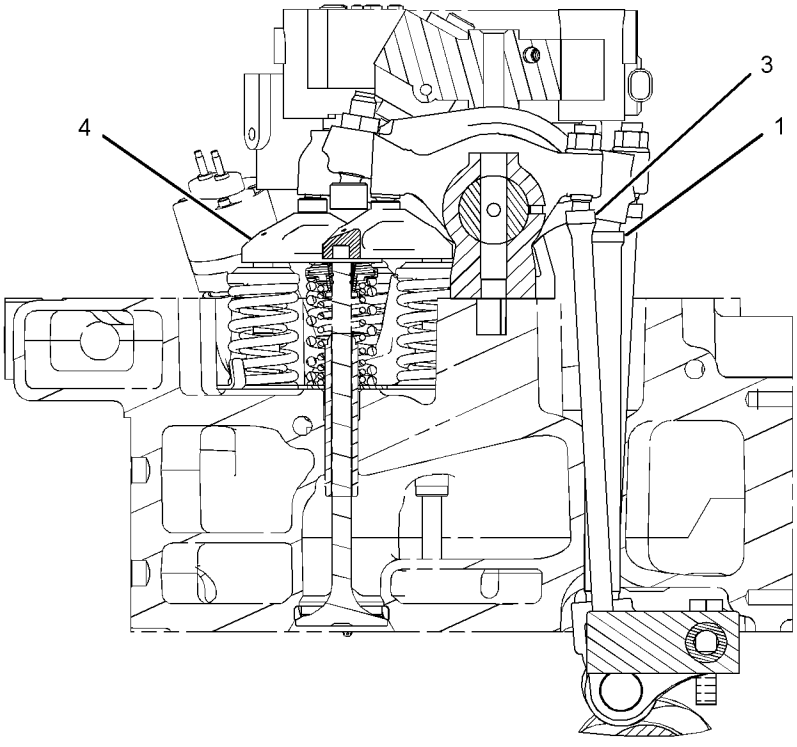

SECTION A-A

GRAPHIC #1 **<END>** g01291144

267-0008 BREATHER GP–CRANKCASE

S/N: TXX1-UP
TALL
PART OF 383-2065, 422-0048 ENGINE AR-COMPLETE
AN ATTACHMENT

SMCS-1317 **i05863973**

NOTE	REF NO	GRAPHIC REF	PART NUMBER	QTY	PART NAME 1 2 3 4 5 6 (PRODUCT LEVEL)	SEE PAGE
C	1	1	**9Y-1758**	1	GASKET	
C	2	1	**290-8568**	1	BREATHER AS (CRANKCASE)	
CM	3	1	**8T-0275**	4	BOLT (M6X1X50-MM)	
	4	1	**9X-8267**	4	WASHER (6.6X12X2-MM THK)	

C - CHANGE FROM PREVIOUS TYPE
M - METRIC PART

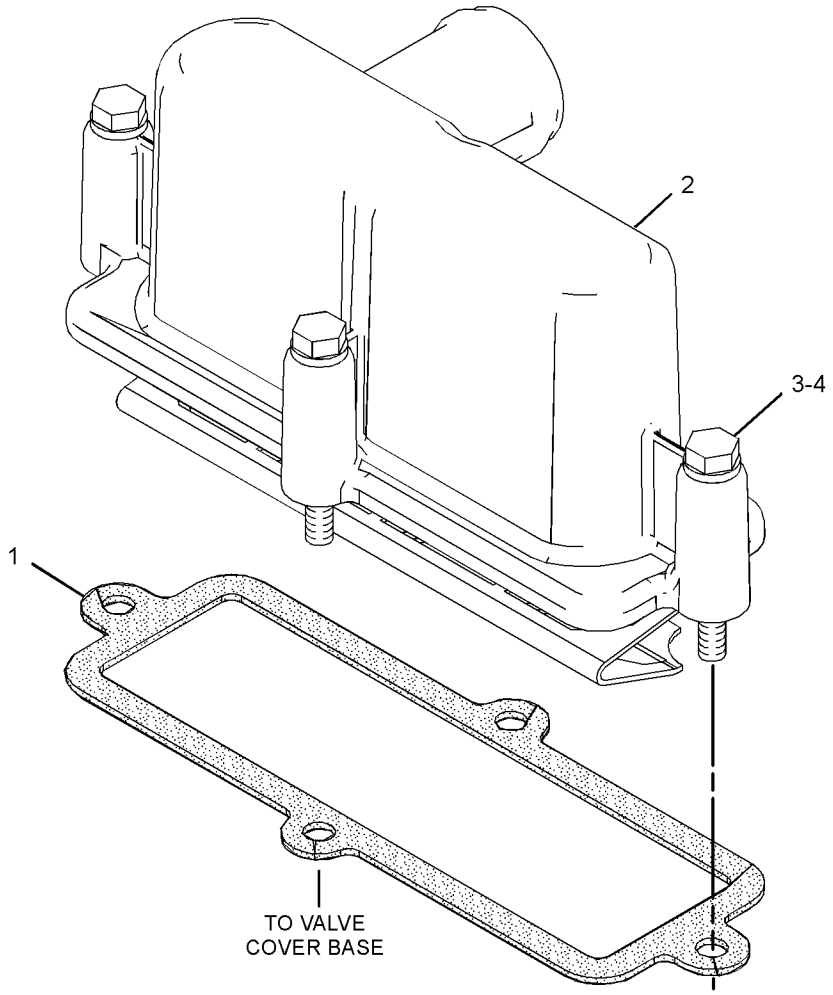

GRAPHIC #1 **<END>** g01430854

436-6213 FILLER GP-ENGINE OIL

S/N: TXX1-UP
PART OF 439-0403 FILLER GP-ENGINE OIL
AN ATTACHMENT

SMCS-1316, 7513

i06133335

NOTE	REF NO	GRAPHIC REF	PART NUMBER	QTY	PART NAME 1 2 3 4 5 6 (PRODUCT LEVEL)	SEE PAGE
	1	1	**385-1450**	1	CAP AS-ENGINE OIL FILLER	
		1	**293-7589**	1	SEAL-O-RING	
	2	1	**436-6212**	1	TUBE AS-OIL FILLER	

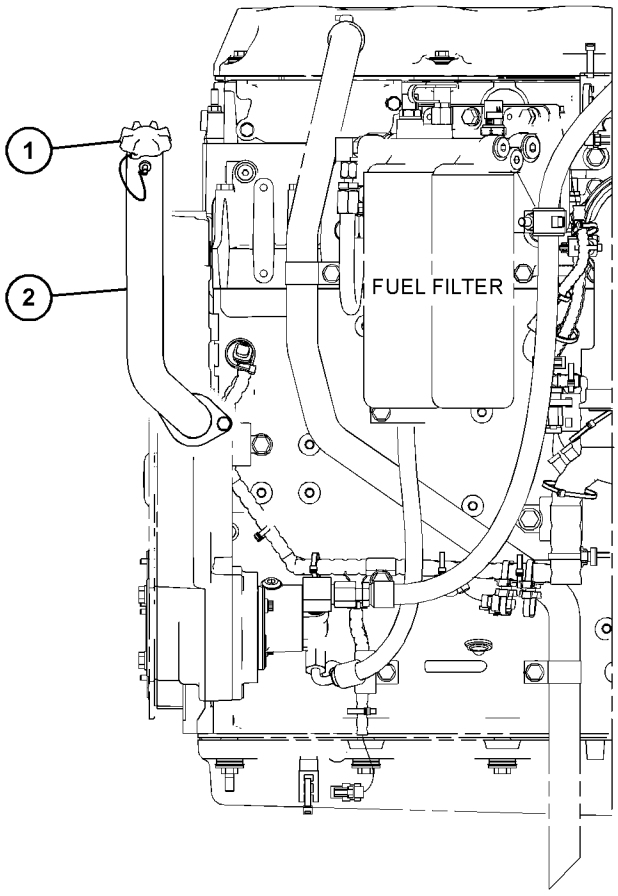

LEFT SIDE VIEW OF ENGINE

GRAPHIC #1

<END>

g03833194

439-0403 FILLER GP-ENGINE OIL

S/N: TXX1-UP

PART OF 383-2065, 422-0048 ENGINE AR-COMPLETE

AN ATTACHMENT

SMCS-1316, 7513

i06133315

NOTE	REF NO	GRAPHIC REF	PART NUMBER	QTY	PART NAME 1 2 3 4 5 6 (PRODUCT LEVEL)	SEE PAGE
Y	1	1	*436-6213*	1	FILLER GP-ENGINE OIL	69
	2	1	**061-9455**	1	SEAL-O-RING	
M	3	1	**6V-2317**	2	BOLT (M8X1.25X30-MM)	
	4	1	**9M-1974**	2	WASHER-HARD (8.8X16X2-MM THK)	

M - METRIC PART
Y - SEPARATE ILLUSTRATION

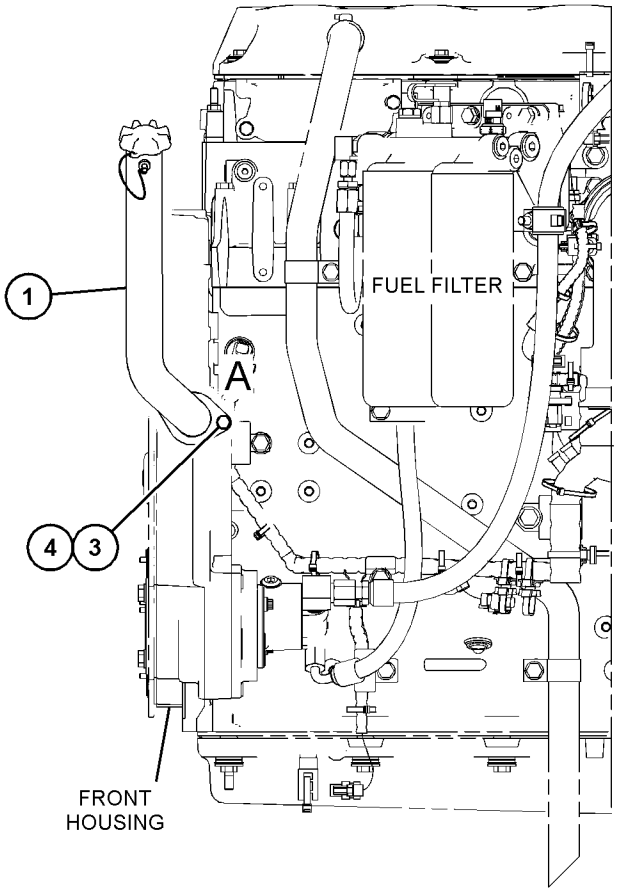

LEFT SIDE VIEW OF ENGINE

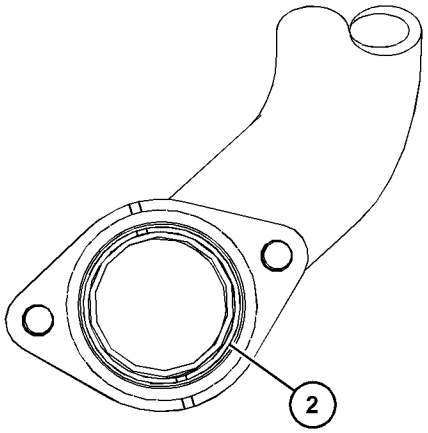

VIEW OF AREA A
(ROTATED 180 DEGREES)

GRAPHIC #1

<END>

g03833180

453-5346 FILLER GP-ENGINE OIL

S/N: TXX591-UP
PART OF 422-0048 ENGINE AR-COMPLETE
AN ATTACHMENT

SMCS-1316, 7513

i06138554

NOTE	REF NO	GRAPHIC REF	PART NUMBER	QTY	PART NAME 1 2 3 4 5 6 (PRODUCT LEVEL)	SEE PAGE
	1	1	**368-2260**	1	PLATE AS	
Y	2	1	*453-5347*	1	FILLER GP-ENGINE OIL	72
	3	1	**061-9455**	1	SEAL-O-RING	
	4	1	**5P-1076**	1	WASHER-HARD (13.5X30X4-MM THK)	
	5	1	**6K-6165**	1	CLIP	
	6	1	**6K-6166**	1	BRACKET	
M	7	1	**8T-4139**	1	BOLT (M12X1.75X30-MM)	
	8	1	**8T-4224**	2	WASHER-HARD (8.8X16X2-MM THK)	
M	9	1	**8T-7547**	2	BOLT (M8X1.25X30-MM)	

M - METRIC PART
Y - SEPARATE ILLUSTRATION

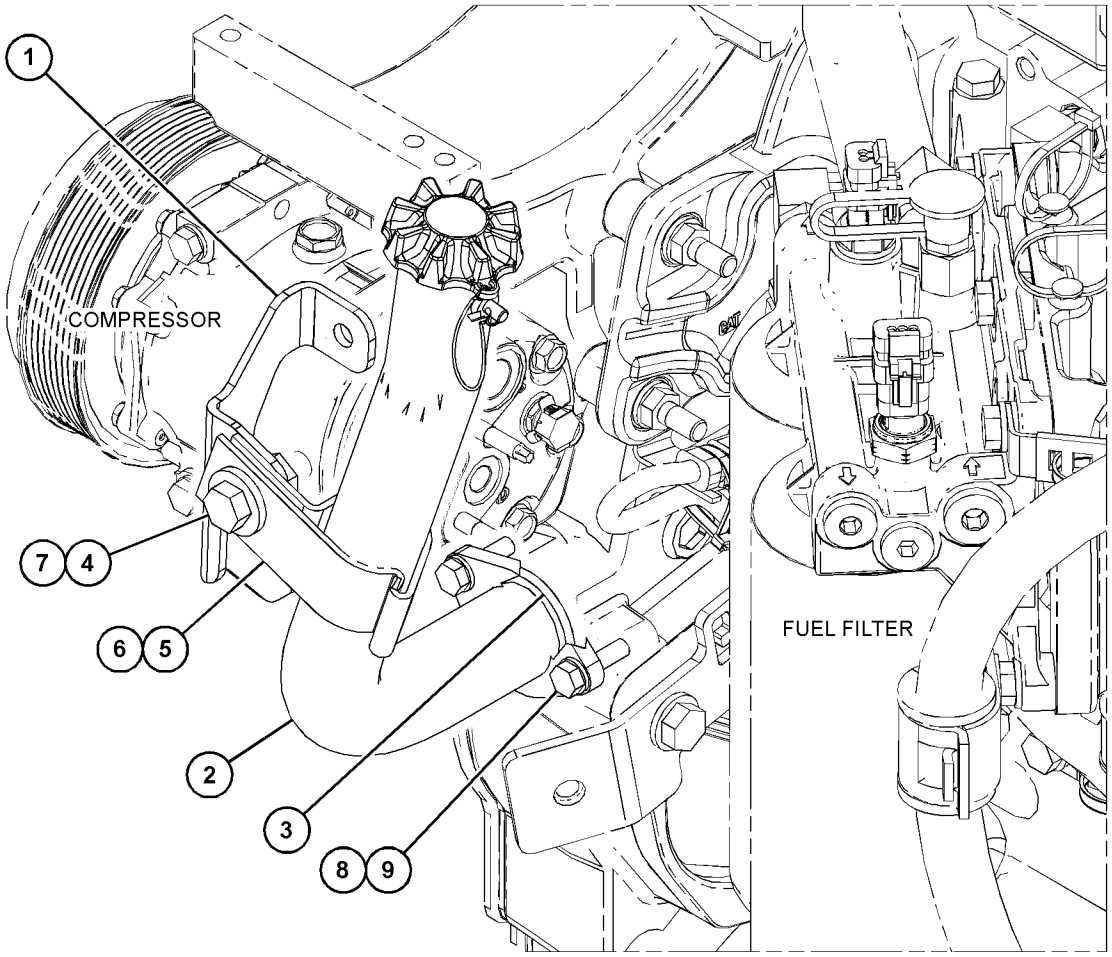

GRAPHIC #1

<END>

g03835116

453-5347 FILLER GP-ENGINE OIL

S/N: TXX591-UP
PART OF 453-5346 FILLER GP-ENGINE OIL
AN ATTACHMENT

SMCS-1316, 7513

i06138557

NOTE	REF NO	GRAPHIC REF	PART NUMBER	QTY	PART NAME 1 2 3 4 5 6 (PRODUCT LEVEL)	SEE PAGE
	1	1	**385-1450**	1	CAP AS-ENGINE OIL FILLER	
		1	**293-7589**	1	SEAL-O-RING	
	2	1	**453-5348**	1	TUBE AS	

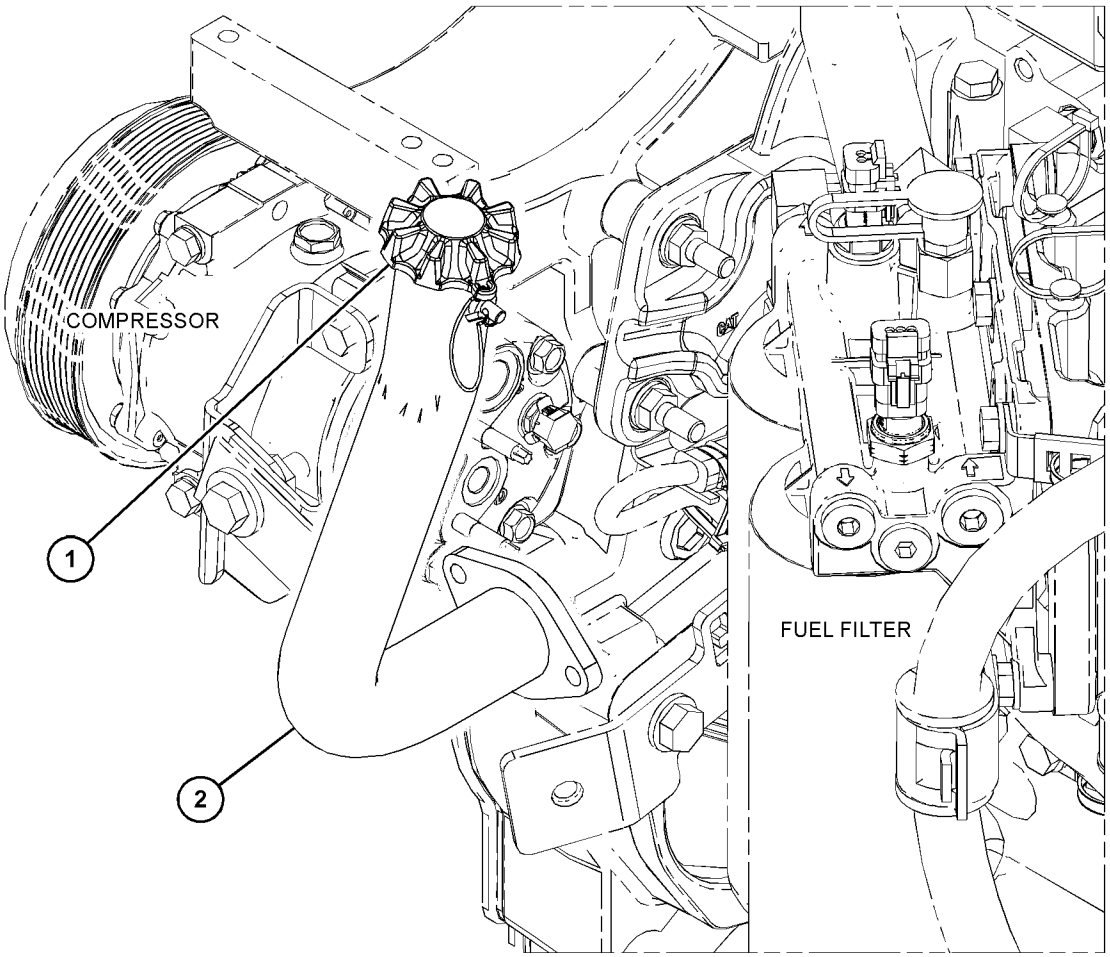

GRAPHIC #1

<END>

g03835114

439-5516 FILTER GP-ENGINE OIL

S/N: E9Y1-UP

PART OF 381-2717 INSTALLATION AR-ENGINE

SMCS-1306, 1308 **i06147637**

NOTE	REF NO	GRAPHIC REF	PART NUMBER	QTY	PART NAME 1 2 3 4 5 6 (PRODUCT LEVEL)	SEE PAGE
	1	1	*164-5602*	1	PLUG AS	
		1	**2S-4078**	1	SEAL-O-RING	
		1	**8J-5914**	1	PLUG	
	2	1	**183-7264**	1	VALVE AS-FLUID SAMPLING (ENGINE OIL)	
		1	**3J-1907**	1	SEAL-O-RING	
	3	1	*260-9189*	1	ELBOW AS-SWIVEL	
		1	**7M-8485**	1	SEAL-O-RING	
		1	**124-8333**	1	ELBOW	
	4	1	**286-6192**	2	SPACER (11X40X25-MM THK)	
	5	1	**362-3515**	1	BASE AS-OIL FILTER	
		1	**6V-7604**	1	PLUG-CUP	
I	6	1	**466-6862**	1	HOSE AS	
I	7	1	**466-6863**	1	HOSE AS	
	8	1	**139-1398**	4	CLIP	
	9	1	*148-8356*	2	ELBOW AS	
					(EACH INCLUDES)	
		1	**2S-4078**	1	SEAL-O-RING	
		1	**6V-8400**	1	SEAL-O-RING	
		1	**6V-9009**	1	ELBOW	
	10	1	*148-8373*	1	ELBOW AS	
		1	**6V-8400**	1	SEAL-O-RING	
		1	**7M-8485**	1	SEAL-O-RING	
		1	**8C-3364**	1	ELBOW	
	11	1	*164-4180*	2	PLUG AS	
					(EACH INCLUDES)	
		1	**7M-8485**	1	SEAL-O-RING	
		1	**9S-4181**	1	PLUG (5/16-12-THD)	
	12	1	**198-4777**	2	WASHER-HARD (11X25X10-MM THK)	
	13	1	**1R-1808**	1	FILTER-ENGINE OIL (ADVANCED EFFICIENCY)	
M	14	1	**231-0336**	2	STUD-TAPERLOCK (M10X1.5X70-MM)	
M	15	1	**309-1905**	2	STUD-TAPERLOCK (M10X1.5X100-MM)	
M	16	1	**344-5675**	2	NUT (M10X1.5-THD)	
	17	1	**5K-9090**	1	SEAL-O-RING	
	18	1	**6V-8400**	1	SEAL-O-RING	
	19	1	**6V-8741**	1	UNION	
	20	1	**7G-5984**	1	CLIP (TAB)	
	21	1	**7G-5985**	1	CLIP (SLOT)	
	22	1	**8C-3445**	1	CAP-DUST	
	23	1	**8T-3440**	1	GROMMET	
	24	1	**8T-4121**	6	WASHER-HARD (11X21X2.5-MM THK)	
M	25	1	**8T-4133**	2	NUT (M10X1.5-THD)	
M	26	1	**8T-4186**	4	BOLT (M10X1.5X40-MM)	

I - REFER TO HYDRAULIC INFORMATION SYSTEM
M - METRIC PART

439-5516 **FILTER GP-ENGINE OIL (*contd.*)** **i06147637**

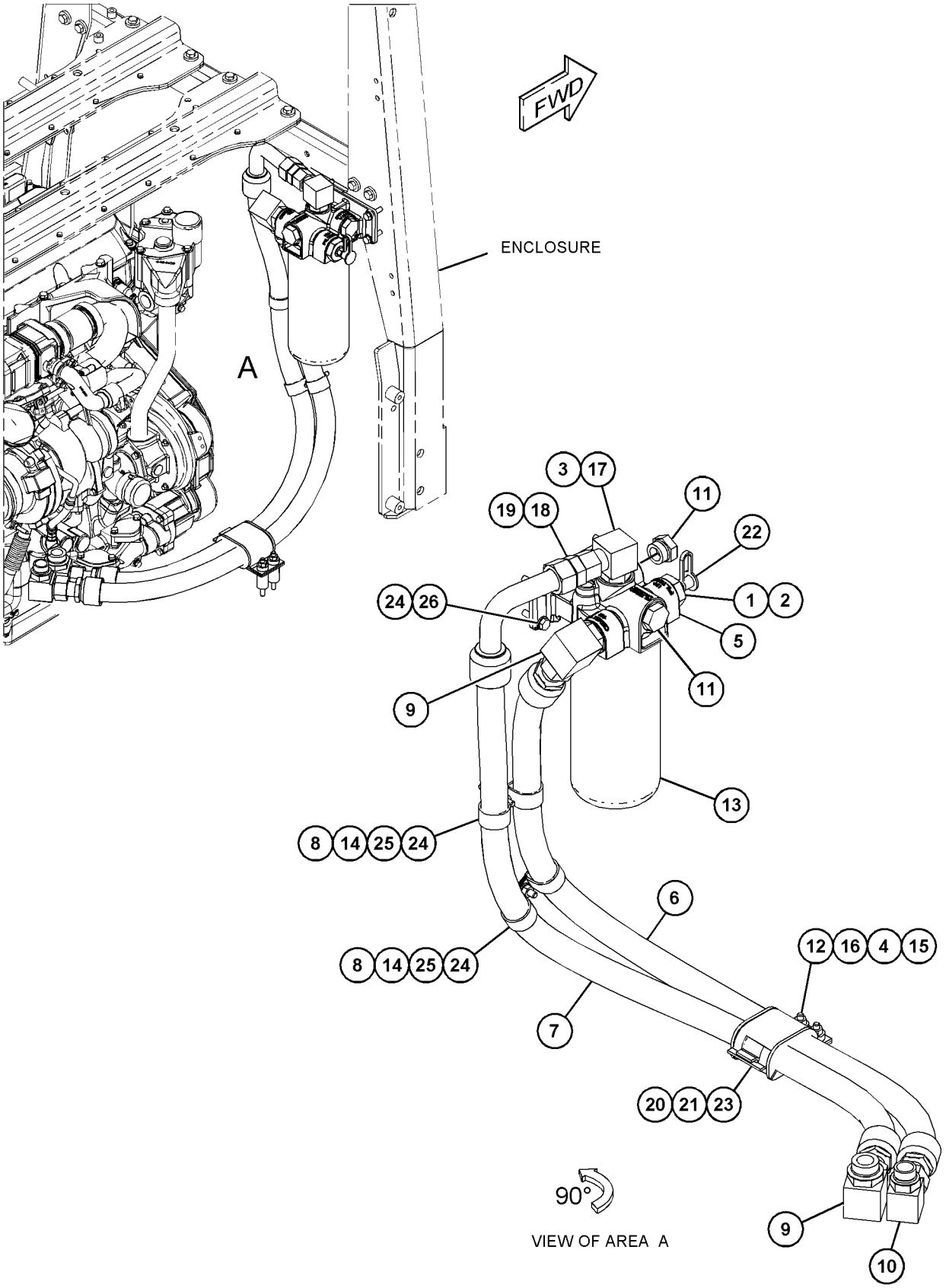

GRAPHIC #1 **<END>** g03834574

393-9078 FUMES DISPOSAL GP

S/N: TXX1-UP

PART OF 383-2065, 422-0048 ENGINE AR-COMPLETE

AN ATTACHMENT

SMCS-1317 **i06133317**

NOTE	REF NO	GRAPHIC REF	PART NUMBER	QTY	PART NAME 1 2 3 4 5 6 (PRODUCT LEVEL)	SEE PAGE
	1	1	**9M-2904**	1	CLAMP-HOSE	
	2	1	**446-8873**	1	HOSE	
	3	1	**132-7551**	1	SPACER (11X19X6-MM THK)	
	4	1	**2L-2685**	2	CLIP	
	5	1	**7G-1239**	1	SPACER (10.5X19X4.5-MM THK)	
	6	1	**8T-4121**	1	WASHER-HARD (11X21X2.5-MM THK)	
M	7	1	**8T-4136**	1	BOLT (M10X1.5X25-MM)	
M	8	1	**8T-4186**	1	BOLT (M10X1.5X40-MM)	
	9	1	**9C-5344**	1	SPACER (10.5X20X18-MM THK)	

M - METRIC PART

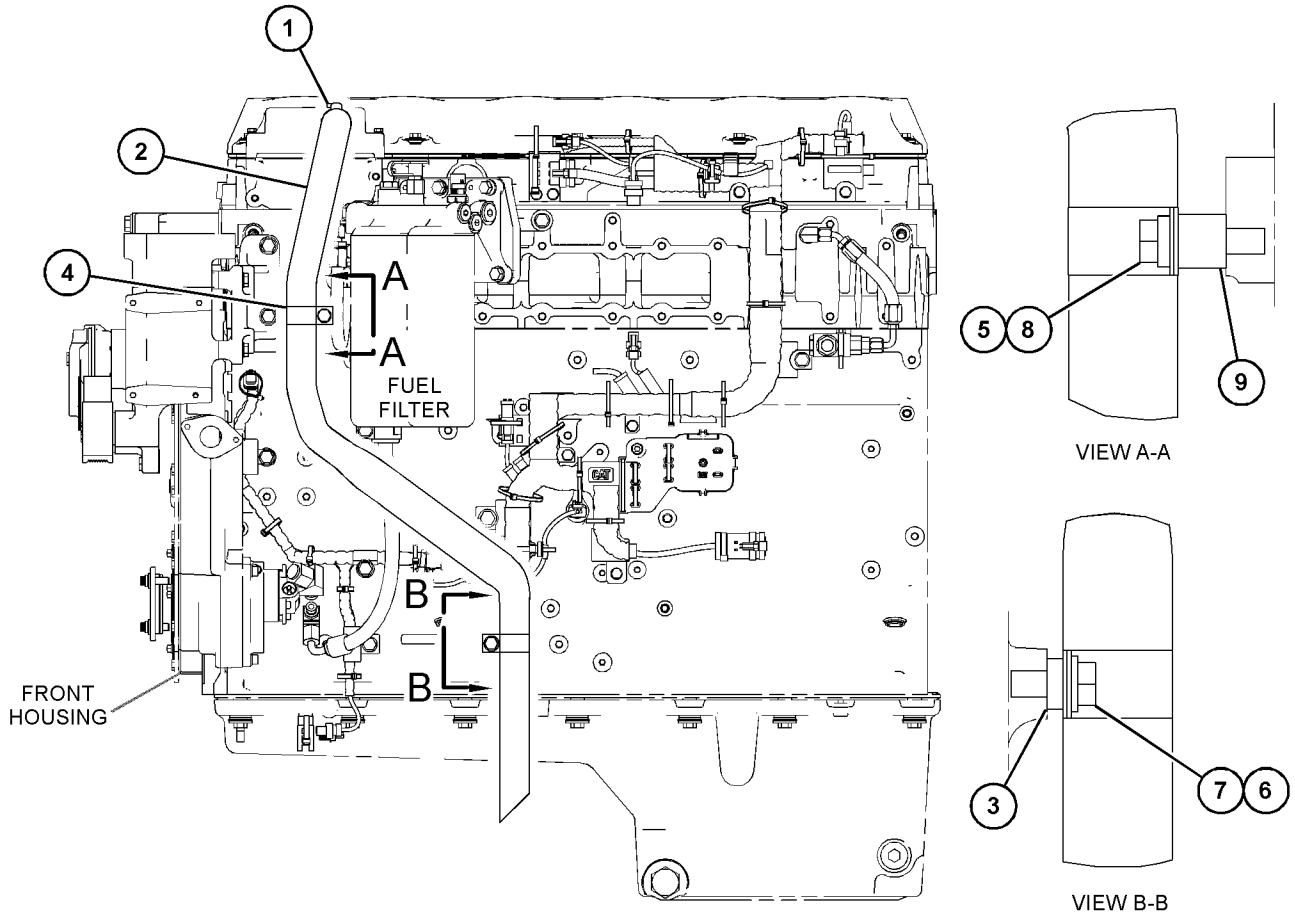

LEFT SIDE VIEW OF ENGINE

GRAPHIC #1 **<END>** g03833136

385-7050 GAUGE GP-OIL LEVEL (DIPSTICK)—LEFT REAR

S/N: TXX1-857

PART OF 383-2065, 422-0048 ENGINE AR-COMPLETE

AN ATTACHMENT

SMCS-1326 **i06133275**

NOTE	REF NO	GRAPHIC REF	PART NUMBER	QTY	PART NAME 1 2 3 4 5 6 (PRODUCT LEVEL)	SEE PAGE
	1	1	**144-4613**	1	ANGLE AS	
M		1	**8T-3490**	1	NUT-WELD (M10X1.5-THD)	
	2	1	**209-7309**	2	PLUG	
	3	1	**385-0251**	1	GAUGE AS-OIL LEVEL (DIPSTICK) (ENGINE OIL)	
			9M-1096	1	RIVET	
	4	1	**386-4128**	1	TUBE AS-OIL GAUGE	
	5	1	**228-4947**	1	SEAL-O-RING	
	6	1	**4P-7233**	1	GROMMET	
M	7	1	**6V-4248**	2	BOLT (M10X1.5X25-MM)	
	8	1	**6V-5839**	2	WASHER (11X21X2.5-MM THK)	
M	9	1	**6V-6317**	1	BOLT (M10X1.5X20-MM)	
	10	1	**8T-1887**	1	CLIP (SLOT)	
	11	1	**8T-1888**	1	CLIP (TAB)	
	12	1	**8T-7934**	1	WASHER-HARD (11X21X5-MM THK)	

M - METRIC PART

385-7050 **GAUGE GP-OIL LEVEL (DIPSTICK) (*contd.*)** **i06133275**

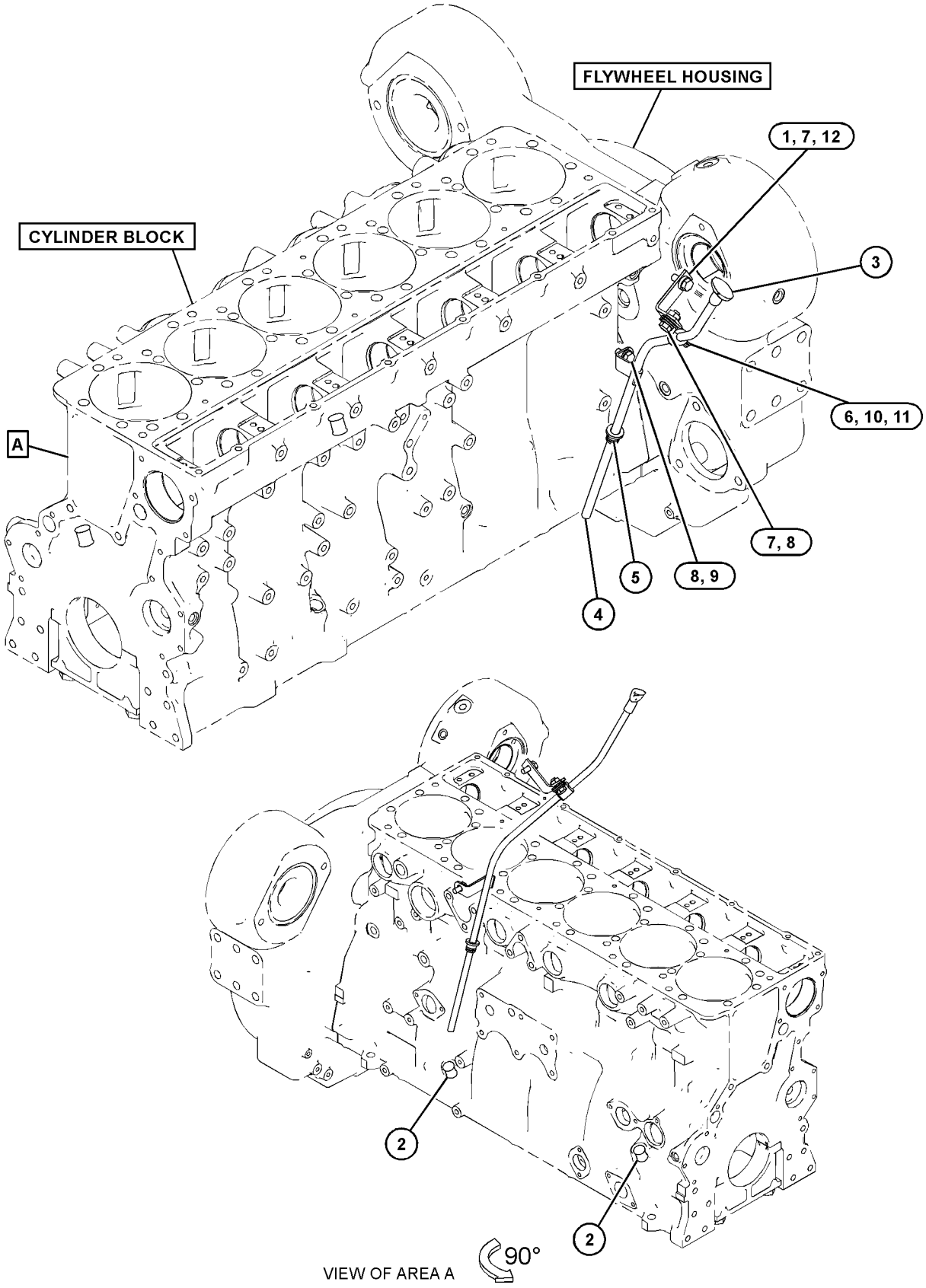

GRAPHIC #1

<END>

g03832514

385-7050 GAUGE GP-OIL LEVEL (DIPSTICK)—LEFT REAR

S/N: TXX858-UP

PART OF 383-2065, 422-0048 ENGINE AR-COMPLETE

AN ATTACHMENT

SMCS-1326 **i06215063**

NOTE	REF NO	GRAPHIC REF	PART NUMBER	QTY	PART NAME 1 2 3 4 5 6 (PRODUCT LEVEL)	SEE PAGE
	1	1	**144-4613**	1	ANGLE AS	
M		1	**8T-3490**	1	NUT-WELD (M10X1.5-THD)	
	2	1	**209-7309**	2	PLUG	
	3	1	**8T-7934**	1	WASHER-HARD (11X21X5-MM THK)	
	4	1	*460-5932*	1	GAUGE GP-OIL LEVEL (DIPSTICK)	
		1	**460-5901**	1	GAUGE AS-OIL LEVEL	
		1	**460-5907**	1	TUBE AS	
	5	1	**228-4947**	1	SEAL-O-RING	
	6	1	**4P-7233**	1	GROMMET	
M	7	1	**6V-4248**	2	BOLT (M10X1.5X25-MM)	
	8	1	**6V-5839**	2	WASHER (11X21X2.5-MM THK)	
M	9	1	**6V-6317**	1	BOLT (M10X1.5X20-MM)	
	10	1	**8T-1887**	1	CLIP (SLOT)	
	11	1	**8T-1888**	1	CLIP (TAB)	

M - METRIC PART

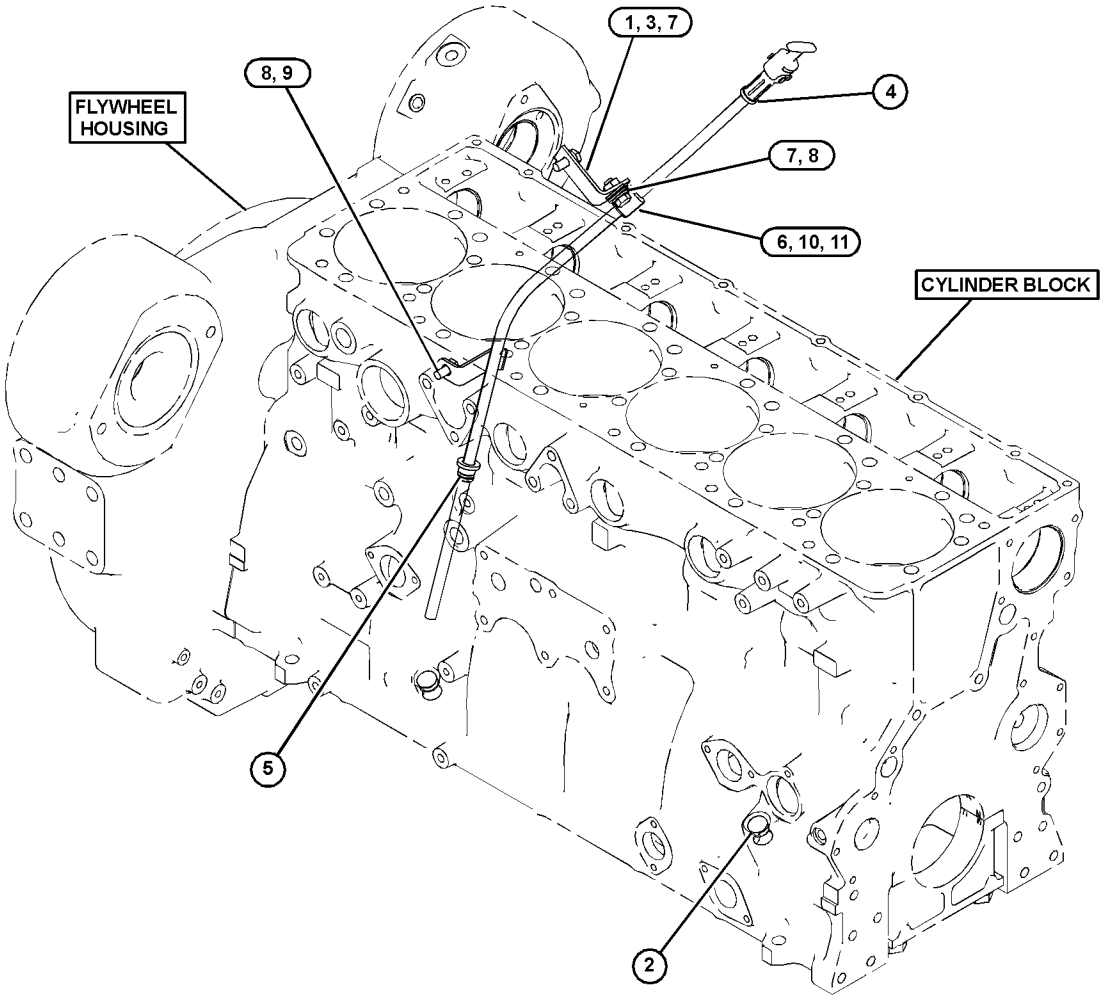

GRAPHIC #1 **<END>** g03859926

397-2401 LINES GP-TURBOCHARGER OIL

S/N: TXX1-UP
FORWARD EXHAUST
PART OF 383-2065, 422-0048 ENGINE AR-COMPLETE
AN ATTACHMENT

SMCS-1052, 1307 **i06133278**

NOTE	REF NO	GRAPHIC REF	PART NUMBER	QTY	PART NAME 1 2 3 4 5 6 (PRODUCT LEVEL)	SEE PAGE
	1		**197-8418**	1	GASKET	
	2		**355-1314**	1	HOSE AS	
	3		**396-9450**	1	TUBE AS	
	4		**197-8419**	1	GASKET	
	5		**225-6948**	1	SEAL-O-RING	
	6		*319-6226*	1	ELBOW AS	
			8T-6876	1	ELBOW	
			214-7568	1	SEAL-O-RING	
			228-7090	1	SEAL-O-RING	
M	7		**6V-5218**	6	BOLT (M8X1.25X35-MM)	
	8		**9M-1974**	6	WASHER-HARD (8.8X16X2-MM THK)	

M - METRIC PART

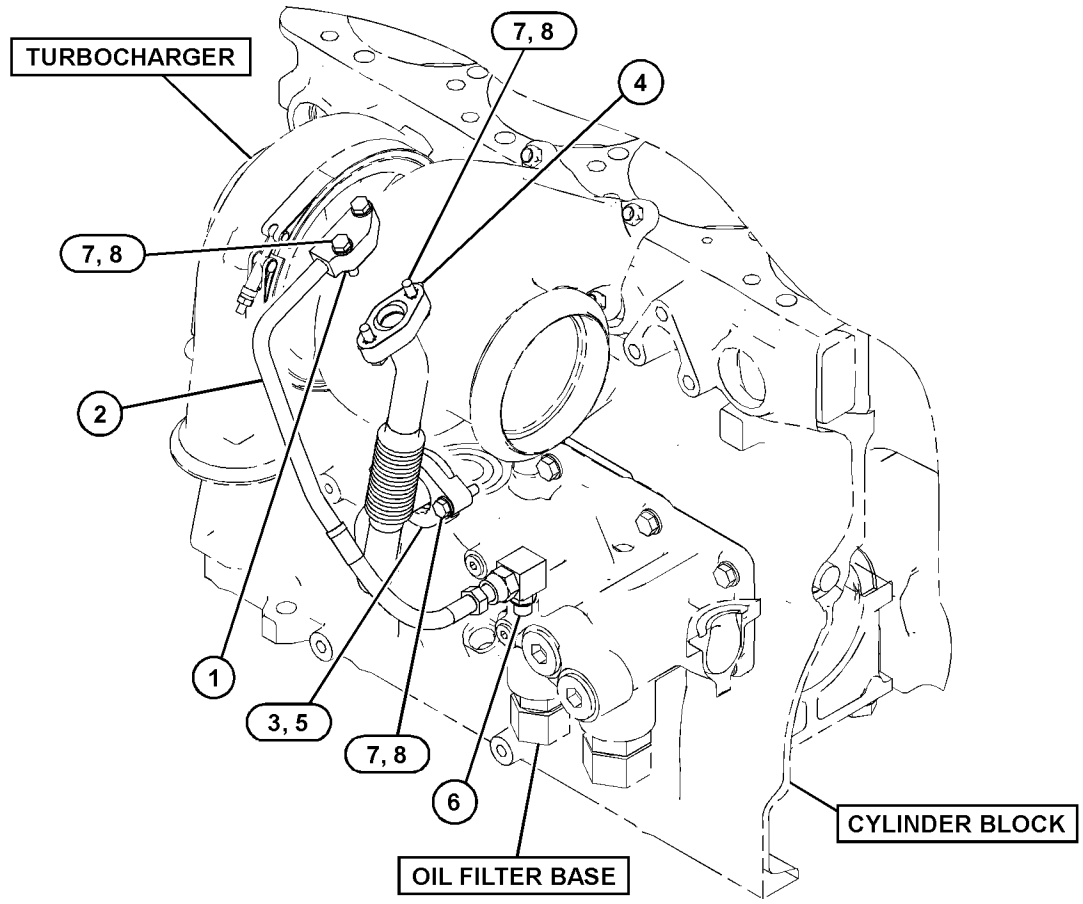

GRAPHIC #1 **<END>** g03832836

384-5612 OIL CHANGE GP-HIGH SPEED

S/N: E9Y1-UP

PART OF 381-2717 INSTALLATION AR-ENGINE

SMCS-1325 **i06139745**

NOTE	REF NO	GRAPHIC REF	PART NUMBER	QTY	PART NAME 1 2 3 4 5 6 (PRODUCT LEVEL)	SEE PAGE
	1	1	*277-4574*	1	ADAPTER AS	
		1	**6V-9746**	1	SEAL-O-RING	
		1	**061-9458**	1	SEAL-O-RING	
		1	**277-4567**	1	ADAPTER	
	2	1	**292-9681**	1	BRACKET	
I	3	1	**444-7840**	1	HOSE AS	
	4	1	**110-8827**	1	FITTING (QUICK DISCONNECT, MALE)	
	5	1	*148-8360*	1	ELBOW AS	
		1	**6V-9182**	1	ELBOW	
		1	**6V-9746**	1	SEAL-O-RING	
		1	**7M-8485**	1	SEAL-O-RING	
	6	1	**2V-2043**	1	NUT-BULKHEAD (1-5/8-12-THD)	
	7	1	**8T-4121**	2	WASHER-HARD (11X21X2.5-MM THK)	
M	8	1	**8T-4136**	2	BOLT (M10X1.5X25-MM)	

I - REFER TO HYDRAULIC INFORMATION SYSTEM
M - METRIC PART

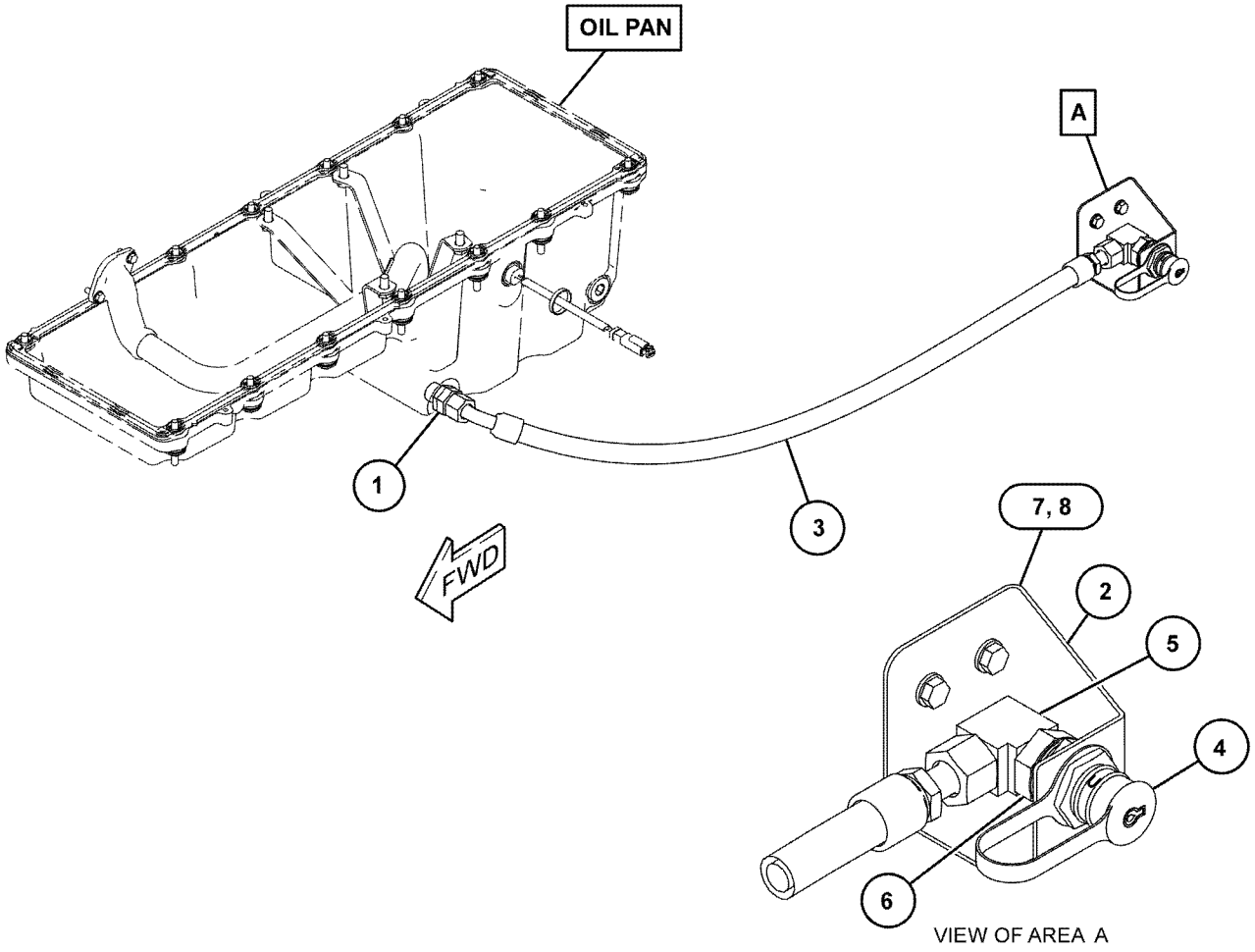

GRAPHIC #1 **<END>** g03823416

233-5220 PUMP GP-ENGINE OIL*R

S/N: TXX1-UP

PART OF 233-5221 PUMP GP-ENGINE OIL

AN ATTACHMENT

SMCS-1304, 1315

i03681550

NOTE	REF NO	GRAPHIC REF	PART NUMBER	QTY	PART NAME 1 2 3 4 5 6 (PRODUCT LEVEL)	SEE PAGE
	1	1	**9Y-8076**	1	SHAFT AS-OIL PUMP (8-TEETH) (ENGINE)	
	2	1	**6D-7146**	1	SEAL-O-RING	
M	3	1	**6V-2317**	4	BOLT (M8X1.25X30-MM)	
	4	1	**9M-1974**	4	WASHER-HARD (8.8X16X2-MM THK)	
	5	1	**9Y-8075**	1	SHAFT AS-OIL PUMP (8-TEETH) (ENGINE)	

M - METRIC PART

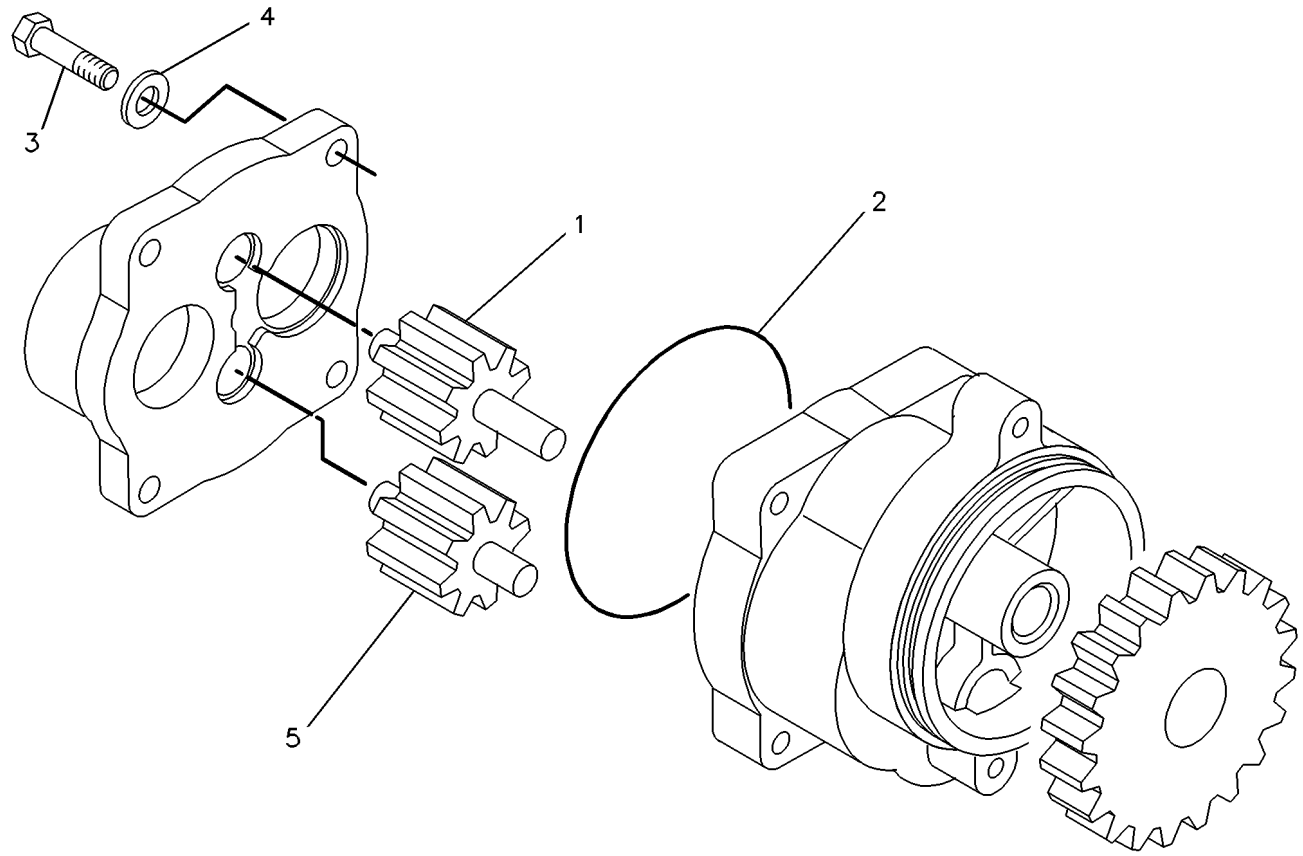

GRAPHIC #1

<END>

g00228139

233-5221 PUMP GP-ENGINE OIL

S/N: TXX1-UP
CONTAINS ALL LINES AND FASTENERS
PART OF 376-4249 ENGINE AR-CORE
AN ATTACHMENT

SMCS-1304, 1315 **i05806054**

NOTE	REF NO	GRAPHIC REF	PART NUMBER	QTY	PART NAME 1 2 3 4 5 6 (PRODUCT LEVEL)	SEE PAGE
	1	1	**7C-1821**	1	COUPLING	
	2	1	**7C-1822**	1	COUPLING	
YR	3	1	**233-5220**	1	PUMP GP-ENGINE OIL	81
	4	1	**456-0011**	1	TUBE AS	
	5	1	**235-1451**	1	ELBOW-OIL PUMP	
	6	1	**346-4897**	1	SEAL-O-RING	
	8	1	**3E-6788**	1	SEAL-O-RING	
	9	1	**5P-8068**	2	SEAL-O-RING	
	10	1	**6V-3834**	1	SEAL-O-RING	
	11	1	**6V-5134**	3	SEAL-O-RING	
M	12	1	**6V-2317**	2	BOLT (M8X1.25X30-MM)	
M	13	1	**6V-5221**	5	BOLT (M8X1.25X80-MM)	
M	14	1	**7X-0870**	1	BOLT (M8X1.25X140-MM)	
	15	1	**8J-4351**	1	SEAL-O-RING	
	16	1	**9M-1974**	8	WASHER-HARD (8.8X16X2-MM THK)	

M - METRIC PART
R - REMFG PART MAY BE AVAILABLE
Y - SEPARATE ILLUSTRATION

233-5221 **PUMP GP-ENGINE OIL (*contd.*)** **i05806054**

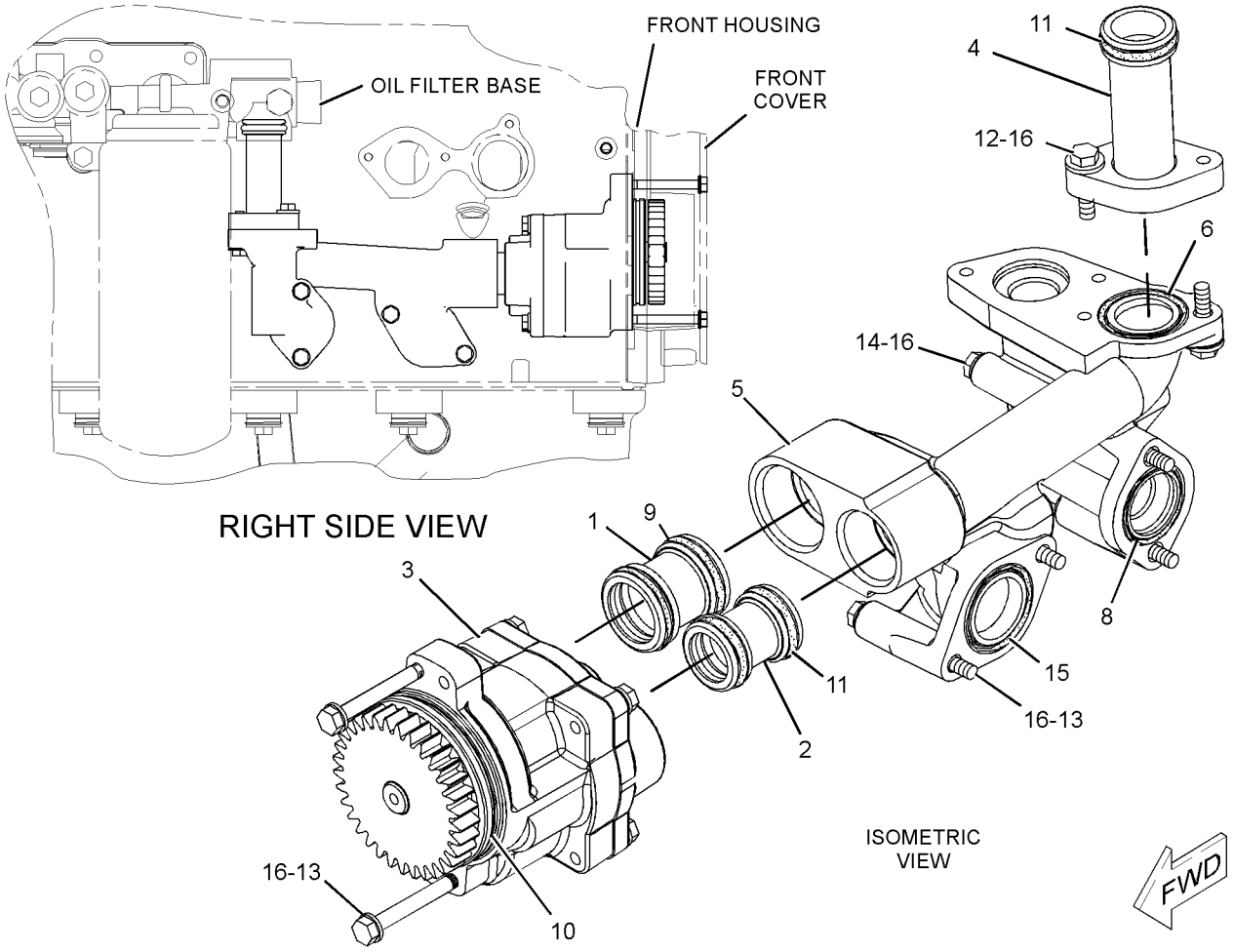

GRAPHIC #1 **<END>** g01246677

379-2168 COOLER GP-ENGINE OIL

S/N: TXX1-UP
PART OF 423-2422 LINES GP-WATER
AN ATTACHMENT

SMCS-1378 **i05767052**

NOTE	REF NO	GRAPHIC REF	PART NUMBER	QTY	PART NAME 1 2 3 4 5 6 (PRODUCT LEVEL)	SEE PAGE
	1	1	**131-6645**	1	HOSE	
	2	1	**440-2907**	1	ELBOW	
	3	1	*304-8008*	1	PLUG AS	
		1	**6V-9027**	1	SEAL-O-RING	
		1	**9S-8002**	1	PLUG	
	4	1	**373-3187**	1	BONNET-OIL COOLER	
R	5	1	**379-3436**	1	CORE AS-OIL COOLER (ENGINE)	
	6	1	**213-9396**	1	SEAL-O-RING	
	7	1	**224-2675**	1	SEAL	
	8	1	**335-9214**	2	CLAMP-BAND	
M	9	1	**6V-2317**	3	BOLT (M8X1.25X30-MM)	
	10	1	**9M-1974**	3	WASHER-HARD (8.8X16X2-MM THK)	

M - METRIC PART
R - REMFG PART MAY BE AVAILABLE

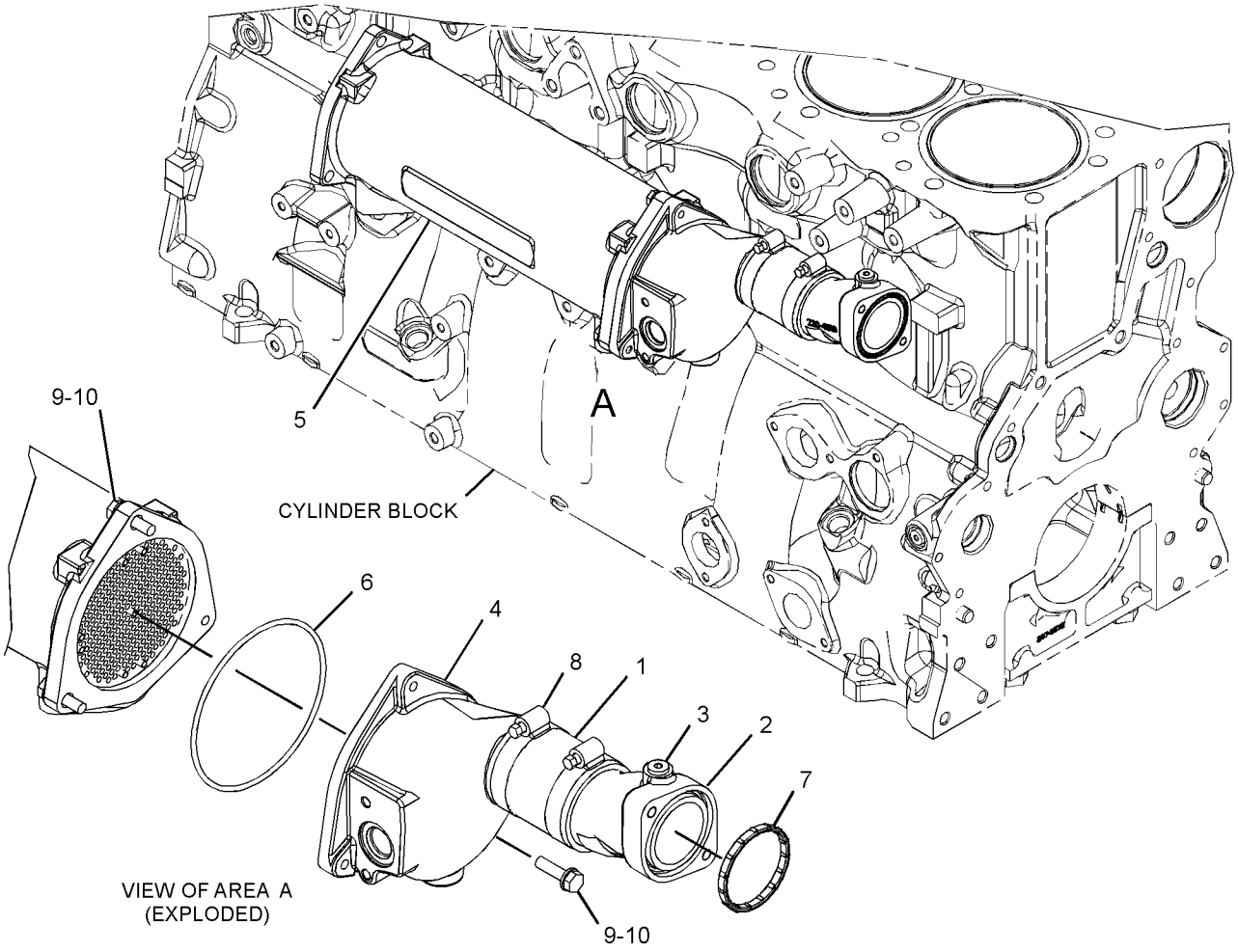

GRAPHIC #1 **<END>** g03353316

388-1485 COOLING AR

S/N: E9Y1-UP

PART OF 386-1317 COMMON AR

SMCS-1350 **i06147526**

NOTE	PART NUMBER	QTY	PART NAME 1 2 3 4 5 6 (PRODUCT LEVEL)	SEE PAGE
Y	*388-1497*	1	AFTERCOOLER GP-AIR	103
Y	*441-0767*	1	COOLER GP-HYDRAULIC OIL	546
Y	*374-3140*	1	FAN GP-SUCTION	86
Y	*444-9681*	1	RADIATOR GP	100
Y	*374-3120*	1	SUPPORT GP-RADIATOR	488

Y - SEPARATE ILLUSTRATION

<END>

374-3140 FAN GP-SUCTION

S/N: E9Y1-UP

PART OF 388-1485 COOLING AR

SMCS-1356 **i06147009**

NOTE	REF NO	GRAPHIC REF	PART NUMBER	QTY	PART NAME 1 2 3 4 5 6 (PRODUCT LEVEL)	SEE PAGE
	1	1	**244-5400**	1	SPIDER AS-FAN (8-BLADE)	
	2	1	**374-3148**	1	BAFFLE	
	3	1	**420-3031**	1	SUPPORT AS-FAN	
		1	**7T-1099**	8	LINK	
M		1	**8T-3490**	4	NUT-WELD (M10X1.5-THD)	
M		1	**8T-3597**	2	NUT-WELD (M12X1.75-THD)	
M		1	**8T-3612**	4	NUT-WELD (M8X1.25-THD)	
M		1	**8Y-3795**	1	BOSS (M10X1.5X39-MM)	
M		1	**178-7023**	1	BOSS (M10X1.5X30-MM)	
Y	4	1	**396-4282**	1	MOTOR GP-PISTON (HYDRAULIC FAN)	375
	5	1	**420-3036**	2	BAFFLE	
	6	1	**374-3151**	1	PLATE	
	7	1	**9X-8257**	1	WASHER (17.5X30X3.5-MM THK)	
	8	1	**381-7686**	1	ADAPTER-FAN	
	9	1	**420-3035**	2	BAFFLE	
	10	1	**139-3785**	20	RIVET-POP	
	11	1	**198-4777**	6	WASHER-HARD (11X25X10-MM THK)	
	12	1	**198-4780**	8	WASHER-HARD (17.5X32X8-MM THK)	
M	13	1	**3E-8000**	1	NUT-JAM (M16X1.5-THD)	
	14	1	**5P-1076**	2	WASHER-HARD (13.5X30X4-MM THK)	
M	15	1	**8T-4183**	2	BOLT (M12X1.75X40-MM)	
M	16	1	**8T-4195**	6	BOLT (M10X1.5X30-MM)	
M	17	1	**8T-4779**	8	BOLT (M16X2X35-MM)	
	18	1	**9X-6165**	12	WASHER (6.5X22X2.5-MM THK)	
E	19	1	**345-1959**		SEAL (107-CM EACH)	
E	19A	1	**345-1959**		SEAL (102-CM EACH)	
E	19B	1	**345-1959**		SEAL (6-CM EACH)	
E	19C	1	**345-1959**		SEAL (41-CM EACH)	
E	19D	1	**345-1959**		SEAL (60-CM)	

E - ORDER BY THE CENTIMETER
M - METRIC PART
Y - SEPARATE ILLUSTRATION

374-3140 **FAN GP-SUCTION (*contd.*)** **i06147009**

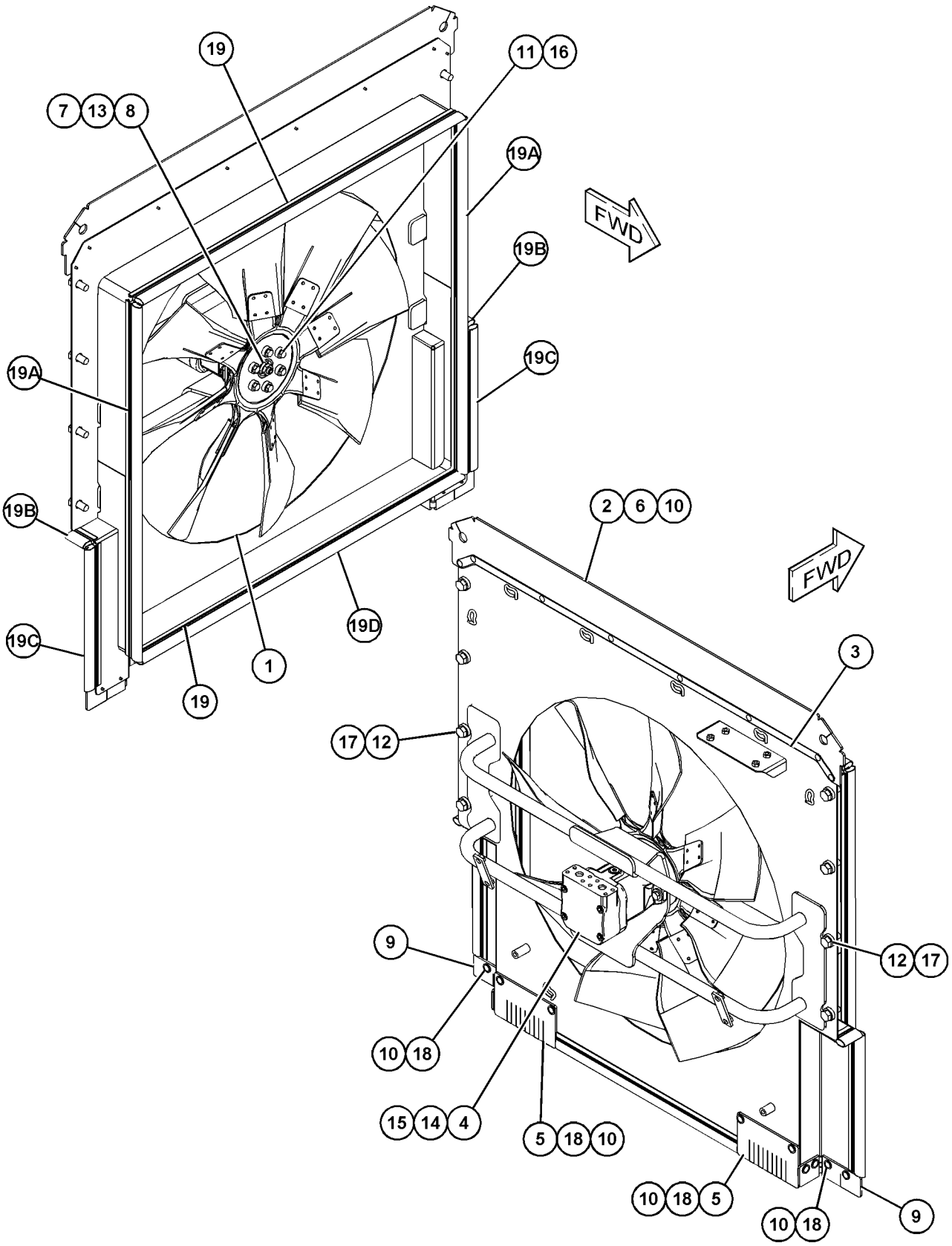

GRAPHIC #1 **<END>** g03831275

343-7192 HOUSING & REGULATOR GP

S/N: TXX1-UP
DUAL STAT
PART OF 423-2422 LINES GP-WATER
AN ATTACHMENT

SMCS-1355, 1393 **i05779905**

NOTE	REF NO	GRAPHIC REF	PART NUMBER	QTY	PART NAME 1 2 3 4 5 6 (PRODUCT LEVEL)	SEE PAGE
	1	1	**239-8135**	1	VALVE AS-VENT (TEMPERATURE REGULATOR) (COOLANT, WATER)	
	1A	1	**9X-7380**	1	SEAL-O-RING	
	2	1	**367-7900**	2	REGULATOR-WATER TEMPERATURE (92-DEG C)	
	3	1	**454-1775**	1	TUBE-WATER	
	4	1	**341-1429**	1	SEAL	
	5	1	**342-9827**	1	HOUSING-WATER REGULATOR	
	6	1	**343-7202**	1	HOUSING AS-REGULATOR	
	6A	1	**3S-9643**	2	SEAL-LIP TYPE (WATER TEMPERATURE REGULATOR)	
	7	1	*353-5140*	2	PLUG AS	
					(EACH INCLUDES)	
		1	**9S-8008**	1	PLUG	
	7A	1	**6V-5063**	1	SEAL-O-RING	
	8	1	**224-6361**	1	SEAL	
	9	1	**6V-9769**	2	SEAL-O-RING	
M	10	1	**8T-0292**	5	BOLT (M8X1.25X90-MM)	
	11	1	**9M-1974**	5	WASHER-HARD (8.8X16X2-MM THK)	

M - METRIC PART

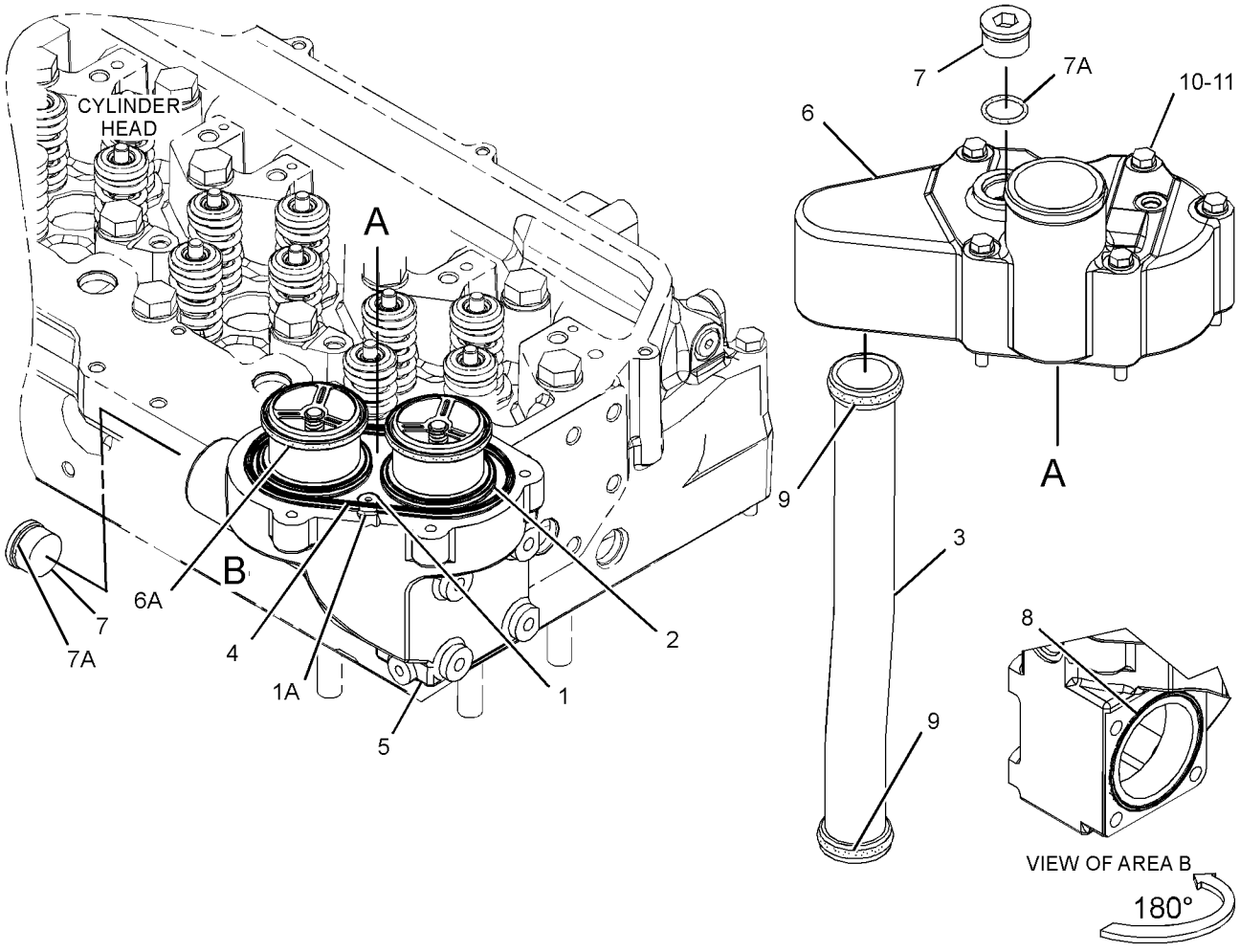

GRAPHIC #1 **<END>** g02150364

255-2396 LINES GP-WATER—PUMP HOUSING

S/N: TXX1-UP
PART OF 423-2422 LINES GP-WATER
AN ATTACHMENT

SMCS-1380 **i05289822**

NOTE	REF NO	GRAPHIC REF	PART NUMBER	QTY	PART NAME 1 2 3 4 5 6 (PRODUCT LEVEL)	SEE PAGE
	1	1	**255-2395**	1	ELBOW-WATER PUMP	
	2	1	*353-5140*	2	PLUG AS	
					(EACH INCLUDES)	
	2A	1	**6V-5063**	1	SEAL-O-RING	
		1	**9S-8008**	1	PLUG	
M	3	1	**6V-3940**	3	BOLT (M8X1.25X25-MM)	
	4	1	**9M-1974**	3	WASHER-HARD (8.8X16X2-MM THK)	

M - METRIC PART

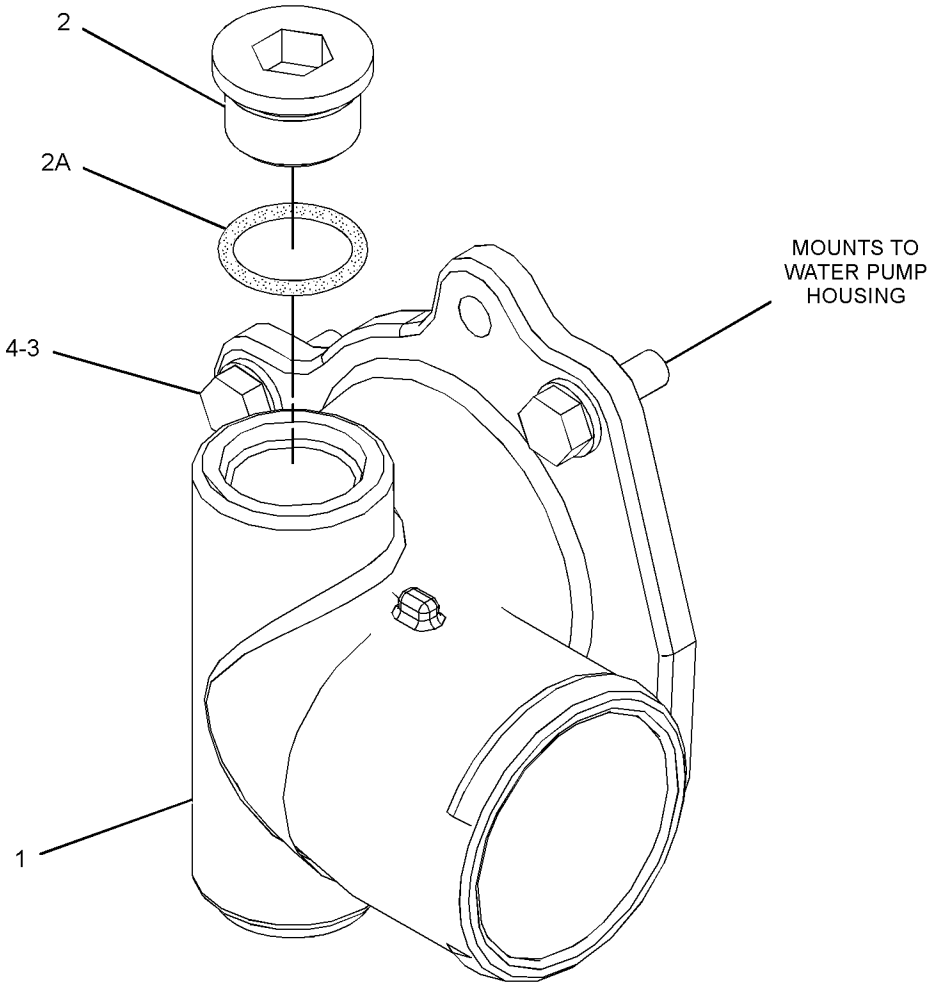

GRAPHIC #1 **<END>** g02224513

420-1700 LINES GP-WATER

S/N: TXX1-UP
PART OF 399-4038 COOLER GP-TRANSMISSION OIL
AN ATTACHMENT

SMCS-1380 **i06179535**

NOTE	REF NO	GRAPHIC REF	PART NUMBER	QTY	PART NAME 1 2 3 4 5 6 (PRODUCT LEVEL)	SEE PAGE
	1	1	**338-2156**	1	BRACKET AS	
	2	1	**420-1756**	1	BRACKET AS	
M		1	**8T-3612**	2	NUT-WELD (M8X1.25-THD)	
	3	1	**455-3858**	1	BRACKET	
	4	1	**9X-8874**	2	BOLT (1/2-13X3-IN)	
	5	1	**222-9151**	1	WASHER-HARD (11X32X5-MM THK)	
	6	1	**3E-4352**	3	WASHER-HARD (8.8X20.5X2.5-MM THK)	
	7	1	**198-4777**	2	WASHER-HARD (11X25X10-MM THK)	
	8	1	**5P-8245**	4	WASHER-HARD (13.5X25.5X3-MM THK)	
M	9	1	**6V-1820**	1	BOLT (M10X1.5X30-MM)	
M	10	1	**6V-3822**	2	BOLT (M10X1.5X35-MM)	
M	11	1	**6V-5218**	2	BOLT (M8X1.25X35-MM)	
M	12	1	**8T-0276**	1	BOLT (M8X1.25X45-MM)	
	13	1	**2B-0947**	2	BOLT (1/2-13X2.25-IN)	

M - METRIC PART

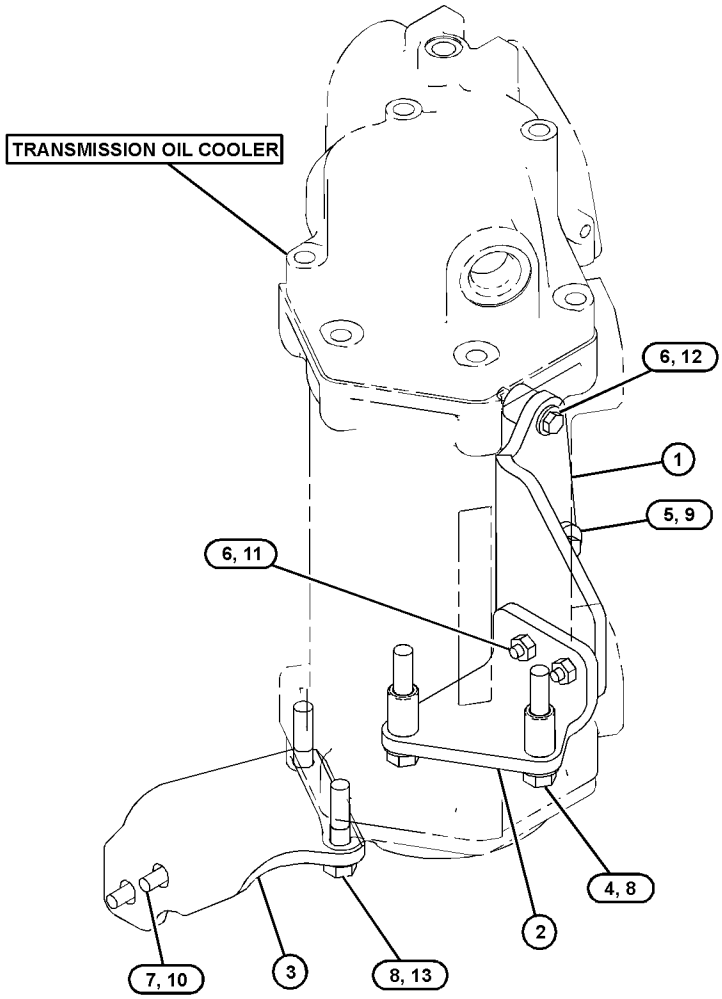

GRAPHIC #1 **<END>** g03855580

423-2422 LINES GP-WATER

S/N: TXX1-UP
PART OF 383-2065, 422-0048 ENGINE AR-COMPLETE
AN ATTACHMENT

SMCS-1380 **i06133284**

NOTE	REF NO	GRAPHIC REF	PART NUMBER	QTY	PART NAME 1 2 3 4 5 6 (PRODUCT LEVEL)	SEE PAGE
Y	1	1	*255-2396*	1	LINES GP-WATER	89
Y	2	1	*343-7192*	1	HOUSING & REGULATOR GP	88
Y	3	1	*352-1650*	1	PLUG GP-WATER LINES	95
Y	4	1	*379-2168*	1	COOLER GP-ENGINE OIL	84
Y	5	1	*399-4038*	1	COOLER GP-TRANSMISSION OIL	355
	6	1	**165-9755**	1	STUD (M12X1.75X35-MM)	
M	7	1	**192-4594**	1	STUD (M8X1.25X80-MM)	
	8	1	**304-8008**	1	PLUG AS	
		1	**6V-9027**	1	SEAL-O-RING	
M	9	1	**6V-2317**	5	BOLT (M8X1.25X30-MM)	
M	10	1	**6V-8675**	1	BOLT (M12X1.75X35-MM)	
	11	1	**7D-1649**	2	WASHER-HARD (13.5X32X5-MM THK)	
M	12	1	**8T-0292**	4	BOLT (M8X1.25X90-MM)	
	13	1	**9M-1974**	10	WASHER-HARD (8.8X16X2-MM THK)	

M - METRIC PART
Y - SEPARATE ILLUSTRATION

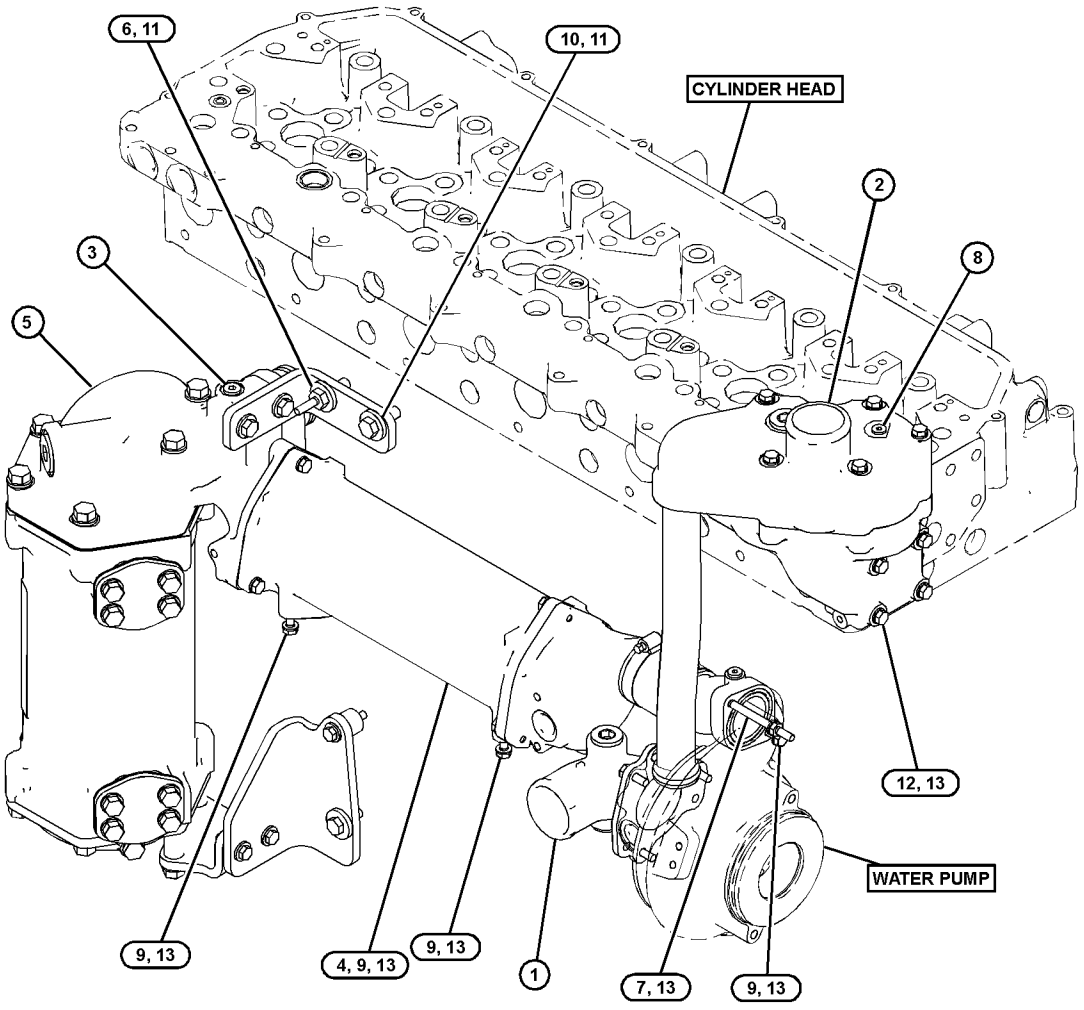

GRAPHIC #1 **<END>** g03833304

441-0768 LINES GP-WATER

S/N: E9Y1-UP

PART OF 381-2717 INSTALLATION AR-ENGINE

SMCS-1380 **i06147638**

NOTE	REF NO	GRAPHIC REF	PART NUMBER	QTY	PART NAME 1 2 3 4 5 6 (PRODUCT LEVEL)	SEE PAGE
	1	1	**191-7816**	1	HOSE	
	2	1	*217-9060*	1	VALVE AS-FLUID SAMPLING (COOLANT)	
		1	**3J-7354**	1	SEAL-O-RING	
		1	**154-9023**	1	VALVE-SAMPLING	
	3	1	**274-2045**	1	BRACKET AS	
	4	1	**333-6504**	2	HOSE	
	5	1	**371-6553**	1	BRACKET	
	6	1	**441-3387**	1	HOSE	
	7	1	**443-4156**	1	HOSE	
	8	1	**450-1078**	1	BRACKET AS	
	9	1	**462-2871**	1	TUBE	
	10	1	**463-6896**	1	TUBE AS	
	11	1	**469-5180**	2	PLATE AS	
	12	1	**469-6687**	1	TUBE AS	
	13	1	**091-0081**	1	SPACER (10.5X20X10-MM THK)	
	14	1	**124-6257**	2	CLAMP-HOSE	
	15	1	**143-3158**	1	CONNECTOR	
	16	1	**157-0670**	1	CAP-DUST	
	17	1	*165-2273*	1	VALVE GP-SHUTOFF	
		1	**3K-0360**	1	SEAL-O-RING	
		1	**6V-7238**	1	VALVE-SHUTOFF	
	18	1	*184-2420*	1	ADAPTER AS	
		1	**3E-7401**	1	ADAPTER	
		1	**6V-8397**	1	SEAL-O-RING	
	19	1	**209-4573**	2	CLAMP-T BOLT	
	20	1	**260-1784**	2	SPACER (23X34X10-MM THK)	
	21	1	**287-7257**	1	ELBOW	
	22	1	**289-9139**	1	CLAMP-BAND	
	23	1	**324-3210**	8	CLAMP	
	24	1	**6V-1581**	4	CLIP (SLOT)	
	25	1	**6V-1582**	4	CLIP (TAB)	
	26	1	**6V-3251**	1	SEAL-O-RING	
	27	1	**6V-9168**	1	NUT (11/16-16-THD)	
M	28	1	**7X-2552**	1	BOLT (M16X2X30-MM)	
	29	1	**8S-0948**	2	CLIP	
	30	1	**8T-4121**	10	WASHER-HARD (11X21X2.5-MM THK)	
	31	1	**8T-4123**	2	WASHER (3.62X5.75X0.375-MM THK)	
M	32	1	**8T-4136**	1	BOLT (M10X1.5X25-MM)	
M	33	1	**8T-4137**	2	BOLT (M10X1.5X20-MM)	
M	34	1	**8T-4195**	4	BOLT (M10X1.5X30-MM)	
M	35	1	**8T-4196**	3	BOLT (M10X1.5X35-MM)	
M	36	1	**8T-5460**	2	BOLT (M20X2.5X40-MM)	
	37	1	**9X-8257**	1	WASHER (17.5X30X3.5-MM THK)	
E	38	1	**5P-0767**		HOSE (27-CM)	
E	39	1	**9X-2133**		HOSE (71-CM)	

E - ORDER BY THE CENTIMETER
M - METRIC PART

441-0768 **LINES GP-WATER (*contd.*)** **i06147638**

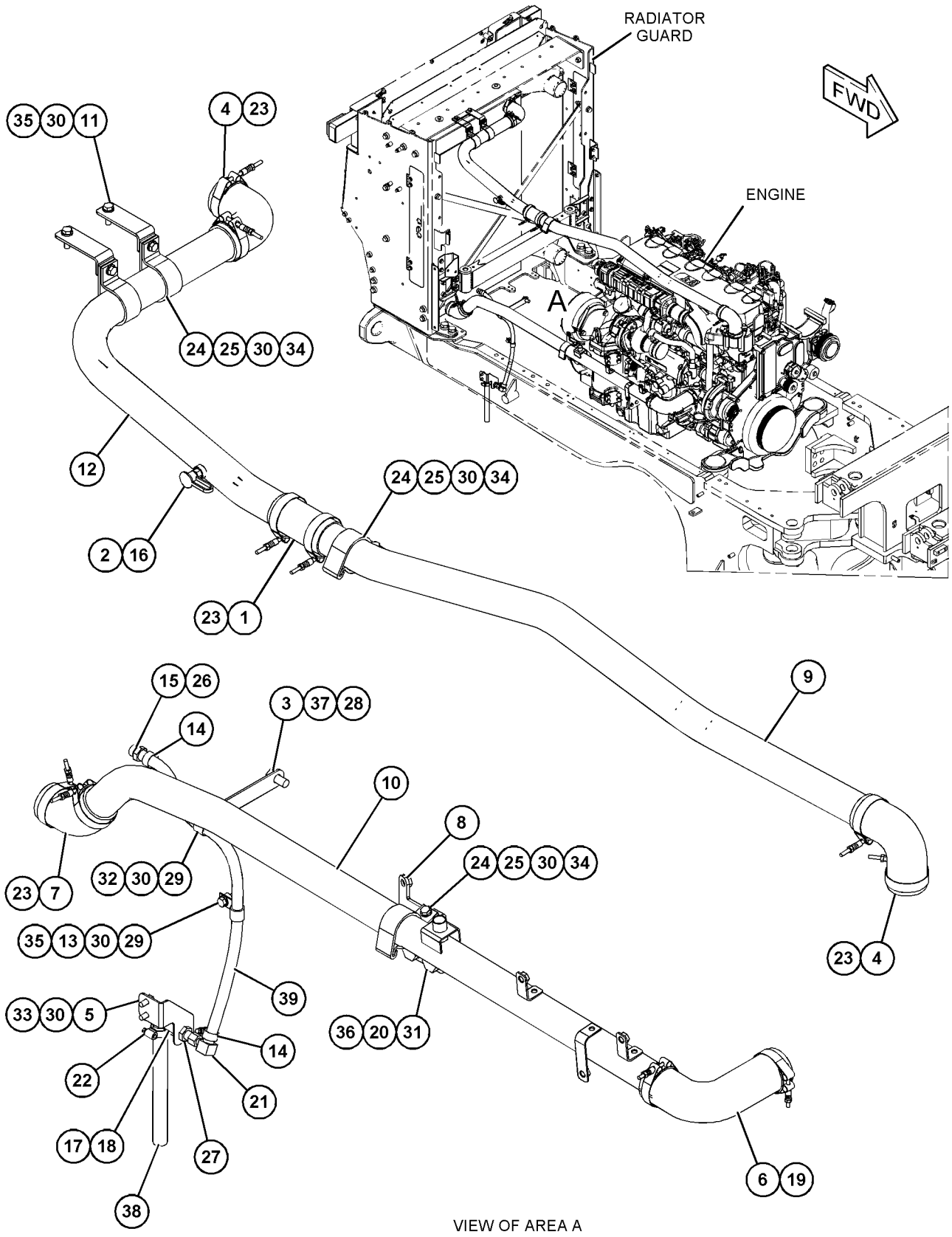

VIEW OF AREA A

GRAPHIC #1 **<END>** g03835460

349-2641 PLUG GP-ENGINE OIL COOLER

S/N: TXX1-UP

PART OF 383-2065, 422-0048 ENGINE AR-COMPLETE

AN ATTACHMENT

SMCS-1378 **i05863943**

NOTE	REF NO	GRAPHIC REF	PART NUMBER	QTY	PART NAME 1 2 3 4 5 6 (PRODUCT LEVEL)	SEE PAGE
	1	1	*353-5124*	1	PLUG AS	
	1A	1	**9S-8004**	1	PLUG	
		1	**6V-3250**	1	SEAL-O-RING	

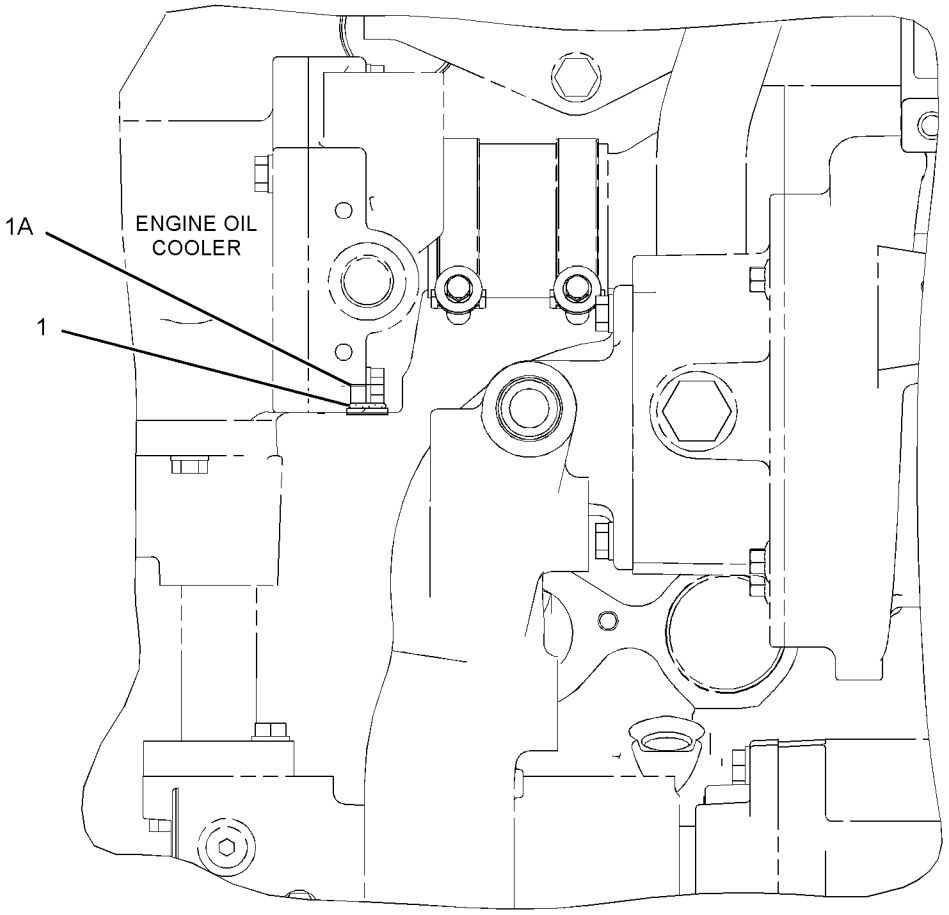

RIGHT SIDE VIEW OF ENGINE

GRAPHIC #1 **<END>** g03058498

352-1650 PLUG GP-WATER LINES

S/N: TXX1-UP
PROVIDES A PLUG GROUP FOR TRANSMISSION OIL COOLER
PART OF 423-2422 LINES GP-WATER
AN ATTACHMENT

SMCS-1380, 1393 **i04033143**

NOTE	REF NO	GRAPHIC REF	PART NUMBER	QTY	PART NAME 1 2 3 4 5 6 (PRODUCT LEVEL)	SEE PAGE
	1	1	**6V-3250**	1	SEAL-O-RING	
	2	1	**9S-8004**	1	PLUG	

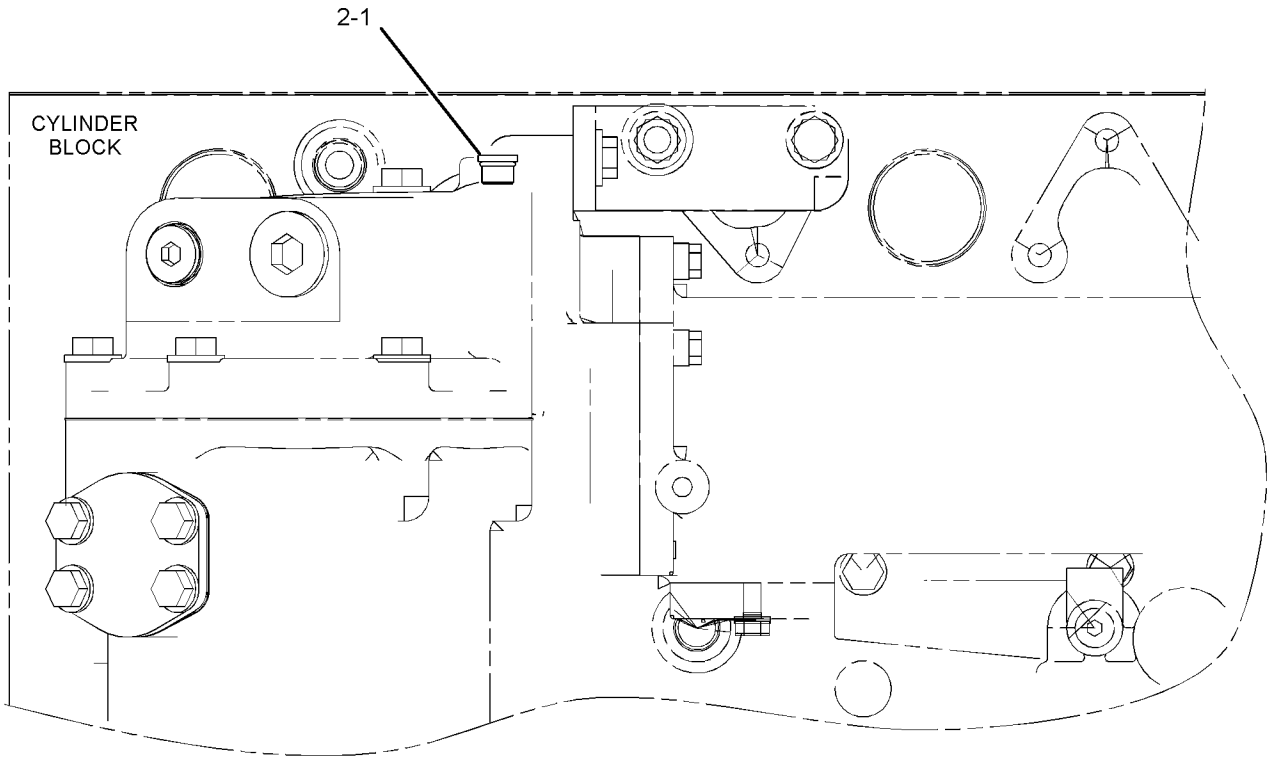

RIGHT SIDE VIEW OF ENGINE

GRAPHIC #1 **<END>** g02278113

384-5510 PLUG GP-WATER LINES

S/N: TXX1-UP
PROVIDES PLUG GP FOR FRONT BONNET
PART OF 383-2065, 422-0048 ENGINE AR-COMPLETE
AN ATTACHMENT

SMCS-1380, 1393 **i05787862**

NOTE	REF NO	GRAPHIC REF	PART NUMBER	QTY	PART NAME 1 2 3 4 5 6 (PRODUCT LEVEL)	SEE PAGE
	1	1	*353-5125*	1	PLUG AS	
		1	**6V-3251**	1	SEAL-O-RING	
		1	**9S-8006**	1	PLUG	

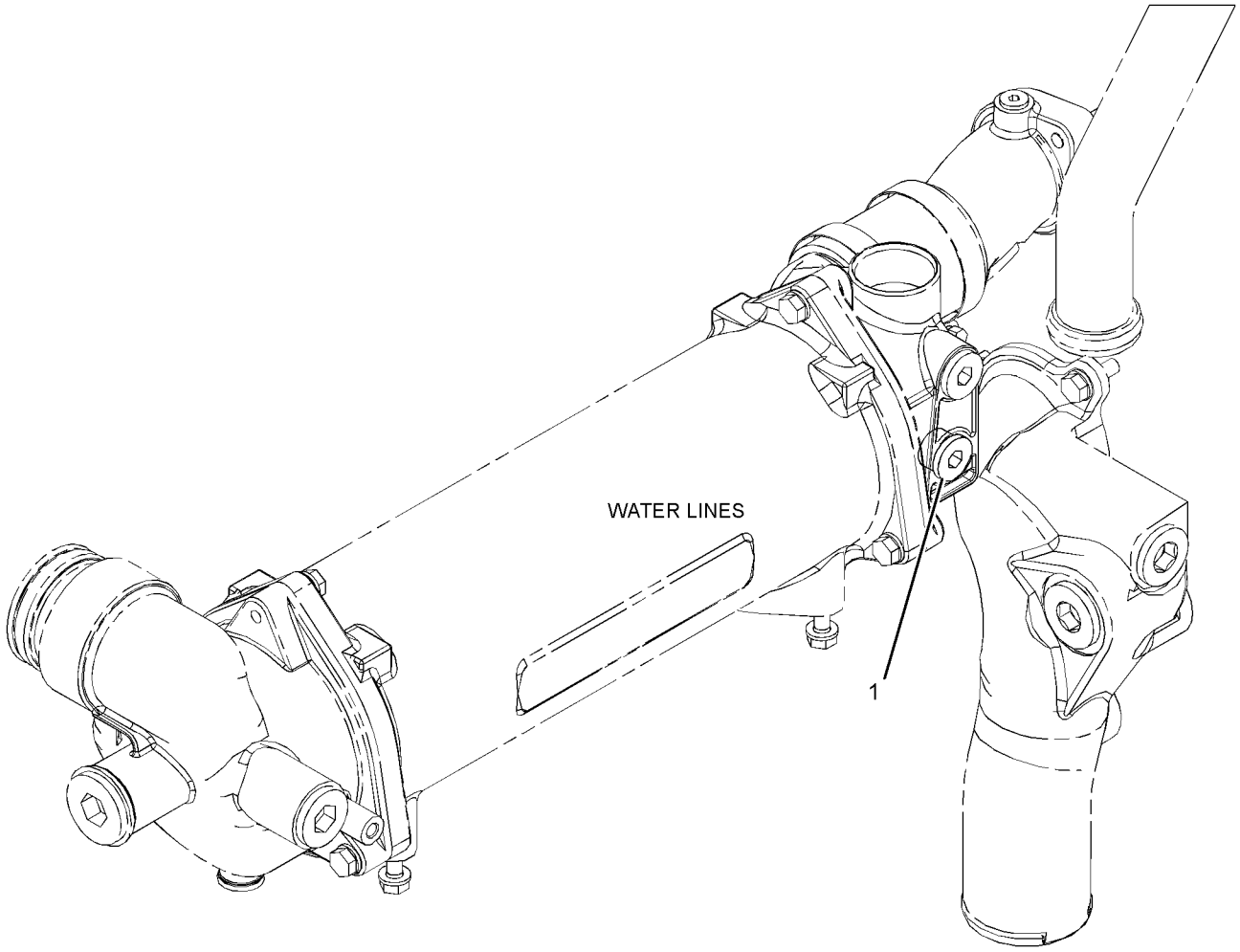

GRAPHIC #1 **<END>** g03198036

332-0984 PUMP GP-WATER

S/N: TXX1-UP
PART OF 376-4249 ENGINE AR-CORE
AN ATTACHMENT

SMCS-1361 **i04758685**

NOTE	REF NO	GRAPHIC REF	PART NUMBER	QTY	PART NAME 1 2 3 4 5 6 (PRODUCT LEVEL)	SEE PAGE
Y	1	1	*352-0207*	1	PUMP GP-WATER	99
	2	1	**6V-5839**	2	WASHER (11X21X2.5-MM THK)	
	3	1	**6V-7350**	1	SEAL-O-RING	
M	4	1	**8T-0643**	2	BOLT (M10X1.5X80-MM)	

M - METRIC PART
Y - SEPARATE ILLUSTRATION

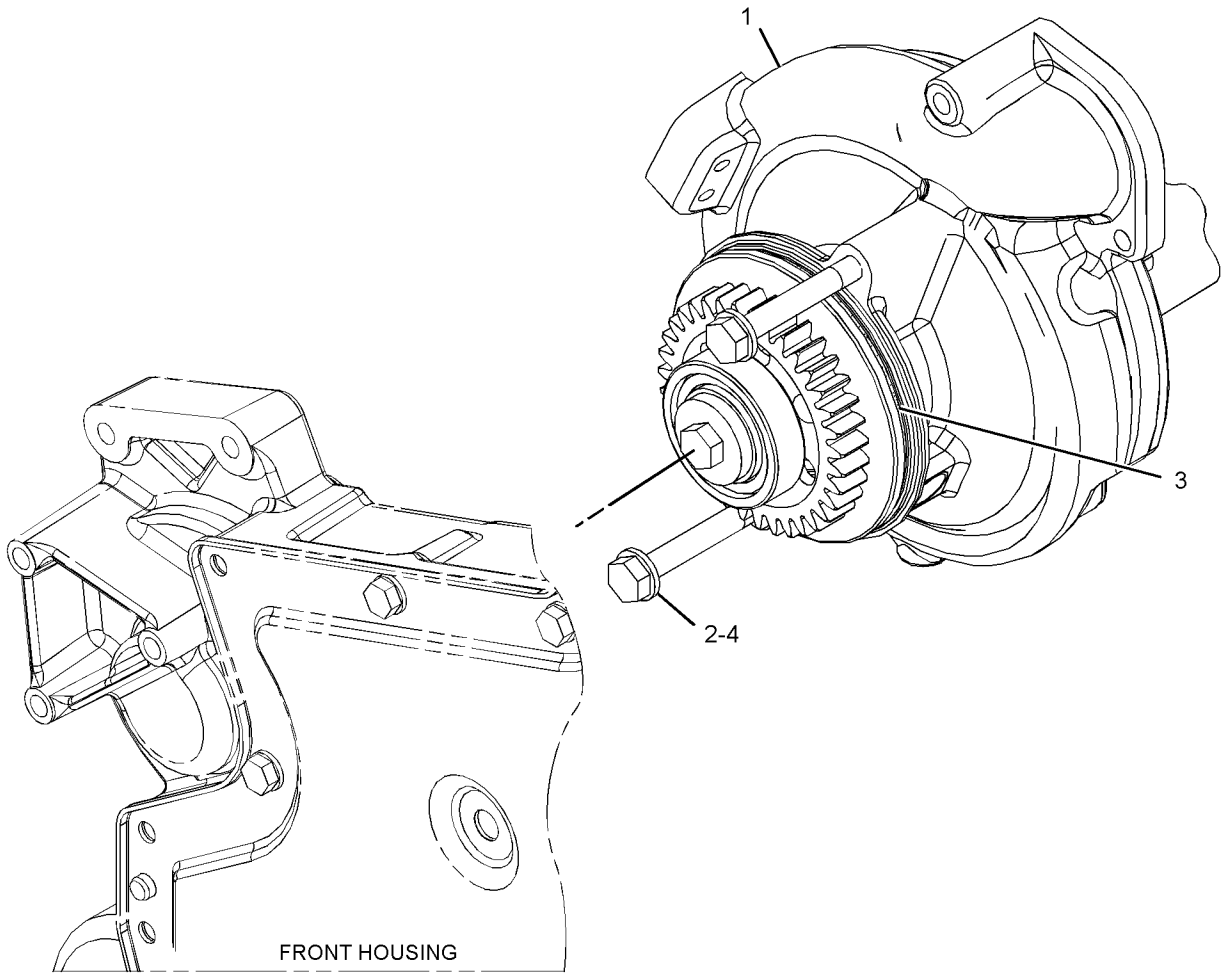

GRAPHIC #1 **<END>** g02798944

352-0205 PUMP GP-WATER

S/N: TXX1-UP

PART OF 352-0207 PUMP GP-WATER

AN ATTACHMENT

SMCS-1361 **i04474509**

NOTE	REF NO	GRAPHIC REF	PART NUMBER	QTY	PART NAME 1 2 3 4 5 6 (PRODUCT LEVEL)	SEE PAGE
	1	1	**6V-9666**	1	WASHER-HARD	
	2	1	**349-2654**	1	SEAL-WATER PUMP	
	3	1	**203-3831**	1	PLUG-CUP	
	4	1	**223-9143**	1	IMPELLER	
	5	1	**223-9145**	1	HOUSING-PUMP	
	6	1	**291-6905**	1	SHAFT-WATER PUMP	
	7	1	**292-1200**	1	GEAR-WATER PUMP	
	8	1	**1B-3867**	2	BALL BEARING	
M	9	1	**6V-5842**	1	BOLT (M10X1.5X40-MM)	
	10	1	**8C-3100**	1	SEAL-LIP TYPE	
	11	1	**8T-9598**	1	RING-RETAINING	

M - METRIC PART

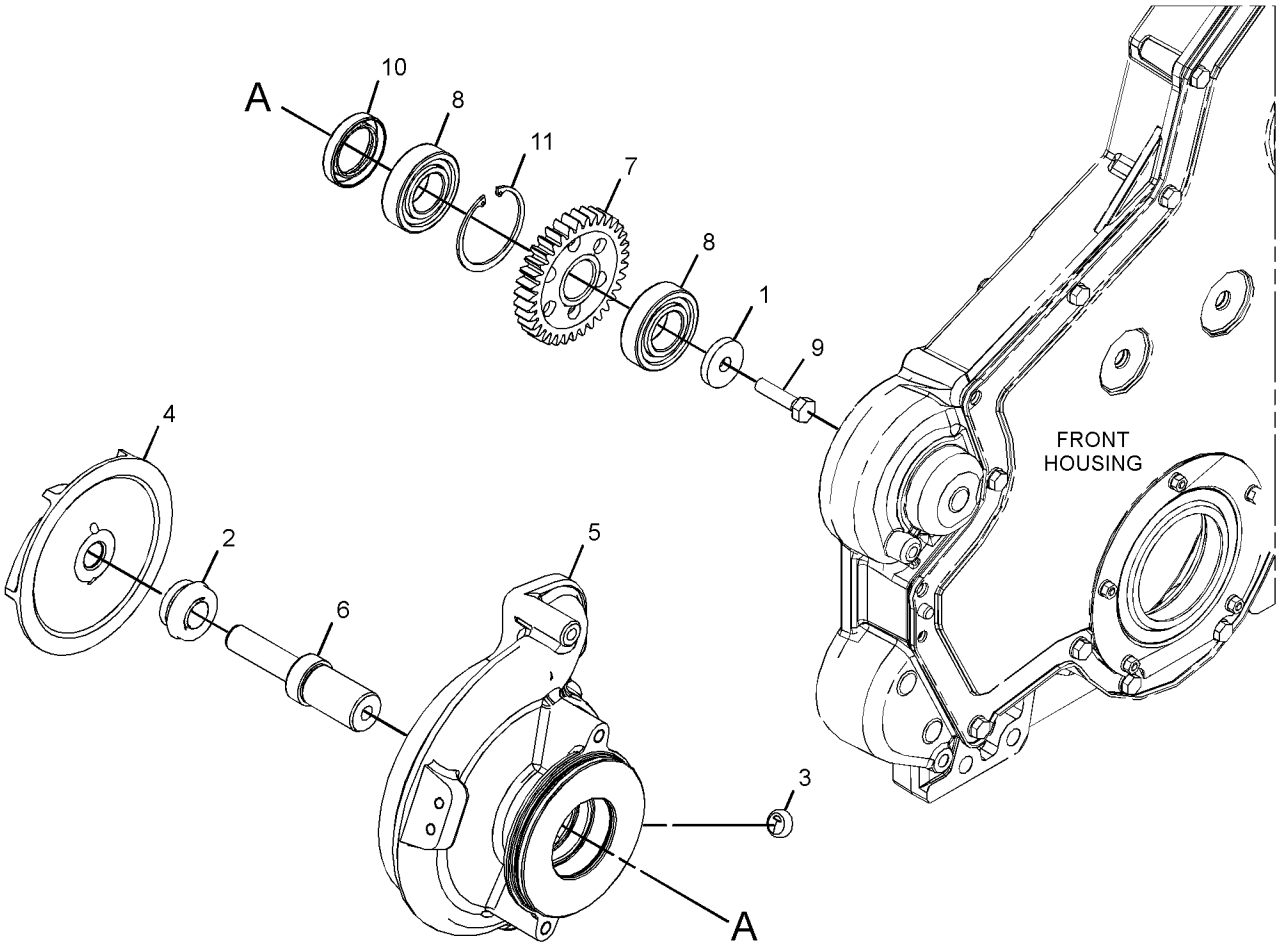

GRAPHIC #1 **<END>** g02659396

352-0207 PUMP GP-WATER

S/N: TXX1-UP
PART OF 332-0984 PUMP GP-WATER
AN ATTACHMENT

SMCS-1361 **i04670453**

NOTE	REF NO	GRAPHIC REF	PART NUMBER	QTY	PART NAME 1 2 3 4 5 6 (PRODUCT LEVEL)	SEE PAGE
YR	1	1	**352-0205**	1	PUMP GP-WATER	98
	2	1	**330-4611**	1	COVER-WATER PUMP (INLET)	
	3	1	**208-9281**	4	BOLT-FLANGE HEAD (M8X1.25X20-MM)	
	4	1	**225-7003**	1	SEAL-O-RING	
	5	1	**229-8810**	1	SEAL	
	6	1	*353-5125*	1	PLUG AS	
		1	**6V-3251**	1	SEAL-O-RING	
		1	**9S-8006**	1	PLUG	

R - REMFG PART MAY BE AVAILABLE
Y - SEPARATE ILLUSTRATION

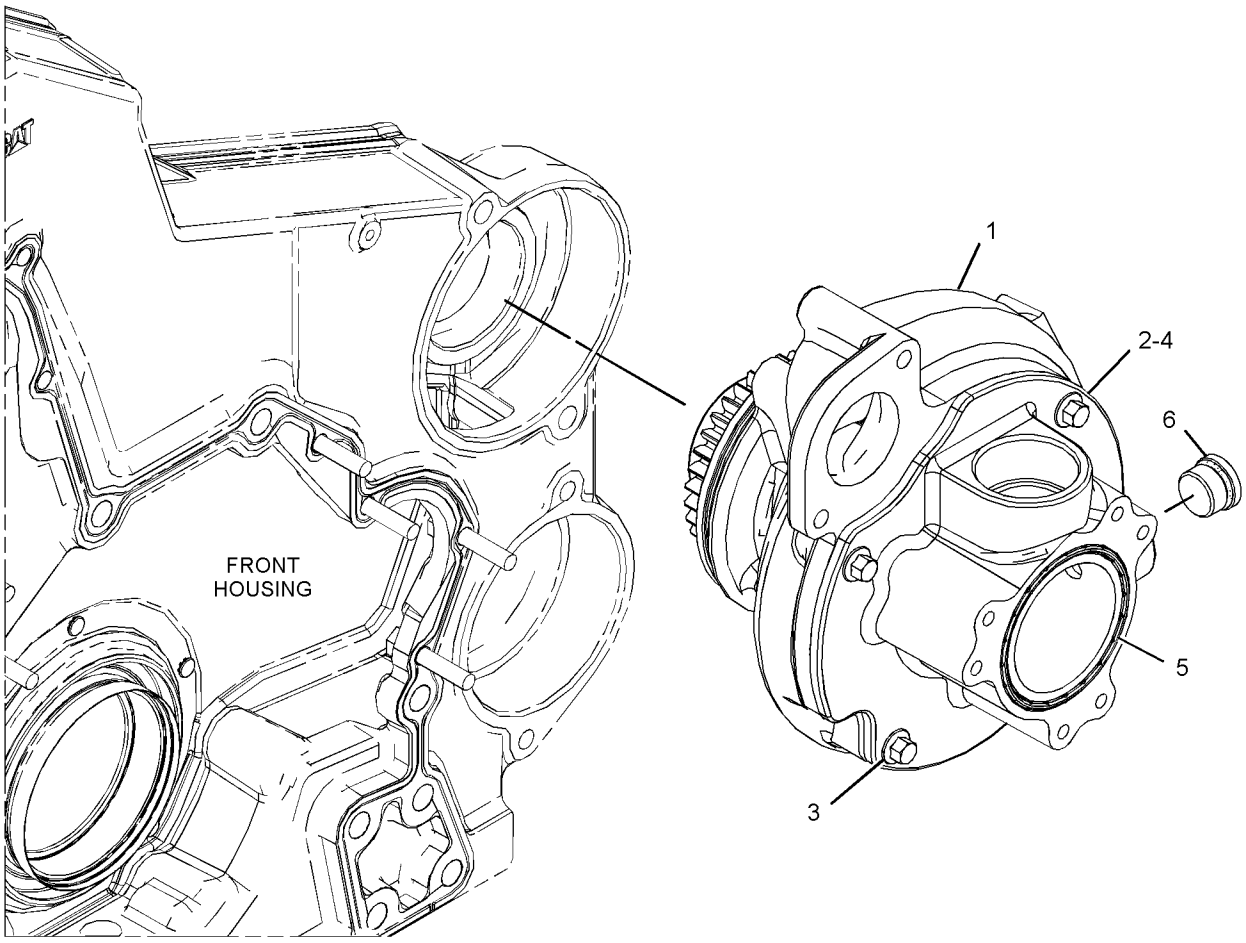

GRAPHIC #1 **<END>** g02798925

444-9681 RADIATOR GP

S/N: E9Y1-UP

PART OF 388-1485 COOLING AR

SMCS-1353 **i06147085**

NOTE	REF NO	GRAPHIC REF	PART NUMBER	QTY	PART NAME 1 2 3 4 5 6 (PRODUCT LEVEL)	SEE PAGE
	1	1	**9D-7924**	4	MOUNTING AS	
	2	1	**443-3189**	1	CORE AS-RADIATOR	
	3	1	**8T-4226**	4	WASHER-PLATED (10.5X45X3-MM THK)	
M	4	1	**8T-6466**	4	BOLT (M10X1.5X60-MM)	
D	5	1	**5P-5931**		SEAL (1-M)	

D - ORDER BY THE METER
M - METRIC PART

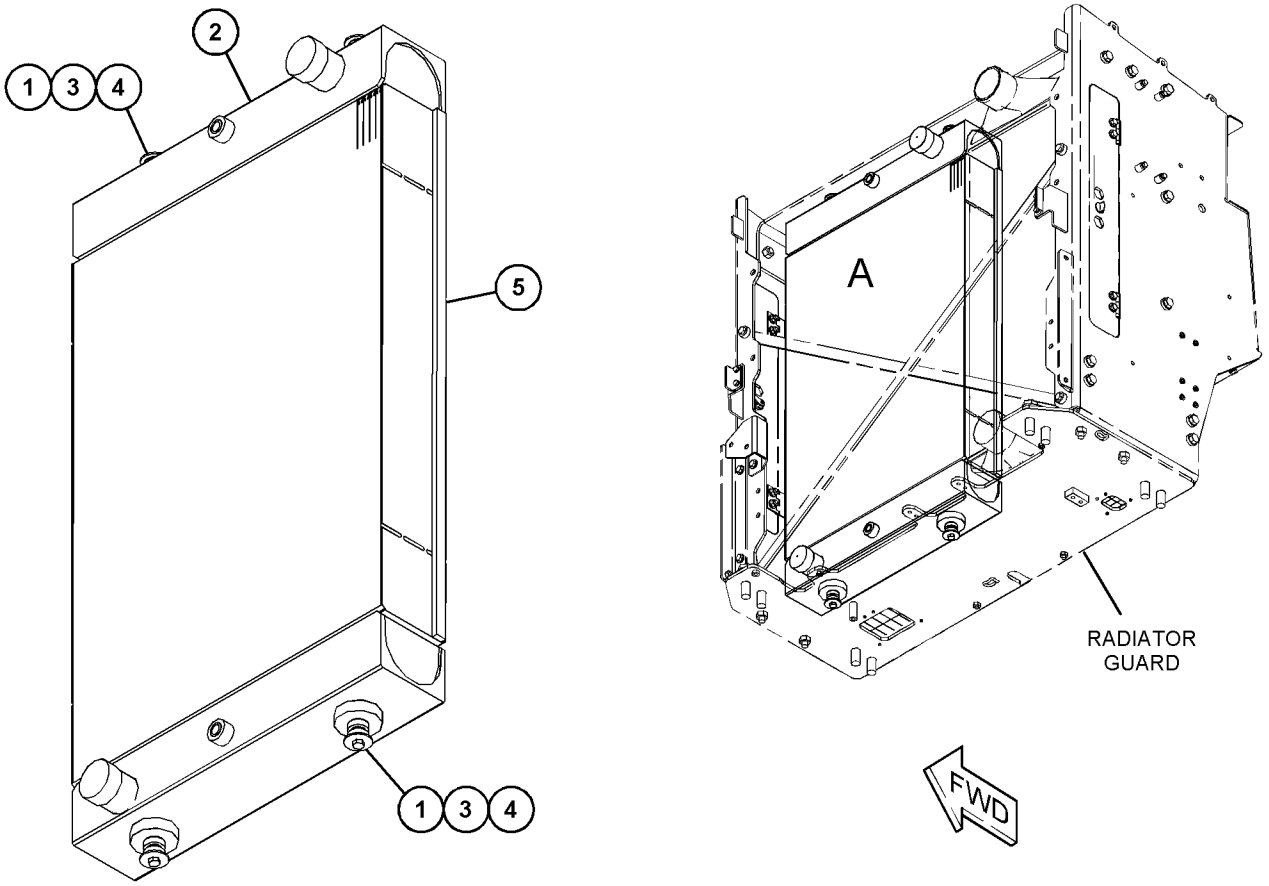

VIEW OF AREA A

GRAPHIC #1 **<END>** g03830111

383-4870 TANK GP-COOLANT

S/N: E9Y1-UP

PART OF 381-2717 INSTALLATION AR-ENGINE

SMCS-1354, 1377 **i06177847**

NOTE	REF NO	GRAPHIC REF	PART NUMBER	QTY	PART NAME 1 2 3 4 5 6 (PRODUCT LEVEL)	SEE PAGE
	1	1	**7K-1181**	2	STRAP-CABLE	
	2	1	**129-2327**	1	ELBOW	
	3	1	**200-6345**	1	MOUNT (DUAL SWIVEL)	
Y	4	1	**430-9454**	1	SENSOR GP-COOLANT LEVEL	242
	5	1	*439-1808*	1	ELBOW AS	
		1	**6V-9027**	1	SEAL-O-RING	
		1	**439-1807**	1	ADAPTER-ELBOW	
	6	1	*459-0576*	1	ELBOW AS	
		1	**6V-3251**	1	SEAL-O-RING	
		1	**459-0575**	1	ADAPTER-ELBOW	
	7	1	**461-3366**	1	BRACKET AS	
	8	1	**461-3367**	1	TANK AS-WATER	
	9	1	**469-4606**	1	GAUGE-SIGHT (COOLANT)	
	10	1	**474-9969**	1	BRACKET	
	11	1	**475-4942**	1	CAP AS (COOLANT)	
	12	1	**093-2068**	1	GROMMET	
	13	1	**124-6257**	4	CLAMP-HOSE	
	14	1	**164-7900**	1	ADAPTER	
	15	1	**1S-0994**	2	CLIP	
	16	1	**1S-1015**	3	CLIP	
	17	1	**310-7300**	3	CLIP	
	18	1	**316-0488**	1	SPACER (11X25X78-MM THK)	
	19	1	**337-8788**	2	ELBOW	
	20	1	**3J-7354**	3	SEAL-O-RING	
	21	1	**3P-5414**	1	GROMMET	
	22	1	**3P-9847**	2	CLIP	
	23	1	**4D-9517**	4	CLIP	
	24	1	**6V-3251**	1	SEAL-O-RING	
	25	1	**7D-7233**	1	CLIP	
	26	1	**8D-9671**	2	CLIP	
	27	1	**8T-1117**	2	CLAMP-HOSE	
	28	1	**8T-4121**	20	WASHER-HARD (11X21X2.5-MM THK)	
M	29	1	**8T-4133**	2	NUT (M10X1.5-THD)	
M	30	1	**8T-4136**	4	BOLT (M10X1.5X25-MM)	
M	31	1	**8T-4137**	13	BOLT (M10X1.5X20-MM)	
M	32	1	**8T-4191**	1	BOLT (M10X1.5X16-MM)	
M	33	1	**8T-4195**	6	BOLT (M10X1.5X30-MM)	
M	34	1	**8T-6685**	1	BOLT (M10X1.5X110-MM)	
	35	1	**8U-4791**	5	WASHER (11X21X8-MM THK)	
E	36	1	**8C-3681**		HOSE (200-CM)	
E	37	1	**371-8094**		HOSE (106-CM)	
E	38	1	**9X-2133**		HOSE (114-CM)	
E	38A	1	**9X-2133**		HOSE (184-CM)	

E - ORDER BY THE CENTIMETER
M - METRIC PART
Y - SEPARATE ILLUSTRATION

383-4870 **TANK GP-COOLANT (*contd.*)** **i06177847**

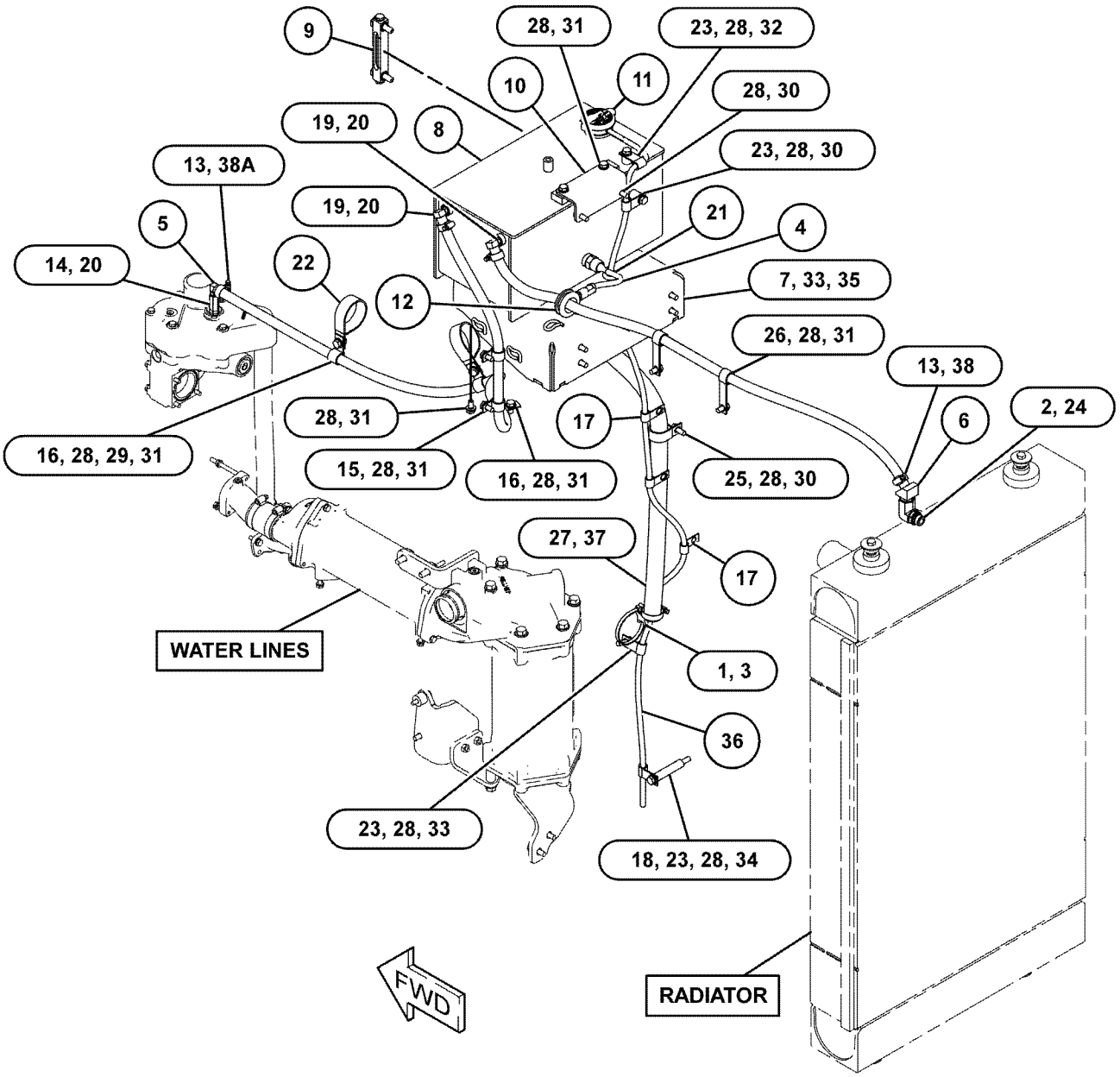

GRAPHIC #1 **<END>** g03828068

AIR INLET AND EXHAUST SYSTEM

388-1497 AFTERCOOLER GP-AIR

S/N: E9Y1-UP

PART OF 388-1485 COOLING AR

SMCS-1063, 1064, 1079 **i06147537**

NOTE	REF NO	GRAPHIC REF	PART NUMBER	QTY	PART NAME 1 2 3 4 5 6 (PRODUCT LEVEL)	SEE PAGE
	1	1	**121-3307**	4	MOUNT AS-RESILIENT	
M	2	1	**174-4181**	6	WASHER-HARD (8.5X40X3-MM THK)	
	3	1	**391-3111**	1	CORE AS-AFTERCOOLER	
M	4	1	**5C-7261**	2	NUT (M8X1.25-THD)	
	5	1	**5P-4116**	2	WASHER-HARD (8.8X20.5X2-MM THK)	
M	6	1	**8T-6869**	2	BOLT (M8X1.25X60-MM)	
M	7	1	**8T-6912**	2	BOLT (M8X1.25X50-MM)	

M - METRIC PART

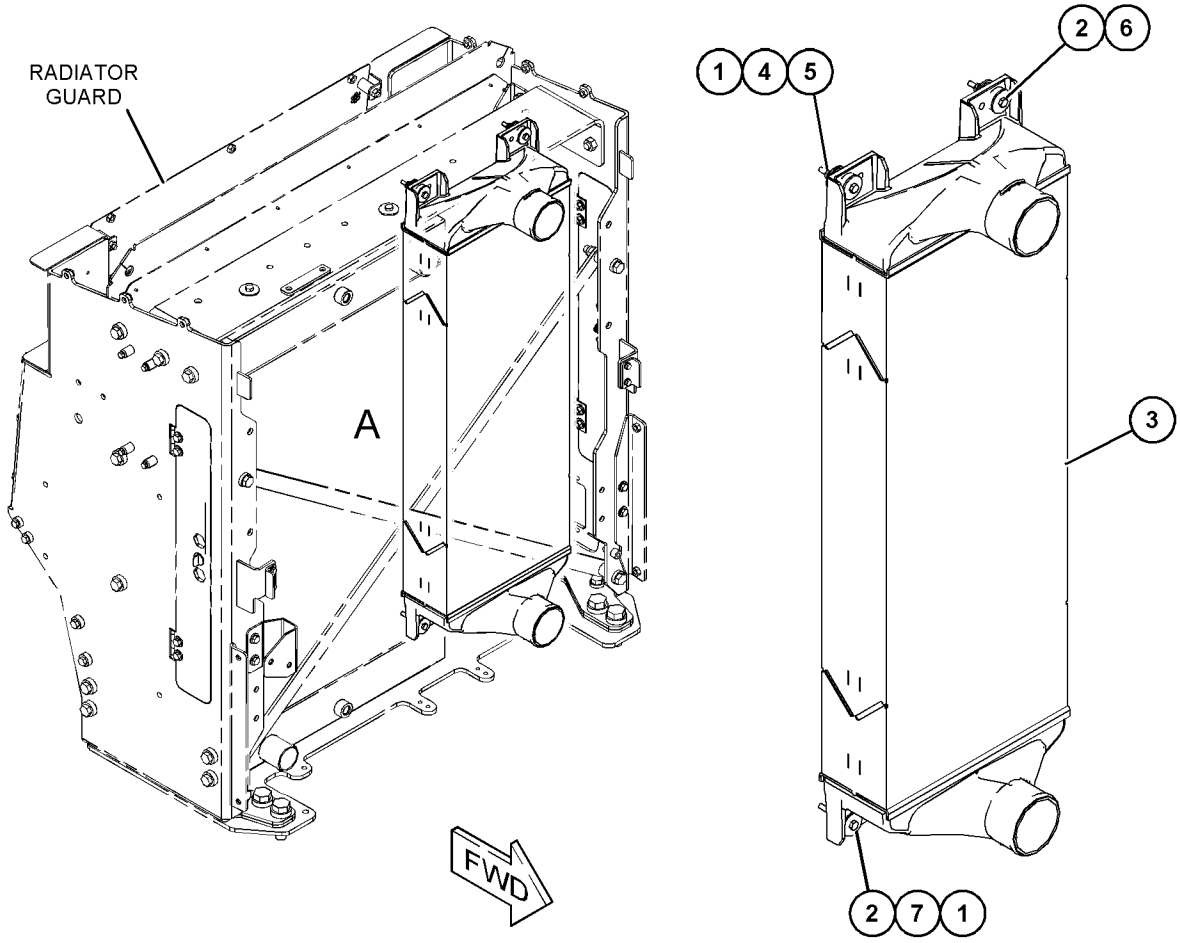

VIEW OF AREA A

GRAPHIC #1 **<END>** g03836656

383-4897 AIR CLEANER GP

S/N: E9Y1-UP

PART OF 381-2717 INSTALLATION AR-ENGINE

SMCS-1051, 1054 **i06147635**

NOTE	REF NO	GRAPHIC REF	PART NUMBER	QTY	PART NAME 1 2 3 4 5 6 (PRODUCT LEVEL)	SEE PAGE
	1		**164-9760**	1	HOSE	
Y	2		**333-1195**	1	PRECLEANER AS	114
	3		**383-4779**	1	PIPE AS	
	4		**384-5599**	1	HOSE	
Y	5		**388-1451**	1	AIR CLEANER GP	105
	6		**198-4778**	4	WASHER-HARD (13.5X30X12-MM THK)	
	7		**233-8350**	1	CLAMP	
	8		**5P-0597**	2	CLAMP-HOSE	
	9		**5P-0599**	1	CLAMP-BAND	
	10		**5P-4869**	2	CLAMP-HOSE	
	11		**8T-4121**	3	WASHER-HARD (11X21X2.5-MM THK)	
M	12		**8T-4184**	4	BOLT (M12X1.75X45-MM)	
M	13		**8T-4195**	3	BOLT (M10X1.5X30-MM)	
E	14		**5P-1471**		HOSE (60-CM)	

E - ORDER BY THE CENTIMETER
M - METRIC PART
Y - SEPARATE ILLUSTRATION

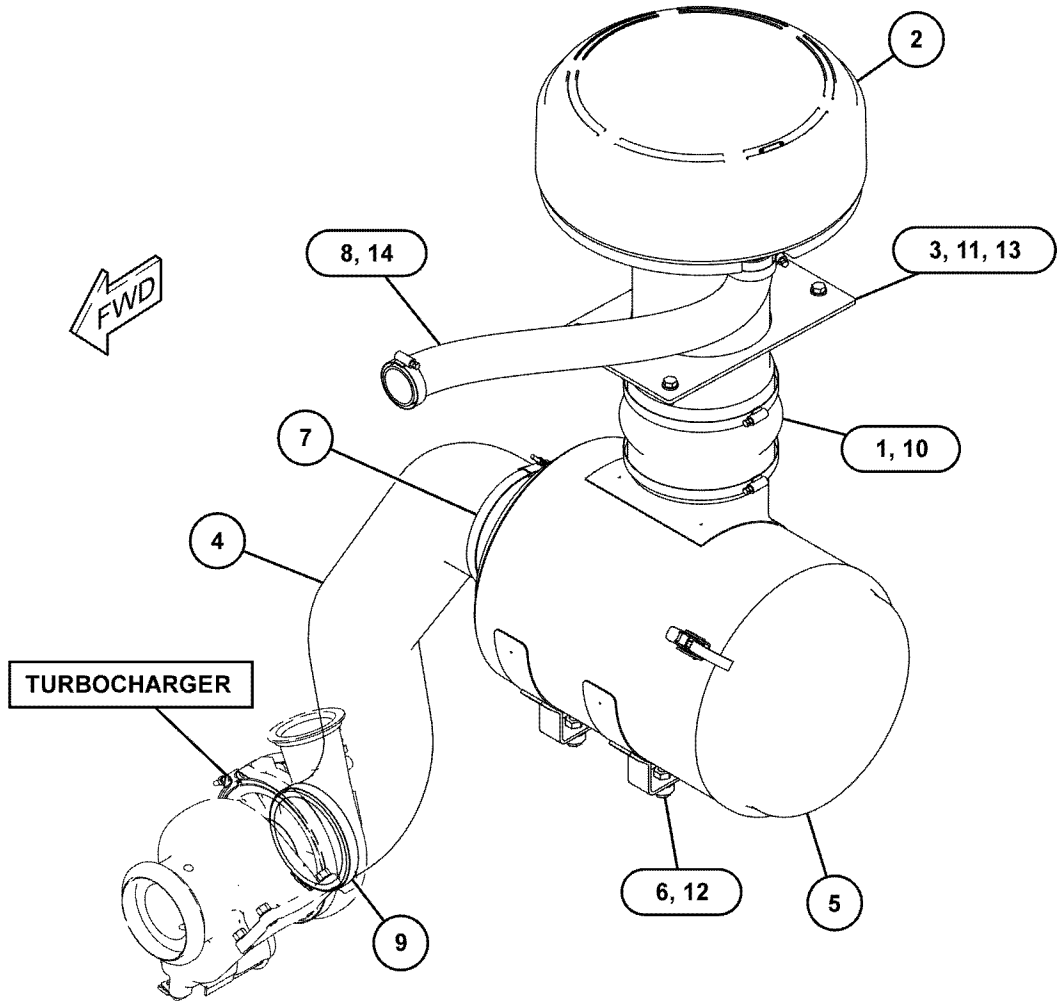

GRAPHIC #1 **<END>** g03836977

AIR INLET AND EXHAUST SYSTEM

388-1451 AIR CLEANER GP

S/N: E9Y1-UP

PART OF 383-4897 AIR CLEANER GP

SMCS-1051, 1054 **i06147636**

NOTE	REF NO	GRAPHIC REF	PART NUMBER	QTY	PART NAME 1 2 3 4 5 6 (PRODUCT LEVEL)	SEE PAGE
	1	1	**6I-2509**	1	FILTER ELEMENT AS-AIR (PRIMARY)	
	2	1	**6I-2510**	1	FILTER ELEMENT AS-AIR (SECONDARY)	
	3	1	**6I-4465**	1	COVER AS-AIR CLEANER	
		1	**6N-7692**	1	GASKET	
	4	1	**8N-4617**	2	KIT-AIR CLEANER CLAMP	

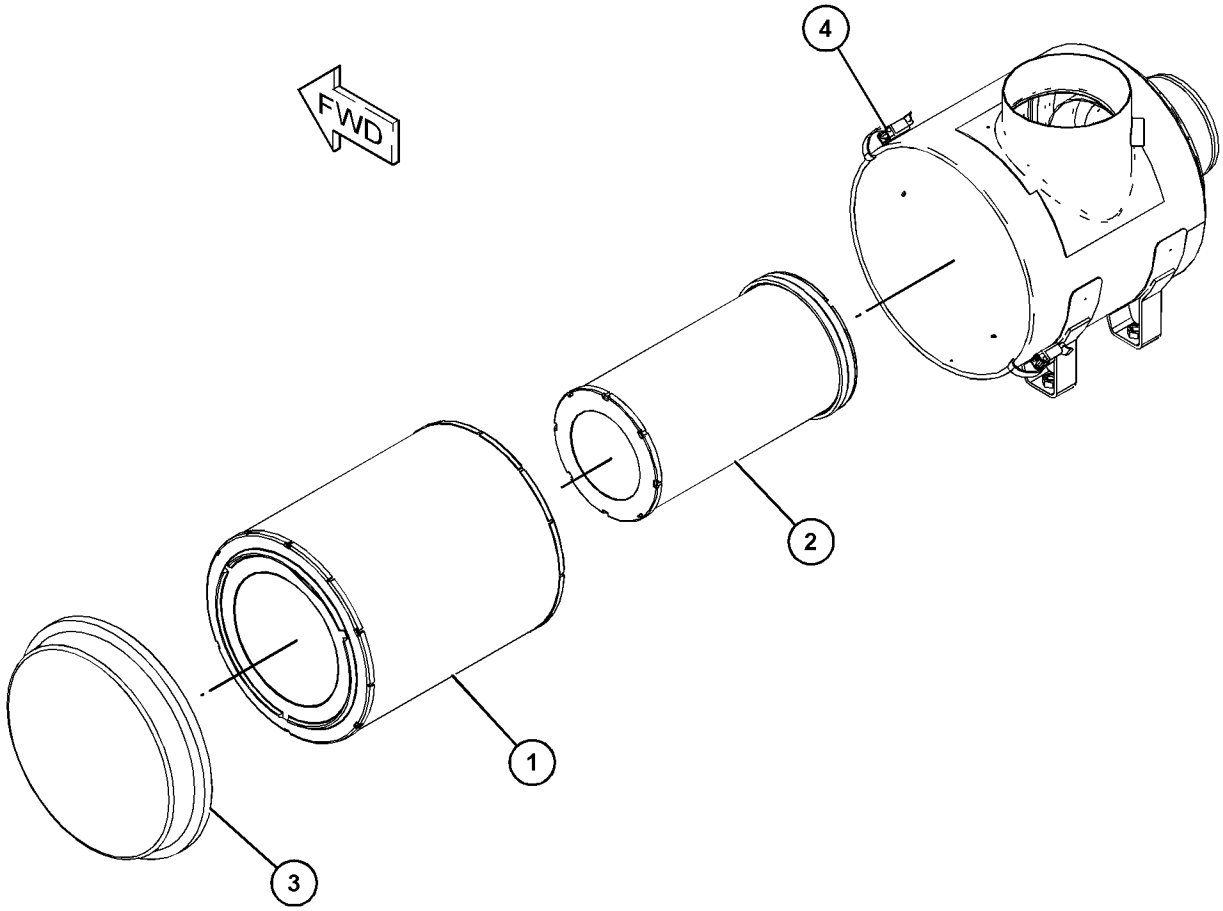

GRAPHIC #1 **<END>** g03836338

366-8297 BRACKET GP-SUPPORT

S/N: TXX1-UP

PART OF 383-2065, 422-0048 ENGINE AR-COMPLETE

AN ATTACHMENT

SMCS-1071, 107P

i05787836

NOTE	REF NO	GRAPHIC REF	PART NUMBER	QTY	PART NAME 1 2 3 4 5 6 (PRODUCT LEVEL)	SEE PAGE
	1	1	**369-8040**	1	BRACKET AS	
M	2	1	**5P-7970**	2	NUT (M8X1.25-THD)	
	3	1	**9M-1974**	4	WASHER-HARD (8.8X16X2-MM THK)	

M - METRIC PART

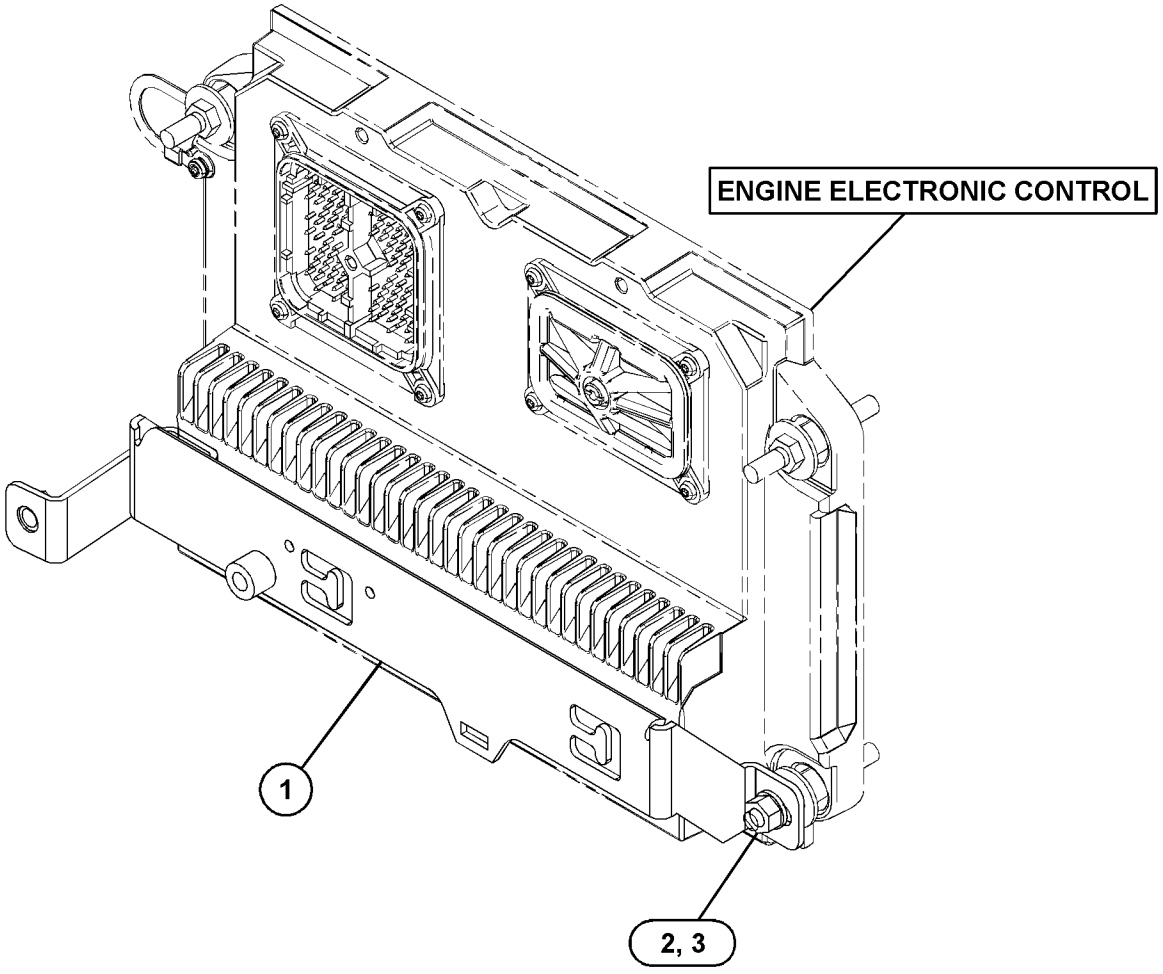

GRAPHIC #1

<END>

g03173418

237-9756 LINES GP-AIR

S/N: TXX1-UP

PART OF 383-2065, 422-0048 ENGINE AR-COMPLETE

AN ATTACHMENT

SMCS-1071 **i03966131**

NOTE	REF NO	GRAPHIC REF	PART NUMBER	QTY	PART NAME 1 2 3 4 5 6 (PRODUCT LEVEL)	SEE PAGE
	1	1	**203-0351**	1	ELBOW-AIR	
	2	1	**248-4840**	1	CAP-PROTECTIVE	
	3	1	**248-4841**	1	CLAMP-BAND	
	4	1	*307-2671*	1	PLUG AS	
	4A	1	**214-7566**	1	SEAL-O-RING	
		1	**9S-8002**	1	PLUG	

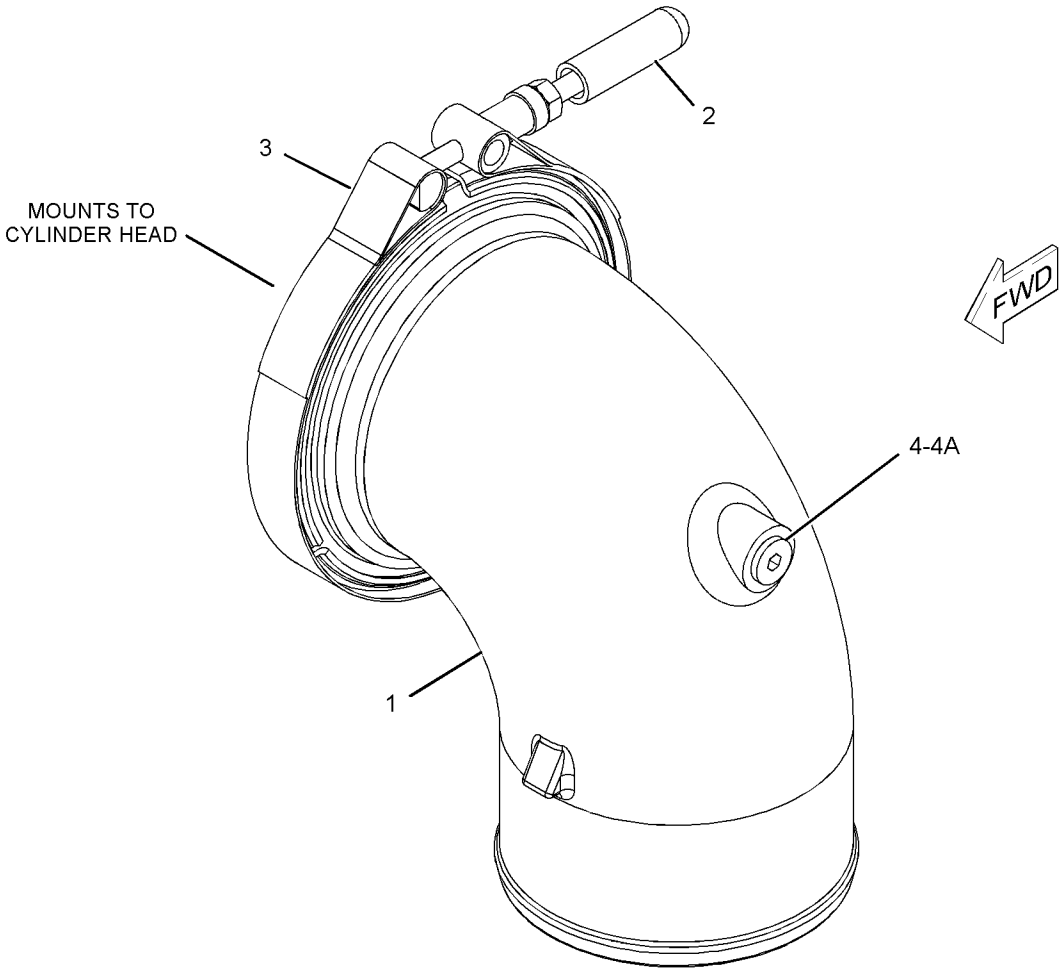

GRAPHIC #1 **<END>** g02163478

383-4893 LINES GP-AIR–ATAAC

S/N: E9Y1-UP

PART OF 381-2717 INSTALLATION AR-ENGINE

SMCS-1071 **i06143911**

NOTE	REF NO	GRAPHIC REF	PART NUMBER	QTY	PART NAME 1 2 3 4 5 6 (PRODUCT LEVEL)	SEE PAGE
	1	1	**440-0899**	1	TUBE	
	2	1	**198-4777**	1	WASHER-HARD (11X25X10-MM THK)	
	3	1	**127-0929**	1	CLAMP-V BAND	
	4	1	**129-6400**	1	ADAPTER	
	5	1	**177-0581**	1	HOSE	
	6	1	**339-8692**	1	HOSE-REDUCER	
	7	1	**368-2269**	1	HOSE-REDUCER	
	8	1	**458-2776**	1	TUBE	
	9	1	**384-5627**	1	PLATE AS	
	10	1	**426-2204**	1	HOSE	
	11	1	**440-2657**	1	TUBE	
	12	1	**446-7511**	1	BRACKET AS	
	13	1	**144-0367**	6	CLAMP-HOSE	
	14	1	**4I-7889**	1	SPACER (11X25X45-MM THK)	
	15	1	**6V-5039**	1	CLIP (SLOT)	
	16	1	**6V-5040**	1	CLIP (TAB)	
	17	1	**7X-7729**	2	WASHER (11X25X3-MM THK)	
	18	1	**8T-4121**	1	WASHER-HARD (11X21X2.5-MM THK)	
	19	1	**8T-4123**	2	WASHER (3.62X5.75X0.375-MM THK)	
M	20	1	**8T-4172**	1	BOLT (M10X1.5X80-MM)	
M	21	1	**8T-4195**	1	BOLT (M10X1.5X30-MM)	
M	22	1	**8T-4196**	1	BOLT (M10X1.5X35-MM)	
M	23	1	**8T-4780**	2	BOLT (M20X2.5X30-MM)	
	24	1	**8T-4986**	4	CLAMP-HOSE	
	25	1	**9X-2646**	2	CLIP (SLOT)	
	26	1	**9X-2647**	2	CLIP (TAB)	
M	27	1	**8T-4186**	1	BOLT (M10X1.5X40-MM)	
	28	1	**426-2205**	1	HOSE	

M - METRIC PART

383-4893 **LINES GP-AIR (*contd.*)** **i06143911**

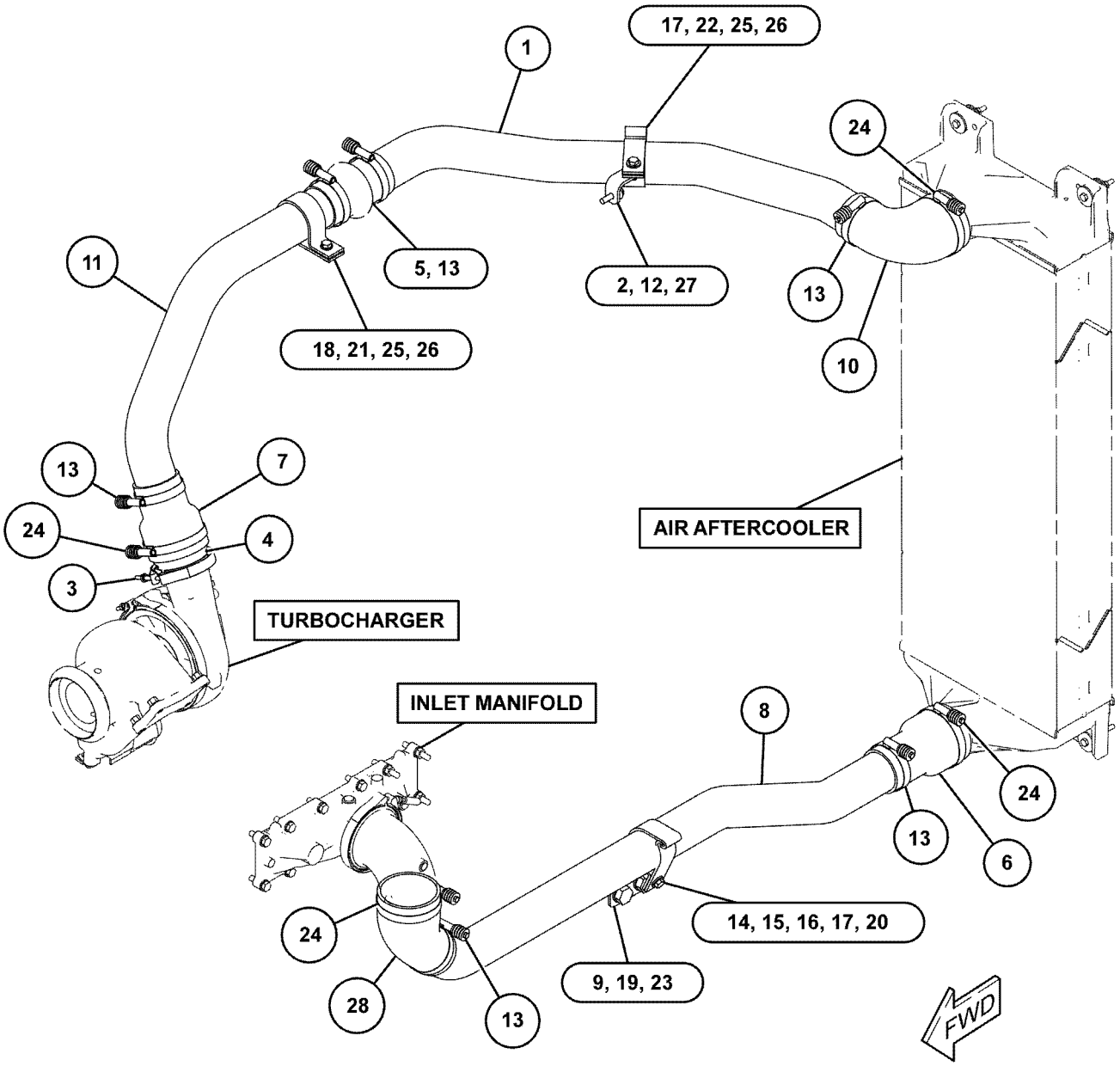

GRAPHIC #1 **<END>** g03828028

380-8509 MANIFOLD GP-EXHAUST

S/N: TXX1-UP

PART OF 383-2065, 422-0048 ENGINE AR-COMPLETE

AN ATTACHMENT

SMCS-1059 **i04859130**

NOTE	REF NO	GRAPHIC REF	PART NUMBER	QTY	PART NAME 1 2 3 4 5 6 (PRODUCT LEVEL)	SEE PAGE
	1	1	**4P-4369**	12	SPACER (12X19X23.5-MM THK)	
	2	1	**283-2238**	6	GASKET	
	3	1	**247-2834**	1	MANIFOLD-EXHAUST (CENTER)	
	4	1	**231-9030**	2	MANIFOLD-EXHAUST (END)	
M	5	1	**116-3715**	12	STUD-TAPERLOCK (M10X1.5X85-MM)	
M	6	1	**9X-6620**	12	LOCKNUT (M10X1.5-THD)	
	7	1	**6V-5839**	12	WASHER (11X21X2.5-MM THK)	
M	8	1	**245-9750**	4	STUD-TAPERLOCK (M10X1.5X50-MM)	

M - METRIC PART

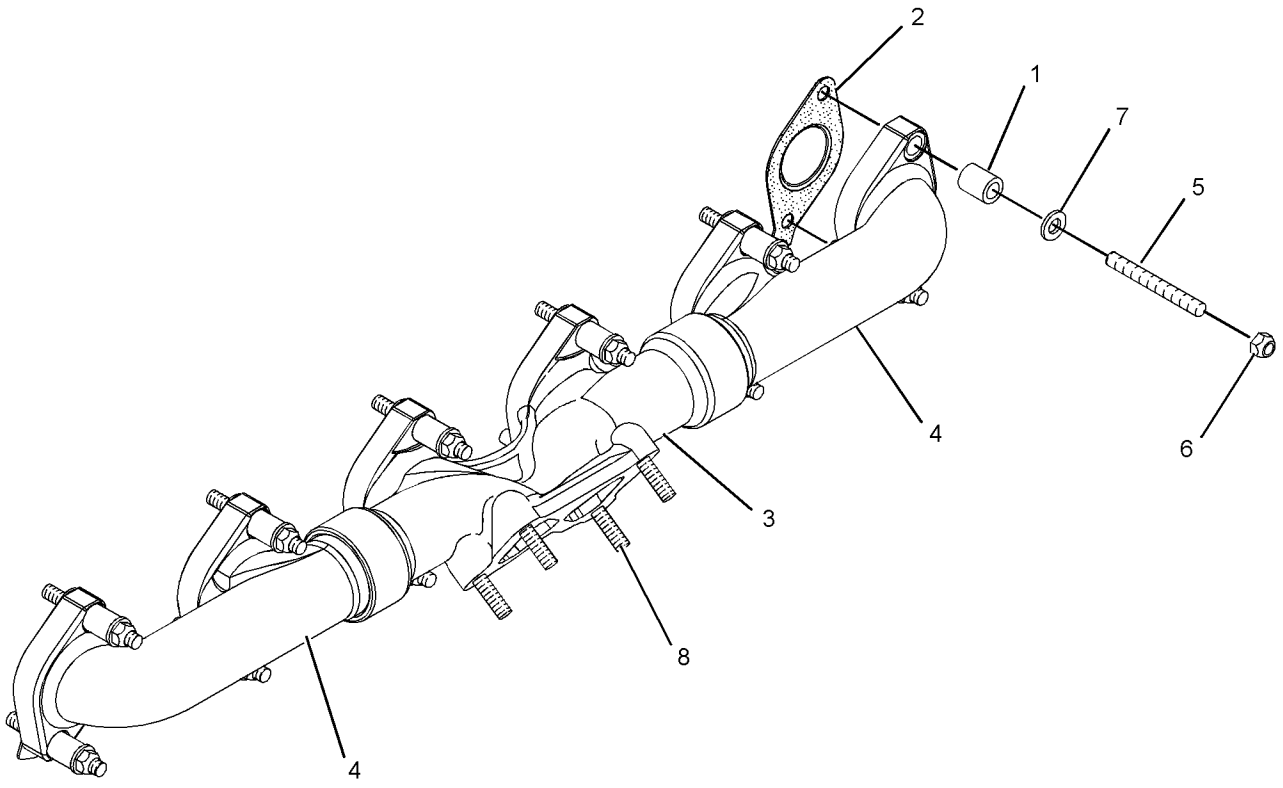

GRAPHIC #1 **<END>** g01256828

340-7244 MANIFOLD GP-INLET

S/N: TXX1-UP

PART OF 383-2065, 422-0048 ENGINE AR-COMPLETE

AN ATTACHMENT

SMCS-1058 **i05910434**

NOTE	REF NO	GRAPHIC REF	PART NUMBER	QTY	PART NAME 1 2 3 4 5 6 (PRODUCT LEVEL)	SEE PAGE
	1	1	**230-3518**	1	GASKET-MANIFOLD	
	2	1	**375-8478**	1	MANIFOLD-INLET	
M	3	1	**176-9237**	3	BOLT-SPECIAL	
	4	1	*183-3407*	2	PLUG AS	
					(EACH INCLUDES)	
		1	**9S-8004**	1	PLUG	
		1	**214-7568**	1	SEAL-O-RING	
M	5	1	**6V-3822**	9	BOLT (M10X1.5X35-MM)	
	6	1	**6V-5839**	12	WASHER (11X21X2.5-MM THK)	
	7	1	**6V-6353**	1	SEAL-O-RING	

M - METRIC PART

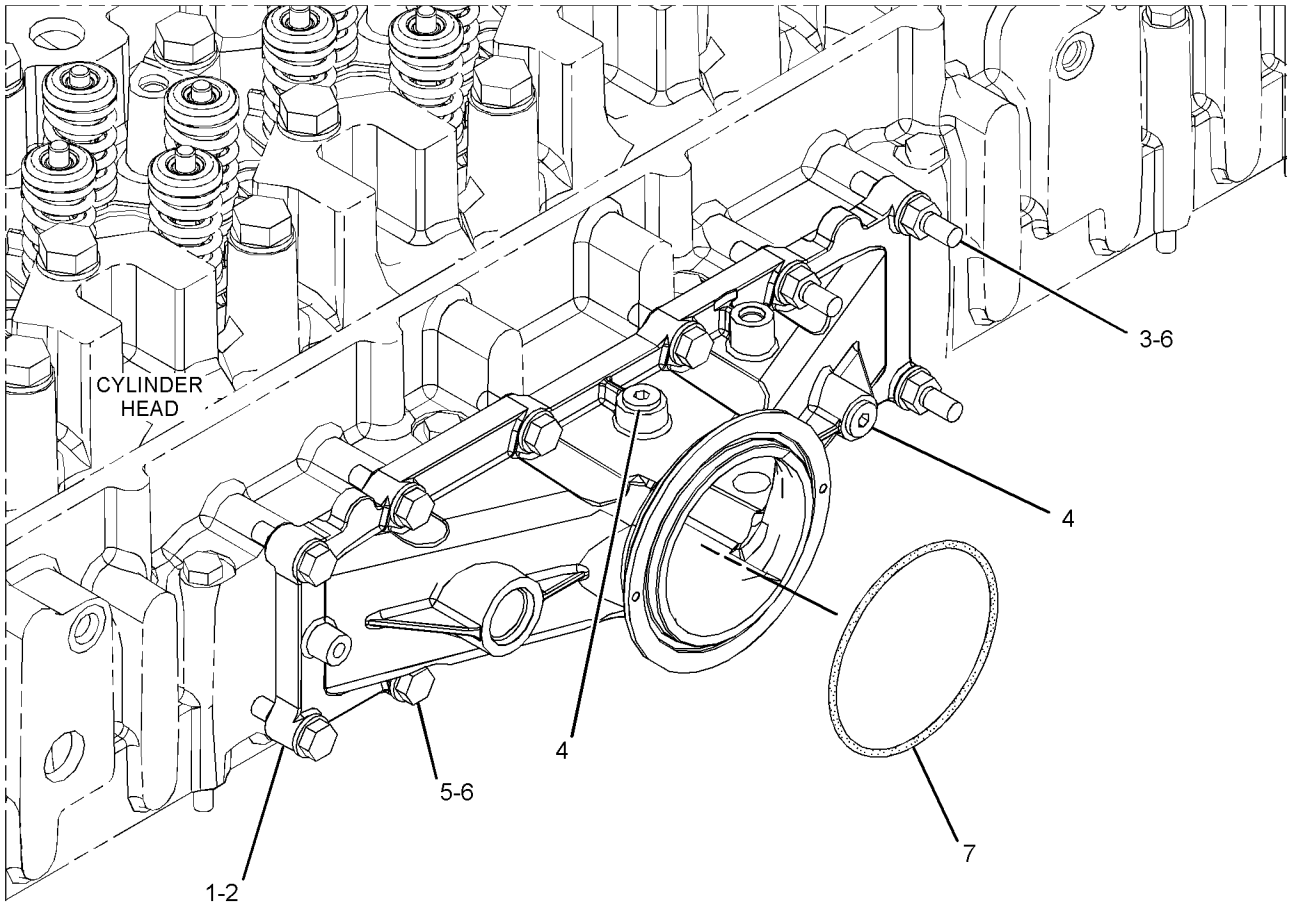

GRAPHIC #1 **<END>** g02278436

383-4877 MUFFLER GP

S/N: E9Y1-UP

PART OF 381-2717 INSTALLATION AR-ENGINE

SMCS-1062 **i06139677**

NOTE	REF NO	GRAPHIC REF	PART NUMBER	QTY	PART NAME 1 2 3 4 5 6 (PRODUCT LEVEL)	SEE PAGE
	1	1	**9N-1941**	1	CLAMP-V BAND	
	2	1	**353-0188**	1	BELLOWS AS	
		1	**034-1432**	2	STRAP-CABLE	
		1	**343-0596**	2	CLAMP-BAND	
	3	1	**371-6545**	1	EJECTOR AS	
	4	1	**392-0198**	1	MUFFLER AS	
	5	1	**477-1212**	1	TUBE AS	
	6	1	**477-1213**	2	BRACKET	
	7	1	**477-1214**	2	CHANNEL AS	
					(EACH INCLUDES)	
M		1	**8T-3597**	2	NUT-WELD (M12X1.75-THD)	
	8	1	**477-1216**	1	BRACKET AS	
M		1	**8T-3490**	2	NUT-WELD (M10X1.5-THD)	
M		1	**355-8941**	2	NUT-WELD (M16X2-THD)	
	9	1	**198-4778**	8	WASHER-HARD (13.5X30X12-MM THK)	
	10	1	**198-4780**	2	WASHER-HARD (17.5X32X8-MM THK)	
M	11	1	**319-6699**	4	BOLT (M12X1.75X45-MM)	
	12	1	**388-7016**	1	CLAMP-BENT BOLT	
M	13	1	**7X-2553**	2	BOLT (M16X2X40-MM)	
	14	1	**7X-7729**	2	WASHER (11X25X3-MM THK)	
M	15	1	**8T-4184**	4	BOLT (M12X1.75X45-MM)	
M	16	1	**8T-4195**	2	BOLT (M10X1.5X30-MM)	

M - METRIC PART

383-4877 **MUFFLER GP (*contd.*)** **i06139677**

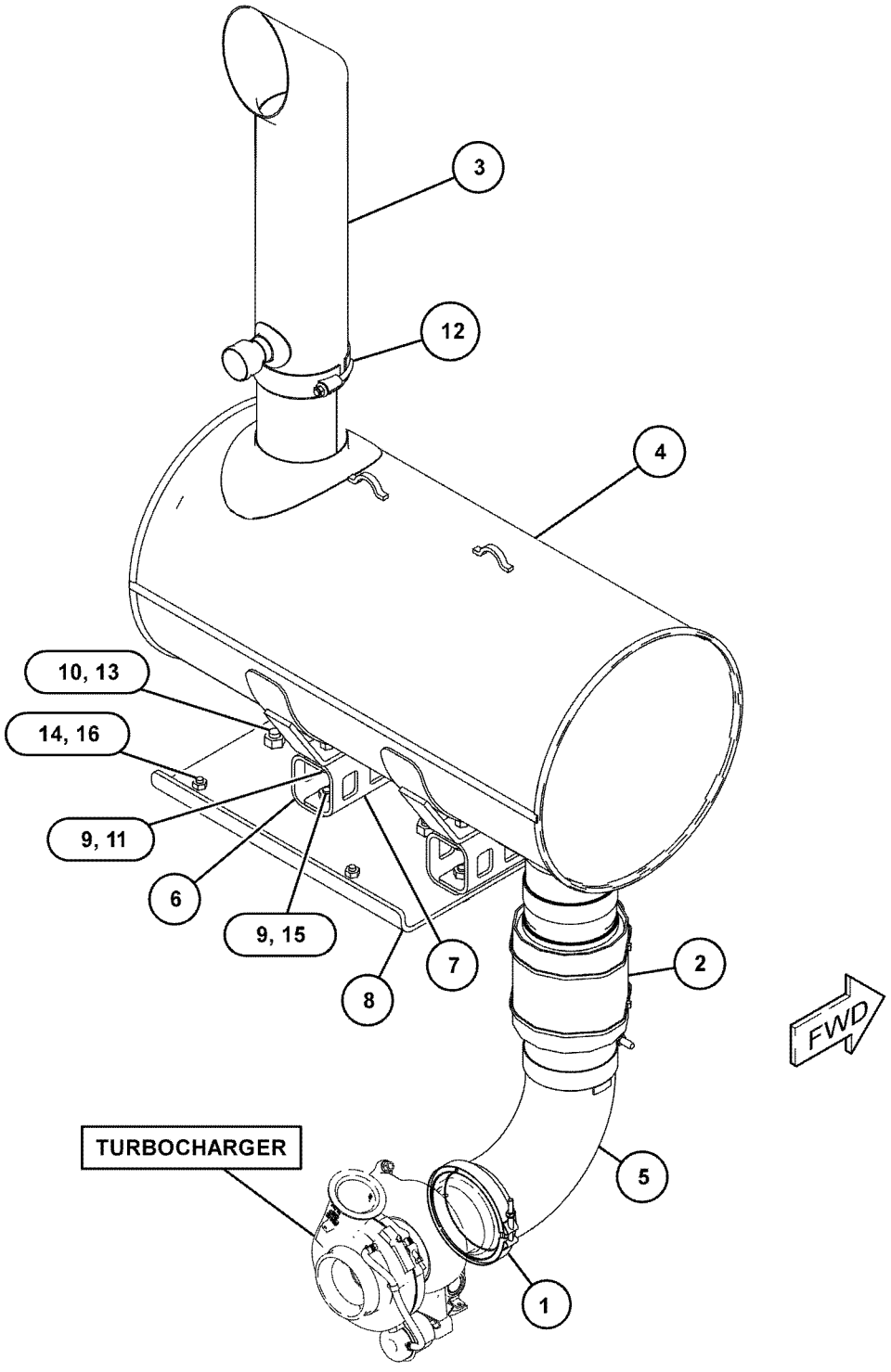

GRAPHIC #1 **<END>** g03825331

333-1195 PRECLEANER AS

S/N: E9Y1-UP
RAIN CAP
PART OF 383-4897 AIR CLEANER GP

SMCS-1055 **i05933161**

NOTE	REF NO	GRAPHIC REF	PART NUMBER	QTY	PART NAME 1 2 3 4 5 6 (PRODUCT LEVEL)	SEE PAGE
	1	1	**5P-0600**	1	CLAMP-HOSE (HEAVY-DUTY)	
	2	1	**350-5811**	2	SCREEN (AIR CLEANER)	
	3	1	**368-9883**	1	GASKET (AIR CLEANER)	
	4	1	**435-9302**	1	BAFFLE (LOWER)	
	5	1	**435-9303**	1	BAFFLE (UPPER)	
	6	1	**435-9304**	1	COVER (PRECLEANER)	
	7	1	**436-6594**	6	SCREW-TRUSS HEAD	

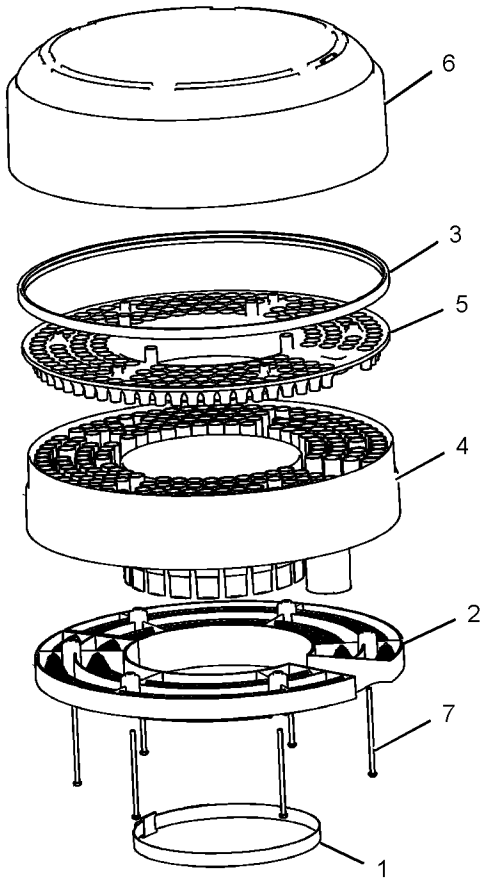

GRAPHIC #1 **<END>** g03500278

378-7689 TURBOCHARGER GP

S/N: TXX1-UP
PART OF 378-7691 TURBOCHARGER GP
AN ATTACHMENT

SMCS-1052, 1053

i04806135

NOTE	REF NO	GRAPHIC REF	PART NUMBER	QTY	PART NAME 1 2 3 4 5 6 (PRODUCT LEVEL)	SEE PAGE
	1	1	**115-7087**	1	BOLT (M6X0.04X10.4-MM)	
	2	1	**161-6958**	1	CLIP-HOSE	
	3	1	**161-6963**	2	CLAMP	
R	4	1	**257-4323**	1	CARTRIDGE GP-TURBOCHARGER	
	5	1	**1W-9311**	1	CLAMP AS-TURBINE	
	6	1	**239-5858**	1	CLAMP AS-COMPRESSOR	
E	7	1	**337-4178**		HOSE (39-CM)	

E - ORDER BY THE CENTIMETER
R - REMFG PART MAY BE AVAILABLE

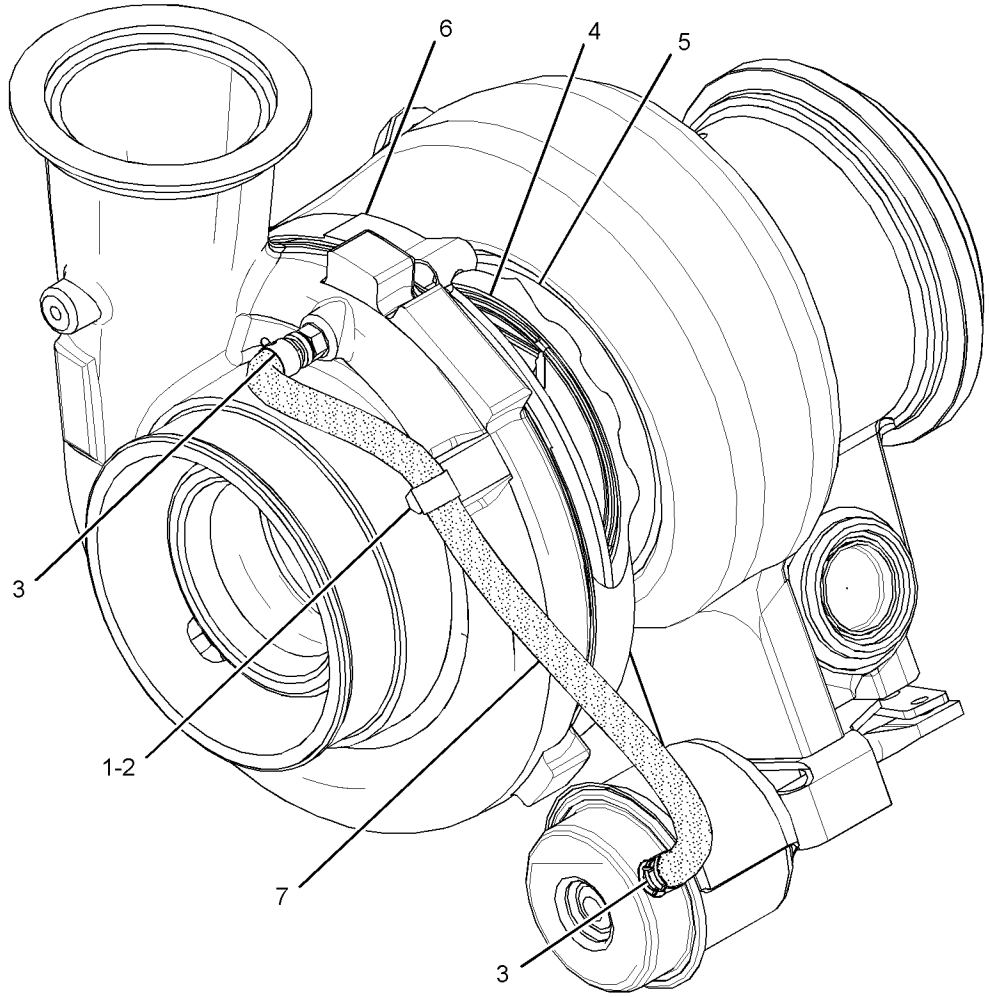

GRAPHIC #1

<END>

g03035398

378-7691 TURBOCHARGER GP–FRONT EXHAUST TURBOCHARGER

S/N: TXX1-UP

PART OF 383-2065, 422-0048 ENGINE AR-COMPLETE

AN ATTACHMENT

SMCS-1052, 1053

i05221233

NOTE	REF NO	GRAPHIC REF	PART NUMBER	QTY	PART NAME 1 2 3 4 5 6 (PRODUCT LEVEL)	SEE PAGE
	1	1	**274-6851**	1	GASKET-TURBOCHARGER	
Y	2	1	**378-7689**	1	TURBOCHARGER GP	115
M	3	1	**375-2467**	4	LOCKNUT-FLANGE (M10X1.5-THD)	

M - METRIC PART
Y - SEPARATE ILLUSTRATION

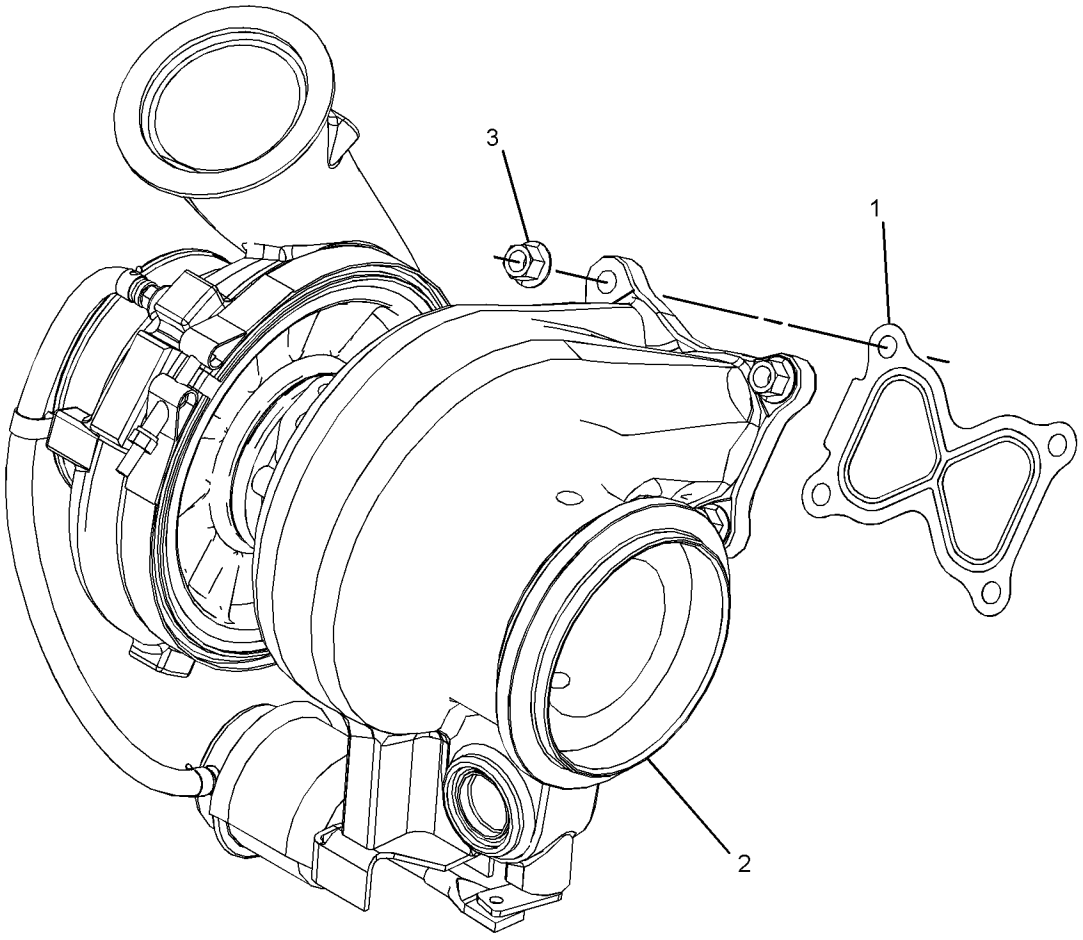

GRAPHIC #1 **<END>** g03382539

343-8126 BASE GP-FUEL FILTER

S/N: TXX1-UP

PART OF 384-3141 FILTER GP-FUEL

AN ATTACHMENT

SMCS-1262 **i05925510**

NOTE	REF NO	GRAPHIC REF	PART NUMBER	QTY	PART NAME 1 2 3 4 5 6 (PRODUCT LEVEL)	SEE PAGE
Y	1	1	*123-0783*	1	VALVE GP-FLUID SAMPLING (FUEL)	143
Y	2	1	*234-5013*	1	SENSOR GP-TEMPERATURE (FUEL)	256
Y	3	1	*325-8634*	1	SENSOR GP-PRESSURE (FUEL)	246
	4	1	**348-7307**	1	BASE AS-FUEL FILTER	
		1	**9S-4167**	2	STUD-HOLLOW (1-14X1.47-IN)	
	5	1	**1R-0749**	2	FILTER-FUEL (ADVANCED EFFICIENCY)	
	6	1	*386-6235*	1	CONNECTOR AS	
	6A	1	**214-7567**	1	SEAL-O-RING	
		1	**5P-1318**	1	ADAPTER	
	7	1	**8L-2786**	1	SEAL-O-RING	
	8	1	**9S-8005**	1	PLUG-O-RING	

Y - SEPARATE ILLUSTRATION

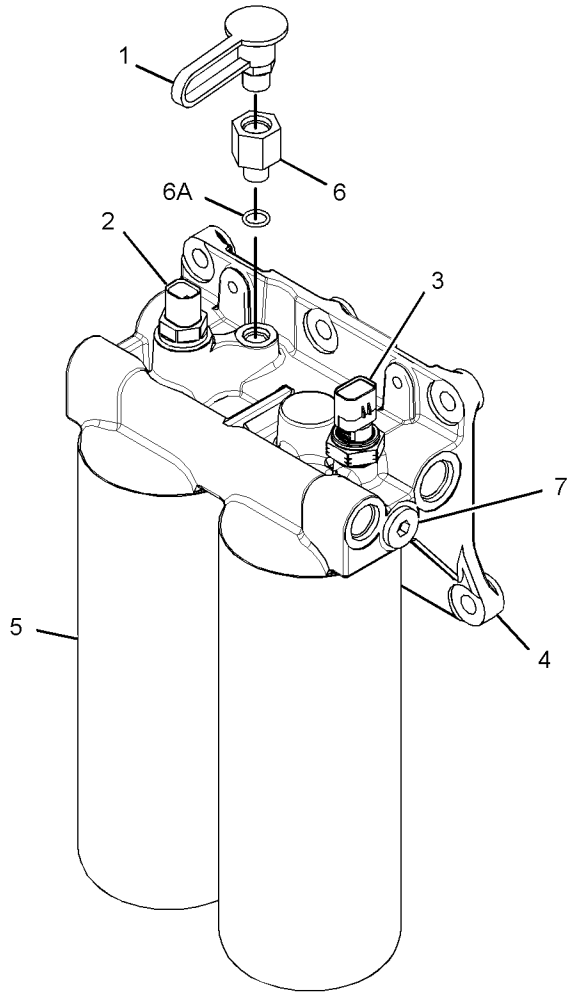

GRAPHIC #1 **<END>** g02909858

383-4888 FILTER & LINES GP-FUEL—PRIMARY FUEL, WATER SEPARATOR

S/N: E9Y1-UP

PART OF 381-2717 INSTALLATION AR-ENGINE

SMCS-1261, 1274 **i06147633**

NOTE	REF NO	GRAPHIC REF	PART NUMBER	QTY	PART NAME 1 2 3 4 5 6 (PRODUCT LEVEL)	SEE PAGE
Y	1		**190-8977**	1	PUMP GP-FUEL PRM & WATER SEP	133
	2		**191-1782**	1	SPACER (8.5X12.7X38.2-MM THK)	
	3		**191-1783**	2	SPACER (8.5X12.7X87.3-MM THK)	
	4		**383-4727**	1	BRACKET AS	
	5		**1P-4278**	1	CLAMP-HOSE	
	6		**243-1353**	1	SPACER (11X20X35-MM THK)	
	7		**4D-7735**	1	CLIP	
	8		**7X-0579**	3	WASHER-HARD (8.8X25.5X2-MM THK)	
M	9		**7X-2539**	2	BOLT (M8X1.25X110-MM)	
	10		**7X-7729**	2	WASHER (11X25X3-MM THK)	
	11		**8T-4121**	6	WASHER-HARD (11X21X2.5-MM THK)	
M	12		**8T-4195**	4	BOLT (M10X1.5X30-MM)	
M	13		**8T-6466**	1	BOLT (M10X1.5X60-MM)	
M	14		**8T-6869**	1	BOLT (M8X1.25X60-MM)	
	15		**8T-9655**	6	MOUNT-ISOLATION	
I	16		**478-1749**	1	HOSE AS	
	17		*281-5981*	2	ELBOW AS	
					(EACH INCLUDES)	
			6V-8722	1	ELBOW	
			228-7091	1	SEAL-O-RING	
			238-5080	1	SEAL-O-RING	
	18		**4E-2289**	1	ANGLE AS	
	19		**6V-2858**	4	GROMMET	
	20		**8T-1897**	4	CLIP (SLOT)	
	21		**8T-1898**	4	CLIP (TAB)	
M	22		**8T-4136**	2	BOLT (M10X1.5X25-MM)	
M	23		**8T-4137**	1	BOLT (M10X1.5X20-MM)	
E	24		**8C-6959**		HOSE (67-CM)	

E - ORDER BY THE CENTIMETER
I - REFER TO HYDRAULIC INFORMATION SYSTEM
M - METRIC PART
Y - SEPARATE ILLUSTRATION

383-4888 **FILTER & LINES GP-FUEL (*contd.*)** **i06147633**

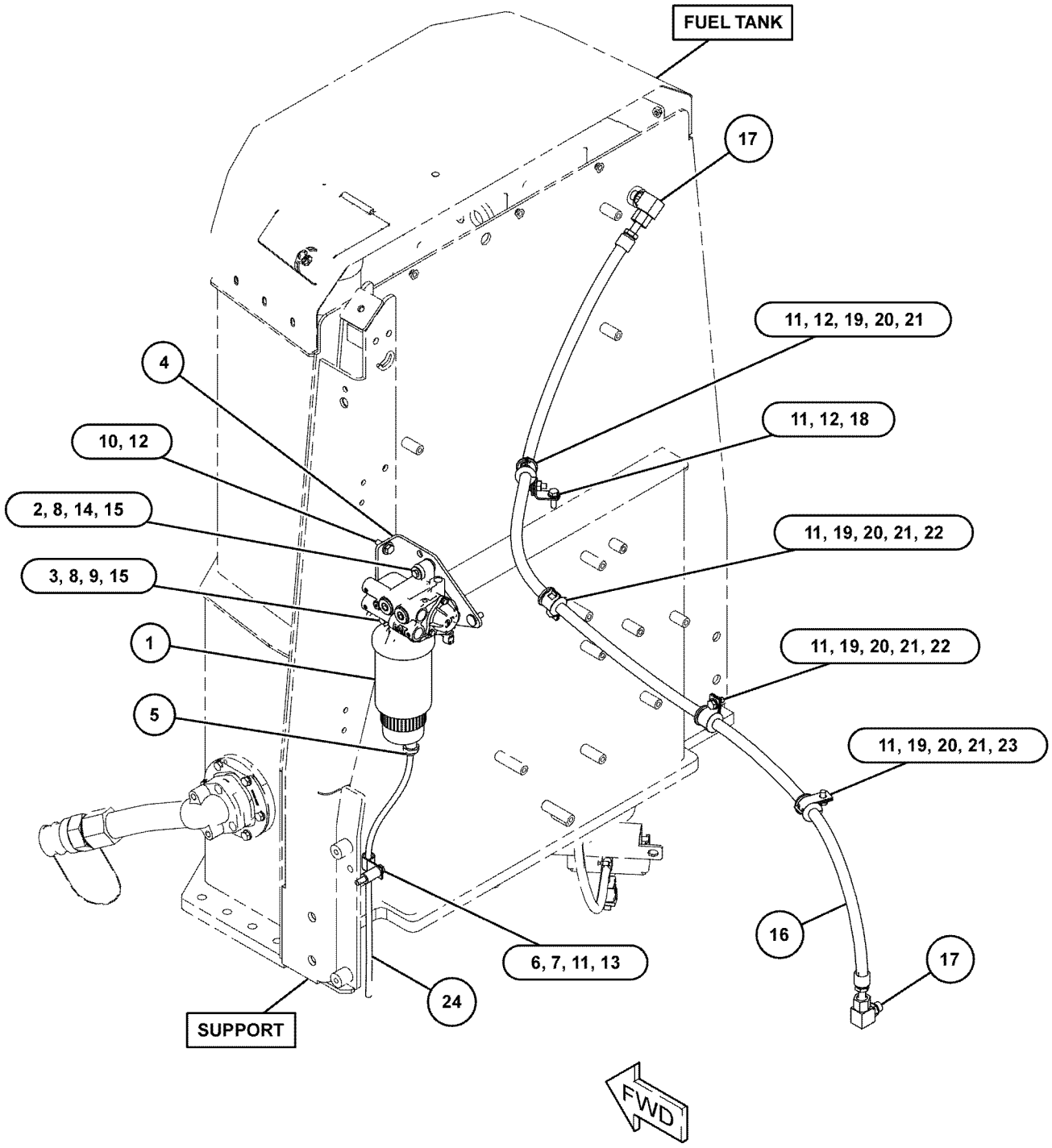

GRAPHIC #1 **<END>** g03836886

384-3141 FILTER GP-FUEL

S/N: TXX1-UP

PART OF 383-2065, 422-0048 ENGINE AR-COMPLETE

AN ATTACHMENT

SMCS-1261 **i06133311**

NOTE	REF NO	GRAPHIC REF	PART NUMBER	QTY	PART NAME 1 2 3 4 5 6 (PRODUCT LEVEL)	SEE PAGE
Y	1	1	*343-8126*	1	BASE GP-FUEL FILTER	117
	2	1	*377-9640*	1	ELBOW AS	
		1	**005-4173**	1	ELBOW	
		1	**238-5081**	1	SEAL-O-RING	
	3	1	*398-5596*	1	PLUG AS	
		1	**360-3680**	1	PLUG	
		1	**238-5080**	1	SEAL-O-RING	
	4	1	*398-5601*	1	PLUG AS	
		1	**360-3681**	1	PLUG	
		1	**238-5081**	1	SEAL-O-RING	
M	5	1	**227-6715**	1	STUD (M10X1.5X30-MM)	
	6	1	*353-5102*	1	FITTING AS-ELBOW	
		1	**005-4362**	1	ELBOW	
		1	**238-5080**	1	SEAL-O-RING	
M	7	1	**6V-3822**	5	BOLT (M10X1.5X35-MM)	
	8	1	**6V-5839**	5	WASHER (11X21X2.5-MM THK)	

M - METRIC PART
Y - SEPARATE ILLUSTRATION

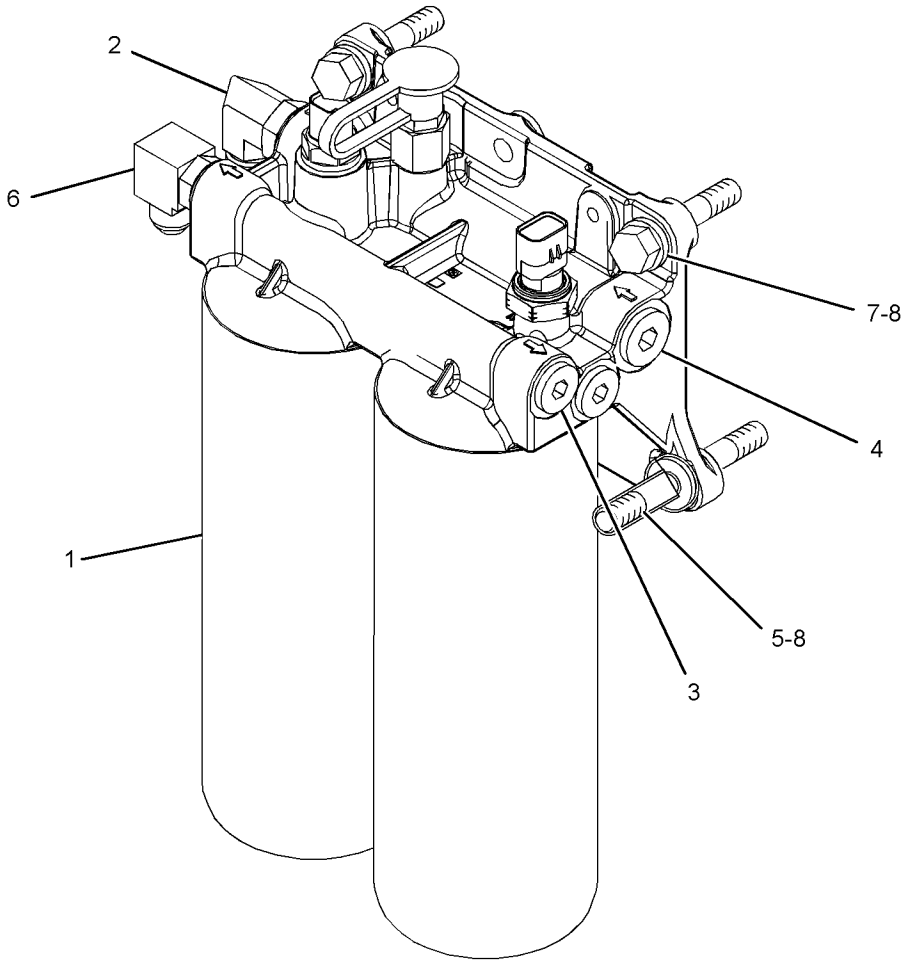

GRAPHIC #1 **<END>** g03822811

174-9570 FILTER GP-WATER SEP & FUEL

S/N: E9Y1-UP

PART OF 190-8977 PUMP GP-FUEL PRM & WATER SEP

SMCS-1261, 1263

i05523182

NOTE	REF NO	GRAPHIC REF	PART NUMBER	QTY	PART NAME 1 2 3 4 5 6 (PRODUCT LEVEL)	SEE PAGE
	1	1	**326-1644**	1	FILTER AS-WATER SEP & FUEL (PRIMARY)	
	1A	1	**220-8678**	1	SEAL-RING (FUEL, WATER SEPARATOR)	
	2	1	**343-5527**	1	BOWL AS	
BJ	2A	1	**3J-1907**	1	SEAL-O-RING	
	2B	1	**5F-9144**	1	SEAL-O-RING	
	2C	1	**8F-7219**	1	SEAL-O-RING	
BJ	2D	1	**9S-8004**	1	PLUG (DRAIN)	

B - USE AS REQUIRED
J - PARTS MARKED J ARE USED WITH BOWL ASSEMBLY THAT IS NOT ONE PIECE.

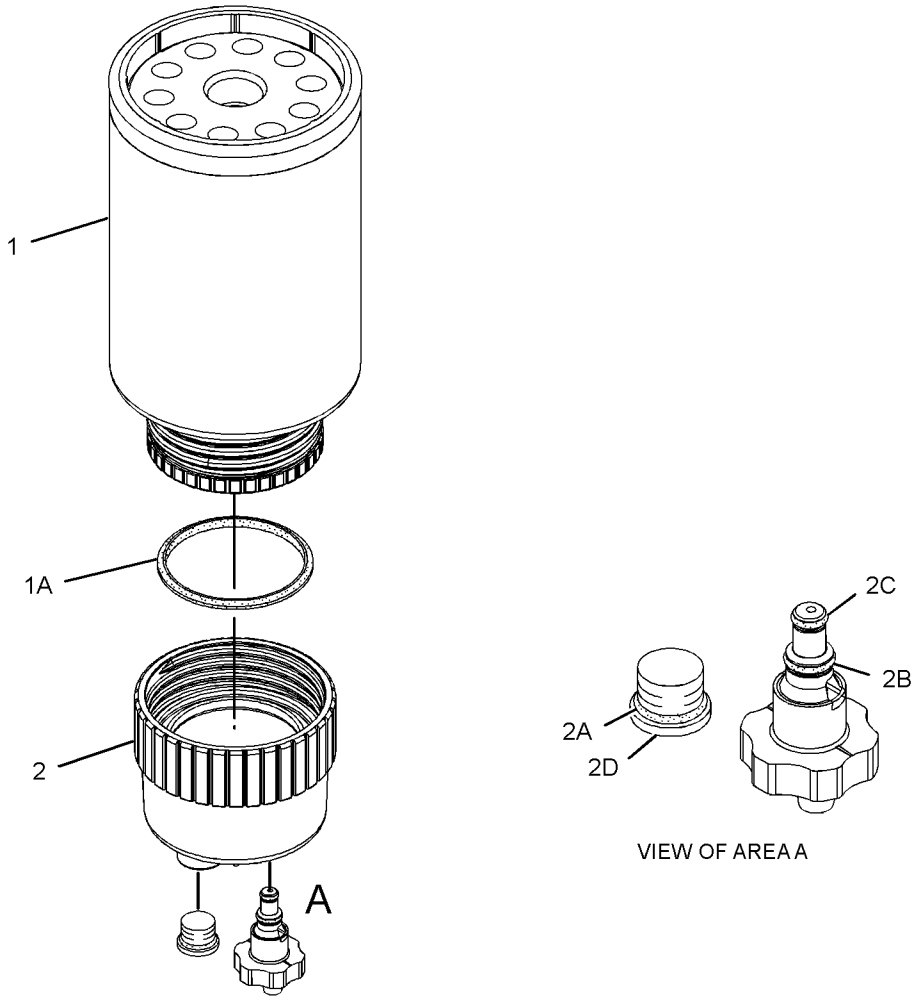

GRAPHIC #1

<END>

g01960053

249-0713 INJECTOR GP-FUEL*R

S/N: TXX1-UP
PART OF 253-1461 PUMP GP-FUEL INJECTION
AN ATTACHMENT

SMCS-1251, 1254, 1290, 1713 **i02144582**

NOTE	REF NO	GRAPHIC REF	PART NUMBER	QTY	PART NAME 1 2 3 4 5 6 (PRODUCT LEVEL)	SEE PAGE
	1	1	**9X-7317**	1	SEAL-O-RING	
	2	1	**230-3728**	1	SEAL-O-RING	
	3	1	**230-3775**	1	SEAL-O-RING	

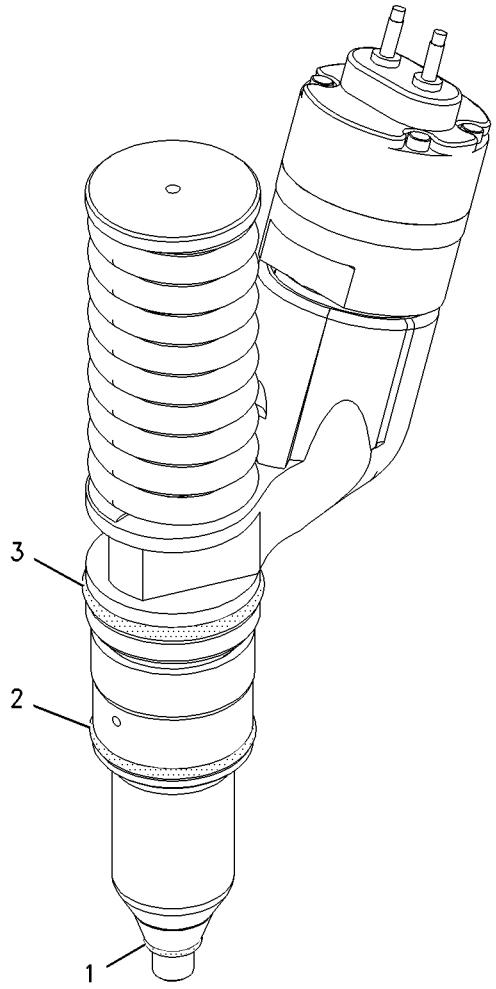

GRAPHIC #1 **<END>** g00914176

366-6128 LINES GP-FUEL

S/N: E9Y1-UP

PART OF 371-3796 HYDRAULIC AR

SMCS-1274 **i06092751**

NOTE	REF NO	GRAPHIC REF	PART NUMBER	QTY	PART NAME 1 2 3 4 5 6 (PRODUCT LEVEL)	SEE PAGE
	1	1	*183-6187*	1	VALVE GP-SHUTOFF (MANUAL) (FUEL SUPPLY)	
		1	**3D-2824**	1	SEAL-O-RING	
		1	**6V-8358**	1	VALVE-BALL	
	2	1	*281-5976*	1	ELBOW AS	
		1	**6V-8629**	1	ELBOW	
		1	**228-7092**	1	SEAL-O-RING	
		1	**238-5081**	1	SEAL-O-RING	
	3	1	*302-1413*	1	ADAPTER AS	
		1	**2M-9780**	1	SEAL-O-RING	
		1	**7X-3165**	1	ADAPTER	
	4	1	*452-0435*	1	ADAPTER AS	
		1	**3E-7420**	1	CONNECTOR	
		1	**228-7092**	1	SEAL-O-RING	
		1	**238-5081**	1	SEAL-O-RING	
I	5	1	**455-2399**	1	HOSE AS	
I	6	1	**455-2400**	1	HOSE AS	
	7	1	**122-0450**	4	GROMMET	
	8	1	*148-8327*	1	CONNECTOR AS	
		1	**3D-2824**	1	SEAL-O-RING	
		1	**6V-8637**	1	CONNECTOR	
		1	**6V-9746**	1	SEAL-O-RING	
	9	1	*148-8382*	1	ELBOW AS	
		1	**3D-2824**	1	SEAL-O-RING	
		1	**7J-9108**	1	SEAL-O-RING	
		1	**8T-0404**	1	ELBOW	
	10	1	*171-6723*	1	ELBOW AS	
		1	**6V-9746**	1	SEAL-O-RING	
		1	**8T-8899**	1	ELBOW	
	11	1	**176-5868**	1	ADAPTER	
	12	1	*313-3492*	2	PLUG AS	
					(EACH INCLUDES)	
		1	**9S-4190**	1	PLUG-O-RING	
		1	**238-5081**	1	SEAL-O-RING	
	13	1	**8T-1897**	4	CLIP (SLOT)	
	14	1	**8T-1898**	4	CLIP (TAB)	
	15	1	**8T-4121**	3	WASHER-HARD (11X21X2.5-MM THK)	
M	16	1	**8T-4136**	3	BOLT (M10X1.5X25-MM)	
	17	1	**8T-4223**	1	WASHER-HARD (13.5X25.5X3-MM THK)	

I - REFER TO HYDRAULIC INFORMATION SYSTEM
M - METRIC PART

366-6128 **LINES GP-FUEL (*contd.*)** **i06092751**

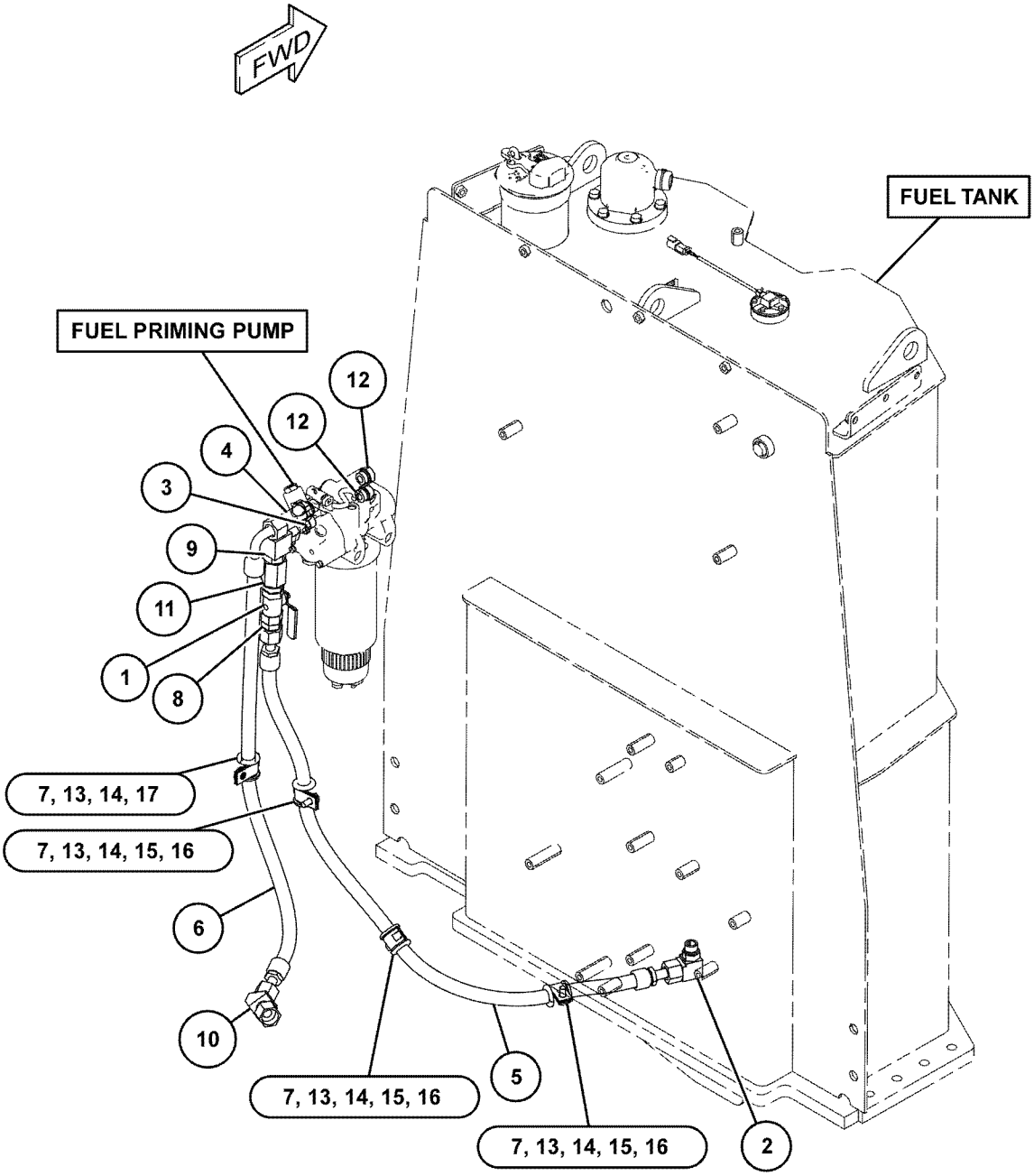

GRAPHIC #1 **<END>** g03809454

384-0183 LINES GP-FUEL

S/N: TXX1-857
PART OF 383-2065, 422-0048 ENGINE AR-COMPLETE
AN ATTACHMENT

SMCS-1274 **i04928867**

NOTE	REF NO	GRAPHIC REF	PART NUMBER	QTY	PART NAME 1 2 3 4 5 6 (PRODUCT LEVEL)	SEE PAGE
	1	1	*191-7805*	1	ELBOW AS	
		1	**030-7947**	1	ELBOW	
		1	**214-7568**	1	SEAL-O-RING	
I	2	1	**334-1465**	1	HOSE AS	
I	3	1	**345-7589**	1	HOSE AS	
	4	1	*347-4404*	1	ADAPTER AS	
		1	**214-7568**	1	SEAL-O-RING	
		1	**347-4403**	1	ADAPTER-ELBOW	
I	5	1	**347-9203**	1	HOSE AS	
Y	6	1	*352-8928*	1	REGULATOR GP-FUEL PRESSURE	137
	7	1	**114-9224**	1	SPACER (11.13X19.05X47-MM THK)	
	8	1	*297-7999*	1	ELBOW AS	
		1	**8T-2530**	1	ELBOW	
		1	**228-7091**	1	SEAL-O-RING	
		1	**238-5080**	1	SEAL-O-RING	
	9	1	*303-1506*	1	ELBOW AS	
		1	**4K-6297**	1	ELBOW	
		1	**214-7568**	1	SEAL-O-RING	
	10	1	*321-8632*	1	CONNECTOR AS	
		1	**6V-8632**	1	CONNECTOR	
		1	**228-7091**	1	SEAL-O-RING	
		1	**238-5080**	1	SEAL-O-RING	
	11	1	**5P-8939**	1	GROMMET	
	12	1	**6V-5839**	1	WASHER (11X21X2.5-MM THK)	
M	13	1	**6V-7981**	1	BOLT (M10X1.5X70-MM)	
M	14	1	**8T-0275**	2	BOLT (M6X1X50-MM)	
	15	1	**8T-1889**	1	CLIP (SLOT)	
	16	1	**8T-1890**	1	CLIP (TAB)	
	17	1	**9X-8267**	2	WASHER (6.6X12X2-MM THK)	

I - REFER TO HYDRAULIC INFORMATION SYSTEM
M - METRIC PART
Y - SEPARATE ILLUSTRATION

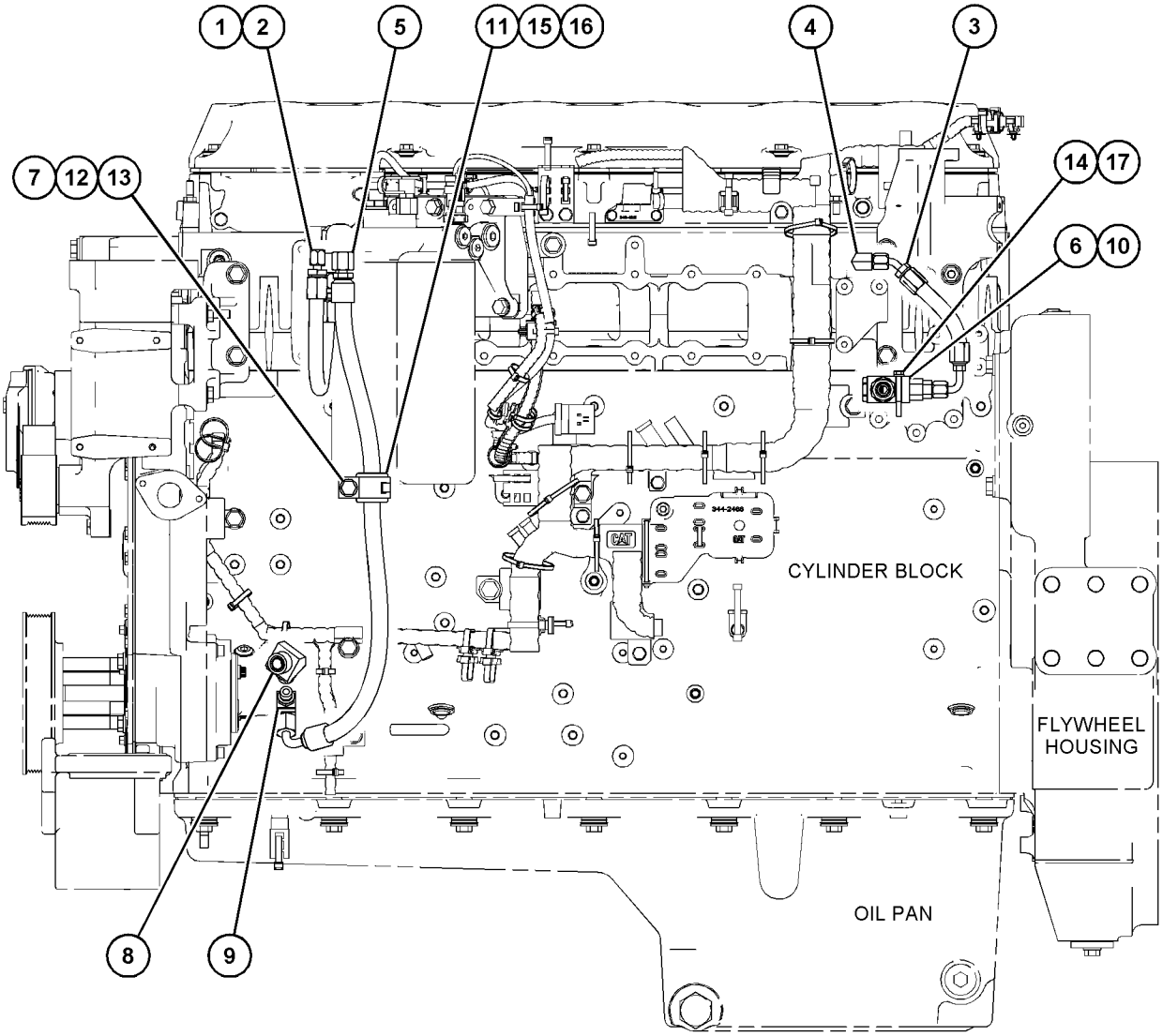

LEFT SIDE VIEW OF ENGINE

GRAPHIC #1 **<END>** g03613056

384-0183 LINES GP-FUEL

S/N: TXX858-UP
PART OF 383-2065 ENGINE AR-COMPLETE
AN ATTACHMENT

SMCS-1274 **i06207476**

NOTE	REF NO	GRAPHIC REF	PART NUMBER	QTY	PART NAME 1 2 3 4 5 6 (PRODUCT LEVEL)	SEE PAGE
	1	1	*191-7805*	1	ELBOW AS	
		1	**030-7947**	1	ELBOW	
		1	**214-7568**	1	SEAL-O-RING	
I	2	1	**334-1465**	1	HOSE AS	
I	3	1	**345-7589**	1	HOSE AS	
	4	1	*347-4404*	1	ADAPTER AS	
		1	**214-7568**	1	SEAL-O-RING	
		1	**347-4403**	1	ADAPTER-ELBOW	
I	5	1	**347-9203**	1	HOSE AS	
Y	6	1	*352-8928*	1	REGULATOR GP-FUEL PRESSURE	137
	7	1	**114-9224**	1	SPACER (11.13X19.05X47-MM THK)	
C	8	1	*281-5935*	1	ELBOW AS	
		1	**8C-6920**	1	ELBOW	
		1	**228-7092**	1	SEAL-O-RING	
		1	**238-5080**	1	SEAL-O-RING	
	9	1	*303-1506*	1	ELBOW AS	
		1	**4K-6297**	1	ELBOW	
		1	**214-7568**	1	SEAL-O-RING	
	10	1	*321-8632*	1	CONNECTOR AS	
		1	**6V-8632**	1	CONNECTOR	
		1	**228-7091**	1	SEAL-O-RING	
		1	**238-5080**	1	SEAL-O-RING	
	11	1	**5P-8939**	1	GROMMET	
	12	1	**6V-5839**	1	WASHER (11X21X2.5-MM THK)	
M	13	1	**6V-7981**	1	BOLT (M10X1.5X70-MM)	
M	14	1	**8T-0275**	2	BOLT (M6X1X50-MM)	
	15	1	**8T-1889**	1	CLIP (SLOT)	
	16	1	**8T-1890**	1	CLIP (TAB)	
	17	1	**9X-8267**	2	WASHER (6.6X12X2-MM THK)	

C - CHANGE FROM PREVIOUS TYPE
I - REFER TO HYDRAULIC INFORMATION SYSTEM
M - METRIC PART
Y - SEPARATE ILLUSTRATION

384-0183 **LINES GP-FUEL (*contd.*)** **i06207476**

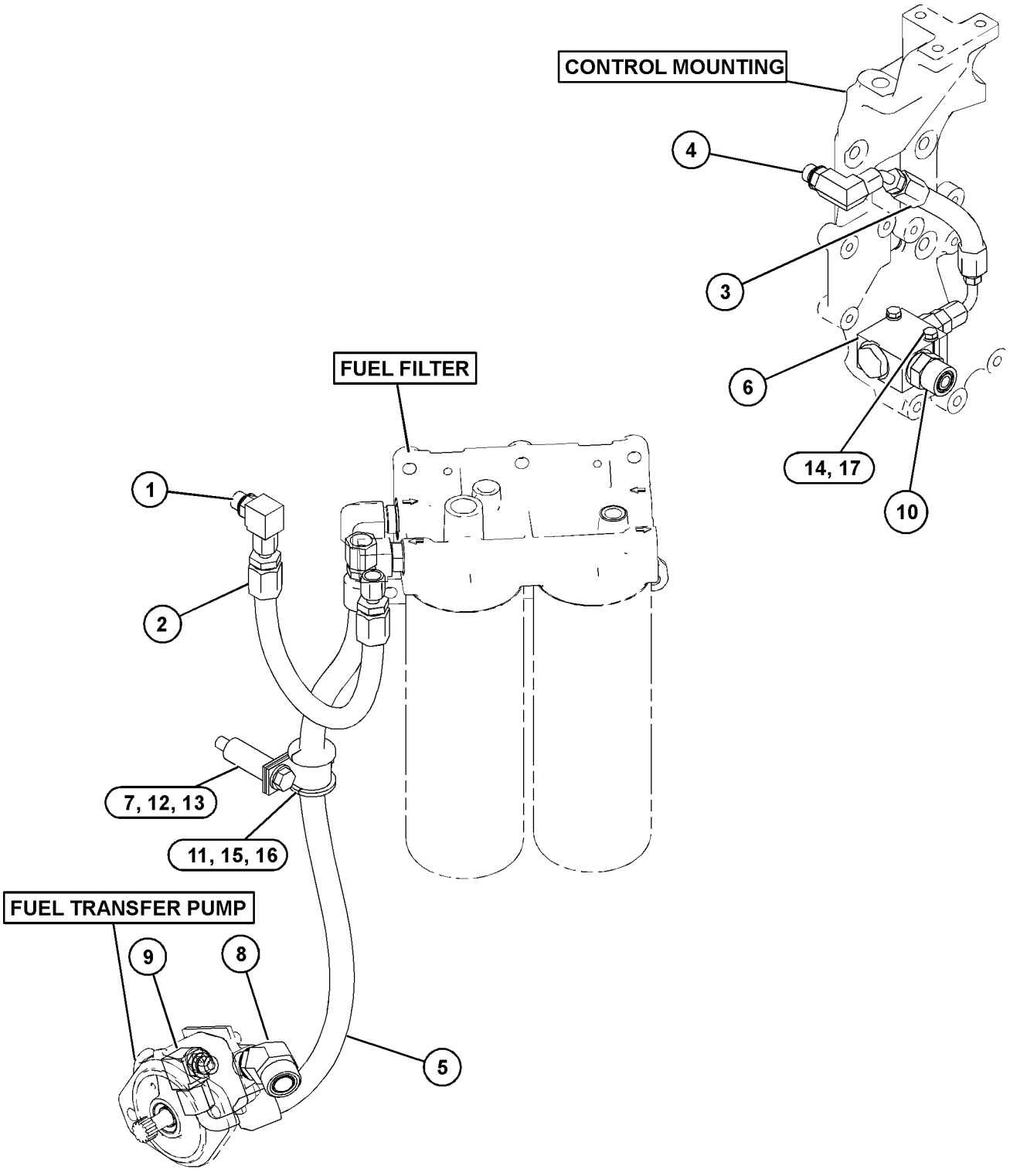

GRAPHIC #1 **<END>** g03857255

469-5839 LINES GP-FUEL

S/N: TXX591-UP
PART OF 422-0048 ENGINE AR-COMPLETE
AN ATTACHMENT

SMCS-1274 **i06138562**

NOTE	REF NO	GRAPHIC REF	PART NUMBER	QTY	PART NAME 1 2 3 4 5 6 (PRODUCT LEVEL)	SEE PAGE
	1	1	*191-7805*	1	ELBOW AS	
		1	**030-7947**	1	ELBOW	
		1	**214-7568**	1	SEAL-O-RING	
I	2	1	**334-1465**	1	HOSE AS	
I	3	1	**345-7589**	1	HOSE AS	
	4	1	*347-4404*	1	ADAPTER AS	
		1	**214-7568**	1	SEAL-O-RING	
		1	**347-4403**	1	ADAPTER-ELBOW	
I	5	1	**347-9203**	1	HOSE AS	
Y	6	1	*352-8928*	1	REGULATOR GP-FUEL PRESSURE	137
	7	1	**114-9224**	1	SPACER (11.13X19.05X47-MM THK)	
	8	1	*281-5935*	1	ELBOW AS	
		1	**8C-6920**	1	ELBOW	
		1	**228-7092**	1	SEAL-O-RING	
		1	**238-5080**	1	SEAL-O-RING	
	9	1	*303-1506*	1	ELBOW AS	
		1	**4K-6297**	1	ELBOW	
		1	**214-7568**	1	SEAL-O-RING	
	10	1	*319-6225*	1	ELBOW AS	
		1	**6V-8625**	1	ELBOW	
		1	**228-7090**	1	SEAL-O-RING	
		1	**238-5080**	1	SEAL-O-RING	
	11	1	**5P-8939**	1	GROMMET	
	12	1	**6V-5839**	1	WASHER (11X21X2.5-MM THK)	
M	13	1	**6V-7981**	1	BOLT (M10X1.5X70-MM)	
M	14	1	**8T-0275**	2	BOLT (M6X1X50-MM)	
	15	1	**8T-1889**	1	CLIP (SLOT)	
	16	1	**8T-1890**	1	CLIP (TAB)	
	17	1	**9X-8267**	2	WASHER (6.6X12X2-MM THK)	

I - REFER TO HYDRAULIC INFORMATION SYSTEM
M - METRIC PART
Y - SEPARATE ILLUSTRATION

469-5839 **LINES GP-FUEL (*contd.*)** **i06138562**

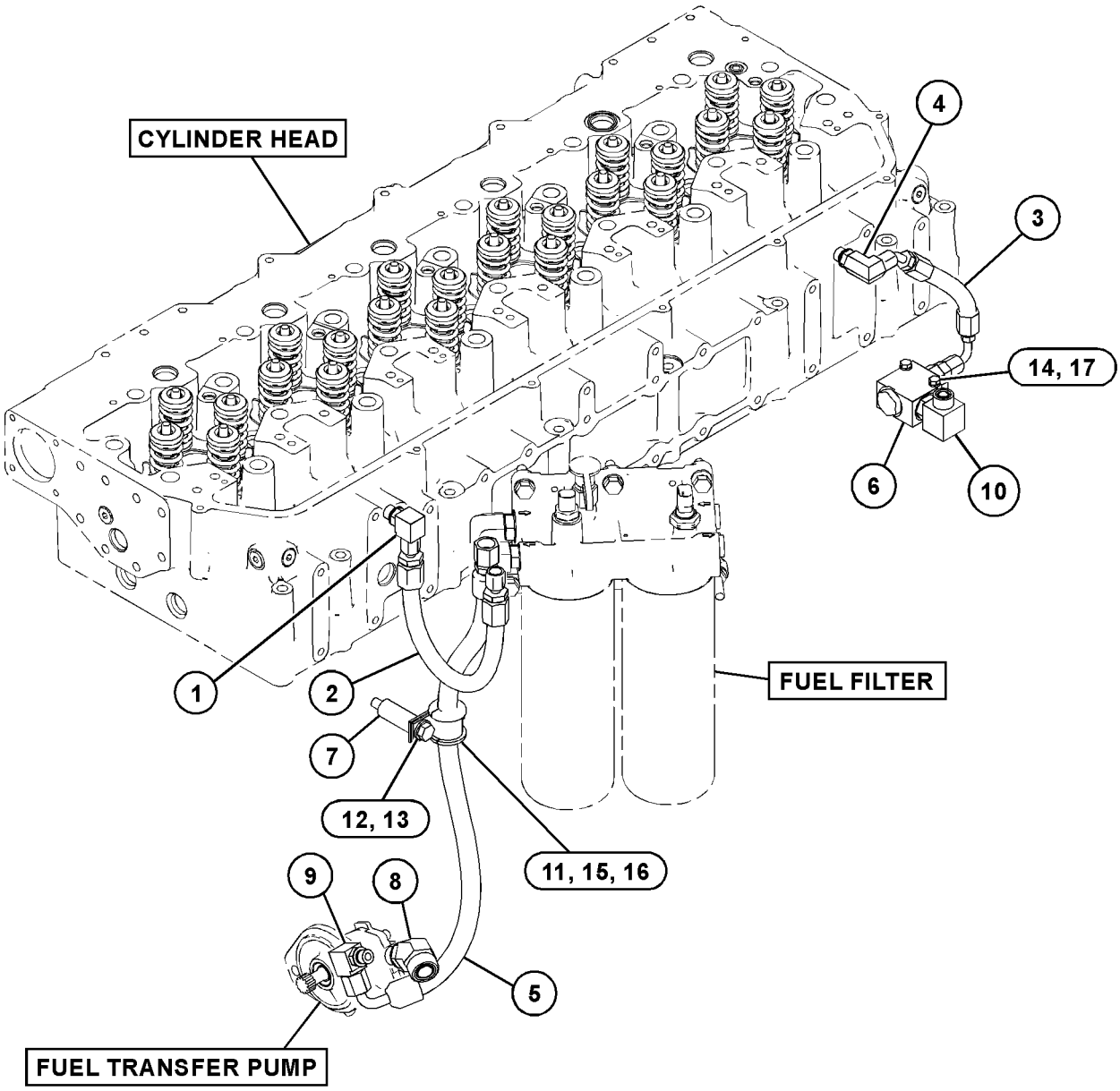

GRAPHIC #1 **<END>** g03829861

349-6100 MOUNTING GP-FUEL FILTER

S/N: TXX1-UP
PROVIDES MTG LOCATION FOR SECONDARY/TERTIARY FUEL FILTER BASE
PART OF 383-2065, 422-0048 ENGINE AR-COMPLETE
AN ATTACHMENT

SMCS-1261, 1262 **i05787789**

NOTE	REF NO	GRAPHIC REF	PART NUMBER	QTY	PART NAME 1 2 3 4 5 6 (PRODUCT LEVEL)	SEE PAGE
	1	1	**349-6101**	1	BRACKET	
	2	1	**6V-5839**	3	WASHER (11X21X2.5-MM THK)	
M	3	1	**6V-5842**	3	BOLT (M10X1.5X40-MM)	

M - METRIC PART

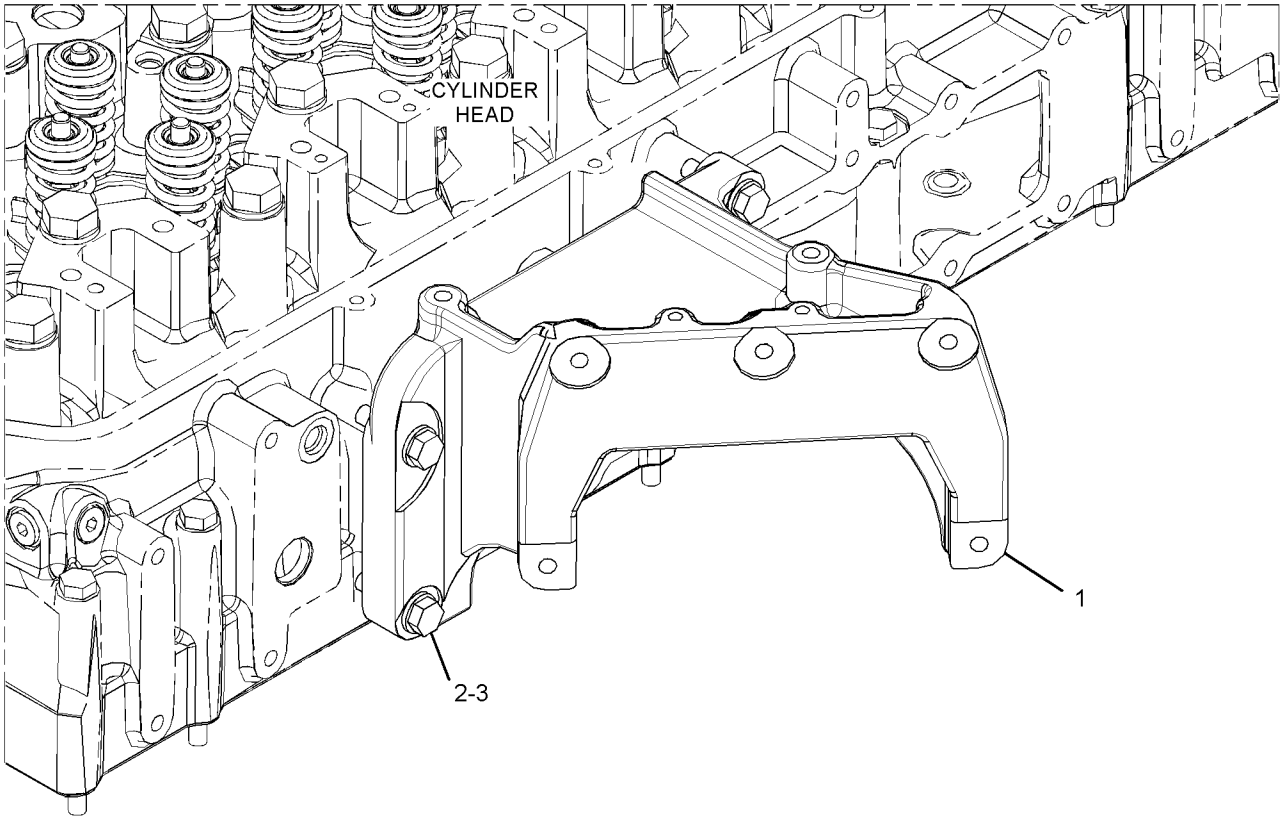

GRAPHIC #1 **<END>** g02494977

253-1461 PUMP GP-FUEL INJECTION

S/N: TXX1-UP
PART OF 376-4249 ENGINE AR-CORE
AN ATTACHMENT

SMCS-1251, 1290 **i05327552**

NOTE	REF NO	GRAPHIC REF	PART NUMBER	QTY	PART NAME 1 2 3 4 5 6 (PRODUCT LEVEL)	SEE PAGE
	1	1	**224-4991**	1	CLAMP-INJECTOR	
YR	2	1	**249-0713**	1	INJECTOR GP-FUEL	122
M	3	1	**8T-0644**	1	BOLT (M10X1.5X90-MM)	

M - METRIC PART
R - REMFG PART MAY BE AVAILABLE
Y - SEPARATE ILLUSTRATION

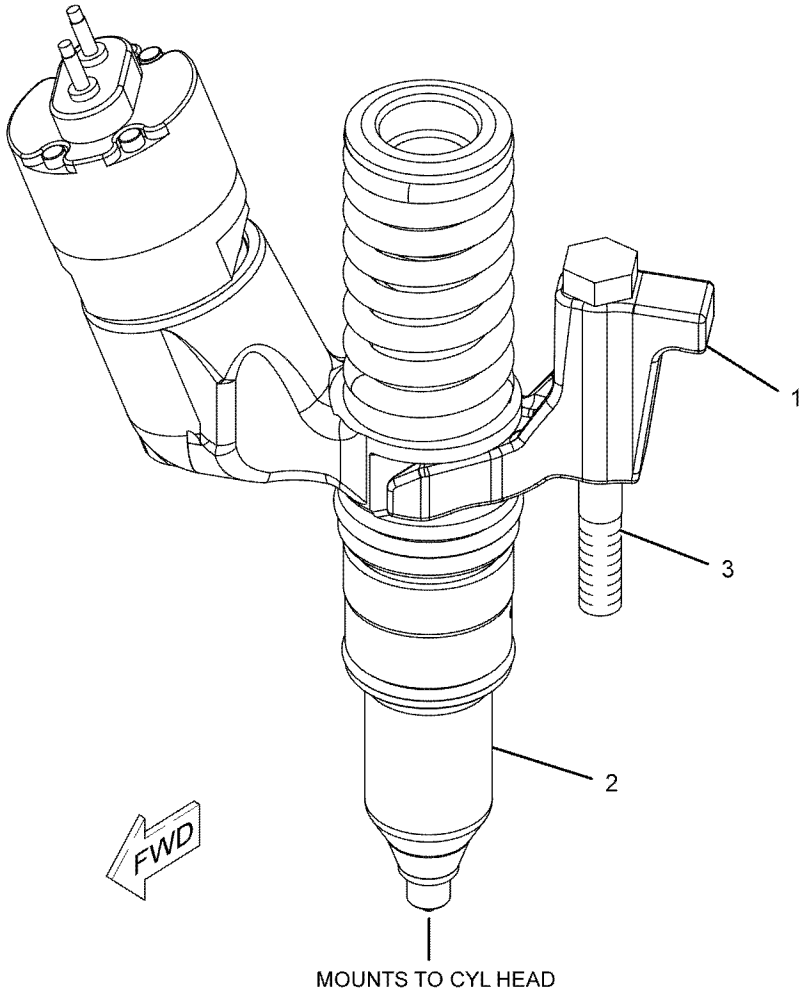

GRAPHIC #1 **<END>** g01065170

190-8977 PUMP GP-FUEL PRM & WATER SEP

S/N: E9Y1-UP

PART OF 383-4888 FILTER & LINES GP-FUEL

SMCS-1258, 1261, 1263 **i04507749**

NOTE	REF NO	GRAPHIC REF	PART NUMBER	QTY	PART NAME 1 2 3 4 5 6 (PRODUCT LEVEL)	SEE PAGE
Y	1	1	*174-9570*	1	FILTER GP-WATER SEP & FUEL (PRIMARY)	121
	2	1	**190-8970**	1	PUMP GP-FUEL PRIMING	

Y - SEPARATE ILLUSTRATION

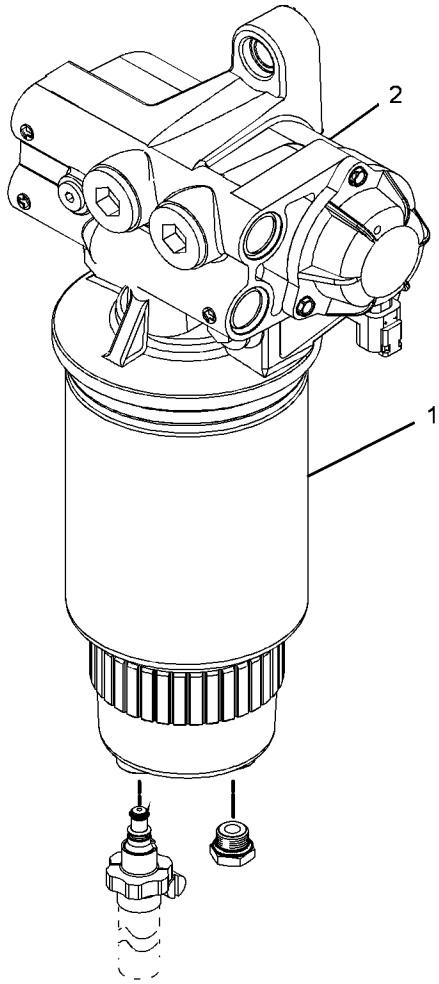

GRAPHIC #1 **<END>** g02686377

305-6163 PUMP GP-FUEL TRANSFER

S/N: TXX1-UP

PART OF 383-2065, 422-0048 ENGINE AR-COMPLETE

AN ATTACHMENT

SMCS-1256 **i04903338**

NOTE	REF NO	GRAPHIC REF	PART NUMBER	QTY	PART NAME 1 2 3 4 5 6 (PRODUCT LEVEL)	SEE PAGE
CY	1	1	**384-8611**	1	PUMP GP-FUEL TRANSFER	135
	2	1	**296-3447**	1	COVER	
	3	1	**107-5769**	1	SEAL-O-RING	
M	4	1	**136-4183**	4	BOLT-12 POINT HEAD (M10X1.5X30-MM)	
	5	1	**5P-4889**	1	SEAL-O-RING	
	6	1	**6V-5839**	4	WASHER (11X21X2.5-MM THK)	

C - CHANGE FROM PREVIOUS TYPE
M - METRIC PART
Y - SEPARATE ILLUSTRATION

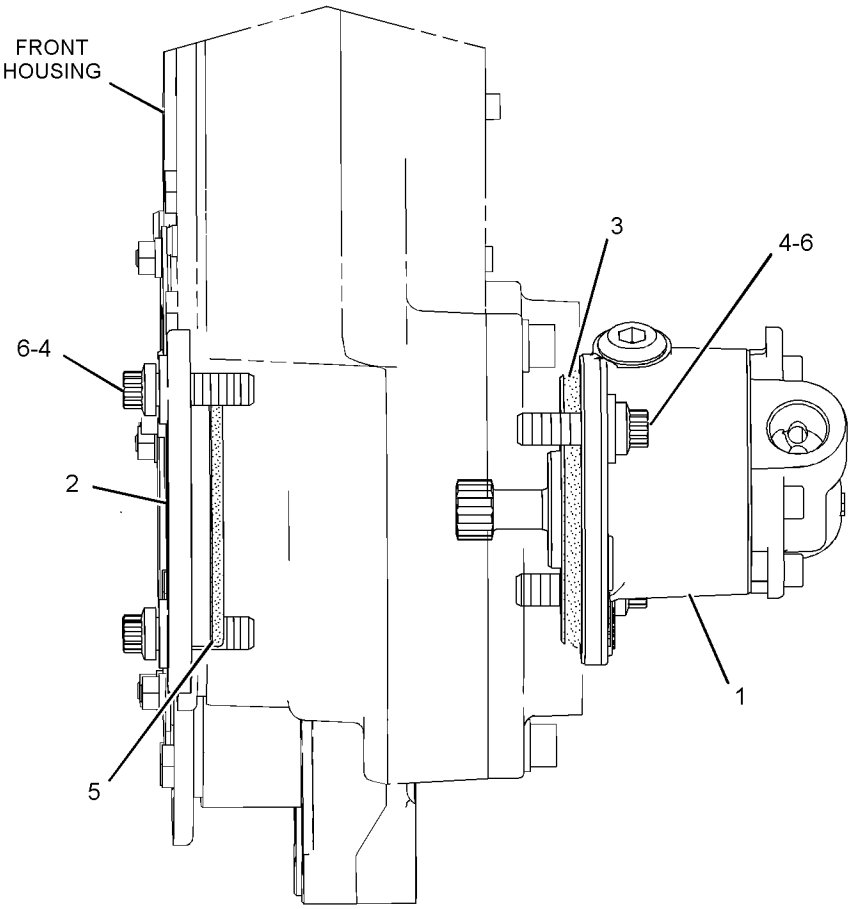

LEFT SIDE VIEW OF ENGINE

GRAPHIC #1 **<END>** g01420228

384-8611 PUMP GP-FUEL TRANSFER*R

S/N: TXX1-UP

PART OF 305-6163 PUMP GP-FUEL TRANSFER

AN ATTACHMENT

SMCS-1256 **i06178007**

NOTE	REF NO	GRAPHIC REF	PART NUMBER	QTY	PART NAME 1 2 3 4 5 6 (PRODUCT LEVEL)	SEE PAGE
					(NO SERVICED PARTS)	

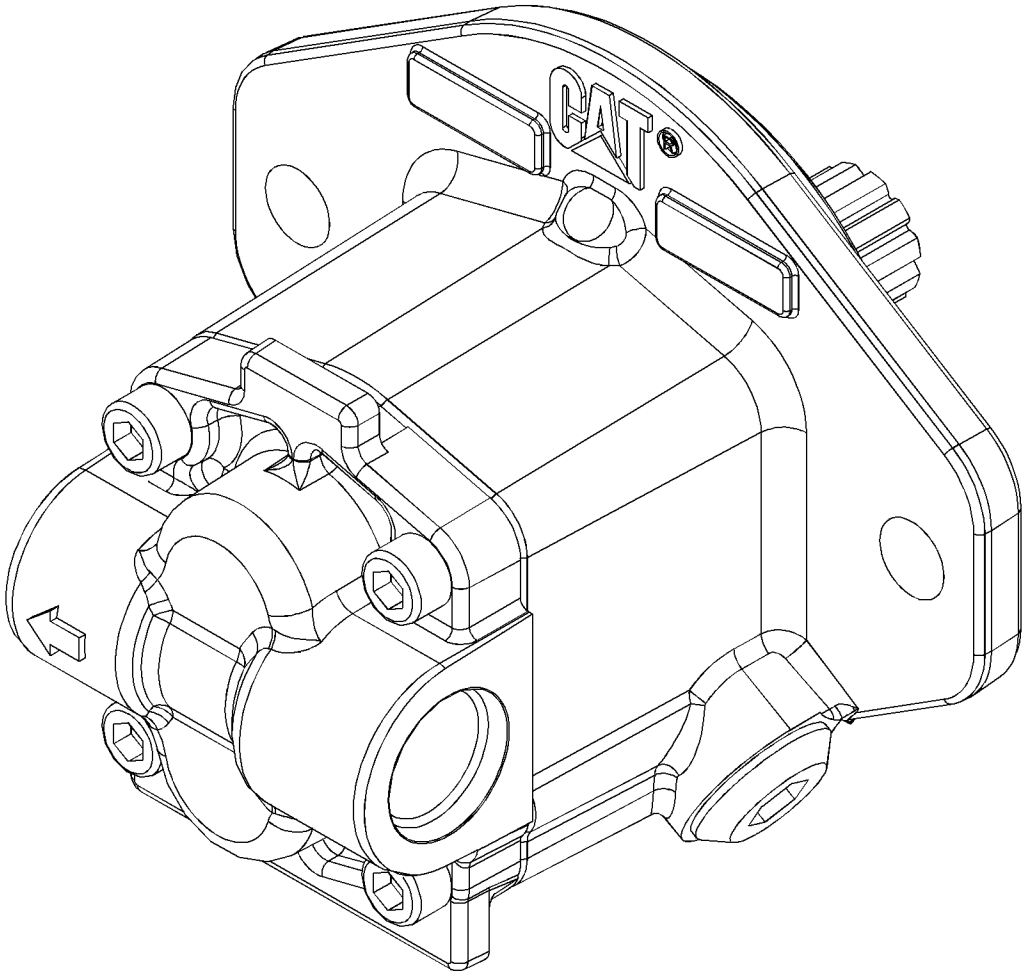

GRAPHIC #1 **<END>** g03842471

331-6882 REGULATOR GP-FUEL PRESSURE

S/N: TXX1-UP

PART OF 352-8928 REGULATOR GP-FUEL PRESSURE

AN ATTACHMENT

SMCS-1715 **i05509499**

NOTE	REF NO	GRAPHIC REF	PART NUMBER	QTY	PART NAME 1 2 3 4 5 6 (PRODUCT LEVEL)	SEE PAGE
Y	1	1	**327-0376**	1	VALVE GP-CHECK (FUEL)	142
	2	1	**238-5081**	1	SEAL-O-RING	

Y - SEPARATE ILLUSTRATION

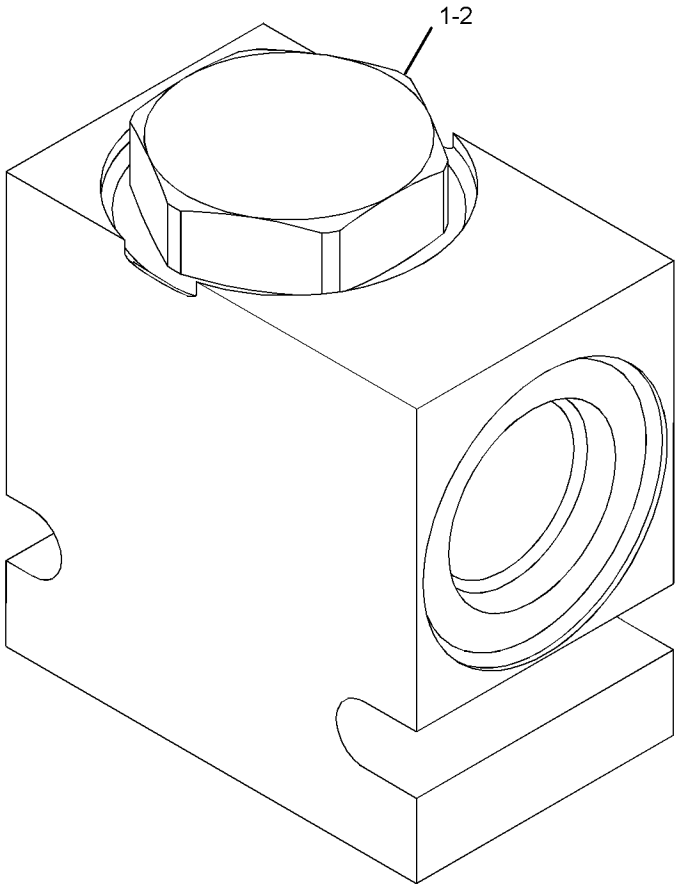

GRAPHIC #1 **<END>** g02096974

352-8928 REGULATOR GP-FUEL PRESSURE

S/N: TXX1-UP

PART OF 384-0183, 469-5839 LINES GP-FUEL

AN ATTACHMENT

SMCS-1715 **i03830193**

NOTE	REF NO	GRAPHIC REF	PART NUMBER	QTY	PART NAME 1 2 3 4 5 6 (PRODUCT LEVEL)	SEE PAGE
	1	1	**327-0377**	1	VALVE-CHECK	
Y	2	1	**331-6882**	1	REGULATOR GP-FUEL PRESSURE	136
	3	1	**214-7568**	1	SEAL-O-RING	
	4	1	*330-9732*	1	ADAPTER AS	
		1	**5P-6944**	1	ADAPTER	
		1	**238-5080**	1	SEAL-O-RING	

Y - SEPARATE ILLUSTRATION

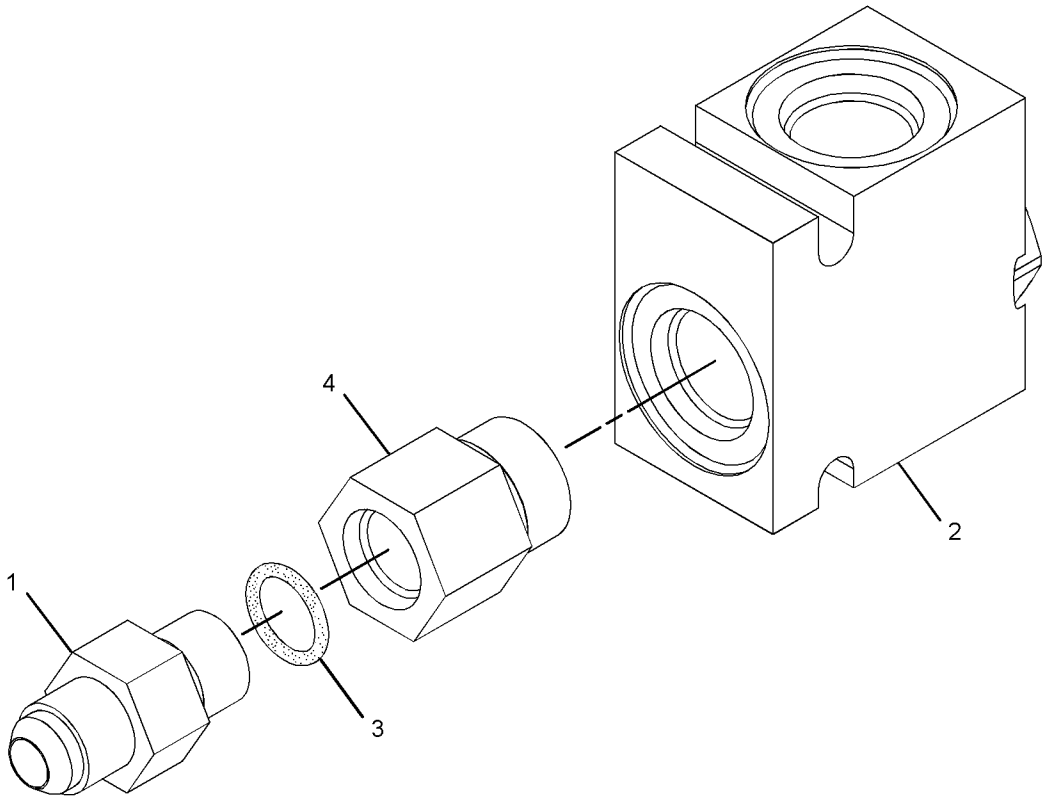

GRAPHIC #1 **<END>** g02097114

375-3440 TANK AR-FUEL

S/N: E9Y1-UP

PART OF 375-3500 CHASSIS AR

SMCS-1273 **i06144064**

NOTE	REF NO	GRAPHIC REF	PART NUMBER	QTY	PART NAME 1 2 3 4 5 6 (PRODUCT LEVEL)	SEE PAGE
	1	1	**246-2641**	1	PADLOCK GP	
		1	**5P-8500**	1	KEY	
	2	1	**149-8142**	1	CONNECTOR	
	3	1	**277-0742**	1	VALVE-DRAIN	
	4	1	**332-3604**	4	BUMPER	
Y	5	1	*361-8000*	1	TANK GP-FUEL	140
	6	1	**365-3548**	1	COVER	
Y	7	1	*388-9297*	1	COVER GP-ACCESS	409
	8	1	**421-2495**	1	TUBE AS	
	9	1	**443-7775**	1	SUPPORT	
	10	1	**459-6634**	1	PLATE	
	11	1	**471-8197**	1	RECEIVER	
	12	1	**110-6923**	12	SPACER (17.5X36X25-MM THK)	
	13	1	**198-4780**	4	WASHER-HARD (17.5X32X8-MM THK)	
	14	1	**1P-4278**	2	CLAMP-HOSE	
	15	1	**238-5080**	1	SEAL-O-RING	
	16	1	**388-4327**	1	CAP-DUST	
	17	1	**5P-2369**	3	CLIP	
	18	1	**6V-4368**	1	SEAL-O-RING	
M	19	1	**7X-2553**	4	BOLT (M16X2X40-MM)	
M	20	1	**7X-2554**	12	BOLT (M16X2X70-MM)	
	21	1	**8T-4121**	12	WASHER-HARD (11X21X2.5-MM THK)	
M	22	1	**8T-4136**	9	BOLT (M10X1.5X25-MM)	
M	23	1	**8T-4137**	3	BOLT (M10X1.5X20-MM)	
M	24	1	**8T-4139**	2	BOLT (M12X1.75X30-MM)	
M	25	1	**8T-4183**	2	BOLT (M12X1.75X40-MM)	
	26	1	**8T-4223**	6	WASHER-HARD (13.5X25.5X3-MM THK)	
M	27	1	**8T-4648**	2	BOLT (M12X1.75X70-MM)	
	28	1	**9M-2904**	1	CLAMP-HOSE	
E	29	1	**371-8113**		HOSE (159-CM)	
E	30	1	**347-8645**		HOSE (41-CM)	

E - ORDER BY THE CENTIMETER
M - METRIC PART
Y - SEPARATE ILLUSTRATION

375-3440 **TANK AR-FUEL (*contd.*)** **i06144064**

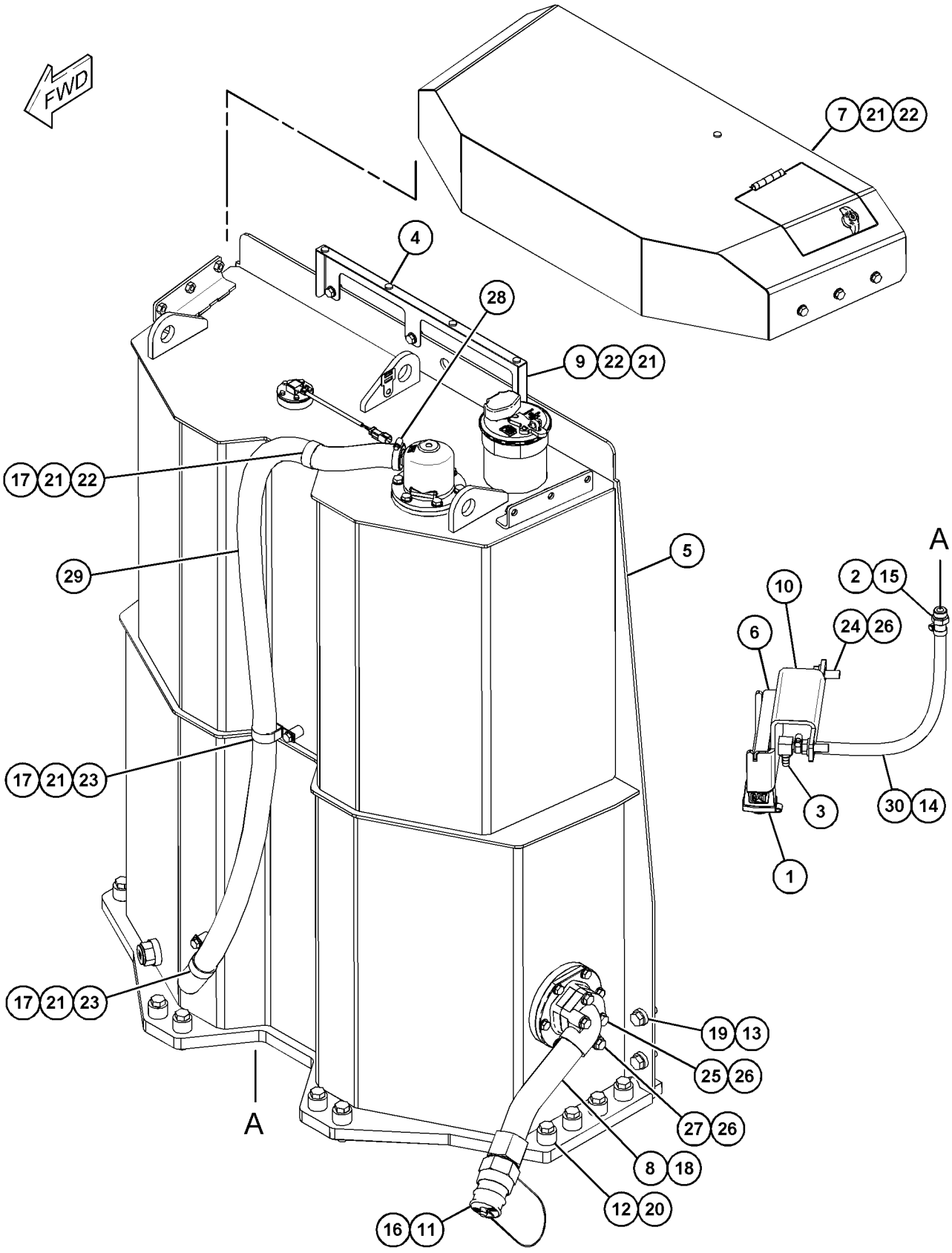

GRAPHIC #1 **<END>** g03833447

361-8000 TANK GP-FUEL

S/N: E9Y1-UP

PART OF 375-3440 TANK AR-FUEL

SMCS-1273 **i06140245**

NOTE	REF NO	GRAPHIC REF	PART NUMBER	QTY	PART NAME 1 2 3 4 5 6 (PRODUCT LEVEL)	SEE PAGE
	1	1	**9P-7121**	1	STRAINER-FUEL (FUEL TANK)	
	2	1	**248-0833**	1	PLUG AS-DRAIN	
		1	**3S-9233**	1	SEAL-O-RING	
		1	**5L-4759**	1	SEAL-O-RING	
	3	1	**252-5806**	1	VALVE AS-SHUTOFF (FAST FILL FUEL)	
I	4	1	**290-5542**	1	HOSE AS	
	5	1	**308-0415**	1	VENT AS (FAST FILL)	
	6	1	**349-7059**	1	CAP AS-FUEL (LOCKABLE, VENTED)	
		1	**9X-8600**	1	SEAL-O-RING	
		1	**350-7735**	1	KIT-CAP FILTER (FUEL TANK)	
					(INCLUDES GASKET, SCREWS, WASHERS & BODY-BREATHER)	
	7	1	**363-4123**	1	GASKET	
	8	1	**436-3200**	1	TANK AS-FUEL	
	9	1	**392-5412**	1	SENDER AS-FUEL LEVEL	
		1	**9X-3401**	2	PIN-CONNECTOR (16-GA TO 18-GA)	
		1	**102-8802**	1	KIT-RECEPTACLE (2-PIN)	
					(INCLUDES RECEPTACLE AS & WEDGE)	
	10	1	*321-8674*	2	CONNECTOR AS	
					(EACH INCLUDES)	
		1	**1J-9671**	1	SEAL-O-RING	
		1	**4J-5477**	1	SEAL-O-RING	
		1	**8T-6988**	1	CONNECTOR	
	11	1	**3E-6773**	1	SEAL-O-RING	
	12	1	**7X-4744**	1	SEAL-O-RING	
M	13	1	**7I-2272**	5	BOLT (M5X0.8X12-MM)	
	14	1	**8T-0328**	5	WASHER-HARD (5.5X10X1-MM THK)	
	15	1	**8T-4121**	12	WASHER-HARD (11X21X2.5-MM THK)	
M	16	1	**8T-4195**	12	BOLT (M10X1.5X30-MM)	
	17	1	**9X-7287**	1	SEAL-O-RING	

I - REFER TO HYDRAULIC INFORMATION SYSTEM
M - METRIC PART

361-8000 **TANK GP-FUEL (*contd.*)** **i06140245**

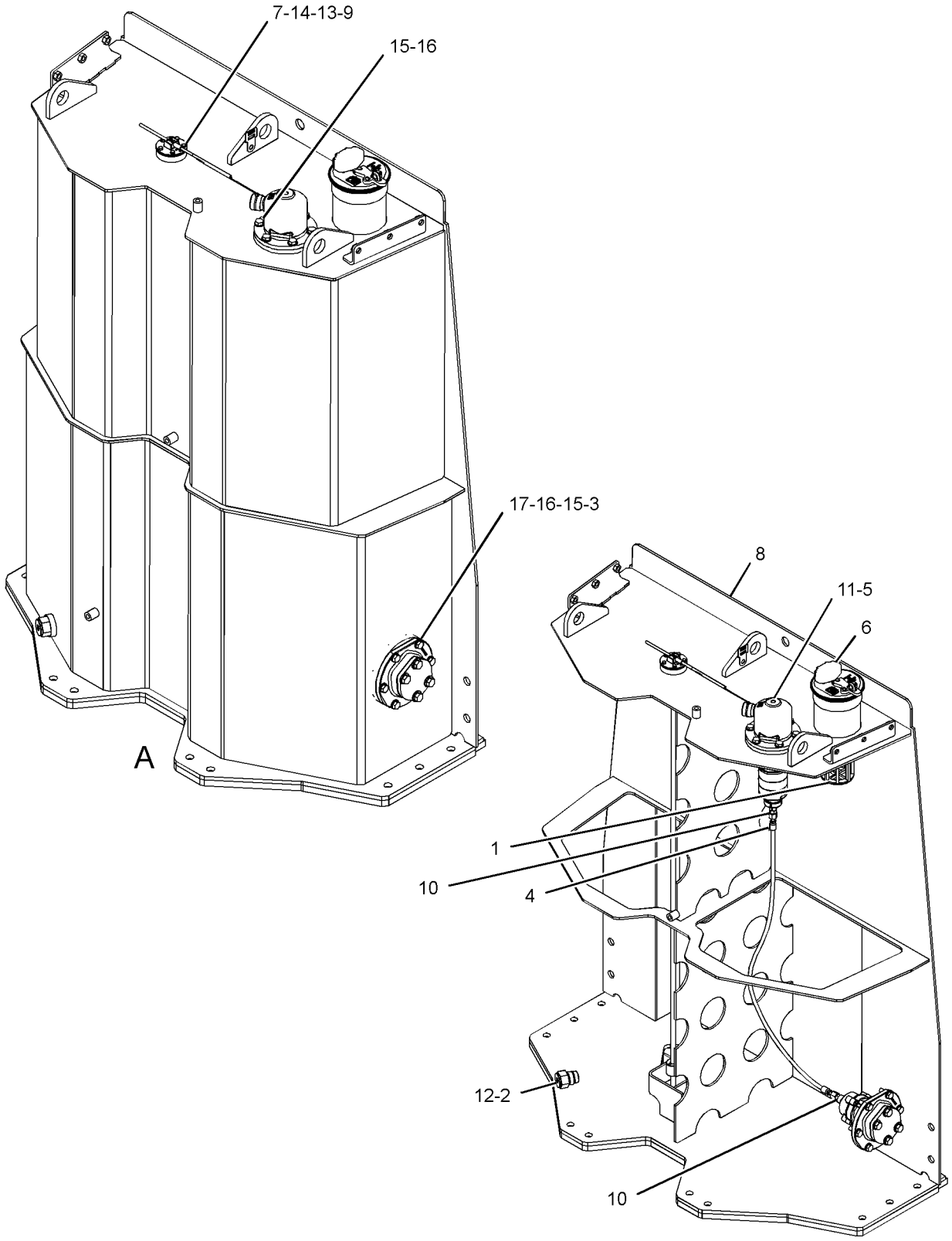

VIEW OF AREA A
(COVER REMOVED FOR CLARITY)

GRAPHIC #1 **<END>** g03797035

327-0376 VALVE GP-CHECK–FUEL

S/N: TXX1-UP

PART OF 331-6882 REGULATOR GP-FUEL PRESSURE

AN ATTACHMENT

SMCS-1250, 1274

i03597860

NOTE	REF NO	GRAPHIC REF	PART NUMBER	QTY	PART NAME 1 2 3 4 5 6 (PRODUCT LEVEL)	SEE PAGE
	1	1	**033-6033**	1	SEAL-O-RING	
	2	1	**6V-6923**	1	RING-BACKUP	

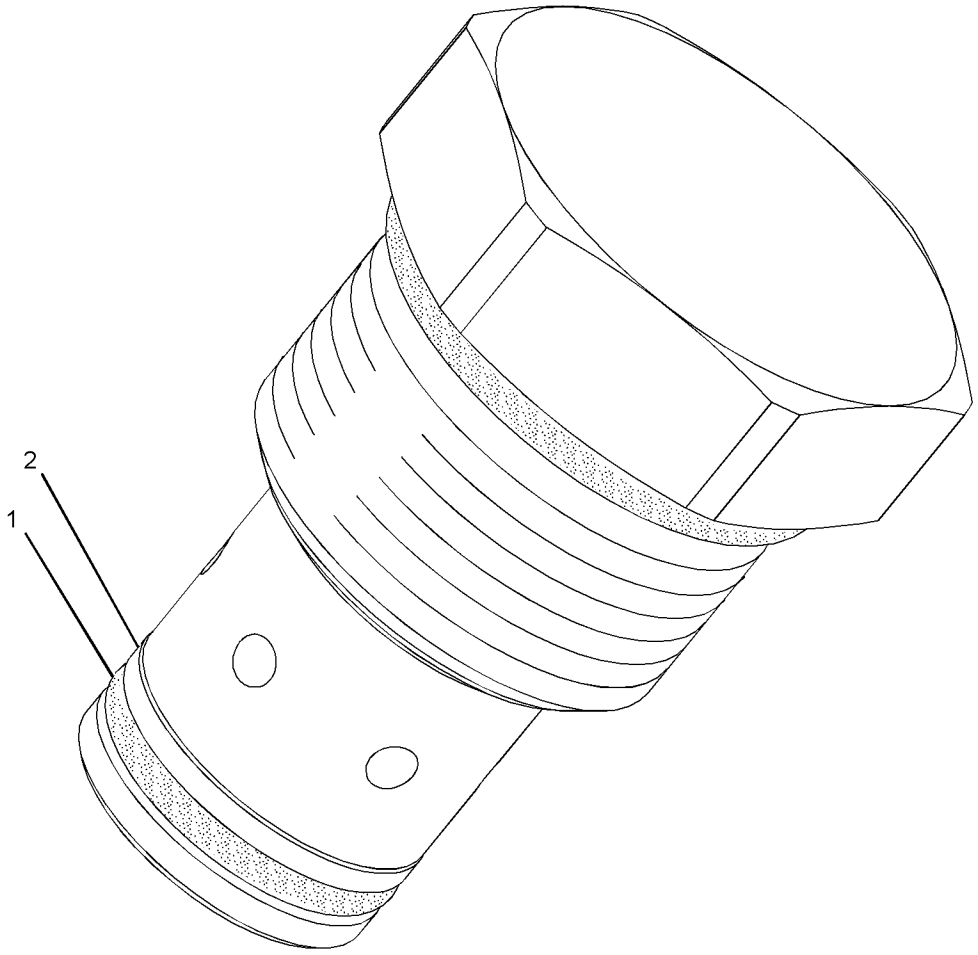

GRAPHIC #1

<END>

g01294010

123-0783 VALVE GP-FLUID SAMPLING

S/N: TXX1-UP
QUICK DISCONNECT FUEL CONNECTION
PART OF 343-8126 BASE GP-FUEL FILTER
AN ATTACHMENT

SMCS-1280 **i04900946**

NOTE	REF NO	GRAPHIC REF	PART NUMBER	QTY	PART NAME 1 2 3 4 5 6 (PRODUCT LEVEL)	SEE PAGE
	1	1	*164-5567*	1	COUPLER AS-QUICK DISCONNECT (MALE)	
		1	**6V-3965**	1	FITTING (QUICK DISCONNECT)	
		1	**214-7568**	1	SEAL-O-RING	
	2	1	**6V-0852**	1	CAP-DUST (FUEL)	

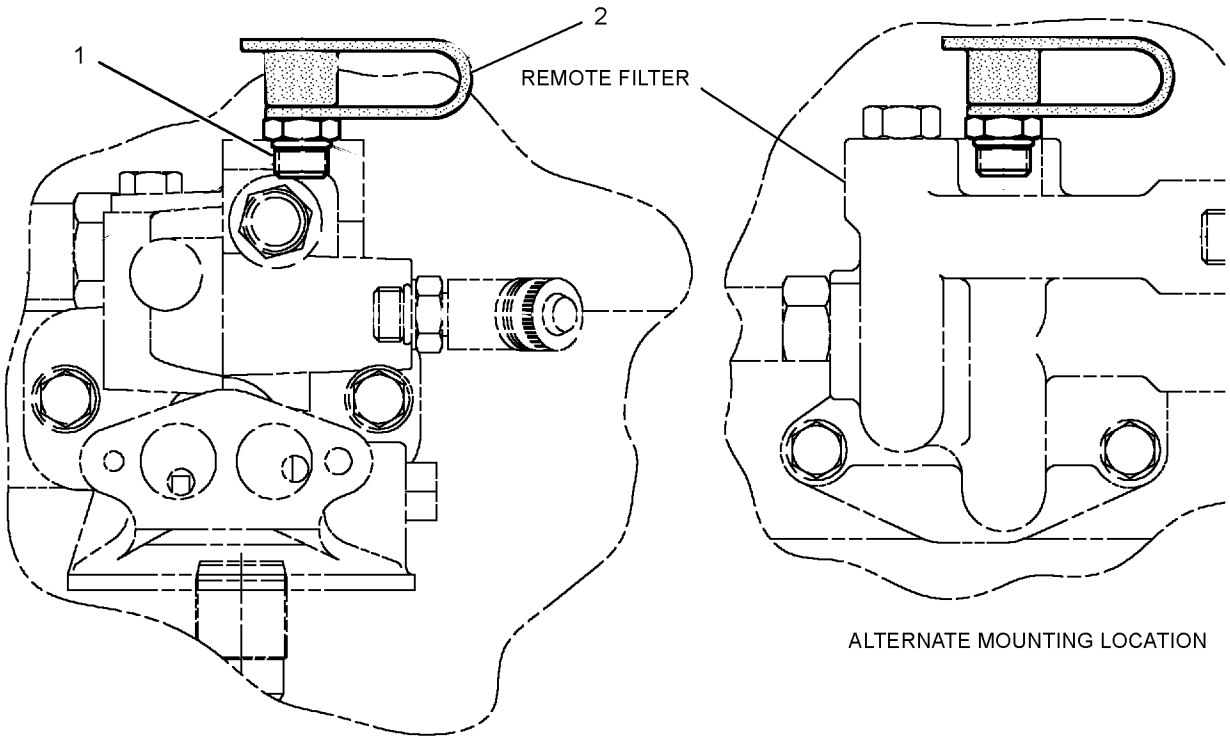

GRAPHIC #1 **<END>** g02978837

3E-6328 ALARM GP

S/N: E9Y1-UP
24-VOLT
PART OF 361-3148 WIRING GP-CAB

SMCS-7400, 7402, 7407 **i06056671**

NOTE	REF NO	GRAPHIC REF	PART NUMBER	QTY	PART NAME 1 2 3 4 5 6 (PRODUCT LEVEL)	SEE PAGE
	1	1	**102-8802**	1	KIT-RECEPTACLE (2-PIN)	
					(INCLUDES RECEPTACLE AS & WEDGE)	
	2	1	**8T-8729**	2	PIN-CONNECTOR (16-GA TO 18-GA)	

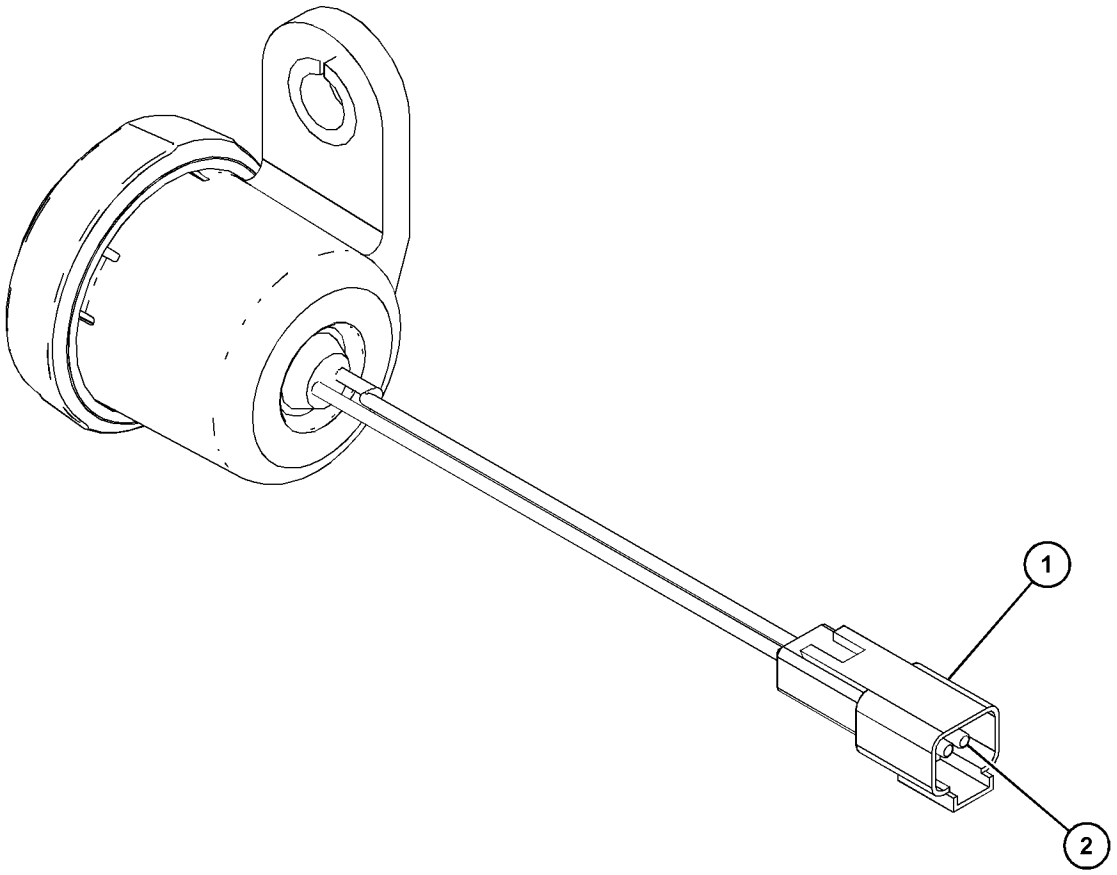

GRAPHIC #1 **<END>** g03798741

272-1889 ALTERNATOR GP-CHARGING*R

S/N: E9Y1-UP
24-VOLT, 150-AMPERE
PART OF 384-5609 ALTERNATOR GP-CHARGING
AN ATTACHMENT

SMCS-1405 **i05781889**

NOTE	REF NO	GRAPHIC REF	PART NUMBER	QTY	PART NAME 1 2 3 4 5 6 (PRODUCT LEVEL)	SEE PAGE
					(NO SERVICED PARTS)	

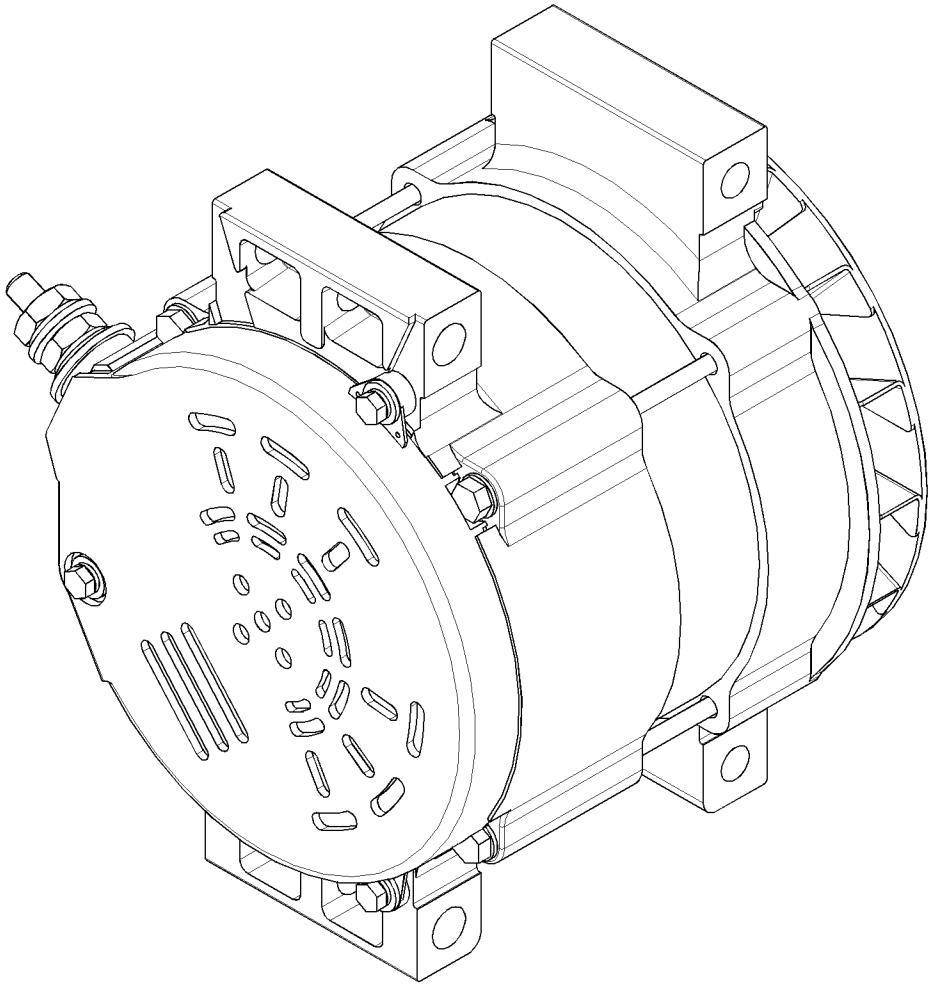

GRAPHIC #1 **<END>** g01735513

322-9743 ALTERNATOR GP-CHARGING

S/N: E9Y1-UP
24-VOLT, 270-AMPERE
PART OF 384-5610 ALTERNATOR GP-CHARGING
AN ATTACHMENT

SMCS-1405 **i04047297**

NOTE	REF NO	GRAPHIC REF	PART NUMBER	QTY	PART NAME 1 2 3 4 5 6 (PRODUCT LEVEL)	SEE PAGE
					(NO SERVICED PARTS)	

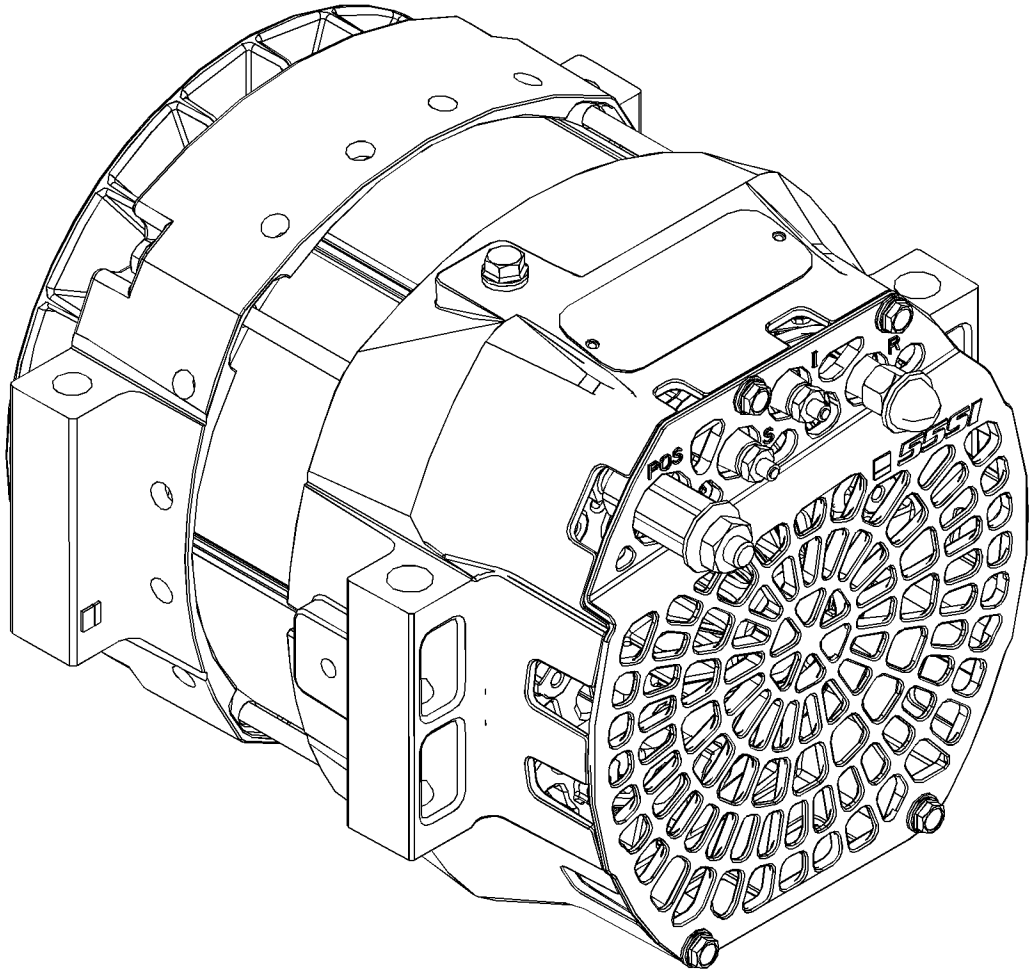

GRAPHIC #1 **<END>** g02297657

384-5609 ALTERNATOR GP-CHARGING

S/N: E9Y1-UP
150-AMP
PART OF 386-1309, 386-1310 CAB GP
AN ATTACHMENT

SMCS-1405 **i06128456**

NOTE	REF NO	GRAPHIC REF	PART NUMBER	QTY	PART NAME 1 2 3 4 5 6 (PRODUCT LEVEL)	SEE PAGE
	1	1	**253-3996**	1	PULLEY-ALTERNATOR	
YR	2	1	**272-1889**	1	ALTERNATOR GP-CHARGING (24-VOLT, 150-AMPERE)	145
	3	1	**374-8493**	1	BELT-SERPENTINE (ALTERNATOR)	
M	4	1	**8T-6685**	1	BOLT (M10X1.5X110-MM)	
	5	1	**466-6864**	1	PLATE AS	
	6	1	**469-3600**	1	GUARD-BELT	
	7	1	**8T-4121**	6	WASHER-HARD (11X21X2.5-MM THK)	
M	8	1	**8T-4137**	2	BOLT (M10X1.5X20-MM)	
M	9	1	**8T-4198**	3	BOLT (M10X1.5X100-MM)	
	10	1	**384-5623**	1	FILM-INFORMATION (BELT ROUTING)	

M - METRIC PART
R - REMFG PART MAY BE AVAILABLE
Y - SEPARATE ILLUSTRATION

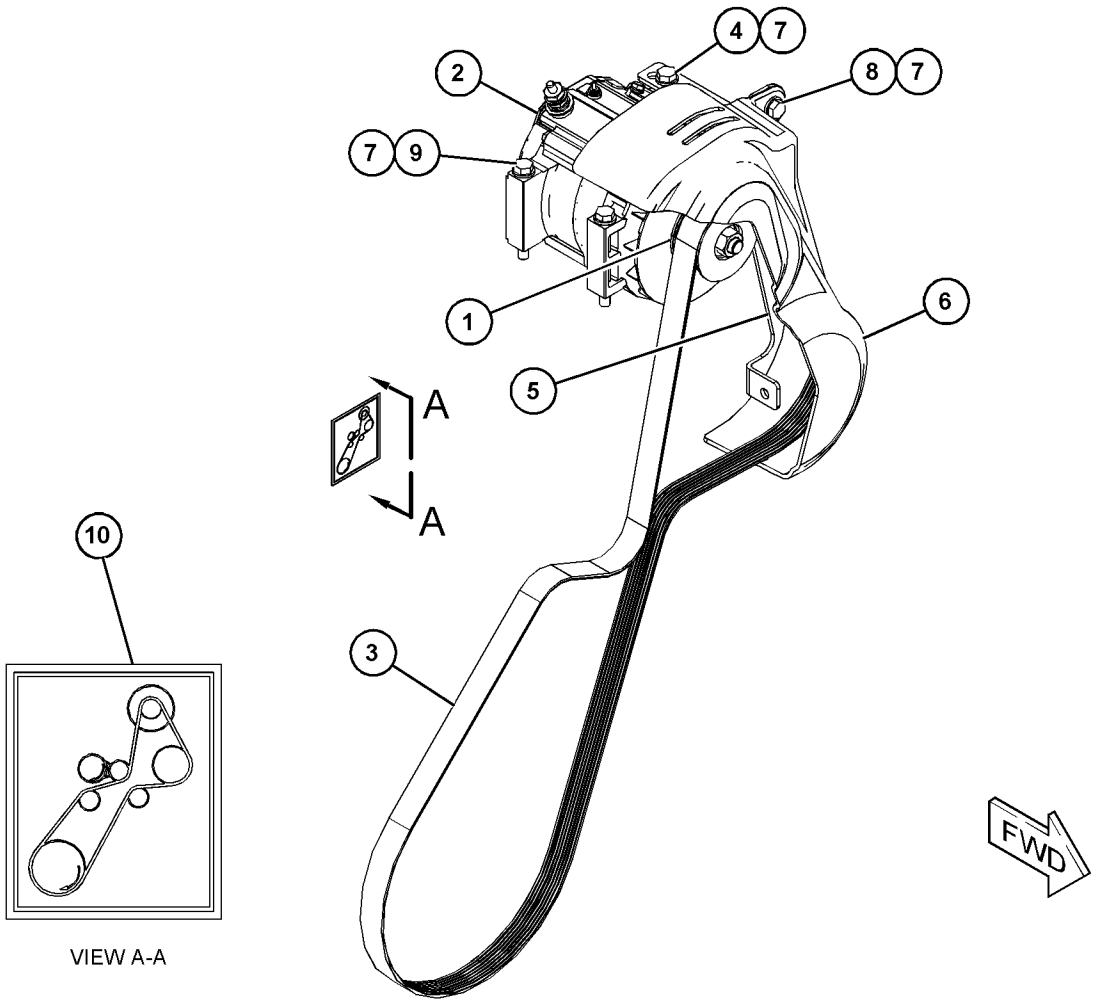

VIEW A-A

GRAPHIC #1 **<END>** g03821681

384-5610 ALTERNATOR GP-CHARGING

S/N: E9Y1-UP
280-AMP
PART OF 386-1311, 442-8722 CAB GP
AN ATTACHMENT

SMCS-1405 **i06128457**

NOTE	REF NO	GRAPHIC REF	PART NUMBER	QTY	PART NAME 1 2 3 4 5 6 (PRODUCT LEVEL)	SEE PAGE
	1	1	**253-3996**	1	PULLEY-ALTERNATOR	
Y	2	1	**322-9743**	1	ALTERNATOR GP-CHARGING	146
	3	1	**374-8493**	1	BELT-SERPENTINE (ALTERNATOR)	
M	4	1	**8T-6685**	1	BOLT (M10X1.5X110-MM)	
	5	1	**466-6864**	1	PLATE AS	
	6	1	**469-3600**	1	GUARD-BELT	
	7	1	**8T-4121**	6	WASHER-HARD (11X21X2.5-MM THK)	
M	8	1	**8T-4137**	2	BOLT (M10X1.5X20-MM)	
M	9	1	**8T-4198**	3	BOLT (M10X1.5X100-MM)	
	10	1	**384-5623**	1	FILM-INFORMATION (BELT ROUTING)	

M - METRIC PART
Y - SEPARATE ILLUSTRATION

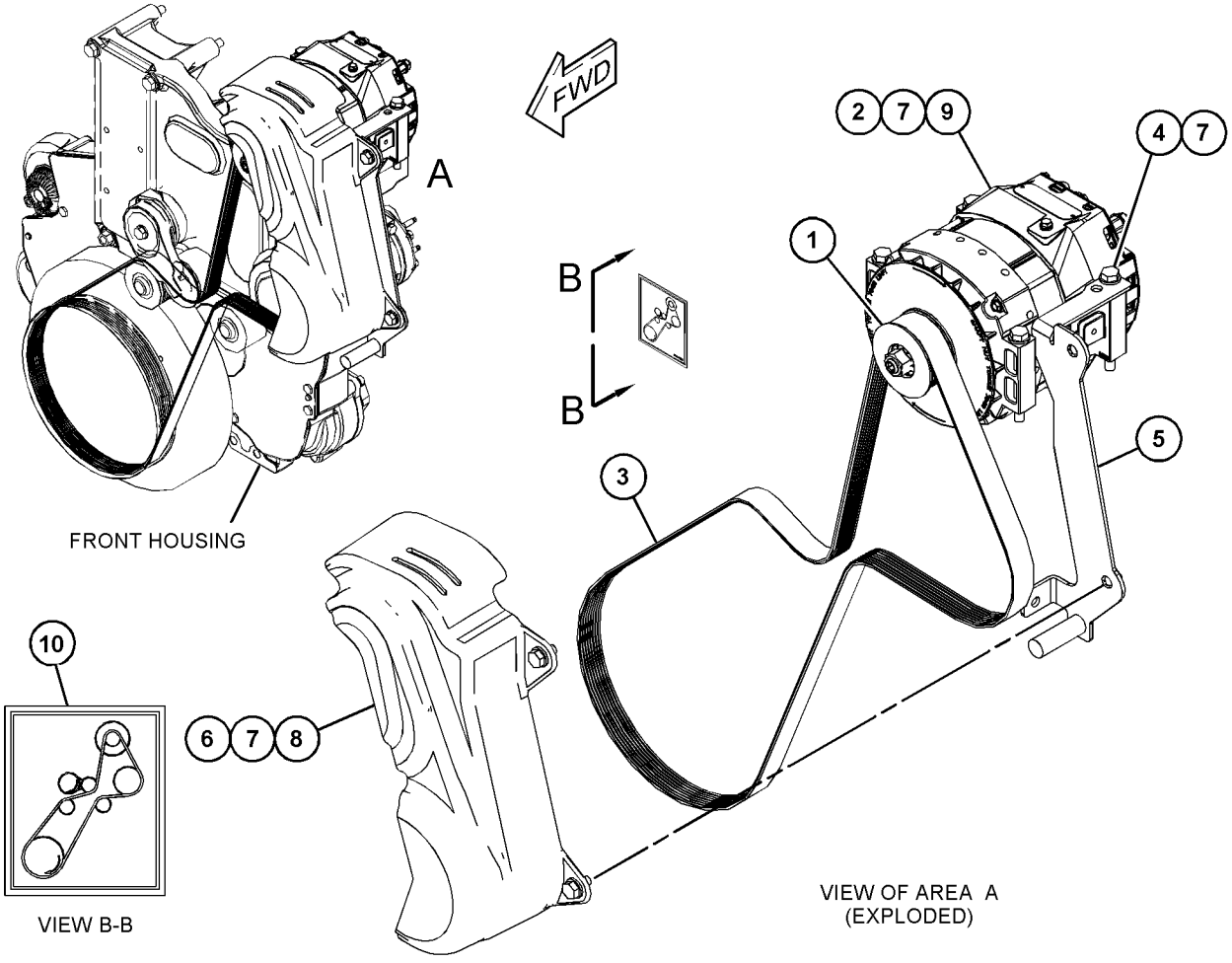

GRAPHIC #1 **<END>** g03821670

463-9613 APPLICATION GP-MONITOR—PLE601 NETWORK MANAGER

S/N: E9Y1-UP
PART OF 456-3346, 456-3347 CONTROL GP-COMMUNICATION
AN ATTACHMENT

SMCS-7610 **i06147733**

NOTE	PART NUMBER	QTY	PART NAME 1 2 3 4 5 6 (PRODUCT LEVEL)	SEE PAGE
Y	**417-4722**	1	ELECTRONICS GP-COMMUNICATION (PLE601 NETWORK MANAGER)	168

Y - SEPARATE ILLUSTRATION

<END>

463-9614 APPLICATION GP-MONITOR—PL641I CELLULAR

S/N: E9Y1-UP
PART OF 456-3347 CONTROL GP-COMMUNICATION
AN ATTACHMENT

SMCS-7610 **i06147729**

NOTE	PART NUMBER	QTY	PART NAME 1 2 3 4 5 6 (PRODUCT LEVEL)	SEE PAGE
Y	**440-2104**	1	RADIO GP-COMMUNICATION (PL641I CELLULAR)	238

Y - SEPARATE ILLUSTRATION

<END>

463-9615 APPLICATION GP-MONITOR—PL631 SATELLITE

S/N: E9Y1-UP
PART OF 456-3346 CONTROL GP-COMMUNICATION
AN ATTACHMENT

SMCS-7610 **i06147730**

NOTE	PART NUMBER	QTY	PART NAME 1 2 3 4 5 6 (PRODUCT LEVEL)	SEE PAGE
Y	**442-7199**	1	RADIO GP-COMMUNICATION (PL631 SATELLITE)	239

Y - SEPARATE ILLUSTRATION

<END>

370-8470 BATTERY & WIRING GP

S/N: E9Y1-UP

PART OF 370-8430 ELECTRICAL AR

SMCS-1401, 1402, 1408 **i06095065**

NOTE	REF NO	GRAPHIC REF	PART NUMBER	QTY	PART NAME 1 2 3 4 5 6 (PRODUCT LEVEL)	SEE PAGE
	1	2	**3S-2093**	13	STRAP-CABLE	
	2	2	**6G-2256**	2	CLAMP	
	3	2	**6G-2263**	2	SPACER (10.5X19X28.5-MM THK)	
	4	2	**8S-2634**	1	COVER AS	
	5	2	**9G-2758**	1	LOCKOUT-SWITCH	
	6	2	**9G-8909**	1	COVER-TERMINAL (BLACK)	
	7	1	**134-3344**	2	STRAP AS	
	8	2	**134-3355**	1	STRAP AS	
	9	1	**153-5710**	2	BATTERY GP (12-VOLT, MAINTENANCE FREE, WET)	
					(EACH INCLUDES)	
		1	**123-1373**	6	CAP AS-FILLER (BATTERY) (NEGATIVE)	
		1	**461-5232**	6	CAP AS-FILLER (BATTERY) (POSITIVE)	
	10	2	**171-2210**	2	CIRCUIT BREAKER AS (80-AMPERE)	
					(EACH INCLUDES)	
		2	**1H-3244**	2	LOCKWASHER	
		2	**4E-5724**	2	WASHER (7X12X1-MM THK)	
		2	**8T-0122**	2	NUT-FULL (1/4-28-THD)	
	11	2	**188-3959**	1	BRACKET	
	12	1	**236-2340**	1	CABLE AS-BATTERY (JUMPER)	
		1	**9G-0002**	1	COVER AS-TERMINAL (RED)	
		1	**8L-8413**	1	STRAP-CABLE (WHITE)	
		1	**9G-0005**	1	COVER AS-TERMINAL (BLACK)	
		1	**8L-8413**	1	STRAP-CABLE (WHITE)	
		1	**8C-5918**	1	TERMINAL AS (NEGATIVE)	
		1	**1M-6119**	1	BOLT (5/16-18X1.375-IN)	
		1	**1M-6120**	1	NUT (5/16-18-THD)	
		1	**8T-9756**	1	TERMINAL AS (POSITIVE)	
		1	**1M-6119**	1	BOLT (5/16-18X1.375-IN)	
		1	**1M-6120**	1	NUT (5/16-18-THD)	
E		1	**159-8049**		CABLE (00-GA, RED) (17-CM)	
Y	13	2	**241-8368**	1	SWITCH GP-MAGNETIC (24-VOLT) (MAIN POWER RELAY)	268
	14	2	**246-1670**	1	BAR	
	15	1	**263-6891**	1	HOLD-DOWN AS	
M		1	**9R-2821**	1	BOSS (M10X1.5X15-MM)	
		1	**190-0544**	2	BOSS-THREADED (M10X1.5-MM THD)	
	16	1	**272-7239**	1	BLOCK AS	
	17	2	**288-3687**	1	CIRCUIT BREAKER AS (20-AMPERE)	
		2	**6V-8378**	2	NUT (10-32-THD)	
		2	**8F-1434**	2	LOCKWASHER	
		2	**8T-0328**	2	WASHER-HARD (5.5X10X1-MM THK)	
	18	2	**309-5487**	1	PLATE AS	
M		2	**8T-3490**	4	NUT-WELD (M10X1.5-THD)	
M		2	**8T-3994**	2	STUD-WELD (M6X1-THD)	
		2	**130-5300**	1	CLIP	
	19	2	**314-7476**	1	COVER AS	
M		2	**8T-3490**	1	NUT-WELD (M10X1.5-THD)	
	20	2	**314-7487**	1	STRAP	
	21	2	**319-5106**	1	PLATE	
	22	2	*319-5109*	1	CABLE AS	
		2	**1S-7251**	1	TERMINAL-CABLE (00-GA, 1/2-IN SCREW)	
		2	**1S-7252**	1	TERMINAL-CABLE (00-GA, 3/8-IN SCREW)	
		2	**7T-4924**	1	COVER-TERMINAL (RED)	
E		2	**159-8049**		CABLE (00-GA, RED) (70-CM)	
	23	2	**319-5119**	1	COVER	
	24	1	*319-5192*	1	CABLE AS	
		1	**8N-1725**	1	COVER AS-TERMINAL (RED)	

370-8470 **BATTERY & WIRING GP (*contd.*)** **i06095065**

NOTE	REF NO	GRAPHIC REF	PART NUMBER	QTY	PART NAME 1 2 3 4 5 6 (PRODUCT LEVEL)	SEE PAGE
		1	**8L-8413**	1	STRAP-CABLE (WHITE)	
		1	**3S-6049**	1	TERMINAL AS-BATTERY (POSITIVE)	
		1	**1M-6119**	1	BOLT (5/16-18X1.375-IN)	
		1	**1M-6120**	1	NUT (5/16-18-THD)	
E		1	**159-8049**		CABLE (00-GA, RED) (30-CM)	
		1	**190-3848**	1	TERMINAL-RING (00-GA, 1/2-IN SCREW)	
	25	2	**322-3245**	1	BRACKET AS	
M		2	**8T-3490**	4	NUT-WELD (M10X1.5-THD)	
	26	2	**322-3246**	1	BRACKET AS	
M		2	**8T-3490**	2	NUT-WELD (M10X1.5-THD)	
Y	27	1	**337-9078**	1	SWITCH GP-MAGNETIC (24-VOLT TO 32-VOLT) (SECONDARY STEERING RELAY)	269
	28	2	**342-9671**	1	RECEPTACLE AS-AUXILIARY START	
	29	1	**354-7718**	1	BAR-BUS	
	30	2	**370-8461**	1	CABLE AS	
		2	**1S-7251**	1	TERMINAL-CABLE (00-GA, 1/2-IN SCREW)	
E		2	**159-8049**		CABLE (00-GA, RED) (129-CM)	
		2	**276-1786**	1	COVER-TERMINAL (RED)	
		2	**311-3475**	1	TERMINAL-RING	
	31	1	**370-8475**	1	CABLE AS	
		1	**1S-7251**	2	TERMINAL-CABLE (00-GA, 1/2-IN SCREW)	
E		1	**159-8049**		CABLE (00-GA, RED) (85-CM)	
		1	**328-8425**	2	COVER-TERMINAL (RED)	
		1	**356-0298**	1	ELBOW	
Y	32	1	**370-8491**	1	WIRING GP-PANEL	304
	33	2	**430-9817**	1	CABLE AS	
			9X-9825	1	TERMINAL-CABLE (00-GA, 1/2-IN SCREW)	
			030-1705	1	TERMINAL-CABLE (00-GA, 5/16-IN SCREW)	
E			**159-8049**		CABLE (00-GA, RED) (8-CM)	
			276-1786	1	COVER-TERMINAL (RED)	
	34	2	**430-9818**	1	CABLE AS	
			9G-0005	1	COVER AS-TERMINAL (BLACK)	
			8L-8413	1	STRAP-CABLE (WHITE)	
			8C-5918	1	TERMINAL AS (NEGATIVE)	
			1M-6119	1	BOLT (5/16-18X1.375-IN)	
			1M-6120	1	NUT (5/16-18-THD)	
			9X-9825	1	TERMINAL-CABLE (00-GA, 1/2-IN SCREW)	
E			**159-8050**		CABLE (00-GA, BLACK) (119-CM)	
			299-9092	1	COVER-TERMINAL (BLACK)	
	35	2	**430-9819**	1	CABLE AS	
			1S-7251	1	TERMINAL-CABLE (00-GA, 1/2-IN SCREW)	
			1S-7252	1	TERMINAL-CABLE (00-GA, 3/8-IN SCREW)	
D			**6V-2722**		TUBE-HEAT SHRINK (25.4-MM DIA) (0.1-M)	
E			**159-8050**		CABLE (00-GA, BLACK) (91-CM)	
	36	2	**430-9827**	1	CABLE AS	
			9X-9825	1	TERMINAL-CABLE (00-GA, 1/2-IN SCREW)	
			030-1705	1	TERMINAL-CABLE (00-GA, 5/16-IN SCREW)	
E			**159-8049**		CABLE (00-GA, RED) (231-CM)	
			190-3848	1	TERMINAL-RING (00-GA, 1/2-IN SCREW)	
			190-3849	1	COVER-TERMINAL (RED)	
			276-1786	1	COVER-TERMINAL (RED)	
	37	2	**113-8373**	4	SCREW-BUTTON HEAD (10-32X0.75-IN)	
M	38	1	**123-0707**	4	SCREW-HEX SOCKET (M4X0.7X20-MM)	
	39	2	**174-5907**	1	CLIP	
	40	1	**194-4121**	1	SPACER (10.1X15.9X70-MM THK)	
	41	2	**1F-7854**	1	SPACER (11.01X19.05X49.21-MM THK)	
	42	2	**204-2281**	3	STRAP-CABLE	
	43	2	**204-8000**	3	MOUNTING-CABLE TIE	
M	44	2	**209-8296**	4	BOLT-SOCKET HEAD (M8X1.25X25-MM)	
	45	2	**2G-8767**	4	WASHER (10.5X60X3-MM THK)	
M	46	2	**344-5674**	1	NUT (M8X1.25-THD)	

370-8470 **BATTERY & WIRING GP (*contd.*)** **i06095065**

NOTE	REF NO	GRAPHIC REF	PART NUMBER	QTY	PART NAME 1 2 3 4 5 6 (PRODUCT LEVEL)	SEE PAGE
	47	2	**4B-4274**	4	WASHER (5.5X13X1.2-MM THK)	
	48	1,2	**4S-1962**	19	CLIP	
M	49	2	**5C-2890**	3	NUT (M6X1-THD)	
	50	2	**5P-4116**	6	WASHER-HARD (8.8X20.5X2-MM THK)	
Y	51	2	**7N-0718**	1	SWITCH GP-DISCONNECT (BATTERY)	266
	52	1,2	**7V-6571**	19	GROMMET	
	53	2	**7X-7729**	3	WASHER (11X25X3-MM THK)	
	54	1	**8D-7712**	4	FASTENER	
	55	1	**8T-0328**	4	WASHER-HARD (5.5X10X1-MM THK)	
M	56	1	**8T-0389**	2	LOCKNUT (M10X1.5-THD)	
	57	1,2	**8T-4121**	45	WASHER-HARD (11X21X2.5-MM THK)	
M	58	2	**8T-4133**	8	NUT (M10X1.5-THD)	
M	59	1,2	**8T-4136**	13	BOLT (M10X1.5X25-MM)	
M	60	1,2	**8T-4137**	16	BOLT (M10X1.5X20-MM)	
M	61	1	**8T-4171**	4	BOLT (M6X1X12-MM)	
M	62	1	**8T-4179**	1	BOLT (M12X1.75X20-MM)	
M	63	2	**8T-4185**	3	BOLT (M10X1.5X50-MM)	
M	64	1	**8T-4189**	1	BOLT (M8X1.25X20-MM)	
M	65	1	**8T-4191**	1	BOLT (M10X1.5X16-MM)	
M	66	1	**8T-4192**	1	BOLT (M12X1.75X25-MM)	
M	67	2	**8T-4196**	3	BOLT (M10X1.5X35-MM)	
M	68	1,2	**8T-4198**	2	BOLT (M10X1.5X100-MM)	
	69	2	**8T-4205**	1	WASHER-HARD (7.2X14.5X2-MM THK)	
	70	1	**8T-4223**	2	WASHER-HARD (13.5X25.5X3-MM THK)	
	71	1	**8T-4224**	1	WASHER-HARD (8.8X16X2-MM THK)	
M	72	2	**8T-6870**	1	BOLT (M8X1.25X70-MM)	
	73	2	**9B-7233**	2	LOCKWASHER	
	74	2	**9G-7101**	1	SPACER (10.5X20X30-MM THK)	
	75	1	**9R-6414**	2	ROD	
	76	2	**9X-6016**	2	SCREW-HEX SOCKET (8-32X0.875-IN)	
	77	1,2	**9X-8256**	6	WASHER (6.6X12X2-MM THK)	
E	78	2	**7X-7877**		STRIP-EDGE (14-CM)	
E	79	1	**9X-2092**		TRIM-EDGE (38-CM)	

D - ORDER BY THE METER
E - ORDER BY THE CENTIMETER
M - METRIC PART
Y - SEPARATE ILLUSTRATION

370-8470 **BATTERY & WIRING GP (*contd.*)** **i06095065**

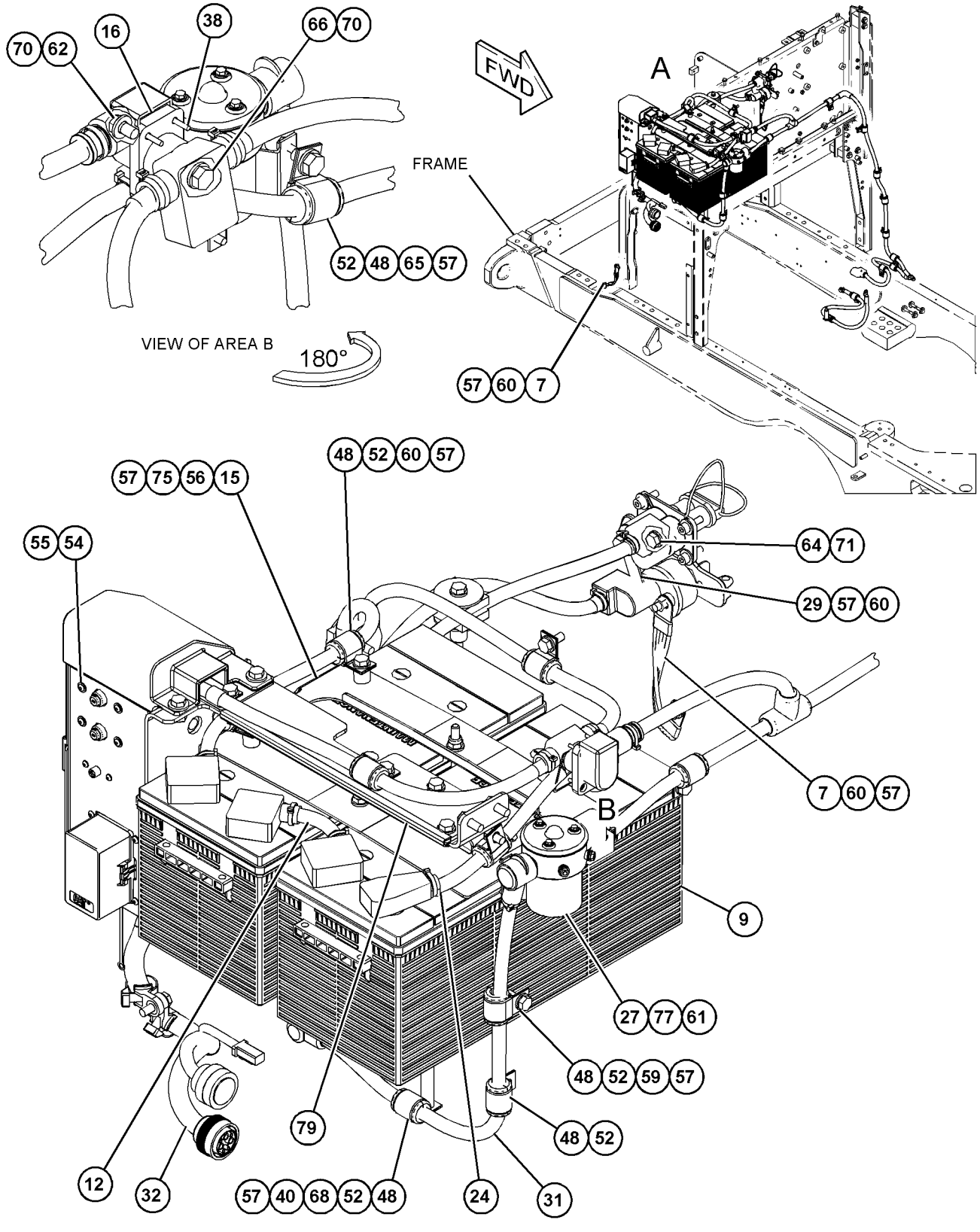

GRAPHIC #1 g03819142

370-8470 **BATTERY & WIRING GP (*contd.*)** **i06095065**

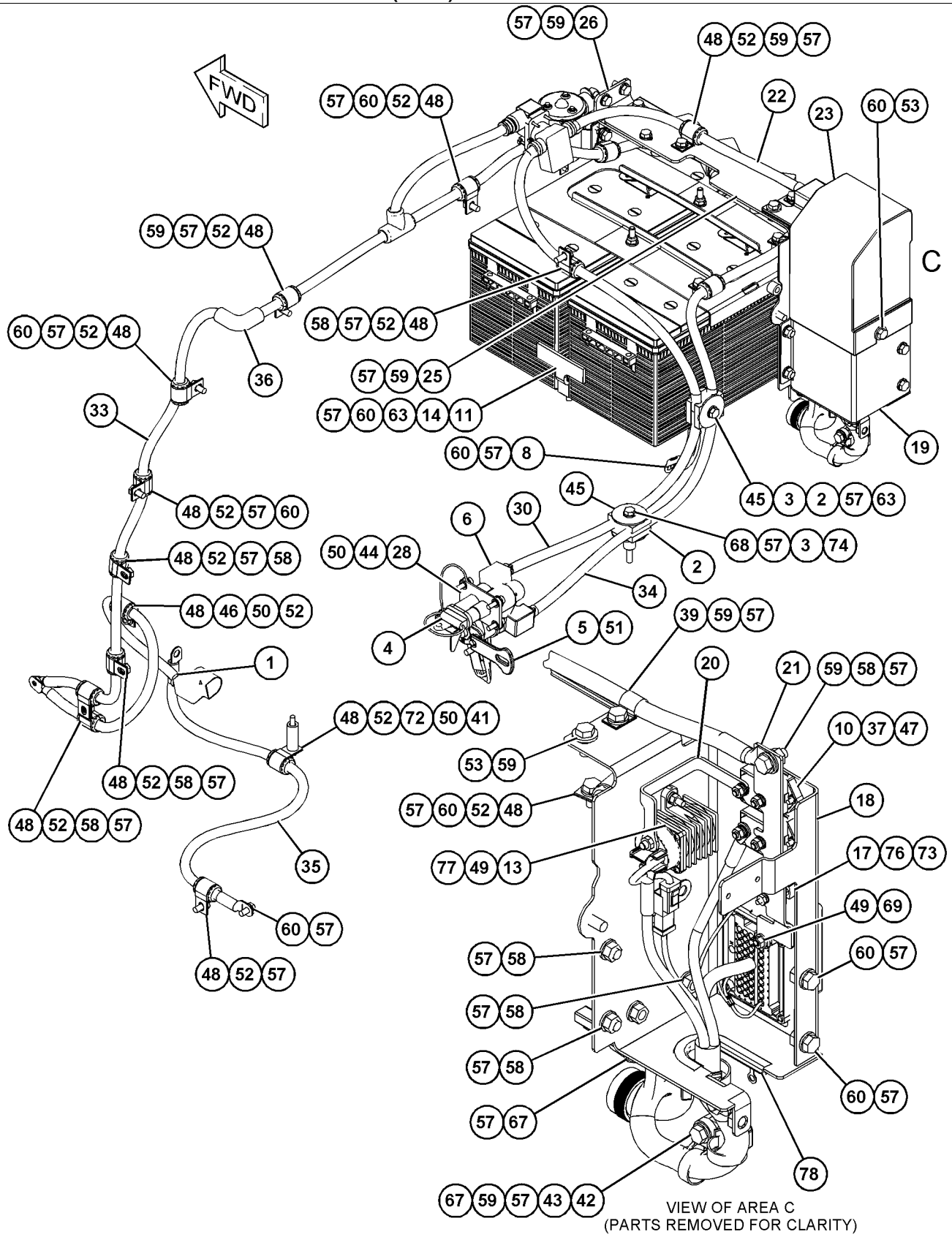

GRAPHIC #2 **<END>** g03819144

370-8525 BOX & MTG GP-OBJECT DETECTION

S/N: E9Y1-UP

AN ATTACHMENT

SMCS-7347 **i06143953**

NOTE	REF NO	GRAPHIC REF	PART NUMBER	QTY	PART NAME 1 2 3 4 5 6 (PRODUCT LEVEL)	SEE PAGE
Y	1	1	**430-8400**	2	SENSOR & MOUNTING GP (RADAR)	240
	2	1	**438-3334**	2	BRACKET AS	
	3	1	**438-3335**	2	BRACKET AS	
	4	1	**5P-4115**	8	WASHER-HARD (7.2X19X2-MM THK)	
	5	1	**5P-9135**	2	GROMMET	
M	6	1	**6V-8490**	8	BOLT (M6X1X25-MM)	
M	7	1	**8T-0276**	8	BOLT (M8X1.25X45-MM)	
	8	1	**8T-9655**	16	MOUNT-ISOLATION	
	9	1	**8T-9658**	8	SPACER (8.2X12.7X25.4-MM THK)	
	10	1	**9N-0869**	8	WASHER-HARD (8.8X25.5X2-MM THK)	

M - METRIC PART
Y - SEPARATE ILLUSTRATION

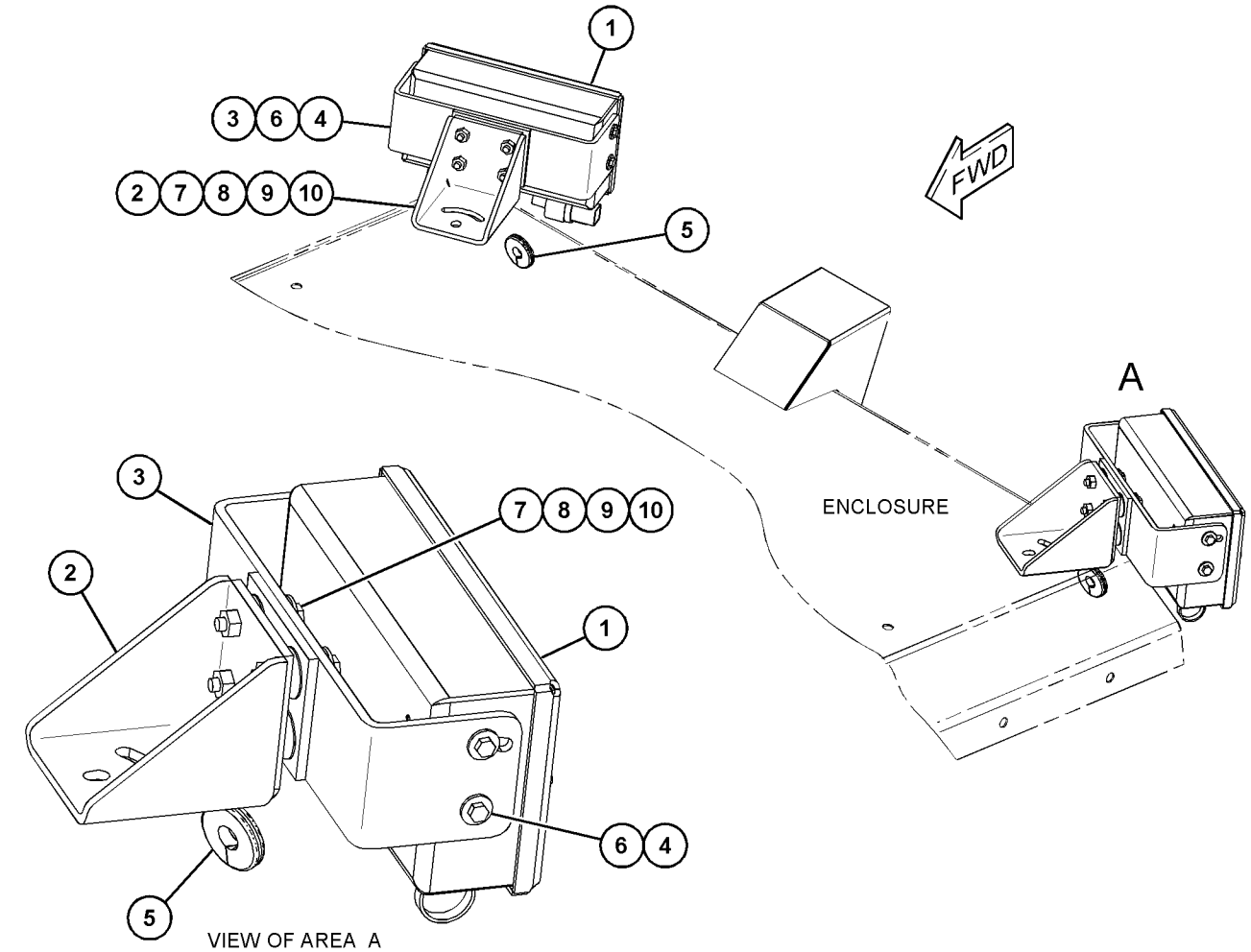

GRAPHIC #1 **<END>** g03827379

430-8398 BOX GP-OBJECT DETECTION–RADAR

S/N: E9Y1-UP

PART OF 430-8400 SENSOR & MOUNTING GP

AN ATTACHMENT

SMCS-7347 **i06105428**

NOTE	REF NO	GRAPHIC REF	PART NUMBER	QTY	PART NAME 1 2 3 4 5 6 (PRODUCT LEVEL)	SEE PAGE
	1	1	**3S-2093**	1	STRAP-CABLE	
	2	1	**8T-9655**	6	MOUNT-ISOLATION	
	3	1	**416-8338**	1	COVER	
	4	1	**416-8343**	1	SEAL	
	5	1	**416-8354**	1	SEAL	
	6	1	**430-8394**	1	BOX AS	
	7	1	**9X-6165**	3	WASHER (6.5X22X2.5-MM THK)	
	8	1	**438-4773**	3	SPACER (8.2X12.7X25.4-MM THK)	
	9	1	**454-9630**	1	HOLDER	
	10	1	**461-3288**	1	RIVET	
	11	1	**1P-6522**	1	GROMMET	
	12	1	**335-4416**	6	SCREW (M6X1.0X20-MM)	
M	13	1	**8C-8451**	3	BOLT (M6X1X40-MM)	
					PARTS SHOWN IN GRAPHIC(S) WITHOUT A REFERENCE NUMBER ARE NOT SERVICED SEPARATELY	

M - METRIC PART

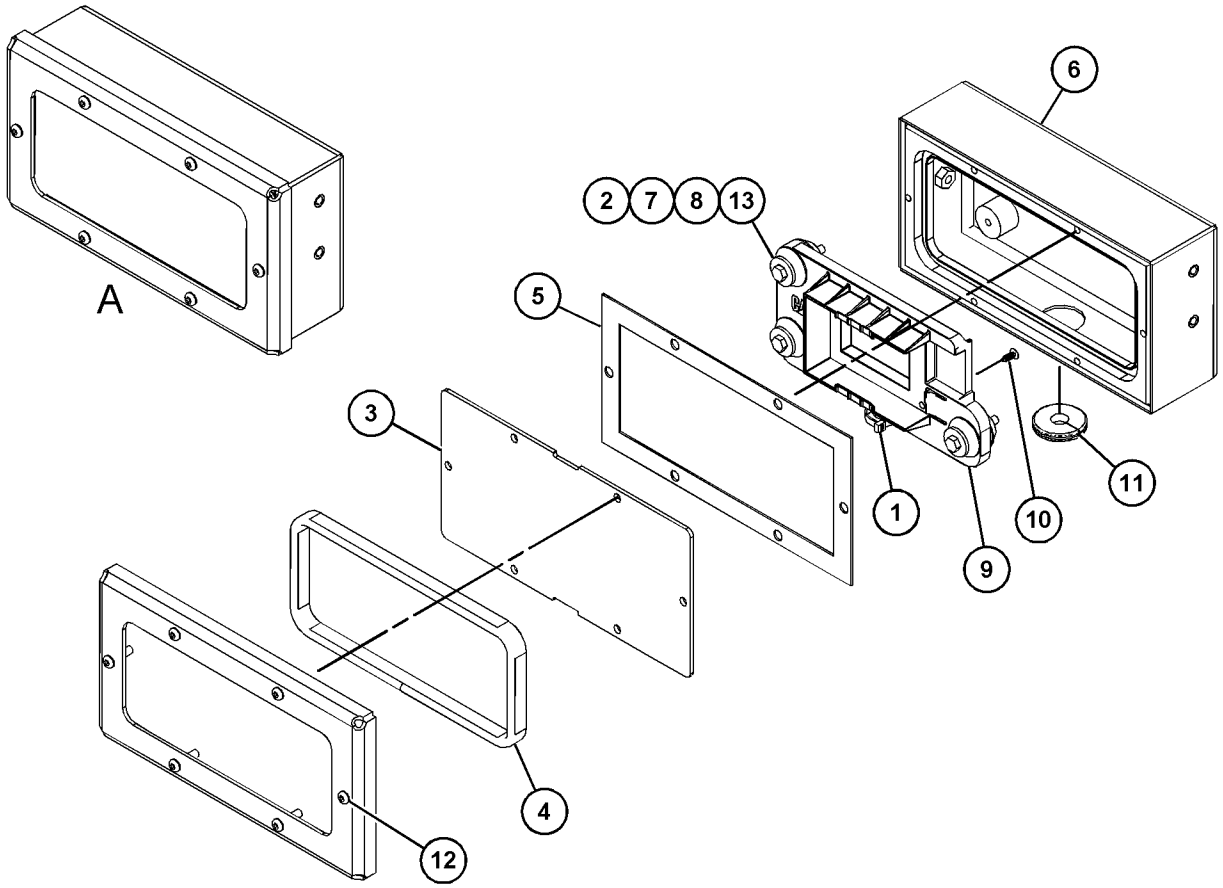

VIEW OF AREA A
(EXPLODED)

GRAPHIC #1 **<END>** g03813720

336-6684 CAMERA GP—WORK AREA VISUAL SYSTEM, REAR

S/N: E9Y1-UP
12-VOLT/24-VOLT, 115 DEGREE. COLOR
PART OF 370-8455 WIRING GP-CAMERA

SMCS-7348 **i05448412**

NOTE	REF NO	GRAPHIC REF	PART NUMBER	QTY	PART NAME 1 2 3 4 5 6 (PRODUCT LEVEL)	SEE PAGE
					AVAILABLE REPAIR KIT(S):	
			251-4162	1	KIT-BRACKET (CAMERA)	
					(INCLUDES BRACKET, BOLTS, LOCK NUTS, GASKET & ALLEN KEY)	

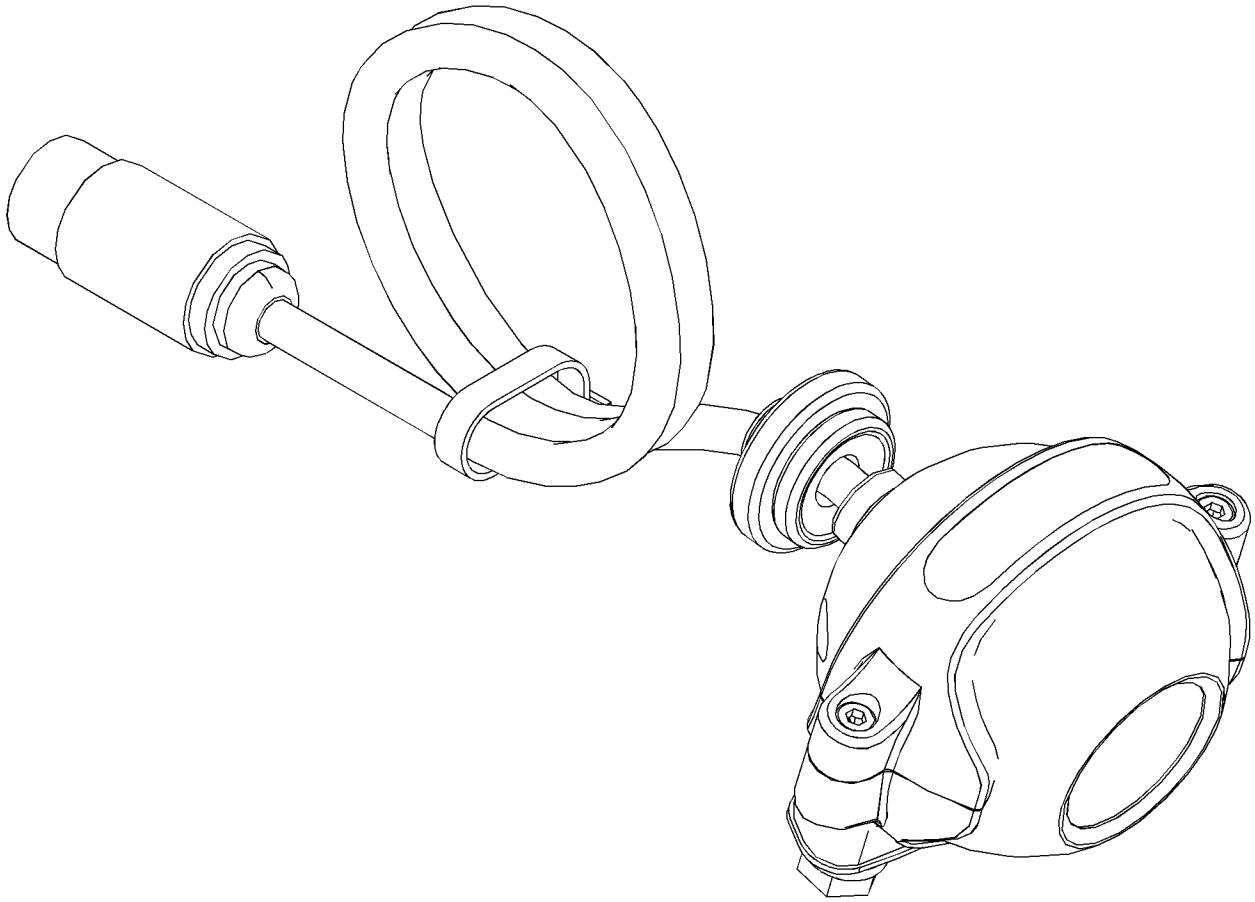

GRAPHIC #1 **<END>** g02034339

397-9348 CONTROL & MTG GP-ELECTRONIC

S/N: TXX1-UP
AIR
FOR USE WITH LESS REGULATED COUNTRIES
CANNOT BE USED WITH FUEL COOLED ECM APPLICATIONS
PART OF 383-2065, 422-0048 ENGINE AR-COMPLETE
AN ATTACHMENT

SMCS-1901, 3168, 7490, 7610 **i05195377**

NOTE	REF NO	GRAPHIC REF	PART NUMBER	QTY	PART NAME 1 2 3 4 5 6 (PRODUCT LEVEL)	SEE PAGE
	1	1	**8T-9655**	8	MOUNT-ISOLATION	
	2	1	**257-4907**	1	COVER AS-ACCESS	
	3	1	**347-1083**	4	SPACER (12.5X35X8-MM THK)	
	4	1	**374-0757**	1	CONTROL GP-UNPROGRAMMED	
M	5	1	**131-0353**	2	STUD (M8X1.25X82.75-MM)	
	6	1	**323-3729**	2	STUD (M8X1.25X97.6-MM)	
	7	1	**9M-1974**	4	WASHER-HARD (8.8X16X2-MM THK)	
	8	1	**9N-0869**	4	WASHER-HARD (8.8X25.5X2-MM THK)	

M - METRIC PART

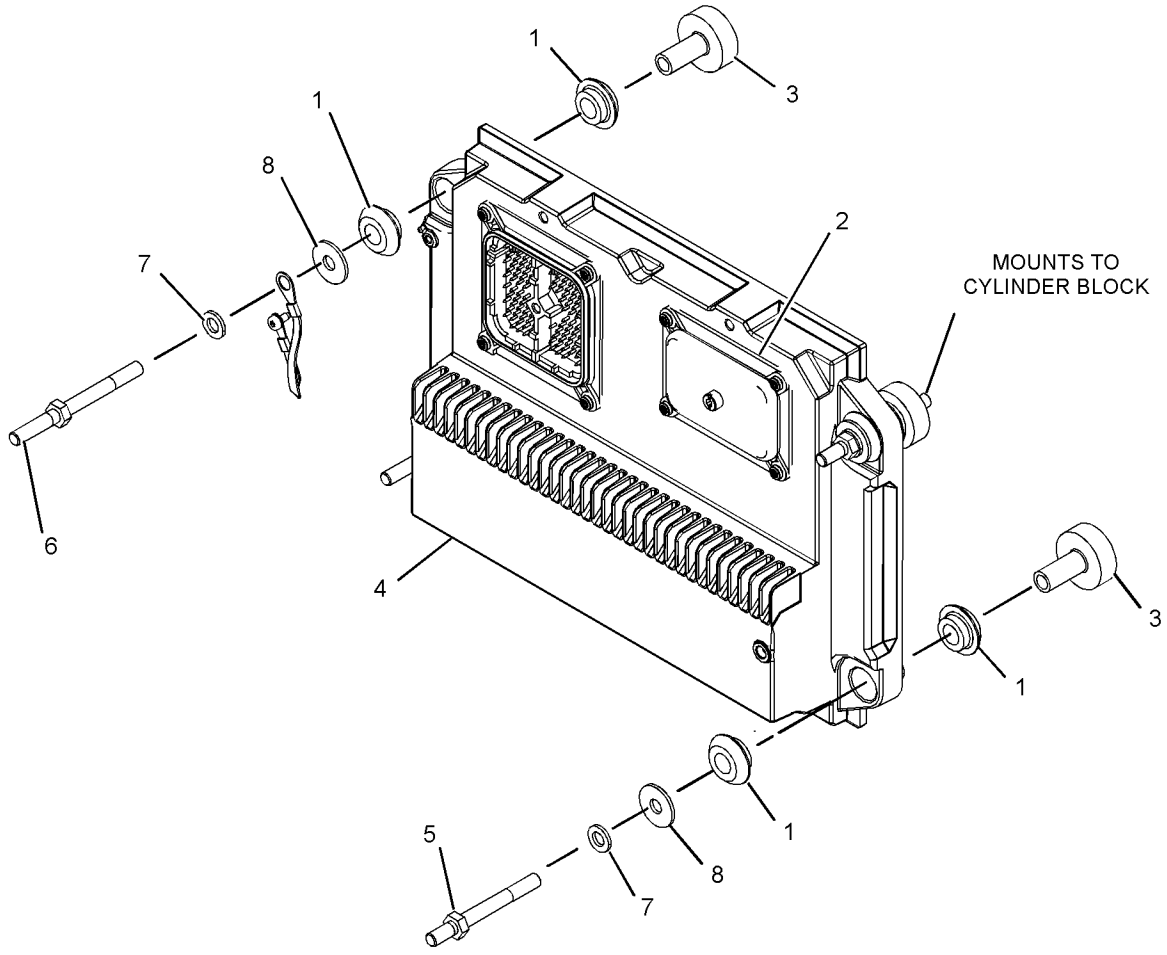

GRAPHIC #1 **<END>** g03380653

361-3109 CONTROL & MTG GP-IMPLEMENT

S/N: E9Y1-UP

PART OF 361-3120 CAB AR

SMCS-5700, 5701 **i05832082**

NOTE	REF NO	GRAPHIC REF	PART NUMBER	QTY	PART NAME 1 2 3 4 5 6 (PRODUCT LEVEL)	SEE PAGE
	1	1	**6I-1418**	8	SPACER (8.2X12.7X28.7-MM THK)	
	2	1	**7K-3215**	1	BOSS (0.413X1X0.630-IN THK)	
	3	1	**8T-9655**	16	MOUNT-ISOLATION	
	4	1	**288-1401**	2	BRACKET	
	5	1	**8T-4224**	2	WASHER-HARD (8.8X16X2-MM THK)	
M	6	1	**8T-6869**	1	BOLT (M8X1.25X60-MM)	
	7	1	**5P-4116**	16	WASHER-HARD (8.8X20.5X2-MM THK)	
M	8	1	**7X-0818**	7	BOLT (M8X1.25X45-MM)	
M	9	1	**8T-4199**	8	BOLT (M8X1.25X12-MM)	
	10	1	**365-6773**	1	CONTROL GP-UNPROGRAMMED (IMPLEMENT 1)	
	11	1	**365-6790**	1	CONTROL GP-MACHINE (IMPLEMENT 2)	

M - METRIC PART

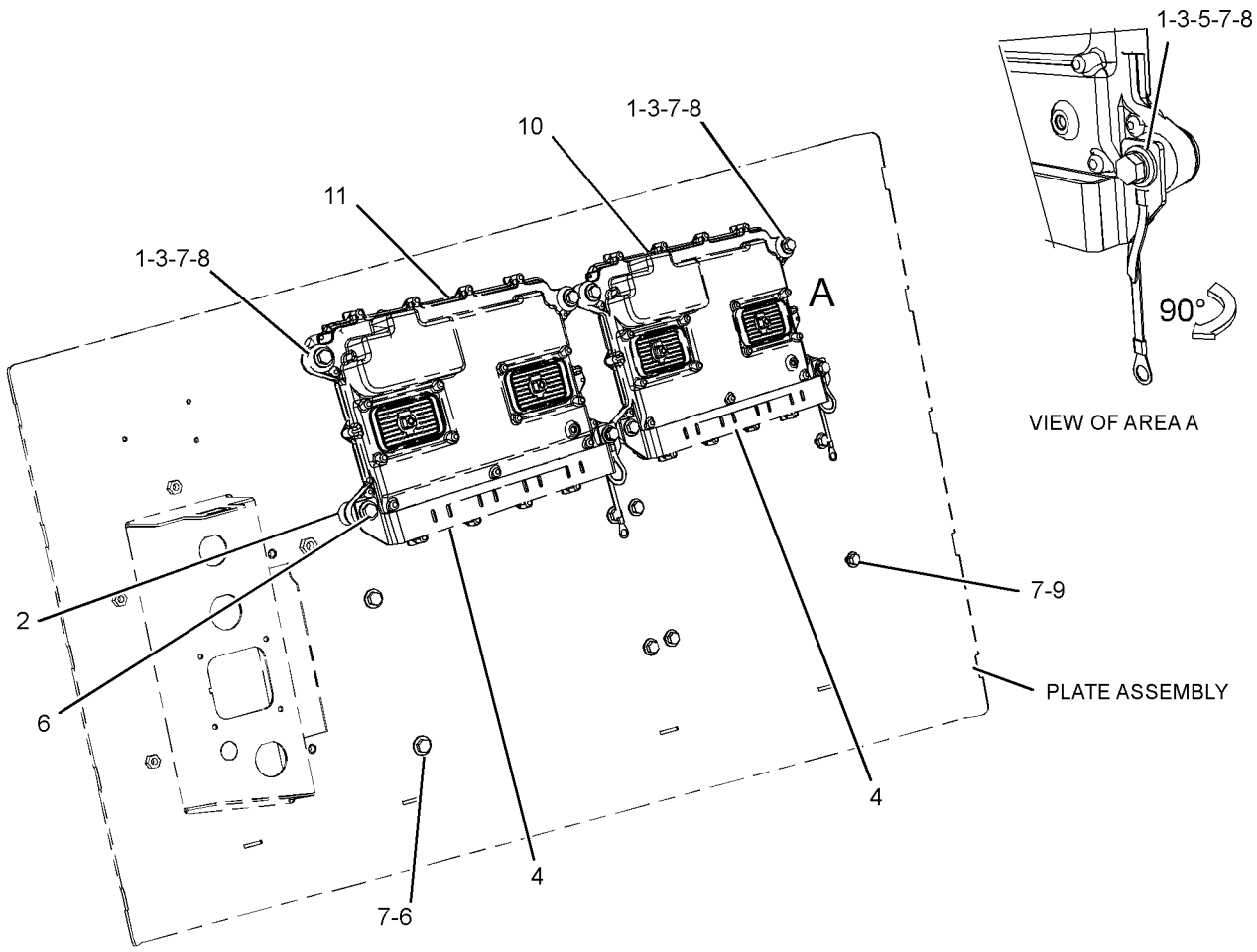

GRAPHIC #1 **<END>** g03689382

456-3346 CONTROL GP-COMMUNICATION—PLE631 SATELLITE

S/N: E9Y1-UP

PART OF 464-2510 INSTALLATION AR-COMMUNICATION

AN ATTACHMENT

SMCS-7602, 7606, 7610, 7620

i06147732

NOTE	REF NO	GRAPHIC REF	PART NUMBER	QTY	PART NAME 1 2 3 4 5 6 (PRODUCT LEVEL)	SEE PAGE
	1	1	**3S-2093**	11	STRAP-CABLE	
	2	1	**8C-5607**	8	MOUNT-ISOLATION	
	3	1	**385-5989**	1	HARNESS AS-CHASSIS	
		1	**155-2255**	1	KIT-CONNECTING PLUG (12-PIN)	
		1	**155-2256**	2	KIT-CONNECTING PLUG (12-PIN)	
		1	**155-2260**	2	KIT-CONNECTING PLUG (3-PIN)	
					(EACH PLUG KIT INCLUDES PLUG AS, WEDGE(S) & INTERFACE SEAL)	
		1	**102-8801**	1	KIT-RECEPTACLE (12-PIN)	
					(INCLUDES RECEPTACLE AS & WEDGE)	
		1	**237-0336**	1	COVER (CONNECTOR)	
		1	**359-5179**	1	PLUG AS-CONNECTOR (14-PIN)	
		1	**374-7468**	2	CAP-SEAL	
		1	**8T-8737**	57	PLUG-SEAL	
E		1	**125-7874**		TUBE-HEAT SHRINK (5.72-MM DIA) (35-CM)	
E		1	**125-7875**		TUBE-HEAT SHRINK (7.44-MM DIA) (5-CM)	
		1	**9X-3402**	70	SOCKET-CONNECTOR (16-GA TO 18-GA)	
					—OR—	
		1	**126-1768**	70	SOCKET-CONNECTOR (14-GA TO 16-GA)	
		1	**2L-8079**	1	TERMINAL-RING (14-GA TO 16-GA, 3/8-IN SCREW)	
		1	**134-2540**	2	RESISTOR AS-CONNECTION (3-PIN)	
		1	**9X-3401**	11	PIN-CONNECTOR (16-GA TO 18-GA)	
					—OR—	
		1	**126-1767**	11	PIN-CONNECTOR (14-GA TO 16-GA)	
		1	**147-1445**	1	PLUG AS-CONNECTOR (70-PIN)	
		1	**159-9322**	1	SEAL-O-RING	
	4	1	**443-8462**	1	ANTENNA AS (CELLULAR)	
		1	**361-1045**	1	NUT-SPECIAL (5/8-18-THD)	
		1	**385-8201**	1	CAP AS-CONNECTOR	
	5	1	**448-2602**	1	COVER	
	6	1	**458-7890**	1	CABLE AS	
Y	7	1	*463-9613*	1	APPLICATION GP-MONITOR (PLE601 NETWORK MANAGER)	149
Y	8	1	*463-9615*	1	APPLICATION GP-MONITOR (PL631 SATELLITE)	149
	9	1	**156-6175**	1	CLIP	
M	10	1	**344-5673**	8	NUT (M6X1-THD)	
	11	1	**4P-7428**	1	CLIP	
	12	1	**5P-4115**	5	WASHER-HARD (7.2X19X2-MM THK)	
M	13	1	**7X-2535**	7	BOLT (M6X1X60-MM)	
	14	1	**8C-5608**	4	SPACER (6.5X9.5X25.4-MM THK)	
M	15	1	**8T-3844**	1	BOLT (M6X1X70-MM)	
M	16	1	**8T-4138**	5	BOLT (M6X1X20-MM)	
	17	1	**9X-2038**	1	WASHER (7X19X2-MM THK)	
	18	1	**9X-6165**	8	WASHER (6.5X22X2.5-MM THK)	
	19	1	**9X-8256**	3	WASHER (6.6X12X2-MM THK)	

E - ORDER BY THE CENTIMETER
M - METRIC PART
Y - SEPARATE ILLUSTRATION

456-3346 **CONTROL GP-COMMUNICATION (*contd.*)** **i06147732**

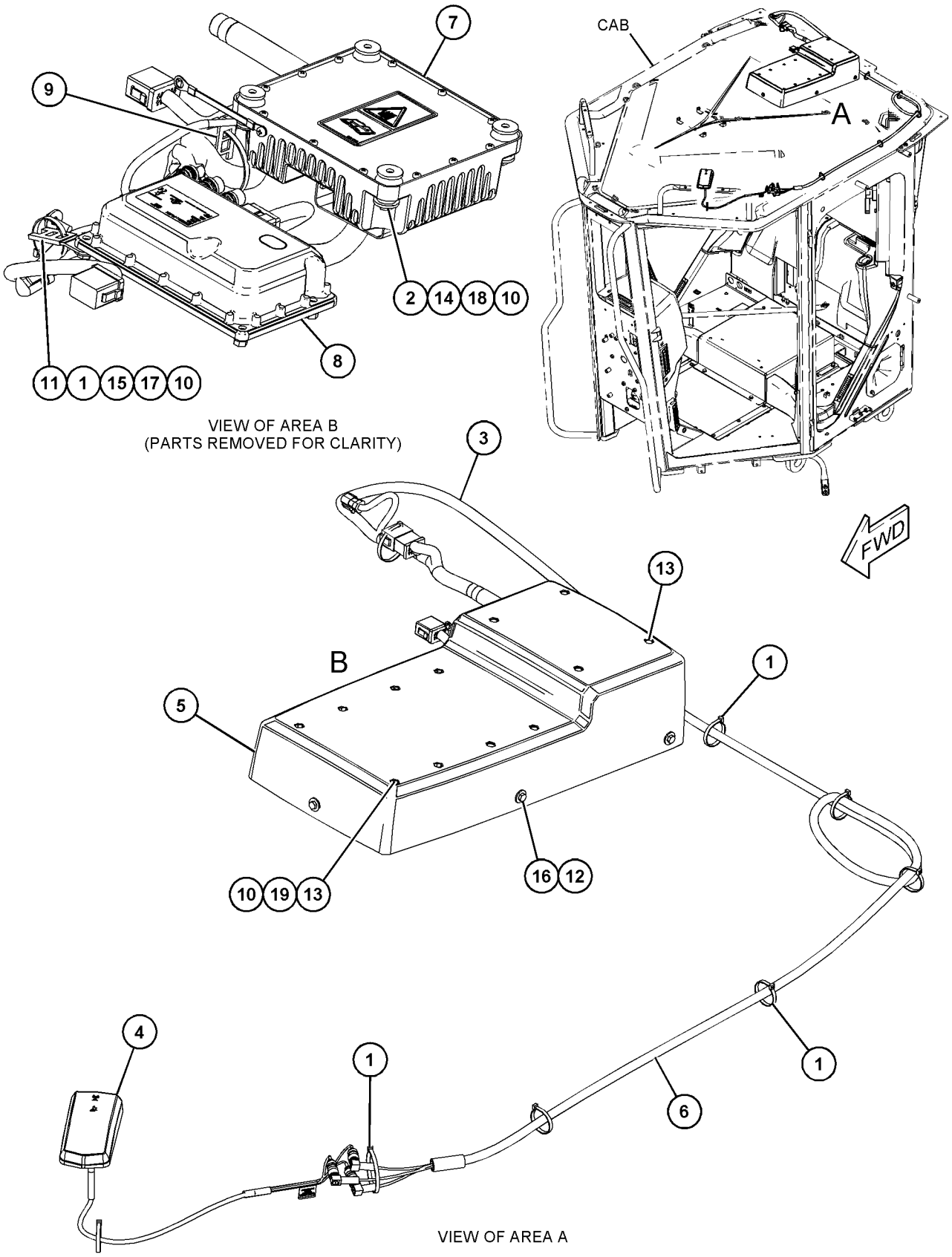

GRAPHIC #1

<END>

g03825956

456-3347 CONTROL GP-COMMUNICATION—PLE641 CELLULAR

S/N: E9Y1-UP

PART OF 464-2500 INSTALLATION AR-COMMUNICATION

AN ATTACHMENT

SMCS-7602, 7606, 7610, 7620 **i06147726**

NOTE	REF NO	GRAPHIC REF	PART NUMBER	QTY	PART NAME 1 2 3 4 5 6 (PRODUCT LEVEL)	SEE PAGE
	1	1	**8C-5607**	8	MOUNT-ISOLATION	
	2	1	**385-5989**	1	HARNESS AS-CHASSIS	
		1	**155-2255**	1	KIT-CONNECTING PLUG (12-PIN)	
		1	**155-2256**	2	KIT-CONNECTING PLUG (12-PIN)	
		1	**155-2260**	2	KIT-CONNECTING PLUG (3-PIN)	
					(EACH PLUG KIT INCLUDES PLUG AS, WEDGE(S) & INTERFACE SEAL)	
		1	**102-8801**	1	KIT-RECEPTACLE (12-PIN)	
					(INCLUDES RECEPTACLE AS & WEDGE)	
		1	**237-0336**	1	COVER (CONNECTOR)	
		1	**359-5179**	1	PLUG AS-CONNECTOR (14-PIN)	
		1	**374-7468**	2	CAP-SEAL	
		1	**8T-8737**	57	PLUG-SEAL	
E		1	**125-7874**		TUBE-HEAT SHRINK (5.72-MM DIA) (35-CM)	
E		1	**125-7875**		TUBE-HEAT SHRINK (7.44-MM DIA) (5-CM)	
		1	**9X-3402**	70	SOCKET-CONNECTOR (16-GA TO 18-GA)	
					—OR—	
		1	**126-1768**	70	SOCKET-CONNECTOR (14-GA TO 16-GA)	
		1	**2L-8079**	1	TERMINAL-RING (14-GA TO 16-GA, 3/8-IN SCREW)	
		1	**134-2540**	2	RESISTOR AS-CONNECTION (3-PIN)	
		1	**9X-3401**	11	PIN-CONNECTOR (16-GA TO 18-GA)	
					—OR—	
		1	**126-1767**	11	PIN-CONNECTOR (14-GA TO 16-GA)	
		1	**147-1445**	1	PLUG AS-CONNECTOR (70-PIN)	
		1	**159-9322**	1	SEAL-O-RING	
	3	1	**448-2602**	1	COVER	
Y	4	1	*463-9613*	1	APPLICATION GP-MONITOR (PLE601 NETWORK MANAGER)	149
Y	5	1	*463-9614*	1	APPLICATION GP-MONITOR (PL641I CELLULAR)	149
	6	1	**156-6175**	1	CLIP	
M	7	1	**344-5673**	8	NUT (M6X1-THD)	
	8	1	**3S-2093**	4	STRAP-CABLE	
	9	1	**4P-7428**	1	CLIP	
	10	1	**5P-4115**	5	WASHER-HARD (7.2X19X2-MM THK)	
M	11	1	**7X-2535**	7	BOLT (M6X1X60-MM)	
	12	1	**8C-5608**	4	SPACER (6.5X9.5X25.4-MM THK)	
M	13	1	**8T-3844**	1	BOLT (M6X1X70-MM)	
M	14	1	**8T-4138**	5	BOLT (M6X1X20-MM)	
	15	1	**9X-2038**	1	WASHER (7X19X2-MM THK)	
	16	1	**9X-6165**	8	WASHER (6.5X22X2.5-MM THK)	
	17	1	**9X-8256**	3	WASHER (6.6X12X2-MM THK)	

E - ORDER BY THE CENTIMETER
M - METRIC PART
Y - SEPARATE ILLUSTRATION

456-3347 **CONTROL GP-COMMUNICATION (*contd.*)** **i06147726**

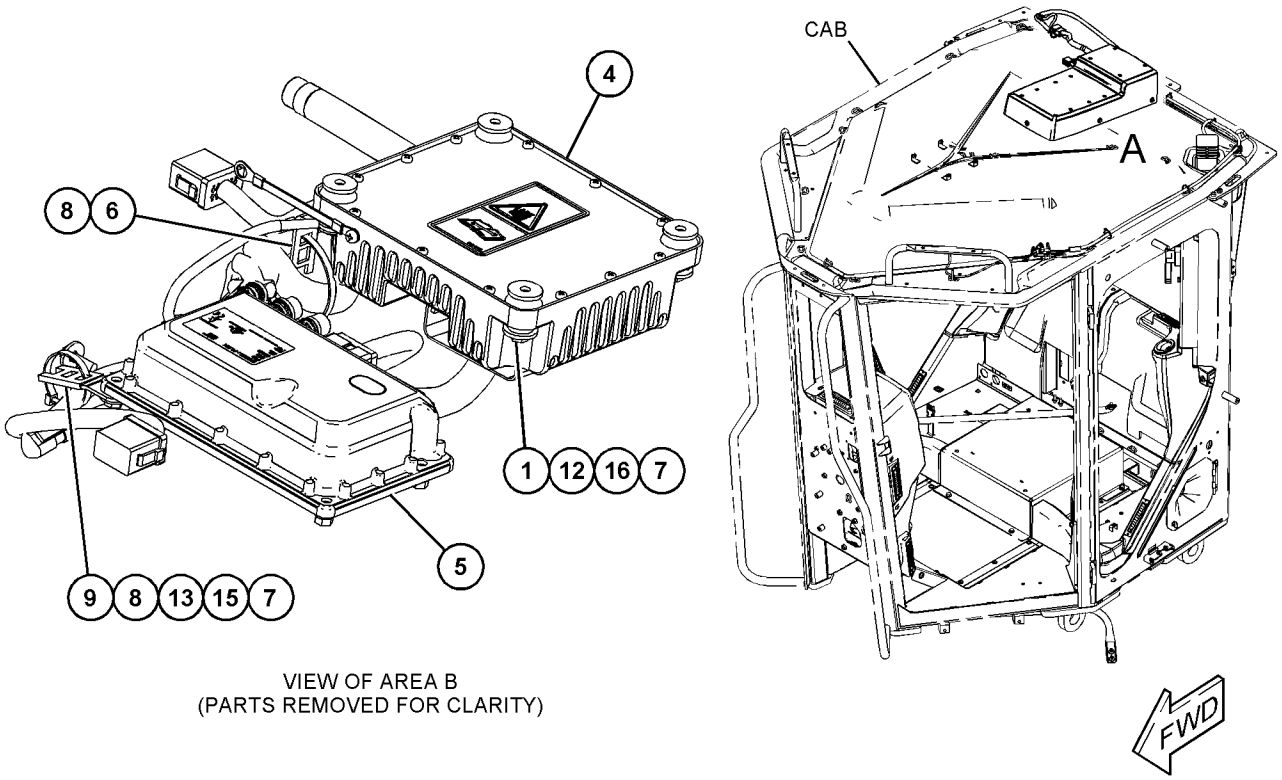

VIEW OF AREA B
(PARTS REMOVED FOR CLARITY)

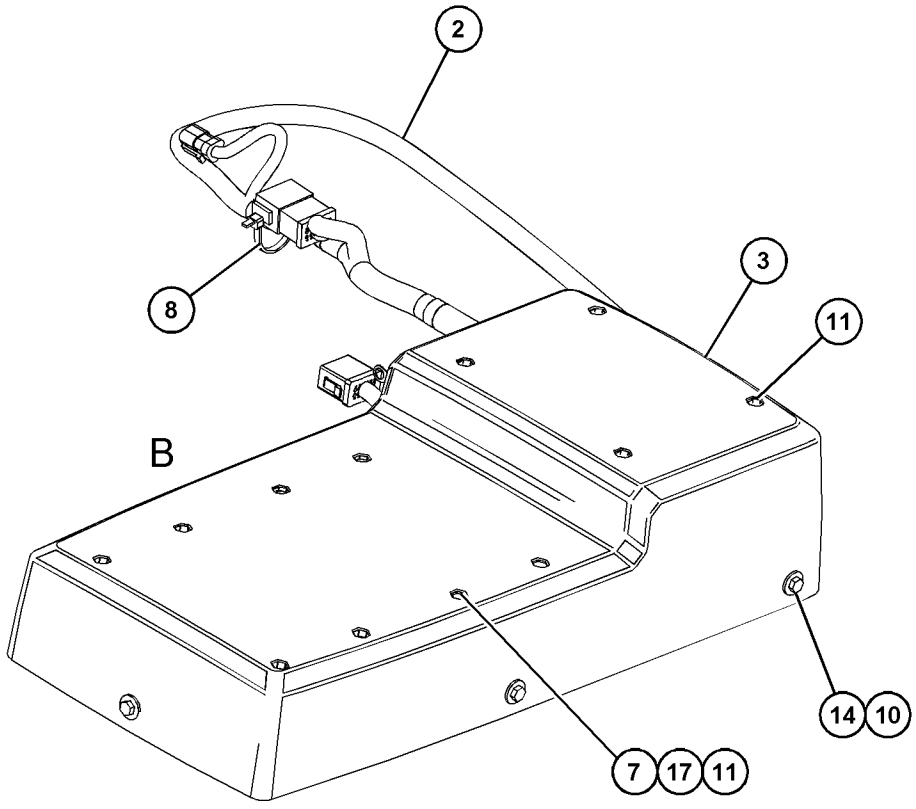

VIEW OF AREA A

GRAPHIC #1 **<END>** g03825984

233-3135 CONVERTER GP-ELECTRICAL

S/N: E9Y1-UP
10-AMPERE, 12-VOLT
PART OF 361-3120 CAB AR

SMCS-1421 **i04341221**

NOTE	REF NO	GRAPHIC REF	PART NUMBER	QTY	PART NAME 1 2 3 4 5 6 (PRODUCT LEVEL)	SEE PAGE
	1	1	**117-2311**	1	SOCKET-AUXILIARY POWER (12-VOLT) (AUXILIARY)	
	2	1	**340-7161**	1	CONVERTER-POWER (24-VOLT TO 12-VOLT)	
	3	1	**8T-0328**	2	WASHER-HARD (5.5X10X1-MM THK)	
M	4	1	**9X-1046**	2	SCREW (M4X0.7X18-MM)	

M - METRIC PART

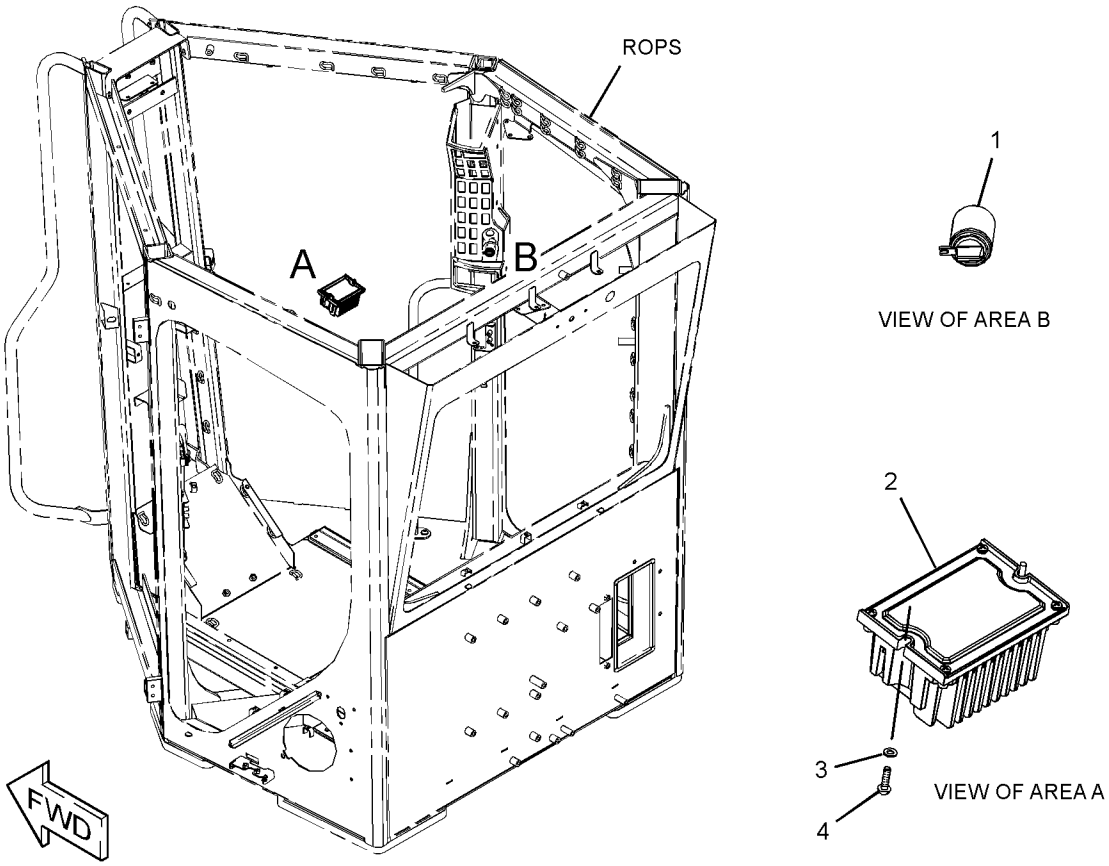

GRAPHIC #1 **<END>** g02530983

361-3136 CONVERTER GP-ELECTRICAL—RADIO

S/N: E9Y1-UP
PART OF 450-1651, 450-1652 OPTION AR-CAB
AN ATTACHMENT

SMCS-1421 **i05792174**

NOTE	REF NO	GRAPHIC REF	PART NUMBER	QTY	PART NAME 1 2 3 4 5 6 (PRODUCT LEVEL)	SEE PAGE
	1	1	**348-7842**	1	CONVERTER-POWER (24-VOLT TO 12-VOLT)	
	2	1	**445-1528**	1	HARNESS AS-WIRING (RADIO)	
		1	**9X-3401**	1	PIN-CONNECTOR (16-GA TO 18-GA)	
					—OR—	
		1	**126-1767**	1	PIN-CONNECTOR (14-GA TO 16-GA)	
		1	**155-2274**	2	KIT-CONNECTING PLUG (6-PIN)	
					(EACH INCLUDES PLUG AS, WEDGE & INTERFACE SEAL)	
		1	**102-8805**	1	KIT-RECEPTACLE (6-PIN)	
		1	**177-9653**	1	KIT-RECEPTACLE (4-PIN)	
					(EACH RECEPTACLE KIT INCLUDES RECEPTACLE AS & WEDGE)	
		1	**9X-3402**	5	SOCKET-CONNECTOR (16-GA TO 18-GA)	
					—OR—	
		1	**126-1768**	5	SOCKET-CONNECTOR (14-GA TO 16-GA)	
		1	**115-3519**	3	PIN-CONNECTOR (12-GA TO 14-GA)	
		1	**8T-8737**	7	PLUG-SEAL	
E		1	**125-7874**		TUBE-HEAT SHRINK (5.72-MM DIA) (5-CM)	
		1	**3E-3383**	1	WEDGE-RECEPTACLE LOCK (6-PIN)	
	3	1	**449-2127**	1	PLATE	
	4	1	**096-6166**	4	WASHER-HARD (4.5X9X1-MM THK)	
M	5	1	**162-2165**	4	BOLT-SOCKET HEAD (M4X0.7X16-MM)	
M	6	1	**9X-2043**	4	SCREW-TRUSS HEAD (M6X1X14-MM)	

E - ORDER BY THE CENTIMETER
M - METRIC PART

361-3136 **CONVERTER GP-ELECTRICAL (*contd.*)** **i05792174**

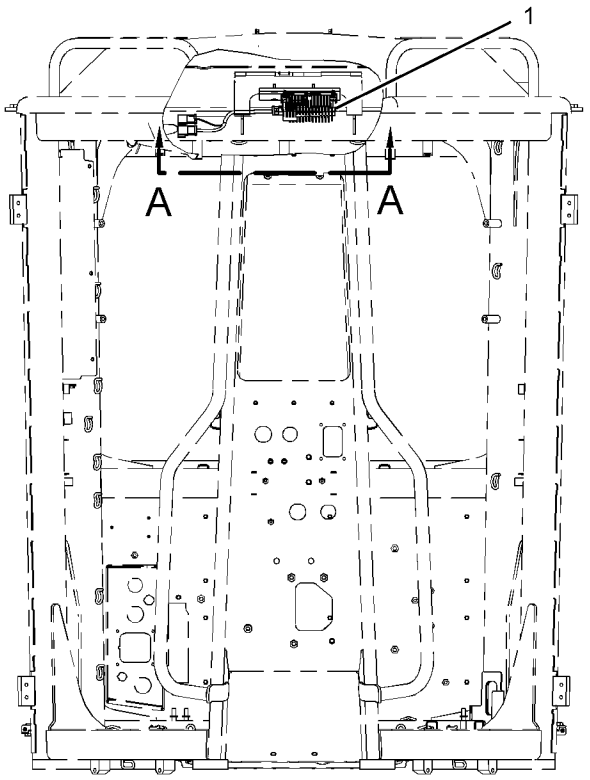

FRONT VIEW

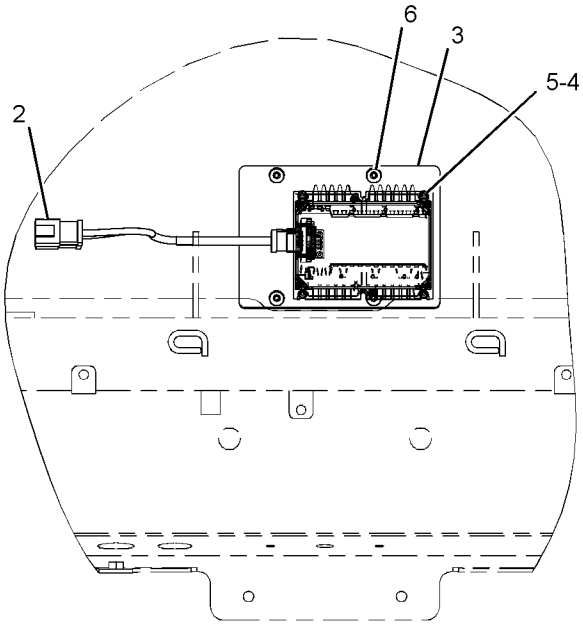

VIEW A-A

GRAPHIC #1 **<END>** g03510005

370-8430 ELECTRICAL AR

S/N: E9Y1-UP

PART OF 386-1317 COMMON AR

SMCS-1400, 1401, 1408, 1429, 1453, 1454, 1465, 7402, 7406 **i06143969**

NOTE	PART NUMBER	QTY	PART NAME 1 2 3 4 5 6 (PRODUCT LEVEL)	SEE PAGE
Y	*370-8470*	1	BATTERY & WIRING GP	150
Y	*360-2145*	1	ELECTRONICS GP-IMPLEMENT (MASTER)	169
Y	*360-2150*	1	ELECTRONICS GP-IMPLEMENT (STEERING)	169
Y	*465-3277*	1	ELECTRONICS GP-MACHINE	169
Y	*391-1379*	1	ELECTRONICS GP-MONITOR (INDICATION DISPLAY)	170
Y	*391-1383*	1	ELECTRONICS GP-MONITOR (INFORMATION DISPLAY)	170
Y	*360-2157*	1	ELECTRONICS GP-POWER TRAIN	171
Y	*370-8455*	1	WIRING GP-CAMERA	286
Y	*370-8445*	1	WIRING GP-FRONT	292
Y	*370-8452*	1	WIRING GP-GRADE CONTROL	299
Y	*420-9070*	1	WIRING GP-REAR (RIGHT SIDE)	307
Y	*420-9085*	1	WIRING GP-REAR (SERVICE CENTER)	308
Y	*420-9090*	1	WIRING GP-REAR	310
Y	*363-4325*	1	WIRING GP-SENSOR	325

Y - SEPARATE ILLUSTRATION

<END>

417-4722 ELECTRONICS GP-COMMUNICATION–PLE601 NETWORK MANAGER

S/N: E9Y1-UP
YELLOW KEY
PART OF 463-9613 APPLICATION GP-MONITOR
AN ATTACHMENT

SMCS-7606, 7610, 7620 **i06193445**

NOTE	REF NO	GRAPHIC REF	PART NUMBER	QTY	PART NAME 1 2 3 4 5 6 (PRODUCT LEVEL)	SEE PAGE
	1	1	**459-0786**	1	CONTROL GP-UNPROGRAMMED (NETWORK MANAGER)	
		1	**7X-6315**	1	STRAP AS-GROUND	
		1	**5P-6006**	1	TUBE-HEAT SHRINK (9.52-MM DIA)	
		1	**2L-8078**	1	TERMINAL-RING (14-GA TO 16-GA, 5/16-IN SCREW)	
		1	**2L-8075**	1	TERMINAL-RING (14-GA TO 16-GA, NO. 8 SCREW)	
		1	**8C-8514**	1	SCREW-MACHINE (8-32X0.375-IN)	
		1	**134-4126**	1	WASHER (4.52X8.28X0.76-MM THK)	
		1	**175-4168**	12	SCREW-PAN HEAD (6-32X0.37-IN)	
		1	**272-2379**	1	FILM-WARNING (EXPLOSION HAZARD, READ OMM)	

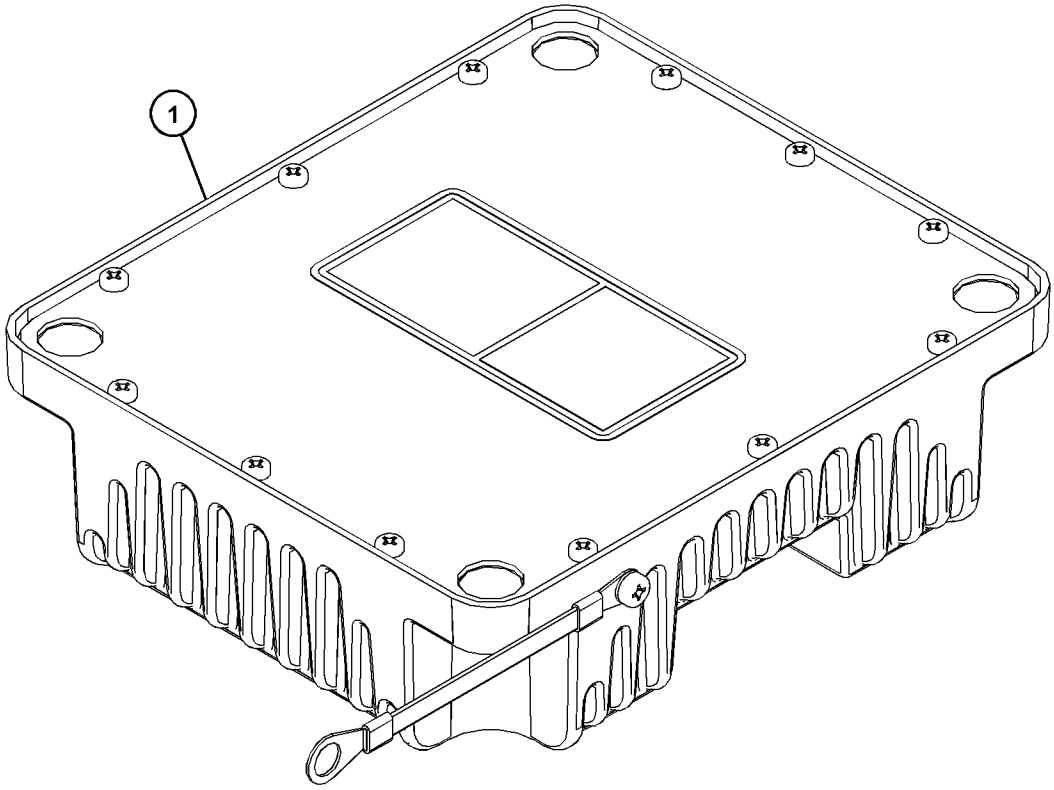

GRAPHIC #1 **<END>** g03786631

360-2135 ELECTRONICS GP-IMPLEMENT

S/N: E9Y1-UP
SLAVE #2
PART OF 385-7557 CONTROL AR-HYDRAULIC
AN ATTACHMENT

SMCS-5701, 7610, 7620 **i06049023**

NOTE	PART NUMBER	QTY	PART NAME 1 2 3 4 5 6 (PRODUCT LEVEL)	SEE PAGE
	468-8022	1	SOFTWARE GP-IMPLEMENT	

<END>

360-2145 ELECTRONICS GP-IMPLEMENT—MASTER

S/N: E9Y1-UP
PART OF 370-8430 ELECTRICAL AR

SMCS-5701, 7610, 7620 **i06031630**

NOTE	PART NUMBER	QTY	PART NAME 1 2 3 4 5 6 (PRODUCT LEVEL)	SEE PAGE
	468-3608	1	SOFTWARE GP-IMPLEMENT	

<END>

360-2150 ELECTRONICS GP-IMPLEMENT—STEERING

S/N: E9Y1-UP
PART OF 370-8430 ELECTRICAL AR

SMCS-5701, 7610, 7620 **i06031634**

NOTE	PART NUMBER	QTY	PART NAME 1 2 3 4 5 6 (PRODUCT LEVEL)	SEE PAGE
	468-3491	1	SOFTWARE GP-IMPLEMENT	

<END>

310-5289 ELECTRONICS GP-MACHINE

S/N: E9Y1-UP
PART OF 393-6336 INSTALLATION GP-SECURITY
AN ATTACHMENT

SMCS-7610, 7620 **i03546822**

NOTE	PART NUMBER	QTY	PART NAME 1 2 3 4 5 6 (PRODUCT LEVEL)	SEE PAGE
	310-4772	1	MODULE GP-INTERFACE	
	6V-6715	1	SCREW-PAN HEAD (4-20X0.25-IN)	
	8C-3095	1	SEAL-O-RING	

<END>

465-3277 ELECTRONICS GP-MACHINE

S/N: E9Y1-UP
OPERATOR INPUT MODULE
PART OF 370-8430 ELECTRICAL AR

SMCS-7610, 7620 **i06143831**

NOTE	PART NUMBER	QTY	PART NAME 1 2 3 4 5 6 (PRODUCT LEVEL)	SEE PAGE
	465-2496	1	SOFTWARE GP-MACHINE	

<END>

391-1379 ELECTRONICS GP-MONITOR

S/N: E9Y1-UP
INDICATION DISPLAY
PART OF 370-8430 ELECTRICAL AR, 386-1254 PLATE & FILM GP
ALSO AN ATTACHMENT

SMCS-7490, 7610, 7620 **i06226020**

NOTE	PART NUMBER	QTY	PART NAME 1 2 3 4 5 6 (PRODUCT LEVEL)	SEE PAGE
	470-1001	1	SOFTWARE GP-MONITOR (INSTRUMENT PANEL)	

<END>

391-1383 ELECTRONICS GP-MONITOR

S/N: E9Y1-UP
INFORMATION DISPLAY
PART OF 370-8430 ELECTRICAL AR, 386-1254 PLATE & FILM GP
ALSO AN ATTACHMENT

SMCS-7490, 7610, 7620 **i05731429**

NOTE	PART NUMBER	QTY	PART NAME 1 2 3 4 5 6 (PRODUCT LEVEL)	SEE PAGE
	391-5946	1	SOFTWARE GP-MONITOR	

<END>

463-9605 ELECTRONICS GP-MONITOR—CELLULAR

S/N: E9Y1-UP
RADIO
PART OF 464-2500 INSTALLATION AR-COMMUNICATION
AN ATTACHMENT

SMCS-7490, 7610, 7620 **i06139542**

NOTE	PART NUMBER	QTY	PART NAME 1 2 3 4 5 6 (PRODUCT LEVEL)	SEE PAGE
	466-3328	1	SOFTWARE GP-MONITOR	

<END>

463-9606 ELECTRONICS GP-MONITOR—NETWORK MANAGER

S/N: E9Y1-UP
PART OF 464-2500, 464-2510 INSTALLATION AR-COMMUNICATION
AN ATTACHMENT

SMCS-7490, 7610, 7620 **i06139544**

NOTE	PART NUMBER	QTY	PART NAME 1 2 3 4 5 6 (PRODUCT LEVEL)	SEE PAGE
	463-9600	1	SOFTWARE GP-MONITOR (TELEMATICS)	
	464-0579	1	SOFTWARE GP-MONITOR (TELEMATICS)	

<END>

463-9611 ELECTRONICS GP-MONITOR—PL631 SATELLITE

S/N: E9Y1-UP
PART OF 464-2510 INSTALLATION AR-COMMUNICATION
AN ATTACHMENT

SMCS-7490, 7610, 7620 **i06204356**

NOTE	PART NUMBER	QTY	PART NAME 1 2 3 4 5 6 (PRODUCT LEVEL)	SEE PAGE
	479-0025	1	SOFTWARE GP-MONITOR	

<END>

360-2157 ELECTRONICS GP-POWER TRAIN

S/N: E9Y1-UP
PART OF 370-8430 ELECTRICAL AR

SMCS-4800, 4808, 7610, 7620 **i06181600**

NOTE	PART NUMBER	QTY	PART NAME 1 2 3 4 5 6 (PRODUCT LEVEL)	SEE PAGE
	479-0707	1	SOFTWARE GP-POWER TRAIN	

<END>

360-7617 GRADE CONTROL GP–ACCUGRADE

S/N: E9Y1-UP

PART OF 361-3120 CAB AR

SMCS-7220 **i05525589**

NOTE	REF NO	GRAPHIC REF	PART NUMBER	QTY	PART NAME 1 2 3 4 5 6 (PRODUCT LEVEL)	SEE PAGE
Y	1	1	**283-7960**	1	POWER SUPPLY GP (GRADE CONTROL)	237
Y	2	1	**314-3323**	1	PANEL GP-CONTROL (ACCUGRADE) (LH)	779
	3	1	**360-2968**	1	HARNESS AS-WIRING (POWER MODULE, RH)	
		1	**3R-9965**	1	PLUG AS-CONNECTOR (8-PIN)	
		1	**8T-8737**	6	PLUG-SEAL	
		1	**126-1767**	6	PIN-CONNECTOR (14-GA TO 16-GA)	
		1	**230-4010**	1	RECEPTACLE AS-CONNECTOR (12-PIN)	
	4	1	**360-2969**	1	HARNESS AS-WIRING (POWER MODULE, LH)	
		1	**6D-5257**	1	PLUG AS-CONNECTOR (8-PIN)	
		1	**8T-8737**	4	PLUG-SEAL	
		1	**126-1768**	8	SOCKET-CONNECTOR (14-GA TO 16-GA)	
		1	**230-4009**	1	PLUG AS-CONNECTOR (12-PIN)	
		1	**264-7034**	1	SEAL-CONNECTOR	
Y	5	1	**360-8162**	1	PANEL GP-CONTROL (ACCUGRADE) (RH)	780
	6	1	**4P-8134**	2	CLIP	
	7	1	**3S-2093**	5	STRAP-CABLE	

Y - SEPARATE ILLUSTRATION

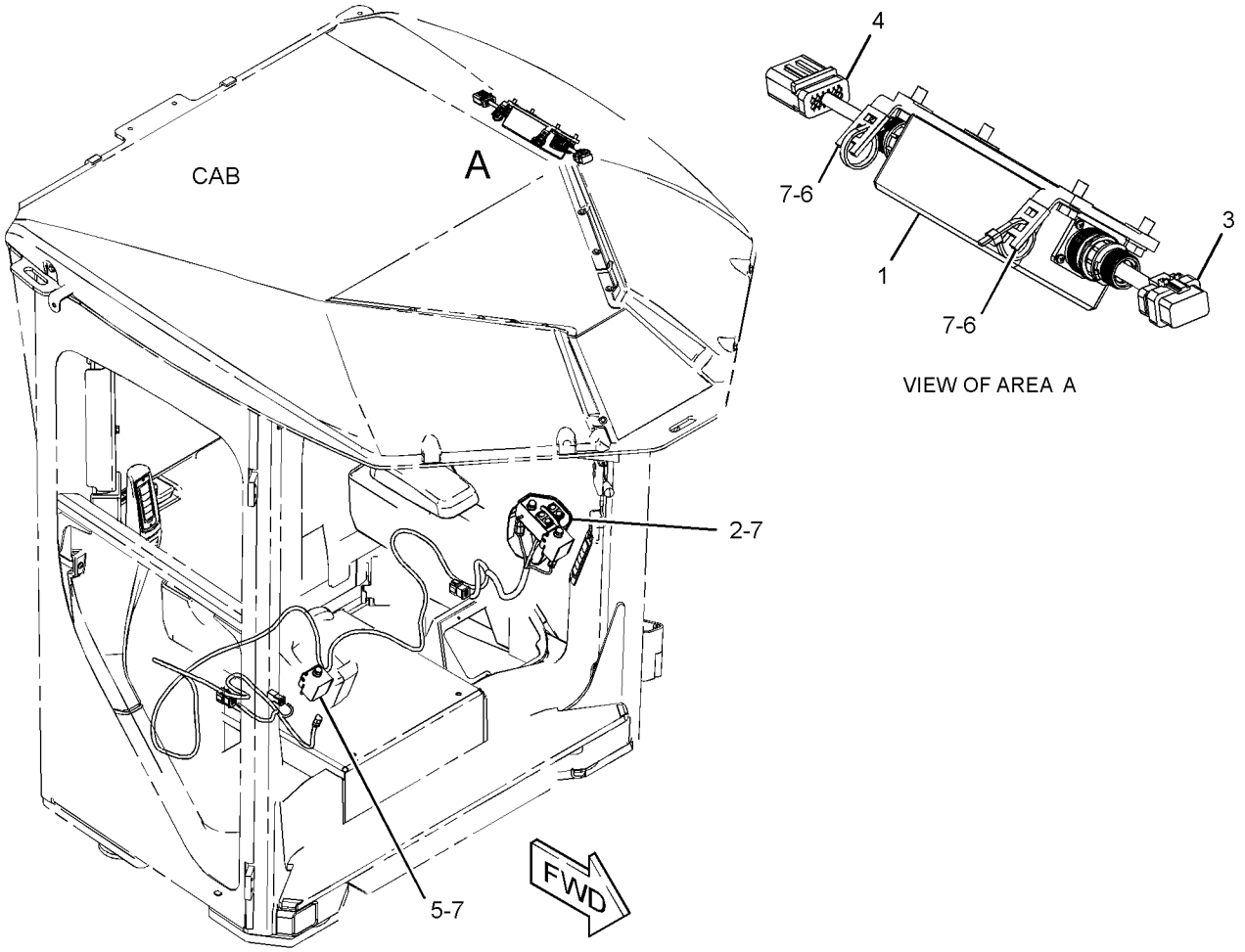

GRAPHIC #1 **<END>** g03506565

381-0775 HARNESS AS-CAB–CAMERA

S/N: E9Y1-UP
WORK AREA VISION SYSTEM
PART OF 442-4478 WIRING GP-CAMERA
AN ATTACHMENT

SMCS-1408 **i05791082**

NOTE	PART NUMBER	QTY	PART NAME 1 2 3 4 5 6 (PRODUCT LEVEL)	SEE PAGE
	241-8834	1	PLUG AS-CONNECTOR (12-PIN)	
	264-7034	1	SEAL-CONNECTOR	
	8T-8737	8	PLUG-SEAL	
	8T-8730	4	SOCKET-CONNECTOR (16-GA TO 18-GA)	

<END>

450-5678 HARNESS AS-CAB–ROOF

S/N: E9Y1-UP
PART OF 361-3148 WIRING GP-CAB

SMCS-1408 **i06126078**

NOTE	PART NUMBER	QTY	PART NAME 1 2 3 4 5 6 (PRODUCT LEVEL)	SEE PAGE
	274-3779	1	CAP-SEAL	
	374-7463	13	CAP-SEAL	
	155-2255	1	KIT-CONNECTING PLUG (12-PIN)	
	155-2270	13	KIT-CONNECTING PLUG (2-PIN)	
			(EACH PLUG KIT INCLUDES PLUG AS, WEDGE & INTERFACE SEAL)	
	167-3693	1	PLUG AS-CONNECTOR (31-PIN)	
	8T-8737	7	PLUG-SEAL	
	9X-3402	62	SOCKET-CONNECTOR (16-GA TO 18-GA)	
			–OR–	
	126-1768	62	SOCKET-CONNECTOR (14-GA TO 16-GA)	
E	**119-3662**		TUBE-HEAT SHRINK (10.85-MM DIA) (13-CM)	
E	**125-7874**		TUBE-HEAT SHRINK (5.72-MM DIA) (20-CM)	
E	**125-7875**		TUBE-HEAT SHRINK (7.44-MM DIA) (10-CM)	

E - ORDER BY THE CENTIMETER

<END>

475-4304 HARNESS AS-CAB

S/N: E9Y1-UP

PART OF 361-3148 WIRING GP-CAB

SMCS-1408 **i06144070**

NOTE	PART NUMBER	QTY	PART NAME 1 2 3 4 5 6 (PRODUCT LEVEL)	SEE PAGE
	3E-3371	1	WEDGE-RECEPTACLE LOCK (3-PIN)	
	102-8806	1	KIT-RECEPTACLE (8-PIN)	
	151-9272	1	KIT-RECEPTACLE (2-PIN)	
	174-3091	1	KIT-RECEPTACLE (12-PIN)	
	177-9645	1	KIT-RECEPTACLE (2-PIN)	
			(EACH RECEPTACLE KIT INCLUDES RECEPTACLE AS & WEDGE)	
	3E-3389	1	WEDGE-RECEPTACLE LOCK (8-PIN)	
	3E-5226	2	SOCKET-CONNECTOR (12-GA TO 14-GA)	
	3S-2093	38	STRAP-CABLE	
	7R-2750	62	SEAL-CONNECTOR	
	7R-2751	99	PLUG-CONNECTOR (1-PIN)	
	7T-0094	2	SOCKET-CONNECTOR (12-GA TO 14-GA)	
	9X-0196	1	TERMINAL AS	
	8T-8737	372	PLUG-SEAL	
	196-2412	96	TERMINAL AS (16-GA)	
			(EACH INCLUDES)	
	7R-2750	1	SEAL-CONNECTOR	
E	**125-7874**		TUBE-HEAT SHRINK (5.72-MM DIA) (640-CM)	
E	**125-7875**		TUBE-HEAT SHRINK (7.44-MM DIA) (50-CM)	
	9X-3402	477	SOCKET-CONNECTOR (16-GA TO 18-GA)	
			—OR—	
	126-1768	479	SOCKET-CONNECTOR (14-GA TO 16-GA)	
	126-1774	4	COVER-CONNECTOR	
	128-4123	3	SEAL	
	2L-8069	5	TERMINAL-RING (2-GA TO 10-GA, 3/8-IN SCREW)	
	128-5016	96	SEAL-CABLE	
	5P-5618	1	TERMINAL-BLADE (10-GA TO 12-GA)	
	5P-4571	3	TERMINAL-BLADE (14-GA TO 16-GA)	
	2L-8052	3	TERMINAL-RING (6-GA, 3/8-IN SCREW)	
			—OR—	
	2L-8060	3	TERMINAL-RING (8-GA, 3/8-IN SCREW)	
	2L-8079	11	TERMINAL-RING (14-GA TO 16-GA, 3/8-IN SCREW)	
	134-2540	3	RESISTOR AS-CONNECTION (3-PIN)	
	144-1636	229	PIN-CONNECTOR (14-GA TO 18-GA)	
	155-2258	9	WEDGE-PLUG LOCK (12-PIN)	
	155-2259	11	WEDGE-PLUG LOCK (8-PIN)	
	155-2261	6	WEDGE-PLUG LOCK (2-PIN)	
	155-2262	5	WEDGE-PLUG LOCK (4-PIN)	
	160-7690	1	PLUG AS-CONNECTOR (70-PIN)	
	159-9322	1	SEAL-O-RING	
	5P-2957	2	TERMINAL-BLADE (14-GA TO 16-GA)	
			—OR—	
	5P-5602	2	TERMINAL-BLADE (18-GA TO 22-GA)	
	167-3692	1	RECEPTACLE AS-CONNECTOR (31-PIN)	
	171-0596	1	RECEPTACLE AS-CONNECTOR	
	196-2413	65	TERMINAL AS (12-GA)	
	185-1860	56	SEAL-WIRE	
	197-7259	1	RECEPTACLE AS-CONNECTOR (19-PIN)	
	202-5397	24	PLUG	
	203-9007	3	NUT (1-1/2-18-THD)	
	204-1297	56	TERMINAL AS-BLADE (18-GA TO 20-GA)	
			(EACH INCLUDES)	
	235-4123	1	TERMINAL (18-GA TO 20-GA)	
	211-0052	3	NUT (1-11/16-18-THD)	
	230-4011	1	PLUG AS-CONNECTOR (2-PIN)	
	455-0704	1	SEAL-CONNECTOR	

475-4304 **HARNESS AS-CAB (*contd.*)** **i06144070**

NOTE	PART NUMBER	QTY	PART NAME 1 2 3 4 5 6 (PRODUCT LEVEL)	SEE PAGE
	230-4012	1	RECEPTACLE AS-CONNECTOR (2-PIN)	
	230-5010	2	PLUG AS-CONNECTOR (6-PIN)	
			(EACH INCLUDES)	
	455-0707	1	SEAL-CONNECTOR	
	239-7352	2	PLUG AS-CONNECTOR (6-PIN)	
			(EACH INCLUDES)	
	455-0707	1	SEAL-CONNECTOR	
	245-8025	11	PLUG AS	
	261-0524	1	PLUG AS-CONNECTOR (4-PIN)	
	455-0706	1	SEAL-CONNECTOR	
	269-8222	10	PLUG AS-CONNECTOR	
	269-8225	5	PLUG AS	
	270-2679	3	LOCKWASHER	
	271-5590	2	PLUG AS-CONNECTOR (2-PIN)	
	273-3288	1	RECEPTACLE AS-CONNECTOR	
	283-8106	4	SOCKET-CONNECTOR (20-GA)	
			—OR—	
	374-8372	4	SOCKET-CONNECTOR (16-GA TO 18-GA)	
	281-3395	2	PLUG AS-CONNECTOR (12-PIN)	
			(EACH INCLUDES)	
	455-0709	1	SEAL-CONNECTOR	
	281-8811	2	PLUG AS-CONNECTOR (6-PIN)	
			(EACH INCLUDES)	
	455-0707	1	SEAL-CONNECTOR	
	309-6831	2	PLUG AS-CONNECTOR (70-PIN)	
			(EACH INCLUDES)	
	159-9322	1	SEAL-O-RING	
	309-9886	1	BLOCK AS-FUSE	
M	**5C-7261**	2	NUT (M8X1.25-THD)	
	7X-0608	2	WASHER-HARD (10.2X16X2-MM THK)	
	9F-5644	2	LOCKWASHER	
	310-0674	3	LOCKWASHER	
	324-5680	1	RECEPTACLE AS-CONNECTOR (120-PIN)	
	324-5681	1	SEAL	
B	**329-3734**		TAPE-ELECTRICAL	
	331-3575	1	RECEPTACLE AS-CONNECTOR (70-PIN)	
	331-4222	3	KIT-CONNECTING PLUG (12-PIN)	
	331-4223	1	KIT-CONNECTING PLUG (12-PIN)	
	331-4224	11	KIT-CONNECTING PLUG (6-PIN)	
	331-4226	6	KIT-CONNECTING PLUG (2-PIN)	
	176-2947	5	KIT-CONNECTING PLUG (4-PIN)	
			(EACH PLUG KIT INCLUDES PLUG AS, WEDGE & INTERFACE SEAL)	
	177-9648	2	KIT-CONNECTING PLUG (2-PIN)	
			(EACH INCLUDES PLUG AS & WEDGE)	
	245-7434	8	KIT-CONNECTING PLUG (10-PIN)	
			(EACH INCLUDES PLUG CONNECTOR, WIRE AS & PLUG)	
	331-3593	1	RECEPTACLE AS-CONNECTOR	
	338-8860	2	PLUG AS-CONNECTOR (70-PIN)	
			(EACH INCLUDES)	
	159-9322	1	SEAL-O-RING	
E	**347-4721**		SLEEVE (206-CM)	
	359-5180	2	PLUG AS-CONNECTOR	
	374-7463	3	CAP-SEAL	
	374-7464	2	CAP-SEAL	
	374-7465	2	CAP-SEAL	
	374-7466	5	CAP-SEAL	
	374-7467	6	CAP-SEAL	
	374-7468	2	CAP-SEAL	
	451-2140	1	BLOCK AS-FUSE	
M	**5C-7261**	1	NUT (M8X1.25-THD)	
	7X-0608	1	WASHER-HARD (10.2X16X2-MM THK)	

475-4304 **HARNESS AS-CAB (*contd.*)** **i06144070**

NOTE	PART NUMBER	QTY	PART NAME 1 2 3 4 5 6 (PRODUCT LEVEL)	SEE PAGE
	264-3617	1	LOCKWASHER	
E	**452-9526**		SLEEVE (15-CM)	

B - USE AS REQUIRED
E - ORDER BY THE CENTIMETER
M - METRIC PART

<END>

439-4710 HARNESS AS-CONTROL

S/N: E9Y1-UP

PART OF 370-8452 WIRING GP-GRADE CONTROL

SMCS-1408 **i06158534**

NOTE	PART NUMBER	QTY	PART NAME 1 2 3 4 5 6 (PRODUCT LEVEL)	SEE PAGE
	7R-3029	4	CAP-DUST	
	243-5362	1	CAP-DUST	
	228-3323	4	CLIP-SPRING	
	174-0503	1	KIT-CONNECTING PLUG (3-PIN)	
			(INCLUDES PLUG AS, WEDGE & INTERFACE SEAL)	
	102-8804	1	KIT-RECEPTACLE (4-PIN)	
			(INCLUDES RECEPTACLE AS & WEDGE)	
	9W-0852	2	PIN-CONNECTOR (14-GA TO 16-GA)	
	9X-3401	2	PIN-CONNECTOR (16-GA TO 18-GA)	
	9X-4385	1	PLUG AS-CONNECTOR (6-PIN)	
	359-5179	1	PLUG AS-CONNECTOR (14-PIN)	
	8T-8737	5	PLUG-SEAL	
	134-2540	1	RESISTOR AS-CONNECTION (3-PIN)	
	8T-8730	2	SOCKET-CONNECTOR (16-GA TO 18-GA)	
	9W-0844	4	SOCKET-CONNECTOR (14-GA TO 16-GA)	
	9X-3402	6	SOCKET-CONNECTOR (16-GA TO 18-GA)	
E	**119-3662**		TUBE-HEAT SHRINK (10.85-MM DIA) (26-CM)	
E	**125-7875**		TUBE-HEAT SHRINK (7.44-MM DIA) (125-CM)	
	3E-3377	1	WEDGE-RECEPTACLE LOCK (4-PIN)	

E - ORDER BY THE CENTIMETER

<END>

474-5409 HARNESS AS-CONTROL–DRAWBAR

S/N: E9Y1-UP

COMBINES ACCUGRADE & AUTOLUBE HARNESSES

PART OF 370-8452 WIRING GP-GRADE CONTROL

SMCS-1408 **i06103611**

NOTE	PART NUMBER	QTY	PART NAME 1 2 3 4 5 6 (PRODUCT LEVEL)	SEE PAGE
G	**165-0018**		HOSE (132-IN)	
	155-2271	2	KIT-CONNECTING PLUG (4-PIN)	
	155-2270	2	KIT-CONNECTING PLUG (2-PIN)	
	174-0503	1	KIT-CONNECTING PLUG (3-PIN)	
			(EACH KIT INCLUDES PLUG AS, WEDGE(S) & INTERFACE SEAL)	
	102-8802	1	KIT-RECEPTACLE (2-PIN)	
	102-8804	1	KIT-RECEPTACLE (4-PIN)	
			(EACH KIT INLUDES RECEPTACLE AS & WEDGE)	
	8T-8729	2	PIN-CONNECTOR (16-GA TO 18-GA)	
	9X-3401	2	PIN-CONNECTOR (16-GA TO 18-GA)	
	8T-8737	3	PLUG-SEAL	
	134-2540	1	RESISTOR AS-CONNECTION (3-PIN)	
	8T-8730	4	SOCKET-CONNECTOR (16-GA TO 18-GA)	
	9W-0844	2	SOCKET-CONNECTOR (14-GA TO 16-GA)	
	9X-3402	8	SOCKET-CONNECTOR (16-GA TO 18-GA)	
B	**368-2370**		TAPE (48-CM)	
E	**125-7875**		TUBE-HEAT SHRINK (7.44-MM DIA) (30-CM)	
E	**210-8958**		TUBE-HEAT SHRINK (24-MM DIA) (14-CM)	

B - USE AS REQUIRED
E - ORDER BY THE CENTIMETER
G - ORDER BY THE INCH

<END>

370-3255 HARNESS AS-ENGINE

S/N: TXX1-UP

PART OF 370-3254 WIRING GP-UNIT INJECTOR

AN ATTACHMENT

SMCS-1408 **i05632970**

NOTE	REF NO	GRAPHIC REF	PART NUMBER	QTY	PART NAME 1 2 3 4 5 6 (PRODUCT LEVEL)	SEE PAGE
	1	1	**346-4897**	1	SEAL-O-RING	
	2	1	**3S-2093**	4	STRAP-CABLE	
	3	1	**241-5682**	11	CLIP	
Y	4	1	*370-3257*	1	HARNESS AS-ENGINE	179
	5	1	**1S-9593**	15	STRAP-CABLE	
	6	1	**033-6034**	1	SEAL-O-RING	

Y - SEPARATE ILLUSTRATION

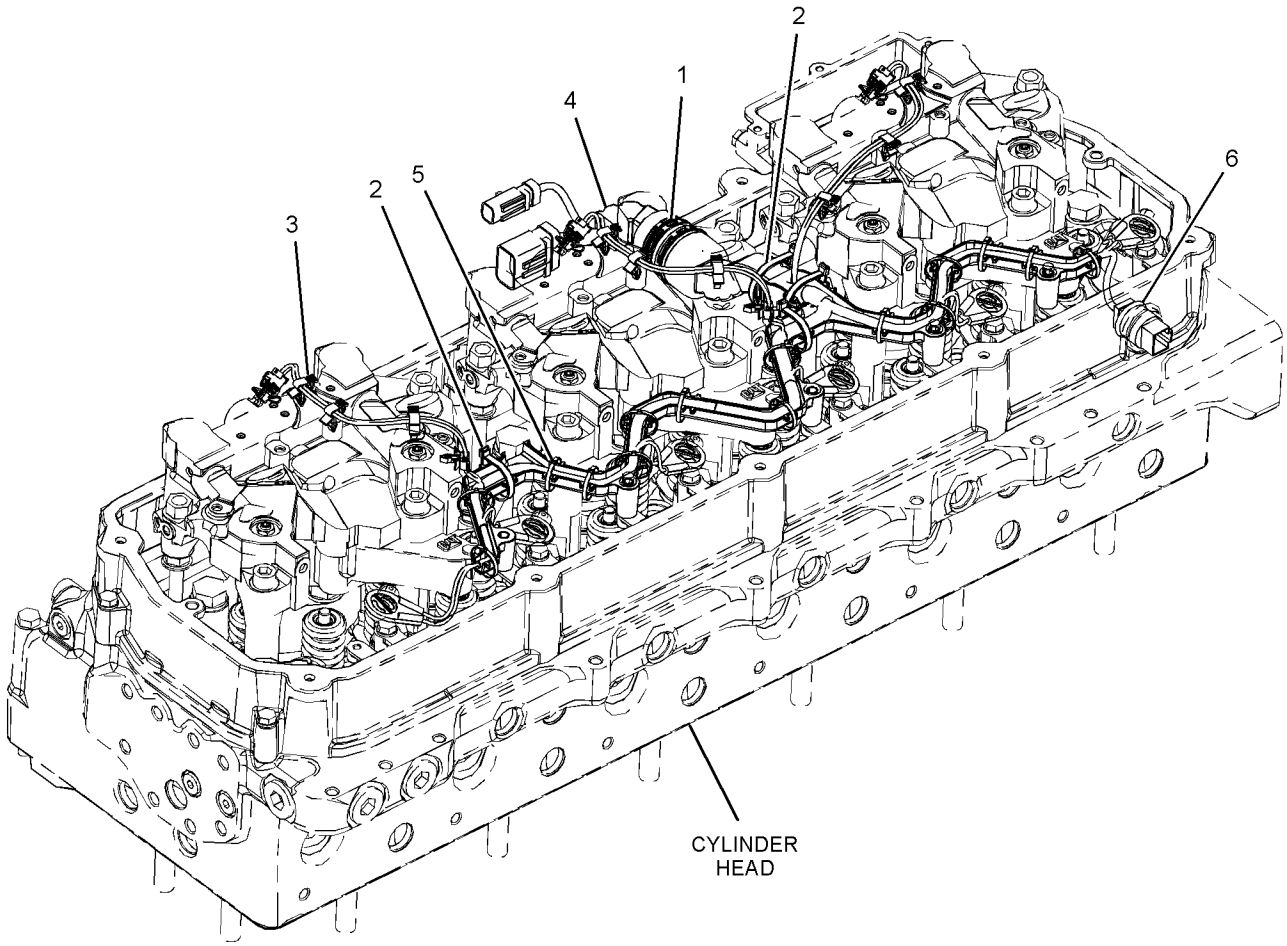

GRAPHIC #1 **<END>** g02633437

370-3257 HARNESS AS-ENGINE

S/N: TXX1-UP
PART OF 370-3255 HARNESS AS-ENGINE
AN ATTACHMENT

SMCS-1408 **i05219066**

NOTE	PART NUMBER	QTY	PART NAME 1 2 3 4 5 6 (PRODUCT LEVEL)	SEE PAGE
	102-8804	1	KIT-RECEPTACLE (4-PIN)	
			(INCLUDES RECEPTACLE AS AND WEDGE)	
	9X-3401	16	PIN-CONNECTOR (16-GA TO 18-GA)	
			—OR—	
	126-1767	16	PIN-CONNECTOR (14-GA TO 16-GA)	
	8T-8737	2	PLUG-SEAL	
	238-8246	1	RECEPTACLE AS (2-PIN)	
	113-4630	1	RECEPTACLE AS-CONNECTOR (4-PIN)	
	230-4010	1	RECEPTACLE AS-CONNECTOR (12-PIN)	
E	**329-3734**		TAPE-ELECTRICAL (15-CM)	
E	**125-7874**		TUBE-HEAT SHRINK (5.72-MM DIA) (56-CM)	

E - ORDER BY THE CENTIMETER

<END>

474-5407 HARNESS AS-FRONT

S/N: E9Y1-UP
PART OF 370-8445 WIRING GP-FRONT

SMCS-1408 **i06140404**

NOTE	PART NUMBER	QTY	PART NAME 1 2 3 4 5 6 (PRODUCT LEVEL)	SEE PAGE
	274-3774	1	CAP-CONNECTOR	
	274-3781	2	CAP-SEAL	
	155-2270	5	KIT-CONNECTING PLUG (2-PIN)	
			(EACH INCLUDES PLUG AS, WEDGE & INTERFACE SEAL)	
	102-8801	1	KIT-RECEPTACLE (12-PIN)	
			(INCLUDES RECEPTACLE AS & WEDGE)	
	8T-8729	6	PIN-CONNECTOR (16-GA TO 18-GA)	
	9X-3401	4	PIN-CONNECTOR (16-GA TO 18-GA)	
	230-4013	2	PLUG AS-CONNECTOR (3-PIN)	
			(EACH INCLUDES)	
	455-0705	1	SEAL-CONNECTOR	
	8T-8737	2	PLUG-SEAL	
	8T-8730	10	SOCKET-CONNECTOR (16-GA TO 18-GA)	
	9X-3402	6	SOCKET-CONNECTOR (16-GA TO 18-GA)	
BE	**125-7874**		TUBE-HEAT SHRINK (5.72-MM DIA) (10-CM)	
BE	**125-7875**		TUBE-HEAT SHRINK (7.44-MM DIA) (20-CM)	

B - USE AS REQUIRED
E - ORDER BY THE CENTIMETER

<END>

474-5411 HARNESS AS-FRONT

S/N: E9Y1-UP

PART OF 370-8445 WIRING GP-FRONT

SMCS-1408 **i06095071**

NOTE	PART NUMBER	QTY	PART NAME 1 2 3 4 5 6 (PRODUCT LEVEL)	SEE PAGE
	274-3774	7	CAP-CONNECTOR	
	274-3777	1	CAP-CONNECTOR	
BE	**232-0895**		CONDUIT-FLEXIBLE (9.6-MM ID) (115-CM)	
	155-2255	1	KIT-CONNECTING PLUG (12-PIN)	
	155-2260	1	KIT-CONNECTING PLUG (3-PIN)	
	155-2270	31	KIT-CONNECTING PLUG (2-PIN)	
	155-2271	2	KIT-CONNECTING PLUG (4-PIN)	
	155-2274	3	KIT-CONNECTING PLUG (6-PIN)	
			(EACH PLUG KIT INCLUDES PLUG AS, WEDGE(S) & INTERFACE SEAL)	
	102-8802	2	KIT-RECEPTACLE (2-PIN)	
	102-8803	3	KIT-RECEPTACLE (3-PIN)	
	102-8805	1	KIT-RECEPTACLE (6-PIN)	
			(EACH RECPECTACLE KIT INCLUDES RECEPTACLE AS & WEDGE)	
	8T-8729	2	PIN-CONNECTOR (16-GA TO 18-GA)	
	9X-3401	11	PIN-CONNECTOR (16-GA TO 18-GA)	
	160-7689	1	PLUG AS-CONNECTOR (70-PIN)	
	159-9322	1	SEAL-O-RING	
	197-7261	1	PLUG AS-CONNECTOR (19-PIN)	
	230-4013	1	PLUG AS-CONNECTOR (3-PIN)	
	455-0705	1	SEAL-CONNECTOR	
	8T-8737	31	PLUG-SEAL	
BE	**114-8843**		SLEEVE-PLASTIC (20-CM)	
	7T-0094	2	SOCKET-CONNECTOR (12-GA TO 14-GA)	
	8T-8730	126	SOCKET-CONNECTOR (16-GA TO 18-GA)	
	9W-0844	5	SOCKET-CONNECTOR (14-GA TO 16-GA)	
	9X-3402	36	SOCKET-CONNECTOR (16-GA TO 18-GA)	
	2L-8069	2	TERMINAL-RING (2-GA TO 10-GA, 3/8-IN SCREW)	
BE	**119-3662**		TUBE-HEAT SHRINK (10.85-MM DIA) (13-CM)	
BE	**125-7874**		TUBE-HEAT SHRINK (5.72-MM DIA) (60-CM)	
BE	**125-7875**		TUBE-HEAT SHRINK (7.44-MM DIA) (35-CM)	
BE	**125-7876**		TUBE-HEAT SHRINK (17.78-MM DIA) (14-CM)	
	155-2258	1	WEDGE-PLUG LOCK (12-PIN)	
	3E-3371	3	WEDGE-RECEPTACLE LOCK (3-PIN)	

B - USE AS REQUIRED
E - ORDER BY THE CENTIMETER

<END>

459-1690 HARNESS AS-FUEL TANK–FUEL SENDER

S/N: E9Y1-UP

PART OF 420-9090 WIRING GP-REAR

SMCS-1408 **i06140525**

NOTE	PART NUMBER	QTY	PART NAME 1 2 3 4 5 6 (PRODUCT LEVEL)	SEE PAGE
	455-3852	1	BOOT	
	274-3774	1	CAP-CONNECTOR	
	155-2270	3	KIT-CONNECTING PLUG (2-PIN)	
	155-2274	1	KIT-CONNECTING PLUG (6-PIN)	
			(EACH PLUG KIT INCLUDES PLUG AS, WEDGE & INTERFACE SEAL)	
E	**333-0968**		SLEEVE (36-CM)	
	8T-8730	8	SOCKET-CONNECTOR (16-GA TO 18-GA)	
	9W-0844	4	SOCKET-CONNECTOR (14-GA TO 16-GA)	
	3S-2093	1	STRAP-CABLE	
E - ORDER BY THE CENTIMETER				

<END>

475-4928 HARNESS AS-LIGHTING–LADDER

S/N: E9Y1-UP

PART OF 370-8510 LIGHTING GP-FLOOD

AN ATTACHMENT

SMCS-1408 **i06158531**

NOTE	PART NUMBER	QTY	PART NAME 1 2 3 4 5 6 (PRODUCT LEVEL)	SEE PAGE
	155-2260	1	KIT-CONNECTING PLUG (3-PIN)	
	155-2270	1	KIT-CONNECTING PLUG (2-PIN)	
			(EACH PLUG KIT INCLUDES PLUG AS, WEDGE & INTERFACE SEAL)	
	102-8803	1	KIT-RECEPTACLE (3-PIN)	
	102-8805	1	KIT-RECEPTACLE (6-PIN)	
			(EACH RECEPTACLE KIT INCLUDES RECEPTACLE AS & WEDGE)	
	8T-8729	5	PIN-CONNECTOR (16-GA TO 18-GA)	
	8T-8737	4	PLUG-SEAL	
	8T-8730	5	SOCKET-CONNECTOR (16-GA TO 18-GA)	

<END>

479-6066 HARNESS AS-LIGHTING—STOP, TAIL, TURN, BACKUP

S/N: E9Y1-UP

PART OF 475-4930 WIRING GP-REAR, 479-6065 WIRING GP-REAR LIGHTING

AN ATTACHMENT

SMCS-1408 **i06139525**

NOTE	PART NUMBER	QTY	PART NAME 1 2 3 4 5 6 (PRODUCT LEVEL)	SEE PAGE
	155-2270	1	KIT-CONNECTING PLUG (2-PIN)	
	155-2271	1	KIT-CONNECTING PLUG (4-PIN)	
			(EACH PLUG KIT INCLUDES PLUG AS, WEDGE & INTERFACE SEAL)	
	102-8802	1	KIT-RECEPTACLE (2-PIN)	
	102-8804	1	KIT-RECEPTACLE (4-PIN)	
			(EACH RECEPTACLE KIT INCLUDES RECEPTACLE AS & WEDGE)	
	8T-8729	6	PIN-CONNECTOR (16-GA TO 18-GA)	
	8T-8730	6	SOCKET-CONNECTOR (16-GA TO 18-GA)	

<END>

200-5728 HARNESS AS-RADIO

S/N: E9Y1-UP

4-FLANGE

PART OF 477-1254 INSTALLATION GP-RADIO, 294-0989 RADIO GP

AN ATTACHMENT

SMCS-1408 **i05346149**

NOTE	PART NUMBER	QTY	PART NAME 1 2 3 4 5 6 (PRODUCT LEVEL)	SEE PAGE
	172-8037	1	CONNECTOR (RADIO)	
	160-3518	1	KIT-RECEPTACLE (8-PIN)	
			(INCLUDES RECEPTACLE AS & WEDGE)	
	8T-8729	7	PIN-CONNECTOR (16-GA TO 18-GA)	
	8T-8737	1	PLUG-SEAL	
	172-8039	11	TERMINAL (RADIO)	

<END>

439-4715 HARNESS AS-REAR

S/N: E9Y1-UP

PART OF 420-9085 WIRING GP-REAR

SMCS-1408 **i06126075**

NOTE	PART NUMBER	QTY	PART NAME 1 2 3 4 5 6 (PRODUCT LEVEL)	SEE PAGE
	274-3774	1	CAP-CONNECTOR	
	155-2260	2	KIT-CONNECTING PLUG (3-PIN)	
	155-2270	3	KIT-CONNECTING PLUG (2-PIN)	
			(EACH PLUG KIT INCLUDES PLUG AS, WEDGE & INTERFACE SEAL)	
	102-8805	1	KIT-RECEPTACLE (6-PIN)	
	102-8801	1	KIT-RECEPTACLE (12-PIN)	
	177-9645	2	KIT-RECEPTACLE (2-PIN)	
			(EACH RECEPTACLE KIT INCLUDES RECEPTACLE AS & WEDGE)	
	310-0674	1	LOCKWASHER	
	211-0052	1	NUT (1-11/16-18-THD)	
	7T-0093	3	PIN-CONNECTOR (12-GA TO 14-GA)	
	8T-8729	19	PIN-CONNECTOR (16-GA TO 18-GA)	
	9W-0852	2	PIN-CONNECTOR (14-GA TO 16-GA)	
	9X-3401	4	PIN-CONNECTOR (16-GA TO 18-GA)	
	167-3693	1	PLUG AS-CONNECTOR (31-PIN)	
	230-4011	1	PLUG AS-CONNECTOR (2-PIN)	
	455-0704	1	SEAL-CONNECTOR	
	281-8803	1	PLUG AS-CONNECTOR (3-PIN)	
	455-0705	1	SEAL-CONNECTOR	
	8T-8737	13	PLUG-SEAL	
	197-7259	1	RECEPTACLE AS-CONNECTOR (19-PIN)	
	8T-8730	32	SOCKET-CONNECTOR (16-GA TO 18-GA)	
	9W-0844	3	SOCKET-CONNECTOR (14-GA TO 16-GA)	
	9X-3402	13	SOCKET-CONNECTOR (16-GA TO 18-GA)	
	2L-8076	2	TERMINAL-RING (14-GA TO 16-GA, NO. 10 SCREW)	
E	**125-7874**		TUBE-HEAT SHRINK (5.72-MM DIA) (10-CM)	

E - ORDER BY THE CENTIMETER

<END>

444-0560 HARNESS AS-REAR—RADIATOR

S/N: E9Y1-UP

PART OF 475-4930 WIRING GP-REAR, 370-8449, 370-8450, 479-6065 WIRING GP-REAR LIGHTING AN ATTACHMENT

SMCS-1408 **i06126077**

NOTE	PART NUMBER	QTY	PART NAME 1 2 3 4 5 6 (PRODUCT LEVEL)	SEE PAGE
	274-3774	2	CAP-CONNECTOR	
E	**232-0895**		CONDUIT-FLEXIBLE (9.6-MM ID) (67-CM)	
	155-2270	5	KIT-CONNECTING PLUG (2-PIN)	
	155-2271	2	KIT-CONNECTING PLUG (4-PIN)	
			(EACH PLUG KIT INCLUDES PLUG AS, WEDGE & INTERFACE SEAL)	
	176-9299	1	KIT-RECEPTACLE (3-PIN)	
			(INCLUDES RECEPTACLE AS & WEDGES)	
	9X-3401	2	PIN-CONNECTOR (16-GA TO 18-GA)	
	174-3016	1	PLUG AS-CONNECTOR (3-PIN)	
	197-7261	1	PLUG AS-CONNECTOR (19-PIN)	
	230-5010	2	PLUG AS-CONNECTOR (6-PIN)	
			(EACH INCLUDES)	
	455-0707	1	SEAL-CONNECTOR	
	8T-8737	11	PLUG-SEAL	
	274-3783	2	SEAL-CAP	
	7T-0094	2	SOCKET-CONNECTOR (12-GA TO 14-GA)	
	8T-8730	27	SOCKET-CONNECTOR (16-GA TO 18-GA)	
	9W-0844	4	SOCKET-CONNECTOR (14-GA TO 16-GA)	
	9X-3402	6	SOCKET-CONNECTOR (16-GA TO 18-GA)	
E	**119-3662**		TUBE-HEAT SHRINK (10.85-MM DIA) (7-CM)	
E	**125-7874**		TUBE-HEAT SHRINK (5.72-MM DIA) (40-CM)	
E	**125-7875**		TUBE-HEAT SHRINK (7.44-MM DIA) (5-CM)	

E - ORDER BY THE CENTIMETER

<END>

459-1689 HARNESS AS-REAR

S/N: E9Y1-UP

PART OF 420-9090 WIRING GP-REAR

SMCS-1408 **i06140411**

NOTE	PART NUMBER	QTY	PART NAME 1 2 3 4 5 6 (PRODUCT LEVEL)	SEE PAGE
	274-3774	1	CAP-CONNECTOR	
	155-2270	2	KIT-CONNECTING PLUG (2-PIN)	
			(EACH INCLUDES PLUG AS, WEDGE & INTERFACE SEAL)	
	102-8804	1	KIT-RECEPTACLE (4-PIN)	
			(INCLUDES RECEPTACLE AS & WEDGE)	
	8T-8729	4	PIN-CONNECTOR (16-GA TO 18-GA)	
	8T-8730	4	SOCKET-CONNECTOR (16-GA TO 18-GA)	
	3S-2093	1	STRAP-CABLE	
	155-2261	2	WEDGE-PLUG LOCK (2-PIN)	
	3E-3377	1	WEDGE-RECEPTACLE LOCK (4-PIN)	

<END>

459-1700 HARNESS AS-REAR

S/N: E9Y1-UP

PART OF 420-9090 WIRING GP-REAR

SMCS-1408 **i06158536**

NOTE	PART NUMBER	QTY	PART NAME 1 2 3 4 5 6 (PRODUCT LEVEL)	SEE PAGE
	274-3774	1	CAP-CONNECTOR	
	432-8393	1	CONDUIT	
	213-0141	2	CONNECTOR	
	126-1774	2	COVER-CONNECTOR	
	174-0503	1	KIT-CONNECTING PLUG (3-PIN)	
	155-2274	2	KIT-CONNECTING PLUG (6-PIN)	
	155-2255	1	KIT-CONNECTING PLUG (12-PIN)	
	155-2260	2	KIT-CONNECTING PLUG (3-PIN)	
			(EACH PLUG KIT INCLUDES PLUG AS, WEDGE & INTERFACE SEAL)	
	177-9648	1	KIT-CONNECTING PLUG (2-PIN)	
			(INCLUDES PLUG AS & WEDGE)	
	102-8805	1	KIT-RECEPTACLE (6-PIN)	
			(INCLUDES RECEPTACLE AS & WEDGE)	
	128-4249	1	LOCKWASHER	
	211-0052	1	NUT (1-11/16-18-THD)	
	8T-8729	23	PIN-CONNECTOR (16-GA TO 18-GA)	
	9W-0852	5	PIN-CONNECTOR (14-GA TO 16-GA)	
	9X-3401	9	PIN-CONNECTOR (16-GA TO 18-GA)	
	147-1446	1	PLUG AS-CONNECTOR (70-PIN)	
	159-9322	1	SEAL-O-RING	
	155-2269	2	PLUG AS-CONNECTOR (2-PIN)	
	155-2272	1	PLUG AS-CONNECTOR (4-PIN)	
	160-7689	1	PLUG AS-CONNECTOR (70-PIN)	
	159-9322	1	SEAL-O-RING	
	230-4011	1	PLUG AS-CONNECTOR (2-PIN)	
	455-0704	1	SEAL-CONNECTOR	
	237-0227	2	PLUG AS-CONNECTOR (3-PIN)	
			(EACH INCLUDES)	
	455-0705	1	SEAL-CONNECTOR	
	241-8834	1	PLUG AS-CONNECTOR (12-PIN)	
	455-0709	1	SEAL-CONNECTOR	
	264-5732	1	PLUG AS-CONNECTOR (120-PIN)	
	288-7324	1	SEAL-CONNECTOR	
	8T-8737	151	PLUG-SEAL	
	134-2540	1	RESISTOR AS-CONNECTION (3-PIN)	
	167-3692	1	RECEPTACLE AS-CONNECTOR (31-PIN)	
	7T-0094	1	SOCKET-CONNECTOR (12-GA TO 14-GA)	
	8T-8730	73	SOCKET-CONNECTOR (16-GA TO 18-GA)	
	9W-0844	17	SOCKET-CONNECTOR (14-GA TO 16-GA)	
	9X-3402	127	SOCKET-CONNECTOR (16-GA TO 18-GA)	
	3S-2093	4	STRAP-CABLE	
	2L-8069	5	TERMINAL-RING (2-GA TO 10-GA, 3/8-IN SCREW)	
	2L-8079	2	TERMINAL-RING (14-GA TO 16-GA, 3/8-IN SCREW)	
	435-5164	2	TUBE	
BE	**119-3662**		TUBE-HEAT SHRINK (10.85-MM DIA) (26-CM)	
BE	**125-7874**		TUBE-HEAT SHRINK (5.72-MM DIA) (95-CM)	
BE	**125-7875**		TUBE-HEAT SHRINK (7.44-MM DIA) (5-CM)	
	155-2258	1	WEDGE-PLUG LOCK (12-PIN)	
	155-2261	2	WEDGE-PLUG LOCK (2-PIN)	
	155-2262	1	WEDGE-PLUG LOCK (4-PIN)	
	3E-3383	1	WEDGE-RECEPTACLE LOCK (6-PIN)	

B - USE AS REQUIRED
E - ORDER BY THE CENTIMETER

<END>

459-1701 HARNESS AS-REAR

S/N: E9Y1-UP

PART OF 420-9090 WIRING GP-REAR

SMCS-1408 **i06140414**

NOTE	PART NUMBER	QTY	PART NAME 1 2 3 4 5 6 (PRODUCT LEVEL)	SEE PAGE
	311-8740	1	ADAPTER-CONNECTOR	
BE	**233-9494**		CONDUIT (47-MM OD) (78-CM)	
	155-2270	3	KIT-CONNECTING PLUG (2-PIN)	
	155-2274	1	KIT-CONNECTING PLUG (6-PIN)	
			(EACH PLUG KIT INCLUDES PLUG AS, WEDGE & INTERFACE SEAL)	
	310-0674	1	LOCKWASHER	
	211-0052	1	NUT (1-11/16-18-THD)	
	8T-8729	4	PIN-CONNECTOR (16-GA TO 18-GA)	
	9W-0852	6	PIN-CONNECTOR (14-GA TO 16-GA)	
	9X-3401	64	PIN-CONNECTOR (16-GA TO 18-GA)	
	264-5732	1	PLUG AS-CONNECTOR (120-PIN)	
	288-7324	1	SEAL-CONNECTOR	
	311-2812	1	PLUG-CONNECTOR	
	8T-8737	134	PLUG-SEAL	
	324-5680	1	RECEPTACLE AS-CONNECTOR (120-PIN)	
	324-5681	1	SEAL	
	331-3593	1	RECEPTACLE AS-CONNECTOR	
	8T-8730	12	SOCKET-CONNECTOR (16-GA TO 18-GA)	
	9W-0844	6	SOCKET-CONNECTOR (14-GA TO 16-GA)	
	9X-3402	72	SOCKET-CONNECTOR (16-GA TO 18-GA)	
BE	**125-7874**		TUBE-HEAT SHRINK (5.72-MM DIA) (20-CM)	
	155-2261	3	WEDGE-PLUG LOCK (2-PIN)	

B - USE AS REQUIRED
E - ORDER BY THE CENTIMETER

<END>

439-4712 HARNESS AS-REAR LIGHTING—REAR FRAME

S/N: E9Y1-UP

PART OF 420-9070 WIRING GP-REAR

SMCS-1408 **i06103292**

NOTE	PART NUMBER	QTY	PART NAME 1 2 3 4 5 6 (PRODUCT LEVEL)	SEE PAGE
E	**235-2765**		CONDUIT-FLEXIBLE (27.6-MM ID) (98-CM)	
	102-8801	1	KIT-RECEPTACLE (12-PIN)	
			(INLCUDES RECEPTACLE AS & WEDGE)	
	310-0674	1	LOCKWASHER	
	211-0052	1	NUT (1-11/16-18-THD)	
	8T-8729	8	PIN-CONNECTOR (16-GA TO 18-GA)	
	9W-0852	1	PIN-CONNECTOR (14-GA TO 16-GA)	
	9X-3401	2	PIN-CONNECTOR (16-GA TO 18-GA)	
	359-5179	1	PLUG AS-CONNECTOR (14-PIN)	
	361-2944	1	PLUG AS-CONNECTOR	
	7G-7920	2	PLUG-SEAL (GROMMET)	
	8T-8737	12	PLUG-SEAL	
	361-2945	1	RECEPTACLE AS	
	8T-8730	8	SOCKET-CONNECTOR (16-GA TO 18-GA)	
	9W-0844	1	SOCKET-CONNECTOR (14-GA TO 16-GA)	
	9X-3402	2	SOCKET-CONNECTOR (16-GA TO 18-GA)	
E	**311-4859**		TUBE-HEAT SHRINK (48-MM DIA) (20-CM)	

E - ORDER BY THE CENTIMETER

<END>

443-8386 HARNESS AS-REAR LIGHTING—RIGHT SIDE, REAR

S/N: E9Y1-UP

PART OF 420-9070 WIRING GP-REAR

SMCS-1408 **i06103293**

NOTE	PART NUMBER	QTY	PART NAME 1 2 3 4 5 6 (PRODUCT LEVEL)	SEE PAGE
	155-2255	1	KIT-CONNECTING PLUG (12-PIN)	
	155-2270	1	KIT-CONNECTING PLUG (2-PIN)	
			(EACH PLUG KIT INCLUDES PLUG AS, WEDGE & INTERFACE SEAL)	
	310-0674	2	LOCKWASHER	
	211-0052	2	NUT (1-11/16-18-THD)	
	7T-0093	2	PIN-CONNECTOR (12-GA TO 14-GA)	
	8T-8729	7	PIN-CONNECTOR (16-GA TO 18-GA)	
	9W-0852	2	PIN-CONNECTOR (14-GA TO 16-GA)	
	9X-3401	2	PIN-CONNECTOR (16-GA TO 18-GA)	
	361-2944	1	PLUG AS-CONNECTOR	
	7G-7920	2	PLUG-SEAL (GROMMET)	
	8T-8737	15	PLUG-SEAL	
	361-2945	1	RECEPTACLE AS	
	197-7259	1	RECEPTACLE AS-CONNECTOR (19-PIN)	
	8T-8730	10	SOCKET-CONNECTOR (16-GA TO 18-GA)	
	9W-0844	1	SOCKET-CONNECTOR (14-GA TO 16-GA)	
	9X-3402	2	SOCKET-CONNECTOR (16-GA TO 18-GA)	
	2L-8079	2	TERMINAL-RING (14-GA TO 16-GA, 3/8-IN SCREW)	

<END>

362-1505 HARNESS AS-SENSOR

S/N: TXX1-UP

PART OF 349-6154 WIRING GP-SENSOR

AN ATTACHMENT

SMCS-1408 **i05259722**

NOTE	PART NUMBER	QTY	PART NAME 1 2 3 4 5 6 (PRODUCT LEVEL)	SEE PAGE
	155-2271	1	KIT-CONNECTING PLUG (4-PIN)	
			(INCLUDES PLUG AS, WEDGE & INTERFACE SEAL)	
	230-4011	1	PLUG AS-CONNECTOR (2-PIN)	
	264-7029	1	SEAL-CONNECTOR	
	8T-8737	2	PLUG-SEAL	
E	**348-1879**		SLEEVE (47-CM)	
	9X-3402	4	SOCKET-CONNECTOR (16-GA TO 18-GA)	
			—OR—	
	126-1768	4	SOCKET-CONNECTOR (14-GA TO 16-GA)	
B	**1P-0810**		TAPE-ELECTRICAL	

B - USE AS REQUIRED
E - ORDER BY THE CENTIMETER

<END>

370-8447 HARNESS AS-SENSOR

S/N: E9Y1-UP

PART OF 370-8445 WIRING GP-FRONT

SMCS-1408 **i06095064**

NOTE	PART NUMBER	QTY	PART NAME 1 2 3 4 5 6 (PRODUCT LEVEL)	SEE PAGE
BE	**232-0895**		CONDUIT-FLEXIBLE (9.6-MM ID) (145-CM)	
	369-9842	1	FITTING-ELBOW	
	155-2260	1	KIT-CONNECTING PLUG (3-PIN)	
			(INCLUDES PLUG AS, WEDGE & INTERFACE SEAL)	
M	**263-6540**	1	NUT (M16X1.5-THD)	
	9X-3402	3	SOCKET-CONNECTOR (16-GA TO 18-GA)	

B - USE AS REQUIRED
E - ORDER BY THE CENTIMETER
M - METRIC PART

<END>

434-9531 HARNESS AS-SENSOR

S/N: TXX1-UP

PART OF 417-0980 WIRING GP-ELECTRONIC CONTROL

AN ATTACHMENT

SMCS-1408 **i05391312**

NOTE	PART NUMBER	QTY	PART NAME 1 2 3 4 5 6 (PRODUCT LEVEL)	SEE PAGE
	367-5037	1	COVER	
	211-6807	1	COVER-CONNECTOR	
	155-2270	1	KIT-CONNECTING PLUG (2-PIN)	
	174-0503	1	KIT-CONNECTING PLUG (3-PIN)	
	155-2260	1	KIT-CONNECTING PLUG (3-PIN)	
			(EACH PLUG KIT INCLUDES PLUG AS, WEDGE, & INTERFACE SEAL)	
	9X-3401	10	PIN-CONNECTOR (16-GA TO 18-GA)	
			—OR—	
	126-1767	10	PIN-CONNECTOR (14-GA TO 16-GA)	
	160-8124	1	PLUG AS (2-PIN)	
	102-8802	1	KIT-RECEPTACLE (2-PIN)	
			(INCLUDES RECEPTACLE AS AND WEDGE)	
	8T-8737	2	PLUG-SEAL	
	325-8700	1	PLUG AS	
	8T-8737	12	PLUG-SEAL	
	230-4009	1	PLUG AS-CONNECTOR (12-PIN)	
	264-7034	1	SEAL-CONNECTOR	
	230-4009	2	PLUG AS-CONNECTOR (12-PIN)	
	264-7034	1	SEAL-CONNECTOR	
	230-4011	3	PLUG AS-CONNECTOR (2-PIN)	
			(EACH INCLUDES)	
	264-7029	1	SEAL-CONNECTOR	
	237-0227	1	PLUG AS-CONNECTOR (3-PIN)	
	264-7030	1	SEAL-CONNECTOR	
	238-8245	1	PLUG AS-CONNECTOR (2-PIN)	
	264-7029	1	SEAL-CONNECTOR	
	264-5732	1	PLUG AS-CONNECTOR (120-PIN)	
	288-7324	1	SEAL-CONNECTOR	
	281-8803	1	PLUG AS-CONNECTOR (3-PIN)	
	264-7030	1	SEAL-CONNECTOR	
	281-8804	1	PLUG AS-CONNECTOR (3-PIN)	
	264-7030	1	SEAL-CONNECTOR	
	8T-8737	105	PLUG-SEAL	
	230-4010	2	RECEPTACLE AS-CONNECTOR (12-PIN)	
	355-6702	1	RECEPTACLE AS-CONNECTOR (2-PIN)	
	8T-8737	2	PLUG-SEAL	
	238-8246	1	RECEPTACLE AS (2-PIN)	
	134-2540	1	RESISTOR AS-CONNECTION (3-PIN)	
	9X-3402	75	SOCKET-CONNECTOR (16-GA TO 18-GA)	
			—OR—	
	126-1768	75	SOCKET-CONNECTOR (14-GA TO 16-GA)	
	1S-9593	5	STRAP-CABLE	
B	**329-3734**		TAPE-ELECTRICAL	
B	**1P-0810**		TAPE-ELECTRICAL	
E	**125-7874**		TUBE-HEAT SHRINK (5.72-MM DIA) (40-CM)	

B - USE AS REQUIRED
E - ORDER BY THE CENTIMETER

<END>

474-5410 HARNESS AS-SENSOR—ROTATION SENSOR

S/N: E9Y1-UP
ACCUGRADE READY OPTION
PART OF 370-8452 WIRING GP-GRADE CONTROL

SMCS-1408 **i06103612**

NOTE	PART NUMBER	QTY	PART NAME 1 2 3 4 5 6 (PRODUCT LEVEL)	SEE PAGE
	243-5362	1	CAP-DUST (PLUG)	
	155-2271	1	KIT-CONNECTING PLUG (4-PIN)	
			(INCLUDES PLUG AS, WEDGE & INTERFACE SEAL)	
	9X-4385	1	PLUG AS-CONNECTOR (6-PIN)	
	8T-8730	2	SOCKET-CONNECTOR (16-GA TO 18-GA)	
	9X-3402	2	SOCKET-CONNECTOR (16-GA TO 18-GA)	
E	**125-7875**		TUBE-HEAT SHRINK (7.44-MM DIA) (5-CM)	

E - ORDER BY THE CENTIMETER

<END>

391-4444 HARNESS AS-SOLENOID—STEERING VALVE

S/N: E9Y1-UP
PART OF 391-4440 HARNESS AS-VALVE

SMCS-1408, 1467 **i06095067**

NOTE	PART NUMBER	QTY	PART NAME 1 2 3 4 5 6 (PRODUCT LEVEL)	SEE PAGE
	311-8743	4	ADAPTER-CONNECTOR	
	318-2589	1	HOUSING-RECEPTACLE	
	155-2270	4	KIT-CONNECTING PLUG (2-PIN)	
			(EACH INCLUDES PLUG AS, WEDGE & INTERFACE SEAL)	
	102-8804	1	KIT-RECEPTACLE (4-PIN)	
	102-8805	1	KIT-RECEPTACLE (6-PIN)	
			(EACH RECEPTACLE KIT INCLUDES RECEPTACLE AS & WEDGE)	
	9X-3401	10	PIN-CONNECTOR (16-GA TO 18-GA)	
	230-4011	1	PLUG AS-CONNECTOR (2-PIN)	
	455-0704	1	SEAL-CONNECTOR	
	9X-3402	10	SOCKET-CONNECTOR (16-GA TO 18-GA)	
E	**125-7876**		TUBE-HEAT SHRINK (17.78-MM DIA) (21-CM)	
	3E-3377	1	WEDGE-RECEPTACLE LOCK (4-PIN)	
	3E-3383	1	WEDGE-RECEPTACLE LOCK (6-PIN)	

E - ORDER BY THE CENTIMETER

<END>

430-9835 HARNESS AS-SOLENOID

S/N: E9Y1-UP

PART OF 420-9085 WIRING GP-REAR

SMCS-1408, 1467 **i06088525**

NOTE	PART NUMBER	QTY	PART NAME 1 2 3 4 5 6 (PRODUCT LEVEL)	SEE PAGE
	155-2255	1	KIT-CONNECTING PLUG (12-PIN)	
	155-2270	2	KIT-CONNECTING PLUG (2-PIN)	
			(EACH PLUG KIT INCLUDES PLUG AS, WEDGE & INTERFACE SEAL)	
	230-4013	2	PLUG AS-CONNECTOR (3-PIN)	
			(EACH INCLUDES)	
	455-0705	1	SEAL-CONNECTOR	
	8T-8737	4	PLUG-SEAL	
	8T-8730	8	SOCKET-CONNECTOR (16-GA TO 18-GA)	
	9X-3402	10	SOCKET-CONNECTOR (16-GA TO 18-GA)	
E	**125-7874**		TUBE-HEAT SHRINK (5.72-MM DIA) (10-CM)	

E - ORDER BY THE CENTIMETER

<END>

450-2704 HARNESS AS-SWITCH

S/N: E9Y1-UP

PART OF 370-8452 WIRING GP-GRADE CONTROL

SMCS-1408 **i06105367**

NOTE	PART NUMBER	QTY	PART NAME 1 2 3 4 5 6 (PRODUCT LEVEL)	SEE PAGE
BE	**232-0895**		CONDUIT-FLEXIBLE (9.6-MM ID) (210-CM)	
	102-8804	1	KIT-RECEPTACLE (4-PIN)	
			(INCLUDES RECEPTACLE AS & WEDGE)	
	8T-8729	2	PIN-CONNECTOR (16-GA TO 18-GA)	
	9X-3401	2	PIN-CONNECTOR (16-GA TO 18-GA)	
	9X-4385	1	PLUG AS-CONNECTOR (6-PIN)	
BE	**125-7875**		TUBE-HEAT SHRINK (7.44-MM DIA) (5-CM)	
BE	**125-7876**		TUBE-HEAT SHRINK (17.78-MM DIA) (8-CM)	
	3E-3377	1	WEDGE-RECEPTACLE LOCK (4-PIN)	

B - USE AS REQUIRED
E - ORDER BY THE CENTIMETER

<END>

459-1694 HARNESS AS-THERMOSTAT

S/N: E9Y1-UP

PART OF 420-9090 WIRING GP-REAR

SMCS-1408 **i06140412**

NOTE	PART NUMBER	QTY	PART NAME 1 2 3 4 5 6 (PRODUCT LEVEL)	SEE PAGE
	155-2270	6	KIT-CONNECTING PLUG (2-PIN)	
			(EACH INCLUDES PLUG AS, WEDGE & INTERFACE SEAL)	
	102-8801	1	KIT-RECEPTACLE (12-PIN)	
			(INCLUDES RECEPTACLE AS & WEDGE)	
	8T-8729	7	PIN-CONNECTOR (16-GA TO 18-GA)	
	8T-8737	5	PLUG-SEAL	
	240-7193	1	RESISTOR AS (500-OHM, 2-WATT)	
	102-8802	1	KIT-RECEPTACLE (2-PIN)	
			(INCLUDES RECEPTACLE AS & WEDGE)	
	9X-3401	2	PIN-CONNECTOR (16-GA TO 18-GA)	
	8T-8730	12	SOCKET-CONNECTOR (16-GA TO 18-GA)	
	189-3158	1	SUPPRESSOR-ARC	
BE	**125-7874**		TUBE-HEAT SHRINK (5.72-MM DIA) (10-CM)	
	155-2261	6	WEDGE-PLUG LOCK (2-PIN)	

B - USE AS REQUIRED
E - ORDER BY THE CENTIMETER

<END>

477-8215 HARNESS AS-TRANSMISSION

S/N: DM31-UP

PART OF 381-0672 CONTROL GP-TRANSMISSION HYD

SMCS-1408, 3030 **i06204351**

NOTE	PART NUMBER	QTY	PART NAME 1 2 3 4 5 6 (PRODUCT LEVEL)	SEE PAGE
	3S-2093	2	STRAP-CABLE	
	8T-8730	50	SOCKET-CONNECTOR (16-GA TO 18-GA)	
	8T-8737	17	PLUG-SEAL	
	9X-3402	41	SOCKET-CONNECTOR (16-GA TO 18-GA)	
E	**114-8843**		SLEEVE-PLASTIC (360-CM)	
E	**114-8845**		SLEEVE-PLASTIC (40-CM)	
E	**119-3662**		TUBE-HEAT SHRINK (10.85-MM DIA) (13-CM)	
E	**125-7874**		TUBE-HEAT SHRINK (5.72-MM DIA) (25-CM)	
E	**125-7875**		TUBE-HEAT SHRINK (7.44-MM DIA) (10-CM)	
	126-1774	1	COVER-CONNECTOR	
	9X-3401	22	PIN-CONNECTOR (16-GA TO 18-GA)	
			—OR—	
	126-1767	22	PIN-CONNECTOR (14-GA TO 16-GA)	
	147-1445	1	PLUG AS-CONNECTOR (70-PIN)	
	159-9322	1	SEAL-O-RING	
	155-2270	16	KIT-CONNECTING PLUG (2-PIN)	
			(EACH INCLUDES PLUG KIT, WEDGE & INTERFACE SEAL)	
B	**1P-0810**		TAPE-ELECTRICAL	
	211-0052	1	NUT (1-11/16-18-THD)	
	212-9865	1	CONNECTOR	
	230-4011	1	PLUG AS-CONNECTOR (2-PIN)	
	455-0704	1	SEAL-CONNECTOR	
	237-0227	1	PLUG AS-CONNECTOR (3-PIN)	
	455-0705	1	SEAL-CONNECTOR	
	310-0674	1	LOCKWASHER	
	416-7158	1	COVER-CONNECTOR	

B - USE AS REQUIRED
E - ORDER BY THE CENTIMETER

<END>

370-8458 HARNESS AS-VALVE—AUXILIARY

S/N: E9Y1-UP

PART OF 370-8457 WIRING GP-FRONT

AN ATTACHMENT

SMCS-1408 **i06105196**

NOTE	PART NUMBER	QTY	PART NAME 1 2 3 4 5 6 (PRODUCT LEVEL)	SEE PAGE
	274-3774	8	CAP-CONNECTOR	
	155-2270	8	KIT-CONNECTING PLUG (2-PIN)	
			(EACH INCLUDES PLUG AS, WEDGE & INTERFACE SEAL)	
	359-5179	1	PLUG AS-CONNECTOR (14-PIN)	
	8T-8737	4	PLUG-SEAL	
	8T-8730	26	SOCKET-CONNECTOR (16-GA TO 18-GA)	
BE	**125-7875**		TUBE-HEAT SHRINK (7.44-MM DIA) (10-CM)	

B - USE AS REQUIRED
E - ORDER BY THE CENTIMETER

<END>

391-4440 HARNESS AS-VALVE—STEERING

S/N: E9Y1-UP

PART OF 370-8445 WIRING GP-FRONT

SMCS-1408 **i06096930**

NOTE	PART NUMBER	QTY	PART NAME 1 2 3 4 5 6 (PRODUCT LEVEL)	SEE PAGE
Y	*391-4444*	1	HARNESS AS-SOLENOID (STEERING VALVE)	190
	391-4443	1	PLATE	

Y - SEPARATE ILLUSTRATION

<END>

370-8459 HARNESS AS-WIRING—DOWN FORCE

S/N: E9Y1-UP

PART OF 370-8448 WIRING GP-BLADE

AN ATTACHMENT

SMCS-1408 **i06095104**

NOTE	PART NUMBER	QTY	PART NAME 1 2 3 4 5 6 (PRODUCT LEVEL)	SEE PAGE
	155-2270	4	KIT-CONNECTING PLUG (2-PIN)	
			(EACH INCLUDES PLUG AS, WEDGE & INTERFACE SEAL)	
	102-8805	1	KIT-RECEPTACLE (6-PIN)	
			(INCLUDES RECEPTACLE AS & WEDGE)	
	8T-8729	6	PIN-CONNECTOR (16-GA TO 18-GA)	
	8T-8730	8	SOCKET-CONNECTOR (16-GA TO 18-GA)	
BE	**125-7874**		TUBE-HEAT SHRINK (5.72-MM DIA) (10-CM)	
	3E-3383	1	WEDGE-RECEPTACLE LOCK (6-PIN)	

B - USE AS REQUIRED
E - ORDER BY THE CENTIMETER

<END>

417-9251 HARNESS AS-WIRING—FUEL

S/N: TXX1-UP

PART OF 417-4431 WIRING GP-SENSOR

AN ATTACHMENT

SMCS-1408 **i06133354**

NOTE	PART NUMBER	QTY	PART NAME 1 2 3 4 5 6 (PRODUCT LEVEL)	SEE PAGE
	8T-8737	8	PLUG-SEAL	
	9X-3402	5	SOCKET-CONNECTOR (16-GA TO 18-GA)	
			—OR—	
	126-1768	5	SOCKET-CONNECTOR (14-GA TO 16-GA)	
	9X-3401	4	PIN-CONNECTOR (16-GA TO 18-GA)	
			—OR—	
	126-1767	4	PIN-CONNECTOR (14-GA TO 16-GA)	
	230-4010	1	RECEPTACLE AS-CONNECTOR (12-PIN)	
	230-4011	1	PLUG AS-CONNECTOR (2-PIN)	
	455-0704	1	SEAL-CONNECTOR	
	281-8804	1	PLUG AS-CONNECTOR (3-PIN)	
	455-0705	1	SEAL-CONNECTOR	
E	**289-5150**		SLEEVE (24-CM)	
E	**125-7874**		TUBE-HEAT SHRINK (5.72-MM DIA) (5-CM)	
E	**289-5151**		SLEEVE (12-CM)	
B	**1P-0810**		TAPE-ELECTRICAL	

B - USE AS REQUIRED
E - ORDER BY THE CENTIMETER

<END>

433-5754 HARNESS AS-WIRING

S/N: E9Y1-UP
PART OF 191-2933 SUSPENSION GP-SEAT
AN ATTACHMENT

SMCS-1408 **i05858237**

NOTE	PART NUMBER	QTY	PART NAME 1 2 3 4 5 6 (PRODUCT LEVEL)	SEE PAGE
	9X-3401	2	PIN-CONNECTOR (16-GA TO 18-GA)	
			—OR—	
	126-1767	2	PIN-CONNECTOR (14-GA TO 16-GA)	
	102-8802	1	KIT-RECEPTACLE (2-PIN)	
			(INCLUDES RECEPTACLE AS & WEDGE)	
B	**1P-0810**		TAPE-ELECTRICAL	
B	**329-3734**		TAPE-ELECTRICAL	
	5P-4571	2	TERMINAL-BLADE (14-GA TO 16-GA)	
	097-7234	2	TERMINAL-BLADE (18-GA TO 22-GA)	

B - USE AS REQUIRED

<END>

438-3108 HARNESS AS-WIRING

S/N: E9Y1-UP
ACCUGRADE READY OPTION
PART OF 463-6258 INSTALLATION GP-CONTROLS

SMCS-1408 **i06092710**

NOTE	PART NUMBER	QTY	PART NAME 1 2 3 4 5 6 (PRODUCT LEVEL)	SEE PAGE
	102-8804	1	KIT-RECEPTACLE (4-PIN)	
	102-8806	3	KIT-RECEPTACLE (8-PIN)	
			(EACH RECEPTACLE KIT INCLUDES RECEPTACLE AS & WEDGE)	
	3E-3377	1	WEDGE-RECEPTACLE LOCK (4-PIN)	
	3E-3389	3	WEDGE-RECEPTACLE LOCK (8-PIN)	
	8T-8737	14	PLUG-SEAL	
E	**125-7874**		TUBE-HEAT SHRINK (5.72-MM DIA) (10-CM)	
E	**125-7875**		TUBE-HEAT SHRINK (7.44-MM DIA) (5-CM)	
	9X-3402	19	SOCKET-CONNECTOR (16-GA TO 18-GA)	
			—OR—	
	126-1768	19	SOCKET-CONNECTOR (14-GA TO 16-GA)	
	9X-3401	19	PIN-CONNECTOR (16-GA TO 18-GA)	
			—OR—	
	126-1767	19	PIN-CONNECTOR (14-GA TO 16-GA)	
	155-2255	2	KIT-CONNECTING PLUG (12-PIN)	
			(EACH PLUG KIT INCLUDES PLUG AS, WEDGE & INTERFACE SEAL)	
	155-2258	2	WEDGE-PLUG LOCK (12-PIN)	
B	**329-3734**		TAPE-ELECTRICAL	

B - USE AS REQUIRED
E - ORDER BY THE CENTIMETER

<END>

458-7887 HARNESS AS-WIRING—CONSOLE, RH

S/N: E9Y1-UP
PERFORMANCE CONTROL MODULE
PART OF 463-6258 INSTALLATION GP-CONTROLS

SMCS-1408 **i06056413**

NOTE	PART NUMBER	QTY	PART NAME 1 2 3 4 5 6 (PRODUCT LEVEL)	SEE PAGE
	102-8801	1	KIT-RECEPTACLE (12-PIN)	
			(INCLUDES RECEPTACLE AS & WEDGE)	
	8T-8737	10	PLUG-SEAL	
	9X-3402	7	SOCKET-CONNECTOR (16-GA TO 18-GA)	
			—OR—	
	126-1768	7	SOCKET-CONNECTOR (14-GA TO 16-GA)	
	9X-3401	7	PIN-CONNECTOR (16-GA TO 18-GA)	
			—OR—	
	126-1767	7	PIN-CONNECTOR (14-GA TO 16-GA)	
	155-2259	1	WEDGE-PLUG LOCK (8-PIN)	
	155-2271	1	KIT-CONNECTING PLUG (4-PIN)	
	155-2265	1	KIT-CONNECTING PLUG (8-PIN)	
			(EACH PLUG KIT INCLUDES PLUG AS, WEDGE & INTERFACE SEAL)	
BE	**329-3734**		TAPE-ELECTRICAL (88-CM)	

B - USE AS REQUIRED
E - ORDER BY THE CENTIMETER

<END>

458-7888 HARNESS AS-WIRING—YW ADAPTER

S/N: E9Y1-UP
PERFORMANCE CONTROL MODULE
PART OF 463-6258 INSTALLATION GP-CONTROLS

SMCS-1408 **i06056414**

NOTE	PART NUMBER	QTY	PART NAME 1 2 3 4 5 6 (PRODUCT LEVEL)	SEE PAGE
	102-8804	2	KIT-RECEPTACLE (4-PIN)	
	190-7615	1	KIT-RECEPTACLE (12-PIN)	
			(EACH INCLUDES RECEPTACLE AS & WEDGE)	
	8T-8737	16	PLUG-SEAL	
	9X-3402	12	SOCKET-CONNECTOR (16-GA TO 18-GA)	
			—OR—	
	126-1768	12	SOCKET-CONNECTOR (14-GA TO 16-GA)	
	9X-3401	12	PIN-CONNECTOR (16-GA TO 18-GA)	
			—OR—	
	126-1767	12	PIN-CONNECTOR (14-GA TO 16-GA)	
	155-2259	2	WEDGE-PLUG LOCK (8-PIN)	
	155-2265	2	KIT-CONNECTING PLUG (8-PIN)	
	155-2271	1	KIT-CONNECTING PLUG (4-PIN)	
			(EACH PLUG KIT INCLUDES PLUG AS, WEDGE & INTERFACE SEAL)	
BE	**329-3734**		TAPE-ELECTRICAL (465-CM)	

B - USE AS REQUIRED
E - ORDER BY THE CENTIMETER

<END>

295-1039 HEATER GP-JACKET WATER

S/N: E9Y1-UP
120-VOLT, 1500-WATT
FOR USE WITH 256-3325—PAGE: 401
CANNOT BE USED WITH 295-1040—PAGE: 198
AN ATTACHMENT

SMCS-1383 **i05219341**

NOTE	REF NO	GRAPHIC REF	PART NUMBER	QTY	PART NAME 1 2 3 4 5 6 (PRODUCT LEVEL)	SEE PAGE
	1	1	**246-2686**	1	ELEMENT AS-JACKET WATER HEATER (120-VOLT, 1500-WATT)	
	1A	1	**7M-8485**	1	SEAL-O-RING	
	1B	1	**133-6517**	1	CAP AS-DUST	
	2	1	**7X-6312**	1	CORD AS-HEATER ELEMENT (120-VOLT, 15-AMPERE)	

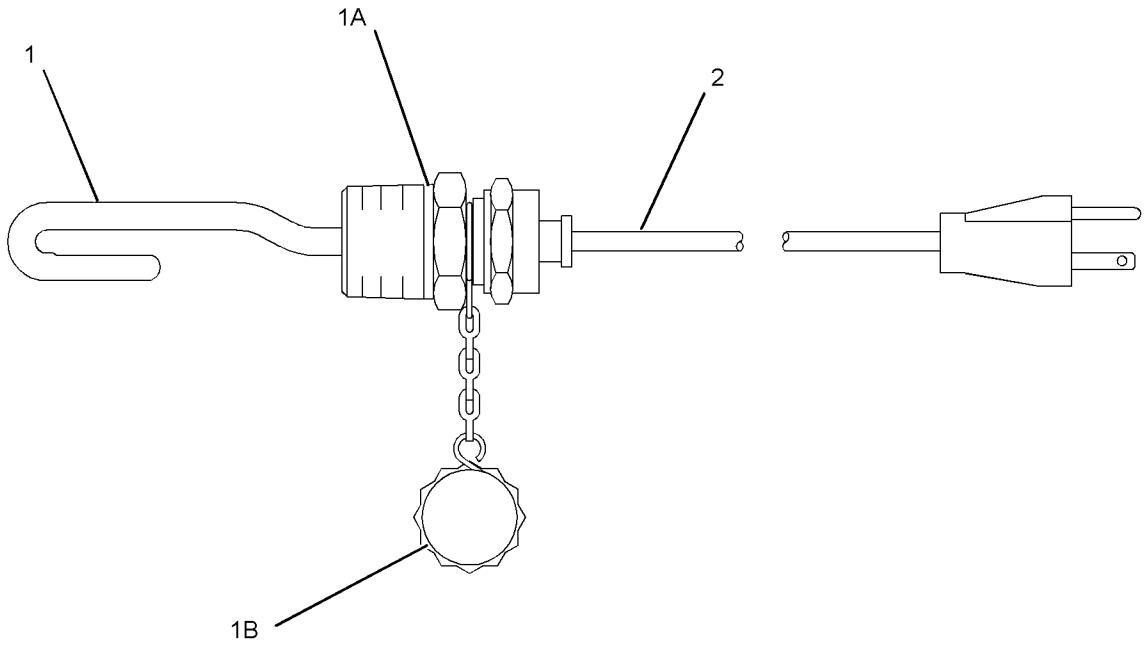

GRAPHIC #1 **<END>** g01288682

295-1040 HEATER GP-JACKET WATER

S/N: E9Y1-UP
240-VOLT, 1500-WATT
CANNOT BE USED WITH 295-1039—PAGE: 197
AN ATTACHMENT

SMCS-1383 **i05219342**

NOTE	REF NO	GRAPHIC REF	PART NUMBER	QTY	PART NAME 1 2 3 4 5 6 (PRODUCT LEVEL)	SEE PAGE
	1	1	**246-3513**	1	ELEMENT AS-JACKET WATER HEATER (240-VOLT, 1500-WATT)	
	1A	1	**7M-8485**	1	SEAL-O-RING	
	1B	1	**133-6517**	1	CAP AS-DUST	
	2	1	**127-8609**	1	CORD AS-HEATER ELEMENT (240-VOLT, 15-AMPERE)	

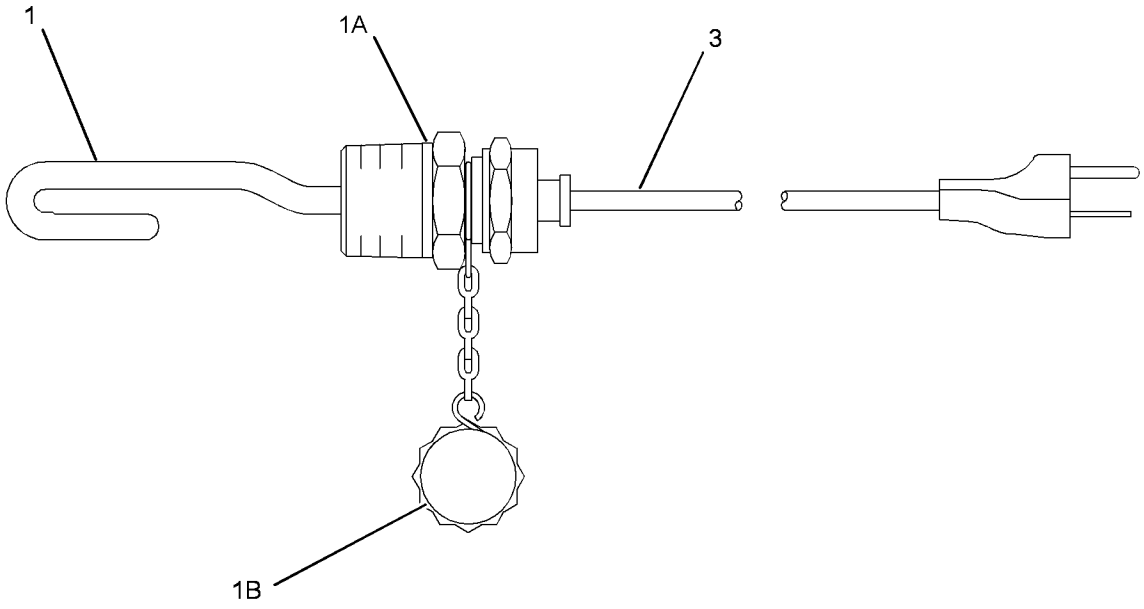

GRAPHIC #1 **<END>** g01288714

464-2500 INSTALLATION AR-COMMUNICATION–PRODUCT LINK ELITE CELLULAR

S/N: E9Y1-UP

CANNOT BE USED WITH ANY OTHER INSTALLATION AR-COMMUNICATION AN ATTACHMENT

SMCS-7606 **i06139535**

NOTE	PART NUMBER	QTY	PART NAME 1 2 3 4 5 6 (PRODUCT LEVEL)	SEE PAGE
Y	*456-3347*	1	CONTROL GP-COMMUNICATION (PLE641 CELLULAR)	162
Y	*463-9605*	1	ELECTRONICS GP-MONITOR (CELLULAR)	170
Y	*463-9606*	1	ELECTRONICS GP-MONITOR (NETWORK MANAGER)	170

Y - SEPARATE ILLUSTRATION

<END>

464-2510 INSTALLATION AR-COMMUNICATION–PRODUCT LINK ELITE SATELLITE

S/N: E9Y1-UP

CANNOT BE USED WITH ANY OTHER INSTALLATION AR-COMMUNICATION AN ATTACHMENT

SMCS-7606 **i06139536**

NOTE	PART NUMBER	QTY	PART NAME 1 2 3 4 5 6 (PRODUCT LEVEL)	SEE PAGE
Y	*456-3346*	1	CONTROL GP-COMMUNICATION (PLE631 SATELLITE)	160
Y	*463-9606*	1	ELECTRONICS GP-MONITOR (NETWORK MANAGER)	170
Y	*463-9611*	1	ELECTRONICS GP-MONITOR (SATELLITE)	171

Y - SEPARATE ILLUSTRATION

<END>

393-6336 INSTALLATION GP-SECURITY

S/N: E9Y1-UP
LESS REGULATED COUNTRIES
AN ATTACHMENT

SMCS-7631 **i06140551**

NOTE	REF NO	GRAPHIC REF	PART NUMBER	QTY	PART NAME 1 2 3 4 5 6 (PRODUCT LEVEL)	SEE PAGE
	1	1	**3S-2093**	3	STRAP-CABLE	
	2	1	**8C-5607**	4	MOUNT-ISOLATION	
	3	1	**198-5389**	1	FILM-IDENTIFICATION (IGNITION SWITCH)	
	4	1	**205-0826**	1	FILM-INSTRUCTION (MACHINE SECURITY, CONSOLE)	
	5	1	**206-5162**	2	KEY AS-ELECTRONIC (SECURITY)	
	6	1	**205-8257**	1	COIL AS (EXCITER)	
D		1	**5P-5677**		WIRE (18-GA, BLACK) (0.4-M)	
		1	**8T-8729**	2	PIN-CONNECTOR (16-GA TO 18-GA)	
		1	**207-5271**	1	WASHER (27X60.5X0.36-MM THK)	
	7	1	**219-6314**	2	KEY RING (IDENTIFICATION)	
	8	1	**219-6607**	2	FILM-INFORMATION (SECURITY SYSTEM)	
	9	1	**205-0826**	1	FILM-INSTRUCTION (MACHINE SECURITY, CONSOLE)	
Y	10	1	**310-5289**	1	ELECTRONICS GP-MACHINE (SECURITY SYSTEM)	169
	11	1	**360-5667**	1	HARNESS AS-CHASSIS	
BE		1	**329-3734**		TAPE-ELECTRICAL (72-CM)	
		1	**155-2270**	1	KIT-CONNECTING PLUG (2-PIN)	
		1	**155-2265**	1	KIT-CONNECTING PLUG (8-PIN)	
					(EACH PLUG KIT INCLUDES PLUG AS, WEDGE & INTERFACE SEAL)	
		1	**102-8805**	1	KIT-RECEPTACLE (6-PIN)	
					(INCLUDES RECEPTACLE AS & WEDGE)	
		1	**3E-3383**	1	WEDGE-RECEPTACLE LOCK (6-PIN)	
		1	**8T-8737**	4	PLUG-SEAL	
		1	**9X-3402**	8	SOCKET-CONNECTOR (16-GA TO 18-GA)	
					—OR—	
		1	**126-1768**	8	SOCKET-CONNECTOR (14-GA TO 16-GA)	
		1	**9X-3401**	4	PIN-CONNECTOR (16-GA TO 18-GA)	
					—OR—	
		1	**126-1767**	4	PIN-CONNECTOR (14-GA TO 16-GA)	
		1	**155-2259**	1	WEDGE-PLUG LOCK (8-PIN)	
	12	1	**156-6175**	1	CLIP	
M	13	1	**8C-8451**	2	BOLT (M6X1X40-MM)	
	14	1	**8C-5608**	2	SPACER (6.5X9.5X25.4-MM THK)	
	15	1	**9X-6165**	4	WASHER (6.5X22X2.5-MM THK)	

B - USE AS REQUIRED
D - ORDER BY THE METER
E - ORDER BY THE CENTIMETER
M - METRIC PART
Y - SEPARATE ILLUSTRATION

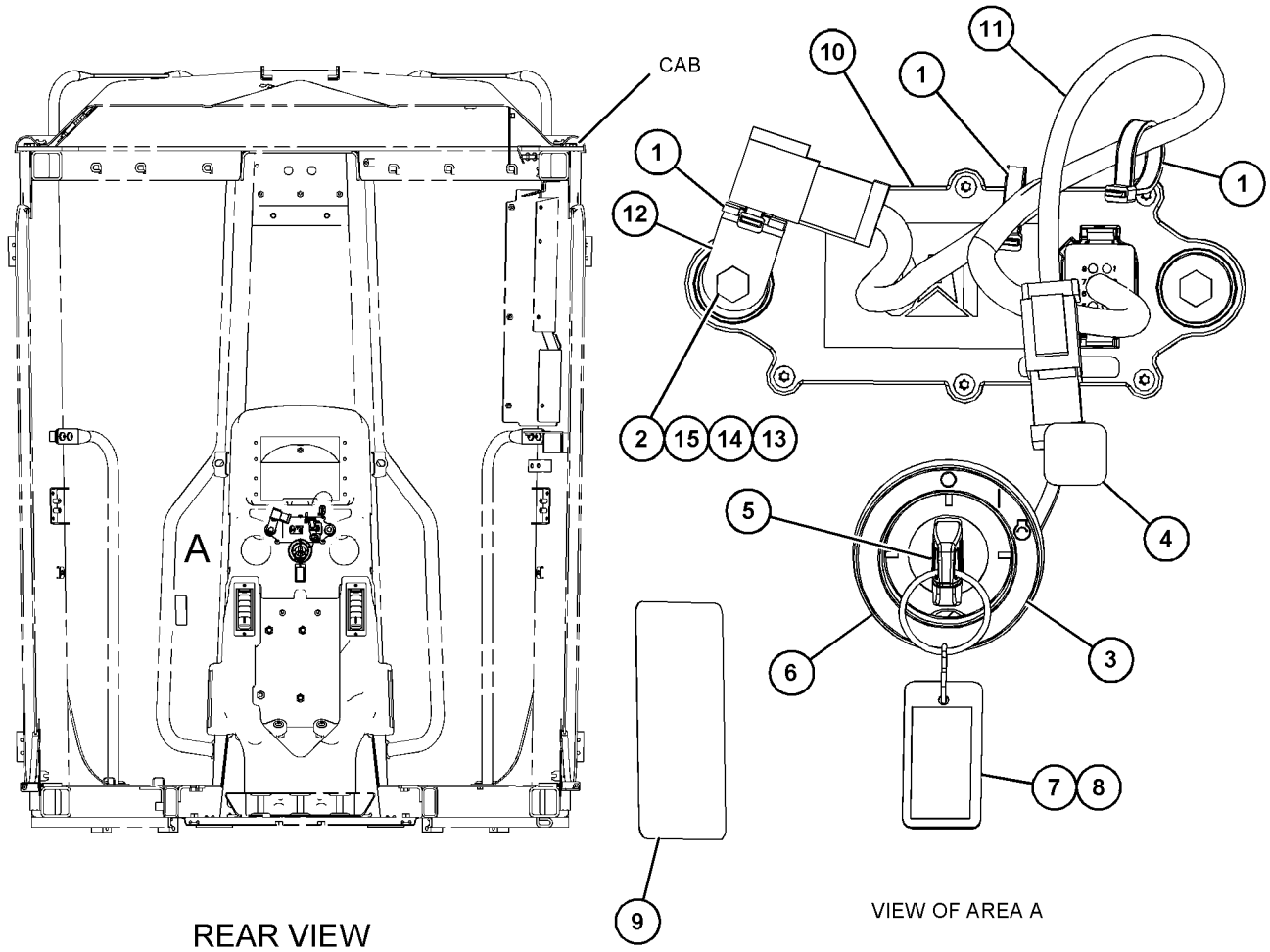

GRAPHIC #1 **<END>** g03831239

421-7812 INSTALLATION GP-WARNING BEACON

S/N: E9Y1-UP
FOR USE WITH 338-1132—PAGE: 215
CANNOT BE USED WITH 351-4490—PAGE: 758
AN ATTACHMENT

SMCS-1408, 1429, 1431, 7553 **i06145150**

NOTE	REF NO	GRAPHIC REF	PART NUMBER	QTY	PART NAME 1 2 3 4 5 6 (PRODUCT LEVEL)	SEE PAGE
	1	1	**356-5178**	1	PLATE AS	
		1	**130-5300**	1	CLIP	
	2	1	**5P-4115**	4	WASHER-HARD (7.2X19X2-MM THK)	
M	3	1	**8T-4138**	4	BOLT (M6X1X20-MM)	

M - METRIC PART

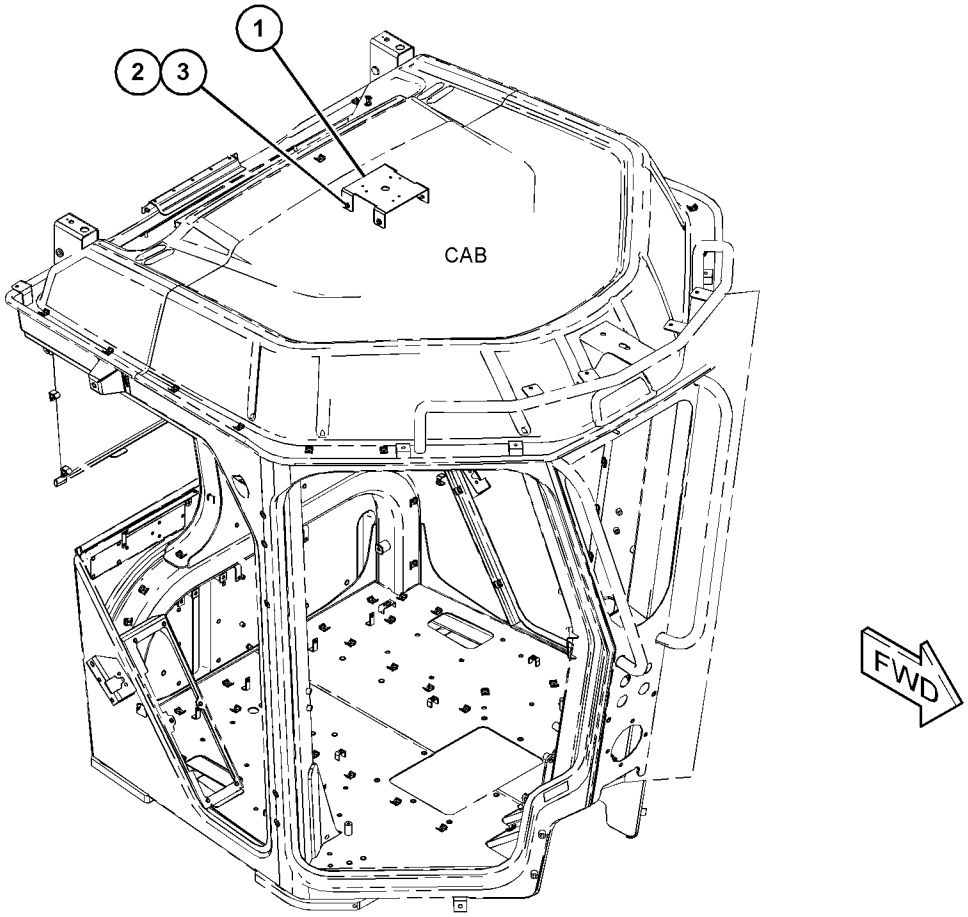

GRAPHIC #1 **<END>** g03833726

441-4489 KIT-RETROFIT

S/N: E9Y1-UP

REFER TO SPECIAL INSTRUCTIONS REHS7155 FOR INSTALLATION OF KIT. THIS KIT CONTAINS COMPONENTS TO RETROFIT 120M, 12M, 140M, 14M, 160M, & 16M MOTOR GRADERS WITH FRONT HEATED WINDOW GLASS. FRONT WINDOW RETROFIT KIT

FIELD INSTALLATION

SMCS-5705, 7220 **i05410877**

NOTE	PART NUMBER	QTY	PART NAME 1 2 3 4 5 6 (PRODUCT LEVEL)	SEE PAGE
	294-1018	2	BRACKET	
	376-1386	1	HARNESS AS-WIRING	
	7T-6364	2	TERMINAL-BLADE (12-GA TO 16-GA)	
E	**125-7874**		TUBE-HEAT SHRINK (5.72-MM DIA) (21-CM)	
	126-1766	2	SOCKET-CONNECTOR (14-GA TO 18-GA)	
	9X-3402	1	SOCKET-CONNECTOR (16-GA TO 18-GA)	
			—OR—	
	126-1768	1	SOCKET-CONNECTOR (14-GA TO 16-GA)	
	155-2270	1	KIT-CONNECTING PLUG (2-PIN)	
			(INCLUDES PLUG AS AND WEDGE)	
E	**329-3734**		TAPE-ELECTRICAL (14-CM)	
M	**9X-2045**	6	SCREW-TRUSS HEAD (M6X1X20-MM)	
E	**294-1015**		SEAL (52-CM)	
E	**294-1014**		SEAL-GLASS (180-CM)	
	7K-1181	1	STRAP-CABLE	
	114-6658	6	WASHER (6.5X17X1-MM THK)	
	380-3885	1	WINDOW AS-FRONT (HEATED)	
	126-1768	2	SOCKET-CONNECTOR (14-GA TO 16-GA)	
	155-2270	1	KIT-CONNECTING PLUG (2-PIN)	
			(INCLUDES PLUG AS AND WEDGE)	

E - ORDER BY THE CENTIMETER
M - METRIC PART

<END>

441-4490 KIT-RETROFIT

S/N: E9Y1-UP

CONTAINS COMPONENTS TO RETROFIT 120M, 12M, 140M, 14M, 160M, & 16M MOTOR GRADERS WITH FRONT HEATED WINDOW GLASS. REFER TO SPECIAL INSTRUCTIONS REHS7155 FOR INSTALLATION OF KIT. FRONT WINDOW RETROFIT KIT
FIELD INSTALLATION

SMCS-5705, 7220 **i05410992**

NOTE	PART NUMBER	QTY	PART NAME 1 2 3 4 5 6 (PRODUCT LEVEL)	SEE PAGE
	294-1018	2	BRACKET	
	376-1386	1	HARNESS AS-WIRING	
	7T-6364	2	TERMINAL-BLADE (12-GA TO 16-GA)	
E	**125-7874**		TUBE-HEAT SHRINK (5.72-MM DIA) (21-CM)	
	126-1766	2	SOCKET-CONNECTOR (14-GA TO 18-GA)	
	9X-3402	1	SOCKET-CONNECTOR (16-GA TO 18-GA)	
			—OR—	
	126-1768	1	SOCKET-CONNECTOR (14-GA TO 16-GA)	
	155-2270	1	KIT-CONNECTING PLUG (2-PIN)	
			(INCLUDES PLUG AS AND WEDGE)	
E	**329-3734**		TAPE-ELECTRICAL (14-CM)	
M	**9X-2045**	6	SCREW-TRUSS HEAD (M6X1X20-MM)	
E	**294-1015**		SEAL (52-CM)	
E	**294-1014**		SEAL-GLASS (180-CM)	
	7K-1181	1	STRAP-CABLE	
	114-6658	6	WASHER (6.5X17X1-MM THK)	
	380-3886	1	WINDOW AS-FRONT (HEATED)	
	126-1768	2	SOCKET-CONNECTOR (14-GA TO 16-GA)	
	155-2270	1	KIT-CONNECTING PLUG (2-PIN)	
			(INCLUDES PLUG AS AND WEDGE)	

E - ORDER BY THE CENTIMETER
M - METRIC PART

<END>

3E-6389 LAMP GP-DOME

S/N: E9Y1-UP
24-VOLT . WITH SWITCH
PART OF 447-2230 LINER GP-CAB

SMCS-1433 **i04953731**

NOTE	REF NO	GRAPHIC REF	PART NUMBER	QTY	PART NAME 1 2 3 4 5 6 (PRODUCT LEVEL)	SEE PAGE
	1	1	**7N-9943**	1	LAMP (24-VOLT) (DOME LIGHT)	
	2	1	**102-8803**	1	KIT-RECEPTACLE (3-PIN)	
					(INCLUDES RECEPTACLE AS & WEDGE)	
	3	1	**8T-8729**	3	PIN-CONNECTOR (16-GA TO 18-GA)	
	4	1	**7T-0020**	1	LENS-DOME LAMP	

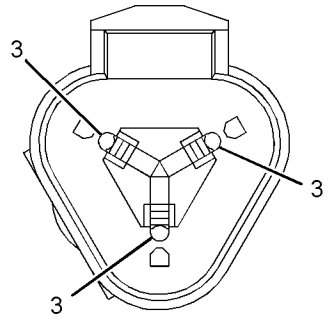

VIEW A-A

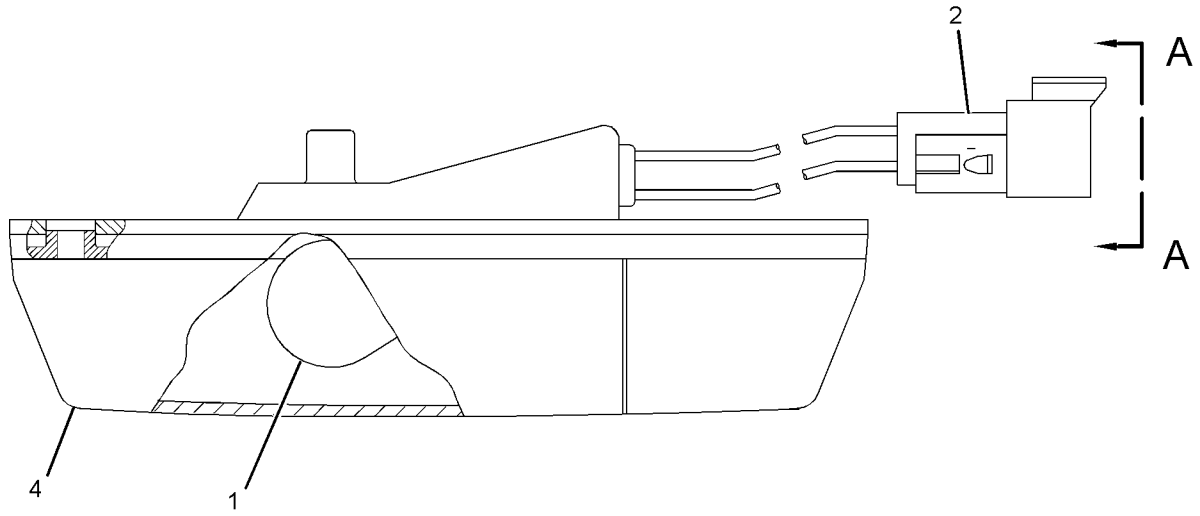

GRAPHIC #1 **<END>** g02646562

147-0319 LAMP GP-FLOOD

S/N: E9Y1-UP
24-VOLT, 70-WATT
PART OF 370-8503 LIGHTING GP-FLOOD
AN ATTACHMENT

SMCS-1434 **i06041366**

NOTE	REF NO	GRAPHIC REF	PART NUMBER	QTY	PART NAME 1 2 3 4 5 6 (PRODUCT LEVEL)	SEE PAGE
	1	1	**351-9918**	1	LAMP-HALOGEN (24-VOLT, 70-WATT)	
	2	1	**188-8849**	2	CLAMP	
	3	1	**375-0352**	1	LENS AS (FLOODLIGHT)	
	4	1	**158-0252**	1	BEZEL	
					PARTS SHOWN IN GRAPHIC(S) WITHOUT A REFERENCE NUMBER ARE NOT SERVICED SEPARATELY	

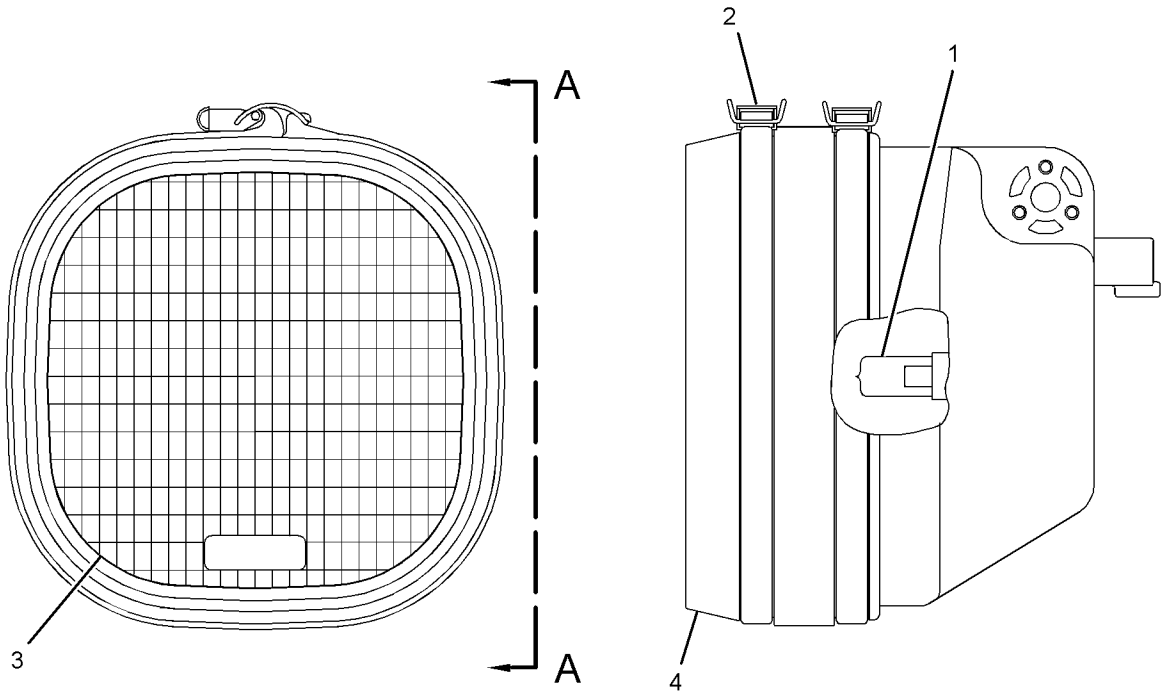

VIEW A-A

GRAPHIC #1 **<END>** g03786158

219-6488 LAMP GP-FLOOD

S/N: E9Y1-UP
24-VOLT
PART OF 382-0678 LIGHTING GP-FLOOD
AN ATTACHMENT

SMCS-1434 **i04141289**

NOTE	REF NO	GRAPHIC REF	PART NUMBER	QTY	PART NAME 1 2 3 4 5 6 (PRODUCT LEVEL)	SEE PAGE
	1	1	**351-9918**	1	LAMP-HALOGEN (24-VOLT, 70-WATT)	
M	2	1	**8T-6912**	1	BOLT (M8X1.25X50-MM)	
M	3	1	**6V-9189**	1	LOCKNUT (M8X1.25-THD)	
	4	1	**8T-4224**	2	WASHER-HARD (8.8X16X2-MM THK)	
M	5	1	**9X-4244**	2	SCREW-SPECIAL (M4X1.79X25-MM)	
	7	1	**202-6611**	1	LENS AS	
	8	1	**175-4292**	1	BODY AS	
	9	1	**164-7556**	1	BRACKET (LAMP RETAINING)	
	10	1	**175-4291**	1	BRACKET AS	

M - METRIC PART

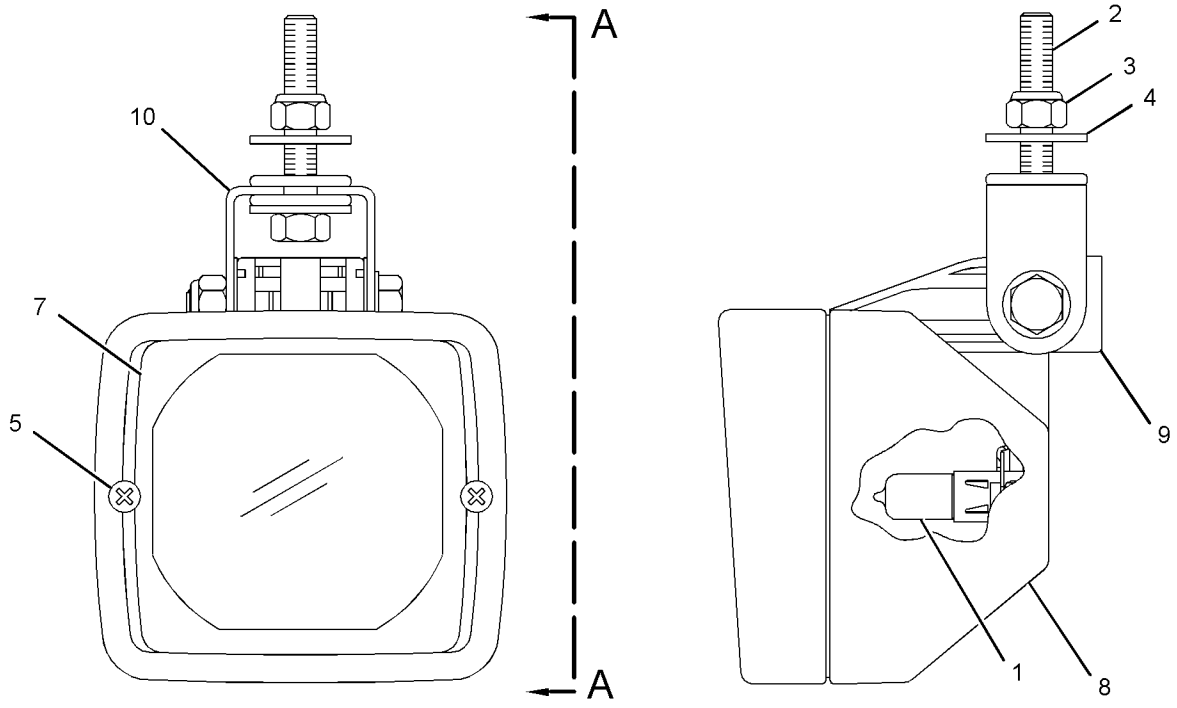

VIEW A-A

GRAPHIC #1 **<END>** g01475061

272-6641 LAMP GP-FLOOD

S/N: E9Y1-UP
24-VOLT, 70-WATT
PART OF 370-8510 LIGHTING GP-FLOOD
AN ATTACHMENT

SMCS-1434 **i06218558**

NOTE	REF NO	GRAPHIC REF	PART NUMBER	QTY	PART NAME 1 2 3 4 5 6 (PRODUCT LEVEL)	SEE PAGE
	1	1	**351-9918**	1	LAMP-HALOGEN (24-VOLT, 70-WATT)	
M	2	1	**9X-4244**	2	SCREW-SPECIAL (M4X1.79X25-MM)	
	3	1	**202-6614**	1	LENS AS	
	4	1	**175-4292**	1	BODY AS	
	5	1	**164-7556**	1	BRACKET (LAMP RETAINING)	
M	6	1	**8T-7547**	1	BOLT (M8X1.25X30-MM)	
M	7	1	**5C-7261**	1	NUT (M8X1.25-THD)	
	8	1	**8T-4224**	2	WASHER-HARD (8.8X16X2-MM THK)	
	9	1	**175-4291**	1	BRACKET AS	

M - METRIC PART

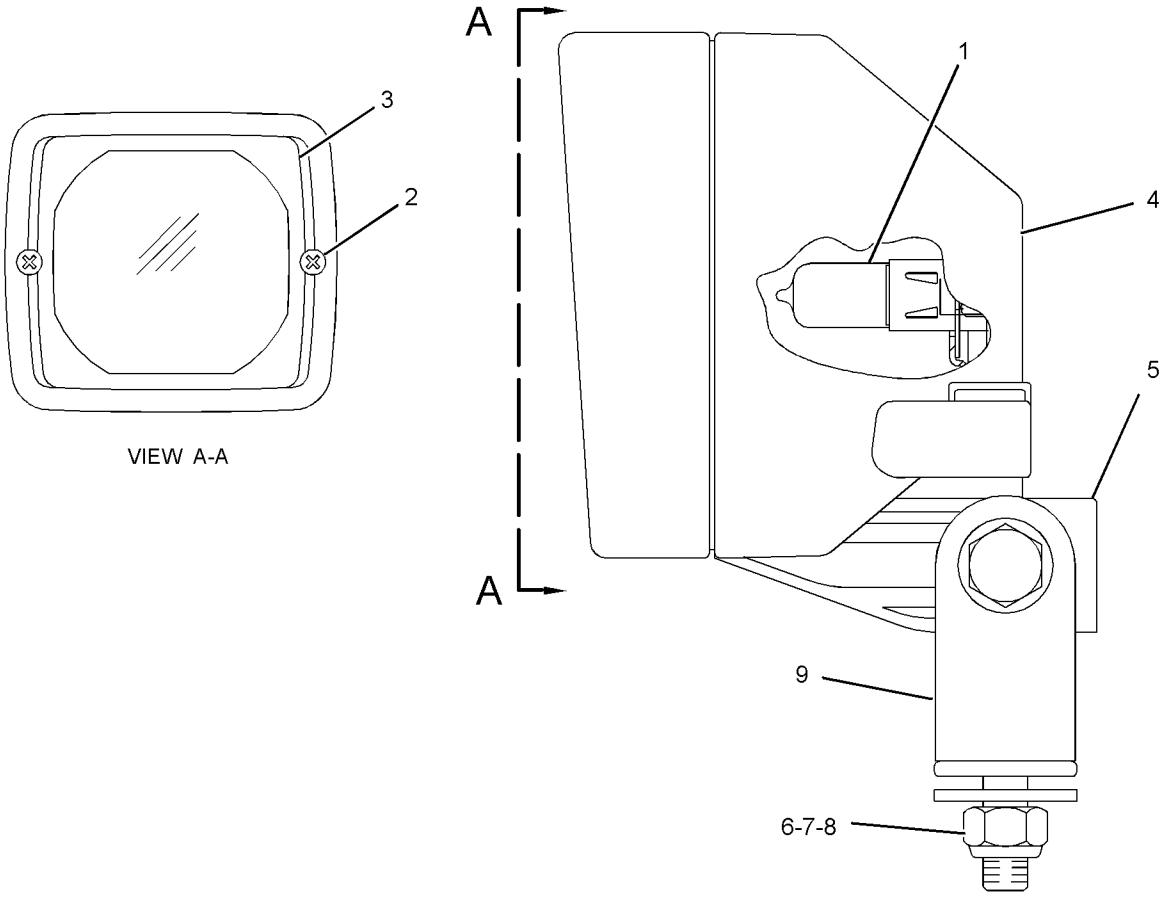

GRAPHIC #1 **<END>** g01305640

315-1251 LAMP GP-FLOOD

S/N: E9Y1-UP
24-VOLT, 65-WATT
PART OF 382-0678 LIGHTING GP-FLOOD
AN ATTACHMENT

SMCS-1434 **i05437954**

NOTE	REF NO	GRAPHIC REF	PART NUMBER	QTY	PART NAME 1 2 3 4 5 6 (PRODUCT LEVEL)	SEE PAGE
	1	1	**351-9918**	1	LAMP-HALOGEN (24-VOLT, 70-WATT)	
M	2	1	**9X-4244**	2	SCREW-SPECIAL (M4X1.79X25-MM)	
	3	1	**202-6614**	1	LENS AS	
	4	1	**175-4292**	1	BODY AS	
	5	1	**164-7556**	1	BRACKET (LAMP RETAINING)	
M	6	1	**8T-6912**	1	BOLT (M8X1.25X50-MM)	
M	7	1	**6V-9189**	1	LOCKNUT (M8X1.25-THD)	
	8	1	**8T-4224**	2	WASHER-HARD (8.8X16X2-MM THK)	

M - METRIC PART

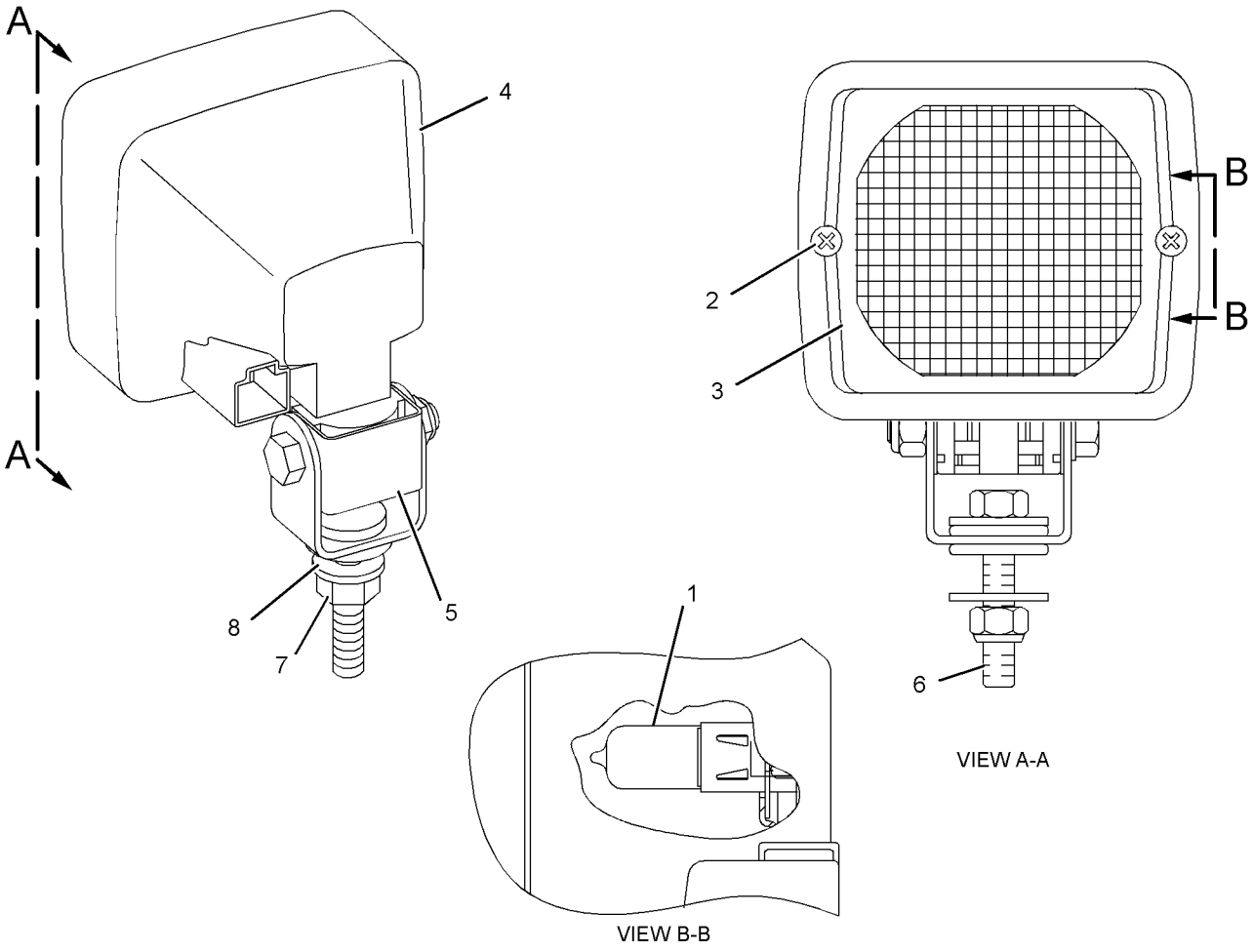

GRAPHIC #1 **<END>** g02679481

386-1722 LAMP GP-FLOOD–LED

S/N: E9Y1-UP
9-VOLT TO 32-VOLT
PART OF 459-1708 LIGHTING GP-FLOOD
AN ATTACHMENT

SMCS-1434 **i05273941**

NOTE	REF NO	GRAPHIC REF	PART NUMBER	QTY	PART NAME 1 2 3 4 5 6 (PRODUCT LEVEL)	SEE PAGE
	1	1	**389-0447**	1	BRACKET AS	

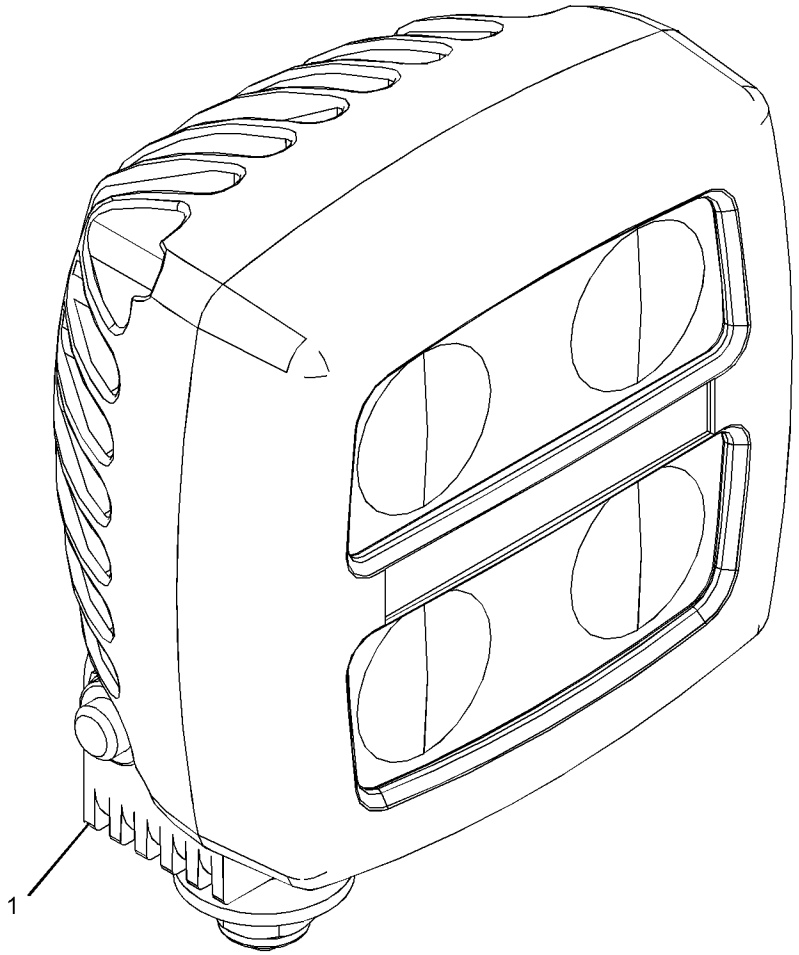

GRAPHIC #1 **<END>** g03355689

161-3509 LAMP GP-HEAD

S/N: E9Y1-UP
24-VOLT, 70-WATT, LOW BEAM
PART OF 370-8503 LIGHTING GP-FLOOD, 370-8501 LIGHTING GP-ROADING
AN ATTACHMENT

SMCS-1429 **i05946731**

NOTE	REF NO	GRAPHIC REF	PART NUMBER	QTY	PART NAME 1 2 3 4 5 6 (PRODUCT LEVEL)	SEE PAGE
	1	1	**351-9918**	1	LAMP-HALOGEN (24-VOLT, 70-WATT) (LOW BEAM)	
	2	1	**188-8849**	2	CLAMP	
	3	1	**375-0355**	1	LENS AS (HEADLIGHT, LOW BEAM)	
	4	1	**158-0252**	1	BEZEL	

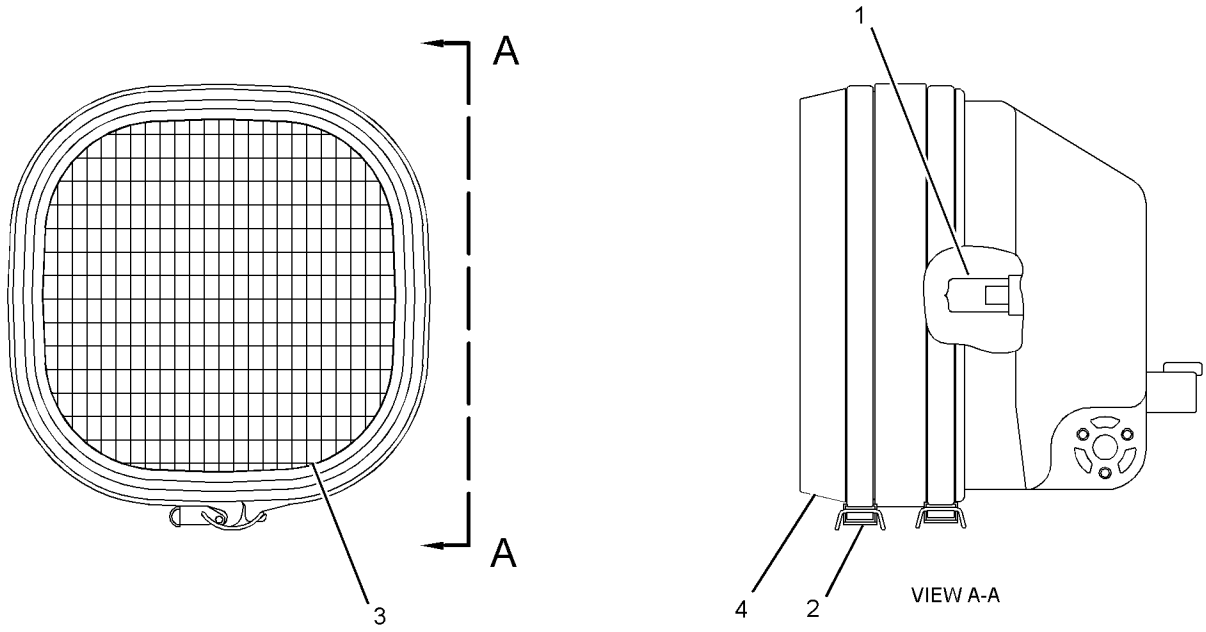

GRAPHIC #1 **<END>** g03734704

290-5749 LAMP GP-HEAD

S/N: E9Y1-UP
24-VOLT, HIGH BEAM
PART OF 382-0678 LIGHTING GP-FLOOD
AN ATTACHMENT

SMCS-1429 **i05806112**

NOTE	REF NO	GRAPHIC REF	PART NUMBER	QTY	PART NAME 1 2 3 4 5 6 (PRODUCT LEVEL)	SEE PAGE
	1	1	**351-9918**	1	LAMP-HALOGEN (24-VOLT, 70-WATT)	
M	2	1	**3E-9854**	1	BOLT (M8X1.25X20-MM)	
M	3	1	**6V-9189**	2	LOCKNUT (M8X1.25-THD)	
M	4	1	**8C-5748**	1	BOLT (M8X1.25X55-MM)	
	5	1	**8T-4224**	1	WASHER-HARD (8.8X16X2-MM THK)	

M - METRIC PART

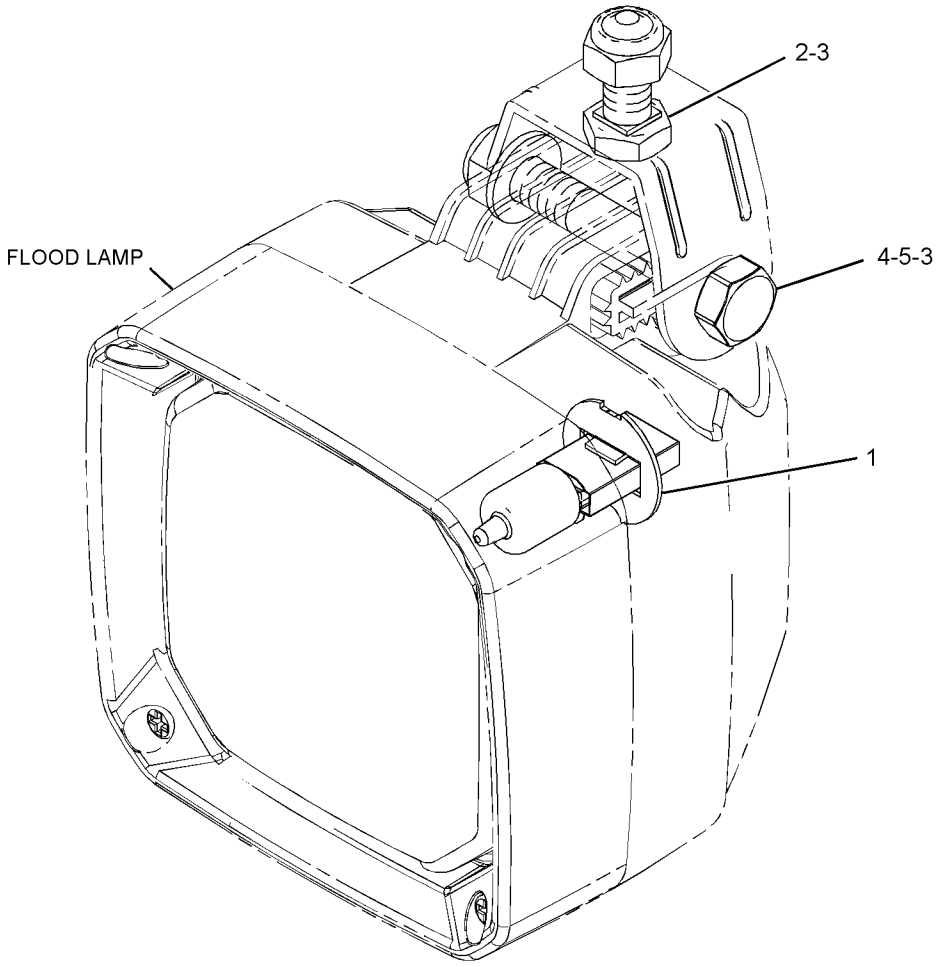

GRAPHIC #1 **<END>** g03316591

259-9287 LAMP GP-HEAD & SIGNAL–LH

S/N: E9Y1-UP
24-VOLT, D & P
PART OF 260-1909, 260-1910 MOUNTING GP-LIGHTING
AN ATTACHMENT

SMCS-1429, 1430 **i06041395**

NOTE	REF NO	GRAPHIC REF	PART NUMBER	QTY	PART NAME 1 2 3 4 5 6 (PRODUCT LEVEL)	SEE PAGE
	1	1	**8T-8737**	1	PLUG-SEAL	
	2	1	**228-6054**	1	BEZEL	
	3	1	**444-6523**	1	LENS AS (HEADLIGHT)	
	4	1	**377-5227**	1	LENS AS (TURN SIGNAL)	
	5	1	**228-6056**	6	SCREW (4-32X1.26-IN)	
	6	1	**9X-3465**	1	LAMP (24-VOLT, 75/70-WATT)	
	7	1	**130-3515**	1	LAMP (24-VOLT, 5-WATT)	
M	8	1	**8T-0389**	1	LOCKNUT (M10X1.5-THD)	
	9	1	**473-8155**	2	SPACER (SPHERICAL)	
	10	1	**473-8156**	2	WASHER (SPHERICAL)	
	11	1	**102-8805**	1	KIT-RECEPTACLE (6-PIN)	
					(INCLUDES RECEPTACLE AS & WEDGE)	
	12	1	**8T-8729**	5	PIN-CONNECTOR (16-GA TO 18-GA)	

M - METRIC PART

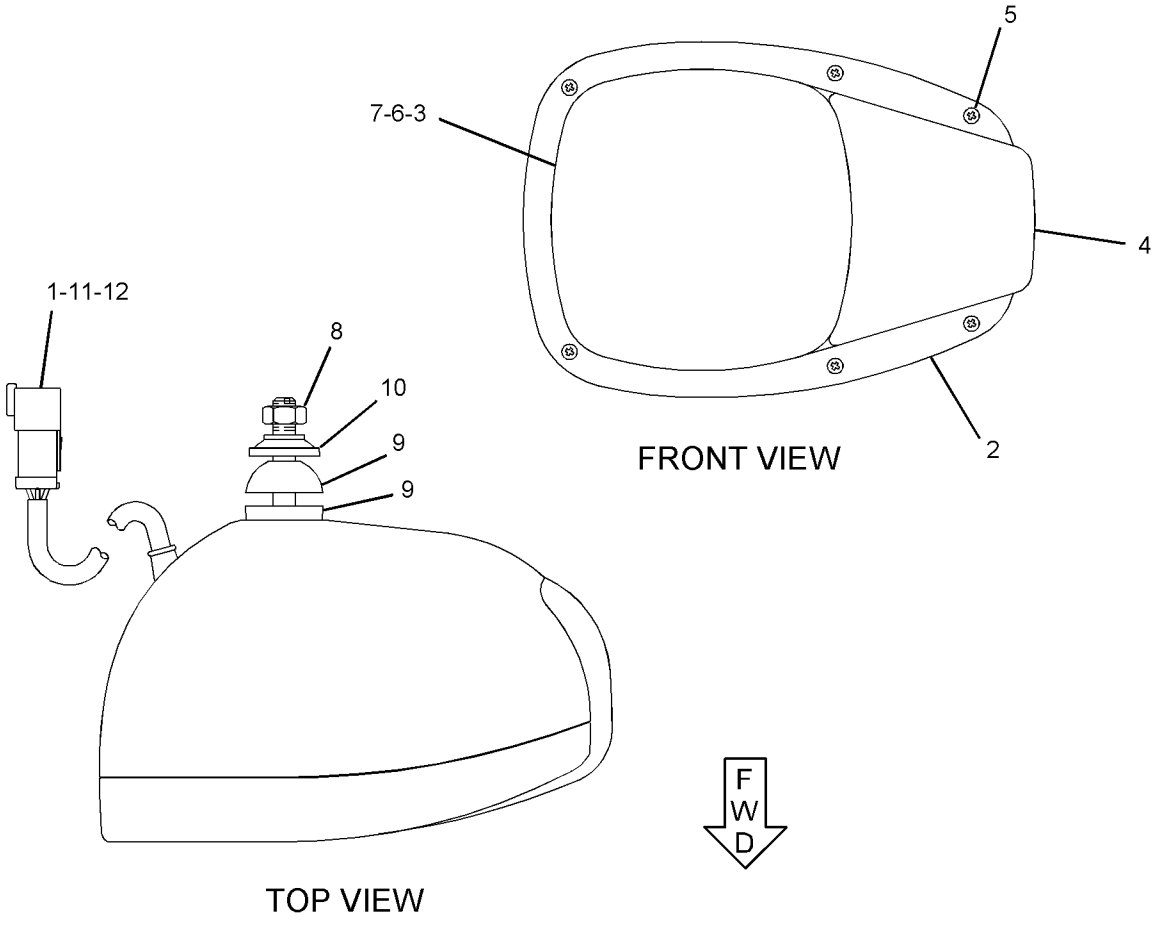

GRAPHIC #1 **<END>** g02701777

259-9288 LAMP GP-HEAD & SIGNAL–RH

S/N: E9Y1-UP
24-VOLT, D & P
PART OF 260-1909, 260-1910 MOUNTING GP-LIGHTING
AN ATTACHMENT

SMCS-1429, 1430 **i06041397**

NOTE	REF NO	GRAPHIC REF	PART NUMBER	QTY	PART NAME 1 2 3 4 5 6 (PRODUCT LEVEL)	SEE PAGE
	1	1	**8T-8737**	1	PLUG-SEAL	
	2	1	**228-6054**	1	BEZEL	
	3	1	**444-6523**	1	LENS AS (HEADLIGHT)	
	4	1	**377-5227**	1	LENS AS (TURN SIGNAL)	
	5	1	**228-6056**	6	SCREW (4-32X1.26-IN)	
	6	1	**9X-3465**	1	LAMP (24-VOLT, 75/70-WATT)	
	7	1	**130-3515**	1	LAMP (24-VOLT, 5-WATT)	
M	8	1	**8T-0389**	1	LOCKNUT (M10X1.5-THD)	
	9	1	**473-8155**	2	SPACER (SPHERICAL)	
	10	1	**473-8156**	2	WASHER (SPHERICAL)	
	11	1	**102-8805**	1	KIT-RECEPTACLE (6-PIN)	
					(INCLUDES RECEPTACLE AS & WEDGE)	
	12	1	**8T-8729**	5	PIN-CONNECTOR (16-GA TO 18-GA)	

M - METRIC PART

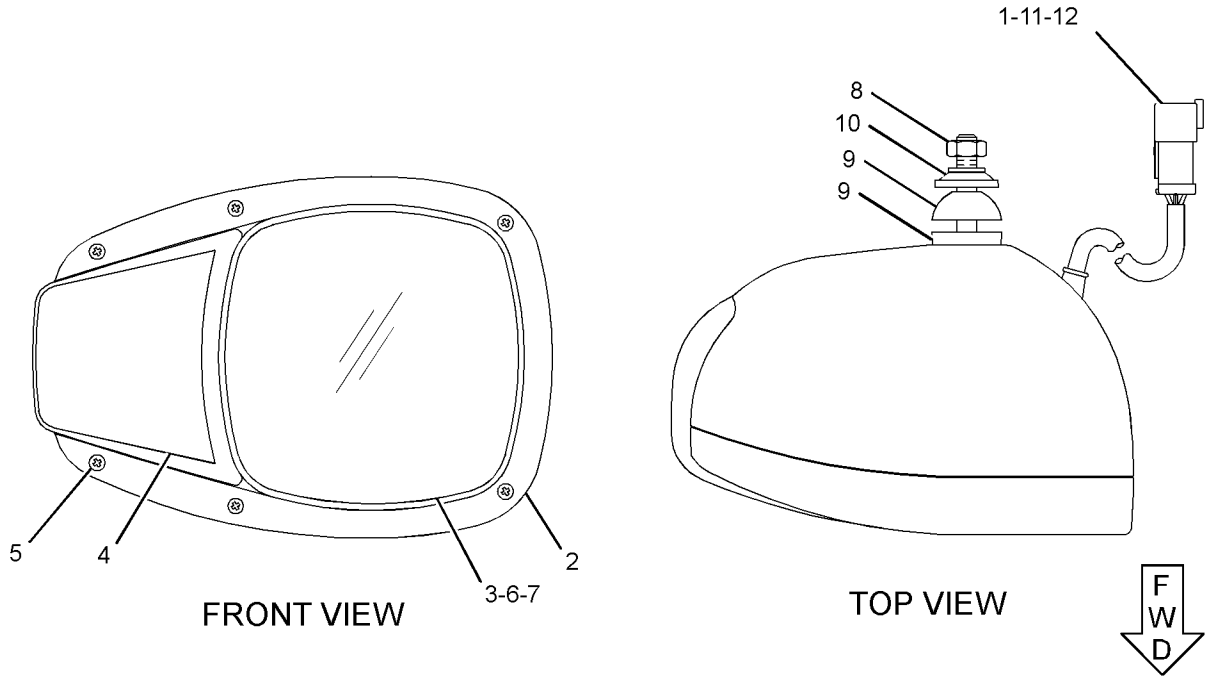

GRAPHIC #1 **<END>** g02701796

338-1132 LAMP GP-WARNING BEACON–STROBE

S/N: E9Y1-UP
12-VOLT, 24-VOLT, LED. AMBER
FOR USE WITH 421-7812–PAGE: 202
AN ATTACHMENT

SMCS-1431 **i05819730**

NOTE	REF NO	GRAPHIC REF	PART NUMBER	QTY	PART NAME 1 2 3 4 5 6 (PRODUCT LEVEL)	SEE PAGE
	1	1	**102-8802**	1	KIT-RECEPTACLE (2-PIN)	
					(INCLUDES RECEPTACLE AS & WEDGE)	
	2	1	**8T-8729**	2	PIN-CONNECTOR (16-GA TO 18-GA)	
	3	1	**356-7515**	1	LENS (AMBER)	
					–OR–	
		1	**421-5583**	1	LENS (RED)	
					–OR–	
		1	**421-5584**	1	LENS (CLEAR)	
					–OR–	
		1	**421-5585**	1	LENS (GREEN)	
E	4	1	**9X-1386**		SLEEVE (44-CM)	

E - ORDER BY THE CENTIMETER

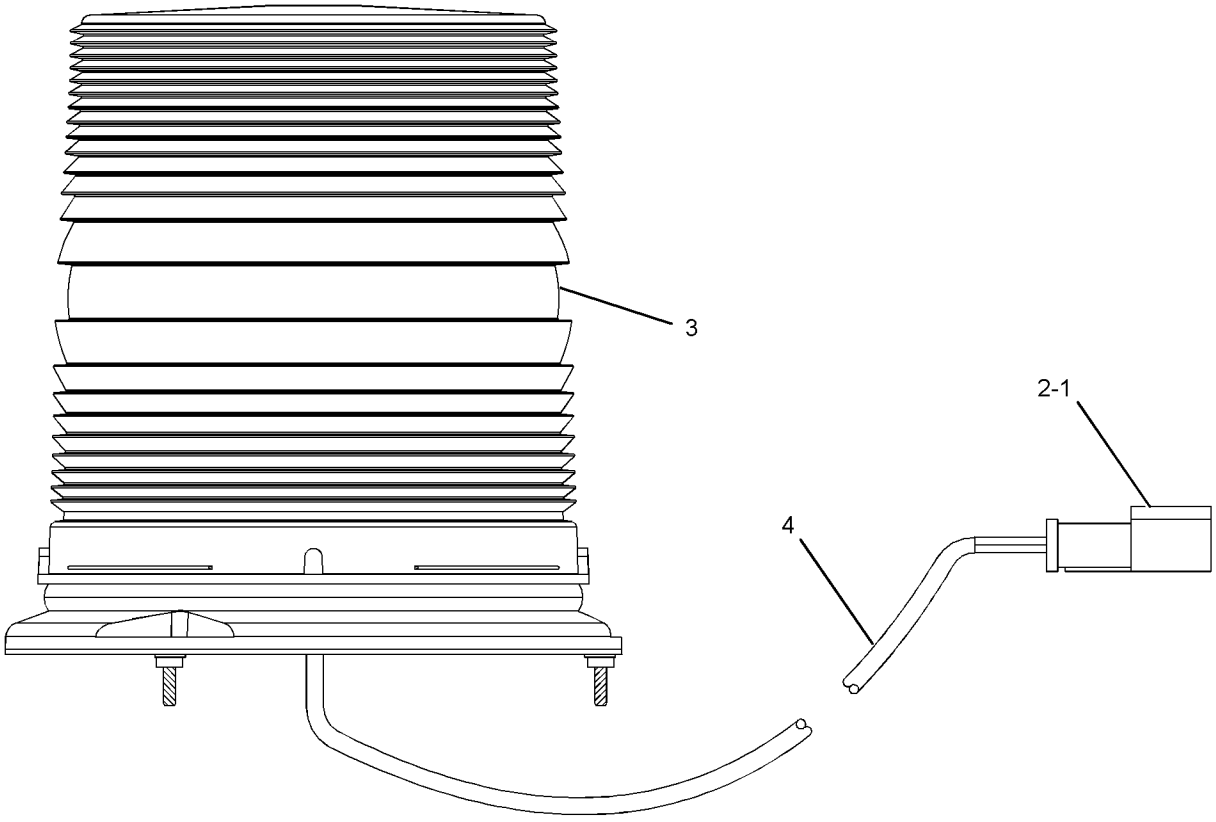

GRAPHIC #1 **<END>** g02193876

390-2798 LIGHTING AR-FLOOD

S/N: E9Y1-UP

CANNOT BE USED WITH 390-2797—PAGE: 216

AN ATTACHMENT

SMCS-1434 **i06144726**

NOTE	PART NUMBER	QTY	PART NAME 1 2 3 4 5 6 (PRODUCT LEVEL)	SEE PAGE
Y	*370-8502*	1	LIGHTING GP-FLOOD	218
Y	*421-7811*	1	LIGHTING GP-FLOOD & HEAD	227

Y - SEPARATE ILLUSTRATION

<END>

386-1304 LIGHTING AR-ROADING

S/N: E9Y1-UP

CANNOT BE USED WITH 370-8450—PAGE: 319

AN ATTACHMENT

SMCS-1408, 1429 **i06139692**

NOTE	PART NUMBER	QTY	PART NAME 1 2 3 4 5 6 (PRODUCT LEVEL)	SEE PAGE
Y	*260-1909*	1	MOUNTING GP-LIGHTING (SNOW REMOVAL)	231
Y	*442-4470*	1	SWITCH GP-ROADING	270
Y	*370-8449*	1	WIRING GP-REAR LIGHTING	317

Y - SEPARATE ILLUSTRATION

<END>

386-1305 LIGHTING AR-ROADING

S/N: E9Y1-UP

CANNOT BE USED WITH 370-8450—PAGE: 319

AN ATTACHMENT

SMCS-1408, 1429 **i06139695**

NOTE	PART NUMBER	QTY	PART NAME 1 2 3 4 5 6 (PRODUCT LEVEL)	SEE PAGE
Y	*260-1910*	1	MOUNTING GP-LIGHTING	233
Y	*442-4470*	1	SWITCH GP-ROADING	270
Y	*370-8449*	1	WIRING GP-REAR LIGHTING	317

Y - SEPARATE ILLUSTRATION

<END>

390-2797 LIGHTING AR-ROADING

S/N: E9Y1-UP

CANNOT BE USED WITH 390-2798—PAGE: 216

AN ATTACHMENT

SMCS-1408, 1429 **i06144725**

NOTE	PART NUMBER	QTY	PART NAME 1 2 3 4 5 6 (PRODUCT LEVEL)	SEE PAGE
Y	*382-0678*	1	LIGHTING GP-FLOOD (CAB ROOF)	225
Y	*370-8501*	1	LIGHTING GP-ROADING	228

Y - SEPARATE ILLUSTRATION

<END>

479-7338 LIGHTING AR-ROADING

S/N: E9Y1-UP
WITH FIRE SUPPRESSION
CANNOT BE USED WITH ANY OTHER LIGHTING AR-ROADING AN ATTACHMENT

SMCS-1408, 1429 **i06139510**

NOTE	PART NUMBER	QTY	PART NAME 1 2 3 4 5 6 (PRODUCT LEVEL)	SEE PAGE
Y	*260-1909*	1	MOUNTING GP-LIGHTING (SNOW REMOVAL)	231
Y	*442-4470*	1	SWITCH GP-ROADING	270
Y	*475-4930*	1	WIRING GP-REAR	315

Y - SEPARATE ILLUSTRATION

<END>

479-7339 LIGHTING AR-ROADING

S/N: E9Y1-UP
WITH FIRE SUPPRESSION
CANNOT BE USED WITH ANY OTHER LIGHTING AR-ROADING AN ATTACHMENT

SMCS-1408, 1429 **i06139511**

NOTE	PART NUMBER	QTY	PART NAME 1 2 3 4 5 6 (PRODUCT LEVEL)	SEE PAGE
Y	*260-1910*	1	MOUNTING GP-LIGHTING	233
Y	*442-4470*	1	SWITCH GP-ROADING	270
Y	*475-4930*	1	WIRING GP-REAR	315

Y - SEPARATE ILLUSTRATION

<END>

370-8502 LIGHTING GP-FLOOD—WORK LIGHTS, FRONT

S/N: E9Y1-UP
LED
PART OF 390-2798 LIGHTING AR-FLOOD
AN ATTACHMENT

SMCS-1434 **i06093442**

NOTE	REF NO	GRAPHIC REF	PART NUMBER	QTY	PART NAME 1 2 3 4 5 6 (PRODUCT LEVEL)	SEE PAGE
	1	1	**3S-2093**	6	STRAP-CABLE	
	2	1	**270-3422**	2	HARNESS AS-LIGHTING	
					(EACH INCLUDES)	
		1	**102-8802**	1	KIT-RECEPTACLE (2-PIN)	
					(INCLUDES RECEPTACLE AS & WEDGE)	
		1	**155-2270**	1	KIT-CONNECTING PLUG (2-PIN)	
					(INCLUDES PLUG AS, WEDGE & INTERFACE SEAL)	
		1	**9W-0844**	2	SOCKET-CONNECTOR (14-GA TO 16-GA)	
		1	**9W-0852**	2	PIN-CONNECTOR (14-GA TO 16-GA)	
	3	1	**370-8509**	2	BRACKET	
	4	1	**451-2535**	2	LAMP GP-FLOOD (24-VOLT)	
	5	1	**451-2536**	2	BRACKET AS	
	6	1	**4P-7581**	2	CLIP	
	7	1	**4P-8134**	4	CLIP	
M	8	1	**8T-0389**	2	LOCKNUT (M10X1.5-THD)	
	9	1	**8T-4121**	10	WASHER-HARD (11X21X2.5-MM THK)	
M	10	1	**8T-4136**	4	BOLT (M10X1.5X25-MM)	
M	11	1	**8T-4195**	6	BOLT (M10X1.5X30-MM)	

M - METRIC PART

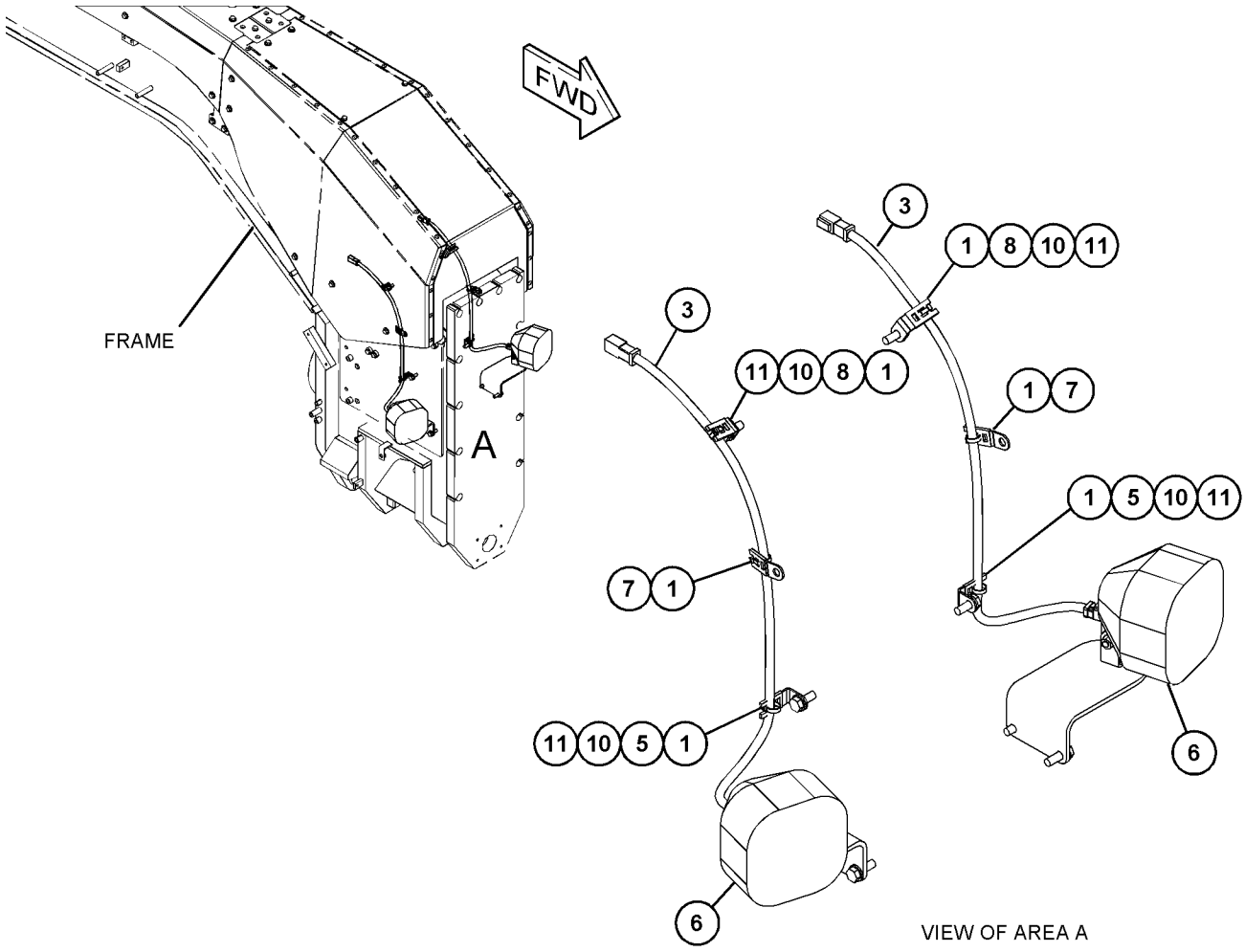

VIEW OF AREA A

GRAPHIC #1 **<END>** g03814949

370-8503 LIGHTING GP-FLOOD—WORK LIGHTS

S/N: E9Y1-UP
HALOGEN
CANNOT BE USED WITH 370-8504—PAGE: 221, 421-7813—PAGE: 763, 375-3407—PAGE: 3
AN ATTACHMENT

SMCS-1434 **i06128735**

NOTE	REF NO	GRAPHIC REF	PART NUMBER	QTY	PART NAME 1 2 3 4 5 6 (PRODUCT LEVEL)	SEE PAGE
	1	1	**3S-2093**	6	STRAP-CABLE	
	2	1	**140-1088**	8	BRACKET AS	
					(EACH INCLUDES)	
M		1	**8T-3490**	1	NUT-WELD (M10X1.5-THD)	
		1	**115-0617**	1	BRACKET	
	3	1	**288-5530**	2	BRACKET	
	4	1	**370-8509**	4	BRACKET	
	5	1	**132-5789**	4	CLIP	
Y	6	1	*147-0319*	6	LAMP GP-FLOOD (24-VOLT, 70-WATT)	206
Y	7	1	**161-3509**	2	LAMP GP-HEAD (24-VOLT)	211
	8	1	**4P-7581**	2	CLIP	
M	9	1	**5C-7261**	8	NUT (M8X1.25-THD)	
	10	1	**7X-4780**	2	GROMMET	
	11	1	**8T-4121**	20	WASHER-HARD (11X21X2.5-MM THK)	
M	12	1	**8T-4136**	8	BOLT (M10X1.5X25-MM)	
M	13	1	**8T-4137**	4	BOLT (M10X1.5X20-MM)	
M	14	1	**8T-4195**	8	BOLT (M10X1.5X30-MM)	
	15	1	**8T-4224**	16	WASHER-HARD (8.8X16X2-MM THK)	
M	16	1	**8T-6869**	8	BOLT (M8X1.25X60-MM)	

M - METRIC PART
Y - SEPARATE ILLUSTRATION

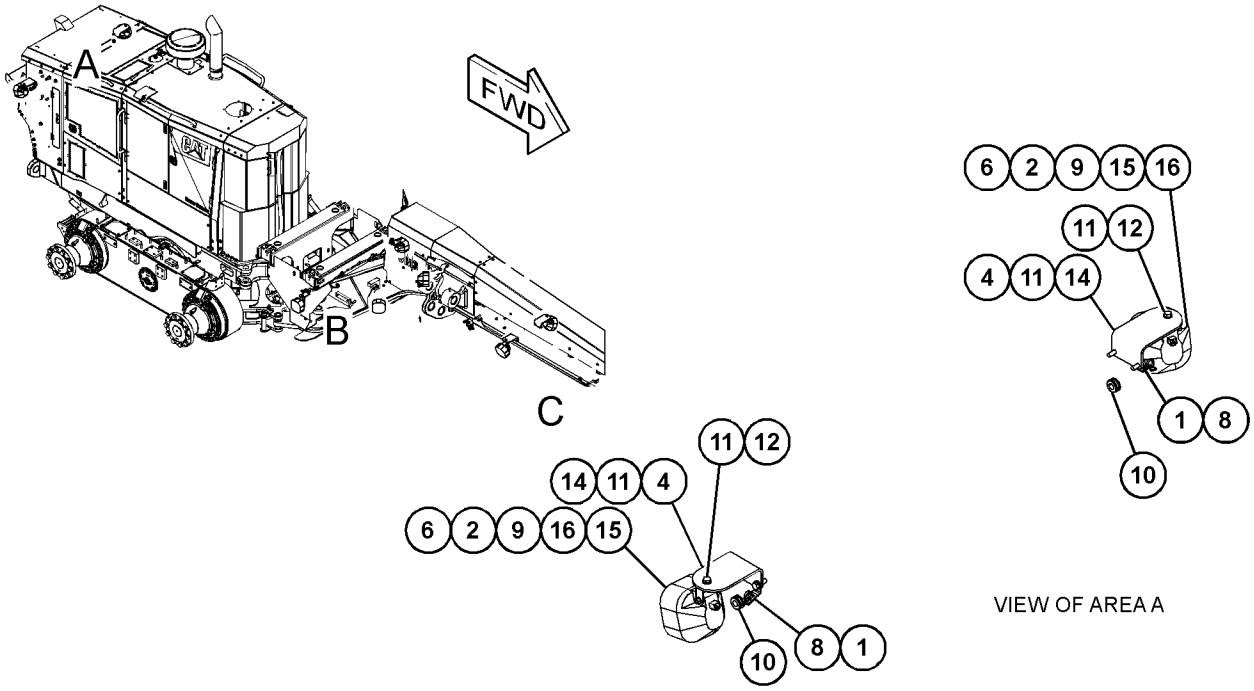

VIEW OF AREA A

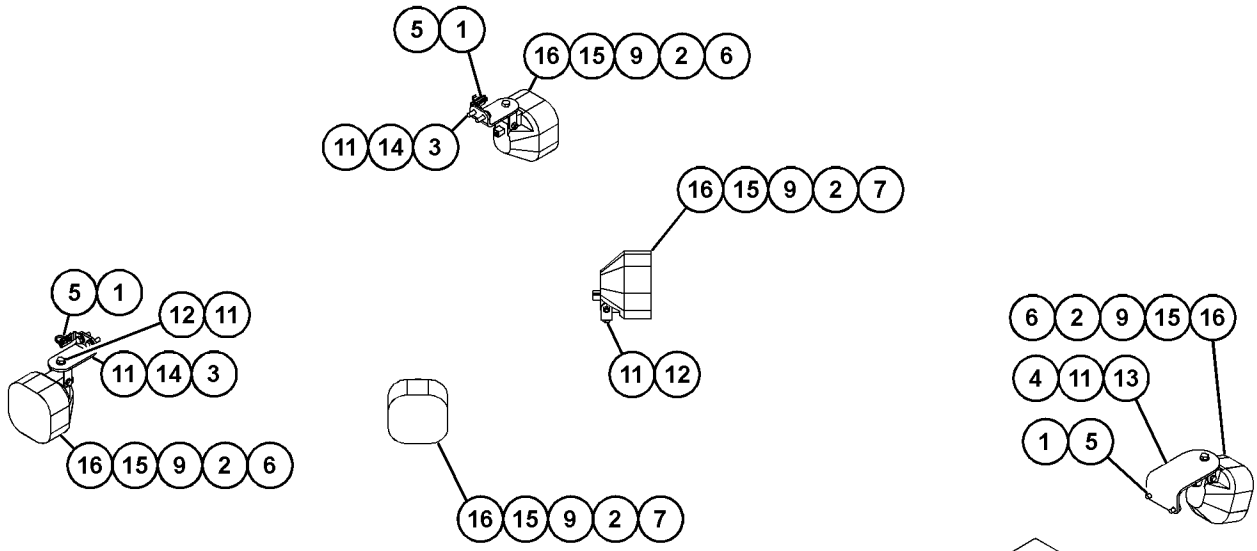

VIEW OF AREA B

VIEW OF AREA C

GRAPHIC #1 **<END>** g03818234

370-8504 LIGHTING GP-FLOOD—WORK LIGHTS

S/N: E9Y1-UP

LED

CANNOT BE USED WITH 370-8503—PAGE: 219, 421-7813—PAGE: 763, 375-3407—PAGE: 3

AN ATTACHMENT

SMCS-1434 **i06093438**

NOTE	REF NO	GRAPHIC REF	PART NUMBER	QTY	PART NAME 1 2 3 4 5 6 (PRODUCT LEVEL)	SEE PAGE
	1	1	**3S-2093**	6	STRAP-CABLE	
	2	1	**370-8508**	2	BRACKET	
	3	1	**370-8509**	4	BRACKET	
	4	1	**451-2535**	8	LAMP GP-FLOOD (24-VOLT)	
	5	1	**451-2536**	8	BRACKET AS	
	6	1	**132-5789**	4	CLIP	
	7	1	**4P-8134**	2	CLIP	
	8	1	**7X-4780**	2	GROMMET	
	9	1	**8T-4121**	20	WASHER-HARD (11X21X2.5-MM THK)	
M	10	1	**8T-4133**	8	NUT (M10X1.5-THD)	
M	11	1	**8T-4136**	8	BOLT (M10X1.5X25-MM)	
M	12	1	**8T-4137**	4	BOLT (M10X1.5X20-MM)	
M	13	1	**8T-4195**	8	BOLT (M10X1.5X30-MM)	

M - METRIC PART

370-8504 **LIGHTING GP-FLOOD (*contd.*)** **i06093438**

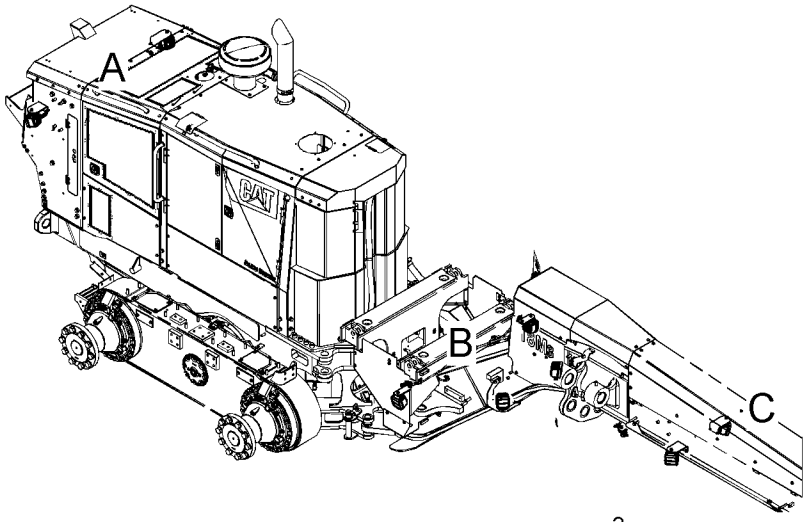

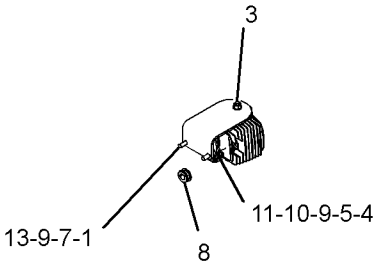

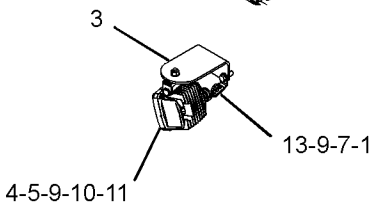

VIEW OF AREA A

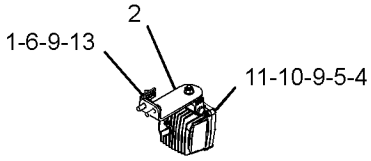

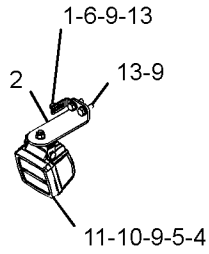

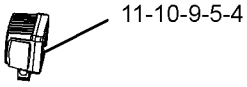

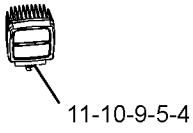

VIEW OF AREA B

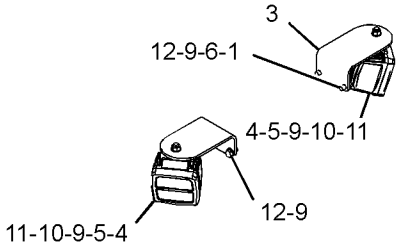

VIEW OF AREA C

GRAPHIC #1 **<END>** g03809239

370-8510 LIGHTING GP-FLOOD—ACCESS LIGHTS

S/N: E9Y1-UP
PART OF 375-3407, 462-6400 OPTION AR-LADDER
AN ATTACHMENT

SMCS-1434 **i06140550**

NOTE	REF NO	GRAPHIC REF	PART NUMBER	QTY	PART NAME 1 2 3 4 5 6 (PRODUCT LEVEL)	SEE PAGE
	1	1	**3E-5169**	1	GUARD-SWITCH (GROUND LEVEL SHUTDOWN)	
	2	1	**6T-6969**	1	GUARD-SWITCH (ACCESS LIGHTS)	
	3	1	**7K-1181**	4	STRAP-CABLE	
	4	1	**109-0361**	1	FILM-INSTRUCTION (ENGINE SHUTDOWN)	
Y	5	1	*272-6641*	2	LAMP GP-FLOOD (24-VOLT) (LADDER)	208
	6	1	**353-4515**	1	SWITCH AS-TOGGLE (GROUND LEVEL SHUTDOWN)	
		1	**102-8803**	1	KIT-RECEPTACLE (3-PIN)	
					(INCLUDES RECEPTACLE AS & WEDGE)	
		1	**3E-3371**	1	WEDGE-RECEPTACLE LOCK (3-PIN)	
		1	**8T-8729**	3	PIN-CONNECTOR (16-GA TO 18-GA)	
E		1	**112-4550**		SLEEVE (19-CM)	
	7	1	**423-5025**	1	FILM-IDENTIFICATION (LIGHTING)	
	8	1	**448-9283**	1	PLATE AS	
	9	1	**475-4926**	1	PLATE AS	
	10	1	**475-4927**	1	PLATE AS	
Y	11	1	**475-4928**	1	HARNESS AS-LIGHTING	181
	12	1	**202-2762**	1	CLIP	
Y	13	1	**284-8381**	1	SWITCH AS-TOGGLE (ACCESS LIGHTS)	264
	14	1	**2G-1133**	1	GROMMET	
	15	1	**3E-6753**	1	GROMMET	
	16	1	**4D-9517**	1	CLIP	
	17	1	**6H-4005**	2	GROMMET	
	18	1	**8T-4121**	9	WASHER-HARD (11X21X2.5-MM THK)	
M	19	1	**8T-4136**	3	BOLT (M10X1.5X25-MM)	
M	20	1	**8T-4137**	4	BOLT (M10X1.5X20-MM)	
M	21	1	**8T-4196**	2	BOLT (M10X1.5X35-MM)	

E - ORDER BY THE CENTIMETER
M - METRIC PART
Y - SEPARATE ILLUSTRATION

370-8510 **LIGHTING GP-FLOOD (*contd.*)** **i06140550**

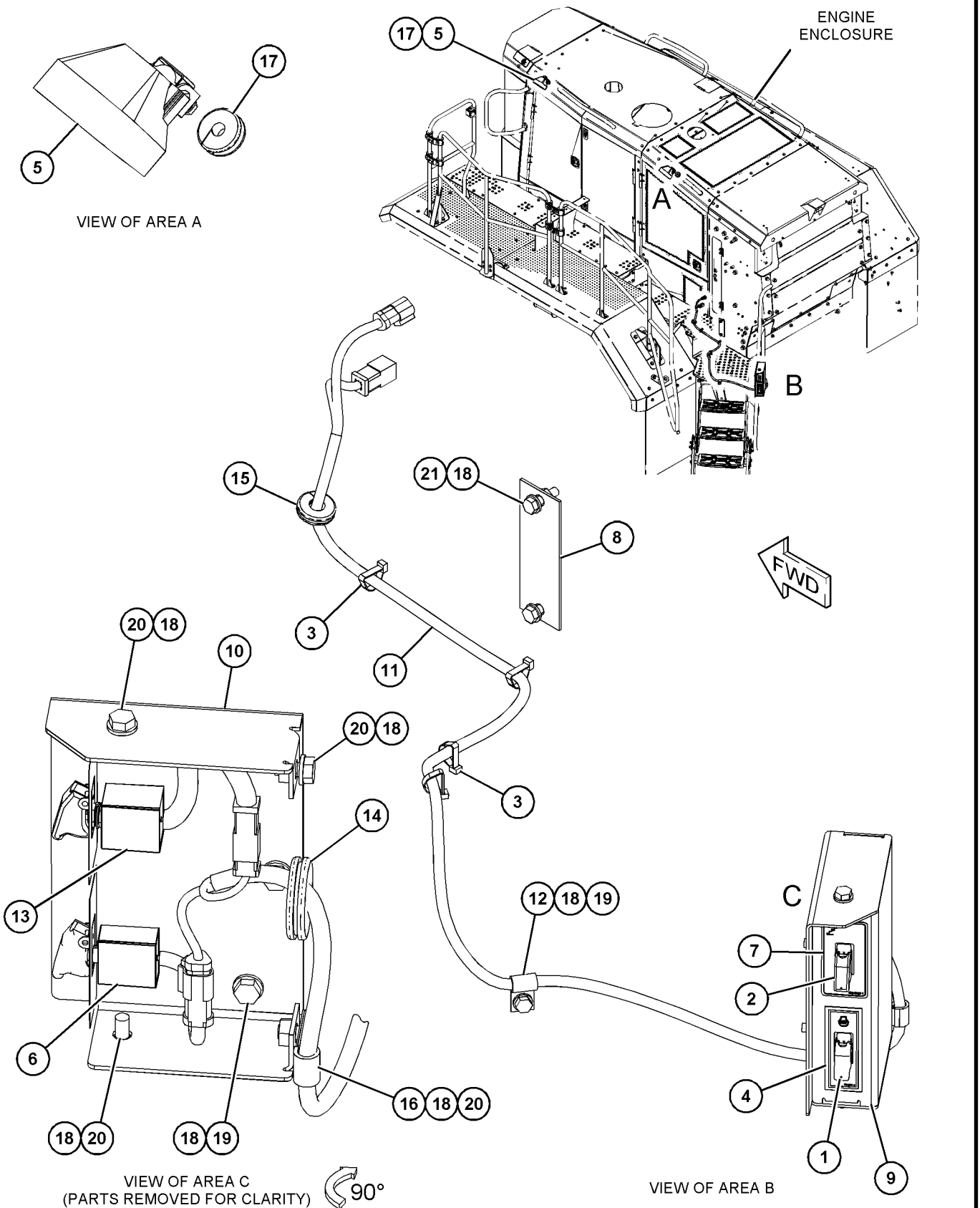

GRAPHIC #1 **<END>** g03833357

382-0678 LIGHTING GP-FLOOD

S/N: E9Y1-UP
PART OF 390-2797 LIGHTING AR-ROADING
AN ATTACHMENT

SMCS-1434 **i04724248**

NOTE	REF NO	GRAPHIC REF	PART NUMBER	QTY	PART NAME 1 2 3 4 5 6 (PRODUCT LEVEL)	SEE PAGE
Y	1	1	**219-6488**	2	LAMP GP-FLOOD (24-VOLT)	207
Y	2	1	**290-5749**	2	LAMP GP-HEAD (24-VOLT)	212
	3	1	**261-4907**	1	SWITCH AS-ROCKER (FLOODLIGHT)	
Y	4	1	**315-1251**	2	LAMP GP-FLOOD (24-VOLT)	209

Y - SEPARATE ILLUSTRATION

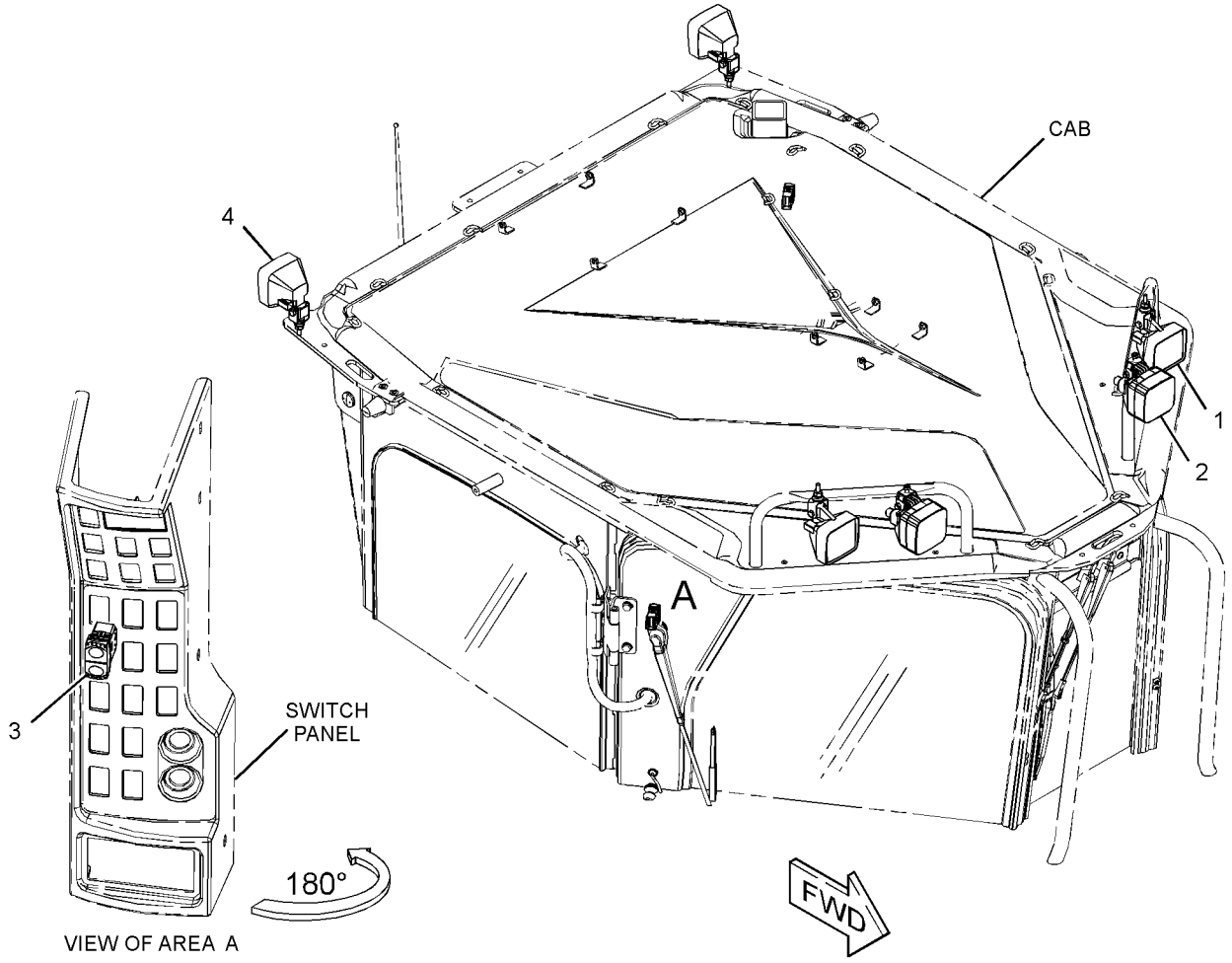

GRAPHIC #1 **<END>** g02994225

459-1708 LIGHTING GP-FLOOD—ENCLOSURE

S/N: E9Y1-UP

AN ATTACHMENT

SMCS-1434 **i06158556**

NOTE	REF NO	GRAPHIC REF	PART NUMBER	QTY	PART NAME 1 2 3 4 5 6 (PRODUCT LEVEL)	SEE PAGE
	1	1	**7K-1181**	2	STRAP-CABLE	
	2	1	**124-3019**	1	BRACKET AS	
M		1	**8T-3490**	1	NUT-WELD (M10X1.5-THD)	
	3	1	**288-5530**	1	BRACKET	
	4	1	**294-7278**	1	PLATE	
	5	1	**353-4515**	1	SWITCH AS-TOGGLE (ENGINE COMPARTMENT LIGHTS)	
		1	**102-8803**	1	KIT-RECEPTACLE (3-PIN)	
					(INCLUDES RECEPTACLE AS & WEDGE)	
		1	**8T-8729**	3	PIN-CONNECTOR (16-GA TO 18-GA)	
E		1	**112-4550**		SLEEVE (19-CM)	
		1	**271-2178**	1	SWITCH AS-TOGGLE (ENGINE COMPARTMENT)	
		1	**6T-3631**	2	NUT-HEX (15/32-32-THD)	
		1	**6T-3632**	1	LOCKWASHER	
		1	**6T-3633**	1	RING-LOCKING	
Y	6	1	**386-1722**	2	LAMP GP-FLOOD (9 TO 32-VOLT) (ENGINE)	210
	7	1	**4P-7581**	2	CLIP	
	8	1	**8T-4121**	3	WASHER-HARD (11X21X2.5-MM THK)	
M	9	1	**8T-4136**	2	BOLT (M10X1.5X25-MM)	
M	10	1	**8T-4191**	1	BOLT (M10X1.5X16-MM)	

E - ORDER BY THE CENTIMETER
M - METRIC PART
Y - SEPARATE ILLUSTRATION

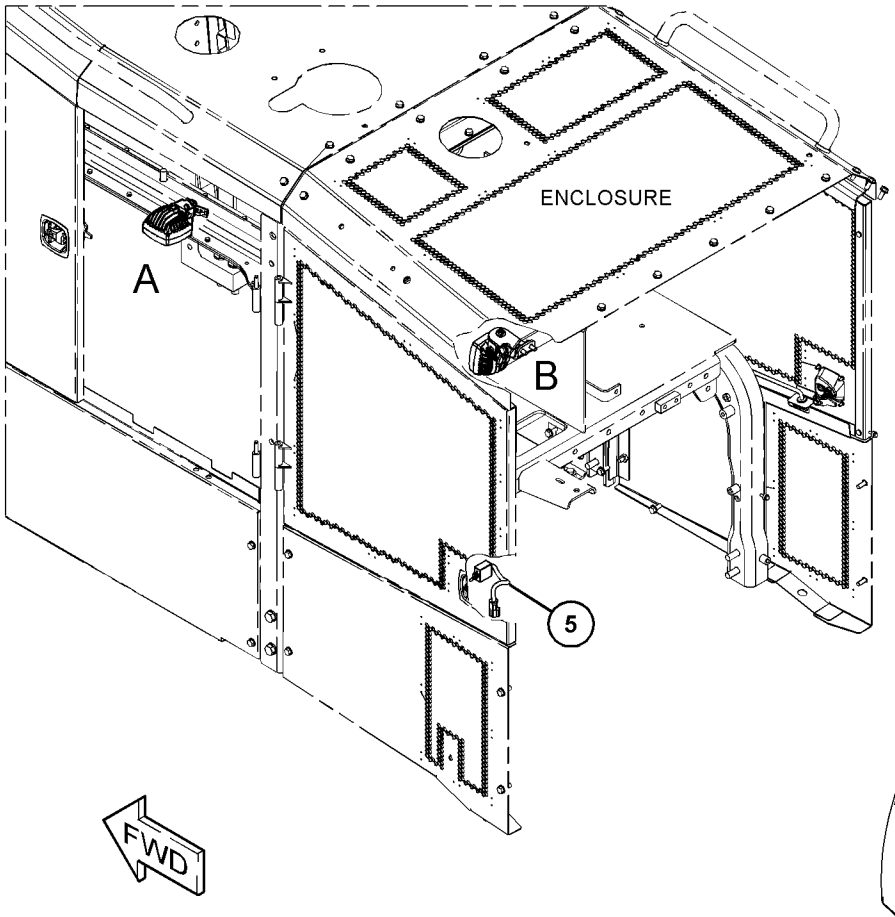

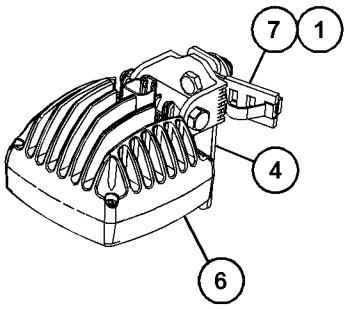

VIEW OF AREA A

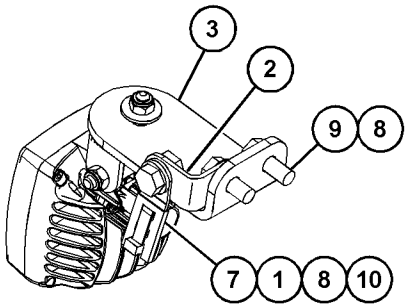

VIEW OF AREA B

GRAPHIC #1 **<END>** g03834643

421-7811 LIGHTING GP-FLOOD & HEAD–LED

S/N: E9Y1-UP
PART OF 390-2798 LIGHTING AR-FLOOD
AN ATTACHMENT

SMCS-1429 **i06144724**

NOTE	REF NO	GRAPHIC REF	PART NUMBER	QTY	PART NAME 1 2 3 4 5 6 (PRODUCT LEVEL)	SEE PAGE
	1	1	**383-8634**	4	LAMP GP-FLOOD (24-VOLT) (CAB)	
	2	1	**386-1717**	2	LAMP GP-HEAD (24-VOLT)	

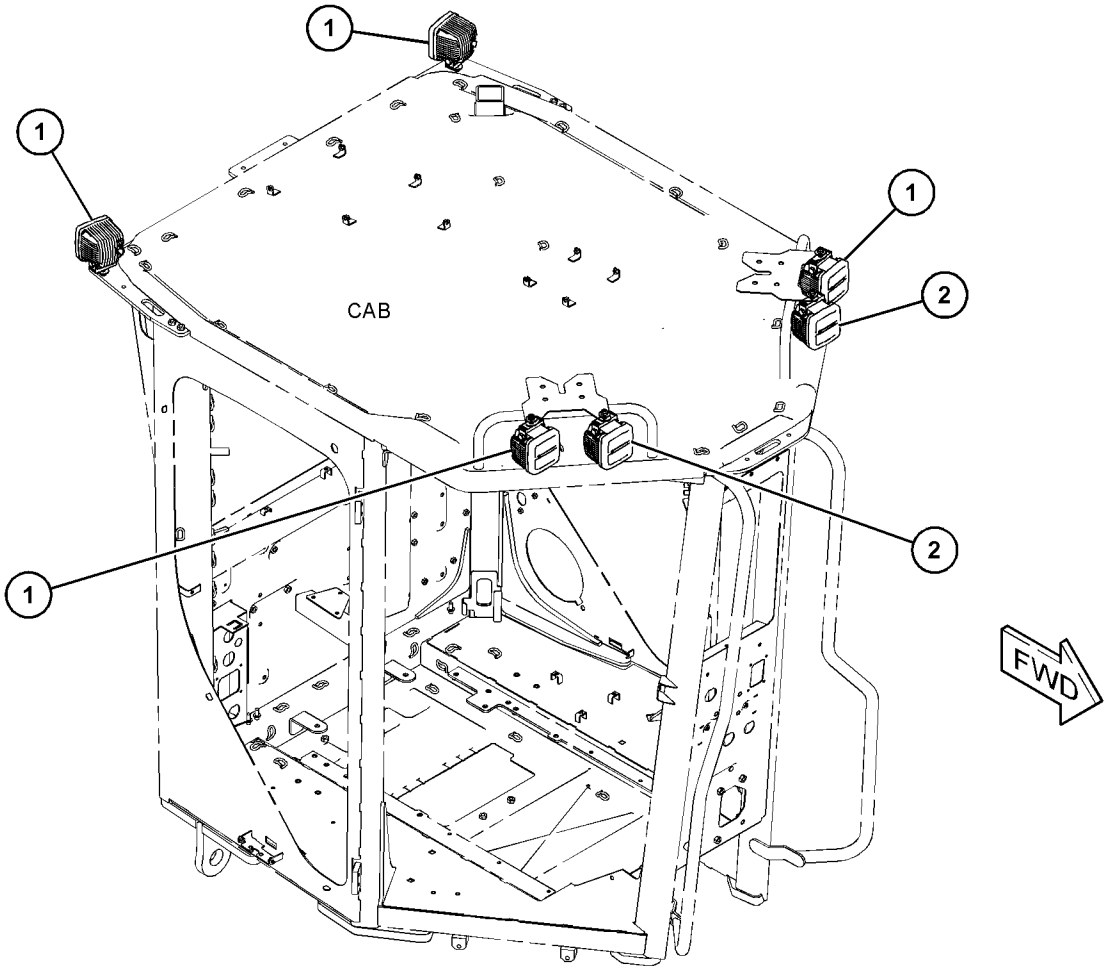

GRAPHIC #1 **<END>** g03833696

370-8501 LIGHTING GP-ROADING—WORK LIGHTS, FRONT

S/N: E9Y1-UP
PART OF 390-2797 LIGHTING AR-ROADING
AN ATTACHMENT

SMCS-1429 **i06093443**

NOTE	REF NO	GRAPHIC REF	PART NUMBER	QTY	PART NAME 1 2 3 4 5 6 (PRODUCT LEVEL)	SEE PAGE
	1	1	**3S-2093**	6	STRAP-CABLE	
	2		**140-1088**	2	BRACKET AS	
					(EACH INCLUDES)	
M			**8T-3490**	1	NUT-WELD (M10X1.5-THD)	
			115-0617	1	BRACKET	
	3	1	**270-3422**	2	HARNESS AS-LIGHTING	
					(EACH INCLUDES)	
		1	**102-8802**	1	KIT-RECEPTACLE (2-PIN)	
					(INCLUDES RECEPTACLE AS & WEDGE)	
		1	**155-2270**	2	KIT-CONNECTING PLUG (2-PIN)	
					(EACH PLUG KIT INCLUDES PLUG AS, WEDGE & INTERFACE SEAL)	
		1	**9W-0844**	2	SOCKET-CONNECTOR (14-GA TO 16-GA)	
		1	**9W-0852**	2	PIN-CONNECTOR (14-GA TO 16-GA)	
	4		**370-8509**	2	BRACKET	
	5	1	**132-5789**	2	CLIP	
Y	6	1	**161-3509**	2	LAMP GP-HEAD (24-VOLT)	211
	7	1	**4P-7581**	2	CLIP	
	8	1	**4P-8134**	2	CLIP	
M	9		**5C-7261**	2	NUT (M8X1.25-THD)	
	10	1	**8T-4121**	10	WASHER-HARD (11X21X2.5-MM THK)	
M	11	1	**8T-4136**	6	BOLT (M10X1.5X25-MM)	
M	12		**8T-4195**	4	BOLT (M10X1.5X30-MM)	
	13		**8T-4224**	4	WASHER-HARD (8.8X16X2-MM THK)	
M	14		**8T-6869**	2	BOLT (M8X1.25X60-MM)	

M - METRIC PART
Y - SEPARATE ILLUSTRATION

370-8501 **LIGHTING GP-ROADING (*contd.*)** **i06093443**

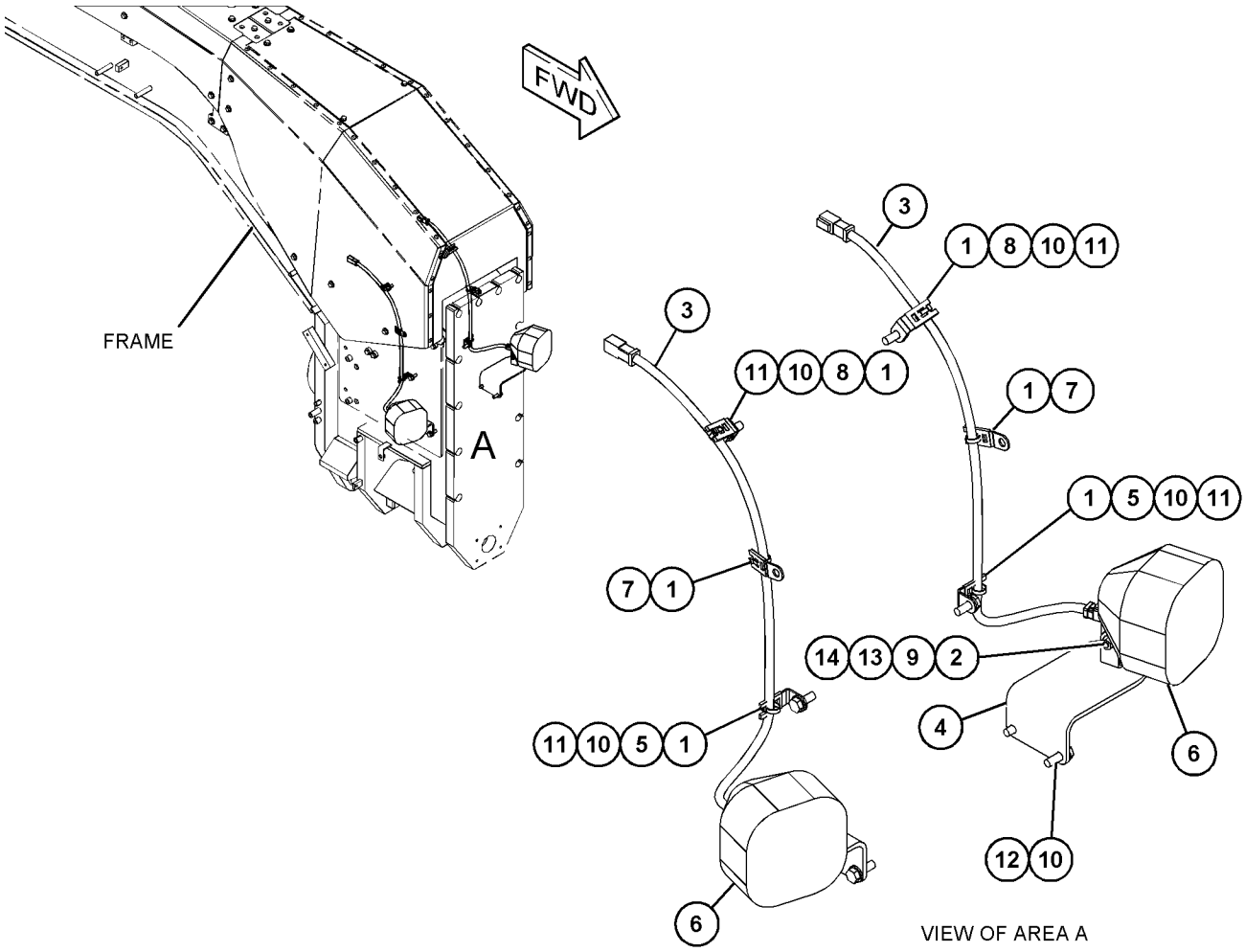

GRAPHIC #1 **<END>** g03814956

436-9180 MOTOR GP-ELECTRIC—CIRCULATING FAN

S/N: E9Y1-UP
27-VOLT
PART OF 170-5334 FAN GP-CIRCULATING
AN ATTACHMENT

SMCS-5927 **i05673749**

NOTE	REF NO	GRAPHIC REF	PART NUMBER	QTY	PART NAME 1 2 3 4 5 6 (PRODUCT LEVEL)	SEE PAGE
	1	1	**102-8802**	1	KIT-RECEPTACLE (2-PIN)	
					(INCLUDES RECEPTACLE AS & WEDGE)	
	2	1	**9W-0852**	2	PIN-CONNECTOR (14-GA TO 16-GA)	

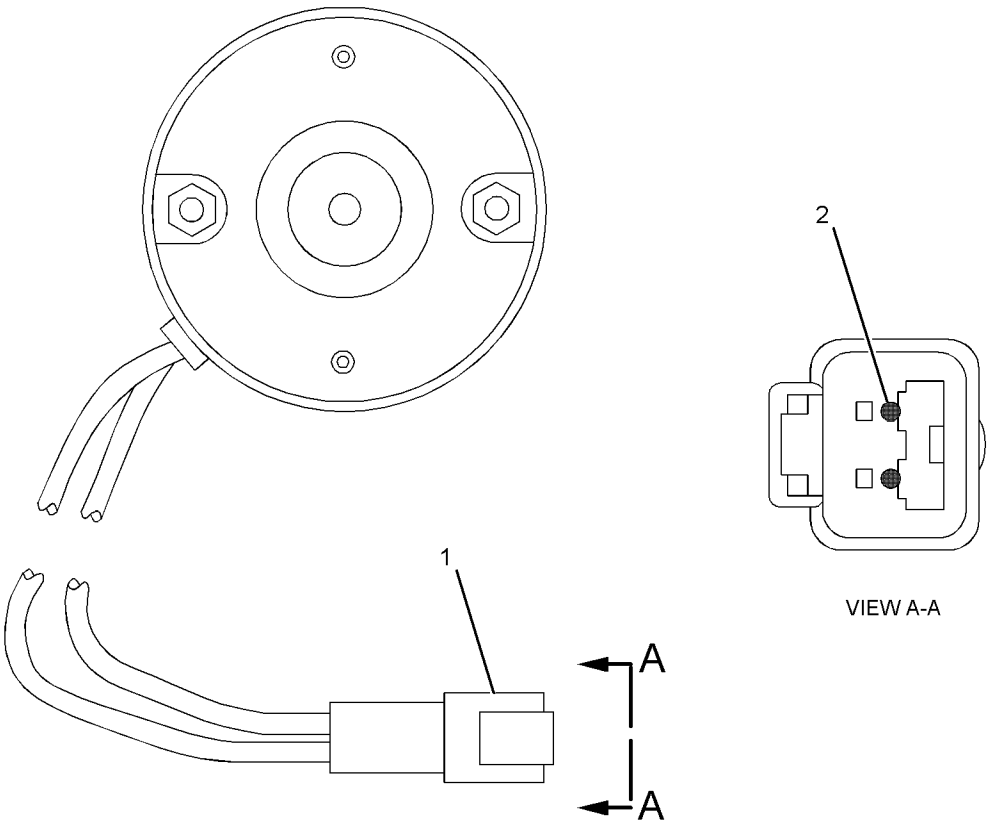

GRAPHIC #1 **<END>** g01224350

260-1909 MOUNTING GP-LIGHTING—SNOW REMOVAL

S/N: E9Y1-UP
HIGH BAR
CANNOT BE USED WITH 260-1910—PAGE: 233
PART OF 386-1304, 479-7338 LIGHTING AR-ROADING
AN ATTACHMENT

SMCS-1429 **i05358628**

NOTE	REF NO	GRAPHIC REF	PART NUMBER	QTY	PART NAME 1 2 3 4 5 6 (PRODUCT LEVEL)	SEE PAGE
	1	1	**2G-0617**	2	CLAMP	
	2	1	**2G-0988**	2	CAP	
	3	1	**3K-9520**	3	GROMMET	
	4	1	**137-9410**	2	CLAMP	
	5	1	**236-2335**	1	HARNESS AS-FRONT LIGHTING	
		1	**102-8802**	1	KIT-RECEPTACLE (2-PIN)	
		1	**102-8805**	1	KIT-RECEPTACLE (6-PIN)	
					(EACH RECEPTACLE KIT INCLUDES RECEPTACLE AS & WEDGE)	
		1	**8T-8737**	3	PLUG-SEAL	
		1	**9W-0844**	10	SOCKET-CONNECTOR (14-GA TO 16-GA)	
		1	**9W-0852**	7	PIN-CONNECTOR (14-GA TO 16-GA)	
E		1	**114-8843**		SLEEVE-PLASTIC (80-CM)	
E		1	**119-3662**		TUBE-HEAT SHRINK (10.85-MM DIA) (20-CM)	
		1	**155-2274**	2	KIT-CONNECTING PLUG (6-PIN)	
					(EACH INCLUDES PLUG AS, WEDGE, & INTERFACE SEAL)	
	6	1	**310-7636**	1	TUBE	
Y	7	1	**259-9287**	1	LAMP GP-HEAD & SIGNAL (24-VOLT, LH)	213
Y	8	1	**259-9288**	1	LAMP GP-HEAD & SIGNAL (24-VOLT, RH)	214
	9	1	**331-3710**	1	BRACKET AS	
	10	1	**130-5300**	2	CLIP	
	11	1	**130-5301**	2	CLIP	
	12	1	**4P-7428**	1	CLIP	
	13	1	**5P-9135**	1	GROMMET	
	14	1	**8T-4121**	4	WASHER-HARD (11X21X2.5-MM THK)	
M	15	1	**8T-4133**	2	NUT (M10X1.5-THD)	
M	16	1	**8T-4195**	2	BOLT (M10X1.5X30-MM)	
	17	1	**8T-4223**	4	WASHER-HARD (13.5X25.5X3-MM THK)	
M	18	1	**8T-5092**	4	BOLT (M12X1.75X150-MM)	
	19	1	**374-4761**	1	BRACKET AS	
	20	1	**7K-1181**	1	STRAP-CABLE	

E - ORDER BY THE CENTIMETER
M - METRIC PART
Y - SEPARATE ILLUSTRATION

260-1909 **MOUNTING GP-LIGHTING (*contd.*)** **i05358628**

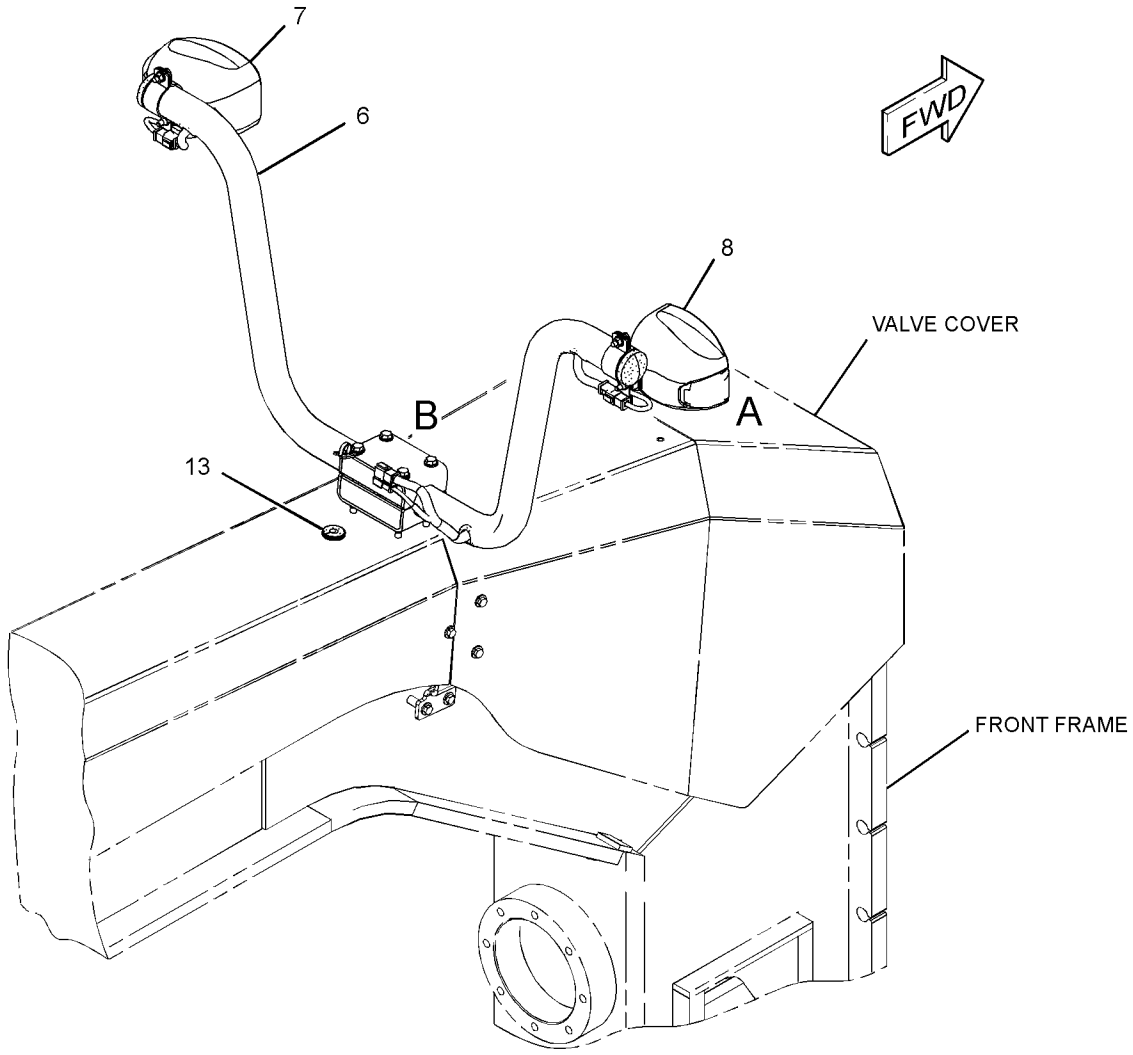

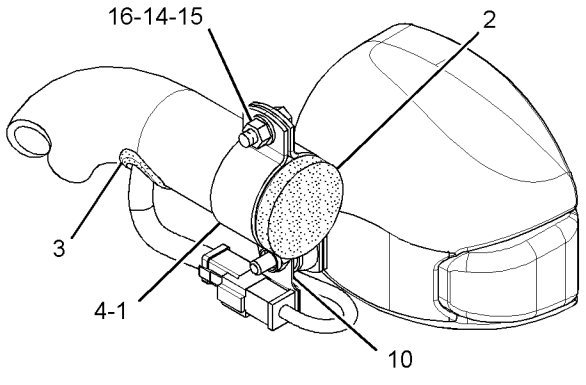

VIEW OF AREA A

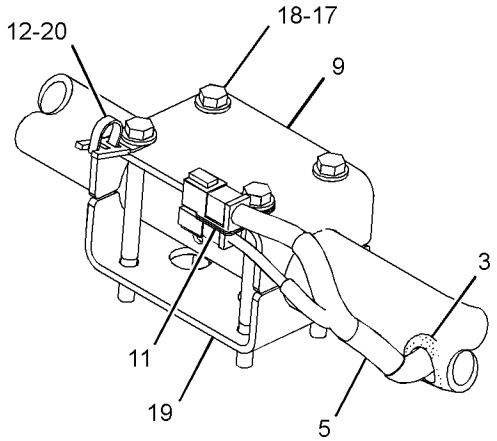

VIEW OF AREA B

GRAPHIC #1 **<END>** g03178816

260-1910 MOUNTING GP-LIGHTING

S/N: E9Y1-UP
LOW BAR
CANNOT BE USED WITH 260-1909—PAGE: 231
PART OF 386-1305, 479-7339 LIGHTING AR-ROADING
AN ATTACHMENT

SMCS-1429 **i05358629**

NOTE	REF NO	GRAPHIC REF	PART NUMBER	QTY	PART NAME 1 2 3 4 5 6 (PRODUCT LEVEL)	SEE PAGE
	1	1	**2G-0617**	2	CLAMP	
	2	1	**2G-0988**	2	CAP	
	3	1	**3K-9520**	3	GROMMET	
	4	1	**137-9410**	2	CLAMP	
	5	1	**236-2335**	1	HARNESS AS-FRONT LIGHTING	
		1	**9W-0852**	7	PIN-CONNECTOR (14-GA TO 16-GA)	
		1	**155-2274**	2	KIT-CONNECTING PLUG (6-PIN)	
					(EACH INCLUDES PLUG AS, WEDGE & INTERFACE SEAL)	
		1	**8T-8737**	3	PLUG-SEAL	
		1	**102-8802**	1	KIT-RECEPTACLE (2-PIN)	
		1	**102-8805**	1	KIT-RECEPTACLE (6-PIN)	
					(EACH RECEPTACLE KIT INCLUDES RECEPTACLE AS & WEDGE)	
E		1	**114-8843**		SLEEVE-PLASTIC (80-CM)	
		1	**9W-0844**	10	SOCKET-CONNECTOR (14-GA TO 16-GA)	
E		1	**119-3662**		TUBE-HEAT SHRINK (10.85-MM DIA) (20-CM)	
Y	6	1	**259-9287**	1	LAMP GP-HEAD & SIGNAL (24-VOLT, LH)	213
Y	7	1	**259-9288**	1	LAMP GP-HEAD & SIGNAL (24-VOLT, RH)	214
	8	1	**300-6497**	1	TUBE	
	9	1	**331-3710**	1	BRACKET AS	
	10	1	**130-5300**	2	CLIP	
	11	1	**130-5301**	2	CLIP	
	12	1	**4P-7428**	1	CLIP	
	13	1	**5P-9135**	1	GROMMET	
	14	1	**8T-4121**	4	WASHER-HARD (11X21X2.5-MM THK)	
M	15	1	**8T-4133**	2	NUT (M10X1.5-THD)	
M	16	1	**8T-4195**	2	BOLT (M10X1.5X30-MM)	
	17	1	**8T-4223**	4	WASHER-HARD (13.5X25.5X3-MM THK)	
M	18	1	**8T-5092**	4	BOLT (M12X1.75X150-MM)	
	19	1	**374-4761**	1	BRACKET AS	
	20	1	**7K-1181**	1	STRAP-CABLE	

E - ORDER BY THE CENTIMETER
M - METRIC PART
Y - SEPARATE ILLUSTRATION

260-1910 **MOUNTING GP-LIGHTING (*contd.*)** **i05358629**

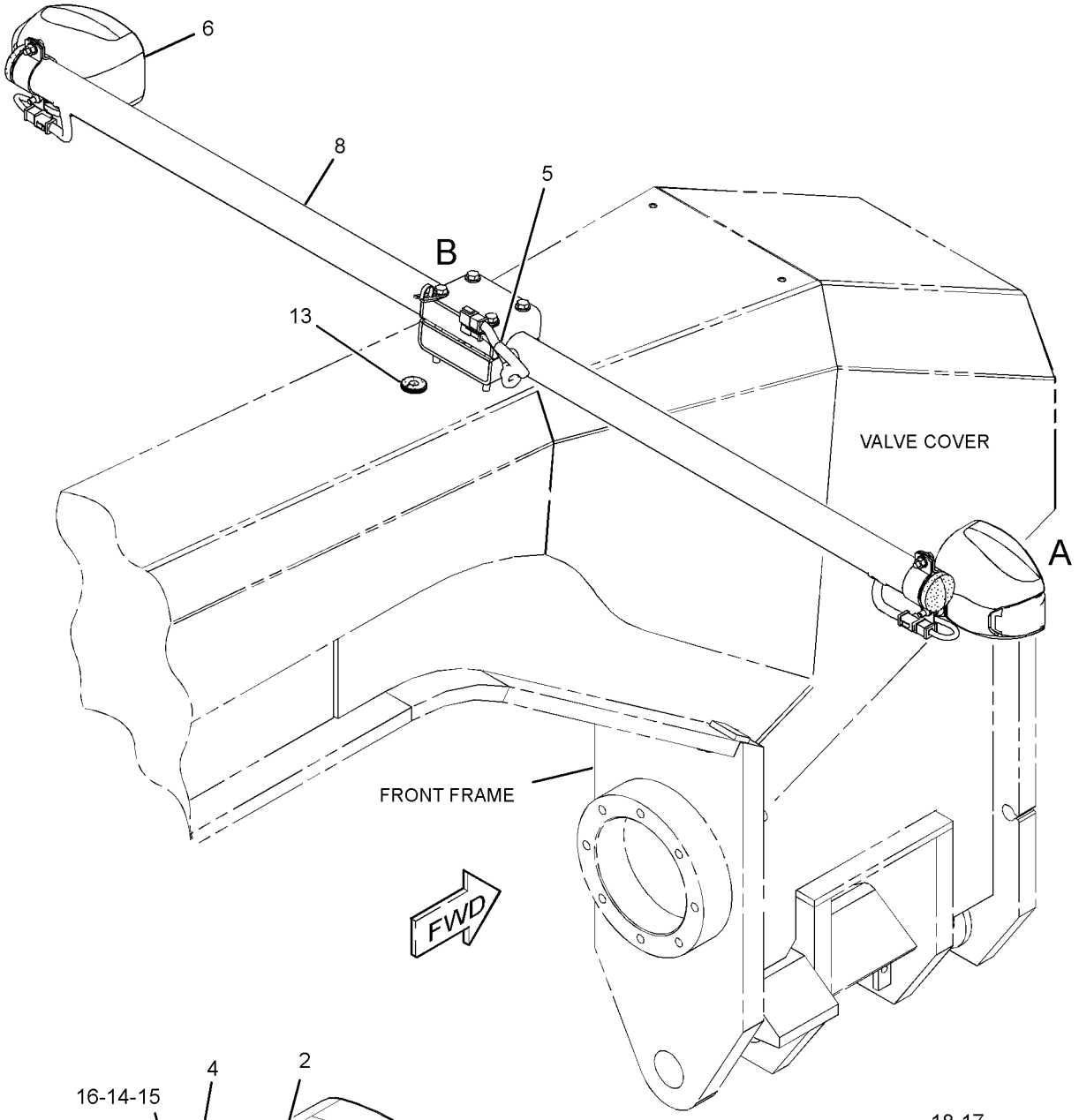

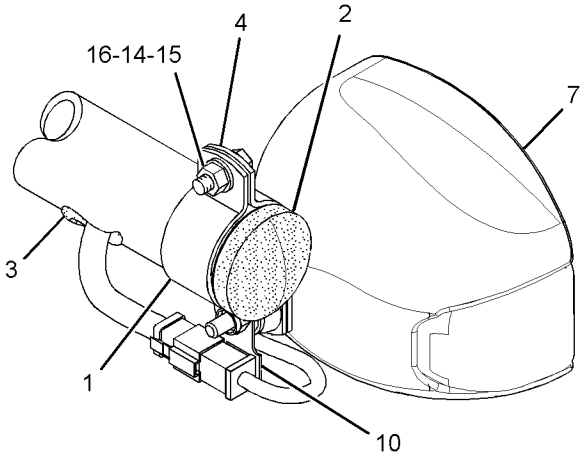

VIEW OF AREA A

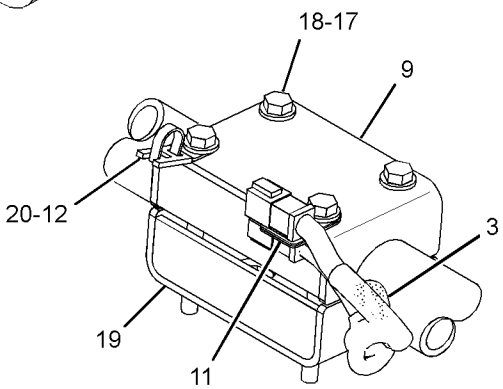

VIEW OF AREA B

GRAPHIC #1 **<END>** g03178836

439-5036 MOUNTING GP-WIRING

S/N: TXX1-UP

PART OF 383-2065, 422-0048 ENGINE AR-COMPLETE

AN ATTACHMENT

SMCS-1408 **i06105533**

NOTE	REF NO	GRAPHIC REF	PART NUMBER	QTY	PART NAME 1 2 3 4 5 6 (PRODUCT LEVEL)	SEE PAGE
	1	1	**386-3897**	1	BRACKET AS	
M		1	**8C-8778**	1	STUD-WELD (M8X1.25X25-MM)	
	2	1	**132-5789**	1	CLIP	
M	3	1	**8T-0642**	1	BOLT (M8X1.25X14-MM)	
	4	1	**9M-1974**	1	WASHER-HARD (8.8X16X2-MM THK)	

M - METRIC PART

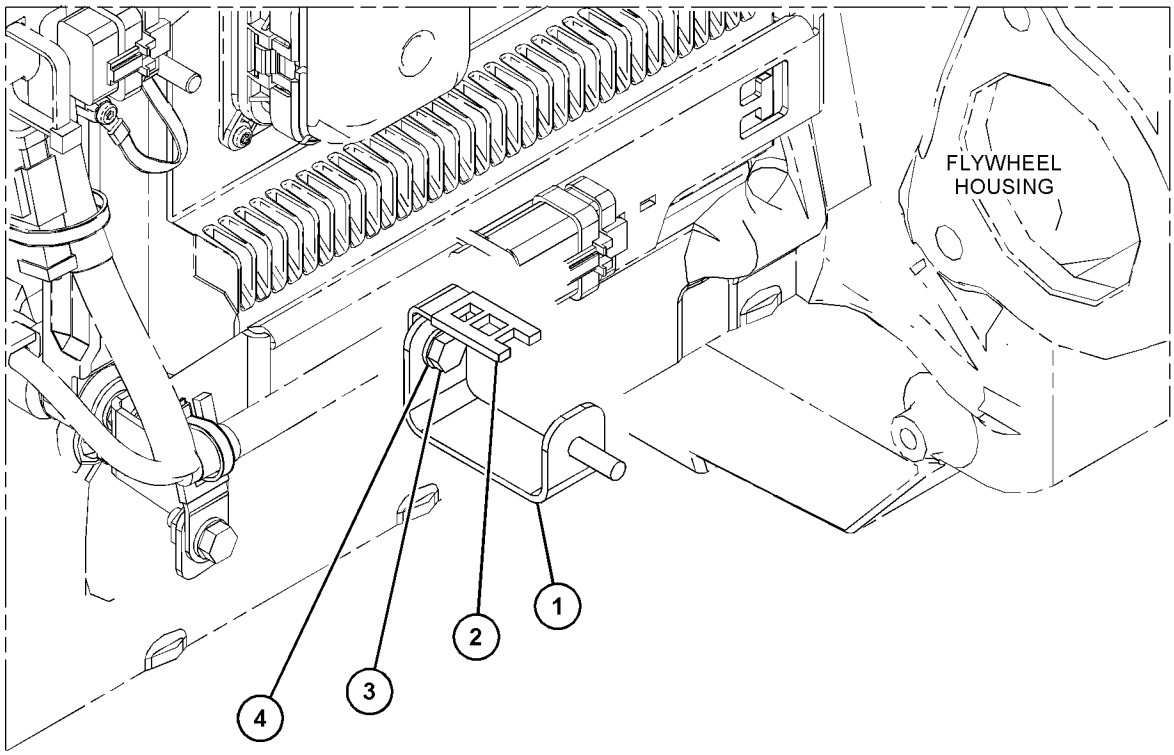

GRAPHIC #1 **<END>** g03839233

3T-9525 PLATE AS-BRUSH

S/N: TXX1-UP

PART OF 349-6606 STARTING MOTOR GP-ELECTRIC

AN ATTACHMENT

SMCS-1453 **i04083269**

NOTE	REF NO	GRAPHIC REF	PART NUMBER	QTY	PART NAME 1 2 3 4 5 6 (PRODUCT LEVEL)	SEE PAGE
	1	1	**6T-0372**	1	PLATE	
	2	1	**6T-0371**	1	INSULATOR	
	3	1	**9F-5599**	12	LOCKWASHER	
	4	1	**6T-0363**	6	HOLDER AS-BRUSH	
					(EACH INCLUDES)	
		1	**3T-9494**	1	SPRING	
	5	1	**3T-4709**	3	PLATE	
	6	1	**3T-4710**	3	PLATE	
	7	1	**2L-6679**	3	PLATE-INSULATOR	
	8	1	**7F-3525**	6	WASHER-BUSHING (0.207X0.39X0.09-IN THK)	
	9	1	**5P-6298**	12	SCREW-MACHINE (10-32X0.5-IN)	

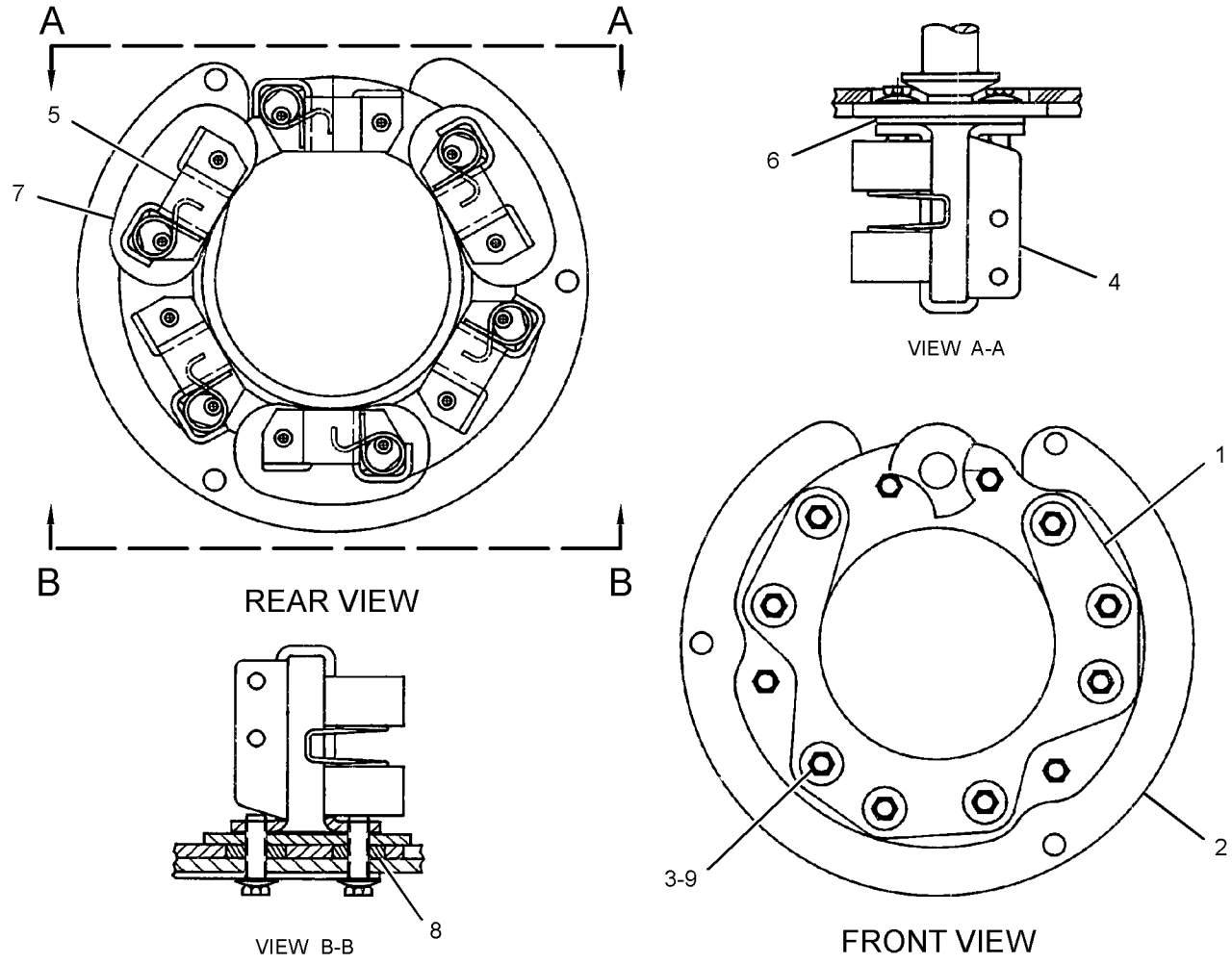

GRAPHIC #1 **<END>** g02294074

283-7960 POWER SUPPLY GP–GRADE CONTROL

S/N: E9Y1-UP

PART OF 360-7617 GRADE CONTROL GP

SMCS-5201, 7220

i02756636

NOTE	REF NO	GRAPHIC REF	PART NUMBER	QTY	PART NAME 1 2 3 4 5 6 (PRODUCT LEVEL)	SEE PAGE
	1	1	**226-9169**	1	MODULE AS-POWER SUPPLY	
	2	1	**8T-4224**	4	WASHER-HARD (8.8X16X2-MM THK)	
M	3	1	**8T-4189**	4	BOLT (M8X1.25X20-MM)	

M - METRIC PART

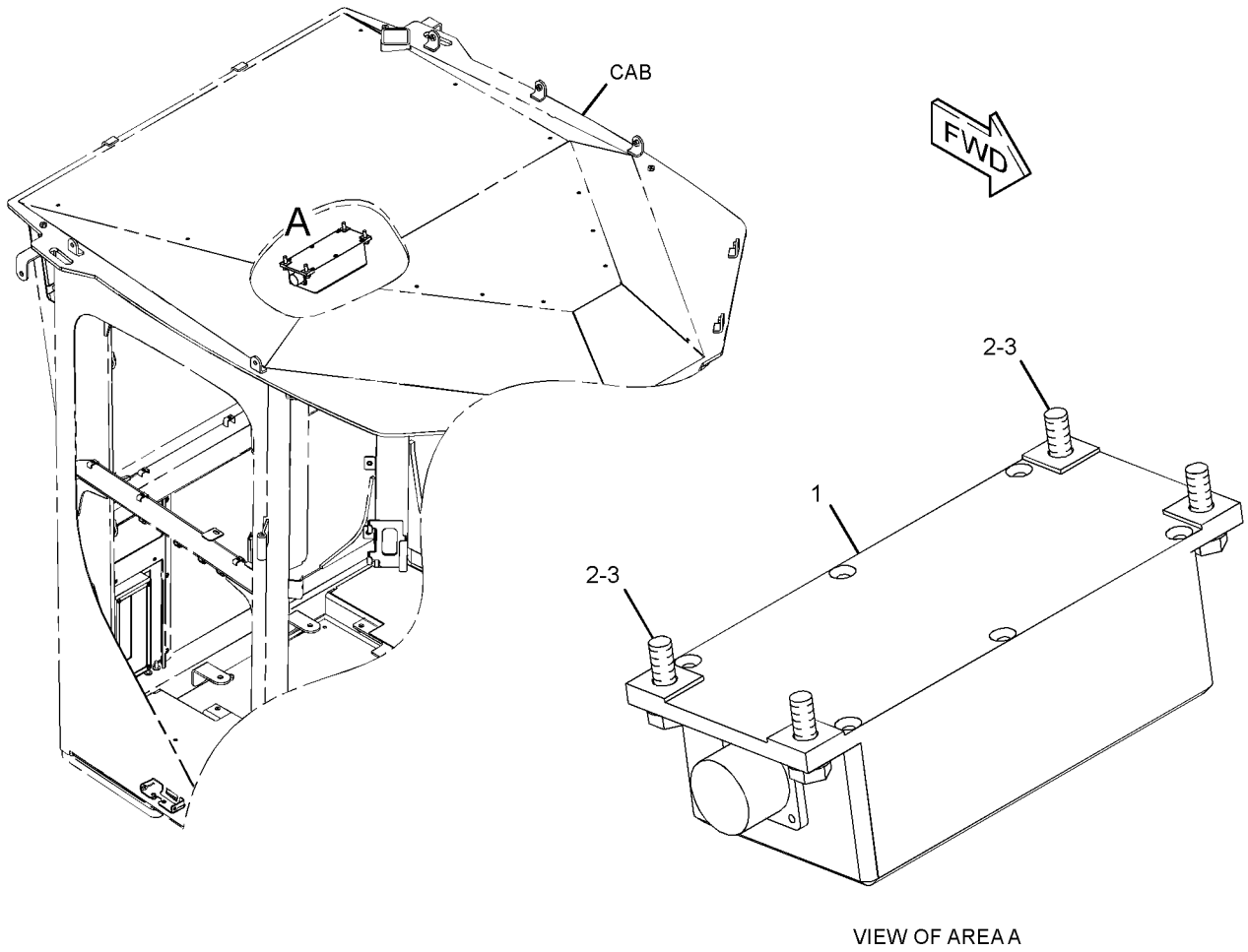

VIEW OF AREA A

GRAPHIC #1

<END>

g01288314

440-2104 RADIO GP-COMMUNICATION–PL641I CELLULAR

S/N: E9Y1-UP

PART OF 463-9614 APPLICATION GP-MONITOR

AN ATTACHMENT

SMCS-733T **i06213402**

NOTE	REF NO	GRAPHIC REF	PART NUMBER	QTY	PART NAME 1 2 3 4 5 6 (PRODUCT LEVEL)	SEE PAGE
	1	1	**449-7301**	1	FILM-INFORMATION (PL641 CELLULAR)	
F			**479-0024**	1	SOFTWARE GP-MONITOR (CELLULAR)	

F - NOT SHOWN

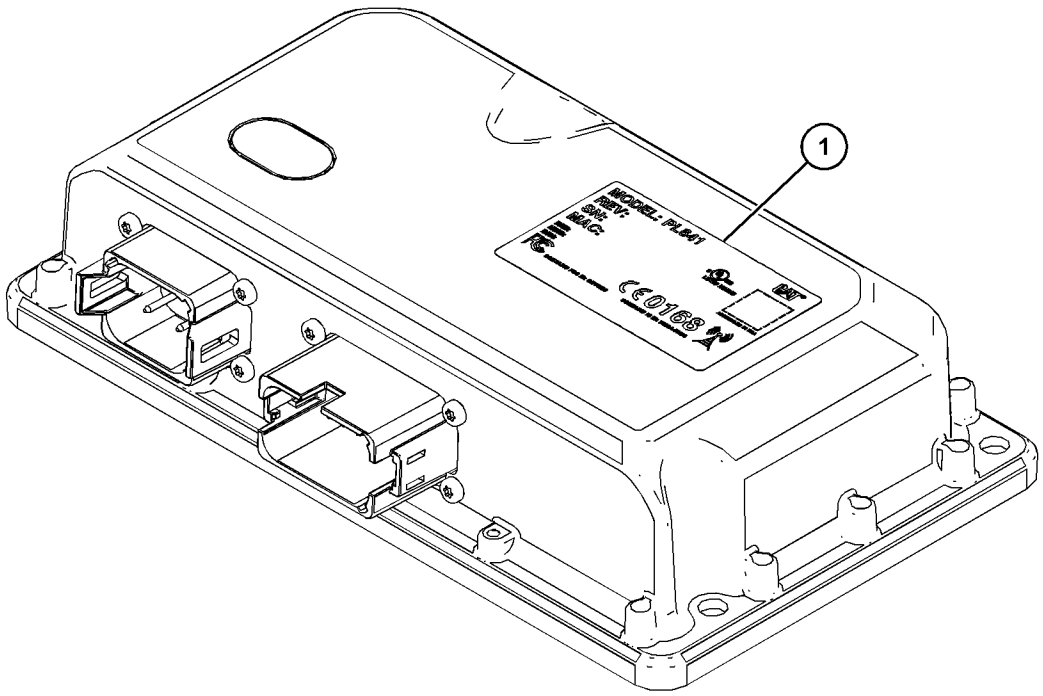

GRAPHIC #1 **<END>** g03840902

442-7199 RADIO GP-COMMUNICATION–PL631 SATELLITE

S/N: E9Y1-UP

PART OF 463-9615 APPLICATION GP-MONITOR

AN ATTACHMENT

SMCS-733T **i06180830**

NOTE	REF NO	GRAPHIC REF	PART NUMBER	QTY	PART NAME 1 2 3 4 5 6 (PRODUCT LEVEL)	SEE PAGE
	1	1	**467-2513**	1	FILM-CERTIFICATION (PL631)	
	2	1	**449-7303**	1	FILM-INFORMATION (SERIAL NUMBER)	
F			**479-0025**	1	SOFTWARE GP-MONITOR	

F - NOT SHOWN

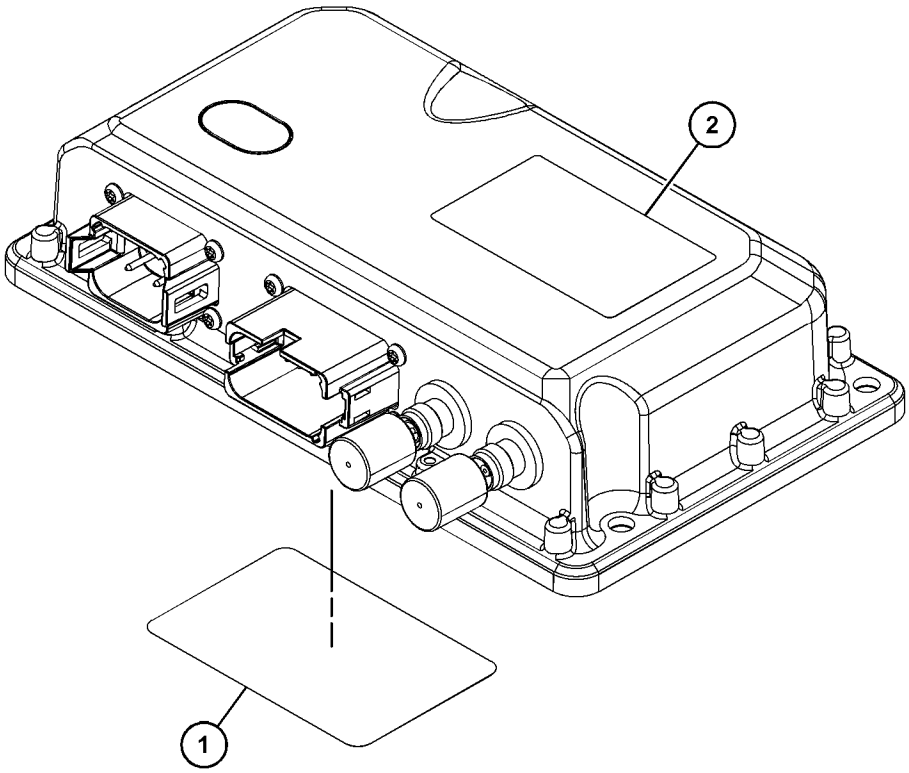

GRAPHIC #1 **<END>** g03836726

430-8400 SENSOR & MOUNTING GP

S/N: E9Y1-UP

RADAR

PART OF 370-8525 BOX & MTG GP-OBJECT DETECTION

AN ATTACHMENT

SMCS-1408, 1439, 1906, 1907, 1912, 1917, 1923, 1924, 7400 **i06105431**

NOTE	REF NO	GRAPHIC REF	PART NUMBER	QTY	PART NAME 1 2 3 4 5 6 (PRODUCT LEVEL)	SEE PAGE
Y	1	1	**430-8398**	1	BOX GP-OBJECT DETECTION (RADAR)	156
	2	1	**464-7684**	1	SENSOR GP-OBJECT DETECTION (RADAR)	
		1	**9X-3401**	6	PIN-CONNECTOR (16-GA TO 18-GA)	
		1	**281-3136**	1	RECEPTACLE AS-CONNECTOR (6-PIN)	

Y - SEPARATE ILLUSTRATION

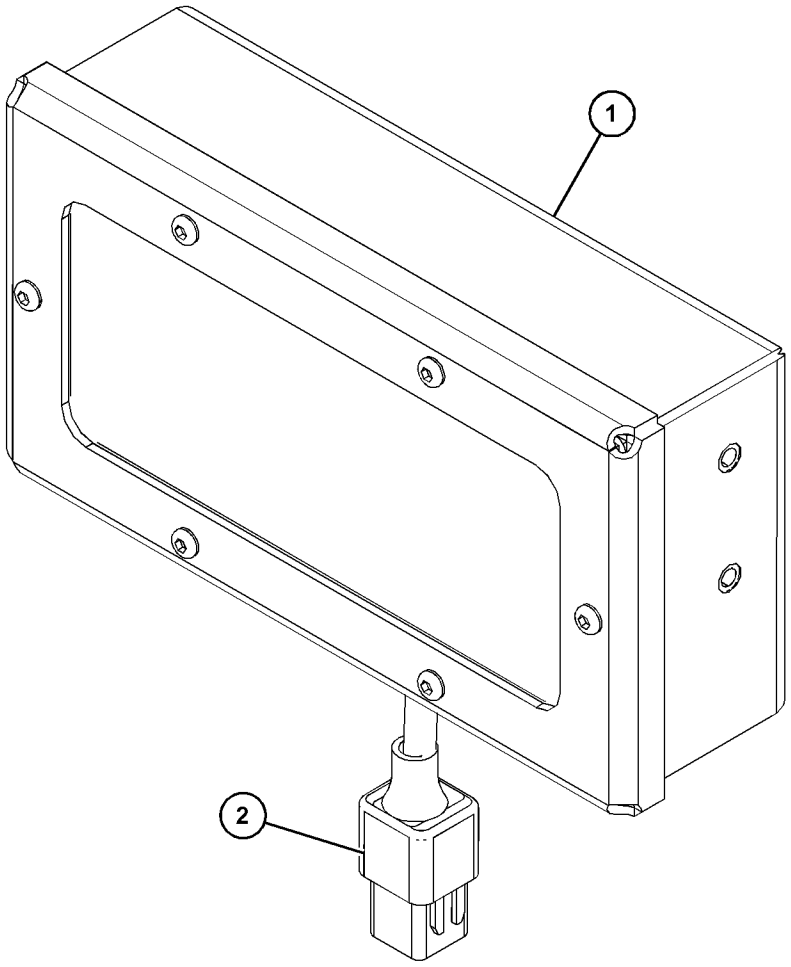

GRAPHIC #1 **<END>** g03817771

276-8491 SENSOR & MTG GP-POSITION

S/N: E9Y1-UP
PART OF 276-8498 PANEL GP-CONTROL
AN ATTACHMENT

SMCS-1408, 4806, 7400 **i05242987**

NOTE	REF NO	GRAPHIC REF	PART NUMBER	QTY	PART NAME 1 2 3 4 5 6 (PRODUCT LEVEL)	SEE PAGE
	1	1	**112-0858**	4	BEARING	
	2	1	**127-3008**	2	SPRING	
	3	1	**142-2527**	4	GASKET	
C	4	1	**373-4327**	2	SENSOR GP-POSITION (VARIABLE BLADE FLOAT)	
	5	1	**244-2710**	2	BLOCK	
	6	1	**244-2711**	2	SHAFT	
	7	1	**249-4099**	2	PLATE	
	8	1	**276-8492**	1	PLATE AS	
M		1	**6V-9632**	4	NUT-WELD (M6X1-THD)	
M		1	**091-4537**	4	BOSS-THREADED (M6X1X12-MM)	
	9	1	**276-9617**	2	DETENT	
	10	1	**127-4838**	2	SETSCREW-SOCKET (8-32X0.375-IN)	
	11	1	**1M-6718**	2	BALL	
M	12	1	**3T-0849**	4	BOLT-SOCKET HEAD (M6X1X25-MM)	
	13	1	**8T-0328**	4	WASHER-HARD (5.5X10X1-MM THK)	
	14	1	**8T-5410**	2	SEAL-LIP TYPE	
M	15	1	**8T-6699**	4	BOLT-SOCKET HEAD (M5X0.8X35-MM)	
	16	1	**8T-7566**	4	PIN-SPRING	
	17	1	**9X-8256**	4	WASHER (6.6X12X2-MM THK)	

C - CHANGE FROM PREVIOUS TYPE
M - METRIC PART

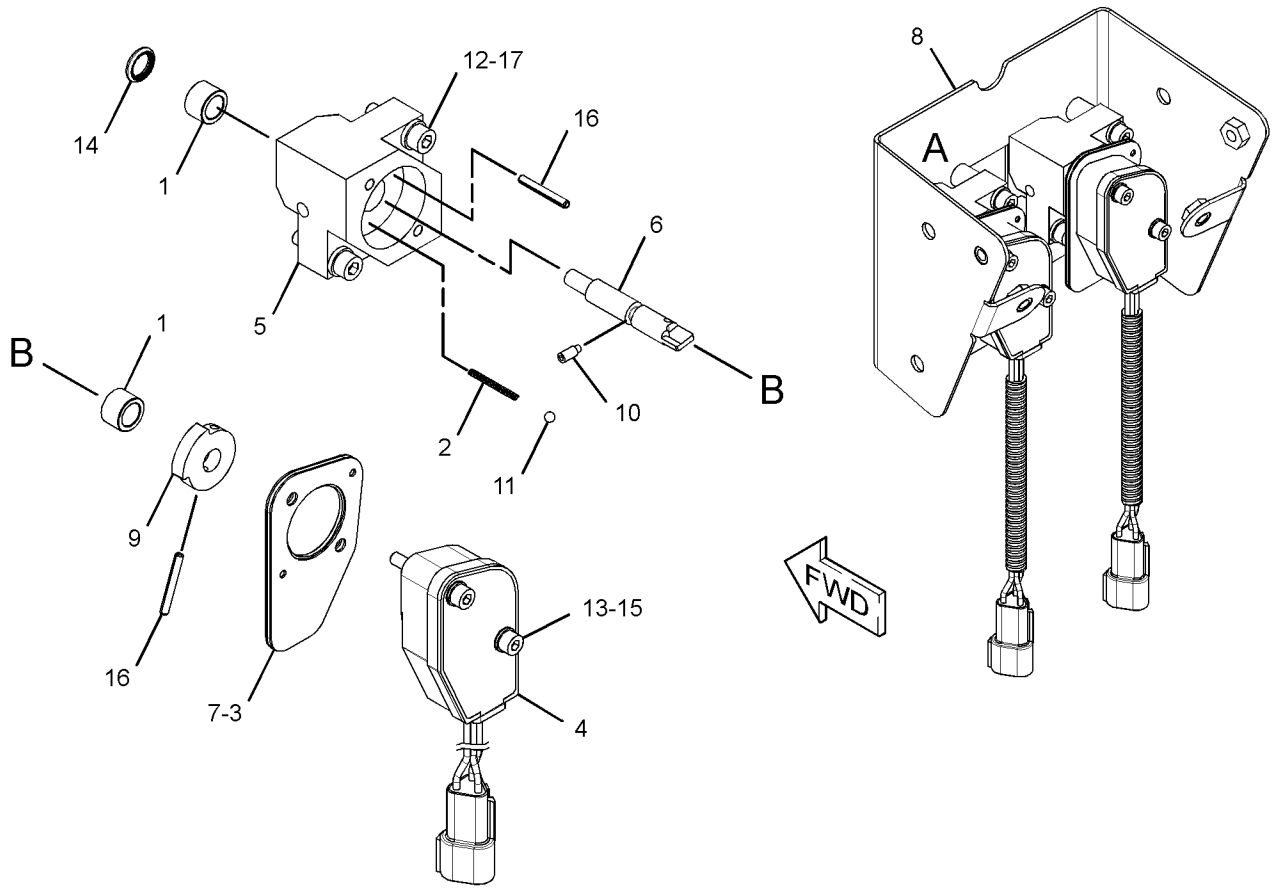

VIEW OF AREA A
(EXPLODED)

GRAPHIC #1 **<END>** g03346799

430-9454 SENSOR GP-COOLANT LEVEL

S/N: E9Y1-UP

PART OF 383-4870 TANK GP-COOLANT

SMCS-1439, 7422 **i05884676**

NOTE	REF NO	GRAPHIC REF	PART NUMBER	QTY	PART NAME 1 2 3 4 5 6 (PRODUCT LEVEL)	SEE PAGE
	1	1	**171-0596**	1	RECEPTACLE AS-CONNECTOR	
	2	1	**8T-8729**	3	PIN-CONNECTOR (16-GA TO 18-GA)	
	3	1	**3E-3371**	1	WEDGE-RECEPTACLE LOCK (3-PIN)	

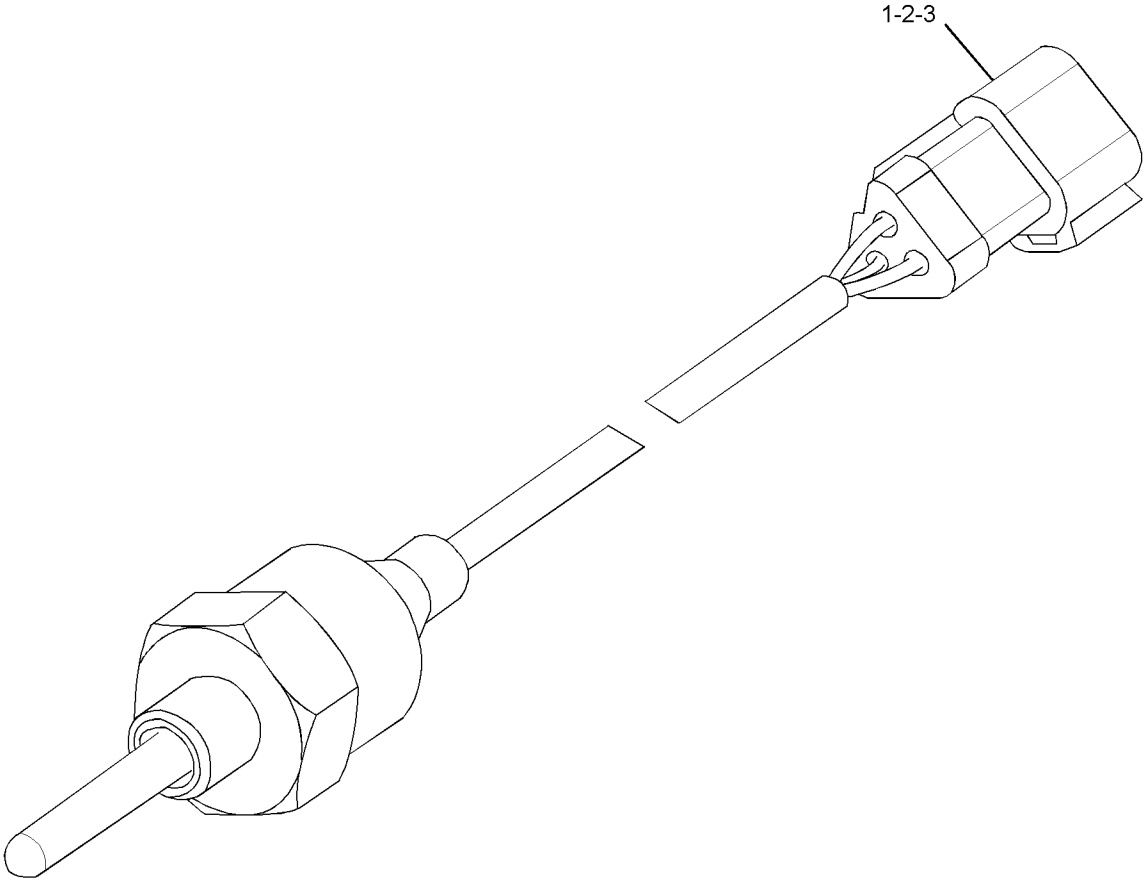

GRAPHIC #1 **<END>** g02625176

379-6636 SENSOR GP-ENGINE

S/N: TXX1-UP
PART OF 376-4249 ENGINE AR-CORE
AN ATTACHMENT

SMCS-1052, 1087, 1439, 1906, 1912, 1917, 1923, 1924, 1925 **i05421736**

NOTE	REF NO	GRAPHIC REF	PART NUMBER	QTY	PART NAME 1 2 3 4 5 6 (PRODUCT LEVEL)	SEE PAGE
	1	1	**3S-2093**	2	STRAP-CABLE	
Y	2	1	*234-5012*	1	SENSOR GP-TEMPERATURE (COOLANT)	255
Y	3	1	*234-5013*	1	SENSOR GP-TEMPERATURE (INTAKE AIR MANIFOLD)	256
	4	1	**274-6719**	1	SENSOR GP-PRESSURE (OIL PRESSURE)	
Y	5	1	*300-9806*	1	SENSOR GP-SPEED (CAMSHAFT)	252
	6	1	*330-9740*	1	ADAPTER AS	
		1	**214-7566**	1	SEAL-O-RING	
		1	**330-9739**	1	ADAPTER	
Y	7	1	*331-1134*	1	SENSOR GP-PRESSURE (ATMOSPHERIC)	247
Y	8	1	*332-0296*	1	SENSOR GP-PRESSURE (INTAKE MANIFOLD)	248
	9	1	**443-4151**	1	BRACKET	
Y	10	1	*384-1836*	1	SENSOR GP-SPEED (CRANKSHAFT)	253
	11	1	**156-6175**	1	CLIP	
	12	1	*183-3407*	1	PLUG AS	
		1	**9S-8004**	1	PLUG	
		1	**214-7568**	1	SEAL-O-RING	
M	13	1	**2Y-5829**	1	NUT (M10X1.5-THD)	
	14	1	*353-5112*	1	ADAPTER AS	
		1	**9X-0262**	1	ADAPTER	
		1	**214-7566**	2	SEAL-O-RING	
	15	1	**5P-0537**	1	WASHER-HARD (7.2X14.5X2-MM THK)	
M	16	1	**6V-5215**	2	BOLT (M8X1.25X16-MM)	
M	17	1	**6V-8836**	1	BOLT (M6X1X14-MM)	
	18	1	**9M-1974**	2	WASHER-HARD (8.8X16X2-MM THK)	
	19	1	**7W-9094**	1	SPACER (10.5X20X9-MM THK)	

M - METRIC PART
Y - SEPARATE ILLUSTRATION

379-6636 **SENSOR GP-ENGINE (*contd.*)** **i05421736**

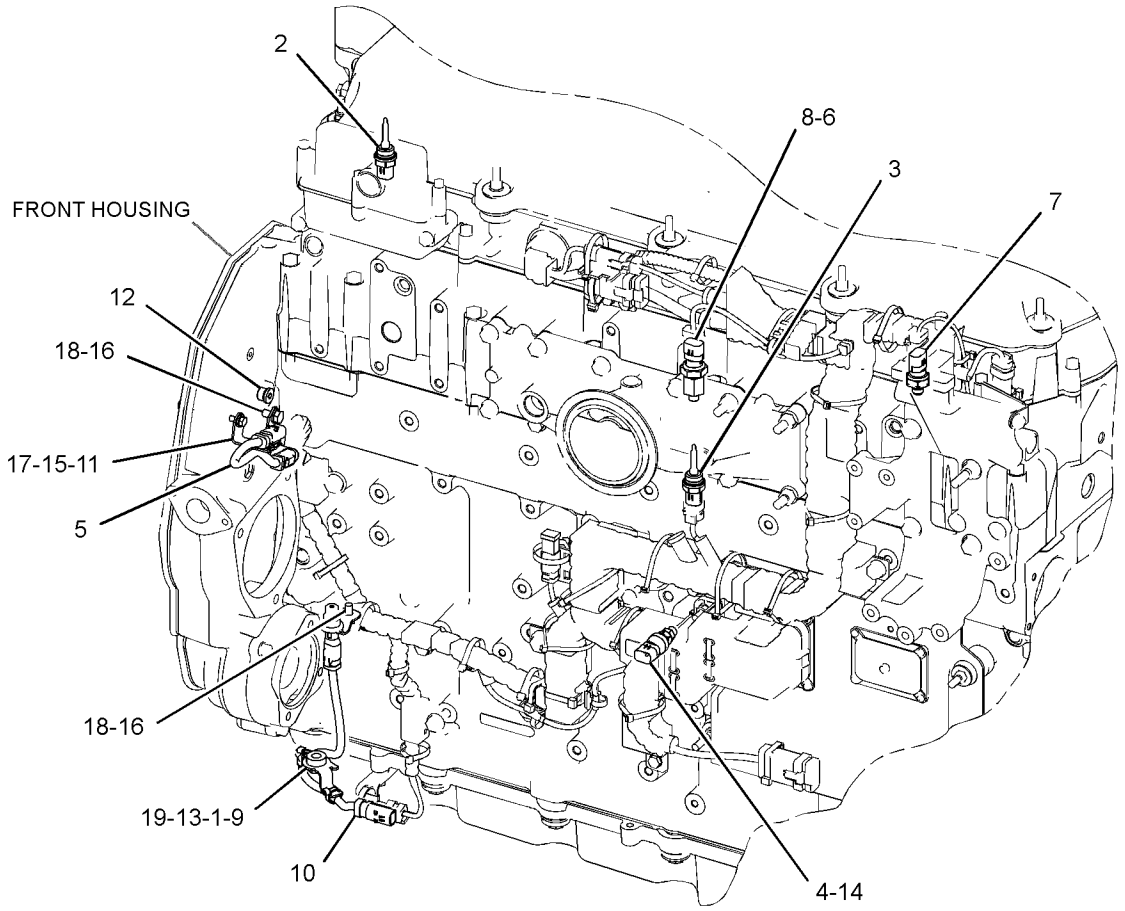

GRAPHIC #1 **<END>** g03424720

266-1467 SENSOR GP-POSITION

S/N: E9Y1-UP
ROTARY
PART OF 389-5846 PEDAL GP-BRAKE, XMSN & GOV

SMCS-1408, 3168, 3175, 4269, 430S, 4809 **i05580556**

NOTE	REF NO	GRAPHIC REF	PART NUMBER	QTY	PART NAME 1 2 3 4 5 6 (PRODUCT LEVEL)	SEE PAGE
	1	1	**9X-3401**	3	PIN-CONNECTOR (16-GA TO 18-GA)	
					—OR—	
		1	**126-1767**	3	PIN-CONNECTOR (14-GA TO 16-GA)	
	2	1	**102-8803**	1	KIT-RECEPTACLE (3-PIN)	
					(INCLUDES RECEPTACLE AS & WEDGE)	
E	3	1	**3E-9375**		CONDUIT (13-CM)	

E - ORDER BY THE CENTIMETER

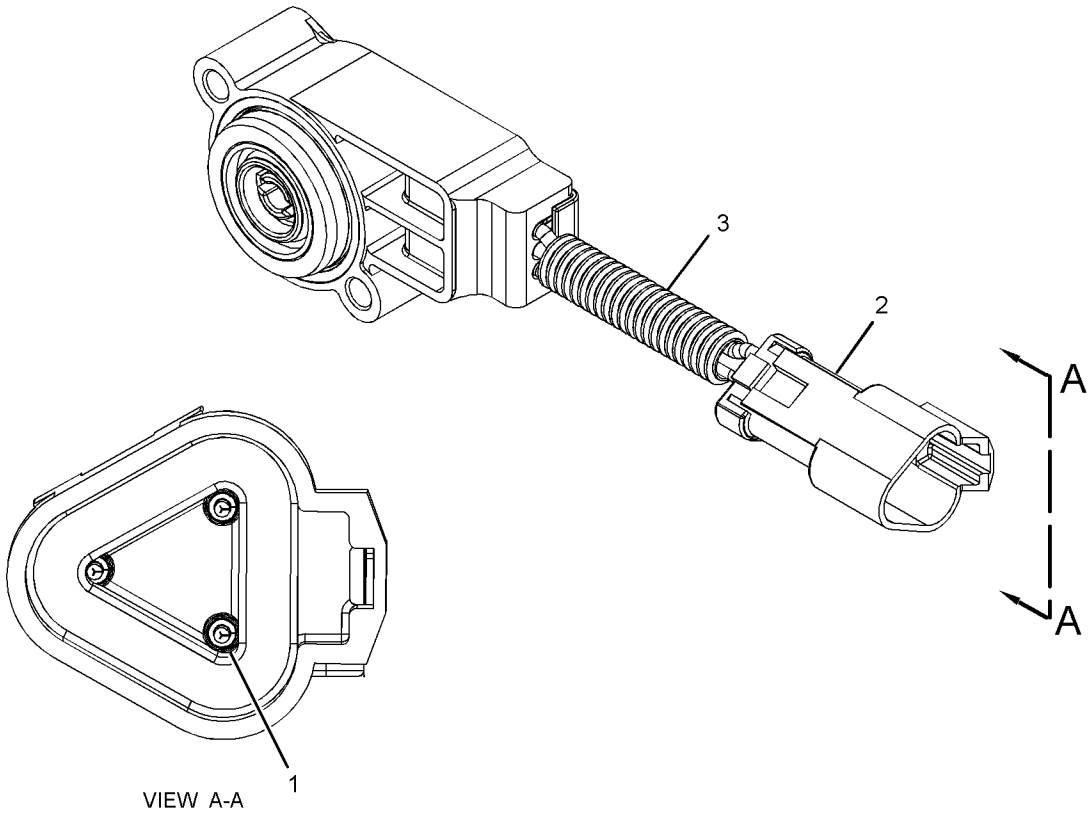

VIEW A-A

GRAPHIC #1 **<END>** g03547699

325-8634 SENSOR GP-PRESSURE

S/N: TXX1-UP

PART OF 343-8126 BASE GP-FUEL FILTER

AN ATTACHMENT

SMCS-1052, 1058, 1408, 1718, 1907, 1912, 1916, 1917, 1923, 1924, 1925, 3175, 4351, 4352, 7400, 7494

i04407514

NOTE	REF NO	GRAPHIC REF	PART NUMBER	QTY	PART NAME 1 2 3 4 5 6 (PRODUCT LEVEL)	SEE PAGE
	1	1	**320-3060**	1	SENSOR GP-PRESSURE (FUEL)	
	2	1	**228-7100**	1	SEAL-O-RING	

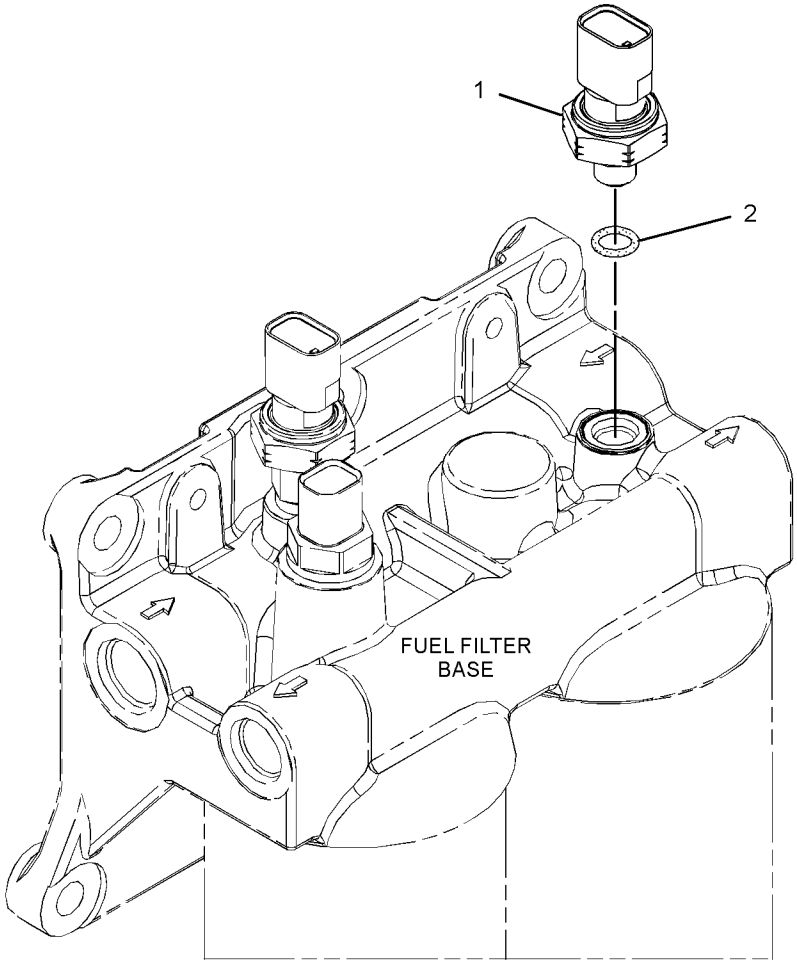

GRAPHIC #1

<END>

g02080674

331-1134 SENSOR GP-PRESSURE

S/N: TXX1-UP
ATMOSPHERIC
PART OF 379-6636 SENSOR GP-ENGINE
AN ATTACHMENT

SMCS-1052, 1058, 1408, 1718, 1907, 1912, 1916, 1917, 1923, 1924, 1925, 3175, 4351, 4352, 7400, 7494

i05529091

NOTE	REF NO	GRAPHIC REF	PART NUMBER	QTY	PART NAME 1 2 3 4 5 6 (PRODUCT LEVEL)	SEE PAGE
	1	1	**320-3063**	1	SENSOR GP-PRESSURE	
	2	1	**228-7100**	1	SEAL-O-RING	

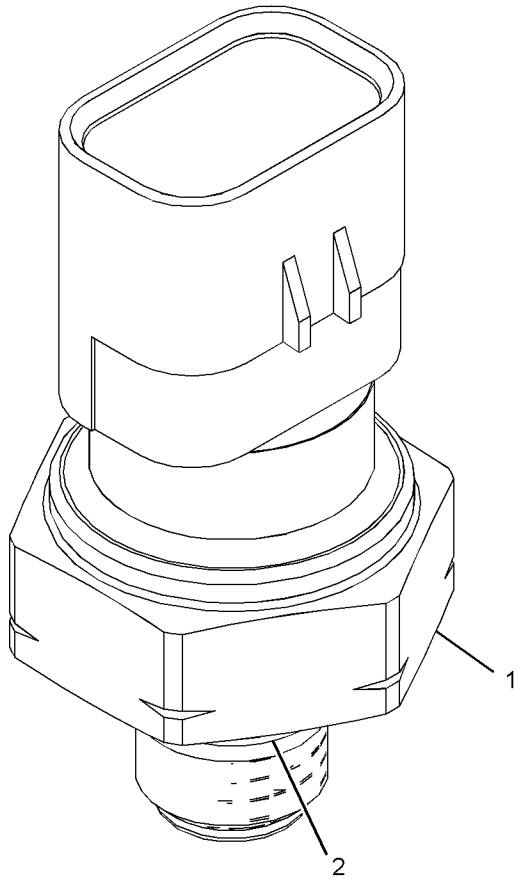

GRAPHIC #1

<END>

g03346854

332-0296 SENSOR GP-PRESSURE

S/N: TXX1-UP

PART OF 379-6636 SENSOR GP-ENGINE

AN ATTACHMENT

SMCS-1052, 1058, 1408, 1718, 1907, 1912, 1916, 1917, 1923, 1924, 1925, 3175, 4351, 4352, 7400, 7494

i06034928

NOTE	REF NO	GRAPHIC REF	PART NUMBER	QTY	PART NAME 1 2 3 4 5 6 (PRODUCT LEVEL)	SEE PAGE
	1	1	**320-3061**	1	SENSOR GP-PRESSURE	
	2	1	**228-7101**	1	SEAL-O-RING	

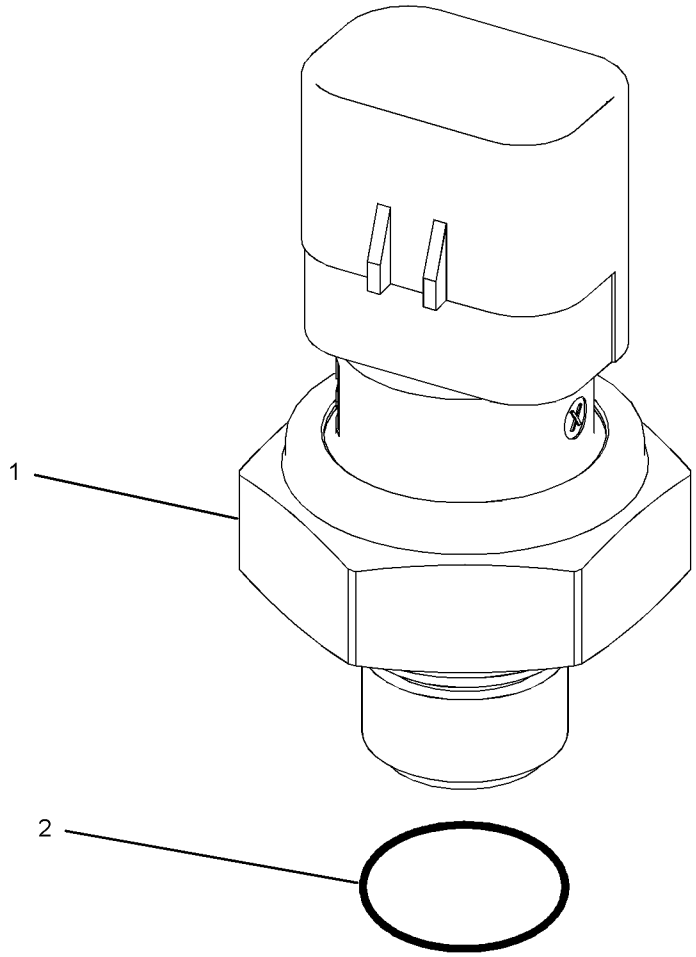

GRAPHIC #1

<END>

g03783456

214-2484 SENSOR GP-SPEED

S/N: DM31-UP

PART OF 381-0672 CONTROL GP-TRANSMISSION HYD

SMCS-1907, 1912, 3141, 3175, 4803, 7493

i03319926

NOTE	REF NO	GRAPHIC REF	PART NUMBER	QTY	PART NAME 1 2 3 4 5 6 (PRODUCT LEVEL)	SEE PAGE
	1	1	**228-4947**	1	SEAL-O-RING	
	2	1	**191-8303**	1	SENSOR GP-SPEED	
		1	**137-6645**	1	PAD-CONNECTOR (CONNECTOR)	

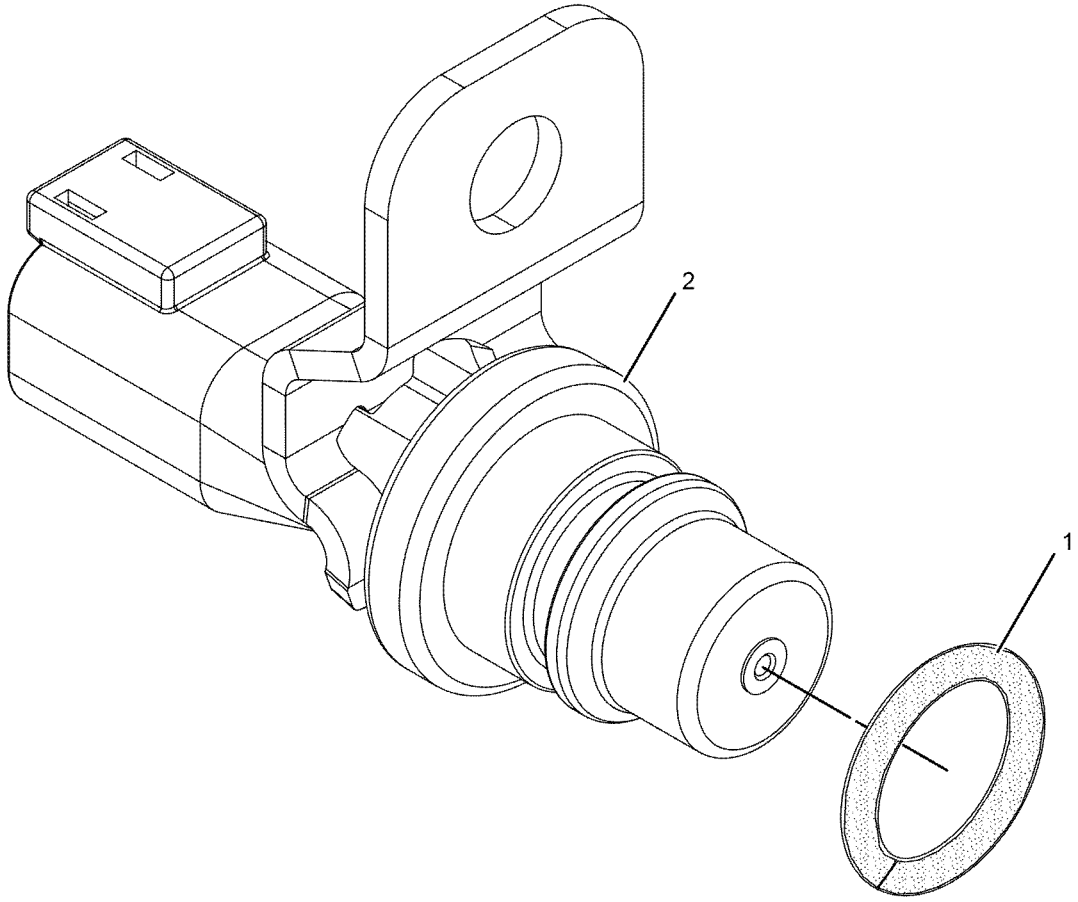

GRAPHIC #1

<END>

g01021497

214-2485 SENSOR GP-SPEED

S/N: DM31-UP

TORQUE CONVERTER OUTPUT

PART OF 381-0672 CONTROL GP-TRANSMISSION HYD

SMCS-1907, 1912, 3141, 3175, 4803, 7493 **i04186412**

NOTE	REF NO	GRAPHIC REF	PART NUMBER	QTY	PART NAME 1 2 3 4 5 6 (PRODUCT LEVEL)	SEE PAGE
	1	1	**228-4947**	1	SEAL-O-RING	
	2	1	**191-8304**	1	SENSOR GP-SPEED (TRANSMISSION OUTPUT 2)	

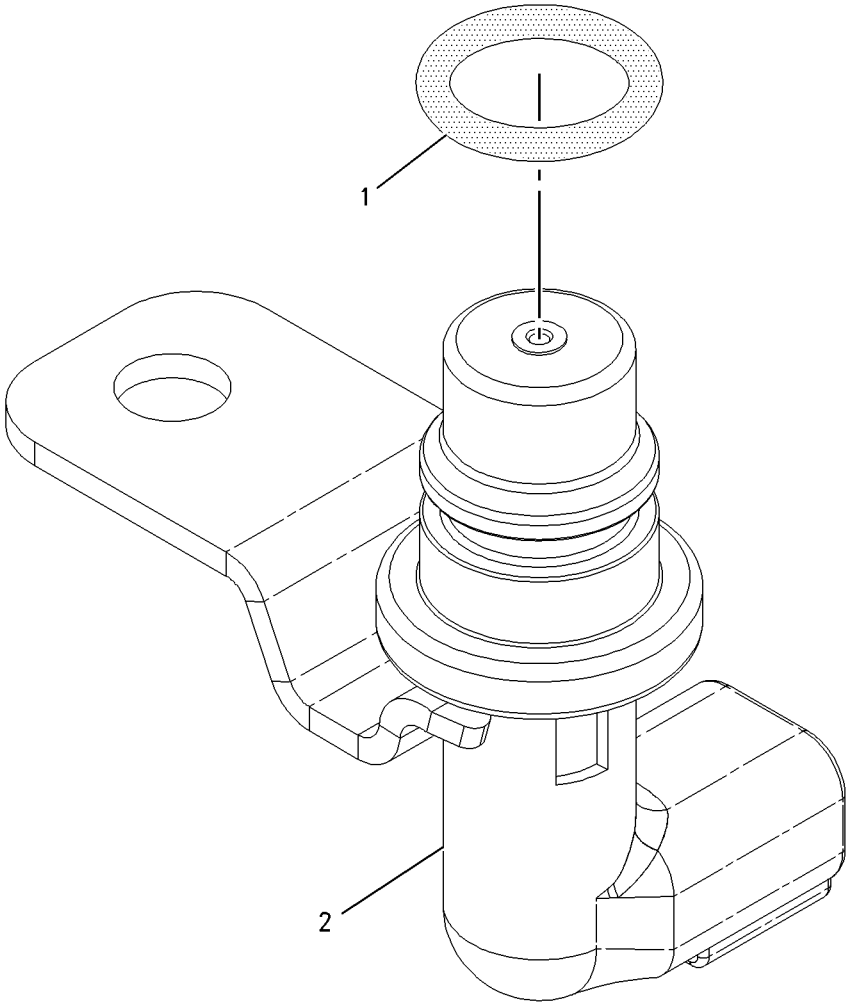

GRAPHIC #1 **<END>** g00998408

300-9805 SENSOR GP-SPEED

S/N: TXX1-UP
PART OF 384-1836 SENSOR GP-SPEED
AN ATTACHMENT

SMCS-1907, 1912, 3141, 3175, 4803, 7493 **i05529110**

NOTE	REF NO	GRAPHIC REF	PART NUMBER	QTY	PART NAME 1 2 3 4 5 6 (PRODUCT LEVEL)	SEE PAGE
	1	1	**228-4947**	1	SEAL-O-RING	
	2	1	**279-9828**	1	SENSOR GP-SPEED	

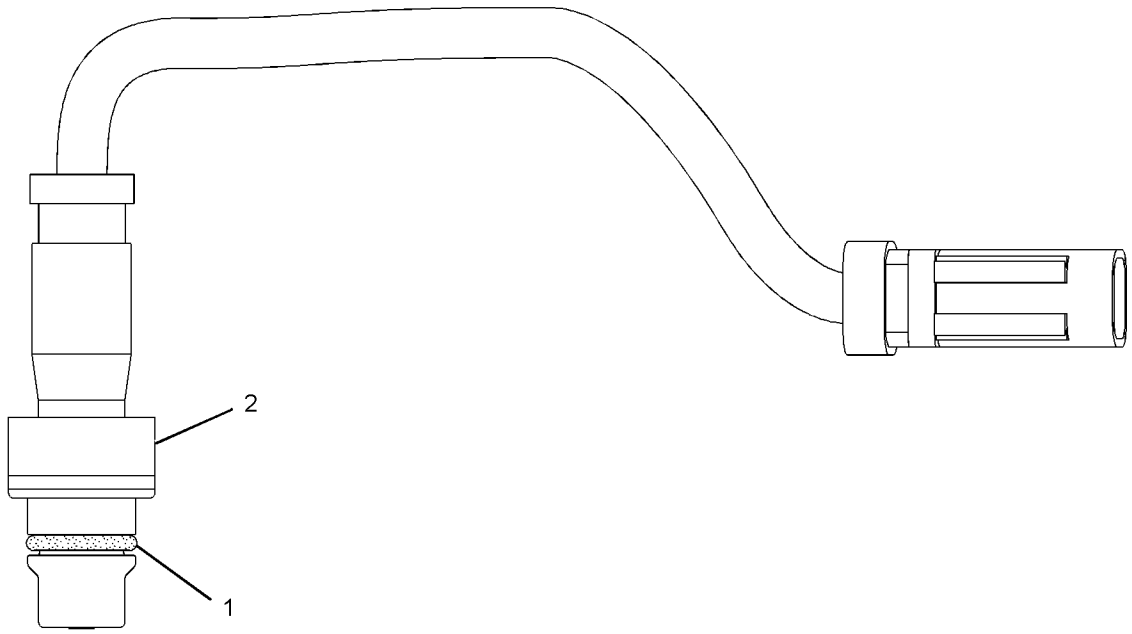

GRAPHIC #1 **<END>** g02168513

300-9806 SENSOR GP-SPEED

S/N: TXX1-UP

PART OF 379-6636 SENSOR GP-ENGINE

AN ATTACHMENT

SMCS-1907, 1912, 3141, 3175, 4803, 7493 **i05529129**

NOTE	REF NO	GRAPHIC REF	PART NUMBER	QTY	PART NAME 1 2 3 4 5 6 (PRODUCT LEVEL)	SEE PAGE
	1	1	**228-4947**	1	SEAL-O-RING	
	2	1	**279-9829**	1	SENSOR GP-SPEED	

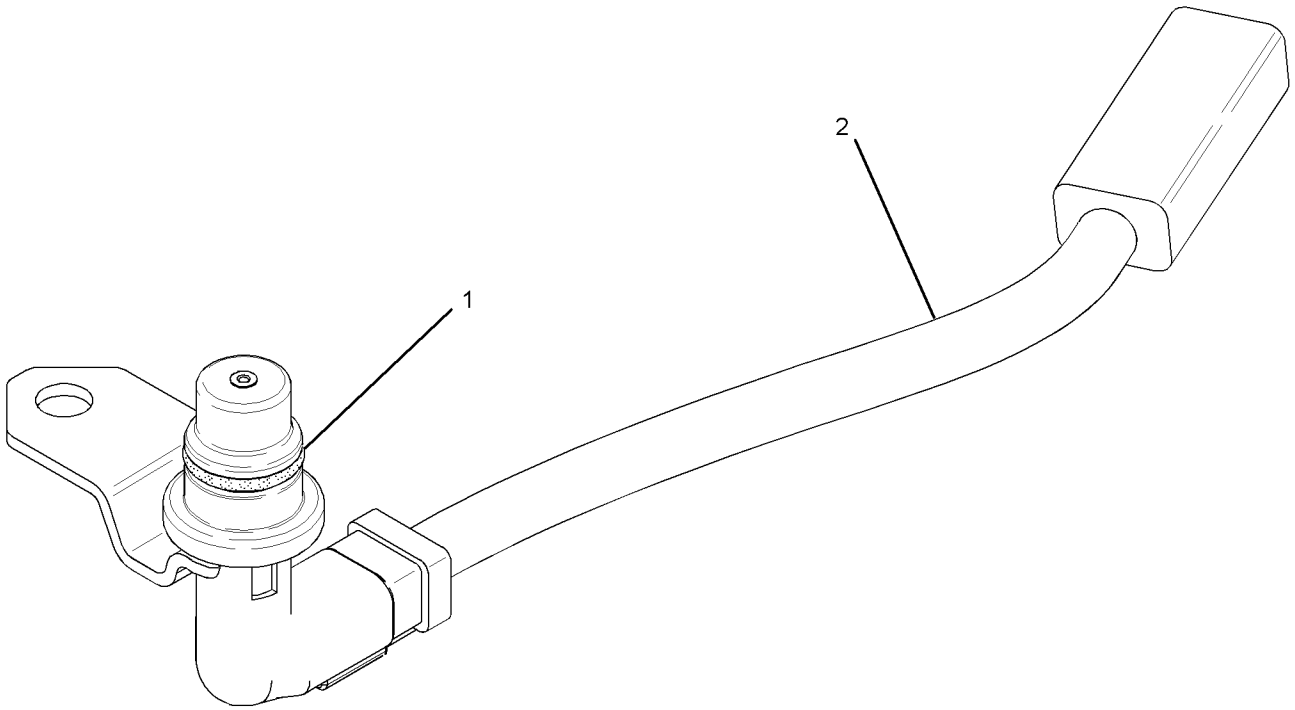

GRAPHIC #1 **<END>** g01333640

384-1836 SENSOR GP-SPEED

S/N: TXX1-UP
PART OF 379-6636 SENSOR GP-ENGINE
AN ATTACHMENT

SMCS-1907, 1912, 3141, 3175, 4803, 7493 **i05529131**

NOTE	REF NO	GRAPHIC REF	PART NUMBER	QTY	PART NAME 1 2 3 4 5 6 (PRODUCT LEVEL)	SEE PAGE
Y	1	1	**300-9805**	1	SENSOR GP-SPEED	251
B	2	1	**1P-0810**		TAPE-ELECTRICAL (5-CM EACH)	

B - USE AS REQUIRED
Y - SEPARATE ILLUSTRATION

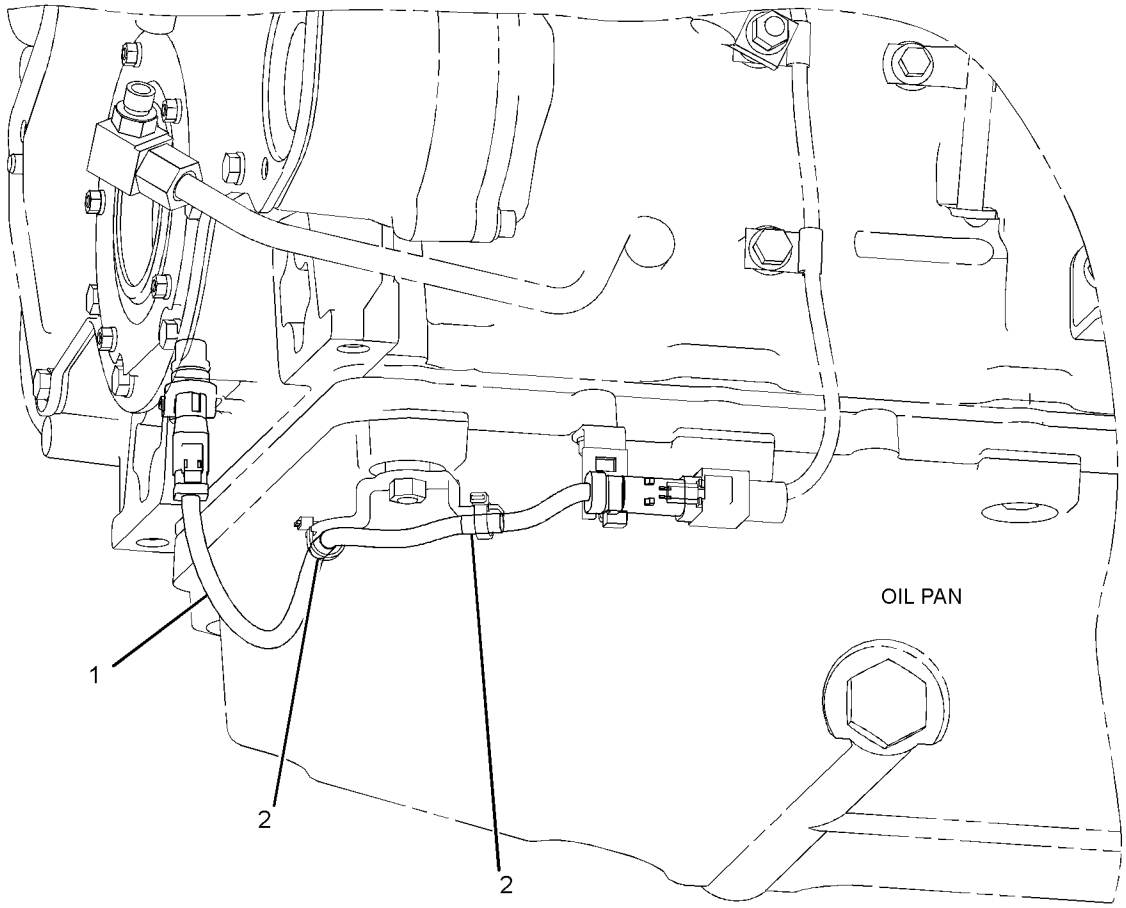

GRAPHIC #1 **<END>** g02888528

191-6587 SENSOR GP-TEMPERATURE

S/N: E9Y1-UP
2 PIN PASSIVE
PART OF 370-8445 WIRING GP-FRONT

SMCS-1087, 1439, 1906, 1919, 1921, 1922, 1928, 1929, 192T, 1932, 301T, 3194, 3290, 429T, 509T, 7344

i03817529

NOTE	REF NO	GRAPHIC REF	PART NUMBER	QTY	PART NAME 1 2 3 4 5 6 (PRODUCT LEVEL)	SEE PAGE
J	1	1	**153-5043**		SLEEVE (2-DM)	
	2	1	**155-2270**	1	KIT-CONNECTING PLUG (2-PIN)	
					(INCLUDES PLUG AS, WEDGE & INTERFACE SEAL)	
	3	1	**180-9340**	2	SOCKET-CONNECTOR (14-GA TO 18-GA)	

J - ORDER BY THE DECIMETER

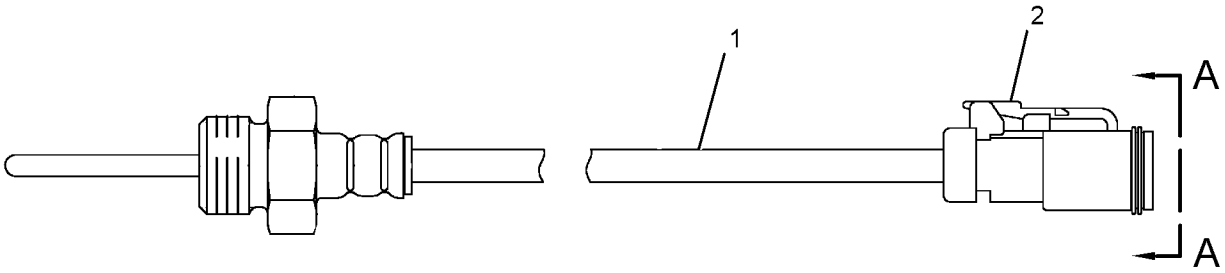

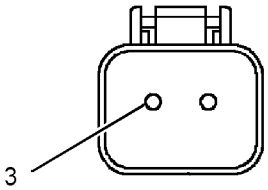

VIEW A-A

GRAPHIC #1 **<END>** g02069919

234-5012 SENSOR GP-TEMPERATURE

S/N: TXX1-UP
PART OF 379-6636 SENSOR GP-ENGINE
AN ATTACHMENT

SMCS-1087, 1439, 1906, 1919, 1921, 1922, 1928, 1929, 192T, 1932, 301T, 3194, 3290, 429T, 509T, 7344

i05506314

NOTE	REF NO	GRAPHIC REF	PART NUMBER	QTY	PART NAME 1 2 3 4 5 6 (PRODUCT LEVEL)	SEE PAGE
	1	1	**256-6453**	1	SENSOR-TEMPERATURE	
	2	1	**6V-6609**	1	SEAL-O-RING	

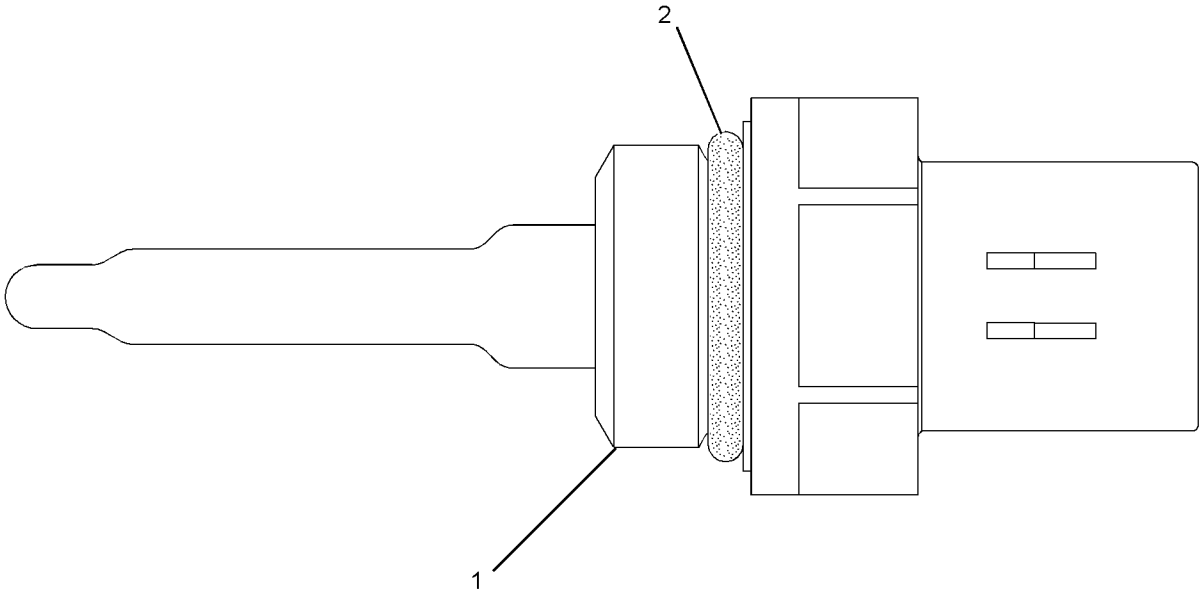

GRAPHIC #1

<END>

g01164284

234-5013 SENSOR GP-TEMPERATURE

S/N: TXX1-UP

PART OF 343-8126 BASE GP-FUEL FILTER, 379-6636 SENSOR GP-ENGINE

AN ATTACHMENT

SMCS-1087, 1439, 1906, 1919, 1921, 1922, 1928, 1929, 192T, 1932, 301T, 3194, 3290, 429T, 509T, 7344

i05506315

NOTE	REF NO	GRAPHIC REF	PART NUMBER	QTY	PART NAME 1 2 3 4 5 6 (PRODUCT LEVEL)	SEE PAGE
	1	1	**256-6453**	1	SENSOR-TEMPERATURE	
	2	1	**238-5080**	1	SEAL-O-RING	

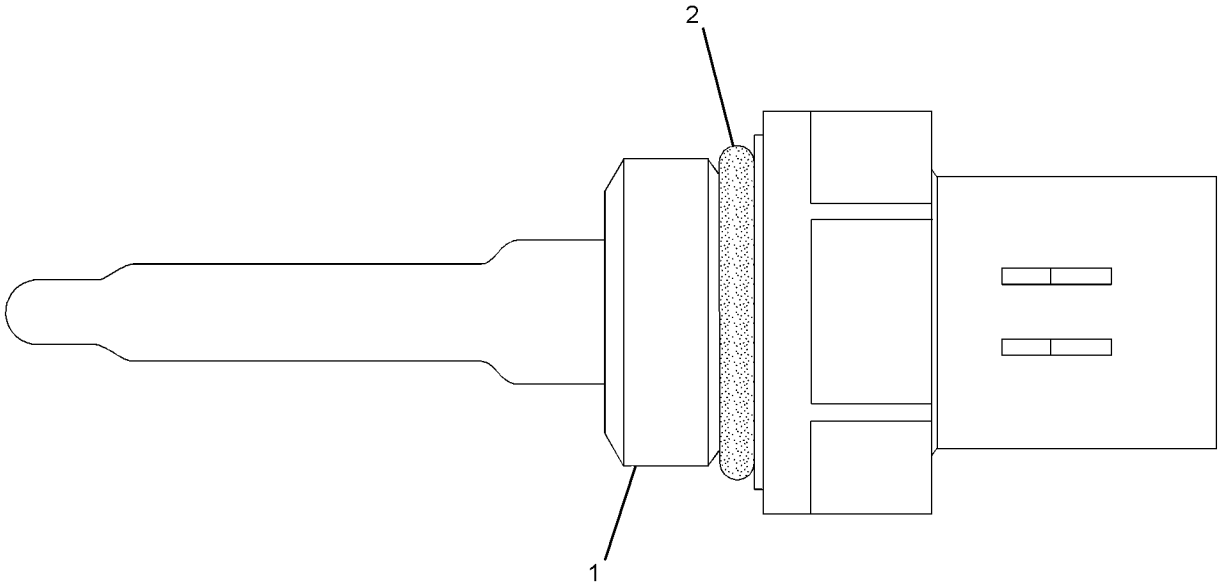

GRAPHIC #1

<END>

g01164268

383-4895 STARTING AID GP-ETHER

S/N: E9Y1-UP

PART OF 381-2717 INSTALLATION AR-ENGINE

SMCS-1456 **i06147036**

NOTE	REF NO	GRAPHIC REF	PART NUMBER	QTY	PART NAME 1 2 3 4 5 6 (PRODUCT LEVEL)	SEE PAGE
	1	1	**7N-2059**	1	CLAMP AS	
	2	1	**230-0917**	1	FITTING AS	
		1	**236-4545**	1	NUT-SLEEVE (5/16-24-THD)	
	3	1	**252-1607**	1	ATOMIZER AS	
		1	**236-4545**	1	NUT-SLEEVE (5/16-24-THD)	
	4	1	**383-4806**	1	BRACKET AS	
	5	1	**388-3693**	1	VALVE GP-ETHER STARTING	
		1	**7N-9801**	1	GASKET	
		1	**8T-8729**	2	PIN-CONNECTOR (16-GA TO 18-GA)	
		1	**358-4889**	1	FILTER (ETHER START)	
		1	**102-8802**	1	KIT-RECEPTACLE (2-PIN)	
					(INCLUDES RECEPTACLE AS & WEDGE)	
	6	1	**091-9035**	1	SPACER (11X25X20-MM THK)	
M	7	1	**5C-7261**	4	NUT (M8X1.25-THD)	
	8	1	**5P-5528**	1	BUSHING-REDUCER	
	9	1	**6V-2686**	2	CLIP	
	10	1	**6V-5048**	1	SEAL-O-RING	
	11	1	**8T-4121**	4	WASHER-HARD (11X21X2.5-MM THK)	
M	12	1	**8T-4136**	2	BOLT (M10X1.5X25-MM)	
M	13	1	**8T-4137**	1	BOLT (M10X1.5X20-MM)	
M	14	1	**8T-4182**	1	BOLT (M10X1.5X45-MM)	
	15	1	**8T-4224**	4	WASHER-HARD (8.8X16X2-MM THK)	
D	16	1	**5P-5630**		TUBE (1.2-M)	
A			**7N-0296**	1	CYLINDER AS-ETHER	
					(MUST BE PROCURED LOCALLY FROM YOUR CAT DEALER)	

A - NOT PART OF THIS GROUP
D - ORDER BY THE METER
M - METRIC PART

383-4895 **STARTING AID GP-ETHER (*contd.*)** **i06147036**

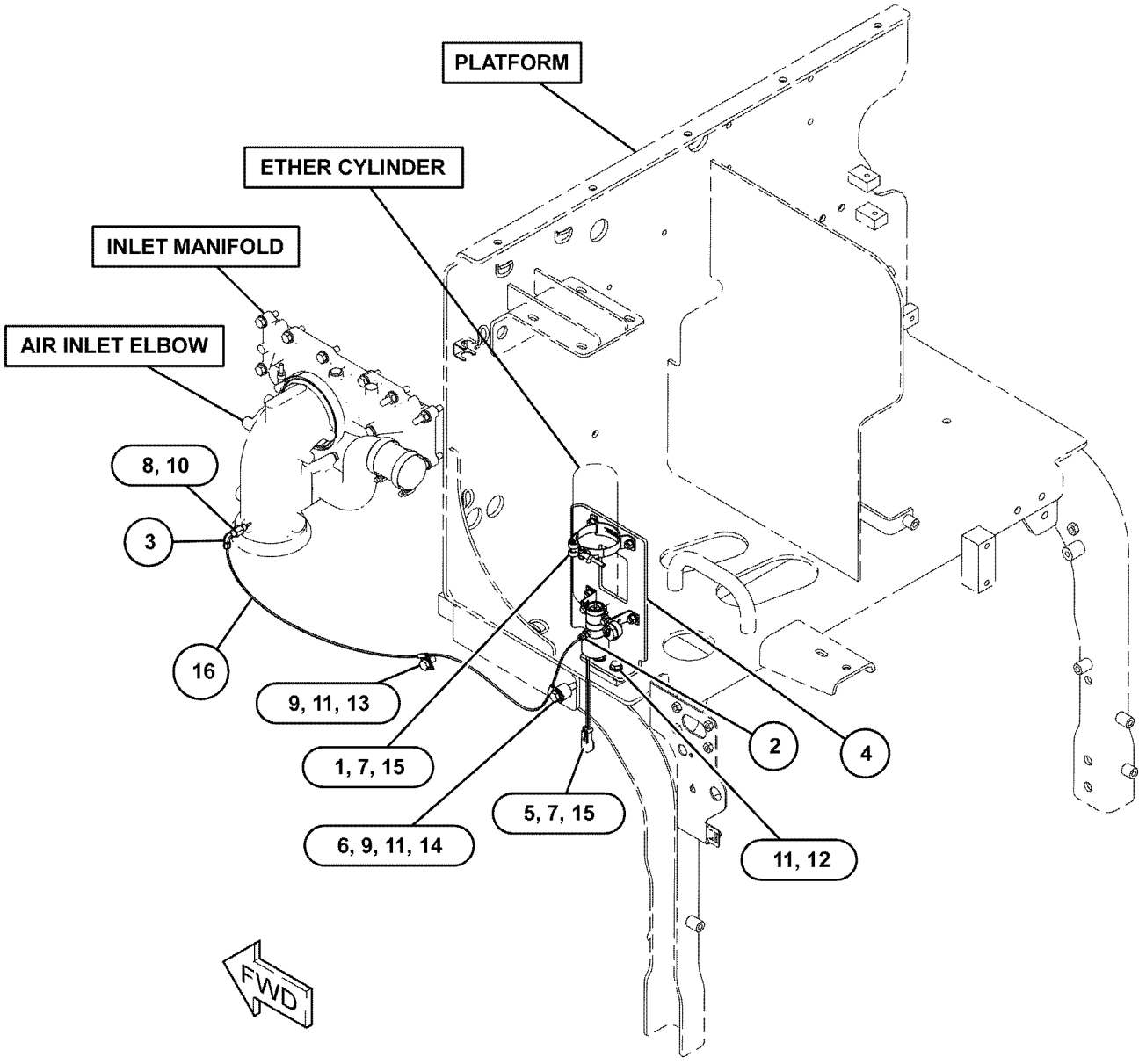

GRAPHIC #1 **<END>** g03831330

349-6606 STARTING MOTOR GP-ELECTRIC

S/N: TXX1-UP
24-VOLT
PART OF 386-3935 STARTING MOTOR GP-ELECTRIC
AN ATTACHMENT

SMCS-1453 **i05686210**

NOTE	REF NO	GRAPHIC REF	PART NUMBER	QTY	PART NAME 1 2 3 4 5 6 (PRODUCT LEVEL)	SEE PAGE
	1	1	**7M-0326**	1	CONNECTOR	
	2	1	**9H-3757**	2	WASHER (0.516X1X0.094-IN THK)	
	3	1	**1S-7446**	3	SCREW-MACHINE (8-32X0.437-IN)	
	4	1	**8C-9660**	3	WASHER (4.6X7.9X0.8-MM THK)	
	5	1	**9S-2544**	9	SCREW-HEX HEAD (8-32X11.13-MM)	
	6	1	**7M-0327**	1	WASHER-THRUST (17.4X25.4X1.6-MM THK)	
	7	1	**3T-3418**	1	FRAME AS-END	
	7A	1	**9G-4101**	1	BUSHING-END	
		1	**3T-3423**	1	CUP	
		1	**3T-3424**	1	PLUG-FELT	
Y	8	1	**3T-9525**	1	PLATE AS-BRUSH (STARTING MOTOR)	236
	9	1	**1T-0808**	2	WASHER (0.516X0.812X0.09-IN THK)	
	10	1	**3T-3422**	1	WIRE AS	
	11	1	**2J-8163**	2	SEAL-O-RING	
	12	1	**7X-3373**	1	BOLT (5/16-18X0.88-IN)	
	13	1	**5J-5314**	5	BOLT (5/16-18X1.5-IN)	
	14	1	**3L-3380**	1	BUSHING-TERMINAL	
	15	1	**8C-3089**	1	SEAL-O-RING	
	16	1	**4M-1853**	1	LEVER AS-SHIFT	
	17	1	**5M-3034**	1	LOCKNUT (5/16-24-THD)	
	18	1	**7L-2894**	4	GASKET	
	19	1	**4M-1831**	4	PLUG-LEVER HOUSING	
	20	1	**4M-1854**	1	SHAFT-LEVER	
	21	1	**1H-1023**	1	SEAL-O-RING	
	22	1	**2D-6392**	1	SEAL-O-RING	
	23	1	**7T-3974**	1	HOUSING AS-DRIVE	
	24	1	**6N-3826**	1	DRIVE AS-MOTOR	
	25	1	**2H-3429**	1	RING-RETAINING	
	26	1	**6V-1322**	4	BOLT (1/4-20X0.375-IN)	
	27	1	**8T-4205**	1	WASHER-HARD (7.2X14.5X2-MM THK)	
	28	1	**6N-3279**	1	INSULATOR	
	29	1	**0S-1597**	13	BOLT (1/4-28X1-IN)	
	30	1	**1M-9971**	1	SPACER (0.835X1.72X0.188-IN THK)	
	31	1	**1H-2629**	3	STRIP-INSULATION	
	32	1	**7M-0324**	1	COIL AS-FIELD	
	33	1	**3R-8797**	12	SCREW & WASHER AS (3/8-24X0.72-IN)	
	34	1	**7F-3488**	6	SHOE-POLE	
	35	1	**7M-8651**	1	ARMATURE AS	
	36	1	**7M-0325**	1	INSULATOR	
	37	1	**3T-9524**	6	BRUSH AS	
	38	1	**3N-3763**	1	KIT-TERMINAL (STARTING MOTOR)	
	39	1	**3R-8801**	1	CLAMP	
	40	1	**8F-1434**	2	LOCKWASHER	
	41	1	**6V-8188**	6	NUT (1/2-13-THD)	
	42	1	**7X-0562**	6	WASHER-HARD (13.5X19X0.8-MM THK)	
	43	1	**4B-2049**	6	NUT (10-32-THD)	
	44	1	**8T-0328**	10	WASHER-HARD (5.5X10X1-MM THK)	
	45	1	**3T-9494**	6	SPRING	
	46	1	**349-6255**	1	HOUSING AS	
	47	1	**9G-4101**	1	BUSHING-END	
	48	1	**3T-3424**	3	PLUG-FELT	
	49	1	**3T-3423**	3	CUP	
	50	1	**1M-9968**	1	BUSHING	
	51	1	**2F-6678**	1	SEAL-LIP TYPE	
	52	1	**4L-2729**	1	WASHER (0.844X1.9X0.188-IN THK)	
	53	1	**4M-1896**	1	BUSHING-TERMINAL	

349-6606 **STARTING MOTOR GP-ELECTRIC (*contd.*)** **i05686210**

NOTE	REF NO	GRAPHIC REF	PART NUMBER	QTY	PART NAME 1 2 3 4 5 6 (PRODUCT LEVEL)	SEE PAGE
	54	1	**045-4065**	4	SCREW-MACHINE (10-32X0.75-IN)	
	55	1	**125-6535**	1	COVER-STARTING MOTOR	
	56	1	**338-3453**	1	SOLENOID AS-STARTING MOTOR (24-VOLT)	
		1	**3R-8801**	1	CLAMP	
	57	1	**352-7994**	1	KIT-SWITCH (RELAY, STARTER)	
					(INCLUDES STARTER RELAY SWITCH AS, JUMP START PROTECTION COVER, BOLTS, ANCHOR & CLAMP)	

Y - SEPARATE ILLUSTRATION

349-6606 **STARTING MOTOR GP-ELECTRIC (*contd.*)** **i05686210**

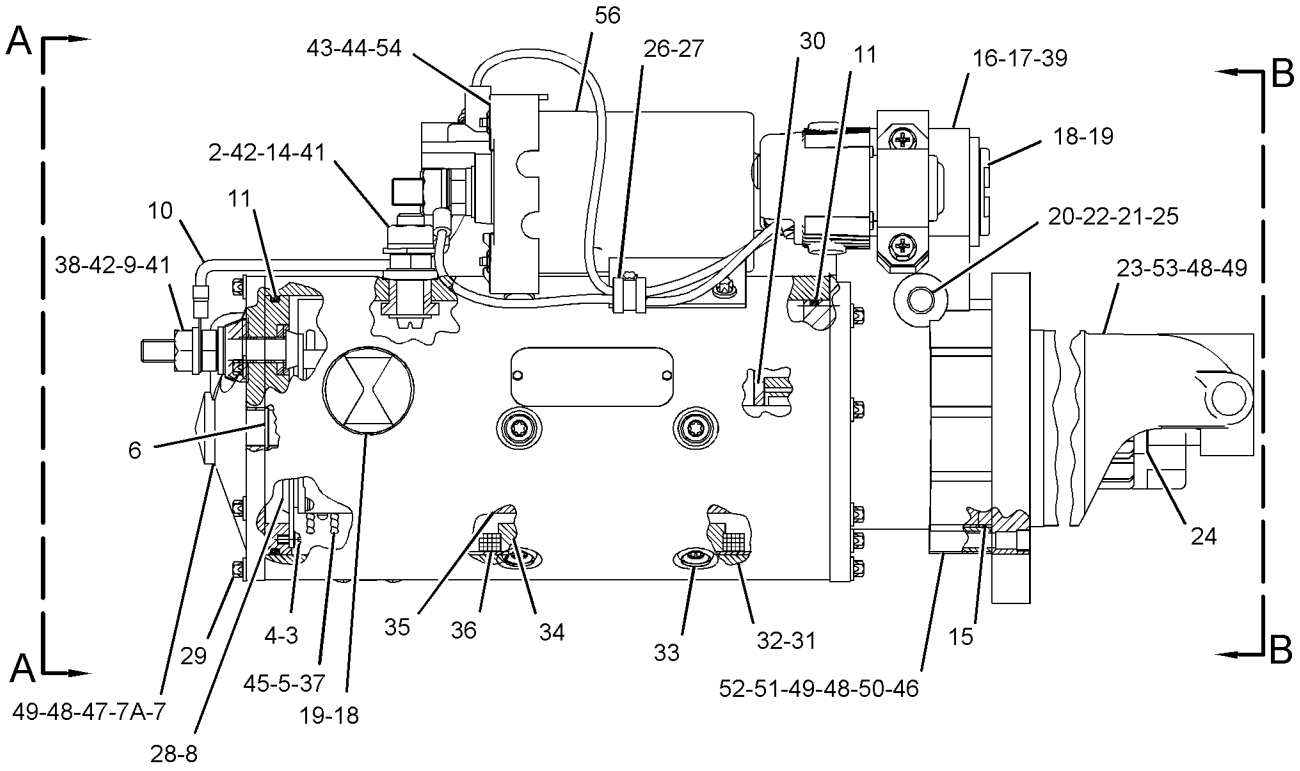

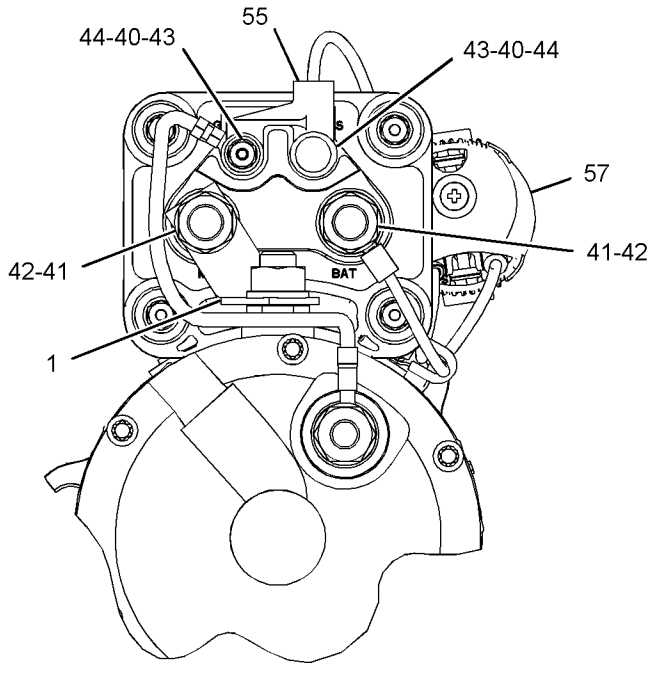

VIEW A-A

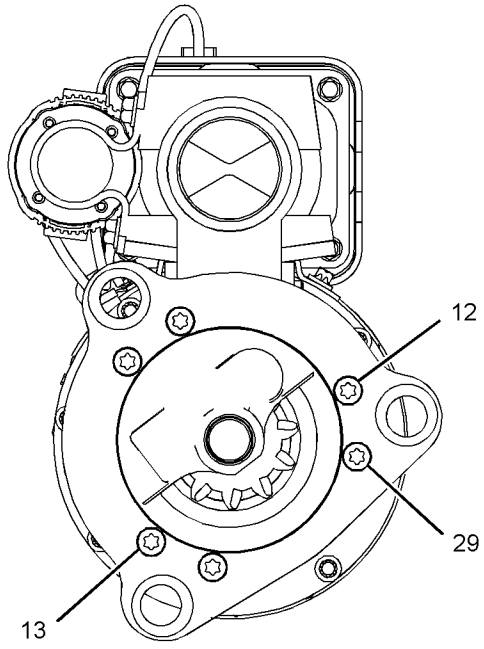

VIEW B-B

GRAPHIC #1 **<END>** g03617656

386-3935 STARTING MOTOR GP-ELECTRIC

S/N: TXX1-UP

PART OF 383-2065, 422-0048 ENGINE AR-COMPLETE

AN ATTACHMENT

SMCS-1453 **i06133314**

NOTE	REF NO	GRAPHIC REF	PART NUMBER	QTY	PART NAME 1 2 3 4 5 6 (PRODUCT LEVEL)	SEE PAGE
	1	1	**9Y-6089**	1	GASKET	
	2	1	**306-8156**	1	STRAP AS-GROUND	
YR	3	1	**349-6606**	1	STARTING MOTOR GP-ELECTRIC (24-VOLT)	259
	4	1	**220-0771**	3	BOLT-12 POINT HEAD (M16X2X45-MM)	
	5	1	**231-4245**	1	WASHER-HARD (9X17X4-MM THK)	
M	6	1	**8T-4189**	1	BOLT (M8X1.25X20-MM)	

M - METRIC PART
R - REMFG PART MAY BE AVAILABLE
Y - SEPARATE ILLUSTRATION

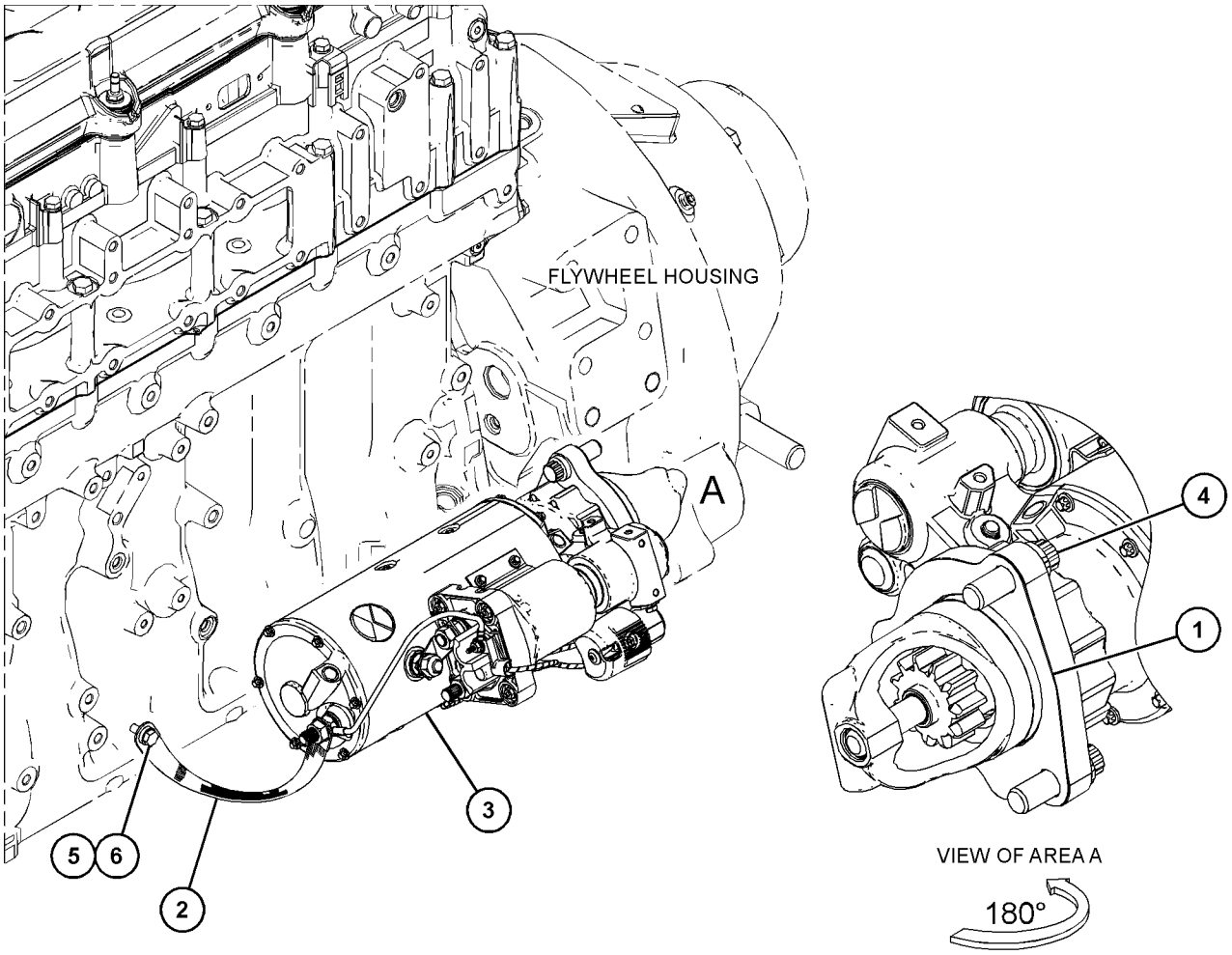

GRAPHIC #1 **<END>** g03833269

467-2009 STARTING MOTOR GP-ELECTRIC

S/N: TXX591-UP
24-VOLT
PART OF 422-0048 ENGINE AR-COMPLETE
AN ATTACHMENT

SMCS-1453 **i06138561**

NOTE	REF NO	GRAPHIC REF	PART NUMBER	QTY	PART NAME 1 2 3 4 5 6 (PRODUCT LEVEL)	SEE PAGE
	1	1	*278-8844*	1	PLUG AS-CONNECTOR	
		1	**8T-8737**	2	PLUG-SEAL	
		1	**230-4011**	1	PLUG AS-CONNECTOR (2-PIN)	
		1	**455-0704**	1	SEAL-CONNECTOR	
	2	1	**306-8156**	1	STRAP AS-GROUND	
	3	1	**420-1992**	1	STARTING MOTOR GP-ELECTRIC (24-VOLT)	
		1	**230-4012**	1	RECEPTACLE AS-CONNECTOR (2-PIN)	
		1	**423-9049**	1	SEAL-O-RING	
	4	1	**214-4677**	3	WASHER-HARD (17X27X5-MM THK)	
	5	1	**214-1048**	1	SPACER (8.8X16X4-MM THK)	
	6	1	**397-4942**	3	BOLT-12 POINT HEAD	
M	7	1	**8T-4189**	1	BOLT (M8X1.25X20-MM)	

M - METRIC PART

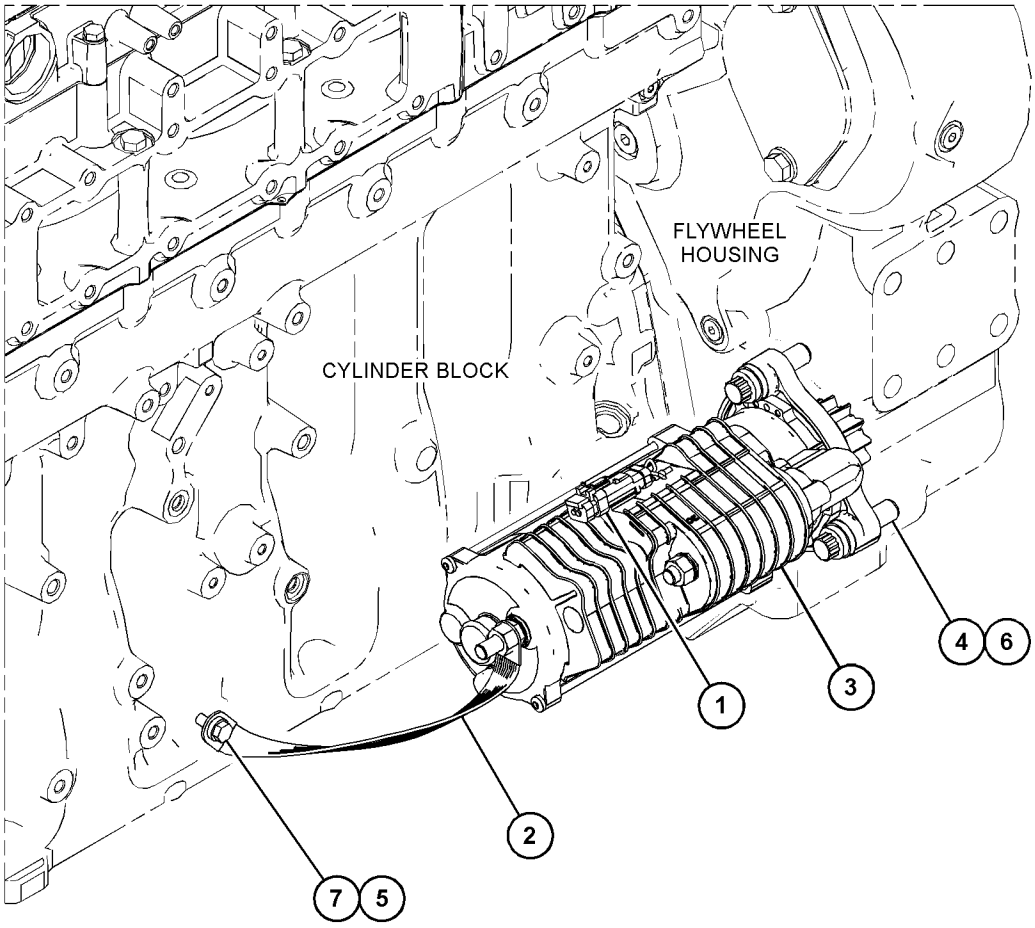

GRAPHIC #1 **<END>** g03835117

284-8381 SWITCH AS-TOGGLE

S/N: E9Y1-UP
PART OF 370-8510 LIGHTING GP-FLOOD
AN ATTACHMENT

SMCS-1435, 7332 **i05537045**

NOTE	REF NO	GRAPHIC REF	PART NUMBER	QTY	PART NAME 1 2 3 4 5 6 (PRODUCT LEVEL)	SEE PAGE
	1	1	**102-8802**	1	KIT-RECEPTACLE (2-PIN)	
					(INCLUDES RECEPTACLE AS & WEDGE)	
	2	1	**8T-8729**	2	PIN-CONNECTOR (16-GA TO 18-GA)	
	3	1	**271-2180**	1	SWITCH AS-TOGGLE (DOOR RELEASE, REMOTE)	
		1	**6T-3631**	2	NUT-HEX (15/32-32-THD)	
		1	**6T-3632**	1	LOCKWASHER	
		1	**6T-3633**	1	RING-LOCKING	
J	4	1	**153-5043**		SLEEVE (3-DM)	

J - ORDER BY THE DECIMETER

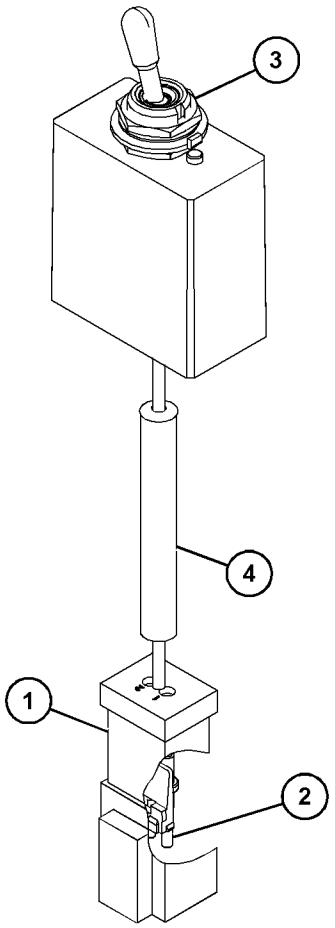

GRAPHIC #1 **<END>** g03494022

164-7577 SWITCH GP-BYPASS—OIL FILTER BYPASS

S/N: E9Y1-UP

PART OF 352-5829 FILTER & MTG GP-HYDRAULIC

SMCS-1408, 1435 **i04182818**

NOTE	REF NO	GRAPHIC REF	PART NUMBER	QTY	PART NAME 1 2 3 4 5 6 (PRODUCT LEVEL)	SEE PAGE
E	1	1	**9X-1813**		SLEEVE (19-CM)	
	2	1	**102-8802**	1	KIT-RECEPTACLE (2-PIN)	
					(INCLUDES RECEPTACLE AS & WEDGE)	
	3	1	**8T-8729**	2	PIN-CONNECTOR (16-GA TO 18-GA)	
	4	1	**3D-2824**	1	SEAL-O-RING	

E - ORDER BY THE CENTIMETER

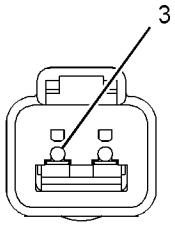

VIEW A-A

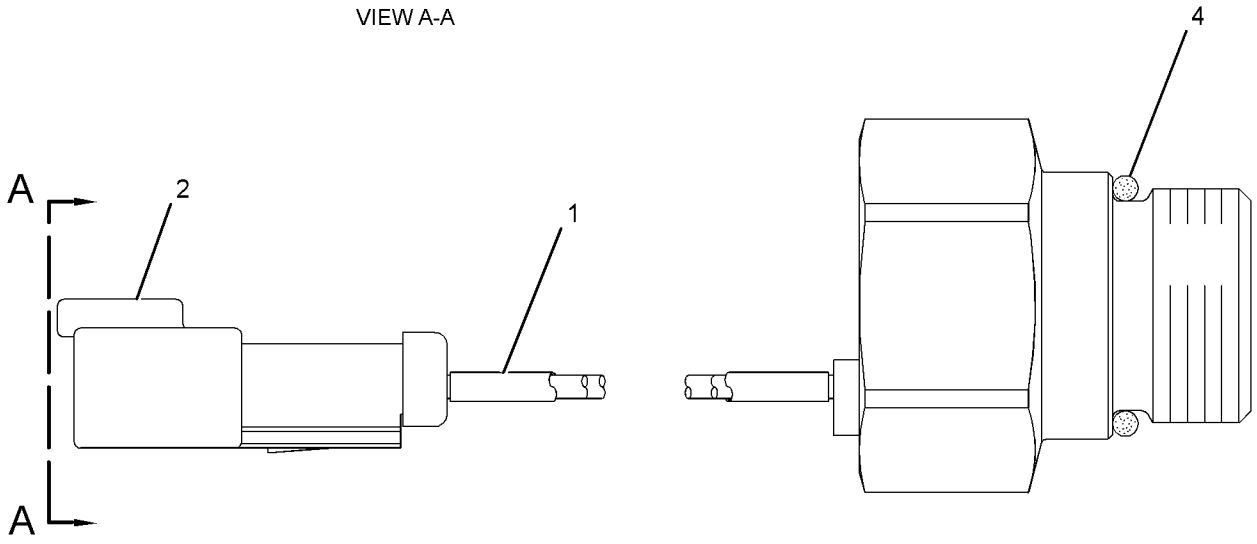

GRAPHIC #1 **<END>** g02157795

7N-0718 SWITCH GP-DISCONNECT–BATTERY

S/N: E9Y1-UP
6-VOLT TO 24-VOLT
PART OF 370-8470 BATTERY & WIRING GP

SMCS-1411 **i05944268**

NOTE	REF NO	GRAPHIC REF	PART NUMBER	QTY	PART NAME 1 2 3 4 5 6 (PRODUCT LEVEL)	SEE PAGE
	1	1	**8H-5306**	1	KEY (BATTERY DISCONNECT)	
	2	1	**8H-5303**	1	NUT (3/4-16-THD)	
	3	1	**2H-3922**	2	LOCKWASHER	
	4	1	**9F-5644**	2	LOCKWASHER	
	5	1	**6F-7045**	2	NUT-FULL (3/8-24-THD)	

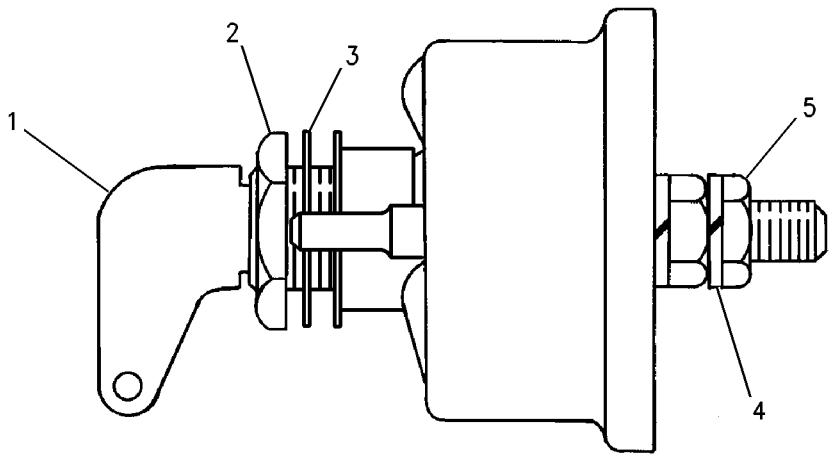

GRAPHIC #1 **<END>** g00715584

171-3759 SWITCH GP-LIMIT

S/N: E9Y1-UP

PART OF 389-5846 PEDAL GP-BRAKE, XMSN & GOV

SMCS-1435, 7332 **i03110481**

NOTE	REF NO	GRAPHIC REF	PART NUMBER	QTY	PART NAME 1 2 3 4 5 6 (PRODUCT LEVEL)	SEE PAGE
	2	1	**144-1636**	3	PIN-CONNECTOR (14-GA TO 18-GA)	
	3	1	**3E-3377**	1	WEDGE-RECEPTACLE LOCK (4-PIN)	
	4	1	**102-8804**	1	KIT-RECEPTACLE (4-PIN)	
					(INCLUDES RECEPTACLE AS AND WEDGE)	
BE	5	1	**9X-1386**		SLEEVE	
BE	6	1	**125-7874**		TUBE-HEAT SHRINK (5.72-MM DIA)	
BD	7	1	**6V-1614**		TUBE-HEAT SHRINK (9.52-MM DIA)	
BD	8	1	**5P-5677**		WIRE (18-GA, BLACK)	
	9	1	**9G-3695**	1	PLUG-SEAL	

B - USE AS REQUIRED
D - ORDER BY THE METER
E - ORDER BY THE CENTIMETER

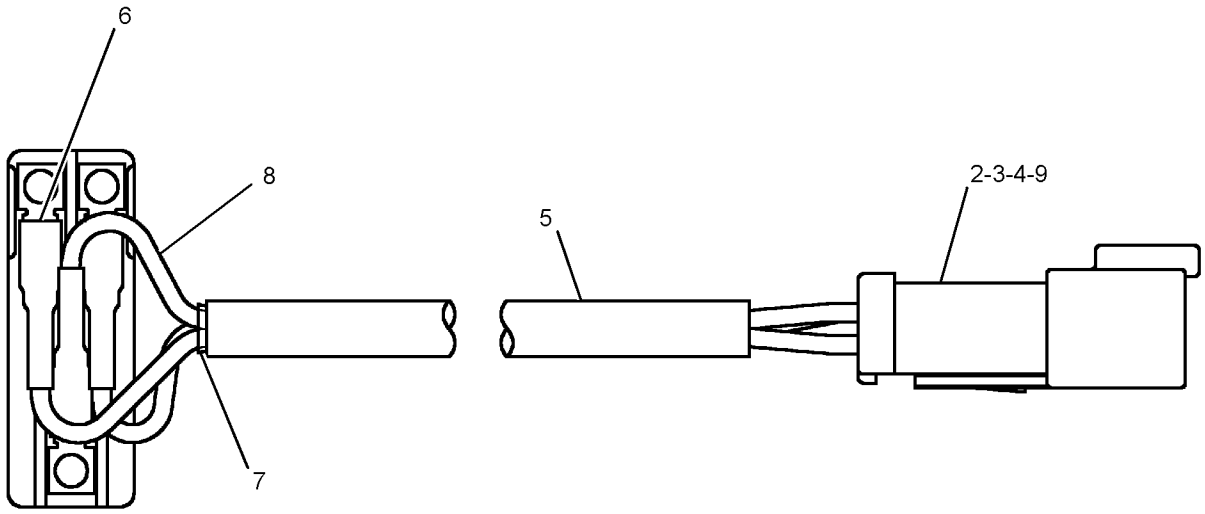

GRAPHIC #1 **<END>** g01231938

241-8368 SWITCH GP-MAGNETIC

S/N: E9Y1-UP
24-VOLT
PART OF 370-8470 BATTERY & WIRING GP

SMCS-7499 **i05772886**

NOTE	REF NO	GRAPHIC REF	PART NUMBER	QTY	PART NAME 1 2 3 4 5 6 (PRODUCT LEVEL)	SEE PAGE
	1	1	**155-2270**	1	KIT-CONNECTING PLUG (2-PIN)	
					(INCLUDES PLUG AS, WEDGE & INTERFACE SEAL)	
	2	1	**4F-2294**	2	NUT-JAM (5/16-24-THD)	
	3	1	**8T-8730**	2	SOCKET-CONNECTOR (16-GA TO 18-GA)	

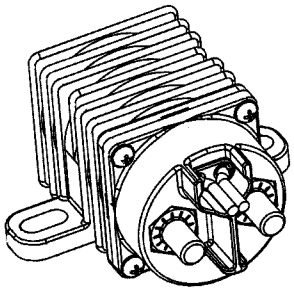

ISOMETRIC VIEW

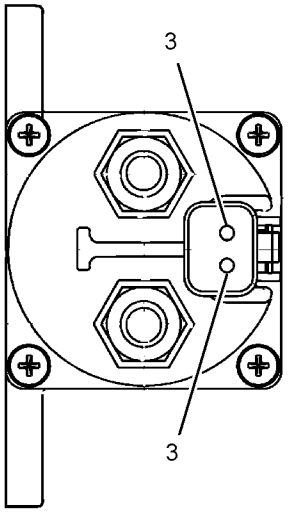

VIEW A-A

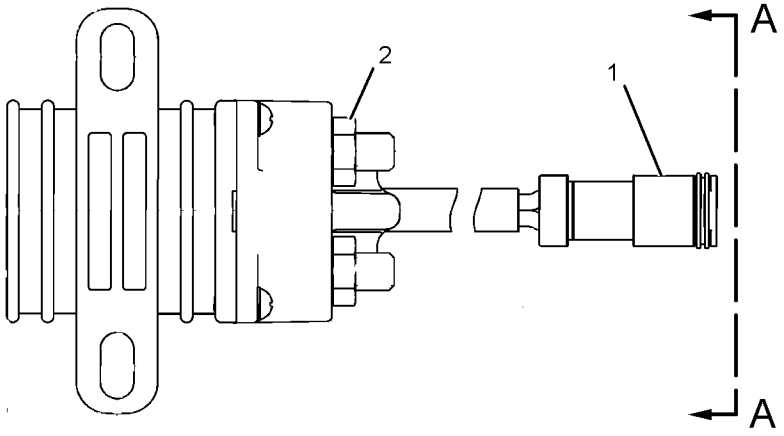

GRAPHIC #1

<END>

g01077362

337-9078 SWITCH GP-MAGNETIC

S/N: E9Y1-UP

24-VOLT, 32-VOLT, SECONDARY STEERING CONTROL

PART OF 370-8470 BATTERY & WIRING GP

SMCS-7499 **i05867457**

NOTE	REF NO	GRAPHIC REF	PART NUMBER	QTY	PART NAME 1 2 3 4 5 6 (PRODUCT LEVEL)	SEE PAGE
	1	1	**7X-0620**	2	WASHER-HARD (5.5X13X1.6-MM THK)	
	2	1	**8F-1434**	2	LOCKWASHER	
	3	1	**6V-8378**	2	NUT (10-32-THD)	
	4	1	**4L-6499**	2	WASHER (0.38X0.88X0.06-IN THK)	
	5	1	**4D-1326**	2	LOCKWASHER	
	6	1	**1B-2578**	2	NUT (3/8-16-THD)	

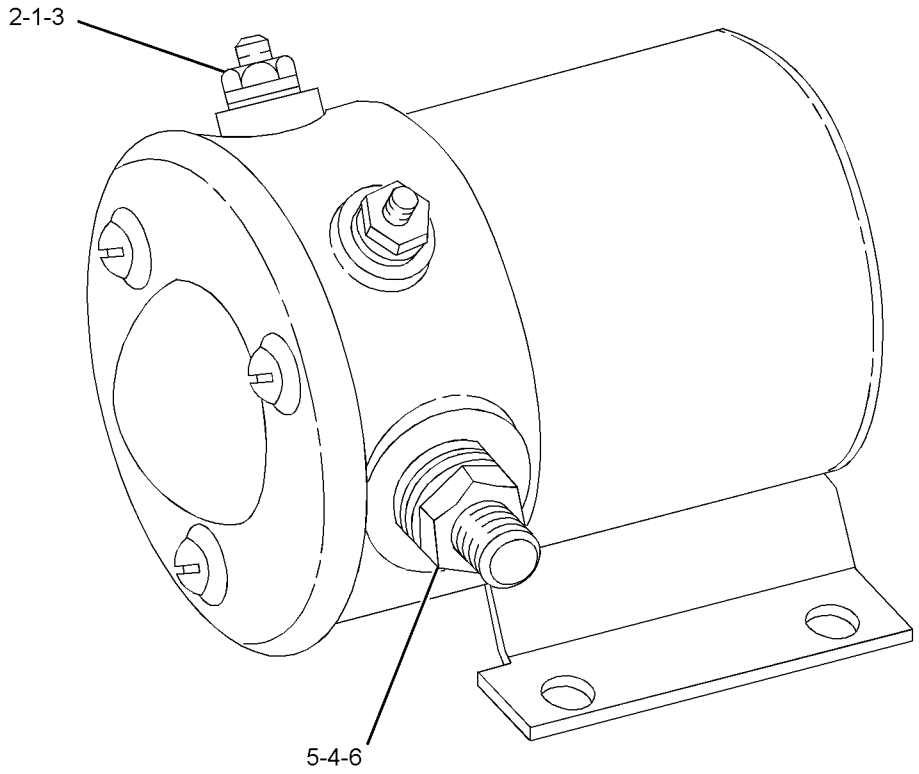

GRAPHIC #1 **<END>** g01132022

442-4470 SWITCH GP-ROADING—LIGHTS

S/N: E9Y1-UP

PART OF 386-1304, 386-1305, 479-7338, 479-7339 LIGHTING AR-ROADING

AN ATTACHMENT

SMCS-7332 **i06139523**

NOTE	REF NO	GRAPHIC REF	PART NUMBER	QTY	PART NAME 1 2 3 4 5 6 (PRODUCT LEVEL)	SEE PAGE
	1	1	**236-4616**	1	SWITCH AS-ROCKER (HAZARD)	
	2	1	**248-2841**	1	RELAY AS (24-VOLT)	
	3	1	**367-5212**	1	SWITCH AS-ROCKER (24-VOLT) (TURN SIGNAL)	
	4	1	**381-2326**	1	RELAY AS (24-VOLT)	

442-4470 **SWITCH GP-ROADING (*contd.*)** **i06139523**

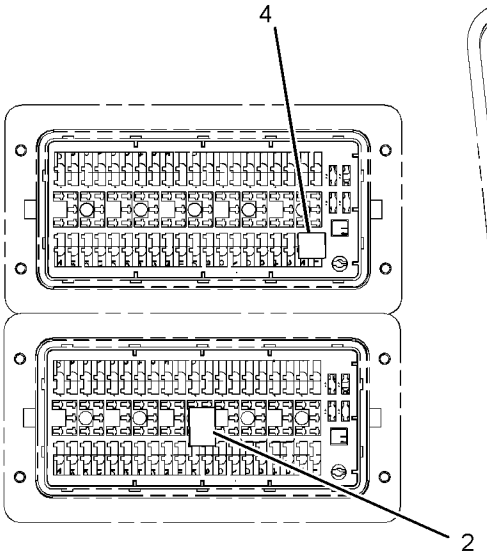

FRONT VIEW OF FUSE BLOCKS

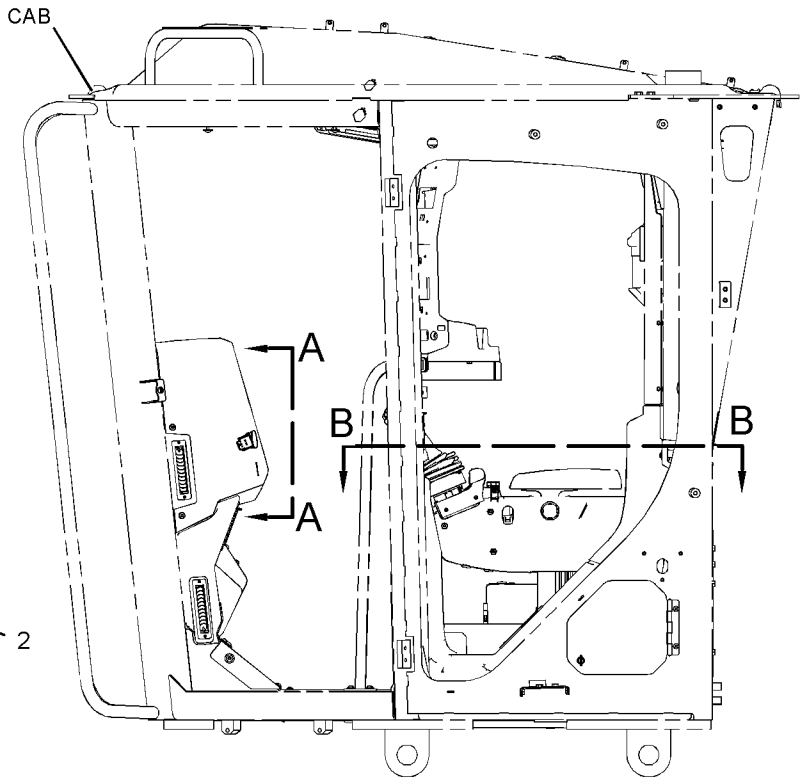

LEFT SIDE VIEW

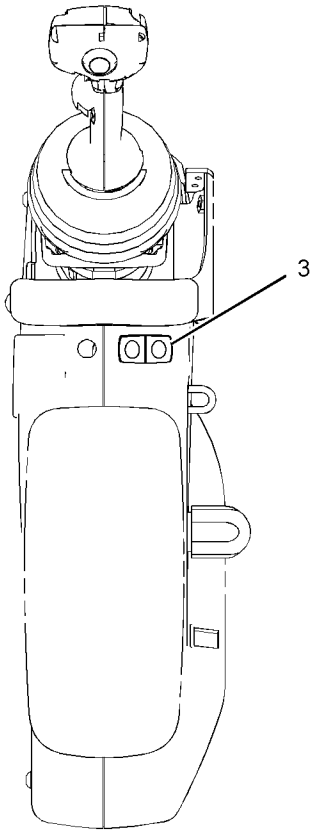

VIEW B-B

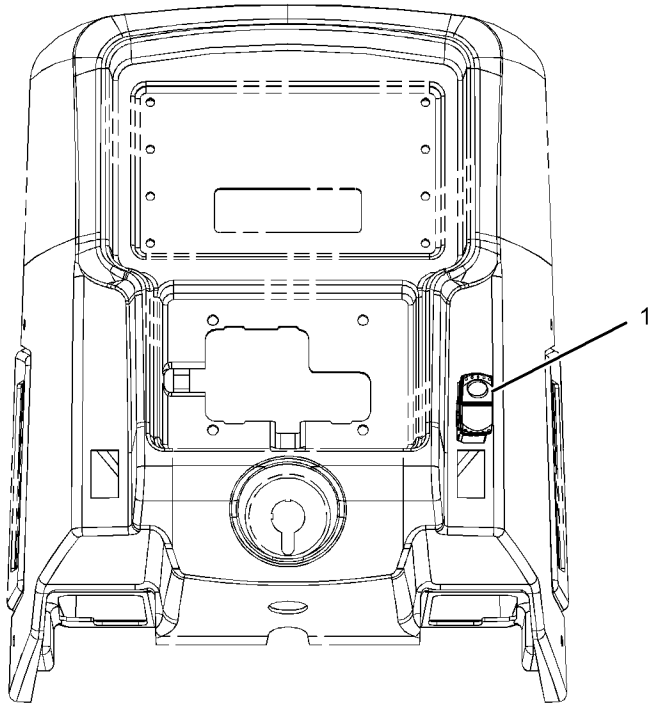

VIEW A-A

GRAPHIC #1 **<END>** g03824916

275-7741 SWITCH GP-WIPER–CAB

S/N: E9Y1-UP
24-VOLT, INTERMITTENT
PART OF 275-7764 SWITCH GP-WIPER

SMCS-7305, 7332

i05772888

NOTE	REF NO	GRAPHIC REF	PART NUMBER	QTY	PART NAME 1 2 3 4 5 6 (PRODUCT LEVEL)	SEE PAGE
	1	1	**6V-8369**	1	NUT (7/16-28-THD)	
	2	1	**2H-3920**	1	LOCKWASHER	
	3	1	**8T-8737**	2	PLUG-SEAL	
	4	1	**8T-8729**	6	PIN-CONNECTOR (16-GA TO 18-GA)	
	5	1	**102-8806**	1	KIT-RECEPTACLE (8-PIN)	
					(INCLUDES RECEPTACLE AS & WEDGE)	

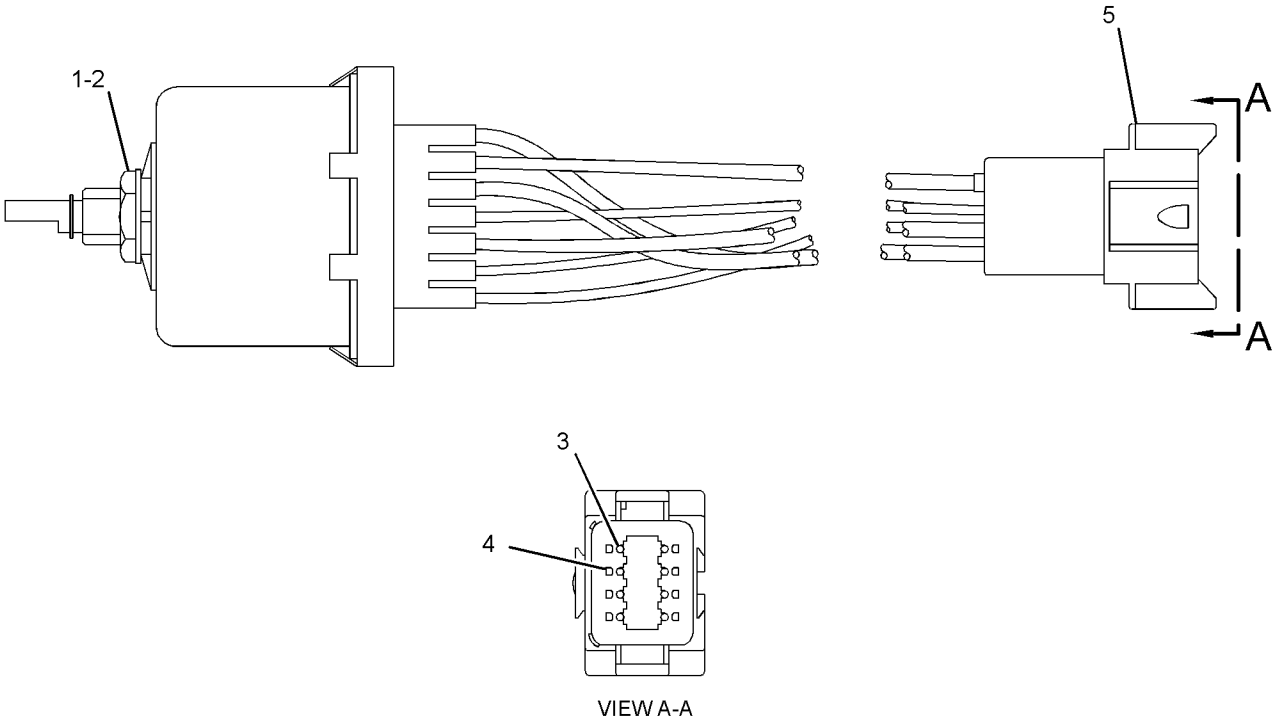

GRAPHIC #1

<END>

g01445891

275-7764 SWITCH GP-WIPER

S/N: E9Y1-UP
24-VOLT. INTERMITTENT
PART OF 330-3868 WIPER GP-WINDOW, 361-3148 WIRING GP-CAB

SMCS-7305, 7332 **i02980144**

NOTE	REF NO	GRAPHIC REF	PART NUMBER	QTY	PART NAME 1 2 3 4 5 6 (PRODUCT LEVEL)	SEE PAGE
Y	1	1	**275-7741**	1	SWITCH GP-WIPER (24-VOLT)	272
	2	1	**7T-9302**	1	KNOB AS-WIPER SWITCH	
		1	**014-0816**	1	SETSCREW (8-32X0.5-IN)	

Y - SEPARATE ILLUSTRATION

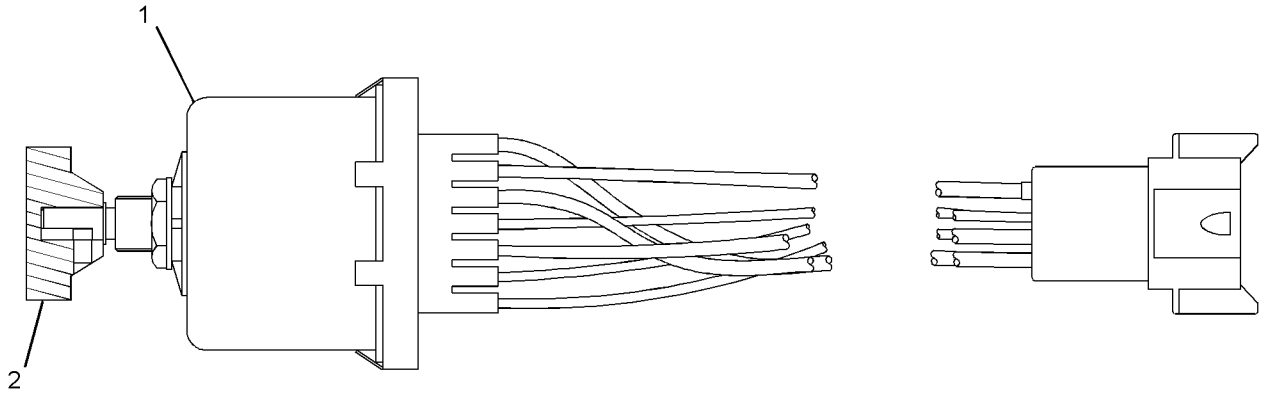

GRAPHIC #1 **<END>** g01516002

370-8467 WIRING GP-ALTERNATOR

S/N: E9Y1-UP
280-AMPERE
PART OF 386-1311, 442-8722 CAB GP
AN ATTACHMENT

SMCS-1405, 1408 **i06119915**

NOTE	REF NO	GRAPHIC REF	PART NUMBER	QTY	PART NAME 1 2 3 4 5 6 (PRODUCT LEVEL)	SEE PAGE
	1	1	**3S-2093**	1	STRAP-CABLE	
	2	1	**267-2744**	1	HOLDER AS-FUSE	
M		1	**5C-7261**	2	NUT (M8X1.25-THD)	
		1	**7X-0608**	2	WASHER-HARD (10.2X16X2-MM THK)	
		1	**264-3617**	2	LOCKWASHER	
		1	**267-2746**	1	COVER AS	
	3	1	**326-8116**	1	FUSE (300-AMPERE)	
	4	1	**459-1696**	1	BRACKET AS	
	6	1	**380-5123**	1	BRACKET AS	
	7	1	**380-5114**	1	BRACKET AS	
	8	1	**420-9082**	1	CABLE AS	
		1	**1S-7252**	1	TERMINAL-CABLE (00-GA, 3/8-IN SCREW)	
		1	**030-1705**	1	TERMINAL-CABLE (00-GA, 5/16-IN SCREW)	
E		1	**159-8049**		CABLE (00-GA, RED) (118-CM)	
		1	**328-8425**	1	COVER-TERMINAL (RED)	
	9	1	**444-0559**	1	CABLE AS	
		1	**1S-7251**	1	TERMINAL-CABLE (00-GA, 1/2-IN SCREW)	
		1	**030-1706**	1	TERMINAL-RING (00-GA, 1/4-IN SCREW)	
		1	**159-8050**		CABLE (00-GA, BLACK) (113-CM)	
	10	1	**459-1703**	1	PLATE AS	
	11	1	**114-6658**	2	WASHER (6.5X17X1-MM THK)	
	12	1	**174-5907**	1	CLIP	
	13	1	**2G-8767**	6	WASHER (10.5X60X3-MM THK)	
	14	1	**4S-1962**	1	CLIP	
M	15	1	**5C-7261**	2	NUT (M8X1.25-THD)	
M	16	1	**5C-9553**	2	BOLT (M6X1X16-MM)	
	17	1	**6G-2256**	3	CLAMP	
	18	1	**6G-2263**	3	SPACER (10.5X19X28.5-MM THK)	
	19	1	**7V-6571**	1	GROMMET	
	20	1	**7X-0608**	2	WASHER-HARD (10.2X16X2-MM THK)	
	21	1	**8T-4121**	6	WASHER-HARD (11X21X2.5-MM THK)	
M	22	1	**8T-4136**	2	BOLT (M10X1.5X25-MM)	
M	23	1	**8T-4137**	1	BOLT (M10X1.5X20-MM)	
M	24	1	**8T-6466**	1	BOLT (M10X1.5X60-MM)	
	25	1	**264-3617**	2	LOCKWASHER	
M	26	1	**8T-5005**	2	BOLT (M10X1.5X70-MM)	

E - ORDER BY THE CENTIMETER
M - METRIC PART

370-8467 **WIRING GP-ALTERNATOR (*contd.*)** **i06119915**

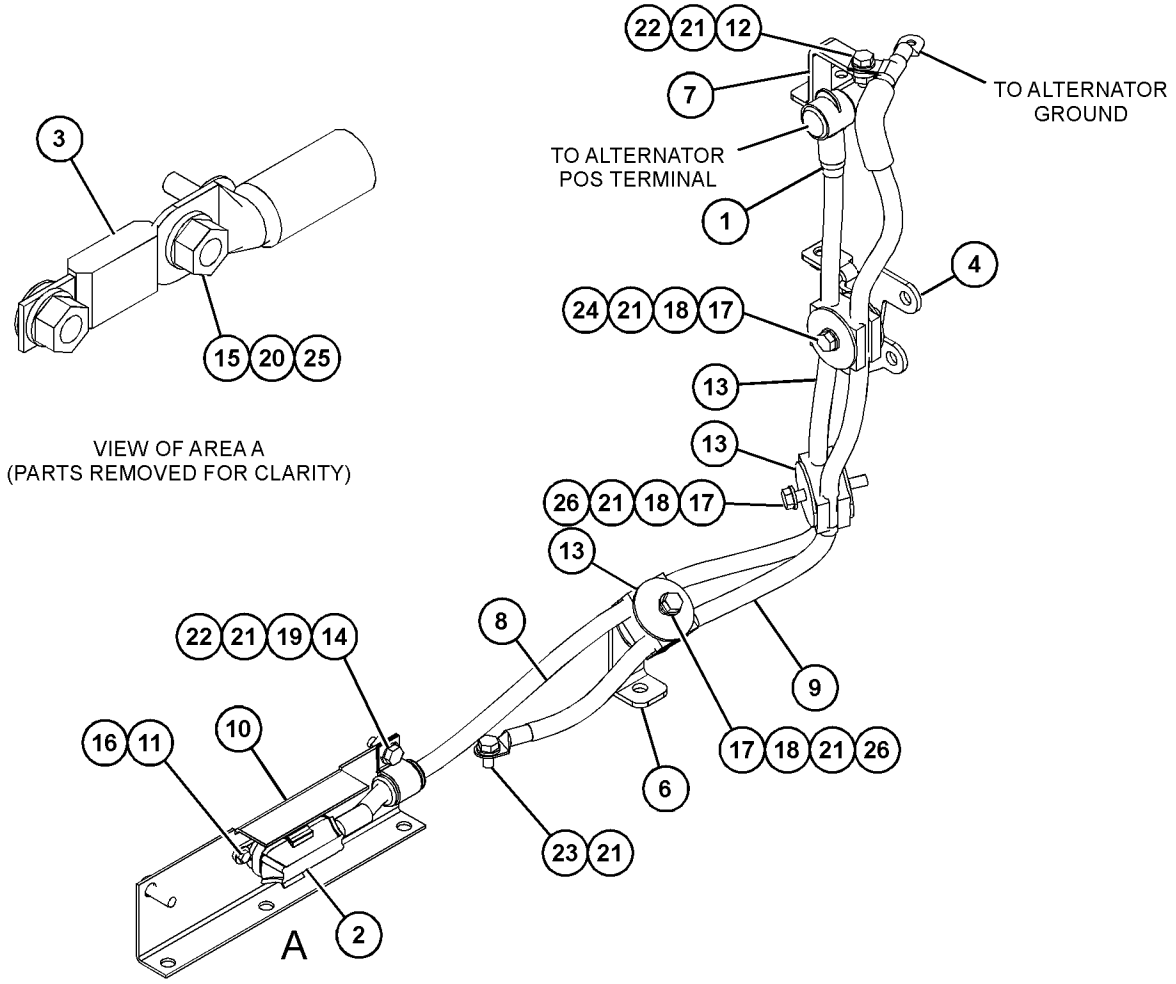

GRAPHIC #1 **<END>** g03818257

370-8469 WIRING GP-ALTERNATOR

S/N: E9Y1-UP
150-AMPERE
PART OF 386-1309, 386-1310 CAB GP
AN ATTACHMENT

SMCS-1405, 1408 **i06139476**

NOTE	REF NO	GRAPHIC REF	PART NUMBER	QTY	PART NAME 1 2 3 4 5 6 (PRODUCT LEVEL)	SEE PAGE
	1	1	**3S-2093**	1	STRAP-CABLE	
	2	1	**6G-2256**	3	CLAMP	
	3	1	**239-8107**	1	FUSE (175-AMPERE)	
	4	1	**267-2744**	1	HOLDER AS-FUSE	
M		1	**5C-7261**	2	NUT (M8X1.25-THD)	
		1	**7X-0608**	2	WASHER-HARD (10.2X16X2-MM THK)	
		1	**264-3617**	2	LOCKWASHER	
		1	**267-2746**	1	COVER AS	
	5	1	**380-5123**	1	BRACKET AS	
	6	1	**380-5124**	1	BRACKET AS	
	7	1	**420-9086**	1	CABLE AS (GROUND)	
		1	**030-1706**	1	TERMINAL-RING (00-GA, 1/4-IN SCREW)	
E		1	**159-8050**		CABLE (00-GA, BLACK) (110-CM)	
E		1	**135-5010**		TUBE-HEAT SHRINK (52-MM DIA) (5-CM)	
		1	**276-7278**	1	TERMINAL-RING	
	8	1	**420-9088**	1	CABLE AS (ALTERNATOR)	
		1	**9R-4286**	1	TERMINAL-RING (00-GA, 3/8-IN SCREW)	
		1	**030-1705**	1	TERMINAL-CABLE (00-GA, 5/16-IN SCREW)	
E		1	**159-8049**		CABLE (00-GA, RED) (121-CM)	
		1	**368-9752**	1	BOOT	
	9	1	**459-1696**	1	BRACKET AS	
	10	1	**459-1703**	1	PLATE AS	
	11	1	**114-6658**	2	WASHER (6.5X17X1-MM THK)	
	12	1	**174-5907**	1	CLIP	
	13	1	**2G-8767**	6	WASHER (10.5X60X3-MM THK)	
	14	1	**4S-1962**	1	CLIP	
M	15	1	**5C-7261**	2	NUT (M8X1.25-THD)	
M	16	1	**5C-9553**	2	BOLT (M6X1X16-MM)	
	17	1	**6G-2263**	3	SPACER (10.5X19X28.5-MM THK)	
	18	1	**7V-6571**	1	GROMMET	
	19	1	**7X-0608**	2	WASHER-HARD (10.2X16X2-MM THK)	
	20	1	**8T-4121**	6	WASHER-HARD (11X21X2.5-MM THK)	
M	21	1	**8T-4136**	2	BOLT (M10X1.5X25-MM)	
M	22	1	**8T-4137**	1	BOLT (M10X1.5X20-MM)	
M	23	1	**8T-5005**	2	BOLT (M10X1.5X70-MM)	
M	24	1	**8T-6466**	1	BOLT (M10X1.5X60-MM)	
	25	1	**264-3617**	2	LOCKWASHER	

E - ORDER BY THE CENTIMETER
M - METRIC PART

370-8469 **WIRING GP-ALTERNATOR (*contd.*)** **i06139476**

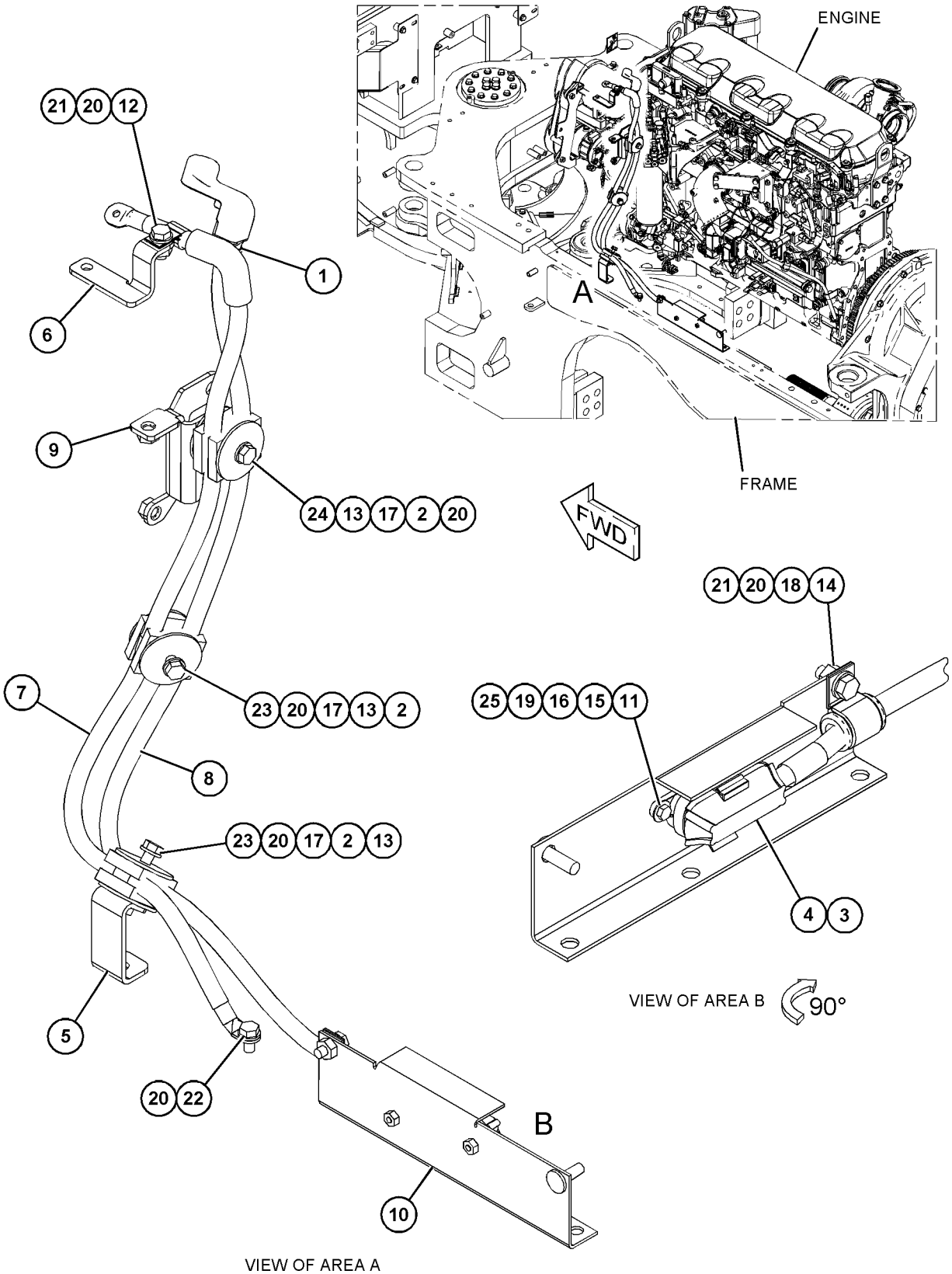

GRAPHIC #1 **<END>** g03825897

370-8448 WIRING GP-BLADE—DOWN FORCE

S/N: E9Y1-UP
PART OF 386-4105 FLOAT AR-BLADE
AN ATTACHMENT

SMCS-5734 **i06095103**

NOTE	REF NO	GRAPHIC REF	PART NUMBER	QTY	PART NAME 1 2 3 4 5 6 (PRODUCT LEVEL)	SEE PAGE
	1	1	**7K-1181**	13	STRAP-CABLE	
Y	2	1	**370-8459**	1	HARNESS AS-WIRING	194
	3	1	**132-5789**	4	CLIP	
	4	1	**4P-7581**	1	CLIP	
	5	1	**8T-4121**	1	WASHER-HARD (11X21X2.5-MM THK)	
M	6	1	**8T-4191**	1	BOLT (M10X1.5X16-MM)	

M - METRIC PART
Y - SEPARATE ILLUSTRATION

370-8448 **WIRING GP-BLADE (*contd.*)** **i06095103**

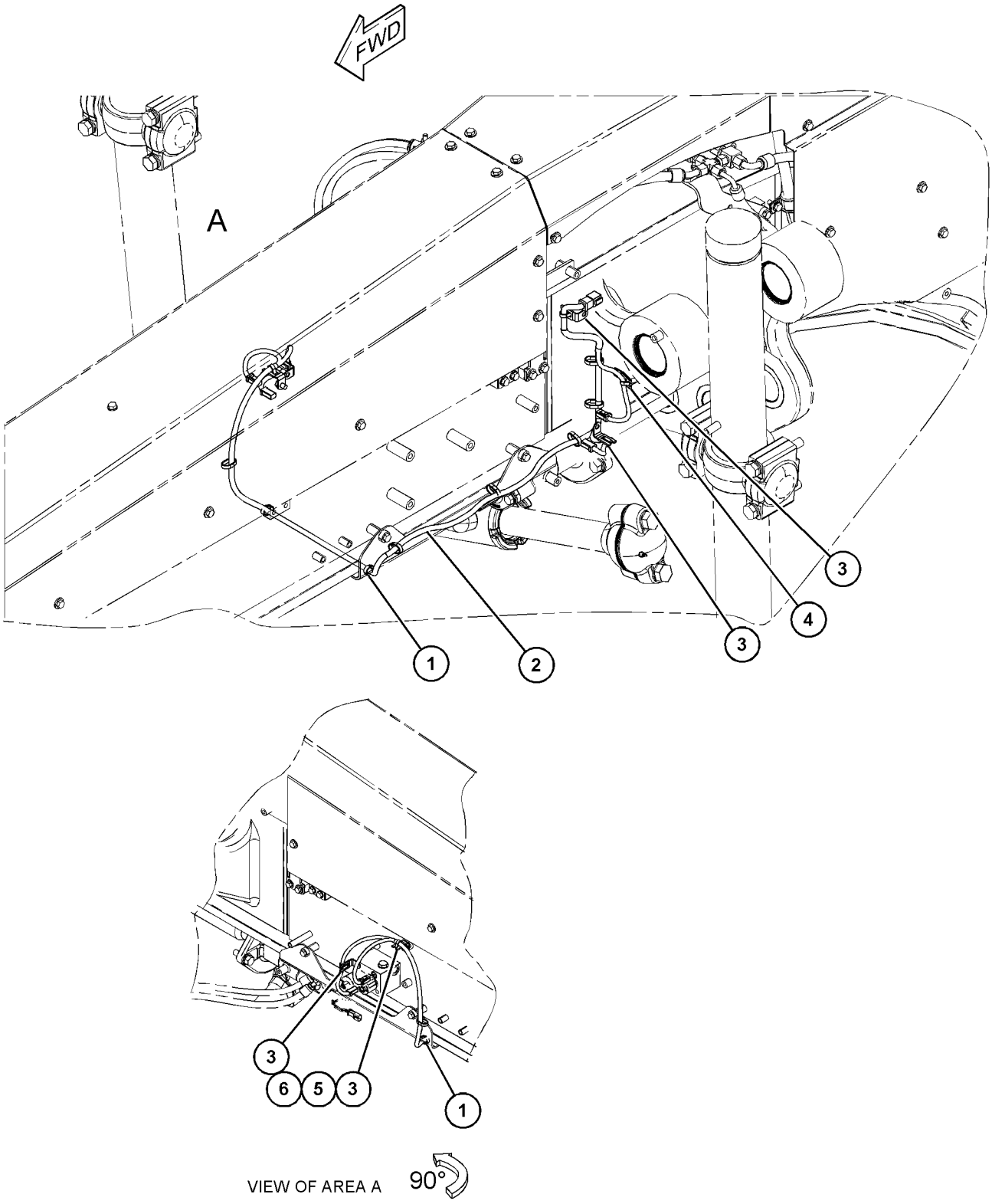

GRAPHIC #1 **<END>** g03818219

361-3148 WIRING GP-CAB

S/N: E9Y1-UP

PART OF 361-3120 CAB AR

SMCS-1408 **i06144373**

NOTE	REF NO	GRAPHIC REF	PART NUMBER	QTY	PART NAME 1 2 3 4 5 6 (PRODUCT LEVEL)	SEE PAGE
Y	1	2	**3E-6328**	1	ALARM GP (24-VOLT)	144
	2	1,2,3	**3S-2093**	49	STRAP-CABLE	
	3	1,2,3	**7K-1181**	80	STRAP-CABLE	
	4	2	**113-8490**	22	FUSE (10-AMPERE)	
	5	2	**113-8491**	30	FUSE (15-AMPERE)	
	6	2	**113-8492**	6	FUSE (20-AMPERE)	
	7	1	**180-9900**	2	CAP AS	
					(EACH INCLUDES)	
		1	**5P-7958**	1	SLEEVE-CABLE SPLICE	
		1	**8C-6354**	1	CAP-RECEPTACLE (ET CONNECTOR)	
		1	**179-9392**	1	LANYARD	
	8	2	**203-9007**	1	NUT (1-1/2-18-THD)	
	9	3	**228-6089**	1	PLUG (ROCKER SWITCH)	
	10	2	**234-5925**	1	GASKET	
	11	2	**242-1555**	2	PULLER-FUSE	
	12	2	**248-2841**	17	RELAY AS (24-VOLT)	
	13	2	**257-4907**	1	COVER AS-ACCESS	
	14	2	**270-2679**	1	LOCKWASHER	
	15	2	**271-7825**	1	COVER-PROTECTIVE	
Y	16	2	*275-7764*	3	SWITCH GP-WIPER (24-VOLT, INTERMITTENT)	273
	17	2	**280-2711**	1	CIRCUIT BREAKER AS (25-AMPERE)	
	18	3	**283-6947**	1	SWITCH AS-PUSH BUTTON (HORN)	
R	19	2	**299-5744**	1	MODULE GP-RELAY DRIVER	
		2	**7X-6315**	1	STRAP AS-GROUND	
D		2	**5P-6006**		TUBE-HEAT SHRINK (9.52-MM DIA) (0.1-M)	
		2	**2L-8078**	1	TERMINAL-RING (14-GA TO 16-GA, 5/16-IN SCREW)	
		2	**2L-8075**	1	TERMINAL-RING (14-GA TO 16-GA, NO. 8 SCREW)	
		2	**134-4126**	1	WASHER (4.52X8.28X0.76-MM THK)	
		2	**184-2472**	1	SCREW-PAN HEAD (8-32X0.375-IN)	
	20	2	**310-0674**	1	LOCKWASHER	
	21	1,2,3	**311-2813**	4	SEAL	
	22	3	**331-6861**	1	HARNESS AS-WINDOW WIPER	
		3	**9X-0196**	6	TERMINAL AS	
		3	**9X-3402**	12	SOCKET-CONNECTOR (16-GA TO 18-GA)	
					—OR—	
		3	**126-1768**	12	SOCKET-CONNECTOR (14-GA TO 16-GA)	
		3	**155-2252**	1	PLUG AS-CONNECTOR (12-PIN)	
		3	**155-2258**	1	WEDGE-PLUG LOCK (12-PIN)	
B		3	**329-3734**		TAPE-ELECTRICAL	
	23	1,2,3	**339-2958**	4	GASKET	
	24	3	**347-0799**	2	SWITCH AS-ROCKER (24-VOLT) (JOYSTICK CONTROL RAISE, LOWER)	
Y	25	3	*357-9151*	1	CONTROL & MTG GP-JOYSTICK	700
	26	1	**374-5511**	1	HARNESS AS-CONTROL (GRADE)	
		1	**359-5180**	1	PLUG AS-CONNECTOR	
		1	**424-4322**	1	COVER-CONNECTOR	
E		1	**329-3734**		TAPE-ELECTRICAL (806-CM)	
		1	**102-8806**	1	KIT-RECEPTACLE (8-PIN)	
					(INCLUDES RECEPTACLE AS & WEDGE)	
		1	**3E-3389**	1	WEDGE-RECEPTACLE LOCK (8-PIN)	
		1	**8T-8737**	33	PLUG-SEAL	
E		1	**125-7874**		TUBE-HEAT SHRINK (5.72-MM DIA) (70-CM)	
E		1	**125-7875**		TUBE-HEAT SHRINK (7.44-MM DIA) (15-CM)	
		1	**9X-3402**	48	SOCKET-CONNECTOR (16-GA TO 18-GA)	
					—OR—	
		1	**126-1768**	48	SOCKET-CONNECTOR (14-GA TO 16-GA)	

361-3148 **WIRING GP-CAB (*contd.*)** **i06144373**

NOTE	REF NO	GRAPHIC REF	PART NUMBER	QTY	PART NAME 1 2 3 4 5 6 (PRODUCT LEVEL)	SEE PAGE
		1	**134-2540**	1	RESISTOR AS-CONNECTION (3-PIN)	
		1	**9X-3401**	23	PIN-CONNECTOR (16-GA TO 18-GA)	
					—OR—	
		1	**126-1767**	23	PIN-CONNECTOR (14-GA TO 16-GA)	
		1	**155-2256**	1	KIT-CONNECTING PLUG (12-PIN)	
		1	**174-0503**	11	KIT-CONNECTING PLUG (3-PIN)	
					(EACH PLUG KIT INCLUDES PLUG AS, WEDGE & INTERFACE SEAL)	
		1	**155-2258**	2	WEDGE-PLUG LOCK (12-PIN)	
		1	**203-9007**	1	NUT (1-1/2-18-THD)	
		1	**225-3861**	1	RECEPTACLE AS-CONNECTOR (31-PIN)	
		1	**230-4009**	1	PLUG AS-CONNECTOR (12-PIN)	
		1	**455-0709**	1	SEAL-CONNECTOR	
		1	**230-4010**	1	RECEPTACLE AS-CONNECTOR (12-PIN)	
		1	**237-0164**	1	PLUG AS	
		1	**237-0166**	1	KIT-CONNECTING PLUG (12-PIN)	
					(INCLUDES PLUG AS, WEDGE & INTERFACE SEAL)	
		1	**270-2679**	1	LOCKWASHER	
		1	**274-3779**	2	CAP-SEAL	
	27	1	**374-5512**	1	HARNESS AS-CAB (POWER)	
		1	**8T-8737**	4	PLUG-SEAL	
		1	**211-0052**	1	NUT (1-11/16-18-THD)	
		1	**246-2932**	1	CAP	
		1	**274-8267**	1	PLUG (4-GA)	
		1	**283-6447**	2	TERMINAL-RING	
		1	**310-0674**	1	LOCKWASHER	
		1	**311-2813**	1	SEAL	
E		1	**329-3734**		TAPE-ELECTRICAL (228-CM)	
		1	**361-2945**	1	RECEPTACLE AS	
	28	2	**381-2326**	10	RELAY AS (24-VOLT) (BREAK OUT)	
	29	3	**381-8082**	1	COVER AS	
	30	2	**385-5990**	1	FILM-FUSE/RELAY	
	31	2,3	**416-7158**	2	COVER-CONNECTOR	
	32	3	**424-4322**	1	COVER-CONNECTOR	
	33	3	**431-8735**	1	FLASHER AS (12/24-VOLT)	
	34	2	**436-6364**	1	HARNESS AS-POWER	
		2	**284-8481**	2	TERMINAL AS-RING	
					(EACH INCLUDES)	
E		2	**119-3662**		TUBE-HEAT SHRINK (10.85-MM DIA) (4-CM)	
		2	**284-8480**	1	TERMINAL-RING	
Y	35	1	**450-5678**	1	HARNESS AS-CAB (ROOF)	173
	36	2	**460-3190**	1	MODULE GP-KEYPAD (LIGHTS, STEP, CUTTING EDGE)	
		2	**8F-1326**	4	WASHER (4.2X9.5X0.8-MM THK)	
M		2	**8T-2659**	4	LOCKNUT (M4X0.7-THD)	
	37	2	**460-3191**	1	MODULE GP-KEYPAD (FAN BLOWER SPEED)	
		2	**8F-1326**	4	WASHER (4.2X9.5X0.8-MM THK)	
M		2	**8T-2659**	4	LOCKNUT (M4X0.7-THD)	
Y	38	1	**475-4304**	1	HARNESS AS-CAB (MAIN)	174
	39	1,3	**096-6166**	4	WASHER-HARD (4.5X9X1-MM THK)	
	40	1	**130-5300**	3	CLIP	
M	41	1,3	**162-2165**	4	BOLT-SOCKET HEAD (M4X0.7X16-MM)	
	42	3	**204-8000**	5	MOUNTING-CABLE TIE	
	43	2	**211-0052**	1	NUT (1-11/16-18-THD)	
	44	2	**236-4616**	1	SWITCH AS-ROCKER (HAZARD)	
	45	2	**284-3623**	1	SWITCH AS-ROCKER (24-VOLT) (IMPLEMENT LOCKOUT)	
	46	2	**309-4314**	1	CLIP	
	47	2	**329-6791**	1	SWITCH AS-ROCKER (PARKING BRAKE)	
M	48	2	**5C-7261**	3	NUT (M8X1.25-THD)	
M	49	2,3	**5C-9553**	8	BOLT (M6X1X16-MM)	
M	50	2	**8T-4191**	1	BOLT (M10X1.5X16-MM)	
	51	2	**5P-4116**	6	WASHER-HARD (8.8X20.5X2-MM THK)	

361-3148 **WIRING GP-CAB (*contd.*)** **i06144373**

NOTE	REF NO	GRAPHIC REF	PART NUMBER	QTY	PART NAME 1 2 3 4 5 6 (PRODUCT LEVEL)	SEE PAGE
	52	2	**6I-1418**	3	SPACER (8.2X12.7X28.7-MM THK)	
	53	2	**7X-0608**	3	WASHER-HARD (10.2X16X2-MM THK)	
	54	3	**7X-7729**	5	WASHER (11X25X3-MM THK)	
M	55	2	**7Y-7388**	8	SCREW-BUTTON HEAD (M5X0.8X12-MM)	
	56	2	**8T-0328**	8	WASHER-HARD (5.5X10X1-MM THK)	
	57	1,2,3	**8T-4121**	9	WASHER-HARD (11X21X2.5-MM THK)	
M	58	1,2,3	**8T-4133**	12	NUT (M10X1.5-THD)	
M	59	2	**8T-4136**	1	BOLT (M10X1.5X25-MM)	
M	60	3	**8T-4137**	5	BOLT (M10X1.5X20-MM)	
M	61	1	**8T-4189**	2	BOLT (M8X1.25X20-MM)	
	62	1	**8T-4224**	2	WASHER-HARD (8.8X16X2-MM THK)	
	63	2	**8T-9655**	6	MOUNT-ISOLATION	
M	64	2	**8T-6912**	3	BOLT (M8X1.25X50-MM)	
	65	2	**264-3617**	3	LOCKWASHER	
	66	2,3	**9X-8256**	8	WASHER (6.6X12X2-MM THK)	
B	67	2,3	**1P-0810**		TAPE-ELECTRICAL	

B - USE AS REQUIRED
D - ORDER BY THE METER
E - ORDER BY THE CENTIMETER
M - METRIC PART
R - REMFG PART MAY BE AVAILABLE
Y - SEPARATE ILLUSTRATION

361-3148 **WIRING GP-CAB (*contd.*)** **i06144373**

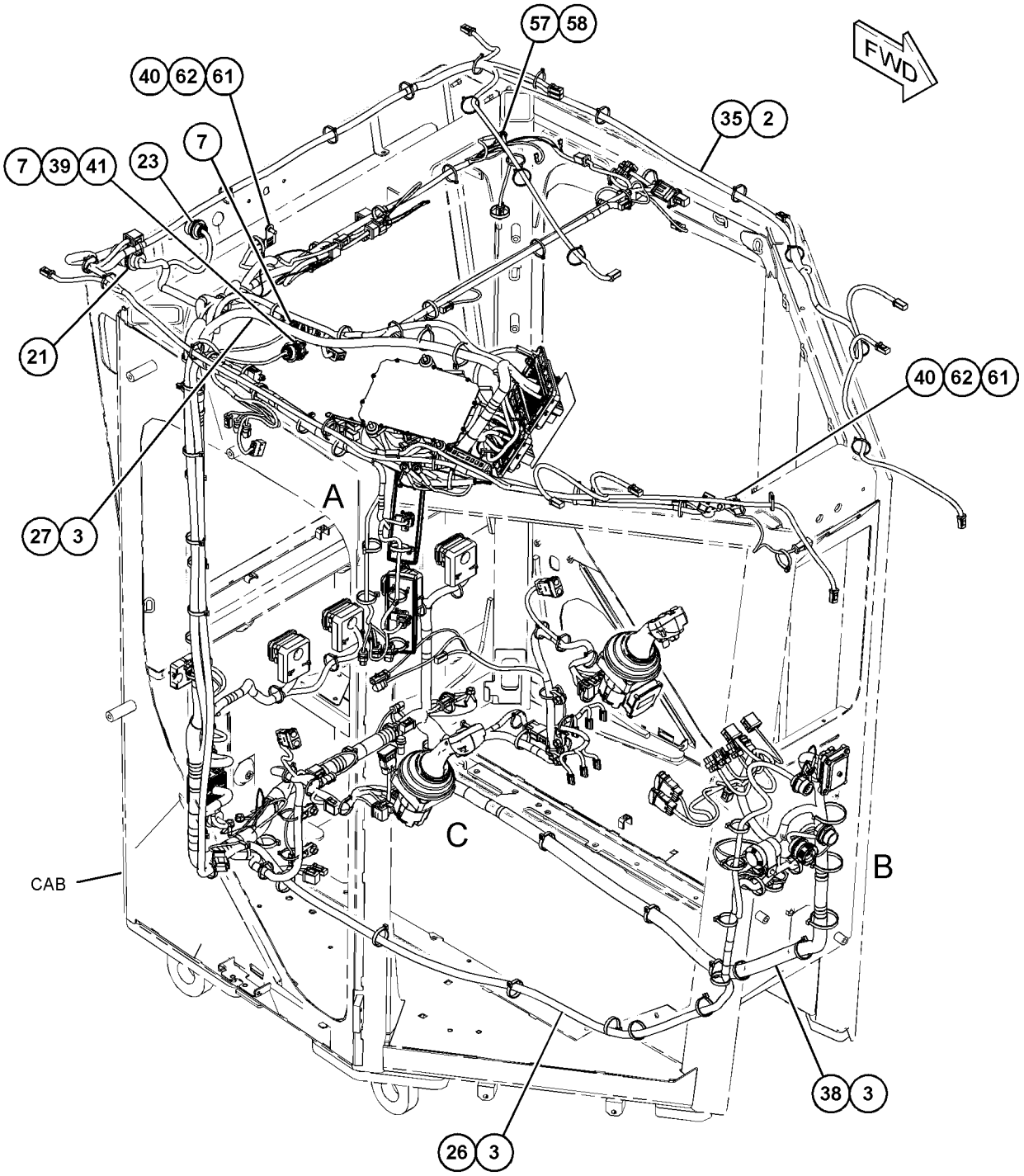

REFER TO ALL ILLUSTRATIONS OF
THIS GROUP FOR AUXILIARY VIEWS

GRAPHIC #1 g03833221

361-3148 **WIRING GP-CAB (*contd.*)** **i06144373**

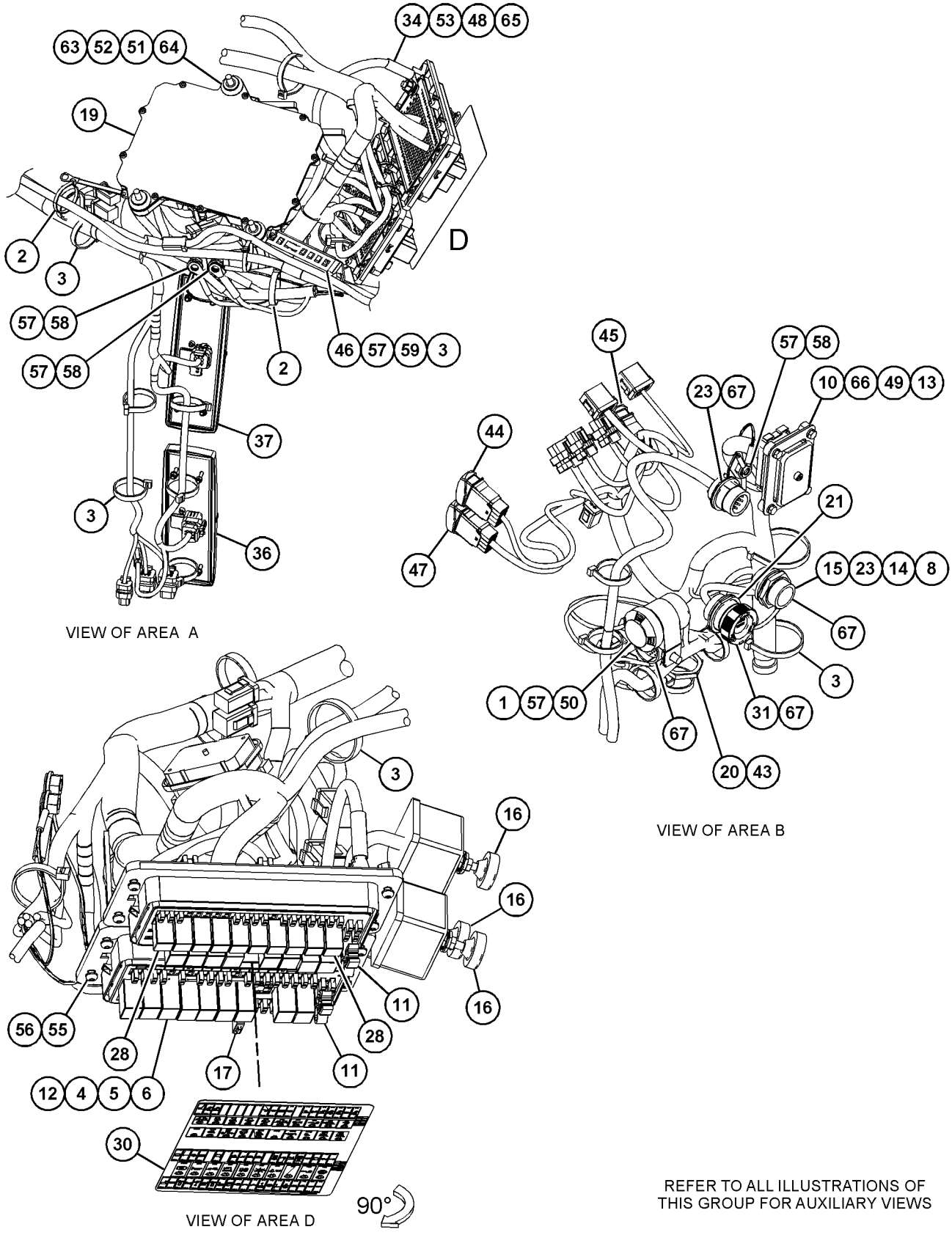

GRAPHIC #2 g03833222

361-3148 **WIRING GP-CAB (*contd.*)** **i06144373**

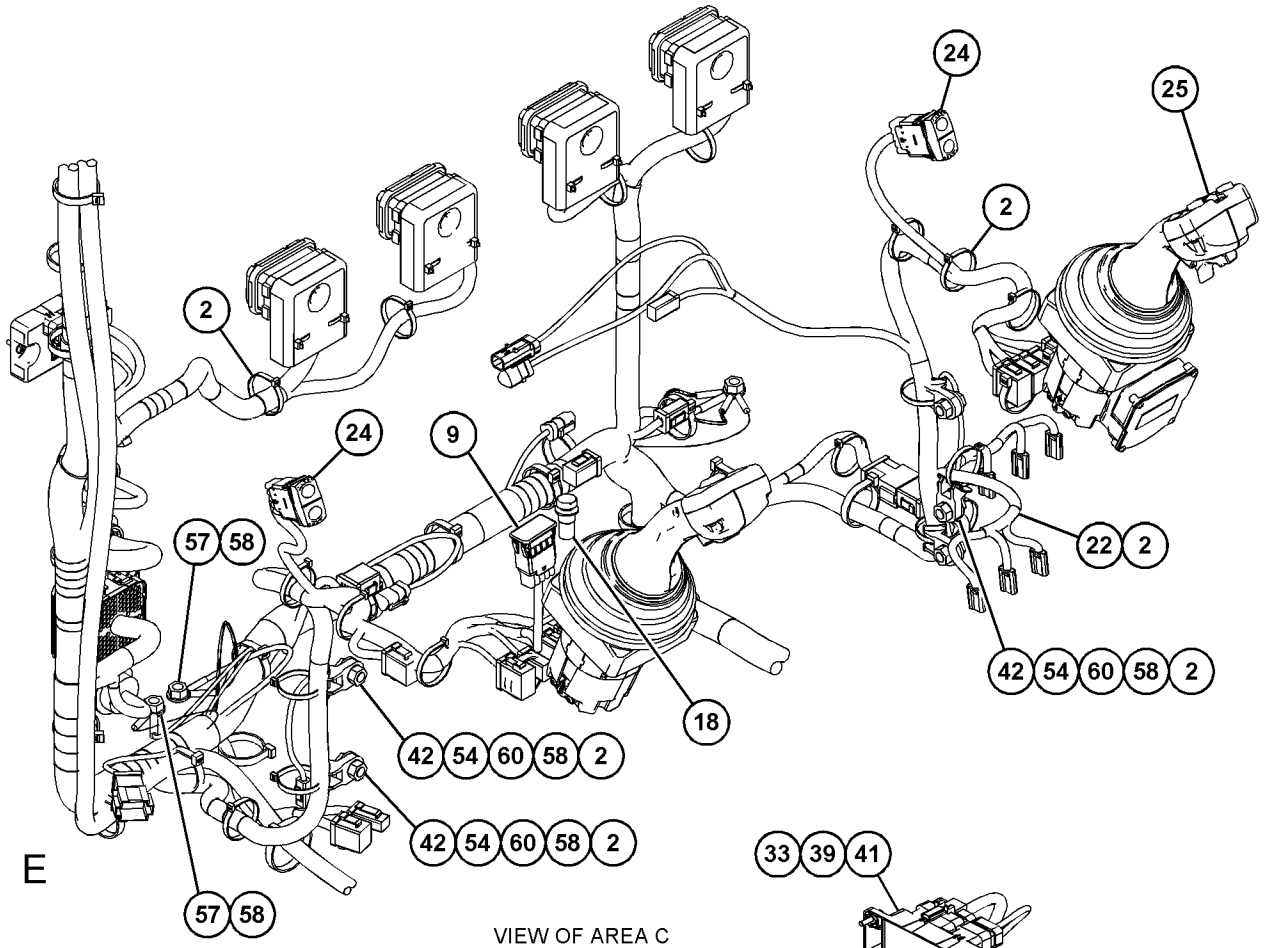

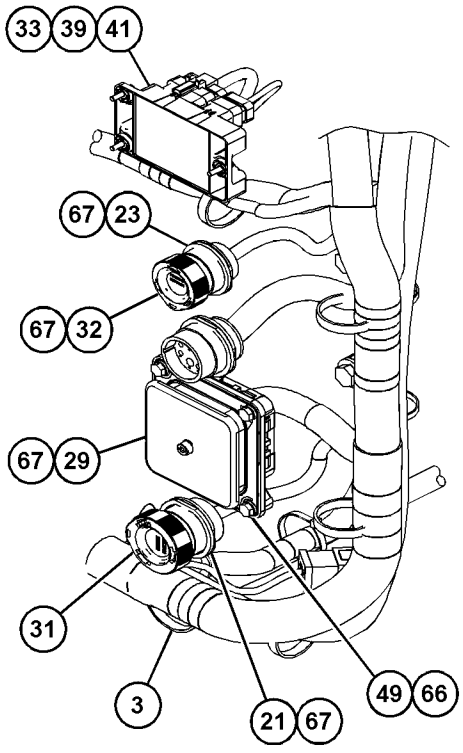

REFER TO ALL ILLUSTRATIONS OF THIS GROUP FOR AUXILIARY VIEWS

GRAPHIC #3 **<END>** g03833224

370-8455 WIRING GP-CAMERA—REAR VISION

S/N: E9Y1-UP

PART OF 370-8430 ELECTRICAL AR

SMCS-1408, 7348 **i06103373**

NOTE	REF NO	GRAPHIC REF	PART NUMBER	QTY	PART NAME 1 2 3 4 5 6 (PRODUCT LEVEL)	SEE PAGE
	1	1	**7K-1181**	38	STRAP-CABLE	
	2	1	**261-3223**	1	CABLE AS-COMMUNICATION	
Y	3	1	**336-6684**	1	CAMERA GP (12-VOLT, 24-VOLT)	157
	4	1	**268-8643**	1	CABLE AS	

Y - SEPARATE ILLUSTRATION

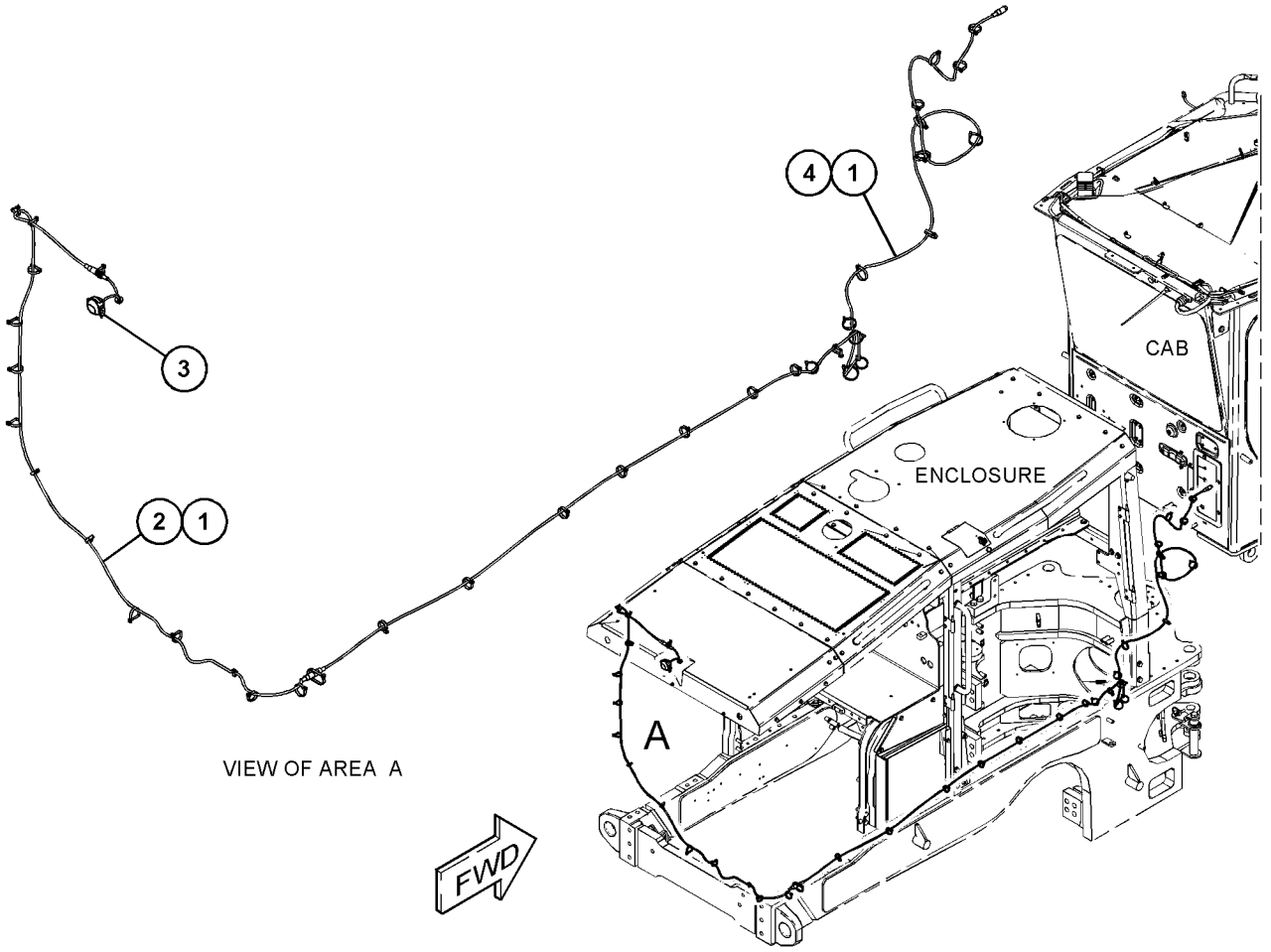

GRAPHIC #1 **<END>** g03813456

442-4478 WIRING GP-CAMERA

S/N: E9Y1-UP
CANNOT BE USED WITH 447-2229—PAGE: 711
AN ATTACHMENT

SMCS-1408, 7348

i06155309

NOTE	REF NO	GRAPHIC REF	PART NUMBER	QTY	PART NAME 1 2 3 4 5 6 (PRODUCT LEVEL)	SEE PAGE
	1	1	**261-3223**	1	CABLE AS-COMMUNICATION	
	2	1	**333-8153**	1	CONNECTION AS	
Y	3	1	**381-0775**	1	HARNESS AS-CAB (CAMERA)	173

Y - SEPARATE ILLUSTRATION

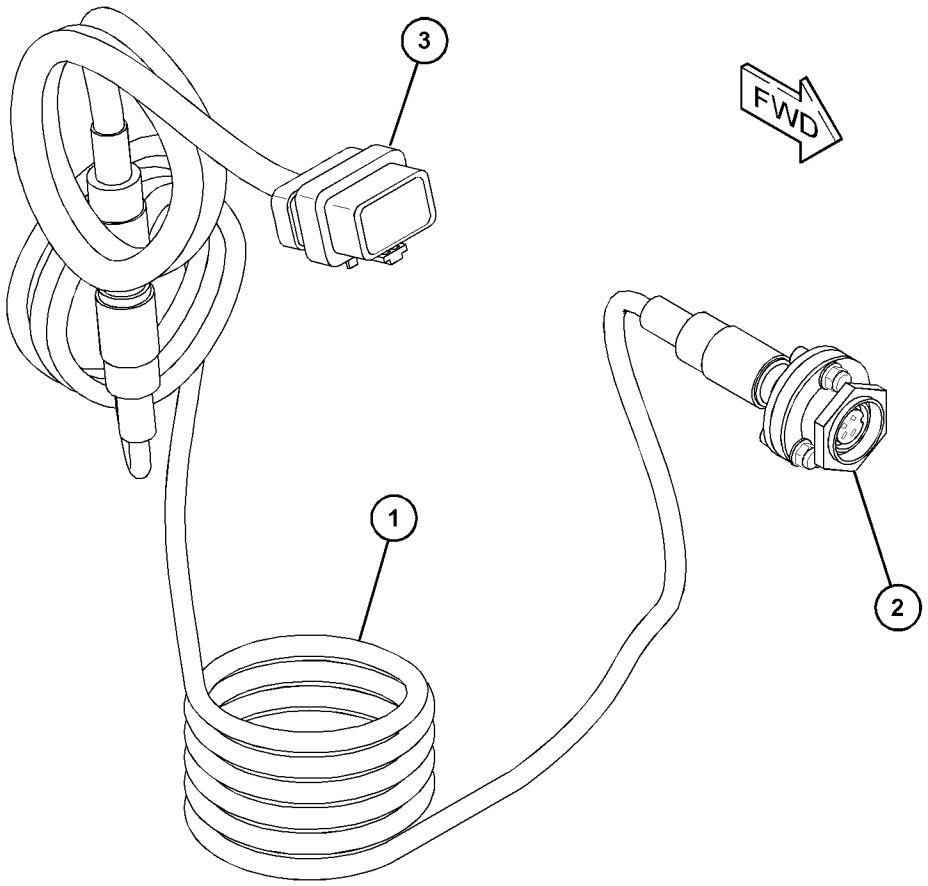

GRAPHIC #1

<END>

g03833266

361-3105 WIRING GP-ELECTRONIC CONTROL

S/N: E9Y1-UP
M3
PART OF 385-7557 CONTROL AR-HYDRAULIC
AN ATTACHMENT

SMCS-1408, 1900 **i05559970**

NOTE	REF NO	GRAPHIC REF	PART NUMBER	QTY	PART NAME 1 2 3 4 5 6 (PRODUCT LEVEL)	SEE PAGE
	1	1	**6I-1418**	4	SPACER (8.2X12.7X28.7-MM THK)	
	2	1	**8T-9655**	8	MOUNT-ISOLATION	
	3	1	*360-2136*	1	APPLICATION GP-IMPLEMENT (HYDRAULIC ELECTRONIC)	
		1	**365-6765**	1	CONTROL GP-UNPROGRAMMED (HYDRAULIC ELECTRONIC)	
	4	1	**366-9659**	1	HARNESS AS-CONTROL (CAB)	
		1	**102-8805**	1	KIT-RECEPTACLE (6-PIN)	
					(INCLUDES RECEPTACLE AS & WEDGE)	
		1	**3E-3383**	1	WEDGE-RECEPTACLE LOCK (6-PIN)	
		1	**3S-2093**	4	STRAP-CABLE	
		1	**8T-8737**	116	PLUG-SEAL	
E		1	**119-3662**		TUBE-HEAT SHRINK (10.85-MM DIA) (13-CM)	
E		1	**125-7874**		TUBE-HEAT SHRINK (5.72-MM DIA) (5-CM)	
E		1	**125-7875**		TUBE-HEAT SHRINK (7.44-MM DIA) (10-CM)	
		1	**9X-3402**	28	SOCKET-CONNECTOR (16-GA TO 18-GA)	
					—OR—	
		1	**126-1768**	28	SOCKET-CONNECTOR (14-GA TO 16-GA)	
		1	**126-1774**	2	COVER-CONNECTOR	
		1	**2L-8079**	1	TERMINAL-RING (14-GA TO 16-GA, 3/8-IN SCREW)	
		1	**9X-3401**	16	PIN-CONNECTOR (16-GA TO 18-GA)	
					—OR—	
		1	**126-1767**	16	PIN-CONNECTOR (14-GA TO 16-GA)	
		1	**147-1445**	1	PLUG AS-CONNECTOR (70-PIN)	
		1	**159-9322**	1	SEAL-O-RING	
		1	**147-1446**	1	PLUG AS-CONNECTOR (70-PIN)	
		1	**159-9322**	1	SEAL-O-RING	
		1	**156-1458**	1	COVER	
		1	**203-9007**	1	NUT (1-1/2-18-THD)	
		1	**270-2679**	1	LOCKWASHER	
B		1	**329-3734**		TAPE-ELECTRICAL	
		1	**339-2958**	1	GASKET	
	5	1	**5P-4116**	4	WASHER-HARD (8.8X20.5X2-MM THK)	
M	6	1	**7X-0818**	4	BOLT (M8X1.25X45-MM)	
	7	1	**8T-4224**	1	WASHER-HARD (8.8X16X2-MM THK)	

B - USE AS REQUIRED
E - ORDER BY THE CENTIMETER
M - METRIC PART

361-3105 **WIRING GP-ELECTRONIC CONTROL (*contd.*)** **i05559970**

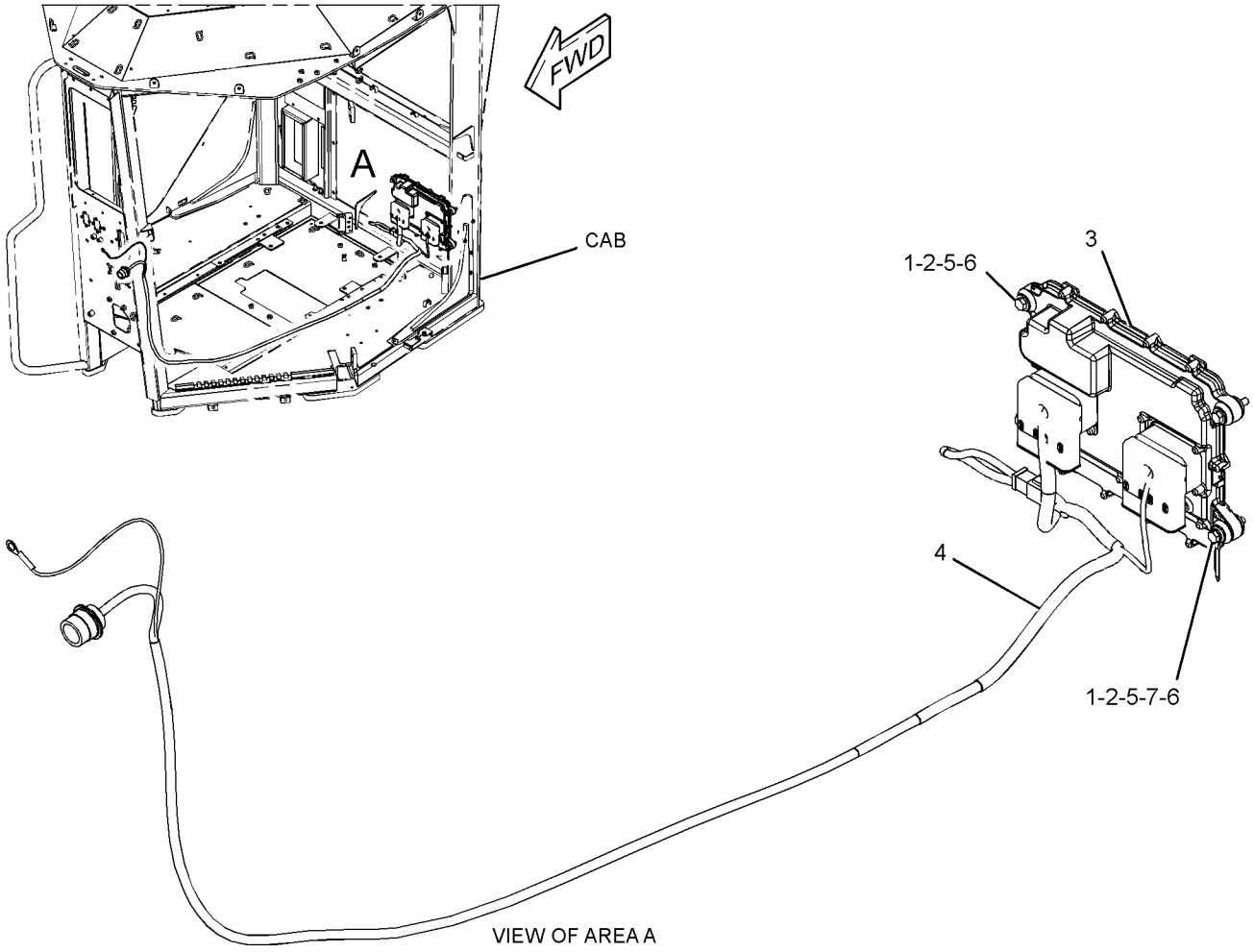

GRAPHIC #1 **<END>** g03481138

417-0980 WIRING GP-ELECTRONIC CONTROL

S/N: TXX1-UP

FOR USE WITH MOUNTING GROUP-BULKHEAD, CONTROL MOUNTING GROUP, INTERNAL WIRING GROUP, WIRING GROUP-CONTROL(FUEL), SENSOR GROUP

PART OF 383-2065, 422-0048 ENGINE AR-COMPLETE

AN ATTACHMENT

SMCS-1408, 1900 **i05534309**

NOTE	REF NO	GRAPHIC REF	PART NUMBER	QTY	PART NAME 1 2 3 4 5 6 (PRODUCT LEVEL)	SEE PAGE
	1	1	**3S-2093**	16	STRAP-CABLE	
	2	1	**7K-1181**	4	STRAP-CABLE	
	3	1	**224-9222**	3	BRACKET	
	4	1	**312-8415**	1	BRACKET	
	5	1	**347-3869**	1	CLIP	
	6	1	**417-2409**	1	BRACKET	
Y	7	1	**434-9531**	1	HARNESS AS-SENSOR	189
M	8	1	**101-3129**	2	STUD (M10X1.5-THD)	
	9	1	**132-5789**	5	CLIP	
	10	1	**4P-7581**	3	CLIP	
	11	1	**4P-8134**	1	CLIP	
M	12	1	**5C-7261**	1	NUT (M8X1.25-THD)	
M	13	1	**6V-5215**	4	BOLT (M8X1.25X16-MM)	
M	14	1	**6V-5217**	2	BOLT (M8X1.25X20-MM)	
	15	1	**6V-5839**	9	WASHER (11X21X2.5-MM THK)	
M	16	1	**6V-6317**	7	BOLT (M10X1.5X20-MM)	
	17	1	**9M-1974**	7	WASHER-HARD (8.8X16X2-MM THK)	

M - METRIC PART
Y - SEPARATE ILLUSTRATION

417-0980 **WIRING GP-ELECTRONIC CONTROL (*contd.*)** **i05534309**

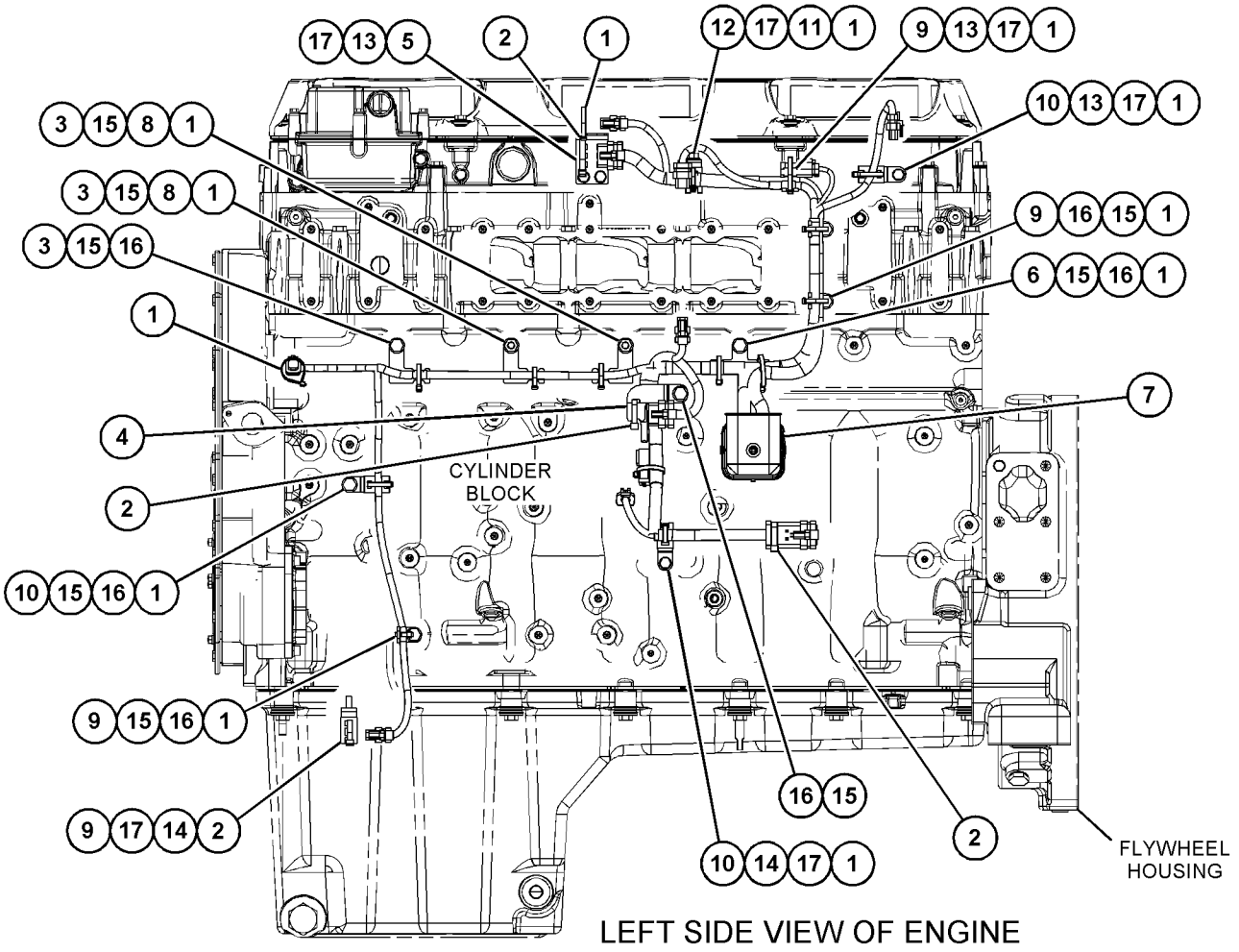

GRAPHIC #1 **<END>** g03507684

370-8445 WIRING GP-FRONT

S/N: E9Y1-UP

PART OF 370-8430 ELECTRICAL AR

SMCS-1408 **i06214335**

NOTE	REF NO	GRAPHIC REF	PART NUMBER	QTY	PART NAME 1 2 3 4 5 6 (PRODUCT LEVEL)	SEE PAGE
	1	2	**3E-3636**	1	SWITCH AS-BALL (CENTERSHIFT INDICATOR)	
		2	**8T-8729**	4	PIN-CONNECTOR (16-GA TO 18-GA)	
		2	**102-8804**	1	KIT-RECEPTACLE (4-PIN)	
					(INCLUDES RECEPTACLE AS & WEDGE)	
	2	1	**3S-2093**	15	STRAP-CABLE	
	3	1,2,3,4	**7K-1181**	53	STRAP-CABLE	
	4	1	**118-6878**	4	BRACKET AS	
	5	1	**132-1805**	1	STRAP AS-GROUND	
Y	6	3	**191-6587**	1	SENSOR GP-TEMPERATURE (STEERING OIL)	254
	7	1	**309-9812**	1	BRACKET AS	
M		1	**8T-3490**	1	NUT-WELD (M10X1.5-THD)	
	8	1	**309-9814**	1	BRACKET AS	
M		1	**8T-3490**	1	NUT-WELD (M10X1.5-THD)	
	9	4	**360-2082**	1	BRACKET AS	
	10	3	**360-2086**	2	PLATE AS	
	11	3	**360-2087**	2	COVER	
	12	4	**360-2137**	1	BRACKET AS	
Y	13	3	**370-8447**	1	HARNESS AS-SENSOR (STEERING CYLINDER POSITION, RH)	188
Y	13A	3	**370-8447**	1	HARNESS AS-SENSOR (STEERING CYLINDER POSITION, LH)	188
Y	14	1	**391-4440**	1	HARNESS AS-VALVE (STEERING)	194
	15	3	**430-9821**	1	BRACKET AS	
	16	2,3	**439-4708**	3	BRACKET AS	
	17	2	**459-1695**	1	PLATE AS	
Y	18	1	**474-5407**	1	HARNESS AS-FRONT (BRAKING, LIGHTING)	179
Y	19	3	**474-5411**	1	HARNESS AS-FRONT (MAIN)	180
	20	2	**478-9033**	1	BRACKET AS	
	21	1,2	**104-6202**	2	CLIP	
	22	2,3,4	**130-5300**	13	CLIP	
	23	1,2,3,4	**132-5789**	10	CLIP	
M	24	3	**172-5291**	2	SCREW (M10X1.5X30-MM)	
	25	2,3	**1F-7854**	2	SPACER (11.01X19.05X49.21-MM THK)	
	26	2,3,4	**204-2281**	10	STRAP-CABLE	
	27	2,3,4	**204-8000**	9	MOUNTING-CABLE TIE	
M	28	3	**231-0336**	1	STUD-TAPERLOCK (M10X1.5X70-MM)	
	29	4	**310-1898**	1	CLIP	
	30	3	**345-3753**	1	MOUNTING-CABLE TIE	
	31	3	**352-3964**	1	CLIP	
	32	4	**352-3966**	1	CLIP	
	33	2	**3E-6909**	2	CLIP	
	34	2,3	**3J-1907**	2	SEAL-O-RING	
	35	3	**3V-2431**	4	WASHER (10.2X16X2-MM THK)	
	36	3	**3W-2647**	2	SPACER (13.5X30X10-MM THK)	
	37	3	**4D-9517**	2	CLIP	
	38	1,2,3,4	**4P-7581**	26	CLIP	
	39	2,3,4	**4P-8134**	7	CLIP	
	40	3	**4S-5565**	4	BOLT (3/8-16X0.875-IN)	
	41	4	**5P-8112**	2	GROMMET (50-MM ID)	
B	42	2	**8F-1974**	10	SHIM (0.13-MM THK)	
	43	3	**8M-2770**	12	CLIP	
	44	1,2,3,4	**8T-4121**	81	WASHER-HARD (11X21X2.5-MM THK)	
M	45	3,4	**8T-4133**	3	NUT (M10X1.5-THD)	
M	46	2,3,4	**8T-4136**	22	BOLT (M10X1.5X25-MM)	
M	47	1,2,3,4	**8T-4137**	48	BOLT (M10X1.5X20-MM)	
M	48	4	**8T-4185**	1	BOLT (M10X1.5X50-MM)	
M	49	3	**8T-4191**	1	BOLT (M10X1.5X16-MM)	
M	50	1	**8T-4183**	4	BOLT (M12X1.75X40-MM)	

370-8445 **WIRING GP-FRONT (*contd.*)** **i06214335**

NOTE	REF NO	GRAPHIC REF	PART NUMBER	QTY	PART NAME 1 2 3 4 5 6 (PRODUCT LEVEL)	SEE PAGE
	51	1	**198-4767**	4	WASHER-HARD (13.5X30X12-MM THK)	
M	52	2,3	**8T-5005**	2	BOLT (M10X1.5X70-MM)	
	53	4	**9G-7101**	1	SPACER (10.5X20X30-MM THK)	
M	54	3	**9X-2041**	2	SCREW-TRUSS HEAD (M10X1.5X20-MM)	

B - USE AS REQUIRED
M - METRIC PART
Y - SEPARATE ILLUSTRATION

370-8445 **WIRING GP-FRONT (*contd.*)** **i06214335**

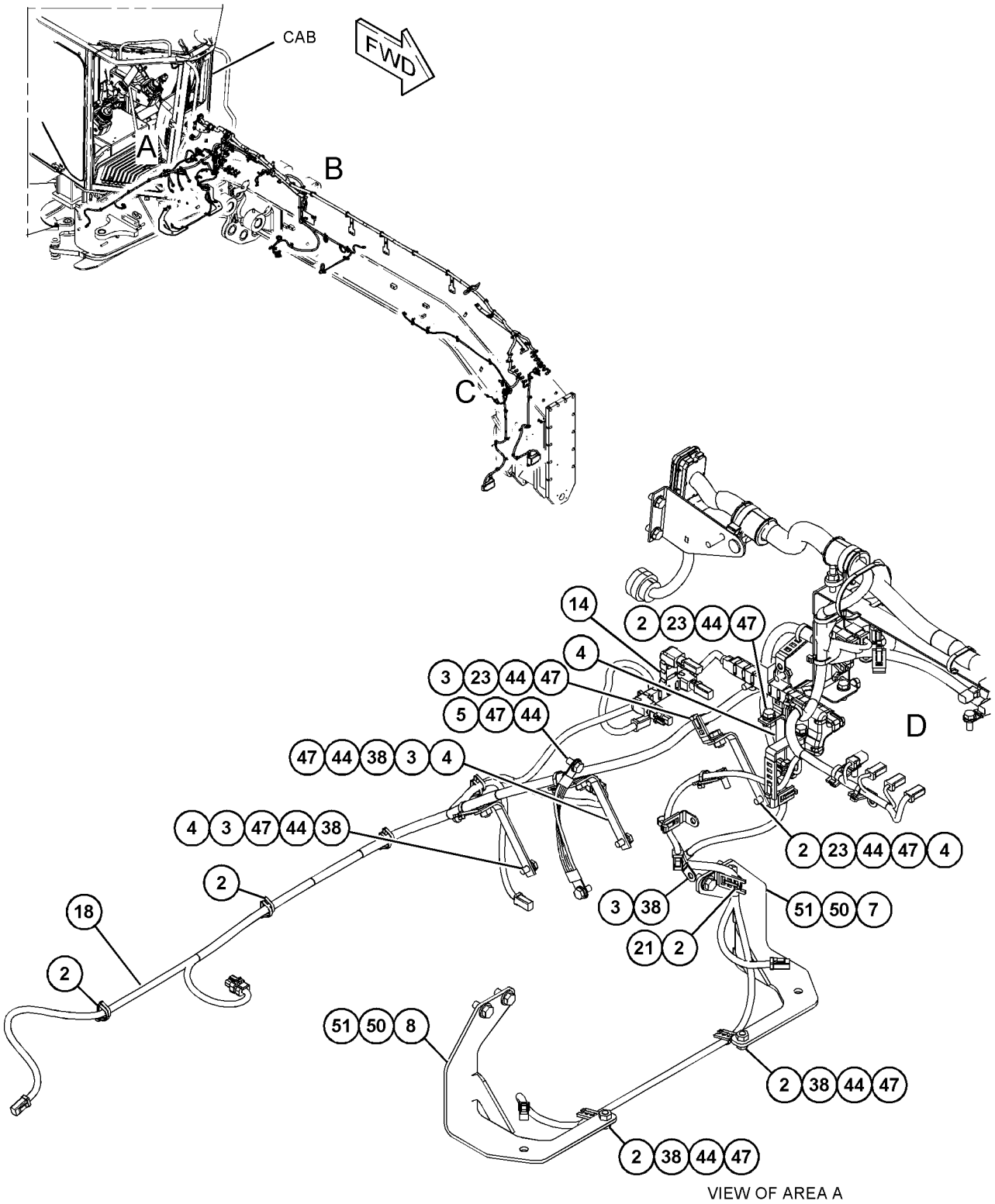

GRAPHIC #1 g03817517

370-8445 **WIRING GP-FRONT (*contd.*)** **i06214335**

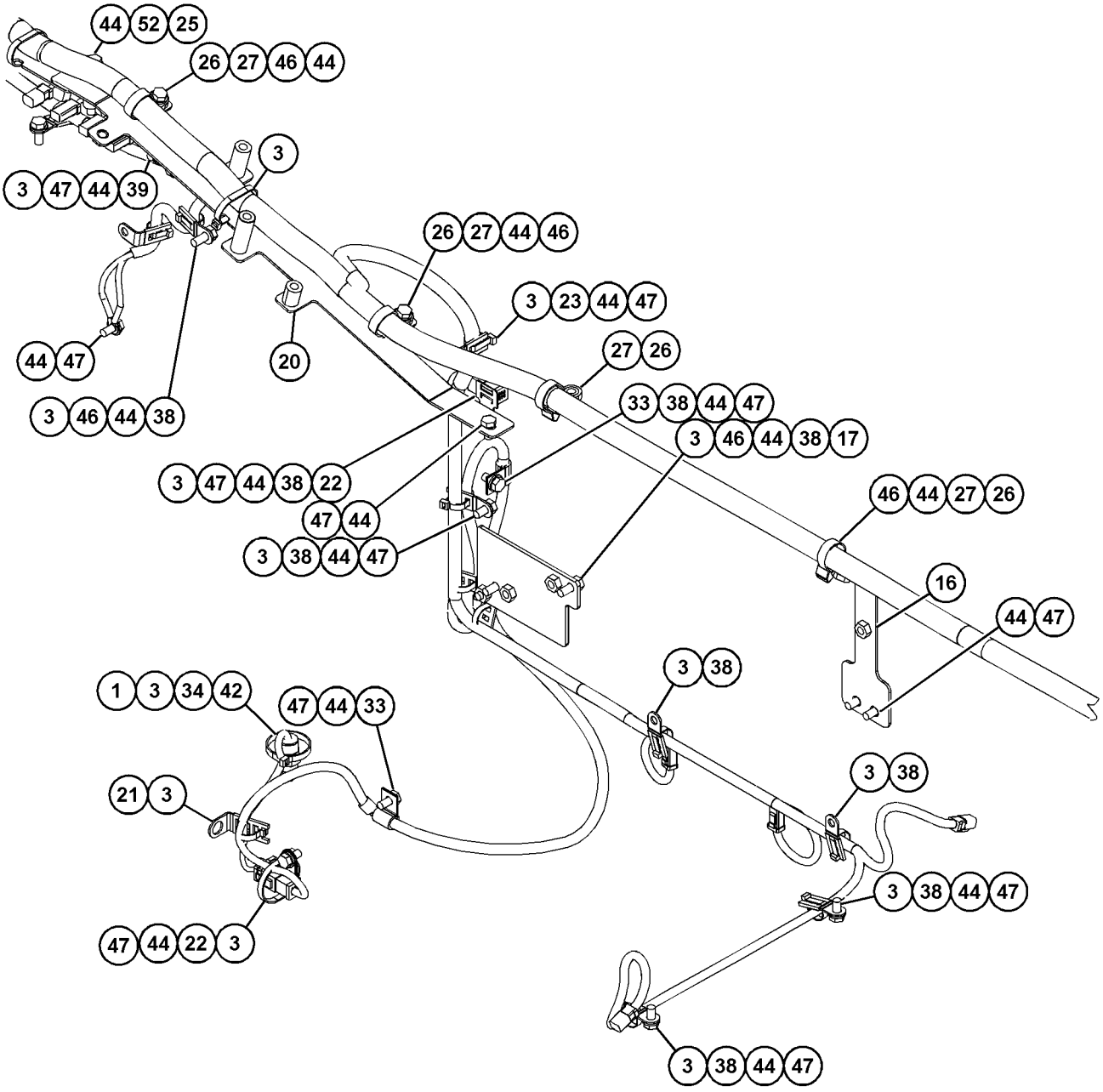

VIEW OF AREA B

GRAPHIC #2 g03818039

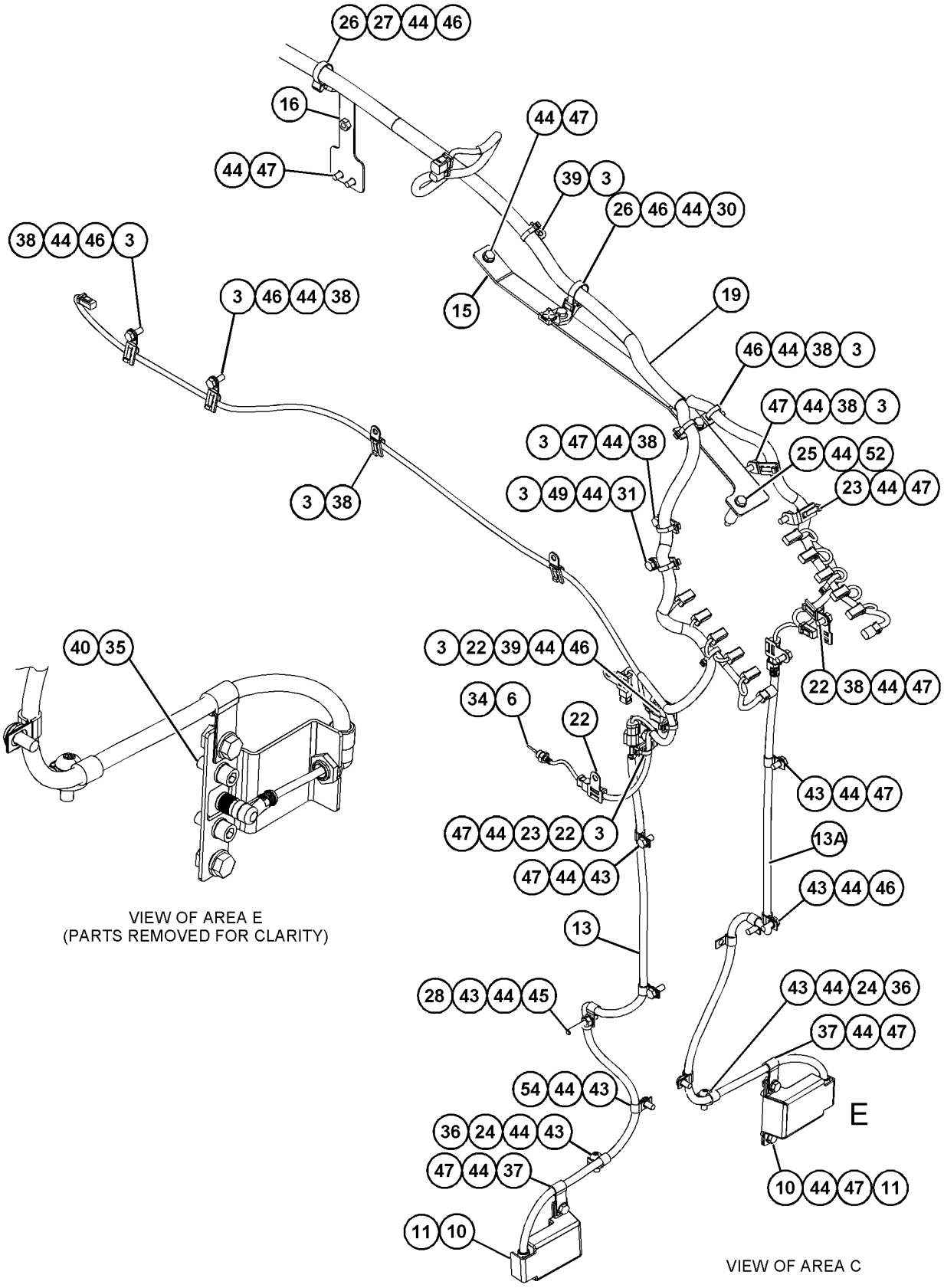

GRAPHIC #3 g03855547

370-8445 **WIRING GP-FRONT (*contd.*)** **i06214335**

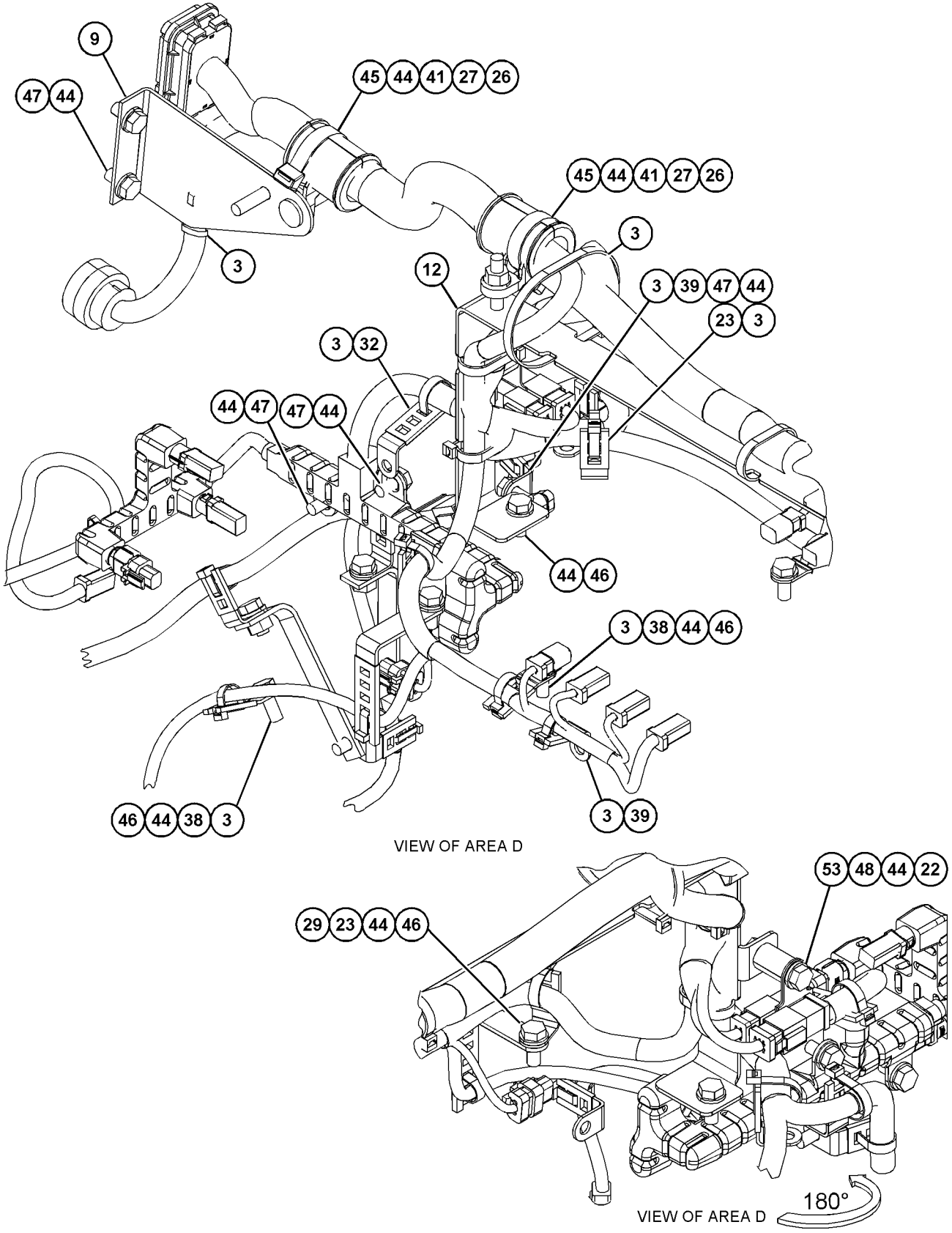

GRAPHIC #4 **<END>** g03818031

370-8457 WIRING GP-FRONT–FRONT IMPLEMENT

S/N: E9Y1-UP

PART OF 385-7557 CONTROL AR-HYDRAULIC

AN ATTACHMENT

SMCS-1408 **i06105195**

NOTE	REF NO	GRAPHIC REF	PART NUMBER	QTY	PART NAME 1 2 3 4 5 6 (PRODUCT LEVEL)	SEE PAGE
	1	1	**7K-1181**	22	STRAP-CABLE	
Y	2	1	**370-8458**	1	HARNESS AS-VALVE	193
	3	1	**204-2281**	2	STRAP-CABLE	
	4	1	**204-8000**	2	MOUNTING-CABLE TIE	
	5	1	**7V-6571**	2	GROMMET	

Y - SEPARATE ILLUSTRATION

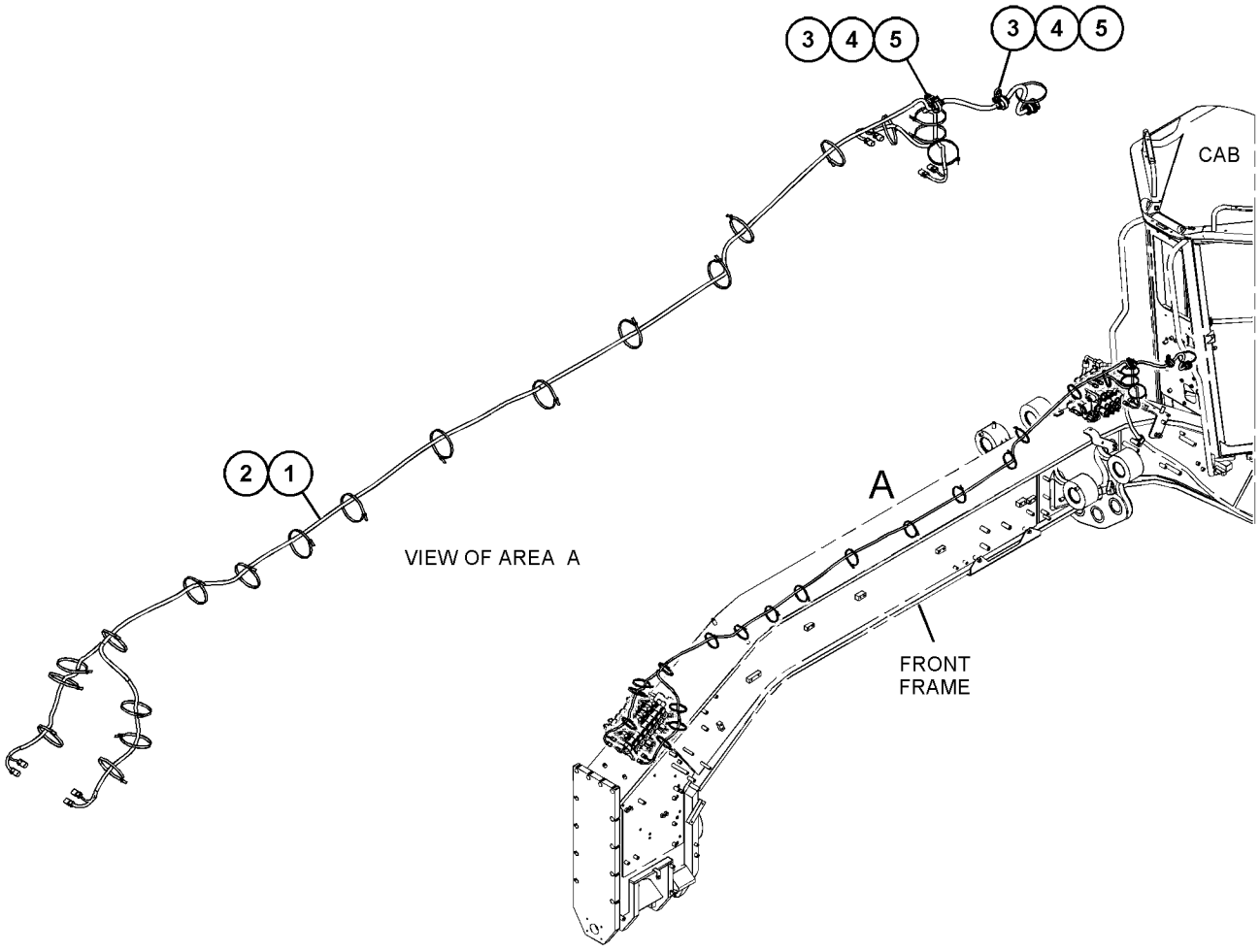

GRAPHIC #1 **<END>** g03813960

370-8452 WIRING GP-GRADE CONTROL

S/N: E9Y1-UP

PART OF 370-8430 ELECTRICAL AR

SMCS-1408 **i06105445**

NOTE	REF NO	GRAPHIC REF	PART NUMBER	QTY	PART NAME 1 2 3 4 5 6 (PRODUCT LEVEL)	SEE PAGE
	1	2	**6D-3033**	16	SCREW-SOCKET HEAD (4-40X0.5-IN)	
	2	1,2	**7K-1181**	21	STRAP-CABLE	
	3	1	**116-0118**	1	CLIP	
	4	2	**132-8487**	4	NUT-RING	
	5	2	**160-8708**	2	BRACKET AS	
					(EACH INCLUDES)	
M		2	**8T-3490**	1	NUT-WELD (M10X1.5-THD)	
	6	1	**169-5414**	1	CLIP	
Y	7	1	**450-2704**	1	HARNESS AS-SWITCH (BLADE CONTROL)	191
	8	2	**236-8826**	4	BOSS (1-1/8-18X0.708-IN)	
Y	9	1	**474-5410**	1	HARNESS AS-SENSOR (ROTATION SENSOR)	190
	10	1	**251-1133**	1	TUBE	
	11	1	**255-3482**	1	BRACKET	
	12	2	**288-5508**	1	BRACKET AS (LH)	
M		2	**8T-3612**	2	NUT-WELD (M8X1.25-THD)	
M		2	**9R-2672**	1	BOSS-THREADED (M10X1.5-THD)	
	13	2	**288-5509**	1	BRACKET AS (RH)	
M		2	**8T-3612**	2	NUT-WELD (M8X1.25-THD)	
M		2	**9R-2672**	1	BOSS-THREADED (M10X1.5-THD)	
	14	2	**308-9396**	2	BRACKET AS	
					(EACH INCLUDES)	
M		2	**8T-3490**	1	NUT-WELD (M10X1.5-THD)	
	15	1	**327-3871**	1	BRACKET (LH)	
	16	1	**327-3872**	1	BRACKET (RH)	
	17	2	**384-5624**	2	PLATE AS	
					(EACH INCLUDES)	
M		2	**8T-3490**	1	NUT-WELD (M10X1.5-THD)	
	18	1	**439-4708**	3	BRACKET AS	
					(EACH INCLUDES)	
M		1	**8T-3490**	2	NUT-WELD (M10X1.5-THD)	
Y	19	1	**474-5409**	1	HARNESS AS-CONTROL (BLADE, ROTATOR)	177
Y	20	1	**439-4710**	1	HARNESS AS-CONTROL (BLADE CONTROL)	177
	21	1	**130-5300**	2	CLIP	
M	22	1,2	**131-3539**	4	SCREW-FLAT HEAD (M8X1.25X30-MM)	
	23	1	**1J-6762**	4	BOLT-PLOW (3/4-10X3-IN)	
	24	1,2	**204-2281**	10	STRAP-CABLE	
	25	1,2	**204-8000**	9	MOUNTING-CABLE TIE	
	27	1	**226-4192**	8	WASHER-HARD (21.5X35X8-MM THK)	
	28	1	**2J-3506**	4	NUT-FULL (3/4-10-THD)	
	29	1	**4P-7428**	1	CLIP	
	31	1	**4P-7581**	5	CLIP	
	32	1	**4P-8134**	3	CLIP	
	33	2	**7V-6571**	2	GROMMET	
M	34	2	**7X-2563**	4	BOLT (M20X2.5X60-MM)	
	35	1	**8C-6857**	4	BOLT (3/4-10X2.75-IN)	
	36	2	**8M-2773**	10	CLIP	
	37	1,2	**8T-4121**	49	WASHER-HARD (11X21X2.5-MM THK)	
	38	1,2	**8T-4123**	12	WASHER (3.62X5.75X0.375-MM THK)	
M	39	2	**8T-4133**	1	NUT (M10X1.5-THD)	
M	40	1,2	**8T-4136**	17	BOLT (M10X1.5X25-MM)	
M	41	1,2	**8T-4137**	26	BOLT (M10X1.5X20-MM)	
M	42	1	**8T-4191**	1	BOLT (M10X1.5X16-MM)	
M	43	1	**8T-4192**	1	BOLT (M12X1.75X25-MM)	
	44	1	**8T-4223**	2	WASHER-HARD (13.5X25.5X3-MM THK)	
M	45	1	**8T-4244**	1	NUT (M12X1.75-THD)	
	47	1	**9X-8250**	1	CLIP	
	48	1	**474-5408**	1	BRACKET AS	

370-8452 **WIRING GP-GRADE CONTROL (*contd.*)** **i06105445**

NOTE	REF NO	GRAPHIC REF	PART NUMBER	QTY	PART NAME 1 2 3 4 5 6 (PRODUCT LEVEL)	SEE PAGE
M		1	**8T-3490**	1	NUT-WELD (M10X1.5-THD)	
	49	1	**448-1893**	1	BRACKET AS	
M		1	**8T-3490**	2	NUT-WELD (M10X1.5-THD)	
M	50	1	**344-5675**	1	NUT (M10X1.5-THD)	
	51	1	**343-2389**	2	CLIP	
M	52	1	**8T-4195**	3	BOLT (M10X1.5X30-MM)	
	53	1	**8M-2770**	7	CLIP	

M - METRIC PART
Y - SEPARATE ILLUSTRATION

370-8452 **WIRING GP-GRADE CONTROL (*contd.*)** **i06105445**

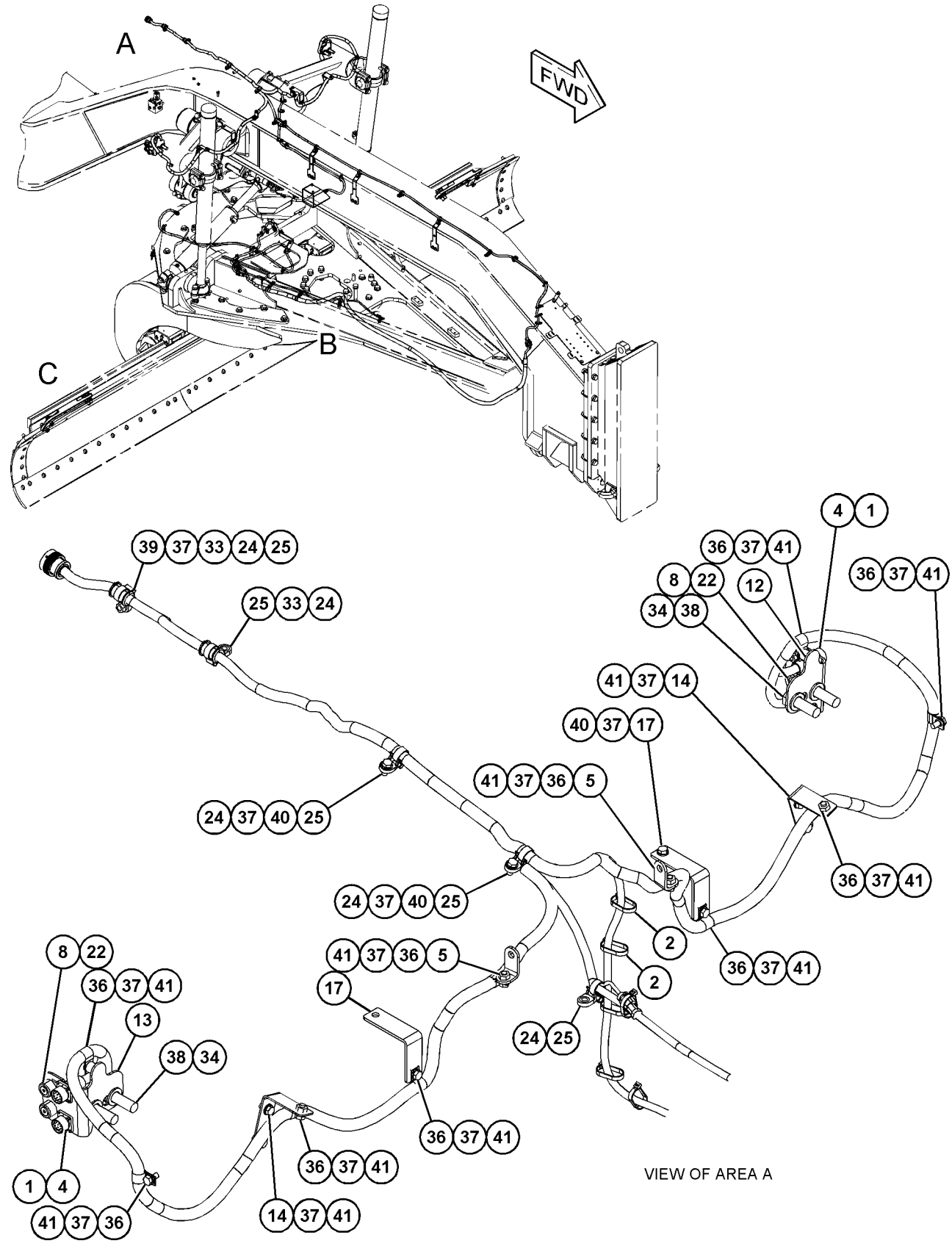

GRAPHIC #1

g03819126

370-8452 **WIRING GP-GRADE CONTROL (*contd.*)** **i06105445**

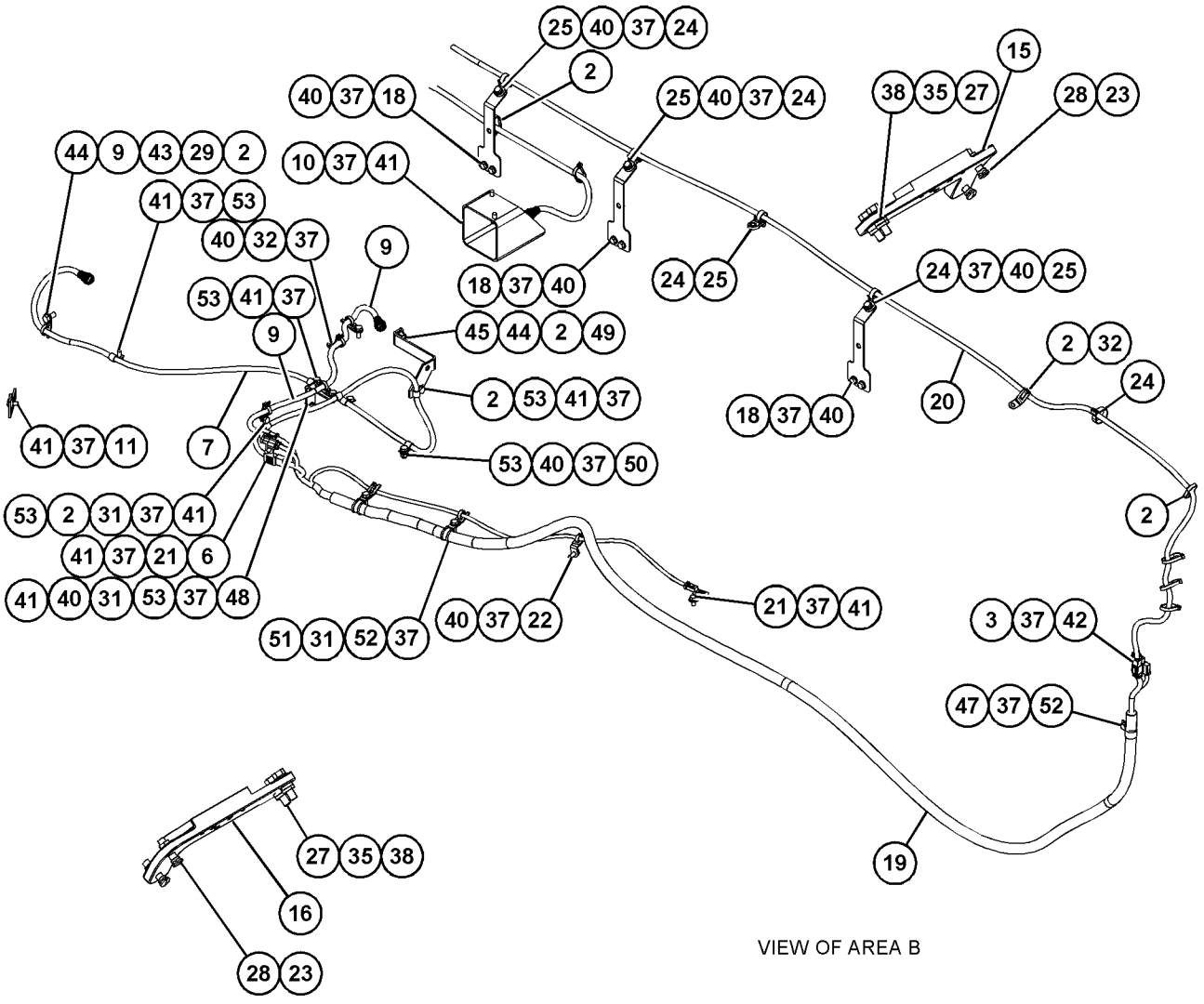

GRAPHIC #2 **<END>** g03819141

370-8520 WIRING GP-LUBRICATION

S/N: E9Y1-UP
PART OF 385-7552 LUBRICATION AR-AUTOMATIC
AN ATTACHMENT

SMCS-1408 **i06125965**

NOTE	REF NO	GRAPHIC REF	PART NUMBER	QTY	PART NAME 1 2 3 4 5 6 (PRODUCT LEVEL)	SEE PAGE
	1	1	**7K-1181**	1	STRAP-CABLE	
	2	1	**221-3405**	1	SENSOR GP-PRESSURE (AUTOLUBE)	
		1	**194-5226**	3	WIRE AS (16-GA)	
					—OR—	
		1	**194-5227**	3	WIRE AS (14-GA)	
		1	**155-2260**	1	KIT-CONNECTING PLUG (3-PIN)	
					(INCLUDES PLUG AS, WEDGES & INTERFACE SEAL)	
	3	1	**3J-1907**	1	SEAL-O-RING	
	4	1	**4P-7581**	1	CLIP	
	5	1	**8T-4121**	1	WASHER-HARD (11X21X2.5-MM THK)	
M	6	1	**8T-4137**	1	BOLT (M10X1.5X20-MM)	

M - METRIC PART

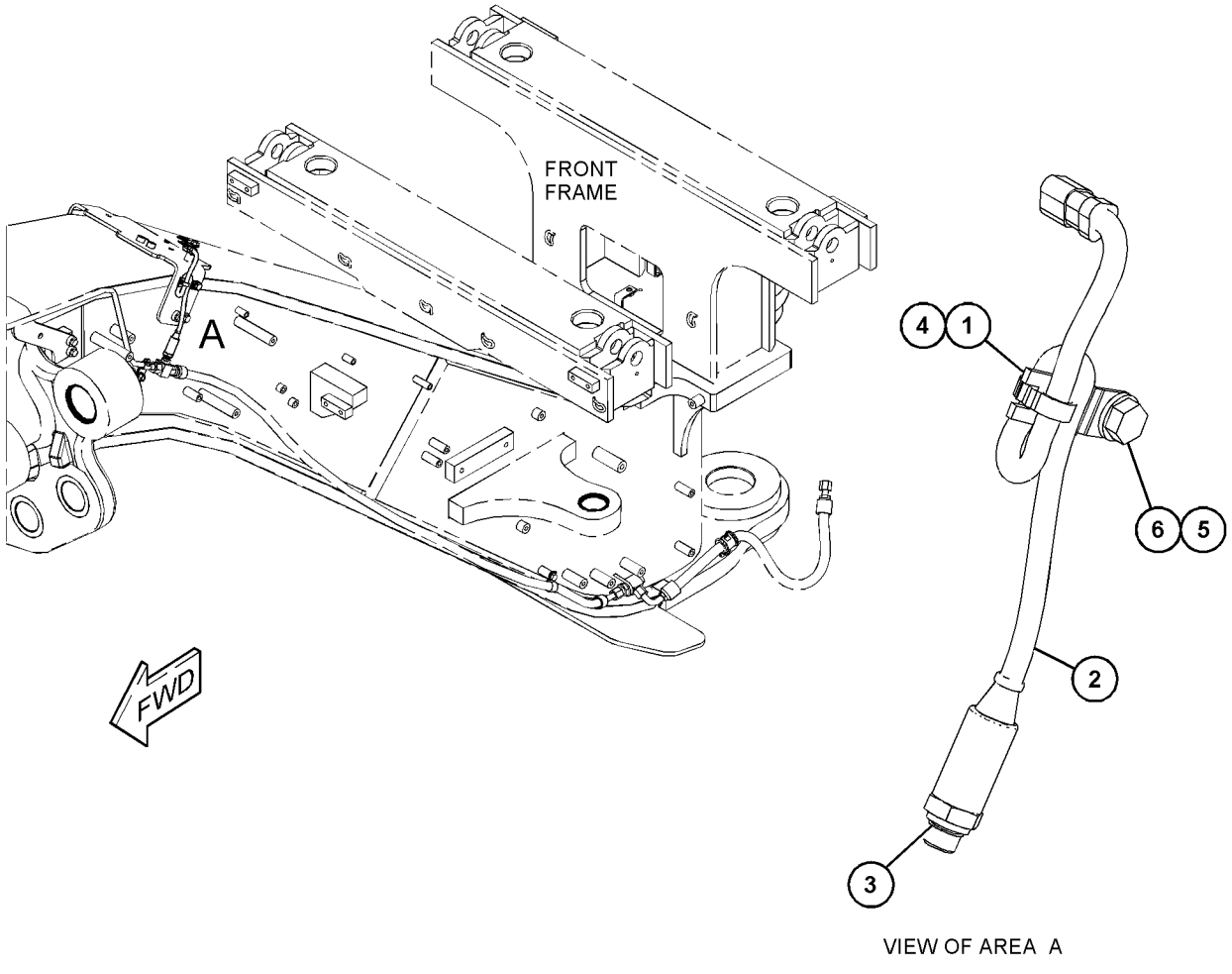

VIEW OF AREA A

GRAPHIC #1 **<END>** g03819881

370-8491 WIRING GP-PANEL

S/N: E9Y1-UP

PART OF 370-8470 BATTERY & WIRING GP

SMCS-1408, 1417, 1422 **i06093459**

NOTE	PART NUMBER	QTY	PART NAME 1 2 3 4 5 6 (PRODUCT LEVEL)	SEE PAGE
	335-2318	1	BLOCK AS-FUSE	
	1H-3244	1	LOCKWASHER	
M	**5C-2890**	1	NUT (M6X1-THD)	
	8T-4205	1	WASHER-HARD (7.2X14.5X2-MM THK)	
	306-0350	1	COVER	
	306-0351	1	SEAL-COVER	
	113-8490	3	FUSE (10-AMPERE)	
	113-8491	3	FUSE (15-AMPERE)	
	113-8492	2	FUSE (20-AMPERE)	
	124-3548	2	FUSE (30-AMPERE)	
	177-9648	1	KIT-CONNECTING PLUG (2-PIN)	
			(INCLUDES PLUG AS & WEDGE)	
	102-8802	1	KIT-RECEPTACLE (2-PIN)	
			(INCLUDES RECEPTACLE AS & WEDGE)	
	8T-8729	2	PIN-CONNECTOR (16-GA TO 18-GA)	
	197-7261	1	PLUG AS-CONNECTOR (19-PIN)	
	361-2944	1	PLUG AS-CONNECTOR	
	7R-2751	17	PLUG-CONNECTOR (1-PIN)	
	7G-7920	1	PLUG-SEAL	
	8T-8737	8	PLUG-SEAL	
	248-2841	3	RELAY AS (24-VOLT)	
	425-4513	1	RETAINER	
	128-4123	6	SEAL	
	128-5016	5	SEAL-CABLE	
	7R-2750	7	SEAL-CONNECTOR	
	7T-0094	4	SOCKET-CONNECTOR (12-GA TO 14-GA)	
	8T-8730	10	SOCKET-CONNECTOR (16-GA TO 18-GA)	
	9W-0844	3	SOCKET-CONNECTOR (14-GA TO 16-GA)	
	366-7775	2	SOCKET-CONNECTOR	
	202-0313	5	TERMINAL AS (18-GA)	
			(EACH INCLUDES)	
	128-5016	1	SEAL-CABLE	
	202-0314	12	TERMINAL AS (14-GA)	
			(EACH INCLUDES)	
	128-4123	1	SEAL	
	202-0315	1	TERMINAL AS	
	128-4123	1	SEAL	
	9G-4343	1	TERMINAL-RING (4-GA, 1/4-IN SCREW)	
	5P-3454	1	TERMINAL-RING (4-GA, 5/16-IN SCREW)	
	2L-8076	1	TERMINAL-RING (14-GA TO 16-GA, NO. 10 SCREW)	
BE	**125-7874**		TUBE-HEAT SHRINK (5.72-MM DIA) (10-CM)	

B - USE AS REQUIRED
E - ORDER BY THE CENTIMETER
M - METRIC PART

<END>

448-9280 WIRING GP-PANEL

S/N: E9Y1-UP

PART OF 375-3405 OPTION AR-LADDER, 375-3406 PLATFORM AR AN ATTACHMENT

SMCS-1408, 1417, 1422

i06140553

NOTE	REF NO	GRAPHIC REF	PART NUMBER	QTY	PART NAME 1 2 3 4 5 6 (PRODUCT LEVEL)	SEE PAGE
	1	1	**3E-5169**	1	GUARD-SWITCH	
	2	1	**7K-1181**	3	STRAP-CABLE	
	3	1	**109-0361**	1	FILM-INSTRUCTION (ENGINE SHUTDOWN)	
	4	1	**353-4515**	1	SWITCH AS-TOGGLE (GROUND LEVEL SHUTDOWN)	
		1	**102-8803**	1	KIT-RECEPTACLE (3-PIN)	
					(INCLUDES RECEPTACLE AS & WEDGE)	
		1	**3E-3371**	1	WEDGE-RECEPTACLE LOCK (3-PIN)	
		1	**8T-8729**	3	PIN-CONNECTOR (16-GA TO 18-GA)	
E		1	**112-4550**		SLEEVE (19-CM)	
	5	1	**448-9279**	1	HARNESS AS-OPERATOR CONTROLS	
		1	**102-8803**	1	KIT-RECEPTACLE (3-PIN)	
					(INCLUDES RECEPTACLE AS & WEDGE)	
		1	**3E-3371**	1	WEDGE-RECEPTACLE LOCK (3-PIN)	
		1	**8T-8729**	3	PIN-CONNECTOR (16-GA TO 18-GA)	
		1	**8T-8730**	3	SOCKET-CONNECTOR (16-GA TO 18-GA)	
		1	**155-2260**	1	KIT-CONNECTING PLUG (3-PIN)	
					(INCLUDES PLUG AS, WEDGE(S) & INTERFACE SEAL)	
	6	1	**448-9281**	1	PLATE AS	
	7	1	**130-5300**	1	CLIP	
	8	1	**4P-8134**	1	CLIP	
	9	1	**8T-4121**	4	WASHER-HARD (11X21X2.5-MM THK)	
M	10	1	**8T-4133**	1	NUT (M10X1.5-THD)	
M	11	1	**8T-4191**	1	BOLT (M10X1.5X16-MM)	
M	12	1	**8T-4196**	2	BOLT (M10X1.5X35-MM)	

E - ORDER BY THE CENTIMETER
M - METRIC PART

448-9280 **WIRING GP-PANEL (*contd.*)** **i06140553**

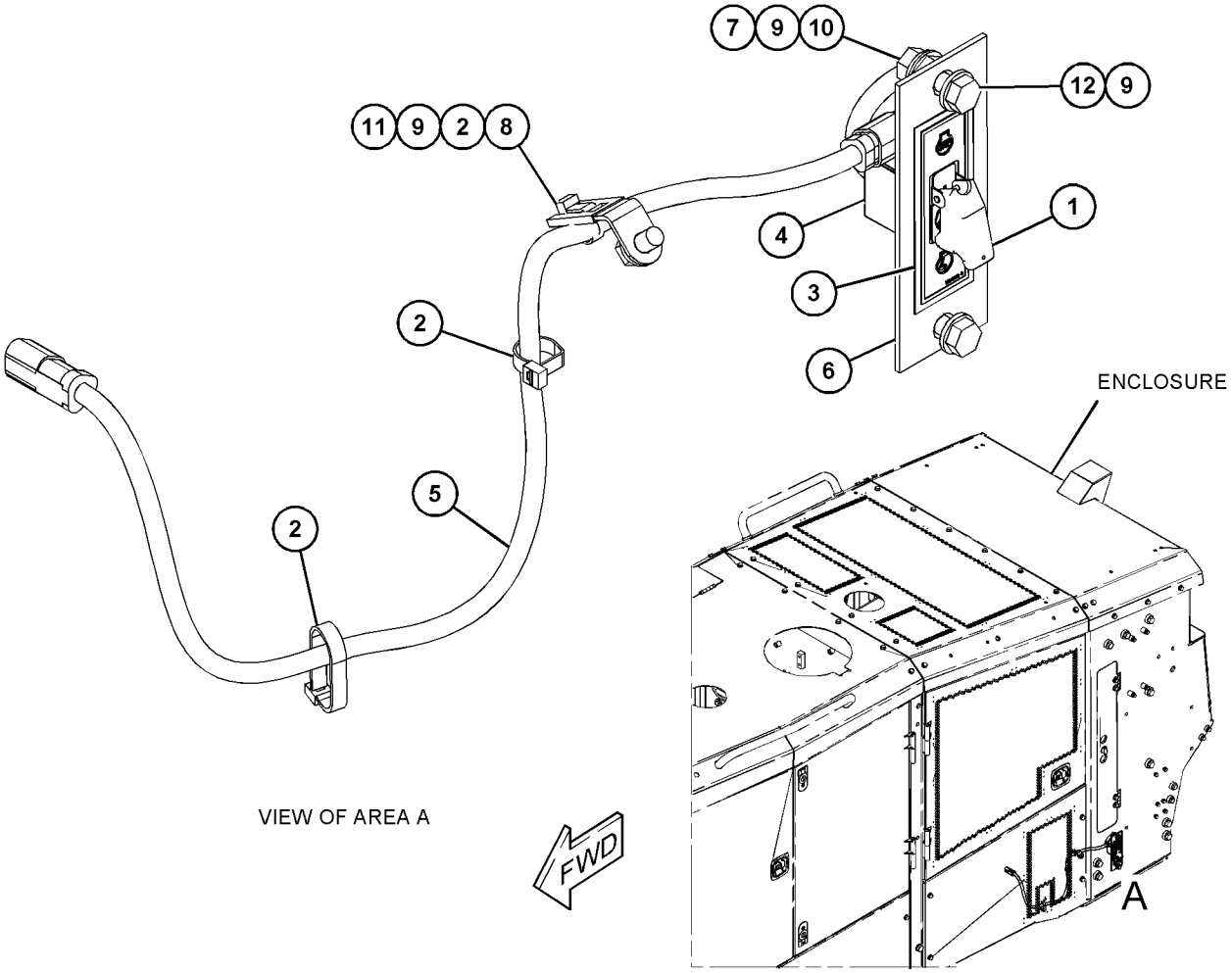

GRAPHIC #1 **<END>** g03833847

420-9070 WIRING GP-REAR–RIGHT SIDE, REAR

S/N: E9Y1-UP

PART OF 370-8430 ELECTRICAL AR

SMCS-1408 **i06103291**

NOTE	REF NO	GRAPHIC REF	PART NUMBER	QTY	PART NAME 1 2 3 4 5 6 (PRODUCT LEVEL)	SEE PAGE
	1	1	**7K-1181**	2	STRAP-CABLE	
	2	1	**226-6583**	1	BRACKET AS	
	3	1	**370-8542**	2	PLATE	
Y	4	1	**439-4712**	1	HARNESS AS-REAR LIGHTING (REAR FRAME)	186
Y	5	1	**443-8386**	1	HARNESS AS-REAR LIGHTING (RIGHT SIDE, REAR)	187
	6	1	**130-5300**	1	CLIP	
	7	1	**132-5789**	1	CLIP (LADDER)	
	8	1	**204-2281**	18	STRAP-CABLE	
	9	1	**204-8000**	16	MOUNTING-CABLE TIE	
	10	1	**302-3908**	1	SPACER (11X20X30-MM THK)	
	11	1	**381-2621**	2	MOUNTING-CABLE TIE	
	12	1	**4P-8134**	1	CLIP	
	13	1	**8T-4121**	23	WASHER-HARD (11X21X2.5-MM THK)	
M	14	1	**8T-4136**	13	BOLT (M10X1.5X25-MM)	
M	15	1	**8T-4137**	4	BOLT (M10X1.5X20-MM)	
M	16	1	**8T-4186**	1	BOLT (M10X1.5X40-MM)	
M	17	1	**8T-4195**	3	BOLT (M10X1.5X30-MM)	
M	18	1	**8T-4196**	1	BOLT (M10X1.5X35-MM)	
M	19	1	**8T-6466**	1	BOLT (M10X1.5X60-MM)	

M - METRIC PART
Y - SEPARATE ILLUSTRATION

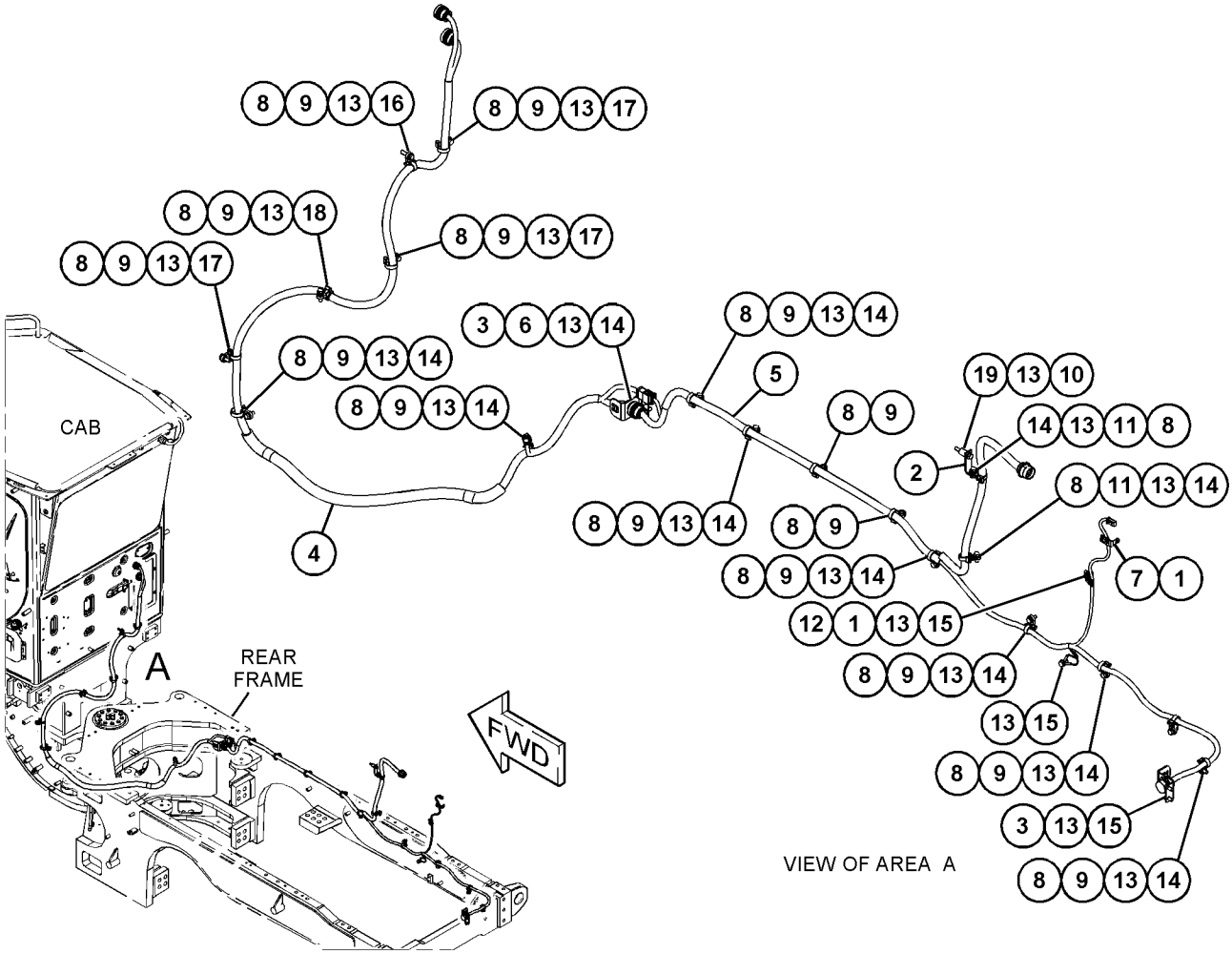

GRAPHIC #1 **<END>** g03813542

420-9085 WIRING GP-REAR—SERVICE CENTER

S/N: E9Y1-UP

PART OF 370-8430 ELECTRICAL AR

SMCS-1408 **i06140523**

NOTE	REF NO	GRAPHIC REF	PART NUMBER	QTY	PART NAME 1 2 3 4 5 6 (PRODUCT LEVEL)	SEE PAGE
	1	1	**7K-1181**	25	STRAP-CABLE	
	2	1	**256-6453**	1	SENSOR-TEMPERATURE (AMBIENT AIR)	
	3	1	**261-7991**	1	GROMMET	
	4	1	**269-4983**	1	BRACKET AS	
	5	1	**320-3063**	1	SENSOR GP-PRESSURE (AIR FILTER)	
	6	1	**344-7391**	1	SENSOR GP-PRESSURE (BRAKE CHARGE)	
	6A	1	**344-7391**	1	SENSOR GP-PRESSURE (SERVICE BRAKE)	
Y	7	1	**430-9835**	1	HARNESS AS-SOLENOID (BRAKE)	191
Y	8	1	**439-4715**	1	HARNESS AS-REAR (SERVICE LAMP)	183
	9	1	**459-1691**	1	BRACKET AS	
	10	1	**459-1697**	1	BRACKET AS	
	11	1	**130-5300**	6	CLIP	
	12	1	**132-5789**	3	CLIP	
	13	1	**198-4777**	1	WASHER-HARD (11X25X10-MM THK)	
	14	1	**204-2281**	4	STRAP-CABLE	
	15	1	**204-8000**	4	MOUNTING-CABLE TIE	
	16	1	**206-5017**	1	SPACER (11X20X5-MM THK)	
	17	1	**228-7100**	1	SEAL-O-RING	
	18	1	**277-1873**	1	CLIP	
	19	1	**309-4314**	1	CLIP	
	20	1	**352-3964**	1	CLIP	
	21	1	**3J-1907**	2	SEAL-O-RING	
	22	1	**3K-0360**	1	SEAL-O-RING	
	23	1	**4P-7429**	3	CLIP	
	24	1	**4P-7581**	3	CLIP	
M	25	1	**7X-0818**	1	BOLT (M8X1.25X45-MM)	
	26	1	**8T-4121**	14	WASHER-HARD (11X21X2.5-MM THK)	
M	27	1	**8T-4136**	9	BOLT (M10X1.5X25-MM)	
M	28	1	**8T-4185**	1	BOLT (M10X1.5X50-MM)	
M	29	1	**8T-4191**	2	BOLT (M10X1.5X16-MM)	
M	30	1	**8T-4195**	1	BOLT (M10X1.5X30-MM)	
M	31	1	**8T-4196**	1	BOLT (M10X1.5X35-MM)	
	32	1	**8T-4224**	1	WASHER-HARD (8.8X16X2-MM THK)	
	33	1	**9G-7101**	2	SPACER (10.5X20X30-MM THK)	

M - METRIC PART
Y - SEPARATE ILLUSTRATION

420-9085 **WIRING GP-REAR (*contd.*)** **i06140523**

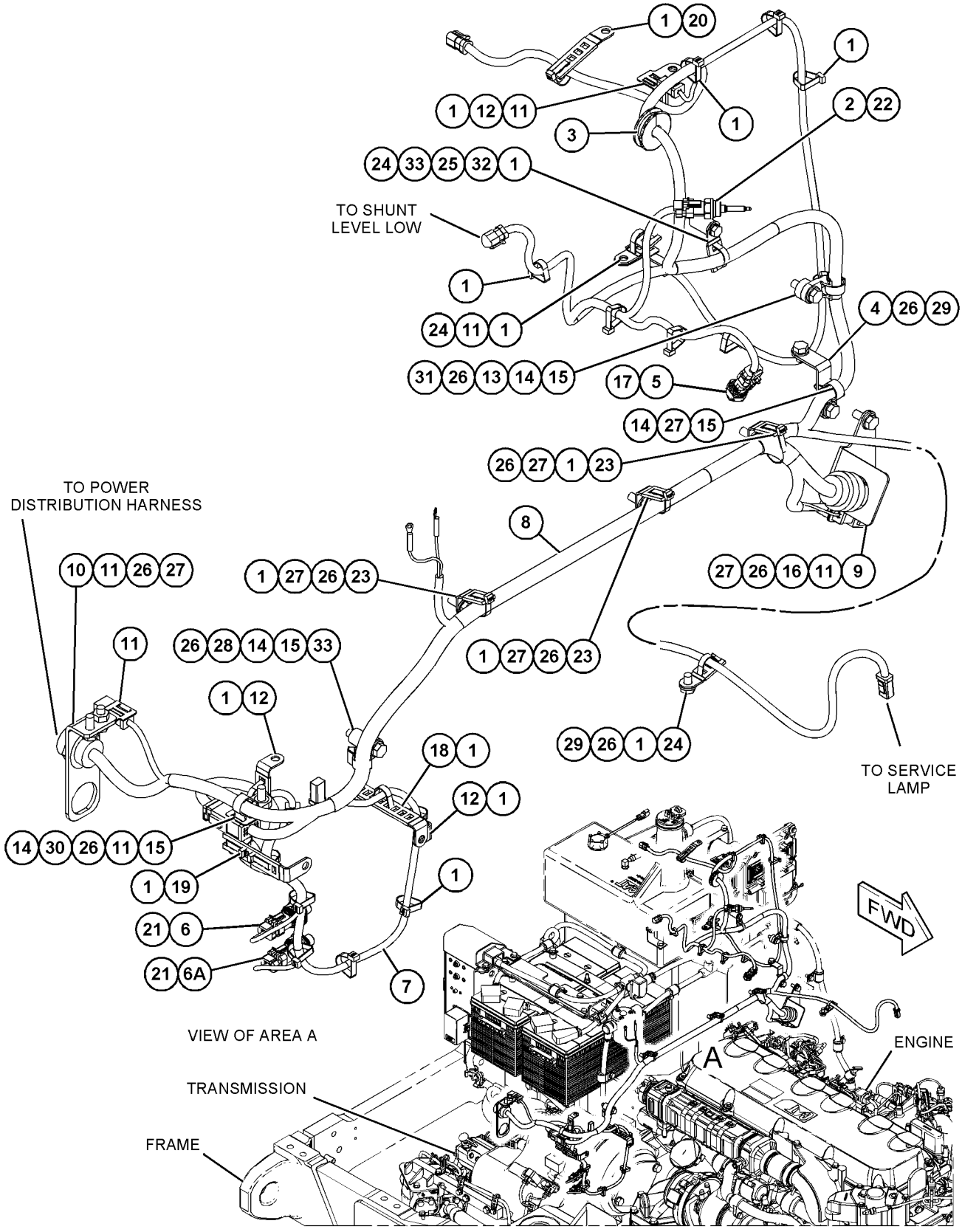

GRAPHIC #1 **<END>** g03839497

420-9090 WIRING GP-REAR

S/N: E9Y1-UP

PART OF 370-8430 ELECTRICAL AR

SMCS-1408 **i06190829**

NOTE	REF NO	GRAPHIC REF	PART NUMBER	QTY	PART NAME 1 2 3 4 5 6 (PRODUCT LEVEL)	SEE PAGE
	1	2	**3S-2093**	1	STRAP-CABLE	
	2	1,2,3	**7K-1181**	39	STRAP-CABLE	
	3	3	**118-6878**	1	BRACKET AS	
	4	2	**127-9323**	1	BRACKET AS	
	5	2	**149-6371**	1	SWITCH AS-PRESSURE (COMPRESSOR, LOW SIDE)	
		2	**102-8802**	1	KIT-RECEPTACLE (2-PIN)	
					(INCLUDES RECEPTACLE AS & WEDGE)	
		2	**8T-8729**	2	PIN-CONNECTOR (16-GA TO 18-GA)	
	6	1	**166-0690**	1	BLOCK AS-MOUNTING	
	7	2	**217-4590**	1	BRACKET AS	
	8	1	**287-6155**	1	LEVER	
	9	2	**288-5535**	1	BRACKET AS	
	10	3	**296-5270**	1	SENSOR GP-PRESSURE (MAIN HYDRAULIC PUMP)	
	11	1	**301-5180**	1	LINK AS	
		1	**6F-0612**	1	NUT-JAM (1/4-28-THD)	
		1	**8S-7048**	1	ROD END	
		1	**9L-3334**	1	NUT-PLATED (1/4-28-THD, LH)	
		1	**036-7232**	1	ROD END	
	12	3	**319-5123**	1	BRACKET AS	
M		3	**8T-3490**	1	NUT-WELD (M10X1.5-THD)	
	13	3	**344-7389**	1	SENSOR GP-PRESSURE (TRANSMISSION OIL)	
	14	2	**355-3148**	1	SWITCH AS-PRESSURE (HIGH, LOW) (COMPRESSOR, HIGH SIDE)	
		2	**102-8802**	1	KIT-RECEPTACLE (2-PIN)	
					(INCLUDES RECEPTACLE AS & WEDGE)	
		2	**8T-8729**	2	PIN-CONNECTOR (16-GA TO 18-GA)	
	15	1	**373-4328**	1	SENSOR GP-POSITION (ROTARY) (ARTICULATION)	
	16	2	**430-9822**	1	PLATE AS	
	17	2	**430-9823**	1	PLATE	
	18	2	**430-9825**	2	PLATE AS	
	19	1	**444-0558**	1	PLATE	
	20	1	**444-0561**	1	BRACKET AS	
Y	21	3	**459-1689**	1	HARNESS AS-REAR (ACCESS LIGHTS)	184
Y	22	1	**459-1690**	1	HARNESS AS-FUEL TANK	181
	23	2	**459-1693**	1	PLATE AS	
Y	24	2	**459-1694**	1	HARNESS AS-THERMOSTAT	192
Y	25	2	**459-1700**	1	HARNESS AS-REAR (MAIN)	185
Y	26	1	**459-1701**	1	HARNESS AS-REAR (HYDRAULIC FAN, PILOT)	186
	27	1,2,3	**130-5300**	11	CLIP	
	28	1	**132-1806**	1	STRAP AS-GROUND	
	29	1,3	**132-5789**	5	CLIP	
	30	2	**133-6934**	1	SPACER (11X20X25-MM THK)	
	31	3	*148-8309*	1	ADAPTER AS	
		3	**2P-8421**	1	ADAPTER-O-RING	
		3	**3D-2824**	1	SEAL-O-RING	
	32	1	**198-4777**	1	WASHER-HARD (11X25X10-MM THK)	
	33	2	**199-7854**	2	SPACER (11.8X20X45-MM THK)	
	34	3	**1J-9671**	1	SEAL-O-RING	
	35	1,2,3	**204-2281**	27	STRAP-CABLE	
	36	1,2,3	**204-8000**	25	MOUNTING-CABLE TIE	
	37	1	**2F-7888**	2	SCREW-MACHINE (10-32X1.25-IN)	
M	38	1,2	**344-5675**	4	NUT (M10X1.5-THD)	
	39	2	**352-3964**	1	CLIP	
	40	2	**352-3968**	1	CLIP	
	41	3	**352-3969**	4	CLIP	
	42	2,3	**353-7957**	5	GROMMET	
	43	3	**366-2401**	1	GROMMET	
	44	1	**381-2621**	1	MOUNTING-CABLE TIE	

420-9090 **WIRING GP-REAR (*contd.*)** **i06190829**

NOTE	REF NO	GRAPHIC REF	PART NUMBER	QTY	PART NAME 1 2 3 4 5 6 (PRODUCT LEVEL)	SEE PAGE
	45	3	**397-9301**	1	WASHER-HARD (11.5X20X15-MM THK)	
	46	1	**3B-4619**	1	PIN-COTTER	
	47	3	**3J-1907**	1	SEAL-O-RING	
	48	1	**4B-4274**	2	WASHER (5.5X13X1.2-MM THK)	
	49	1	**4M-5281**	2	BOLT (1/4-20X0.75-IN)	
	50	1,2,3	**4P-7581**	8	CLIP	
	51	1,2,3	**4P-8134**	5	CLIP	
	52	3	**5G-3676**	2	GROMMET	
	53	1	**6V-0894**	1	SEAL-O-RING	
	54	2	**6V-1249**	2	GROMMET (22-MM ID)	
M	55	1	**6V-8490**	1	BOLT (M6X1X25-MM)	
	56	1	**7G-7053**	1	GROMMET	
	57	1,2,3	**8T-4121**	58	WASHER-HARD (11X21X2.5-MM THK)	
M	58	1,2,3	**8T-4136**	24	BOLT (M10X1.5X25-MM)	
M	59	1,2,3	**8T-4137**	18	BOLT (M10X1.5X20-MM)	
M	60	2	**8T-4138**	4	BOLT (M6X1X20-MM)	
M	61	2	**8T-4182**	1	BOLT (M10X1.5X45-MM)	
M	62	3	**8T-4191**	1	BOLT (M10X1.5X16-MM)	
M	63	2,3	**8T-4195**	8	BOLT (M10X1.5X30-MM)	
	64	1	**8T-4205**	4	WASHER-HARD (7.2X14.5X2-MM THK)	
M	65	2	**8T-5005**	2	BOLT (M10X1.5X70-MM)	
	66	2	**9X-7378**	2	SEAL-O-RING	
	67	2	**9X-8256**	4	WASHER (6.6X12X2-MM THK)	

M - METRIC PART
Y - SEPARATE ILLUSTRATION

420-9090 **WIRING GP-REAR (*contd.*)** **i06190829**

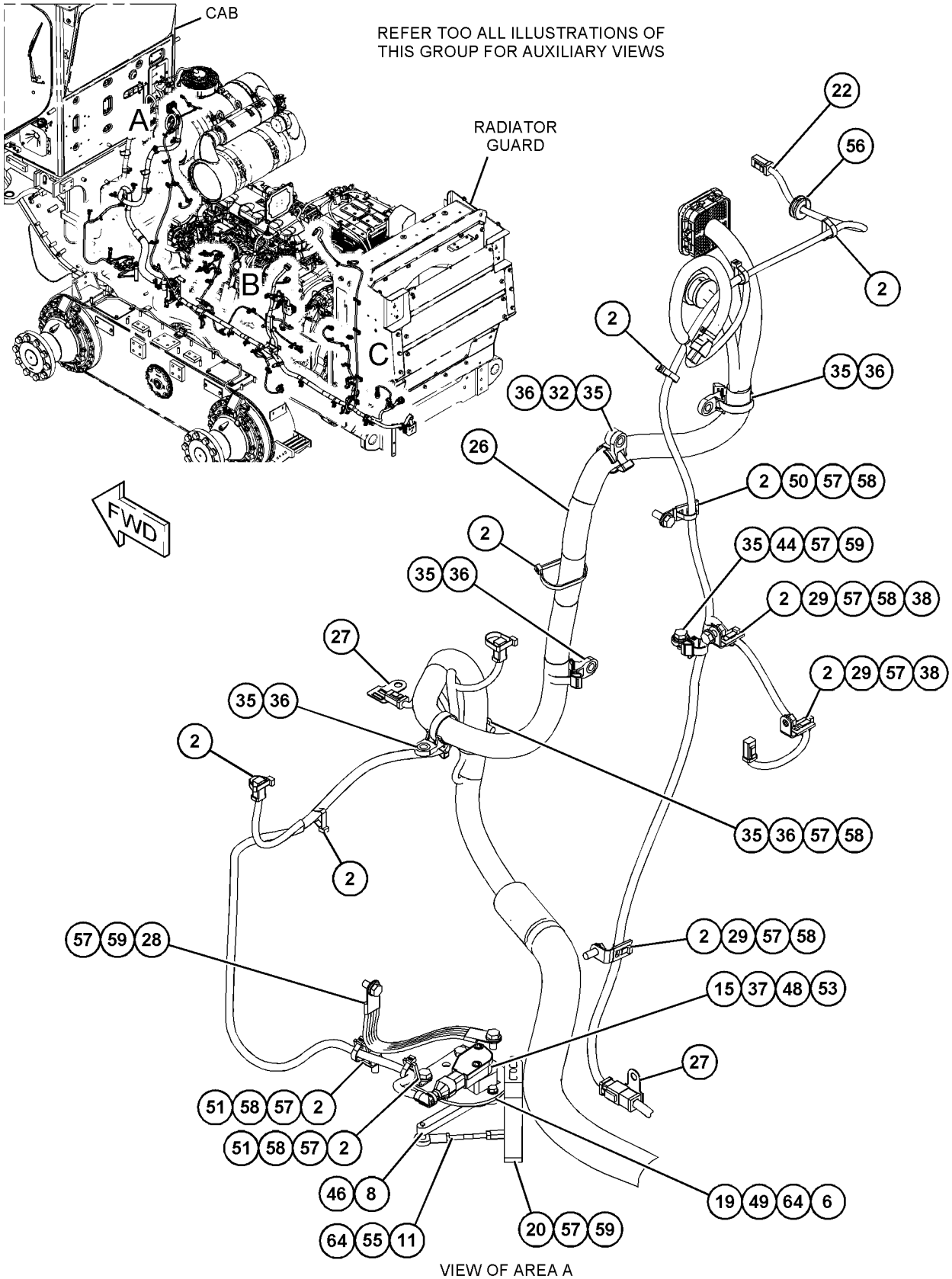

VIEW OF AREA A

GRAPHIC #1 g03838871

420-9090 **WIRING GP-REAR (*contd.*)** **i06190829**

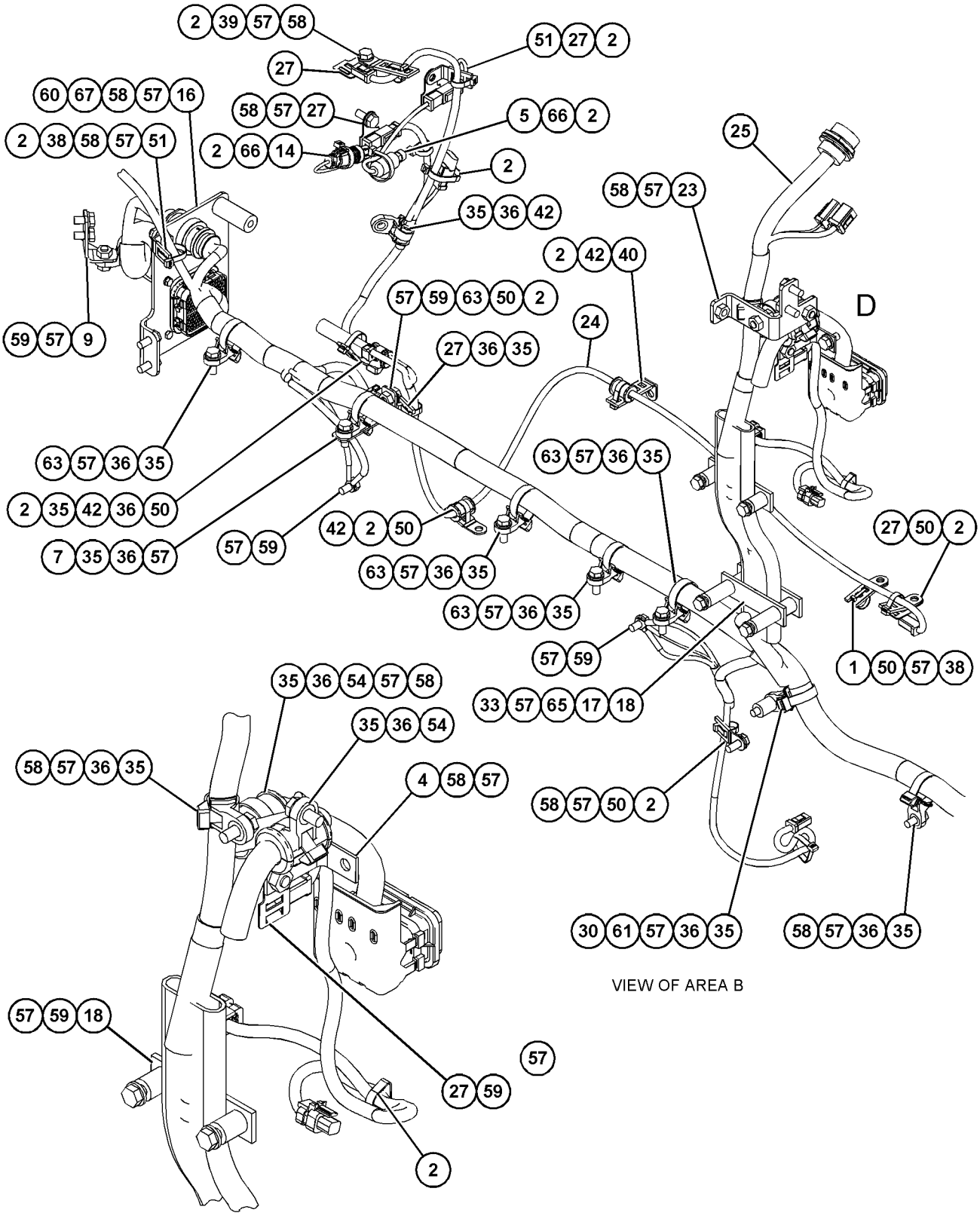

VIEW OF AREA B

VIEW OF AREA D
(PARTS REMOVED FOR CLARITY)

GRAPHIC #2 g03843886

420-9090 **WIRING GP-REAR (*contd.*)** **i06190829**

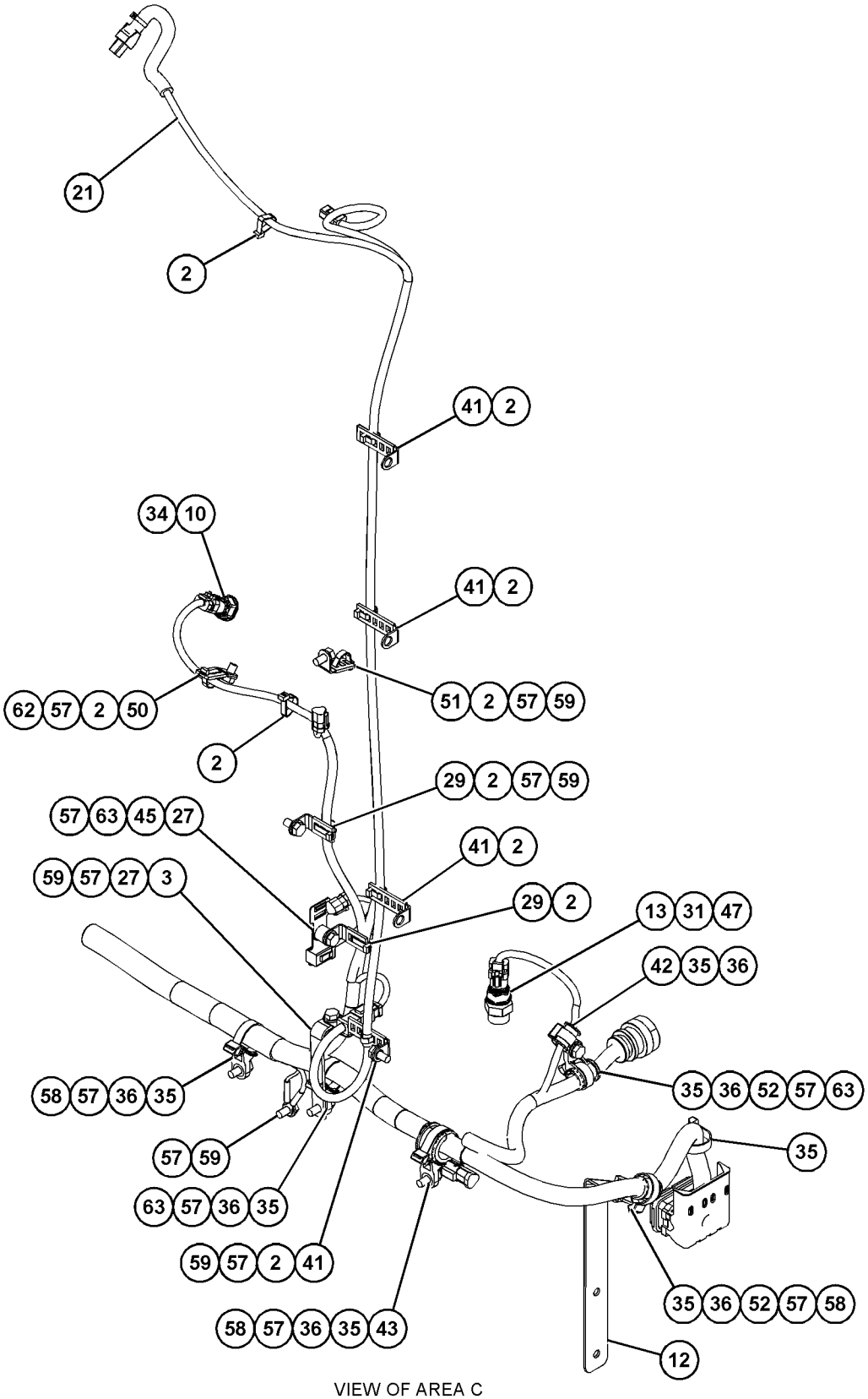

VIEW OF AREA C

GRAPHIC #3 **<END>** g03838873

475-4930 WIRING GP-REAR

S/N: E9Y1-UP
PART OF 479-7338, 479-7339 LIGHTING AR-ROADING
AN ATTACHMENT

SMCS-1408 **i06139524**

NOTE	REF NO	GRAPHIC REF	PART NUMBER	QTY	PART NAME 1 2 3 4 5 6 (PRODUCT LEVEL)	SEE PAGE
	1	1	**379-3416**	2	LAMP GP-SIGNAL (BACKUP)	
					(EACH INCLUDES)	
		1	**8T-8729**	2	PIN-CONNECTOR (16-GA TO 18-GA)	
		1	**102-8802**	1	KIT-RECEPTACLE (2-PIN)	
					(INCLUDES RECEPTACLE AS & WEDGE)	
	2	1	**7K-1181**	19	STRAP-CABLE	
	3	1	**213-9100**	1	ALARM AS (BACKUP)	
		1	**102-8802**	1	KIT-RECEPTACLE (2-PIN)	
					(INCLUDES RECEPTACLE AS & WEDGE)	
		1	**8T-8729**	2	PIN-CONNECTOR (16-GA TO 18-GA)	
E		1	**9X-1813**		SLEEVE (29-CM)	
	4	1	**395-2113**	2	LAMP GP-SIGNAL (STOP, TAIL, TURN)	
					(EACH INCLUDES)	
		1	**8T-8729**	4	PIN-CONNECTOR (16-GA TO 18-GA)	
		1	**102-8804**	1	KIT-RECEPTACLE (4-PIN)	
					(INCLUDES RECEPTACLE AS & WEDGE)	
Y	5	1	**444-0560**	1	HARNESS AS-REAR (RADIATOR)	184
	6	1	**475-4929**	1	PLATE AS (LH)	
	7	1	**479-6062**	1	BRACKET AS (LH)	
		1	**130-5300**	2	CLIP	
	8	1	**479-6063**	1	PLATE AS (RH)	
	9	1	**479-6064**	1	BRACKET AS (RH)	
		1	**130-5300**	2	CLIP	
Y	10	1	**479-6066**	2	HARNESS AS-LIGHTING (STOP, TAIL, TURN, BACKUP)	182
	11	1	**130-5300**	4	CLIP	
M	12	1	**344-5675**	2	NUT (M10X1.5-THD)	
	13	1	**4P-7581**	2	CLIP	
	14	1	**4P-8134**	2	CLIP	
M	15	1	**5C-2890**	24	NUT (M6X1-THD)	
	16	1	**5P-4116**	4	WASHER-HARD (8.8X20.5X2-MM THK)	
	17	1	**7G-7053**	2	GROMMET	
	18	1	**8T-4121**	8	WASHER-HARD (11X21X2.5-MM THK)	
M	19	1	**8T-4136**	4	BOLT (M10X1.5X25-MM)	
M	20	1	**8T-4137**	4	BOLT (M10X1.5X20-MM)	
M	21	1	**8T-4189**	4	BOLT (M8X1.25X20-MM)	
	22	1	**8T-4205**	24	WASHER-HARD (7.2X14.5X2-MM THK)	
	23	1	**8T-4222**	2	WASHER-PLATED (11X32X2.5-MM THK)	
D	24	1	**8T-3425**		CHANNEL-TRIM (0.2-M)	

D - ORDER BY THE METER
E - ORDER BY THE CENTIMETER
M - METRIC PART
Y - SEPARATE ILLUSTRATION

475-4930 **WIRING GP-REAR (*contd.*)** **i06139524**

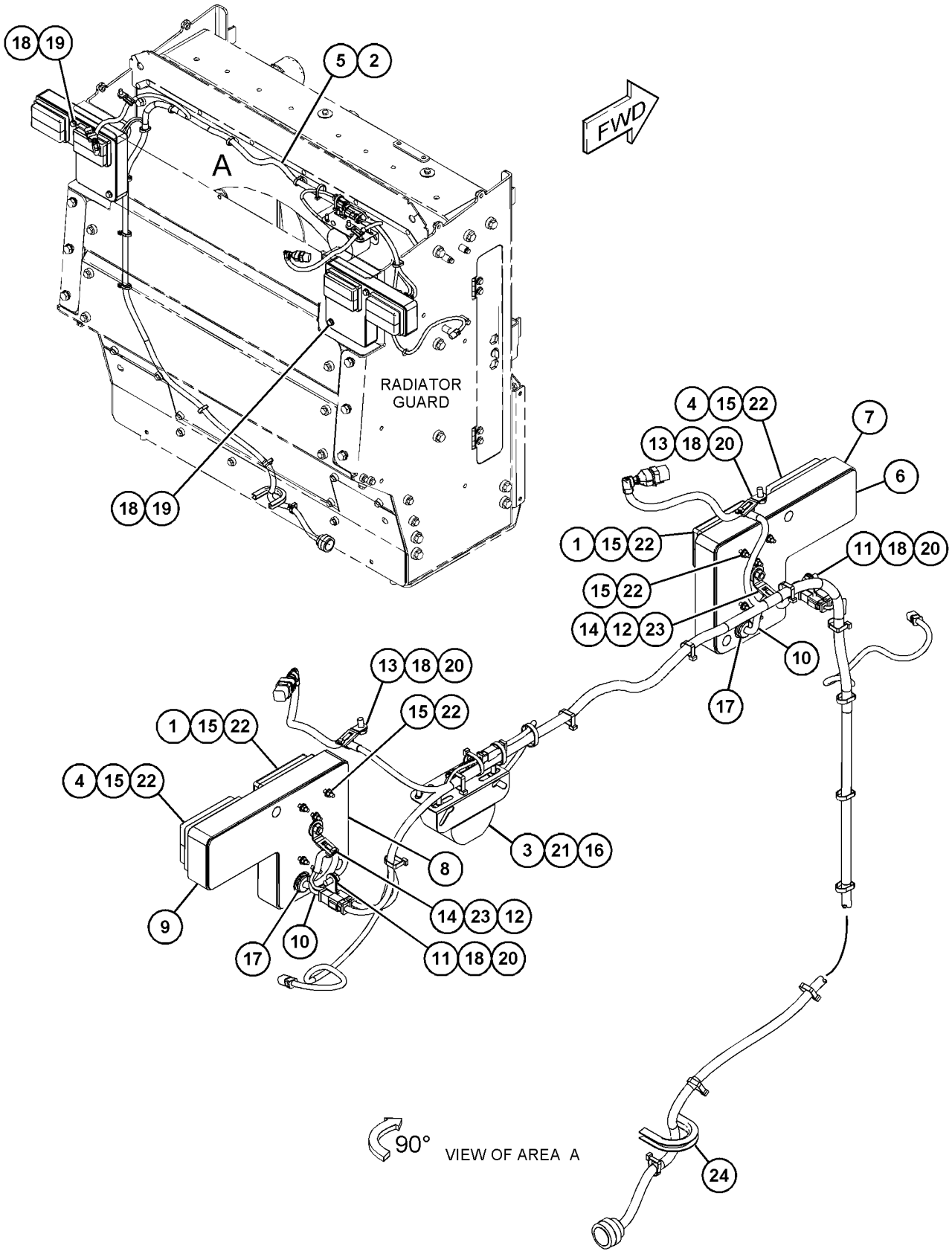

GRAPHIC #1 **<END>** g03824504

370-8449 WIRING GP-REAR LIGHTING

S/N: E9Y1-UP
PART OF 386-1304, 386-1305 LIGHTING AR-ROADING
AN ATTACHMENT

SMCS-1408, 1429

i06139712

NOTE	REF NO	GRAPHIC REF	PART NUMBER	QTY	PART NAME 1 2 3 4 5 6 (PRODUCT LEVEL)	SEE PAGE
	1	1	**7K-1181**	17	STRAP-CABLE	
	2	1	**213-9100**	1	ALARM AS (BACKUP)	
		1	**8T-8729**	2	PIN-CONNECTOR (16-GA TO 18-GA)	
E		1	**9X-1813**		SLEEVE (29-CM)	
		1	**102-8802**	1	KIT-RECEPTACLE (2-PIN)	
					(INCLUDES RECEPTACLE AS & WEDGE)	
	3	1	**379-3416**	2	LAMP GP-SIGNAL (BACKUP)	
					(EACH INCLUDES)	
		1	**8T-8729**	2	PIN-CONNECTOR (16-GA TO 18-GA)	
		1	**102-8802**	1	KIT-RECEPTACLE (2-PIN)	
					(INCLUDES RECEPTACLE AS & WEDGE)	
	4	1	**395-2113**	2	LAMP GP-SIGNAL (STOP, TAIL, TURN)	
					(EACH INCLUDES)	
		1	**8T-8729**	4	PIN-CONNECTOR (16-GA TO 18-GA)	
		1	**102-8804**	1	KIT-RECEPTACLE (4-PIN)	
					(INCLUDES RECEPTACLE AS & WEDGE)	
Y	5	1	**444-0560**	1	HARNESS AS-REAR (RADIATOR)	184
	6	1	**130-5300**	4	CLIP	
	7	1	**4P-7581**	2	CLIP	
M	8	1	**5C-2890**	12	NUT (M6X1-THD)	
	9	1	**5P-4116**	4	WASHER-HARD (8.8X20.5X2-MM THK)	
	10	1	**8T-4121**	4	WASHER-HARD (11X21X2.5-MM THK)	
M	11	1	**8T-4137**	4	BOLT (M10X1.5X20-MM)	
M	12	1	**8T-4189**	4	BOLT (M8X1.25X20-MM)	
	13	1	**8T-4205**	12	WASHER-HARD (7.2X14.5X2-MM THK)	
D	14	1	**8T-3425**		CHANNEL-TRIM (0.2-M)	

D - ORDER BY THE METER
E - ORDER BY THE CENTIMETER
M - METRIC PART
Y - SEPARATE ILLUSTRATION

370-8449 **WIRING GP-REAR LIGHTING (*contd.*)** **i06139712**

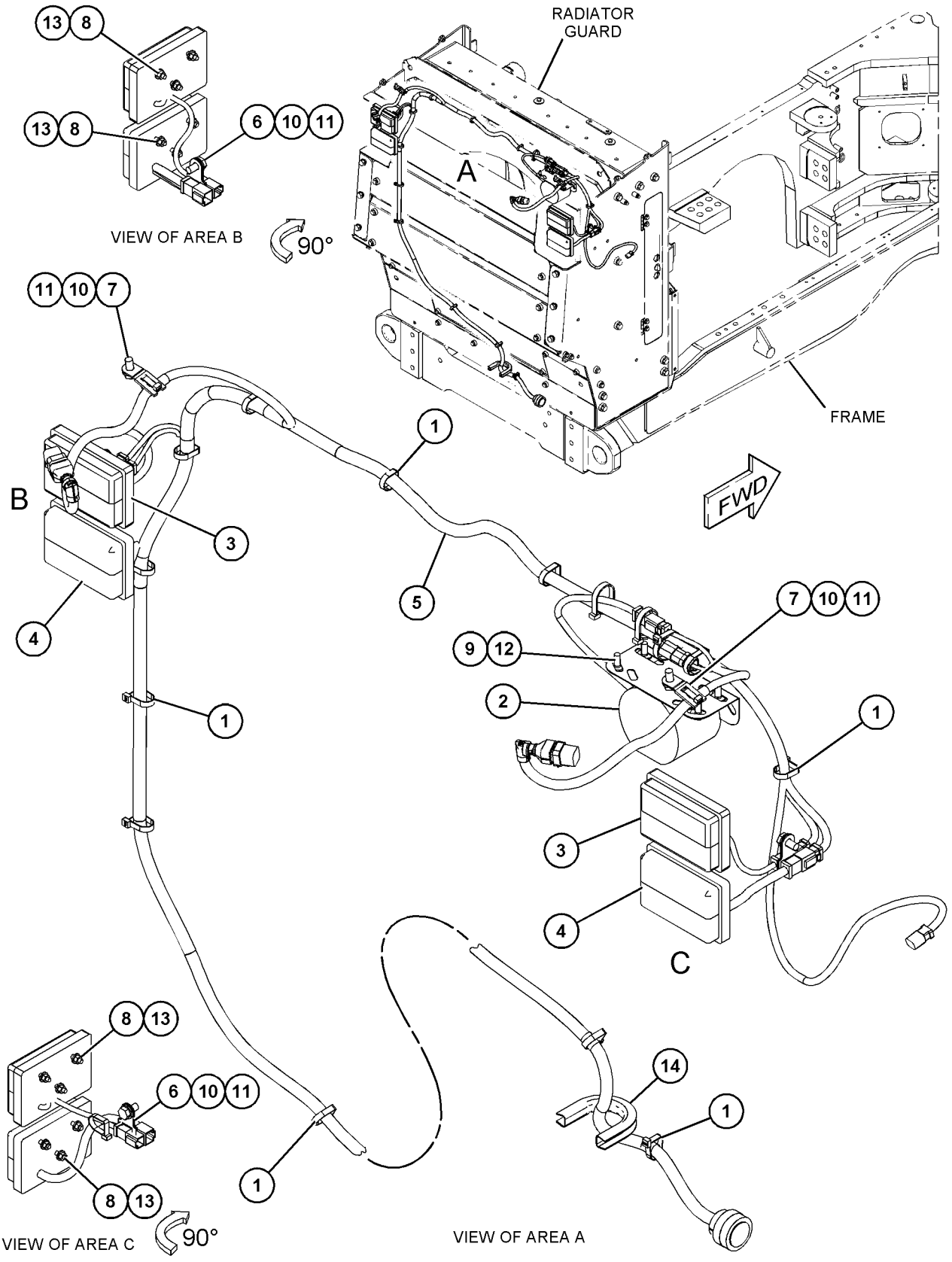

GRAPHIC #1 **<END>** g03825893

370-8450 WIRING GP-REAR LIGHTING

S/N: E9Y1-UP
CANNOT BE USED WITH 479-6065—PAGE: 321
AN ATTACHMENT

SMCS-1408, 1429 **i06140348**

NOTE	REF NO	GRAPHIC REF	PART NUMBER	QTY	PART NAME 1 2 3 4 5 6 (PRODUCT LEVEL)	SEE PAGE
	1	1	**7K-1181**	17	STRAP-CABLE	
	2	1	**213-9100**	1	ALARM AS (BACKUP)	
		1	**102-8802**	1	KIT-RECEPTACLE (2-PIN)	
					(INCLUDES RECEPTACLE AS & WEDGE)	
		1	**8T-8729**	2	PIN-CONNECTOR (16-GA TO 18-GA)	
E		1	**9X-1813**		SLEEVE (29-CM)	
	3	1	**259-8450**	2	LAMP GP-SIGNAL (24-VOLT) (STOP, TAIL LIGHTS)	
					(EACH INCLUDES)	
		1	**8T-8729**	3	PIN-CONNECTOR (16-GA TO 18-GA)	
		1	**8T-8737**	1	PLUG-SEAL	
		1	**102-8804**	1	KIT-RECEPTACLE (4-PIN)	
					(INCLUDES RECEPTACLE AS & WEDGE)	
	4	1	**379-3416**	2	LAMP GP-SIGNAL (BACKUP)	
					(EACH INCLUDES)	
		1	**8T-8729**	2	PIN-CONNECTOR (16-GA TO 18-GA)	
		1	**102-8802**	1	KIT-RECEPTACLE (2-PIN)	
					(INCLUDES RECEPTACLE AS & WEDGE)	
Y	5	1	**444-0560**	1	HARNESS AS-REAR (RADIATOR)	184
	6	1	**130-5300**	4	CLIP	
	7	1	**4P-7581**	2	CLIP	
M	8	1	**5C-2890**	12	NUT (M6X1-THD)	
	9	1	**5P-4116**	4	WASHER-HARD (8.8X20.5X2-MM THK)	
	10	1	**8T-4121**	4	WASHER-HARD (11X21X2.5-MM THK)	
M	11	1	**8T-4137**	4	BOLT (M10X1.5X20-MM)	
M	12	1	**8T-4189**	4	BOLT (M8X1.25X20-MM)	
	13	1	**8T-4205**	12	WASHER-HARD (7.2X14.5X2-MM THK)	
D	14	1	**8T-3425**		CHANNEL-TRIM (0.2-M)	

D - ORDER BY THE METER
E - ORDER BY THE CENTIMETER
M - METRIC PART
Y - SEPARATE ILLUSTRATION

370-8450 **WIRING GP-REAR LIGHTING (*contd.*)** **i06140348**

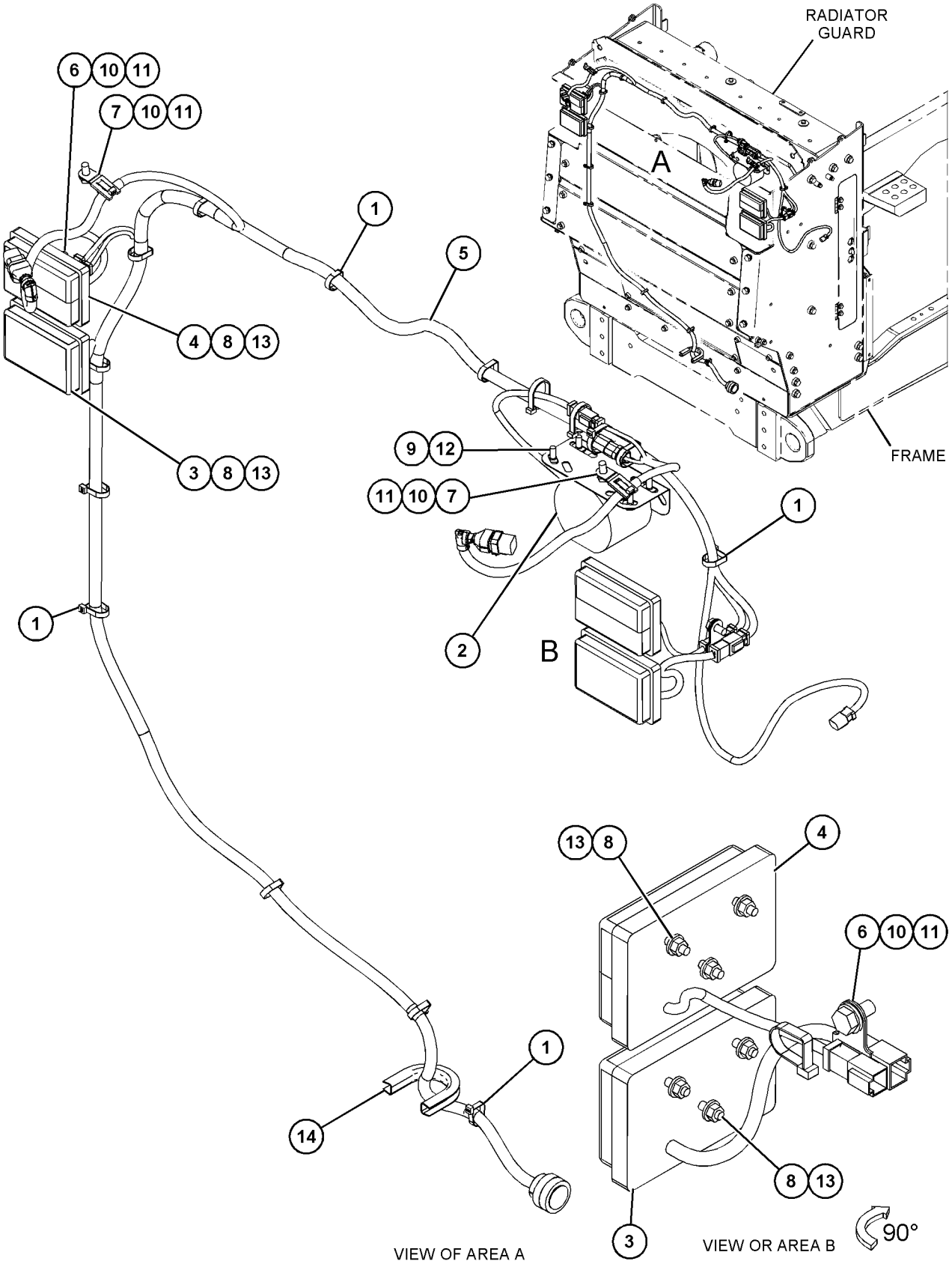

GRAPHIC #1

<END>

g03832450

479-6065 WIRING GP-REAR LIGHTING

S/N: E9Y1-UP
CANNOT BE USED WITH 370-8450—PAGE: 319
AN ATTACHMENT

SMCS-1408, 1429 **i06155409**

NOTE	REF NO	GRAPHIC REF	PART NUMBER	QTY	PART NAME 1 2 3 4 5 6 (PRODUCT LEVEL)	SEE PAGE
	1	1	**379-3416**	2	LAMP GP-SIGNAL (BACKUP)	
					(EACH INCLUDES)	
		1	**8T-8729**	2	PIN-CONNECTOR (16-GA TO 18-GA)	
		1	**102-8802**	1	KIT-RECEPTACLE (2-PIN)	
					(INCLUDES RECEPTACLE AS & WEDGE)	
	2	1,2	**7K-1181**	19	STRAP-CABLE	
	3	1	**213-9100**	1	ALARM AS (BACKUP)	
		1	**102-8802**	1	KIT-RECEPTACLE (2-PIN)	
					(INCLUDES RECEPTACLE AS & WEDGE)	
		1	**8T-8729**	2	PIN-CONNECTOR (16-GA TO 18-GA)	
E		1	**9X-1813**		SLEEVE (29-CM)	
	4	1	**259-8450**	2	LAMP GP-SIGNAL (24-VOLT) (STOP, TAIL LIGHTS)	
					(EACH INCLUDES)	
		1	**8T-8729**	3	PIN-CONNECTOR (16-GA TO 18-GA)	
		1	**8T-8737**	1	PLUG-SEAL	
		1	**102-8804**	1	KIT-RECEPTACLE (4-PIN)	
					(INCLUDES RECEPTACLE AS & WEDGE)	
Y	5	1	**444-0560**	1	HARNESS AS-REAR (RADIATOR)	184
	6	2	**475-4929**	1	PLATE AS	
	7	1	**479-6062**	1	BRACKET AS	
	8	2	**479-6063**	1	PLATE AS	
	9	1	**479-6064**	1	BRACKET AS	
Y	10	2	**479-6066**	2	HARNESS AS-LIGHTING (STOP, TAIL, TURN, BACKUP)	182
	11	2	**130-5300**	4	CLIP	
M	12	2	**344-5675**	2	NUT (M10X1.5-THD)	
	13	1	**4P-7581**	2	CLIP	
	14	2	**4P-8134**	2	CLIP	
M	15	2	**5C-2890**	24	NUT (M6X1-THD)	
	16	1	**5P-4116**	4	WASHER-HARD (8.8X20.5X2-MM THK)	
	17	2	**7G-7053**	2	GROMMET	
	18	1,2	**8T-4121**	8	WASHER-HARD (11X21X2.5-MM THK)	
M	19	1	**8T-4136**	4	BOLT (M10X1.5X25-MM)	
M	20	1,2	**8T-4137**	4	BOLT (M10X1.5X20-MM)	
M	21	1	**8T-4189**	4	BOLT (M8X1.25X20-MM)	
	22	2	**8T-4205**	24	WASHER-HARD (7.2X14.5X2-MM THK)	
	23	2	**8T-4222**	2	WASHER-PLATED (11X32X2.5-MM THK)	
D	24	1	**8T-3425**		CHANNEL-TRIM (0.2-M)	

D - ORDER BY THE METER
E - ORDER BY THE CENTIMETER
M - METRIC PART
Y - SEPARATE ILLUSTRATION

479-6065 **WIRING GP-REAR LIGHTING (*contd.*)** **i06155409**

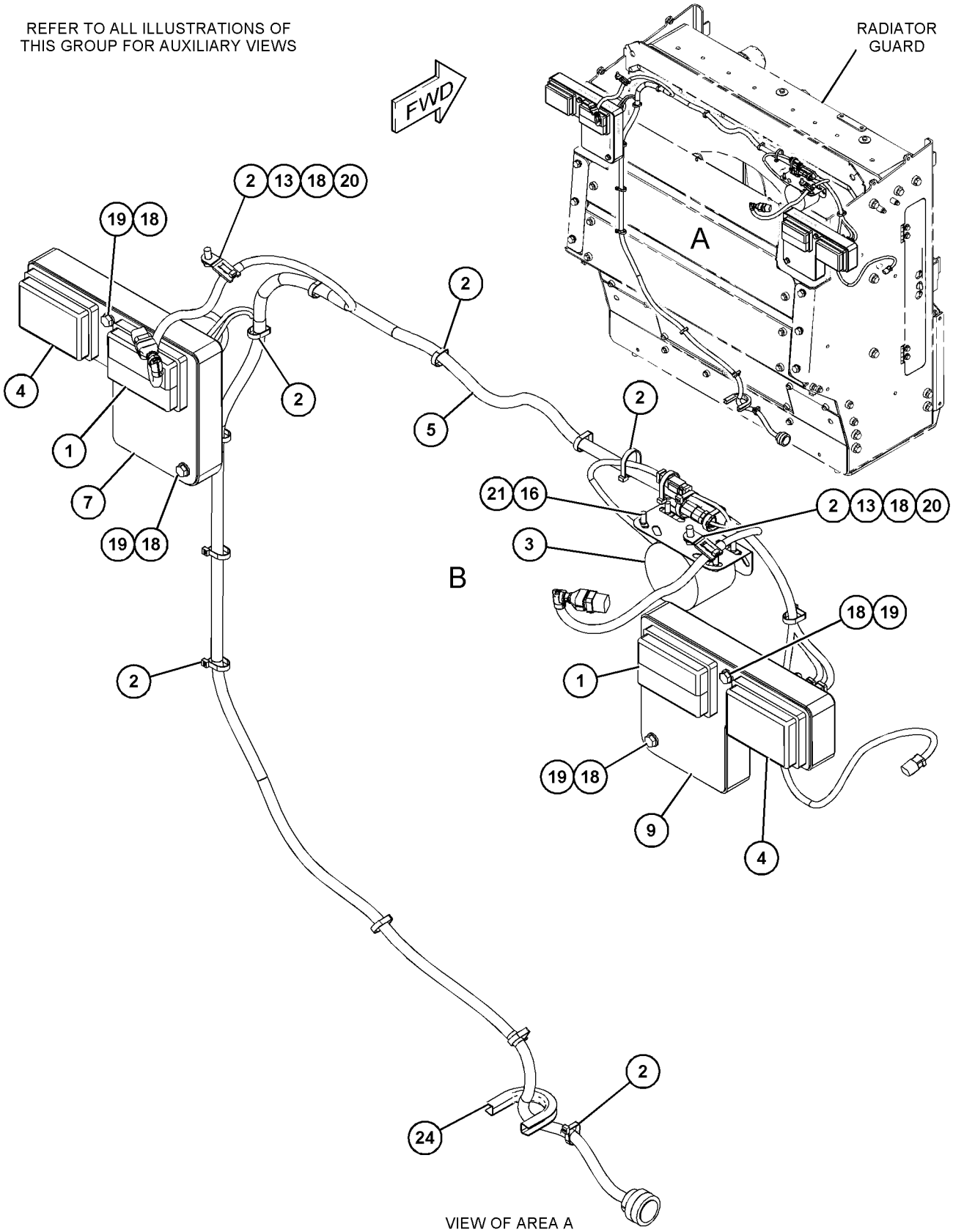

GRAPHIC #1 g03835386

479-6065 **WIRING GP-REAR LIGHTING (*contd.*)** **i06155409**

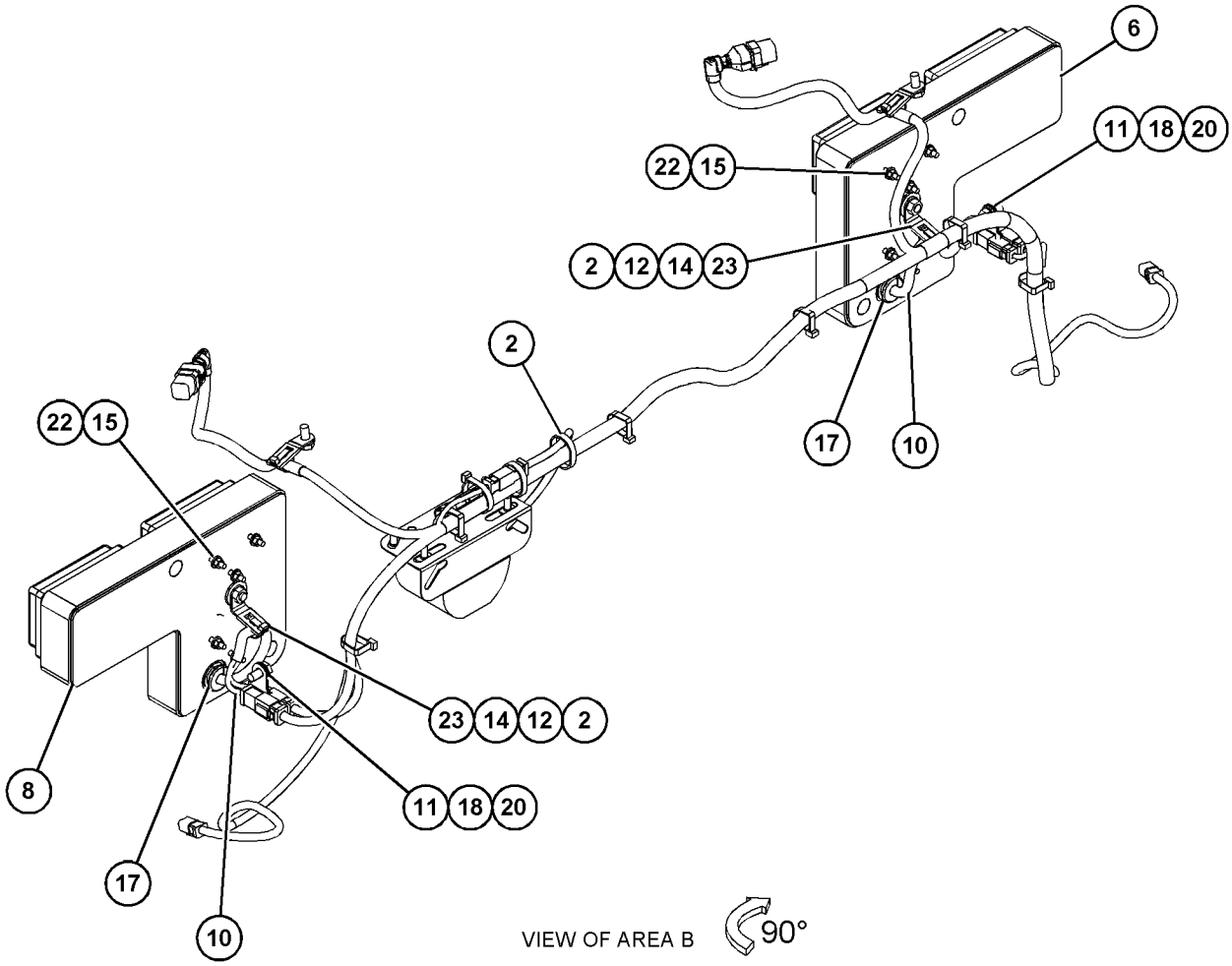

GRAPHIC #2

<END>

g03835387

349-6154 WIRING GP-SENSOR

S/N: TXX1-UP
PROVIDE A WIRING GROUP WITH COOLANT TEMPERATURE HARNESS
FOR USE WITH EXTERNAL HARNESS
PART OF 383-2065, 422-0048 ENGINE AR-COMPLETE
AN ATTACHMENT

SMCS-1408 **i05295342**

NOTE	REF NO	GRAPHIC REF	PART NUMBER	QTY	PART NAME 1 2 3 4 5 6 (PRODUCT LEVEL)	SEE PAGE
	1	1	**290-1993**	2	STRAP-CABLE	
	2	1	**349-7699**	1	BRACKET	
M	3	1	**101-3129**	1	STUD (M10X1.5-THD)	
Y	4	1	**362-1505**	1	HARNESS AS-SENSOR (COOLANT TEMPERATURE)	187
	5	1	**4P-7581**	1	CLIP	
M	6	1	**6V-5215**	1	BOLT (M8X1.25X16-MM)	
	7	1	**6V-5839**	1	WASHER (11X21X2.5-MM THK)	
	8	1	**9M-1974**	1	WASHER-HARD (8.8X16X2-MM THK)	

M - METRIC PART
Y - SEPARATE ILLUSTRATION

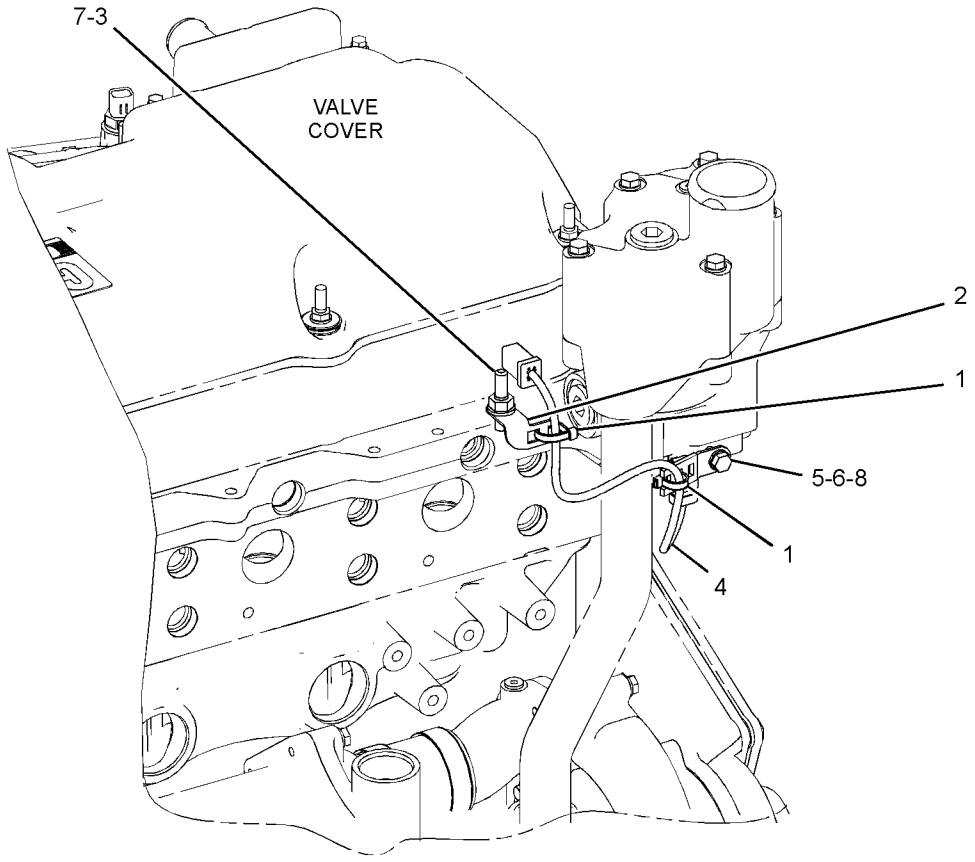

GRAPHIC #1 **<END>** g02981336

363-4325 WIRING GP-SENSOR

S/N: E9Y1-UP

PART OF 370-8430 ELECTRICAL AR

SMCS-1408 **i05819515**

NOTE	REF NO	GRAPHIC REF	PART NUMBER	QTY	PART NAME 1 2 3 4 5 6 (PRODUCT LEVEL)	SEE PAGE
	1	1	**3E-4363**	1	RING-RETAINING	
	2	1	**276-6146**	1	SENSOR AS-ANGLE (AS400TC) (MAINFALL)	
	2A	1	**276-6146**	1	SENSOR AS-ANGLE (AS400TC) (BLADE SLOPE)	
	3	1	**363-0347**	1	SENSOR-ROTARY	
		1	**269-3277**	1	RING	
	4	1	**365-8763**	1	BRACKET	
	5	1	**365-8764**	1	BRACKET	
	6	1	**186-0359**	1	CLIP	
	7	1	**270-7137**	1	BOLT	
	8	1	**4M-6425**	2	BOLT (5/16-18X1-IN)	
M	9	1	**5C-2890**	2	NUT (M6X1-THD)	
M	10	1	**9X-6155**	4	BOLT-SOCKET HEAD (M6X1X16.7-MM)	
M	11	1	**8T-3844**	4	BOLT (M6X1X70-MM)	
	12	1	**8T-4223**	1	WASHER-HARD (13.5X25.5X3-MM THK)	
	13	1	**8T-4224**	2	WASHER-HARD (8.8X16X2-MM THK)	
M	14	1	**8T-4244**	1	NUT (M12X1.75-THD)	
	16	1	**8T-4205**	6	WASHER-HARD (7.2X14.5X2-MM THK)	
	17	1	**452-0944**	1	COLLAR	

M - METRIC PART

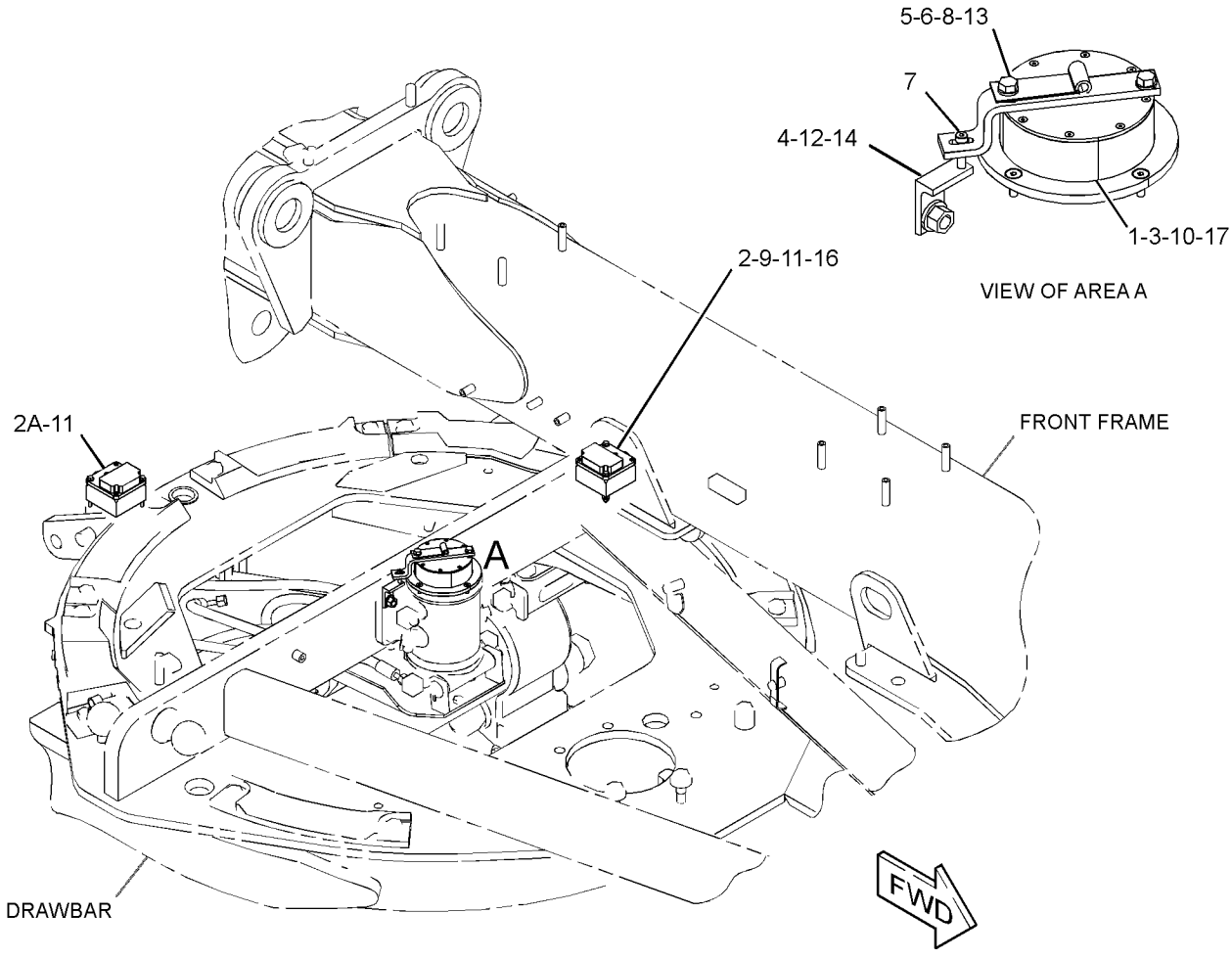

GRAPHIC #1 **<END>** g03635317

417-4431 WIRING GP-SENSOR—SECONDARY FUEL FILTER

S/N: TXX1-UP

PART OF 383-2065, 422-0048 ENGINE AR-COMPLETE

AN ATTACHMENT

SMCS-1408 **i06133279**

NOTE	REF NO	GRAPHIC REF	PART NUMBER	QTY	PART NAME 1 2 3 4 5 6 (PRODUCT LEVEL)	SEE PAGE
	1	1	**3S-2093**	2	STRAP-CABLE	
Y	2	1	**417-9251**	1	HARNESS AS-WIRING	194
	3	1	**206-1345**	2	STRAP-CABLE	
	4	1	**104-6202**	1	CLIP	
	5	1	**4P-8134**	1	CLIP	

Y - SEPARATE ILLUSTRATION

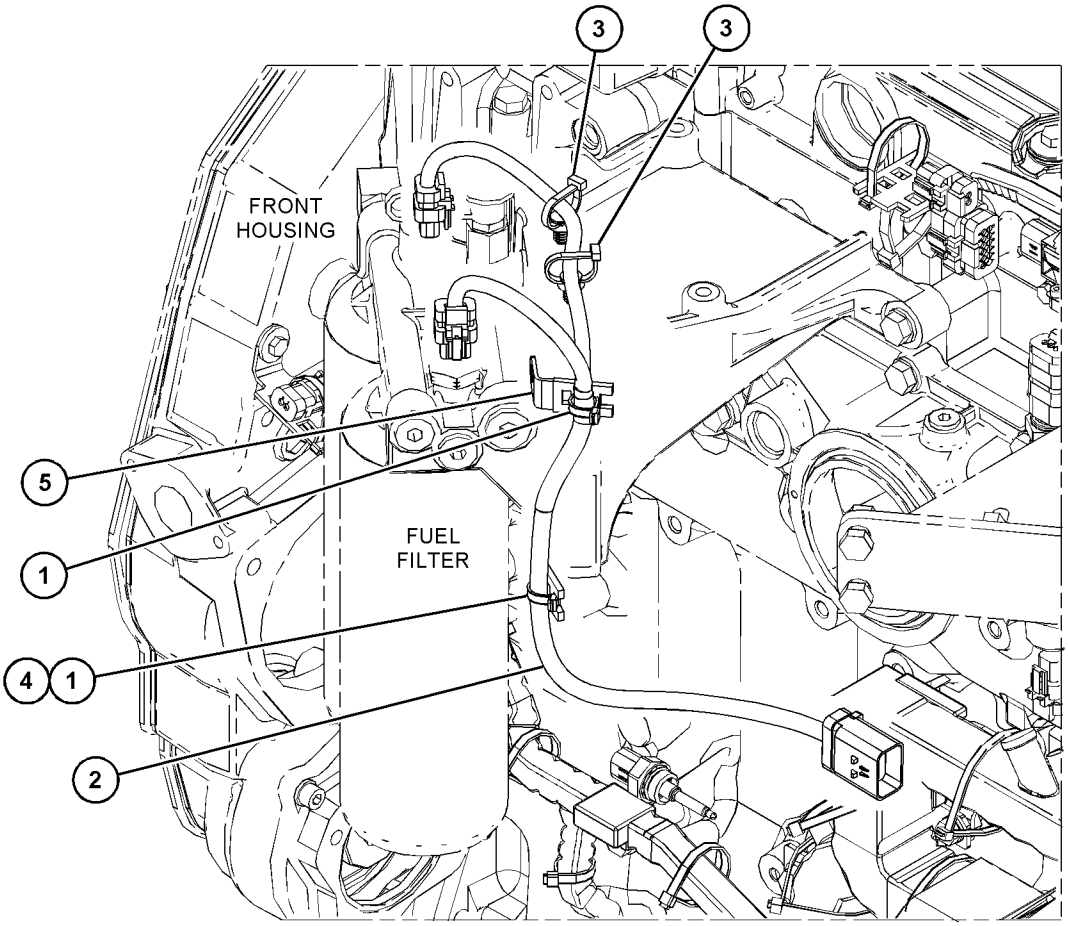

GRAPHIC #1 **<END>** g03834665

370-3254 WIRING GP-UNIT INJECTOR

S/N: TXX1-UP
FOR USE WITH CAT BRAKES AND COOLANT TEMP JUMPER HARNESS
CANNOT BE USED WITH NON-BRAKE ENGINES, ENGINES WITH NO CENTER BRAKE, LOW PROFILE VALVE COVER
PART OF 383-2065, 422-0048 ENGINE AR-COMPLETE
AN ATTACHMENT

SMCS-1408 **i04384186**

NOTE	REF NO	GRAPHIC REF	PART NUMBER	QTY	PART NAME 1 2 3 4 5 6 (PRODUCT LEVEL)	SEE PAGE
	1	1	**7E-6508**	6	CAP AS	
Y	2	1	**370-3255**	1	HARNESS AS-ENGINE	178
	3	1	**230-2600**	5	BOLT-FLANGE HEAD	
	4	1	**359-4892**	1	RING-RETAINING	
	5	1	**359-4893**	1	RING-RETAINING	

Y - SEPARATE ILLUSTRATION

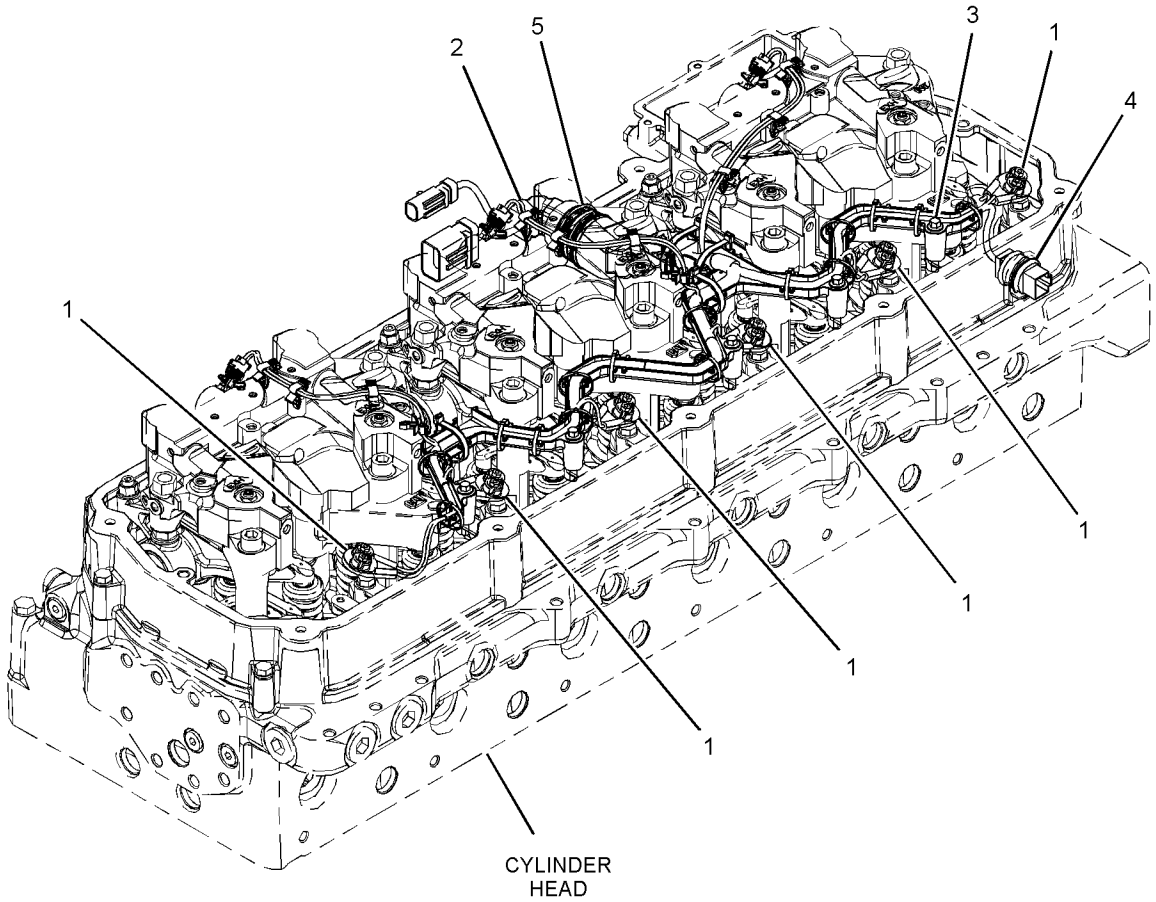

GRAPHIC #1 **<END>** g02631740

474-6913 AXLE AR-FRONT

S/N: E9Y1-UP

PART OF 371-6317 POWER TRAIN AR

SMCS-3020, 3278, 4303, 4305, 5225 **i06145076**

NOTE	PART NUMBER	QTY	PART NAME 1 2 3 4 5 6 (PRODUCT LEVEL)	SEE PAGE
Y	*474-6914*	1	AXLE GP-FRONT	329
Y	*386-6709*	1	MOUNTING GP-AXLE	477

Y - SEPARATE ILLUSTRATION

<END>

386-6764 AXLE AR-FIXED & OSCILLATING

S/N: E9Y1-UP

PART OF 371-6317 POWER TRAIN AR

SMCS-3013 **i06144830**

NOTE	PART NUMBER	QTY	PART NAME 1 2 3 4 5 6 (PRODUCT LEVEL)	SEE PAGE
Y	**379-9145**	1	AXLE GP-REAR	333
Y	*6G-1740*	1	CHAIN GP-DRIVE	340
Y	*390-2936*	1	CONTROL GP-DIFFERENTIAL LOCK	350
Y	*390-2932*	1	LINES GP-SERVICE BRAKE	533
Y	*381-0821*	1	TANDEM & COVER GP	386
Y	*381-0830*	1	WHEEL AR	404
	349-6143	1	FILLER GP-POWER TRAIN OIL	
	3N-2945	1	GASKET	
	305-3333	1	TUBE AS	

Y - SEPARATE ILLUSTRATION

<END>

474-6914 AXLE GP-FRONT

S/N: E9Y1-UP

PART OF 474-6913 AXLE AR-FRONT

SMCS-3020, 3282, 4303, 4305, 5225 **i06184557**

NOTE	REF NO	GRAPHIC REF	PART NUMBER	QTY	PART NAME 1 2 3 4 5 6 (PRODUCT LEVEL)	SEE PAGE
	1	2	**1P-7835**	2	CONE-BEARING	
	2	1,2	**2G-5667**	3	RETAINER	
	3	2	**2G-8615**	4	WASHER-THRUST (2.015X3.625X0.11-IN THK)	
	4	2	**2G-8626**	2	WASHER-THRUST (2.02X3.63X0.16-IN THK)	
	5	2	**2G-8741**	4	RING-METAL SEAL	
	6	2	**2G-8777**	4	SEAL	
	7	1	**3B-8489**	10	FITTING-GREASE (1/8-27 PTF)	
	8	2	**8D-1819**	2	CONE-BEARING	
	9	2	**186-6531**	2	SEAL GP-DUO-CONE	
					(EACH INCLUDES)	
		2	**5K-1075**	2	RING-SEALING	
Y	10	1	*249-6545*	1	CYLINDER & MTG GP-WHEEL LEAN	556
	11	2	**257-9799**	2	PIN	
	12	1	**264-1150**	1	ARM AS (LH)	
	12A	2	**2G-7106**	1	BUSHING	
	12B	2	**2G-8738**	1	BUSHING	
		1	**264-1152**	1	PIN	
	13	1	**264-1153**	1	ARM AS (RH)	
	13A	1	**2G-7106**	1	BUSHING	
	13B	1	**2G-8738**	1	BUSHING	
		1	**264-1155**	1	PIN	
	14	1	**264-1158**	1	BAR AS	
	14A	1	**2G-8635**	2	BUSHING	
M		1	**9R-2613**	4	BOSS-WELD (M10X1.5X25-MM)	
	15	2	**264-1167**	2	PIN	
	16	1	**264-1168**	2	PIN	
	17	1	**297-2539**	2	LOCK	
	18	1	**311-1932**	1	HOUSING (LH)	
	19	1	**311-1933**	1	HOUSING (RH)	
Y	20	1	*361-4430*	1	LINK GP-STEERING	473
	21	1	*148-8410*	2	PLUG AS	
					(EACH INCLUDES)	
		1	**2M-9780**	1	SEAL-O-RING	
		1	**9S-4190**	1	PLUG-O-RING	
Y	22	1	*421-8644*	1	CYLINDER & MTG GP-STEERING	554
	23	2	**437-8982**	2	RETAINER	
	24	2	**437-8983**	2	SPINDLE	
	25	2	**437-8984**	2	COVER	
	26	1	**474-6915**	1	AXLE AS	
	27	1,2	**198-4768**	3	WASHER-HARD (17.5X32X8-MM THK)	
	28	2	**266-7315**	2	WASHER-HARD (22X65X6-MM THK)	
	29	2	**1P-7834**	2	CUP-BEARING	
	30	1	**3B-4640**	2	PIN-COTTER	
	31	1	**4I-5480**	4	WASHER (11X72X3-MM THK)	
	32	2	**5P-8890**	2	SEAL-LIP TYPE	
M	33	2	**6V-5696**	6	BOLT (M12X1.75X80-MM)	
M	34	1,2	**6V-5844**	3	BOLT (M16X2X35-MM)	
	35	1	**6V-8237**	2	WASHER (26X44X4-MM THK)	
	36	2	**7D-1649**	6	WASHER-HARD (13.5X32X5-MM THK)	
	37	1,2	**7K-9203**	4	SEAL-LIP TYPE	
M	38	1	**7X-0851**	2	NUT (M24X3-THD)	
M	39	2	**7X-2561**	4	BOLT (M20X2.5X35-MM)	
	40	1	**7X-7729**	4	WASHER (11X25X3-MM THK)	
	41	2	**8D-1817**	2	CUP-BEARING	
	42	2	**8F-8733**	2	SEAL-O-RING	
M	43	1	**8T-0667**	2	BOLT (M24X3X100-MM)	
	44	1	**8T-4121**	4	WASHER-HARD (11X21X2.5-MM THK)	
M	45	1	**8T-4137**	4	BOLT (M10X1.5X20-MM)	

474-6914 **AXLE GP-FRONT (*contd.*)** **i06184557**

NOTE	REF NO	GRAPHIC REF	PART NUMBER	QTY	PART NAME 1 2 3 4 5 6 (PRODUCT LEVEL)	SEE PAGE
	46	2	**9M-2092**	4	SEAL-O-RING	
M	47	1	**9X-2125**	4	BOLT-LOCKING (M10X1.5X25-MM)	
B	48	2	**426-4334**	6	SHIM	

B - USE AS REQUIRED
M - METRIC PART
Y - SEPARATE ILLUSTRATION

474-6914 **AXLE GP-FRONT (*contd.*)** **i06184557**

REFER TO ALL ILLUSTRATIONS OF
THIS GROUP FOR AUXILIARY VIEWS

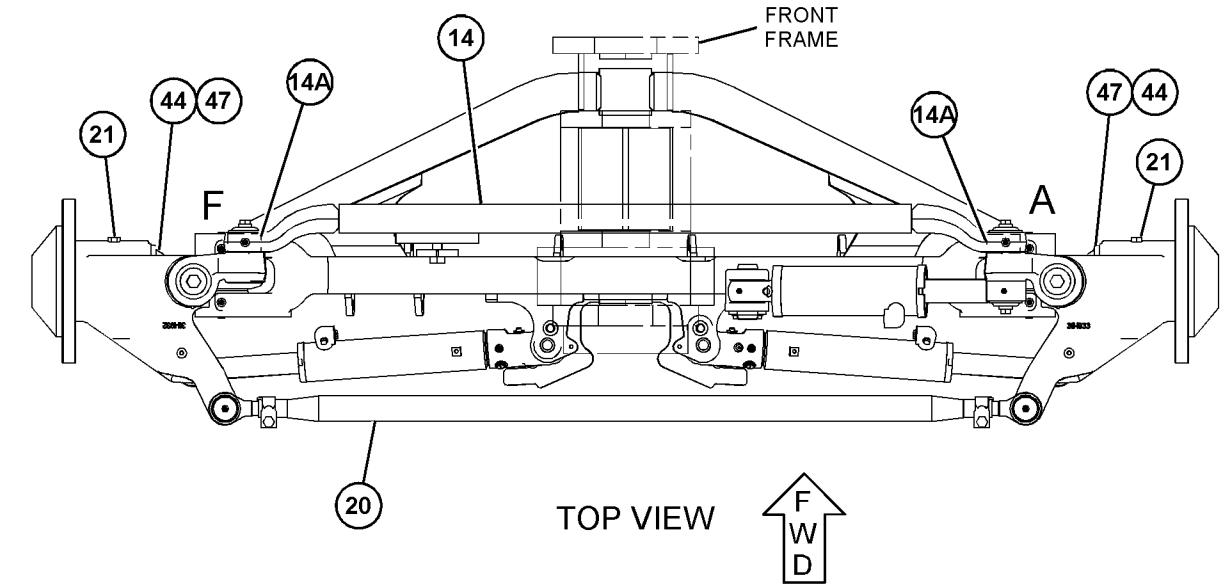

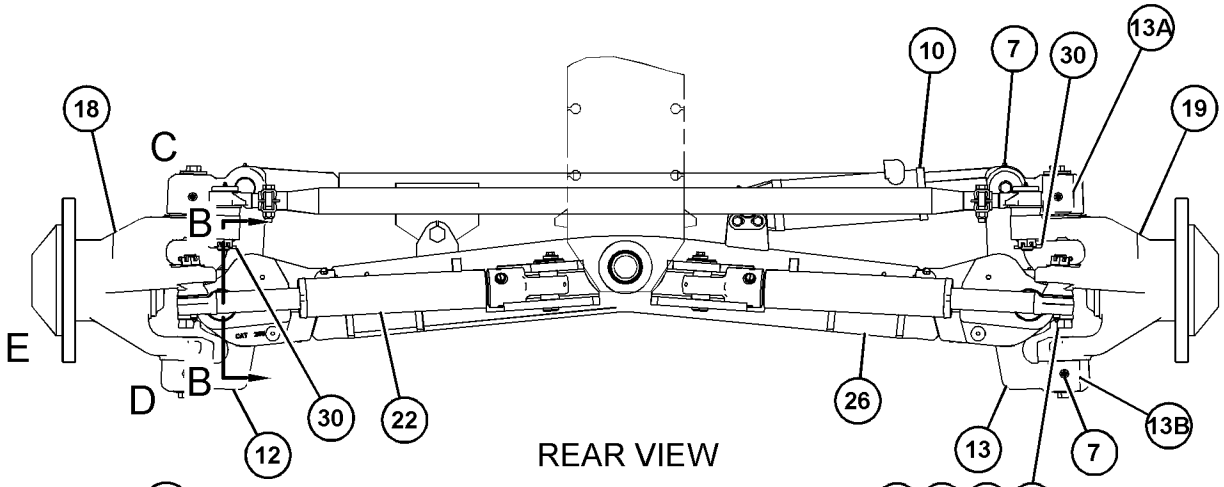

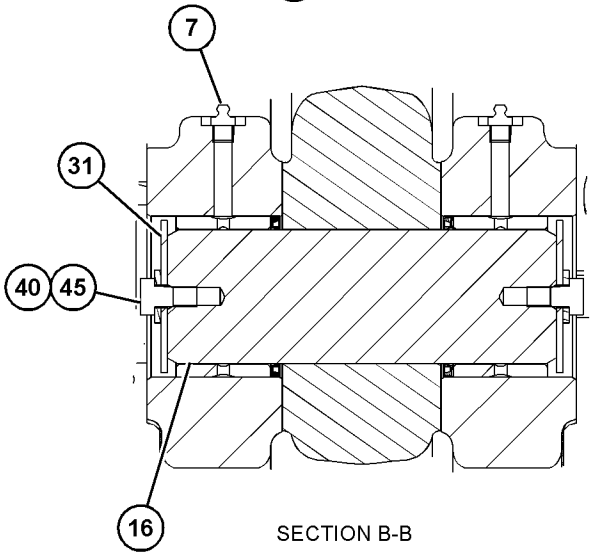

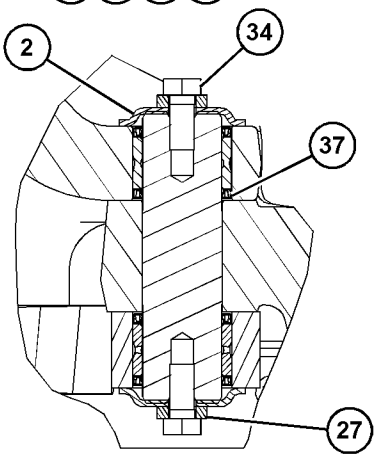

GRAPHIC #1 g03836716

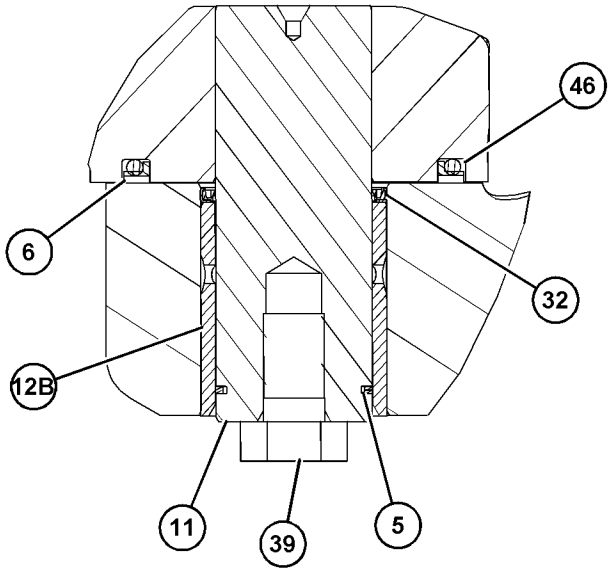

SECTION VIEW OF AREA D

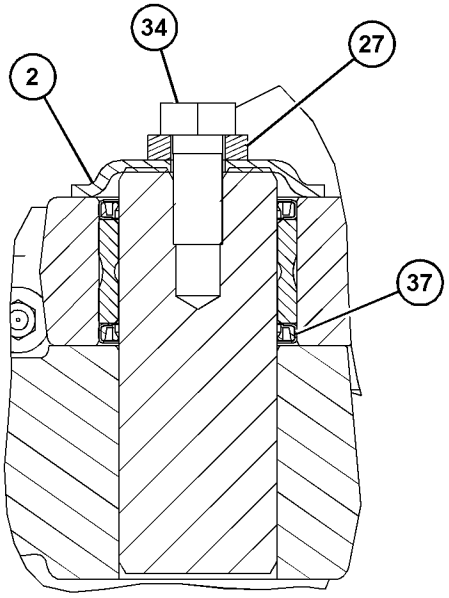

SECTION VIEW OF AREA F

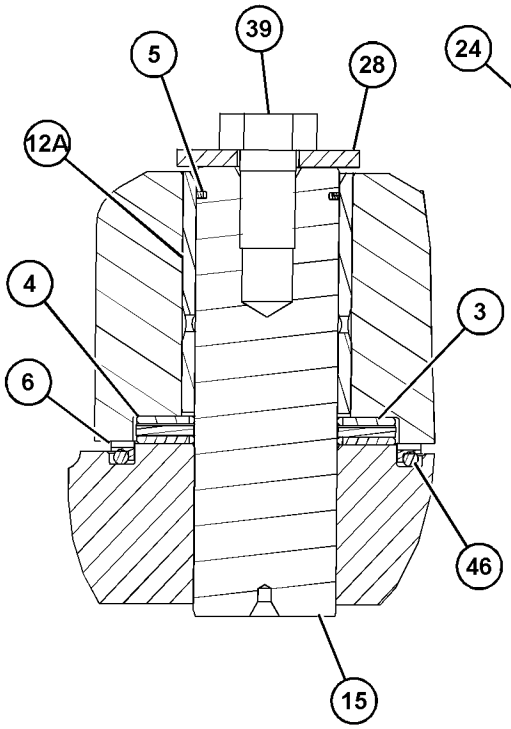

SECTION VIEW OF AREA C

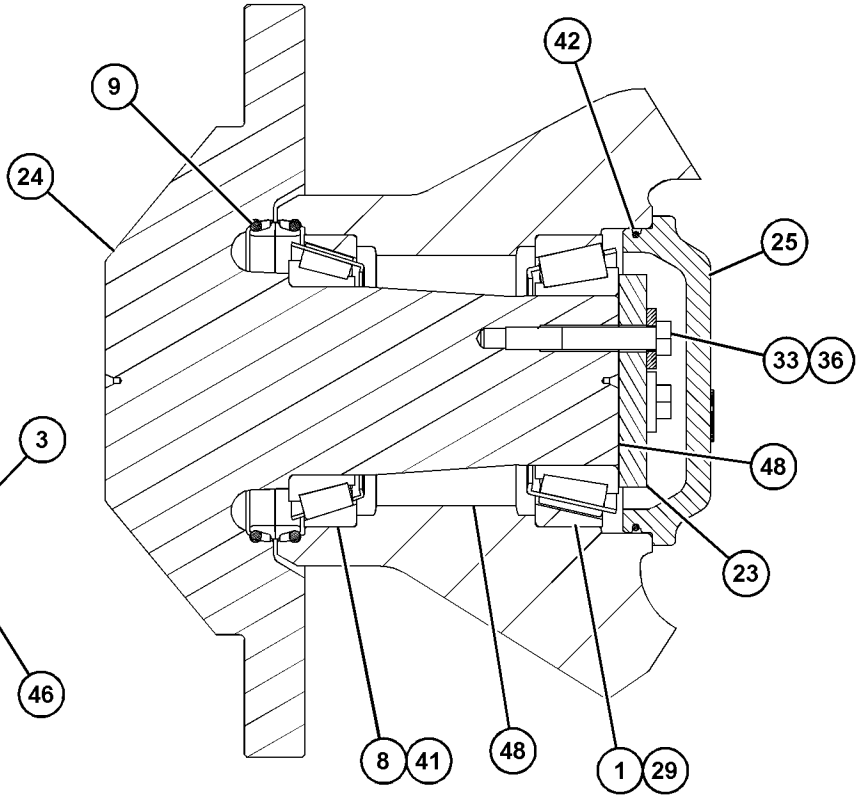

SECTION VIEW OF AREA E

GRAPHIC #2 **<END>** g03836717

379-9145 AXLE GP-REAR

S/N: E9Y1-UP

PART OF 386-6764 AXLE AR-REAR

SMCS-3278, 3282, 4068 **i06128441**

NOTE	REF NO	GRAPHIC REF	PART NUMBER	QTY	PART NAME 1 2 3 4 5 6 (PRODUCT LEVEL)	SEE PAGE
	1	1	**4K-6804**	1	SEAL-O-RING	
B	2	1	**215-9665**	1	SHIM PACK (INCLUDES 12-SHIMS)	
B	3	1	**215-9666**	1	SHIM PACK (INCLUDES 11-SHIMS)	
	4	1	**224-2323**	1	BEARING-THRUST	
	5	1	**248-0833**	1	PLUG AS-DRAIN (AXLE, REAR)	
		1	**3S-9233**	1	SEAL-O-RING	
		1	**5L-4759**	1	SEAL-O-RING	
	6	1	**273-8664**	1	PISTON	
	7	1	**273-8666**	1	SEAL-D-RING	
	8	1	**273-8667**	1	SEAL-D-RING	
	9	1	**280-4438**	2	PLUG	
	10	1	**285-2074**	1	TUBE AS	
	11	1	**288-5962**	2	SHAFT-AXLE	
	12	1	**313-4677**	2	GEAR AS-SUN	
					(EACH INCLUDES)	
		1	**3H-4192**	1	RING-RETAINING	
	13	1	**379-9146**	1	HOUSING AS	
		1	**5P-8245**	25	WASHER-HARD (13.5X25.5X3-MM THK)	
M		1	**6V-5684**	21	BOLT (M12X1.75X45-MM)	
		1	**095-0889**	2	PIN-SPRING	
M		1	**6V-3823**	4	BOLT (M12X1.75X60-MM)	
	14	1	**381-0824**	1	TUBE AS	
Y	15	1	*387-4496*	1	DIFFERENTIAL & BEVEL GEAR GP	360
Y	16	1	**392-0178**	2	DRIVE GP-FINAL	364
	17	1	*148-8369*	1	ELBOW AS	
		1	**3J-7354**	1	SEAL-O-RING	
		1	**4J-5477**	1	SEAL-O-RING	
		1	**6V-8628**	1	ELBOW	
M	18	1	**378-2695**	56	BOLT (M20X2.5X70-MM)	
	19	1	**215-8209**	1	BEARING-SPECIAL RACE	
	20	1	**2D-0591**	2	RING-RETAINING	
	21	1	**317-1009**	2	WASHER (18X35X8-MM THK)	
	22	1	**4J-5351**	2	SEAL-O-RING	
	23	1	**4K-1388**	2	SEAL-O-RING	
M	24	1	**6V-3532**	8	BOLT (M20X2.5X60-MM)	
	25	1	**6V-8397**	2	SEAL-O-RING	
	26	1	**6V-9168**	2	NUT (11/16-16-THD)	
	27	1	**7M-8485**	1	SEAL-O-RING	
M	28	1	**8T-0088**	8	BOLT (M16X2X65-MM)	
	29	1	**8T-3282**	64	WASHER-HARD (22X35X3.5-MM THK)	
	30	1	**9X-8268**	8	WASHER (17.5X30X3.5-MM THK)	

B - USE AS REQUIRED
M - METRIC PART
Y - SEPARATE ILLUSTRATION

379-9145 **AXLE GP-REAR (*contd.*)** **i06128441**

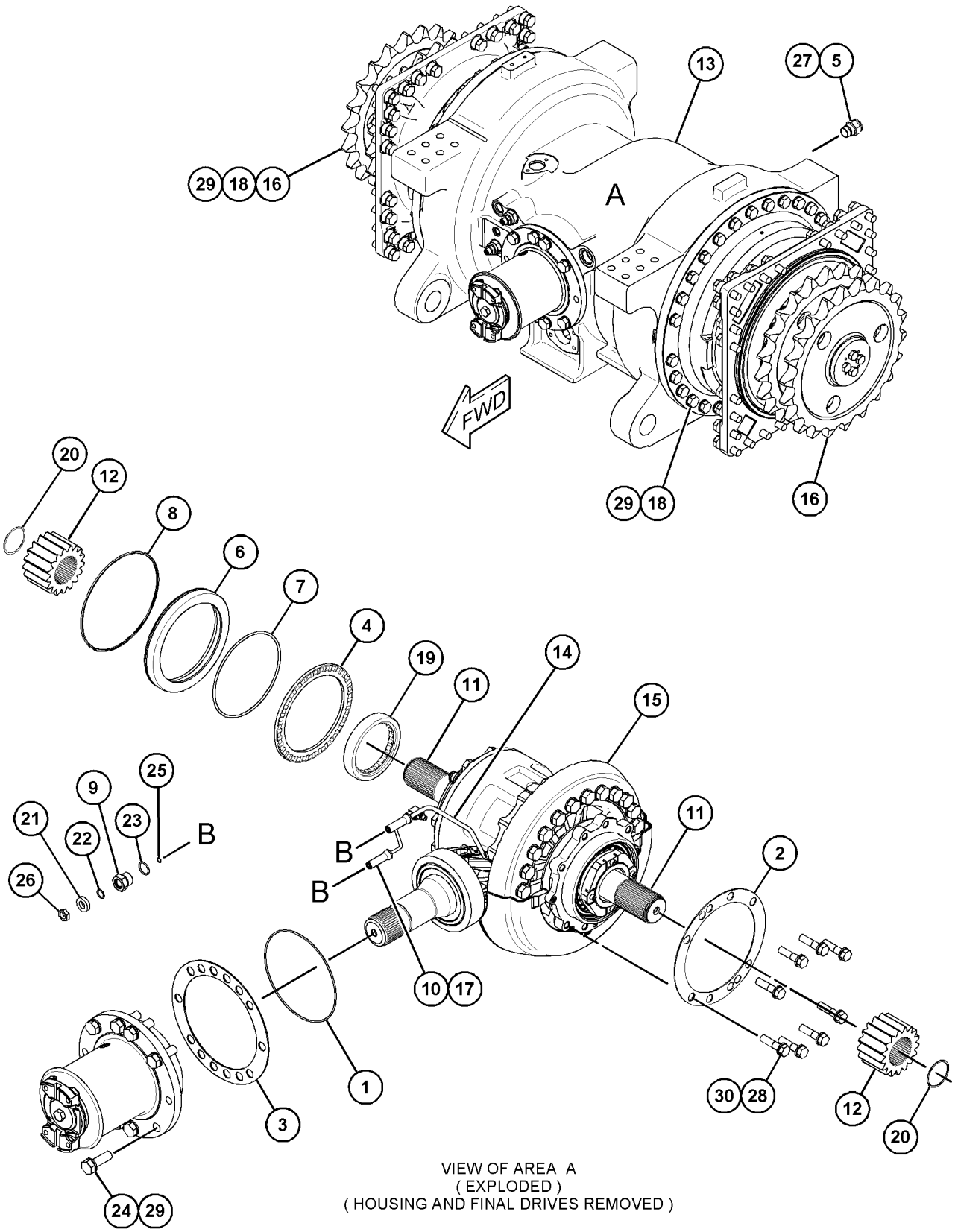

VIEW OF AREA A
(EXPLODED)
(HOUSING AND FINAL DRIVES REMOVED)

GRAPHIC #1 **<END>** g03821572

272-8011 CARRIER GP-FINAL DRIVE

S/N: E9Y1-UP

PART OF 392-0178 DRIVE GP-FINAL

SMCS-4050 **i05319513**

NOTE	REF NO	GRAPHIC REF	PART NUMBER	QTY	PART NAME 1 2 3 4 5 6 (PRODUCT LEVEL)	SEE PAGE
	1	1	**2D-6516**	6	BEARING AS-ROLLER	
	2	1	**424-8845**	1	CARRIER-PLANETARY	
	3	1	**269-5767**	3	SHAFT	
	4	1	**269-8417**	3	GEAR-PLANETARY (29-TEETH)	
	5	1	**272-4978**	3	SPACER (111.07X89X2.56-MM THK)	
	6	1	**273-2457**	3	RETAINER	
	7	1	**3E-4353**	6	WASHER-HARD (11X25X3-MM THK)	
M	8	1	**6V-7732**	6	BOLT (M10X1.5X25-MM)	
	9	1	**8X-8378**	6	WASHER (85.32X131.80X2.92-MM THK)	

M - METRIC PART

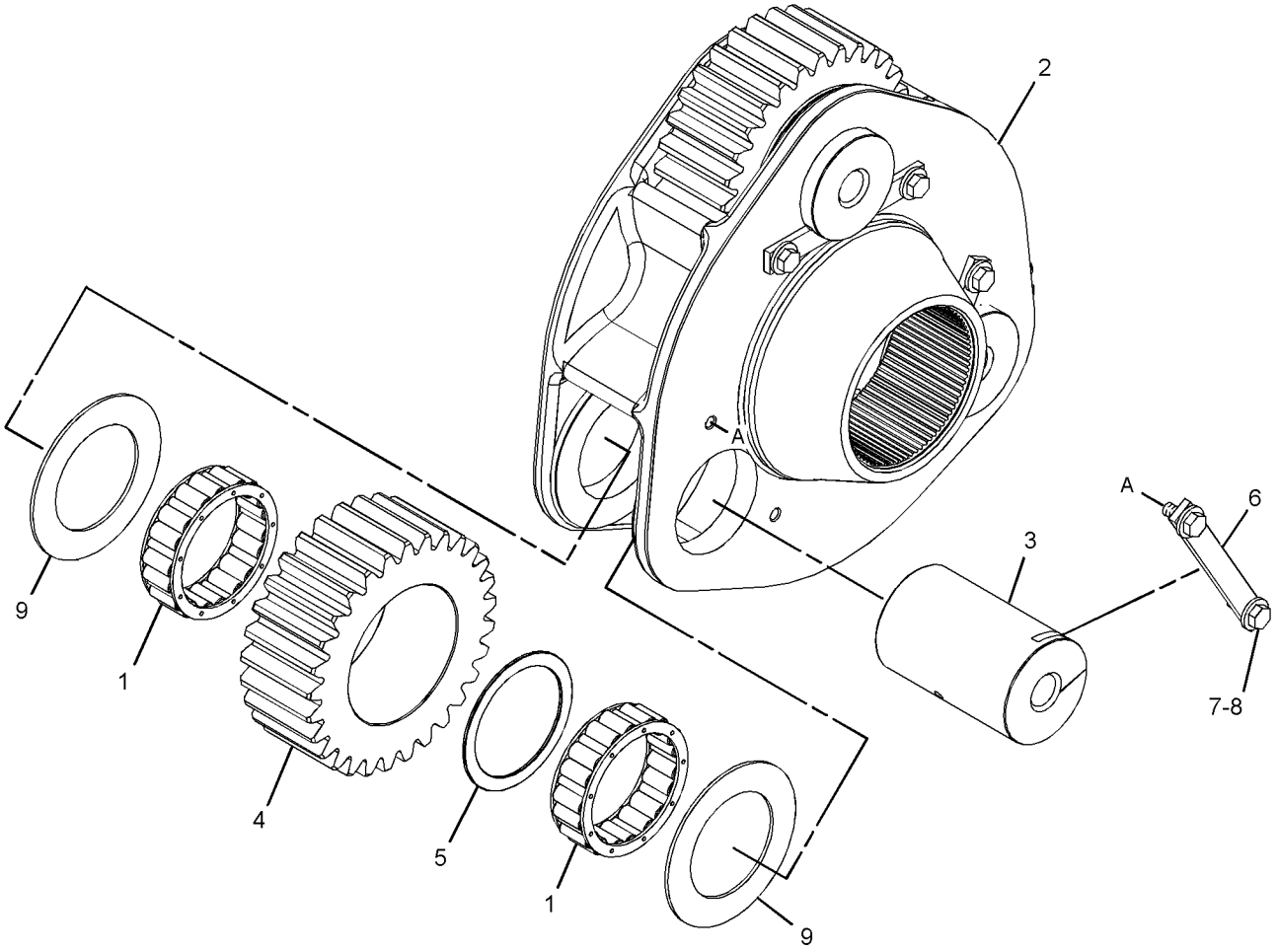

GRAPHIC #1 **<END>** g01323840

381-0673 CASE & PARTS GP-PLANETARY

S/N: DM31-UP

PART OF 381-0675 TRANSMISSION AR

SMCS-3030, 3064, 3160 **i06144782**

NOTE	REF NO	GRAPHIC REF	PART NUMBER	QTY	PART NAME 1 2 3 4 5 6 (PRODUCT LEVEL)	SEE PAGE
	1	2	**8E-5157**	4	RACE-BEARING OUTER	
	2	1	**250-0951**	1	RACE-BEARING	
	3	1	**250-0953**	1	RACE-BEARING	
	4	2	**2H-6489**	1	RACE-BEARING OUTER	
	5	1	**5P-2304**	2	RACE & ROLLER AS	
	6	1	**2S-3029**	1	BALL BEARING	
	7	1	**6K-4718**	1	BEARING	
	8	2	**6V-0852**	1	CAP-DUST	
	9	2	**6V-1720**	1	PLATE-SERIAL NUMBER (TRANSMISSION)	
	10	2	**9W-1454**	4	COVER	
	11	1	**9W-6465**	1	RETAINER-BEARING	
	12	1	**145-8039**	3	LOCK	
	13	2	*164-5567*	1	COUPLER AS-QUICK DISCONNECT (MALE)	
		2	**6V-3965**	1	FITTING (QUICK DISCONNECT)	
		2	**214-7568**	1	SEAL-O-RING	
	14	2	*165-4929*	2	PLUG AS-MAGNETIC (AXLE OIL DRAIN)	
					(EACH INCLUDES)	
		2	**5P-4484**	1	PLUG-MAGNETIC	
		2	**7M-8485**	1	SEAL-O-RING	
	15	1	**188-2162**	1	COVER	
	16	1	*197-4977*	1	PLUG AS	
		1	**5P-4483**	1	PLUG	
		1	**7M-8485**	1	SEAL-O-RING	
	17	1	**233-8134**	1	GEAR AS (44-TEETH)	
		1	**4K-8603**	1	PLUG-CUP	
	18	1	**251-6673**	1	FILTER-MAGNETIC (TRANSMISSION SUMP)	
	19	1	**251-6674**	1	SCREEN-SUCTION (TRANSMISSION SUMP)	
	20	2	**253-5303**	1	GUARD	
	21	2	**253-5322**	2	GUARD	
	22	1	**263-7429**	1	TUBE AS	
	23	1	**290-3263**	1	PLATE	
	24	2	**299-8905**	1	PLATE AS	
M		2	**8T-3490**	6	NUT-WELD (M10X1.5-THD)	
	25	2	**322-3260**	1	BRACKET AS	
M		2	**8T-3851**	1	BOSS-WELD (M10X1.5X17.5-MM)	
	26	2	**345-1999**	1	PLATE AS	
	27	1	**431-8814**	1	COVER AS	
		1	**5M-7937**	2	DOWEL	
	28	1	**455-7895**	1	CASE AS-TRANSMISSION	
		1	**6Y-3083**	6	PLUG	
		1	**7T-6496**	2	PLUG	
		1	**8M-6521**	2	DOWEL	
	29	2	*148-8309*	1	ADAPTER AS	
		2	**2P-8421**	1	ADAPTER-O-RING	
		2	**3D-2824**	1	SEAL-O-RING	
	31	2	*148-8409*	5	PLUG AS	
					(EACH INCLUDES)	
		2	**3D-2824**	1	SEAL-O-RING	
		2	**9S-8008**	1	PLUG	
M	32	1	**160-8492**	1	BOLT (M10X1.5X85-MM)	
	33	2	*164-5619*	5	PLUG AS	
					(EACH INCLUDES)	
		2	**2M-9780**	1	SEAL-O-RING	
		2	**9S-8006**	1	PLUG	
	34	1,2	*183-7262*	2	PLUG AS	
					(EACH INCLUDES)	
		1,2	**2S-4078**	1	SEAL-O-RING	
		1,2	**9S-8010**	1	PLUG	

381-0673 **CASE & PARTS GP-PLANETARY (*contd.*)** **i06144782**

NOTE	REF NO	GRAPHIC REF	PART NUMBER	QTY	PART NAME 1 2 3 4 5 6 (PRODUCT LEVEL)	SEE PAGE
	35	1	**1B-5170**	1	PLUG-PIPE	
	36	1	**3K-0715**	1	SEAL-O-RING	
	37	1	**4J-8996**	2	SEAL-O-RING	
	38	1	**5F-3092**	1	SEAL-O-RING	
	39	2	**5P-3863**	4	SEAL-O-RING	
M	40	1	**6V-1820**	1	BOLT (M10X1.5X30-MM)	
M	41	1	**6V-3940**	4	BOLT (M8X1.25X25-MM)	
M	42	1	**6V-8212**	1	BOLT (M10X1.5X16-MM)	
M	43	1	**8C-3210**	2	BOLT (M6X1X16-MM)	
	44	2	**8T-4121**	50	WASHER-HARD (11X21X2.5-MM THK)	
M	45	2	**8T-4137**	7	BOLT (M10X1.5X20-MM)	
M	46	2	**8T-4178**	43	BOLT (M10X1.5X90-MM)	
M	47	1,2	**8T-4189**	5	BOLT (M8X1.25X20-MM)	
M	48	2	**8T-4908**	12	BOLT (M8X1.25X25-MM)	
	49	2	**9M-1974**	2	WASHER-HARD (8.8X16X2-MM THK)	
	50	1	**9W-7038**	1	RING-SNAP	
	51	1	**9X-8256**	2	WASHER (6.6X12X2-MM THK)	
	52	2	*164-4180*	1	PLUG AS	
		2	**7M-8485**	1	SEAL-O-RING	
		2	**9S-4181**	1	PLUG (5/16-12-THD)	
	53	2	**455-9193**	1	VALVE GP-RELIEF	
		2	**2H-3932**	1	SEAL-O-RING	
		2	**6V-8116**	1	RING-RETAINING	
		2	**136-9301**	1	SPRING	
		2	**456-0097**	1	PLUG AS	
		2	**9J-8580**	1	PIN	
	54	2	*148-8406*	5	PLUG AS	
					(EACH INCLUDES)	
		2	**7M-8485**	1	SEAL-O-RING	
		2	**9S-9334**	1	PLUG-O-RING	
	55	1	**6V-5759**	1	SEAL-O-RING	
B	56	1	**1U-8846**		SEALANT-GASKET	

B - USE AS REQUIRED
M - METRIC PART

381-0673 **CASE & PARTS GP-PLANETARY (*contd.*)** **i06144782**

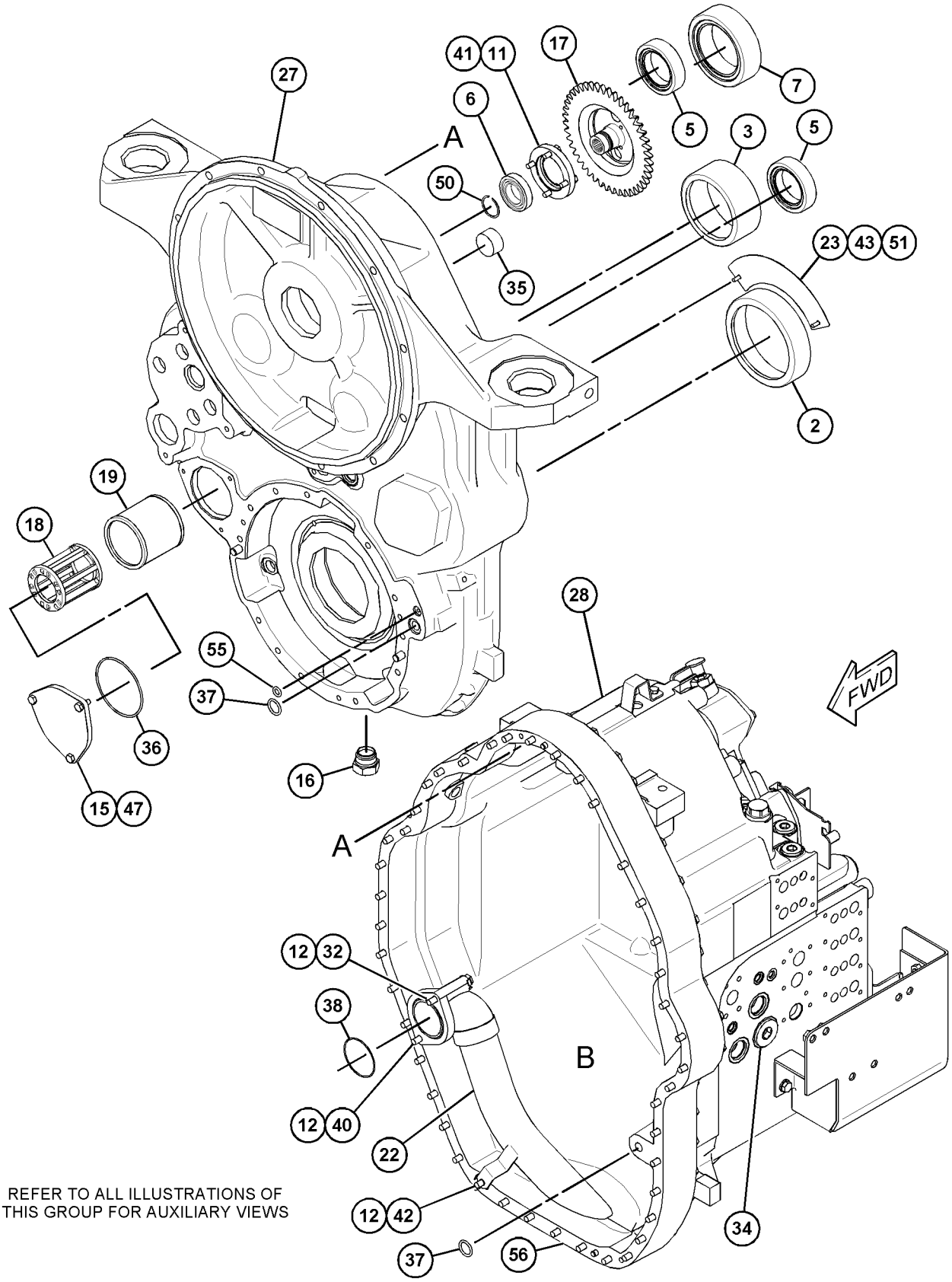

REFER TO ALL ILLUSTRATIONS OF THIS GROUP FOR AUXILIARY VIEWS

GRAPHIC #1 g03830690

381-0673 **CASE & PARTS GP-PLANETARY (*contd.*)** **i06144782**

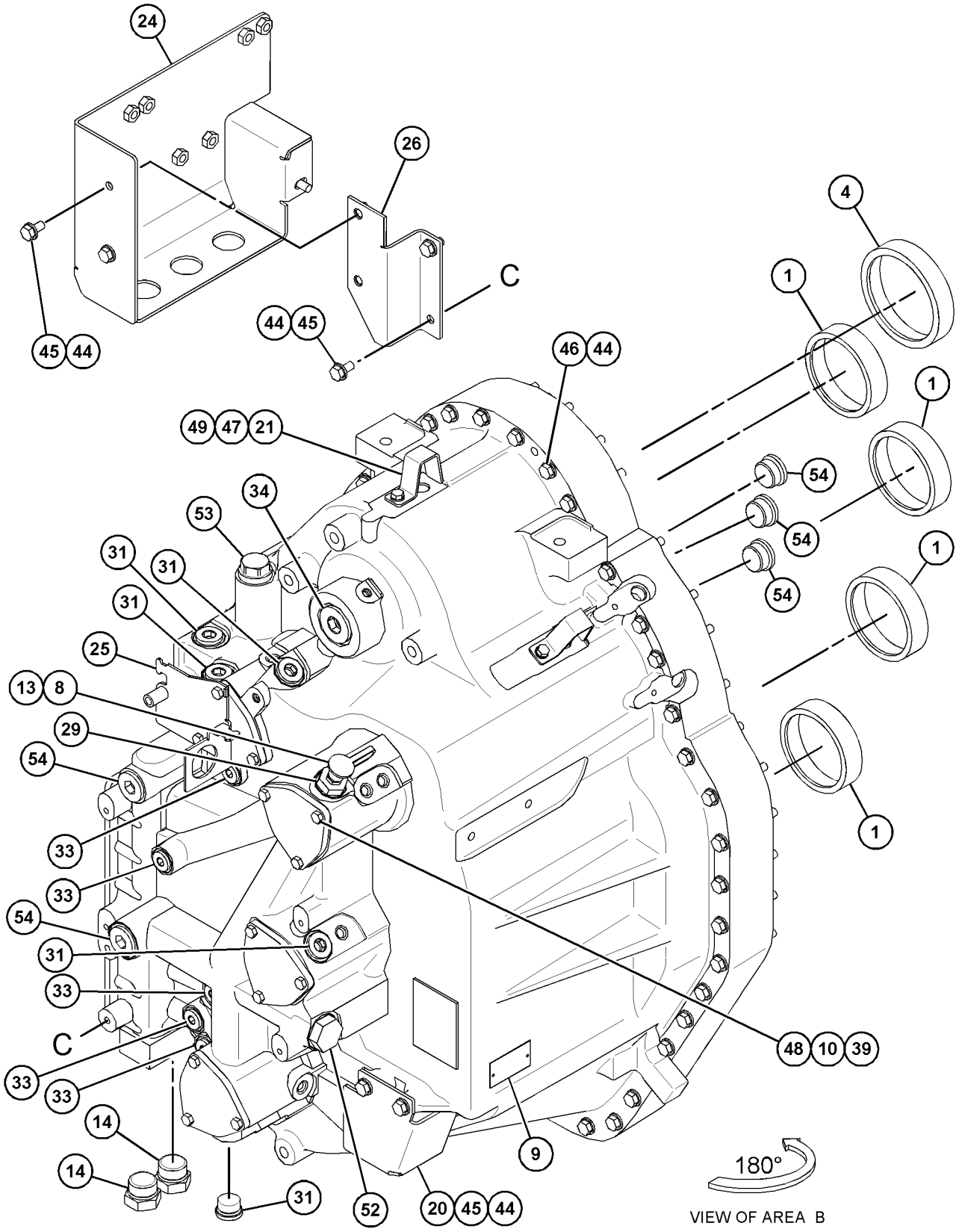

GRAPHIC #2 **<END>** g03828781

6G-1740 CHAIN GP-DRIVE

S/N: E9Y1-UP

PART OF 386-6764 AXLE AR-REAR

SMCS-3261, 4063

i00817372

NOTE	REF NO	GRAPHIC REF	PART NUMBER	QTY	PART NAME 1 2 3 4 5 6 (PRODUCT LEVEL)	SEE PAGE
	1	1	**6G-1601**	4	CHAIN GP	
					(EACH INCLUDES)	
	2	1	**6G-1602**	1	LINK-CONNECTING (MASTER)	

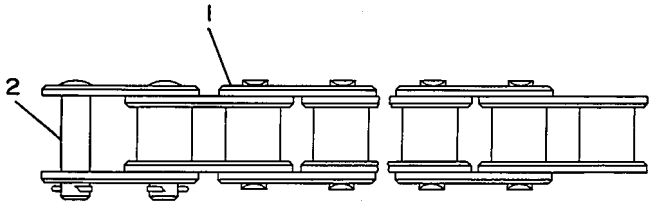

GRAPHIC #1

<END>

g00108248

455-7887 CLUTCH GP-TRANSMISSION–FORWARD

S/N: DM31-UP

PART OF 381-0675 TRANSMISSION AR

SMCS-3063, 3155, 3170 **i06140594**

NOTE	REF NO	GRAPHIC REF	PART NUMBER	QTY	PART NAME 1 2 3 4 5 6 (PRODUCT LEVEL)	SEE PAGE
	1	1	**4D-7889**	2	RING	
	2	1	**5P-3114**	2	SEAL-O-RING	
	3	1	**6I-8911**	16	DISC-FRICTION	
	4	1	**455-7859**	1	CARRIER-SEAL	
	5	1	**7G-4822**	3	RING-SEAL	
	6	1	**7T-4897**	1	DISC-THRUST	
	7	1	**8E-8319**	4	DISC-THRUST	
	8	1	**8F-3469**	4	SEAL-O-RING	
	9	1	**9F-8477**	2	RING-METAL SEAL	
	10	1	**9W-2029**	1	RACE-THRUST BEARING	
	11	1	**415-1706**	2	RING-SEAL	
	12	1	**165-0488**	2	RING-SEAL	
	13	1	**466-3030**	2	PISTON	
	14	1	**263-1649**	2	SLIDER	
	15	1	**451-5616**	1	SPACER (61X95.25X43.46-MM THK)	
	16	1	**246-8793**	2	RING-RETAINING	
	17	1	**246-8794**	2	RETAINER	
	18	1	**442-6257**	2	SPRING-WAVE	
	19	1	**248-2222**	2	PLATE-END	
R	20	1	**248-2226**	16	PLATE-SEPARATOR	
	21	1	**258-7562**	1	GEAR (50-TEETH)	
	22	1	**258-7561**	1	GEAR (43-TEETH)	
	23	1	**307-4611**	1	SHAFT AS	
	23A	1	**1P-0604**	1	PLUG-CUP	
	24	1	**140-8010**	1	BEARING AS	
	25	1	**5H-8985**	1	PIN-SPRING	
M	26	1	**6V-1819**	2	BOLT (M10X1.5X100-MM)	
	27	1	**8E-1263**	2	BEARING-ROLLER	
	28	1	**8E-6558**	1	RACE-ROLLER BEARING	
	29	1	**415-1704**	2	SEAL-O-RING	

M - METRIC PART
R - REMFG PART MAY BE AVAILABLE

455-7887 **CLUTCH GP-TRANSMISSION (*contd.*)** **i06140594**

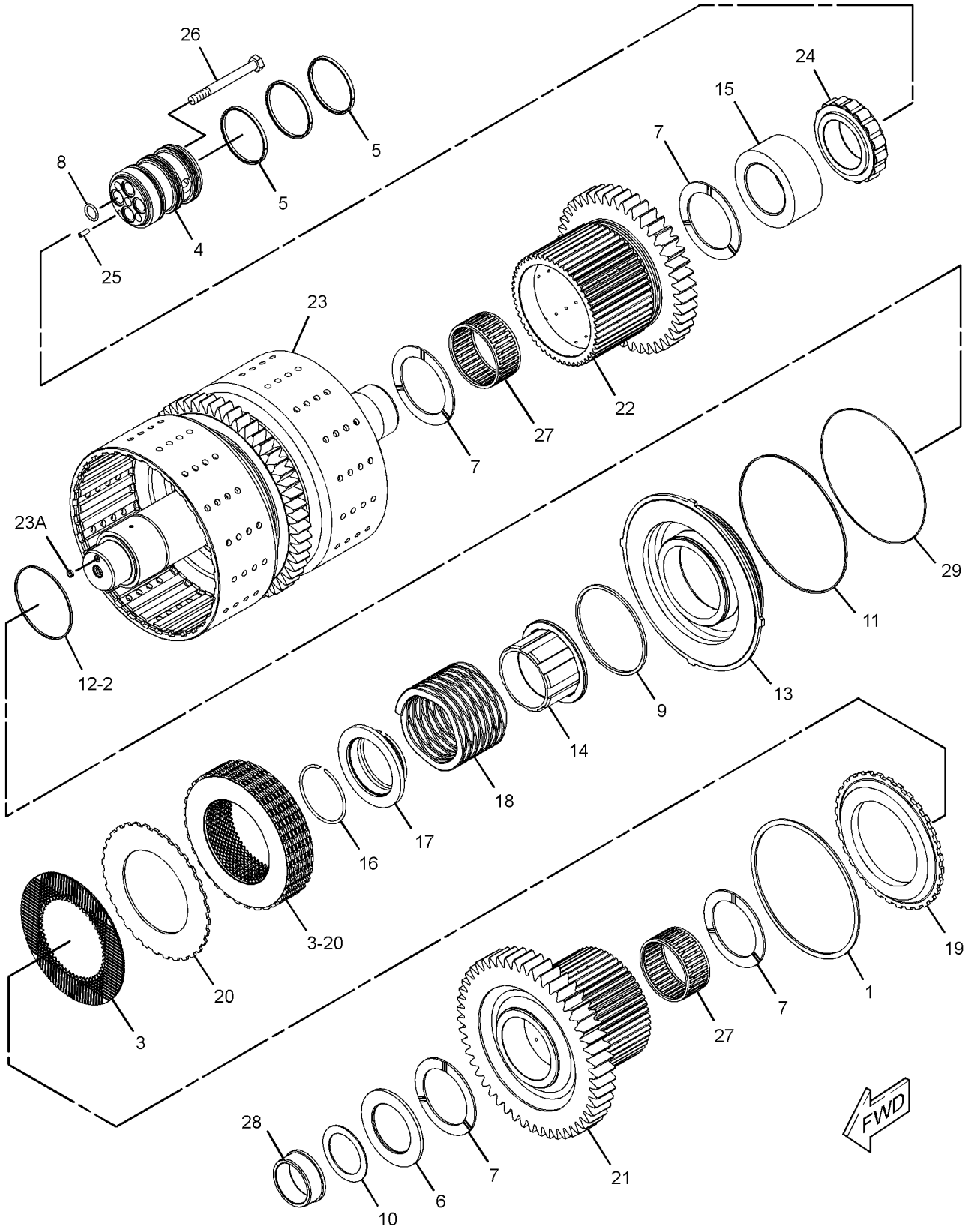

GRAPHIC #1 **<END>** g03322261

455-7888 CLUTCH GP-TRANSMISSION—REVERSE, 2ND

S/N: DM31-UP

PART OF 381-0675 TRANSMISSION AR

SMCS-3063, 3155, 3170 **i06147700**

NOTE	REF NO	GRAPHIC REF	PART NUMBER	QTY	PART NAME 1 2 3 4 5 6 (PRODUCT LEVEL)	SEE PAGE
	1	1	**466-3019**	1	PISTON	
	2	1	**5P-3114**	2	SEAL-O-RING	
	3	1	**7G-4822**	3	RING-SEAL	
	4	1	**7T-4897**	1	DISC-THRUST	
	5	1	**8E-0401**	12	PLATE-CLUTCH	
	6	1	**8E-8319**	4	DISC-THRUST	
	7	1	**8F-3469**	4	SEAL-O-RING	
	8	1	**9F-8477**	1	RING-METAL SEAL	
	9	1	**163-0343**	12	DISC-FRICTION	
	10	1	**165-0367**	2	PLATE-END	
	11	1	**165-0488**	2	RING-SEAL	
	12	1	**246-8757**	1	GEAR (25-TEETH)	
	13	1	**246-8793**	2	RING-RETAINING	
	14	1	**246-8794**	2	RETAINER	
	15	1	**246-8801**	1	SPRING-WAVE	
	16	1	**258-7564**	1	GEAR (46-TEETH)	
	17	1	**263-1649**	1	SLIDER	
	18	1	**263-1650**	1	SLIDER	
	19	1	**280-6895**	1	GEAR AS	
	19A	1	**6Y-1895**	1	BUSHING	
	20	1	**282-7842**	1	SHAFT AS	
		1	**1P-0604**	1	PLUG-CUP	
	21	1	**291-0996**	1	SPACER AS	
	22	1	**415-1704**	2	SEAL-O-RING	
	23	1	**415-1706**	2	RING-SEAL	
	24	1	**442-6257**	1	SPRING-WAVE	
	25	1	**451-5615**	1	SPACER	
	26	1	**455-7859**	1	CARRIER-SEAL	
	27	1	**466-3025**	1	PISTON	
	28	1	**140-8010**	1	BEARING AS	
	29	1	**5H-8985**	1	PIN-SPRING	
	30	1	**6V-1586**	2	RING-RETAINING	
M	31	1	**6V-1819**	2	BOLT (M10X1.5X100-MM)	
	32	1	**8E-1263**	1	BEARING-ROLLER	
	33	1	**8E-6558**	1	RACE-ROLLER BEARING	
	34	1	**9W-2029**	1	RACE-THRUST BEARING	

M - METRIC PART

455-7888 **CLUTCH GP-TRANSMISSION (*contd.*)** **i06147700**

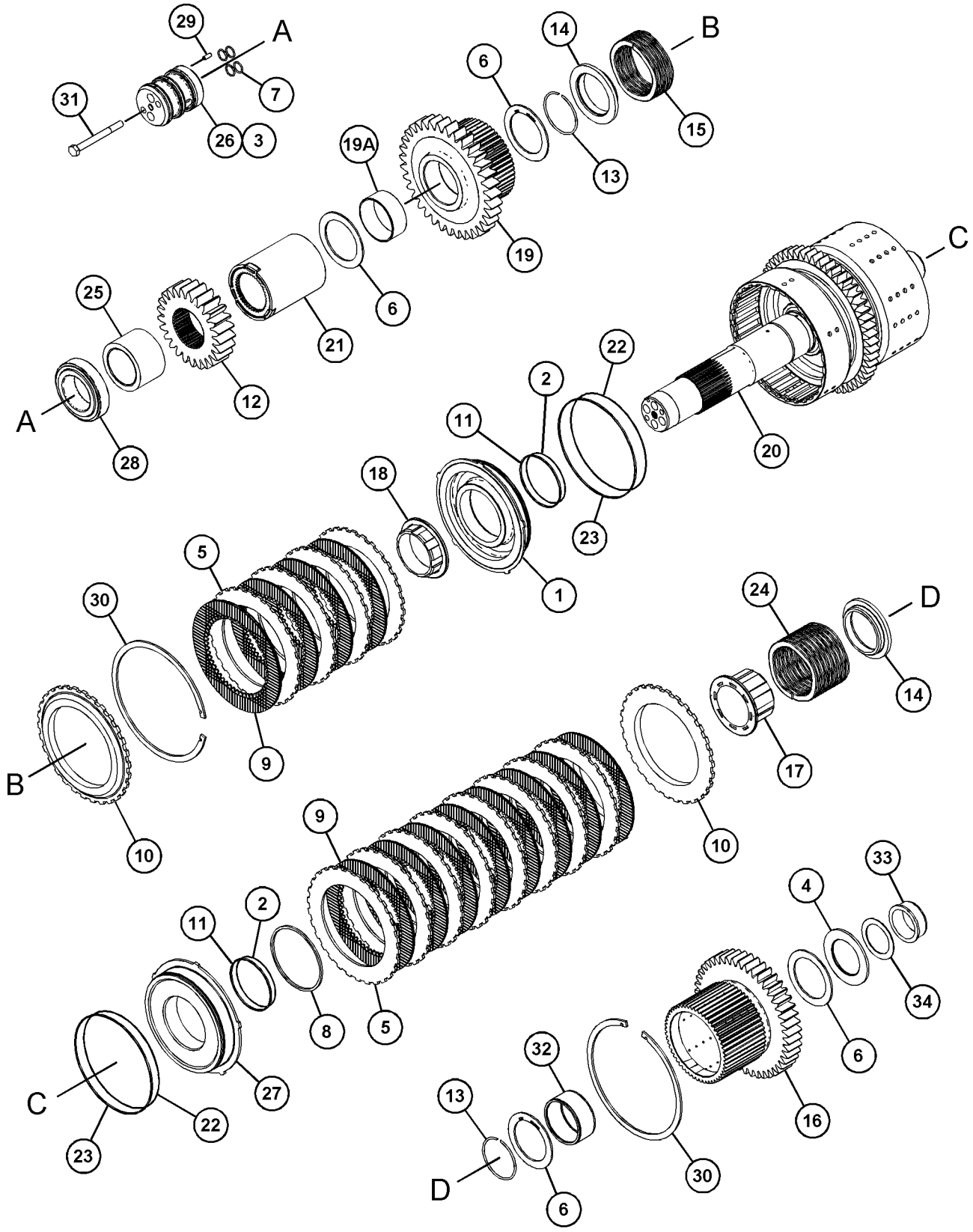

GRAPHIC #1 **<END>** g03839381

455-7889 CLUTCH GP-TRANSMISSION–FIRST, THIRD

S/N: DM31-UP

PART OF 381-0675 TRANSMISSION AR

SMCS-3063, 3155, 3170

i06140595

NOTE	REF NO	GRAPHIC REF	PART NUMBER	QTY	PART NAME 1 2 3 4 5 6 (PRODUCT LEVEL)	SEE PAGE
	1	1	**250-0952**	1	BEARING AS-ROLLER	
	2	1	**140-8010**	1	BEARING AS	
	3	1	**5P-3114**	2	SEAL-O-RING	
	4	1	**163-0343**	12	DISC-FRICTION	
	5	1	**455-7859**	1	CARRIER-SEAL	
	6	1	**7G-4822**	3	RING-SEAL	
	7	1	**7T-4897**	1	DISC-THRUST	
	8	1	**8E-0401**	12	PLATE-CLUTCH	
	9	1	**8E-8319**	4	DISC-THRUST	
	10	1	**8F-3469**	4	SEAL-O-RING	
	11	1	**415-1706**	2	RING-SEAL	
	12	1	**165-0367**	2	PLATE-END	
	13	1	**165-0488**	2	RING-SEAL	
	14	1	**323-3935**	1	SHAFT AS	
	15	1	**466-3019**	1	PISTON	
	16	1	**466-3025**	1	PISTON	
	17	1	**263-1649**	1	SLIDER	
	18	1	**323-3933**	1	GEAR (25-TEETH)	
	19	1	**246-8764**	1	GEAR (56-TEETH)	
	20	1	**246-8793**	2	RING-RETAINING	
	21	1	**246-8794**	2	RETAINER	
	22	1	**442-6257**	1	SPRING-WAVE	
	23	1	**246-8801**	1	SPRING-WAVE	
	25	1	**280-6896**	1	GEAR AS (54-TEETH)	
	25A	1	**6Y-2419**	1	BUSHING	
	26	1	**280-6897**	1	GEAR AS (68-TEETH)	
	26A	1	**6Y-2419**	1	BUSHING	
	27	1	**5H-8985**	1	PIN-SPRING	
	28	1	**6V-1586**	2	RING-RETAINING	
M	29	1	**6V-1819**	2	BOLT (M10X1.5X100-MM)	
	30	1	**263-1650**	1	SLIDER	
	31	1	**415-1704**	2	SEAL-O-RING	

M - METRIC PART

455-7889 **CLUTCH GP-TRANSMISSION (*contd.*)** **i06140595**

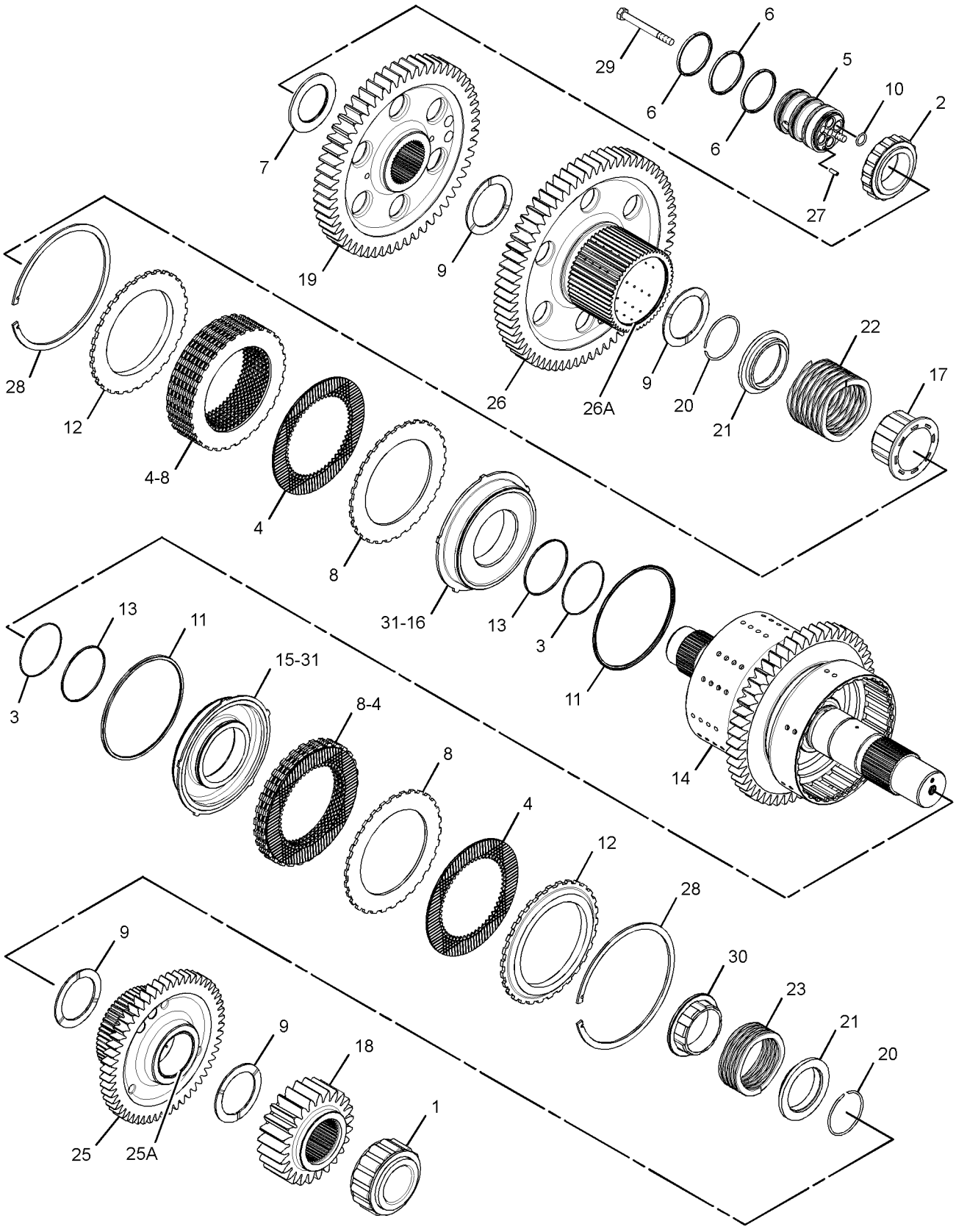

GRAPHIC #1 **<END>** g03322138

455-7891 CLUTCH GP-TRANSMISSION–HIGH, LOW

S/N: DM31-UP

PART OF 381-0675 TRANSMISSION AR

SMCS-3063, 3155, 3170 **i06140596**

NOTE	REF NO	GRAPHIC REF	PART NUMBER	QTY	PART NAME 1 2 3 4 5 6 (PRODUCT LEVEL)	SEE PAGE
	1	1	**140-8010**	1	BEARING AS	
	2	2	**6B-5154**	1	BEARING AS-ROLLER	
	3	2	**4D-7889**	1	RING	
	4	1,2	**5P-3114**	2	SEAL-O-RING	
	5	2	**6I-8911**	8	DISC-FRICTION	
	6	1	**163-0343**	5	DISC-FRICTION	
	7	1	**455-7859**	1	CARRIER-SEAL	
	8	1	**7G-4822**	3	RING-SEAL	
	9	1	**8E-0401**	5	PLATE-CLUTCH	
	10	1	**8E-8319**	2	DISC-THRUST	
	11	1	**8F-3469**	4	SEAL-O-RING	
	12	1	**415-1706**	1	RING-SEAL	
	13	1	**165-0367**	1	PLATE-END	
	14	1,2	**165-0488**	2	RING-SEAL	
	15	2	**425-4618**	1	SHAFT AS	
		2	**1P-0604**	1	PLUG-CUP	
	16	1	**466-3019**	1	PISTON	
	17	2	**246-8774**	2	DISC-THRUST	
	18	1	**246-8793**	1	RING-RETAINING	
	19	1	**246-8794**	1	RETAINER	
	20	2	**246-8795**	1	RING-RETAINING	
	21	2	**246-8796**	1	RETAINER	
	22	2	**246-8797**	1	SEAL-PISTON	
	23	1,2	**442-6257**	2	SPRING-WAVE	
	24	2	**248-2222**	1	PLATE-END	
R	25	2	**248-2226**	8	PLATE-SEPARATOR	
	26	2	**464-2399**	1	PISTON	
	27	1	**260-7596**	1	ROTOR	
	28	1	**263-1649**	1	SLIDER	
	29	2	**273-2827**	1	SPACER (75.5X110X4-MM THK)	
	30	2	**280-6898**	1	GEAR AS	
	30A	2	**246-8761**	2	BUSHING	
	31	1	**434-4395**	1	GEAR AS	
	31A	1	**9W-6467**	2	BUSHING	
		1	**427-1377**	1	GEAR	
	32	1	**5H-8985**	1	PIN-SPRING	
	33	1	**6V-1586**	1	RING-RETAINING	
M	34	1	**6V-1819**	2	BOLT (M10X1.5X100-MM)	
	35	1	**415-1704**	1	SEAL-O-RING	

M - METRIC PART
R - REMFG PART MAY BE AVAILABLE

455-7891 **CLUTCH GP-TRANSMISSION (*contd.*)** **i06140596**

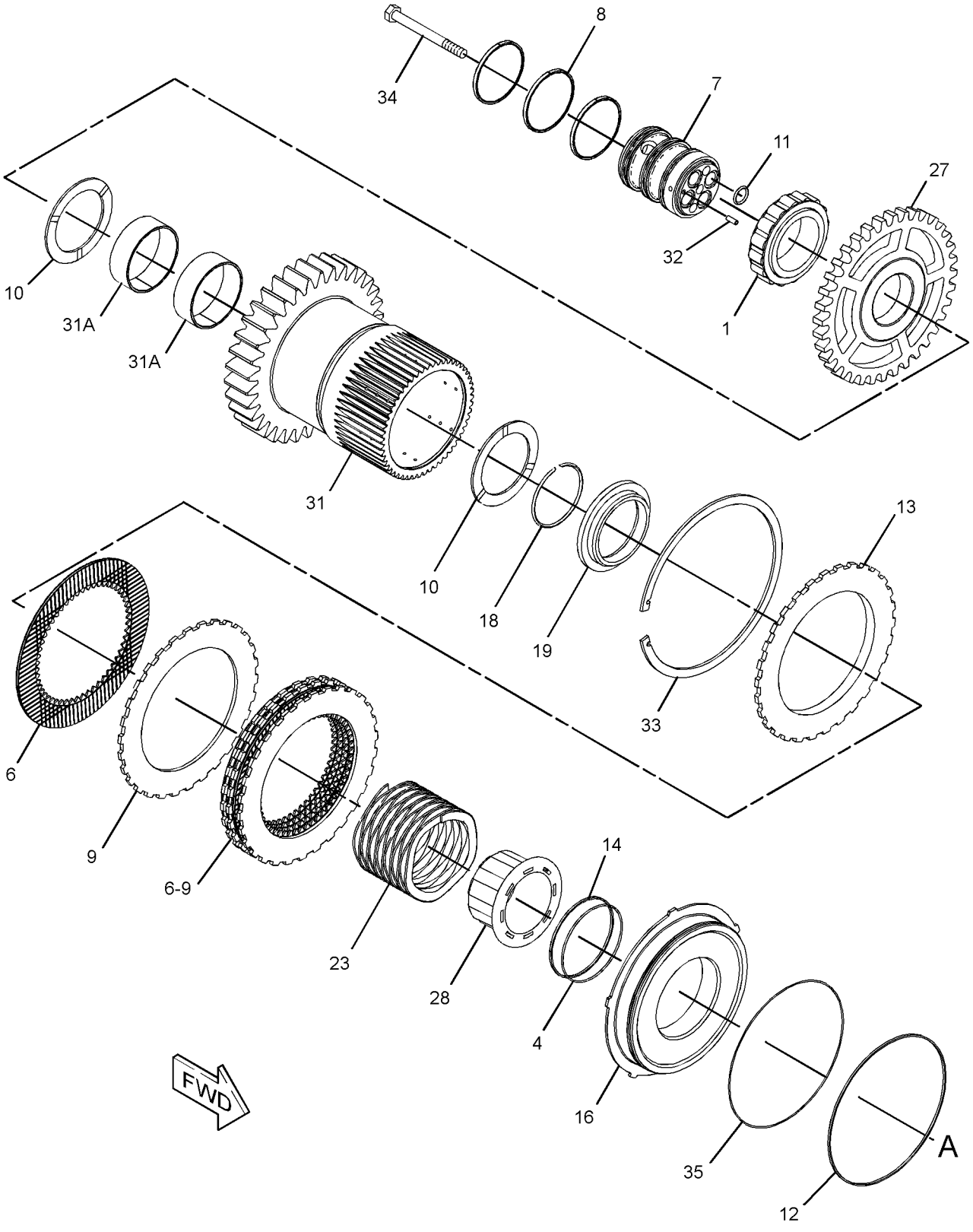

GRAPHIC #1 g03826033

455-7891 **CLUTCH GP-TRANSMISSION (*contd.*)** **i06140596**

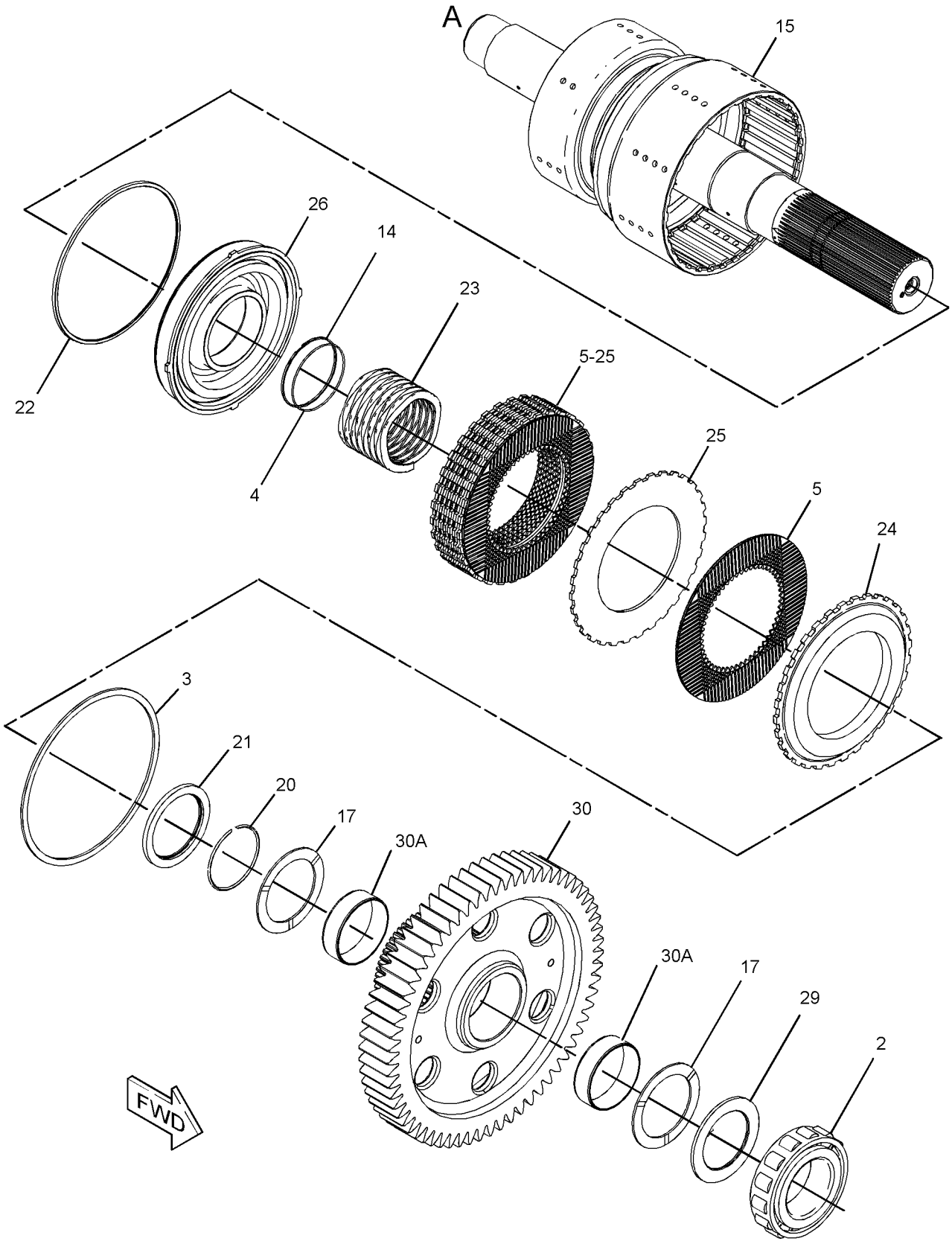

GRAPHIC #2 **<END>** g03825496

390-2936 CONTROL GP-DIFFERENTIAL LOCK

S/N: E9Y1-UP

PART OF 386-6764 AXLE AR-REAR

SMCS-3264 **i06144834**

NOTE	REF NO	GRAPHIC REF	PART NUMBER	QTY	PART NAME 1 2 3 4 5 6 (PRODUCT LEVEL)	SEE PAGE
	1	1	*164-5567*	1	COUPLER AS-QUICK DISCONNECT (MALE)	
		1	**6V-3965**	1	FITTING (QUICK DISCONNECT)	
		1	**214-7568**	1	SEAL-O-RING	
	2	1	**288-9681**	1	TUBE AS	
	3	1	**288-9682**	1	TUBE AS	
	4	1	**291-8099**	1	PLATE AS	
	5	1	*148-8318*	1	CONNECTOR AS	
		1	**3K-0360**	1	SEAL-O-RING	
		1	**6V-8397**	1	SEAL-O-RING	
		1	**6V-8634**	1	CONNECTOR	
	6	1	*148-8368*	1	ELBOW AS	
		1	**3J-1907**	1	SEAL-O-RING	
		1	**4J-5477**	1	SEAL-O-RING	
		1	**6V-8627**	1	ELBOW	
	7	1	*148-8378*	1	ELBOW AS	
		1	**3J-1907**	1	SEAL-O-RING	
		1	**6V-8397**	1	SEAL-O-RING	
		1	**6V-8724**	1	ELBOW	
	8	1	*148-8443*	1	TEE AS	
		1	**3J-1907**	1	SEAL-O-RING	
		1	**6V-8397**	1	SEAL-O-RING	
		1	**7X-2459**	1	TEE-O-RING	
Y	9	1	**250-2139**	1	VALVE & MTG GP-SOLENOID (DIFFERENTIAL LOCK)	392
	10	1	**4P-7581**	1	CLIP	
	11	1	**6V-0852**	1	CAP-DUST	
	12	1	**8T-4121**	2	WASHER-HARD (11X21X2.5-MM THK)	
M	13	1	**8T-5005**	2	BOLT (M10X1.5X70-MM)	

M - METRIC PART
Y - SEPARATE ILLUSTRATION

390-2936 **CONTROL GP-DIFFERENTIAL LOCK (*contd.*)** **i06144834**

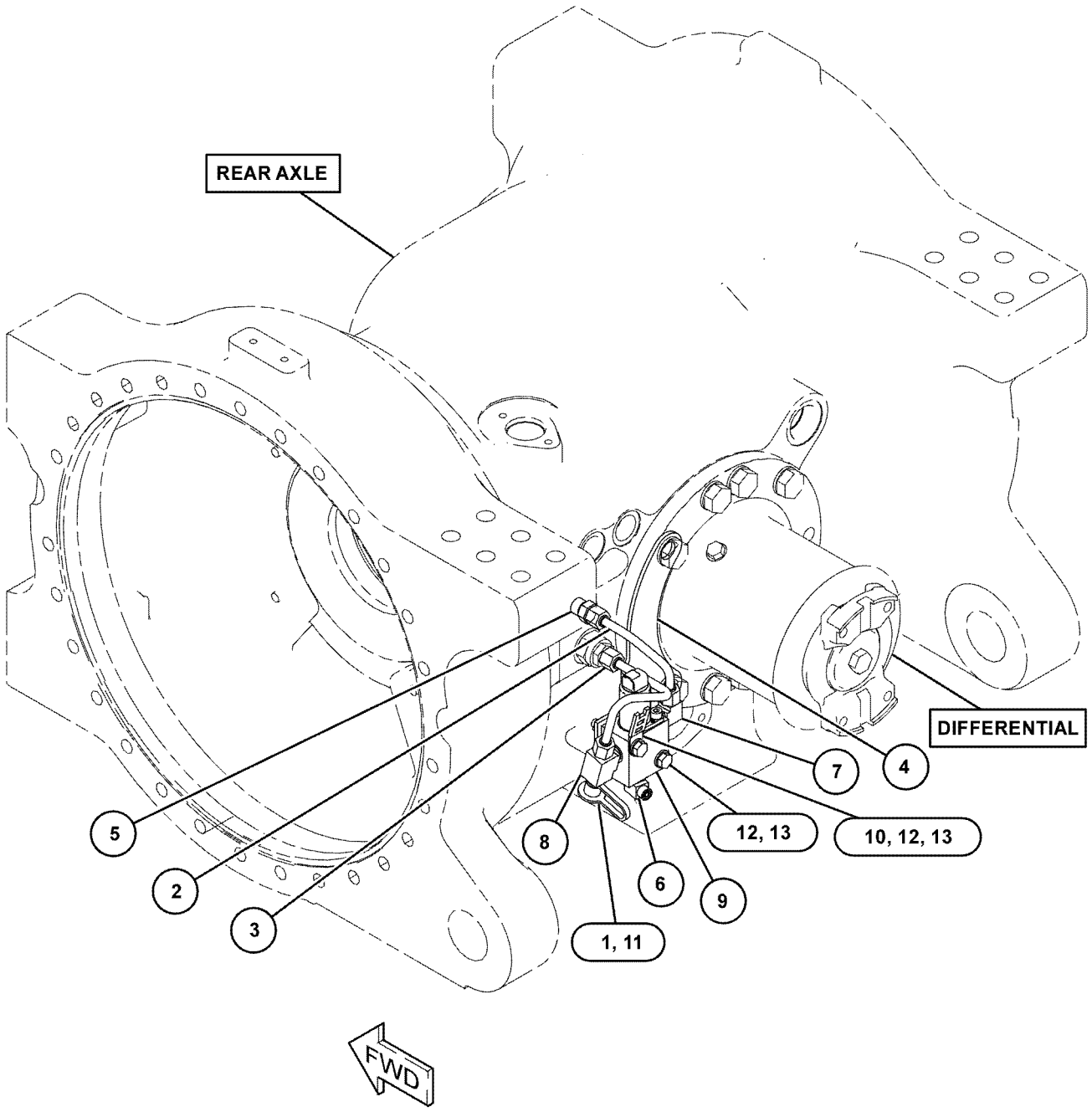

GRAPHIC #1 **<END>** g03829702

381-0672 CONTROL GP-TRANSMISSION HYD

S/N: DM31-UP

PART OF 381-0675 TRANSMISSION AR

SMCS-3073, 3167 **i06144781**

NOTE	REF NO	GRAPHIC REF	PART NUMBER	QTY	PART NAME 1 2 3 4 5 6 (PRODUCT LEVEL)	SEE PAGE
	1	1	**2P-1692**	1	SEAL-O-RING	
	2	1	**6D-7889**	8	SEAL-O-RING	
	3	1	**148-1925**	1	VALVE-RELIEF (COOLER BYPASS)	
	4	2	**155-5114**	3	SPACER-SPECIAL	
Y	5	2	**214-2484**	2	SENSOR GP-SPEED (TRANSMISSION OUTPUT)	249
Y	6	2	**214-2485**	1	SENSOR GP-SPEED (TRANSMISSION INPUT)	250
Y	6A	2	**214-2485**	1	SENSOR GP-SPEED (TRANSMISSION INTERMEDIATE 2)	250
Y	6B	2	**214-2485**	1	SENSOR GP-SPEED (TRANSMISSION INTERMEDIATE 1)	250
Y	6C	2	**214-2485**	1	SENSOR GP-SPEED (TRANSMISSION INTERMEDIATE 3)	250
Y	7	1	**244-3114**	8	VALVE GP-MODULATING (24-VOLT)	393
	8	2	**247-4993**	1	SPACER	
Y	9	1	**252-2237**	1	VALVE GP-SOLENOID (TRANSMISSION CONTROL)	400
Y	10	1	**257-5026**	1	VALVE GP-RELIEF (TRANSMISSION CONTROL VALVE)	398
	11	1	**260-7595**	1	VALVE-RELIEF	
	12	2	**288-1401**	1	BRACKET	
	13	1	**290-4134**	1	VALVE-RELIEF (TRANSMISSION)	
	14	1	**344-7389**	1	SENSOR GP-PRESSURE (TRANSMISSION OIL)	
Y	15	2	**477-8215**	1	HARNESS AS-TRANSMISSION	193
	16	2	**365-6773**	1	CONTROL GP-UNPROGRAMMED (TRANSMISSION)	
	17	2	**104-6202**	1	CLIP	
	18	2	**130-5300**	1	CLIP	
	19	1,2	**132-5789**	10	CLIP	
	20	1	*165-4931*	4	ELBOW AS	
					(EACH INCLUDES)	
		1	**3J-1907**	1	SEAL-O-RING	
		1	**6V-8077**	1	ELBOW	
	21	1	**214-7568**	1	SEAL-O-RING	
	22	1	**238-0112**	1	SENSOR GP-TEMPERATURE (TRANSMISSION OIL)	
	23	1,2	**277-1873**	3	CLIP	
	24	1	**2H-1142**	1	RING-RETAINING	
	25	1	**2K-8199**	1	SEAL-O-RING	
	26	1,2	**3S-2093**	28	STRAP-CABLE	
	27	1,2	**4P-7581**	6	CLIP	
	28	1,2	**4P-8134**	2	CLIP	
M	29	1	**5P-8347**	2	BOLT (M8X1.25X70-MM)	
	30	1	**6F-6672**	1	SEAL-O-RING	
	31	1	**6V-0852**	8	CAP-DUST	
M	32	1,2	**6V-5215**	5	BOLT (M8X1.25X16-MM)	
M	33	2	**6V-5222**	3	BOLT (M8X1.25X85-MM)	
	34	1,2	**6V-5839**	3	WASHER (11X21X2.5-MM THK)	
M	35	1	**6V-6317**	1	BOLT (M10X1.5X20-MM)	
	36	1	**6V-9028**	1	SEAL-O-RING	
M	37	2	**8C-5748**	1	BOLT (M8X1.25X55-MM)	
M	38	1	**8T-0100**	20	BOLT (M8X1.25X60-MM)	
M	39	1	**8T-1158**	1	BOLT-SOCKET HEAD (M8X1.25X20-MM)	
	40	2	**8T-4121**	1	WASHER-HARD (11X21X2.5-MM THK)	
M	41	2	**8T-4137**	1	BOLT (M10X1.5X20-MM)	
M	42	2	**8T-4190**	1	BOLT (M16X2X25-MM)	
	43	2	**8T-9655**	8	MOUNT-ISOLATION	
	44	1,2	**9M-1974**	27	WASHER-HARD (8.8X16X2-MM THK)	
	45	2	**9N-0869**	4	WASHER-HARD (8.8X25.5X2-MM THK)	
	46	1	**9X-4609**	1	SEAL-O-RING	
	47	2	**9X-8257**	1	WASHER (17.5X30X3.5-MM THK)	
M	48	2	**6V-4248**	2	BOLT (M10X1.5X25-MM)	

M - METRIC PART
Y - SEPARATE ILLUSTRATION

381-0672 **CONTROL GP-TRANSMISSION HYD (*contd.*)** **i06144781**

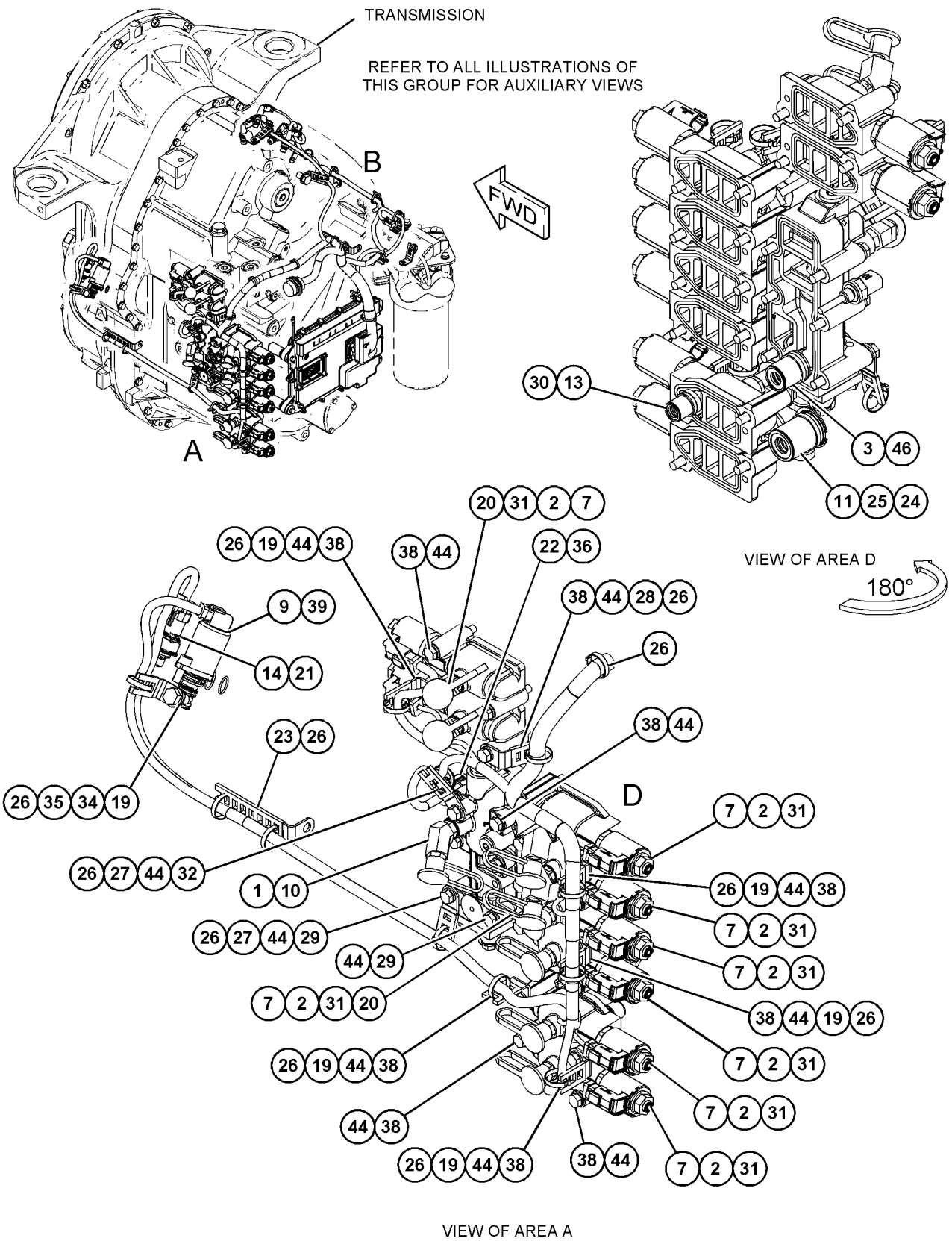

GRAPHIC #1 g03837828

381-0672 **CONTROL GP-TRANSMISSION HYD (*contd.*)** **i06144781**

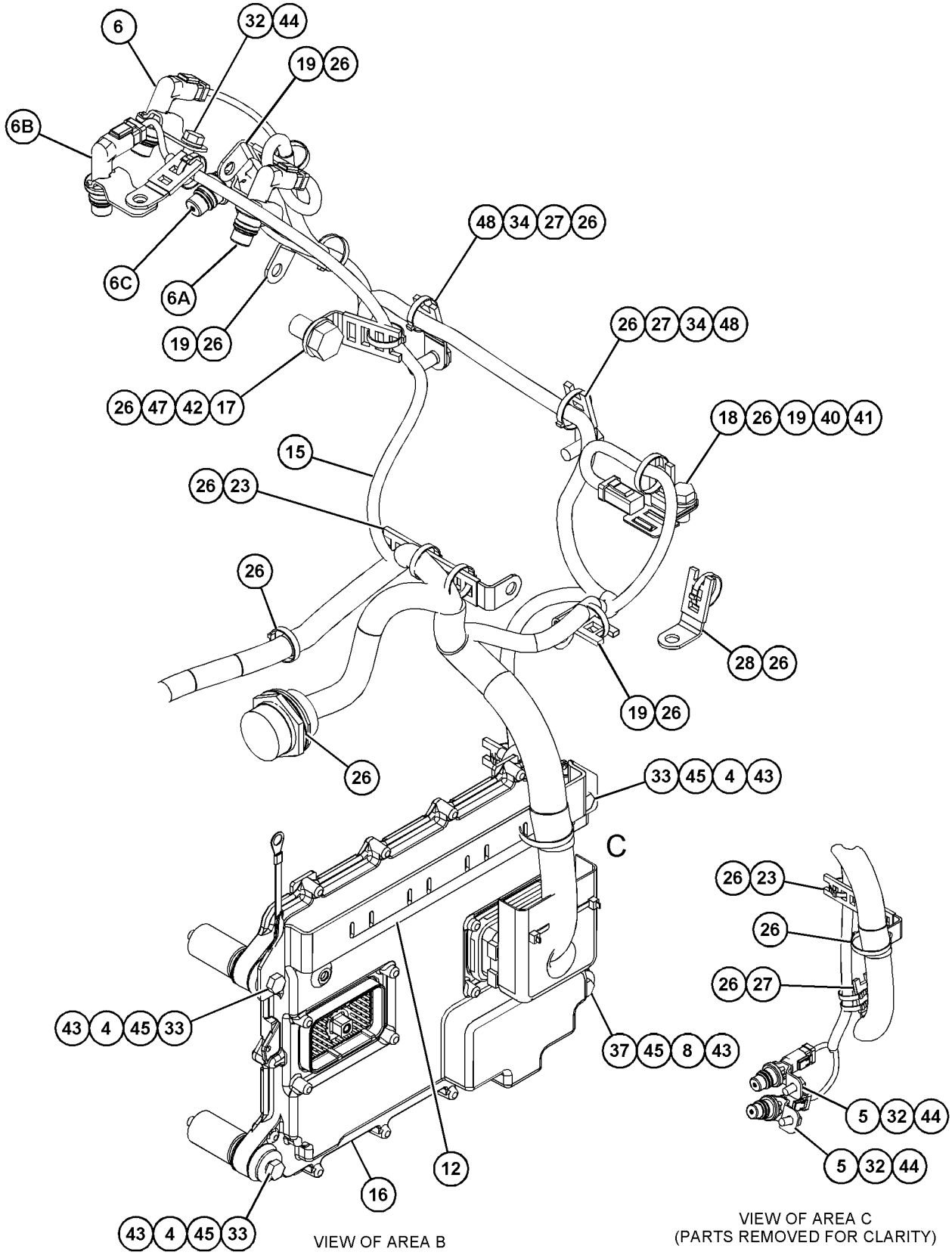

VIEW OF AREA B

VIEW OF AREA C
(PARTS REMOVED FOR CLARITY)

GRAPHIC #2 **<END>** g03837829

399-4038 COOLER GP-TRANSMISSION OIL

S/N: TXX1-UP

PART OF 423-2422 LINES GP-WATER

AN ATTACHMENT

SMCS-1375 **i06133359**

NOTE	REF NO	GRAPHIC REF	PART NUMBER	QTY	PART NAME 1 2 3 4 5 6 (PRODUCT LEVEL)	SEE PAGE
	1		**2S-0795**	2	GASKET	
	2		**8M-9307**	1	PLUG	
	3		**8S-4304**	1	BONNET-XMSN OIL COOLER	
	4		**124-5043**	1	COUPLING	
R	5		**127-5537**	1	CORE AS (TRANSMISSION OIL)	
	6		**451-7256**	1	BRACKET	
	7		**418-2295**	1	ELBOW	
Y	8		*420-1700*	1	LINES GP-WATER	90
	9		**0S-1595**	2	BOLT (1/2-13X1.25-IN)	
	10		**117-3036**	1	SEAL-O-RING	
	11		**1A-1460**	4	BOLT (1/2-13X2-IN)	
	12		**2N-5243**	2	SEAL-O-RING	
	13		*353-5144*	1	PLUG AS	
			6V-5064	1	SEAL-O-RING	
			9S-9334	1	PLUG-O-RING	
	14		**3E-4353**	2	WASHER-HARD (11X25X3-MM THK)	
	15		**5P-8245**	6	WASHER-HARD (13.5X25.5X3-MM THK)	
	16		**6F-7062**	1	WASHER (12.7X19.05X1.83-MM THK)	
M	17		**6V-1820**	2	BOLT (M10X1.5X30-MM)	
M	18		**6V-5219**	3	BOLT (M8X1.25X40-MM)	
	19		**9M-1974**	3	WASHER-HARD (8.8X16X2-MM THK)	
	20		**9X-8876**	2	BOLT (1/2-13X4.75-IN)	

M - METRIC PART
R - REMFG PART MAY BE AVAILABLE
Y - SEPARATE ILLUSTRATION

399-4038 **COOLER GP-TRANSMISSION OIL (*contd.*)** **i06133359**

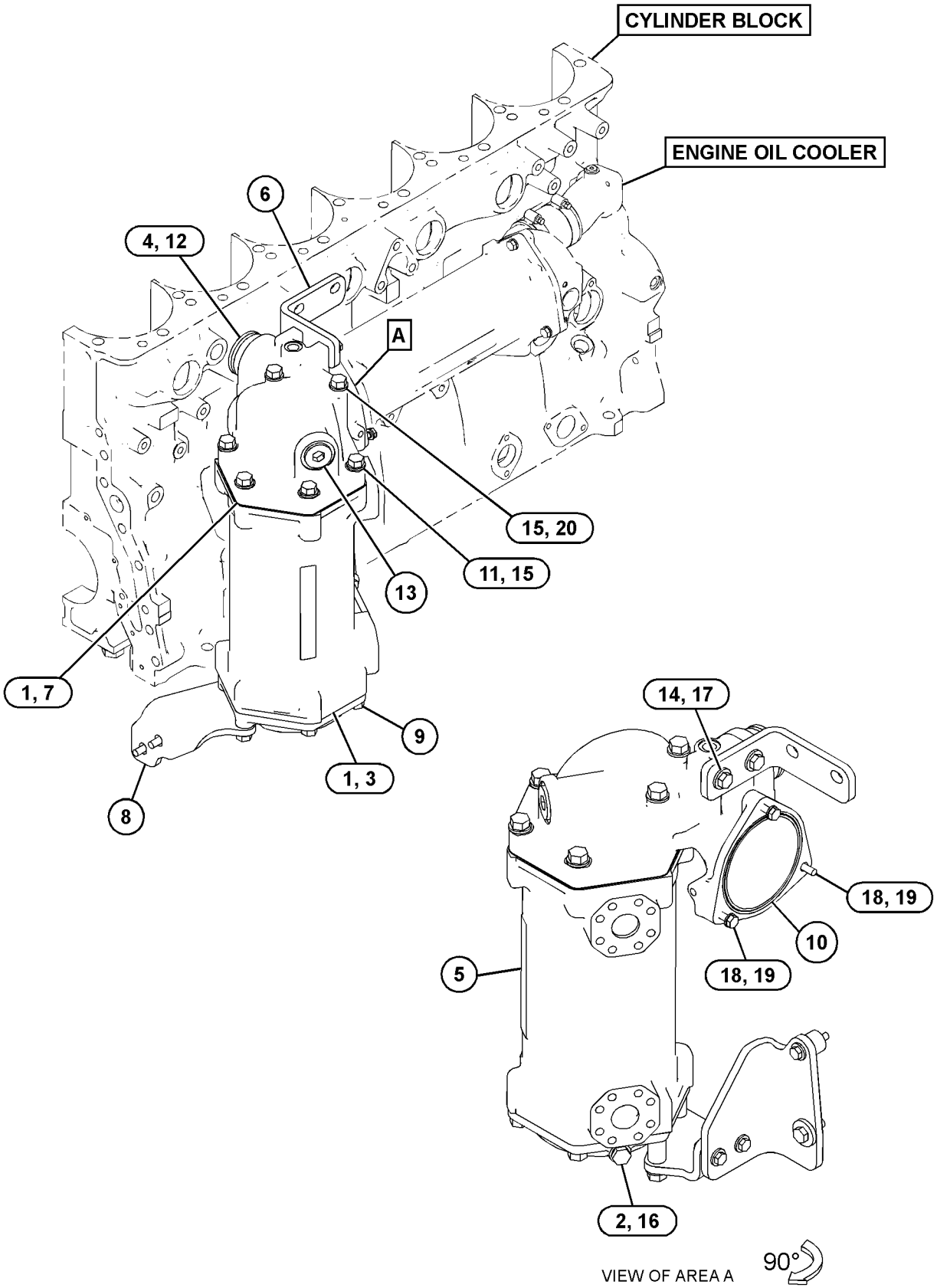

GRAPHIC #1 **<END>** g03833365

446-7734 COUPLING GP-TORSIONAL

S/N: E9Y1-UP

PART OF 381-2717 INSTALLATION AR-ENGINE

SMCS-3252, 3279 **i06113028**

NOTE	REF NO	GRAPHIC REF	PART NUMBER	QTY	PART NAME 1 2 3 4 5 6 (PRODUCT LEVEL)	SEE PAGE
	1	1	**444-0562**	1	COUPLING AS-DRIVE (TORSIONAL COUPLING)	
		1	**239-6458**	10	SPRING AS	
	2	1	**165-3930**	20	BOLT (3/8-16X1.625-IN)	
	3	1	**5M-2894**	20	WASHER-HARD (10.2X18.5X2.5-MM THK)	

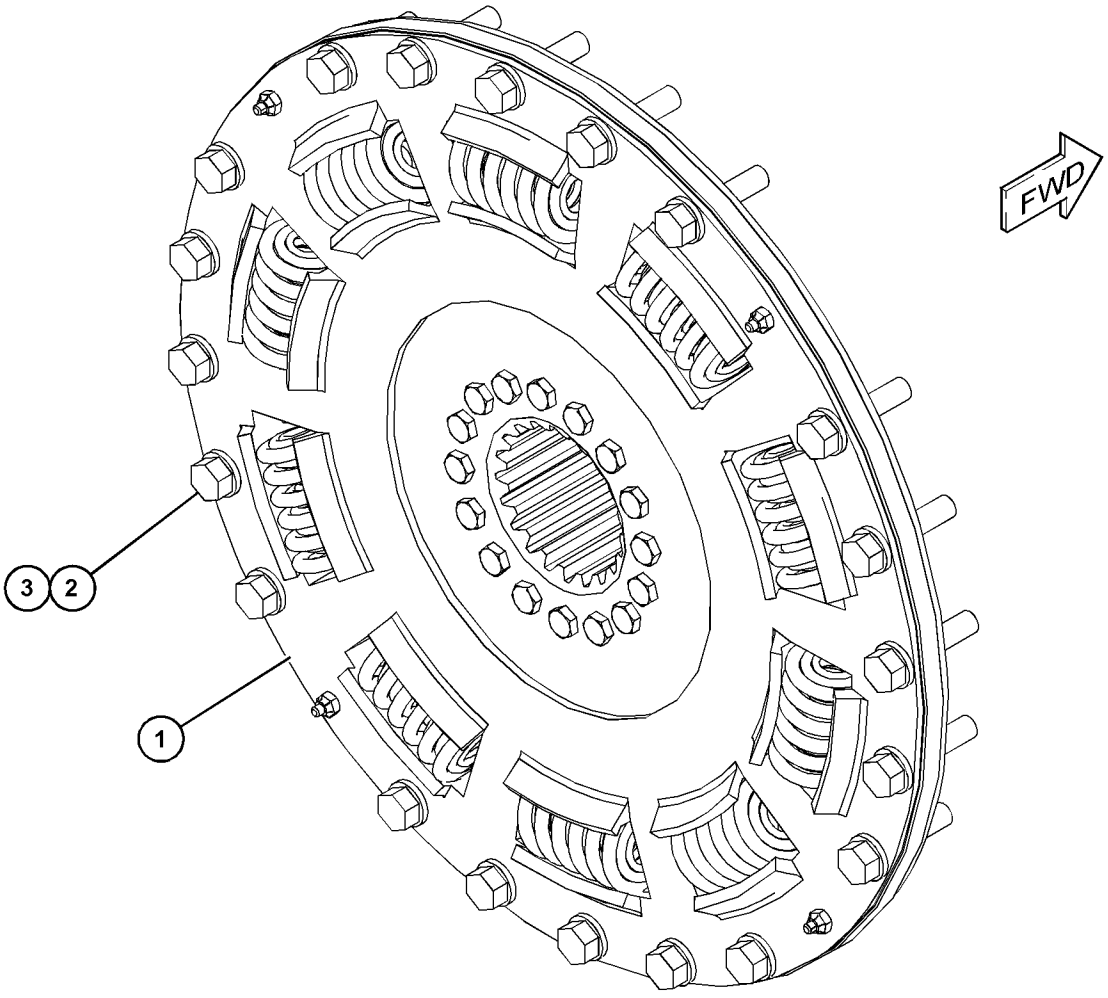

GRAPHIC #1 **<END>** g03817549

381-0647 COVER GP-SHIPPING—TRANSMISSION

S/N: DM31-UP

PART OF 381-0675 TRANSMISSION AR

SMCS-3030, 3064 **i06147698**

NOTE	REF NO	GRAPHIC REF	PART NUMBER	QTY	PART NAME 1 2 3 4 5 6 (PRODUCT LEVEL)	SEE PAGE
	1	1	**2J-6540**	1	CLAMP-HOSE	
	2	1	**371-7951**	1	CAP-PLUG	
	3	1	**8E-5287**	1	STRAP	
	4	1	**117-2927**	1	COVER-SHIPPING	
	5	1	**126-1773**	1	CAP-CONNECTOR	
	6	1	**381-0667**	1	CAP	
	7	1	*148-8406*	2	PLUG AS	
					(EACH INCLUDES)	
		1	**7M-8485**	1	SEAL-O-RING	
		1	**9S-9334**	1	PLUG-O-RING	
	8	1	*148-8407*	2	PLUG AS	
					(EACH INCLUDES)	
		1	**3J-1907**	1	SEAL-O-RING	
		1	**9S-4191**	1	PLUG (9/16-18-THD)	
	9	1	*148-8408*	1	PLUG AS	
		1	**3D-2824**	1	SEAL-O-RING	
		1	**9S-4183**	1	PLUG	
	10	1	**1S-3725**	2	COVER	
	11	1	**1S-3730**	1	COVER	
	12	1	**5P-8245**	10	WASHER-HARD (13.5X25.5X3-MM THK)	
M	13	1	**6V-3823**	10	BOLT (M12X1.75X60-MM)	
M	14	1	**8T-0293**	2	BOLT (M12X1.75X20-MM)	
M	15	1	**6V-8149**	10	NUT (M12X1.75-THD)	
	16	1	**6V-9833**	1	CAP AS	
	17	1	**8E-7365**	1	GASKET	
	18	1	**8E-7366**	2	GASKET	
M	19	1	**8T-4137**	8	BOLT (M10X1.5X20-MM)	
M	20	1	**8T-4139**	4	BOLT (M12X1.75X30-MM)	
	21	1	**9H-0846**	1	SEAL-O-RING	

M - METRIC PART

381-0647 **COVER GP-SHIPPING (*contd.*)** **i06147698**

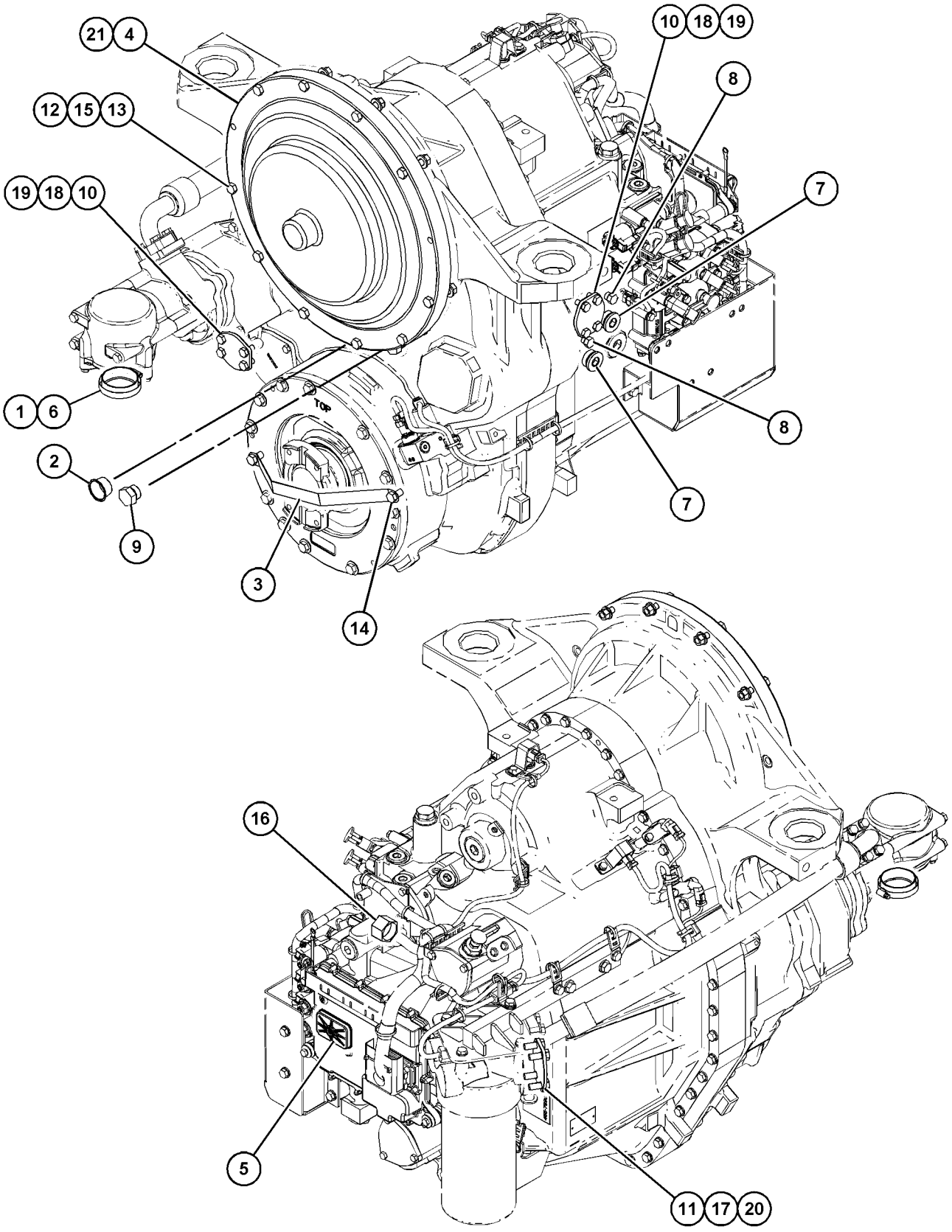

GRAPHIC #1

<END>

g03833661

387-4496 DIFFERENTIAL & BEVEL GEAR GP

S/N: E9Y1-UP

PART OF 379-9145 AXLE GP-REAR

SMCS-3256, 3258 **i05629231**

NOTE	REF NO	GRAPHIC REF	PART NUMBER	QTY	PART NAME 1 2 3 4 5 6 (PRODUCT LEVEL)	SEE PAGE
	1	1	**000-9262**	1	CONE-TAPERED	
	2	1	**8B-6511**	1	CUP-BEARING	
	3	1	**132-6597**	1	CONE-BEARING	
	4	1	**132-6598**	1	CUP-BEARING	
	5	1	**215-8200**	1	BEARING AS	
	6	1	**215-9664**	1	LOCKNUT AS	
		1	**159-3046**	4	BOLT (M8X1.25X20-MM)	
	7	1	**219-4681**	1	SHROUD	
	8	1	**253-5413**	1	YOKE AS	
	9	1	**264-0575**	1	SEAL-LIP TYPE	
B	10	1	**271-8528**	1	SHIM PACK (INCLUDES 18-SHIMS)	
	11	1	**271-8529**	1	RETAINER	
	12	1	**274-5365**	1	HOUSING-PINION	
M	13	1	**286-9155**	1	BOLT-SELF-LOCKING (M16X2X120-MM)	
Y	14	1	**287-8262**	1	DIFFERENTIAL GP	362
	15	1	**378-8474**	1	SHAFT-BEVEL PINION (13-TEETH)	
	16	1	**378-8476**	1	GEAR-BEVEL (44-TEETH)	
	17	1	**215-8207**	1	RACE-ROLLER BEARING	
	18	1	**219-7569**	24	BOLT (M20X2.5X45-MM)	
	19	1	**278-4876**	1	RING-RETAINING	
	20	1	**2H-3933**	1	SEAL-O-RING	
M	21	1	**5A-3604**	3	BOLT-SOCKET HEAD (M8X1.25X25-MM)	
	22	1	**8T-3282**	24	WASHER-HARD (22X35X3.5-MM THK)	

B - USE AS REQUIRED
M - METRIC PART
Y - SEPARATE ILLUSTRATION

387-4496 **DIFFERENTIAL & BEVEL GEAR GP (*contd.*)** **i05629231**

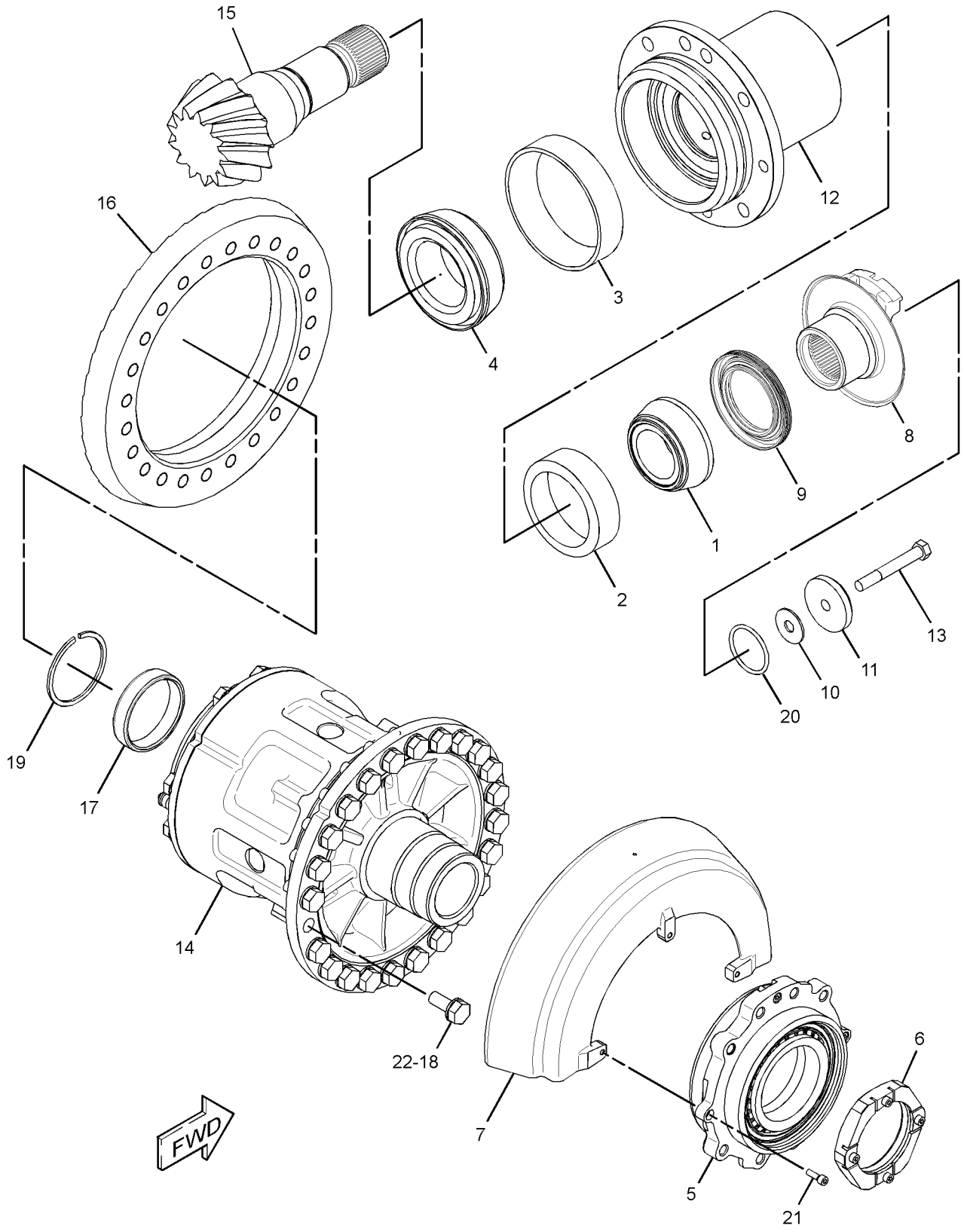

GRAPHIC #1 **<END>** g03582872

287-8262 DIFFERENTIAL GP

S/N: E9Y1-UP

PART OF 387-4496 DIFFERENTIAL & BEVEL GEAR GP

SMCS-3258 **i02770335**

NOTE	REF NO	GRAPHIC REF	PART NUMBER	QTY	PART NAME 1 2 3 4 5 6 (PRODUCT LEVEL)	SEE PAGE
	1	1	**148-7841**	3	SPRING	
	2	1	**217-4541**	10	DISC-FRICTION	
	3	1	**306-5633**	1	GEAR-DIFFERENTIAL	
	4	1	**306-5637**	4	PINION	
	5	1	**267-7340**	1	PLATE-THRUST	
	6	1	**267-7347**	1	RING-THRUST	
	7	1	**270-1778**	10	PLATE-SEPARATOR	
	8	1	**272-0353**	3	DOWEL	
	9	1	**272-1491**	1	WASHER-THRUST	
	10	1	**306-5632**	1	GEAR	
	11	1	**305-3347**	2	WASHER-THRUST	
	12	1	**287-8261**	1	CASE AS-DIFFERENTIAL	
M	12A	1	**6V-8569**	8	BOLT (M20X2.5X200-MM)	
	12B	1	**8T-3282**	8	WASHER-HARD (22X35X3.5-MM THK)	
Z	12C	1		1	CASE-DIFFERENTIAL (LOCK)	
Z	12D	1		1	CASE-DIFFERENTIAL (GEAR)	
Z	12E	1		1	CASE-DIFFERENTIAL (REACTION)	
	13	1	**306-5624**	1	SPIDER	
	14	1	**305-3348**	4	WASHER-THRUST	
	15	1	**293-5370**	4	BEARING-SLEEVE	
	16	1	**5F-9144**	3	SEAL-O-RING	

M - METRIC PART
Z - NOT SERVICED SEPARATELY

287-8262 **DIFFERENTIAL GP (*contd.*)** **i02770335**

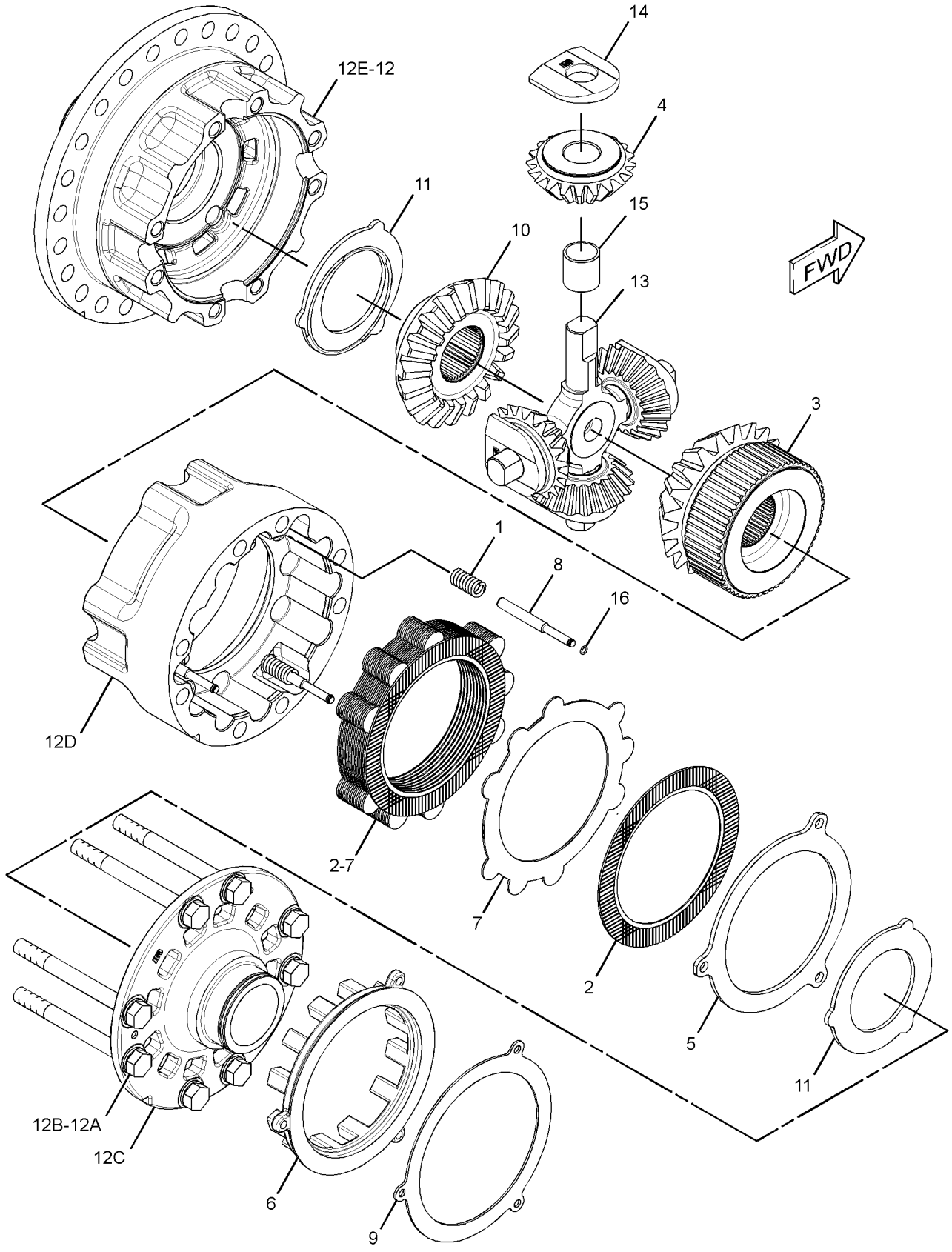

GRAPHIC #1 **<END>** g01318326

392-0178 DRIVE GP-FINAL

S/N: E9Y1-UP

PART OF 379-9145 AXLE GP-REAR

SMCS-4050 **i06128445**

NOTE	REF NO	GRAPHIC REF	PART NUMBER	QTY	PART NAME 1 2 3 4 5 6 (PRODUCT LEVEL)	SEE PAGE
	1	1	**8D-2256**	1	CONE-BEARING	
	2	1	**9K-1172**	1	CONE-BEARING	
	3	1	**8D-4771**	1	SEAL-O-RING	
	4	1	**9K-1171**	2	CUP-BEARING	
	5	1	**264-7961**	2	SPROCKET (76-TEETH)	
	6	1	**265-2829**	1	SHAFT-DRIVE	
Y	7	1	*272-8011*	1	CARRIER GP-FINAL DRIVE	335
	8	1	**273-2455**	1	RETAINER	
B	9	1	**273-2460**	1	SHIM PACK (INCLUDES 10-SHIMS)	
B	10	1	**273-7305**	2	SHIM (0.5-MM THK)	
B	11	1	**273-7306**	5	SHIM (0.12-MM THK)	
B	12	1	**273-7307**	5	SHIM (0.18-MM THK)	
	13	1	**378-3739**	1	WASHER-THRUST	
	14	1	**388-9334**	1	WASHER-THRUST	
	15	1	**388-9337**	1	RETAINER	
	16	1	**390-2937**	1	HOUSING	
	17	1	**390-2938**	1	HOUSING	
	18	1	**418-5326**	1	SEAL-LIP TYPE	
	19	1	**421-8647**	2	RING-WEAR	
	20	1	**438-1541**	4	RETAINER	
	21	1	**438-1549**	1	GEAR-RING (79-TEETH)	
M	22	1	**103-6169**	4	BOLT-SELF-LOCKING (M16X2X60-MM)	
	23	1	**133-2905**	1	RING-RETAINING	
M	24	1	**160-8510**	16	BOLT-SELF-LOCKING (M20X2.5X60-MM)	
M	25	1	**178-2991**	12	BOLT-SELF-LOCKING (M20X2.5X70-MM)	
	26	1	**4E-5685**	28	SPACER (20.5X35X16-MM THK)	
	27	1	**6V-5839**	8	WASHER (11X21X2.5-MM THK)	
M	28	1	**6V-5845**	20	BOLT (M20X2.5X70-MM)	
M	29	1	**6V-7732**	8	BOLT (M10X1.5X25-MM)	
	30	1	**8D-2311**	1	SEAL-LIP TYPE	
	31	1	**8T-3282**	20	WASHER-HARD (22X35X3.5-MM THK)	
	32	1	**9F-2247**	1	PLUG-PIPE	
	33	1	**9H-3360**	1	SEAL-O-RING	

B - USE AS REQUIRED
M - METRIC PART
Y - SEPARATE ILLUSTRATION

392-0178 **DRIVE GP-FINAL (*contd.*)** **i06128445**

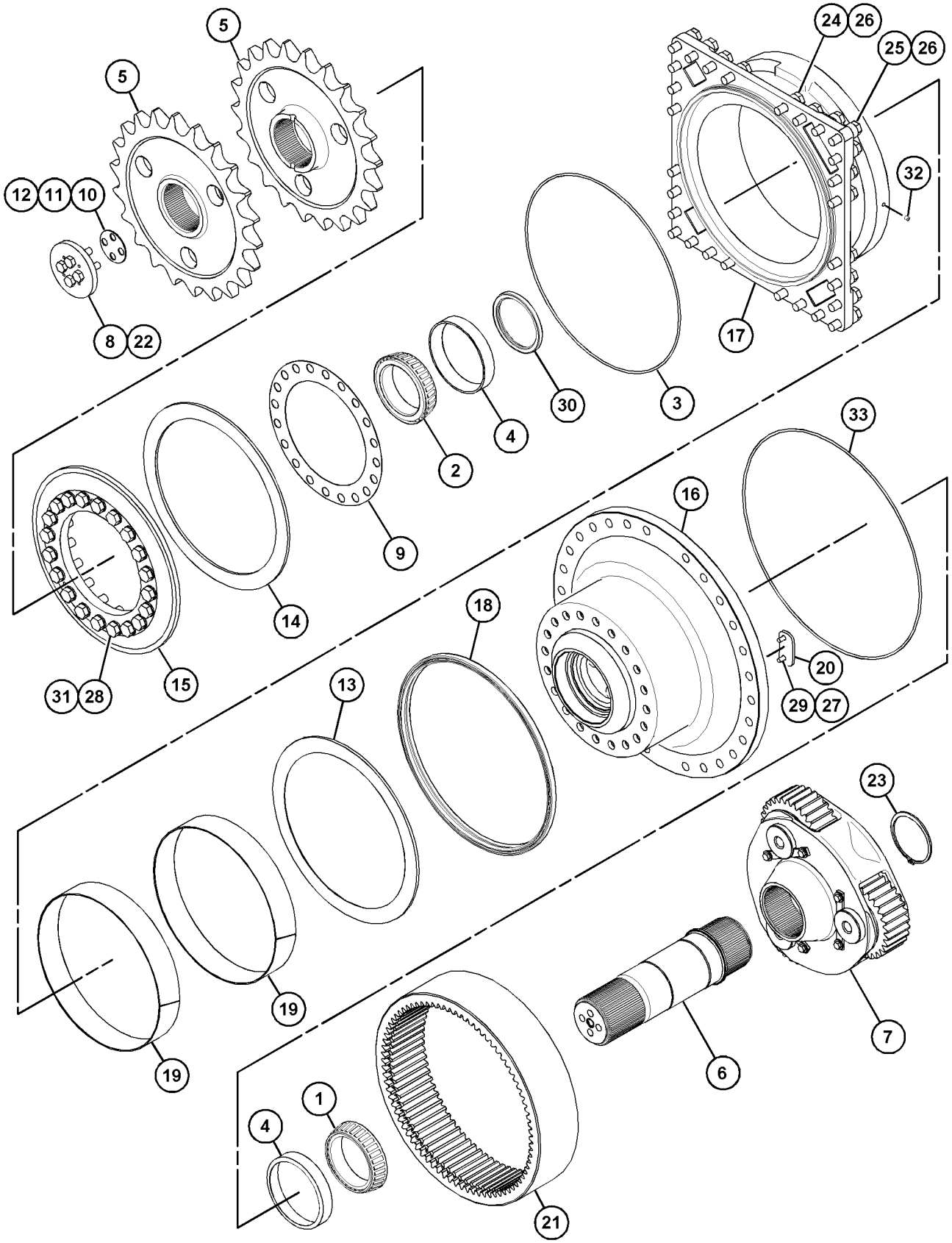

GRAPHIC #1 **<END>** g03820435

381-0827 FILLER GP-POWER TRAIN OIL

S/N: E9Y1-UP

PART OF 371-6317 POWER TRAIN AR

SMCS-3005, 3081, 7513 **i06144842**

NOTE	REF NO	GRAPHIC REF	PART NUMBER	QTY	PART NAME 1 2 3 4 5 6 (PRODUCT LEVEL)	SEE PAGE
	1	1	**9G-5127**	1	BREATHER AS (POWER TRAIN OIL)	
	2	1	**381-0829**	1	GAUGE AS (POWER TRAIN OIL)	
	3	1	**464-1564**	1	TUBE AS	
	4	1	**3N-2945**	1	GASKET	
	5	1	**7J-8611**	1	ELBOW-PIPE	
	6	1	**8T-4121**	2	WASHER-HARD (11X21X2.5-MM THK)	
M	7	1	**8T-4196**	2	BOLT (M10X1.5X35-MM)	

M - METRIC PART

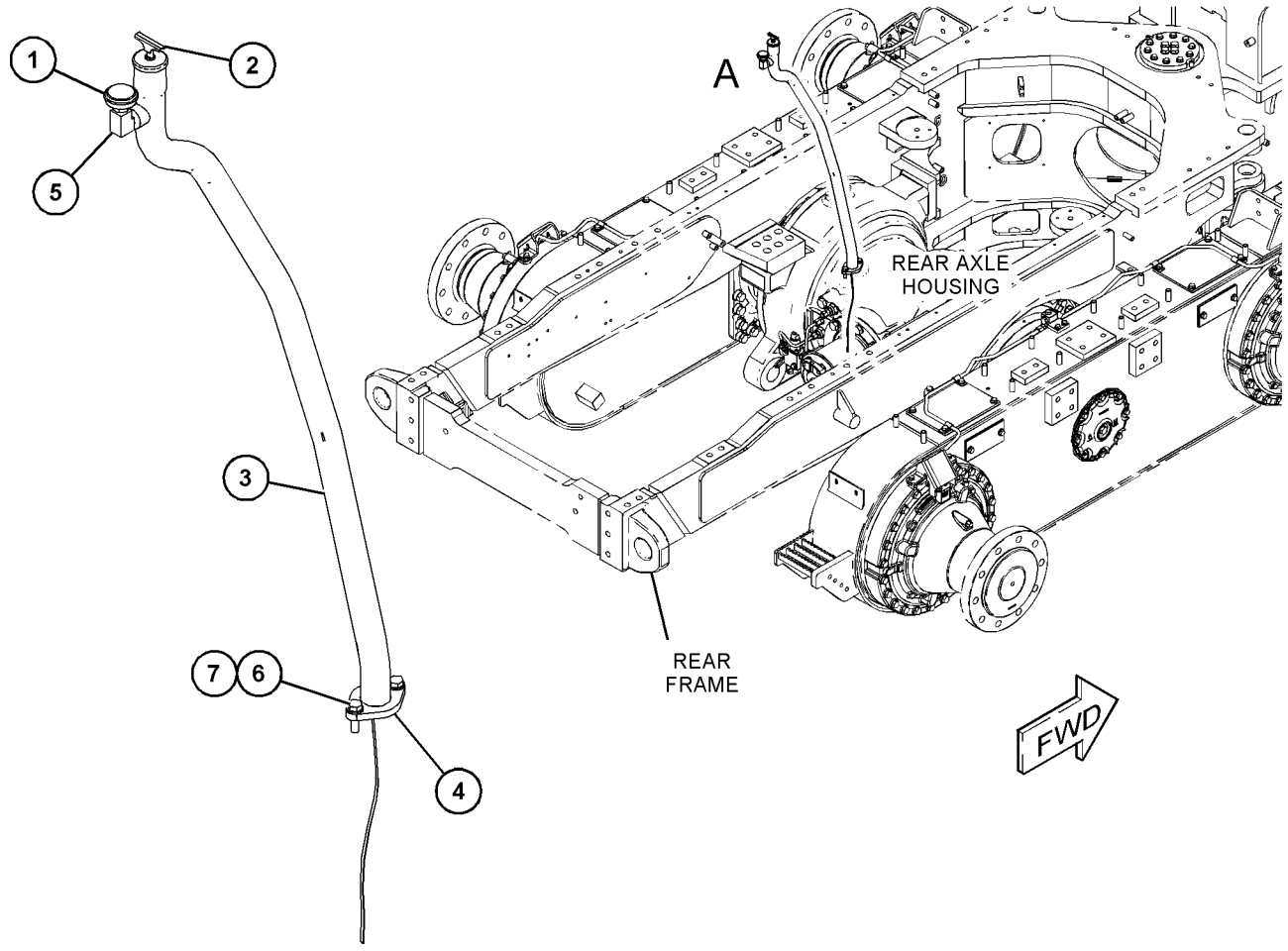

VIEW OF AREA A

GRAPHIC #1 **<END>** g03830940

381-0642 FILTER GP-OIL

S/N: DM31-UP

PART OF 381-0675 TRANSMISSION AR

SMCS-3004, 3067

i06144780

NOTE	REF NO	GRAPHIC REF	PART NUMBER	QTY	PART NAME 1 2 3 4 5 6 (PRODUCT LEVEL)	SEE PAGE
	1	1	**257-9850**	1	BRACKET AS	
Y	2	1	*443-8486*	1	FILTER GP-OIL (HYDRAULIC, TRANSMISSION)	368
	3	1	**8T-4121**	4	WASHER-HARD (11X21X2.5-MM THK)	
M	4	1	**8T-4184**	2	BOLT (M12X1.75X45-MM)	
M	5	1	**8T-4195**	4	BOLT (M10X1.5X30-MM)	
	6	1	**8T-4223**	2	WASHER-HARD (13.5X25.5X3-MM THK)	

M - METRIC PART
Y - SEPARATE ILLUSTRATION

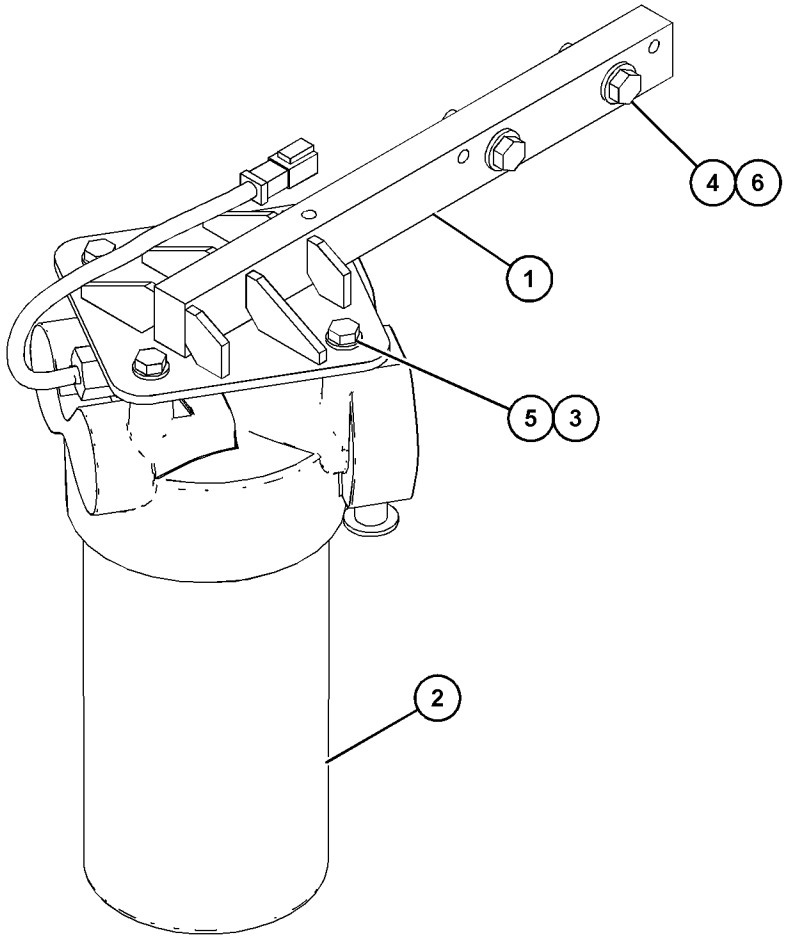

GRAPHIC #1

<END>

g03828546

443-8486 FILTER GP-OIL—HYDRAULIC, TRANSMISSION

S/N: DM31-UP
WITH HOUSING
PART OF 381-0642 FILTER GP-OIL

SMCS-3004, 3067 **i05628110**

NOTE	REF NO	GRAPHIC REF	PART NUMBER	QTY	PART NAME 1 2 3 4 5 6 (PRODUCT LEVEL)	SEE PAGE
	1	1	**3P-1932**	1	ADAPTER	
	2	1	**6V-3965**	1	FITTING (QUICK DISCONNECT)	
	3	1	**6V-5048**	1	SEAL-O-RING	
	4	1	**8C-3446**	1	VALVE-SAMPLING (HYDRAULIC OIL)	
	5	1	**8L-2786**	1	SEAL-O-RING	
	6	1	**214-7568**	1	SEAL-O-RING	
	7	1	**321-5967**	1	HOUSING GP-FILTER (HYDRAULIC)	
		1	**9S-8004**	1	PLUG	
		1	**214-7568**	1	SEAL-O-RING	
	8	1	**328-3655**	1	FILTER ELEMENT AS-OIL (ADVANCED EFFICIENCY)	
	9	1	**349-6097**	1	SWITCH AS-PRESSURE (HYDRAULIC OIL)	
		1	**033-6033**	1	SEAL-O-RING	
		1	**206-9295**	1	SEAL-O-RING	
	10	1	**443-8488**	1	BASE AS-OIL FILTER	
	11	1	**6V-0852**	1	CAP-DUST	
	12	1	**8C-3447**	1	CAP-DUST (TRANSMISSION OIL)	
	13	1	**130-0229**	1	SEAL-O-RING	

443-8486 **FILTER GP-OIL (*contd.*)** **i05628110**

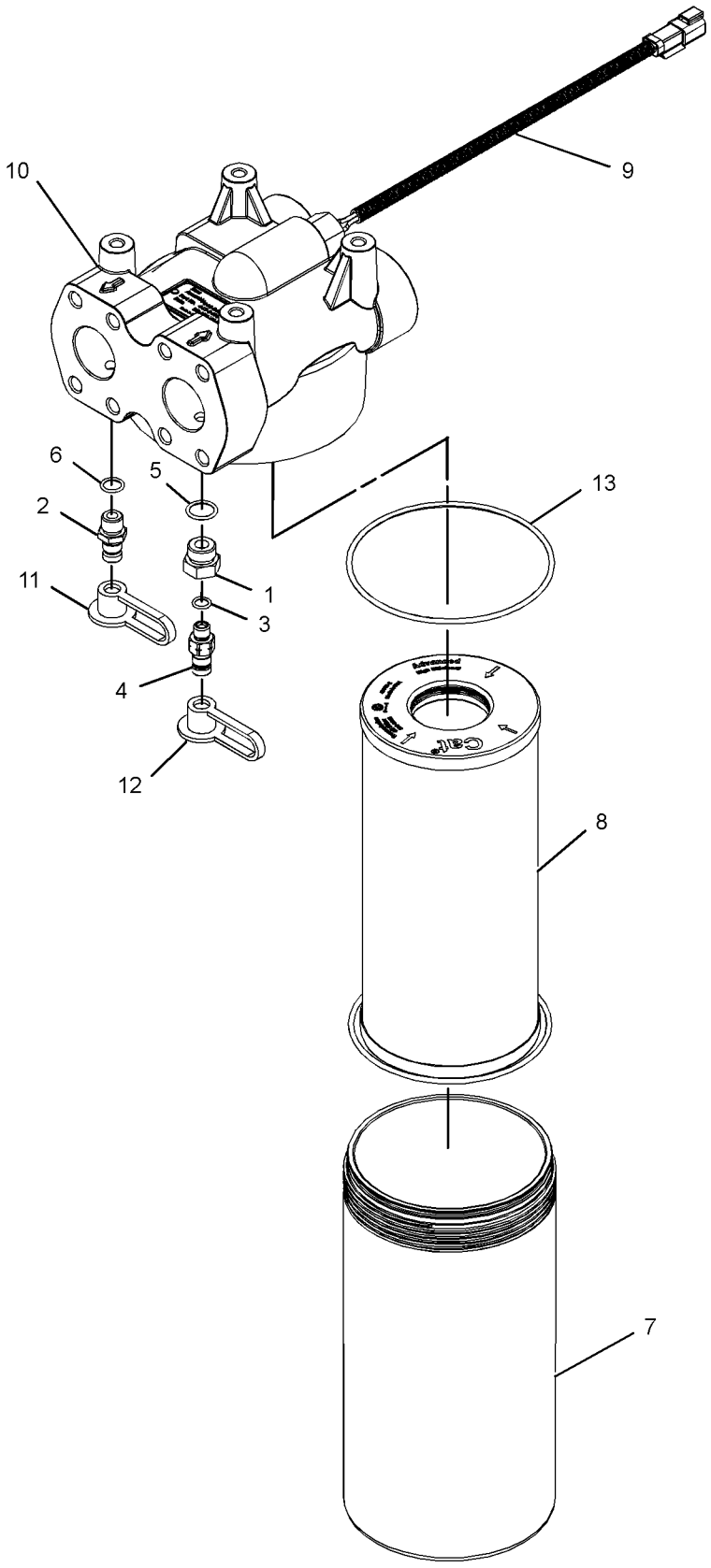

GRAPHIC #1 **<END>** g03581652

222-3088 GEAR GP-FRONT

S/N: TXX1-UP
PART OF 376-4249 ENGINE AR-CORE
AN ATTACHMENT

SMCS-4053 **i05327561**

NOTE	REF NO	GRAPHIC REF	PART NUMBER	QTY	PART NAME 1 2 3 4 5 6 (PRODUCT LEVEL)	SEE PAGE
	1	1	**7C-7851**	1	SHAFT	
	2	1	**218-7270**	1	SHAFT	
	3	1	**222-3902**	1	GEAR AS (64-TEETH)	
		1	**7C-7852**	1	BEARING	
	4	1	**222-3905**	1	GEAR AS (CAMSHAFT IDLER, 71-TEETH)	
M	5	1	**8T-0281**	1	BOLT (M16X2X80-MM)	
M	6	1	**8T-0360**	1	BOLT (M20X2.5X90-MM)	

M - METRIC PART

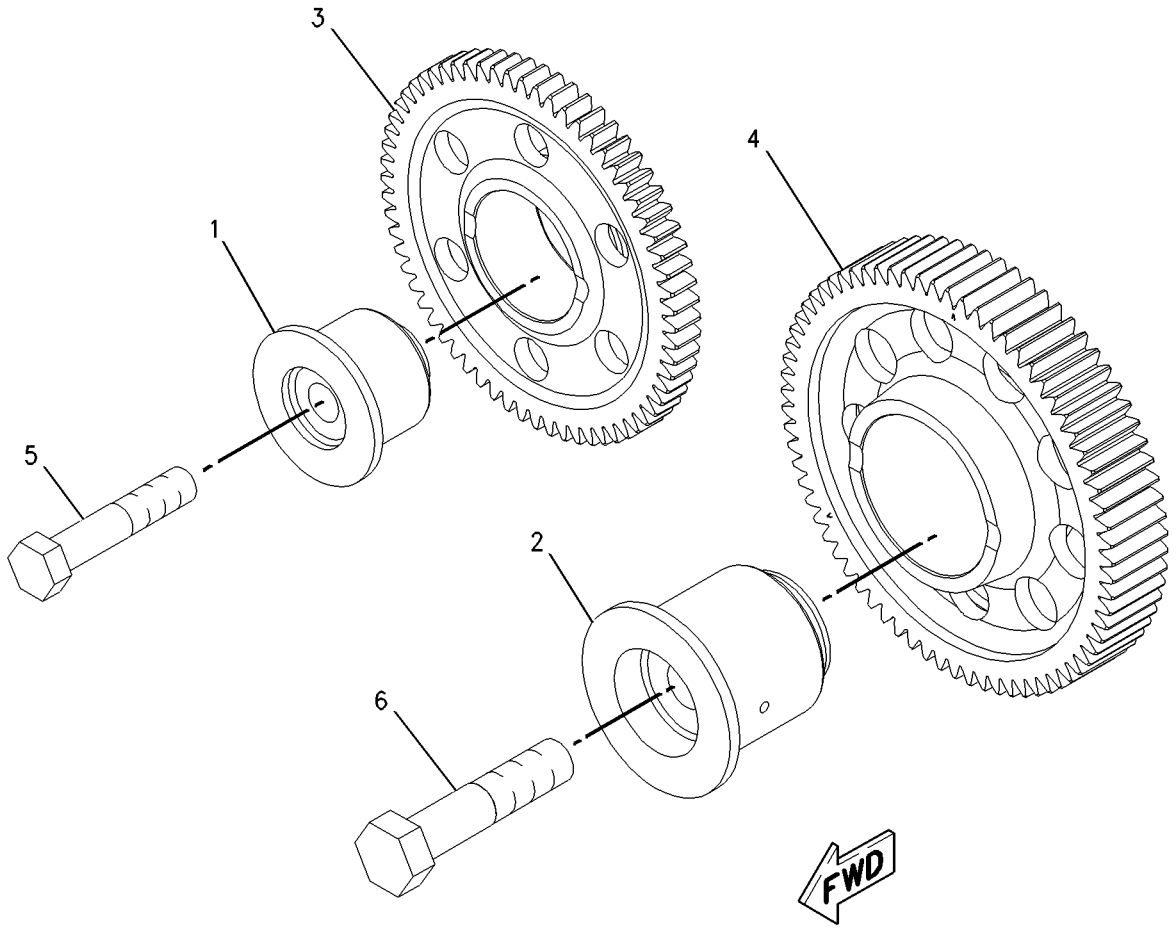

GRAPHIC #1 **<END>** g00939640

253-7931 LINES GP-TRANSMISSION OIL

S/N: DM31-UP

PART OF 381-0675 TRANSMISSION AR

SMCS-3154 **i02534586**

NOTE	REF NO	GRAPHIC REF	PART NUMBER	QTY	PART NAME 1 2 3 4 5 6 (PRODUCT LEVEL)	SEE PAGE
I	1	1	**280-6900**	1	HOSE AS	
	2	1	**1P-4579**	2	FLANGE-HALF	
	3	1	**4J-0522**	1	SEAL-O-RING	
	4	1	**4J-0524**	1	SEAL-O-RING	
	5	1	**1P-4578**	2	FLANGE-HALF	
	6	1	**8T-4121**	4	WASHER-HARD (11X21X2.5-MM THK)	
M	7	1	**8T-4184**	4	BOLT (M12X1.75X45-MM)	
M	8	1	**8T-4196**	4	BOLT (M10X1.5X35-MM)	
	9	1	**8T-4223**	4	WASHER-HARD (13.5X25.5X3-MM THK)	

I - REFER TO HYDRAULIC INFORMATION SYSTEM
M - METRIC PART

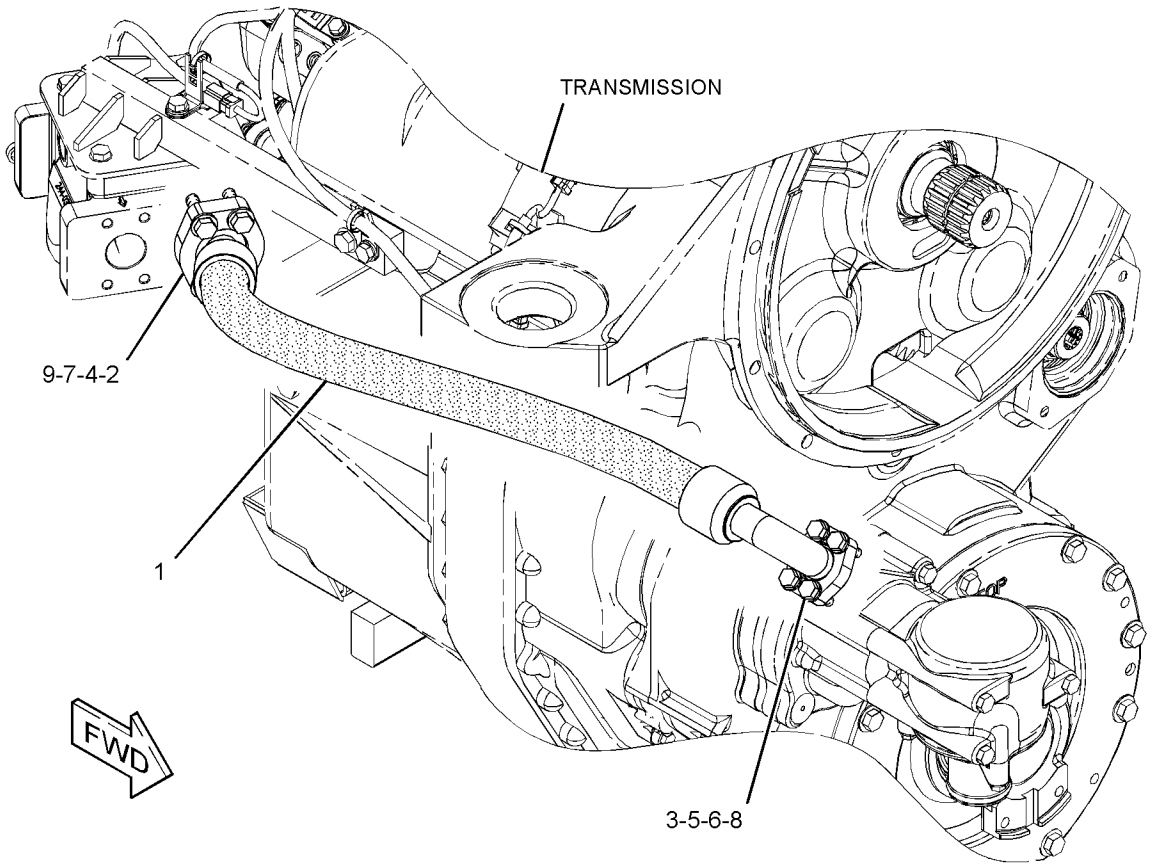

GRAPHIC #1 **<END>** g01206902

366-6125 LINES GP-TRANSMISSION OIL

S/N: E9Y1-UP

PART OF 371-3796 HYDRAULIC AR

SMCS-3154 **i06140261**

NOTE	REF NO	GRAPHIC REF	PART NUMBER	QTY	PART NAME 1 2 3 4 5 6 (PRODUCT LEVEL)	SEE PAGE
	1	1	**147-3150**	2	ANGLE AS	
					(EACH INCLUDES)	
M		1	**8T-3490**	1	NUT-WELD (M10X1.5-THD)	
	2	1	**210-4458**	1	ELBOW	
	3	1	**280-1766**	1	SLEEVE	
I	4	1	**285-0347**	1	HOSE AS	
I	5	1	**292-0889**	1	HOSE AS	
	6	1	**328-3655**	1	FILTER ELEMENT AS-OIL (ADVANCED EFFICIENCY) (TRANSMISSION)	
I	7	1	**348-0218**	1	HOSE AS	
	8	1	**390-2961**	1	HOSE AS	
	9	1	**390-2962**	1	HOSE AS	
I	10	1	**426-2708**	1	HOSE AS	
I	11	1	**426-2710**	1	HOSE AS	
I	12	1	**434-3937**	1	HOSE AS	
	13	1	**443-4912**	1	PLATE AS	
M		1	**8T-4910**	2	BOLT (M12X1.75X60-MM)	
	14	1	**443-4913**	1	PLATE AS	
M		1	**8T-4194**	2	BOLT (M12X1.75X50-MM)	
I	15	1	**444-8535**	1	HOSE AS	
	16	1	**139-1398**	1	CLIP	
	17	1	**144-0367**	1	CLAMP-HOSE	
	18	1	*148-8327*	1	CONNECTOR AS	
		1	**3D-2824**	1	SEAL-O-RING	
		1	**6V-8637**	1	CONNECTOR	
		1	**6V-9746**	1	SEAL-O-RING	
	19	1	*148-8336*	2	CONNECTOR AS	
					(EACH INCLUDES)	
		1	**3J-1907**	1	SEAL-O-RING (1)	
		1	**6V-8397**	1	SEAL-O-RING	
		1	**6V-8636**	1	CONNECTOR	
	20	1	*148-8353*	1	ELBOW AS	
		1	**3J-1907**	1	SEAL-O-RING (1)	
		1	**6V-8397**	1	SEAL-O-RING	
		1	**6V-9001**	1	ELBOW	
	21	1	*148-8355*	2	ELBOW AS	
					(EACH INCLUDES)	
		1	**5K-9090**	1	SEAL-O-RING	
		1	**6V-9005**	1	ELBOW	
		1	**7M-8485**	1	SEAL-O-RING	
	22	1	*148-8367*	1	ELBOW AS	
		1	**6V-8397**	1	SEAL-O-RING	
		1	**6V-9850**	1	ELBOW	
	23	1	*148-8382*	1	ELBOW AS	
		1	**3D-2824**	1	SEAL-O-RING	
		1	**7J-9108**	1	SEAL-O-RING	
		1	**8T-0404**	1	ELBOW	
	24	1	*148-8416*	2	REDUCER AS	
					(EACH INCLUDES)	
		1	**6V-8398**	1	SEAL-O-RING	
		1	**6V-8939**	1	REDUCER-O-RING	
	25	1	*148-8446*	1	TEE AS-SWIVEL	
		1	**6V-9838**	1	TEE-SWIVEL	
		1	**7J-9108**	2	SEAL-O-RING	
	26	1	**164-5555**	1	ADAPTER AS	
		1	**2S-4078**	1	SEAL-O-RING	
		1	**4S-6679**	1	ADAPTER	
	27	1	**165-4854**	2	SEAL-O-RING	
	28	1	*169-5864*	1	STEM AS	

366-6125 **LINES GP-TRANSMISSION OIL (*contd.*)** **i06140261**

NOTE	REF NO	GRAPHIC REF	PART NUMBER	QTY	PART NAME 1 2 3 4 5 6 (PRODUCT LEVEL)	SEE PAGE
		1	**3D-2824**	1	SEAL-O-RING	
		1	**069-4269**	1	ADAPTER	
	29	1	*177-1061*	2	ELBOW AS	
					(EACH INCLUDES)	
		1	**5K-9090**	1	SEAL-O-RING	
		1	**142-0038**	1	ELBOW	
	30	1	**1P-4578**	8	FLANGE-HALF	
	31	1	**1P-4579**	2	FLANGE-HALF	
	32	1	**1P-4584**	2	FLANGE-HALF	
	33	1	**1S-9799**	1	SEAL-O-RING	
	34	1	**284-3502**	2	CLAMP-BAND	
M	35	1	**329-3356**	4	NUT (M12X1.75-THD)	
	36	1	*332-8556*	1	CONNECTOR AS	
		1	**145-2237**	1	CONNECTOR	
		1	**214-7568**	1	SEAL-O-RING	
		1	**228-7088**	1	SEAL-O-RING	
M	37	1	**344-5674**	1	NUT (M8X1.25-THD)	
M	38	1	**344-5675**	5	NUT (M10X1.5-THD)	
	39	1	**3D-2824**	1	SEAL-O-RING	
	40	1	**4D-7388**	1	CLIP	
	41	1	**4J-0522**	5	SEAL-O-RING	
	42	1	**4J-0524**	1	SEAL-O-RING	
	43	1	**5P-1230**	1	CONNECTOR	
	44	1	**5P-9299**	2	CLIP	
	45	1	**6G-2168**	1	BLOCK	
	46	1	**6J-2680**	1	SEAL-O-RING	
	47	1	**7G-5984**	2	CLIP (TAB)	
	48	1	**7G-5985**	2	CLIP (SLOT)	
	49	1	**7X-7729**	4	WASHER (11X25X3-MM THK)	
	50	1	**8M-2773**	1	CLIP	
	51	1	**8T-4121**	15	WASHER-HARD (11X21X2.5-MM THK)	
M	52	1	**8T-4136**	4	BOLT (M10X1.5X25-MM)	
M	53	1	**8T-4172**	4	BOLT (M10X1.5X80-MM)	
M	54	1	**8T-4184**	8	BOLT (M12X1.75X45-MM)	
M	55	1	**8T-4195**	1	BOLT (M10X1.5X30-MM)	
M	56	1	**8T-4196**	4	BOLT (M10X1.5X35-MM)	
M	57	1	**8T-4198**	1	BOLT (M10X1.5X100-MM)	
	58	1	**8T-4223**	20	WASHER-HARD (13.5X25.5X3-MM THK)	
	59	1	**8T-4224**	2	WASHER-HARD (8.8X16X2-MM THK)	
	60	1	**8T-7088**	2	GROMMET	
	61	1	**8T-8916**	8	BOLT (7/16-14X1.5-IN)	
M	62	1	**9X-2097**	1	STUD (M8X1.25-THD)	
	63	1	**9X-6581**	2	NUT-O-RING SEAL (1-14-THD)	
E	64	1	**8I-1362**		HOSE (65-CM)	

E - ORDER BY THE CENTIMETER
I - REFER TO HYDRAULIC INFORMATION SYSTEM
M - METRIC PART

366-6125 **LINES GP-TRANSMISSION OIL (*contd.*)** **i06140261**

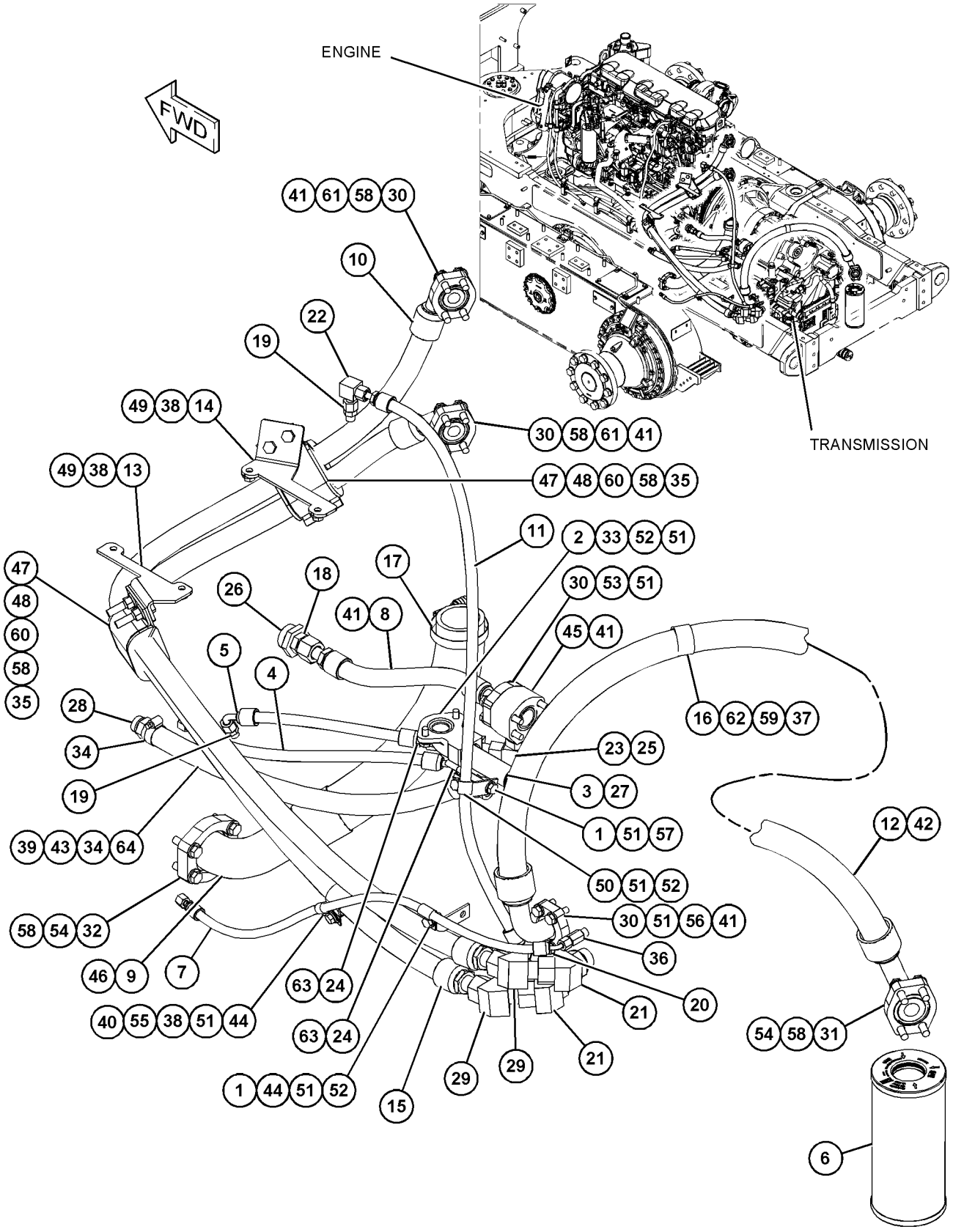

GRAPHIC #1 **<END>** g03831958

396-4282 MOTOR GP-PISTON—HYDRAULIC FAN

S/N: E9Y1-UP

PART OF 374-3140 FAN GP-SUCTION

SMCS-4351 **i06140652**

NOTE	REF NO	GRAPHIC REF	PART NUMBER	QTY	PART NAME 1 2 3 4 5 6 (PRODUCT LEVEL)	SEE PAGE
	1	1	**185-0248**	1	SEAL-OIL	
	2	1	**9S-8006**	1	PLUG	
	3	1	**2M-9780**	1	SEAL-O-RING	
	4	1	**148-1240**	1	SWASHPLATE	
Y	5	1	**313-2545**	1	ROTATING GP-PUMP	381
	6	1	**127-9485**	1	SEAL-O-RING	
M	7	1	**095-0673**	4	BOLT-SOCKET HEAD (M12X1.75X60-MM)	
	8	1	**213-4208**	1	RING-LOCK	
	9	1	**9X-8979**	1	DOWEL	
	10	1	**101-2862**	2	DOWEL	
	11	1	**185-0263**	1	BEARING	
	12	1	**185-0242**	1	PLATE	
	13	1	**379-2345**	1	SHAFT-DRIVE	
	14	1	**203-8609**	1	CUP-BEARING	
	15	1	**148-1238**	1	SHIM (3-MM THK)	
	16	1	**197-2471**	1	PLUG AS	
		1	**197-2472**	1	SEAL	
	17	1	**197-2474**	1	VALVE AS	
	18	1	**242-3374**	1	SLEEVE	
	19	1	**105-3035**	1	CONE-BEARING	

M - METRIC PART
Y - SEPARATE ILLUSTRATION

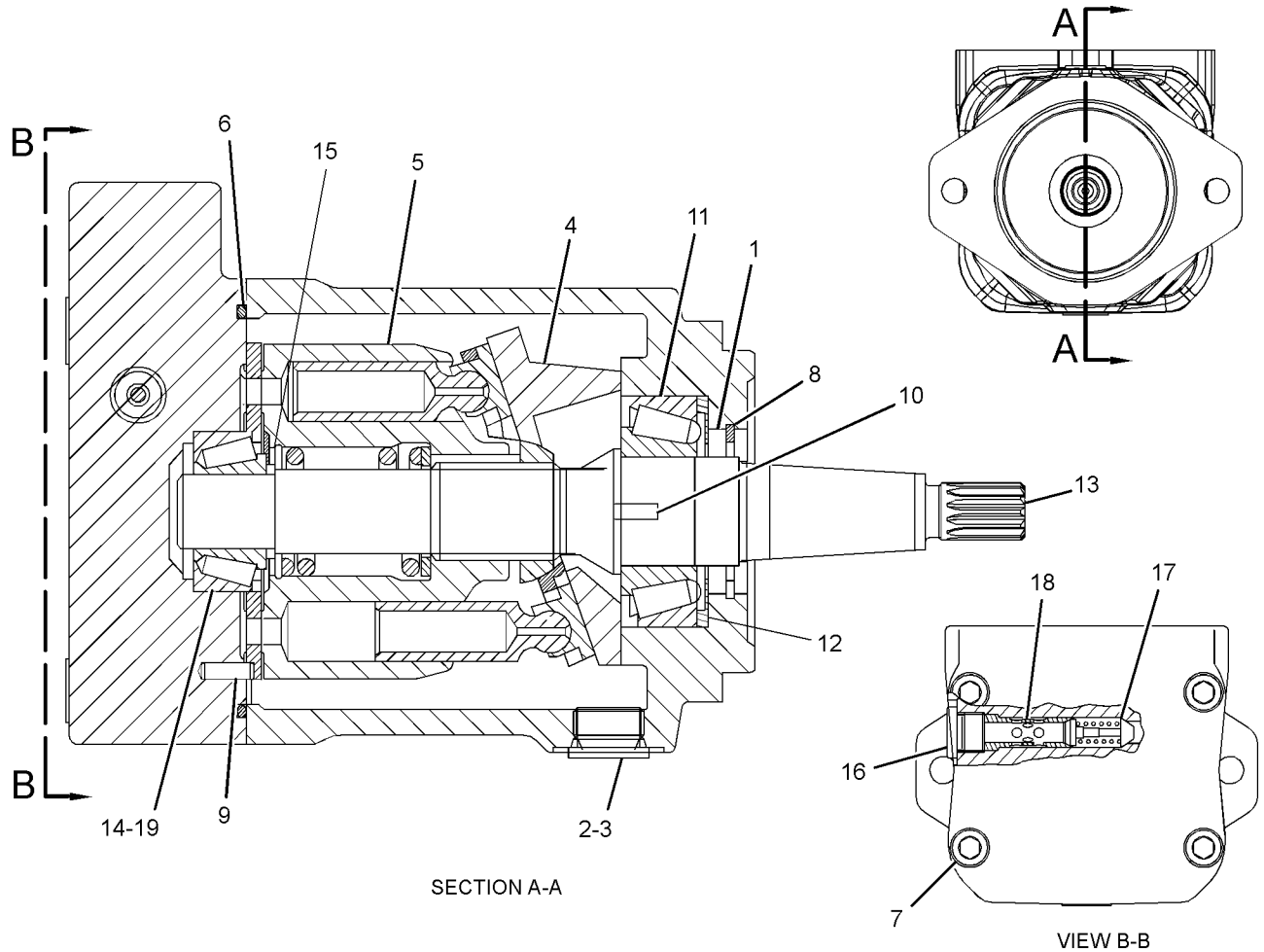

SECTION A-A

VIEW B-B

GRAPHIC #1 **<END>** g03825540

250-8213 MOUNTING GP-WHEEL

S/N: E9Y1-UP

PART OF 371-6317 POWER TRAIN AR

SMCS-4201 **i05367846**

NOTE	PART NUMBER	QTY	PART NAME 1 2 3 4 5 6 (PRODUCT LEVEL)	SEE PAGE
M	**7Y-5232**	60	BOLT (M30X3.5X70-MM) (M30X3.5X70-MM)	
	9X-8258	60	WASHER (33X56X6-MM THK) (33X56X6-MM THK)	

M - METRIC PART

<END>

371-6317 POWER TRAIN AR

S/N: E9Y1-UP

PART OF 386-1317 COMMON AR

SMCS-3000, 4000 **i06147646**

NOTE	PART NUMBER	QTY	PART NAME 1 2 3 4 5 6 (PRODUCT LEVEL)	SEE PAGE
Y	*474-6913*	1	AXLE AR-FRONT	328
Y	*386-6764*	1	AXLE AR-REAR	328
Y	*381-0827*	1	FILLER GP-POWER TRAIN OIL	366
Y	*386-6716*	1	MOUNTING GP-AXLE	478
Y	*250-8213*	1	MOUNTING GP-WHEEL	376
Y	*237-8199*	1	SHAFT GP-DRIVE	383

Y - SEPARATE ILLUSTRATION

<END>

246-8065 PUMP GP-GEAR

S/N: DM31-UP
2-SECTION
PART OF 381-0675 TRANSMISSION AR

SMCS-3066, 3115, 3203, 5073 **i02178257**

NOTE	REF NO	GRAPHIC REF	PART NUMBER	QTY	PART NAME 1 2 3 4 5 6 (PRODUCT LEVEL)	SEE PAGE
Y	1	1	**246-8066**	1	PUMP GP-GEAR	378
	2	1	**112-1574**	1	SEAL-O-RING	
	3	1	**4F-7952**	1	SEAL-O-RING	
M	4	1	**6V-5230**	2	BOLT (M10X1.5X60-MM)	
M	5	1	**8C-2926**	1	BOLT (M10X1.5X140-MM)	

M - METRIC PART
Y - SEPARATE ILLUSTRATION

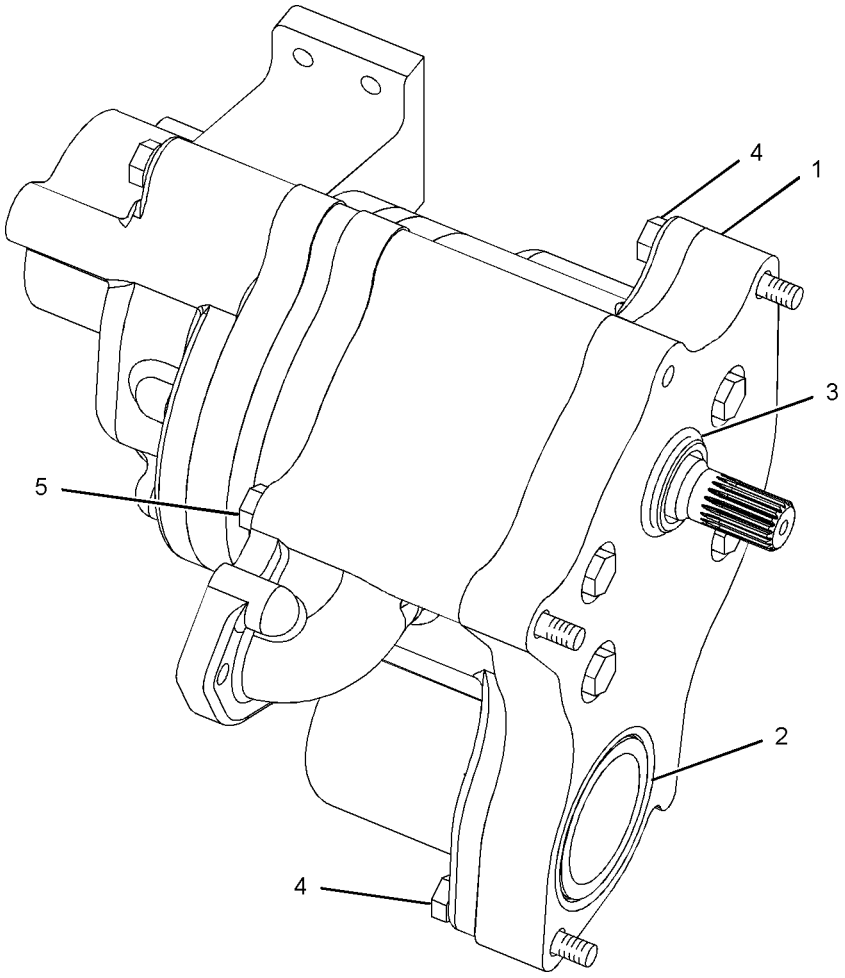

GRAPHIC #1 **<END>** g01102956

246-8066 PUMP GP-GEAR

S/N: DM31-UP
2-SECTION
PART OF 246-8065 PUMP GP-GEAR

SMCS-3066, 3115, 3203, 5073 **i02976076**

NOTE	REF NO	GRAPHIC REF	PART NUMBER	QTY	PART NAME 1 2 3 4 5 6 (PRODUCT LEVEL)	SEE PAGE
	1	1	**3S-0004**	5	WASHER (0.406X0.728X0.09-IN THK)	
	2	1	**3T-3663**	4	GEAR (8-TEETH)	
	3	1	**6Y-5010**	8	WASHER (10.16X19X0.84-MM THK)	
	5	1	**9W-3273**	1	SPACER (OIL PUMP)	
	6	1	**231-6565**	2	BODY AS (OIL PUMP)	
	7	1	**246-8068**	1	MANIFOLD AS	
		1	**1M-3909**	2	BUSHING	
	8	1	**246-8071**	1	BODY AS	
		1	**1M-3909**	2	BUSHING	
	9	1	**246-8073**	1	COVER AS	
		1	**8M-8489**	2	DOWEL	
		1	**9M-4370**	2	BEARING	
		1	**9N-4155**	1	ADAPTER	
	10	1	**246-8075**	1	GEAR AS (8-TEETH)	
	11	1	**246-8078**	1	GEAR AS (8-TEETH)	
	13	1	**112-1574**	1	SEAL-O-RING	
	14	1	**1B-8705**	2	KEY-WOODRUFF	
	15	1	**161-8068**	5	SEAL-O-RING	
M	16	1	**7X-0474**	1	BOLT (M10X1.5X220-MM)	
M	17	1	**7X-2546**	4	BOLT (M10X1.5X180-MM)	

M - METRIC PART

246-8066 **PUMP GP-GEAR (*contd.*)** **i02976076**

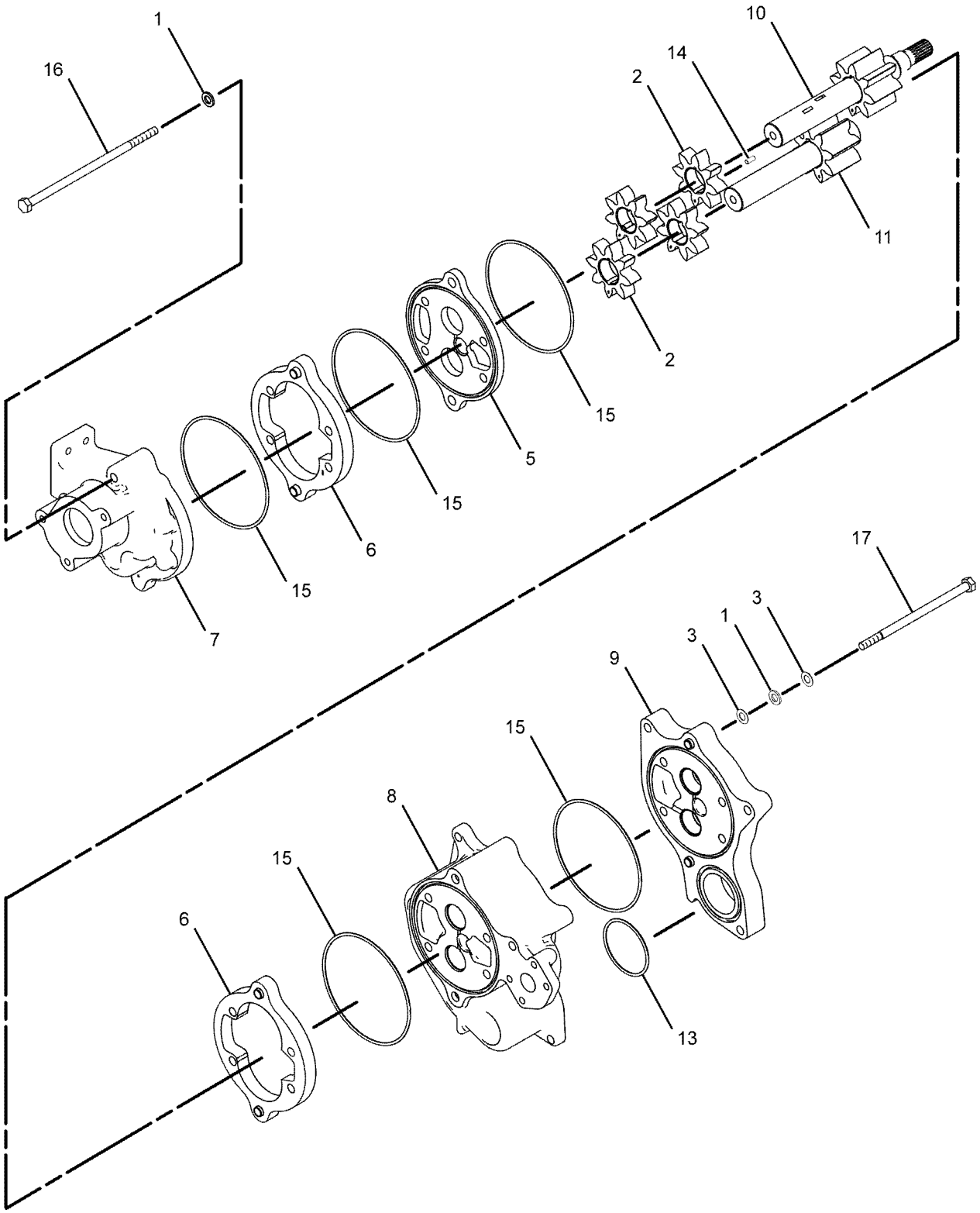

GRAPHIC #1 **<END>** g01103191

6E-4216 ROTATING GP-PUMP

S/N: E9Y1-UP

PART OF 376-2269 PUMP GP-PISTON

SMCS-3203, 5070 **i05133153**

NOTE	REF NO	GRAPHIC REF	PART NUMBER	QTY	PART NAME 1 2 3 4 5 6 (PRODUCT LEVEL)	SEE PAGE
	1	1	**9T-4906**	1	RING-RETAINING	
	2	1	**6E-4219**	1	GUIDE	
M	3	1	**6V-5192**	4	BOLT-SOCKET HEAD (M8X1.25X30-MM)	
	4	1	**6E-4218**	2	PLATE-SPACER	
	5	1	**6E-4217**	2	PLATE-LIMITER	
	6	1	**9T-8452**	9	PISTON	
	7	1	**9T-8445**	1	GUIDE	
	8	1	**9T-8446**	1	SPRING	
	9	1	**9T-8448**	1	BARREL	
	10	1	**9T-8450**	1	PLATE-RETAINING	

M - METRIC PART

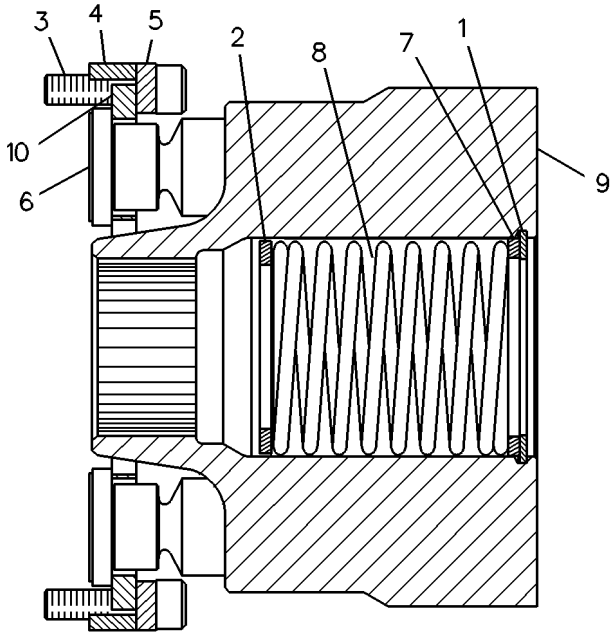

GRAPHIC #1 **<END>** g00083062

313-2545 ROTATING GP-PUMP

S/N: E9Y1-UP

PART OF 396-4282 MOTOR GP-PISTON

SMCS-3203, 5070

i02864381

NOTE	REF NO	GRAPHIC REF	PART NUMBER	QTY	PART NAME 1 2 3 4 5 6 (PRODUCT LEVEL)	SEE PAGE
	1	1	**168-7943**	9	PISTON AS-PUMP	
	2	1	**155-6654**	1	BARREL	
	3	1	**258-5194**	1	PLATE	
	4	1	**138-8175**	1	BEARING-SPHERICAL	
	5	1	**168-7941**	1	SPRING	
	6	1	**168-7940**	3	PIN	
	7	1	**096-0015**	1	RING-RETAINING	
M	8	1	**168-7942**	1	WASHER (28.2X36.5X2-MM THK)	
	9	1	**313-4424**	1	PLATE-CONTROL	

M - METRIC PART

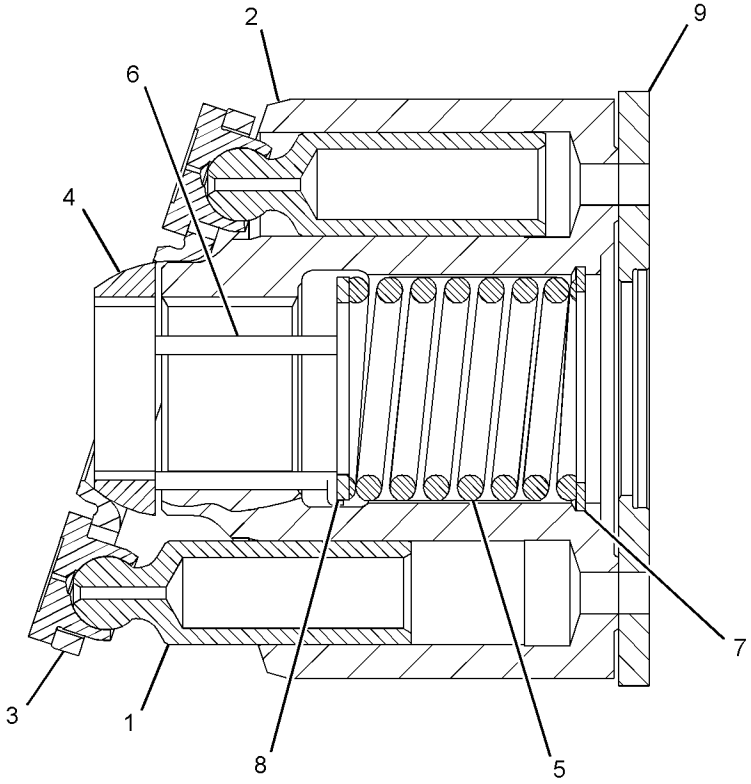

GRAPHIC #1

<END>

g01429814

381-0640 SCREEN GP-MAGNETIC

S/N: DM31-UP

PART OF 381-0675 TRANSMISSION AR

SMCS-3067 **i06144793**

NOTE	REF NO	GRAPHIC REF	PART NUMBER	QTY	PART NAME 1 2 3 4 5 6 (PRODUCT LEVEL)	SEE PAGE
	1	1	**251-6673**	1	FILTER-MAGNETIC (TRANSMISSION)	
	2	1	**251-6674**	1	SCREEN-SUCTION	
	3	1	**316-5384**	1	HOUSING-FILTER	
	4	1	**381-0639**	1	COVER AS	
		1	**381-0637**	1	TUBE	
	5	1	**3E-6785**	1	SEAL-O-RING	
	6	1	**5P-4892**	1	SEAL-O-RING	
M	7	1	**6V-5219**	3	BOLT (M8X1.25X40-MM)	
M	8	1	**8T-6408**	3	BOLT (M10X1.5X160-MM)	

M - METRIC PART

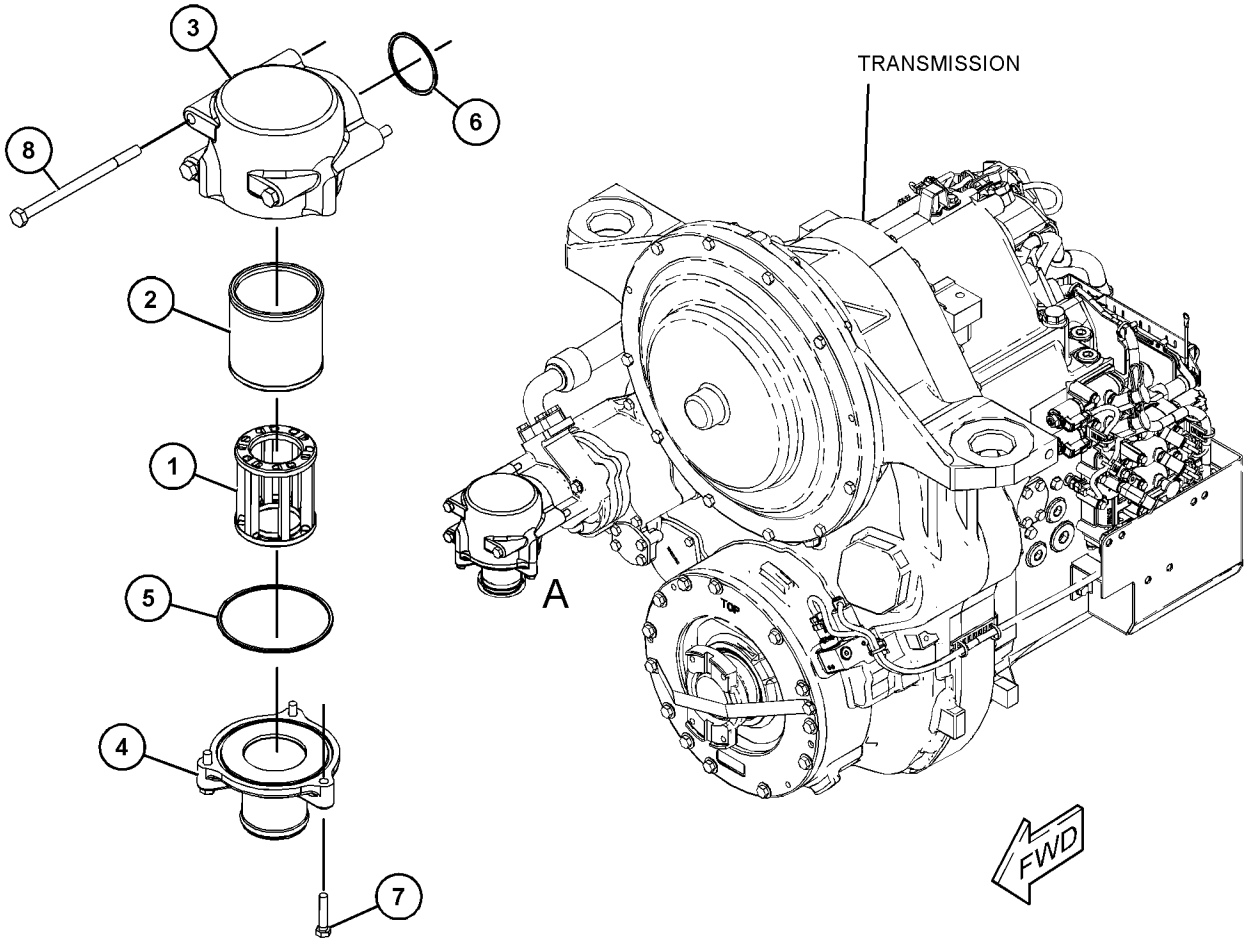

VIEW OF AREA A

GRAPHIC #1 **<END>** g03830757

237-8199 SHAFT GP-DRIVE

S/N: E9Y1-UP

PART OF 371-6317 POWER TRAIN AR

SMCS-3253 **i05842245**

NOTE	REF NO	GRAPHIC REF	PART NUMBER	QTY	PART NAME 1 2 3 4 5 6 (PRODUCT LEVEL)	SEE PAGE
CY	1	1	**419-1963**	1	UNIVERSAL JOINT GP	391
M	2	1	**290-7514**	8	BOLT (M12X1.75X60-MM)	

C - CHANGE FROM PREVIOUS TYPE
M - METRIC PART
Y - SEPARATE ILLUSTRATION

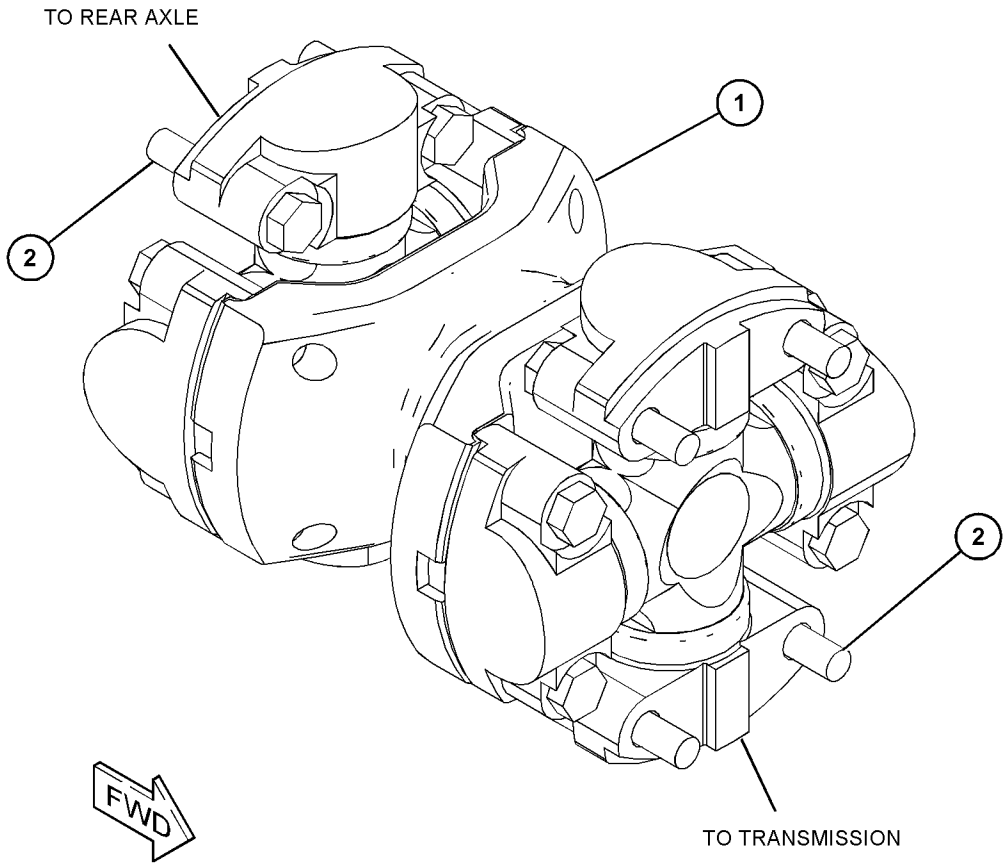

GRAPHIC #1 **<END>** g03695854

253-5307 SHAFT GP-INPUT

S/N: DM31-UP

PART OF 381-0675 TRANSMISSION AR

SMCS-3063 **i02861005**

NOTE	REF NO	GRAPHIC REF	PART NUMBER	QTY	PART NAME 1 2 3 4 5 6 (PRODUCT LEVEL)	SEE PAGE
	1	1	**251-1545**	1	RACE-BEARING	
	2	1	**2H-6490**	1	BEARING-INNER	
	3	1	**3T-4377**	1	SEAL-RING	
	4	1	**246-8773**	1	SPACER (76X97.55X44.75-MM THK)	
	5	1	**305-2230**	1	SHAFT	
	6	1	**246-8746**	1	GEAR (38-TEETH)	
	7	1	**246-8752**	1	GEAR (45-TEETH)	

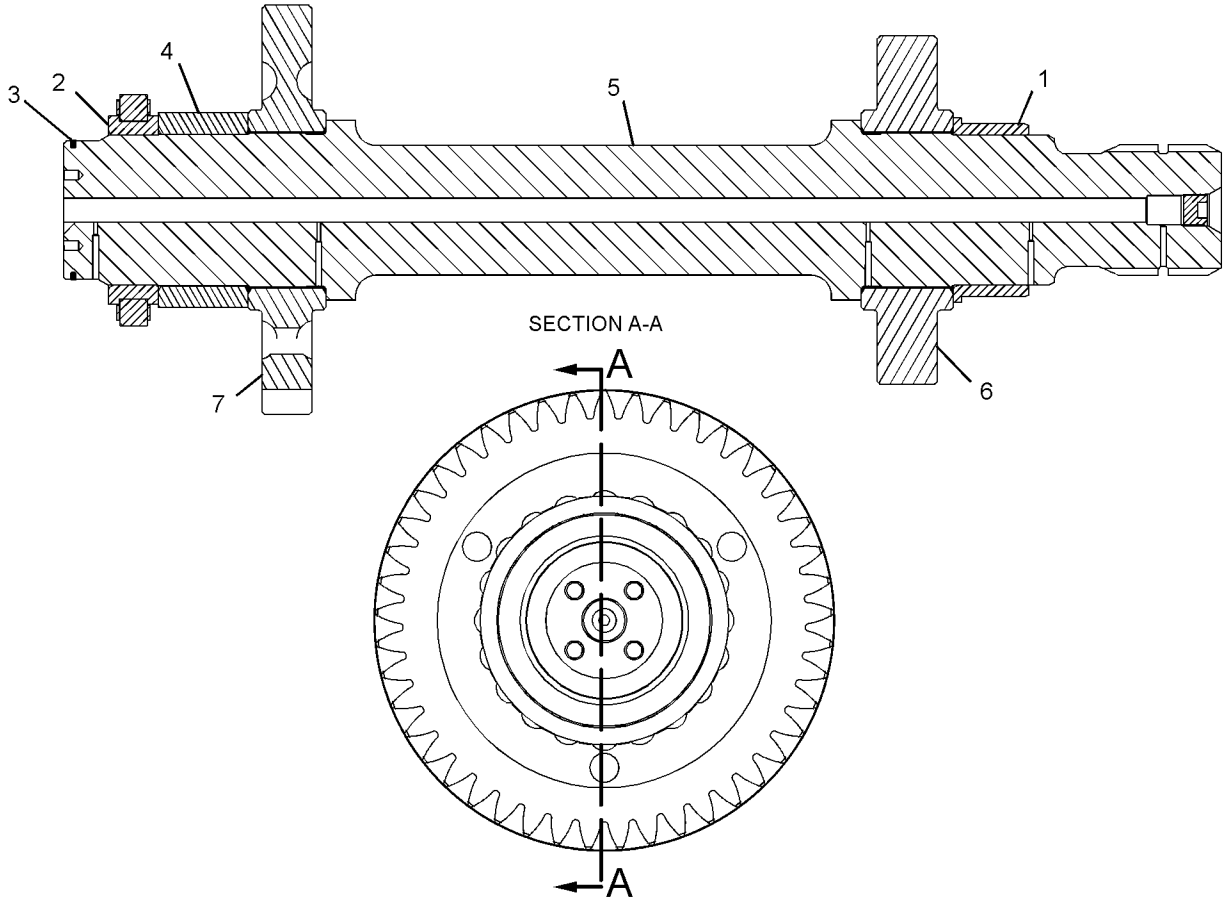

GRAPHIC #1 **<END>** g01285917

184-1527 SWASHPLATE GP

S/N: E9Y1-UP

PART OF 376-2269 PUMP GP-PISTON

SMCS-3203, 5070

i01247539

NOTE	PART NUMBER	QTY	PART NAME 1 2 3 4 5 6 (PRODUCT LEVEL)	SEE PAGE
	1H-3937	2	PIN	
	167-1801	2	STOP-SWASHPLATE	

<END>

381-0821 TANDEM & COVER GP

S/N: E9Y1-UP

PART OF 386-6764 AXLE AR-REAR

SMCS-4062, 4064 **i06128472**

NOTE	REF NO	GRAPHIC REF	PART NUMBER	QTY	PART NAME 1 2 3 4 5 6 (PRODUCT LEVEL)	SEE PAGE
	1	1	**2G-9796**	4	GASKET	
	2	1	**264-1176**	4	COVER	
	3	1	**266-9727**	8	GASKET	
	4	1	**266-9728**	6	COVER	
	5	1	**266-9729**	2	BREATHER GP (TANDEM)	
					(EACH INCLUDES)	
		1	**4H-6112**	1	BREATHER (TANDEM)	
		1	**6B-5072**	1	BUSHING-REDUCER	
		1	**002-6453**	1	ELBOW	
	6	1	**381-0822**	1	HOUSING AS (RH)	
		1	**461-8675**	1	STEP AS	
	7	1	**381-0823**	1	HOUSING AS (LH)	
		1	**461-8676**	1	STEP AS	
	8	1	**395-3690**	2	COVER	
	9	1	**2M-9780**	2	SEAL-O-RING	
	10	1	**304-8032**	2	PLUG-MAGNETIC (DRAIN, HYDRAULIC OIL)	
M	11	1	**311-8290**	48	BOLT (M12X1.75X25-MM)	
	12	1	**3K-0360**	2	SEAL-O-RING	
	13	1	**4K-6804**	2	SEAL-O-RING	
	14	1	**7H-3171**	2	PLUG-PIPE	
	15	1	**8T-4223**	48	WASHER-HARD (13.5X25.5X3-MM THK)	
	16	1	**9S-4190**	2	PLUG-O-RING	

M - METRIC PART

381-0821 **TANDEM & COVER GP (*contd.*)** **i06128472**

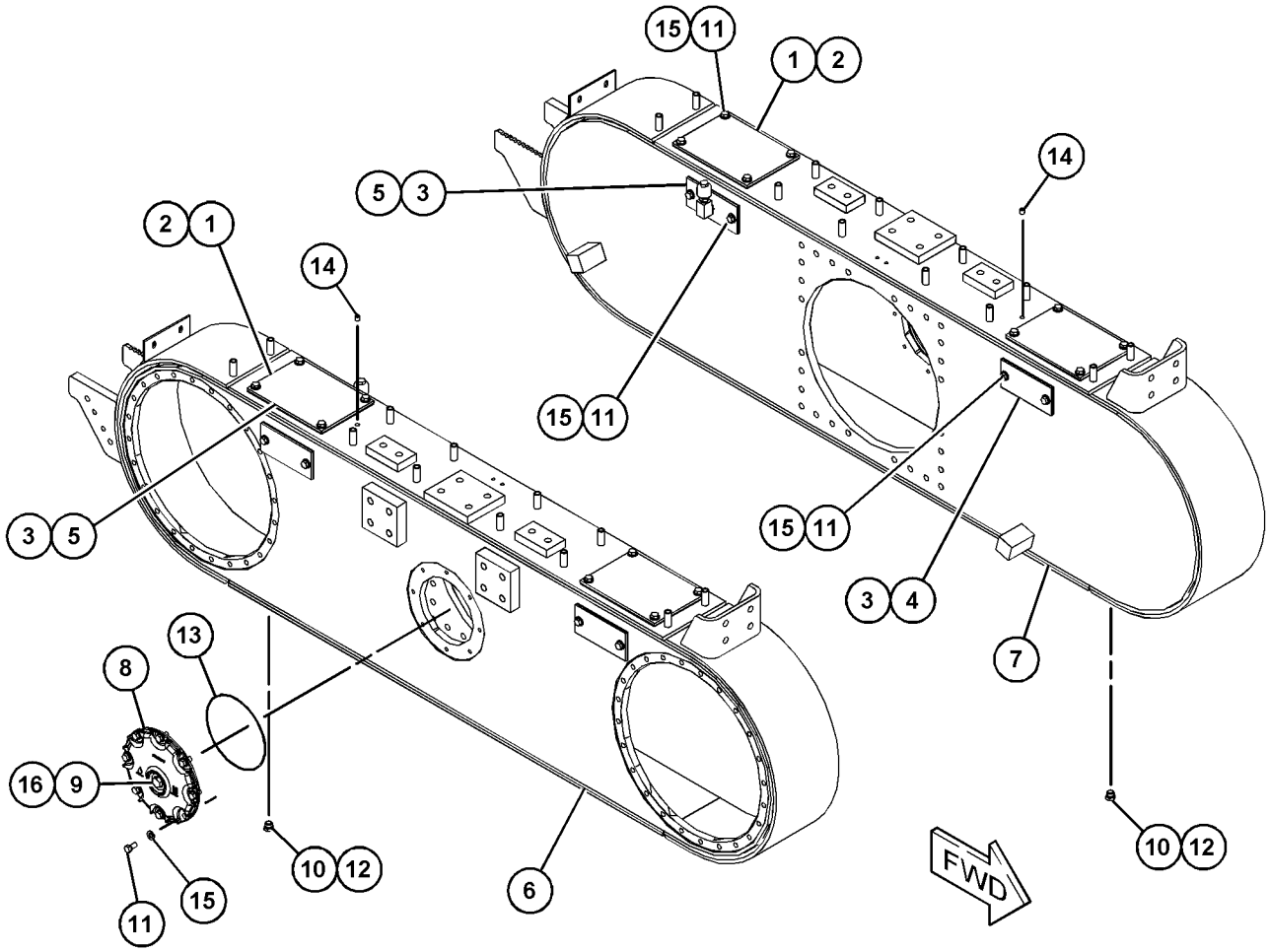

GRAPHIC #1 **<END>** g03823678

381-0675 TRANSMISSION AR

S/N: DM31-UP

PART OF 386-1317 COMMON AR

SMCS-3030 **i06147648**

NOTE	PART NUMBER	QTY	PART NAME 1 2 3 4 5 6 (PRODUCT LEVEL)	SEE PAGE
Y	*431-8852*	1	BRAKE GP-PARKING	520
Y	*381-0673*	1	CASE & PARTS GP-PLANETARY	336
Y	*455-7888*	1	CLUTCH GP-TRANSMISSION (REVERSE, 2ND)	343
Y	*455-7887*	1	CLUTCH GP-TRANSMISSION (FORWARD)	341
Y	*455-7889*	1	CLUTCH GP-TRANSMISSION (FIRST, THIRD)	345
Y	*455-7891*	1	CLUTCH GP-TRANSMISSION (HIGH, LOW)	347
Y	*381-0672*	1	CONTROL GP-TRANSMISSION HYD	352
Y	*381-0647*	1	COVER GP-SHIPPING (TRANSMISSION)	358
Y	*381-0642*	1	FILTER GP-OIL (TRANSMISSION)	367
Y	*253-7931*	1	LINES GP-TRANSMISSION OIL	371
Y	*246-8065*	1	PUMP GP-GEAR	377
Y	*381-0640*	1	SCREEN GP-MAGNETIC	382
Y	*253-5307*	1	SHAFT GP-INPUT	384

Y - SEPARATE ILLUSTRATION

<END>

397-8069 UNIVERSAL JOINT GP

S/N: E9Y1-UP

PART OF 419-1963 UNIVERSAL JOINT GP

SMCS-3251, 3253

i05842265

NOTE	REF NO	GRAPHIC REF	PART NUMBER	QTY	PART NAME 1 2 3 4 5 6 (PRODUCT LEVEL)	SEE PAGE
	1	1	**2T-3013**	2	SPIDER & BEARING GP	
M	2	1	**290-7514**	8	BOLT (M12X1.75X60-MM)	

M - METRIC PART

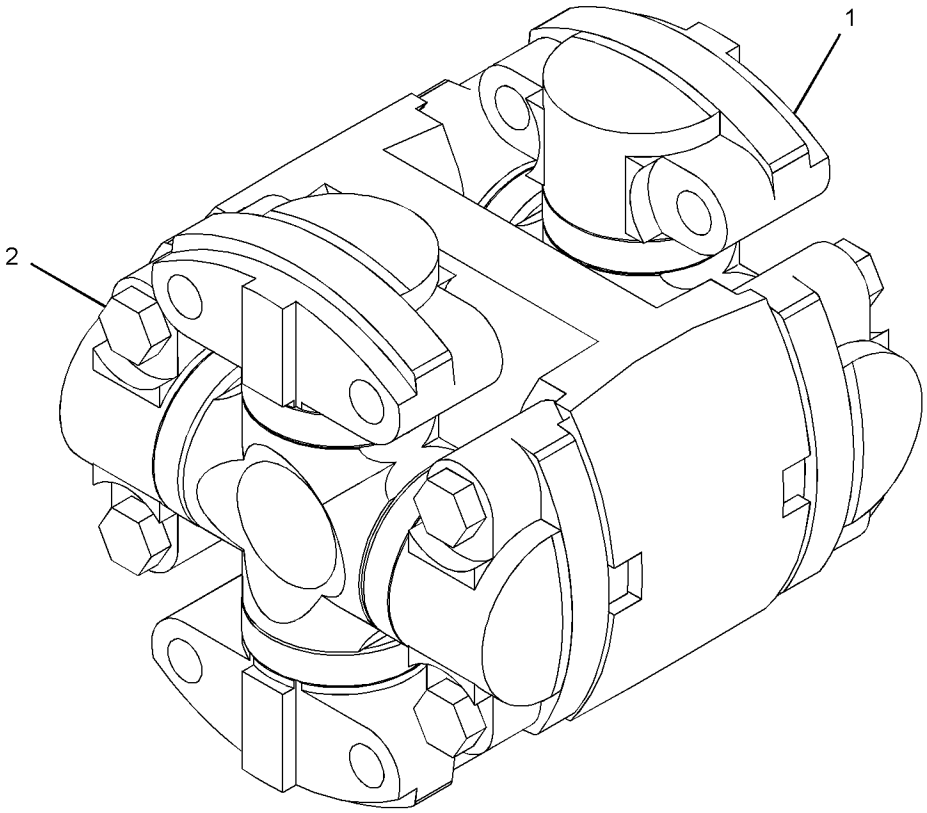

GRAPHIC #1

<END>

g02318974

397-8098 UNIVERSAL JOINT GP

S/N: E9Y1-UP

PART OF 419-1963 UNIVERSAL JOINT GP

SMCS-3251, 3253 **i05522254**

NOTE	REF NO	GRAPHIC REF	PART NUMBER	QTY	PART NAME 1 2 3 4 5 6 (PRODUCT LEVEL)	SEE PAGE
	1	1	**2T-3013**	2	SPIDER & BEARING GP	
M	2	1	**6V-3823**	8	BOLT (M12X1.75X60-MM)	

M - METRIC PART

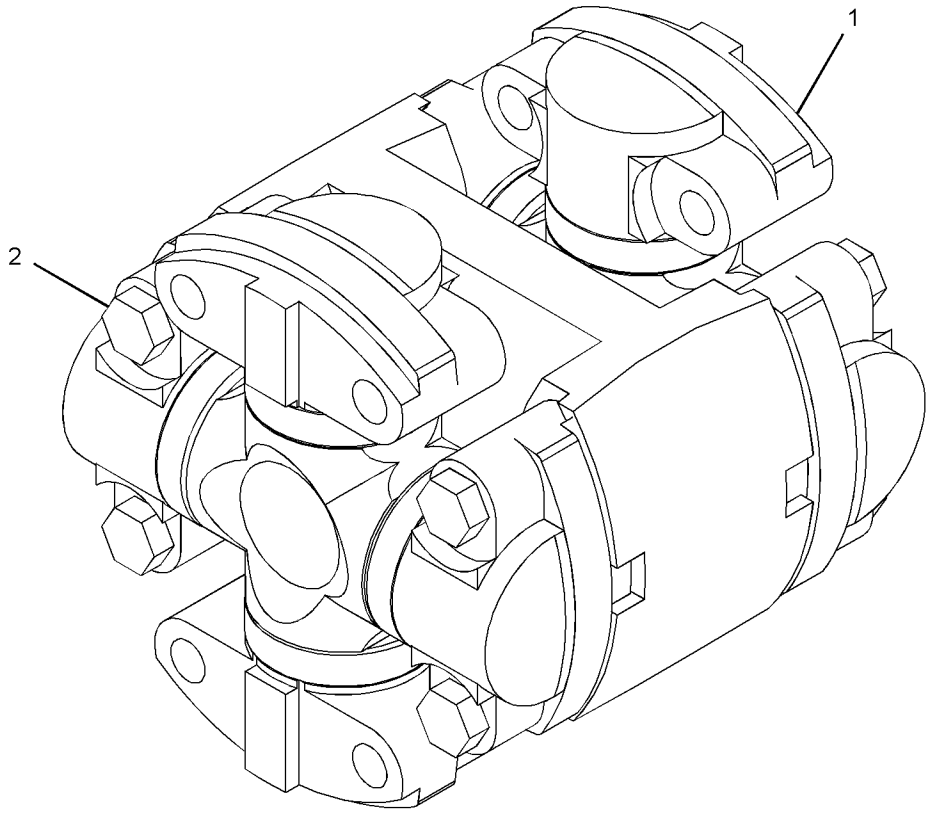

GRAPHIC #1 **<END>** g02318974

419-1963 UNIVERSAL JOINT GP

S/N: E9Y1-UP

PART OF 237-8199 SHAFT GP-DRIVE

SMCS-3251, 3253

i05842258

NOTE	PART NUMBER	QTY	PART NAME 1 2 3 4 5 6 (PRODUCT LEVEL)	SEE PAGE
Y	*397-8069*	1	UNIVERSAL JOINT GP	389
			—OR—	
Y	*397-8098*	1	UNIVERSAL JOINT GP	390

Y - SEPARATE ILLUSTRATION

<END>

250-2139 VALVE & MTG GP-SOLENOID

S/N: E9Y1-UP

PART OF 390-2936 CONTROL GP-DIFFERENTIAL LOCK

SMCS-5479 **i02787799**

NOTE	REF NO	GRAPHIC REF	PART NUMBER	QTY	PART NAME 1 2 3 4 5 6 (PRODUCT LEVEL)	SEE PAGE
M	1	1	**8T-1158**	1	BOLT-SOCKET HEAD (M8X1.25X20-MM)	
	2	1	**245-1181**	1	FLANGE	
	3	1	**245-3555**	1	VALVE GP-SOLENOID (DIFFERENTIAL LOCK)	
		1	**245-1811**	1	COVER-BASE	
		1	**245-1912**	1	KIT-SEAL (SOLENOID VALVE)	
					(INCLUDES SEAL-O-RINGS)	
	4	1	**250-2138**	1	MANIFOLD	

M - METRIC PART

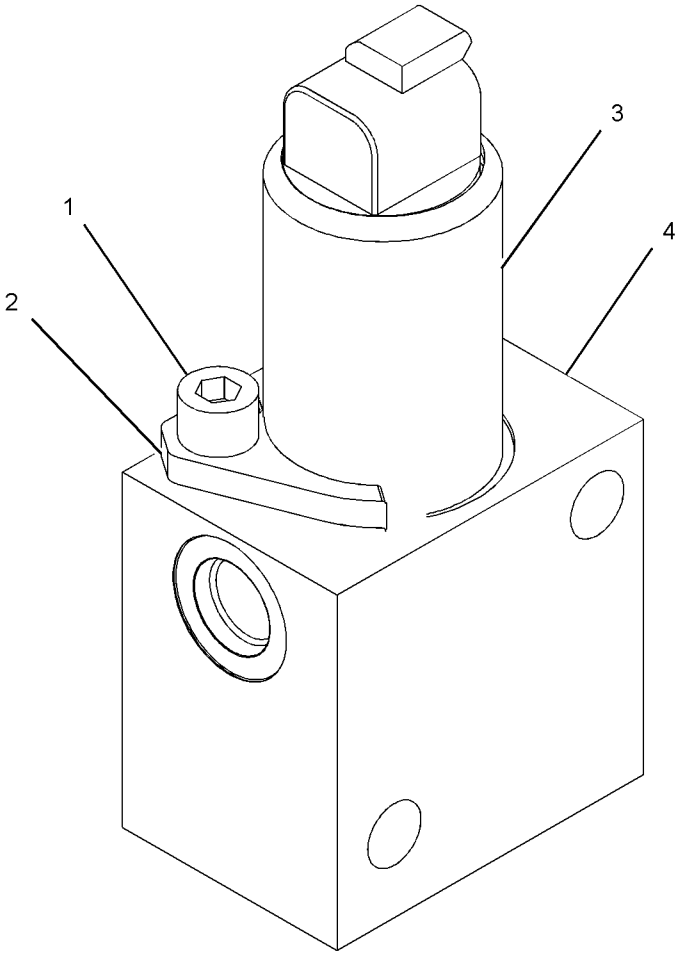

GRAPHIC #1 **<END>** g01109363

244-3114 VALVE GP-MODULATING

S/N: DM31-UP
24-VOLT
PART OF 381-0672 CONTROL GP-TRANSMISSION HYD

SMCS-3139 **i05966990**

NOTE	PART NUMBER	QTY	PART NAME 1 2 3 4 5 6 (PRODUCT LEVEL)	SEE PAGE
Y	*385-4432*	1	VALVE GP-MODULATING (24-VOLT)	395
			—OR—	
Y	*425-6734*	1	VALVE GP-MODULATING (24-VOLT)	397
			—OR—	
Y	*350-3913*	1	VALVE GP-MODULATING (24-VOLT)	394
			—OR—	
Y	*425-4565*	1	VALVE GP-MODULATING (24-VOLT)	396

Y - SEPARATE ILLUSTRATION

<END>

350-3913 VALVE GP-MODULATING

S/N: DM31-UP
24-VOLT
FIELD REPLACEMENT FOR 244-3114—PAGE: 393
PART OF 244-3114 VALVE GP-MODULATING

SMCS-3139 **i05946308**

NOTE	REF NO	GRAPHIC REF	PART NUMBER	QTY	PART NAME 1 2 3 4 5 6 (PRODUCT LEVEL)	SEE PAGE
	1	1	**6V-3965**	1	FITTING (QUICK DISCONNECT)	
	2	1	**218-2373**	1	NUT (1/2-28-THD)	
	3	1	**323-9531**	1	COIL AS (24-VOLT)	
	4	1	**214-7568**	1	SEAL-O-RING	
	5	1	**164-2108**	1	WASHER (13.03X25.4X2.38-MM THK)	

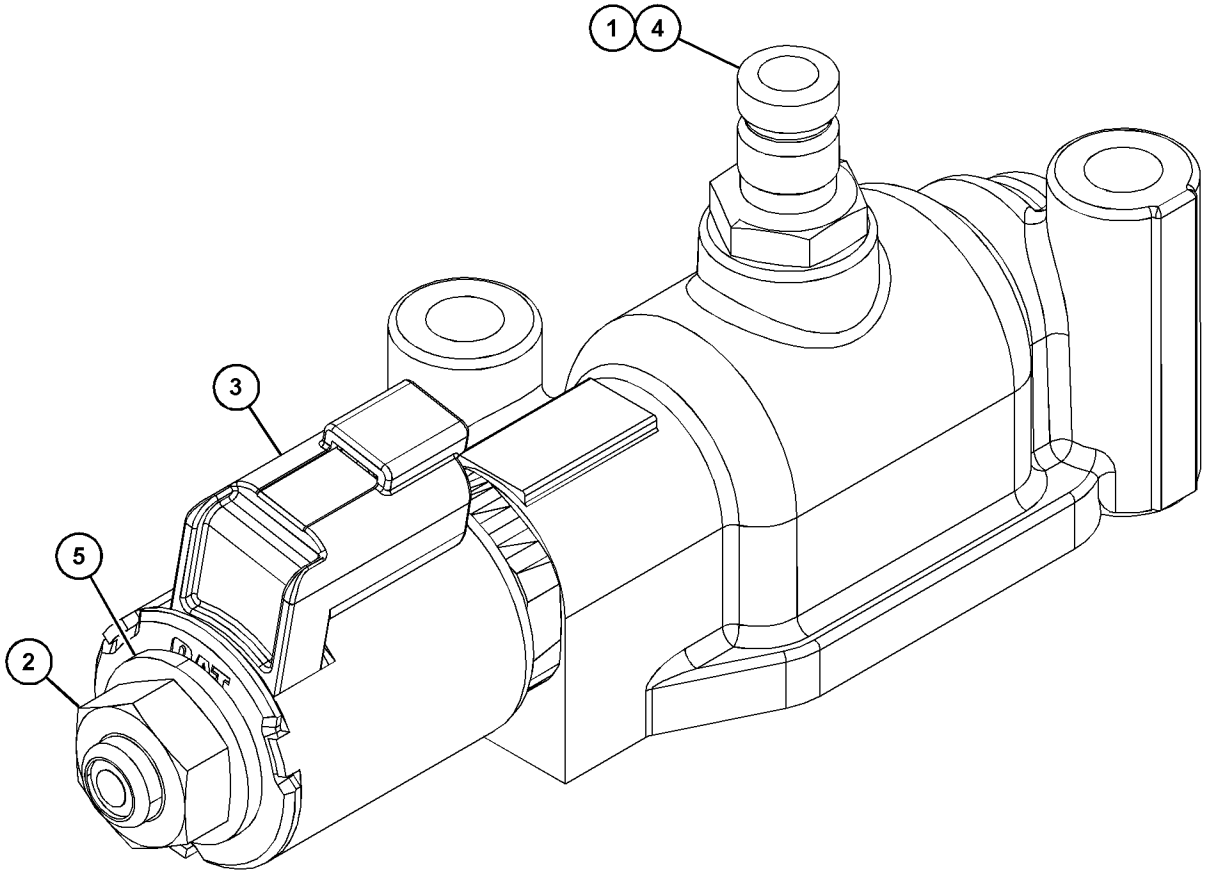

GRAPHIC #1 **<END>** g03736461

385-4432 VALVE GP-MODULATING

S/N: DM31-UP
24-VOLT
FIELD REPLACEMENT FOR 244-3114—PAGE: 393
PART OF 244-3114 VALVE GP-MODULATING

SMCS-3139 **i05966991**

NOTE	REF NO	GRAPHIC REF	PART NUMBER	QTY	PART NAME 1 2 3 4 5 6 (PRODUCT LEVEL)	SEE PAGE
	1	1	**6V-3965**	1	FITTING (QUICK DISCONNECT)	
	2	1	**323-9531**	1	COIL AS (24-VOLT)	
	3	1	**214-7568**	1	SEAL-O-RING	
	4	1	**164-2108**	1	WASHER (13.03X25.4X2.38-MM THK)	
	5	1	**218-2373**	1	NUT (1/2-28-THD)	
					PARTS SHOWN IN GRAPHIC(S) WITHOUT A REFERENCE NUMBER ARE NOT SERVICED SEPARATELY	

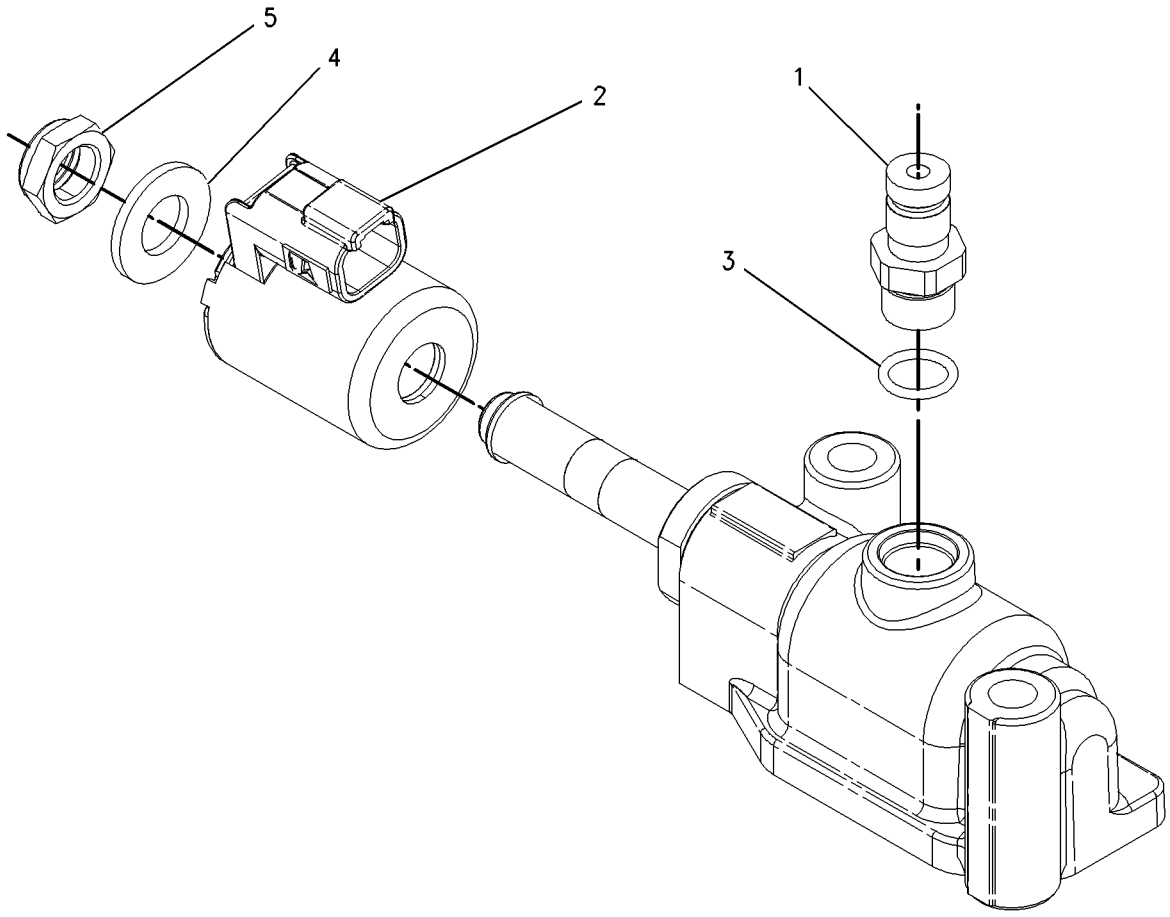

GRAPHIC #1 **<END>** g00919065

425-4565 VALVE GP-MODULATING

S/N: DM31-UP
24-VOLT
FIELD REPLACEMENT FOR 244-3114—PAGE: 393
PART OF 244-3114 VALVE GP-MODULATING

SMCS-3139 **i05946713**

NOTE	REF NO	GRAPHIC REF	PART NUMBER	QTY	PART NAME 1 2 3 4 5 6 (PRODUCT LEVEL)	SEE PAGE
	1	1	**6V-3965**	1	FITTING (QUICK DISCONNECT)	
	2	1	**164-2108**	1	WASHER (13.03X25.4X2.38-MM THK)	
	3	1	**218-2373**	1	NUT (1/2-28-THD)	
	4	1	**214-7568**	1	SEAL-O-RING	
	5	1	**323-9531**	1	COIL AS (24-VOLT)	

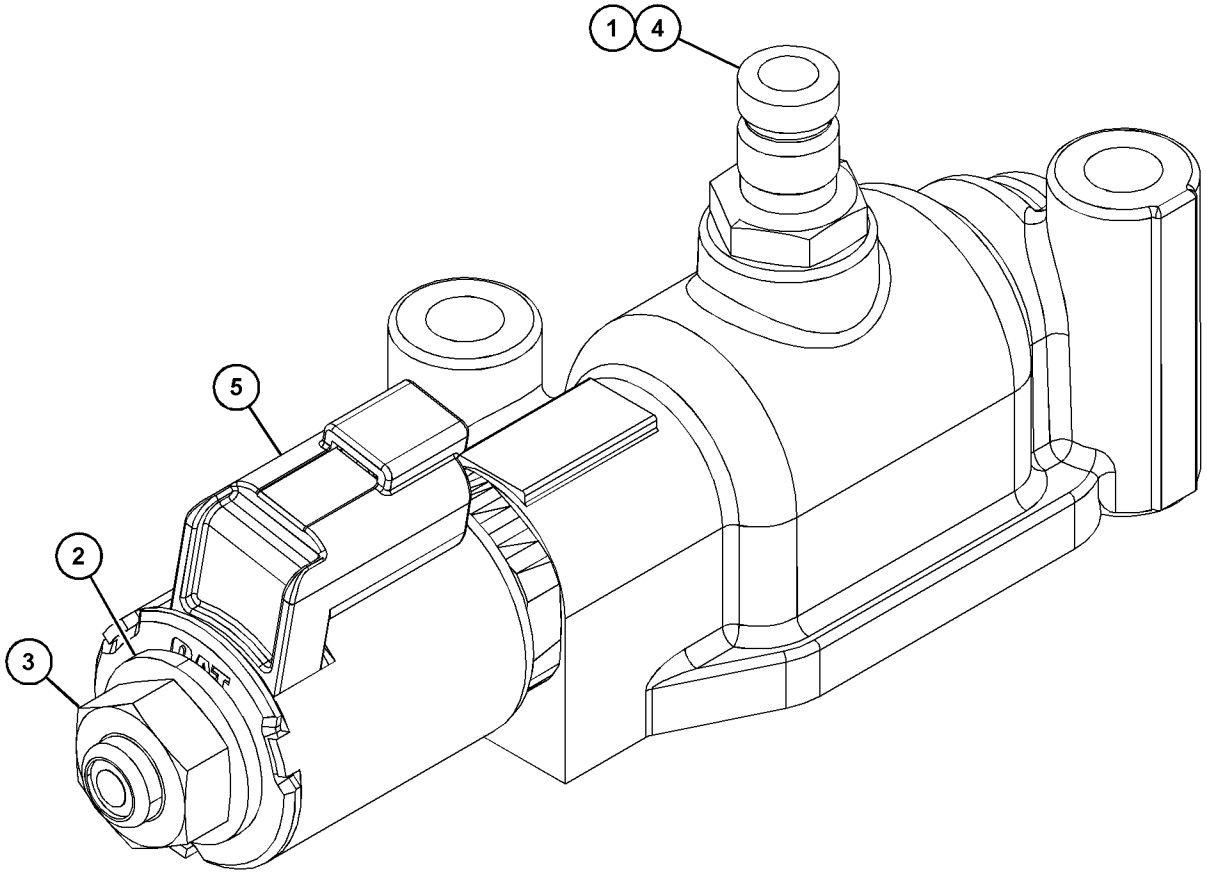

GRAPHIC #1 **<END>** g03736453

425-6734 VALVE GP-MODULATING

S/N: DM31-UP
24-VOLT
FIELD REPLACEMENT FOR 244-3114—PAGE: 393
PART OF 244-3114 VALVE GP-MODULATING

SMCS-3139 **i05980391**

NOTE	REF NO	GRAPHIC REF	PART NUMBER	QTY	PART NAME 1 2 3 4 5 6 (PRODUCT LEVEL)	SEE PAGE
	1	1	**6V-3965**	1	FITTING (QUICK DISCONNECT)	
	2	1	**323-9531**	1	COIL AS (24-VOLT)	
	3	1	**214-7568**	1	SEAL-O-RING	
	4	1	**164-2108**	1	WASHER (13.03X25.4X2.38-MM THK)	
	5	1	**218-2373**	1	NUT (1/2-28-THD)	
					PARTS SHOWN IN GRAPHIC(S) WITHOUT A REFERENCE NUMBER ARE NOT SERVICED SEPARATELY	

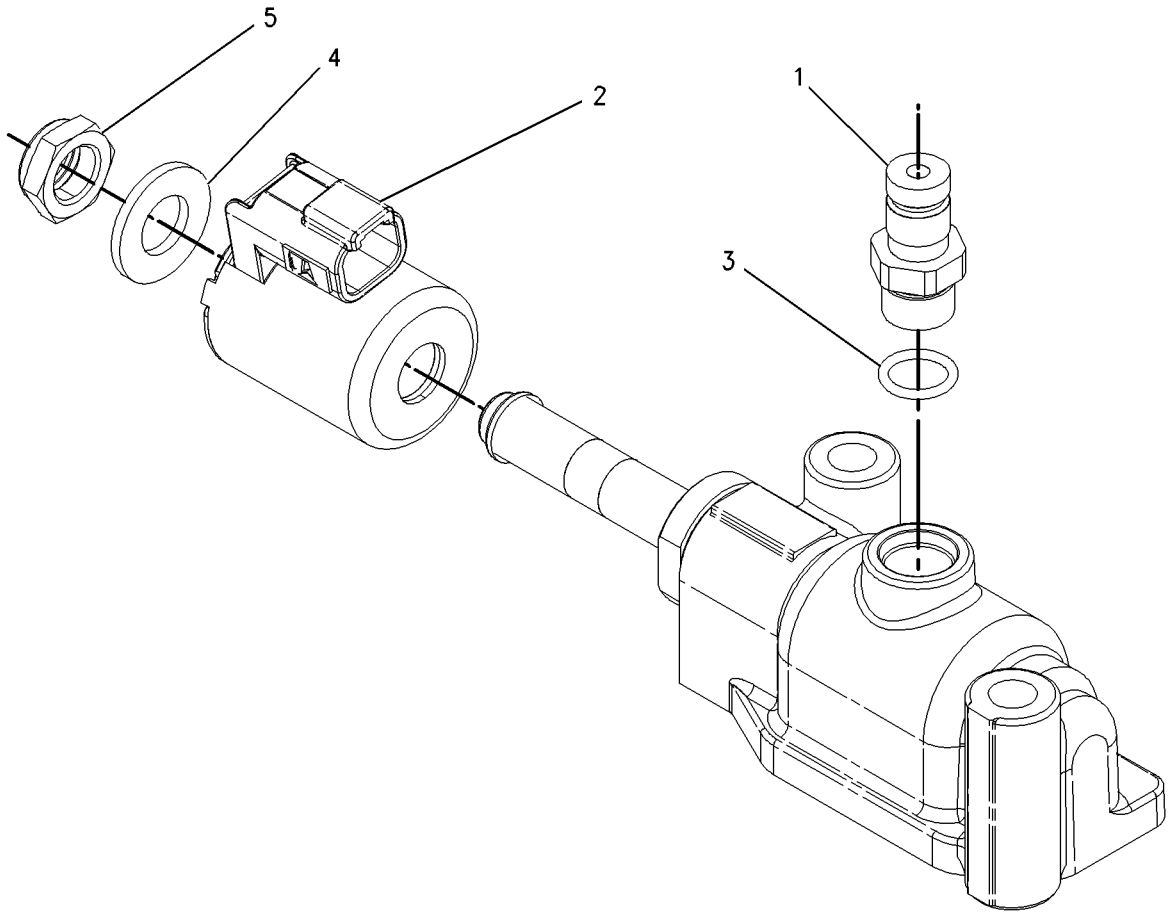

GRAPHIC #1 **<END>** g00919065

257-5026 VALVE GP-RELIEF

S/N: DM31-UP

PART OF 381-0672 CONTROL GP-TRANSMISSION HYD

SMCS-3133 **i03321161**

NOTE	REF NO	GRAPHIC REF	PART NUMBER	QTY	PART NAME 1 2 3 4 5 6 (PRODUCT LEVEL)	SEE PAGE
	1	1	**2S-4663**	1	SEAL-O-RING	
	2	1	**2S-5835**	1	PISTON-LOAD	
	4	1	*241-6218*	1	PLUG AS	
		1	**9S-8005**	1	PLUG-O-RING	
		1	**3K-0360**	1	SEAL-O-RING	
	5	1	**4M-5905**	1	SCREW-ADJUSTMENT (5/16-18X1-IN)	
	6	1	**6V-0852**	1	CAP-DUST	
	7	1	*164-5567*	1	COUPLER AS-QUICK DISCONNECT (MALE)	
		1	**3J-1907**	1	SEAL-O-RING	
		1	**6V-3965**	1	FITTING (QUICK DISCONNECT)	
	10	1	**8E-1143**	1	SLUG	
	11	1	**8M-5253**	1	SEAL-O-RING	
	12	1	**9M-2110**	1	COVER-ADJUSTMENT	
	13	1	**115-4550**	1	COVER	
	14	1	**172-7966**	1	BODY	
	15	1	**172-7968**	1	SPOOL AS	
		1	**3D-8317**	1	RING-RETAINING	
		1	**4B-9880**	1	BALL	
		1	**4M-2381**	1	SPRING	
		1	**9U-8669**	1	RETAINER	
	16	1	**174-7449**	1	SPRING	
M	18	1	**6V-3940**	2	BOLT (M8X1.25X25-MM)	
M	19	1	**6V-5218**	2	BOLT (M8X1.25X35-MM)	
	20	1	**9M-1974**	2	WASHER-HARD (8.8X16X2-MM THK)	
	21	1	*162-0177*	1	PLUG AS	
		1	**3J-1907**	1	SEAL-O-RING	
		1	**9S-8004**	1	PLUG	
	22	1	*165-4931*	1	ELBOW AS	
		1	**3J-1907**	1	SEAL-O-RING	
		1	**6V-8077**	1	ELBOW	

M - METRIC PART

257-5026 **VALVE GP-RELIEF (*contd.*)** **i03321161**

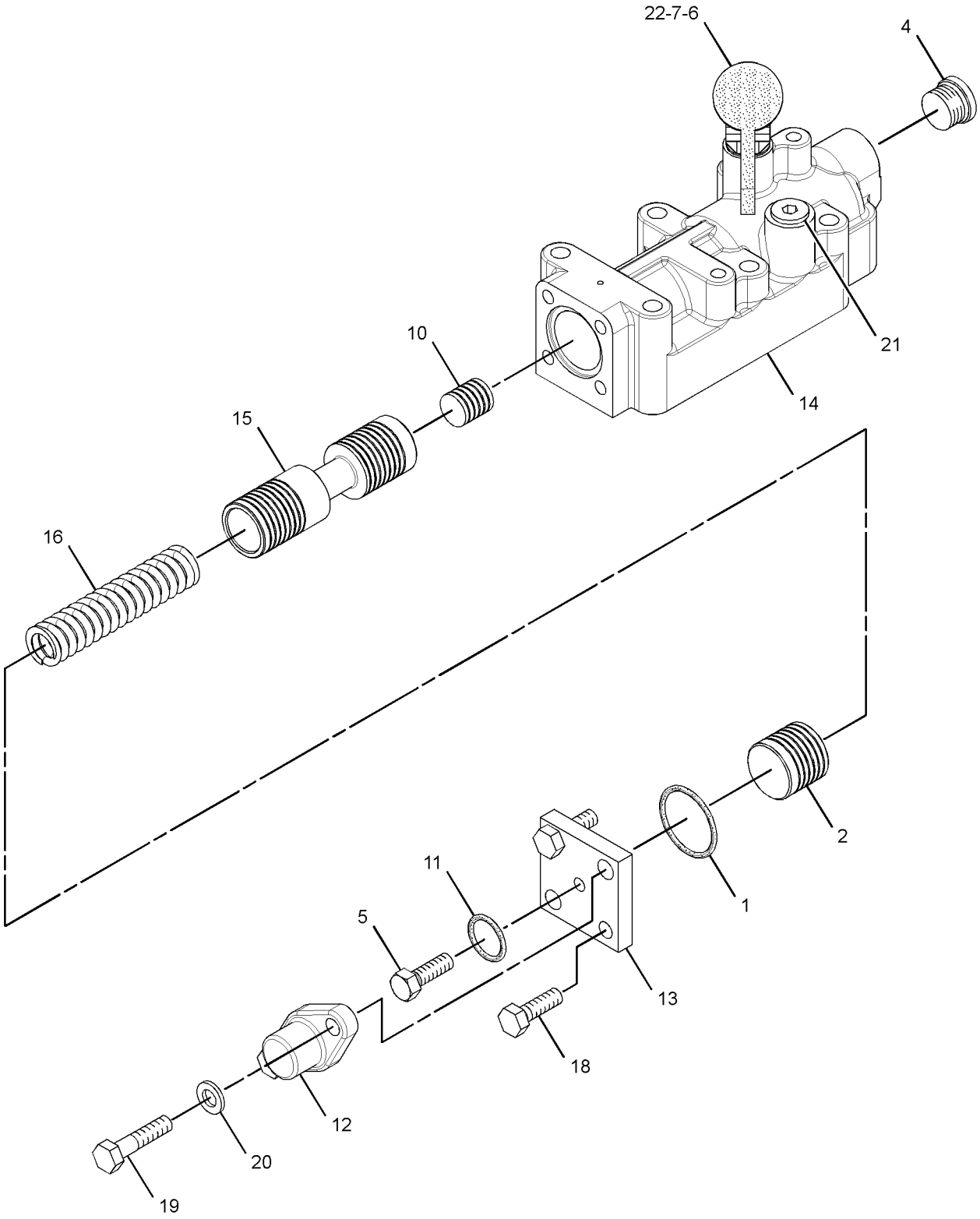

GRAPHIC #1 **<END>** g01923797

252-2237 VALVE GP-SOLENOID

S/N: DM31-UP
24-VOLT DC
PART OF 381-0672 CONTROL GP-TRANSMISSION HYD

SMCS-5479 **i05712034**

NOTE	REF NO	GRAPHIC REF	PART NUMBER	QTY	PART NAME 1 2 3 4 5 6 (PRODUCT LEVEL)	SEE PAGE
	1	1	**245-1181**	1	FLANGE	
					AVAILABLE REPAIR KIT(S):	
			245-1912	1	KIT-SEAL (SOLENOID VALVE)	
					(INCLUDES SEALS)	

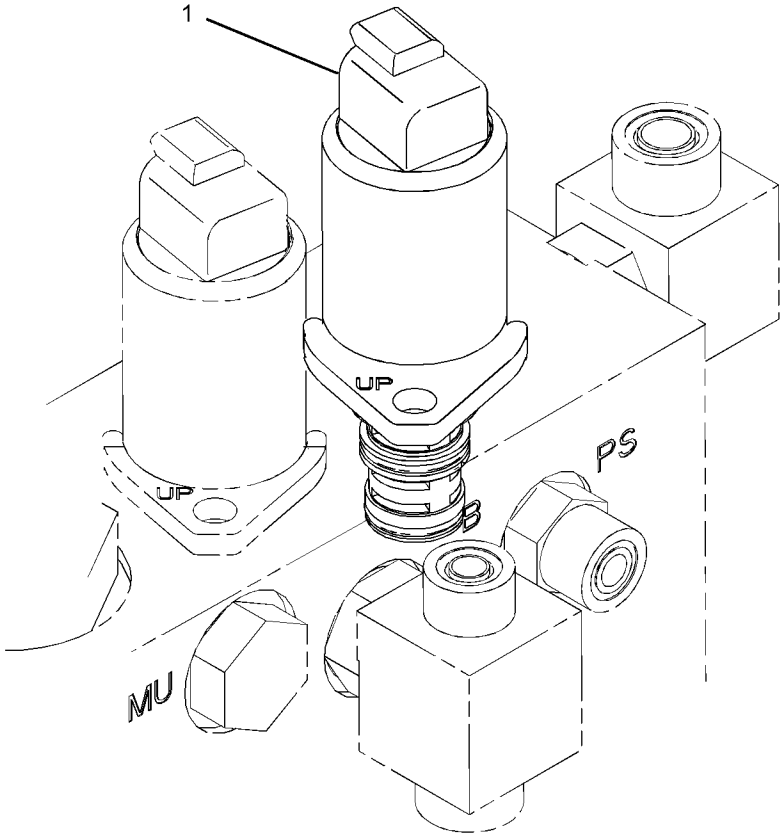

GRAPHIC #1 **<END>** g01199604

152-3988 WHEEL & TIRE AR

S/N: E9Y1-UP
CANNOT BE USED WITH 256-3325—PAGE: 401
AN ATTACHMENT

SMCS-4200 **i00708582**

NOTE	PART NUMBER	QTY	PART NAME 1 2 3 4 5 6 (PRODUCT LEVEL)	SEE PAGE
Y	*142-6433*	6	WHEEL & TIRE GP	402

Y - SEPARATE ILLUSTRATION

<END>

196-4928 WHEEL & TIRE AR

S/N: E9Y1-UP
CANNOT BE USED WITH 256-3325—PAGE: 401
AN ATTACHMENT

SMCS-4200 **i01828951**

NOTE	PART NUMBER	QTY	PART NAME 1 2 3 4 5 6 (PRODUCT LEVEL)	SEE PAGE
Y	*196-4927*	6	WHEEL & TIRE GP	403

Y - SEPARATE ILLUSTRATION

<END>

256-3325 WHEEL & TIRE AR

S/N: E9Y1-UP
FOR USE WITH 295-1039—PAGE: 197
CANNOT BE USED WITH 152-3988—PAGE: 401, 310-7336—PAGE: 401, 196-4928—PAGE: 401, 389-6915—PAGE: 402
AN ATTACHMENT

SMCS-4200 **i02386686**

NOTE	PART NUMBER	QTY	PART NAME 1 2 3 4 5 6 (PRODUCT LEVEL)	SEE PAGE
Y	*256-3314*	6	WHEEL & TIRE GP	403

Y - SEPARATE ILLUSTRATION

<END>

310-7336 WHEEL & TIRE AR

S/N: E9Y1-UP
CANNOT BE USED WITH 152-3988—PAGE: 401, 256-3325—PAGE: 401
AN ATTACHMENT

SMCS-4200 **i02836964**

NOTE	PART NUMBER	QTY	PART NAME 1 2 3 4 5 6 (PRODUCT LEVEL)	SEE PAGE
Y	*310-7318*	6	WHEEL & TIRE GP	403

Y - SEPARATE ILLUSTRATION

<END>

389-6915 WHEEL & TIRE AR

S/N: E9Y1-UP
CANNOT BE USED WITH 256-3325—PAGE: 401
AN ATTACHMENT

SMCS-4200 **i04959550**

NOTE	PART NUMBER	QTY	PART NAME 1 2 3 4 5 6 (PRODUCT LEVEL)	SEE PAGE
Y	*389-6916*	6	WHEEL & TIRE GP	404

Y - SEPARATE ILLUSTRATION

<END>

435-7972 WHEEL & TIRE AR

S/N: E9Y1-UP
CANNOT BE USED WITH ANY OTHER WHEEL & TIRE AR
AN ATTACHMENT

SMCS-4200 **i05644535**

NOTE	PART NUMBER	QTY	PART NAME 1 2 3 4 5 6 (PRODUCT LEVEL)	SEE PAGE
Y	*435-7971*	6	WHEEL & TIRE GP	404

Y - SEPARATE ILLUSTRATION

<END>

142-6433 WHEEL & TIRE GP

S/N: E9Y1-UP
19.5X25
PART OF 152-3988 WHEEL & TIRE AR
AN ATTACHMENT

SMCS-4200 **i04004202**

NOTE	PART NUMBER	QTY	PART NAME 1 2 3 4 5 6 (PRODUCT LEVEL)	SEE PAGE
Y	*226-1885*	1	WHEEL GP	406
	2D-2443	1	SEAL-O-RING	
	354-1627	1	TIRE (23.5-R25)	
	2G-6595	1	VALVE GP-TIRE	
	9K-7951	1	CAP-VALVE (STEM)	
	6F-3930	1	CORE-VALVE	
	7D-5252	1	SPUD AS	
	2D-2508	1	GROMMET	
	2D-2509	1	LOCKNUT (11/16-16-THD)	
	2D-2507	1	SPUD	

Y - SEPARATE ILLUSTRATION

<END>

196-4927 WHEEL & TIRE GP

S/N: E9Y1-UP
(19.5 X 25)
PART OF 196-4928 WHEEL & TIRE AR
AN ATTACHMENT

SMCS-4200 **i01828953**

NOTE	PART NUMBER	QTY	PART NAME 1 2 3 4 5 6 (PRODUCT LEVEL)	SEE PAGE
	2D-2443	1	SEAL-O-RING	
	102-4559	1	TIRE (23.5-R25)	
	2G-6595	1	VALVE GP-TIRE	
	9K-7951	1	CAP-VALVE (STEM)	
	6F-3930	1	CORE-VALVE	
	7D-5252	1	SPUD AS	
	2D-2508	1	GROMMET	
	2D-2509	1	LOCKNUT (11/16-16-THD)	
	2D-2507	1	SPUD	
	226-1885	1	WHEEL GP	
	7D-7469	1	RING-LOCK	
	226-1886	1	FLANGE AS	
	228-0902	1	RIM AS (19.5X25)	

<END>

256-3314 WHEEL & TIRE GP

S/N: E9Y1-UP
PART OF 256-3325 WHEEL & TIRE AR
AN ATTACHMENT

SMCS-4200 **i04024249**

NOTE	PART NUMBER	QTY	PART NAME 1 2 3 4 5 6 (PRODUCT LEVEL)	SEE PAGE
Y	*256-3235*	1	WHEEL GP	407
	6C-8882	1	TIRE (23.5-R25)	

Y - SEPARATE ILLUSTRATION

<END>

310-7318 WHEEL & TIRE GP

S/N: E9Y1-UP
PART OF 310-7336 WHEEL & TIRE AR
AN ATTACHMENT

SMCS-4200 **i02836967**

NOTE	PART NUMBER	QTY	PART NAME 1 2 3 4 5 6 (PRODUCT LEVEL)	SEE PAGE
Y	*150-5144*	1	WHEEL GP	405
	196-7867	1	TIRE (23.5-R25)	

Y - SEPARATE ILLUSTRATION

<END>

389-6916 WHEEL & TIRE GP

S/N: E9Y1-UP
PART OF 389-6915 WHEEL & TIRE AR
AN ATTACHMENT

SMCS-4200 **i04959553**

NOTE	PART NUMBER	QTY	PART NAME 1 2 3 4 5 6 (PRODUCT LEVEL)	SEE PAGE
Y	*150-5144*	1	WHEEL GP	405
	378-5706	1	TIRE (23.5-R25)	

Y - SEPARATE ILLUSTRATION

<END>

435-7971 WHEEL & TIRE GP

S/N: E9Y1-UP
23.5-R25
PART OF 435-7972 WHEEL & TIRE AR
AN ATTACHMENT

SMCS-4200 **i05632140**

NOTE	PART NUMBER	QTY	PART NAME 1 2 3 4 5 6 (PRODUCT LEVEL)	SEE PAGE
Y	*226-1885*	1	WHEEL GP	406
	2D-2443	1	SEAL-O-RING	
	319-7428	1	TIRE (23.5-R25)	
	2G-6595	1	VALVE GP-TIRE	
	6F-3930	1	CORE-VALVE	
	7D-5252	1	SPUD AS	
	2D-2507	1	SPUD	
	2D-2508	1	GROMMET	
	2D-2509	1	LOCKNUT (11/16-16-THD)	
	9K-7951	1	CAP-VALVE (STEM)	

Y - SEPARATE ILLUSTRATION

<END>

381-0830 WHEEL AR

S/N: E9Y1-UP
PART OF 386-6764 AXLE AR-REAR

SMCS-4208 **i06128446**

NOTE	PART NUMBER	QTY	PART NAME 1 2 3 4 5 6 (PRODUCT LEVEL)	SEE PAGE
Y	*381-0831*	2	WHEEL & BRAKE GP (FRONT)	522
Y	*381-0832*	2	WHEEL & BRAKE GP (REAR)	524

Y - SEPARATE ILLUSTRATION

<END>

150-5144 WHEEL GP

S/N: E9Y1-UP

PART OF 310-7318, 389-6916 WHEEL & TIRE GP

AN ATTACHMENT

SMCS-4006, 4201, 4208

i02668877

NOTE	PART NUMBER	QTY	PART NAME 1 2 3 4 5 6 (PRODUCT LEVEL)	SEE PAGE
Y	*226-1885*	1	WHEEL GP	406
	2D-2443	1	SEAL-O-RING	
	2G-6595	1	VALVE GP-TIRE	
	6F-3930	1	CORE-VALVE	
	9K-7951	1	CAP-VALVE (STEM)	
	7D-5252	1	SPUD AS	
	2D-2507	1	SPUD	
	2D-2508	1	GROMMET	
	2D-2509	1	LOCKNUT (11/16-16-THD)	

Y - SEPARATE ILLUSTRATION

<END>

226-1885 WHEEL GP

S/N: E9Y1-UP
(19.5X25)
PART OF 142-6433, 435-7971 WHEEL & TIRE GP, 150-5144, 256-3235 WHEEL GP
AN ATTACHMENT

SMCS-4006, 4201, 4208 **i06105156**

NOTE	REF NO	GRAPHIC REF	PART NUMBER	QTY	PART NAME 1 2 3 4 5 6 (PRODUCT LEVEL)	SEE PAGE
	1	1	**7D-7469**	1	RING-LOCK	
	2	1	**226-1886**	1	FLANGE AS	
	3	1	**228-0902**	1	RIM AS (19.5X25)	

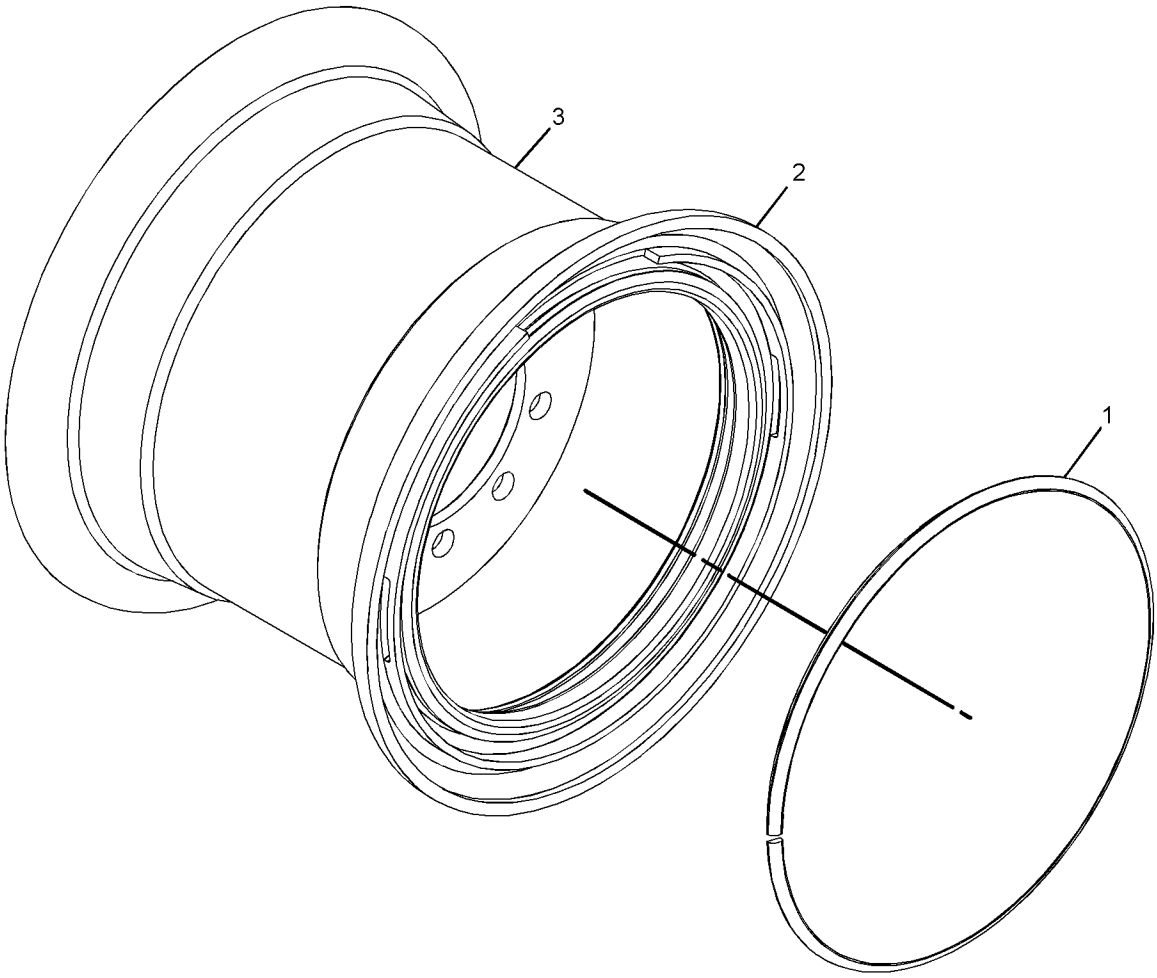

GRAPHIC #1 **<END>** g01151567

256-3235 WHEEL GP

S/N: E9Y1-UP
PART OF 256-3314 WHEEL & TIRE GP
AN ATTACHMENT

SMCS-4006, 4201, 4208

i06105304

NOTE	PART NUMBER	QTY	PART NAME 1 2 3 4 5 6 (PRODUCT LEVEL)	SEE PAGE
Y	*226-1885*	1	WHEEL GP	406
	2D-2443	1	SEAL-O-RING	
	2G-6595	1	VALVE GP-TIRE (TIRE INFLATION)	
	9K-7951	1	CAP-VALVE (STEM)	
	6F-3930	1	CORE-VALVE	
	7D-5252	1	SPUD AS	
	2D-2507	1	SPUD	
	2D-2508	1	GROMMET	
	2D-2509	1	LOCKNUT (11/16-16-THD)	

Y - SEPARATE ILLUSTRATION

<END>

479-6537 BUMPER GP-FRONT

S/N: E9Y1-UP

PART OF 375-3405, 375-3407 OPTION AR-LADDER, 375-3406 PLATFORM AR AN ATTACHMENT

SMCS-7156 **i06140556**

NOTE	REF NO	GRAPHIC REF	PART NUMBER	QTY	PART NAME 1 2 3 4 5 6 (PRODUCT LEVEL)	SEE PAGE
	1	1	**189-8789**	2	BUMPER AS	
	2	1	**462-1542**	2	BRACKET AS	

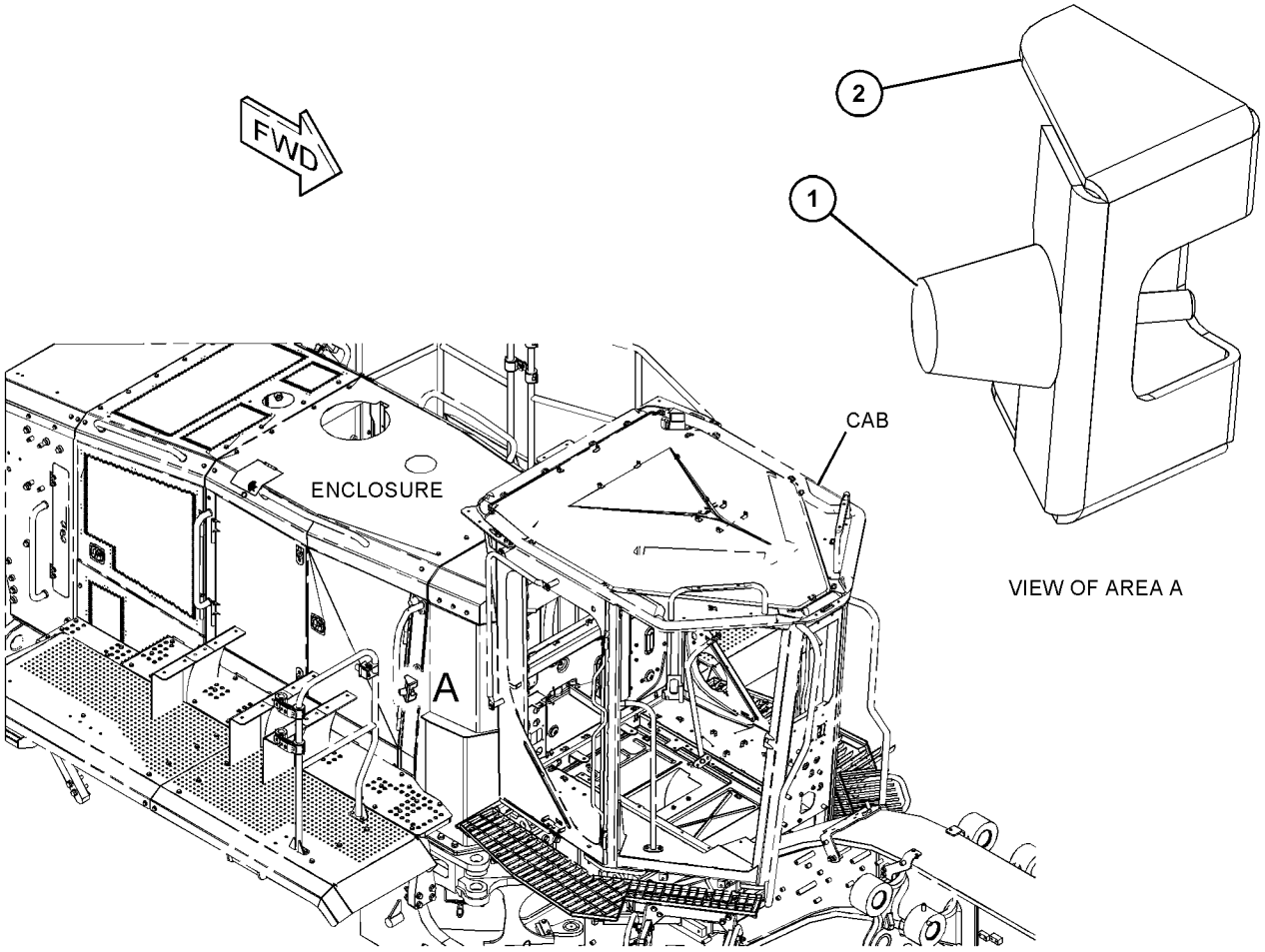

GRAPHIC #1 **<END>** g03833760

388-9297 COVER GP-ACCESS

S/N: E9Y1-UP

PART OF 375-3440 TANK AR-FUEL

SMCS-726A **i06144073**

NOTE	REF NO	GRAPHIC REF	PART NUMBER	QTY	PART NAME 1 2 3 4 5 6 (PRODUCT LEVEL)	SEE PAGE
J	1	1	**275-0572**	1	LATCH AS	
	2	1	**319-2305**	1	CAM-LATCH	
	3	1	**332-3604**	1	BUMPER	
	4	1	**456-7554**	1	COVER AS	
		1	**1V-8284**	1	HINGE	

J - REQUIRES CORPORATE KEY

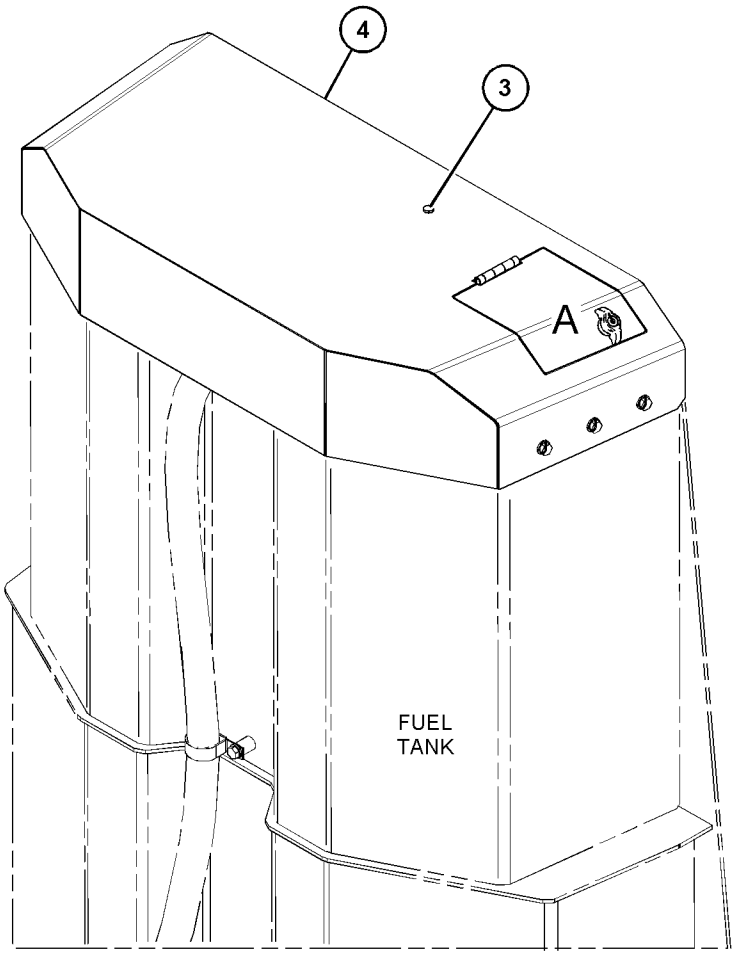

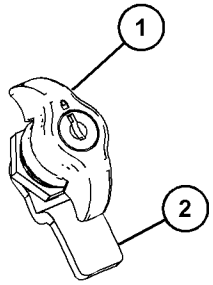

VIEW OF AREA A



GRAPHIC #1 **<END>** g03839012

375-3424 COVER GP-CONTROL VALVE

S/N: E9Y1-UP

PART OF 375-3450 COVER GP-CONTROL VALVE

SMCS-7150 **i06140341**

NOTE	REF NO	GRAPHIC REF	PART NUMBER	QTY	PART NAME 1 2 3 4 5 6 (PRODUCT LEVEL)	SEE PAGE
	1	1	**367-3254**	1	COVER AS (LH)	
M		1	**8T-3490**	7	NUT-WELD (M10X1.5-THD)	
M		1	**8T-3597**	2	NUT-WELD (M12X1.75-THD)	
	2	1	**367-3256**	1	COVER AS (RH)	
M		1	**8T-3490**	7	NUT-WELD (M10X1.5-THD)	
M		1	**8T-3597**	2	NUT-WELD (M12X1.75-THD)	
	3	1	**385-6754**	1	COVER (RH)	
	4	1	**421-2518**	2	BRACKET AS	
					(EACH INCLUDES)	
M		1	**8T-3490**	2	NUT-WELD (M10X1.5-THD)	
	5	1	**421-2516**	1	COVER (LH)	
	6	1	**421-2496**	1	COVER (RH)	
	7	1	**421-2447**	1	BRACKET AS (LH)	
M		1	**8T-3490**	3	NUT-WELD (M10X1.5-THD)	
	8	1	**421-2448**	1	BRACKET AS (RH)	
M		1	**8T-3490**	3	NUT-WELD (M10X1.5-THD)	
	9	1	**385-6755**	1	COVER (LH)	
C	10	1	**466-9584**	2	SUPPORT AS	
					(EACH INCLUDES)	
M		1	**8T-3490**	6	NUT-WELD (M10X1.5-THD)	
	11	1	**7X-7729**	32	WASHER (11X25X3-MM THK)	
	12	1	**8T-4121**	10	WASHER-HARD (11X21X2.5-MM THK)	
M	13	1	**8T-4136**	42	BOLT (M10X1.5X25-MM)	

C - CHANGE FROM PREVIOUS TYPE
M - METRIC PART

375-3424 **COVER GP-CONTROL VALVE (*contd.*)** **i06140341**

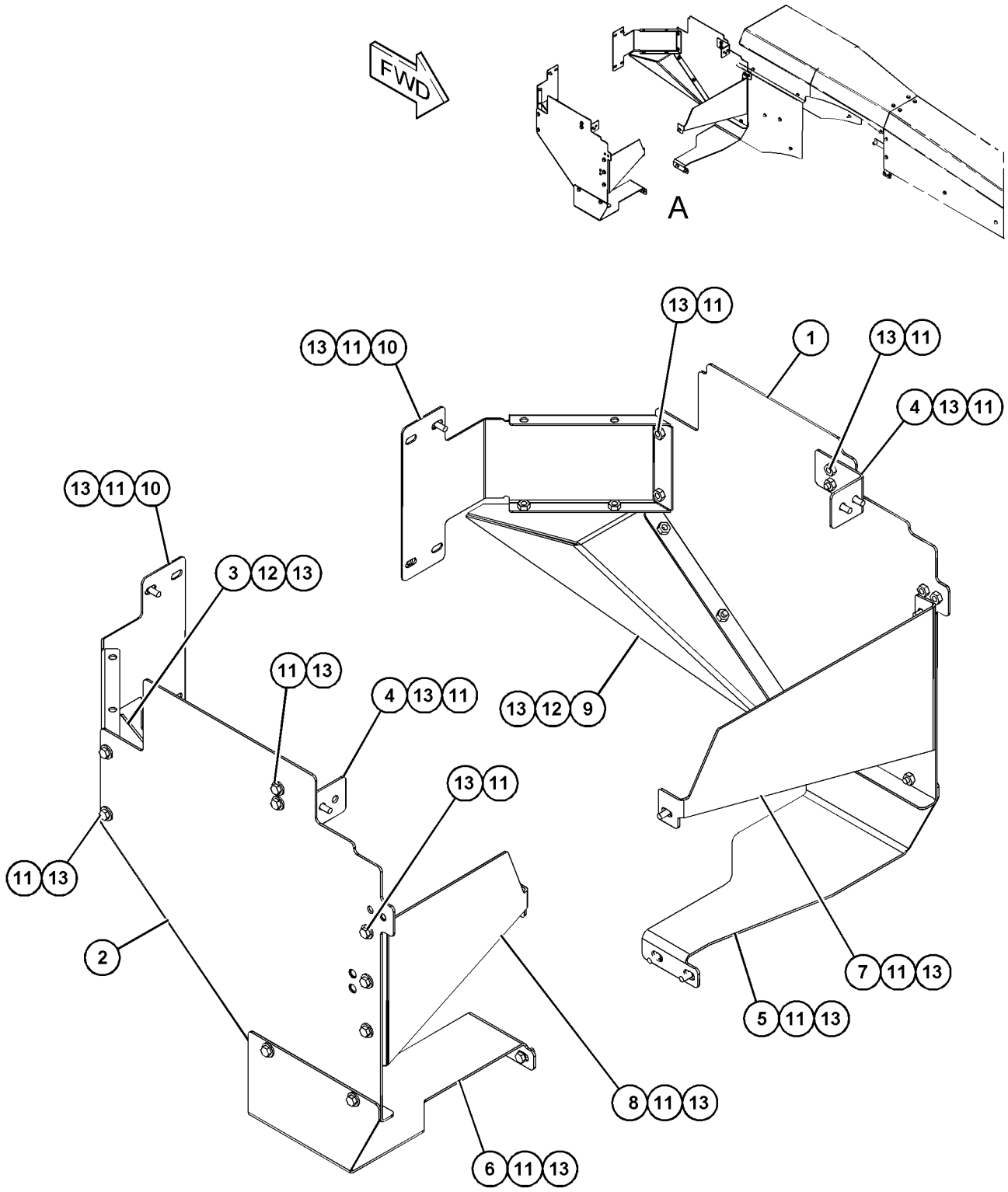

VIEW OF AREA A

GRAPHIC #1 **<END>** g03824511

375-3450 COVER GP-CONTROL VALVE

S/N: E9Y1-UP

PART OF 375-3500 CHASSIS AR

SMCS-7150 **i06140342**

NOTE	REF NO	GRAPHIC REF	PART NUMBER	QTY	PART NAME 1 2 3 4 5 6 (PRODUCT LEVEL)	SEE PAGE
	1	1	**474-6955**	1	COVER	
	2	1	**310-5238**	1	PLATE AS	
M		1	**8T-3490**	6	NUT-WELD (M10X1.5-THD)	
M		1	**8T-3597**	4	NUT-WELD (M12X1.75-THD)	
Y	3	1	*375-3424*	1	COVER GP-CONTROL VALVE	410
	4	1	**375-3448**	1	BRACKET AS (LH)	
M		1	**8T-3490**	7	NUT-WELD (M10X1.5-THD)	
M		1	**9R-2613**	2	BOSS-WELD (M10X1.5X25-MM)	
	5	1	**375-3475**	1	BRACKET AS (RH)	
M		1	**8T-3490**	5	NUT-WELD (M10X1.5-THD)	
M		1	**9R-2613**	1	BOSS-WELD (M10X1.5X25-MM)	
	6	1	**421-2482**	2	BRACKET AS	
					(EACH INCLUDES)	
M		1	**8T-3490**	1	NUT-WELD (M10X1.5-THD)	
	7	1	**443-4065**	1	COVER AS	
M		1	**322-0819**	1	INSERT-THREADED (M10X1.5-THD)	
	8	1	**443-7768**	1	BRACKET AS	
M		1	**9R-2821**	3	BOSS (M10X1.5X15-MM)	
	9	1	**443-7770**	1	BRACKET AS	
M		1	**9R-2821**	3	BOSS (M10X1.5X15-MM)	
	10	1	**474-9447**	1	COVER AS (RH)	
M		1	**8T-3490**	3	NUT-WELD (M10X1.5-THD)	
	11	1	**474-9449**	1	COVER AS (LH)	
M		1	**8T-3490**	3	NUT-WELD (M10X1.5-THD)	
	12	1	**474-9450**	1	COVER AS	
M		1	**322-0819**	2	INSERT-THREADED (M10X1.5-THD)	
		1	**447-0763**	30	RIVET-ALUMINUM	
M	13	1	**161-7632**	4	BOLT-SELF-LOCKING (M10X1.5X40-MM)	
	14	1	**7X-7729**	62	WASHER (11X25X3-MM THK)	
M	15	1	**8T-0722**	6	BOLT-LOCKING (M10X1.5X30-MM)	
	16	1	**8T-4121**	5	WASHER-HARD (11X21X2.5-MM THK)	
M	17	1	**8T-4137**	3	BOLT (M10X1.5X20-MM)	
M	18	1	**8T-4195**	2	BOLT (M10X1.5X30-MM)	
M	19	1	**8T-4201**	6	BOLT-LOCKING (M10X1.5X20-MM)	
M	20	1	**9X-2125**	46	BOLT-LOCKING (M10X1.5X25-MM)	

M - METRIC PART
Y - SEPARATE ILLUSTRATION

375-3450 **COVER GP-CONTROL VALVE (*contd.*)** **i06140342**

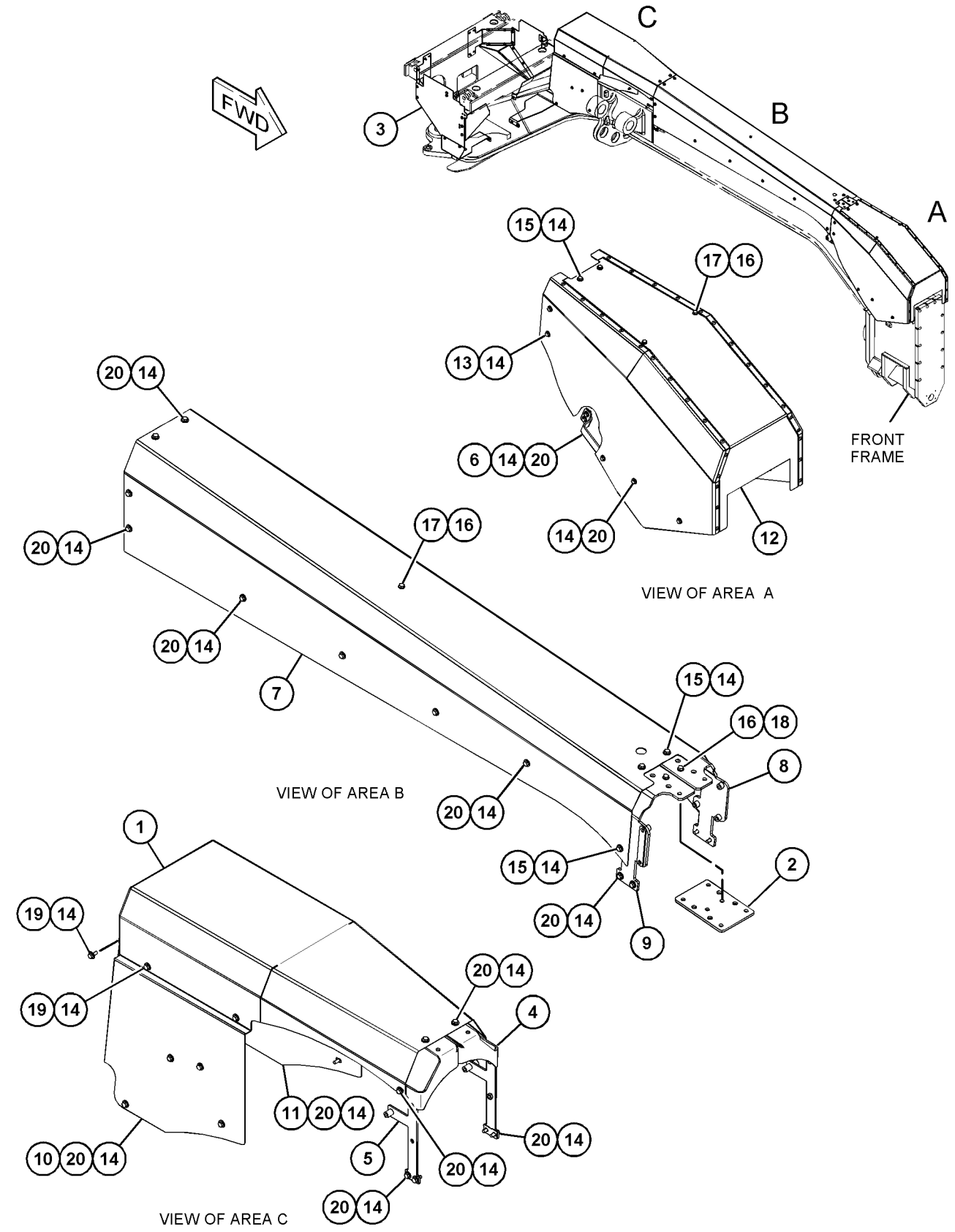

GRAPHIC #1 **<END>** g03831460

375-3431 DOOR GP-ACCESS—LH

S/N: E9Y1-UP

PART OF 375-3465 ENCLOSURE GP-ENGINE

SMCS-7273 **i06119263**

NOTE	REF NO	GRAPHIC REF	PART NUMBER	QTY	PART NAME 1 2 3 4 5 6 (PRODUCT LEVEL)	SEE PAGE
	1	1	**282-3117**	1	ROD	
	2	1	**305-3153**	2	PAWL	
J	3	1	**326-0610**	2	LATCH AS	
					(EACH INCLUDES)	
		1	**1H-3244**	4	LOCKWASHER	
M		1	**095-1207**	2	NUT (M12X1.75-THD)	
		1	**326-0612**	2	WASHER-TAB	
M		1	**344-5673**	4	NUT (M6X1-THD)	
	4	1	**329-1798**	1	GUIDE	
	5	1	**332-3604**	4	BUMPER	
	6	1	**421-2442**	2	HINGE AS	
	7	1	**421-2445**	2	PLATE AS	
	8	1	**443-4063**	1	COVER	
	9	1	**477-9370**	1	INSULATION (LH)	
	10	1	**477-9372**	1	DOOR AS (LH)	
	11	1	**3B-4615**	2	PIN-COTTER	
	12	1	**5P-8439**	2	GROMMET	
M	13	1	**6V-7744**	4	LOCKNUT (M10X1.5-THD)	
	14	1	**7X-1387**	2	WASHER (10.26X22.22X1.9-MM THK)	
	15	1	**7X-7729**	8	WASHER (11X25X3-MM THK)	
	16	1	**8T-4121**	2	WASHER-HARD (11X21X2.5-MM THK)	
M	17	1	**8T-4185**	4	BOLT (M10X1.5X50-MM)	
M	18	1	**8T-4195**	2	BOLT (M10X1.5X30-MM)	

J - REQUIRES CORPORATE KEY
M - METRIC PART

375-3431 **DOOR GP-ACCESS (*contd.*)** **i06119263**

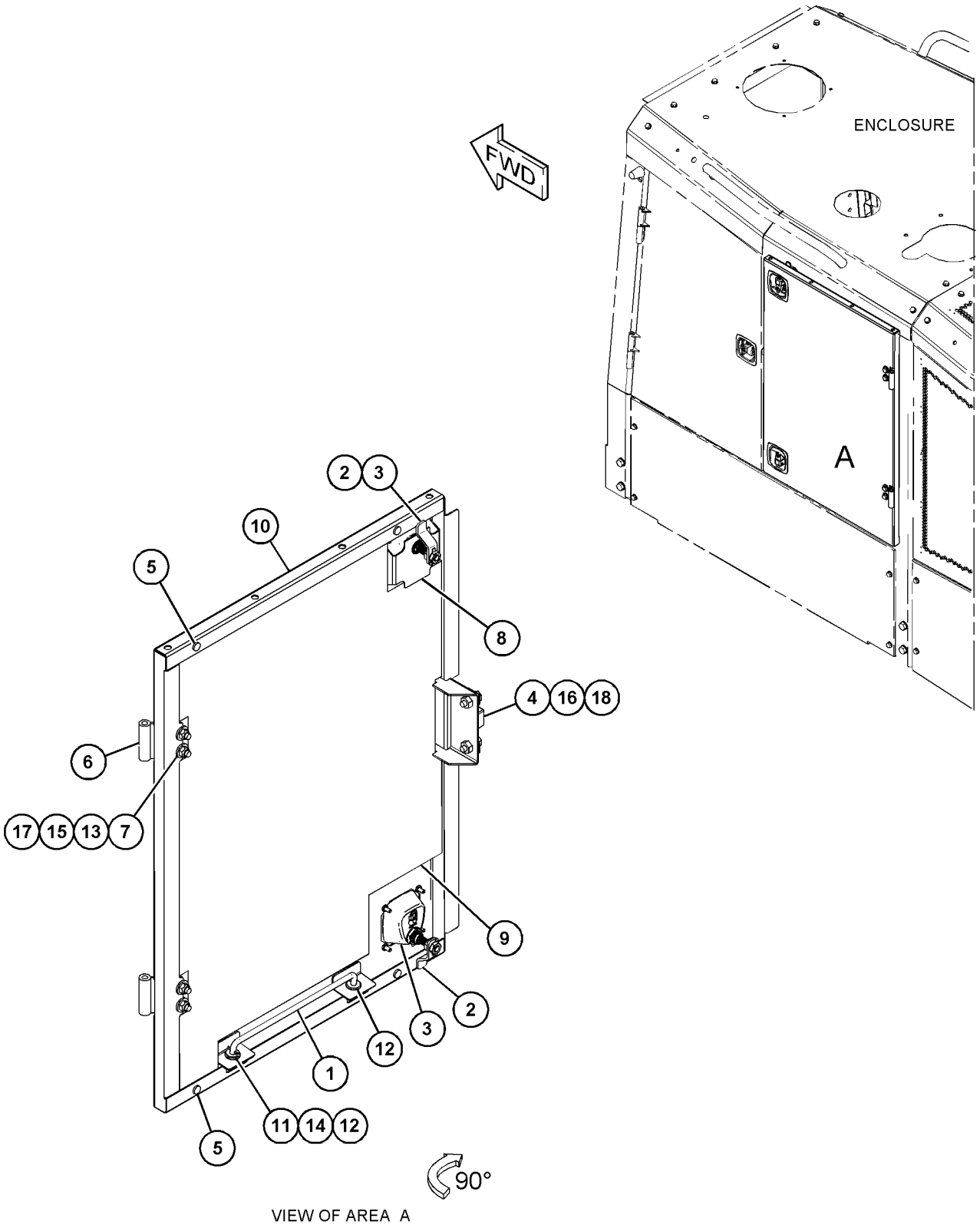

VIEW OF AREA A

GRAPHIC #1 **<END>** g03818169

375-3432 DOOR GP-ACCESS—RH

S/N: E9Y1-UP

PART OF 375-3465 ENCLOSURE GP-ENGINE

SMCS-7273 **i06119294**

NOTE	REF NO	GRAPHIC REF	PART NUMBER	QTY	PART NAME 1 2 3 4 5 6 (PRODUCT LEVEL)	SEE PAGE
	1	1	**282-3117**	1	ROD	
	2	1	**305-3153**	2	PAWL	
J	3	1	**326-0610**	2	LATCH AS	
					(EACH INCLUDES)	
		1	**1H-3244**	4	LOCKWASHER	
M		1	**095-1207**	2	NUT (M12X1.75-THD)	
		1	**326-0612**	2	WASHER-TAB	
M		1	**344-5673**	4	NUT (M6X1-THD)	
	4	1	**329-1798**	1	GUIDE	
	5	1	**332-3604**	4	BUMPER	
	6	1	**421-2442**	2	HINGE AS	
	7	1	**421-2445**	2	PLATE AS	
	8	1	**443-4063**	2	COVER	
	9	1	**477-9371**	1	INSULATION (RH)	
	10	1	**477-9373**	1	DOOR AS (RH)	
	11	1	**3B-4615**	2	PIN-COTTER	
	12	1	**5P-8439**	2	GROMMET	
M	13	1	**6V-7744**	4	LOCKNUT (M10X1.5-THD)	
	14	1	**7X-1387**	2	WASHER (10.26X22.22X1.9-MM THK)	
	15	1	**7X-7729**	8	WASHER (11X25X3-MM THK)	
	16	1	**8T-4121**	2	WASHER-HARD (11X21X2.5-MM THK)	
M	17	1	**8T-4185**	4	BOLT (M10X1.5X50-MM)	
M	18	1	**8T-4195**	2	BOLT (M10X1.5X30-MM)	

J - REQUIRES CORPORATE KEY
M - METRIC PART

375-3432 **DOOR GP-ACCESS (*contd.*)** **i06119294**

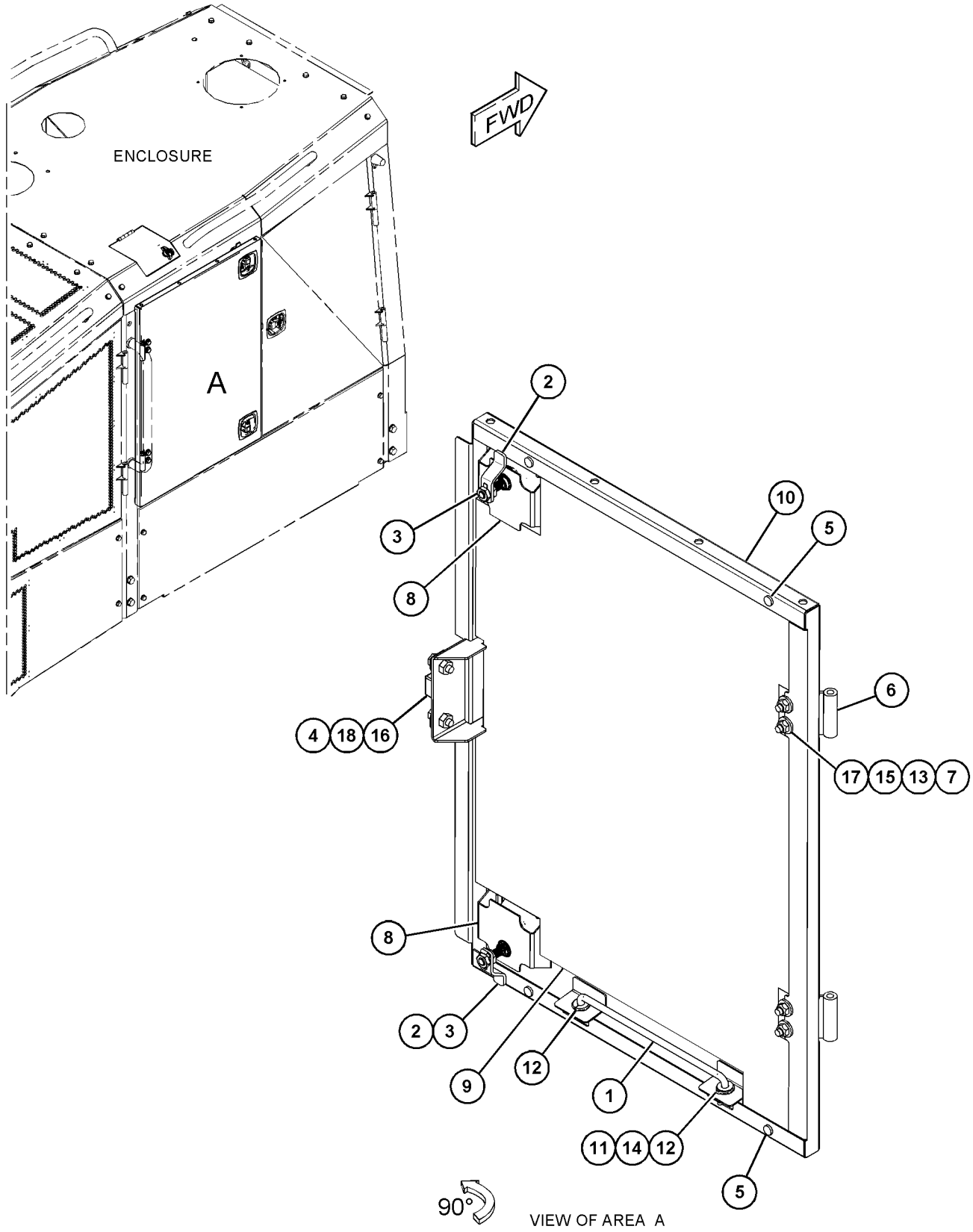

GRAPHIC #1

<END>

g03818208

375-3433 DOOR GP-ACCESS—RH

S/N: E9Y1-UP

PART OF 375-3465 ENCLOSURE GP-ENGINE

SMCS-7273 **i06199678**

NOTE	REF NO	GRAPHIC REF	PART NUMBER	QTY	PART NAME 1 2 3 4 5 6 (PRODUCT LEVEL)	SEE PAGE
	1	1	**8E-4832**	1	STRIKER	
	2	1	**282-3117**	1	ROD	
	3	1	**295-3839**	1	PAWL	
J	4	1	**326-0610**	1	LATCH AS	
		1	**1H-3244**	4	LOCKWASHER	
M		1	**095-1207**	2	NUT (M12X1.75-THD)	
		1	**326-0612**	2	WASHER-TAB	
M		1	**344-5673**	4	NUT (M6X1-THD)	
	5	1	**332-3604**	6	BUMPER	
	6	1	**421-2442**	2	HINGE AS	
	7	1	**421-2445**	2	PLATE AS	
	8	1	**421-2453**	1	DOOR AS (RH)	
	9	1	**485-4427**	1	INSULATION (RH)	
	10	1	**446-8382**	1	PLATE	
	11	1	**3B-4615**	2	PIN-COTTER	
	12	1	**5P-8439**	2	GROMMET	
M	13	1	**6V-7744**	4	LOCKNUT (M10X1.5-THD)	
	14	1	**7X-1387**	2	WASHER (10.26X22.22X1.9-MM THK)	
	15	1	**7X-7729**	8	WASHER (11X25X3-MM THK)	
	16	1	**8T-4121**	2	WASHER-HARD (11X21X2.5-MM THK)	
M	17	1	**8T-4137**	2	BOLT (M10X1.5X20-MM)	
M	18	1	**8T-4185**	4	BOLT (M10X1.5X50-MM)	

J - REQUIRES CORPORATE KEY
M - METRIC PART

375-3433 **DOOR GP-ACCESS (*contd.*)** **i06199678**

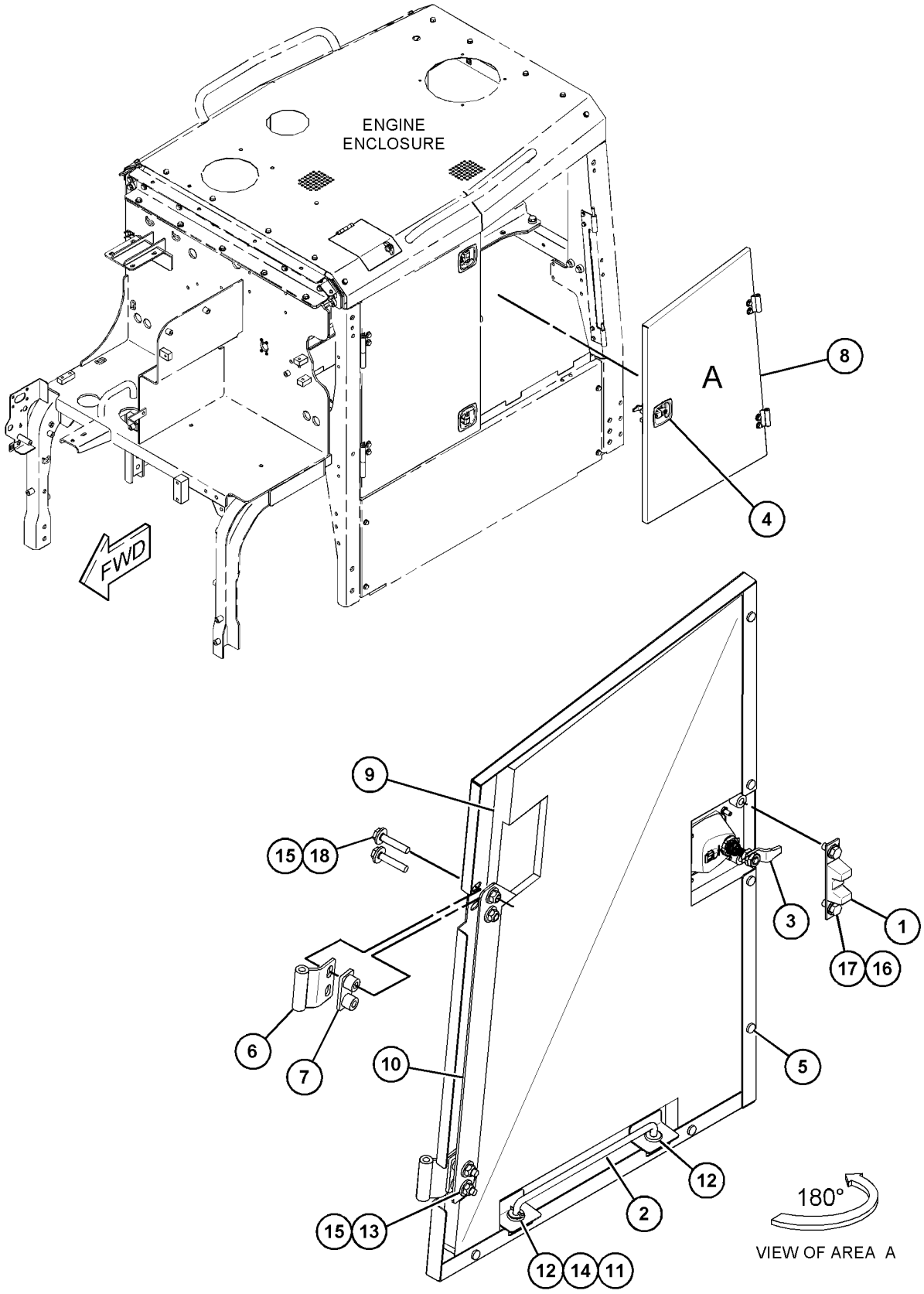

GRAPHIC #1

<END>

g03820541

375-3434 DOOR GP-ACCESS—LH

S/N: E9Y1-UP

PART OF 375-3465 ENCLOSURE GP-ENGINE

SMCS-7273 **i06199679**

NOTE	REF NO	GRAPHIC REF	PART NUMBER	QTY	PART NAME 1 2 3 4 5 6 (PRODUCT LEVEL)	SEE PAGE
	1	1	**8E-4832**	1	STRIKER	
	2	1	**282-3117**	1	ROD	
	3	1	**295-3839**	1	PAWL	
J	4	1	**326-0610**	1	LATCH AS	
		1	**1H-3244**	4	LOCKWASHER	
M		1	**095-1207**	2	NUT (M12X1.75-THD)	
		1	**326-0612**	2	WASHER-TAB	
M		1	**344-5673**	4	NUT (M6X1-THD)	
	5	1	**332-3604**	6	BUMPER	
	6	1	**421-2442**	2	HINGE AS	
	7	1	**421-2445**	2	PLATE AS	
	8	1	**421-2454**	1	DOOR AS (LH)	
	9	1	**485-4426**	1	INSULATION (LH)	
	10	1	**446-8382**	1	PLATE	
	11	1	**3B-4615**	2	PIN-COTTER	
	12	1	**5P-8439**	2	GROMMET	
M	13	1	**6V-7744**	4	LOCKNUT (M10X1.5-THD)	
	14	1	**7X-1387**	2	WASHER (10.26X22.22X1.9-MM THK)	
	15	1	**7X-7729**	8	WASHER (11X25X3-MM THK)	
	16	1	**8T-4121**	2	WASHER-HARD (11X21X2.5-MM THK)	
M	17	1	**8T-4137**	2	BOLT (M10X1.5X20-MM)	
M	18	1	**8T-4185**	4	BOLT (M10X1.5X50-MM)	
M	19	1	**8T-4191**	1	BOLT (M10X1.5X16-MM)	
	20	1	**8T-4226**	1	WASHER-PLATED (10.5X45X3-MM THK)	

J - REQUIRES CORPORATE KEY
M - METRIC PART

375-3434 **DOOR GP-ACCESS (*contd.*)** **i06199679**

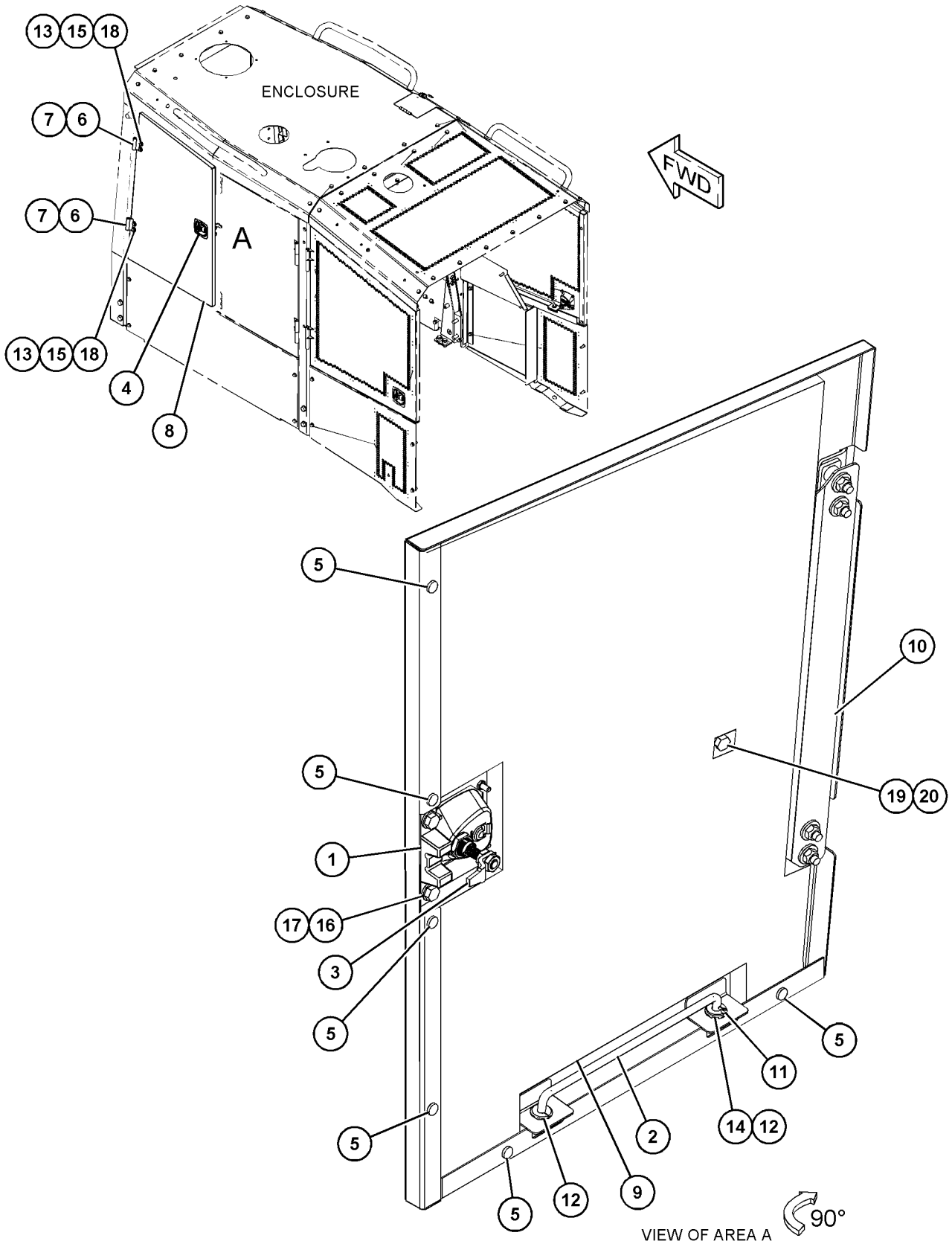

GRAPHIC #1 **<END>** g03836188

375-3435 DOOR GP-ACCESS–LH

S/N: E9Y1-UP

PART OF 371-1316 ENCLOSURE GP-ENGINE

SMCS-7273 **i06128365**

NOTE	REF NO	GRAPHIC REF	PART NUMBER	QTY	PART NAME 1 2 3 4 5 6 (PRODUCT LEVEL)	SEE PAGE
	1	1	**282-3116**	1	ROD	
	2	1	**295-3839**	1	PAWL	
J	3	1	**326-0610**	1	LATCH AS	
		1	**1H-3244**	4	LOCKWASHER	
M		1	**095-1207**	2	NUT (M12X1.75-THD)	
		1	**326-0612**	2	WASHER-TAB	
M		1	**344-5673**	4	NUT (M6X1-THD)	
	4	1	**332-3604**	4	BUMPER	
	5	1	**477-5498**	1	DOOR AS	
	6	1	**3B-4615**	2	PIN-COTTER	
	7	1	**5P-8439**	2	GROMMET	
	8	1	**7X-1387**	2	WASHER (10.26X22.22X1.9-MM THK)	

J - REQUIRES CORPORATE KEY
M - METRIC PART

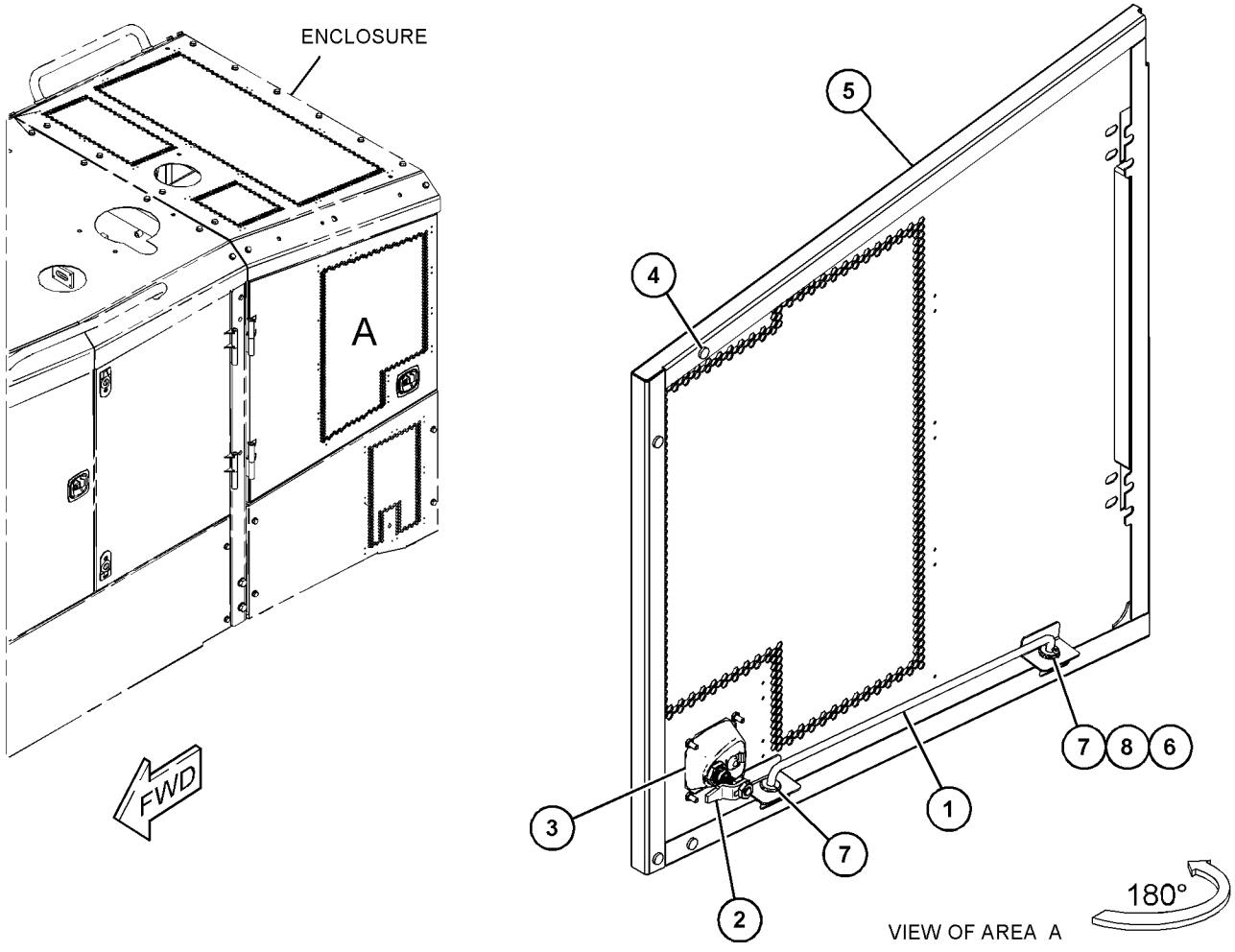

GRAPHIC #1 **<END>** g03820813

375-3436 DOOR GP-ACCESS–RH

S/N: E9Y1-UP

PART OF 371-1316 ENCLOSURE GP-ENGINE

SMCS-7273 **i06128366**

NOTE	REF NO	GRAPHIC REF	PART NUMBER	QTY	PART NAME 1 2 3 4 5 6 (PRODUCT LEVEL)	SEE PAGE
	1	1	**282-3116**	1	ROD	
	2	1	**295-3839**	1	PAWL	
J	3	1	**326-0610**	1	LATCH AS	
		1	**1H-3244**	4	LOCKWASHER	
M		1	**095-1207**	2	NUT (M12X1.75-THD)	
		1	**326-0612**	2	WASHER-TAB	
M		1	**344-5673**	4	NUT (M6X1-THD)	
	4	1	**332-3604**	4	BUMPER	
	5	1	**477-5497**	1	DOOR AS	
	6	1	**3B-4615**	2	PIN-COTTER	
	7	1	**5P-8439**	2	GROMMET	
	8	1	**7X-1387**	2	WASHER (10.26X22.22X1.9-MM THK)	

J - REQUIRES CORPORATE KEY
M - METRIC PART

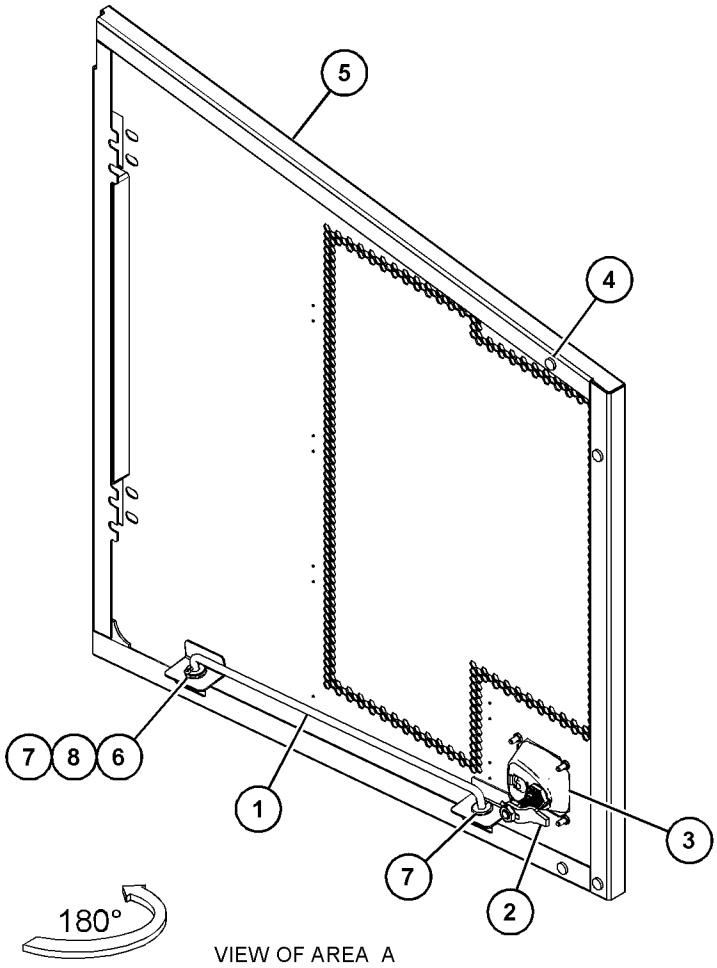

VIEW OF AREA A

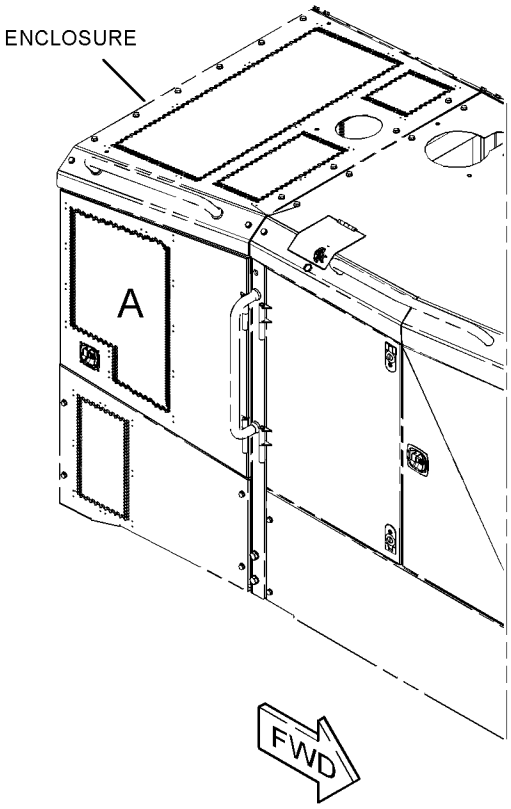

GRAPHIC #1 **<END>** g03820994

375-3460 ENCLOSURE AR

S/N: E9Y1-UP

PART OF 375-3500 CHASSIS AR

SMCS-7263 **i06144059**

NOTE	PART NUMBER	QTY	PART NAME 1 2 3 4 5 6 (PRODUCT LEVEL)	SEE PAGE
Y	*371-1316*	1	ENCLOSURE GP-ENGINE	425
Y	*375-3465*	1	ENCLOSURE GP-ENGINE	427
Y	*371-1312*	1	FASTENER GP-ENCLOSURE	429

Y - SEPARATE ILLUSTRATION

<END>

371-1316 ENCLOSURE GP-ENGINE

S/N: E9Y1-UP

PART OF 375-3460 ENCLOSURE AR-ENGINE

SMCS-7263 **i06190825**

NOTE	REF NO	GRAPHIC REF	PART NUMBER	QTY	PART NAME 1 2 3 4 5 6 (PRODUCT LEVEL)	SEE PAGE
	1	1	**9P-6573**	2	PLUG	
	2	1	**354-8358**	1	HANDHOLD GP	
		1	**361-5860**	2	PLATE AS	
					(EACH INCLUDES)	
M		1	**8T-3490**	1	NUT-WELD (M10X1.5-THD)	
	3	1	**371-1322**	1	PANEL AS	
JY	4	1	**375-3435**	1	DOOR GP-ACCESS (LH)	422
JY	5	1	**375-3436**	1	DOOR GP-ACCESS (RH)	423
	6	1	**375-3442**	2	HINGE AS	
	7	1	**421-2442**	4	HINGE AS	
	8	1	**421-2445**	4	PLATE AS	
	9	1	**447-1485**	1	BRACKET AS (LH)	
	10	1	**447-1487**	1	BRACKET AS (RH)	
	11	1	**456-5787**	1	HOOD AS	
	12	1	**477-5499**	1	PANEL AS	
	13	1	**479-8470**	1	HOOD AS	
M	14	1	**6V-7744**	8	LOCKNUT (M10X1.5-THD)	
	15	1	**7X-7729**	27	WASHER (11X25X3-MM THK)	
	16	1	**8T-4121**	2	WASHER-HARD (11X21X2.5-MM THK)	
M	17	1	**8T-4136**	11	BOLT (M10X1.5X25-MM)	
M	18	1	**8T-4185**	8	BOLT (M10X1.5X50-MM)	
M	19	1	**8T-4196**	2	BOLT (M10X1.5X35-MM)	

J - REQUIRES CORPORATE KEY
M - METRIC PART
Y - SEPARATE ILLUSTRATION

371-1316 **ENCLOSURE GP-ENGINE (*contd.*)** **i06190825**

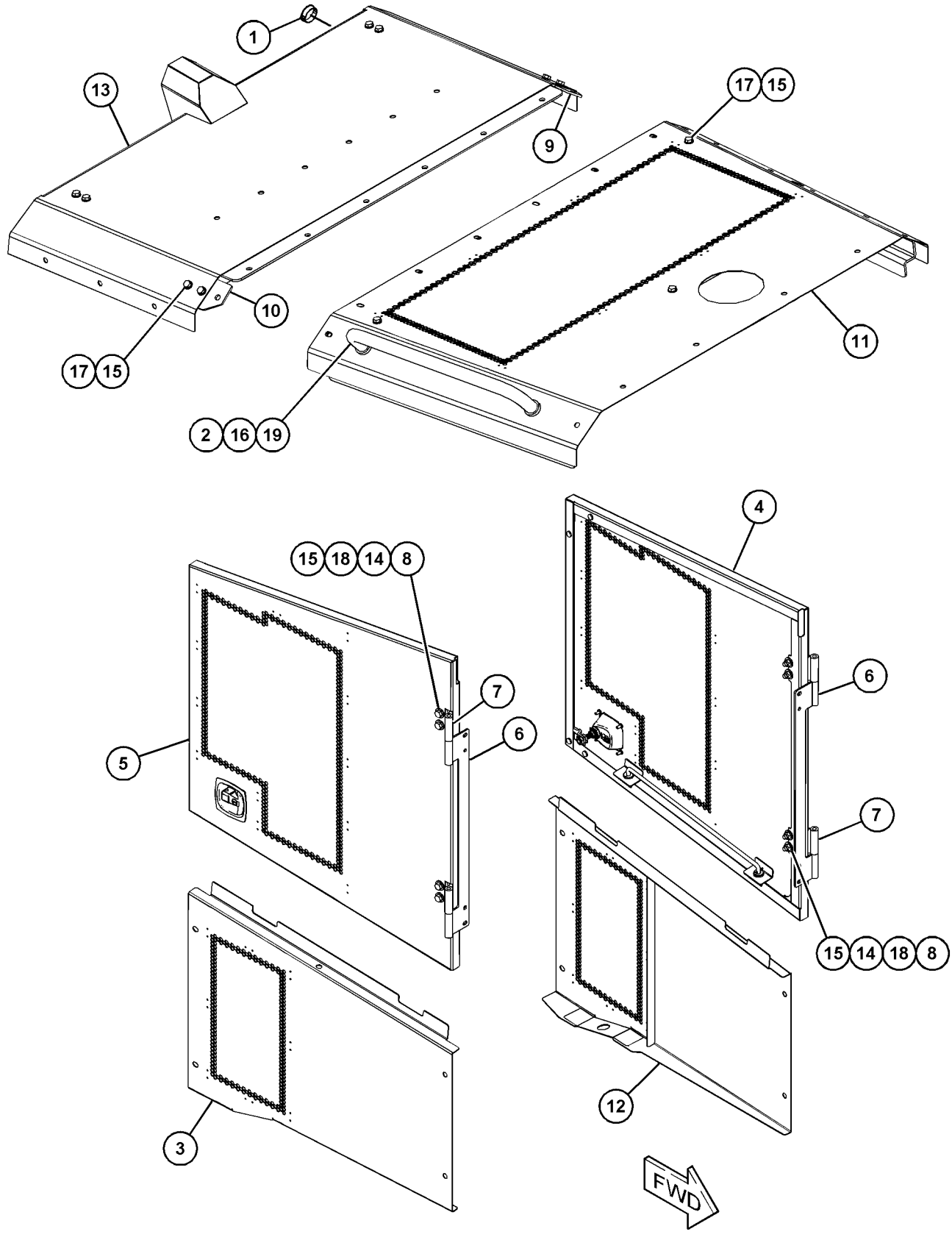

GRAPHIC #1 **<END>** g03843884

375-3465 ENCLOSURE GP-ENGINE

S/N: E9Y1-UP

PART OF 375-3460 ENCLOSURE AR-ENGINE

SMCS-7263 **i06144039**

NOTE	REF NO	GRAPHIC REF	PART NUMBER	QTY	PART NAME 1 2 3 4 5 6 (PRODUCT LEVEL)	SEE PAGE
Y	1	1	**375-3431**	1	DOOR GP-ACCESS (LH)	414
Y	2	1	**375-3432**	1	DOOR GP-ACCESS (RH)	416
Y	3	1	**375-3433**	1	DOOR GP-ACCESS (RH)	418
Y	4	1	**375-3434**	1	DOOR GP-ACCESS (LH)	420
	5	1	**375-3442**	4	HINGE AS	
Y	6	1	**375-3464**	1	SUPPORT GP-CONTROL	813
	7	1	*388-9292*	1	PANEL GP-SOUND SUPPRESSION (RH)	
		1	**380-7686**	2	INSULATION	
		1	**457-1110**	1	PANEL AS-SOUND SUPPRESSION	
Y	8	1	*438-0240*	1	PANEL GP-SOUND SUPPRESSION (LH)	480
M	9	1	**7X-2537**	16	BOLT (M8X1.25X35-MM)	
	10	1	**8T-4121**	8	WASHER-HARD (11X21X2.5-MM THK)	
M	11	1	**8T-4195**	8	BOLT (M10X1.5X30-MM)	
	12	1	**8T-4224**	16	WASHER-HARD (8.8X16X2-MM THK)	

M - METRIC PART
Y - SEPARATE ILLUSTRATION

375-3465 **ENCLOSURE GP-ENGINE (*contd.*)** **i06144039**

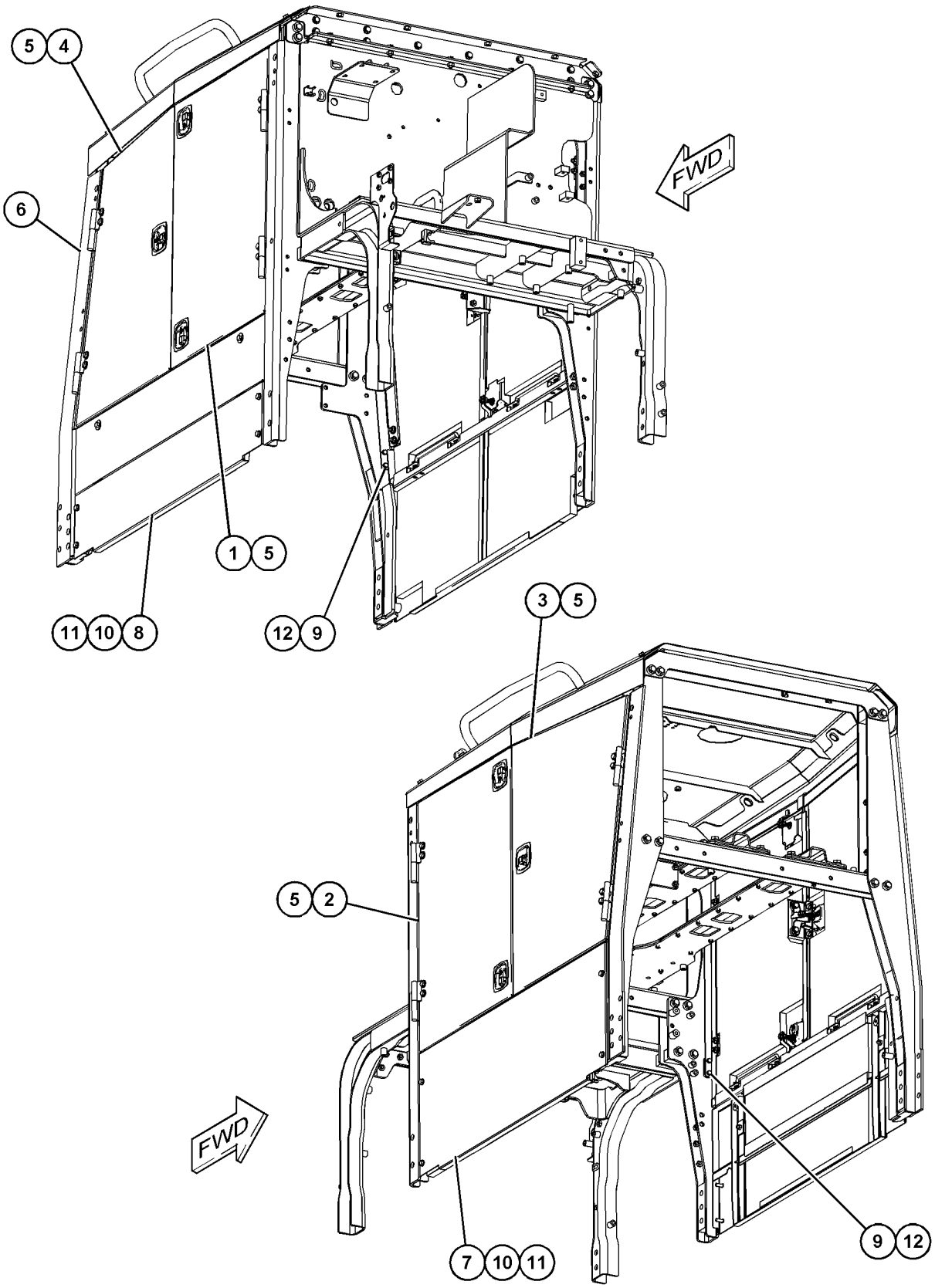

GRAPHIC #1 **<END>** g03836259

371-1312 FASTENER GP-ENCLOSURE

S/N: E9Y1-UP

PART OF 375-3460 ENCLOSURE AR-ENGINE

SMCS-7263, 7553

i06204368

NOTE	REF NO	GRAPHIC REF	PART NUMBER	QTY	PART NAME 1 2 3 4 5 6 (PRODUCT LEVEL)	SEE PAGE
	1	1	**375-3452**	1	BRACKET AS (RH)	
	2	1	**437-5444**	1	BRACKET AS (LH)	
	3	1	**438-6020**	2	BAR	
	4	1	**444-6474**	1	MOUNT AS (RH)	
	5	1	**444-6476**	1	MOUNT AS (LH)	
	6	1	**460-5429**	2	BRACKET	
	7	1	**485-9852**	1	SUPPORT AS	
	8	1	**110-6923**	4	SPACER (17.5X36X25-MM THK)	
	9	1	**198-4777**	8	WASHER-HARD (11X25X10-MM THK)	
	10	1	**198-4778**	8	WASHER-HARD (13.5X30X12-MM THK)	
	11	1	**299-3424**	20	WASHER-HARD (17.5X30X6-MM THK)	
	12	1	**5P-1076**	4	WASHER-HARD (13.5X30X4-MM THK)	
M	13	1	**7X-2553**	10	BOLT (M16X2X40-MM)	
M	14	1	**7X-2554**	4	BOLT (M16X2X70-MM)	
M	15	1	**7X-2555**	10	BOLT (M16X2X80-MM)	
M	16	1	**7X-2564**	4	BOLT (M20X2.5X90-MM)	
	17	1	**8T-4121**	12	WASHER-HARD (11X21X2.5-MM THK)	
M	18	1	**8T-4136**	26	BOLT (M10X1.5X25-MM)	
M	19	1	**8T-4183**	12	BOLT (M12X1.75X40-MM)	
M	20	1	**8T-4186**	5	BOLT (M10X1.5X40-MM)	
M	21	1	**8T-4195**	15	BOLT (M10X1.5X30-MM)	
	22	1	**8T-4224**	8	WASHER-HARD (8.8X16X2-MM THK)	
	23	1	**8T-5439**	4	WASHER-HARD (21.5X45X6-MM THK)	
M	24	1	**8T-7547**	8	BOLT (M8X1.25X30-MM)	
	25	1	**7X-0632**	19	WASHER-HARD (11X36X6-MM THK)	
	26	1	**7X-7729**	20	WASHER (11X25X3-MM THK)	
	27	1	**485-9851**	1	SUPPORT	
M	28	1	**8T-4196**	13	BOLT (M10X1.5X35-MM)	

M - METRIC PART

371-1312 **FASTENER GP-ENCLOSURE (*contd.*)** **i06204368**

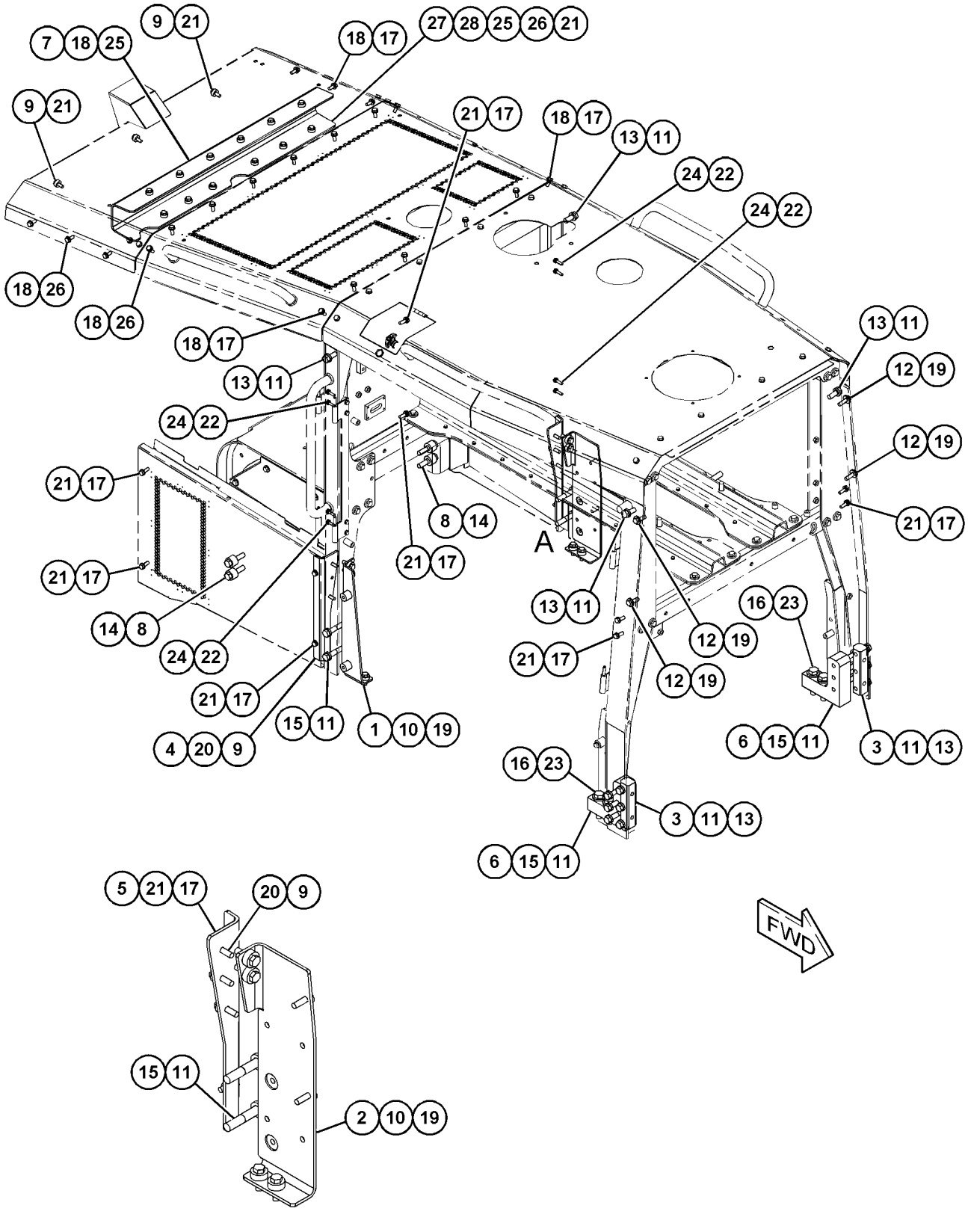

VIEW OF AREA A

GRAPHIC #1 **<END>** g03853231

383-8166 FASTENER GP-HANDRAIL–FENDER

S/N: E9Y1-UP
PART OF 383-8170 HANDRAIL GP
AN ATTACHMENT

SMCS-7256 **i06144522**

NOTE	REF NO	GRAPHIC REF	PART NUMBER	QTY	PART NAME 1 2 3 4 5 6 (PRODUCT LEVEL)	SEE PAGE
	1	1	**115-3580**	2	PLATE	
	2	1	**337-3347**	1	BRACKET AS	
M		1	**8T-3490**	4	NUT-WELD (M10X1.5-THD)	
	3	1	**479-4212**	1	PLATE AS	
	4	1	**479-4214**	1	PLATE AS	
	5	1	**5P-1076**	10	WASHER-HARD (13.5X30X4-MM THK)	
	6	1	**5P-7468**	4	CLIP (SLOT)	
	7	1	**5P-7469**	4	CLIP (TAB)	
	8	1	**6V-1874**	4	GROMMET (31-MM ID)	
	9	1	**7X-7729**	14	WASHER (11X25X3-MM THK)	
M	10	1	**8T-4139**	8	BOLT (M12X1.75X30-MM)	
M	11	1	**8T-4183**	6	BOLT (M12X1.75X40-MM)	
M	12	1	**8T-4195**	6	BOLT (M10X1.5X30-MM)	
M	13	1	**8T-4196**	8	BOLT (M10X1.5X35-MM)	
	14	1	**8T-4223**	8	WASHER-HARD (13.5X25.5X3-MM THK)	
M	15	1	**8T-4244**	4	NUT (M12X1.75-THD)	

M - METRIC PART

383-8166 **FASTENER GP-HANDRAIL (*contd.*)** **i06144522**

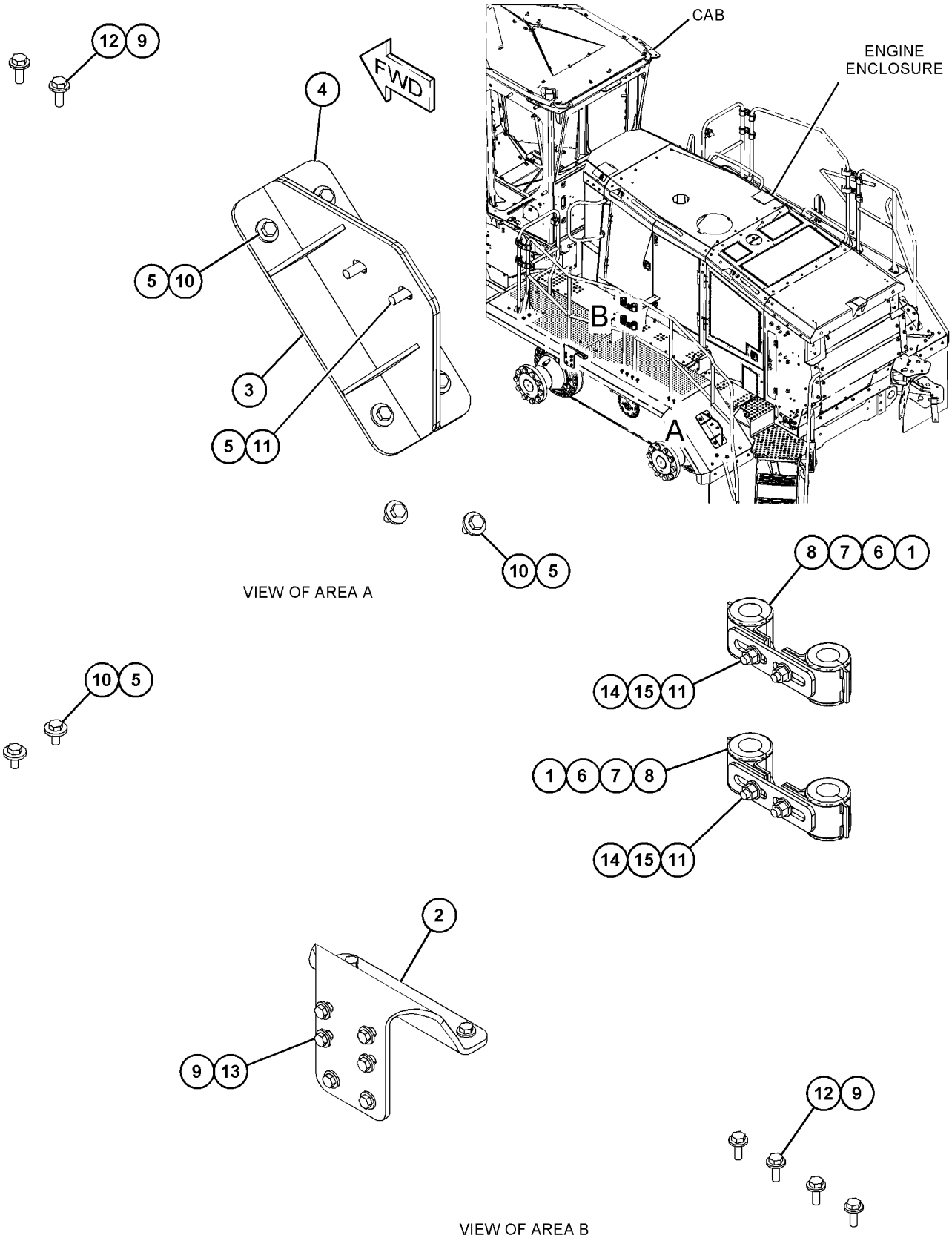

GRAPHIC #1 **<END>** g03828455

476-8829 FASTENER GP-HANDRAIL

S/N: E9Y1-UP
PART OF 383-8170 HANDRAIL GP
AN ATTACHMENT

SMCS-7256 **i06139737**

NOTE	REF NO	GRAPHIC REF	PART NUMBER	QTY	PART NAME 1 2 3 4 5 6 (PRODUCT LEVEL)	SEE PAGE
	1	1	**115-3580**	2	PLATE	
	2	1	**337-3347**	1	BRACKET AS	
M		1	**8T-3490**	4	NUT-WELD (M10X1.5-THD)	
	3	1	**479-4212**	1	PLATE AS	
	4	1	**479-4214**	1	PLATE AS	
	5	1	**5P-1076**	10	WASHER-HARD (13.5X30X4-MM THK)	
	6	1	**5P-7468**	4	CLIP (SLOT)	
	7	1	**5P-7469**	4	CLIP (TAB)	
	8	1	**6V-1874**	4	GROMMET (31-MM ID)	
	9	1	**7X-7729**	14	WASHER (11X25X3-MM THK)	
M	10	1	**8T-4139**	8	BOLT (M12X1.75X30-MM)	
M	11	1	**8T-4183**	6	BOLT (M12X1.75X40-MM)	
M	12	1	**8T-4195**	6	BOLT (M10X1.5X30-MM)	
M	13	1	**8T-4196**	8	BOLT (M10X1.5X35-MM)	
	14	1	**8T-4223**	8	WASHER-HARD (13.5X25.5X3-MM THK)	
M	15	1	**8T-4244**	4	NUT (M12X1.75-THD)	

M - METRIC PART

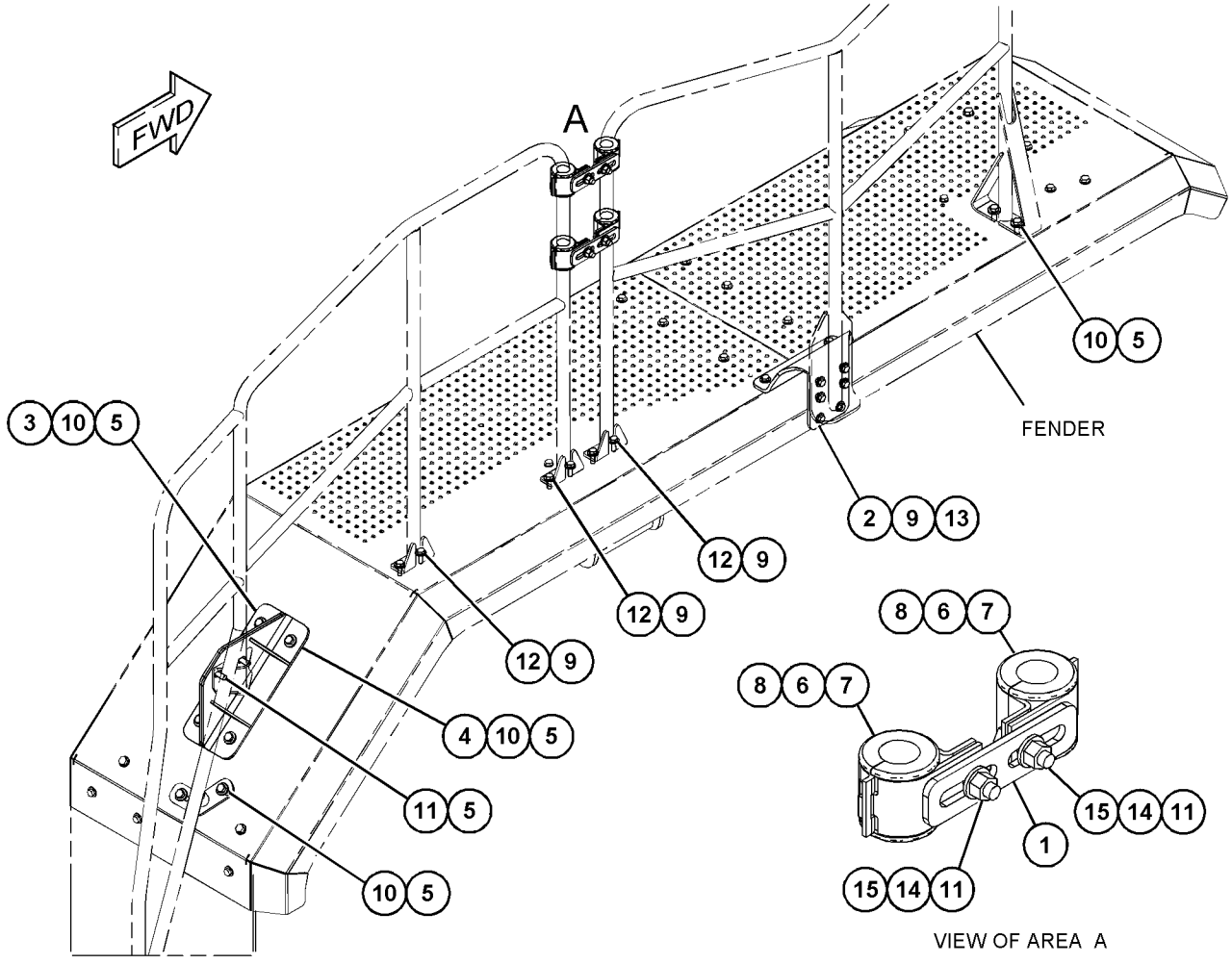

GRAPHIC #1 **<END>** g03824090

375-3402 FENDER & SUPPORT GP—REAR

S/N: E9Y1-UP

CANNOT BE USED WITH 375-3407—PAGE: 3, 462-6400—PAGE: 3 AN ATTACHMENT

SMCS-7252 **i06139500**

NOTE	REF NO	GRAPHIC REF	PART NUMBER	QTY	PART NAME 1 2 3 4 5 6 (PRODUCT LEVEL)	SEE PAGE
	1	1	**271-5390**	2	HANDRAIL	
	2	1	**388-9318**	2	SUPPORT	
	3	1	**388-9328**	1	PLATE AS	
M		1	**8T-3490**	1	NUT-WELD (M10X1.5-THD)	
	4	1	**415-7541**	1	FENDER AS (RH)	
	5	1	**415-7545**	1	FENDER AS (LH)	
					(EACH FENDER AS INCLUDES)	
M		1	**8T-3490**	3	NUT-WELD (M10X1.5-THD)	
M		1	**9R-2613**	1	BOSS-WELD (M10X1.5X25-MM)	
	6	1	**415-9332**	2	PLATE AS	
	7	1	**415-9334**	2	PLATE AS	
					(EACH PLATE AS INCLUDES)	
M		1	**8T-3490**	3	NUT-WELD (M10X1.5-THD)	
	8	1	**417-6867**	2	PLATE AS	
	9	1	**417-6870**	2	PLATE AS	
	10	1	**417-6873**	2	PLATE AS	
	11	1	**417-6875**	2	PLATE AS	
	12	1	**417-6910**	2	PLATE AS	
	13	1	**420-0689**	2	CHANNEL AS	
	14	1	**421-3140**	2	SUPPORT AS	
	15	1	**421-7354**	1	PLATE AS	
M		1	**8T-3490**	1	NUT-WELD (M10X1.5-THD)	
	16	1	**479-8461**	1	FENDER AS (LH)	
	17	1	**479-8464**	1	FENDER AS (RH)	
					(EACH FENDER AS INCLUDES)	
M		1	**8T-3490**	3	NUT-WELD (M10X1.5-THD)	
	18	1	**198-4780**	28	WASHER-HARD (17.5X32X8-MM THK)	
	19	1	**198-4781**	48	WASHER-HARD (22X40X10-MM THK)	
	20	1	**7X-0590**	6	WASHER-HARD (13.5X44.5X6-MM THK)	
M	21	1	**7X-2556**	8	BOLT (M16X2X100-MM)	
M	22	1	**7X-2563**	16	BOLT (M20X2.5X60-MM)	
	23	1	**7X-7729**	52	WASHER (11X25X3-MM THK)	
	24	1	**8T-4121**	6	WASHER-HARD (11X21X2.5-MM THK)	
M	25	1	**8T-4136**	32	BOLT (M10X1.5X25-MM)	
M	26	1	**8T-4139**	10	BOLT (M12X1.75X30-MM)	
M	27	1	**8T-4175**	4	BOLT (M16X2X90-MM)	
M	28	1	**8T-4193**	16	BOLT (M16X2X50-MM)	
M	29	1	**8T-4195**	24	BOLT (M10X1.5X30-MM)	
	30	1	**8T-4223**	12	WASHER-HARD (13.5X25.5X3-MM THK)	
M	31	1	**8T-4778**	8	LOCKNUT (M16X2-THD)	
M	32	1	**8T-4956**	2	BOLT (M12X1.75X35-MM)	
M	33	1	**8T-5460**	16	BOLT (M20X2.5X40-MM)	
M	34	1	**8T-6430**	16	BOLT (M20X2.5X50-MM)	
M	35	1	**8T-6466**	2	BOLT (M10X1.5X60-MM)	
M	36	1	**8T-6868**	2	BOLT (M12X1.75X80-MM)	
	37	1	**9X-8257**	8	WASHER (17.5X30X3.5-MM THK)	

M - METRIC PART

375-3402 **FENDER & SUPPORT GP** (*contd.*) **i06139500**

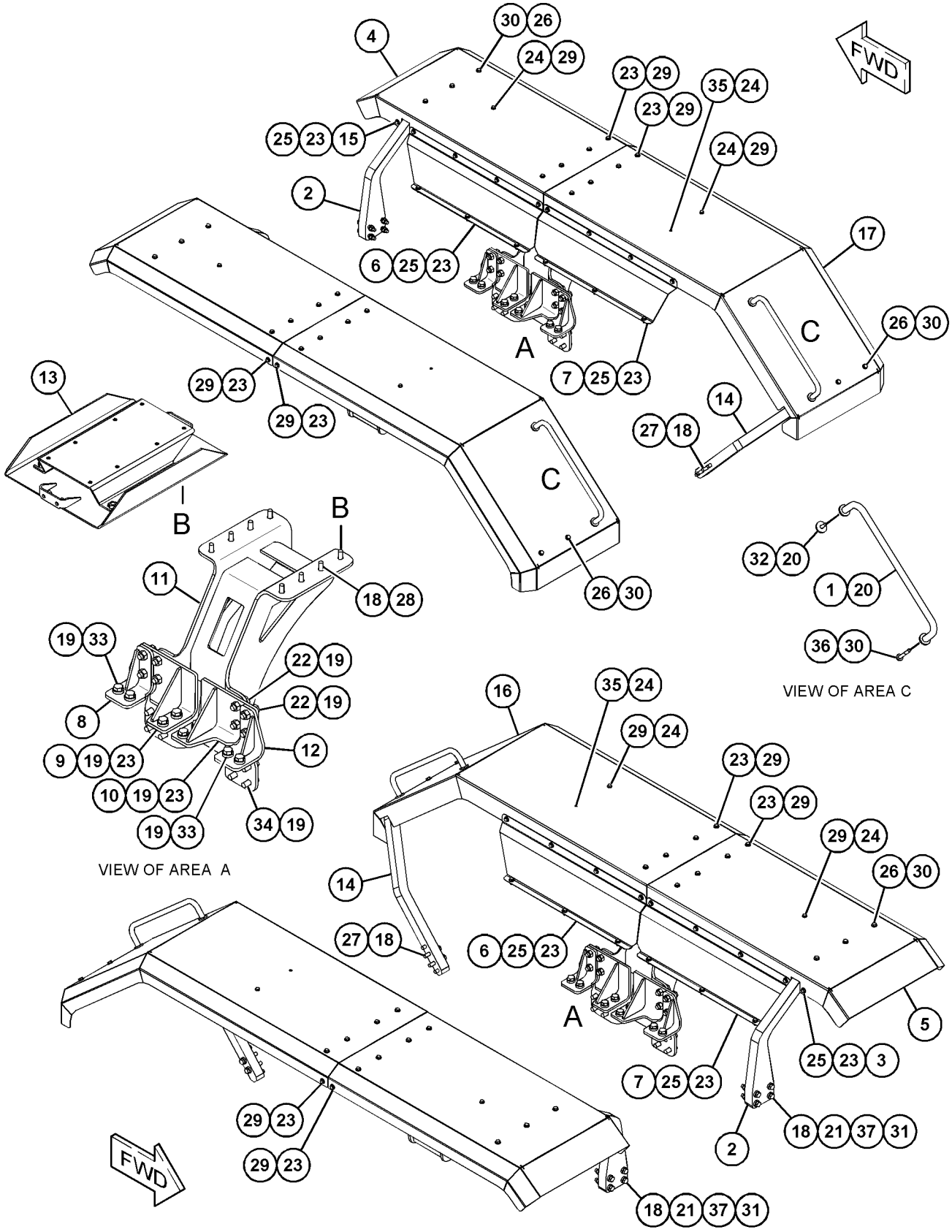

GRAPHIC #1 **<END>** g03826265

383-8150 FENDER GP-REAR

S/N: E9Y1-UP

PART OF 375-3407, 462-6400 OPTION AR-LADDER

AN ATTACHMENT

SMCS-7252 **i06177849**

NOTE	REF NO	GRAPHIC REF	PART NUMBER	QTY	PART NAME 1 2 3 4 5 6 (PRODUCT LEVEL)	SEE PAGE
	1	1	**319-2607**	2	FLAP	
	2	1,2	**388-9318**	2	SUPPORT	
	3	2	**388-9328**	1	PLATE AS	
M		2	**8T-3490**	1	NUT-WELD (M10X1.5-THD)	
	4	2	**417-6867**	2	PLATE AS	
	5	2	**417-6870**	2	PLATE AS	
	6	2	**417-6873**	2	PLATE AS	
	7	2	**417-6875**	2	PLATE AS	
	8	2	**417-6910**	2	PLATE AS	
	9	2	**420-0689**	2	CHANNEL AS	
	10	1,2	**421-3140**	2	SUPPORT AS	
	11	1	**421-7354**	1	PLATE AS	
M		1	**8T-3490**	1	NUT-WELD (M10X1.5-THD)	
	12	2	**478-9469**	1	FENDER AS (LH)	
	13	1	**479-0391**	1	FENDER AS (RH)	
	14	1	**479-0393**	1	FENDER AS (RH)	
	15	2	**479-7374**	1	FENDER AS (LH)	
	16	1,2	**198-4780**	28	WASHER-HARD (17.5X32X8-MM THK)	
	17	2	**198-4781**	48	WASHER-HARD (22X40X10-MM THK)	
M	18	1	**329-3356**	2	NUT (M12X1.75-THD)	
M	19	1	**6V-7744**	8	LOCKNUT (M10X1.5-THD)	
M	20	1,2	**7X-2556**	8	BOLT (M16X2X100-MM)	
M	21	2	**7X-2563**	16	BOLT (M20X2.5X60-MM)	
	22	1,2	**7X-7729**	36	WASHER (11X25X3-MM THK)	
	23	1,2	**8T-4121**	6	WASHER-HARD (11X21X2.5-MM THK)	
M	24	1,2	**8T-4136**	4	BOLT (M10X1.5X25-MM)	
M	25	1,2	**8T-4139**	8	BOLT (M12X1.75X30-MM)	
M	26	1,2	**8T-4175**	4	BOLT (M16X2X90-MM)	
M	27	2	**8T-4193**	16	BOLT (M16X2X50-MM)	
M	28	1,2	**8T-4195**	36	BOLT (M10X1.5X30-MM)	
	29	1,2	**8T-4223**	12	WASHER-HARD (13.5X25.5X3-MM THK)	
	30	1	**8T-4226**	8	WASHER-PLATED (10.5X45X3-MM THK)	
M	31	1	**8T-4648**	2	BOLT (M12X1.75X70-MM)	
M	32	1,2	**8T-4778**	8	LOCKNUT (M16X2-THD)	
M	33	2	**8T-5460**	16	BOLT (M20X2.5X40-MM)	
M	34	2	**8T-6430**	16	BOLT (M20X2.5X50-MM)	
M	35	1,2	**8T-6466**	2	BOLT (M10X1.5X60-MM)	
	36	1,2	**9X-8257**	8	WASHER (17.5X30X3.5-MM THK)	

M - METRIC PART

383-8150 **FENDER GP-REAR (*contd.*)** **i06177849**

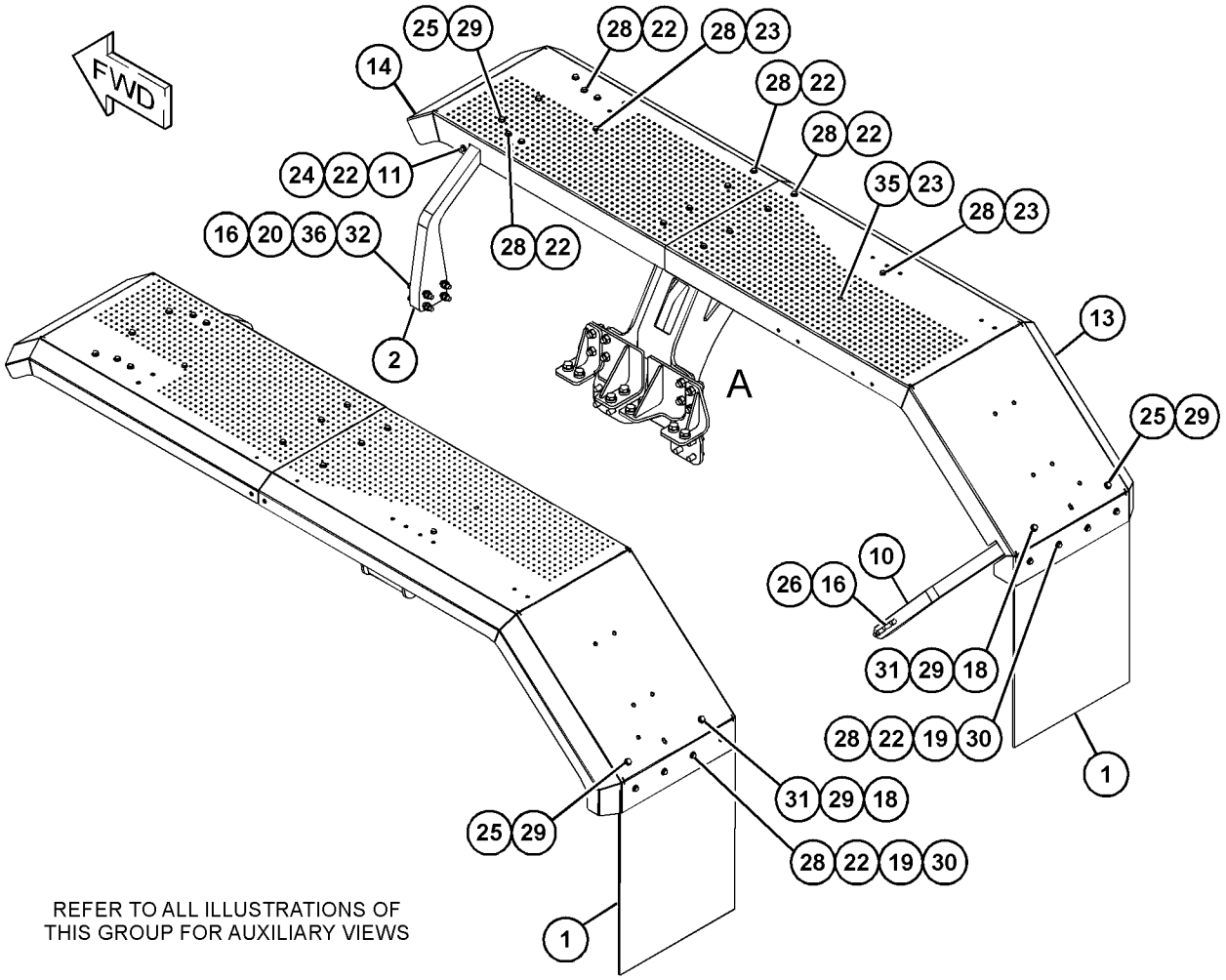

GRAPHIC #1 g03826675

383-8150 **FENDER GP-REAR (*contd.*)** **i06177849**

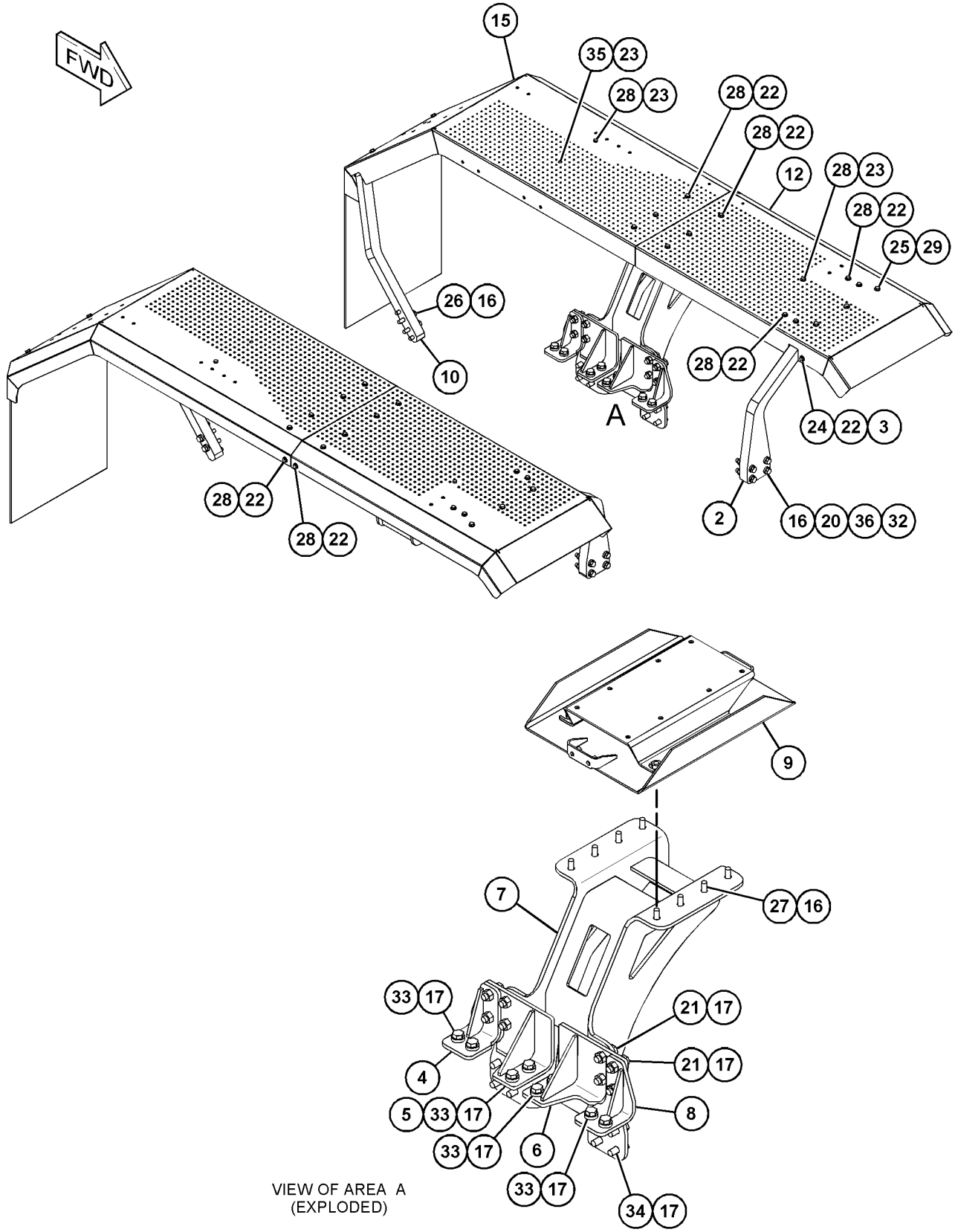

GRAPHIC #2 **<END>** g03826677

370-2944 FRAME AR

S/N: E9Y1-UP

PART OF 386-1317 COMMON AR

SMCS-7050, 7051

i06061668

NOTE	PART NUMBER	QTY	PART NAME 1 2 3 4 5 6 (PRODUCT LEVEL)	SEE PAGE
Y	*391-3947*	1	FRAME GP-FRONT	440
Y	*370-3000*	1	FRAME GP-REAR	441
Y	*370-3204*	1	HITCH GP-ARTICULATING	455

Y - SEPARATE ILLUSTRATION

<END>

391-3947 FRAME GP-FRONT

S/N: E9Y1-UP

PART OF 370-2944 FRAME AR

SMCS-7050, 7051 **i06147699**

NOTE	REF NO	GRAPHIC REF	PART NUMBER	QTY	PART NAME 1 2 3 4 5 6 (PRODUCT LEVEL)	SEE PAGE
	1	1	**9D-0498**	5	BUSHING-TERMINAL	
	2	1	**370-3100**	1	FRAME AS	
	3	1	**391-4387**	2	BUSHING	
	4	1	**425-2540**	1	PLATE AS	
	5	1	**470-8537**	1	PLATE AS	
	6	1	**470-8539**	1	PLATE AS	
	8	1	**473-3006**	1	PLATE AS	
	9	1	**473-3004**	1	PLATE AS	
	10	1	**198-4777**	20	WASHER-HARD (11X25X10-MM THK)	
	11	1	**3P-1461**	4	SEAL-LIP TYPE	
	12	1	**8D-8572**	4	BUSHING	
M	13	1	**8T-4195**	16	BOLT (M10X1.5X30-MM)	
	14	1	**9D-6591**	8	SEAL-LIP TYPE	
	15	1	**479-3367**	1	PLATE AS	
M	16	1	**175-9079**	1	ROD-LINK	
M	17	1	**8T-4186**	3	BOLT (M10X1.5X40-MM)	

M - METRIC PART

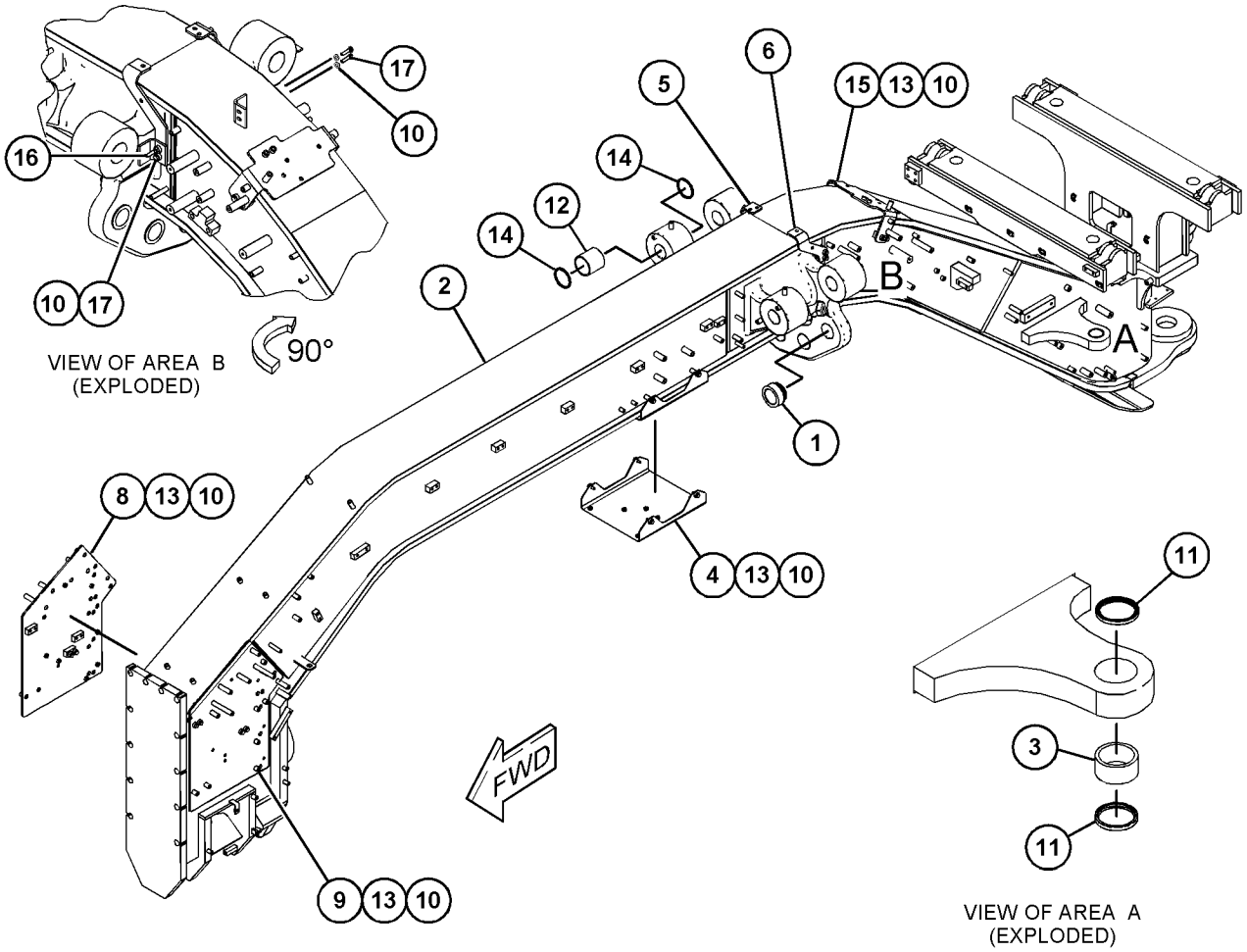

GRAPHIC #1 **<END>** g03833171

370-3000 FRAME GP-REAR

S/N: E9Y1-UP

PART OF 370-2944 FRAME AR

SMCS-7050, 7051

i06144118

NOTE	REF NO	GRAPHIC REF	PART NUMBER	QTY	PART NAME 1 2 3 4 5 6 (PRODUCT LEVEL)	SEE PAGE
	1	1	**370-3001**	1	FRAME AS-REAR	
	2	1	**466-1528**	1	PIN AS	
	3	1	**8D-3791**	1	PIN	

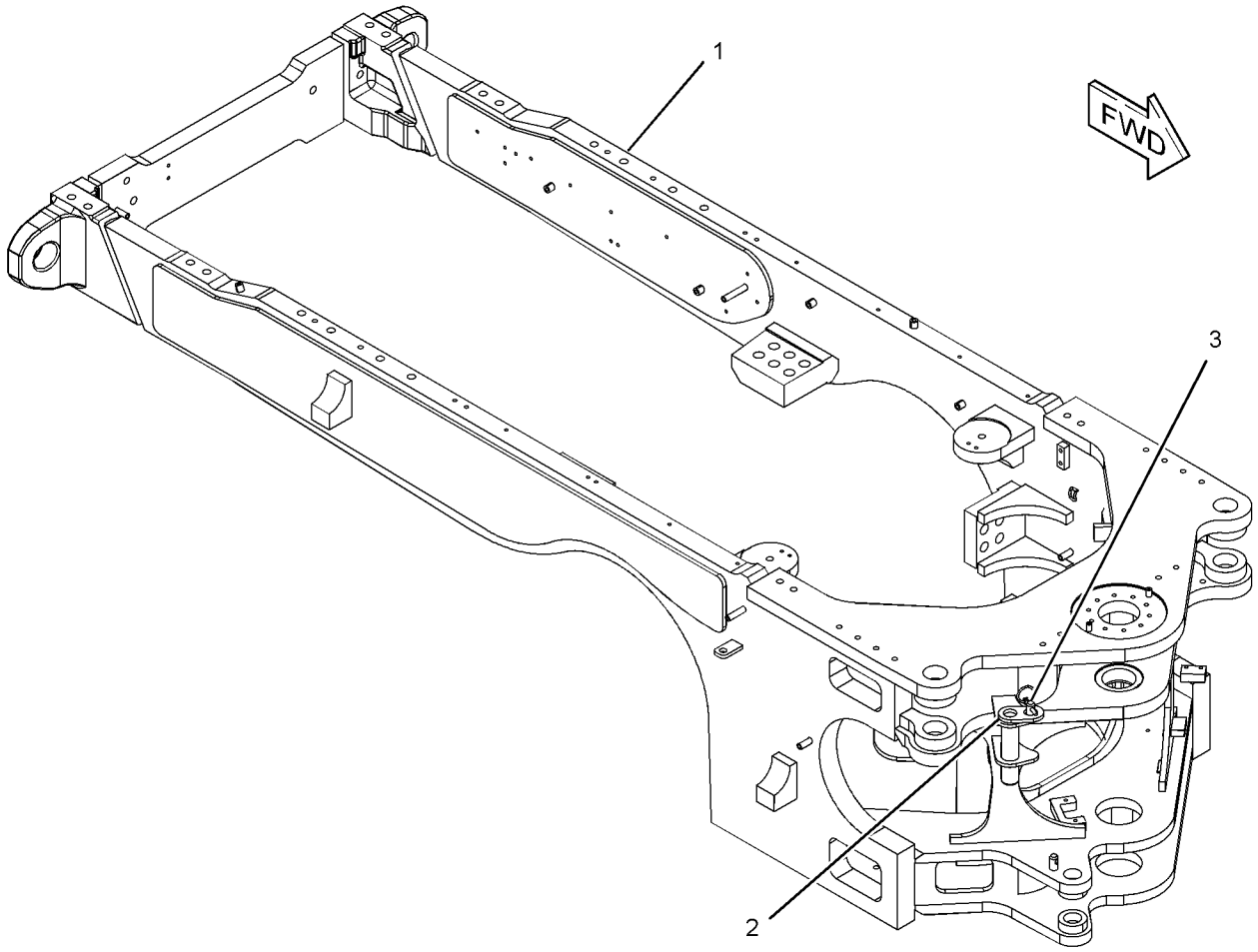

GRAPHIC #1

<END>

g03797015

480-6660 GUARD GP-AXLE

S/N: E9Y1-UP

AN ATTACHMENT

SMCS-7185 **i06139762**

NOTE	REF NO	GRAPHIC REF	PART NUMBER	QTY	PART NAME 1 2 3 4 5 6 (PRODUCT LEVEL)	SEE PAGE
	1	1	**480-6655**	1	PLATE AS (RH)	
	2	1	**480-6656**	1	PLATE AS (LH)	
	3	1	**5D-8159**	8	PIN AS	
	4	1	**5D-8161**	8	PIN	

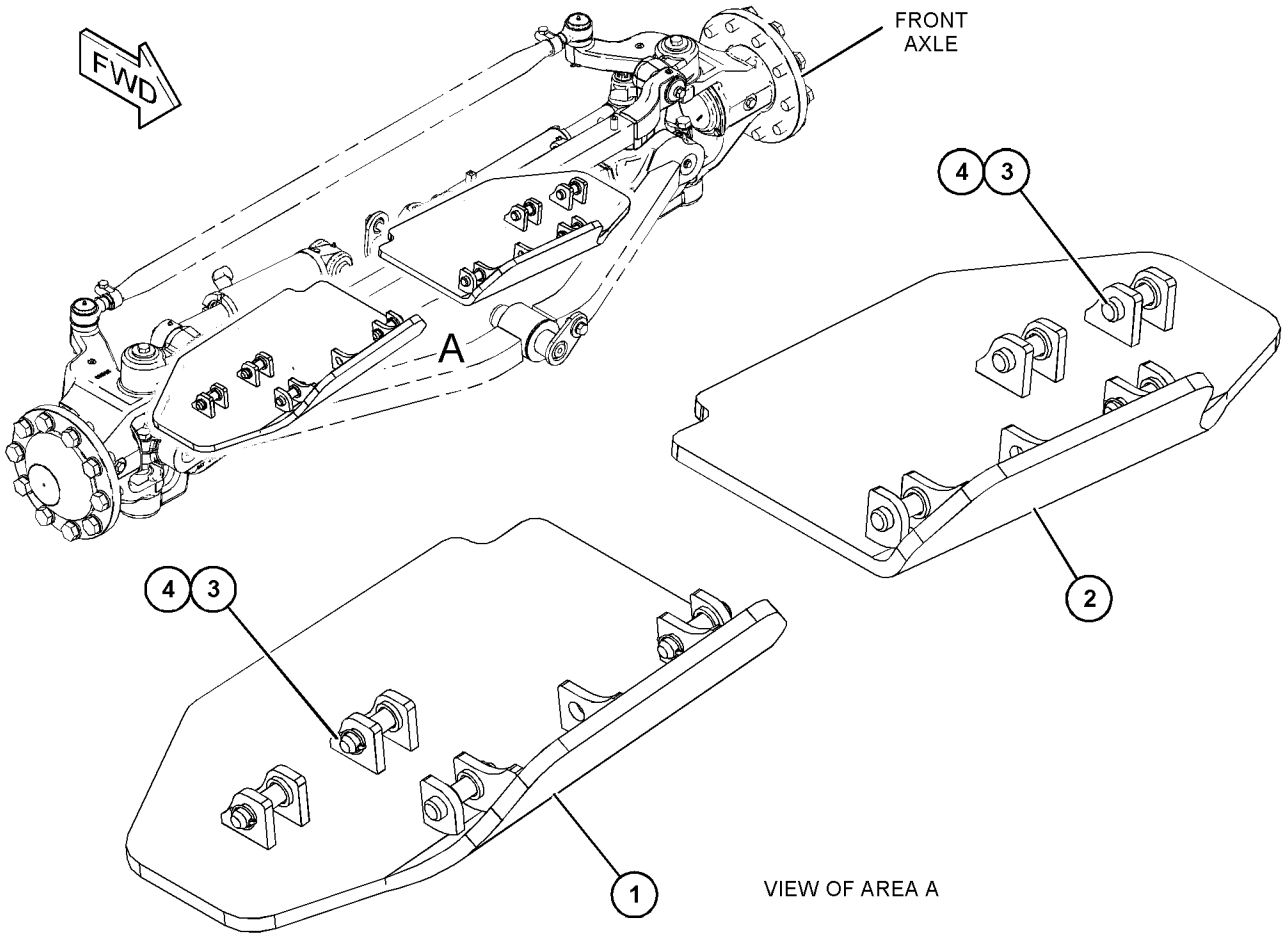

GRAPHIC #1 **<END>** g03824538

375-3408 GUARD GP-BOTTOM

S/N: E9Y1-UP
FOR USE WITH 375-3401—PAGE: 491
AN ATTACHMENT

SMCS-7153 **i06145191**

NOTE	REF NO	GRAPHIC REF	PART NUMBER	QTY	PART NAME 1 2 3 4 5 6 (PRODUCT LEVEL)	SEE PAGE
	1	1	**8W-6626**	2	CAP	
	2	1	**365-6668**	1	SUPPORT AS	
M		1	**8T-3490**	3	NUT-WELD (M10X1.5-THD)	
	3	1	**375-3486**	1	PLATE AS	
M		1	**8Y-4489**	4	BOSS (M10X1.5-THD)	
	4	1	**479-3306**	1	GUARD AS	
	5	1	**7D-7496**	2	PIN AS	
	6	1	**8K-0530**	2	PIN-CABLE SOCKET	
	7	1	**8T-4121**	4	WASHER-HARD (11X21X2.5-MM THK)	
M	8	1	**8T-4139**	8	BOLT (M12X1.75X30-MM)	
M	9	1	**8T-4175**	4	BOLT (M16X2X90-MM)	
M	10	1	**8T-4185**	4	BOLT (M10X1.5X50-MM)	
	11	1	**8T-4223**	8	WASHER-HARD (13.5X25.5X3-MM THK)	
	12	1	**9X-8257**	4	WASHER (17.5X30X3.5-MM THK)	

M - METRIC PART

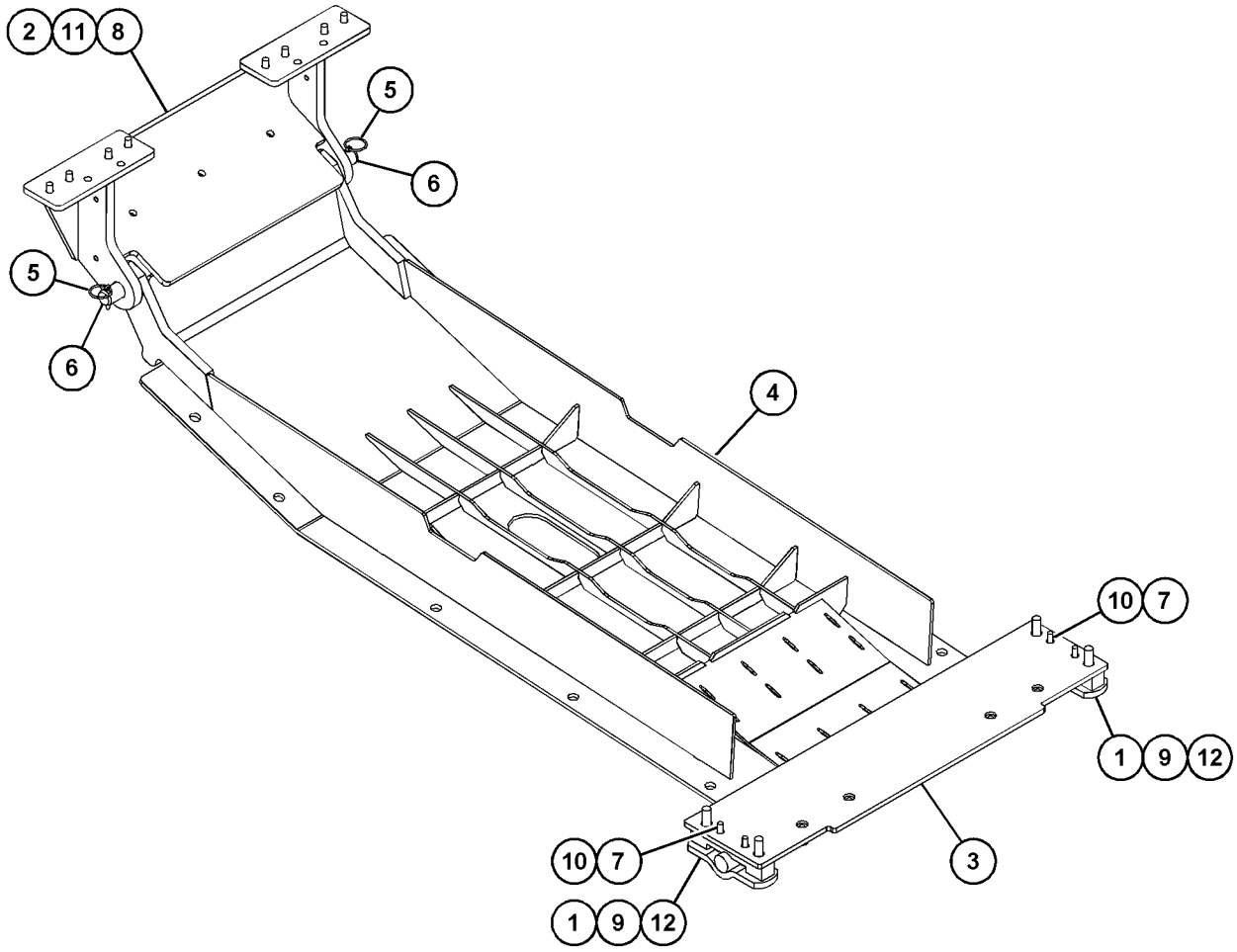

GRAPHIC #1 **<END>** g03834285

375-3404 GUARD GP-DEBRIS

S/N: E9Y1-UP
PART OF 390-2819 OPTION AR-HYDRAULIC
AN ATTACHMENT

SMCS-7158 **i06125946**

NOTE	REF NO	GRAPHIC REF	PART NUMBER	QTY	PART NAME 1 2 3 4 5 6 (PRODUCT LEVEL)	SEE PAGE
	1	1	**199-4318**	48	TURNBUCKLE	
	2	1	**380-7692**	2	COVER AS-PANEL	
	3	1	**421-2470**	1	COVER AS-ACCESS (RH)	
	4	1	**421-2471**	1	COVER AS-ACCESS (LH)	
	5	1	**421-2472**	1	COVER AS-TOP	
M	6	1	**131-3987**	96	SCREW (M4X0.7X12-MM)	

M - METRIC PART

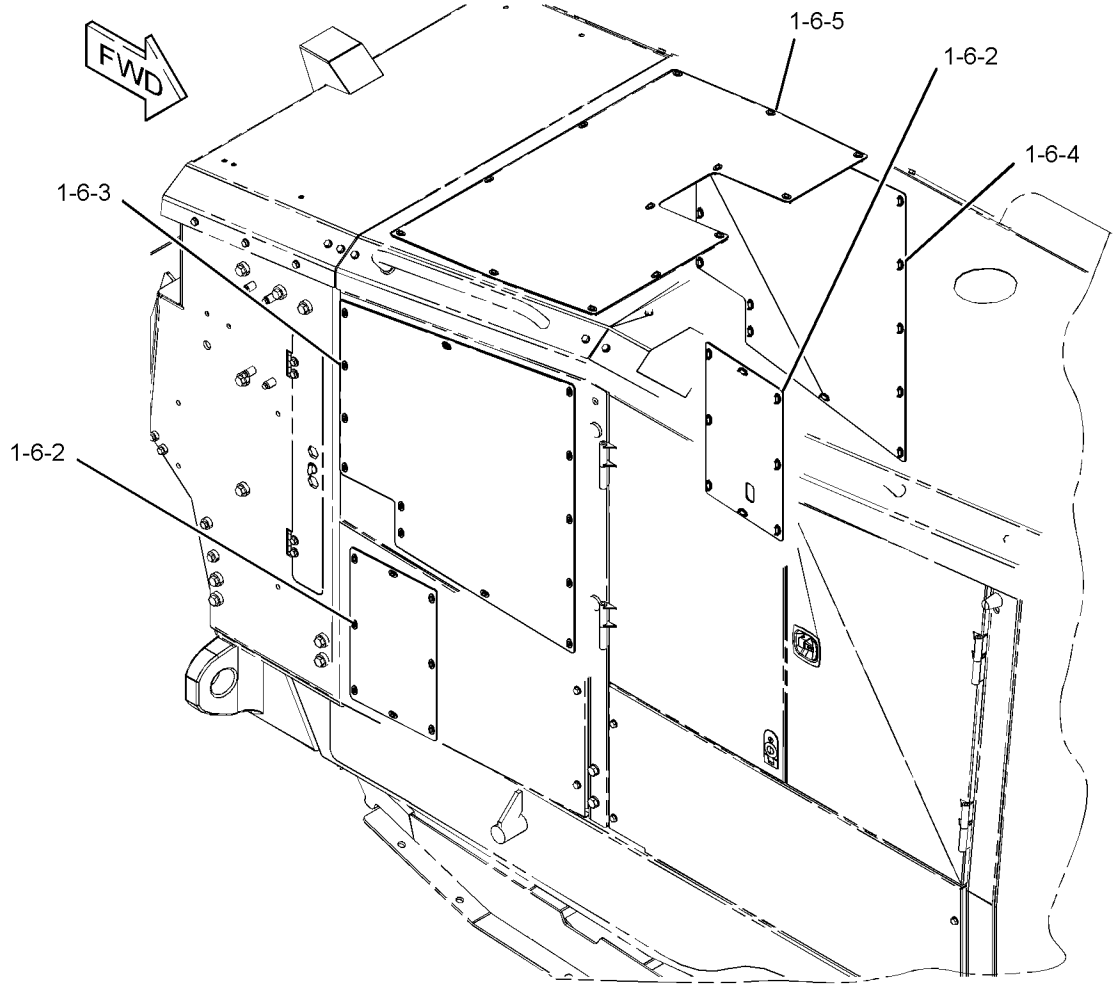

GRAPHIC #1 **<END>** g03822677

428-6017 HANDHOLD GP

S/N: E9Y1-UP
PART OF 375-3407 OPTION AR-LADDER
AN ATTACHMENT

SMCS-7256 **i06144112**

NOTE	REF NO	GRAPHIC REF	PART NUMBER	QTY	PART NAME 1 2 3 4 5 6 (PRODUCT LEVEL)	SEE PAGE
	1	1	**276-7286**	1	HANDRAIL	
	2	1	**276-7338**	1	HANDRAIL	
	3	1	**7X-7729**	6	WASHER (11X25X3-MM THK)	
M	4	1	**8T-4137**	6	BOLT (M10X1.5X20-MM)	

M - METRIC PART

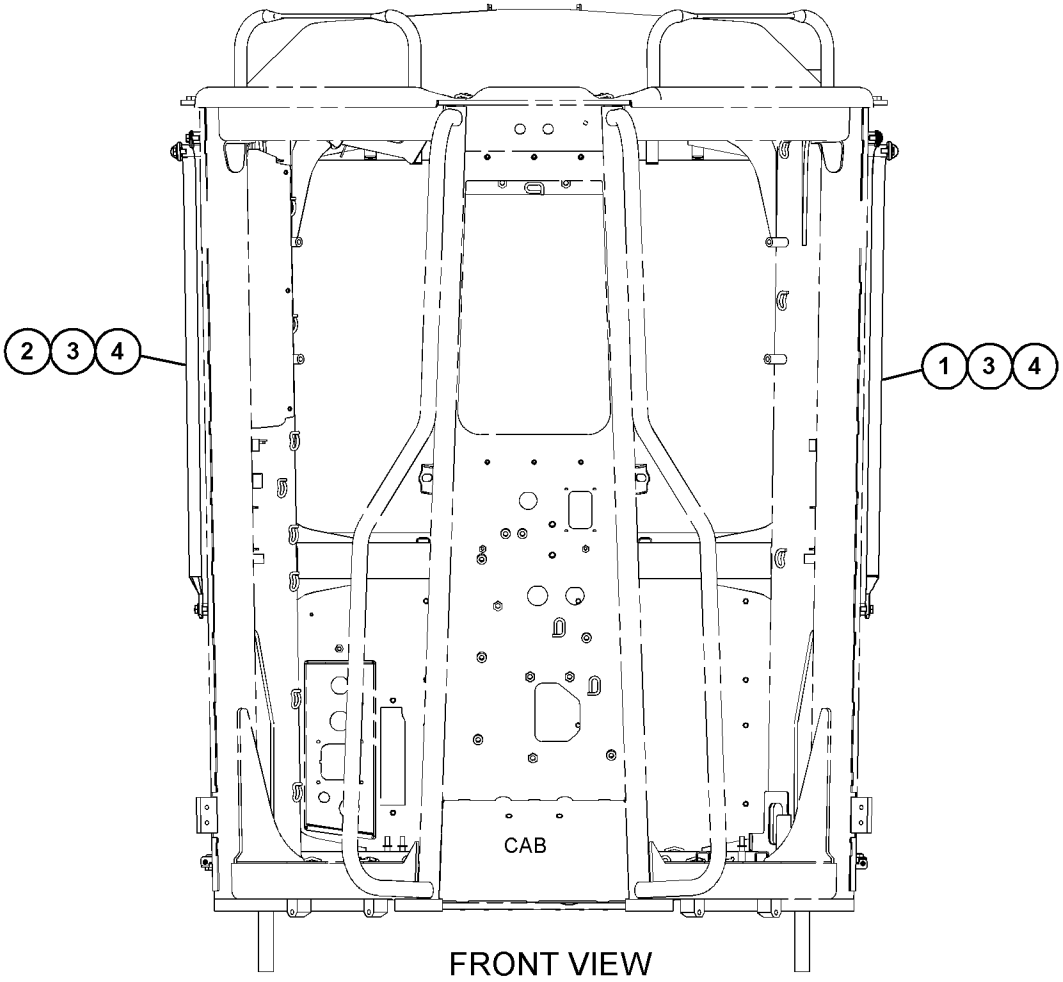

FRONT VIEW

GRAPHIC #1 **<END>** g03837849

442-4475 HANDHOLD GP

S/N: E9Y1-UP
PART OF 375-3406 PLATFORM AR
AN ATTACHMENT

SMCS-7256 **i06144069**

NOTE	REF NO	GRAPHIC REF	PART NUMBER	QTY	PART NAME 1 2 3 4 5 6 (PRODUCT LEVEL)	SEE PAGE
	1	1	**276-7286**	1	HANDRAIL	
	2	1	**276-7338**	1	HANDRAIL	
	3	1	**442-4473**	1	HANDRAIL	
	4	1	**442-4474**	1	HANDRAIL	
	5	1	**7X-7729**	6	WASHER (11X25X3-MM THK)	
M	6	1	**8T-0722**	8	BOLT-LOCKING (M10X1.5X30-MM)	
	7	1	**8T-4121**	8	WASHER-HARD (11X21X2.5-MM THK)	
M	8	1	**8T-4137**	6	BOLT (M10X1.5X20-MM)	

M - METRIC PART

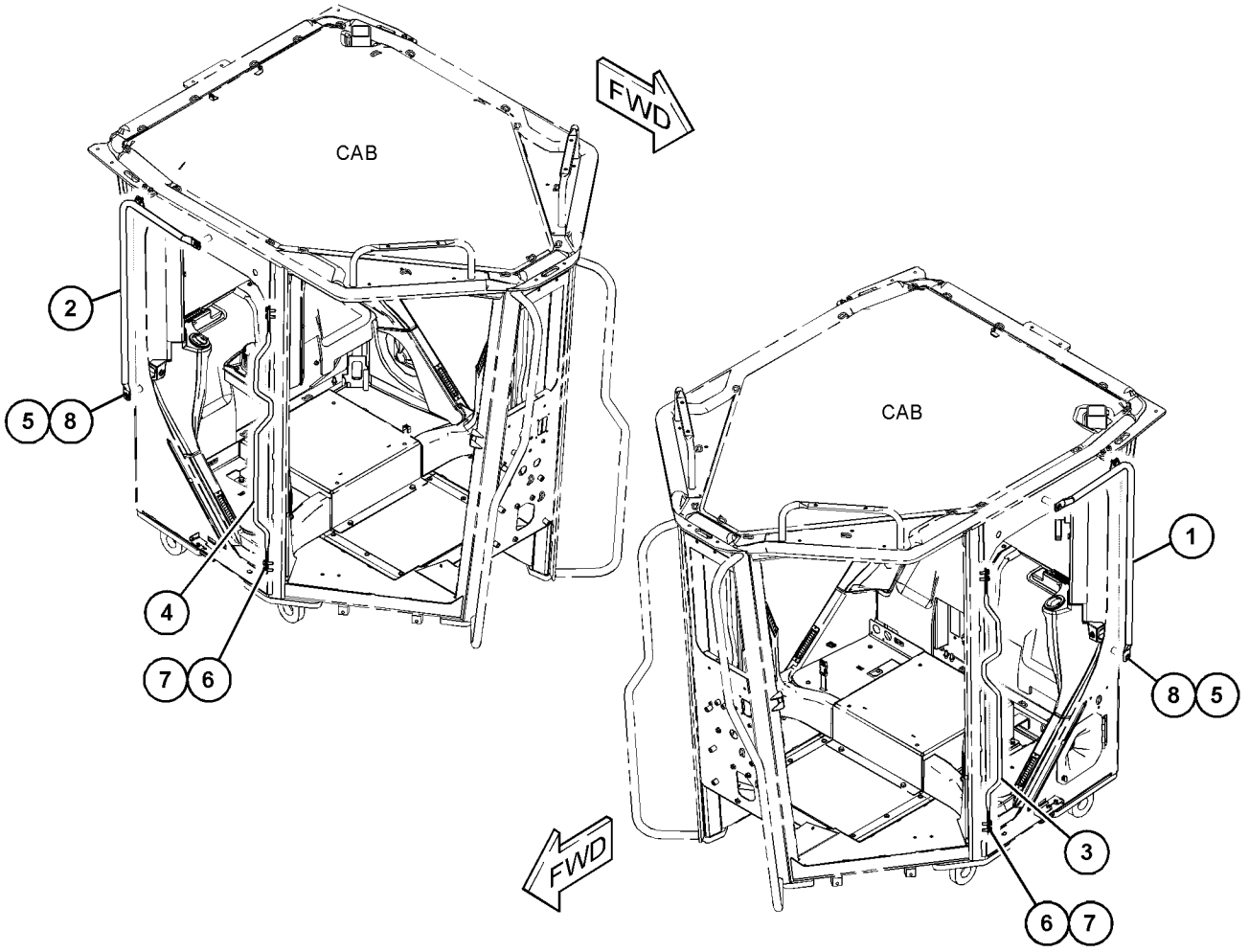

GRAPHIC #1 **<END>** g03836321

356-5163 HANDRAIL GP

S/N: E9Y1-UP

PART OF 375-3405, 462-6400 OPTION AR-LADDER, 375-3406 PLATFORM AR AN ATTACHMENT

SMCS-7256 **i05657436**

NOTE	REF NO	GRAPHIC REF	PART NUMBER	QTY	PART NAME 1 2 3 4 5 6 (PRODUCT LEVEL)	SEE PAGE
	1	1	**356-5165**	2	HANDRAIL AS	
					(EACH INCLUDES)	
E		1	**141-5519**		PIPE-BULK (94-CM)	
M	2	1	**127-2170**	8	SCREW-TRUSS HEAD (M8X1.25X20-MM)	
	3	1	**3E-4352**	8	WASHER-HARD (8.8X20.5X2.5-MM THK)	

E - ORDER BY THE CENTIMETER
M - METRIC PART

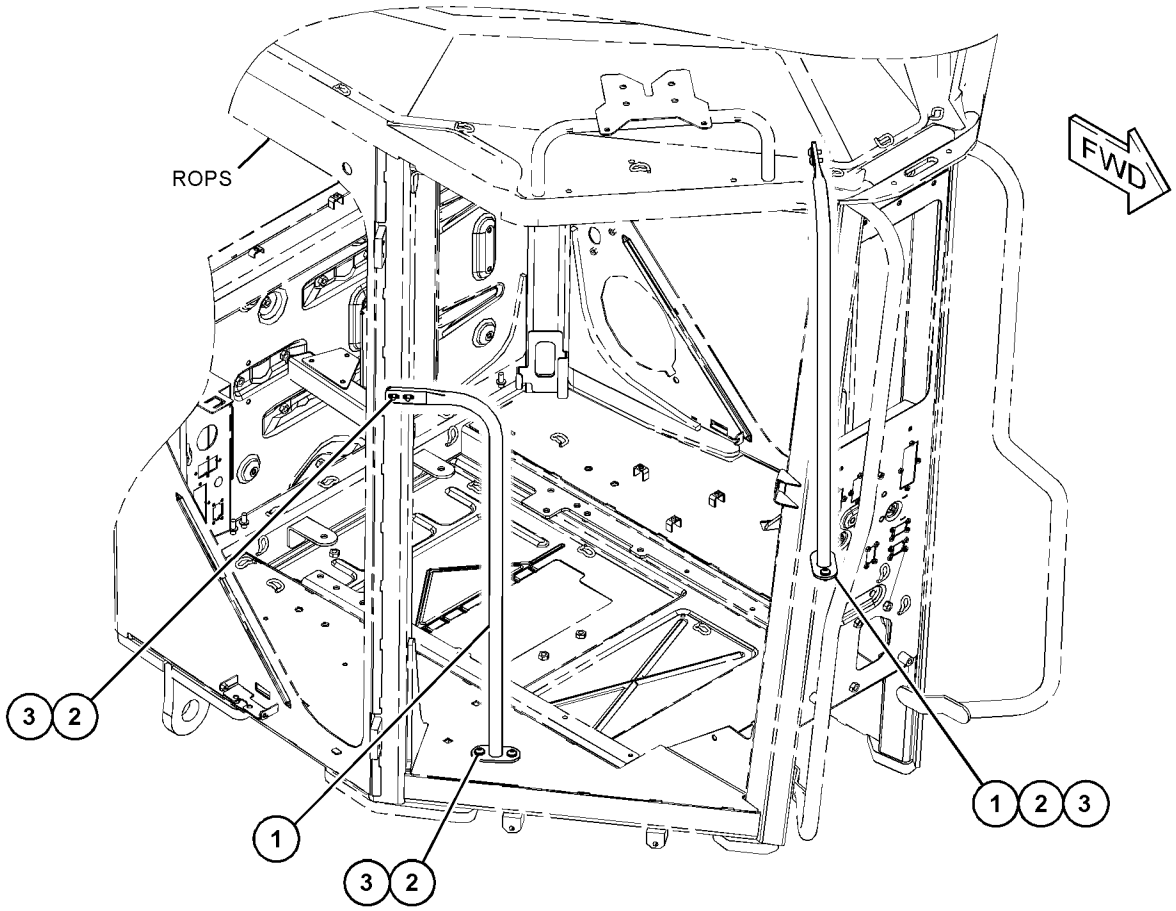

GRAPHIC #1 **<END>** g03590940

383-8165 HANDRAIL GP–FENDER, LH

S/N: E9Y1-UP

PART OF 383-8170 HANDRAIL GP

AN ATTACHMENT

SMCS-7256 **i06144521**

NOTE	REF NO	GRAPHIC REF	PART NUMBER	QTY	PART NAME 1 2 3 4 5 6 (PRODUCT LEVEL)	SEE PAGE
	1	1	**383-8167**	1	HANDRAIL AS (PLATFORM)	
	2	1	**477-0556**	1	HANDRAIL AS (STAIRWAY)	
		1	**6F-8480**	1	PLUG	
M		1	**8T-3597**	2	NUT-WELD (M12X1.75-THD)	

M - METRIC PART

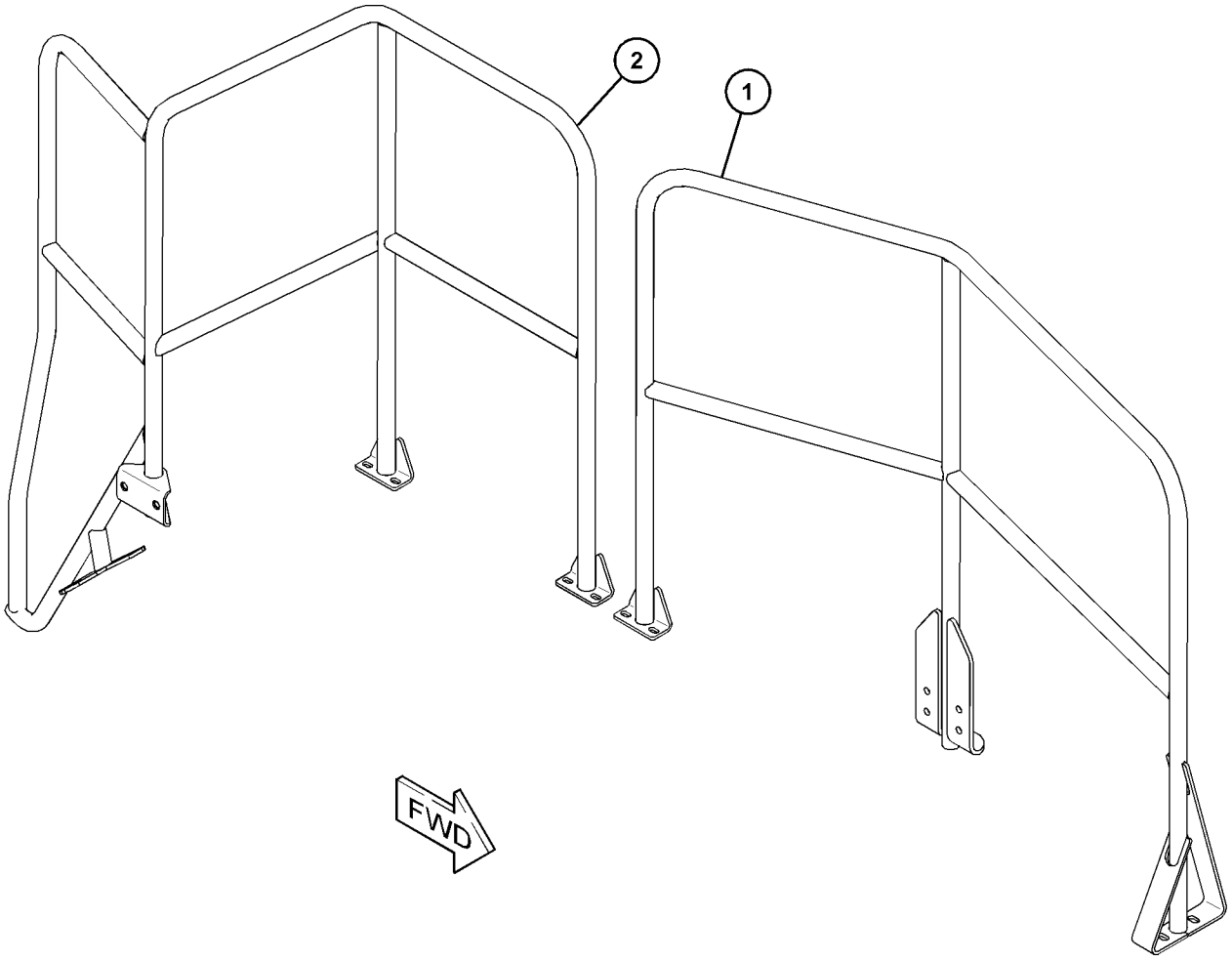

GRAPHIC #1 **<END>** g03833124

383-8170 HANDRAIL GP–FENDER

S/N: E9Y1-UP
PART OF 375-3407, 462-6400 OPTION AR-LADDER
AN ATTACHMENT

SMCS-7256 **i06144524**

NOTE	PART NUMBER	QTY	PART NAME 1 2 3 4 5 6 (PRODUCT LEVEL)	SEE PAGE
Y	*476-8829*	1	FASTENER GP-HANDRAIL	433
Y	*383-8165*	1	HANDRAIL GP (FENDER, LH)	448
Y	*476-8831*	1	HANDRAIL GP (PLATFORM, RH)	453
Y	*383-8166*	1	MOUNTING GP (FENDER)	431

Y - SEPARATE ILLUSTRATION

<END>

443-7772 HANDRAIL GP

S/N: E9Y1-UP

PART OF 386-0539 PLATFORM GP-OPERATOR

AN ATTACHMENT

SMCS-7256 **i06143855**

NOTE	REF NO	GRAPHIC REF	PART NUMBER	QTY	PART NAME 1 2 3 4 5 6 (PRODUCT LEVEL)	SEE PAGE
	1	1	**421-2520**	1	HANDRAIL AS	
	2	1	**434-1890**	1	HANDRAIL AS	

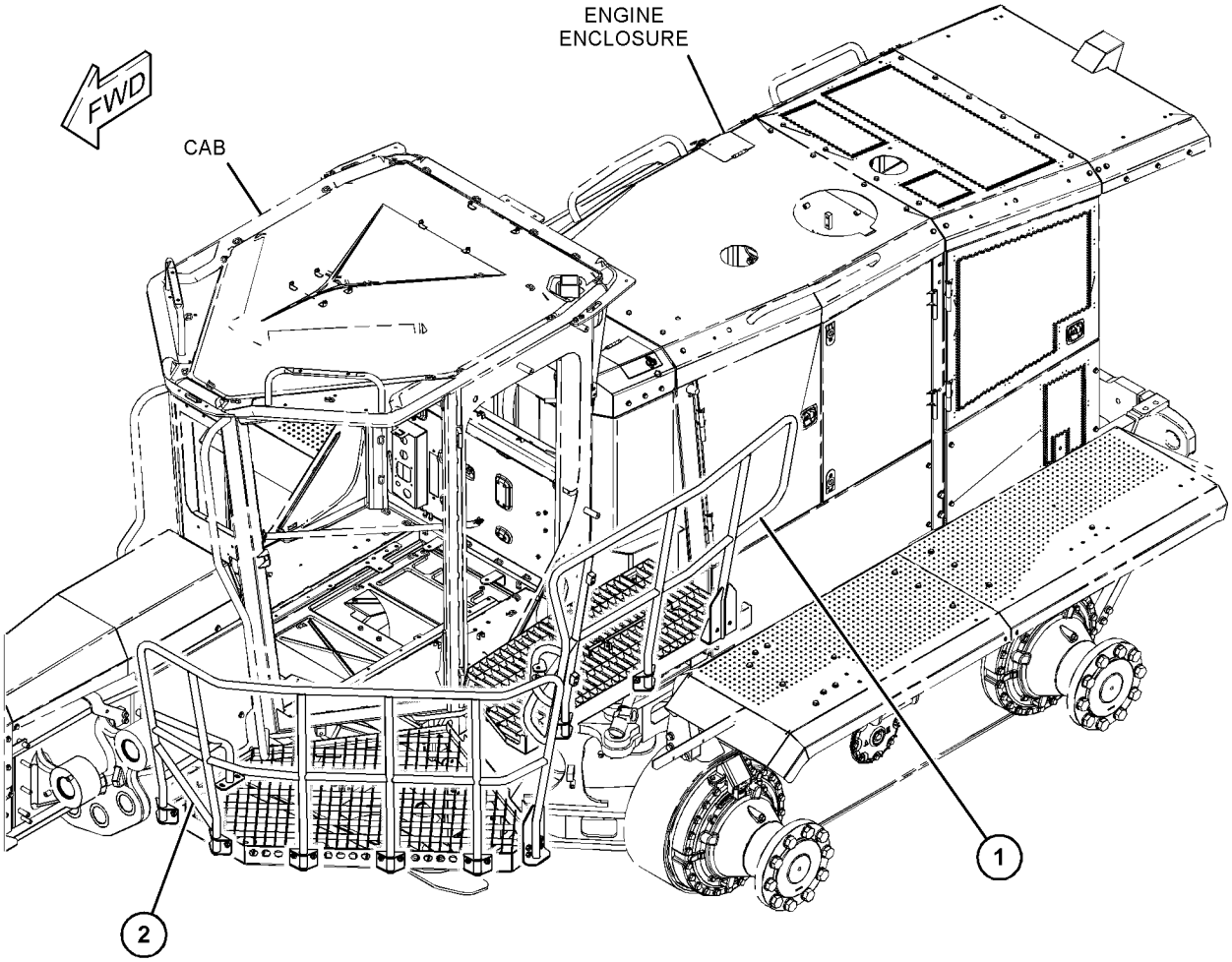

GRAPHIC #1 **<END>** g03830654

476-8830 HANDRAIL GP

S/N: E9Y1-UP

PART OF 462-6400 OPTION AR-LADDER

AN ATTACHMENT

SMCS-7256 **i06143915**

NOTE	REF NO	GRAPHIC REF	PART NUMBER	QTY	PART NAME 1 2 3 4 5 6 (PRODUCT LEVEL)	SEE PAGE
	1	1	**115-3580**	4	PLATE	
	2	1	**189-8789**	2	BUMPER AS	
	3	1	**456-5609**	2	BRACKET AS	
	4	1	**479-0384**	2	GUARDRAIL AS (LH)	
	5	1	**479-0385**	1	GUARDRAIL AS (LH)	
	6	1	**479-0389**	1	GUARDRAIL AS (RH)	
M	7	1	**329-3356**	8	NUT (M12X1.75-THD)	
M	8	1	**344-5674**	2	NUT (M8X1.25-THD)	
	9	1	**5P-7468**	8	CLIP (SLOT)	
	10	1	**5P-7469**	8	CLIP (TAB)	
	11	1	**6V-1874**	8	GROMMET (31-MM ID)	
	12	1	**7X-7729**	4	WASHER (11X25X3-MM THK)	
M	13	1	**8T-4136**	4	BOLT (M10X1.5X25-MM)	
M	14	1	**8T-4183**	8	BOLT (M12X1.75X40-MM)	
	15	1	**8T-4223**	16	WASHER-HARD (13.5X25.5X3-MM THK)	

M - METRIC PART

476-8830 **HANDRAIL GP (*contd.*)** **i06143915**

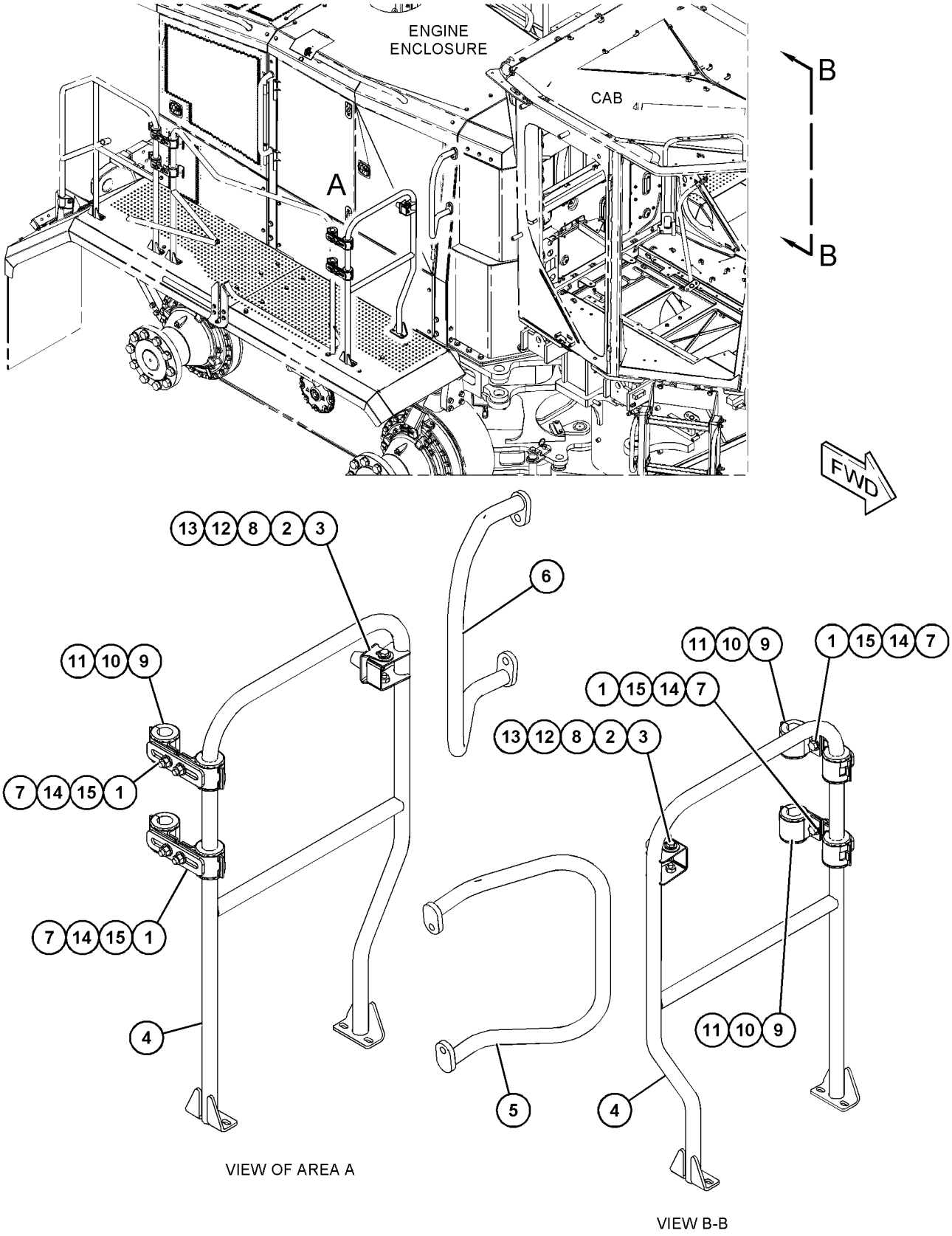

GRAPHIC #1 **<END>** g03828395

476-8831 HANDRAIL GP–PLATFORM, RH

S/N: E9Y1-UP
PART OF 383-8170 HANDRAIL GP
AN ATTACHMENT

SMCS-7256 **i06144523**

NOTE	REF NO	GRAPHIC REF	PART NUMBER	QTY	PART NAME 1 2 3 4 5 6 (PRODUCT LEVEL)	SEE PAGE
	1	1	**479-1940**	1	HANDRAIL AS	
		1	**6F-8480**	1	PLUG	
M		1	**8T-3597**	2	NUT-WELD (M12X1.75-THD)	
	2	1	**479-1942**	1	HANDRAIL AS	

M - METRIC PART

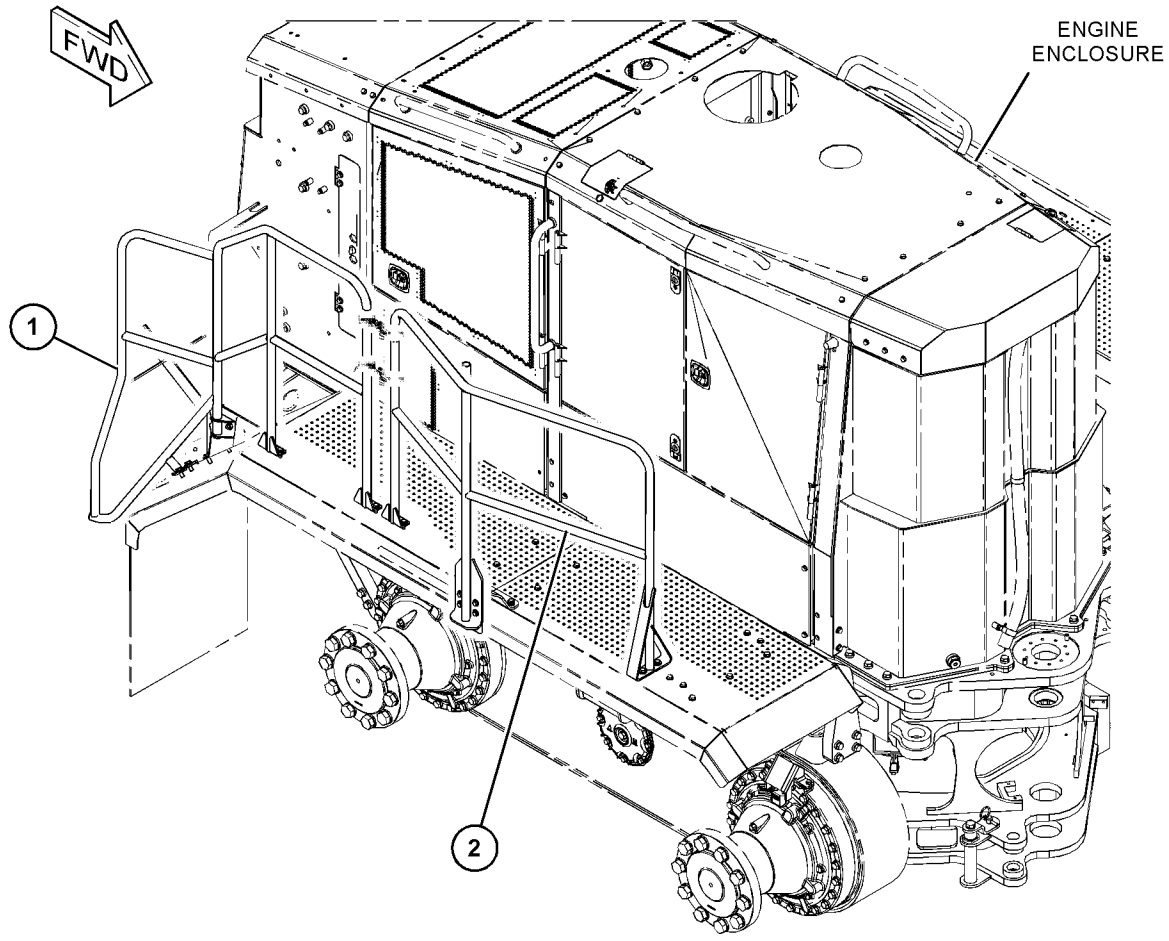

GRAPHIC #1 **<END>** g03836309

479-6633 HANDRAIL GP

S/N: E9Y1-UP

PART OF 386-0538 PLATFORM GP-OPERATOR

AN ATTACHMENT

SMCS-7256 **i06143917**

NOTE	REF NO	GRAPHIC REF	PART NUMBER	QTY	PART NAME 1 2 3 4 5 6 (PRODUCT LEVEL)	SEE PAGE
	1	1	**443-5651**	1	HANDRAIL AS (LH)	
	2	1	**456-5119**	1	HANDRAIL AS (RH)	
	3	1	**479-6594**	1	HANDRAIL AS (RH)	

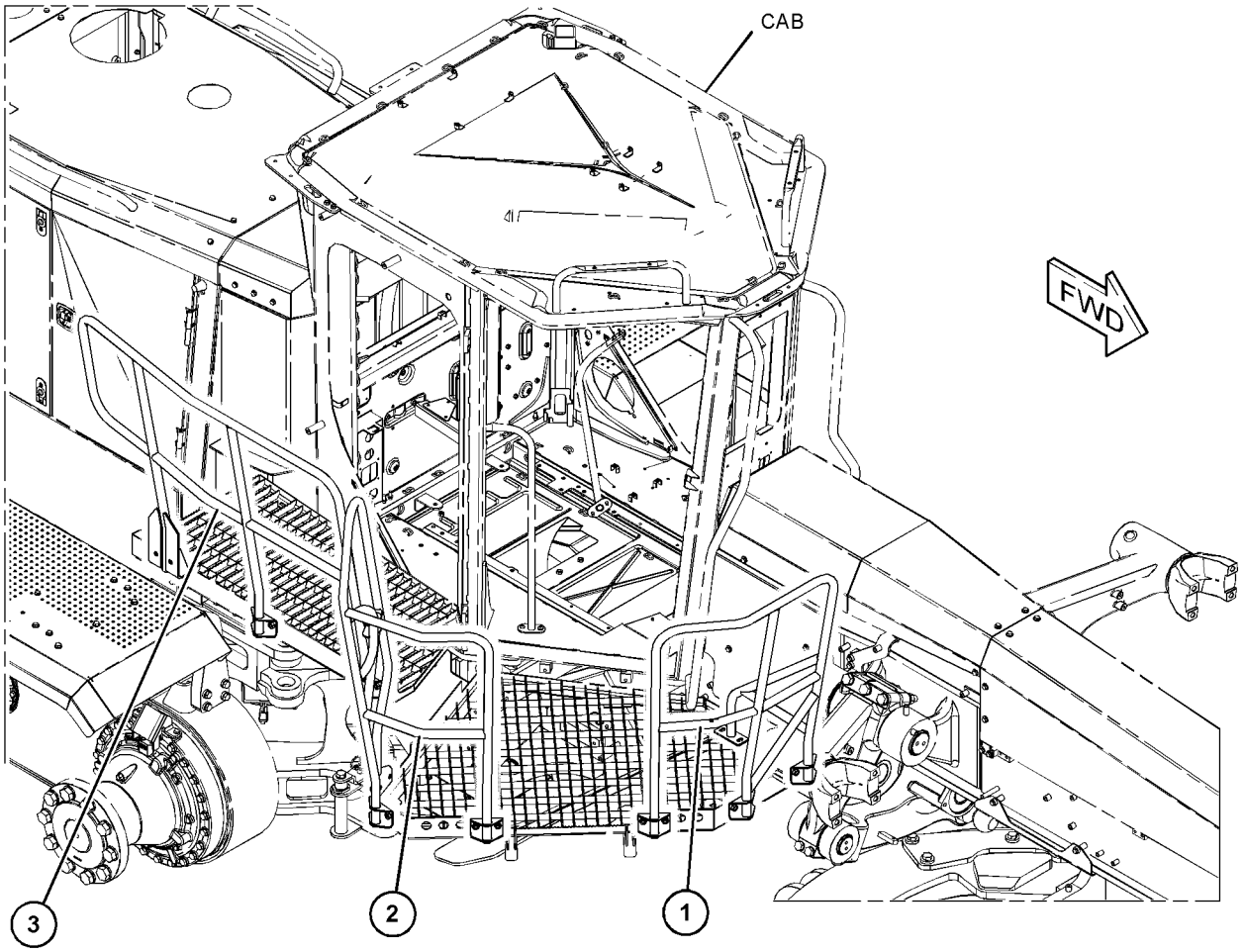

GRAPHIC #1 **<END>** g03828621

370-3204 HITCH GP-ARTICULATING

S/N: E9Y1-UP

PART OF 370-2944 FRAME AR

SMCS-7057, 7100

i06184555

NOTE	REF NO	GRAPHIC REF	PART NUMBER	QTY	PART NAME 1 2 3 4 5 6 (PRODUCT LEVEL)	SEE PAGE
B	1	1	**5K-3492**	1	SHIM PACK (INCLUDES 19-SHIMS)	
	2	1	**5K-3929**	1	BEARING AS-ROLLER	
	3	1	**276-2634**	1	CAP-LOWER	
	4	1	**370-3205**	1	CAP AS (UPPER)	
	5	1	**483-3845**	1	PIN	
	6	1	**370-3207**	1	PLATE	
B	7	1	**370-3208**	1	SHIM PACK (INCLUDES 26-SHIMS)	
B	8	1	**370-3209**	1	SHIM PACK (INCLUDES 26-SHIMS)	
	9	1	**370-3225**	1	PLATE	
	10	1	**370-3226**	1	SPACER	
	11	1	**389-9730**	1	RETAINER-PLATE	
	12	1	**472-0422**	1	PIN AS	
	13	1	**1J-2150**	2	SEAL-LIP TYPE	
	14	1	**3K-6454**	2	SEAL-LIP TYPE	
	15	1	**5K-3494**	2	BUSHING	
	16	1	**5K-3496**	1	BUSHING	
	17	1	**8T-4121**	2	WASHER-HARD (11X21X2.5-MM THK)	
M	18	1	**8T-4184**	10	BOLT (M12X1.75X45-MM)	
M	19	1	**8T-4193**	8	BOLT (M16X2X50-MM)	
M	20	1	**8T-4195**	2	BOLT (M10X1.5X30-MM)	
	21	1	**8T-4223**	20	WASHER-HARD (13.5X25.5X3-MM THK)	
M	22	1	**8T-5412**	10	BOLT (M12X1.75X140-MM)	
	23	1	**9X-8257**	8	WASHER (17.5X30X3.5-MM THK)	

B - USE AS REQUIRED
M - METRIC PART

370-3204 **HITCH GP-ARTICULATING (*contd.*)** **i06184555**

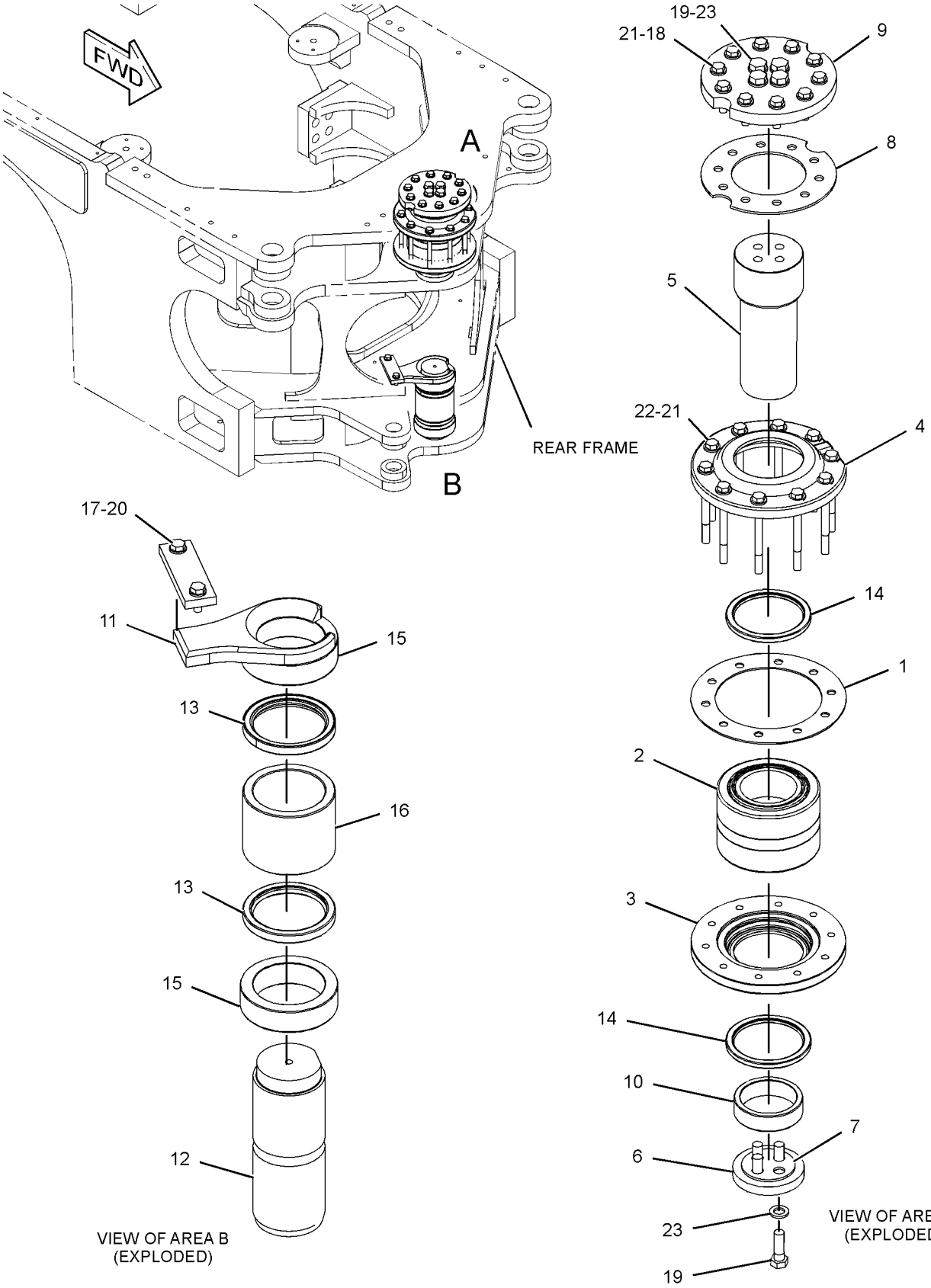

GRAPHIC #1 **<END>** g03797092

390-4077 HITCH GP-TOWING

S/N: E9Y1-UP

CANNOT BE USED WITH 372-7830—PAGE: 846, 453-4370—PAGE: 846 AN ATTACHMENT

SMCS-7100 **i06147038**

NOTE	REF NO	GRAPHIC REF	PART NUMBER	QTY	PART NAME 1 2 3 4 5 6 (PRODUCT LEVEL)	SEE PAGE
	1	1	**190-5386**	2	FILM-IDENTIFICATION (ROUND RED REFLECTIVE)	
	2	1	**477-9838**	1	HITCH AS	
M		1	**9R-2640**	8	BOSS (M12X1.75X25-MM)	
	3	1	**6V-8237**	12	WASHER (26X44X4-MM THK)	
M	4	1	**7X-2576**	12	BOLT (M24X3X70-MM)	

M - METRIC PART

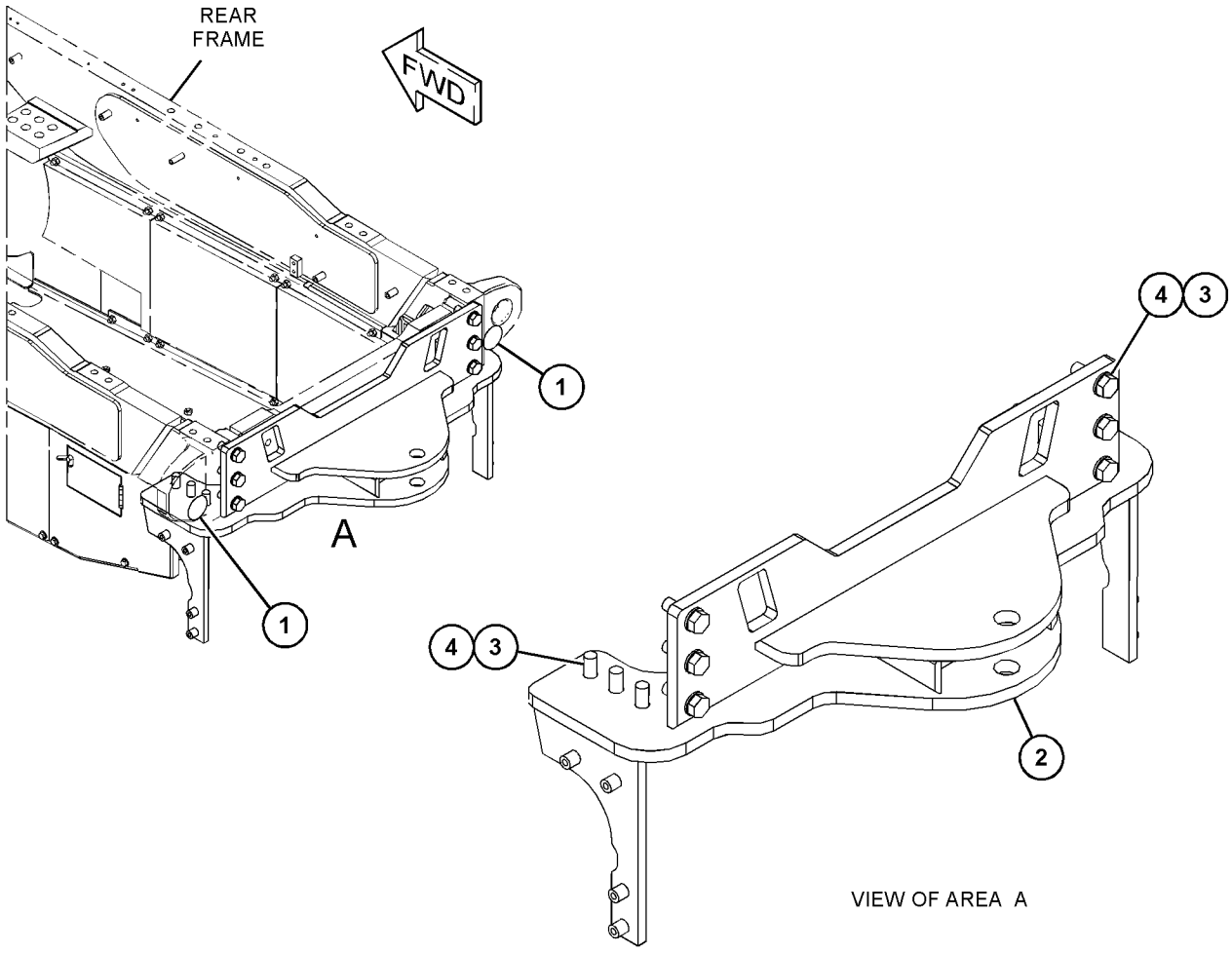

GRAPHIC #1 **<END>** g03830398

388-9316 HOOD GP

S/N: E9Y1-UP

PART OF 375-3464 SUPPORT GP-CONTROL

SMCS-7251 **i06144016**

NOTE	REF NO	GRAPHIC REF	PART NUMBER	QTY	PART NAME 1 2 3 4 5 6 (PRODUCT LEVEL)	SEE PAGE
J	1	1	**275-0572**	1	LATCH AS	
	2	1	**319-2305**	1	CAM-LATCH	
	3	1	**332-3604**	1	BUMPER	
	4	1	**476-4813**	1	HOOD AS	

J - REQUIRES CORPORATE KEY

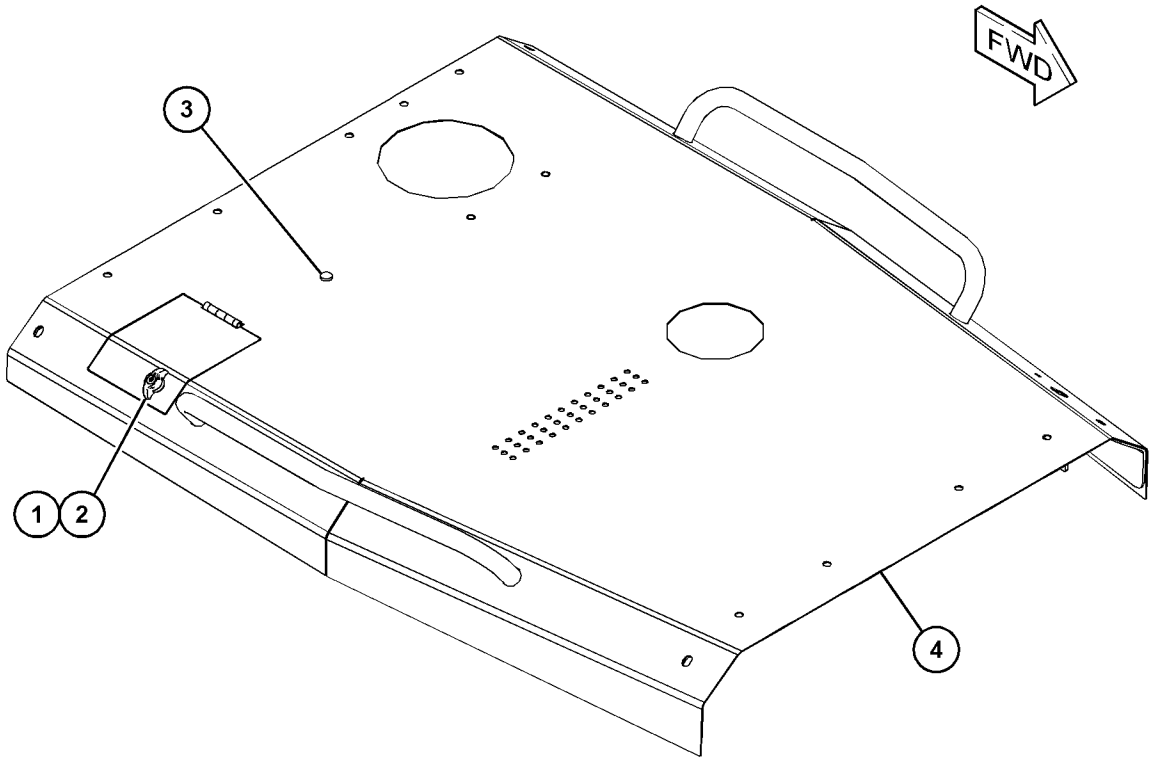

GRAPHIC #1 **<END>** g03830522

385-1260 LADDER AR

S/N: E9Y1-UP
PART OF 375-3407, 462-6400 OPTION AR-LADDER
AN ATTACHMENT

SMCS-7254 **i06143799**

NOTE	PART NUMBER	QTY	PART NAME 1 2 3 4 5 6 (PRODUCT LEVEL)	SEE PAGE
Y	*478-9464*	1	LADDER GP	460
Y	*479-7376*	1	LADDER GP	461
Y	*389-9884*	1	MOUNTING GP-PLATFORM	773
	439-3895	1	SUPPORT AS	
	478-9467	1	SUPPORT AS	

Y - SEPARATE ILLUSTRATION

<END>

478-9464 LADDER GP

S/N: E9Y1-UP
PART OF 385-1260 LADDER GP
AN ATTACHMENT

SMCS-7254 **i06158879**

NOTE	REF NO	GRAPHIC REF	PART NUMBER	QTY	PART NAME 1 2 3 4 5 6 (PRODUCT LEVEL)	SEE PAGE
	1	1	**356-9931**	2	SHAFT	
Y	2	1	*439-3888*	1	STEP GP	486
	3	1	**478-9025**	1	LADDER AS	
	4	1	**478-9028**	1	PLATE AS	
	5	1	**478-9029**	1	TREAD	
	6	1	**478-9030**	1	TREAD	
	7	1	**478-9463**	1	HANDRAIL AS	
	8	1	**162-2480**	14	RIVET	
	9	1	**198-4778**	4	WASHER-HARD (13.5X30X12-MM THK)	
M	10	1	**206-5143**	2	BOLT (M12X1.75X50-MM)	
	11	1	**5P-1076**	2	WASHER-HARD (13.5X30X4-MM THK)	
M	12	1	**6V-7687**	2	LOCKNUT (M12X1.75-THD)	
	13	1	**7X-3392**	4	WASHER-HARD (13.5X22.5X3-MM THK)	
M	14	1	**8T-4139**	4	BOLT (M12X1.75X30-MM)	
M	15	1	**8T-4183**	4	BOLT (M12X1.75X40-MM)	

M - METRIC PART
Y - SEPARATE ILLUSTRATION

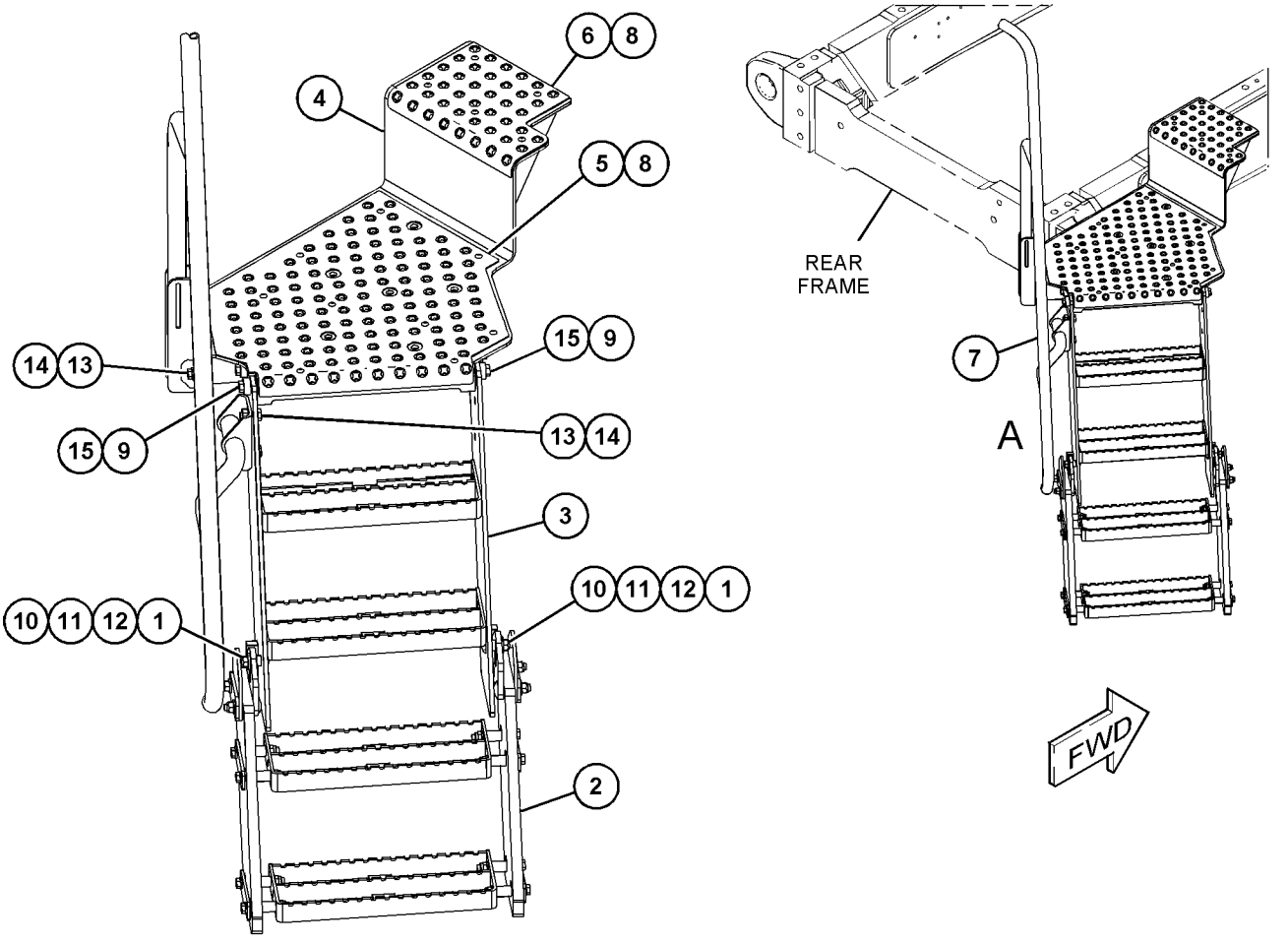

VIEW OF AREA A

GRAPHIC #1 **<END>** g03835583

479-7376 LADDER GP

S/N: E9Y1-UP
PART OF 385-1260 LADDER GP
AN ATTACHMENT

SMCS-7254 **i06158881**

NOTE	REF NO	GRAPHIC REF	PART NUMBER	QTY	PART NAME 1 2 3 4 5 6 (PRODUCT LEVEL)	SEE PAGE
	1	1	**356-9931**	2	SHAFT	
	2	1	**389-9874**	1	TREAD	
	3	1	**439-3882**	1	PLATE AS	
Y	4	1	**439-3888**	1	STEP GP	486
	5	1	**440-5236**	1	HANDRAIL AS	
M		1	**8T-3597**	2	NUT-WELD (M12X1.75-THD)	
	6	1	**447-9089**	1	TREAD	
	7	1	**478-9025**	1	LADDER AS	
	8	1	**162-2480**	14	RIVET	
	9	1	**198-4778**	4	WASHER-HARD (13.5X30X12-MM THK)	
M	10	1	**206-5143**	2	BOLT (M12X1.75X50-MM)	
	11	1	**5P-1076**	2	WASHER-HARD (13.5X30X4-MM THK)	
M	12	1	**6V-7687**	2	LOCKNUT (M12X1.75-THD)	
	13	1	**7X-3392**	4	WASHER-HARD (13.5X22.5X3-MM THK)	
M	14	1	**8T-4139**	4	BOLT (M12X1.75X30-MM)	
M	15	1	**8T-4183**	4	BOLT (M12X1.75X40-MM)	

M - METRIC PART
Y - SEPARATE ILLUSTRATION

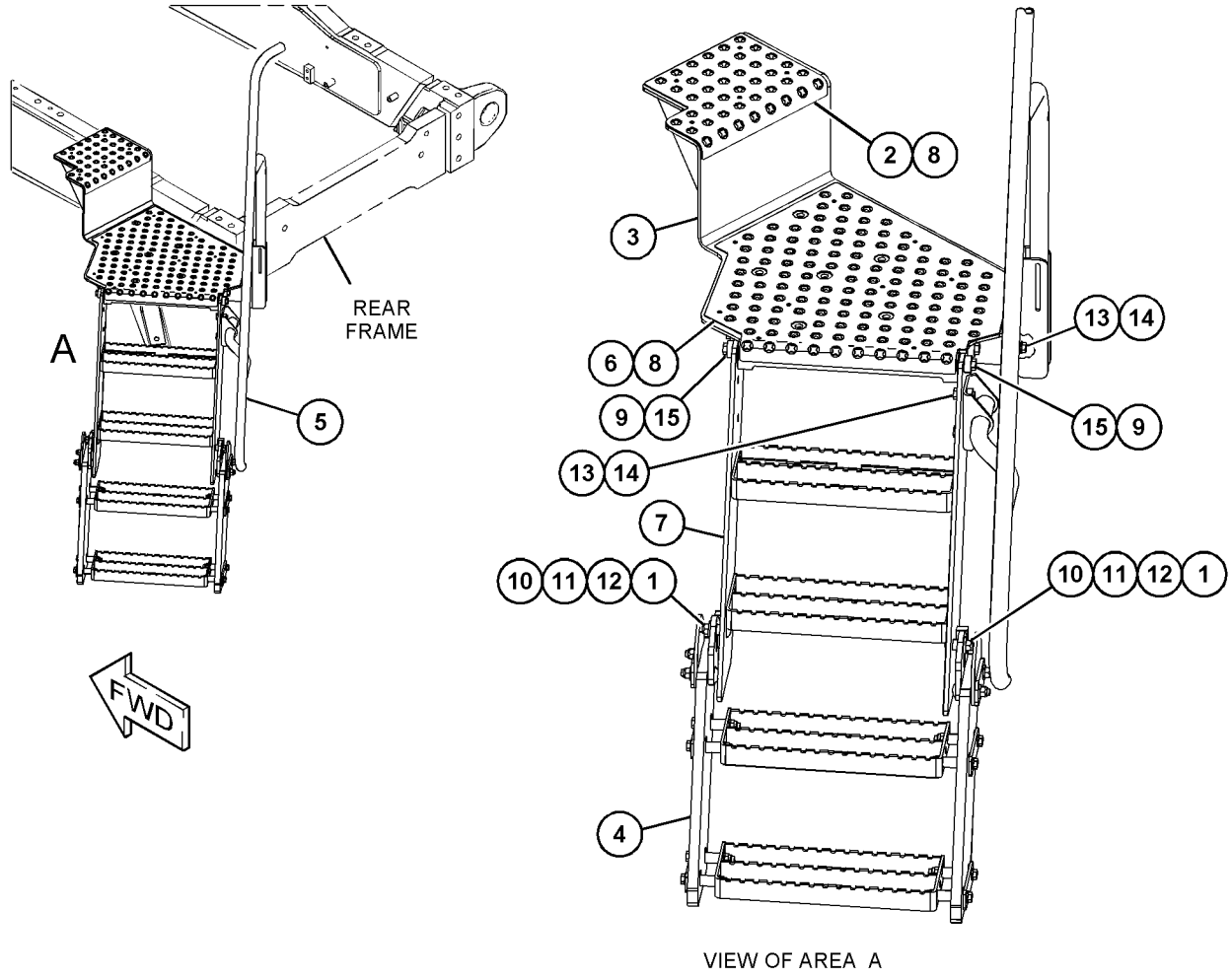

GRAPHIC #1 **<END>** g03835487

482-6297 LADDER GP–WINDOW WASHER

S/N: E9Y1-UP

PART OF 483-0648 PLATFORM GP-OPERATOR

AN ATTACHMENT

SMCS-7254 **i06158646**

NOTE	REF NO	GRAPHIC REF	PART NUMBER	QTY	PART NAME 1 2 3 4 5 6 (PRODUCT LEVEL)	SEE PAGE
	1	1	**255-2322**	8	PLATE	
	2	1	**255-2323**	6	PLATE	
	3	1	**263-1775**	2	TUBE	
	4	1	**291-9812**	3	STEP AS	
	5	1	**291-9814**	1	STEP AS	
	6	1	**482-6296**	2	RAIL	
	7	1	**482-8219**	1	BRACKET	
	8	1	**482-8220**	2	PLATE	
M	9	1	**156-4974**	10	BOLT-CARRIAGE (M12X1.75X60-MM)	
M	10	1	**206-5143**	28	BOLT (M12X1.75X50-MM)	
M	11	1	**6V-7687**	42	LOCKNUT (M12X1.75-THD)	
	12	1	**7J-8673**	4	PIPE	
M	13	1	**7X-2549**	4	BOLT (M12X1.75X100-MM)	
	14	1	**8T-4223**	42	WASHER-HARD (13.5X25.5X3-MM THK)	
	15	1	**8T-7971**	4	WASHER-HARD (13.5X25.5X5-MM THK)	

M - METRIC PART

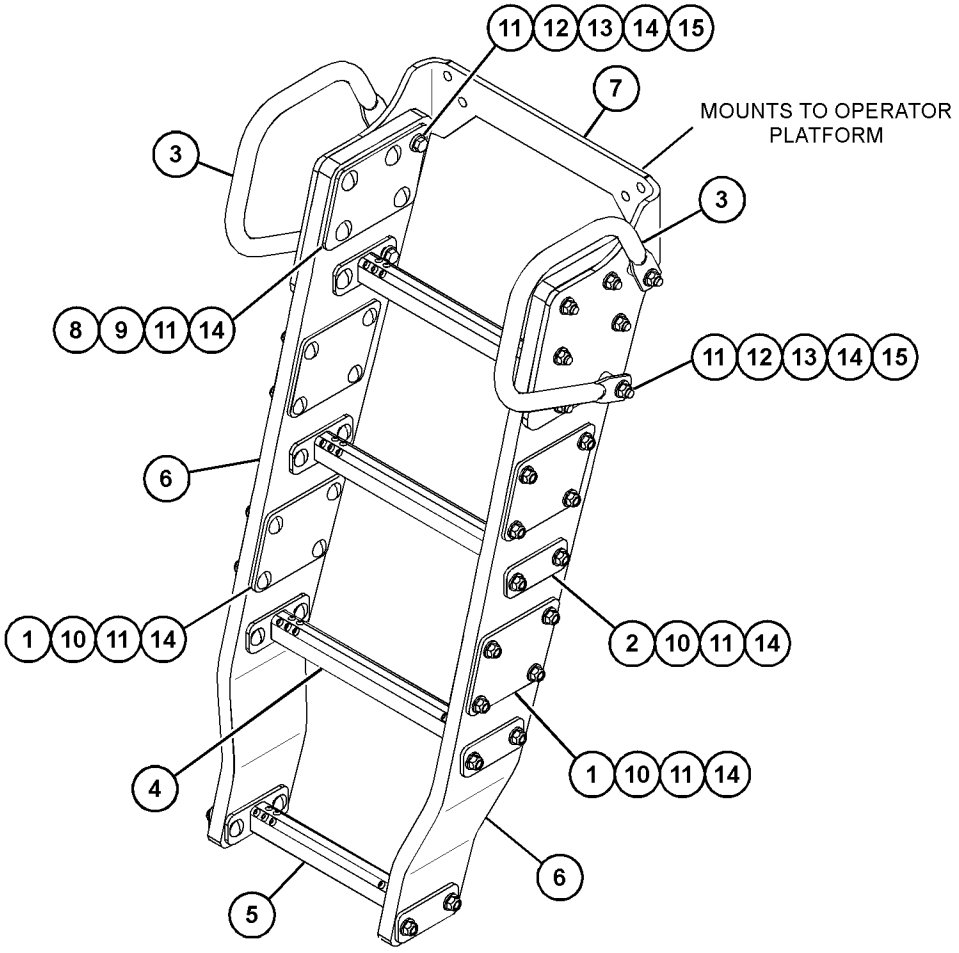

GRAPHIC #1 **<END>** g03835357

376-7663 LINES GP-AUTOMATIC LUBRICATION—FRONT AXLE

S/N: E9Y1-UP
PART OF 385-7552 LUBRICATION AR-AUTOMATIC
AN ATTACHMENT

SMCS-7510, 7540

i06204369

NOTE	REF NO	GRAPHIC REF	PART NUMBER	QTY	PART NAME 1 2 3 4 5 6 (PRODUCT LEVEL)	SEE PAGE
I	1	2	**461-4283**	2	HOSE AS	
	2	1,2	**267-9432**	2	ADAPTER	
	3	1	**291-6268**	1	FILM-IDENTIFICATION (LUBRICATION POINTS, LH)	
	4	2	**291-6269**	1	FILM-IDENTIFICATION (LUBRICATION POINTS, RH)	
	5	1,2	**292-4311**	4	FITTING-SWIVEL	
	6	1,2	**294-0691**	2	BLOCK	
Y	7	1	*389-8622*	1	VALVE GP-LUBE DISTRIBUTION (LH)	502
Y	8	2	*389-8623*	1	VALVE GP-LUBE DISTRIBUTION (RH)	503
	9	1	**393-1217**	2	PLATE	
I	10	1	**418-6449**	1	HOSE AS	
I	11	1,2	**436-5764**	3	HOSE AS	
I	12	1	**437-1141**	1	HOSE AS	
I	13	2	**437-1151**	2	HOSE AS	
I	14	1	**438-6117**	1	HOSE AS	
I	15	1	**444-4299**	1	HOSE AS	
I	16	2	**461-4279**	1	HOSE AS	
I	17	1	**461-4282**	1	HOSE AS	
I	18	1,2	**461-4287**	2	HOSE AS	
I	19	2	**471-6095**	3	HOSE AS	
I	20	2	**471-6096**	1	HOSE AS	
I	21	1	**471-6097**	1	HOSE AS	
I	22	2	**471-6098**	1	HOSE AS	
I	23	2	**471-6099**	1	HOSE AS	
I	24	1	**471-6815**	1	HOSE AS	
	25	1,2	**091-0081**	4	SPACER (10.5X20X10-MM THK)	
	26	2	**302-3908**	1	SPACER (11X20X30-MM THK)	
M	27	1,2	**344-5675**	3	NUT (M10X1.5-THD)	
	28	1,2	**3B-6552**	7	ELBOW-PIPE	
	29	1,2	**4D-8123**	2	CLIP	
	30	1,2	**4M-8973**	7	ELBOW	
	31	1,2	**5M-6214**	4	PLUG-PIPE	
	32	1,2	**5P-9085**	17	CLIP	
	33	1,2	**6D-4244**	14	CLIP	
	34	1	**6K-6967**	3	ADAPTER-PIPE	
	35	1,2	**8L-5008**	8	ELBOW-PIPE	
	36	1,2	**8T-4121**	43	WASHER-HARD (11X21X2.5-MM THK)	
M	37	1,2	**8T-4136**	22	BOLT (M10X1.5X25-MM)	
M	38	1,2	**8T-4137**	7	BOLT (M10X1.5X20-MM)	
M	39	1,2	**8T-4185**	2	BOLT (M10X1.5X50-MM)	
M	40	2	**8T-4191**	2	BOLT (M10X1.5X16-MM)	
M	41	1,2	**8T-4195**	4	BOLT (M10X1.5X30-MM)	
	42	1,2	**9R-5008**	2	SPACER (11X20X6-MM THK)	
	43	1,2	**9X-8582**	2	CLIP	
E	44	2	**7I-1024**		GUARD-HOSE (76.9-CM)	
E	44A	2	**7I-1024**		GUARD-HOSE (76.7-CM)	
E	44B	1	**7I-1024**		GUARD-HOSE (75.7-CM)	
E	44C	1	**7I-1024**		GUARD-HOSE (62-CM)	

E - ORDER BY THE CENTIMETER
I - REFER TO HYDRAULIC INFORMATION SYSTEM
M - METRIC PART
Y - SEPARATE ILLUSTRATION

376-7663 **LINES GP-AUTOMATIC LUBRICATION (*contd.*)** **i06204369**

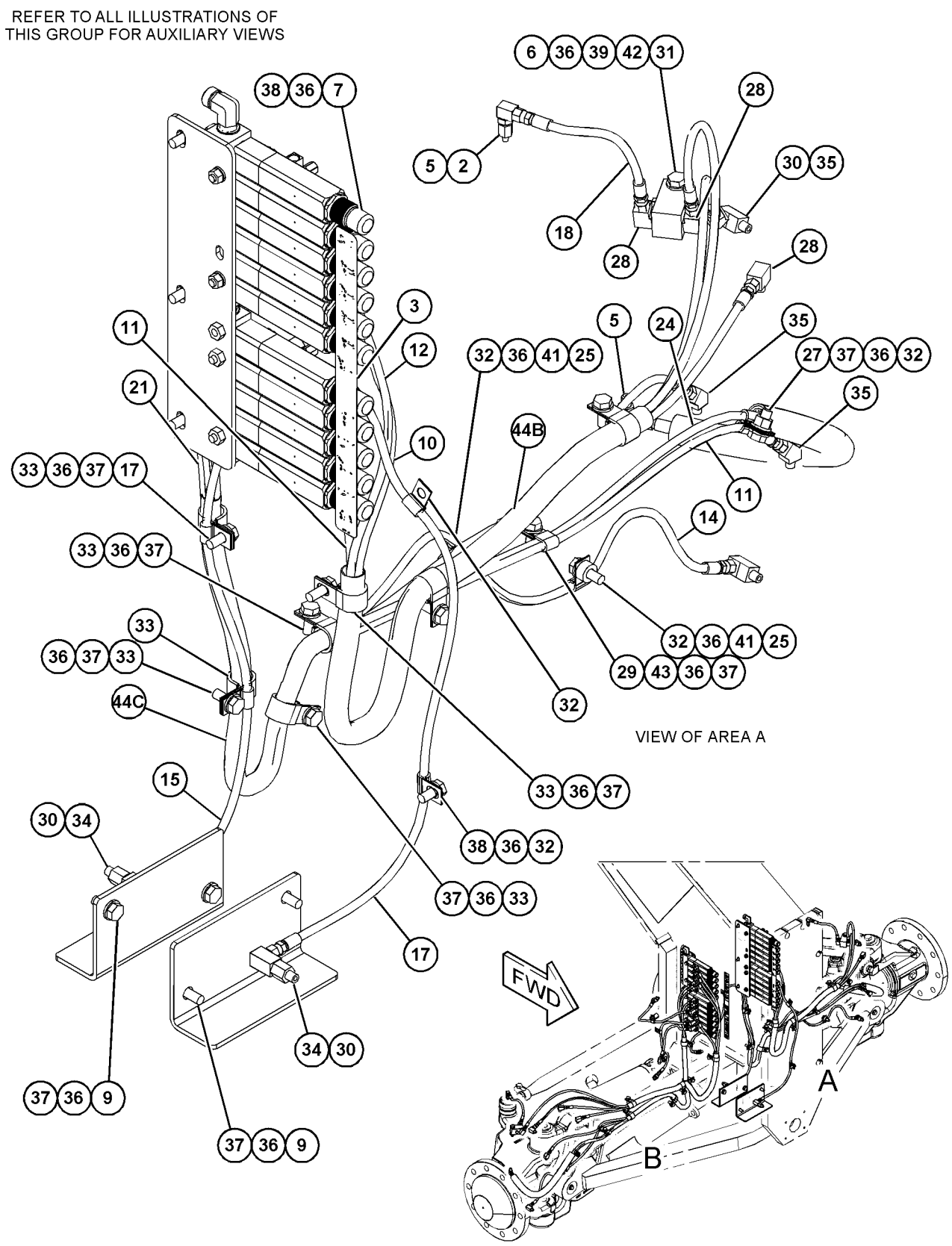

GRAPHIC #1 g03821182

376-7663 **LINES GP-AUTOMATIC LUBRICATION (*contd.*)** **i06204369**

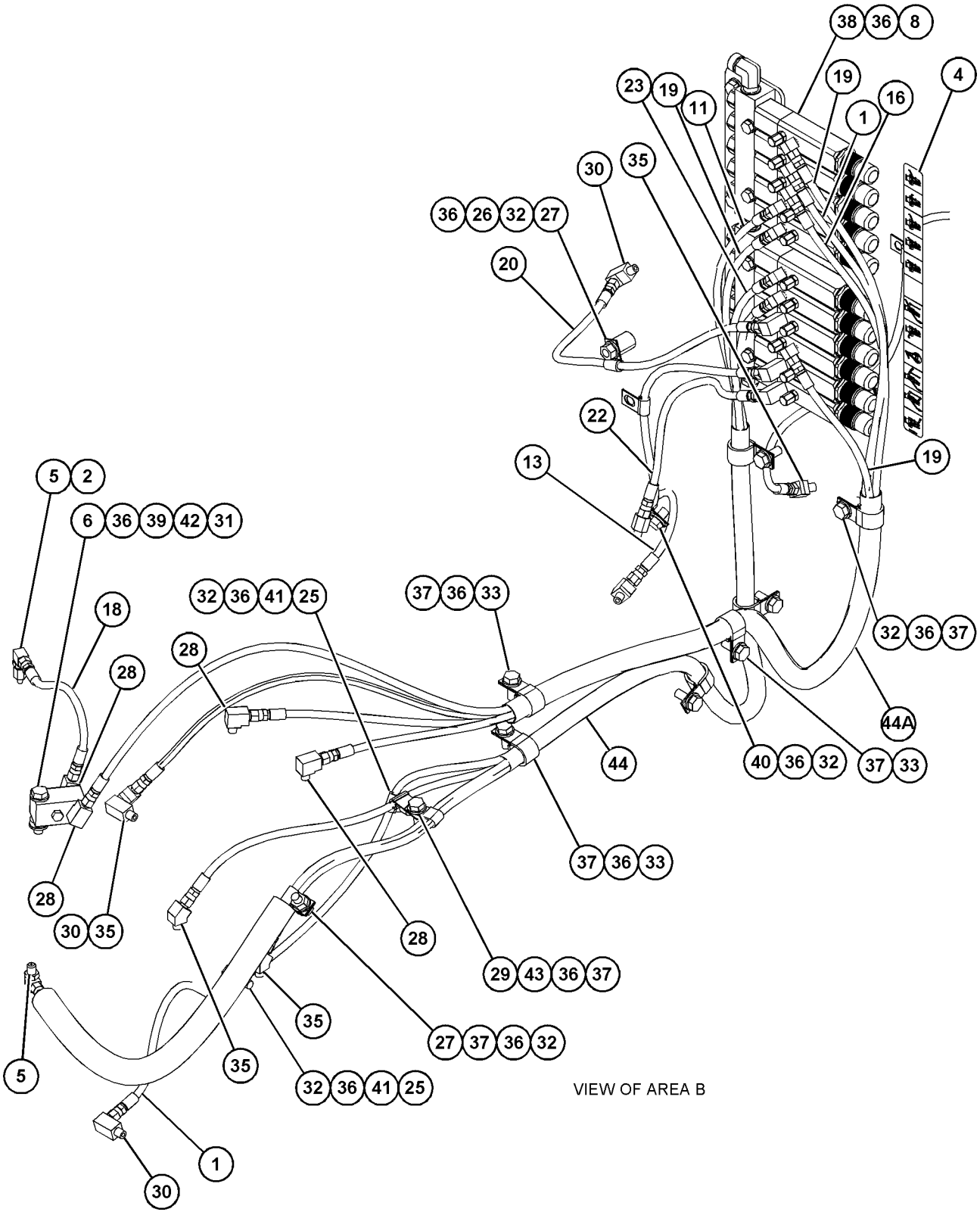

GRAPHIC #2 **<END>** g03821548

385-0199 LINES GP-AUTOMATIC LUBRICATION—CIRCLE, DRAWBAR, MOLDBOARD

S/N: E9Y1-UP
CENTER SHIFT
PART OF 385-7552 LUBRICATION AR-AUTOMATIC
AN ATTACHMENT

SMCS-7510, 7540 **i06127170**

NOTE	REF NO	GRAPHIC REF	PART NUMBER	QTY	PART NAME 1 2 3 4 5 6 (PRODUCT LEVEL)	SEE PAGE
	1	1	**8T-0082**	1	TEE	
Y	2	1	**160-4128**	1	VALVE GP-PRESSURE REDUCING (IMPLEMENT PILOT OIL)	666
I	3	1	**227-2002**	1	HOSE AS	
	4	1	**291-6270**	1	FILM-IDENTIFICATION (LUBRICATION POINTS, CYLINDER)	
	5	1	**292-4311**	4	FITTING-SWIVEL	
Y	6	1	*333-0677*	1	VALVE GP-LUBE DISTRIBUTION (4-INJECTOR)	501
	7	1	**344-1950**	2	CLIP (SLOT)	
I	8	1	**388-6673**	1	HOSE AS	
I	9	1	**396-7044**	1	HOSE AS	
I	10	1	**396-7046**	1	HOSE AS	
	11	1	**430-8907**	1	TUBE AS	
	12	1	**443-9601**	1	TUBE AS	
	13	1	**460-5306**	1	TUBE AS	
I	14	1	**460-5307**	1	HOSE AS	
I	15	1	**463-7571**	1	HOSE AS	
I	16	1	**463-7584**	1	HOSE AS	
I	17	1	**466-3754**	1	HOSE AS	
I	18	1	**466-3756**	1	HOSE AS	
I	19	1	**466-3757**	1	HOSE AS	
I	20	1	**466-3758**	1	HOSE AS	
I	21	1	**471-6100**	1	HOSE AS	
I	22	1	**475-3869**	1	HOSE AS	
I	23	1	**475-4129**	1	HOSE AS	
	24	1	**091-9035**	1	SPACER (11X25X20-MM THK)	
	25	1	**122-0450**	4	GROMMET	
	26	1	*148-8318*	1	CONNECTOR AS	
		1	**3K-0360**	1	SEAL-O-RING	
		1	**6V-8397**	1	SEAL-O-RING	
		1	**6V-8634**	1	CONNECTOR	
	27	1	*148-8336*	1	CONNECTOR AS	
		1	**3J-1907**	1	SEAL-O-RING	
		1	**6V-8397**	1	SEAL-O-RING	
		1	**6V-8636**	1	CONNECTOR	
	28	1	*148-8340*	1	CONNECTOR AS	
		1	**3K-0360**	1	SEAL-O-RING	
		1	**6V-8398**	1	SEAL-O-RING	
		1	**6V-8639**	1	CONNECTOR	
	29	1	*148-8370*	2	ELBOW AS	
					(EACH INCLUDES)	
		1	**6V-8398**	1	SEAL-O-RING	
		1	**6V-9851**	1	ELBOW	
	30	1	*148-8371*	2	ELBOW AS	
					(EACH INCLUDES)	
		1	**6V-8397**	1	SEAL-O-RING	
		1	**8C-8988**	1	ELBOW	
	31	1	*148-8374*	1	ELBOW AS	
		1	**3K-0360**	1	SEAL-O-RING	
		1	**6V-8397**	1	SEAL-O-RING	
		1	**6V-8723**	1	ELBOW	
	32	1	*148-8417*	1	REDUCER AS	
		1	**6V-8397**	1	SEAL-O-RING	
		1	**6V-8941**	1	REDUCER	
	33	1	*148-8427*	1	TEE AS	

385-0199 **LINES GP-AUTOMATIC LUBRICATION (*contd.*)** **i06127170**

NOTE	REF NO	GRAPHIC REF	PART NUMBER	QTY	PART NAME 1 2 3 4 5 6 (PRODUCT LEVEL)	SEE PAGE
		1	**6V-8398**	3	SEAL-O-RING	
		1	**8T-6895**	1	TEE-UNION	
	34	1	*148-8444*	3	TEE AS-SWIVEL	
					(EACH INCLUDES)	
		1	**6V-9837**	1	TEE-SWIVEL	
		1	**6V-8398**	2	SEAL-O-RING	
	35	1	*150-3061*	1	TEE AS	
		1	**3K-0360**	1	SEAL-O-RING	
		1	**6V-8397**	2	SEAL-O-RING	
		1	**098-5687**	1	TEE	
	36	1	*150-4037*	1	TEE AS	
		1	**6V-8398**	2	SEAL-O-RING	
		1	**6V-9844**	1	TEE-SWIVEL	
	37	1	*164-7908*	1	ELBOW AS	
		1	**3J-7354**	1	SEAL-O-RING	
		1	**6V-8397**	1	SEAL-O-RING	
		1	**8T-7546**	1	ELBOW	
	38	1	**206-5017**	2	SPACER (11X20X5-MM THK)	
	39	1	**211-5237**	1	CONNECTOR	
M	40	1	**227-6715**	1	STUD (M10X1.5X30-MM)	
	41	1	**344-1951**	2	CLIP (TAB)	
M	42	1	**344-5675**	4	NUT (M10X1.5-THD)	
	43	1	**5G-3676**	3	GROMMET	
	44	1	**5P-7462**	1	CLIP (SLOT)	
	45	1	**5P-7463**	1	CLIP (TAB)	
	46	1	**5P-9085**	9	CLIP	
	47	1	**6D-4246**	1	CLIP	
	48	1	**6V-0683**	1	GROMMET (19-MM ID)	
	49	1	**6V-8398**	5	SEAL-O-RING	
	50	1	**6V-9169**	1	NUT (13/16-16-THD)	
	51	1	**7S-3916**	1	CLIP (TAB)	
	52	1	**7S-3919**	1	CLIP (SLOT)	
	53	1	**7V-6571**	1	GROMMET	
	54	1	**8L-5008**	1	ELBOW-PIPE	
	55	1	**8M-2770**	2	CLIP	
	56	1	**8M-2773**	4	CLIP	
	57	1	**8T-1889**	3	CLIP (SLOT)	
	58	1	**8T-1890**	3	CLIP (TAB)	
	59	1	**8T-1897**	4	CLIP (SLOT)	
	60	1	**8T-1898**	4	CLIP (TAB)	
	61	1	**8T-4121**	24	WASHER-HARD (11X21X2.5-MM THK)	
M	62	1	**8T-4136**	2	BOLT (M10X1.5X25-MM)	
M	63	1	**8T-4137**	13	BOLT (M10X1.5X20-MM)	
M	64	1	**8T-4185**	2	BOLT (M10X1.5X50-MM)	
M	65	1	**8T-4186**	1	BOLT (M10X1.5X40-MM)	
M	66	1	**8T-4195**	1	BOLT (M10X1.5X30-MM)	
	67	1	**9X-6580**	1	NUT (1-3/16-12-THD)	
	68	1	**9X-8582**	2	CLIP	

I - REFER TO HYDRAULIC INFORMATION SYSTEM
M - METRIC PART
Y - SEPARATE ILLUSTRATION

385-0199 **LINES GP-AUTOMATIC LUBRICATION (*contd.*)** **i06127170**

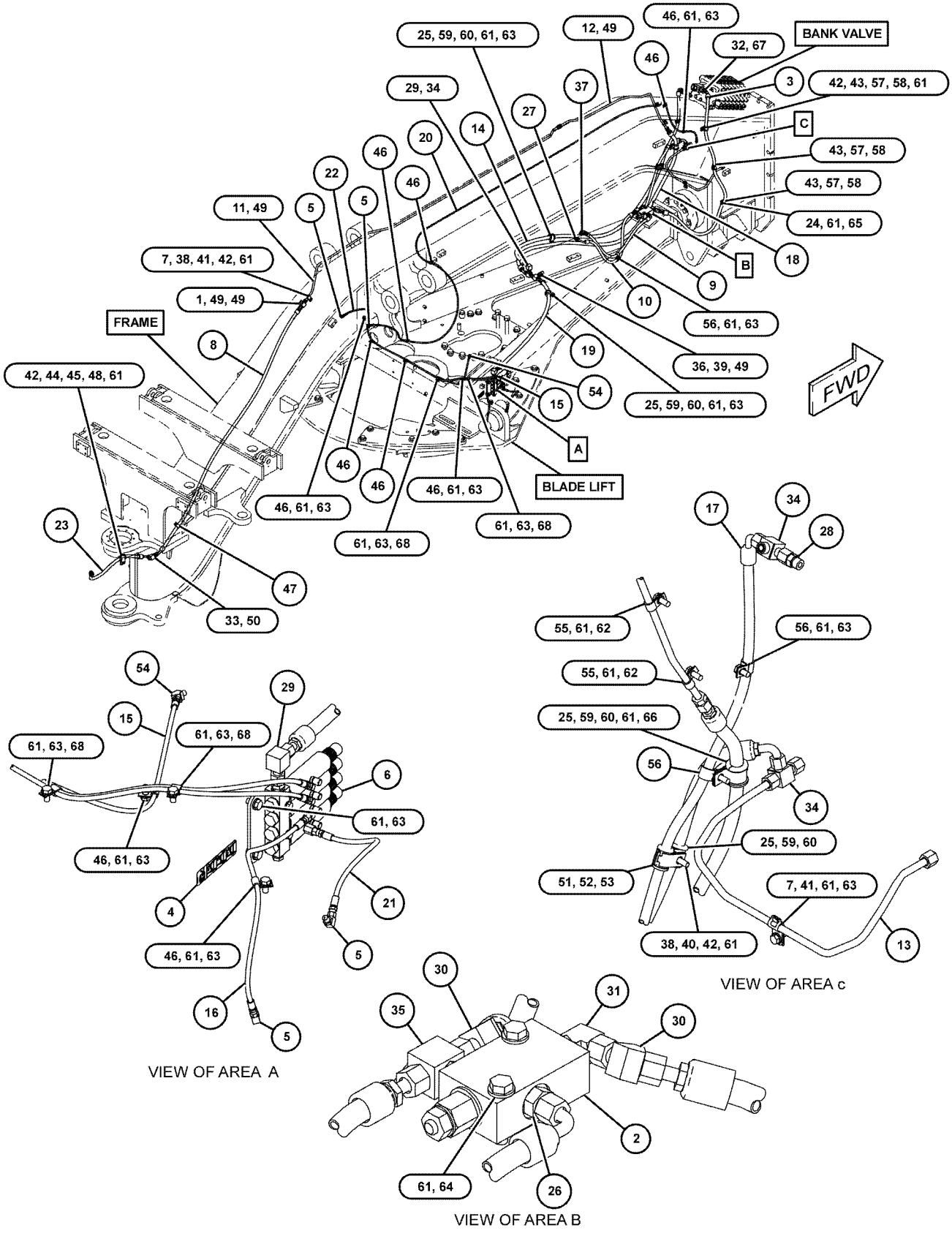

GRAPHIC #1 **<END>** g03820599

385-0200 LINES GP-AUTOMATIC LUBRICATION–REAR

S/N: E9Y1-UP
PART OF 385-7552 LUBRICATION AR-AUTOMATIC
AN ATTACHMENT

SMCS-7510, 7540

i06127171

NOTE	REF NO	GRAPHIC REF	PART NUMBER	QTY	PART NAME 1 2 3 4 5 6 (PRODUCT LEVEL)	SEE PAGE
	1	1	**5M-6214**	1	PLUG-PIPE	
	2	1	*105-7167*	1	FITTING GP	
		1	**6V-8397**	2	SEAL-O-RING	
		1	**8T-5890**	1	UNION	
	3	1	**291-6271**	1	FILM-IDENTIFICATION (LUBRICATION, HITCH PIN)	
Y	4	1	*392-6547*	1	VALVE GP-LUBE DISTRIBUTION (2-INJECTOR)	504
I	5	1	**420-6821**	1	HOSE AS	
I	6	1	**437-1151**	1	HOSE AS	
	7	1	**456-7165**	1	PLATE AS	
I	8	1	**461-4277**	1	HOSE AS	
	9	1	**002-0639**	2	ADAPTER-PIPE	
	10	1	*148-8371*	1	ELBOW AS	
		1	**6V-8397**	1	SEAL-O-RING	
		1	**8C-8988**	1	ELBOW	
	11	1	**5G-3676**	2	GROMMET	
	12	1	**5P-9085**	1	CLIP	
	13	1	**6V-9168**	1	NUT (11/16-16-THD)	
	14	1	**6V-9829**	1	CAP AS	
	15	1	**7X-0608**	1	WASHER-HARD (10.2X16X2-MM THK)	
	16	1	**8T-1889**	2	CLIP (SLOT)	
	17	1	**8T-1890**	2	CLIP (TAB)	
	18	1	**8T-4121**	3	WASHER-HARD (11X21X2.5-MM THK)	
M	19	1	**8T-4137**	3	BOLT (M10X1.5X20-MM)	
M	20	1	**8T-6912**	1	BOLT (M8X1.25X50-MM)	

I - REFER TO HYDRAULIC INFORMATION SYSTEM
M - METRIC PART
Y - SEPARATE ILLUSTRATION

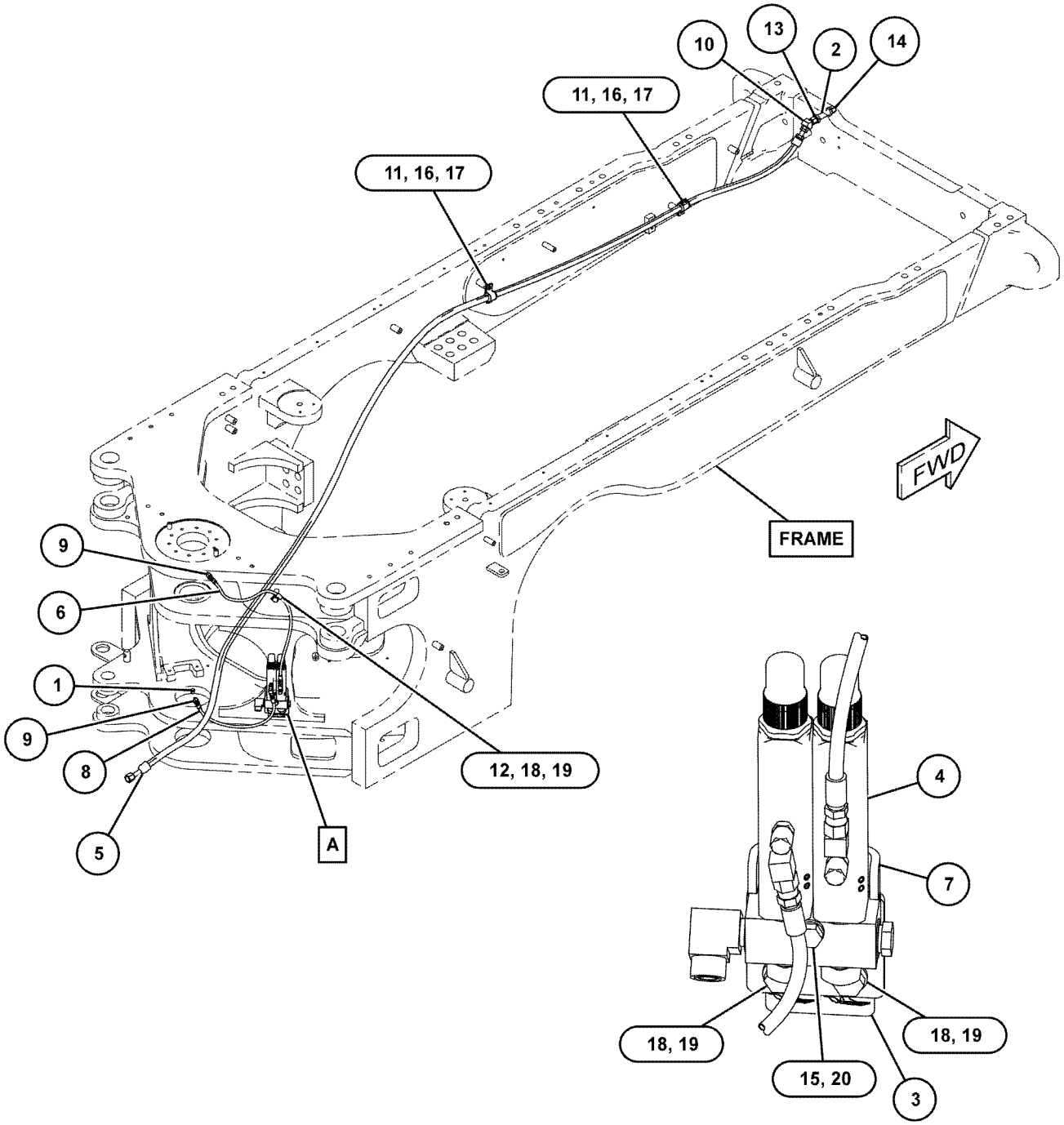

VIEW OF AREA A

GRAPHIC #1 **<END>** g03820601

366-6152 LINES GP-LUBRICATION

S/N: E9Y1-UP

CANNOT BE USED WITH 385-7552—PAGE: 474

AN ATTACHMENT

SMCS-7510 **i06143870**

NOTE	REF NO	GRAPHIC REF	PART NUMBER	QTY	PART NAME 1 2 3 4 5 6 (PRODUCT LEVEL)	SEE PAGE
	1	1	**3B-8485**	1	ELBOW	
	2	1	**3B-8488**	2	FITTING-GREASE (1/8-27 PTF)	
I	3	1	**436-5766**	1	HOSE AS	
	4	1	**454-9703**	1	FILM-IDENTIFICATION (GREASE POINT)	
I	5	1	**471-6103**	1	HOSE AS	
I	6	1	**471-7722**	1	HOSE AS	
	7	1	**002-0639**	2	ADAPTER-PIPE	
	8	1	*148-8340*	1	CONNECTOR AS	
		1	**3K-0360**	1	SEAL-O-RING	
		1	**6V-8398**	1	SEAL-O-RING	
		1	**6V-8639**	1	CONNECTOR	
	9	1	*148-8370*	1	ELBOW AS	
		1	**6V-8398**	1	SEAL-O-RING	
		1	**6V-9851**	1	ELBOW	
	10	1	**3B-6552**	2	ELBOW-PIPE	
	11	1	**3B-8822**	1	ELBOW	
	12	1	**5P-9085**	5	CLIP	
	13	1	**8L-5008**	3	ELBOW-PIPE	
	14	1	**8T-4121**	5	WASHER-HARD (11X21X2.5-MM THK)	
M	15	1	**8T-4137**	5	BOLT (M10X1.5X20-MM)	

I - REFER TO HYDRAULIC INFORMATION SYSTEM
M - METRIC PART

366-6152 **LINES GP-LUBRICATION (*contd.*)** **i06143870**

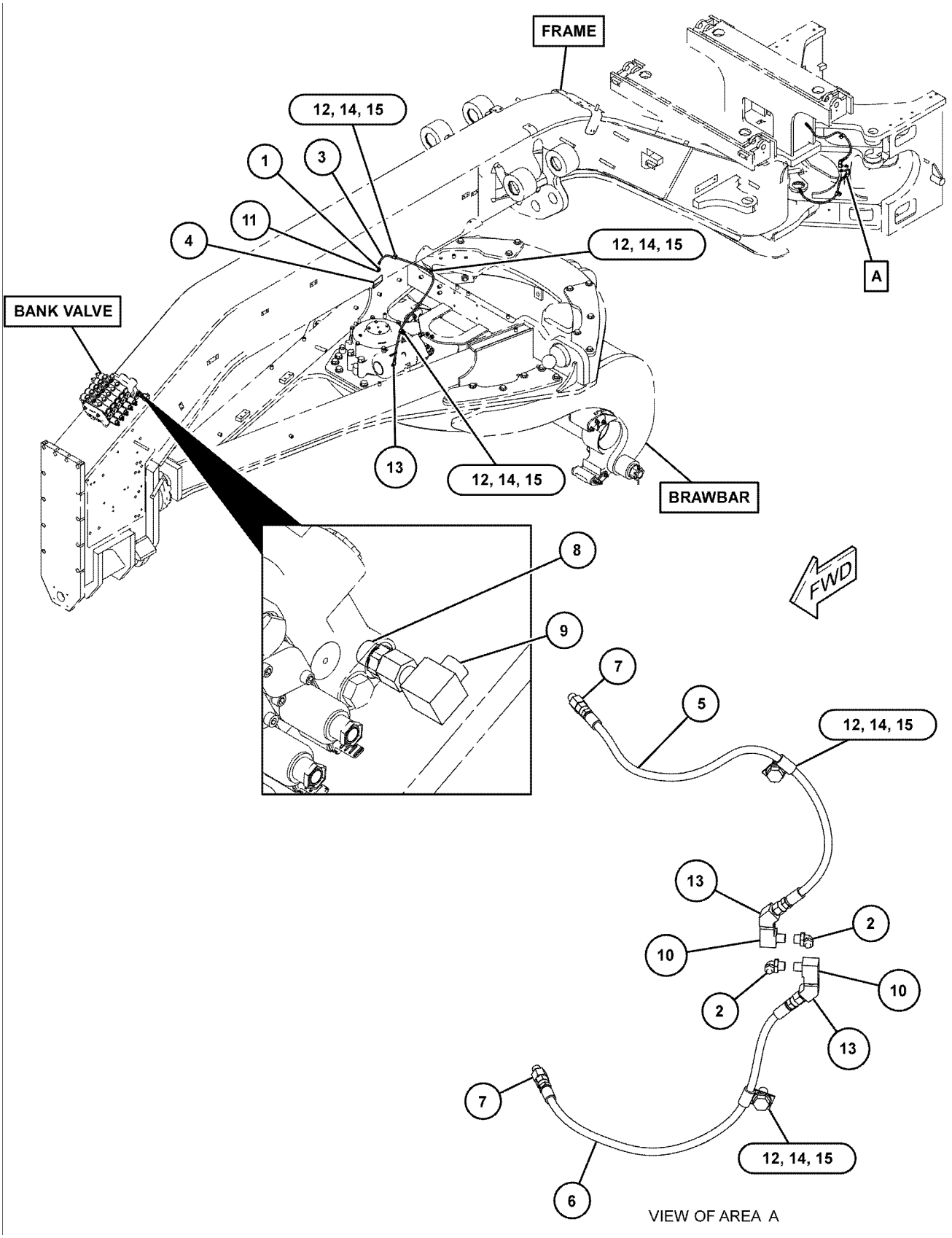

GRAPHIC #1 **<END>** g03828024

361-4430 LINK GP-STEERING

S/N: E9Y1-UP

PART OF 474-6914 AXLE GP-FRONT

SMCS-4305 **i05079231**

NOTE	REF NO	GRAPHIC REF	PART NUMBER	QTY	PART NAME 1 2 3 4 5 6 (PRODUCT LEVEL)	SEE PAGE
	1	1	**361-4431**	1	ROD	
	2	1	**274-6809**	2	CLAMP	
	3	1	**274-6810**	1	TIE ROD GP (LH)	
		1	**1D-0906**	1	NUT-SLOTTED	
		1	**199-7819**		SEAL-BOOT	
	4	1	**274-6811**	1	TIE ROD GP (RH)	
		1	**1D-0906**	1	NUT-SLOTTED	
		1	**199-7819**		SEAL-BOOT	
M	5	1	**8T-0281**	2	BOLT (M16X2X80-MM)	
M	6	1	**8T-4778**	2	LOCKNUT (M16X2-THD)	

M - METRIC PART

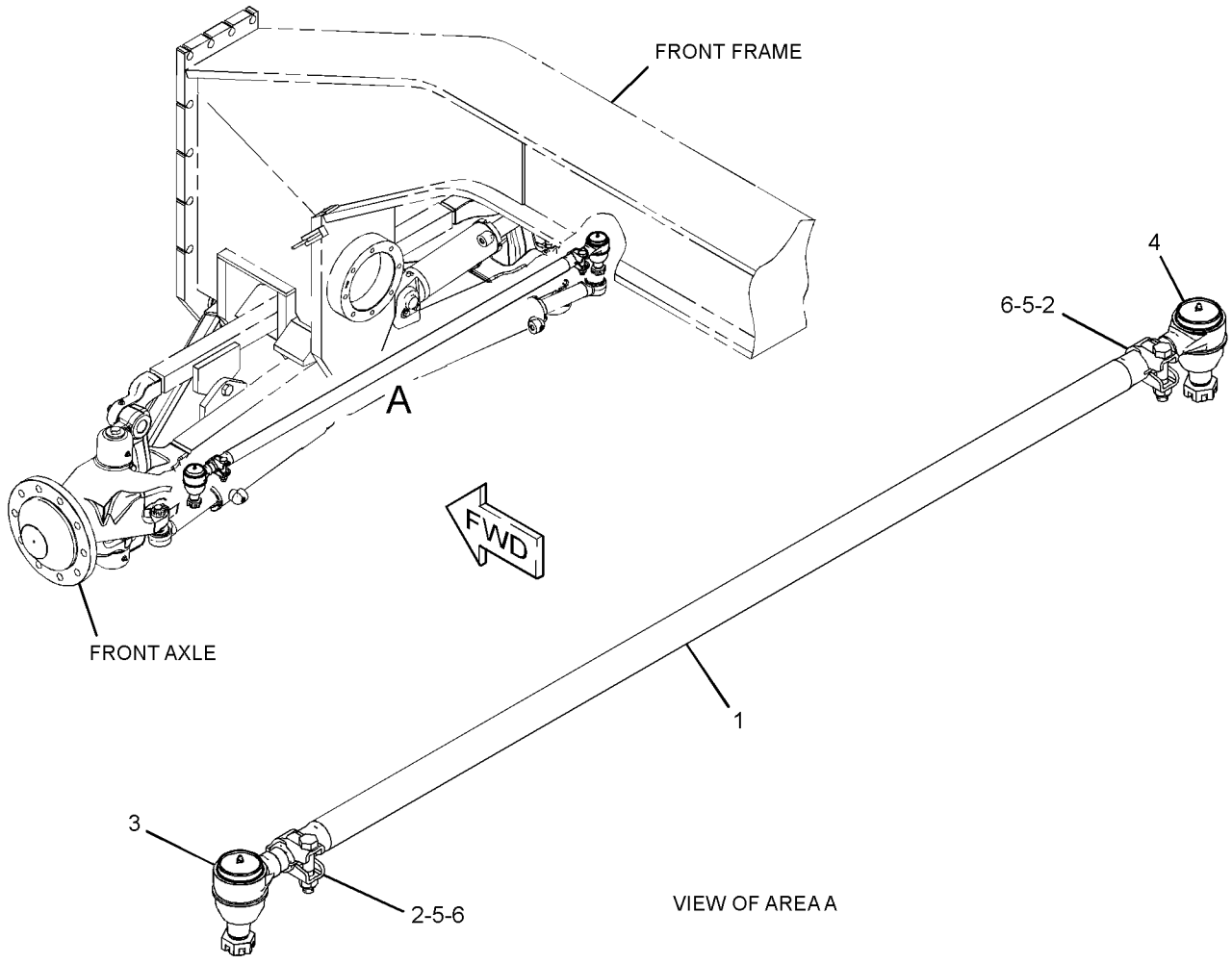

GRAPHIC #1 **<END>** g01334076

385-7552 LUBRICATION AR-AUTOMATIC

S/N: E9Y1-UP

FOR USE WITH 391-8190—PAGE: 475, 372-7830—PAGE: 846, 453-4370—PAGE: 846

CANNOT BE USED WITH 366-6152—PAGE: 471

AN ATTACHMENT

SMCS-7540 **i06127177**

NOTE	PART NUMBER	QTY	PART NAME 1 2 3 4 5 6 (PRODUCT LEVEL)	SEE PAGE
Y	*376-7663*	1	LINES GP-AUTOMATIC LUBRICATION (FRONT AXLE)	463
Y	*385-0199*	1	LINES GP-AUTOMATIC LUBRICATION (CIRCLE, DRAWBAR, MOLDBOARD)	466
Y	*385-0200*	1	LINES GP-AUTOMATIC LUBRICATION (REAR)	469
Y	*385-0197*	1	TANK & PUMP GP-LUBRICATION	495
Y	*370-8520*	1	WIRING GP-LUBRICATION	303

Y - SEPARATE ILLUSTRATION

<END>

391-8190 LUBRICATION AR-AUTOMATIC—RIPPER

S/N: E9Y1-UP
FOR USE WITH 385-7552—PAGE: 474
PART OF 453-4370 RIPPER AR
AN ATTACHMENT

SMCS-7540 **i06190827**

NOTE	REF NO	GRAPHIC REF	PART NUMBER	QTY	PART NAME 1 2 3 4 5 6 (PRODUCT LEVEL)	SEE PAGE
Y	1	1	**269-5348**	1	VALVE GP-LUBE DISTRIBUTION (3-INJECTOR)	497
I	2	1	**288-7952**	1	HOSE AS	
	3	1	**430-3498**	1	FILM-IDENTIFICATION (LUBRICATION POINTS, CYLINDER)	
I	4	1	**461-4277**	1	HOSE AS	
I	5	1	**461-4288**	1	HOSE AS	
I	6	1	**471-6101**	1	HOSE AS	
	7	1	**476-3198**	1	PLATE AS	
M		1	**8T-3612**	2	NUT-WELD (M8X1.25-THD)	
	8	1	*155-3502*	1	ADAPTER AS	
		1	**3E-7403**	1	ADAPTER	
		1	**6V-8398**	1	SEAL-O-RING	
	9	1	*171-6731*	1	CONNECTOR AS	
		1	**6V-8398**	1	SEAL-O-RING	
		1	**8C-6871**	1	CONNECTOR	
	10	1	**3J-5390**	1	PLUG	
	11	1	**4M-8973**	5	ELBOW	
	12	1	**5P-9085**	2	CLIP	
	13	1	**6K-6967**	1	ADAPTER-PIPE	
	14	1	**8T-4121**	2	WASHER-HARD (11X21X2.5-MM THK)	
M	15	1	**8T-4137**	2	BOLT (M10X1.5X20-MM)	
	16	1	**8T-4224**	2	WASHER-HARD (8.8X16X2-MM THK)	
M	17	1	**8T-6912**	2	BOLT (M8X1.25X50-MM)	
	18	1	**198-4777**	2	WASHER-HARD (11X25X10-MM THK)	
M	19	1	**8T-4196**	2	BOLT (M10X1.5X35-MM)	

I - REFER TO HYDRAULIC INFORMATION SYSTEM
M - METRIC PART
Y - SEPARATE ILLUSTRATION

391-8190 **LUBRICATION AR-AUTOMATIC (*contd.*)** **i06190827**

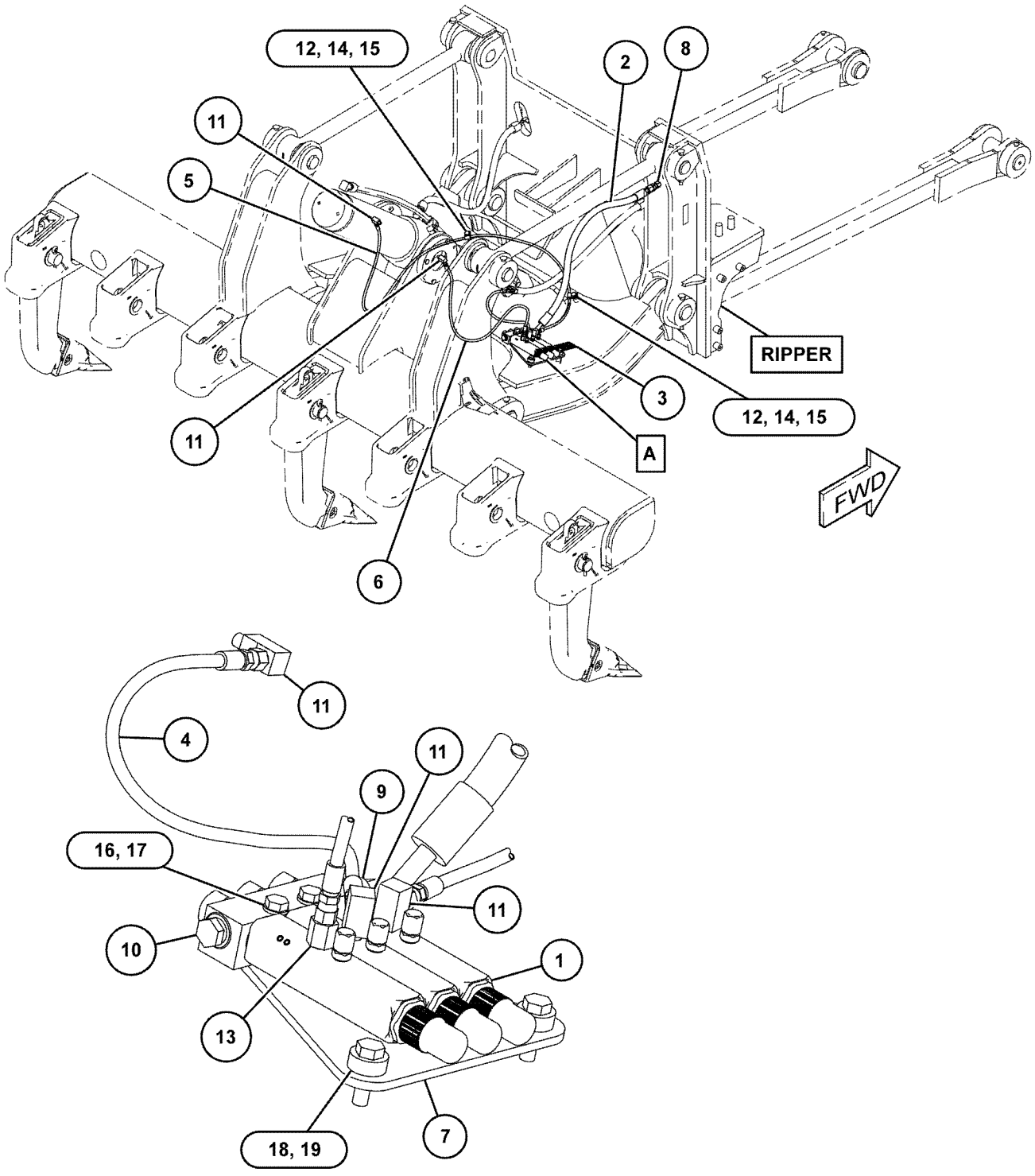

VIEW OF AREA A

GRAPHIC #1 **<END>** g03843706

386-6709 MOUNTING GP-AXLE–FRONT

S/N: E9Y1-UP

PART OF 474-6913 AXLE AR-FRONT

SMCS-3268, 3278

i06139522

NOTE	REF NO	GRAPHIC REF	PART NUMBER	QTY	PART NAME 1 2 3 4 5 6 (PRODUCT LEVEL)	SEE PAGE
	1	1	**2G-5668**	2	WASHER (2.781X5X0.188-IN THK)	
	2	1	**2G-5669**	2	WASHER (71X127X1.5)	
	3	1	**365-8210**	1	PIN AS	
	4	1	**365-8211**	1	PIN AS	
	5	1	**219-5757**	2	BOSS	
	6	1	**287-5718**	2	WASHER-HARD (22X60X6-MM THK)	
	7	1	**3B-8489**	2	FITTING-GREASE (1/8-27 PTF)	
	8	1	**8T-4123**	2	WASHER (3.62X5.75X0.375-MM THK)	
M	9	1	**8T-6430**	2	BOLT (M20X2.5X50-MM)	

M - METRIC PART

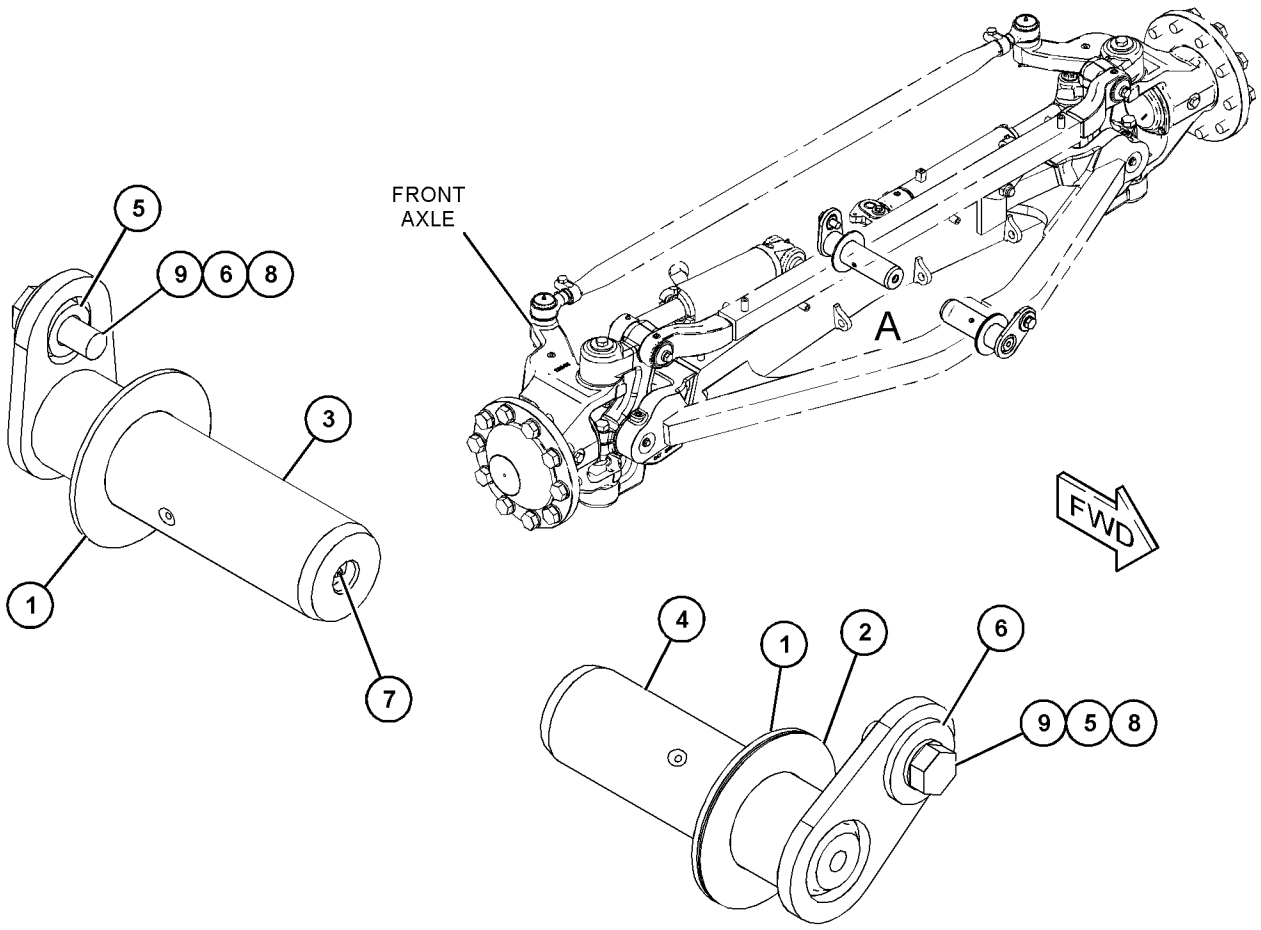

GRAPHIC #1

<END>

g03825421

386-6716 MOUNTING GP-AXLE

S/N: E9Y1-UP

PART OF 371-6317 POWER TRAIN AR

SMCS-3268, 3278 **i06139733**

NOTE	REF NO	GRAPHIC REF	PART NUMBER	QTY	PART NAME 1 2 3 4 5 6 (PRODUCT LEVEL)	SEE PAGE
M	1	1	**112-3931**	28	BOLT (M24X3X120-MM)	
	2	1	**267-3507**	28	WASHER-HARD (26X47X12-MM THK)	

M - METRIC PART

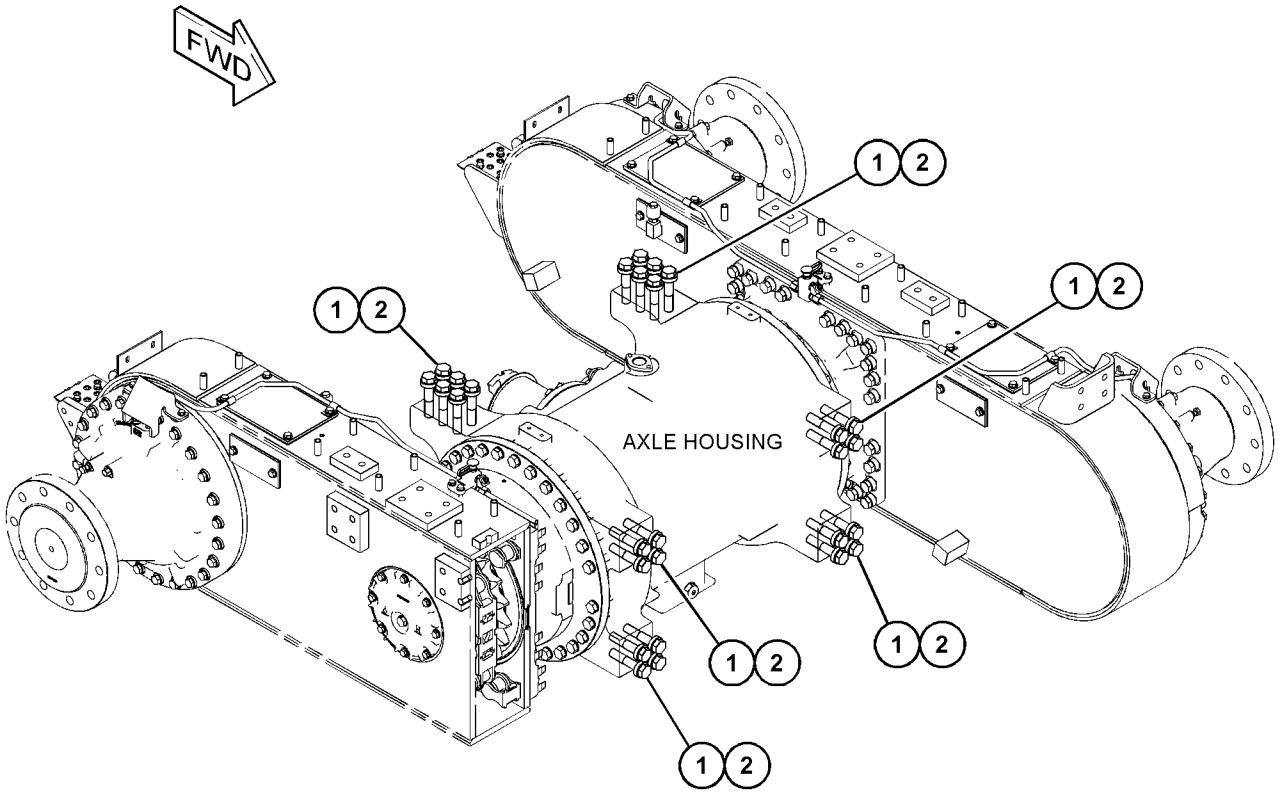

GRAPHIC #1 **<END>** g03823883

352-5797 MOUNTING GP-VALVE

S/N: E9Y1-UP

PART OF 371-3796 HYDRAULIC AR

SMCS-5051 **i06144242**

NOTE	REF NO	GRAPHIC REF	PART NUMBER	QTY	PART NAME 1 2 3 4 5 6 (PRODUCT LEVEL)	SEE PAGE
	1	1	**364-1985**	1	PLATE AS	
	2	1	**381-8503**	1	PLATE AS	
	3	1	**8T-4121**	6	WASHER-HARD (11X21X2.5-MM THK)	
M	4	1	**8T-4137**	6	BOLT (M10X1.5X20-MM)	
M	5	1	**8T-4186**	2	BOLT (M10X1.5X40-MM)	
	6	1	**8T-7934**	2	WASHER-HARD (11X21X5-MM THK)	

M - METRIC PART

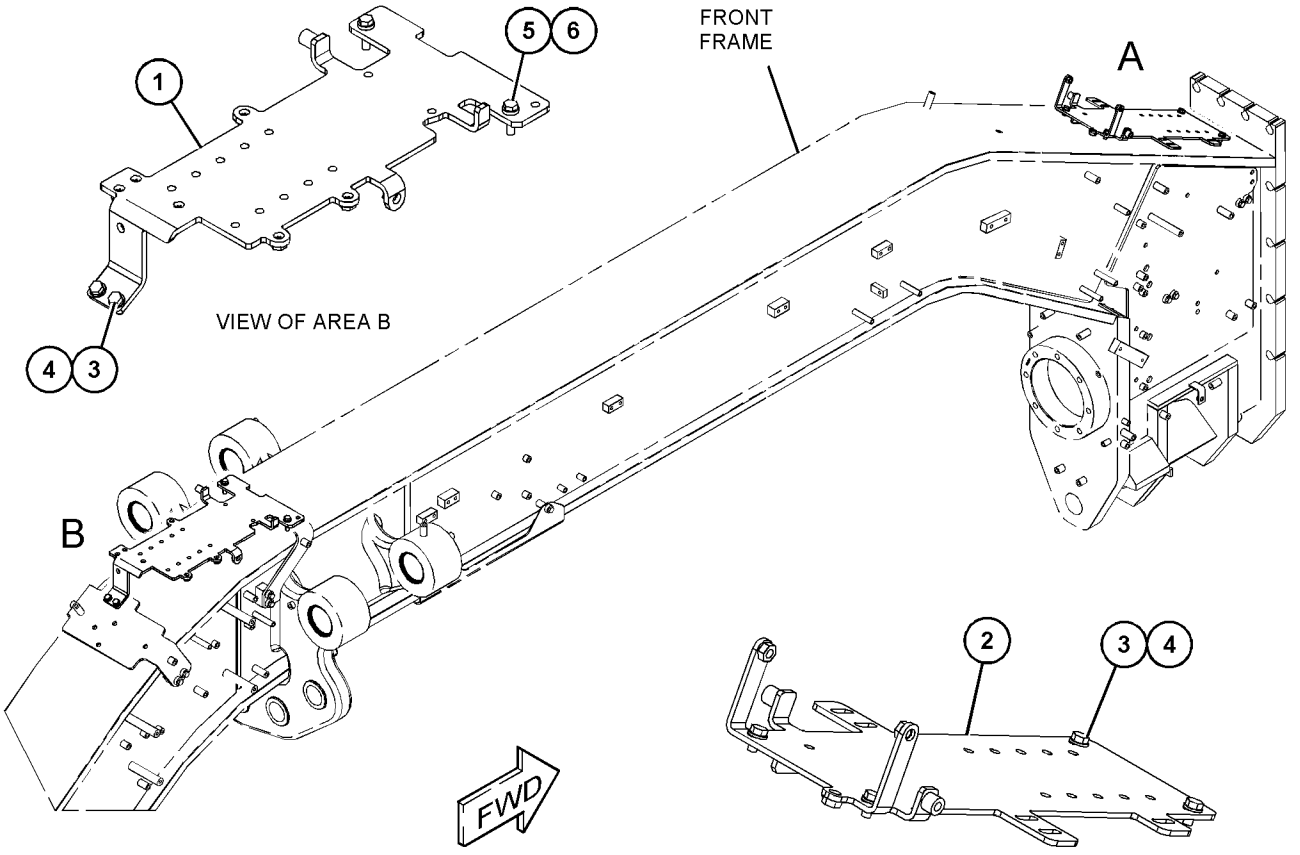

GRAPHIC #1 **<END>** g03830921

438-0240 PANEL GP-SOUND SUPPRESSION

S/N: E9Y1-UP

PART OF 375-3465 ENCLOSURE GP-ENGINE

SMCS-7076, 7261

i06144040

NOTE	REF NO	GRAPHIC REF	PART NUMBER	QTY	PART NAME 1 2 3 4 5 6 (PRODUCT LEVEL)	SEE PAGE
	1	1	**194-9487**	2	BUMPER AS	
	2	1	**438-0238**	1	PANEL AS	
M		1	**8T-3612**	2	NUT-WELD (M8X1.25-THD)	
		1	**294-5046**	2	NUT-WELD	
	3	1	**438-4675**	2	INSULATION	
	4	1	**457-1109**	1	PANEL AS	
	5	1	**6P-6256**	2	RETAINER-SPRING	
M	6	1	**8T-4195**	2	BOLT (M10X1.5X30-MM)	
	7	1	**8T-4222**	2	WASHER-PLATED (11X32X2.5-MM THK)	

M - METRIC PART

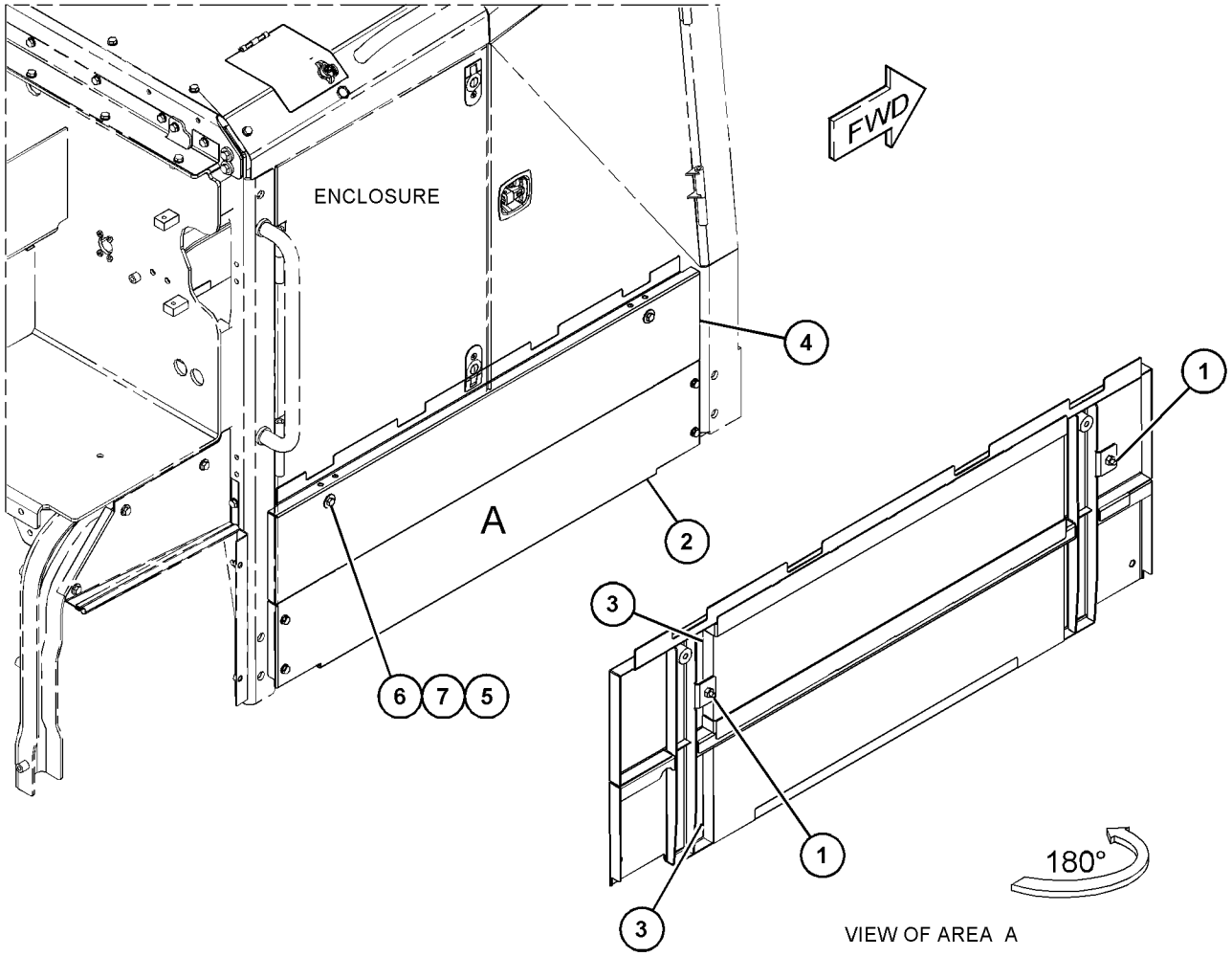

VIEW OF AREA A

GRAPHIC #1

<END>

g03834836

441-4488 PLATE GP-PUSH

S/N: E9Y1-UP

AN ATTACHMENT

SMCS-6077 **i06158555**

NOTE	REF NO	GRAPHIC REF	PART NUMBER	QTY	PART NAME 1 2 3 4 5 6 (PRODUCT LEVEL)	SEE PAGE
	1	1	**441-4479**	1	PLATE AS	
		1	**5J-7333**	2	HOOK	
M	2	1	**112-3928**	10	BOLT (M24X3X130-MM)	
	3	1	**267-3507**	20	WASHER-HARD (26X47X12-MM THK)	
M	4	1	**8T-4001**	10	NUT (M24X3-THD)	

M - METRIC PART

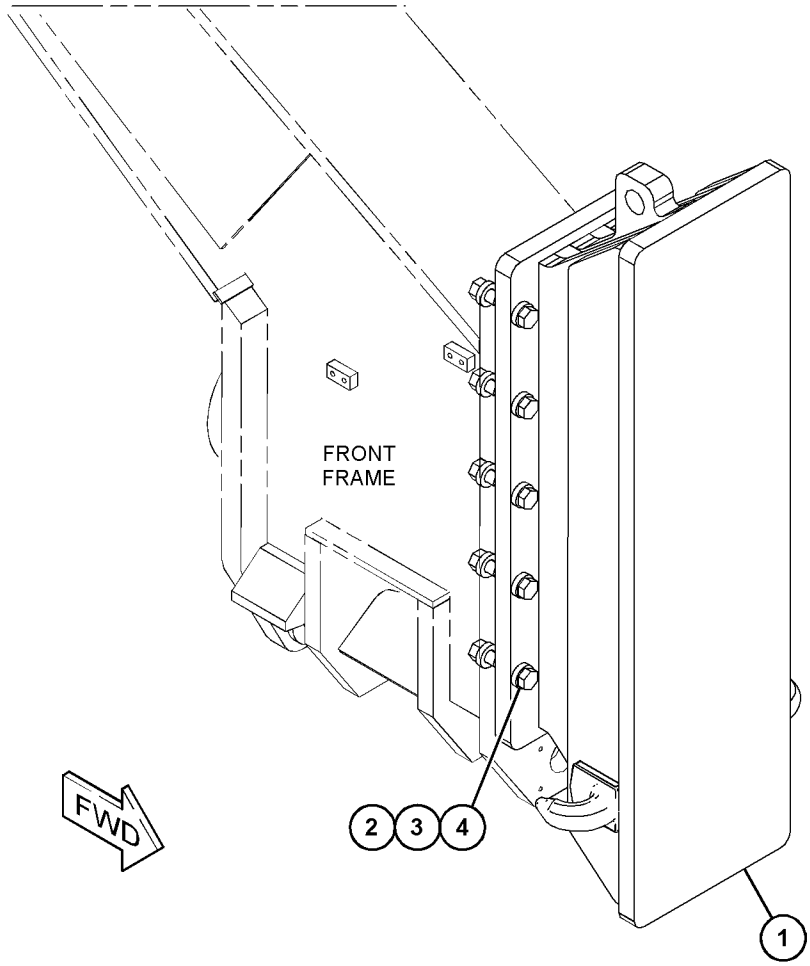

GRAPHIC #1 **<END>** g03835678

438-1094 PUMP GP-LUBRICATION

S/N: E9Y1-UP

PART OF 377-2072 TANK & PUMP GP-LUBRICATION

AN ATTACHMENT

SMCS-7516, 7540

i05367999

NOTE	REF NO	GRAPHIC REF	PART NUMBER	QTY	PART NAME 1 2 3 4 5 6 (PRODUCT LEVEL)	SEE PAGE
	1	1	**189-4383**	1	HOUSING-PUMP	
	2	1	**189-4387**	1	MANIFOLD	
	3	1	**195-8697**	1	VALVE AS-PRESSURE REDUCING	
	4	1	**195-8698**	1	VALVE AS-FLOW CONTROL	
	5	1	**275-0701**	1	MOTOR-HYDRAULIC	
	6	1	**333-9967**	1	GAUGE-OIL LEVEL (DIPSTICK)	
	7	1	**430-9684**	1	COVER AS	
	8	1	**430-9686**	1	COIL AS	
	9	1	**430-9687**	1	MOUNT AS	
	10	1	**432-2045**	2	ADAPTER	
	11	1	**432-2046**	1	FITTING-ORIFICE	
	12	1	**438-4662**	1	TUBE	
	13	1	**2M-9780**	4	SEAL-O-RING	
	14	1	**4P-7581**	1	CLIP	
	15	1	**5F-8807**	2	BOLT (1/2-13X1.25-IN)	
	16	1	**5M-6213**	2	PLUG-PIPE	
	17	1	**9B-0453**	2	LOCKWASHER	

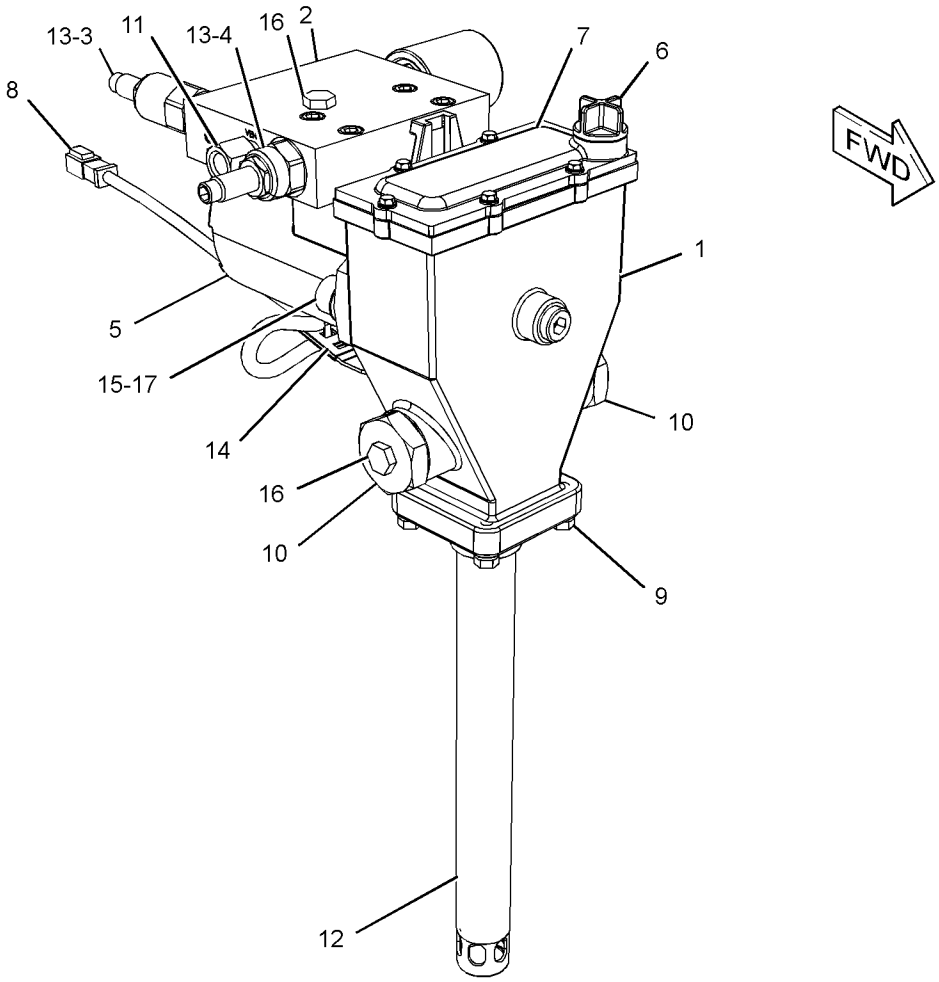

GRAPHIC #1

<END>

g03401023

386-1982 SHIELD GP-ENGINE COMPARTMENT

S/N: E9Y1-UP

AN ATTACHMENT

SMCS-7263 **i06140650**

NOTE	REF NO	GRAPHIC REF	PART NUMBER	QTY	PART NAME 1 2 3 4 5 6 (PRODUCT LEVEL)	SEE PAGE
	1	1	**420-3026**	1	BAFFLE AS	
		1	**6V-1635**	2	RIVET-POP	
		1	**9X-6165**	4	WASHER (6.5X22X2.5-MM THK)	
	2	1	**420-3028**	1	PLATE AS	
M		1	**8T-3612**	6	NUT-WELD (M8X1.25-THD)	
	3	1	**5P-4116**	8	WASHER-HARD (8.8X20.5X2-MM THK)	
M	4	1	**8T-4908**	8	BOLT (M8X1.25X25-MM)	

M - METRIC PART

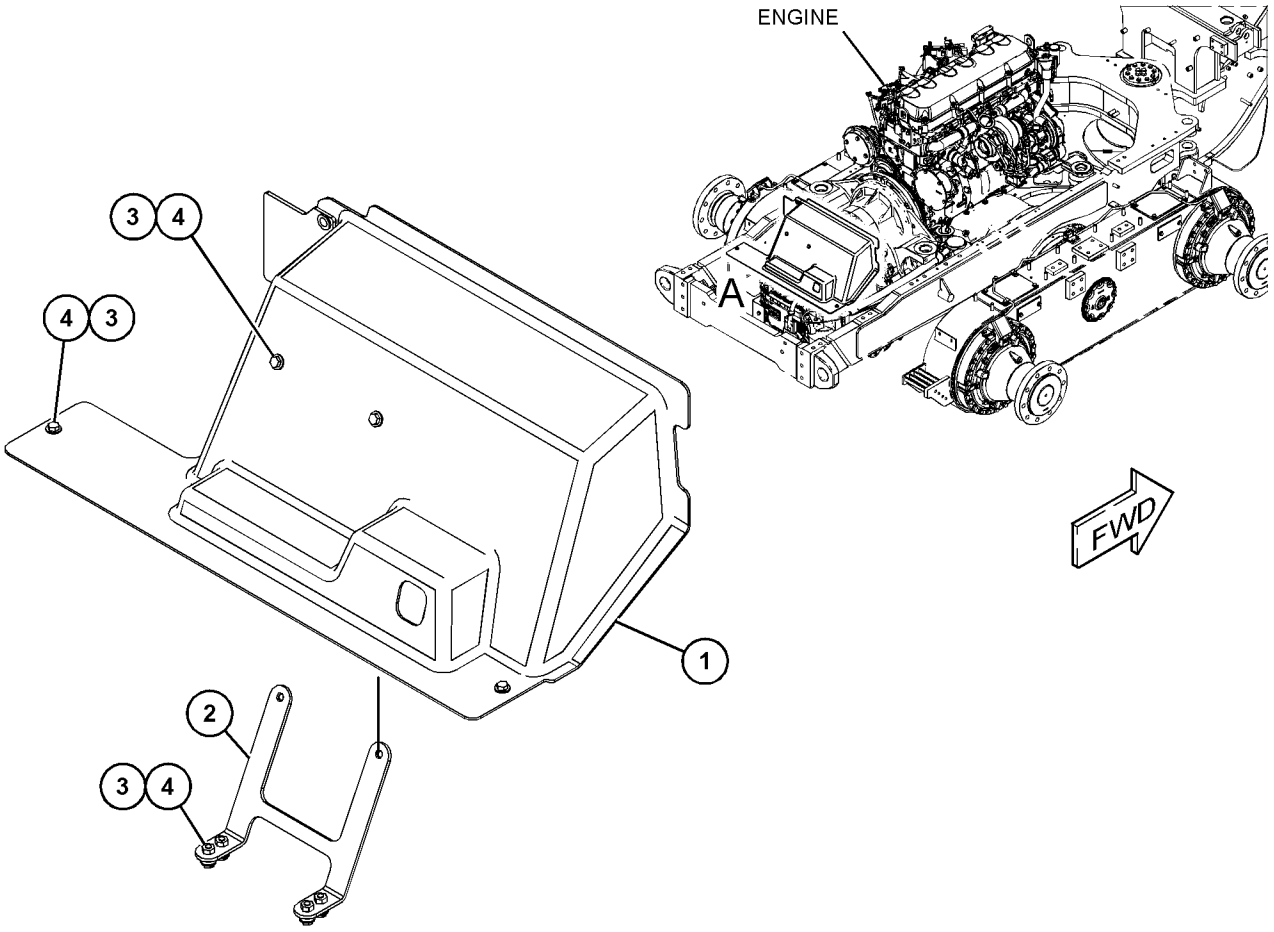

VIEW OF AREA A

GRAPHIC #1 **<END>** g03825422

314-4860 STEP GP–LH

S/N: E9Y1-UP
PART OF 352-3813 OPTION AR-LADDER
AN ATTACHMENT

SMCS-7254 **i05349628**

NOTE	REF NO	GRAPHIC REF	PART NUMBER	QTY	PART NAME 1 2 3 4 5 6 (PRODUCT LEVEL)	SEE PAGE
	1	1	**4V-9804**	8	PLATE	
	2	1	**141-4043**	2	SUPPORT-STEP (RUBBER)	
	3	1	**244-2729**	2	STEP	
	4	1	**311-7500**	1	PLATE AS	
		1	**244-2729**	2	STEP	
	5	1	**1D-4689**	4	BOLT (1/2-13X1.75-IN)	
	6	1	**1D-4691**	4	BOLT-CARRIAGE (1/2-13X2.5-IN)	
	7	1	**311-1956**	2	HANDHOLD	
	8	1	**1K-6872**	16	LOCKNUT (1/2-13-THD)	
	9	1	**5P-1076**	3	WASHER-HARD (13.5X30X4-MM THK)	
	10	1	**8T-4223**	16	WASHER-HARD (13.5X25.5X3-MM THK)	
M	11	1	**8T-4956**	3	BOLT (M12X1.75X35-MM)	
	12	1	**1B-2709**	8	BOLT-CARRIAGE (1/2-13X3.2-IN)	

M - METRIC PART

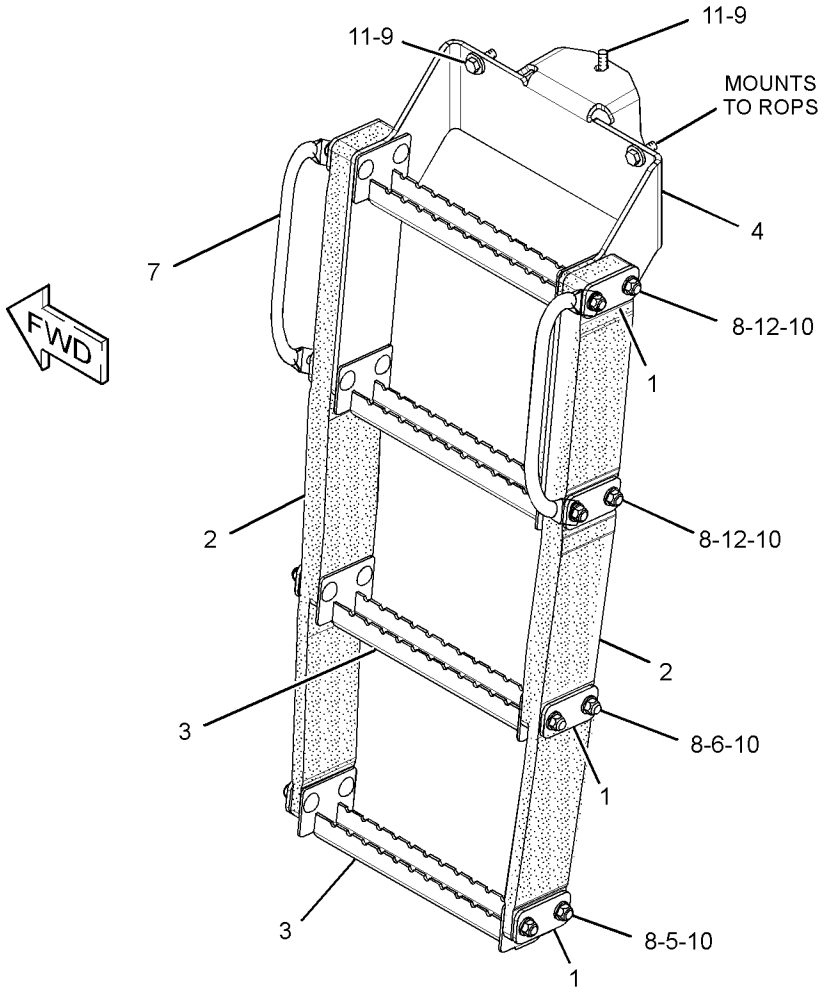

GRAPHIC #1 **<END>** g03389411

435-1952 STEP GP

S/N: E9Y1-UP

PART OF 375-3405 OPTION AR-LADDER, 375-3406 PLATFORM AR

AN ATTACHMENT

SMCS-7254 **i06140552**

NOTE	REF NO	GRAPHIC REF	PART NUMBER	QTY	PART NAME 1 2 3 4 5 6 (PRODUCT LEVEL)	SEE PAGE
	1	1	**435-1948**	2	HANDHOLD AS	
	2	1	**437-4535**	2	STEP AS	
	3	1	**198-4778**	8	WASHER-HARD (13.5X30X12-MM THK)	
	4	1	**8T-4121**	4	WASHER-HARD (11X21X2.5-MM THK)	
M	5	1	**8T-4183**	8	BOLT (M12X1.75X40-MM)	
M	6	1	**8T-4196**	4	BOLT (M10X1.5X35-MM)	

M - METRIC PART

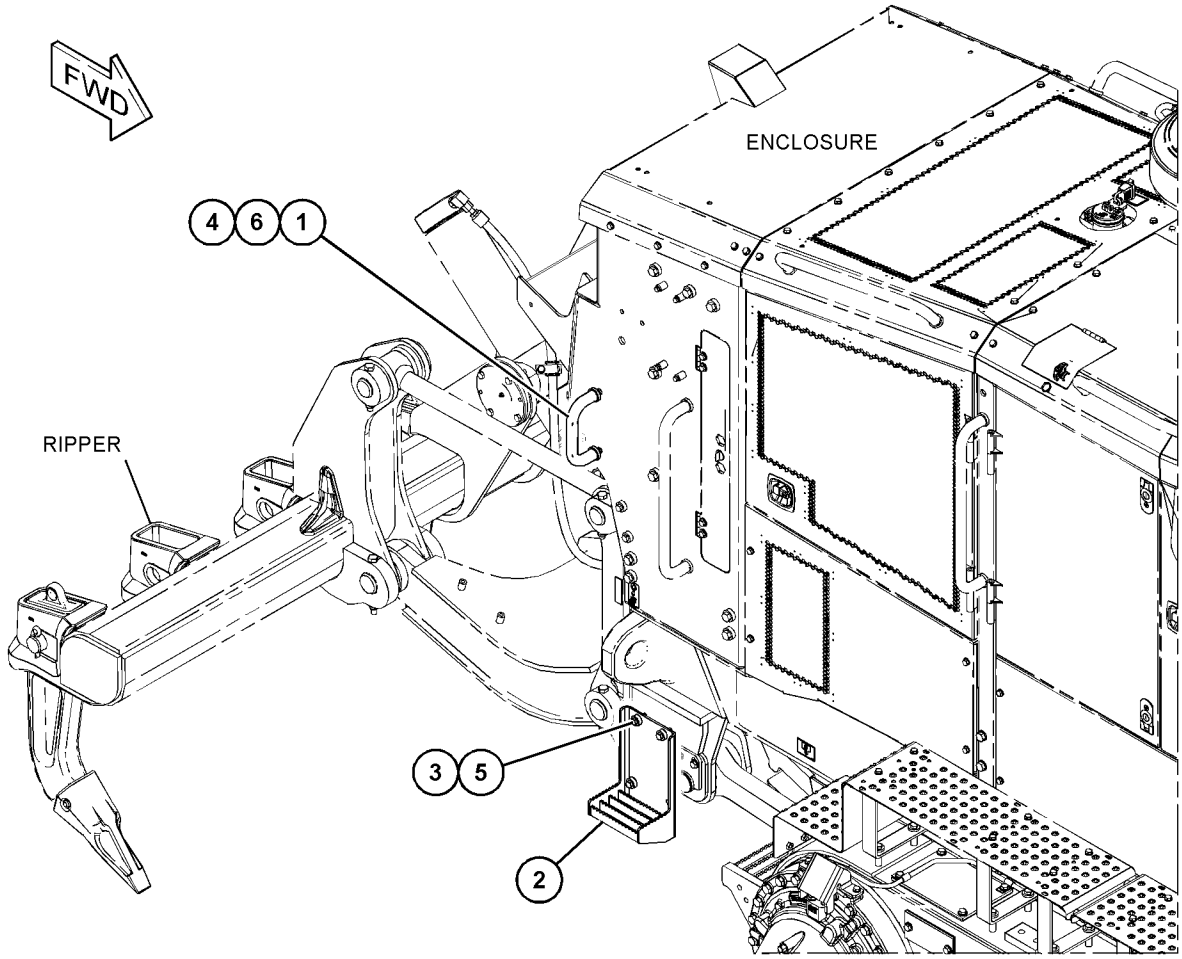

GRAPHIC #1 **<END>** g03833924

439-3888 STEP GP

S/N: E9Y1-UP
PART OF 478-9464, 479-7376 LADDER GP
AN ATTACHMENT

SMCS-7254 **i06158878**

NOTE	REF NO	GRAPHIC REF	PART NUMBER	QTY	PART NAME 1 2 3 4 5 6 (PRODUCT LEVEL)	SEE PAGE
	1	1	**141-3983**	8	SPACER (11X19X48-MM THK)	
	2	1	**356-6693**	4	PLATE	
	3	1	**360-5036**	2	BAFFLE	
	4	1	**374-7990**	2	STEP AS	
	5	1	**478-9020**	2	PLATE	
	6	1	**478-9021**	2	BELT	
	7	1	**478-9022**	2	PLATE	
M	8	1	**156-4974**	4	BOLT-CARRIAGE (M12X1.75X60-MM)	
M	9	1	**6V-7687**	4	LOCKNUT (M12X1.75-THD)	
M	10	1	**8T-0389**	8	LOCKNUT (M10X1.5-THD)	
	11	1	**8T-4121**	16	WASHER-HARD (11X21X2.5-MM THK)	
M	12	1	**8T-4172**	8	BOLT (M10X1.5X80-MM)	
	13	1	**8T-4223**	4	WASHER-HARD (13.5X25.5X3-MM THK)	

M - METRIC PART

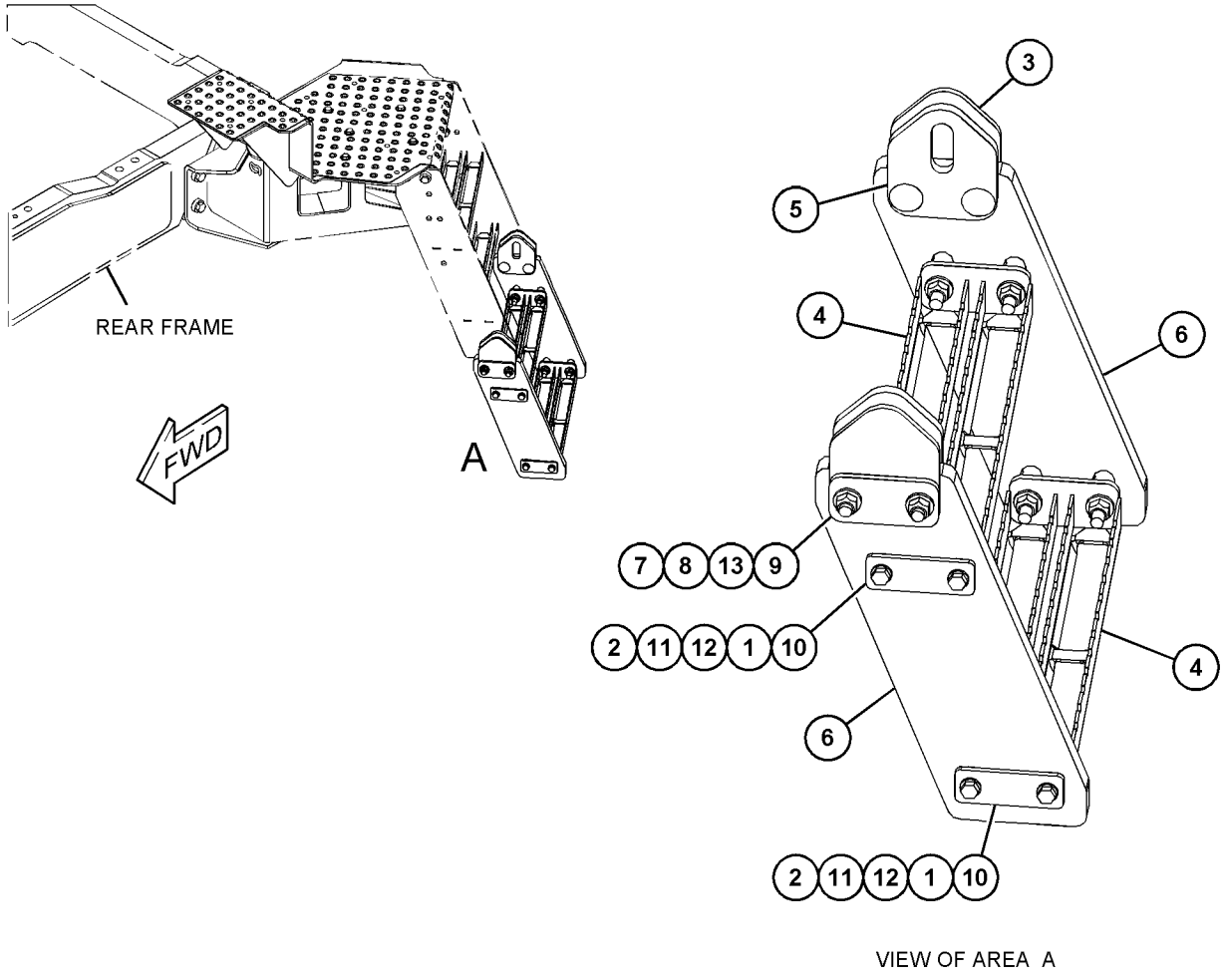

VIEW OF AREA A

GRAPHIC #1 **<END>** g03834884

480-0365 SUPPORT GP-PLATFORM

S/N: E9Y1-UP
PART OF 386-0538 PLATFORM GP-OPERATOR
AN ATTACHMENT

SMCS-7253 **i06143918**

NOTE	REF NO	GRAPHIC REF	PART NUMBER	QTY	PART NAME 1 2 3 4 5 6 (PRODUCT LEVEL)	SEE PAGE
	1	1	**386-0529**	1	PLATE AS	
	2	1	**479-7500**	1	PLATE AS	
	3	1	**198-4778**	3	WASHER-HARD (13.5X30X12-MM THK)	
	4	1	**311-8300**	3	BOSS	
M	5	1	**8T-5041**	3	BOLT (M12X1.75X120-MM)	

M - METRIC PART

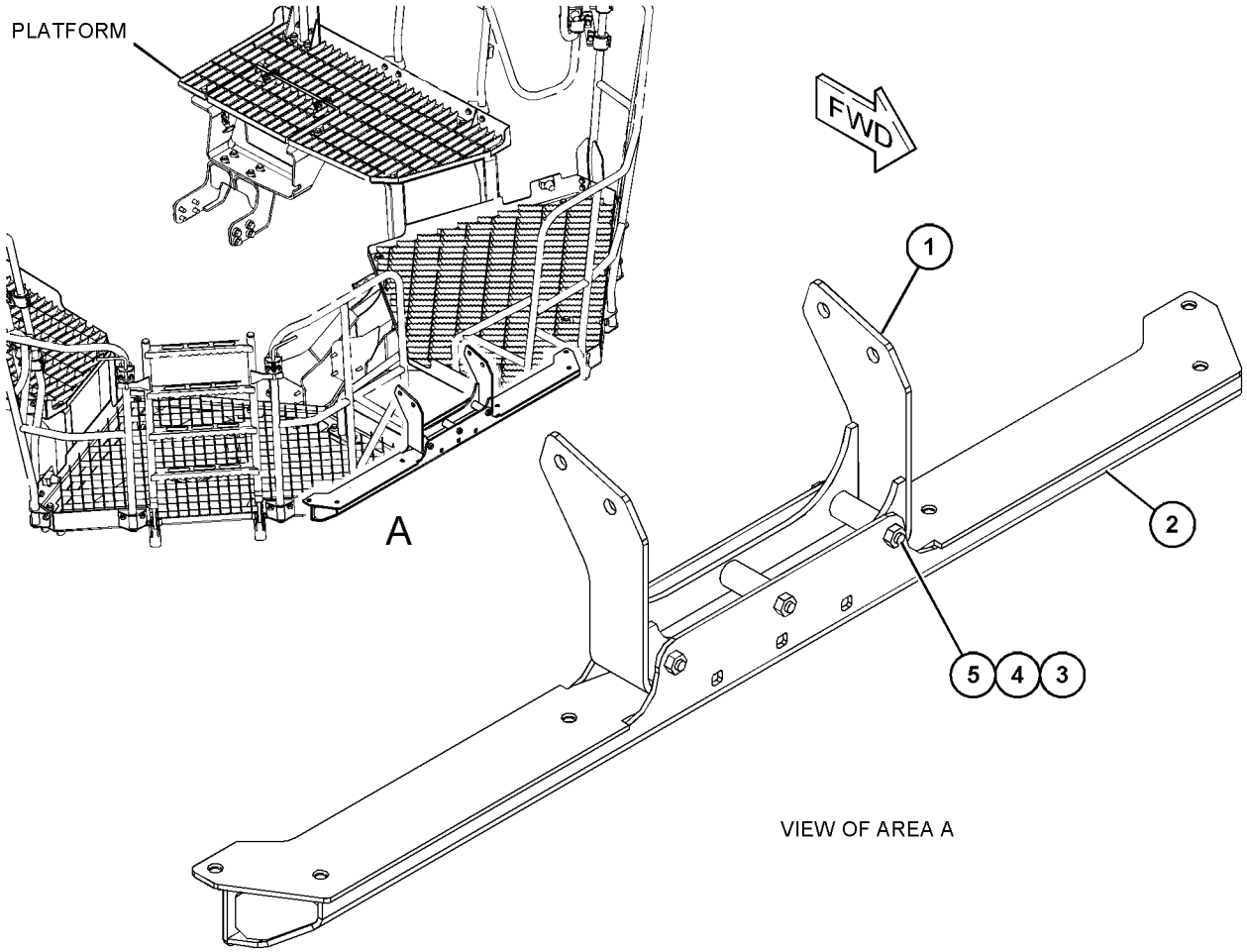

GRAPHIC #1 **<END>** g03829023

374-3120 SUPPORT GP-RADIATOR

S/N: E9Y1-UP

PART OF 388-1485 COOLING AR

SMCS-1353 **i06160788**

NOTE	REF NO	GRAPHIC REF	PART NUMBER	QTY	PART NAME 1 2 3 4 5 6 (PRODUCT LEVEL)	SEE PAGE
	1	1	**277-0750**	2	PLATE	
	2	1	**361-3890**	2	LATCH AS	
	3	1	**388-1488**	1	BAFFLE	
	4	1	**388-1489**	2	PLATE	
	5	1	**390-7270**	1	BAFFLE	
	6	1	**390-7271**	2	PLATE	
	7	1	**396-1677**	1	PLATE AS	
M		1	**355-8941**	4	NUT-WELD (M16X2-THD)	
	8	1	**396-1678**	1	PLATE AS	
M		1	**355-8941**	4	NUT-WELD (M16X2-THD)	
	9	1	**420-3037**	2	PLATE AS	
					(EACH INCLUDES)	
M		1	**355-8941**	7	NUT-WELD (M16X2-THD)	
	10	1	**482-9166**	1	PLATE AS (LH)	
		1	**1F-1609**	1	SPACER (13.5X25.4X39.7-MM THK)	
		1	**1V-8284**	2	HINGE	
M		1	**8T-3490**	12	NUT-WELD (M10X1.5-THD)	
M		1	**8T-3597**	5	NUT-WELD (M12X1.75-THD)	
M		1	**8T-3612**	2	NUT-WELD (M8X1.25-THD)	
M		1	**9R-2160**	4	BOSS (M8X1.25X25-MM)	
M		1	**9R-2613**	1	BOSS-WELD (M10X1.5X25-MM)	
		1	**259-8137**	3	WASHER-HARD (17.5X32X22-MM THK)	
M		1	**355-8941**	3	NUT-WELD (M16X2-THD)	
	11	1	**482-9168**	1	PLATE AS (RH)	
		1	**1F-1609**	1	SPACER (13.5X25.4X39.7-MM THK)	
		1	**1V-8284**	2	HINGE	
		1	**7T-1099**	3	LINK	
M		1	**8T-3490**	11	NUT-WELD (M10X1.5-THD)	
M		1	**8T-3597**	5	NUT-WELD (M12X1.75-THD)	
M		1	**8T-3612**	8	NUT-WELD (M8X1.25-THD)	
M		1	**9R-2613**	1	BOSS-WELD (M10X1.5X25-MM)	
M		1	**9R-2821**	1	BOSS (M10X1.5X15-MM)	
		1	**234-0707**	4	BOSS	
		1	**259-8137**	3	WASHER-HARD (17.5X32X22-MM THK)	
M		1	**355-8941**	3	NUT-WELD (M16X2-THD)	
	12	1	**433-7128**	4	SPACER (17X30X35-MM THK)	
	13	1	**458-0284**	2	PLATE	
	14	1	**458-0287**	2	PLATE	
	15	1	**476-3279**	1	PLATE AS	
M		1	**8T-3490**	8	NUT-WELD (M10X1.5-THD)	
M		1	**8T-3597**	2	NUT-WELD (M12X1.75-THD)	
M		1	**355-8941**	4	NUT-WELD (M16X2-THD)	
	16	1	**478-1319**	2	PLATE AS	
					(EACH INCLUDES)	
M		1	**8T-3490**	2	NUT-WELD (M10X1.5-THD)	
	17	1	**478-1935**	1	BRACKET AS	
M		1	**8T-3490**	2	NUT-WELD (M10X1.5-THD)	
	18	1	**479-2108**	1	GRILL AS	
M		1	**8T-3490**	3	NUT-WELD (M10X1.5-THD)	
	19	1	**482-9169**	1	PLATE AS	
M		1	**8T-3490**	5	NUT-WELD (M10X1.5-THD)	
	20	1	**483-3713**	2	BRACKET AS	
					(EACH INCLUDES)	
		1	**6H-7062**	2	SPACER (13.5X25X19-MM THK)	
M		1	**8T-3490**	2	NUT-WELD (M10X1.5-THD)	
	21	1	**480-6724**	1	BRACKET AS	
		1	**1F-1609**	1	SPACER (13.5X25.4X39.7-MM THK)	

374-3120 **SUPPORT GP-RADIATOR (*contd.*)** **i06160788**

NOTE	REF NO	GRAPHIC REF	PART NUMBER	QTY	PART NAME 1 2 3 4 5 6 (PRODUCT LEVEL)	SEE PAGE
M		1	**8T-3490**	3	NUT-WELD (M10X1.5-THD)	
	22	1	**480-6725**	1	BRACKET AS	
		1	**1F-1609**	1	SPACER (13.5X25.4X39.7-MM THK)	
M		1	**8T-3490**	3	NUT-WELD (M10X1.5-THD)	
	23	1	**482-9170**	1	BRACKET AS	
M		1	**8T-3490**	1	NUT-WELD (M10X1.5-THD)	
M		1	**355-8941**	2	NUT-WELD (M16X2-THD)	
	24	1	**482-9171**	1	BRACKET AS	
M		1	**8T-3490**	1	NUT-WELD (M10X1.5-THD)	
M		1	**355-8941**	2	NUT-WELD (M16X2-THD)	
	25	1	**483-3712**	1	PLATE AS	
		1	**7T-1099**	2	LINK	
M		1	**8T-3490**	1	NUT-WELD (M10X1.5-THD)	
M		1	**8T-3612**	4	NUT-WELD (M8X1.25-THD)	
M		1	**9C-7929**	2	BLOCK (M10X1.5-MM)	
M		1	**9R-3761**	1	BOSS (M10X1.5X51-MM)	
M		1	**355-8941**	4	NUT-WELD (M16X2-THD)	
M	26	1	**114-6099**	8	BOLT (M24X3X80-MM)	
M	27	1	**206-5143**	2	BOLT (M12X1.75X50-MM)	
M	28	1	**176-5311**	4	LOCKNUT (M16X2-THD)	
	29	1	**198-4777**	19	WASHER-HARD (11X25X10-MM THK)	
	30	1	**198-4778**	6	WASHER-HARD (13.5X30X12-MM THK)	
	31	1	**198-4780**	10	WASHER-HARD (17.5X32X8-MM THK)	
	32	1	**267-3507**	8	WASHER-HARD (26X47X12-MM THK)	
	33	1	**267-8821**	22	WASHER (17X36X12-MM THK)	
	34	1	**6H-7062**	2	SPACER (13.5X25X19-MM THK)	
	35	1	**6V-1635**	8	RIVET-POP	
M	36	1	**6V-3303**	4	BOLT (M16X2X60-MM)	
M	37	1	**7X-2556**	4	BOLT (M16X2X100-MM)	
	38	1	**7X-7729**	22	WASHER (11X25X3-MM THK)	
M	39	1	**8T-0375**	6	BOLT (M16X2X45-MM)	
M	40	1	**8T-8549**	2	LOCKNUT (M12X1.75-THD)	
M	41	1	**8T-4133**	8	NUT (M10X1.5-THD)	
M	43	1	**8T-4189**	8	BOLT (M8X1.25X20-MM)	
M	44	1	**8T-4193**	22	BOLT (M16X2X50-MM)	
M	45	1	**8T-4195**	14	BOLT (M10X1.5X30-MM)	
M	46	1	**8T-4196**	11	BOLT (M10X1.5X35-MM)	
	47	1	**8T-4224**	18	WASHER-HARD (8.8X16X2-MM THK)	
M	48	1	**8T-4910**	6	BOLT (M12X1.75X60-MM)	
M	49	1	**8T-4908**	4	BOLT (M8X1.25X25-MM)	
M	50	1	**8T-5005**	4	BOLT (M10X1.5X70-MM)	
M	51	1	**8T-7547**	6	BOLT (M8X1.25X30-MM)	
	52	1	**9X-8257**	10	WASHER (17.5X30X3.5-MM THK)	
M	53	1	**8T-6466**	4	BOLT (M10X1.5X60-MM)	

M - METRIC PART

374-3120 **SUPPORT GP-RADIATOR (*contd.*)** **i06160788**

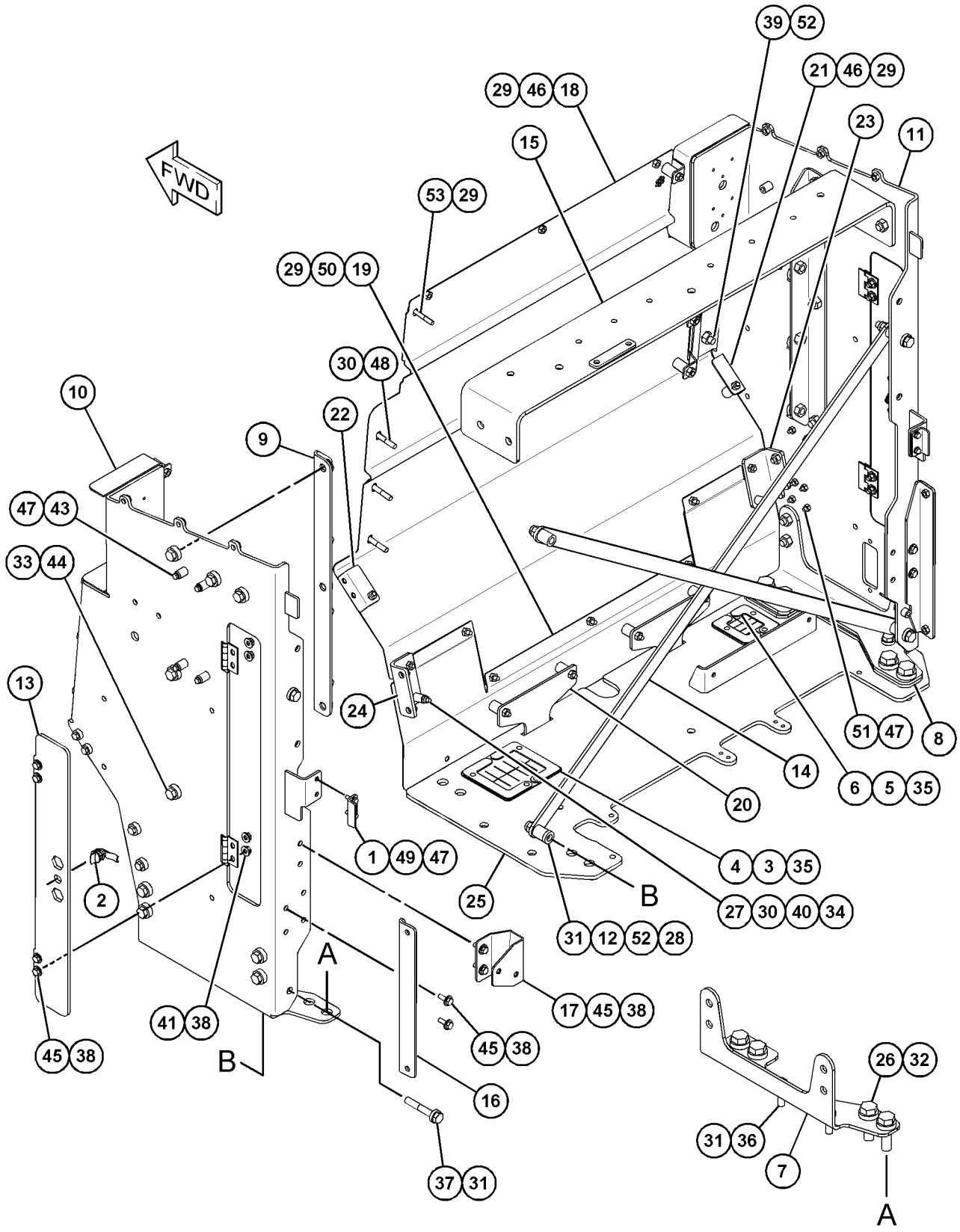

GRAPHIC #1 **<END>** g03834529

375-3401 SUPPRESSION GP-SOUND

S/N: E9Y1-UP
FOR USE WITH 375-3408—PAGE: 443
AN ATTACHMENT

SMCS-1801, 7076 **i06155487**

NOTE	REF NO	GRAPHIC REF	PART NUMBER	QTY	PART NAME 1 2 3 4 5 6 (PRODUCT LEVEL)	SEE PAGE
	1	1	**380-8087**	1	INSULATION	
	2	1	**380-8088**	1	INSULATION	
	3	1	**380-8089**	1	INSULATION	
	4	1	**380-8090**	1	INSULATION	
	5	1	**380-8091**	1	INSULATION	
	6	1	**380-8094**	2	PLATE	
	7	1	**380-8095**	2	PLATE	
	8	1	**380-8100**	1	PLATE	
	9	1	**380-8302**	2	PLATE AS	
					(EACH INCLUDES)	
M		1	**8T-3490**	2	NUT-WELD (M10X1.5-THD)	
	10	1	**385-5284**	1	PLATE AS	
	11	1	**385-5286**	1	PLATE AS	
					(EACH PLATE AS INCLUDES)	
M		1	**8T-3597**	11	NUT-WELD (M12X1.75-THD)	
	12	1	**421-2466**	1	PLATE	
Y	13	1	*421-2485*	1	COVER GP-SOUND SUPPRESSION	20
	14	1	**421-2490**	1	PLATE AS (LH)	
	15	1	**421-2491**	1	PLATE AS (RH)	
					(EACH PLATE AS INCLUDES)	
M		1	**8T-3597**	6	NUT-WELD (M12X1.75-THD)	
	16	1	**5P-1076**	10	WASHER-HARD (13.5X30X4-MM THK)	
M	17	1	**7X-2552**	6	BOLT (M16X2X30-MM)	
	18	1	**7X-7729**	20	WASHER (11X25X3-MM THK)	
M	19	1	**8T-4136**	16	BOLT (M10X1.5X25-MM)	
M	20	1	**8T-4139**	34	BOLT (M12X1.75X30-MM)	
M	21	1	**8T-4196**	4	BOLT (M10X1.5X35-MM)	
	22	1	**8T-4223**	24	WASHER-HARD (13.5X25.5X3-MM THK)	
	23	1	**9X-8257**	6	WASHER (17.5X30X3.5-MM THK)	

M - METRIC PART
Y - SEPARATE ILLUSTRATION

375-3401 **SUPPRESSION GP-SOUND (*contd.*)** **i06155487**

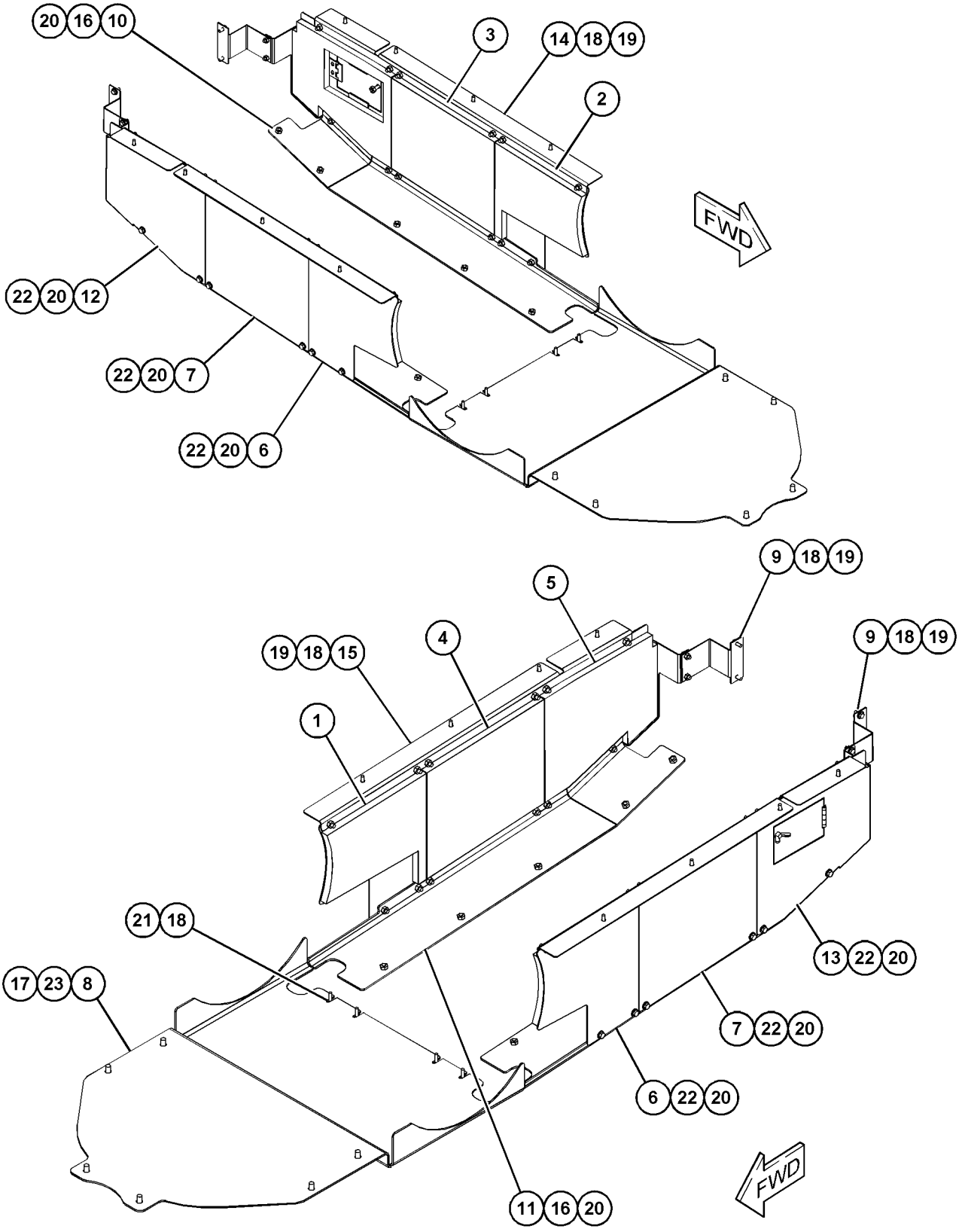

GRAPHIC #1 **<END>** g03838118

377-2072 TANK & PUMP GP-LUBRICATION

S/N: E9Y1-UP

PART OF 385-0197 TANK & PUMP GP-LUBRICATION

AN ATTACHMENT

SMCS-7516, 7540

i05367993

NOTE	REF NO	GRAPHIC REF	PART NUMBER	QTY	PART NAME 1 2 3 4 5 6 (PRODUCT LEVEL)	SEE PAGE
	1	1	**2F-1336**	1	FITTING-HEAD	
	2	1	**8X-2321**	1	VALVE GP-CHECK	
		1	**3B-1925**	1	WASHER (0.766X1X0.064-IN THK)	
		1	**7W-3556**	1	WASHER (14.27X20.57X1.5-MM THK)	
	3	1	**8X-2323**	1	UNLOADER	
	4	1	**8X-3316**	1	FITTING	
	5	1	**9X-2474**	1	ADAPTER	
	6	1	**178-8063**	1	BREATHER (GREASE TANK)	
	7	1	**189-4394**	1	HOSE AS	
	8	1	**189-4395**	1	HOSE AS	
	9	1	**189-4401**	1	ELBOW	
	10	1	**189-4404**	1	FITTING	
	11	1	**197-1563**	1	VALVE AS-VENT	
	12	1	**240-9689**	1	GASKET	
	13	1	**318-8583**	1	BRACKET	
	14	1	**352-8772**	1	COVER	
	15	1	**432-2043**	1	FOLLOWER AS	
	16	1	**432-2044**	1	BRACKET AS	
	17	1	**432-5415**	1	ELBOW	
	18	1	**438-1066**	1	RESERVOIR	
Y	19	1	**438-1094**	1	PUMP GP-LUBRICATION	482
	20	1	**438-1117**	1	TUBE-VENT	
	21	1	**438-1122**	1	CABLE AS	
	22	1	**438-1140**	1	LID	
	23	1	**438-4449**	1	HOSE AS	
	24	1	**005-7541**	2	ELBOW-PIPE	
	25	1	**4L-9337**	2	BOLT (3/8-16X1.5-IN)	
	26	1	**4M-5281**	2	BOLT (1/4-20X0.75-IN)	
	27	1	**5K-0906**	2	BOLT (5/16-18X0.625-IN)	
	28	1	**6B-1628**	1	BUSHING-REDUCER	
	29	1	**6K-1972**	1	ELBOW-FLARED	
	30	1	**6V-8185**	2	NUT (1/4-20-THD)	
	31	1	**6V-8801**	8	NUT (3/8-16-THD)	
	32	1	**7D-4903**	1	ADAPTER	
	33	1	**7J-8611**	2	ELBOW-PIPE	
	34	1	**8T-4205**	4	WASHER-HARD (7.2X14.5X2-MM THK)	
	35	1	**8T-4224**	2	WASHER-HARD (8.8X16X2-MM THK)	
	36	1	**8T-4896**	8	WASHER-HARD (10.2X18.5X2.5-MM THK)	
	37	1	**9B-7237**	7	BOLT (3/8-16X1.25-IN)	

Y - SEPARATE ILLUSTRATION

377-2072 **TANK & PUMP GP-LUBRICATION (*contd.*)** **i05367993**

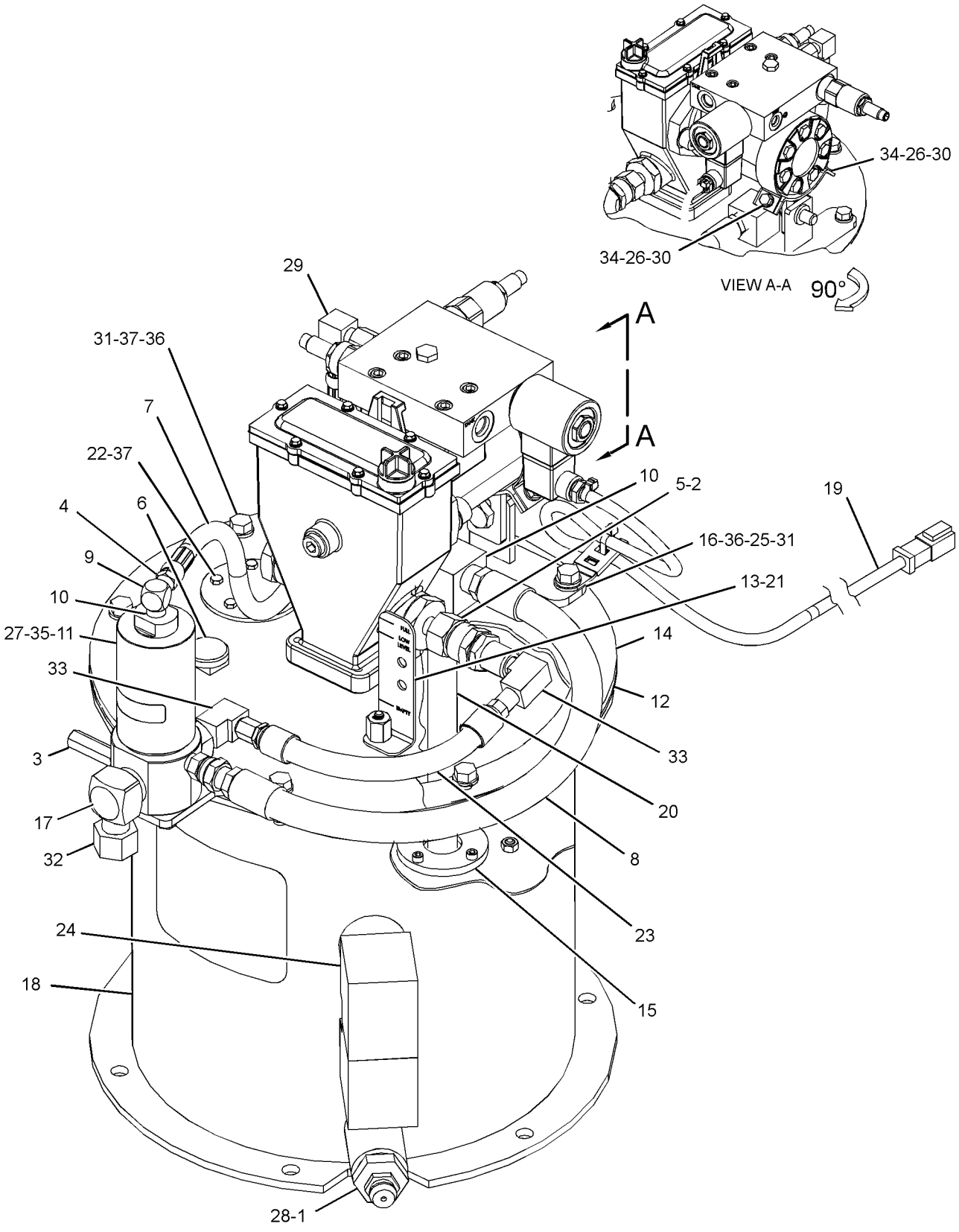

GRAPHIC #1 **<END>** g03450580

385-0197 TANK & PUMP GP-LUBRICATION

S/N: E9Y1-UP
PART OF 385-7552 LUBRICATION AR-AUTOMATIC
AN ATTACHMENT

SMCS-7516, 7540

i06125973

NOTE	REF NO	GRAPHIC REF	PART NUMBER	QTY	PART NAME 1 2 3 4 5 6 (PRODUCT LEVEL)	SEE PAGE
	1	1	**108-3589**	4	SPACER	
Y	2	1	**377-2072**	1	TANK & PUMP GP-LUBRICATION	493
	3	1	**395-3528**	1	PLATE AS	
M		1	**8T-3490**	6	NUT-WELD (M10X1.5-THD)	
	4	1	**395-3689**	1	PLATE AS	
M		1	**8T-3490**	4	NUT-WELD (M10X1.5-THD)	
	5	1	**5P-1076**	16	WASHER-HARD (13.5X30X4-MM THK)	
	6	1	**8T-4121**	10	WASHER-HARD (11X21X2.5-MM THK)	
M	7	1	**8T-4194**	8	BOLT (M12X1.75X50-MM)	
M	8	1	**8T-4195**	10	BOLT (M10X1.5X30-MM)	

M - METRIC PART
Y - SEPARATE ILLUSTRATION

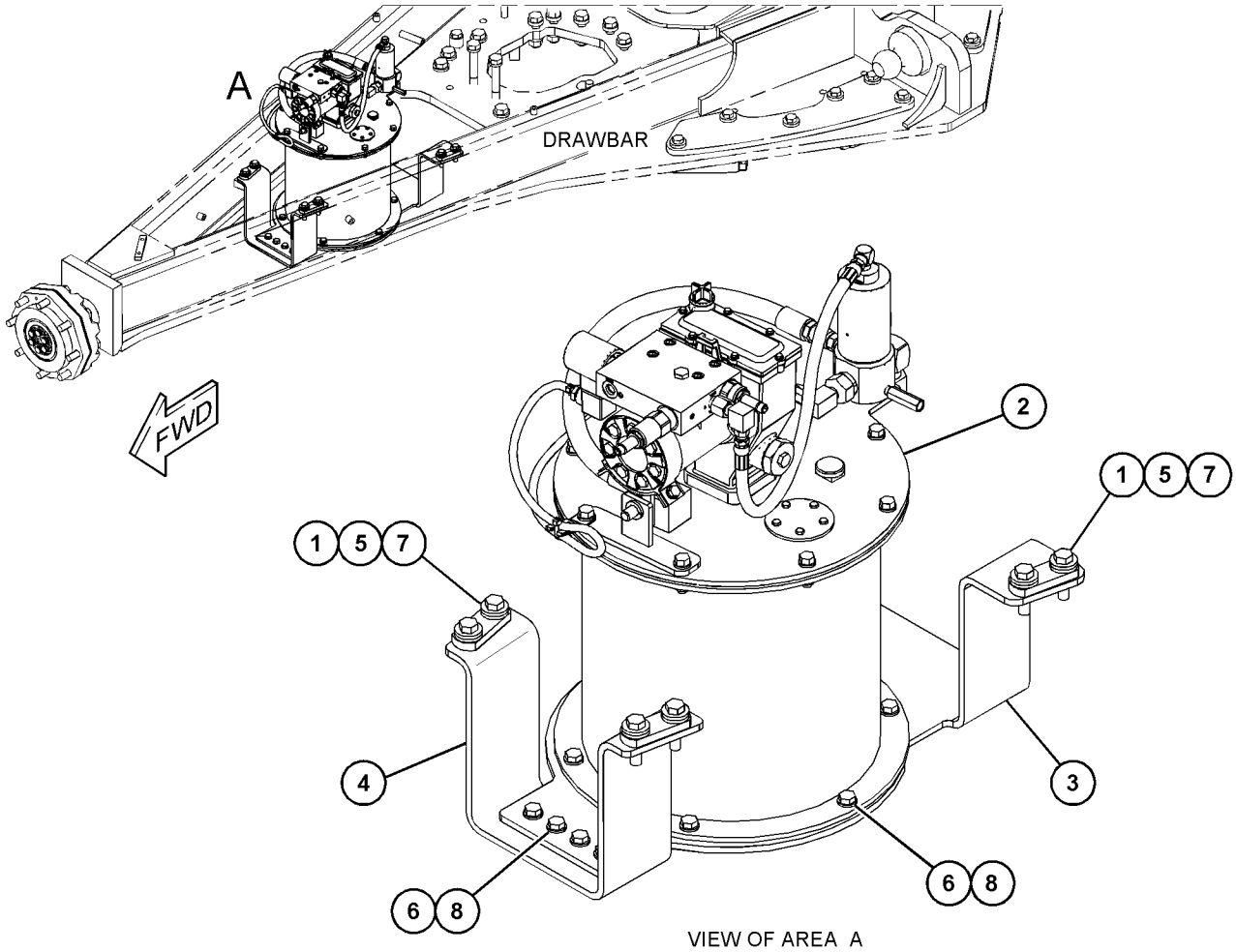

VIEW OF AREA A

GRAPHIC #1

<END>

g03820075

269-5346 VALVE GP-LUBE DISTRIBUTION–2-INJECTOR

S/N: E9Y1-UP

PART OF 392-6547 VALVE GP-LUBE DISTRIBUTION

AN ATTACHMENT

SMCS-7540 **i06135051**

NOTE	REF NO	GRAPHIC REF	PART NUMBER	QTY	PART NAME 1 2 3 4 5 6 (PRODUCT LEVEL)	SEE PAGE
	1	1	**8X-1106**	2	FITTING AS-GREASE (1/8-27-THD)	
	2	1	**307-3245**	2	INJECTOR AS	
					(EACH INCLUDES)	
		1	**444-6559**	1	CAP	
		1	**449-3815**	1	SCREW	
		1	**449-3816**	1	LOCKNUT (7/16-27-THD)	

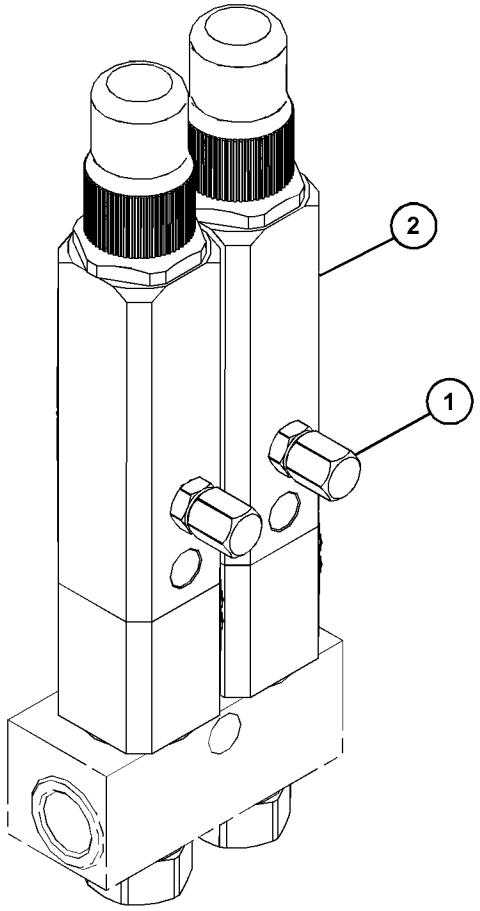

GRAPHIC #1 **<END>** g03823899

269-5348 VALVE GP-LUBE DISTRIBUTION–3-INJECTOR

S/N: E9Y1-UP
PART OF 391-8190 LUBRICATION AR-AUTOMATIC
AN ATTACHMENT

SMCS-7540 **i04607034**

NOTE	REF NO	GRAPHIC REF	PART NUMBER	QTY	PART NAME 1 2 3 4 5 6 (PRODUCT LEVEL)	SEE PAGE
	1	1	**307-3245**	3	INJECTOR AS	
	2	1	**8X-1106**	3	FITTING AS-GREASE (1/8-27-THD)	

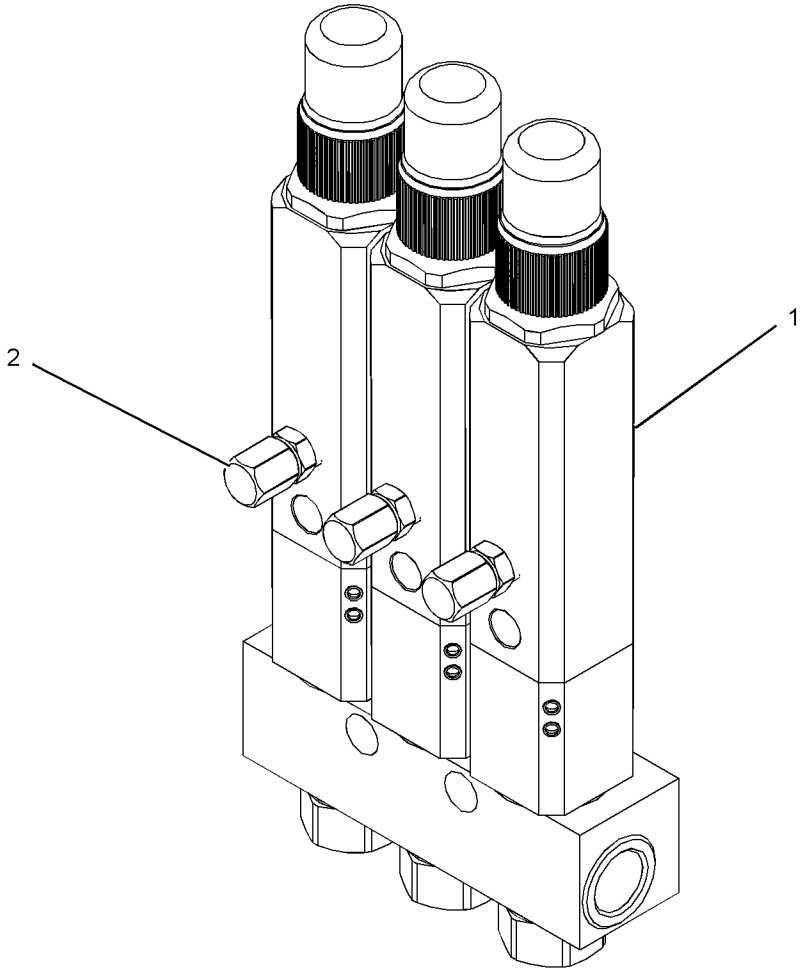

GRAPHIC #1 **<END>** g02758557

269-5352 VALVE GP-LUBE DISTRIBUTION–4-INJECTOR

S/N: E9Y1-UP

PART OF 333-0677 VALVE GP-LUBE DISTRIBUTION

AN ATTACHMENT

SMCS-7540 **i06136392**

NOTE	REF NO	GRAPHIC REF	PART NUMBER	QTY	PART NAME 1 2 3 4 5 6 (PRODUCT LEVEL)	SEE PAGE
	1	1	**307-3245**	4	INJECTOR AS	
		1	**444-6559**	1	CAP	
		1	**449-3815**	1	SCREW	
		1	**449-3816**	1	LOCKNUT (7/16-27-THD)	
	2	1	**8X-1106**	4	FITTING AS-GREASE (1/8-27-THD)	
	3	1	**362-8366**	1	MANIFOLD	

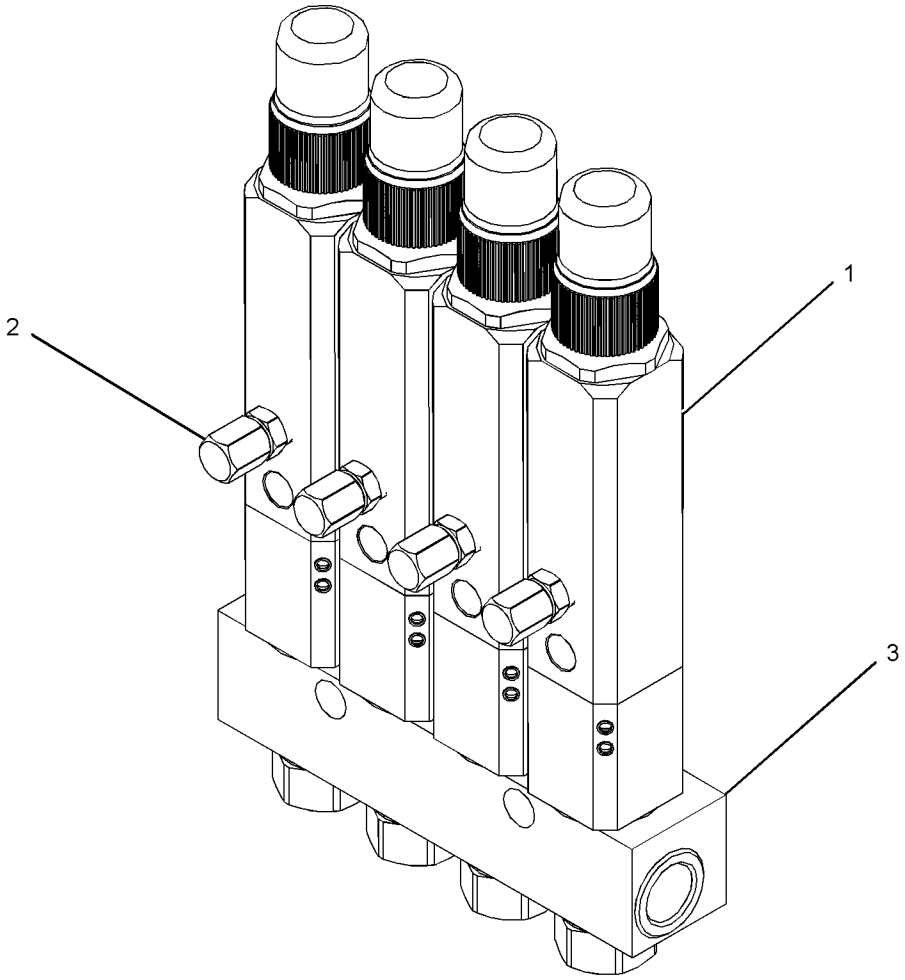

GRAPHIC #1 **<END>** g02758559

269-5353 VALVE GP-LUBE DISTRIBUTION–5-INJECTOR

S/N: E9Y1-UP

PART OF 389-8622, 389-8623 VALVE GP-LUBE DISTRIBUTION AN ATTACHMENT

SMCS-7540 **i06139685**

NOTE	REF NO	GRAPHIC REF	PART NUMBER	QTY	PART NAME 1 2 3 4 5 6 (PRODUCT LEVEL)	SEE PAGE
	1	1	**307-3245**	5	INJECTOR AS	
		1	**444-6559**	1	CAP	
		1	**449-3815**	1	SCREW	
		1	**449-3816**	1	LOCKNUT (7/16-27-THD)	
	2	1	**8X-1106**	5	FITTING AS-GREASE (1/8-27-THD)	

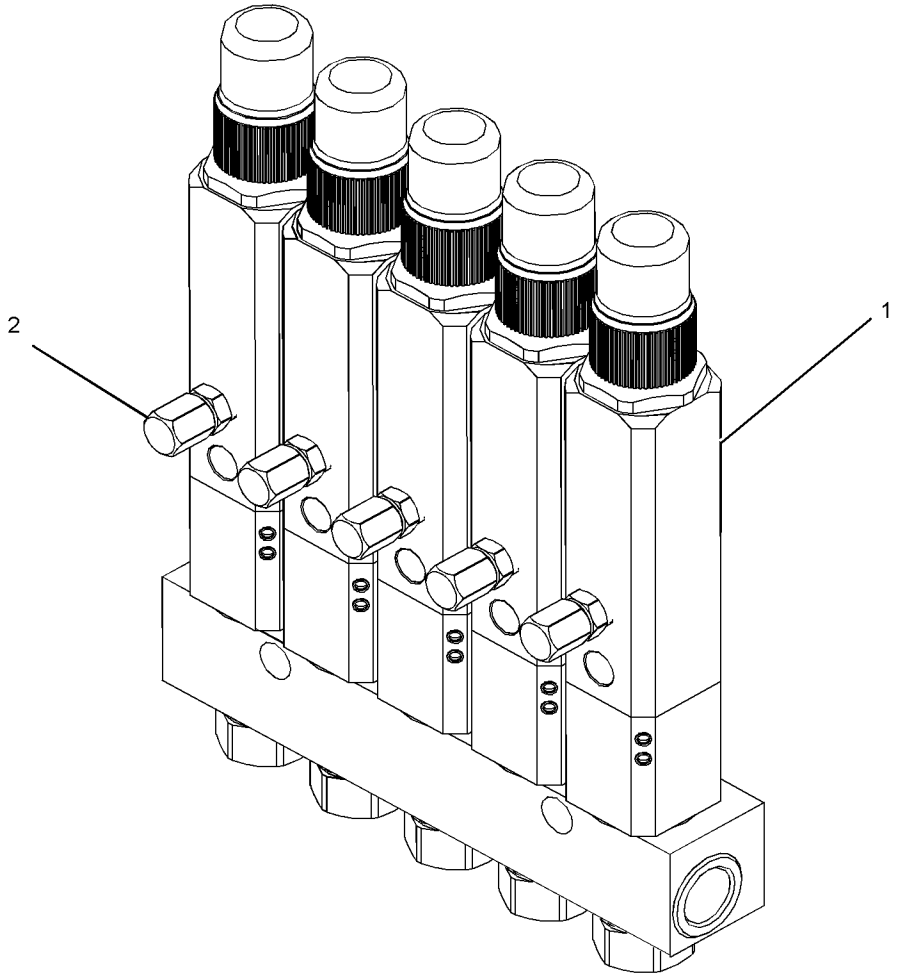

GRAPHIC #1 **<END>** g02886438

292-4086 VALVE GP-LUBE DISTRIBUTION–6-INJECTOR

S/N: E9Y1-UP

PART OF 389-8622, 389-8623 VALVE GP-LUBE DISTRIBUTION

AN ATTACHMENT

SMCS-7540 **i06134158**

NOTE	REF NO	GRAPHIC REF	PART NUMBER	QTY	PART NAME 1 2 3 4 5 6 (PRODUCT LEVEL)	SEE PAGE
	1	1	**8X-1106**	6	FITTING AS-GREASE (1/8-27-THD)	
	2	1	**307-3245**	6	INJECTOR AS	
					(EACH INCLUDES)	
		1	**444-6559**	1	CAP	
		1	**449-3815**	1	SCREW	
		1	**449-3816**	1	LOCKNUT (7/16-27-THD)	

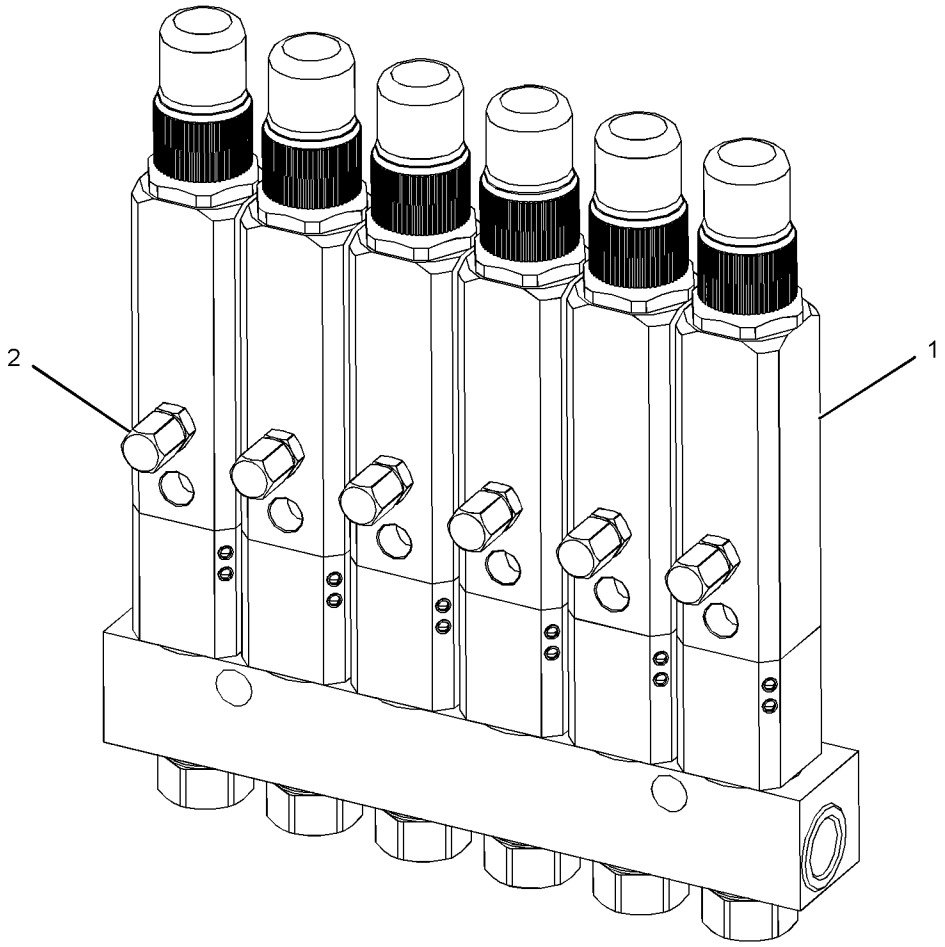

GRAPHIC #1 **<END>** g03824917

333-0677 VALVE GP-LUBE DISTRIBUTION–4-INJECTOR

S/N: E9Y1-UP

PART OF 385-0199 LINES GP-AUTOMATIC LUBRICATION

AN ATTACHMENT

SMCS-7540 **i04607533**

NOTE	REF NO	GRAPHIC REF	PART NUMBER	QTY	PART NAME 1 2 3 4 5 6 (PRODUCT LEVEL)	SEE PAGE
	1	1	**2D-1683**	3	FITTING	
Y	2	1	**269-5352**	1	VALVE GP-LUBE DISTRIBUTION (4-INJECTOR)	498
	3	1	**333-0676**	1	PLATE AS	
M		1	**8T-3612**	2	NUT-WELD (M8X1.25-THD)	
	4	1	*171-6731*	1	CONNECTOR AS	
		1	**6V-8398**	1	SEAL-O-RING	
		1	**8C-6871**	1	CONNECTOR	
	5	1	**3J-5390**	1	PLUG	
	6	1	**6K-6967**	1	ADAPTER-PIPE	
	7	1	**8T-4224**	2	WASHER-HARD (8.8X16X2-MM THK)	
M	8	1	**8T-6912**	2	BOLT (M8X1.25X50-MM)	

M - METRIC PART
Y - SEPARATE ILLUSTRATION

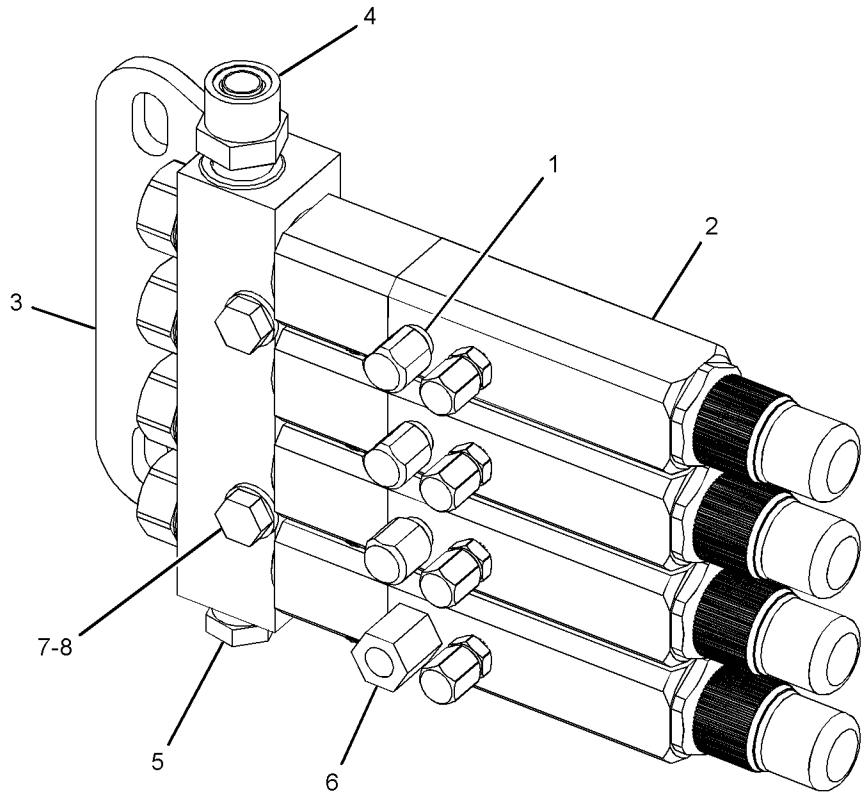

GRAPHIC #1 **<END>** g02175408

389-8622 VALVE GP-LUBE DISTRIBUTION–FRONT AXLE

S/N: E9Y1-UP

PART OF 376-7663 LINES GP-AUTOMATIC LUBRICATION AN ATTACHMENT

SMCS-7540 **i06134144**

NOTE	REF NO	GRAPHIC REF	PART NUMBER	QTY	PART NAME 1 2 3 4 5 6 (PRODUCT LEVEL)	SEE PAGE
	1	1	**2D-1683**	8	FITTING (1/8-27 PTF)	
	2	1	*208-1629*	1	ELBOW AS	
		1	**2T-2396**	1	ELBOW	
		1	**6V-8398**	1	SEAL-O-RING	
Y	3	1	**269-5353**	1	VALVE GP-LUBE DISTRIBUTION (5-INJECTOR)	499
Y	4	1	**292-4086**	1	VALVE GP-LUBE DISTRIBUTION (6-INJECTOR)	500
	5	1	**389-8621**	1	PLATE AS	
	6	1	**004-6683**	1	FITTING	
	7	1	**3J-5390**	1	PLUG	
	8	1	**4M-8973**	3	ELBOW	
M	9	1	**5C-7261**	2	NUT (M8X1.25-THD)	
	10	1	**8T-4224**	6	WASHER-HARD (8.8X16X2-MM THK)	
M	11	1	**8T-6912**	4	BOLT (M8X1.25X50-MM)	

M - METRIC PART
Y - SEPARATE ILLUSTRATION

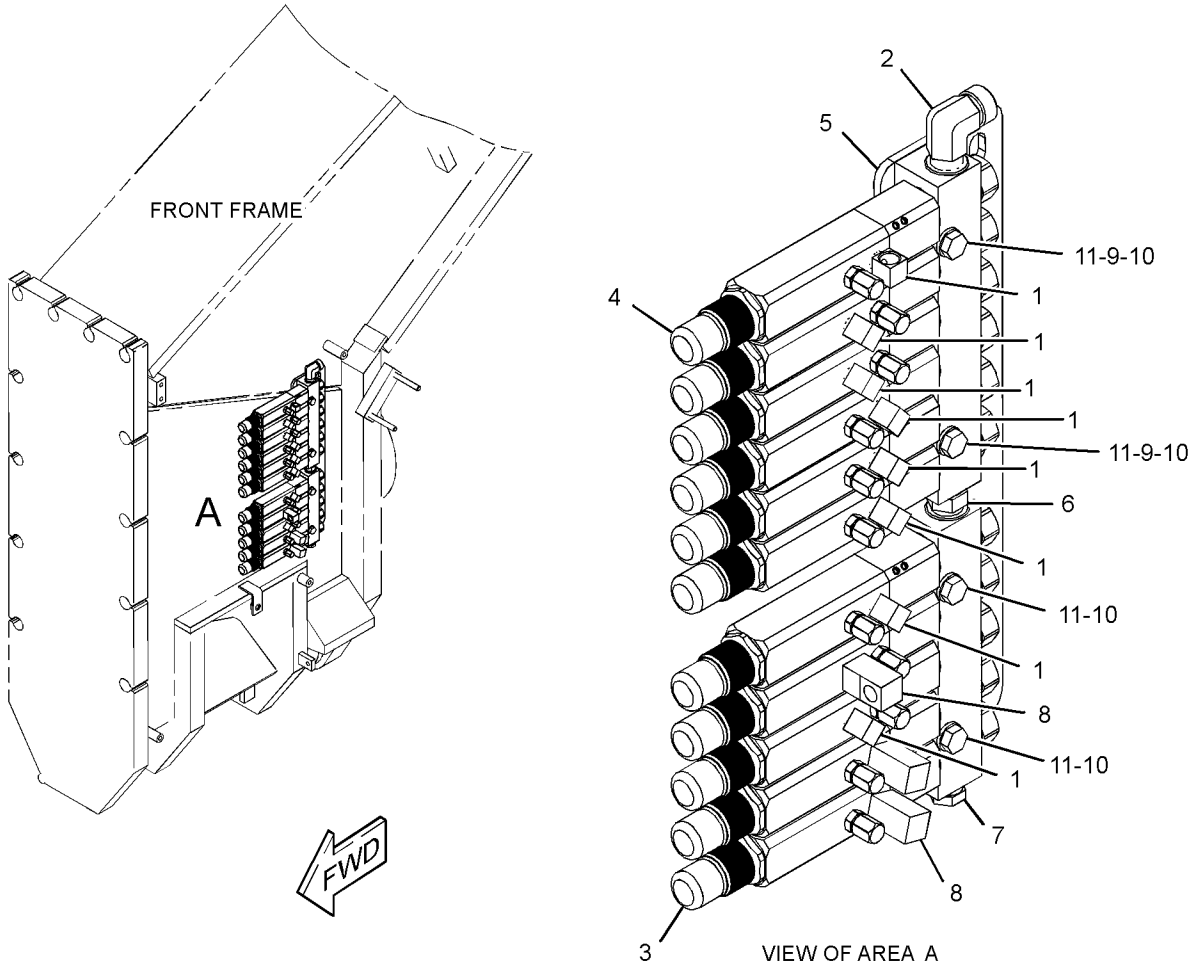

GRAPHIC #1 **<END>** g03819921

389-8623 VALVE GP-LUBE DISTRIBUTION–FRONT AXLE OIL

S/N: E9Y1-UP
PART OF 376-7663 LINES GP-AUTOMATIC LUBRICATION
AN ATTACHMENT

SMCS-7540 **i06134143**

NOTE	REF NO	GRAPHIC REF	PART NUMBER	QTY	PART NAME 1 2 3 4 5 6 (PRODUCT LEVEL)	SEE PAGE
	1	1	**2D-1683**	8	FITTING (1/8-27 PTF)	
	2	1	*208-1629*	1	ELBOW AS	
		1	**2T-2396**	1	ELBOW	
		1	**6V-8398**	1	SEAL-O-RING	
Y	3	1	**269-5353**	1	VALVE GP-LUBE DISTRIBUTION (5-INJECTOR)	499
Y	4	1	**292-4086**	1	VALVE GP-LUBE DISTRIBUTION (6-INJECTOR)	500
	5	1	**389-8621**	1	PLATE AS	
	6	1	**004-6683**	1	FITTING	
	7	1	**3J-5390**	1	PLUG	
	8	1	**4M-8973**	3	ELBOW	
M	9	1	**5C-7261**	2	NUT (M8X1.25-THD)	
	10	1	**8T-4224**	6	WASHER-HARD (8.8X16X2-MM THK)	
M	11	1	**8T-6912**	4	BOLT (M8X1.25X50-MM)	

M - METRIC PART
Y - SEPARATE ILLUSTRATION

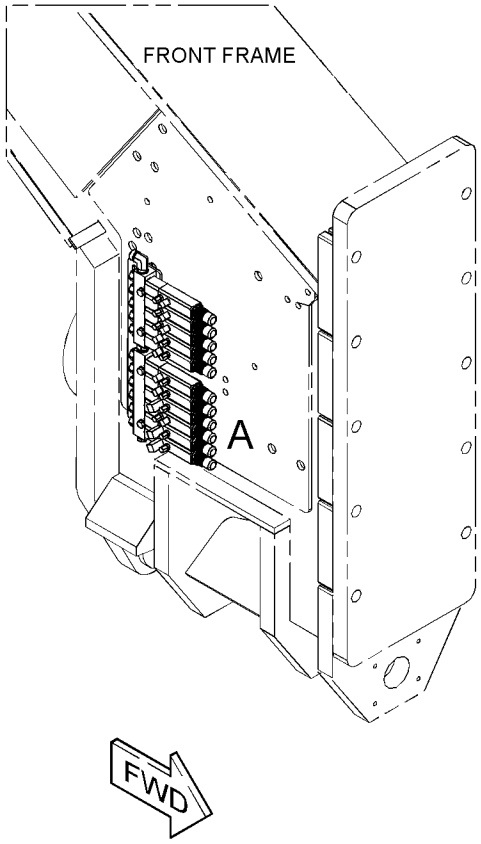

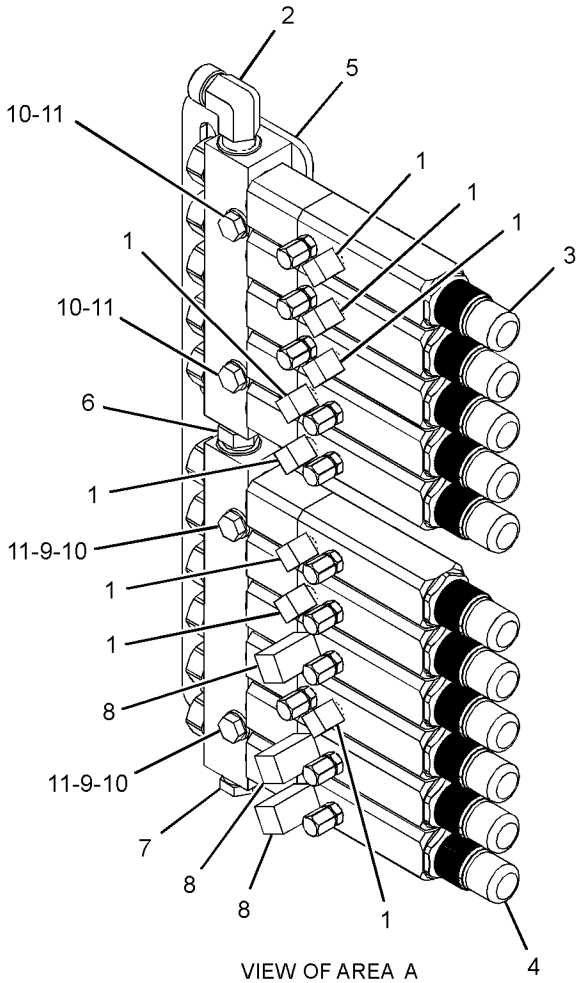

VIEW OF AREA A

GRAPHIC #1

<END>

g03819944

392-6547 VALVE GP-LUBE DISTRIBUTION

S/N: E9Y1-UP
2-INJECTOR
PART OF 385-0200 LINES GP-AUTOMATIC LUBRICATION
AN ATTACHMENT

SMCS-7540 **i06127173**

NOTE	REF NO	GRAPHIC REF	PART NUMBER	QTY	PART NAME 1 2 3 4 5 6 (PRODUCT LEVEL)	SEE PAGE
	1	1	**2D-1683**	2	FITTING (1/8-27 PTF)	
Y	2	1	**269-5346**	1	VALVE GP-LUBE DISTRIBUTION (2-INJECTOR)	496
	3	1	**2T-2396**	1	ELBOW	
	4	1	**3J-5390**	1	PLUG (PIPE)	
	5	1	**6V-8398**	1	SEAL-O-RING	

Y - SEPARATE ILLUSTRATION

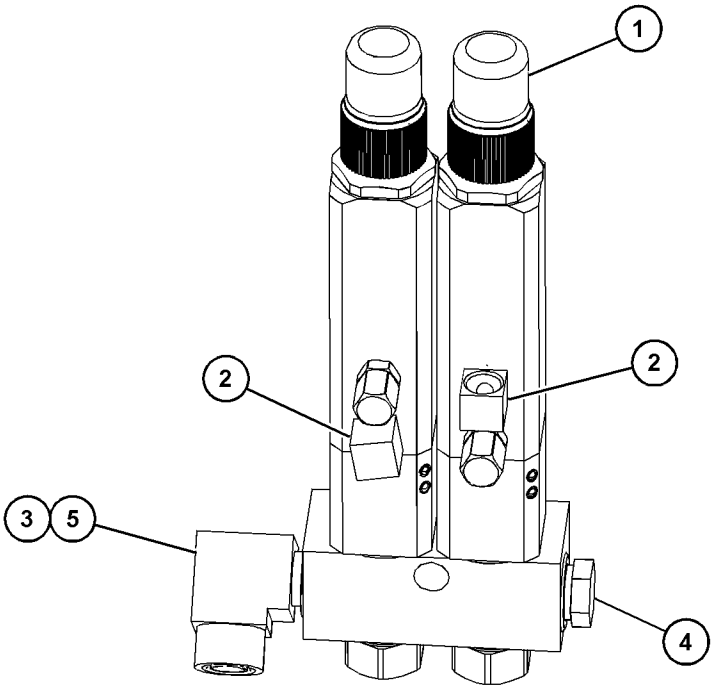

GRAPHIC #1 **<END>** g03820734

375-3422 WALKWAY GP

S/N: E9Y1-UP

PART OF 375-3405 OPTION AR-LADDER, 375-3406 PLATFORM AR AN ATTACHMENT

SMCS-7255 **i06119260**

NOTE	REF NO	GRAPHIC REF	PART NUMBER	QTY	PART NAME 1 2 3 4 5 6 (PRODUCT LEVEL)	SEE PAGE
	1	1	**274-6866**	12	BRACKET AS	
					(EACH INCLUDES)	
M		1	**8T-3490**	2	NUT-WELD (M10X1.5-THD)	
	2	1	**329-8823**	4	PLATE	
	3	1	**354-8358**	5	HANDHOLD GP (GRAB)	
					(EACH INCLUDES)	
		1	**361-5860**	2	PLATE AS	
					(EACH INCLUDES)	
M		1	**8T-3490**	1	NUT-WELD (M10X1.5-THD)	
	4	1	**360-1787**	2	PLATE AS	
					(EACH INCLUDES)	
M		1	**8T-3490**	8	NUT-WELD (M10X1.5-THD)	
	5	1	**425-5357**	2	PLUG	
M	6	1	**344-5675**	3	NUT (M10X1.5-THD)	
M	7	1	**6V-7744**	4	LOCKNUT (M10X1.5-THD)	
	8	1	**7X-3391**	24	WASHER-HARD (13.5X32X6-MM THK)	
	9	1	**8T-4121**	60	WASHER-HARD (11X21X2.5-MM THK)	
M	10	1	**8T-4136**	39	BOLT (M10X1.5X25-MM)	
M	11	1	**8T-4139**	24	BOLT (M12X1.75X30-MM)	
M	12	1	**8T-4182**	4	BOLT (M10X1.5X45-MM)	
M	13	1	**8T-4196**	10	BOLT (M10X1.5X35-MM)	
	14	1	**9C-5344**	4	SPACER (10.5X20X18-MM THK)	

M - METRIC PART

375-3422 **WALKWAY GP (*contd.*)** **i06119260**

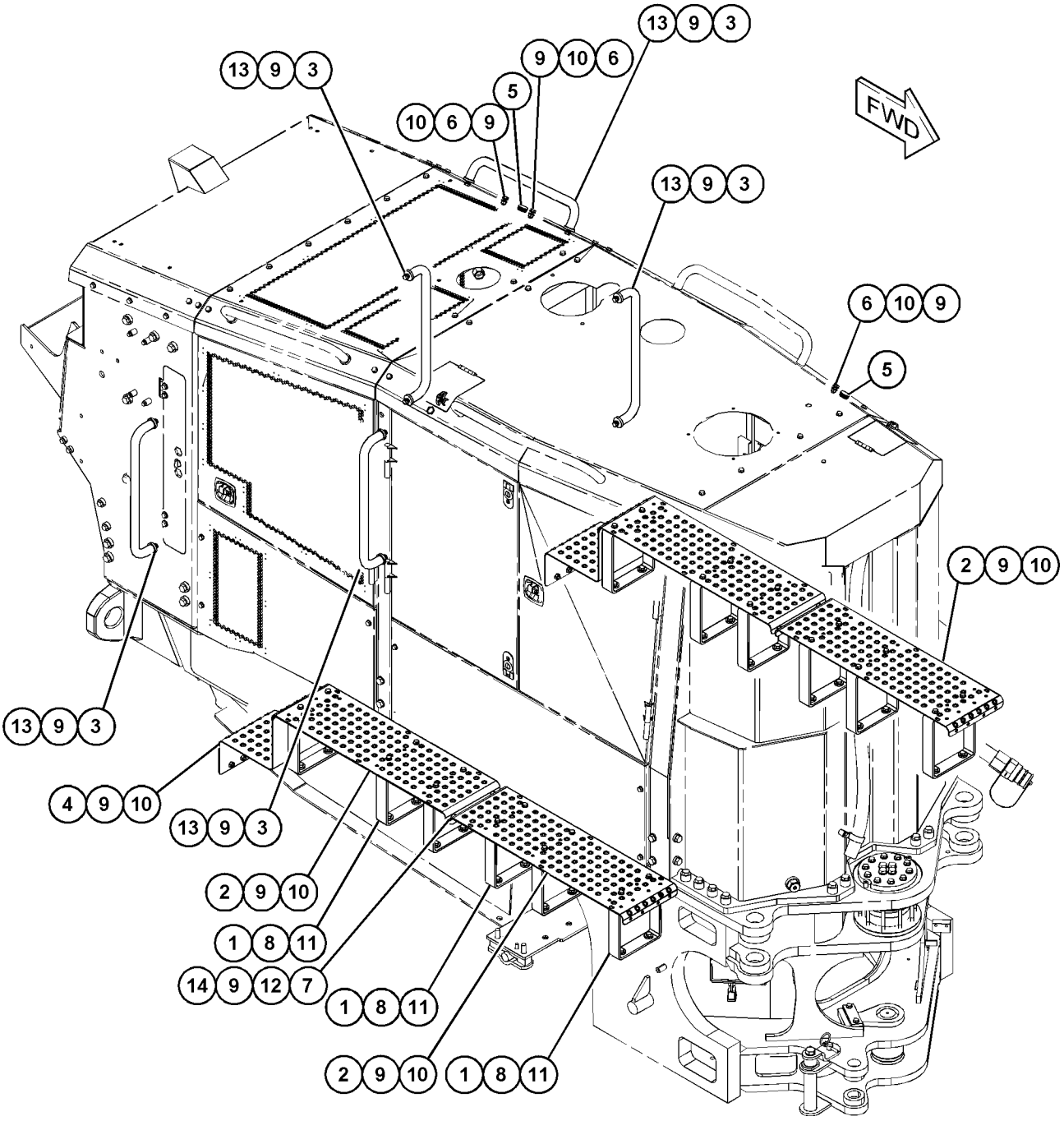

GRAPHIC #1 **<END>** g03818586

383-8180 WALKWAY GP

S/N: E9Y1-UP

PART OF 375-3407, 462-6400 OPTION AR-LADDER AN ATTACHMENT

SMCS-7255 **i06139678**

NOTE	REF NO	GRAPHIC REF	PART NUMBER	QTY	PART NAME 1 2 3 4 5 6 (PRODUCT LEVEL)	SEE PAGE
	1	1	**435-1948**	1	HANDHOLD AS	
	2	1	**479-7473**	1	BRACKET AS	
	3	1	**479-7475**	1	BRACKET AS	
	4	1	**479-7479**	2	BRACKET	
	5	1	**479-7480**	1	BRACKET AS	
	6	1	**479-7482**	4	BRACKET AS	
	7	1	**479-7484**	1	BRACKET AS	
	8	1	**479-7486**	1	BRACKET AS	
	9	1	**424-1673**	1	BRACKET AS	
	10	1	**424-1675**	1	BRACKET AS	
	11	1	**424-1677**	2	TREAD	
	12	1	**430-4564**	1	BRACKET AS	
	13	1	**430-4565**	1	PLATE	
	14	1	**430-4568**	2	BRACKET	
	15	1	**479-7488**	2	BRACKET AS	
	16	1	**479-7490**	1	BRACKET AS	
	17	1	**479-7492**	4	BRACKET AS	
	18	1	**479-7494**	1	BRACKET AS	
	19	1	**479-7495**	1	PLATE	
	20	1	**198-4777**	12	WASHER-HARD (11X25X10-MM THK)	
	21	1	**1S-4305**	24	SPACER (0.531X1X0.56-IN THK)	
M	22	1	**344-5675**	13	NUT (M10X1.5-THD)	
M	23	1	**6V-7744**	4	LOCKNUT (M10X1.5-THD)	
	24	1	**8T-4121**	112	WASHER-HARD (11X21X2.5-MM THK)	
M	25	1	**8T-4136**	89	BOLT (M10X1.5X25-MM)	
M	26	1	**8T-4186**	8	BOLT (M10X1.5X40-MM)	
M	27	1	**8T-4195**	8	BOLT (M10X1.5X30-MM)	
M	28	1	**8T-4196**	6	BOLT (M10X1.5X35-MM)	
M	29	1	**8T-4956**	24	BOLT (M12X1.75X35-MM)	

M - METRIC PART

383-8180 **WALKWAY GP (*contd.*)** **i06139678**

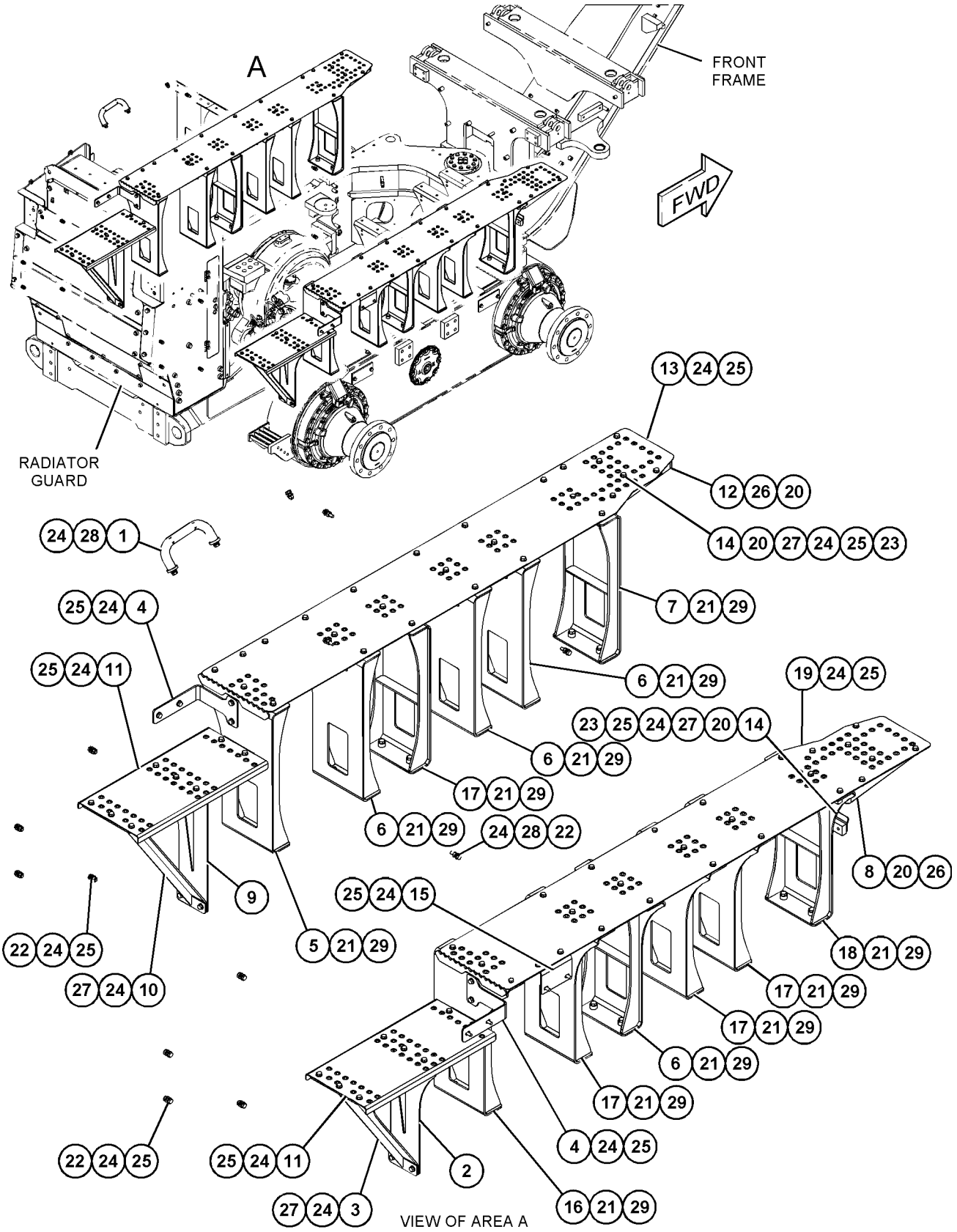

GRAPHIC #1

<END>

g03825918

479-0396 WALKWAY GP–RH

S/N: E9Y1-UP
PART OF 386-0538 PLATFORM GP-OPERATOR
AN ATTACHMENT

SMCS-7255 **i06143916**

NOTE	REF NO	GRAPHIC REF	PART NUMBER	QTY	PART NAME 1 2 3 4 5 6 (PRODUCT LEVEL)	SEE PAGE
	1	1	**479-0770**	1	WALKWAY AS	
	2	1	**479-7499**	1	WALKWAY AS	

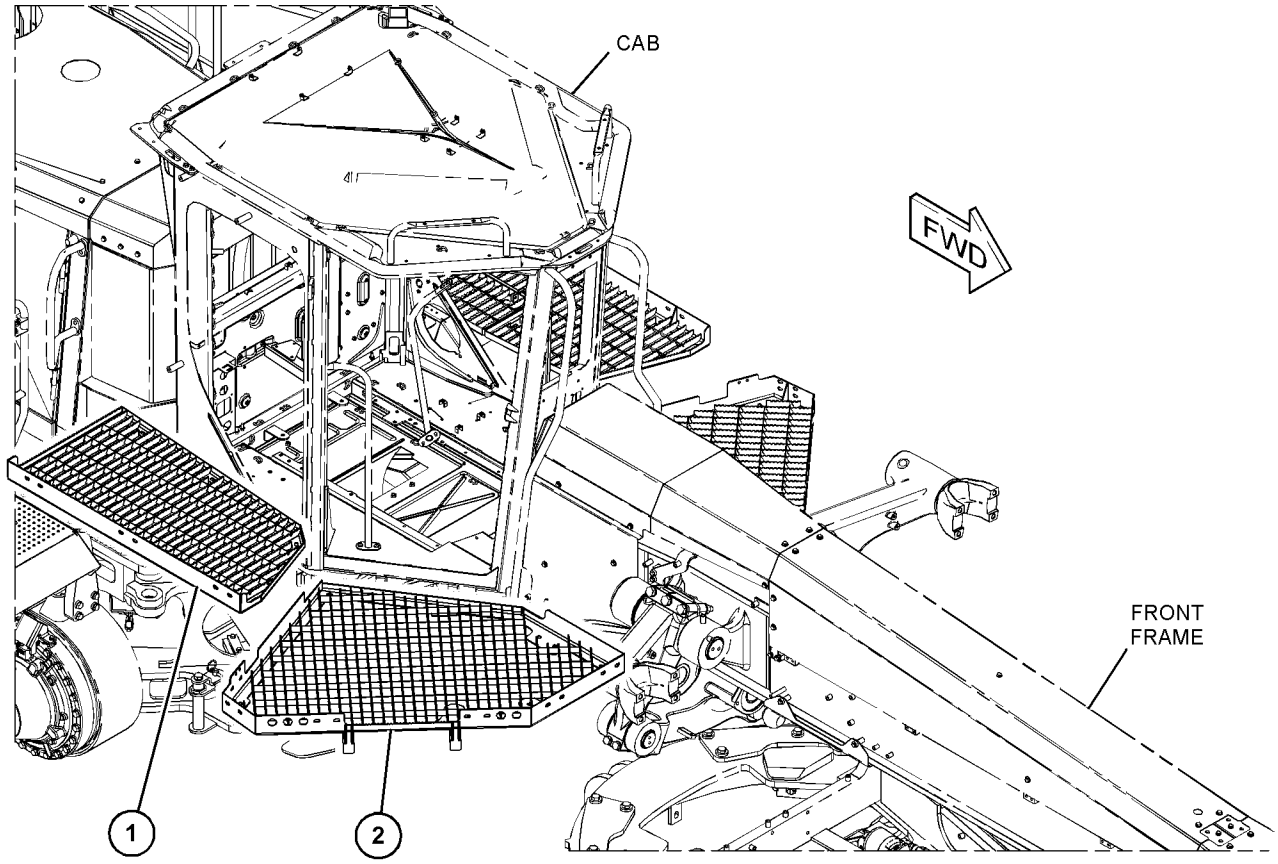

GRAPHIC #1 **<END>** g03828599

480-0416 WALKWAY GP–LH

S/N: E9Y1-UP

PART OF 386-0539 PLATFORM GP-OPERATOR

AN ATTACHMENT

SMCS-7255 **i06143857**

NOTE	REF NO	GRAPHIC REF	PART NUMBER	QTY	PART NAME 1 2 3 4 5 6 (PRODUCT LEVEL)	SEE PAGE
	1	1	**440-9601**	1	WALKWAY AS	
	2	1	**443-0935**	1	PLATFORM AS	
M		1	**9X-2032**	2	NUT-WELD (M4X0.7-THD)	
	3	1	**479-7497**	1	WALKWAY AS	

M - METRIC PART

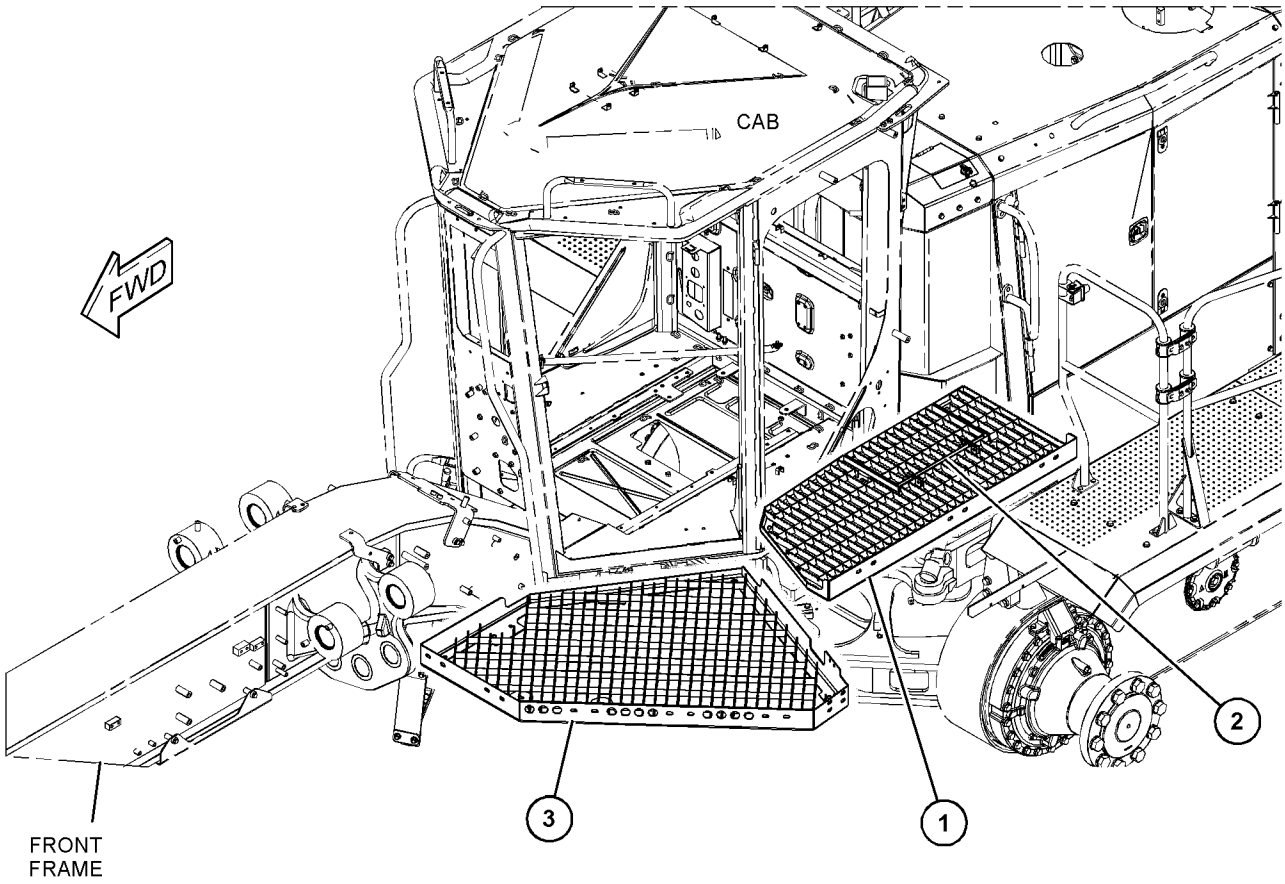

GRAPHIC #1 **<END>** g03828445

366-6154 ACCUMULATOR & MTG GP-BRAKE

S/N: E9Y1-UP
GLOBAL & CANADA
PART OF 391-3804 ACCUMULATOR AR-BLADE CUSHION
AN ATTACHMENT

SMCS-4263 **i06146844**

NOTE	REF NO	GRAPHIC REF	PART NUMBER	QTY	PART NAME 1 2 3 4 5 6 (PRODUCT LEVEL)	SEE PAGE
Y	1	1	*431-1428*	2	ACCUMULATOR GP-BRAKE (CHARGED)	516
M	2	1	**8T-4192**	6	BOLT (M12X1.75X25-MM)	
	3	1	**8T-4223**	6	WASHER-HARD (13.5X25.5X3-MM THK)	

M - METRIC PART
Y - SEPARATE ILLUSTRATION

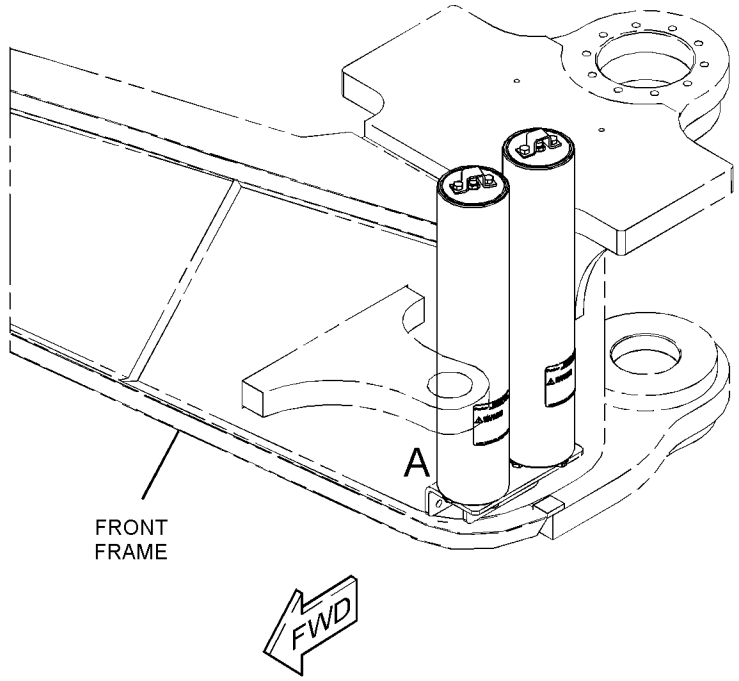

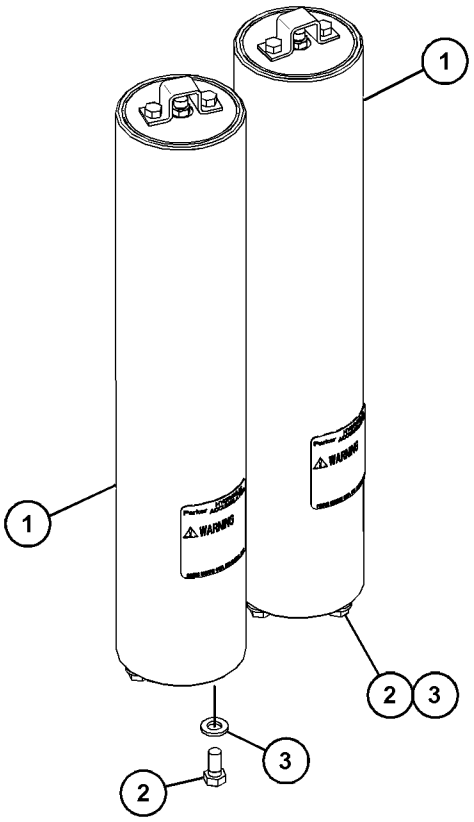

VIEW OF AREA A

GRAPHIC #1 **<END>** g03830735

366-6156 ACCUMULATOR & MTG GP-BRAKE

S/N: E9Y1-UP
EUROPEAN MARKET
PART OF 386-2533 ACCUMULATOR AR-BLADE CUSHION
AN ATTACHMENT

SMCS-4263 **i06146780**

NOTE	REF NO	GRAPHIC REF	PART NUMBER	QTY	PART NAME 1 2 3 4 5 6 (PRODUCT LEVEL)	SEE PAGE
Y	1	1	*431-1430*	2	ACCUMULATOR GP-BRAKE (CHARGED)	517
M	2	1	**8T-4192**	6	BOLT (M12X1.75X25-MM)	
	3	1	**8T-4223**	6	WASHER-HARD (13.5X25.5X3-MM THK)	

M - METRIC PART
Y - SEPARATE ILLUSTRATION

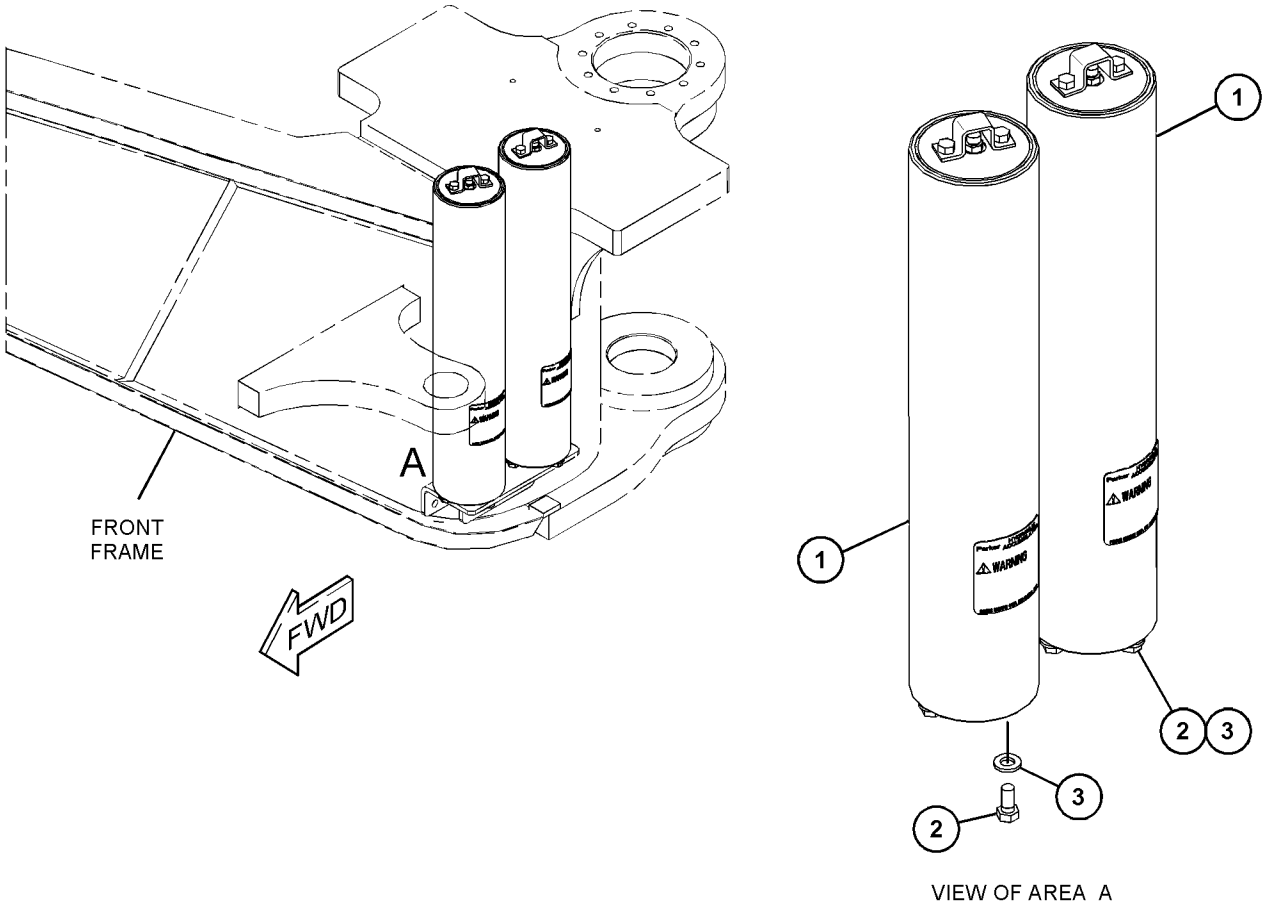

VIEW OF AREA A

GRAPHIC #1 **<END>** g03830735

479-3072 ACCUMULATOR & MTG GP-BRAKE–COLD WEATHER

S/N: E9Y1-UP

PART OF 479-3361 ACCUMULATOR AR-BLADE CUSHION AN ATTACHMENT

SMCS-4263 **i06155377**

NOTE	REF NO	GRAPHIC REF	PART NUMBER	QTY	PART NAME 1 2 3 4 5 6 (PRODUCT LEVEL)	SEE PAGE
Y	1	1	*398-6986*	2	ACCUMULATOR GP (CHARGED)	514
M	2	1	**8T-4192**	6	BOLT (M12X1.75X25-MM)	
	3	1	**8T-4223**	6	WASHER-HARD (13.5X25.5X3-MM THK)	

M - METRIC PART
Y - SEPARATE ILLUSTRATION

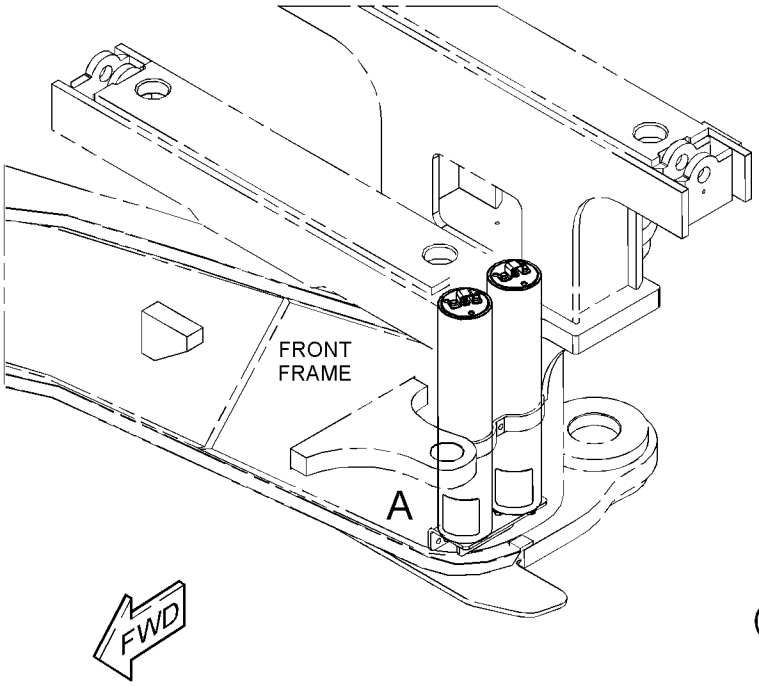

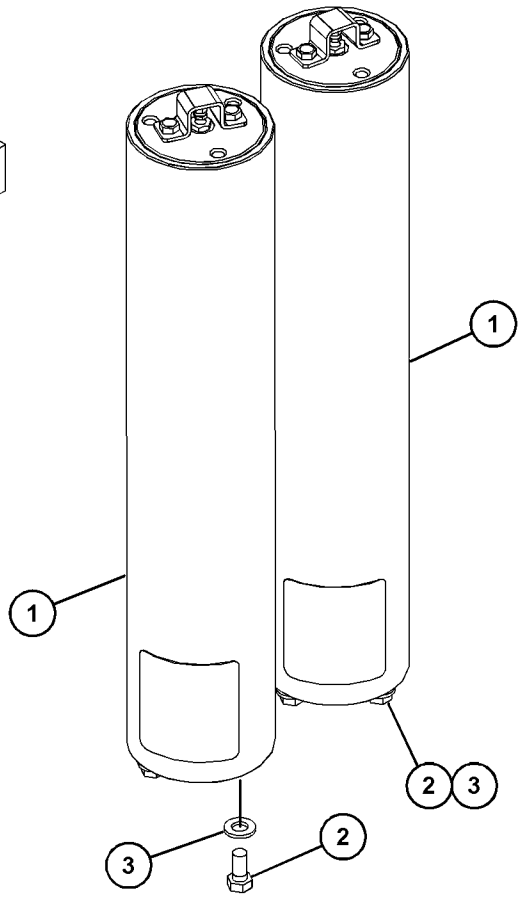

VIEW OF AREA A

GRAPHIC #1 **<END>** g03833492

398-6986 ACCUMULATOR GP–CHARGED

S/N: E9Y1-UP
FIELD REPLACEMENT ORDER 398-6987–PAGE: 515
PART OF 479-3072 ACCUMULATOR & MTG GP-BRAKE
AN ATTACHMENT

SMCS-4263, 4264 **i06155375**

NOTE	REF NO	GRAPHIC REF	PART NUMBER	QTY	PART NAME 1 2 3 4 5 6 (PRODUCT LEVEL)	SEE PAGE
	1	1	**241-0037**	1	FILM-WARNING (HIGH PRESSURE, READ OMM)	
	2	1	**222-2367**	1	VALVE GP-ACCUMULATOR CHARGING	
		1	**190-3850**	1	CORE	
	3	1	**111-9110**	1	PROTECTOR-GAS VALVE	
	4	1	**1J-9671**	1	SEAL-O-RING	
	5	1	**5M-3062**	2	BOLT (3/8-16XO.75-IN)	
					AVAILABLE REPAIR KIT(S):	
			170-0493	1	KIT-SEAL (HYDRAULIC ACCUMULATOR)	
					(INCLUDES O-RING SEALS, BACKUP WASHERS, PISTON RINGS & PISTON SEAL)	

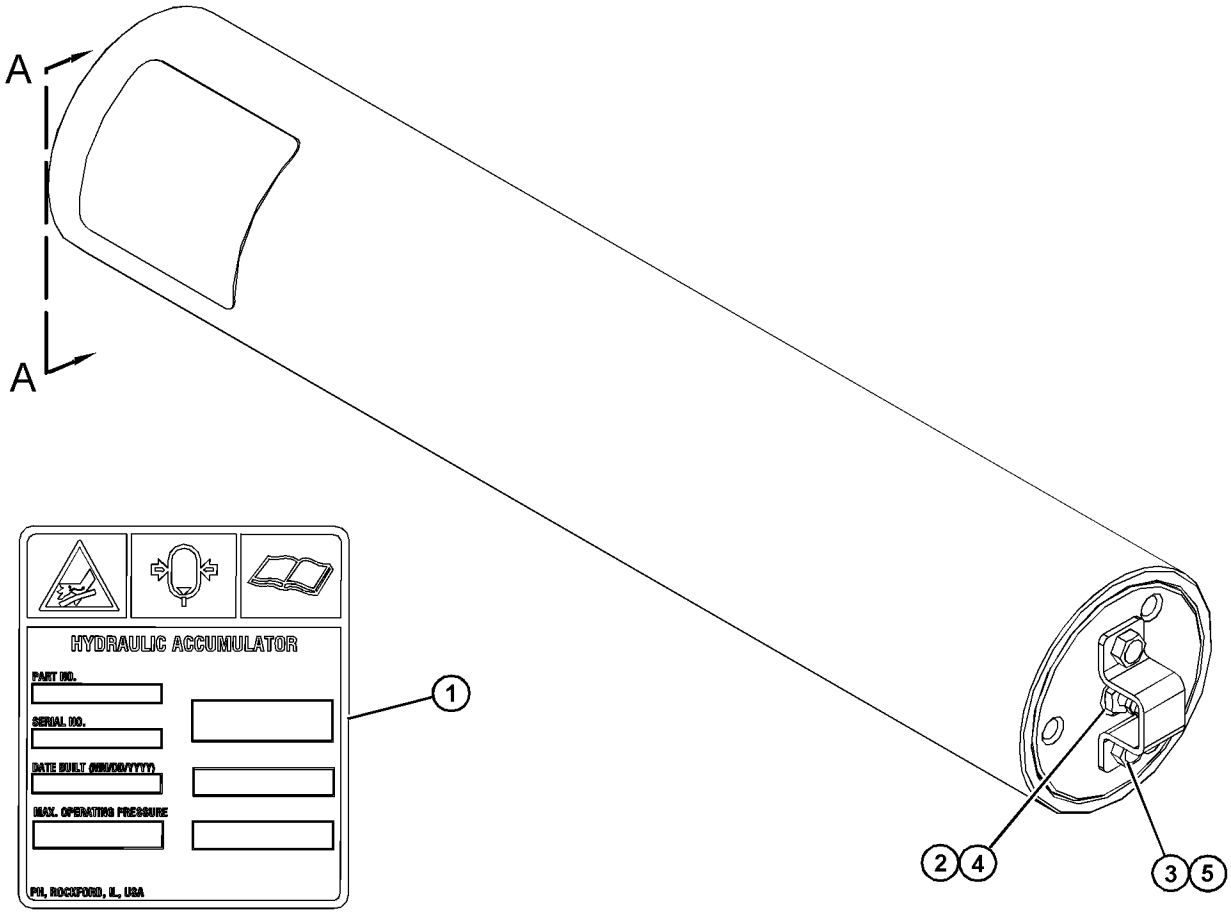

VIEW A-A

GRAPHIC #1 **<END>** g03833829

398-6987 ACCUMULATOR GP—UNCHARGED

S/N: E9Y1-UP

FIELD REPLACEMENT FOR 398-6986—PAGE: 514

SMCS-4263, 4264 **i06155376**

NOTE	REF NO	GRAPHIC REF	PART NUMBER	QTY	PART NAME 1 2 3 4 5 6 (PRODUCT LEVEL)	SEE PAGE
	1	1	**241-0037**	1	FILM-WARNING (HIGH PRESSURE, READ OMM)	
	2	1	**222-2367**	1	VALVE GP-ACCUMULATOR CHARGING	
		1	**190-3850**	1	CORE	
	3	1	**111-9110**	1	PROTECTOR-GAS VALVE	
	4	1	**1J-9671**	1	SEAL-O-RING	
	5	1	**5M-3062**	2	BOLT (3/8-16X0.75-IN)	
					AVAILABLE REPAIR KIT(S):	
			170-0493	1	KIT-SEAL (HYDRAULIC ACCUMULATOR)	
					(INCLUDES O-RING SEALS, BACKUP WASHERS, PISTON RINGS & PISTON SEAL)	

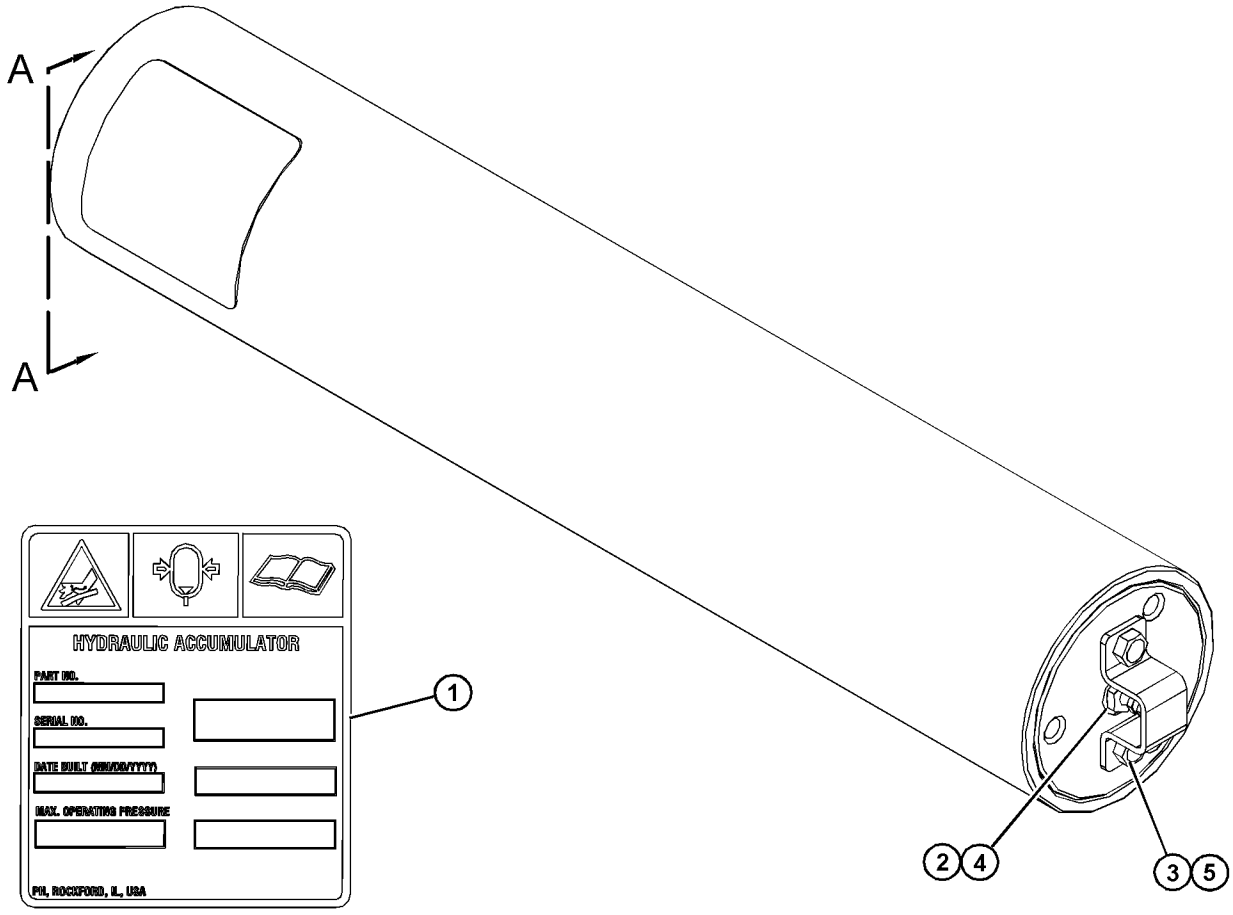

VIEW A-A

GRAPHIC #1 **<END>** g03833829

431-1428 ACCUMULATOR GP-BRAKE–CHARGED

S/N: E9Y1-UP
FIELD REPLACEMENT ORDER 431-1431–PAGE: 518
PART OF 366-6154 ACCUMULATOR & MTG GP-BRAKE
AN ATTACHMENT

SMCS-4263, 4264

i06146855

NOTE	REF NO	GRAPHIC REF	PART NUMBER	QTY	PART NAME 1 2 3 4 5 6 (PRODUCT LEVEL)	SEE PAGE
	1	1	**222-2367**	1	VALVE GP-ACCUMULATOR CHARGING	
		1	**190-3850**	1	CORE	
	2	1	**111-9110**	1	PROTECTOR-GAS VALVE	
	3	1	**1J-9671**	1	SEAL-O-RING	
	4	1	**5M-3062**	2	BOLT (3/8-16XO.75-IN)	
	5	1	**241-0037**	1	FILM-WARNING (HIGH PRESSURE, READ OMM)	
					AVAILABLE REPAIR KIT(S):	
			170-0493	1	KIT-SEAL (HYDRAULIC ACCUMULATOR)	
					(INCLUDES O-RING SEALS, BACKUP WASHERS, PISTON RINGS & PISTON SEAL)	

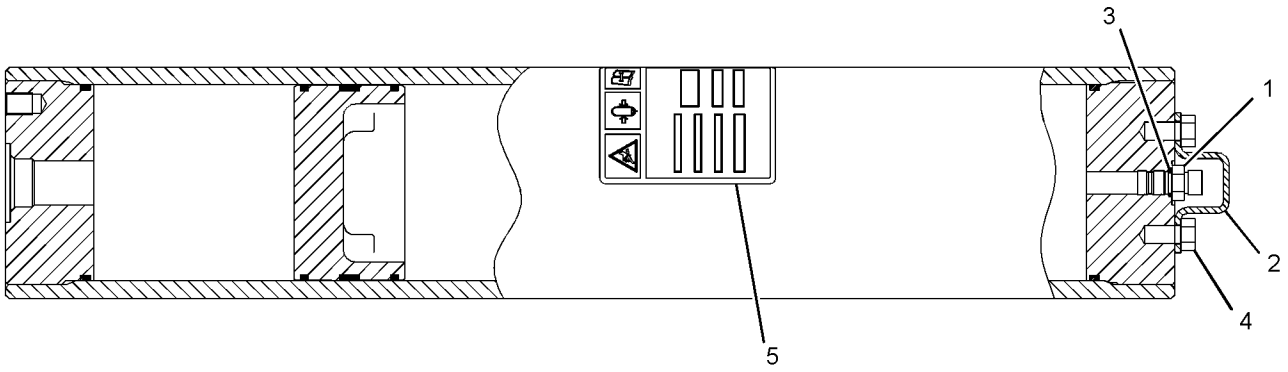

GRAPHIC #1

<END>

g03228736

431-1430 ACCUMULATOR GP-BRAKE–CHARGED

S/N: E9Y1-UP
FIELD REPLACEMENT ORDER 431-1432–PAGE: 519
PART OF 366-6156 ACCUMULATOR & MTG GP-BRAKE
AN ATTACHMENT

SMCS-4263, 4264 **i06146800**

NOTE	REF NO	GRAPHIC REF	PART NUMBER	QTY	PART NAME 1 2 3 4 5 6 (PRODUCT LEVEL)	SEE PAGE
	1	1	**222-2367**	1	VALVE GP-ACCUMULATOR CHARGING (BRAKE)	
		1	**190-3850**	1	CORE	
	2	1	**241-0037**	1	FILM-WARNING (HIGH PRESSURE, READ OMM)	
	3	1	**111-9110**	1	PROTECTOR-GAS VALVE	
	4	1	**157-5537**	1	PISTON	
	5	1	**1J-9671**	1	SEAL-O-RING	
	6	1	**5M-3062**	2	BOLT (3/8-16X0.75-IN)	
					AVAILABLE REPAIR KIT(S):	
			437-0046	1	KIT-SEAL (BRAKE ACCUMULATOR)	
					(INCLUDES PISTON SEAL, SEALS, O-RING SEALS & BACKUP WASHERS)	

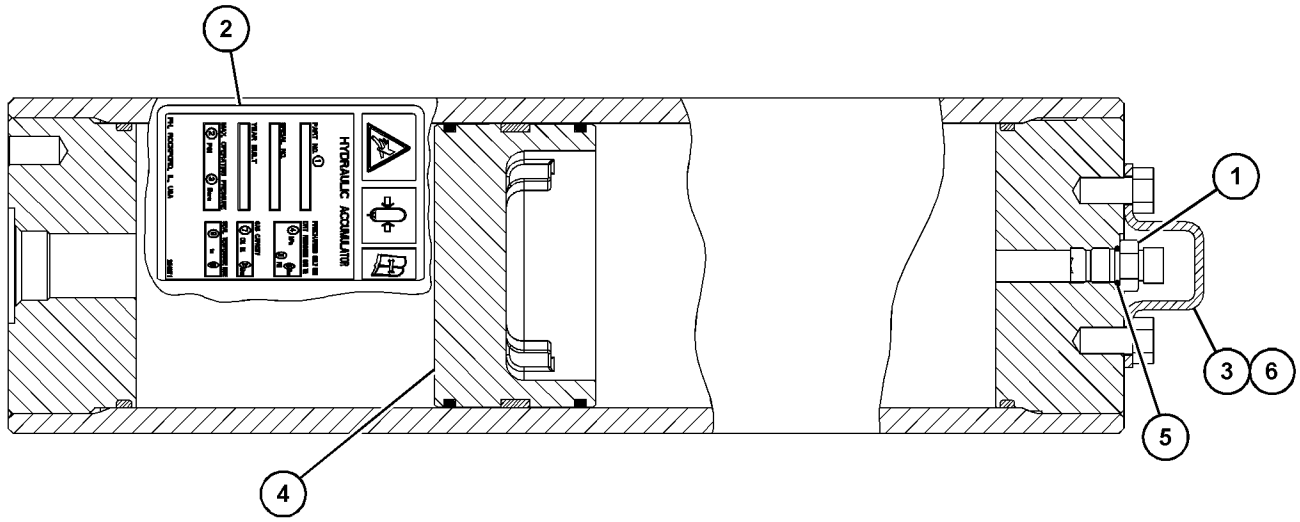

GRAPHIC #1 **<END>** g03830505

431-1431 ACCUMULATOR GP-BRAKE—UNCHARGED

S/N: E9Y1-UP

FIELD REPLACEMENT FOR 431-1428—PAGE: 516

SMCS-4263, 4264 **i06146856**

NOTE	REF NO	GRAPHIC REF	PART NUMBER	QTY	PART NAME 1 2 3 4 5 6 (PRODUCT LEVEL)	SEE PAGE
	1	1	**222-2367**	1	VALVE GP-ACCUMULATOR CHARGING	
		1	**190-3850**	1	CORE	
	2	1	**111-9110**	1	PROTECTOR-GAS VALVE	
	3	1	**1J-9671**	1	SEAL-O-RING	
	4	1	**5M-3062**	2	BOLT (3/8-16X0.75-IN)	
	5	1	**241-0037**	1	FILM-WARNING (HIGH PRESSURE, READ OMM)	
					AVAILABLE REPAIR KIT(S):	
			170-0493	1	KIT-SEAL (HYDRAULIC ACCUMULATOR)	
					(INCLUDES O-RING SEALS, BACKUP WASHERS, PISTON RINGS & PISTON SEAL)	

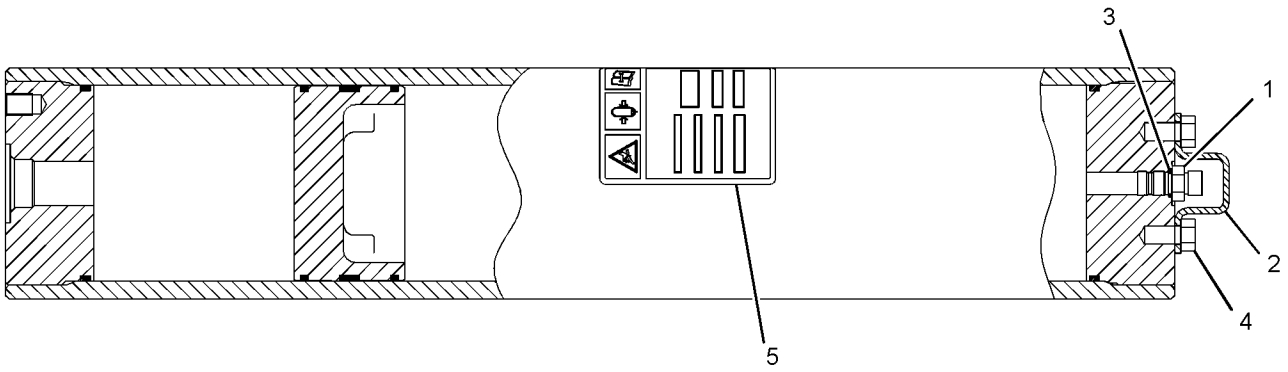

GRAPHIC #1 **<END>** g03228736

431-1432 ACCUMULATOR GP-BRAKE–UNCHARGED

S/N: E9Y1-UP

FIELD REPLACEMENT FOR 431-1430–PAGE: 517

SMCS-4263, 4264 **i06204340**

NOTE	REF NO	GRAPHIC REF	PART NUMBER	QTY	PART NAME 1 2 3 4 5 6 (PRODUCT LEVEL)	SEE PAGE
	1	1	**222-2367**	1	VALVE GP-ACCUMULATOR CHARGING (BRAKE)	
		1	**190-3850**	1	CORE	
	2	1	**241-0037**	1	FILM-WARNING (HIGH PRESSURE, READ OMM)	
	3	1	**111-9110**	1	PROTECTOR-GAS VALVE	
	4	1	**157-5537**	1	PISTON	
	5	1	**1J-9671**	1	SEAL-O-RING	
	6	1	**5M-3062**	2	BOLT (3/8-16X0.75-IN)	
					AVAILABLE REPAIR KIT(S):	
			437-0046	1	KIT-SEAL (BRAKE ACCUMULATOR)	
					(INCLUDES PISTON SEAL, SEALS, O-RING SEALS & BACKUP WASHERS)	

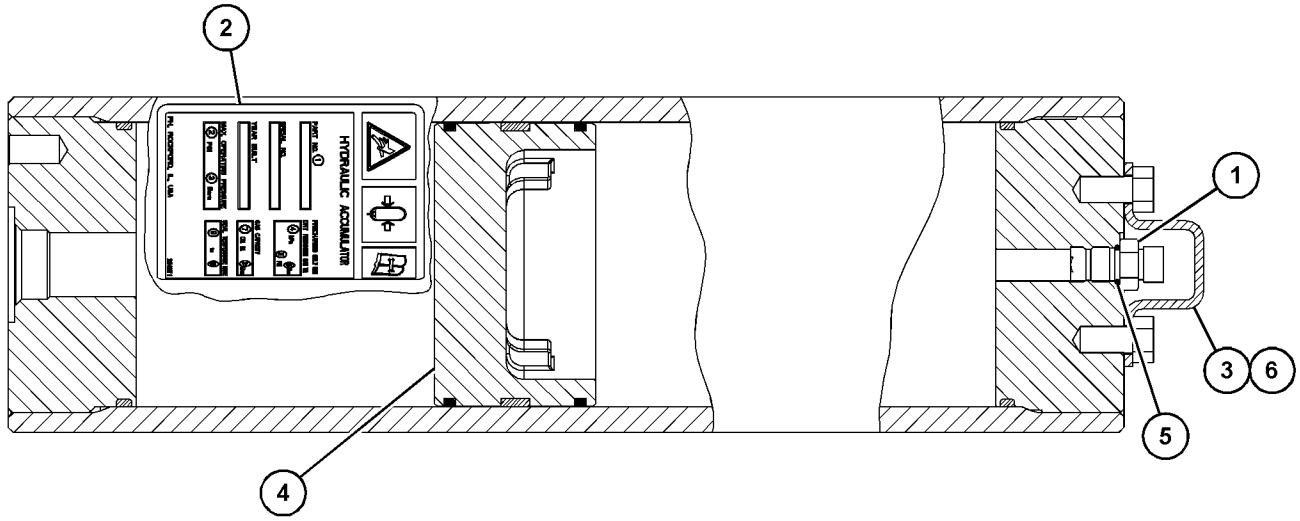

GRAPHIC #1 **<END>** g03830505

431-8852 BRAKE GP-PARKING

S/N: DM31-UP

PART OF 381-0675 TRANSMISSION AR

SMCS-3077, 4267 **i05602940**

NOTE	REF NO	GRAPHIC REF	PART NUMBER	QTY	PART NAME 1 2 3 4 5 6 (PRODUCT LEVEL)	SEE PAGE
	1	1	**2L-6726**	1	RING-RETAINING	
	2	1	**6F-6672**	1	SEAL-O-RING	
	3	1	**133-4292**	1	SEAL-LIP TYPE	
	4	1	*162-0177*	1	PLUG AS	
		1	**3J-1907**	1	SEAL-O-RING	
		1	**9S-8004**	1	PLUG	
	5	1	**171-9375**	1	SEAL-O-RING	
	6	1	**187-3369**	4	SPRING	
	7	1	**188-0633**	1	SEAL-BRAKE	
	8	1	**241-3722**	1	FILM-WARNING (RECOIL SPRING)	
	9	1	**246-8743**	1	YOKE AS	
		1	**2H-4145**	1	SEAL-O-RING	
		1	**6V-6767**	1	RING-RETAINING	
		1	**172-6423**	1	CUP-DUST	
	10	1	**246-8777**	1	SEAL-BRAKE	
	11	1	**246-8780**	6	PLATE-CLUTCH	
	12	1	**297-2830**	1	PLATE AS	
		1	**5M-7937**	2	DOWEL	
	13	1	**343-8739**	5	DISC-FRICTION	
	14	1	**431-8816**	1	HOUSING AS-BRAKE	
	15	1	**381-0662**	1	HUB-BRAKE	
	16	1	**431-8842**	1	PISTON	
	17	1	**290-4134**	1	VALVE-RELIEF	
	18	1	**095-0930**	1	RING-RETAINING (EXTERNAL)	
M	19	1	**129-3181**	3	BOLT-SOCKET HEAD (M10X1.5X55-MM)	
	20	1	**315-6094**	3	DOWEL	
	21	1	**7X-0605**	12	WASHER-HARD (13X28X1.6-MM THK)	
M	22	1	**8T-5092**	12	BOLT (M12X1.75X150-MM)	
B	23	1	**1U-8846**		SEALANT-GASKET	

B - USE AS REQUIRED
M - METRIC PART

431-8852 **BRAKE GP-PARKING (*contd.*)** **i05602940**

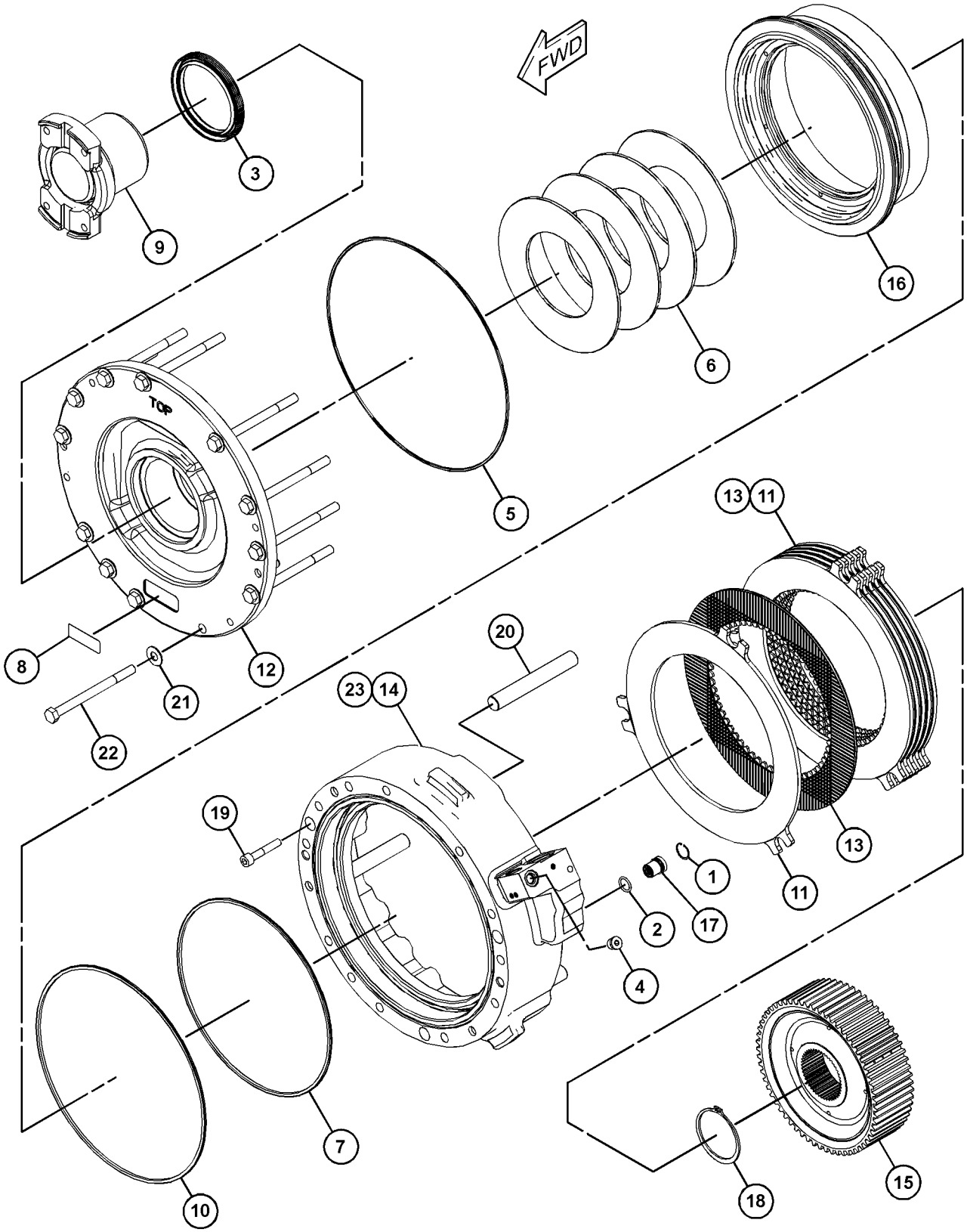

GRAPHIC #1 **<END>** g03581296

381-0831 BRAKE GP-SERVICE—FRONT

S/N: E9Y1-UP

PART OF 381-0830 WHEEL AR

SMCS-4251 **i06128443**

NOTE	REF NO	GRAPHIC REF	PART NUMBER	QTY	PART NAME 1 2 3 4 5 6 (PRODUCT LEVEL)	SEE PAGE
	1	1	**1B-3937**	1	CUP-BEARING	
	2	1	**1B-4043**	1	CONE-BEARING	
	3	1	**5H-3701**	1	SCREW-PURGE	
	4	1	**6I-8792**	8	SPRING	
	5	1	**6T-3377**	1	SEAL GP-DUO-CONE	
		1	**5P-3401**	2	RING-TORIC	
	6	1	**8S-9075**	1	CONE-BEARING	
	7	1	**8S-9076**	1	CUP-BEARING	
	8	1	**136-2967**	1	SEAL-O-RING	
	9	1	**264-7962**	1	SPROCKET (63-TEETH)	
	10	1	**270-6941**	1	RETAINER	
B	11	1	**270-6942**	4	SHIM (0.12-MM THK)	
B	12	1	**270-6943**	1	SHIM (0.18-MM THK)	
B	13	1	**270-6944**	4	SHIM (0.5-MM THK)	
	14	1	**290-3922**	1	COMPENSATOR	
	15	1	**297-4956**	6	DISC-FRICTION	
	16	1	**379-3889**	1	PISTON	
	17	1	**379-3905**	1	COVER	
	18	1	**381-0833**	1	HOUSING	
	19	1	**381-0834**	1	COVER	
	20	1	**381-0836**	7	PLATE	
	21	1	**381-0837**	1	INDICATOR (BRAKE, REAR)	
	22	1	**381-0839**	1	HUB	
	23	1	**415-1942**	1	SPACER	
R	24	1	**415-1946**	1	SPINDLE	
M	25	1	**103-6169**	4	BOLT-SELF-LOCKING (M16X2X60-MM)	
	26	1	**163-7233**	1	SEAL-D-RING	
	27	1	**198-4768**	24	WASHER-HARD (17.5X32X8-MM THK)	
	28	1	**266-6049**	4	DOWEL	
M	29	1	**286-9155**	24	BOLT-SELF-LOCKING (M16X2X120-MM)	
	30	1	**296-8274**	8	DOWEL	
	31	1	**325-3780**	1	SEAL	
	32	1	**3J-1907**	1	SEAL-O-RING	
M	33	1	**4I-0755**	1	NUT (M12X1.25-THD)	
	34	1	**6H-9691**	1	SEAL-O-RING	
	35	1	**8F-9538**	1	SEAL-O-RING	
M	36	1	**8T-1159**	4	BOLT-SOCKET HEAD (M10X1.5X25-MM)	

B - USE AS REQUIRED
M - METRIC PART
R - REMFG PART MAY BE AVAILABLE

381-0831 **BRAKE GP-SERVICE (*contd.*)** **i06128443**

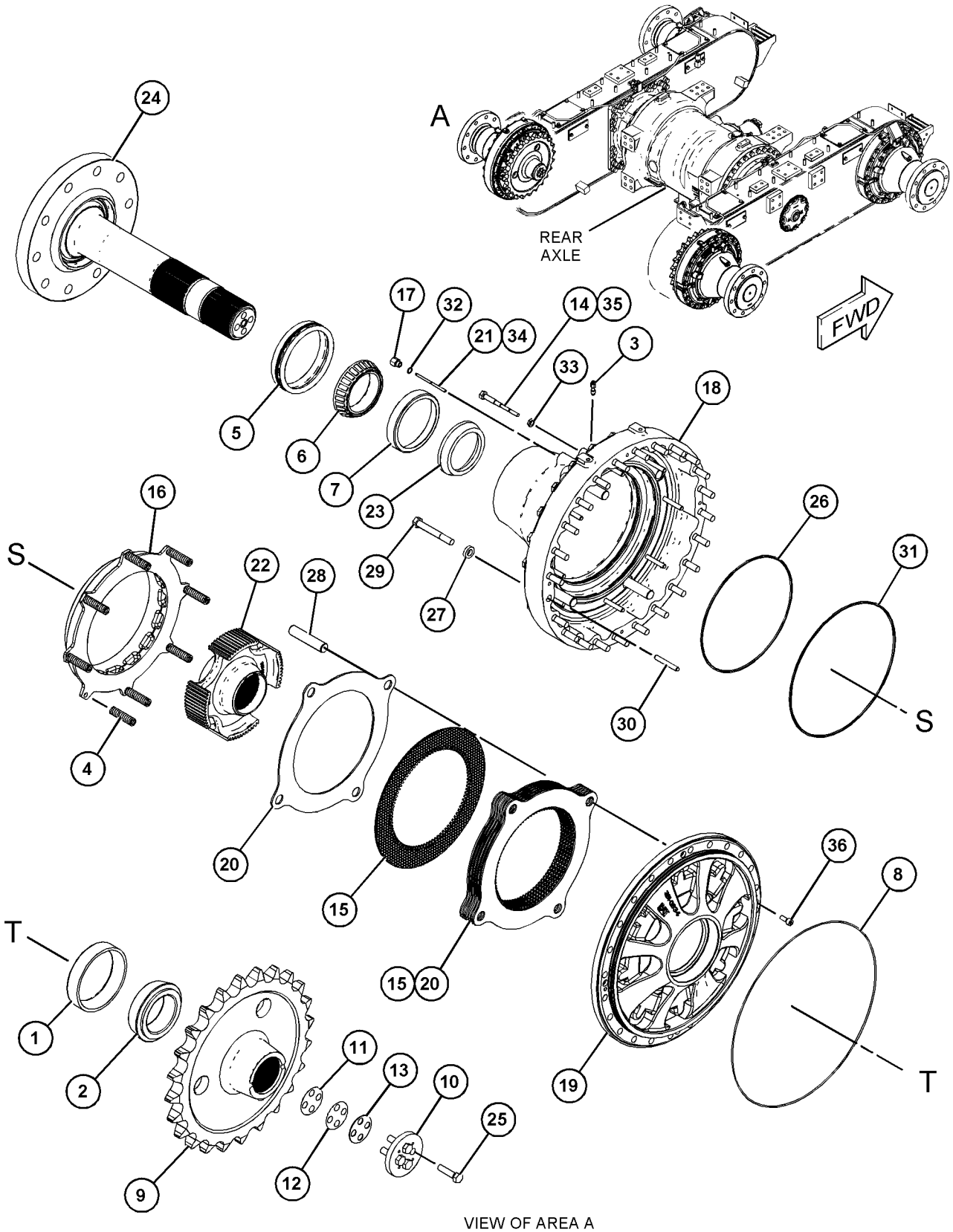

VIEW OF AREA A
(EXPLODED)

GRAPHIC #1 **<END>** g03821171

381-0832 BRAKE GP-SERVICE—REAR

S/N: E9Y1-UP

PART OF 381-0830 WHEEL AR

SMCS-4251 **i06128444**

NOTE	REF NO	GRAPHIC REF	PART NUMBER	QTY	PART NAME 1 2 3 4 5 6 (PRODUCT LEVEL)	SEE PAGE
	1	1	**1B-3937**	1	CUP-BEARING	
	2	1	**1B-4043**	1	CONE-BEARING	
	3	1	**5H-3701**	1	SCREW-PURGE	
	4	1	**6I-8792**	8	SPRING	
	5	1	**6T-3377**	1	SEAL GP-DUO-CONE	
		1	**5P-3401**	2	RING-TORIC	
	6	1	**8S-9075**	1	CONE-BEARING	
	7	1	**8S-9076**	1	CUP-BEARING	
	8	1	**136-2967**	1	SEAL-O-RING	
	9	1	**264-7962**	1	SPROCKET (63-TEETH)	
	10	1	**270-6941**	1	RETAINER	
B	11	1	**270-6942**	4	SHIM (0.12-MM THK)	
B	12	1	**270-6943**	1	SHIM (0.18-MM THK)	
B	13	1	**270-6944**	4	SHIM (0.5-MM THK)	
	14	1	**290-3922**	1	COMPENSATOR	
	15	1	**297-4956**	6	DISC-FRICTION	
	16	1	**379-3889**	1	PISTON	
	17	1	**379-3905**	1	COVER	
	18	1	**381-0833**	1	HOUSING	
	19	1	**381-0834**	1	COVER	
	20	1	**381-0836**	7	PLATE	
	21	1	**381-0837**	1	INDICATOR (BRAKE, REAR)	
	22	1	**381-0839**	1	HUB	
	23	1	**415-1942**	1	SPACER	
R	24	1	**415-1946**	1	SPINDLE	
M	25	1	**103-6169**	4	BOLT-SELF-LOCKING (M16X2X60-MM)	
	26	1	**163-7233**	1	SEAL-D-RING	
	27	1	**198-4768**	24	WASHER-HARD (17.5X32X8-MM THK)	
	28	1	**266-6049**	4	DOWEL (LH)	
M	29	1	**286-9155**	24	BOLT-SELF-LOCKING (M16X2X120-MM)	
	30	1	**296-8274**	8	DOWEL (RH)	
	31	1	**325-3780**	1	SEAL	
	32	1	**3J-1907**	1	SEAL-O-RING (1)	
M	33	1	**4I-0755**	1	NUT (M12X1.25-THD)	
	34	1	**6H-9691**	1	SEAL-O-RING	
	35	1	**8F-9538**	1	SEAL-O-RING	
M	36	1	**8T-1159**	4	BOLT-SOCKET HEAD (M10X1.5X25-MM)	

B - USE AS REQUIRED
M - METRIC PART
R - REMFG PART MAY BE AVAILABLE

381-0832 **BRAKE GP-SERVICE (*contd.*)** **i06128444**

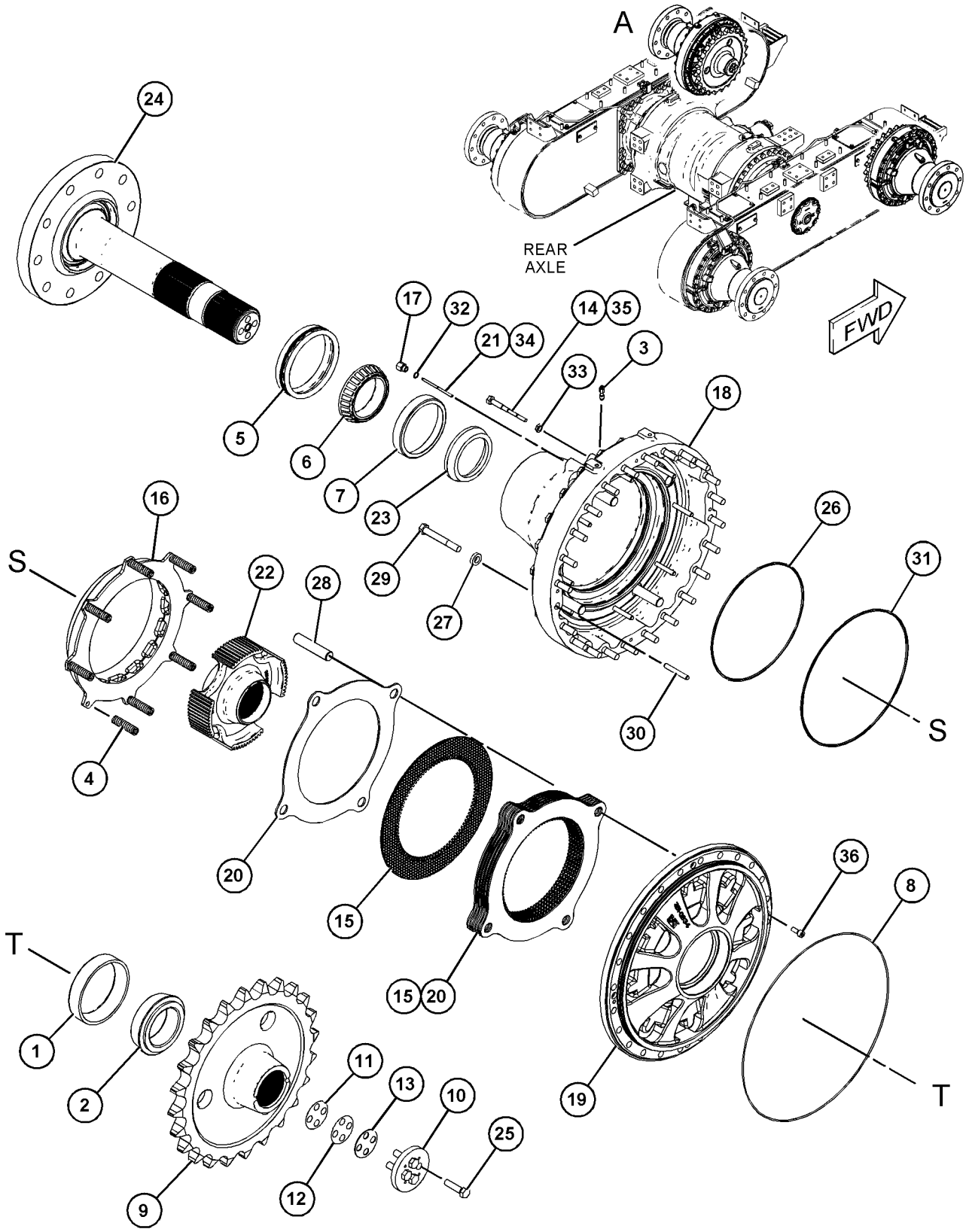

VIEW OF AREA A
(EXPLODED)

GRAPHIC #1 **<END>** g03821162

389-2167 CONTROL GP-SERVICE BRAKE

S/N: E9Y1-UP

PART OF 361-3120 CAB AR

SMCS-4251, 4265, 4269 **i06144374**

NOTE	REF NO	GRAPHIC REF	PART NUMBER	QTY	PART NAME 1 2 3 4 5 6 (PRODUCT LEVEL)	SEE PAGE
	1	1	**6V-0852**	2	CAP-DUST	
	2	1	*164-5567*	2	COUPLER AS-QUICK DISCONNECT (MALE)	
					(EACH INCLUDES)	
		1	**6V-3965**	1	FITTING (QUICK DISCONNECT)	
		1	**214-7568**	1	SEAL-O-RING	
	3	1	*196-2036*	2	TEE AS	
					(EACH INCLUDES)	
		1	**3K-0360**	1	SEAL-O-RING	
		1	**6V-8398**	1	SEAL-O-RING	
		1	**9X-2492**	1	TEE-O-RING	
	4	1	*241-6215*	2	ELBOW AS	
					(EACH INCLUDES)	
		1	**3J-1907**	1	SEAL-O-RING (1)	
		1	**6V-8076**	1	ELBOW	
	5	1	**249-4089**	1	TUBE AS	
	6	1	**249-4091**	6	BLOCK	
	7	1	**281-9356**	3	PLATE	
	8	1	**389-2168**	1	TUBE AS	
	9	1	**389-2172**	1	TUBE AS	
Y	10	1	**444-9775**	1	PEDAL GP-BRAKE, XMSN & GOV	785
	11	1	**467-3418**	1	TUBE AS	
	12	1	**468-2942**	1	TUBE AS	
	13	1	**472-3544**	1	TUBE AS	
	14	1	*148-8364*	3	ELBOW AS	
					(EACH INCLUDES)	
		1	**3K-0360**	1	SEAL-O-RING	
		1	**6V-8398**	1	SEAL-O-RING	
		1	**6V-8625**	1	ELBOW	
	15	1	*148-8428*	1	TEE AS	
		1	**3K-0360**	1	SEAL-O-RING	
		1	**6V-8398**	2	SEAL-O-RING	
		1	**6V-8782**	1	TEE	
	16	1	**8T-4121**	9	WASHER-HARD (11X21X2.5-MM THK)	
M	17	1	**8T-4186**	6	BOLT (M10X1.5X40-MM)	
M	18	1	**8T-6466**	3	BOLT (M10X1.5X60-MM)	

M - METRIC PART
Y - SEPARATE ILLUSTRATION

389-2167 **CONTROL GP-SERVICE BRAKE (*contd.*)** **i06144374**

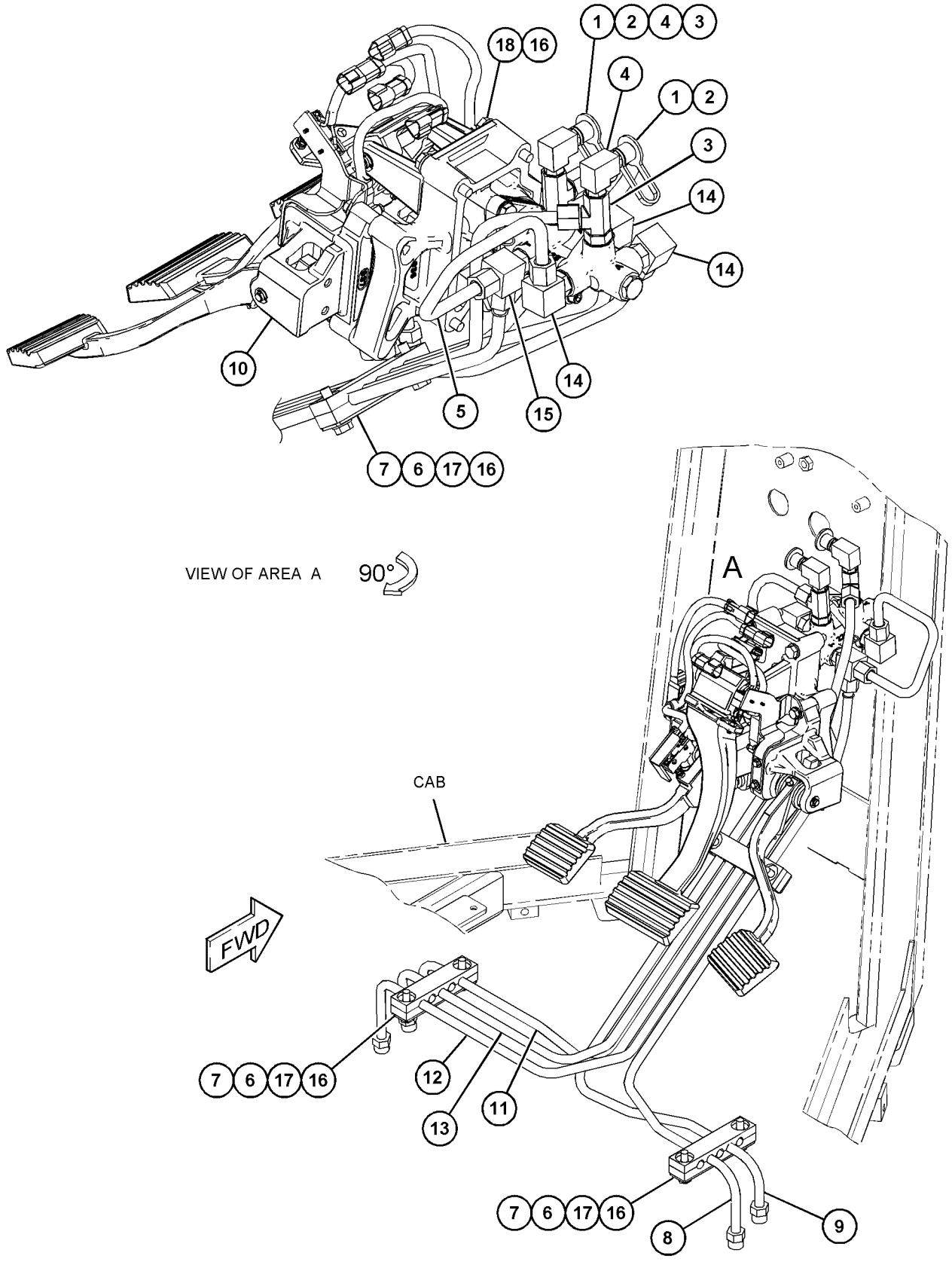

GRAPHIC #1 **<END>** g03833323

366-6126 LINES GP-SERVICE BRAKE

S/N: E9Y1-UP

PART OF 371-3796 HYDRAULIC AR

SMCS-4257 **i06140264**

NOTE	REF NO	GRAPHIC REF	PART NUMBER	QTY	PART NAME 1 2 3 4 5 6 (PRODUCT LEVEL)	SEE PAGE
	1	3	**165-4388**	1	SPACER (13X20X54-MM THK)	
	2	1	**228-7031**	1	BRACKET AS	
M		1	**8T-3490**	1	NUT-WELD (M10X1.5-THD)	
	3	2	**300-8554**	1	BRACKET AS	
I	4	1	**376-1658**	1	HOSE AS	
I	5	1	**376-1678**	1	HOSE AS	
	6	1	**385-6290**	1	HOSE	
I	7	1	**388-3947**	1	HOSE AS	
	8	1	**390-4733**	1	PLATE AS	
I	9	1	**423-6371**	1	HOSE AS	
	10	3	**434-1994**	1	PLATE AS	
I	11	1	**441-2404**	1	HOSE AS	
I	12	2	**479-2039**	2	HOSE AS	
I	13	2	**482-9908**	1	HOSE AS	
I	14	2	**482-9912**	1	HOSE AS	
I	15	2	**482-9914**	1	HOSE AS	
I	16	3	**482-9915**	1	HOSE AS	
I	17	3	**482-9916**	1	HOSE AS	
	18	1,2	**091-0081**	4	SPACER (10.5X20X10-MM THK)	
M	19	3	**101-3129**	1	STUD (M10X1.5-THD)	
	20	2	**122-0450**	4	GROMMET	
M	21	2	**133-7810**	1	STUD-TAPERLOCK (M10X1.5X45-MM)	
	22	3	**136-6417**	2	CLAMP	
	23	1	**142-9242**	1	ADAPTER	
	24	3	*148-8311*	1	ADAPTER AS	
		3	**3K-0360**	1	SEAL-O-RING	
		3	**8T-1715**	1	ADAPTER	
	25	1	*148-8316*	1	CONNECTOR AS	
		1	**3J-7354**	1	SEAL-O-RING	
		1	**4J-5477**	1	SEAL-O-RING	
		1	**6V-8647**	1	CONNECTOR	
	26	1	*148-8327*	1	CONNECTOR AS	
		1	**3D-2824**	1	SEAL-O-RING	
		1	**6V-8637**	1	CONNECTOR	
		1	**6V-9746**	1	SEAL-O-RING	
	27	1	*148-8347*	1	ELBOW AS	
		1	**3D-2824**	1	SEAL-O-RING	
		1	**6V-9007**	1	ELBOW	
		1	**6V-9746**	1	SEAL-O-RING	
	28	1	*148-8374*	2	ELBOW AS	
					(EACH INCLUDES)	
		1	**3K-0360**	1	SEAL-O-RING	
		1	**6V-8397**	1	SEAL-O-RING	
		1	**6V-8723**	1	ELBOW	
	29	3	*148-8436*	1	TEE AS	
		3	**3K-0360**	1	SEAL-O-RING	
		3	**6V-8398**	2	SEAL-O-RING	
		3	**6V-8775**	1	TEE-FACE SEAL	
	30	1	*150-3033*	1	ELBOW AS	
		1	**3J-1907**	1	SEAL-O-RING	
		1	**4J-5477**	1	SEAL-O-RING	
		1	**8T-0164**	1	ELBOW	
	31	3	*150-4037*	1	TEE AS	
		3	**6V-8398**	2	SEAL-O-RING	
		3	**6V-9844**	1	TEE-SWIVEL	
	32	1	*164-5567*	2	COUPLER AS-QUICK DISCONNECT (MALE)	
					(EACH INCLUDES)	
		1	**6V-3965**	1	FITTING (QUICK DISCONNECT)	
		1	**214-7568**	1	SEAL-O-RING	

366-6126 **LINES GP-SERVICE BRAKE (*contd.*)** **i06140264**

NOTE	REF NO	GRAPHIC REF	PART NUMBER	QTY	PART NAME 1 2 3 4 5 6 (PRODUCT LEVEL)	SEE PAGE
	33	3	*164-8908*	1	CONNECTOR AS	
		3	**3K-0360**	1	SEAL-O-RING	
		3	**6V-8398**	1	SEAL-O-RING	
		3	**8T-0077**	1	CONNECTOR	
	34	2	*169-7409*	2	UNION AS	
					(EACH INCLUDES)	
		2	**6V-8996**	1	UNION	
		2	**7J-9108**	2	SEAL-O-RING	
	35	2	**172-0197**	2	SPACER (10.5X20X5.29-MM THK)	
M	36	2	**176-9237**	1	BOLT-SPECIAL	
	37	1	*180-9933*	2	ADAPTER AS	
					(EACH INCLUDES)	
		1	**3J-7354**	1	SEAL-O-RING	
		1	**135-9941**	1	ADAPTER	
	38	3	**198-4777**	3	WASHER-HARD (11X25X10-MM THK)	
	39	1	**1P-4579**	2	FLANGE-HALF	
	40	2,3	**1S-0994**	3	CLIP	
M	41	1	**227-6715**	3	STUD (M10X1.5X30-MM)	
	42	1	**243-1353**	1	SPACER (11X20X35-MM THK)	
	43	3	**302-3908**	1	SPACER (11X20X30-MM THK)	
M	44	1,2,3	**344-5675**	8	NUT (M10X1.5-THD)	
	45	2,3	**3S-8665**	7	CLIP	
	46	2	**4D-7733**	2	CLIP	
	47	1	**4J-0520**	1	SEAL-O-RING	
	48	1	**4J-0524**	1	SEAL-O-RING	
	49	3	**5P-1076**	1	WASHER-HARD (13.5X30X4-MM THK)	
	50	1	**5P-9299**	1	CLIP	
	51	1	**6V-0852**	2	CAP-DUST	
	52	2	**6V-9170**	2	NUT-BULKHEAD (1-14-THD)	
M	53	3	**7X-2549**	1	BOLT (M12X1.75X100-MM)	
	54	1	**8C-3206**	2	FLANGE-HALF	
	55	2	**8T-1897**	4	CLIP (SLOT)	
	56	2	**8T-1898**	4	CLIP (TAB)	
	57	1,2,3	**8T-4121**	27	WASHER-HARD (11X21X2.5-MM THK)	
M	58	1,2	**8T-4136**	4	BOLT (M10X1.5X25-MM)	
M	59	1,2,3	**8T-4137**	8	BOLT (M10X1.5X20-MM)	
M	60	1	**8T-4183**	4	BOLT (M12X1.75X40-MM)	
M	61	2,3	**8T-4195**	5	BOLT (M10X1.5X30-MM)	
M	62	1	**8T-4196**	4	BOLT (M10X1.5X35-MM)	
M	63	1	**8T-4198**	1	BOLT (M10X1.5X100-MM)	
	64	1	**8T-4223**	4	WASHER-HARD (13.5X25.5X3-MM THK)	
M	65	1	**8T-6466**	1	BOLT (M10X1.5X60-MM)	
	66	1	**8T-6703**	2	CLAMP-HOSE	
	67	1,3	**9M-8406**	8	CLIP	

I - REFER TO HYDRAULIC INFORMATION SYSTEM
M - METRIC PART

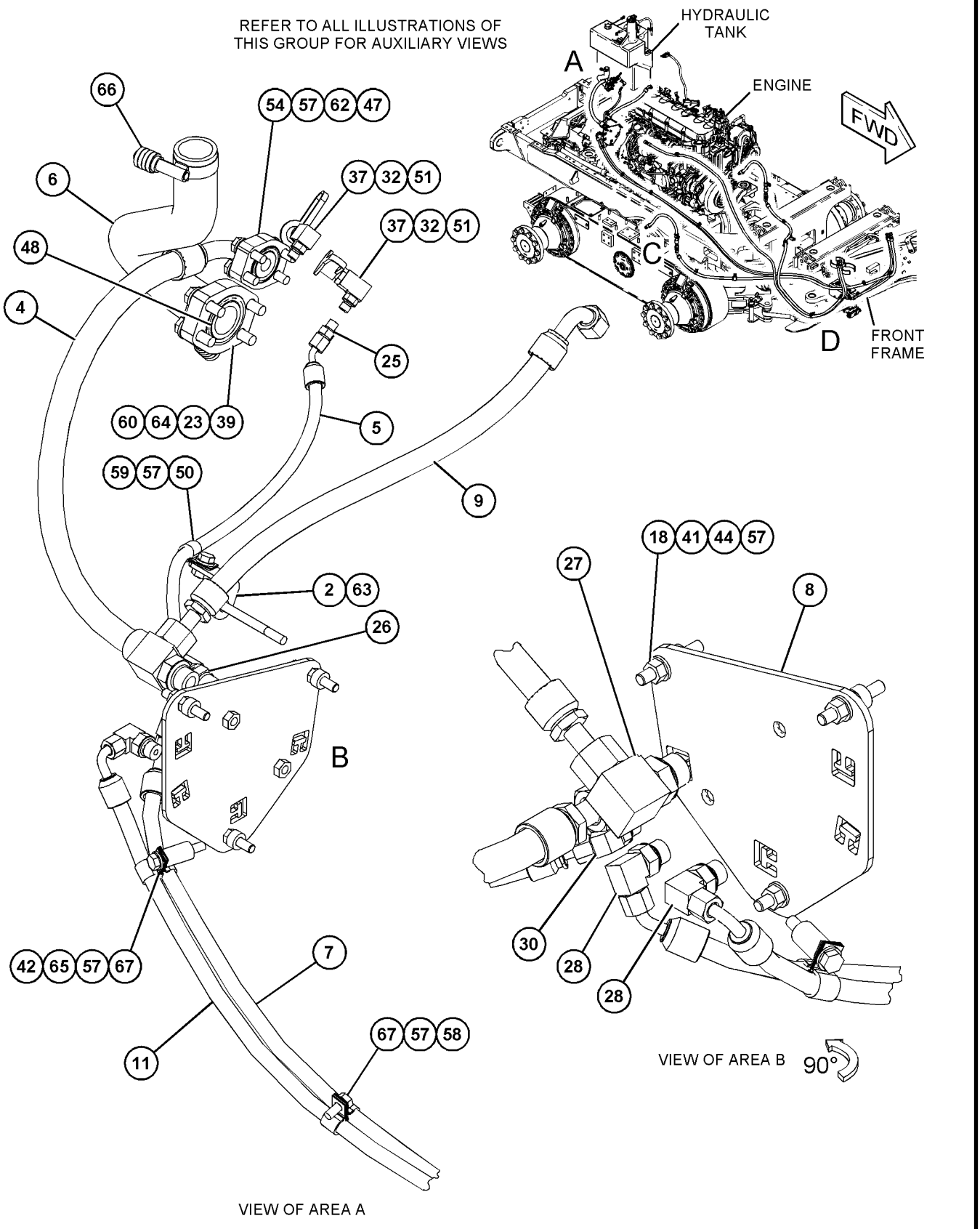

GRAPHIC #1 g03836040

366-6126 **LINES GP-SERVICE BRAKE (*contd.*)** **i06140264**

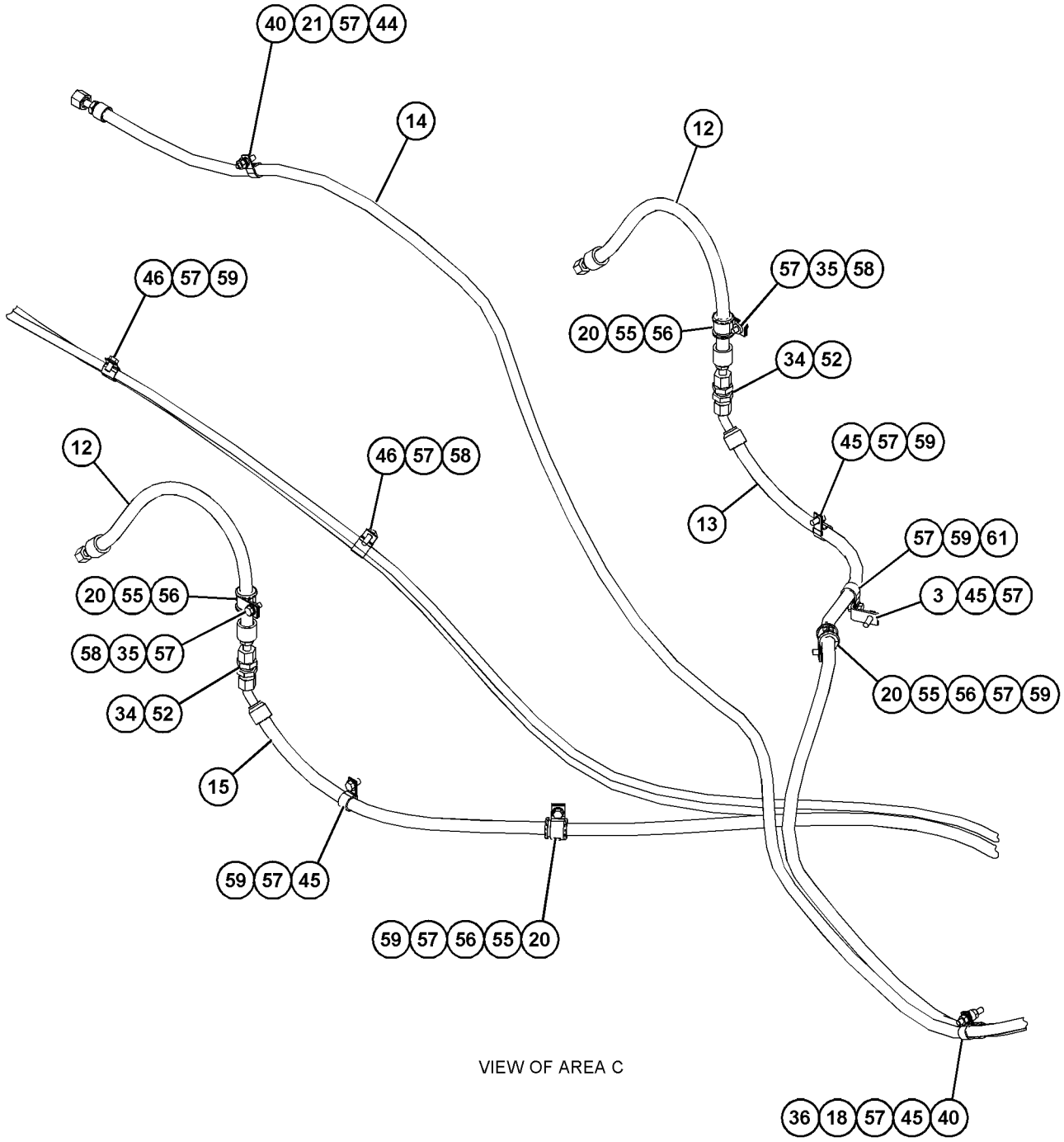

VIEW OF AREA C

GRAPHIC #2 g03836041

366-6126 **LINES GP-SERVICE BRAKE (*contd.*)** **i06140264**

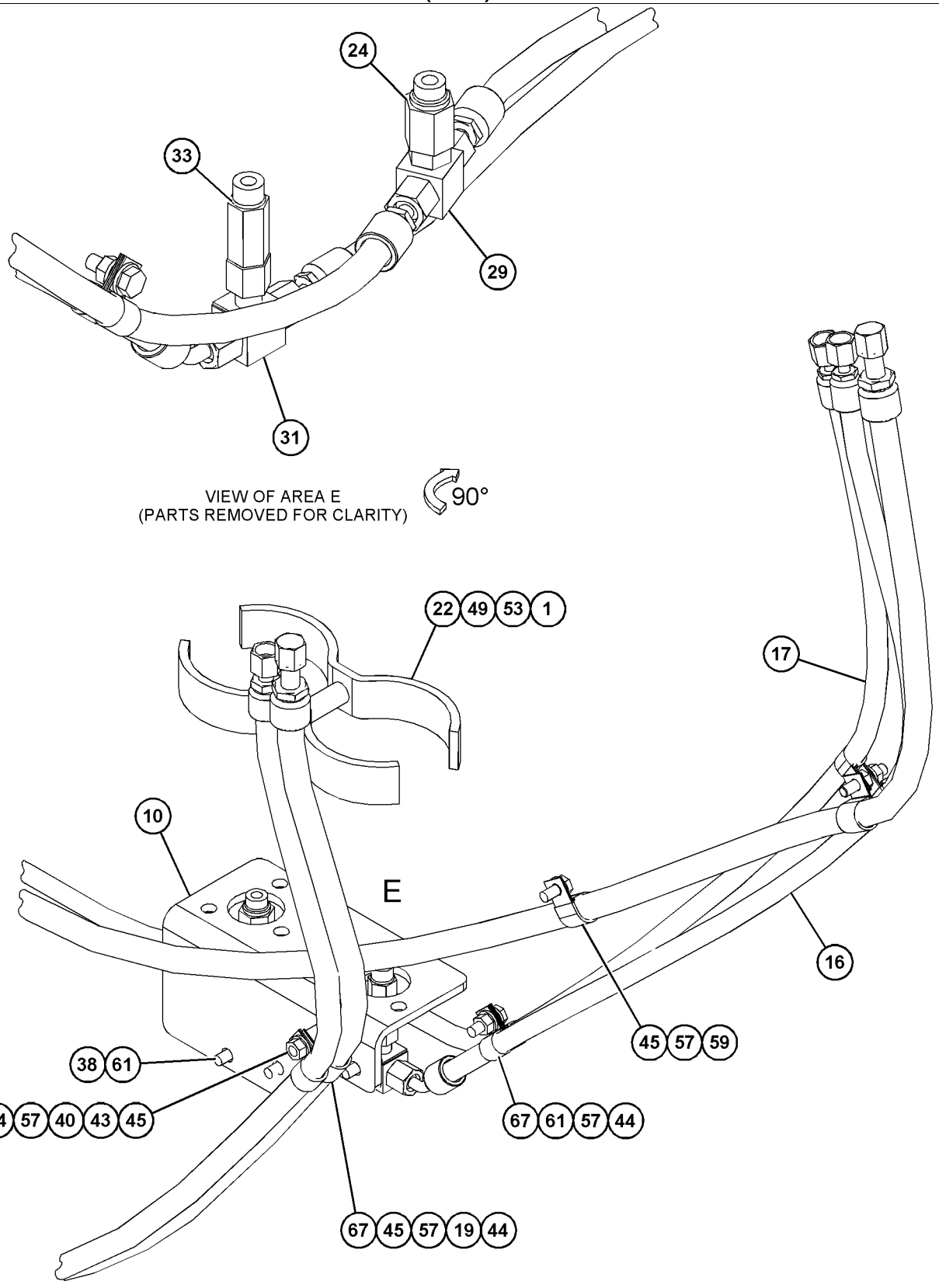

GRAPHIC #3 **<END>** g03836043

390-2932 LINES GP-SERVICE BRAKE

S/N: E9Y1-UP

PART OF 386-6764 AXLE AR-REAR

SMCS-4257 **i06140651**

NOTE	REF NO	GRAPHIC REF	PART NUMBER	QTY	PART NAME 1 2 3 4 5 6 (PRODUCT LEVEL)	SEE PAGE
	1	1	*357-4372*	4	CONNECTOR AS	
					(EACH INCLUDES)	
		1	**3J-1907**	1	SEAL-O-RING	
		1	**6V-8398**	1	SEAL-O-RING	
		1	**6V-9873**	1	CONNECTOR	
	2	1	**390-2935**	4	PLATE	
	3	1	**438-1551**	2	TUBE AS	
	4	1	**438-1552**	2	TUBE AS	
	5	1	**480-6661**	2	BLOCK	
	6	1	*148-8354*	2	ELBOW AS	
					(EACH INCLUDES)	
		1	**3K-0360**	1	SEAL-O-RING	
		1	**6V-8398**	1	SEAL-O-RING	
		1	**6V-9002**	1	ELBOW	
	7	1	*148-8407*	2	PLUG AS	
					(EACH INCLUDES)	
		1	**3J-1907**	1	SEAL-O-RING	
		1	**9S-4191**	1	PLUG (9/16-18-THD)	
	8	1	*148-8411*	2	PLUG AS	
					(EACH INCLUDES)	
		1	**3K-0360**	1	SEAL-O-RING	
		1	**9S-4185**	1	PLUG	
	9	1	*150-4043*	4	CONNECTOR AS	
					(EACH INCLUDES)	
		1	**3J-1907**	1	SEAL-O-RING	
		1	**6V-8398**	1	SEAL-O-RING	
		1	**6V-9873**	1	CONNECTOR	
	10	1	**5K-3294**	8	CLIP	
	11	1	**8T-4121**	12	WASHER-HARD (11X21X2.5-MM THK)	
M	12	1	**8T-4195**	12	BOLT (M10X1.5X30-MM)	

M - METRIC PART

390-2932 **LINES GP-SERVICE BRAKE (*contd.*)** **i06140651**

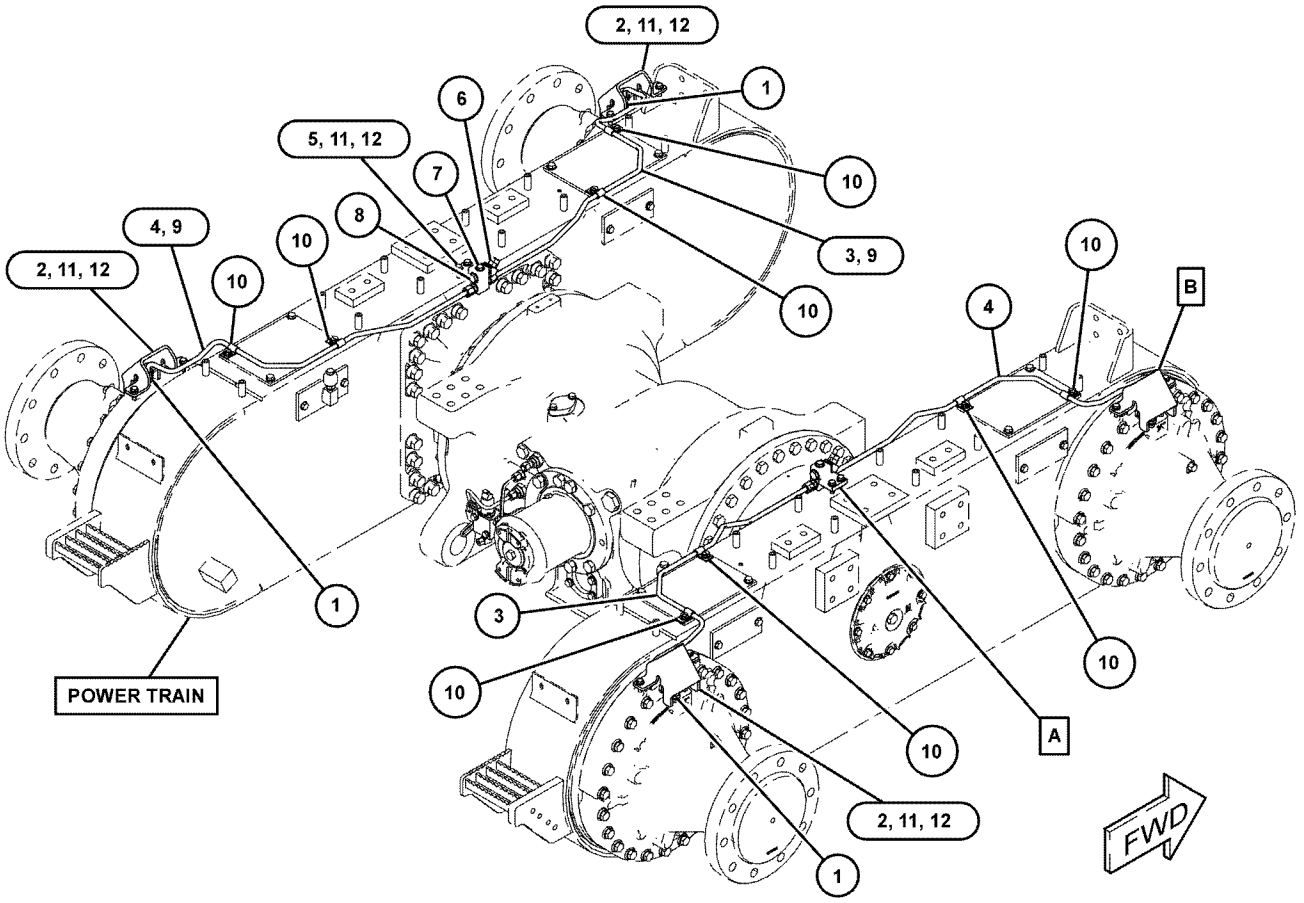

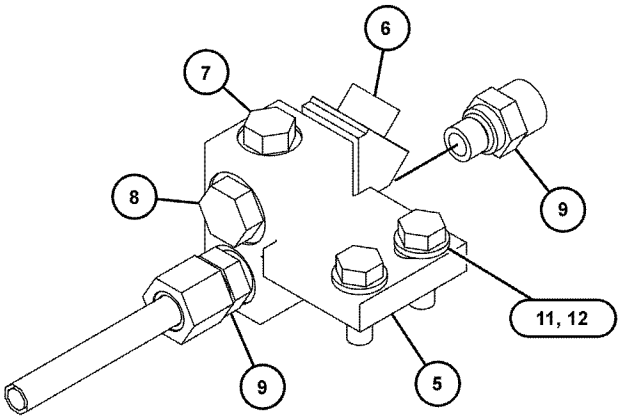

VIEW OF AREA A

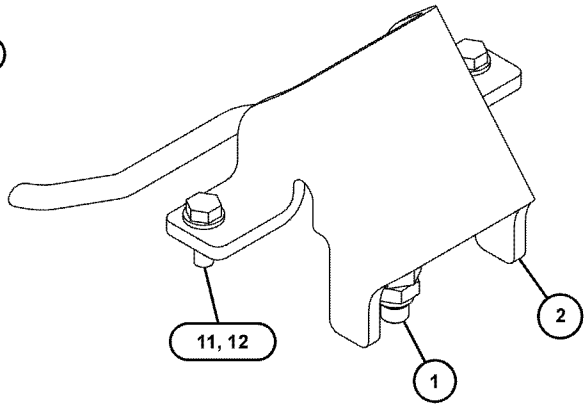

VIEW OF AREA B

GRAPHIC #1 **<END>** g03825163

352-5816 ACCUMULATOR & MTG GP-HYDRAULIC–BLADE LIFT

S/N: E9Y1-UP
GLOBAL & CANADA
PART OF 391-3804, 479-3361 ACCUMULATOR AR-BLADE CUSHION
AN ATTACHMENT

SMCS-5077 **i06146843**

NOTE	REF NO	GRAPHIC REF	PART NUMBER	QTY	PART NAME 1 2 3 4 5 6 (PRODUCT LEVEL)	SEE PAGE
Y	1	1	*160-9413*	2	ACCUMULATOR GP-HYDRAULIC (CHARGED)	538
	2	1	*171-6466*	2	UNION AS	
					(EACH INCLUDES)	
		1	**3D-2824**	2	SEAL-O-RING	
		1	**5P-9560**	1	UNION	
Y	3	1	**322-3798**	2	MANIFOLD GP-CONTROL (ACCUMULATOR)	610

Y - SEPARATE ILLUSTRATION

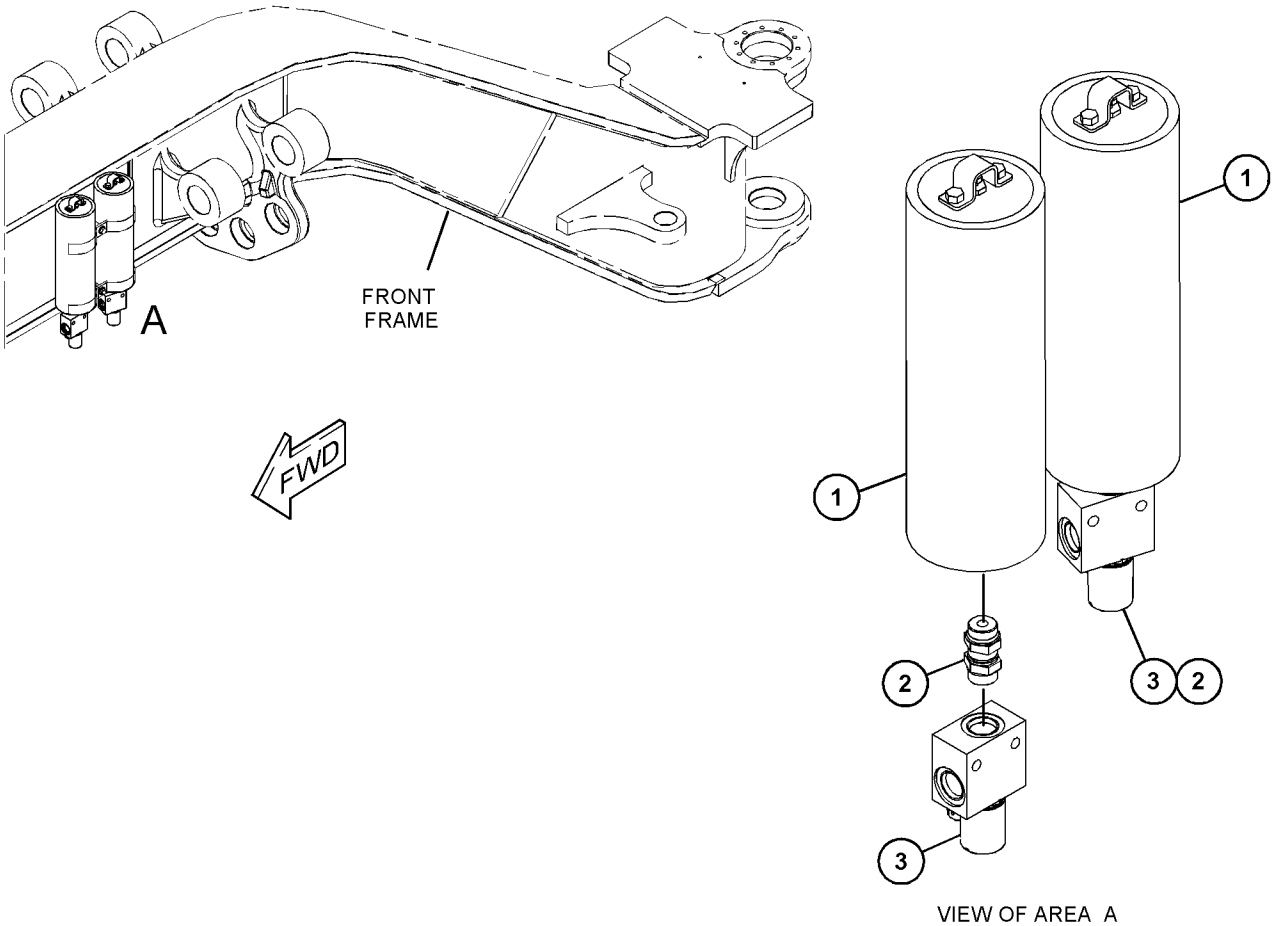

VIEW OF AREA A

GRAPHIC #1 **<END>** g03830791

364-9192 ACCUMULATOR & MTG GP-HYDRAULIC—BLADE LIFT

S/N: E9Y1-UP
EUROPEAN MARKET
PART OF 386-2533 ACCUMULATOR AR-BLADE CUSHION
AN ATTACHMENT

SMCS-5077 **i06146778**

NOTE	REF NO	GRAPHIC REF	PART NUMBER	QTY	PART NAME 1 2 3 4 5 6 (PRODUCT LEVEL)	SEE PAGE
	1	1	*171-6466*	2	UNION AS	
					(EACH INCLUDES)	
		1	**3D-2824**	2	SEAL-O-RING	
		1	**5P-9560**	1	UNION	
Y	2	1	*219-8035*	2	ACCUMULATOR GP-HYDRAULIC (CHARGED)	539
Y	3	1	**322-3798**	2	MANIFOLD GP-CONTROL (ACCUMULATOR)	610

Y - SEPARATE ILLUSTRATION

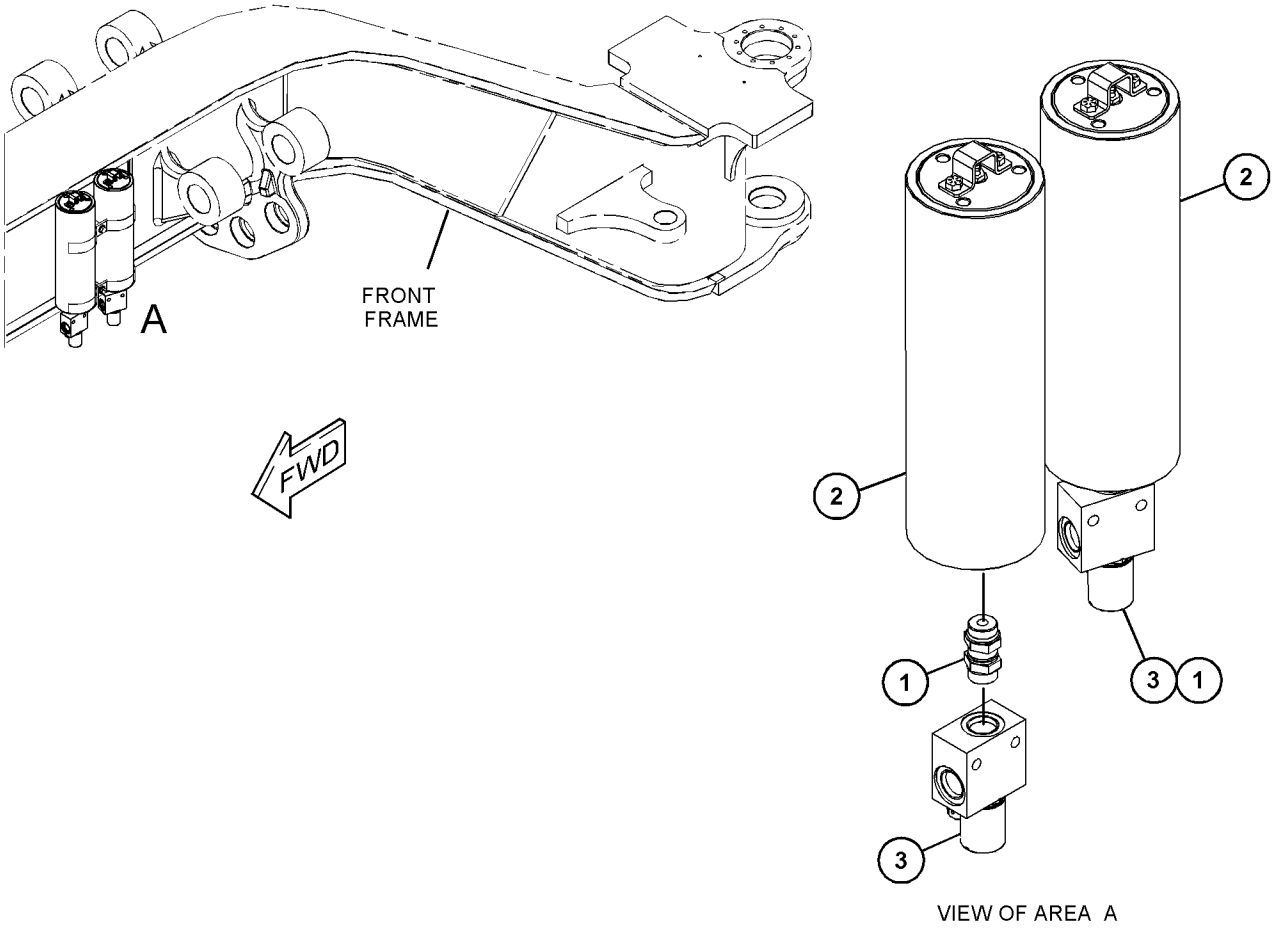

VIEW OF AREA A

GRAPHIC #1 **<END>** g03830952

386-2533 ACCUMULATOR AR-BLADE CUSHION

S/N: E9Y1-UP
EUROPEAN MARKET
CANNOT BE USED WITH 391-3804—PAGE: 537
AN ATTACHMENT

SMCS-5077, 5081 **i06146799**

NOTE	PART NUMBER	QTY	PART NAME 1 2 3 4 5 6 (PRODUCT LEVEL)	SEE PAGE
Y	*366-6156*	1	ACCUMULATOR & MTG GP-BRAKE	512
Y	*364-9192*	1	ACCUMULATOR & MTG GP-HYDRAULIC (BLADE LIFT)	536
Y - SEPARATE ILLUSTRATION				

<END>

391-3804 ACCUMULATOR AR-BLADE CUSHION

S/N: E9Y1-UP
GLOBAL & CANADA
CANNOT BE USED WITH 386-2533—PAGE: 537, 479-3361—PAGE: 537
AN ATTACHMENT

SMCS-5077, 5081 **i06146841**

NOTE	PART NUMBER	QTY	PART NAME 1 2 3 4 5 6 (PRODUCT LEVEL)	SEE PAGE
Y	*366-6154*	1	ACCUMULATOR & MTG GP-BRAKE	511
Y	*352-5816*	1	ACCUMULATOR & MTG GP-HYDRAULIC (BLADE LIFT)	535
Y - SEPARATE ILLUSTRATION				

<END>

479-3361 ACCUMULATOR AR-BLADE CUSHION

S/N: E9Y1-UP
GLOBAL & CANADA
CANNOT BE USED WITH 391-3804—PAGE: 537
AN ATTACHMENT

SMCS-5077, 5081 **i06155374**

NOTE	PART NUMBER	QTY	PART NAME 1 2 3 4 5 6 (PRODUCT LEVEL)	SEE PAGE
Y	*479-3072*	1	ACCUMULATOR & MTG GP-BRAKE (COLD WEATHER)	513
Y	*352-5816*	1	ACCUMULATOR & MTG GP-HYDRAULIC (BLADE LIFT)	535
Y - SEPARATE ILLUSTRATION				

<END>

160-9413 ACCUMULATOR GP-HYDRAULIC

S/N: E9Y1-UP
FIELD REPLACEMENT ORDER 179-9399 ACCUMULATOR GP
PART OF 352-5816 ACCUMULATOR & MTG GP-HYDRAULIC
AN ATTACHMENT

SMCS-5077 **i05535319**

NOTE	REF NO	GRAPHIC REF	PART NUMBER	QTY	PART NAME 1 2 3 4 5 6 (PRODUCT LEVEL)	SEE PAGE
	1	1	*222-2367*	1	VALVE GP-ACCUMULATOR CHARGING	
		1	**190-3850**	1	CORE	
	2	1	**111-9110**	1	PROTECTOR-GAS VALVE	
	3	1	**1J-9671**	1	SEAL-O-RING	
	4	1	**5M-3062**	2	BOLT (3/8-16X0.75-IN)	
	5	1	**241-0037**	1	FILM-WARNING (HIGH PRESSURE, READ OMM)	
					AVAILABLE REPAIR KIT(S):	
			170-0493	1	KIT-SEAL (HYDRAULIC ACCUMULATOR)	
					(INCLUDES SEAL-O-RINGS, BACKUP WASHERS,PISTON RINGS & SEAL PISTON)	

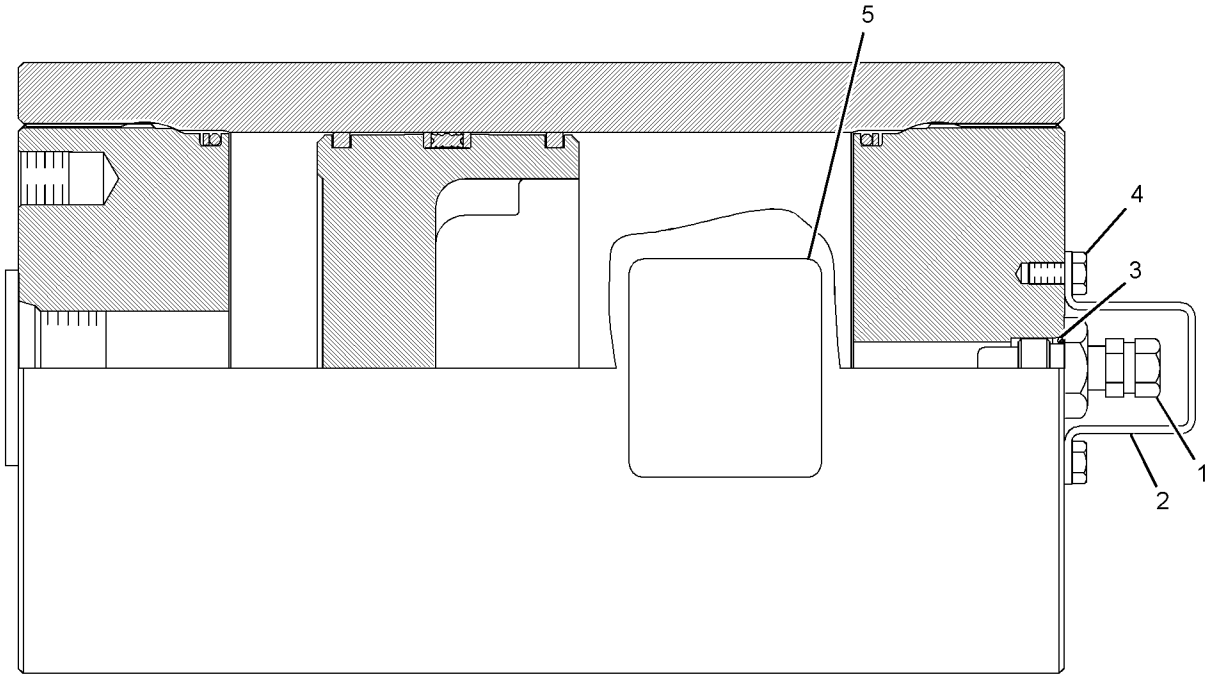

GRAPHIC #1 **<END>** g01421467

219-8035 ACCUMULATOR GP-HYDRAULIC—CHARGED

S/N: E9Y1-UP

PART OF 364-9192 ACCUMULATOR & MTG GP-HYDRAULIC

AN ATTACHMENT

SMCS-5077 **i05537012**

NOTE	REF NO	GRAPHIC REF	PART NUMBER	QTY	PART NAME 1 2 3 4 5 6 (PRODUCT LEVEL)	SEE PAGE
	1	1	**222-2367**	1	VALVE GP-ACCUMULATOR CHARGING (HYDRAULIC ACCUMULATOR)	
		1	**190-3850**	1	CORE	
F			**241-0037**	1	FILM-WARNING (HIGH PRESSURE, READ OMM)	
					AVAILABLE REPAIR KIT(S):	
			170-0493	1	KIT-SEAL (HYDRAULIC ACCUMULATOR)	
					(KIT INCLUDES BACKUP WASHERS, PISTON SEALS, O-RINGS, & PISTON RING)	

F - NOT SHOWN

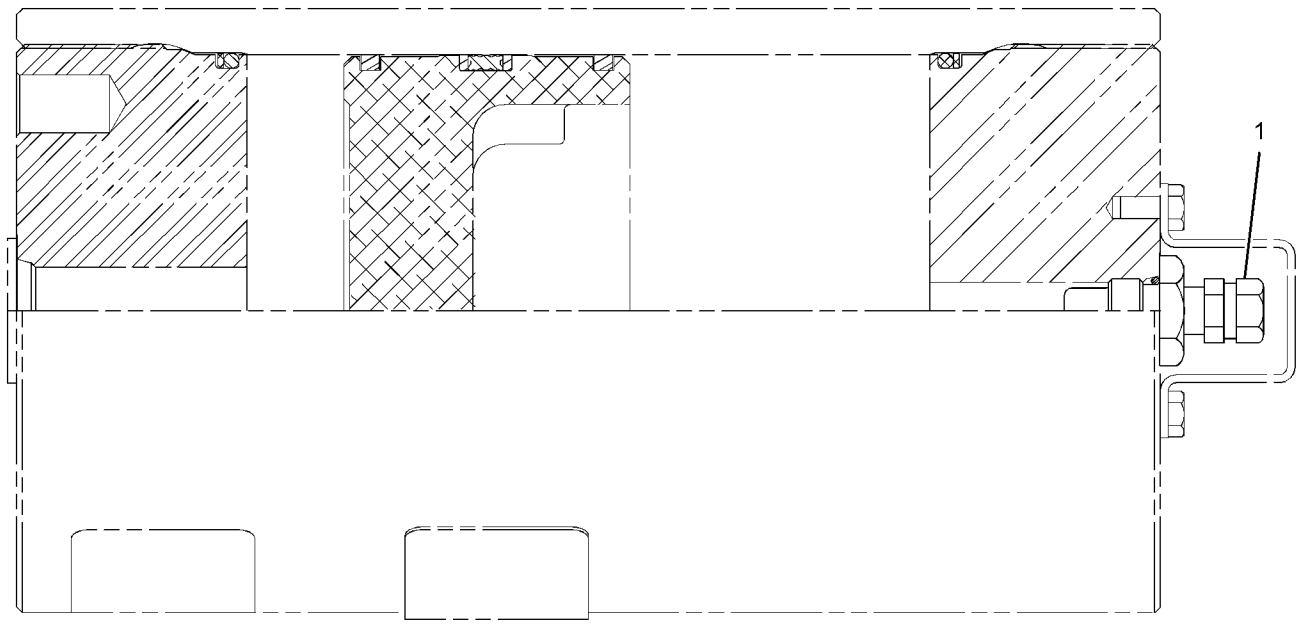

GRAPHIC #1 **<END>** g01313792

249-2308 BASE GP-OIL FILTER

S/N: E9Y1-UP
HYDRAULIC, INTERNAL BYPASS
PART OF 249-2307 FILTER GP-OIL

SMCS-5068 **i03635785**

NOTE	REF NO	GRAPHIC REF	PART NUMBER	QTY	PART NAME 1 2 3 4 5 6 (PRODUCT LEVEL)	SEE PAGE
	1	1	**7G-4998**	1	SPOOL-BYPASS	
	2	1	**7M-1297**	1	SPRING	
	4	1	**5P-7815**	1	SEAL-O-RING	
	5	1	**5P-7701**	1	SEAL-O-RING	
	6	1	**9S-8010**	1	PLUG	
	7	1	**9S-9334**	1	PLUG-O-RING	

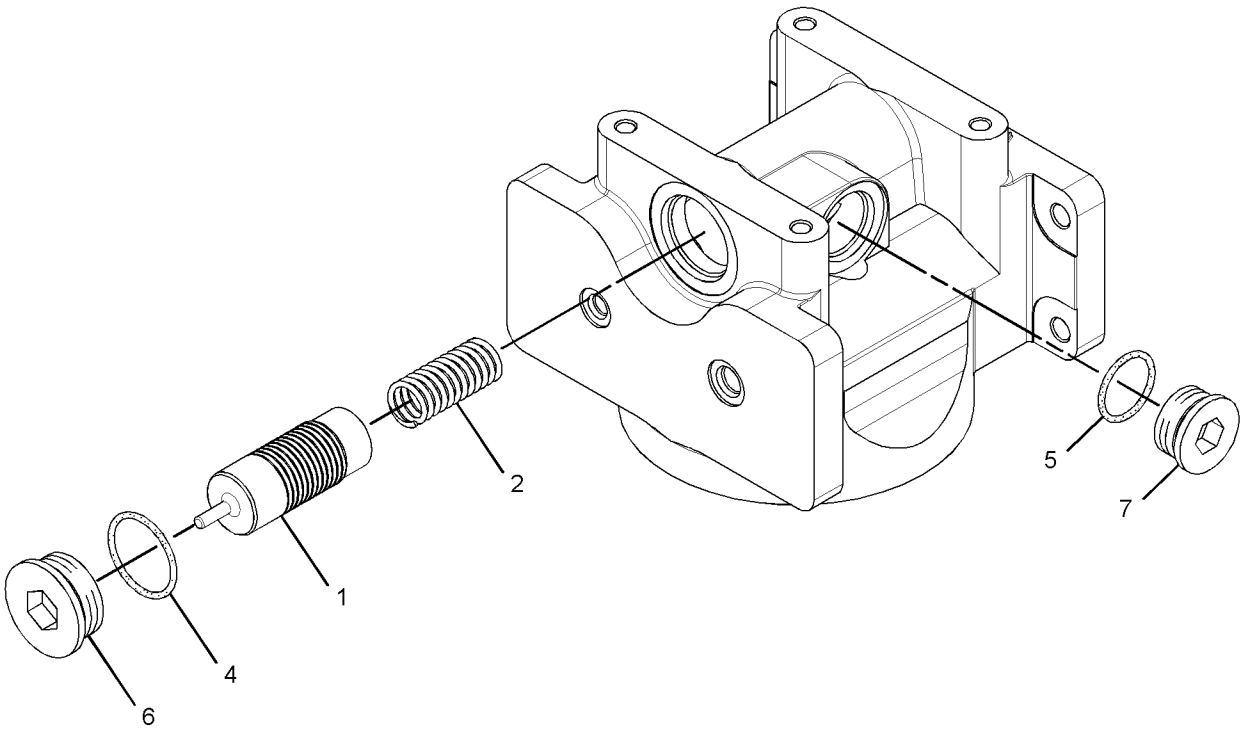

GRAPHIC #1 **<END>** g01442612

342-6070 BASE GP-OIL FILTER–ENGINE

S/N: TXX1-UP

PROVIDES AN OIL COOLER BASE GP WHICH ALSO PROVIDES SUPPLY AND RETURN OIL PORTS FOR REMOTE OIL FILTER

CANNOT BE USED WITH NON-REMOTE OIL FILTER

PART OF 383-2065, 422-0048 ENGINE AR-COMPLETE

AN ATTACHMENT

SMCS-5068 **i05787696**

NOTE	REF NO	GRAPHIC REF	PART NUMBER	QTY	PART NAME 1 2 3 4 5 6 (PRODUCT LEVEL)	SEE PAGE
	1	1	**336-2216**	1	GASKET-FILTER BASE	
CY	2	1	*369-0818*	1	BASE GP-OIL FILTER	542
	3	1	**113-5304**	2	SEAL-O-RING	
CM	4	1	**134-5245**	6	BOLT (M10X1.5X30-MM)	
	5	1	*309-5137*	1	CONNECTOR AS	
		1	**6V-8635**	1	CONNECTOR	
		1	**228-7093**	1	SEAL-O-RING	
		1	**238-5084**	1	SEAL-O-RING	
	6	1	*330-9754*	1	CONNECTOR AS	
		1	**8T-3611**	1	CONNECTOR	
		1	**228-7094**	1	SEAL-O-RING	
		1	**228-7096**	1	SEAL-O-RING	
	7	1	**6V-5839**	6	WASHER (11X21X2.5-MM THK)	

C - CHANGE FROM PREVIOUS TYPE
M - METRIC PART
Y - SEPARATE ILLUSTRATION

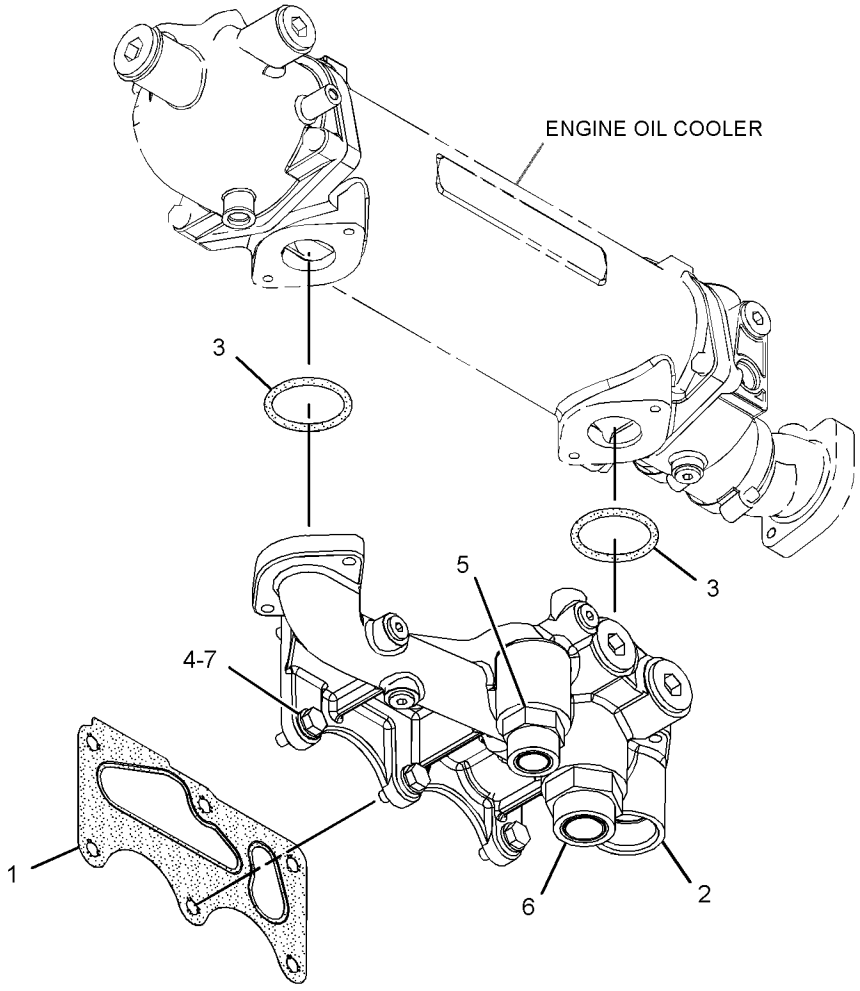

GRAPHIC #1 **<END>** g03075556

369-0818 BASE GP-OIL FILTER

S/N: TXX1-590

PART OF 342-6070 BASE GP-OIL FILTER

AN ATTACHMENT

SMCS-5068 **i05245793**

NOTE	REF NO	GRAPHIC REF	PART NUMBER	QTY	PART NAME 1 2 3 4 5 6 (PRODUCT LEVEL)	SEE PAGE
	1	1	**1A-2170**	1	SPRING-RETAINER	
	2	1	**7C-3081**	1	SPACER (6.88X9.53X50-MM THK)	
	3	1	**7C-3082**	1	RETAINER	
	4	1	**7C-3083**	1	SEAT-RELIEF VALVE SPRING	
	5	1	**7C-3954**	1	SPRING AS	
	6	1	**392-9208**	1	PLUNGER-VALVE (RELIEF)	
	7	1	**224-3405**	1	VALVE AS (OIL PUMP BYPASS)	
	8	1	**369-0817**	1	BASE-OIL COOLER	
	9	1	*183-3407*	3	PLUG AS	
					(EACH INCLUDES)	
		1	**9S-8004**	1	PLUG	
		1	**214-7568**	1	SEAL-O-RING	
	10	1	*319-6234*	2	PLUG AS	
					(EACH INCLUDES)	
		1	**9S-9334**	1	PLUG-O-RING	
		1	**238-5084**	1	SEAL-O-RING	
	11	1	**4N-8150**	1	SPRING	
M	12	1	**6V-8359**	1	BOLT (M6X1X70-MM)	

M - METRIC PART

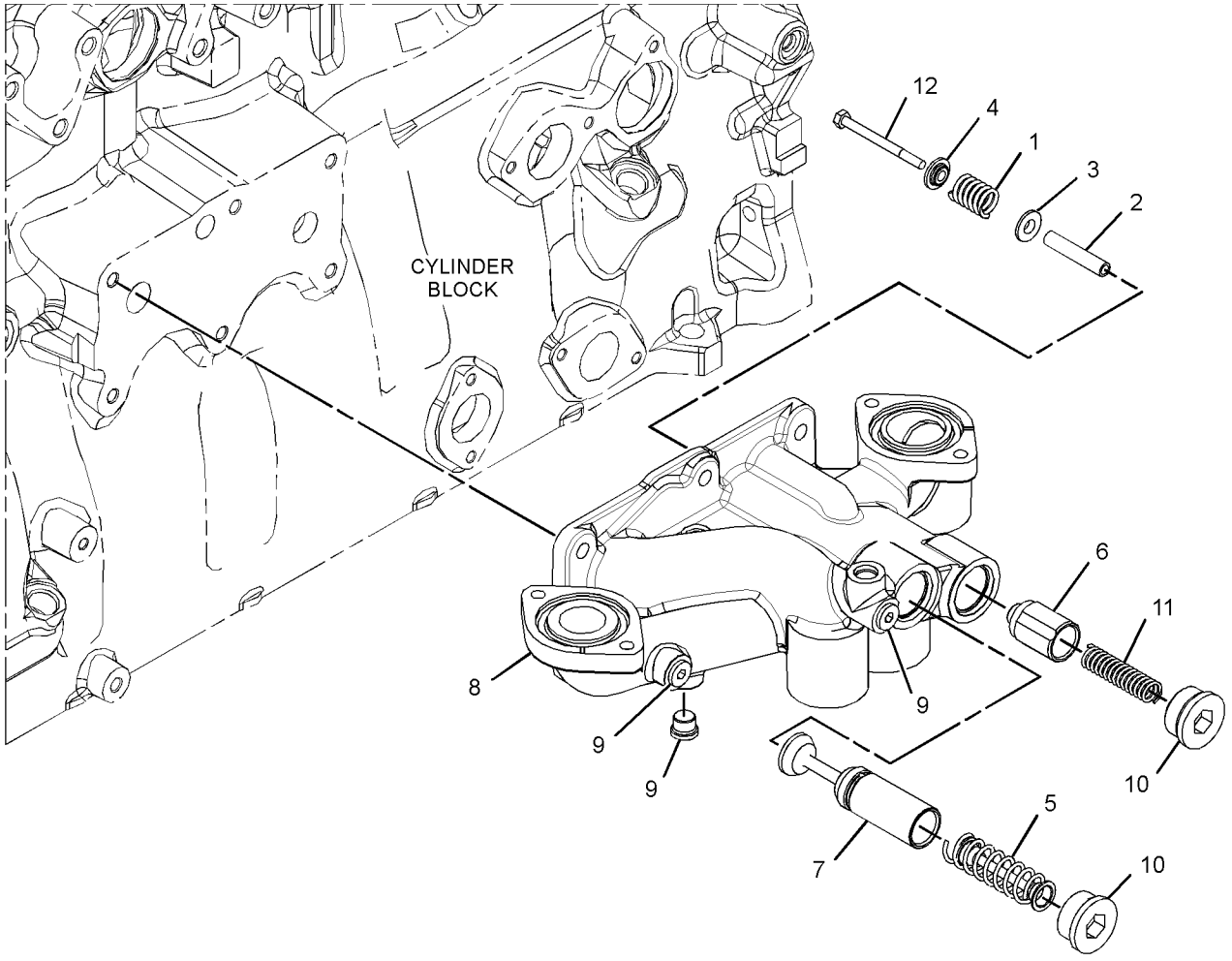

GRAPHIC #1 **<END>** g03044944

474-4618 BASE GP-OIL FILTER

S/N: TXX591-UP

PART OF 474-4621 BASE GP-OIL FILTER

AN ATTACHMENT

SMCS-5068 **i06138602**

NOTE	REF NO	GRAPHIC REF	PART NUMBER	QTY	PART NAME 1 2 3 4 5 6 (PRODUCT LEVEL)	SEE PAGE
	1	1	**1A-2170**	1	SPRING-RETAINER	
	2	1	**7C-3081**	1	SPACER (6.88X9.53X50-MM THK)	
	3	1	**7C-3082**	1	RETAINER	
	4	1	**7C-3083**	1	SEAT-RELIEF VALVE SPRING	
	5	1	**7C-3954**	1	SPRING AS	
		1	**2N-6005**	1	SPRING	
	6	1	**224-3405**	1	VALVE AS (OIL PUMP BYPASS)	
	7	1	*389-3708*	3	PLUG AS	
					(EACH INCLUDES)	
		1	**214-7568**	1	SEAL-O-RING	
		1	**360-3679**	1	PLUG-CONNECTOR	
	8	1	*389-3728*	2	PLUG AS	
					(EACH INCLUDES)	
		1	**238-5084**	1	SEAL-O-RING	
		1	**360-3684**	1	PLUG-O-RING	
	9	1	**392-9208**	1	PLUNGER-VALVE (RELIEF)	
	10	1	**472-7445**	1	BASE-OIL COOLER	
	11	1	**4N-8150**	1	SPRING	
M	12	1	**6V-8359**	1	BOLT (M6X1X70-MM)	

M - METRIC PART

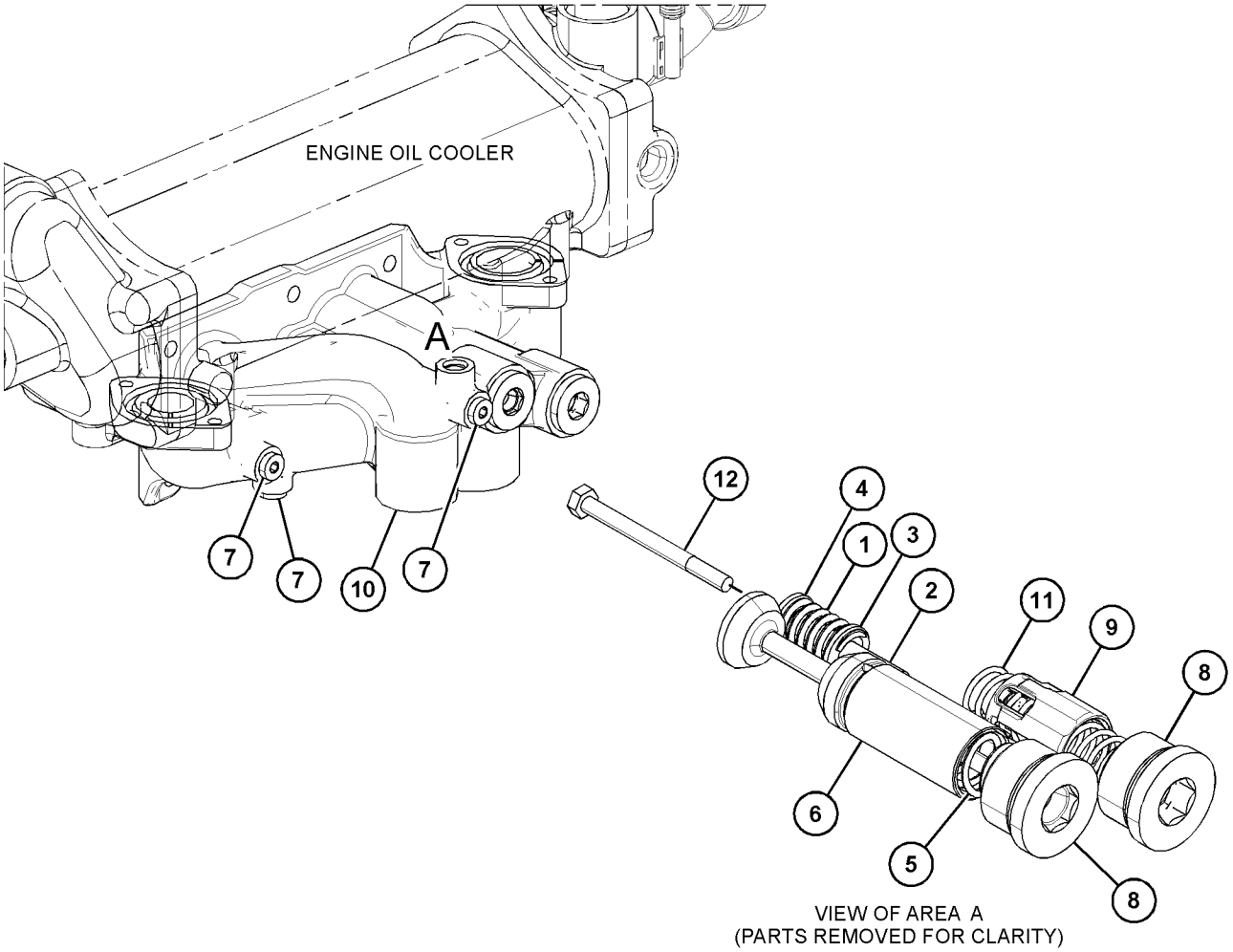

VIEW OF AREA A
(PARTS REMOVED FOR CLARITY)

GRAPHIC #1 **<END>** g03838165

474-4621 BASE GP-OIL FILTER

S/N: TXX591-UP
PART OF 422-0048 ENGINE AR-COMPLETE
AN ATTACHMENT

SMCS-5068 **i06138567**

NOTE	REF NO	GRAPHIC REF	PART NUMBER	QTY	PART NAME 1 2 3 4 5 6 (PRODUCT LEVEL)	SEE PAGE
	1	1	*309-5137*	1	CONNECTOR AS	
		1	**6V-8635**	1	CONNECTOR	
		1	**228-7093**	1	SEAL-O-RING	
		1	**238-5084**	1	SEAL-O-RING	
	2	1	*330-9754*	1	CONNECTOR AS	
		1	**8T-3611**	1	CONNECTOR	
		1	**228-7094**	1	SEAL-O-RING	
		1	**228-7096**	1	SEAL-O-RING	
	3	1	**336-2216**	1	GASKET-FILTER BASE	
Y	4	1	*474-4618*	1	BASE GP-OIL FILTER	543
	5	1	**113-5304**	2	SEAL-O-RING	
M	6	1	**134-5245**	6	BOLT (M10X1.5X30-MM)	
	7	1	**8T-4121**	6	WASHER-HARD (11X21X2.5-MM THK)	

M - METRIC PART
Y - SEPARATE ILLUSTRATION

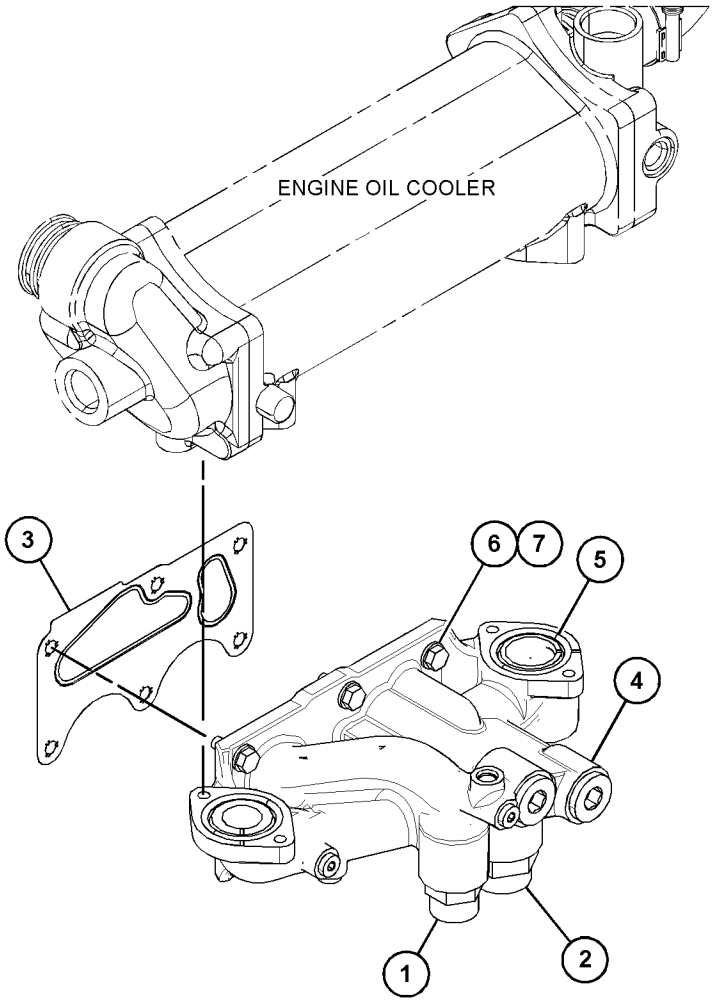

GRAPHIC #1 **<END>** g03838166

385-7554 CONTROL AR-HYDRAULIC—RIPPER

S/N: E9Y1-UP
FOR USE WITH 372-7830—PAGE: 846, 453-4370—PAGE: 846
AN ATTACHMENT

SMCS-5050 **i06127182**

NOTE	PART NUMBER	QTY	PART NAME 1 2 3 4 5 6 (PRODUCT LEVEL)	SEE PAGE
Y	*344-2764*	1	CONTROL GP-ELECTROHYDRAULIC	703
Y	*366-6167*	1	LINES GP-RIPPER	602
Y	**382-4425**	1	VALVE GP-BANK 4 (REAR)	637
Y	**382-4415**	1	VALVE GP-BANK 5 (FRONT)	638
M	**8T-4136**	8	BOLT (M10X1.5X25-MM)	
	8T-4121	8	WASHER-HARD (11X21X2.5-MM THK)	

M - METRIC PART
Y - SEPARATE ILLUSTRATION

<END>

385-7557 CONTROL AR-HYDRAULIC—DOZER ANGLE, FRONT LIFT, RIPPER, WING MAST, WING TILT

S/N: E9Y1-UP
FOR USE WITH 372-7830—PAGE: 846
AN ATTACHMENT

SMCS-5050 **i06105210**

NOTE	PART NUMBER	QTY	PART NAME 1 2 3 4 5 6 (PRODUCT LEVEL)	SEE PAGE
Y	*344-2764*	1	CONTROL GP-ELECTROHYDRAULIC	703
Y	*360-7615*	1	CONTROL GP-ELECTROHYDRAULIC (AUXILIARY)	704
Y	*360-2135*	1	ELECTRONICS GP-IMPLEMENT	169
Y	*366-6167*	1	LINES GP-RIPPER	602
Y	**382-4426**	1	VALVE GP-BANK 6 (REAR FRAME)	639
Y	**382-4417**	1	VALVE GP-BANK 7 (FRONT)	640
Y	*370-8457*	1	WIRING GP	298
Y	*361-3105*	1	WIRING GP-ELECTRONIC CONTROL	288
M	**8T-4136**	8	BOLT (M10X1.5X25-MM)	
	8T-4121	8	WASHER-HARD (11X21X2.5-MM THK)	

M - METRIC PART
Y - SEPARATE ILLUSTRATION

<END>

441-0767 COOLER GP-HYDRAULIC OIL

S/N: E9Y1-UP

PART OF 388-1485 COOLING AR

SMCS-1374 **i06146967**

NOTE	REF NO	GRAPHIC REF	PART NUMBER	QTY	PART NAME 1 2 3 4 5 6 (PRODUCT LEVEL)	SEE PAGE
	1	1	**365-6876**	1	CORE AS-OIL COOLER (HYDRAULIC OIL)	
	2	1	**441-0762**	1	BRACKET AS	
	3	1	**441-0764**	1	HOSE AS	
	4	1	**441-0766**	1	HOSE AS	
	5	1	**467-0235**	1	HOSE AS	
	6	1	*148-8388*	1	ELBOW AS	
		1	**2M-9780**	1	SEAL-O-RING	
		1	**6V-8629**	1	ELBOW	
		1	**6V-9746**	1	SEAL-O-RING	
	7	1	*153-6260*	1	TEE AS	
		1	**2M-9780**	1	SEAL-O-RING	
		1	**6V-9746**	2	SEAL-O-RING	
		1	**8T-8984**	1	TEE-O-RING PORT	
	8	1	**198-4778**	4	WASHER-HARD (13.5X30X12-MM THK)	
	9	1	**223-3490**	1	CLIP	
	10	1	**7X-7729**	4	WASHER (11X25X3-MM THK)	
	11	1	**8T-4121**	1	WASHER-HARD (11X21X2.5-MM THK)	
M	12	1	**8T-4136**	4	BOLT (M10X1.5X25-MM)	
M	13	1	**8T-4137**	1	BOLT (M10X1.5X20-MM)	
M	14	1	**8T-4183**	4	BOLT (M12X1.75X40-MM)	

M - METRIC PART

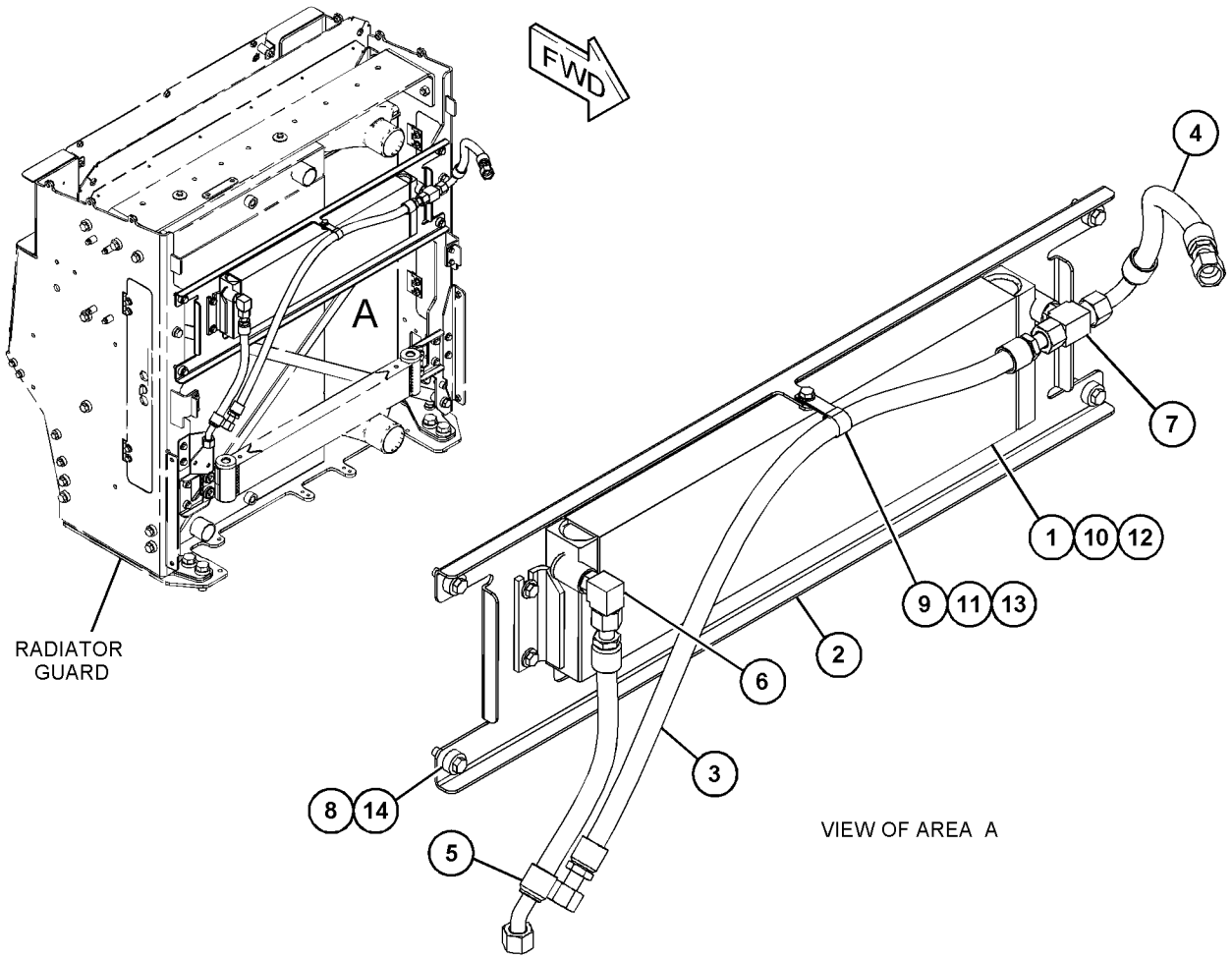

GRAPHIC #1 **<END>** g03830917

366-6093 CYLINDER & MTG GP-ARTICULATION

S/N: E9Y1-UP

PART OF 371-3796 HYDRAULIC AR

SMCS-5265 **i06144272**

NOTE	REF NO	GRAPHIC REF	PART NUMBER	QTY	PART NAME 1 2 3 4 5 6 (PRODUCT LEVEL)	SEE PAGE
B	1	1	**2G-5672**	2	WASHER (64.5X120.5X1.6-MM THK)	
B	2	1	**112-8764**	12	WASHER-THRUST (61.37X89.8X0.813-MM THK)	
	3	1	**386-7410**	2	PIN AS	
	4	1	**386-7411**	2	PIN AS	
Y	5	1	*388-7681*	2	CYLINDER GP-ARTICULATION	557
	6	1	**151-5520**	2	WASHER (17X56X5-MM THK)	
	7	1	**198-4778**	2	WASHER-HARD (13.5X30X12-MM THK)	
B	8	1	**215-9690**	8	WASHER (66X100X4-MM THK)	
	9	1	**267-8821**	2	WASHER (17X36X12-MM THK)	
	10	1	**3B-5317**	2	PIN-COTTER	
	11	1	**7K-9205**	4	SEAL-LIP TYPE	
M	12	1	**8T-4140**	2	BOLT (M16X2X60-MM)	
	13	1	**8T-4223**	2	WASHER-HARD (13.5X25.5X3-MM THK)	
	14	1	**8T-4821**	2	WASHER (13.5X40X3-MM THK)	
M	15	1	**8T-4956**	2	BOLT (M12X1.75X35-MM)	
	16	1	**9X-8257**	2	WASHER (17.5X30X3.5-MM THK)	

B - USE AS REQUIRED
M - METRIC PART
Y - SEPARATE ILLUSTRATION

366-6093 **CYLINDER & MTG GP-ARTICULATION (*contd.*)** **i06144272**

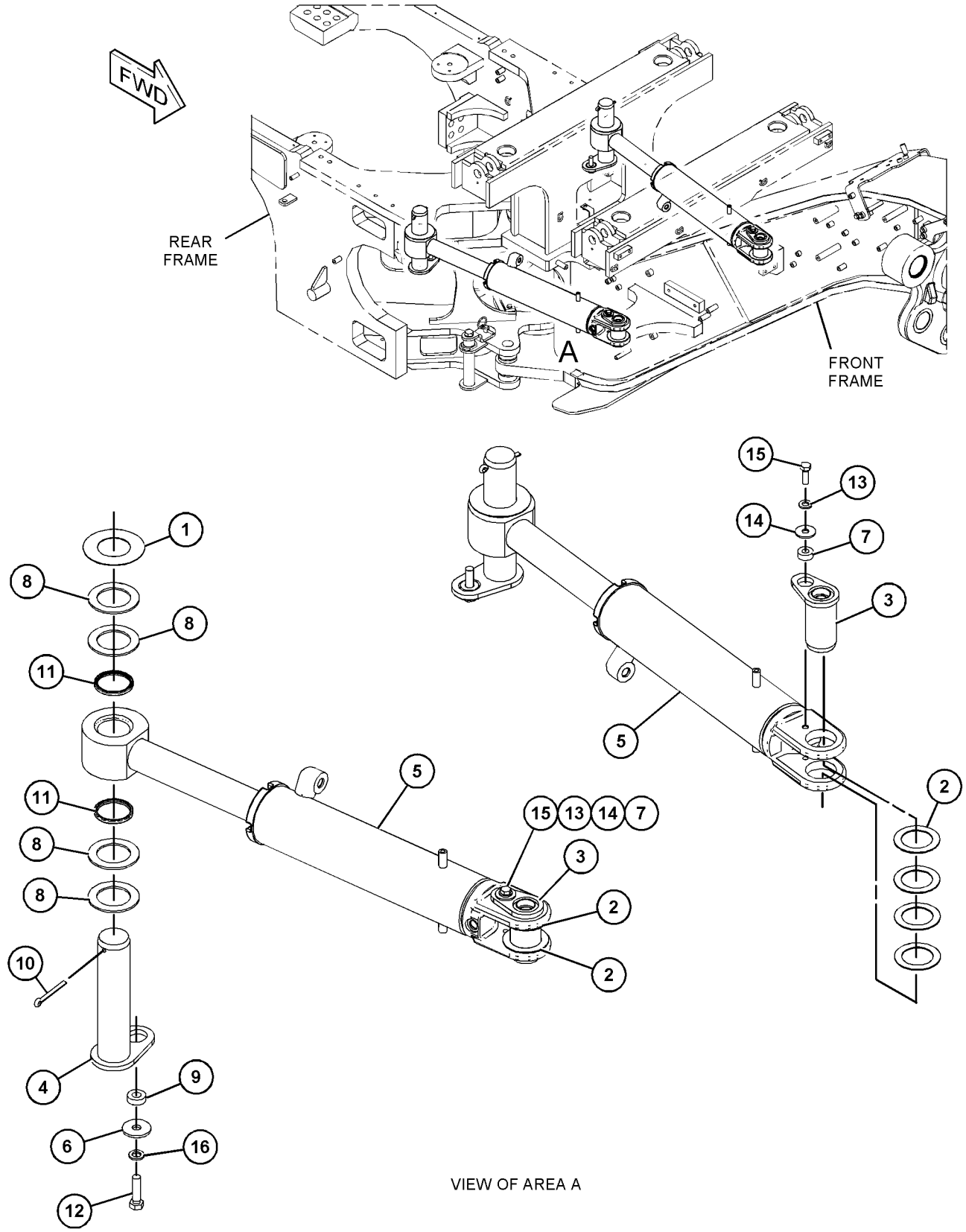

VIEW OF AREA A

GRAPHIC #1 **<END>** g03829876

366-6096 CYLINDER & MTG GP-BLADE LIFT

S/N: E9Y1-UP

PART OF 371-3796 HYDRAULIC AR

SMCS-5102 **i06144263**

NOTE	REF NO	GRAPHIC REF	PART NUMBER	QTY	PART NAME 1 2 3 4 5 6 (PRODUCT LEVEL)	SEE PAGE
	1	1	**3B-8485**	2	ELBOW	
B	2	1	**310-5479**	8	SHIM	
	3	1	**310-5480**	4	INSERT	
	4	1	**386-1828**	2	CAP	
Y	5	1	**389-9512**	2	CYLINDER GP-LIFT	561
M	6	1	**112-3929**	4	BOLT (M24X3X100-MM)	
M	7	1	**225-0098**	8	BOLT (M20X2.5X140-MM)	
	8	1	**8T-4167**	4	WASHER-HARD (26X44X4-MM THK)	
	9	1	**267-3508**	16	WASHER-HARD (22X35X3.5-MM THK)	
	10	1	**273-4130**	4	CAP AS	
					(EACH INCLUDES)	
	10A	1	**8D-8888**	1	BEARING	
	10B	1	**9D-6586**	1	SEAL-LIP TYPE	

B - USE AS REQUIRED
M - METRIC PART
Y - SEPARATE ILLUSTRATION

366-6096 **CYLINDER & MTG GP-BLADE LIFT (*contd.*)** **i06144263**

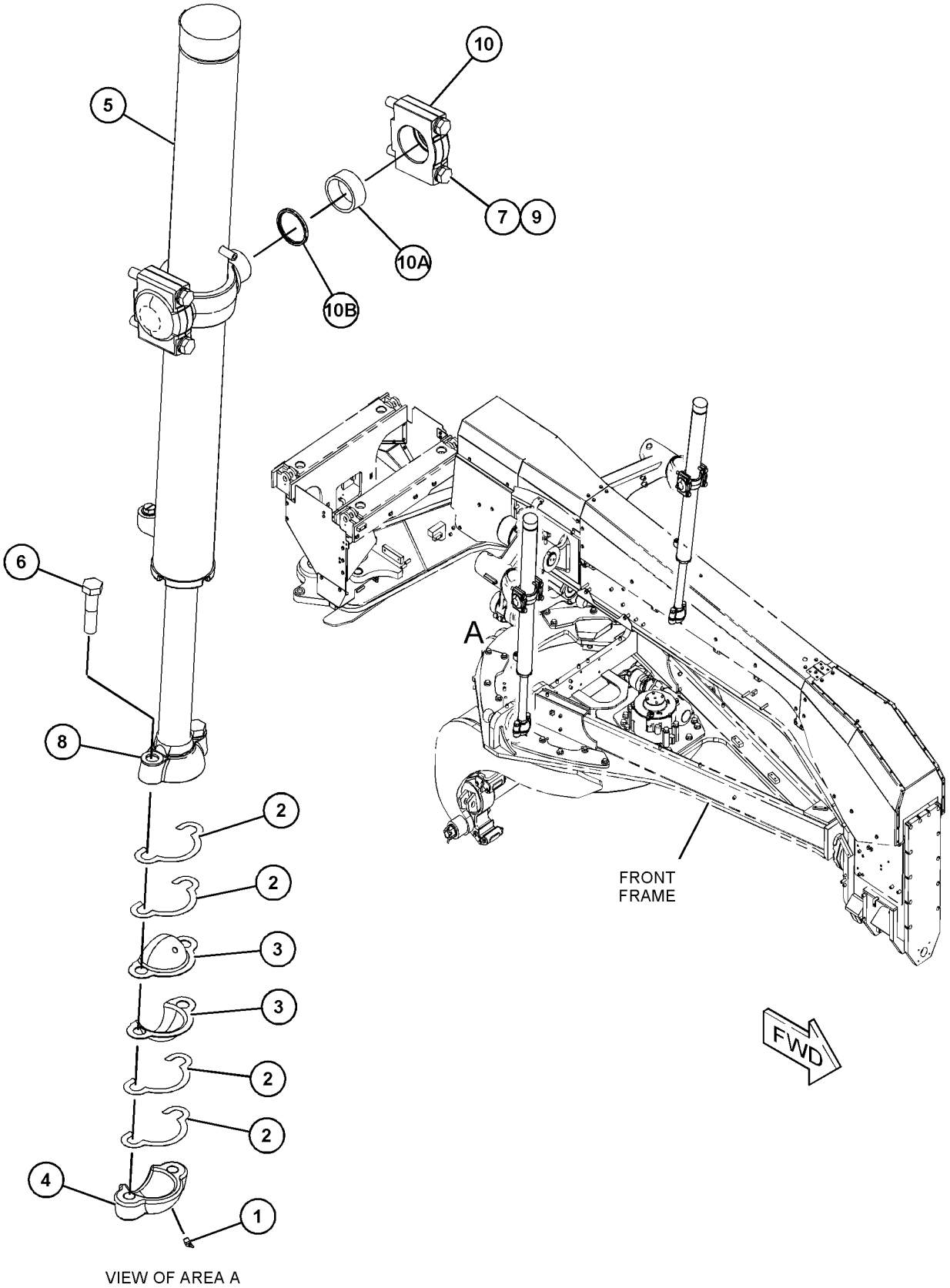

VIEW OF AREA A

GRAPHIC #1 **<END>** g03830548

352-5793 CYLINDER & MTG GP-BLADE TIP

S/N: E9Y1-UP

PART OF 371-3796 HYDRAULIC AR, 479-7656 IMPLEMENT AR

ALSO AN ATTACHMENT

SMCS-5106 **i06113026**

NOTE	REF NO	GRAPHIC REF	PART NUMBER	QTY	PART NAME 1 2 3 4 5 6 (PRODUCT LEVEL)	SEE PAGE
	1	1	**364-1374**	2	PIN AS	
Y	2	1	**389-9511**	1	CYLINDER GP-BLADE TIP	558
	3	1	**170-3093**	2	BUSHING	
	4	1	**248-9337**	2	SPACER (39X75X20-MM THK)	
	5	1	**7X-0618**	2	WASHER-HARD (13.5X40X5-MM THK)	
M	6	1	**8T-4183**	2	BOLT (M12X1.75X40-MM)	

M - METRIC PART
Y - SEPARATE ILLUSTRATION

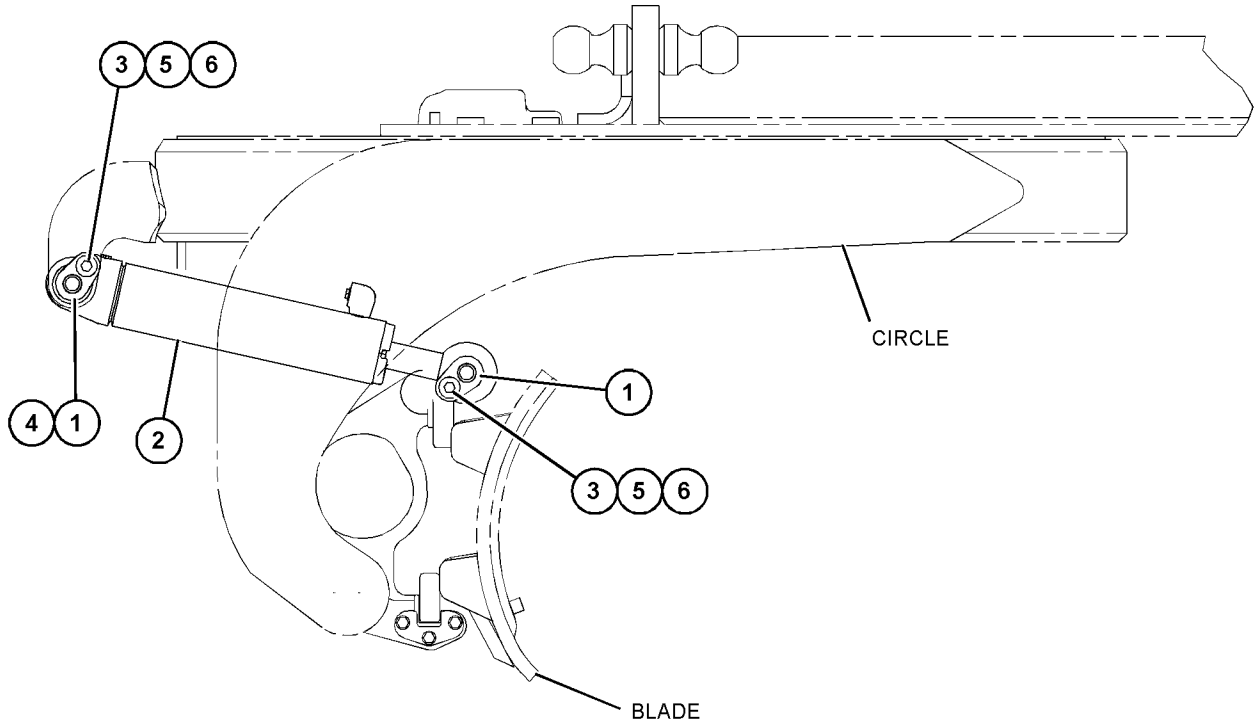

RIGHT SIDE VIEW

GRAPHIC #1 **<END>** g03817521

261-2373 CYLINDER & MTG GP-CENTERSHIFT

S/N: E9Y1-UP

PART OF 371-3796 HYDRAULIC AR, 479-7656 IMPLEMENT AR

ALSO AN ATTACHMENT

SMCS-5223 **i06002389**

NOTE	REF NO	GRAPHIC REF	PART NUMBER	QTY	PART NAME 1 2 3 4 5 6 (PRODUCT LEVEL)	SEE PAGE
	1	1	**2G-9101**	2	CAP	
	2	1	**310-5479**	8	SHIM (0.5-MM THK)	
	3	1	**3B-8485**	2	ELBOW	
	4	1	**310-5480**	4	INSERT	
Y	5	1	**262-1905**	1	CYLINDER GP-CENTERSHIFT	559
M	6	1	**112-3929**	4	BOLT (M24X3X100-MM)	
	7	1	**267-3506**	4	WASHER-HARD (26X44X4-MM THK)	

M - METRIC PART
Y - SEPARATE ILLUSTRATION

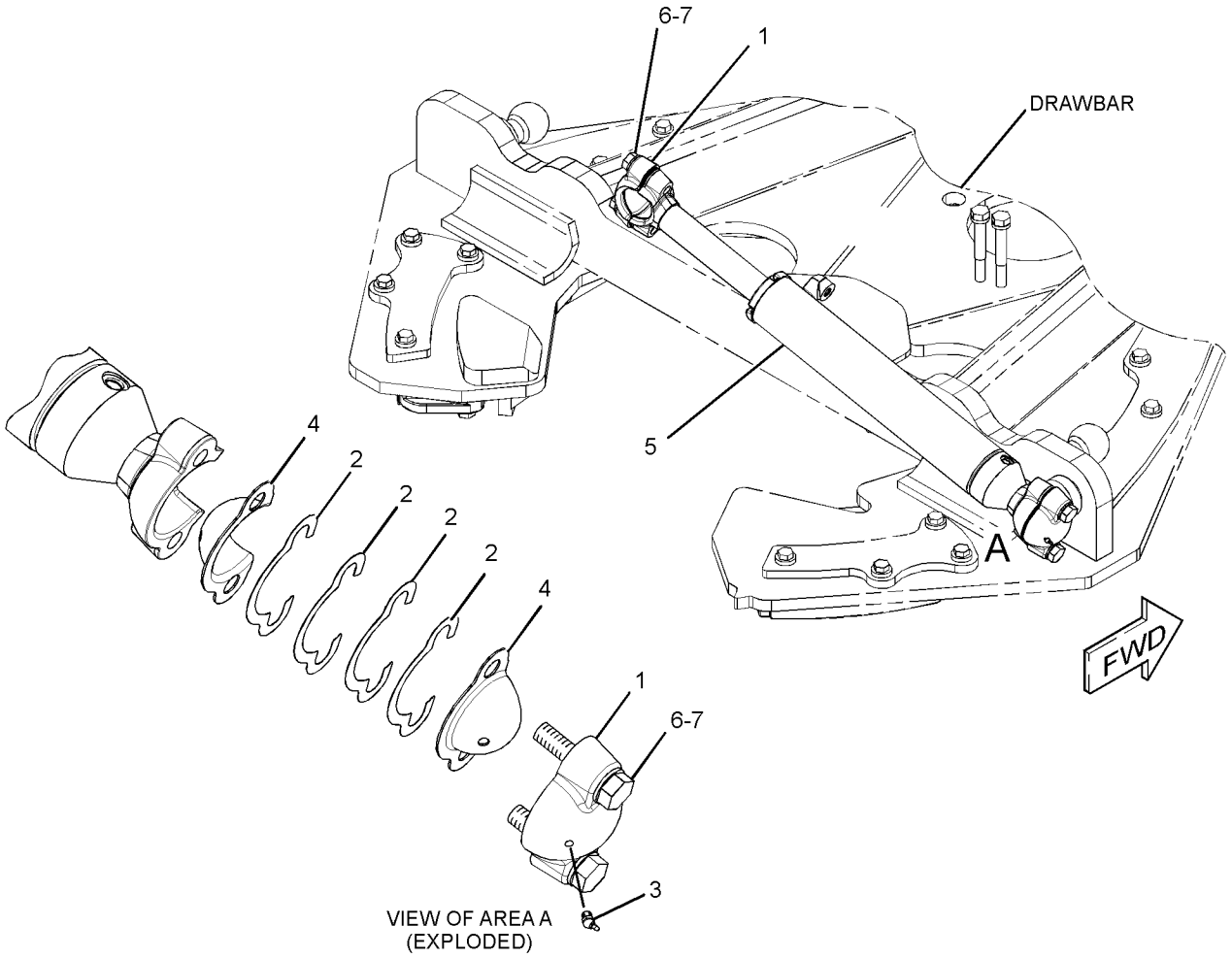

GRAPHIC #1 **<END>** g03762316

257-6804 CYLINDER & MTG GP-SIDESHIFT

S/N: E9Y1-UP

PART OF 371-3796 HYDRAULIC AR, 479-7656 IMPLEMENT AR

ALSO AN ATTACHMENT

SMCS-5229 **i04880654**

NOTE	REF NO	GRAPHIC REF	PART NUMBER	QTY	PART NAME 1 2 3 4 5 6 (PRODUCT LEVEL)	SEE PAGE
Y	1	1	**257-5083**	1	CYLINDER GP-SIDESHIFT	563
	2	1	**283-1578**	6	WASHER-HARD (22X45X10-MM THK)	
	3	1	**312-6156**	1	PIN	
	4	1	**370-8685**	1	BRACKET	
M	5	1	**112-3927**	5	BOLT (M20X2.5X90-MM)	
	6	1	**1H-4478**	1	PIN	
	7	1	**3B-4647**	2	PIN-COTTER	
	8	1	**9R-0109**	2	WASHER (41X64X3-MM THK)	
M	9	1	**166-1880**	1	BOLT (M20X2.5X75-MM)	

M - METRIC PART
Y - SEPARATE ILLUSTRATION

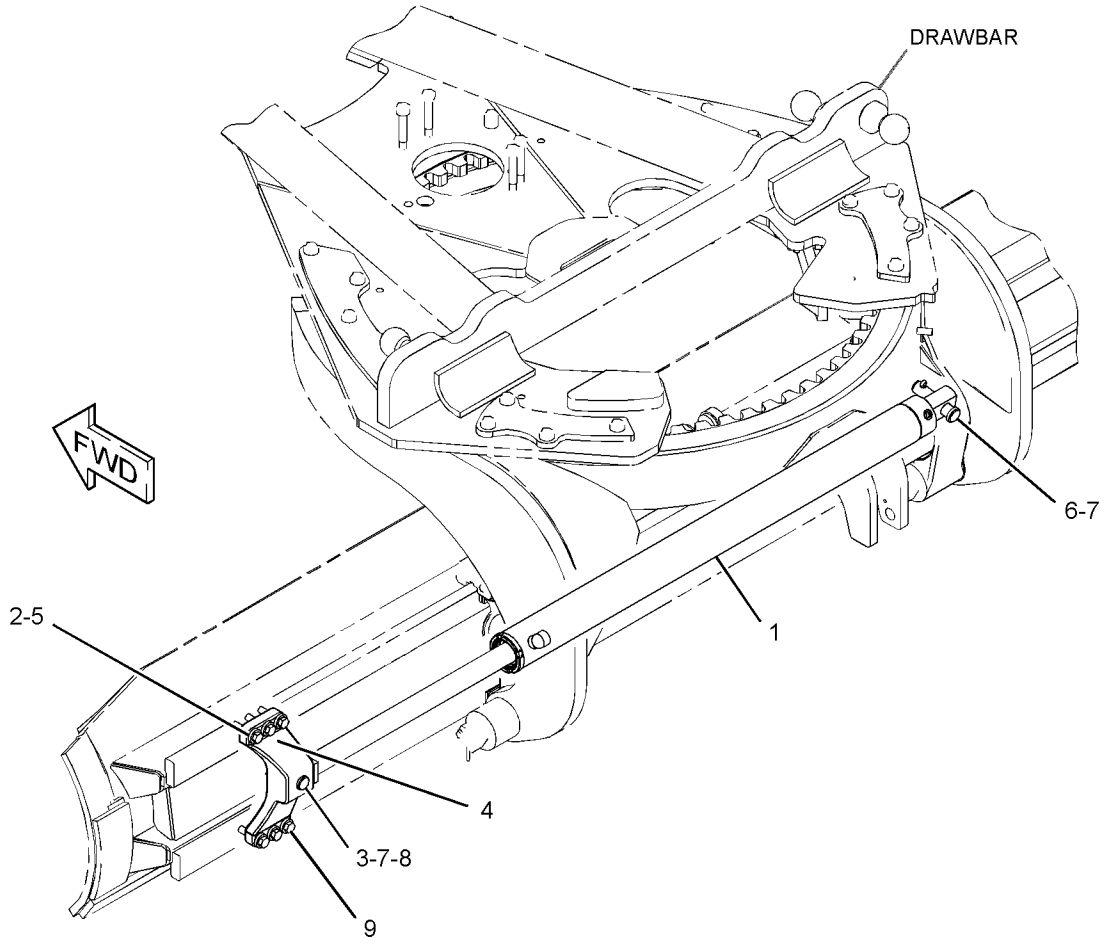

GRAPHIC #1 **<END>** g03052707

421-8644 CYLINDER & MTG GP-STEERING

S/N: E9Y1-UP

PART OF 474-6914 AXLE GP-FRONT

SMCS-4303 **i06145072**

NOTE	REF NO	GRAPHIC REF	PART NUMBER	QTY	PART NAME 1 2 3 4 5 6 (PRODUCT LEVEL)	SEE PAGE
	1	1	**260-6117**	2	BALL STUD	
	2	1	**285-0612**	2	CAP AS-DUST	
	3	1	**426-4335**	2	PIN AS	
Y	4	1	**436-9156**	1	CYLINDER GP-STEERING	565
Y	5	1	**436-9157**	1	CYLINDER GP-STEERING	567
	6	1	**438-1542**	4	SPACER	
	7	1	**441-8164**	2	SEAL-BOOT	
	8	1	**124-6524**	2	SPACER (11X25X10.5-MM THK)	
	9	1	**249-3505**	2	RACE-BEARING	
	10	1	**8B-1002**	2	NUT-SLOTTED	
	11	1	**3B-4629**	2	PIN-COTTER	
	12	1	**3B-8489**	2	FITTING-GREASE (1/8-27 PTF)	
	13	1	**3J-8500**	2	RING-RETAINING	
	14	1	**4F-8824**	2	SEAL-O-RING	
M	15	1	**6V-5842**	2	BOLT (M10X1.5X40-MM)	
	16	1	**7X-0632**	2	WASHER-HARD (11X36X6-MM THK)	
	17	1	**8T-4121**	2	WASHER-HARD (11X21X2.5-MM THK)	
	18	1	**9X-6590**	2	WASHER (30.5X46X3.5-MM THK)	

M - METRIC PART
Y - SEPARATE ILLUSTRATION

421-8644 **CYLINDER & MTG GP-STEERING (*contd.*)** **i06145072**

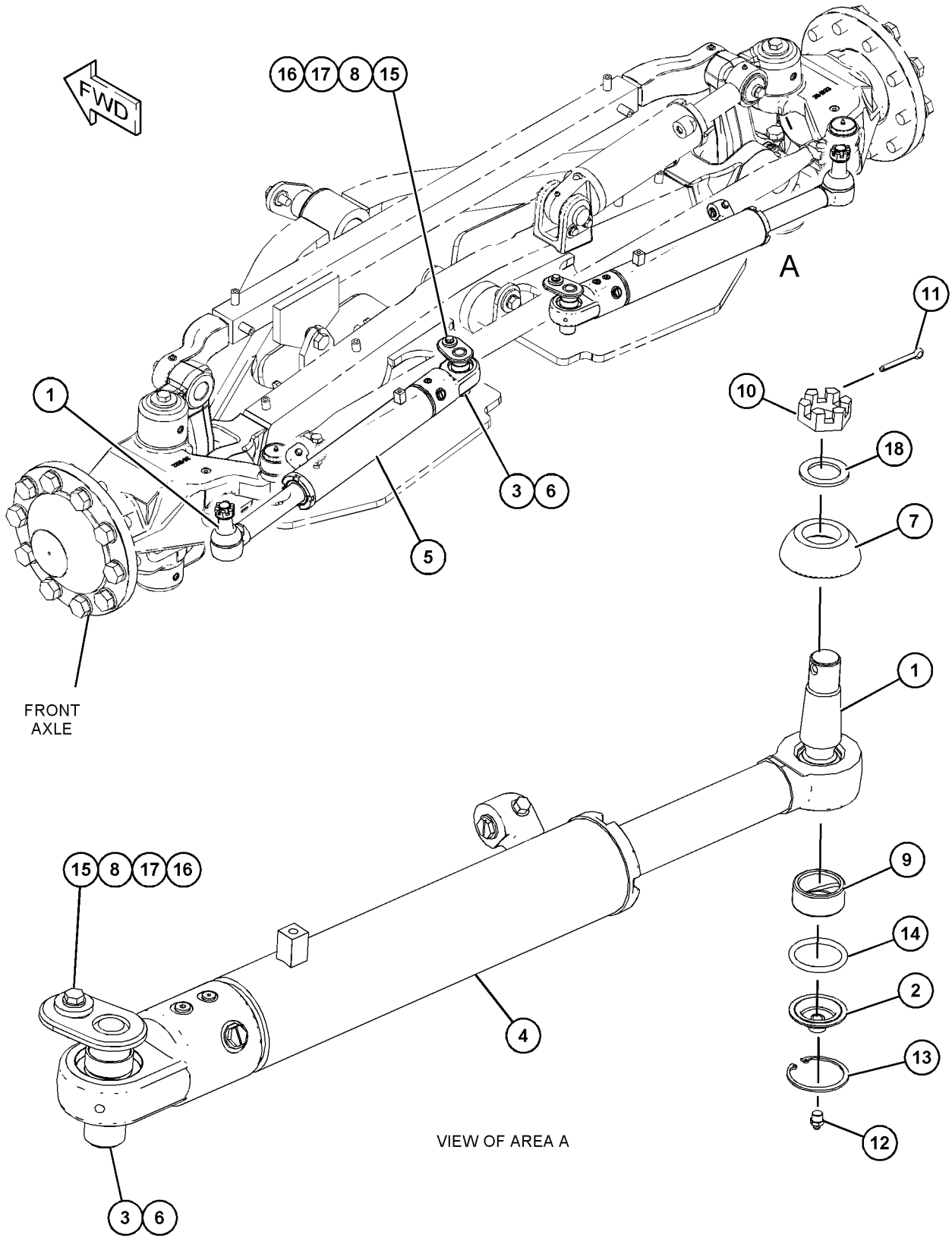

GRAPHIC #1 **<END>** g03839305

249-6545 CYLINDER & MTG GP-WHEEL LEAN—NON ALL WHEEL DRIVE

S/N: E9Y1-UP

PART OF 474-6914 AXLE GP-FRONT

SMCS-5211 **i02651759**

NOTE	REF NO	GRAPHIC REF	PART NUMBER	QTY	PART NAME 1 2 3 4 5 6 (PRODUCT LEVEL)	SEE PAGE
	1	1	**2G-8611**	1	PIN	
	2	1	**6G-7187**	1	LOCK	
Y	3	1	**289-3054**	1	CYLINDER GP-WHEEL LEAN	569
	4	1	**3B-8489**	2	FITTING-GREASE	
	5	1	**5P-8245**	2	WASHER-HARD (13.5X25.5X3-MM THK)	
	6	1	**5P-8843**	4	SEAL-LIP TYPE	
M	7	1	**6V-3668**	2	BOLT (M12X1.75X30-MM)	

M - METRIC PART
Y - SEPARATE ILLUSTRATION

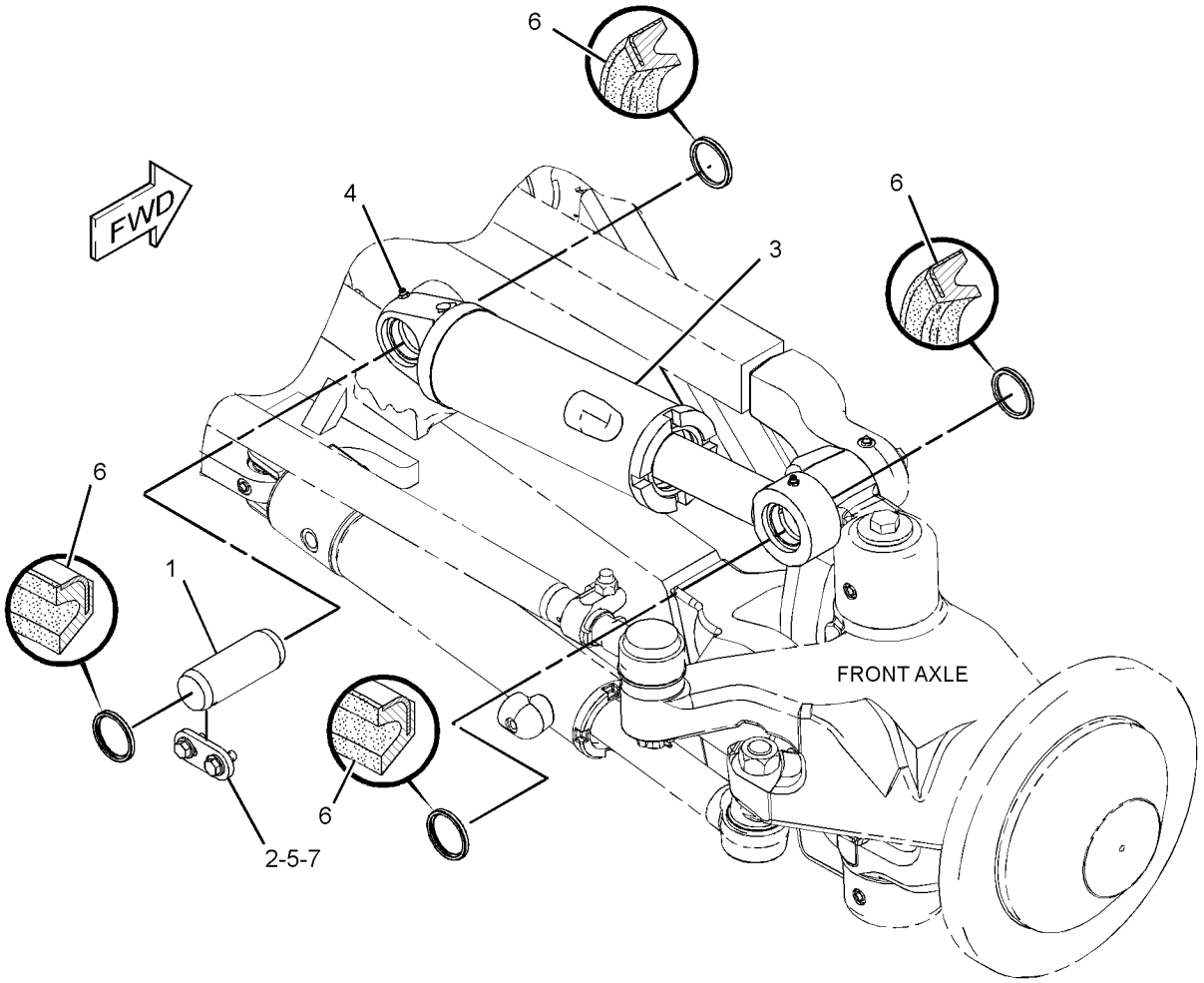

GRAPHIC #1 **<END>** g01315891

388-7681 CYLINDER GP-ARTICULATION

S/N: E9Y1-UP
101.6-MM (4-IN) BORE X 375-MM (14.8-IN) STROKE
PART OF 366-6093 CYLINDER & MTG GP-ARTICULATION

SMCS-5265 **i06144273**

NOTE	REF NO	GRAPHIC REF	PART NUMBER	QTY	PART NAME 1 2 3 4 5 6 (PRODUCT LEVEL)	SEE PAGE
	1	1	**5J-5402**	1	SEAL AS	
	2	1	**6J-2797**	1	RING-WEAR	
	3	1	**8T-0785**	1	RING-WEAR	
	4	1	**142-5893**	1	PISTON	
	5	1	**172-9981**	1	HEAD	
	6	1	**225-3281**	1	SEAL-WIPER	
	7	1	**289-2937**	1	SEAL AS-BUFFER	
	8	1	**388-2076**	1	ROD AS	
	8A	1	**8D-8168**	1	BEARING (63.65-MM ID)	
	9	1	**388-7682**	1	CYLINDER AS	
M	10	1	**173-9683**	1	BOLT (M30X3.5X90-MM)	
	11	1	**289-2948**	1	SEAL-U-CUP	
	12	1	**2K-6830**	1	RING-BACKUP	
	13	1	**9X-4611**	1	SEAL-O-RING	
	14	1	**9X-8399**	1	WASHER (33X56X6-MM THK)	

M - METRIC PART

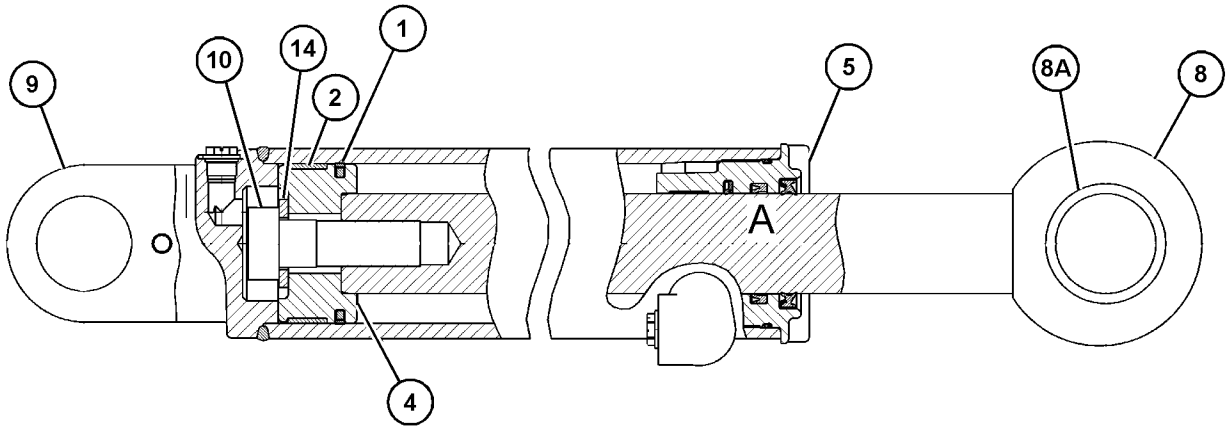

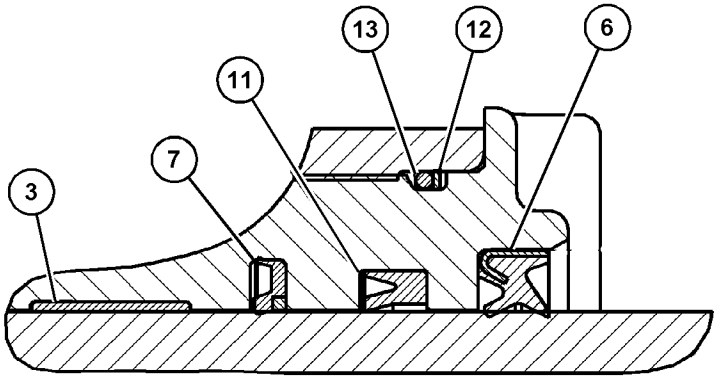

VIEW OF AREA A

GRAPHIC #1 **<END>** g03830640

389-9511 CYLINDER GP-BLADE TIP

S/N: E9Y1-UP
101.2-MM (4-IN) BORE X 355.5-MM (14-IN) STROKE
PART OF 352-5793 CYLINDER & MTG GP-BLADE TIP
ALSO AN ATTACHMENT

SMCS-5106 **i06113027**

NOTE	REF NO	GRAPHIC REF	PART NUMBER	QTY	PART NAME 1 2 3 4 5 6 (PRODUCT LEVEL)	SEE PAGE
	1	1	**6E-0775**	1	HEAD AS	
		1	**308-1845**	1	SEAL-WIPER	
R	2	1	**6E-1049**	1	ROD AS	
	2A	1	**4D-0298**		BEARING	
	3	1	**9T-3133**	1	PISTON	
	4	1	**390-0186**	1	CYLINDER AS	
	4A	1	**4D-0298**	1	BEARING	
M	5	1	**173-9683**	1	BOLT (M30X3.5X90-MM)	
	6	1	**289-2935**	1	SEAL AS-BUFFER	
	7	1	**289-2946**	1	SEAL-U-CUP	
	8	1	**175-7900**	1	SEAL-O-RING	
	9	1	**2K-6830**	1	RING-BACKUP	
	10	1	**308-1845**	1	SEAL-WIPER	
	11	1	**3S-7023**	1	WASHER (34X57X6-MM THK)	
	12	1	**4T-5613**	1	RING-WEAR	
	13	1	**5J-5402**	1	SEAL AS	
	14	1	**6J-2797**	1	RING-WEAR	

M - METRIC PART
R - REMFG PART MAY BE AVAILABLE

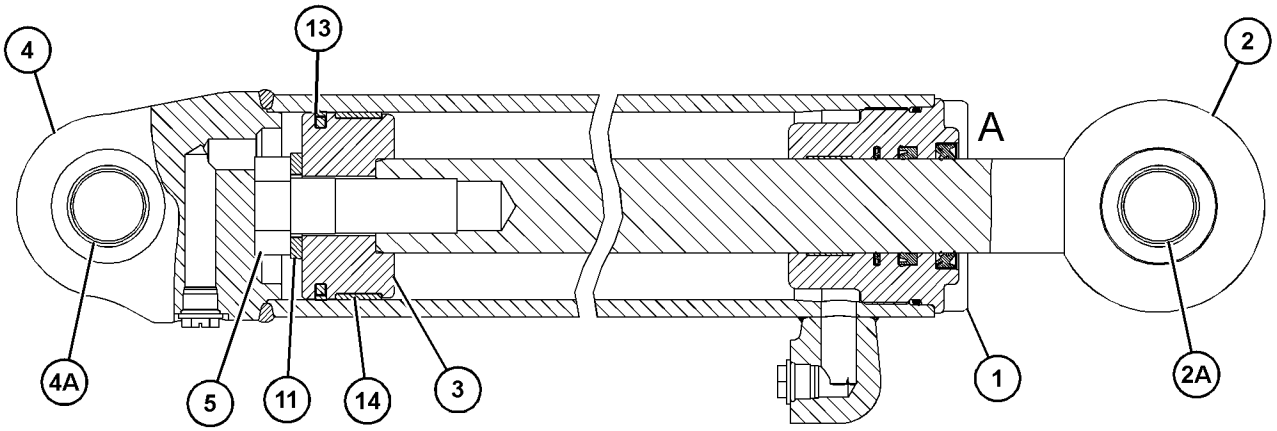

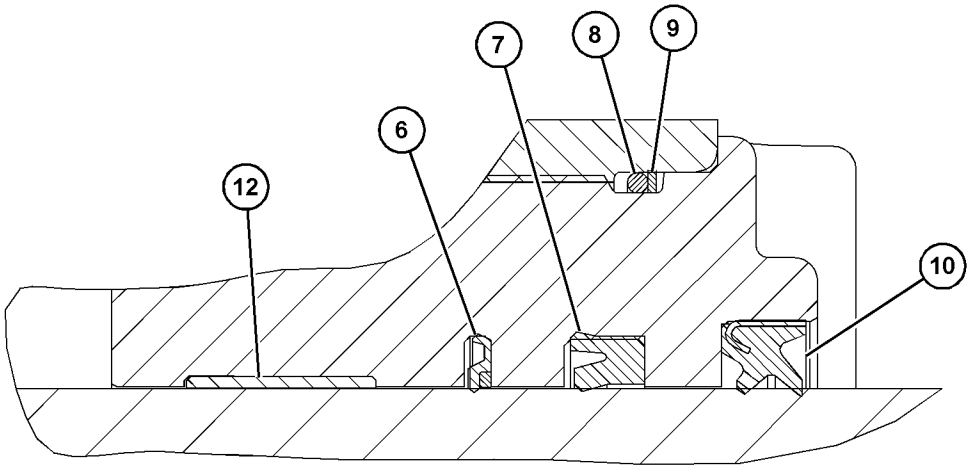

VIEW OF AREA A

GRAPHIC #1 **<END>** g03817452

262-1905 CYLINDER GP-CENTERSHIFT

S/N: E9Y1-UP
101.6-MM (4-IN) BORE X 479.6-MM (18.9-IN) STROKE
PART OF 261-2373 CYLINDER & MTG GP-CENTERSHIFT
ALSO AN ATTACHMENT

SMCS-5223 **i04444073**

NOTE	REF NO	GRAPHIC REF	PART NUMBER	QTY	PART NAME 1 2 3 4 5 6 (PRODUCT LEVEL)	SEE PAGE
	1	1	**9T-3051**	1	PISTON	
	2	1	**172-9981**	1	HEAD	
	3	1	**262-1924**	1	ROD AS	
	4	1	**262-1929**	1	CYLINDER AS	
J	5	1	**289-2937**	1	SEAL AS-BUFFER	
J	6	1	**289-2948**	1	SEAL-U-CUP	
M	7	1	**173-9683**	1	BOLT (M30X3.5X90-MM)	
J	8	1	**175-7900**	1	SEAL-O-RING	
J	9	1	**225-3281**	1	SEAL-WIPER	
J	10	1	**2K-6830**	1	RING-BACKUP	
	11	1	**3S-7023**	1	WASHER (34X57X6-MM THK)	
J	12	1	**5J-5402**	1	SEAL AS	
J	13	1	**6J-2797**	1	RING-WEAR	
J	14	1	**8T-0785**	1	RING-WEAR	
					AVAILABLE REPAIR KIT(S):	
J			**234-1949**	1	KIT-SEAL (HYDRAULIC CYLINDER)	
					(INCLUDES RINGS & SEALS)	
					(FOR USE WITH REHS1392)	

J - KIT MARKED J SERVICES PARTS MARKED J
M - METRIC PART

262-1905 **CYLINDER GP-CENTERSHIFT (*contd.*)** **i04444073**

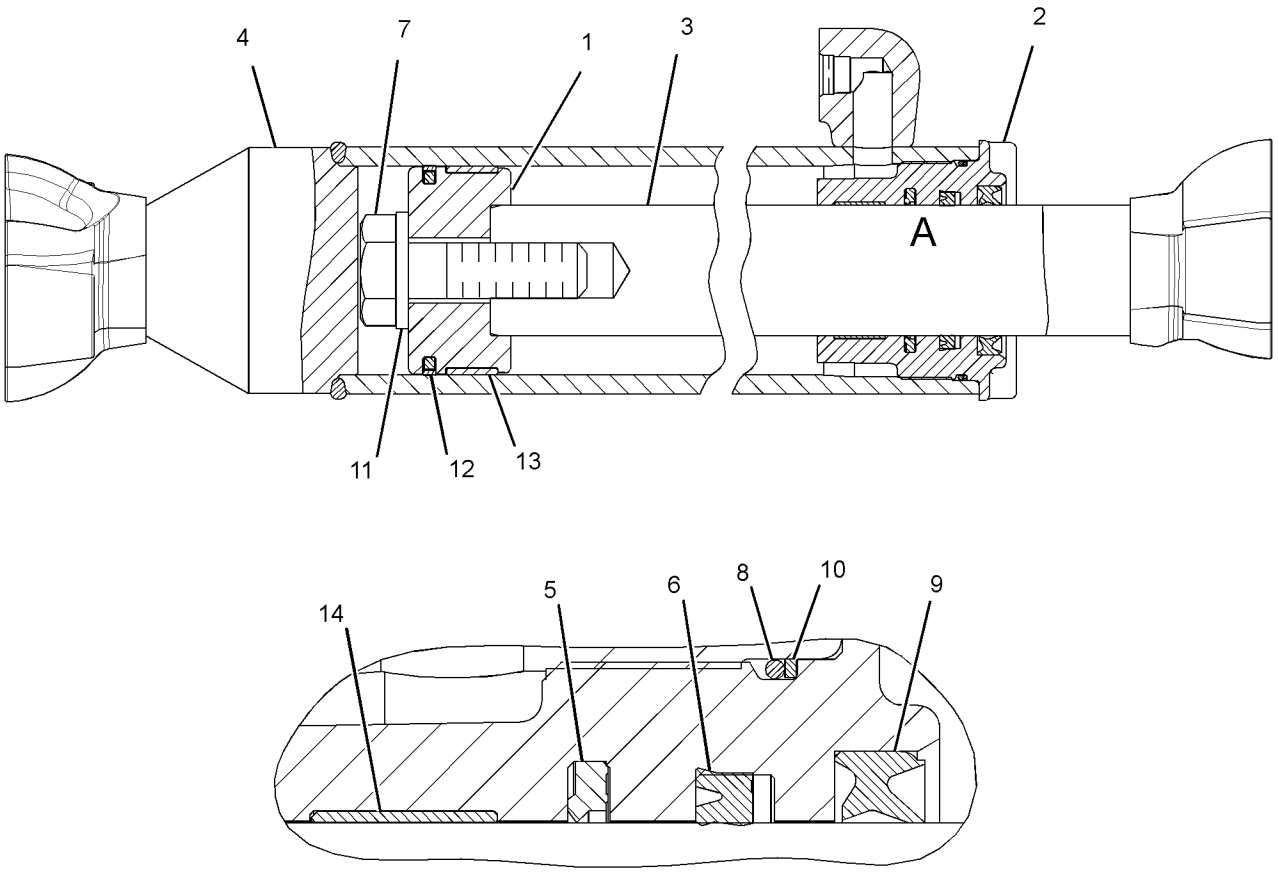

VIEW OF AREA A

GRAPHIC #1 **<END>** g01314427

389-9512 CYLINDER GP-LIFT

S/N: E9Y1-UP
101.6-MM (4-IN) BORE X 1114.6-MM (44-IN) STROKE
PART OF 366-6096 CYLINDER & MTG GP-BLADE LIFT

SMCS-5102 **i06178003**

NOTE	REF NO	GRAPHIC REF	PART NUMBER	QTY	PART NAME 1 2 3 4 5 6 (PRODUCT LEVEL)	SEE PAGE
	1	1	**1M-1571**	1	RING-WEAR	
	2	1	**460-8222**	1	PISTON	
	3	1	**172-9981**	1	HEAD	
	4	1	**365-7415**	1	CYLINDER AS-LIFT	
	4A	1	**8J-5654**	2	BUSHING	
	5	1	**390-0187**	1	ROD AS	
	6	1	**225-3281**	1	SEAL-WIPER	
	7	1	**289-2937**	1	SEAL AS-BUFFER	
	8	1	**289-2948**	1	SEAL-U-CUP	
	9	1	**2K-6830**	1	RING-BACKUP	
	10	1	**3S-7023**	1	WASHER (34X57X6-MM THK)	
	11	1	**5J-5402**	1	SEAL AS	
M	12	1	**173-9683**	1	BOLT (M30X3.5X90-MM)	
	13	1	**8T-0785**	1	RING-WEAR	
	14	1	**9X-4611**	1	SEAL-O-RING	

M - METRIC PART

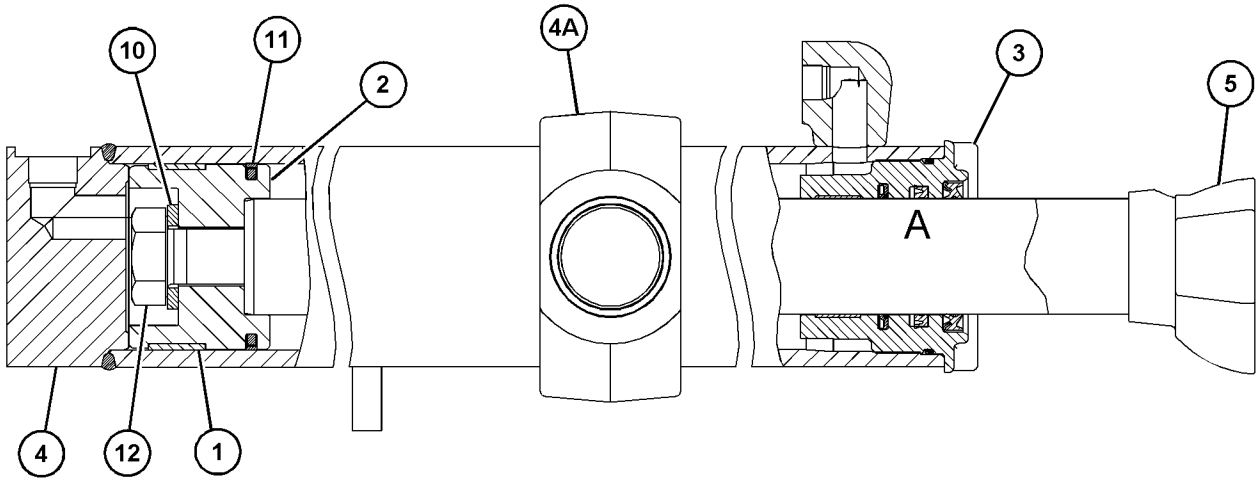

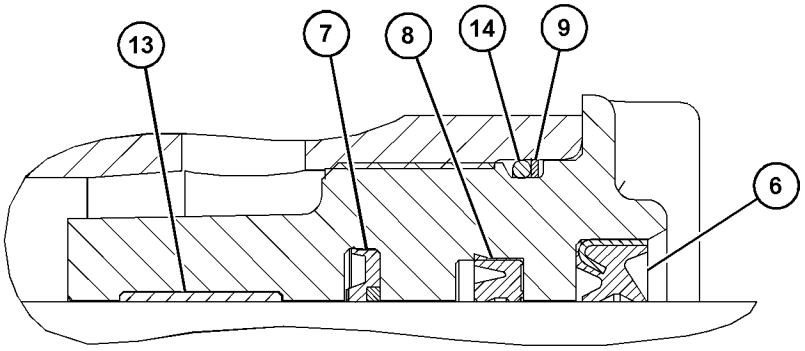

VIEW OF AREA A

GRAPHIC #1 **<END>** g03838891

477-9271 CYLINDER GP-RIPPER

S/N: E9Y1-UP
127-MM (5-IN) BORE X 495-MM (19.5-IN) STROKE
PART OF 372-7830 RIPPER AR
AN ATTACHMENT

SMCS-5352, 5356 **i06147086**

NOTE	REF NO	GRAPHIC REF	PART NUMBER	QTY	PART NAME 1 2 3 4 5 6 (PRODUCT LEVEL)	SEE PAGE
	1	1	**478-9924**	1	CYLINDER AS-HYDRAULIC	
	1A	1	**4K-3128**	2	BUSHING	
	2	1	**5J-5731**	1	LOCKNUT (1-3/4-12-THD)	
	3	1	**4J-4630**	1	RING-WEAR	
	4	1	**9X-7264**	1	SEAL AS	
	5	1	**6E-2314**	1	PISTON	
	6	1	**175-7904**	1	SEAL-O-RING	
	7	1	**2K-4096**	1	RING-BACKUP	
	8	1	**121-3395**	1	HEAD	
	9	1	**345-7209**	1	ROD AS	
	9A	1	**2K-4507**	1	BUSHING	
	10	1	**225-3281**	1	SEAL-WIPER	
	11	1	**289-2948**	1	SEAL-U-CUP	
	12	1	**289-2937**	1	SEAL AS-BUFFER	
	13	1	**8T-0785**	1	RING-WEAR	

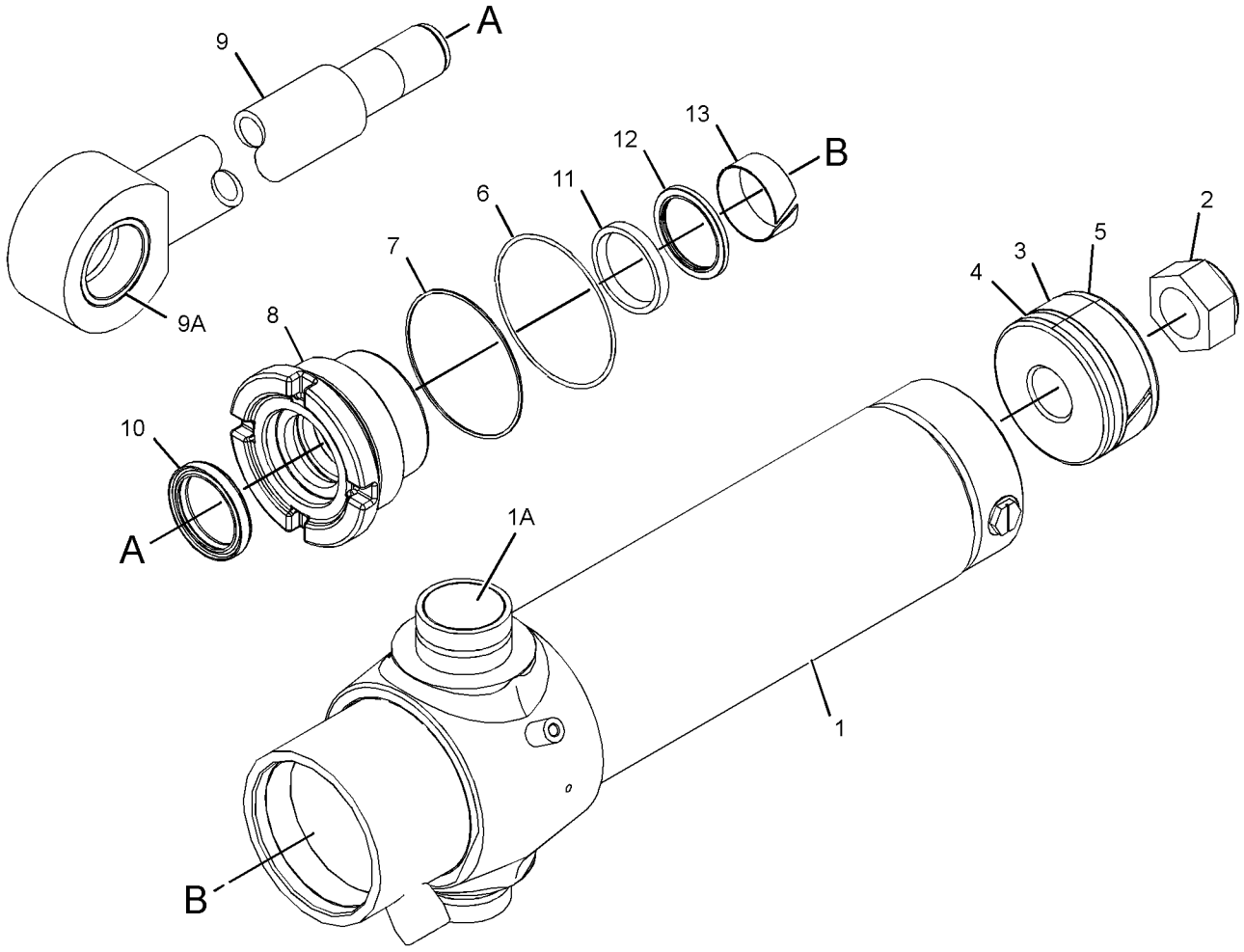

GRAPHIC #1 **<END>** g03831389

257-5083 CYLINDER GP-SIDESHIFT

S/N: E9Y1-UP
101.6-MM (3.99-IN) BORE X 1531.9 (60.31-IN) STROKE
PART OF 257-6804 CYLINDER & MTG GP-SIDESHIFT
ALSO AN ATTACHMENT

SMCS-5229 **i04445316**

NOTE	REF NO	GRAPHIC REF	PART NUMBER	QTY	PART NAME 1 2 3 4 5 6 (PRODUCT LEVEL)	SEE PAGE
	1	1	**9T-3051**	1	PISTON	
	2	1	**172-9981**	1	HEAD	
	3	1	**257-5085**	1	ROD AS	
J	4	1	**289-2937**	1	SEAL AS-BUFFER	
J	5	1	**289-2948**	1	SEAL-U-CUP	
M	6	1	**173-9683**	1	BOLT (M30X3.5X90-MM)	
J	7	1	**175-7900**	1	SEAL-O-RING	
J	8	1	**225-3281**	1	SEAL-WIPER	
	9	1	**257-5084**	1	CYLINDER AS	
J	10	1	**2K-6830**	1	RING-BACKUP	
J	11	1	**5J-5402**	1	SEAL AS	
J	12	1	**6J-2797**	1	RING-WEAR	
J	13	1	**8T-0785**	1	RING-WEAR	
	14	1	**9X-8399**	1	WASHER (33X56X6-MM THK)	
					AVAILABLE REPAIR KIT(S):	
J			**234-1949**	1	KIT-SEAL (HYDRAULIC CYLINDER)	
					(INCLUDES RINGS & SEALS)	
					(FOR USE WITH REHS1392)	

J - KIT MARKED J SERVICES PARTS MARKED J
M - METRIC PART

257-5083 **CYLINDER GP-SIDESHIFT (*contd.*)** **i04445316**

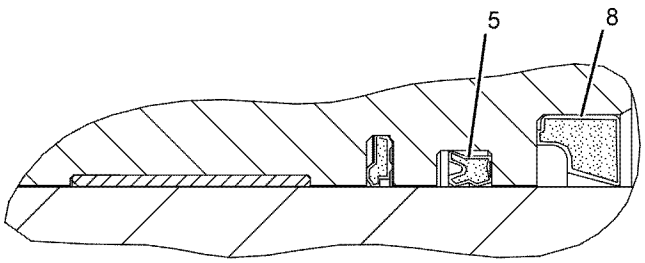

VIEW OF AREA A

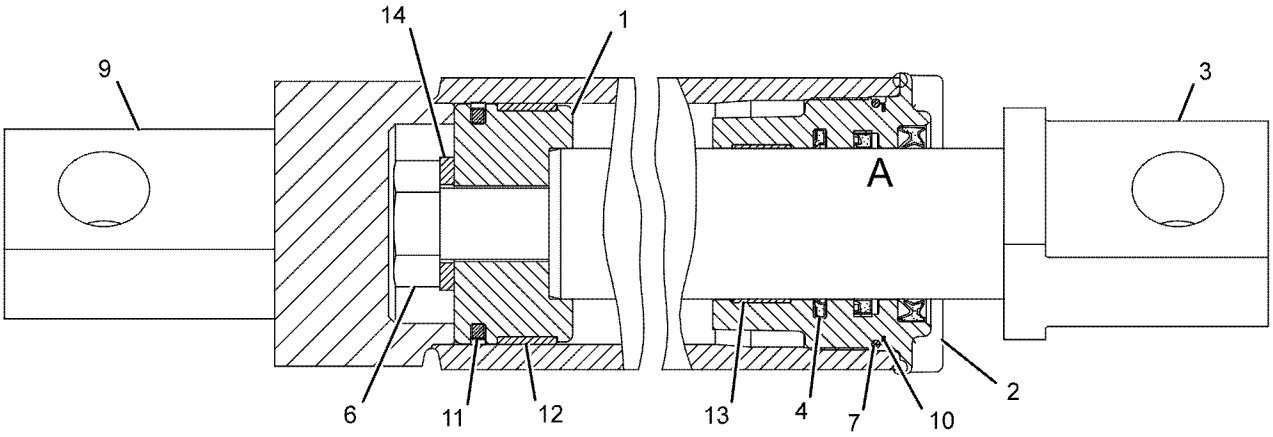

GRAPHIC #1 **<END>** g01105376

436-9156 CYLINDER GP-STEERING

S/N: E9Y1-UP
76.2-MM (3-IN) BORE X 316-MM (12.4-IN) STROKE
PART OF 421-8644 CYLINDER & MTG GP-STEERING

SMCS-4303 **i06144375**

NOTE	REF NO	GRAPHIC REF	PART NUMBER	QTY	PART NAME 1 2 3 4 5 6 (PRODUCT LEVEL)	SEE PAGE
	1	1	**1H-7339**	1	SEAL-O-RING	
	2	1	**3J-7354**	1	SEAL-O-RING	
	3	1	**4T-5613**	1	RING-WEAR	
	4	1	**6J-1972**	1	SEAL AS	
	5	1	**6J-5731**	1	RING-BACKUP	
	6	1	**9S-8002**	1	PLUG	
	7	1	**151-7038**	1	HEAD	
	8	1	**217-3312**	1	MAGNET	
	9	1	**223-3353**	1	RING-WEAR	
	10	1	**289-2935**	1	SEAL AS-BUFFER	
	11	1	**289-2946**	1	SEAL-U-CUP	
	12	1	**308-1845**	1	SEAL-WIPER	
	13	1	**350-3842**	2	SETSCREW (SPECIAL)	
	14	1	**376-8250**	1	SPRING-WAVE	
	15	1	**383-7670**	1	PISTON	
	16	1	**386-4103**	1	ROD AS	
	17	1	**390-1864**	1	SENSOR GP-POSITION (STEERING CYLINDER)	
		1	**118-8586**	1	SEAL-O-RING	
		1	**420-5767**	1	RING-BACKUP	
	18	1	**435-3388**	1	RECEPTACLE AS	
	19	1	**436-9115**	1	CYLINDER AS-STEERING	
		1	**289-6002**	1	ELBOW AS	
		1	**1N-5999**	2	PLUG-O-RING	
		1	**7J-0204**	2	SEAL-O-RING	
M	20	1	**109-1393**	3	BOLT-SOCKET HEAD (M4X0.7X10-MM)	
	21	1	**5S-4455**	1	RING-RETAINING	
M	22	1	**8T-9102**	1	SETSCREW-SOCKET (M5X0.8X10-MM)	

M - METRIC PART

436-9156 **CYLINDER GP-STEERING (*contd.*)** **i06144375**

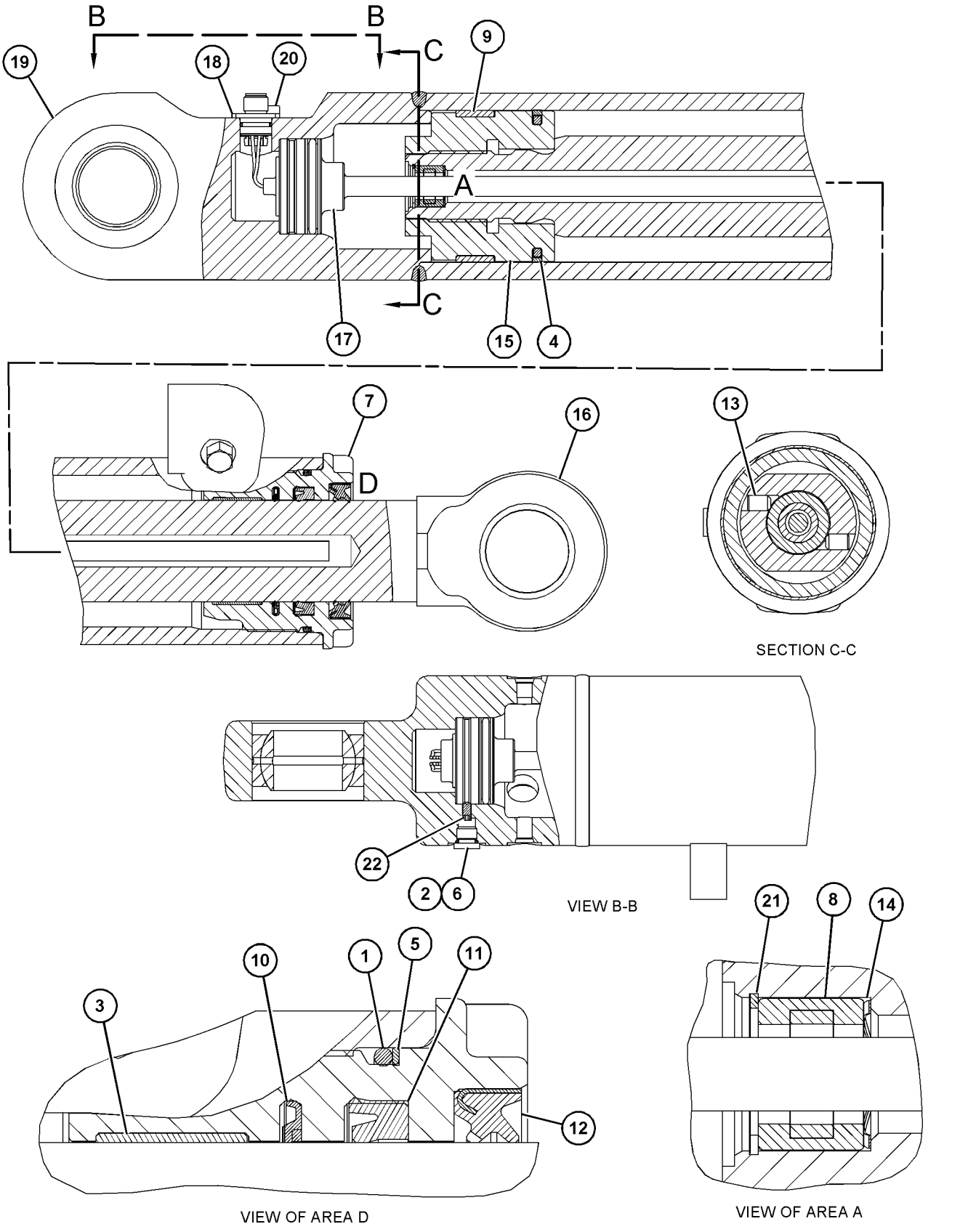

GRAPHIC #1 **<END>** g03839059

436-9157 CYLINDER GP-STEERING

S/N: E9Y1-UP
76.2-MM (3-IN) BORE X 316-MM (12.4-IN) STROKE
PART OF 421-8644 CYLINDER & MTG GP-STEERING

SMCS-4303 **i06144376**

NOTE	REF NO	GRAPHIC REF	PART NUMBER	QTY	PART NAME 1 2 3 4 5 6 (PRODUCT LEVEL)	SEE PAGE
	1	1	**1H-7339**	1	SEAL-O-RING	
	2	1	**3J-7354**	1	SEAL-O-RING	
	3	1	**4T-5613**	1	RING-WEAR	
	4	1	**6J-1972**	1	SEAL AS	
	5	1	**6J-5731**	1	RING-BACKUP	
	6	1	**9S-8002**	1	PLUG	
	7	1	**151-7038**	1	HEAD	
	8	1	**217-3312**	1	MAGNET	
	9	1	**223-3353**	1	RING-WEAR	
	10	1	**289-2935**	1	SEAL AS-BUFFER	
	11	1	**289-2946**	1	SEAL-U-CUP	
	12	1	**308-1845**	1	SEAL-WIPER	
	13	1	**350-3842**	2	SETSCREW (SPECIAL)	
	14	1	**376-8250**	1	SPRING-WAVE	
	15	1	**383-7670**	1	PISTON	
	16	1	**386-4103**	1	ROD AS	
	17	1	**390-1864**	1	SENSOR GP-POSITION (STEERING CYLINDER)	
		1	**118-8586**	1	SEAL-O-RING	
		1	**420-5767**	1	RING-BACKUP	
	18	1	**435-3388**	1	RECEPTACLE AS	
	19	1	**436-9116**	1	CYLINDER AS-STEERING	
		1	**289-6002**	1	ELBOW AS	
		1	**1N-5999**	2	PLUG-O-RING	
		1	**7J-0204**	2	SEAL-O-RING	
M	20	1	**109-1393**	3	BOLT-SOCKET HEAD (M4X0.7X10-MM)	
	21	1	**5S-4455**	1	RING-RETAINING	
M	22	1	**8T-9102**	1	SETSCREW-SOCKET (M5X0.8X10-MM)	

M - METRIC PART

436-9157 **CYLINDER GP-STEERING** (*contd.*) **i06144376**

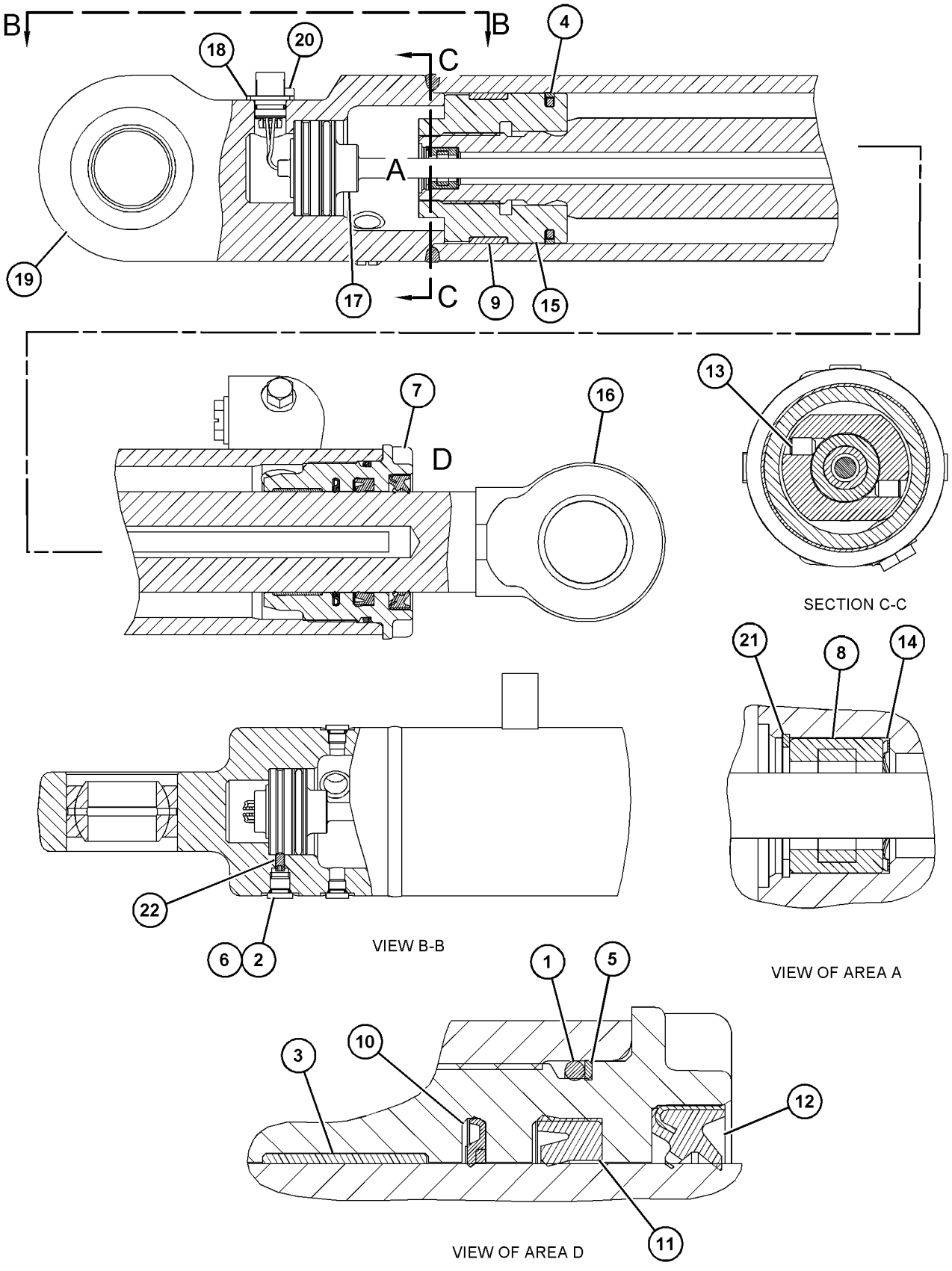

GRAPHIC #1 **<END>** g03838401

289-3054 CYLINDER GP-WHEEL LEAN—NON ALL WHEEL DRIVE

S/N: E9Y1-UP

101.6-MM (4.0-IN) BORE X 174.8-MM (6.88-IN) STROKE

PART OF 249-6545 CYLINDER & MTG GP-WHEEL LEAN

SMCS-5211 **i05319603**

NOTE	REF NO	GRAPHIC REF	PART NUMBER	QTY	PART NAME 1 2 3 4 5 6 (PRODUCT LEVEL)	SEE PAGE
	1	1	**289-3055**	1	CYLINDER AS	
	1A	1	**2G-8635**	1	BUSHING	
M	2	1	**173-9683**	1	BOLT (M30X3.5X90-MM)	
	3	1	**3S-7023**	1	WASHER (34X57X6-MM THK)	
J	4	1	**5J-5402**	1	SEAL AS	
J	5	1	**6J-2797**	1	RING-WEAR	
	6	1	**9T-5927**	1	PISTON	
J	7	1	**9X-4611**	1	SEAL-O-RING	
J	8	1	**2K-6830**	1	RING-BACKUP	
	9	1	**6E-4977**	1	HEAD	
R	10	1	**121-9247**	1	ROD AS	
	10A	1	**2G-8635**	1	BUSHING	
J	11	1	**231-3538**	1	SEAL-WIPER	
J	12	1	**362-3819**	1	SEAL-U-CUP	
J	13	1	**167-2200**	1	SEAL AS	
J	14	1	**8T-4958**	1	RING-WEAR	
					AVAILABLE REPAIR KIT(S):	
J			**425-2108**	1	KIT-HYD CYLINDER SEAL	

J - KIT MARKED J SERVICES PART(S) MARKED J
M - METRIC PART
R - REMFG PART MAY BE AVAILABLE

289-3054 **CYLINDER GP-WHEEL LEAN (*contd.*)** **i05319603**

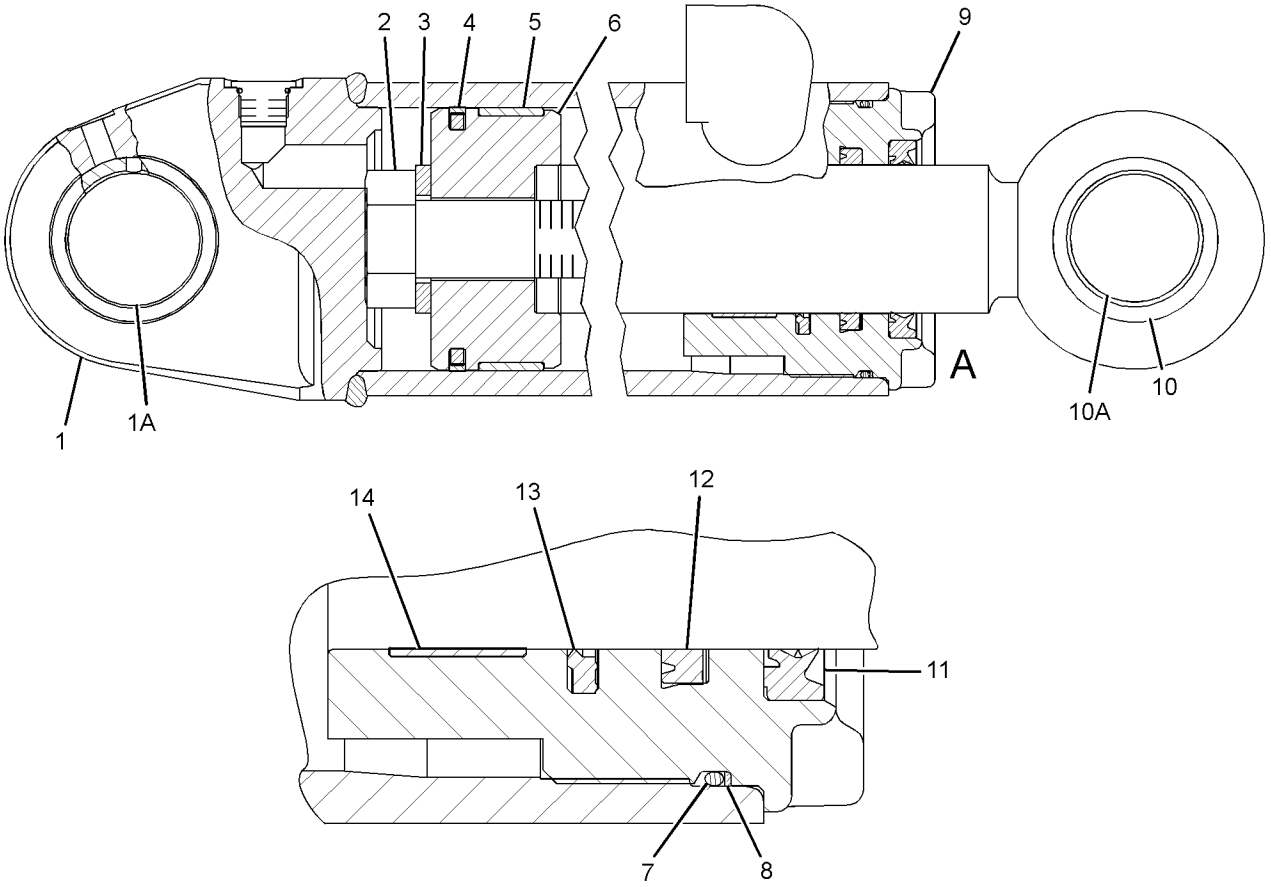

VIEW OF AREA A

GRAPHIC #1 **<END>** g01341779

454-4691 DRIVE GP-CIRCLE

S/N: E9Y1-UP

PART OF 479-7656 IMPLEMENT AR, 370-2227 SPECIAL AR

ALSO AN ATTACHMENT

SMCS-5207 **i06214336**

NOTE	REF NO	GRAPHIC REF	PART NUMBER	QTY	PART NAME 1 2 3 4 5 6 (PRODUCT LEVEL)	SEE PAGE
	1	2	**2G-0339**	1	WASHER-SPECIAL	
	2	2	**2G-0478**	10	PLATE-CLUTCH	
R	3	2	**5K-5288**	2	SEAL GP-DUO-CONE	
					(EACH INCLUDES)	
		2	**5K-5129**	2	RING-SEALING	
	4	1	**5T-8060**	1	ADAPTER	
	5	2	**6G-1536**	1	SPACER (69.88X90X13-MM THK)	
	6	2	**6G-1539**	1	COVER	
	7	2	**6G-5538**	1	COVER	
	8	2	**6Y-7953**	11	DISC-FRICTION	
B	9	2	**8D-4522**	4	SHIM (0.005-MM THK)	
B	10	2	**8D-4523**	2	SHIM (0.01-MM THK)	
	11	2	**8D-7333**	1	COLLAR	
	12	1	**9D-1491**	1	COUPLING	
Y	13	1	**9T-5977**	1	MOTOR GP-GEROTOR	620
B	14	2	**307-1959**	6	SHIM (0.13-MM THK)	
B	15	2	**307-1960**	1	SHIM (0.25-MM THK)	
	16	2	**307-1961**	1	PLATE	
B	17	2	**307-1962**	4	SHIM (0.5-MM THK)	
	18	2	**389-8348**	1	HOUSING AS-DRIVE	
	18A	1	**3J-2333**	2	BUSHING	
		2	**265-6724**	1	HOUSING-DRIVE	
		2	**4D-4823**	4	STUD-TAPERLOCK (5/8-11-THD)	
M		2	**116-3720**	2	STUD-TAPERLOCK	
	19	2	**461-3325**	1	ADAPTER	
	20	2	**450-5243**	1	SHAFT	
	21	2	**450-5244**	1	PINION	
	22	1	**450-6181**	1	GEAR-WORM	
	23	2	**450-6182**	1	GEAR-WORM	
	24	2	**454-6333**	1	CAGE AS	
	24A	2	**7J-2604**	1	BUSHING	
	25	1,2	**0S-1585**	8	BOLT (1/2-13X1.5-IN)	
M	26	1	**116-2434**	2	BOLT (M24X3X170-MM)	
	27	1	**126-8928**	4	WASHER-HARD (26X40X8-MM THK)	
	28	2	**165-3930**	4	BOLT (3/8-16X1.625-IN)	
	29	2	**1A-1415**	1	NUT (1-7/8-12-THD)	
	30	1	**1B-5174**	1	PLUG-PIPE	
	31	1,2	**267-3507**	3	WASHER-HARD (26X47X12-MM THK)	
	32	1	**2B-0858**	1	PLUG-PIPE	
	33	2	**2D-6533**	1	SEAL-O-RING	
	34	1	**5H-3252**	1	SEAL-O-RING	
	35	1	**2H-3931**	1	SEAL-O-RING	
	36	1	**4H-6996**	1	PIN-SPRING	
	37	1	**4K-0367**	4	NUT-FULL (5/8-11-THD)	
	38	1	**5K-7143**	2	BOLT-SELF-LOCKING (1/2-13X1.5-IN)	
	39	1,2	**5P-8245**	10	WASHER-HARD (13.5X25.5X3-MM THK)	
	40	1	**5P-8247**	4	WASHER-HARD (17X32X3.5-MM THK)	
	41	1	**5S-7379**	4	BOLT (3/8-16X0.875-IN)	
	42	2	**6G-5539**	1	GASKET	
	43	2	**6G-5542**	2	SPACER (119.2X178X9.3-MM THK)	
	44	2	**6G-6122**	1	SPRING-DISC	
M	45	2	**6V-5686**	3	BOLT (M16X2X50-MM)	
M	46	1	**7X-2575**	1	BOLT (M24X3X60-MM)	
	47	1	**8D-3984**	2	CONE-BEARING	
	48	1	**8D-3986**	2	CUP-BEARING	
	49	2	**8D-5054**	3	WASHER-HARD (17X30X3-MM THK)	
	50	2	**8D-7343**	1	WASHER-THRUST (3.12X4.62X0.09-MM THK)	

454-4691 **DRIVE GP-CIRCLE (*contd.*)** **i06214336**

NOTE	REF NO	GRAPHIC REF	PART NUMBER	QTY	PART NAME 1 2 3 4 5 6 (PRODUCT LEVEL)	SEE PAGE
	51	2	**8D-7424**	1	SPACER (48X81X6-MM THK)	
	52	1	**8T-0336**	1	FITTING-PRESSURE RELIEF	
M	53	1,2	**8T-4001**	4	NUT (M24X3-THD)	
	54	1,2	**8T-4896**	8	WASHER-HARD (10.2X18.5X2.5-MM THK)	
	55	2	**8W-6179**	1	WASHER-THRUST	
	56	1	**461-2375**	1	FILM-INFORMATION (ENGINE OIL GRADE)	

B - USE AS REQUIRED
M - METRIC PART
R - REMFG PART MAY BE AVAILABLE
Y - SEPARATE ILLUSTRATION

454-4691 **DRIVE GP-CIRCLE (*contd.*)** **i06214336**

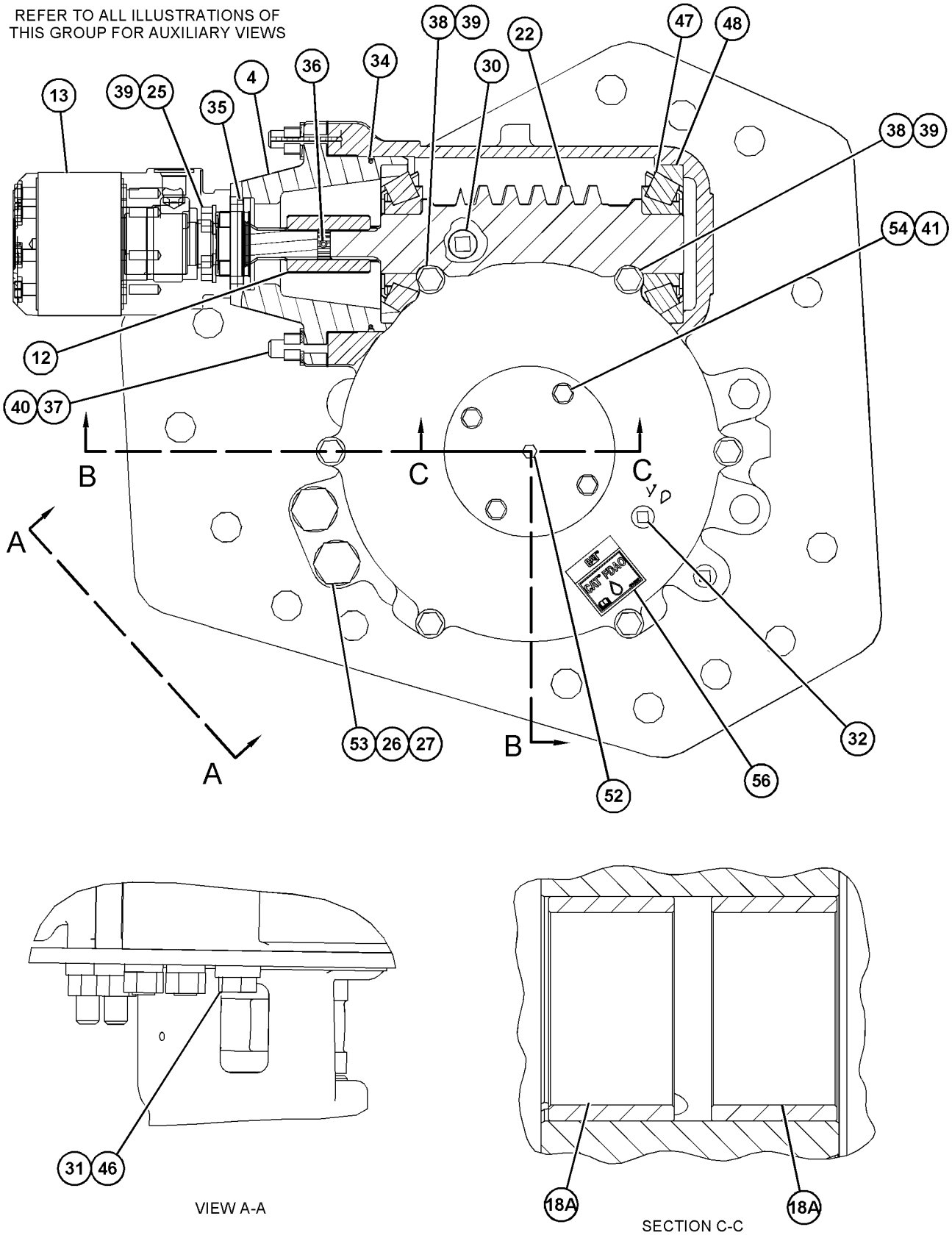

GRAPHIC #1 g03859128

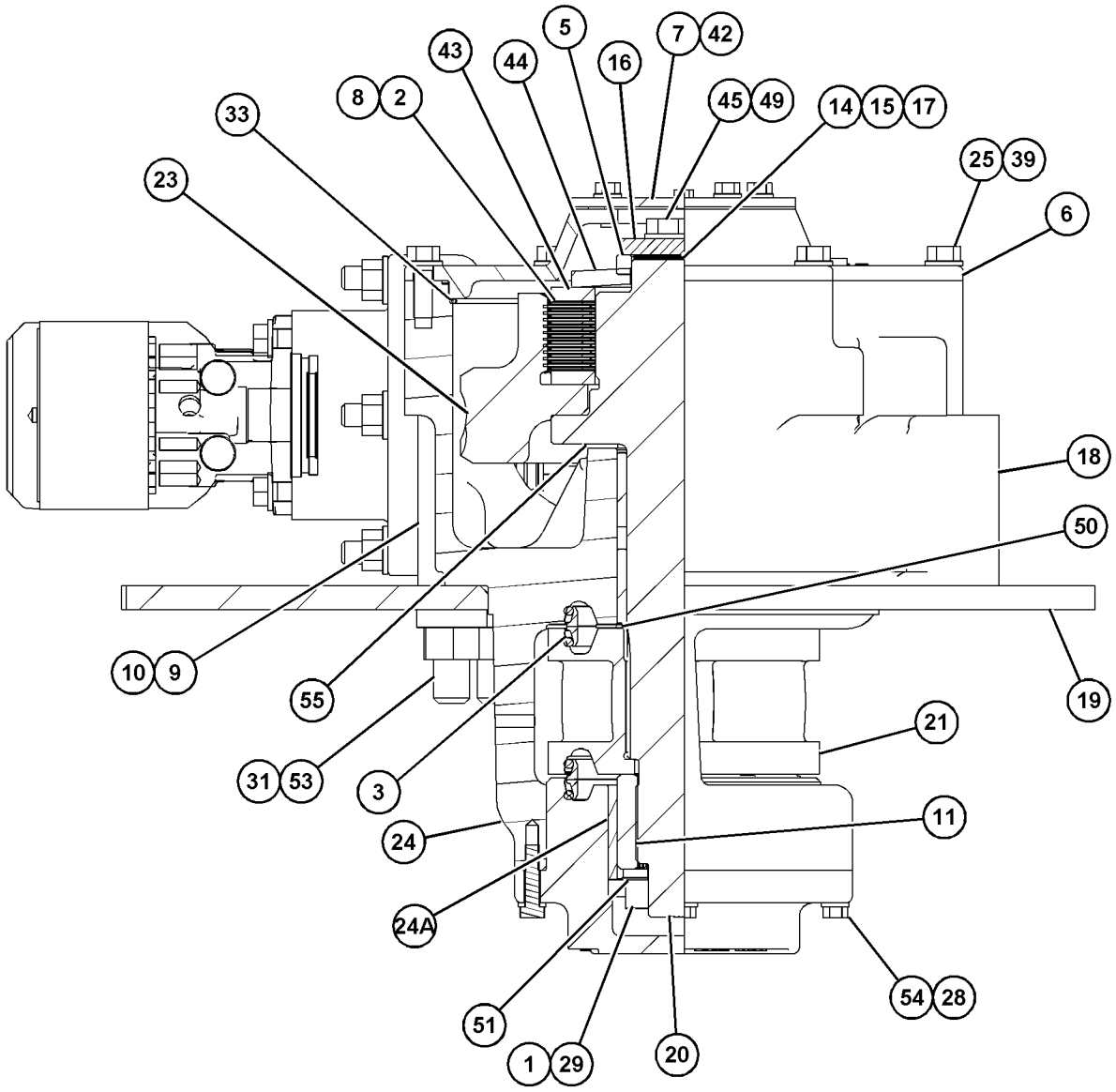

SECTION B-B

GRAPHIC #2 **<END>** g03859131

352-5829 FILTER & MTG GP-HYDRAULIC

S/N: E9Y1-UP
MAIN RETURN & PILOT
PART OF 371-3796 HYDRAULIC AR

SMCS-5068 **i06144314**

NOTE	REF NO	GRAPHIC REF	PART NUMBER	QTY	PART NAME 1 2 3 4 5 6 (PRODUCT LEVEL)	SEE PAGE
Y	1	1	**164-7577**	1	SWITCH GP-BYPASS (FILTER)	265
	2	1	**242-0407**	1	VALVE-DRAIN	
		1	**214-7568**	1	SEAL-O-RING	
Y	3	1	**249-2307**	1	FILTER GP-OIL (HYDRAULIC TANK RETURN)	576
	4	1	*260-9151*	1	PLUG AS	
		1	**2S-4078**	1	SEAL-O-RING	
		1	**3T-9549**	1	ADAPTER	
Y	5	1	*416-8304*	1	FILTER GP-OIL (HYDRAULIC, TRANSMISSION)	577
	6	1	**8T-4121**	8	WASHER-HARD (11X21X2.5-MM THK)	
M	7	1	**8T-4137**	4	BOLT (M10X1.5X20-MM)	
M	8	1	**8T-4195**	4	BOLT (M10X1.5X30-MM)	

M - METRIC PART
Y - SEPARATE ILLUSTRATION

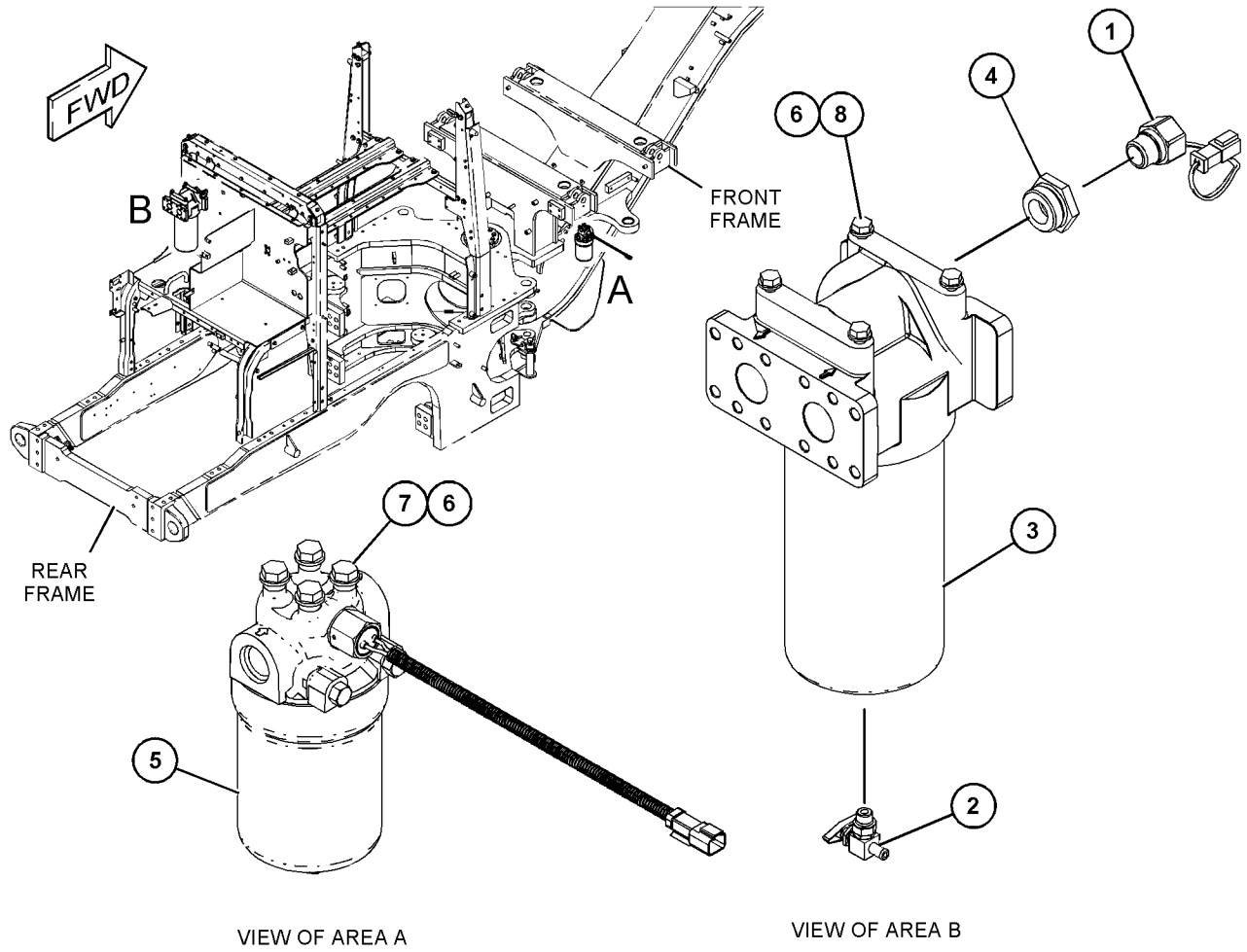

GRAPHIC #1 **<END>** g03829153

249-2307 FILTER GP-OIL

S/N: E9Y1-UP
INTERNAL BYPASS
PART OF 352-5829 FILTER & MTG GP-HYDRAULIC

SMCS-5068, 5093 **i03797265**

NOTE	REF NO	GRAPHIC REF	PART NUMBER	QTY	PART NAME 1 2 3 4 5 6 (PRODUCT LEVEL)	SEE PAGE
	1	1	**338-3540**	1	FILTER ELEMENT-OIL (ULTRA HIGH EFFICIENCY) (HYDRAULIC TANK)	
C	2	1	**321-5967**	1	HOUSING GP-FILTER (OIL)	
		1	**9S-8004**	1	PLUG	
		1	**214-7568**	1	SEAL-O-RING	
Y	3	1	*249-2308*	1	BASE GP-OIL FILTER (HYDRAULIC TANK RETURN)	540
	4	1	**214-7568**	1	SEAL-O-RING	
	5	1	**6V-5048**	1	SEAL-O-RING	
	6	1	**9S-4185**	1	PLUG	
	7	1	**9S-4191**	1	PLUG	
	8	1	**130-0229**	1	SEAL-O-RING	
F			**8L-2786**	1	SEAL-O-RING	

C - CHANGE FROM PREVIOUS TYPE
F - NOT SHOWN
Y - SEPARATE ILLUSTRATION

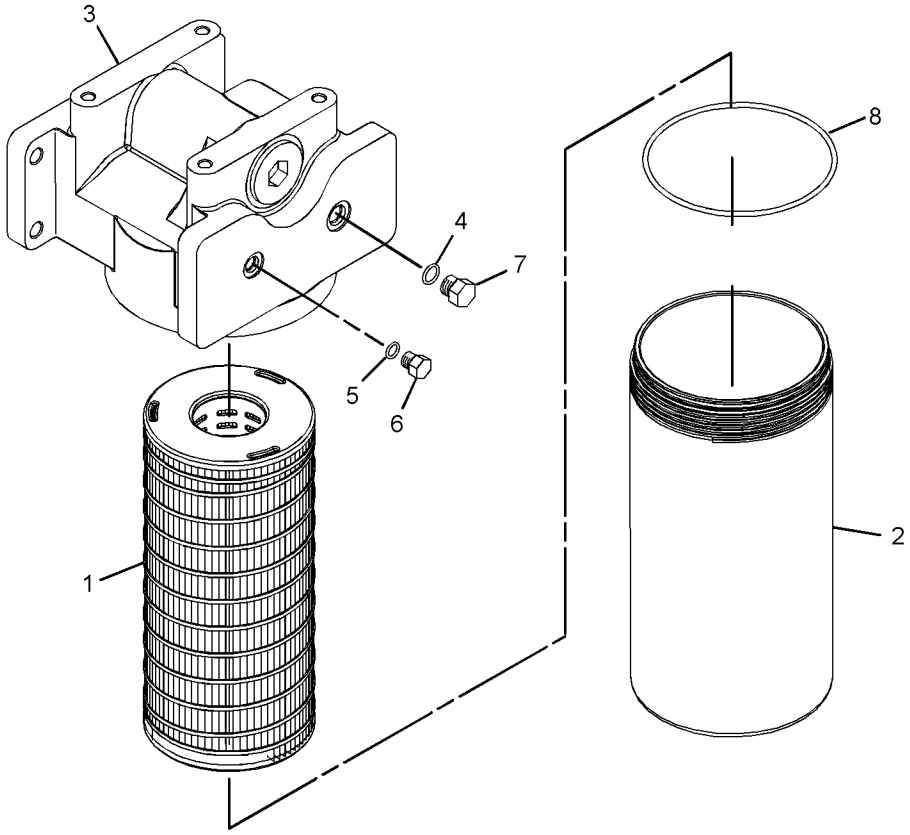

GRAPHIC #1 **<END>** g01447672

416-8304 FILTER GP-OIL—HYDRAULIC, TRANSMISSION

S/N: E9Y1-UP

PART OF 352-5829 FILTER & MTG GP-HYDRAULIC

SMCS-5068, 5093

i06145809

NOTE	REF NO	GRAPHIC REF	PART NUMBER	QTY	PART NAME 1 2 3 4 5 6 (PRODUCT LEVEL)	SEE PAGE
	1	1	**346-5577**	1	BASE AS-FILTER (HYDRAULIC OIL)	
		1	**6V-5048**	1	SEAL-O-RING	
		1	**9S-4182**	1	PLUG (7/16-20-THD)	
		1	**9S-4191**	1	PLUG (9/16-18-THD)	
		1	**214-7568**	1	SEAL-O-RING	
	2	1	**349-6097**	1	SWITCH AS-PRESSURE (HYDRAULIC OIL)	
		1	**033-6033**	1	SEAL-O-RING	
		1	**206-9295**	1	SEAL-O-RING	
	3	1	**428-8644**	1	HOUSING AS-FILTER (HYDRAULIC OIL)	
		1	**6V-5048**	1	SEAL-O-RING	
		1	**9S-8002**	1	PLUG	
		1	**095-1671**	1	SEAL-O-RING	
		1	**095-1671**	1	SEAL-O-RING	
	4	1	**389-1076**	1	FILTER ELEMENT AS-OIL (HYDRAULIC)	
	4A	1	**095-1671**	1	SEAL-O-RING	

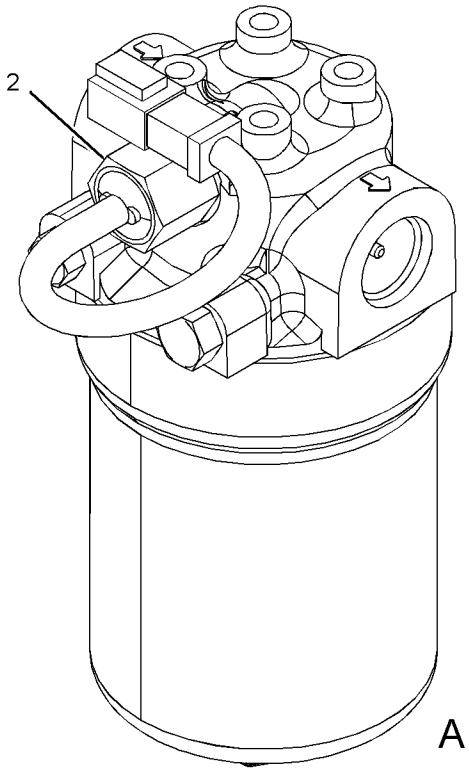

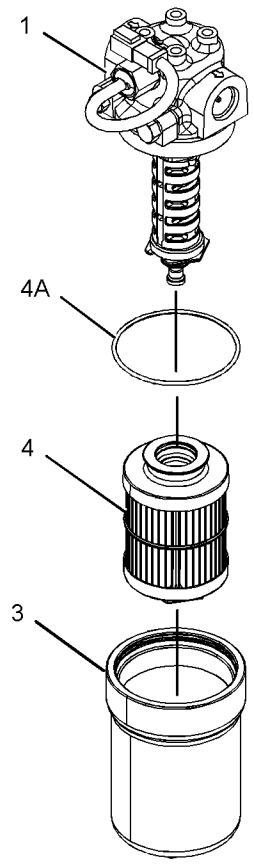

VIEW OF AREA A

GRAPHIC #1

<END>

g03451597

386-4105 FLOAT AR-BLADE

S/N: E9Y1-UP

CANNOT BE USED WITH 366-6151—PAGE: 584

AN ATTACHMENT

SMCS-5241 **i06127191**

NOTE	PART NUMBER	QTY	PART NAME 1 2 3 4 5 6 (PRODUCT LEVEL)	SEE PAGE
Y	*366-6164*	1	LINES GP-IMPLEMENT	591
Y	*276-8498*	1	PANEL GP-CONTROL (VARIABLE BLADE FLOAT)	777
Y	*370-8448*	1	WIRING GP-BLADE	278

Y - SEPARATE ILLUSTRATION

<END>

371-3796 HYDRAULIC AR

S/N: E9Y1-UP

PART OF 386-1317 COMMON AR

SMCS-5050 **i06144115**

NOTE	PART NUMBER	QTY	PART NAME 1 2 3 4 5 6 (PRODUCT LEVEL)	SEE PAGE
Y	*366-6093*	1	CYLINDER & MTG GP-ARTICULATION	547
Y	*366-6096*	1	CYLINDER & MTG GP-BLADE LIFT	549
Y	*352-5793*	1	CYLINDER & MTG GP-BLADE TIP	551
Y	*261-2373*	1	CYLINDER & MTG GP-CENTERSHIFT	552
Y	*257-6804*	1	CYLINDER & MTG GP-SIDESHIFT	553
Y	*352-5829*	1	FILTER & MTG GP-HYDRAULIC	575
Y	*366-6121*	1	LINES GP-ACCUMULATOR	579
Y	*366-6122*	1	LINES GP-ACCUMULATOR	581
Y	*366-6129*	1	LINES GP-AIR CONDITIONER	754
Y	*366-6128*	1	LINES GP-FUEL	123
Y	*366-6132*	1	LINES GP-HEATER	756
Y	*366-6120*	1	LINES GP-HYDRAULIC	587
Y	*366-6124*	1	LINES GP-HYDRAULIC FAN	589
Y	*366-6118*	1	LINES GP-PUMP (FRONT)	594
Y	*366-6119*	1	LINES GP-PUMP	598
Y	*366-6127*	1	LINES GP-SECONDARY STEERING	605
Y	*366-6126*	1	LINES GP-SERVICE BRAKE	528
Y	*366-6115*	1	LINES GP-STEERING	606
Y	*366-6125*	1	LINES GP-TRANSMISSION OIL	372
Y	*249-6537*	1	LOCK GP-CENTERSHIFT	609
Y	*352-5790*	1	MANIFOLD GP-HYDRAULIC	616
Y	*352-5789*	1	MANIFOLD GP-HYDRAULIC	615
Y	*352-5797*	1	MOUNTING GP-VALVE	479
Y	*352-5804*	1	PUMP & MTG GP-PISTON	624
Y	*388-8872*	1	PUMP & MTG GP-SECONDARY STEER (ELECTRIC DRIVE)	625
Y	*465-3377*	1	SWIVEL GP	632
Y	*366-6133*	1	TANK & MTG GP-HYDRAULIC	633
Y	*373-1573*	1	VALVE & MOUNTING GP	636

Y - SEPARATE ILLUSTRATION

<END>

366-6121 LINES GP-ACCUMULATOR–ARTICULATION

S/N: E9Y1-UP

PART OF 371-3796 HYDRAULIC AR

SMCS-5057, 5077 **i06077334**

NOTE	REF NO	GRAPHIC REF	PART NUMBER	QTY	PART NAME 1 2 3 4 5 6 (PRODUCT LEVEL)	SEE PAGE
I	1	1	**246-6323**	1	HOSE AS	
I	2	1	**442-0048**	1	HOSE AS	
I	3	1	**467-9188**	1	HOSE AS	
I	4	1	**475-1688**	1	HOSE AS	
	5	1	**091-0081**	1	SPACER (10.5X20X10-MM THK)	
	6	1	**122-0450**	8	GROMMET	
	7	1	*148-8340*	3	CONNECTOR AS	
					(EACH INCLUDES)	
		1	**3K-0360**	1	SEAL-O-RING	
		1	**6V-8398**	1	SEAL-O-RING	
		1	**6V-8639**	1	CONNECTOR	
	8	1	*148-8364*	1	ELBOW AS	
		1	**3K-0360**	1	SEAL-O-RING	
		1	**6V-8398**	1	SEAL-O-RING	
		1	**6V-8625**	1	ELBOW	
	9	1	*148-8370*	2	ELBOW AS	
					(EACH INCLUDES)	
		1	**6V-8398**	1	SEAL-O-RING	
		1	**6V-9851**	1	ELBOW	
	10	1	*148-8436*	2	TEE AS	
					(EACH INCLUDES)	
		1	**3K-0360**	1	SEAL-O-RING	
		1	**6V-8398**	2	SEAL-O-RING	
		1	**6V-8775**	1	TEE-FACE SEAL	
	11	1	*194-2903*	1	ELBOW AS	
		1	**3K-0360**	1	SEAL-O-RING	
		1	**8T-0119**	1	ELBOW	
M	12	1	**227-6715**	1	STUD (M10X1.5X30-MM)	
M	13	1	**344-5675**	3	NUT (M10X1.5-THD)	
	14	1	**3G-8047**	2	GROMMET	
	15	1	**3G-8054**	2	CLIP (TAB)	
	16	1	**3G-8057**	2	CLIP (SLOT)	
	17	1	**6D-4244**	1	CLIP	
	18	1	**8T-1897**	8	CLIP (SLOT)	
	19	1	**8T-1898**	8	CLIP (TAB)	
	20	1	**8T-4121**	14	WASHER-HARD (11X21X2.5-MM THK)	
M	21	1	**8T-4136**	6	BOLT (M10X1.5X25-MM)	
M	22	1	**8T-4195**	3	BOLT (M10X1.5X30-MM)	
M	23	1	**8T-4196**	1	BOLT (M10X1.5X35-MM)	

I - REFER TO HYDRAULIC INFORMATION SYSTEM
M - METRIC PART

366-6121 **LINES GP-ACCUMULATOR (*contd.*)** **i06077334**

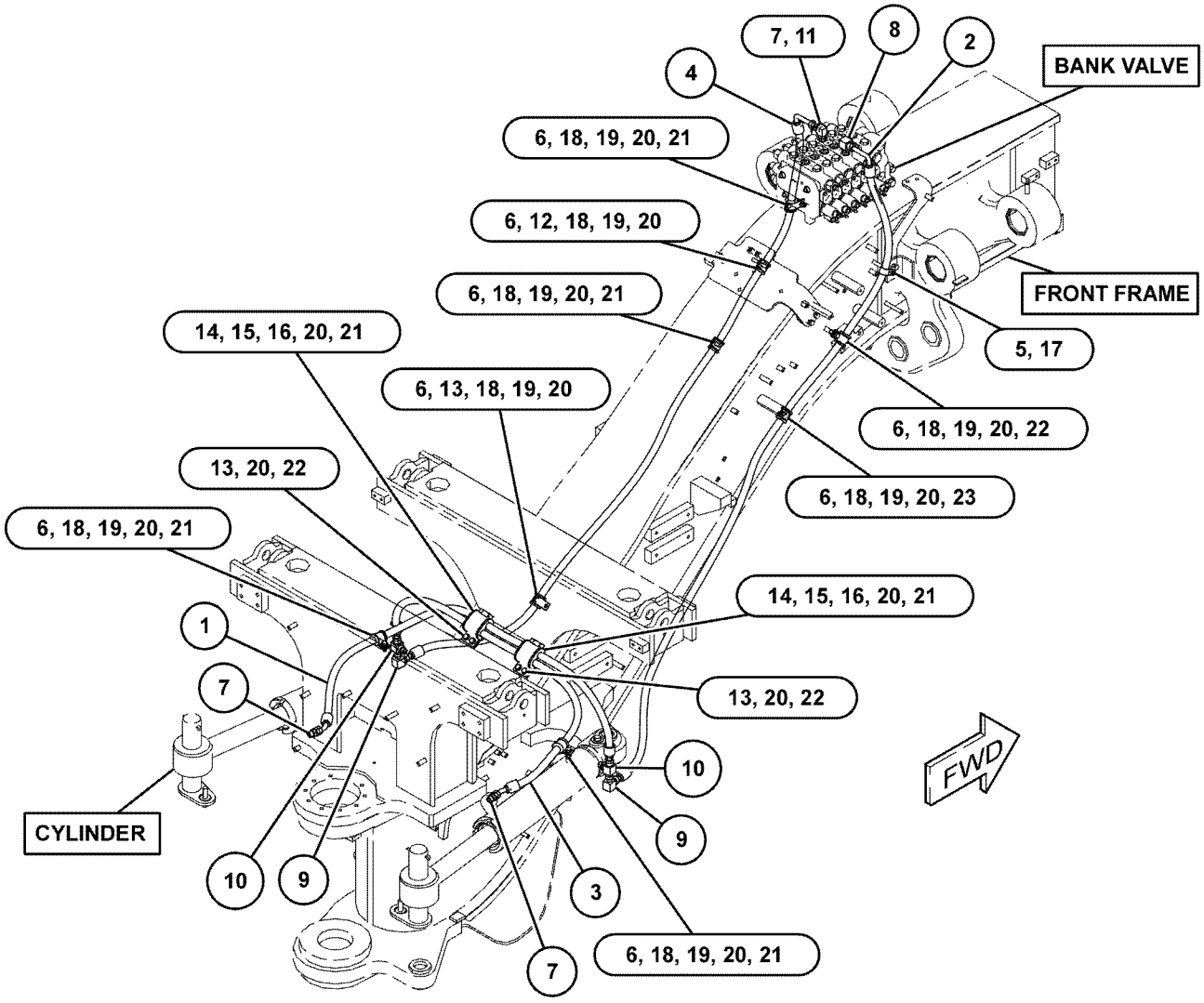

GRAPHIC #1 **<END>** g03799534

366-6122 LINES GP-ACCUMULATOR—CIRCLE, DRAWBAR, MOLDBOARD

S/N: E9Y1-UP

PART OF 371-3796 HYDRAULIC AR, 479-7656 IMPLEMENT AR

ALSO AN ATTACHMENT

SMCS-5057, 5077

i06144256

NOTE	REF NO	GRAPHIC REF	PART NUMBER	QTY	PART NAME 1 2 3 4 5 6 (PRODUCT LEVEL)	SEE PAGE
	1	1	**5P-0599**	3	CLAMP-BAND	
	2	1	**6G-2263**	4	SPACER (10.5X19X28.5-MM THK)	
	3	1	**9R-2053**	3	BLOCK	
	4	1	**264-0638**	2	PLATE	
	5	1	**269-9521**	1	GUIDE AS-HOSE	
M		1	**8T-3490**	2	NUT-WELD (M10X1.5-THD)	
	6	1	**372-9270**	4	PLATE	
	7	1	**384-3843**	6	BLOCK	
	8	1	**388-6664**	4	PLATE AS	
					(EACH INCLUDES)	
M		1	**8T-5005**	2	BOLT (M10X1.5X70-MM)	
	9	1	**388-6675**	4	PLATE AS	
					(EACH INCLUDES)	
M		1	**8T-3490**	1	NUT-WELD (M10X1.5-THD)	
M		1	**9R-2821**	1	BOSS (M10X1.5X15-MM)	
	10	1	**389-3197**	4	PLATE	
I	11	1	**436-3251**	1	HOSE AS	
I	12	1	**443-4103**	1	HOSE AS	
I	13	1	**443-4108**	1	HOSE AS	
	14	1	**444-6560**	2	PLATE AS	
					(EACH INCLUDES)	
M		1	**8T-5005**	2	BOLT (M10X1.5X70-MM)	
	15	1	**449-4835**	2	BLOCK	
I	16	1	**461-5716**	1	HOSE AS	
I	17	1	**461-5717**	1	HOSE AS	
I	18	1	**464-2963**	1	HOSE AS	
I	19	1	**464-2964**	1	HOSE AS	
I	20	1	**464-2965**	1	HOSE AS	
I	21	1	**464-2966**	1	HOSE AS	
I	22	1	**464-2967**	1	HOSE AS	
I	23	1	**464-2968**	1	HOSE AS	
I	24	1	**464-2969**	1	HOSE AS	
I	25	1	**464-2970**	1	HOSE AS	
	26	1	**474-3003**	6	BLOCK	
	27	1	**476-4177**	2	PLATE	
I	28	1	**476-4187**	1	HOSE AS	
I	29	1	**476-4188**	1	HOSE AS	
I	30	1	**476-4216**	1	HOSE AS	
	31	1	**122-0450**	2	GROMMET	
	32	1	*148-8318*	3	CONNECTOR AS	
					(EACH INCLUDES)	
		1	**3K-0360**	1	SEAL-O-RING	
		1	**6V-8397**	1	SEAL-O-RING	
		1	**6V-8634**	1	CONNECTOR	
	33	1	*148-8340*	3	CONNECTOR AS	
					(EACH INCLUDES)	
		1	**3K-0360**	1	SEAL-O-RING	
		1	**6V-8398**	1	SEAL-O-RING	
		1	**6V-8639**	1	CONNECTOR	
	34	1	*148-8345*	1	CONNECTOR AS	
		1	**2M-9780**	1	SEAL-O-RING	
		1	**6V-8398**	1	SEAL-O-RING	
		1	**6V-8638**	1	CONNECTOR	
	35	1	*148-8346*	4	ELBOW AS	
					(EACH INCLUDES)	
		1	**3K-0360**	1	SEAL-O-RING	
		1	**6V-8398**	1	SEAL-O-RING	

366-6122 **LINES GP-ACCUMULATOR (*contd.*)** **i06144256**

NOTE	REF NO	GRAPHIC REF	PART NUMBER	QTY	PART NAME 1 2 3 4 5 6 (PRODUCT LEVEL)	SEE PAGE
		1	**8T-1686**	1	ELBOW	
	36	1	*148-8363*	2	ELBOW AS	
					(EACH INCLUDES)	
		1	**3K-0360**	1	SEAL-O-RING	
		1	**6V-8397**	1	SEAL-O-RING	
		1	**6V-9876**	1	ELBOW	
	37	1	*148-8364*	2	ELBOW AS	
					(EACH INCLUDES)	
		1	**3K-0360**	1	SEAL-O-RING	
		1	**6V-8398**	1	SEAL-O-RING	
		1	**6V-8625**	1	ELBOW	
	38	1	*148-8367*	1	ELBOW AS	
		1	**6V-8397**	1	SEAL-O-RING	
		1	**6V-9850**	1	ELBOW	
	39	1	*148-8372*	1	ELBOW AS	
		1	**2M-9780**	1	SEAL-O-RING	
		1	**6V-8398**	1	SEAL-O-RING	
		1	**6V-8721**	1	ELBOW	
	40	1	*148-8374*	11	ELBOW AS	
					(EACH INCLUDES)	
		1	**3K-0360**	1	SEAL-O-RING	
		1	**6V-8397**	1	SEAL-O-RING	
		1	**6V-8723**	1	ELBOW	
	41	1	*149-5452*	2	UNION AS (STRAIGHT)	
					(EACH INCLUDES)	
		1	**6V-8397**	2	SEAL-O-RING	
		1	**6V-8994**	1	UNION (STRAIGHT)	
	42	1	**199-7854**	12	SPACER (11.8X20X45-MM THK)	
	43	1	*204-0317*	1	CONNECTOR AS	
		1	**3K-0360**	1	SEAL-O-RING	
		1	**6V-8397**	1	SEAL-O-RING	
		1	**092-3635**	1	CONNECTOR	
M	44	1	**309-1906**	4	STUD-TAPERLOCK (M10X1.5X55-MM)	
M	45	1	**344-5675**	21	NUT (M10X1.5-THD)	
	46	1	**3G-8054**	1	CLIP (TAB)	
	47	1	**3G-8057**	1	CLIP (SLOT)	
	48	1	**4D-7735**	2	CLIP	
	49	1	**5G-3676**	17	GROMMET	
	50	1	**6D-4246**	6	CLIP	
	51	1	**6V-0974**	1	GROMMET	
	52	1	**6V-8367**	2	LOCKWASHER	
	53	1	**6V-9168**	2	NUT (11/16-16-THD)	
	54	1	**8T-1889**	17	CLIP (SLOT)	
	55	1	**8T-1890**	17	CLIP (TAB)	
	56	1	**8T-1897**	2	CLIP (SLOT)	
	57	1	**8T-1898**	2	CLIP (TAB)	
	58	1	**8T-4121**	52	WASHER-HARD (11X21X2.5-MM THK)	
M	59	1	**8T-4136**	13	BOLT (M10X1.5X25-MM)	
M	60	1	**8T-4137**	10	BOLT (M10X1.5X20-MM)	
M	61	1	**8T-4195**	4	BOLT (M10X1.5X30-MM)	
M	62	1	**8T-6466**	4	BOLT (M10X1.5X60-MM)	

I - REFER TO HYDRAULIC INFORMATION SYSTEM
M - METRIC PART

366-6122 **LINES GP-ACCUMULATOR (*contd.*)** **i06144256**

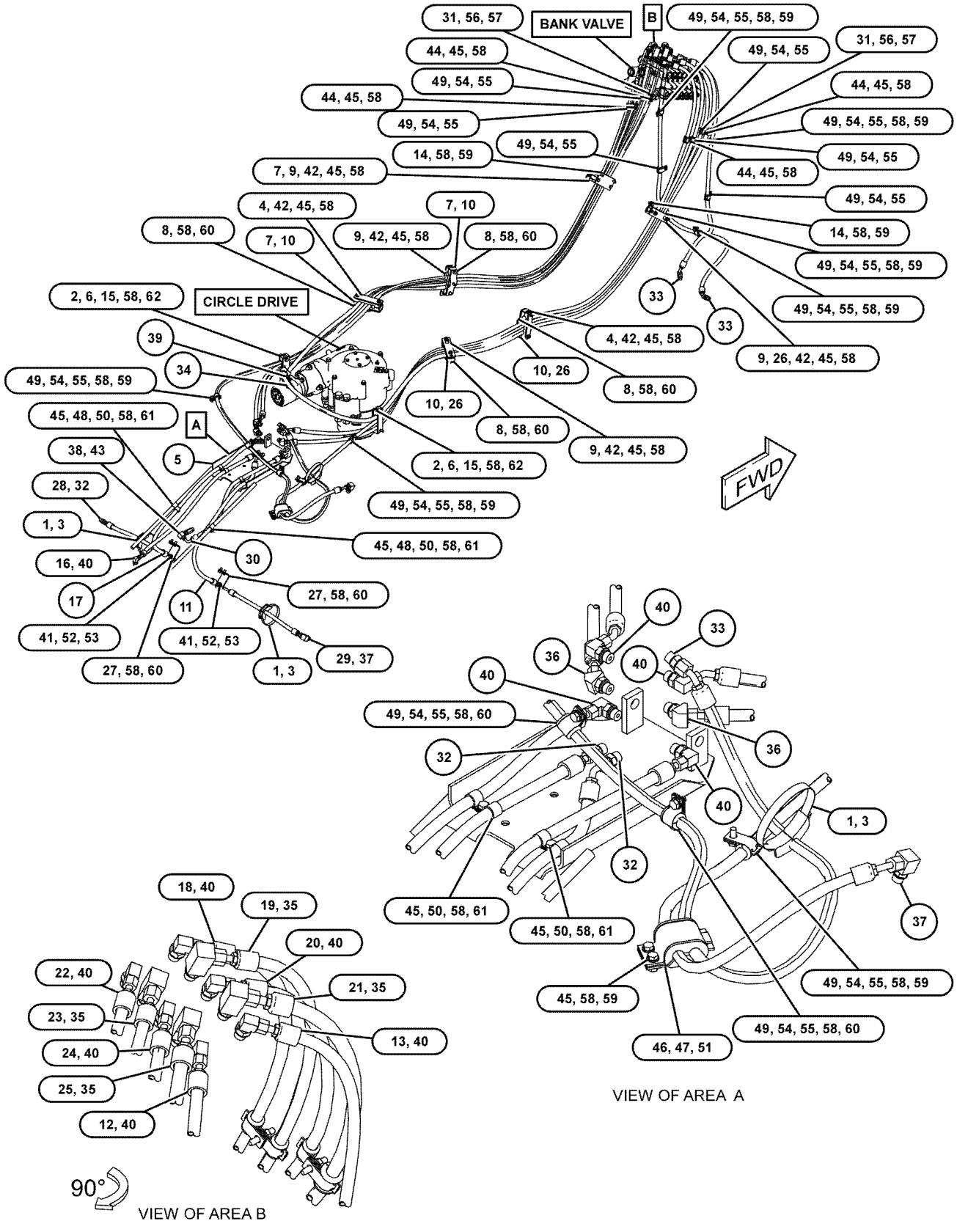

GRAPHIC #1 **<END>** g03831325

366-6151 LINES GP-ACCUMULATOR—BLADE LIFT

S/N: E9Y1-UP
WITH ACCUMULATOR
CANNOT BE USED WITH 386-4105—PAGE: 578
AN ATTACHMENT

SMCS-5057, 5077 **i06143869**

NOTE	REF NO	GRAPHIC REF	PART NUMBER	QTY	PART NAME 1 2 3 4 5 6 (PRODUCT LEVEL)	SEE PAGE
	1	1	**4N-5091**	2	SPACER (0.53X1X3.375-IN THK)	
	2	1	**162-7449**	2	CLAMP	
	3	1	**274-8312**	1	PLATE AS	
M		1	**8T-3490**	1	NUT-WELD (M10X1.5-THD)	
M		1	**8T-3597**	2	NUT-WELD (M12X1.75-THD)	
I	4	1	**361-0944**	1	HOSE AS	
I	5	1	**463-6235**	1	HOSE AS	
I	6	1	**433-4333**	1	HOSE AS	
I	7	1	**443-7732**	1	HOSE AS	
I	8	1	**443-7737**	1	HOSE AS	
I	9	1	**443-7740**	1	HOSE AS	
	10	1	**122-0450**	9	GROMMET	
	11	1	*148-8328*	1	CONNECTOR AS	
		1	**3D-2824**	1	SEAL-O-RING	
		1	**6V-8398**	1	SEAL-O-RING	
		1	**6V-8633**	1	CONNECTOR	
	12	1	*148-8340*	2	CONNECTOR AS	
					(EACH INCLUDES)	
		1	**3K-0360**	1	SEAL-O-RING	
		1	**6V-8398**	1	SEAL-O-RING	
		1	**6V-8639**	1	CONNECTOR	
	13	1	*148-8363*	2	ELBOW AS	
					(EACH INCLUDES)	
		1	**3K-0360**	1	SEAL-O-RING	
		1	**6V-8397**	1	SEAL-O-RING	
		1	**6V-9876**	1	ELBOW	
	14	1	*148-8364*	1	ELBOW AS	
		1	**3K-0360**	1	SEAL-O-RING	
		1	**6V-8398**	1	SEAL-O-RING	
		1	**6V-8625**	1	ELBOW	
	15	1	*148-8370*	1	ELBOW AS	
		1	**6V-8398**	1	SEAL-O-RING	
		1	**6V-9851**	1	ELBOW	
	16	1	*148-8374*	1	ELBOW AS	
		1	**3K-0360**	1	SEAL-O-RING	
		1	**6V-8397**	1	SEAL-O-RING	
		1	**6V-8723**	1	ELBOW	
	17	1	*148-8381*	2	ELBOW AS	
					(EACH INCLUDES)	
		1	**3D-2824**	1	SEAL-O-RING	
		1	**6V-8398**	1	SEAL-O-RING	
		1	**8T-5429**	1	ELBOW	
	18	1	*148-8428*	1	TEE AS	
		1	**3K-0360**	1	SEAL-O-RING	
		1	**6V-8398**	2	SEAL-O-RING	
		1	**6V-8782**	1	TEE	
	19	1	*148-8444*	1	TEE AS-SWIVEL	
		1	**6V-8398**	2	SEAL-O-RING	
		1	**6V-9837**	1	TEE-SWIVEL	
	20	1	*155-7321*	1	ADAPTER AS	
		1	**3D-2824**	1	SEAL-O-RING	
		1	**6V-1722**	1	ADAPTER	
	22	1	**302-3908**	4	SPACER (11X20X30-MM THK)	
M	23	1	**288-4403**	1	STUD-TAPERLOCK (M10X1.5X85-MM)	
	24	1	**316-0488**	1	SPACER (11X25X78-MM THK)	
	25	1	**5G-3676**	8	GROMMET	

366-6151 **LINES GP-ACCUMULATOR (*contd.*)** **i06143869**

NOTE	REF NO	GRAPHIC REF	PART NUMBER	QTY	PART NAME 1 2 3 4 5 6 (PRODUCT LEVEL)	SEE PAGE
	26	1	**5P-1076**	3	WASHER-HARD (13.5X30X4-MM THK)	
	27	1	**8T-1889**	8	CLIP (SLOT)	
	28	1	**8T-1890**	8	CLIP (TAB)	
	29	1	**8T-1897**	9	CLIP (SLOT)	
	30	1	**8T-1898**	9	CLIP (TAB)	
	31	1	**8T-4121**	11	WASHER-HARD (11X21X2.5-MM THK)	
M	32	1	**344-5675**	1	NUT (M10X1.5-THD)	
M	33	1	**8T-4139**	3	BOLT (M12X1.75X30-MM)	
M	34	1	**8T-4185**	3	BOLT (M10X1.5X50-MM)	
M	35	1	**8T-4195**	3	BOLT (M10X1.5X30-MM)	
M	36	1	**8T-4196**	2	BOLT (M10X1.5X35-MM)	
M	37	1	**8T-4198**	1	BOLT (M10X1.5X100-MM)	
	38	1	**8T-4223**	2	WASHER-HARD (13.5X25.5X3-MM THK)	
M	39	1	**8T-5041**	2	BOLT (M12X1.75X120-MM)	
M	40	1	**8T-5005**	1	BOLT (M10X1.5X70-MM)	

I - REFER TO HYDRAULIC INFORMATION SYSTEM
M - METRIC PART

366-6151 **LINES GP-ACCUMULATOR (*contd.*)** **i06143869**

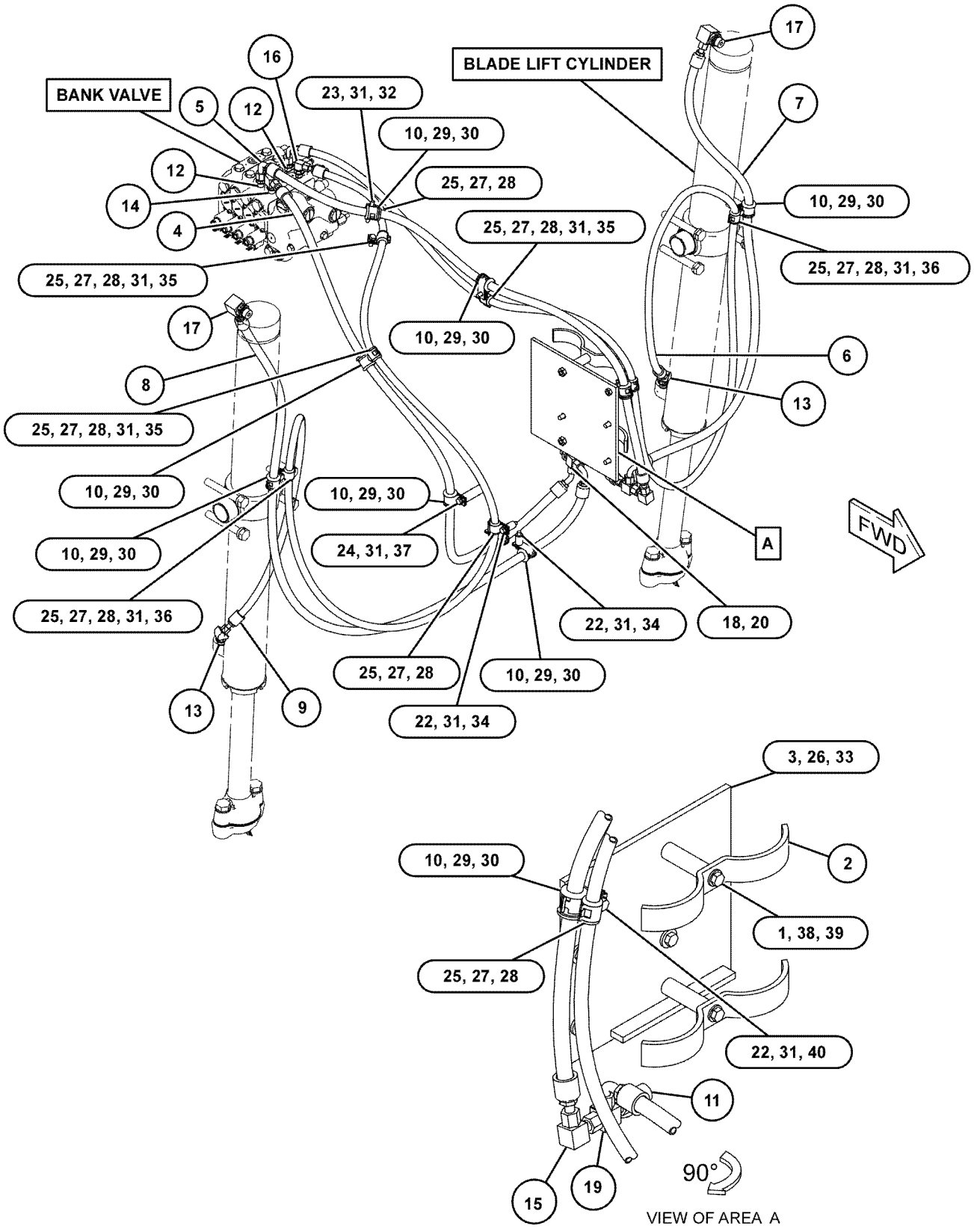

GRAPHIC #1 **<END>** g03828019

366-6120 LINES GP-CENTERSHIFT LOCK

S/N: E9Y1-UP

PART OF 371-3796 HYDRAULIC AR

SMCS-5057, 5221 **i06144252**

NOTE	REF NO	GRAPHIC REF	PART NUMBER	QTY	PART NAME 1 2 3 4 5 6 (PRODUCT LEVEL)	SEE PAGE
	1	1	**328-8411**	1	TUBE AS	
I	2	1	**386-2618**	1	HOSE AS	
I	3	1	**467-4723**	1	HOSE AS	
	4	1	*148-8336*	2	CONNECTOR AS	
					(EACH INCLUDES)	
		1	**3J-1907**	1	SEAL-O-RING	
		1	**6V-8397**	1	SEAL-O-RING	
		1	**6V-8636**	1	CONNECTOR	
	5	1	*148-8367*	1	ELBOW AS	
		1	**6V-8397**	1	SEAL-O-RING	
		1	**6V-9850**	1	ELBOW	
	6	1	*148-8378*	1	ELBOW AS	
		1	**3J-1907**	1	SEAL-O-RING	
		1	**6V-8397**	1	SEAL-O-RING	
		1	**6V-8724**	1	ELBOW	
	7	1	*150-3074*	1	ORIFICE AS	
		1	**3J-1907**	1	SEAL-O-RING	
		1	**6V-8397**	1	SEAL-O-RING	
		1	**110-5266**	1	ORIFICE	
M	8	1	**259-7140**	1	STUD-TAPERLOCK (M10X1.5X80-MM)	
	9	1	**302-3908**	1	SPACER (11X20X30-MM THK)	
M	10	1	**344-5675**	1	NUT (M10X1.5-THD)	
	11	1	**4S-1962**	1	CLIP	
	12	1	**7S-3916**	4	CLIP (TAB)	
	13	1	**7S-3919**	4	CLIP (SLOT)	
	14	1	**7V-6571**	4	GROMMET	
	15	1	**8T-4121**	5	WASHER-HARD (11X21X2.5-MM THK)	
M	16	1	**8T-4133**	1	NUT (M10X1.5-THD)	
M	17	1	**8T-4195**	2	BOLT (M10X1.5X30-MM)	
M	18	1	**8T-6466**	1	BOLT (M10X1.5X60-MM)	
	19	1	**9M-8406**	4	CLIP	

I - REFER TO HYDRAULIC INFORMATION SYSTEM
M - METRIC PART

366-6120 **LINES GP-CENTERSHIFT LOCK (*contd.*)** **i06144252**

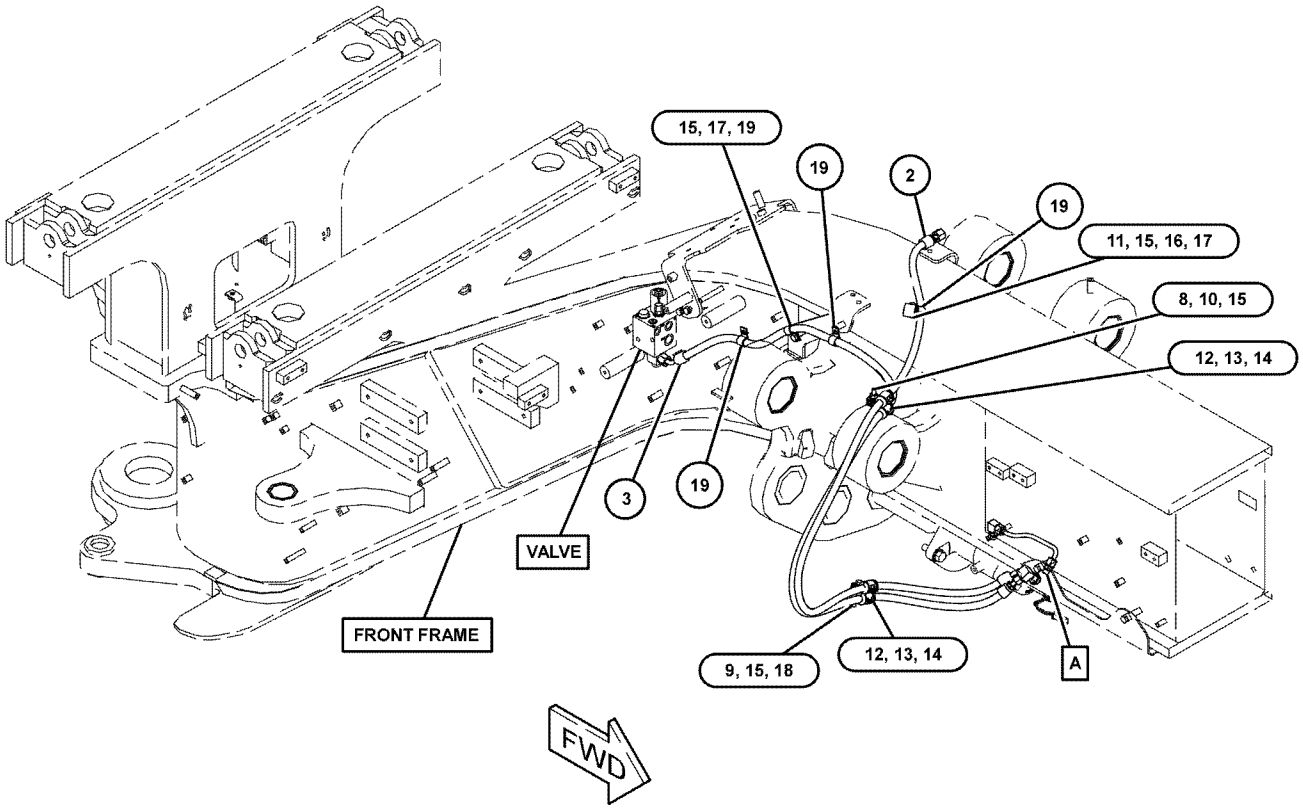

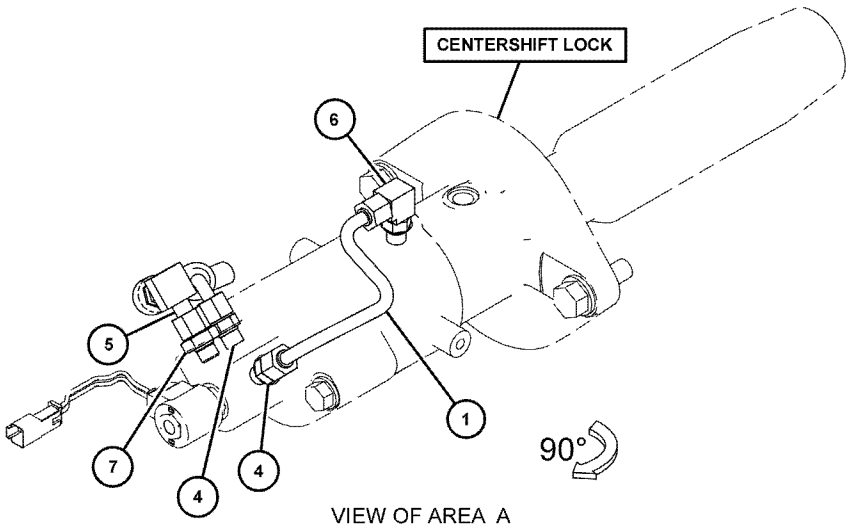

VIEW OF AREA A

GRAPHIC #1 **<END>** g03828823

366-6124 LINES GP-HYDRAULIC FAN

S/N: E9Y1-UP

PART OF 371-3796 HYDRAULIC AR

SMCS-1386, 1387, 5057 **i06144257**

NOTE	REF NO	GRAPHIC REF	PART NUMBER	QTY	PART NAME 1 2 3 4 5 6 (PRODUCT LEVEL)	SEE PAGE
Y	1	1	**126-0747**	1	VALVE GP-BYPASS (HYDRAULIC FAN)	641
	2	1	**253-0472**	1	PLATE AS	
	3	1	**264-4297**	1	SENSOR AS-TEMPERATURE (HYDRAULIC FAN OIL)	
		1	**137-6645**	1	PAD-CONNECTOR	
I	4	1	**376-1655**	1	HOSE AS	
I	5	1	**376-1656**	1	HOSE AS	
I	6	1	**376-1657**	1	HOSE AS	
	7	1	**390-7872**	2	PLATE AS	
					(EACH INCLUDES)	
M		1	**8T-3490**	1	NUT-WELD (M10X1.5-THD)	
	8	1	**124-4287**	4	FLANGE-SPLIT	
	9	1	**143-4535**	3	CLIP (SLOT)	
	10	1	**143-4536**	3	CLIP (TAB)	
	11	1	*148-8307*	1	ADAPTER AS	
		1	**3J-1907**	1	SEAL-O-RING (1)	
		1	**5P-8874**	1	ADAPTER	
	12	1	*148-8327*	1	CONNECTOR AS	
		1	**3D-2824**	1	SEAL-O-RING	
		1	**6V-8637**	1	CONNECTOR	
		1	**6V-9746**	1	SEAL-O-RING	
	13	1	*148-8339*	2	CONNECTOR AS	
					(EACH INCLUDES)	
		1	**6V-8716**	1	CONNECTOR (STRAIGHT)	
		1	**6V-9746**	1	SEAL-O-RING	
		1	**7M-8485**	1	SEAL-O-RING	
	14	1	*148-8345*	1	CONNECTOR AS	
		1	**2M-9780**	1	SEAL-O-RING	
		1	**6V-8398**	1	SEAL-O-RING	
		1	**6V-8638**	1	CONNECTOR	
	15	1	*150-4049*	1	ELBOW AS	
		1	**6V-9746**	1	SEAL-O-RING	
		1	**7M-8485**	1	SEAL-O-RING	
		1	**8T-4149**	1	ELBOW	
	16	1	*171-6723*	1	ELBOW AS	
		1	**6V-9746**	1	SEAL-O-RING	
		1	**8T-8899**	1	ELBOW	
	17	1	**1S-0994**	3	CLIP	
	18	1	**366-2401**	3	GROMMET	
	19	1	**3K-0360**	1	SEAL-O-RING	
	20	1	**4J-5267**	2	SEAL-O-RING	
	21	1	**6V-1889**	4	CLIP	
	22	1	**8T-4121**	23	WASHER-HARD (11X21X2.5-MM THK)	
M	23	1	**8T-4136**	9	BOLT (M10X1.5X25-MM)	
M	24	1	**8T-4137**	1	BOLT (M10X1.5X20-MM)	
M	25	1	**8T-4178**	2	BOLT (M10X1.5X90-MM)	
M	26	1	**8T-4195**	3	BOLT (M10X1.5X30-MM)	
M	27	1	**8T-4196**	8	BOLT (M10X1.5X35-MM)	

I - REFER TO HYDRAULIC INFORMATION SYSTEM
M - METRIC PART
Y - SEPARATE ILLUSTRATION

366-6124 **LINES GP-HYDRAULIC FAN (*contd.*)** **i06144257**

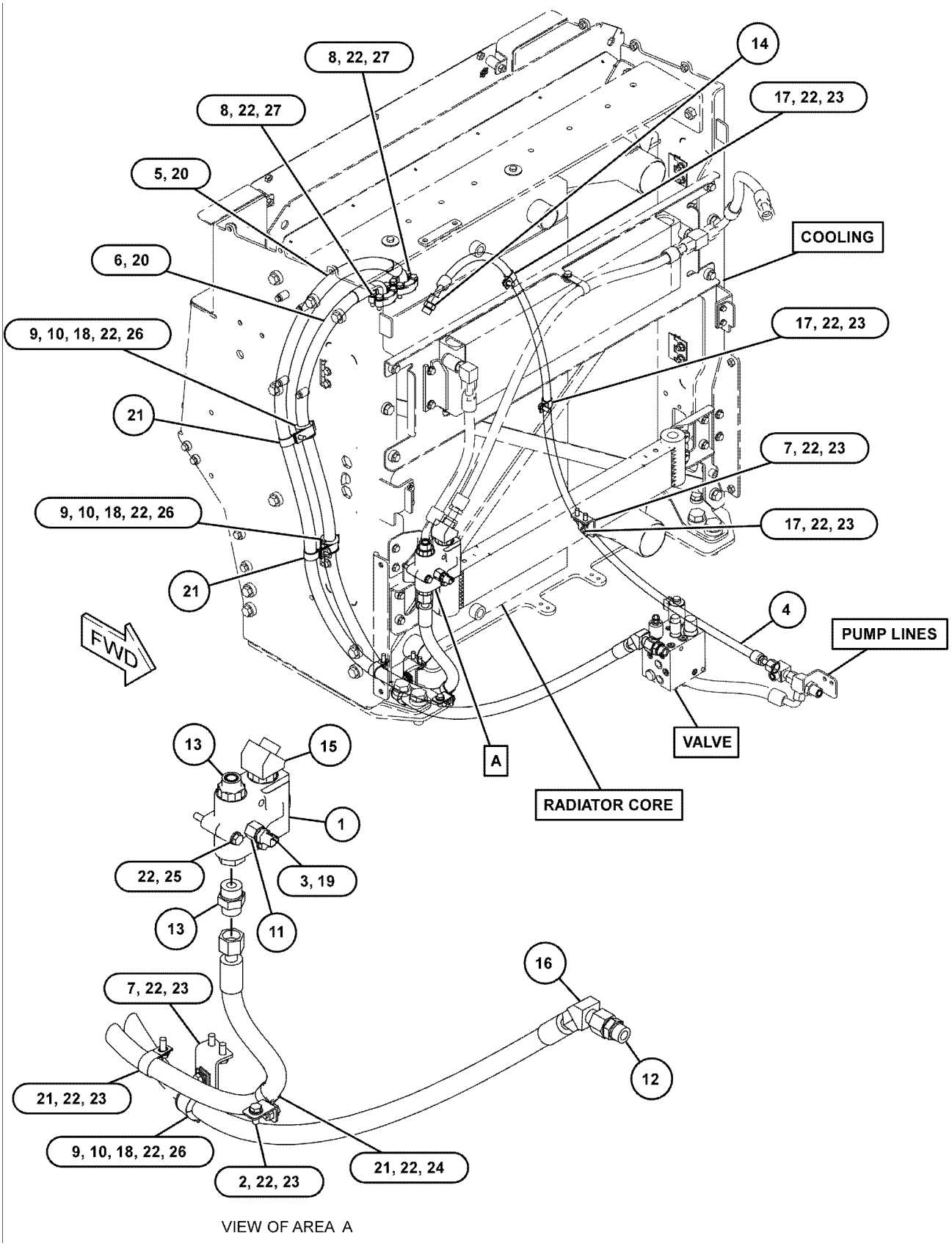

VIEW OF AREA A

GRAPHIC #1 **<END>** g03828821

366-6164 LINES GP-IMPLEMENT–BLADE LIFT

S/N: E9Y1-UP
WITH VARIABLE FLOAT
PART OF 386-4105 FLOAT AR-BLADE
AN ATTACHMENT

SMCS-5057 **i06141111**

NOTE	REF NO	GRAPHIC REF	PART NUMBER	QTY	PART NAME 1 2 3 4 5 6 (PRODUCT LEVEL)	SEE PAGE
	1	1	**4N-5091**	2	SPACER (0.53X1X3.375-IN THK)	
I	2	1	**147-8855**	1	HOSE AS	
	3	1	**162-7449**	2	CLAMP	
I	4	1	**175-1375**	1	HOSE AS	
	5	1	**274-8312**	1	PLATE AS	
M		1	**8T-3490**	1	NUT-WELD (M10X1.5-THD)	
M		1	**8T-3597**	2	NUT-WELD (M12X1.75-THD)	
Y	6	1	**279-6521**	2	VALVE GP-SOLENOID & MANIFOLD (BLADE CUSHION)	672
	7	1	**387-5588**	1	PLATE AS	
I	8	1	**463-6235**	1	HOSE AS	
I	9	1	**433-4441**	1	HOSE AS	
I	10	1	**443-7757**	1	HOSE AS	
I	11	1	**443-7758**	1	HOSE AS	
	12	1	**122-0450**	9	GROMMET	
I	13	1	**146-0124**	1	HOSE AS	
	14	1	*148-8318*	3	CONNECTOR AS	
					(EACH INCLUDES)	
		1	**3K-0360**	1	SEAL-O-RING	
		1	**6V-8397**	1	SEAL-O-RING	
		1	**6V-8634**	1	CONNECTOR	
	15	1	*148-8328*	1	CONNECTOR AS	
		1	**3D-2824**	1	SEAL-O-RING	
		1	**6V-8398**	1	SEAL-O-RING	
		1	**6V-8633**	1	CONNECTOR	
	16	1	*148-8340*	3	CONNECTOR AS	
					(EACH INCLUDES)	
		1	**3K-0360**	1	SEAL-O-RING	
		1	**6V-8398**	1	SEAL-O-RING	
		1	**6V-8639**	1	CONNECTOR	
	17	1	*148-8363*	2	ELBOW AS	
					(EACH INCLUDES)	
		1	**3K-0360**	1	SEAL-O-RING	
		1	**6V-8397**	1	SEAL-O-RING	
		1	**6V-9876**	1	ELBOW	
	18	1	*148-8364*	4	ELBOW AS	
					(EACH INCLUDES)	
		1	**3K-0360**	1	SEAL-O-RING	
		1	**6V-8398**	1	SEAL-O-RING	
		1	**6V-8625**	1	ELBOW	
	19	1	*148-8370*	1	ELBOW AS	
		1	**6V-8398**	1	SEAL-O-RING	
		1	**6V-9851**	1	ELBOW	
	20	1	*148-8374*	2	ELBOW AS	
					(EACH INCLUDES)	
		1	**3K-0360**	1	SEAL-O-RING	
		1	**6V-8397**	1	SEAL-O-RING	
		1	**6V-8723**	1	ELBOW	
	21	1	*148-8381*	2	ELBOW AS	
					(EACH INCLUDES)	
		1	**3D-2824**	1	SEAL-O-RING	
		1	**6V-8398**	1	SEAL-O-RING	
		1	**8T-5429**	1	ELBOW	
	22	1	*148-8428*	1	TEE AS	
		1	**3K-0360**	1	SEAL-O-RING	
		1	**6V-8398**	2	SEAL-O-RING	
		1	**6V-8782**	1	TEE	
	23	1	*148-8444*	1	TEE AS-SWIVEL	

366-6164 **LINES GP-IMPLEMENT (*contd.*)** **i06141111**

NOTE	REF NO	GRAPHIC REF	PART NUMBER	QTY	PART NAME 1 2 3 4 5 6 (PRODUCT LEVEL)	SEE PAGE
		1	**6V-8398**	2	SEAL-O-RING	
		1	**6V-9837**	1	TEE-SWIVEL	
	24	1	*155-7321*	1	ADAPTER AS	
		1	**3D-2824**	1	SEAL-O-RING	
		1	**6V-1722**	1	ADAPTER	
I	26	1	**245-0723**	1	HOSE AS	
	27	1	**302-3908**	2	SPACER (11X20X30-MM THK)	
M	28	1	**288-4403**	1	STUD-TAPERLOCK (M10X1.5X85-MM)	
	29	1	**5G-3676**	7	GROMMET	
	30	1	**5P-1076**	3	WASHER-HARD (13.5X30X4-MM THK)	
	31	1	**8T-1889**	7	CLIP (SLOT)	
	32	1	**8T-1890**	7	CLIP (TAB)	
	33	1	**8T-1897**	9	CLIP (SLOT)	
	34	1	**8T-1898**	9	CLIP (TAB)	
	35	1	**8T-4121**	16	WASHER-HARD (11X21X2.5-MM THK)	
M	36	1	**344-5675**	1	NUT (M10X1.5-THD)	
M	37	1	**8T-4136**	2	BOLT (M10X1.5X25-MM)	
M	38	1	**8T-4139**	3	BOLT (M12X1.75X30-MM)	
M	39	1	**8T-4185**	2	BOLT (M10X1.5X50-MM)	
M	40	1	**8T-4195**	5	BOLT (M10X1.5X30-MM)	
M	41	1	**8T-4196**	2	BOLT (M10X1.5X35-MM)	
M	42	1	**8T-4198**	4	BOLT (M10X1.5X100-MM)	
	43	1	**8T-4223**	2	WASHER-HARD (13.5X25.5X3-MM THK)	
M	44	1	**8T-5041**	2	BOLT (M12X1.75X120-MM)	
I	45	1	**8W-0220**	1	HOSE AS	
I	46	1	**8X-9145**	1	HOSE AS	

I - REFER TO HYDRAULIC INFORMATION SYSTEM
M - METRIC PART
Y - SEPARATE ILLUSTRATION

366-6164 **LINES GP-IMPLEMENT (*contd.*)** **i06141111**

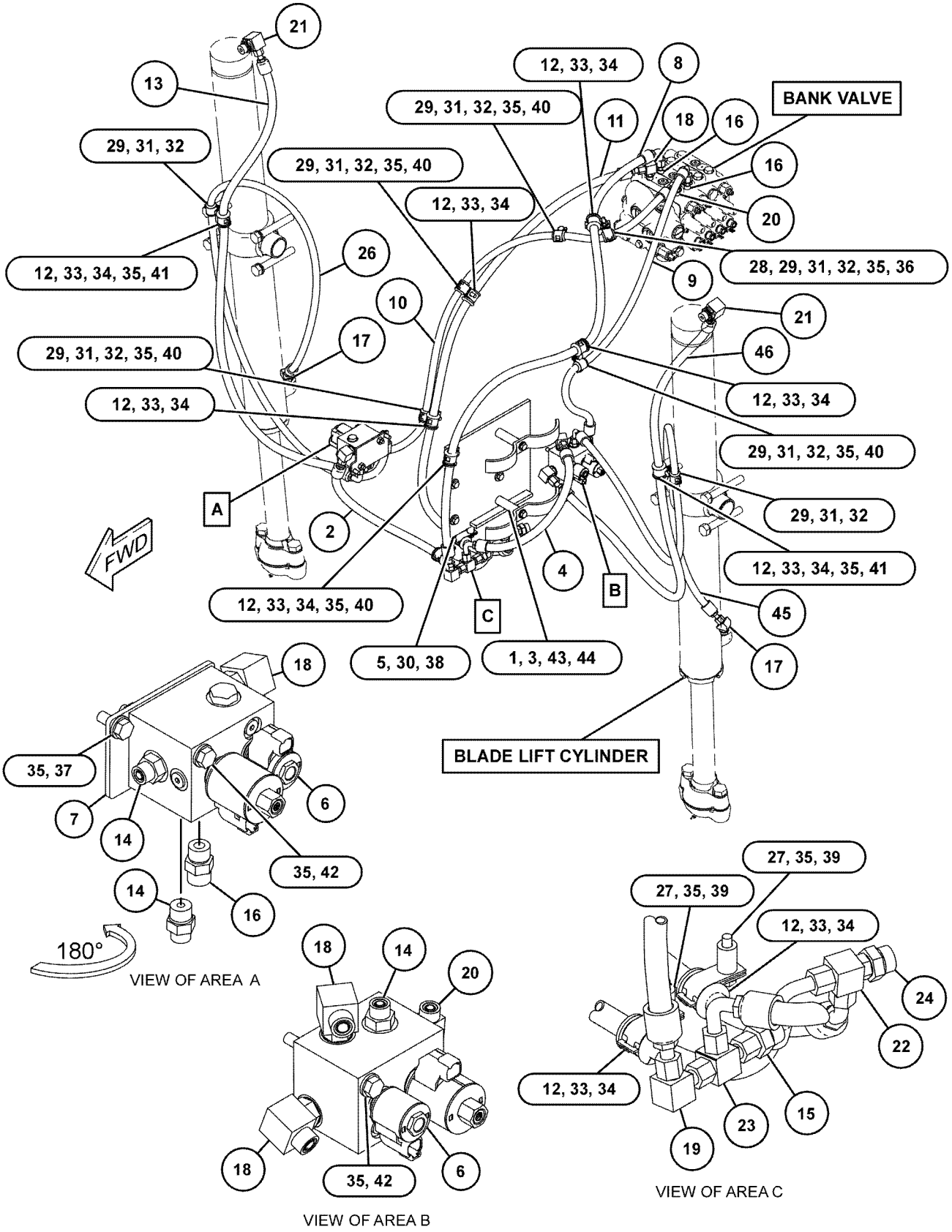

GRAPHIC #1 **<END>** g03833352

366-6118 LINES GP-PUMP–FRONT

S/N: E9Y1-UP

PART OF 371-3796 HYDRAULIC AR

SMCS-5057 **i06190824**

NOTE	REF NO	GRAPHIC REF	PART NUMBER	QTY	PART NAME 1 2 3 4 5 6 (PRODUCT LEVEL)	SEE PAGE
I	1	1	**152-9070**	1	HOSE AS	
	2	1	**254-4486**	1	BLOCK	
	3	1	*260-9173*	1	UNION AS-CROSS	
		1	**6V-8398**	3	SEAL-O-RING	
		1	**207-2484**	1	UNION	
	4	1	**364-1334**	6	BLOCK	
	5	1	**364-1587**	3	PLATE AS	
	6	1	**369-7130**	1	TUBE AS	
	7	1	**371-8454**	1	PLATE AS	
	8	1	**385-8702**	4	BLOCK	
	9	1	**385-8721**	2	PLATE AS	
	10	1	**385-8724**	1	TUBE AS	
	11	1	**385-8725**	1	TUBE AS	
I	12	1	**385-8728**	1	HOSE AS	
I	13	1	**385-8729**	1	HOSE AS	
	14	1	**387-5537**	1	PLATE	
	15	1	**387-8447**	1	PLATE AS	
I	16	1	**420-6099**	1	HOSE AS	
I	17	1	**422-1732**	1	HOSE AS	
	18	1	**425-5941**	1	PLATE	
I	19	1	**431-9630**	1	HOSE AS	
	20	1	**435-2108**	4	PLATE	
	21	1	**435-2110**	1	PLATE AS	
	22	1	**435-2111**	2	PLATE AS	
	23	1	**435-2612**	2	BLOCK	
	24	1	**437-0360**	1	PLATE AS	
I	25	1	**443-5969**	1	HOSE AS	
	26	1	**455-9045**	2	PLATE AS	
	27	1	**456-4390**	1	BLOCK	
I	28	1	**476-5508**	1	HOSE AS	
	29	1	**476-5514**	2	BLOCK	
	30	1	**476-5515**	2	BLOCK	
	31	1	**476-5516**	2	BLOCK	
I	32	1	**477-7212**	1	HOSE AS	
	33	1	**479-2090**	1	PLATE AS	
	34	1	**479-2092**	1	BLOCK	
	35	1	**479-2093**	1	BLOCK	
	36	1	**091-0081**	1	SPACER (10.5X20X10-MM THK)	
M	37	1	**116-3715**	1	STUD-TAPERLOCK (M10X1.5X85-MM)	
M	38	1	**133-7810**	1	STUD-TAPERLOCK (M10X1.5X45-MM)	
	39	1	*148-8316*	1	CONNECTOR AS	
		1	**3J-7354**	1	SEAL-O-RING	
		1	**4J-5477**	1	SEAL-O-RING	
		1	**6V-8647**	1	CONNECTOR	
	40	1	*148-8328*	1	CONNECTOR AS	
		1	**3D-2824**	1	SEAL-O-RING	
		1	**6V-8398**	1	SEAL-O-RING	
		1	**6V-8633**	1	CONNECTOR	
	41	1	*148-8329*	2	CONNECTOR AS	
					(EACH INCLUDES)	
		1	**4K-1388**	1	SEAL-O-RING	
		1	**5K-9090**	1	SEAL-O-RING	
		1	**8T-6453**	1	CONNECTOR	
	42	1	*148-8335*	4	CONNECTOR AS	
					(EACH INCLUDES)	
		1	**5K-9090**	1	SEAL-O-RING	
		1	**6V-8635**	1	CONNECTOR	
		1	**7M-8485**	1	SEAL-O-RING	
	43	1	*148-8336*	4	CONNECTOR AS	

366-6118 **LINES GP-PUMP (*contd.*)** **i06190824**

NOTE	REF NO	GRAPHIC REF	PART NUMBER	QTY	PART NAME 1 2 3 4 5 6 (PRODUCT LEVEL)	SEE PAGE
					(EACH INCLUDES)	
		1	**3J-1907**	1	SEAL-O-RING	
		1	**6V-8397**	1	SEAL-O-RING	
		1	**6V-8636**	1	CONNECTOR	
	44	1	*148-8340*	1	CONNECTOR AS	
		1	**3K-0360**	1	SEAL-O-RING	
		1	**6V-8398**	1	SEAL-O-RING	
		1	**6V-8639**	1	CONNECTOR	
	45	1	*148-8342*	1	CONNECTOR AS	
		1	**3K-0360**	1	SEAL-O-RING	
		1	**6V-8632**	1	CONNECTOR	
		1	**7J-9108**	1	SEAL-O-RING	
	46	1	*148-8354*	1	ELBOW AS	
		1	**3K-0360**	1	SEAL-O-RING	
		1	**6V-8398**	1	SEAL-O-RING	
		1	**6V-9002**	1	ELBOW	
	47	1	*148-8361*	1	ELBOW AS	
		1	**3J-7354**	1	SEAL-O-RING	
		1	**6V-8397**	1	SEAL-O-RING	
		1	**6V-9200**	1	ELBOW	
	48	1	*148-8370*	1	ELBOW AS	
		1	**6V-8398**	1	SEAL-O-RING	
		1	**6V-9851**	1	ELBOW	
	49	1	*148-8371*	1	ELBOW AS	
		1	**6V-8397**	1	SEAL-O-RING	
		1	**8C-8988**	1	ELBOW	
	50	1	*148-8372*	1	ELBOW AS	
		1	**2M-9780**	1	SEAL-O-RING	
		1	**6V-8398**	1	SEAL-O-RING	
		1	**6V-8721**	1	ELBOW	
	51	1	*148-8381*	1	ELBOW AS	
		1	**3D-2824**	1	SEAL-O-RING	
		1	**6V-8398**	1	SEAL-O-RING	
		1	**8T-5429**	1	ELBOW	
	52	1	*148-8393*	1	ELBOW AS	
		1	**6V-9852**	1	ELBOW	
		1	**7J-9108**	1	SEAL-O-RING	
	53	1	*148-8410*	1	PLUG AS	
		1	**2M-9780**	1	SEAL-O-RING	
		1	**9S-4190**	1	PLUG-O-RING	
	54	1	*148-8422*	1	TEE AS	
		1	**5K-9090**	1	SEAL-O-RING	
		1	**6V-9746**	1	SEAL-O-RING	
		1	**7M-8485**	1	SEAL-O-RING	
		1	**8T-6356**	1	TEE-O-RING PORT	
	55	1	*148-8436*	1	TEE AS	
		1	**3K-0360**	1	SEAL-O-RING	
		1	**6V-8398**	2	SEAL-O-RING	
		1	**6V-8775**	1	TEE-FACE SEAL	
	56	1	*148-8444*	1	TEE AS-SWIVEL	
		1	**6V-8398**	2	SEAL-O-RING	
		1	**6V-9837**	1	TEE-SWIVEL	
	57	1	*150-4037*	1	TEE AS	
		1	**6V-8398**	2	SEAL-O-RING	
		1	**6V-9844**	1	TEE-SWIVEL	
	58	1	*153-6241*	1	ELBOW AS	
		1	**6V-8398**	1	SEAL-O-RING	
		1	**8C-8989**	1	ELBOW	
	59	1	*164-5608*	2	CONNECTOR AS	
					(EACH INCLUDES)	
		1	**3K-0360**	1	SEAL-O-RING	
		1	**6V-8398**	1	SEAL-O-RING	
		1	**8T-1687**	1	CONNECTOR	
M	60	1	**180-3998**	3	STUD (M10X1.5X55-MM)	

366-6118 **LINES GP-PUMP (*contd.*)** **i06190824**

NOTE	REF NO	GRAPHIC REF	PART NUMBER	QTY	PART NAME 1 2 3 4 5 6 (PRODUCT LEVEL)	SEE PAGE
	61	1	**1S-0994**	1	CLIP	
M	62	1	**227-6715**	2	STUD (M10X1.5X30-MM)	
	63	1	*268-1646*	1	UNION AS-CROSS	
		1	**3K-0360**	1	SEAL-O-RING	
		1	**6V-8398**	3	SEAL-O-RING	
		1	**268-1645**	1	CROSS	
	64	1	**2B-0941**	1	SPACER (10.5X19X19-MM THK)	
M	65	1	**344-5675**	5	NUT (M10X1.5-THD)	
	66	1	**5P-7468**	1	CLIP (SLOT)	
	67	1	**5P-7469**	1	CLIP (TAB)	
	68	1	**5P-8444**	1	GROMMET (37-MM ID)	
	69	1	**5P-9299**	3	CLIP	
	70	1	**6V-8397**	1	SEAL-O-RING	
	71	1	**6V-9832**	1	CAP AS	
	72	1	**8T-4121**	55	WASHER-HARD (11X21X2.5-MM THK)	
M	73	1	**8T-4136**	14	BOLT (M10X1.5X25-MM)	
M	74	1	**8T-4137**	19	BOLT (M10X1.5X20-MM)	
M	75	1	**8T-4195**	2	BOLT (M10X1.5X30-MM)	
M	76	1	**8T-4196**	13	BOLT (M10X1.5X35-MM)	
	77	1	**9M-8406**	5	CLIP	

I - REFER TO HYDRAULIC INFORMATION SYSTEM
M - METRIC PART

366-6118 **LINES GP-PUMP (*contd.*)** **i06190824**

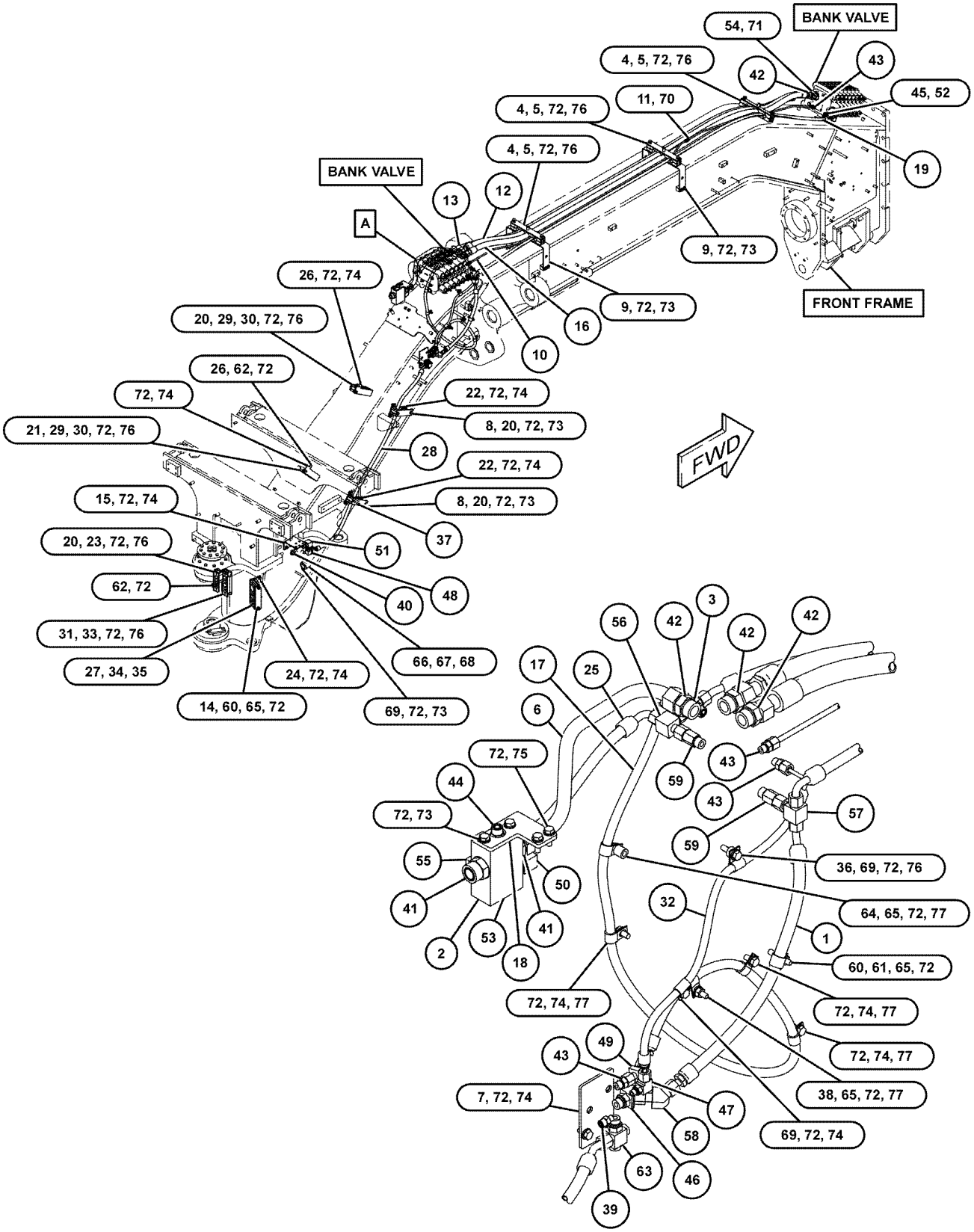

VIEW OF AREA A

GRAPHIC #1 **<END>** g03844557

HYDRAULIC SYSTEM

366-6119 LINES GP-PUMP

S/N: E9Y1-UP

PART OF 371-3796 HYDRAULIC AR

SMCS-5057 **i06140244**

NOTE	REF NO	GRAPHIC REF	PART NUMBER	QTY	PART NAME 1 2 3 4 5 6 (PRODUCT LEVEL)	SEE PAGE
	1	1	**8Y-7452**	1	TEE-O-RING	
	2	1	**183-7264**	2	VALVE AS-FLUID SAMPLING (HYDRAULIC OIL)	
					(EACH INCLUDES)	
		1	**3J-1907**	1	SEAL-O-RING	
	3	1	**206-4669**	1	VALVE-DRAIN	
	4	1	*235-3575*	1	CONNECTOR AS	
		1	**7J-9108**	1	SEAL-O-RING	
		1	**7M-8485**	1	SEAL-O-RING	
		1	**138-7538**	1	CONNECTOR	
	5	1	**245-7603**	1	TUBE AS	
	6	1	**246-3352**	1	TUBE AS	
	7	1	**253-0472**	1	PLATE AS	
M		1	**8T-3490**	1	NUT-WELD (M10X1.5-THD)	
	8	1	**257-8897**	1	HOSE-MOLDED	
	9	1	*268-1507*	1	CONNECTOR AS	
		1	**7M-8485**	1	SEAL-O-RING	
		1	**8T-0315**	1	SEAL-O-RING	
		1	**268-1506**	1	CONNECTOR	
	10	1	**334-6352**	1	PLATE	
	11	1	*369-6858*	1	PLUG AS	
		1	**7M-8485**	1	SEAL-O-RING	
		1	**360-3697**	1	PLUG	
	12	1	**373-1349**	1	BRACKET	
I	13	1	**375-9988**	1	HOSE AS	
I	14	1	**375-9989**	1	HOSE AS	
I	15	1	**375-9990**	1	HOSE AS	
	16	1	**384-9655**	1	HOSE	
	17	1	**387-5537**	1	PLATE	
	18	1	**387-5539**	1	PLATE	
	19	1	**388-7231**	4	BLOCK	
	20	1	**388-8868**	2	BLOCK	
	21	1	**388-8869**	1	PLATE	
I	22	1	**388-8870**	1	HOSE AS	
I	23	1	**388-8874**	1	HOSE AS	
I	24	1	**396-1782**	1	HOSE AS	
	25	1	**423-3480**	1	BODY	
	26	1	**428-9250**	1	HOSE AS	
	27	1	**431-6437**	1	PLATE AS	
	28	1	**431-8921**	1	TUBE AS	
	29	1	**432-4337**	1	PLATE AS	
	30	1	**433-0614**	1	PLATE AS	
	31	1	**433-0615**	1	BRACKET AS	
	32	1	**433-1034**	2	PLATE AS	
	33	1	**435-2108**	1	PLATE	
	34	1	**435-2110**	1	PLATE AS	
	35	1	**435-2612**	1	BLOCK	
	36	1	**435-3123**	1	BLOCK	
	37	1	**435-3124**	1	BLOCK	
	38	1	**435-3125**	2	BLOCK	
	39	1	**435-3126**	2	BLOCK	
	40	1	**435-3127**	1	PLATE AS	
I	41	1	**435-3386**	1	HOSE AS	
	42	1	**439-6983**	1	PLATE AS	
I	43	1	**443-6606**	1	HOSE AS	
I	44	1	**443-6607**	1	HOSE AS	
	45	1	**456-4390**	1	BLOCK	
	46	1	**471-4258**	1	BRACKET AS	
	47	1	**479-2092**	1	BLOCK	
	48	1	**479-2093**	1	BLOCK	

366-6119 **LINES GP-PUMP (*contd.*)** **i06140244**

NOTE	REF NO	GRAPHIC REF	PART NUMBER	QTY	PART NAME 1 2 3 4 5 6 (PRODUCT LEVEL)	SEE PAGE
	49	1	**067-3045**	1	CLIP	
M	50	1	**133-7810**	2	STUD-TAPERLOCK (M10X1.5X45-MM)	
	51	1	**144-0367**	2	CLAMP-HOSE	
	52	1	*148-8305*	1	ADAPTER AS	
		1	**3J-1907**	1	SEAL-O-RING	
		1	**5P-9617**	1	ADAPTER	
	53	1	*148-8323*	1	CONNECTOR AS	
		1	**2S-4078**	1	SEAL-O-RING	
		1	**5K-9090**	1	SEAL-O-RING	
		1	**6V-9875**	1	CONNECTOR	
	54	1	*148-8355*	1	ELBOW AS	
		1	**5K-9090**	1	SEAL-O-RING	
		1	**6V-9005**	1	ELBOW	
		1	**7M-8485**	1	SEAL-O-RING	
	55	1	*148-8360*	2	ELBOW AS	
					(EACH INCLUDES)	
		1	**6V-9182**	1	ELBOW	
		1	**6V-9746**	1	SEAL-O-RING	
		1	**7M-8485**	1	SEAL-O-RING	
	56	1	*148-8405*	1	PLUG AS	
		1	**1J-9671**	1	SEAL-O-RING	
		1	**3K-8460**	1	PLUG	
	57	1	*148-8446*	1	TEE AS-SWIVEL	
		1	**6V-9838**	1	TEE-SWIVEL	
		1	**7J-9108**	2	SEAL-O-RING	
	58	1	*153-6256*	1	ELBOW AS	
		1	**7J-9108**	1	SEAL-O-RING	
		1	**8C-7563**	1	ELBOW	
	59	1	*155-3504*	1	ELBOW AS	
		1	**2M-9780**	1	SEAL-O-RING	
		1	**6V-9003**	1	ELBOW	
		1	**7J-9108**	1	SEAL-O-RING	
	60	1	*164-5567*	1	COUPLER AS-QUICK DISCONNECT (MALE)	
		1	**6V-3965**	1	FITTING (QUICK DISCONNECT)	
		1	**214-7568**	1	SEAL-O-RING	
	61	1	*164-6860*	1	TEE AS	
		1	**6V-9350**	1	TEE-BULKHEAD	
		1	**7J-9108**	3	SEAL-O-RING	
	62	1	*165-4931*	2	ELBOW AS	
					(EACH INCLUDES)	
		1	**3J-1907**	1	SEAL-O-RING	
		1	**6V-8077**	1	ELBOW	
M	63	1	**180-3998**	2	STUD (M10X1.5X55-MM)	
	64	1	**1S-0994**	1	CLIP	
	65	1	*212-1336*	1	TEE AS	
		1	**2M-9780**	1	SEAL-O-RING	
		1	**6V-8783**	1	TEE-FACE SEAL	
		1	**7J-9108**	2	SEAL-O-RING	
	66	1	**212-4174**	1	LOCKWASHER	
	67	1	**269-4967**	1	ELBOW-ADAPTER	
	68	1	**269-4969**	1	ADAPTER	
	69	1	**269-4970**	1	ADAPTER	
M	70	1	**309-1906**	1	STUD-TAPERLOCK (M10X1.5X55-MM)	
M	71	1	**344-5675**	5	NUT (M10X1.5-THD)	
	72	1	**3J-7354**	1	SEAL-O-RING	
	73	1	**4D-7388**	2	CLIP	
	74	1	**4J-0524**	2	SEAL-O-RING	
	75	1	**4J-5477**	1	SEAL-O-RING	
	76	1	**5H-8848**	1	SEAL-O-RING	
	77	1	**6D-4246**	1	CLIP	
	78	1	**6V-0852**	2	CAP-DUST	
	79	1	**6V-9170**	1	NUT-BULKHEAD (1-14-THD)	
	80	1	**7X-7729**	2	WASHER (11X25X3-MM THK)	

366-6119 **LINES GP-PUMP (*contd.*)** **i06140244**

NOTE	REF NO	GRAPHIC REF	PART NUMBER	QTY	PART NAME 1 2 3 4 5 6 (PRODUCT LEVEL)	SEE PAGE
	81	1	**8C-3451**	1	CAP-DUST	
	82	1	**8T-4121**	36	WASHER-HARD (11X21X2.5-MM THK)	
M	83	1	**8T-4136**	26	BOLT (M10X1.5X25-MM)	
M	84	1	**8T-4137**	3	BOLT (M10X1.5X20-MM)	
M	85	1	**8T-4178**	2	BOLT (M10X1.5X90-MM)	
M	86	1	**8T-4183**	4	BOLT (M12X1.75X40-MM)	
M	87	1	**8T-4184**	4	BOLT (M12X1.75X45-MM)	
M	88	1	**8T-4195**	2	BOLT (M10X1.5X30-MM)	
	89	1	**8T-4223**	12	WASHER-HARD (13.5X25.5X3-MM THK)	
M	90	1	**8T-4956**	4	BOLT (M12X1.75X35-MM)	
	91	1	**8T-6703**	3	CLAMP-HOSE	
	92	1	**8X-5489**	1	SLEEVE	
	93	1	**9M-7958**	1	CLAMP-HOSE	
	94	1	**9X-8250**	1	CLIP	
E	95	1	**9X-2023**		HOSE (31-CM)	
G	96	1	**423-1986**		HOSE (5.2-IN)	

E - ORDER BY THE CENTIMETER
G - ORDER BY THE INCH
I - REFER TO HYDRAULIC INFORMATION SYSTEM
M - METRIC PART

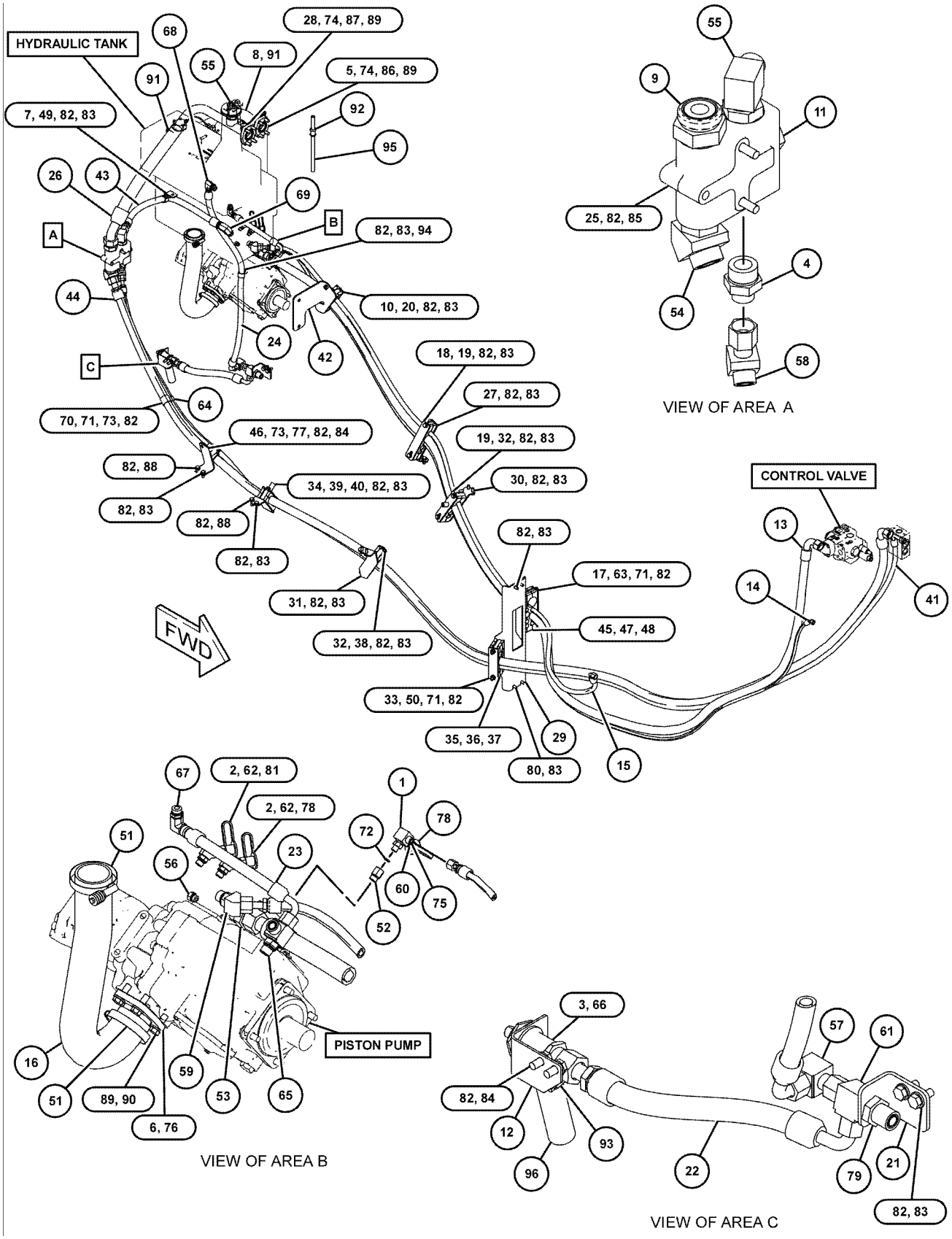

GRAPHIC #1 **<END>** g03835447

366-6167 LINES GP-RIPPER

S/N: E9Y1-UP

PART OF 385-7554, 385-7557 CONTROL AR-HYDRAULIC

AN ATTACHMENT

SMCS-5057 **i06077333**

NOTE	REF NO	GRAPHIC REF	PART NUMBER	QTY	PART NAME 1 2 3 4 5 6 (PRODUCT LEVEL)	SEE PAGE
I	1	1	**424-2226**	1	HOSE AS	
I	2	1	**443-6981**	1	HOSE AS	
	3	1	**097-4896**	1	SPACER (12X20X23-MM THK)	
	4	1	**122-0450**	9	GROMMET	
M	5	1	**133-7810**	2	STUD-TAPERLOCK (M10X1.5X45-MM)	
	6	1	*148-8311*	1	ADAPTER AS	
		1	**3K-0360**	1	SEAL-O-RING	
		1	**8T-1715**	1	ADAPTER	
	7	1	*148-8340*	2	CONNECTOR AS	
					(EACH INCLUDES)	
		1	**3K-0360**	1	SEAL-O-RING	
		1	**6V-8398**	1	SEAL-O-RING	
		1	**6V-8639**	1	CONNECTOR	
	8	1	*148-8370*	1	ELBOW AS	
		1	**6V-8398**	1	SEAL-O-RING	
		1	**6V-9851**	1	ELBOW	
	9	1	*153-6241*	2	ELBOW AS	
					(EACH INCLUDES)	
		1	**6V-8398**	1	SEAL-O-RING	
		1	**8C-8989**	1	ELBOW	
	10	1	**185-6644**	2	UNION	
	11	1	*194-2903*	1	ELBOW AS	
		1	**3K-0360**	1	SEAL-O-RING	
		1	**8T-0119**	1	ELBOW	
M	12	1	**344-5675**	2	NUT (M10X1.5-THD)	
	13	1	**6D-4244**	2	CLIP	
	14	1	**6V-8398**	4	SEAL-O-RING	
	15	1	**6V-9169**	2	NUT (13/16-16-THD)	
	16	1	**6V-9830**	2	CAP AS	
	17	1	**8T-1897**	9	CLIP (SLOT)	
	18	1	**8T-1898**	9	CLIP (TAB)	
	19	1	**8T-4121**	8	WASHER-HARD (11X21X2.5-MM THK)	
M	20	1	**8T-4136**	2	BOLT (M10X1.5X25-MM)	
M	21	1	**8T-4182**	1	BOLT (M10X1.5X45-MM)	
M	22	1	**8T-4196**	2	BOLT (M10X1.5X35-MM)	
	23	1	**8T-7934**	2	WASHER-HARD (11X21X5-MM THK)	

I - REFER TO HYDRAULIC INFORMATION SYSTEM
M - METRIC PART

366-6167 **LINES GP-RIPPER (*contd.*)** **i06077333**

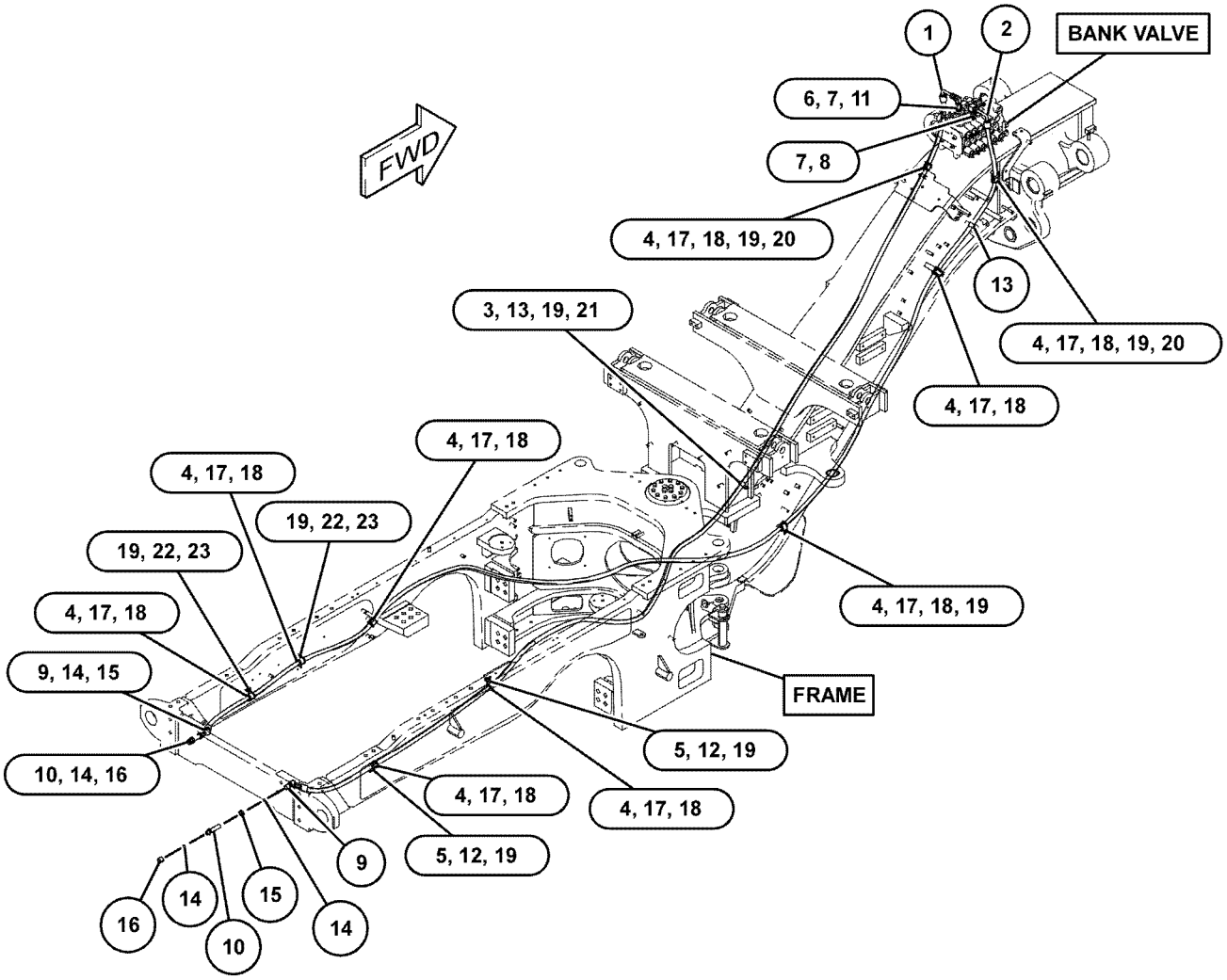

GRAPHIC #1 **<END>** g03799632

390-3134 LINES GP-RIPPER

S/N: E9Y1-UP
PART OF 372-7830 RIPPER AR
AN ATTACHMENT

SMCS-5057 **i06145149**

NOTE	REF NO	GRAPHIC REF	PART NUMBER	QTY	PART NAME 1 2 3 4 5 6 (PRODUCT LEVEL)	SEE PAGE
I	1	1	**479-4996**	1	HOSE AS	
I	2	1	**479-4997**	1	HOSE AS	
	3	1	**122-0450**	1	GROMMET	
	4	1	*148-8358*	1	ELBOW AS	
		1	**2M-9780**	1	SEAL-O-RING	
		1	**6V-8398**	1	SEAL-O-RING	
		1	**6V-8624**	1	ELBOW	
	5	1	*148-8372*	1	ELBOW AS	
		1	**2M-9780**	1	SEAL-O-RING	
		1	**6V-8398**	1	SEAL-O-RING	
		1	**6V-8721**	1	ELBOW	
	6	1	**8T-1897**	1	CLIP (SLOT)	
	7	1	**8T-1898**	1	CLIP (TAB)	
	8	1	**8T-4121**	1	WASHER-HARD (11X21X2.5-MM THK)	
M	9	1	**8T-4195**	1	BOLT (M10X1.5X30-MM)	

I - REFER TO HYDRAULIC INFORMATION SYSTEM
M - METRIC PART

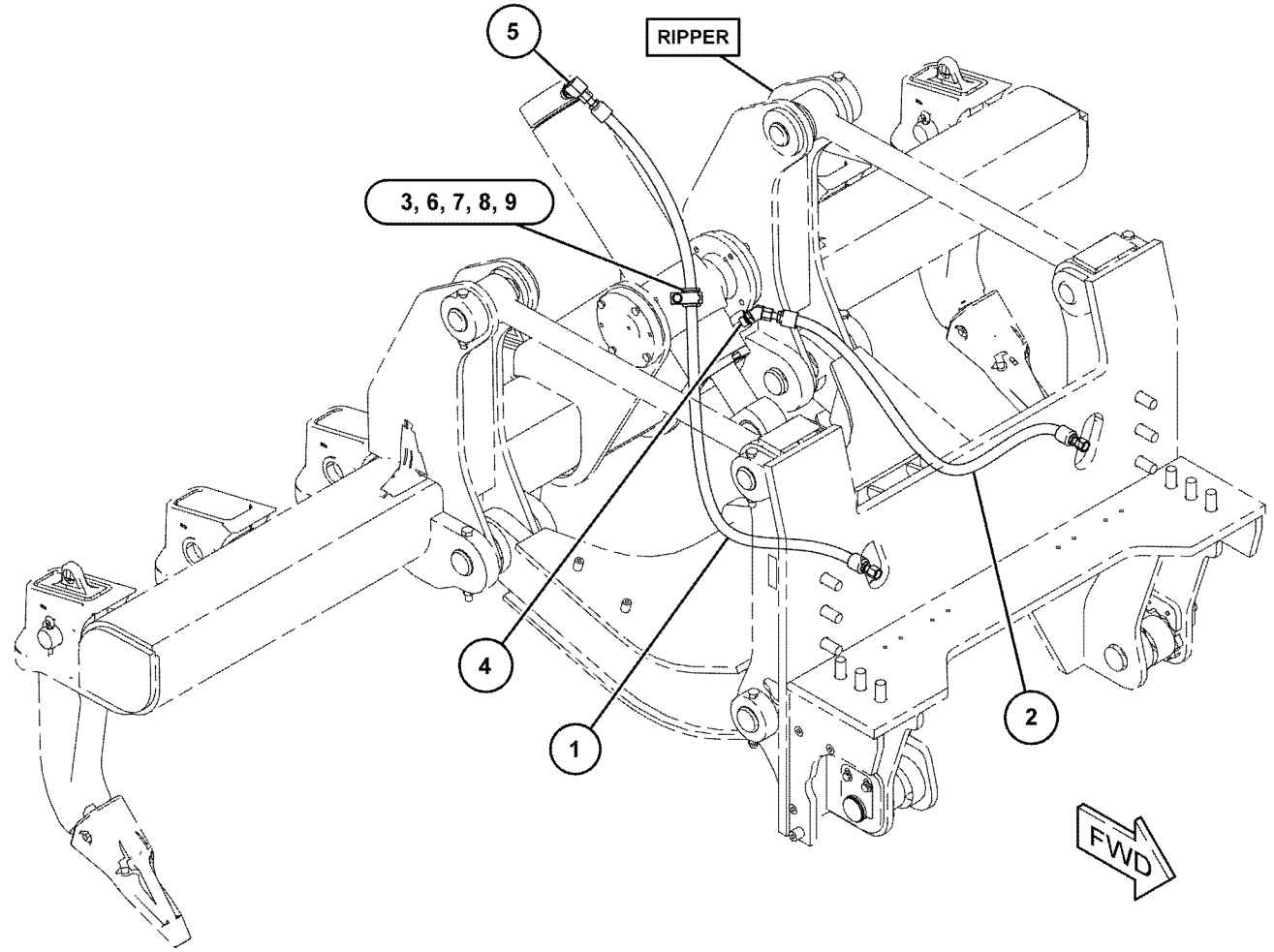

GRAPHIC #1 **<END>** g03833350

366-6127 LINES GP-SECONDARY STEERING

S/N: E9Y1-UP

PART OF 371-3796 HYDRAULIC AR

SMCS-4304 **i06144244**

NOTE	REF NO	GRAPHIC REF	PART NUMBER	QTY	PART NAME 1 2 3 4 5 6 (PRODUCT LEVEL)	SEE PAGE
I	1	1	**359-9150**	1	HOSE AS	
	2	1	**388-8871**	1	BRACKET AS	
	3	1	*148-8340*	1	CONNECTOR AS	
		1	**3K-0360**	1	SEAL-O-RING	
		1	**6V-8398**	1	SEAL-O-RING	
		1	**6V-8639**	1	CONNECTOR	
	4	1	*148-8345*	1	CONNECTOR AS	
		1	**2M-9780**	1	SEAL-O-RING	
		1	**6V-8398**	1	SEAL-O-RING	
		1	**6V-8638**	1	CONNECTOR	
	5	1	**159-1503**	2	CLAMP-HOSE	
	6	1	**3D-2824**	2	SEAL-O-RING	
	7	1	**3E-4075**	2	FITTING	
	8	1	**7X-7729**	4	WASHER (11X25X3-MM THK)	
M	9	1	**8T-4136**	4	BOLT (M10X1.5X25-MM)	
G	10	1	**122-6905**		HOSE-HYDRAULIC (9-IN)	

G - ORDER BY THE INCH
I - REFER TO HYDRAULIC INFORMATION SYSTEM
M - METRIC PART

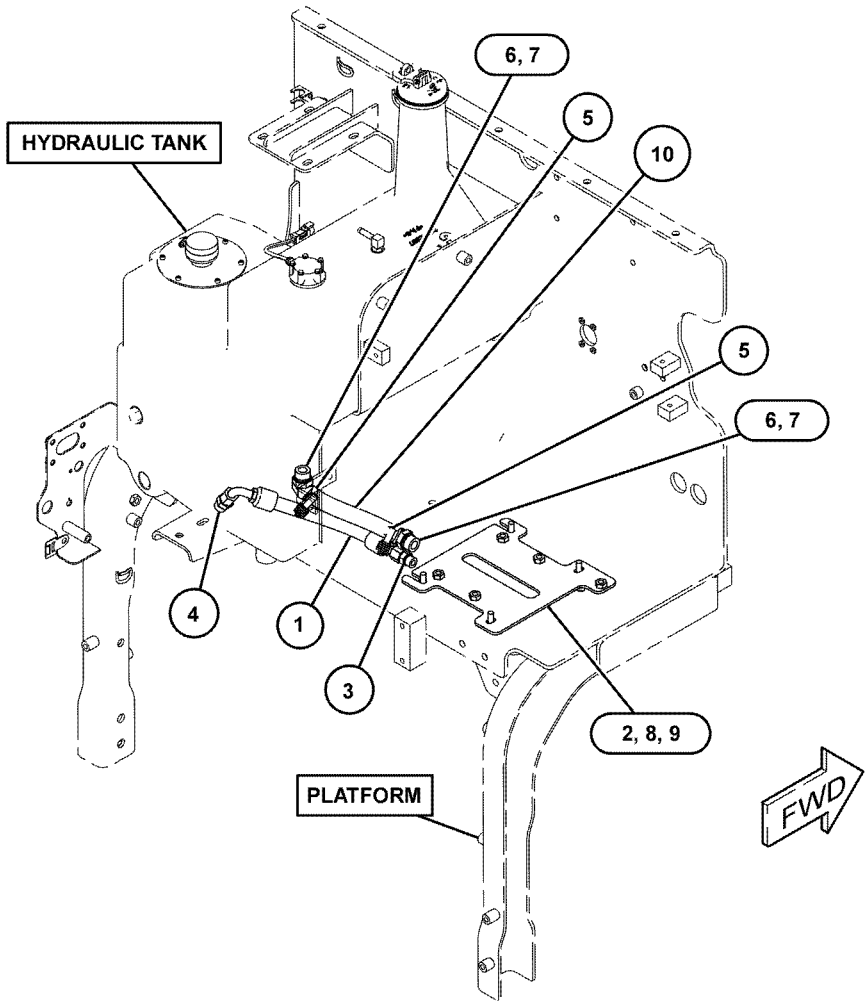

GRAPHIC #1 **<END>** g03828817

366-6115 LINES GP-STEERING

S/N: E9Y1-UP

PART OF 371-3796 HYDRAULIC AR

SMCS-4304 **i06092757**

NOTE	REF NO	GRAPHIC REF	PART NUMBER	QTY	PART NAME 1 2 3 4 5 6 (PRODUCT LEVEL)	SEE PAGE
I	1	1	**465-3891**	1	HOSE AS	
I	2	1	**388-3715**	1	HOSE AS	
	3	1	**428-7945**	1	TUBE AS	
I	4	1	**430-9123**	1	HOSE AS	
	5	1	**432-1674**	1	PLATE AS	
		1	**5G-7946**	2	BOSS	
I	6	1	**435-4305**	1	HOSE AS	
I	7	1	**435-4306**	1	HOSE AS	
I	8	1	**439-4056**	1	HOSE AS	
I	9	1	**472-7195**	1	HOSE AS	
I	10	1	**440-1692**	1	HOSE AS	
I	11	1	**440-1694**	1	HOSE AS	
I	12	1	**472-7194**	1	HOSE AS	
I	13	1	**441-4865**	1	HOSE AS	
M	14	1	**101-3129**	1	STUD (M10X1.5-THD)	
M	15	1	**105-3477**	3	BOLT-SOCKET HEAD (M10X1.5X45-MM)	
	16	1	**122-0450**	10	GROMMET	
	17	1	*148-8315*	1	CONNECTOR AS	
		1	**2M-9780**	1	SEAL-O-RING	
		1	**6V-8642**	1	CONNECTOR	
		1	**7J-9108**	1	SEAL-O-RING	
	18	1	*148-8316*	1	CONNECTOR AS	
		1	**3J-7354**	1	SEAL-O-RING	
		1	**4J-5477**	1	SEAL-O-RING	
		1	**6V-8647**	1	CONNECTOR	
	19	1	*148-8318*	1	CONNECTOR AS	
		1	**3K-0360**	1	SEAL-O-RING	
		1	**6V-8397**	1	SEAL-O-RING	
		1	**6V-8634**	1	CONNECTOR	
	20	1	*148-8335*	1	CONNECTOR AS	
		1	**5K-9090**	1	SEAL-O-RING	
		1	**6V-8635**	1	CONNECTOR	
		1	**7M-8485**	1	SEAL-O-RING	
	21	1	*148-8342*	2	CONNECTOR AS	
					(EACH INCLUDES)	
		1	**3K-0360**	1	SEAL-O-RING	
		1	**6V-8632**	1	CONNECTOR	
		1	**7J-9108**	1	SEAL-O-RING	
	22	1	*148-8361*	2	ELBOW AS	
					(EACH INCLUDES)	
		1	**3J-7354**	1	SEAL-O-RING	
		1	**6V-8397**	1	SEAL-O-RING	
		1	**6V-9200**	1	ELBOW	
	23	1	*148-8367*	1	ELBOW AS	
		1	**6V-8397**	1	SEAL-O-RING	
		1	**6V-9850**	1	ELBOW	
	24	1	*148-8369*	1	ELBOW AS	
		1	**3J-7354**	1	SEAL-O-RING	
		1	**4J-5477**	1	SEAL-O-RING	
		1	**6V-8628**	1	ELBOW	
	25	1	*148-8370*	1	ELBOW AS	
		1	**6V-8398**	1	SEAL-O-RING	
		1	**6V-9851**	1	ELBOW	
	26	1	*148-8372*	1	ELBOW AS	
		1	**2M-9780**	1	SEAL-O-RING	
		1	**6V-8398**	1	SEAL-O-RING	
		1	**6V-8721**	1	ELBOW	
	27	1	*148-8390*	1	ELBOW AS	
		1	**2M-9780**	1	SEAL-O-RING	

366-6115 **LINES GP-STEERING (*contd.*)** **i06092757**

NOTE	REF NO	GRAPHIC REF	PART NUMBER	QTY	PART NAME 1 2 3 4 5 6 (PRODUCT LEVEL)	SEE PAGE
		1	**6V-8626**	1	ELBOW	
		1	**7J-9108**	1	SEAL-O-RING	
	28	1	*148-8444*	2	TEE AS-SWIVEL	
					(EACH INCLUDES)	
		1	**6V-8398**	2	SEAL-O-RING	
		1	**6V-9837**	1	TEE-SWIVEL	
	29	1	*150-4043*	1	CONNECTOR AS	
		1	**3J-1907**	1	SEAL-O-RING	
		1	**6V-8398**	1	SEAL-O-RING	
		1	**6V-9873**	1	CONNECTOR	
	30	1	*150-4048*	2	ELBOW AS	
					(EACH INCLUDES)	
		1	**3K-0360**	1	SEAL-O-RING	
		1	**6V-8722**	1	ELBOW	
		1	**7J-9108**	1	SEAL-O-RING	
	31	1	*164-5586*	1	TEE AS	
		1	**6V-8398**	1	SEAL-O-RING	
		1	**7X-0871**	1	TEE	
	32	1	*164-6859*	2	UNION AS	
					(EACH INCLUDES)	
		1	**6V-8398**	1	SEAL-O-RING	
		1	**6V-9353**	1	UNION	
		1	**7J-9108**	1	SEAL-O-RING	
M	33	1	**180-3998**	1	STUD (M10X1.5X55-MM)	
	34	1	**268-1647**	1	ELBOW	
M	35	1	**288-4402**	1	STUD-TAPERLOCK (M10X1.5X60-MM)	
	36	1	*341-0078*	1	CONNECTOR AS	
		1	**3J-1907**	1	SEAL-O-RING	
		1	**341-0083**	1	CONNECTOR	
M	37	1	**344-5675**	4	NUT (M10X1.5-THD)	
	38	1	**4J-0520**	2	SEAL-O-RING	
	39	1	**5K-9090**	1	SEAL-O-RING	
	40	1	**5P-7464**	4	CLIP (SLOT)	
	41	1	**5P-7465**	4	CLIP (TAB)	
	42	1	**5P-9299**	2	CLIP	
	43	1	**6D-4246**	1	CLIP	
	44	1	**6V-7359**	4	GROMMET (25-MM ID, 37-MM OD)	
	45	1	**6V-9169**	2	NUT (13/16-16-THD)	
	46	1	**8C-3206**	2	FLANGE-HALF	
	47	1	**8R-0721**	1	SPACER (11X16X35-MM THK)	
	48	1	**8T-1897**	10	CLIP (SLOT)	
	49	1	**8T-1898**	10	CLIP (TAB)	
	50	1	**8T-4121**	19	WASHER-HARD (11X21X2.5-MM THK)	
M	51	1	**8T-4136**	3	BOLT (M10X1.5X25-MM)	
M	52	1	**8T-4137**	1	BOLT (M10X1.5X20-MM)	
M	53	1	**8T-4178**	1	BOLT (M10X1.5X90-MM)	
M	54	1	**8T-4182**	1	BOLT (M10X1.5X45-MM)	
M	55	1	**8T-4195**	6	BOLT (M10X1.5X30-MM)	
M	56	1	**8T-4196**	5	BOLT (M10X1.5X35-MM)	
	57	1	**8T-7934**	5	WASHER-HARD (11X21X5-MM THK)	
M	59	1	**259-7140**	2	STUD-TAPERLOCK (M10X1.5X80-MM)	

I - REFER TO HYDRAULIC INFORMATION SYSTEM
M - METRIC PART

366-6115 **LINES GP-STEERING (*contd.*)** **i06092757**

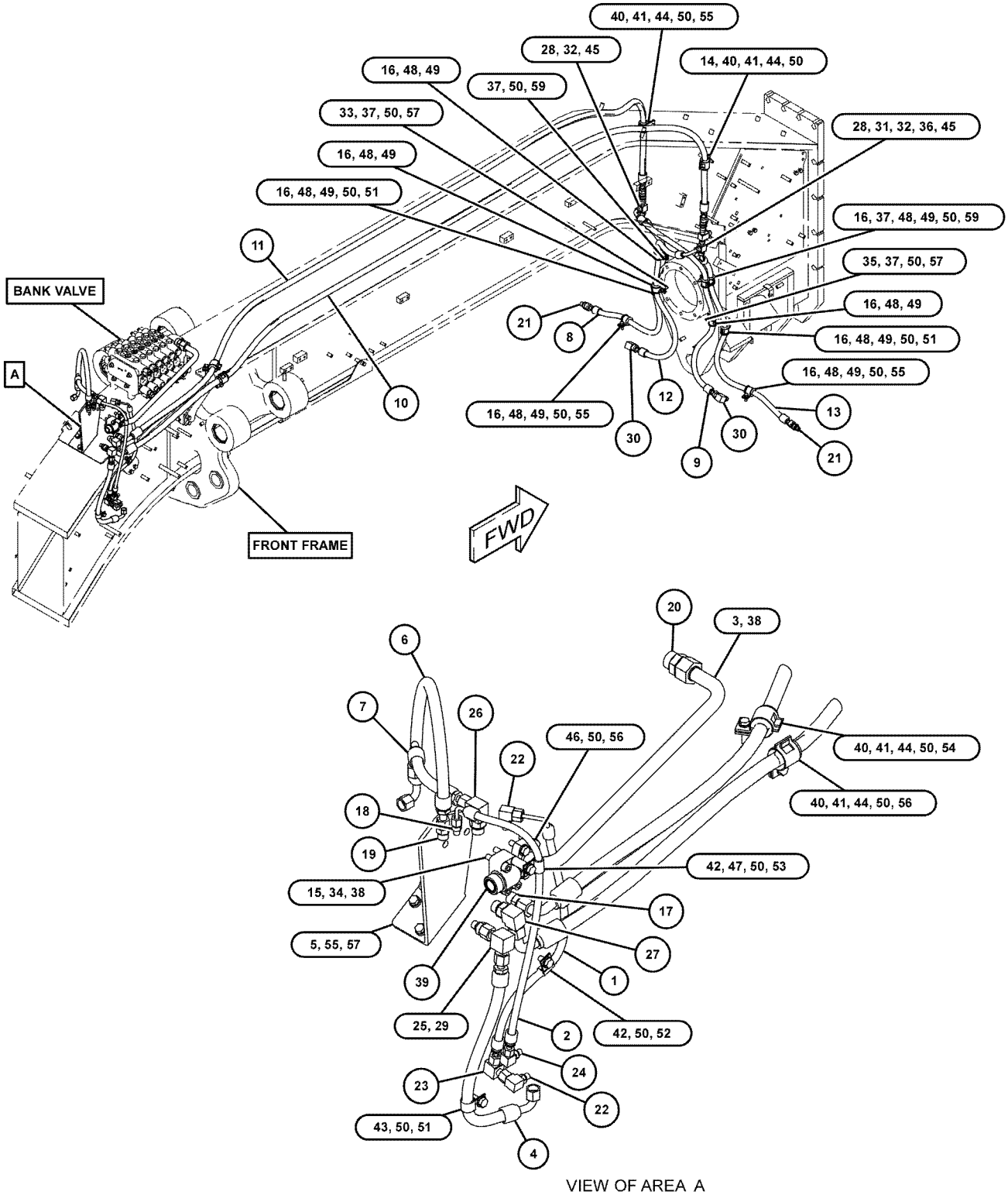

VIEW OF AREA A

GRAPHIC #1 **<END>** g03806857

249-6537 LOCK GP-CENTERSHIFT

S/N: E9Y1-UP

PART OF 371-3796 HYDRAULIC AR

SMCS-5221 **i05100291**

NOTE	REF NO	GRAPHIC REF	PART NUMBER	QTY	PART NAME 1 2 3 4 5 6 (PRODUCT LEVEL)	SEE PAGE
	1	1	**2H-3931**	1	SEAL-O-RING	
	2	1	**4T-8054**	1	SEAL AS	
	3	1	**8X-3749**	1	PISTON	
	4	1	**9D-6584**	1	SEAL-LIP TYPE	
	5	1	**380-6951**	1	CAP GP-PROTECTION	
		1	**380-6950**	1	CAP	
		1	**384-3892**	1	VALVE GP-SOLENOID (CENTERSHIFT LOCK)	
		1	**384-3893**	1	COIL AS	
	6	1	**9X-8880**	1	BOLT (5/8-11X2-IN)	
	7	1	**167-2307**	1	SEAL-U-CUP	
	8	1	**271-7839**	1	CYLINDER	
	9	1	**370-6682**	1	PIN	
	10	1	**5P-8247**	1	WASHER-HARD (17X32X3.5-MM THK)	
	11	1	**7X-0346**	2	BOLT (5/8-11X2-IN)	
	12	1	**8T-4122**	2	WASHER-HARD (17X32X3.5-MM THK)	
	13	1	**8T-4223**	2	WASHER-HARD (13.5X25.5X3-MM THK)	
	14	1	**8T-8917**	2	BOLT (1/2-13X1.25-IN)	

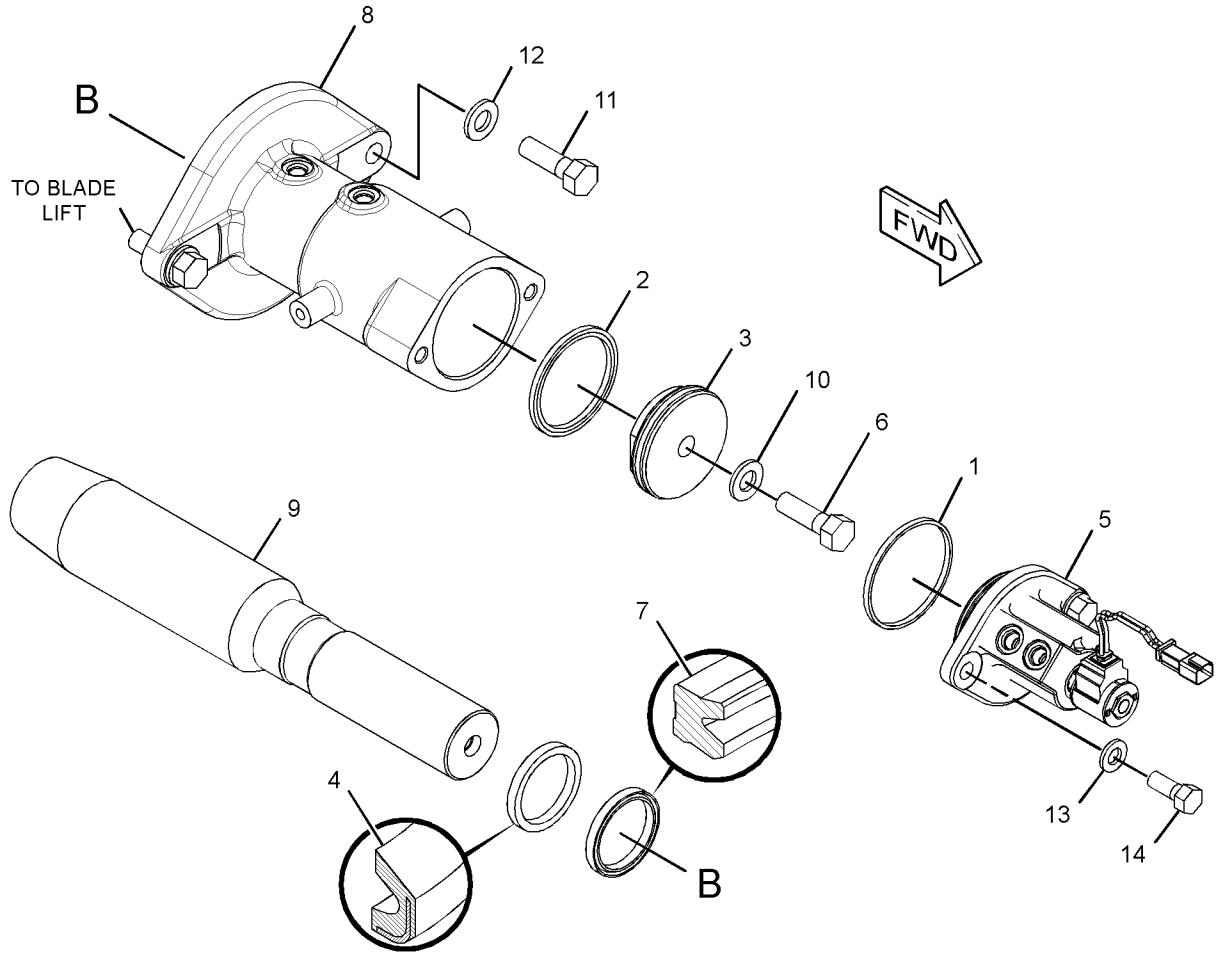

GRAPHIC #1 **<END>** g03326102

322-3798 MANIFOLD GP-CONTROL–BLADE CUSHION

S/N: E9Y1-UP

PART OF 352-5816, 364-9192 ACCUMULATOR & MTG GP-HYDRAULIC

AN ATTACHMENT

SMCS-5051, 5069, 5264, 5467, 5479

i03902329

NOTE	REF NO	GRAPHIC REF	PART NUMBER	QTY	PART NAME 1 2 3 4 5 6 (PRODUCT LEVEL)	SEE PAGE
	1	1	**253-1319**	1	MANIFOLD	
	2	1	**320-8117**	1	VALVE GP-SOLENOID (HYDRAULIC ACCUMULATOR)	
		1	**257-5022**	1	COIL AS	

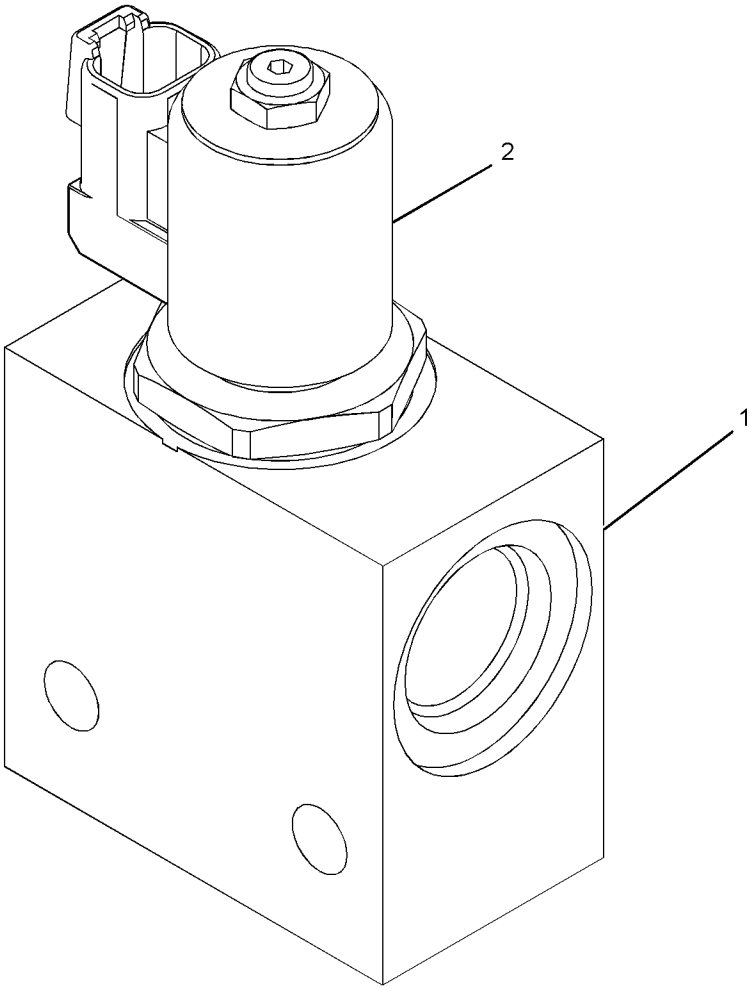

GRAPHIC #1

<END>

g01227961

396-4779 MANIFOLD GP-CONTROL

S/N: E9Y1-UP

PART OF 352-5789 MANIFOLD GP-HYDRAULIC

SMCS-5051, 5069, 5264, 5467, 5479 **i06140592**

NOTE	REF NO	GRAPHIC REF	PART NUMBER	QTY	PART NAME 1 2 3 4 5 6 (PRODUCT LEVEL)	SEE PAGE
	1	1	**474-4232**	1	PLUG-O-RING	
Y	2	1	**252-8038**	1	VALVE GP-PRESSURE REDUCING (IMPLEMENT PILOT OIL)	667
H	3	1	**430-8363**	1	VALVE GP-RELIEF (MAIN)	
H	4	1	**430-8364**	1	VALVE GP-RELIEF (SECONDARY STEERING)	
J	5	1	**348-1107**	1	VALVE GP-CHECK (SECONDARY STEERING)	
	6	1	**6V-3965**	1	FITTING (QUICK DISCONNECT)	
	7	1	**6V-0852**	1	CAP-DUST	
	8	1	**1U-0322**	1	BUSHING	
	9	1	**7J-7423**	1	VALVE-CONTROL	
	10	1	**3J-1907**	1	SEAL-O-RING	
	11	1	**7S-8491**	1	SPRING	
	12	1	**9S-8001**	2	PLUG	
	13	1	**9S-8002**	3	PLUG	
	14	1	**4J-7533**	2	SEAL-O-RING	
	15	1	**3J-7354**	3	SEAL-O-RING	
	16	1	**2S-4078**	1	SEAL-O-RING	
					AVAILABLE REPAIR KIT(S):	
J			**391-9059**	1	KIT-SEAL (CHECK VALVE)	
H			**133-5545**	1	KIT-SEAL (RELIEF VALVE)	
					(EACH SEAL KIT INCLUDES BACKUP RINGS & O-RING SEALS)	

H - KIT MARKED H SERVICES PARTS MARKED H
J - KIT MARKED J SERVICES PARTS MARKED J
Y - SEPARATE ILLUSTRATION

396-4779 **MANIFOLD GP-CONTROL** (*contd.*) **i06140592**

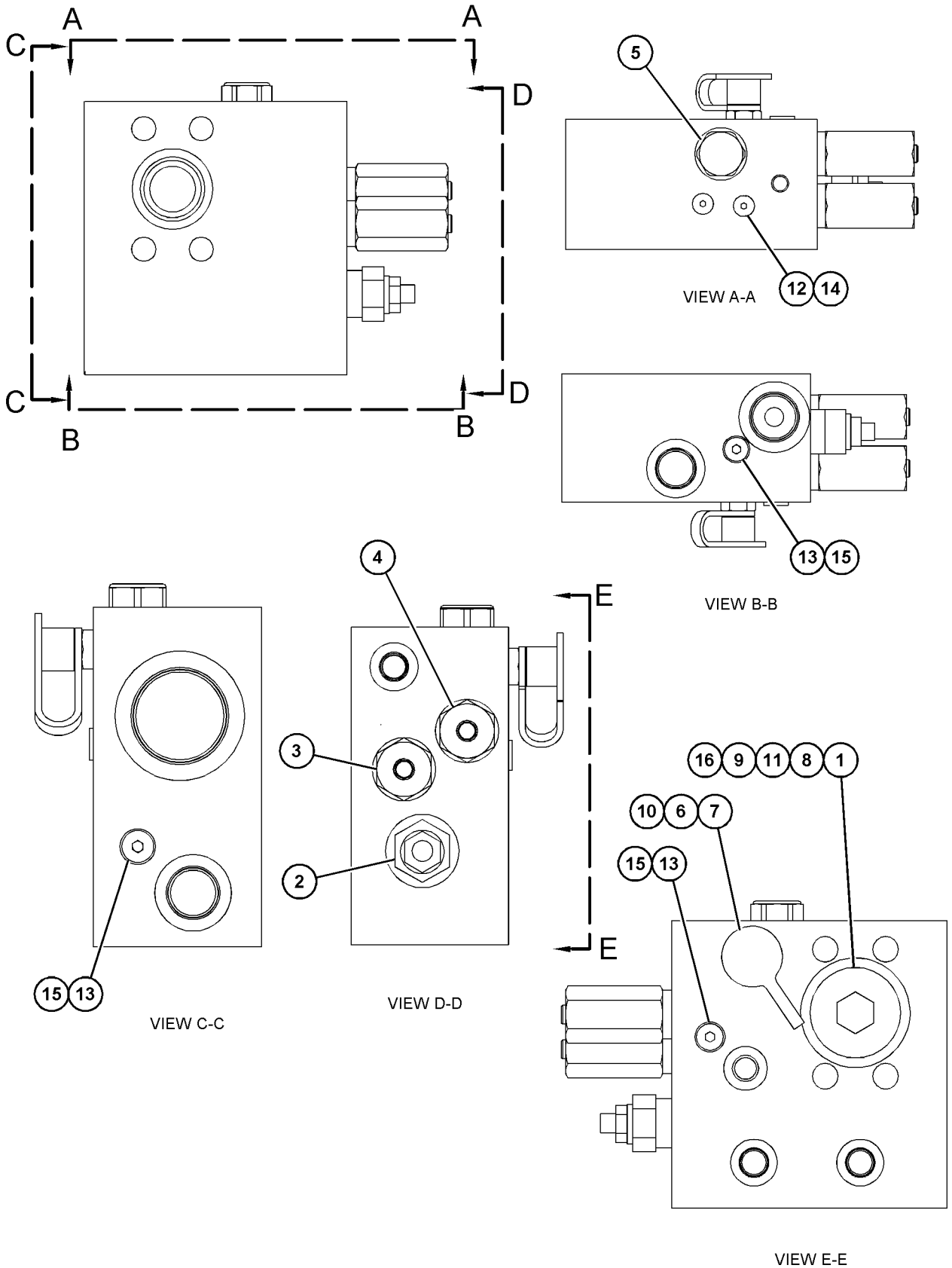

GRAPHIC #1 **<END>** g03832265

423-4959 MANIFOLD GP-CONTROL

S/N: E9Y1-UP

PART OF 352-5790 MANIFOLD GP-HYDRAULIC

SMCS-5051, 5069, 5264, 5467, 5479 **i06144247**

NOTE	REF NO	GRAPHIC REF	PART NUMBER	QTY	PART NAME 1 2 3 4 5 6 (PRODUCT LEVEL)	SEE PAGE
Y	1	1	**251-3268**	1	VALVE GP-SOLENOID (24-VOLT) (BRAKE ACCUMULATOR CHARGE)	670
H	2	1	**340-1765**	1	VALVE GP-PRIORITY (BRAKE, HYDRAULIC FAN PRIORITY)	
	3	1	**148-9364**	1	VALVE GP-CHECK (BRAKE ACCUMULATOR PRESSURE)	
L	4	1	**340-1766**	1	VALVE GP-RELIEF (BRAKE ACCUMULATOR CHARGE)	
N	5	1	**340-1767**	1	VALVE GP-SHUTTLE (BRAKE ACCUMULATOR)	
J	6	1	**241-5889**	1	VALVE GP-SHUTTLE (BRAKE PUMP)	
Y	7	1	**189-8627**	1	VALVE GP-SOLENOID (HYDRAULIC FAN)	669
	8	1	**6E-5066**	2	SCREEN	
	9	1	**390-8961**	1	PLUG-ORIFICE	
	10	1	**348-3583**	1	PLUG-ORIFICE	
	11	1	**3J-1907**	3	SEAL-O-RING	
	12	1	**9S-8001**	13	PLUG	
	13	1	**4J-7533**	13	SEAL-O-RING	
	14	1	**9S-8004**	3	PLUG	
	15	1	**9S-8002**	3	PLUG	
	16	1	**3J-7354**	3	SEAL-O-RING	
					AVAILABLE REPAIR KIT(S):	
J			**272-6538**	1	KIT-SEAL	
					(INCLUDES BACKUP RINGS & O-RINGS)	
H			**166-0321**	1	KIT-SEAL	
					(INCLUDES SEALS)	
L			**333-9152**	1	KIT-SEAL	
					(INCLUDES BACKUP RING & O-RINGS)	
N			**189-2102**	1	KIT-SEAL (SOLENOID VALVE)	
					(INCLUDES BACKUP RINGS & O-RINGS)	

H - KIT MARKED H SERVICES PART(S) MARKED H
J - KIT MARKED J SERVICES PART(S) MARKED J
L - KIT MARKED L SERVIES PART(S) MARKED L
N - KIT MARKED N SERVICES PART(S) MARKED N
Y - SEPARATE ILLUSTRATION

423-4959 **MANIFOLD GP-CONTROL (*contd.*)** **i06144247**

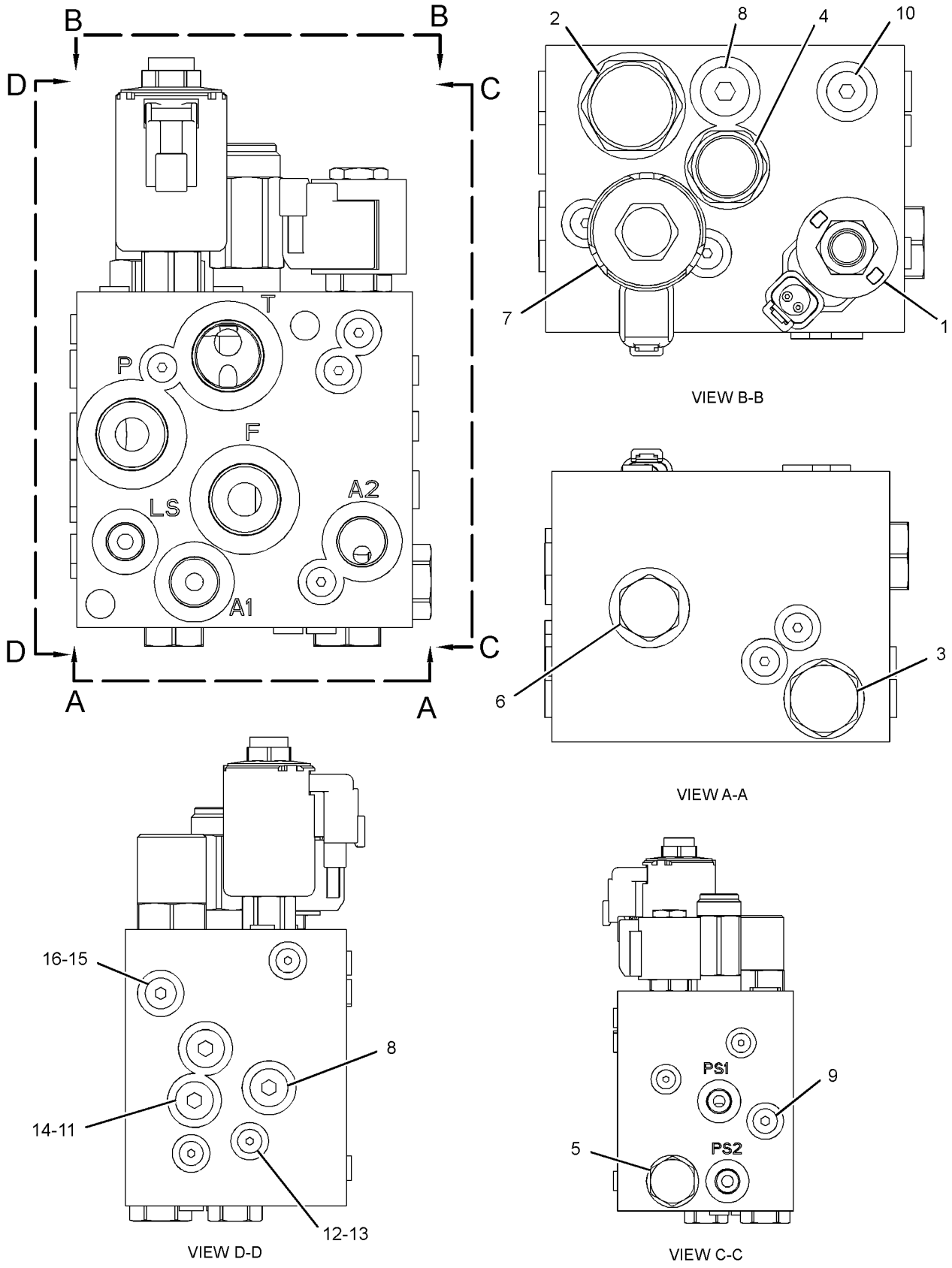

GRAPHIC #1 **<END>** g03487738

352-5789 MANIFOLD GP-HYDRAULIC

S/N: E9Y1-UP

PART OF 371-3796 HYDRAULIC AR

SMCS-5264 **i06140590**

NOTE	REF NO	GRAPHIC REF	PART NUMBER	QTY	PART NAME 1 2 3 4 5 6 (PRODUCT LEVEL)	SEE PAGE
Y	1	1	**396-4779**	1	MANIFOLD GP-CONTROL	611
	2	1	**246-4996**	4	WASHER-HARD (13.5X25.5X5-MM THK)	
	3	1	**4J-0522**	1	SEAL-O-RING	
M	4	1	**7X-2549**	4	BOLT (M12X1.75X100-MM)	

M - METRIC PART
Y - SEPARATE ILLUSTRATION

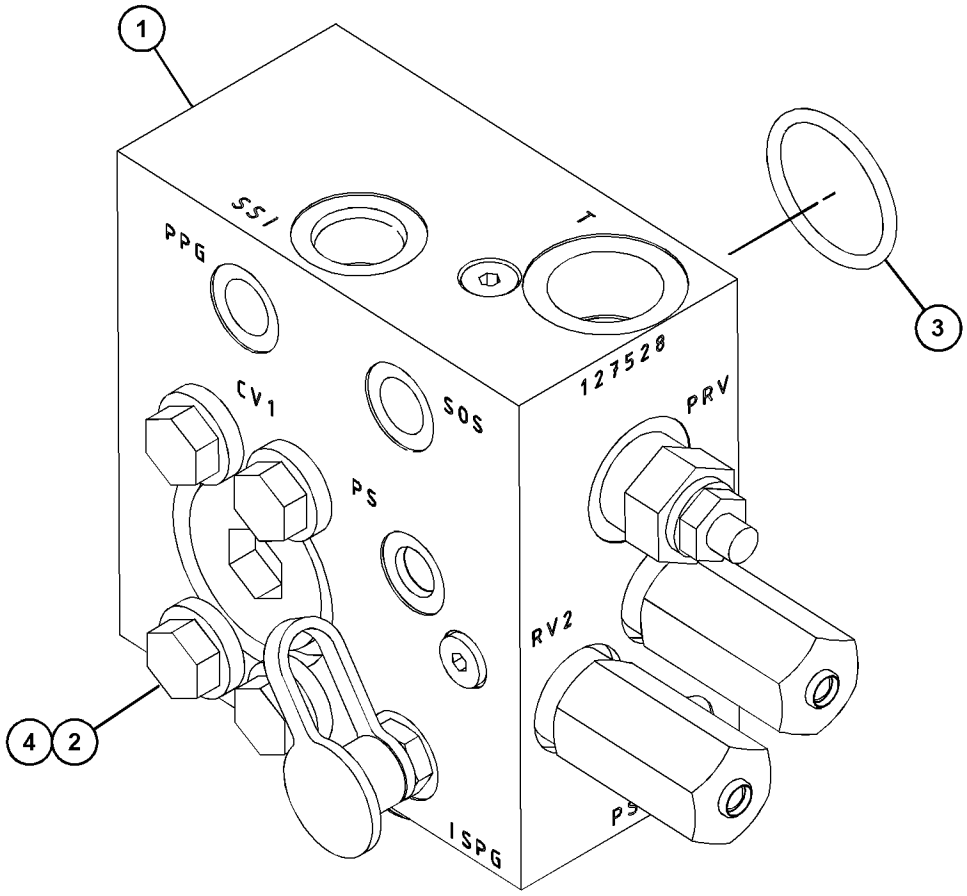

GRAPHIC #1 **<END>** g03825640

352-5790 MANIFOLD GP-HYDRAULIC

S/N: E9Y1-UP

PART OF 371-3796 HYDRAULIC AR

SMCS-5264 **i06144241**

NOTE	REF NO	GRAPHIC REF	PART NUMBER	QTY	PART NAME 1 2 3 4 5 6 (PRODUCT LEVEL)	SEE PAGE
Y	1	1	**423-4959**	1	MANIFOLD GP-CONTROL (HYDRAULIC)	613
	2	1	**8T-4121**	2	WASHER-HARD (11X21X2.5-MM THK)	
M	3	1	**8T-5030**	2	BOLT (M10X1.5X120-MM)	

M - METRIC PART
Y - SEPARATE ILLUSTRATION

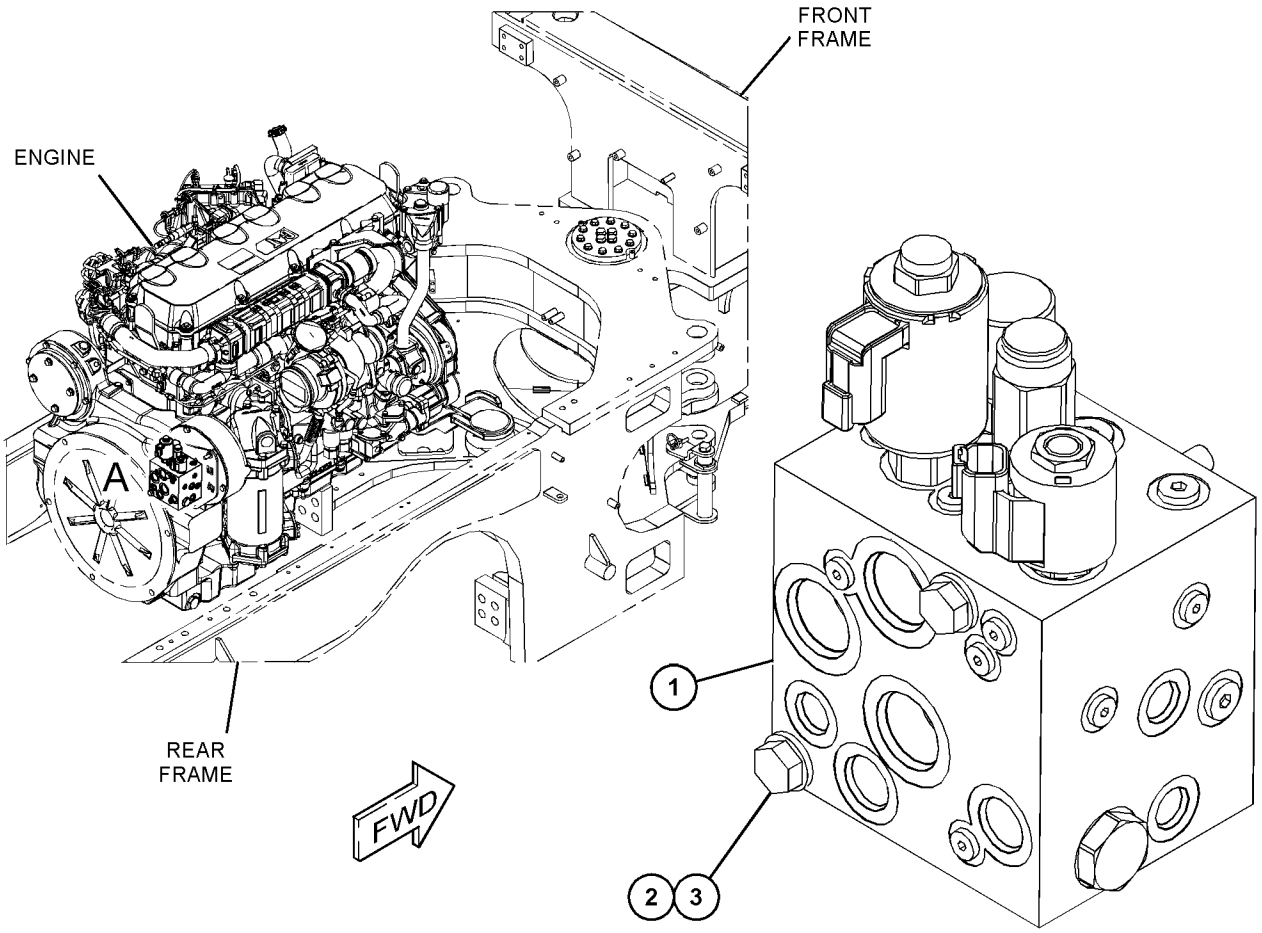

VIEW OF AREA A

GRAPHIC #1 **<END>** g03829189

388-4280 MANIFOLD GP-VALVE–FRONT

S/N: E9Y1-UP

PART OF 382-4415 VALVE GP-BANK 5, 382-4417 VALVE GP-BANK 7

AN ATTACHMENT

SMCS-5264 **i05977077**

NOTE	REF NO	GRAPHIC REF	PART NUMBER	QTY	PART NAME 1 2 3 4 5 6 (PRODUCT LEVEL)	SEE PAGE
	1	1	**382-5517**	1	MANIFOLD-INLET	
	2	1	**301-4568**	1	ORIFICE	
	3	1	*366-4699*	2	PLUG AS	
					(EACH INCLUDES)	
		1	**360-3692**	1	PLUG	
		1	**3J-1907**	1	SEAL-O-RING	
	4	1	*366-4700*	4	PLUG AS	
					(EACH INCLUDES)	
		1	**360-3693**	1	PLUG	
		1	**3K-0360**	1	SEAL-O-RING	
	5	1	*367-6001*	5	PLUG AS	
					(EACH INCLUDES)	
		1	**360-3675**	1	PLUG	
		1	**4J-7533**	1	SEAL-O-RING	

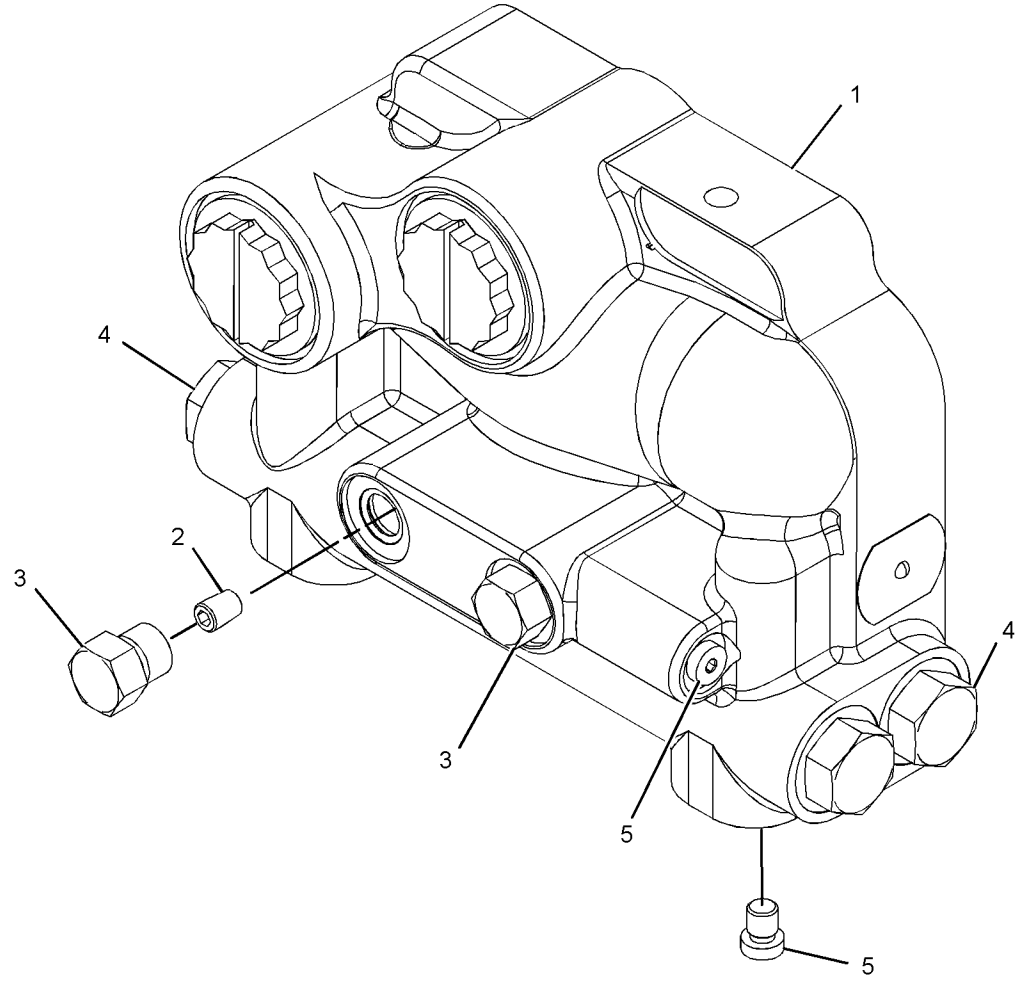

GRAPHIC #1 **<END>** g03401296

388-4281 MANIFOLD GP-VALVE—FRONT

S/N: E9Y1-UP

PART OF 382-4425 VALVE GP-BANK 4, 382-4426 VALVE GP-BANK 6

AN ATTACHMENT

SMCS-5264 **i05977080**

NOTE	REF NO	GRAPHIC REF	PART NUMBER	QTY	PART NAME 1 2 3 4 5 6 (PRODUCT LEVEL)	SEE PAGE
	1	1	**382-5518**	1	MANIFOLD-INLET	
	2	1	**096-3831**	1	ORIFICE	
J	3	1	**361-3059**	1	VALVE GP-RELIEF (MAIN)	
	4	1	*366-4699*	3	PLUG AS	
					(EACH INCLUDES)	
		1	**3J-1907**	1	SEAL-O-RING	
		1	**360-3692**	1	PLUG	
	5	1	*366-4700*	4	PLUG AS	
					(EACH INCLUDES)	
		1	**3K-0360**	1	SEAL-O-RING	
		1	**360-3693**	1	PLUG	
	6	1	*367-6001*	4	PLUG AS	
					(EACH INCLUDES)	
		1	**4J-7533**	1	SEAL-O-RING	
		1	**360-3675**	1	PLUG	
	7	1	*367-6002*	1	PLUG AS	
		1	**3J-7354**	1	SEAL-O-RING	
		1	**360-3677**	1	PLUG	
					AVAILABLE REPAIR KIT(S):	
J			**133-5545**	1	KIT-SEAL (RELIEF VALVE)	
					(INCLUDES RINGS)	

J - KIT MARKED J SERVICES PART(S) MARKED J

388-4281 **MANIFOLD GP-VALVE (*contd.*)** **i05977080**

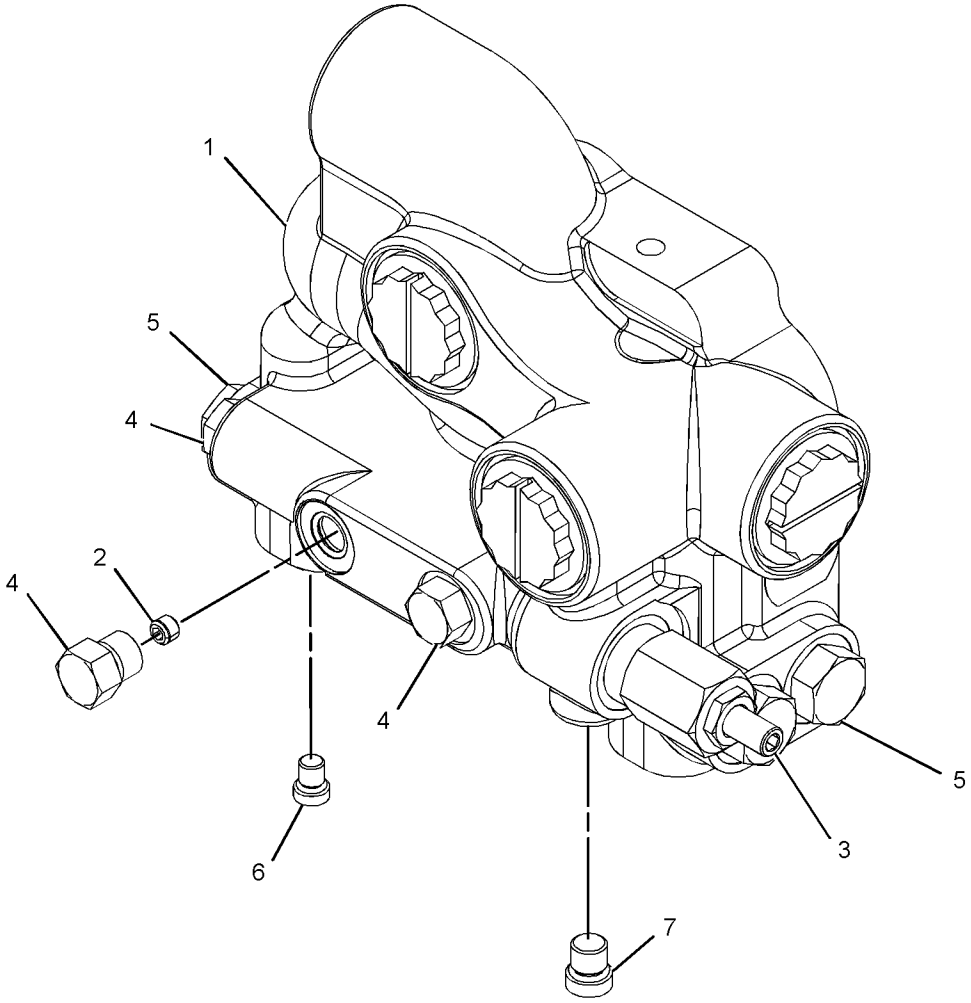

GRAPHIC #1 **<END>** g03403193

9T-5977 MOTOR GP-GEROTOR

S/N: E9Y1-UP

PART OF 454-4691 DRIVE GP-CIRCLE

ALSO AN ATTACHMENT

SMCS-5082 **i02291910**

NOTE	REF NO	GRAPHIC REF	PART NUMBER	QTY	PART NAME 1 2 3 4 5 6 (PRODUCT LEVEL)	SEE PAGE
	1	1	**7X-4733**	1	SEAL-LIP TYPE	
	2	1	**9T-8070**	1	HOUSING AS	
	3	1	**6Y-2934**	1	BEARING-ROLLER	
	4	1	**6Y-2933**	2	RING-THRUST	
	5	1	**6Y-2932**	1	BEARING-THRUST	
	6	1	**8T-1698**	1	BEARING AS-NEEDLE	
	7	1	**9T-9071**	1	SHIM	
	8	1	**9T-8058**	1	BACKUP	
	9	1	**9T-8059**	1	SEAL	
	10	1	**9T-8057**	1	SHAFT	
	11	1	**6Y-2935**	1	BEARING	
	12	1	**9T-8053**	5	SEAL	
	13	1	**9T-8055**	1	LINK	
	14	1	**9T-8061**	1	PLATE	
	15	1	**9T-8062**	1	ROTOR SET	
	16	1	**9T-8065**	1	MANIFOLD	
	17	1	**9J-4963**	1	RING	
	18	1	**9T-8069**	1	PLATE AS	
	19	1	**9T-8067**	1	COVER	
	20	1	**9T-8052**	7	BOLT (3/8-24X4.375-IN)	
					AVAILABLE REPAIR KIT(S):	
			9T-9072	1	KIT-SEAL (MOTOR)	
					(INCLUDES SEALS, BACKUP RING, SHIM & GREASE PACK)	

9T-5977 **MOTOR GP-GEROTOR (*contd.*)** **i02291910**

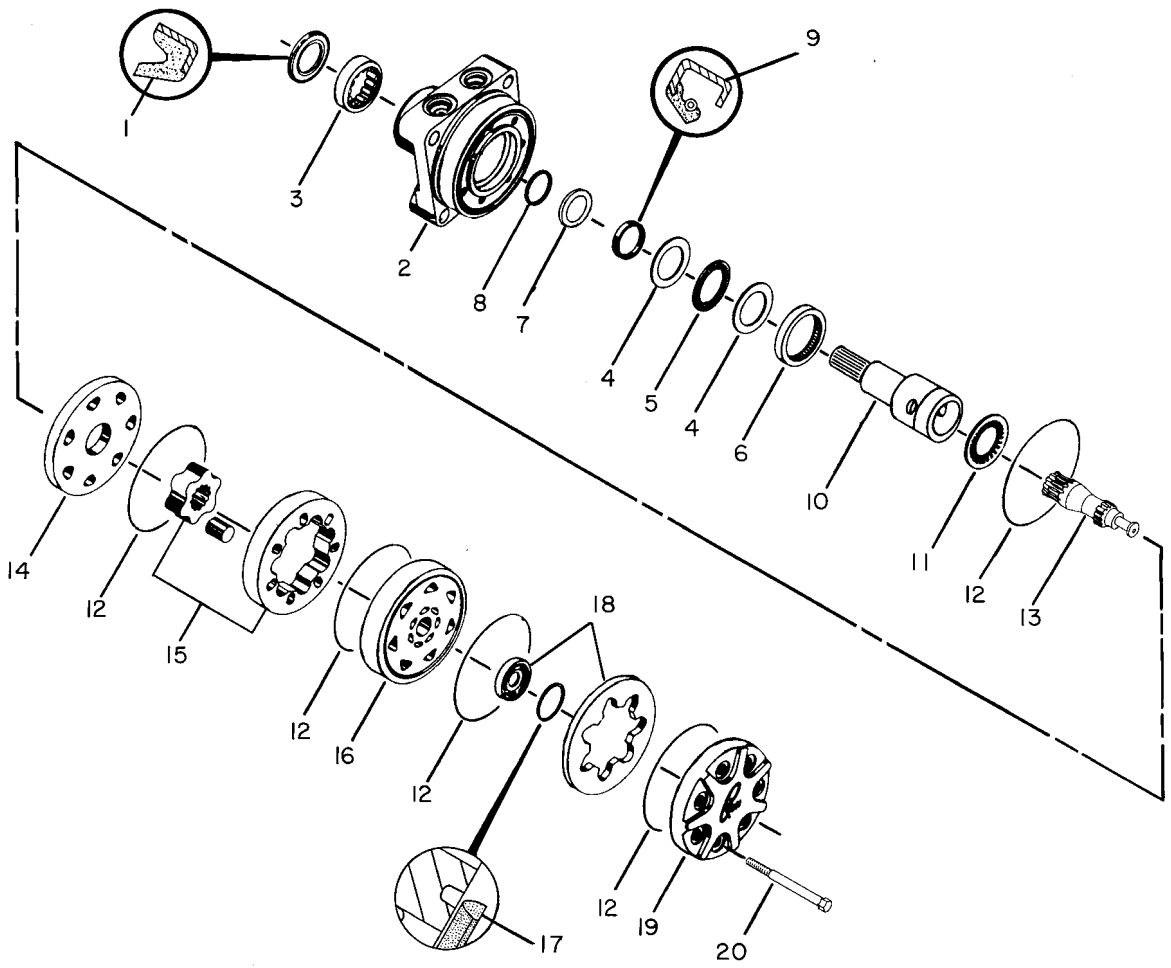

GRAPHIC #1 **<END>** g00082184

391-3129 PUMP & MOTOR GP-SEC STEERING

S/N: E9Y1-UP

ELECTRIC DRIVE

PART OF 388-8872 PUMP & MTG GP-SECONDARY STEER

SMCS-4324, 4325, 5070, 5073, 5927

i06140293

NOTE	REF NO	GRAPHIC REF	PART NUMBER	QTY	PART NAME 1 2 3 4 5 6 (PRODUCT LEVEL)	SEE PAGE
	1	1	**354-7543**	1	MOTOR GP-ELEC HYD PUMP	
	2	1	**373-3989**	1	PUMP GP-GEAR (SECONDARY STEERING)	
					PARTS SHOWN IN GRAPHIC(S) WITHOUT A REFERENCE NUMBER ARE NOT SERVICED SEPARATELY	
					AVAILABLE REPAIR KIT(S):	
			201-0418	1	KIT-SEAL	
					(PARTS MARKED J IN GRAPHIC INCLUDES RINGS & SEALS)	
			373-3991	1	KIT-GASKET	
					(PARTS MARKED N IN GRAPHIC INCLUDES GASKET, SCREWS & WASHERS)	

391-3129 **PUMP & MOTOR GP-SEC STEERING (*contd.*)** **i06140293**

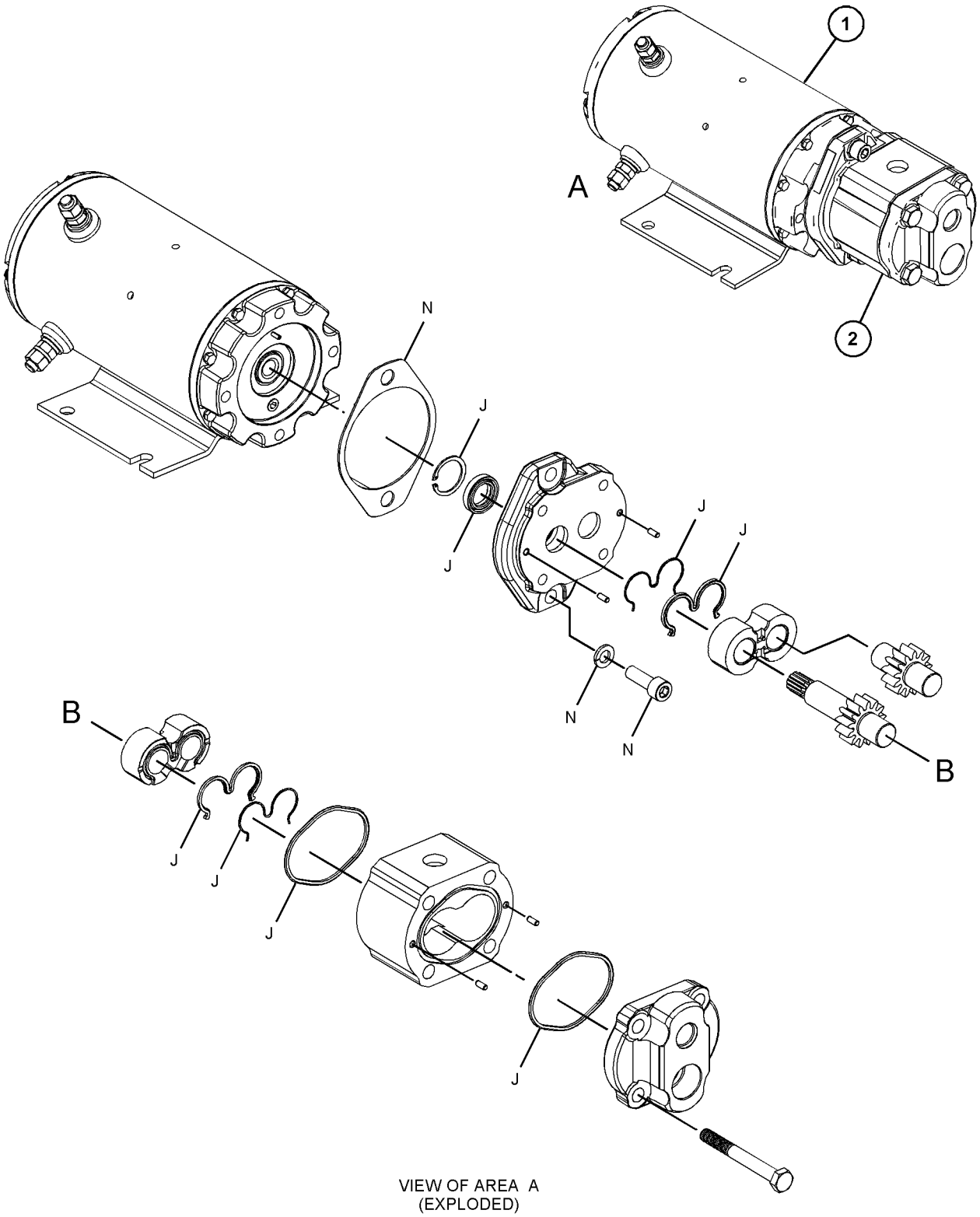

VIEW OF AREA A
(EXPLODED)

GRAPHIC #1 **<END>** g03831299

352-5804 PUMP & MTG GP-PISTON

S/N: E9Y1-UP

PART OF 371-3796 HYDRAULIC AR

SMCS-5070 **i06144243**

NOTE	REF NO	GRAPHIC REF	PART NUMBER	QTY	PART NAME 1 2 3 4 5 6 (PRODUCT LEVEL)	SEE PAGE
Y	1	1	**375-2948**	1	PUMP GP-PISTON (BRAKE, HYDRAULIC FAN)	626
Y	2	1	**376-2269**	1	PUMP GP-PISTON (IMPLEMENT)	628
	3	1	**292-3198**	2	WASHER-HARD (13.5X25.5X9-MM THK)	
	4	1	**5P-1076**	4	WASHER-HARD (13.5X30X4-MM THK)	
	5	1	**6D-7146**	1	SEAL-O-RING	
M	6	1	**8T-4956**	6	BOLT (M12X1.75X35-MM)	
	7	1	**9Y-8386**	1	GASKET	

M - METRIC PART
Y - SEPARATE ILLUSTRATION

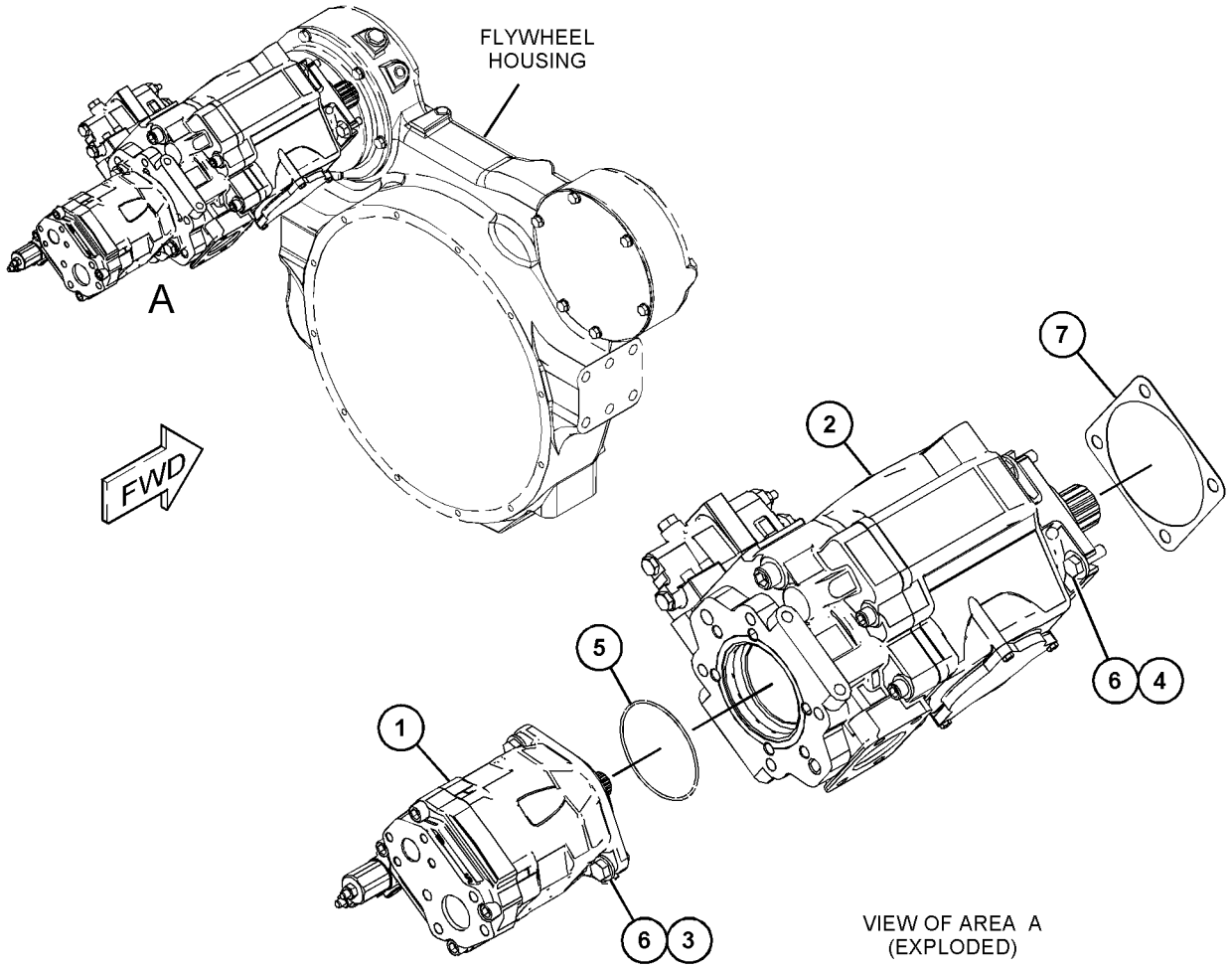

VIEW OF AREA A (EXPLODED)

GRAPHIC #1 **<END>** g03830868

388-8872 PUMP & MTG GP-SECONDARY STEER

S/N: E9Y1-UP

PART OF 371-3796 HYDRAULIC AR

SMCS-4324 **i06140292**

NOTE	REF NO	GRAPHIC REF	PART NUMBER	QTY	PART NAME 1 2 3 4 5 6 (PRODUCT LEVEL)	SEE PAGE
Y	1	1	**391-3129**	1	PUMP & MOTOR GP-SEC STEERING	622
	2	1	**8T-4121**	4	WASHER-HARD (11X21X2.5-MM THK)	
M	3	1	**8T-4136**	4	BOLT (M10X1.5X25-MM)	

M - METRIC PART
Y - SEPARATE ILLUSTRATION

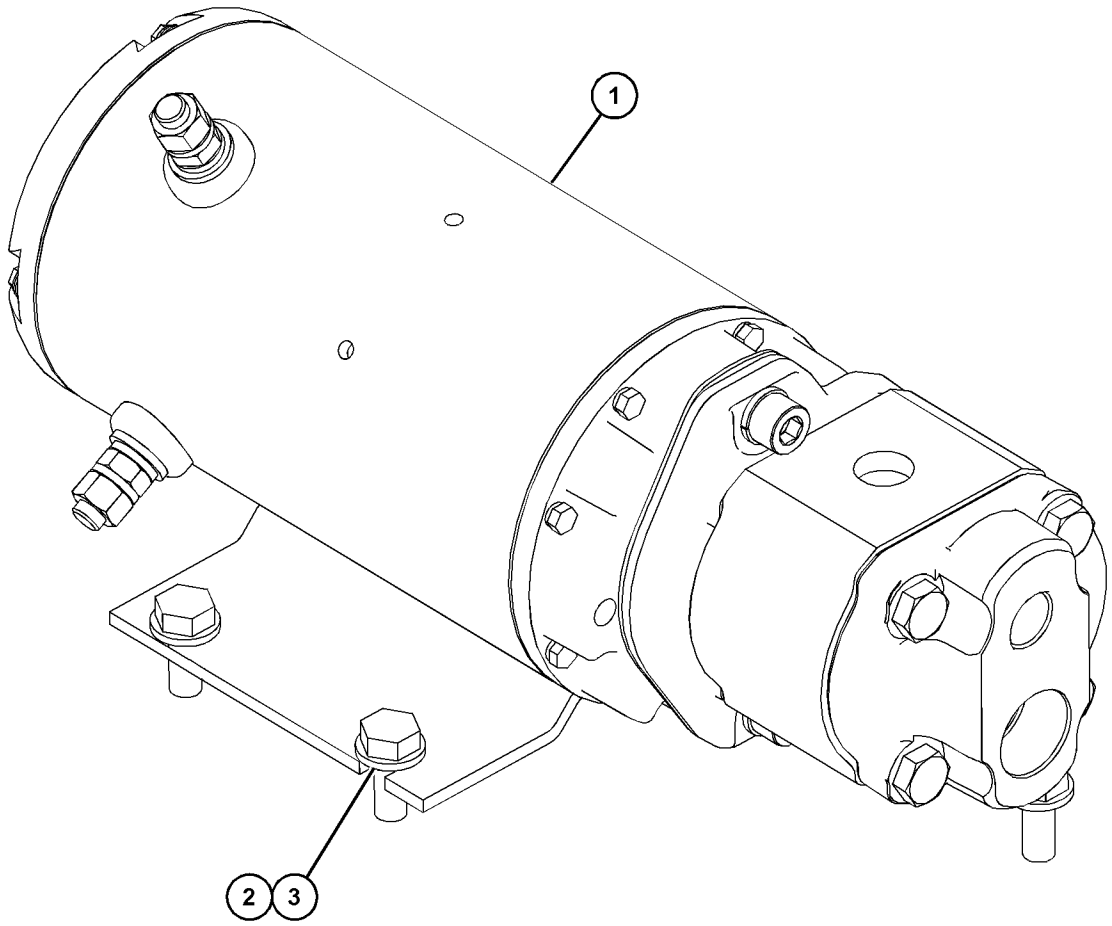

GRAPHIC #1 **<END>** g03824506

375-2948 PUMP GP-PISTON—BRAKE, HYDRAULIC FAN

S/N: E9Y1-UP

PART OF 352-5804 PUMP & MTG GP-PISTON

SMCS-5070 **i06204337**

NOTE	REF NO	GRAPHIC REF	PART NUMBER	QTY	PART NAME 1 2 3 4 5 6 (PRODUCT LEVEL)	SEE PAGE
M	1	1	**8T-8442**	4	BOLT-SOCKET HEAD (M6X1X30-MM)	
	2	1	**168-7861**	1	PISTON-ACTUATOR	
	3	1	**274-7452**	1	LINK-CONTROL	
	4	1	**197-1762**	1	SWASHPLATE	
	5	1	**396-5089**	1	SHAFT-DRIVE	
	6	1	**203-8609**	1	CUP-BEARING	
	7	1	**188-6303**	1	SPRING	
	8	1	**148-1238**	1	SHIM (3-MM THK)	
	9	1	**185-0263**	1	BEARING	
	10	1	**9S-8002**	1	PLUG	
	11	1	**105-3035**	1	CONE-BEARING	
	12	1	**3J-7354**	1	SEAL-O-RING	
	13	1	**237-4227**	2	BEARING-CRADLE	
	14	1	**166-0344**	1	SEAL-SHAFT	
	15	1	**127-9485**	1	SEAL-O-RING	
	16	1	**8T-7525**	1	SEAL-O-RING	
	17	1	**168-3504**	1	SEAL	
	18	1	**8C-3110**	1	RING-RETAINING	
M	19	1	**095-0670**	4	BOLT (M12X1.75X45-MM)	
	20	1	**120-4394**	1	PLUG-BREAK OFF	
	21	1	**9X-8979**	1	DOWEL	
	22	1	**396-5080**	1	VALVE GP-PUMP CONTROL	
		1	**6E-6528**	2	SEAL	
		1	**6V-8352**	1	SEAL-O-RING	
M		1	**8T-8442**	4	BOLT-SOCKET HEAD (M6X1X30-MM)	
		1	**033-6043**	1	SEAL-O-RING	
		1	**280-7870**	1	GASKET	
	23	1	**9X-7680**	3	SEAL-O-RING	

M - METRIC PART

375-2948 **PUMP GP-PISTON (*contd.*)** **i06204337**

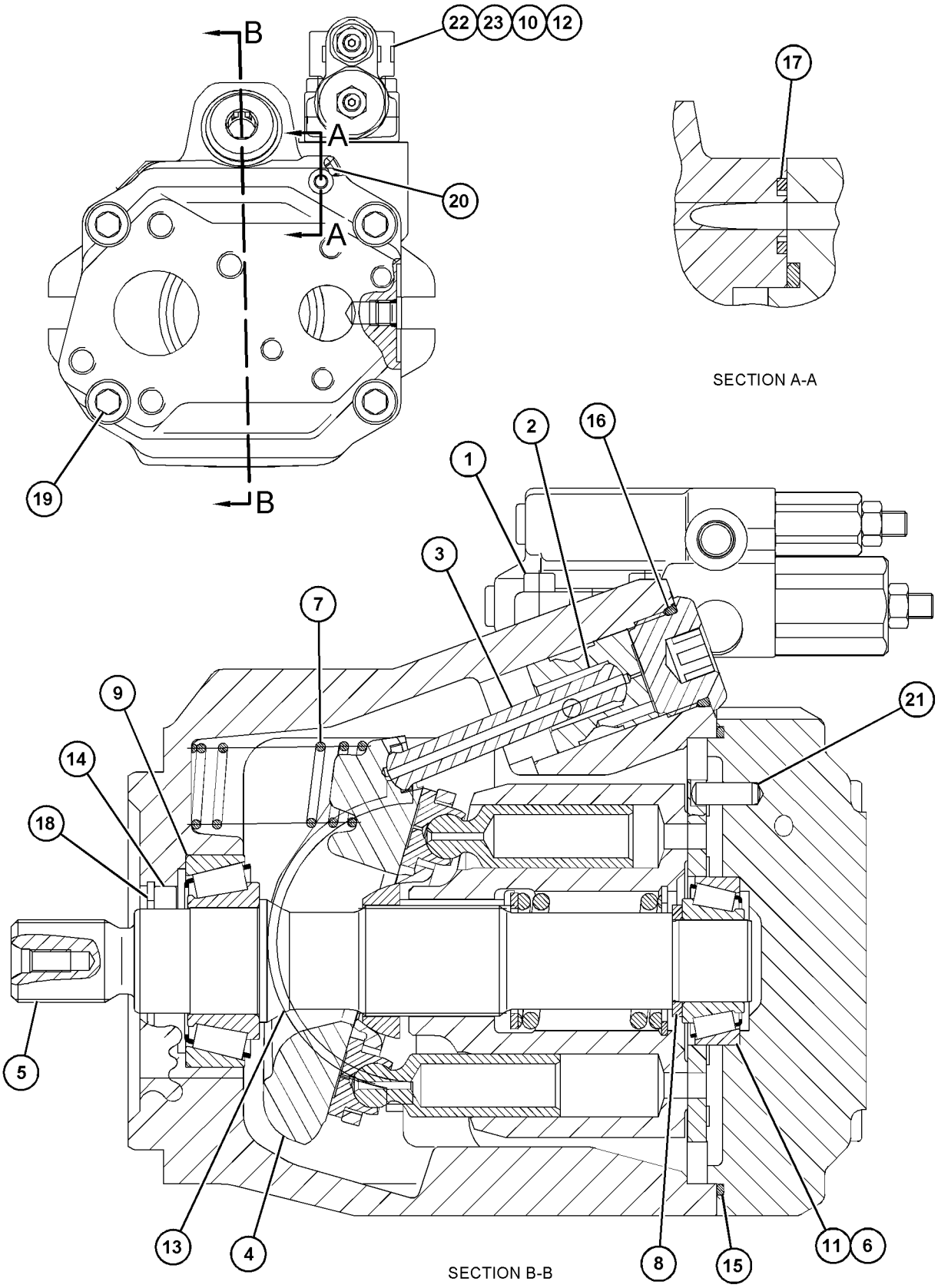

GRAPHIC #1

<END>

g03825608

376-2269 PUMP GP-PISTON

S/N: E9Y1-UP

PART OF 352-5804 PUMP & MTG GP-PISTON

SMCS-5070 **i06144249**

NOTE	REF NO	GRAPHIC REF	PART NUMBER	QTY	PART NAME 1 2 3 4 5 6 (PRODUCT LEVEL)	SEE PAGE
	1	2	**395-4317**	1	SHAFT-DRIVE	
	2	1	**6E-4237**	1	BEARING	
	3	1	**6E-4224**	1	PLUG-SWASHPLATE	
	4	1	**033-6036**	1	SEAL-O-RING	
	5	1	**9S-4190**	1	PLUG-O-RING	
	6	1	**9T-1699**	1	SPRING	
	7	1	**9T-1710**	1	POPPET	
	8	1	**9T-1636**	1	SEAT	
	9	1	**6E-4227**	1	COVER	
M	10	1	**6V-8837**	3	BOLT (M6X1X16-MM)	
	11	1	**4F-4097**	1	SEAL-O-RING	
	12	1	**6E-4236**	1	BEARING	
M	13	1	**3E-4302**	2	SCREW-FLAT HEAD (M4X0.7X10-MM)	
	14	1	**8T-5039**	3	SEAL-O-RING	
	15	1	**4H-1440**	2	PIN-SPRING	
M	16	1	**8T-0343**	4	BOLT-SOCKET HEAD (M12X1.75X55-MM)	
M	17	1	**095-0705**	2	BOLT-SOCKET HEAD (M16X2X100-MM)	
Y	18	1	**369-2611**	1	VALVE GP-PUMP CONTROL	668
	19	2	**7K-8877**	1	CONE-BEARING	
M	20	1	**6V-8337**	4	BOLT-SOCKET HEAD (M8X1.25X35-MM)	
	21	1	**033-6027**	1	SEAL-O-RING	
	22	2	**7K-8876**	1	CUP-BEARING	
	23	2	**6E-4213**	1	KIT-BIAS PISTON	
					(INCLUDES ROD, PISTON & PACKING)	
	24	2	**6E-4214**	1	SPRING-BIAS	
Y	25	2	**6E-4216**	1	ROTATING GP-PUMP (IMPLEMENT)	380
	26	2	**6E-4225**	1	GASKET	
	27	2	**7L-9061**	2	SEAL-O-RING	
	28	2	**3E-7417**	2	PLUG	
	29	2	**8T-7876**	2	SEAL-O-RING	
	30	2	**6E-4233**	1	PLATE-VALVE	
	31	2	**005-0471**	1	CONE-BEARING	
	32	2	**005-0469**	1	CUP-BEARING	
B	33	2	**457-5912**	1	KIT-SHIM (INCLUDES 17-SHIMS)	
	34	2	**9T-1652**	1	PIN	
	35	2	**6E-4215**	1	KIT-PISTON	
					(INCLUDES PACKING, ROD & PISTON)	
Y	36	2	**184-1527**	1	SWASHPLATE GP	385
	37	2	**6L-8797**	1	RING-RETAINING	
	38	2	**9X-7547**	1	SEAL-LIP TYPE	
	39	2	**398-3767**	1	COUPLER	

B - USE AS REQUIRED
M - METRIC PART
Y - SEPARATE ILLUSTRATION

376-2269 **PUMP GP-PISTON (*contd.*)** **i06144249**

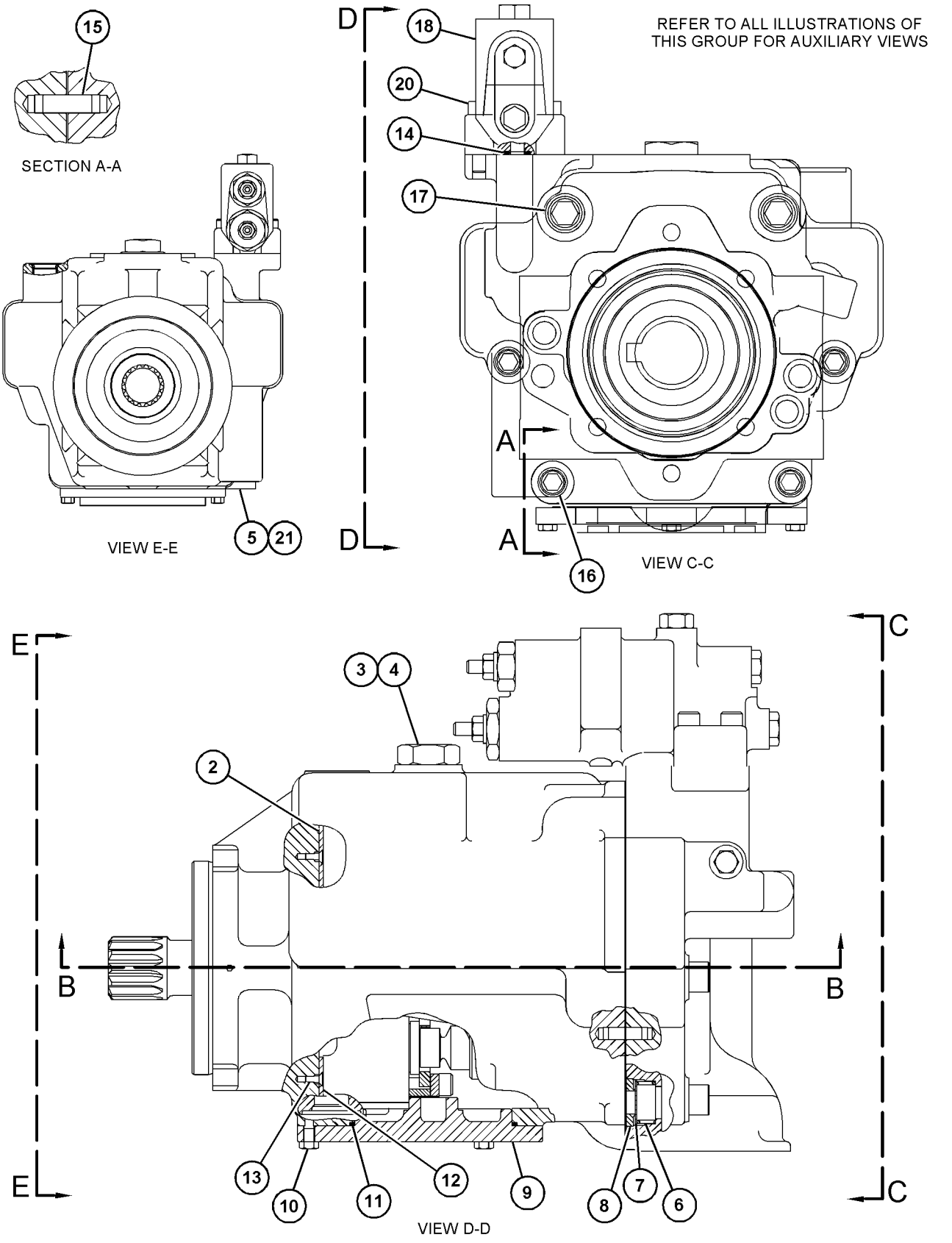

GRAPHIC #1 g03831242

376-2269 **PUMP GP-PISTON (*contd.*)** **i06144249**

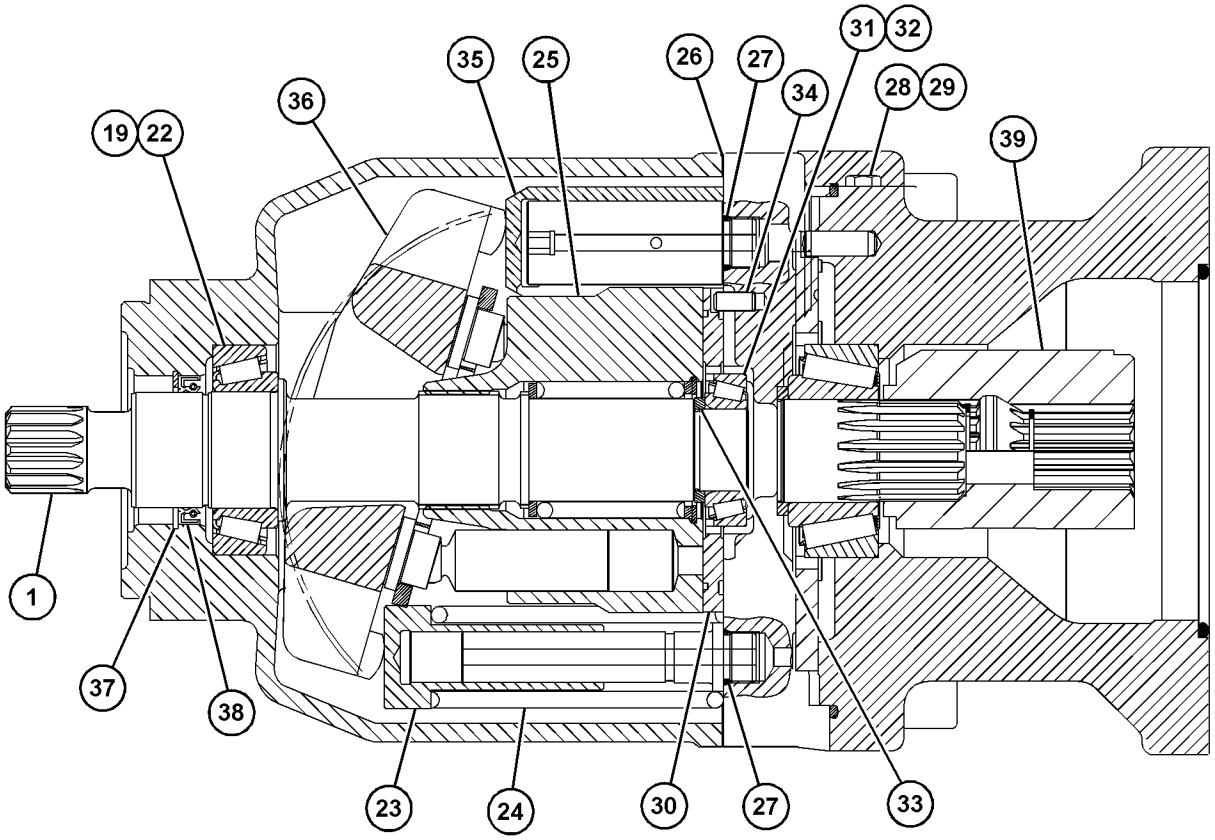

SECTION B-B

GRAPHIC #2 **<END>** g03831243

452-9419 SWIVEL GP

S/N: E9Y1-UP
PART OF 465-3377 SWIVEL GP
ALSO AN ATTACHMENT

SMCS-5060 **i05848181**

NOTE	REF NO	GRAPHIC REF	PART NUMBER	QTY	PART NAME 1 2 3 4 5 6 (PRODUCT LEVEL)	SEE PAGE
B	1	1	**5J-1246**	6	SHIM (0.13-MM THK)	
	2	1	**8J-2331**	7	SEAL	
	3	1	**173-1008**	1	ROTOR	
	4	1	*148-8395*	4	PLUG AS	
					(EACH INCLUDES)	
		1	**3K-0360**	1	SEAL-O-RING	
		1	**9S-8005**	1	PLUG-O-RING	
	5	1	**260-6501**	1	BODY	
	6	1	**2H-3928**	7	SEAL-O-RING	
	7	1	**452-0946**	1	PLATE	
	8	1	**107-2784**	2	SCREW-FLAT HEAD (1/2-13X1.5-IN)	
	9	1	**173-1007**	2	SEAL	
	10	1	**4J-9964**	2	SEAL	

B - USE AS REQUIRED

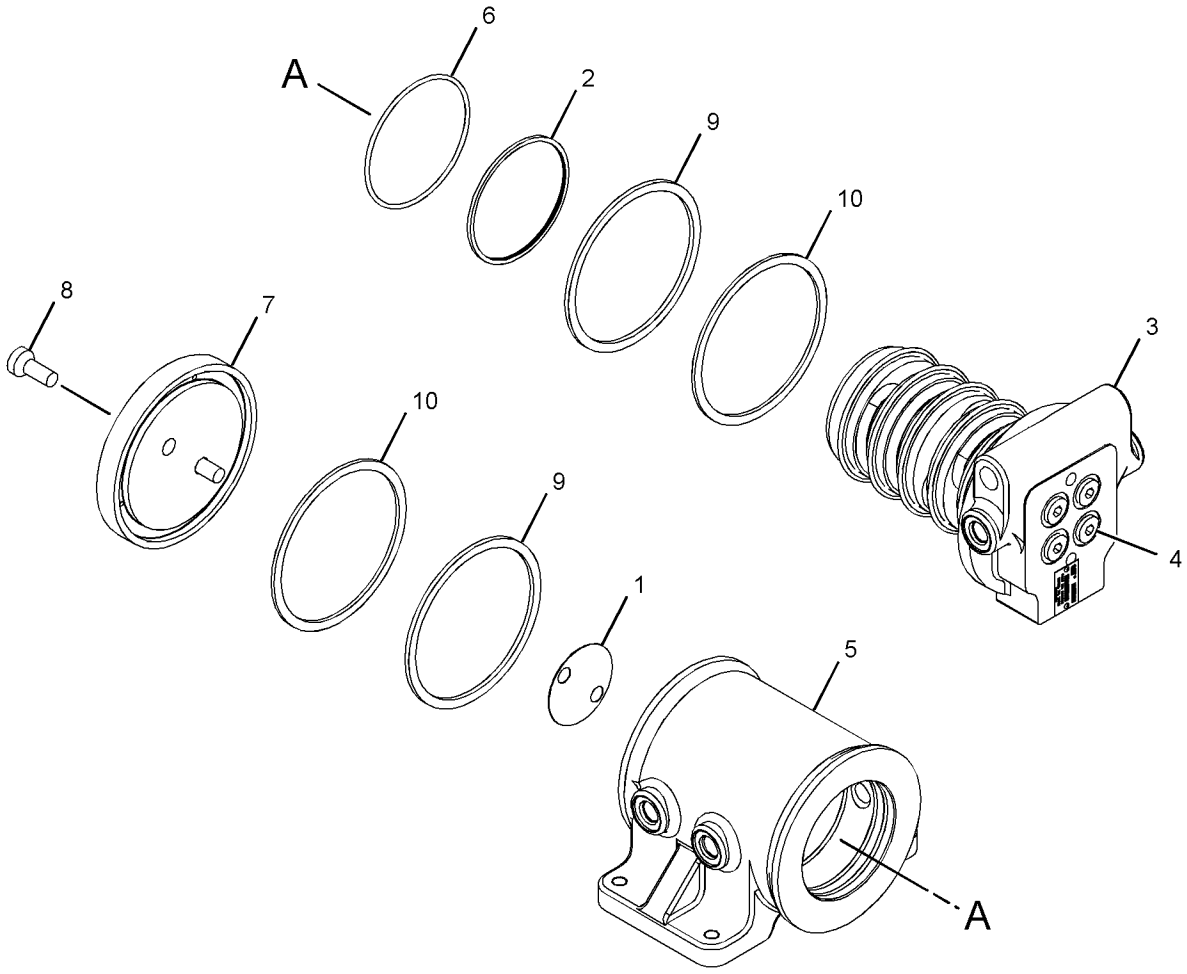

GRAPHIC #1 **<END>** g03698416

465-3377 SWIVEL GP

S/N: E9Y1-UP
CROSS SLOPE
PART OF 371-3796 HYDRAULIC AR, 479-7656 IMPLEMENT AR
ALSO AN ATTACHMENT

SMCS-5060 **i06144113**

NOTE	REF NO	GRAPHIC REF	PART NUMBER	QTY	PART NAME 1 2 3 4 5 6 (PRODUCT LEVEL)	SEE PAGE
Y	1	1	**452-9419**	1	SWIVEL GP (CIRCLE DRIVE)	631
M	2	1	**092-5524**	2	BOLT (M12X1.75X80-MM)	
	3	1	**1K-6870**	1	LOCKNUT (3/4-10-THD)	
	4	1	**286-0433**	2	BOLT (M12X1.75X100-MM)	
	5	1	**5P-4135**	1	BOLT (3/4-10X8-IN)	
	6	1	**8T-4223**	4	WASHER-HARD (13.5X25.5X3-MM THK)	
	7	1	**8T-4994**	4	WASHER-HARD (20X36.5X3.5-MM THK)	

M - METRIC PART
Y - SEPARATE ILLUSTRATION

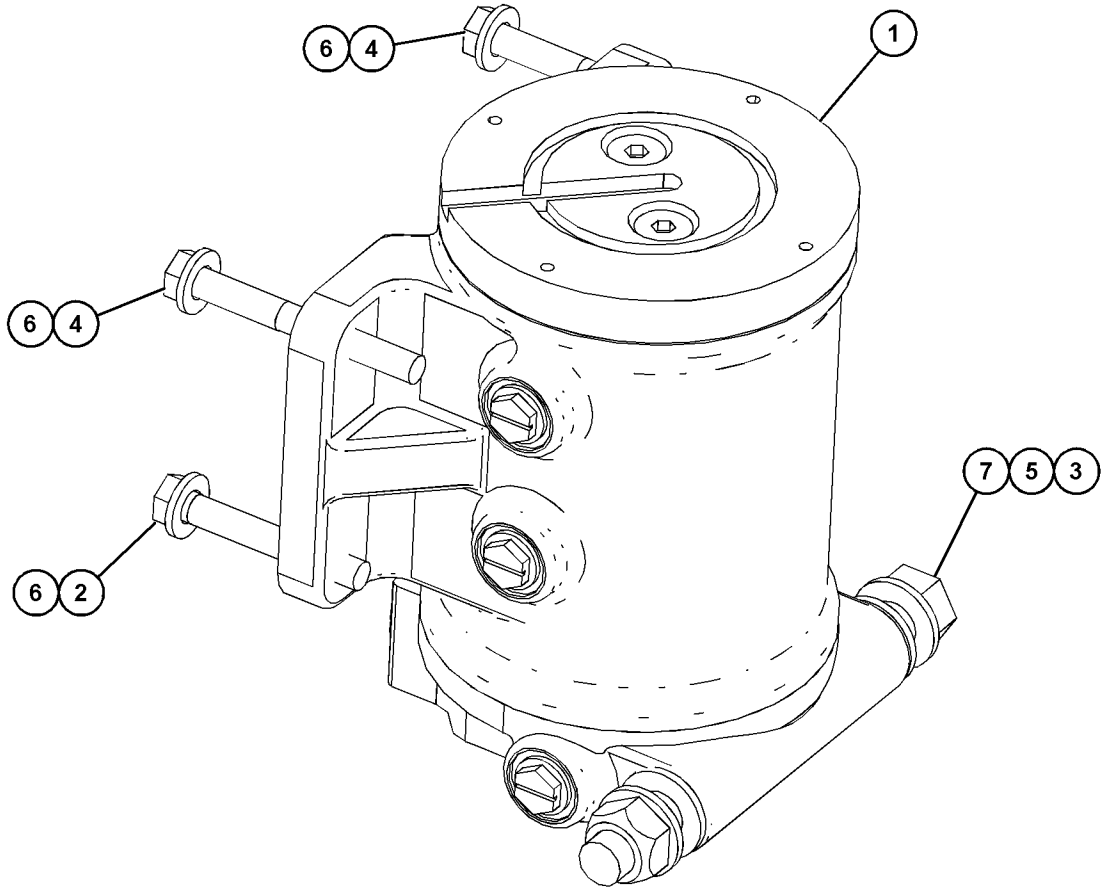

GRAPHIC #1 **<END>** g03836033

366-6133 TANK & MTG GP-HYDRAULIC

S/N: E9Y1-UP

PART OF 371-3796 HYDRAULIC AR

SMCS-4332, 5056, 5068 **i06144245**

NOTE	REF NO	GRAPHIC REF	PART NUMBER	QTY	PART NAME 1 2 3 4 5 6 (PRODUCT LEVEL)	SEE PAGE
	1	1	**1P-4278**	3	CLAMP-HOSE	
	2	1	**9R-9925**	1	FILTER ELEMENT-BREATHER	
	3	1	**250-2784**	1	STRAP AS	
	4	1	**286-1338**	1	PLATE	
Y	5	1	**386-2396**	1	TANK GP-HYDRAULIC	634
	6	1	**198-4777**	1	WASHER-HARD (11X25X10-MM THK)	
	7	1	**350-4369**	1	CLIP	
	8	1	**6D-3479**	1	CLIP	
M	9	1	**8T-0389**	1	LOCKNUT (M10X1.5-THD)	
	10	1	**8T-4121**	10	WASHER-HARD (11X21X2.5-MM THK)	
M	11	1	**8T-4133**	4	NUT (M10X1.5-THD)	
M	12	1	**8T-4136**	1	BOLT (M10X1.5X25-MM)	
M	13	1	**8T-4186**	3	BOLT (M10X1.5X40-MM)	
M	14	1	**8T-4195**	1	BOLT (M10X1.5X30-MM)	
G	15	1	**423-1982**		HOSE (14-IN)	
G	15A	1	**423-1982**		HOSE (8-IN)	

G - ORDER BY THE INCH
M - METRIC PART
Y - SEPARATE ILLUSTRATION

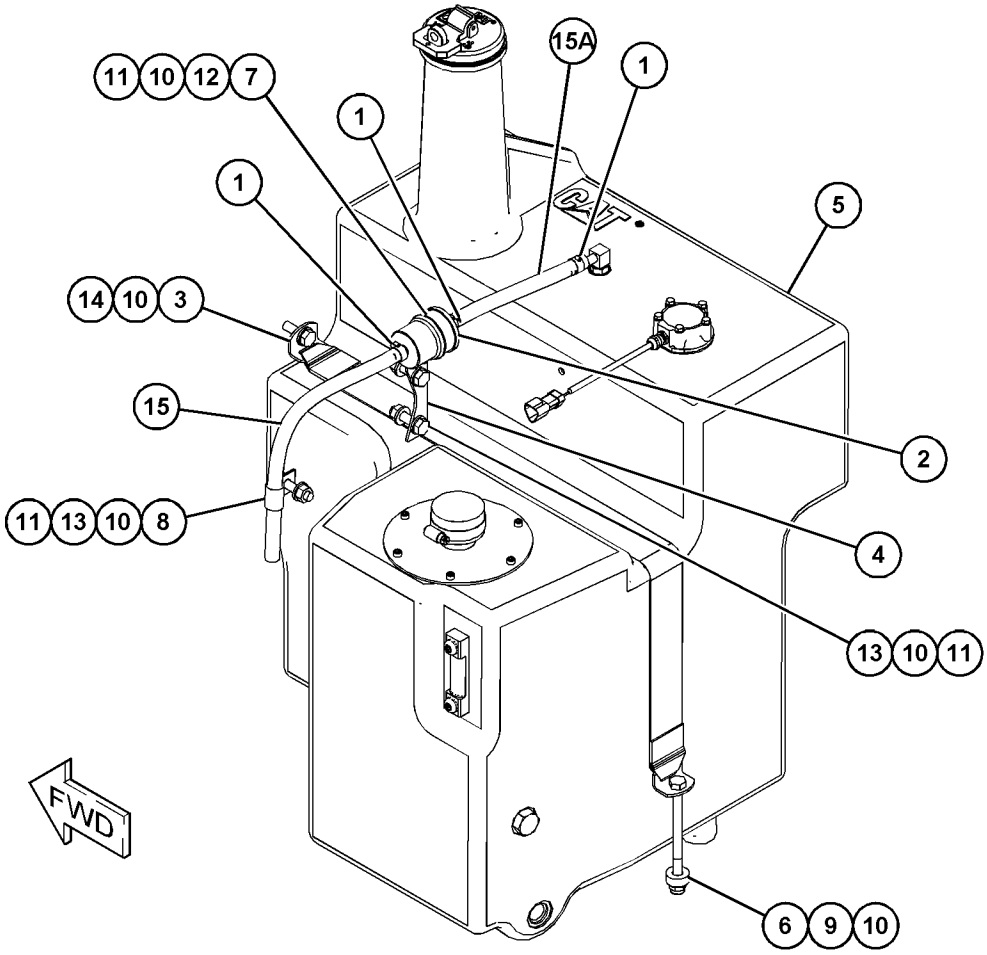

GRAPHIC #1 **<END>** g03830910

386-2396 TANK GP-HYDRAULIC

S/N: E9Y1-UP
90-L (23.8-US GAL)
PART OF 366-6133 TANK & MTG GP-HYDRAULIC

SMCS-4332, 5056, 5068 **i06139732**

NOTE	REF NO	GRAPHIC REF	PART NUMBER	QTY	PART NAME 1 2 3 4 5 6 (PRODUCT LEVEL)	SEE PAGE
M	1	1	**6V-2314**	5	BOLT (M5X0.8X35-MM)	
	2	1	**8T-0328**	5	WASHER-HARD (5.5X10X1-MM THK)	
	3	1	**8T-4224**	1	WASHER-HARD (8.8X16X2-MM THK)	
M	4	1	**125-3298**	6	BOLT-SOCKET HEAD (M5X0.8X12-MM)	
	5	1	**132-3056**	1	SEAL-O-RING	
	6	1	**142-8937**	1	CAP AS-FILLER (LOCKABLE)	
	7	1	**148-8410**	1	PLUG AS	
		1	**2M-9780**	1	SEAL-O-RING	
		1	**9S-4190**	1	PLUG-O-RING	
	8	1	*150-3024*	1	ELBOW AS	
		1	**3J-1907**	1	SEAL-O-RING	
		1	**5P-4924**	1	ELBOW	
	9	1	*164-4180*	2	PLUG AS	
					(EACH INCLUDES)	
		1	**7M-8485**	1	SEAL-O-RING	
		1	**9S-4181**	1	PLUG	
	10	1	**206-8818**	1	STRAINER	
	11	1	**250-3443**	1	TUBE AS	
	12	1	**273-4838**	1	SEAL	
	13	1	**386-2397**	1	TANK AS-HYDRAULIC	
	14	1	**415-1093**	1	GAUGE GP-OIL LEVEL (DIPSTICK)	
	15	1	**440-9801**	1	SENSOR AS-LIQUID LEVEL (HYDRAULIC OIL)	
		1	**3E-3371**	1	WEDGE-RECEPTACLE LOCK (3-PIN)	
		1	**9X-3401**	3	PIN-CONNECTOR (16-GA TO 18-GA)	
		1	**102-8803**	1	KIT-RECEPTACLE (3-PIN)	
					(INCLUDES RECEPTACLE AS & WEDGE)	
		1	**171-0596**	1	RECEPTACLE AS-CONNECTOR	
	16	1	**130-5300**	1	CLIP	
M	17	1	**7X-2536**	1	BOLT (M8X1.25X14-MM)	

M - METRIC PART

386-2396 **TANK GP-HYDRAULIC (*contd.*)** **i06139732**

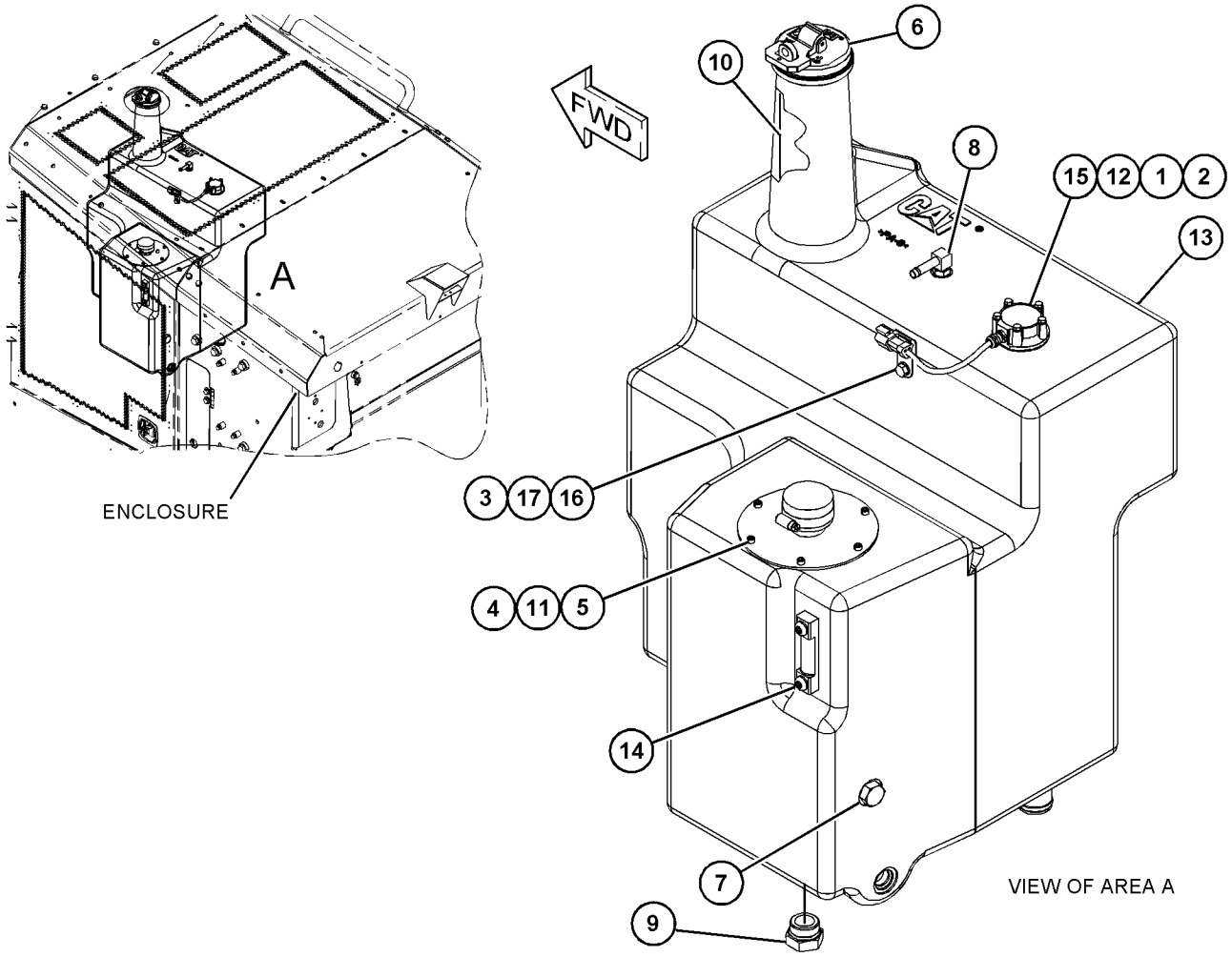

GRAPHIC #1 **<END>** g03823680

373-1573 VALVE & MOUNTING GP

S/N: E9Y1-UP
STEERING & SHUTOFF
PART OF 371-3796 HYDRAULIC AR

SMCS-5051, 5306, 5640 **i06139759**

NOTE	REF NO	GRAPHIC REF	PART NUMBER	QTY	PART NAME 1 2 3 4 5 6 (PRODUCT LEVEL)	SEE PAGE
Y	1	1	**366-6681**	1	VALVE GP-STEERING	673
	2	1	**382-2790**	1	VALVE GP-SHUTOFF (IMPLEMENT PILOT OIL)	
J		1	**239-0618**	1	VALVE GP-SHUTTLE (IMPLEMENT PILOT OIL)	
		1	**3H-0442**	1	SEAL-O-RING	
		1	**252-0741**	1	VALVE GP-SOLENOID (IMPLEMENT PILOT OIL)	
		1	**156-5970**	1	NUT (1/2-20-THD)	
		1	**362-6151**	1	COIL AS	
	3	1	**8T-4121**	2	WASHER-HARD (11X21X2.5-MM THK)	
M	4	1	**8T-4136**	3	BOLT (M10X1.5X25-MM)	
M	5	1	**8T-4198**	2	BOLT (M10X1.5X100-MM)	
	6	1	**8T-7934**	3	WASHER-HARD (11X21X5-MM THK)	
					AVAILABLE REPAIR KIT(S):	
J			**239-5195**	1	KIT-SEAL (SHUTTLE VALVE)	
					(INCLUDES O-RING & BACKUP RINGS)	

J - KIT MARKED J SERVICES PART MARKED J
M - METRIC PART
Y - SEPARATE ILLUSTRATION

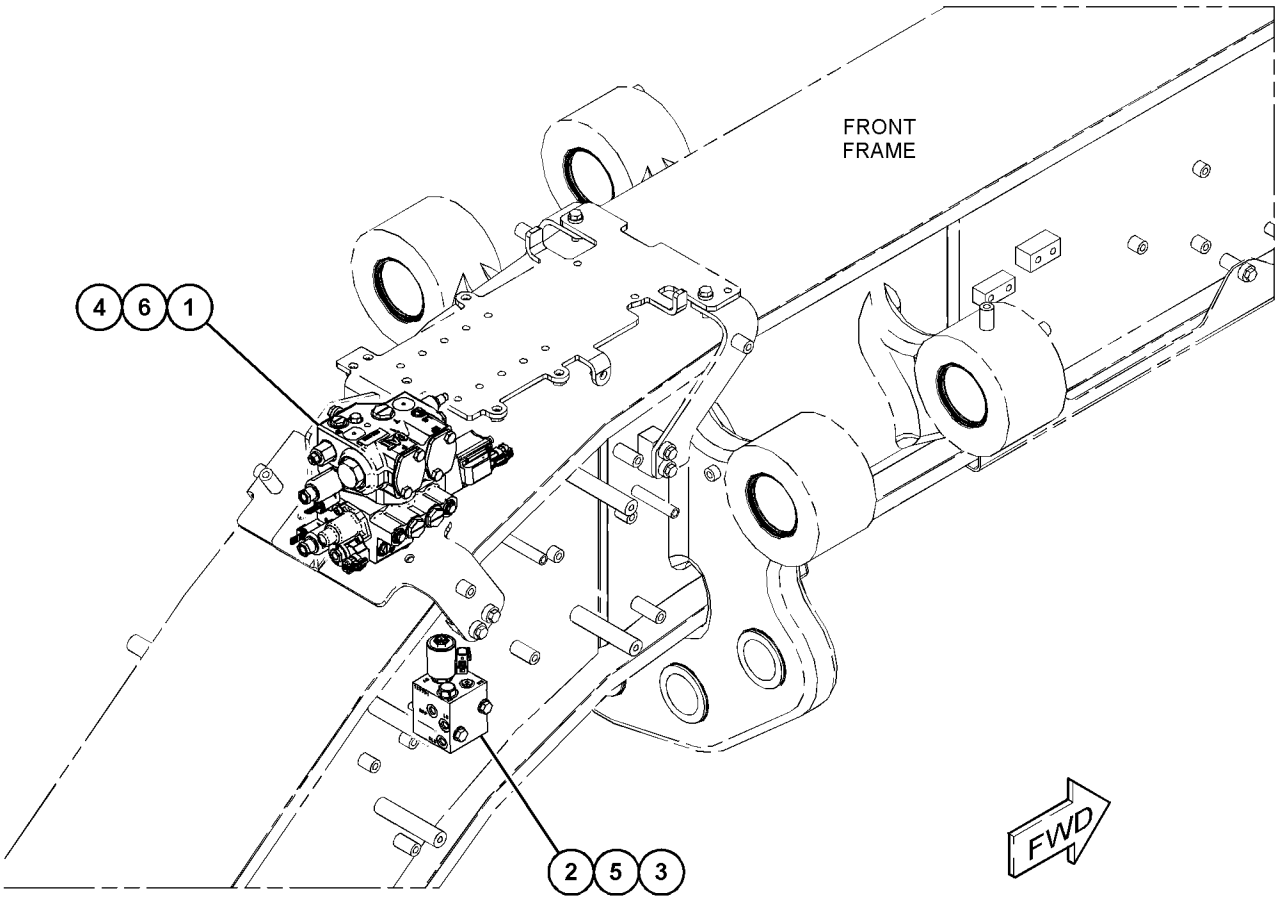

GRAPHIC #1 **<END>** g03830636

382-4425 VALVE GP-BANK 4–REAR

S/N: E9Y1-UP
PART OF 385-7554 CONTROL AR-HYDRAULIC
AN ATTACHMENT

SMCS-5051 **i05811766**

NOTE	REF NO	GRAPHIC REF	PART NUMBER	QTY	PART NAME 1 2 3 4 5 6 (PRODUCT LEVEL)	SEE PAGE
M	1	1	**8T-4133**	4	NUT (M10X1.5-THD)	
	2	1	**372-0918**	5	SEAL-INTEGRAL	
	3	1	**248-6175**	4	ROD	
Y	4	1	**382-3308**	1	VALVE GP-CONTROL (ARTICULATION)	660
Y	5	1	**382-3299**	1	VALVE GP-CONTROL (RIPPER)	652
Y	6	1	**382-3312**	1	VALVE GP-CONTROL (BLADE LIFT) (LH)	662
Y	6A	1	**382-3312**	1	VALVE GP-CONTROL (BLADE LIFT) (RH)	662
	7	1	**8T-4121**	4	WASHER-HARD (11X21X2.5-MM THK)	
	8	1	**273-1871**	1	COVER	
Y	9	1	**388-4281**	1	MANIFOLD GP-VALVE (INLET)	618
	10	1	*292-9221*	1	PLUG AS	
		1	**292-9220**	1	PLUG	
		1	**294-8055**	1	SEAL-O-RING	
	11	1	*366-4700*	8	PLUG AS	
					(EACH INCLUDES)	
		1	**360-3693**	1	PLUG	
		1	**3K-0360**	1	SEAL-O-RING	

M - METRIC PART
Y - SEPARATE ILLUSTRATION

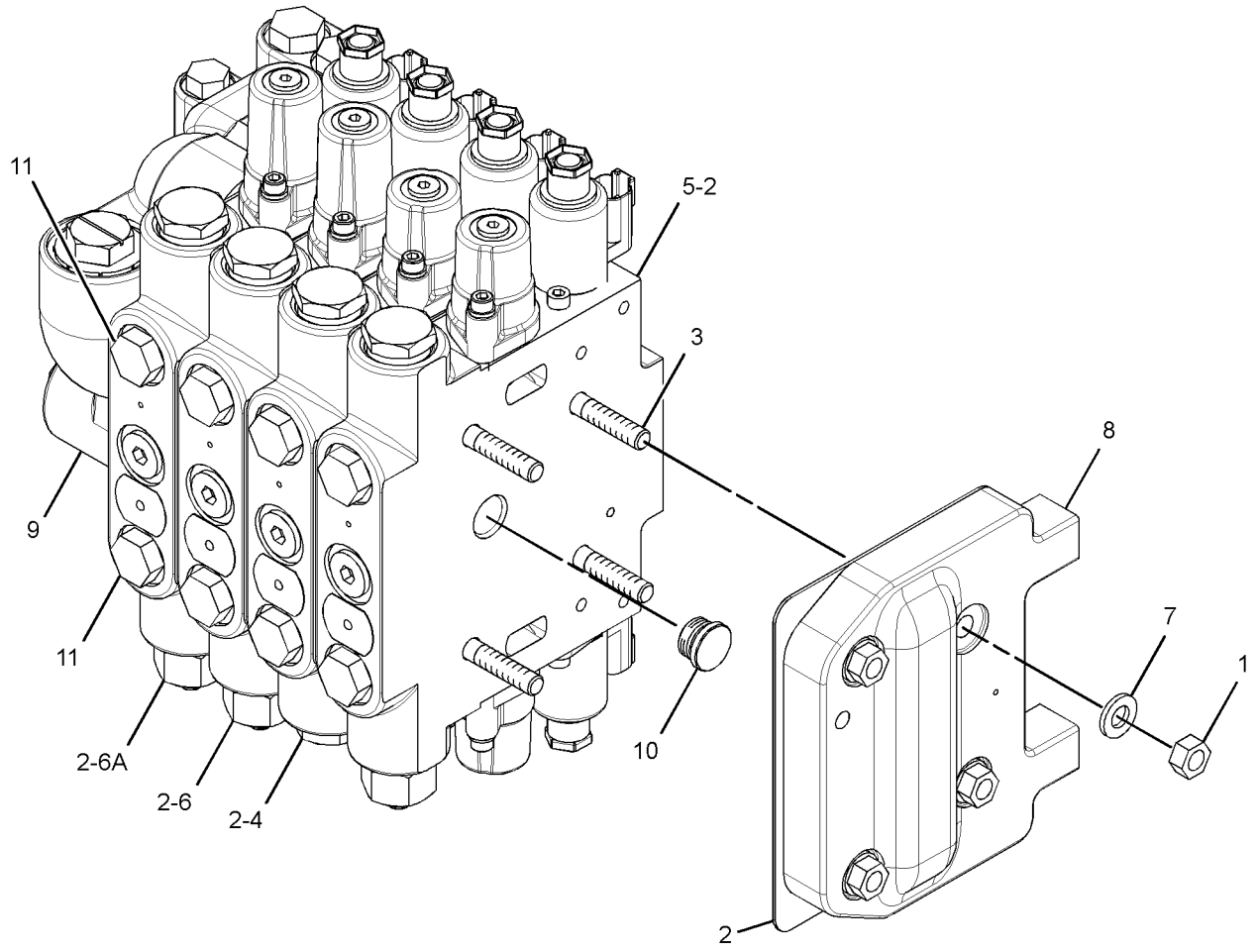

GRAPHIC #1 **<END>** g03682469

382-4415 VALVE GP-BANK 5–FRONT

S/N: E9Y1-UP

PART OF 385-7554 CONTROL AR-HYDRAULIC

AN ATTACHMENT

SMCS-5051 **i05858573**

NOTE	REF NO	GRAPHIC REF	PART NUMBER	QTY	PART NAME 1 2 3 4 5 6 (PRODUCT LEVEL)	SEE PAGE
M	1	1	**8T-4133**	4	NUT (M10X1.5-THD)	
	2	1	**372-0918**	6	SEAL-INTEGRAL	
	3	1	**248-6174**	4	ROD	
Y	4	1	**382-3301**	1	VALVE GP-CONTROL (BLADE TIP)	654
Y	5	1	**382-3302**	1	VALVE GP-CONTROL (SIDESHIFT)	656
Y	6	1	**382-3304**	1	VALVE GP-CONTROL (CIRCLE DRIVE)	658
Y	7	1	**382-3313**	1	VALVE GP-CONTROL (CENTERSHIFT)	664
Y	7A	1	**382-3313**	1	VALVE GP-CONTROL (WHEEL LEAN)	664
	8	1	*366-4700*	10	PLUG AS	
					(EACH INCLUDES)	
		1	**360-3693**	1	PLUG	
		1	**3K-0360**	1	SEAL-O-RING	
	9	1	**273-1871**	1	COVER	
	10	1	**8T-4121**	4	WASHER-HARD (11X21X2.5-MM THK)	
Y	11	1	**388-4280**	1	MANIFOLD GP-VALVE (INLET)	617
	12	1	*292-9221*	1	PLUG AS	
		1	**292-9220**	1	PLUG	
		1	**294-8055**	1	SEAL-O-RING	

M - METRIC PART
Y - SEPARATE ILLUSTRATION

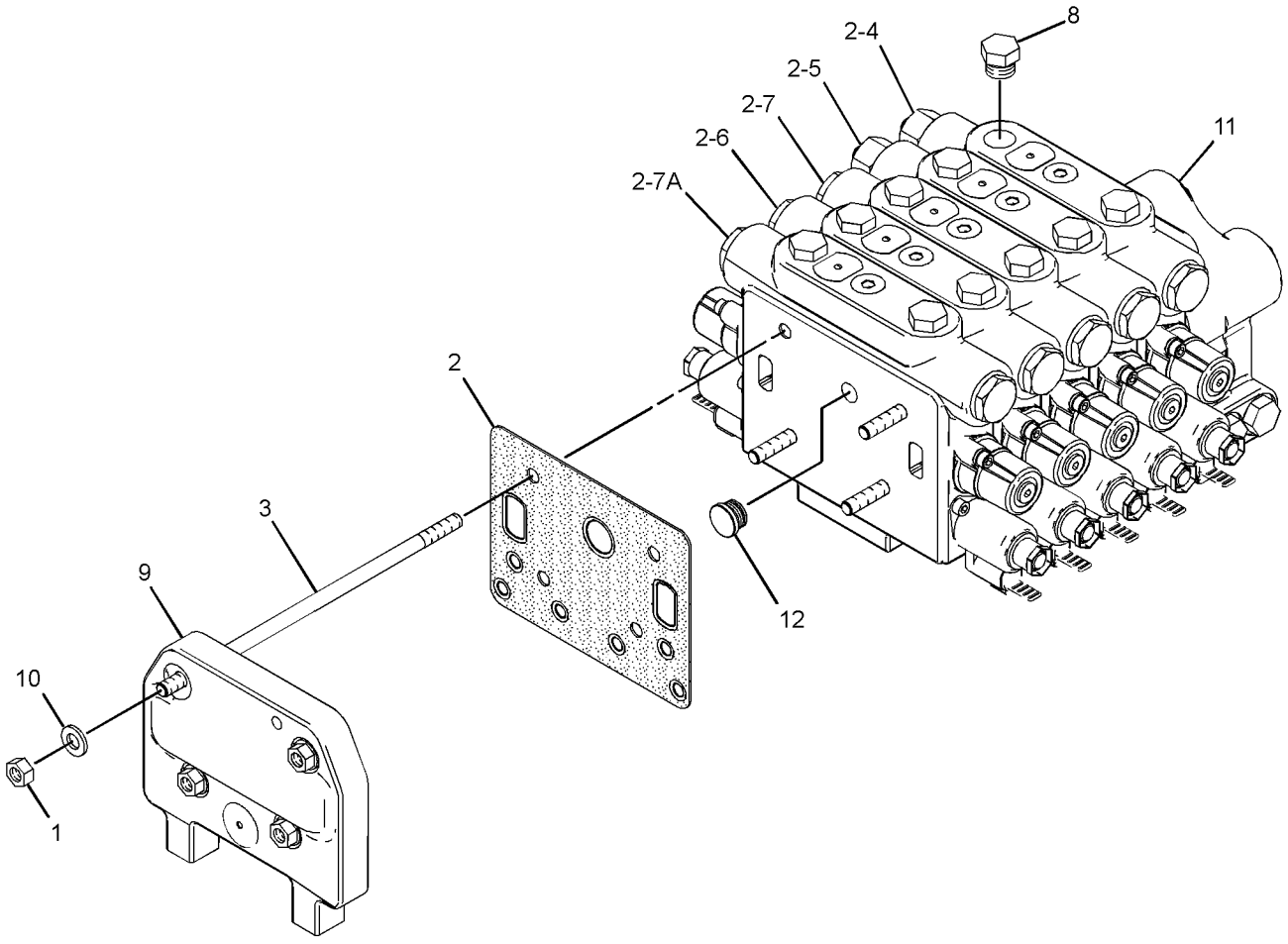

GRAPHIC #1 **<END>** g03700698

382-4426 VALVE GP-BANK 6–REAR

S/N: E9Y1-UP
PART OF 385-7557 CONTROL AR-HYDRAULIC
AN ATTACHMENT

SMCS-5051 **i05811773**

NOTE	REF NO	GRAPHIC REF	PART NUMBER	QTY	PART NAME 1 2 3 4 5 6 (PRODUCT LEVEL)	SEE PAGE
M	1	1	**8T-4133**	4	NUT (M10X1.5-THD)	
	2	1	**372-0918**	7	SEAL-INTEGRAL	
	3	1	**249-5334**	4	ROD	
Y	4	1	**382-3312**	2	VALVE GP-CONTROL (BLADE LIFT)	662
Y	5	1	**382-3308**	1	VALVE GP-CONTROL (ARTICULATION)	660
Y	6	1	**382-3299**	1	VALVE GP-CONTROL (RIPPER)	652
Y	7	1	**382-3297**	1	VALVE GP-CONTROL (WING LIFT)	648
	8	1	**273-1871**	1	COVER	
Y	9	1	**382-3296**	1	VALVE GP-CONTROL (WING TILT)	646
Y	10	1	**388-4281**	1	MANIFOLD GP-VALVE (INLET)	618
	11	1	*292-9221*	1	PLUG AS	
		1	**292-9220**	1	PLUG	
		1	**294-8055**	1	SEAL-O-RING	
	12	1	**8T-4121**	4	WASHER-HARD (11X21X2.5-MM THK)	
	13	1	*366-4700*	12	PLUG AS	
					(EACH INCLUDES)	
		1	**360-3693**	1	PLUG	
		1	**3K-0360**	1	SEAL-O-RING	

M - METRIC PART
Y - SEPARATE ILLUSTRATION

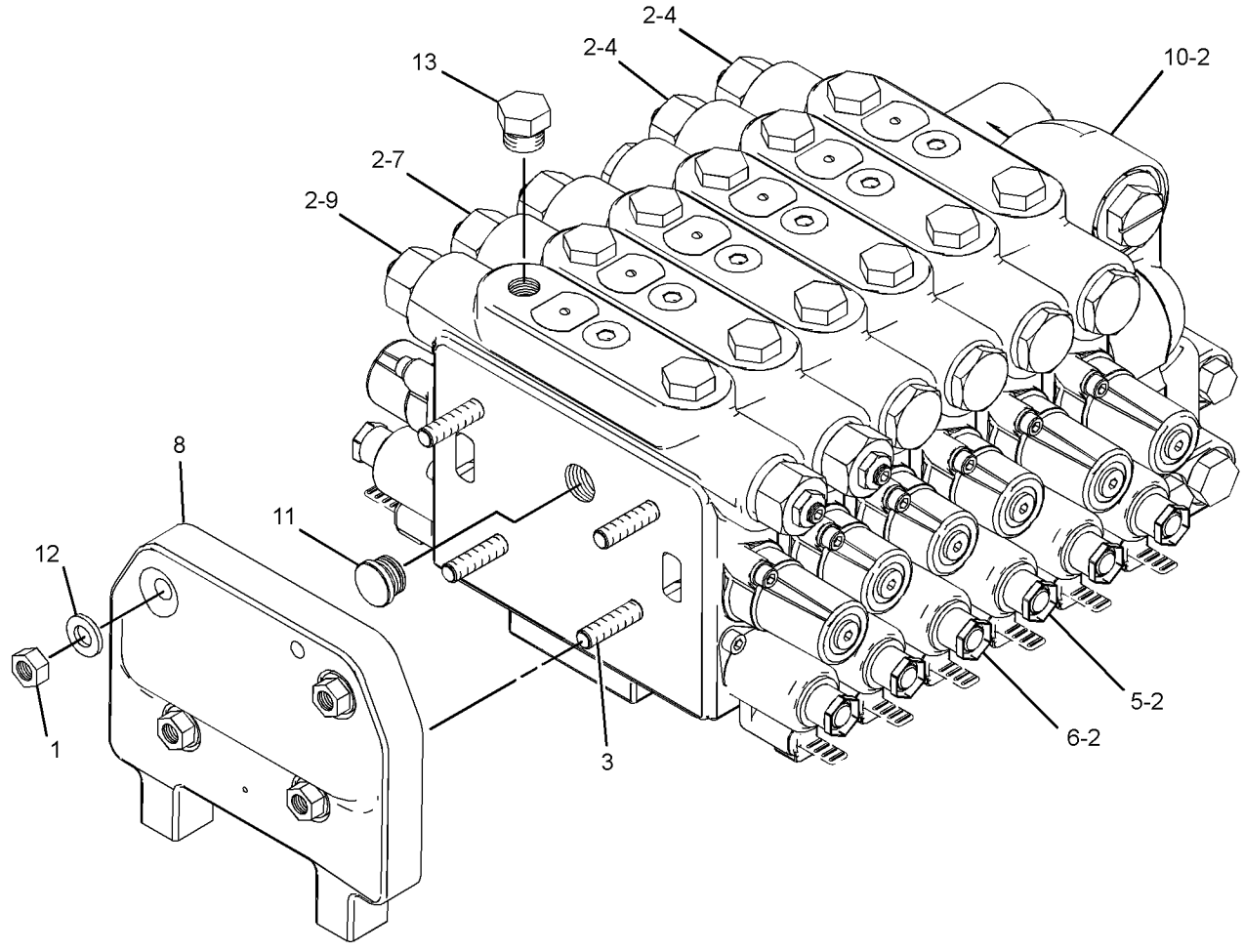

GRAPHIC #1 **<END>** g03682478

382-4417 VALVE GP-BANK 7–FRONT

S/N: E9Y1-UP

PART OF 385-7557 CONTROL AR-HYDRAULIC

AN ATTACHMENT

SMCS-5051 **i05994364**

NOTE	REF NO	GRAPHIC REF	PART NUMBER	QTY	PART NAME 1 2 3 4 5 6 (PRODUCT LEVEL)	SEE PAGE
M	1	1	**8T-4133**	4	NUT (M10X1.5-THD)	
	2	1	**246-3193**	4	ROD	
	3	1	**273-1871**	1	COVER	
	4	1	*292-9221*	1	PLUG AS	
		1	**292-9220**	1	PLUG	
		1	**294-8055**	1	SEAL-O-RING	
	5	1	*366-4700*	14	PLUG AS	
		1	**3K-0360**	1	SEAL-O-RING	
		1	**360-3693**	1	PLUG	
	6	1	**372-0918**	8	SEAL-INTEGRAL	
Y	7	1	**382-3298**	1	VALVE GP-CONTROL (LIFT)	650
Y	8	1	**382-3299**	1	VALVE GP-CONTROL (RIPPER)	652
Y	9	1	**382-3301**	1	VALVE GP-CONTROL (BLADE TIP)	654
Y	10	1	**382-3302**	1	VALVE GP-CONTROL (SIDESHIFT)	656
Y	11	1	**382-3304**	1	VALVE GP-CONTROL (CIRCLE DRIVE)	658
Y	12	1	**382-3313**	1	VALVE GP-CONTROL (CENTERSHIFT)	664
Y	12A	1	**382-3313**	1	VALVE GP-CONTROL (WHEEL LEAN)	664
Y	13	1	**388-4280**	1	MANIFOLD GP-VALVE (INLET)	617
	14	1	**8T-4121**	4	WASHER-HARD (11X21X2.5-MM THK)	

M - METRIC PART
Y - SEPARATE ILLUSTRATION

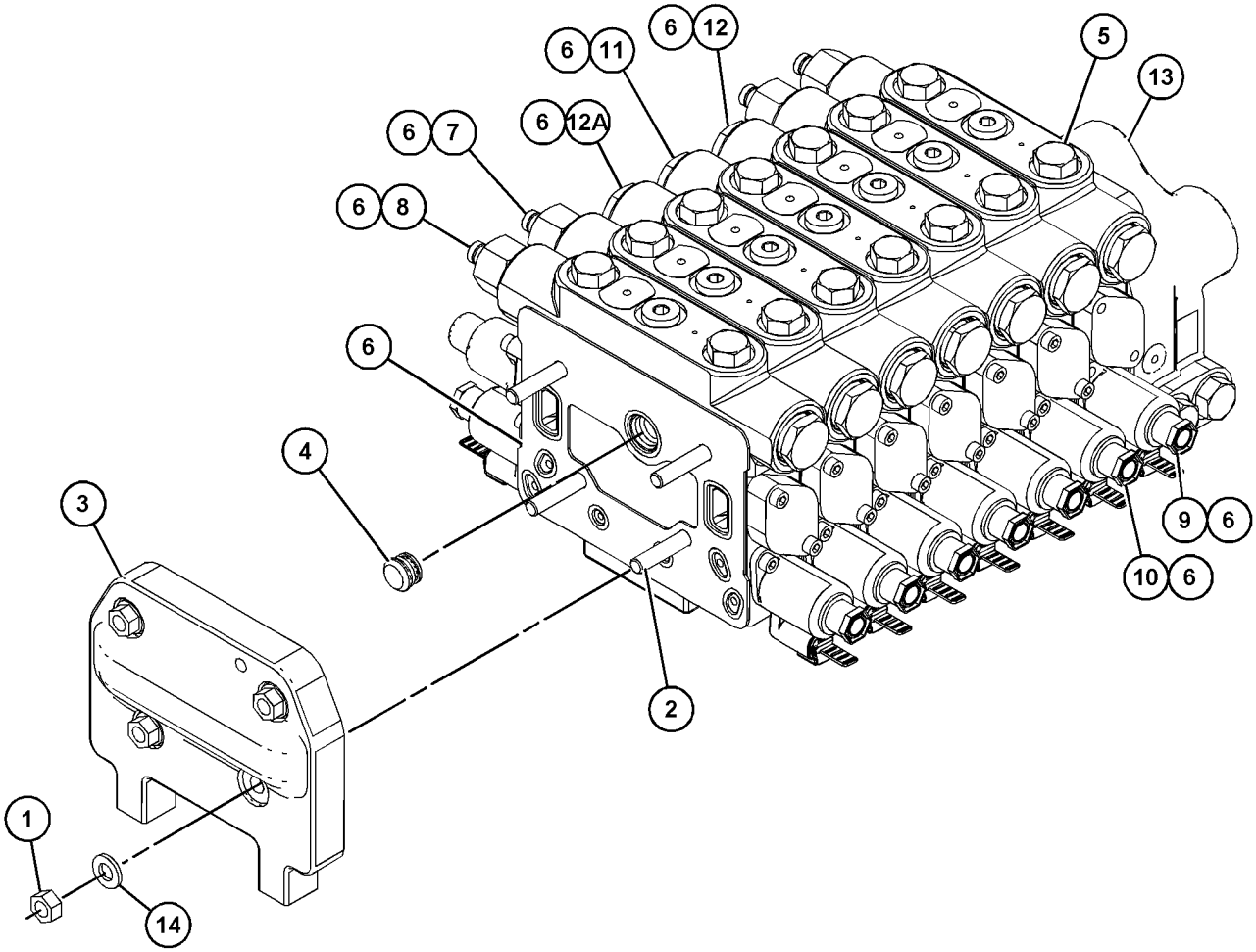

GRAPHIC #1 **<END>** g03805493

126-0747 VALVE GP-BYPASS

S/N: E9Y1-UP

PART OF 366-6124 LINES GP-HYDRAULIC FAN

SMCS-5093 **i05295248**

NOTE	REF NO	GRAPHIC REF	PART NUMBER	QTY	PART NAME 1 2 3 4 5 6 (PRODUCT LEVEL)	SEE PAGE
	1	1	**124-8335**	1	VALVE AS-CONTROL	
	2	1	**126-0748**	1	BODY	
	3	1	*366-4699*	1	PLUG AS	
		1	**360-3692**	1	PLUG	
		1	**3J-1907**	1	SEAL-O-RING (1)	
	4	1	**6V-8218**	1	SEAL-O-RING	

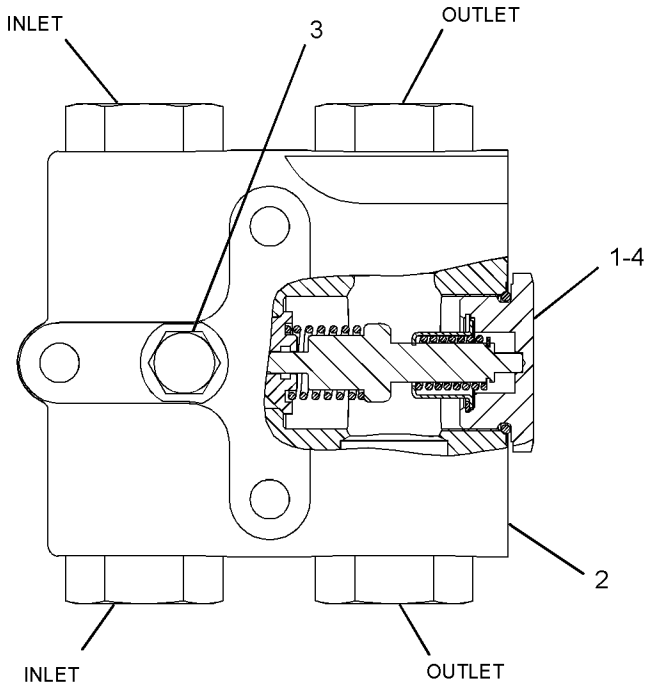

GRAPHIC #1 **<END>** g03363298

366-6687 VALVE GP-CONTROL–PRIORITY

S/N: E9Y1-UP

PART OF 366-6681 VALVE GP-STEERING

SMCS-5051 **i06139770**

NOTE	REF NO	GRAPHIC REF	PART NUMBER	QTY	PART NAME 1 2 3 4 5 6 (PRODUCT LEVEL)	SEE PAGE
	1	1	**1T-0936**	2	PLUG-ORIFICE	
Y	3	1	**252-8038**	1	VALVE GP-PRESSURE REDUCING (PRIMARY STEERING)	667
Y	4	1	**278-1799**	2	VALVE GP-SOLENOID (STEERING)	671
	5	1	**282-8827**	8	PLUG	
	6	1	**361-9760**	1	SPRING	
J	7	1	**363-6520**	1	VALVE GP-RELIEF (STEERING)	
	8	1	*366-4695*	1	PLUG AS	
		1	**3J-1907**	1	SEAL-O-RING	
		1	**360-3679**	1	PLUG-CONNECTOR	
M	9	1	**8T-0267**	2	BOLT-SOCKET HEAD (M6X1X12-MM)	
	11	1	*369-6858*	1	PLUG AS	
		1	**7M-8485**	1	SEAL-O-RING	
		1	**360-3697**	1	PLUG	
	12	1	**372-7875**	1	PLUG	
	13	1	**1P-3700**	1	SEAL-RECTANGULAR	
	14	1	**1P-3702**	1	SEAL-RECTANGULAR	
	15	1	**4J-9535**	3	SEAL-O-RING	
	16	1	**7J-9933**	1	SEAL-O-RING	
	17	1	**7M-8485**	1	SEAL-O-RING	
					AVAILABLE REPAIR KIT(S):	
J			**120-9051**	1	KIT-SEAL	
					(INCLUDES O-RINGS & RINGS)	

J - KIT MARKED J SERVICES PART MARKED J
M - METRIC PART
Y - SEPARATE ILLUSTRATION

366-6687 **VALVE GP-CONTROL (*contd.*)** **i06139770**

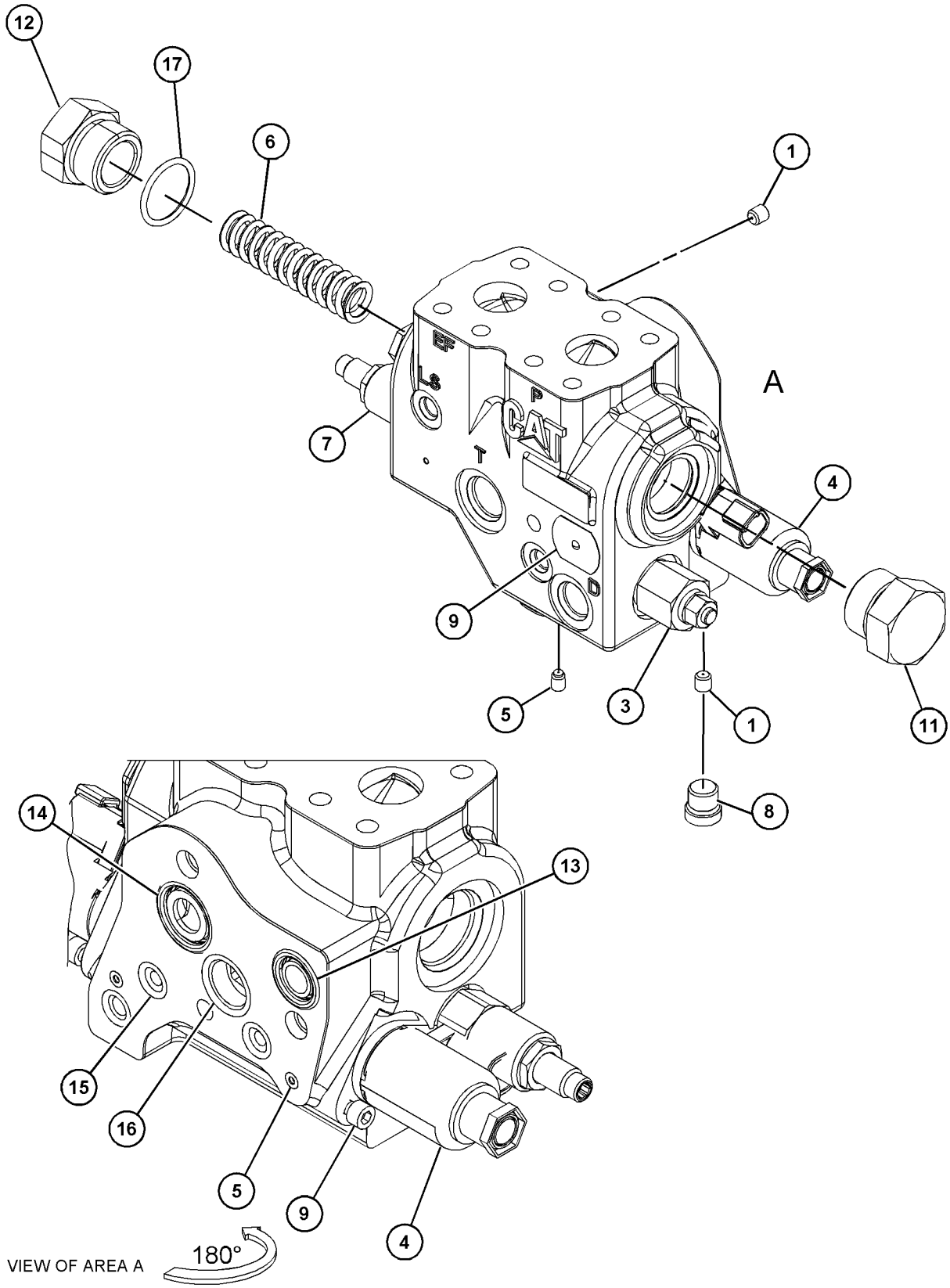

GRAPHIC #1 **<END>** g03849665

366-6693 VALVE GP-CONTROL–STEERING

S/N: E9Y1-UP

PART OF 366-6681 VALVE GP-STEERING

SMCS-5051 **i06139771**

NOTE	REF NO	GRAPHIC REF	PART NUMBER	QTY	PART NAME 1 2 3 4 5 6 (PRODUCT LEVEL)	SEE PAGE
Y	1	1	**278-1799**	2	VALVE GP-SOLENOID (STEERING)	671
	3	1	**282-8827**	10	PLUG	
	4	1	**313-3966**	2	VALVE GP-SHUTTLE (STEERING)	
	5	1	**341-0824**	1	SENSOR AS (SPOOL)	
	6	1	**341-0825**	1	PROBE AS (SPOOL)	
	7	1	**352-6515**	1	VALVE GP-SOLENOID (PILOT)	
		1	**305-1981**	1	COIL AS (24-VOLT)	
	8	1	**361-9761**	1	HOUSING	
	9	1	**363-8120**	1	PLUG	
M	10	1	**8T-0267**	2	BOLT-SOCKET HEAD (M6X1X12-MM)	
	12	1	**366-6702**	2	VALVE GP-RELIEF (STEERING)	
					(EACH INCLUDES)	
		1	**7J-9108**	1	SEAL-O-RING	
	13	1	*367-6002*	2	PLUG AS	
					(EACH INCLUDES)	
		1	**3J-7354**	1	SEAL-O-RING	
		1	**360-3677**	1	PLUG	
	14	1	*367-6003*	2	PLUG AS	
					(EACH INCLUDES)	
		1	**3K-0360**	1	SEAL-O-RING	
		1	**360-3680**	1	PLUG	
	15	1	**370-8976**	1	COVER-SPRING	
	16	1	**377-2121**	1	SPRING	
	17	1	**380-0794**	4	RETAINER	
	18	1	**095-1582**	1	SEAL-O-RING	
M	19	1	**102-7364**	2	BOLT-SOCKET HEAD (M6X1X80-MM)	
	20	1	**2S-4663**	2	SEAL-O-RING	
	21	1	**336-6718**	1	LOCKNUT-FLANGE	
M	22	1	**3T-0849**	4	BOLT-SOCKET HEAD (M6X1X25-MM)	

M - METRIC PART
Y - SEPARATE ILLUSTRATION

366-6693 **VALVE GP-CONTROL (*contd.*)** **i06139771**

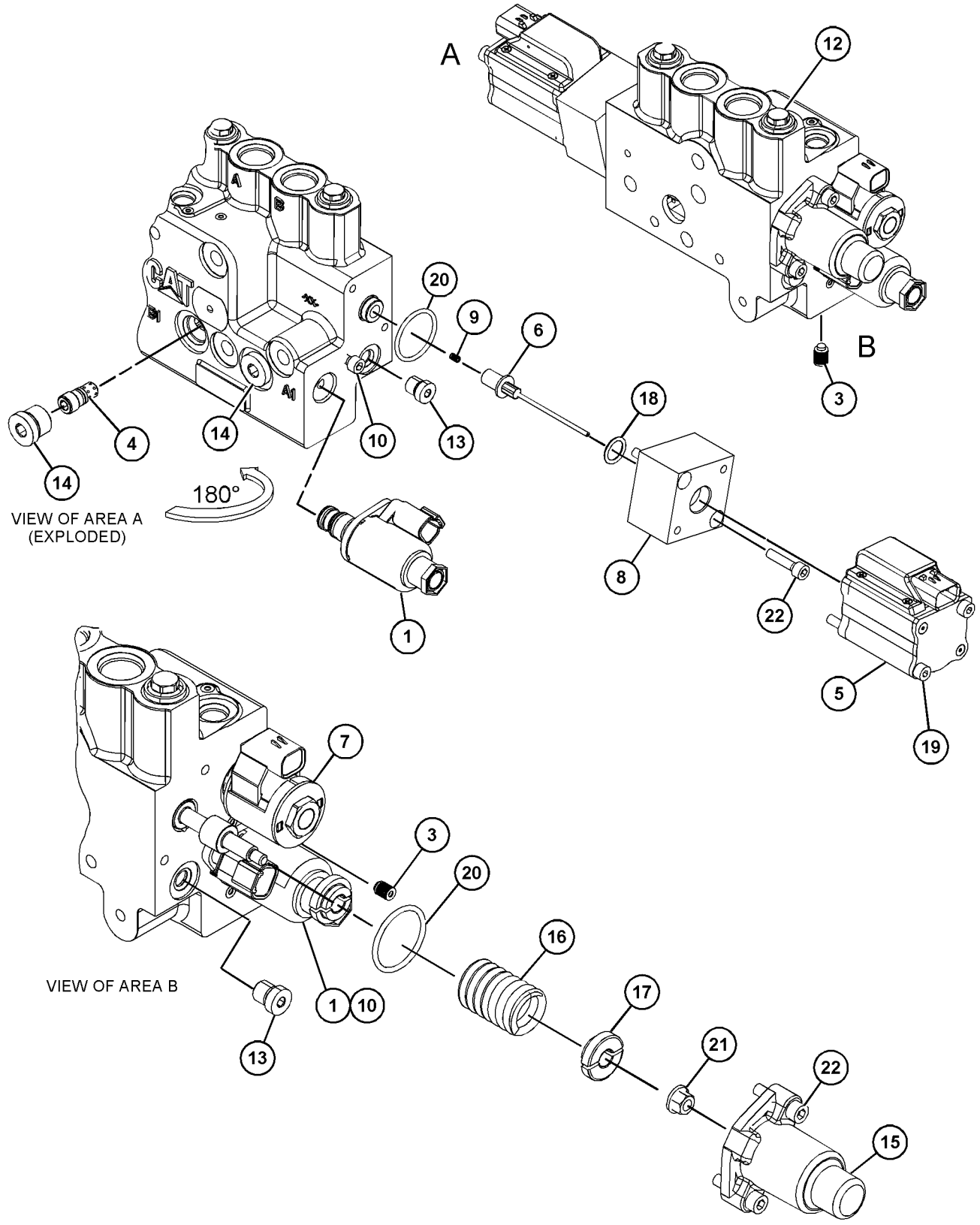

GRAPHIC #1 **<END>** g03827289

382-3296 VALVE GP-CONTROL—WING TILT

S/N: E9Y1-UP
PART OF 382-4426 VALVE GP-BANK 6
AN ATTACHMENT

SMCS-5051 **i05373070**

NOTE	REF NO	GRAPHIC REF	PART NUMBER	QTY	PART NAME 1 2 3 4 5 6 (PRODUCT LEVEL)	SEE PAGE
M	1	1	**8T-0267**	2	BOLT-SOCKET HEAD (M6X1X12-MM)	
	2	1	**6E-3007**	1	SPRING	
	3	1	**106-3659**	1	PISTON	
	4	1	**212-4961**	1	SPRING	
	5	1	**242-9264**	1	PLUG-ORIFICE	
	6	1	**243-2965**	1	SPOOL	
	7	1	**244-2579**	1	PLUG	
Y	8	1	**278-1799**	2	VALVE GP-SOLENOID (WING TILT)	671
J	9	1	**318-3040**	2	VALVE GP-CHECK & RELIEF (LINE, TILT)	
	10	1	*367-6002*	1	PLUG AS	
		1	**3J-7354**	1	SEAL-O-RING	
		1	**360-3677**	1	PLUG	
	11	1	*367-6003*	1	PLUG AS	
		1	**3K-0360**	1	SEAL-O-RING	
		1	**360-3680**	1	PLUG	
	12	1	**370-8976**	1	COVER-SPRING	
	14	1	**380-0794**	4	RETAINER	
	18	1	**2S-4663**	2	SEAL-O-RING	
	19	1	**336-6718**	1	LOCKNUT-FLANGE	
	21	1	**3K-0360**	1	SEAL-O-RING	
M	22	1	**3T-0849**	4	BOLT-SOCKET HEAD (M6X1X25-MM)	
	23	1	**4J-7533**	1	SEAL-O-RING	
	24	1	**5B-9318**	1	BALL	
					PARTS SHOWN IN GRAPHIC(S) WITHOUT A REFERENCE NUMBER ARE NOT SERVICED SEPARATELY	
					AVAILABLE REPAIR KIT(S):	
J			**325-2588**	1	KIT-SEAL	
					(KIT INCLUDES O-RINGS & BACKUP RINGS)	

J - KIT MARKED J SERVICE PART(S) MARKED J
M - METRIC PART
Y - SEPARATE ILLUSTRATION

382-3296 **VALVE GP-CONTROL (*contd.*)** **i05373070**

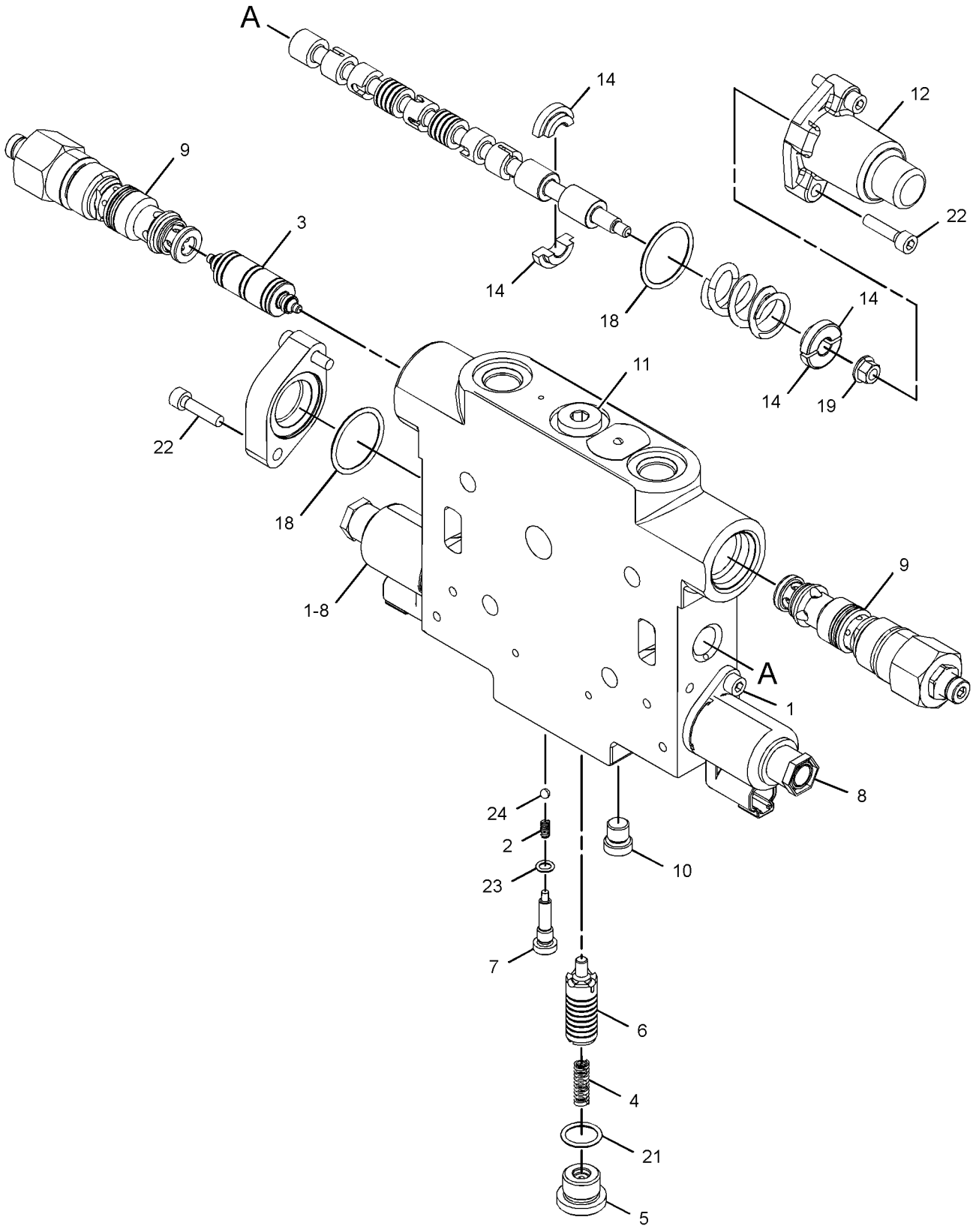

GRAPHIC #1 **<END>** g03404048

382-3297 VALVE GP-CONTROL–WING LIFT

S/N: E9Y1-UP
PART OF 382-4426 VALVE GP-BANK 6
AN ATTACHMENT

SMCS-5051 **i05373085**

NOTE	REF NO	GRAPHIC REF	PART NUMBER	QTY	PART NAME 1 2 3 4 5 6 (PRODUCT LEVEL)	SEE PAGE
M	1	1	**8T-0267**	2	BOLT-SOCKET HEAD (M6X1X12-MM)	
	2	1	**6E-3007**	1	SPRING	
	3	1	**106-3659**	1	PISTON	
	4	1	**212-4961**	1	SPRING	
	5	1	**242-9264**	1	PLUG-ORIFICE	
	6	1	**243-2965**	1	SPOOL	
	7	1	**244-2579**	1	PLUG	
Y	8	1	**278-1799**	2	VALVE GP-SOLENOID (WING TILT)	671
J	9	1	**318-3040**	2	VALVE GP-CHECK & RELIEF (LINE, LIFT)	
	10	1	*367-6002*	1	PLUG AS	
		1	**3J-7354**	1	SEAL-O-RING	
		1	**360-3677**	1	PLUG	
	11	1	*367-6003*	1	PLUG AS	
		1	**3K-0360**	1	SEAL-O-RING	
		1	**360-3680**	1	PLUG	
	12	1	**370-8976**	1	COVER-SPRING	
	15	1	**380-0794**	4	RETAINER	
	19	1	**2S-4663**	2	SEAL-O-RING	
	20	1	**336-6718**	1	LOCKNUT-FLANGE	
	21	1	**3K-0360**	1	SEAL-O-RING	
M	22	1	**3T-0849**	4	BOLT-SOCKET HEAD (M6X1X25-MM)	
	23	1	**4J-7533**	1	SEAL-O-RING	
	24	1	**5B-9318**	1	BALL	
					PARTS SHOWN IN GRAPHIC(S) WITHOUT A REFERENCE NUMBER ARE NOT SERVICED SEPARATELY	
					AVAILABLE REPAIR KIT(S):	
J			**325-2588**	1	KIT-SEAL (WING LIFT)	
					(KIT INCLUDES O-RINGS & BACKUP RINGS)	

J - KIT MARKED J SERVICES PART(S) MARKED J
M - METRIC PART
Y - SEPARATE ILLUSTRATION

382-3297 **VALVE GP-CONTROL (*contd.*)** **i05373085**

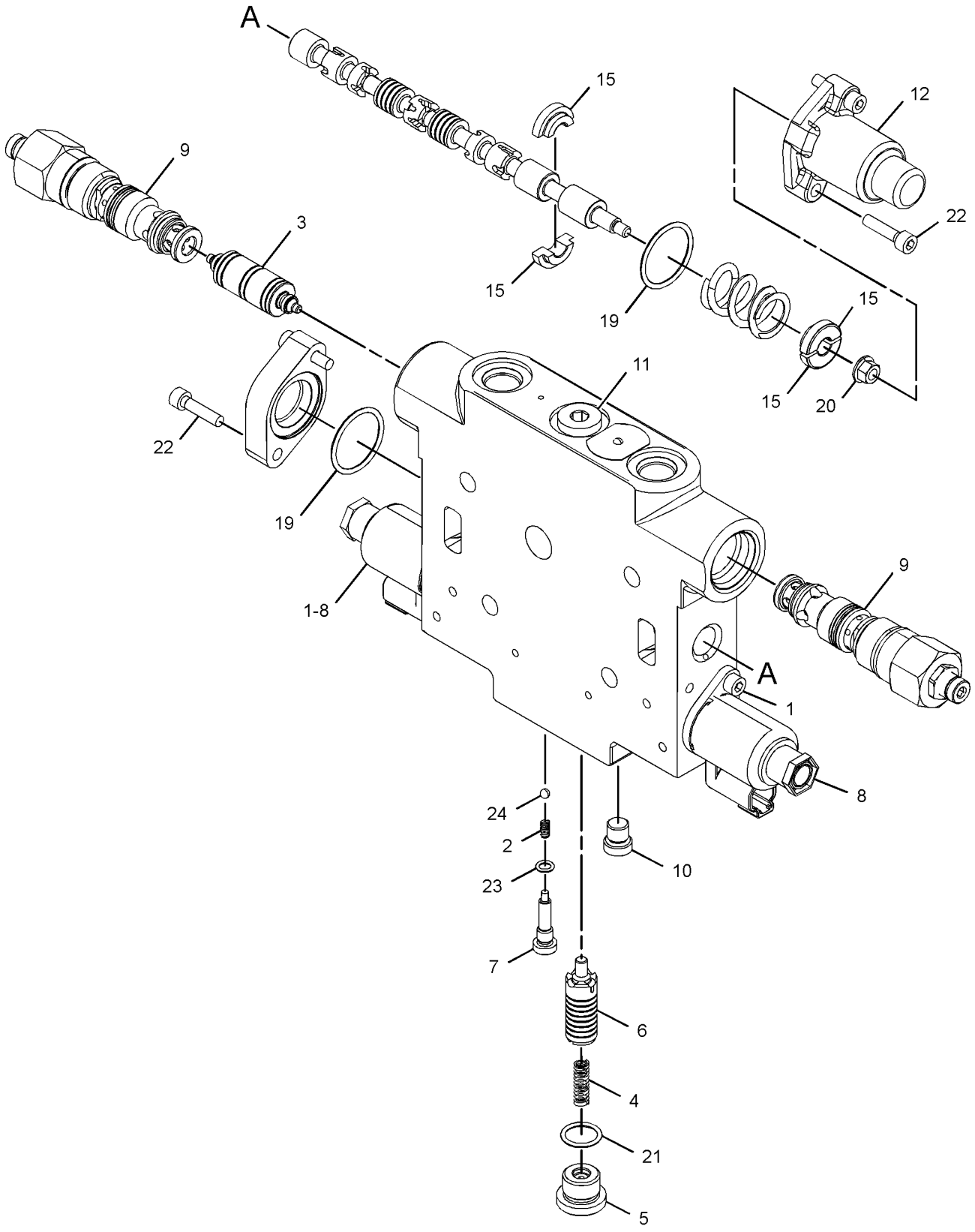

GRAPHIC #1 **<END>** g03404155

382-3298 VALVE GP-CONTROL–PLOW LIFT

S/N: E9Y1-UP
PART OF 382-4417 VALVE GP-BANK 7
AN ATTACHMENT

SMCS-5051 **i05373178**

NOTE	REF NO	GRAPHIC REF	PART NUMBER	QTY	PART NAME 1 2 3 4 5 6 (PRODUCT LEVEL)	SEE PAGE
	1	1	**6E-3007**	1	SPRING	
	2	1	**106-3660**	2	PISTON	
	3	1	**212-4961**	1	SPRING	
	4	1	**242-9264**	1	PLUG-ORIFICE	
	5	1	**243-2965**	1	SPOOL	
	6	1	**244-2579**	1	PLUG	
Y	7	1	**278-1799**	2	VALVE GP-SOLENOID (BULLDOZER LIFT, PLOW)	671
J	8	1	**318-3052**	1	VALVE GP-CHECK & RELIEF (BULLDOZER LIFT, PLOW)	
J	9	1	**318-3115**	1	VALVE GP-CHECK (BULLDOZER LIFT, PLOW)	
	10	1	*367-6002*	1	PLUG AS	
		1	**360-3677**	1	PLUG	
		1	**3J-7354**	1	SEAL-O-RING	
	11	1	*367-6003*	1	PLUG AS	
		1	**360-3680**	1	PLUG	
		1	**3K-0360**	1	SEAL-O-RING	
	12	1	**370-8976**	1	COVER-SPRING	
	15	1	**380-0794**	4	RETAINER	
	16	1	**380-0820**	1	SPRING	
	17	1	**380-0821**	1	SPRING	
	20	1	**2S-4663**	2	SEAL-O-RING	
	21	1	**336-6718**	1	LOCKNUT-FLANGE	
	22	1	**3K-0360**	1	SEAL-O-RING	
M	23	1	**3T-0849**	4	BOLT-SOCKET HEAD (M6X1X25-MM)	
	25	1	**4J-7533**	1	SEAL-O-RING	
	26	1	**5B-9318**	1	BALL	
M	27	1	**8T-0267**	2	BOLT-SOCKET HEAD (M6X1X12-MM)	
					PARTS SHOWN IN GRAPHIC(S) WITHOUT A REFERENCE NUMBER ARE NOT SERVICED SEPARATELY	
					AVAILABLE REPAIR KIT(S):	
J			**325-2588**	1	KIT-SEAL	
					(INCLUDES SEAL-O-RINGS & RING-BACKUPS)	

J - KIT MARKED J SERVICES PARTS MARKED J
M - METRIC PART
Y - SEPARATE ILLUSTRATION

382-3298 **VALVE GP-CONTROL (*contd.*)** **i05373178**

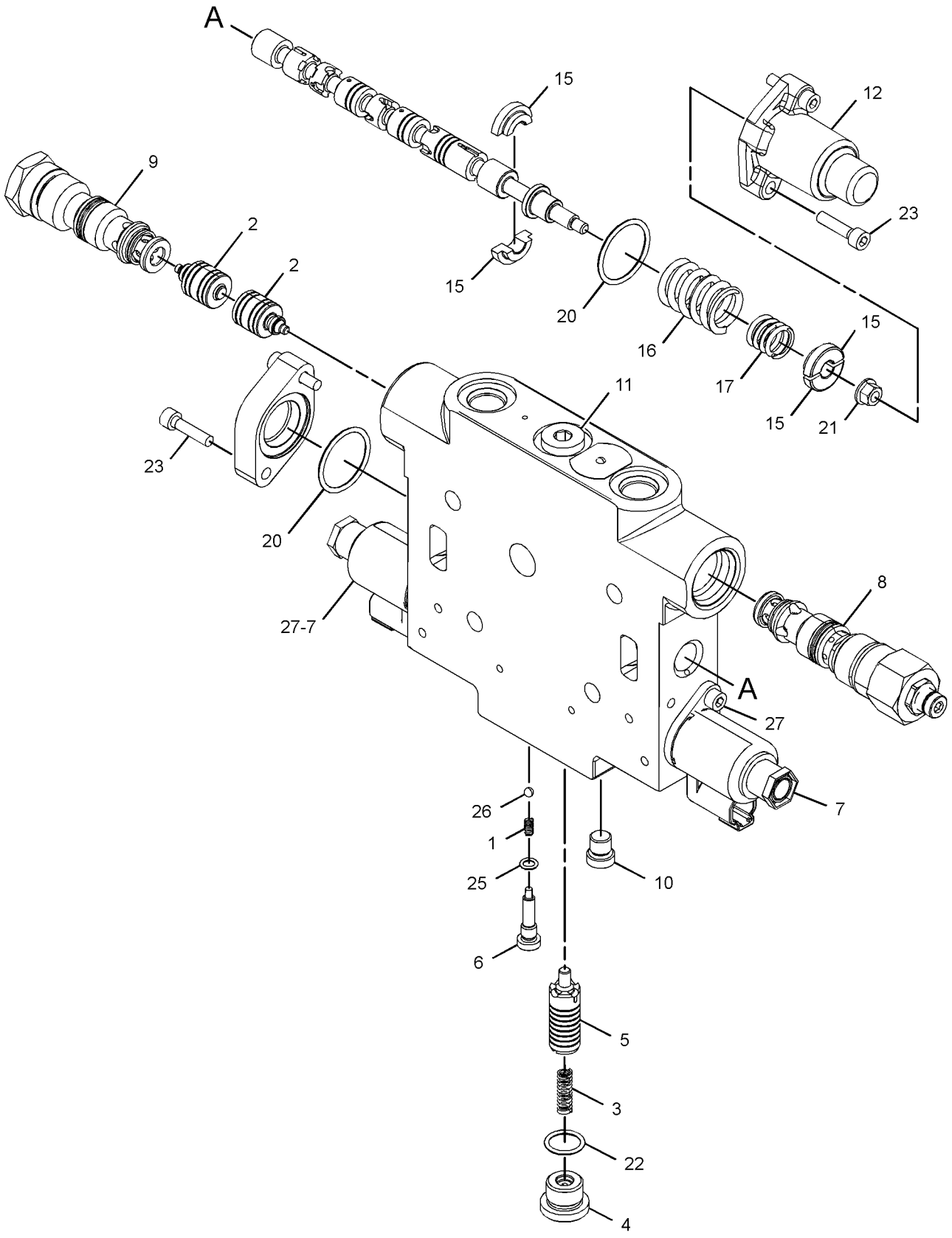

GRAPHIC #1 **<END>** g03404197

382-3299 VALVE GP-CONTROL–RIPPER

S/N: E9Y1-UP

PART OF 382-4425 VALVE GP-BANK 4, 382-4426 VALVE GP-BANK 6, 382-4417 VALVE GP-BANK 7 AN ATTACHMENT

SMCS-5051 **i05571353**

NOTE	REF NO	GRAPHIC REF	PART NUMBER	QTY	PART NAME 1 2 3 4 5 6 (PRODUCT LEVEL)	SEE PAGE
M	1	1	**8T-0267**	2	BOLT-SOCKET HEAD (M6X1X12-MM)	
	2	1	**6E-3007**	1	SPRING	
	3	1	**106-3659**	1	PISTON	
	4	1	**212-4961**	1	SPRING	
	5	1	**242-9264**	1	PLUG-ORIFICE	
	6	1	**243-2965**	1	SPOOL	
	7	1	**244-2579**	1	PLUG	
Y	8	1	**278-1799**	2	VALVE GP-SOLENOID (RIPPER)	671
J	9	1	**318-3040**	1	VALVE GP-CHECK & RELIEF (RIPPER)	
J	10	1	**318-3115**	1	VALVE GP-CHECK	
		1	**6V-5326**	1	SEAL-O-RING	
		1	**6V-6580**	1	SEAL-O-RING	
		1	**9X-7745**	1	SEAL-O-RING	
	11	1	*367-6002*	1	PLUG AS	
		1	**3J-7354**	1	SEAL-O-RING	
		1	**360-3677**	1	PLUG	
	12	1	*367-6003*	1	PLUG AS	
		1	**3K-0360**	1	SEAL-O-RING	
		1	**360-3680**	1	PLUG	
	13	1	**370-8976**	1	COVER-SPRING	
	16	1	**380-0794**	4	RETAINER	
	20	1	**2S-4663**	2	SEAL-O-RING	
	21	1	**336-6718**	1	LOCKNUT-FLANGE	
	22	1	**3K-0360**	1	SEAL-O-RING	
M	23	1	**3T-0849**	4	BOLT-SOCKET HEAD (M6X1X25-MM)	
	24	1	**4J-7533**	1	SEAL-O-RING	
	25	1	**5B-9318**	1	BALL	
					PARTS SHOWN IN GRAPHIC(S) WITHOUT A REFERENCE NUMBER ARE NOT SERVICED SEPARATELY	
					AVAILABLE REPAIR KIT(S):	
			325-2588		KIT-SEAL (PLOW ANGLE)	
					(KIT INCLUDES O-RING SEALS & BACKUP RING)	

J - KIT MARKED J SERVICES PARTS MARKED J
M - METRIC PART
Y - SEPARATE ILLUSTRATION

382-3299 **VALVE GP-CONTROL (*contd.*)** **i05571353**

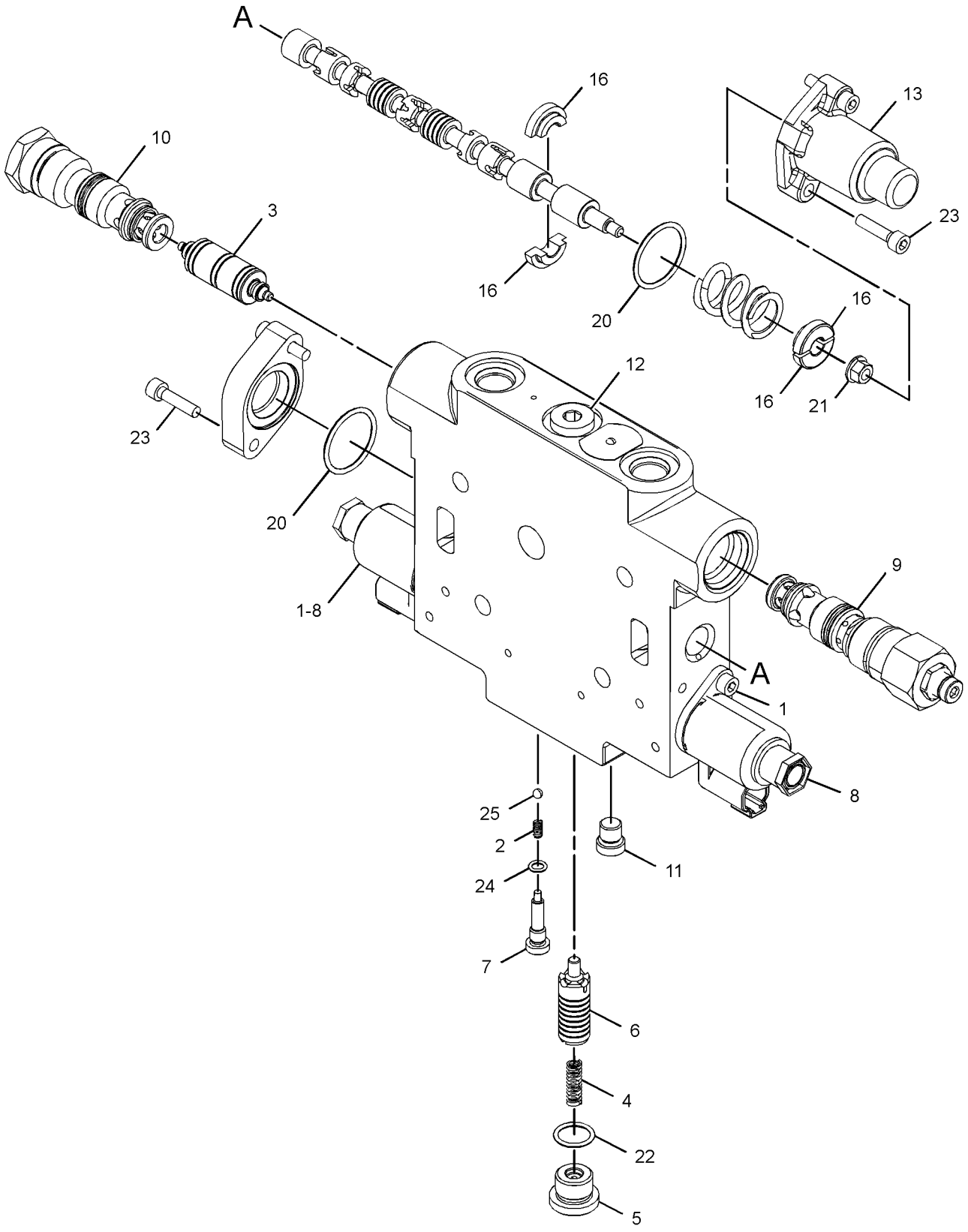

GRAPHIC #1 **<END>** g03404004

382-3301 VALVE GP-CONTROL–BLADE TIP

S/N: E9Y1-UP

PART OF 382-4415 VALVE GP-BANK 5, 382-4417 VALVE GP-BANK 7

AN ATTACHMENT

SMCS-5051 **i05373116**

NOTE	REF NO	GRAPHIC REF	PART NUMBER	QTY	PART NAME 1 2 3 4 5 6 (PRODUCT LEVEL)	SEE PAGE
M	1	1	**8T-0267**	2	BOLT-SOCKET HEAD (M6X1X12-MM)	
	2	1	**6E-3007**	1	SPRING	
	3	1	**106-3659**	1	PISTON	
	4	1	**212-4961**	1	SPRING	
	5	1	**242-9264**	1	PLUG-ORIFICE	
	6	1	**243-2965**	1	SPOOL	
	7	1	**244-2579**	1	PLUG	
Y	8	1	**278-1799**	2	VALVE GP-SOLENOID (BLADE TIP)	671
J	9	1	**318-3040**	1	VALVE GP-CHECK & RELIEF (BLADE TIP)	
J	10	1	**318-3115**	1	VALVE GP-CHECK (BLADE TIP)	
		1	**6V-5326**	1	SEAL-O-RING	
		1	**6V-6580**	1	SEAL-O-RING	
		1	**9X-7745**	1	SEAL-O-RING	
	11	1	*367-6002*	1	PLUG AS	
		1	**3J-7354**	1	SEAL-O-RING	
		1	**360-3677**	1	PLUG	
	12	1	*367-6003*	1	PLUG AS	
		1	**3K-0360**	1	SEAL-O-RING	
		1	**360-3680**	1	PLUG	
	13	1	**370-8976**	1	COVER-SPRING	
	16	1	**380-0794**	4	RETAINER	
	20	1	**2S-4663**	2	SEAL-O-RING	
	21	1	**336-6718**	1	LOCKNUT-FLANGE	
	22	1	**3K-0360**	1	SEAL-O-RING	
M	23	1	**3T-0849**	4	BOLT-SOCKET HEAD (M6X1X25-MM)	
	24	1	**4J-7533**	1	SEAL-O-RING	
	25	1	**5B-9318**	1	BALL	
					AVAILABLE REPAIR KIT(S):	
J			**325-2588**		KIT-SEAL (BLADE TIP)	
					(INCLUDES SEAL RINGS & BACKUP RINGS)	

J - KIT MARKED J SERVICES PARTS MARKED J
M - METRIC PART
Y - SEPARATE ILLUSTRATION

382-3301 **VALVE GP-CONTROL (*contd.*)** **i05373116**

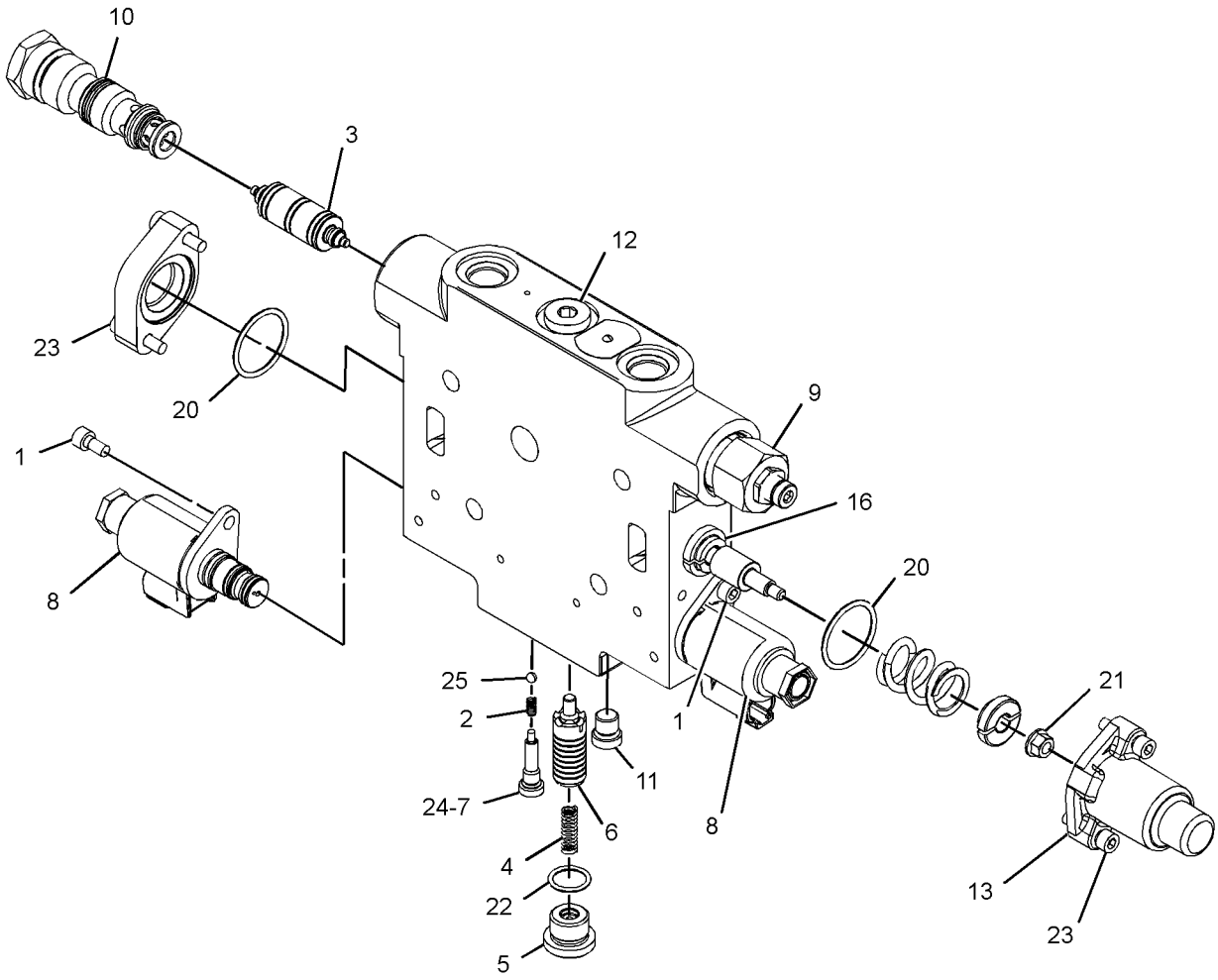

GRAPHIC #1 **<END>** g03402424

382-3302 VALVE GP-CONTROL—SIDE SHIFT

S/N: E9Y1-UP

PART OF 382-4415 VALVE GP-BANK 5, 382-4417 VALVE GP-BANK 7

AN ATTACHMENT

SMCS-5051 **i05389740**

NOTE	REF NO	GRAPHIC REF	PART NUMBER	QTY	PART NAME 1 2 3 4 5 6 (PRODUCT LEVEL)	SEE PAGE
M	1	1	**8T-0267**	2	BOLT-SOCKET HEAD (M6X1X12-MM)	
	2	1	**6E-3007**	1	SPRING	
	3	1	**106-3659**	1	PISTON	
	4	1	**212-4961**	1	SPRING	
	5	1	**242-9264**	1	PLUG-ORIFICE	
	6	1	**243-2965**	1	SPOOL	
	7	1	**244-2579**	1	PLUG	
Y	8	1	**278-1799**	2	VALVE GP-SOLENOID (SIDESHIFT)	671
J	9	1	**318-3040**	1	VALVE GP-CHECK & RELIEF (SIDESHIFT)	
J	10	1	**318-3115**	1	VALVE GP-CHECK (SIDESHIFT)	
	11	1	*367-6002*	1	PLUG AS	
		1	**3J-7354**	1	SEAL-O-RING	
		1	**360-3677**	1	PLUG	
	12	1	*367-6003*	1	PLUG AS	
		1	**3K-0360**	1	SEAL-O-RING	
		1	**360-3680**	1	PLUG	
	13	1	**370-8976**	1	COVER-SPRING	
	16	1	**380-0794**	4	RETAINER	
	17	1	**380-0819**	1	SPRING	
	20	1	**2S-4663**	2	SEAL-O-RING	
	21	1	**336-6718**	1	LOCKNUT-FLANGE	
	22	1	**3K-0360**	1	SEAL-O-RING	
M	23	1	**3T-0849**	4	BOLT-SOCKET HEAD (M6X1X25-MM)	
	24	1	**4J-7533**	1	SEAL-O-RING	
	25	1	**5B-9318**	1	BALL	
					AVAILABLE REPAIR KIT(S):	
J			**325-2588**	1	KIT-SEAL	
					(INCLUDES RINGS & SEALS)	

J - KIT MARKED J SERVICES PARTS MARKED J
M - METRIC PART
Y - SEPARATE ILLUSTRATION

382-3302 **VALVE GP-CONTROL (*contd.*)** **i05389740**

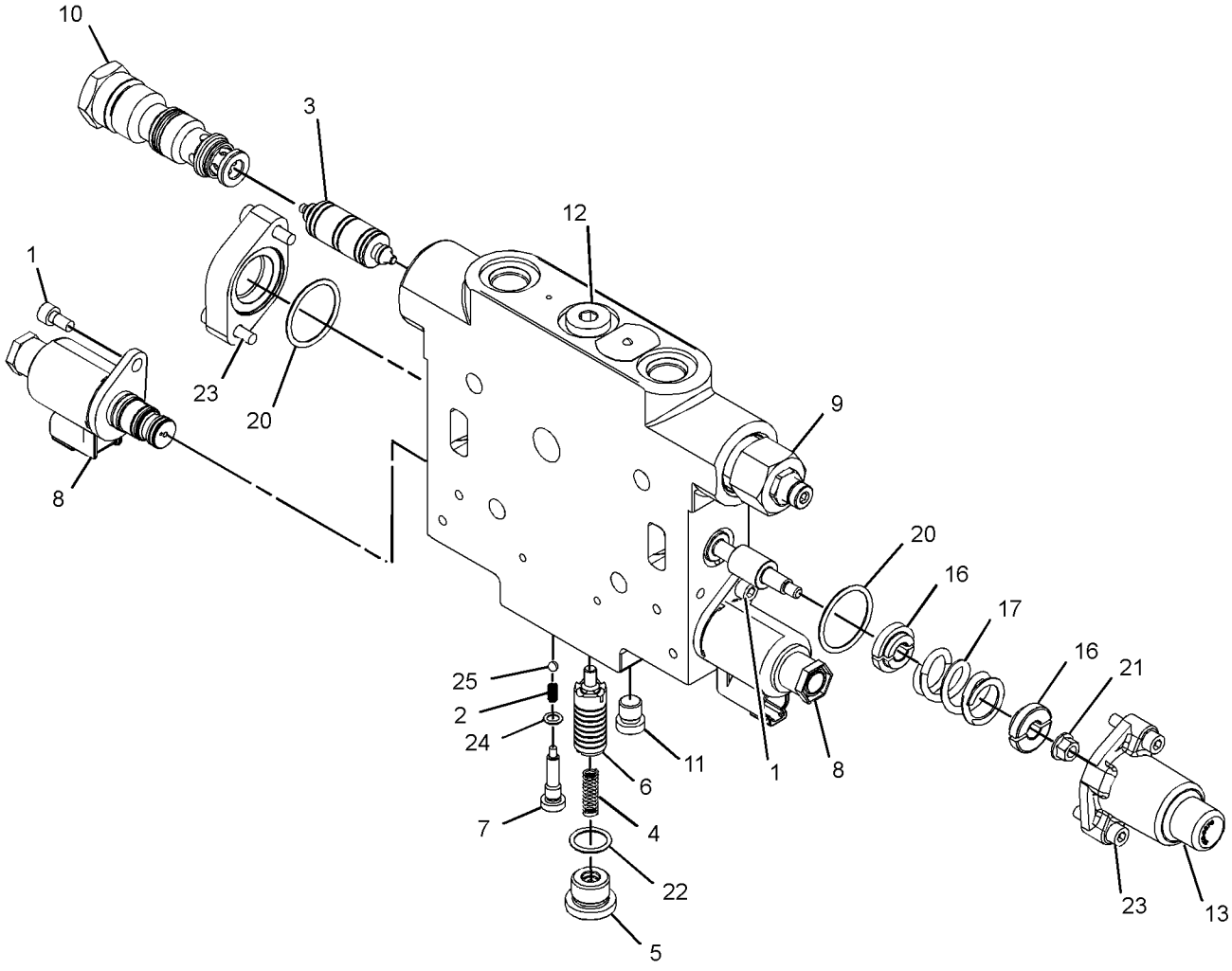

GRAPHIC #1 **<END>** g03412772

382-3304 VALVE GP-CONTROL—CIRCLE DRIVE

S/N: E9Y1-UP

PART OF 382-4415 VALVE GP-BANK 5, 382-4417 VALVE GP-BANK 7

AN ATTACHMENT

SMCS-5051 **i05389739**

NOTE	REF NO	GRAPHIC REF	PART NUMBER	QTY	PART NAME 1 2 3 4 5 6 (PRODUCT LEVEL)	SEE PAGE
M	1	1	**8T-0267**	2	BOLT-SOCKET HEAD (M6X1X12-MM)	
	2	1	**6E-3007**	1	SPRING	
	3	1	**6L-9716**	1	PLUG-PIPE	
	4	1	**106-3659**	1	PISTON	
	5	1	**212-4961**	1	SPRING	
	6	1	**242-9264**	1	PLUG-ORIFICE	
	7	1	**243-2965**	1	SPOOL	
	8	1	**244-2579**	1	PLUG	
Y	9	1	**278-1799**	2	VALVE GP-SOLENOID (CIRCLE DRIVE)	671
J	10	1	**304-9654**	2	PLUG AS	
	11	1	*367-6002*	1	PLUG AS	
		1	**3J-7354**	1	SEAL-O-RING	
		1	**360-3677**	1	PLUG	
	12	1	*367-6003*	1	PLUG AS	
		1	**3K-0360**	1	SEAL-O-RING	
		1	**360-3680**	1	PLUG	
	13	1	**370-8976**	1	COVER-SPRING	
	16	1	**380-0794**	4	RETAINER	
	17	1	**380-0819**	1	SPRING	
	20	1	**2S-4663**	2	SEAL-O-RING	
	21	1	**336-6718**	1	LOCKNUT-FLANGE	
	22	1	**3K-0360**	1	SEAL-O-RING	
M	23	1	**3T-0849**	4	BOLT-SOCKET HEAD (M6X1X25-MM)	
	24	1	**4J-7533**	1	SEAL-O-RING	
	25	1	**5B-9318**	1	BALL	
					AVAILABLE REPAIR KIT(S):	
J			**325-2588**	1	KIT-SEAL	
					(INCLUDES RINGS & SEALS)	

J - KIT MARKED J SERVICES PARTS MARKED J
M - METRIC PART
Y - SEPARATE ILLUSTRATION

382-3304 **VALVE GP-CONTROL (*contd.*)** **i05389739**

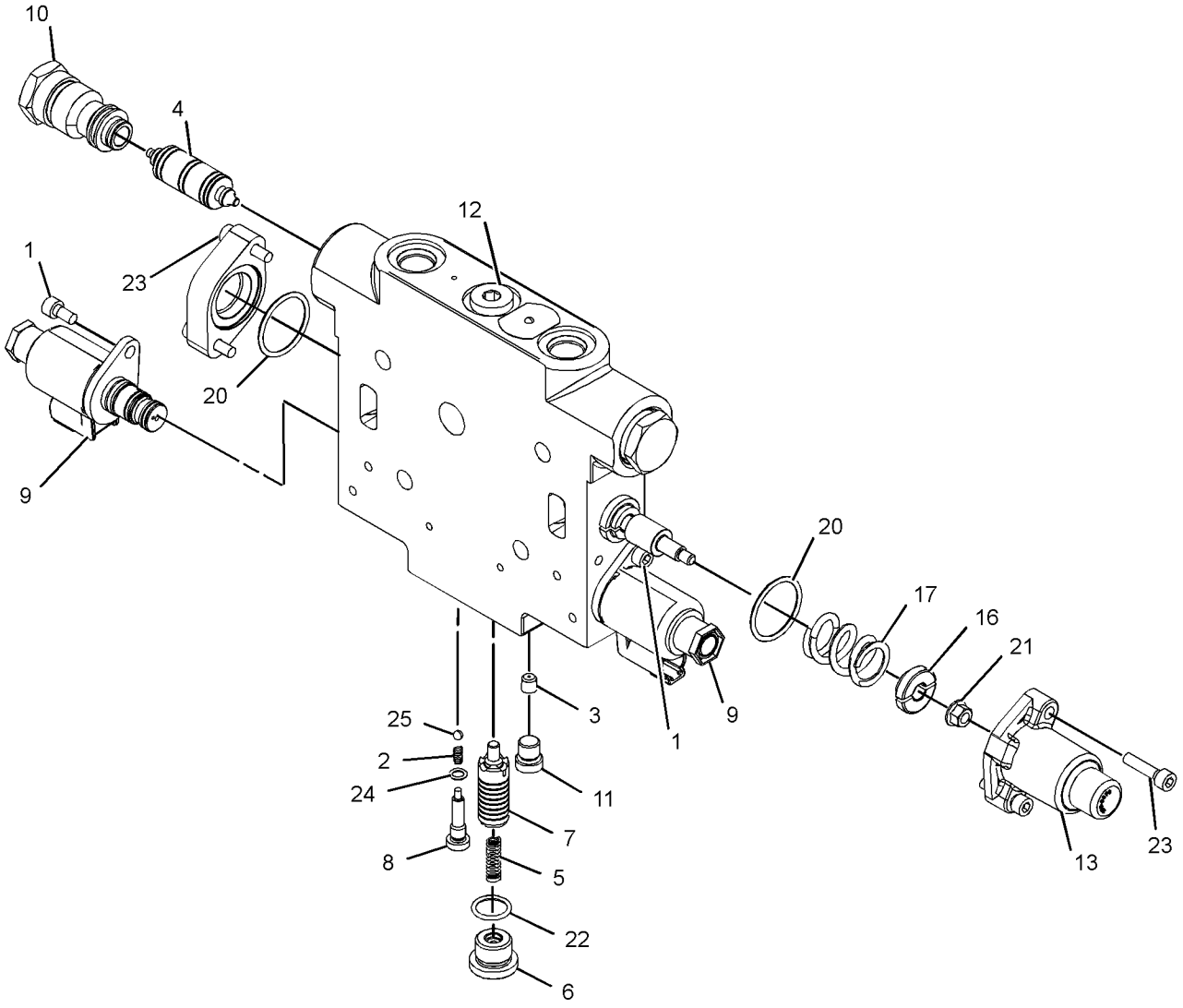

GRAPHIC #1 **<END>** g03412708

382-3308 VALVE GP-CONTROL—ARTICULATION

S/N: E9Y1-UP

PART OF 382-4425 VALVE GP-BANK 4, 382-4426 VALVE GP-BANK 6

AN ATTACHMENT

SMCS-5051 **i05389738**

NOTE	REF NO	GRAPHIC REF	PART NUMBER	QTY	PART NAME 1 2 3 4 5 6 (PRODUCT LEVEL)	SEE PAGE
M	1	1	**8T-0267**	2	BOLT-SOCKET HEAD (M6X1X12-MM)	
	2	1	**6E-3007**	1	SPRING	
	3	1	**106-3659**	1	PISTON	
	4	1	**212-4961**	1	SPRING	
	5	1	**242-9264**	1	PLUG-ORIFICE	
	6	1	**243-2965**	1	SPOOL	
	7	1	**244-2579**	1	PLUG	
Y	8	1	**278-1799**	2	VALVE GP-SOLENOID (ARTICULATION)	671
J	9	1	**321-6908**	2	VALVE GP-CHECK (ARTICULATION)	
	10	1	*367-6002*	1	PLUG AS	
		1	**3J-7354**	1	SEAL-O-RING	
		1	**360-3677**	1	PLUG	
	11	1	*367-6003*	1	PLUG AS	
		1	**3K-0360**	1	SEAL-O-RING	
		1	**360-3680**	1	PLUG	
	12	1	**370-8976**	1	COVER-SPRING	
	15	1	**380-0794**	4	RETAINER	
	16	1	**380-0819**	1	SPRING	
	19	1	**2S-4663**	2	SEAL-O-RING	
	20	1	**336-6718**	1	LOCKNUT-FLANGE	
	21	1	**3K-0360**	1	SEAL-O-RING	
M	22	1	**3T-0849**	4	BOLT-SOCKET HEAD (M6X1X25-MM)	
	23	1	**4J-7533**	1	SEAL-O-RING	
	24	1	**5B-9318**	1	BALL	
					AVAILABLE REPAIR KIT(S):	
J			**325-2588**	1	KIT-SEAL	
					(INCLUDES RINGS & SEALS)	

J - KIT MARKED J SERVICES PARTS MARKED J
M - METRIC PART
Y - SEPARATE ILLUSTRATION

382-3308 **VALVE GP-CONTROL (*contd.*)** **i05389738**

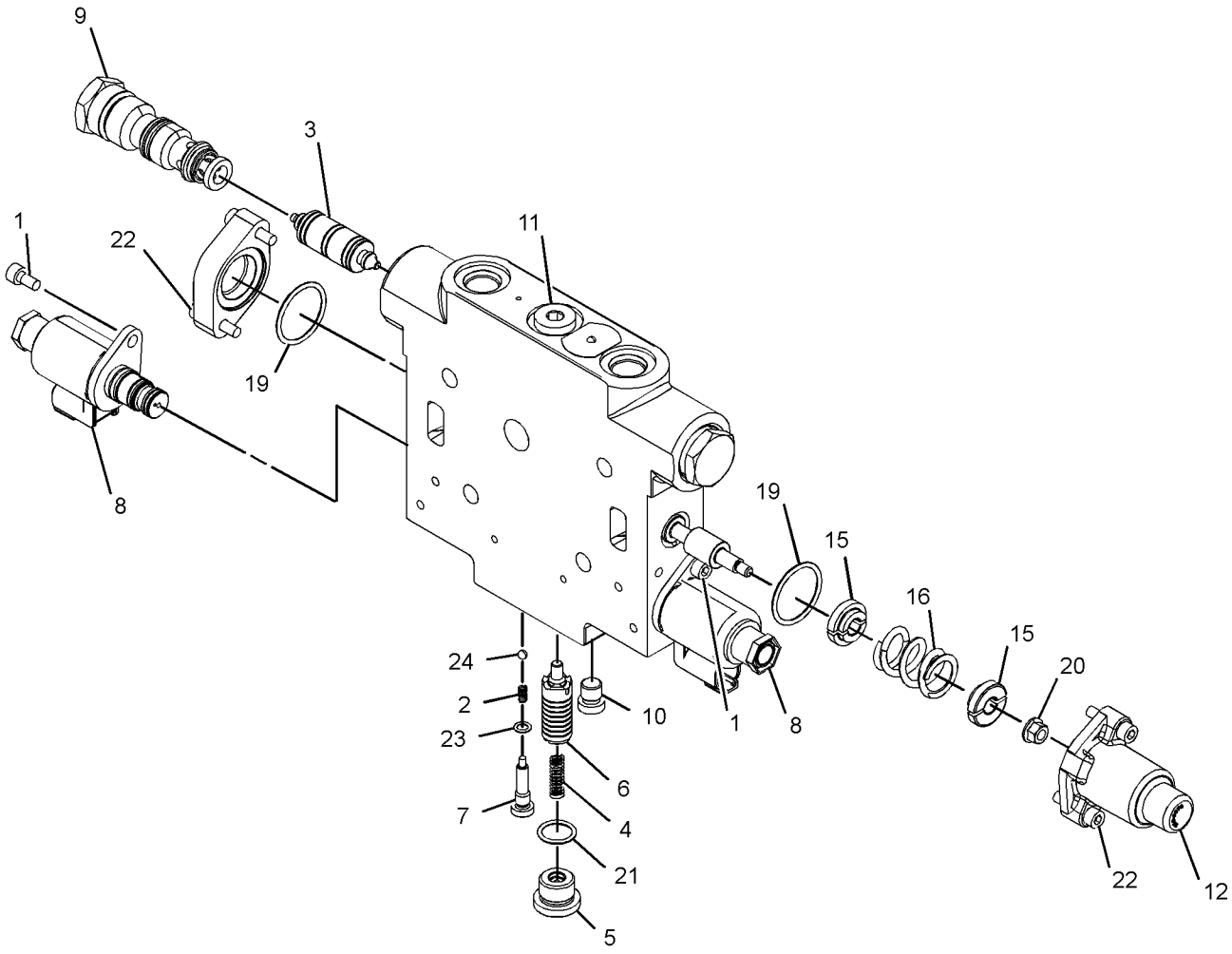

GRAPHIC #1 **<END>** g03413117

382-3312 VALVE GP-CONTROL—BLADE LIFT

S/N: E9Y1-UP

PART OF 382-4425 VALVE GP-BANK 4, 382-4426 VALVE GP-BANK 6

AN ATTACHMENT

SMCS-5051 **i05400494**

NOTE	REF NO	GRAPHIC REF	PART NUMBER	QTY	PART NAME 1 2 3 4 5 6 (PRODUCT LEVEL)	SEE PAGE
	1	1	**6E-3007**	1	SPRING	
	2	1	**106-3660**	2	PISTON	
	3	1	**212-4961**	1	SPRING	
	4	1	**242-9264**	1	PLUG-ORIFICE	
	5	1	**243-2965**	1	SPOOL	
	6	1	**244-2579**	1	PLUG	
Y	7	1	**278-1799**	2	VALVE GP-SOLENOID (BLADE LIFT)	671
	8	1	**318-3052**	1	VALVE GP-CHECK & RELIEF (BLADE LIFT)	
	9	1	**318-3115**	1	VALVE GP-CHECK (BLADE LIFT)	
	10	1	*367-6002*	1	PLUG AS	
		1	**3J-7354**	1	SEAL-O-RING	
		1	**360-3677**	1	PLUG	
	11	1	*367-6003*	1	PLUG AS	
		1	**3K-0360**	1	SEAL-O-RING	
		1	**360-3680**	1	PLUG	
	12	1	**370-8976**	1	COVER-SPRING	
	15	1	**380-0794**	4	RETAINER	
	16	1	**380-0820**	1	SPRING	
	17	1	**380-0821**	1	SPRING	
	20	1	**2S-4663**	2	SEAL-O-RING	
	21	1	**336-6718**	1	LOCKNUT-FLANGE	
	22	1	**3K-0360**	1	SEAL-O-RING	
M	23	1	**3T-0849**	4	BOLT-SOCKET HEAD (M6X1X25-MM)	
	25	1	**4J-7533**	1	SEAL-O-RING	
	26	1	**5B-9318**	1	BALL	
M	27	1	**8T-0267**	2	BOLT-SOCKET HEAD (M6X1X12-MM)	

M - METRIC PART
Y - SEPARATE ILLUSTRATION

382-3312 **VALVE GP-CONTROL (*contd.*)** **i05400494**

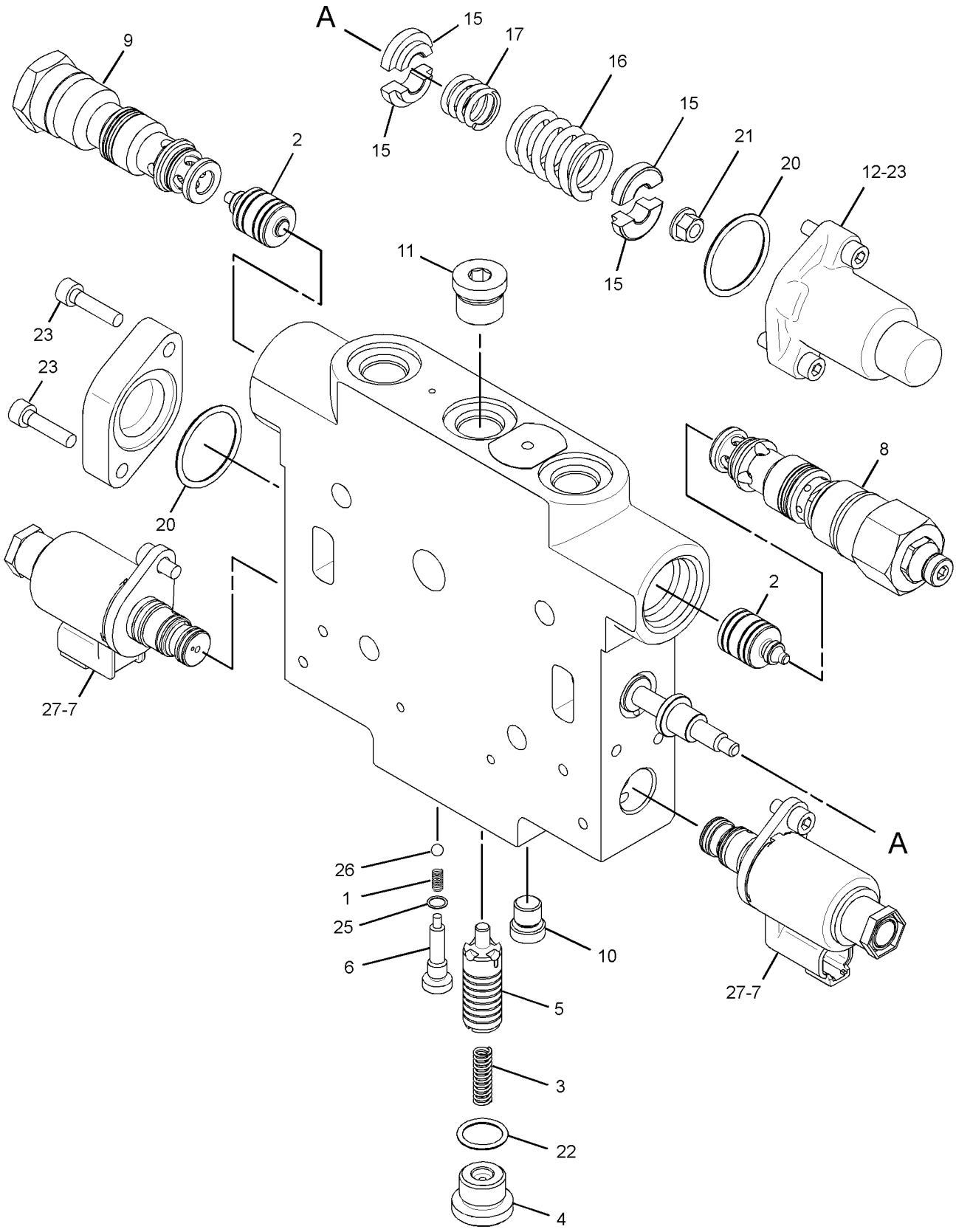

GRAPHIC #1 **<END>** g03416101

382-3313 VALVE GP-CONTROL–CENTER SHIFT

S/N: E9Y1-UP

PART OF 382-4415 VALVE GP-BANK 5, 382-4417 VALVE GP-BANK 7

AN ATTACHMENT

SMCS-5051 **i05400495**

NOTE	REF NO	GRAPHIC REF	PART NUMBER	QTY	PART NAME 1 2 3 4 5 6 (PRODUCT LEVEL)	SEE PAGE
M	1	1	**8T-0267**	2	BOLT-SOCKET HEAD (M6X1X12-MM)	
	2	1	**6E-3007**	1	SPRING	
	3	1	**106-3659**	1	PISTON	
	4	1	**212-4961**	1	SPRING	
	5	1	**242-9264**	1	PLUG-ORIFICE	
	6	1	**243-2965**	1	SPOOL	
	7	1	**244-2579**	1	PLUG	
Y	8	1	**278-1799**	2	VALVE GP-SOLENOID (CENTERSHIFT)	671
	9	1	**318-3115**	2	VALVE GP-CHECK (CENTERSHIFT)	
	10	1	*367-6002*	1	PLUG AS	
		1	**3J-7354**	1	SEAL-O-RING	
		1	**360-3677**	1	PLUG	
	11	1	*367-6003*	1	PLUG AS	
		1	**3K-0360**	1	SEAL-O-RING	
		1	**360-3680**	1	PLUG	
	12	1	**370-8976**	1	COVER-SPRING	
	15	1	**380-0794**	4	RETAINER	
	16	1	**380-0819**	1	SPRING	
	19	1	**2S-4663**	2	SEAL-O-RING	
	20	1	**336-6718**	1	LOCKNUT-FLANGE	
	21	1	**3K-0360**	1	SEAL-O-RING	
M	22	1	**3T-0849**	4	BOLT-SOCKET HEAD (M6X1X25-MM)	
	23	1	**4J-7533**	1	SEAL-O-RING	
	24	1	**5B-9318**	1	BALL	

M - METRIC PART
Y - SEPARATE ILLUSTRATION

382-3313 **VALVE GP-CONTROL (*contd.*)** **i05400495**

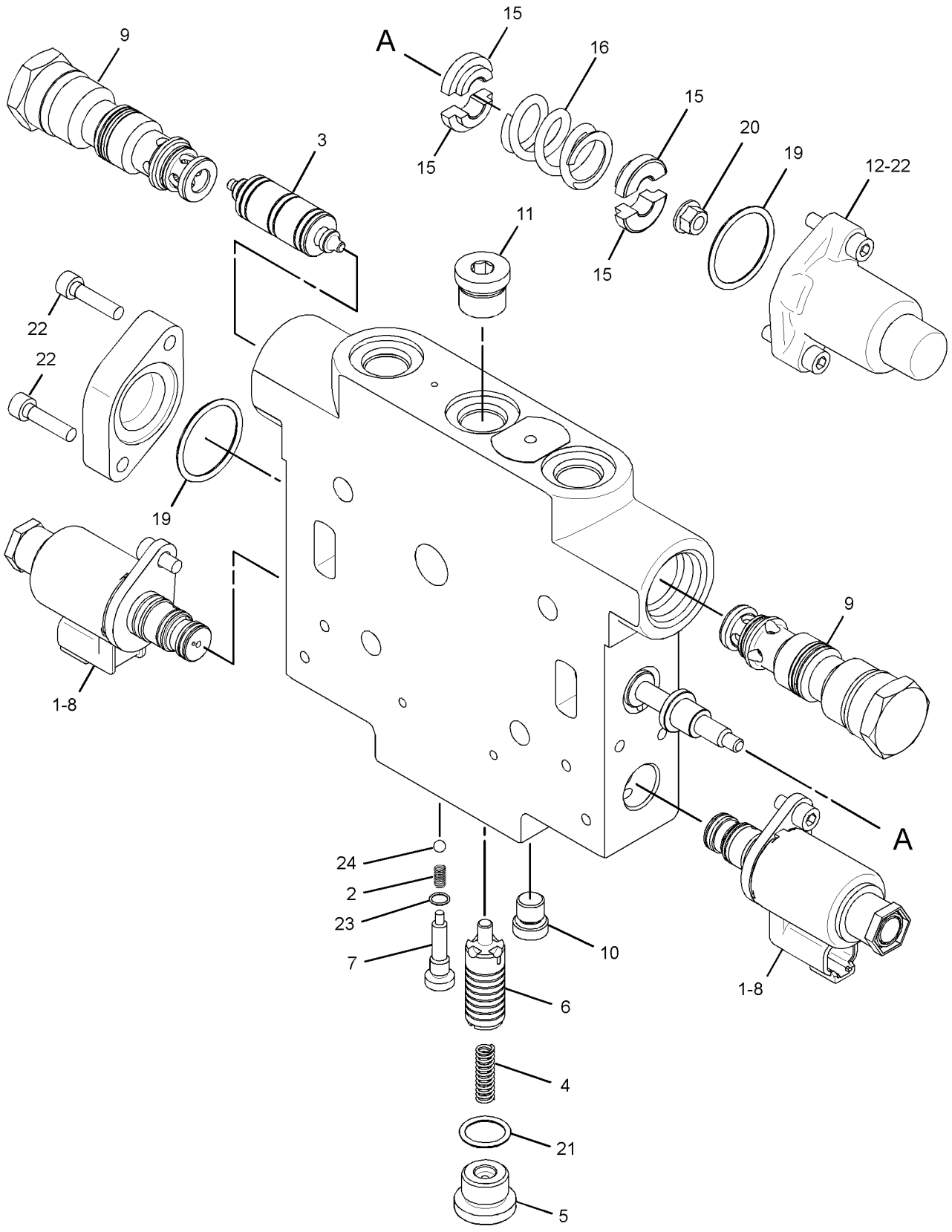

GRAPHIC #1 **<END>** g03416549

160-4128 VALVE GP-PRESSURE REDUCING

S/N: E9Y1-UP
PART OF 385-0199 LINES GP-AUTOMATIC LUBRICATION
AN ATTACHMENT

SMCS-5117, 5467 **i02960645**

NOTE	REF NO	GRAPHIC REF	PART NUMBER	QTY	PART NAME 1 2 3 4 5 6 (PRODUCT LEVEL)	SEE PAGE
Y	1	1	**252-8038**	1	VALVE GP-PRESSURE REDUCING (IMPLEMENT PILOT OIL)	667

Y - SEPARATE ILLUSTRATION

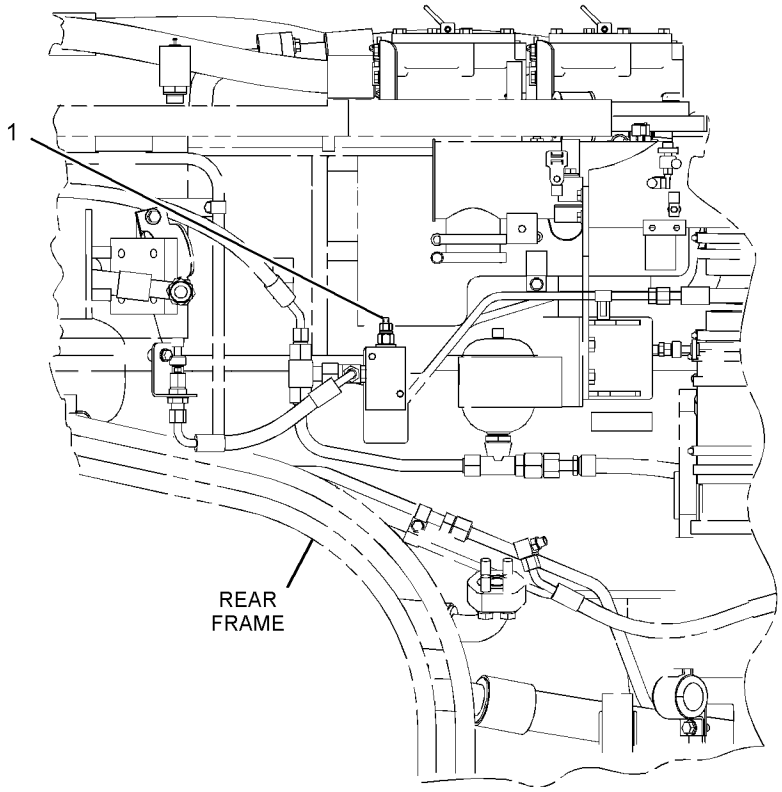

LEFT SIDE VIEW

GRAPHIC #1 **<END>** g01420800

252-8038 VALVE GP-PRESSURE REDUCING

S/N: E9Y1-UP

PART OF 396-4779 MANIFOLD GP-CONTROL, 366-6687 VALVE GP-CONTROL, 160-4128 VALVE GP-PRESSURE REDUCING

ALSO AN ATTACHMENT

SMCS-5117, 5467

i02148309

NOTE	REF NO	GRAPHIC REF	PART NUMBER	QTY	PART NAME 1 2 3 4 5 6 (PRODUCT LEVEL)	SEE PAGE
	1	1	**2M-9780**	1	SEAL-O-RING	
	2	1	**6V-3505**	1	RING-BACKUP	
	3	1	**8C-3132**	1	SEAL-O-RING	
	4	1	**6E-0410**	1	SEAL-O-RING	
	5	1	**5P-2199**	1	RING-BACKUP	

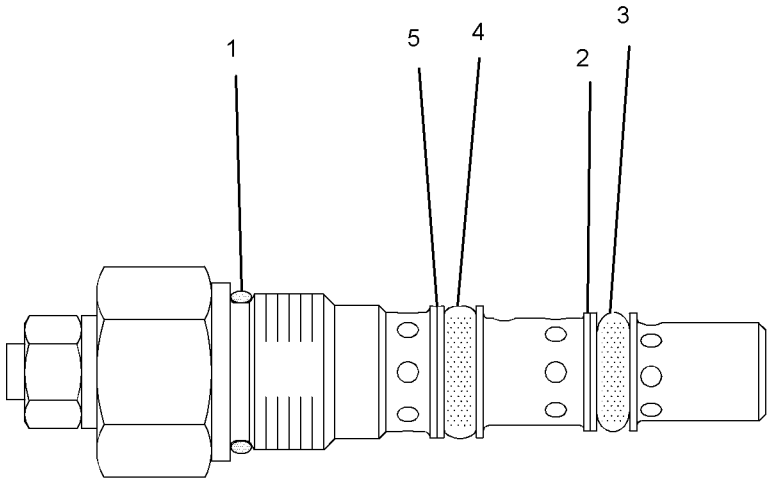

GRAPHIC #1

<END>

g01089904

369-2611 VALVE GP-PUMP CONTROL

S/N: E9Y1-UP
FLOW COMPENSATOR
PART OF 376-2269 PUMP GP-PISTON

SMCS-5455 **i04222630**

NOTE	REF NO	GRAPHIC REF	PART NUMBER	QTY	PART NAME 1 2 3 4 5 6 (PRODUCT LEVEL)	SEE PAGE
	1	1	**9S-4191**	1	PLUG	
	2	1	**3J-1907**	3	SEAL-O-RING	
	3	1	**9T-2186**	2	PLUG	
	4	1	**6E-6140**	1	PLUG-COMPENSATOR	
	5	1	**033-6036**	1	SEAL-O-RING	
M	6	1	**9X-8914**	2	SETSCREW-SOCKET (M8X1.25X45-MM)	
	7	1	**6E-6142**	1	PLUG-MARGIN	
	8	1	**033-6027**	1	SEAL-O-RING	
	9	1	**6E-6141**	2	LOCKNUT-SEALING	

M - METRIC PART

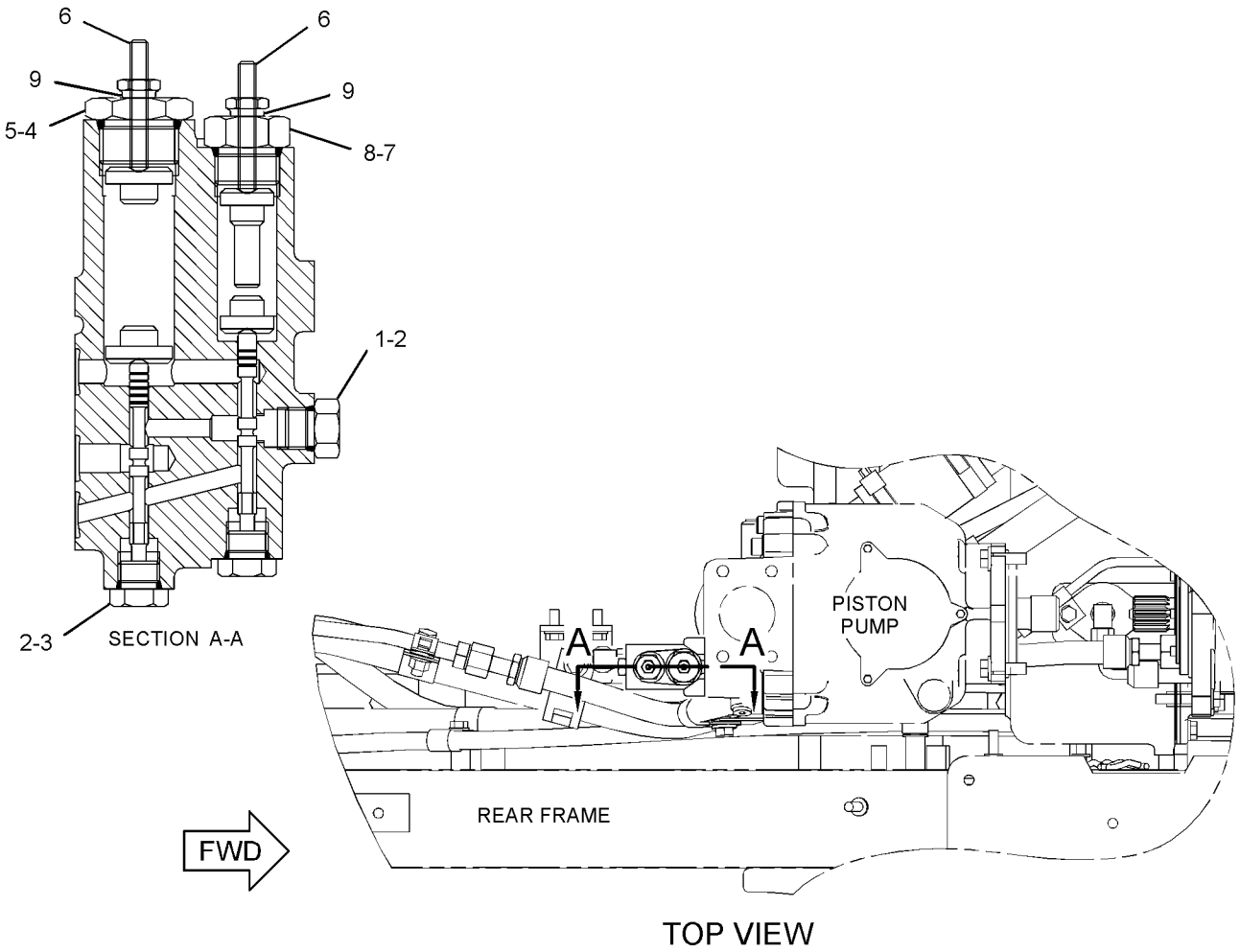

GRAPHIC #1 **<END>** g02432700

189-8627 VALVE GP-SOLENOID

S/N: E9Y1-UP
24-VOLT
PART OF 423-4959 MANIFOLD GP-CONTROL

SMCS-5479 **i05143710**

NOTE	REF NO	GRAPHIC REF	PART NUMBER	QTY	PART NAME 1 2 3 4 5 6 (PRODUCT LEVEL)	SEE PAGE
	1	1	**312-8629**	1	COIL AS (24-VOLT)	
	2	1	**191-9247**	1	WASHER (19.15X31.65X2.36-MM THK)	
	3	1	**198-2914**	1	NUT (3/4-32-THD)	
					PARTS SHOWN IN GRAPHIC(S) WITHOUT A REFERENCE NUMBER ARE NOT SERVICED SEPARATELY	

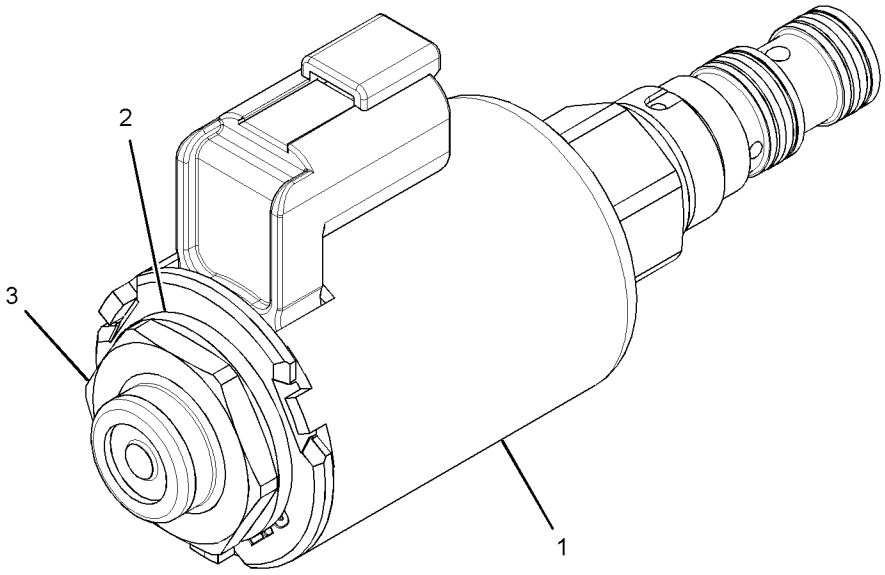

GRAPHIC #1 **<END>** g01947439

251-3268 VALVE GP-SOLENOID

S/N: E9Y1-UP
24-VOLT
PART OF 423-4959 MANIFOLD GP-CONTROL

SMCS-5479 **i06067124**

NOTE	REF NO	GRAPHIC REF	PART NUMBER	QTY	PART NAME 1 2 3 4 5 6 (PRODUCT LEVEL)	SEE PAGE
	1	1	**384-8750**	1	COIL AS (24-VOLT)	
					AVAILABLE REPAIR KIT(S):	
			332-5669	1	KIT-SEAL (SOLENOID VALVE)	
					(INCLUDES O-RING SEALS & BACKUP RINGS)`	

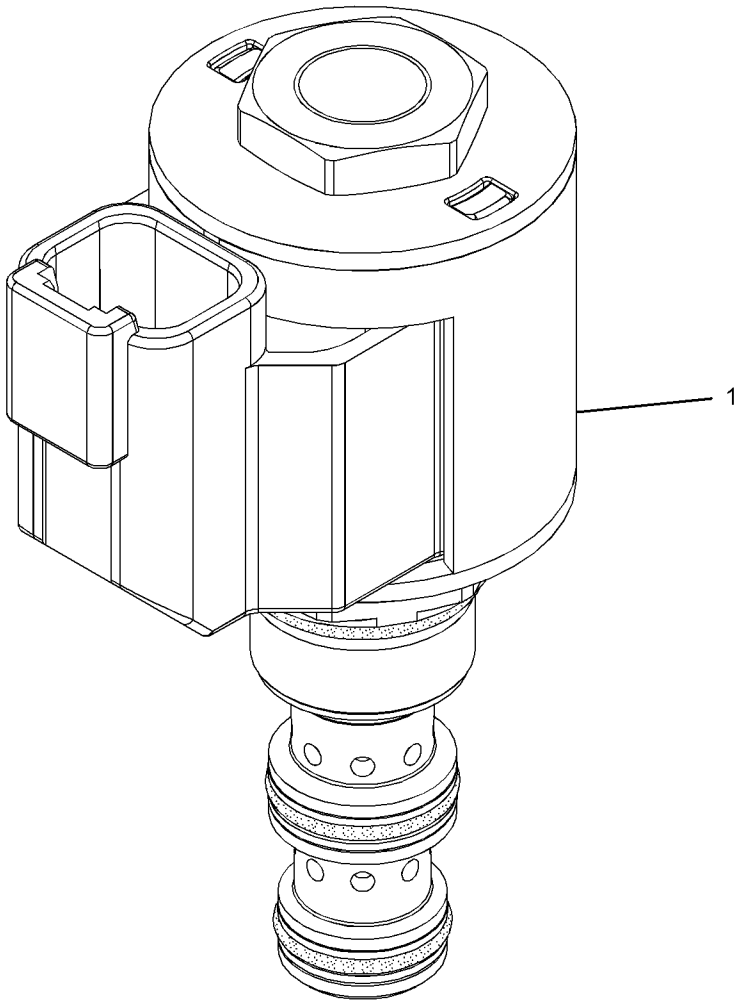

GRAPHIC #1 **<END>** g02173984

278-1799 VALVE GP-SOLENOID

S/N: E9Y1-UP

PART OF 366-6687, 366-6693, 382-3296, 382-3297, 382-3298, 382-3299, 382-3301, 382-3302, 382-3304, 382-3308, 382-3312, 382-3313 VALVE GP-CONTROL

ALSO AN ATTACHMENT

SMCS-5479 **i02558898**

NOTE	REF NO	GRAPHIC REF	PART NUMBER	QTY	PART NAME 1 2 3 4 5 6 (PRODUCT LEVEL)	SEE PAGE
	1	1	**8C-6711**	1	NUT-RETAINER (1/2-20-THD)	
	2	1	**226-9622**	1	COIL AS-SOLENOID (24-VOLT)	
	3	1	**4K-2039**	1	SEAL-O-RING	
	4	1	**5L-4758**	1	SEAL-O-RING	
	5	1	**6F-4855**	1	SEAL-O-RING	

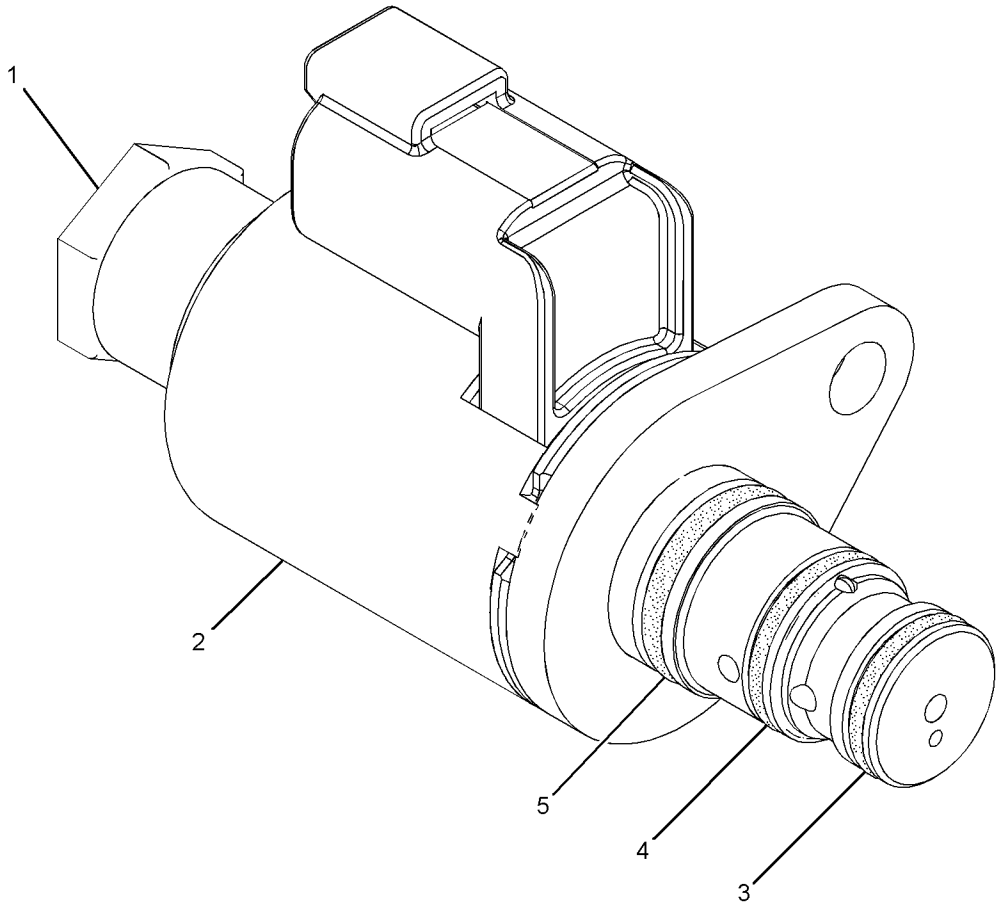

GRAPHIC #1 **<END>** g01281815

279-6521 VALVE GP-SOLENOID & MANIFOLD

S/N: E9Y1-UP
PART OF 366-6164 LINES GP-IMPLEMENT
AN ATTACHMENT

SMCS-5264, 5479 **i03809530**

NOTE	REF NO	GRAPHIC REF	PART NUMBER	QTY	PART NAME 1 2 3 4 5 6 (PRODUCT LEVEL)	SEE PAGE
	1	1	**263-1392**	1	VALVE-CHECK	
	2	1	**283-9570**	1	VALVE GP-SOLENOID (BLADE CUSHION)	
		1	**3K-0360**	1	SEAL-O-RING	
		1	**030-6121**	1	RING-BACKUP	
		1	**161-6154**	1	SEAL-O-RING	
		1	**187-8191**	1	COIL AS	
	3	1	**283-9557**	1	VALVE GP-SOLENOID (BLADE CUSHION)	
		1	**250-6148**	1	COIL AS (24-VOLT)	

PARTS SHOWN IN GRAPHIC(S) WITHOUT A REFERENCE NUMBER ARE NOT SERVICED SEPARATELY

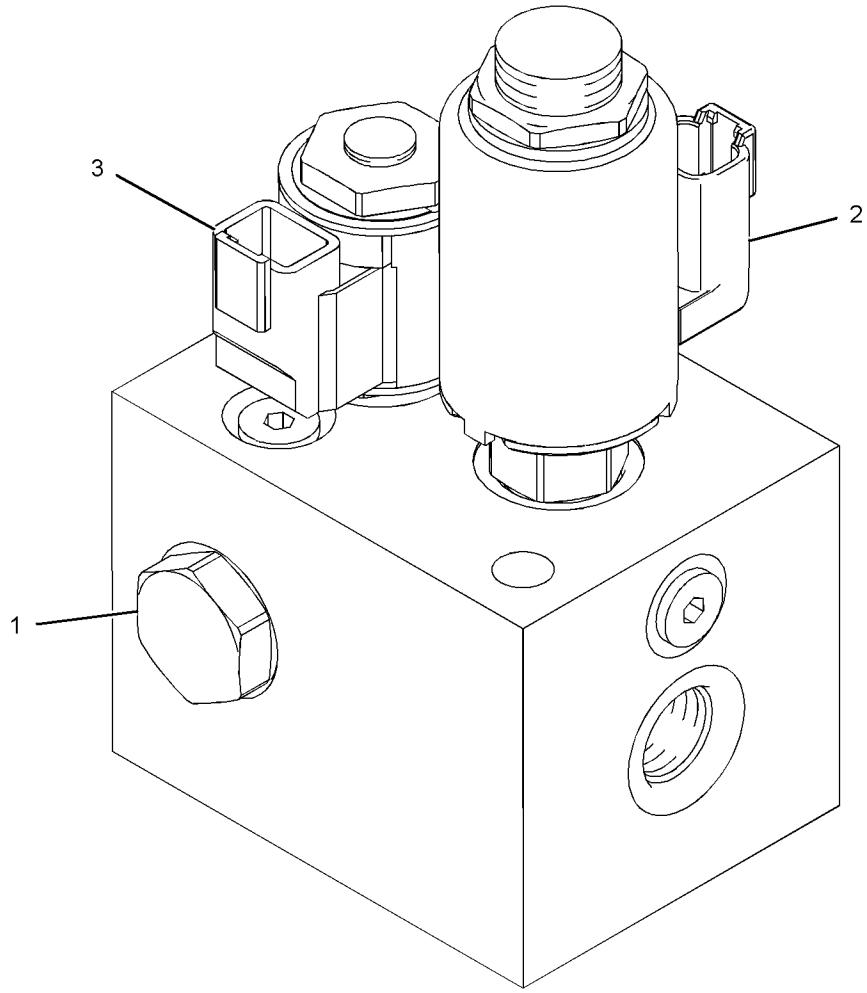

GRAPHIC #1 **<END>** g02064335

366-6681 VALVE GP-STEERING

S/N: E9Y1-UP

PART OF 373-1573 VALVE & MOUNTING GP

SMCS-4307, 4322 **i06139758**

NOTE	REF NO	GRAPHIC REF	PART NUMBER	QTY	PART NAME 1 2 3 4 5 6 (PRODUCT LEVEL)	SEE PAGE
M	1	1	**8T-4198**	3	BOLT (M10X1.5X100-MM)	
Y	2	1	**366-6693**	1	VALVE GP-CONTROL (STEERING)	644
	3	1	**8T-4121**	3	WASHER-HARD (11X21X2.5-MM THK)	
Y	4	1	**366-6687**	1	VALVE GP-CONTROL (PRIORITY)	642

M - METRIC PART
Y - SEPARATE ILLUSTRATION

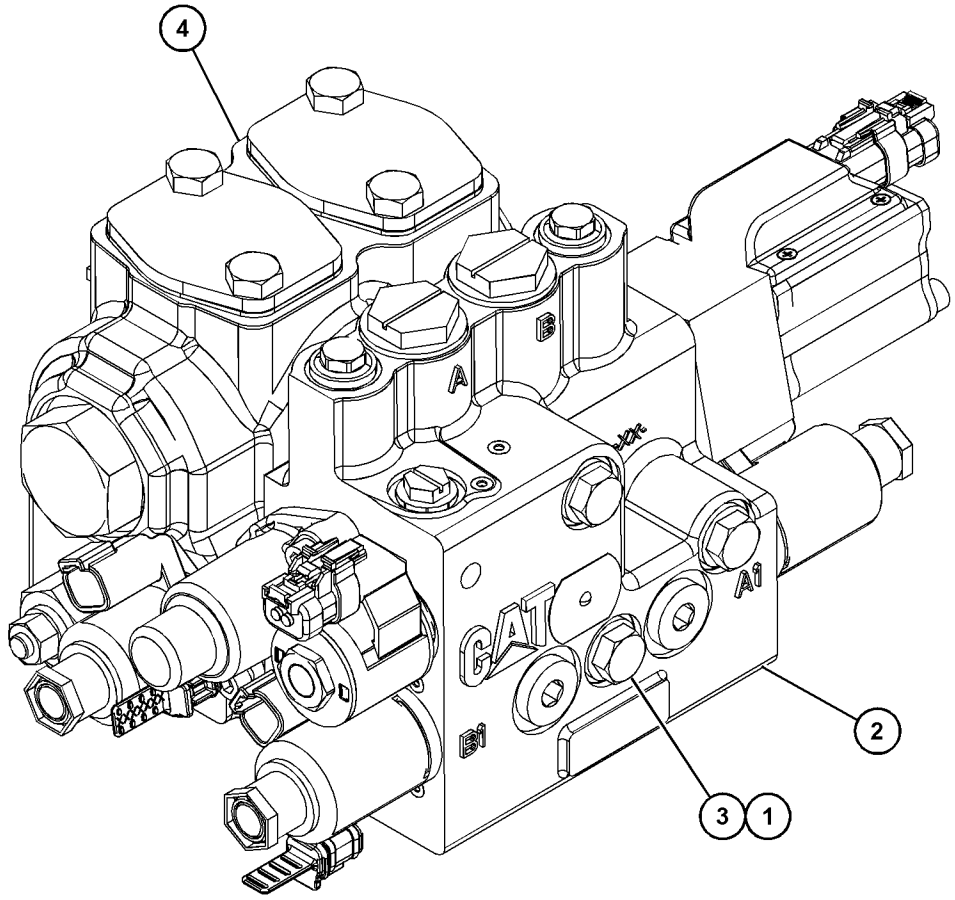

GRAPHIC #1 **<END>** g03824291

390-9853 CIRCLE & BEAM AS

S/N: E9Y1-UP
PART OF 390-9852 CIRCLE GP
ALSO AN ATTACHMENT

SMCS-6153, 6154 **i06146706**

NOTE	REF NO	GRAPHIC REF	PART NUMBER	QTY	PART NAME 1 2 3 4 5 6 (PRODUCT LEVEL)	SEE PAGE
M	1	1	**9R-9866**	1	BOSS-THREADED (M10X1.5-THD)	
	2	1	**6G-4911**	2	BOSS	
	3	1	**8X-4893**	2	BLOCK	
	4	1	**8X-4897**	1	BEAM-BLADE	
	5	1	**8X-4898**	1	BEAM-BLADE	
	6	1	**256-7143**	1	BRACKET AS	
M		1	**159-9539**	2	NUT-WELD (M6X1-THD)	
	7	1	**281-4297**	1	BRACKET AS	
	8	1	**281-9451**	2	PLATE	
M	9	1	**9R-2672**	1	BOSS-THREADED (M10X1.5-THD)	
	10	1	**9R-4595**	1	BOSS (M12X1.75X30-MM)	

M - METRIC PART

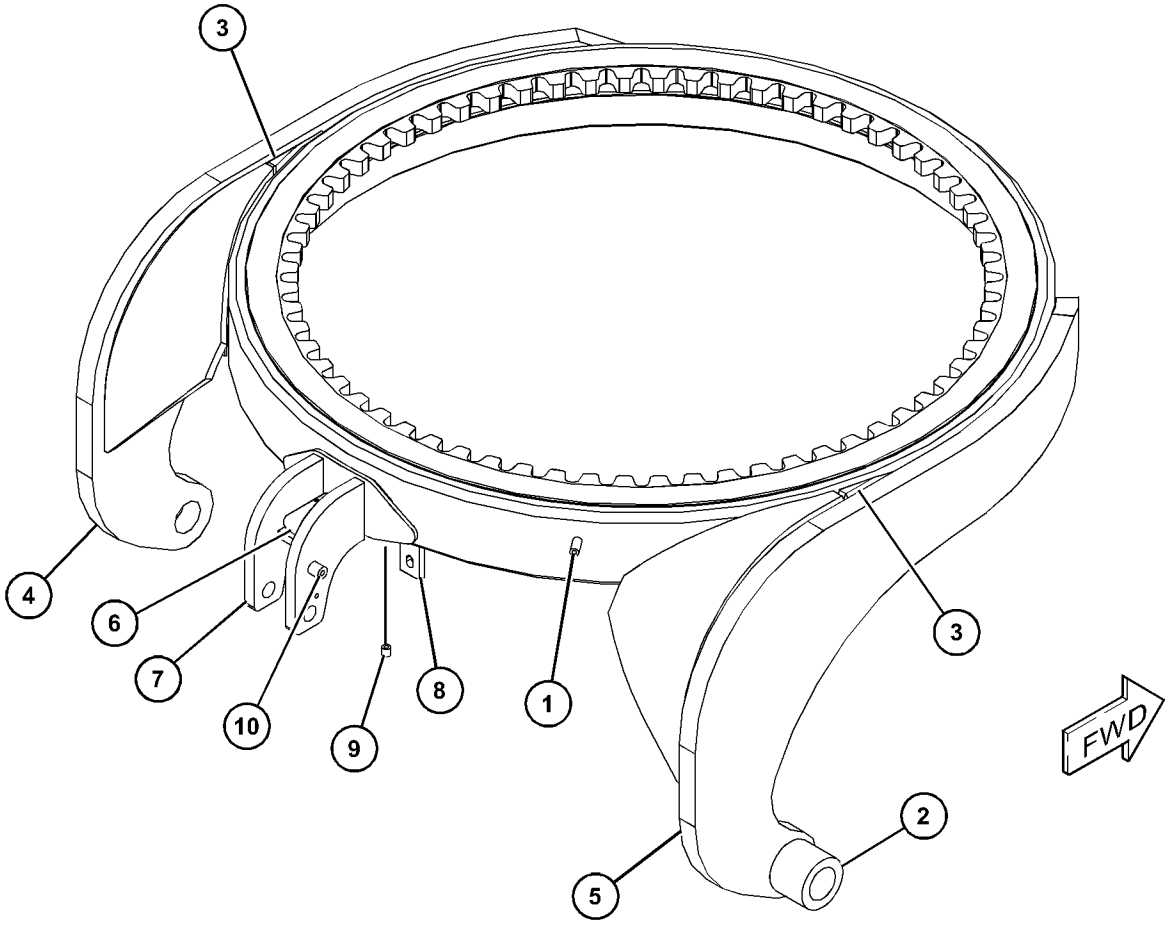

GRAPHIC #1 **<END>** g03802863

390-9852 CIRCLE GP

S/N: E9Y1-UP

PART OF 479-7656 IMPLEMENT AR, 370-2227 SPECIAL AR

ALSO AN ATTACHMENT

SMCS-6152, 6154, 6155

i06140653

NOTE	REF NO	GRAPHIC REF	PART NUMBER	QTY	PART NAME 1 2 3 4 5 6 (PRODUCT LEVEL)	SEE PAGE
	1	1	**6G-4831**	2	SHAFT	
	2	1	**449-1751**	4	RETAINER	
B	3	1	**253-4643**	2	SHIM (2-MM THK)	
	4	1	**449-1750**	4	RETAINER	
	5	1	**8T-4223**	24	WASHER-HARD (13.5X25.5X3-MM THK)	
Y	6	1	**390-9853**	1	CIRCLE & BEAM AS	674
	7	1	**478-8991**	1	BRACKET AS	
	8	1	**7X-0481**	12	BOLT (1/2-13X8-IN)	
	9	1	**4J-1888**	4	PIN-COTTER	
	10	1	**5F-3715**	4	NUT-SLOTTED HEX (2-12-THD)	
	11	1	**7Y-0725**	8	WASHER-HARD (52X92X8-MM THK)	
	12	1	**8W-4167**	8	BUSHING	
	13	1	**446-1523**	4	STRIP-WEAR	
	14	1	**253-4635**	2	PLATE AS	
	15	1	**9X-0941**	12	LOCKNUT (1/2-13-THD)	
B	16	1	**2G-2946**	4	SHIM (1.52-MM THK)	
B	17	1	**2G-2945**	4	SHIM (0.76-MM THK)	

B - USE AS REQUIRED
Y - SEPARATE ILLUSTRATION

390-9852 **CIRCLE GP (*contd.*)** **i06140653**

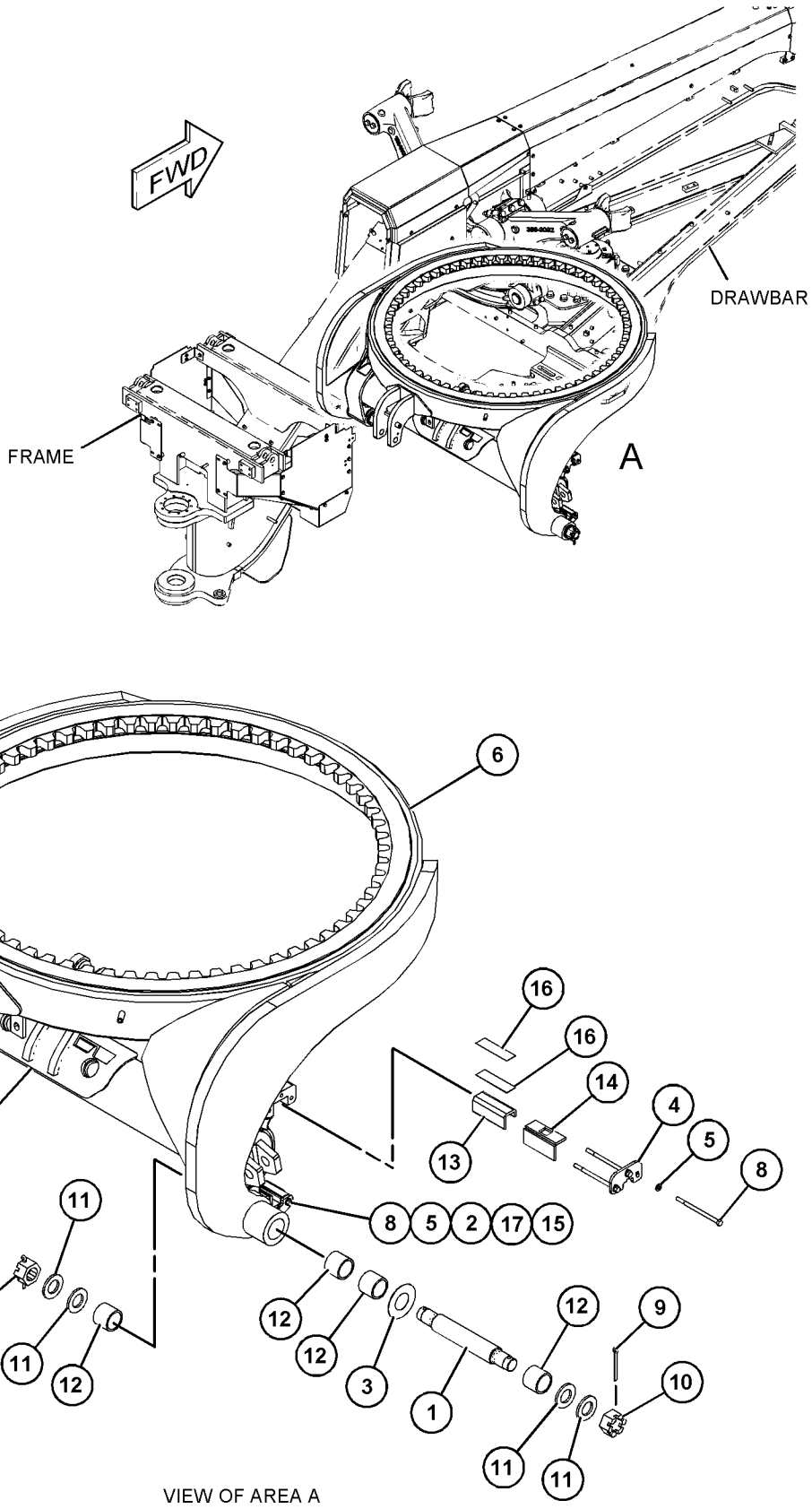

VIEW OF AREA A

GRAPHIC #1 **<END>** g03826002

425-8674 DRAWBAR GP

S/N: E9Y1-UP

PART OF 479-7656 IMPLEMENT AR, 370-2227 SPECIAL AR

ALSO AN ATTACHMENT

SMCS-6153 **i06144111**

NOTE	REF NO	GRAPHIC REF	PART NUMBER	QTY	PART NAME 1 2 3 4 5 6 (PRODUCT LEVEL)	SEE PAGE
	1	1	**3B-8489**	1	FITTING-GREASE (1/8-27 PTF)	
	2	1	**6G-4372**	6	STRIP-WEAR	
	3	2	**6G-4896**	1	BALL	
	4	1	**6K-6444**	2	SPACER (0.906X1.625X1.31-IN THK)	
B	5	2	**185-7115**	152	SHIM (0.5-MM THK)	
B	6	2	**257-4932**	48	SHIM (0.25-MM THK)	
	7	1	**259-4468**	1	CAP	
	8	1	**259-4469**	1	ADAPTER	
B	9	2	**259-4470**	1	SHIM (0.12-MM THK)	
B	10	2	**259-4471**	3	SHIM (0.25-MM THK)	
B	11	2	**259-4472**	3	SHIM (0.76-MM THK)	
B	12	2	**259-4473**	2	SHIM (1.52-MM THK)	
	13	1	**268-5743**	2	PLATE	
	14	2	**302-6333**	8	PLATE	
	15	2	**302-6343**	8	PLATE	
	16	1	**308-6304**	6	SHOE-CIRCLE GUIDE	
	17	1	**352-1002**	8	STRIP-WEAR	
	18	1	**424-7251**	2	PLATE	
	19	1	**425-8673**	1	DRAWBAR AS	
	19A	2	**472-1052**	3	STUD-BALL	
M	20	2	**101-7396**	2	BOLT-SOCKET HEAD (M10X1.5X50-MM)	
M	21	1	**106-4175**	22	BOLT (M20X2.5X60-MM)	
M	22	2	**112-3926**	8	BOLT (M20X2.5X110-MM)	
M	23	1	**112-3928**	18	BOLT (M24X3X130-MM)	
M	24	1	**116-2434**	2	BOLT (M24X3X170-MM)	
	25	1	**126-8928**	2	WASHER-HARD (26X40X8-MM THK)	
M	26	1	**166-1880**	2	BOLT (M20X2.5X75-MM)	
	27	2	**1D-6306**	12	NUT (1-8-THD)	
	28	1	**267-3507**	29	WASHER-HARD (26X47X12-MM THK)	
	29	2	**292-5889**	12	SETSCREW (1-8X3.25-IN)	
	30	1	**6C-9149**	22	WASHER (22X50X10-MM THK)	
M	31	1	**7X-2489**	5	BOLT (M24X3X100-MM)	
M	32	1	**7X-2577**	1	BOLT (M24X3X90-MM)	
	33	1	**8T-1482**	7	WASHER-HARD (26X50X8-MM THK)	
M	34	1	**8T-4001**	5	NUT (M24X3-THD)	
	35	2	**8T-4123**	8	WASHER (3.62X5.75X0.375-MM THK)	
M	36	1	**8T-5379**	7	BOLT (M24X3X50-MM)	
	37	2	**9S-8892**	6	BOLT-12 POINT HEAD (3/4-16X3.5-IN)	

B - USE AS REQUIRED
M - METRIC PART

425-8674 **DRAWBAR GP** (*contd.*) **i06144111**

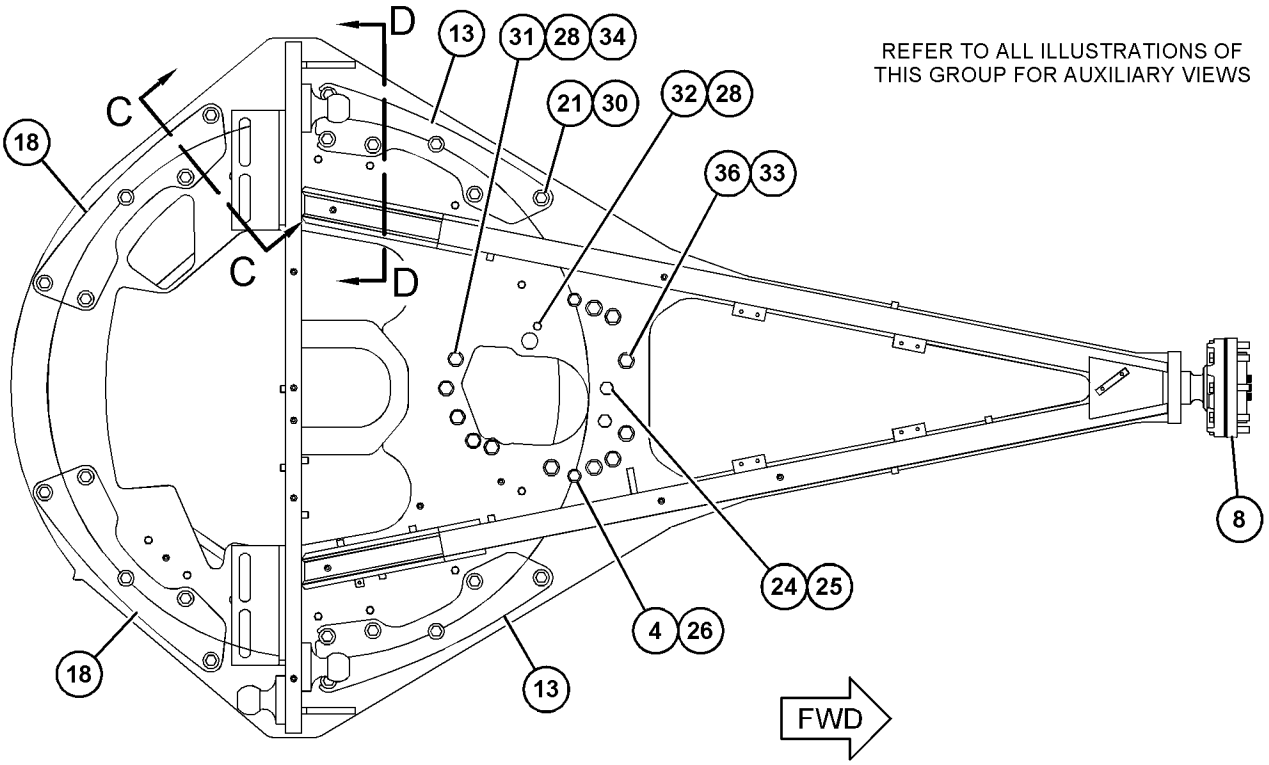

TOP VIEW

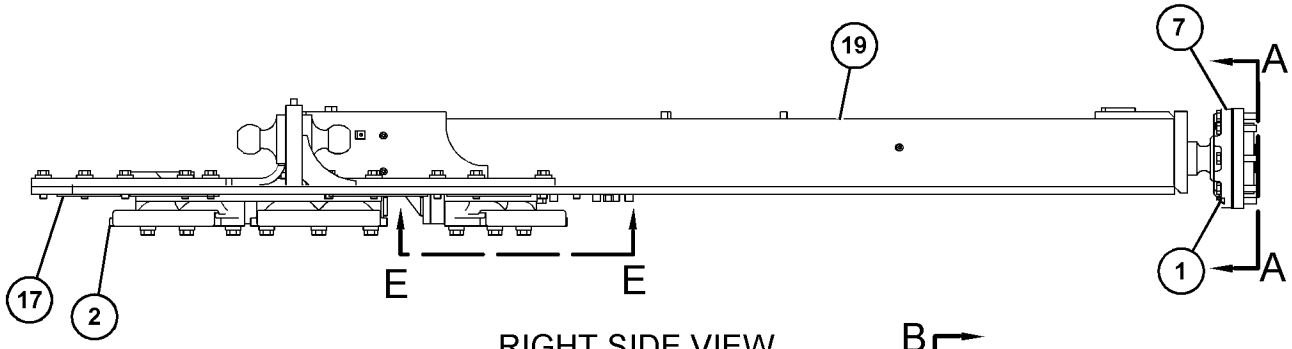

RIGHT SIDE VIEW

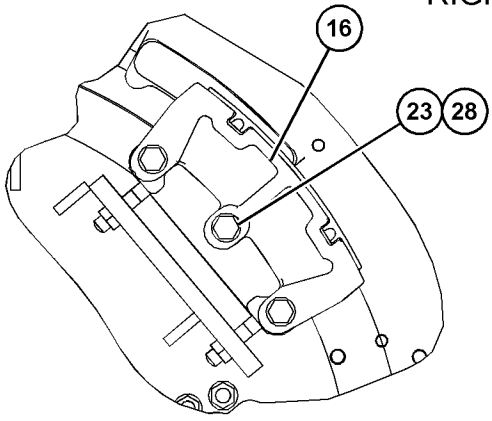

VIEW E-E

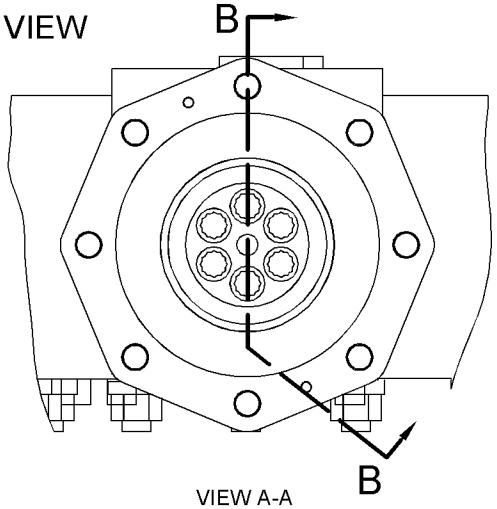

VIEW A-A

GRAPHIC #1 g03836906

425-8674 **DRAWBAR GP** (*contd.*) **i06144111**

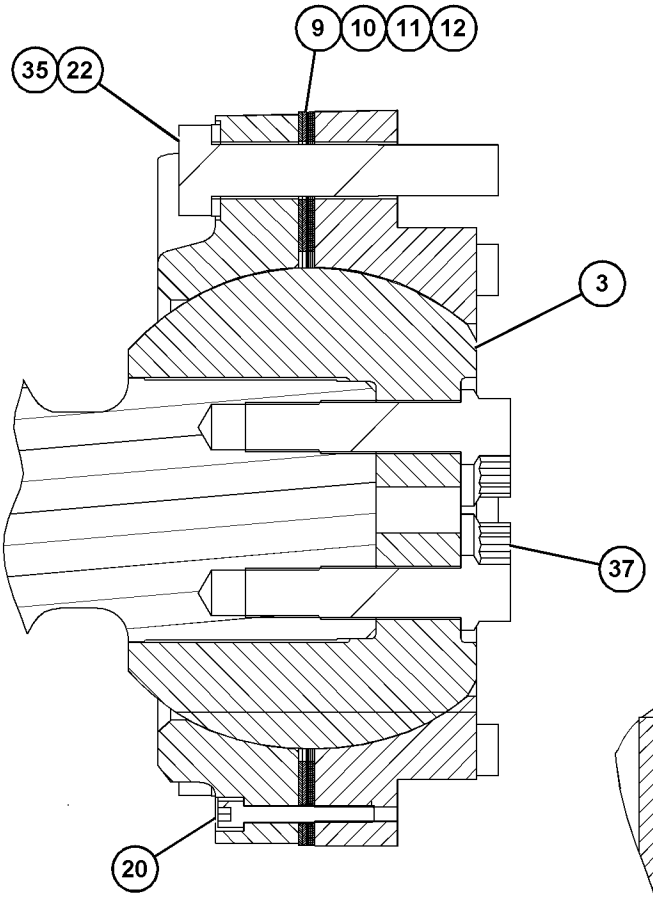

SECTION B-B

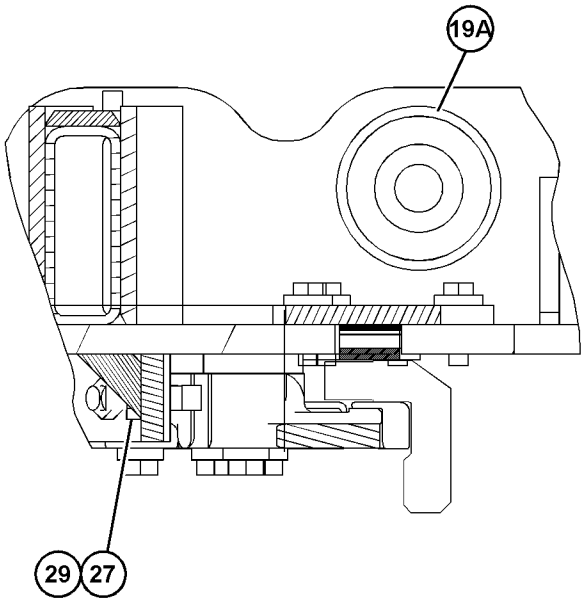

SECTION D-D

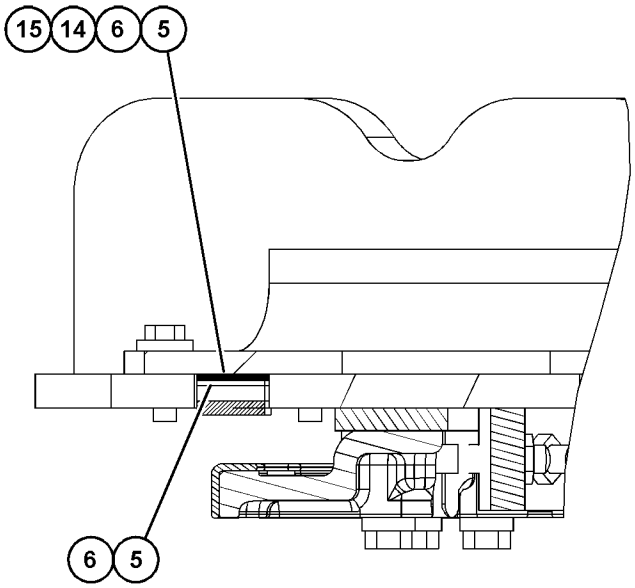

SECTION C-C

GRAPHIC #2 **<END>** g03839036

479-7656 OPTION AR—CIRCLE, DRAWBAR, MOLDBOARD

S/N: E9Y1-UP
AN ATTACHMENT

SMCS-6000 **i06146756**

NOTE	PART NUMBER	QTY	PART NAME 1 2 3 4 5 6 (PRODUCT LEVEL)	SEE PAGE
Y	*390-9852*	1	CIRCLE GP	675
Y	*352-5793*	1	CYLINDER & MTG GP-BLADE TIP	551
Y	*261-2373*	1	CYLINDER & MTG GP-CENTERSHIFT	552
Y	*257-6804*	1	CYLINDER & MTG GP-SIDESHIFT	553
Y	*425-8674*	1	DRAWBAR GP	677
Y	**454-4691**	1	DRIVE GP-CIRCLE	571
Y	*366-6122*	1	LINES GP-ACCUMULATOR	581
Y	*462-6461*	1	MOLDBOARD GP	680
Y	*465-3377*	1	SWIVEL GP	632

Y - SEPARATE ILLUSTRATION

<END>

462-6461 MOLDBOARD GP

S/N: E9Y1-UP
16-FT, CURVED
CANNOT BE USED WITH ANY OTHER MOLDBOARD AR
PART OF 479-7656 IMPLEMENT AR
AN ATTACHMENT

SMCS-6151, 6174, 6801 **i06127199**

NOTE	PART NUMBER	QTY	PART NAME 1 2 3 4 5 6 (PRODUCT LEVEL)	SEE PAGE
Y	*257-3466*	1	BIT GP-END	838
Y	*257-3462*	1	EDGE GP-CUTTING (25-MM THK, CURVED)	839
	253-4670	1	MOLDBOARD AS	

Y - SEPARATE ILLUSTRATION

<END>

462-6462 MOLDBOARD GP

S/N: E9Y1-UP
16-FT, STRAIGHT
CANNOT BE USED WITH ANY OTHER MOLDBOARD AR
AN ATTACHMENT

SMCS-6151, 6174, 6801 **i06127200**

NOTE	PART NUMBER	QTY	PART NAME 1 2 3 4 5 6 (PRODUCT LEVEL)	SEE PAGE
Y	*257-3466*	1	BIT GP-END	838
Y	*257-3464*	1	EDGE GP-CUTTING (35-MM THK, STRAIGHT)	840
	253-4670	1	MOLDBOARD AS	

Y - SEPARATE ILLUSTRATION

<END>

274-1525 AIR CONDITIONER & MOUNTING GP

S/N: E9Y1-UP

PART OF 389-6377 AIR CONDITIONER AR

SMCS-7320 **i04780671**

NOTE	REF NO	GRAPHIC REF	PART NUMBER	QTY	PART NAME 1 2 3 4 5 6 (PRODUCT LEVEL)	SEE PAGE
	1	1	**249-0410**	2	GASKET	
	2	1	**249-0411**	1	GASKET	
	3	1	**249-0937**	1	DUCT	
Y	4	1	**263-2555**	1	AIR CONDITIONER GP	683
	5	1	**265-7454**	1	GASKET	
	6	1	**387-8731**	2	SPACER	
	7	1	**267-5032**	2	FITTING-DRAIN	
	8	1	**118-5619**	2	SCREW-FLAT HEAD (6-20X1-IN)	
	9	1	**145-6669**	2	SCREW-SELF-TAPPING (10X0.75-IN)	
	10	1	**8T-4121**	4	WASHER-HARD (11X21X2.5-MM THK)	
M	11	1	**8T-4172**	2	BOLT (M10X1.5X80-MM)	
M	12	1	**8T-4196**	2	BOLT (M10X1.5X35-MM)	
D	13	1	**5P-5637**		SEAL (0.5-M)	
D	14	1	**5P-5927**		SEAL (0.44-M)	
D	14A	1	**5P-5927**		SEAL (0.23-M EACH)	
D	14B	1	**5P-5927**		SEAL (0.37-M)	
	15	1	**5P-5643**		SEAL (0.5-M)	

D - ORDER BY THE METER
M - METRIC PART
Y - SEPARATE ILLUSTRATION

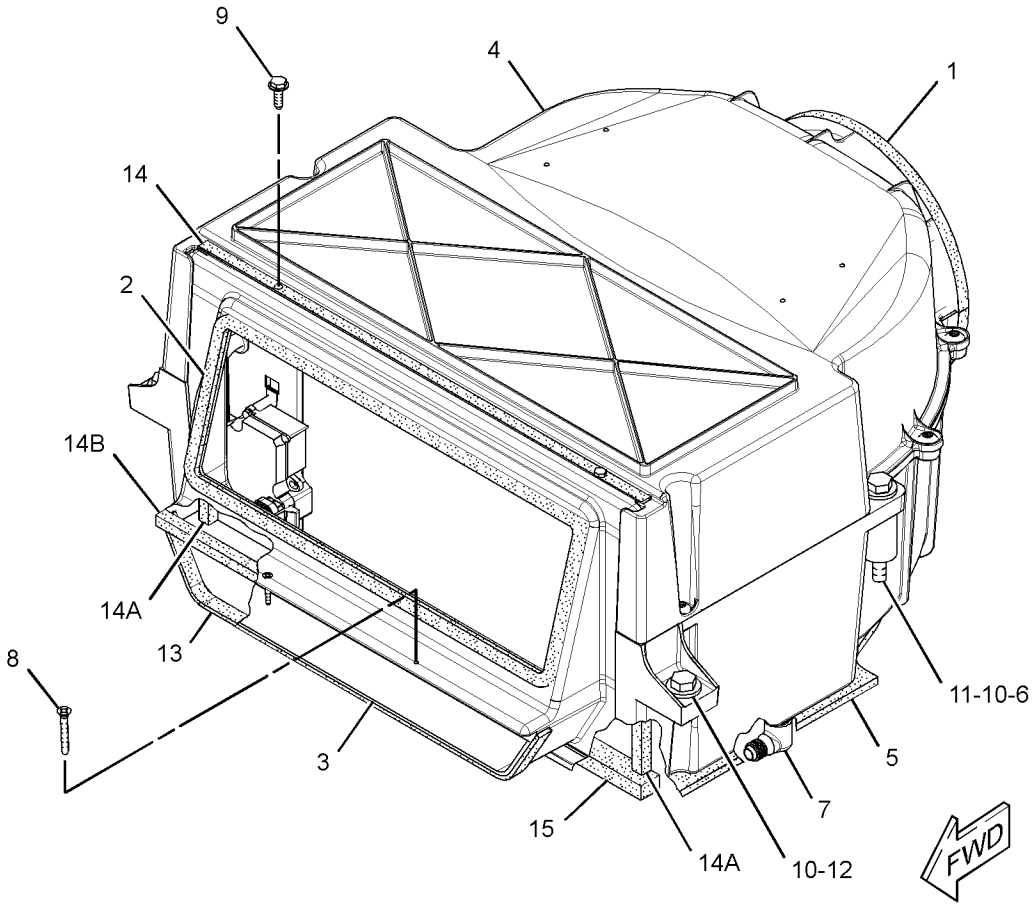

GRAPHIC #1 **<END>** g01434407

389-6377 AIR CONDITIONER AR

S/N: E9Y1-UP

PART OF 361-3120 CAB AR

SMCS-7320 **i06144673**

NOTE	REF NO	GRAPHIC REF	PART NUMBER	QTY	PART NAME 1 2 3 4 5 6 (PRODUCT LEVEL)	SEE PAGE
Y	1	1	*244-2701*	1	DUCT & FILTER GP-CAB AIR	733
Y	2	1	*273-1878*	1	LINES GP-HEATER	755
Y	3	1	*274-1525*	1	AIR CONDITIONER & MOUNTING GP	681
Y	4	1	*300-4231*	1	CONTROL GP-AIR & TEMPERATURE (AIR CONDITIONER)	701
Y	5	1	*389-6378*	1	CONDENSER & MTG GP-REFRIGERANT	696

Y - SEPARATE ILLUSTRATION

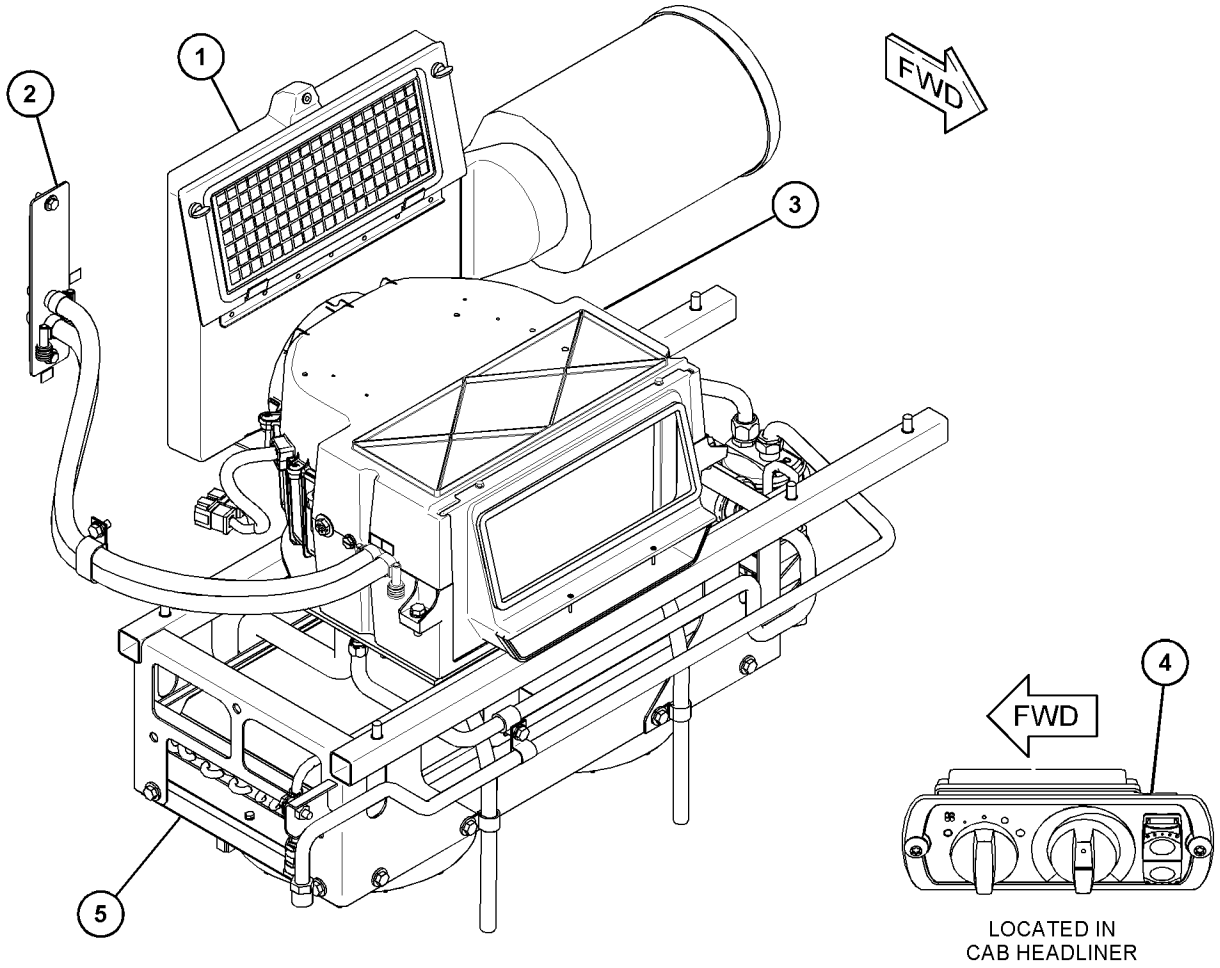

GRAPHIC #1 **<END>** g03833233

263-2555 AIR CONDITIONER GP

S/N: E9Y1-UP

PART OF 274-1525 AIR CONDITIONER & MOUNTING GP

SMCS-7320 **i05971618**

NOTE	REF NO	GRAPHIC REF	PART NUMBER	QTY	PART NAME 1 2 3 4 5 6 (PRODUCT LEVEL)	SEE PAGE
	1	1	**119-9631**	1	SWITCH-TEMPERATURE (HVAC) (REFRIGERANT)	
	2	1	**6T-6708**	2	WASHER (7X28.6X4.1-MM THK)	
	3	1	**125-9740**	1	RESISTOR	
C	4	1	**133-9012**	2	FUSE (15-AMPERE) (AIR CONDITIONER)	
	5	1	**249-0938**	1	CASE	
	6	1	**263-2553**	1	CASE AS	
	7	1	**263-9466**	1	PLATE	
	8	1	**265-7434**	1	SEAL	
	9	1	**265-7435**	1	GASKET	
C	10	1	**273-0338**	1	PLUG	
C	11	1	**273-0339**	1	PLUG	
	12	1	**276-9015**	1	HARNESS AS-MOTOR (HVAC)	
		1	**177-9645**	1	KIT-RECEPTACLE (2-PIN)	
		1	**102-8806**	1	KIT-RECEPTACLE (8-PIN)	
					(EACH KIT INCLUDES RECEPTACLE AS & WEDGE)	
		1	**7T-0093**	2	PIN-CONNECTOR (12-GA TO 14-GA)	
		1	**8T-8729**	4	PIN-CONNECTOR (16-GA TO 18-GA)	
		1	**8T-8737**	1	PLUG-SEAL	
		1	**9W-0852**	3	PIN-CONNECTOR (14-GA TO 16-GA)	
		1	**100-6674**	3	SEAL-CONNECTOR	
		1	**118-5125**	1	CLIP	
E		1	**119-3662**		TUBE-HEAT SHRINK (10.85-MM DIA) (7-CM)	
E		1	**125-7875**		TUBE-HEAT SHRINK (7.44-MM DIA) (5-CM)	
		1	**5P-5618**	3	TERMINAL-BLADE (10-GA TO 12-GA)	
		1	**5P-4571**	5	TERMINAL-BLADE (14-GA TO 16-GA)	
		1	**2L-8067**	2	TERMINAL-RING (10-GA TO 12-GA, 1/4-IN SCREW)	
Y	13	1	*278-1154*	1	COIL GP-EVAPORATOR & HEATER	692
	14	1	**278-3354**	1	FILM-INSTRUCTION (HVAC WATER, DRAINING, FILLING)	
C	15	1	**322-6674**	1	PLATE	
C	16	1	**322-6675**	1	PLATE	
C	17	1	**466-7341**	1	FAN AS (24-VOLT, A/C, HEATER)	
		1	**1F-7958**	1	NUT-FULL (1/2-13-THD)	
C	18	1	**328-8755**	1	WIRE AS	
M	19	1	**129-3178**	1	LOCKNUT (M6X1-THD)	
C	20	1	**132-5793**	2	SCREW-WASHER HEAD (4-40X0.25-IN)	
M	21	1	**141-9784**	1	BOLT (M6X1X190-MM)	
	22	1	**5P-8524**	1	GROMMET	
	23	1	**6L-7159**	2	SCREW-MACHINE (8-32X0.313-IN)	
	24	1	**6V-1668**	2	WASHER (6.5X29.1X3-MM THK)	
C	25	1	**8T-4205**	10	WASHER-HARD (7.2X14.5X2-MM THK)	
	26	1	**9X-2038**	4	WASHER (7X19X2-MM THK)	
CM	27	1	**9X-2044**	14	SCREW-TRUSS HEAD (M6X1X16-MM)	
D	28	1	**5P-7070**		INSULATION-STRIP (0.2-M EACH)	

C - CHANGE FROM PREVIOUS TYPE
D - ORDER BY THE METER
E - ORDER BY THE CENTIMETER
M - METRIC PART
Y - SEPARATE ILLUSTRATION

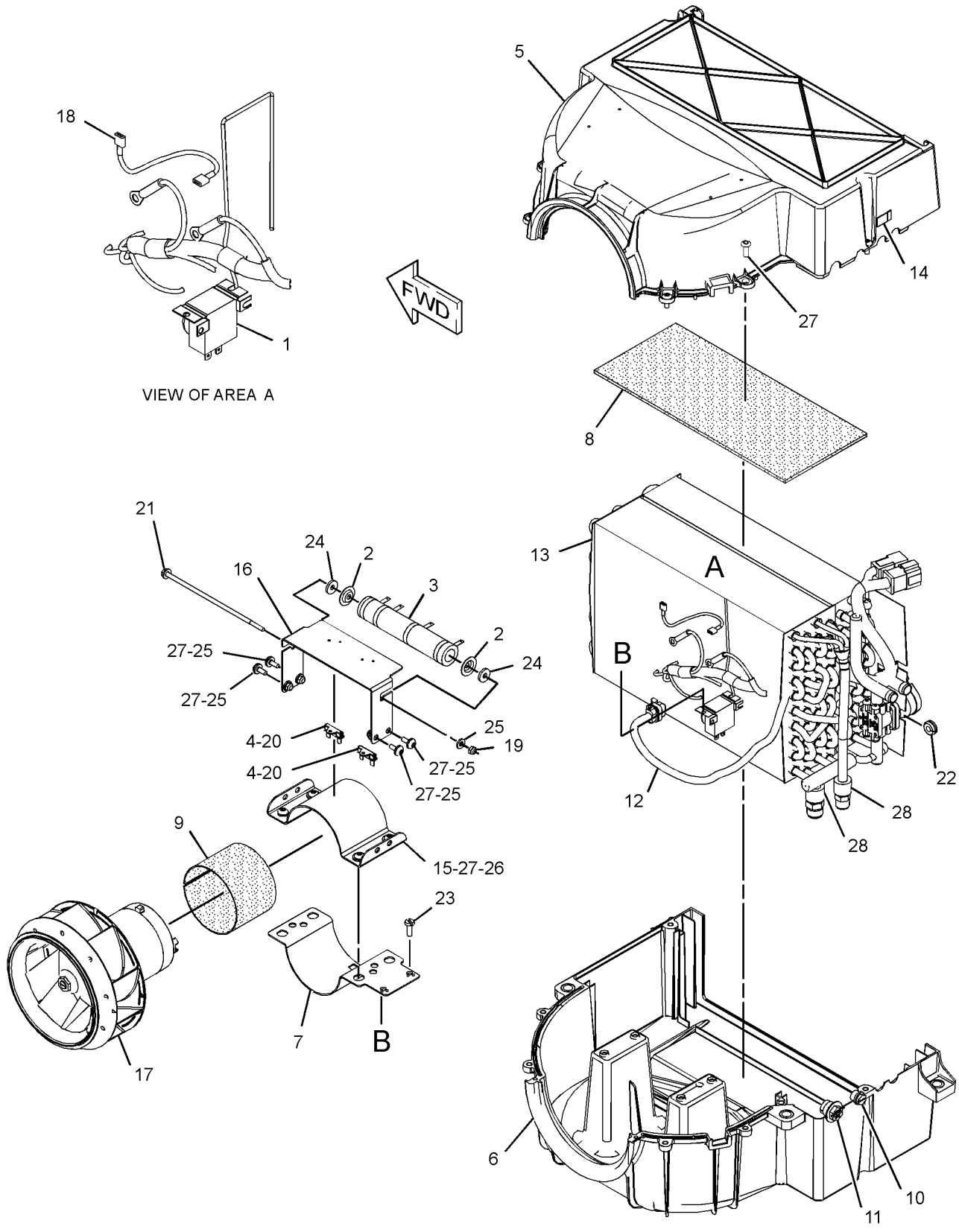

GRAPHIC #1 **<END>** g03078139

292-0609 ARMREST GP–RH

S/N: E9Y1-UP

PART OF 345-1271 SUPPORT GP-CONTROL

SMCS-7307 **i05165197**

NOTE	REF NO	GRAPHIC REF	PART NUMBER	QTY	PART NAME 1 2 3 4 5 6 (PRODUCT LEVEL)	SEE PAGE
	1	1	**233-3278**	1	BRACKET AS (RH)	
M		1	**6V-9632**	2	NUT-WELD (M6X1-THD)	
	2	1	**253-8868**	1	PIN-SPRING	
	3	1	**283-7980**	1	CUSHION AS	
M	4	1	**3E-8020**	4	SCREW-TRUSS HEAD (M6X1X25-MM)	
	5	1	**122-7666**	1	SPRING	
	6	1	**8C-8430**	1	SETSCREW-SOCKET (10-24X1-IN)	
	7	1	**292-0611**	2	BUSHING	
	8	1	**292-0612**	1	BUSHING	
	9	1	**292-0614**	1	ROD	
	10	1	**292-0618**	1	KNOB	

M - METRIC PART

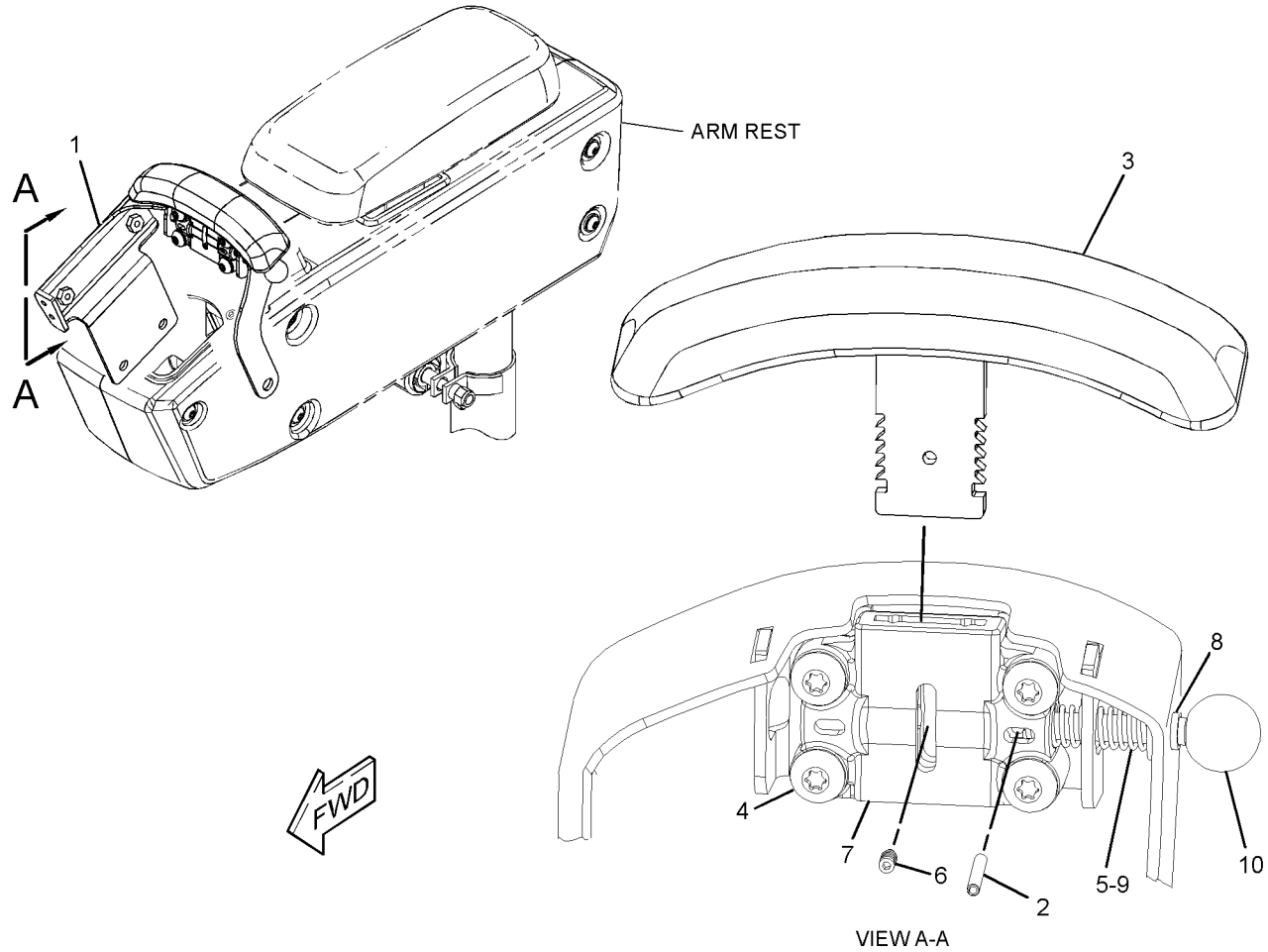

GRAPHIC #1 **<END>** g01391688

OPERATOR STATION

292-0617 ARMREST GP–LH

S/N: E9Y1-UP

PART OF 345-1272 SUPPORT GP-CONTROL

SMCS-7307 **i05165198**

NOTE	REF NO	GRAPHIC REF	PART NUMBER	QTY	PART NAME 1 2 3 4 5 6 (PRODUCT LEVEL)	SEE PAGE
	1	1	**233-3277**	1	BRACKET AS (LH)	
M		1	**6V-9632**	2	NUT-WELD (M6X1-THD)	
	2	1	**253-8868**	1	PIN-SPRING	
	3	1	**283-7980**	1	CUSHION AS	
M	4	1	**3E-8020**	4	SCREW-TRUSS HEAD (M6X1X25-MM)	
	5	1	**8C-8430**	1	SETSCREW-SOCKET (10-24X1-IN)	
	6	1	**122-7666**	1	SPRING	
	7	1	**292-0611**	2	BUSHING	
	8	1	**292-0612**	1	BUSHING	
	9	1	**292-0614**	1	ROD	
	10	1	**292-0618**	1	KNOB	

M - METRIC PART

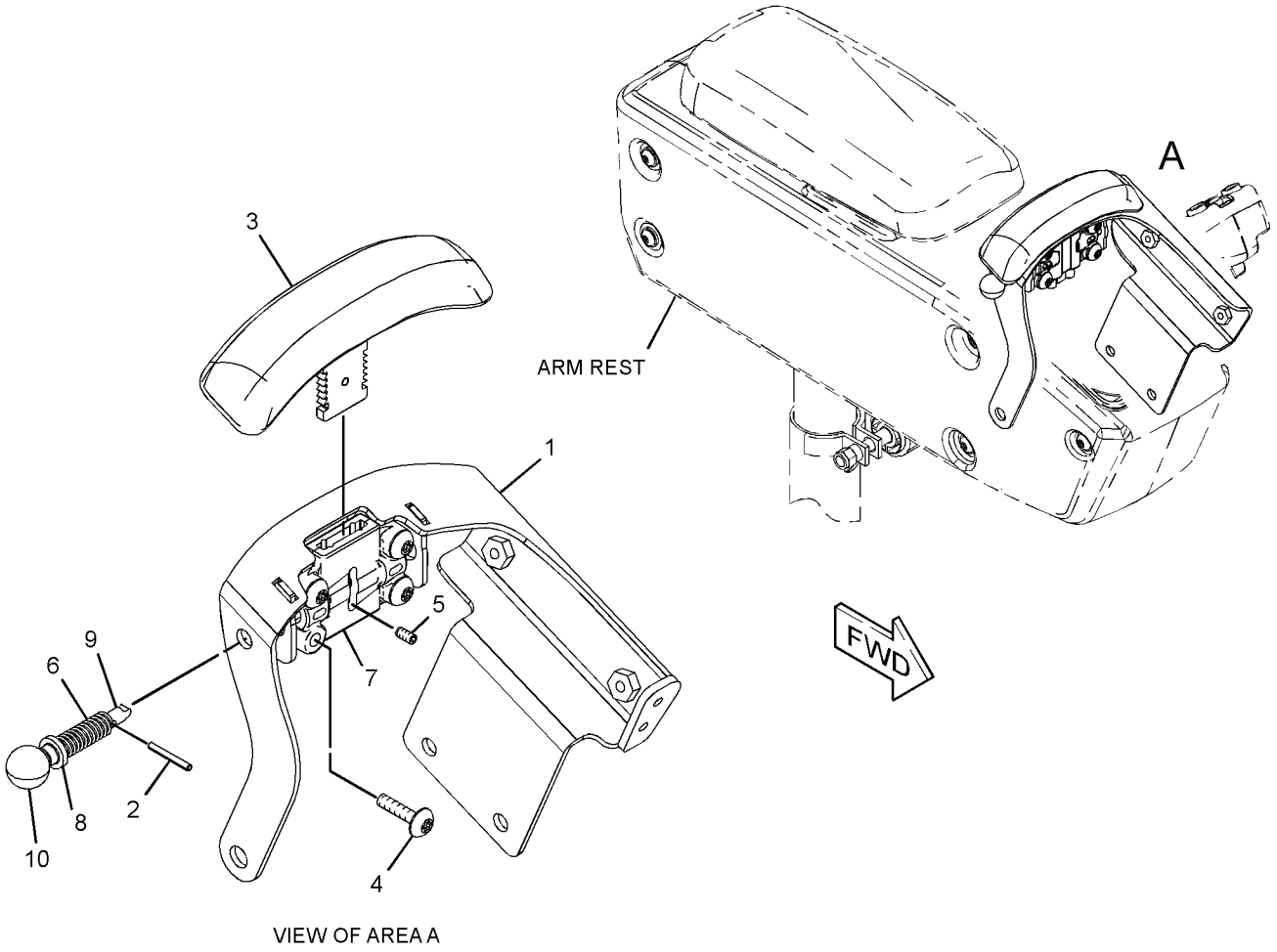

VIEW OF AREA A

GRAPHIC #1 **<END>** g01523630

371-1389 BRACKET GP-MOUNTING—CLEAN EMISSIONS MODULE, RH

S/N: E9Y1-UP

PART OF 375-3464 SUPPORT GP-CONTROL

SMCS-7301 **i06177844**

NOTE	REF NO	GRAPHIC REF	PART NUMBER	QTY	PART NAME 1 2 3 4 5 6 (PRODUCT LEVEL)	SEE PAGE
	1	1	**474-9433**	1	SUPPORT AS	
	2	1	**474-9434**	1	SUPPORT AS	
M	3	1	**8T-4195**	18	BOLT (M10X1.5X30-MM)	
	4	1	**7X-7729**	18	WASHER (11X25X3-MM THK)	

M - METRIC PART

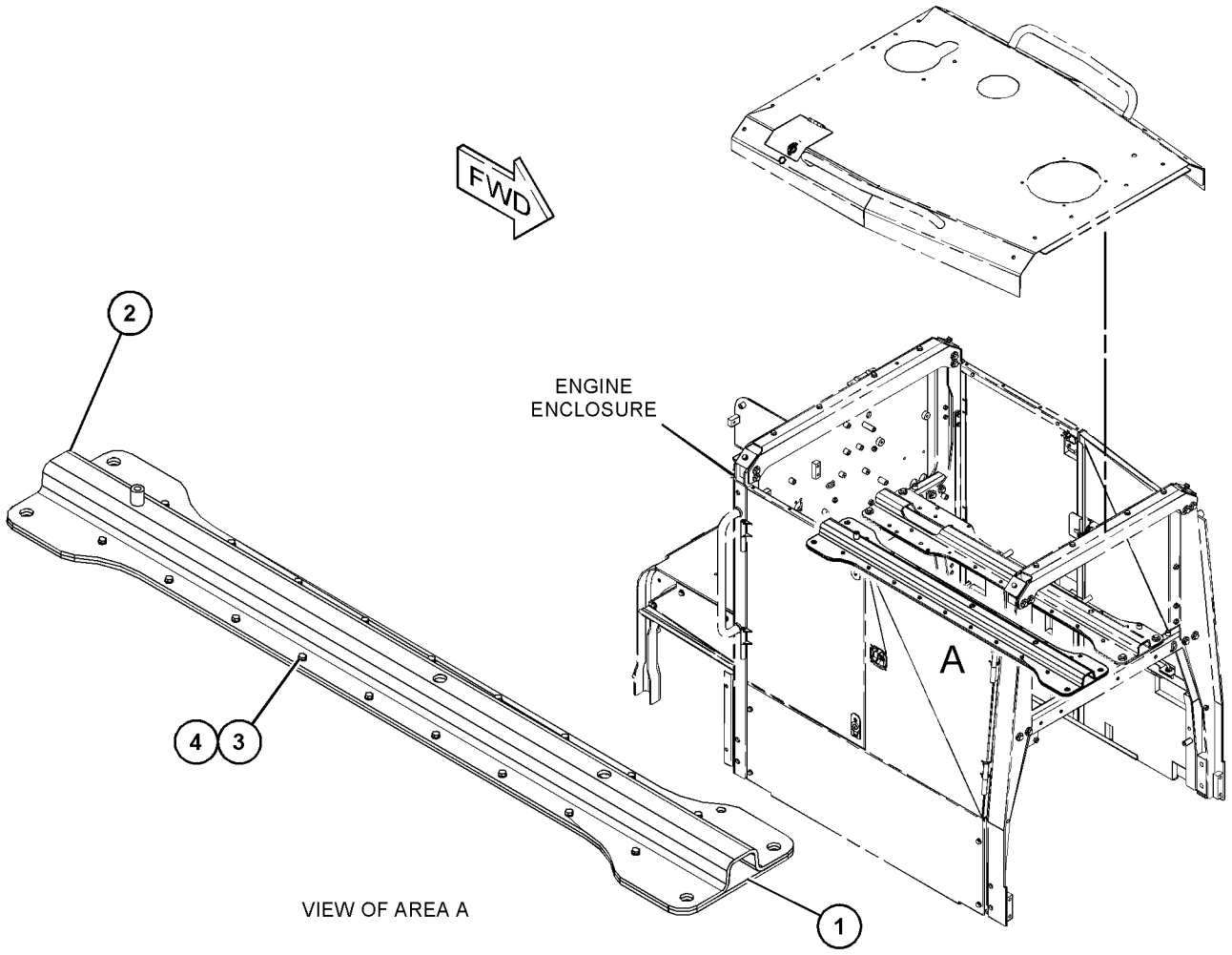

GRAPHIC #1 **<END>** g03830553

371-1390 BRACKET GP-MOUNTING—CLEAN EMISSIONS MODULE, LH

S/N: E9Y1-UP

PART OF 375-3464 SUPPORT GP-CONTROL

SMCS-7301 **i06177845**

NOTE	REF NO	GRAPHIC REF	PART NUMBER	QTY	PART NAME 1 2 3 4 5 6 (PRODUCT LEVEL)	SEE PAGE
	1	1	**479-6904**	1	PLATE AS	
	2	1	**479-6914**	1	SUPPORT AS	
M	3	1	**8T-4195**	14	BOLT (M10X1.5X30-MM)	
	4	1	**7X-7729**	14	WASHER (11X25X3-MM THK)	

M - METRIC PART

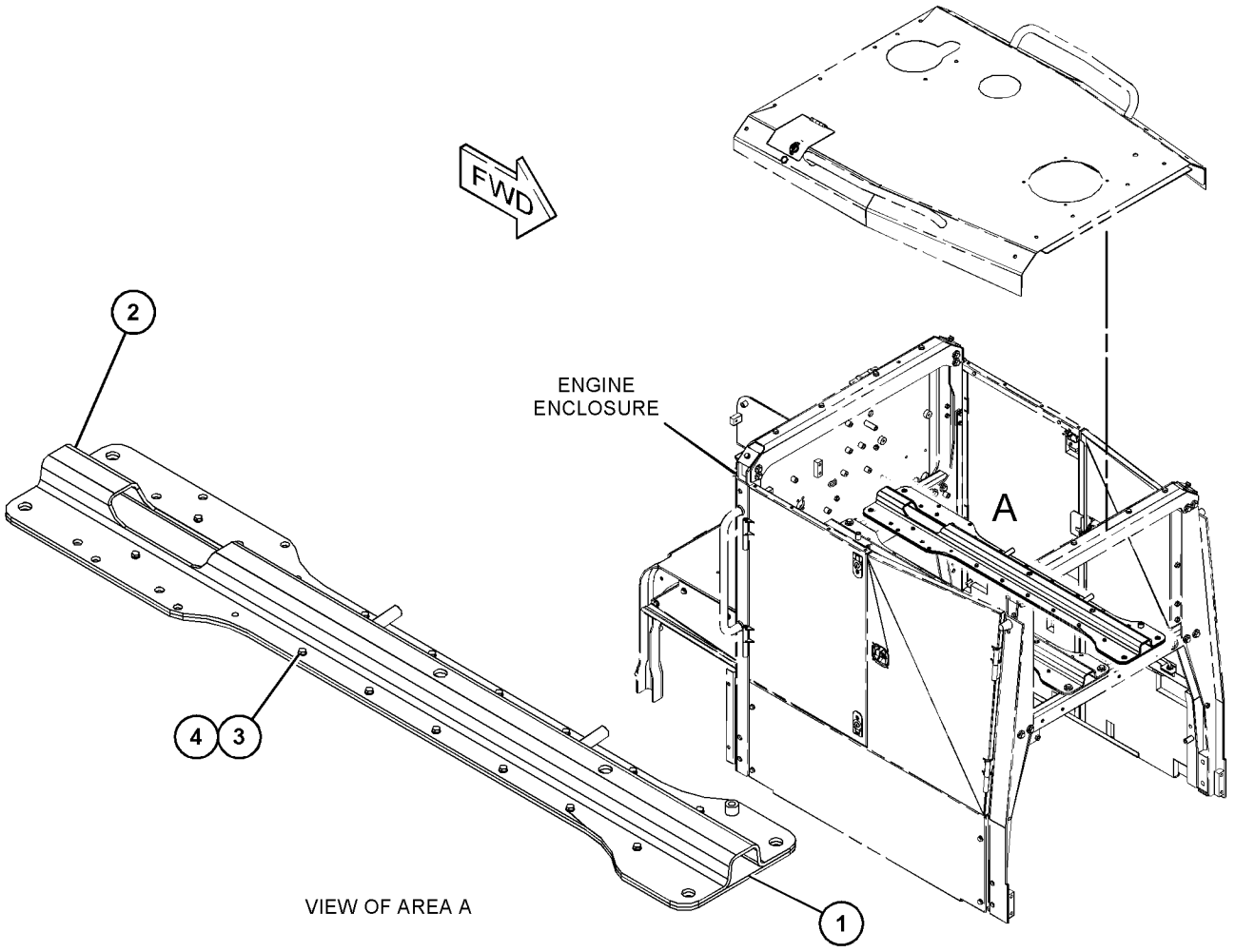

GRAPHIC #1 **<END>** g03830554

OPERATOR STATION

361-3120 CAB AR

S/N: E9Y1-UP

PART OF 385-8720 CAB AR

SMCS-7301 **i06151936**

NOTE	PART NUMBER	QTY	PART NAME 1 2 3 4 5 6 (PRODUCT LEVEL)	SEE PAGE
Y	*389-6377*	1	AIR CONDITIONER AR	682
Y	*361-3109*	1	CONTROL & MTG GP-IMPLEMENT	159
Y	*345-1277*	1	CONTROL & MTG GP-JOYSTICK (OPERATOR PLATFORM)	699
Y	*389-2167*	1	CONTROL GP-SERVICE BRAKE	526
Y	*233-3135*	1	CONVERTER GP-ELECTRICAL	164
Y	*363-4962*	1	COVER GP-CAB	709
Y	*381-8141*	1	FILM GP	850
Y	*360-7617*	1	GRADE CONTROL GP (ACCUGRADE)	172
Y	*447-2230*	1	LINER GP-CAB	752
Y	*233-3208*	1	MIRROR GP-REAR VIEW (INTERIOR)	761
Y	*233-3122*	1	MOUNTING GP-ANTENNA (RADIO)	768
Y	*382-0667*	1	PANEL GP-INSTRUMENT	782
Y	*385-8717*	1	SEAT BELT GP	799
Y	*457-8944*	1	TRIM GP-CAB	822
Y	*381-8211*	1	WINDOW GP-VENT	829
Y	*310-2029*	1	WIPER & WASHER GP-WINDOW (FRONT)	830
Y	*310-2041*	1	WIPER GP-WINDOW (CAB)	832
Y	*330-3868*	1	WIPER GP-WINDOW (REAR)	835
Y	*361-3148*	1	WIRING GP-CAB	280
	382-0668	1	CAB AS-ROPS	
	468-0970	1	FILM-INFORMATION (RETARDING GUIDELINES, READ OMM)	
	442-6279	1	FILM-WARNING (ROPS, FOPS, READ OMM, NO WELD)	

Y - SEPARATE ILLUSTRATION

<END>

385-8720 CAB AR

S/N: E9Y1-UP

PART OF 386-1317 COMMON AR

SMCS-7301 **i06147553**

NOTE	PART NUMBER	QTY	PART NAME 1 2 3 4 5 6 (PRODUCT LEVEL)	SEE PAGE
Y	*361-3120*	1	CAB AR	689
Y	*386-0235*	1	INSTALLATION GP-CAB	740
Y	*385-8708*	1	MONITOR AR-PAYLOAD	765

Y - SEPARATE ILLUSTRATION

<END>

386-1309 CAB GP

S/N: E9Y1-UP
STANDARD
FOR USE WITH 375-3405—PAGE: 2, 375-3406—PAGE: 786
CANNOT BE USED WITH 386-1310—PAGE: 690, 386-1311—PAGE: 690
AN ATTACHMENT

SMCS-7301 **i06139478**

NOTE	PART NUMBER	QTY	PART NAME 1 2 3 4 5 6 (PRODUCT LEVEL)	SEE PAGE
Y	*384-5609*	1	ALTERNATOR GP-CHARGING	147
Y	**357-9201**	1	DOOR GP-CAB (RH)	712
Y	**357-9202**	1	DOOR GP-CAB (LH)	716
Y	*373-3993*	1	WINDOW GP-CAB (FRONT)	826
Y	*370-8469*	1	WIRING GP	276
Y - SEPARATE ILLUSTRATION				

<END>

386-1310 CAB GP

S/N: E9Y1-UP
PLATFORM
CANNOT BE USED WITH 386-1309—PAGE: 690, 462-6400—PAGE: 3
AN ATTACHMENT

SMCS-7301 **i06139479**

NOTE	PART NUMBER	QTY	PART NAME 1 2 3 4 5 6 (PRODUCT LEVEL)	SEE PAGE
Y	*384-5609*	1	ALTERNATOR GP-CHARGING	147
Y	**357-9203**	1	DOOR GP-CAB (RH)	719
Y	**357-9204**	1	DOOR GP-CAB (LH)	722
Y	*373-3993*	1	WINDOW GP-CAB (FRONT)	826
Y	*370-8469*	1	WIRING GP	276
Y - SEPARATE ILLUSTRATION				

<END>

386-1311 CAB GP

S/N: E9Y1-UP
HEATED
CANNOT BE USED WITH 386-1309—PAGE: 690
AN ATTACHMENT

SMCS-7301 **i06147391**

NOTE	PART NUMBER	QTY	PART NAME 1 2 3 4 5 6 (PRODUCT LEVEL)	SEE PAGE
Y	*384-5610*	1	ALTERNATOR GP-CHARGING	148
Y	**357-9202**	1	DOOR GP-CAB (LH)	716
Y	**388-6622**	1	DOOR GP-CAB (RH)	725
Y	*374-0714*	1	WINDOW GP-CAB	827
Y	*370-8467*	1	WIRING GP-ALTERNATOR	274
Y - SEPARATE ILLUSTRATION				

<END>

OPERATOR STATION

442-8722 CAB GP

S/N: E9Y1-UP
HEATED
CANNOT BE USED WITH 386-1309—PAGE: 690
AN ATTACHMENT

SMCS-7301 **i06147389**

NOTE	PART NUMBER	QTY	PART NAME 1 2 3 4 5 6 (PRODUCT LEVEL)	SEE PAGE
Y	*384-5610*	1	ALTERNATOR GP-CHARGING	148
Y	**357-9204**	1	DOOR GP-CAB (LH)	722
Y	**442-7348**	1	DOOR GP-CAB (RH)	729
Y	*374-0714*	1	WINDOW GP-CAB	827
Y	*370-8467*	1	WIRING GP-ALTERNATOR	274

Y - SEPARATE ILLUSTRATION

<END>

278-1154 COIL GP-EVAPORATOR & HEATER—AIR CONDITIONER

S/N: E9Y1-UP

PART OF 263-2555 AIR CONDITIONER GP

SMCS-7309, 7343

i06146765

NOTE	REF NO	GRAPHIC REF	PART NUMBER	QTY	PART NAME 1 2 3 4 5 6 (PRODUCT LEVEL)	SEE PAGE
	1	1	**131-3093**	1	BUSHING	
	2	1	**238-8839**	1	CORE AS-HEATER	
	3	1	**476-6335**	1	VALVE AS-CONTROL	
	4	1	**245-1596**	1	ACTUATOR	
	5	1	**248-2924**	2	SPACER (4.3X9.5X19.1-MM THK)	
	6	1	**248-6772**	11	SCREW-MACHINE (8-16X7.75-IN)	
	7	1	**263-2548**	1	COIL AS-EVAPORATOR	
	8	1	**281-2588**	4	SCREW-SELF-TAPPING	
M	9	1	**281-2590**	2	BOLT (M4X0.7X30-MM)	
	10	1	**4D-2297**	2	SEAL-O-RING	
	11	1	**154-8079**	2	NUT-RETAINER (U-TYPE)	
	12	1	**262-4930**	1	TUBE	

M - METRIC PART

278-1154 **COIL GP-EVAPORATOR & HEATER (*contd.*)** **i06146765**

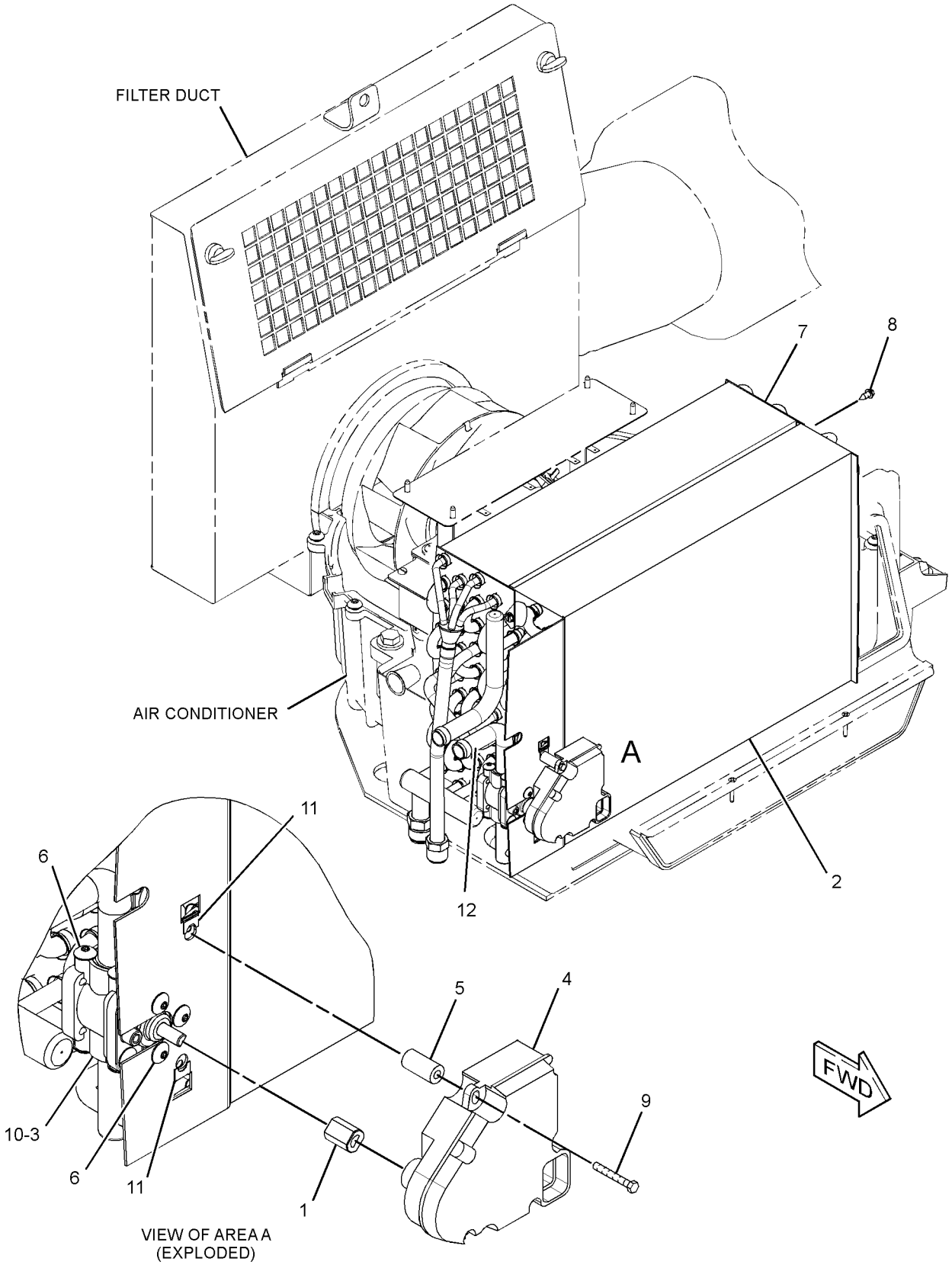

GRAPHIC #1 **<END>** g03830365

324-9711 COMPRESSOR GP-REFRIGERANT

S/N: TXX1-UP

PART OF 424-0286 COMPRESSOR GP-REFRIGERANT

AN ATTACHMENT

SMCS-1802 **i06218983**

NOTE	REF NO	GRAPHIC REF	PART NUMBER	QTY	PART NAME 1 2 3 4 5 6 (PRODUCT LEVEL)	SEE PAGE
	1	1	**102-8802**	1	KIT-RECEPTACLE (2-PIN)	
					(INCLUDES RECEPTACLE AS & WEDGE)	
	2	1	**314-4018**	1	VALVE AS-PRESSURE RELIEF (REFRIGERANT COMPRESSOR)	
	3	1	**126-1767**	2	PIN-CONNECTOR (14-GA TO 16-GA)	
	4	1	**7T-4532**	1	PLUG AS	
	5	1	**329-1023**	1	HEAD	

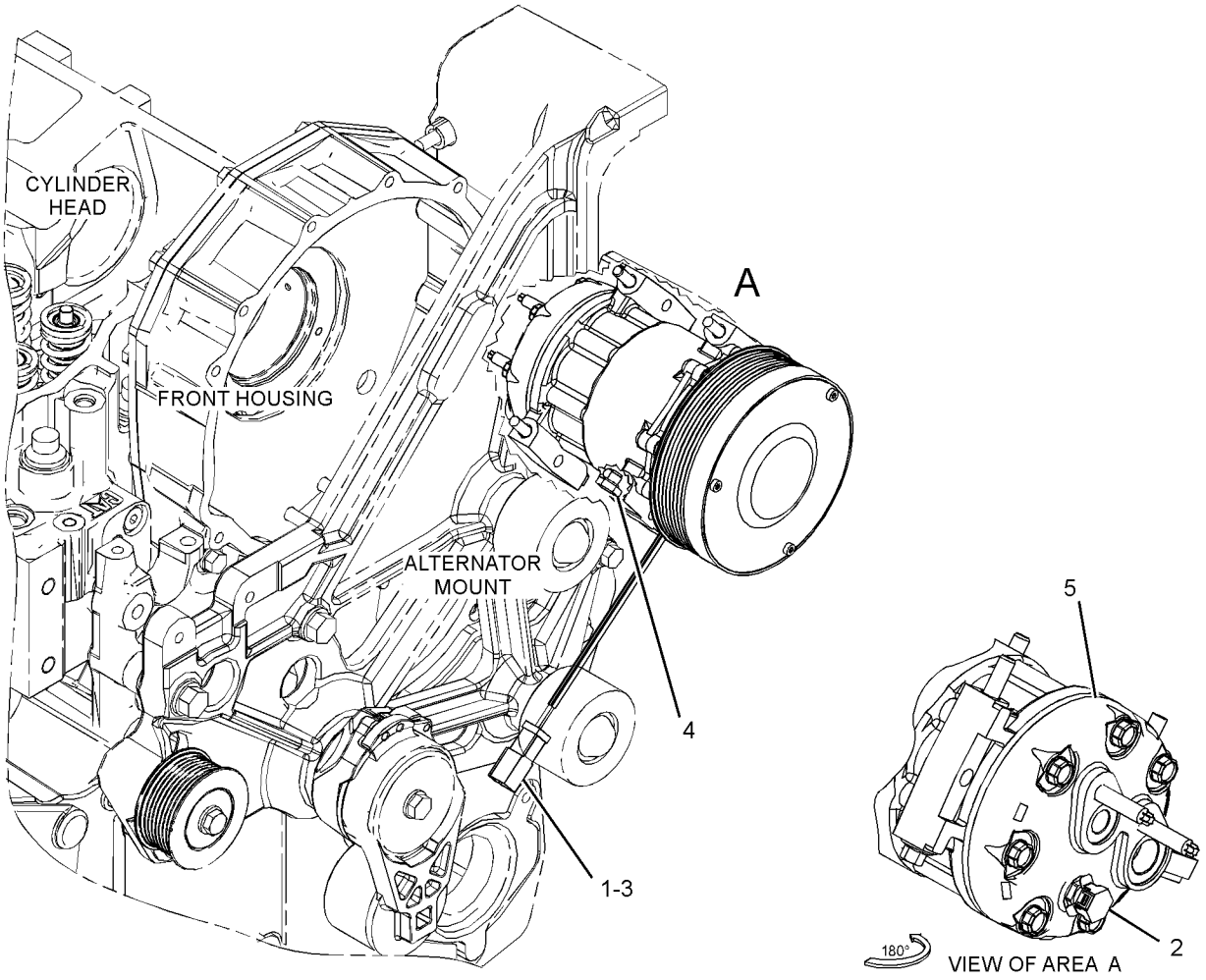

GRAPHIC #1 **<END>** g02254553

424-0286 COMPRESSOR GP-REFRIGERANT

S/N: TXX1-UP
FOR USE WITH C13 TIER IV FINAL INDUSTRIAL ENGINES
PART OF 383-2065, 422-0048 ENGINE AR-COMPLETE
AN ATTACHMENT

SMCS-1802 **i05260947**

NOTE	REF NO	GRAPHIC REF	PART NUMBER	QTY	PART NAME 1 2 3 4 5 6 (PRODUCT LEVEL)	SEE PAGE
Y	1	1	**324-9711**	1	COMPRESSOR GP-REFRIGERANT	694
M	2	1	**7X-2538**	4	BOLT (M8X1.25X100-MM)	
	3	1	**8T-4224**	4	WASHER-HARD (8.8X16X2-MM THK)	

M - METRIC PART
Y - SEPARATE ILLUSTRATION

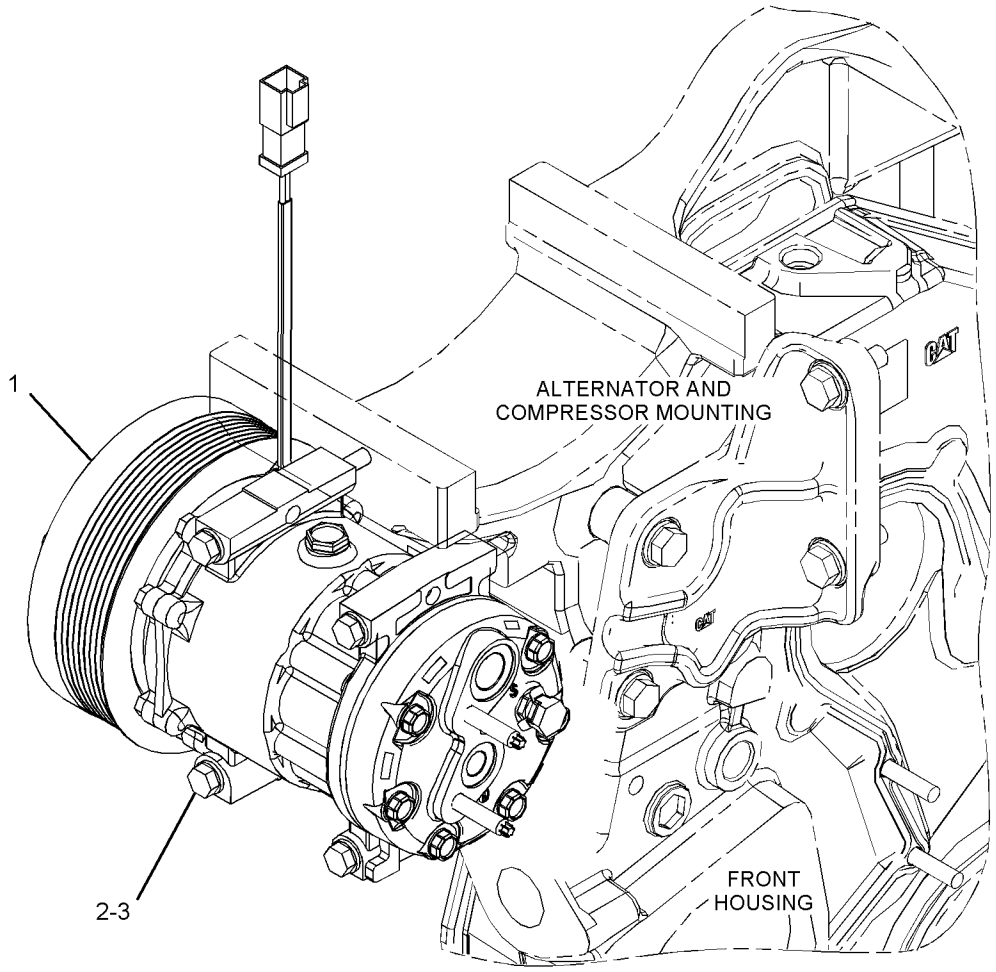

GRAPHIC #1 **<END>** g03425428

389-6378 CONDENSER & MTG GP-REFRIGERANT

S/N: E9Y1-UP

PART OF 389-6377 AIR CONDITIONER AR

SMCS-1805 **i06144676**

NOTE	REF NO	GRAPHIC REF	PART NUMBER	QTY	PART NAME 1 2 3 4 5 6 (PRODUCT LEVEL)	SEE PAGE
	1	1	**9X-7383**	1	SEAL-O-RING	
Y	2	1	**389-6379**	1	CONDENSER GP-REFRIGERANT	697
	3	1	**1S-0994**	2	CLIP	
	4	1	**5D-1026**	2	CLAMP-BAND	
M	5	1	**8T-4192**	6	BOLT (M12X1.75X25-MM)	
	6	1	**8T-4223**	6	WASHER-HARD (13.5X25.5X3-MM THK)	
	7	1	**9X-7381**	1	SEAL-O-RING	
E	8	1	**9X-2133**		HOSE (50-CM EACH)	
D	9	1	**5P-7070**		INSULATION-STRIP (0.5-M EACH)	

D - ORDER BY THE METER
E - ORDER BY THE CENTIMETER
M - METRIC PART
Y - SEPARATE ILLUSTRATION

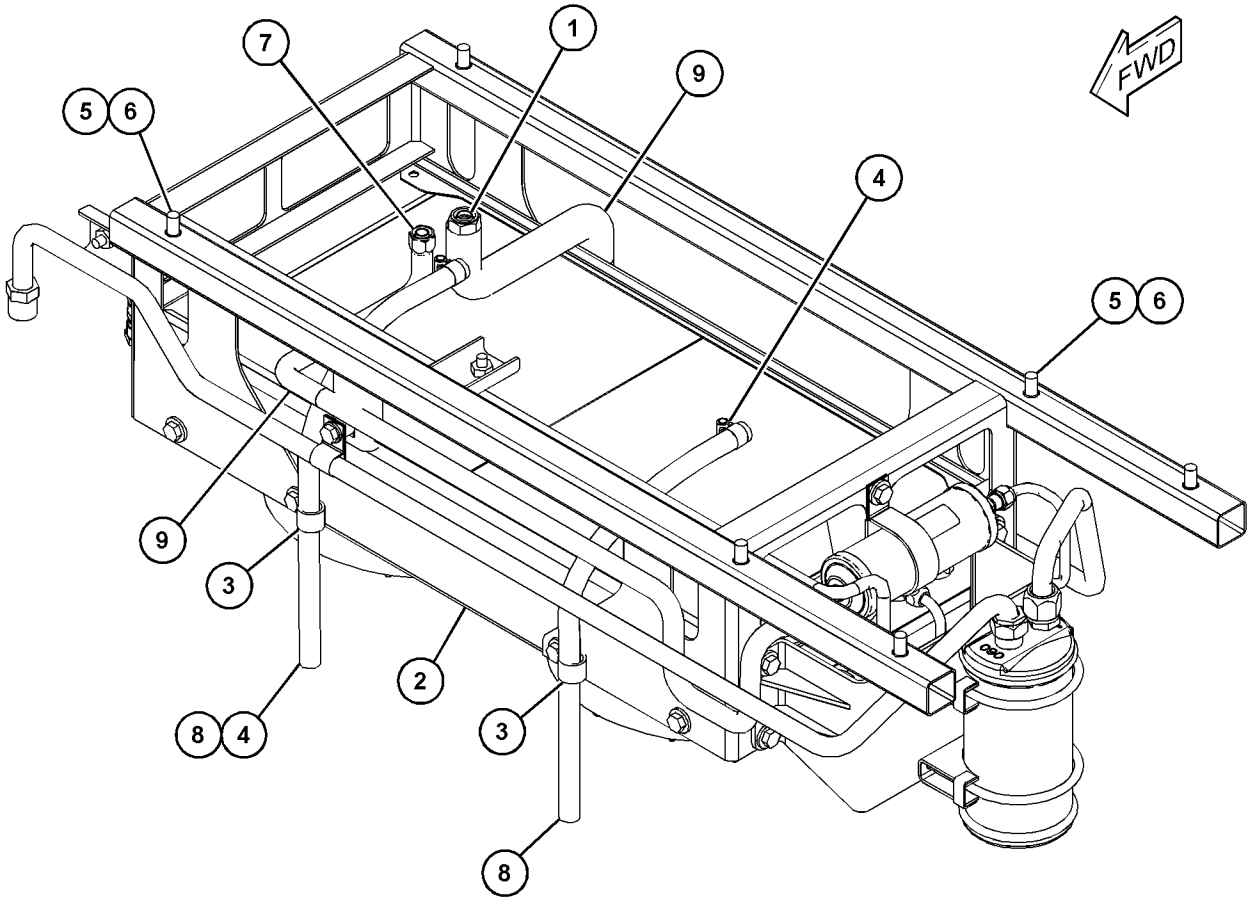

GRAPHIC #1 **<END>** g03838973

389-6379 CONDENSER GP-REFRIGERANT

S/N: E9Y1-UP

PART OF 389-6378 CONDENSER & MTG GP-REFRIGERANT

SMCS-1805 **i06144682**

NOTE	REF NO	GRAPHIC REF	PART NUMBER	QTY	PART NAME 1 2 3 4 5 6 (PRODUCT LEVEL)	SEE PAGE
	1	1	**5P-3948**	1	COUPLING AS-REFRIGERANT (SELF-SEALING)	
	2	1	**257-3226**	1	DRYER AS-REFRIGERANT (IN-LINE) (AIR CONDITIONER)	
		1	**7X-2049**	1	TUBE AS	
	3	1	**274-5909**	1	ACCUMULATOR-REFRIGERANT	
	4	1	**283-0597**	1	TUBE AS	
	5	1	**283-0599**	1	BRACKET AS	
	6	1	**283-0601**	1	COVER AS	
M		1	**6V-9632**	14	NUT-WELD (M6X1-THD)	
M		1	**8T-3490**	12	NUT-WELD (M10X1.5-THD)	
	7	1	**328-2321**	2	U-CLAMP AS	
					(EACH INCLUDES)	
		1	**6V-8801**	2	NUT (3/8-16-THD)	
		1	**8T-4896**	2	WASHER-HARD (10.2X18.5X2.5-MM THK)	
	8	1	**328-8446**	1	TUBE AS	
	9	1	**328-8447**	1	TUBE AS	
	10	1	**329-1013**	1	CONDENSER AS-REFRIGERANT	
	11	1	**360-4783**	2	FAN AS	
	12	1	**389-6380**	1	SUPPORT AS	
M		1	**8T-3490**	6	NUT-WELD (M10X1.5-THD)	
	13	1	**389-6382**	1	TUBE AS	
	14	1	**389-6383**	1	TUBE AS	
	15	1	**154-2302**	2	SPACER (11X20X15-MM THK)	
	16	1	**1F-7567**	1	CLIP	
	17	1	**3P-9847**	1	CLIP	
	18	1	**4B-0418**	1	CLIP	
	19	1	**5K-9660**	3	CLIP	
	20	1	**7X-7729**	14	WASHER (11X25X3-MM THK)	
	21	1	**8M-2770**	2	CLIP	
	22	1	**8T-4121**	4	WASHER-HARD (11X21X2.5-MM THK)	
M	23	1	**8T-4136**	16	BOLT (M10X1.5X25-MM)	
M	24	1	**8T-4138**	14	BOLT (M6X1X20-MM)	
M	25	1	**8T-4186**	2	BOLT (M10X1.5X40-MM)	
	26	1	**9X-7381**	2	SEAL-O-RING	
	27	1	**9X-7382**	2	SEAL-O-RING	
	28	1	**9X-7383**	4	SEAL-O-RING	
	29	1	**9X-8256**	14	WASHER (6.6X12X2-MM THK)	
	30	1	**5P-7070**	3	INSULATION-STRIP	

M - METRIC PART

389-6379 **CONDENSER GP-REFRIGERANT (*contd.*)** **i06144682**

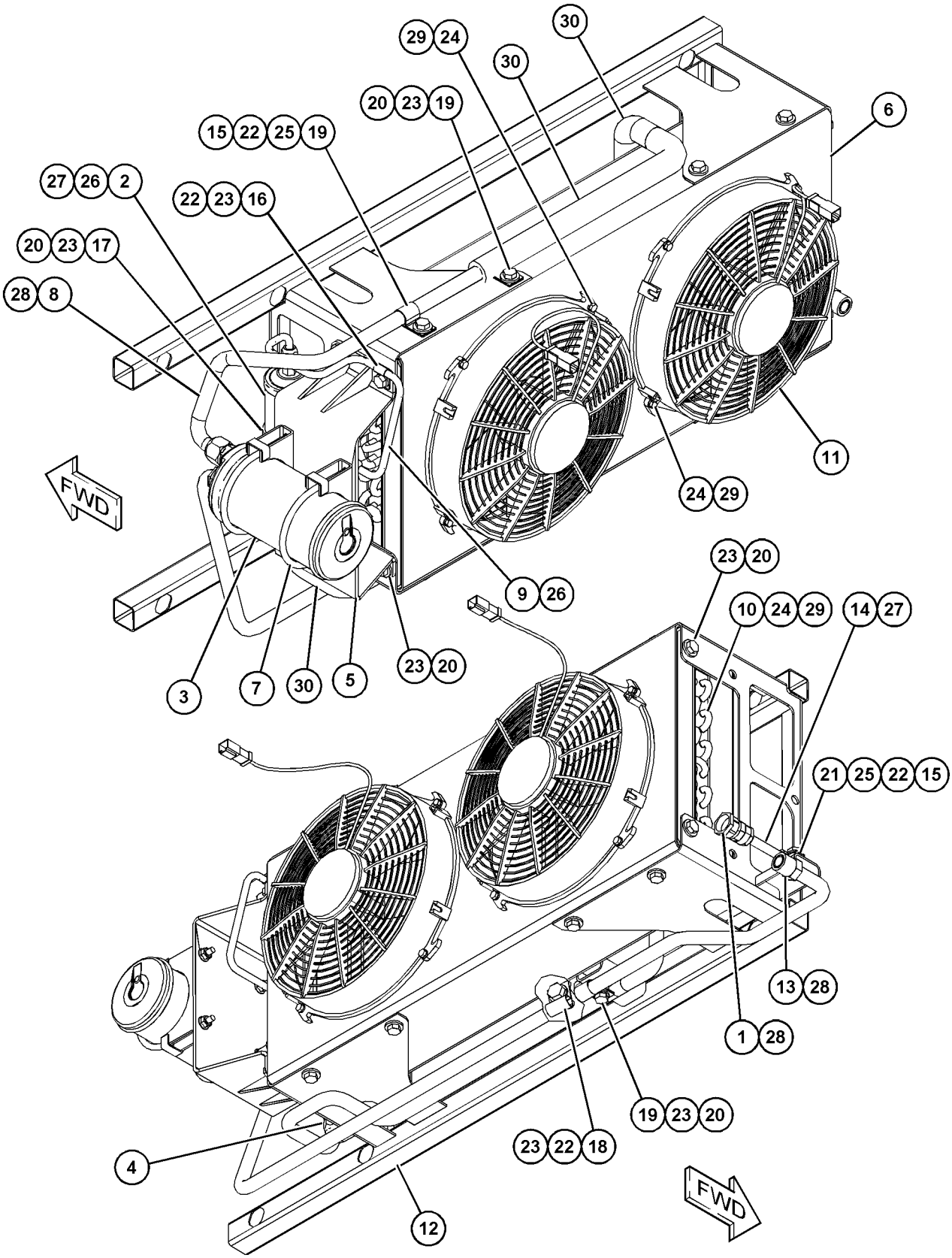

GRAPHIC #1 **<END>** g03839309

345-1277 CONTROL & MTG GP-JOYSTICK–OPERATOR PLATFORM

S/N: E9Y1-UP

PART OF 361-3120 CAB AR

SMCS-5063, 5705 **i06077301**

NOTE	REF NO	GRAPHIC REF	PART NUMBER	QTY	PART NAME 1 2 3 4 5 6 (PRODUCT LEVEL)	SEE PAGE
Y	1	1	*345-1271*	1	SUPPORT GP-CONTROL (JOYSTICK, RH)	809
Y	2	1	*345-1272*	1	SUPPORT GP-CONTROL (JOYSTICK, LH)	811
	3	1	**6V-5839**	8	WASHER (11X21X2.5-MM THK)	
M	4	1	**8T-4196**	8	BOLT (M10X1.5X35-MM)	
	5	1	**310-2042**	4	PLATE	
	6	1	**140-5945**	1	FILM-IDENTIFICATION (HORN)	

M - METRIC PART
Y - SEPARATE ILLUSTRATION

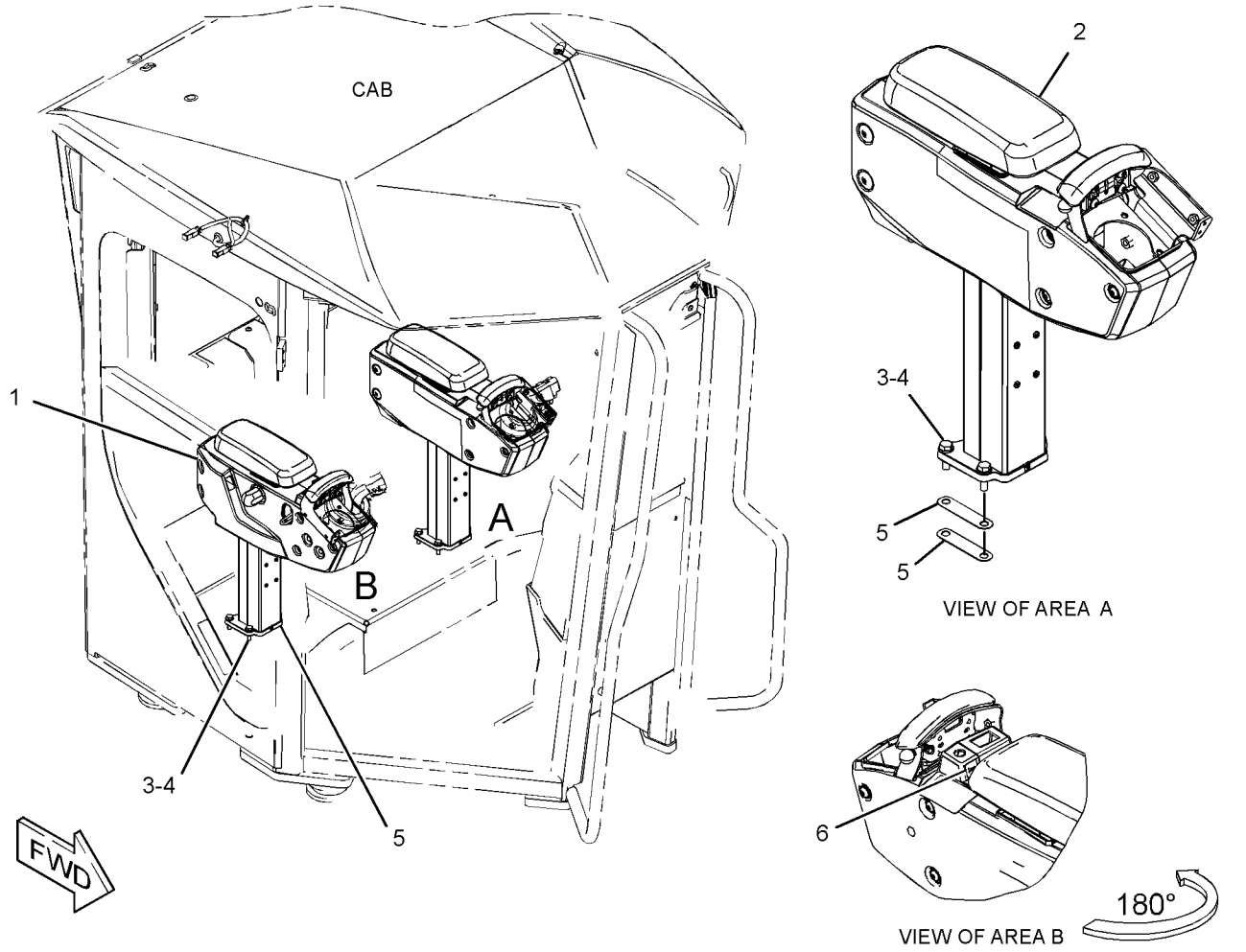

GRAPHIC #1

<END>

g03787096

OPERATOR STATION

357-9151 CONTROL & MTG GP-JOYSTICK

S/N: E9Y1-UP

PART OF 361-3148 WIRING GP-CAB

SMCS-5063, 5705

i05923902

NOTE	PART NUMBER	QTY	PART NAME 1 2 3 4 5 6 (PRODUCT LEVEL)	SEE PAGE
Y	**360-2987**	1	CONTROL GP-JOYSTICK (LH)	706
Y	**348-6995**	1	CONTROL GP-JOYSTICK (RH)	705
M	**9X-2546**	8	BOLT (M6X1X20-MM)	

M - METRIC PART
Y - SEPARATE ILLUSTRATION

<END>

300-4231 CONTROL GP-AIR & TEMPERATURE

S/N: E9Y1-UP

PART OF 389-6377 AIR CONDITIONER AR

SMCS-7451 **i06144667**

NOTE	REF NO	GRAPHIC REF	PART NUMBER	QTY	PART NAME 1 2 3 4 5 6 (PRODUCT LEVEL)	SEE PAGE
	1	1	**248-4220**	1	PANEL AS (AIR CONDITIONER, HEATER CONT)	
	1A	1	**271-7312**	1	KNOB (TEMPERATURE CONTROL)	
	1B	1	**285-7415**	1	KNOB (BLOWER FAN SPEED)	
	2	1	**284-3662**	1	SWITCH AS-ROCKER (24-VOLT) (AIR CONDITIONER ON, OFF)	
M	3	1	**9X-2045**	2	SCREW-TRUSS HEAD (M6X1X20-MM)	

M - METRIC PART

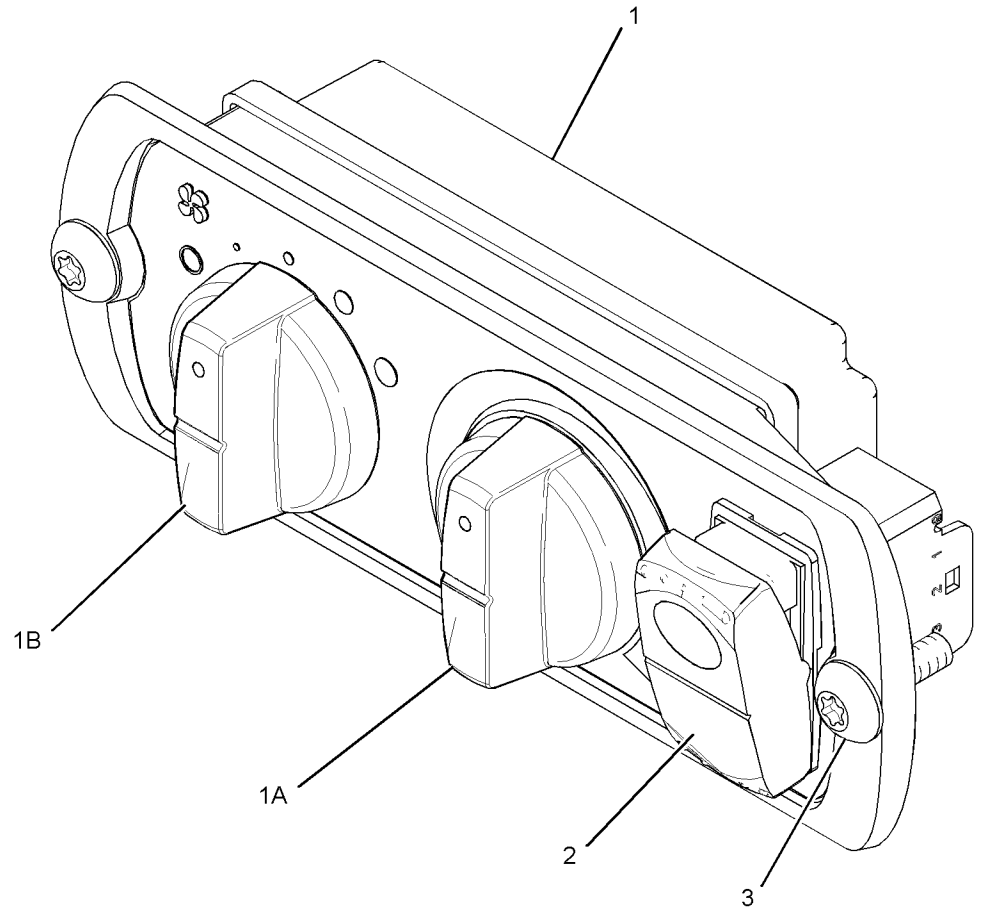

GRAPHIC #1 **<END>** g01323364

272-8442 CONTROL GP-ELECTROHYDRAULIC—WITH AUXILIARY LEVER

S/N: E9Y1-UP
WITH MINI JOYSTICK
PART OF 360-7615 CONTROL GP-ELECTROHYDRAULIC
AN ATTACHMENT

SMCS-5702, 5705 **i05373900**

NOTE	REF NO	GRAPHIC REF	PART NUMBER	QTY	PART NAME 1 2 3 4 5 6 (PRODUCT LEVEL)	SEE PAGE
	1	1	**247-0737**	1	CONTROL GP-JOYSTICK (ELECTRONIC CONTROL)	
	1A	1	**292-8705**	1	BOOT	
	2	1	**292-8706**	1	CONTROL GP-ELECTROHYDRAULIC	
	2A	1	**8T-8737**	1	PLUG-SEAL	
	2B	1	**9X-3401**	11	PIN-CONNECTOR (16-GA TO 18-GA)	
	2C	1	**190-7615**	1	KIT-RECEPTACLE (12-PIN)	
					(INCLUDES RECEPTACLE AS & WEDGE)	
	2D	1	**281-4655**	1	FILM-INSTRUCTION (AUXILIARY)	
	3	1	**292-8703**	1	PALMREST	
	4	1	**292-8054**	1	BRACKET	

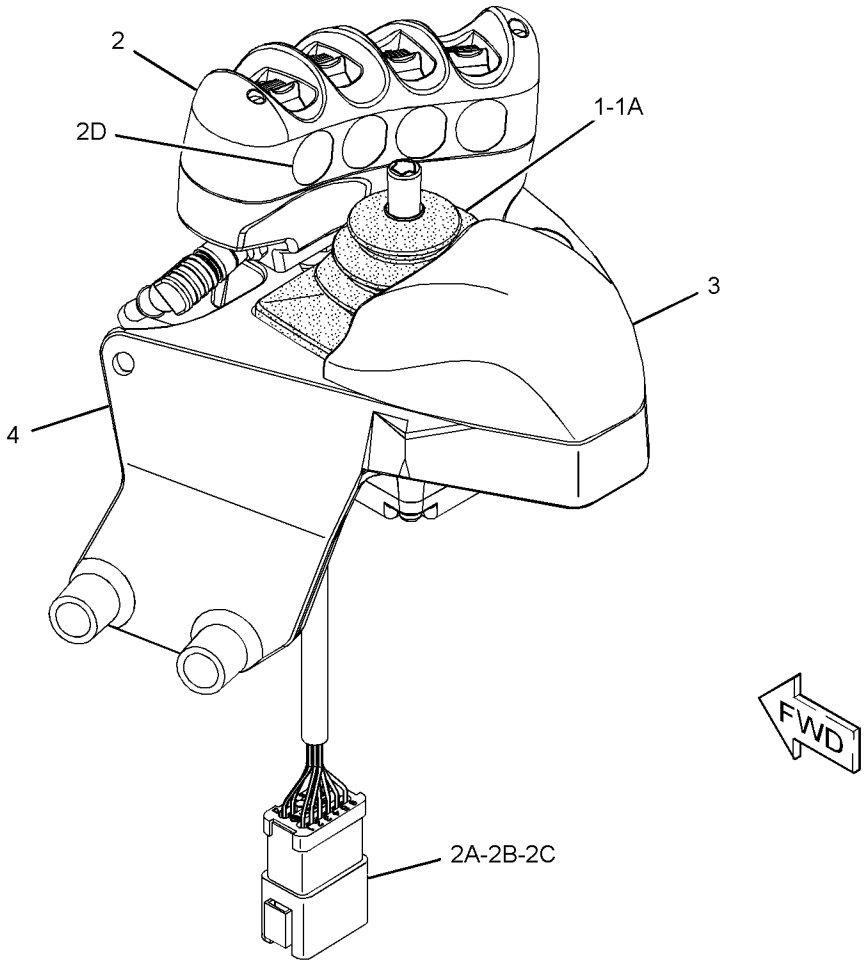

GRAPHIC #1 **<END>** g03405308

344-2764 CONTROL GP-ELECTROHYDRAULIC

S/N: E9Y1-UP

PART OF 385-7554, 385-7557 CONTROL AR-HYDRAULIC

AN ATTACHMENT

SMCS-5702, 5705 **i06105144**

NOTE	REF NO	GRAPHIC REF	PART NUMBER	QTY	PART NAME 1 2 3 4 5 6 (PRODUCT LEVEL)	SEE PAGE
	1	1	**358-4931**	1	CONTROL AS-PROPORTIONAL (REAR IMPLEMENT)	
		1	**8T-8737**	1	PLUG-SEAL	
		1	**9X-3401**	5	PIN-CONNECTOR (16-GA TO 18-GA)	
		1	**281-3136**	1	RECEPTACLE AS-CONNECTOR (6-PIN)	
	2	1	**251-2247**	1	GROMMET	
	3	1	**281-0387**	1	PLATE	
	4	1	**281-0390**	1	GRIP	
	5	1	**281-0431**	1	PLATE AS	
	6	1	**286-0277**	1	FILM-INSTRUCTION (NO FLOAT)	
	7	1	**299-1030**	1	ENCLOSURE AS	
	8	1	**334-9395**	1	KNOB	
	9	1	**351-8482**	1	BRACKET	
	10	1	**352-1502**	1	BEARING	
	11	1	**352-2586**	1	BOLT-SPECIAL	
M	12	1	**127-2170**	2	SCREW-TRUSS HEAD (M8X1.25X20-MM)	
M	13	1	**225-3109**	5	SCREW-TRUSS HEAD (M4X0.7X14-MM)	

M - METRIC PART

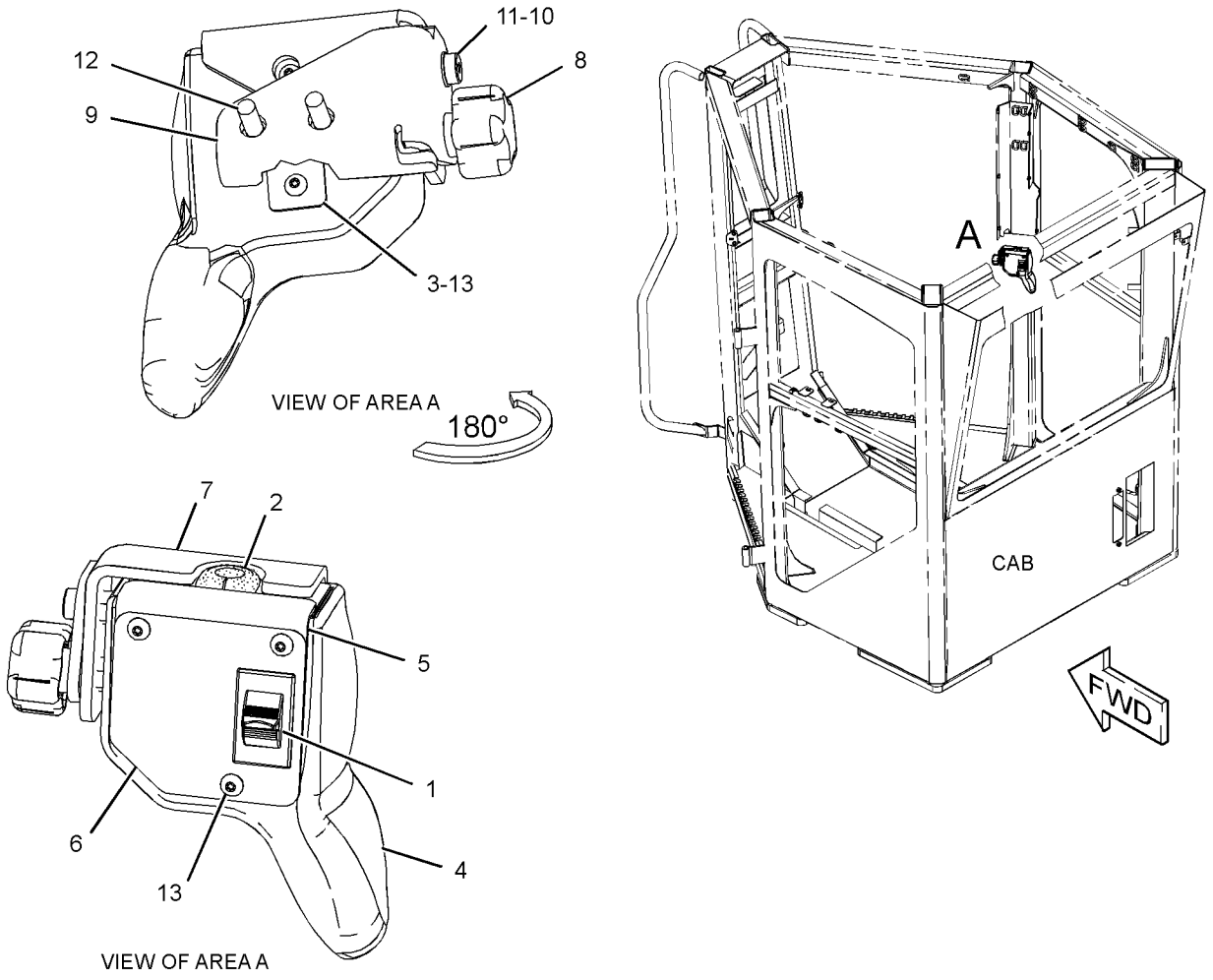

GRAPHIC #1 **<END>** g02155533

360-7615 CONTROL GP-ELECTROHYDRAULIC—AUXILIARY CONTROL

S/N: E9Y1-UP
POD
PART OF 385-7557 CONTROL AR-HYDRAULIC
AN ATTACHMENT

SMCS-5702, 5705

i05098155

NOTE	PART NUMBER	QTY	PART NAME 1 2 3 4 5 6 (PRODUCT LEVEL)	SEE PAGE
Y	**272-8442**	1	CONTROL GP-ELECTROHYDRAULIC (WITH AUXILIARY LEVER)	702
M	**5C-9553**	1	BOLT (M6X1X16-MM)	
M	**7X-0818**	2	BOLT (M8X1.25X45-MM)	
	9X-8256	1	WASHER (6.6X12X2-MM THK)	
	5P-4116	2	WASHER-HARD (8.8X20.5X2-MM THK)	

M - METRIC PART
Y - SEPARATE ILLUSTRATION

<END>

348-6995 CONTROL GP-JOYSTICK–RH

S/N: E9Y1-UP
ELECTRONIC
PART OF 357-9151 CONTROL & MTG GP-JOYSTICK

SMCS-3168, 4343, 5063, 5705 **i06204496**

NOTE	REF NO	GRAPHIC REF	PART NUMBER	QTY	PART NAME 1 2 3 4 5 6 (PRODUCT LEVEL)	SEE PAGE
	1	1	**169-0705**	9	SEAL	
	2	1	**174-3091**	1	KIT-RECEPTACLE (12-PIN)	
					(INCLUDES RECEPTACLE AS & WEDGE)	
	3	1	**247-0733**	1	BOOT	
	4	1	**9X-3401**	15	PIN-CONNECTOR (16-GA TO 18-GA)	
	5	1	**8T-8737**	9	PLUG-SEAL	
	6	1	**271-2811**	1	KIT-RECEPTACLE (12-PIN)	
					(INCLUDES RECEPTACLE AS & WEDGE)	
J	7	1	**442-0052**	1	KIT-JOYSTICK	
					(INCLUDES TAPE, TAPE REMOVAL TOOL, SCREWS, NUTS, BOLT, BIT & WASHERS)	

J - USED ONLY WHEN ADVANCED CONTROL JOYSTICK IS MOUNTED TO JOYSTICK HANDLE

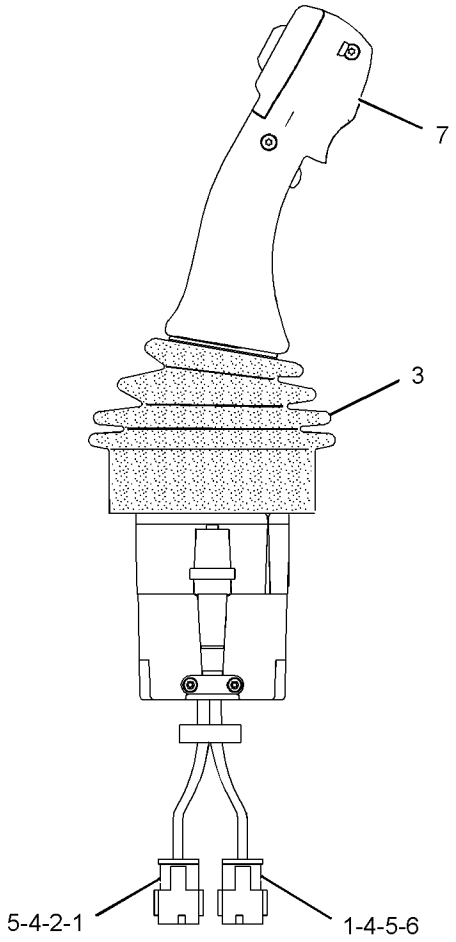

RIGHT SIDE VIEW

GRAPHIC #1 **<END>** g03834013

360-2987 CONTROL GP-JOYSTICK–LH

S/N: E9Y1-UP
ELECTRONIC
PART OF 357-9151 CONTROL & MTG GP-JOYSTICK

SMCS-3168, 4343, 5063, 5705 **i06204498**

NOTE	REF NO	GRAPHIC REF	PART NUMBER	QTY	PART NAME 1 2 3 4 5 6 (PRODUCT LEVEL)	SEE PAGE
	1	1	**169-0705**	5	SEAL	
	2	1	**174-3091**	1	KIT-RECEPTACLE (12-PIN)	
					(INCLUDES RECEPTACLE AS & WEDGE)	
	3	1	**247-0733**	1	BOOT	
	4	1	**9X-3401**	23	PIN-CONNECTOR (16-GA TO 18-GA)	
	5	1	**8T-8737**	5	PLUG-SEAL	
	6	1	**271-2811**	1	KIT-RECEPTACLE (12-PIN)	
	7	1	**151-9274**	1	KIT-RECEPTACLE (4-PIN)	
					(EACH RECEPTACLE KIT INCLUDES RECEPTACLE AS & WEDGE)	
	8	1	**342-9971**	1	SWITCH AS (FORWARD, NEUTRAL, REVERSE)	
J	9	1	**442-0052**	1	KIT-JOYSTICK	
					(INCLUDES TAPE, TAPE REMOVAL TOOL, SCREWS, BOLT, NUTS, BIT & WASHERS)	

J - KIT USED ONLY WHEN ADVANCED CONTROL JOYSTICK IS MOUNTED TO JOYSTICK HANDLE)

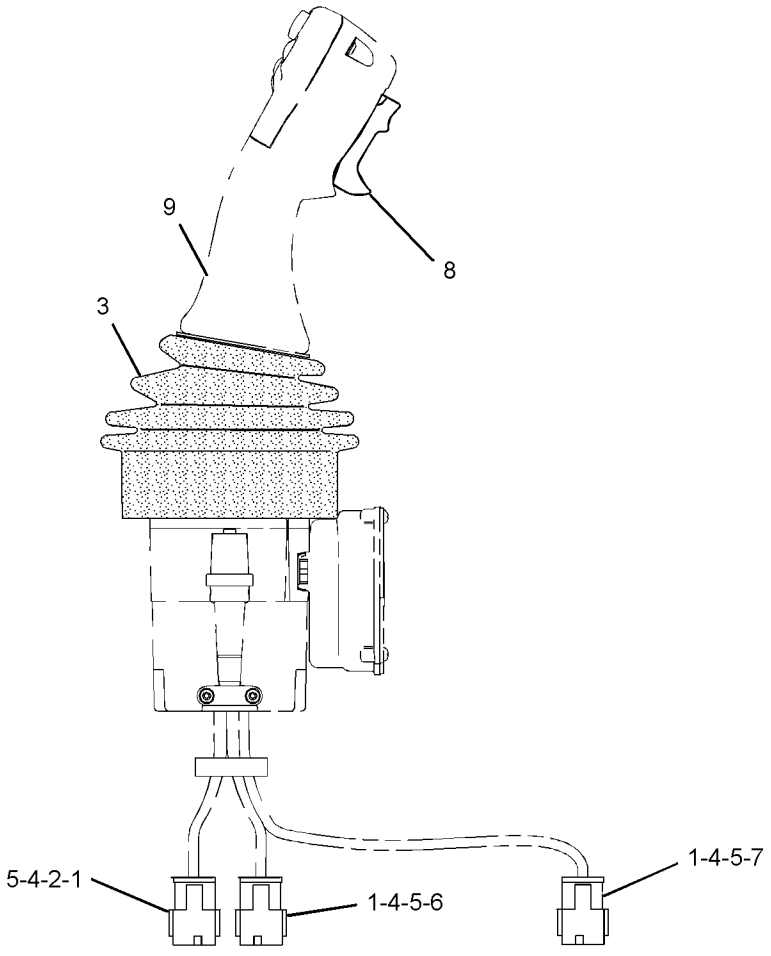

GRAPHIC #1 **<END>** g03853228

434-2232 CONTROL GP-JOYSTICK–LH

S/N: E9Y1-UP
ELECTRONIC
PART OF 463-6258 INSTALLATION GP-CONTROLS

SMCS-3168, 4343, 5063, 5705 **i05958141**

NOTE	REF NO	GRAPHIC REF	PART NUMBER	QTY	PART NAME 1 2 3 4 5 6 (PRODUCT LEVEL)	SEE PAGE
	1	1	**174-3091**	1	KIT-RECEPTACLE (12-PIN)	
					(INCLUDES RECEPTACLE AS & WEDGE)	
	2	1	**9X-3401**	10	PIN-CONNECTOR (16-GA TO 18-GA)	
	3	1	**144-0331**	1	CAP-PUSH BUTTON (YELLOW) (AUTOMATIC, MANUAL)	
	3A	1	**144-0331**	1	CAP-PUSH BUTTON (YELLOW) (NOT USED)	
	4	1	**8T-8737**	2	PLUG-SEAL	
					AVAILABLE REPAIR KIT(S):	
			442-0052	1	KIT-JOYSTICK (ATTACHMENT)	
					(INCLUDES TAPE, SCREWS, BOLT, NUTS, TORX BIT & WASHERS)	

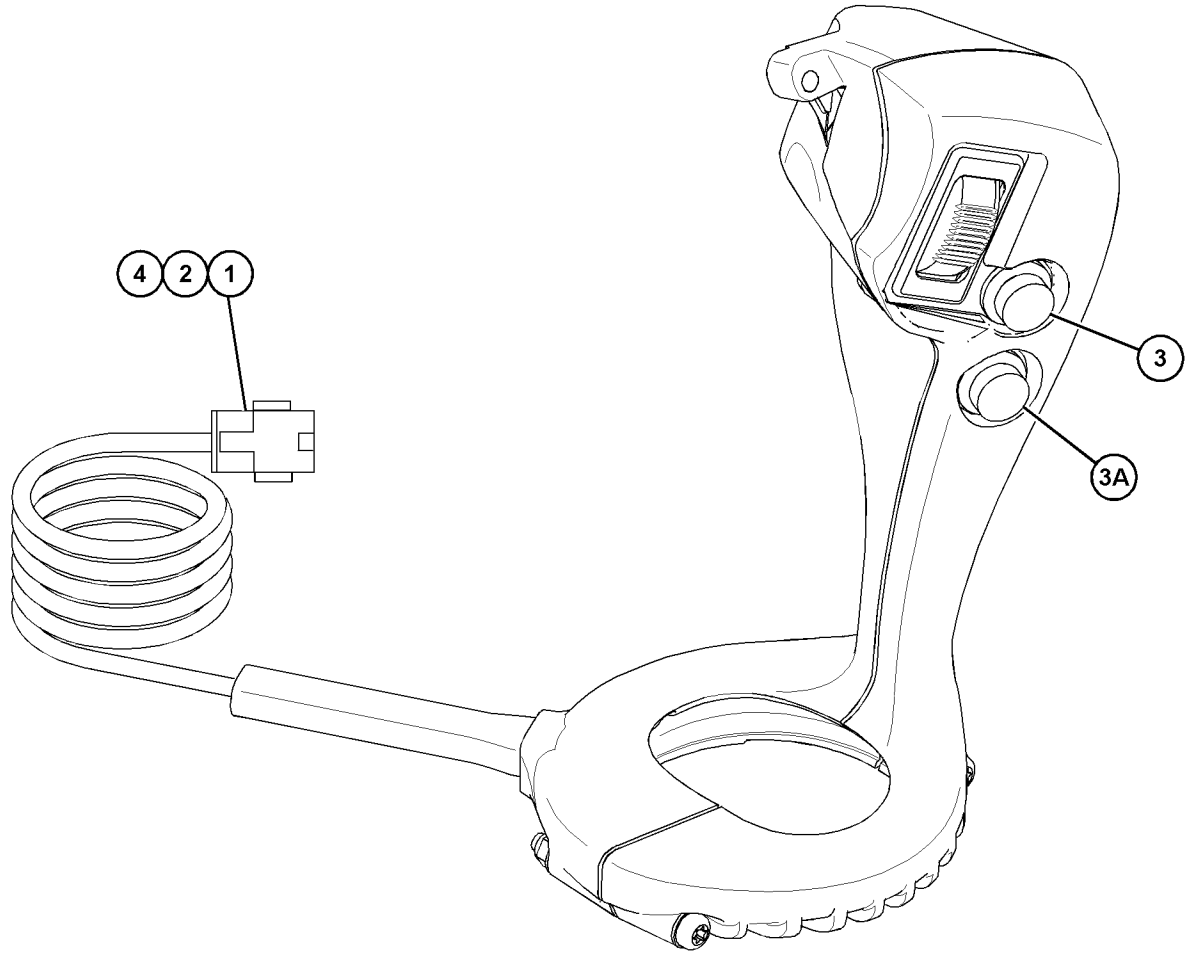

GRAPHIC #1 **<END>** g03745883

434-2233 CONTROL GP-JOYSTICK–RH

S/N: E9Y1-UP
ELECTRONIC
PART OF 463-6258 INSTALLATION GP-CONTROLS

SMCS-3168, 4343, 5063, 5705 **i05958179**

NOTE	REF NO	GRAPHIC REF	PART NUMBER	QTY	PART NAME 1 2 3 4 5 6 (PRODUCT LEVEL)	SEE PAGE
	1	1	**174-3091**	1	KIT-RECEPTACLE (12-PIN)	
					(INCLUDES RECEPTACLE AS & WEDGE)	
	2	1	**9X-3401**	11	PIN-CONNECTOR (16-GA TO 18-GA)	
	3	1	**144-0331**	1	CAP-PUSH BUTTON (YELLOW) (AUTOMATIC, MANUAL)	
	3A	1	**144-0331**	1	CAP-PUSH BUTTON (YELLOW) (NOT USED)	
	4	1	**8T-8737**	1	PLUG-SEAL	
					AVAILABLE REPAIR KIT(S):	
			442-0052	1	KIT-JOYSTICK (ATTACHMENT)	
					(INCLUDES TAPE, SCREWS, BOLT, NUTS, TORX BIT & WASHERS)	

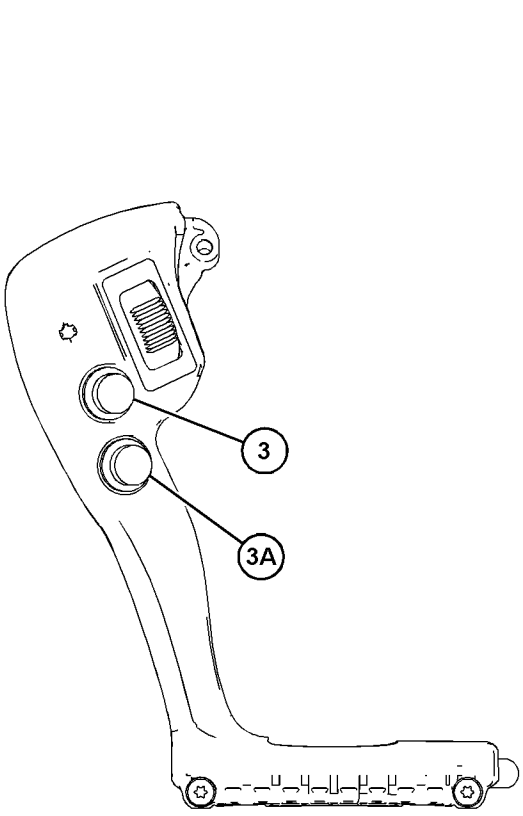

REAR VIEW
(HARNESS REMOVED FOR CLARITY)

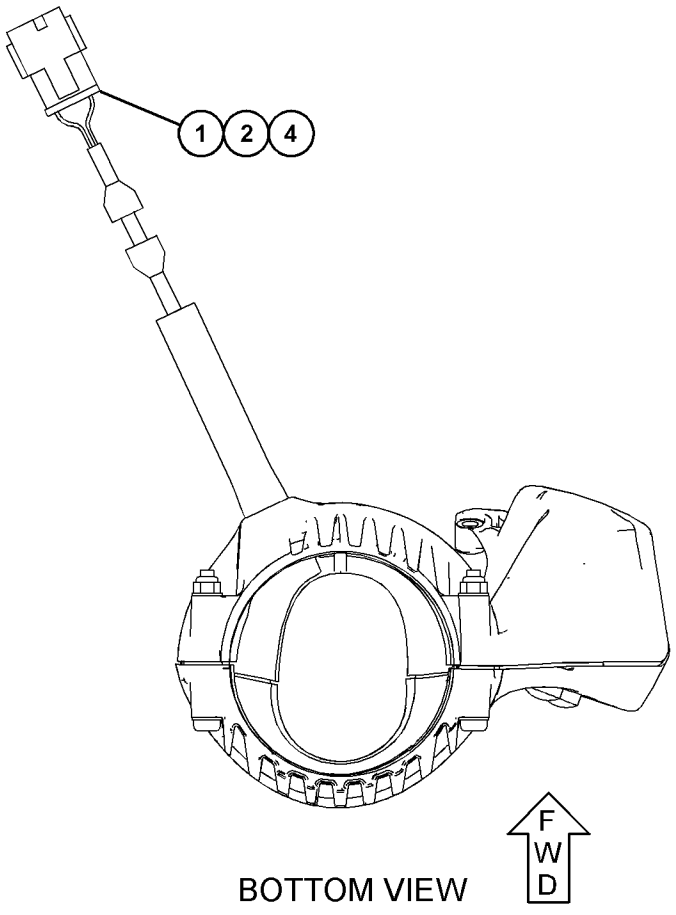

BOTTOM VIEW

GRAPHIC #1 **<END>** g03748213

363-4962 COVER GP-CAB

S/N: E9Y1-UP

PART OF 361-3120 CAB AR

SMCS-7301 **i04562502**

NOTE	PART NUMBER	QTY	PART NAME 1 2 3 4 5 6 (PRODUCT LEVEL)	SEE PAGE
M	**8T-4189**	3	BOLT (M8X1.25X20-MM)	
	363-4961	1	COVER	
	356-5177	1	COVER-VENT	
D	**6V-5746**		TRIM (0.8-M)	
	5P-4116	3	WASHER-HARD (8.8X20.5X2-MM THK)	

D - ORDER BY THE METER
M - METRIC PART

<END>

252-1805 CUSHION GP-ARM

S/N: E9Y1-UP

PART OF 345-1271, 345-1272 SUPPORT GP-CONTROL

SMCS-7307 **i02748414**

NOTE	REF NO	GRAPHIC REF	PART NUMBER	QTY	PART NAME 1 2 3 4 5 6 (PRODUCT LEVEL)	SEE PAGE
	1	1	**233-3245**	1	PLATE	
	2	1	**233-3272**	1	CUSHION AS	
M	3	1	**5C-9553**	2	BOLT (M6X1X16-MM)	
	4	1	**9X-8256**	2	WASHER (6.6X12X2-MM THK)	

M - METRIC PART

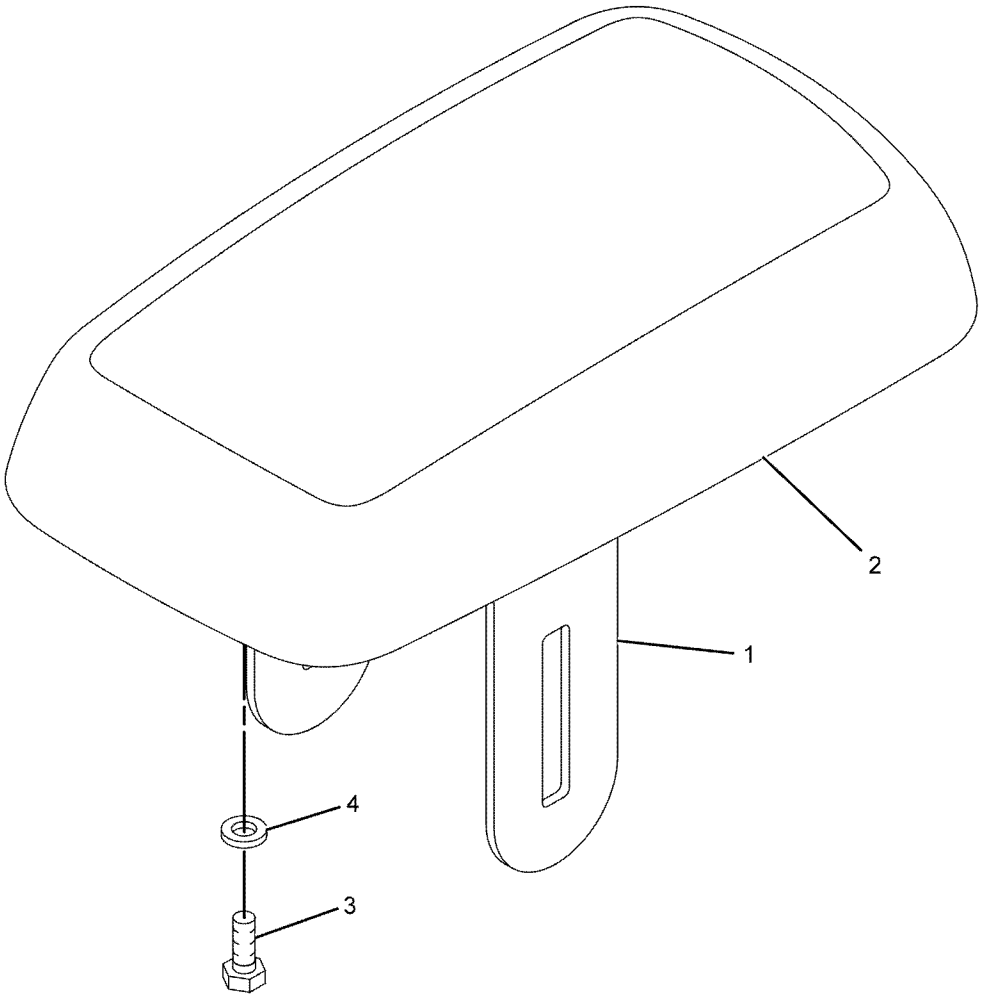

GRAPHIC #1 **<END>** g01109286

447-2229 DISPLAY GP-CAMERA

S/N: E9Y1-UP

CANNOT BE USED WITH 442-4478—PAGE: 287

AN ATTACHMENT

SMCS-7347 **i05550593**

NOTE	REF NO	GRAPHIC REF	PART NUMBER	QTY	PART NAME 1 2 3 4 5 6 (PRODUCT LEVEL)	SEE PAGE
	1	1	**251-8248**	1	CABLE AS-COMMUNICATION (5-M)	
	2	1	**333-8153**	1	CONNECTION AS	
	3	1	**344-2733**	1	MODULE GP-DISPLAY (WORK AREA VISUAL SYSTEM)	
		1	**8T-8729**	5	PIN-CONNECTOR (16-GA TO 18-GA)	
		1	**8T-8737**	1	PLUG-SEAL	
		1	**102-8805**	1	KIT-RECEPTACLE (6-PIN)	
					(INCLUDES RECEPTACLE AS & WEDGE)	
		1	**344-3847**	1	CABLE AS	
	4	1	**3S-2093**	11	STRAP-CABLE	
M	5	1	**8T-2226**	4	SCREW-MACHINE (M5X0.8X10-MM)	
	6	1	**9X-8267**	4	WASHER (6.6X12X2-MM THK)	

M - METRIC PART

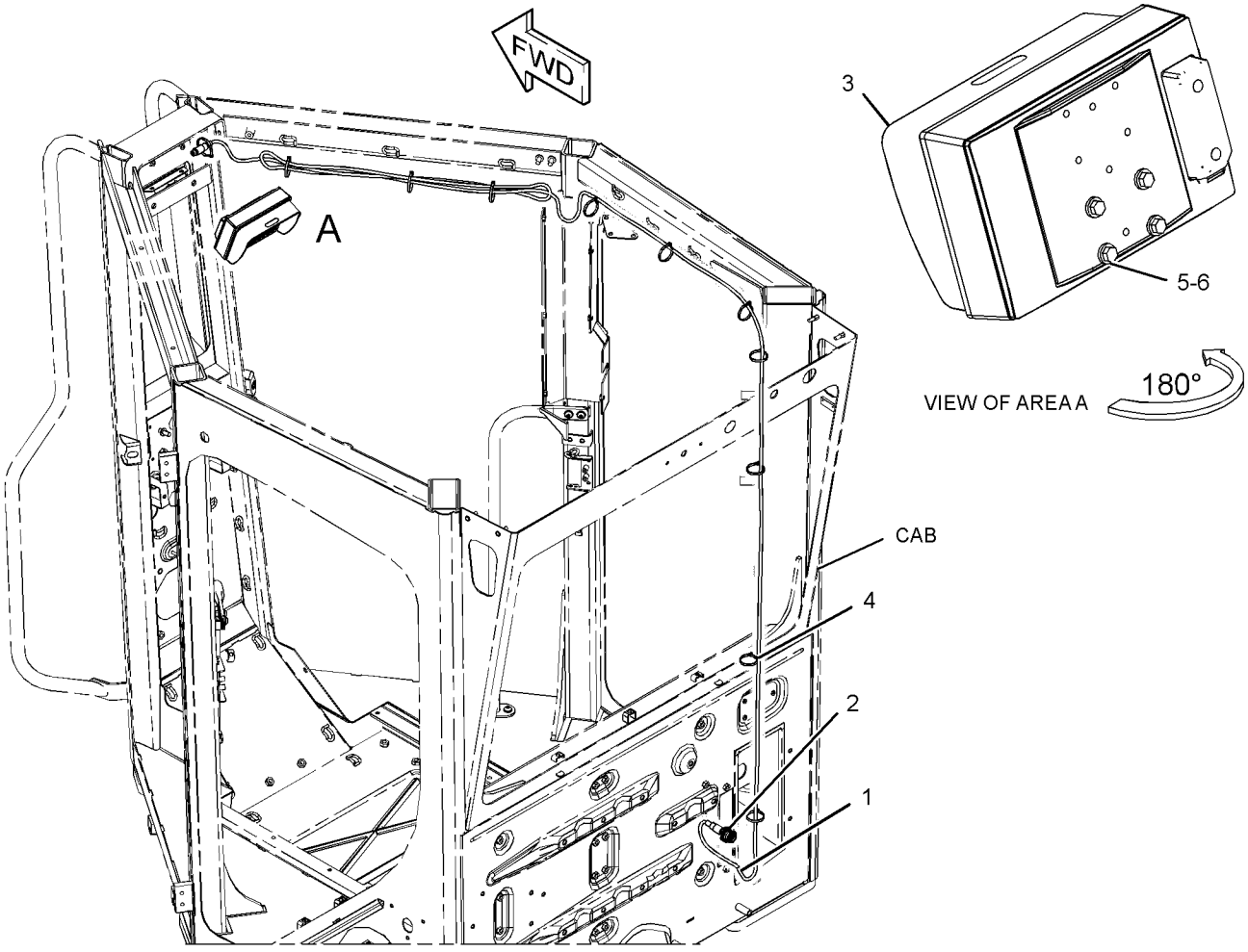

GRAPHIC #1 **<END>** g03512586

OPERATOR STATION

357-9201 DOOR GP-CAB—RH

S/N: E9Y1-UP
PART OF 386-1309 CAB GP
AN ATTACHMENT

SMCS-7308 **i06109780**

NOTE	REF NO	GRAPHIC REF	PART NUMBER	QTY	PART NAME 1 2 3 4 5 6 (PRODUCT LEVEL)	SEE PAGE
M	1	2	**172-8591**	3	NUT-SPRING (M6X1-THD)	
	2	2	**6V-7636**	2	PIN AS-SPRING	
M	3	1	**184-0983**	1	NUT-HEX FLANGE (M12X1.75-THD)	
J	4	1	**252-1862**	1	HANDLE AS (PULL)	
	5	1	**252-1863**	1	GASKET	
	6	2	**261-1731**	1	BOOT	
	7	1	**269-2890**	1	CLEVIS	
	8	1	**269-2892**	1	PIN	
	9	1	**269-2893**	1	CLIP	
	10	1	**272-1623**	1	BELLCRANK AS	
	11	1	**285-3692**	1	SPACER-SPECIAL	
	12	2	**295-6405**	1	LATCH AS (RH)	
	13	2	**296-4040**	1	STRIKER AS	
	14	2	**299-1020**	1	LEVER AS	
		2	**8T-7971**	2	WASHER-HARD (13.5X25.5X5-MM THK)	
M		2	**9X-2042**	2	SCREW-TRUSS HEAD (M6X1X12-MM)	
		2	**114-6658**	2	WASHER (6.5X17X1-MM THK)	
		2	**115-9345**	1	KNOB-CONTROL	
	15	2	**299-1660**	1	CABLE AS	
		2	**7S-9930**	2	RING-RETAINING	
		2	**159-0052**	2	PIN-CLEVIS	
	16	2	**328-4985**	1	LATCH AS-DOOR (RH)	
	17	1	**357-0728**	1	HARNESS AS-WINDOW WIPER	
		1	**297-4169**	2	GROMMET	
E		1	**144-0195**		HOSE (119-CM)	
		1	**9X-3401**	5	PIN-CONNECTOR (16-GA TO 18-GA)	
					—OR—	
		1	**126-1767**	5	PIN-CONNECTOR (14-GA TO 16-GA)	
		1	**155-2274**	1	KIT-CONNECTING PLUG (6-PIN)	
					(INCLUDES PLUG AS, WEDGE & INTERFACE SEAL)	
		1	**8T-8737**	2	PLUG-SEAL	
		1	**102-8805**	1	KIT-RECEPTACLE (6-PIN)	
					(INCLUDES RECEPTACLE AS & WEDGE)	
		1	**9X-3402**	5	SOCKET-CONNECTOR (16-GA TO 18-GA)	
					—OR—	
		1	**126-1768**	5	SOCKET-CONNECTOR (14-GA TO 16-GA)	
B		1	**329-3734**		TAPE-ELECTRICAL	
E		1	**8T-2225**		TUBE-HEAT SHRINK (25.4-MM DIA) (9-CM)	
	18	1	**357-9183**	1	DOOR AS-CAB (RH)	
		1	**308-2903**	3	NUT-WELD (M6X1-THD)	
M		1	**7Y-9096**	2	SCREW-TRUSS HEAD (M6X1X6-MM)	
M		1	**9X-2042**	3	SCREW-TRUSS HEAD (M6X1X12-MM)	
	19	2	**357-9187**	1	HANDLE AS-PULL	
	20	2	**357-9188**	1	PLATE	
	21	1	**357-9190**	1	BRACKET AS	
	22	2	**357-9191**	2	BUMPER	
	23	1	**357-9236**	1	GLASS (DOOR)	
	24	2	**357-9260**	1	COVER (WIPER-RH)	
	25	2	**357-9261**	1	COVER-LATCH	
Y	26	1	*357-9652*	1	WIPER GP-WINDOW (DOOR, RH)	836
	27	2	**358-9553**	1	LINKAGE	
	28	2	**361-0421**	1	COVER	
	29	1	**372-7541**	1	BRACKET AS	
M		1	**8T-3612**	1	NUT-WELD (M8X1.25-THD)	
	30	2	**376-4795**	1	HANDLE AS-PULL	
M		2	**6V-9632**	1	NUT-WELD (M6X1-THD)	

357-9201 **DOOR GP-CAB (*contd.*)** **i06109780**

NOTE	REF NO	GRAPHIC REF	PART NUMBER	QTY	PART NAME 1 2 3 4 5 6 (PRODUCT LEVEL)	SEE PAGE
	31	1	**380-6158**	2	HINGE AS	
					(EACH INCLUDES)	
	31A	1	**372-5042**	2	BUSHING	
	32	1	**4E-1384**	1	BUMPER-CONICAL	
	33	1,2	**114-6658**	4	WASHER (6.5X17X1-MM THK)	
M	34	2	**3E-8020**	4	SCREW-TRUSS HEAD (M6X1X25-MM)	
M	35	1	**5C-7261**	1	NUT (M8X1.25-THD)	
	36	1	**6D-4244**	2	CLIP (SLOT)	
M	37	1	**8T-4000**	2	SCREW-WASHER HEAD (M8X1.25X4.8-MM)	
	38	1,2	**8T-4121**	12	WASHER-HARD (11X21X2.5-MM THK)	
M	39	2	**8T-7547**	2	BOLT (M8X1.25X30-MM)	
M	40	2	**9X-2042**	2	SCREW-TRUSS HEAD (M6X1X12-MM)	
M	41	1,2	**9X-2043**	13	SCREW-TRUSS HEAD (M6X1X14-MM)	
M	42	1,2	**9X-2044**	4	SCREW-TRUSS HEAD (M6X1X16-MM)	
M	43	1,2	**9X-2125**	10	BOLT-LOCKING (M10X1.5X25-MM)	
E	44	2	**331-9731**		SEAL (4-CM)	
E	45	1	**353-7114**		SEAL (440-CM)	
E	46	2	**367-2761**		SEAL (500-CM)	
	47	1	**108-5471**	1	CLEVIS	
M	48	1	**8T-4195**	2	BOLT (M10X1.5X30-MM)	
	49	1	**6V-8185**	1	NUT (1/4-20-THD)	
	50	1	**7X-0605**	1	WASHER-HARD (13X28X1.6-MM THK)	

B - USE AS REQUIRED
E - ORDER BY THE CENTIMETER
J - REQUIRES CORPORATE KEY
M - METRIC PART
Y - SEPARATE ILLUSTRATION

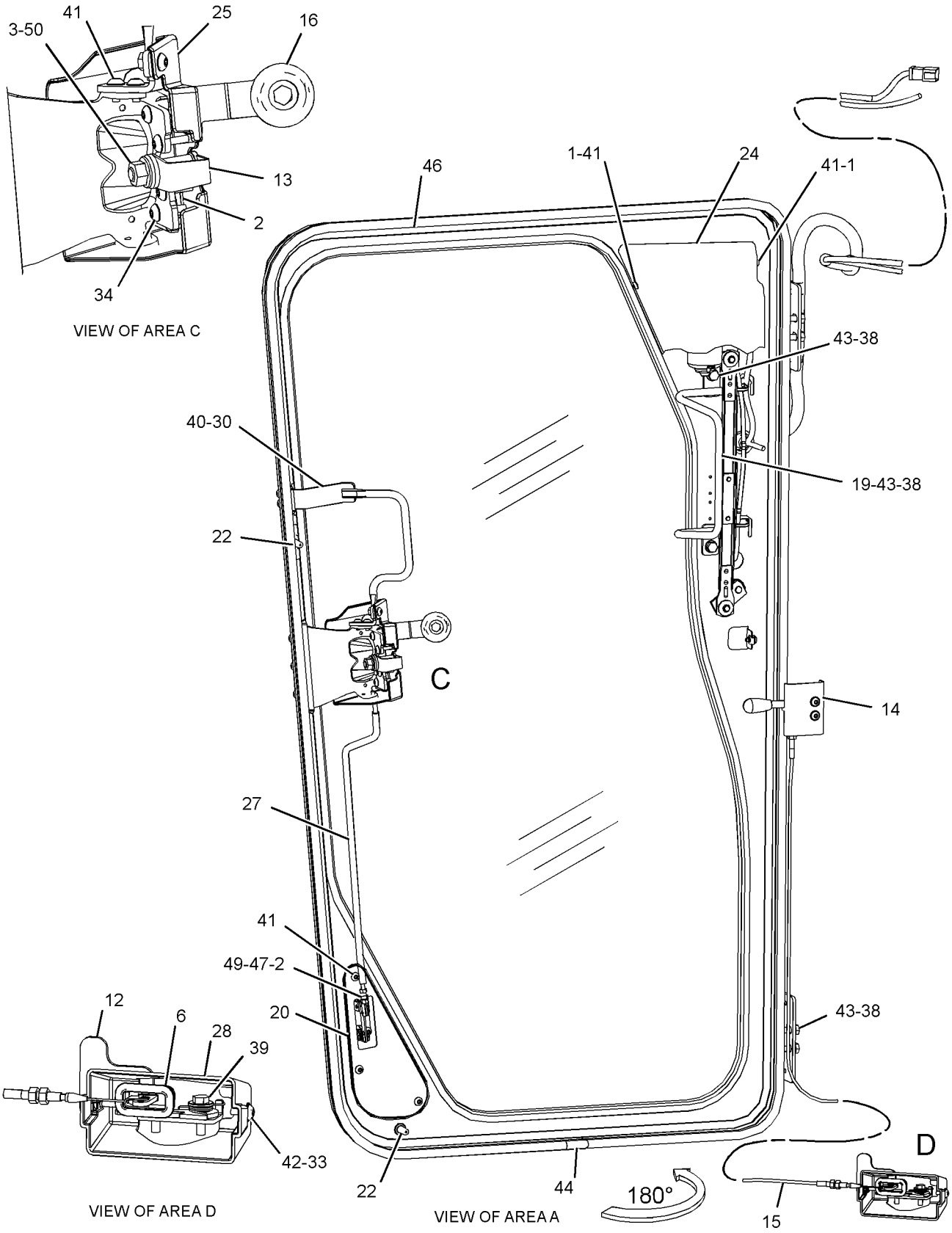

GRAPHIC #1

g03693292

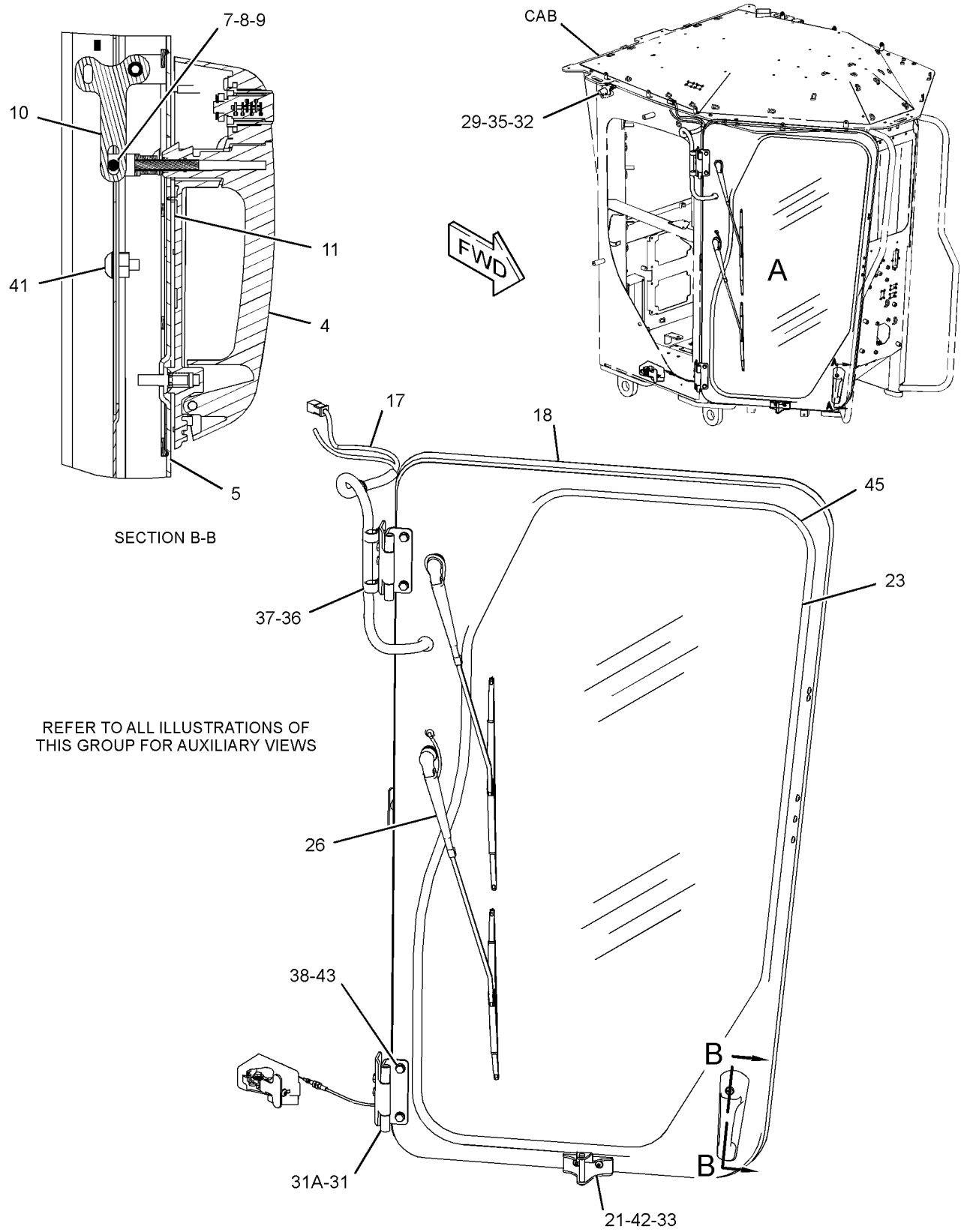

GRAPHIC #2

<END>

g03353499

OPERATOR STATION

357-9202 DOOR GP-CAB—LH

S/N: E9Y1-UP
PART OF 386-1309, 386-1311 CAB GP
AN ATTACHMENT

SMCS-7308 **i06109789**

NOTE	REF NO	GRAPHIC REF	PART NUMBER	QTY	PART NAME 1 2 3 4 5 6 (PRODUCT LEVEL)	SEE PAGE
	1	1	**3S-2093**	1	STRAP-CABLE	
	2	1	**4E-1384**	1	BUMPER-CONICAL	
	3	1	**4E-8722**	3	NUT (RETAINER)	
	4	1	**6V-7636**	2	PIN AS-SPRING	
	5	1	**108-5471**	1	CLEVIS	
M	6	1	**184-0983**	1	NUT-HEX FLANGE (M12X1.75-THD)	
J	7	1	**252-1862**	1	HANDLE AS (PULL)	
	8	1	**252-1863**	1	GASKET	
	9	1	**261-1731**	1	BOOT	
	10	1	**269-2890**	1	CLEVIS	
	11	1	**269-2892**	1	PIN	
	12	1	**269-2893**	1	CLIP	
	13	1	**272-1623**	1	BELLCRANK AS	
	14	1	**285-3692**	1	SPACER-SPECIAL	
	15	1	**295-6406**	1	LATCH AS (LH)	
	16	1	**296-4040**	1	STRIKER AS	
	17	1	**299-1021**	1	LEVER AS	
		1	**8T-7971**	2	WASHER-HARD (13.5X25.5X5-MM THK)	
M		1	**9X-2042**	2	SCREW-TRUSS HEAD (M6X1X12-MM)	
		1	**114-6658**	2	WASHER (6.5X17X1-MM THK)	
		1	**115-9345**	1	KNOB-CONTROL	
	18	1	**299-1660**	1	CABLE AS	
		1	**7S-9930**	2	RING-RETAINING	
		1	**159-0052**	2	PIN-CLEVIS	
	19	1	**328-4984**	1	LATCH AS-DOOR (LH)	
	20	1	**357-0728**	1	HARNESS AS-WINDOW WIPER	
E		1	**8T-2225**		TUBE-HEAT SHRINK (25.4-MM DIA) (9-CM)	
		1	**8T-8737**	2	PLUG-SEAL	
E		1	**144-0195**		HOSE (119-CM)	
		1	**297-4169**	2	GROMMET	
B		1	**329-3734**		TAPE-ELECTRICAL	
	21	1	**357-9184**	1	DOOR AS-CAB (LH)	
M		1	**7Y-9096**	2	SCREW-TRUSS HEAD (M6X1X6-MM)	
M		1	**9X-2042**	3	SCREW-TRUSS HEAD (M6X1X12-MM)	
		1	**308-2903**	3	NUT-WELD (M6X1-THD)	
	22	1	**357-9187**	1	HANDLE AS-PULL	
	23	1	**357-9188**	1	PLATE	
	24	1	**357-9190**	1	BRACKET AS	
	25	1	**357-9191**	2	BUMPER	
	26	1	**357-9236**	1	GLASS (DOOR)	
	27	1	**357-9257**	1	COVER (WIPER-LH)	
	28	1	**357-9258**	1	COVER-LATCH (LH)	
Y	29	1	*357-9653*	1	WIPER GP-WINDOW (DOOR, LH)	837
	30	1	**358-9553**	1	LINKAGE (RH)	
	31	1	**361-0421**	1	COVER	
	32	1	**372-7541**	1	BRACKET AS	
M		1	**8T-3612**	1	NUT-WELD (M8X1.25-THD)	
	33	1	*376-4796*	1	HANDLE AS-PULL	
M		1	**6V-9632**	1	NUT-WELD (M6X1-THD)	
	34	1	**380-6158**	2	HINGE AS	
					(EACH INCLUDES)	
	34A	1	**372-5042**	2	BUSHING	
	35	1	**114-6658**	4	WASHER (6.5X17X1-MM THK)	
M	36	1	**3E-8020**	4	SCREW-TRUSS HEAD (M6X1X25-MM)	
M	37	1	**5C-7261**	1	NUT (M8X1.25-THD)	
	38	1	**6D-4244**	2	CLIP (SLOT)	
	39	1	**6V-8185**	1	NUT (1/4-20-THD)	

357-9202 **DOOR GP-CAB (*contd.*)** **i06109789**

NOTE	REF NO	GRAPHIC REF	PART NUMBER	QTY	PART NAME 1 2 3 4 5 6 (PRODUCT LEVEL)	SEE PAGE
M	40	1	**8T-4000**	2	SCREW-WASHER HEAD (M8X1.25X4.8-MM)	
	41	1	**8T-4121**	12	WASHER-HARD (11X21X2.5-MM THK)	
M	42	1	**8T-4195**	2	BOLT (M10X1.5X30-MM)	
M	43	1	**8T-7547**	2	BOLT (M8X1.25X30-MM)	
M	44	1	**9X-2042**	2	SCREW-TRUSS HEAD (M6X1X12-MM)	
M	45	1	**9X-2043**	13	SCREW-TRUSS HEAD (M6X1X14-MM)	
M	46	1	**9X-2044**	4	SCREW-TRUSS HEAD (M6X1X16-MM)	
M	47	1	**9X-2125**	10	BOLT-LOCKING (M10X1.5X25-MM)	
E	48	1	**331-9731**		SEAL (4-CM)	
E	49	1	**353-7114**		SEAL (440-CM)	
E	50	1	**367-2761**		SEAL (500-CM)	
	51	1	**7X-0605**	1	WASHER-HARD (13X28X1.6-MM THK)	

B - USE AS REQUIRED
E - ORDER BY THE CENTIMETER
J - REQUIRES CORPORATE KEY
M - METRIC PART
Y - SEPARATE ILLUSTRATION

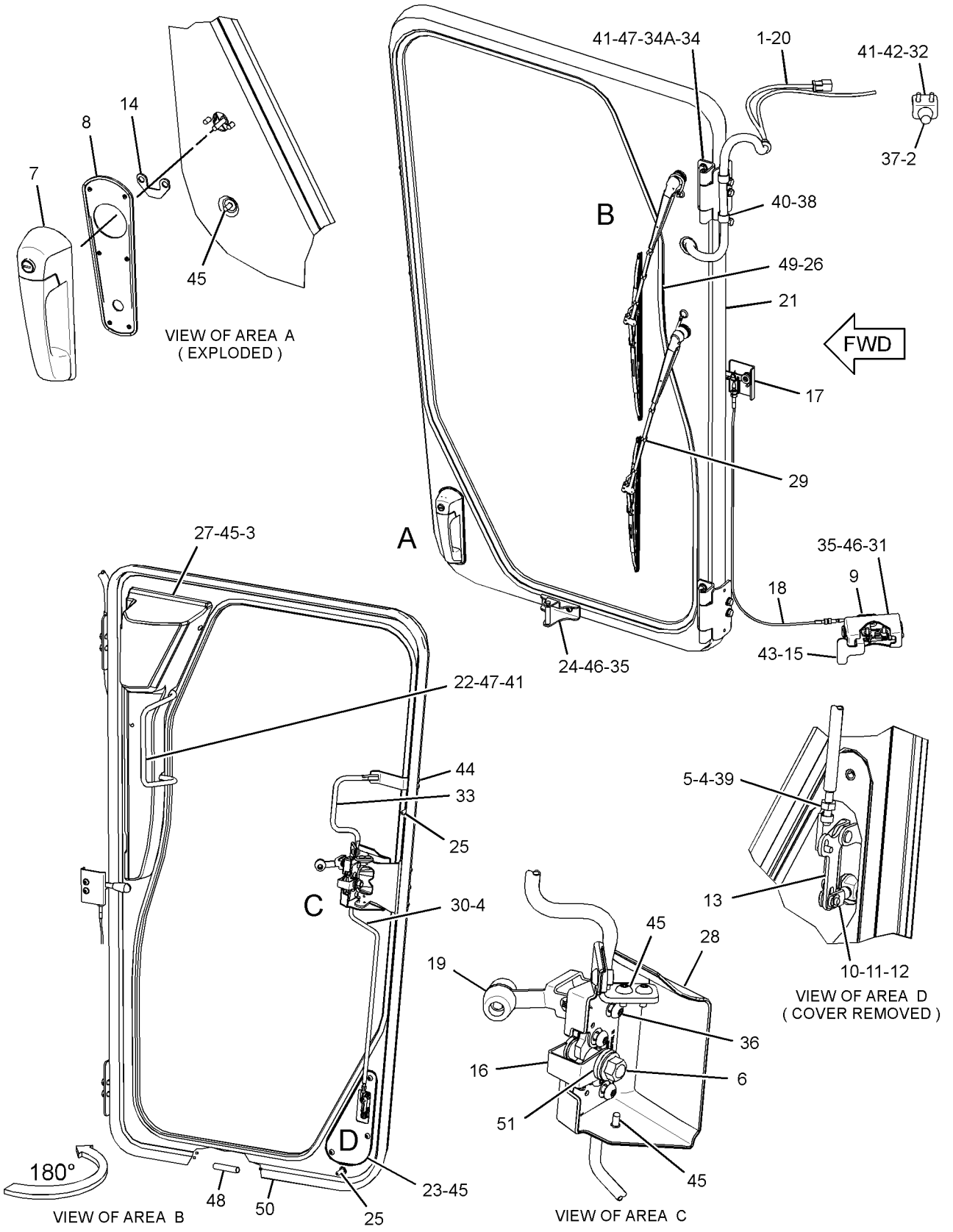

GRAPHIC #1 **<END>** g03692158

357-9203 DOOR GP-CAB—RH

S/N: E9Y1-UP
PLATFORM
PART OF 386-1310 CAB GP
AN ATTACHMENT

SMCS-7308 **i06105312**

NOTE	REF NO	GRAPHIC REF	PART NUMBER	QTY	PART NAME 1 2 3 4 5 6 (PRODUCT LEVEL)	SEE PAGE
M	1	1	**172-8591**	3	NUT-SPRING (M6X1-THD)	
	2	1	**246-2641**	1	PADLOCK GP	
		1	**5P-8500**	1	KEY	
	3	1	**6V-7636**	2	PIN AS-SPRING	
	4	1	**108-5471**	1	CLEVIS	
	5	1	**147-5530**	1	SEAL-LIP TYPE	
M	6	1	**184-0983**	1	NUT-HEX FLANGE (M12X1.75-THD)	
	7	1	**214-9186**	2	BUTTON	
	8	1	**278-0674**	1	PLATE	
	9	1	**296-4040**	1	STRIKER AS	
	10	1	**328-4985**	1	LATCH AS-DOOR (RH)	
	11	1	**357-0728**	1	HARNESS AS-WINDOW WIPER	
		1	**297-4169**	2	GROMMET	
E		1	**144-0195**		HOSE (119-CM)	
		1	**9X-3401**	5	PIN-CONNECTOR (16-GA TO 18-GA)	
					—OR—	
		1	**126-1767**	5	PIN-CONNECTOR (14-GA TO 16-GA)	
		1	**155-2274**	1	KIT-CONNECTING PLUG (6-PIN)	
					(INCLUDES PLUG AS, WEDGE & INTERFACE SEAL)	
		1	**8T-8737**	2	PLUG-SEAL	
		1	**102-8805**	1	KIT-RECEPTACLE (6-PIN)	
					(INCLUDES RECEPTACLE AS & WEDGE)	
		1	**9X-3402**	5	SOCKET-CONNECTOR (16-GA TO 18-GA)	
					—OR—	
		1	**126-1768**	5	SOCKET-CONNECTOR (14-GA TO 16-GA)	
B		1	**329-3734**		TAPE-ELECTRICAL	
E		1	**8T-2225**		TUBE-HEAT SHRINK (25.4-MM DIA) (9-CM)	
	12	1	**357-9183**	1	DOOR AS-CAB	
M		1	**7Y-9096**	2	SCREW-TRUSS HEAD (M6X1X6-MM)	
M		1	**9X-2042**	3	SCREW-TRUSS HEAD (M6X1X12-MM)	
		1	**308-2903**	3	NUT-WELD (M6X1-THD)	
	13	1	**357-9187**	1	HANDLE AS-PULL	
	14	1	**357-9188**	1	PLATE	
	15	1	**357-9191**	2	BUMPER	
	16	1	**357-9236**	1	GLASS (DOOR)	
	17	1	**357-9260**	1	COVER (WIPER-RH)	
	18	1	**357-9261**	1	COVER-LATCH	
Y	19	1	*357-9652*	1	WIPER GP-WINDOW (DOOR, RH)	836
	20	1	**362-3499**	1	PLATE	
	21	1	**362-3502**	2	BUSHING	
	22	1	**362-3503**	1	PLATE	
	23	1	**362-3505**	1	PEDAL AS	
	24	1	**376-4795**	1	HANDLE AS-PULL	
	25	1	**380-6158**	2	HINGE AS	
					(EACH INCLUDES)	
	25A	1	**372-5042**	2	BUSHING	
	26	1	**384-5369**	1	BRACKET	
	27	1	**384-5371**	2	WASHER (16X25.5X2.4-MM THK)	
	28	1	**384-5372**	1	SPRING	
	29	1	**384-5376**	1	SHAFT AS	
	30	1	**384-5377**	1	LINK-CONNECTING	
	31	1	**462-6345**	1	BRACKET AS	
M		1	**6V-9632**	1	NUT-WELD (M6X1-THD)	
		1	**397-4828**	1	BRACKET (RH)	
	32	1	**114-6658**	3	WASHER (6.5X17X1-MM THK)	
	33	1	**205-5149**	2	SCREW-FLAT HEAD (M6X1X30-MM)	

357-9203 **DOOR GP-CAB (*contd.*)** **i06105312**

NOTE	REF NO	GRAPHIC REF	PART NUMBER	QTY	PART NAME 1 2 3 4 5 6 (PRODUCT LEVEL)	SEE PAGE
M	34	1	**344-5673**	1	NUT (M6X1-THD)	
M	35	1	**3E-8020**	4	SCREW-TRUSS HEAD (M6X1X25-MM)	
	36	1	**6D-4244**	2	CLIP	
	37	1	**6V-4422**	1	PIN-SPRING	
	38	1	**6V-8185**	1	NUT (1/4-20-THD)	
M	39	1	**8T-4000**	2	SCREW-WASHER HEAD (M8X1.25X4.8-MM)	
	40	1	**8T-4121**	10	WASHER-HARD (11X21X2.5-MM THK)	
M	41	1	**9X-2042**	2	SCREW-TRUSS HEAD (M6X1X12-MM)	
M	42	1	**9X-2043**	11	SCREW-TRUSS HEAD (M6X1X14-MM)	
M	43	1	**9X-2044**	2	SCREW-TRUSS HEAD (M6X1X16-MM)	
M	44	1	**9X-2125**	10	BOLT-LOCKING (M10X1.5X25-MM)	
BE	45	1	**331-9731**		SEAL (4-CM)	
E	46	1	**353-7114**		SEAL (440-CM)	
BE	47	1	**367-2761**		SEAL (500-CM)	
	48	1	**351-2625**	1	WASHER-HARD (6.6X16X10-MM THK)	
M	49	1	**9X-2045**	1	SCREW-TRUSS HEAD (M6X1X20-MM)	
	50	1	**7X-0605**	1	WASHER-HARD (13X28X1.6-MM THK)	

B - USE AS REQUIRED
E - ORDER BY THE CENTIMETER
M - METRIC PART
Y - SEPARATE ILLUSTRATION

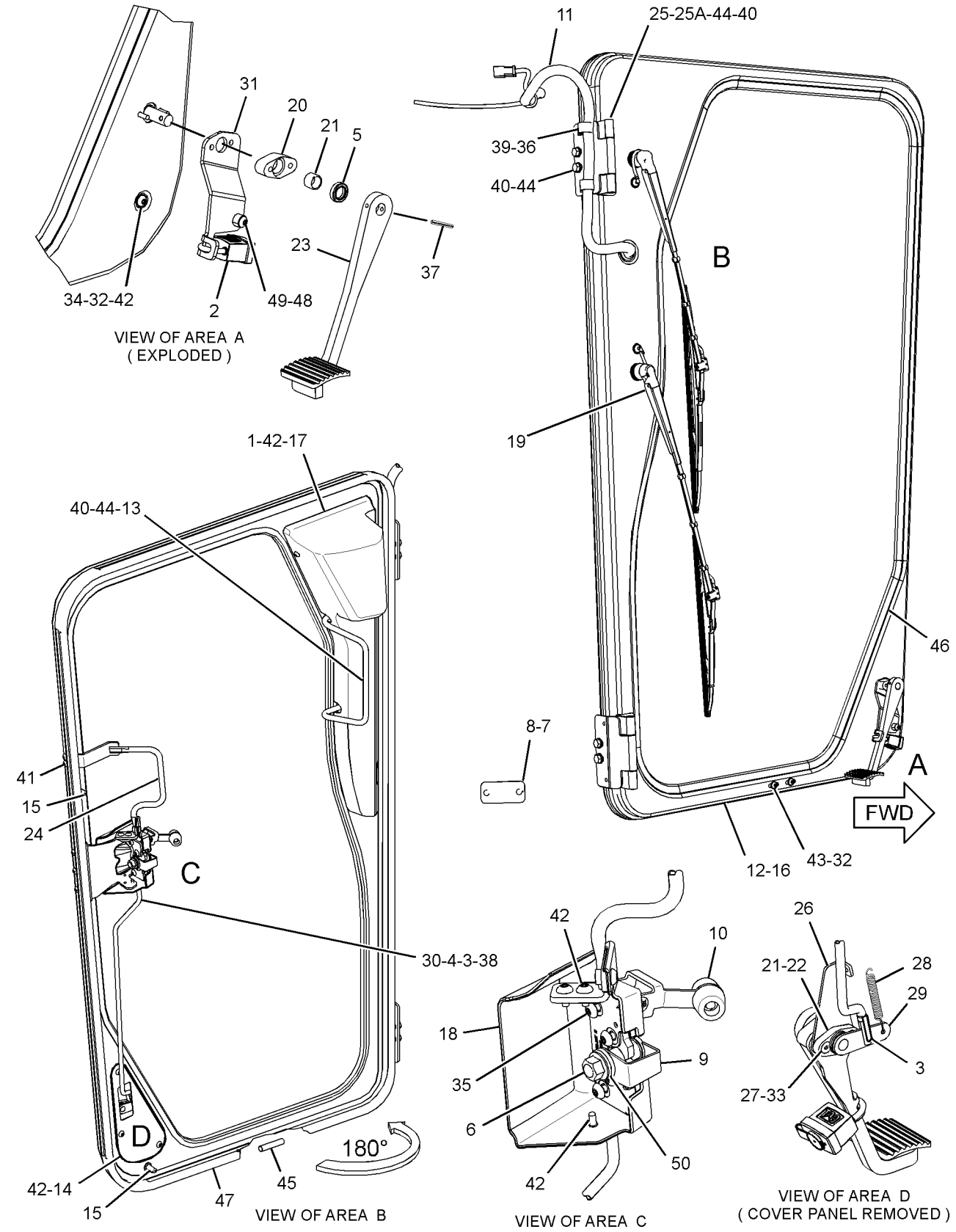

GRAPHIC #1

<END>

g03816608

357-9204 DOOR GP-CAB—PLATFORM, LH

S/N: E9Y1-UP

PART OF 386-1310, 442-8722 CAB GP

AN ATTACHMENT

SMCS-7308 **i06140659**

NOTE	REF NO	GRAPHIC REF	PART NUMBER	QTY	PART NAME 1 2 3 4 5 6 (PRODUCT LEVEL)	SEE PAGE
	1	1	**7X-0605**	1	WASHER-HARD (13X28X1.6-MM THK)	
M	2	1	**172-8591**	3	NUT-SPRING (M6X1-THD)	
	3	1	**246-2641**	1	PADLOCK GP	
		1	**5P-8500**	1	KEY	
	4	1	**6V-7636**	2	PIN AS-SPRING	
	5	1	**108-5471**	1	CLEVIS	
	6	1	**147-5530**	1	SEAL-LIP TYPE	
	7	1	**214-9186**	2	BUTTON	
	8	1	**278-0674**	1	PLATE	
	9	1	**296-4040**	1	STRIKER AS	
	10	1	**328-4984**	1	LATCH AS-DOOR (LH)	
	11	1	**357-0728**	1	HARNESS AS-WINDOW WIPER	
		1	**297-4169**	2	GROMMET	
E		1	**144-0195**		HOSE (119-CM)	
		1	**9X-3401**	5	PIN-CONNECTOR (16-GA TO 18-GA)	
					—OR—	
		1	**126-1767**	5	PIN-CONNECTOR (14-GA TO 16-GA)	
		1	**155-2274**	1	KIT-CONNECTING PLUG (6-PIN)	
					(INCLUDES PLUG AS, WEDGE & INTERFACE SEAL)	
		1	**8T-8737**	2	PLUG-SEAL	
		1	**102-8805**	1	KIT-RECEPTACLE (6-PIN)	
					(INCLUDES RECEPTACLE AS & WEDGE)	
		1	**9X-3402**	5	SOCKET-CONNECTOR (16-GA TO 18-GA)	
					—OR—	
		1	**126-1768**	5	SOCKET-CONNECTOR (14-GA TO 16-GA)	
B		1	**329-3734**		TAPE-ELECTRICAL	
E		1	**8T-2225**		TUBE-HEAT SHRINK (25.4-MM DIA) (9-CM)	
	12	1	**357-9184**	1	DOOR AS-CAB	
M		1	**7Y-9096**	2	SCREW-TRUSS HEAD (M6X1X6-MM)	
M		1	**9X-2042**	3	SCREW-TRUSS HEAD (M6X1X12-MM)	
		1	**308-2903**	3	NUT-WELD (M6X1-THD)	
	13	1	**357-9187**	1	HANDLE AS-PULL	
	14	1	**357-9188**	1	PLATE	
	15	1	**357-9191**	2	BUMPER	
	16	1	**357-9236**	1	GLASS (DOOR)	
	17	1	**357-9257**	1	COVER (WIPER-LH)	
	18	1	**357-9258**	1	COVER-LATCH	
Y	19	1	*357-9653*	1	WIPER GP-WINDOW (DOOR, LH)	837
	20	1	**362-3499**	1	PLATE	
	21	1	**362-3500**	1	PEDAL AS	
	22	1	**362-3501**	1	SHAFT AS	
	23	1	**362-3502**	2	BUSHING	
	24	1	**362-3503**	1	PLATE	
	25	1	**362-3504**	1	LINK-CONNECTING	
	26	1	**376-4796**	1	HANDLE AS-PULL	
	27	1	**380-6158**	2	HINGE AS	
					(EACH INCLUDES)	
	27A	1	**372-5042**	2	BUSHING	
	28	1	**384-5366**	1	BRACKET	
	29	1	**384-5371**	2	WASHER (16X25.5X2.4-MM THK)	
	30	1	**384-5372**	1	SPRING	
	31	1	**462-6344**	1	BRACKET AS (LH)	
M		1	**6V-9632**	1	NUT-WELD (M6X1-THD)	
		1	**397-4827**	1	BRACKET (LH)	
	32	1	**114-6658**	3	WASHER (6.5X17X1-MM THK)	
M	33	1	**184-0983**	1	NUT-HEX FLANGE (M12X1.75-THD)	
	34	1	**205-5149**	2	SCREW-FLAT HEAD (M6X1X30-MM)	

357-9204 **DOOR GP-CAB (*contd.*)** **i06140659**

NOTE	REF NO	GRAPHIC REF	PART NUMBER	QTY	PART NAME 1 2 3 4 5 6 (PRODUCT LEVEL)	SEE PAGE
M	35	1	**344-5673**	1	NUT (M6X1-THD)	
M	36	1	**3E-8020**	4	SCREW-TRUSS HEAD (M6X1X25-MM)	
	37	1	**6D-4244**	2	CLIP	
	38	1	**6V-4422**	1	PIN-SPRING	
	39	1	**6V-8185**	1	NUT (1/4-20-THD)	
M	40	1	**8T-4000**	2	SCREW-WASHER HEAD (M8X1.25X4.8-MM)	
	41	1	**8T-4121**	10	WASHER-HARD (11X21X2.5-MM THK)	
M	42	1	**9X-2042**	2	SCREW-TRUSS HEAD (M6X1X12-MM)	
M	43	1	**9X-2043**	11	SCREW-TRUSS HEAD (M6X1X14-MM)	
M	44	1	**9X-2044**	2	SCREW-TRUSS HEAD (M6X1X16-MM)	
M	45	1	**9X-2125**	10	BOLT-LOCKING (M10X1.5X25-MM)	
BE	46	1	**331-9731**		SEAL (4-CM)	
E	47	1	**353-7114**		SEAL (440-CM)	
BE	48	1	**367-2761**		SEAL (500-CM)	
	49	1	**351-2625**	1	WASHER-HARD (6.6X16X10-MM THK)	
M	50	1	**9X-2045**	1	SCREW-TRUSS HEAD (M6X1X20-MM)	

B - USE AS REQUIRED
E - ORDER BY THE CENTIMETER
M - METRIC PART
Y - SEPARATE ILLUSTRATION

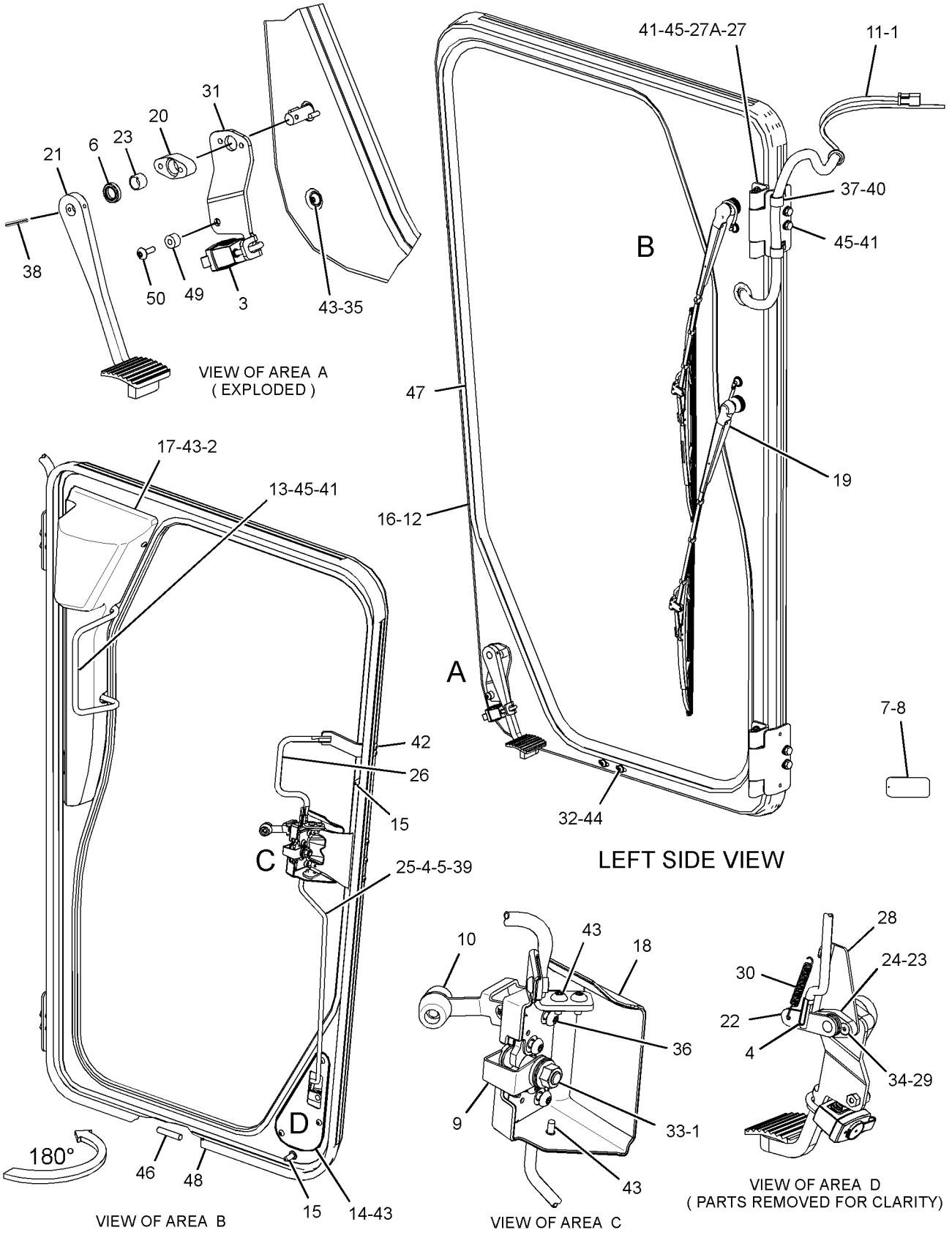

GRAPHIC #1

<END>

g03814427

388-6622 DOOR GP-CAB—RH

S/N: E9Y1-UP
HEATED
PART OF 386-1311 CAB GP
AN ATTACHMENT

SMCS-7308 **i06147392**

NOTE	REF NO	GRAPHIC REF	PART NUMBER	QTY	PART NAME 1 2 3 4 5 6 (PRODUCT LEVEL)	SEE PAGE
	1	2	**357-9187**	1	HANDLE AS-PULL	
	2	1	**357-9190**	1	BRACKET AS	
	3	1	**380-6158**	2	HINGE AS	
					(EACH INCLUDES)	
		1	**372-5042**	2	BUSHING	
	4	2	**3S-2093**	2	STRAP-CABLE	
	5	1	**4E-1384**	1	BUMPER-CONICAL	
	6	2	**6V-7636**	2	PIN AS-SPRING	
	7	1	**248-2841**	2	RELAY AS (24-VOLT)	
	8	1	**252-1862**	1	HANDLE AS (PULL)	
	9	1	**252-1863**	1	GASKET	
	10	1	**261-1731**	1	BOOT	
	11	2	**269-2890**	1	CLEVIS	
	12	2	**269-2892**	1	PIN	
	13	2	**269-2893**	1	CLIP	
	14	2	**272-1623**	1	BELLCRANK AS	
	15	2	**285-3692**	1	SPACER-SPECIAL	
	16	1	**295-6405**	1	LATCH AS (RH)	
	17	2	**296-4040**	1	STRIKER AS	
	18	2	**299-1020**	1	LEVER AS	
		2	**8T-7971**	2	WASHER-HARD (13.5X25.5X5-MM THK)	
M		2	**9X-2042**	2	SCREW-TRUSS HEAD (M6X1X12-MM)	
		2	**114-6658**	2	WASHER (6.5X17X1-MM THK)	
		2	**115-9345**	1	KNOB-CONTROL	
		2	**299-1024**	1	LEVER	
		2	**299-1441**	1	SPRING	
		2	**299-1442**	1	SPRING	
	19	1	**299-1660**	1	CABLE AS	
		1	**7S-9930**	2	RING-RETAINING	
		1	**159-0052**	2	PIN-CLEVIS	
	20	2	**328-4985**	1	LATCH AS-DOOR (RH)	
	21	1	**357-9183**	1	DOOR AS-CAB	
M		1	**7Y-9096**	2	SCREW-TRUSS HEAD (M6X1X6-MM)	
M		1	**9X-2042**	3	SCREW-TRUSS HEAD (M6X1X12-MM)	
		1	**308-2903**	3	NUT-WELD (M6X1-THD)	
	22	2	**357-9188**	1	PLATE	
	23	2	**357-9191**	2	BUMPER	
	24	2	**357-9260**	1	COVER (WIPER-RH)	
	25	2	**357-9261**	1	COVER-LATCH	
Y	26	1	*357-9652*	1	WIPER GP-WINDOW (DOOR, RH)	836
	27	2	**358-9553**	1	LINKAGE	
	28	1	**361-0421**	1	COVER	
	29	1	**365-5588**	1	HARNESS AS-CHASSIS	
		1	**102-8804**	2	KIT-RECEPTACLE (4-PIN)	
		1	**102-8805**	1	KIT-RECEPTACLE (6-PIN)	
					(EACH INCLUDES RECEPTACLE AS & WEDGE)	
		1	**3E-3377**	2	WEDGE-RECEPTACLE LOCK (4-PIN)	
		1	**3E-3383**	1	WEDGE-RECEPTACLE LOCK (6-PIN)	
E		1	**8T-2225**		TUBE-HEAT SHRINK (25.4-MM DIA) (10-CM)	
		1	**8T-8737**	2	PLUG-SEAL	
		1	**9X-3402**	5	SOCKET-CONNECTOR (16-GA TO 18-GA)	
					—OR—	
		1	**126-1768**	5	SOCKET-CONNECTOR (14-GA TO 16-GA)	
E		1	**144-0195**		HOSE (119-CM)	
		1	**9X-3401**	13	PIN-CONNECTOR (16-GA TO 18-GA)	
					—OR—	

388-6622 **DOOR GP-CAB (*contd.*)** **i06147392**

NOTE	REF NO	GRAPHIC REF	PART NUMBER	QTY	PART NAME 1 2 3 4 5 6 (PRODUCT LEVEL)	SEE PAGE
		1	**126-1767**	13	PIN-CONNECTOR (14-GA TO 16-GA)	
		1	**155-2274**	1	KIT-CONNECTING PLUG (6-PIN)	
					(INCLUDES PLUG AS, WEDGE & INTERFACE SEAL)	
		1	**297-4169**	2	GROMMET	
E		1	**329-3734**		TAPE-ELECTRICAL (99-CM)	
	30	1	**372-7541**	1	BRACKET AS	
M		1	**8T-3612**	1	NUT-WELD (M8X1.25-THD)	
	31	2	**376-4795**	1	HANDLE AS-PULL	
M		2	**6V-9632**	1	NUT-WELD (M6X1-THD)	
	32	1	**380-3889**	1	GLASS AS-DOOR (RH)	
		1	**126-1768**	4	SOCKET-CONNECTOR (14-GA TO 16-GA)	
		1	**155-2271**	1	KIT-CONNECTING PLUG (4-PIN)	
					(INCLUDES PLUG AS, WEDGE & INTERFACE SEAL)	
	33	2	**391-2051**	2	STRAP-CABLE	
	34	2	**108-5471**	1	CLEVIS	
	35	1	**114-6658**	4	WASHER (6.5X17X1-MM THK)	
M	36	2	**184-0983**	1	NUT-HEX FLANGE (M12X1.75-THD)	
M	37	2	**3E-8020**	4	SCREW-TRUSS HEAD (M6X1X25-MM)	
M	38	2	**172-8591**	3	NUT-SPRING (M6X1-THD)	
M	39	1	**5C-7261**	1	NUT (M8X1.25-THD)	
	40	1	**6D-4244**	2	CLIP	
	41	2	**6V-8185**	1	NUT (1/4-20-THD)	
M	42	1	**8T-4000**	2	SCREW-WASHER HEAD (M8X1.25X4.8-MM)	
	43	1,2	**8T-4121**	12	WASHER-HARD (11X21X2.5-MM THK)	
M	44	1	**8T-4195**	2	BOLT (M10X1.5X30-MM)	
M	45	1	**8T-7547**	2	BOLT (M8X1.25X30-MM)	
	46	2	**9S-2437**	2	SCREW-TAPPING (10-24X19.05-MM)	
M	47	1	**9X-2042**	2	SCREW-TRUSS HEAD (M6X1X12-MM)	
M	48	1,2	**9X-2043**	13	SCREW-TRUSS HEAD (M6X1X14-MM)	
M	49	1	**9X-2044**	4	SCREW-TRUSS HEAD (M6X1X16-MM)	
M	50	1,2	**9X-2125**	10	BOLT-LOCKING (M10X1.5X25-MM)	
BE	51	2	**331-9731**		SEAL (4-CM)	
E	52	1	**353-7114**		SEAL (440-CM)	
BE	53	2	**367-2761**		SEAL (500-CM)	

B - USE AS REQUIRED
E - ORDER BY THE CENTIMETER
M - METRIC PART
Y - SEPARATE ILLUSTRATION

388-6622 **DOOR GP-CAB (*contd.*)** **i06147392**

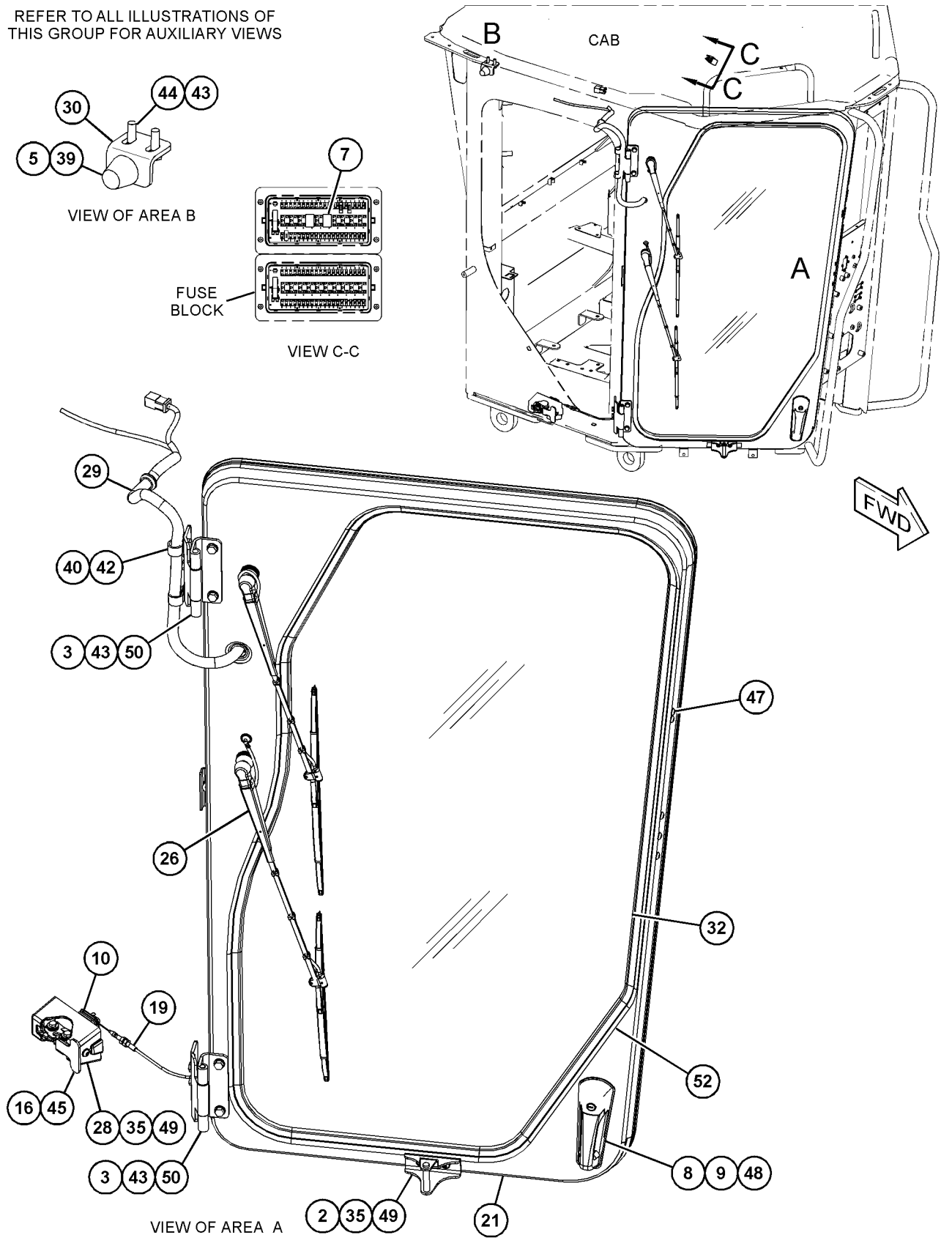

GRAPHIC #1 g03839714

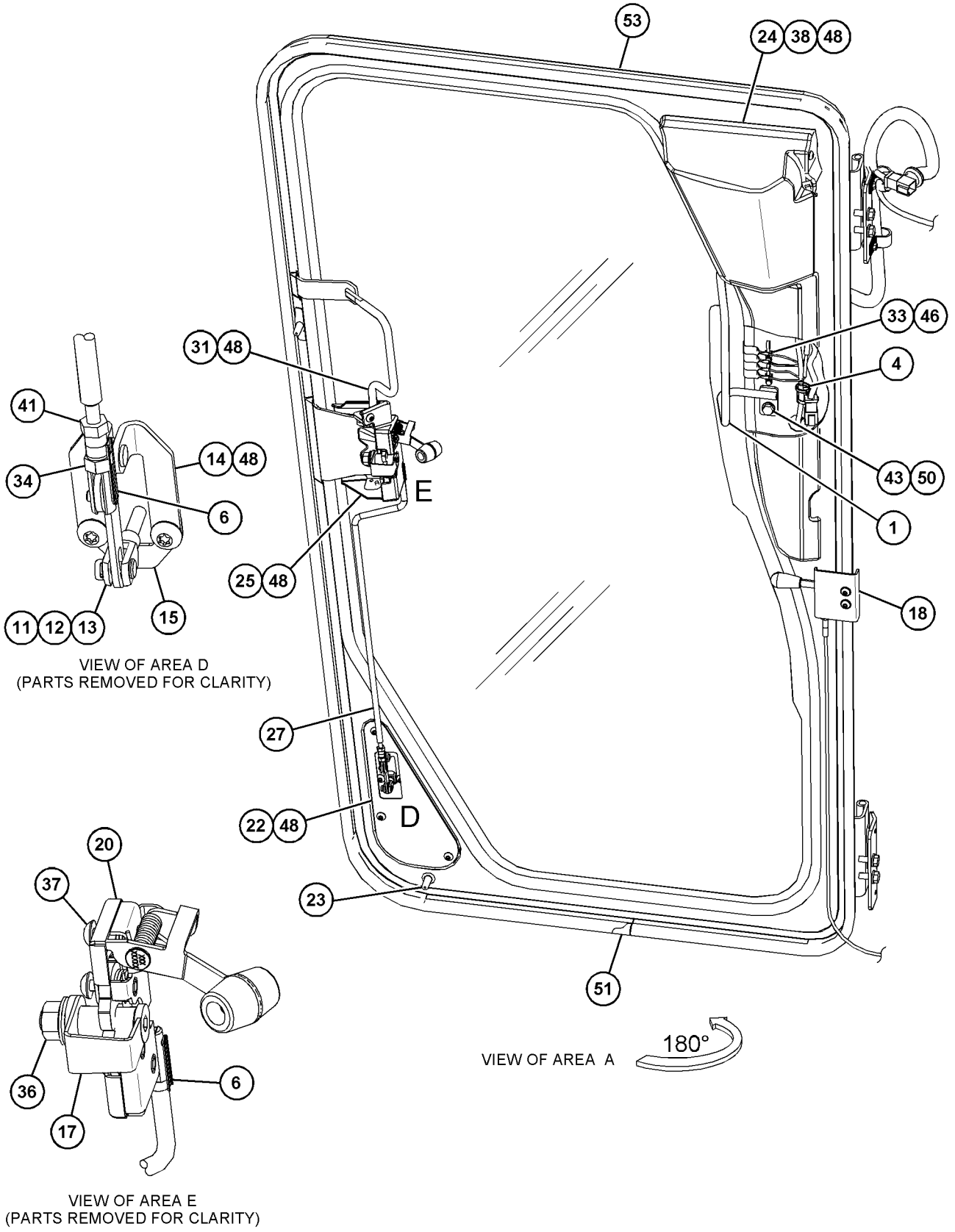

GRAPHIC #2 **<END>** g03839716

442-7348 DOOR GP-CAB—PLATFORM, RH

S/N: E9Y1-UP
PART OF 442-8722 CAB GP
AN ATTACHMENT

SMCS-7308 **i06147011**

NOTE	REF NO	GRAPHIC REF	PART NUMBER	QTY	PART NAME 1 2 3 4 5 6 (PRODUCT LEVEL)	SEE PAGE
	1	2	**3S-2093**	2	STRAP-CABLE	
	2	1	**246-2641**	1	PADLOCK GP	
		1	**5P-8500**	1	KEY	
	3	2	**6V-7636**	2	PIN AS-SPRING	
	4	2	**147-5530**	1	SEAL-LIP TYPE	
	5	1	**214-9186**	2	BUTTON	
	6	1	**248-2841**	2	RELAY AS (24-VOLT) (WINDOW WIPER)	
	7	1	**278-0674**	1	PLATE	
	8	2	**296-4040**	1	STRIKER AS	
	9	2	**328-4985**	1	LATCH AS-DOOR (RH)	
	10	1	**357-9183**	1	DOOR AS-CAB (RH)	
M		1	**7Y-9096**	2	SCREW-TRUSS HEAD (M6X1X6-MM)	
M		1	**9X-2042**	3	SCREW-TRUSS HEAD (M6X1X12-MM)	
M		1	**6V-9632**	3	NUT-WELD (M6X1-THD)	
	11	2	**357-9187**	1	HANDLE AS-PULL	
	12	2	**357-9188**	1	PLATE	
	13	2	**357-9191**	2	BUMPER	
	14	2	**357-9260**	1	COVER (WIPER-RH)	
	15	2	**357-9261**	1	COVER-LATCH (RH)	
Y	16	1	*357-9652*	1	WIPER GP-WINDOW (DOOR, RH)	836
	17	2	**362-3499**	1	PLATE	
	18	2	**362-3502**	2	BUSHING	
	19	2	**362-3503**	1	PLATE	
	20	2	**362-3505**	1	PEDAL AS	
	21	1	**365-5588**	1	HARNESS AS-CHASSIS	
		1	**102-8804**	2	KIT-RECEPTACLE (4-PIN)	
		1	**102-8805**	1	KIT-RECEPTACLE (6-PIN)	
					(EACH RECEPTACLE KIT INCLUDES RECEPTACLE AS & WEDGE)	
E		1	**8T-2225**		TUBE-HEAT SHRINK (25.4-MM DIA) (10-CM)	
		1	**8T-8737**	2	PLUG-SEAL	
		1	**9X-3402**	5	SOCKET-CONNECTOR (16-GA TO 18-GA)	
					—OR—	
		1	**126-1768**	5	SOCKET-CONNECTOR (14-GA TO 16-GA)	
E		1	**144-0195**		HOSE (119-CM)	
		1	**9X-3401**	13	PIN-CONNECTOR (16-GA TO 18-GA)	
					—OR—	
		1	**126-1767**	13	PIN-CONNECTOR (14-GA TO 16-GA)	
		1	**297-4169**	2	GROMMET	
B		1	**329-3734**		TAPE-ELECTRICAL	
		1	**155-2274**	1	KIT-CONNECTING PLUG (6-PIN)	
					(INCLUDES PLUG AS, WEDGE & INTERFACE SEAL)	
	22	2	**376-4795**	1	HANDLE AS-PULL	
M		2	**6V-9632**	1	NUT-WELD (M6X1-THD)	
	23	1	**380-3889**	1	GLASS AS-DOOR (RH)	
		1	**126-1768**	4	SOCKET-CONNECTOR (14-GA TO 16-GA)	
		1	**155-2271**	1	KIT-CONNECTING PLUG (4-PIN)	
					(INCLUDES PLUG AS, WEDGE & INTERFACE SEAL)	
	24	1	**380-6158**	2	HINGE AS	
					(EACH INCLUDES)	
	24A	1	**372-5042**	2	BUSHING	
	25	2	**384-5369**	1	BRACKET	
	26	2	**384-5371**	2	WASHER (16X25.5X2.4-MM THK)	
	27	2	**384-5372**	1	SPRING	
	28	2	**384-5376**	1	SHAFT AS	
	29	2	**384-5377**	1	LINK-CONNECTING	
	30	2	**391-2051**	2	STRAP-CABLE	

442-7348 **DOOR GP-CAB (*contd.*)** **i06147011**

NOTE	REF NO	GRAPHIC REF	PART NUMBER	QTY	PART NAME 1 2 3 4 5 6 (PRODUCT LEVEL)	SEE PAGE
	31	2	**397-4828**	1	BRACKET (RH)	
	32	1	**114-6658**	4	WASHER (6.5X17X1-MM THK)	
	33	2	**108-5471**	1	CLEVIS	
M	34	2	**184-0983**	1	NUT-HEX FLANGE (M12X1.75-THD)	
	35	2	**205-5149**	2	SCREW-FLAT HEAD (M6X1X30-MM)	
M	36	1	**344-5673**	1	NUT (M6X1-THD)	
M	37	2	**3E-8020**	4	SCREW-TRUSS HEAD (M6X1X25-MM)	
M	38	2	**172-8591**	3	NUT-SPRING (M6X1-THD)	
	39	1	**6D-4244**	2	CLIP	
	40	2	**6V-4422**	1	PIN-SPRING	
	41	2	**6V-8185**	1	NUT (1/4-20-THD)	
M	42	1	**8T-4000**	2	SCREW-WASHER HEAD (M8X1.25X4.8-MM)	
	43	1,2	**8T-4121**	10	WASHER-HARD (11X21X2.5-MM THK)	
	44	2	**9S-2437**	2	SCREW-TAPPING (10-24X19.05-MM)	
M	45	1	**9X-2042**	2	SCREW-TRUSS HEAD (M6X1X12-MM)	
M	46	1,2	**9X-2043**	11	SCREW-TRUSS HEAD (M6X1X14-MM)	
M	47	1	**9X-2044**	2	SCREW-TRUSS HEAD (M6X1X16-MM)	
M	48	1,2	**9X-2125**	10	BOLT-LOCKING (M10X1.5X25-MM)	
BE	49	2	**331-9731**		SEAL (4-CM)	
E	50	1	**353-7114**		SEAL (440-CM)	
BE	51	2	**367-2761**		SEAL (500-CM)	

B - USE AS REQUIRED
E - ORDER BY THE CENTIMETER
M - METRIC PART
Y - SEPARATE ILLUSTRATION

REFER TO ALL ILLUSTRATIONS OF THIS GROUP FOR AUXILIARY VIEWS

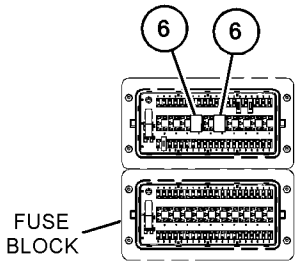

VIEW B-B

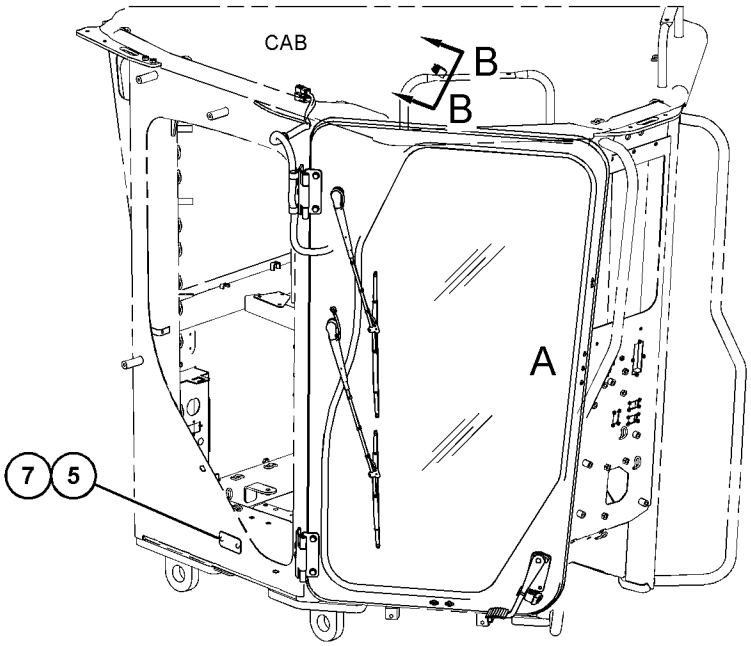

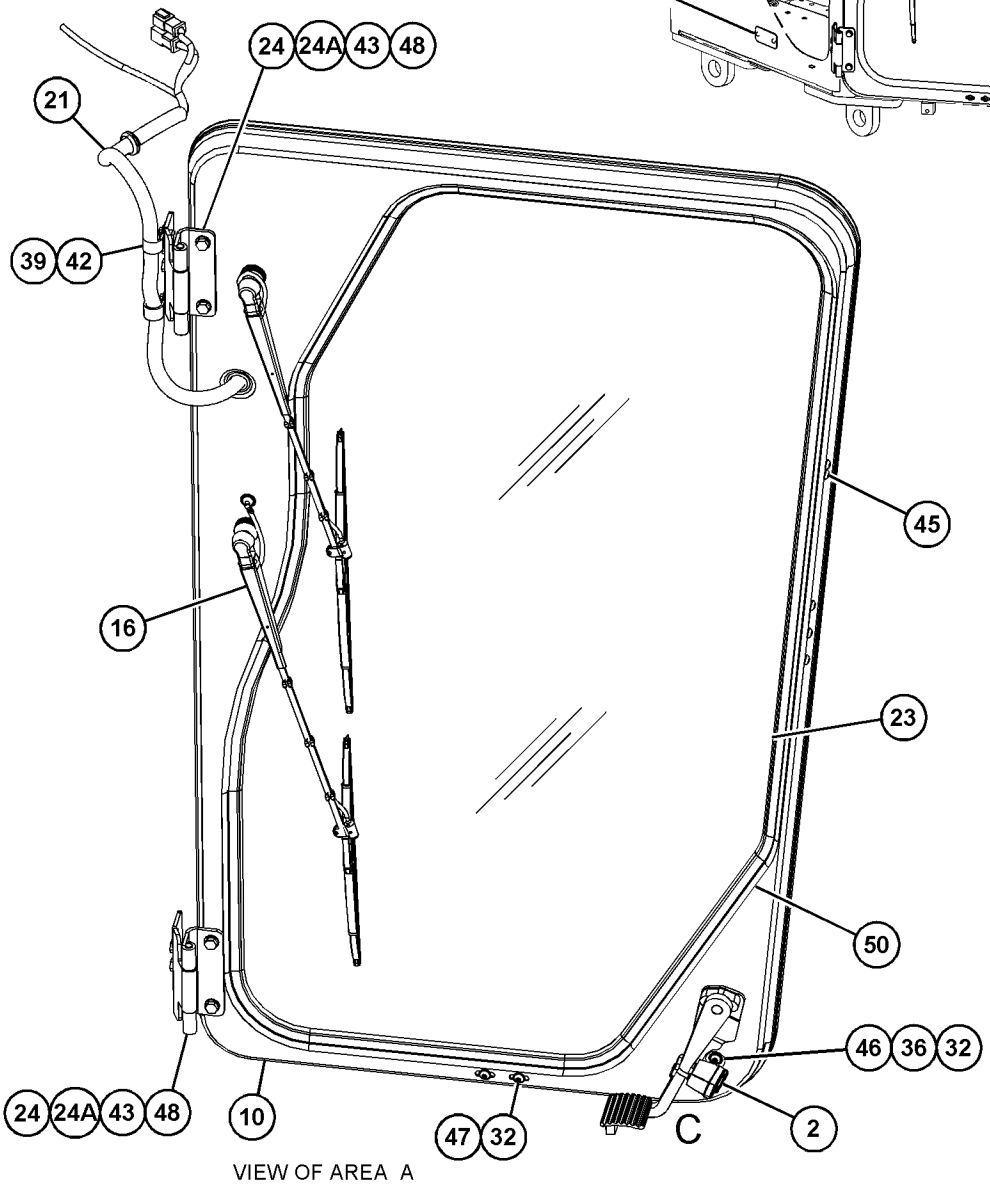

VIEW OF AREA A

GRAPHIC #1 g03840118

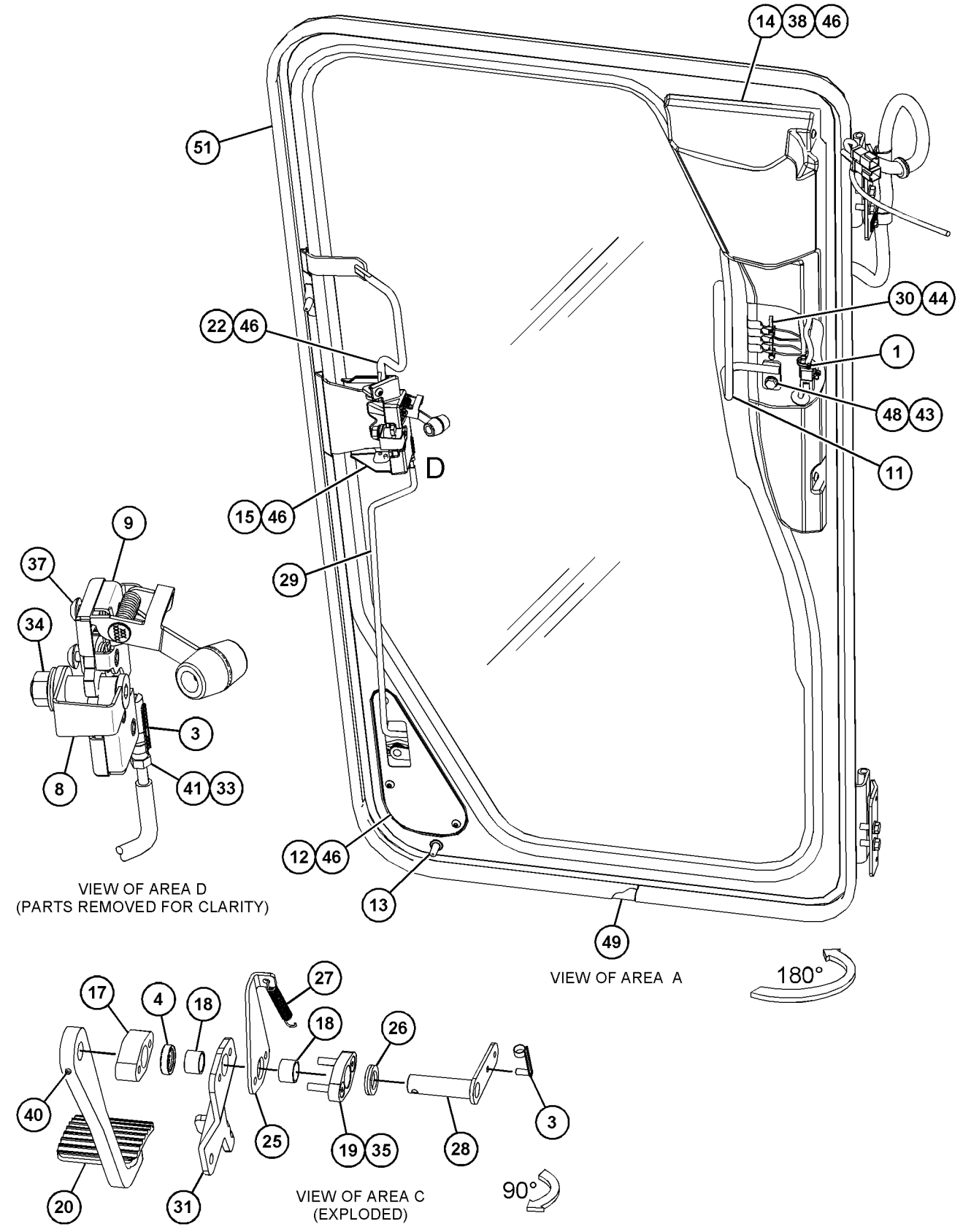

GRAPHIC #2

<END>

g03840121

OPERATOR STATION

244-2701 DUCT & FILTER GP-CAB AIR

S/N: E9Y1-UP

PART OF 389-6377 AIR CONDITIONER AR

SMCS-7337, 7342, 734D **i05819510**

NOTE	REF NO	GRAPHIC REF	PART NUMBER	QTY	PART NAME 1 2 3 4 5 6 (PRODUCT LEVEL)	SEE PAGE
	1	1	**2R-2376**	2	WASHER (7X16X0.8-MM THK)	
	2	1	**149-1912**	1	FILTER ELEMENT-CAB AIR (CAB HEATER, AIR CONDITIONER)	
					—OR—	
		1	**220-8800**	1	FILTER ELEMENT-CAB AIR (ACTIVATED CHARCOAL)	
	3	1	**211-2660**	1	FILTER ELEMENT-AIR (CAB HEATER, AIR CONDITIONER)	
	4	1	**297-4139**	1	DUCT	
	5	1	**297-4140**	1	DUCT	
	6	1	**351-5958**	1	DUCT AS	
		1	**7K-4201**	2	NUT-SPEED	
	7	1	**274-2385**	1	COVER	
	8	1	**274-2392**	2	SCREW-THUMB	
	9	1	**5P-4115**	1	WASHER-HARD (7.2X19X2-MM THK)	
M	10	1	**6V-6317**	2	BOLT (M10X1.5X20-MM)	
M	11	1	**8T-0640**	1	BOLT (M6X1X30-MM)	
	12	1	**8T-4121**	2	WASHER-HARD (11X21X2.5-MM THK)	
E	13	1	**126-5648**		SEAL (70-CM)	

E - ORDER BY THE CENTIMETER
M - METRIC PART

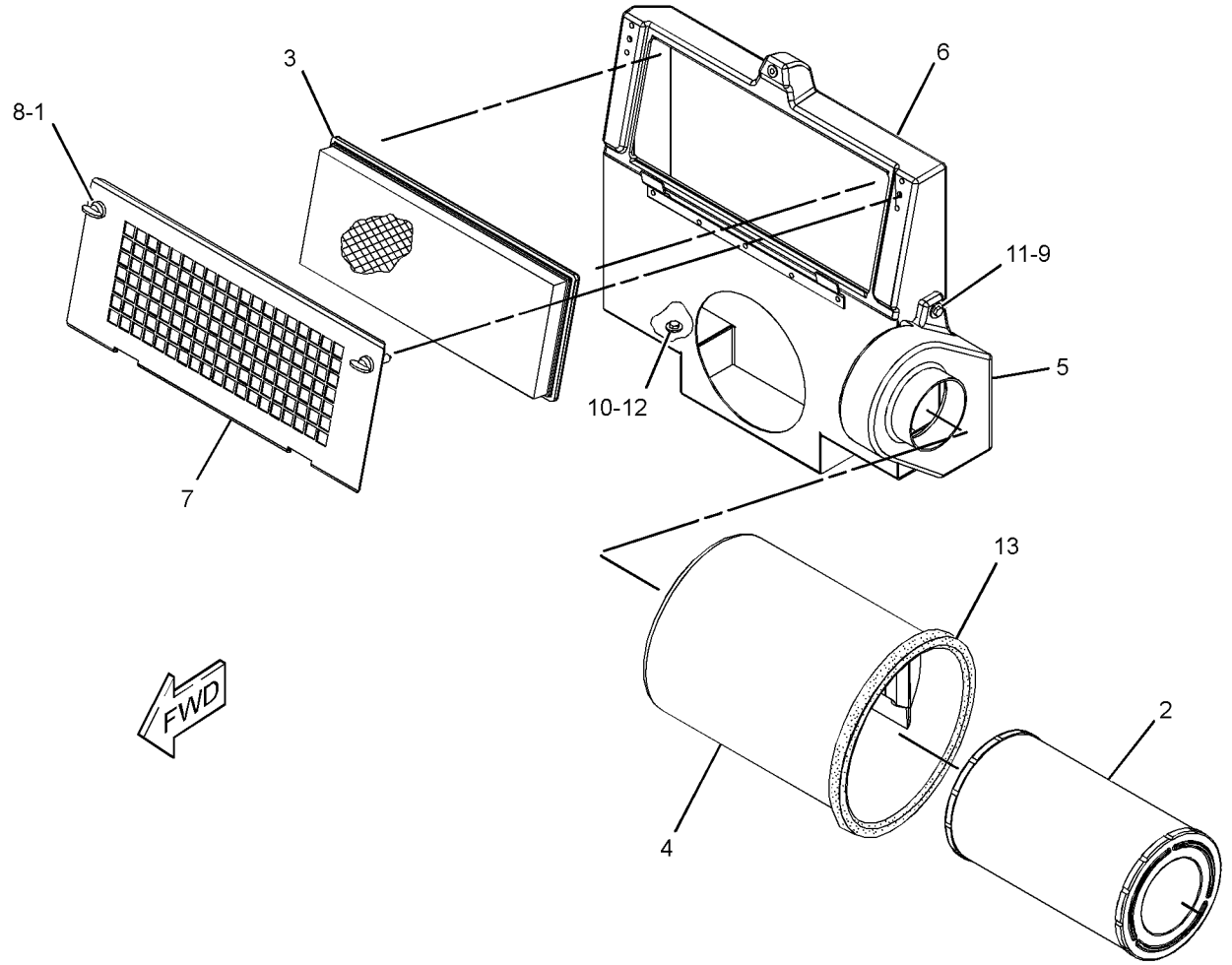

GRAPHIC #1 **<END>** g02334244

170-5334 FAN GP-CIRCULATING—FRONT DEFROSTER

S/N: E9Y1-UP
24-VOLT
PART OF 421-7814 FAN GP-CIRCULATING
AN ATTACHMENT

SMCS-7316 **i05711091**

NOTE	REF NO	GRAPHIC REF	PART NUMBER	QTY	PART NAME 1 2 3 4 5 6 (PRODUCT LEVEL)	SEE PAGE
	1	1	**1B-2713**	1	BOLT (1/4-20X1.75-IN)	
	2	1	**3D-8747**	1	BRACKET	
	3	1	**383-7644**	1	FAN AS (4-BLADE)	
	4	1	**3D-8749**	1	GUARD	
	5	1	**3T-6774**	1	GROMMET	
	6	1	**9X-9689**	1	BASE-FAN	
	7	1	**135-1979**	1	BRACKET	
CY	8	1	**436-9180**	1	MOTOR GP-ELECTRIC (CIRCULATING FAN)	230
	9	1	**031-4155**	1	LOCKNUT (5/16-18-THD)	
	10	1	**1M-1230**	2	NUT-LOCKING (10-32-THD)	
	11	1	**2D-6235**	1	LOCKNUT (1/4-20-THD)	
	12	1	**3D-8752**	1	LOCKNUT (5/16-24-THD)	
	13	1	**4M-0061**	1	BOLT (5/16-18X0.75-IN)	
	14	1	**5P-0537**	4	WASHER-HARD (7.2X14.5X2-MM THK)	
	15	1	**6G-5987**	1	BRACKET	
	16	1	**7L-8316**	1	SETSCREW-SOCKET (10-32X2.54-IN)	
	17	1	**7T-0582**	1	BOLT	
	18	1	**9M-1974**	3	WASHER-HARD (8.8X16X2-MM THK)	
	19	1	**9T-5241**	2	WASHER (9.53X18X1-MM THK)	

C - CHANGE FROM PREVIOUS TYPE
Y - SEPARATE ILLUSTRATION

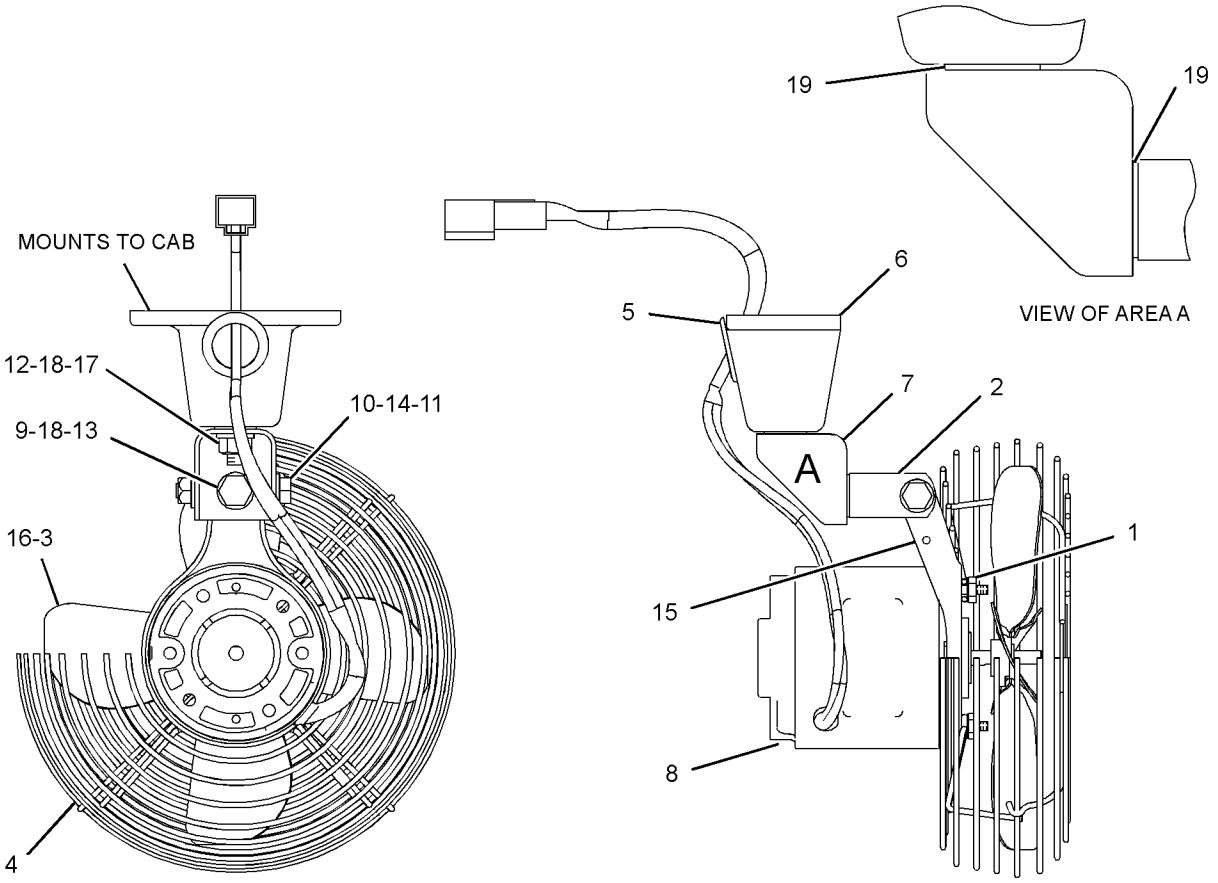

GRAPHIC #1 **<END>** g03634976

421-7814 FAN GP-CIRCULATING—DEFROST

S/N: E9Y1-UP
PART OF 450-1651, 450-1652 OPTION AR-CAB
AN ATTACHMENT

SMCS-7316 **i06092731**

NOTE	REF NO	GRAPHIC REF	PART NUMBER	QTY	PART NAME 1 2 3 4 5 6 (PRODUCT LEVEL)	SEE PAGE
	1	1	**7T-4003**	1	RESISTOR	
	2	1	**154-8079**	2	NUT-RETAINER (U-TYPE)	
Y	3	1	**170-5334**	1	FAN GP-CIRCULATING (FRONT DEFROSTER)	734
	4	1	**248-2841**	1	RELAY AS (24-VOLT) (FAN SPEED)	
	5	1	**381-2326**	1	RELAY AS (24-VOLT) (DEFROSTER FAN)	
M	6	1	**213-7315**	2	SCREW-TRUSS HEAD (M4X0.7X25-MM)	
	7	1	**5P-8441**	1	GROMMET	
M	8	1	**9X-2045**	4	SCREW-TRUSS HEAD (M6X1X20-MM)	

M - METRIC PART
Y - SEPARATE ILLUSTRATION

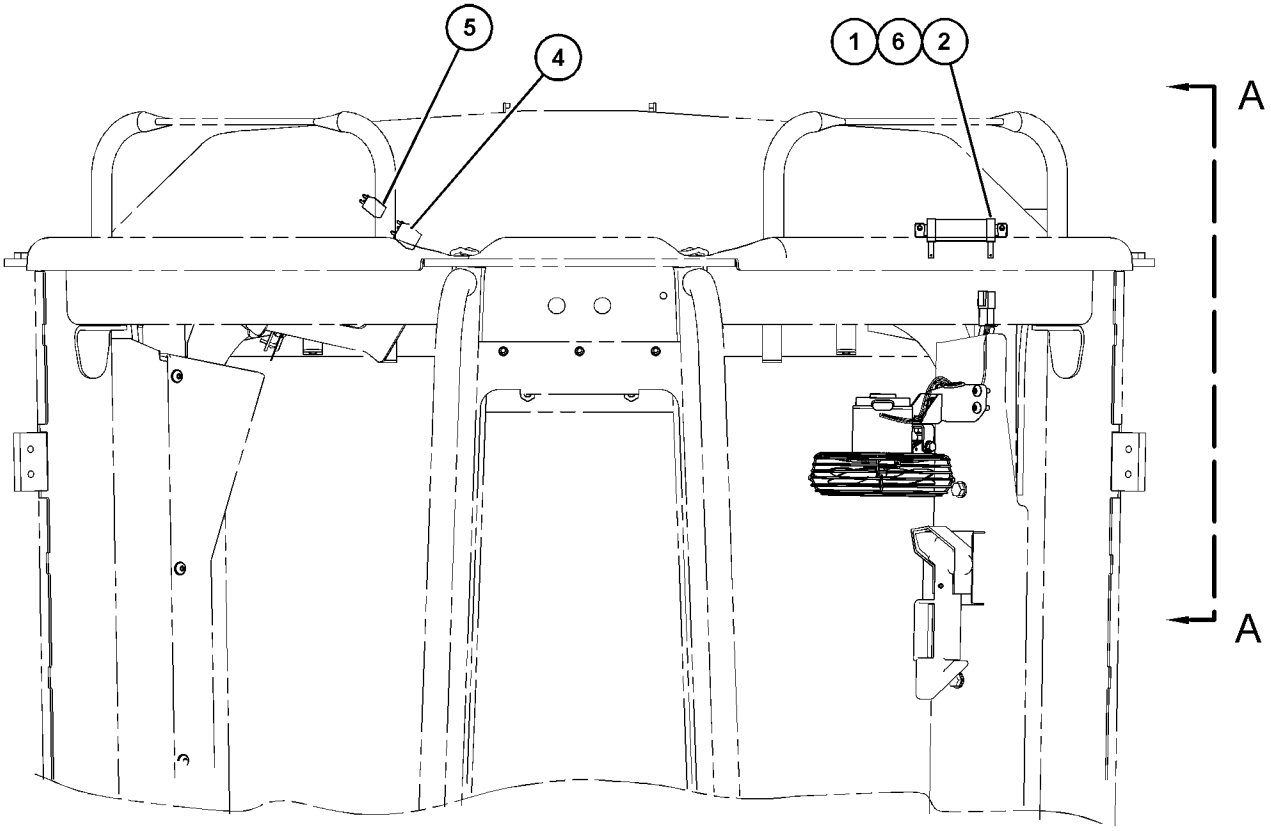

FRONT VIEW

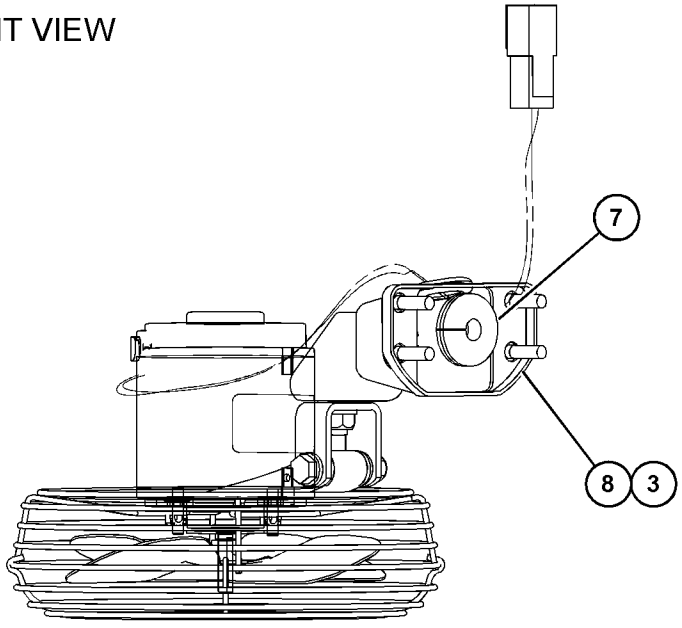

VIEW A-A

GRAPHIC #1 **<END>** g03818247

370-8465 HORN GP-AIR

S/N: E9Y1-UP

CANNOT BE USED WITH 370-8464—PAGE: 739

AN ATTACHMENT

SMCS-7402 **i06103314**

NOTE	REF NO	GRAPHIC REF	PART NUMBER	QTY	PART NAME 1 2 3 4 5 6 (PRODUCT LEVEL)	SEE PAGE
	1	1	**3S-2093**	1	STRAP-CABLE	
	2	1	**146-5804**	1	HORN AS (24-VOLT)	
		1	**8T-8729**	2	PIN-CONNECTOR (16-GA TO 18-GA)	
		1	**102-8802**	1	KIT-RECEPTACLE (2-PIN)	
					(INCLUDES RECEPTACLE AS & WEDGE)	
	3	1	**297-3246**	1	BRACKET AS	
	4	1	**130-5301**	1	CLIP	
	5	1	**4P-7429**	1	CLIP	
M	6	1	**8T-4139**	2	BOLT (M12X1.75X30-MM)	
	7	1	**8T-4223**	2	WASHER-HARD (13.5X25.5X3-MM THK)	

M - METRIC PART

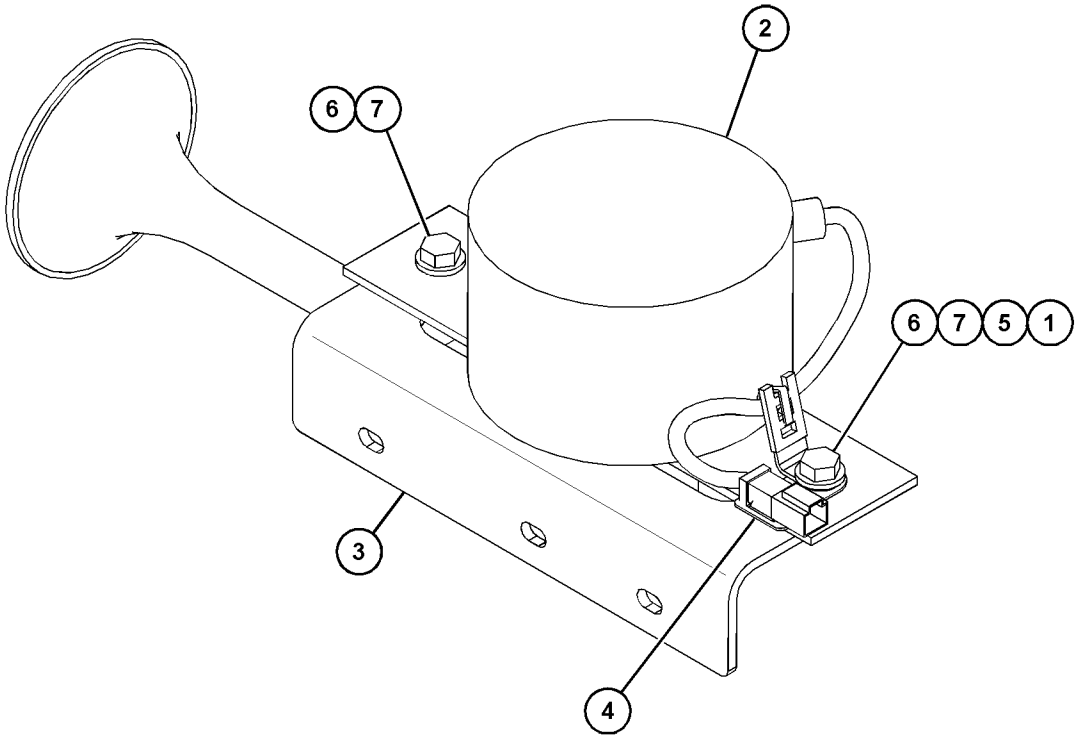

GRAPHIC #1 **<END>** g03813481

370-8464 HORN GP-ELECTRIC

S/N: E9Y1-UP
CANNOT BE USED WITH 370-8465—PAGE: 738
AN ATTACHMENT

SMCS-7402 **i06147006**

NOTE	REF NO	GRAPHIC REF	PART NUMBER	QTY	PART NAME 1 2 3 4 5 6 (PRODUCT LEVEL)	SEE PAGE
	1	1	**174-7875**	1	HORN AS (24-VOLT, HIGH TONE)	
	2	1	**8T-4121**	1	WASHER-HARD (11X21X2.5-MM THK)	
M	3	1	**8T-4137**	1	BOLT (M10X1.5X20-MM)	

M - METRIC PART

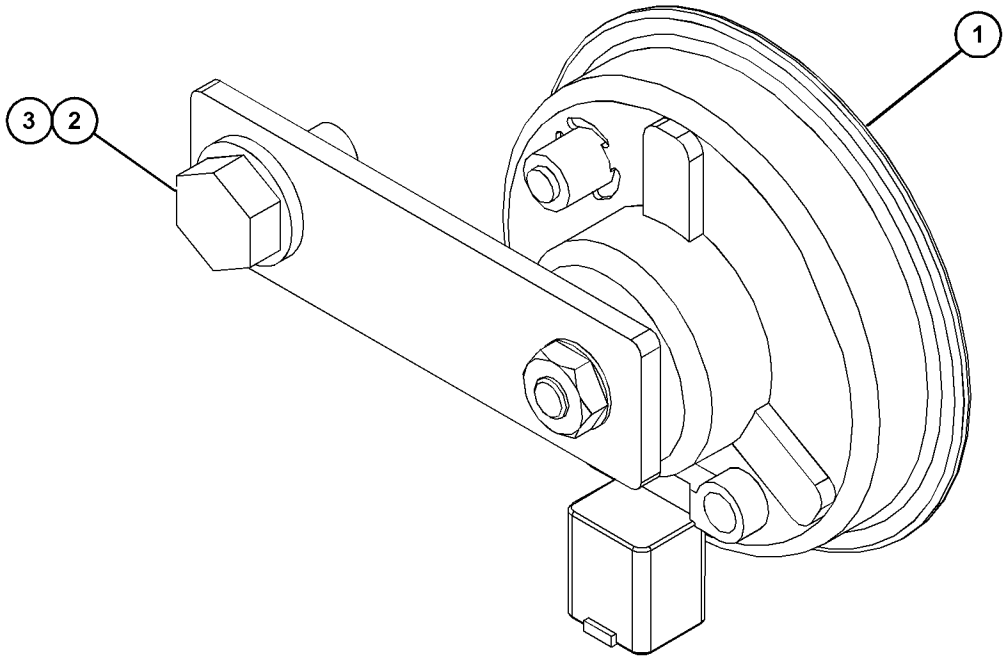

GRAPHIC #1 **<END>** g03830693

386-0235 INSTALLATION GP-CAB

S/N: E9Y1-UP

PART OF 385-8720 CAB AR

SMCS-1265, 4284, 7301 **i06143954**

NOTE	REF NO	GRAPHIC REF	PART NUMBER	QTY	PART NAME 1 2 3 4 5 6 (PRODUCT LEVEL)	SEE PAGE
	1	1	**224-3969**	1	INDICATOR-LEVEL (MACHINE)	
Y	2	1	*233-3206*	1	MOUNTING GP-CAB	769

Y - SEPARATE ILLUSTRATION

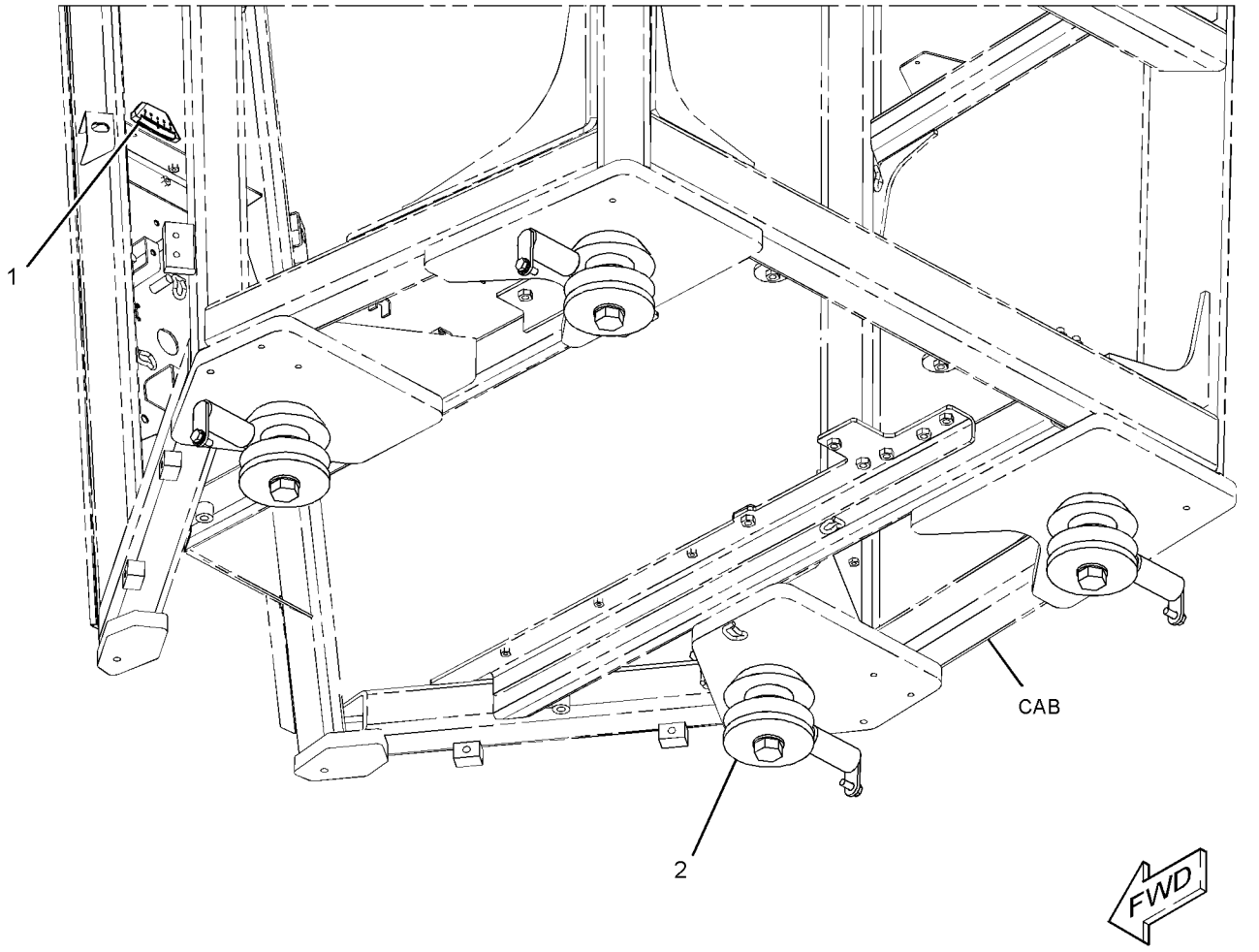

GRAPHIC #1 **<END>** g03827316

463-6258 INSTALLATION GP-CONTROLS—JOYSTICK

S/N: E9Y1-UP

FIELD INSTALLATION

SMCS-1265, 1435, 4284, 5063, 7450 **i06056390**

NOTE	PART NUMBER	QTY	PART NAME 1 2 3 4 5 6 (PRODUCT LEVEL)	SEE PAGE
Y	**434-2232**	1	CONTROL GP-JOYSTICK (LH)	707
Y	**434-2233**	1	CONTROL GP-JOYSTICK (RH)	708
Y	**438-3108**	1	HARNESS AS-WIRING (JOYSTICK)	195
Y	**458-7887**	1	HARNESS AS-WIRING (CONSOLE, RH)	196
Y	**458-7888**	1	HARNESS AS-WIRING (YW ADAPTER)	196
	457-7811	1	FILM-IDENTIFICATION (GRADE CONTROL)	
	457-7812	1	FILM-IDENTIFICATION (INSTRUCTION)	
	251-2247	2	GROMMET	
	458-7889	1	HARNESS AS-WIRING (ECM)	
	8T-8737	1	PLUG-SEAL	
	9X-3402	14	SOCKET-CONNECTOR (16-GA TO 18-GA)	
			—OR—	
	126-1768	14	SOCKET-CONNECTOR (14-GA TO 16-GA)	
	155-2259	1	WEDGE-PLUG LOCK (8-PIN)	
	155-2265	1	KIT-CONNECTING PLUG (8-PIN)	
			(INCLUDES PLUG AS, WEDGE & INTERFACE SEAL)	

Y - SEPARATE ILLUSTRATION

<END>

477-1254 INSTALLATION GP-RADIO–AM/FM/WB/CD/XM/USB/BLUETOOTH

S/N: E9Y1-UP

PART OF 450-1652 OPTION AR-CAB

AN ATTACHMENT

SMCS-7338 **i06204464**

NOTE	REF NO	GRAPHIC REF	PART NUMBER	QTY	PART NAME 1 2 3 4 5 6 (PRODUCT LEVEL)	SEE PAGE
	1	1	**344-5594**	1	HARNESS AS-RADIO (AUXILIARY)	
	2	1	**353-1634**	1	HARNESS AS-RADIO (BLUETOOTH)	
	3	1	**3S-2093**	4	STRAP-CABLE	
	4	1	**7K-1181**	7	STRAP-CABLE	
	5	1	**136-5490**	1	BUSHING (RADIO MOUNT)	
Y	6	1	**200-5728**	1	HARNESS AS-RADIO (AM/FM)	182
	7	1	**307-2245**	1	ANTENNA AS (SIRIUS SATELLITE)	
	8	1	**349-8642**	1	MICROPHONE	
	9	1	**439-2311**	1	PLATE	
	10	1	**455-1592**	1	GROMMET	
	11	1	**462-9621**	1	RADIO GP (AUXILIARY)	
	12	1	**5P-4116**	2	WASHER-HARD (8.8X20.5X2-MM THK)	
M	13	1	**8T-4189**	2	BOLT (M8X1.25X20-MM)	

M - METRIC PART
Y - SEPARATE ILLUSTRATION

477-1254 **INSTALLATION GP-RADIO (*contd.*)** **i06204464**

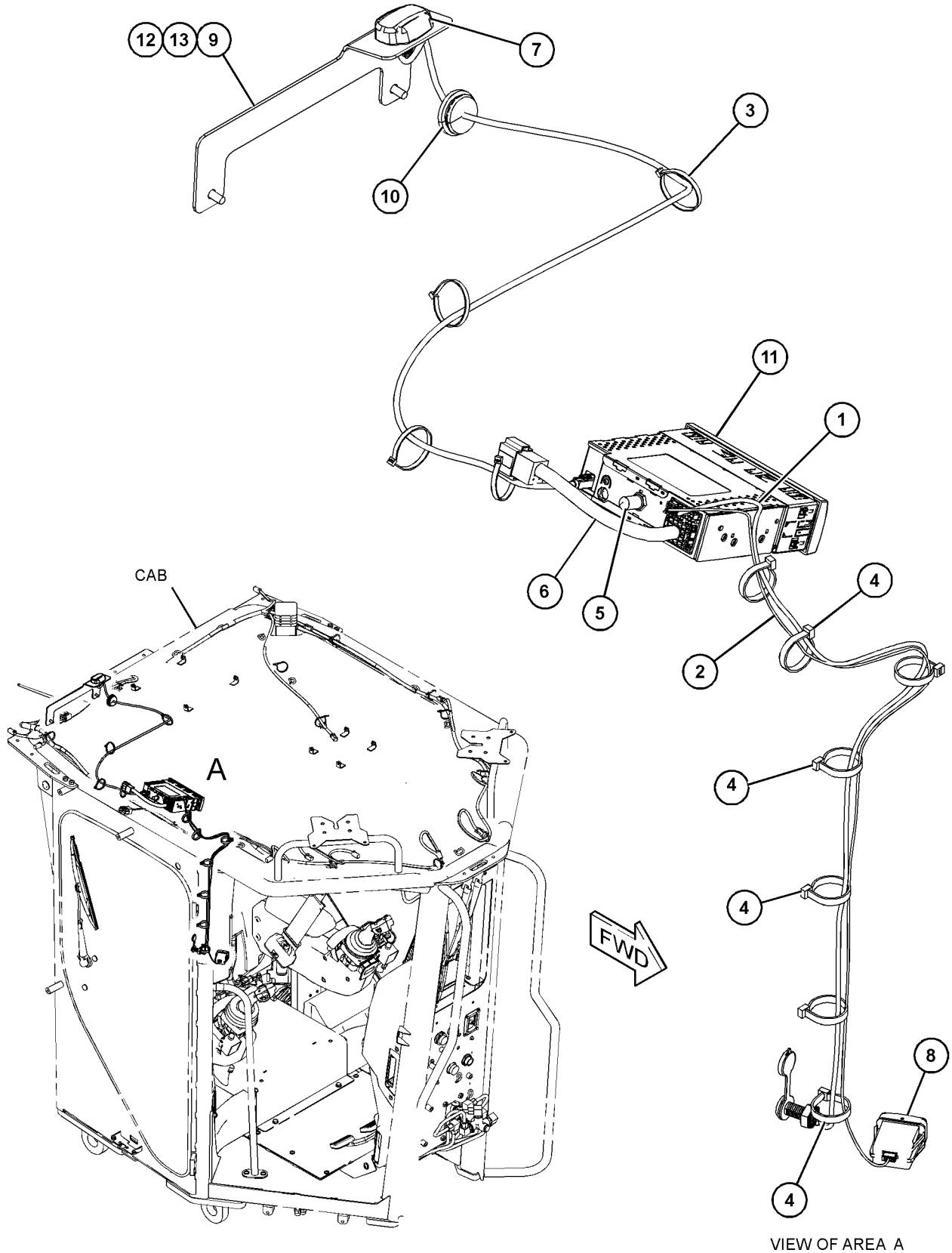

VIEW OF AREA A

GRAPHIC #1 **<END>** g03853065

443-8573 KIT-HANDLE

S/N: E9Y1-UP
FOR USE WITH SEAT GP
PART OF 443-8217, 443-8222 SEAT GP, 443-8216 SEAT GP-SUSPENSION
AN ATTACHMENT

SMCS-7312 **i06194055**

NOTE	REF NO	GRAPHIC REF	PART NUMBER	QTY	PART NAME 1 2 3 4 5 6 (PRODUCT LEVEL)	SEE PAGE
	1	1	**5T-7486**	2	RETAINER-SPRING	
	2	1	**7Y-0468**	2	PIN-SPRING	
	3	1	**9T-5241**	4	WASHER (9.53X18X1-MM THK)	

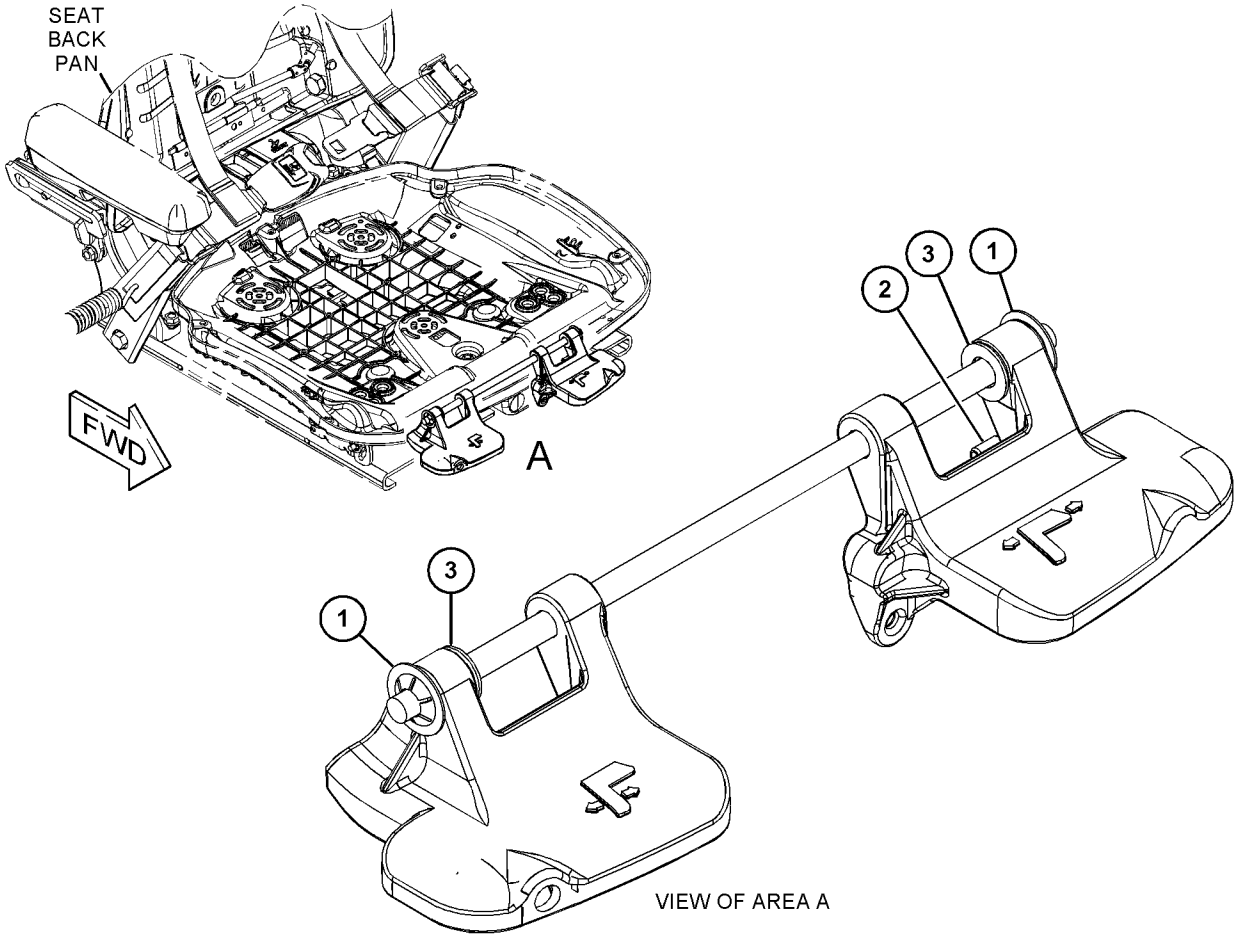

GRAPHIC #1 **<END>** g03850471

397-6405 KIT-SEAT AIR COMPRESSOR

S/N: E9Y1-UP

PART OF 452-6716 KIT-SEAT AIR COMPRESSOR

AN ATTACHMENT

SMCS-731K, 7324

i05235042

NOTE	REF NO	GRAPHIC REF	PART NUMBER	QTY	PART NAME 1 2 3 4 5 6 (PRODUCT LEVEL)	SEE PAGE
	1	1	**8L-8413**	1	STRAP-CABLE	
	2	1	**186-5107**	2	SCREW-DRIVE (NO 8-16X1.25-IN)	
	3	1	**370-9894**	1	COMPRESSOR AS	
	4	1	**372-2158**	1	BRACKET-MOUNTING	
	5	1	**387-0314**	1	WIRE AS (16-GA, ORANGE)	
	6	1	**387-0317**	1	WIRE AS (16-GA, BLACK)	

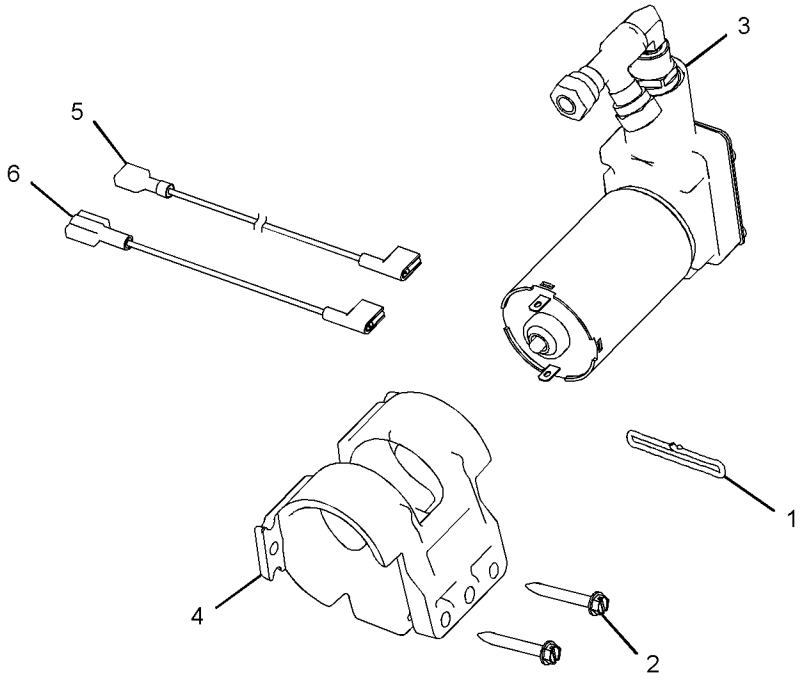

GRAPHIC #1 **<END>** g03341849

452-6716 KIT-SEAT AIR COMPRESSOR

S/N: E9Y1-UP
PART OF 191-2933 SUSPENSION GP-SEAT
AN ATTACHMENT

SMCS-731K, 7324

i06086953

NOTE	PART NUMBER	QTY	PART NAME 1 2 3 4 5 6 (PRODUCT LEVEL)	SEE PAGE
ABY	**397-6405**	1	KIT-SEAT AIR COMPRESSOR	745
	372-2158	1	BRACKET-MOUNTING	
	186-5107	2	SCREW-DRIVE (NO 8-16X1.25-IN)	
	8L-8413	6	STRAP-CABLE (WHITE)	

A - NOT PART OF THIS GROUP
B - USE AS REQUIRED
Y - SEPARATE ILLUSTRATION

<END>

446-0635 KIT-SEAT CUSHION–CLOTH

S/N: E9Y1-UP
PART OF 443-8216 SEAT GP-SUSPENSION
AN ATTACHMENT

SMCS-7312 **i06210641**

NOTE	REF NO	GRAPHIC REF	PART NUMBER	QTY	PART NAME 1 2 3 4 5 6 (PRODUCT LEVEL)	SEE PAGE
	1	1	**357-5168**	1	CUSHION AS-BACK	
	2	1	**443-8574**	1	CUSHION AS-SEAT	
	3	1	**385-0229**	7	SCREW-FORMING (12-16X0.75-IN)	
	4	1	**385-0230**	2	SCREW-FORMING (1/4-15-1-IN)	
					(KIT ALSO INCLUDES SEAT PAN & OPERATOR STATION HARNESS)	

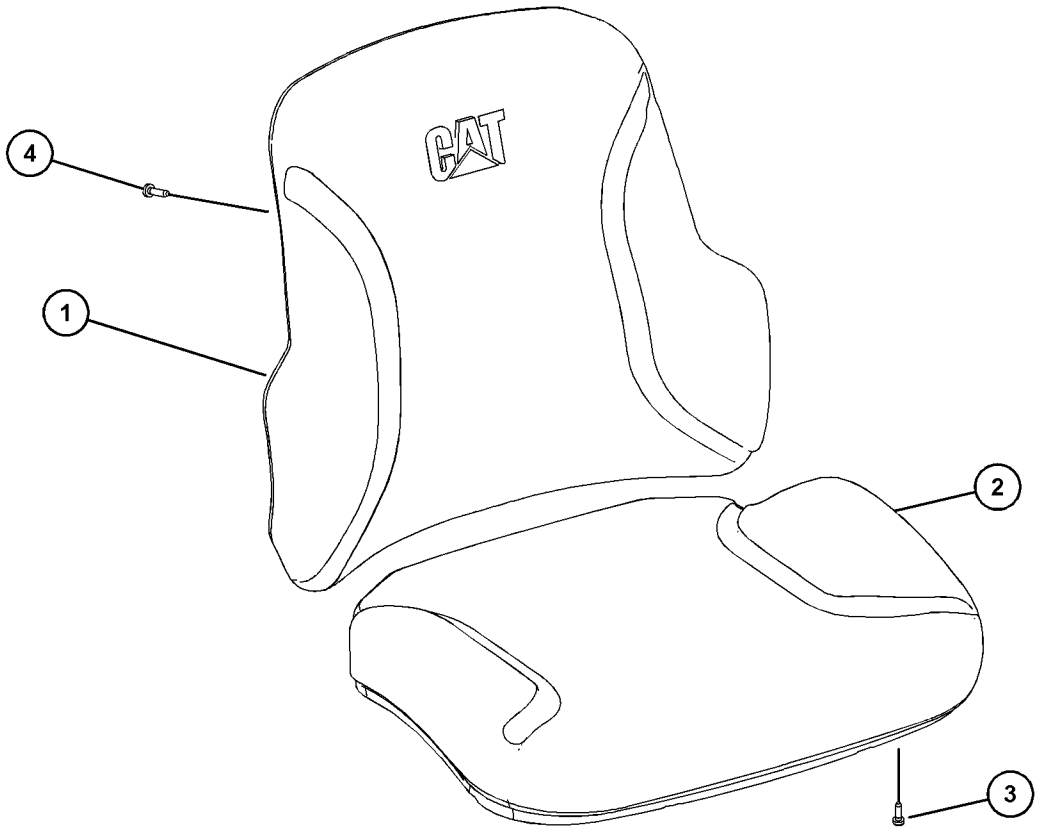

GRAPHIC #1 **<END>** g03855002

446-0642 KIT-SEAT CUSHION—CLOTH

S/N: E9Y1-UP
PART OF 443-8217 SEAT GP
AN ATTACHMENT

SMCS-7312 **i06210489**

NOTE	REF NO	GRAPHIC REF	PART NUMBER	QTY	PART NAME 1 2 3 4 5 6 (PRODUCT LEVEL)	SEE PAGE
	1	1	**357-5169**	1	CUSHION AS-BACK (CLOTH)	
	2	1	**443-8578**	1	CUSHION AS-SEAT	
	3	1	**385-0229**	7	SCREW-FORMING (12-16X0.75-IN)	
	4	1	**385-0230**	2	SCREW-FORMING (1/4-15-1-IN)	
					(KIT ALSO INCLUDES SEAT PAN, HEATER PAD HARNESS AND OPERATOR STATION HARNESS)	

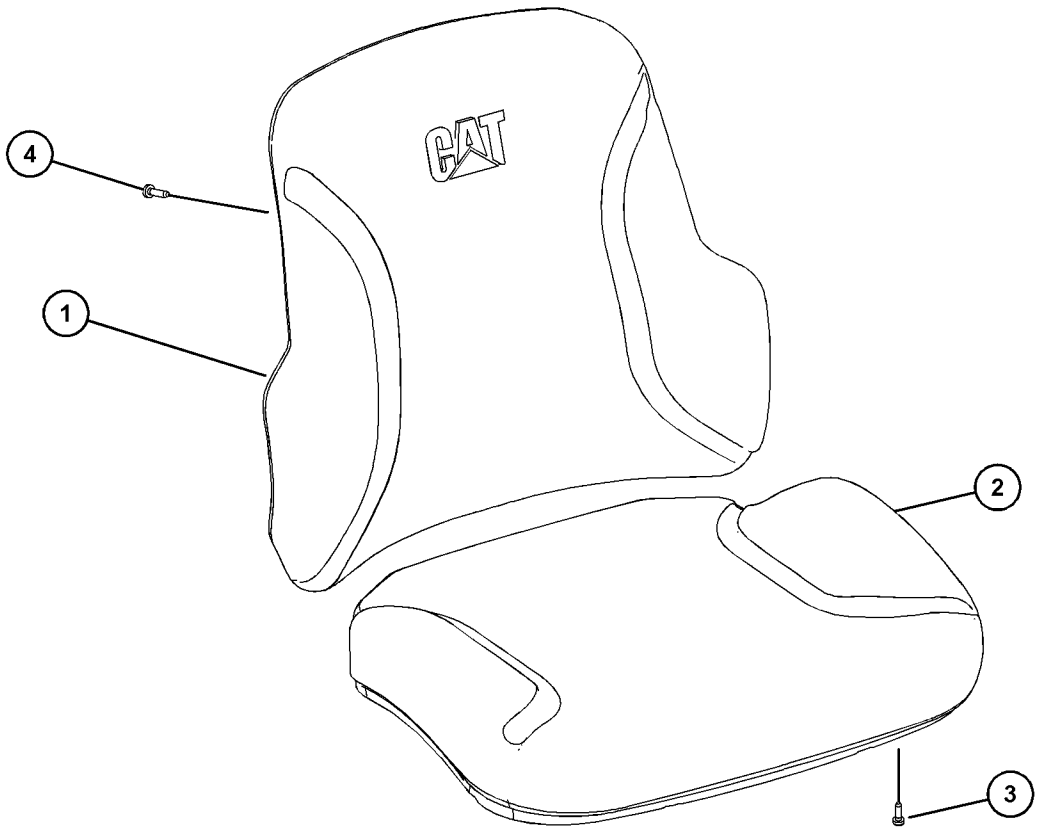

GRAPHIC #1 **<END>** g03855002

446-0649 KIT-SEAT CUSHION–DELUXE

S/N: E9Y1-UP
PART OF 443-8222 SEAT GP
AN ATTACHMENT

SMCS-7312 **i06210439**

NOTE	REF NO	GRAPHIC REF	PART NUMBER	QTY	PART NAME 1 2 3 4 5 6 (PRODUCT LEVEL)	SEE PAGE
	1	1	**357-5170**	1	CUSHION AS-BACK	
	2	1	**443-8576**	1	CUSHION AS	
	3	1	**385-0229**	7	SCREW-FORMING (12-16X0.75-IN)	
	4	1	**385-0230**	2	SCREW-FORMING (1/4-15-1-IN)	
					(KIT ALSO INCLUDES SEAT PAN, HEATER PAD & VENT FAN HARNESS AND OPERATOR STATION HARNESS)	

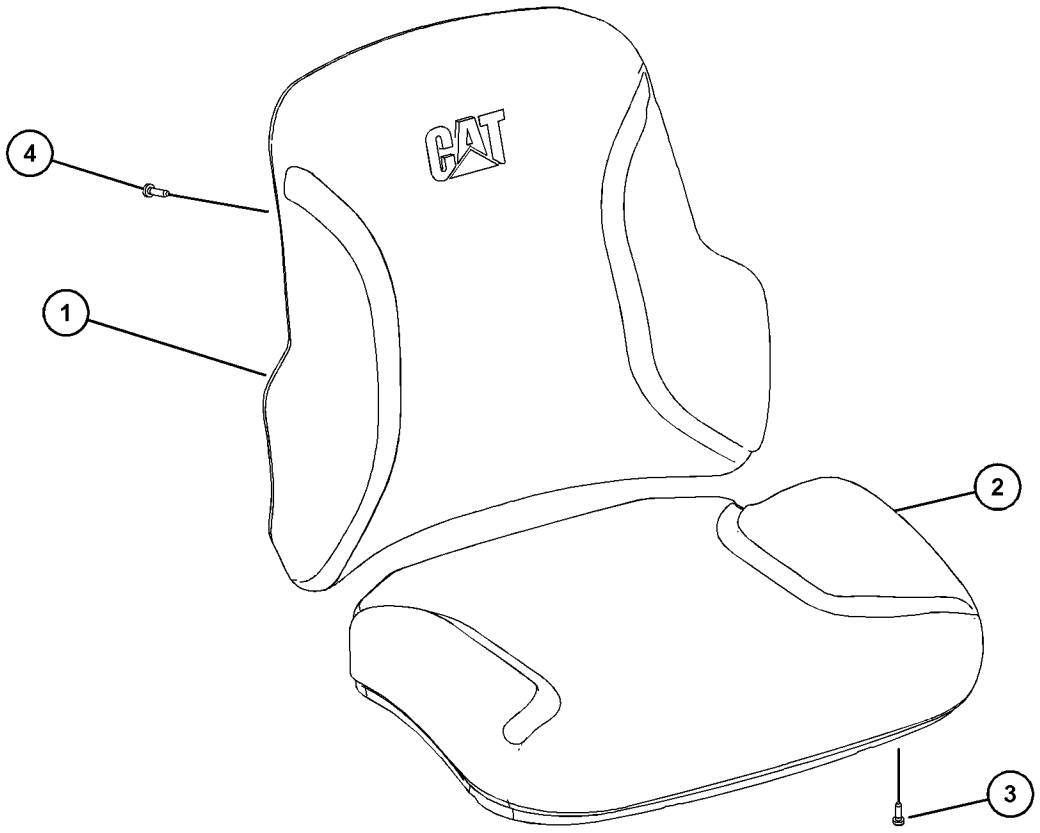

GRAPHIC #1 **<END>** g03855002

212-7779 KIT-SHOCK ABSORBER

S/N: E9Y1-UP

PART OF 191-2933 SUSPENSION GP-SEAT

AN ATTACHMENT

SMCS-7324 **i05772699**

NOTE	REF NO	GRAPHIC REF	PART NUMBER	QTY	PART NAME 1 2 3 4 5 6 (PRODUCT LEVEL)	SEE PAGE
	1	1	**3S-2093**	1	STRAP-CABLE	
	2	1	**7D-6922**	1	LOCKNUT (6-32-THD)	
	3	1	**114-5157**	2	ADJUSTER	
	4	1	**138-8885**	1	BOLT-SOCKET HEAD (6-32X0.5-IN)	
	5	1	**163-1137**	2	BEARING	
	6	1	**192-7811**	2	WASHER (13X22X2-MM THK)	
	7	1	**192-7812**	1	BOLT-SPECIAL	
	8	1	**192-7813**	1	BOLT-SPECIAL	
	9	1	**212-7780**	1	ABSORBER AS-SHOCK	
	10	1	**212-7783**	1	KIT-PULLEY	
					(INCLUDES PARTS MARKED "H" IN GRAPHIC)	
	11	1	**213-4754**	1	KNOB	
	12	1	**9M-2904**	1	CLAMP-HOSE	
	13	1	**377-3141**	1	CABLE AS	
	14	1	**138-8886**	1	BOLT-SOCKET HEAD (1/4-20X1.5-IN)	
	15	1	**2D-6235**	3	LOCKNUT (1/4-20-THD)	
	16	1	**2D-6642**	1	BALL	
	17	1	**2K-4973**	1	LOCKNUT (3/8-16-THD)	
	18	1	**3J-4818**	1	LOCKWASHER	
					PARTS SHOWN IN GRAPHIC(S) WITHOUT A REFERENCE NUMBER ARE NOT SERVICED SEPARATELY	

212-7779 **KIT-SHOCK ABSORBER (*contd.*)** **i05772699**

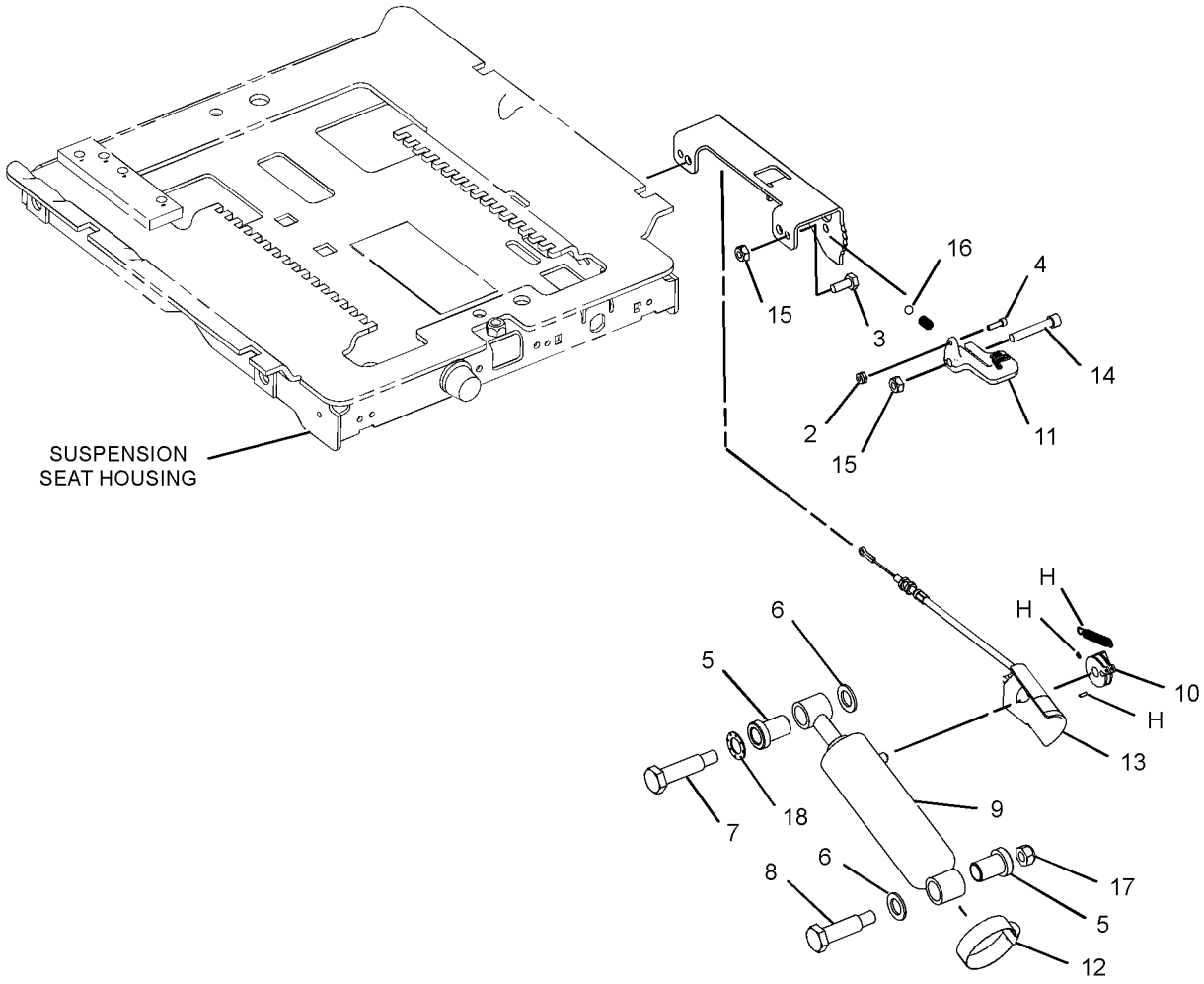

GRAPHIC #1 **<END>** g03662307

447-2230 LINER GP-CAB

S/N: E9Y1-UP

PART OF 361-3120 CAB AR

SMCS-7329 **i06096006**

NOTE	REF NO	GRAPHIC REF	PART NUMBER	QTY	PART NAME 1 2 3 4 5 6 (PRODUCT LEVEL)	SEE PAGE
Y	1	1	**3E-6389**	1	LAMP GP-DOME (24-VOLT) (CAB)	205
M	2	1	**172-8591**	18	NUT-SPRING (M6X1-THD)	
	3	1	**5T-1625**	1	PLATE AS	
	4	1	**096-0192**	3	LOCKWASHER (EXTERNAL TOOTH)	
	5	1	**9R-0932**	1	LATCH	
	6	1	**101-0003**	2	FASTENER	
	7	1	**112-8728**	3	SCREW (10-32X1.25-IN)	
	8	1	**131-5171**	1	CLIP	
	9	1	**250-8335**	2	LAMP AS (24-VOLT) (IMPLEMENT CONTROL)	
					(EACH INCLUDES)	
		1	**102-8802**	1	KIT-RECEPTACLE (2-PIN)	
					(INCLUDES RECEPTACLE AS & WEDGE)	
		1	**186-3735**	2	PIN-CONNECTOR (16-GA TO 18-GA)	
	10	1	**330-3862**	1	PLATE	
	11	1	**330-3863**	1	FILM-INSTRUCTION (WIPER)	
	12	1	**330-3864**	1	PLATE	
	13	1	**344-0980**	1	PLATE AS	
	14	1	**361-0423**	1	COVER	
	15	1	**361-0426**	1	LINER AS-CAB (LH)	
		1	**174-5763**	6	CLIP	
	16	1	**447-2231**	1	LINER AS-CAB	
		1	**174-5763**	10	CLIP	
	17	1	**363-5824**	1	PLATE AS	
	18	1	**114-6658**	8	WASHER (6.5X17X1-MM THK)	
	19	1	**096-6166**	4	WASHER-HARD (4.5X9X1-MM THK)	
	20	1	**7X-0579**	16	WASHER-HARD (8.8X25.5X2-MM THK)	
	21	1	**9K-5635**	8	SCREW-TAPPING (8-18X1-IN)	
	22	1	**447-8925**	6	INSERT-THREADED	
M	23	1	**9X-2045**	10	SCREW-TRUSS HEAD (M6X1X20-MM)	
M	24	1	**9X-2046**	11	SCREW-TRUSS HEAD (M6X1X35-MM)	
D	25	1	**8T-5372**		SEAL (0.6-M)	
	26	1	**446-1483**	3	SCREW-TRUSS HEAD (M6X1X45-MM)	
	27	1	**206-3747**	3	SPACER (6.3X12.7X32-MM THK)	
	28	1	**160-2169**	2	SPACER (7X11X8.4-MM THK)	

D - ORDER BY THE METER
M - METRIC PART
Y - SEPARATE ILLUSTRATION

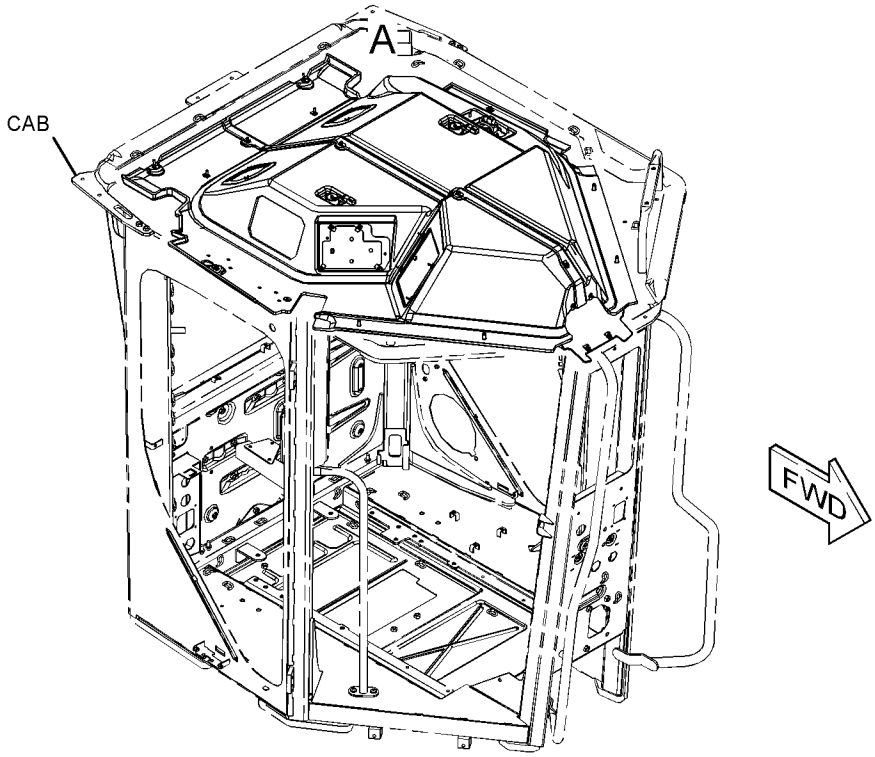

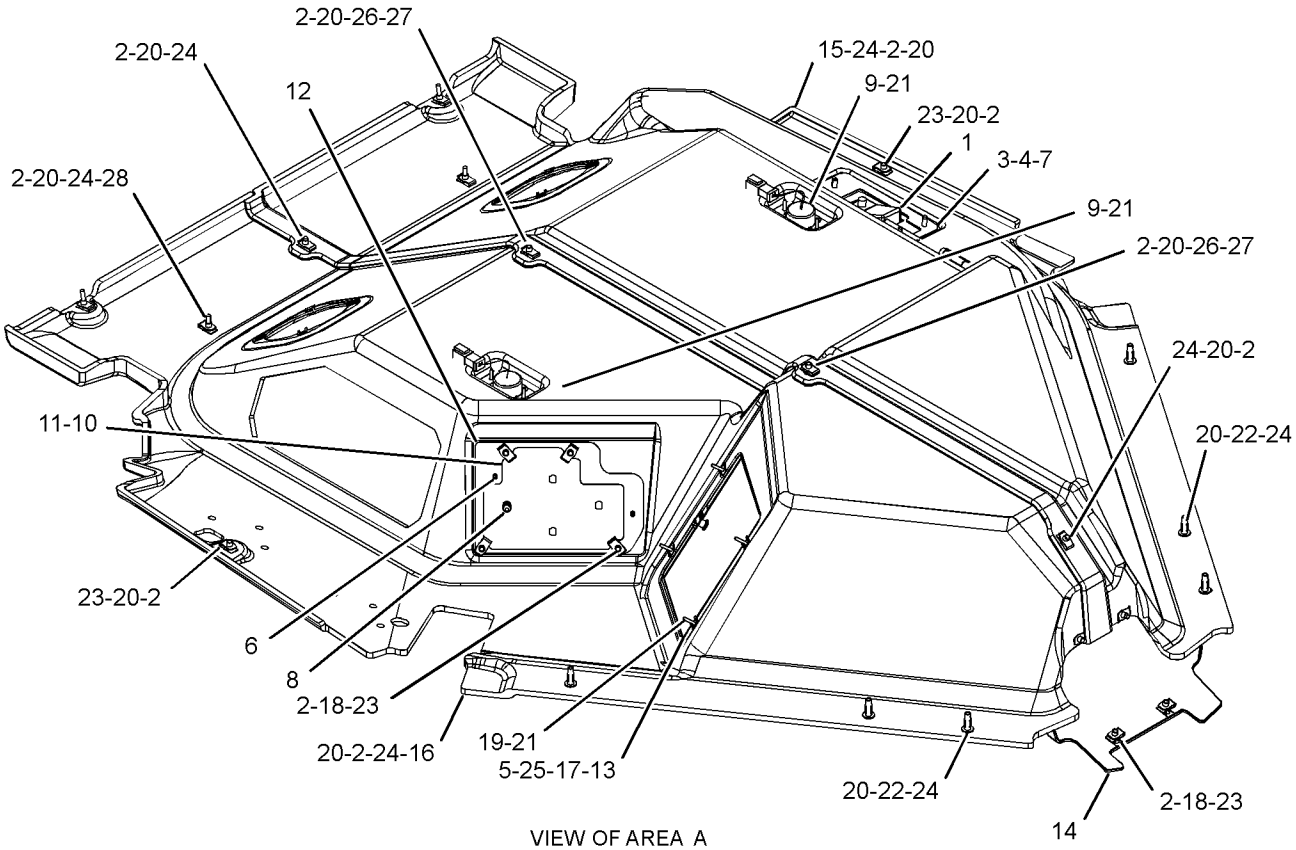

VIEW OF AREA A

GRAPHIC #1 **<END>** g03681159

366-6129 LINES GP-AIR CONDITIONER

S/N: E9Y1-UP

PART OF 371-3796 HYDRAULIC AR

SMCS-1808 **i06125945**

NOTE	REF NO	GRAPHIC REF	PART NUMBER	QTY	PART NAME 1 2 3 4 5 6 (PRODUCT LEVEL)	SEE PAGE
	1	1	**7K-3176**	1	COUPLING AS-REFRIGERANT (SELF-SEALING)	
	2	1	**160-1744**	1	BRACKET	
	3	1	**376-0575**	1	HOSE AS	
		1	**327-0282**	1	SEAL-INTEGRAL (1/2-IN)	
	4	1	**456-0579**	1	HOSE AS	
		1	**327-0283**	1	SEAL-INTEGRAL (3/4-IN)	
M	5	1	**178-3336**	2	NUT-HEX FLANGE (M8X1.25-THD)	
M	6	1	**344-5675**	1	NUT (M10X1.5-THD)	
	7	1	**5P-7466**	2	CLIP (SLOT)	
	8	1	**5P-7467**	2	CLIP (TAB)	
	9	1	**5P-8112**	2	GROMMET (50-MM ID)	
	10	1	**8M-2773**	2	CLIP	
	11	1	**8T-4121**	4	WASHER-HARD (11X21X2.5-MM THK)	
M	12	1	**8T-4136**	1	BOLT (M10X1.5X25-MM)	
M	13	1	**8T-4186**	1	BOLT (M10X1.5X40-MM)	
M	14	1	**8T-4195**	1	BOLT (M10X1.5X30-MM)	
	15	1	**9X-7383**	2	SEAL-O-RING	

M - METRIC PART

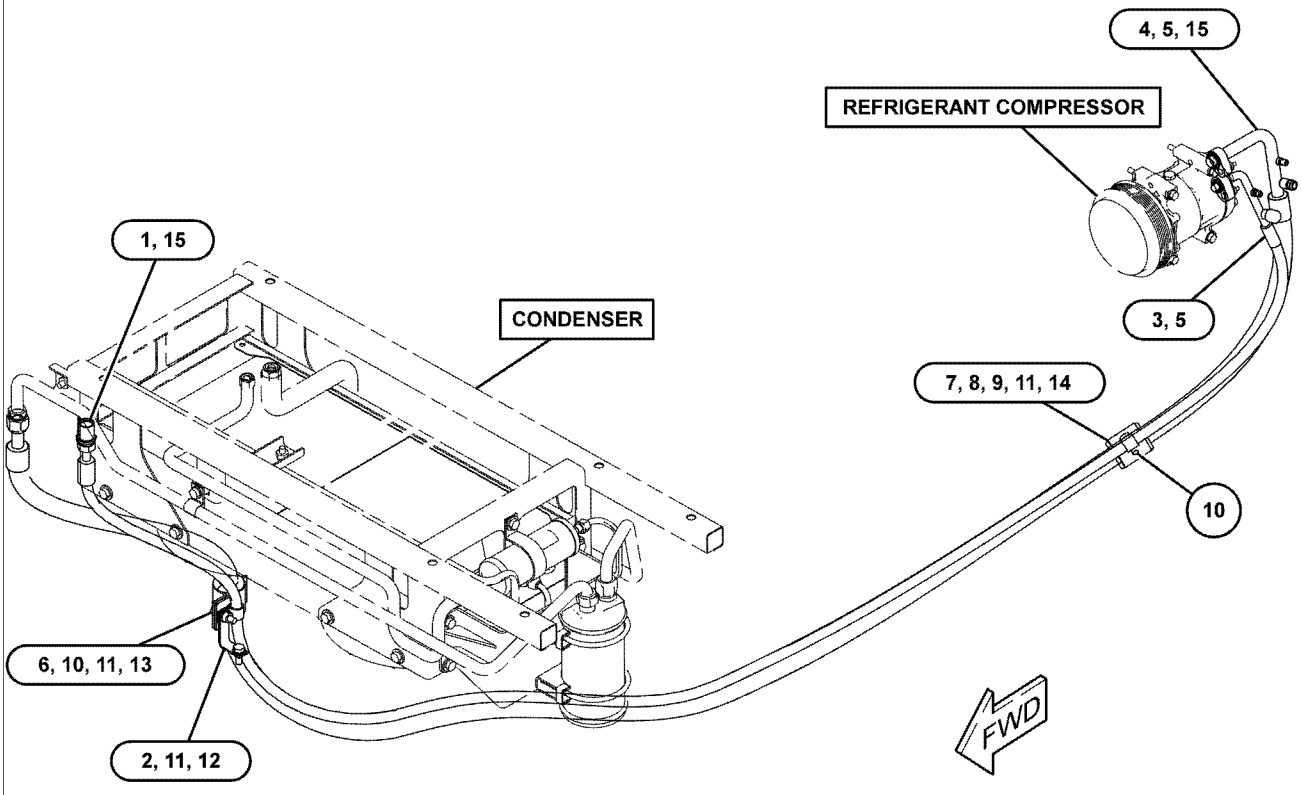

GRAPHIC #1 **<END>** g03818333

273-1878 LINES GP-HEATER

S/N: E9Y1-UP

PART OF 389-6377 AIR CONDITIONER AR

SMCS-1812, 7304 **i05148010**

NOTE	REF NO	GRAPHIC REF	PART NUMBER	QTY	PART NAME 1 2 3 4 5 6 (PRODUCT LEVEL)	SEE PAGE
	1	1	**9X-2488**	4	CLAMP-HOSE	
	2	1	**273-0343**	1	PLATE AS	
		1	**273-0344**	1	PLATE	
	3	1	**278-3354**	1	FILM-INSTRUCTION (HVAC WATER, DRAINING, FILLING)	
	4	1	**5P-4116**	2	WASHER-HARD (8.8X20.5X2-MM THK)	
	5	1	**6D-1641**	1	CLIP	
	6	1	**8T-4121**	1	WASHER-HARD (11X21X2.5-MM THK)	
M	7	1	**8T-4137**	1	BOLT (M10X1.5X20-MM)	
M	8	1	**8T-4908**	2	BOLT (M8X1.25X25-MM)	
E	9	1	**136-1953**		HOSE (87-CM EACH)	
D	10	1	**5P-5637**		SEAL (0.6-M)	

D - ORDER BY THE METER
E - ORDER BY THE CENTIMETER
M - METRIC PART

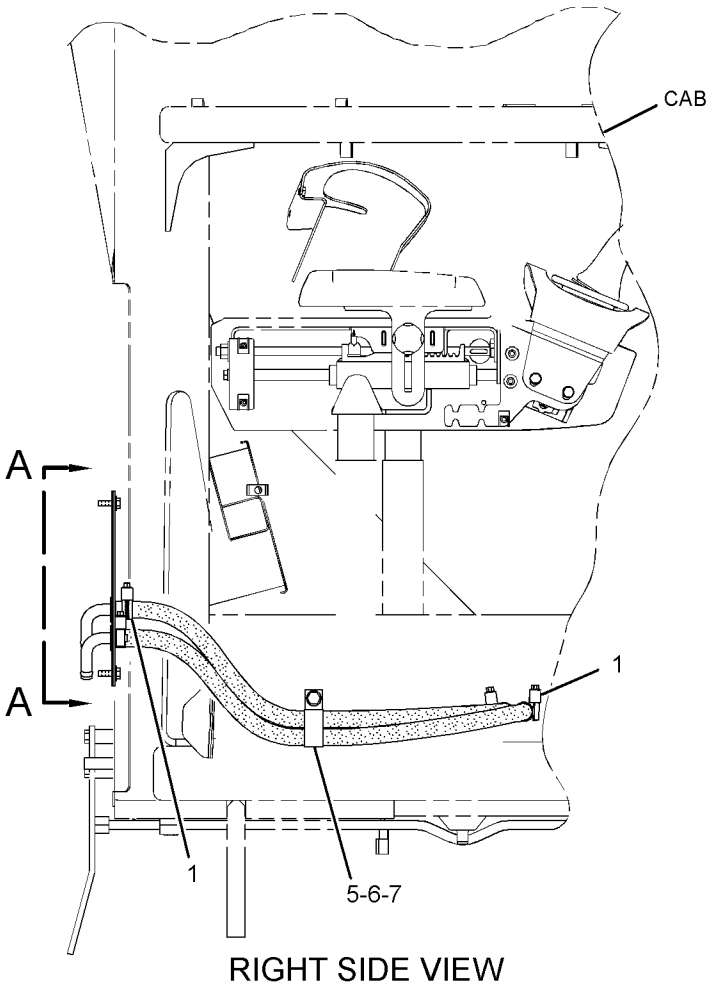

RIGHT SIDE VIEW

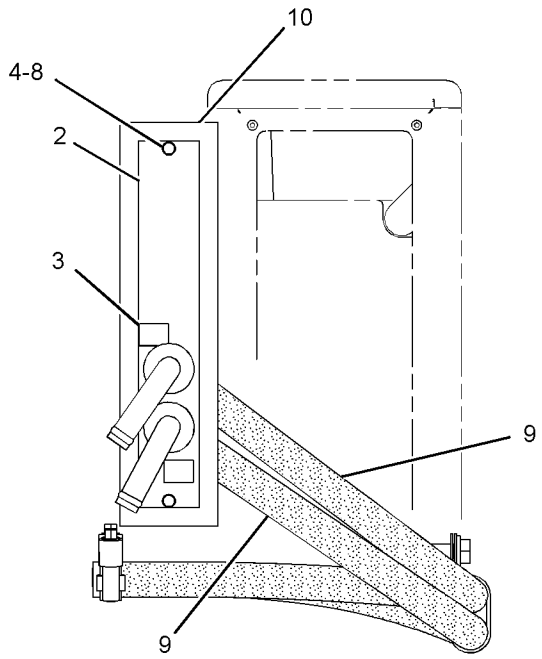

VIEW A-A

GRAPHIC #1 **<END>** g01259573

366-6132 LINES GP-HEATER

S/N: E9Y1-UP

PART OF 371-3796 HYDRAULIC AR

SMCS-1812, 7304 **i06144253**

NOTE	REF NO	GRAPHIC REF	PART NUMBER	QTY	PART NAME 1 2 3 4 5 6 (PRODUCT LEVEL)	SEE PAGE
	1	1	**194-4864**	1	ELBOW	
	2	1	**124-6257**	4	CLAMP-HOSE	
	3	1	**5P-1045**	1	CONNECTOR	
	4	1	**6D-4247**	4	CLIP	
	5	1	**6V-4589**	1	SEAL-O-RING	
	6	1	**6V-5050**	1	SEAL-O-RING	
	7	1	**8T-4121**	3	WASHER-HARD (11X21X2.5-MM THK)	
M	8	1	**8T-4136**	3	BOLT (M10X1.5X25-MM)	
G	9	1	**423-1984**		HOSE (160-IN)	
G	9A	1	**423-1984**		HOSE (154-IN)	

G - ORDER BY THE INCH
M - METRIC PART

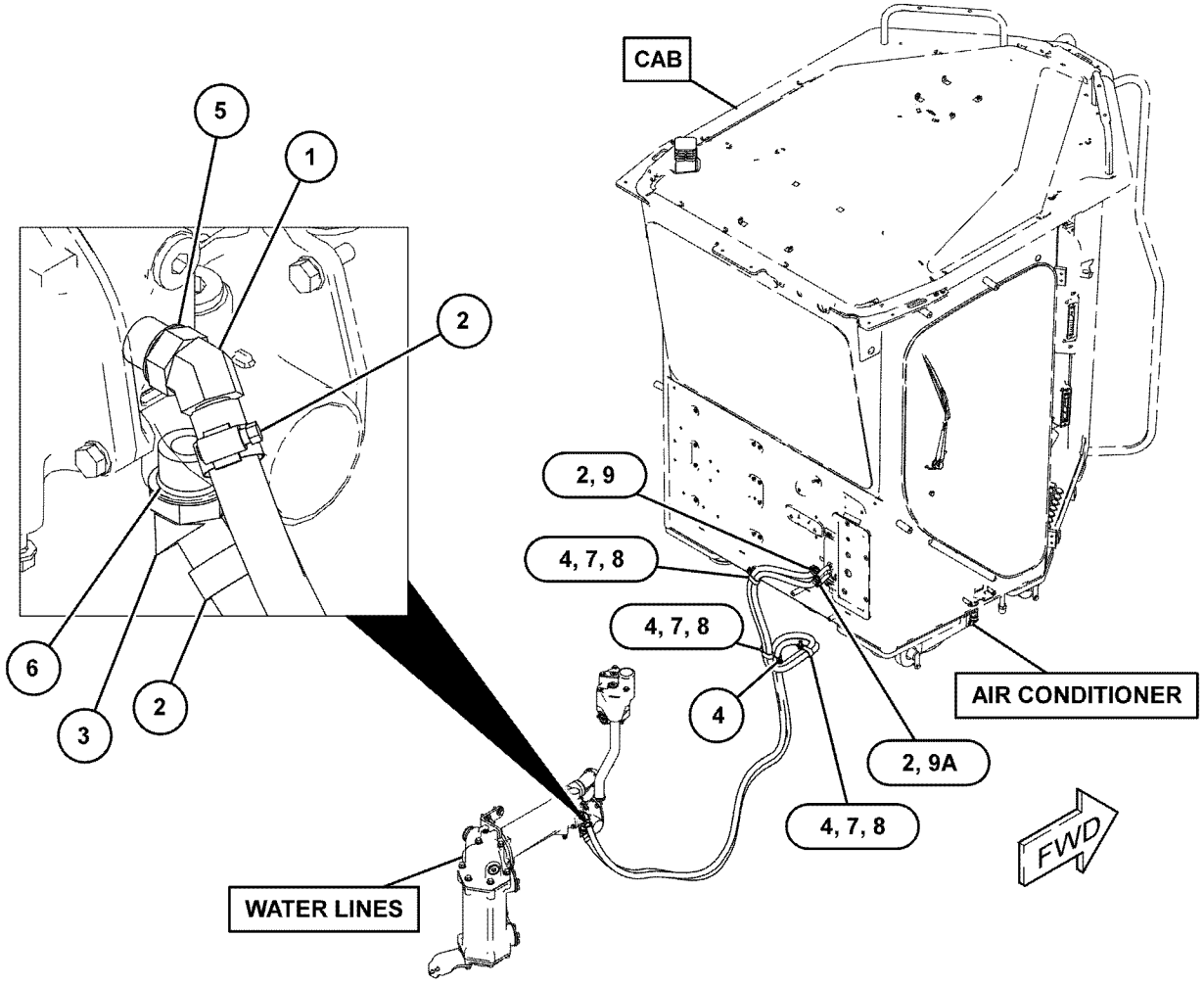

GRAPHIC #1 <END> g03828824

OPERATOR STATION

6V-1970 LITERATURE GP

S/N: E9Y1-UP

PART OF 386-1317 COMMON AR

SMCS-0374, 0375

i02831417

NOTE	PART NUMBER	QTY	PART NAME 1 2 3 4 5 6 (PRODUCT LEVEL)	SEE PAGE
	5P-8500	2	KEY (LITERATURE COMPARTMENT)	
	5P-7958	1	SLEEVE-CABLE SPLICE	

<END>

351-4490 MIRROR GP

S/N: E9Y1-UP

CANNOT BE USED WITH 421-7812—PAGE: 202, 375-3407—PAGE: 3 AN ATTACHMENT

SMCS-7319 **i05350566**

NOTE	REF NO	GRAPHIC REF	PART NUMBER	QTY	PART NAME 1 2 3 4 5 6 (PRODUCT LEVEL)	SEE PAGE
	1	1	*123-4586*	8	BLOCK	
	2	1	**185-3874**	1	MIRROR AS	
	3	1	**291-9154**	8	BLOCK	
	4	1	**339-6543**	2	MIRROR AS	
	5	1	**215-4809**	2	MIRROR-CONVEX	
	6	1	**351-4424**	1	ARM AS (RH)	
	7	1	**351-4425**	1	ARM AS (LH)	
	8	1	**351-4483**	2	BLOCK	
	9	1	**351-4484**	2	BLOCK	
	10	1	**351-4485**	2	BRACKET	
	11	1	**360-1598**	1	TUBE	
	12	1	**351-4489**	4	TUBE	
	13	1	**351-4491**	1	TUBE AS	
	14	1	**214-0647**	2	MIRROR AS	
	15	1	**264-3637**	4	BOLT (M10X1.5X55-MM)	
	16	1	**323-3730**	4	BOLT (M10X1.5X50-MM)	
	17	1	**3K-6060**	4	LOCKNUT (3/8-16-THD)	
	18	1	**5S-7379**	2	BOLT (3/8-16X0.875-IN)	
	19	1	**7V-7584**	2	ANGLE	
	20	1	**7X-7729**	4	WASHER (11X25X3-MM THK)	
	21	1	**8T-4121**	20	WASHER-HARD (11X21X2.5-MM THK)	
M	22	1	**8T-4133**	4	NUT (M10X1.5-THD)	
M	23	1	**8T-4182**	4	BOLT (M10X1.5X45-MM)	
M	24	1	**8T-4185**	4	BOLT (M10X1.5X50-MM)	
M	25	1	**8T-4189**	2	BOLT (M8X1.25X20-MM)	
	26	1	**8T-4224**	3	WASHER-HARD (8.8X16X2-MM THK)	
	27	1	**8T-4896**	2	WASHER-HARD (10.2X18.5X2.5-MM THK)	
M	28	1	**8T-6466**	8	BOLT (M10X1.5X60-MM)	
M	29	1	**8T-7547**	1	BOLT (M8X1.25X30-MM)	

M - METRIC PART

351-4490 **MIRROR GP (*contd.*)** **i05350566**

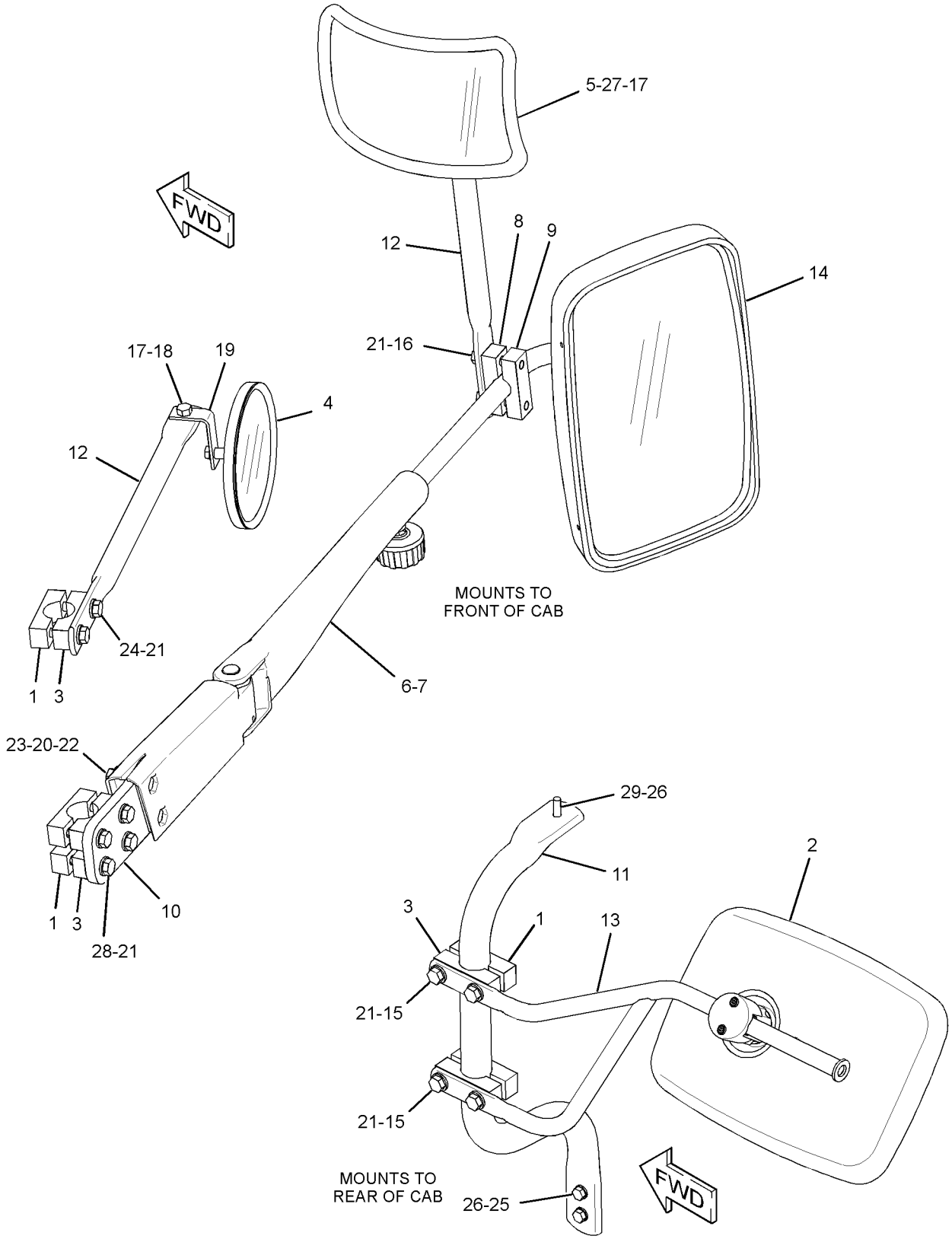

GRAPHIC #1 **<END>** g02213394

105-9659 MIRROR GP-REAR VIEW—INTERIOR

S/N: E9Y1-UP

PART OF 233-3208 MIRROR GP-REAR VIEW

SMCS-7319 **i01901909**

NOTE	REF NO	GRAPHIC REF	PART NUMBER	QTY	PART NAME 1 2 3 4 5 6 (PRODUCT LEVEL)	SEE PAGE
	1	1	**9P-9388**	1	KNOB (MIRROR ADJUSTMENT)	
	2	1	**5P-6874**	1	MIRROR (REAR VIEW)	
	3	1	**5K-9179**	1	BOLT-ROUND HEAD (3/8-16X11-IN)	
	4	1	**6Y-5113**	1	BRACKET	
	5	1	**8T-4121**	2	WASHER-HARD (11X21X2.5-MM THK)	
M	6	1	**8T-4195**	2	BOLT (M10X1.5X30-MM)	

M - METRIC PART

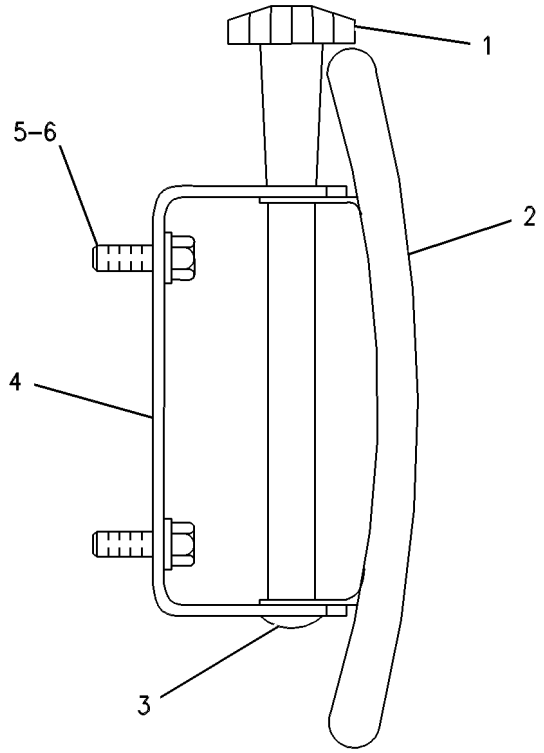

GRAPHIC #1 **<END>** g00254288

233-3208 MIRROR GP-REAR VIEW—INTERIOR

S/N: E9Y1-UP

PART OF 361-3120 CAB AR

SMCS-7319 **i03786952**

NOTE	PART NUMBER	QTY	PART NAME 1 2 3 4 5 6 (PRODUCT LEVEL)	SEE PAGE
Y	*105-9659*	1	MIRROR GP-REAR VIEW (INTERIOR)	760

Y - SEPARATE ILLUSTRATION

<END>

233-3295 MIRROR GP-REAR VIEW—EXTERIOR

S/N: E9Y1-UP
DUAL
CANNOT BE USED WITH 421-7813—PAGE: 763
AN ATTACHMENT

SMCS-7319 **i05210810**

NOTE	REF NO	GRAPHIC REF	PART NUMBER	QTY	PART NAME 1 2 3 4 5 6 (PRODUCT LEVEL)	SEE PAGE
	1	1	**123-4586**	4	BLOCK	
	2	1	**291-9154**	4	BLOCK	
	3	1	**259-4758**	2	MIRROR AS	
	4	1	**265-8941**	2	TUBE AS	
	5	1	**8T-4121**	8	WASHER-HARD (11X21X2.5-MM THK)	
M	6	1	**189-5358**	8	BOLT (M10X1.5X60-MM)	

M - METRIC PART

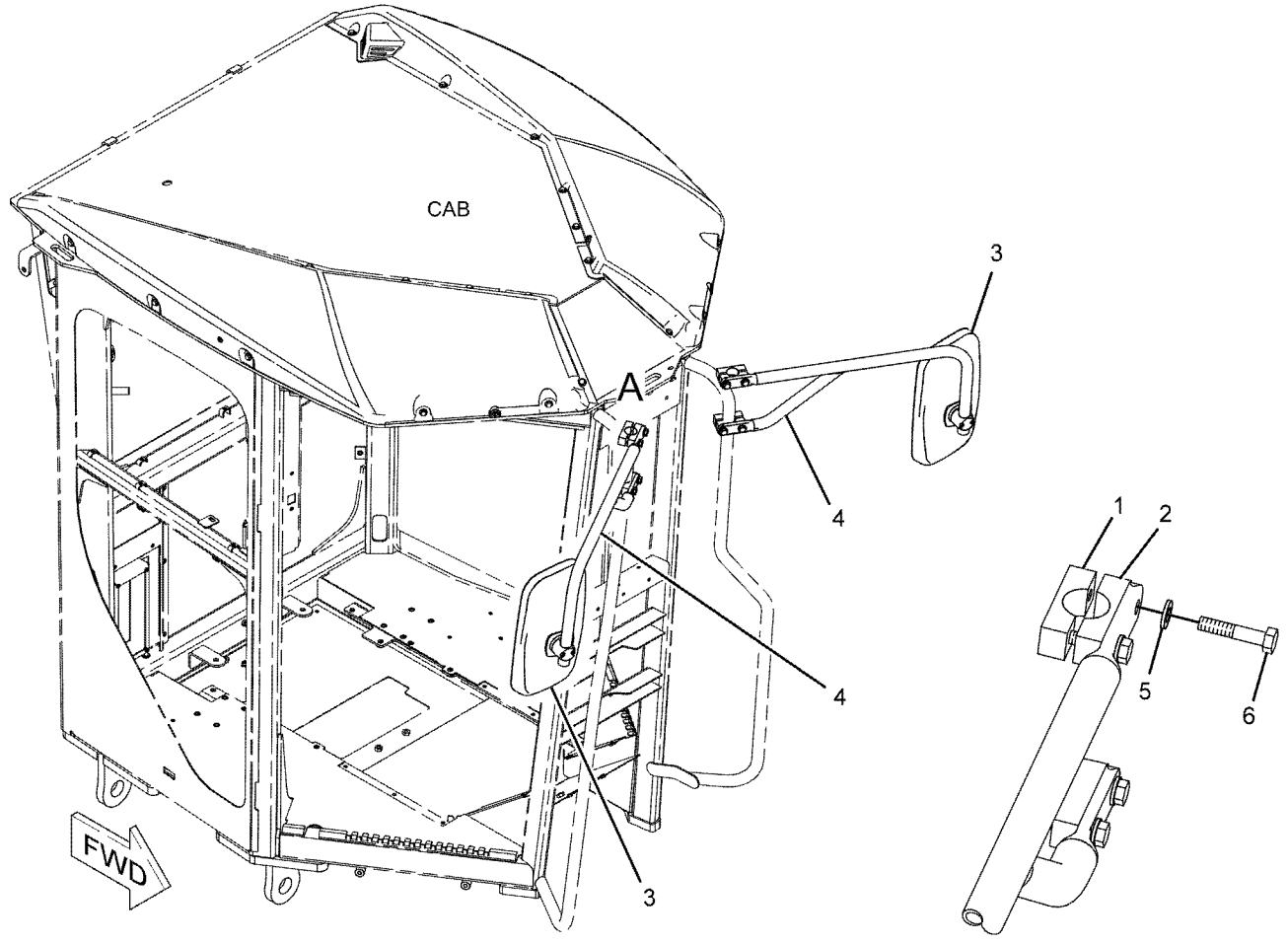

VIEW OF AREA A

GRAPHIC #1 **<END>** g01142028

421-7813 MIRROR GP-REAR VIEW

S/N: E9Y1-UP

CANNOT BE USED WITH 370-8503—PAGE: 219, 370-8504—PAGE: 221, 375-3407—PAGE: 3, 233-3295—PAGE: 762

AN ATTACHMENT

SMCS-7319 **i06155291**

NOTE	REF NO	GRAPHIC REF	PART NUMBER	QTY	PART NAME 1 2 3 4 5 6 (PRODUCT LEVEL)	SEE PAGE
	1	1	**123-4586**	4	BLOCK	
	2	1	**259-4759**	2	MIRROR AS	
					(EACH INCLUDES)	
		1	**8T-8729**	2	PIN-CONNECTOR (16-GA TO 18-GA)	
		1	**102-8802**	1	KIT-RECEPTACLE (2-PIN)	
					(INCLUDES RECEPTACLE AS & WEDGE)	
	3	1	**265-8941**	2	TUBE AS	
	4	1	**291-9154**	4	BLOCK	
M	5	1	**189-5358**	8	BOLT (M10X1.5X60-MM)	
	6	1	**3S-2093**	12	STRAP-CABLE	
	7	1	**8T-4121**	8	WASHER-HARD (11X21X2.5-MM THK)	

M - METRIC PART

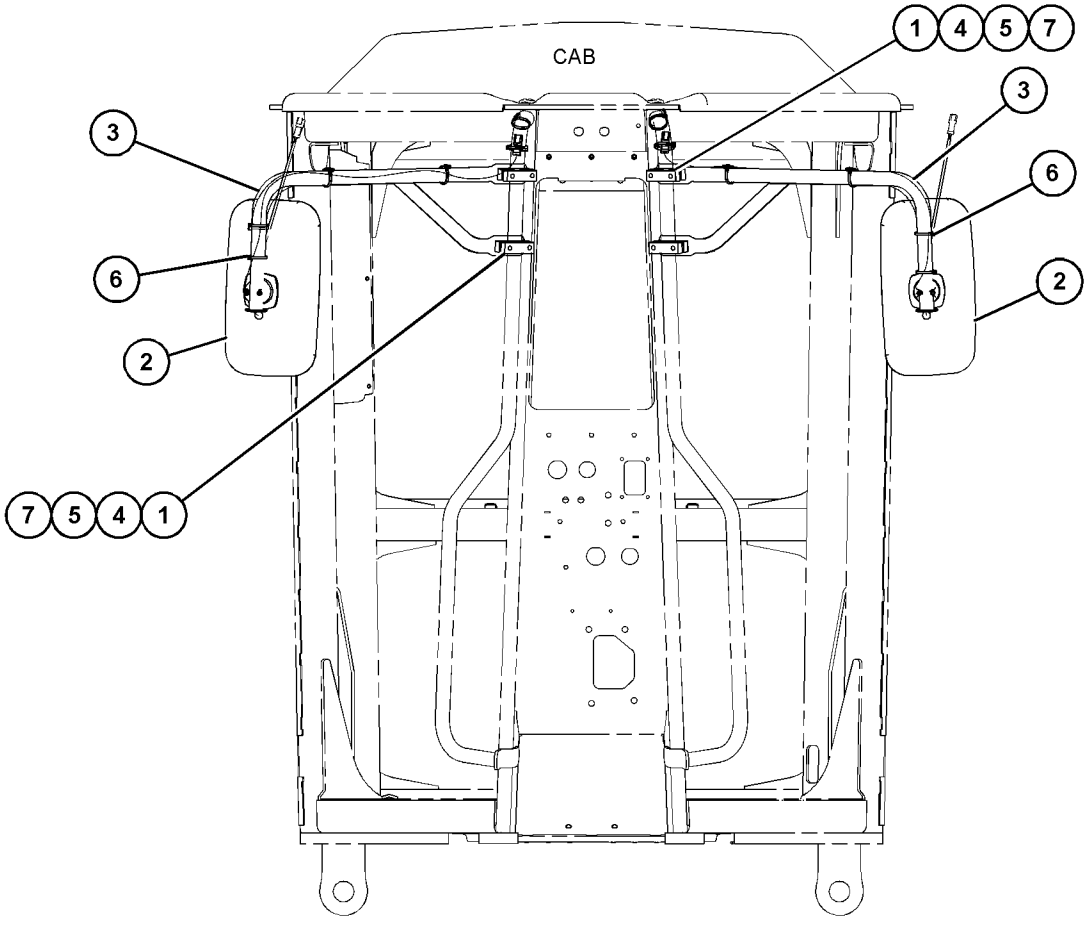

FRONT VIEW

GRAPHIC #1 **<END>** g03833899

446-9427 MIRROR GP-REAR VIEW

S/N: E9Y1-UP
PART OF 375-3407 OPTION AR-LADDER
AN ATTACHMENT

SMCS-7319 **i06145073**

NOTE	REF NO	GRAPHIC REF	PART NUMBER	QTY	PART NAME 1 2 3 4 5 6 (PRODUCT LEVEL)	SEE PAGE
	1	1	**203-0780**	2	MIRROR	
	2	1	**259-4758**	2	MIRROR AS	
	3	1	**457-3298**	1	TUBE AS	
	4	1	**457-3299**	1	TUBE AS	
	5	1	**2K-3019**	8	CLAMP-HOSE	
	6	1	**5M-2894**	8	WASHER-HARD (10.2X18.5X2.5-MM THK)	
	7	1	**6W-5458**	4	SPACER (0.406X0.75X0.5-IN THK)	
	8	1	**7Y-5262**	4	U-BOLT	
M	9	1	**8T-0389**	12	LOCKNUT (M10X1.5-THD)	
	10	1	**8T-4121**	8	WASHER-HARD (11X21X2.5-MM THK)	
M	11	1	**8T-4182**	4	BOLT (M10X1.5X45-MM)	

M - METRIC PART

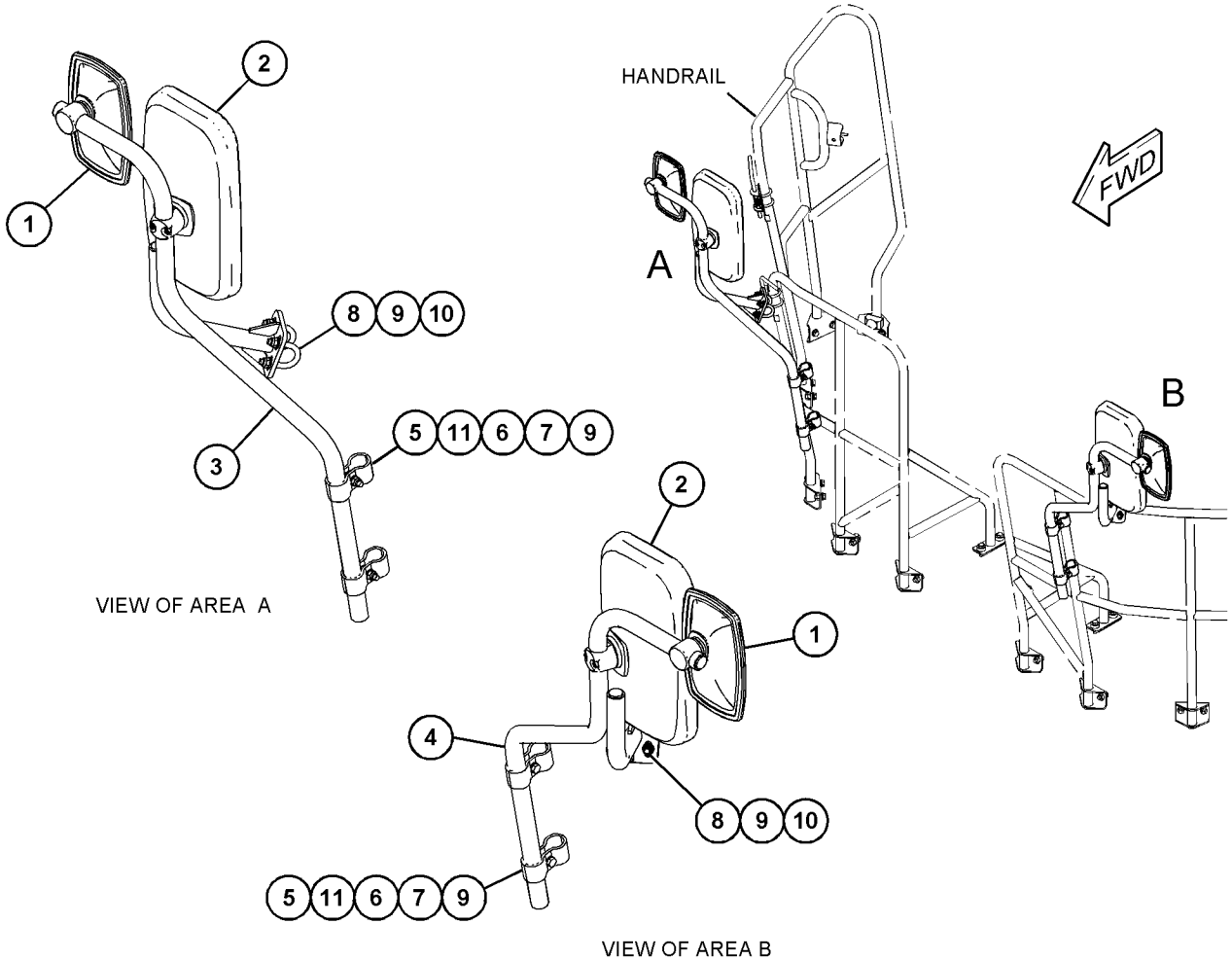

GRAPHIC #1 **<END>** g03834916

385-8708 MONITOR AR-PAYLOAD

S/N: E9Y1-UP

PART OF 385-8720 CAB AR

SMCS-7494 **i06147105**

NOTE	REF NO	GRAPHIC REF	PART NUMBER	QTY	PART NAME 1 2 3 4 5 6 (PRODUCT LEVEL)	SEE PAGE
	1	1	**381-5749**	1	CONTROL GP-ELECTRONIC	
	2	1	**345-0351**	1	FILM-IDENTIFICATION (IGNITION SWITCH)	
J	3	1	**369-4095**	1	SWITCH AS-START	
		1	**7T-6799**	1	NUT-MOUNTING (1-32-THD)	
		1	**8T-8729**	5	PIN-CONNECTOR (16-GA TO 18-GA)	
		1	**8T-8737**	1	PLUG-SEAL	
		1	**102-8805**	1	KIT-RECEPTACLE (6-PIN)	
					(INCLUDES RECEPTACLE AS & WEDGE)	
	4	1	**386-1372**	1	MODULE GP-DISPLAY (INSTRUMENT CLUSTER)	
		1	**364-8277**	1	FILM-IDENTIFICATION (CAT)	
	5	1	**5P-4116**	4	WASHER-HARD (8.8X20.5X2-MM THK)	
M	6	1	**8T-0325**	8	BOLT (M5X0.8X14-MM)	
M	7	1	**9X-2043**	4	SCREW-TRUSS HEAD (M6X1X14-MM)	
	8	1	**9X-8256**	8	WASHER (6.6X12X2-MM THK)	

J - REQUIRES CORPORATE KEY
M - METRIC PART

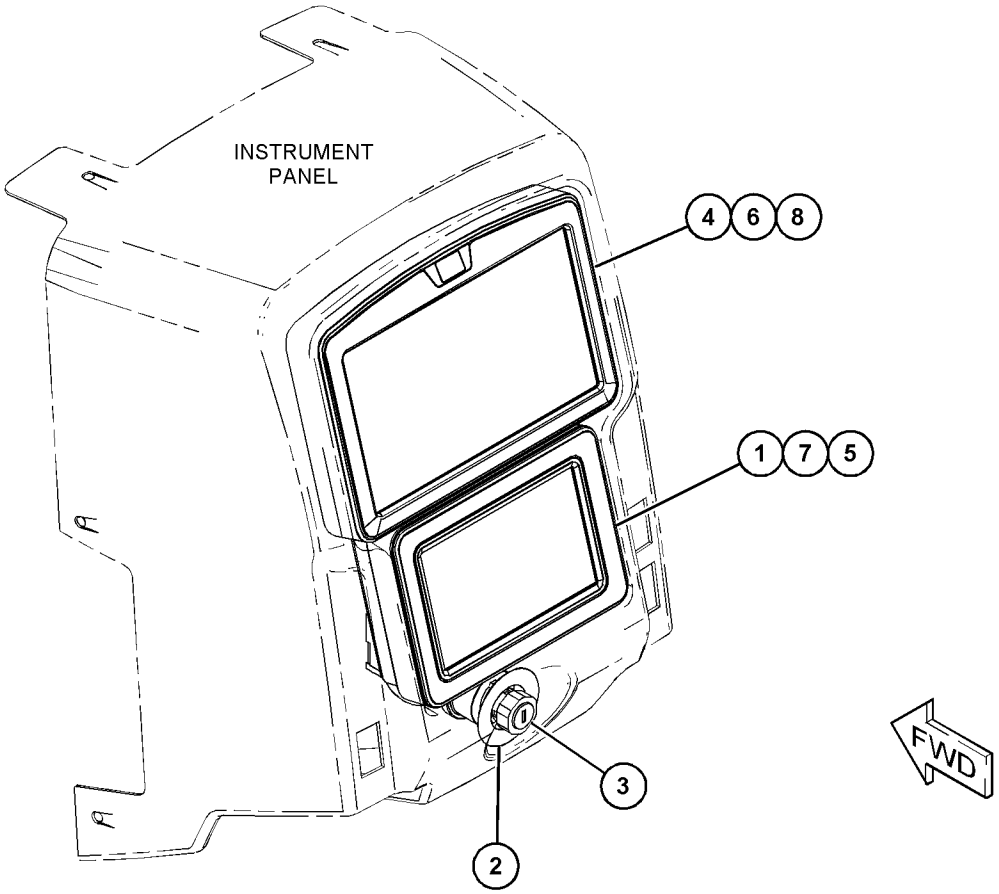

GRAPHIC #1 **<END>** g03829792

295-1120 MOTOR GP-WINDOW WIPER

S/N: E9Y1-UP

24-VOLT

PART OF 310-2029 WIPER & WASHER GP-WINDOW

SMCS-7305 **i03115001**

NOTE	REF NO	GRAPHIC REF	PART NUMBER	QTY	PART NAME 1 2 3 4 5 6 (PRODUCT LEVEL)	SEE PAGE
	1	1	**135-0611**	1	MOTOR GP-WINDOW WIPER (24-VOLT, 2-SPEED) (FRONT)	
	2	1	**206-5823**	2	CAP (MOTOR)	
	3	1	**3F-9556**	2	LOCKWASHER	
M	4	1	**5C-7261**	2	NUT (M8X1.25-THD)	

M - METRIC PART

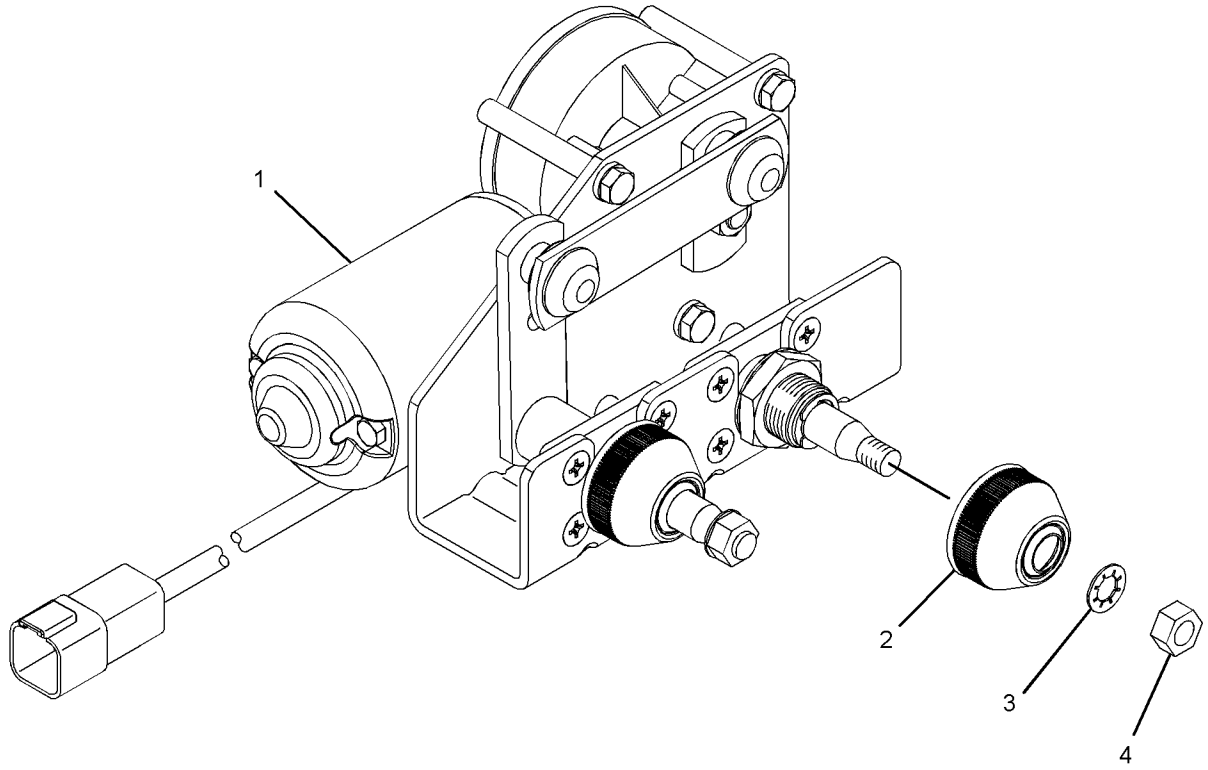

GRAPHIC #1 **<END>** g01315464

457-3648 MOTOR GP-WINDOW WIPER–REAR

S/N: E9Y1-UP
24-VOLT
PART OF 330-3868 WIPER GP-WINDOW

SMCS-7305 **i06057337**

NOTE	REF NO	GRAPHIC REF	PART NUMBER	QTY	PART NAME 1 2 3 4 5 6 (PRODUCT LEVEL)	SEE PAGE
	1	1	**102-8805**	1	KIT-RECEPTACLE (6-PIN)	
					(INCLUDES RECEPTACLE AS & WEDGE)	
	2	1	**3F-9556**	1	LOCKWASHER	
M	3	1	**5C-7261**	1	NUT (M8X1.25-THD)	
	4	1	**263-3823**	1	CAP-WIPER	
	5	1	**8T-8729**	5	PIN-CONNECTOR (16-GA TO 18-GA)	
	6	1	**8T-8737**	1	PLUG-SEAL	

M - METRIC PART

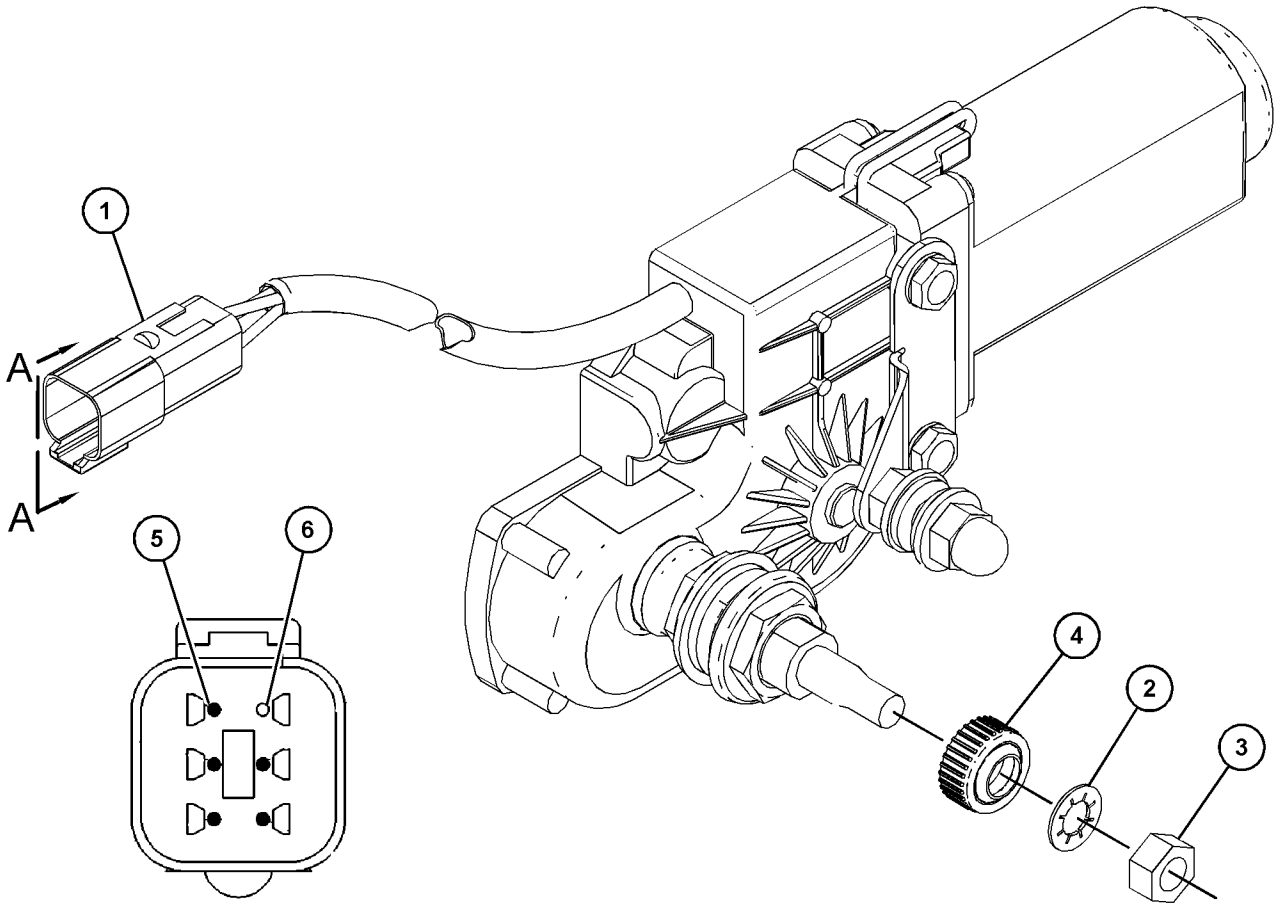

VIEW A-A

GRAPHIC #1 **<END>** g03794660

233-3122 MOUNTING GP-ANTENNA-RADIO

S/N: E9Y1-UP

PART OF 361-3120 CAB AR

SMCS-7338 **i05908347**

NOTE	REF NO	GRAPHIC REF	PART NUMBER	QTY	PART NAME 1 2 3 4 5 6 (PRODUCT LEVEL)	SEE PAGE
	1	1	**6T-7695**	2	SPEAKER AS-RADIO	
	2	1	**7K-1181**	1	STRAP-CABLE	
	3	1	**437-3856**	1	ANTENNA AS	
	4	1	**101-3055**	2	COVER-SPEAKER	
	5	1	**323-0201**	8	SCREW	

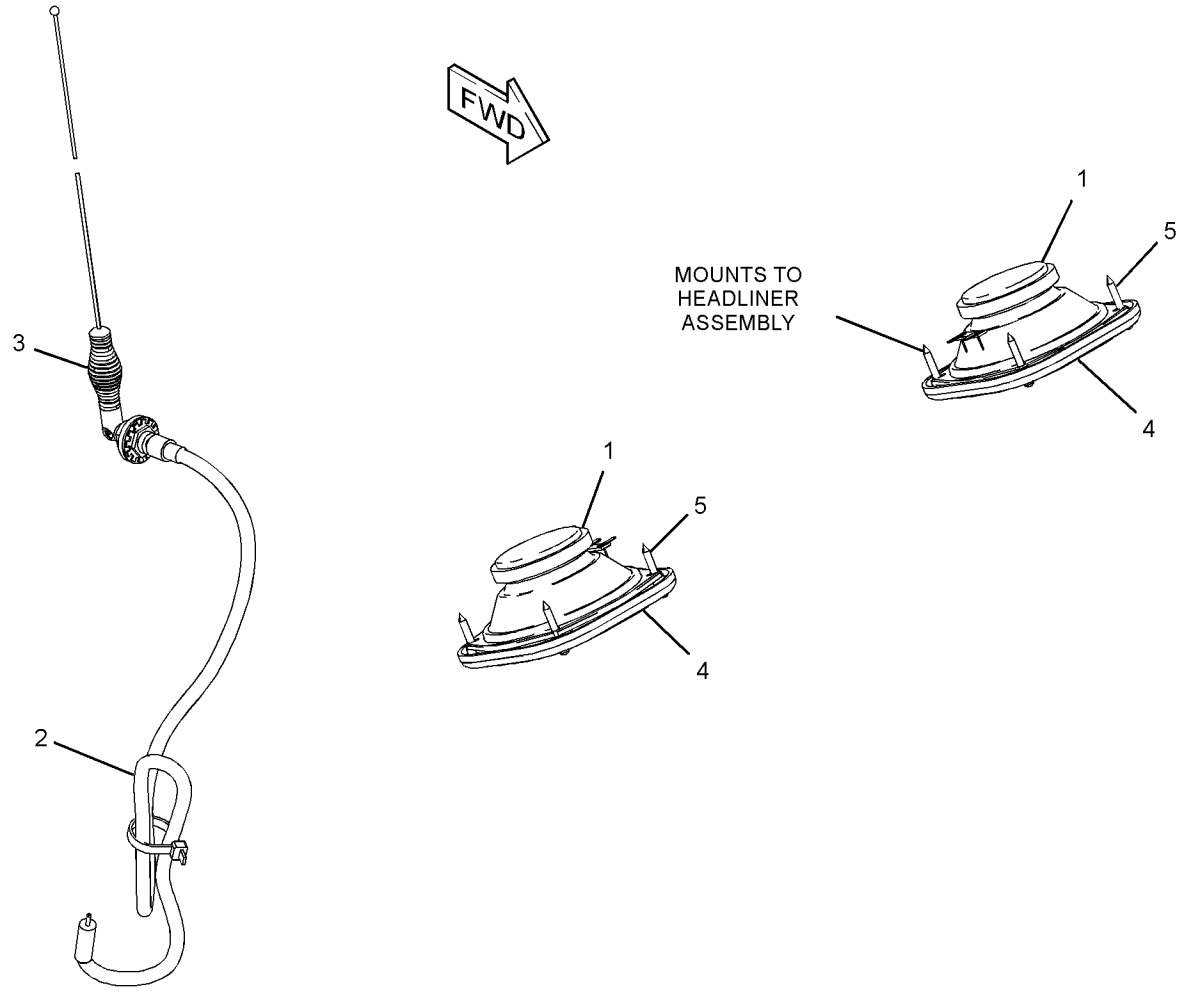

GRAPHIC #1 **<END>** g03720654

OPERATOR STATION

233-3206 MOUNTING GP-CAB

S/N: E9Y1-UP

PART OF 386-0235 INSTALLATION GP-CAB

SMCS-7266, 7301 **i04855138**

NOTE	REF NO	GRAPHIC REF	PART NUMBER	QTY	PART NAME 1 2 3 4 5 6 (PRODUCT LEVEL)	SEE PAGE
	1	1	**3E-4898**	4	SLEEVE	
	2	1	**7Y-2174**	8	WASHER (24.5X130X12-MM THK)	
	3	1	**117-8131**	8	MOUNT AS	
	4	1	**380-5918**	4	PIN AS	
M	5	1	**7X-2465**	4	BOLT (M24X3X180-MM)	
	6	1	**8T-4121**	4	WASHER-HARD (11X21X2.5-MM THK)	
M	7	1	**8T-4136**	4	BOLT (M10X1.5X25-MM)	
	8	1	**8T-4167**	4	WASHER-HARD (26X44X4-MM THK)	

M - METRIC PART

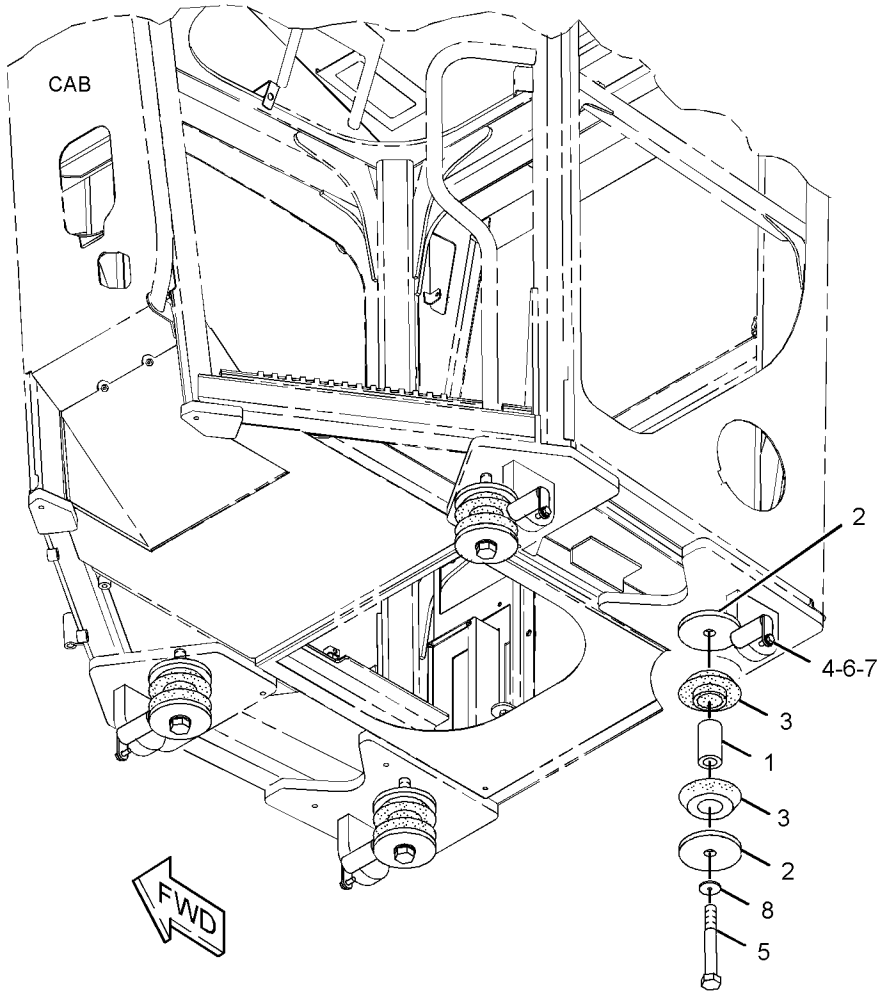

GRAPHIC #1 **<END>** g01880814

428-6026 MOUNTING GP-CAB—FIRE SUPPRESSION

S/N: E9Y1-UP

PART OF 435-8504 OPTION AR-LIGHTING

AN ATTACHMENT

SMCS-7266, 7301 **i06126007**

NOTE	REF NO	GRAPHIC REF	PART NUMBER	QTY	PART NAME 1 2 3 4 5 6 (PRODUCT LEVEL)	SEE PAGE
	1	1	**440-2515**	1	PLATE AS	
	2	1	**440-2520**	1	PLATE AS	
M	3	1	**8T-4189**	8	BOLT (M8X1.25X20-MM)	
	4	1	**8T-4224**	8	WASHER-HARD (8.8X16X2-MM THK)	

M - METRIC PART

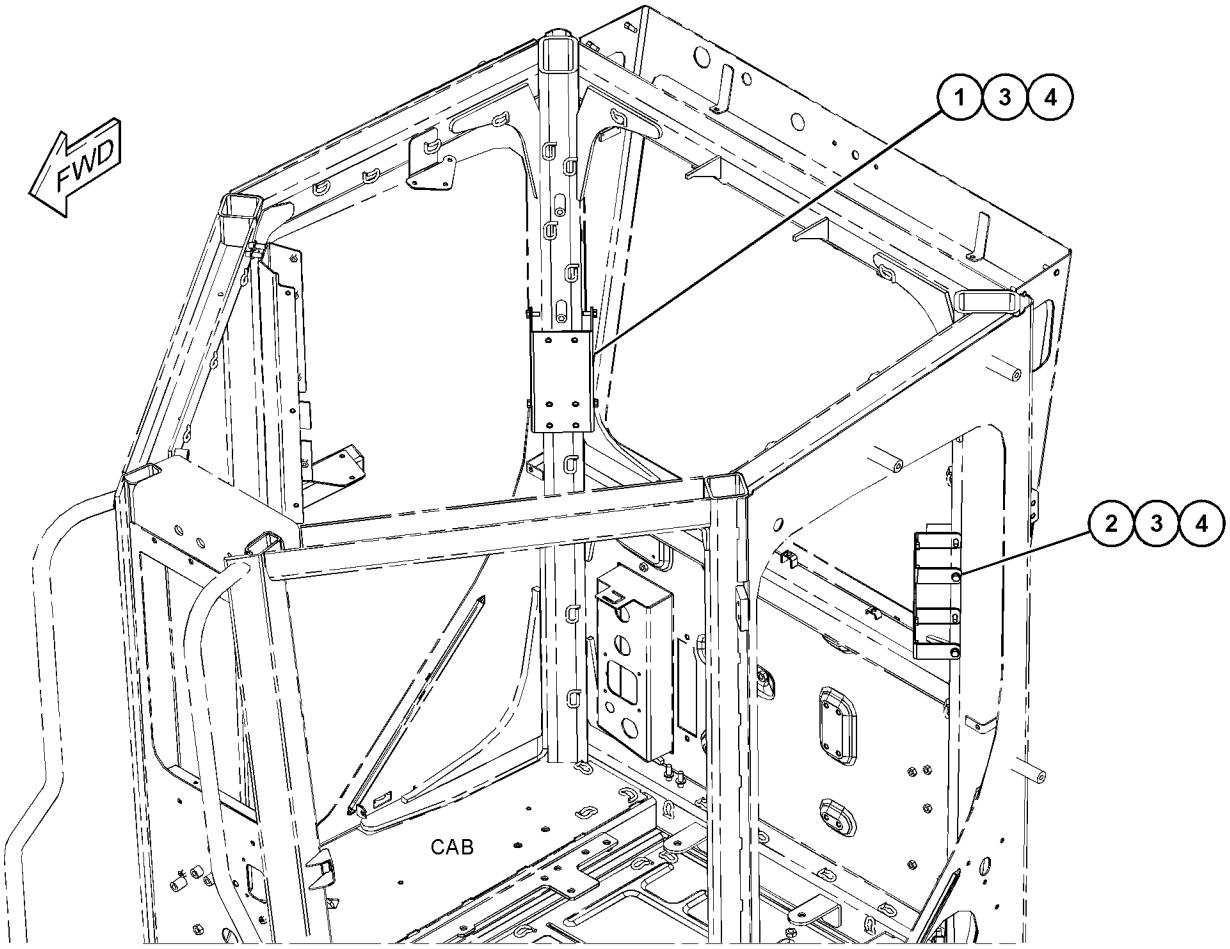

GRAPHIC #1 **<END>** g03820092

346-8842 MOUNTING GP-CONTROL

S/N: TXX1-UP

PROVIDES BRACKET WHICH MOUNTS TO THE CYLINDER HEAD AT THE UPPER LEFT AND PROVIDES MOUNTING FOR THE VENTURI CONTROL VALVE, FUEL REGULATOR MANIFOLD, BAROMETRIC PRESSURE SENSOR, AND CLIPPING LOCATIONS FOR THE NRS OIL LINES

PART OF 383-2065, 422-0048 ENGINE AR-COMPLETE

AN ATTACHMENT

SMCS-5063 **i05326615**

NOTE	REF NO	GRAPHIC REF	PART NUMBER	QTY	PART NAME 1 2 3 4 5 6 (PRODUCT LEVEL)	SEE PAGE
	1	1	**342-6233**	1	BRACKET	
M	2	1	**6V-1820**	3	BOLT (M10X1.5X30-MM)	
	3	1	**6V-5839**	3	WASHER (11X21X2.5-MM THK)	
M	4	1	**227-6715**	1	STUD (M10X1.5X30-MM)	
	5	1	**8T-7934**	1	WASHER-HARD (11X21X5-MM THK)	

M - METRIC PART

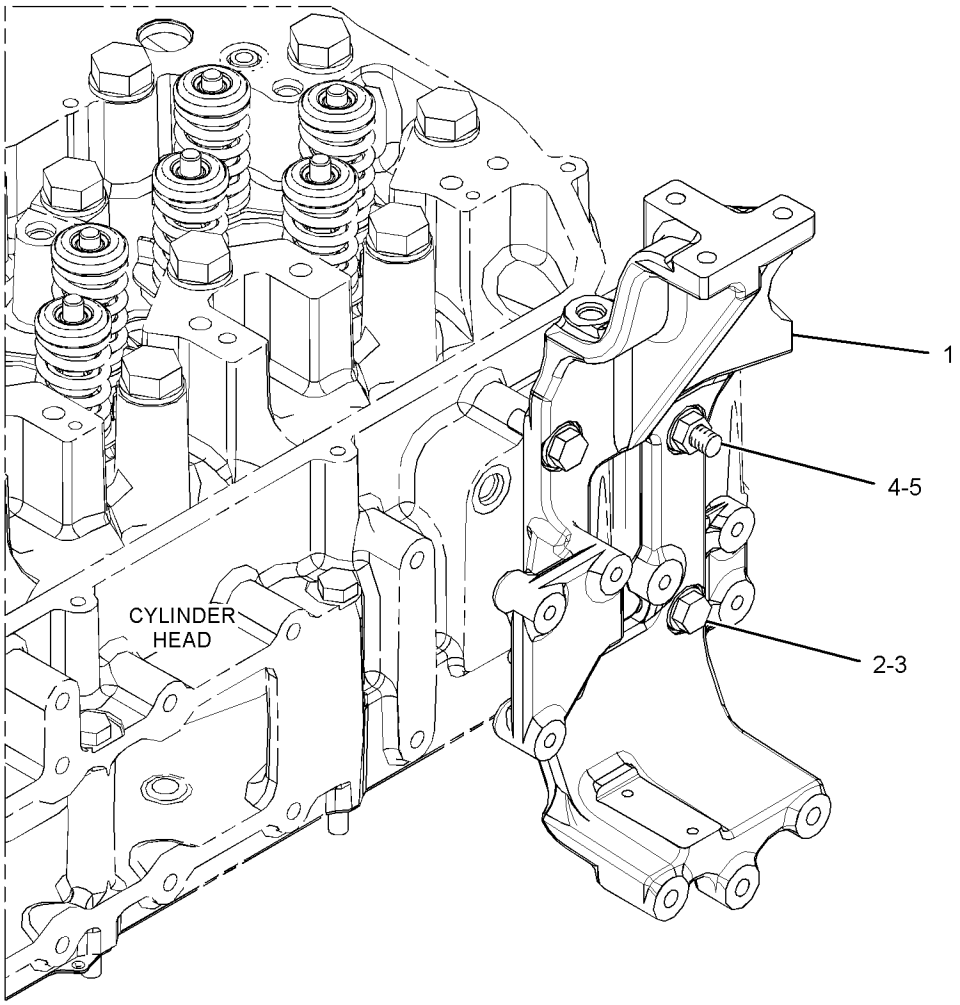

GRAPHIC #1 **<END>** g03374717

370-3080 MOUNTING GP-PLATFORM

S/N: E9Y1-UP
PART OF 375-3407, 462-6400 OPTION AR-LADDER
AN ATTACHMENT

SMCS-7253 **i06155221**

NOTE	REF NO	GRAPHIC REF	PART NUMBER	QTY	PART NAME 1 2 3 4 5 6 (PRODUCT LEVEL)	SEE PAGE
(NO SERVICED PARTS)						

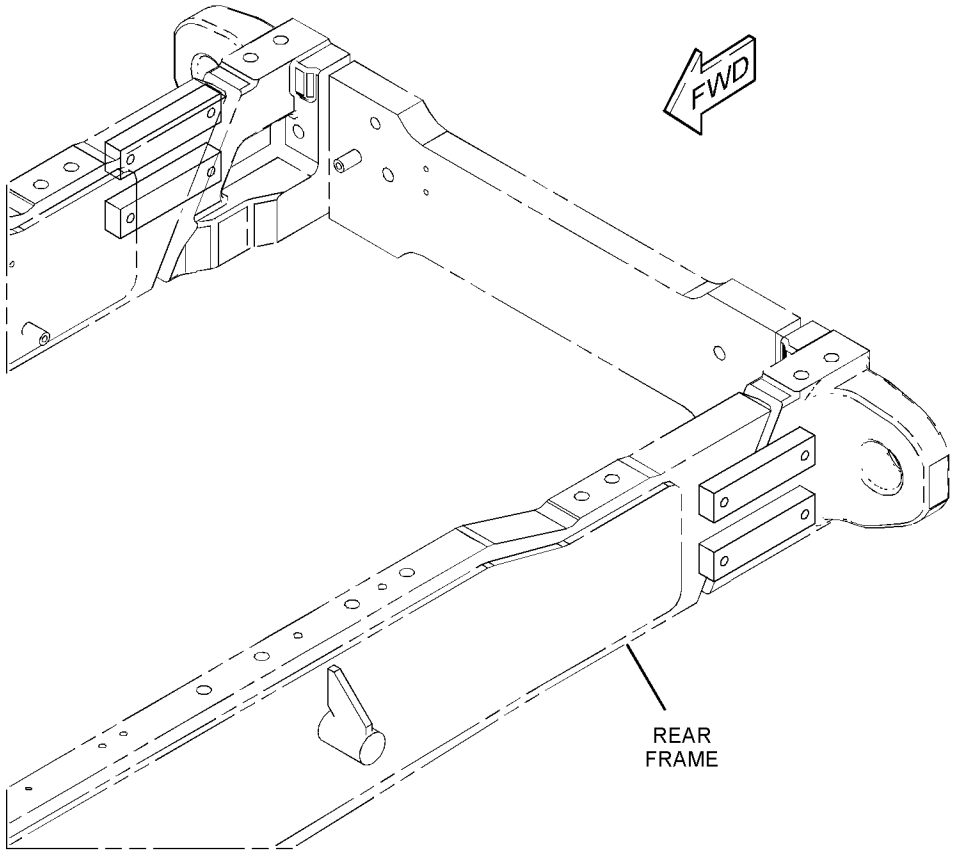

GRAPHIC #1 **<END>** g03832311

389-9884 MOUNTING GP-PLATFORM

S/N: E9Y1-UP
PART OF 385-1260 LADDER GP
AN ATTACHMENT

SMCS-7253 **i06139735**

NOTE	REF NO	GRAPHIC REF	PART NUMBER	QTY	PART NAME 1 2 3 4 5 6 (PRODUCT LEVEL)	SEE PAGE
	1	1	**267-8821**	8	WASHER (17X36X12-MM THK)	
	2	1	**7X-7729**	4	WASHER (11X25X3-MM THK)	
	3	1	**8T-4121**	12	WASHER-HARD (11X21X2.5-MM THK)	
M	4	1	**8T-4136**	16	BOLT (M10X1.5X25-MM)	
M	5	1	**8T-4193**	8	BOLT (M16X2X50-MM)	

M - METRIC PART

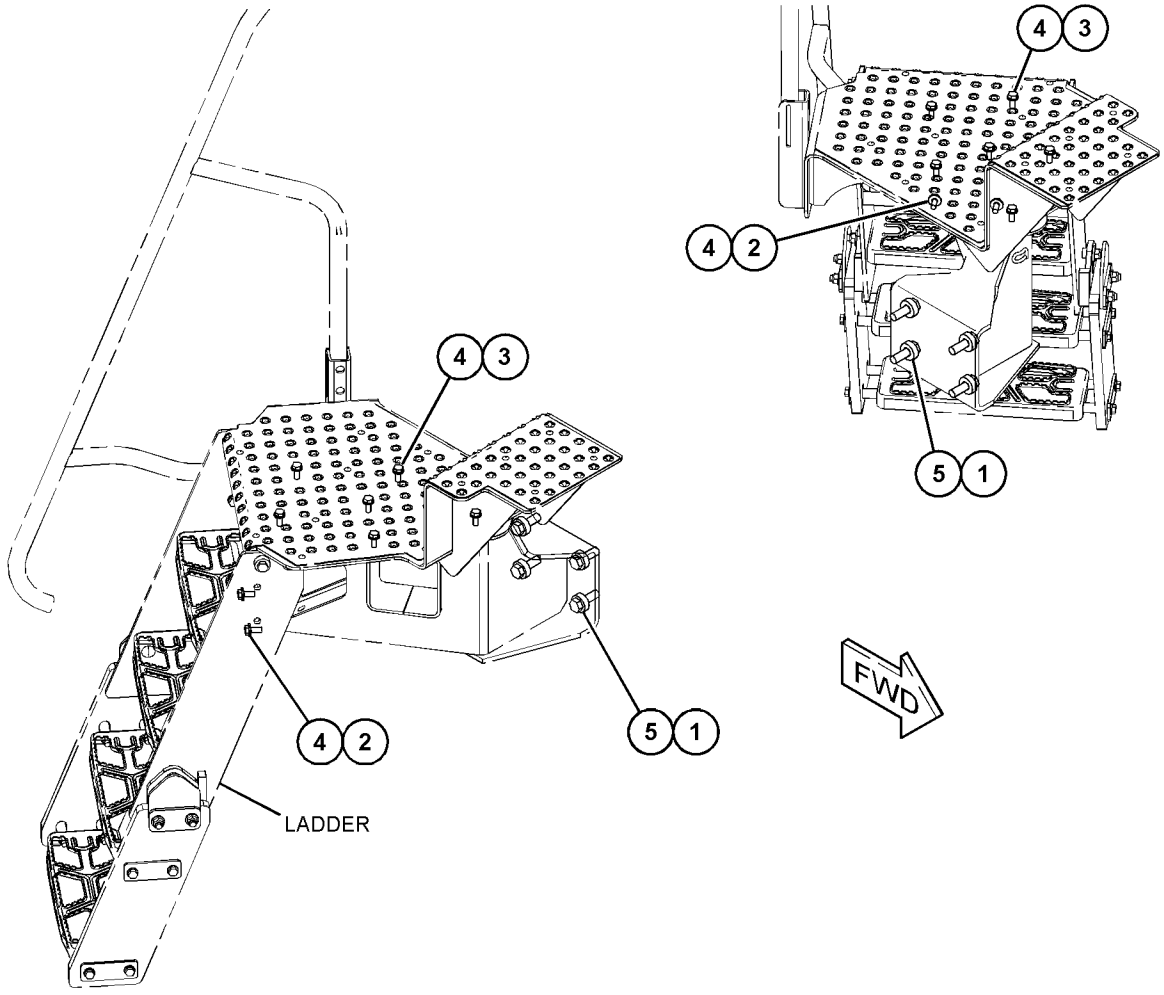

GRAPHIC #1 **<END>** g03824048

480-6115 MOUNTING GP-PLATFORM–WINDOW CLEANING

S/N: E9Y1-UP

PART OF 480-5149 PLATFORM GP-OPERATOR

AN ATTACHMENT

SMCS-7253 **i06147107**

NOTE	REF NO	GRAPHIC REF	PART NUMBER	QTY	PART NAME 1 2 3 4 5 6 (PRODUCT LEVEL)	SEE PAGE
	1	1	**198-4778**	36	WASHER-HARD (13.5X30X12-MM THK)	
	2	1	**267-8821**	24	WASHER (17X36X12-MM THK)	
M	3	1	**8T-4183**	24	BOLT (M12X1.75X40-MM)	
M	4	1	**8T-4956**	4	BOLT (M12X1.75X35-MM)	
M	5	1	**8T-5001**	8	BOLT (M12X1.75X130-MM)	
M	6	1	**8T-7338**	24	BOLT (M16X2X45-MM)	

M - METRIC PART

480-6115 **MOUNTING GP-PLATFORM (*contd.*)** **i06147107**

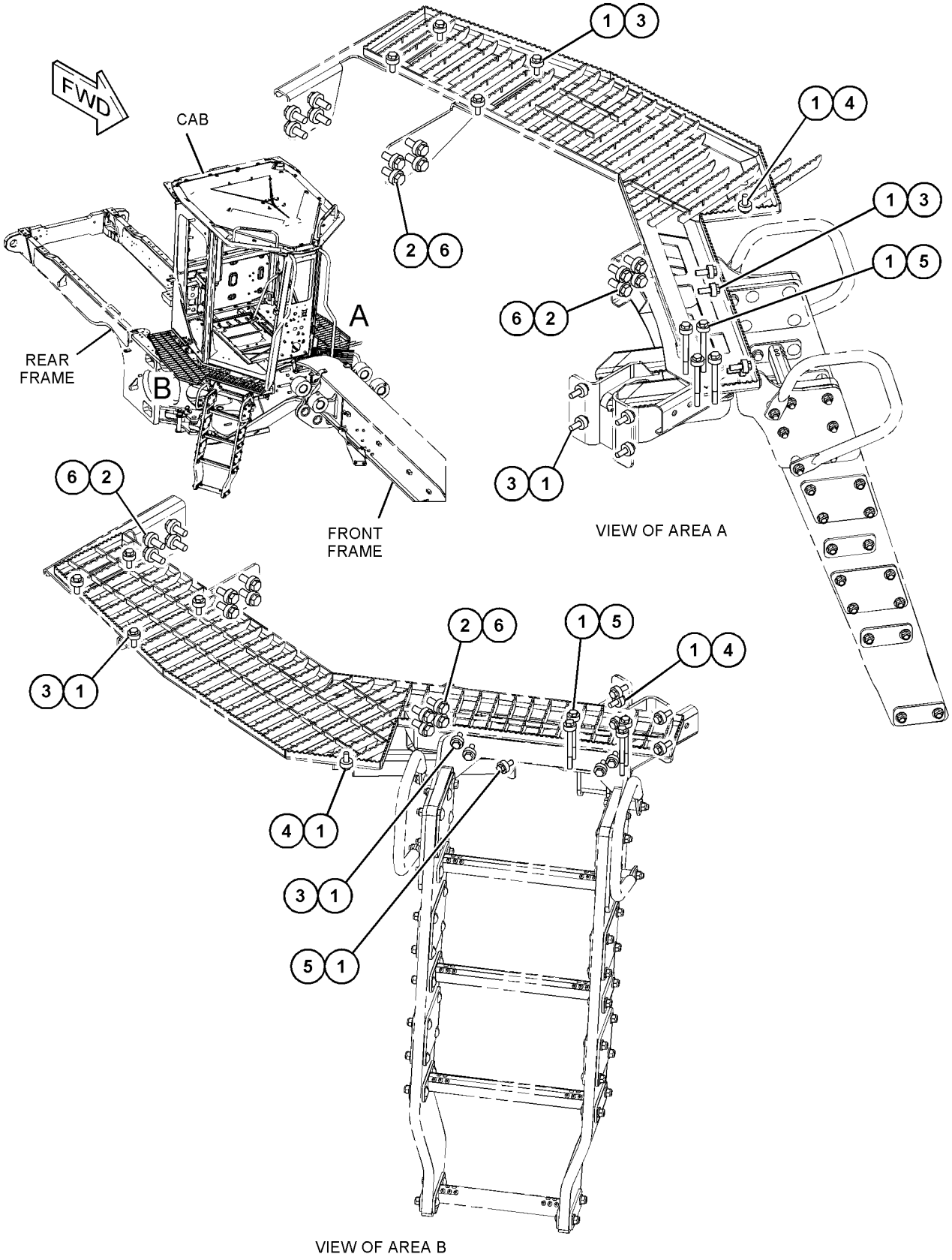

GRAPHIC #1 **<END>** g03830876

292-6402 PAN GP-BACKREST–LUMBAR

S/N: E9Y1-UP

PART OF 443-8217 SEAT GP, 443-8216 SEAT GP-SUSPENSION

AN ATTACHMENT

SMCS-7312 **i05645894**

NOTE	REF NO	GRAPHIC REF	PART NUMBER	QTY	PART NAME 1 2 3 4 5 6 (PRODUCT LEVEL)	SEE PAGE
	1	1	**5P-7957**	1	LANYARD	
	2	1	**136-1543**	1	PLATE AS-LUMBAR	
	3	1	**173-2052**	1	RETAINER	
	4	1	**178-7907**	1	HOLDER	
	5	1	**261-5694**	1	PAN AS-BACKREST	
	6	1	**322-3161**	1	SPRING	
	7	1	**4K-9429**	8	RIVET-POP	

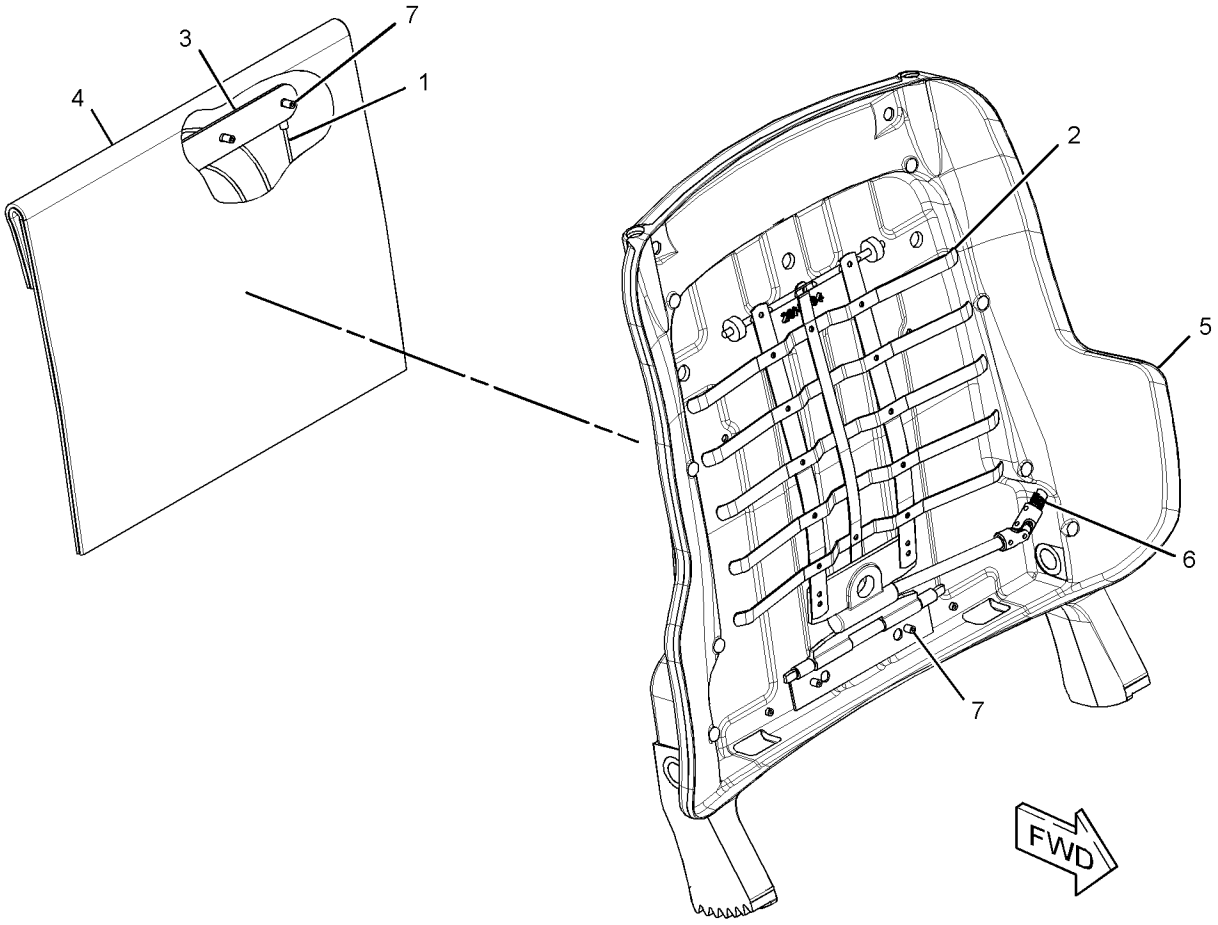

GRAPHIC #1 **<END>** g01577333

276-8498 PANEL GP-CONTROL—VARIABLE BLADE FLOAT

S/N: E9Y1-UP
PART OF 386-4105 FLOAT AR-BLADE
AN ATTACHMENT

SMCS-7332, 7451

i03893550

NOTE	REF NO	GRAPHIC REF	PART NUMBER	QTY	PART NAME 1 2 3 4 5 6 (PRODUCT LEVEL)	SEE PAGE
	1	1	**110-6109**	2	KNOB-CONTROL (VARIABLE BLADE FLOAT)	
	2	1	**114-6658**	8	WASHER (6.5X17X1-MM THK)	
Y	3	1	**276-8491**	1	SENSOR & MTG GP-POSITION (VARIABLE BLADE FLOAT)	241
	4	1	**297-4157**	1	PANEL-COVER	
	5	1	**276-8495**	1	PLATE AS	
M		1	**6V-9632**	7	NUT-WELD (M6X1-THD)	
	6	1	**297-4158**	1	PLATE	
	7	1	**276-8500**	1	FILM-IDENTIFICATION (VARIABLE BLADE FLOAT)	
	8	1	**278-4210**	1	SWITCH AS-ROCKER (VARIABLE BLADE FLOAT)	
M	9	1	**7X-2533**	3	BOLT (M6X1X35-MM)	
M	10	1	**9X-2043**	4	SCREW-TRUSS HEAD (M6X1X14-MM)	
M	11	1	**9X-2044**	4	SCREW-TRUSS HEAD (M6X1X16-MM)	
	12	1	**250-2299**	1	LAMP AS-LED (24-VOLT, GREEN)	
	13	1	**102-8802**	1	KIT-RECEPTACLE (2-PIN)	
					(INCLUDES RECEPTACLE AS & WEDGE)	
	14	1	**9X-8256**	3	WASHER (6.6X12X2-MM THK)	

M - METRIC PART
Y - SEPARATE ILLUSTRATION

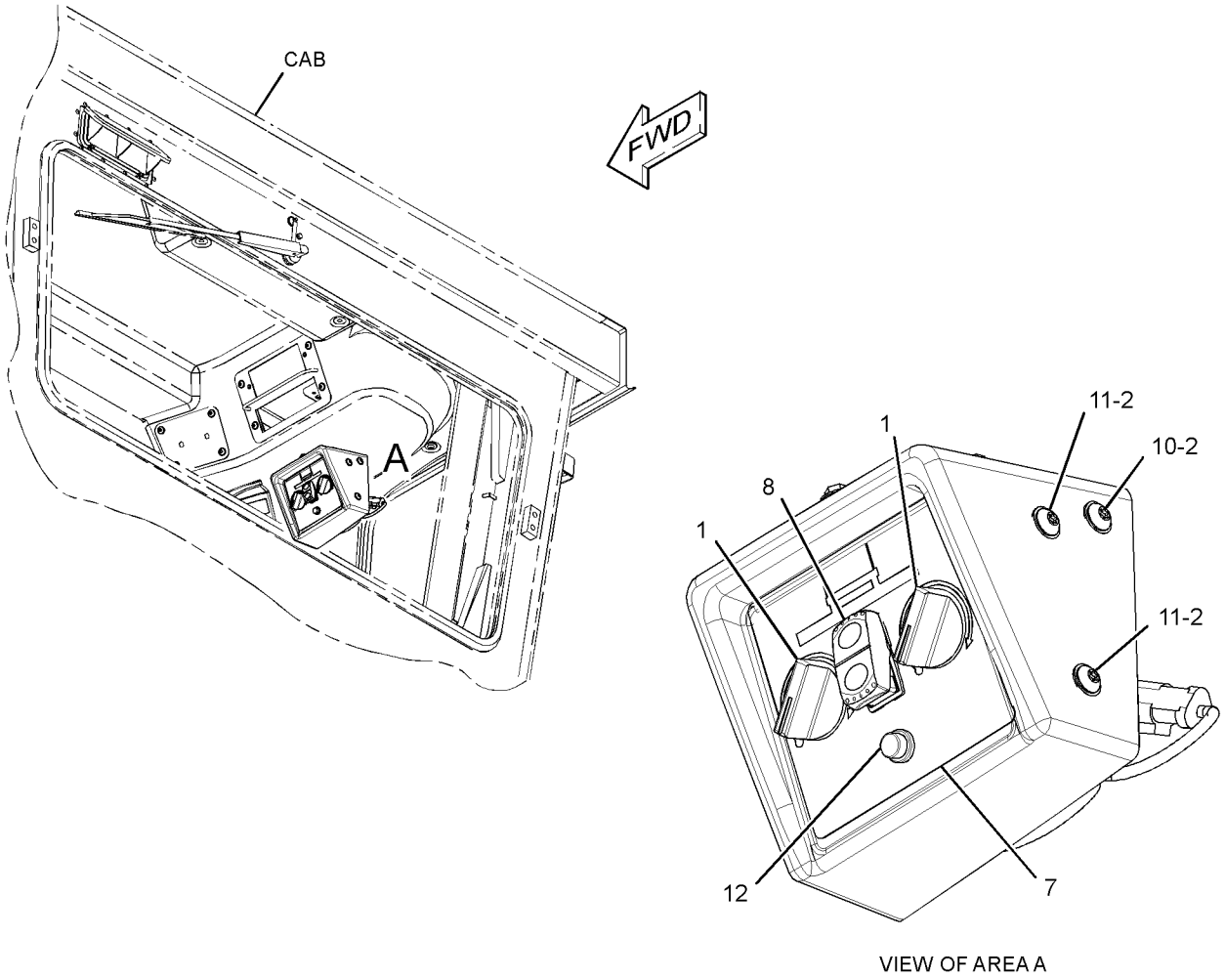

GRAPHIC #1 **<END>** g02218353

314-3323 PANEL GP-CONTROL–GRADE CONTROL, LH

S/N: E9Y1-UP

PART OF 360-7617 GRADE CONTROL GP

SMCS-7332, 7451 **i05819514**

NOTE	REF NO	GRAPHIC REF	PART NUMBER	QTY	PART NAME 1 2 3 4 5 6 (PRODUCT LEVEL)	SEE PAGE
	1	1	**249-5483**	1	SWITCH AS-ROCKER (24-VOLT) (BLADE OFFSET, LH)	
	1A	1	**249-5483**	1	SWITCH AS-ROCKER (24-VOLT) (BLADE OFFSET, RH)	
	2	1	**302-9089**	1	BRACKET AS (LH)	
	3	1	**302-9090**	1	COVER	
	4	1	**307-0016**	1	FILM-IDENTIFICATION (PANEL SWITCHES)	
	5	1	**253-1789**	1	SWITCH AS-PUSH BUTTON (AUTO/MANUAL SIDESHIFT)	
		1	**6F-0253**	1	LOCKWASHER	
		1	**102-8803**	1	KIT-RECEPTACLE (3-PIN)	
					(INCLUDES RECEPTACLE AS & WEDGE)	
		1	**172-3511**	1	NUT (5/8-24-THD)	
		1	**8T-8729**	1	PIN-CONNECTOR (16-GA TO 18-GA)	
M	6	1	**5C-9553**	2	BOLT (M6X1X16-MM)	
M	7	1	**9X-2044**	2	SCREW-TRUSS HEAD (M6X1X16-MM)	
	8	1	**114-6658**	4	WASHER (6.5X17X1-MM THK)	

M - METRIC PART

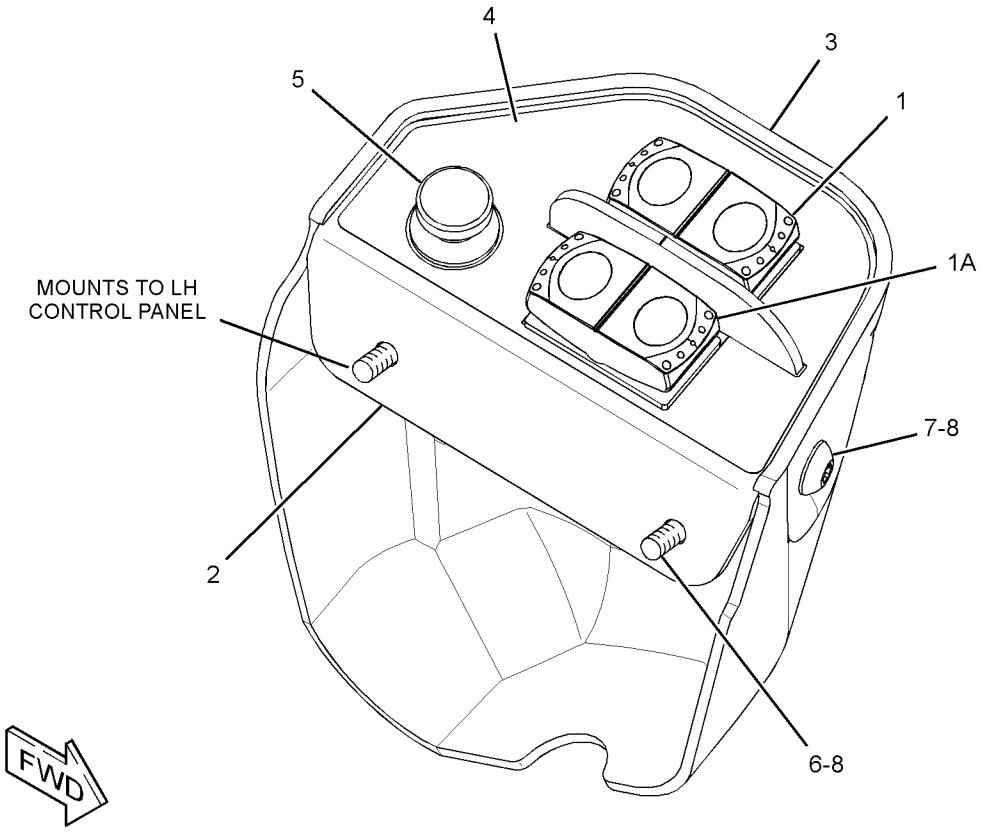

GRAPHIC #1 **<END>** g01525433

360-8162 PANEL GP-CONTROL—GRADE CONTROL, RH

S/N: E9Y1-UP

PART OF 360-7617 GRADE CONTROL GP

SMCS-7332, 7451 **i05812520**

NOTE	REF NO	GRAPHIC REF	PART NUMBER	QTY	PART NAME 1 2 3 4 5 6 (PRODUCT LEVEL)	SEE PAGE
	1	1	**306-9214**	1	FILM-INSTRUCTION (BLADE CONTROL, LH)	
	2	1	**306-9215**	1	FILM-INSTRUCTION (BLADE CONTROL, RH)	
	3	1	**360-2972**	1	HARNESS AS-PANEL	
		1	**102-8803**	1	KIT-RECEPTACLE (3-PIN)	
		1	**102-8804**	1	KIT-RECEPTACLE (4-PIN)	
		1	**102-8806**	2	KIT-RECEPTACLE (8-PIN)	
					(EACH RECEPTACLE KIT INCLUDES RECEPTACLE AS & WEDGE)	
		1	**8T-8737**	6	PLUG-SEAL	
		1	**9X-3401**	17	PIN-CONNECTOR (16-GA TO 18-GA)	
		1	**9X-3402**	9	SOCKET-CONNECTOR (16-GA TO 18-GA)	
		1	**155-2260**	3	KIT-CONNECTING PLUG (3-PIN)	
					(EACH INCLUDES PLUG AS, WEDGE, & INTERFACE SEAL)	
		1	**185-1860**	12	SEAL-WIRE	
		1	**202-5397**	8	PLUG	
		1	**235-4123**	12	TERMINAL (18-GA TO 20-GA)	
		1	**245-7434**	2	KIT-CONNECTING PLUG (10-PIN)	
					(EACH INCLUDES PLUGS & WIRE AS)	
B		1	**329-3734**		TAPE-ELECTRICAL	
	4	1	**381-1678**	2	BRACKET AS	
	5	1	**381-1679**	2	BRACKET AS	
					(EACH INCLUDES)	
		1	**5D-9629**	1	ROD	
	6	1	**253-1789**	2	SWITCH AS-PUSH BUTTON (BLADE CONTROL)	
					(EACH INCLUDES)	
		1	**6F-0253**	1	LOCKWASHER	
		1	**102-8803**	1	KIT-RECEPTACLE (3-PIN)	
					(INCLUDES RECEPTACLE AS & WEDGE)	
		1	**172-3511**	1	NUT (5/8-24-THD)	
		1	**8T-8729**	1	PIN-CONNECTOR (16-GA TO 18-GA)	
M	7	1	**138-8454**	4	SCREW-TRUSS HEAD (M4X0.7X10-MM)	
M	8	1	**9X-2042**	4	SCREW-TRUSS HEAD (M6X1X12-MM)	

B - USE AS REQUIRED
M - METRIC PART

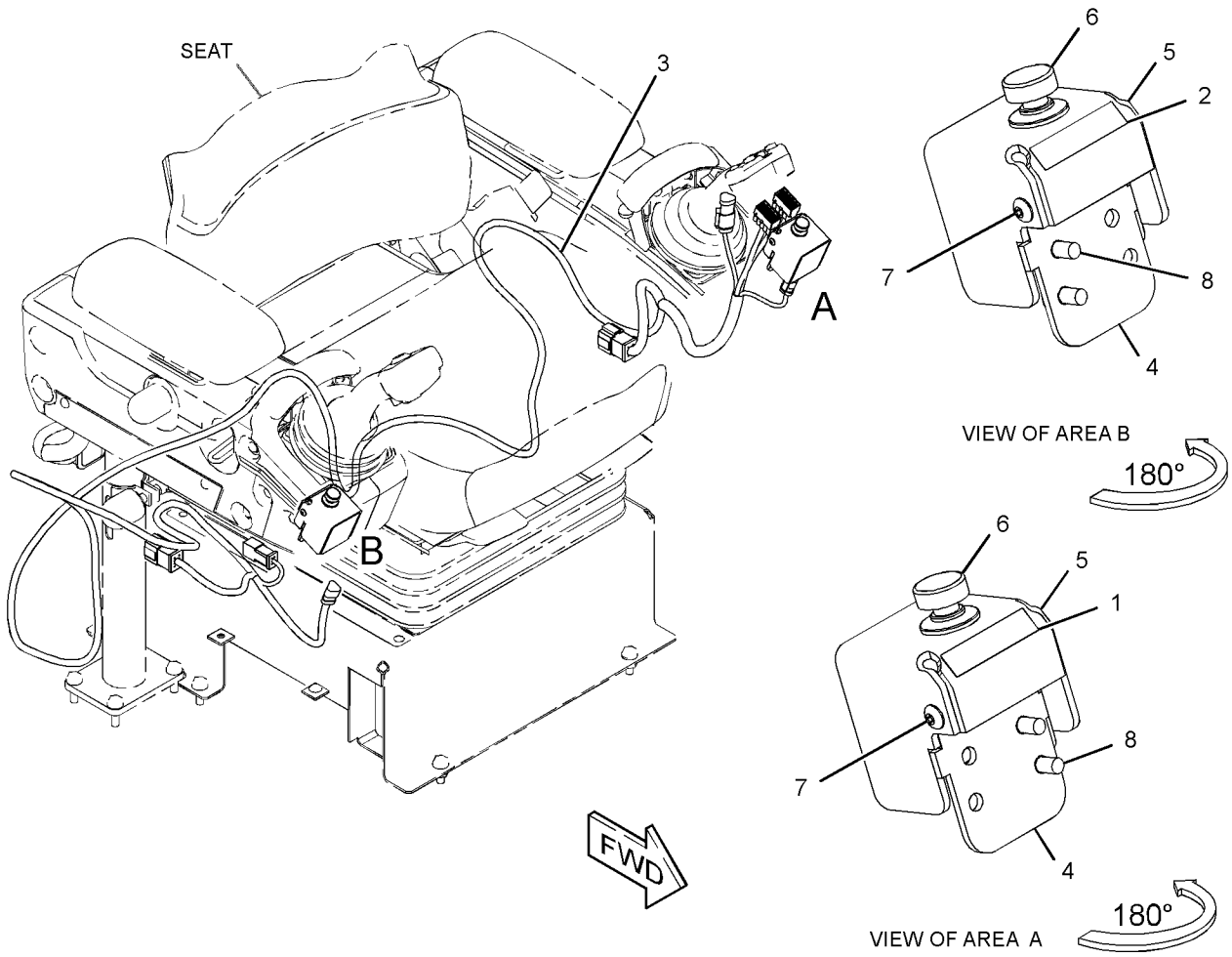

GRAPHIC #1 **<END>** g03005216

OPERATOR STATION

382-0667 PANEL GP-INSTRUMENT

S/N: E9Y1-UP

PART OF 361-3120 CAB AR

SMCS-7450, 7451 **i06143955**

NOTE	REF NO	GRAPHIC REF	PART NUMBER	QTY	PART NAME 1 2 3 4 5 6 (PRODUCT LEVEL)	SEE PAGE
M	1	1	**172-8591**	2	NUT-SPRING (M6X1-THD)	
	2	1	**422-2152**	2	LOUVER AS-VENT (VENT)	
	3	1	**171-4047**	5	LOUVER AS-VENT	
	4	1	**294-0999**	1	PLENUM	
	5	1	**312-4153**	1	BRACKET AS	
M		1	**6V-9632**	2	NUT-WELD (M6X1-THD)	
	6	1	**357-2258**	1	COVER AS	
M		1	**6V-9632**	4	NUT-WELD (M6X1-THD)	
	7	1	**385-8718**	1	PLATE AS	
M		1	**8T-3612**	3	NUT-WELD (M8X1.25-THD)	
	8	1	**388-8625**	1	PLENUM AS	
	9	1	**472-6230**	1	PANEL AS-CONTROL	
	10	1	**472-6231**	1	PLATE	
	11	1	**104-2091**	14	SCREW-FLAT HEAD (6-20X0.5-IN)	
M	12	1	**111-4627**	2	SCREW-MACHINE (M6X1X30-MM)	
	13	1	**114-6658**	13	WASHER (6.5X17X1-MM THK)	
M	14	1	**127-2170**	5	SCREW-TRUSS HEAD (M8X1.25X20-MM)	
M	15	1	**138-8454**	2	SCREW-TRUSS HEAD (M4X0.7X10-MM)	
	16	1	**207-4183**	2	INSERT-NUT	
M	17	1	**5C-2890**	2	NUT (M6X1-THD)	
	18	1	**7X-0579**	2	WASHER-HARD (8.8X25.5X2-MM THK)	
	19	1	**9N-0869**	5	WASHER-HARD (8.8X25.5X2-MM THK)	
	20	1	**9X-2038**	2	WASHER (7X19X2-MM THK)	
M	21	1	**9X-2043**	9	SCREW-TRUSS HEAD (M6X1X14-MM)	
M	22	1	**9X-2044**	4	SCREW-TRUSS HEAD (M6X1X16-MM)	
M	23	1	**9X-2045**	2	SCREW-TRUSS HEAD (M6X1X20-MM)	
M	24	1	**9X-2046**	2	SCREW-TRUSS HEAD (M6X1X35-MM)	

M - METRIC PART

382-0667 **PANEL GP-INSTRUMENT (*contd.*)** **i06143955**

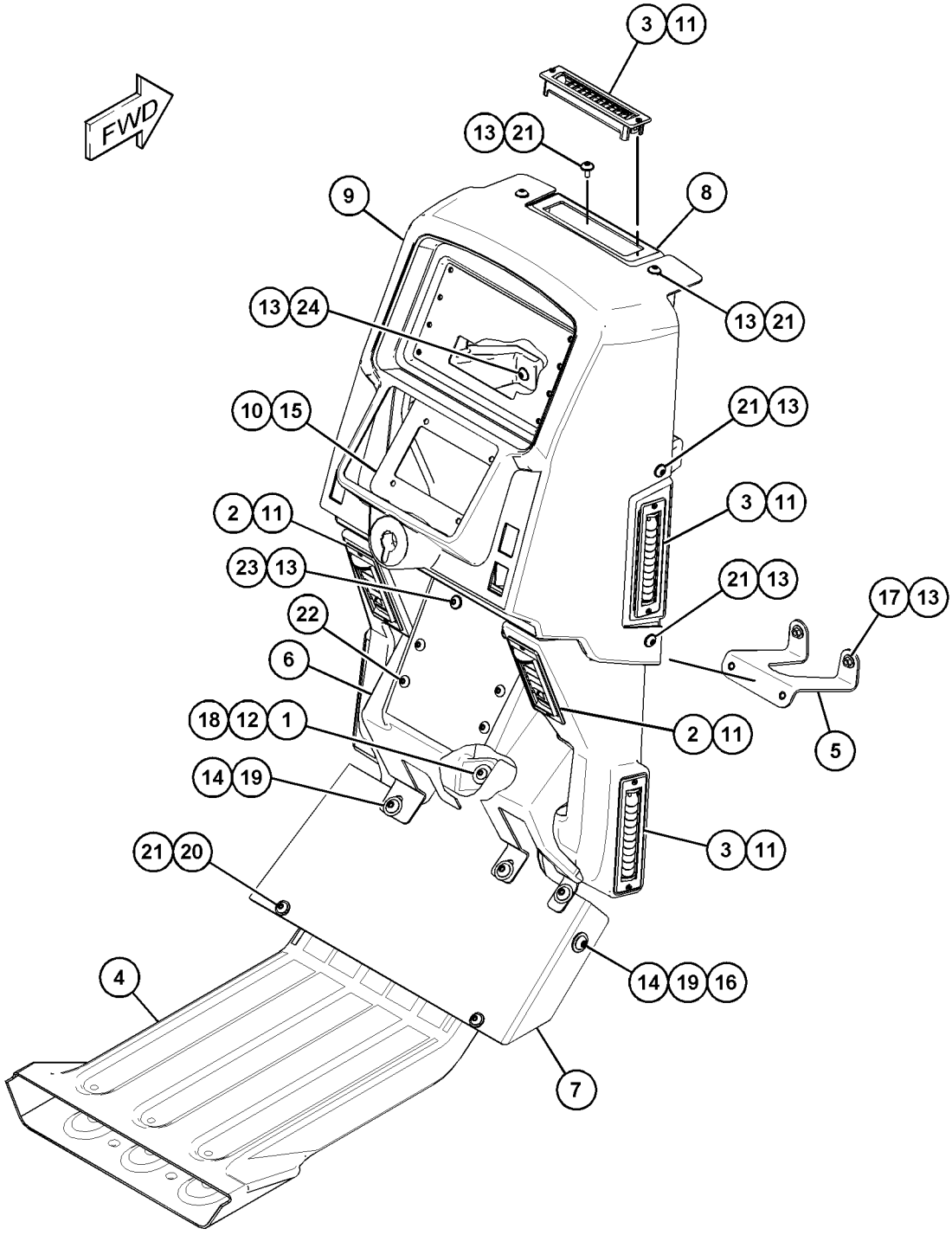

GRAPHIC #1 **<END>** g03827485

389-5846 PEDAL GP-BRAKE, XMSN & GOV

S/N: E9Y1-UP

PART OF 444-9775 PEDAL GP-BRAKE, XMSN & GOV

SMCS-1265, 3191, 4269 **i05522758**

NOTE	REF NO	GRAPHIC REF	PART NUMBER	QTY	PART NAME 1 2 3 4 5 6 (PRODUCT LEVEL)	SEE PAGE
Y	1	1	**171-3759**	1	SWITCH GP-LIMIT (XMSN MODULATOR CONTROL)	267
Y	2	1	**266-1467**	1	SENSOR GP-POSITION (ROTARY)	245
Y	2A	1	**266-1467**	1	SENSOR GP-POSITION (ROTARY) (XMSN MODULATOR CONTROL)	245
	3	1	**366-9670**	1	SPRING	
	4	1	**374-9690**	1	SWITCH AS-LIMIT (BRAKE LIGHT)	
		1	**102-8803**	1	KIT-RECEPTACLE (3-PIN)	
					(INCLUDES RECEPTACLE AS & WEDGE)	
		1	**3E-3371**	1	WEDGE-RECEPTACLE LOCK (3-PIN)	
		1	**8T-8729**	3	PIN-CONNECTOR (16-GA TO 18-GA)	

Y - SEPARATE ILLUSTRATION

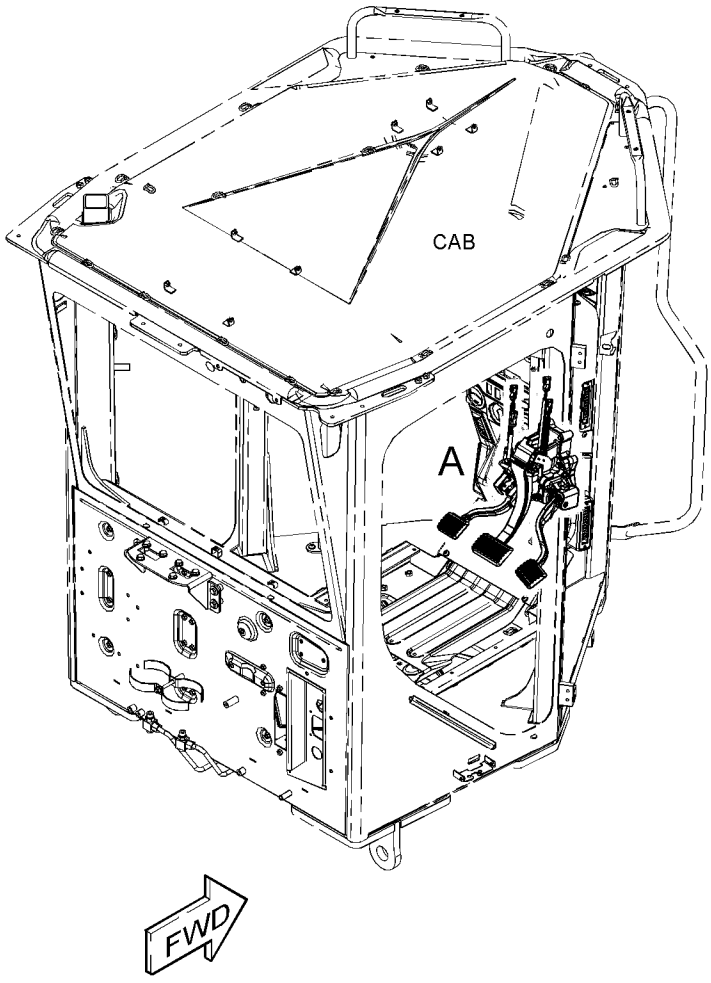

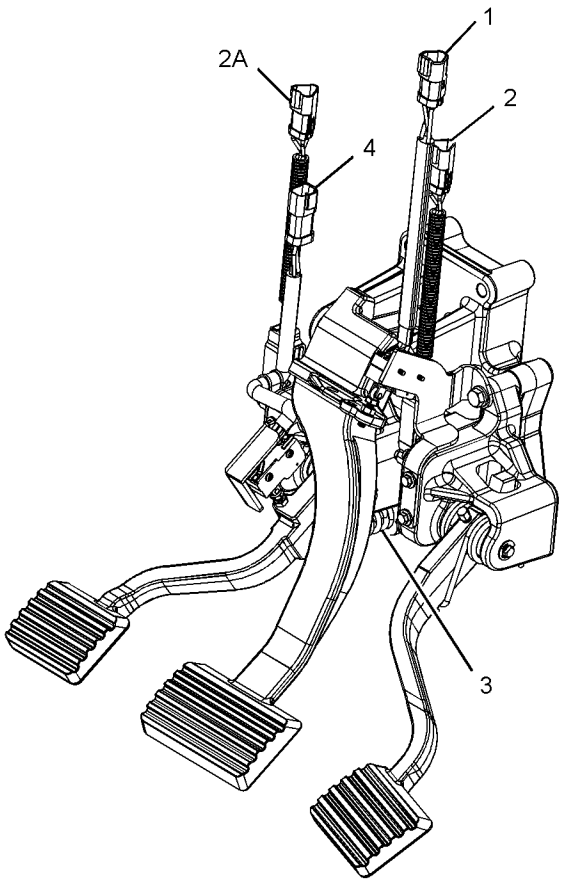

VIEW OF AREA A

GRAPHIC #1 **<END>** g03504460

444-9775 PEDAL GP-BRAKE, XMSN & GOV

S/N: E9Y1-UP

PART OF 389-2167 CONTROL GP-SERVICE BRAKE

SMCS-1265, 3191, 4269

i06144377

NOTE	REF NO	GRAPHIC REF	PART NUMBER	QTY	PART NAME 1 2 3 4 5 6 (PRODUCT LEVEL)	SEE PAGE
	1		**444-9777**	1	VALVE GP-BRAKE CONTROL	
Y	2		**389-5846**	1	PEDAL GP-BRAKE, XMSN & GOV	784
					AVAILABLE REPAIR KIT(S):	
			360-4432	1	KIT-REPAIR (BRAKE PEDAL)	
					(INCLUDES BOOT, CUP, O-RINGS & QUAD RING)	

Y - SEPARATE ILLUSTRATION

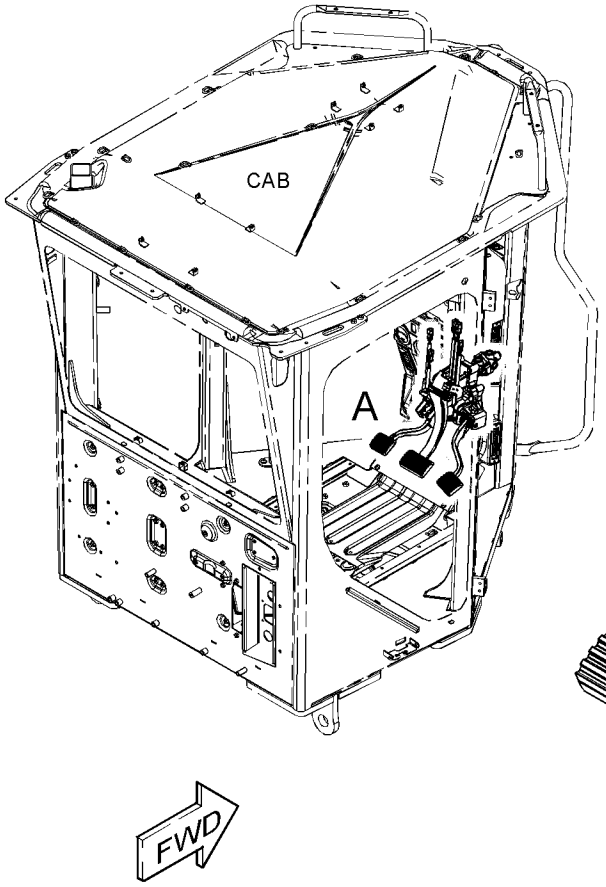

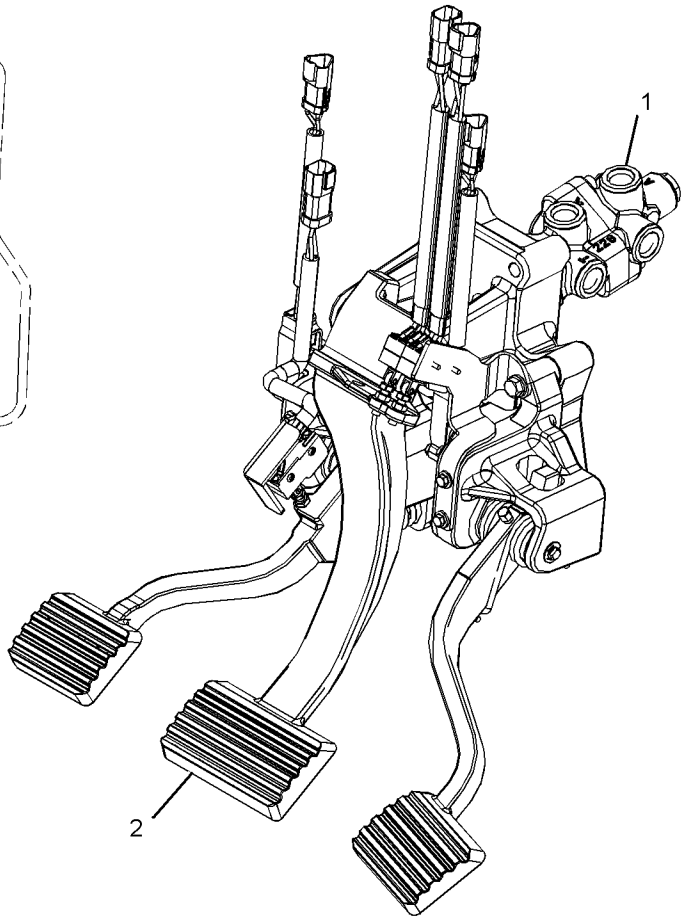

VIEW OF AREA A

GRAPHIC #1

<END>

g03505430

375-3406 PLATFORM AR

S/N: E9Y1-UP
FOR USE WITH 386-1309—PAGE: 690
CANNOT BE USED WITH 375-3405—PAGE: 2
AN ATTACHMENT

SMCS-7253 **i06155107**

NOTE	PART NUMBER	QTY	PART NAME 1 2 3 4 5 6 (PRODUCT LEVEL)	SEE PAGE
Y	*479-6537*	1	BUMPER GP-FRONT	408
Y	*442-4475*	1	HANDHOLD GP	446
Y	*356-5163*	1	HANDRAIL GP	447
Y	*480-5149*	1	PLATFORM GP-OPERATOR	792
Y	*435-1952*	1	STEP GP	485
Y	*375-3422*	1	WALKWAY GP	505
Y	*448-9280*	1	WIRING GP-PANEL	305

Y - SEPARATE ILLUSTRATION

<END>

386-0540 PLATFORM AR

S/N: E9Y1-UP
PART OF 375-3407 OPTION AR-LADDER
AN ATTACHMENT

SMCS-7253 **i06143919**

NOTE	PART NUMBER	QTY	PART NAME 1 2 3 4 5 6 (PRODUCT LEVEL)	SEE PAGE
Y	*386-0539*	1	PLATFORM GP-OPERATOR	790
Y	*386-0538*	1	PLATFORM GP-OPERATOR (RH)	787

Y - SEPARATE ILLUSTRATION

<END>

386-0538 PLATFORM GP-OPERATOR–RH

S/N: E9Y1-UP
PART OF 386-0540 PLATFORM AR
AN ATTACHMENT

SMCS-7253 **i06143912**

NOTE	REF NO	GRAPHIC REF	PART NUMBER	QTY	PART NAME 1 2 3 4 5 6 (PRODUCT LEVEL)	SEE PAGE
	1	1	**7X-2393**	1	BUMPER-CONICAL	
	2	1	**115-3580**	2	PLATE	
	3	1	**189-8789**	1	BUMPER AS	
	4	1	**336-7433**	1	LADDER AS	
		1	**6F-8480**	2	PLUG	
	5	1	**336-7475**	1	PLATE AS	
M		1	**8T-3597**	2	NUT-WELD (M12X1.75-THD)	
		1	**348-3428**	2	SPACER (14X20X42-MM THK)	
	6	1	**336-7476**	1	PLATE AS	
M		1	**8T-3597**	1	NUT-WELD (M12X1.75-THD)	
		1	**348-3428**	2	SPACER (14X20X42-MM THK)	
	7	1	**336-8436**	1	BLOCK	
	8	1	**368-1321**	1	BRACKET AS	
	9	1	**368-1322**	1	BRACKET AS	
					(EACH BRACKET AS INCLUDES)	
M		1	**8T-3597**	2	NUT-WELD (M12X1.75-THD)	
	10	1	**368-1438**	1	PLATE	
	11	1	**371-4423**	2	LATCH AS	
					(EACH INCLUDES)	
		1	**3B-4615**	1	PIN-COTTER	
		1	**6F-8499**	1	SPRING	
		1	**7X-0605**	1	WASHER-HARD (13X28X1.6-MM THK)	
		1	**290-5827**	1	BRACKET	
	12	1	**456-5609**	1	BRACKET AS	
	13	1	**472-4231**	1	BRACKET	
	14	1	**478-9881**	1	SUPPORT AS	
	15	1	**478-9883**	1	SUPPORT AS	
	16	1	**479-0395**	1	BRACKET AS	
Y	17	1	**479-0396**	1	WALKWAY GP	509
Y	18	1	**479-6633**	1	HANDRAIL GP	454
Y	19	1	**480-0365**	1	SUPPORT GP-PLATFORM	487
M	20	1	**129-3180**	2	LOCKNUT (M12X1.75-THD)	
	21	1	**198-4778**	31	WASHER-HARD (13.5X30X12-MM THK)	
	22	1	**198-4780**	2	WASHER-HARD (17.5X32X8-MM THK)	
	23	1	**248-0102**	4	U-BOLT	
	24	1	**267-8821**	12	WASHER (17X36X12-MM THK)	
M	25	1	**329-3356**	4	NUT (M12X1.75-THD)	
M	26	1	**344-5674**	1	NUT (M8X1.25-THD)	
	27	1	**345-8534**	2	BOLT-SPECIAL	
	28	1	**5P-7468**	4	CLIP (SLOT)	
	29	1	**5P-7469**	4	CLIP (TAB)	
	30	1	**6V-1874**	4	GROMMET (31-MM ID)	
M	31	1	**6V-9189**	8	LOCKNUT (M8X1.25-THD)	
	32	1	**7E-0031**	2	WASHER (13.5X25.5X3-MM THK)	
M	33	1	**7X-2553**	2	BOLT (M16X2X40-MM)	
	34	1	**7X-7729**	2	WASHER (11X25X3-MM THK)	
	35	1	**8D-5054**	6	WASHER-HARD (17X30X3-MM THK)	
M	36	1	**8T-4136**	2	BOLT (M10X1.5X25-MM)	
M	37	1	**8T-4139**	16	BOLT (M12X1.75X30-MM)	
M	38	1	**8T-4183**	23	BOLT (M12X1.75X40-MM)	
M	39	1	**8T-4184**	14	BOLT (M12X1.75X45-MM)	
M	40	1	**8T-4189**	2	BOLT (M8X1.25X20-MM)	
	41	1	**8T-4223**	30	WASHER-HARD (13.5X25.5X3-MM THK)	
	42	1	**8T-4224**	10	WASHER-HARD (8.8X16X2-MM THK)	
M	43	1	**8T-6868**	4	BOLT (M12X1.75X80-MM)	

386-0538 **PLATFORM GP-OPERATOR (*contd.*)** **i06143912**

NOTE	REF NO	GRAPHIC REF	PART NUMBER	QTY	PART NAME 1 2 3 4 5 6 (PRODUCT LEVEL)	SEE PAGE
M	44	1	**8T-7338**	12	BOLT (M16X2X45-MM)	
E	45	1	**3E-8349**		SEAL (6-CM EACH)	

E - ORDER BY THE CENTIMETER
M - METRIC PART
Y - SEPARATE ILLUSTRATION

386-0538 **PLATFORM GP-OPERATOR (*contd.*)** **i06143912**

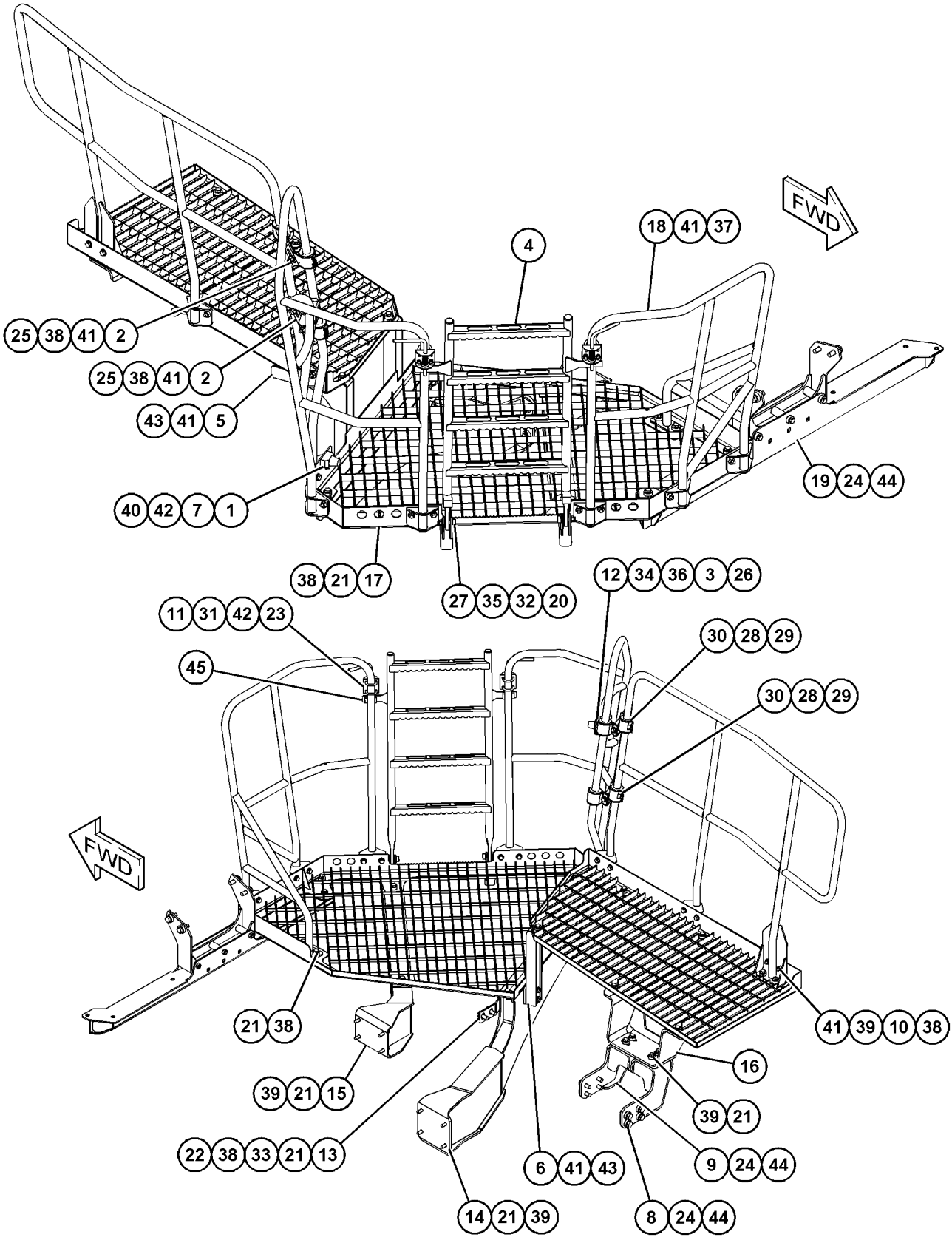

GRAPHIC #1 **<END>** g03829054

386-0539 PLATFORM GP-OPERATOR–LH

S/N: E9Y1-UP
PART OF 386-0540 PLATFORM AR
AN ATTACHMENT

SMCS-7253 **i06143854**

NOTE	REF NO	GRAPHIC REF	PART NUMBER	QTY	PART NAME 1 2 3 4 5 6 (PRODUCT LEVEL)	SEE PAGE
	1	1	**2G-9524**	1	LATCH	
	2	1	**7X-2393**	1	BUMPER-CONICAL	
	3	1	**115-3580**	2	PLATE	
	4	1	**189-8789**	1	BUMPER AS	
	5	1	**336-7475**	1	PLATE AS	
M		1	**8T-3597**	2	NUT-WELD (M12X1.75-THD)	
		1	**348-3428**	2	SPACER (14X20X42-MM THK)	
	6	1	**336-7476**	1	PLATE AS	
M		1	**8T-3597**	1	NUT-WELD (M12X1.75-THD)	
		1	**348-3428**	2	SPACER (14X20X42-MM THK)	
	7	1	**336-8436**	1	BLOCK	
	8	1	**368-0752**	1	BRACKET AS	
	9	1	**368-0753**	1	BRACKET AS	
					(EACH BRACKET AS INCLUDES)	
M		1	**8T-3597**	2	NUT-WELD (M12X1.75-THD)	
	10	1	**368-1438**	1	PLATE	
	11	1	**443-0924**	1	BRACKET AS	
	12	1	**443-0925**	2	LINK	
Y	13	1	*443-7772*	1	HANDRAIL GP	450
	14	1	**456-5609**	1	BRACKET AS	
	15	1	**472-4231**	1	BRACKET	
	16	1	**478-9880**	1	SUPPORT AS	
	17	1	**478-9882**	1	SUPPORT AS	
Y	18	1	*480-0416*	1	WALKWAY GP	510
	19	1	**198-4778**	31	WASHER-HARD (13.5X30X12-MM THK)	
	20	1	**198-4780**	2	WASHER-HARD (17.5X32X8-MM THK)	
	21	1	**267-8821**	8	WASHER (17X36X12-MM THK)	
M	22	1	**329-3356**	4	NUT (M12X1.75-THD)	
M	23	1	**344-5674**	1	NUT (M8X1.25-THD)	
M	24	1	**438-9257**	4	BOLT (M4X0.7X20-MM)	
	25	1	**5P-7468**	4	CLIP (SLOT)	
	26	1	**5P-7469**	4	CLIP (TAB)	
	27	1	**6V-1874**	4	GROMMET (31-MM ID)	
M	28	1	**7X-2553**	2	BOLT (M16X2X40-MM)	
	29	1	**7X-7729**	2	WASHER (11X25X3-MM THK)	
	30	1	**8T-0328**	4	WASHER-HARD (5.5X10X1-MM THK)	
M	31	1	**8T-4136**	2	BOLT (M10X1.5X25-MM)	
M	32	1	**8T-4139**	18	BOLT (M12X1.75X30-MM)	
M	33	1	**8T-4183**	23	BOLT (M12X1.75X40-MM)	
M	34	1	**8T-4184**	14	BOLT (M12X1.75X45-MM)	
M	35	1	**8T-4189**	2	BOLT (M8X1.25X20-MM)	
	36	1	**8T-4223**	32	WASHER-HARD (13.5X25.5X3-MM THK)	
	37	1	**8T-4224**	2	WASHER-HARD (8.8X16X2-MM THK)	
M	38	1	**8T-6868**	4	BOLT (M12X1.75X80-MM)	
M	39	1	**8T-7338**	8	BOLT (M16X2X45-MM)	
	40	1	**9R-2806**	4	PIN	
	41	1	**9R-2807**	4	CLIP	

M - METRIC PART
Y - SEPARATE ILLUSTRATION

386-0539 **PLATFORM GP-OPERATOR (*contd.*)** **i06143854**

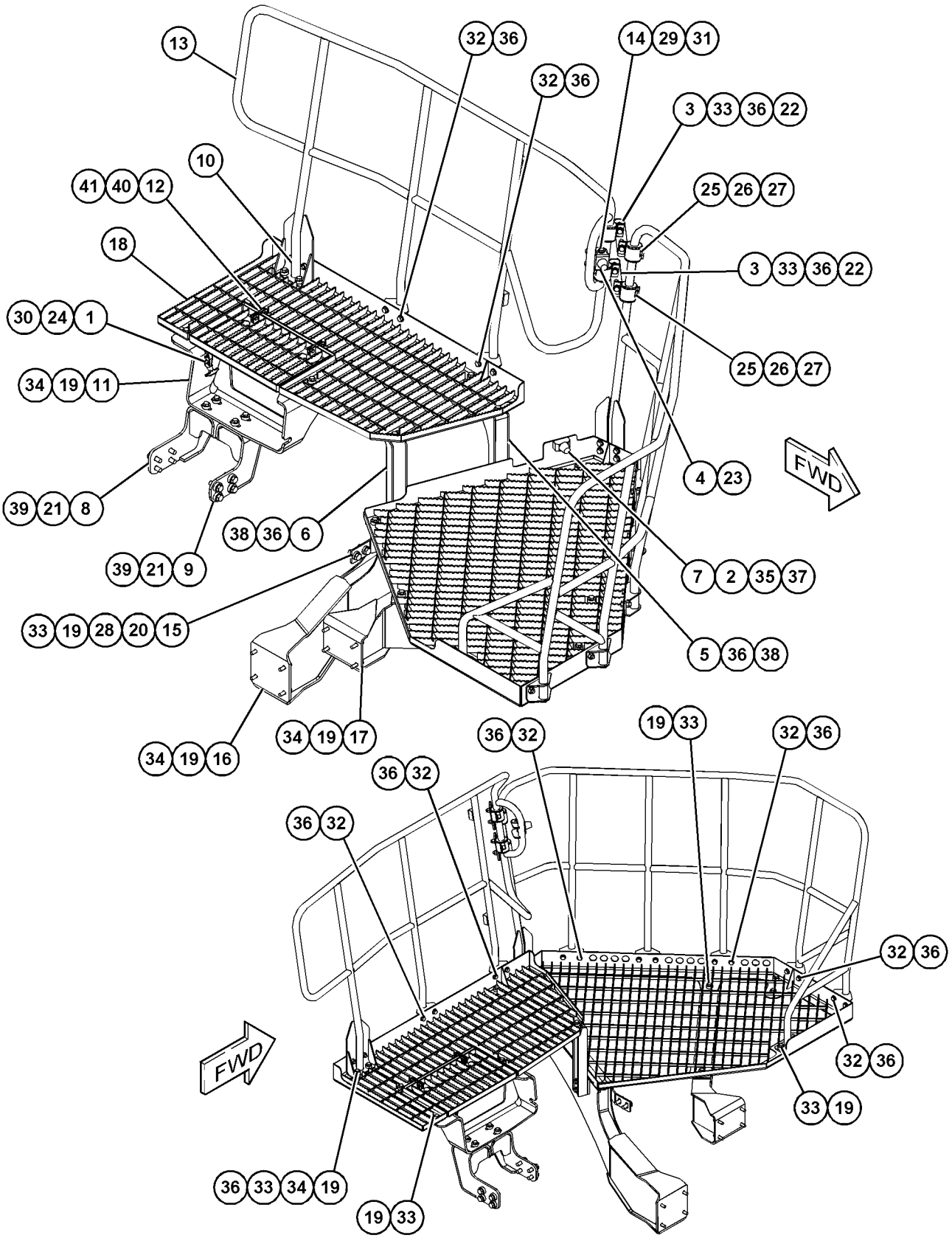

GRAPHIC #1 **<END>** g03829118

OPERATOR STATION

480-5149 PLATFORM GP-OPERATOR—WINDOW WASHER

S/N: E9Y1-UP
PART OF 375-3406 PLATFORM AR
AN ATTACHMENT

SMCS-7253 **i06158661**

NOTE	PART NUMBER	QTY	PART NAME 1 2 3 4 5 6 (PRODUCT LEVEL)	SEE PAGE
Y	*480-6115*	1	MOUNTING GP-PLATFORM	774
Y	*483-0648*	1	PLATFORM GP	793

Y - SEPARATE ILLUSTRATION

<END>

483-0648 PLATFORM GP-OPERATOR—WINDOW WASHER

S/N: E9Y1-UP

PART OF 480-5149 PLATFORM GP-OPERATOR

AN ATTACHMENT

SMCS-7253 **i06158648**

NOTE	REF NO	GRAPHIC REF	PART NUMBER	QTY	PART NAME 1 2 3 4 5 6 (PRODUCT LEVEL)	SEE PAGE
	1	1	**389-1560**	1	SUPPORT AS	
	2	1	**389-1561**	1	SUPPORT AS	
	3	1	**480-2162**	1	WALKWAY AS	
	4	1	**480-2163**	1	WALKWAY AS	
	5	1	**480-2173**	1	SUPPORT AS	
	6	1	**480-2174**	1	SUPPORT AS	
	7	1	**480-2175**	1	BRACKET AS	
	8	1	**480-2176**	1	SUPPORT AS	
	9	1	**480-2177**	1	SUPPORT AS	
	10	1	**480-2178**	1	SUPPORT AS	
	11	1	**480-2179**	1	SUPPORT AS	
	12	1	**480-2180**	1	BRACKET AS	
Y	13	1	*482-6297*	2	LADDER GP	462

Y - SEPARATE ILLUSTRATION

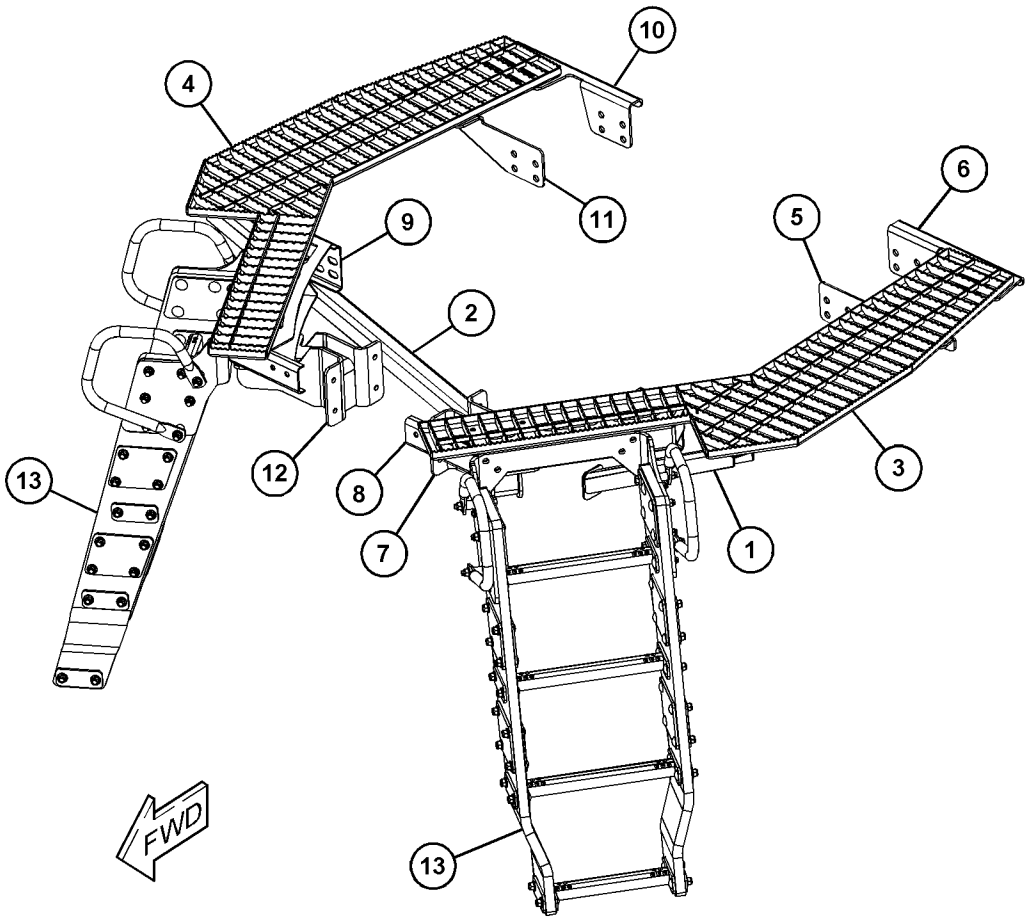

GRAPHIC #1 **<END>** g03835661

294-0989 RADIO GP–AM/FM/USB/BLUETOOTH

S/N: E9Y1-UP
PART OF 396-9062 RADIO GP
AN ATTACHMENT

SMCS-7338 **i05482455**

NOTE	REF NO	GRAPHIC REF	PART NUMBER	QTY	PART NAME 1 2 3 4 5 6 (PRODUCT LEVEL)	SEE PAGE
	1	1	**136-5490**	1	BUSHING (RADIO MOUNT)	
Y	2	1	**200-5728**	1	HARNESS AS-RADIO	182
C	3	1	**439-1562**	1	RADIO GP (AM/FM/USB/BLUETOOTH)	

C - CHANGE FROM PREVIOUS TYPE
Y - SEPARATE ILLUSTRATION

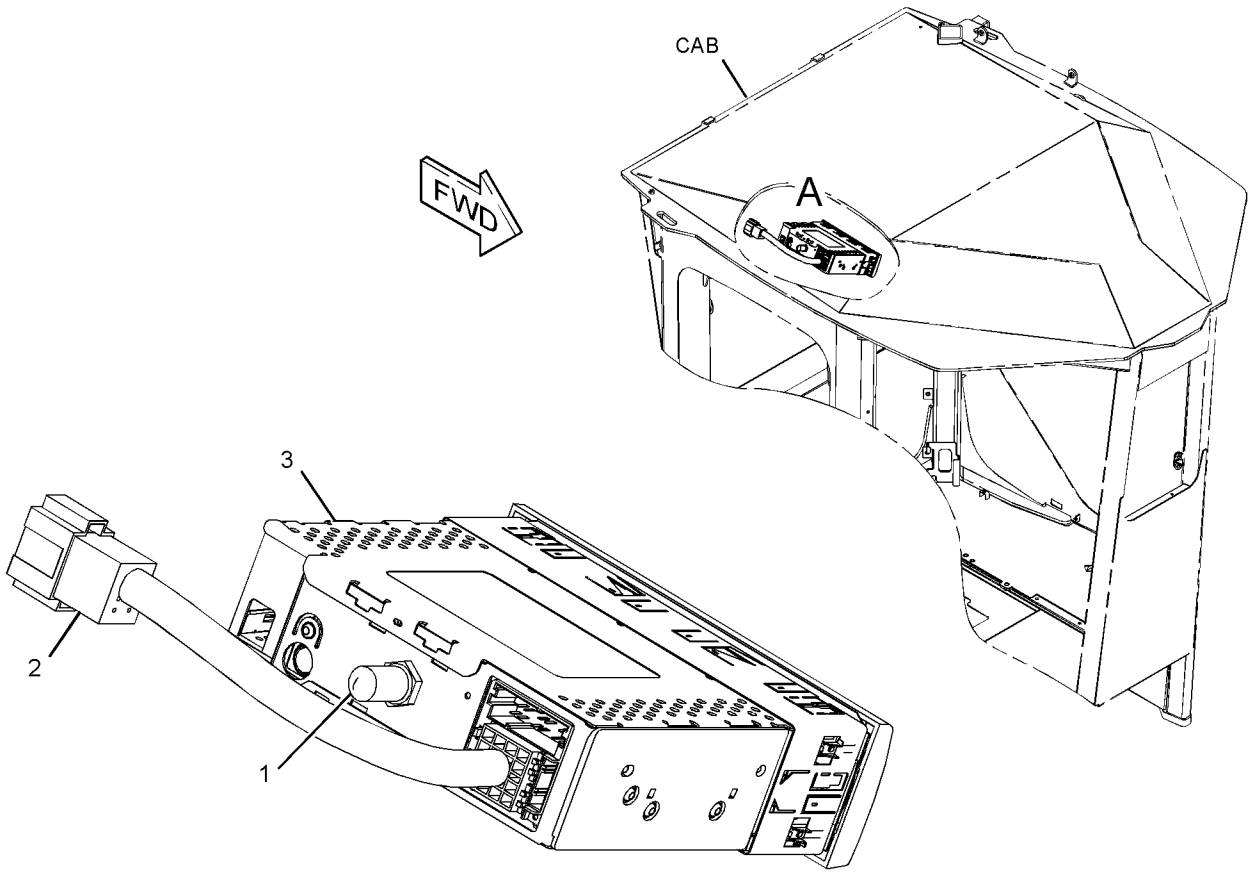

VIEW OF AREA A

GRAPHIC #1 **<END>** g03478538

OPERATOR STATION

396-9062 RADIO GP—AM/FM/WB/CD/XM/USB/BLUETOOTH

S/N: E9Y1-UP
PART OF 450-1651 OPTION AR-CAB
AN ATTACHMENT

SMCS-7338 **i06111132**

NOTE	REF NO	GRAPHIC REF	PART NUMBER	QTY	PART NAME 1 2 3 4 5 6 (PRODUCT LEVEL)	SEE PAGE
	1	1	**7K-1181**	7	STRAP-CABLE	
Y	2	1	**294-0989**	1	RADIO GP	794
	3	1	**353-1634**	1	HARNESS AS-RADIO (BLUETOOTH)	
	4	1	**344-5594**	1	HARNESS AS-RADIO (AUXILIARY)	
	5	1	**349-8642**	1	MICROPHONE	

Y - SEPARATE ILLUSTRATION

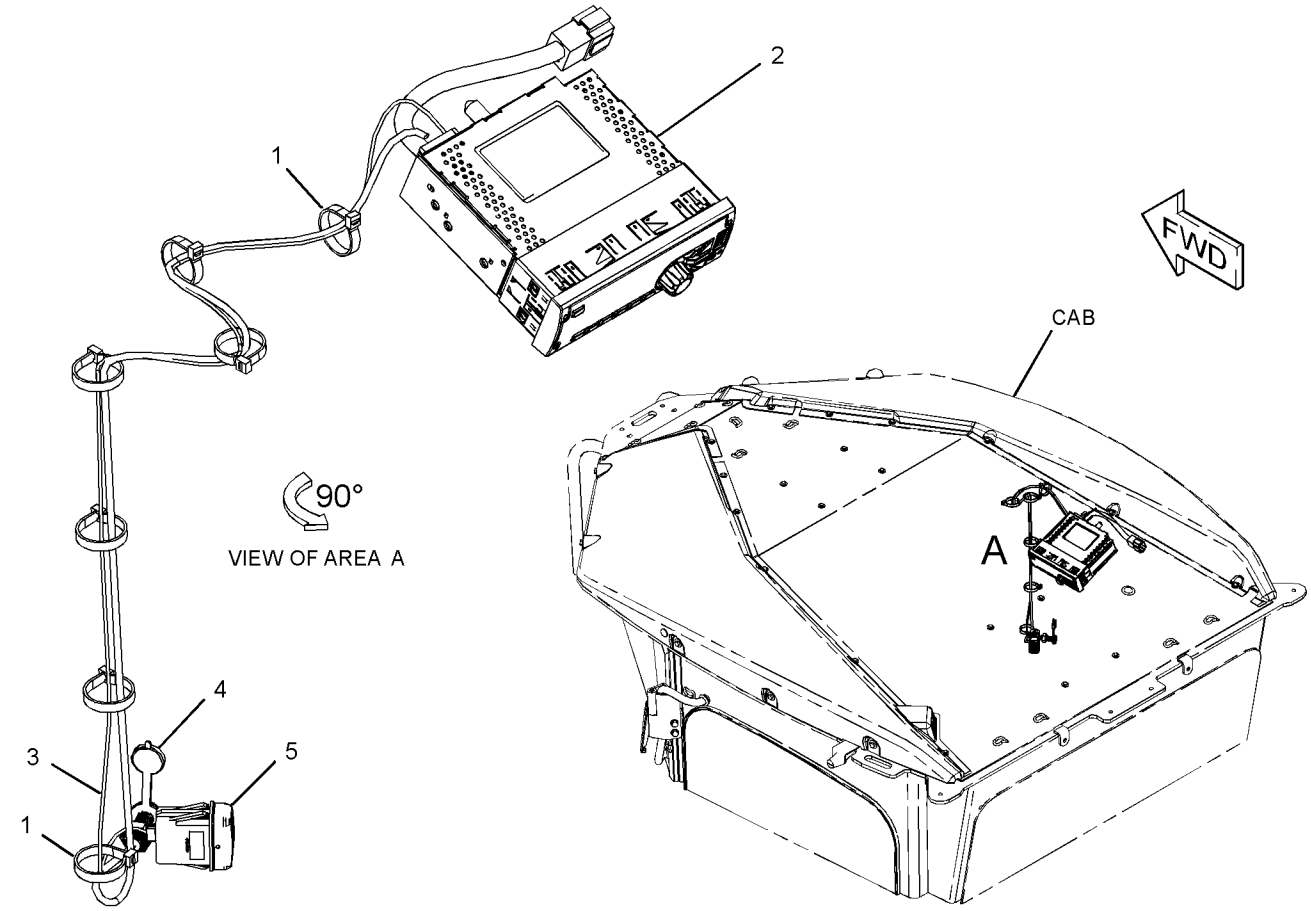

GRAPHIC #1 **<END>** g03512787

385-8713 SEAT & MOUNTING GP

S/N: E9Y1-UP

CANNOT BE USED WITH 391-5182—PAGE: 798

AN ATTACHMENT

SMCS-7312 **i06160568**

NOTE	REF NO	GRAPHIC REF	PART NUMBER	QTY	PART NAME 1 2 3 4 5 6 (PRODUCT LEVEL)	SEE PAGE
CY	1	1	**443-8262**	1	SEAT GP-SUSPENSION (CLOTH, HEATED)	807
	2	1	**8T-4121**	4	WASHER-HARD (11X21X2.5-MM THK)	
M	3	1	**8T-4136**	4	BOLT (M10X1.5X25-MM)	
	4	1	**156-6175**	1	CLIP	
	5	1	**5P-4115**	2	WASHER-HARD (7.2X19X2-MM THK)	
M	6	1	**8T-4138**	1	BOLT (M6X1X20-MM)	
M	7	1	**5C-2890**	1	NUT (M6X1-THD)	
	8	1	**7K-1181**	1	STRAP-CABLE	

C - CHANGE FROM PREVIOUS TYPE
M - METRIC PART
Y - SEPARATE ILLUSTRATION

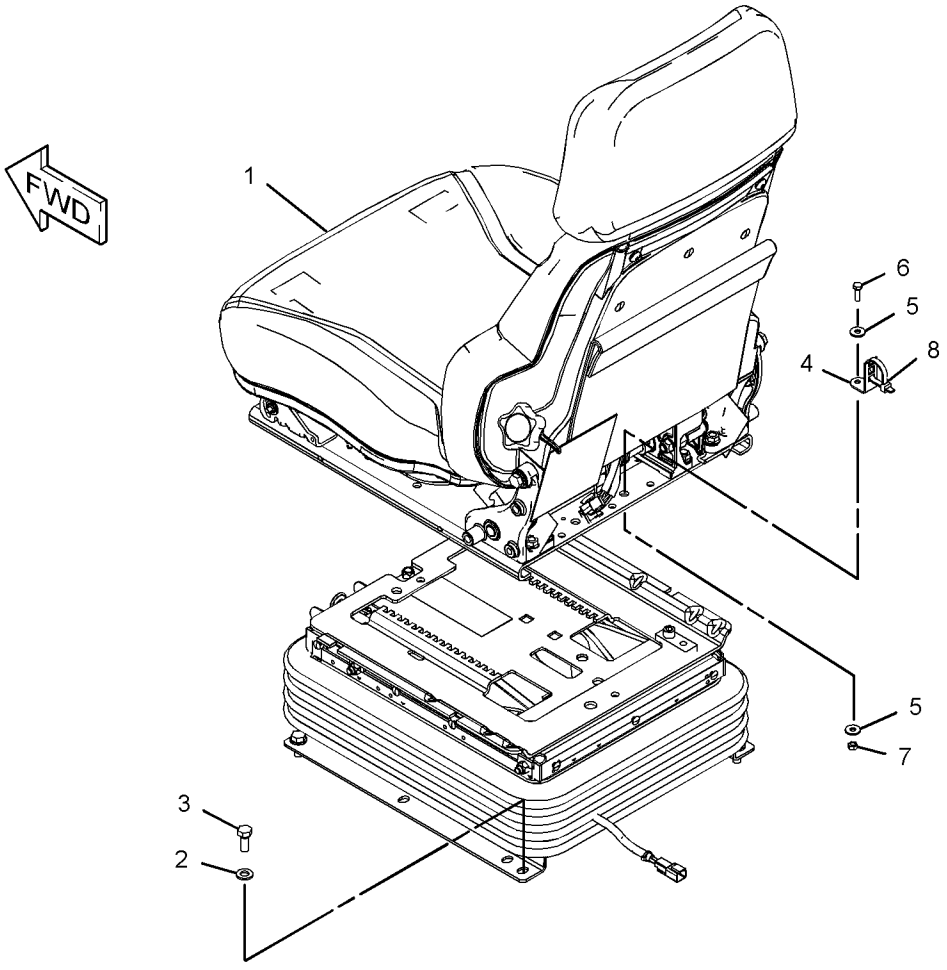

GRAPHIC #1 **<END>** g03425494

385-8714 SEAT & MOUNTING GP

S/N: E9Y1-UP

CANNOT BE USED WITH 391-5182—PAGE: 798

AN ATTACHMENT

SMCS-7312 **i06160570**

NOTE	REF NO	GRAPHIC REF	PART NUMBER	QTY	PART NAME 1 2 3 4 5 6 (PRODUCT LEVEL)	SEE PAGE
CY	1	1	**443-8263**	1	SEAT GP-SUSPENSION (CLOTH, HEATED, AIR)	808
	2	1	**8T-4121**	4	WASHER-HARD (11X21X2.5-MM THK)	
M	3	1	**8T-4136**	4	BOLT (M10X1.5X25-MM)	
	4	1	**156-6175**	2	CLIP	
	5	1	**5P-4115**	4	WASHER-HARD (7.2X19X2-MM THK)	
M	6	1	**8T-4138**	2	BOLT (M6X1X20-MM)	
M	7	1	**5C-2890**	2	NUT (M6X1-THD)	
	8	1	**7K-1181**	2	STRAP-CABLE	

C - CHANGE FROM PREVIOUS TYPE
M - METRIC PART
Y - SEPARATE ILLUSTRATION

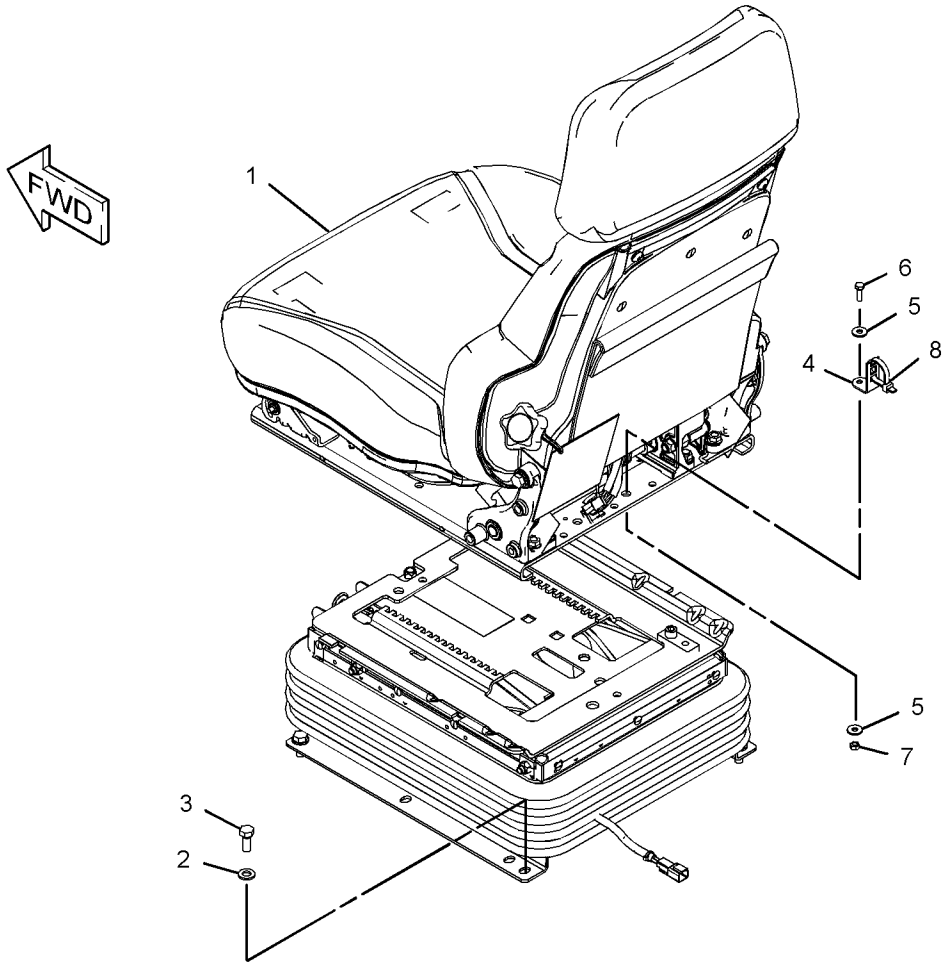

GRAPHIC #1 **<END>** g03425494

391-5182 SEAT & MOUNTING GP

S/N: E9Y1-UP
DELUXE
CANNOT BE USED WITH 385-8713—PAGE: 796, 385-8714—PAGE: 797
AN ATTACHMENT

SMCS-7312 **i06147907**

NOTE	REF NO	GRAPHIC REF	PART NUMBER	QTY	PART NAME 1 2 3 4 5 6 (PRODUCT LEVEL)	SEE PAGE
Y	1	1	**421-1285**	1	SEAT GP-SUSPENSION	804
	2	1	**156-6175**	1	CLIP (LADDER)	
M	3	1	**5C-2890**	1	NUT (M6X1-THD)	
	4	1	**5P-4115**	2	WASHER-HARD (7.2X19X2-MM THK)	
	5	1	**7K-1181**	1	STRAP-CABLE	
	6	1	**8T-4121**	4	WASHER-HARD (11X21X2.5-MM THK)	
M	7	1	**8T-4136**	4	BOLT (M10X1.5X25-MM)	
M	8	1	**8T-4138**	1	BOLT (M6X1X20-MM)	

M - METRIC PART
Y - SEPARATE ILLUSTRATION

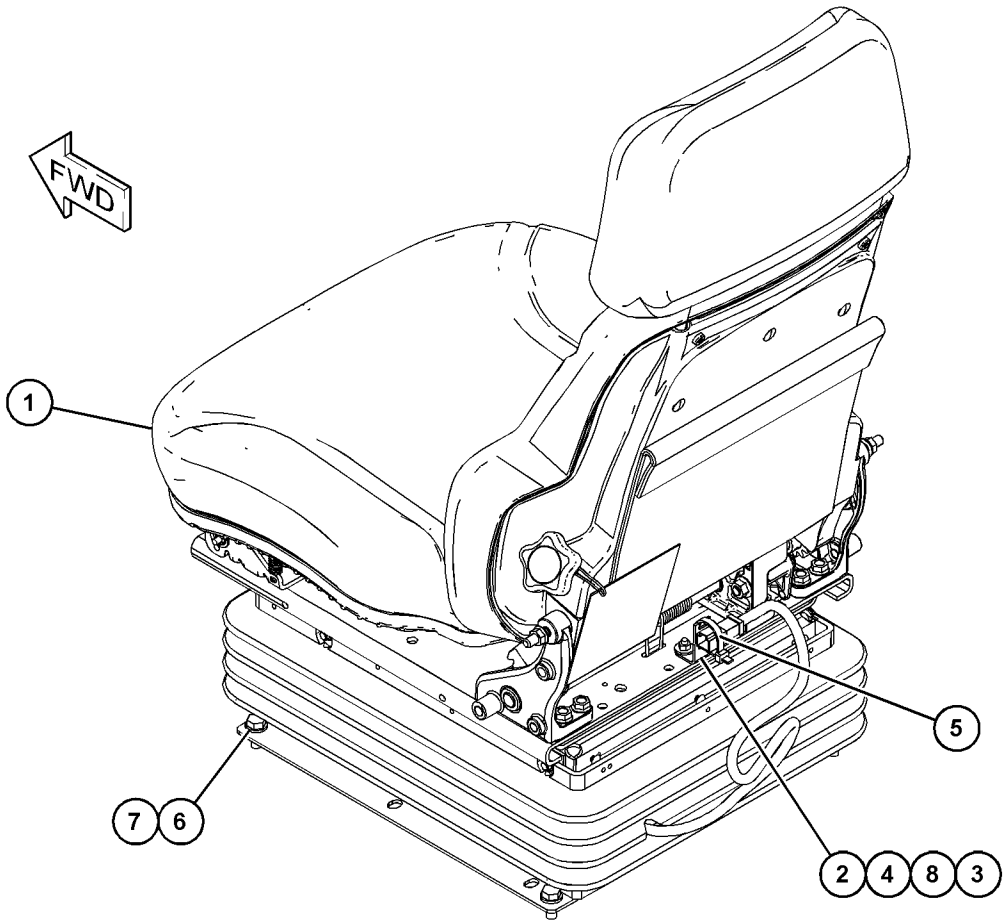

GRAPHIC #1 **<END>** g03817537

385-8717 SEAT BELT GP

S/N: E9Y1-UP
INDICATION, MOUNTING
PART OF 361-3120 CAB AR

SMCS-7327 **i05563320**

NOTE	REF NO	GRAPHIC REF	PART NUMBER	QTY	PART NAME 1 2 3 4 5 6 (PRODUCT LEVEL)	SEE PAGE
	1	1	**3S-2093**	1	STRAP-CABLE	
	2	1	**381-4538**	1	SEAT BELT GP (RETRACT, LOWER) (RETRACT, LOWER)	
		1	**0T-0489**	1	BOLT (7/16-20X2-IN)	
		1	**7X-7729**	1	WASHER (11X25X3-MM THK)	
		1	**205-6388**	1	BOLT (7/16-20X1.75-IN)	
		1	**275-7803**	1	SPACER (11.7X19.8X25.4-MM THK)	

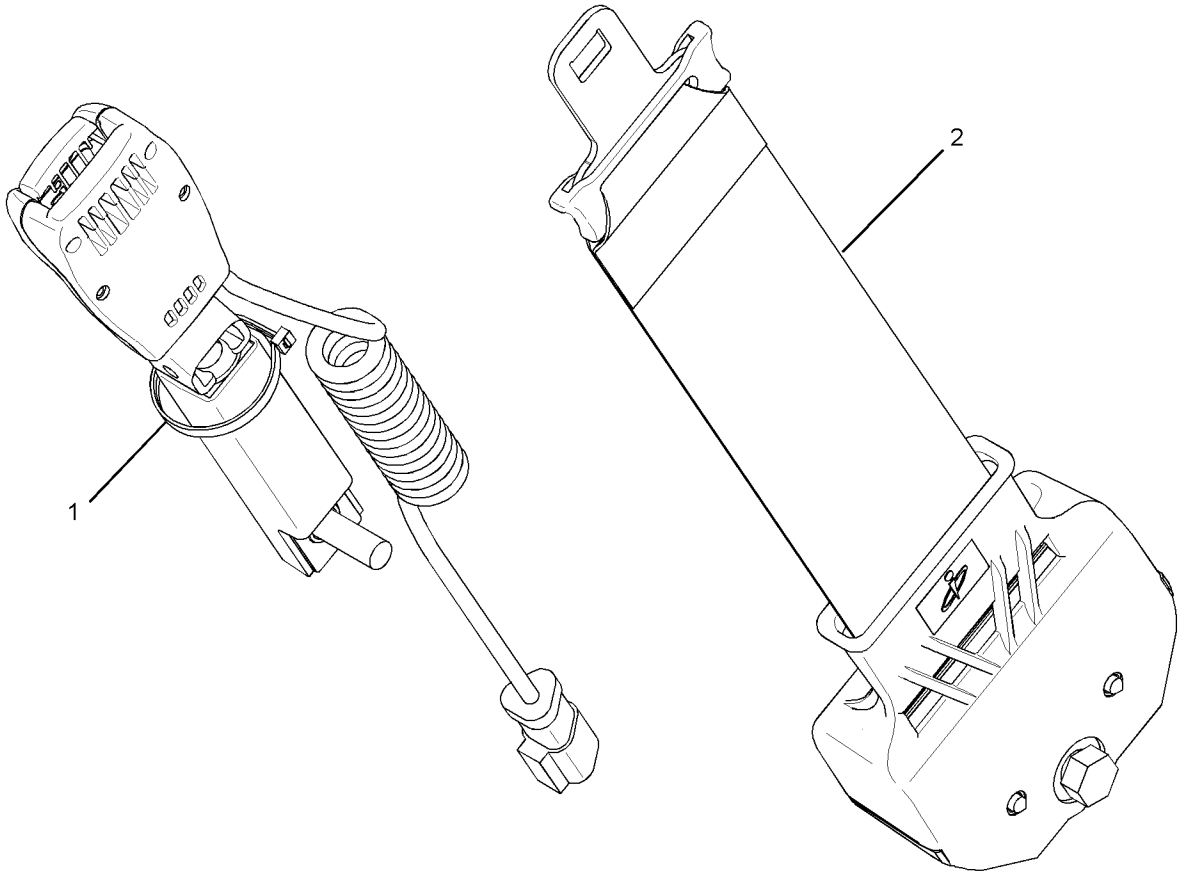

GRAPHIC #1 **<END>** g03418752

443-8217 SEAT GP–CLOTH, HEATED

S/N: E9Y1-UP
24-VOLT, OPERATED PRESENCE SWITCH
PART OF 443-8262 SEAT GP-SUSPENSION
AN ATTACHMENT

SMCS-7312 **i06210520**

NOTE	REF NO	GRAPHIC REF	PART NUMBER	QTY	PART NAME 1 2 3 4 5 6 (PRODUCT LEVEL)	SEE PAGE
	1	1	**143-1288**	8	LOCKNUT-FLANGE (3/8-16-THD)	
	2	1	**164-4883**	1	KNOB-LUMBAR	
	3	1	**177-1863**	2	BOLT-PIVOT (3/8-16X2.89-IN)	
	4	1	**218-2529**	3	PLUG	
	5	1	**229-1494**	1	EXTENSION GP-BACKREST (CLOTH)	
	6	1	**262-0767**	1	BRACKET AS (LH)	
	7	1	**277-8102**	1	SWITCH-ROCKER (24-VOLT) (HEATED SEAT)	
	8	1	**277-8103**	2	PLUG	
Y	9	1	**292-6402**	1	PAN GP-BACKREST (LUMBAR)	776
	10	1	**294-5042**	2	SPACER (11.1X19.5X9.67-MM THK)	
	11	1	**314-5162**	1	BRACKET AS (RH)	
	13	1	**355-3016**	1	PLATE AS	
	14	1	**369-9004**	1	CABLE AS	
	15	1	**389-0879**	1	PAN-SEAT BACK	
	16	1	**171-1230**	6	SCREW-BUTTON HEAD (3/8-16X1-IN)	
	17	1	**8T-7566**	1	PIN-SPRING	
	18	1	**9F-5975**	1	BOLT (5/16-18X0.75-IN)	
	19	1	**436-1687**	1	KIT-LATCH	
					(INCLUDES BOLTS, LATCHES, RODS, SPRINGS, & WASHERS)	
	20	1	**436-1688**	1	KIT-SEAT	
					(INCLUDES RETAINERS, ROD, SPRINGS, & WASHERS)	
	21	1	**442-5287**	1	KIT-SHAFT	
Y	22	1	**443-8573**	1	KIT-HANDLE (SEAT ADJUSTMENT)	744
					(INCLUDES ROD, LEVERS, RETAINERS, PIN-SPRINGS, & WASHERS)	
Y	23	1	**446-0642**	1	KIT-SEAT CUSHION	748
					(INCLUDES CUSHIONS, SCREWS, SEAT PAN, HEATER PAD HARNESS & OPERATOR STATION HARNESS)	

Y - SEPARATE ILLUSTRATION

443-8217 **SEAT GP (*contd.*)** **i06210520**

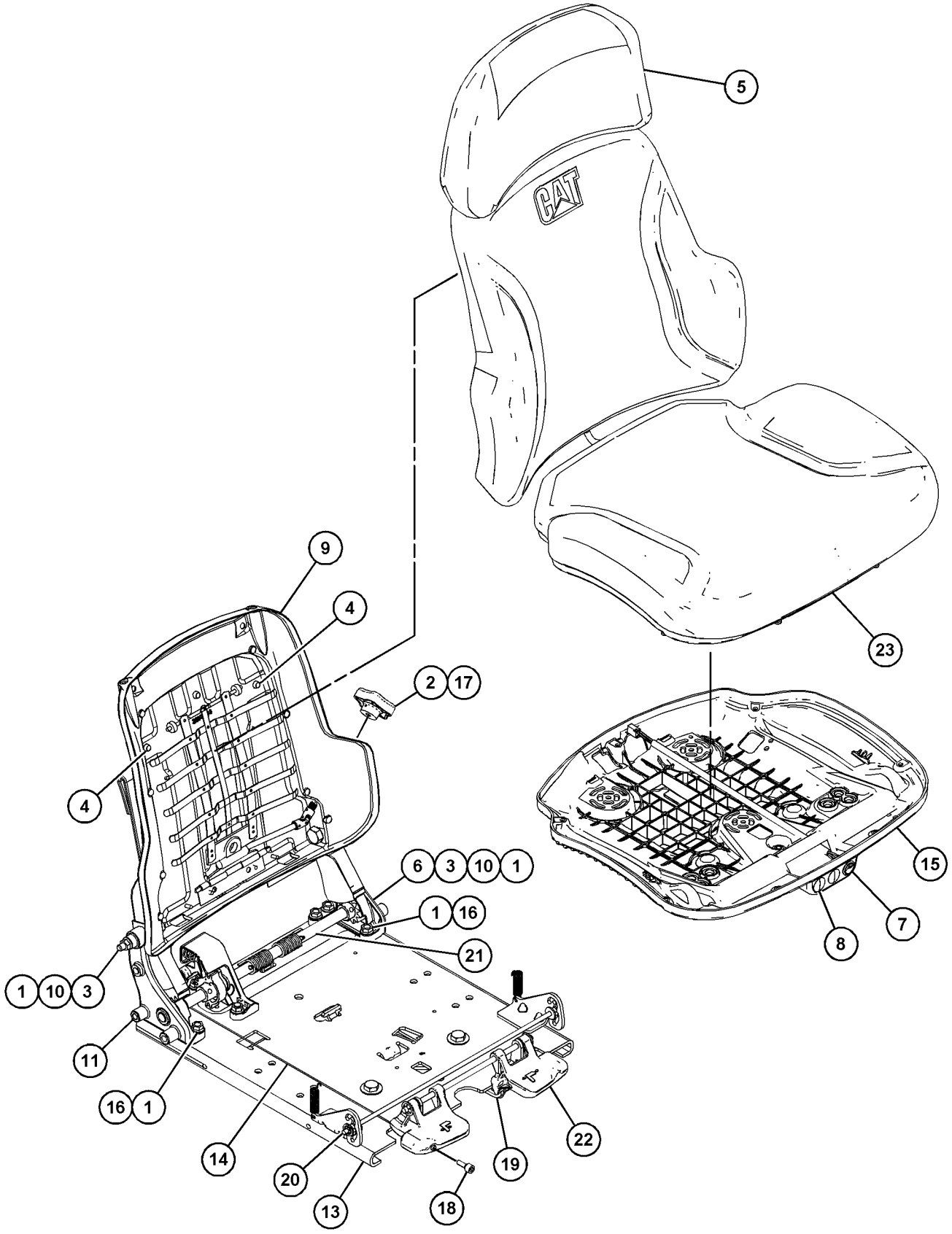

GRAPHIC #1 **<END>** g03711706

443-8222 SEAT GP—CLOTH, HEATED

S/N: E9Y1-UP
24-VOLT, OPERATED PRESENCE SWITCH
PART OF 443-8263 SEAT GP-SUSPENSION
AN ATTACHMENT

SMCS-7312 **i06208829**

NOTE	REF NO	GRAPHIC REF	PART NUMBER	QTY	PART NAME 1 2 3 4 5 6 (PRODUCT LEVEL)	SEE PAGE
	1	1	**143-1288**	8	LOCKNUT-FLANGE (3/8-16-THD)	
	2	1	**177-1863**	2	BOLT-PIVOT (3/8-16X2.89-IN)	
	3	1	**218-2529**	3	PLUG	
	4	1	**229-1494**	1	EXTENSION GP-BACKREST (CLOTH)	
		1	**117-4491**	1	ROD	
	5	1	**262-0767**	1	BRACKET AS (LH)	
	6	1	**277-8103**	1	PLUG	
	7	1	**314-5162**	1	BRACKET AS (RH)	
Y	8	1	**446-0649**	1	KIT-SEAT CUSHION	749
					(INCLUDES CUSHIONS, HEATER PAD, SEAT PAN, SCREWS, VENT FAN HARNESS & OPERATOR STATION HARNESS)	
	9	1	**355-3016**	1	PLATE AS	
	10	1	**365-3532**	1	PAN AS-BACK (24-VOLT)	
	11	1	**369-9004**	1	CABLE AS	
	12	1	**389-0879**	1	PAN-SEAT BACK	
	13	1	**451-5453**	1	HARNESS AS-SWITCH (SEAT HEATER)	
	14	1	**171-1230**	6	SCREW-BUTTON HEAD (3/8-16X1-IN)	
	15	1	**294-5042**	2	SPACER (11.1X19.5X9.67-MM THK)	
	16	1	**9F-5975**	1	BOLT (5/16-18X0.75-IN)	
	17	1	**436-1687**	1	KIT-LATCH	
					(INCLUDES BOLTS, LATCHES, RODS, SPRINGS & WASHERS)	
	18	1	**436-1688**	1	KIT-SEAT	
					(INCLUDES RETAINERS, SPRINGS, WASHERS & ROD)	
	19	1	**442-5287**	1	KIT-SHAFT	
Y	20	1	**443-8573**	1	KIT-HANDLE (SEAT ADJUSTMENT)	744
					(INCLUDES LEVERS, RETAINER-SPRINGS, PIN-SPRINGS, WASHERS & ROD)	

Y - SEPARATE ILLUSTRATION

443-8222 **SEAT GP (*contd.*)** **i06208829**

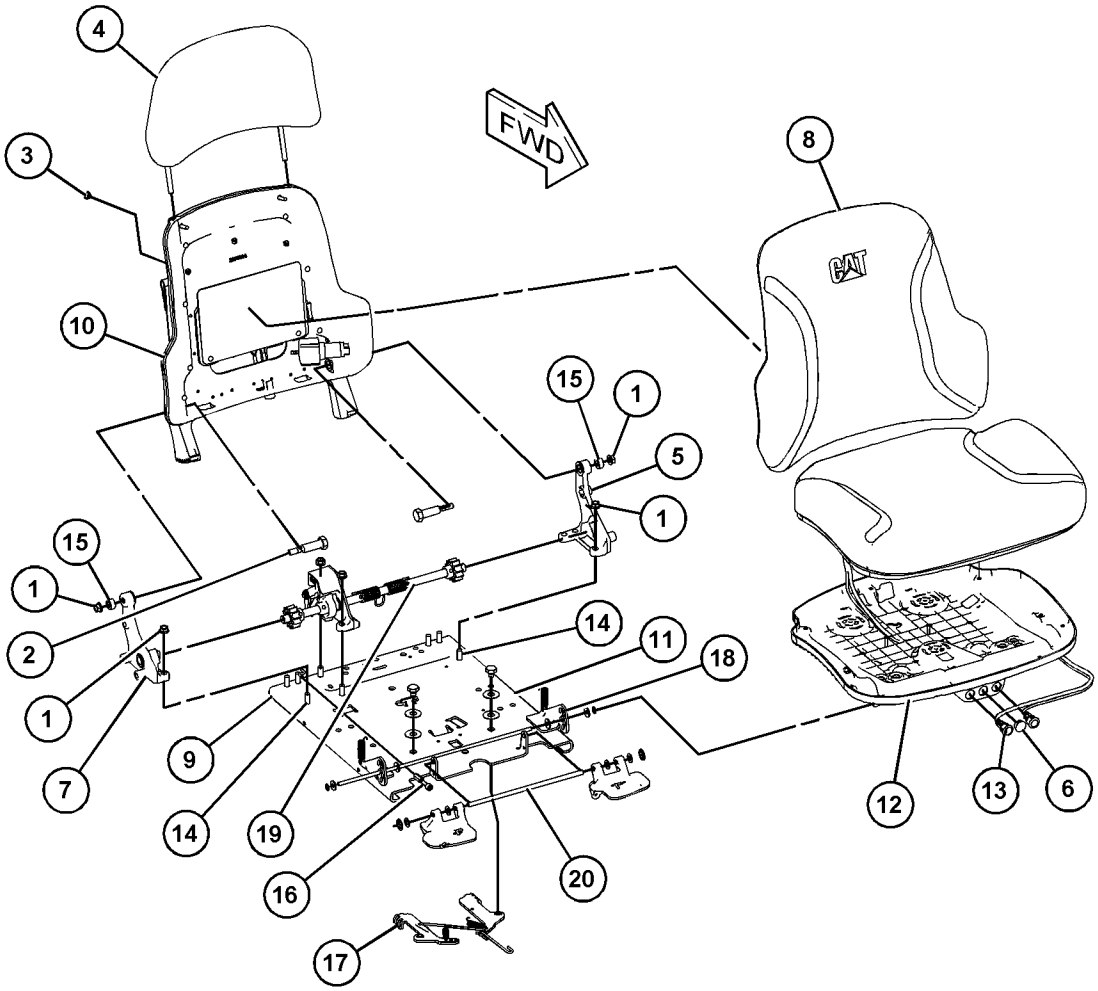

GRAPHIC #1 **<END>** g03820438

421-1285 SEAT GP-SUSPENSION

S/N: E9Y1-UP
24-VOLT. CLOTH, WITH OPERATOR PRESENT SWITCH
PART OF 391-5182 SEAT & MOUNTING GP
AN ATTACHMENT

SMCS-7312 **i06147908**

NOTE	REF NO	GRAPHIC REF	PART NUMBER	QTY	PART NAME 1 2 3 4 5 6 (PRODUCT LEVEL)	SEE PAGE
Y	1		**256-8768**	1	SUSPENSION GP-SEAT (AIR)	818
Y	2		**443-8216**	1	SEAT GP-SUSPENSION (CLOTH)	805
	3		**173-7035**	1	KIT-SLIDER BLOCK (SUSPENSION SEAT)	
					(INCLUDES BOLT, BLOCK-SLIDERS, SETSCREWS, & WASHERS)	

Y - SEPARATE ILLUSTRATION

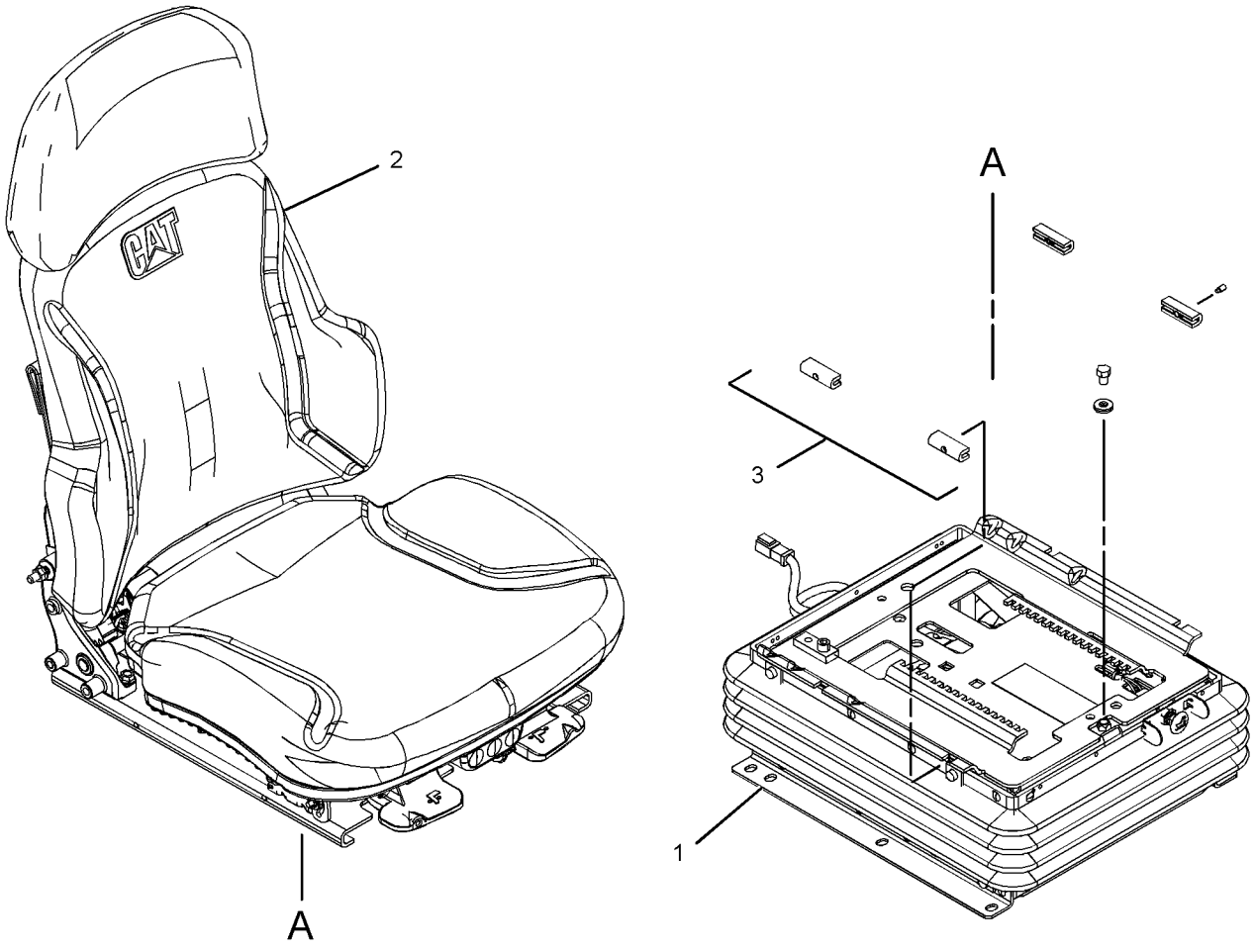

GRAPHIC #1 **<END>** g03717145

443-8216 SEAT GP-SUSPENSION—CLOTH

S/N: E9Y1-UP

PART OF 421-1285 SEAT GP-SUSPENSION

AN ATTACHMENT

SMCS-7312 **i06210638**

NOTE	REF NO	GRAPHIC REF	PART NUMBER	QTY	PART NAME 1 2 3 4 5 6 (PRODUCT LEVEL)	SEE PAGE
	1	1	**143-1288**	10	LOCKNUT-FLANGE (3/8-16-THD)	
	2	1	**164-4883**	1	KNOB-LUMBAR	
	3	1	**177-1863**	2	BOLT-PIVOT (3/8-16X2.89-IN)	
	4	1	**218-2529**	3	PLUG	
	5	1	**229-1494**	1	EXTENSION GP-BACKREST (CLOTH)	
	6	1	**262-0767**	1	BRACKET AS (LH)	
	7	1	**277-8103**	3	PLUG	
Y	8	1	**292-6402**	1	PAN GP-BACKREST (LUMBAR)	776
	9	1	**314-5162**	1	BRACKET AS (RH)	
	11	1	**355-3016**	1	PLATE AS	
	12	1	**369-9004**	1	CABLE AS	
	13	1	**389-0879**	1	PAN-SEAT BACK	
	14	1	**171-1230**	6	SCREW-BUTTON HEAD (3/8-16X1-IN)	
	15	1	**8T-7566**	1	PIN-SPRING	
	16	1	**9F-5975**	1	BOLT (5/16-18X0.75-IN)	
	17	1	**436-1687**	1	KIT-LATCH	
					(INCLUDES BOLTS, LATCHES, RODS, SPRINGS, & WASHERS)	
	18	1	**436-1688**	1	KIT-SEAT	
					(INCLUDES RETAINERS, ROD, SPRINGS, & WASHERS)	
	19	1	**442-5287**	1	KIT-SHAFT	
Y	20	1	**443-8573**	1	KIT-HANDLE (SEAT ADJUSTMENT)	744
					(INCLUDES RETAINER-SPRINGS, PIN-SPRINGS, WASHERS, ROD, & LEVERS)	
Y	21	1	**446-0635**	1	KIT-SEAT CUSHION	747
					(INCLUDES CUSHIONS, SCREWS, SEAT PAN & OPERATOR STATION HARNESS)	
	22	1	**294-5042**	2	SPACER (11.1X19.5X9.67-MM THK)	
	23	1	**4L-6454**	2	BOLT (3/8-16X1-IN)	

Y - SEPARATE ILLUSTRATION

443-8216 **SEAT GP-SUSPENSION (*contd.*)** **i06210638**

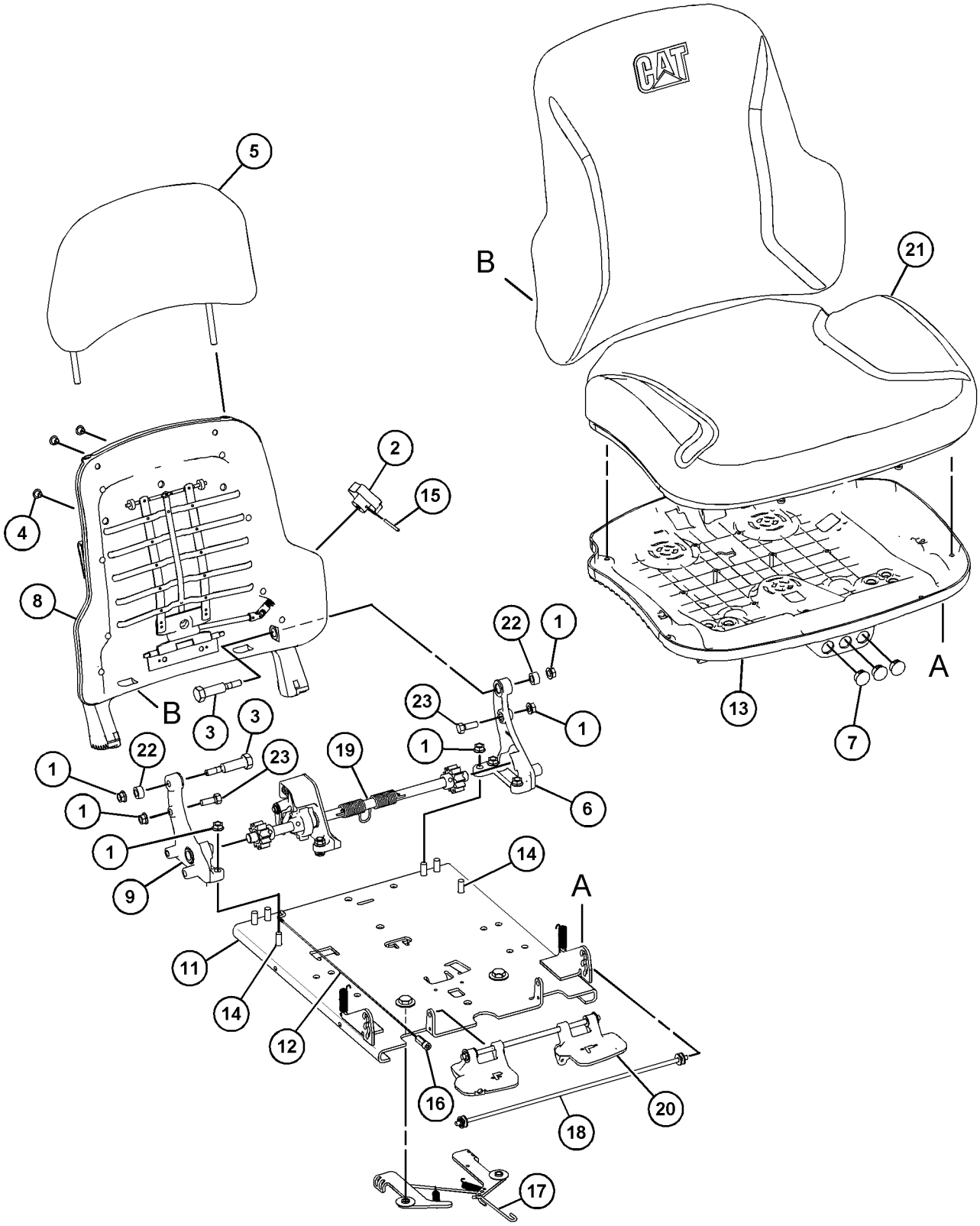

GRAPHIC #1 **<END>** g03814156

443-8262 SEAT GP-SUSPENSION—CLOTH, HEATED

S/N: E9Y1-UP
24-VOLT
PART OF 385-8713 SEAT & MOUNTING GP
AN ATTACHMENT

SMCS-7312 **i05885268**

NOTE	REF NO	GRAPHIC REF	PART NUMBER	QTY	PART NAME 1 2 3 4 5 6 (PRODUCT LEVEL)	SEE PAGE
Y	1	1	**191-2933**	1	SUSPENSION GP-SEAT (AIR)	815
	2	1	**241-5786**	1	HARNESS AS-HEATER (SEAT)	
Y	3	1	**443-8217**	1	SEAT GP (CLOTH, HEATED)	800
	4	1	**173-7035**	1	KIT-SLIDER BLOCK (SUSPENSION SEAT)	
					(INCLUDES BOLT, BLOCK-SLIDERS, SETCSREWS, & WASHERS)	

Y - SEPARATE ILLUSTRATION

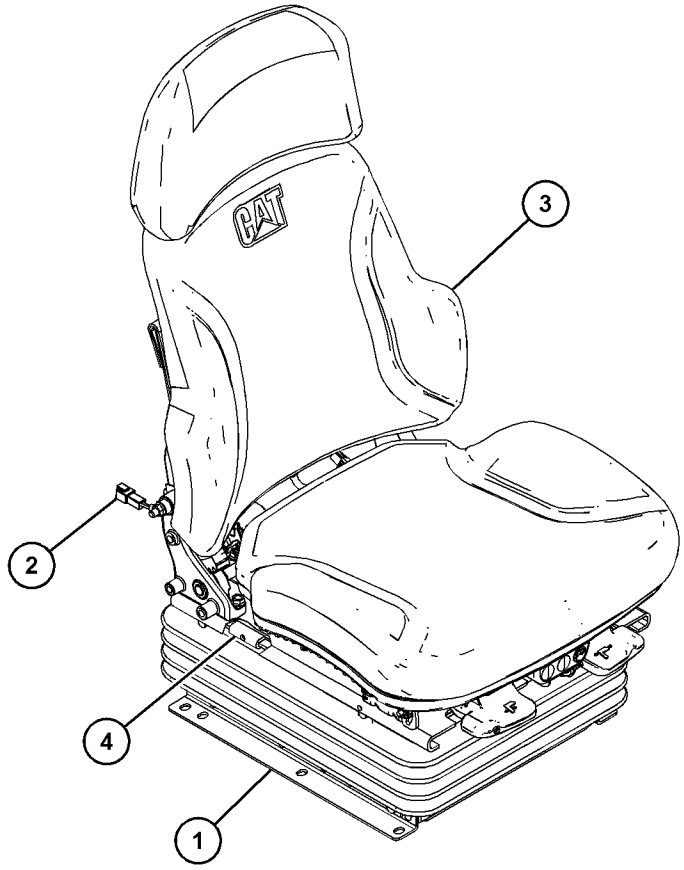

GRAPHIC #1 **<END>** g03711740

443-8263 SEAT GP-SUSPENSION—CLOTH, HEATED, AIR

S/N: E9Y1-UP
24-VOLT, DELUXE, OPERATOR PRESENCE SWITCH
PART OF 385-8714 SEAT & MOUNTING GP
AN ATTACHMENT

SMCS-7312 **i06103255**

NOTE	REF NO	GRAPHIC REF	PART NUMBER	QTY	PART NAME 1 2 3 4 5 6 (PRODUCT LEVEL)	SEE PAGE
Y	1	1	**191-2933**	1	SUSPENSION GP-SEAT (AIR)	815
	2	1	**365-3536**	1	HARNESS AS-HEATER	
Y	3	1	**443-8222**	1	SEAT GP (CLOTH)	802
	4	1	**173-7035**	1	KIT-SLIDER BLOCK (SUSPENSION SEAT)	
					(INCLUDES WASHERS, BLOCK-SLIDERS, SETSCREWS & BOLT)	

Y - SEPARATE ILLUSTRATION

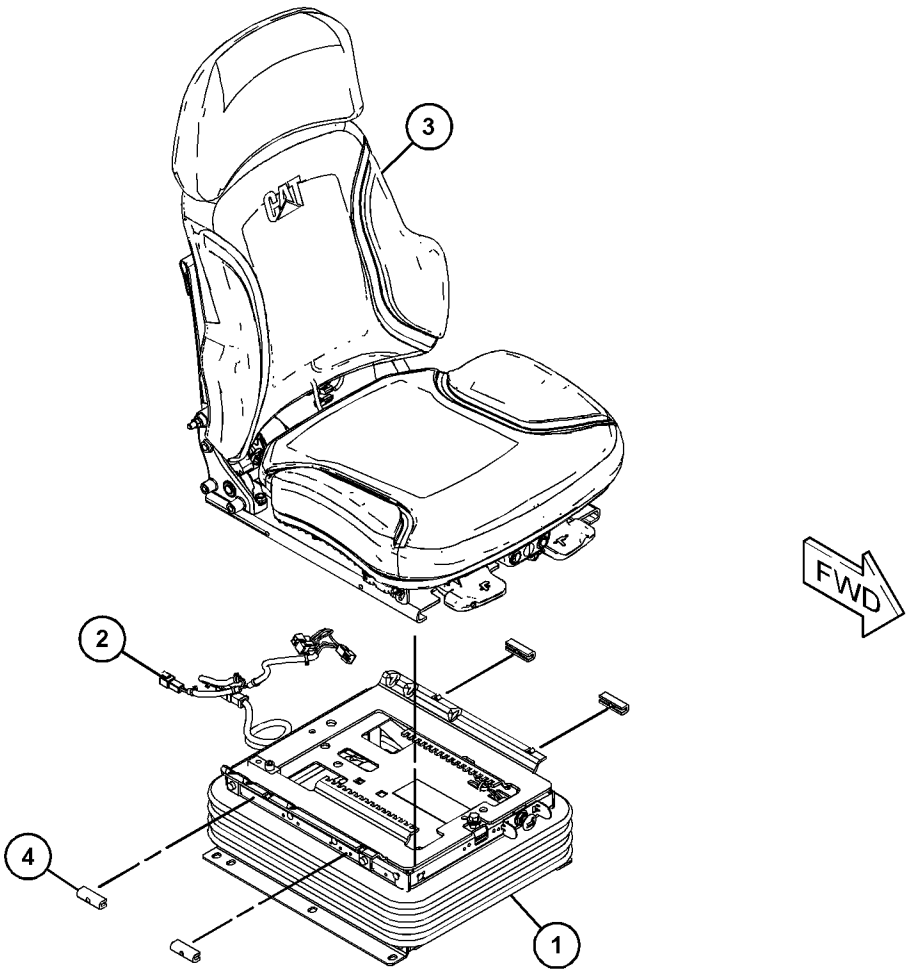

GRAPHIC #1 **<END>** g03813916

345-1271 SUPPORT GP-CONTROL—JOYSTICK, RH

S/N: E9Y1-UP

PART OF 345-1277 CONTROL & MTG GP-JOYSTICK

SMCS-4343, 6150 **i06102276**

NOTE	REF NO	GRAPHIC REF	PART NUMBER	QTY	PART NAME 1 2 3 4 5 6 (PRODUCT LEVEL)	SEE PAGE
M	1	1	**172-8591**	10	NUT-SPRING (M6X1-THD)	
	2	1	**8X-1386**	1	SPACER (12.2X23X22-MM THK)	
	3	1	**233-3248**	2	BUSHING	
	4	1	**233-3252**	1	SHAFT AS	
	5	1	**233-3270**	1	SUPPORT AS (RH)	
	6	1	**233-3275**	1	BRACKET	
	7	1	**251-2247**	2	GROMMET	
Y	8	1	**252-1805**	1	CUSHION GP-ARM	710
	9	1	**252-1808**	1	SUPPORT AS (RH)	
		1	**3G-0622**	2	RING-RETAINING	
		1	**7X-0605**	2	WASHER-HARD (13X28X1.6-MM THK)	
M		1	**9X-2044**	2	SCREW-TRUSS HEAD (M6X1X16-MM)	
		1	**114-6658**	2	WASHER (6.5X17X1-MM THK)	
		1	**294-1001**	1	PLATE AS	
M		1	**6V-9632**	2	NUT-WELD (M6X1-THD)	
	10	1	**253-3482**	1	KNOB AS (ARMREST ADJUSTMENT)	
	11	1	**253-3483**	1	PLATE AS	
	12	1	**253-3484**	2	WASHER (13X46X3.5-MM THK)	
Y	13	1	*292-0609*	1	ARMREST GP (RH)	685
	14	1	**456-1559**	1	ADJUSTER AS	
	15	1	**345-1273**	1	COVER	
	16	1	**345-1274**	1	COVER	
	17	1	**346-0626**	1	BRACKET	
	18	1	**346-9581**	1	FILM-IDENTIFICATION (OPERATOR CONTROLS, RH)	
	19	1	**114-6658**	10	WASHER (6.5X17X1-MM THK)	
M	20	1	**5C-9553**	2	BOLT (M6X1X16-MM)	
	21	1	**7J-5925**	1	PIN-COTTER	
	22	1	**7X-0578**	2	WASHER-HARD (10.2X32X2.5-MM THK)	
M	23	1	**8T-4200**	3	BOLT (M8X1.25X16-MM)	
	24	1	**8T-4224**	10	WASHER-HARD (8.8X16X2-MM THK)	
M	25	1	**8T-4908**	7	BOLT (M8X1.25X25-MM)	
M	26	1	**9X-2043**	2	SCREW-TRUSS HEAD (M6X1X14-MM)	
M	27	1	**9X-2044**	10	SCREW-TRUSS HEAD (M6X1X16-MM)	
	28	1	**9X-8256**	2	WASHER (6.6X12X2-MM THK)	
D	29	1	**8T-6936**		SEAL (0.1-M EACH)	

D - ORDER BY THE METER
M - METRIC PART
Y - SEPARATE ILLUSTRATION

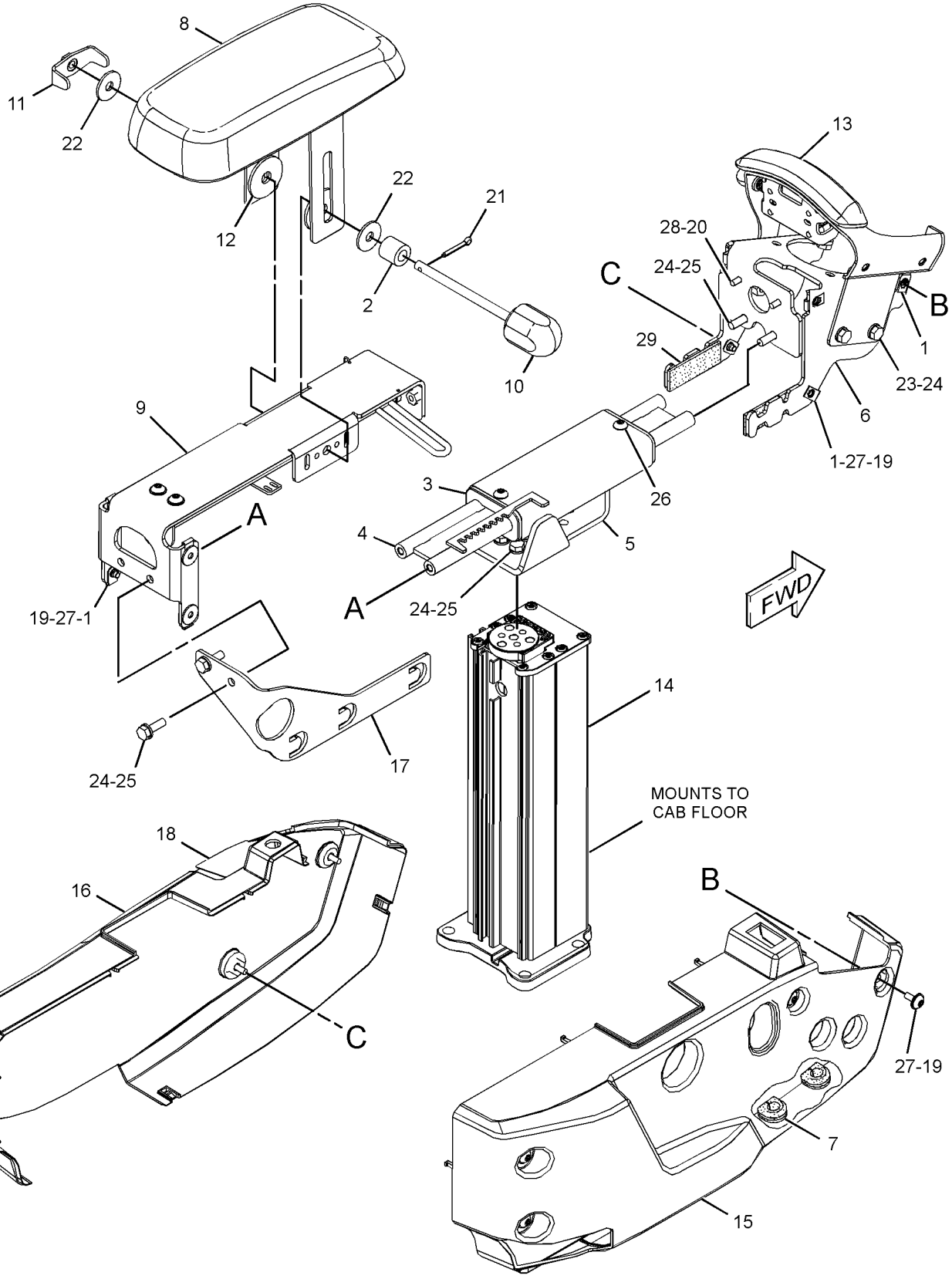

GRAPHIC #1 **<END>** g02261233

345-1272 SUPPORT GP-CONTROL—JOYSTICK, LH

S/N: E9Y1-UP

PART OF 345-1277 CONTROL & MTG GP-JOYSTICK

SMCS-4343, 6150 **i06102278**

NOTE	REF NO	GRAPHIC REF	PART NUMBER	QTY	PART NAME 1 2 3 4 5 6 (PRODUCT LEVEL)	SEE PAGE
M	1	1	**172-8591**	10	NUT-SPRING (M6X1-THD)	
	2	1	**8X-1386**	1	SPACER (12.2X23X22-MM THK)	
	3	1	**233-3227**	1	SUPPORT AS (LH)	
	4	1	**233-3248**	2	BUSHING	
	5	1	**233-3252**	1	SHAFT AS	
	6	1	**251-2247**	1	GROMMET	
Y	7	1	**252-1805**	1	CUSHION GP-ARM	710
	8	1	**252-1807**	1	SUPPORT AS (LH)	
		1	**3G-0622**	2	RING-RETAINING	
		1	**7X-0605**	2	WASHER-HARD (13X28X1.6-MM THK)	
M		1	**9X-2044**	2	SCREW-TRUSS HEAD (M6X1X16-MM)	
		1	**114-6658**	2	WASHER (6.5X17X1-MM THK)	
		1	**294-1001**	1	PLATE AS	
M		1	**6V-9632**	2	NUT-WELD (M6X1-THD)	
	9	1	**253-3482**	1	KNOB AS (ARMREST ADJUSTMENT)	
	10	1	**253-3483**	1	PLATE AS	
	11	1	**253-3484**	2	WASHER (13X46X3.5-MM THK)	
	12	1	**272-8329**	1	BRACKET	
Y	13	1	*292-0617*	1	ARMREST GP (LH)	686
	14	1	**456-1559**	1	ADJUSTER AS	
	15	1	**345-1275**	1	COVER	
	16	1	**345-1276**	1	COVER	
	17	1	**346-0627**	1	BRACKET	
	18	1	**346-9580**	1	FILM-IDENTIFICATION (OPERATOR CONTROLS, LH)	
	19	1	**114-6658**	10	WASHER (6.5X17X1-MM THK)	
M	20	1	**5C-9553**	2	BOLT (M6X1X16-MM)	
	21	1	**7J-5925**	1	PIN-COTTER	
	22	1	**7X-0578**	2	WASHER-HARD (10.2X32X2.5-MM THK)	
M	23	1	**8T-4200**	3	BOLT (M8X1.25X16-MM)	
	24	1	**8T-4224**	10	WASHER-HARD (8.8X16X2-MM THK)	
M	25	1	**8T-4908**	7	BOLT (M8X1.25X25-MM)	
M	26	1	**9X-2043**	2	SCREW-TRUSS HEAD (M6X1X14-MM)	
M	27	1	**9X-2044**	10	SCREW-TRUSS HEAD (M6X1X16-MM)	
	28	1	**9X-8256**	2	WASHER (6.6X12X2-MM THK)	
D	29	1	**8T-6936**		SEAL (0.1-M EACH)	

D - ORDER BY THE METER
M - METRIC PART
Y - SEPARATE ILLUSTRATION

345-1272 **SUPPORT GP-CONTROL (*contd.*)** **i06102278**

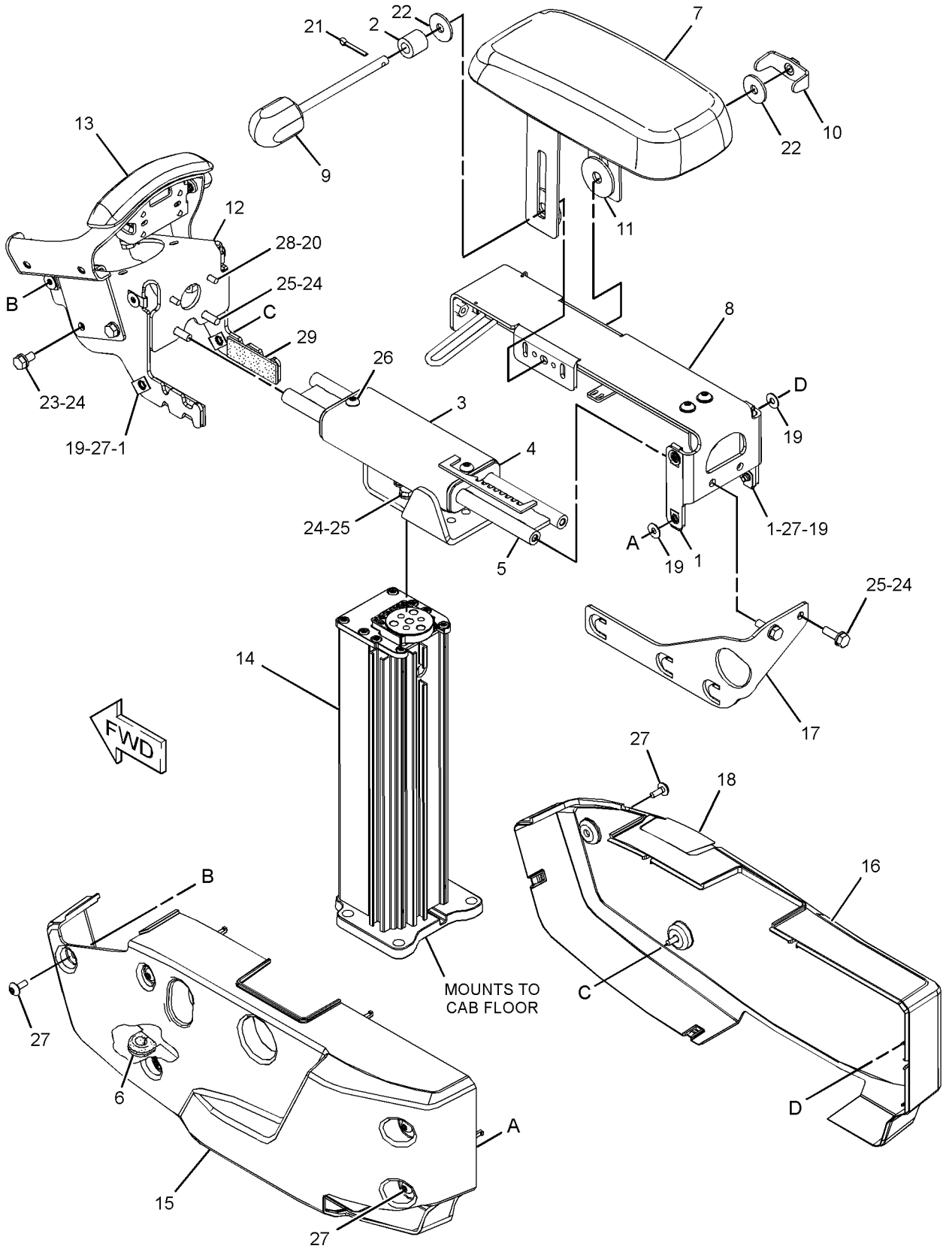

GRAPHIC #1 **<END>** g02257793

375-3464 SUPPORT GP-CONTROL

S/N: E9Y1-UP

PART OF 375-3465 ENCLOSURE GP-ENGINE

SMCS-4343, 6150 **i06184556**

NOTE	REF NO	GRAPHIC REF	PART NUMBER	QTY	PART NAME 1 2 3 4 5 6 (PRODUCT LEVEL)	SEE PAGE
	1	1	**365-9935**	1	SUPPORT AS-TOP	
	2	1	**371-1381**	1	SUPPORT AS	
	3	1	**371-1385**	2	SUPPORT AS	
	4	1	**371-1386**	1	SUPPORT AS	
Y	5	1	*371-1389*	1	BRACKET GP-MOUNTING (CLEAN EMISSIONS MODULE, RH)	687
Y	6	1	*371-1390*	1	BRACKET GP-MOUNTING (CLEAN EMISSIONS MODULE, LH)	688
Y	7	1	*388-9316*	1	HOOD GP	458
	8	1	**444-6472**	1	SUPPORT AS	
	9	1	**456-7009**	1	SUPPORT AS	
	10	1	**456-7166**	1	SUPPORT AS	
	11	1	**459-1861**	1	PLATFORM AS	
M		1	**8T-3490**	4	NUT-WELD (M10X1.5-THD)	
M		1	**9R-2613**	4	BOSS-WELD (M10X1.5X25-MM)	
		1	**190-0544**	1	BOSS-THREADED (M10X1.5-MM THD)	
M		1	**294-4550**	1	BOSS-WELD (M10X1.5X60-MM)	
	12	1	**462-8039**	1	SUPPORT AS	
	13	1	**198-4778**	36	WASHER-HARD (13.5X30X12-MM THK)	
	14	1	**198-4780**	8	WASHER-HARD (17.5X32X8-MM THK)	
M	15	1	**7X-2550**	4	BOLT (M12X1.75X110-MM)	
	16	1	**7X-7729**	27	WASHER (11X25X3-MM THK)	
M	18	1	**8T-4136**	2	BOLT (M10X1.5X25-MM)	
M	19	1	**8T-4184**	32	BOLT (M12X1.75X45-MM)	
M	20	1	**8T-4193**	8	BOLT (M16X2X50-MM)	
M	21	1	**8T-4195**	25	BOLT (M10X1.5X30-MM)	

M - METRIC PART
Y - SEPARATE ILLUSTRATION

375-3464 **SUPPORT GP-CONTROL (*contd.*)** **i06184556**

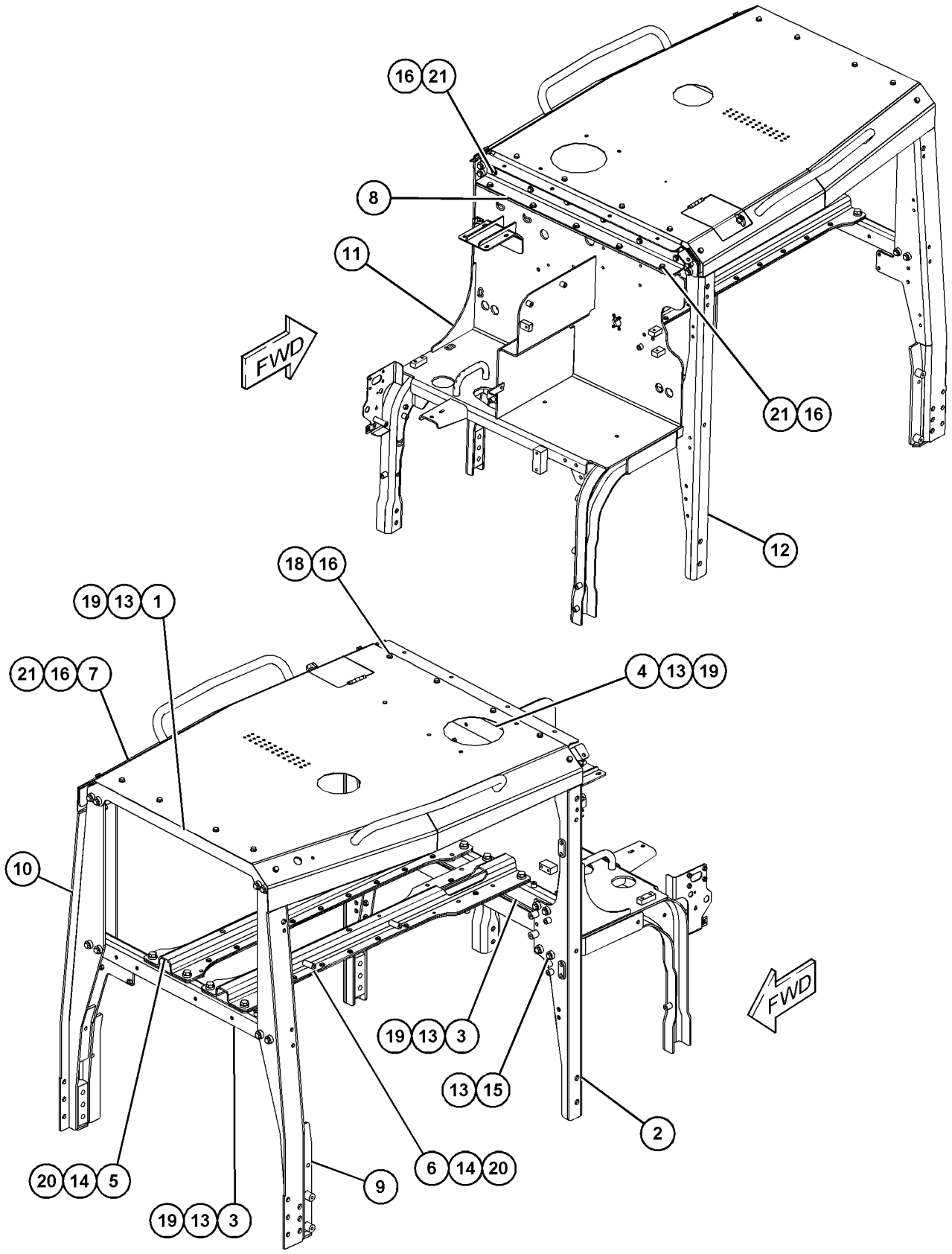

GRAPHIC #1 **<END>** g03841873

191-2933 SUSPENSION GP-SEAT–AIR

S/N: E9Y1-UP
24-VOLT
PART OF 443-8262, 443-8263 SEAT GP-SUSPENSION
AN ATTACHMENT

SMCS-7324 **i06084189**

NOTE	REF NO	GRAPHIC REF	PART NUMBER	QTY	PART NAME 1 2 3 4 5 6 (PRODUCT LEVEL)	SEE PAGE
	1	1	**3P-9900**	5	WASHER (10.5X30X3-MM THK)	
	2	1	**4B-4278**	2	WASHER (10.2X20.5X1.6-MM THK)	
	3	1	**4V-8577**	12	BEARING	
	5	1	**145-0326**	1	FILM-INSTRUCTION (SEAT ADJUSTMENT)	
	6	1	**164-1234**	1	PLATE	
	7	1	**101-0003**	26	FASTENER	
	8	1	**169-7380**	1	BOLT-SOCKET HEAD (3/8-16X0.375-IN)	
	10	1	**192-7752**	4	SHAFT AS	
	11	1	**192-7755**	1	HOUSING AS (LOWER)	
	12	1	**314-5274**	1	SHAFT (INNER)	
	13	1	**192-7767**	1	SCISSORS AS	
	14	1	**192-7783**	1	TOGGLE AS (WIDE)	
	15	1	**192-7787**	1	TOGGLE AS (NARROW)	
	16	1	**192-7790**	1	HOUSING AS (UPPER)	
	17	1	**192-7795**	1	BOOT	
Y	18	1	**433-5754**	1	HARNESS AS-WIRING (SEAT AIR COMPRESSOR)	195
	19	1	**192-7810**	1	SPRING AS-AIR	
		1	**5P-4423**	1	ELBOW	
		1	**163-1135**	1	SPRING	
	20	1	**192-7812**	1	BOLT-SPECIAL	
	21	1	**192-7820**	3	BUMPER	
	22	1	**314-5275**	1	SHAFT (OUTER)	
	25	1	**108-4311**	1	SCREW-MACHINE (3/8-16X0.75-IN)	
	26	1	**2K-4973**	8	LOCKNUT (3/8-16-THD)	
	27	1	**3J-4818**	1	LOCKWASHER	
M	28	1	**5C-2890**	3	NUT (M6X1-THD)	
	29	1	**8T-9371**	1	BOLT (3/8-16X0.5-IN)	
CE	30	1	**211-5358**		CONDUIT-FLEXIBLE (29-CM)	
CE	30A	1	**211-5358**		CONDUIT-FLEXIBLE (43-CM)	
	32	1	**442-8151**	1	CLIP-CABLE	
C	33	1	**3S-2093**	5	STRAP-CABLE	
					AVAILABLE REPAIR KIT(S):	
			192-7799	1	KIT-AIR VALVE (SUSPENSION SEAT)	
					(INCLUDES KNOB AS, NUT, VALVE, LOCKWASHER & FITTING)	
			192-7848	1	KIT-SHOCK ABSORBER (SUSPENSION SEAT)	
					(INCLUDES LOCKNUT, LOCKWASHER, SHOCK ABSORBER, BEARINGS, WASHER & BOLTS)	
			211-9294	1	KIT-TETHER (SUSPENSION SEAT)	
					(INCLUDES TETHERS)	
AB			**213-5170**	1	KIT-SEAT ADJUSTER (SEAT ADJUSTMENT)	
					(INCLUDES BOLTS, NUTS, ROD, ARM & HOUSING)	
ABY			**212-7779**	1	KIT-SHOCK ABSORBER (SUSPENSION SEAT) (ADJUSTABLE SEAT)	750
AB			**346-4360**	1	KIT-SHOCK ABSORBER (SUSPENSION SEAT) (HEAVY-DUTY)	
					(INCLUDES SHOCK ABSORBER, BEARINGS, WASHERS, BOLTS, LOCKNUT, & LOCKWASHER)	
CY			**452-6716**	1	KIT-SEAT AIR COMPRESSOR (SUSPENSION SEAT)	746
					(INCLUDES SCREWS, COMPRESSOR AS, BRACKET, STRAPS & HOSE)	

191-2933 **SUSPENSION GP-SEAT (*contd.*)** **i06084189**

NOTE	REF NO	GRAPHIC REF	PART NUMBER	QTY	PART NAME 1 2 3 4 5 6 (PRODUCT LEVEL)	SEE PAGE

A - NOT PART OF THIS GROUP
B - USE AS REQUIRED
C - CHANGE FROM PREVIOUS TYPE
E - ORDER BY THE CENTIMETER
M - METRIC PART
Y - SEPARATE ILLUSTRATION

191-2933 **SUSPENSION GP-SEAT (*contd.*)** **i06084189**

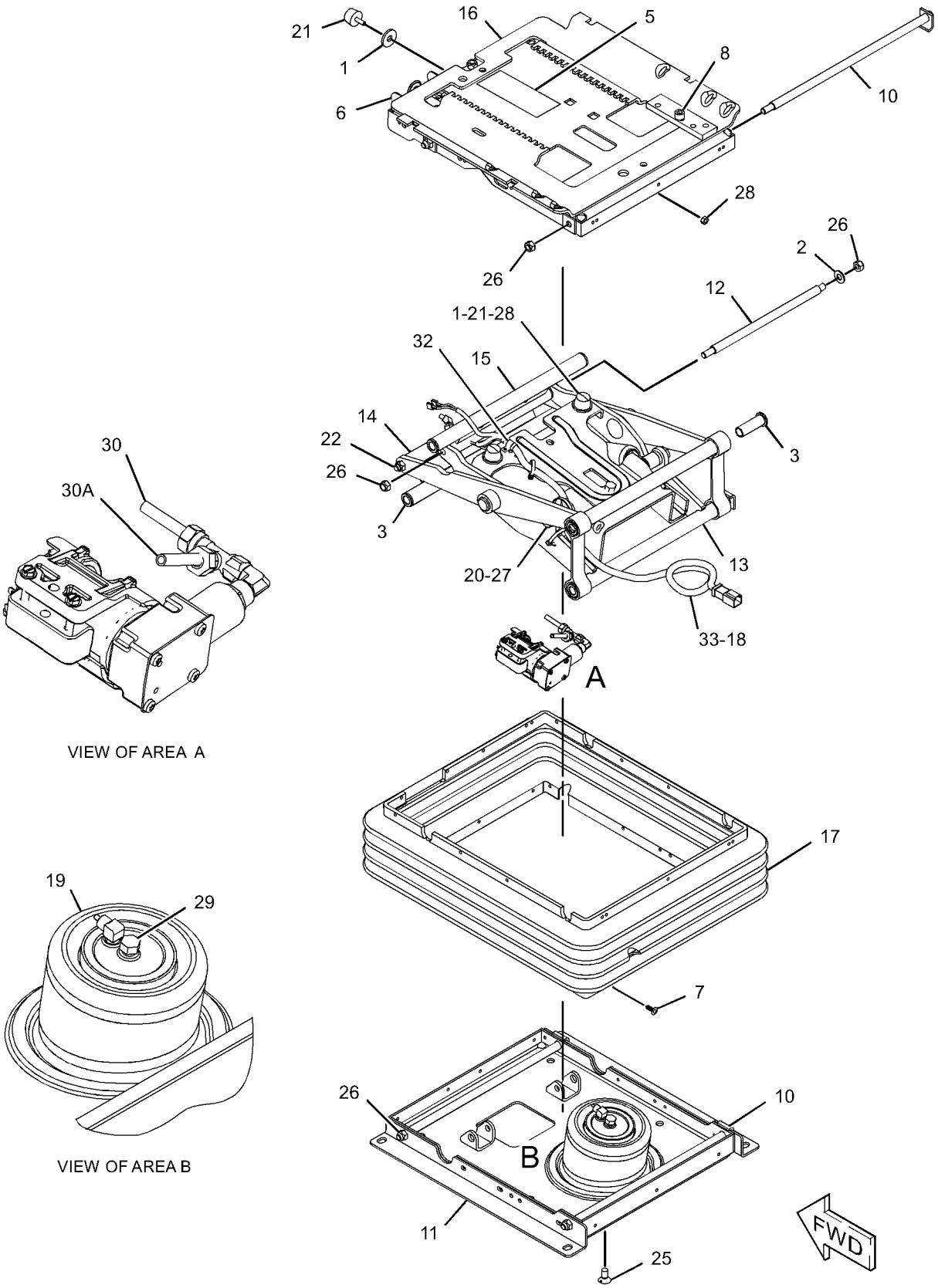

GRAPHIC #1 **<END>** g03802066

256-8768 SUSPENSION GP-SEAT—AIR

S/N: E9Y1-UP
24-VOLT
PART OF 421-1285 SEAT GP-SUSPENSION
AN ATTACHMENT

SMCS-7324 **i05711034**

NOTE	REF NO	GRAPHIC REF	PART NUMBER	QTY	PART NAME 1 2 3 4 5 6 (PRODUCT LEVEL)	SEE PAGE
	1	1	**3P-9900**	5	WASHER (10.5X30X3-MM THK)	
	2	1	**4B-4278**	2	WASHER (10.2X20.5X1.6-MM THK)	
	3	1	**4V-8577**	12	BEARING	
	5	1	**101-0003**	26	FASTENER	
	6	1	**145-0326**	1	FILM-INSTRUCTION (SEAT ADJUSTMENT)	
	7	1	**164-1234**	1	PLATE	
	8	1	**169-7380**	1	BOLT-SOCKET HEAD (3/8-16X0.375-IN)	
	10	1	**192-7752**	4	SHAFT AS	
	11	1	**192-7755**	1	HOUSING AS (LOWER)	
C	12	1	**314-5274**	1	SHAFT (INNER)	
	13	1	**192-7767**	1	SCISSORS AS	
	14	1	**192-7783**	1	TOGGLE AS (WIDE)	
	15	1	**192-7787**	1	TOGGLE AS (NARROW)	
	16	1	**192-7790**	1	HOUSING AS (UPPER)	
	17	1	**192-7795**	1	BOOT	
	18	1	**433-5754**	1	HARNESS AS-WIRING (SEAT AIR COMPRESSOR)	
		1	**102-8802**	1	KIT-RECEPTACLE (2-PIN)	
					(INCLUDES RECEPTACLE AS & WEDGE)	
		1	**5P-4571**	2	TERMINAL-BLADE (14-GA TO 16-GA)	
		1	**097-7234**	2	TERMINAL-BLADE (18-GA TO 22-GA)	
		1	**9X-3401**	2	PIN-CONNECTOR (16-GA TO 18-GA)	
					—OR—	
		1	**126-1767**	2	PIN-CONNECTOR (14-GA TO 16-GA)	
B		1	**1P-0810**		TAPE-ELECTRICAL	
B		1	**329-3734**		TAPE-ELECTRICAL	
	19	1	**192-7810**	1	SPRING AS-AIR	
		1	**5P-4423**	1	ELBOW	
	20	1	**192-7812**	1	BOLT-SPECIAL	
	21	1	**192-7820**	3	BUMPER	
C	22	1	**314-5275**	1	SHAFT (OUTER)	
	25	1	**108-4311**	1	SCREW-MACHINE (3/8-16X0.75-IN)	
	26	1	**2K-4973**	8	LOCKNUT (3/8-16-THD)	
	27	1	**3J-4818**	1	LOCKWASHER	
M	28	1	**5C-2890**	3	NUT (M6X1-THD)	
D	29	1	**5P-6010**		TUBE (0.257-M)	
D	29A	1	**5P-6010**		TUBE (0.356-M)	
	30	1	**8T-9371**	1	BOLT (3/8-16X0.5-IN)	
E	31	1	**211-5358**		CONDUIT-FLEXIBLE (26.7-CM)	
E	31A	1	**211-5358**		CONDUIT-FLEXIBLE (35.6-CM)	
	34	1	**442-8151**	1	CLIP-CABLE	
	35	1	**3S-2093**	4	STRAP-CABLE	
					AVAILABLE REPAIR KIT(S):	
			192-7799	1	KIT-AIR VALVE (SEAT)	
					(INCLUDES KNOB ASSEMBLY)	
			212-7779	1	KIT-SHOCK ABSORBER (SUSPENSION SEAT)	
					(INCLUDES, LOCKNUTS, BALL, LOCKWASHER, STRAP, SPRING, CLAMP, ADJUSTERS, BOLTS, BEARINGS, WASHERS, SHOCK ABSORBER,	
					BRACKETS, KIT, CABLE ASSEMBLY & KNOB)	
			211-9294	1	KIT-TETHER (SEAT)	
					(INCLUDES TETHER)	
			213-5170	1	KIT-INDICATOR (SEAT ADJUSTMENT)	
					(INCLUDES BOLTS, NUTS, ROD, ARM & HOUSING)	
H			**212-7783**	1	KIT-PULLEY	

256-8768 **SUSPENSION GP-SEAT (*contd.*)** **i05711034**

NOTE	REF NO	GRAPHIC REF	PART NUMBER	QTY	PART NAME 1 2 3 4 5 6 (PRODUCT LEVEL)	SEE PAGE
					(INCLUDES PIN, PULLEY, RETAINING RING, SETSCREW & SPRING)	
			397-6405	1	KIT-SEAT AIR COMPRESSOR	
					(INCLUDES STRAP, SCREWS, COMPRESSOR AS, BRACKET-MOUNT & HARNESS ASSEMBLIES)	

B - USE AS REQUIRED
C - CHANGE FROM PREVIOUS TYPE
D - ORDER BY THE METER
E - ORDER BY THE CENTIMETER
H - KIT MARKED H SERVICES 212-7779 KIT-SHOCK ABSORBER
M - METRIC PART

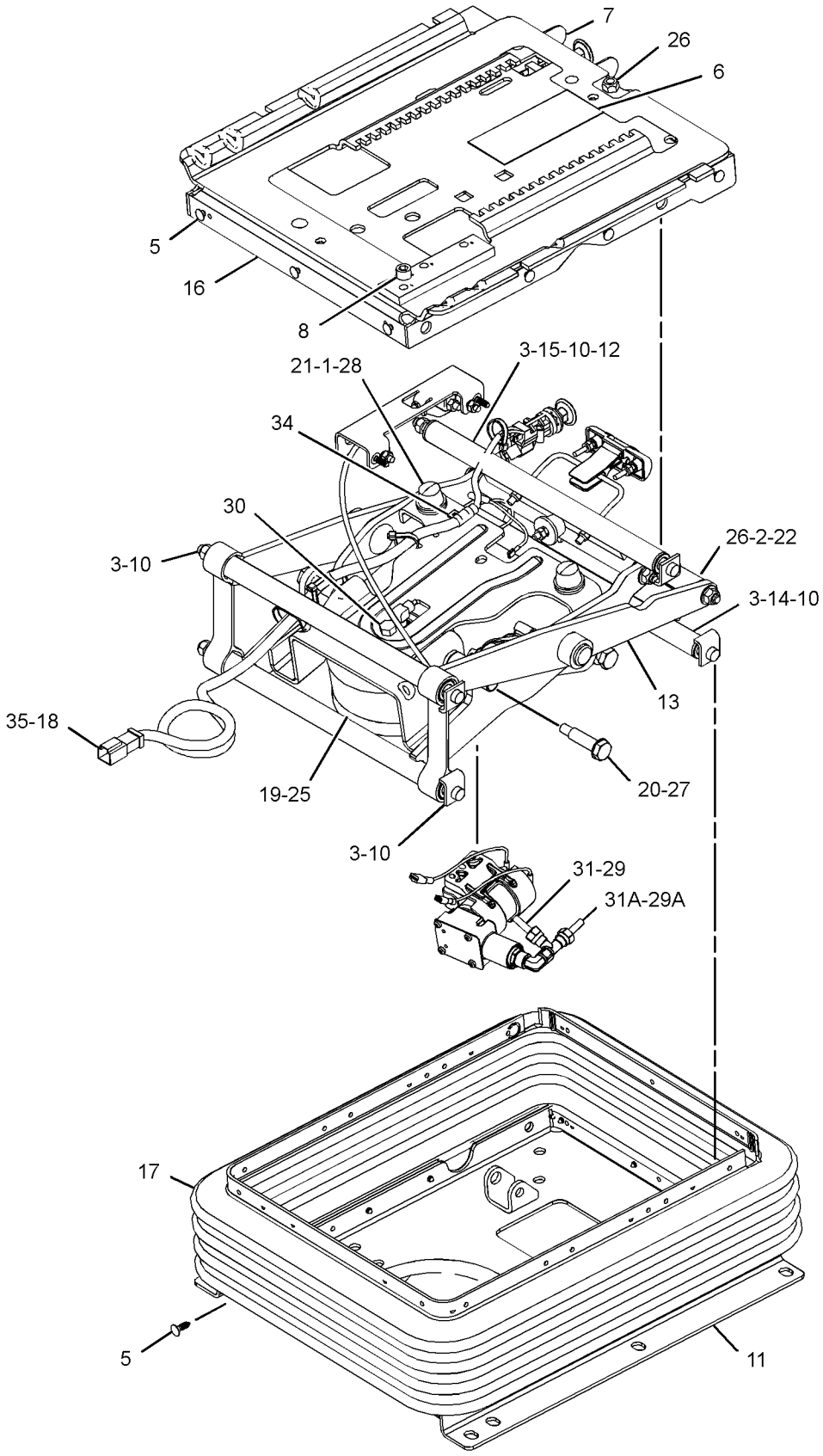

GRAPHIC #1 **<END>** g03637837

325-9410 TANK GP-WINDOW WASHER

S/N: E9Y1-UP

PART OF 310-2029 WIPER & WASHER GP-WINDOW

SMCS-7306 **i05257510**

NOTE	REF NO	GRAPHIC REF	PART NUMBER	QTY	PART NAME 1 2 3 4 5 6 (PRODUCT LEVEL)	SEE PAGE
	1	1	**6W-5698**	1	GROMMET	
	2	1	**416-0021**	3	PUMP AS-WASHER (24-VOLT)	
	3	1	**261-3345**	1	CONNECTOR	
	4	1	**267-8715**	3	GROMMET	
	5	1	**321-5236**	3	PLUG	
	6	1	**355-9823**	1	TANK AS-WINDOW WASHER	

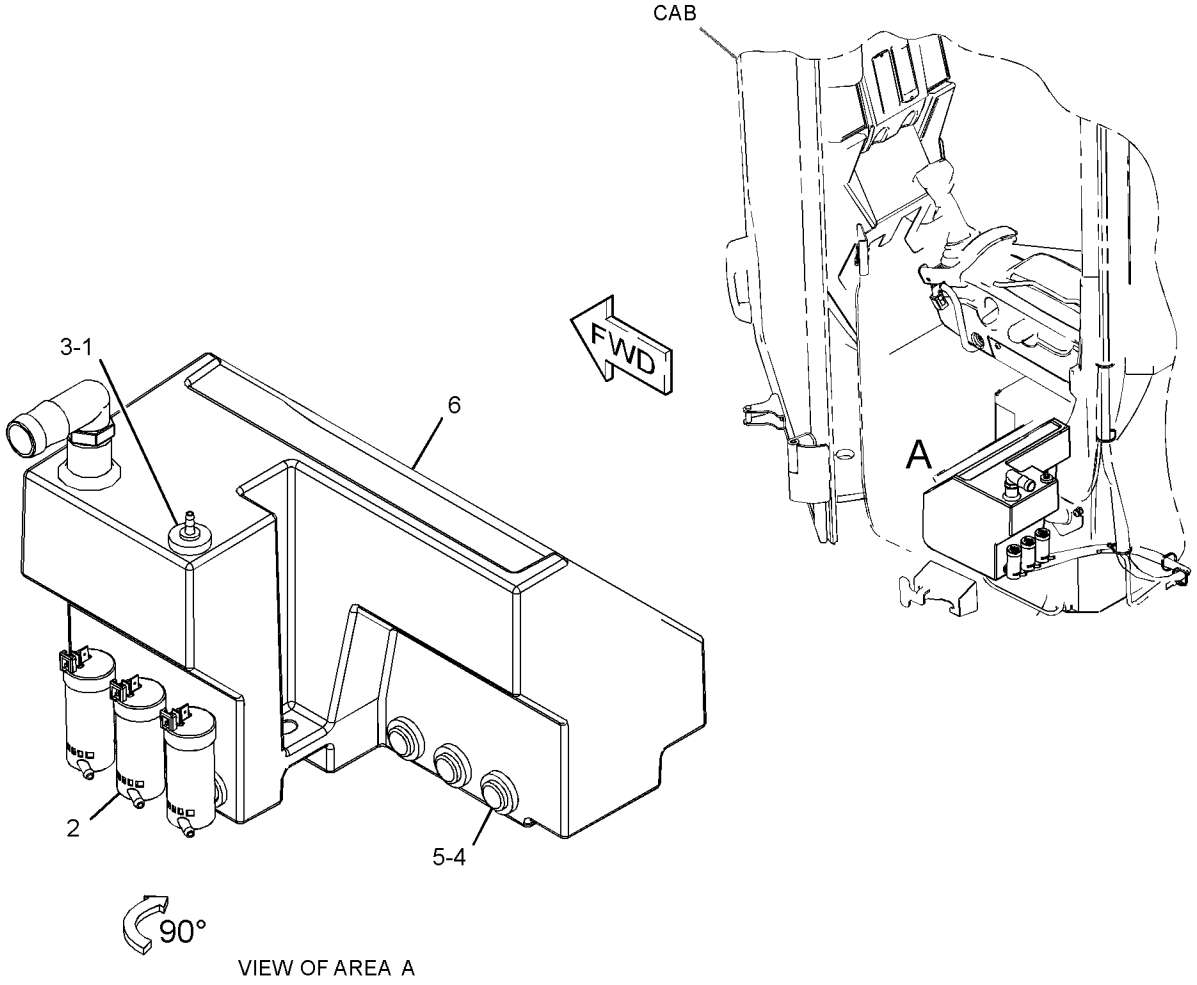

VIEW OF AREA A

GRAPHIC #1 **<END>** g03348559

OPERATOR STATION

457-8944 TRIM GP-CAB—HVAC

S/N: E9Y1-UP

PART OF 361-3120 CAB AR

SMCS-7329 **i06146764**

NOTE	REF NO	GRAPHIC REF	PART NUMBER	QTY	PART NAME 1 2 3 4 5 6 (PRODUCT LEVEL)	SEE PAGE
B	1	1,2	**1R-0622**	10	PLUG-BUTTON	
M	2	1	**172-8591**	7	NUT-SPRING (M6X1-THD)	
	3	1	**6V-8928**	1	HOOK-COAT	
	4	1	**8C-6368**	1	SCREW AS-WING	
	5	1	**8Y-6379**	1	KIT-HAMMER (CAB WINDOW)	
					(INCLUDES BRACKET & HAMMER)	
	6	1	**422-2152**	4	LOUVER AS-VENT	
B	7	2	**9U-8263**	1	COVER	
B	8	1	**144-4107**	2	FASTENER	
	9	1	**164-8474**	2	LOUVER AS-VENT	
	10	2	**169-2876**	1	FILM-IDENTIFICATION (POWER RECEPTACLE, 12-VOLT)	
	11	1	**171-4047**	4	LOUVER AS-VENT	
	12	2	**214-9186**	5	BUTTON	
	13	1	**294-1002**	1	PLENUM (LOWER, RH)	
	14	1	**294-1004**	1	PLENUM (LOWER, LH)	
	15	1	**297-4170**	1	INSULATION	
	16	2	**303-9456**	1	CUP HOLDER	
	17	1	**325-1258**	1	PLENUM (UPPER, RH)	
	18	1	**325-1260**	1	PLENUM (UPPER, LH)	
	19	2	**477-1251**	1	FILM-IDENTIFICATION (VIMS)	
	20	2	**330-3865**	1	PLATE AS	
M		2	**6V-9632**	2	NUT-WELD (M6X1-THD)	
M		2	**9X-2032**	1	NUT-WELD (M4X0.7-THD)	
		2	**419-3214**	6	BOSS	
	21	1,2	**334-6090**	6	STUD	
	22	1	**343-6499**	1	COVER AS (RH)	
M		1	**6V-9632**	1	NUT-WELD (M6X1-THD)	
M		1	**8T-3612**	6	NUT-WELD (M8X1.25-THD)	
M		1	**9X-2032**	1	NUT-WELD (M4X0.7-THD)	
	23	1	**343-6500**	1	COVER AS (LH)	
M		1	**6V-9632**	4	NUT-WELD (M6X1-THD)	
M		1	**8T-3612**	4	NUT-WELD (M8X1.25-THD)	
	24	1	**357-2261**	1	SUPPORT AS	
M		1	**6V-9632**	3	NUT-WELD (M6X1-THD)	
M		1	**8T-3490**	4	NUT-WELD (M10X1.5-THD)	
	25	1	**357-2270**	1	COVER AS	
	26	1	**361-0429**	1	PANEL (LH)	
	27	1	**368-8072**	1	PANEL (RH)	
B	28	2	**373-4446**	1	PLUG	
	29	2	**417-6775**	1	TRAY	
	30	1	**419-7776**	1	COVER AS	
M		1	**6V-9632**	2	NUT-WELD (M6X1-THD)	
M		1	**8T-3490**	2	NUT-WELD (M10X1.5-THD)	
	31	2	**419-8564**	2	STRAP	
	32	2	**424-8957**	1	PANEL-COVER	
	33	1	**436-7082**	1	TRAY	
	34	1	**437-8991**	1	NET AS	
	35	2	**438-8077**	1	BIN-STORAGE	
	36	1	**438-8078**	1	BIN-STORAGE	
	37	1,2	**439-9973**	6	CLIP	
	38	2	**441-7480**	1	PLATE AS	
M		2	**9R-2672**	1	BOSS-THREADED (M10X1.5-THD)	
M		2	**9R-2821**	1	BOSS (M10X1.5X15-MM)	
	39	1	**443-6428**	1	FLOOR MAT AS	
	40	2	**445-0466**	2	INSERT	
	41	2	**448-3613**	1	STRAP	
	42	2	**463-6185**	1	LINER	

457-8944 **TRIM GP-CAB (*contd.*)** **i06146764**

NOTE	REF NO	GRAPHIC REF	PART NUMBER	QTY	PART NAME 1 2 3 4 5 6 (PRODUCT LEVEL)	SEE PAGE
	43	1	**463-6186**	1	LINER	
	44	1	**104-2091**	16	SCREW-FLAT HEAD (6-20X0.5-IN)	
M	45	1	**111-4627**	6	SCREW-MACHINE (M6X1X30-MM)	
	46	2	**114-6658**	14	WASHER (6.5X17X1-MM THK)	
M	47	2	**195-0936**	6	INSERT-THREADED (M6X1-THD)	
	48	1,2	**212-6891**	6	RETAINER	
	49	1	**2R-2376**	1	WASHER (7X16X0.8-MM THK)	
	50	1	**2V-2015**	1	NUT-SPEED	
B	51	2	**2V-3726**	1	BUMPER	
M	52	1,2	**3E-8020**	8	SCREW-TRUSS HEAD (M6X1X25-MM)	
	53	2	**6K-3273**	1	RIVET-POP	
	54	1,2	**6V-5839**	4	WASHER (11X21X2.5-MM THK)	
M	55	1,2	**6V-8212**	4	BOLT (M10X1.5X16-MM)	
	56	1	**7X-0579**	8	WASHER-HARD (8.8X25.5X2-MM THK)	
M	57	2	**7X-2621**	2	BOLT (M10X1.5X12-MM)	
	58	2	**8C-9660**	6	WASHER (4.6X7.9X0.8-MM THK)	
B	59	1	**8R-3695**	1	GROMMET	
	60	1	**8T-4121**	6	WASHER-HARD (11X21X2.5-MM THK)	
M	61	1	**8T-4195**	6	BOLT (M10X1.5X30-MM)	
	62	2	**9N-1995**	3	RIVET-POP	
	63	1,2	**9X-2038**	9	WASHER (7X19X2-MM THK)	
M	64	2	**9X-2043**	6	SCREW-TRUSS HEAD (M6X1X14-MM)	
M	65	1,2	**9X-2044**	8	SCREW-TRUSS HEAD (M6X1X16-MM)	
M	66	1	**9X-2045**	6	SCREW-TRUSS HEAD (M6X1X20-MM)	
	67	2	**477-1252**	1	FILM-IDENTIFICATION (EMS)	
D	68	1	**5P-5927**		SEAL (0.9-M)	
D	69	1	**8T-6936**		SEAL (0.5-M EACH)	

B - USE AS REQUIRED
D - ORDER BY THE METER
M - METRIC PART

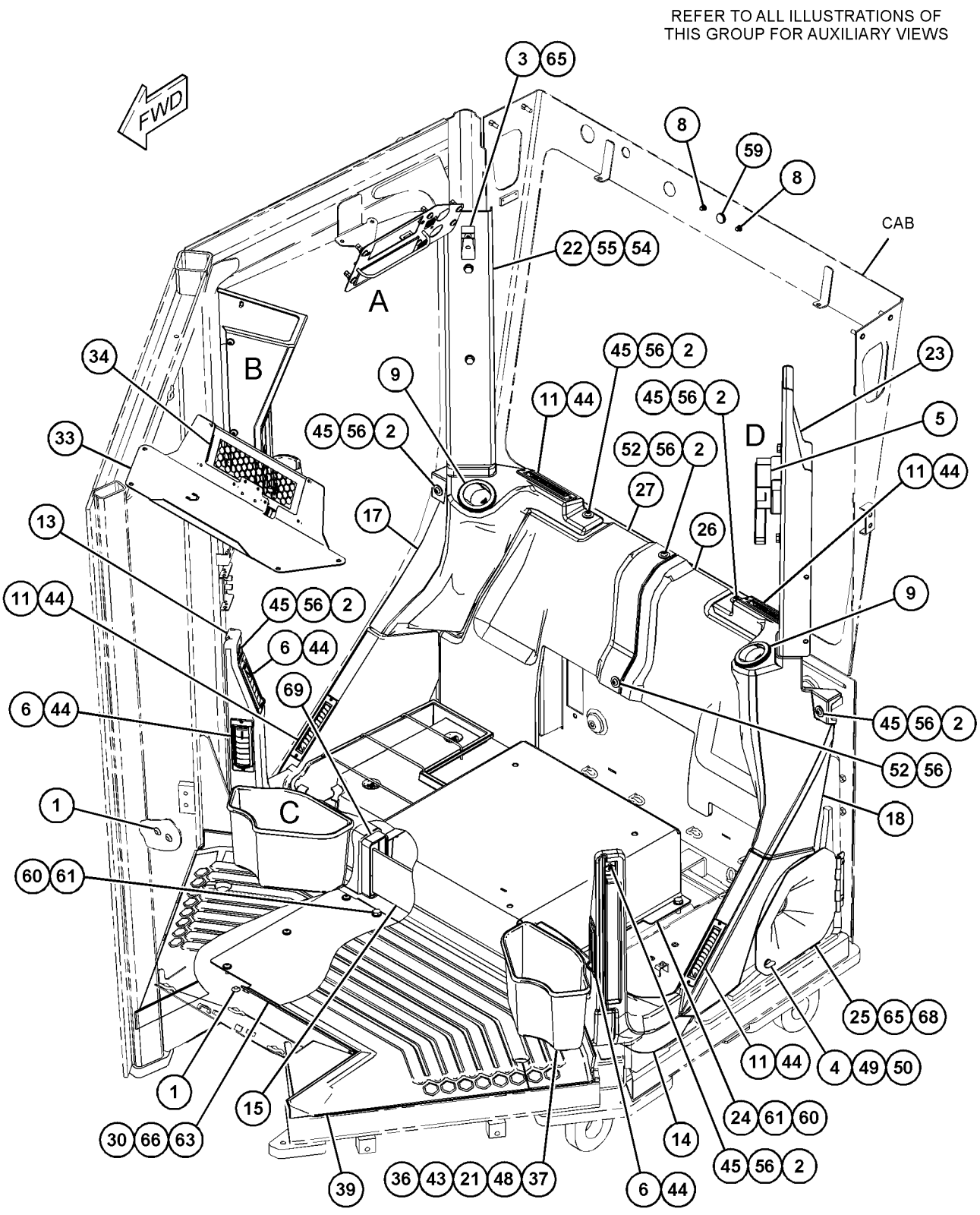

GRAPHIC #1 g03831994

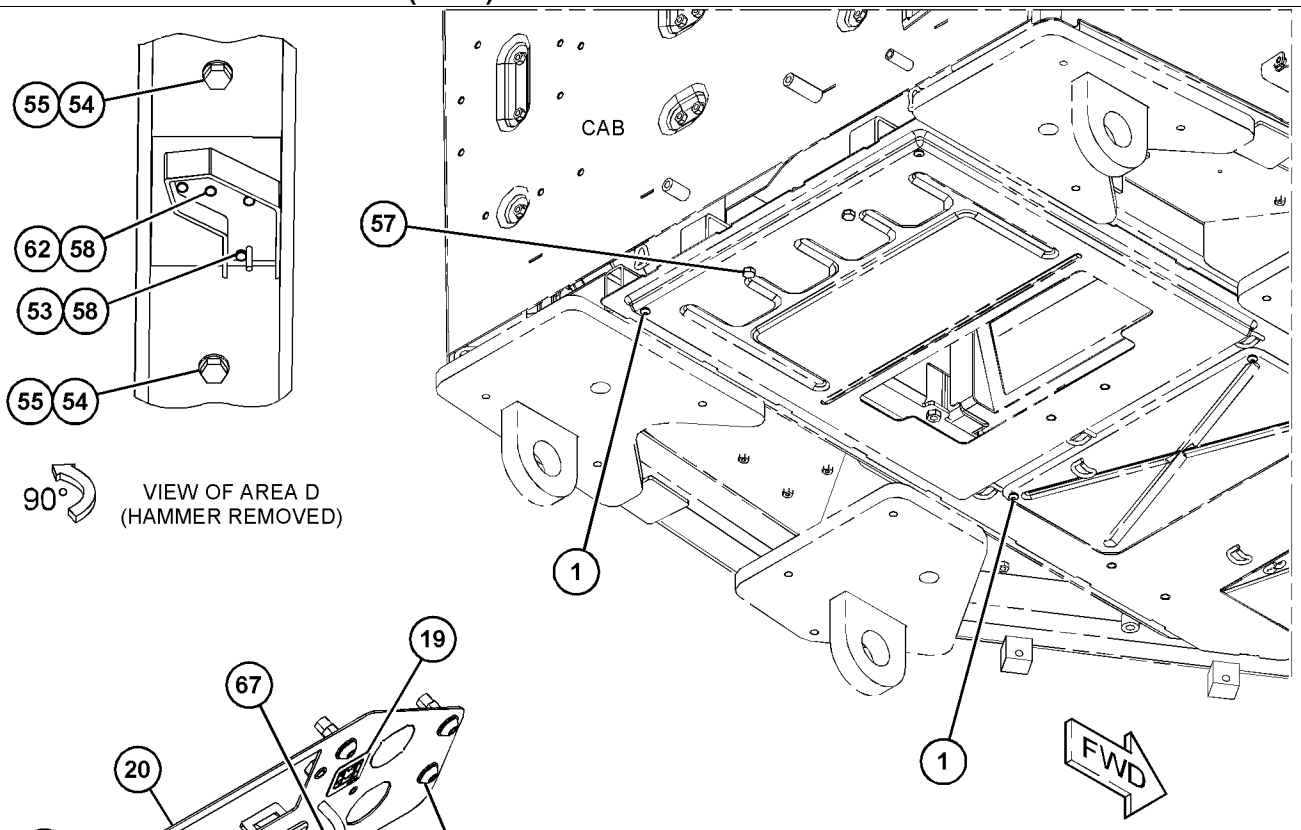

GRAPHIC #2 **<END>** g03831996

373-3993 WINDOW GP-CAB—FRONT

S/N: E9Y1-UP

PART OF 386-1309, 386-1310 CAB GP

AN ATTACHMENT

SMCS-7310 **i05080776**

NOTE	REF NO	GRAPHIC REF	PART NUMBER	QTY	PART NAME 1 2 3 4 5 6 (PRODUCT LEVEL)	SEE PAGE
	1	1	**294-1018**	2	BRACKET	
	2	1	**373-3994**	1	GLASS-FRONT	
	3	1	**114-6658**	6	WASHER (6.5X17X1-MM THK)	
M	4	1	**9X-2045**	6	SCREW-TRUSS HEAD (M6X1X20-MM)	
E	5	1	**294-1015**		SEAL (25-CM EACH)	
E	6	1	**294-1014**		SEAL-GLASS (178-CM)	

E - ORDER BY THE CENTIMETER
M - METRIC PART

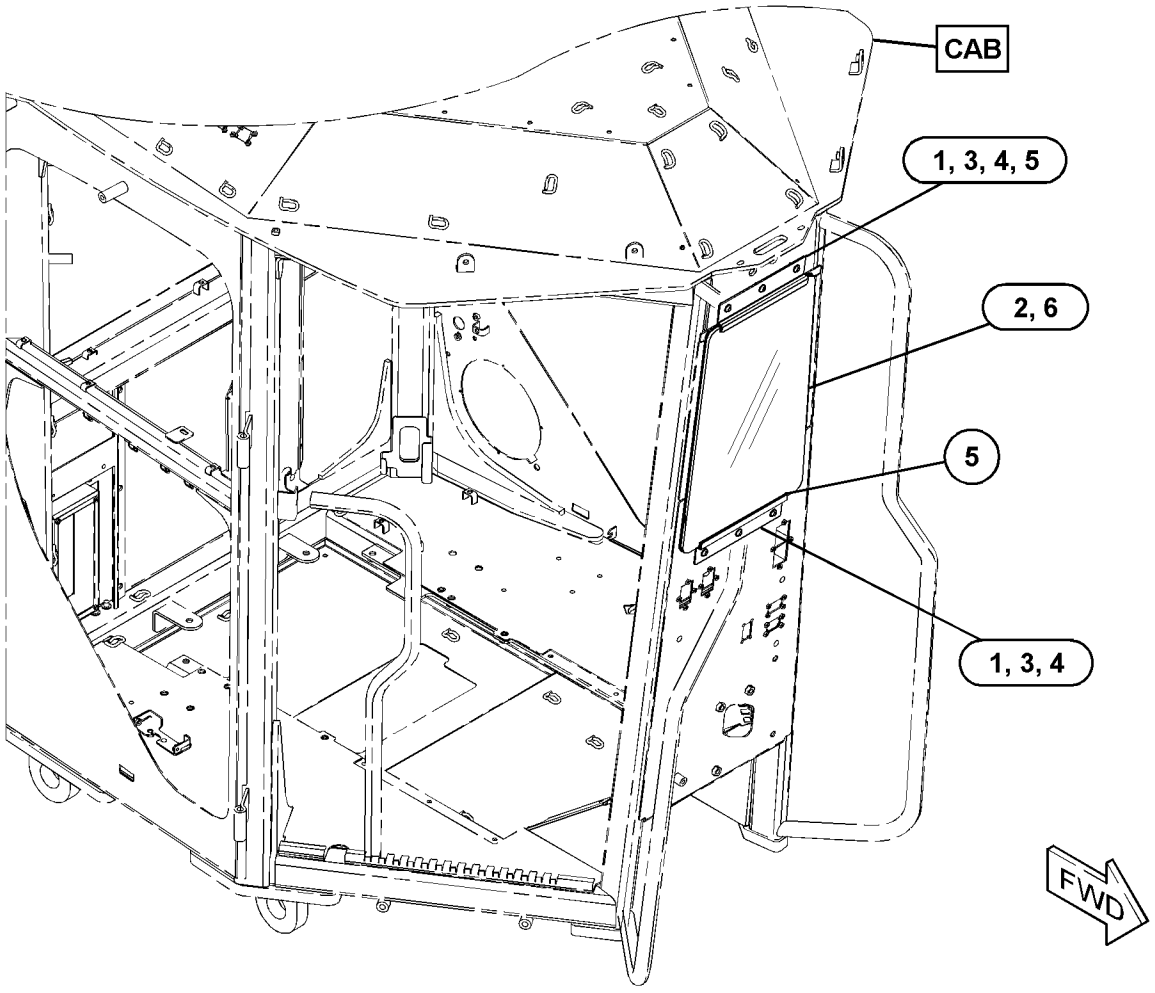

GRAPHIC #1 **<END>** g03326358

374-0714 WINDOW GP-CAB—FRONT

S/N: E9Y1-UP
HEATED
PART OF 386-1311, 442-8722 CAB GP
AN ATTACHMENT

SMCS-7310 **i06147008**

NOTE	REF NO	GRAPHIC REF	PART NUMBER	QTY	PART NAME 1 2 3 4 5 6 (PRODUCT LEVEL)	SEE PAGE
	1	1	**248-2841**	1	RELAY AS (24-VOLT) (HEATED WINDOW)	
	2	1	**294-1018**	2	BRACKET	
	3	1	**374-0715**	1	GLASS AS-FRONT (HEATED)	
		1	**126-1768**	2	SOCKET-CONNECTOR (14-GA TO 16-GA)	
		1	**155-2270**	1	KIT-CONNECTING PLUG (2-PIN)	
					(INCLUDES PLUG AS, WEDGE & INTERFACE SEAL)	
	4	1	**114-6658**	6	WASHER (6.5X17X1-MM THK)	
	5	1	**7K-1181**	1	STRAP-CABLE	
M	6	1	**9X-2045**	6	SCREW-TRUSS HEAD (M6X1X20-MM)	
E	7	1	**294-1015**		SEAL (25-CM EACH)	
E	8	1	**294-1014**		SEAL-GLASS (178-CM)	

E - ORDER BY THE CENTIMETER
M - METRIC PART

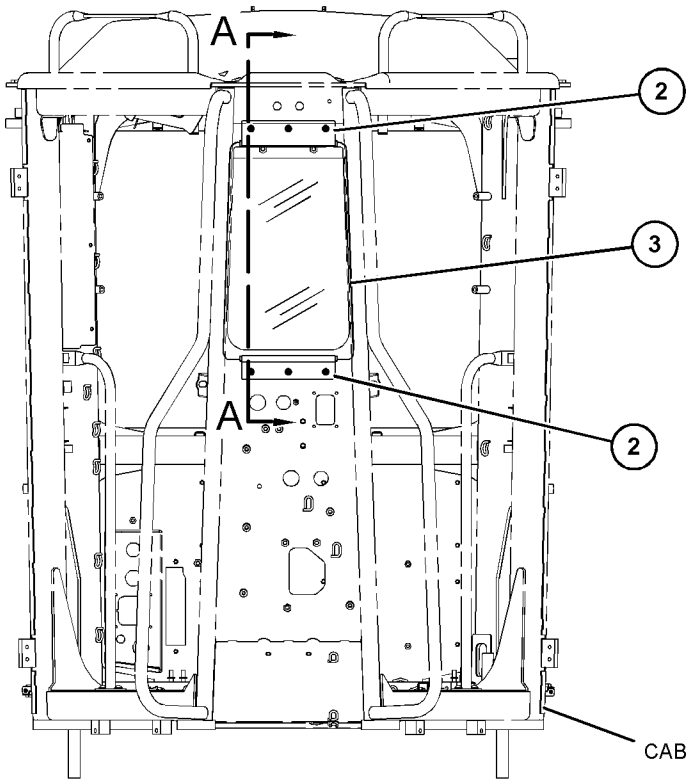

FRONT VIEW

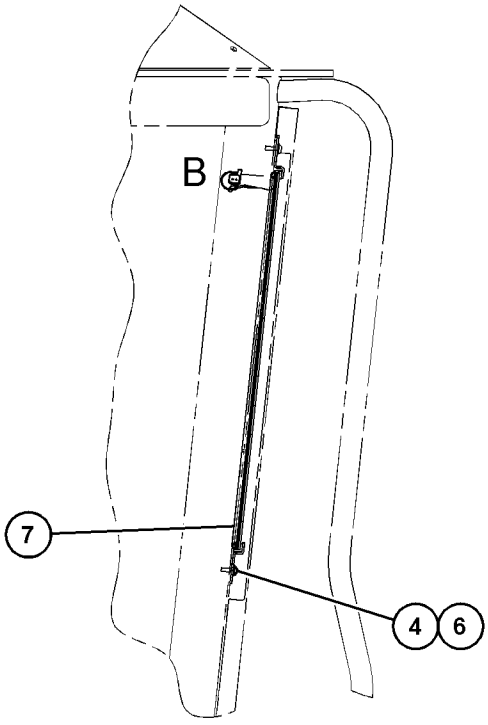

SECTION A-A

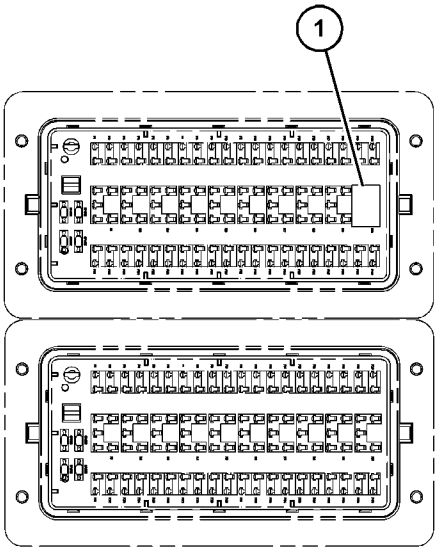

VIEW OF FUSE RELAY PANEL

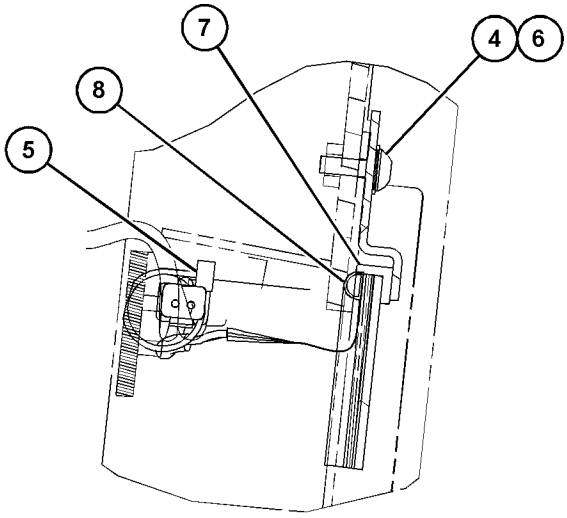

VIEW OF AREA B

GRAPHIC #1 **<END>** g03831228

381-8211 WINDOW GP-VENT

S/N: E9Y1-UP

PART OF 361-3120 CAB AR

SMCS-7310 **i05833350**

NOTE	REF NO	GRAPHIC REF	PART NUMBER	QTY	PART NAME 1 2 3 4 5 6 (PRODUCT LEVEL)	SEE PAGE
	1	1	**4B-5059**	2	WASHER (15X29.5X2.5-MM THK)	
	2	1	**341-8342**	2	LATCH AS-WINDOW	
					(EACH INCLUDES)	
		1	**8Y-8294**	1	LATCH AS-WINDOW	
		1	**335-2228**	1	PIN-GROOVED	
		1	**332-8658**	1	BRACKET	
	3	1	**376-9207**	2	VENT AS	
	4	1	**114-6658**	4	WASHER (6.5X17X1-MM THK)	
M	5	1	**3E-4302**	4	SCREW-FLAT HEAD (M4X0.7X10-MM)	
M	6	1	**3E-8020**	4	SCREW-TRUSS HEAD (M6X1X25-MM)	
E	7	1	**148-5355**		SEAL (42-CM EACH)	

E - ORDER BY THE CENTIMETER
M - METRIC PART

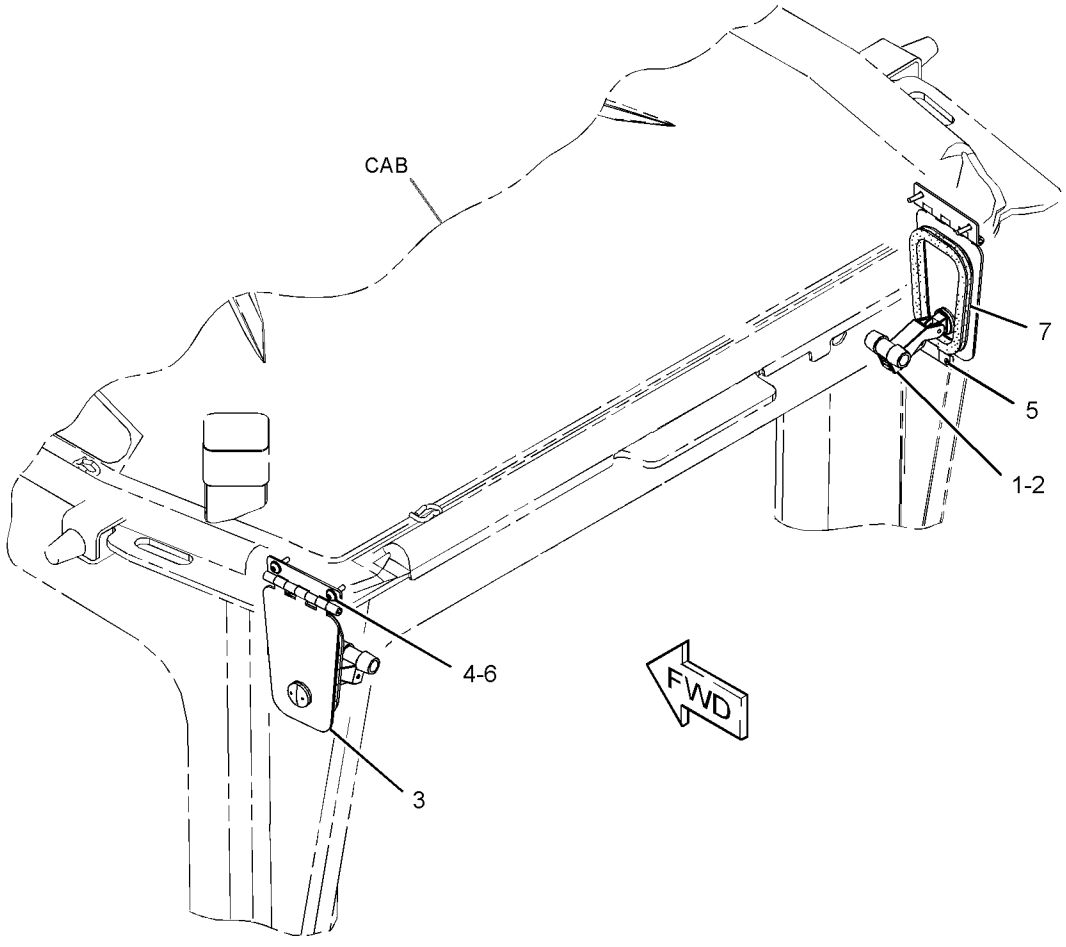

GRAPHIC #1 **<END>** g02724286

310-2029 WIPER & WASHER GP-WINDOW—FRONT

S/N: E9Y1-UP

PART OF 361-3120 CAB AR

SMCS-7305, 7306 **i05841635**

NOTE	REF NO	GRAPHIC REF	PART NUMBER	QTY	PART NAME 1 2 3 4 5 6 (PRODUCT LEVEL)	SEE PAGE
	1	1	**3S-2093**	15	STRAP-CABLE	
	2	1	**3V-3263**	2	CONNECTOR (HOSE)	
	3	1	**4E-8722**	3	NUT (RETAINER)	
	4	1	**6V-5853**	1	BLADE AS-WIPER (450-MM) (FRONT, UPPER)	
	5	1	**444-9544**	3	VALVE AS (WINDOW WASHER)	
	6	1	**8T-5400**	1	CONNECTOR AS	
	7	1	**8V-7162**	1	CABLE	
	8	1	**114-6658**	3	WASHER (6.5X17X1-MM THK)	
	9	1	**180-0149**	3	TUBE	
	10	1	**240-2172**	1	SPOUT	
	11	1	**248-2621**	1	ARM GP-WINDOW WIPER (FRONT, UPPER)	
		1	**136-3188**	2	CLIP	
		1	**136-3191**	1	NOZZLE AS-WASHER	
E		1	**194-5171**		HOSE (55-CM)	
	12	1	**276-3884**	1	CAP-VENTED (WASHER TANK)	
Y	13	1	**295-1120**	1	MOTOR GP-WINDOW WIPER	766
Y	14	1	*325-9410*	1	TANK GP-WINDOW WASHER	821
	15	1	**336-7699**	2	CLAMP	
	16	1	**7X-0579**	3	WASHER-HARD (8.8X25.5X2-MM THK)	
M	17	1	**9X-2044**	3	SCREW-TRUSS HEAD (M6X1X16-MM)	
M	18	1	**9X-2046**	3	SCREW-TRUSS HEAD (M6X1X35-MM)	
E	19	1	**8I-1362**		HOSE (33-CM)	
E	20	1	**144-0195**		HOSE (320-CM)	
E	20A	1	**144-0195**		HOSE (83-CM)	
E	20B	1	**144-0195**		HOSE (213-CM)	
E	20C	1	**144-0195**		HOSE (342-CM)	
E	20D	1	**144-0195**		HOSE (18-CM EACH)	
	21	1	**445-1508**	1	GASKET	

E - ORDER BY THE CENTIMETER
M - METRIC PART
Y - SEPARATE ILLUSTRATION

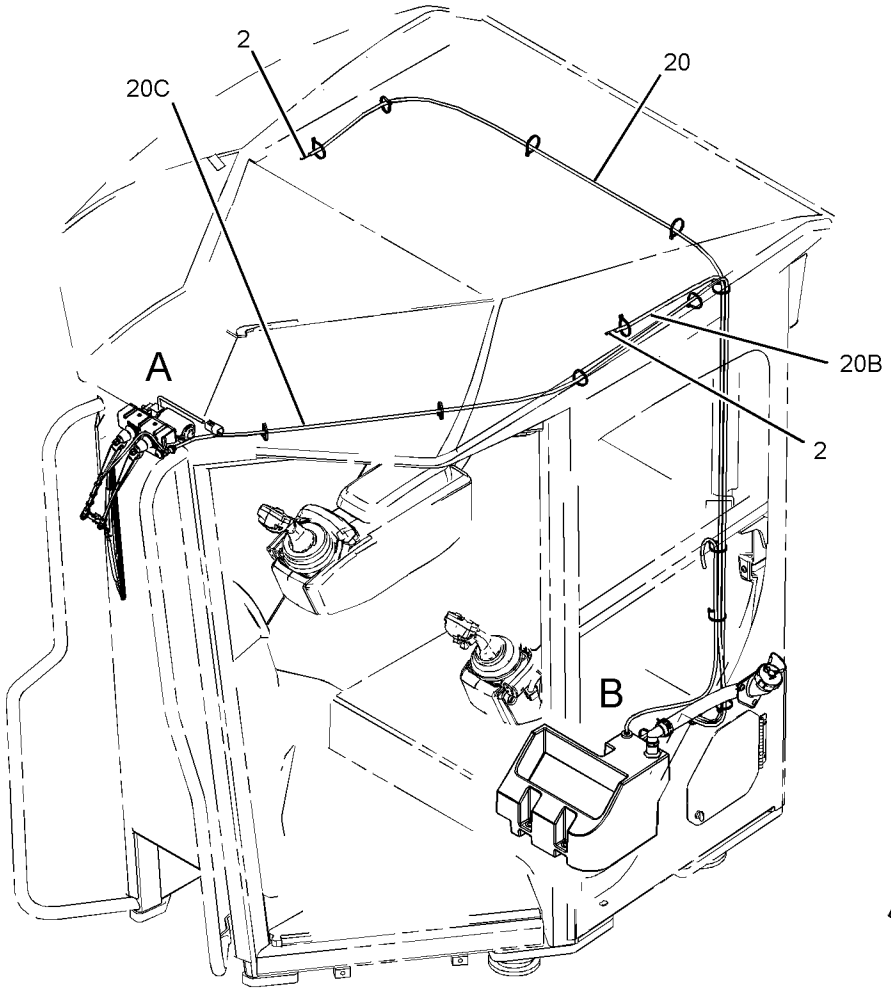

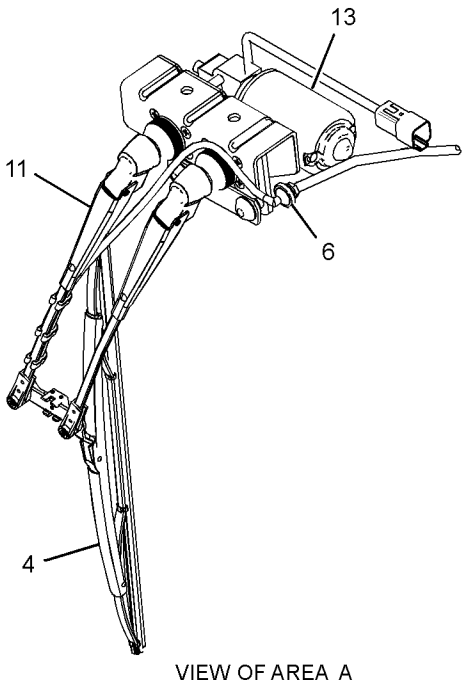

VIEW OF AREA A

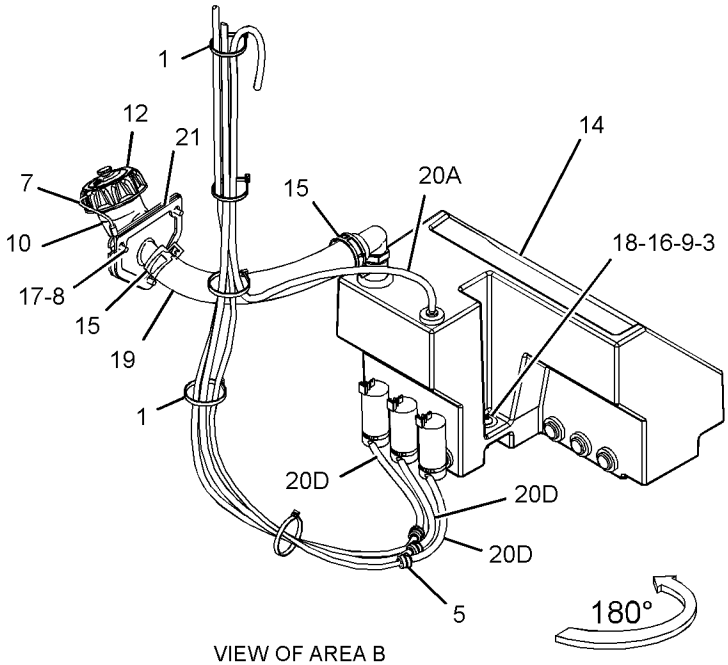

VIEW OF AREA B

GRAPHIC #1 **<END>** g03694235

310-2041 WIPER GP-WINDOW—CAB

S/N: E9Y1-UP

PART OF 361-3120 CAB AR

SMCS-7305 **i04501810**

NOTE	REF NO	GRAPHIC REF	PART NUMBER	QTY	PART NAME 1 2 3 4 5 6 (PRODUCT LEVEL)	SEE PAGE
	1	1	**110-7524**	6	BUTTON	
	2	1	**214-9186**	2	BUTTON	
	3	1	**233-3235**	1	GLASS-REAR	
	4	1	**235-6175**	1	HARNESS AS-WINDOW WIPER	
		1	**102-8804**	1	KIT-RECEPTACLE (4-PIN)	
					(INCLUDES RECEPTACLE AS & WEDGE)	
		1	**8T-8730**	2	SOCKET-CONNECTOR (16-GA TO 18-GA)	
		1	**9W-0844**	4	SOCKET-CONNECTOR (14-GA TO 16-GA)	
		1	**9W-0852**	4	PIN-CONNECTOR (14-GA TO 16-GA)	
E		1	**125-7875**		TUBE-HEAT SHRINK (7.44-MM DIA) (10-CM)	
		1	**155-2260**	2	KIT-CONNECTING PLUG (3-PIN)	
					(EACH KIT INCLUDES PLUG AS, WEDGE & INTERFACE SEAL)	
	5	1	**300-1874**	1	GLASS (RH)	
	6	1	**300-1875**	1	GLASS (LH)	
Y	7	1	*330-3867*	1	WIPER GP-WINDOW	833
E	8	1	**3E-3000**		SEAL (398-CM EACH)	

E - ORDER BY THE CENTIMETER
Y - SEPARATE ILLUSTRATION

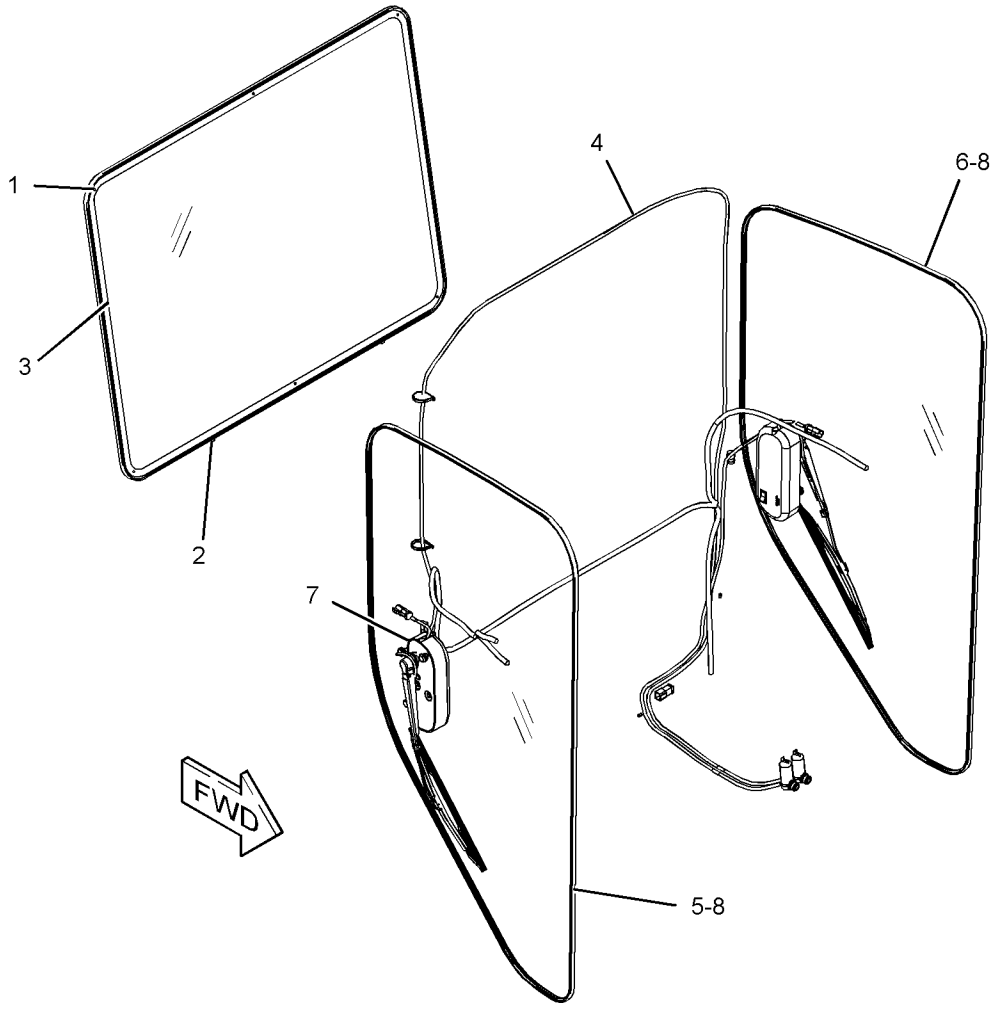

GRAPHIC #1 **<END>** g02701898

330-3867 WIPER GP-WINDOW

S/N: E9Y1-UP

PART OF 310-2041 WIPER GP-WINDOW

SMCS-7305 **i05711549**

NOTE	REF NO	GRAPHIC REF	PART NUMBER	QTY	PART NAME 1 2 3 4 5 6 (PRODUCT LEVEL)	SEE PAGE
B	1	1	**3S-2093**	4	STRAP-CABLE	
	2	1	**6V-5851**	2	BLADE AS-WIPER (400-MM)	
	3	1	**444-9544**	2	VALVE AS	
	4	1	**8T-5400**	2	CONNECTOR AS	
	5	1	**416-0021**	2	PUMP AS-WASHER (24-VOLT)	
	6	1	**260-2579**	1	ARM AS-WIPER (LH)	
E		1	**194-5171**		HOSE (33-CM)	
		1	**305-9194**	1	NOZZLE AS-WASHER	
	7	1	**270-4884**	1	ARM AS-WIPER (RH)	
E		1	**194-5171**		HOSE (33-CM)	
		1	**305-9195**	1	NOZZLE AS-WASHER	
	8	1	**295-4243**	2	WASHER-RUBBER	
	9	1	**451-0115**	1	MOTOR GP-WINDOW WIPER (RH)	
	10	1	**451-0116**	1	MOTOR GP-WINDOW WIPER (LH)	
					(EACH MOTOR GP INCLUDES)	
		1	**3F-9556**	1	LOCKWASHER	
M		1	**5C-7261**	1	NUT (M8X1.25-THD)	
		1	**102-8803**	1	KIT-RECEPTACLE (3-PIN)	
					(INCLUDES RECEPTACLE AS & WEDGE)	
		1	**8T-8729**	3	PIN-CONNECTOR (16-GA TO 18-GA)	
E	11	1	**144-0195**		HOSE (393-CM)	
E	11A	1	**144-0195**		HOSE (123-CM)	
E	11B	1	**144-0195**		HOSE (18-CM EACH)	

B - USE AS REQUIRED
E - ORDER BY THE CENTIMETER
M - METRIC PART

330-3867 **WIPER GP-WINDOW (*contd.*)** **i05711549**

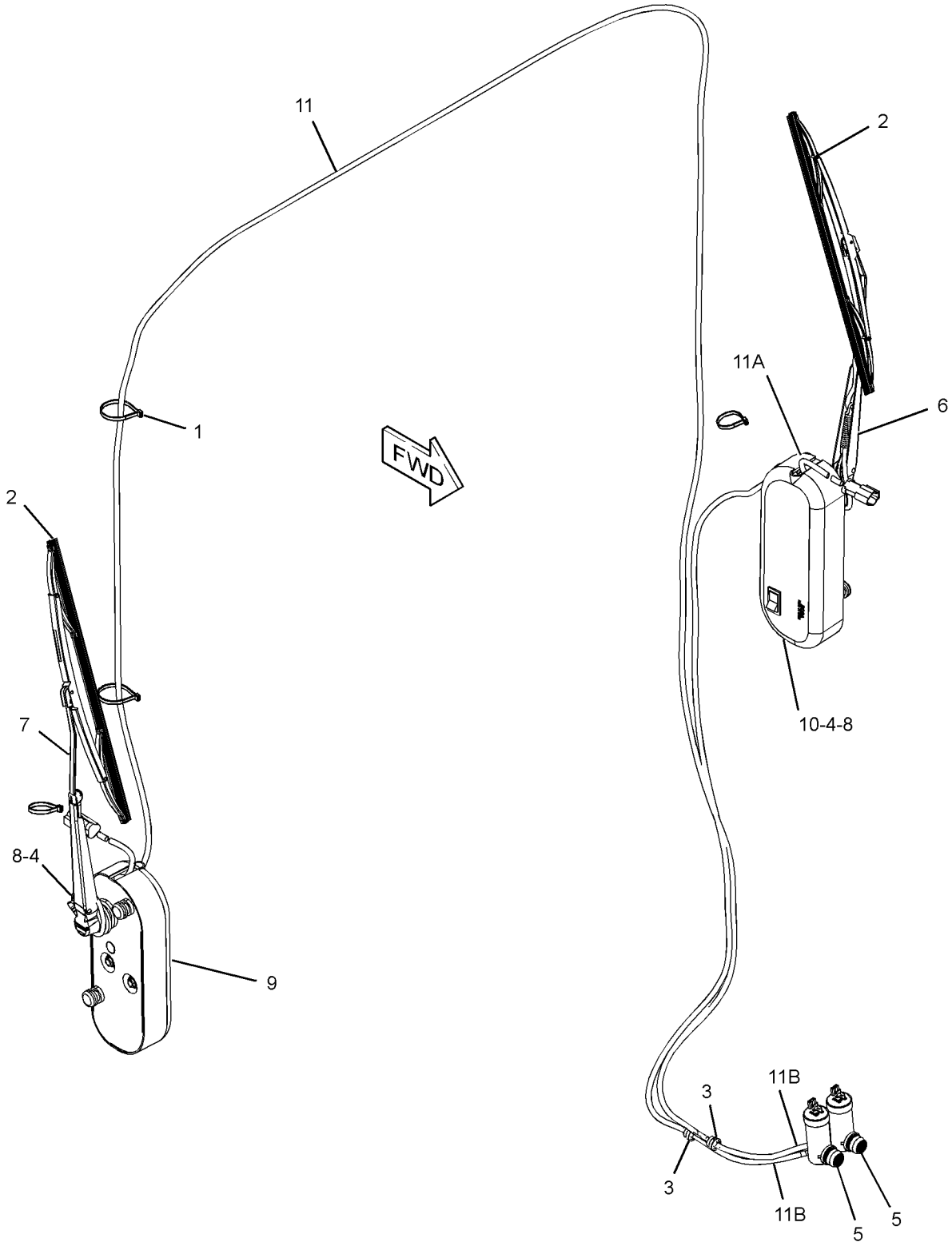

GRAPHIC #1 **<END>** g03635176

330-3868 WIPER GP-WINDOW–REAR

S/N: E9Y1-UP

PART OF 361-3120 CAB AR

SMCS-7305 **i06057318**

NOTE	REF NO	GRAPHIC REF	PART NUMBER	QTY	PART NAME 1 2 3 4 5 6 (PRODUCT LEVEL)	SEE PAGE
	1	1	**444-9544**	1	VALVE AS (WINDOW WASHER)	
	2	1	**8T-5400**	1	CONNECTOR AS	
	3	1	**112-5869**	1	ARM AS-WINDOW WIPER	
E		1	**194-5171**		HOSE (43-CM)	
		1	**305-9192**	1	NOZZLE AS-WASHER	
	4	1	**146-6433**	1	BLADE AS-WIPER (500-MM)	
	5	1	**416-0021**	1	PUMP AS-WASHER (24-VOLT)	
Y	6	1	**275-7764**	1	SWITCH GP-WIPER (24-VOLT, INTERMITTENT)	273
CY	7	1	**457-3648**	1	MOTOR GP-WINDOW WIPER	767
E	8	1	**144-0195**		HOSE (276-CM)	
E	8A	1	**144-0195**		HOSE (18-CM)	

C - CHANGE FROM PREVIOUS TYPE
E - ORDER BY THE CENTIMETER
Y - SEPARATE ILLUSTRATION

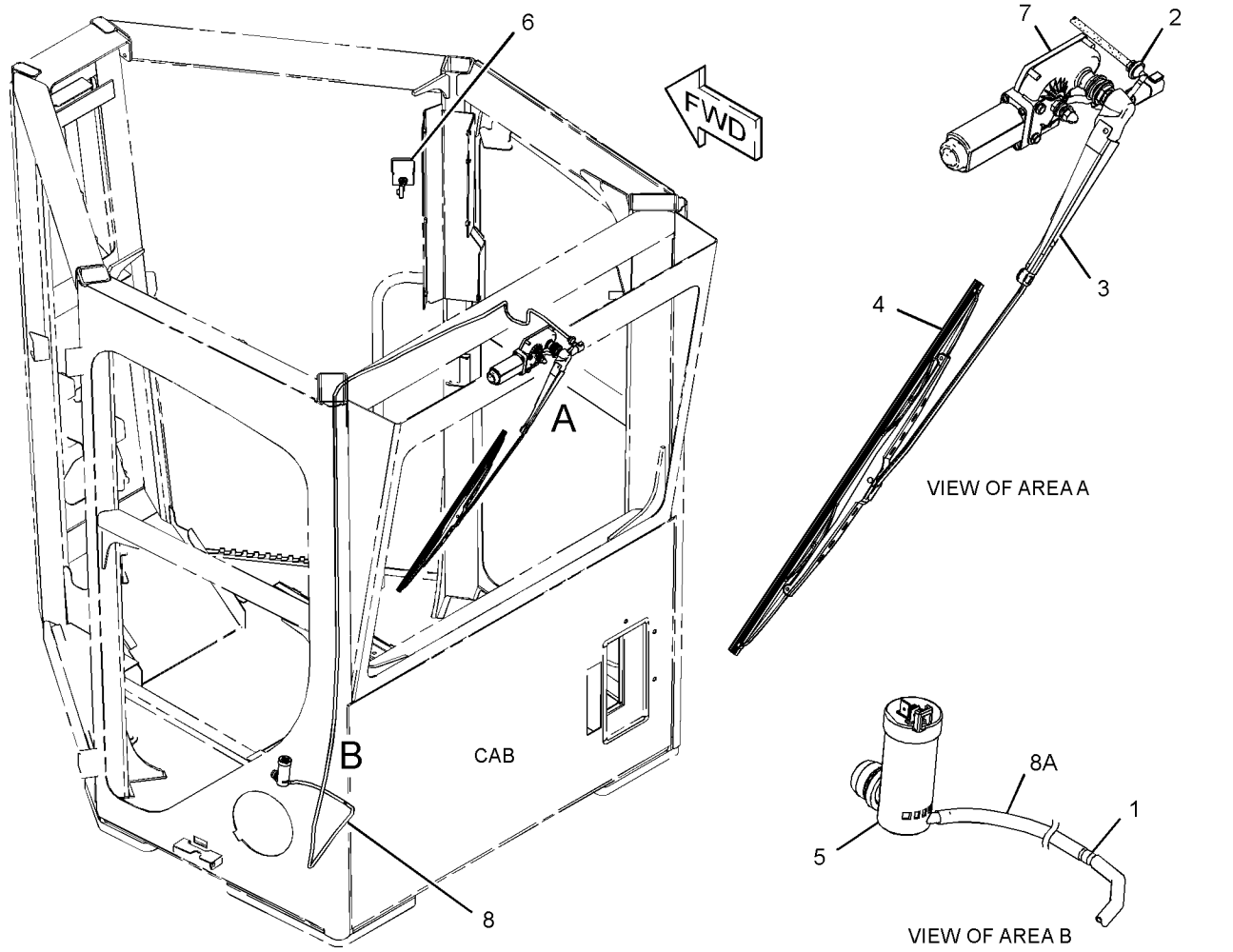

GRAPHIC #1 **<END>** g03351889

357-9652 WIPER GP-WINDOW—DOOR, RH

S/N: E9Y1-UP

PART OF 357-9201, 357-9203, 388-6622, 442-7348 DOOR GP-CAB

AN ATTACHMENT

SMCS-7305 **i04912153**

NOTE	PART NUMBER	QTY	PART NAME 1 2 3 4 5 6 (PRODUCT LEVEL)	SEE PAGE
	256-9448	1	ARM GP-WINDOW WIPER (UPPER)	
E	**194-5171**		HOSE (33-CM)	
	305-9195	1	NOZZLE AS-WASHER	
	295-1117	1	ARM GP-WINDOW WIPER (LOWER)	
E	**194-5171**		HOSE (29-CM)	
	305-9195	1	NOZZLE AS-WASHER	
	357-9654	1	LINKAGE GP-WIPER	
	206-5823	2	CAP	
	3F-9556	2	LOCKWASHER	
M	**5C-7261**	2	NUT (M8X1.25-THD)	
	389-2249	1	MOTOR GP-WINDOW WIPER (24-VOLT, 2-SPEED)	
	8T-8737	1	PLUG-SEAL	
	102-8805	1	KIT-RECEPTACLE (6-PIN)	
			(INCLUDES RECEPTACLE AS & WEDGE)	
	8T-8729	5	PIN-CONNECTOR (16-GA TO 18-GA)	
	5C-8811	1	BLADE AS-WIPER (500-MM)	
	6V-5851	1	BLADE AS-WIPER (400-MM)	
	8T-5400	2	CONNECTOR AS	
	7Y-3474	1	VALVE AS-CHECK (WINDOW WASHER)	
M	**8T-4970**	3	BOLT (M6X1X14-MM)	
E	**144-0195**		HOSE (40-CM)	
	3F-9556	1	LOCKWASHER	
	8T-0087	3	LOCKWASHER	
M	**5C-7261**	1	NUT (M8X1.25-THD)	
	3S-2093	3	STRAP-CABLE	
	2U-4504	1	TEE	

E - ORDER BY THE CENTIMETER
M - METRIC PART

<END>

357-9653 WIPER GP-WINDOW—DOOR, LH

S/N: E9Y1-UP
PART OF 357-9202, 357-9204 DOOR GP-CAB
AN ATTACHMENT

SMCS-7305 **i04912155**

NOTE	PART NUMBER	QTY	PART NAME 1 2 3 4 5 6 (PRODUCT LEVEL)	SEE PAGE
	295-1118	1	ARM GP-WINDOW WIPER (UPPER)	
	240-8666	3	CLIP	
E	**194-5171**		HOSE (58-CM)	
	8T-1118	1	NOZZLE AS-WASHER	
	295-1119	1	ARM GP-WINDOW WIPER (LOWER)	
	240-8666	3	CLIP	
E	**194-5171**		HOSE (60-CM)	
	8T-1118	1	NOZZLE AS-WASHER	
	357-9655	1	LINKAGE GP-WIPER (LH)	
	3F-9556	2	LOCKWASHER	
M	**5C-7261**	2	NUT (M8X1.25-THD)	
	206-5823	2	CAP	
	389-2250	1	MOTOR GP-WINDOW WIPER (24-VOLT, 2-SPEED)	
	8T-8737	1	PLUG-SEAL	
	102-8805	1	KIT-RECEPTACLE (6-PIN)	
			(INCLUDES RECEPTACLE AS & WEDGE)	
	8T-8729	5	PIN-CONNECTOR (16-GA TO 18-GA)	
	5C-8811	1	BLADE AS-WIPER (500-MM)	
	6V-5851	1	BLADE AS-WIPER (400-MM)	
	8T-5400	2	CONNECTOR AS	
	7Y-3474	1	VALVE AS-CHECK (WINDOW WASHER)	
M	**8T-4970**	3	BOLT (M6X1X14-MM)	
E	**144-0195**		HOSE (40-CM)	
	3F-9556	1	LOCKWASHER	
	8T-0087	3	LOCKWASHER	
M	**5C-7261**	1	NUT (M8X1.25-THD)	
	3S-2093	3	STRAP-CABLE	
	2U-4504	1	TEE	

E - ORDER BY THE CENTIMETER
M - METRIC PART

<END>

257-3466 BIT GP-END

S/N: E9Y1-UP

PART OF 462-6461, 462-6462 MOLDBOARD GP

AN ATTACHMENT

SMCS-6804 **i02608536**

NOTE	REF NO	GRAPHIC REF	PART NUMBER	QTY	PART NAME 1 2 3 4 5 6 (PRODUCT LEVEL)	SEE PAGE
	1	1	**8E-5530**	2	BIT-END (MOLDBOARD)	
	2	1	**1J-6762**	4	BOLT-PLOW (3/4-10X3-IN)	
	3	1	**2J-3506**	10	NUT-FULL (3/4-10-THD)	
	4	1	**5F-8933**	6	BOLT-PLOW (3/4-10X3.75-IN)	

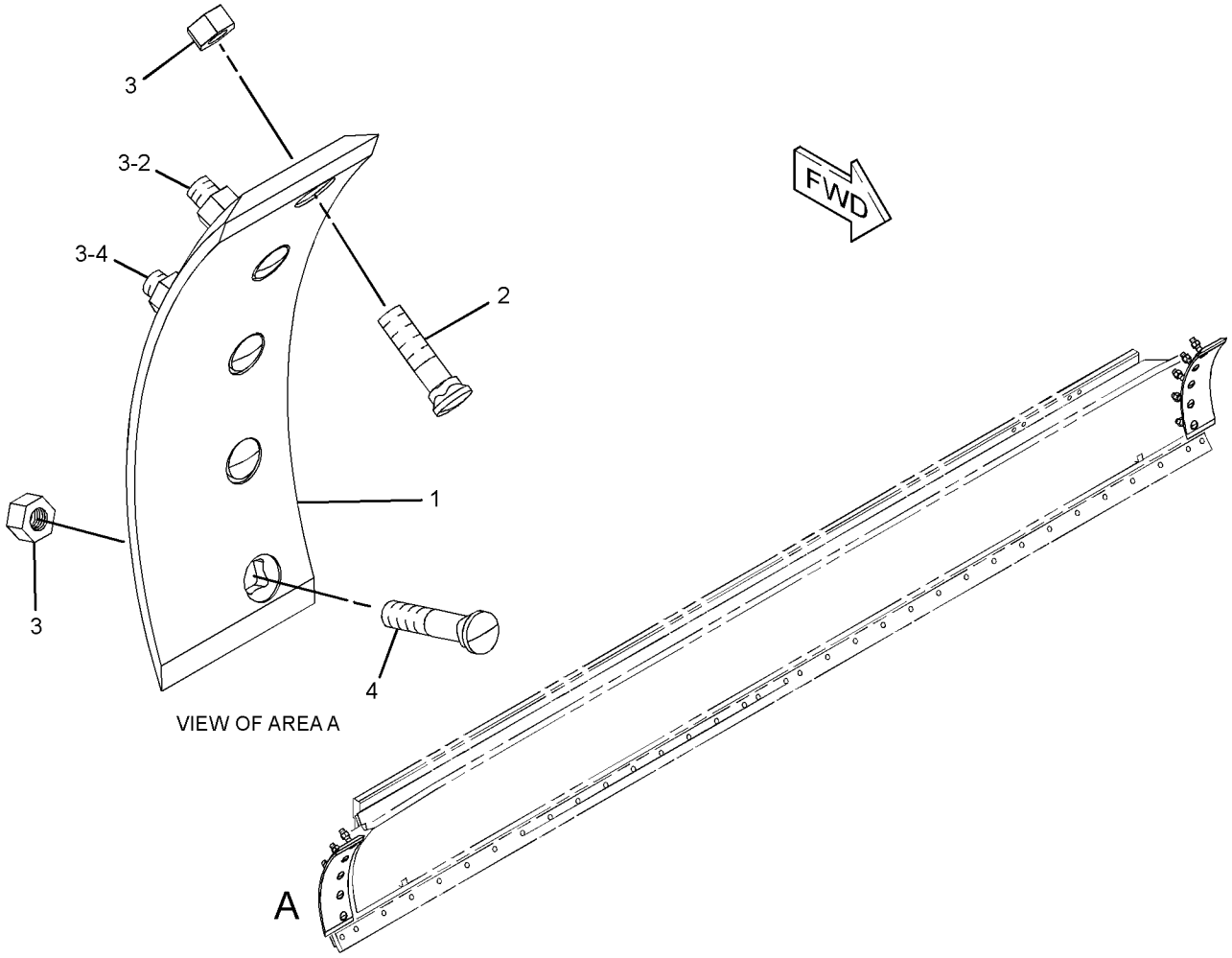

GRAPHIC #1 **<END>** g01312153

257-3462 EDGE GP-CUTTING—CURVED

S/N: E9Y1-UP
25-MM THK
CANNOT BE USED WITH 257-3464—PAGE: 840
PART OF 462-6461 MOLDBOARD GP
AN ATTACHMENT

SMCS-6801 **i02579612**

NOTE	REF NO	GRAPHIC REF	PART NUMBER	QTY	PART NAME 1 2 3 4 5 6 (PRODUCT LEVEL)	SEE PAGE
	1	1	**4T-2236**	2	EDGE-CUTTING	
	2	1	**2J-3506**	34	NUT-FULL (3/4-10-THD)	
	3	1	**5F-8933**	14	BOLT-PLOW (3/4-10X3.75-IN)	
	4	1	**5J-4771**	20	BOLT-PLOW (3/4-10X2.75-IN)	

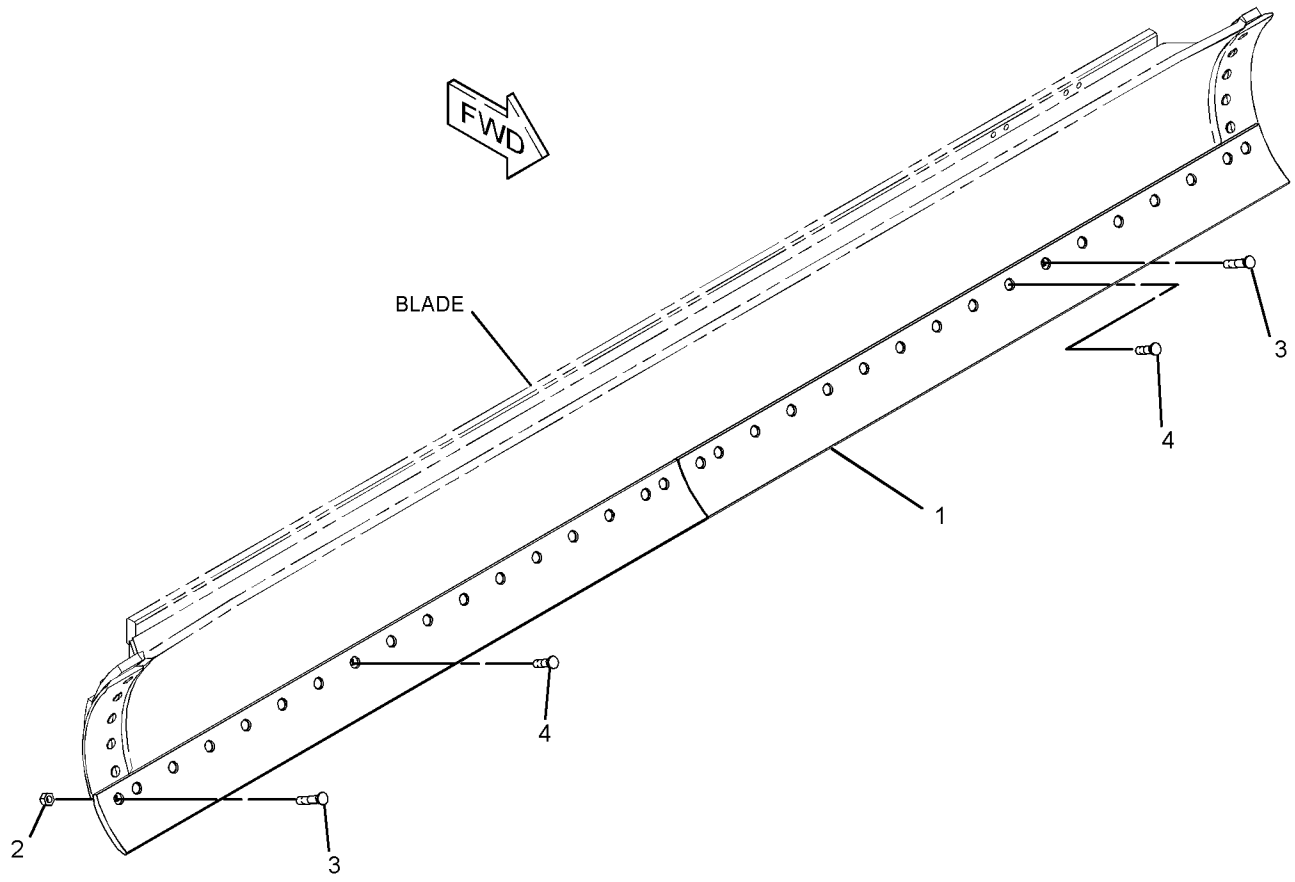

GRAPHIC #1 **<END>** g01316455

257-3464 EDGE GP-CUTTING—STRAIGHT

S/N: E9Y1-UP
35-MM THK
CANNOT BE USED WITH 257-3462—PAGE: 839
PART OF 462-6462 MOLDBOARD GP
AN ATTACHMENT

SMCS-6801 **i02579613**

NOTE	REF NO	GRAPHIC REF	PART NUMBER	QTY	PART NAME 1 2 3 4 5 6 (PRODUCT LEVEL)	SEE PAGE
	1	1	**1J-6762**	20	BOLT-PLOW (3/4-10X3-IN)	
	2	1	**2J-3506**	34	NUT-FULL (3/4-10-THD)	
	3	1	**4T-8317**	2	EDGE-CUTTING	
	4	1	**5F-8933**	14	BOLT-PLOW (3/4-10X3.75-IN)	

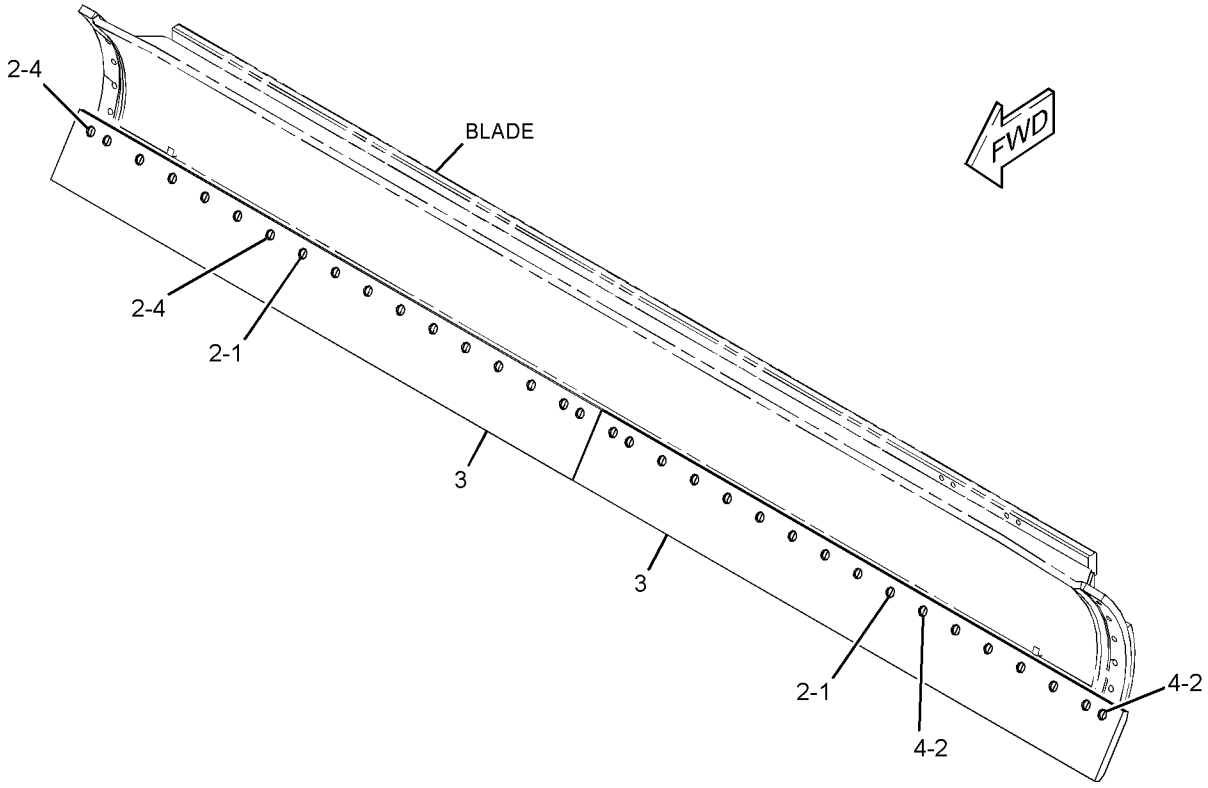

GRAPHIC #1 **<END>** g01311733

281-9455 EXTENSION GP-BLADE–LH

S/N: E9Y1-UP

AN ATTACHMENT

SMCS-6173 **i02655491**

NOTE	REF NO	GRAPHIC REF	PART NUMBER	QTY	PART NAME 1 2 3 4 5 6 (PRODUCT LEVEL)	SEE PAGE
	1	1	**3G-2165**	1	EDGE-CUTTING	
	2	1	**110-5334**	3	SPACER (3-MM THK)	
	3	1	**231-4714**	1	PLATE AS (LH)	
	4	1	**265-6745**	1	BLOCK	
	5	1	**265-6746**	1	PLATE AS (LH)	
	6	1	**281-9458**	1	EXTENSION AS	
		1	**133-7524**	1	EXTENSION-LH	
	7	1	**1J-0962**	8	BOLT-PLOW (3/4-10X4.25-IN)	
	8	1	**2J-3506**	15	NUT-FULL (3/4-10-THD)	
	9	1	**5F-8933**	5	BOLT-PLOW (3/4-10X3.75-IN)	
	10	1	**5J-4773**	2	BOLT-PLOW (3/4-10X2.5-IN)	
	11	1	**7X-0365**	2	BOLT (3/4-10X1.5-IN)	
	12	1	**8T-4994**	6	WASHER-HARD (20X36.5X3.5-MM THK)	

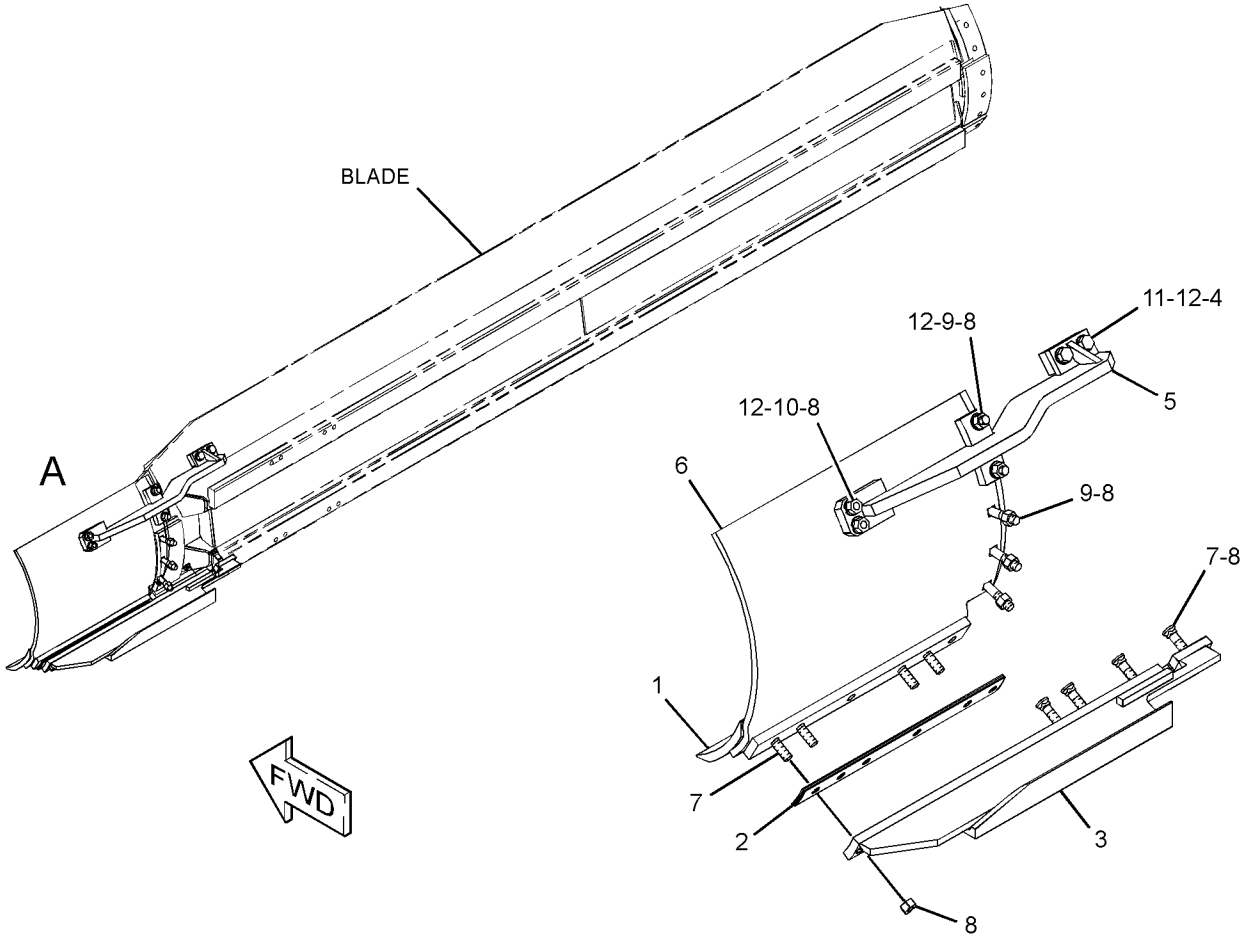

VIEW OF AREA A

GRAPHIC #1 **<END>** g01337023

456-4448 EXTENSION GP-BLADE—RH

S/N: E9Y1-UP

FIELD INSTALLATION

SMCS-6173 **i06049747**

NOTE	REF NO	GRAPHIC REF	PART NUMBER	QTY	PART NAME 1 2 3 4 5 6 (PRODUCT LEVEL)	SEE PAGE
	1	1	**3G-2166**	1	EDGE-CUTTING	
	2	1	**133-7523**	1	EXTENSION (RH)	
	3	1	**265-6745**	1	BLOCK	
	4	1	**265-6747**	1	PLATE AS (RH)	
	5	1	**456-4446**	1	ANGLE AS (RH)	
	6	1	**456-4447**	3	SPACER	
	7	1	**1J-0962**	8	BOLT-PLOW (3/4-10X4.25-IN)	
	8	1	**2J-3506**	15	NUT-FULL (3/4-10-THD)	
	9	1	**5F-8933**	2	BOLT-PLOW (3/4-10X3.75-IN)	
	10	1	**5J-4773**	5	BOLT-PLOW (3/4-10X2.5-IN)	
	11	1	**7X-0365**	2	BOLT (3/4-10X1.5-IN)	
	12	1	**8T-4994**	6	WASHER-HARD (20X36.5X3.5-MM THK)	

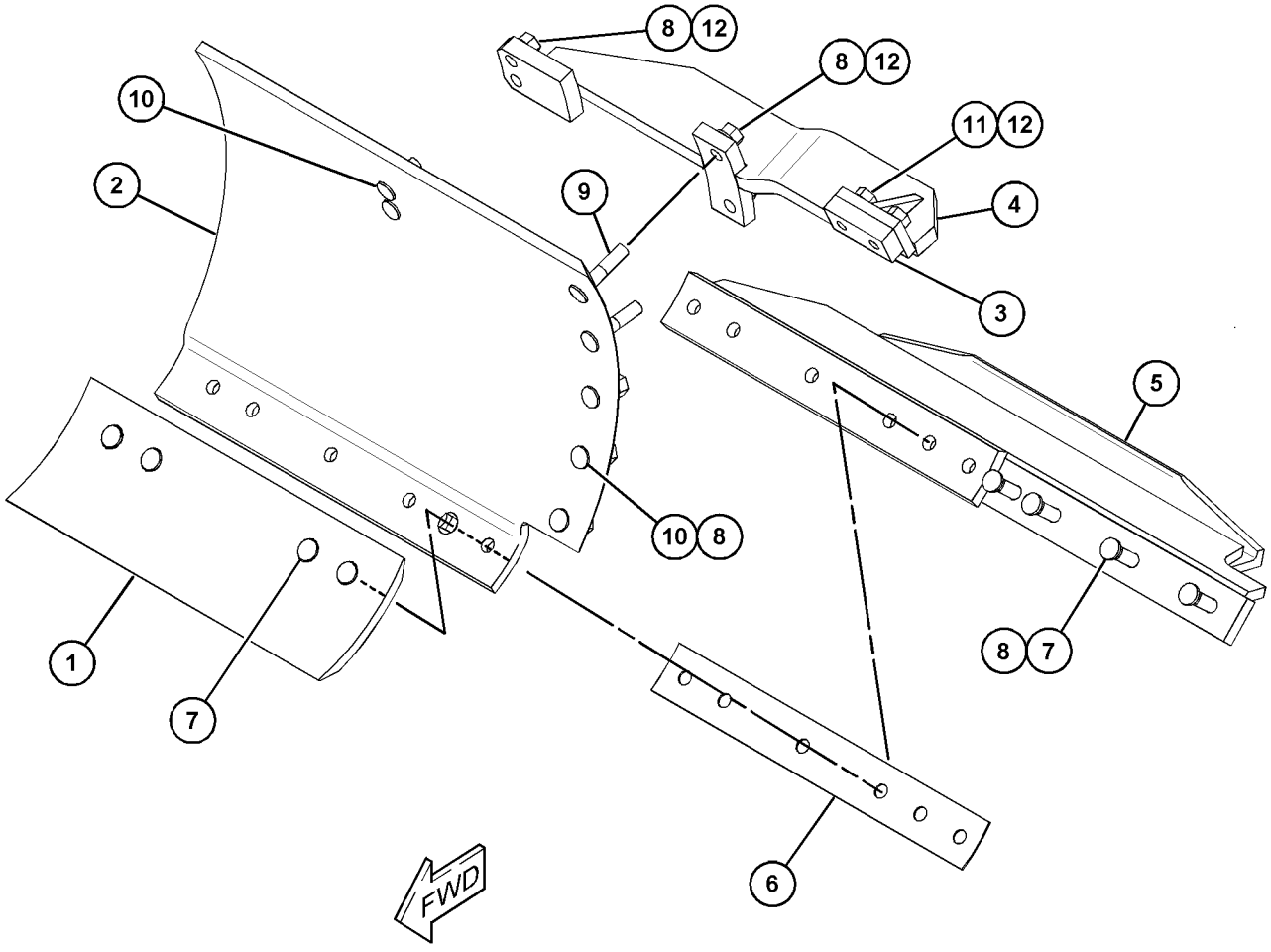

GRAPHIC #1 **<END>** g03792813

265-6710 LIFT GP-BLADE

S/N: E9Y1-UP

PART OF 370-2227 SPECIAL AR

SMCS-6151 **i06054094**

NOTE	REF NO	GRAPHIC REF	PART NUMBER	QTY	PART NAME 1 2 3 4 5 6 (PRODUCT LEVEL)	SEE PAGE
	1	1	**8D-3329**	2	PIN	
	2	1	**265-1099**	2	PIN	
	3	1	**390-6837**	1	ARM AS (RH)	
	3A	1	**8D-3309**	1	BUSHING	
	3B	1	**8D-3311**	1	BUSHING	
M	4	1	**8T-4910**	1	BOLT (M12X1.75X60-MM)	
	5	1	**463-8361**	1	PLATE	
	6	1	**8T-4223**	1	WASHER-HARD (13.5X25.5X3-MM THK)	
M	7	1	**189-3925**	4	BOLT (M20X2.5X170-MM)	
	8	1	**8T-3282**	8	WASHER-HARD (22X35X3.5-MM THK)	
	9	1	**265-1098**	2	LOCK	
	10	1	*436-3828*	1	BAR AS	
	10A	1	**8D-9507**	4	BUSHING	
	10B	1	**9D-3313**	2	BUSHING	
	10C	1	**9D-3333**	1	RING-RETAINING	
	11	1	**390-6838**	1	ARM AS (LH)	
	11A	1	**8D-3309**	1	BUSHING	
	11B	1	**8D-3311**	1	BUSHING	
M	12	1	**6V-7742**	4	NUT-FULL (M20X2.5-THD)	
M	13	1	**7X-0851**	6	NUT (M24X3-THD)	
M	14	1	**8T-0674**	6	BOLT (M24X3X180-MM)	
	15	1	**6V-8237**	12	WASHER (26X44X4-MM THK)	
	16	1	**265-6717**	2	RETAINER	
M	17	1	**7X-2563**	4	BOLT (M20X2.5X60-MM)	
B	18	1	**265-6718**	8	SHIM (0.13-MM THK)	
B	19	1	**265-6719**	6	SHIM (0.25-MM THK)	
B	20	1	**265-6720**	2	SHIM (0.5-MM THK)	
	21	1	**8D-3308**	2	SEAL	
	22	1	**5H-5672**	2	SEAL-O-RING	
	23	1	**8D-3268**	2	WASHER (93.68X133.35X2.39-MM THK)	
	24	1	**8D-3269**	4	WASHER (3.635X5.25X0.075-IN THK)	
	25	1	**8D-3267**	4	WASHER (4.265X5.84X0.075-IN THK)	
	26	1	**8D-3266**	2	WASHER (109X149X2.39-MM THK)	
	27	1	**8D-3307**	2	SEAL	
	28	1	**2S-8439**	2	SEAL-O-RING	
	29	1	**265-6716**	2	YOKE AS	
					(EACH INCLUDES)	
	29A	1	**2G-8234**	1	RING	
	30	1	**9D-6588**	8	SEAL-LIP TYPE	
	31	1	**8D-3245**	8	WASHER (3.515X7X0.075-IN THK)	
	32	1	**8D-3244**	4	WASHER (90.47X177.8X2.39-MM THK)	
	33	1	**8D-3247**	4	WASHER (71.42X152.4X2.39-MM THK)	
B	34	1	**8D-3251**	10	WASHER (70X151X1.22-MM THK)	
B	35	1	**8D-3252**	10	WASHER (70X151X0.76-MM THK)	
	36	1	**8T-4123**	4	WASHER (3.62X5.75X0.375-MM THK)	
	37	1	**265-1097**	2	LOCK	
	38	1	**9D-6589**	1	SEAL-LIP TYPE	

B - USE AS REQUIRED
M - METRIC PART

265-6710 **LIFT GP-BLADE (*contd.*)** **i06054094**

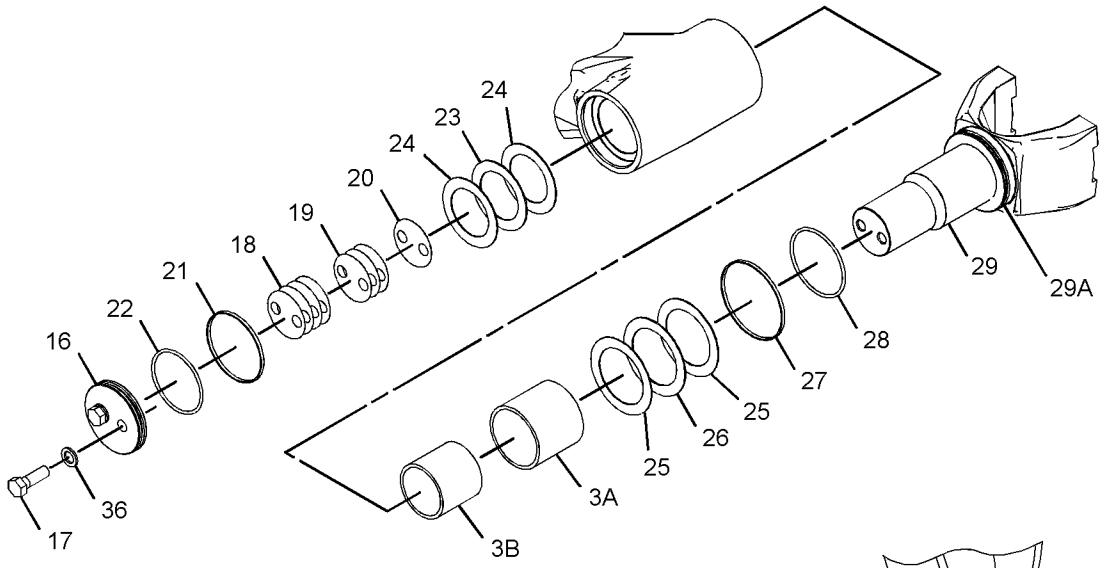

VIEW OF AREA A
(EXPLODED)

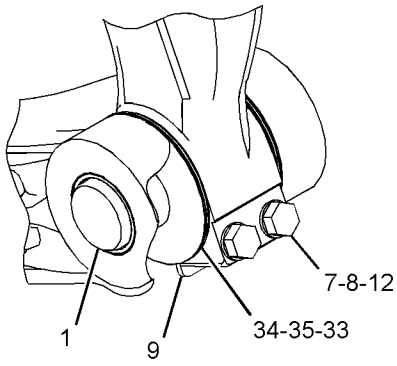

VIEW OF AREA B

GRAPHIC #1 **<END>** g03445529

372-7831 MOUNTING GP-RIPPER

S/N: E9Y1-UP
PART OF 372-7830 RIPPER AR
AN ATTACHMENT

SMCS-6324 **i06145190**

NOTE	REF NO	GRAPHIC REF	PART NUMBER	QTY	PART NAME 1 2 3 4 5 6 (PRODUCT LEVEL)	SEE PAGE
	1	1	**6K-0715**	2	PIN	
	2	1	**8B-9840**	12	SPACER (1.125X2X1-IN THK)	
	3	1	**8J-9607**	2	PIN	
	4	1	**8J-9608**	2	PIN	
	5	1	**120-9875**	2	CAM AS	
	6	1	**276-3176**	2	PLATE	
	7	1	**293-7854**	2	RETAINER	
	8	1	**293-7855**	2	PIN	
	9	1	**372-7832**	2	LINK AS	
	10	1	**476-7228**	1	PLATE AS	
M	11	1	**112-3929**	12	BOLT (M24X3X100-MM)	
M	12	1	**176-5311**	4	LOCKNUT (M16X2-THD)	
M	13	1	**6V-7687**	2	LOCKNUT (M12X1.75-THD)	
M	14	1	**7X-2557**	4	BOLT (M16X2X140-MM)	
	15	1	**8T-4167**	12	WASHER-HARD (26X44X4-MM THK)	
	16	1	**8T-4223**	4	WASHER-HARD (13.5X25.5X3-MM THK)	
M	17	1	**8T-4910**	4	BOLT (M12X1.75X60-MM)	
M	18	1	**8T-5092**	2	BOLT (M12X1.75X150-MM)	

M - METRIC PART

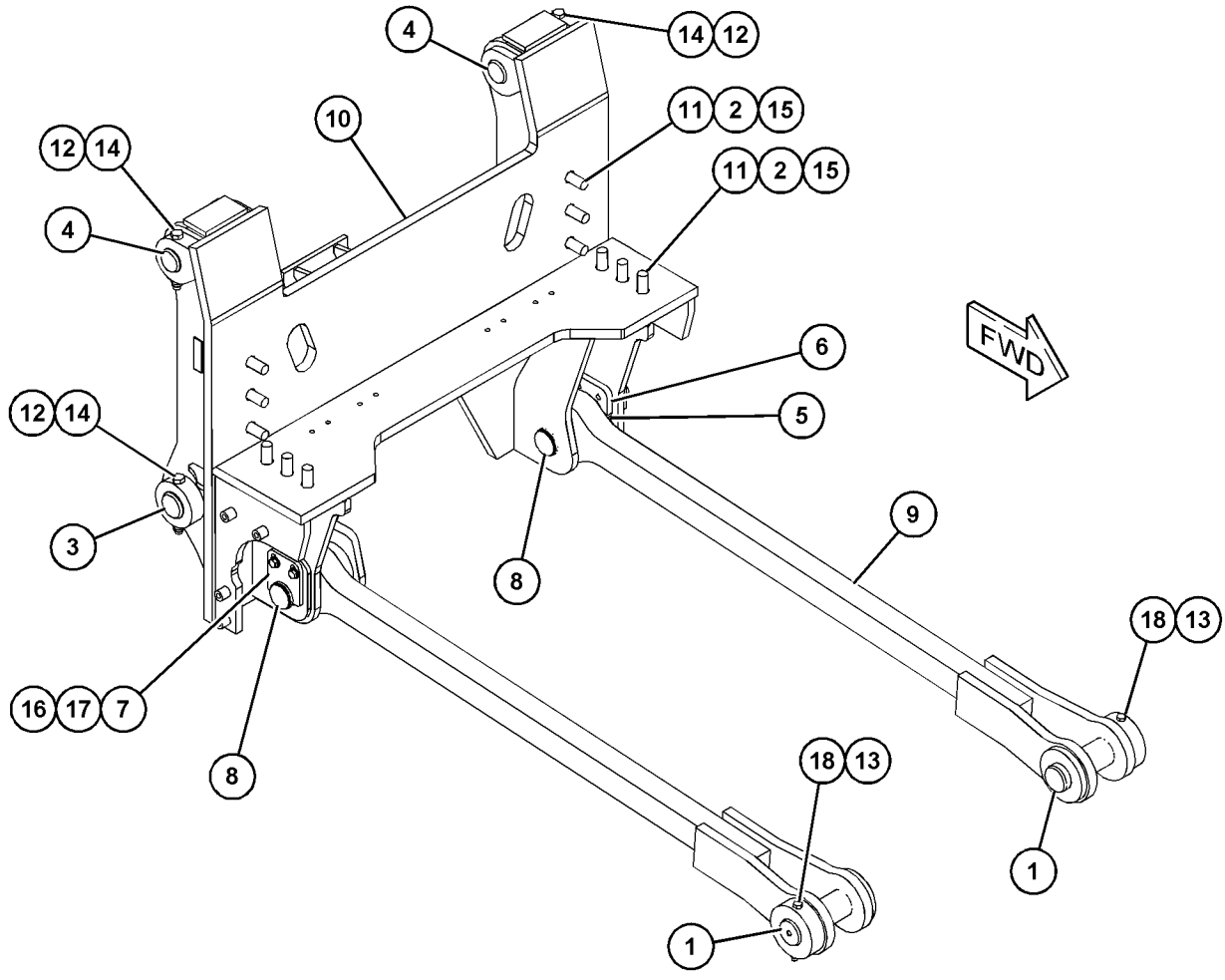

GRAPHIC #1 **<END>** g03833636

372-7830 RIPPER AR

S/N: E9Y1-UP
FOR USE WITH 385-7554—PAGE: 545, 385-7557—PAGE: 545
CANNOT BE USED WITH 390-4077—PAGE: 457
PART OF 453-4370 RIPPER AR
AN ATTACHMENT

SMCS-6325 **i06147394**

NOTE	PART NUMBER	QTY	PART NAME 1 2 3 4 5 6 (PRODUCT LEVEL)	SEE PAGE
Y	**477-9271**	1	CYLINDER GP-RIPPER	562
Y	*390-3134*	1	LINES GP-RIPPER	604
Y	*372-7831*	1	MOUNTING GP-RIPPER	845
Y	*8T-4009*	1	PLATE & FILM GP	857
Y	*390-9126*	1	RIPPER GP	847

Y - SEPARATE ILLUSTRATION

<END>

453-4370 RIPPER AR—AUTOLUBE

S/N: E9Y1-UP
FOR USE WITH 385-7554—PAGE: 545, 385-7552—PAGE: 474
CANNOT BE USED WITH ANY OTHER REAR MOUNTED ATTACHMENTS, 390-4077—PAGE: 457
AN ATTACHMENT

SMCS-6325 **i06146929**

NOTE	PART NUMBER	QTY	PART NAME 1 2 3 4 5 6 (PRODUCT LEVEL)	SEE PAGE
Y	*391-8190*	1	LUBRICATION AR-AUTOMATIC	475
Y	*372-7830*	1	RIPPER AR	846

Y - SEPARATE ILLUSTRATION

<END>

390-9126 RIPPER GP

S/N: E9Y1-UP
PART OF 372-7830 RIPPER AR
AN ATTACHMENT

SMCS-6325 **i06145192**

NOTE	REF NO	GRAPHIC REF	PART NUMBER	QTY	PART NAME 1 2 3 4 5 6 (PRODUCT LEVEL)	SEE PAGE
	1	1	**2K-0703**	1	BAR	
	2	1	**3B-8489**	3	FITTING-GREASE (1/8-27 PTF)	
	3	1	**3K-8510**	1	PIN	
	4	1	**4K-3004**	2	BEARING-TRUNNION SUPPLEMENTARY	
Y	5	1	*8J-2189*	3	TOOTH GP-RIPPER	849
	6	1	**8J-5050**	1	CARRIAGE AS	
		1	**2K-4309**	1	REINFORCEMENT (RH)	
		1	**2K-4310**	1	REINFORCEMENT (LH)	
		1	**2K-4315**	4	BOSS	
		1	**5K-7748**	7	HOLDER-BIT	
	7	1	**9J-2880**	2	LINK AS	
					(EACH INCLUDES)	
		1	**3G-2582**	2	BEARING	
	8	1	**190-5386**	2	FILM-IDENTIFICATION (ROUND RED REFLECTIVE)	
	9	1	**478-4686**	1	LINK AS	
		1	**3G-2580**	4	BEARING	
M	10	1	**6V-7687**	8	LOCKNUT (M12X1.75-THD)	
	11	1	**7K-9204**	8	SEAL-LIP TYPE	
M	12	1	**7X-2557**	2	BOLT (M16X2X140-MM)	
	13	1	**8J-9607**	2	PIN	
	14	1	**8J-9608**	2	PIN	
M	15	1	**8T-4192**	2	BOLT (M12X1.75X25-MM)	
M	16	1	**8T-4778**	4	LOCKNUT (M16X2-THD)	
M	17	1	**8T-4910**	8	BOLT (M12X1.75X60-MM)	
M	18	1	**8T-6385**	2	BOLT (M16X2X180-MM)	
	19	1	**9D-6585**	8	SEAL-LIP TYPE	

M - METRIC PART
Y - SEPARATE ILLUSTRATION

390-9126 **RIPPER GP (*contd.*)** **i06145192**

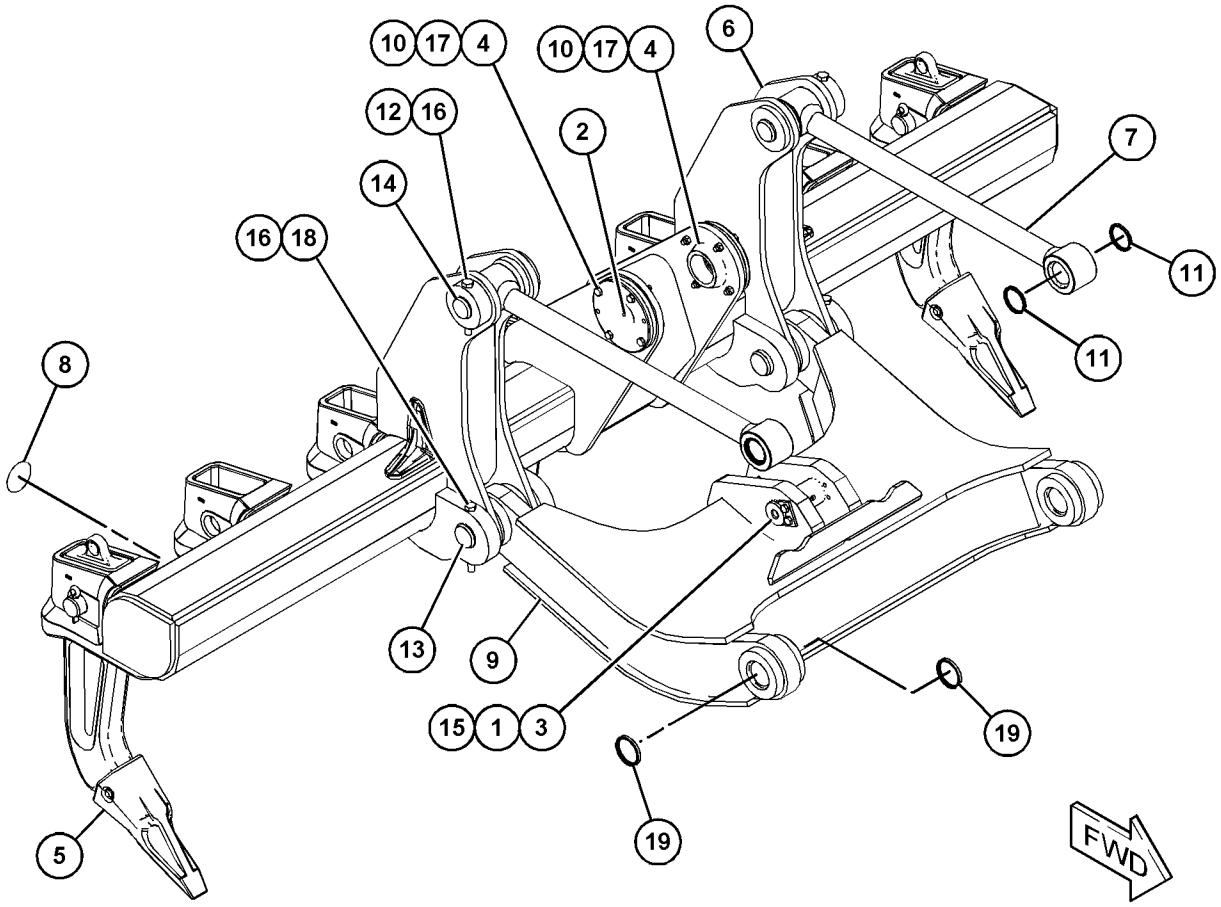

GRAPHIC #1 **<END>** g03833676

8J-2189 TOOTH GP-RIPPER

S/N: E9Y1-UP
PART OF 390-9126 RIPPER GP
AN ATTACHMENT

SMCS-6808 **i01169199**

NOTE	REF NO	GRAPHIC REF	PART NUMBER	QTY	PART NAME 1 2 3 4 5 6 (PRODUCT LEVEL)	SEE PAGE
	1	1	**3B-5325**	2	PIN-COTTER	
	2	1	**8J-2190**	1	PIN	
	3	1	**9J-3139**	1	SHANK-RIPPER	
C	4	1	**114-0358**	1	PIN	
C		1	**114-0359**	1	RETAINER AS	
	5	1	**6Y-0359**	1	TIP-RIPPER	

C - CHANGE FROM PREVIOUS TYPE

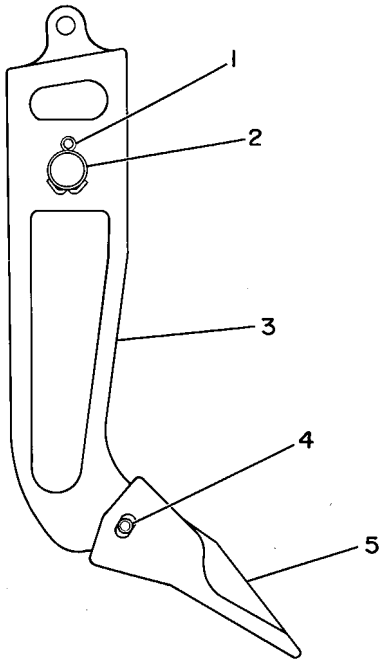

GRAPHIC #1 **<END>** g00081660

SERVICE EQUIPMENT AND SUPPLIES

381-8141 FILM GP

S/N: E9Y1-UP

PART OF 361-3120 CAB AR

SMCS-0375, 7000, 7405, 7557 **i05270849**

NOTE	PART NUMBER	QTY	PART NAME 1 2 3 4 5 6 (PRODUCT LEVEL)	SEE PAGE
	356-2212	2	FILM	
			(ON CAB INTERIOR SIDE OF TWO FRONT A-POSTS)	

<END>

SERVICE EQUIPMENT AND SUPPLIES

393-2515 FILM GP

S/N: E9Y1-UP
PART OF 386-1274, 437-7839 PLATE & FILM GP
ALSO AN ATTACHMENT

SMCS-0375, 7000, 7405, 7557 **i05731459**

NOTE	REF NO	GRAPHIC REF	PART NUMBER	QTY	PART NAME 1 2 3 4 5 6 (PRODUCT LEVEL)	SEE PAGE
	1	1	**296-4125**	1	FILM-IDENTIFICATION (CAT)	
	2	1	**396-8403**	1	FILM-IDENTIFICATION (CAT HOOD, LH)	
	3	1	**396-8404**	1	FILM-IDENTIFICATION (CAT HOOD, RH)	
	4	1	**396-8405**	2	FILM-IDENTIFICATION (16M3)	

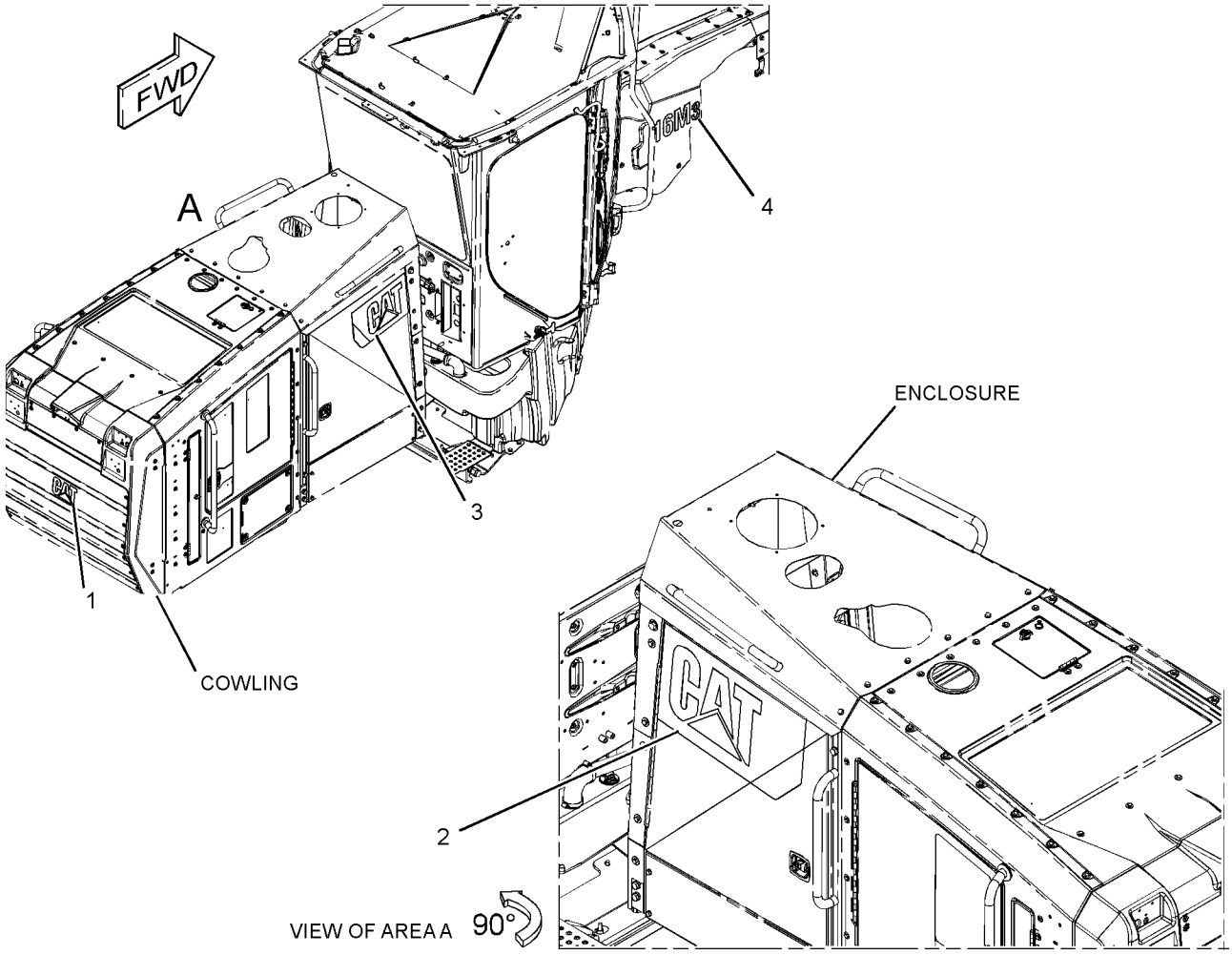

GRAPHIC #1 **<END>** g03645647

423-4280 FILM GP–INTERNATIONAL

S/N: E9Y1-UP
PART OF 437-7841 FILM GP
AN ATTACHMENT

SMCS-0375, 7000, 7405, 7557 **i05794967**

NOTE	REF NO	GRAPHIC REF	PART NUMBER	QTY	PART NAME 1 2 3 4 5 6 (PRODUCT LEVEL)	SEE PAGE
	1	1	**100-5612**	1	FILM-INSTRUCTION (ALTERNATE EXIT, REMOVE WINDOW)	
	2	1	**219-0302**	1	FILM-WARNING (NO WELD, NO DRILL, READ OMM)	
	3	1	**227-7391**	1	FILM-WARNING (SEAT BELT, INTERNATIONAL)	
	4	1	**228-2616**	1	FILM-WARNING (UNIVERSAL, READ OMM)	
	5	1	**260-7653**	1	FILM-WARNING (PRODUCT LINK 300, INTL)	
	6	1	**307-0047**	1	FILM-INFORMATION (PRODUCT LINK, READ OMM)	
	7	1	**423-4275**	1	FILM-WARNING (CRUSH HAZARD, READ MANUAL)	

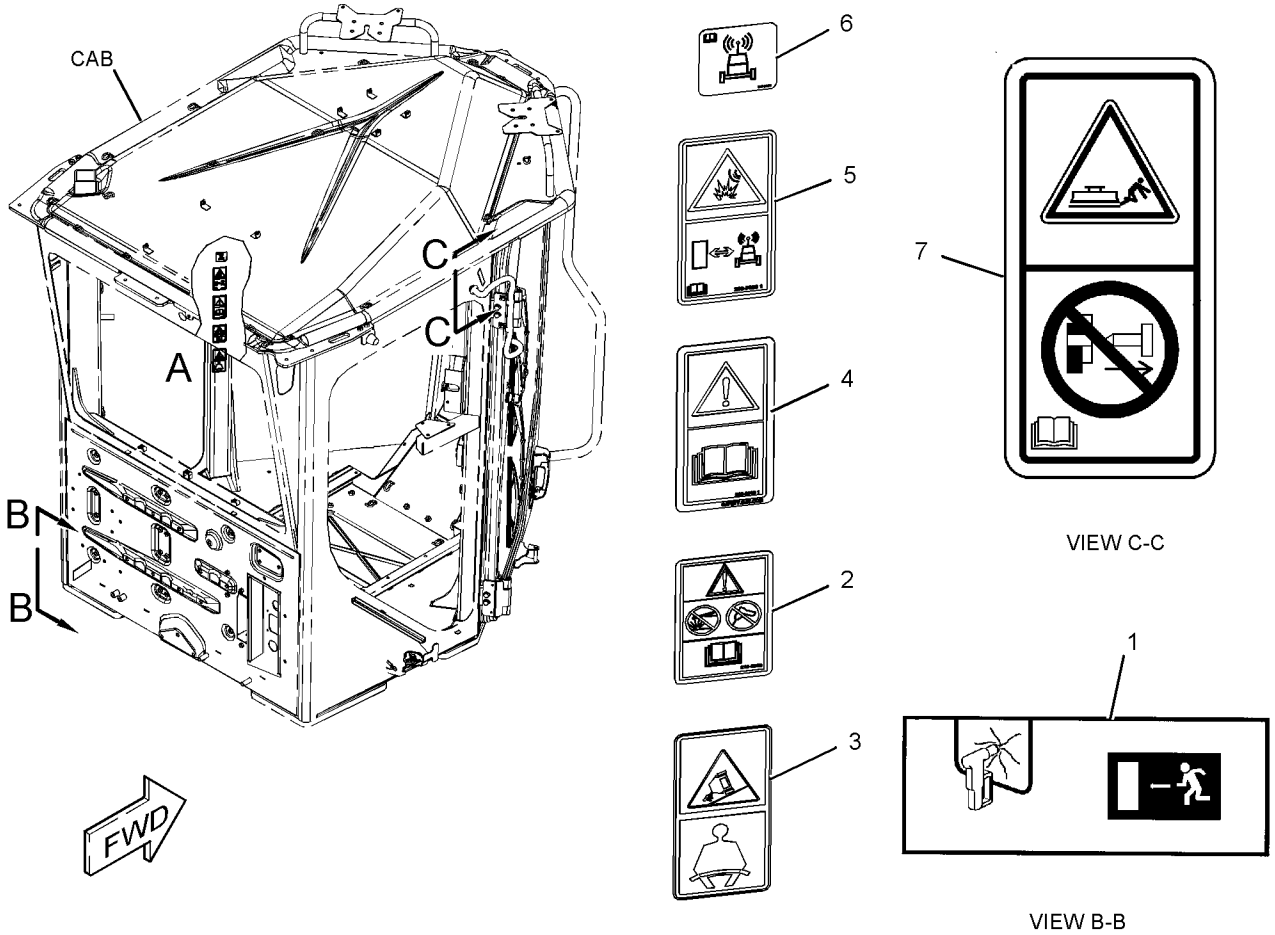

GRAPHIC #1 **<END>** g03421963

437-7841 FILM GP

S/N: E9Y1-UP
INTERNATIONAL
AN ATTACHMENT

SMCS-0375, 7000, 7405, 7557 **i06061971**

NOTE	REF NO	GRAPHIC REF	PART NUMBER	QTY	PART NAME 1 2 3 4 5 6 (PRODUCT LEVEL)	SEE PAGE
	1	1,2	**224-6820**	3	FILM-WARNING (HOT SURFACE)	
					(1 ON EACH SIDE OF MACHINE NEAR HANDRAIL ON ENCLOSURE)	
					(1 NEAR FUEL TANK LID)	
	2	2	**224-6821**	1	FILM-WARNING (HOT SURFACE)	
					(TOP OF RADIATOR FILL LID)	
	3	1	**225-0312**	1	FILM-WARNING (JUMP START, READ OMM, INTL)	
					(RH OF SERVICE AR BELOW BATTERY GP)	
	4	2	**226-1240**	2	FILM-WARNING (CRUSH HAZARD, STAY BACK, INTL)	
					(ON SUPPORT GP FUEL TANK)	
	5	2	**226-1274**	2	FILM-WARNING (CRUSH HAZARD, READ OMM, INTL)	
					(ON SUPPORT GP FUEL TANK)	
	6	2	**239-4991**	2	FILM-WARNING (HIGH PRESSURE CYLINDER)	
					(ON BRAKE ACCUMULATORS BELOW CAB)	
	7	1	**263-6902**	1	FILM-WARNING (HOT FLUID)	
					(UNDER RADIATOR FILL LID TO BE READ FROM RH SIDE OF MACHINE)	
	8	2	**292-9391**	2	FILM-WARNING (HAND CRUSH HAZARD, STAY BACK)	
					(1 ON EACH SIDE OF CAB DOOR)	
	9	2	**329-5706**	1	FILM-WARNING (COLD START, READ OMM)	
					(ON TOP OF HOOD GP RIGHT ABOVE SERVICE CENTER ACCESS DOOR)	
	10	2	**367-0844**	1	FILM-INSTRUCTION (FUEL, READ OMM)	
					(ON LH OF MACHINE BELOW OUTLET TUBE NEAR FUEL TANK)	
Y	11	1	*423-4280*	1	FILM GP	852

Y - SEPARATE ILLUSTRATION

REFER TO ALL ILLUSTRATIONS OF
THIS GROUP FOR AUXILIARY VIEWS

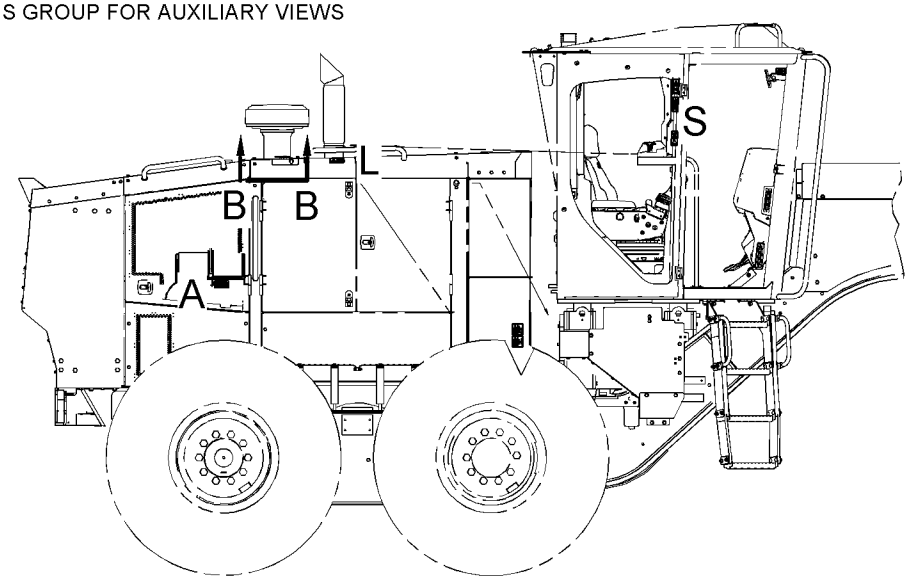

RIGHT SIDE VIEW

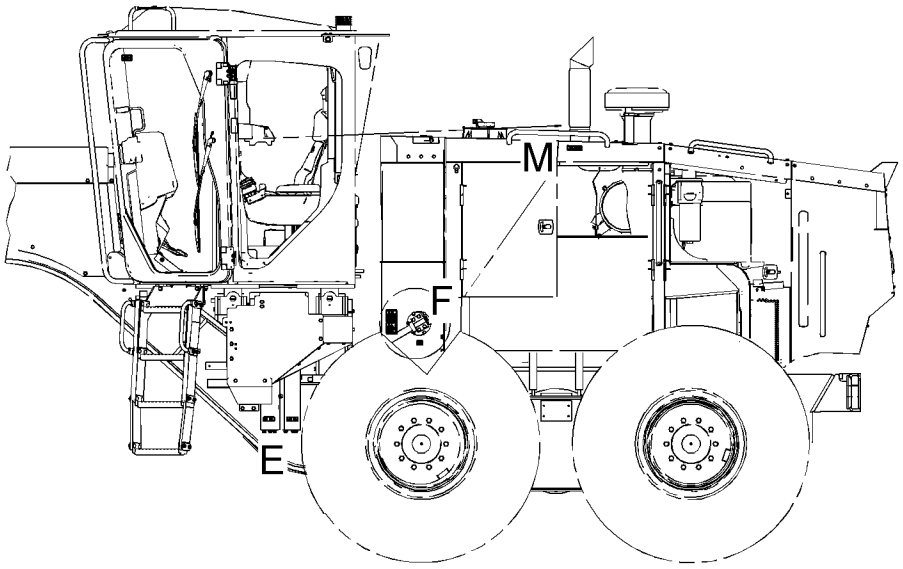

LEFT SIDE VIEW

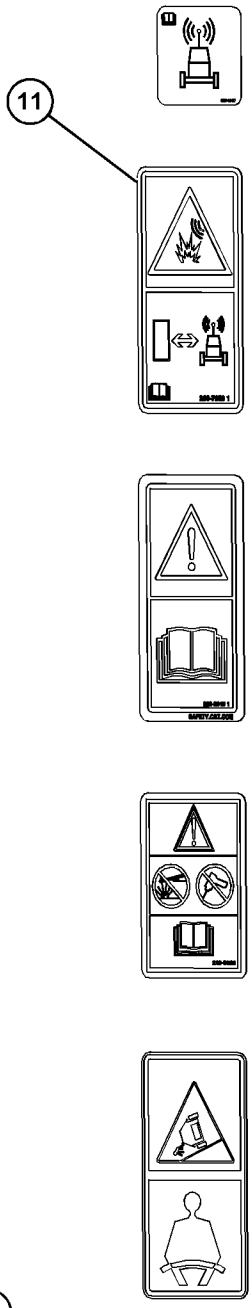

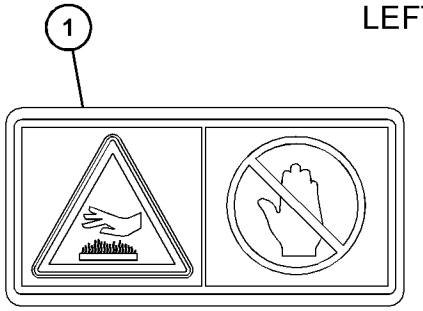

VIEW OF AREA M

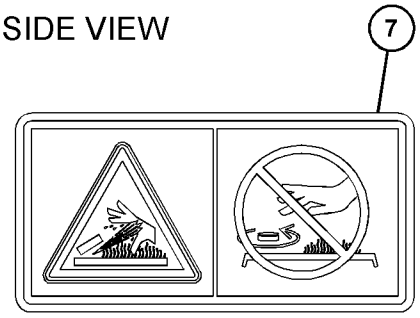

VIEW B-B

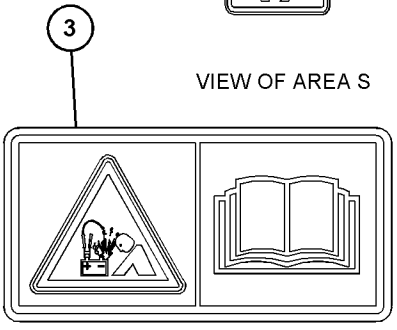

VIEW OF AREA S

VIEW OF AREA A

GRAPHIC #1

g03797119

437-7841 **FILM GP (*contd.*)** **i06061971**

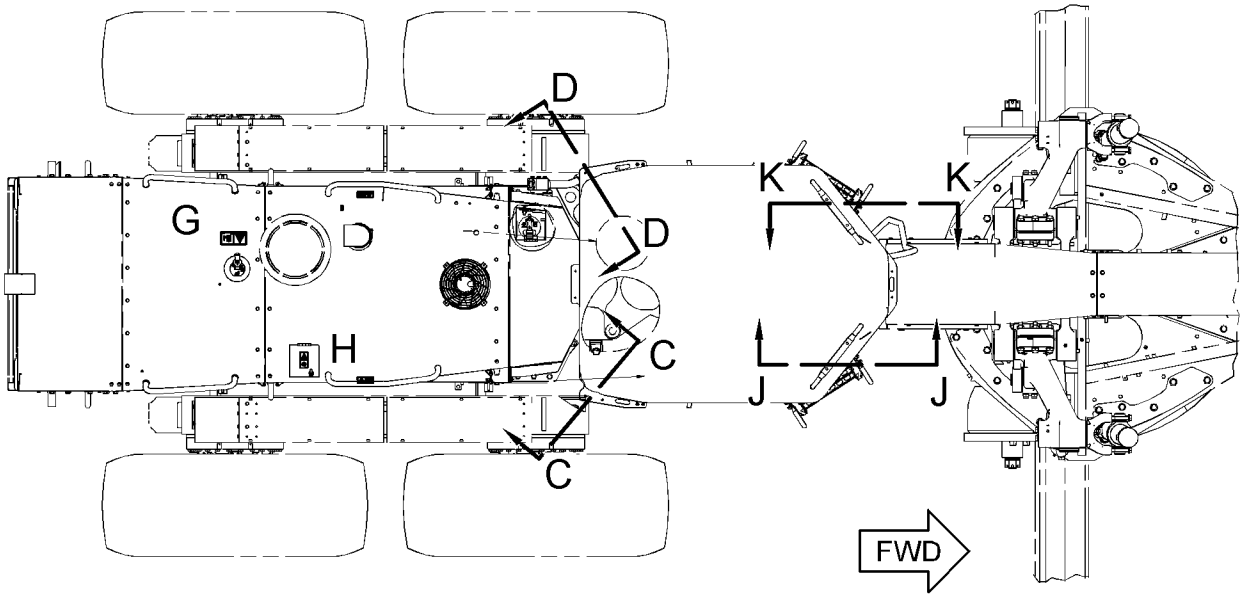

TOP VIEW

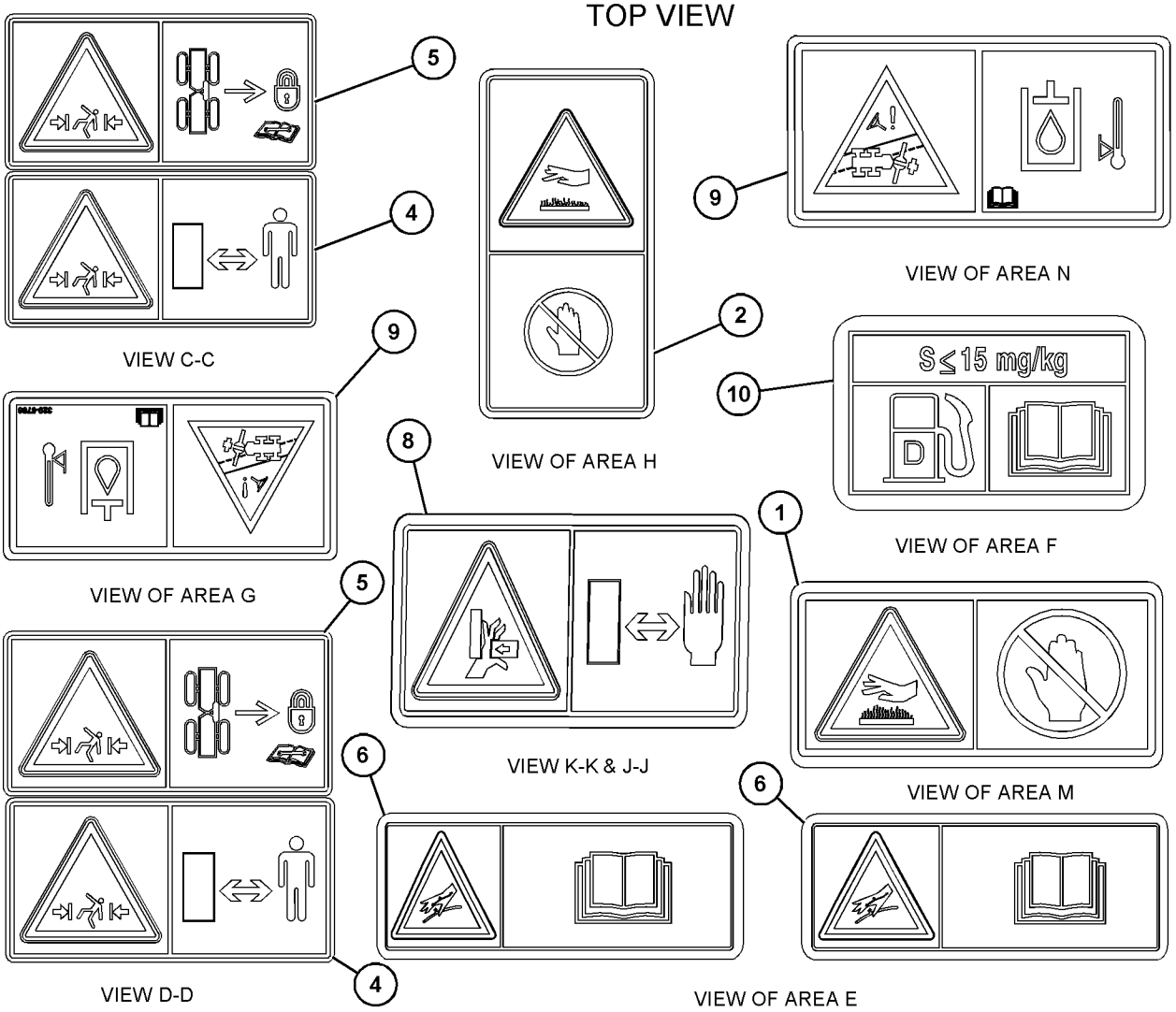

GRAPHIC #2 **<END>** g03797120

267-3183 FILM GP-U.S.

S/N: E9Y1-UP
PART OF 386-1254 PLATE & FILM GP
AN ATTACHMENT

SMCS-7557 **i05794956**

NOTE	REF NO	GRAPHIC REF	PART NUMBER	QTY	PART NAME 1 2 3 4 5 6 (PRODUCT LEVEL)	SEE PAGE
	1	1	**100-5612**	1	FILM-INSTRUCTION (ALTERNATE EXIT, REMOVE WINDOW)	
	2	1	**219-0302**	1	FILM-WARNING (NO WELD, NO DRILL, READ OMM)	
	3	1	**228-2615**	1	FILM-WARNING (UNIVERSAL, U.S.)	
	4	1	**227-7390**	1	FILM-WARNING (SEAT BELT)	
	5	1	**249-6687**	1	FILM-WARNING (CRUSH HAZARD)	
	6	1	**260-7652**	1	FILM-WARNING (PRODUCT LINK 300, U.S.)	
	7	1	**307-0047**	1	FILM-INFORMATION (PRODUCT LINK, READ OMM)	

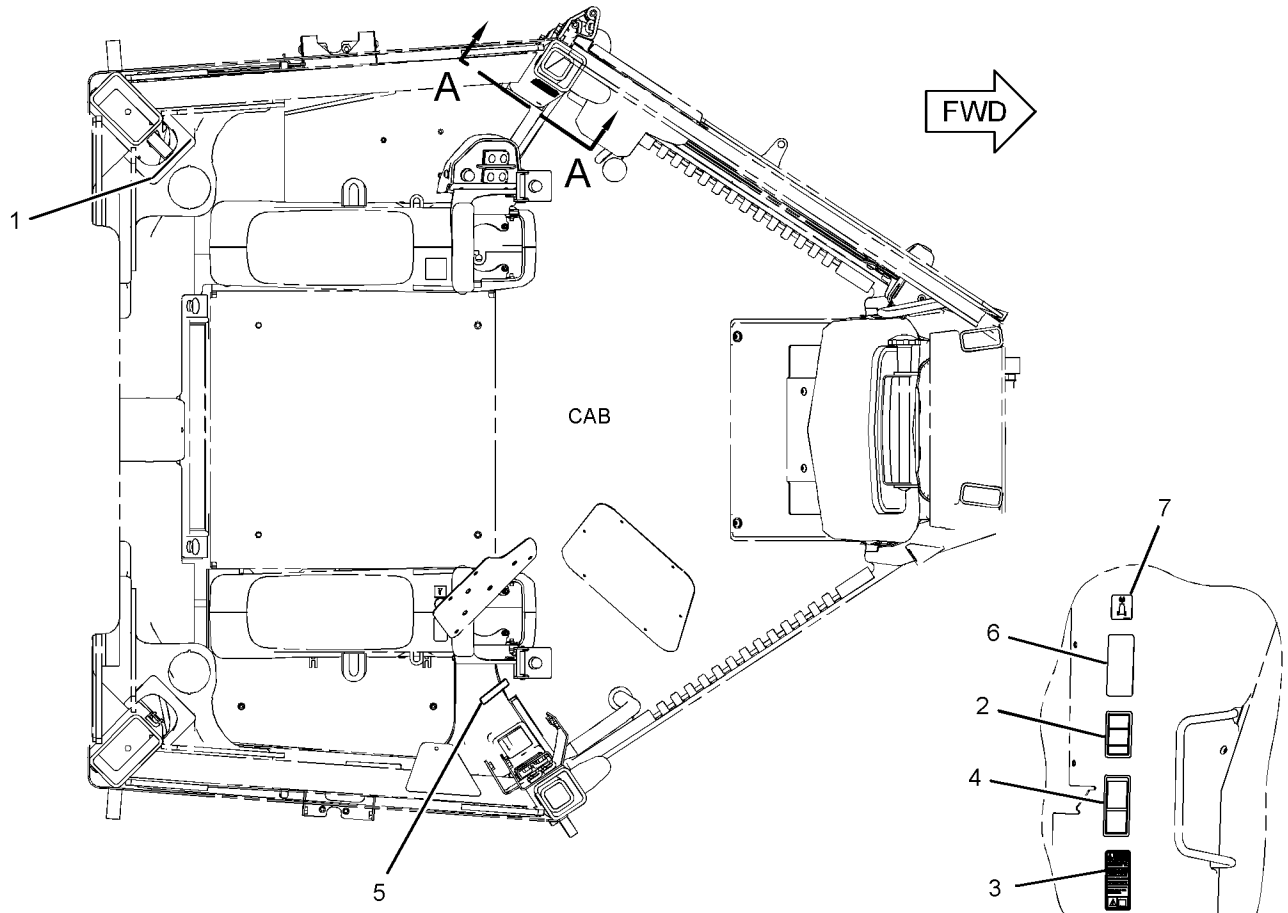

TOP VIEW
(ROOF REMOVED)

VIEW A-A

GRAPHIC #1 **<END>** g03051676

SERVICE EQUIPMENT AND SUPPLIES

8T-4009 PLATE & FILM GP

S/N: E9Y1-UP
PART OF 372-7830 RIPPER AR
AN ATTACHMENT

SMCS-7405, 7557

i01153136

NOTE	PART NUMBER	QTY	PART NAME 1 2 3 4 5 6 (PRODUCT LEVEL)	SEE PAGE
			(NO SERVICED PARTS)	

<END>

375-3577 PLATE & FILM GP

S/N: TXX1-UP
PART OF 422-0047 ENGINE AR
AN ATTACHMENT

SMCS-7405, 7557

i05328071

NOTE	REF NO	GRAPHIC REF	PART NUMBER	QTY	PART NAME 1 2 3 4 5 6 (PRODUCT LEVEL)	SEE PAGE
	1	1	**293-9659**	2	FILM-WARNING (UNIVERSAL, READ OMM)	
	2	1	**290-3785**	1	PLATE-IDENTIFICATION (CAT C13 ACERT)	
	3	1	**3N-3790**	1	PLATE-SERIAL NUMBER (ENGINE)	

375-3577 **PLATE & FILM GP (*contd.*)** **i05328071**

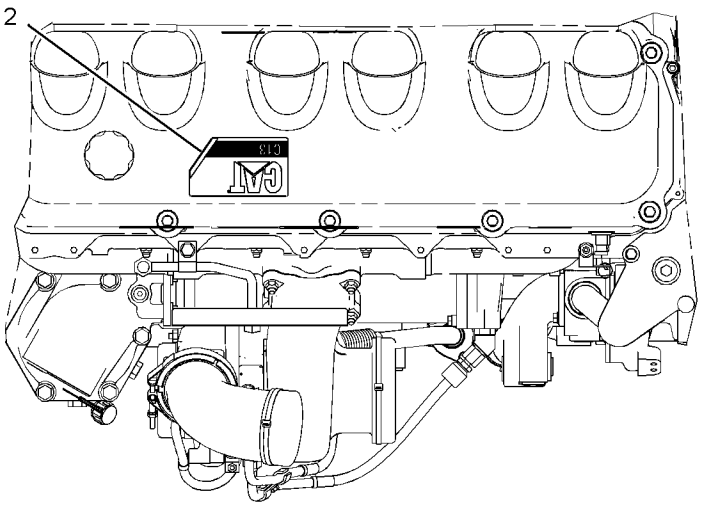

TOP VIEW OF ENGINE

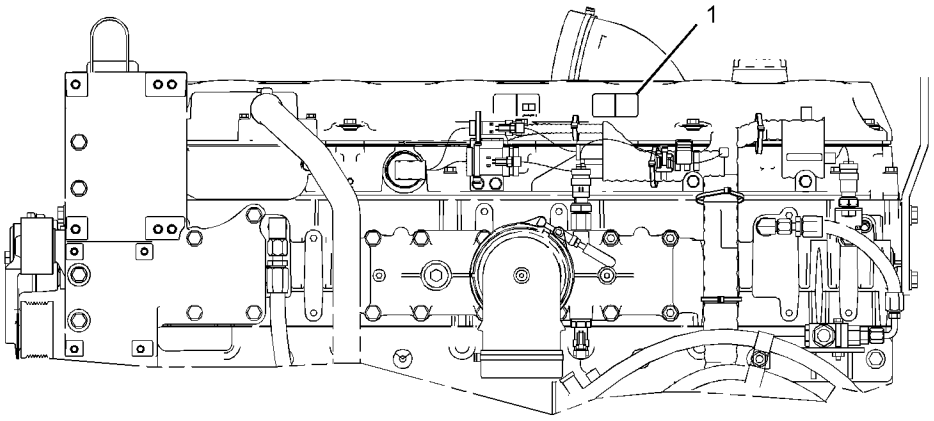

LEFT SIDE VIEW OF ENGINE

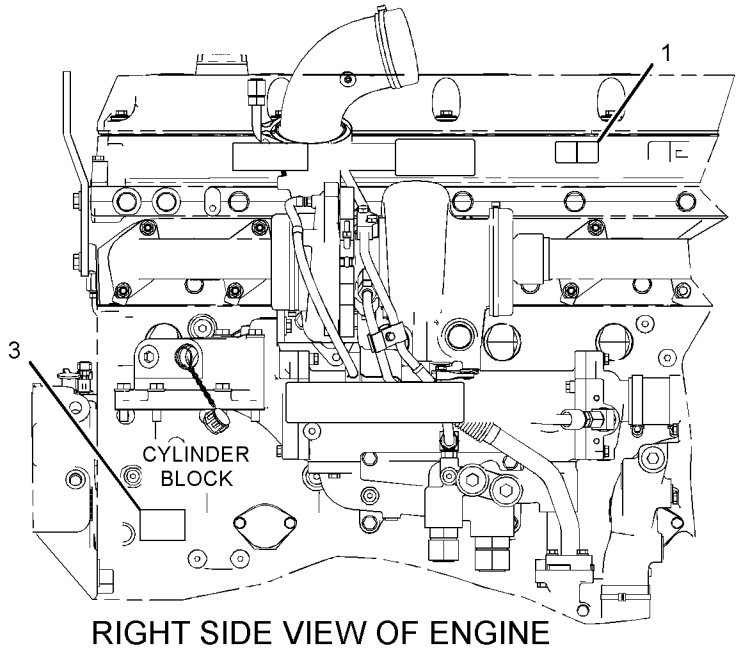

RIGHT SIDE VIEW OF ENGINE

GRAPHIC #1 **<END>** g02581658

SERVICE EQUIPMENT AND SUPPLIES

386-1254 PLATE & FILM GP

S/N: E9Y1-UP

AN ATTACHMENT

SMCS-7405, 7557 **i05731404**

NOTE	PART NUMBER	QTY	PART NAME 1 2 3 4 5 6 (PRODUCT LEVEL)	SEE PAGE
Y	*391-1383*	1	ELECTRONICS GP-MONITOR	170
Y	*391-1379*	1	ELECTRONICS GP-MONITOR	170
Y	*267-3183*	1	FILM GP-U.S.	856
Y	*386-1274*	1	PLATE & FILM GP	861

Y - SEPARATE ILLUSTRATION

<END>

386-1274 PLATE & FILM GP

S/N: E9Y1-UP
PART OF 386-1254 PLATE & FILM GP
AN ATTACHMENT

SMCS-7405, 7557 **i06103723**

NOTE	REF NO	GRAPHIC REF	PART NUMBER	QTY	PART NAME 1 2 3 4 5 6 (PRODUCT LEVEL)	SEE PAGE
	1	1	**3E-1552**	1	FILM-INSTRUCTION (TRANSMISSION FILTER)	
	2	1	**5P-1174**	1	FILM-IDENTIFICATION (TRANSMISSION OIL FILL CAP)	
	4	1	**460-8154**	1	PLATE-INDICATOR (CENTERSHIFT INDICATOR)	
	5	1	**129-7680**	1	FILM-INSTRUCTION (HYDRAULIC TANK OIL DRAIN)	
	7	1	**146-6747**	1	FILM-INFORMATION (24-VOLT)	
	8	1	**158-7864**	1	FILM-IDENTIFICATION (HYDRAULIC OIL)	
	9	2	**159-3590**	1	FILM-IDENTIFICATION (WATER SEPARATOR)	
	11	1	**209-5776**	2	FILM-INFORMATION (ENGINE COOLANT)	
	12	1	**220-3634**	1	FILM-IDENTIFICATION (DRAIN, ENGINE COOLANT)	
	13	1	**225-4150**	1	PLATE-SERVICE INFORMATION (MACHINE)	
	17	1	**239-6989**	1	PLATE-SERIAL NUMBER (MACHINE)	
	18	1	**248-5245**	2	FILM-INFORMATION (LIFT EYE, TIE-DOWN LOCATION)	
	20	1	**249-8575**	1	FILM-WARNING (NO DRILL, WELD, READ OMM)	
	21	1	**252-2157**	2	FILM-INFORMATION (TIE-DOWN)	
	22	1	**261-4377**	1	FILM-IDENTIFICATION (FILL, DRAIN)	
	23	2	**275-3292**	1	FILM-IDENTIFICATION (GREASE POINT)	
	25	2	**329-5707**	1	FILM-IDENTIFICATION (OIL GRADE, READ OMM)	
	26	1	**334-4424**	1	FILM-IDENTIFICATION (CIRCUIT BREAKERS)	
	27	1	**360-2142**	1	FILM-IDENTIFICATION (LAMP)	
	28	1	**366-7409**	1	FILM-IDENTIFICATION (FLUID, DRAIN/EMPTY)	
	29	1	**371-6464**	2	FILM-IDENTIFICATION (GRADE CONTROL)	
	31	3	**375-9845**	1	FILM-INFORMATION (GRADE CONTROL ENABLED)	
Y	32	1	*393-2515*	1	FILM GP	851
	33	1	**393-2516**	1	FILM-IDENTIFICATION (RELAY PANEL)	
	34	1	**393-2518**	1	FILM-IDENTIFICATION (FUSE PANEL)	
	35	2	**393-2614**	1	FILM-IDENTIFICATION (DIESEL EXHAUST FLUID FILL)	
	36	1	**423-4101**	1	FILM-IDENTIFICATION (BATTERY DISCONNECT, READ OMM)	
	38	2	**444-5131**	1	FILM-INSTRUCTION (DIESEL EXHAUST FLUID)	
	39	2	**450-2497**	2	FILM-STRIPE (RED)	
	40	1	**452-0064**	2	FILM-IDENTIFICATION (LIFT POINT)	
	41	1	**114-0066**	1	PLATE-INSTRUCTION (READ SERVICE MANUAL)	
	42	1	**3F-5535**	3	SCREW-DRIVE (NO 10X0.375-IN)	
	43	2	**293-3823**	1	FILM-IDENTIFICATION (ARTICULATION LOCK)	
	44	2	**460-8153**	1	FILM-IDENTIFICATION (LUBRICATION CHART)	
FJ			**246-2641**	2	PADLOCK GP	
					(EACH INCLUDES)	
F			**5P-8500**	1	KEY	
					(ONE PADLOCK FOR EACH OF THE FOLLOWING COMPONENTS)	
					(1-ON HYDRAULIC TANK)	
					(1-ON BATTERY)	
AF			**3N-3790**	1	PLATE-SERIAL NUMBER (ENGINE)	
					(ON LOWER RH REAR CORNER OF CYLINDER BLOCK)	

A - NOT PART OF THIS GROUP
F - NOT SHOWN
J - SHIPPED IN TOOL BOX
Y - SEPARATE ILLUSTRATION

386-1274 **PLATE & FILM GP (*contd.*)** **i06103723**

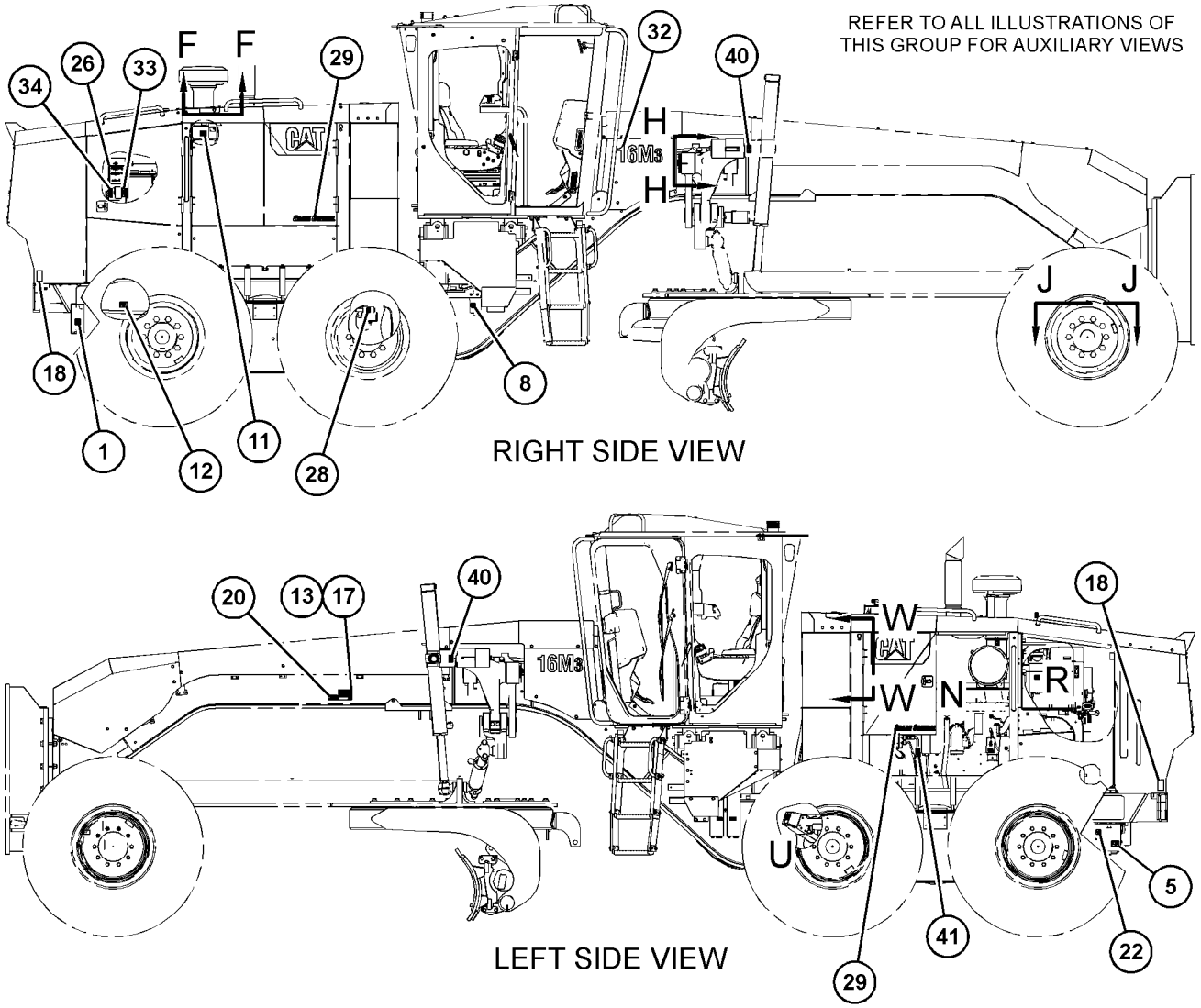

GRAPHIC #1 g03817016

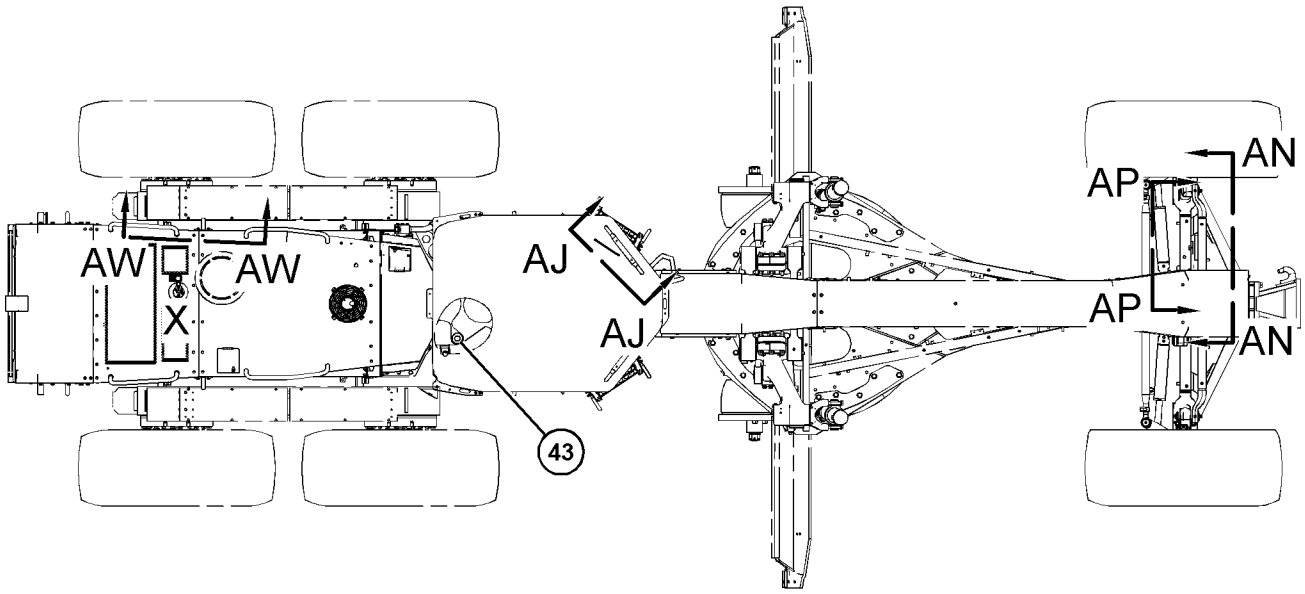

TOP VIEW FWD

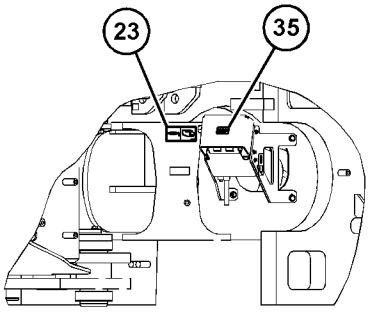

VIEW OF AREA U

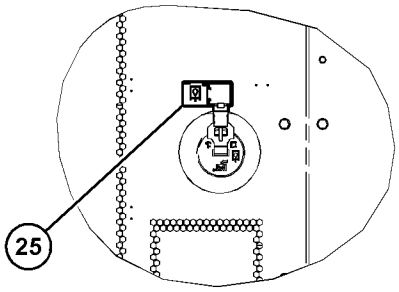

VIEW X-X

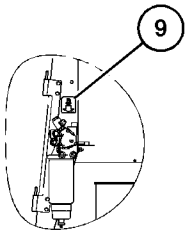

VIEW W-W

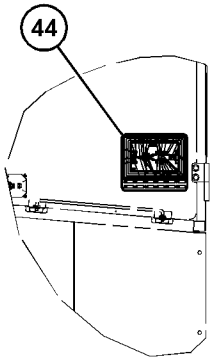

VIEW AW-AW

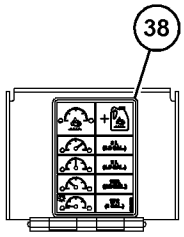

VIEW AJ-AJ

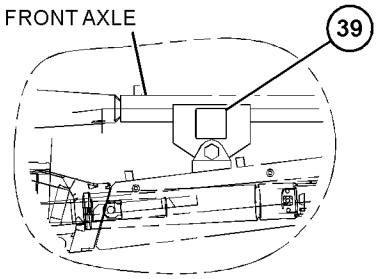

VIEW AP-AP

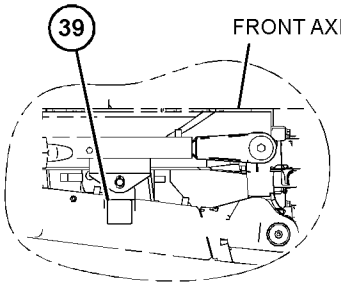

VIEW AN-AN

GRAPHIC #2 g03817017

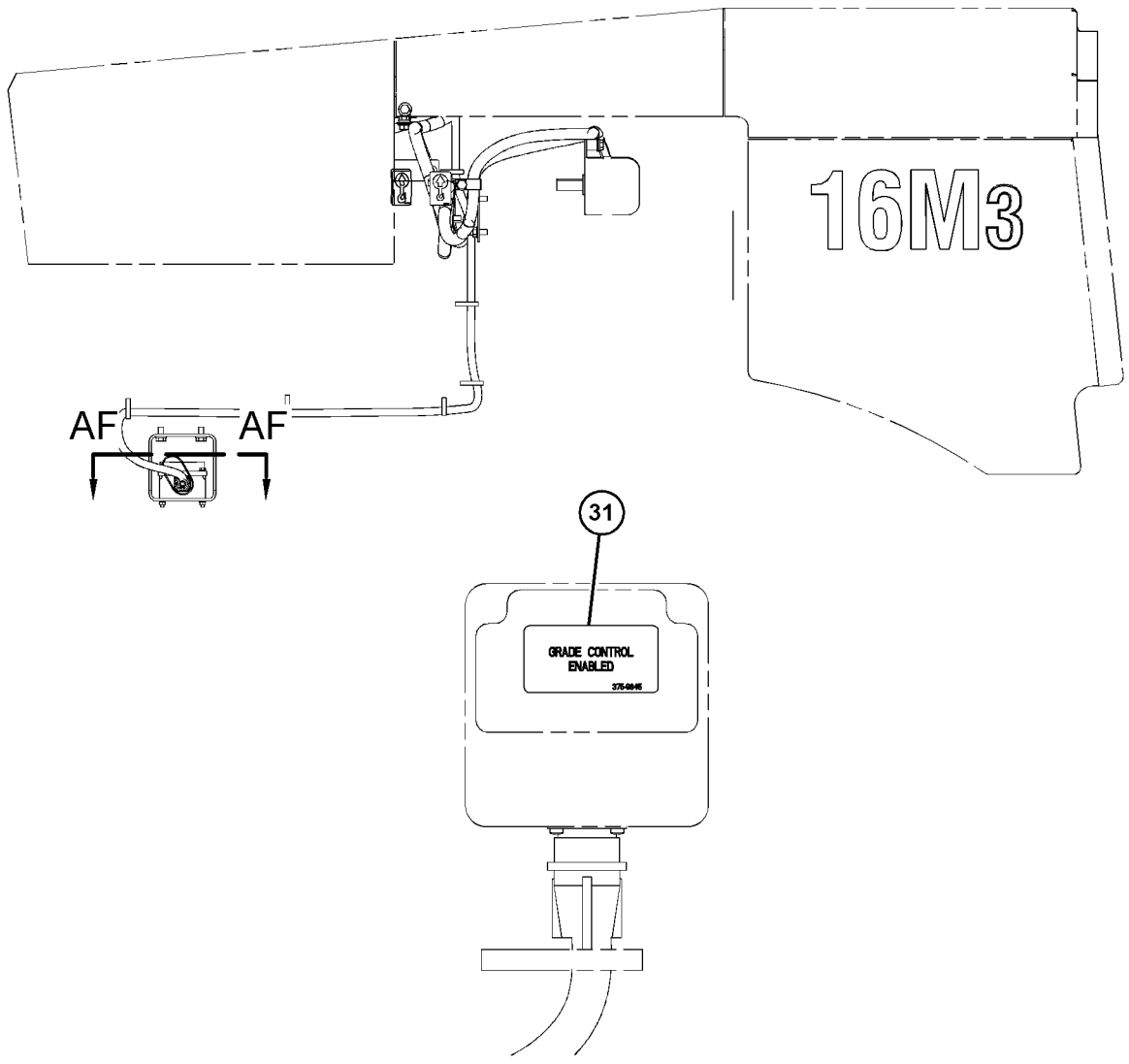

VIEW AF-AF

GRAPHIC #3 **<END>** g03817018

437-7839 PLATE & FILM GP

S/N: E9Y1-UP

PART OF 386-1317 COMMON AR

SMCS-7405, 7557 **i06103724**

NOTE	REF NO	GRAPHIC REF	PART NUMBER	QTY	PART NAME 1 2 3 4 5 6 (PRODUCT LEVEL)	SEE PAGE
	1	2	**3E-1552**	1	FILM-INSTRUCTION (TRANSMISSION FILTER)	
	2	2	**5P-1174**	1	FILM-IDENTIFICATION (TRANSMISSION OIL FILL CAP)	
	4	2	**129-7680**	1	FILM-INSTRUCTION (HYDRAULIC TANK OIL DRAIN)	
	6	2	**146-6747**	1	FILM-INFORMATION (24-VOLT)	
	7	3	**159-3590**	1	FILM-IDENTIFICATION (WATER SEPARATOR)	
	9	2,3	**209-5776**	2	FILM-INFORMATION (ENGINE COOLANT)	
	10	4	**220-3634**	1	FILM-IDENTIFICATION (DRAIN, ENGINE COOLANT)	
	11	2	**225-4150**	1	PLATE-SERVICE INFORMATION (MACHINE)	
	15	2	**239-6989**	1	PLATE-SERIAL NUMBER (MACHINE)	
	16	2	**248-5245**	2	FILM-INFORMATION (LIFT EYE, TIE-DOWN LOCATION)	
	18	2	**249-8575**	1	FILM-WARNING (NO DRILL, WELD, READ OMM)	
	19	2	**252-2157**	2	FILM-INFORMATION (TIE-DOWN)	
	20	2	**261-4377**	1	FILM-IDENTIFICATION (FILL, DRAIN)	
	21	3	**275-3292**	1	FILM-IDENTIFICATION (GREASE POINT)	
	22	3	**293-3823**	1	FILM-IDENTIFICATION (ARTICULATION LOCK)	
	23	3	**329-5707**	1	FILM-IDENTIFICATION (OIL GRADE, READ OMM)	
	24	2	**334-4424**	1	FILM-IDENTIFICATION (CIRCUIT BREAKERS)	
	25	2	**360-2142**	1	FILM-IDENTIFICATION (LAMP)	
	26	3	**366-7409**	1	FILM-IDENTIFICATION (FLUID, DRAIN/EMPTY)	
	27	4	**371-6464**	2	FILM-IDENTIFICATION (GRADE CONTROL)	
	29	4	**375-9845**	1	FILM-INFORMATION (GRADE CONTROL ENABLED)	
Y	31	1	*393-2515*	1	FILM GP	851
	32	2	**393-2516**	1	FILM-IDENTIFICATION (RELAY PANEL)	
	34	2	**437-1450**	1	FILM-IDENTIFICATION (FUSE PANEL)	
	35	3	**450-2497**	2	FILM-STRIPE (RED)	
	36	3	**452-0064**	2	FILM-IDENTIFICATION (LIFT POINT)	
	37	4	**460-8153**	1	FILM-IDENTIFICATION (LUBRICATION CHART)	
	38	2	**460-8154**	1	PLATE-INDICATOR (CENTERSHIFT INDICATOR)	
	39	3	**114-0066**	1	PLATE-INSTRUCTION (READ SERVICE MANUAL)	
	40	2	**3F-5535**	3	SCREW-DRIVE (NO 10X0.375-IN)	
	41	2	**158-7864**	1	FILM-IDENTIFICATION (HYDRAULIC OIL)	
FJ			**246-2641**	2	PADLOCK GP	
					(EACH INCLUDES)	
F			**5P-8500**	1	KEY	
					(ONE PADLOCK FOR EACH OF THE FOLLOWING COMPONENTS)	
					(1-ON HYDRAULIC TANK)	
					(1-ON BATTERY)	
AF			**3N-3790**	1	PLATE-SERIAL NUMBER (ENGINE)	
					(ON LOWER RH REAR CORNER OF CYLINDER BLOCK)	

A - NOT PART OF THIS GROUP
F - NOT SHOWN
J - SHIPPED IN TOOL BOX
Y - SEPARATE ILLUSTRATION

437-7839 **PLATE & FILM GP (*contd.*)** **i06103724**

REFER TO ALL ILLUSTRATIONS OF THIS GROUP FOR AUXILIARY VIEW

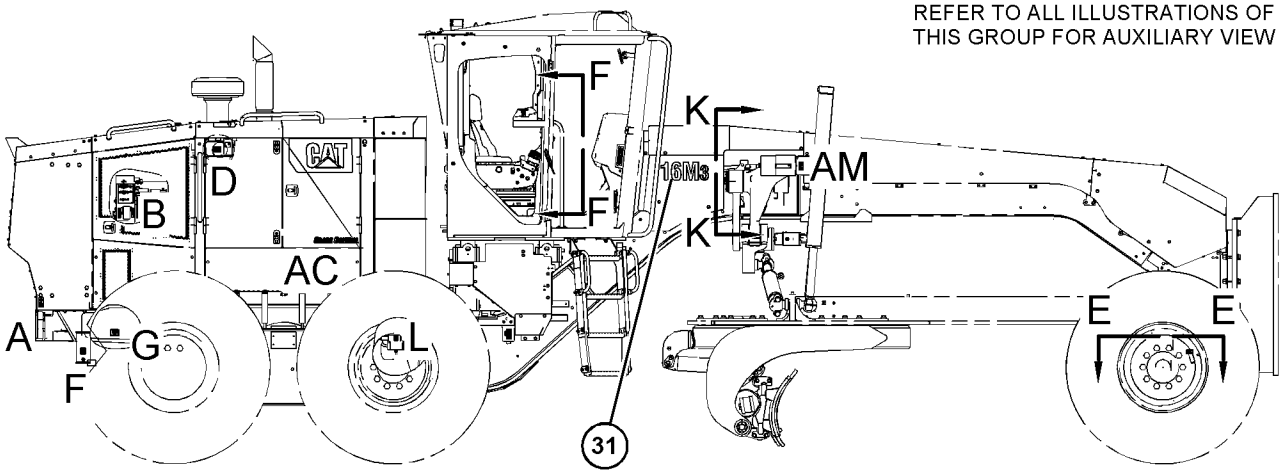

RIGHT SIDE VIEW

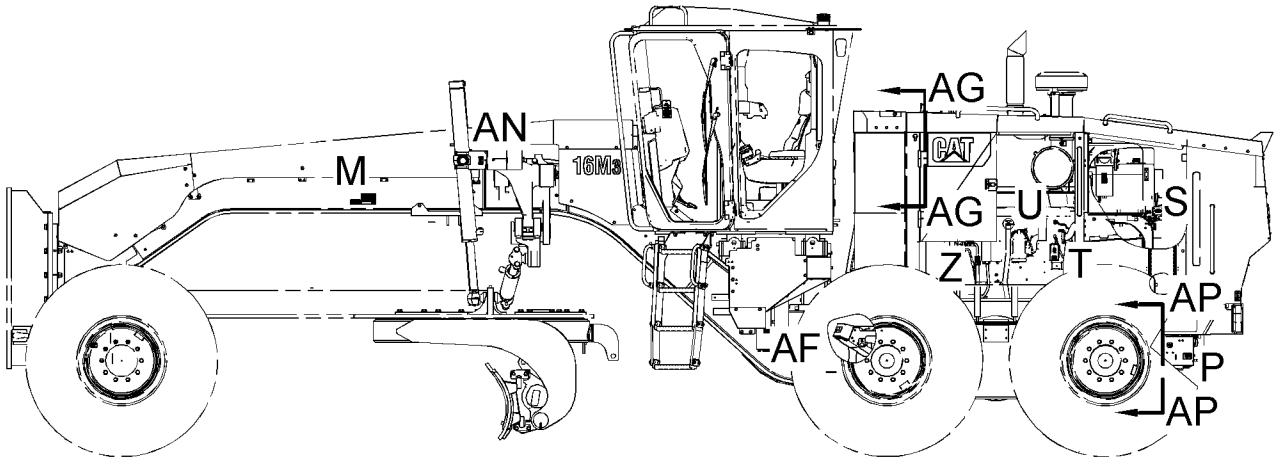

LEFT SIDE VIEW

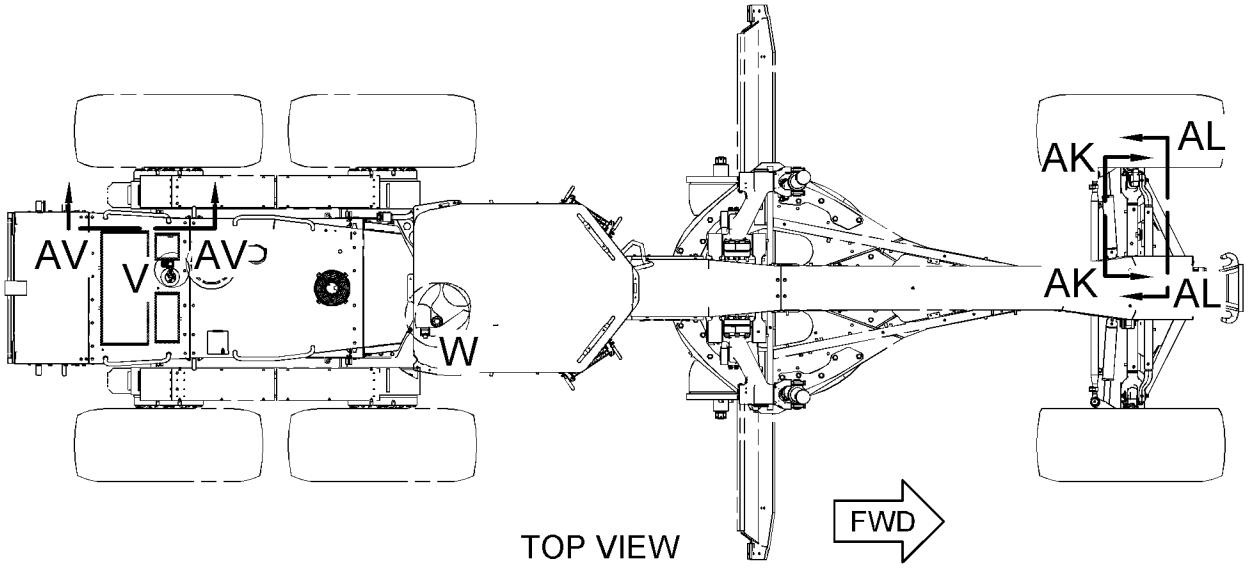

TOP VIEW

GRAPHIC #1 g03814318

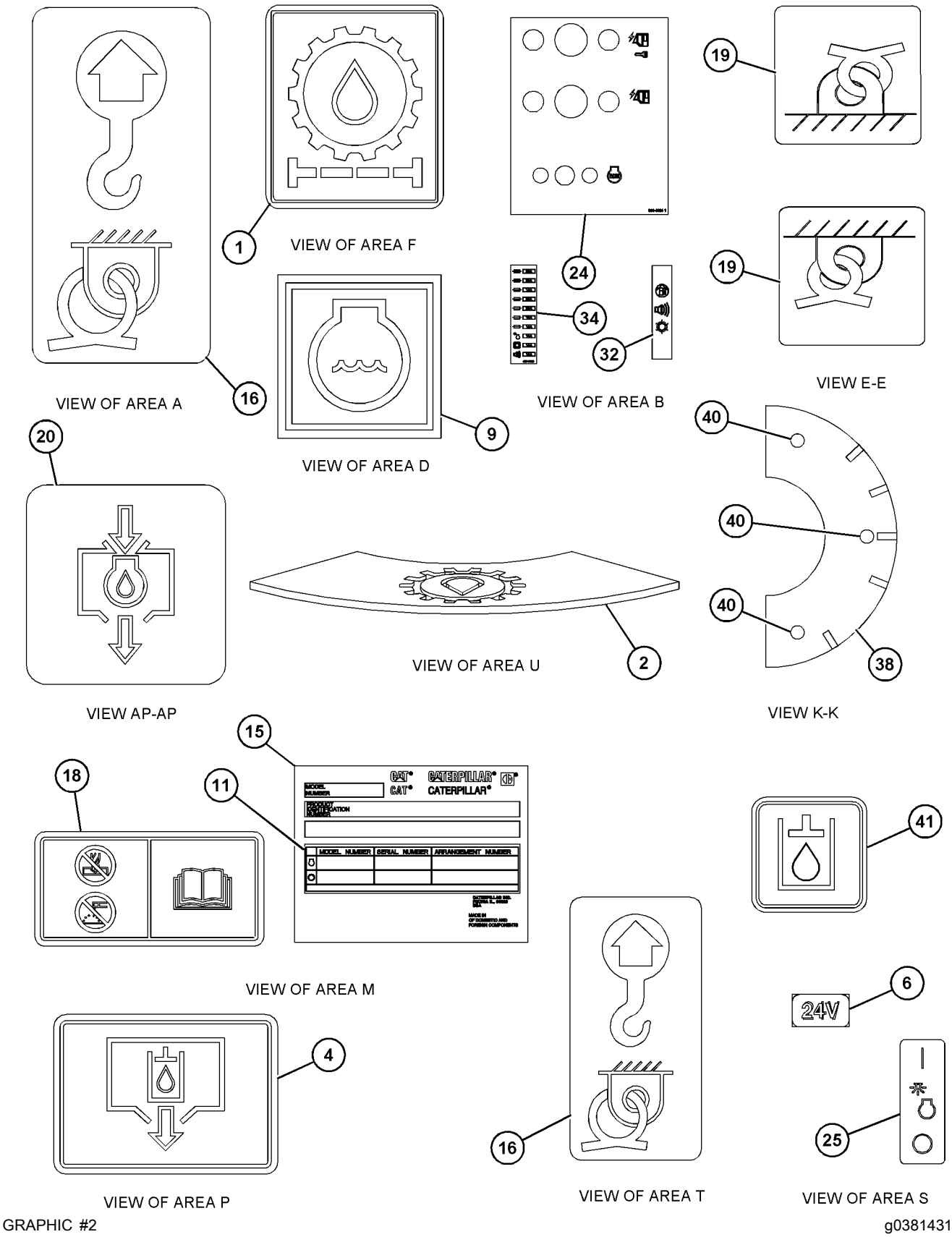

GRAPHIC #2 g03814319

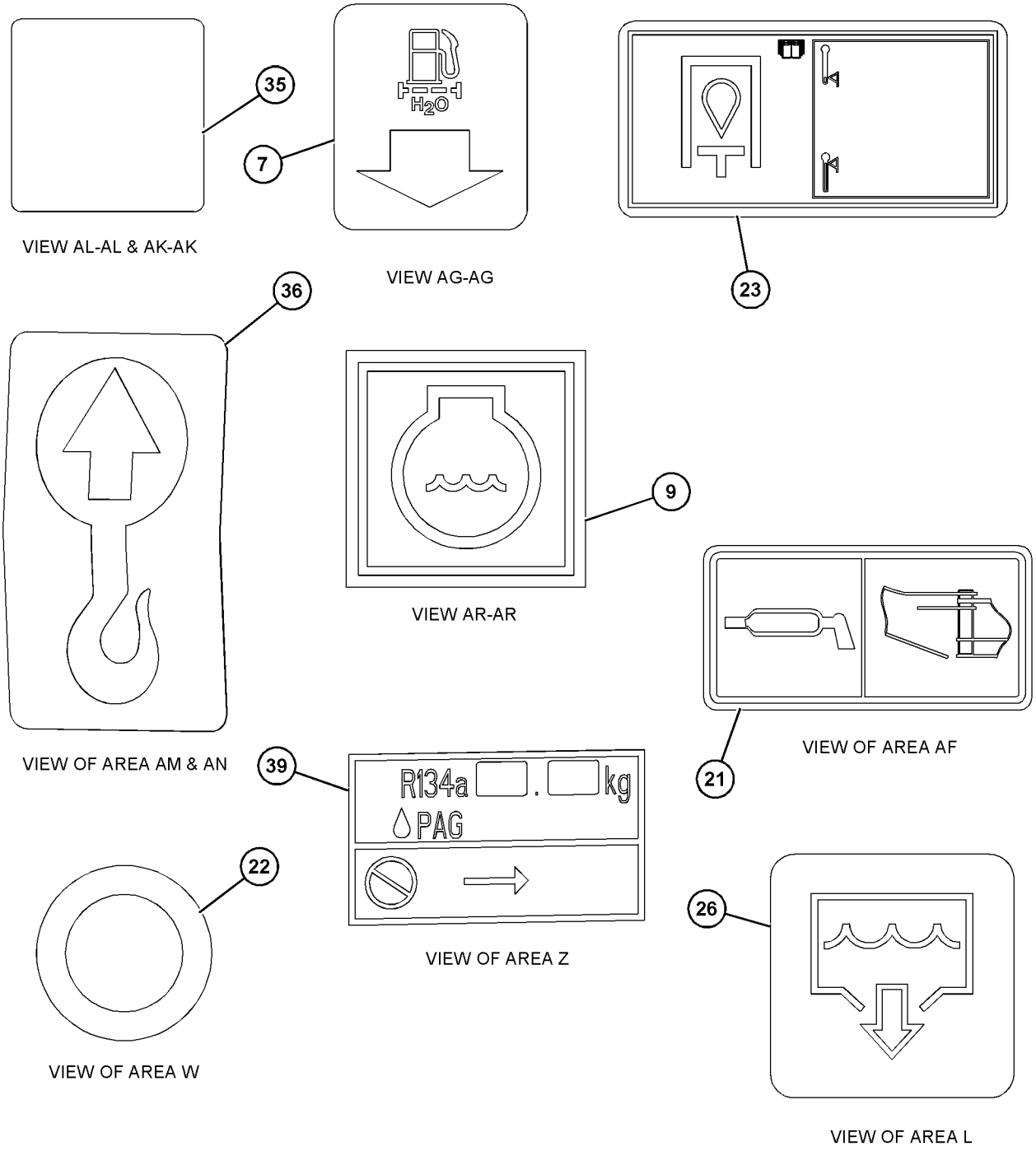

GRAPHIC #3 g03814320

437-7839 **PLATE & FILM GP (*contd.*)** **i06103724**

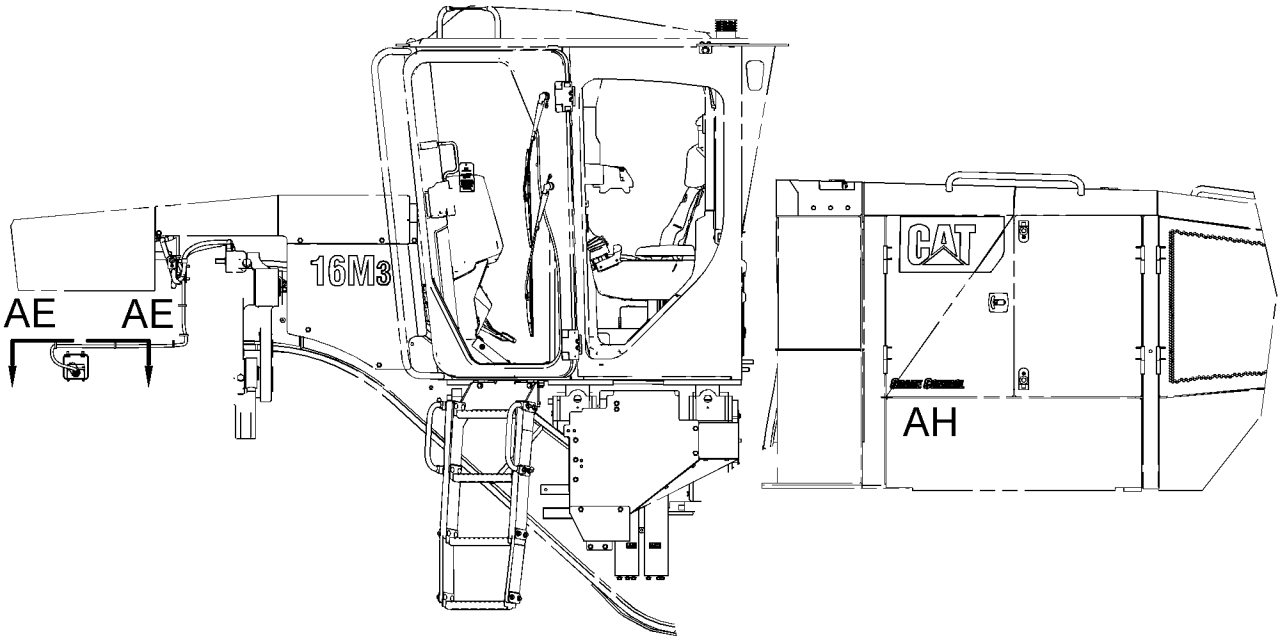

LEFT SIDE VIEW



VIEW OF AREA AC



VIEW OF AREA AH

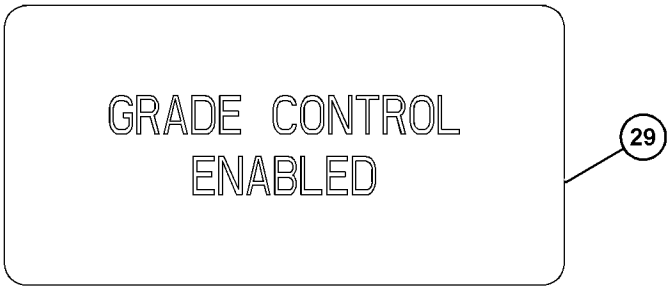

VIEW AE-AE

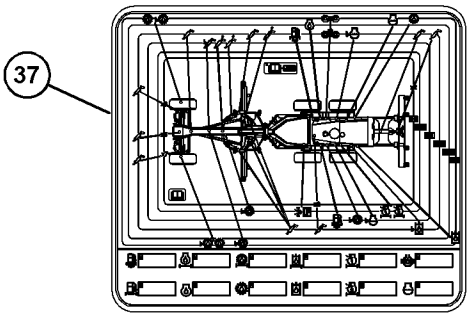

VIEW AV-AV

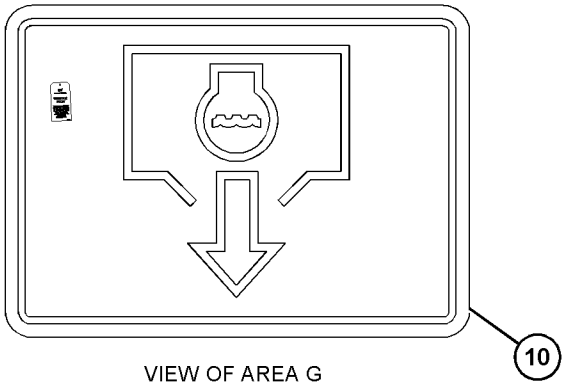

VIEW OF AREA G

GRAPHIC #4 **<END>** g03814321

442-5255 PLATE & FILM GP

S/N: TXX1-UP
PART OF 394-1172 ENGINE AR
AN ATTACHMENT

SMCS-7405, 7557

i06158986

NOTE	REF NO	GRAPHIC REF	PART NUMBER	QTY	PART NAME 1 2 3 4 5 6 (PRODUCT LEVEL)	SEE PAGE
	1	1	**293-9659**	2	FILM-WARNING (UNIVERSAL, READ OMM)	
	2	1	**136-9066**	1	FILM-INFORMATION (ENGINE OIL)	
	3	1	**3N-3790**	1	PLATE-SERIAL NUMBER (ENGINE)	
	4	1	**419-8867**	1	PLATE-IDENTIFICATION (CAT)	

442-5255 **PLATE & FILM GP (*contd.*)** **i06158986**

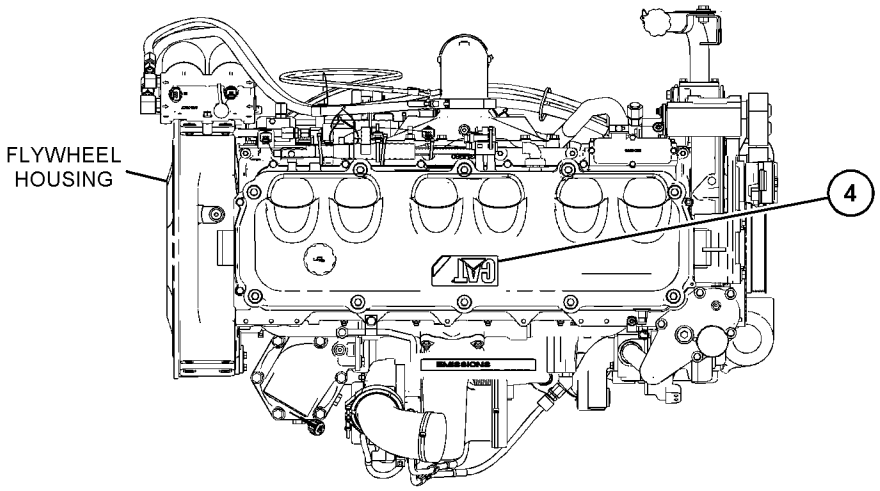

TOP VIEW OF ENGINE

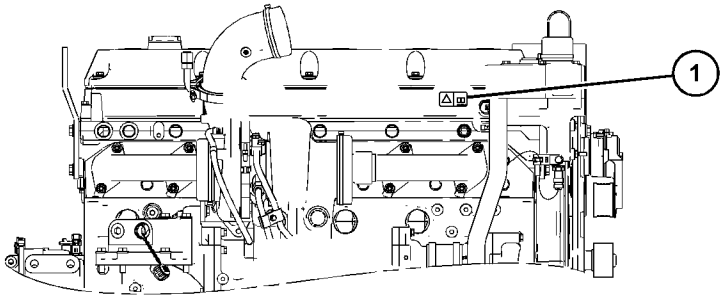

RIGHT SIDE VIEW OF ENGINE

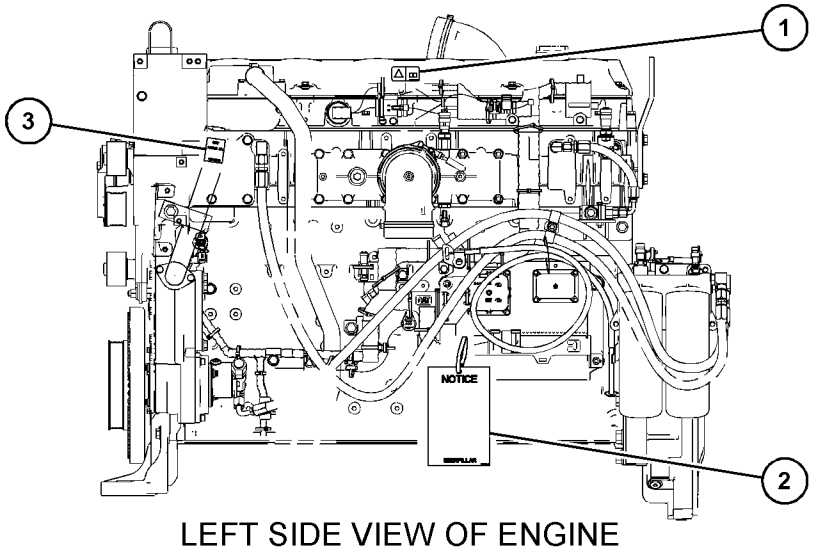

LEFT SIDE VIEW OF ENGINE

GRAPHIC #1 **<END>** g03839418

PART NUMBER INDEX

Part	Page
0	
0L-1026	42
0S-1585	571
0S-1595	355
0S-1597	259
0T-0489	799
1	
1A-1415	571
1A-1460	355
1A-2170	542
	543
1A-2610	46
1B-2578	269
1B-2709	484
1B-2713	734
1B-3867	98
1B-3937	522
	524
1B-4043	522
	524
1B-5170	337
1B-5174	571
1B-8705	14
	378
1D-0906	473
1D-4689	484
1D-4691	484
1D-6306	677
1F-1609	488
	489
1F-7567	697
1F-7854	151
	292
1F-7958	683
1H-1023	259
1H-2629	259
1H-3244	150
	304
	414
	416
	418
	420
	422
	423
1H-3937	385
1H-4478	553
1H-7339	565
	567
1J-0962	841
	842
1J-2150	455
1J-6762	299
	838
	840
1J-9671	140
	310
	514
	515
	516
	517
	518
	519
	538
	599
1K-6870	632
1K-6872	484
1M-1230	734
1M-1571	561
1M-3909	378
1M-6119	150
	151
1M-6120	150
	151
1M-6718	241
1M-9968	259
1M-9971	259
1N-5999	565
	567
1P-0604	341
	343
	347
1P-0810	187
	189
	193
	194
	195
	253
	282
	818
1P-3700	642
1P-3702	642
1P-4278	118
	138
	633
1P-4578	371
	373
1P-4579	371
	373
	529
1P-4584	373
1P-6522	156
1P-7834	329
1P-7835	329
1R-0622	822
1R-0749	117
1R-1808	73
1S-0994	101
	529
	589
	596
	599
	696
1S-1015	101
1S-3725	358
1S-3730	358
1S-4305	507
1S-7251	150
	151
	274
1S-7252	150
	151
	274
1S-7446	259
1S-9593	178
	189
1S-9799	373
1T-0808	259
1T-0936	642
1U-0322	611
1U-8846	38
	337
	520
1V-8284	20
	409
	488
1W-4738	37
1W-4741	37
1W-4746	37
1W-9311	115
2	
2A-1162	38
2A-4429	32
2B-0858	571
2B-0941	596
2B-0947	90
2D-0591	333
2D-1683	501
	502
	503
	504
2D-2443	402
	403
	404
	405
	407
2D-2507	402
	403
	404
	405
	407
2D-2508	402
	403
	404
	405
	407
2D-2509	402
	403
	404
	405
	407
2D-6235	734
	750
2D-6392	259
2D-6516	335
2D-6533	571
2D-6642	60
	750
2F-1336	493
2F-6678	259
2F-7888	310
2G-0339	571
2G-0478	571
2G-0617	231
	233
2G-0988	231
	233
2G-1133	223
2G-2945	675
2G-2946	675
2G-5667	329
2G-5668	477
2G-5669	477
2G-5672	547
2G-6595	402
	403
	404
	405
	407
2G-7106	329
2G-8234	843
2G-8611	556
2G-8615	329
2G-8626	329
2G-8635	329
	569
2G-8738	329
2G-8741	329
2G-8767	151
	274
	276
2G-8777	329
2G-9101	552
2G-9524	790
2G-9796	386
2H-1142	352
2H-3429	259
2H-3920	272
2H-3922	266
2H-3928	631
2H-3931	571
	609
2H-3932	337
2H-3933	360
2H-4145	520
2H-6489	336
2H-6490	384
2J-3506	299
	838
	839
	840
	841
	842
2J-6540	358
2J-8163	259
2K-0703	847
2K-3019	764
2K-4096	562
2K-4309	847
2K-4310	847
2K-4315	847
2K-4507	562
2K-4973	750
	815
	818
2K-6830	557
	558
	559
	561
	563
	569
2K-8199	352
2L-2685	75
2L-6679	236
2L-6726	520
2L-8052	174
2L-8060	174
2L-8067	683
2L-8069	174
	180
	185
2L-8075	168
	280
2L-8076	183
	304
2L-8078	168
	280
2L-8079	160
	162
	174
	185
	187
	288
2M-9780	123
	329
	336
	375
	386
	482
	546
	581
	582
	589
	595
	599
	604
	605

► **PRIMARY REFERENCE**

PART NUMBER INDEX

Part	Page
	606
	634
	667
2N-5243	355
2N-6005	543
2P-1692	352
2P-8421	310
	336
2R-2376	733
	823
2S-0795	355
2S-3029	336
2S-4078	73
	336
	372
	575
	599
	611
2S-4663	398
	644
	646
	648
	650
	652
	654
	656
	658
	660
	662
	664
2S-5658	35
2S-5835	398
2S-8439	843
2T-2396	502
	503
	504
2T-3013	389
	390
2U-4504	836
	837
2V-2015	823
2V-2043	80
2V-3726	823
2Y-5829	61
	62
	243

3

Part	Page
3B-0623	27
	29
	55
3B-1925	493
3B-4611	20
3B-4615	414
	416
	418
	420
	422
	423
	787
3B-4619	311
3B-4629	554
3B-4640	329
3B-4647	553
3B-5317	547
3B-5325	849
3B-6552	463
	471
3B-8485	471
	549
	552
3B-8488	471
3B-8489	329
	477
	554
	556
	677
	847
3B-8822	471
3D-2824	123
	265
	310
	336
	358
	372
	373
	528
	535
	536
	584
	589
	591
	592
	594
	595
	605
3D-8317	398
3D-8747	734
3D-8749	734
3D-8752	734
3E-1552	861
	865
3E-3000	832
3E-3371	174
	180
	223
	242
	305
	634
	784
3E-3377	177
	184
	190
	191
	195
	267
	725
3E-3383	165
	185
	190
	194
	200
	288
	725
3E-3389	174
	195
	280
3E-3636	292
3E-4075	605
3E-4302	628
	829
3E-4352	53
	90
	447
3E-4353	335
	355
3E-4363	325
3E-4887	46
3E-4888	46
3E-4898	769
3E-5169	223
	305
3E-5226	174
3E-6328	►144
	280
3E-6389	►205
	752
3E-6753	223
3E-6773	140
3E-6785	382
3E-6788	82
3E-6909	292
3E-7401	92
3E-7403	475
3E-7417	628
3E-7420	123
3E-8000	86
3E-8016	40
	50
	52
3E-8020	685
	686
	713
	716
	720
	723
	726
	730
	823
	829
3E-8349	788
3E-9375	245
3E-9854	212
3F-5535	861
	865
3F-5792	38
3F-9556	766
	767
	833
	836
	837
3G-0622	809
	811
3G-2165	841
3G-2166	842
3G-2580	847
3G-2582	847
3G-8047	579
3G-8054	579
	582
3G-8057	579
	582
3H-0442	636
3H-4192	333
3H-7654	11
3J-1907	73
	121
	292
	303
	308
	311
	350
	352
	358
	372
	398
	466
	520
	522
	524
	526
	528
	533
	587
	589
	595
	598
	599
	607
	611
	613
	617
	618
	634
	641
	642
	668
3J-2333	571
3J-4818	750
	815
	818
3J-5390	475
	501
	502
	503
	504
3J-7354	92
	101
	333
	467
	528
	529
	565
	567
	594
	595
	599
	606
	611
	613
	618
	626
	644
	646
	648
	650
	652
	654
	656
	658
	660
	662
	664
3J-8500	554
3K-0360	92
	308
	350
	386
	398
	466
	467
	471
	526
	528
	529
	533
	579
	581
	582
	584
	589
	591
	595
	596
	602
	605
	606
	607
	617
	618
	631
	637
	638

► PRIMARY REFERENCE

PART NUMBER INDEX

Part	Page
	639
	640
	644
	646
	648
	650
	652
	654
	656
	658
	660
	662
	664
	672
3K-0715	337
3K-6060	758
3K-6454	455
3K-8460	599
3K-8510	847
3K-9520	231
	233
3L-3380	259
3N-2945	328
	366
3N-3763	259
3N-3790	858
	861
	865
	870
3P-1461	440
3P-1932	368
3P-5414	101
3P-9847	101
	697
3P-9900	815
	818
3R-8797	259
3R-8801	259
	260
3R-9965	172
3S-0004	378
3S-2093	50
	150
	156
	160
	162
	172
	174
	178
	181
	184
	185
	193
	200
	218
	219
	221
	228
	243
	274
	276
	280
	288
	290
	292
	310
	326
	352
	711
	716
	725
	729
	738
	742
	750
	763
	799
	815
	818
	830
	833
	836
	837
3S-6049	151
3S-6605	63
3S-7023	558
	559
	561
	569
3S-8665	529
3S-9233	140
	333
3S-9643	88
3T-0849	241
	644
	646
	648
	650
	652
	654
	656
	658
	660
	662
	664
3T-3418	259
3T-3422	259
3T-3423	259
3T-3424	259
3T-3663	378
3T-4377	384
3T-4709	236
3T-4710	236
3T-6774	734
3T-9494	236
	259
3T-9524	259
3T-9525	►236
	259
3T-9549	575
3V-2431	292
3V-3263	830
3W-2647	292

4

4B-0418	697
4B-2049	259
4B-4274	152
	311
4B-4278	815
	818
4B-5059	829
4B-9880	398
4D-0298	558
4D-1326	269
4D-2297	692
4D-4823	571
4D-7388	373
	599
4D-7733	529
4D-7735	118
	582
4D-7889	341
	347
4D-8123	463
4D-9517	101
	223
	292
4E-1384	713
	716
	725
4E-2289	118
4E-5685	364
4E-5724	150
4E-8722	716
	830
4F-2294	268
4F-4097	628
4F-5695	26
4F-6024	37
4F-7952	377
4F-8824	554
4H-1440	628
4H-6112	386
4H-6996	571
4I-0755	522
	524
4I-5480	329
4I-7889	108
4J-0520	529
	607
4J-0522	371
	373
	615
4J-0524	371
	373
	529
	599
4J-1888	675
4J-4630	562
4J-5267	589
4J-5351	333
4J-5477	140
	333
	350
	528
	594
	599
	606
4J-7533	611
	613
	617
	618
	646
	648
	650
	652
	654
	656
	658
	660
	662
	664
4J-8996	337
4J-9535	642
4J-9964	631
4K-0367	571
4K-1388	333
	594
4K-2039	671
4K-3004	847
4K-3128	562
4K-6297	125
	127
	129
4K-6804	333
	386
4K-8603	336
4K-9429	776
4L-2729	259
4L-6454	805
4L-6499	269
4L-9337	493
4M-0061	734
4M-0189	38
4M-1831	259
4M-1853	259
4M-1854	259
4M-1896	259
4M-2381	398
4M-5281	311
	493
4M-5905	398
4M-6425	325
4M-6480	17
4M-8973	463
	475
	502
	503
4N-1230	37
4N-2514	36
4N-5091	584
	591
4N-8150	542
	543
4P-4369	110
4P-7233	76
	78
4P-7428	160
	162
	231
	233
	299
4P-7429	308
	738
4P-7581	218
	219
	226
	228
	278
	290
	292
	299
	303
	308
	311
	315
	317
	319
	321
	324
	350
	352
	482
4P-8134	172
	218
	221
	228
	290
	292
	299
	305
	307
	311
	315
	321
	326
	352
4S-1962	152
	274
	276
	587
4S-5565	292

► **PRIMARY REFERENCE**

PART NUMBER INDEX

Part	Page
4S-6679	372
4T-2236	839
4T-5613	558
	565
	567
4T-8054	609
4T-8317	840
4V-8577	815
	818
4V-9804	484
5	
5A-3604	360
5B-9318	646
	648
	650
	652
	654
	656
	658
	660
	662
	664
5C-2890	152
	304
	315
	317
	319
	321
	325
	782
	796
	797
	798
	815
	818
5C-7261	103
	175
	208
	219
	228
	257
	274
	276
	281
	290
	502
	503
	713
	716
	726
	766
	767
	833
	836
	837
5C-8811	836
	837
5C-9553	274
	276
	281
	704
	710
	779
	809
	811
5D-1026	696
5D-8159	442
5D-8161	442
5D-9629	780
5F-0304	38
5F-3092	337
5F-3715	675
5F-8807	482
5F-8933	838
	839
	840
	841
	842
5F-9144	121
	362
5G-3676	311
	467
	469
	582
	584
	592
5G-7946	606
5H-3252	571
5H-3701	522
	524
5H-5672	843
5H-8848	599
5H-8985	341
	343
	345
	347
5J-1246	631
5J-4771	839
5J-4773	841
	842
5J-5314	259
5J-5402	557
	558
	559
	561
	563
	569
5J-5731	562
5J-7333	481
5K-0906	493
5K-1075	329
5K-3294	533
5K-3492	455
5K-3494	455
5K-3496	455
5K-3929	455
5K-5129	571
5K-5288	571
5K-7143	571
5K-7748	847
5K-9090	73
	372
	373
	594
	595
	599
	606
	607
5K-9179	760
5K-9660	697
5L-4758	671
5L-4759	140
	333
5L-4763	42
5M-2894	357
	764
5M-3034	259
5M-3062	514
	515
	516
	517
	518
	519
	538
5M-6213	482
5M-6214	463
	469
5M-7937	336
	520
5P-0537	243
	734
5P-0597	104
5P-0599	104
	581
5P-0600	114
5P-0767	92
5P-1045	756
5P-1076	71
	86
	429
	431
	433
	460
	461
	484
	491
	495
	529
	585
	592
	624
5P-1174	861
	865
5P-1230	373
5P-1318	117
5P-1471	104
5P-2199	667
5P-2304	336
5P-2369	138
5P-2957	174
5P-3114	341
	343
	345
	347
5P-3401	522
	524
5P-3454	304
5P-3863	337
5P-3948	697
5P-4115	155
	160
	162
	202
	733
	796
	797
	798
5P-4116	103
	152
	159
	281
	288
	315
	317
	319
	321
	483
	704
	709
	742
	755
	765
5P-4135	632
5P-4423	815
	818
5P-4483	336
5P-4484	336
5P-4571	174
	195
	683
	818
5P-4869	104
5P-4889	134
5P-4892	382
5P-4924	634
5P-5528	257
5P-5598	32
5P-5602	174
5P-5618	174
	683
5P-5630	257
5P-5637	681
	755
5P-5643	681
5P-5677	200
	267
5P-5927	681
	823
5P-5931	100
5P-6006	168
	280
5P-6010	818
5P-6298	236
5P-6727	40
5P-6874	760
5P-6944	137
5P-7070	683
	696
	697
5P-7462	467
5P-7463	467
5P-7464	607
5P-7465	607
5P-7466	754
5P-7467	754
5P-7468	431
	433
	451
	596
	787
	790
5P-7469	431
	433
	451
	596
	787
	790
5P-7701	540
5P-7815	540
5P-7957	776
5P-7958	280
	757
5P-7970	106
5P-8068	82
5P-8112	292
	754
5P-8211	50
	52
5P-8245	18
	19
	38
	43
	44
	45
	48
	50
	52
	65
	90
	333
	355
	358

PART NUMBER INDEX

Part	Page
	556
	571
5P-8246	38
5P-8247	36
	571
	609
5P-8347	12
	352
5P-8439	414
	416
	418
	420
	422
	423
5P-8441	736
5P-8444	596
5P-8500	138
	719
	722
	729
	757
	861
	865
5P-8524	683
5P-8843	556
5P-8874	589
5P-8890	329
5P-8939	125
	127
	129
5P-9085	463
	467
	469
	471
	475
5P-9135	155
	231
	233
5P-9299	373
	529
	596
	607
5P-9560	535
	536
5P-9617	599
5S-4455	565
	567
5S-7379	571
	758
5T-1625	752
5T-7486	744
5T-8060	571

6

Part	Page
6A-5591	38
	50
	52
6B-1628	493
6B-5072	386
6B-5154	347
6C-8882	403
6C-9149	677
6D-1641	755
6D-3033	299
6D-3479	633
6D-4244	463
	579
	602
	713
	716
	720
	723
	726
	730
6D-4246	467
	582
	599
	607
6D-4247	756
6D-5257	172
6D-7146	81
	624
6D-7889	352
6E-0410	667
6E-0775	558
6E-1049	558
6E-2314	562
6E-3007	646
	648
	650
	652
	654
	656
	658
	660
	662
	664
6E-4213	628
6E-4214	628
6E-4215	628
6E-4216	▶380
	628
6E-4217	380
6E-4218	380
6E-4219	380
6E-4224	628
6E-4225	628
6E-4227	628
6E-4233	628
6E-4236	628
6E-4237	628
6E-4977	569
6E-5066	613
6E-6140	668
6E-6141	668
6E-6142	668
6E-6528	626
6F-0253	779
	780
6F-0612	310
6F-3930	402
	403
	404
	405
	407
6F-4855	671
6F-6672	352
	520
6F-7045	266
6F-7062	355
6F-8480	448
	453
	787
6F-8499	787
6G-1536	571
6G-1539	571
6G-1601	340
6G-1602	340
6G-1740	328
	340
6G-2168	373
6G-2256	150
	274
	276
6G-2263	150
	274
	276
	581
6G-4372	677
6G-4831	675
6G-4896	677
6G-4911	674
6G-5538	571
6G-5539	571
6G-5542	571
6G-5987	734
6G-6122	571
6G-7187	556
6H-4005	223
6H-7062	488
	489
6H-9691	522
	524
6I-1418	159
	282
	288
6I-2509	105
6I-2510	105
6I-4465	105
6I-8792	522
	524
6I-8911	341
	347
6J-1972	565
	567
6J-2680	373
6J-2797	557
	558
	559
	563
	569
6J-5731	565
	567
6K-0715	845
6K-1972	493
6K-3273	823
6K-4718	336
6K-6165	71
6K-6166	71
6K-6444	677
6K-6967	463
	475
	501
6L-7159	683
6L-8797	628
6L-9716	658
6N-3279	259
6N-3826	259
6N-7692	105
6N-8863	50
	52
6P-6256	480
6T-0363	236
6T-0371	236
6T-0372	236
6T-3377	522
	524
6T-3631	226
	264
6T-3632	226
	264
6T-3633	226
	264
6T-6708	683
6T-6969	223
6T-7695	768
6V-0683	467
6V-0852	143
	336
	350
	352
	368
	398
	526
	529
	599
	611
6V-0894	311
6V-0974	582
6V-1249	311
6V-1322	259
6V-1581	92
6V-1582	92
6V-1586	343
	345
	347
6V-1614	267
6V-1635	483
	489
6V-1668	683
6V-1720	336
6V-1722	584
	592
6V-1819	341
	343
	345
	347
6V-1820	37
	90
	337
	355
	771
6V-1874	431
	433
	451
	787
	790
6V-1889	589
6V-1970	1
	757
6V-2314	634
6V-2317	40
	70
	81
	82
	84
	91
6V-2686	257
6V-2722	151
6V-2858	118
6V-3250	94
	95
6V-3251	59
	92
	96
	99
	101
6V-3303	489
6V-3505	667
6V-3532	333
6V-3535	40
6V-3536	22
6V-3538	27
6V-3668	43
	556
6V-3822	44
	45
	90
	111
	120
6V-3823	333
	358
	390

► **PRIMARY REFERENCE**

PART NUMBER INDEX

Part	Page
6V-3834	82
6V-3918	13
6V-3940	16
	89
	337
	398
6V-3965	143
	336
	350
	368
	394
	395
	396
	397
	398
	526
	528
	599
	611
6V-4248	17
	76
	78
	352
6V-4249	44
	50
	52
6V-4368	138
6V-4422	720
	723
	730
6V-4589	756
6V-5039	108
6V-5040	108
6V-5048	257
	368
	576
	577
6V-5050	756
6V-5063	29
	32
	88
	89
6V-5064	355
6V-5134	82
6V-5192	40
	380
6V-5215	243
	290
	324
	352
6V-5217	15
	16
	290
6V-5218	79
	90
	398
6V-5219	40
	355
	382
6V-5221	13
	82
6V-5222	352
6V-5230	377
6V-5326	652
	654
6V-5684	19
	38
	333
6V-5686	571
6V-5696	65
	329
6V-5746	709
6V-5759	337
6V-5839	17
	37
	44
	45
	76
	78
	97
	110
	111
	120
	125
	127
	129
	131
	134
	290
	324
	352
	364
	541
	699
	771
	823
6V-5842	98
	131
	554
6V-5843	42
6V-5844	38
	329
6V-5845	364
6V-5851	833
	836
	837
6V-5853	830
6V-6317	37
	76
	78
	290
	352
	733
6V-6353	111
6V-6580	652
	654
6V-6609	59
	255
6V-6715	169
6V-6767	520
6V-6923	142
6V-7238	92
6V-7350	97
6V-7359	607
6V-7604	73
6V-7636	712
	716
	719
	722
	725
	729
6V-7673	37
6V-7687	460
	461
	462
	486
	845
	847
6V-7727	38
6V-7732	335
	364
6V-7742	843
6V-7744	414
	416
	418
	420
	425
	436
	505
	507
6V-7981	44
	45
	125
	127
	129
6V-8076	526
6V-8077	352
	398
	599
6V-8116	337
6V-8149	11
	44
	45
	358
6V-8185	493
	713
	716
	720
	723
	726
	730
6V-8188	259
6V-8197	18
	19
6V-8212	337
	823
6V-8218	641
6V-8225	40
6V-8237	329
	457
	843
6V-8337	628
6V-8352	626
6V-8358	123
6V-8359	542
	543
6V-8367	582
6V-8369	272
6V-8378	150
	269
6V-8397	92
	333
	350
	372
	466
	467
	469
	528
	581
	582
	584
	587
	591
	595
	596
	606
6V-8398	372
	466
	467
	471
	475
	501
	502
	503
	504
	526
	528
	529
	533
	579
	581
	582
	584
	589
	591
	592
	594
	595
	596
	602
	604
	605
	606
	607
6V-8400	73
6V-8490	155
	311
6V-8569	362
6V-8624	604
6V-8625	129
	526
	579
	582
	584
	591
6V-8626	607
6V-8627	350
6V-8628	333
	606
6V-8629	123
	546
6V-8632	125
	127
	595
	606
6V-8633	584
	591
	594
6V-8634	350
	466
	581
	591
	606
6V-8635	541
	544
	594
	606
6V-8636	372
	466
	587
	595
6V-8637	123
	372
	528
	589
6V-8638	581
	589
	605
6V-8639	466
	471
	579
	581
	584
	591
	595
	602
	605
6V-8642	606
6V-8647	528
	594
	606
6V-8675	91
6V-8716	589
6V-8721	582
	595
	604

PART NUMBER INDEX

Part	Page
	606
6V-8722	118
	607
6V-8723	466
	528
	582
	584
	591
6V-8724	350
	587
6V-8741	73
6V-8775	528
	579
	595
6V-8782	526
	584
	591
6V-8783	599
6V-8801	493
	697
6V-8836	243
6V-8837	628
6V-8928	822
6V-8939	372
6V-8941	466
6V-8994	582
6V-8996	529
6V-9001	372
6V-9002	533
	595
6V-9003	599
6V-9005	372
	599
6V-9007	528
6V-9009	73
6V-9027	84
	91
	101
6V-9028	352
6V-9168	92
	333
	469
	582
6V-9169	467
	602
	607
6V-9170	529
	599
6V-9182	80
	599
6V-9189	207
	209
	212
	787
6V-9200	595
	606
6V-9350	599
6V-9353	607
6V-9632	241
	685
	686
	697
	712
	716
	719
	722
	726
	729
	777
	782
	809
	811
	822
6V-9666	98
6V-9746	80
	123
	372
	528
	546
	589
	595
	599
6V-9769	88
6V-9829	469
6V-9830	602
6V-9832	596
6V-9833	358
6V-9837	467
	584
	592
	595
	607
6V-9838	372
	599
6V-9844	467
	528
	595
6V-9850	372
	582
	587
	606
6V-9851	466
	471
	579
	584
	591
	595
	602
	606
6V-9852	595
6V-9873	533
	607
6V-9875	599
6V-9876	582
	584
	591
6W-5458	764
6W-5698	821
6Y-0359	849
6Y-1895	343
6Y-2419	345
6Y-2932	620
6Y-2933	620
6Y-2934	620
6Y-2935	620
6Y-3083	336
6Y-5010	378
6Y-5113	760
6Y-7953	571
6Y-9960	46
	7
7C-1445	16
7C-1821	82
7C-1822	82
7C-3081	542
	543
7C-3082	542
	543
7C-3083	542
	543
7C-3954	542
	543
7C-7851	370
7C-7852	370
7C-8581	32
7D-1649	91
	329
7D-4903	493
7D-5252	402
	403
	404
	405
	407
7D-6922	750
7D-7233	101
7D-7469	403
	406
7D-7496	443
7E-0031	787
7E-6508	327
7E-7977	32
7E-7978	32
7F-3488	259
7F-3525	236
7G-1239	75
7G-4822	341
	343
	345
	347
7G-4998	540
7G-5984	73
	373
7G-5985	73
	373
7G-7053	311
	315
	321
7G-7920	186
	187
	304
7H-3171	386
7I-1024	463
7I-2272	140
7J-0204	565
	567
7J-2604	571
7J-5925	809
	811
7J-7423	611
7J-8611	366
	493
7J-8673	462
7J-9108	123
	372
	529
	595
	598
	599
	606
	607
	644
7J-9933	642
7K-1181	101
	203
	204
	223
	226
	231
	233
	278
	280
	286
	290
	292
	298
	299
	303
	305
	307
	308
	310
	315
	317
	319
	321
	742
	768
	795
	796
	797
	798
	827
7K-3176	754
7K-3215	159
7K-4201	733
7K-8876	628
7K-8877	628
7K-9203	329
7K-9204	847
7K-9205	547
7L-2894	259
7L-8316	734
7L-9061	628
7M-0324	259
7M-0325	259
7M-0326	259
7M-0327	259
7M-1297	540
7M-8485	73
	80
	197
	198
	333
	336
	337
	358
	372
	589
	594
	595
	598
	599
	606
	634
	642
7M-8651	259
7N-0296	257
7N-0718	152
	266
7N-2059	257
7N-5683	27
7N-9801	257
7N-9943	205
7R-2750	174
	304
7R-2751	174
	304
7R-3029	177
7S-3916	467
	587
7S-3919	467
	587
7S-8491	611
7S-9930	712
	716
	725
7T-0020	205
7T-0093	183
	187
	683
7T-0094	174
	180

► **PRIMARY REFERENCE**

PART NUMBER INDEX

Part	Page
	184
	185
	304
7T-0582	734
7T-1099	86
	488
	489
7T-3974	259
7T-4003	736
7T-4532	694
7T-4897	341
	343
	345
7T-4924	150
7T-6364	203
	204
7T-6496	336
7T-6799	765
7T-9302	273
7V-6571	152
	274
	276
	298
	299
	467
	587
7V-7584	758
7W-3556	493
7W-9094	243
7X-0346	609
7X-0365	841
	842
7X-0474	378
7X-0481	675
7X-0562	259
7X-0578	809
	811
7X-0579	118
	752
	782
	823
	830
7X-0584	20
7X-0590	434
7X-0605	520
	713
	717
	720
	722
	787
	809
	811
7X-0608	175
	274
	276
	282
	469
7X-0618	551
7X-0620	269
7X-0632	429
	554
7X-0818	159
	288
	308
	704
7X-0851	329
	843
7X-0870	82
7X-0871	607
7X-0909	44
	45
7X-1387	414
	416
	418
	420
	422
	423
7X-2049	697
7X-2393	787
	790
7X-2459	350
7X-2465	769
7X-2489	677
7X-2533	777
7X-2535	160
	162
7X-2536	634
7X-2537	427
7X-2538	695
7X-2539	118
7X-2546	378
7X-2549	462
	529
	615
7X-2550	813
7X-2552	92
	491
7X-2553	112
	138
	429
	787
	790
7X-2554	138
	429
7X-2555	429
7X-2556	434
	436
	489
7X-2557	845
	847
7X-2561	329
7X-2563	299
	434
	436
	843
7X-2564	429
7X-2575	571
7X-2576	457
7X-2577	46
	677
7X-2585	46
7X-2621	823
7X-3165	123
7X-3373	259
7X-3391	505
7X-3392	460
	461
7X-4733	620
7X-4744	140
7X-4780	219
	221
7X-6312	197
7X-6315	168
	280
7X-7729	108
	112
	118
	152
	282
	329
	373
	410
	412
	414
	416
	418
	420
	425
	429
	431
	433
	434
	436
	445
	446
	451
	489
	491
	546
	599
	605
	687
	688
	697
	758
	773
	787
	790
	799
	813
7X-7877	152
7Y-0468	744
7Y-0725	675
7Y-2174	769
7Y-3474	836
	837
7Y-5232	376
7Y-5262	764
7Y-7388	282
7Y-9096	712
	716
	719
	722
	725
	729
8B-1002	554
8B-6511	360
8B-9840	845
8C-2926	377
8C-3089	259
8C-3095	169
8C-3100	98
8C-3110	626
8C-3132	667
8C-3206	529
	607
8C-3210	337
8C-3364	73
8C-3445	73
8C-3446	368
8C-3447	368
8C-3451	600
8C-3681	101
8C-5607	160
	162
	200
8C-5608	160
	162
	200
8C-5748	212
	352
8C-5918	150
	151
8C-6354	280
8C-6368	822
8C-6711	671
8C-6857	299
8C-6871	475
	501
8C-6920	127
	129
8C-6959	118
8C-7563	599
8C-8430	685
	686
8C-8451	156
	200
8C-8514	168
8C-8778	235
8C-8988	466
	469
	595
8C-8989	595
	602
8C-9660	259
	823
8D-1817	329
8D-1819	329
8D-2256	364
8D-2311	364
8D-3244	843
8D-3245	843
8D-3247	843
8D-3251	843
8D-3252	843
8D-3266	843
8D-3267	843
8D-3268	843
8D-3269	843
8D-3307	843
8D-3308	843
8D-3309	843
8D-3311	843
8D-3329	843
8D-3791	441
8D-3984	571
8D-3986	571
8D-4522	571
8D-4523	571
8D-4771	364
8D-5054	571
	787
8D-7333	571
8D-7343	571
8D-7424	572
8D-7712	152
8D-8168	557
8D-8572	440
8D-8888	549
8D-9507	843
8D-9671	101
8E-0401	343
	345
	347
8E-1143	398
8E-1263	341
	343
8E-4832	418
	420
8E-5157	336
8E-5287	358
8E-5530	838
8E-6558	341
	343
8E-7365	358
8E-7366	358
8E-8319	341
	343
	345
	347
8E-8439	42

8

PART NUMBER INDEX

Part	Page
8F-1326	281
8F-1434	150
	259
	269
8F-1974	292
8F-3469	341
	343
	345
	347
8F-7219	121
8F-8733	329
8F-9538	522
	524
8H-5303	266
8H-5306	266
8H-9789	40
8I-1362	373
	830
8J-2189	847
	849
8J-2190	849
8J-2331	631
8J-4351	82
8J-5050	847
8J-5654	561
8J-5914	73
8J-9607	845
	847
8J-9608	845
	847
8K-0530	443
8L-2777	60
8L-2786	117
	368
	576
8L-5008	463
	467
	471
8L-8413	150
	151
	745
	746
8M-2770	292
	300
	467
	697
8M-2773	299
	373
	467
	754
8M-5253	398
8M-6521	336
8M-8489	378
8M-9307	355
8M-9315	38
8N-1725	150
8N-4617	105
8R-0721	607
8R-3695	823
8S-0948	92
8S-2634	150
8S-4304	355
8S-7048	310
8S-9075	522
	524
8S-9076	522
	524
8T-0077	529
8T-0082	466
8T-0087	836
	837
8T-0088	333
8T-0100	53
	352
8T-0119	579
	602
8T-0122	150
8T-0164	528
8T-0226	38
8T-0267	642
	644
	646
	648
	650
	652
	654
	656
	658
	660
	662
	664
8T-0275	68
	125
	127
	129
8T-0276	90
	155
8T-0281	370
	473
8T-0292	88
	91
8T-0293	358
8T-0315	598
8T-0325	765
8T-0328	140
	150
	152
	164
	241
	259
	282
	634
	790
8T-0336	572
8T-0338	15
8T-0343	628
8T-0360	370
8T-0375	489
8T-0389	152
	213
	214
	218
	486
	633
	764
8T-0404	123
	372
8T-0640	733
8T-0642	235
8T-0643	97
8T-0644	132
8T-0667	329
8T-0674	843
8T-0722	412
	446
8T-0785	557
	559
	561
	562
	563
8T-1117	101
8T-1118	837
8T-1158	352
	392
8T-1159	522
	524
8T-1482	677
8T-1686	582
8T-1687	595
8T-1698	620
8T-1715	528
	602
8T-1887	76
	78
8T-1888	76
	78
8T-1889	125
	127
	129
	467
	469
	582
	585
	592
8T-1890	125
	127
	129
	467
	469
	582
	585
	592
8T-1897	118
	123
	467
	529
	579
	582
	585
	592
	602
	604
	607
8T-1898	118
	123
	467
	529
	579
	582
	585
	592
	602
	604
	607
8T-2225	712
	716
	719
	722
	725
	729
8T-2226	711
8T-2530	125
8T-2659	281
8T-3282	333
	360
	362
	364
	843
8T-3425	315
	317
	319
	321
8T-3440	73
8T-3490	3
	19
	76
	78
	86
	112
	150
	151
	219
	226
	228
	292
	299
	300
	310
	336
	372
	410
	412
	425
	431
	433
	434
	436
	443
	488
	489
	491
	495
	505
	528
	581
	584
	589
	591
	598
	697
	813
	822
8T-3597	3
	86
	112
	410
	412
	448
	453
	461
	488
	491
	584
	591
	787
	790
8T-3611	541
	544
8T-3612	86
	90
	299
	475
	480
	483
	488
	489
	501
	712
	716
	726
	782
	822
8T-3844	160
	162
	325
8T-3851	336
8T-3994	150
8T-4000	713
	717
	720
	723
	726
	730
8T-4001	481
	572
	677

► **PRIMARY REFERENCE**

PART NUMBER INDEX

Part	Page
8T-4009	846
	857
8T-4121	73
	75
	80
	92
	101
	104
	108
	118
	123
	138
	140
	147
	148
	152
	218
	219
	221
	223
	226
	228
	231
	233
	257
	274
	276
	278
	282
	292
	299
	303
	305
	307
	308
	311
	315
	317
	319
	321
	329
	337
	350
	352
	366
	367
	371
	373
	410
	412
	414
	416
	418
	420
	425
	427
	429
	434
	436
	443
	446
	455
	463
	467
	469
	471
	475
	479
	485
	486
	495
	505
	507
	526
	529
	533
	544
	545
	546
	554
	575
	579
	582
	585
	587
	589
	592
	596
	600
	602
	604
	607
	616
	625
	633
	636
	637
	638
	639
	640
	673
	681
	697
	713
	717
	720
	723
	726
	730
	733
	739
	754
	755
	756
	758
	760
	762
	763
	764
	769
	773
	796
	797
	798
	823
8T-4122	609
8T-4123	46
	92
	108
	299
	477
	677
	843
8T-4133	73
	101
	152
	221
	231
	233
	282
	292
	299
	305
	489
	587
	633
	637
	638
	639
	640
	758
8T-4136	75
	80
	92
	101
	118
	123
	138
	152
	218
	219
	221
	223
	226
	228
	257
	274
	276
	282
	292
	299
	307
	308
	311
	315
	321
	373
	410
	425
	429
	434
	436
	451
	463
	467
	491
	505
	507
	529
	545
	546
	579
	582
	589
	592
	596
	600
	602
	605
	607
	625
	633
	636
	697
	754
	756
	769
	773
	787
	790
	796
	797
	798
	813
8T-4137	92
	101
	118
	138
	147
	148
	152
	219
	221
	223
	257
	274
	276
	282
	292
	299
	307
	311
	315
	317
	319
	321
	329
	337
	352
	358
	412
	418
	420
	445
	446
	463
	467
	469
	471
	475
	479
	529
	546
	575
	582
	589
	596
	600
	607
	739
	755
8T-4138	160
	162
	202
	311
	697
	796
	797
	798
8T-4139	71
	138
	358
	431
	433
	434
	436
	443
	460
	461
	491
	505
	585
	592
	738
	787
	790
8T-4140	547
8T-4149	589
8T-4167	549
	769
	845
8T-4171	152
8T-4172	108
	373
	486

PART NUMBER INDEX

Part	Page
	681
8T-4174	34
8T-4175	434
	436
	443
8T-4178	337
	589
	600
	607
8T-4179	152
8T-4182	257
	311
	505
	602
	607
	758
	764
8T-4183	46
	86
	138
	292
	429
	431
	433
	451
	460
	461
	485
	529
	546
	551
	600
	774
	787
	790
8T-4184	104
	112
	367
	371
	373
	455
	600
	787
	790
	813
8T-4185	152
	292
	308
	414
	416
	418
	420
	425
	443
	463
	467
	585
	592
	758
8T-4186	73
	75
	108
	307
	429
	440
	467
	479
	507
	526
	633
	697
	754
8T-4189	152
	237
	262
	263
	282
	315
	317
	319
	321
	337
	489
	709
	742
	758
	770
	787
	790
8T-4190	352
8T-4191	101
	152
	226
	278
	281
	292
	299
	305
	308
	311
	420
	463
8T-4192	152
	299
	511
	512
	513
	696
	847
8T-4193	434
	436
	455
	489
	773
	813
8T-4194	46
	372
	495
8T-4195	86
	92
	101
	104
	108
	112
	118
	140
	218
	219
	221
	228
	231
	233
	300
	307
	308
	311
	367
	373
	412
	414
	416
	427
	429
	431
	433
	434
	436
	440
	455
	463
	467
	480
	489
	495
	507
	529
	533
	575
	579
	582
	585
	587
	589
	592
	596
	600
	604
	607
	633
	687
	688
	713
	717
	726
	754
	760
	813
	823
8T-4196	92
	108
	152
	223
	305
	307
	308
	366
	371
	373
	425
	429
	431
	433
	475
	485
	489
	491
	505
	507
	529
	579
	585
	589
	592
	596
	602
	607
	681
	699
8T-4198	147
	148
	152
	373
	529
	585
	592
	636
	673
8T-4199	159
8T-4200	809
	811
8T-4201	412
8T-4205	152
	259
	304
	311
	315
	317
	319
	321
	325
	493
	683
8T-4222	315
	321
	480
8T-4223	123
	138
	152
	231
	233
	299
	325
	367
	371
	373
	386
	431
	433
	434
	436
	443
	451
	455
	462
	484
	486
	491
	511
	512
	513
	529
	547
	585
	592
	600
	609
	632
	675
	696
	738
	787
	790
	843
	845
8T-4224	21
	71
	152
	159
	207
	208
	209
	212
	219
	228
	237
	257
	282
	288
	308
	325
	373
	427
	429
	475
	489
	493

► **PRIMARY REFERENCE**

PART NUMBER INDEX

Part	Page
	501
	502
	503
	634
	695
	758
	770
	787
	790
	809
	811
8T-4226	100
	420
	436
8T-4244	299
	325
	431
	433
8T-4648	138
	436
8T-4778	434
	436
	473
	847
8T-4779	86
8T-4780	108
8T-4821	547
8T-4896	493
	572
	697
	758
8T-4908	337
	483
	489
	755
	809
	811
8T-4910	372
	489
	843
	845
	847
8T-4956	434
	484
	507
	547
	600
	624
	774
8T-4958	569
8T-4970	836
	837
8T-4986	108
8T-4994	632
	841
	842
8T-5001	774
8T-5005	274
	276
	293
	311
	350
	489
	581
	585
8T-5030	616
8T-5039	628
8T-5041	487
	585
	592
8T-5092	231
	233
	520
	845
8T-5372	752
8T-5379	677
8T-5400	830
	833
	835
	836
	837
8T-5410	241
8T-5412	455
8T-5429	584
	591
	595
8T-5439	429
8T-5460	92
	434
	436
8T-5890	469
8T-6356	595
8T-6385	847
8T-6408	382
8T-6430	434
	436
	477
8T-6453	594
8T-6466	100
	118
	274
	276
	307
	434
	436
	489
	526
	529
	582
	587
	758
8T-6685	101
	147
	148
8T-6699	241
8T-6703	529
	600
8T-6868	434
	787
	790
8T-6869	103
	118
	159
	219
	228
8T-6870	152
8T-6876	79
8T-6895	467
8T-6912	21
	103
	207
	209
	282
	469
	475
	501
	502
	503
8T-6936	809
	811
	823
8T-6988	140
8T-7058	11
8T-7088	373
8T-7338	774
	788
	790
8T-7525	626
8T-7546	467
8T-7547	71
	208
	429
	489
	713
	717
	726
	758
8T-7566	241
	800
	805
8T-7876	628
8T-7934	76
	78
	479
	602
	607
	636
	771
8T-7971	46
	462
	712
	716
	725
8T-8442	626
8T-8549	489
8T-8729	144
	177
	179
	180
	181
	182
	183
	184
	185
	186
	187
	189
	191
	192
	193
	194
	195
	196
	200
	213
	214
	231
	233
	263
	272
	280
	281
	288
	304
	319
	321
	683
	702
	703
	705
	706
	707
	708
	711
	712
	716
	719
	722
	725
	729
	741
	765
	767
	780
8T-8730	173
8T-8737	160
	162
	165
	172
	173
	174
	177
	179
	180
	181
	182
	183
	184
	185
	186
	187
	190
	191
	192
	193
	194
	268
	304
	305
	832
	836

► **PRIMARY REFERENCE**

PART NUMBER INDEX

Part	Page
	837
8T-8899	123
	589
8T-8916	373
8T-8917	609
8T-8984	546
8T-9102	565
	567
8T-9371	815
	818
8T-9598	98
8T-9655	118
	155
	156
	158
	159
	282
	288
	352
8T-9658	155
8T-9756	150
8U-4791	101
8V-7162	830
8W-0220	592
8W-4167	675
8W-6179	572
8W-6626	443
8X-1106	496
	497
	498
	499
	500
8X-1386	809
	811
8X-2321	493
8X-2323	493
8X-3316	493
8X-3749	609
8X-4893	674
8X-4897	674
8X-4898	674
8X-5489	600
8X-8378	335
8X-9145	592
8Y-3795	86
8Y-4489	443
8Y-6379	822
8Y-7452	598
8Y-8294	829

9

Part	Page
9B-0453	482
9B-7233	152
9B-7237	493
9C-5344	75
	505
9C-7929	489
9D-0498	440
9D-1491	571
9D-3313	843
9D-3333	843
9D-6584	609
9D-6585	847
9D-6586	549
9D-6588	843
9D-6589	843
9D-6591	440
9D-7924	100
9F-2247	364
9F-5599	236
9F-5644	175
	266
9F-5975	800
	802
	805
9F-8477	341
	343
9G-0002	150
9G-0005	150
	151
9G-2758	150
9G-3695	267
9G-4101	259
9G-4343	304
9G-5127	366
9G-7101	152
	293
	308
9G-8909	150
9H-0846	358
9H-3360	364
9H-3757	259
9J-2880	847
9J-3139	849
9J-4963	620
9J-8580	337
9K-1171	364
9K-1172	364
9K-5635	752
9K-7951	402
	403
	404
	405
	407
9L-3334	310
9M-1096	76
9M-1974	12
	13
	15
	16
	40
	50
	52
	70
	79
	81
	82
	84
	88
	89
	91
	106
	158
	235
	243
	290
	324
	337
	352
	355
	398
	734
9M-2092	330
9M-2110	398
9M-2904	75
	138
	750
9M-4370	378
9M-7958	600
9M-8406	529
	587
	596
9N-0869	155
	158
	352
	782
9N-1941	112
9N-1995	823
9N-4155	378
9P-6573	425
9P-7121	140
9P-9388	760
9R-0109	553
9R-0932	752
9R-2053	581
9R-2160	488
9R-2613	329
	412
	434
	488
	813
9R-2640	457
9R-2672	299
	674
	822
9R-2806	790
9R-2807	790
9R-2821	150
	412
	488
	581
	822
9R-3761	489
9R-4286	276
9R-4595	674
9R-5008	463
9R-6414	152
9R-9866	674
9R-9925	633
9S-2437	726
	730
9S-2544	259
9S-4167	117
9S-4181	73
	337
	634
9S-4182	577
9S-4183	358
9S-4185	533
	576
9S-4190	123
	329
	386
	595
	628
	634
9S-4191	358
	533
	576
	577
	668
9S-8001	611
	613
9S-8002	56
	84
	107
	565
	567
	577
	611
	613
	626
9S-8004	29
	57
	94
	95
	111
	121
	243
	368
	398
	520
	542
	576
	613
9S-8005	57
	59
	117
	398
	631
9S-8006	59
	96
	99
	336
	375
9S-8008	29
	32
	59
	88
	89
	336
9S-8010	336
	540
9S-8892	677
9S-9334	337
	355
	358
	540
	542
9T-1636	628
9T-1652	628
9T-1699	628
9T-1710	628
9T-2186	668
9T-3051	559
	563
9T-3133	558
9T-4906	380
9T-5241	734
	744
9T-5927	569
9T-5977	571
	620
9T-8052	620
9T-8053	620
9T-8055	620
9T-8057	620
9T-8058	620
9T-8059	620
9T-8061	620
9T-8062	620
9T-8065	620
9T-8067	620
9T-8069	620
9T-8070	620
9T-8445	380
9T-8446	380
9T-8448	380
9T-8450	380
9T-8452	380
9T-9071	620
9T-9072	620
9U-8263	822
9U-8669	398
9W-0844	177
	180
	181
	183
	184
	185
	186
	187
	218

► **PRIMARY REFERENCE**

PART NUMBER INDEX

Part	Page
	228
	231
	233
	304
	832
9W-0852	177
	183
	185
	186
	187
	218
	228
	230
	231
	233
	683
	832
9W-1454	336
9W-2029	341
	343
9W-3273	378
9W-6465	336
9W-6467	347
9W-6582	46
9W-6584	46
9W-7038	337
9W-8095	46
9W-9930	46
9X-0196	174
	280
9X-0262	243
9X-0941	675
9X-1046	164
9X-1386	215
	267
9X-1813	265
	315
	317
	319
	321
9X-2023	600
9X-2032	510
	822
9X-2038	160
	162
	683
	782
	823
9X-2041	293
9X-2042	712
	713
	716
	717
	719
	720
	722
	723
	725
	726
	729
	730
	780
9X-2043	165
	713
	717
	720
	723
	726
	730
	765
	777
	782
	809
	811
	823
9X-2044	683
	713
	717
	720
	723
	726
	730
	777
	779
	782
	809
	811
	823
	830
9X-2045	203
	204
	701
	720
	723
	736
	752
	782
	823
	826
	827
9X-2046	752
	782
	830
9X-2053	36
9X-2092	152
9X-2097	373
9X-2125	330
	412
	713
	717
	720
	723
	726
	730
9X-2133	92
	101
	696
9X-2474	493
9X-2488	755
9X-2492	526
9X-2546	700
9X-2646	108
9X-2647	108
9X-3401	50
	140
	160
	162
	165
	177
	179
	180
	183
	184
	185
	186
	187
	189
	190
	191
	192
	193
	194
	195
	196
	200
	240
	245
	281
	288
	634
	702
	703
	705
	706
	707
	708
	712
	719
	722
	725
	729
	780
	818
9X-3402	160
	162
	165
	173
	174
	177
	179
	180
	183
	184
	185
	186
	187
	188
	189
	190
	191
	193
	194
	195
	196
	200
	203
	204
	280
	288
	712
	719
	722
	725
	729
	741
	780
9X-3465	213
	214
9X-4244	207
	208
	209
9X-4385	177
	190
	191
9X-4609	352
9X-4611	557
	561
	569
9X-6016	152
9X-6155	325
9X-6165	86
	156
	160
	162
	200
	483
9X-6451	50
	52
9X-6580	467
9X-6581	373
9X-6590	554
9X-6620	110
9X-7264	562
9X-7287	140
9X-7317	122
9X-7378	311
9X-7380	88
9X-7381	696
	697
9X-7382	697
9X-7383	696
	697
	754
9X-7430	29
9X-7547	628
9X-7680	626
9X-7745	652
	654
9X-8250	299
	600
9X-8256	40
	152
	160
	162
	241
	282
	311
	337
	697
	704
	710
	765
	777
	809
	811
9X-8257	86
	92
	352
	434
	436
	443
	455
	489
	491
	547
9X-8258	46
	376
9X-8267	38
	68
	125
	127
	129
	711
9X-8268	34
	38
	333
9X-8399	557
	563
9X-8582	463
	467
9X-8600	140
9X-8874	90
9X-8876	355
9X-8880	609
9X-8914	668
9X-8979	375
	626
9X-9689	734
9X-9825	151
9Y-0810	22
9Y-0821	22
9Y-1758	68
9Y-6089	262
9Y-8075	81
9Y-8076	81
9Y-8386	624

PART NUMBER INDEX

Part	Page
0	
000-9262	360
002-0639	469
	471
002-6453	386
004-6683	502
	503
005-0469	628
005-0471	628
005-4173	120
005-4362	120
005-7541	493
014-0816	273
030-1705	151
	274
	276
030-1706	274
	276
030-6121	672
030-7947	125
	127
	129
031-4155	734
033-6027	628
	668
033-6033	142
	368
	577
033-6034	178
033-6036	628
	668
033-6043	626
034-1432	112
036-7232	310
045-4065	260
061-9455	16
	70
	71
061-9458	50
	52
	80
067-3045	599
069-4269	373
091-0081	92
	463
	528
	579
	594
091-4537	241
091-9035	257
	466
092-3635	582
092-5524	632
093-2068	101
095-0670	626
095-0673	375
095-0705	628
095-0889	333
095-0930	520
095-1207	414
	416
	418
	420
	422
	423
095-1582	644
095-1671	577
096-0015	381
096-0192	752
096-3831	618
096-6166	165
	281
	752
097-4896	602
097-7234	195
	818
098-5687	467
099-0822	10
1	
100-5421	64
100-5612	852
	856
100-6674	683
101-0003	752
	815
	818
101-2862	375
101-3055	768
101-3129	290
	324
	528
	606
101-3934	38
101-7396	677
102-4559	403
102-7364	644
102-8801	160
	162
	179
	183
	186
	192
	196
102-8802	50
	140
	144
	177
	180
	182
	189
	192
	195
	215
	218
	228
	230
	231
	233
	257
	264
	265
	304
	310
	315
	317
	319
	321
	694
	738
	752
	763
	777
	818
102-8803	180
	181
	205
	223
	226
	245
	305
	634
	779
	780
	784
	833
102-8804	177
	179
	182
	184
	190
	191
	195
	196
	267
	292
	315
	317
	319
	321
	725
	729
	780
	832
102-8805	165
	180
	181
	183
	185
	190
	194
	200
	213
	214
	231
	233
	288
	711
	712
	719
	722
	725
	729
	765
	767
	836
	837
102-8806	174
	195
	272
	280
	683
	780
103-6169	364
	522
	524
104-2091	782
	823
104-6202	292
	326
	352
105-3035	375
	626
105-3477	606
105-7167	469
105-9659	▶760
	761
106-3659	646
	648
	652
	654
	656
	658
	660
	664
106-3660	650
	662
106-4175	677
107-2784	631
107-5769	134
108-3589	495
108-4311	815
	818
108-5471	713
	716
	719
	722
	726
	730
109-0361	223
	305
109-1393	565
	567
110-5266	587
110-5334	841
110-6109	777
110-6923	138
	429
110-7524	832
110-8827	80
111-4627	782
	823
111-9110	514
	515
	516
	517
	518
	519
	538
112-0858	241
112-1574	377
	378
112-3926	677
112-3927	553
112-3928	481
	677
112-3929	549
	552
	845
112-3931	478
112-4550	223
	226
	305
112-5869	835
112-8728	752
112-8764	547
113-4630	179
113-5304	541
	544
113-8373	151
113-8490	280
	304
113-8491	280
	304
113-8492	280
	304
114-0066	861
	865
114-0358	849
114-0359	849
114-5157	750
114-6099	489
114-6658	203
	204
	274
	276
	712
	713
	716
	719
	722
	725

► **PRIMARY REFERENCE**

PART NUMBER INDEX

Part	Page
	726
	730
	752
	777
	779
	782
	809
	811
	823
	826
	827
	829
	830
114-8843	180
	193
	231
	233
114-8845	193
114-9224	125
	127
	129
115-0617	219
	228
115-2972	53
115-2973	53
115-3519	165
115-3580	431
	433
	451
	787
	790
115-4550	398
115-7087	115
115-9345	712
	716
	725
116-0118	299
116-2434	571
	677
116-3715	110
	594
116-3720	571
117-0165	6
	7
	▶55
117-2311	164
117-2927	358
117-3036	355
117-4491	802
117-8131	769
117-8801	18
	19
	40
118-5125	683
118-5619	681
118-6878	292
	310
118-8586	565
	567
119-3662	173
	177
	180
	184
	185
	193
	231
	233
	281
	288
	683
119-9631	683
120-4394	626
120-9051	642
120-9875	845
121-3307	103
121-3395	562
121-9247	569
122-0450	123
	466
	528
	579
	581
	584
	591
	602
	604
	606
122-6905	605
122-7666	685
	686
123-0707	151
123-0764	48
123-0783	117
	▶143
123-1373	150
123-4586	758
	762
	763
124-3019	226
124-3548	304
124-4287	589
124-5043	355
124-6257	92
	101
	756
124-6524	554
124-8333	73
124-8335	641
125-3298	634
125-6535	260
125-7874	160
	162
	165
	173
	174
	179
	180
	183
	184
	185
	186
	189
	191
	192
	193
	194
	195
	203
	204
	267
	280
	288
	304
125-7875	160
	162
	173
	174
	177
	179
	180
	184
	185
	190
	191
	193
	195
	280
	288
	683
	832
125-7876	180
	190
	191
125-9740	683
126-0747	589
	▶641
126-0748	641
126-1766	203
	204
126-1767	50
	160
	162
	165
	172
	179
	189
	193
	194
	195
	196
	200
	245
	281
	288
	694
	712
	719
	722
	726
	729
	818
126-1768	160
	162
	165
	172
	173
	174
	187
	189
	194
	195
	196
	200
	203
	204
	280
	288
	712
	719
	722
	725
	726
	729
	741
	827
126-1773	358
126-1774	174
	185
	193
	288
126-5648	733
126-8928	571
	677
127-0929	108
127-2170	447
	703
	782
127-3008	241
127-4838	241
127-5537	355
127-8609	198
127-9323	310
127-9485	375
	626
128-0382	22
128-0383	22
128-0384	22
128-0385	22
128-0400	22
128-0401	22
128-0402	22
128-0403	22
128-4123	174
	304
128-4249	185
128-5016	174
	304
129-2327	101
129-2893	42
129-3178	683
129-3180	787
129-3181	520
129-6400	108
129-7680	861
	865
130-0229	368
	576
130-3515	213
	214
130-5300	150
	202
	231
	233
	281
	292
	299
	305
	307
	308
	310
	315
	317
	319
	321
	352
	634
130-5301	231
	233
	738
131-0353	158
131-3093	692
131-3539	299
131-3718	15
131-3987	444
131-5171	752
131-6645	84
132-1805	292
132-1806	310
132-3056	634
132-5789	219
	221
	228
	235
	278
	290
	292
	307
	308
	310
	352
132-5793	683
132-6597	360
132-6598	360
132-7551	75
132-8487	299
133-2905	364

▶ **PRIMARY REFERENCE**

PART NUMBER INDEX

Part	Page
133-4292	520
133-5545	611
	618
133-6517	197
	198
133-6934	310
133-7523	842
133-7524	841
133-7810	528
	594
	599
	602
133-9012	683
134-2540	160
	162
	174
	177
	185
	189
	281
134-3344	150
134-3355	150
134-4126	168
	280
134-5245	541
	544
135-0611	766
135-1979	734
135-5010	276
135-9941	529
136-1543	776
136-1953	755
136-2967	522
	524
136-3188	830
136-3191	830
136-4183	134
136-5490	742
	794
136-6417	528
136-9066	870
136-9301	337
137-6645	249
	589
137-9410	231
	233
138-7538	598
138-8175	381
138-8454	780
	782
138-8885	750
138-8886	750
139-1398	73
	372
139-3785	86
140-1088	219
	228
140-5945	699
140-8010	341
	343
	345
	347
141-3983	486
141-4043	484
141-5519	447
141-9784	683
142-0038	373
142-2527	241
142-5893	557
142-6433	401
	▶402
142-8937	634
142-9242	528
143-1288	800
	802
	805
143-3158	92
143-4535	589
143-4536	589
144-0195	712
	716
	719
	722
	725
	729
	830
	833
	835
	836
	837
144-0331	707
	708
144-0367	108
	372
	599
144-1636	174
	267
144-4107	822
144-4613	76
	78
145-0326	815
	818
145-2237	373
145-6669	681
145-8039	336
146-0124	591
146-1680	46
146-5804	738
146-6433	835
146-6747	861
	865
147-0319	▶206
	219
147-1445	160
	162
	193
	288
147-1446	185
	288
147-3150	372
147-5530	719
	722
	729
147-8855	591
148-1238	375
	626
148-1240	375
148-1925	352
148-5355	829
148-7841	362
148-8305	599
148-8307	589
148-8309	310
	336
148-8311	528
	602
148-8315	606
148-8316	528
	594
	606
148-8318	350
	466
	581
	591
	606
148-8323	599
148-8327	123
	372
	528
	589
148-8328	584
	591
	594
148-8329	594
148-8335	594
	606
148-8336	372
	466
	587
	594
148-8339	589
148-8340	466
	471
	579
	581
	584
	591
	595
	602
	605
148-8342	595
	606
148-8345	581
	589
	605
148-8346	581
148-8347	528
148-8353	372
148-8354	533
	595
148-8355	372
	599
148-8356	73
148-8358	604
148-8360	80
	599
148-8361	595
	606
148-8363	582
	584
	591
148-8364	526
	579
	582
	584
	591
148-8367	372
	582
	587
	606
148-8368	350
148-8369	333
	606
148-8370	466
	471
	579
	584
	591
	595
	602
	606
148-8371	466
	469
	595
148-8372	582
	595
	604
	606
148-8373	73
148-8374	466
	528
	582
	584
	591
148-8378	350
	587
148-8381	584
	591
	595
148-8382	123
	372
148-8388	546
148-8390	606
148-8393	595
148-8395	631
148-8405	599
148-8406	337
	358
148-8407	358
	533
148-8408	358
148-8409	336
148-8410	329
	595
	634
148-8411	533
148-8416	372
148-8417	466
148-8422	595
148-8427	466
148-8428	526
	584
	591
148-8436	528
	579
	595
148-8443	350
148-8444	467
	584
	591
	595
	607
148-8446	372
	599
148-9364	613
149-1912	733
149-5452	582
149-6371	310
149-8142	138
150-3024	634
150-3033	528
150-3061	467
150-3074	587
150-4037	467
	528
	595
150-4043	533
	607
150-4048	607
150-4049	589
150-5144	403
	404
	▶405
151-5520	547
151-7038	565
	567
151-9272	174
151-9274	706
152-3988	▶401
152-9070	594
153-5043	254
	264
153-5710	150
153-6241	595
	602
153-6256	599

▶ **PRIMARY REFERENCE**

PART NUMBER INDEX

Part	Page
153-6260	546
154-2302	697
154-3358	37
154-8079	692
	736
154-9023	92
155-2252	280
155-2255	160
	162
	173
	180
	185
	187
	191
	195
155-2256	160
	162
	281
155-2258	174
	180
	185
	195
	280
	281
155-2259	174
	196
	200
	741
155-2260	160
	162
	180
	181
	183
	185
	188
	189
	303
	305
	780
	832
155-2261	174
	184
	185
	186
	192
155-2262	174
	185
155-2265	196
	200
	741
155-2269	185
155-2270	173
	177
	179
	180
	181
	182
	183
	184
	186
	187
	189
	190
	191
	192
	193
	194
	200
	203
	204
	218
	228
	254
	268
	827
155-2271	177
	180
	182
	184
	187
	190
	196
	726
	729
155-2272	185
155-2274	165
	180
	181
	185
	186
	231
	233
	712
	719
	722
	726
	729
155-3502	475
155-3504	599
155-5114	352
155-6654	381
155-7321	584
	592
156-1458	288
156-4974	462
	486
156-5970	636
156-6175	160
	162
	200
	243
	796
	797
	798
157-0670	92
157-5537	517
	519
158-0252	206
	211
158-7864	861
	865
159-0052	712
	716
	725
159-1503	605
159-3046	360
159-3590	861
	865
159-8049	150
	151
	274
	276
159-8050	151
	274
	276
159-9322	160
	162
	174
	175
	180
	185
	193
	288
159-9539	674
160-1744	754
160-2169	752
160-3518	182
160-4128	466
	▶666
160-7689	180
	185
160-7690	174
160-8124	189
160-8184	37
160-8492	336
160-8510	364
160-8708	299
160-9413	535
	▶538
161-3509	▶211
	219
	228
161-6154	672
161-6958	115
161-6963	115
161-7632	412
161-8068	378
162-0177	398
	520
162-2165	165
	281
162-2480	460
	461
162-7449	584
	591
163-0343	343
	345
	347
163-1135	815
163-1137	750
163-2478	32
163-7233	522
	524
164-1234	815
	818
164-2108	394
	395
	396
	397
164-4180	73
	337
	634
164-4883	800
	805
164-5555	372
164-5567	143
	336
	350
	398
	526
	528
	599
164-5586	607
164-5602	73
164-5608	595
164-5619	336
164-6859	607
164-6860	599
164-7556	207
	208
	209
164-7577	▶265
	575
164-7900	101
164-7908	467
164-8474	822
164-8908	529
164-9760	104
165-0018	177
165-0367	343
	345
	347
165-0488	341
	343
	345
	347
165-2273	92
165-3930	357
	571
165-4388	528
165-4854	372
165-4929	336
165-4931	352
	398
	599
165-9755	91
166-0321	613
166-0344	626
166-0690	310
166-1880	553
	677
166-2904	29
167-1801	385
167-2200	569
167-2307	609
167-3692	174
	185
167-3693	173
	183
168-3504	626
168-7861	626
168-7940	381
168-7941	381
168-7942	381
168-7943	381
169-0705	705
	706
169-2876	822
169-4166	40
169-5414	299
169-5864	372
169-7380	815
	818
169-7409	529
170-0493	514
	515
	516
	518
	538
	539
170-3093	551
170-5334	▶734
	736
171-0596	174
	242
	634
171-1230	800
	802
	805
171-2210	150
171-3759	▶267
	784
171-4047	782
	822
171-6466	535
	536
171-6723	123
	589
171-6731	475
	501
171-9375	520
172-0197	529
172-3511	779
	780
172-5291	292
172-6423	520

PART NUMBER INDEX

Part	Page
172-7966	398
172-7968	398
172-8037	182
172-8039	182
172-8591	712
	719
	722
	726
	730
	752
	782
	809
	811
	822
172-9981	557
	559
	561
	563
173-1007	631
173-1008	631
173-2052	776
173-7035	804
	807
	808
173-9683	557
	558
	559
	561
	563
	569
174-0503	177
	185
	189
	281
174-3016	184
174-3091	174
	705
	706
	707
	708
174-4181	103
174-5763	752
174-5907	151
	274
	276
174-7449	398
174-7875	739
174-9527	46
174-9570	▶121
	133
175-1375	591
175-3721	38
175-4168	168
175-4291	207
	208
175-4292	207
	208
	209
175-7900	558
	559
	563
175-7904	562
175-9079	440
176-2947	175
176-5311	489
	845
176-5868	123
176-9237	111
	529
176-9299	184
177-0581	108
177-1061	373
177-1863	800
	802
	805
177-9645	174
	183
	683
177-9648	175
	185
	304
177-9653	165
178-2991	364
178-3336	754
178-7023	86
178-7907	776
178-8063	493
179-9392	280
180-0149	830
180-3998	595
	599
	607
180-9340	254
180-9900	280
180-9933	529
183-3407	29
	57
	111
	243
	542
183-6187	123
183-7262	336
183-7264	73
	598
184-0983	712
	716
	719
	722
	726
	730
184-1527	▶385
	628
184-2420	92
184-2472	280
185-0242	375
185-0248	375
185-0263	375
	626
185-1860	174
	780
185-3874	758
185-6644	602
185-7115	677
186-0359	325
186-3735	752
186-5107	745
	746
186-6531	329
187-3369	520
187-8191	672
187-8969	25
187-8972	22
188-0633	520
188-2162	336
188-3959	150
188-6303	626
188-8849	206
	211
189-2102	613
189-3158	192
189-3925	843
189-4383	482
189-4387	482
189-4394	493
189-4395	493
189-4401	493
189-4404	493
189-5358	762
	763
189-8627	613
	▶669
189-8789	408
	451
	787
	790
190-0544	150
	813
190-3848	151
190-3849	151
190-3850	514
	515
	516
	517
	518
	519
	538
	539
190-5386	457
	847
190-7615	196
	702
190-8970	133
190-8977	118
	▶133
191-1782	118
191-1783	118
191-2857	38
191-2933	807
	808
	▶815
191-6587	▶254
	292
191-7805	125
	127
	129
191-7816	92
191-8303	249
191-8304	250
191-9247	669
192-4594	91
192-7752	815
	818
192-7755	815
	818
192-7767	815
	818
192-7783	815
	818
192-7787	815
	818
192-7790	815
	818
192-7795	815
	818
192-7799	815
	818
192-7810	815
	818
192-7811	750
192-7812	750
	815
	818
192-7813	750
192-7820	815
	818
192-7848	815
194-2903	579
	602
194-4121	151
194-4864	756
194-5171	830
	833
	835
	836
	837
194-5226	303
194-5227	303
194-9487	480
195-0936	823
195-8697	482
195-8698	482
196-2036	526
196-2412	174
196-2413	174
196-4927	401
	▶403
196-4928	▶401
196-7867	403
197-1563	493
197-1762	626
197-2471	375
197-2472	375
197-2474	375
197-4977	336
197-7259	174
	183
	187
197-7261	180
	184
	304
197-8418	79
197-8419	79
197-9326	53
197-9327	53
197-9330	26
198-2914	669
198-4767	293
198-4768	329
	522
	524
198-4777	73
	86
	90
	108
	308
	310
	429
	440
	475
	489
	507
	529
	633
198-4778	104
	112
	429
	460
	461
	485
	487
	489
	546
	547
	774
	787
	790
	813
198-4780	86
	112
	138
	434
	436
	489
	787
	790
	813

▶ **PRIMARY REFERENCE**

PART NUMBER INDEX

Part	Page
198-4781	434
	436
198-4963	31
	▶35
198-5389	200
199-4318	444
199-7819	473
199-7854	310
	582
2	
200-5728	▶182
	742
	794
200-6345	101
201-0418	622
202-0313	304
202-0314	304
202-0315	304
202-2762	223
202-5397	174
	780
202-6611	207
202-6614	208
	209
202-7475	42
203-0351	107
203-0780	764
203-3831	98
203-8609	375
	626
203-9007	174
	280
	281
	288
204-0317	582
204-1297	174
204-2281	151
	292
	298
	299
	307
	308
	310
204-8000	151
	281
	292
	298
	299
	307
	308
	310
205-0826	200
205-5149	719
	722
	730
205-6388	799
205-8257	200
206-1345	326
206-3747	752
206-4669	598
206-5017	308
	467
206-5143	460
	461
	462
	489
206-5162	200
206-5823	766
	836
	837
206-8818	634
206-9295	368
	577
207-2484	594
207-4183	782
207-5271	200
207-8572	24
208-1629	502
	503
208-9281	99
209-4573	92
209-5776	861
	865
209-7309	58
	76
	78
209-8296	151
210-1743	50
	52
210-1746	50
	52
210-4458	372
210-4460	35
210-8958	177
211-0052	174
	183
	185
	186
	187
	193
	281
211-0587	22
211-0588	22
211-2660	733
211-3445	13
211-5237	467
211-5358	815
	818
211-6807	189
211-9294	815
	818
212-1336	599
212-4174	599
212-4961	646
	648
	650
	652
	654
	656
	658
	660
	662
	664
212-6891	823
212-7728	21
212-7779	▶750
	815
	818
212-7780	750
212-7783	750
	818
212-9865	193
213-0141	185
213-0677	50
213-4208	375
213-4754	750
213-5170	815
	818
213-7315	736
213-9100	315
	317
	319
	321
213-9396	84
214-0647	758
214-1048	263
214-2484	▶249
	352
214-2485	▶250
	352
214-4677	263
214-7566	27
	56
	107
	243
214-7567	117
214-7568	29
	57
	79
	111
	125
	127
	129
	137
	143
	243
	336
	350
	352
	368
	373
	394
	395
	396
	397
	526
	528
	542
	543
	575
	576
	577
	599
214-9186	719
	722
	729
	822
	832
215-4809	758
215-8200	360
215-8207	360
215-8209	333
215-9664	360
215-9665	333
215-9666	333
215-9690	547
216-5540	▶17
	38
217-3312	565
	567
217-3673	50
	52
217-3674	50
	52
217-4541	362
217-4590	310
217-5900	17
217-9060	92
218-2373	394
	395
	396
	397
218-2529	800
	802
	805
218-7270	370
218-7272	6
	7
	▶40
219-0302	852
	856
219-4681	360
219-5757	477
219-6314	200
219-6488	▶207
	225
219-6607	200
219-7440	6
	7
	▶48
219-7569	360
219-8035	536
	▶539
220-0771	262
220-3373	40
220-3634	861
	865
220-8678	121
220-8800	733
221-3405	303
221-9357	40
221-9392	31
222-2367	514
	515
	516
	517
	518
	519
	538
	539
222-3088	9
	▶370
222-3902	370
222-3905	370
222-3907	14
222-9151	90
223-3353	565
	567
223-3490	546
223-3875	6
	7
	▶56
223-6546	24
223-7471	14
223-7852	40
223-9143	98
223-9145	98
223-9150	53
224-0880	6
	7
	▶43
224-1270	29
224-2323	333
224-2675	84
224-3125	32
224-3405	542
	543
224-3881	9
	▶22
224-3969	740
224-4140	43
224-4418	63
224-4441	32
224-4991	132
224-6361	88
224-6820	853
224-6821	853
224-9222	290
225-0098	549
225-0312	853
225-3109	703
225-3281	557

PART NUMBER INDEX

Part	Page
	559
	561
	562
	563
225-3861	281
225-4150	861
	865
225-6948	79
225-7003	99
226-1240	853
226-1274	853
226-1885	402
	403
	404
	405
	▶406
	407
226-1886	403
	406
226-4192	299
226-4755	40
226-6583	307
226-9169	237
226-9622	671
227-0838	38
	▶64
227-2002	466
227-2574	6
	7
	▶18
227-6715	120
	467
	529
	579
	596
	771
227-7390	856
227-7391	852
227-9545	6
	7
	▶57
228-0902	403
	406
228-2615	856
228-2616	852
228-3323	177
228-4947	76
	78
	249
	250
	251
	252
228-6054	213
	214
228-6056	213
	214
228-6089	280
228-7031	528
228-7088	373
228-7090	79
	129
228-7091	118
	125
	127
228-7092	123
	127
	129
228-7093	541
	544
228-7094	541
	544
228-7096	541
	544
228-7100	246
	247
	308
228-7101	248
229-1494	800
	802
	805
229-5684	15
229-5711	21
229-8083	6
	7
	▶49
229-8810	99
230-0917	257
230-2600	327
230-3518	111
230-3728	122
230-3775	122
230-4009	172
	189
	281
230-4010	172
	179
	189
	194
	281
230-4011	174
	183
	185
	187
	189
	190
	193
	194
	263
230-4012	175
	263
230-4013	179
	180
	191
230-5010	175
	184
230-9498	10
231-0336	73
	292
231-3538	569
231-4245	262
231-4714	841
231-6565	378
231-9030	110
232-0895	180
	184
	188
	191
233-3122	689
	▶768
233-3135	▶164
	689
233-3206	740
	▶769
233-3208	689
	▶761
233-3227	811
233-3235	832
233-3245	710
233-3248	809
	811
233-3252	809
	811
233-3270	809
233-3272	710
233-3275	809
233-3277	686
233-3278	685
233-3295	▶762
233-5220	▶81
	82
233-5221	9
	▶82
233-8134	336
233-8350	104
233-9494	186
234-0707	488
234-1949	559
	563
234-5012	243
	▶255
234-5013	117
	243
	▶256
234-5925	280
235-1451	82
235-2765	186
235-3575	598
235-4123	174
	780
235-6175	832
236-2335	231
	233
236-2340	150
236-4545	257
236-4616	270
	281
236-6021	10
236-8826	299
237-0164	281
237-0166	281
237-0227	185
	189
	193
237-0336	160
	162
237-4227	626
237-4376	▶42
	66
237-7253	66
237-8199	376
	▶383
237-9756	6
	7
	▶107
238-0112	352
238-5080	57
	118
	120
	125
	127
	129
	137
	138
	256
238-5081	120
	123
	136
238-5082	50
	59
238-5084	50
	52
	541
	542
	543
	544
238-6777	49
238-8245	189
238-8246	179
	189
238-8839	692
239-0618	636
239-4991	853
239-5195	636
239-5858	115
239-6458	357
239-6989	861
	865
239-7352	175
239-8107	276
239-8135	88
240-2172	830
240-2636	42
240-3277	52
240-7193	192
240-7271	9
	▶27
240-7272	9
	▶66
240-8666	837
240-9689	493
241-0037	514
	515
	516
	517
	518
	519
	538
	539
241-0847	63
241-3722	520
241-5682	178
241-5786	807
241-5889	613
241-6215	526
241-6218	398
241-8368	150
	▶268
241-8834	173
	185
242-0407	575
242-1401	63
242-1555	280
242-1811	35
242-3374	375
242-7418	63
242-9264	646
	648
	650
	652
	654
	656
	658
	660
	662
	664
243-1353	118
	529
243-2310	44
	45
243-2965	646
	648
	650
	652
	654
	656
	658
	660
	662
	664
243-5362	177
	190
243-6717	22
244-2579	646
	648
	650
	652

▶ **PRIMARY REFERENCE**

PART NUMBER INDEX

Part	Page
	654
	656
	658
	660
	662
	664
244-2701	682
	▶733
244-2710	241
244-2711	241
244-2729	484
244-3114	352
	▶393
244-5400	86
245-0723	592
245-1181	392
	400
245-1596	692
245-1811	392
245-1912	392
	400
245-3555	392
245-6095	60
245-7434	175
	780
245-7603	598
245-8025	175
245-9750	110
246-1670	150
246-2641	138
	719
	722
	729
	861
	865
246-2686	197
246-2932	281
246-3144	22
246-3193	640
246-3352	598
246-3513	198
246-4996	615
246-6323	579
246-8065	▶377
	388
246-8066	377
	▶378
246-8068	378
246-8071	378
246-8073	378
246-8075	378
246-8078	378
246-8743	520
246-8746	384
246-8752	384
246-8757	343
246-8761	347
246-8764	345
246-8773	384
246-8774	347
246-8777	520
246-8780	520
246-8793	341
	343
	345
	347
246-8794	341
	343
	345
	347
246-8795	347
246-8796	347
246-8797	347
246-8801	343
	345
247-0733	705
	706
247-0737	702
247-2834	110
247-4993	352
248-0102	787
248-0833	140
	333
248-1467	32
248-2222	341
	347
248-2226	341
	347
248-2621	830
248-2841	270
	280
	304
	725
	729
	736
	827
248-2924	692
248-4220	701
248-4840	107
248-4841	107
248-5245	861
	865
248-6174	638
248-6175	637
248-6772	692
248-9337	551
249-0410	681
249-0411	681
249-0713	▶122
	132
249-0937	681
249-0938	683
249-2307	575
	▶576
249-2308	▶540
	576
249-3505	554
249-4089	526
249-4091	526
249-4099	241
249-5334	639
249-5483	779
249-6537	578
	▶609
249-6545	329
	▶556
249-6687	856
249-8575	861
	865
250-0951	336
250-0952	345
250-0953	336
250-2138	392
250-2139	350
	▶392
250-2299	777
250-2784	633
250-3443	634
250-6148	672
250-7012	65
250-7017	6
	8
	▶65
250-8213	▶376
250-8335	752
250-9378	10
251-1005	42
251-1133	299
251-1545	384
251-2247	703
	741
	809
	811
251-3268	613
	▶670
251-4162	157
251-4314	40
251-6673	336
	382
251-6674	336
	382
251-8248	711
252-0741	636
252-1607	257
252-1805	▶710
	809
	811
252-1807	811
252-1808	809
252-1862	712
	716
	725
252-1863	712
	716
	725
252-2157	861
	865
252-2237	352
	▶400
252-5806	140
252-7802	32
252-8038	611
	642
	666
	▶667
253-0472	589
	598
253-1319	610
253-1461	9
	▶132
253-1789	779
	780
253-3482	809
	811
253-3483	809
	811
253-3484	809
	811
253-3996	147
	148
253-4635	675
253-4643	675
253-4670	680
253-5303	336
253-5307	▶384
	388
253-5322	336
253-5413	360
253-7931	▶371
	388
253-8868	685
	686
254-3944	29
254-4486	594
255-2322	462
255-2323	462
255-2395	89
255-2396	▶89
	91
255-3482	299
256-3235	403
	▶407
256-3314	401
	▶403
256-3325	▶401
256-6453	255
	256
	308
256-7143	674
256-8768	804
	▶818
256-9448	836
257-2015	40
257-3226	697
257-3462	680
	▶839
257-3464	680
	▶840
257-3466	680
	▶838
257-4323	115
257-4907	158
	280
257-4932	677
257-5022	610
257-5026	352
	▶398
257-5083	553
	▶563
257-5084	563
257-5085	563
257-6804	▶553
	578
	680
257-8897	598
257-9799	329
257-9850	367
258-5194	381
258-7561	341
258-7562	341
258-7564	343
258-8721	60
259-4468	677
259-4469	677
259-4470	677
259-4471	677
259-4472	677
259-4473	677
259-4758	762
	764
259-4759	763
259-7140	587
	607
259-8137	488
259-8450	319
	321
259-9287	▶213
	231
	233
259-9288	▶214
	231
	233
260-0251	▶60
	63
260-0915	60
260-1784	92
260-1909	216
	217
	▶231
260-1910	216
	217
	▶233
260-2579	833
260-4855	29
260-6117	554

PART NUMBER INDEX

Part	Page
260-6501	631
260-7524	61
	62
260-7595	352
260-7596	347
260-7652	856
260-7653	852
260-9151	575
260-9173	594
260-9189	73
261-0524	175
261-1731	712
	716
	725
261-2293	61
261-2294	▶61
	63
261-2373	▶552
	578
	680
261-3223	286
	287
261-3345	821
261-4377	861
	865
261-4907	225
261-5694	776
261-7991	308
262-0767	800
	802
	805
262-1905	552
	▶559
262-1924	559
262-1929	559
262-4930	692
262-5528	46
263-1392	672
263-1649	341
	343
	345
	347
263-1650	343
	345
263-1775	462
263-2548	692
263-2553	683
263-2555	681
	▶683
263-3823	767
263-4920	29
263-6540	188
263-6891	150
263-6902	853
263-7429	336
263-9466	683
264-0575	360
264-0638	581
264-1150	329
264-1152	329
264-1153	329
264-1155	329
264-1158	329
264-1167	329
264-1168	329
264-1176	386
264-3617	176
	274
	276
	282
264-3637	758
264-4297	589
264-5732	185
	186
	189
264-7029	187
	189
264-7030	189
264-7034	172
	173
	189
264-7961	364
264-7962	522
	524
265-1097	843
265-1098	843
265-1099	843
265-1113	53
265-2829	364
265-6710	4
	▶843
265-6716	843
265-6717	843
265-6718	843
265-6719	843
265-6720	843
265-6724	571
265-6745	841
	842
265-6746	841
265-6747	842
265-7434	683
265-7435	683
265-7454	681
265-8941	762
	763
266-1467	▶245
	784
266-6049	522
	524
266-7315	329
266-9727	386
266-9728	386
266-9729	386
267-0008	6
	7
	▶68
267-2744	274
	276
267-2746	274
	276
267-3183	▶856
	860
267-3506	552
267-3507	46
	478
	481
	489
	571
	677
267-3508	549
267-5032	681
267-7340	362
267-7347	362
267-8715	821
267-8821	489
	547
	773
	774
	787
	790
267-9432	463
268-1506	598
268-1507	598
268-1645	596
268-1646	596
268-1647	607
268-2953	29
268-5743	677
268-8643	286
269-2860	42
269-2862	42
269-2864	42
269-2890	712
	716
	725
269-2892	712
	716
	725
269-2893	712
	716
	725
269-3277	325
269-4967	599
269-4969	599
269-4970	599
269-4983	308
269-5346	▶496
	504
269-5348	475
	▶497
269-5352	▶498
	501
269-5353	▶499
	502
	503
269-5767	335
269-6164	6
	8
	▶59
269-8222	175
269-8225	175
269-8417	335
269-9521	581
270-1778	362
270-2679	175
	280
	281
	288
270-3422	218
	228
270-4884	833
270-6941	522
	524
270-6942	522
	524
270-6943	522
	524
270-6944	522
	524
270-7137	325
271-2178	226
271-2180	264
271-2811	705
	706
271-5390	434
271-5590	175
271-7312	701
271-7825	280
271-7839	609
271-8528	360
271-8529	360
272-0353	362
272-0389	13
272-1491	362
272-1623	712
	716
	725
272-1889	▶145
	147
272-2379	168
272-4978	335
272-6538	613
272-6641	▶208
	223
272-7239	150
272-8011	▶335
	364
272-8329	811
272-8442	▶702
	704
273-0338	683
273-0339	683
273-0343	755
273-0344	755
273-1871	637
	638
	639
	640
273-1878	682
	▶755
273-2455	364
273-2457	335
273-2460	364
273-2827	347
273-3288	175
273-4130	549
273-4838	634
273-7305	364
273-7306	364
273-7307	364
273-8664	333
273-8666	333
273-8667	333
274-1525	▶681
	682
274-2045	92
274-2385	733
274-2392	733
274-3774	179
	180
	181
	183
	184
	185
	193
274-3777	180
274-3779	173
	281
274-3781	179
274-3783	184
274-4490	60
274-5365	360
274-5909	697
274-6719	243
274-6809	473
274-6810	473
274-6811	473
274-6851	116
274-6866	505
274-7452	626
274-8267	281
274-8312	584
	591
275-0572	409
	458
275-0701	482
275-3292	861
	865
275-4236	20
275-7741	▶272
	273
275-7764	▶273
	280
	835
275-7803	799

▶ **PRIMARY REFERENCE**

PART NUMBER INDEX

Part	Page
276-1786	151
276-2634	455
276-3176	845
276-3884	830
276-6146	325
276-7222	53
276-7278	276
276-7286	445
	446
276-7338	445
	446
276-8491	▶241
	777
276-8492	241
276-8495	777
276-8498	578
	▶777
276-8500	777
276-9015	683
276-9617	241
277-0742	138
277-0750	488
277-1873	308
	352
277-4435	6
	7
	▶38
277-4567	80
277-4574	80
277-8102	800
277-8103	800
	802
	805
277-8283	37
278-0674	719
	722
	729
278-1154	683
	▶692
278-1799	642
	644
	646
	648
	650
	652
	654
	656
	658
	660
	662
	664
	▶671
278-3354	683
	755
278-4210	777
278-4876	360
278-8844	263
279-2589	44
	45
279-6521	591
	▶672
279-9828	251
279-9829	252
280-1766	372
280-2711	280
280-4438	333
280-6895	343
280-6896	345
280-6897	345
280-6898	347
280-6900	371
280-7870	626
281-0387	703
281-0390	703
281-0431	703
281-2588	692
281-2590	692
281-3136	240
	703
281-3395	175
281-4297	674
281-4655	702
281-5935	127
	129
281-5976	123
281-5981	118
281-8803	183
	189
281-8804	189
	194
281-8811	175
281-9356	526
281-9451	674
281-9455	▶841
281-9458	841
282-3116	422
	423
282-3117	414
	416
	418
	420
282-7842	343
282-8827	642
	644
283-0597	697
283-0599	697
283-0601	697
283-1578	553
283-2238	110
283-6447	281
283-6947	280
283-7960	172
	▶237
283-7980	685
	686
283-8106	175
283-9557	672
283-9570	672
284-3502	373
284-3623	281
284-3662	701
284-8381	223
	▶264
284-8480	281
284-8481	281
285-0347	372
285-0612	554
285-0823	18
	19
285-2074	333
285-3692	712
	716
	725
285-7415	701
286-0277	703
286-0433	632
286-1338	633
286-6192	73
286-9155	360
	522
	524
287-3049	45
	50
	52
287-5718	477
287-6155	310
287-7257	92
287-8261	362
287-8262	360
	▶362
287-8357	37
288-1401	159
	352
288-3687	150
288-4402	607
288-4403	584
	592
288-5508	299
288-5509	299
288-5530	219
	226
288-5535	310
288-5962	333
288-7324	185
	186
	189
288-7952	475
288-9681	350
288-9682	350
289-2935	558
	565
	567
289-2937	557
	559
	561
	562
	563
289-2946	558
	565
	567
289-2948	557
	559
	561
	562
	563
289-3054	556
	▶569
289-3055	569
289-5150	194
289-5151	194
289-6002	565
	567
289-9139	92
290-1993	324
290-3263	336
290-3785	858
290-3922	522
	524
290-4134	352
	520
290-5542	140
290-5749	▶212
	225
290-5827	787
290-7514	383
	389
290-8568	68
291-0996	343
291-6268	463
291-6269	463
291-6270	466
291-6271	469
291-6905	98
291-8099	350
291-9154	758
	762
	763
291-9812	462
291-9814	462
292-0484	53
292-0609	▶685
	809
292-0611	685
	686
292-0612	685
	686
292-0614	685
	686
292-0617	▶686
	811
292-0618	685
	686
292-0889	372
292-1200	98
292-3198	624
292-4086	▶500
	502
	503
292-4311	463
	466
292-5889	677
292-6402	▶776
	800
	805
292-8054	702
292-8703	702
292-8705	702
292-8706	702
292-9220	637
	638
	639
	640
292-9221	637
	638
	639
	640
292-9391	853
292-9681	80
293-3823	861
	865
293-5370	362
293-7589	69
	72
293-7854	845
293-7855	845
293-9397	24
293-9659	858
	870
294-0691	463
294-0989	▶794
	795
294-0999	782
294-1001	809
	811
294-1002	822
294-1004	822
294-1014	203
	204
	826
	827
294-1015	203
	204
	826
	827
294-1018	203
	204
	826
	827
294-4550	813
294-5042	800
	802
	805
294-5046	480
294-7278	226
294-8055	637
	638

PART NUMBER INDEX

Part	Page
	639
	640
295-1039	▶197
295-1040	▶198
295-1117	836
295-1118	837
295-1119	837
295-1120	▶766
	830
295-3839	418
	420
	422
	423
295-4243	833
295-6405	712
	725
295-6406	716
296-3447	134
296-4040	712
	716
	719
	722
	725
	729
296-4125	851
296-5270	310
296-8274	522
	524
297-2539	329
297-2830	520
297-3246	738
297-4139	733
297-4140	733
297-4157	777
297-4158	777
297-4169	712
	716
	719
	722
	726
	729
297-4170	822
297-4956	522
	524
297-7999	125
299-1020	712
	725
299-1021	716
299-1024	725
299-1030	703
299-1441	725
299-1442	725
299-1660	712
	716
	725
299-3424	429
299-5744	280
299-8905	336
299-9092	151

3

Part	Page
300-1874	832
300-1875	832
300-4231	682
	▶701
300-6497	233
300-8554	528
300-9805	▶251
	253
300-9806	243
	▶252
301-4568	617
301-5180	310
302-1413	123
302-3908	307
	463
	529
	584
	587
	592
302-6333	677
302-6343	677
302-9089	779
302-9090	779
303-1382	▶24
	25
303-1383	▶25
	26
303-1384	▶26
	27
303-1506	125
	127
	129
303-9456	822
304-8008	84
	91
304-8032	386
304-9654	658
305-1981	644
305-2230	384
305-3153	414
	416
305-3333	328
305-3347	362
305-3348	362
305-6163	6
	8
	▶134
305-9192	835
305-9194	833
305-9195	833
	836
306-0350	304
306-0351	304
306-5624	362
306-5632	362
306-5633	362
306-5637	362
306-8156	262
	263
306-9214	780
306-9215	780
307-0016	779
307-0047	852
	856
307-1959	571
307-1960	571
307-1961	571
307-1962	571
307-2245	742
307-2671	56
	107
307-2673	57
307-3245	496
	497
	498
	499
	500
307-4611	341
308-0415	140
308-1845	558
	565
	567
308-2903	712
	716
	719
	722
	725
308-6304	677
308-9396	299
309-1905	73
309-1906	582
	599
309-4314	281
	308
309-5137	541
	544
309-5487	150
309-6831	175
309-9812	292
309-9814	292
309-9886	175
310-0674	175
	183
	186
	187
	193
	280
	281
310-1898	292
310-2029	689
	▶830
310-2041	689
	▶832
310-2042	699
310-4772	169
310-5238	412
310-5289	▶169
	200
310-5479	549
	552
310-5480	549
	552
310-7300	101
310-7318	401
	▶403
310-7336	▶401
310-7636	231
311-1932	329
311-1933	329
311-1956	484
311-2812	186
311-2813	280
	281
311-3475	151
311-4859	186
311-7500	484
311-8290	386
311-8300	487
311-8740	186
311-8743	190
312-4153	782
312-6156	553
312-8415	290
312-8629	669
313-2545	375
	▶381
313-3492	123
313-3966	644
313-3997	22
313-4424	381
313-4677	333
314-3323	172
	▶779
314-4018	694
314-4860	2
	▶484
314-5162	800
	802
	805
314-5274	815
	818
314-5275	815
	818
314-7476	150
314-7487	150
315-1251	▶209
	225
315-6094	520
315-9859	59
316-0488	101
	584
316-5384	382
317-1009	333
318-2589	190
318-3040	646
	648
	652
	654
	656
318-3052	650
	662
318-3115	650
	652
	654
	656
	662
	664
318-8583	493
319-0270	66
319-0271	66
319-2305	409
	458
319-2607	436
319-5106	150
319-5109	150
319-5119	150
319-5123	310
319-5192	150
319-6225	129
319-6226	79
319-6234	542
319-6699	112
319-7428	404
320-3060	246
320-3061	248
320-3063	247
	308
320-8117	610
321-5236	821
321-5639	12
321-5967	368
	576
321-6908	660
321-8632	125
	127
321-8674	140
322-0819	412
322-3161	776
322-3245	151
322-3246	151
322-3260	336
322-3798	535
	536
	▶610
322-6674	683
322-6675	683
322-9743	▶146
	148
323-0201	768
323-3729	158
323-3730	758
323-3933	345

▶ **PRIMARY REFERENCE**

PART NUMBER INDEX

Part	Page
323-3935	345
323-9531	394
	395
	396
	397
324-3210	92
324-5680	175
	186
324-5681	175
	186
324-9711	▶694
	695
325-1258	822
325-1260	822
325-2588	646
	648
	650
	652
	654
	656
	658
	660
325-3780	522
	524
325-8634	117
	▶246
325-8700	189
325-9410	▶821
	830
326-0610	414
	416
	418
	420
	422
	423
326-0612	414
	416
	418
	420
	422
	423
326-1644	121
326-8116	274
327-0282	754
327-0283	754
327-0376	136
	▶142
327-0377	137
327-3871	299
327-3872	299
328-2321	697
328-3655	368
	372
328-4984	716
	722
328-4985	712
	719
	725
	729
328-8411	587
328-8425	151
	274
328-8446	697
328-8447	697
328-8755	683
329-1013	697
329-1023	694
329-1798	414
	416
329-3061	40
329-3356	373
	436
	451
	787
	790
329-3734	175
	179
	189
	195
	196
	200
	203
	204
	280
	281
	288
	712
	716
	719
	722
	726
	729
	780
	818
329-5706	853
329-5707	861
	865
329-6791	281
329-8823	505
330-3862	752
330-3863	752
330-3864	752
330-3865	822
330-3867	832
	▶833
330-3868	689
	▶835
330-4611	99
330-9732	137
330-9739	243
330-9740	243
330-9754	541
	544
331-1134	243
	▶247
331-3575	175
331-3593	175
	186
331-3710	231
	233
331-4222	175
331-4223	175
331-4224	175
331-4226	175
331-5007	29
331-5008	29
331-5009	29
331-5010	29
331-5011	29
331-6025	53
331-6861	280
331-6882	▶136
	137
331-9731	713
	717
	720
	723
	726
	730
332-0296	243
	▶248
332-0984	9
	▶97
332-2152	32
332-3604	138
	409
	414
	416
	418
	420
	422
	423
	458
332-3707	12
332-5669	670
332-8556	373
332-8658	829
333-0676	501
333-0677	466
	▶501
333-0968	181
333-1195	104
	▶114
333-1207	44
	45
333-6504	92
333-8153	287
	711
333-9152	613
333-9967	482
334-1465	125
	127
	129
334-4424	861
	865
334-6090	822
334-6352	598
334-9395	703
335-2228	829
335-2318	304
335-4416	156
335-9214	84
336-2216	541
	544
336-4953	44
	45
336-6684	▶157
	286
336-6718	644
	646
	648
	650
	652
	654
	656
	658
	660
	662
	664
336-7433	787
336-7475	787
	790
336-7476	787
	790
336-7699	830
336-8436	787
	790
337-3347	431
	433
337-4178	115
337-8788	101
337-9078	151
	▶269
338-1132	▶215
338-2156	90
338-3453	260
338-3540	576
338-8860	175
339-1911	46
339-2958	280
	288
339-6543	758
339-7863	▶12
	13
339-8692	108
340-1765	613
340-1766	613
340-1767	613
340-7161	164
340-7244	6
	7
	▶111
341-0078	607
341-0083	607
341-0824	644
341-0825	644
341-1429	88
341-8342	829
342-6070	6
	7
	▶541
342-6233	771
342-9671	151
342-9827	88
342-9971	706
343-0596	112
343-2389	300
343-5527	121
343-6499	822
343-6500	822
343-7192	▶88
	91
343-7202	88
343-8126	▶117
	120
343-8739	520
344-0980	752
344-1950	466
344-1951	467
344-2733	711
344-2764	545
	▶703
344-3847	711
344-5594	742
	795
344-5673	160
	162
	414
	416
	418
	420
	422
	423
	720
	723
	730
344-5674	151
	373
	451
	787
	790
344-5675	73
	300
	310
	315
	321
	373
	463
	467
	505
	507
	529
	579
	582
	585
	587

PART NUMBER INDEX

Part	Page
	592
	596
	599
	602
	607
	754
344-7389	310
	352
344-7391	308
344-7562	21
344-9038	14
345-0351	765
345-1271	699
	▶809
345-1272	699
	▶811
345-1273	809
345-1274	809
345-1275	811
345-1276	811
345-1277	689
	▶699
345-1959	86
345-1999	336
345-3752	▶29
	32
345-3753	292
345-7209	562
345-7589	125
	127
	129
345-8534	787
346-0626	809
346-0627	811
346-4360	815
346-4897	82
	178
346-5577	577
346-5752	6
	7
	▶11
346-8842	6
	7
	▶771
346-9580	811
346-9581	809
347-0799	280
347-1083	158
347-1267	6
	7
	▶16
347-3869	290
347-4403	125
	127
	129
347-4404	125
	127
	129
347-4721	175
347-8645	138
347-9203	125
	127
	129
348-0218	372
348-1107	611
348-1879	187
348-3428	787
	790
348-3583	613
348-6995	700
	▶705
348-7307	117
348-7842	165
349-2641	6
	8
	▶94
349-2654	98
349-5294	9
	▶13
349-6097	368
	577
349-6100	6
	7
	▶131
349-6101	131
349-6143	328
349-6154	6
	8
	▶324
349-6255	259
349-6606	▶259
	262
349-7059	140
349-7699	324
349-8642	742
	795
350-3842	565
	567
350-3913	393
	▶394
350-4369	633
350-5811	114
350-7735	140
351-2625	720
	723
351-4424	758
351-4425	758
351-4483	758
351-4484	758
351-4485	758
351-4489	758
351-4490	▶758
351-4491	758
351-5958	733
351-8482	703
351-9918	206
	207
	208
	209
	211
	212
352-0205	▶98
	99
352-0207	97
	▶99
352-1002	677
352-1502	703
352-1650	91
	▶95
352-2586	703
352-3557	34
352-3813	▶2
	3
352-3964	292
	308
	310
352-3966	292
352-3968	310
352-3969	310
352-5789	578
	▶615
352-5790	578
	▶616
352-5793	▶551
	578
	680
352-5797	▶479
	578
352-5804	578
	▶624
352-5816	▶535
	537
352-5829	▶575
	578
352-6010	3
352-6515	644
352-7994	260
352-8772	493
352-8928	125
	127
	129
	▶137
353-0188	112
353-1634	742
	795
353-4515	223
	226
	305
353-5102	120
353-5112	243
353-5124	94
353-5125	59
	96
	99
353-5126	59
353-5140	29
	32
	88
	89
353-5144	355
353-7114	713
	717
	720
	723
	726
	730
353-7957	310
354-1627	402
354-7543	622
354-7718	151
354-8358	425
	505
355-1287	▶14
	15
355-1288	9
	▶15
355-1314	79
355-3016	800
	802
	805
355-3148	310
355-6702	189
355-7194	6
	7
	▶21
355-8941	112
	488
	489
355-9823	821
356-0298	151
356-0955	40
356-2069	9
	▶31
356-2070	31
	▶32
356-2212	850
356-5163	2
	3
	▶447
	786
356-5165	447
356-5177	709
356-5178	202
356-6693	486
356-7515	215
356-9931	460
	461
357-0728	712
	716
	719
	722
357-2258	782
357-2261	822
357-2270	822
357-4372	533
357-5168	747
357-5169	748
357-5170	749
357-9151	280
	▶700
357-9183	712
	719
	725
	729
357-9184	716
	722
357-9187	712
	716
	719
	722
	725
	729
357-9188	712
	716
	719
	722
	725
	729
357-9190	712
	716
	725
357-9191	712
	716
	719
	722
	725
	729
357-9201	690
	▶712
357-9202	690
	▶716
357-9203	690
	▶719
357-9204	690
	691
	▶722
357-9236	712
	716
	719
	722
357-9257	716
	722
357-9258	716
	722
357-9260	712
	719
	725
	729
357-9261	712
	719
	725
	729
357-9652	712
	719
	725

▶ **PRIMARY REFERENCE**

PART NUMBER INDEX

Part	Page
	729
	▶836
357-9653	716
	722
	▶837
357-9654	836
357-9655	837
358-4889	257
358-4931	703
358-9553	712
	716
	725
359-4892	327
359-4893	327
359-5179	160
	162
	177
	186
	193
359-5180	175
	280
359-9150	605
360-0116	1
	2
360-1598	758
360-1787	505
360-2082	292
360-2086	292
360-2087	292
360-2135	▶169
	545
360-2136	288
360-2137	292
360-2142	861
	865
360-2145	167
	▶169
360-2150	167
	▶169
360-2157	167
	▶171
360-2968	172
360-2969	172
360-2972	780
360-2987	700
	▶706
360-3675	617
	618
360-3677	27
	618
	644
	646
	648
	650
	652
	654
	656
	658
	660
	662
	664
360-3679	543
	642
360-3680	120
	644
	646
	648
	650
	652
	654
	656
	658
	660
	662
360-3681	120
360-3684	50
	52
	543
360-3692	617
	618
	641
360-3693	617
	618
	637
	638
	639
	640
360-3697	598
	642
360-4432	785
360-4783	697
360-5036	486
360-5667	200
360-7615	545
	▶704
360-7617	▶172
	689
360-8162	172
	▶780
361-0421	712
	716
	725
361-0423	752
361-0426	752
361-0429	822
361-0944	584
361-1045	160
361-2944	186
	187
	304
361-2945	186
	187
	281
361-3059	618
361-3105	▶288
	545
361-3109	▶159
	689
361-3120	▶689
361-3136	1
	2
	▶165
361-3148	▶280
	689
361-3890	488
361-4430	329
	▶473
361-4431	473
361-5860	425
	505
361-8000	138
	▶140
361-9760	642
361-9761	644
362-1505	▶187
	324
362-3499	719
	722
	729
362-3500	722
362-3501	722
362-3502	719
	722
	729
362-3503	719
	722
	729
362-3504	722
362-3505	719
	729
362-3515	73
362-3819	569
362-6151	636
362-8366	498
363-0347	325
363-4123	140
363-4325	167
	▶325
363-4961	709
363-4962	689
	▶709
363-5824	752
363-6520	642
363-8120	644
364-1334	594
364-1374	551
364-1587	594
364-1985	479
364-8277	765
364-9192	▶536
	537
365-3532	802
365-3536	808
365-3548	138
365-5588	725
	729
365-6668	443
365-6765	288
365-6773	159
	352
365-6790	159
365-6876	546
365-7415	561
365-8210	477
365-8211	477
365-8763	325
365-8764	325
365-9935	813
366-2401	310
	589
366-4695	642
366-4699	617
	618
	641
366-4700	617
	618
	637
	638
	639
	640
366-6093	▶547
	578
366-6096	▶549
	578
366-6115	578
	▶606
366-6118	578
	▶594
366-6119	578
	▶598
366-6120	578
	▶587
366-6121	578
	▶579
366-6122	578
	▶581
	680
366-6124	578
	▶589
366-6125	▶372
	578
366-6126	▶528
	578
366-6127	578
	▶605
366-6128	▶123
	578
366-6129	578
	▶754
366-6132	578
	▶756
366-6133	578
	▶633
366-6151	▶584
366-6152	▶471
366-6154	▶511
	537
366-6156	▶512
	537
366-6164	578
	▶591
366-6167	545
	▶602
366-6681	636
	▶673
366-6687	▶642
	673
366-6693	▶644
	673
366-6702	644
366-7409	861
	865
366-7775	304
366-8297	6
	7
	▶106
366-9659	288
366-9670	784
367-0844	853
367-2761	713
	717
	720
	723
	726
	730
367-3254	410
367-3256	410
367-3835	▶10
	11
367-5037	189
367-5212	270
367-6001	617
	618
367-6002	618
	644
	646
	648
	650
	652
	654
	656
	658
	660
	662
	664
367-6003	644
	646
	648
	650
	652
	654
	656
	658
	660

PART NUMBER INDEX

Part	Page
	662
	664
367-7900	88
368-0752	790
368-0753	790
368-1321	787
368-1322	787
368-1438	787
	790
368-2260	71
368-2269	108
368-2370	177
368-8072	822
368-9752	276
368-9883	114
369-0817	542
369-0818	541
	▶542
369-2611	628
	▶668
369-4095	765
369-6858	598
	642
369-7130	594
369-8040	106
369-8994	6
	7
	▶44
369-9004	800
	802
	805
369-9842	188
370-2227	1
	▶4
370-2944	1
	▶439
370-3000	439
	▶441
370-3001	441
370-3080	3
	▶772
370-3100	440
370-3204	439
	▶455
370-3205	455
370-3207	455
370-3208	455
370-3209	455
370-3225	455
370-3226	455
370-3254	6
	8
	▶327
370-3255	▶178
	327
370-3257	178
	▶179
370-6682	609
370-8430	1
	▶167
370-8445	167
	▶292
370-8447	▶188
	292
370-8448	▶278
	578
370-8449	216
	▶317
370-8450	▶319
370-8452	167
	▶299
370-8455	167
	▶286
370-8457	▶298
	545
370-8458	▶193
	298
370-8459	▶194
	278
370-8461	151
370-8464	▶739
370-8465	▶738
370-8467	▶274
	690
	691
370-8469	▶276
	690
370-8470	▶150
	167
370-8475	151
370-8491	151
	▶304
370-8501	216
	▶228
370-8502	216
	▶218
370-8503	▶219
370-8504	▶221
370-8508	221
370-8509	218
	219
	221
	228
370-8510	3
	▶223
370-8520	▶303
	474
370-8525	▶155
370-8542	307
370-8685	553
370-8976	644
	646
	648
	650
	652
	654
	656
	658
	660
	662
	664
370-9894	745
371-1312	424
	▶429
371-1316	424
	▶425
371-1322	425
371-1381	813
371-1385	813
371-1386	813
371-1389	▶687
	813
371-1390	▶688
	813
371-3796	1
	▶578
371-4423	787
371-6317	1
	▶376
371-6464	861
	865
371-6545	112
371-6553	92
371-7951	358
371-8094	101
371-8113	138
371-8454	594
372-0918	637
	638
	639
	640
372-2158	745
	746
372-5042	713
	716
	719
	722
	725
	729
372-7541	712
	716
	726
372-7830	▶846
372-7831	▶845
	846
372-7832	845
372-7875	642
372-9270	581
373-1349	598
373-1573	578
	▶636
373-3187	84
373-3989	622
373-3991	622
373-3993	690
	▶826
373-3994	826
374-4327	241
373-4328	310
373-4446	822
374-0714	690
	691
	▶827
374-0715	827
374-0757	158
374-3120	85
	▶488
374-3140	85
	▶86
374-3148	86
374-3151	86
374-4761	231
	233
374-5511	280
374-5512	281
374-7463	173
	175
374-7464	175
374-7465	175
374-7466	175
374-7467	175
374-7468	160
	162
	175
374-7990	486
374-8372	175
374-8493	147
	148
374-9690	784
375-0352	206
375-0355	211
375-2467	116
375-2948	624
	▶626
375-3401	▶491
375-3402	▶434
375-3404	2
	▶444
375-3405	▶2
375-3406	▶786
375-3407	▶3
375-3408	▶443
375-3422	2
	▶505
	786
375-3424	▶410
	412
375-3431	▶414
	427
375-3432	▶416
	427
375-3433	▶418
	427
375-3434	▶420
	427
375-3435	▶422
	425
375-3436	▶423
	425
375-3440	1
	▶138
375-3442	425
	427
375-3448	412
375-3450	1
	▶412
375-3452	429
375-3460	1
	▶424
375-3464	427
	▶813
375-3465	424
	▶427
375-3475	412
375-3486	443
375-3500	▶1
375-3577	5
	▶858
375-8478	111
375-9845	861
	865
375-9988	598
375-9989	598
375-9990	598
376-0575	754
376-1386	203
	204
376-1655	589
376-1656	589
376-1657	589
376-1658	528
376-1678	528
376-2269	624
	▶628
376-4249	5
	▶9
376-4795	712
	719
	726
	729
376-4796	716
	722
376-7663	▶463
	474
376-8250	565
	567
376-9207	829
377-2072	▶493
	495
377-2121	644
377-3141	750
377-5227	213
	214
377-9640	120

▶ **PRIMARY REFERENCE**

PART NUMBER INDEX

Part	Page
378-2695	333
378-3739	364
378-5706	404
378-7689	▶115
	116
378-7691	6
	8
	▶116
378-8474	360
378-8476	360
379-2168	▶84
	91
379-2345	375
379-3416	315
	317
	319
	321
379-3436	84
379-3889	522
	524
379-3905	522
	524
379-6636	9
	▶243
379-9145	328
	▶333
379-9146	333
380-0794	644
	646
	648
	650
	652
	654
	656
	658
	660
	662
	664
380-0819	656
	658
	660
	664
380-0820	650
	662
380-0821	650
	662
380-3885	203
380-3886	204
380-3889	726
	729
380-5114	274
380-5123	274
	276
380-5124	276
380-5455	34
380-5918	769
380-6158	713
	716
	719
	722
	725
	729
380-6950	609
380-6951	609
380-7686	427
380-7692	444
380-8087	491
380-8088	491
380-8089	491
380-8090	491
380-8091	491
380-8094	491
380-8095	491
380-8100	491
380-8302	491
380-8509	6
	7
	▶110
381-0637	382
381-0639	382
381-0640	▶382
	388
381-0642	▶367
	388
381-0647	▶358
	388
381-0662	520
381-0667	358
381-0672	▶352
	388
381-0673	▶336
	388
381-0675	1
	▶388
381-0775	▶173
	287
381-0821	328
	▶386
381-0822	386
381-0823	386
381-0824	333
381-0827	▶366
	376
381-0829	366
381-0830	328
	▶404
381-0831	404
	▶522
381-0832	404
	▶524
381-0833	522
	524
381-0834	522
	524
381-0836	522
	524
381-0837	522
	524
381-0839	522
	524
381-1678	780
381-1679	780
381-2326	270
	281
	736
381-2621	307
	310
381-2717	1
	▶9
381-4538	799
381-5749	765
381-7686	86
381-8082	281
381-8141	689
	▶850
381-8211	689
	▶829
381-8503	479
382-0667	689
	▶782
382-0668	689
382-0678	216
	▶225
382-2790	636
382-3296	639
	▶646
382-3297	639
	▶648
382-3298	640
	▶650
382-3299	637
	639
	640
	▶652
382-3301	638
	640
	▶654
382-3302	638
	640
	▶656
382-3304	638
	640
	▶658
382-3308	637
	639
	▶660
382-3312	637
	639
	▶662
382-3313	638
	640
	▶664
382-4415	545
	▶638
382-4417	545
	▶640
382-4425	545
	▶637
382-4426	545
	▶639
382-5517	617
382-5518	618
382-9881	50
382-9882	7
	▶50
383-2065	▶6
383-4711	46
383-4713	46
383-4727	118
383-4779	104
383-4806	257
383-4870	9
	▶101
383-4877	9
	▶112
383-4888	9
	▶118
383-4890	9
	▶46
383-4893	9
	▶108
383-4895	9
	▶257
383-4897	9
	▶104
383-7644	734
383-7670	565
	567
383-8150	3
	▶436
383-8165	▶448
	449
383-8166	▶431
	449
383-8167	448
383-8170	3
	▶449
383-8180	3
	▶507
383-8634	227
384-0183	6
	7
	▶125
	▶127
384-1836	243
	▶253
384-3141	6
	7
	▶120
384-3843	581
384-3892	609
384-3893	609
384-5366	722
384-5369	719
	729
384-5371	719
	722
	729
384-5372	719
	722
	729
384-5376	719
	729
384-5377	719
	729
384-5510	6
	8
	▶96
384-5599	104
384-5609	▶147
	690
384-5610	▶148
	690
	691
384-5612	9
	▶80
384-5623	147
	148
384-5624	299
384-5627	108
384-8611	134
	▶135
384-8750	670
384-9655	598
385-0197	474
	▶495
385-0199	▶466
	474
385-0200	▶469
	474
385-0229	747
	748
	749
385-0230	747
	748
	749
385-0251	76
385-1260	3
	▶459
385-1450	69
	72
385-4432	393
	▶395
385-4639	▶62
	63
385-5284	491
385-5286	491
385-5474	62
385-5989	160
	162
385-5990	281
385-6290	528
385-6754	410
385-6755	410
385-7050	6
	7

PART NUMBER INDEX

Part	Page
	▶76
	▶78
385-7552	▶474
385-7554	▶545
385-7557	▶545
385-8201	160
385-8702	594
385-8708	689
	▶765
385-8713	▶796
385-8714	▶797
385-8717	689
	▶799
385-8718	782
385-8720	1
	▶689
385-8721	594
385-8724	594
385-8725	594
385-8728	594
385-8729	594
386-0235	689
	▶740
386-0529	487
386-0538	786
	▶787
386-0539	786
	▶790
386-0540	3
	▶786
386-1254	▶860
386-1274	860
	▶861
386-1304	▶216
386-1305	▶216
386-1309	▶690
386-1310	▶690
386-1311	▶690
386-1317	▶1
386-1372	765
386-1717	227
386-1722	▶210
	226
386-1828	549
386-1982	▶483
386-2396	633
	▶634
386-2397	634
386-2533	▶537
386-2618	587
386-3897	235
386-3935	6
	7
	▶262
386-4103	565
	567
386-4105	▶578
386-4128	76
386-6235	117
386-6709	328
	▶477
386-6716	376
	▶478
386-6764	▶328
	376
386-7410	547
386-7411	547
387-0314	745
387-0317	745
387-4496	333
	▶360
387-5537	594
	598
387-5539	598
387-5588	591
387-8447	594
387-8731	681
388-1451	104
	▶105
388-1485	1
	▶85
388-1488	488
388-1489	488
388-1497	85
	▶103
388-2076	557
388-2310	53
388-3693	257
388-3715	606
388-3947	528
388-4280	▶617
	638
	640
388-4281	▶618
	637
	639
388-4327	138
388-6622	690
	▶725
388-6664	581
388-6673	466
388-6675	581
388-7016	112
388-7231	598
388-7681	547
	▶557
388-7682	557
388-8625	782
388-8868	598
388-8869	598
388-8870	598
388-8871	605
388-8872	578
	▶625
388-8874	598
388-9292	427
388-9297	138
	▶409
388-9316	▶458
	813
388-9318	434
	436
388-9328	434
	436
388-9334	364
388-9337	364
389-0447	210
389-0879	800
	802
	805
389-1076	577
389-1560	793
389-1561	793
389-2167	▶526
	689
389-2168	526
389-2172	526
389-2249	836
389-2250	837
389-3197	581
389-3708	543
389-3728	50
	52
	543
389-5846	▶784
	785
389-6377	▶682
	689
389-6378	682
	▶696
389-6379	696
	▶697
389-6380	697
389-6382	697
389-6383	697
389-6915	▶402
389-6916	402
	▶404
389-8348	571
389-8621	502
	503
389-8622	463
	▶502
389-8623	463
	▶503
389-9511	551
	▶558
389-9512	549
	▶561
389-9730	455
389-9874	461
389-9884	459
	▶773
390-0186	558
390-0187	561
390-1864	565
	567
390-2797	▶216
390-2798	▶216
390-2819	▶2
390-2932	328
	▶533
390-2935	533
390-2936	328
	▶350
390-2937	364
390-2938	364
390-2961	372
390-2962	372
390-3134	▶604
	846
390-4077	▶457
390-4733	528
390-6837	843
390-6838	843
390-7270	488
390-7271	488
390-7872	589
390-8961	613
390-9126	846
	▶847
390-9852	4
	▶675
	680
390-9853	▶674
	675
391-0151	44
	45
391-0152	44
	45
391-0306	6
	7
	▶52
391-1379	167
	▶170
	860
391-1383	167
	▶170
	860
391-2051	726
	729
391-3111	103
391-3129	▶622
	625
391-3804	▶537
391-3947	439
	▶440
391-4387	440
391-4440	▶194
	292
391-4443	194
391-4444	▶190
	194
391-5182	▶798
391-5946	170
391-8190	▶475
	846
391-8361	37
391-9059	611
392-0178	333
	▶364
392-0198	112
392-5412	140
392-6547	469
	▶504
392-9208	542
	543
393-1217	463
393-2515	▶851
	861
	865
393-2516	861
	865
393-2518	861
393-2614	861
393-6336	▶200
393-9078	6
	7
	▶75
394-1172	▶5
	6
394-5447	6
	7
	▶37
395-2113	315
	317
395-3528	495
395-3689	495
395-3690	386
395-4317	628
396-0393	27
396-1677	488
396-1678	488
396-1782	598
396-4102	▶63
	66
396-4282	86
	▶375
396-4779	▶611
	615
396-5080	626
396-5089	626
396-7044	466
396-7046	466
396-8403	851
396-8404	851
396-8405	851
396-9062	1
	▶795
396-9450	79
397-2401	6
	7
	▶79
397-4827	722
397-4828	719
	730

▶ **PRIMARY REFERENCE**

PART NUMBER INDEX

Part	Page
397-4942	263
397-6405	▶745
	746
	819
397-8069	▶389
	391
397-8098	▶390
	391
397-9301	311
397-9348	6
	7
	▶158
398-1367	5
398-3767	628
398-5596	120
398-5601	120
398-6932	6
	8
	▶58
398-6986	513
	▶514
398-6987	▶515
399-4038	91
	▶355
4	
415-1093	634
415-1704	341
	343
	345
	347
415-1706	341
	343
	345
	347
415-1942	522
	524
415-1946	522
	524
415-7459	53
415-7541	434
415-7545	434
415-9332	434
415-9334	434
416-0021	821
	833
	835
416-7158	193
	281
416-8304	575
	▶577
416-8338	156
416-8343	156
416-8354	156
417-0980	6
	8
	▶290
417-2409	290
417-4431	6
	8
	▶326
417-4722	149
	▶168
417-6775	822
417-6867	434
	436
417-6870	434
	436
417-6873	434
	436
417-6875	434
	436
417-6910	434
	436
417-9251	▶194
	326
418-2295	355
418-5326	364
418-6449	463
419-1963	383
	▶391
419-3214	822
419-7776	822
419-8564	822
419-8867	870
420-0689	434
	436
420-1700	▶90
	355
420-1756	90
420-1992	263
420-3026	483
420-3028	483
420-3031	86
420-3035	86
420-3036	86
420-3037	488
420-5767	565
	567
420-6099	594
420-6821	469
420-9070	167
	▶307
420-9082	274
420-9085	167
	▶308
420-9086	276
420-9088	276
420-9090	167
	▶310
421-1285	798
	▶804
421-2442	414
	416
	418
	420
	425
421-2445	414
	416
	418
	420
	425
421-2447	410
421-2448	410
421-2453	418
421-2454	420
421-2466	491
421-2470	444
421-2471	444
421-2472	444
421-2482	412
421-2485	▶20
	491
421-2490	491
421-2491	491
421-2495	138
421-2496	410
421-2516	410
421-2518	410
421-2520	450
421-3140	434
	436
421-5583	215
421-5584	215
421-5585	215
421-7354	434
	436
421-7811	216
	▶227
421-7812	▶202
421-7813	▶763
421-7814	1
	2
	▶736
421-8644	329
	▶554
421-8647	364
422-0047	▶5
	7
422-0048	▶7
422-1732	594
422-2152	782
	822
422-8052	5
423-1982	633
423-1984	756
423-1986	600
423-2422	6
	7
	▶91
423-3480	598
423-4101	861
423-4275	852
423-4280	▶852
	853
423-4959	▶613
	616
423-5025	223
423-6371	528
423-9049	263
424-0286	6
	7
	▶695
424-1673	507
424-1675	507
424-1677	507
424-2226	602
424-4322	280
	281
424-7251	677
424-7963	6
	7
	▶34
424-8845	335
424-8957	822
425-2108	569
425-2540	440
425-4513	304
425-4565	393
	▶396
425-4618	347
425-5357	505
425-5941	594
425-6734	393
	▶397
425-8673	677
425-8674	4
	▶677
	680
426-2204	108
426-2205	108
426-2708	372
426-2710	372
426-4334	330
426-4335	554
427-1377	347
428-6017	3
	▶445
428-6026	3
	▶770
428-7945	606
428-8644	577
428-9250	598
430-3498	475
430-4564	507
430-4565	507
430-4568	507
430-8363	611
430-8364	611
430-8394	156
430-8398	▶156
	240
430-8400	155
	▶240
430-8907	466
430-9123	606
430-9454	101
	▶242
430-9684	482
430-9686	482
430-9687	482
430-9817	151
430-9818	151
430-9819	151
430-9821	292
430-9822	310
430-9823	310
430-9825	310
430-9827	151
430-9835	▶191
	308
431-1428	511
	▶516
431-1430	512
	▶517
431-1431	▶518
431-1432	▶519
431-6437	598
431-8735	281
431-8814	336
431-8816	520
431-8842	520
431-8852	388
	▶520
431-8921	598
431-9630	594
432-1674	606
432-2043	493
432-2044	493
432-2045	482
432-2046	482
432-4337	598
432-5415	493
432-8393	185
433-0614	598
433-0615	598
433-1034	598
433-4333	584
433-4441	591
433-5754	▶195
	815
	818
433-7128	488
434-1890	450
434-1994	528
434-2232	▶707
	741
434-2233	▶708
	741
434-3937	372
434-4395	347
434-9531	▶189
	290

PART NUMBER INDEX

Part	Page
435-1948	485
	507
435-1952	2
	▶485
	786
435-2108	594
	598
435-2110	594
	598
435-2111	594
435-2612	594
	598
435-3123	598
435-3124	598
435-3125	598
435-3126	598
435-3127	598
435-3386	598
435-3388	565
	567
435-4305	606
435-4306	606
435-5164	185
435-7971	402
	▶404
435-7972	▶402
435-8504	▶3
435-9302	114
435-9303	114
435-9304	114
436-1687	800
	802
	805
436-1688	800
	802
	805
436-3200	140
436-3251	581
436-3828	843
436-5764	463
436-5766	471
436-6212	69
436-6213	▶69
	70
436-6364	281
436-6594	114
436-7082	822
436-9115	565
436-9116	567
436-9156	554
	▶565
436-9157	554
	▶567
436-9180	▶230
	734
437-0046	517
	519
437-0360	594
437-1141	463
437-1151	463
	469
437-1409	26
437-1450	865
437-3856	768
437-4535	485
437-5444	429
437-7839	1
	▶865
437-7841	▶853
437-8820	3
437-8982	329
437-8983	329
437-8984	329
437-8991	822
438-0238	480
438-0240	427
	▶480
438-1066	493
438-1094	▶482
	493
438-1117	493
438-1122	493
438-1140	493
438-1541	364
438-1542	554
438-1549	364
438-1551	533
438-1552	533
438-3108	▶195
	741
438-3334	155
438-3335	155
438-4449	493
438-4662	482
438-4675	480
438-4773	156
438-6020	429
438-6117	463
438-8077	822
438-8078	822
438-9257	790
438-9577	6
	7
	▶36
438-9578	36
439-0403	6
	7
	▶70
439-1562	794
439-1807	101
439-1808	101
439-2311	742
439-3882	461
439-3888	460
	461
	▶486
439-3895	459
439-4056	606
439-4636	40
439-4704	19
439-4708	292
	299
439-4710	▶177
	299
439-4712	▶186
	307
439-4715	▶183
	308
439-5036	6
	7
	▶235
439-5516	9
	▶73
439-6983	598
439-9973	822
440-0899	108
440-1692	606
440-1694	606
440-2104	149
	▶238
440-2515	770
440-2520	770
440-2657	108
440-2907	84
440-5236	461
440-9601	510
440-9801	634
441-0762	546
441-0764	546
441-0766	546
441-0767	85
	▶546
441-0768	9
	▶92
441-2404	528
441-3387	92
441-4479	481
441-4488	▶481
441-4489	▶203
441-4490	▶204
441-4865	606
441-7480	822
441-8164	554
442-0048	579
442-0052	705
	706
	707
	708
442-4470	216
	217
	▶270
442-4473	446
442-4474	446
442-4475	▶446
	786
442-4478	▶287
442-5255	5
	▶870
442-5287	800
	802
	805
442-6257	341
	343
	345
	347
442-6279	689
442-7199	149
	▶239
442-7348	691
	▶729
442-8151	815
	818
442-8722	▶691
443-0924	790
443-0925	790
443-0935	510
443-3189	100
443-4063	414
	416
443-4065	412
443-4103	581
443-4108	581
443-4151	243
443-4156	92
443-4912	372
443-4913	372
443-5651	454
443-5969	594
443-6428	822
443-6606	598
443-6607	598
443-6981	602
443-7732	584
443-7737	584
443-7740	584
443-7757	591
443-7758	591
443-7768	412
443-7770	412
443-7772	▶450
	790
443-7775	138
443-8216	804
	▶805
443-8217	▶800
	807
443-8222	▶802
	808
443-8262	796
	▶807
443-8263	797
	▶808
443-8386	▶187
	307
443-8462	160
443-8486	367
	▶368
443-8488	368
443-8573	▶744
	800
	802
	805
443-8574	747
443-8576	749
443-8578	748
443-9601	466
444-0558	310
444-0559	274
444-0560	▶184
	315
	317
	319
	321
444-0561	310
444-0562	357
444-2269	64
444-4299	463
444-5131	861
444-6472	813
444-6474	429
444-6476	429
444-6523	213
	214
444-6559	496
	498
	499
	500
444-6560	581
444-7840	80
444-8535	372
444-9544	830
	833
	835
444-9681	85
	▶100
444-9775	526
	▶785
444-9777	785
445-0466	822
445-1508	830
445-1528	165
446-0635	▶747
	805
446-0642	▶748
	800
446-0649	▶749
	802
446-1483	752
446-1523	675
446-7511	108
446-7734	9
	▶357
446-8382	418
	420
446-8873	75
446-9427	3

▶ **PRIMARY REFERENCE**

PART NUMBER INDEX

Part	Page
	▶764
447-0763	412
447-1485	425
447-1487	425
447-2229	▶711
447-2230	689
	▶752
447-2231	752
447-8925	752
447-9089	461
448-1893	300
448-2602	160
	162
448-3613	822
448-9279	305
448-9280	2
	▶305
	786
448-9281	305
448-9283	223
449-1750	675
449-1751	675
449-2127	165
449-3815	496
	498
	499
	500
449-3816	496
	498
	499
	500
449-4835	581
449-7301	238
449-7303	239
450-1078	92
450-1651	▶1
450-1652	▶2
450-2497	861
	865
450-2704	▶191
	299
450-5243	571
450-5244	571
450-5678	▶173
	281
450-6181	571
450-6182	571
451-0115	833
451-0116	833
451-2140	175
451-2535	218
	221
451-2536	218
	221
451-5453	802
451-5615	343
451-5616	341
451-7256	355
452-0064	861
	865
452-0435	123
452-0944	325
452-0946	631
452-6716	▶746
	815
452-9086	9
	▶53
452-9419	▶631
	632
452-9526	176
453-4370	▶846
453-5346	7
	▶71
453-5347	71
	▶72
453-5348	72
453-5500	7
	▶19
453-5919	7
	▶45
454-1775	88
454-4691	4
	▶571
	680
454-6333	571
454-9630	156
454-9703	471
455-0704	174
	183
	185
	190
	193
	194
	263
455-0705	179
	180
	183
	185
	191
	193
	194
455-0706	175
455-0707	175
	184
455-0709	175
	185
	281
455-1592	742
455-2399	123
455-2400	123
455-3852	181
455-3858	90
455-7859	341
	343
	345
	347
455-7887	▶341
	388
455-7888	▶343
	388
455-7889	▶345
	388
455-7891	▶347
	388
455-7895	336
455-9045	594
455-9193	337
456-0011	82
456-0097	337
456-0579	754
456-1559	809
	811
456-3346	▶160
	199
456-3347	▶162
	199
456-4390	594
	598
456-4446	842
456-4447	842
456-4448	▶842
456-5119	454
456-5609	451
	787
	790
456-5787	425
456-7009	813
456-7165	469
456-7166	813
456-7554	409
457-1109	480
457-1110	427
457-3298	764
457-3299	764
457-3648	▶767
	835
457-5912	628
457-7811	741
457-7812	741
457-8944	689
	▶822
458-0284	488
458-0287	488
458-2776	108
458-7887	▶196
	741
458-7888	▶196
	741
458-7889	741
458-7890	160
459-0575	101
459-0576	101
459-0786	168
459-1689	▶184
	310
459-1690	▶181
	310
459-1691	308
459-1693	310
459-1694	▶192
	310
459-1695	292
459-1696	274
	276
459-1697	308
459-1700	▶185
	310
459-1701	▶186
	310
459-1703	274
	276
459-1708	▶226
459-1861	813
459-6634	138
460-3190	281
460-3191	281
460-4062	38
460-5306	466
460-5307	466
460-5429	429
460-5901	78
460-5907	78
460-5932	78
460-8153	861
	865
460-8154	861
	865
460-8222	561
461-2375	572
461-3288	156
461-3325	571
461-3366	101
461-3367	101
461-4277	469
	475
461-4279	463
461-4282	463
461-4283	463
461-4287	463
461-4288	475
461-5232	150
461-5716	581
461-5717	581
461-8675	386
461-8676	386
462-1542	408
462-2871	92
462-6344	722
462-6345	719
462-6400	▶3
462-6461	▶680
462-6462	▶680
462-8039	813
462-9621	742
463-6185	822
463-6186	823
463-6235	584
	591
463-6258	▶741
463-6896	92
463-7571	466
463-7584	466
463-8361	843
463-9600	170
463-9605	▶170
	199
463-9606	▶170
	199
463-9611	▶171
	199
463-9613	▶149
	160
	162
463-9614	▶149
	162
463-9615	▶149
	160
464-0579	170
464-1564	366
464-2399	347
464-2500	▶199
464-2510	▶199
464-2963	581
464-2964	581
464-2965	581
464-2966	581
464-2967	581
464-2968	581
464-2969	581
464-2970	581
464-7684	240
465-2496	169
465-3277	167
	▶169
465-3377	578
	▶632
	680
465-3891	606
466-1528	441
466-3019	343
	345
	347
466-3025	343
	345
466-3030	341
466-3328	170
466-3754	466
466-3756	466
466-3757	466
466-3758	466
466-6862	73
466-6863	73
466-6864	147
	148
466-7341	683

PART NUMBER INDEX

Part	Page
466-9584	410
467-0235	546
467-2009	7
	▶263
467-2513	239
467-3418	526
467-4723	587
467-9188	579
468-0970	689
468-2942	526
468-3491	169
468-3608	169
468-8022	169
469-3600	147
	148
469-4606	101
469-5180	92
469-5839	7
	▶129
469-6687	92
470-1001	170
470-8537	440
470-8539	440
471-4258	598
471-6095	463
471-6096	463
471-6097	463
471-6098	463
471-6099	463
471-6100	466
471-6101	475
471-6103	471
471-6815	463
471-7722	471
471-8197	138
472-0422	455
472-1052	677
472-3544	526
472-4231	787
	790
472-6230	782
472-6231	782
472-7194	606
472-7195	606
472-7445	543
473-3004	440
473-3006	440
473-8155	213
	214
473-8156	213
	214
474-3003	581
474-4232	611
474-4618	▶543
	544
474-4621	7
	▶544
474-5407	▶179
	292
474-5408	299
474-5409	▶177
	299
474-5410	▶190
	299
474-5411	▶180
	292
474-6913	▶328
	376
474-6914	328
	▶329
474-6915	329
474-6955	412
474-9433	687
474-9434	687
474-9447	412
474-9449	412
474-9450	412
474-9969	101
475-1688	579
475-3869	466
475-4129	466
475-4304	▶174
	281
475-4926	223
475-4927	223
475-4928	▶181
	223
475-4929	315
	321
475-4930	217
	▶315
475-4942	101
476-3198	475
476-3279	488
476-4177	581
476-4187	581
476-4188	581
476-4216	581
476-4813	458
476-5508	594
476-5514	594
476-5515	594
476-5516	594
476-6335	692
476-7228	845
476-8829	▶433
	449
476-8830	3
	▶451
476-8831	449
	▶453
477-0556	448
477-1212	112
477-1213	112
477-1214	112
477-1216	112
477-1251	822
477-1252	823
477-1254	2
	▶742
477-5497	423
477-5498	422
477-5499	425
477-7212	594
477-8215	▶193
	352
477-9271	▶562
	846
477-9370	414
477-9371	416
477-9372	414
477-9373	416
477-9838	457
478-1319	488
478-1749	118
478-1935	488
478-4686	847
478-8991	675
478-9020	486
478-9021	486
478-9022	486
478-9025	460
	461
478-9028	460
478-9029	460
478-9030	460
478-9033	292
478-9463	460
478-9464	459
	▶460
478-9467	459
478-9469	436
478-9880	790
478-9881	787
478-9882	790
478-9883	787
478-9924	562
478-9936	20
479-0024	238
479-0025	171
	239
479-0384	451
479-0385	451
479-0389	451
479-0391	436
479-0393	436
479-0395	787
479-0396	▶509
	787
479-0707	171
479-0770	509
479-1806	20
479-1940	453
479-1942	453
479-2039	528
479-2090	594
479-2092	594
	598
479-2093	594
	598
479-2108	488
479-3072	▶513
	537
479-3306	443
479-3361	▶537
479-3367	440
479-4212	431
	433
479-4214	431
	433
479-4996	604
479-4997	604
479-6062	315
	321
479-6063	315
	321
479-6064	315
	321
479-6065	▶321
479-6066	▶182
	315
	321
479-6537	2
	3
	▶408
	786
479-6594	454
479-6633	▶454
	787
479-6904	688
479-6914	688
479-7338	▶217
479-7339	▶217
479-7374	436
479-7376	459
	▶461
479-7473	507
479-7475	507
479-7479	507
479-7480	507
479-7482	507
479-7484	507
479-7486	507
479-7488	507
479-7490	507
479-7492	507
479-7494	507
479-7495	507
479-7497	510
479-7499	509
479-7500	487
479-7656	▶680
479-8461	434
479-8464	434
479-8470	425
480-0365	▶487
	787
480-0416	▶510
	790
480-2162	793
480-2163	793
480-2173	793
480-2174	793
480-2175	793
480-2176	793
480-2177	793
480-2178	793
480-2179	793
480-2180	793
480-5149	786
	▶792
480-6115	▶774
	792
480-6655	442
480-6656	442
480-6660	▶442
480-6661	533
480-6724	488
480-6725	489
482-6296	462
482-6297	▶462
	793
482-8219	462
482-8220	462
482-9166	488
482-9168	488
482-9169	488
482-9170	489
482-9171	489
482-9908	528
482-9912	528
482-9914	528
482-9915	528
482-9916	528
483-0648	792
	▶793
483-3712	489
483-3713	488
483-3845	455
485-4426	420
485-4427	418
485-9851	429
485-9852	429

▶ **PRIMARY REFERENCE**

MEMORANDA



©2015 Caterpillar
All Rights Reserved

CAT, CATERPILLAR, their respective logos, “Caterpillar Yellow”, and the POWER EDGE trade dress as well as corporate and product identity used herein, are trademarks of Caterpillar and may not be used without permission.