NOVEMBRO 1988

TECHNICAL MANUAL

UNIT, DIRECT SUPPORT, AND GENERAL SUPPORT MAINTENANCE

REPAIR PARTS AND SPECIAL TOOLS LISTS (INCLUDING

DEPOT MAINTENANCE REPAIR PARTS AND

SPECIAL TOOLS LISTS)

RUTHZIL TRATOR COMERCIAL DE PEÇAS LTDA 11 97083-6812 ROLANDO

LOADER, SCOOP-TYPE: DED, 4 X 4, ARTICULATED FRAME STEER, 4-1/2 TO 5 CU YD (CCE)

WITH 4-1/2 CU YD ROCK BUCKET

NSN 3805-00-602-5006

CLARK MEL 1758, TYPE I

WITH 5 CU YD GENERAL PURPOSE BUCKET

NSN 3805-00-602-5013

CLARK MODEL 1 TYPE 11

This manual supersedes TM 53805257-20P, dated 12 November 1988 and TM 53805257-34P, date d 1 November 1988.

Approved for public release; distribution is unlimited.

HEADQUARTERS, DEPARTMENT OF THE ARMY OCTOBER 1993

TECHNICAL MANUAL

TM 5-3805-257-24P*

HEADQUARTERS
DEPARTMENT OF THE ARMY
Washington D.C., *22 October 1993*

UNIT, DIRECT SUPPORT, AND GENERAL SUPPORT MAINTENANCE REPAIR PARTS AND SPECIAL TOOLS LISTS (INCLUDING DEPOT MAINTENANCE REPAIR PARTS AND SPECIAL TOOLS LISTS)

LOADER, SCOOP-TYPE: DED, 4 X 4, ARTICULATED FRAME STEER, 4-1/2 TO 5 CU YD (CCE)

WITH 4-1/2 CU YD ROCK BUCKET
NSN 3805-00-602-5006
CLARK MODEL 175B, TYPE I

WITH 5 CU YD GENERAL PURPOSE BUCKET
NSN 3805-00-602-5013
CLARK MODEL 175B, TYPE 11

Current as of 30 November 1992

REPORTING ERRORS AND RECOMMENDING IMPROVEMENTS

You can help improve this manual. If you find any mistakes or if you know of a way to improve the procedures, please let us know. Mail your letter, DA Form 2028 *(Recommended Changes to Publications and Blank Forms),* or DA Form 2028-2, located in the back of this manual, direct to: Commander, U.S. Army Tank Automotive Command, ATTN: AMSTA-MB, Warren, Ml 48397-5000. A reply will be furnished to you.

Approved for public release; distribution is unlimited.

TABLE OF CONTENTS

		Page	Illus Fig
SECTION I	INTRODUCTION	1	
SECTION I I	REPAIR PARTS LIST	1-1	
GROUP 01	ENGINE		
	0100 - ENGINE ASSEMBLY	1-1	
	ENGINE	1-1	1
	ENGINE MOUNTING	2-	2
	ENGINE LIFTING BRACKETS	3-1	3

* This manual supersedes TM 5-3805-257-20P, dated 12 November 1988 and TM 5-3805-257-34P, dated 1 November 1988.

TABLE OF CONTENTS (Con't)

	Page	Illus Fig
0101 - CRANKCASE, BLOCK, CYLINDER HEAD	4-1	
CYLINDER BLOCK	4-1	4
CYLINDER HEAD	5-1	5
0102 - CRANKSHAFT	6-1	
BEARING CAP STABILIZER	6-1	6
CRANKSHAFT	7-1	7
CRANKSHAFT PULLEY, VIBRATION DAMPER, AND HUB	8-1	8
0103 - FLYWHEEL ASSEMBLY	9-1	
FLYWHEEL AND HOUSING	9-1	9
0104 - PISTONS AND CONNECTING RODS	10-1	
PISTON AND CONNECTING ROD	10-1	10
0105 - VALVES, CAMSHAFTS, AND TIMING SYSTEM	11-1	
CAMSHAFT AND GEAR	11-1	11
CAMSHAFT AND RELATED PARTS	12-1	12
CRANKSHAFT TIMING GEAR	13-1	13
BALANCE WEIGHT COVER AND RELATED PARTS	14-1	14
BALANCE WEIGHT COVER, EXPLODED VIEW	15-1	15
ROCKER ARM AND RELATED PARTS	16-1	16
ROCKER ARM VALVES	17-1	17
ROCKER ARM COVER	18-1	18
0106 - ENGINE LUBRICATION SYSTEM	19-1	
OIL PUMP	19-1	19
OIL DISTRIBUTION SYSTEM	20-1	20
OIL PRESSURE REGULATOR AND RELIEF VALVE ASSEMBLY	21-1	21
OIL FILTER	22-1	22
OIL COOLER	23-1	23
OIL FILLER CAP	24-1	24
OIL DIPSTICK	25-1	25
ENGINE BREATHER	26-1	26
VENTILATING SYSTEM	27-1	27
OIL PAN	28-1	28
0108 - MANIFOLDS	29-1	
EXHAUST MANIFOLD	29-1	29
GROUP 03 FUEL SYSTEM		
0301 - CARBURETOR, FUEL INJECTOR	30 -1	
FUEL INJECTOR	30-1	30
FUEL INJECTOR, EXPLODED VIEW	31-1	31
FUEL INJECTOR CONTROL	32-1	32
0302 - FUEL PUMPS	33-1	
FUEL INJECTOR PUMP	33-1	33
0304 - AIR CLEANER	34-1	
ENGINE AIR CLEANER	34-1	34
0305 - SUPERCHARGER, BLOWER, TURBOCHARGER, OR ALTITUDE COMPENSATOR	35-1	
AIR INLET HOUSING	35-1	35
BLOWER	36-1	36
BLOWER AND RELATED PARTS	37-1	37
0306 - TANKS, LINES. FITTINGS, HEADERS	38-1	
FUEL TANK AND RELATED PARTS	38-1	38
FUEL FILTER AND STRAINER LINES	39-1	39

TABLE OF CONTENTS (Con't)

			Page	Illus Fig
		0308 - ENGINE SPEED GOVERNOR AND CONTROLS	40-1	
		LIMITING SPEED GOVERNOR	40-1	40
		LIMITING SPEED GOVERNOR RELATED PARTS	41-1	41
		SPEED CONTROL MECHANISM	42-1	42
		0309 - FUEL FILTERS	43-1	
		FUEL FILTER AND STRAINER	43-1	43
		0311 - ENGINE STARTING AIDS	44-1	
		ALCOHOL INJECTOR SYSTEM	44-1	44
		ENGINE QUICK-START SYSTEM	45-1	45
		0312 - ACCELERATOR, THROTTLE, OR CHOKE CONTROLS	46-1	
		ACCELERATOR CONTROLS	46-1	46
GROUP	04	EXHAUST SYSTEM		
		0401 - MUFFLER AND PIPES	47-1	
		EXHAUST SYSTEM	47-1	47
GROUP	05	COOLING SYSTEM		
		0501 - RADIATOR, EVAPORATIVE COOLER, OR HEAT EXCHANGER	48-1	
		RADIATOR	48-1	48
		RADIATOR MOUNTING	49-1	49
		RADIATOR GRILLE	50-1	50
		0502 - COWLING, DEFLECTORS, AIR DUCTS, SHROUDS, ETC	51-1	
		RADIATOR SHROUD	51-1	51
		0503 - WATER MANIFOLD, HEADERS, THERMOSTATS, AND HOUSING	52-1	
		GASKET RADIATOR HOSES	52-1	52
		THERMOSTAT AND BYPASS TUBE (RIGHT BANK)	53-1	53
		THERMOSTAT AND BYPASS TUBE (LEFT BANK)	54-1	54
		0504 - WATER PUMP	55-1	
		WATER PUMP	55-1	55
		0505 - FAN ASSEMBLY	56-1	
		FAN, MOUNT, AND PULLEY	56-1	56
		FAN GUARD	57-1	57
GROUP	06	ELECTRICAL SYSTEM		
		0601 - GENERATOR, ALTERNATOR	58-1	
		GENERATOR PULLEY AND RELATED PARTS	58-1	58
		GENERATOR (65 AMP)	59-1	59
		GENERATOR	60-1	60
		0603 - STARTING MOTOR	61-1	
		STARTER	61-1	61
		0606 - ENGINE SAFETY CONTROLS	62-1	
		ELECTRIC SYSTEM SWITCHES AND CIRCUIT BREAKERS	62-1	62
		ELECTRIC SWITCHES	63-1	63
		0607 - INSTRUMENT OR ENGINE CONTROL PANEL	64-1	
		ELECTRIC HOURMETER	64-1	64
		BOOM DETENT RELEASE	65-1	65
		ELECTRIC GAGES AND INSTRUMENT PANEL	66-1	66
		0609 - LIGHTS	67-1	
		CAB HEADLIGHT	67-1	67
		MISCELLANEOUS LIGHTS	68-1	68

TABLE OF CONTENTS (Con't)

			Page	Illus Fig
		0610 - SENDING UNITS AND WARNING SWITCHES	69-1	
		SENDING UNITS AND WARNING SWITCHES	69-1	69
		0611 - HORN, SIREN	70-1	
		BACKUP ALARM	70-1	70
		HORN	71-1	71
		0612 - BATTERIES, STORAGE	72-1	
		BATTERIES AND CABLES	72-1	72
		0613 - HULL OR CHASSIS WIRING HARNESS	73-1	
		ELECTRICAL WIRING	73-1	73
		CAB LIGHT WIRING	74-1	74
		INSTRUMENT PANEL WIRING HARNESS	75-1	75
GROUP	07	TRANSMISSION		
		0705 - TRANSMISSION SHIFTING COMPONENTS	76-1	
		TRANSMISSION CONTROLS	76-1	76
		TRANSMISSION CONTROLS AND RELATED PARTS	77-1	77
		0708 - TORQUE CONVERTER OR FLUID COUPLING	78-1	
		CONVERTER ASSEMBLY	78-1	78
		CONVERTER ASSEMBLY, EXPLODED VIEW	79-1	79
		CONVERTER AND RELATED PARTS	80-1	80
		0710 - TRANSMISSION ASSEMBLY AND ASSOCIATED PARTS	81-1	
		TRANSMISSION CASE	81-1	81
		TRANSMISSION ASSEMBLY	82-1	82
		TRANSMISSION ASSEMBLY AND RELATED PARTS	83-1	83
		TRANSMISSION GEARS	84-1	84
		TRANSMISSION SHAFTS	85-1	85
		TRANSMISSION SHAFTS AND RELATED PARTS	86-1	86
		TRANSMISSION REVERSE, THIRD AND FOURTH CLUTCH ASSEMBLY	87-1	87
		TRANSMISSION FIRST AND SECOND CLUTCH ASSEMBLY	88-1	88
		TRANSMISSION TOP COVER ASSEMBLY	89-1	89
		TOP COVER, EXPLODED VIEW	90-1	90
		0721 - COOLERS, PUMPS, MOTORS	91-1	
		TRANSMISSION OIL COOLER	91-1	91
		TRANSMISSION LINES, FILTER, AND RELATED PARTS1	92-1	92
		0725 - IDLER G E A RS	93-1	
		TRANSMISSION IDLER GEAR	93-1	93
		MIDMOUNT BEARING ASSEMBLY	94-1	94
GROUP	09	PROPELLER, PROPELLER SHAFTS, UNIVERSAL JOINTS, COUPLER, AND CLAMP ASSEMBLY		
		0900 - PROPELLER SHAFTS	95-1	
		TRANSMISSION TO REAR AXLE PROPELLER SHAFT ASSEMBLY	95-1	95
		CONVERTER TO TRANSMISSION PROPELLER SHAFT ASSEMBLY	96-1	96
		PROPELLER SHAFT ASSEMBLY	97-1	97
		PROPELLER SHAFT ASSEMBLY AND RELATED PARTS	98-1	98
		GROUP 10 FRONT AXLE		
GROUP	09	FRONT AXLE		
		1000 - FRONT AXLE ASSEMBLY	99-1	
		FRONT AXLE ASSEMBLY	99-1	99
		1002 - DIFFERENTIAL	100-1	
		FRONT DIFFERENTIAL CARRIER ASSEMBLY	100-1	100
		FRONT DIFFERENTIAL AND CARRIER, EXPLODED VIEW	101-1	101

TABLE OF CONTENTS (Con't)

			Page	Illus Fig
		1003 - PLANETARY OR FINAL DRIVE	102-1	
		PLANETARY CARRIER, EXPLODED VIEW	102-1	102
GROUP	11	REAR AXLE		
		1100 - REAR AXLE ASSEMBLY	103-1	
		REAR AXLE ASSEMBLY	103-1	103
		1102 - DIFFERENTIAL	104-1	
		DIFFERENTIAL CARRIER ASSEMBLY	104-1	104
		DIFFERENTIAL, EXPLODED VIEW	105-1	105
		1103 - PLANETARY OR FINAL DRIVE	106-1	
		PLANETARY CARRIER, EXPLODED VIEW	106-1	106
GROUP	12	BRAKES		
		1201 - HANDBRAKES	107-1	
		PARKING BRAKE CONTROLS	107-1	107
		PARKING BRAKE LEVER ASSEMBLY	108-1	108
		1202 - SERVICE BRAKES	109-1	
		BRAKE HEAD ASSEMBLY	109-1	109
		1204 - HYDRAULIC BRAKE SYSTEM	110-1	
		BRAKE POWER CLUSTER	110-1	110
		1206 - MECHANICAL BRAKE SYSTEM	111-1	
		BRAKE PEDAL	111-1	111
		1208 - AIRBRAKE SYSTEM	112-1	
		BRAKE PEDAL VALVE	112-1	112
		BRAKE PEDAL VALVE, EXPLODED VIEW	113-1	113
		BRAKE COMPENSATOR ASSEMBLY	114-1	114
		REAR AIR RESERVOIRS AND VALVES	115-1	115
		REAR AIRBRAKE LINES AND RELATED PARTS	116-1	116
		AIR VALVES AND RELATED PARTS	117-1	117
		FRONT AIRBRAKE LINES AND VALVES	118-1	118
		1209 - AIR COMPRESSOR ASSEMBLY 119-1		
		AIR COMPRESSOR ASSEMBLY AND ATTACHING PARTS	119-1	119
		AIR COMPRESSOR LUBRICATION SYSTEM	120-1	120
		AIR COMPRESSOR AIR INTAKE	121-1	121
		AIR COMPRESSOR COOLING SYSTEM	122-1	122
GROUP	13	WHEELS AND TRACKS		
		1311 - WHEEL ASSEMBLY	123-1	
		WHEEL ASSEMBLY	123-1	123
		WHEEL HUB, DISK, AND RELATED PARTS	124-1	124
		1313 - TIRES, TUBES, TIRE CHAINS	125-1	
		TIRE	125-1	125
GROUP	14	STEERING		
		1401 - MECHANICAL STEERING GEAR ASSEMBLY	126-1	
		STEERING GEAR ASSEMBLY	126-1	126
		STEERING WHEEL SUPPORTS	127-1	127
		STEERING DRAG LINK ASSEMBLY	128-1	128
		STEERING PUMP ATTACHING PARTS	129-1	129
		STEERING PUMP ASSEMBLY	130-1	130

TABLE OF CONTENTS (Con't)

			Page	Illus Fig
		1401 - MECHANICAL STEERING GEAR ASSEMBLY (Can't)		
		REAR STEERING PUMP RELATED PARTS	131-1	131
		FRONT STEERING PUMP ATTACHING PARTS	132-1	132
		STEERING SYSTEM HOSES AND RELATED PARTS	133-1	133
		1412 - HYDRAULIC OR AIR CYLINDERS	134-1	
		STEERING CYLINDER ASSEMBLY	134-1	134
GROUP	15	FRAME, TOWING ATTACHMENTS, DRAWBARS, AND ARTICULATION SYSTEMS		
		1501 - FRAME ASSEMBLY	135-1	
		FRAME AND ATTACHING PARTS	135-1	135
		FRAME RELATED PARTS	136-1	136
		LADDER AND STEP	137-1	137
		1502 - COUNTERWEIGHTS	138-1	
		COUNTERWEIGHT	138-1	138
GROUP	18	BODY CAB, HOOD, AND HULL		
		1801 - BODY CAB, HOOD, AND HULL ASSEMBLIES	139-1	
		HOOD AND RELATED PARTS	139-1	139
		PLATES AND RELATED PARTS	140-1	140
		COCKPIT SOUNDPROOFING	141-1	141
		COCKPIT ASSEMBLY	142-1	142
		ROLL-OVER PROTECTIVE STRUCTURE (ROPS)	143-1	143
		CAB ASSEMBLY AND PANELS .	144-1	144
		CAB TRIMSTRIPS	145-1	145
		1802 - FENDERS, RUNNING BOARDS WITH MOUNTING AND ATTACHING PARTS, OUTRIGGERS, WINDSHIELD, GLASS, ETC	146-1	
		WINDSHIELD, GLASS, AND MOLDING	146-1	146
		1806 - UPHOLSTERY SEATS, AND CARPETS	147-1	
		SEAT AND ATTACHING PARTS	147-1	147
		1808 - STOWAGE RACKS, BOXES, STRAPS, CARRYING CASES, CABLE REELS, HOSE REELS, ETC		
		TOOLBOX	148-1	148
GROUP	22	BODY, CHASSIS, AND HULL ACCESSORY ITEMS		
		2201 - CANVAS, RUBBER, OR PLASTIC ITEMS	149-1	
		CANVAS BAG MOUNTING	149-1	149
		2202 - ACCESSORY ITEMS	150-1	
		REAR WINDSHIELD WIPER	150-1	150
		FRONT WINDSHIELD WIPER, MOTOR, AND RELATED PARTS	151-1	151
		FRONT WINDSHIELD WIPER KIT	152-1	152
		DEFROSTER FAN ASSEMBLY	153-1	153
		HEATER HOSES AND RELATED PARTS	154-1	154
		HEATER ASSEMBLY	155-1	155
		2210 - DATA PLATES AND INSTRUCTION HOLDERS	156-1	
		DATA PLATES	156-1	156
GROUP	24	HYDRAULIC AND FLUID SYSTEMS		
		2401 - PUMP AND MOTOR	157-1	
		MAIN PUMP ATTACHING PARTS	157-1	157
		MAIN PUMP	158-1	158

TABLE OF CONTENTS (Con't)

			Page	Illus Fig
		2402 - MANIFOLD AND/OR CONTROL VALVES	159-1	
		MAIN BOOM VALVE ASSEMBLY	159-1	159
		MAIN BUCKET SECTION VALVE	160-1	160
		MAIN CONTROL SECTION VALVE	161-1	161
		MAIN RELIEF VALVE	162-1	162
		TRIPLE SPOOL MAIN VALVE	163-1	163
		MAIN PILOT VALVE	164-1	164
		PILOT VALVE RELATED PARTS	165-1	165
		THREE SPOOL PILOT VALVE	166-1	166
		BUCKET PILOT VALVE	167-1	167
		BOOM AND COVER END PILOT VALVE	168-1	168
		PILOT VALVE (INLET/OUTLET)	169-1	169
		DECLUTCH VALVE ASSEMBLY	170-1	170
		FEEDER MANIFOLD	171-1	171
		MOUNTING CONTROL VALVE	172-1	172
		SOLENOID VALVE	173-1	173
		PLUNGER AND PILOT VALVE ASSEMBLY	174-1	174
		PILOT VALVE ASSOCIATED PARTS	175-1	175
		2403 - HYDRAULIC CONTROLS AND/OR MANUAL CONTROLS	176-1	
		CONTROL LEVER AND LINKAGE	176-1	176
		CONTROL LEVER AND LINKAGE (THREE SPOOL)	177-1	177
		2406 - STRAINERS, FILTERS, LINES, AND FITTINGS, ETC	178-1	
		HYDRAULIC LINES AND FITTINGS	178-1	178
		THREE SPOOL VALVE PIPING	179-1	179
		MAIN HYDRAULIC LINES	180-1	180
		BOOM HYDRAULIC LINES AND FITTINGS	181-1	181
		FEEDER LINES AND RELATED PARTS	182-1	182
		2407 - HYDRAULIC CYLINDERS	183-1	
		BUCKET CYLINDER	183-1	183
		BOOM CYLINDER	184-1	184
		2408 - LIQUID TANKS OR RESERVOIRS	185-1	
		HYDRAULIC RESERVOIR	18S-1	185
		RESERVOIR RELATED PARTS	186-1	186
GROUP	47	GAGES (NONELECTRICAL), WEIGHING AND MEASURING DEVICES		
		4702 - GAGES, MOUNTINGS, LINES, AND FITTINGS	187-1	
		TRANSMISSION DIPSTICK	187-1	187
GROUP	74	CRANES, SHOVELS, AND EARTHMOVING EQUIPMENT COMPONENTS		
		7404 - ELECTRICAL CONTROLS	188-1	
		BOOM LIMIT SWITCH	188-1	188
		7436 - LIFT ARMS AND PIVOT ASSEMBLIES	189-1	
		BOOM	189-1	189
		BUCKET TEETH AND ADAPTERS	190-1	190
		7437 - LOADER BUCKET ASSEMBLY OR FORKLIFT	191-1	
		BUCKET	191-1	191
GROUP	94	REPAIR KITS		
		9401 - REPAIR KITS	KIT-1	
		REPAIR KITS	KIT-1	KIT

TABLE OF CONTENTS (Con't)

			Page	Illus Fig
GROUP	95	GENERAL USE STANDARDIZED PARTS		
		9501 - BULK MATERIEL	BULK-1	
		BULK MATERIEL	BULK-1	BULK
SECTION	III	SPECIAL TOOLS (NOT APPLICABLE)		
SECTION	IV	CROSS-REFERENCE INDEXES		
		NATIONAL STOCK NUMBER INDEX	I-1	
		PART NUMBER INDEX	I-25	
		FIGURE AND ITEM NUMBER INDEX	I-100	

UNIT, DIRECT SUPPORT, AND GENERAL SUPPORT MAINTENANCE REPAIR PARTS AND SPECIAL TOOLS LISTS (INCLUDING DEPOT MAINTENANCE REPAIR PARTS AND SPECIAL TOOLS LISTS)

SECTION I. INTRODUCTION

1. Scope.

This RPSTL lists and authorizes spares and repair parts; special tools; special test, measurement, and diagnostic equipment (TMDE); and other special support equipment required for performance of Unit, Direct Support, and General Support Maintenance of the Scoop-type Loader. It authorizes the requisitioning, issue, and disposition of spares, repair parts and special tools as indicated by the source, maintenance and recoverability (SMR) codes.

2. General.

In addition to Section I. Introduction, this Repair Parts and Special Tools List is divided into the following sections:

a. *Section I. Repair Parts List.* A list of spares and repair parts authorized by this RPSTL for use in the performance of maintenance. The list also includes parts which must be removed for replacement of the authorized parts. Parts lists are composed of functional groups in ascending alphanumeric sequence, with the parts in each group listed in ascending figure and item number sequence. Bulk materials are listed in item name sequence. Repair kits are listed separately in their own functional group within Section II. Repair parts for reparable special tools are also listed in the section. Items listed are shown on the associated illustration(s)/figure(s).

b. *Section III. Special Tools List.* A list of special tools, special TMDE, and other special support equipment authorized by this RPSTL (as indicated by Basis of Issue (BOI) information in DESCRIPTION AND USABLE ON CODE column) for the performance of maintenance.

c. *Section IV Cross-reference Indexes.* A list, In National Item Identification Number (N]IN) sequence, of all National stock numbered items appearing in the listing, followed by a list in alphanumeric sequence of all part numbers appearing in the listings. National stock numbers and part numbers are cross-referenced to each illustration/figure and item number appearance. The figure and item number index lists figure and item numbers in alphanumeric sequence and crossreferences NSN, CAGE, and part numbers.

3. Explanation of Columns (Sections 11 and 111).

a. ITEM NO. (Column (1)). Indicates the number used to identify items called out in the illustration.

b. SMR CODE (Column (2)). The Source, Maintenance, and Recoverability (SMR) code is a 5-position code containing supply/requisitioning information, maintenance category authorization criteria, and disposition instructions, as shown in the following breakout:

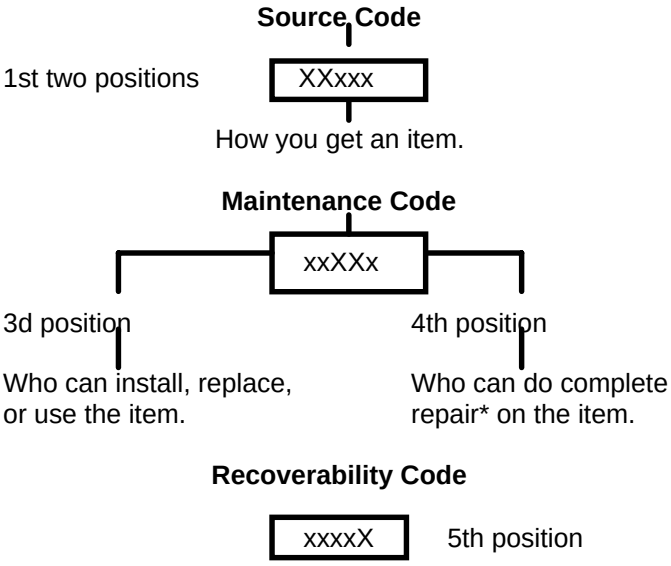

*Complete Repair: Maintenance capacity, capability, and authority to perform all corrective maintenance tasks of the "Repair" function in a use/user environment In order to restore serviceability to a failed item.

(1) Source Code. The source code tells you how to get an item needed for maintenance, repair, or overhaul of an end item/equipment. Explanations of source codes follows:

Code	Application/Explanation
PA	Stocked items; use the applicable NSN to request/requisition items with these source codes. They are authorized to the category indicated by the code entered in the 3d position of the SMR code. ** Items coded PC are subject to PG deterioration.
PB	
*PC***	
PD	
PE	
PF	
KD	Items with these codes are not to be requested/requisitioned individually. They are part of a kit which is authorized to the maintenance category indicated in the 3d position of the SMR code. The complete kit must be requisitioned and applied.
KF	
KB	
MO-(Made at UM/ AVUM Level)	Items with these codes are not to be requested/requisitioned Individually. They must be madefrom bulk material which is identified by the part number in the DESCRIPTION AND USABLE ON CODE (UOC) column and listed in the Bulk Material group of the repair parts list in this RPSTL. If the item is authorized to you by the 3d position code of the SMR code, but the source code indicates it is made at a higher level, order the item from the higher level of maintenance.
MF-(Made at DS/ AVUM Level)	
MH-(Made at GS Level)	
ML-(Made Spe-) cialized Repair Activity (SRA)	
MD-(Made at Depot)	
AO-(Assembled by UMI AVUM Level)	Items with these codes are not to be requested/requisitioned individually. The parts that makeup the assembled item must be requisitioned or fabricated and assembled at the level of maintenance indicted by the source code. If the 3d position code of the SMR code authorizes you to replace the item, but the source code indicates the item is assembled at a higher level, order the item from the higher level of maintenance.
AF-(Assembled by DSIAVIM Level)	
AH-(Assembled by GS Category	
AL-(Assembled by SRA)	
AD-(Assembled by Depot)	
XA	Do not requisition an "XA'-coded item. Order its next higher assembly. (Also refer to the NOTE following.)
XB	If an "XB" item is not available from salvage, order it using the CAGE and part number given.
XC -	Installation drawing, diagram, instruction sheet, field service drawing, that is identified by the manufacturer's part number.
XD	Item is not stocked. Order an "XD"-coded item through normal supply channels using the CAGE and part number given, if no NSN is available.

NOTE: Cannibalization or controlled exchange, when authorized, may be used as a source of supply for items with the above source codes, except for those source coded "XA" or those aircraft support items restricted by requirements of AR 700-42.

(2) Maintenance Code. Maintenance codes tell you the level(s) of maintenance authorized to USE and REPAIR support items. The maintenance codes are entered in the third and fourth positions of the SMR code as follows:

(a) The maintenance code entered in the third position tells you the lowest maintenance level authorized to remove, replace, and use an item. The maintenance code entered in the third position will indicate authorization to one of the following levels of maintenance.

Code	Application/Explanation
C -	Crew or operator maintenance done within unit maintenance or aviation unit maintenance.
O	Unit maintenance or aviation unit category can remove, replace, and use the item.
F	Direct support or aviation intermediate level can remove, replace, and use the item.
H	General support level can remove, replace, and use the item.
L	Specialized repair activity can remove, replace, and use the item.
D	Depot level can remove, replace, and use the item.

(b) The maintenance code entered in the fourth position tells whether or not the item is to be repaired and identifies the lowest maintenance level with the capability to do complete repair (i.e., perform all authorized repair functions). (**NOTE**: Some limited repair may be done on the item at a lower level of maintenance, if authorized by the Maintenance Allocation Chart (MAC) and SMR codes.) This position will contain one of the following maintenance codes:

Code	Application/Explanation
O -	Unit maintenance or aviation unit is the lowest level that can do complete repair of the item.
F	Direct support or aviation intermediate is the lowest level than can do complete repair of the item.

C - Crew or operator maintenance done within unit maintenance or aviation unit maintenance.

H General support is the lowest level that can do complete repair of the item.

L Specialized repair activity Is the lowest level that can do complete repair of the Item.

D Depot is the lowest level that can do complete repair of the item.

Z - Nonreparable. No repair is authorized.

B - No repair is authorized. (No parts or special tools are authorized for the maintenance of a "B"-coded item.) However, the item may be reconditioned by adjusting, lubricating, etc., at the user level.

(3) Recoverability Code. Recoverability codes are assigned to items to indicate the disposition action on unserviceable items. The recoverability code is entered in the fifth position of the SMR code as follows:

Code Application/Explanation

B - No repair is authorized. (No parts or special tools are authorized for the maintenance of a "B"-coded item.) However, the item may be reconditioned by adjusting, lubricating, etc., at the user level.

Z - Nonreparable item. When unserviceable, condemn and dispose of the item at the level of maintenance shown in the 3d position of the SMR code.

O Reparable item. When uneconomically reparable, condemn and dispose of the item at unit maintenance or aviation unit level.

F Reparable item. When uneconomically reparable, condemn and dispose of the item at the direct support or aviation intermediate level.

H Reparable item. When uneconomically reparable, condemn and dispose of the item at the general support level.

D Reparable item. When beyond lower level repair capability, return to depot. Condemnation and disposal of item not authorized below depot level.

L Reparable item. Condemnation and disposal of item not authorized below specialized repair activity (SRA).

A Item requires special handling or condemnation procedures because of specific reasons (e.g., precious metal content, high dollar value, critical material, or hazardous material). Refer to appropriate manuals/directives for specific instructions.

c. CAGEC (Column (3)). The Commercial and Government Entity (CAGE) Code (C) is a 5-digit alphanumeric code which is used to identify the manufacturer, distributor, or Government agency, etc., that supplies the item.

d. PART NUMBER (Column (4)). Indicates the primary number used by the manufacturer (individual, company, firm, corporation, or Government activity), which controls the design and characteristics of the item by means of its engineering drawings, specifications standards, and inspection requirements to identify an item or range of items.

NOTE: When you use an NSN to requisition an item, the item you receive may have a different part number from the part ordered.

e. DESCRIPTION AND USABLE ON CODE (UOC) (Column (5)). This column includes the following information:

(1) The Federal item name and, when required, a minimum description to identify the item.

(2) Physical security classification. Not Applicable.

(3) Items that are included in kits and sets are listed below the name of the kit or set on Figure KIT

(4) Spare/repair parts that make up an assembled item are listed immediately following the assembled item line entry.

(5) Part numbers for bulk materials are referenced in this column in the line item entry for the item to be manufactured/fabricated.

(6) When the item is not used with all serial numbers of the same model, the effective serial numbers are shown on the last line(s) of the description (before UOC).

(7) The usable on code, when applicable (see paragraph 5, Special Information).

(8) In the Special Tools List section, the basis of issue (BOI) appears as the last line(s) in the entry for each special tool, special TMDE, and other special support equipment. When density of equipments supported exceeds density spread indicated in the basis of issue, the total authorization is increased proportionately.

(9) The statement "END OF FIGURE" appears just below the last item description in Column 5 for a given figure in both Section 1i and Section 111.

f. QTY (Column (6)). The QTY (quantity per figure column) Indicates the quantity of the item used in the breakout shown on the illustration/figure, which is prepared for a functional group, subfunctional group, or an assembly. A "V" appearing in this column in lieu of a quantity indicates that the quantity is variable and the quantity may vary from application to application.

4. Explanation of Columns (Section IIV).

a. NATIONAL STOCK NUMBER (NSN) INDEX.

(1) STOCK NUMBER column. This column lists the NSN by National Item Identification Number (NIIN)

sequence. The NIIN consists of the last nine
NSN
digits of the NSN (i.e., 5305-01-574-1467). When
NIIN
using this column to locate an item, ignore the first4 digits of the NSN. However, the complete NSN should be used when ordering items by stock number.

(2) FIG. column. This column lists the number of the figure where the item is identified/located. The figures are in numerical order in Section 11 and Section lll.

(3) ITEM column. The item number identifies the item associated with the figure listed in the adjacent FIG. column. This item is also identified by the NSN listed on the same line.

b. PART NUMBER INDEX. Part numbers in this index are listed by part number in ascending alphanumeric sequence (i.e., vertical arrangement of letter and number combination which places the first letter or digit of each group in order A through Z, followed by the numbers 0 through 9 and each following letter or digit in like order).

(1) CAGEC column. The Commercial and Government Entity (CAGE) Code (C) is a 5-digit alphanumeric code used to identify the manufacturer, distributor, or Government agency, etc., that supplies the item.

(2) PART NUMBER column. Indicates the primary number used by the manufacturer (individual, firm, corporation, or Government activity), which controls the design and characteristics of the item by means of its engineering drawings, specifications standards, and inspection requirements to identify an item or range of items.

(3) STOCK NUMBER column. This column lists the NSN for the associated part number and manufacturer identified in the PART NUMBER and CAGE columns to the left.

(4) FIG. column. This column lists the number of the figure where the item is identified/located in Sections 11 and lll.

(5) ITEM column. The item number is that number assigned to the item as it appears in the figure referenced in the adjacent figure number column.

c. FIGURE AND ITEM NUMBER INDEX.

(1) FIG. column. This column lists the number of the figure where the item is identified/located in Sections 11 and lll

(2) ITEM column. The item number is that number assigned to the item as it appears in the figure referenced in the adjacent figure number column.

(3) STOCK NUMBER column. This column lists the NSN for the item.

(4) CAGEC column. The Commercial and Government Entity (CAGE) Code (C) Is a 5-digit alphanumeric code used to identify the manufacturer, distributor, or Government agency, etc., that supplies the item.

(5) PART NUMBER column. Indicates the primary number used by the manufacturer (individual, firm, corporation, or Government activity), which controls the design and characteristics of the item by means of its engineering drawings, specifications standards and inspection requirements to identify an item or range of items.

5. Special Information.

a. USABLE ON CODE. The usable on code appears in the lower left corner of the Description column heading. Usable on codes are shown as "UOC: .....". in the Description column justified left) on the first line following applicable item description/nomenclature. Uncoded items are applicable to all models. Identification of the usable on codes used in the RPSTL are:

Code	Used On
T26	Model 175B, Type I
T27	Model 175B, Type 11

b. FABRICATION INSTRUCTIONS. Bulk materials required to manufacture items are listed in the Bulk Material Functional Group of this RPSTL. Part numbers for bulk materials are also referenced in the Description column of the line item entry for the item to be manufactured/fabricated. Detailed fabrication instructions for items source coded to be manufactured or fabricated are found in TM 5-3805-257-14&P

c. ASSEMBLY INSTRUCTIONS. Detailed assembly instructions for items source coded to be assembled from component spare/repair parts are found in TM 5-3805-257-14&P Items that make up the assembly are listed immediately following the assembly item entry or reference is made to an applicable figure.

d. KITS. Line item entries for repair parts kits appear in group 9401 in Section 11.

e, INDEX NUMBERS. Items which have the word BULK in the figure column will have an index number shown in the item number column. This index number is a cross-reference between the National Stock Number/Part Number Index and the bulk material list in Section 11.

f. ASSOCIATED PUBLICATIONS. The publications listed below pertain to the Scoop-type Loader and its components:

Publication	Short Title
TM 5-3805-257-14&P I	Clark Model 175B, Types and 11

6. How to Locate Repair Parts.

a. When National Stock Number or Part Number is Not Known:

(1) First. Using the table of contents, determine the assembly group or subassembly group to which the item belongs. This is necessary since figures are prepared for assembly groups and subassembly groups, and listings are divided into the same groups.

(2) Second. Find the figure covering the assembly group or subassembly group to which the item belongs.

(3) Third. Identify the item on the figure and use the Figure and Item Number Index to find the NSN.

b. When National Stock Number or Part Number is Known:

(1) First. Using the National Stock Number or Part Number Index, find the pertinent National Stock Number or Part Number. The NSN Index is in National Item Identification Number (NIIN) sequence (see paragraph 4.a.(1)). The part numbers in the Part Number Index are listed in ascending alphanumeric sequence (see paragraph 4.b). Both indexes cross-reference you to the Illustration/figure and item number of the Item you are looking for.

(2) Second. Turn to the figure and item number, verify that the item is the one you're looking for, then locate the item number in the repair parts list for the figure.

7. Abbreviations.

For standard abbreviations see MIL-STD-12D, Military Standard Abbreviations for Use on Drawings, Specifications, Standards, and in Technical Documents.

Abbreviations	Explanation
NIIN	National Item Identification Number (consists of the last9 digits of the NSN)
RPSTL	Repair Parts and Special Tools List
ROPS	Roll-over Protective Structure

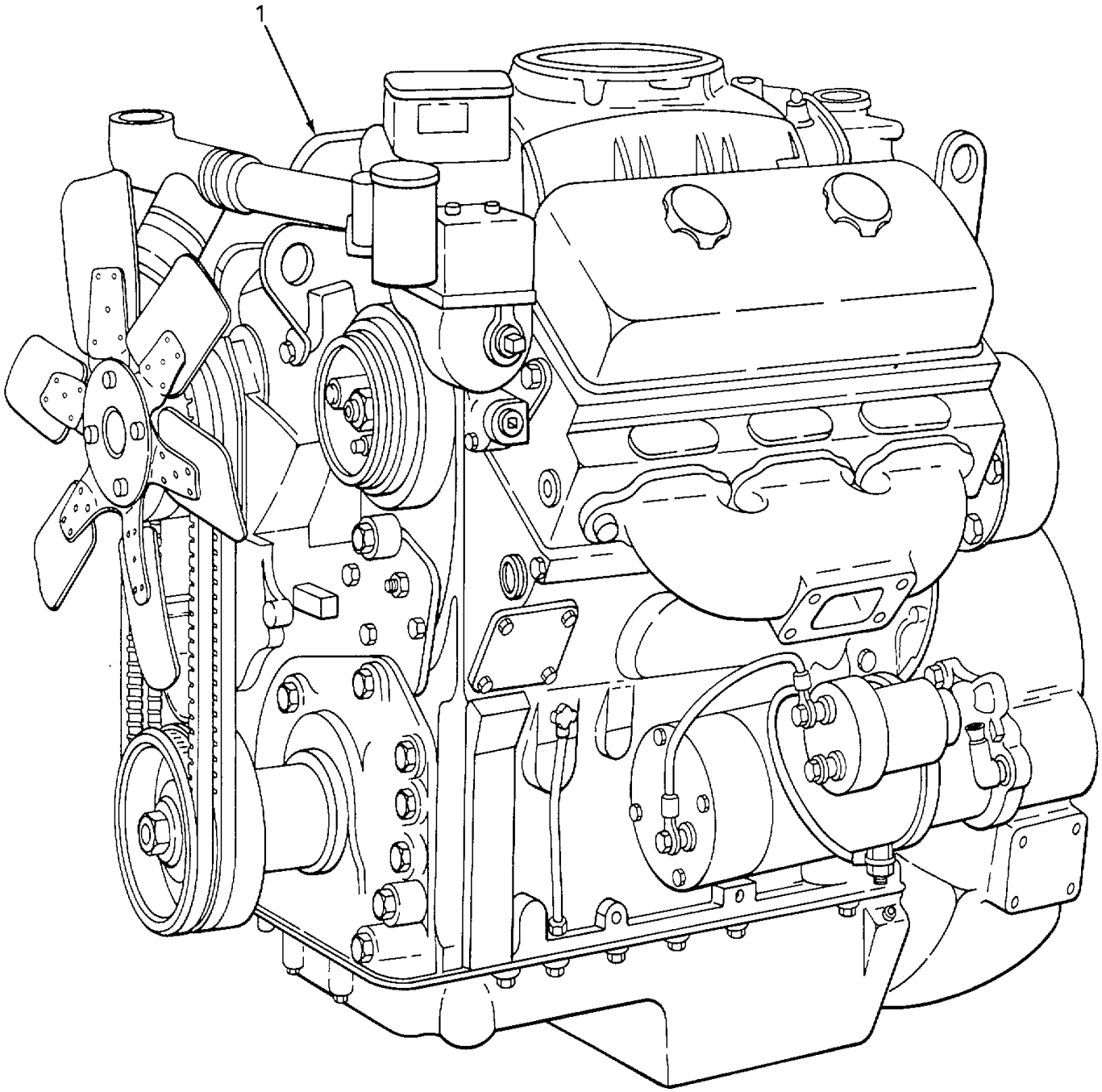

TA235463

FIGURE 1. ENGINE.

(1) ITEM NO	(2) SMR CODE	(3) CAGEC	(4) PART NUMBER	(5) DESCRIPTION AND USABLE ON CODES (UOC)	(6) QTY
				GROUP 01 ENGINE	
				GROUP 0100 ENGINE ASSEMBLY	
				FIG. ENGINE	
1	PAFHD	72582	7083-7000	ENGINE, DIESEL.....	1
				END OF FIGURE	

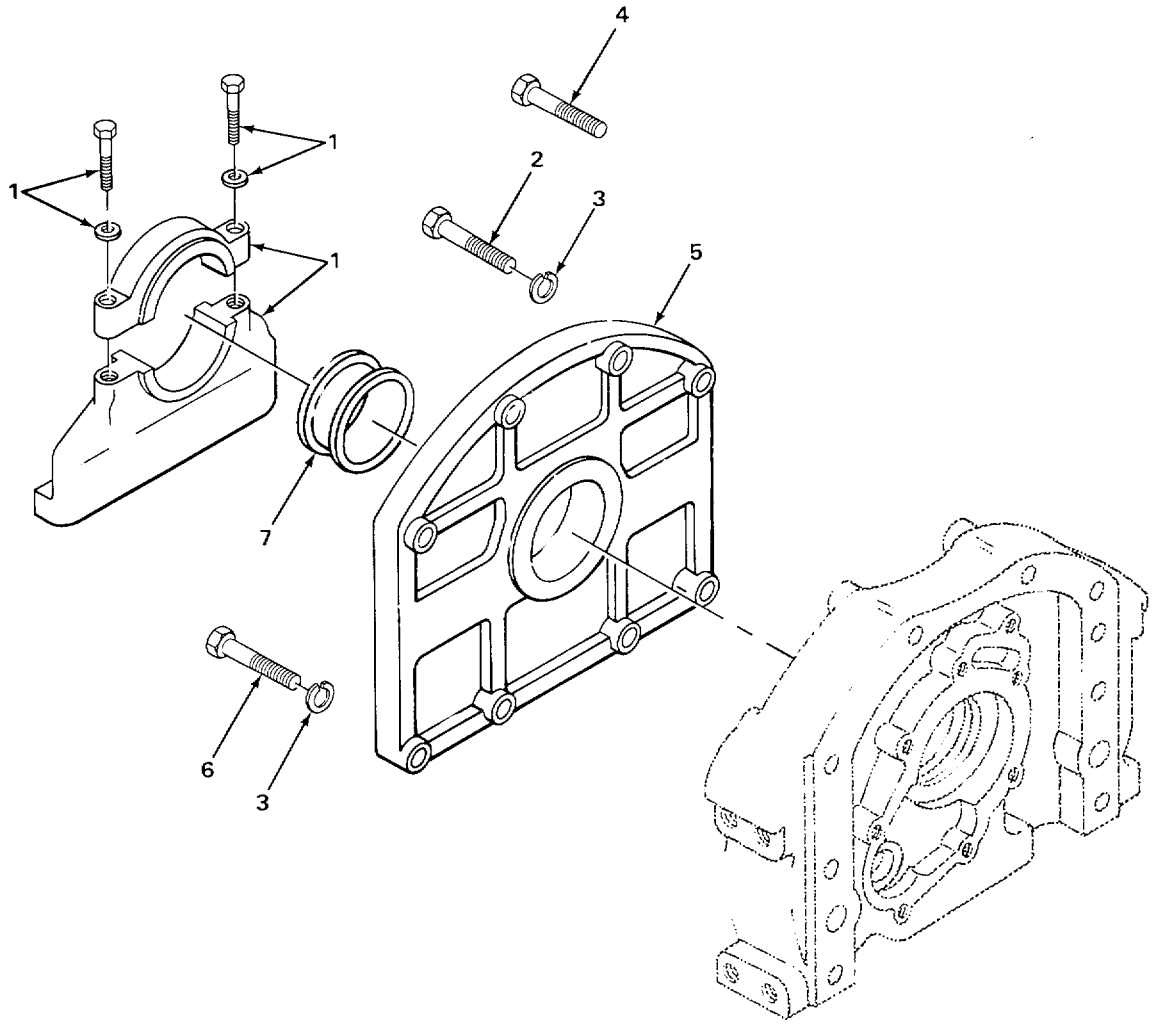

TA235464

FIGURE 2. ENGINE MOUNTING.

(1) ITEM NO	(2) SMR CODE	(3) CAGEC	(4) PART NUMBER	(5) DESCRIPTION AND USABLE ON CODES (UOC)	(6) QTY
				GROUP 0100 ENGINE ASSEMBLY	
				FIG. 2 ENGINE MOUNTING	
1	PFFZZ	72582	5179360	SUPPORT ASSEMBLY.....	1
2	PFFZZ	96906	MS90728-62	SCREW, CAP, HEXAGON H.....	2
3	PFFZZ	96906	MS35338-8	WASHER, LOCK.....	6
4	PFFZZ	96906	MS90728-74	BOLT.....	2
5	PFFZZ	72582	5122294	TRUNNION	1
6	PFFZZ	96906	MS90728-124	BOLT.....	4
7	PFFZZ	72582	5179345	RING	1
				END OF FIGURE	

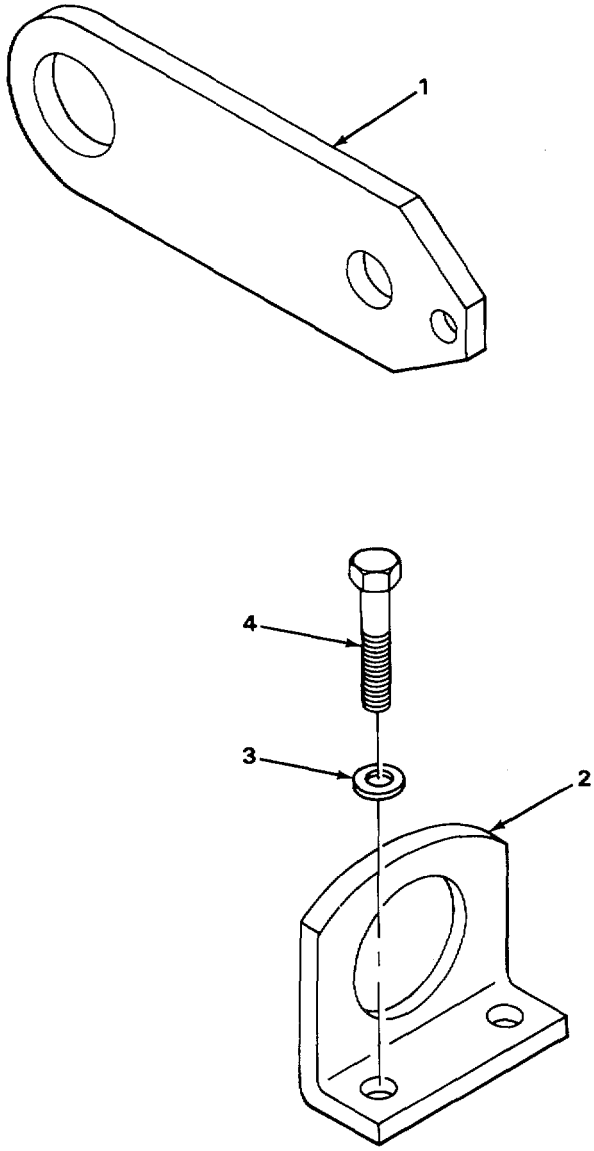

TA235465

FIGURE 3. ENGINE LIFTING BRACKETS.

(1) ITEM NO	(2) SMR CODE	(3) CAGEC	(4) PART NUMBER	(5) DESCRIPTION AND USABLE ON CODES (UOC)	(6) QTY
				GROUP 0100 ENGINE ASSEMBLY	
				FIG. 3 ENGINE LIFTING BRACKETS	
1	PFFZZ	72582	5109900	BRACKET, SPECIAL	1
2	PFFZZ	72582	5137761	BRACKET, ENGINE.....	2
3	PFFZZ	96906	MS27183-16	WASHER, FLAT.....	4
4	PFFZZ	72582	454933	SCREW, CAP, HEXAGON	4
				END OF FIGURE	

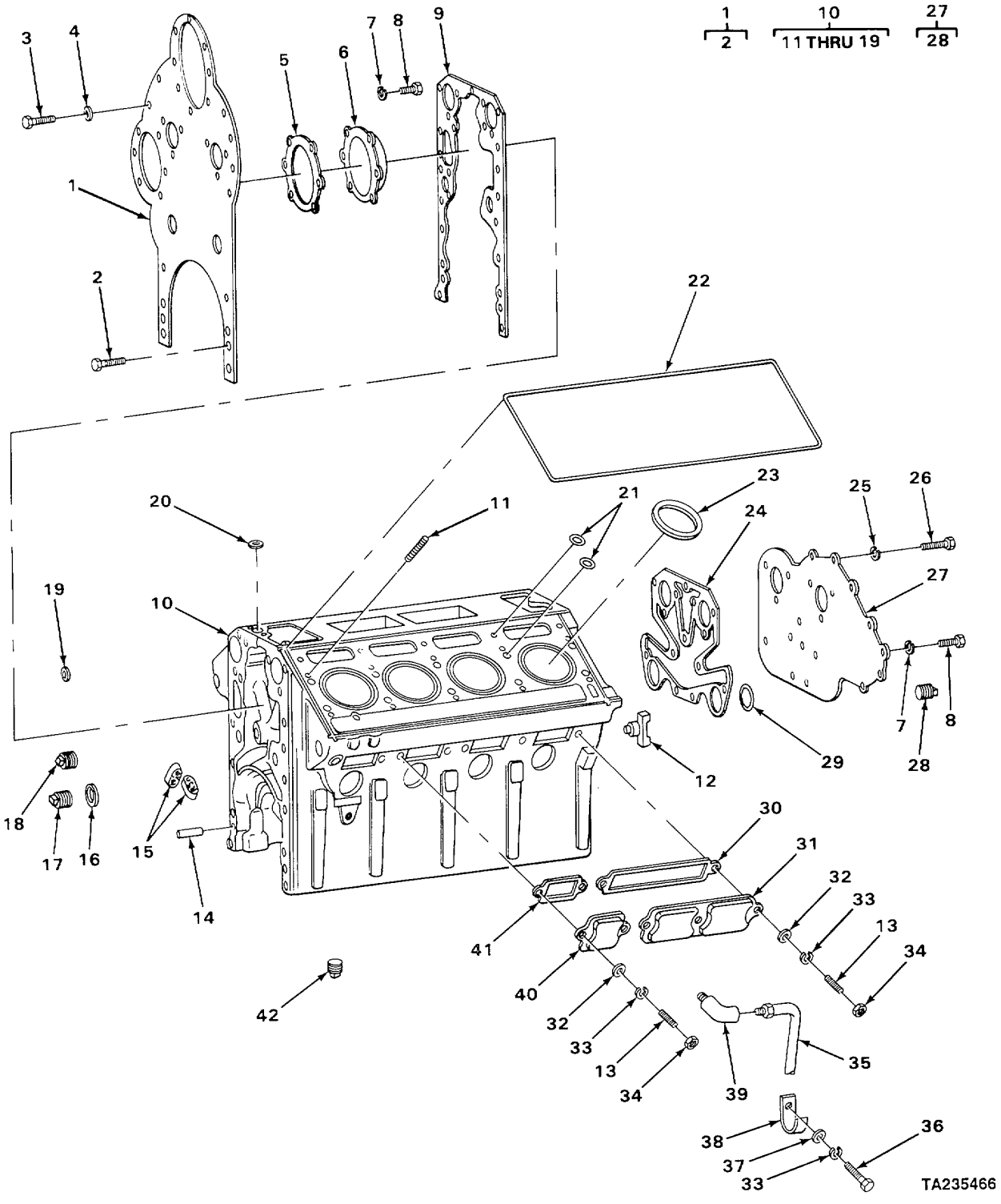

TA235466

FIGURE 4. CYLINDER BLOCK.

(1) ITEM NO	(2) SMR CODE	(3) CAGEC	(4) PART NUMBER	(5) DESCRIPTION AND USABLE ON CODES (UOC)	(6) QTY
				GROUP 0101 CRANKCASE, BLOCK CYLINDER HEAD	
				FIG 4 CYLINDER BLOCK	
1	PFHZZ	72582	5102562	PLATE, CYLINDER BLOC	1
2	PFHZZ	72582	5121459	INSERT, SCREW THREAD	11
3	PFHZZ	96906	90727-57	SCREW CAP, HEXAGON H	2
4	PFHZZ	10001	26585PC88	WASHER, FLAT	2
5	PFHZZ	72582	5117059	GASKET END PLATE COVER PART OF KIT P/N 5196374	1
6	PFHZZ	72582	5117058	COVER, ACCESS	1
7	PFHZZ	96906	35338-8	WASHER, LOCK	13
8	PFHZZ	96906	90728-60	SCREW, CAP, HEXAGON H	13
9	PFHZZ	72582	5102551	GASKET PART OF KIT P/N 5196374	1
10	PFHHH	72582	5199137	BLOCK ASSEMBLY-	1
11	PFHZZ	24617	103196	.STUD, PLAIN-	1
12	PFHZZ	72582	8924140	.COCK. DRAIN-	2
12	PFHZZ	96906	35782-6	.COCK, PLAIN	1
13	PFHZZ	24617	5152121	.STUD, PLAIN	14
14	PFHZZ	24617	141346	.PIN, STRAIGHT, HEADLE	4
14	PFHZZ	24617	5151576	.PIN, STRAIGHT, HEADLE	4
14	PFHZZ	72582	141214	.PIN, STRAIGHT, HEADLE	3
15	PFHZZ	72582	9428477	.PLUG EXPANSION ,	1
15	PFHZZ	72582	5139988 4	.PLUG STAINLESS	5
15	PFHZZ	24617	5150014	.PLUG EXPANSION CORE HOLE,	2
15	PFHZZ	72582	5132410	.PLUG EXPANSION STAINLESS	2
15	PFHZZ	72582	5117186	.PLUG EXPANSION STAINLESS	12
15	PFHZZ	72582	5123862	.PLUG EXPANSION SPECIAL	2
15	PFHZZ	72582	5138646	.PLUG, PROTECTIVE, DUS	2
16	PFHZZ	72582	5138659	.GASKET PART OF KIT P/N 5196374	2
17	PFHZZ	72582	5111798	.PLUG, PIPE SQUARE SOCKET HEAD	10
17	PFHZZ	72582	8924751	.PLUG, PIPE SQUARE SOCKET HEAD	1
17	PFHZZ	72582	5142549	.PLUG, PIPE SQUARE SOCKET HEAD	6
18	PFHZZ	81348	WW-P-471BCB	.PLUG, PIPE	5
18	PFHZZ	72582	5145014	.PLUG, PIPE MAGNETIC ,	1
18	PFHZZ	72582	5115214	.PLUG, PIPE	3
18	XDHZZ	73342	5130896	.PLUG, PIPE	2
18	PFHZZ	72582	5144472	.PLUG PRIMED	14
19	PFHZZ	77445	191663	.WASHER FLAT	3
20	PFHZZ	72582	5116122	WASHER FLAT END WATER HOLE	6
21	PFHZZ	72582	5186579	GASKET WATER HOLE	12
22	PFHZZ	24617	5119944PC5119973	GASKET PART OF KIT P/N 5196374	2
23	PFHZZ	72582	5183330	GASKET PART OF KIT P/N 5196374	8
24	PFHZZ	72582	5132445	GASKET PART OF KIT P/N 5196374	1
25	PFHZZ	96906	35338-48	WASHER LOCK	2
26	PFHZZ	96906	90728-109	SCREW, CAP, , HEXAGON H	2
27	PFHZZ	72582	5132422	PLATE, CYLINDER BLOC	1
28	PFHZZ	72582	5121459	.INSERT, SCREW THREAD	13
29	PFHZZ	72582	5121835	GASKET PART OF KIT PIN 5196374	1
30	PFHZZ	72582	5132572	GASKET LARGE PART OF KIT P/N 5196374	2

(1) ITEM NO	(2) SMR CODE	(3) CAGEC	(4) PART NUMBER	(5) DESCRIPTION AND USABLE ON CODES (UOC)	(6) QTY
31	PFHZZ	72582	5144186	COVER, ACCESS LARGE	2
32	PFHZZ	96906	M27183-12	WASHER, FLAT	14
33	PFHZZ	96906	M35338-45	WASHER, LOCK	15
34	PFHZZ	96906	M51968-5	NUT, PLAIN, HEXAGON	14
35	PFHZZ	72582	5144327	TUBE ASSEMBLY, METAL	2
36	PFHZZ	96906	M90728-32	BOLT, MACHINE	1
37	PFHZZ	96906	M27183-12	WASHER, FLAT	1
38	XOHZZ	72582	5159490	CLIP	1
39	PFHZZ	79470	W400X5	ELBOW, PIPE TO TUBE	2
40	PFHZZ	72582	5132458	COVER, ACCESS MALL	4
41	XDHZZ	72582	5132924	GASKET MALL PART OF KIT P/N 5196374	4
42	PFHZZ	00501	87708-	PLUG, PIPE	2

END OF FIGURE

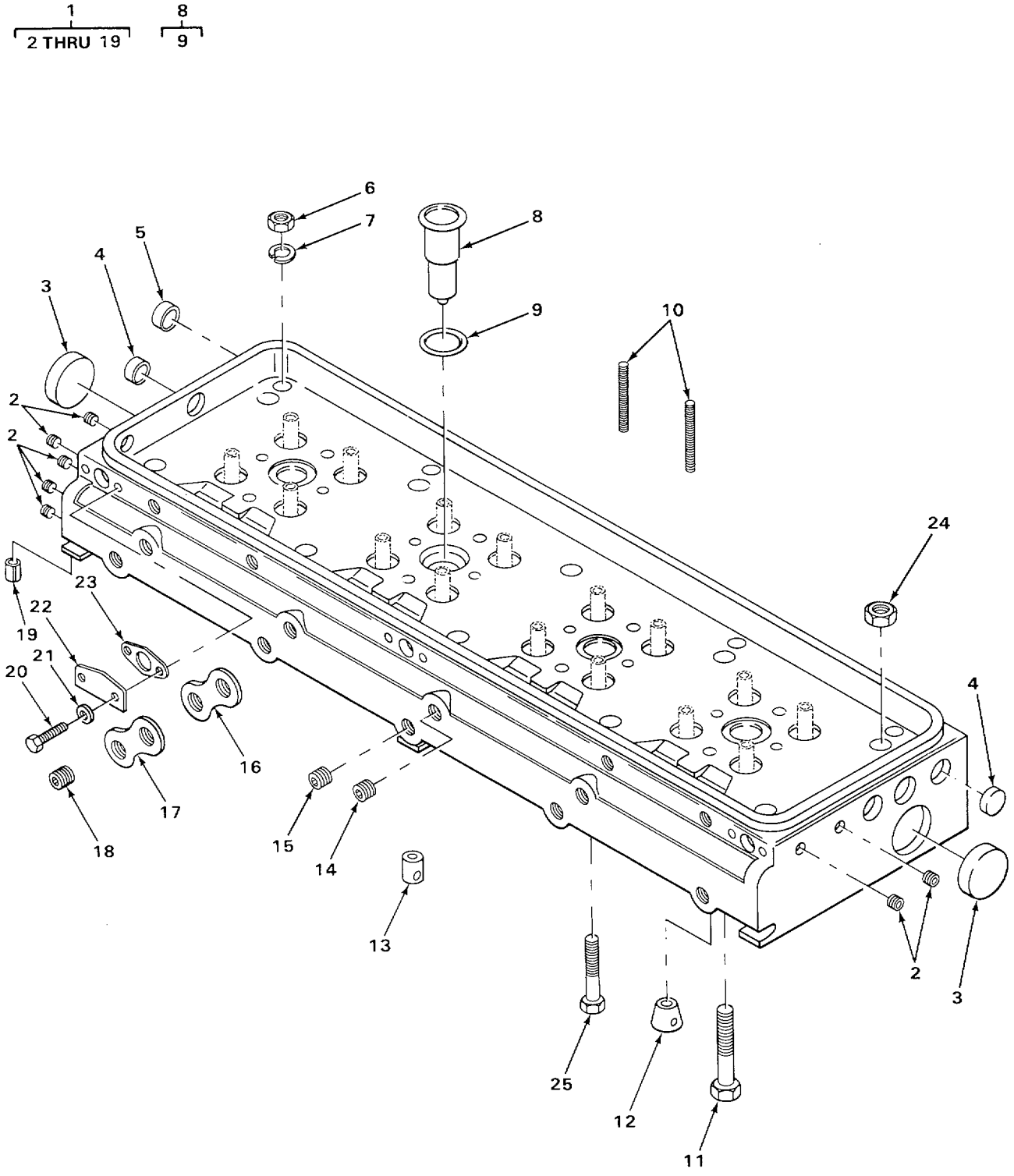

TA235467

FIGURE 5. CYLINDER HEAD.

(1) ITEM NO	(2) SMR CODE	(3) CAGEC	(4) PART NUMBER	(5) DESCRIPTION AND USABLE ON CODES (UOC)	(6) QTY
				GROUP 0101 CRANKCASE, BLOCK, CYLINDER HEAD	
				FIG. 5 CYLINDER HEAD	
1	PFFHH	72582	5102771	CYLINDER HEAD, DIESE	2
2	PFHZZ	81348	WW-P-471ACA8CB	.PLUG, PIPE HEXAGON SOCKET HEAD	7
3	PFHZZ	72582	5117186	.PLUG, EXPANSION	2
4	PFHZZ	72582	5150132	.PLUG, EXPANSION	2
5	PFHZZ	24617	5193541	.PLUG CYLINDER HEAD	1
6	PFHZZ	72582	117049	.NUT, PLAIN, HEXAGON	16
7	PFHZZ	96906	M35338-8	.WASHER, LOCK	16
8	PFHZZ	72582	5199527	.PARTS KIT , FUEL INJE.	4
9	PFHZZ	24617	5160037	..PACKING, PREFORMED PART OF KIT P/N 196374 PART OF KIT PIN 5196381	1
10	PFHZZ	72582	5150362	STUD, PLAIN	8
11	PFHZZ	72582	5101377	SCREW, CAP, HEXAGON H	16
12	PFHZZ	72582	5172874	NOZZLE, WATER SINGLE OUTLET	4
13	PFHZZ	72582	5111332	NOZZLE, WATER, CYLINDER DOUBLE OUTLET	6
14	PFHZZ	72582	178976	PLUG, CYLINDER HEAD	8
15	PFHZZ	72915	5154453	PLUG, MACHINE THREAD	10
16	PFHZZ	80072	0346-177	GASKET PART OF KIT P/N 5196374 PART OF KIT P/N 5196381	8
17	PFHZZ	72582	5117344	COVER, ACCESS	8
18	PFHZZ	72582	5145014	PLUG, PIPE, MAGNETIC HEXAGON SOCKET	5
19	PFHZZ	72582	5100929	BUSHING, SLEEVE	2
20	PFHZZ	96906	M90728-3	CREW, CAP, HEXAGON H	12
21	PFHZZ	81381	5179709	WASHER, FLAT COPPER	12
22	PFHZZ	72582	5150268	COVER, ACCESS PLAIN	6
23	PFHZZ	79150	25103	GASKET PART OF KIT P/N 5196374 PART OF KIT P/N 5196381	6
24	PFHZZ	24617	5150013	NUT, PLAIN, HEXAGON	4
25	PFHZZ	72582	5117003	BOLT, EXTERNALLY REL	20
				END OF FIGURE	

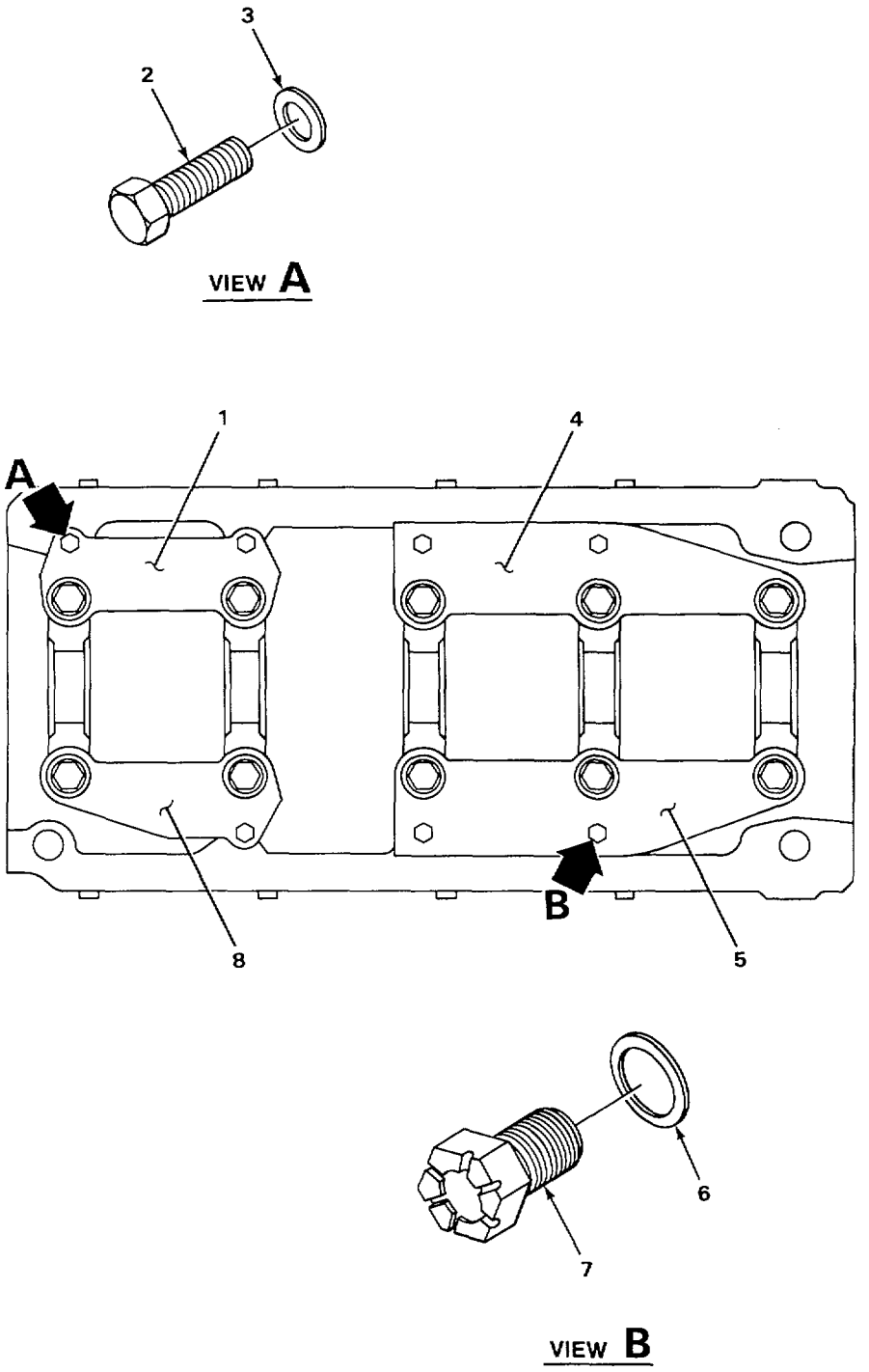

FIGURE 6. BEARING CAP STABILIZER.

(1) ITEM NO	(2) SMR CODE	(3) CAGEC	(4) PART NUMBER	(5) DESCRIPTION AND USABLE ON CODES (UOC)	(6) QTY
				GROUP 0102 CRANKSHAFT	
				FIG. 6 BEARING CAP STABILIZER	
1	PFHZZ	72582	5102413	STABILIZER, MAIN BEA PART OF KIT P/N	1
2	PFHZZ	72582	5102374	BOLT, MACHINE	4
3	PFHZZ	72582	05102373	WASHER, FLAT	4
4	KFHZZ	72582	5104525	STABILIZER, MAIN PART OF KIT PIN 5149294	1
5	KFHZZ	72582	5104303	STABILIZER, MAIN PART OF KIT P/N 5149294	1
6	PFHZZ	77445	191663	WASHER, FLAT	3
7	PFHZZ	77873	A30262300-4	BOLT, SELF-LOCKING	3
8	PFHZZ	72582	5102370	STABILIZER MAIN PART OF KIT P/N 5149294	1
				END OF FIGURE	

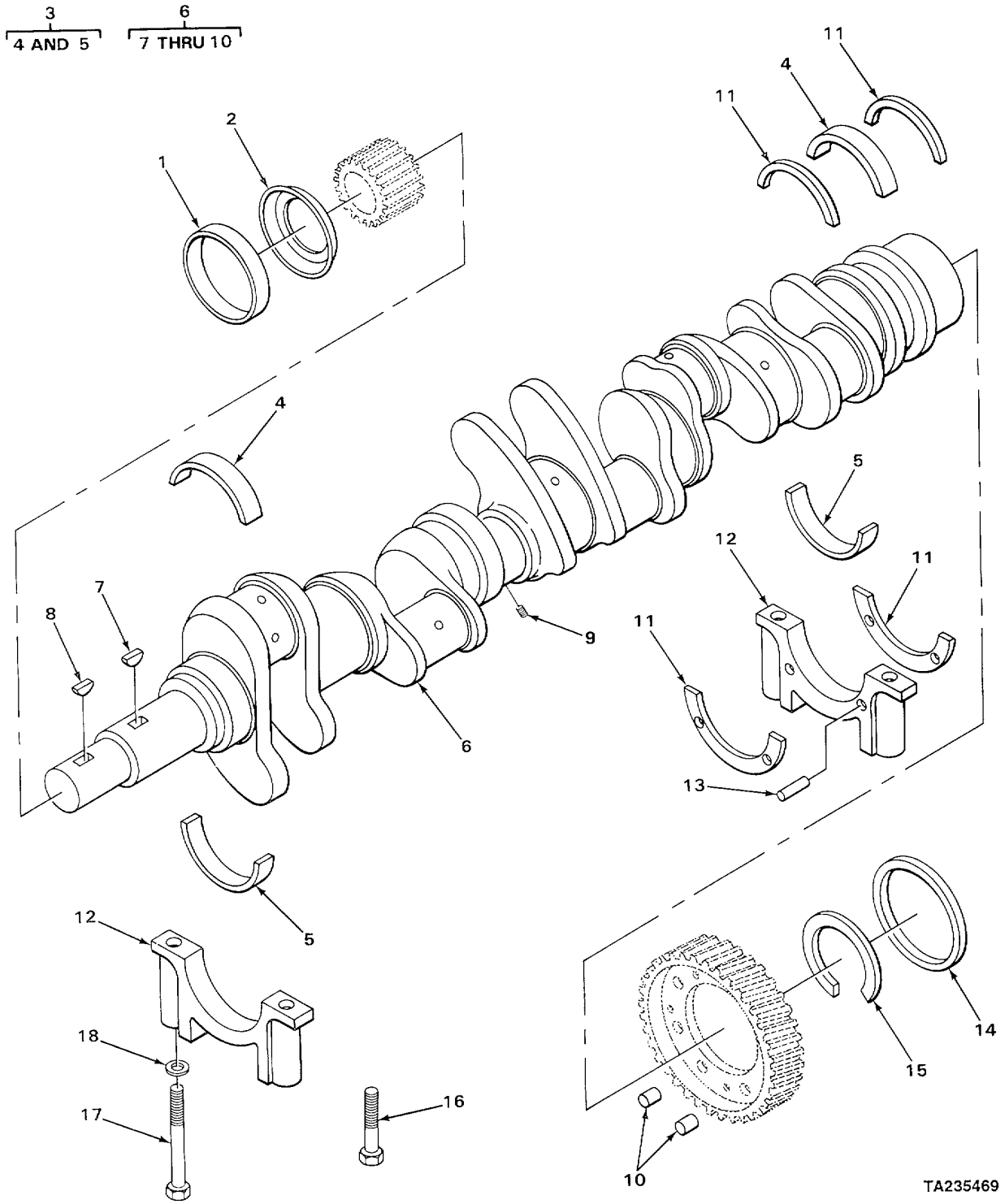

TA235469

FIGURE 7. CRANKSHAFT

(1) ITEM NO	(2) SMR CODE	(3) CAGEC	(4) PART NUMBER	(5) DESCRIPTION AND USABLE ON CODE (UOC)	(6) QTY
1	PFHZZ	81782	E14-23-140B	SEAL, PLAIN ENCASED PART OF KIT P/N 5196374	1
2	PFHZZ	72582	5122214	SPACER, RING	1
3	PFHZZ	72582	5149556	BEARING, SLEEVE	7
4	XAHZZ	72582	5117010	3EARING HALF, SLEEVE UPPER (STO)	1
5	XAHZZ	72582	5117011	BEARING HALF, SLEEVE LOWER (STD)	1
6	XDHHH	72582	5144275	CRANKSHAFT ASSEMBLY	1
7	PAHZZ	96906	MS35756-14	•KEY, WOODRUFF	1
8	PAHZZ	72582	24549	•KEY, WOODRUFF	1
9	PFHZZ	6N299	4255490	•PLUG PIPE	4
10	PFHZZ	72582	5177528	•PIN, STRAIGHT, HEADLE	2
11	PFHZZ	72582	5117005	THRUST PLATE, CRANKS STANDARD,	28
12	PFHZZ	72582	5196317	CAP, PILLOW BLOCK	7
13	PFHZZ	24617	141346	PIN, STRAIGHT, HEADLE	28
14	PFHZ2	35311	L12105	SEAL, PLAIN ENCASED SINGLE LIP, STANDARD	1
15	PFHZZ	24617	5192496	RING, RETAINING USE WITH SINGLE LIP OIL SEAL	1
16	PFHZZ	72582	5116353	BOLT, EXTERNALLY REL	10
17	PFHZZ	72582	5102374	BOLT MACHINE	4
18	PFHZZ	72582	5102373	WASHER	14

END OF FIGURE

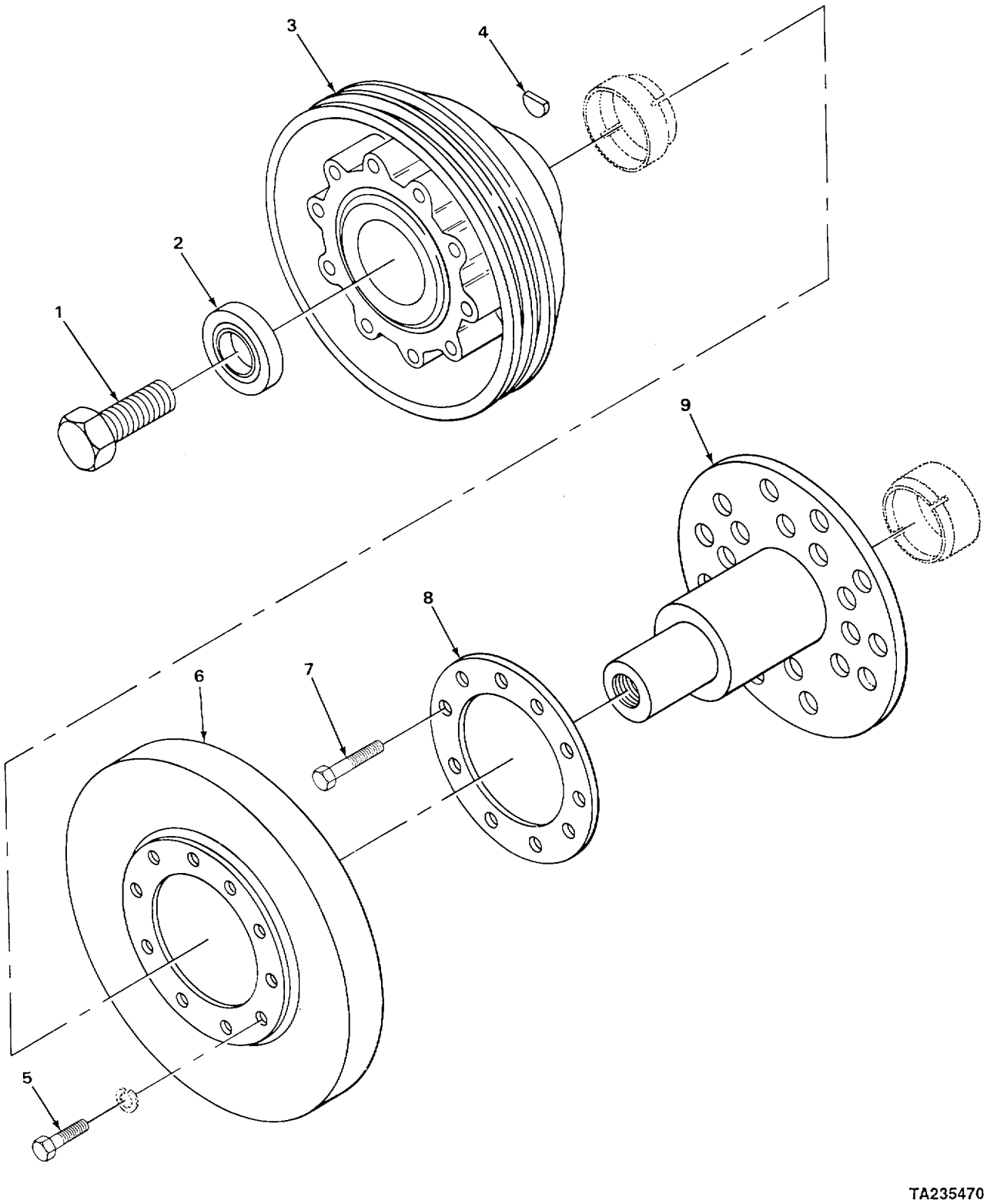

FIGURE 8. CRANKSHAFT PULLEY, VIBERATION DAMPER, AND HOB

SECTION II
SECTION II

(1) ITEM NO	(2) SMR CODE	(3) CAGEC	(4) PART NUMBER	(5) DESCRIPTION AND USABLE ON CODE (UOC)	(6) QTY
				FIG* 8 CRANKSHAFT PULLEY, VIBRATION DAMPER, AND HUB	
1	PFFZZ	24617	N271-108PC5153623	BOLT, MACHINE	1
2	PFFZZ	72582	5157930	WASHER, FLAT	1
3	XDFZZ	72582	5128122	PULLEY, GROOVE	1
4	PFFZZ	24617	5131724	KEY, WOODRUFF	2
5	PFFZZ	72582	179884	SCREW, CAP, HEXAGON H	10
6	XDFZZ	72582	5106222	PULLEY	1
7	PFFZZ	80204	B1821BH050C150N	SCREW, CAP, HEXAGON H	10
8	PAFZZ	72582	5120753	PLATE, RETAINING, SHA	1
9	XDFZZ	72582	5128578	HUB ASSEMBLY	1

END OF FIGURE

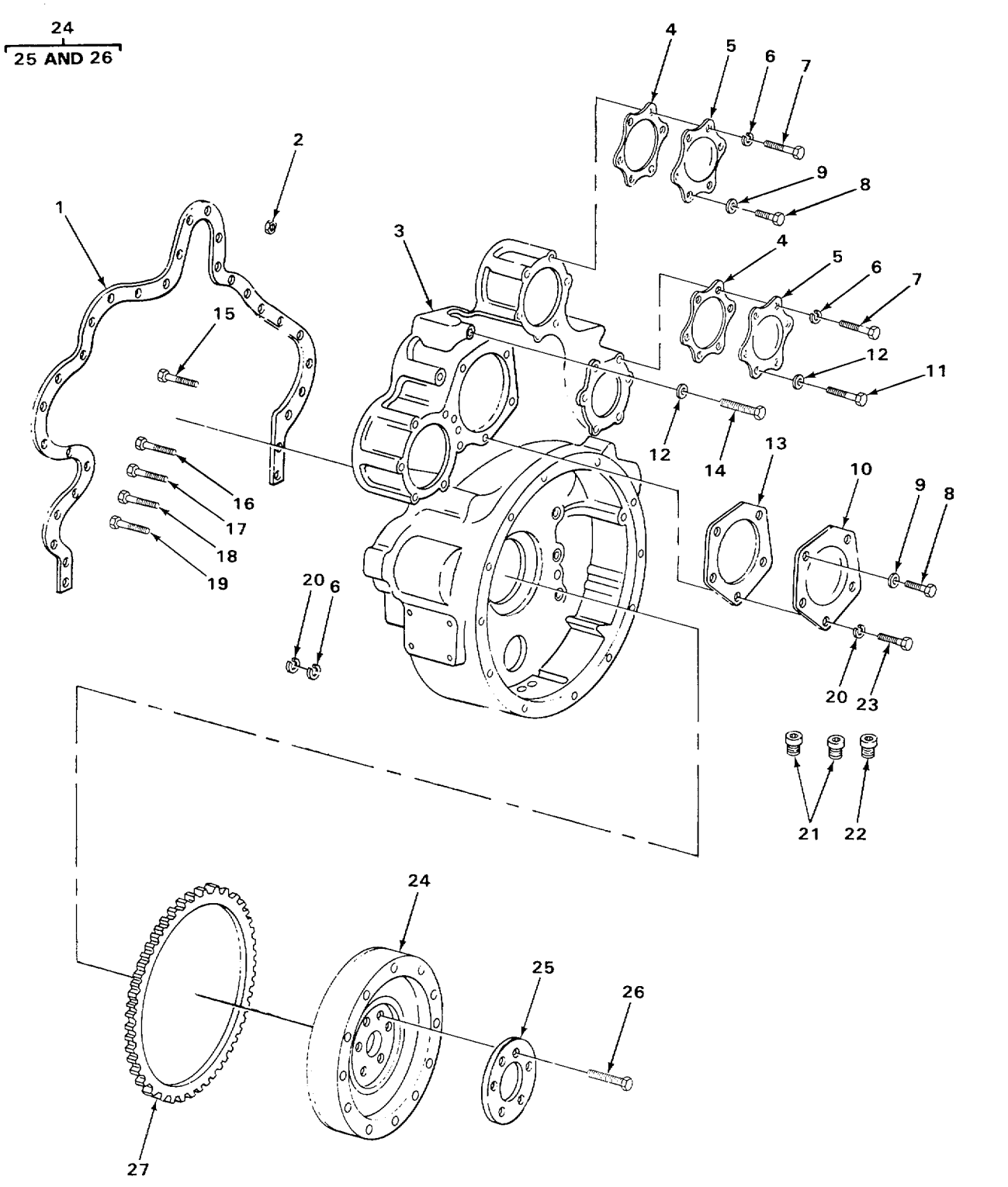

FIGURE 9. FLYWHEEL AND HOUSING.

(1) ITEM NO	(2) SMR CODE	(3) CAGEC	(4) PART NUMBER	(5) DESCRIPTION AND USABLE ON CODE (UOC)	(6) QTY
				GROUP 0103 FLYWHEEL ASSEMBLY FIG. 9 FLYWHEEL AND HOUSING	
1	PFFZZ	72582	5117173	GASKET PART OF KIT P/N 5196374	1
2	PFFZZ	72582	117049	NUT, PLAIN, HEXAGON	1
3	PFFZZ	72582	8925184	HOUSING, FLYWHEEL	1
4	PFFZZ	72582	5122227	GASKET PART OF KIT P/N 5196374	2
5	PFFZZ	72582	8922716	COVER, ACCESS	2
6	PFFZZ	96906	MS35338-8	WASHER LOCK	
7	PFFZZ	72582	186315	SCREW, CAP, HEXAGON H	5
8	PFFZZ	96906	MS90725-84	SCREW, CAP, HEXAGON H	2
9	PFFZZ	88044	AN960-716	WASHER FLAT	2
10	PFFZZ	72582	5122281	COVER ACCESS	2
11	PFFZZ	96906	MS90728-59	SCREW CAP HEXAGON H	5
12	PFFZZ	72582	5138619	WASHER, ENGINE	11
13	PFFZZ	24617	5117061	GASKET PART OF KIT P/N 5196374	2
14	PFFZZ	72582	5121466	BOLT, SPECIAL	7
15	PFFZZ	72582	9409248	BOLT, MACHINE	6
16	PFFZZ	96906	M590728-60	SCREW, CAP, HEXAGON H	2
17	PFFZZ	96906	MS90728-62	SCREW, CAP, HEXAGON H	11
18	PFFZZ	80204	B1821BH05OC325N	SCREW, CAP, HEXAGON H	6
19	PFFZZ	72582	9409028	BOLT, SELF-LOCKING	6
20	PFFZZ	80045	23MS35338-10	WASHER LOCK.	14
21	PFFZZ	72582	5142549	PLUG, PIPE	3
22	PFFZZ	72582	8924751	PLUG, PIPE	1
23	PFFZZ	24617	122408	SCREW, CAP, HEXAGON H	8
24	XDFHH	72582	5136022	FLYWHEEL ASSEMBLY	1
25	PFHZZ	72582	5120753	•PLATE, RETAINING, SHA FLYWHEEL	1
26	PFHZZ	72582	9412014	•SCREW, CAP, HEXAGON H	6
27	PFFZZ	72582	5166664	GEAR, SPUR	1
				END OF FIGURE	

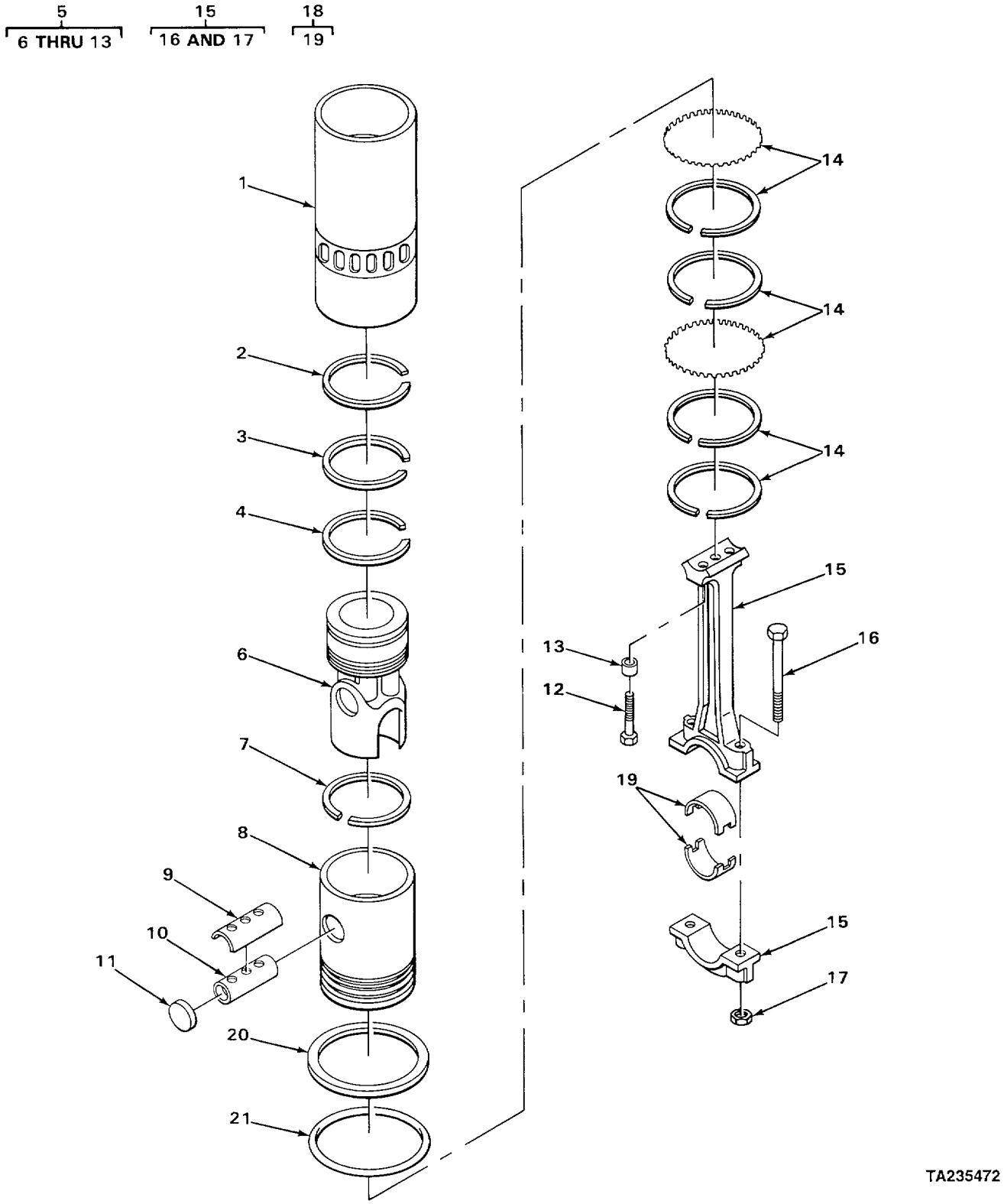

FIGURE 10. PISTON AND CONNECTING ROD.

(1) ITEM NO	(2) SMR CODE	(3) CAGEC	(4) PART NUMBER	(5) DESCRIPTION AND USABLE ON CODE (UOC)	(6) QTY
				GROUP 0104 PISTONS AND CONNECTING RODS FIG. 10 PISTON AND CONNECTING ROD	
1	PFHZZ	72582	23502022	CYLINDER SLEEVE PART OF KIT P/N 5199822	8
2	PFHZZ	72582	5122321	RING, PISTON	8
3	PFHZZ	72582	5148035	RING, PISTON	8
4	PFHZT	72582	8924084	RING, PISTON	1
5	PFHZZ	72582	5149982	PISTON, INTERNAL COM CROSSHEAD PART OF KIT P/N 5199822.	8
6	KFHZZ	72582	5149982	• PISTON, INTERNAL COM	1
7	PFHZZ	72582	8922221	• RING PISTON	1
8	PFHZZ	72582	5144836	• SKIRT, PISTON, DIESEL	1
9	PFHZZ	72582	5144843	• BEARING, SLEEVE SLIPPER TYPE	1
10	PFHZZ	72582	5144744	• PIN, PISTON	1
11	PFHZZ	72582	5180250	• DISK, SOLID, PLAIN	2
12	PFHZZ	72582	5148373	• BOLT	2
13	PFHZZ	72582	5144846	• BUSHING, SLEEVE	2
14	PFHZZ	72582	5199827	RING, PISTON	8
15	PFHZH	72582	R5144848	CONNECTING ROD, PIST	8
16	PFHZZ	72582	5132383	• BOLT, CONNECTING ROD	2
17	PFHZZ	72582	5117629	• NUT, PLAIN, HEXAGON	2
18	XDHZZ	72582	5149572	BEARING HALF, SLEEVE	8
19	PFHZZ	72582	5149572	• BEARING, SLEEVE	2
20	PFHZZ	72582	5199569	SHIM 0.002 OVERSIZE	8
21	PFHZZ	72582	5184484	SEAL RING, METAL	8

END OF FIGURE

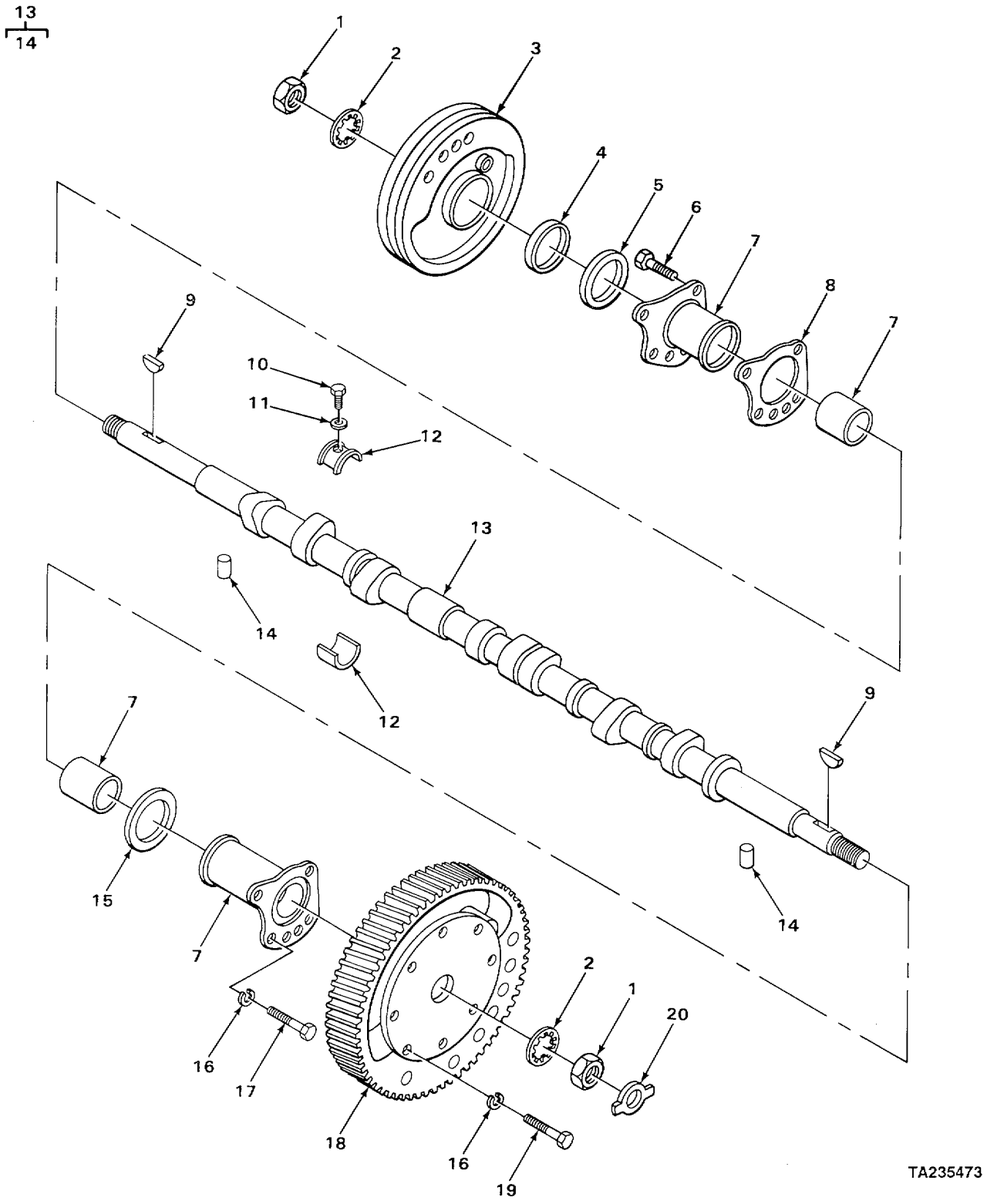

FIGURE 11. CAMSHAFT AND GEAR.

(1) ITEM NO	(2) SMR CODE	(3) CAGEC	(4) PART NUMBER	(5) DESCRIPTION AND USABLE ON CODE (UOC)	(6) QTY
				GROUP 0105 VALVES, CAMSHAFTS, AND TIMING SYSTEM	
				FIG. 11 CAMSHAFT AND GEAR	
1	PFHZZ	24617	5150087	NUT PLAIN, HEXAGON	2
2	PFHZZ	72582	5177769	WASHER, LOCK	2
3	PFHZZ	72582	5138717	PULLEY, GROOVE	1
4	PFHZZ	72582	5116485	SPACER, RING CAMSHAFT GEAR, FRONT	1
5	PAHZZ	72582	5106223	SEAL, PLAIN ENCASED FRONT LEFT BANK PART OF KIT P/N 5196374	1
6	PFHZZ	24617	9414268	BOLT, MACHINE FRONT	6
7	PFHZZ	72582	5117984	BEARING, SLEEVE FRONT, STD	2
8	PFHZZ	72582	5117243	GASKET PART OF KIT P/N 5196374	1
9	PFHZZ	96906	M535756-35	KEY, WOODRUFF	2
10	PFHZZ	72582	5117649	SET, SCREW	6
11	PFHZZ	72582	5115572	RING, RETAINING	6
12	PFHZZ	72582	5196026	BEARING HALF SET, SL STANDARD	6
13	PFHZZ	72582	5117854	CAM, SHAFT, ENGINE LEFT BANK, RH	1
14	PFHZZ	72582	5151277	PIN, STRAIGHT, HEADLE	2
15	PFHZZ	72582	5111424	BEARING, WASHER, THRU STANDARD	4
16	PFHZZ	96906	MS35338-8	WASHER, LOCK	20
17	PFHZZ	96906	MS90728-62	SCREW, CAP, HEXAGON H REAR.	6
18	PFHZZ	72582	5121816	GEAR, HELICAL LEFT BANK, REAR	1
19	PFHZZ	24617	186627	SCREW, CAP, HEXAGON H-	2
20	PFHZZ	72582	5172734	PLATE, RETAINING, SHA	1
				END OF FIGURE	

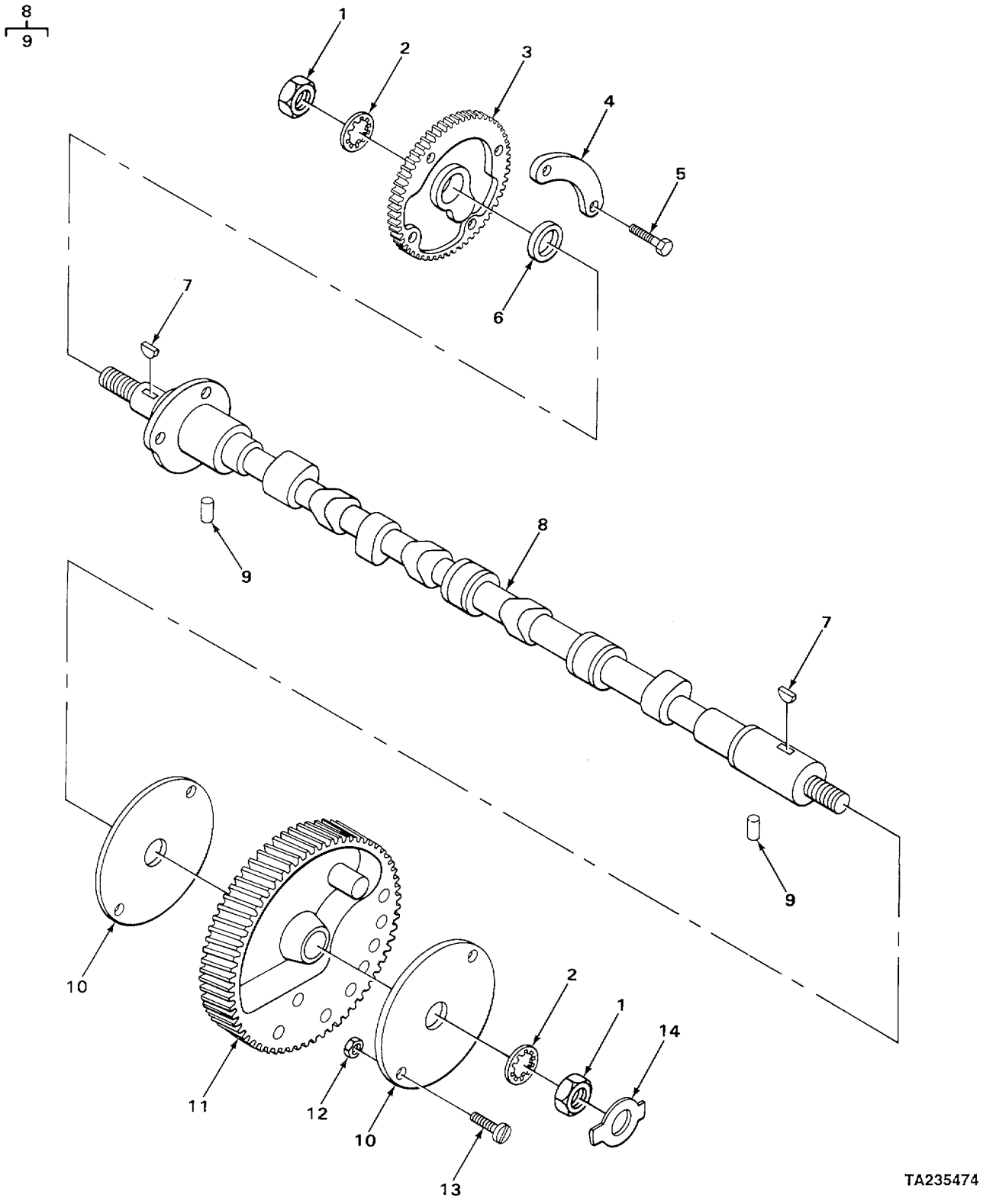

FIGURE 12. CAMSHAFT AND RELATED PARTS

(1) ITEM NO	(2) SMR CODE	(3) CAGEC	(4) PART NUMBER	(5) DESCRIPTION AND USABLE ON CODE (UOC)	(6) QTY
				GROUP 0105 VALVES, CAMSHAFTS, AND TIMING SYSTEM	
				FIG. 12 CAMSHAFT AND RELATED PARTS	
1	PFHZZ	24617	5150087	NUT, PLAIN, HEXAGON	2
2	PFHZZ	72582	5177769	WASHER, LOCK	2
3	PFHZZ	72582	5126904	GEAR, HELICAL RIGHT BANK, FRONT	1
4	PFHZZ	72582	5145732	WEIGHT, CRANKSHAFT B	1
5	PFHZZ	96906	MS35763-1033	BOLT, SELF-LOCKING	2
6	PFHZZ	72582	5116485	SPACER, RING FRONT	1
7	PFHZZ	72582	5153914	KEY, WOODRUFF	1
8	PFHZZ	72582	5117853	CAMSHAFT, ENGINE RIGHT BANK , RH	1
9	PFHZZ	72582	5151277	• PIN, STRAIGHT HEADLE	2
10	PFHZZ	72582	5145612	WEIGHT, CAMSHAFT	2
11	PFHZZ	72582	5121815	GEAR, HELICAL RIGHT BANK, RH REAR	1
12	PFHZZ	24617	9413980	NUT, SELF-LOCKING, HE	4
13	PFHZZ	72582	5108876	SCREW, MACHINE FLAT HEAD	4
14	PFHZZ	72582	5172734	PLATE, RETAINING, SHA	1
				END OF FIGURE	

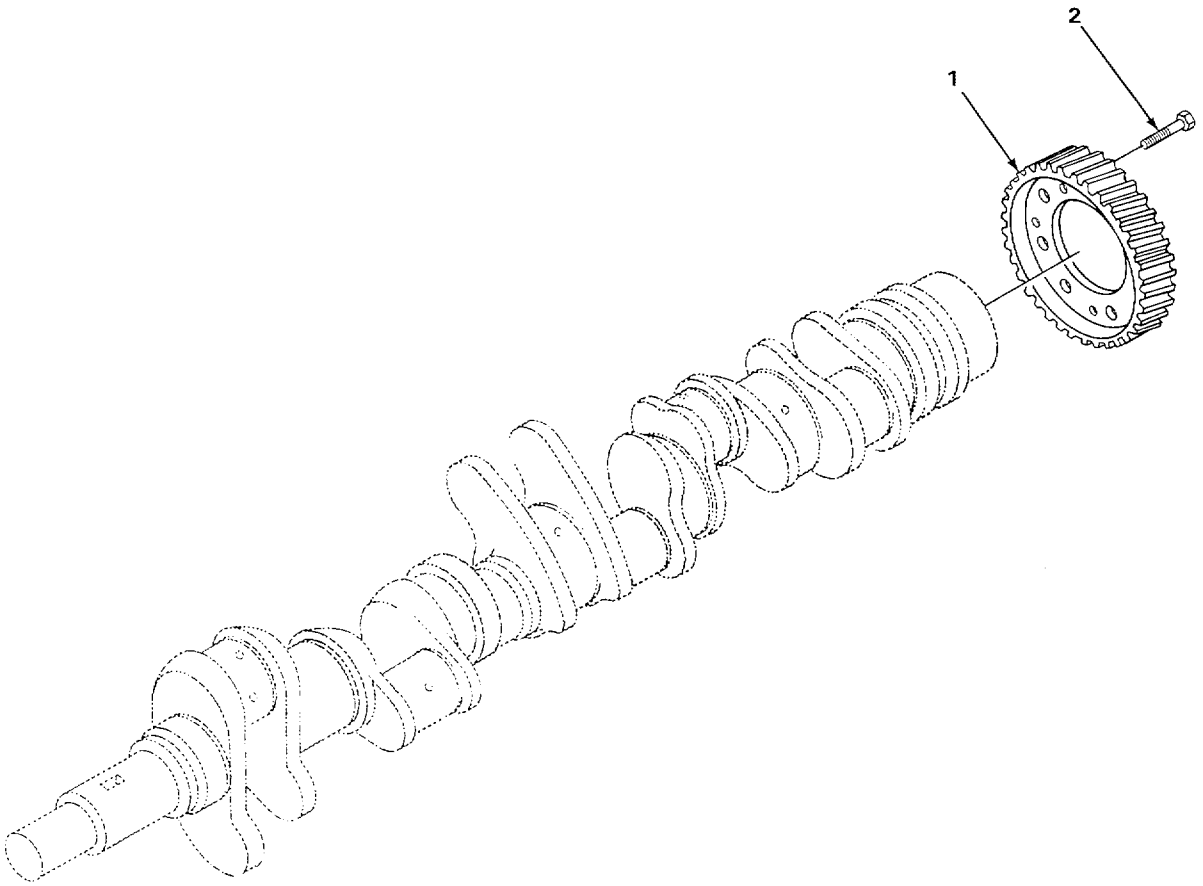

FIGURE 13. CRANKSHAFT TIMING GEAR.

(1) ITEM NO	(2) SMR CODE	(3) CAGEC	(4) PART NUMBER	(5) DESCRIPTION AND USABLE ON CODE (UOC)	(6) QTY
				GROUP 0105 VALVES, CAMSHAFTS, AND TIMING SYSTEM	
				FIG 13 CRANKSHAFT TIMING GEAR	
1	PFHZZ	72582	5117102	GEAR, HELICAL RH ROTATION.....	1
2	PFHZZ	96906	MS35763-1033	BOLT, SELF-LOCKING	6
				END OF FIGURE	

1
2

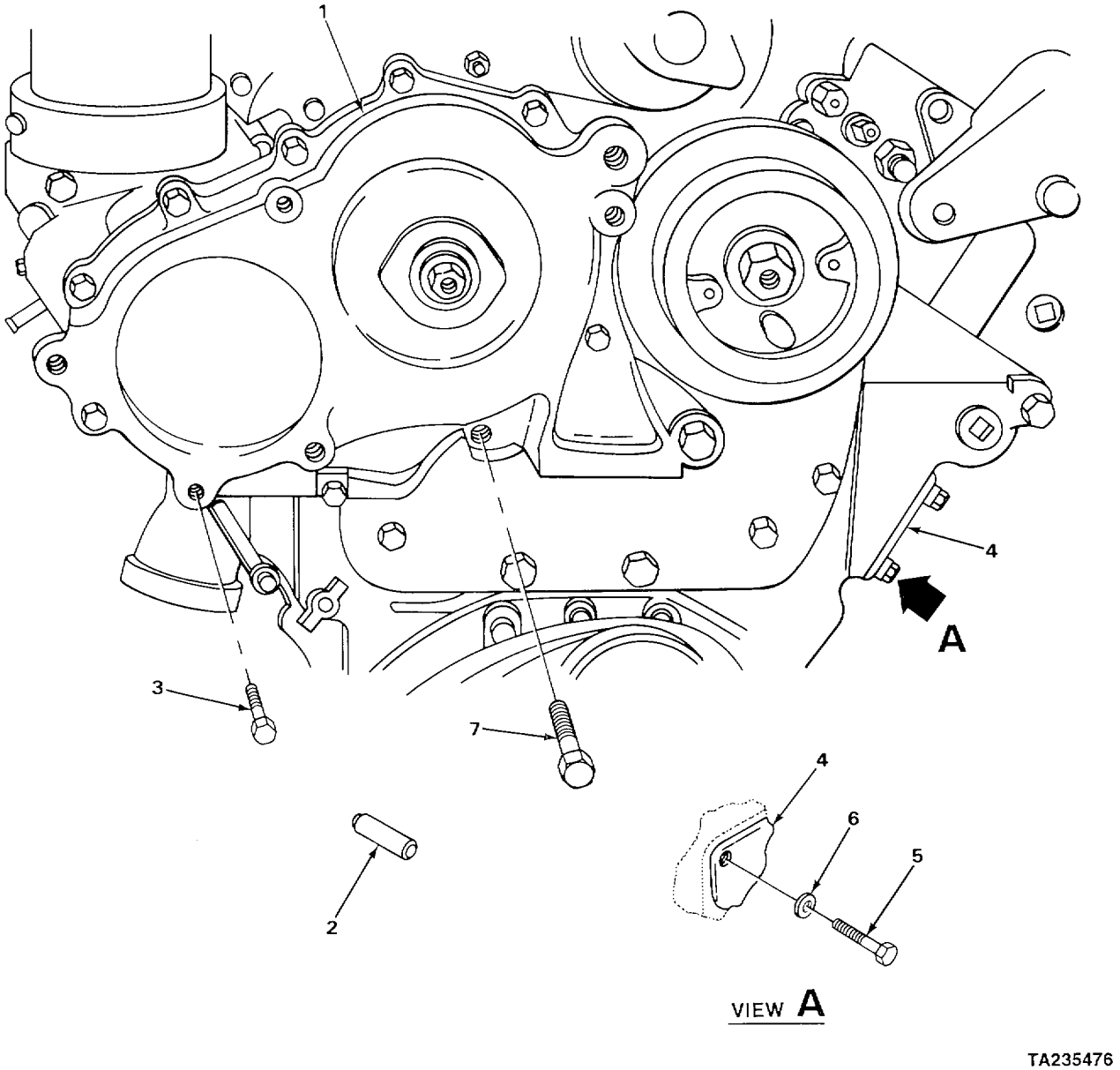

FIGURE 14. BALANCE WEIGHT COVER AND RELATED PARTS.

(1) ITEM NO	(2) SMR CODE	(3) CAGEC	(4) PART NUMBER	(5) DESCRIPTION AND USABLE ON CODE (UOC)	(6) QTY
				GROUP 0105 VALVES, CAMSHAFTS, AND TIMING SYSTEM	
				FIG. 14 BALANCE WEIGHT COVER AND RELATED PARTS	
1	PFHZZ	72582	5141661	COVER ASSEMBLY, BALA.....	1
2	PFHZZ	24617	141236	• PIN, STRAIGHT, HEADLE.....	3
3	PFHZZ	72582	181371	SCREW, CAP, HEXAGON H	6
4	PFOZZ	72582	5117733	COVER, ACCESS PLAIN..... UOC:T26.....	1
5	PFOZZ	96906	MS90728-59	SCREW, CAP, HEXAGON H	4
6	PFOZZ	96906	MS27183-14	WASHER, FLAT	4
7	PFHZZ	96906	M590725-67	SCREW, CAP, HEXAGON H	2
				END OF FIGURE	

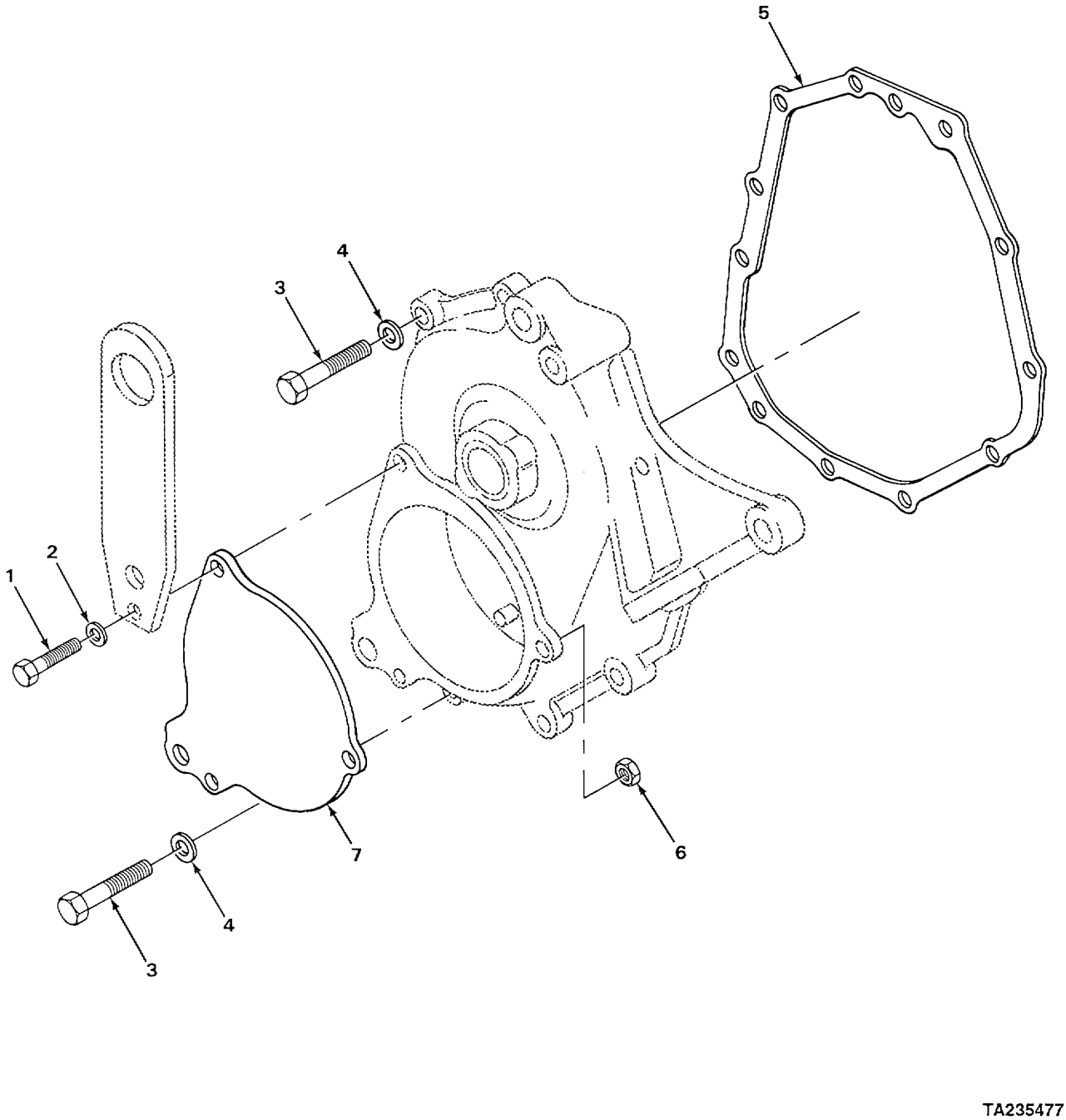

FIGURE 15. BALANCE WEIGHT COVER, EXPLODED VIEW.

(1) ITEM NO	(2) SMR CODE	(3) CAGEC	(4) PART NUMBER	(5) DESCRIPTION AND USABLE ON CODE (UOC)	(6) QTY
				GROUP 0105 VALVES, CAMSHAFTS, AND TIMING SYSTEM	
				FIG. 15 BALANCE WEIGHT COVER (EXPLODED VIEW)	
1	PFFZZ	72582	179888	SCREW	3
2	PFFZZ	96906	MS27183-18	WASHER, FLAT	3
3	PFHZZ	72582	181371	SCREW, CAP, HEXAGON H	4
4	PFHZZ	96906	MS27183-14	WASHER, FLAT	4
5	PFHZZ	72582	5123638	GASKET PART OF KIT P/N 5196374	1
6	PFHZZ	72582	117049	NUT, PLAIN, HEXAGON	3
7	PFHZZ	72582	5122680	COVER, ACCESS	1
				END OF FIGURE	

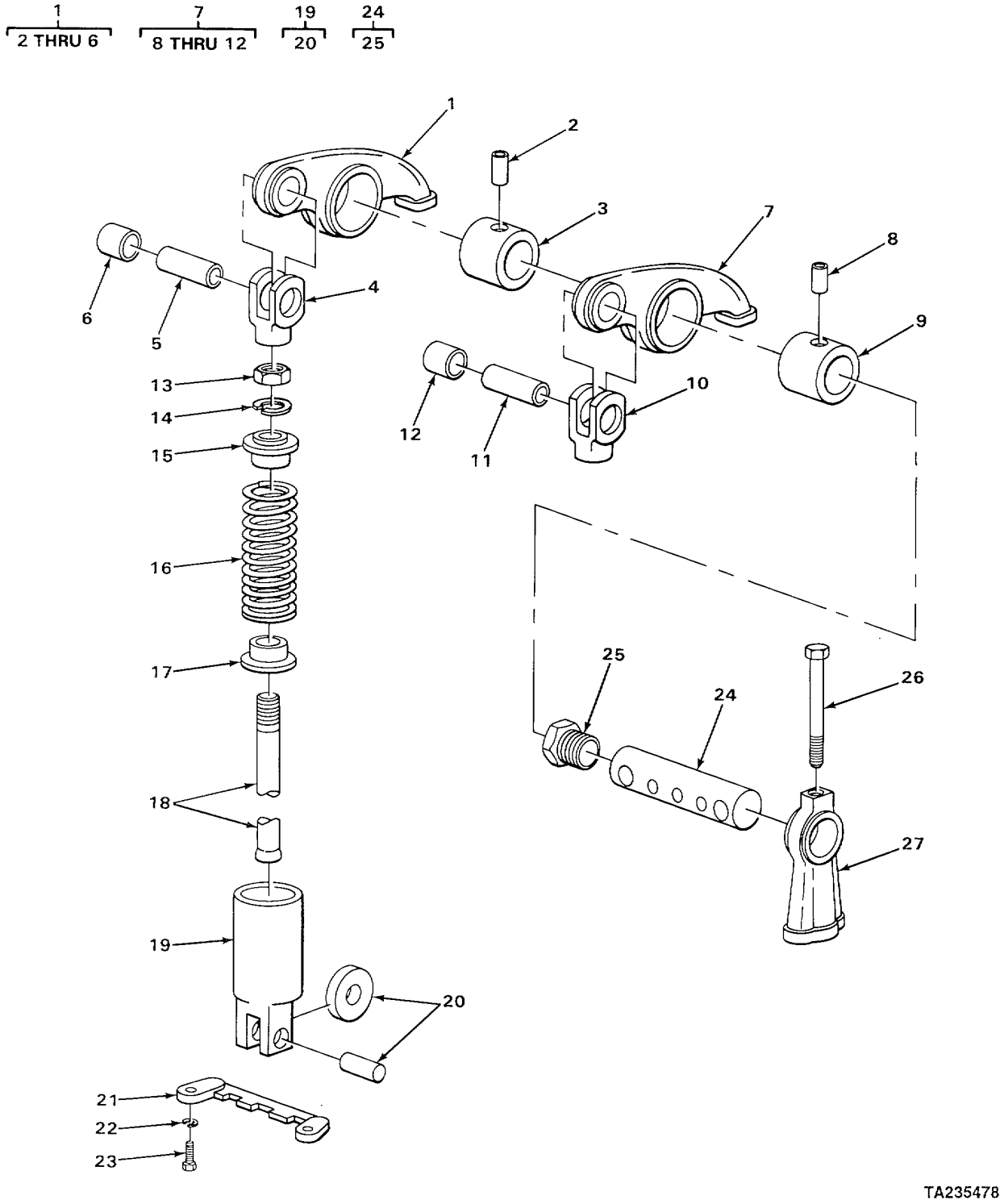

FIGURE 16. ROCKER ARM AND RELATED PARTS.

(1) ITEM NO	(2) SMR CODE	(3) CAGEC	(4) PART NUMBER	(5) DESCRIPTION AND USABLE ON CODE (UOC)	(6) QTY
				GROUP 0105 VALVES, CAMSHAFTS, AND TIMING SYSTEM	
				FIG. 16 ROCKER ARM AND RELATED PARTS	
1	PFFFF	72582	5148472	ROCKER ARM, ENGINE P LEFT, EXHAUST VALVE ROCKER	8
1	PFFFF	72582	5148475	ROCKER ARM, ENGINE P RIGHT, EXHAUST VALVE ROCKER	8
2	PFFZZ	72582	5150311	BEARING, SLEEVE SMALL INJECTOR AND EXHAUST VALVE	1
3	PFFZZ	72582	5122445	BUSHING, SLEEVE LARGE EXHAUST VALVE	1
4	PFFZZ	72582	5150312	CLEVIS, ROD END	1
5	PFFZZ	72582	5150314	PIN, HOLLOW PUSH ROD END	1
6	PFFZZ	72582	5123700	BUSHING, SLEEVE CLEVIS	1
7	PFFZZ	72582	8923543	ROCKER ARM, ENGINE P INJECTOR, ROCKER	8
8	PFFZZ	72582	5150311	BEARING, SLEEVE SMALL INJECTOR AND EXHAUST VALVE	1
9	PFFZZ	72582	5150318	BEARING, SLEEVE LARGE INJECTOR, ROCKER	1
10	PFFZZ	72582	5150312	CLEVIS, ROD END	1
11	PFFZZ	72582	5150314	PIN, HOLLOW PUSH ROD END	1
12	PFFZZ	72582	5123700	BUSHING, SLEEVE CLEVIS	1
13	PFFZZ	73342	5151601	NUT, PLAIN, HEXAGON	1
14	PFFZZ	72582	5150303	RING, RETAINING	24
15	PFFZZ	72582	5150302	SEAT, HELICAL COMPRE	24
16	PFFZZ	72582	5186858	SPRING, HELICAL, COMP	24
17	PFFZZ	72582	5123250	SEAT, HELICAL COMP	24
18	PFFZZ	72582	5128640	PUSH ROD, ENGINE POP	24
19	PFFZZ	72582	8924439	CAM, CONTROL	24
20	PFFZZ	72582	8923814	ROLLER, LINEAR-ROTAR	1
21	PFFZZ	72582	05106413	GUIDE, CAM FOLLOWER	8
22	PFFZZ	96906	MS35338-44	WASHER, LOCK	16
23	PFFZZ	96906	MS90728-6	SCREW, CAP, HEXAGON H	16
24	PFFZZ	72582	23500714	SHAFT ASSEMBLY, ROCK	8
25	PFFZZ	24617	5151272	PLUG, PROTECTIVE, DUS	1
26	PFFZZ	72582	5150325	BOLT, FLUID PASSAGE	16
27	PFFZZ	72582	5103903	BRACKET, EYE, ROTATIN ROCKER SHAFT	16

END OF FIGURE

4
5

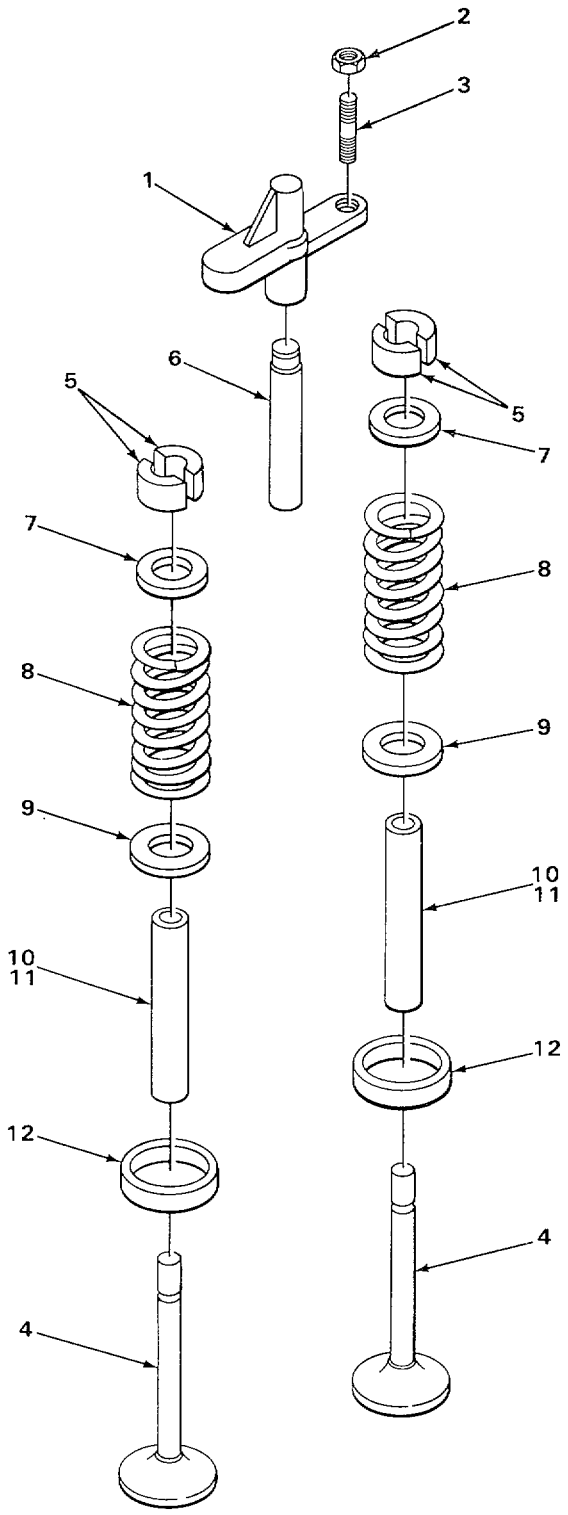

FIGURE 17. ROCKER ARM VALVES.

(1) ITEM NO	(2) SMR CODE	(3) CAGEC	(4) PART NUMBER	(5) DESCRIPTION AND USABLE ON CODE (UOC)	(6) QTY
				GROUP 0105 VALVES, CAMSHAFTS, AND TIMING SYSTEM	
				FIG. 17 ROCKER ARM VALVES	
1	PFFZZ	72582	5117565	BRIDGE, EXHAUST VALV	16
2	PFFZZ	73342	5151601	NUT, PLAIN, HEXAGON EXHAUST VALVE	16
3	PFFZZ	72582	5129101	SETSCREW EXHAUST VALVE	16
4	PFFZZ	72582	23500501	PARTS KIT, ENGINE PO	32
5	PFFZZ	72582	5111337	LOCK, VALVE SPRING R HALVES	1
6	PFFZZ	72582	5117564	PIN, STRAIGHT, HEADLE PRESSED IN TYPE, EXHAUST VALVE BRIDGE	16
7	PFFZZ	72582	5117563	SEAT, HELICAL COMPRE GUIDE, EXHAUST VALVE SPRING R	32
8	PFFZZ	72582	5117561	SPRING, HELICAL, COMP EXHAUST VALVE	32
9	PFFZZ	72582	5196148	SEAT, HELICAL COMPRE EXHAUST VALVE SPRING	32
10	PFFZZ	72582	5129919	GUIDE, VALVE STEM EXHAUST VALVE	32
11	PAFZZ	72582	5199913	INSTALLER, EXHAUST V	32
12	PFFZZ	72582	5101101	SEAT, VALVE EXHAUST VALVE	32
				END OF FIGURE	

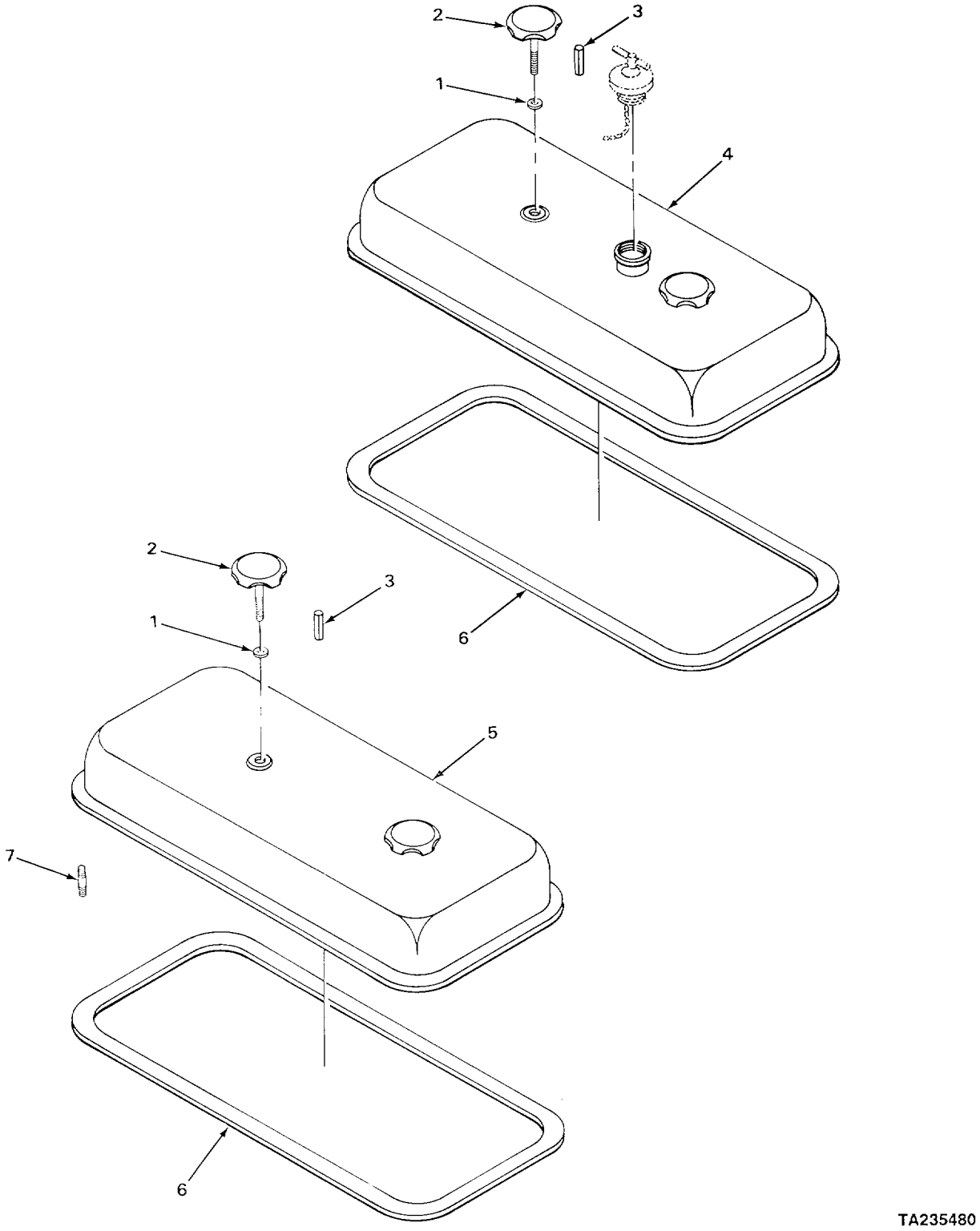

FIGURE 18. ROCKER ARM COVER.

(1) ITEM NO	(2) SMR CODE	(3) CAGEC	(4) PART NUMBER	(5) DESCRIPTION AND USABLE ON CODE (UOC)	(6) QTY
				GROUP 0105 VALVES, CAMSHAFTS, AND TIMING SYSTEM	
				FIG. 18 ROCKER ARM COVER	
1	PFFZZ	72582	5150333	WASHER, FLAT.	4
2	PFFZZ	72582	5157194	THUMB, SCREW	4
3	PFFZZ	96906	MS16562-33	PIN, SPRING	4
4	PFFZZ	72582	5196748	COVER, ENGINE POPPET	1
5	PFFZZ	72582	5115520	COVER, ENGINE POPPET	1
6	PFFZZ	72582	5143406	GASKET NEOPRENE PART OF KIT P/N 5196374 PART OF KIT P/N 5196381	2
7	PFFZZ	72582	5148504	STUD, PLAIN	4
				END OF FIGURE	

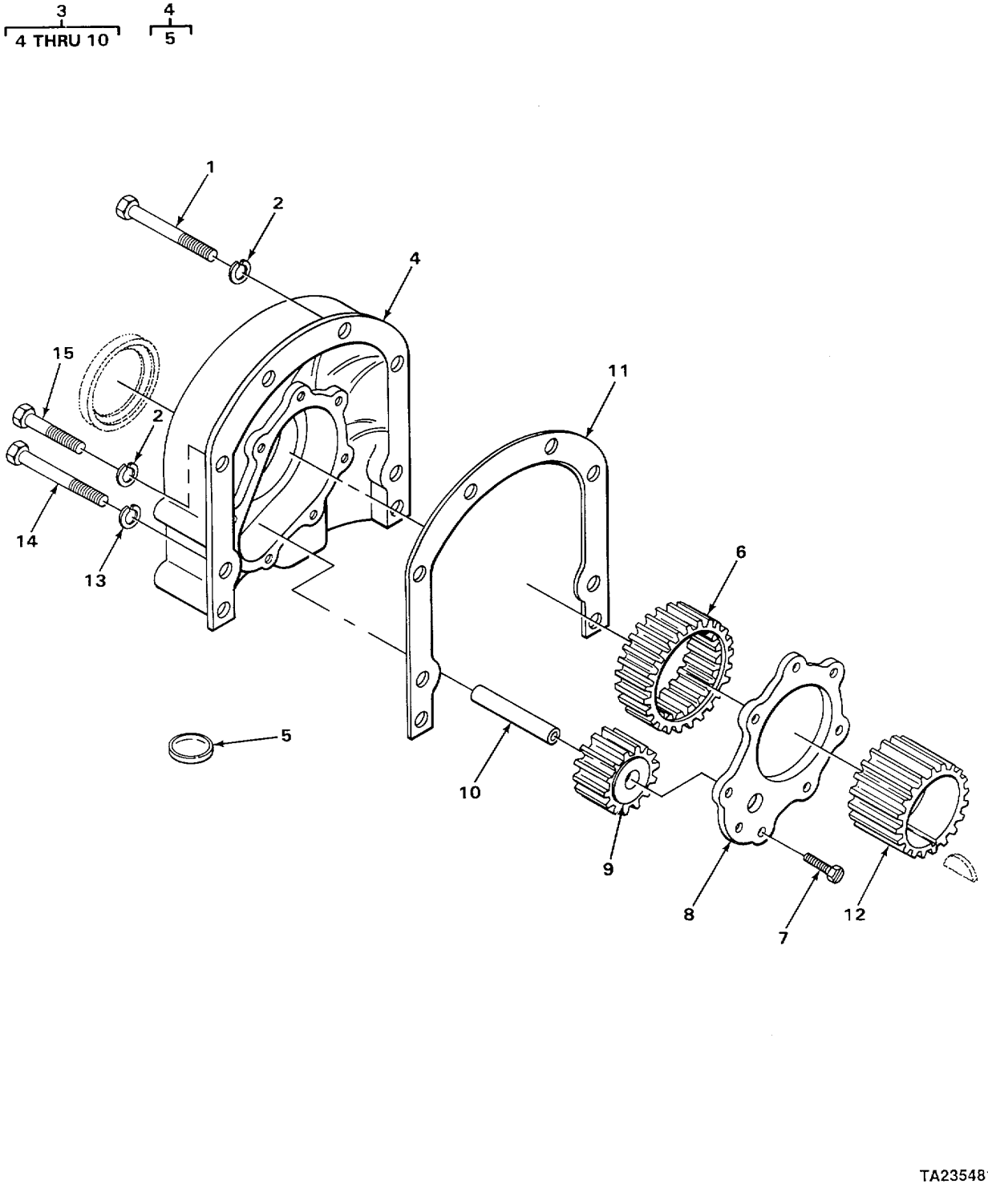

FIGURE 19. OIL PUMP

(1) ITEM NO	(2) SMR CODE	(3) CAGEC	(4) PART NUMBER	(5) DESCRIPTION AND USABLE ON CODE (UOC)	(6) QTY
				GROUP 0106 ENGINE LUBRICATION SYSTEM	
				FIG, 19 OIL PUMP	
1	PFHZZ	96906	MS51095-420	SCREW, CAP, HEXAGON H	2
2	PFHZZ	80045	23MS35338-10	WASHER, LOCK	6
3	PFHZZ	72582	5102019	OIL PUMP ASSEMBLY, E	1
4	PFHZZ	72582	5102020	HOUSING, OIL PUMP AS	1
5	PFHZZ	24617	5150014	PLUG, EXPANSION OIL FILLER HOLE	1
6	PFHZZ	72582	5117587	GEAR, SPUR WIDE	1
7	PFHZZ	24617	9409011	BOLT, SELF-LOCKING	8
8	PFHZZ	72582	5117599	PLATE, OIL PUMP	1
9	PFHZZ	72582	5117588	GEAR, SPUR WIDE	1
10	PFHZZ	72582	5117466	SHAFT, OIL PUMP	1
11	PFHZZ	72582	5121714	GASKET PART OF KIT P/N 5196374	1
12	PFHZZ	72582	5117020	GEAR, SPUR.	1
13	PFHZZ	96906	MS35338-8	WASHER, LOCK	2
14	PFHZZ	96906	MS90728-72	SCREW, CAP, HEXAGON H	2
15	PFHZZ	96906	MS90728-122	SCREW, CAP, HEXAGON H	4
				END OF FIGURE	

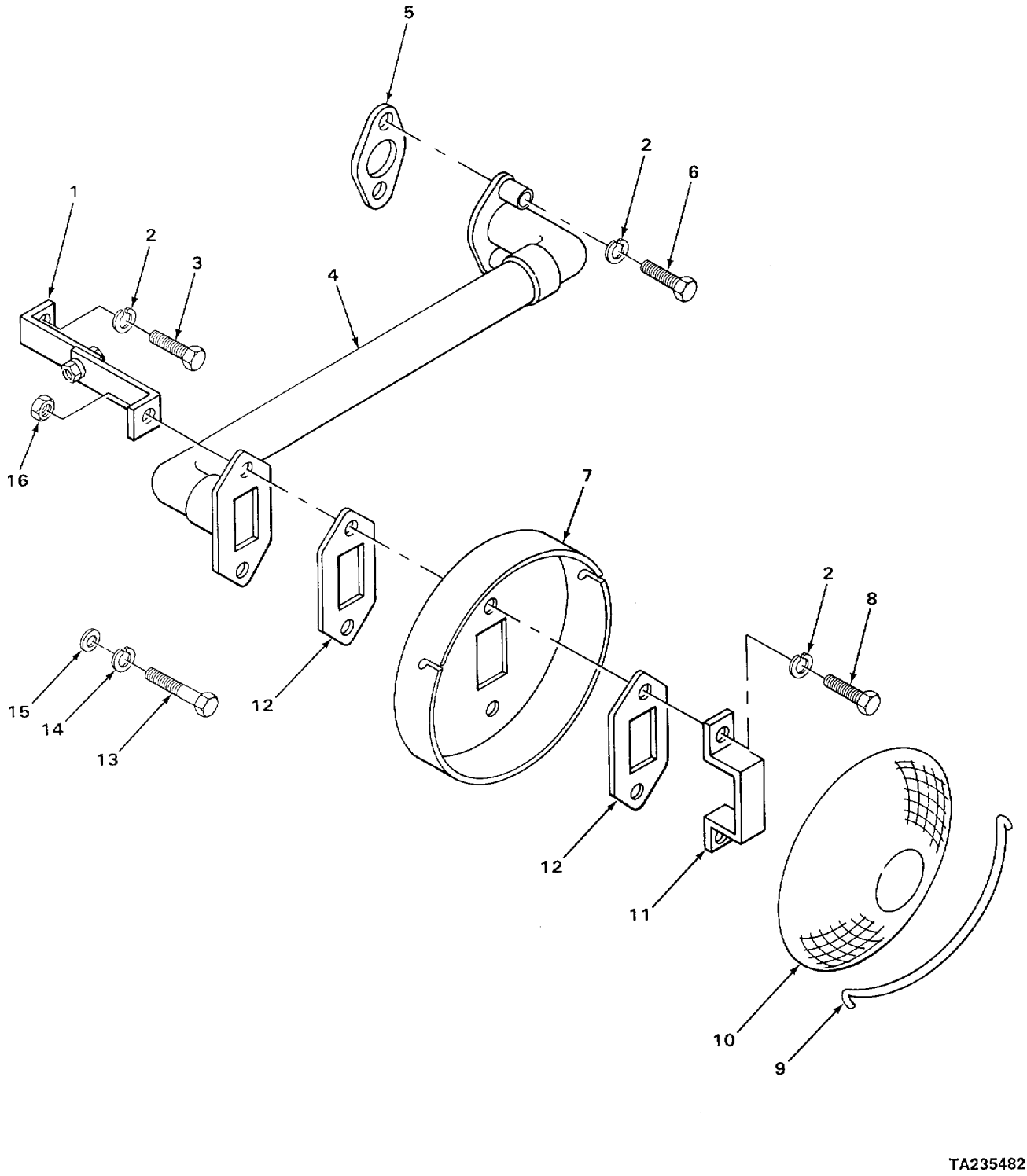

FIGURE 20. OIL DISTRIBUTION SYSTEM.

(1) ITEM NO	(2) SMR CODE	(3) CAGEC	(4) PART NUMBER	(5) DESCRIPTION AND USABLE ON CODE (UOC)	(6) QTY
				GROUP 0106 ENGINE LUBRICATION SYSTEM	
				FIG. 20 OIL DISTRIBUTION SYSTEM	
1	XDOZZ	72582	5131304	BRACKET	2
2	PFOZZ	96906	MS35338-8	WASHER, LOCK	10
3	PFOZZ	96906	MS90728-57	SCREW, CAP, HEXAGON H	2
4	XDOZZ	72582	5131305	PIPE LOWER	1
4	XDOZZ	72582	5131373	PIPE UPPER	1
5	PFOZZ	72582	5117242	GASKET AT PUMP PART OF KIT P/N 5196374	2
6	PFOZZ	72582	181371	SCREW, CAP, HEXAGON H	4
7	PFOZZ	72582	5118302	STRAINER, OIL PUMP	2
8	PFOZZ	96906	MS90728-63	SCREW, CAP, HEXAGON H	4
9	PFOZZ	72582	5153284	CLIP, RETAINING	2
10	PFOZZ	72582	5126143	STRAINER ELEMENT, SE	2
11	PFOZZ	72582	5126320	STRAP , RETAINING	2
12	PFOZZ	24617	5167380	GASKET AT SCREEN COVER PART OF KIT P/N 5196374	4
13	PFOZZ	19207	9409010	BOLT, SELF-LOCKING	2
14	PFOZZ	96906	MS35338-45	WASHER, LOCK	2
15	PFOZZ	96906	MS27183-12	WASHER, FLAT	2
16	PFOZZ	72582	117049	NUT, PLAIN, HEXAGON	2
				END OF FIGURE	

1
2 THRU 9

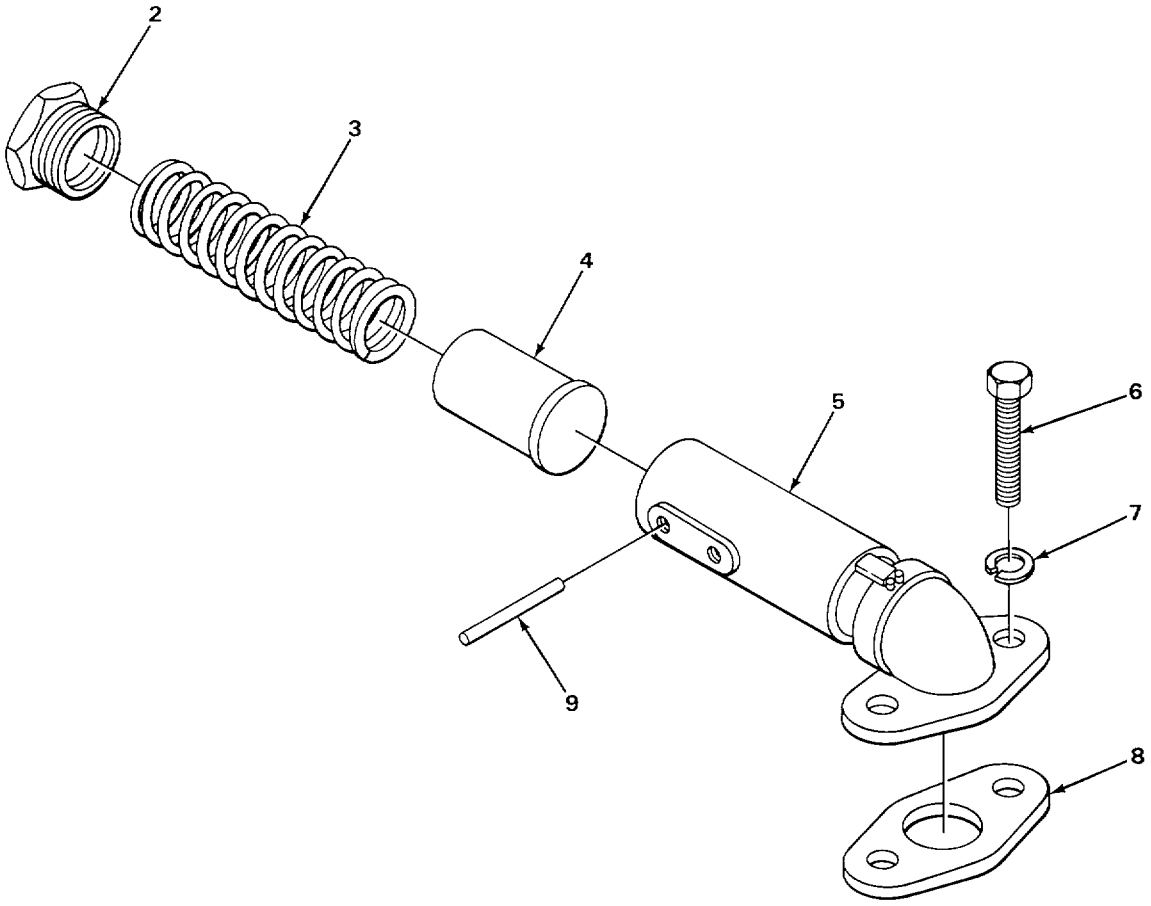

FIGURE 21. OIL PRESSURE REGULATOR AND RELIEF VALVE ASSEMBLY

(1) ITEM NO	(2) SMR CODE	(3) CAGEC	(4) PART NUMBER	(5) DESCRIPTION AND USABLE ON CODE (UOC)	(6) QTY
				GROUP 0106 ENGINE LUBRICATION SYSTEM	
				FIG. 21 OIL PRESSURE REGULATOR AND RELIEF VALVE ASSEMBLY	
1	PFFFF	72582	5122895	VALVE, SAFETY RELIEF ASSEMBLY.....	1
2	PFFZZ	72582	5117957	SEAT.....	1
3	PFFZZ	72582	5126327	SPRING, HELICAL, COMP	1
4	PFFZZ	72582	8922740	PLUNGER, OIL RELIEF	1
5	PFFZZ	72582	5122894	BODY, REGULATOR, OIL PAN RAIL ..... MOUNTED.....	1
6	PFFZZ	96906	MS90728-60	SCREW, CAP, HEXAGON H	2
7	PFFZZ	96906	MS35338-8	WASHER, LOCK	2
8	PFFZZ	72582	5117269	GASKET PART OF KIT P/N 5196374	1
9	PFFZZ	72582	457008	PIN.....	2
				END OF FIGURE	

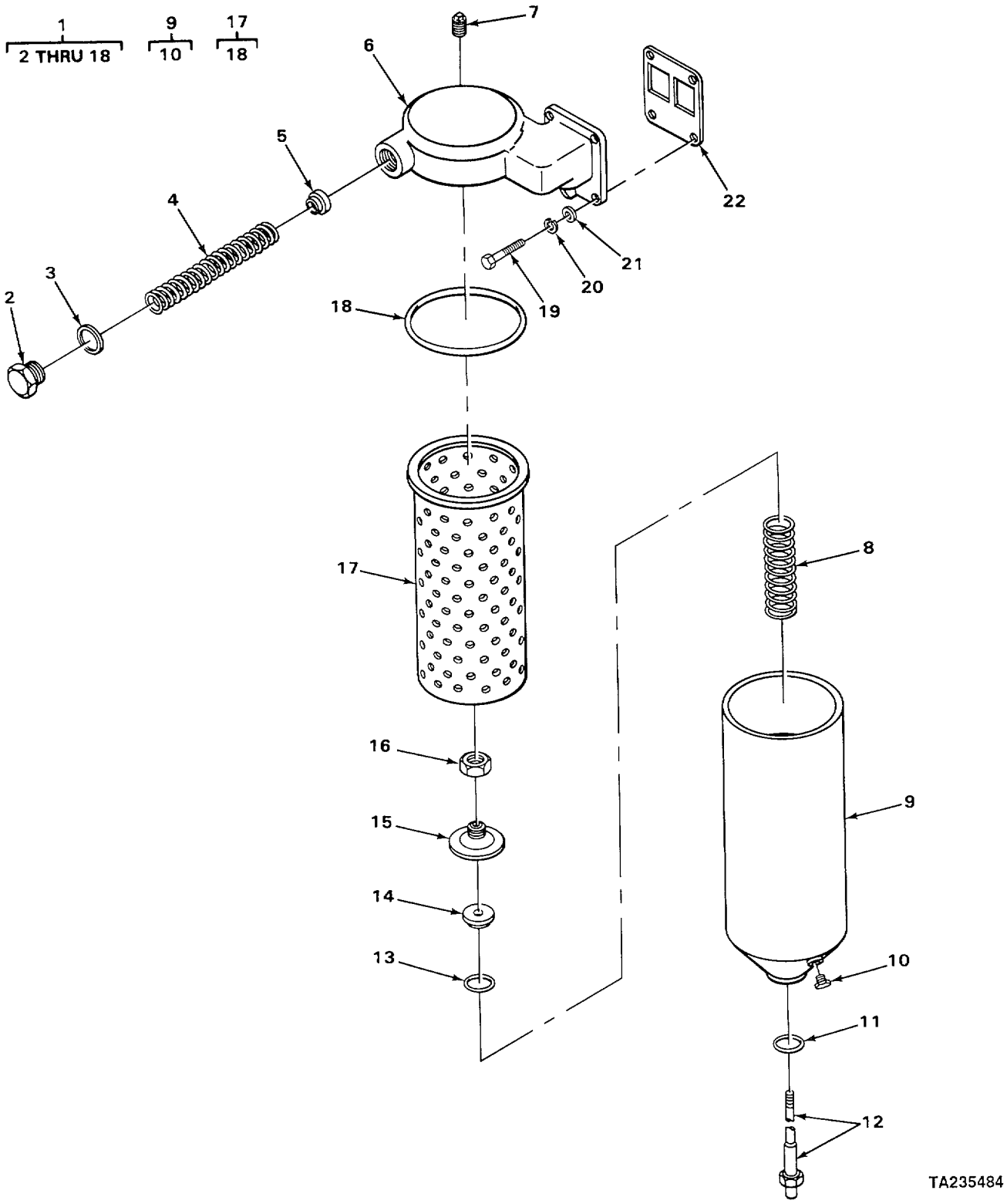

FIGURE 22. OIL FILTER.

SECTION II

(1) ITEM NO	(2) SMR CODE	(3) CAGEC	(4) PART NUMBER	(5) DESCRIPTION AND USABLE ON CODE (UOC)	(6) QTY
				GROUP 0106 ENGINE LUBRICATION SYSTEM	
				FIG 22 OIL FILTER	
1	XDOOO	72582	5134541	FILTER ASSEMBLY FULL FLOW	1
2	PFOZZ	08771	N80P19008C13	.SCREW,MACHINE ROUND HEAD	1
3	PFOZZ	72582	5134456	.RETAINER,HELICAL CO BY-PASS	1
4	PFOZZ	72582	5134477	.SPRING,HELICALICOMP BY-PASS	1
5	PFOZH	72582	5133431	.DISK,VALVE BY-PASS	1
6	PFOZZ	72582	5134307	.HEAD,FLUID FILTER	1
7	PFOZZ	21450	444618	.PLUG,PIPE SQUARE HEAD	2
8	PFOZZ	72582	5187308	SPRINGIHELICAL,COMP	1
9	PFOZZ	70040	OF203	COVER,FLUID FILTER	1
10	PFOZZ	34623	A1264	VALVE,PLUG	1
11	PFOZZ	70040	6437298	*GASKET SET BOLT HEAD PART OF KIT P/N 5196374	1
12	PFOZZ	72582	5120740	BOLT,SHOULDER	1
13	PFOZZ	72582	5187310	.PACKING,PREFORMED RETAINER PART OF KIT P/N 5196374	1
14	PFOZZ	24617	5154538	.SPACER,RING	1
15	PFOZZ	73342	5187309	.RETAINER,PACKINGG	1
16	PFOZZ	73342	00114498	.NUT,PLAIN,HEXAGON	1
17	PFOZZ	96906	MS35802-3	.FILTER ELEMENT,FLUI AC TYPE PF-132	1
18	PFOZZ	70040	G259	..GASKET PART OF KIT P/N 5196374	1
19	PFOZZ	96906	MS90728-64	SCREW,CAP,HEXAGON	4
20	PFOZZ	96906	MS35338-8	WASHER,LOCK	4
21	PFOZZ	96906	MS27183-14	WASHER,FLAT	4
22	PFOZZ	72582	5121205	GASKET,FILTER TO ADAPTER PART OF KIT P/N 5196374	1

END OF FIGURE

SECTION II

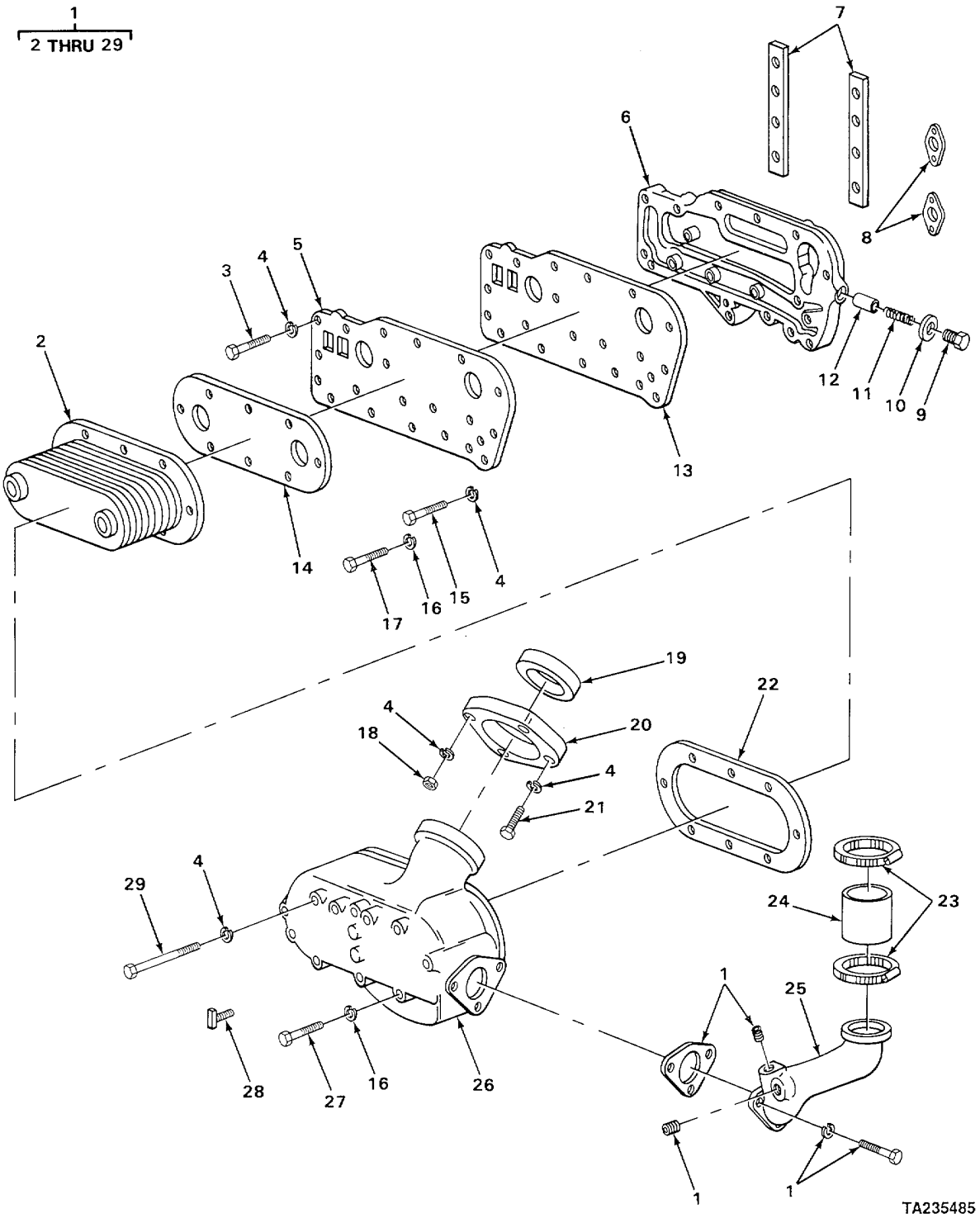

FIGURE 23. OIL COOLER

SECTION II

(1) ITEM NO	(2) SMR CODE	(3) CAGEC	(4) PART NUMBER	(5) DESCRIPTION AND USABLE ON CODE (UOC)	(6) QTY
				GROUP 0106 ENGINE LUBRICATION SYSTEM	
				FIG. 23 OIL COOLER	
1	PFFFF	27462	8547547	COOLER, LUBRICATING	1
2	XAFZZ	72582	8528885	.CORE OIL COOLER	1
3	PFFZZ	96906	MS90728-60	.SCREW,CAP,HEXAGON H	1
4	PFFZZ	96906	MS35338-8	.WASHER,LOCK	9
5	XOFZZ	72582	5125597	.COVER PLATE	-1
6	XOFZZ	72582	5127923	.ADAPTER	1
7	PFFZZ	72582	8920763	.SHIM PART OF KIT P/N 5196374	2
8	PFFZZ	72582	5117535	.GASKET PART OF KIT P/N 5196374	2
9	PFFZZ	24617	5177772	.PLUG,MACHINE THREAD	1
10	PFFZZ	15434	60598	.WASHER,FLAT PART OF KIT P/N 5196374	1
11	PFFZZ	72582	5177778	.SPRING,HELICALLCOMP	1
12	PFFZZ	72582	5177777	.DISK,VALVE	1
13	KFFZZ	72582	5125596	.GASKET PART OF KIT P/N 5196374	1
14	XDFZZ	72582	5102506	.GASKET PART OF KIT P/N 5196374	1
15	PFFZZ	96906	MS90728-61	.SCREWICAPIHEXAGON H	3
16	PFFZZ	96906	MS35338-45	WASHER,LOCK	9
17	PFFZZ	96906	MS90728-33	BOLTIMACHINE	2
18	PFFZZ	72582	117049	NUT,PLAIN,HEXAGON	2
19	XDFZZ	72582	5121745	.GASKET	1
19	PAFZZ	72582	5125599	.GASKET	1
20	PAFZZ	72582	5125598	.FLANGE,FAUCET	1
21	PFFZZ	96906	MS90728-62	.SCREW,CAP,HEXAGON H	2
22	PFFZZ	19207	6246296	.GASKET CORE INNER PART OF KIT P/N 5196374	1
23	XDFZZ	72582	5139809	.CLAMP,SPECIAL	2
24	PFFZZ	72582	5199780	.HOSE,NONMETALLIC TO WATER PUMP	1
25	XDFZZ	72582	5125595	.TUBE OIL COOLER WATER INLET	1
26	XDFZZ	72582	5128270	.HOUSING OIL COOLER	1
27	PFFZZ	72582	215404	.BOLT,MACHINE	7
28	PFFZZ	72582	114981	.COCK,DRAIN	1
29	PFFZZ	72582	9413341	.BOLT,MACHINE	1

END OF FIGURE

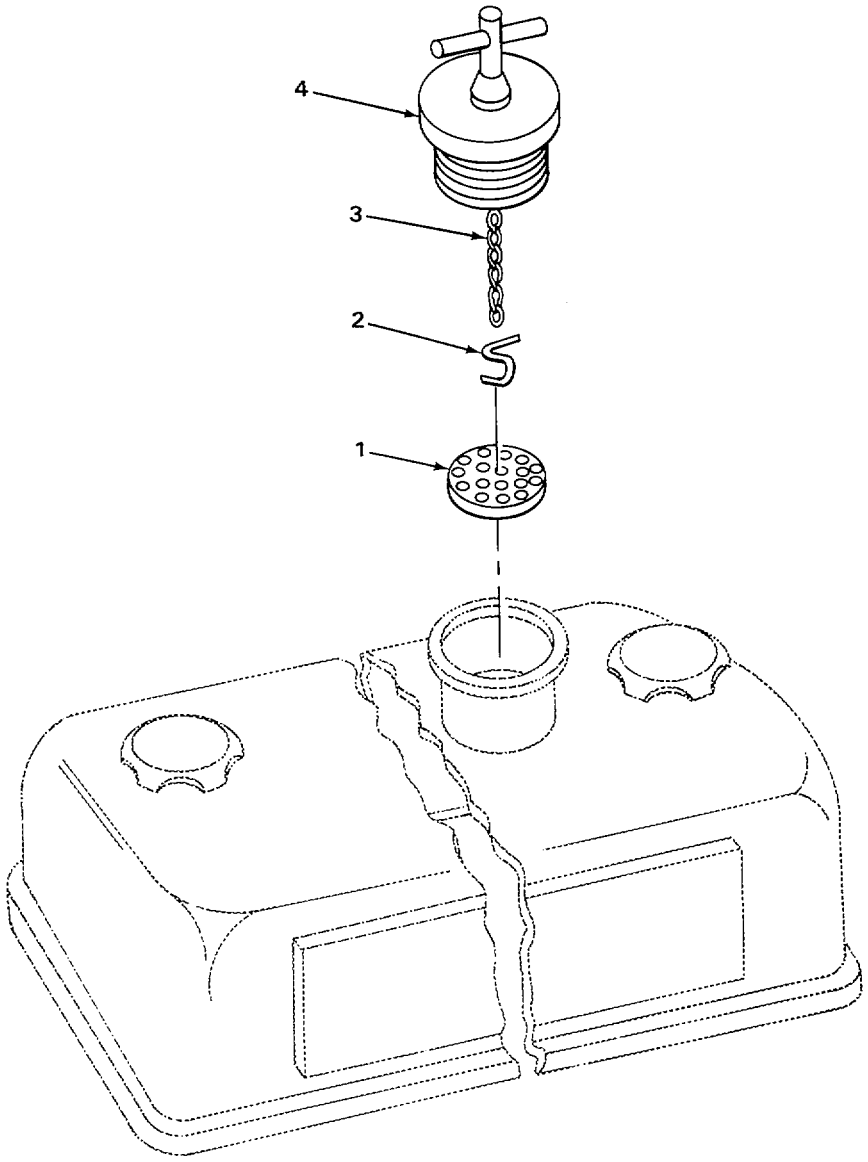

FIGURE 24. OIL FILLER CAP.

SECTION II

(1) ITEM NO	(2) SMR CODE	(3) CAGEC	(4) PART NUMBER	(5) DESCRIPTION AND USABLE ON CODE (UOC)	(6) QTY
				GROUP 0106 ENGINE LUBRICATION SYSTEM FIG. 24 OIL FILLER CAP	
1	PFOZZ	72582	5150147	STRAINER ELEMENTISE	1
2	PFOZZ	72582	5146248	HOCK OIL FILLER	1
3	PFOZZ	72582	5113825	CHAIN,CAP	1
4	PFOZZ	72582	5117362	CAP,FILLER OPENING SQUEEZE TYPE	1

END OF FIGURE

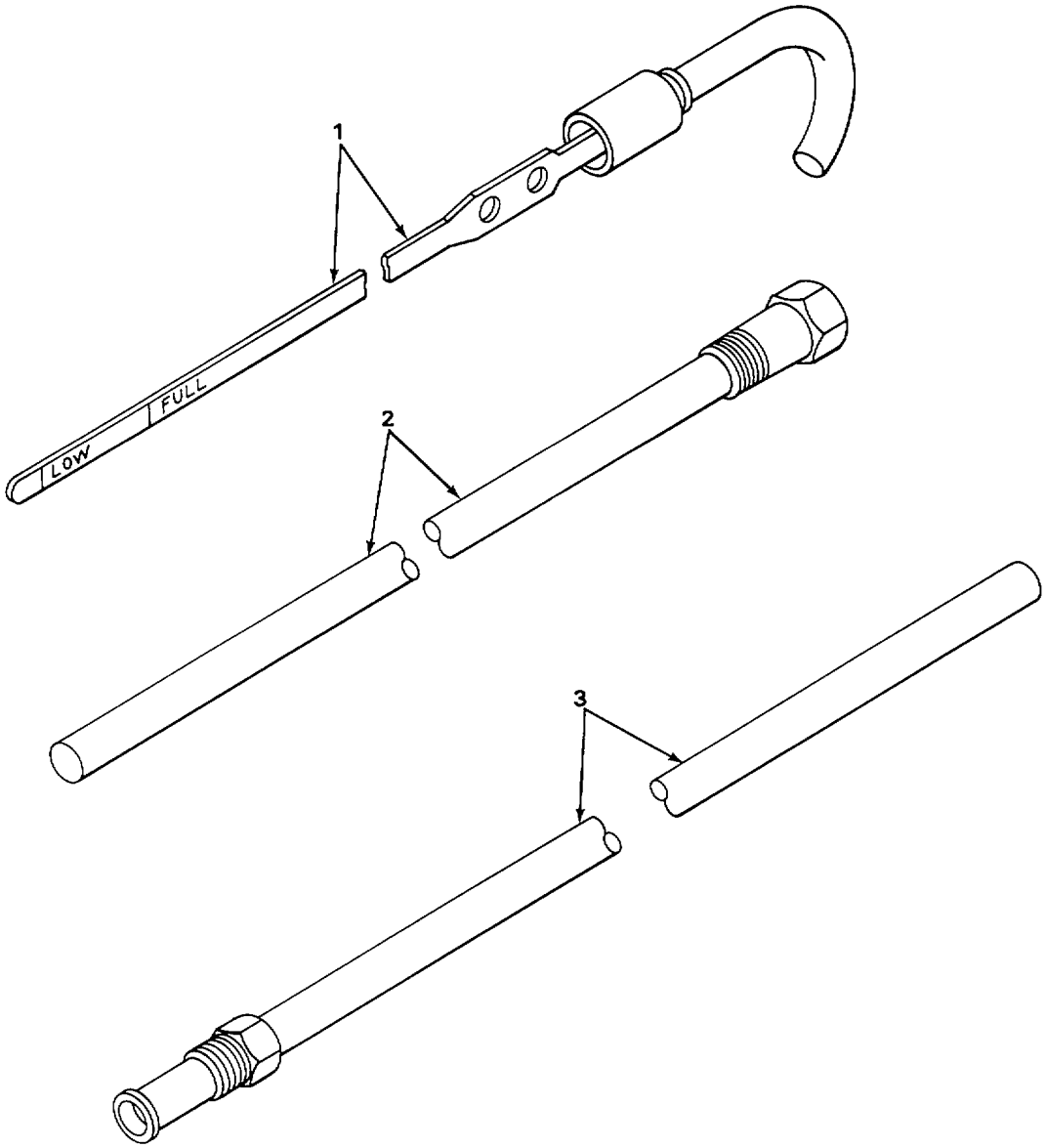

TA235489

FIGURE 25. OIL DIPSTICK.

SECTION II

(1) ITEM NO	(2) SMR CODE	(3) CAGEC	(4) PART NUMBER	(5) DESCRIPTION AND USABLE ON CODE (UOC)	(6) QTY
				GROUP 0106 ENGINE LUBRICATION SYSTEM FIG. 25 OIL DIPSTICK	
1	XDOZZ	72582	5121432	DIPSTICK	1
2	PFOZZ	72582	5151430	ADAPTER,STRAIGHT,PI	1
3	PFOZZ	72582	5139363	TUBE ASSEMBLY,DIPST	1

END OF FIGURE

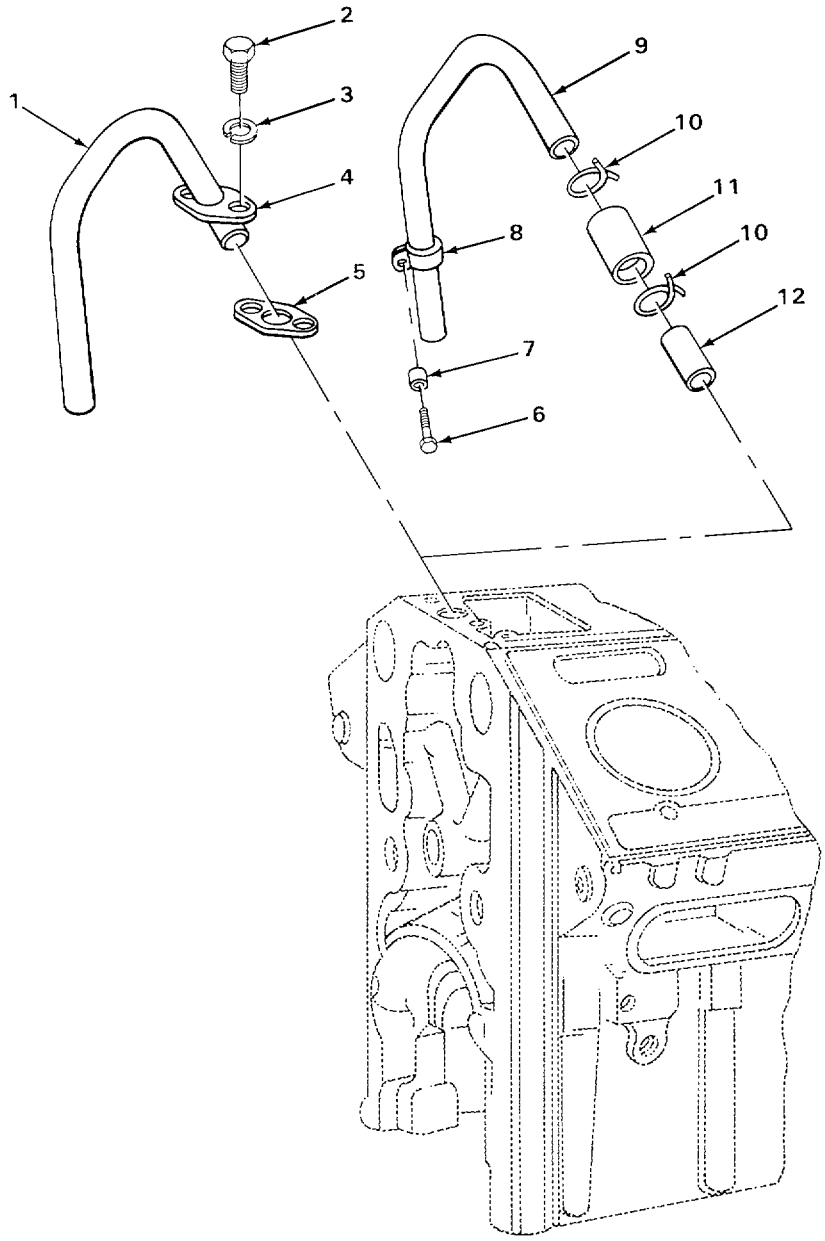

TA235490

FIGURE 26. ENGINE BREATHER.

SECTION II

(1) ITEM NO	(2) SMR CODE	(3) CAGEC	(4) PART NUMBER	(5) DESCRIPTION AND USABLE ON CODE (UOC)	(6) QTY
				GROUP 0106 ENGINE LUBRICATION SYSTEM	
				FIG. 26 ENGINE BREATHER	
1	PFOZZ	72582	5197033	BREATHER	1
2	PFOZZ	96906	MS90728-59	SCREW,CAP,HEXAGON H	2
3	PFOZZ	96906	MS35338-8	WASHEROLOCK	2
4	PFOZZ	72582	5144734	FLANGE,PIPE	1
5	PFOZZ	72582	5132331	GASKET PART OF KIT P/N 5196374	1
6	PFOZZ	96906	MS90728-13	SCREW,CAP,HEXAGON H	1
7	PFOZZ	72582	5160425	SPACER,SLEEVE	1
8	PFOZZ	72582	5184291	CLAMP,LOOP BREATHER EXTENSION PIPE	1
9	XDOZZ	72582	5108244	PIPE	1
10	PFOZZ	96906	MS39326-26	CLAMPTHOSE	2
11	MOOZZ	19207	05120012-1	HOSE MAKE FROM HOSE P/N 5120022	1
12	XDOZZ	72582	5144828	TUBE	1

END OF FIGURE

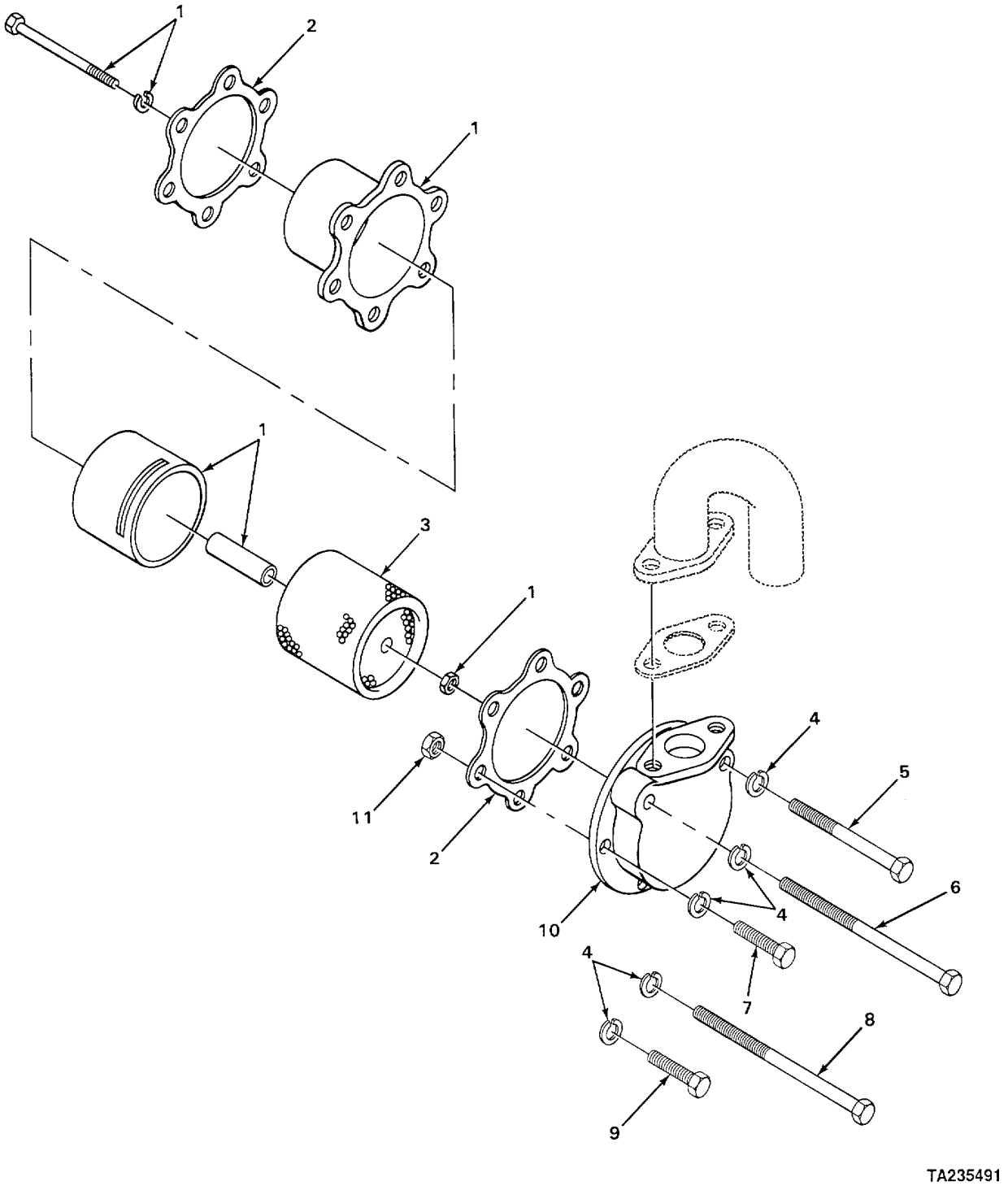

FIGURE 27. VENTILATING SYSTEM.

SECTION II

(1) ITEM NO	(2) SMR CODE	(3) CAGEC	(4) PART NUMBER	(5) DESCRIPTION AND USABLE ON CODE (UOC)	(6) QTY
				GROUP 0106 ENGINE LUBRICATION SYSTEM	
				FIG. 27 VENTILATING SYSTEM	
1	PFOZZ	72582	5113734	SHELL,BREATHER	2
2	PFOZZ	72582	5122227	GASKET PART OF KIT P/N 5196374	4
3	PFOZZ	72582	5101760	FILTERING DISK,FLUI	2
4	PFOZZ	96906	MS35338-8	WASHER,LOCK	12
5	PFOZZ	72582	450517	SCREW,CAP,HEXAGON H	1
6	PFOZZ	72582	9418964	SCREW,CAP,HEXAGON H	3
7	PFOZZ	96906	MS90728-61	SCREW,CAP,HEXAGON H	4
8	PFOZZ	12603	6108	NUT,PLAIN,HEXAGON	1
9	PFOZZ	96906	MS90725-67	SCREW,CAP,HEXAGON H	3
10	PFOZZ	72582	5145592	HOUSING,BREATHER OU	2
11	PFOZZ	96906	MS51967-8	NUT,PLAIN,HEXAGON	12

END OF FIGURE

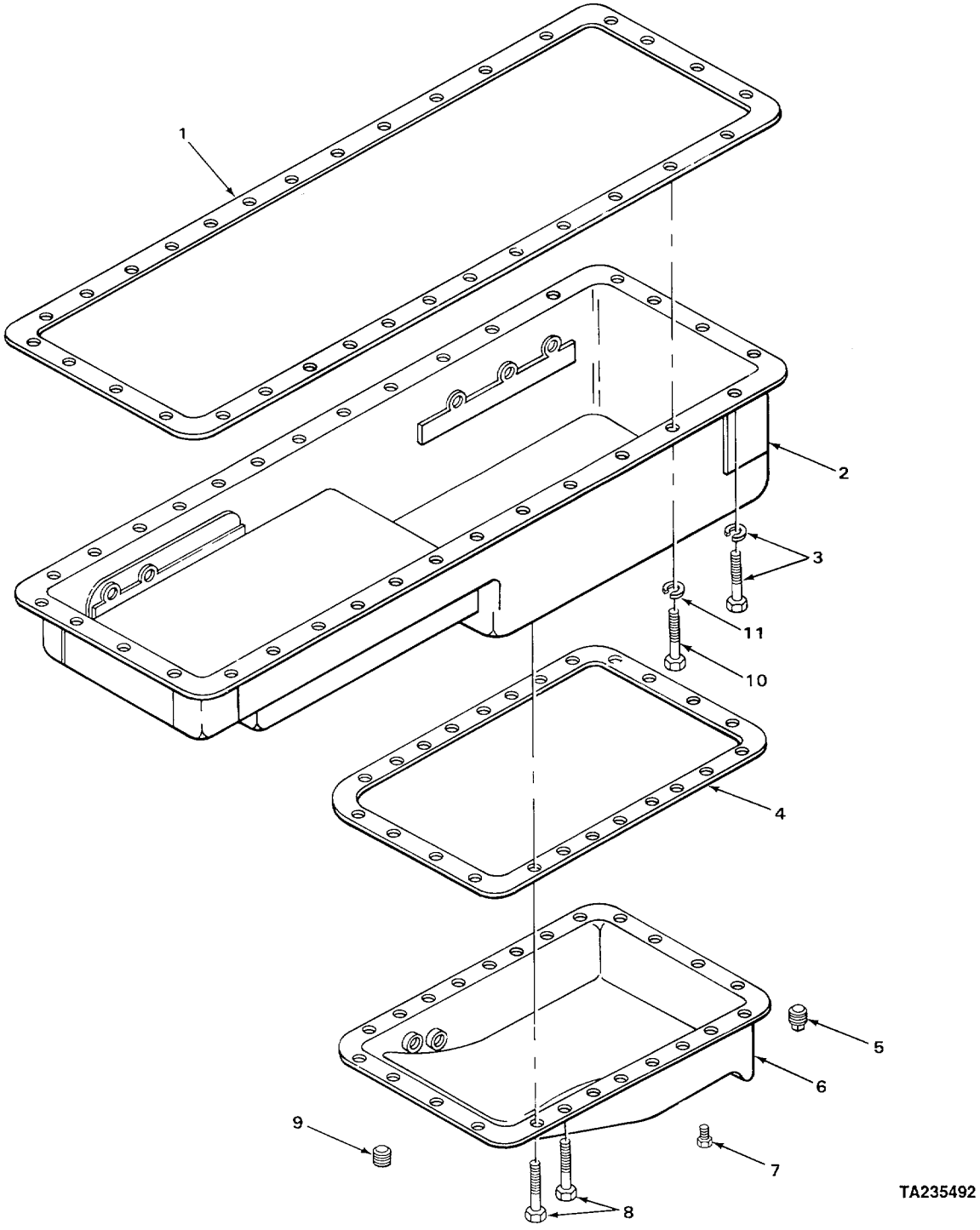

FIGURE 28. OIL PAN.

SECTION II

(1) ITEM NO	(2) SMR CODE	(3) CAGEC	(4) PART NUMBER	(5) DESCRIPTION AND USABLE ON CODE (UOC)	(6) QTY
				GROUP 0106 ENGINE LUBRICATION SYSTEM FIG. 28 OIL PAN	
1	PFFZZ	72582	5196533	GASKET SET UPPER OIL PAN	1
2	XDFFF	73342	5146304	PAN,OIL UPPER	1
3	PFFZZ	72582	5148482	BOLT WITH LOCK WASHER	20
4	XDFZZ	73342	5131100	GASKET LOWER OIL PAN	1
5	PFFZZ	72582	5103185	PLUGIPIPE SQUARE HEAD	2
6	XDFFF	73342	5131099	PAN,OIL LOWER	1
7	PFFZZ	72582	5103187	PLUG,PIPE HEXAGON HEAD	1
8	PFFZZ	72582	5148481	SCREW,ASSEMBLED WAS WITH LOCK WASHER	12
9	PFFZZ	72582	5115214	PLUG,PIPE	1
10	PFFZZ	96906	MS90728-62	SCREW,CAP,HEXAGON H	2
10	PFFZZ	96906	MS90728-75	SCREW,CAP,HEXAGON H	2
10	PFFZZ	72582	187491	SCREW,CAP,HEXAGON H	2
10	PFFZZ	96906	MS90728-72	SCREW,CAP,HEXAGON H	4
11	PFFZZ	96906	MS35338-8	WASHER,LOCK	10

END OF FIGURE

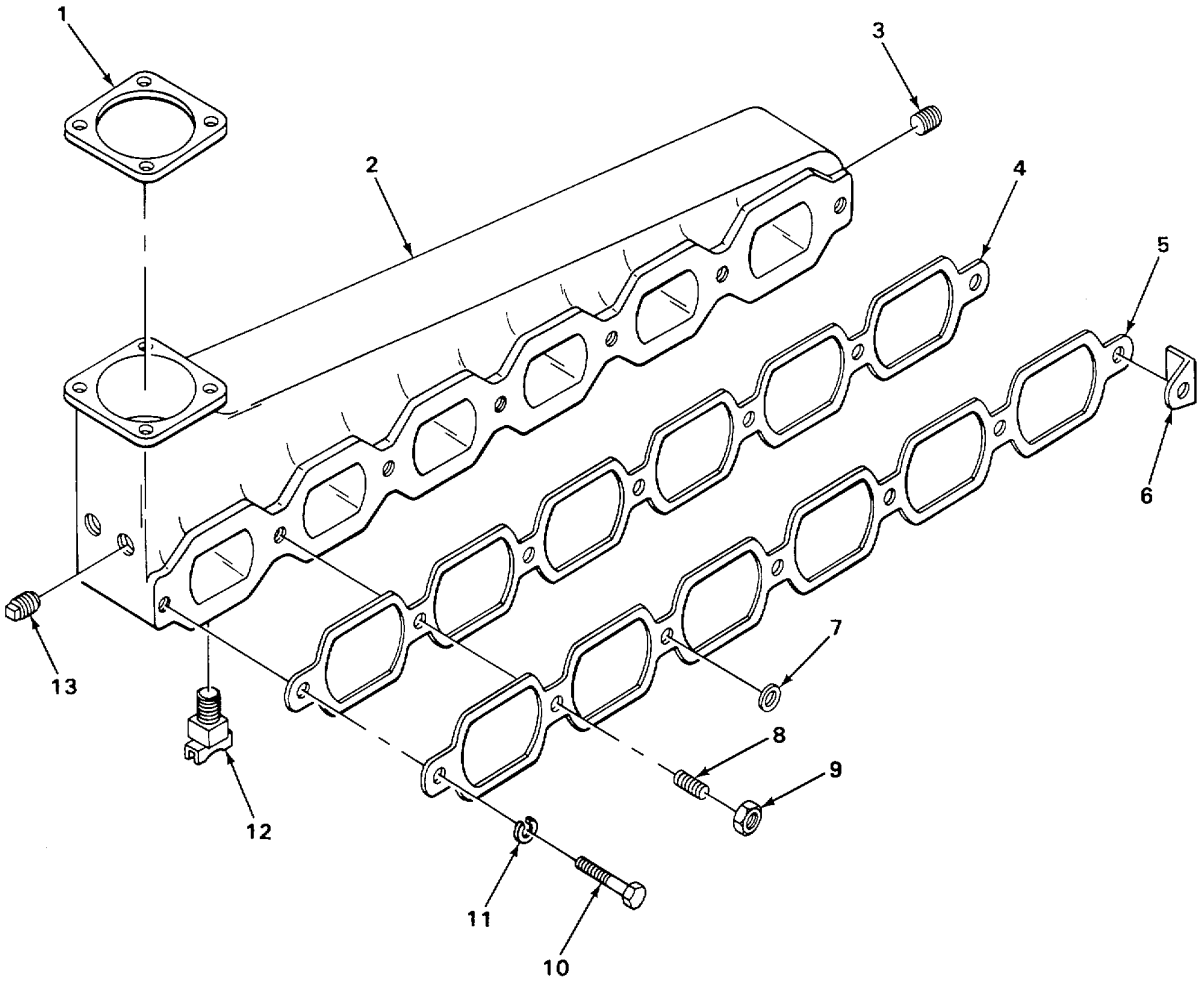

TA235493

FIGURE 29. EXHAUST MANIFOLD.

SECTION II

(1) ITEM NO	(2) SMR CODE	(3) CAGEC	(4) PART NUMBER	(5) DESCRIPTION AND USABLE ON CODE (UOC)	(6) QTY
				GROUP 0108 MANIFOLDS	
				FIG. 29 EXHAUST MANIFOLD	
1	PFFZZ	72582	5113412	GASKET PART OF KIT P/N 5196374 PART OF KIT P/N 5196381	2
2	XDFZZ	72582	5130305	MANIFOLD RIGHT BANK	1
2	XDFZZ	72582	5130308	MANIFOLD LEFT BANK A	1
3	XDFZZ	24617	189060	REDUCER,PIPE RED	2
4	PFFZZ	72582	5120224	GASKET PART OF KIT P/N 5196374 PART OF KIT P/N 519638196381	4
5	XDFZZ	72582	5121098	COVER,ACCESS EXHAUST MANIFOLD COVER	2
6	PFFZZ	72582	5102735	CRAB,MANIFOLD	4
7	PFFZZ	72582	5104439	WASHER,SPRING TENSI	6
8	PFFZZ	24617	5112899	STUD,PLAIN	10
9	PFFZZ	96906	MS51968-11	NUT,PLAIN,HEXAGON	10
10	PFFZZ	72582	186618	BOLT,MACHINE	4
11	PFFZZ	96906	MS35338-45	WASHER,LOCK	4
12	PFFZZ	72582	8924140	COCKIDRAIN	2
13	PFFZZ	96906	MS14314-lX	PLUG,PIPE BRASS	4

END OF FIGURE

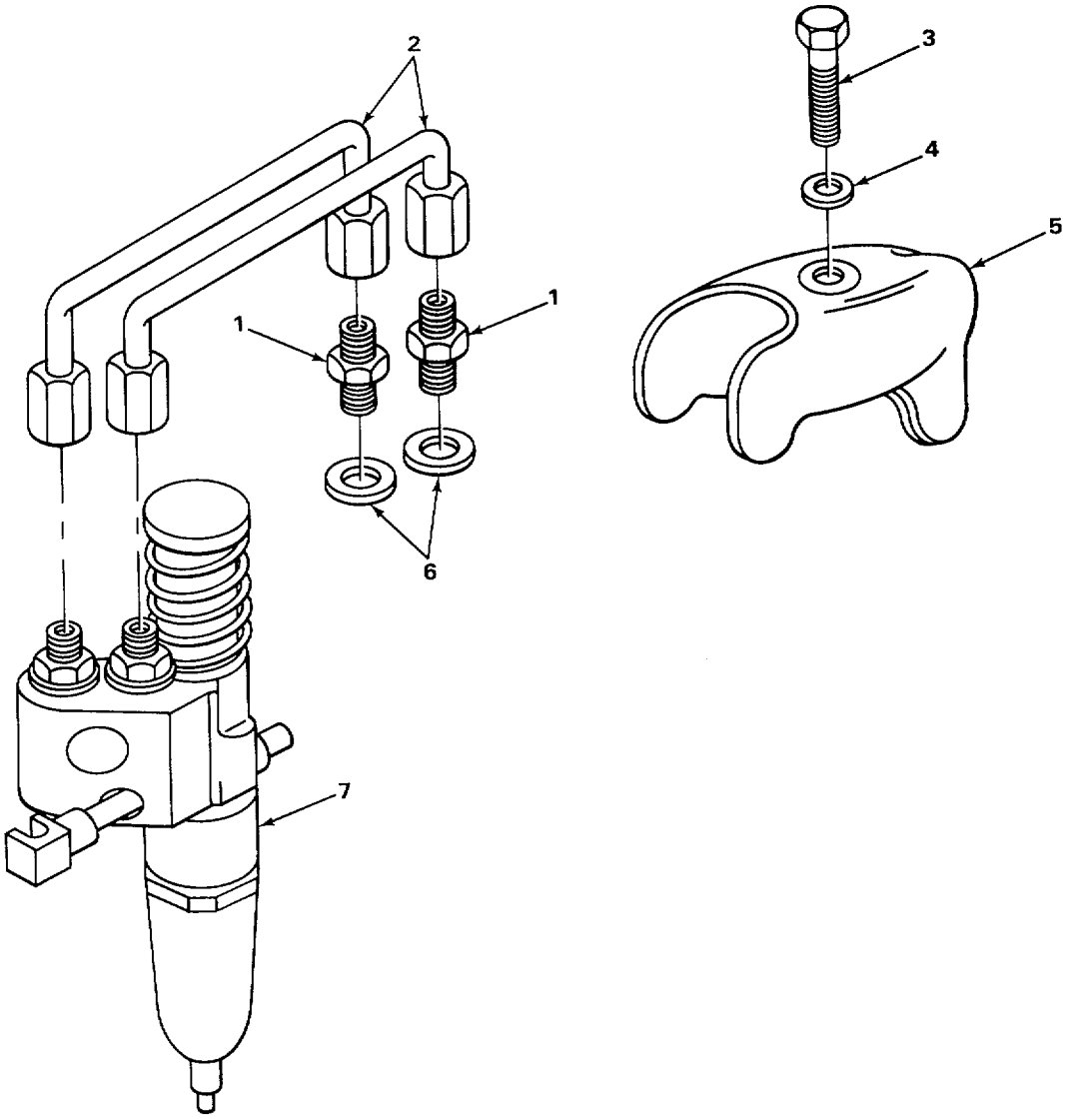

TA235494

FIGURE 30. FUEL INJECTOR.

SECTION II

(1) ITEM NO	(2) SMR CODE	(3) CAGEC	(4) PART NUMBER	(5) DESCRIPTION AND USABLE ON CODE (UOC)	(6) QTY
				GROUP 03 FUEL SYSTEM	
				GROUP 0301 CARBURETOR, FUEL INJECTOR	
				FIG. 30 FUEL INJECTOR	
1	PFFZZ	72582	5117369	ADAPTER,STRAIGHT,TU FUEL PIPE	16
2	PFFZZ	72582	5127276	TUBE ASSEMBLY,METAL	8
2	PFFZZ	72582	5127275	TUBE ASSEMBLY,METAL LONG	8
3	PFFZZ	96906	MS90728-66	SCREW,CAP,HEXAGON H CLAMP	8
4	PFFZZ	24617	5161621	WASHERTCONVEX CLAMP	8
5	PFFZZ	72582	5121259	CLAMPIFUEL INJECTOR	8
6	PFFZZ	88044	AN960-716	WASHER,FLAT FUEL PIPE CONNECTION	16
7	PFFHH	72582	5226440	INJECTOR ASSEMBLY,F	1

END OF FIGURE

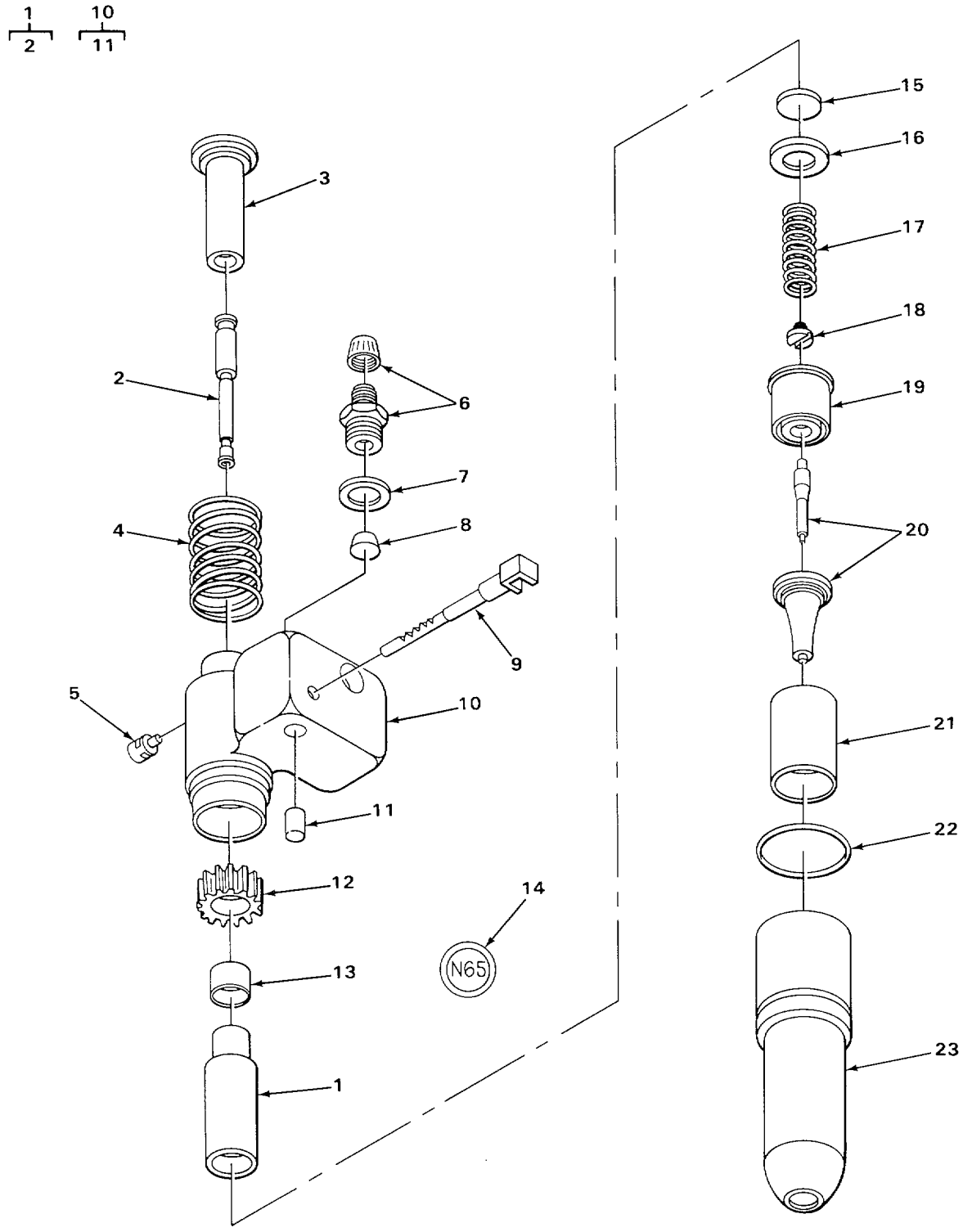

FIGURE 31. FUEL INJECTOR,EXPLODED VIEW.

SECTION II

(1) ITEM NO	(2) SMR CODE	(3) CAGEC	(4) PART NUMBER	(5) DESCRIPTION AND USABLE ON CODE (UOC)	(6) QTY
				GROUP 0301 CARBURETOR, FUEL INJECTOR	
				FIG. 31 FUEL INJECTOR, EXPLODED VIEW	
1	PFHZZ	72582	5228928	.PARTS KIT,FUEL INJE	1
2	PFHZZ	24617	N24188-20	..PIN,STRAIGHT,HEADLE	1
3	PFHZZ	72582	5228104	.GUIDE,FOLLOWER INJECTOR	1
4	PFHZZ	71934	5228739	.SPRING,HELICAL,COMP INJECTOR PLUNGER	1
5	PFHZZ	72582	5228608	.PIN,STOP,FUEL INJEC INJECTOR STOP	1
6	PFHZZ	72582	5228588	.ADAPTER,STRAIGHT,TU INJECTOR FILTER PART OF KIT P/N 5229649	2
7	PFHZZ	24617	5226186	.SPACER,RING INJECTOR FILTER CAP PART OF KIT P/N 5229649 PART OF KIT P/N 5196374 PART OF KIT P/N 5196381.	2
8	PFHZZ	72582	5228587	.FILTER ELEMENT,FLUI INJECTOR FILTER PART OF KIT P/N 5229649	2
9	PFHZZ	23862	5226719	.RACK,INJECTOR	1
10	PFHZZ	72582	5228583	.BODY ASSEMBLY,FUEL	1
11	PFHZZ	24617	5226416	.PIN,STRAIGHT,HEADLE	1
12	PFHZZ	71934	5226400	.GEAR,SPUR	1
13	PFHZZ	72582	5228586	.SPACER,SLEEVE INJECTOR GEAR	1
14	XDHZZ	72582	5228848	.PLATEI!DENTIFICATIO N65	1
15	PFHZZ	81381	5228694	.DISK,SOLID,PLAIN INJECTOR CHECK	1
16	PFHZZ	71934	5228696	.GAGE,VALVE INJECTOR	1
17	PFHZZ	72582	5228596	.SPRING,HELICAL,COMP INJECTOR VALVE SPRING PART OF KIT P/N 5228769	1
18	PFHZZ	72582	5228766	.SEAT,HELICAL COMPRE INJECTOR VALVE PART OF KIT PJN 5228769	1
19	PFHZZ	72582	5228594	.SEAT,HELICAL COMPRE INJECTOR VALVE SPRING	1
20	PFHZZ	72582	5229030	.SPRAY TIP,NOZZLE,FU	1
21	PFHZZ	72582	5228109	.DEFLECTOR,INJECTOR INJECTOR SPILL	1
22	PFHZZ	72582	5229167	.PACKING,PREFORMED PART OF KIT P/N 5229649 PART OF KIT P/N 5196374 PART OF KIT P/N 5196381	1
23	PFHZZ	72582	5228601	.NUT,INJECTOR,VALVE	1

END OF FIGURE

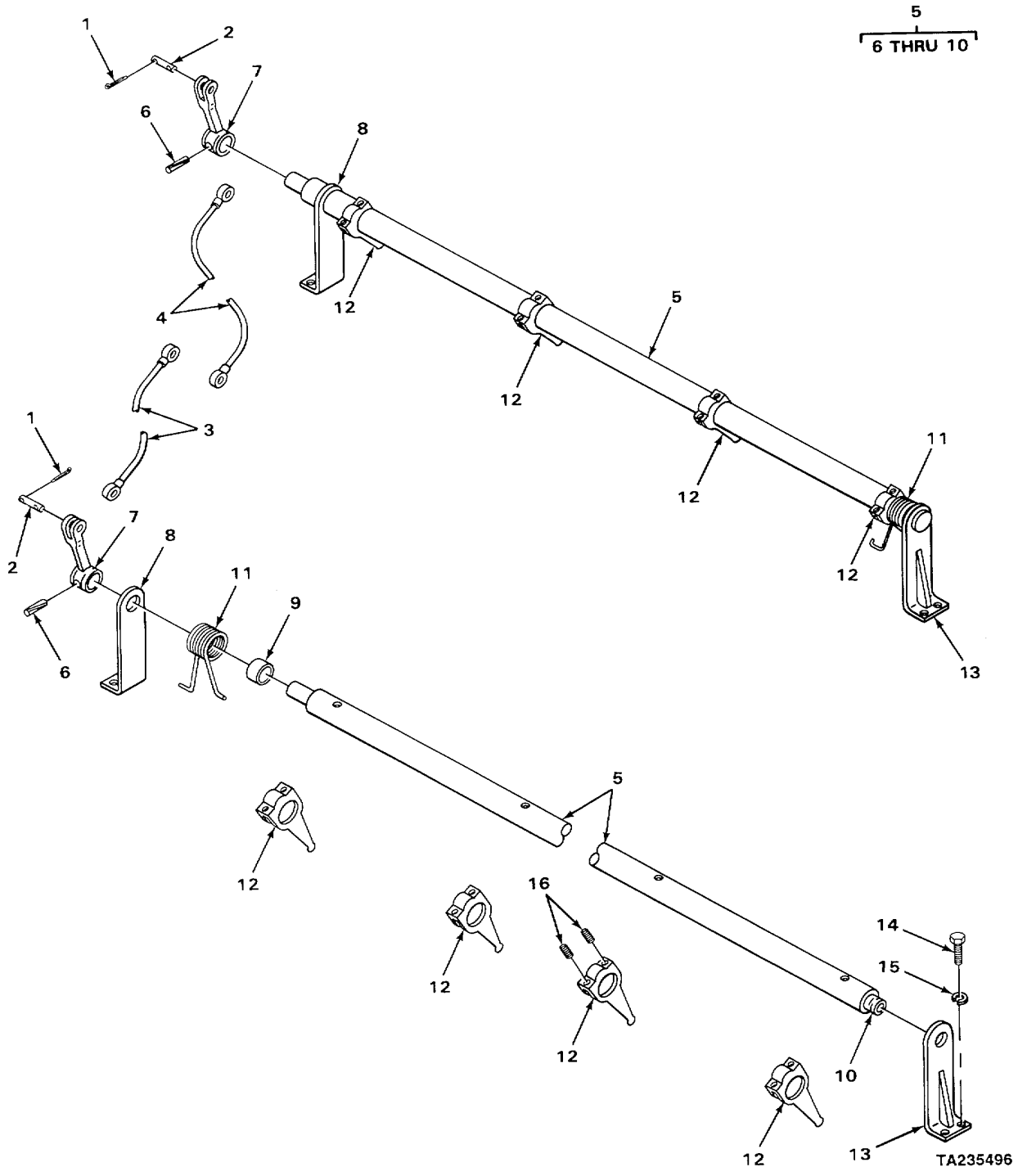

FIGURE 32. FUEL INJECTOR CONTROL.

SECTION II

(1) ITEM NO	(2) SMR CODE	(3) CAGEC	(4) PART NUMBER	(5) DESCRIPTION AND USABLE ON CODE (UOC)	(6) QTY
				GROUP 0301 CARBURETOR FUEL INJECTOR	
				FIG. 32 FUEL INJECTOR CONTROL	
1	PFFZZ	96152	A82-1	PIN,COTTER	4
2	PFFZZ	72582	05147345	PIN. STRAIGHT.HEADLE	2
3	PFFZZ	73342	5117191	CONNECTING LINK,RIG SHORT, MECHANICAL GOVERNOR,LEFT BANK	1
4	PFFZZ	72582	5117942	LINK,LONG MECHANICAL GOVERNOR, RIGHT BANK	1
5	PFFZZ	72582	5197427	SHAFT ASSY,INJECTOR RIGHT BANK	1
5	PFFZZ	72582	5197428	SHAFT AND SHIFTER F LEFT BANK	1
6	PFFZZ	96906	MS35671-24	.PIN,GROOVED,HEADLES	1
7	PFFZZ	72582	5150263	.LEVER,REMOTE CONTRO TUBE	1
8	PFFZZ	72582	5130509	.BRACKET,EYE,ROTATIN CONTROL TUBE	1
9	PFFZZ	24617	5150843	.SPACER,SLEEVE CONTROL TUBE LEVER	1
10	PFFZZ	24617	5150259	.PIN,STRAIGHT,HEADED	1
11	PFFZZ	72582	5124142	SPRING,HELICAL,TORS GREEN RETURN	2
12	PFFZZ	72582	5115322	BELL CRANK RACK	8
13	PFFZZ	72582	5130509	BRACKET,EYE,ROTATIN	2
14	PFFZZ	96906	MS90728-5	SCREW,CAP,HEXAGON H	8
15	PFFZZ	94231	3-07620-311	WASHER,LOCK	8
16	PFFZZ	72582	5176228	SCREW,MACHINE	16

END OF FIGURE

SECTION II

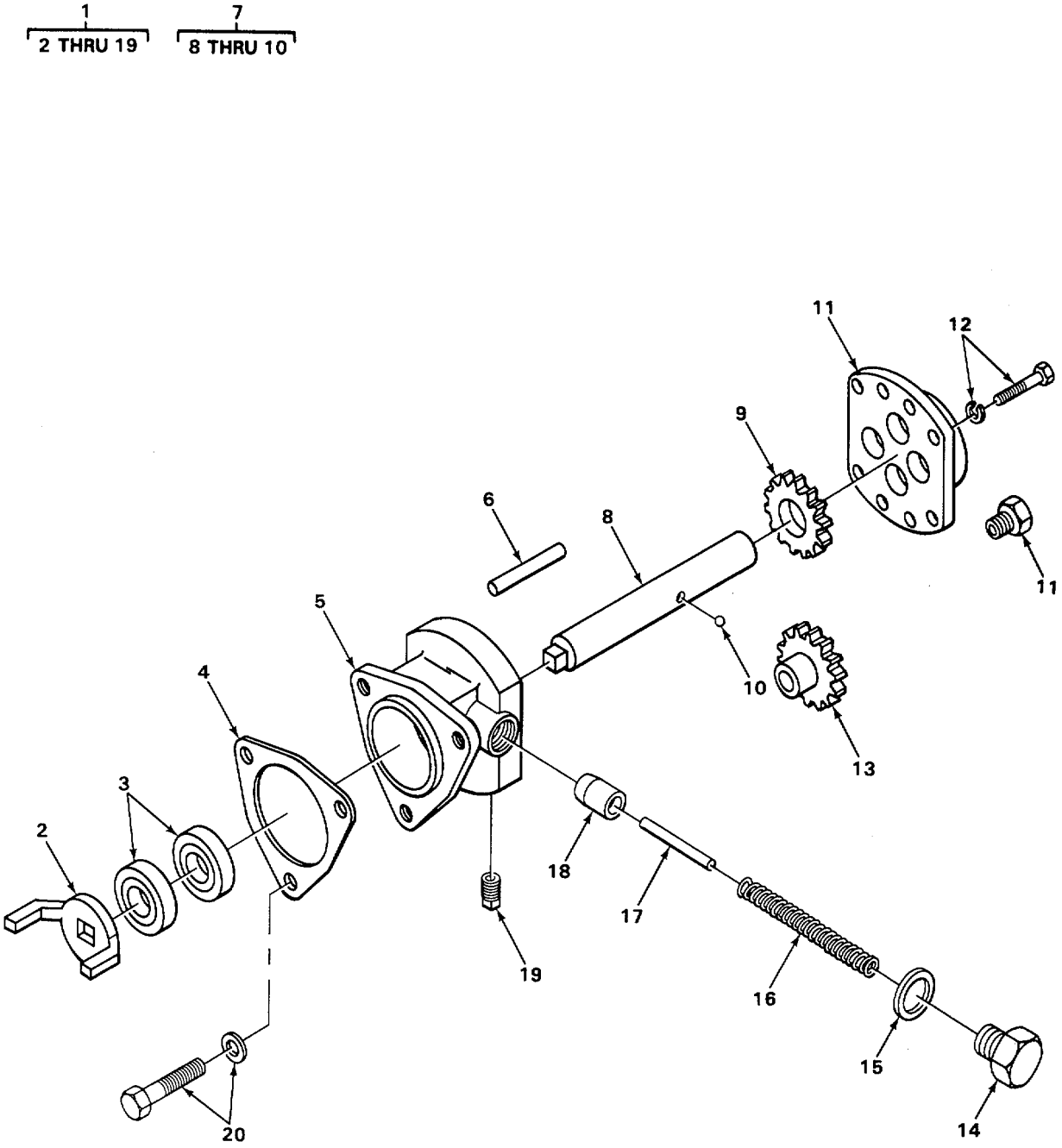

FIGURE 33. FUEL INJECTOR PUMP.

SECTION II

(1) ITEM NO	(2) SMR CODE	(3) CAGEC	(4) PART NUMBER	(5) DESCRIPTION AND USABLE ON CODE (UOC)	(6) QTY
				GROUP 0302 FUEL PUMPS	
				FIG. 33 FUEL INJECTOR PUMP	
1	PFFFF	72582	5199560	PUMP,DIESEL FUEL	1
2	PFFZZ	72582	5102257	.FORK,COUPLING FUEL	1
3	PFFZZ	58275	A058706	.SEAL,PLAIN ENCASED PART OF KIT P/N 5195078	2
4	PFFIZ	24617	NT10800PC4	.GASKET PART OF KIT P/N 5195078 PART OF KIT P/N 5196374 PART OF KIT P/N 5196381	1
5	PFFZZ	72582	5146337	.HOUSING,FUEL PUMP	1
6	PFFZZ	24617	141195	.PIN,STRAIGHT,HEADLE	1
7	PFFZZ	72582	5181746	.GEAR,SHAFT,SPUR DRIVE PART OF KIT P/N 5195078	1
8	PFFZZ	72582	5178700	..SHAFT,STRAIGHT DRIVE	1
9	PFFZZ	72582	5174975	..GEAR,SPUR	1
10	PFFZZ	96906	MS19061-3	..BALL,BEARING	1
11	PFFZZ	72582	5134560	.CONNECTOR,FLUIDVPUM INCLUDES REDUCER BUSHING	1
12	PFFZZ	11862	3719219	.BOLT,MACHINE INCLUDES LOCKWASHER	8
13	PFFZZ	72582	5181747	.GEARVSPUR	1
14	PFFZZ	24617	5174971	.PLUG,MACHINE THREAD	1
15	PFFZZ	72582	5161003	.GASKET PART OF KIT P/N 5195078	1
16	PFFZZ	72582	5184530	.SPRING,HELICAL,COMP PART OF KIT P/N 5195078	1
17	PFFZZ	24617	103709	.PIN,STRAIGHT,HEADLE PART OF KIT P/N 5195078	1
18	PFFZZ	72582	5174973	.VALVE,RELIEF PART OF KIT P/N 5195078	1
19	PFFZZ	6N299	4255490	PLUG,PIPE PART OF KIT P/N 5195078	2
20	PFFZZ	24617	5118219	.BOLT,ASSEMBLED WASH	3

END OF FIGURE

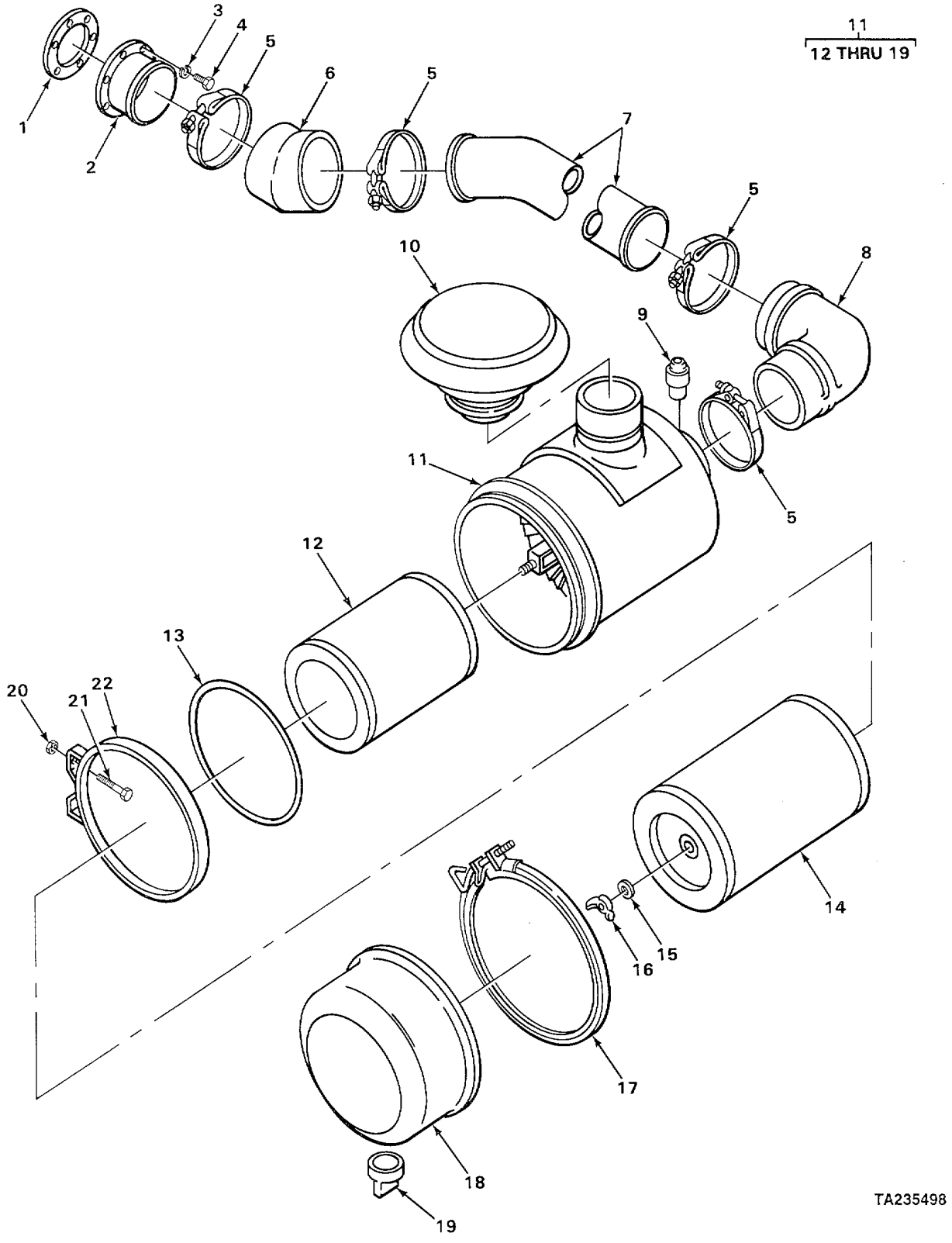

FIGURE 34. ENGINE AIR CLEANER.

SECTION II

(1) ITEM NO	(2) SMR CODE	(3) CAGEC	(4) PART NUMBER	(5) DESCRIPTION AND USABLE ON CODE (UOC)	(6) QTY
				GROUP 0304 AIR CLEANER	
				FIG, 34 ENGINE AIR CLEANER	
1	XDOZZ	40152	533286	GASKET	1
2	XDOZZ	40152	1529298	ADAPTER	1
3	PFOZZ	96906	MS35333-76	WASHER,LOCK	6
4	PFOZZ	40152	23C--616	SOTMCIE	6
5	XDOZZ	40152	1500793	CLAMP	4
6	PFOZZ	24161	23215	HOSE,PREFORMED	1
7	XDOZZ	40152	1543437	TUBE	1
8	XDOZZ	40152	1529315	HOSE	1
9	PFOZZ	40152	2553678	INDICATOR,FILTER WA	1
10	PFOZZ	40152	2558972	CAP,AIR CLEANER INT	1
11	PFOZZ	40152	1513874	AIR CLEANER,INTAKE	1
12	PAOZZ	73370	CA502SY	.FILTER ELEMENT, INTA	1
13	XDOZZ	40152	944494	.PACKING,PREFORME	1
14	PFOZZ	81321	AF2138	.FILTER ELEMENT	1
15	XDOZZ	40152	3992704	.GASKET	1
16	PFOZZ	40152	886526	.NUTIPLAIN,WING	1
17	PFOZZ	40152	945021	.CLAMP	1
18	XDOZZ	40152	946859	.CUP	1
19	PFOZZ	82340	81269-1	.VALVE, VACUATOR	1
20	PFOZZ	12603	60D6	NUTVSEILF-LOCKINGVH-E	4
21	PFOZZ	40152	24C-616	BOLT,SHOULDER	4
22	XDOZZ	40152	1529624	BAND	2

END OF FIGURE

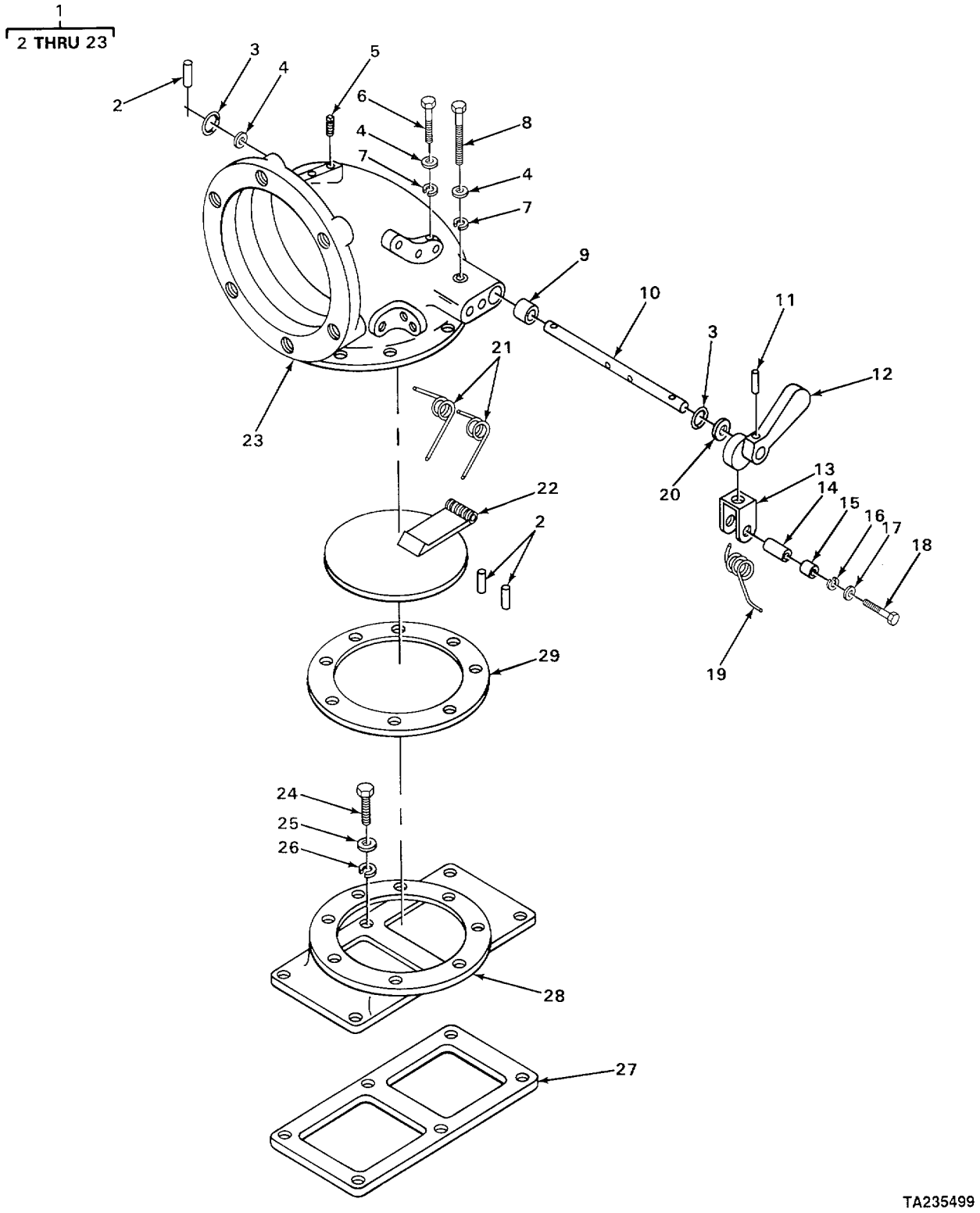

FIGURE 35. AIR INLET HOUSING.

SECTION II

(1) ITEM NO	(2) SMR CODE	(3) CAGEC	(4) PART NUMBER	(5) DESCRIPTION AND USABLE ON CODE (UOC)	(6) QTY
				GROUP 0305 SUPERCHARGERT BLOWER, TURBOCHARGER, OR ALTITUDE COMPENSATOR	
				FIG, 35 AIR INLET HOUSING	
1	PFOHH	72582	5123644	HOUSING,SUPERCHARGE	1
2	PFHZZ	72582	273436	.PIN,VALVE TO SHAFT	3
3	PFHZZ	72582	5179232	.PACKING,PREFORME	2
4	PFHZZ	96906	MS27183-14	.WASHER,FLAT	2
5	PFHZZ	81348	WIW-P-471AASBCB	.PLUG,PIPE	2
6	PFHZZ	96906	MS90728-62	.SCREW,CAP,HEXAGON H	4
7	PFHZZ	96906	MS35338-8	.WASHER,LOCK	6
8	PFHZZ	96906	MS90728-72	.SCREW,CAP,HEXAGON H	2
9	PFHZZ	72582	5198564	.BUSHING,SLEEVE	2
10	PFHZZ	72582	5122296	.SHAFT,STRAIGHT	1
11	PFHZZ	72582	5122982	.CAMTVALVE SHAFT	1
12	PFHZZ	72582	5114974	.HANDLE ASSEMBLY,AIR	1
13	PFHZZ	72582	5112785	.LATCH,HOUSING	1
14	PFHZZ	72582	5143836	.BUSHING,ECCENTRIC	1
15	PFHZZ	72582	5113633	.SPACER,SLEEVE	1
16	PFHZZ	96906	MS35338-46	.WASHER,LOCK	1
17	PFHZZ	96906	MS27183-10	.WASHER?FLAT	1
18	PFHZZ	80204	B1821BH025C150N	.SCREWICAPIHEXAGON He	1
19	PFHZZ	72582	5123743	.SPRING,HELICALITORS LATCH	1
20	PFHZZ	72582	5156612	.WASHER,FLAT	1
21	PFHZZ	72582	5111904	.SPRING,HELICAL,TORS VALVE	2
22	PFHZZ	72582	5123684	.VALVE SHUT DOWN	1
23	XDHZZ	72582	5123608	.HOUSING HORIZONTAL INLET	1
24	PFOZZ	96906	MS90728-61	SCREWICAP,HEXAGON He	14
25	PFOZZ	96906	MS27183-14	WASHERTFLAT	14
26	PFOZZ	96906	MS35338-8	WASHERTLOCK	14
27	PFOZZ	72582	5103602	STRAINER ELEMENT,SE PART OF KIT P/N 5149644	14
28	XDOZZ	72582	5123610	ADAPTER	14
29	PFOZZ	72582	5123703	GASKET	1

END OF FIGURE

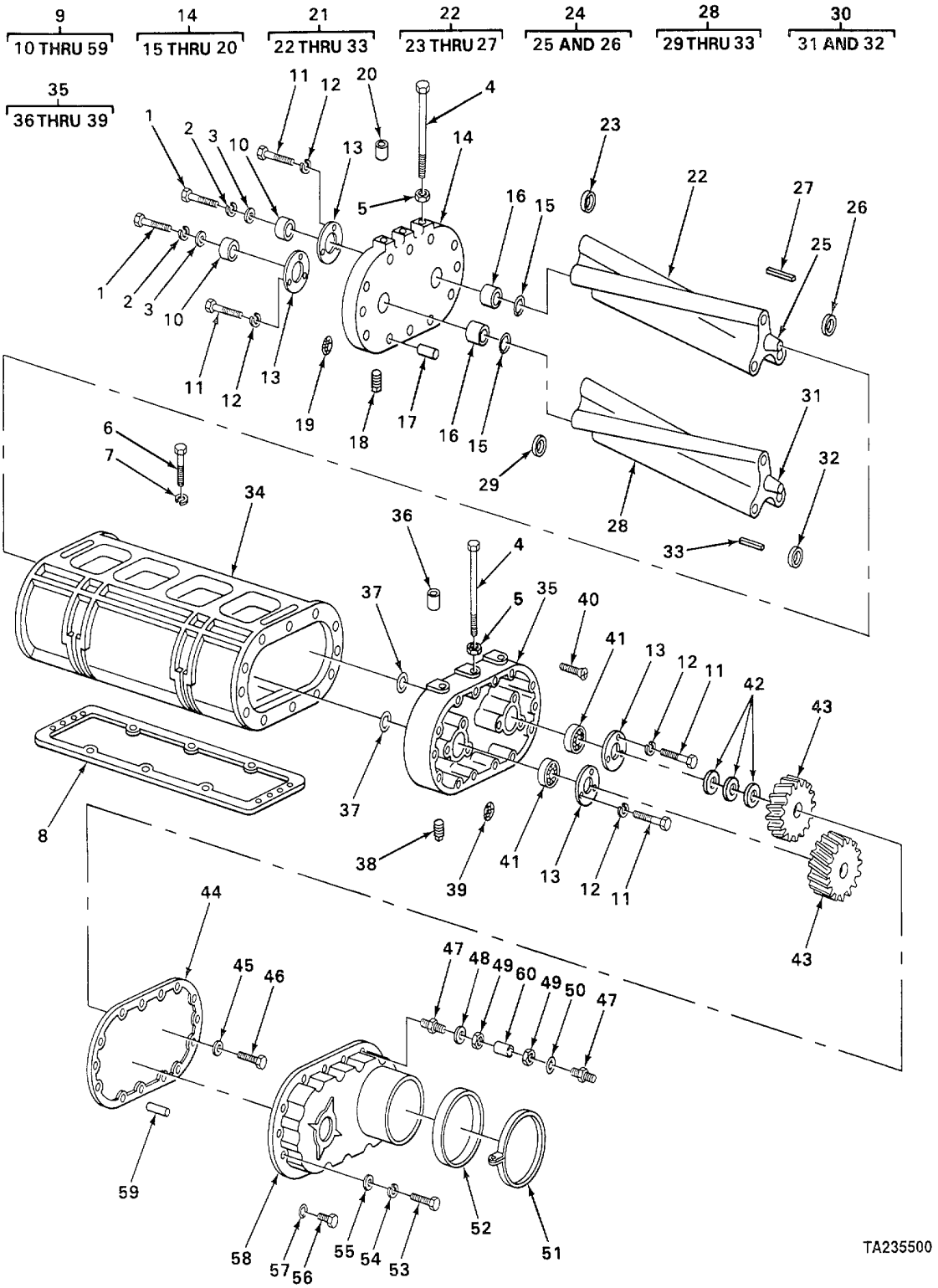

FIGURE 36. BLOWER.

SECTION II

(1) ITEM NO	(2) SMR CODE	(3) CAGEC	(4) PART NUMBER	(5) DESCRIPTION AND USABLE ON CODE (UOC)	(6) QTY
				GROUP 0305 SUPERCHARGER, BLOWER? TURBOCHARGER, OR ALTITUDE COMPENSATOR FIG 36 BLOWER	
1	PFHZZ	96906	MS90727-111	SCREWVCAPIHEXAGON H	2
2	PFHZZ	19207	7520854	WASHER,KEY PART OF KIT P/N 5149644 PART OF KIT PIN 5108120	2
3	PFHZZ	72582	5154401	DISK,COUPLING,BLOWE	2
4	PFHZZ	72582	187491	SCREW,CAPVHEXAGON He	6
5	PAHZZ	72582	5121814	RETAINER, NUT AND B	6
6	PFHZZ	72582	9411488	SCREW, CAP, HEXAGON	4
7	PFHZZ	61510	CKE42A	WASHER,FLAT	4
8	PFHZZ	72582	5141588	GASKET BLOWER PART OF KIT PJN 5149644	1
9	PFHHH	72582	8921938	BLOWER ASSEMBLYVDIE	1
10	PFHZZ	43334	U1205TS18	.BEARING,ROLLER,CYLI PART OF KIT P/N 5108120	2
11	PFHZZ	96906	MS90728-6	.SCREW,CAP,HEXAGON H	12
12	PFHZZ	80045	23MS35338-46	.WASHER,LOCK	12
13	PFHZZ	24617	5179017	.RETAINER,PACKING	4
14	PFHZZ	72582	5103526	.PLATE,BLOWER END	1
15	PFHZZ	72582	5138710	..SEAL,PLAIN ENCASED PART OF KIT P/N 5108120	2
16	PFHZZ	72582	23500533	..SEAL RINGIMETAL	2
17	PFHZZ	24617	5150542	..PIN,STRAIGHT,HEADLE1	1
18	PFHZZ	6N299	4255490	..PLUGTPIPE	1
19	PFHZZ	72582	5109389	..STRAINER ELEMENTISE OIL PASSAGE	1
20	PFHZZ	72582	5127477	..BUSHING,SLEEVE BOLT,GUIDE	1
21	PFHHH	72582	5198156	.ROTOR SET,TURBOCHAR	1
22	PFHZZ	72582	5134340	..ROTOR ASSEMBLY,BLOW RH HELIX	1
23	PFHZZ	72582	9428477	...PLUG,EXPANSION	6
24	PFHHH	72582	5198156	...SHAFT ASSEMBLY	1
25	PFHZZ	72582	5117071	....SHAFT,BLOWER,ROTOR	1
26	PFHZZ	72582	5150829	....PLUG,EXPANSION	1
27	PFHZZ	96906	MS35672-47	...PIN,GROOVED,HEADLES	2
28	PFHZZ	72582	5134341	..ROTOR ASSEMBLY,BLOW LH HELIX.	1
29	PFHZZ	72582	9428477	...PLUG,EXPANSION	6
30	PFHZZ	72582	5150869	....SHAFT ASSEMBLY	1
31	PFHZZ	72582	5117071	....SHAFT,BLOWER,ROTOR	1
32	PFHZZ	72582	5150829	....PLUGTEXPANSION	1
33	PFHZZ	96906	MS35672-47	...PIN,GROOVED,HEADLES	2
34	PFHZZ	72582	5117935	.HOUSING,SUPERCHARGE	1
35	PFHZZ	72582	5103490	.END PLATEIBLOWER REAR	1
36	PFHZZ	72582	5127477	..BUSHING,SLEEVE BOLT GUIDE	1
37	PFHZZ	72582	5138710	..SEAL,PLAIN ENCASED PART OF KIT P/N 5108120	2
38	PFHZZ	6N299	4255490	..PLUGIPIPE	1
39	PFHZZ	72582	5109389	..STRAINER ELEMENTISE OIL PASSAGE	1
40	PFHZZ	24617	117296	.SCREW,MACHINE	4
41	PFHZZ	43334	5205WL1450A	.BEARING,BALL,ANNULA PART OF KIT P/N	2

SECTION II

(1) ITEM NO	(2) SMR CODE	(3) CAGEC	(4) PART NUMBER	(5) DESCRIPTION AND USABLE ON CODE (UOC)	(6) QTY
				5108120	
42	PFHZZ	72582	5150372	.SHIM 0.002 INCH THICK	V
42	PFHZZ	72582	5153938	.SHIM 0.003 INCH THICK	V
42	PFHZZ	72582	5150855	.SHIM 0.005 INCH THICK	V
43	PFHZZ	72582	5196321	.GEAR SET HELICAL, MA	1
44	PFHZZ	72582	5126499	.GASKET PART OF KIT P/N 5196761	1
45	PFHZZ	72582	5117082	.WASHER,FLAT	2
46	PFHZZ	72582	5117081	.BOLT,SELF-LOCKING	2
47	PFHZZ	72582	114629	.CONNECTOR,BALL SLEE	2
48	PFHZZ	72582	5144424	.SEAL,RING	1
49	PFHZZ	72582	114630	.NUT,TUBE COUPLING	2
50	PFHZZ	72582	5124519	.PACKINGPREFORMED	1
51	PFHZZ	08484	QS300M68H	.CLAMP,HOSE BLOWER DRIVE COVER PART OF KIT P/N 5196761	1
52	PFHZZ	72582	5146040	.SEAL BLOWER DRIVE COVER PART OF KIT P/N 5196761	1
53	PFHZZ	96906	MS90728-41	.BOLT,MACHINE PART OF KIT P/N 5196761	8
54	PFHZZ	96906	MS35338-45	.WASHER,LOCK PART OF KIT P3N 5196761	8
55	PFHZZ	72582	5159714	.WASHER,FLAT PART OF KIT P/N 5196761	8
56	PFHZZ	72582	5168749	.PLUG,BLOWER HOUSING PART OF KIT P/N 5196761	1
57	PFHZZ	96906	MS35769-18	.GASKET PART OF KIT P/N 5196761	1
58	KFHZZ	72582	5123439	.COVER ASSEMBLY END PLATEIREAR PART OF KIT P/N 5196761	1
59	PFHZZ	24617	5157933	.PIN,STRAIGHT,HEADLE	2
60	PFHZZ	72582	5117716	TUBE,BLOWER	1
60	XDHZZ	72582	517717	TUBE,BLOWER	1

END OF FIGURE

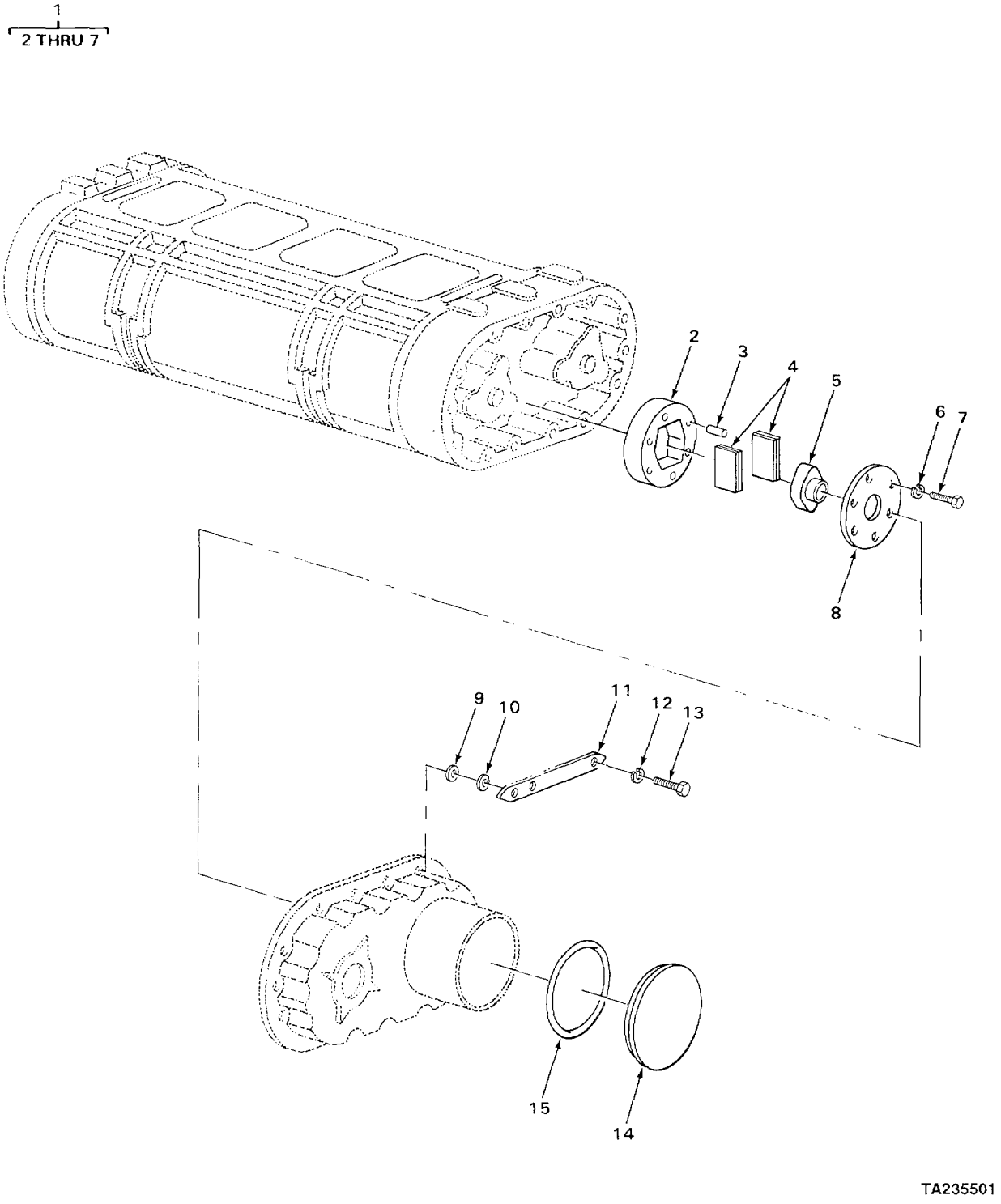

FIGURE 37. BLOWER AND RELATED PARTS.

(1) ITEM NO	(2) SMR CODE	(3) CAGEC	(4) PART NUMBER	(5) DESCRIPTION AND USABLE ON CODES (UOC)	(6) QTY
				GROUP 0305 SUPERCHARGER, BLOWER1 TURBOCHARGER, OR ALTITUDE COMPENSATOR	
				FIG. 37 BLOWER AND RELATED PARTS	
1	PFHHH	72582	5150344	COUPLING, SHAFT, FLEX	1
2	PFHZZ	72582	5150345	.SUPPORTICOUPLING SP	1
3	PFHZZ	72582	5150346	.SEAT, BLOWER DRIVE.	4
4	PFHZZ	18954	K-5196314	.PACK KIT, SPRING, BLO	1
5	PFHZZ	72582	5150348	.CAM, BLOWER DRIVE.	1
6	PFHZZ	96906	M535338-45	.WASHERILOCK	6
7	PFHZZ	72582	186649	.BOLTVMACHINE	6
8	PFHZZ	72582	5150349	RETAINER1PACKING BLOWER DRIVE COUPLING	1
9	PFHZZ	72582	5124520	WASHER, FLAT	1
10	PFHZZ	72582	5124519	PACKING, PREFORMED PART OF KIT P/N 5149644 PART OF KIT P/N 5196761	1
11	PFHZZ	72582	5124521	PLATE, OIL TUBE PART OF KIT P/N 5196761	1
12	PFHZZ	96906	MS35338-45	WASHER, LOCK PART OF KIT P/N 5196761	2
13	PFHZZ	72582	179827	SCREW, CAP, HEXAGON H PART OF KIT P/N 5196761.	2
14	PFHZZ	72582	5123257	COVER PART OF KIT P/N 5149644	1
15	PFHZZ	72582	5146040	SEAL PART OF KIT P/N 5149644	1

END OF FIGURE

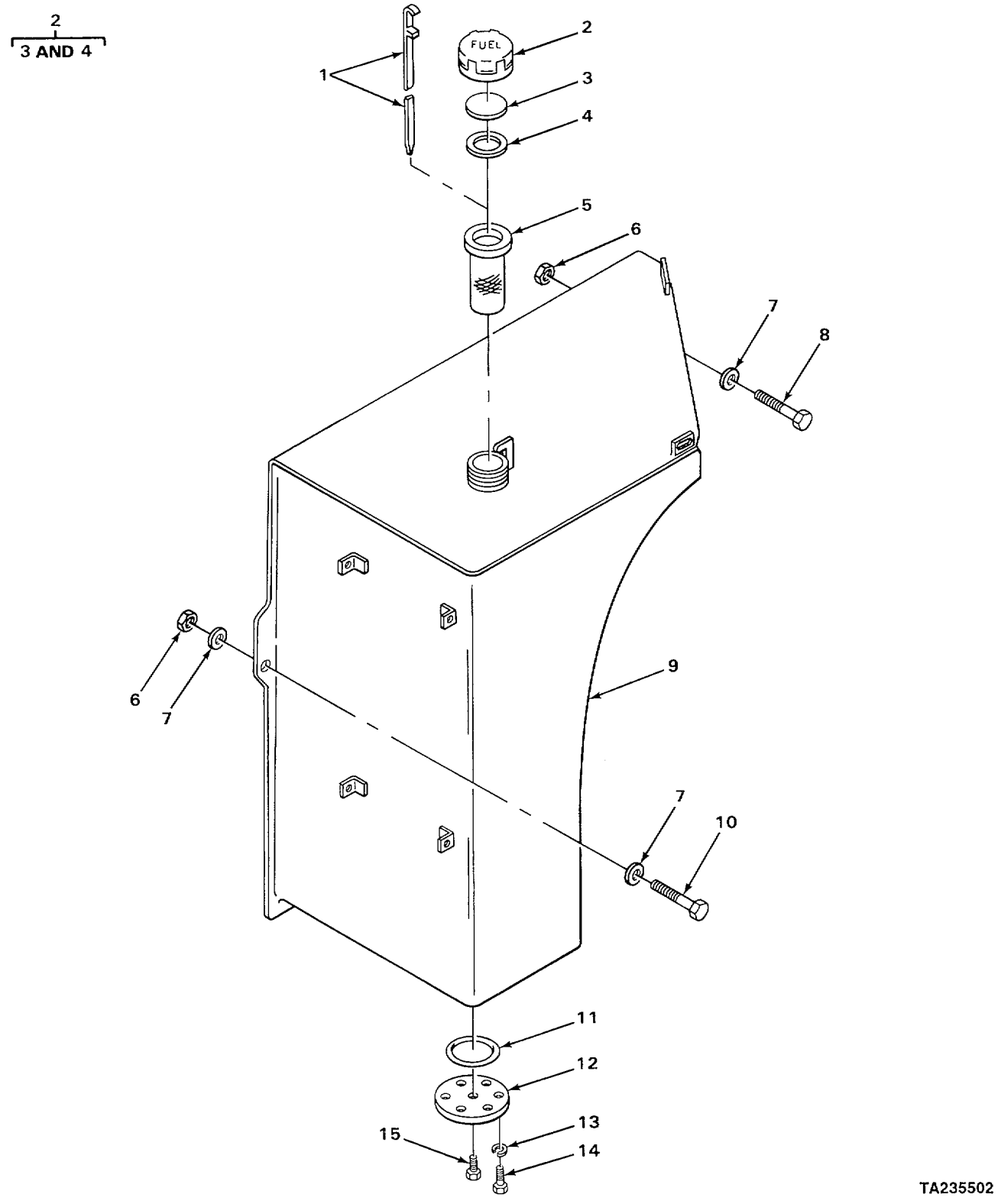

FIGURE 38. FUEL TANK AND RELATED PARTS.

(1) ITEM NO	(2) SMR CODE	(3) CAGEC	(4) PART NUMBER	(5) DESCRIPTION AND USABLE ON CODES (UOC)	(6) QTY
				GROUP 0306 TANKS, LINES, FITTINGS, HEADERS	
				FIG. 38 FUEL TANK AND RELATED PARTS	
1	XDOZZ	40152	573434	DIPSTICK	1
2	PFOOO	49234	EX1784GF38	CAP, FILLER OPENING	1
3	XDOZZ	40152	946954	PLATE	1
4	XDOZZ	40152	946953	GASKET	1
5	PFOZZ	40152	943957	STRAINER ELEMENT, SE	1
6	PFOZZ	40152	180-12	NUT, SELF-LOCKING9HE	2
7	PFOZZ	12603	616809	WASHER1SPECIAL	6
8	PFOZZ	40152	24C-1244	BOLTIMACHINE	1
9	XDOFF	40152	1540067	FUEL TANK	1
10	PFOZZ	40152	24C-1256	BOLT, MACHINE	2
11	PFOZZ	40152	25K40428	PACKING, PREFORMEDO	1
12	PFOZZ	40152	587613	COVER, ACCESS	1
13	PFOZZ	96906	MS35333-76	WASHER, LOCK	6
14	PFOZZ	40152	24C-612	BOLT, MACHINE	6
15	XDOZZ	40152	565295	PLUG	1

END OF FIGURE

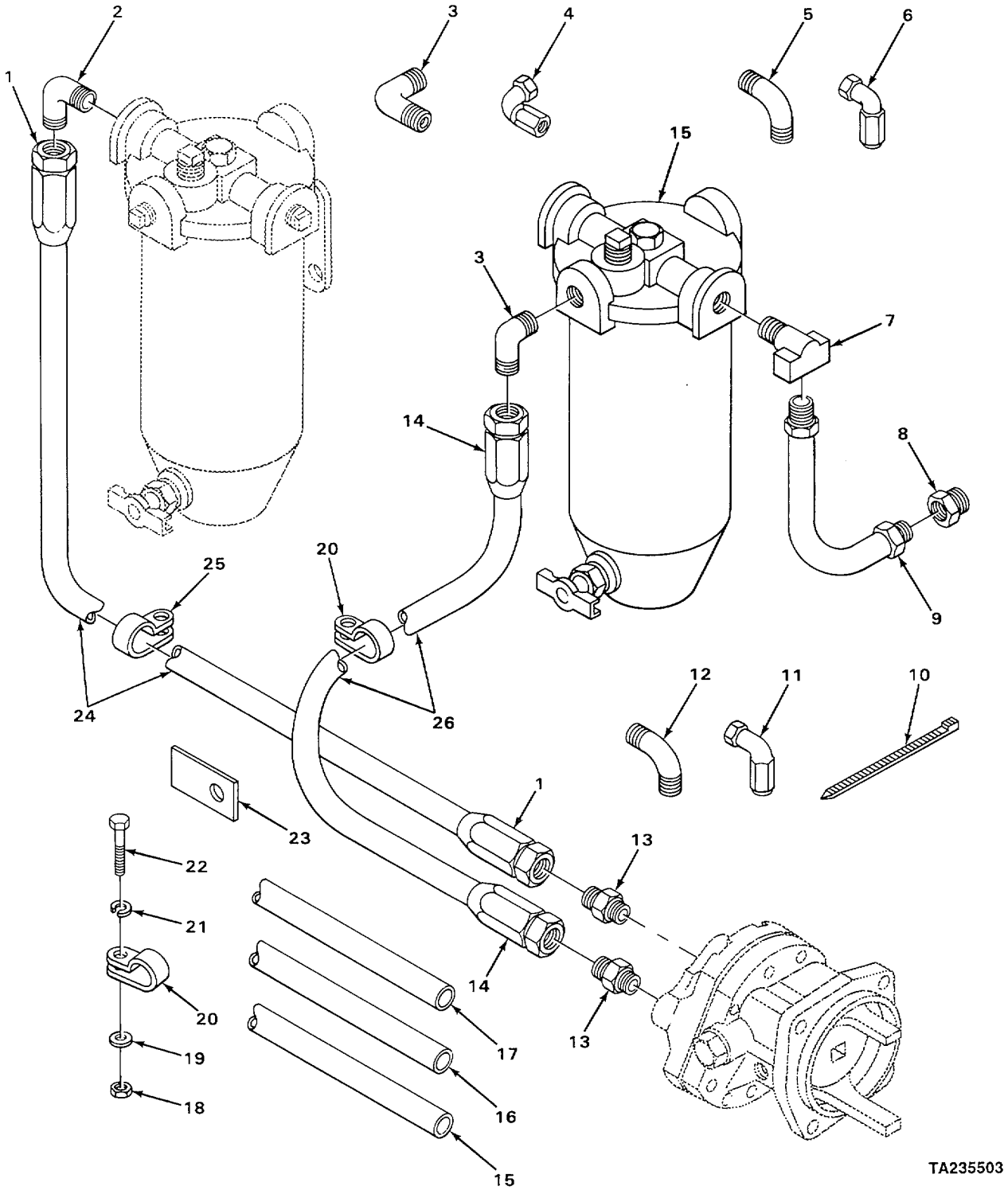

FIGURE 39. FUEL FILTER AND STRAINER LINES.

(1) ITEM NO	(2) SMR CODE	(3) CAGEC	(4) PART NUMBER	(5) DESCRIPTION AND USABLE ON CODES (UOC)	(6) QTY
				GROUP 0306 TANKS, LINES, FITTINGSI HEADERS	
				FIG. 39 FUEL FILTER AND STRAINER LINES	
1	PFFZZ	72582	5199580	ADAPTER, STRAIGHT, TU FUEL STRAINER..... TO FUEL PUMP, ...	2
2	PFFZZ	72582	225828	ELBOW, PIPE TO TUBE FUEL STRAINER..... TO FUEL PUMP.....	2
3	XDFZZ	72582	MD1392	ELBOW, PIPE TO TUBE	6
4	PFFZZ	72582	5199588	ELSOW, TUBE TO HOSE	2
5	PFFZZ	24617	143338	ELBOWIPIPE TO TUBE FILTER TO..... CYLINDER HEAD	1
6	PFFZZ	72582	5199593	ELBOW, TUBE TO HOSE FILTER TO..... CYLINDER HEAD	1
7	PFFZZ	72582	5104778	TEE, PIPE TO TUBE FUEL DRAIN..... CROSSOVER	1
8	PFFZZ	66640	166D1	BUSHING1PIPE RED, FUEL DRAIN..... CROSSOVER	1
9	MFFZZ	19207	0748373-20	HOSE, NONMETALLIC FUEL DRAIN..... CROSSOVER1MAKE FROM HOSE P/N H16606.	1
10	PFFZZ	72582	5101020	STRAP, RETAINING.....	4
11	PFFZZ	72582	5199597	ELBOW, TUBE TO HOSE FUEL DRAIN.....	1
12	PFFZZ	72582	5128927	ELBOW, PIPE TO TUBE FUEL DRAIN.....	1
13	PFFZZ	72582	8924171	CONNECTOR	2
14	PFFZZ	72582	5199579	FITTINGIHOSE 8	
15	MFFZZ	19207	0748373-26	HOSE, NONMETALLIC FILTER TO..... CYLINDER HEAD, MAKE FROM HOSE P/N H166066.....	1
16	MFFZZ	19207	0748373-30	HOSE, NONMETALLIC FILTER TO..... CYLINDER HEADIMAKE FROM HOSE P/N H16606.....	1
17	MFFZZ	19207	0748373-40	HOSE, NONMETALLIC FUEL DRAINIMAKE..... FROM HOSE P/N H16606.....	1
18	PFFZZ	96906	MS51968-2	NUTIPLAINIHEXAGON.	3
19	PFFZO	96906	MS27183-10	WASHER1FLAT.....	3
20	PFFZZ	72582	2488022	CLAMP, LOOP.....	3
21	PFFZZ	96906	MS35338-44	WASHER, LOCK.....	3
22	PFFZZ	72582	123450	BOLT, MACHINE	3
23	PFFZZ	72582	5126504	BRACKETIANGLE	3
24	MFFZZ	19207	4857161-27	HOSE, NONMETALLIC FUEL STRAINER TO..... FUEL PUMP, MAKE FROM HOSE P/N 5199576	1
25	XDFZZ	72582	444002	CLAMP, LOOP.....	1
26	MFFZZ	19207	0748373-17	HOSE, NONMETALLIC PUMP TO FILTER..... MAKE FROM HOSE P/N H16606	1
				END OF FIGURE	

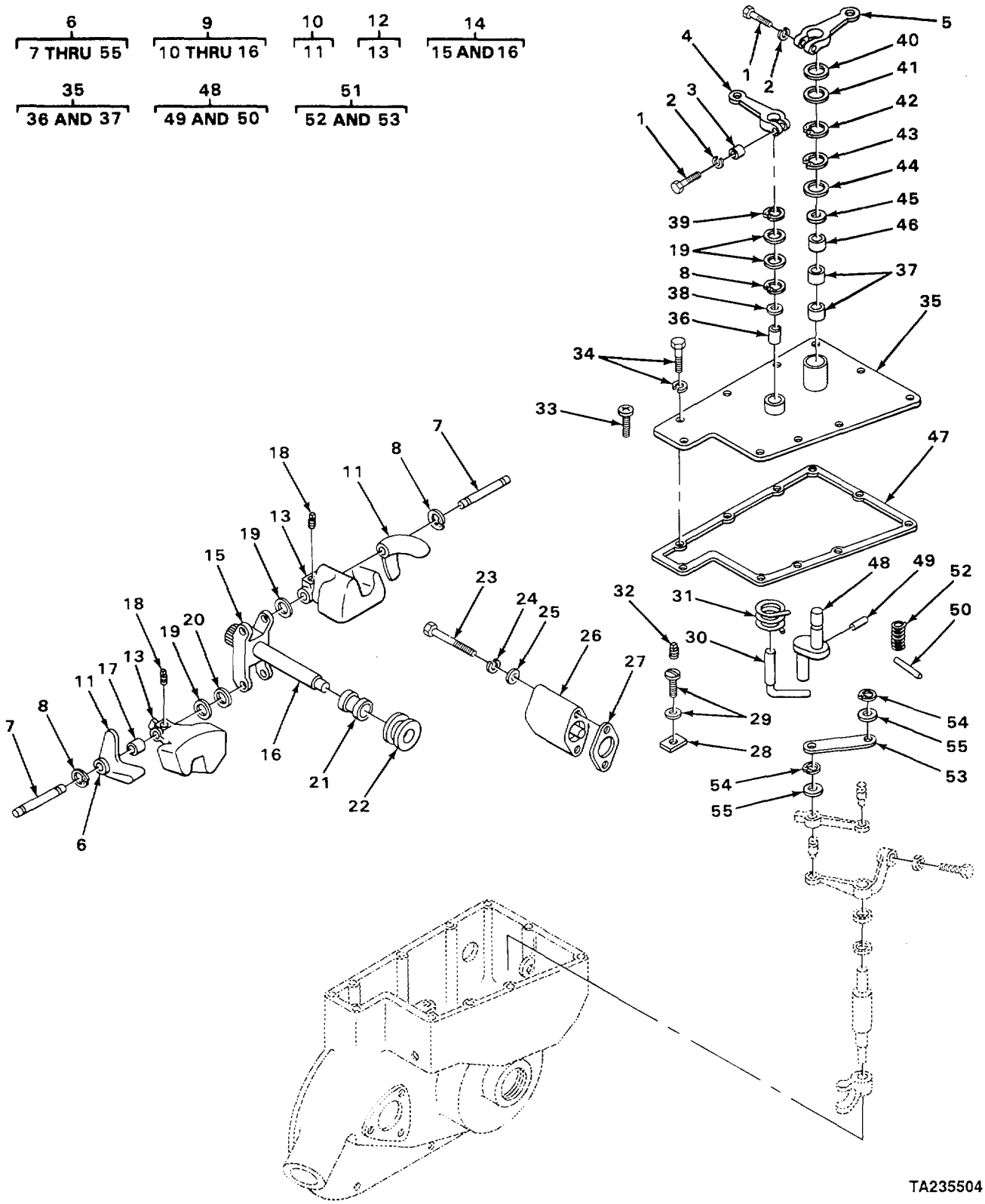

FIGURE 40. LIMITING SPEED GOVERNOR.

(1) ITEM NO	(2) SMR CODE	(3) CAGEC	(4) PART NUMBER	(5) DESCRIPTION AND USABLE ON CODES (UOC)	(6) QTY
				GROUP 0308 ENGINE SPEED GOVERNOR AND CONTROLS	
				FIG. 40 LIMITING SPEED GOVERNOR	
1	PFHZZ	96906	MS90728-8	SCREW, CAPVHEXAGON H	2
2	PFHZZ	96906	MS535338-44	WASHERILOCK	2
3	PFHZZ	72582	5146369	SPACER	1
4	PFHZZ	72582	5183042	LEVER, REMOTE CONTRO GOVERNOR COVER .. SHUTDOWN SHAFT	1
5	PFHZZ	72582	5164318	LEVERAMANUAL CONTRO GOVERNOR COVER... THROTTLE SHAFT	1
6	PFHHH	72582	8921497	GOVERNOR ASSEMBLYTD LIMITING SPEED	1
7	PFHZZ	72582	5185153	PIN1STRAIGHTHEADLE GOVERNOR..... WEIGHT	2
8	PFHZZ	24617	5178581	RINGRETAINING0	5
9	PFHHH	72582	5113906	OCARRIER AND WEIGHT ASSEMBLY	1
10	PFHHH	72582	5188606	WEIGHTVGOVERNOR LOW SPEED	2
11	PFHZZ	72582	5147103	WEIGHT, COUNTERBALAN LOW SPEED	1
12	PFHZZ	72582	5117737	WEIGHT AND 8USHING HIGH SPEED	2
13	PFHZZ	72582	5117738	WEIGHT, GOVERNOR HIGH SPEED	1
14	PFHHH	72582	5183624	SHAFT AND CARRIER A ASSEMBLY	1
15	PFHZZ	72582	5184336	HOLDERWEIGHT, GOVER WEIGHT	1
16	PFHZZ	72582	5150923	SHAFT1SHOULDERED WEIGHT CARRIER	1
17	PFHZZ	72582	5147866	BUSHINGVSLEEVE SLIP FIT	4
18	PFHZZ	72582	5144028	SETSCREW	2
19	PFHZZ	77445	30896	WASHER, FLAT	5
20	PFHZZ	49671	73109-105	WASHER, FLAT	1
21	PFHZZ	72582	5117193	RISERBODY	1
22	PFHZZ	72582	9434171	B8EARINGIBALLTHRUST	1
23	PFHZZ	24617	445520	BOLT, MACHINE	2
24	PFFZZ	96906	MS35338-45	WASHERLOCKO	2
25	PFHZZ	02978	520275	WASHER1FLAT COPPER	2
26	PFHZZ	72582	5182559	COVER, ACCESS	1
27	PFHZZ	24617	5152944	GASKET	1
28	PFHZZ	96906	MS27183-42	WASHER, FLAT	1
29	PFHZZ	24617	9421917	SCREW, SPECIAL	1
30	PFHZZ	72582	5143146	SHAFTGOVERNOR SHUT	1
31	PFHZZ	72582	5131368	SPRING, HELICALITORS SHUTDOWN SHAFT	1
32	PFHZZ	6N299	4255490	PLUG, PIPE	1
33	PFHZZ	24617	5183701	SCREW, MACHIN	1
34	PFHZZ	72582	9417926	SCREW, ASSEMBLED WAS COVER	8
35	PFHHH	72582	5127259	COVER ASSEMBLYTGOVEO	1
36	PFHZZ	72582	5127267	BEARING, SLEEVE SHUTDOWN SHAFT., .	1
37	PFHZZ	72582	148402	SEARING, SLEEVE .	2
38	PFHZZ	79500	1JH4350REVCPC	PACKING, PREFORMED	1
39	PFHZZ	72582	5144178	WASHERSHOULDERED A SHUTDOWN SHAFT	1
40	PFHZZ	24617	NX12290PC7	WASHERFLAT THROTTLE SHAF T	1
41	PFHZZ	72582	5144177	WASHER, SHOULDERED A THROTTLE SHAFT	1
42	PFHZZ	24617	5174429	RING, RETAINING THROTTLE SHAFT	1
43	PFHZZ	24617	274270	RING, RETAINING THROTTLE SHAFT	1
44	XDHZZ	72582	274415	RING THROTTLE SHAFT	1

(1) ITEM NO	(2) SMR CODE	(3) CAGEC	(4) PART NUMBER	(5) DESCRIPTION AND USABLE ON CODES (UOC)	(6) QTY
45	PFHZZ	72582	5101691	SEAL SPECIAL THROTTLE SHAFT	1
46	PFHZZ	72582	5139762	SPACER, RING THROTTLE SHAFT	1
47	PFHZZ	72582	8924869	GASKET.-	1
48	PFHZZ	72582	5117928	.PIN, STRAIGHT, HEADLE THROTTLE.	1
49	PFHZZ	96906	MS24692-178	PIN, TAPERED, PLAIN	1
50	PFHZZ	72582	5117927	.PIN, STRAIGHTIHEADLE SHAFT FULCRUM LEVER	1
51	PFHHZ	72582	5124274	LINK ASSEMBLY GOVE	1
52	PFHZZ	72582	5124273	.SPRING1HELICAL, EXTE THROTTLE YIELD LINK	2
53	PFHZZ	72582	5117210	.CONNECTING LINK, RIG	1
53	PFHZZ	72582	5102636	LINK, GOVERNOR	1
54	PFHZZ	24617	142583	CLIP, RETAINING SPRING	2
55	PFHZZ	72582	5150941	.WASHERVFLAT	2

END OF FIGURE

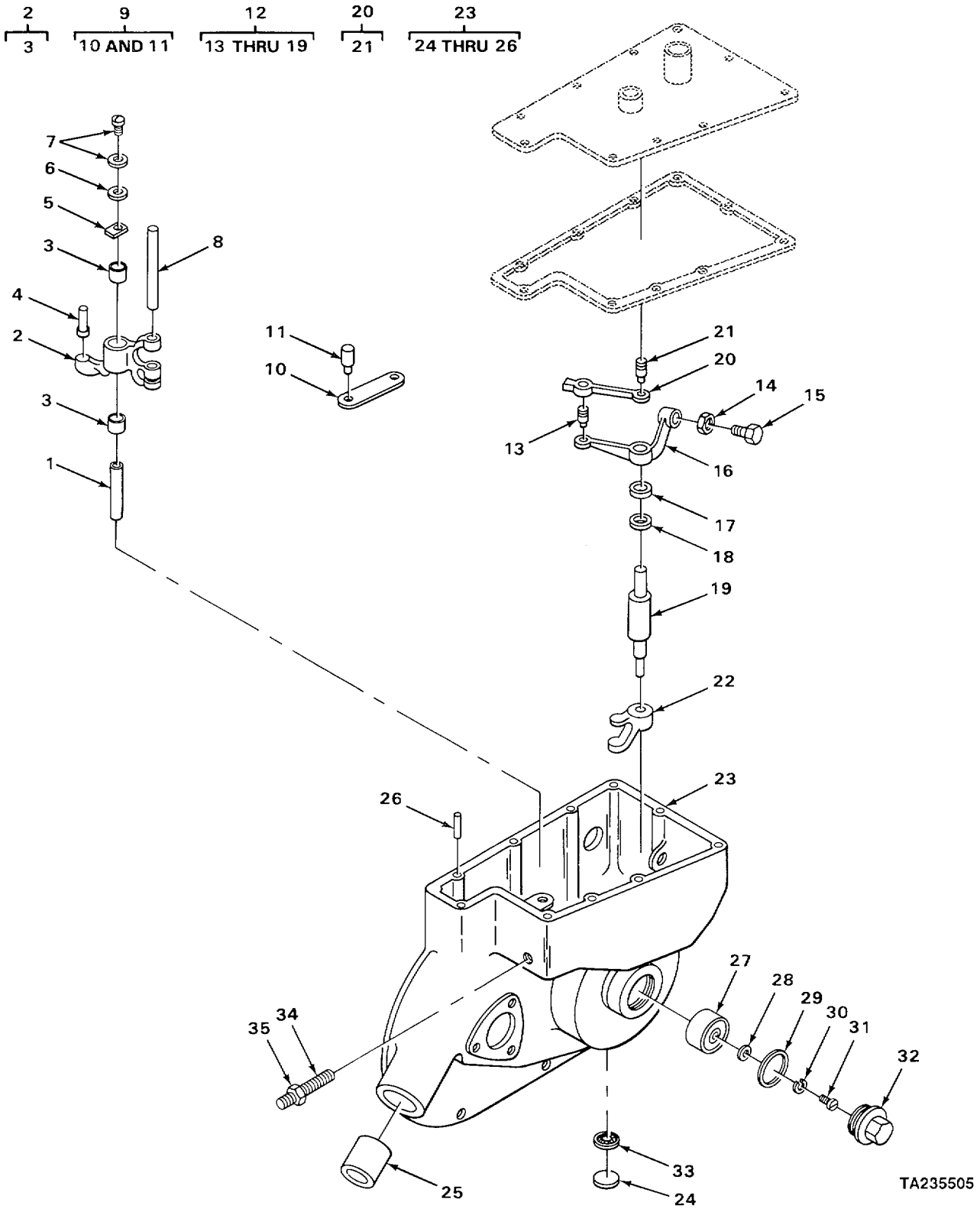

FIGURE 41. LIMITING SPEED GOVERNOR RELATED PARTS.

(1) ITEM NO	(2) SMR CODE	(3) CAGEC	(4) PART NUMBER	(5) DESCRIPTION AND USABLE ON CODES (UOC)	(6) QTY
				GROUP 0308 ENGINE SPEED GOVERNOR AND CONTROLS	
				FIG. 41 LIMITING SPEED GOVERNOR RELATED PARTS	
1	PFHZZ	72582	5143866	.PIN, GROOVED, HEADLES	1
2	PFHZZ	72582	5127373	.LEVER CONTROL LINK OPERATING	1
3	PFHZZ	96906	MS17131-9	BEARINGIROLLERNEED	2
4	PFHZZ	72582	5117693	PIN, SHOULDERIHEADLE	1
5	PFHZZ	72582	5143865	.CLIP, GOVERNOR ASSEM CONTROL SHAFT LOCK	1
6	PFHZZ	49671	73109-105	.WASHER, FLAT	2
7	PFHZZ	24617	9421917	SCREW, SPECIAL AND LOCKWASHER	1
8	PFHZZ	72582	5127375	.PIN, STRAIGHT?HEADLE	1
9	PFHHH	72582	5102559	PIN ASSEMBLY	1
10	PFHZZ	72582	5102558	LINK, GOVERNOR .	1
11	XDHZZ	72582	5124272	PIN, THROTTLE YIELD LINK	2
12	PFHHH	72582	5133795	SHAFT ASSEMBLY OPERATING	1
13	PFHZZ	24617	5150943	PINTSHOULOER1HEADLE	1
14	PFHZZ	96906	MS35691-5	NUTVPLAIN, HEXAGON	1
15	PFHZZ	72582	5132962	SCREW, SHAFT	1
16	PFHZZ	72582	5132747	BELL CRANK .	1
17	PFHZZ	72582	9431896	BEARING, BALL, ANNULA	1
18	PFHZZ	72582	5133686	SPACER, GOVERNOR	1
19	PFHZZ	72582	5133680	SHAFT, SHOULDEREDO	1
20	PFHHH	72582	5150394	.LEVER ASSEMBLY, GOVE	1
21	PFHZZ	24617	5150894	PIN, SHOULOER, HEADLE.	1
22	PFHZZ	72582	5138335	.SHIFTER FORK	1
23	PFHHH	72582	5104775	.HOUSING ASSEMBLY, GO	1
24	PFHZZ	72582	116337	PLUGIEXPANSION	1
25	PFHZZ	72582	5124332	BUSHING, SLEEVE FUEL ROD COVER	2
26	PFHZZ	88044	AN150280	PIN, STRAIGHT, HEADLE COVER ALIGNING	2
27	PFHZZ	83298	B20504-52	.BEARING, BALL, ANNULA	1
28	PFHZZ	72582	5150941	.WASHER, FLAT 1	
29	PFHZZ	43999	2W1R64-46-32	.WASHER, FLAT	1
30	PFHZZ	72582	5150897	.WASHER, KEY WEIGHT SHAFT END	1
31	PFHZZ	24617	5150884	.BOLT, MACHINE WEIGHT SHAFT END	1
32	PFHZZ	72582	5183268	.CAP, GOVERNOR WEIGHT HOUSING	1
33	XDHZZ	52676	60007	.BEARING, BALL, ANNULA	1
34	PFHZZ	72582	5117952	.STUD ASSEMBLY 1	
35	PFHZZ	72582	5174286	.NUT GOVERNOR BUFFER,	1

END OF FIGURE

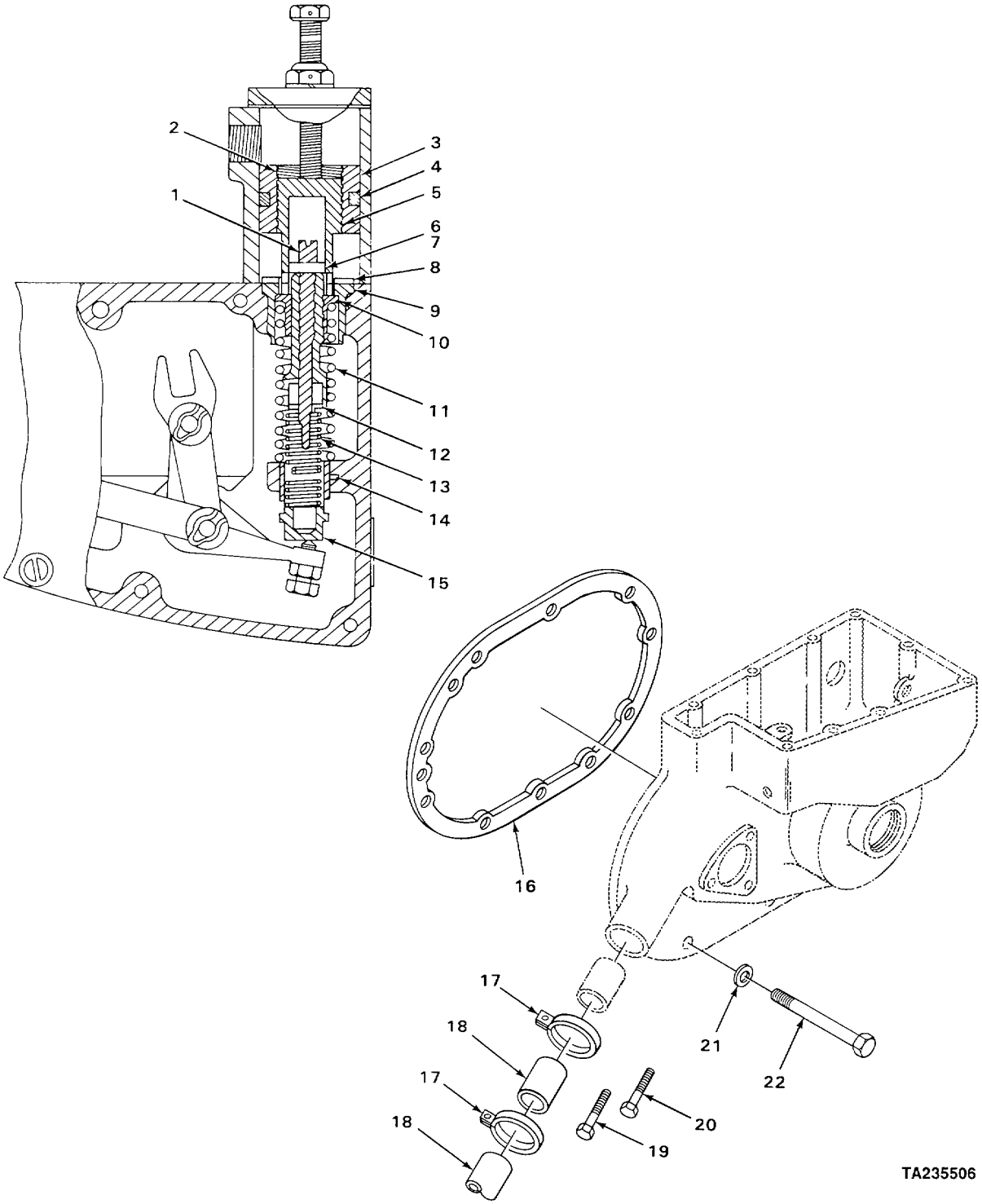

FIGURE 42. SPEED CONTROL MECHANISM.

(1) ITEM NO	(2) SMR CODE	(3) CAGEC	(4) PART NUMBER	(5) DESCRIPTION AND USABLE ON CODES (UOC)	(6) QTY
				GROUP 0308 ENGINE SPEED GOVERNOR AND CONTROLS	
				FIG. 42 SPEED CONTROL MECHANISM	
1	PFHZZ	72582	5102270	SCREW HEXAGON SOCKET, LOW SPEED	1
2	PFHZZ	72582	5123949	.COVER, ACCESS.....	1
3	PFHZZ	72582	5178857	PISTONIGOVERNOR.....	1
4	PFHZZ	72582	5133752	PACKING, PREFORMED	1
5	PFHZZ	72582	5106813	BUSHINGSLEEVE.....	2
6	PFHZZ	72582	5101432	PIN	1
7	PFHZZ	96906	MS35691-5	.NUTWPLAIN, HEXAGON LOW SPEED SPRING	1
8	PFHZZ	72582	5182558	.NUT, PLAIN1ROUND HIGH SPEED SPRING.	1
9	PFHZZ	72582	5182557	.RETAINER, GOVERNOR S HIGH SPEED ..... SPRING.....	1
10	XDHZZ	72582	5124551	.SEAT?HELICAL COMPRE	2
11	PAHZZ	72582	5136160	.SPRING, HELICAL, COMP HIGH SPEED.....	1
12	PFHZZ	14153	00513	SEAT, HELICAL COMPRE LOW SPEED..... SPRING.....	1
13	PFHZZ	72582	5122165	.SPRINGIHELICAL, COMP LOW SPEED I	
14	PFHZZ	72582	5182555	.PLUNGERIGOVERNOR SP LOW SPEED ..... SPRING.....	1
15	PFHZZ	72582	5102968	.CAPGOVERNOR SPEED LOW SPEED ..... SPRING.....	1
16	PFFZZ	72582	5126499	GASKET	1
17	PFFZZ	26385	AN746-14	CLAMP, HOSE.....	2
18	PFFZZ	72582	8924267	HOSE, PREFORMED	2
19	PFFZZ	72582	272545	SCREW?CAP, HEXAGON	1
20	PFFZZ	96906	MS90728-48	BOLT, MACHINE	1
21	PFFZZ	02978	520275	WASHERIFLAT.....	2
22	PFFZZ	72582	179827	SCREWICAP, HEXAGON H.....	8

END OF FIGURE

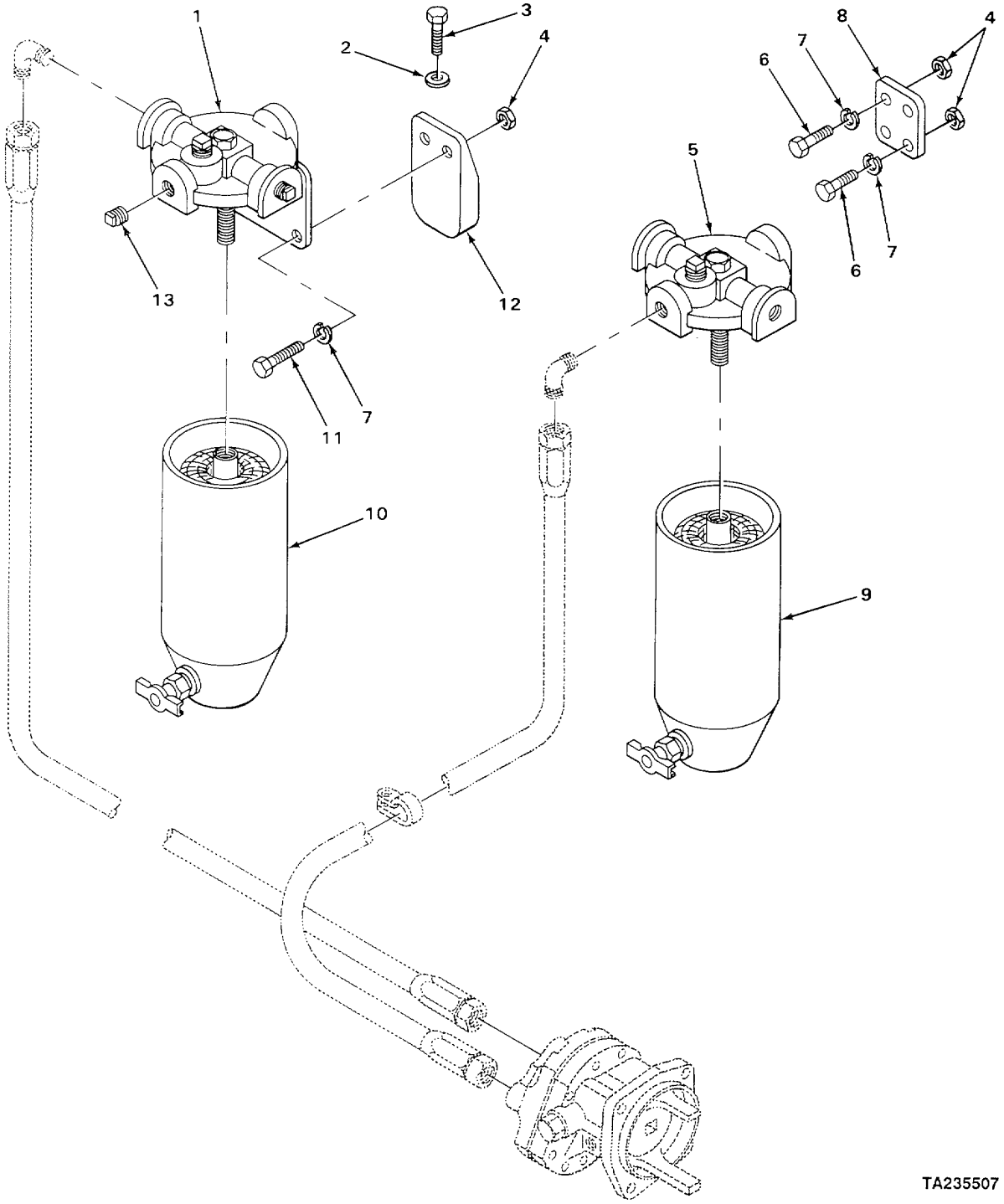

FIGURE 43. FUEL FILTER AND STRAINER.

(1) ITEM NO	(2) SMR CODE	(3) CAGEC	(4) PART NUMBER	(5) DESCRIPTION AND USABLE ON CODES (UOC)	(6) QTY
				GROUP 0309 FUEL FILTERS	
				FIG. 43 FUEL FILTER AND STRAINER	
1	PFOZZ	72582	5148023	HEADIFLUID FILTER FUEL STRAINER ..... SPIN-ON	1
2	PFOZZ	96906	MS27183-14	WASHERVFLAT	2
3	PFOZZ	96906	MS90728-72	SCREWICAPTHEXAGON H	2
3	PFOZZ	96906	MS90728-73	SCREW, CAP, HEXAGON H.....	2
4	PFOZZ	96906	MS51967-8	NUT, PLAIN, HEXAGON	6
5	PFOZZ	72582	5148171	HEADOFLUID FILTER FUEL STRAINER ..... SPIN-ON ..... ·	1
6	PFOZZ	96906	MS90728-61	SCREWTCAPIHEXAGON H	4
7	PFOZZ	96906	MS35338-8	WASHERTLOCK	6
8	PFOZZ	72582	5188969	BRACKETPUMP HOSEOS.....	1
9	PAOZZ	79396	33120	FILTER ELEMENT, FLUI FUEL FILTER ..... SPIN-ON	1
10	PAOZZ	72582	25010793	FILTER ELEMENT, FLUI FUEL STRAINER..... SPIN-ON	1
11	PFOZZ	96906	MS90728-62	SCREW, CAP, HEXAGON H.....	2
12	XDOZZ	73342	5139816	BRACKET	1
13	PFOZZ	72582	5145014	PLUG, PIPE, MAGNETIC	2

END OF FIGURE

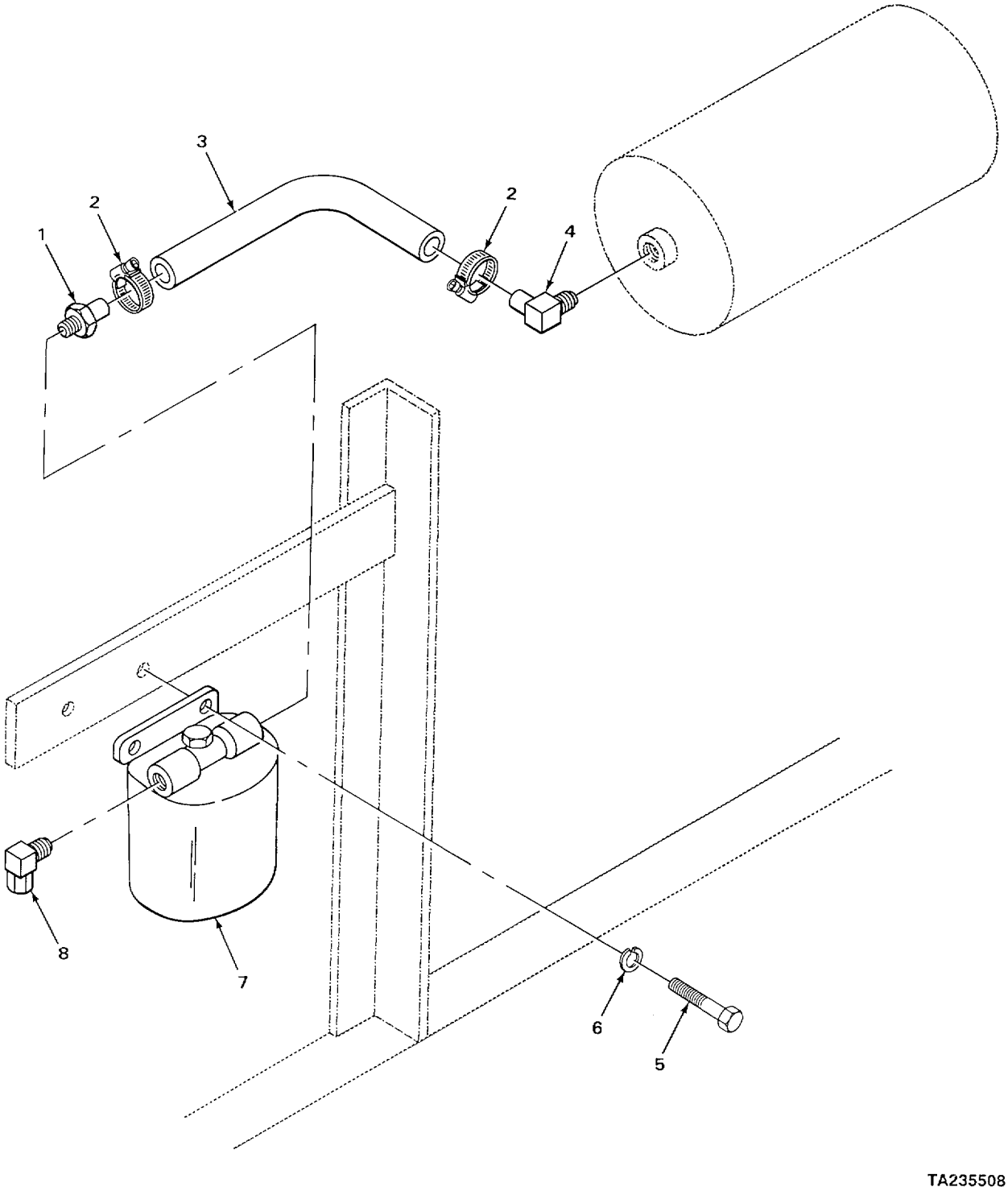

FIGURE 44. ALCOHOL INJECTOR SYSTEM.

(1) ITEM NO	(2) SMR CODE	(3) CAGEC	(4) PART NUMBER	(5) DESCRIPTION AND USABLE ON CODES (UOC)	(6) QTY
				GROUP 0311 ENGINE STARTING AIDS	
				FIG. 44 ALCOHOL INJECTOR SYSTEM	
1	XOOZZ	40152	666867	NIPPLE	1
2	XDOZZ	40152	521874	CLAMP	2
3	XDOZZ	40152	1545333	HOSEINONMETALLIC	1
4	XDOZZ	40152	666842	NIPPLE	1
5	PFOZZ	40152	24C-612	BOLT, MACHINE	2
6	PFOZZ	96906	MS35333-76	WASHER, LOCK	2
7	XDOZZ	40152	1545296	INJECTOR	1
8	PFOZZ	06021	AT 10503	ELBOW, PIPE	1

END OF FIGURE

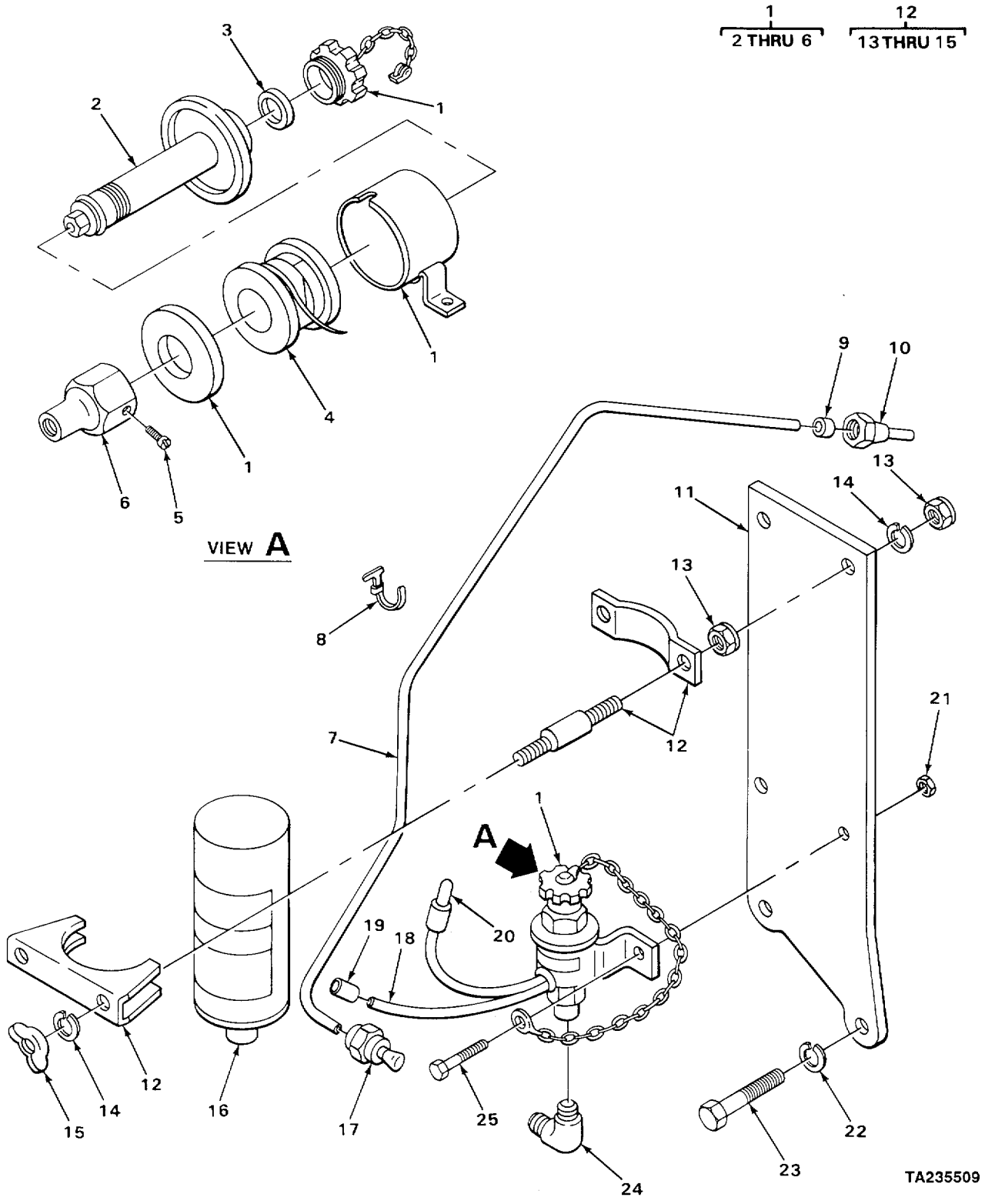

FIGURE 45. ENGINE QUICK-START SYSTEM.

(1) ITEM NO	(2) SMR CODE	(3) CAGEC	(4) PART NUMBER	(5) DESCRIPTION AND USABLE ON CODES (UOC)	(6) QTY
				GROUP 0311 ENGINE STARTING AIDS	
				FIG, 45 ENGINE QUICK-START SYSTEM	
1	PFOZZ	78280	QS4-4TC	PARTS KIT, ENGINE QU	1
2	XDOZZ	40152	960800	VALVE ASSEMBLY	1
3	XDOZZ	40152	960802	GASKET	1
4	XDOZZ	40152	960801	COIL	1
5	PFOZZ	40152	35G-502	SCREWICAP1SOCKET HE	1
6	PFOZZ	40152	960803	NUT, SLEEVE	1
7	XDOZZ	40152	1990278	TUBE	1
8	XDOZZ	40152	1539058	CABLE TIE	3
9	PFOZZ	72582	0112877	BUSHING1PIPE	1
10	XDOZZ	40152	2504977	ATOMIZER.	1
11	XDOZZ	40152	2511439	BRACKET	1
12	PFOOO	40152	1990400	CLAMPBLOCK	1
13	PFOZZ	40152	61D-05	NUTSELF-LOCKING HE	4
14	PFOZZ	96906	MS35338-45	WASHER, LOCK	4
15	PFOZZ	96906	MS35425-72	NUTIPLAIN, WING	2
16	PFOZZ	40152	1572143	FUEL, ENGINE PRIMER	1
17	XDOZZ	40152	961440	FERRULE AND NUT KIT	1
18	XDOZZ	40152	1513575	TERMINAL., .	1
19	XDOZZ	40152	742175	SLEEVE	1
20	XDOZZ	40152	1513577	TERMINAL, ., .	1
21	PFOZZ	96906	MS21044N4	NUT, SELF-LOCKING, HE	2
22	PFOZZ	96906	MS35333-76	WASHER, LOCK	2
23	PFOZZ	40152	24C-668	BOLTMACHINE	2
24	XDOZZ	40152	2504973	ELBOW	1
25	PFOZZ	40152	24C-416	BOLT, MACHINE	2

END OF FIGURE

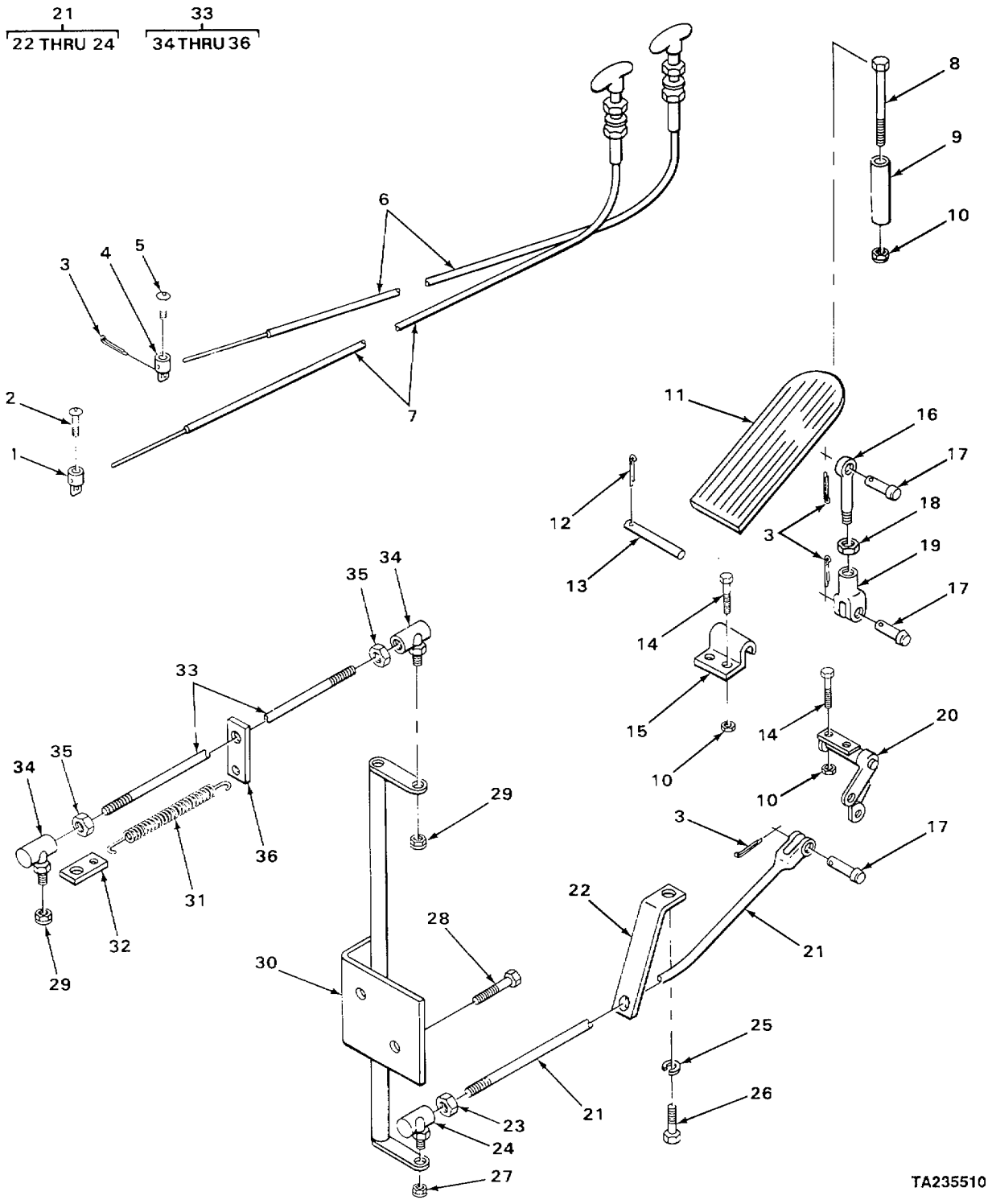

FIGURE 46. ACCELERATOR CONTROLS.

(1) ITEM NO	(2) SMR CODE	(3) CAGEC	(4) PART NUMBER	(5) DESCRIPTION AND USABLE ON CODES (UOC)	(6) QTY
				GROUP 0312 ACCELERATOR, THROTTLE, OR CHOKE CONTROLS	
				FIG. 46 ACCELERATOR CONTROLS	
1	XDOZZ	40152	1523210	CONNECTINGICABLE	1
2	PFOZZ	40152	85G-806	SCREW, CAPISOCKET HE	1
3	XDOZZ	12603	1F208	RING, RETAINING	4
4	XDOZZ	40152	1523209	CONNECTOR, CABLE	1
5	PFOZZ	40152	13804205	SCREWICAP, SOCKET HE	1
6	PFOZZ	40152	1520190	CONTROL ASSEMBLY, PU,	1
7	PFOZZ	12603	1520193	CONTROL ASSEMBLYIPU	1
8	PFOZZ	40152	24C-448	BOLTIMACHINE	1
9	XDOZZ	40152	551016	STOP,	1
10	PFOZZ	96906	MS21044N4	NUTISELF-LOCKING, HE,	3
11	PFOZZ	12603	623829	PEDAL, CONTROL	1
12	PFOZZ	00198	PK379	PIN, COTTER	1
13	PFOZZ	12603	623762	PIN STRAIGHT, HEADLE	1
14	PFOZZ	40152	24C-416	BOLTIMACHINE	4
15	XDOZZ	40152	1544695	BRACKET,	1
16	XDOZZ	40152	550619	ROD	1
17	XDOZZ	03504	10928M3	PIN, STRAIGHT, HEADED	3
18	PFOZZ	96906	MS35691-5	NUT, PLAINIHEXAGON	1
19	PFOZZ	12603	2J4200	CLEVISIROD END	1
20	XDOZZ	40152	1543304	BELLCRANK,	1
21	PFOOO	40152	1529549	CONNECTING LINK, RIG	1
22	XDOZZ	40152	569151	ANGLE.,	1
23	PFOZZ	12603	8D05	NUTIPLAINIHEXAGON	1
24	PFOZZ	89749	1301361	BALL JOINT	1
25	PFOZZ	96906	MS35333-76	WASHERILOCK	1
26	PFOZZ	40152	24C-616	BOLT, SHOULDER,	1
27	PFOZZ	40152	66D-05	NUT, SELF-LOCKING, HE	1
28	PFOZZ	40152	24C-668	BOLT, MACHINE	2
29	PFOZZ	12603	60D5	NUT, SELF-LOCKINGICA	2
30	XDOZZ	40152	574555	BELLCRANK	1
31	PFOZZ	40152	551090	SPRING, HELICAL, EXT	1
32	XDOZZ	40152	521434	ANCHOR, SPRING	1
33	PFOZZ	40152	1544404	CONNECTING LINK, RIG	1
34	PFOZZ	89749	1301361	BALL JOINT,	2
35	PFOZZ	12603	8005	NUT1PLAIN, HEXAGON	2
36	XDOZZ	40152	1535306	ANCHOR	1

END OF FIGURE

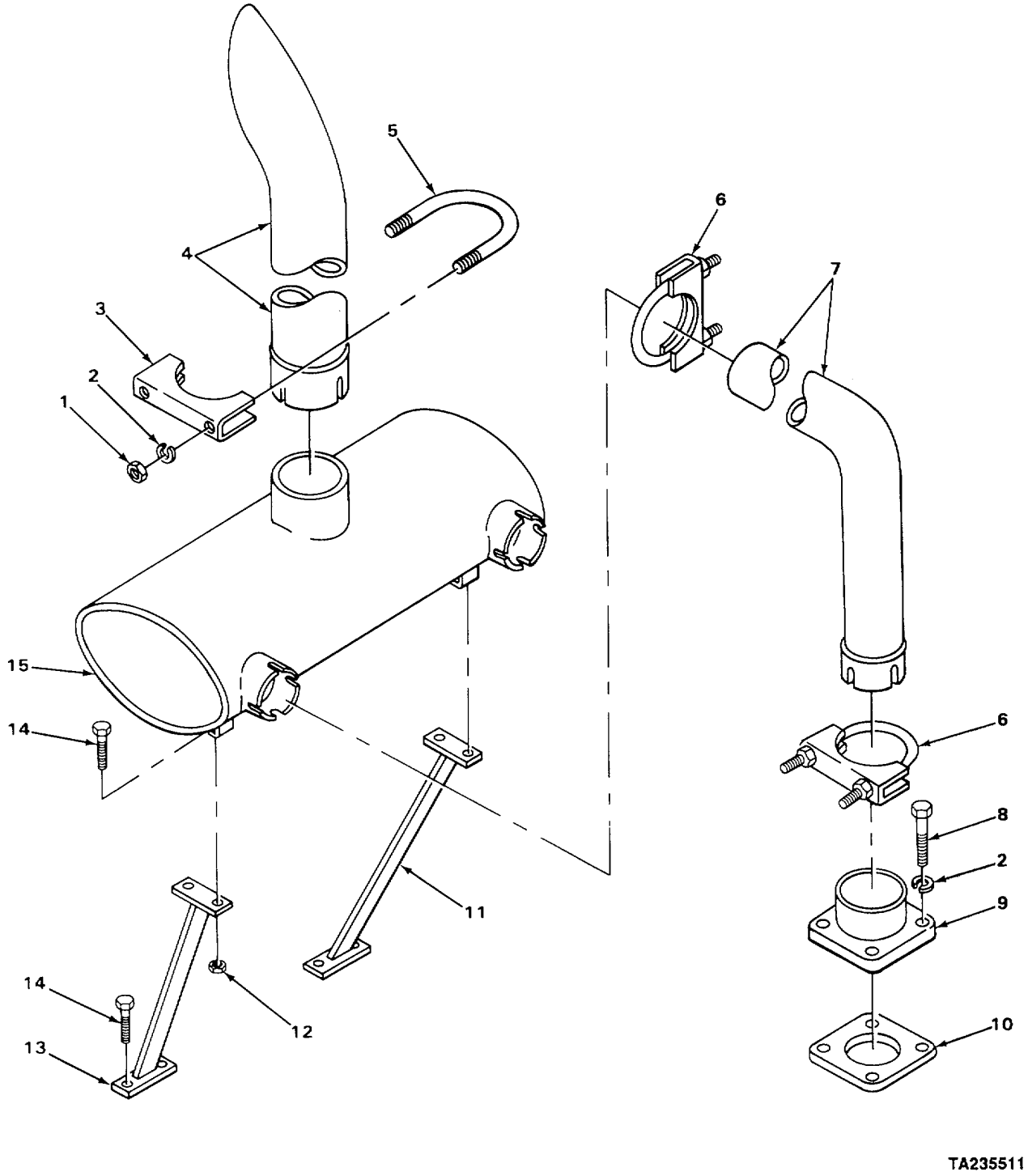

FIGURE 47. EXHOUST SYSTEM.

(1) ITEM NO	(2) SMR CODE	(3) CAGEC	(4) PART NUMBER	(5) DESCRIPTION AND USABLE ON CODES (UOC)	(6) QTY
				GROUP 04 EXHAUST SYSTEM	
				GROUP 0401 MUFFLER AND PIPES	
				FIG, 47 EXHAUST SYSTEM	
1	PFOZZ	40152	63D-06	NUT, SELF-LOCKING, HE	2
2	PFOZZ	96906	MS35333-76	WASHER, LOCK,.....	10
3	PFOZZ	12603	563860	STRAP, RETAINING,.....	1
4	PFOZZ	12603	547058	PIPEIEXHAUST, ...	1
5	PFOZZ	12603	563813	BOLT OU., ...	1
6	PFOZZ	40152	580282	CLAMPLOOP.....	4
7	PFOZZ	40152	564353	TUBEIBENTIMETALLIC	2
8	PFOZZ	40152	23C-620	BOLT1MACHINE	8
9	XDOZZ	40152	564354	ADAPTER, ...	2
10	XDOZZ	40152	588384	GASKET,.....	2
11	XOOZZ	40152	1512898	BRACKET LEFT HAND, ...	1
12	PFOZZ	12603	60D6	NUT, SELF-LOCKING HE, ...	4
13	XDOZZ	40152	542909	BRACKET RIGHT HAND, .,.....	1
14	PFOZZ	40152	24C-616	BOLT, SHOULDER.....	8
15	PFOZZ	76700	T-8123	MUFFLER, EXHAUST	1

END OF FIGURE

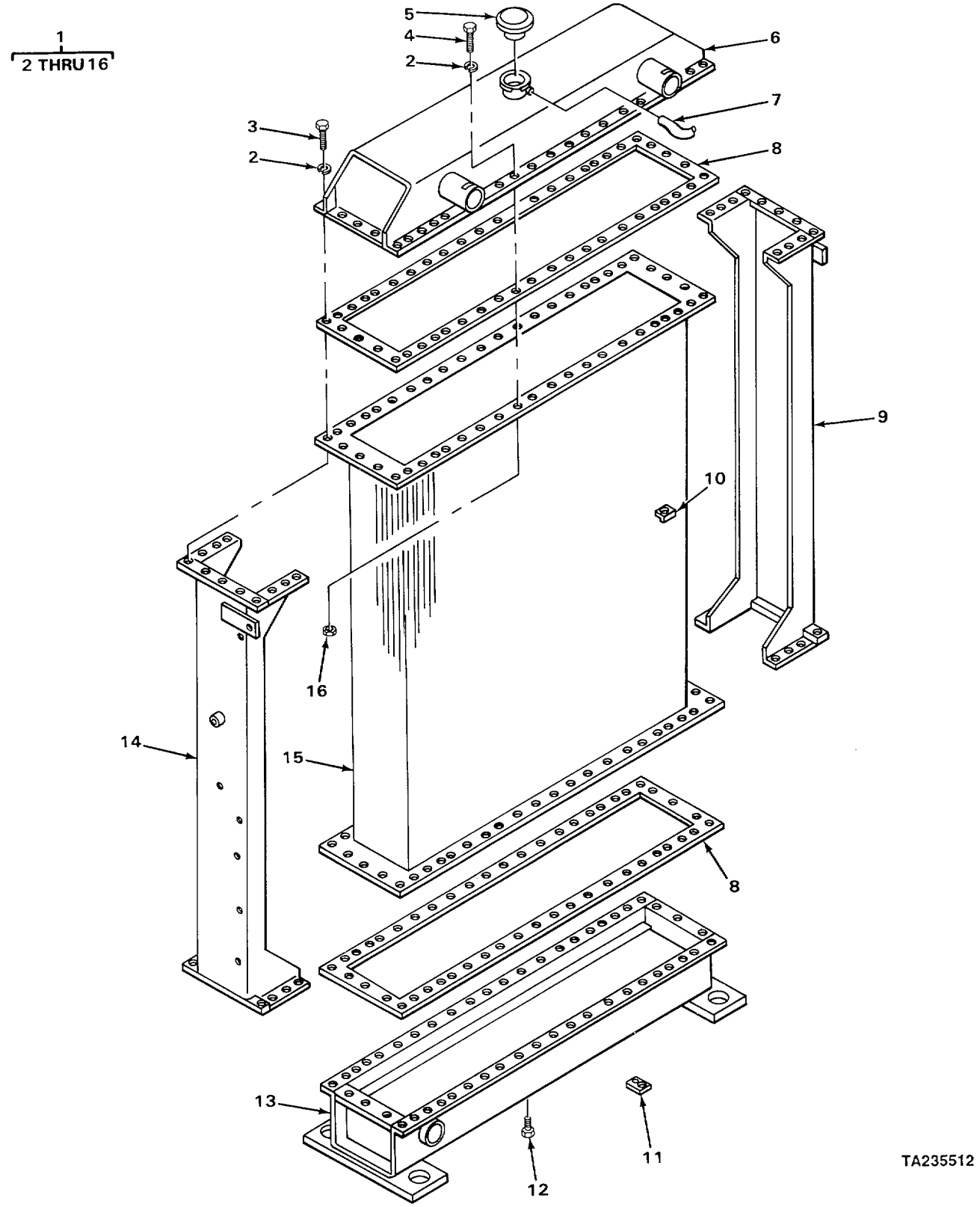

FIGURE 48. RADIATOR.

(1) ITEM NO	(2) SMR CODE	(3) CAGEC	(4) PART NUMBER	(5) DESCRIPTION AND USABLE ON CODES (UOC)	(6) QTY
				GROUP 05 COOLING SYSTEM	
				GROUP 0501 RADIATORV EVAPORATIVE	
				COOLER, OR HEAT EXCHANGER	
				FIG. 48 HEAT EXCHANGER	
1	PFOFF	40152	1504256	.RADIATOR, ENGINE COO.....	1
2	PFFZZ	96906	MS35338-45	.WASHERILOCKO.....	96
3	PAFZZ	12603	1C512	.SCREW.....	20
4	PFFZZ	12603	1C-514	.BOLTM, ACHINE	76
5	PFOZZ	40152	863364	.CAP, FILLER OPENING	1
6	XDFZZ	40152	947803	.TOP TANK, ., ., ...	1
7	PFFZZ	40152	947814	.HOSE, NONMETALLIC	1
8	XDFZZ	40152	944632	.GASKET.,.....	2
9	XDFZZ	40152	947804	.SIDE MEMBER,.....	1
10	XDFZZ	40152	947812	.CLIP	2
11	XDFZZ	40152	947813	.CLIP	2
12	XDFZZ	12603	34F-04	.PLUG-	1
13	XDFZZ	40152	1507695	.BOTTOM TANK	1
14	XDFZZ	40152	947805	.SIDE MEMBER, .,.....	1
15	XDFZZ	40152	947807	.CORE.....	1
16	PFFZZ	40152	610-05	.NUTISELF-LOCKING HE	76

END OF FIGURE

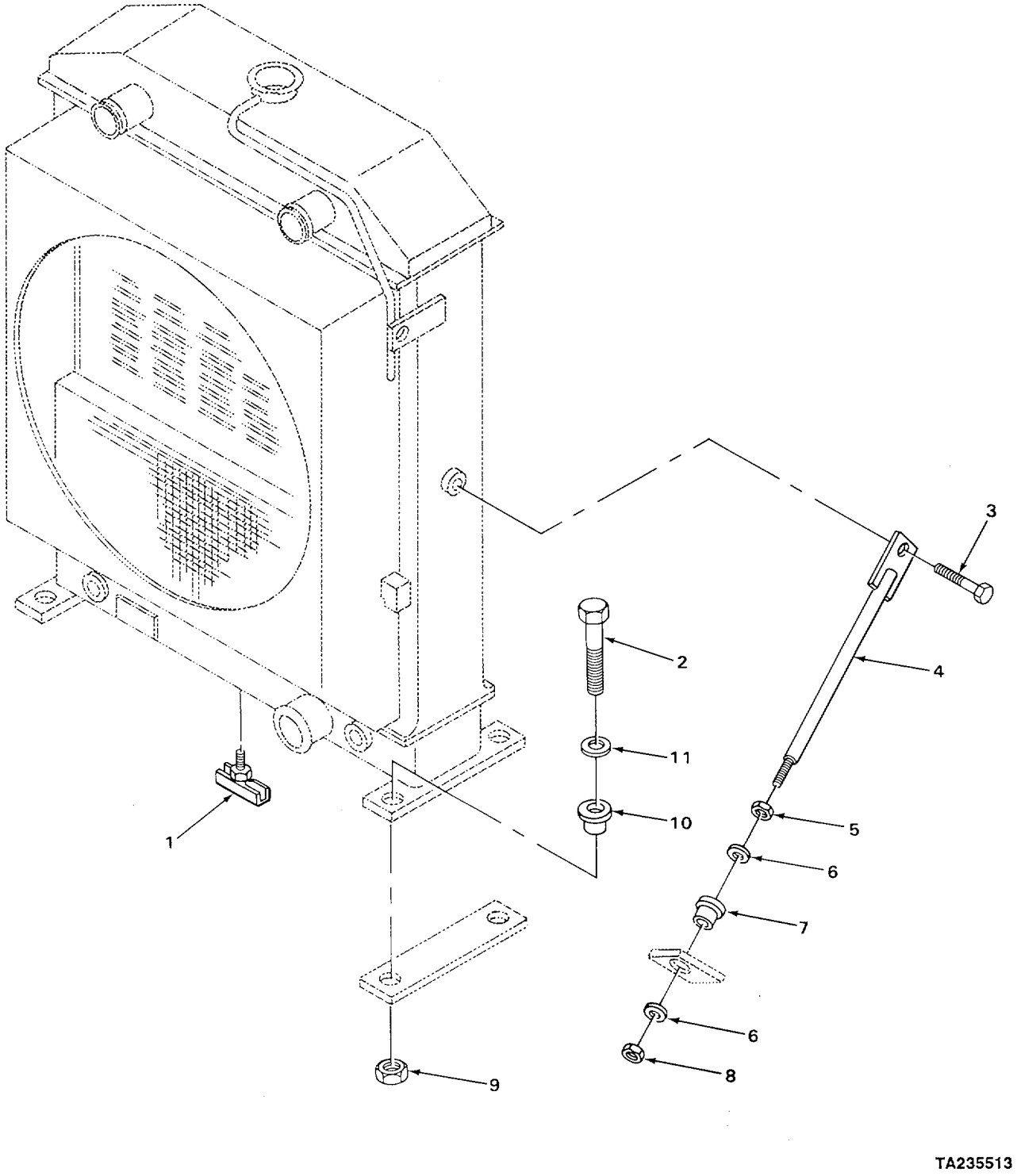

FIGURE 49. RADIATOR MOUNTING.

(1) ITEM NO	(2) SMR CODE	(3) CAGEC	(4) PART NUMBER	(5) DESCRIPTION AND USABLE ON CODES (UOC)	(6) QTY
				GROUP 0501 RADIATOR, EVAPORATIVE COOLER, OR HEAT EXCHANGER	
				FIG. 49 RADIATOR MOUNTING	
1	XDOZZ	12603	72F-2	DRAINCOCK,	1
2	XDOZZ	12603	24C-1060	BOLTIMACHINE	4
3	PFOZZ	12603	18C-816	BOLT MACHINE.·	2
4	PFOZZ	40152	1542211	BRACKET, ENGINE ACCE·	2
5	PFOZZ	12603	8D08	NUT, PLAIN, HEXAGON	2
6	PFOZZ	24446	6655628	WASHER, FLAT	4
7	PFOZZ	40152	569739	DAMPER, ENGINE	2
8	PFOZZ	96906	MS21044N8	NUT, SELF- LOCKING, HE	2
9	PFOZZ	96906	MS21044N10	NUTISELF-LOCKINGIHE	4
10	XDDZZ	40152	1527276	MOUNT	4
11	PFOZZ	40152	569070	WASHER, FLAT	4

END OF FIGURE

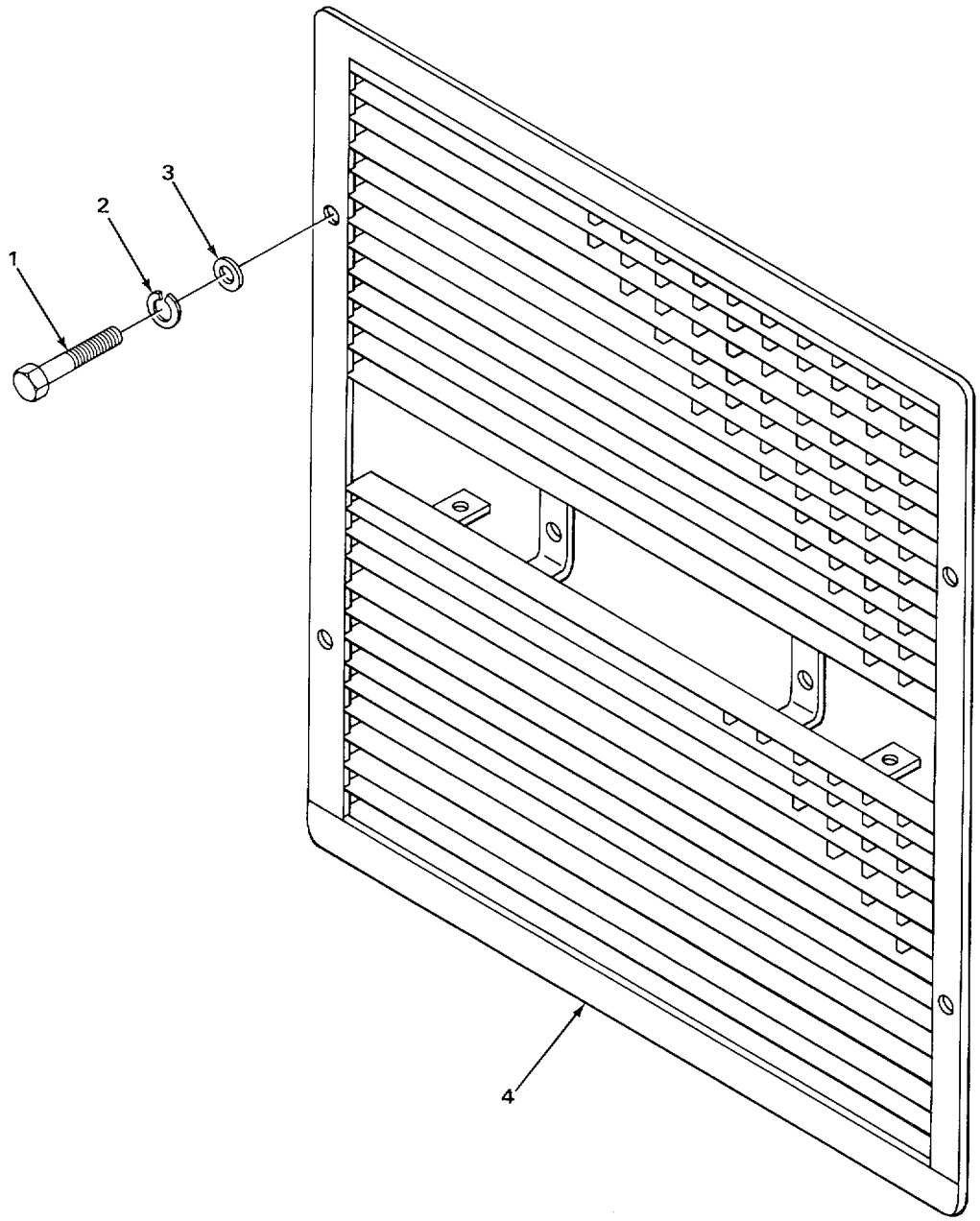

FIGURE 50. RADIATOR GRILLE.

(1) ITEM NO	(2) SMR CODE	(3) CAGEC	(4) PART NUMBER	(5) DESCRIPTION AND USABLE ON CODES (UOC)	(6) QTY
				GROUP 0501 RADIATOR, EVAPORATIVE COOLER, OR HEAT EXCHANGER	
				FIG, 50 RADIATOR GRILLE	
1	PFOZZ	40152	24C-824	BOLT, MACHINE	4
2	PFOZZ	95019	500357-13	WASHERGLOCK.....	4
3	PFOZZ	12603	635682	WASHERFLAT.....	4
4	XDOFF	12603	2513804	GRILLE,.....	1

END OF FIGURE

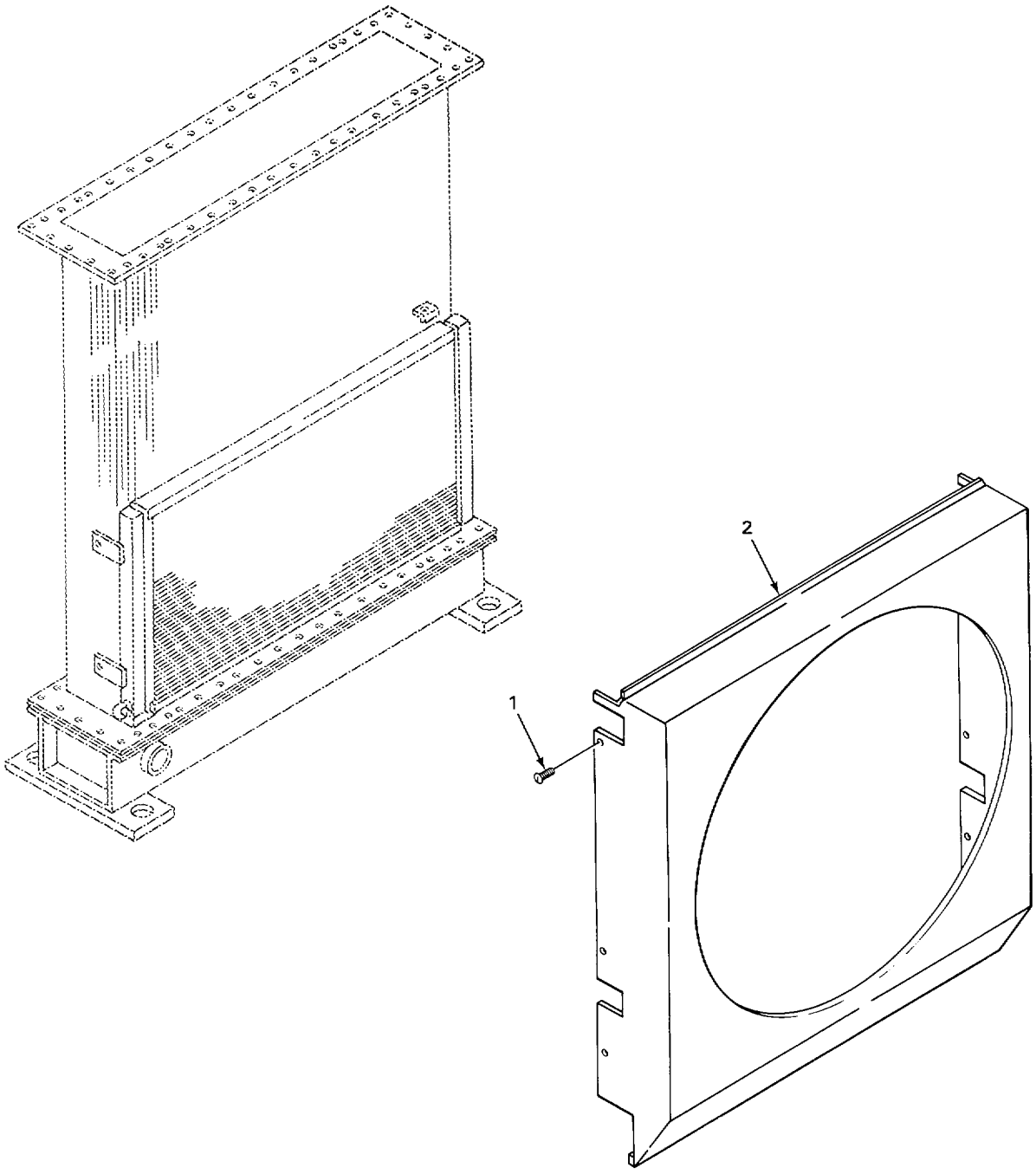

FIGURE 51. RADIATOR SHROUD.

(1) ITEM NO	(2) SMR CODE	(3) CAGEC	(4) PART NUMBER	(5) DESCRIPTION AND USABLE ON CODES (UOC)	(6) QTY
				GROUP 0502 COWLING, DEFLECTORS, AIR DUCTS, SHROUDS1 ETC.	
				FIG 51 RADIATOR SHROUD	
1	PFOZZ	12603	89G-408	SCREW, MACHINE ..... ,	6
2	XDOFF	40152	947806	SHROUDO	1

END OF FIGURE

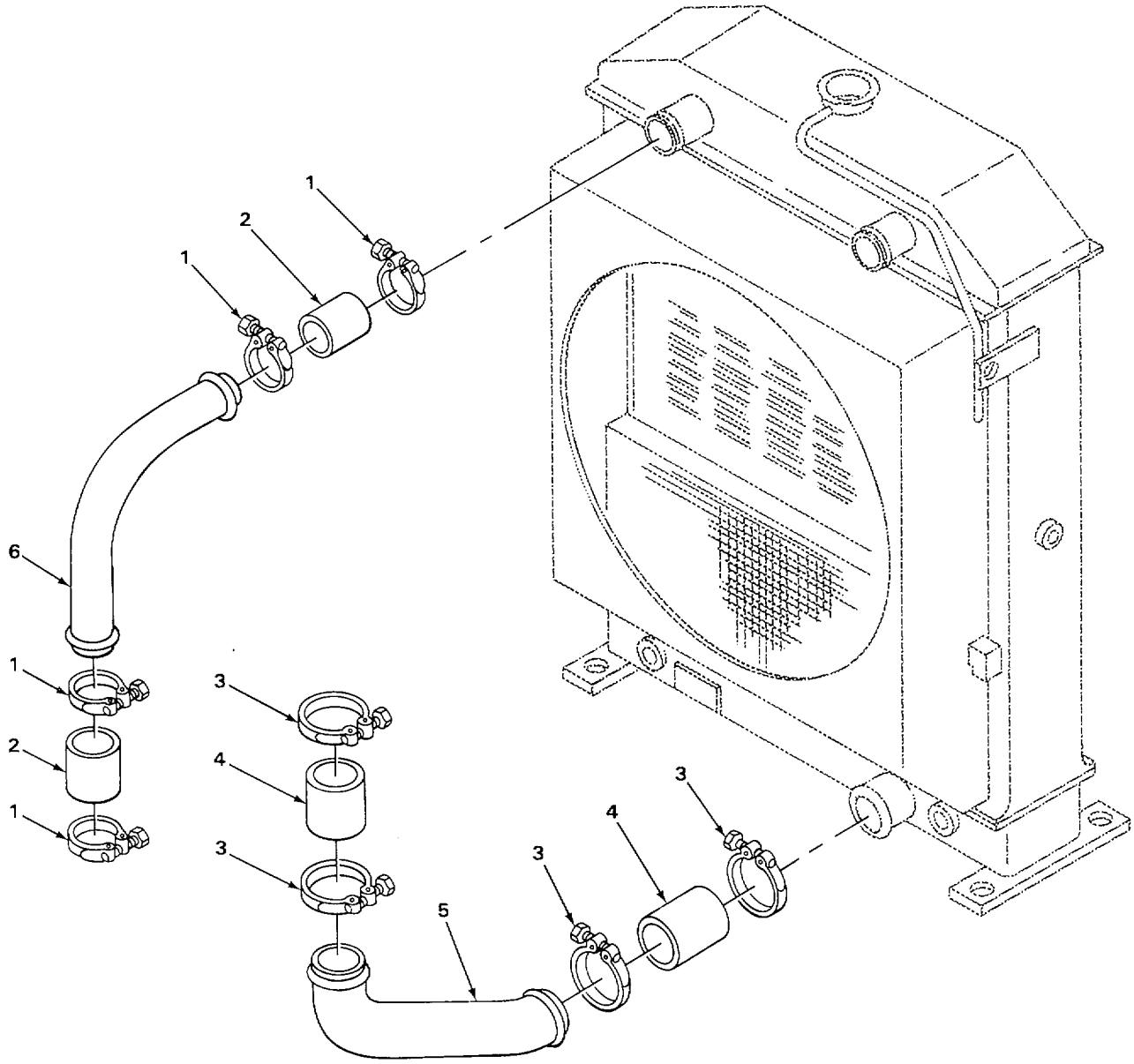

FIGURE 52. RADIATOR HOSES.

(1) ITEM NO	(2) SMR CODE	(3) CAGEC	(4) PART NUMBER	(5) DESCRIPTION AND USABLE ON CODES (UOC)	(6) QTY
				GROUP 0503 WATER MANIFOLD, HEADERS, THERMOSTATS, AND HOUSING GASKET	
				FIG. 52 RADIATOR HOSES	
1	PFOZZ	89749	43H1262	CLAMP, FITTING	8
2	PFOZZ	12603	1M18040	HOSE, PREFORMED	4
3	XDOZZ	89749	43H1319	CLAMPIHOSE	4
4	PFOZZ	89749	IM-22044	HOSE, NONMETALLIC	2
5	XDOZZ	40152	1504309	TUBE	1
6	XDOZZ	40152	1504310	TUBE	2

END OF FIGURE

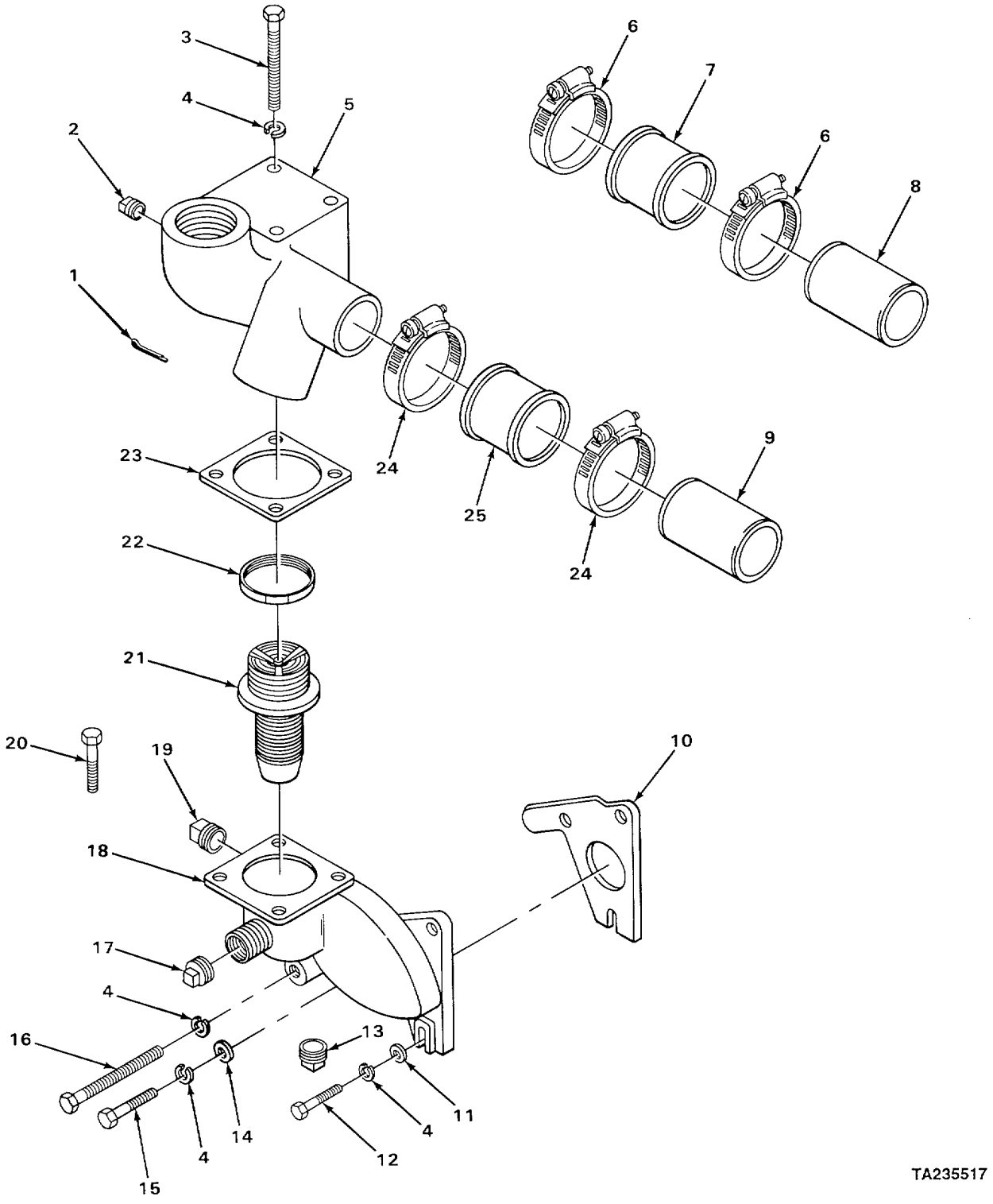

FIGURE 53. THERMOSTAT AND BYPASS TUBE (RIGHT BANK).

(1) ITEM NO	(2) SMR CODE	(3) CAGEC	(4) PART NUMBER	(5) DESCRIPTION AND USABLE ON CODES (UOC)	(6) QTY
				GROUP 0503 WATER MANIFOLD, HEADERS, THERMOSTATS, AND HOUSING GASKET	
				FIG. 53 THERMOSTAT AND BYPASS TUBE (RIGHT BANK)	
1	PFOZZ	72582	5128234	PIN, COTTER JIGGLE	1
2	PFOZZ	6N299	4255490	PLUG, PIPE	1
3	PFOZZ	96906	MS90728-72	SCREWICAP, HEXAGON H	4
4	PFOZZ	96906	MS535338-8	WASHER, LOCK	7
5	PFOZZ	72582	5127600	COVER ASSEMBLYTHER RIGHT BANK	1
6	PFOZZ	96906	M5S35842-14	CLAMP, HOSE	2
7	PFOZZ	72582	5199780	HOSEINONMETALLIC	1
8	PFOZZ	72582	5199780	HOSE, NONMETALLIC	1
9	PFOZZ	72582	5117989	TUBE, BENT, METALLIC WATER BY-PASS	1
10	PFOZZ	72582	5117993	GASKET RIGHT BANK	1
11	PFOZZ	96906	MS27183-14	WASHERIFLAT,	1
12	PFOZZ	96906	MS18154-60	SCREW, CAP, HEXAGON H	1
13	PFOZZ	72582	5115214	PLUG1PIPE	2
14	PFOZZ	10001	265850PC88	WASHERIFLAT	1
15	PFOZZ	96906	MS90728-64	SCREW, CAP, HEXAGON H,	1
16	PFOZZ	24617	191249	SCREW, CAPIHEXAGON H	1
17	PFOZZ	72582	5146607	BUSHINGIPIPE	1
18	PFOZZ	72582	5109652	WATER OUTLET, ENGINE RIGHT BANK	1
19	PFOZZ	72582	5142549	PLUG1PIPE	2
20	PFOZZ	72582	455537	BOLT .,	1
21	PFOZZ	72582	5119826	THERMOSTAT, FLOW CON 170 DEGREES	1
22	PFOZZ	58312	3S9643-00	SEALPLAIN ENCASED THERMOSTAT	1
23	PFOZZ	72582	5117786	GASKET.,	1
24	PFOZZ	72582	100918	CLAMPIHOSE,	2
25	PFOZZ	72582	5199776	HOSE, NON METALLIC	1

END OF FIGURE

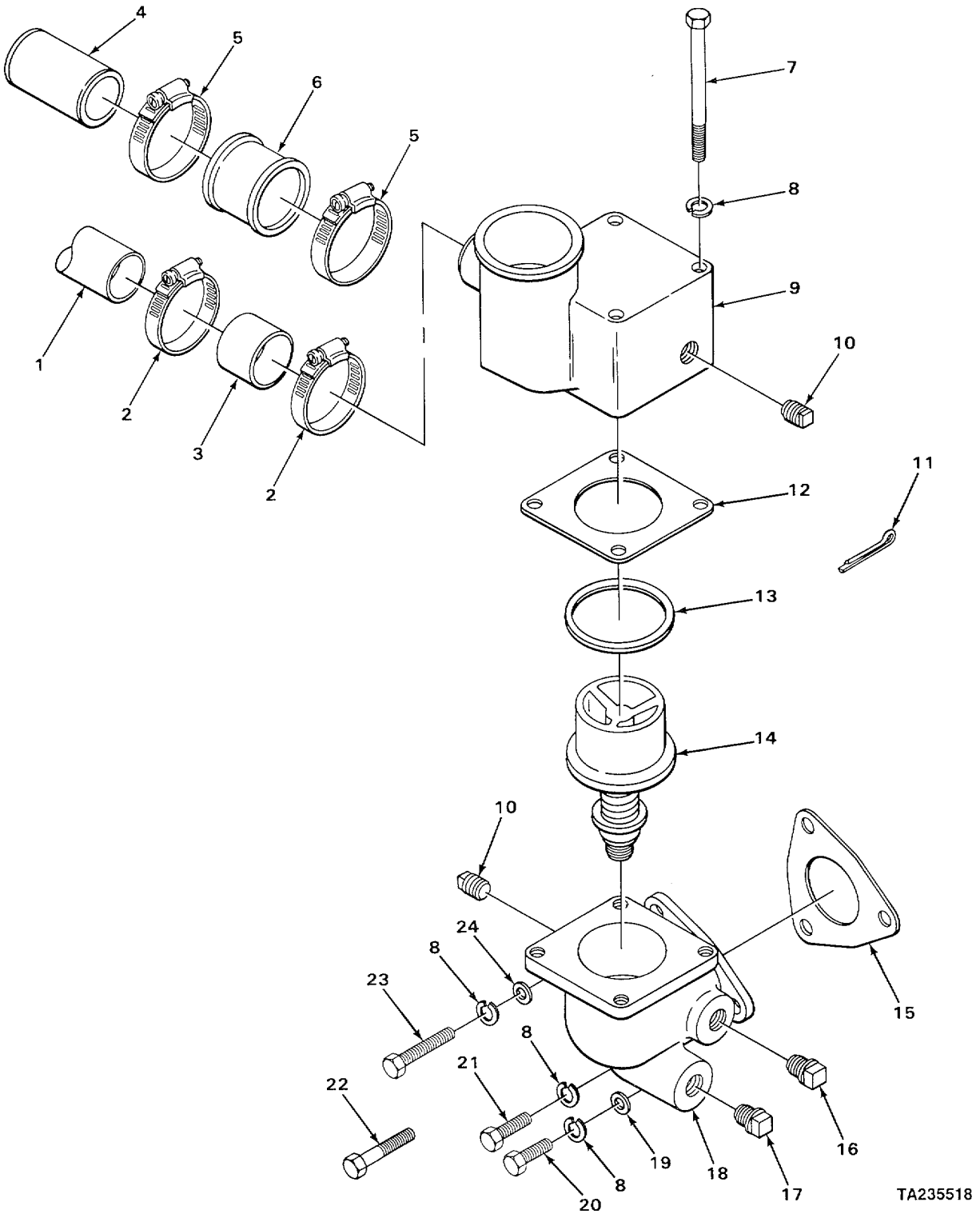

FIGURE 54. THERMOSTAT AND BYPASS TUBE (LEFT BANK).

(1) ITEM NO	(2) SMR CODE	(3) CAGEC	(4) PART NUMBER	(5) DESCRIPTION AND USABLE ON CODES (UOC)	(6) QTY
				GROUP 0503 WATER MANIFOLD, HEADERS, THERMOSTATS, AND HOUSING GASKET	
				FIG, 54 THERMOSTAT AND BYPASS TUBE (LEFT BANK)	
1	PFOZZ	72582	5117989	TUBE, BENT, METALLIC WATER BY-PASS.....	1
2	PFOZZ	72582	100918	CLAMP, HOSE.....	2
3	PFOZZ	72582	5199776	HOSENONMETALLIC	1
4	PFOZZ	72582	5199780	HOSE, NONMETALLIC	1
5	PFOZZ	96906	MS35842-14	CLAMPTHOSE.....	2
6	PFOZZ	72582	5199780	HOSE?NONMETALLIC	1
7	PFOZZ	96906	MS90728-72	SCREW, CAP, HEXAGON H.....	4
8	PFOZZ	96906	MS35338-8	WASHER, LOCK.....	7
9	XDOZZ	72582	5127599	COVER, THERMOSTAT LEFT BANK	1
10	PFOZZ	72582	5142549	PLUG, PIPE	3
11	PFOZZ	72582	5128234	PIN, COTTER JIGGLE.....	1
12	PFOZZ	72582	5117786	GASKET.....	1
13	PFOZZ	58312	3S9643-00	SEAL, PLAIN ENCASED	1
14	PFOZZ	72582	5119826	THERMOSTATIFLOW CON 170 DEGREES	1
15	PFOZZ	72582	5117993	GASKET.....	1
16	PFOZZ	72582	5115214	PLUG, PIPE	2
17	PFOZZ	6N299	4255490	PLUGIPIPE, ...	1
18	PFOZZ	72582	5117546	WATER OUTLETIENGINE LEFT BANK	1
19	PFOZZ	96906	MS27183-14	WASHER1FLAT.....	1
20	PFOZZ	96906	MS18154-60	SCREW, CAPIHEXAGON H.....	1
21	PFOZZ	96906	MS90728-64	SCREW, CAP, HEXAGON H.....	1
22	PFOZZ	24617	191249	SCREWICAP, HEXAGON H.....	1
23	PFOZZ	72582	455537	SOLT.....	1
24	PFOZZ	10001	265850PC88	WASHERIFLAT.....	1

END OF FIGURE

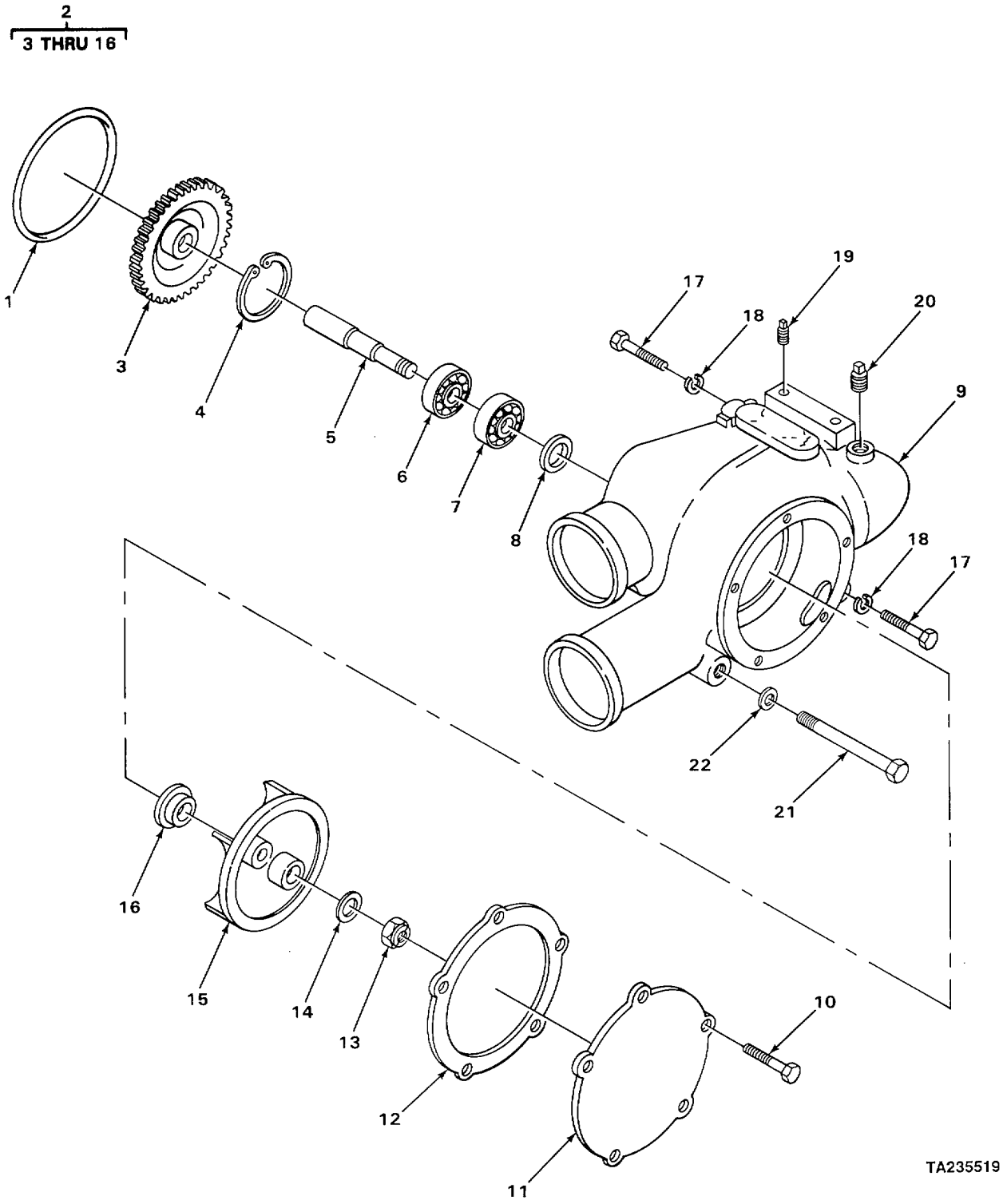

FIGURE 55. WATER PUMP.

(1) ITEM NO	(2) SMR CODE	(3) CAGEC	(4) PART NUMBER	(5) DESCRIPTION AND USABLE ON CODES (UOC)	(6) QTY
				GROUP 0504 WATER PUMP	
				FIG. 55 WATER PUMP	
1	KFFZZ	72582	5117962	PACKING, PREFORMED PART OF KIT P/N 5197509	1
2	PFFFF	72582	5149326	PUMP, COOLING SYSTEM FRESH WATER	1
3	KFFZZ	72582	5146254	GEAR, HELICAL 42 TEETHLIGHTWEIGHT PART OF KIT P/N 5197438	1
4	KFFZZ	72582	274746	RING.LOCK PART OF KIT P/N 5197509 PART OF KIT P/N 5197438	1
5	KFFZZ	72582	5123150	SHAFTSHOULOERED PART OF KIT P/N 5197509 PART OF KIT P/N 5197438	1
6	KFFZZ	24446	A3666784PT5	BEARING, BALL, ANNULA OUTER PART OF KIT P/N 5197509 PART OF KIT P/N 5197438O	1
7	KFFZZ	72582	903204	BEARING, BALL, ANNULA INNER PART OF KIT P/N 5197509 PART OF KIT P/N 5197438	1
8	KFFZZ	06021	AT12820	SEAL, PLAIN ENCASED PART OF KIT P/N 5197509 PART OF KIT P/N 5197438.	1
9	PFFZZ	72582	5135455	.HOUSING, COOLANT PUM.	1
10	PFFZZ	72582	5131685	BOLT NYLON INSERT	5
11	PFFZZ	72582	5117950	COVER	1
12	KFFZZ	72582	5117975	GASKET PART OF KIT P/N 5197509.m	1
13	KFFZZ	72582	5117972	NUT, SELF-LOCKINGIHE PART OF KIT P/N 5197509	1
14	PFFZZ	96906	MS27183-16	WASHER1FLAT	1
15	KFFZZ	72582	5123183	IMPELLER, PUMP, CENTR PART OF KIT P/N 5197509	1
16	KFFZZ	72582	8924297	SEAL?WATERPUMP PART OF KIT P/N 5197509 PART OF KIT P/N 5197438	1
17	PFFZZ	96906	MS90728-89	SCREW1CAP, HEXAGON H	2
18	PFFZZ	96906	MS35338-47	WASHER, LOCK	2
19	PFFZZ	72582	5115214	PLUGVPIPE	2
20	PFFZZ	72582	5142549	PLUG, PIPEO	1
21	PFFZZ	96906	MS90728-99	SCREW, CAP.HEXAGON H	1
22	PFFZZ	96906	MS27183-16	WASHER, FLAT	1

END OF FIGURE

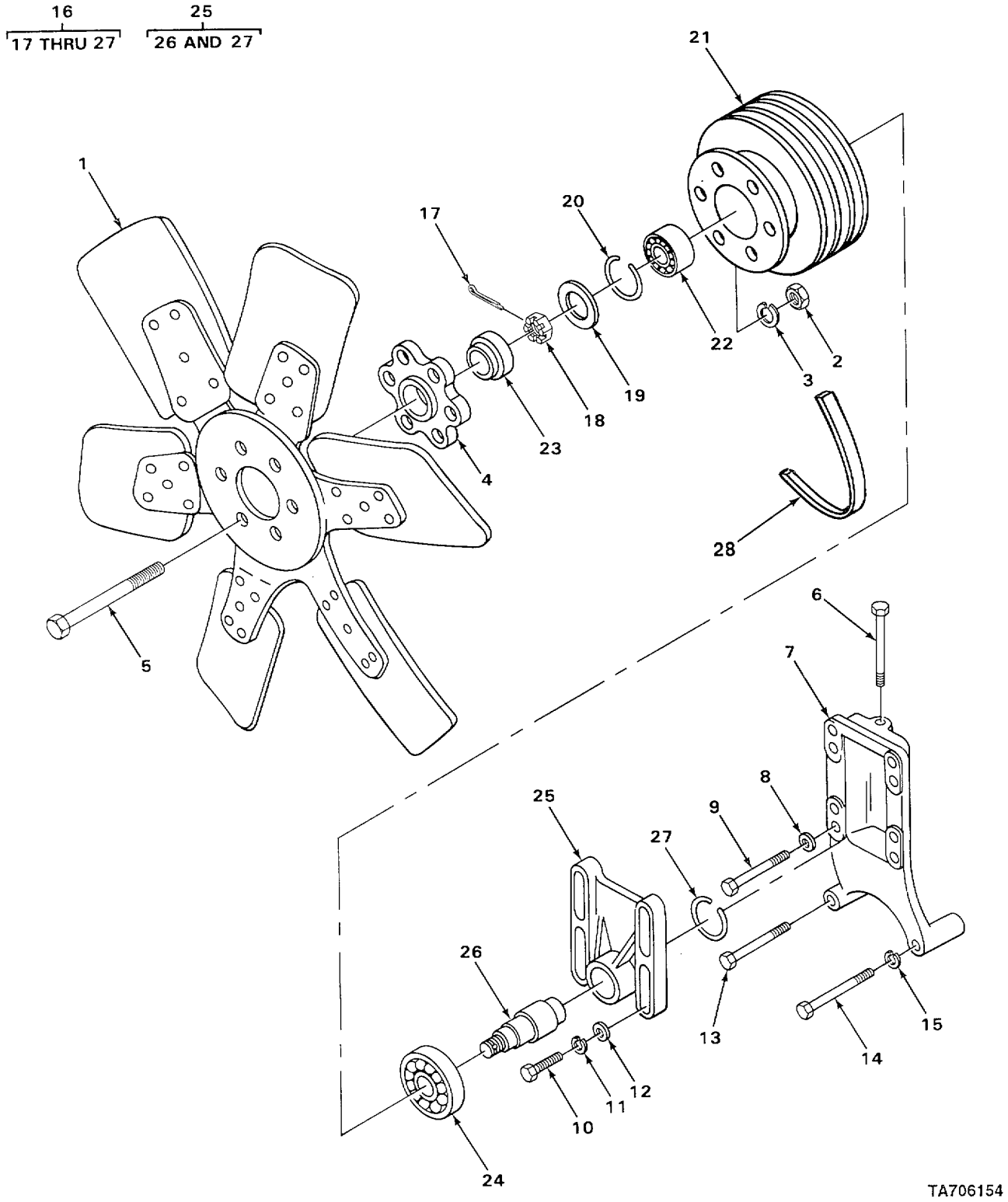

FIGURE 56. FAN, MOUNT, AND PULLEY.

(1) ITEM NO	(2) SMR CODE	(3) CAGEC	(4) PART NUMBER	(5) DESCRIPTION AND USABLE ON CODES (UOC)	(6) QTY
				GROUP 0505 FAN ASSEMBLY	
				FIG. 56 FAN, MOUNT, AND PULLEY	
1	XDFZZ	72582	5109396	BLADE	1
2	PFFZZ	96906	MS35691-624	NUT,PLAIN,HEXAGON	6
3	PFFZZ	96906	MS35338-45	WASHER,LOCK	6
4	PFFZZ	72582	5103718	SPACER	3
5	PFFZZ	72582	217220	BOLT,MACHINE	6
6	PFFZZ	72582	5124203	SCREW,CAP,HEXAGON H BRACKET ADJUSTING	1
7	PFFZZ	72582	5101362	BRACKET,ENGINE ACCE	1
8	PFFZZ	62793	104JD05-28	WASHER,FLAT	1
9	PFFZZ	41947	A6275	BOLT,MACHINE	1
10	PFFZZ	72582	9409053	BOLT,SPECIAL	4
11	PFFZZ	80045	23MS35338-10	WASHER,LOCK	4
12	PFFZZ	72582	5131978	WASHER,FLAT	4
13	PFFZZ	72582	187201	SCREW,CAPIHEXAGON H	1
14	PFFZZ	72582	271574	BOLT,MACHINE	2
15	PFFZZ	12603	23E10	WASHER,LOCK	2
16	PFFFF	72582	5103966	PULLEY AND HUB ASSE	1
17	PFFZZ	96906	MS24665-353	•PIN,COTTER	1
18	PFFZZ	96906	MS35692-1024	•NUT,PLAIN,SLOTTED,H SLOTTED	1
19	PFFZZ	72582	5103295	•WASHER,FLAT	1
20	PFFZZ	72582	274746	•RING,LOCK	1
21	PFFZZ	72582	5122251	•PULLEY,GROOVE 3 GROOVE,HUB	1
22	PFFZZ	43334	Z97509LRIB	•BEARINGIBALL,ANNULA INNER	1
23	PFFZZ	72582	5144798	•CAP,DUST,PROPELLER PULLEY	1
24	PFFZZ	72582	908208	•BEARING OUTER	1
25	XDFFF	72582	5129474	•BRACKET	1
26	XDFZZ	72582	5122238	••SHAFT.	1
27	PFFZZ	72582	5188194	••RING,RETAINING.	1
28	PAOZZ	72582	5133762	BELTS,V,MATCHED SET NHA ENGINE, DIESEL	1
				END OF FIGURE	

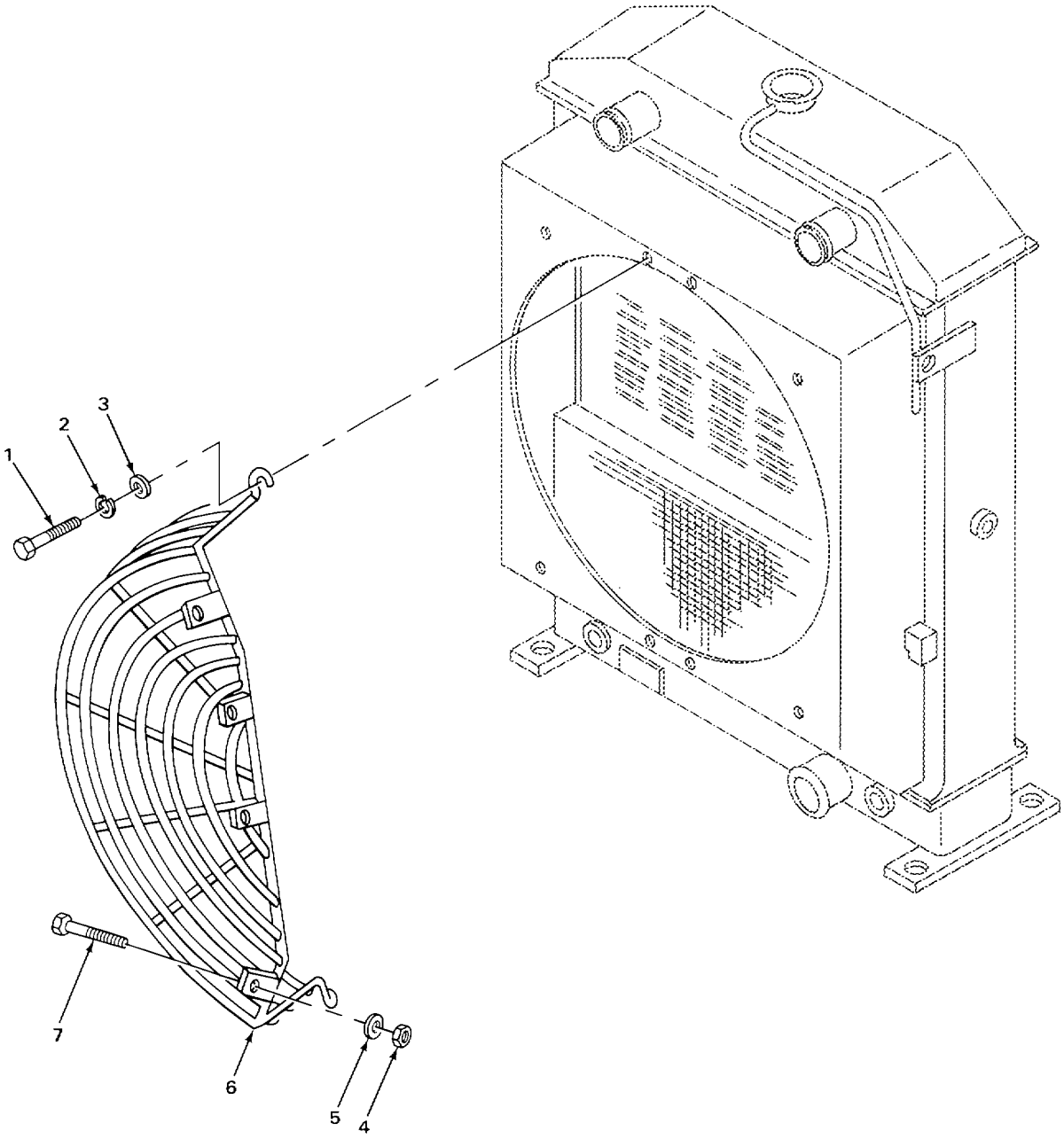

TA235521

FIGURE 57. FAN GUARD.

(1) ITEM NO	(2) SMR CODE	(3) CAGEC	(4) PART NUMBER	(5) DESCRIPTION AND USABLE ON CODES (UOC)	(6) QTY
				GROUP 0505 FAN ASSEMBLY	
				FIG. 57 FAN GUARD	
1	PFOZZ	40152	23C-616	BOLT,MACHINE	8
2	PFOZZ	96906	MS35333-76	WASHER,LOCK	8
3	PFOZZ	40152	103293	WASHER,FLAT	8
4	PFOZZ	12603	60D6	NUT,SELF-LOCKING,HE	4
5	PFOZZ	96906	MS27183-14	WASHER,FLAT	4
6	XDOZZ	40152	1548172	GUARD	2
7	PFOZZ	40152	24C-620	BOLT,MACHINE	4

END OF FIGURE

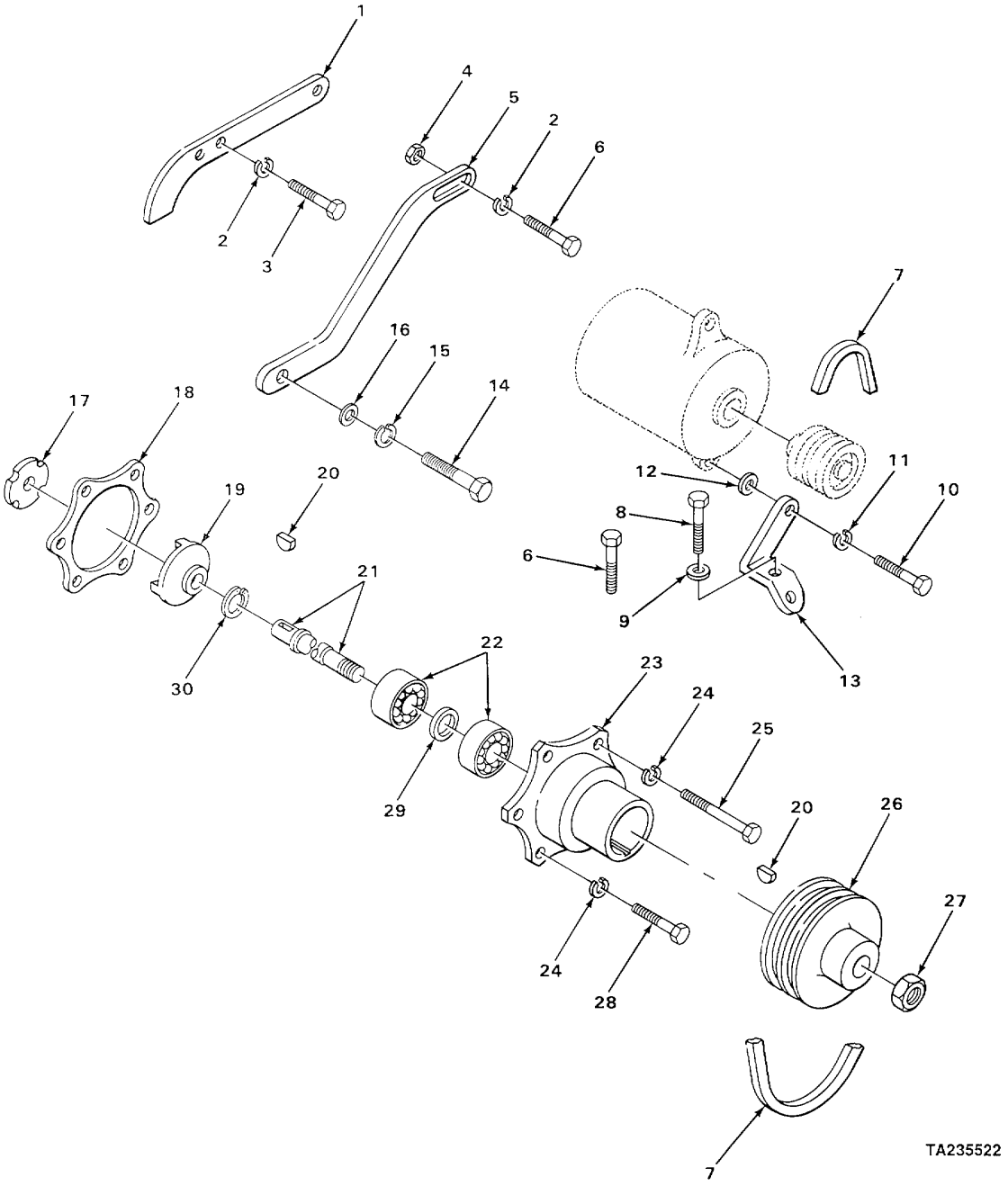

FIGURE 58. GENERATOR PULLEY AND RELATED PARTS.

(1) ITEM NO	(2) SMR CODE	(3) CAGEC	(4) PART NUMBER	(5) DESCRIPTION AND USABLE ON CODES (UOC)	(6) QTY
				GROUP 06 ELECTRICAL SYSTEM	
				GROUP 0601 GENERATORV ALTERNATOR	
				FIG. 58 GENERATOR PULLEY AND RELATED PARTS	
1	XDOZZ	72582	5137851	BRACKET ADJUSTING STRAP	1
2	PFOZZ	96906	MS35338-8	WASHER,LOCK	3
3	PFOZZ	24617	191249	SCREWTCAP,HEXAGON H	2
4	PFOZZ	96906	MS51967-8	NUT,PLAIN,HEXAGON	1
5	XDOZZ	73342	5148407	STRAP GENERATOR ADJUSTING	1
6	PFOZZ	96906	MS18154-60	SCREW,CAPIHEXAGON H	3
7	PAOZZ	72582	5133176	BELTS,VVMATCHED SET 2 BELTS	1
8	PFOZZ	72582	186647	SCREW,CAP,HEXAGON H	2
9	PFOZZ	81381	5179709	WASHER,FLAT COPPER	2
10	PFOZZ	96906	MS90728-89	SCREW,CAP,HEXAGON H	1
11	PFOZZ	96906	MS35338-47	WASHER,LOCK	1
12	PFOZZ	10001	265850PC88	WASHER,FLAT	1
13	XDOZZ	72582	5103197	BRACKET	1
14	PFOZZ	96906	MS18154-113	SCREW,CAP,HEXAGON H	1
15	PFOZZ	80045	23MS35338-10	WASHER,LOCK	1
16	PFOZZ	72582	5117082	WASHER,FLAT	1
17	PFFZZ	72582	5139545	INSERT,FLEXIBLE COU	1
18	PFFZZ	72582	5104507	GASKET	1
19	PFFZZ	72582	5143234	HUB,ACCESSORY DRIVE	1
20	PFFZZ	96906	MS35756-6	KEY,WOODRUFF	2
21	PFFZZ	72582	5143233	SHAFT,SHOULDERED	1
22	PFFZZ	43334	55604L1LD	BEARING,BALL,ANNULA	2
23	PFFZZ	72582	5133683	RETAINER,OIL SEAL	1
24	PFFZZ	96906	MS35338-8	WASHER,LOCK	6
25	PFFZZ	96906	MS90726-33	BOLT,MACHINE	5
26	XDFZZ	72582	5141817	PULLEY	1
27	PFFZZ	24617	9413509	NUT,PLAIN,HEXAG0N	1
28	PFFZZ	72582	186658	BOLT,MACHINE	1
29	PFFZZ	72582	5133682	SPACER,RING	1
30	PFFZZ	24617	274621	RING,RETAINING	1

END OF FIGURE

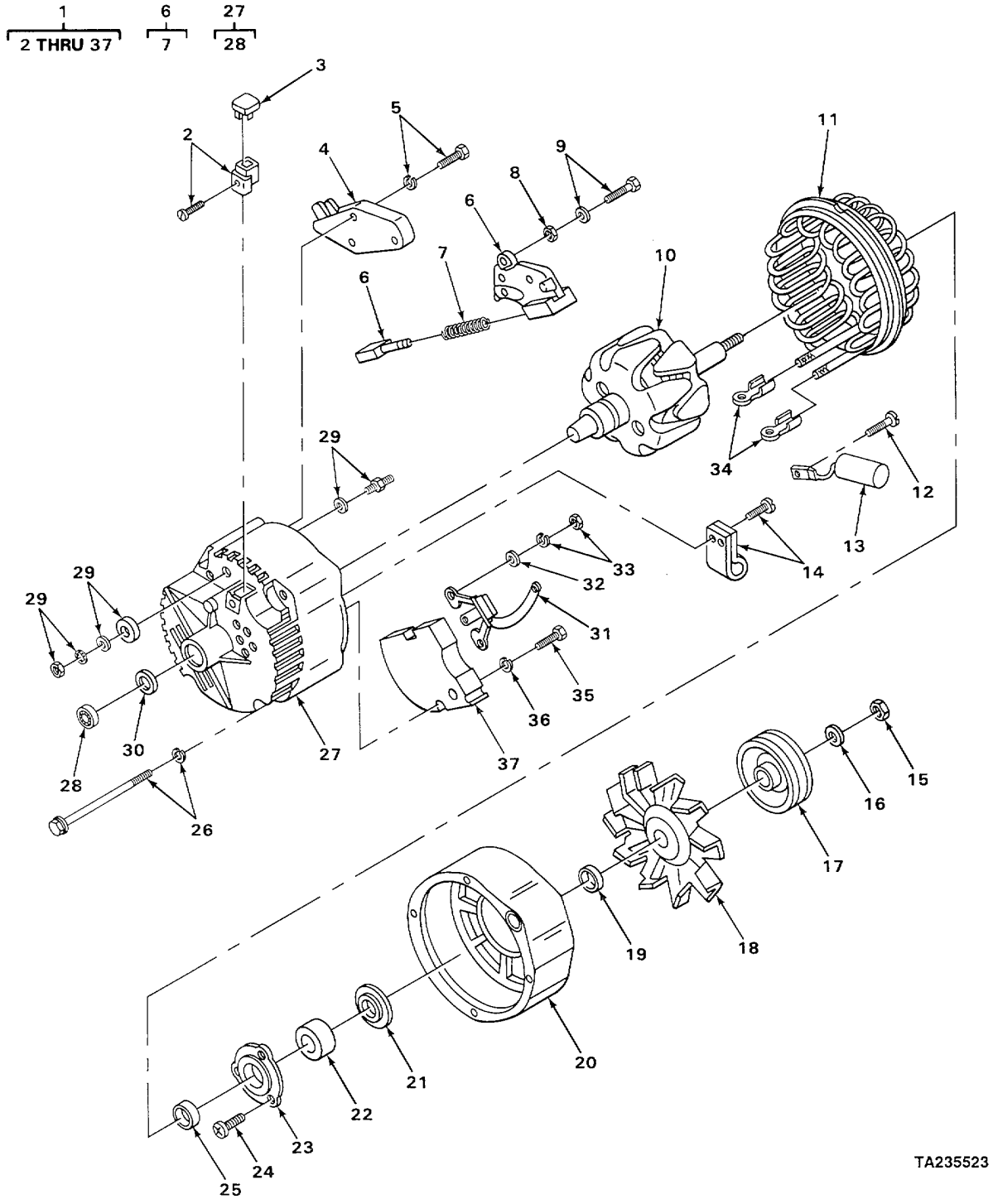

FIGURE 59. GENERATOR (65 AMP).

(1) ITEM NO	(2) SMR CODE	(3) CAGEC	(4) PART NUMBER	(5) DESCRIPTION AND USABLE ON CODES (UOC)	(6) QTY
				GROUP 0601 GENERATORI ALTERNATOR	
				FIG. 59 GENERATOR (65 AMP)	
1	PAOFF	16764	1100077	GENERATORIENGINE AC 65 AMP,USE	1
				WITH SERIAL RANGE 427C659 AND UP	
2	PFFZZ	11083	9L6772	•CONNECTOR,PLUG,ELEC.....	1
3	PFFZZ	16764	801532	•CAP ADJUSTER.....	1
4	PFFZZ	16764	1116405	•REGULATOR,ENGINE GE.....	1
5	PFFZZ	16764	1876808	•SCREW,ASSEMBLED WAS	1
6	XDFFF	16764	1852002	•BRUSH,ELECTRICAL CO WITH BRUSHES	1
7	PAFZZ	16764	1964117	•SPRING,BRUSH HOLDER.....	1
8	PFFZZ	16764	1851808	•NUT,PLAIN,ASSEMBLED REGULATOR STUD.....	1
9	PFFZZ	11862	1876681	•SETSCREW	1
10	XDFZZ	16764	1878873	•ROTOR ASSEMBLY ALTERNATOR	1
11	PFFZZ	16764	1852033	•STATOR,ENGINE GENER ALTERNATOR	1
12	PFFZZ	10988	A45228	•SCREW,TAPPING.....	1
13	PFFZZ	16764	1971411	•CAPACITOR,FIXED,PAP	1
14	PFFZZ	16764	1869573	•CLAMP,LOOP CAPACITOR,WITH SCREWS	1
15	PFFZZ	16764	9418881	•NUTISELF-LOCKING,HE	1
16	PFFZZ	16764	1905406	•WASHER,FLAT	1
17	XDFZZ	16764	510063	•PULLEY,GROOVE.....	1
18	PFFZZ	16764	1969481	•FAN,GENERATOR ALTERNATOR COOLING	1
19	PFFZZ	16764	1969046	•COLLAR OUTSIDE,ROTOR SHAFT.....	1
20	PFFZZ	16764	1852038	•HOUSING,ELECTRICAL DRIVE END	1
21	PFFZZ	16764	1969070	•WASHER,RECESSED DUST,DRIVE END	1
22	XDFZZ	16764	907904	•BEARING,BALL,ANNULA DRIVE END.....	1
23	PFFZZ	16764	1961867	•SEAL,PLAIN ENCASED	1
24	PFFZZ	72560	9411396	•SCREW,MACHINE BALL BEARING	3
				RETAINER	
25	PFFZZ	16764	1970384	•COLLAR,BEARING INSIDE,ROTOR SHAFT	1
26	PFFZZ	11862	801810	•BOLT WITH WASHERITHRU HOUSINGS	4
27	PFFZZ	16764	1852630	•END BELL,ELECTRICAL SLIP RING END.....	1
28	PFFZZ	16764	9437171	•BEARING,ROLLER,NEED SLIP RING END.....	1
29	PFFZZ	16764	1846901	•TERMINAL,FEEDTHRU	1
30	PFFZZ	16764	1961323	•RETAINER LOCK	1
31	PFFZZ	16764	830891	•SEMICONDUCTOR DEVIC DIODE	1
				ALTERNATOR	
32	PFFZZ	16764	1876895	•WASHER,FLAT	3
33	PFFZZ	16764	453434	•NUT,PLAIN,HEXAGON	3
34	PFFZZ	16764	801828	•CONTACT,ELECTRICAL STATOR LEAD	2
35	PFFZZ	16764	1970145	•SCREW,MACHINE	2
36	PFFZZ	16764	1847933	•WASHER,LOCK RECTIFIER BRIDGE	2
37	PFFZZ	16764	1892914	•BRIDGE,RECTIFIER,AL.....	1

END OF FIGURE

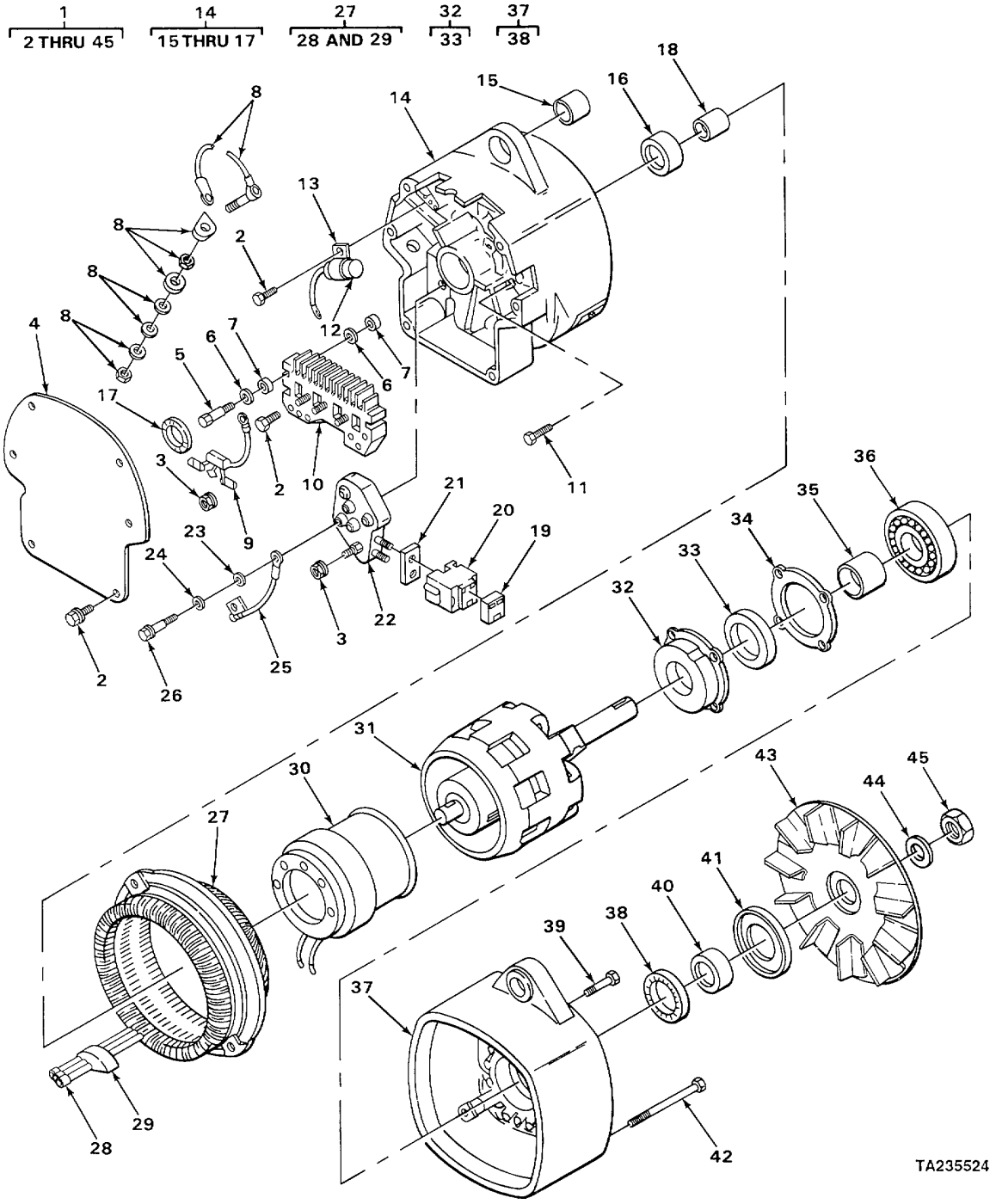

FIGURE 60. GENERATOR.

(1) ITEM NO	(2) SMR CODE	(3) CAGEC	(4) PART NUMBER	(5) DESCRIPTION AND USABLE ON CODES (UOC)	(6) QTY
				GROUP 0601 GENERATOR, ALTERNATOR FIG. 60 GENERATOR	
1	PAOFF	16764	1117734	GENERATOR,ENGINE AC USE WITH	1
				SERIAL RANGE 427C601 THRU 427C658	
2	PFFZZ	16764	1846955	•SCREW,ASSEMBLED WAS	7
3	PFFZZ	16764	1851808	•NUT,PLAIN,ASSEMBLED	2
4	XDFZZ	16764	1876814	•COVER PLATE RECTIFIER END	1
5	PFFZZ	16764	830335	•SCREWIMACHINERECTIFIER BRIDGE	1
				ATTACHING	
6	PFFZZ	16764	1919478	•WASHER,FLAT BRIDGE TO HOUSING	2
6	PFFZZ	16764	807295	•WASHER,FLAT	2
7	PFFZZ	16764	1966879	•BUSHING,SLEEVE RECTIFIER BRIDGE.....	2
8	PFFZZ	16764	1876897	•PARTS KIT,TERMINAL, ...	1
9	PFFZZ	16764	1876797	•DIODE ASSEMBLY,ALTE	1
10	PFFZZ	16764	1880132	•RECTIFIER ASSEMBLY.....	1
11	PFFZZ	16764	1968945	•SCREW,EXTERNALLY RE	1
12	PFFZZ	16764	1880046	•CAPACITOR,FIXED,ELE.....	1
13	XDFZZ	16764	1880118	•BRACKET CAPACITOR	1
14	XDFFF	16764	1876760	•HOUSING,RECTIFIER	1
15	PAFZZ	16764	1892765	••BUSHING,SLEEVE	1
16	PFFZZ	60380	JHT-1413-T1	••BEARING,ROLLERINEED	1
17	PAFZZ	16764	1876813	••CAP-PLUG,PROTECTIVE	1
18	PFFZZ	16764	9436063	•RING,BEARING,INNER.....	1
19	PFFZZ	16764	801532	•CAP VOLTAGE ADJUSTER.....	1
20	PFFZZ	11083	9L6772	•CONNECTOR,PLUG,ELEC.....	1
21	PFFZZ	11862	1876806	•BOOTWDUST AND MOIST	1
22	PAFZZ	16764	1116406	•REGULATOR,ENGINE GE.....	1
23	PFFZZ	16764	807295	•WASHER,FLAT REGULATOR ATTACHING	3
24	PFFZZ	16764	1913846	•WASHER,FLAT REGULATOR ATTACHING	3
25	PFFZZ	16764	1876807	•LEAD,ELECTRICAL	1
26	PFFZZ	16764	1976061	•SCREW REGULATOR ATTACHING	3
27	PAFFF	16764	1876804	•STATOR,ENGINE GENER.....	1
28	PAFZZ	16764	1969671	••TERMINAL,LUG	3
29	XDFZZ	16764	1876805	••GROMMET STATOR LEADS	1
30	PAFZZ	16764	1876790	•COIL,ELECTRICAL WITH SUPPORT	1
31	PAFZZ	16764	1968904	•ROTOR,GENERATOR	1
32	PAFZZ	16764	1970407	•KIT,HEAT SINK	1
33	PFFZZ	16764	1958509	••SEAL,PLAIN ENCASED.....	1
34	PAFZZ	16764	1968884	•GASKET	1
35	PFFZZ	16764	1968885	•COLLAR,SHAFT.....	1
36	PFFZZ	16764	9439570	•BEARING,BALL,ANNULA.....	1
37	PAFFF	16764	1852726	•FRAME.....	1
38	PFFZZ	16764	1958509	••SEAL,PLAIN ENCASED.....	1
39	PFFZZ	16764	1968994	•SCREW,CAP,HEXAGON H	1
40	PAFZZ	16764	1968890	•COLLAR.....	1
41	PAFZZ	16764	1968891	•SLINGER	1
42	PFFZZ	16764	1968991	•SCREW,CAP,HEXAGON H	1
43	PFFZZ	16764	1969481	•FAN,GENERATOR	1
44	PFFZZ	16764	1905406	•WASHER,FLAT	1
45	PFFZZ	16764	9418881	•NUT,SELF-LOCKING,HE	1

END OF FIGURE

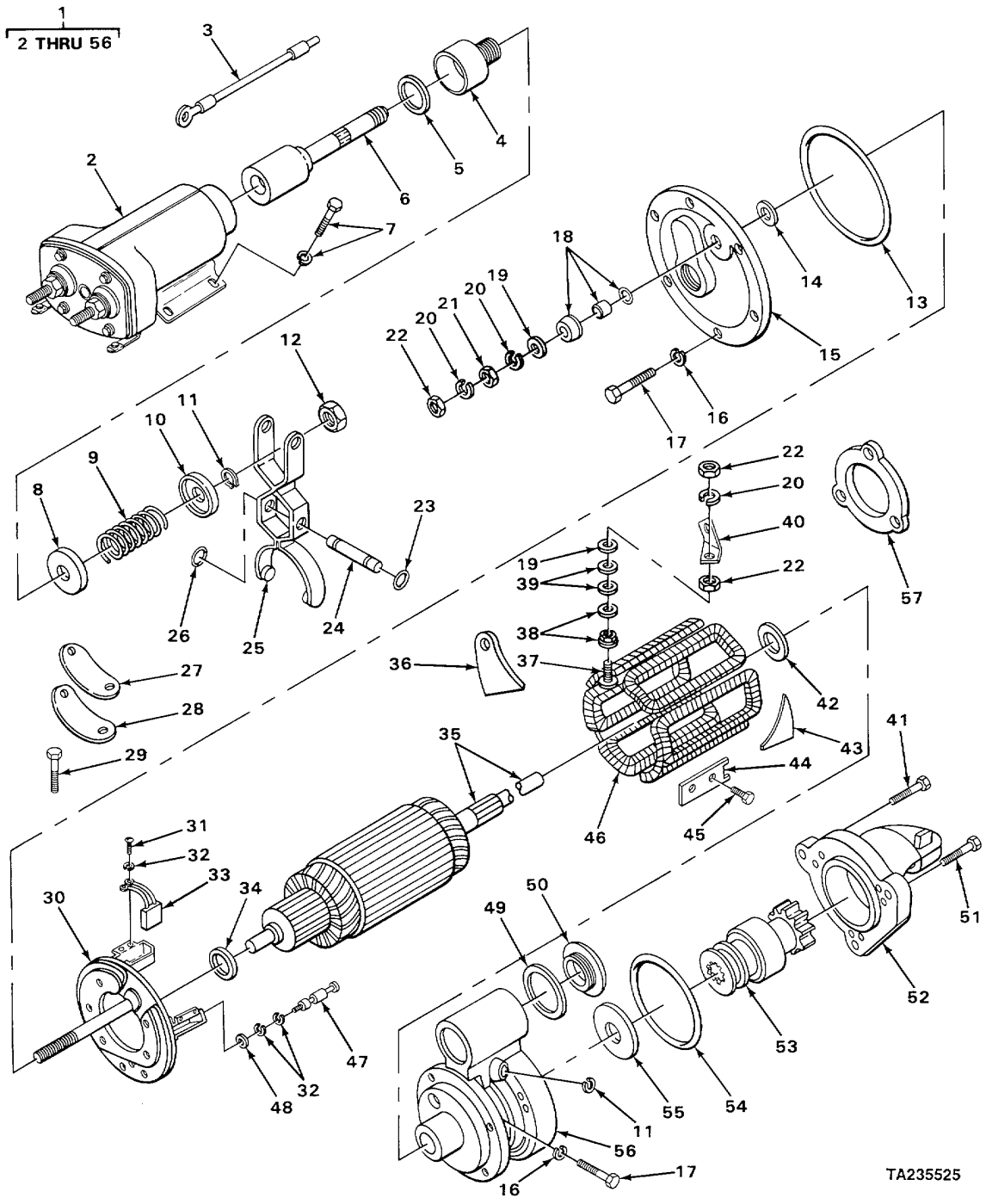

FIGURE 61. STARTER.

(1) ITEM NO	(2) SMR CODE	(3) CAGEC	(4) PART NUMBER	(5) DESCRIPTION AND USABLE ON CODES (UOC)	(6) QTY
				GROUP 0603 STARTING MOTOR	
				FIG. 61 STARTER	
1	PAOFF	16764	1114848	•STARTER,ENGINE,ELEC ASSEMBLY	1
2	PFFZZ	16764	111559	•RELAY-SOLENOID,ENGI	1
3	PFFZZ	16764	1953236	•LEAD,ELECTRICAL	1
4	PFFZZ	16764	801077	•BELLOWS,PROTECTION PLUNGER	1
5	PFFZZ	16764	1948519	•WASHER,FLAT	1
6	PFFZZ	16764	1948522	•PLUNGER,SOLENOID	1
7	XDFZZ	81348	FFB475	•BOLT,MACHINE WITH LOCKWASHER	4
8	PFFZZ	16764	1948520	•WASHER,RECESSED	1
9	PFFZZ	16764	1948521	•SPRING,HELICAL,COMP	1
10	PFFZZ	16764	1948526	•WASHER,RECESSED	1
11	PFFZZ	96906	MS16624-1037	•RING,RETAINING	3
12	PFFZZ	16764	9412305	•NUT,SELF-LOCKING,HE PLUNGER ROD GUIDE	1
13	PFFZZ	16764	1916272	•PACKING,PREFORMED	1
14	PFFZZ	16764	1913084	•WASHER,FLAT COVER END	2
15	PFFZZ	16764	1945515	•END BELL,ELECTRICAL	1
16	PFFZZ	24617	9421423	•WASHER,LOCK	8
17	PFFZZ	16764	1914869	•BOLT,MACHINE COVER END FRAME ATTACHING	8
18	PFFZZ	16764	1851632	•PARTS KIT,ELECTRICA	1
19	PFFZZ	88044	AN960-816L	•WASHER,FLAT	2
20	PFFZZ	16764	11504248	•WASHER,LOCK	3
21	PFFZZ	96906	MS35691-33	•NUT,PLAIN,HEXAGON COVER END TERMINAL STUD	1
22	PFFZZ	24617	9413509	•NUT,PLAIN,HEXAGON COVER END, TERMINAL STUD	3
23	PFFZZ	16764	1894642	•PACKING,PREFORMED	1
24	PFFZZ	16764	1948529	•SHAFT,SHOULDERED	1
25	PFFZZ	16764	1945484	•LEVER ASSEMBLY,	1
26	PFFZZ	16764	1894643	•PACKING,PREFORMED	1
27	PFFZZ	16764	1948512	•GASKET USE WITH THREADED PLUG	1
28	PFFZZ	16764	1948513	•PLATE,ARMATURE	1
29	PFFZZ	16764	9414397	•SCREW,SELF-LOCKING BRUSH COVER PLATE	2
30	PFFZZ	16764	1948515	•HOLDER ASSEMBLY,ELE	1
31	PFFZZ	96906	MS35206-242	•SCREW,MACHINE BRUSH LEAD ATTACHING	4
32	PFFZZ	21450	453844	•WASHER,LOCK	4
33	PFFZZ	16764	1946407	•BRUSH,ELECTRICAL C0	8
34	PFFZZ	16764	1914842	•WASHER,FLAT	1
35	PFFZZ	16764	1945500	•ARMATURE,MOTOR	1
36	PFFZZ	16764	1955990	•INSULATOR,PLATE USE WITH THREADED PLUG	1
37	PFFZZ	16764	1950561	•TERMINAL,STUD	1
38	PFFZZ	16764	1965472	•INSULATOR BUSHING	1
39	PFFZZ	16764	1922457	•WASHER,FLAT	2
40	PFFZZ	16764	1945468	•CONNECTOR,TERMINAL	1
41	PFFZZ	19207	7748639	•BOLT,INTERNAL WRENC DRIVE HOUSING ATTACHING	3

(1) ITEM NO	(2) SMR CODE	(3) CAGEC	(4) PART NUMBER	(5) DESCRIPTION AND USABLE ON CODES (UOC)	(6) QTY
42	PFFZZ	16764	1936466	WASHER	1
43	PFFZZ	16764	1914873	PLATE,INSULATION	1
44	PFFZZ	16764	1934478	POLE,SHOE	1
45	PFFZZ	11862	1968396	SCREW,MACHINE POLE SHOE	2
46	PFFZZ	16764	1974929	COIL,ELECTRICAL	4
47	PFFLZ	16764	1847807	SCREW,MACHINE BRUSH PLATE ASSEMBLY ATTACHING	8
48	PFFZZ	16764	1913086	WASHER,FLAT	8
49	PFFZZ	16764	1964857	GASKET	1
50	PFFZZ	16764	1945356	PLUG,MACHINE THREAD	1
51	PFFZZ	16764	1948536	BOLT,INTERNAL WRENC DRIVE HOUSING ATTACHING	6
52	PFFZZ	16764	1957846	STARTER HOUSINGIENG	1
53	PFFZZ	16764	830620	DRIVE,ENGINE,ELECTR	1
54	PFFZZ	16764	1945476	PACKING,PREFORMED	1
55	PFFZZ	16764	1911644	WASHER,FLAT BRAKE	1
56	XDFZZ	16764	801403	HOUSING LEVER	1
57	PFFZZ	72582	5130995	GASKET PART OF KIT P/N 5196374	1

END OF FIGURE

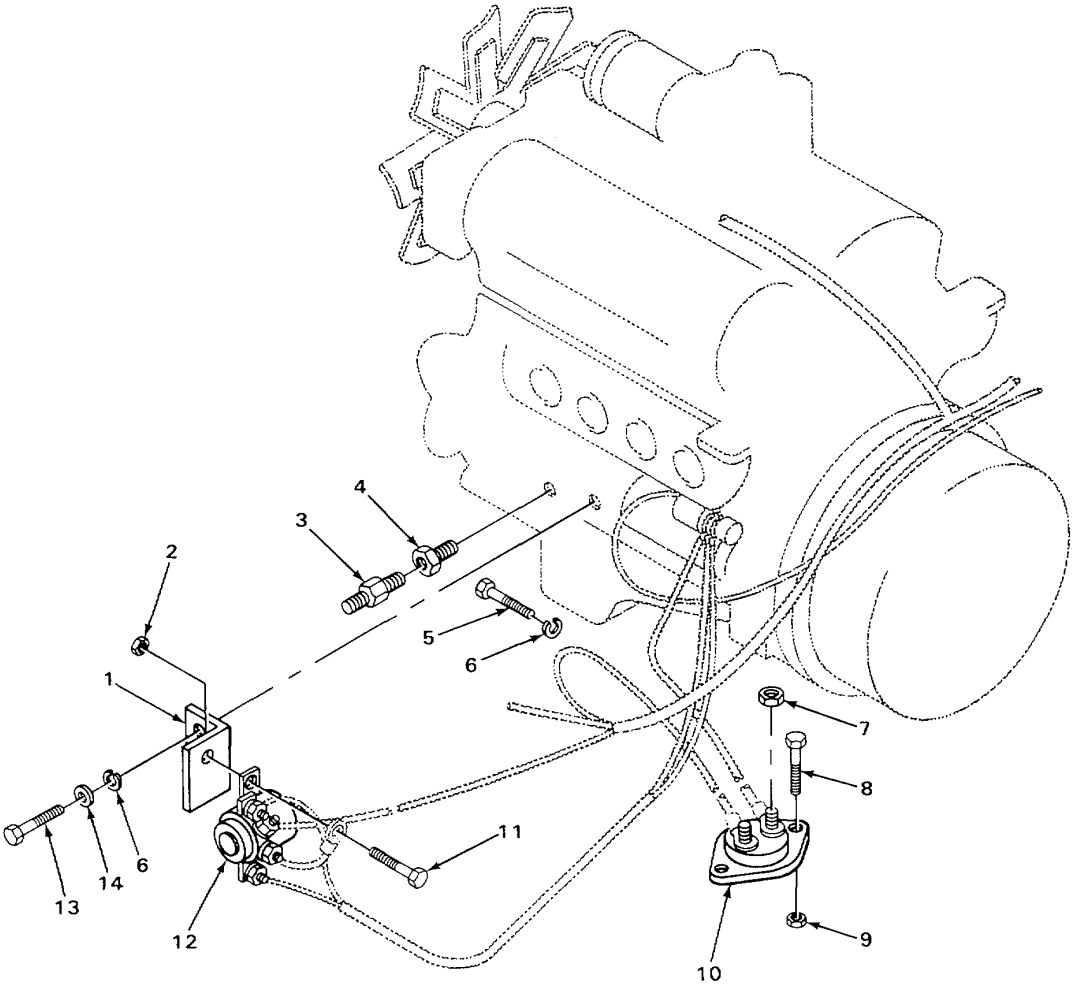

TA235526

FIGURE 62. ELECTRIC SYSTEM SWITCHES AND CIRCUIT BREAKERS.

(1) ITEM NO	(2) SMR CODE	(3) CAGEC	(4) PART NUMBER	(5) DESCRIPTION AND USABLE ON CODES (UOC)	(6) QTY
				GROUP 0606 ENGINE SAFETY CONTROLS	
				FIG. 62 ELECTRIC SYSTEM SWITCHES AND CIRCUIT BREAKERS	
1	XDOZZ	40152	1537934	BRACKET	1
2	PFOZZ	40152	60D-04	NUT,PLAIN,HEXAGON	2
3	PFOZZ	81343	2-2 140137C	NIPPLE,PIPE	1
4	XDOZZ	40152	18F-1	TEE	1
5	PFOZZ	96906	MS90727-58	SCREW,CAP,HEXAGON H	1
6	PFOZZ	96906	MS35333-76	WASHER,LOCK	1
7	PFOZZ	96906	MS35692-7	NUT,PLAIN,SLOTTED,H	2
8	PFOZZ	40152	85G-1218	SCREW,CAP,HEXAGON H	2
9	PFOZZ	40152	50D-12	NUT,SELF-LOCKING,HE	2
10	PFOZZ	40152	1512688	CIRCUIT BREAKER	1
11	PFOZZ	96906	MS90727-6	BOLT,MACHINE	2
12	PFOZZ	40152	1529233	SOLENOID,ELECTRICAL	1
13	PFOZZ	96906	MS90728-60	SCREW,CAP,HEXAGON H	1
14	PFOZZ	12603	656672	WASHER,PLAIN	1

END OF FIGURE

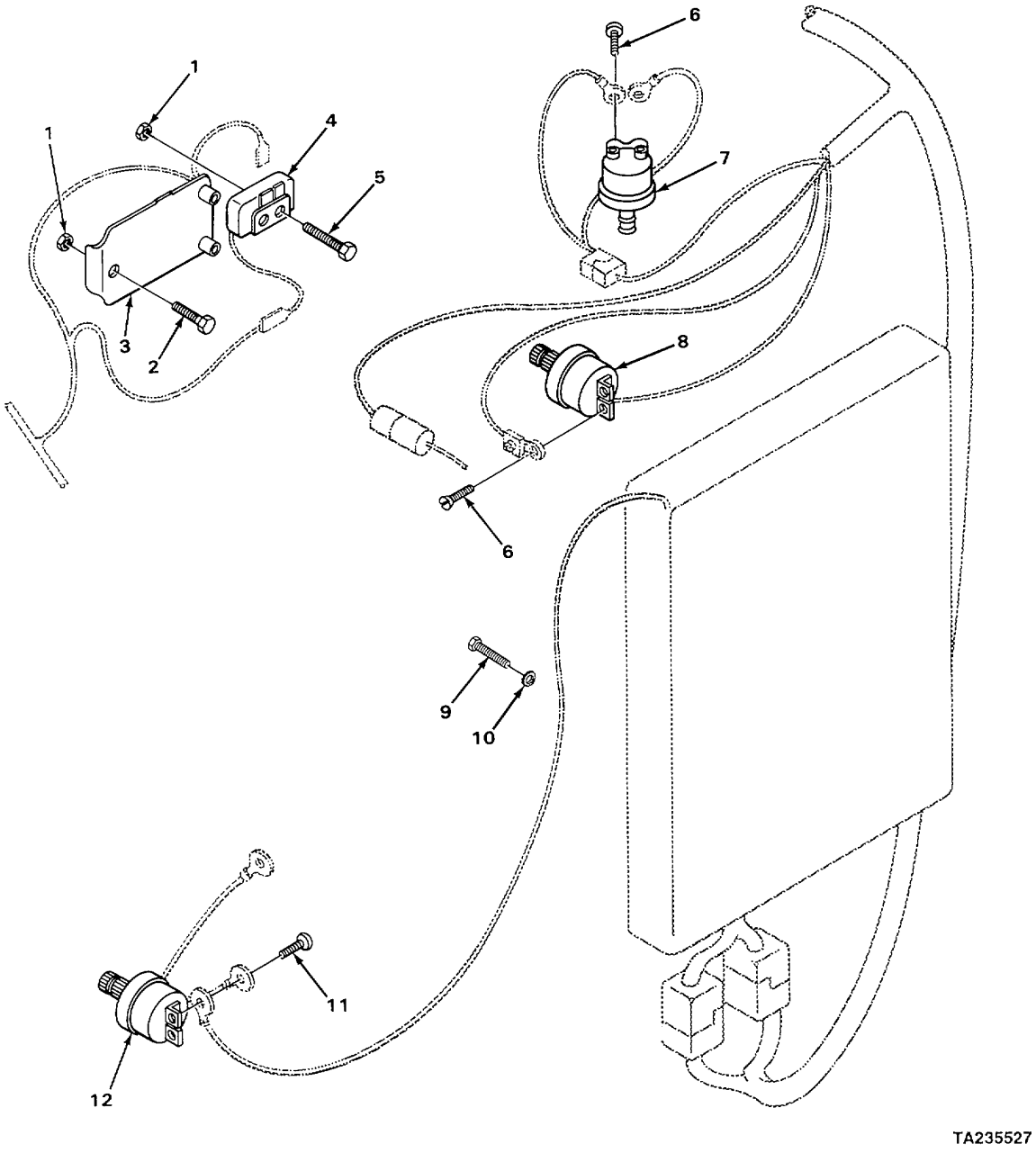

FIGURE 63. ELECTRIC SWITCHES.

(1) ITEM NO	(2) SMR CODE	(3) CAGEC	(4) PART NUMBER	(5) DESCRIPTION AND USABLE ON CODES (UOC)	(6) QTY
				GROUP 0606 ENGINE SAFETY CONTROLS FIG. 63 ELECTRIC SWITCHES	
1	PFOZZ	96906	MS21044N4	NUTTSELF-LOCKING,HE USE WITH ..... SERIAL RANGE 427C601 THRU 427C658	5
2	PFOZZ	40152	24C-420	BOLT,MACHINE USE WITH SERIAL RANGE ..... 427C601 THRU 427C658	3
3	PFOZZ	15434	162201	REGULATOR,ENGINE GE USE WITH ..... SERIAL RANGE 427C601 THRU 427C658	1
4	PFOZZ	40152	1526006	RELAY,ELECTROMAGNET USE WITH ..... SERIAL RANGE 427C601 THRU 427C658	1
5	PFOZZ	40152	24C-416	BOLT,MACHINE USE WITH SERIAL RANGE ..... 427C601 THRU 427C658	2
6	PFOZZ	40152	85G-1004	SCREW,MACHINE	4
7	PFOZZ	12603	236395	SWITCH,PUSH NEUTRAL START	1
8	PFOZZ	40152	636260	SWITCH,PRESSURE	1
9	PFOZZ	40152	24C-612	BOLT,MACHINE	1
10	PFOZZ	96906	MS35333-76	WASHER,LOCK.....	1
11	PFOZZ	40152	85G-804	SCREW,MACHINE	2
12	PFOZZ	12603	1537354	SWITCH,PUSH PRESSURE,EMERGENCY	1
				END OF FIGURE	

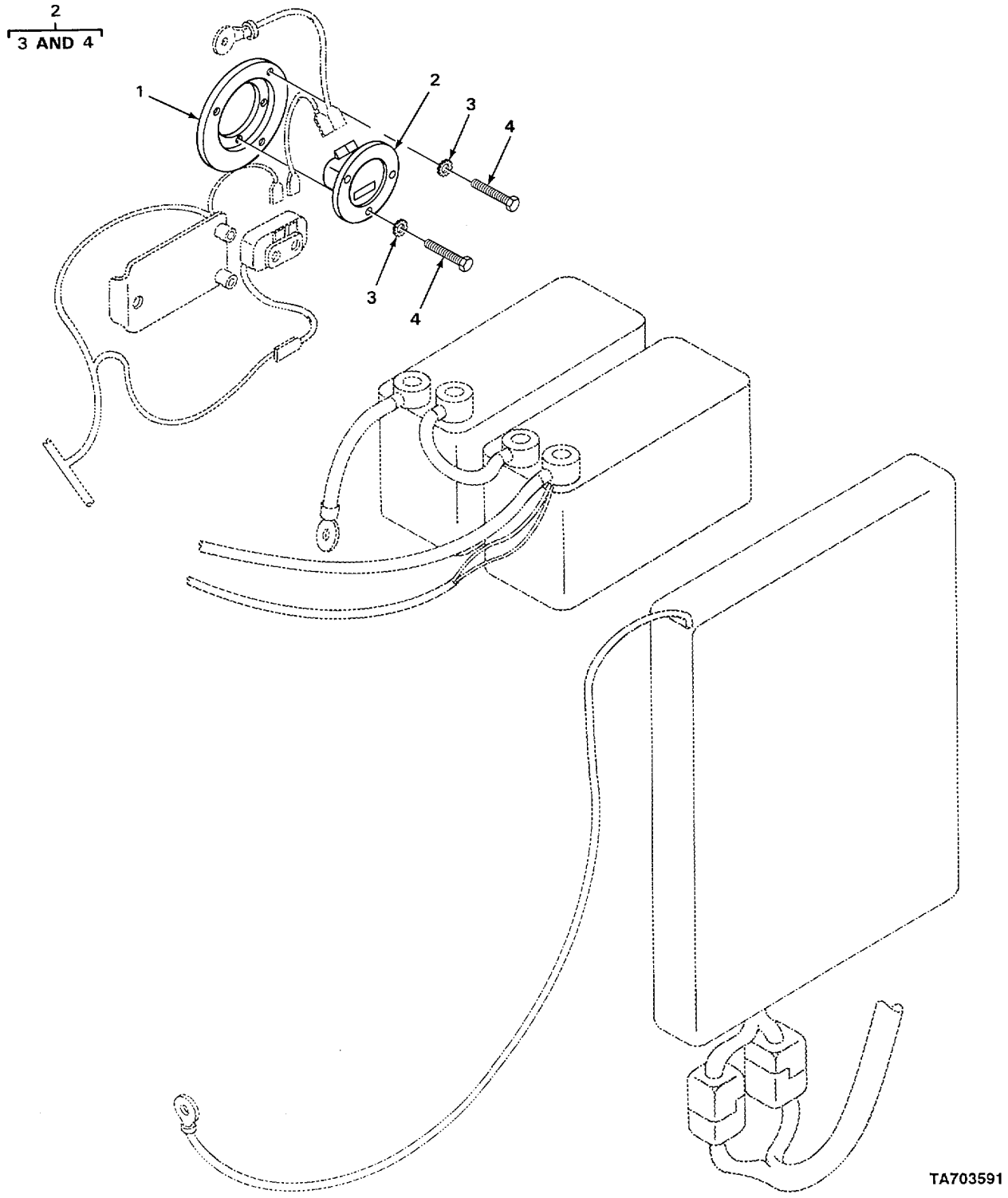

FIGURE 64. ELECTRIC HOURMETER.

(1) ITEM NO	(2) SMR CODE	(3) CAGEC	(4) PART NUMBER	(5) DESCRIPTION AND USABLE ON CODES (UOC)	(6) QTY
				GROUP 0607 INSTRUMENT OR ENGINE CONTROL PANEL	
				FIG. 64 ELECTRIC HOURMETER	
1	PFOZZ	40152	551251	DAMPER, HOURMETER.....	1
2	PFOZZ	12603	1743825	METER,TIME TOTALIZI	1
3	PFOZZ	96906	MS35790-1	WASHER,LOCK.....	6
4	PFOZZ	40152	85G-608	SCREW,CAP,HEXAGON H.....	6

END OF FIGURE

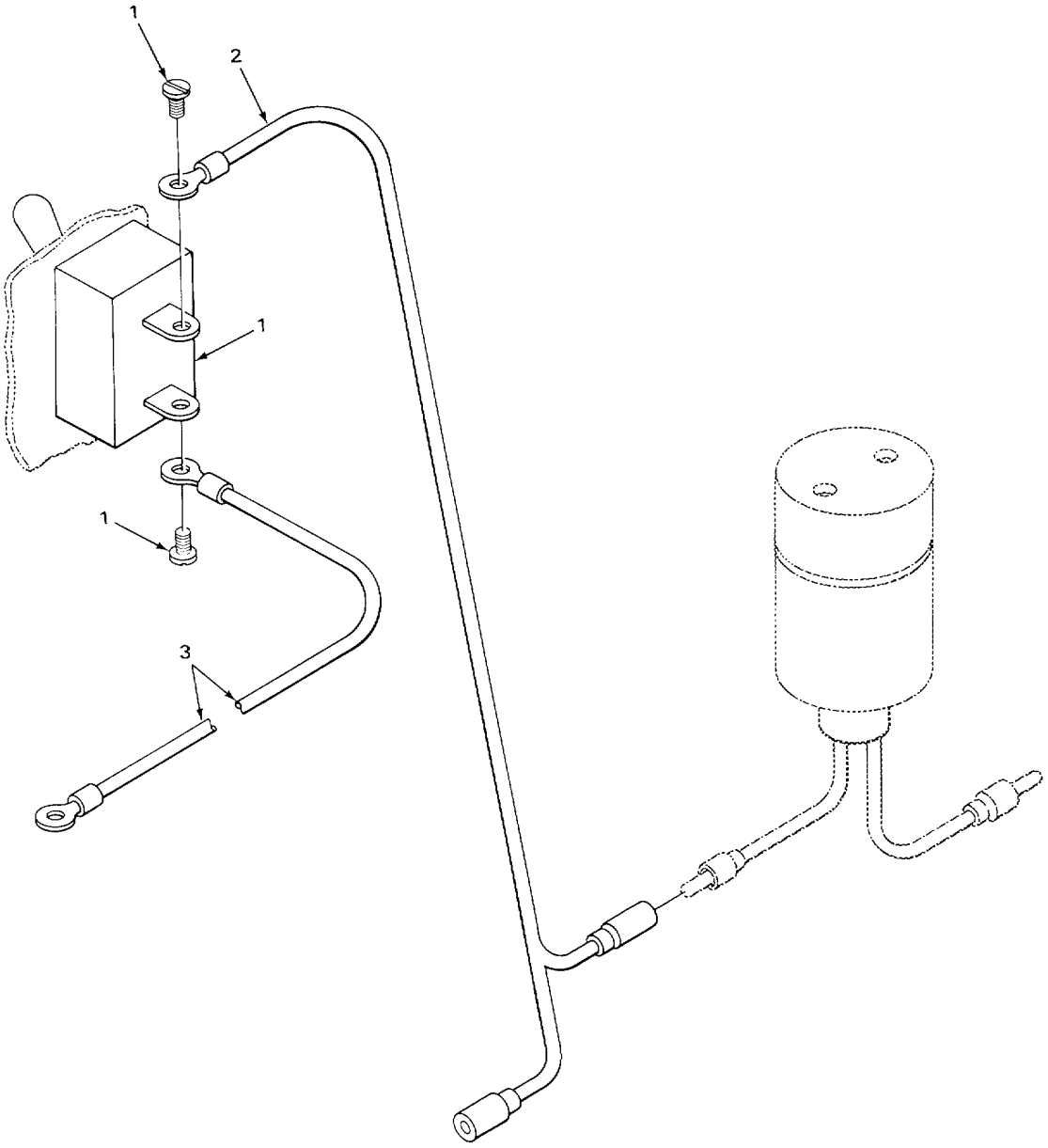

TA235529

FIGURE 65. BOOM DETENT RELEASE.

(1) ITEM NO	(2) SMR CODE	(3) CAGEC	(4) PART NUMBER	(5) DESCRIPTION AND USABLE ON CODES (UOC)	(6) QTY
				GROUP 0607 INSTRUMENT OR ENGINE CONTROL PANEL	
				FIG 65 BOOM DETENT RELEASE	
1	XDOZZ	40152	1501478	SWITCH	1
2	XDOZZ	40152	2502937	WIRE ASSEMBLY	1
3	XDOZZ	40152	2502936	WIRE ASSEMBLY	1

END OF FIGURE

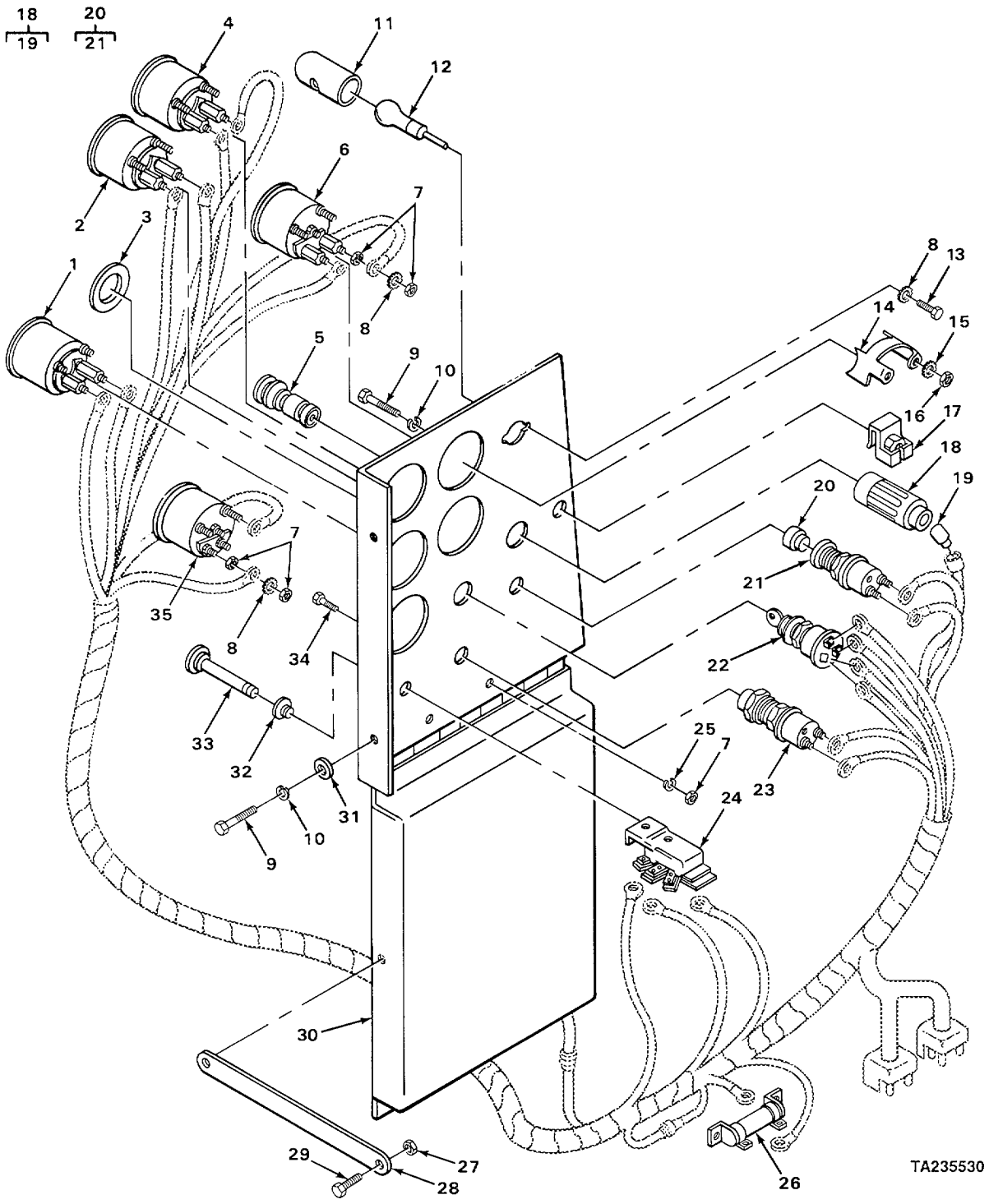

FIGURE 66. ELECTRIC GAGES AND INSTRUMENT PANEL.

(1) ITEM NO	(2) SMR CODE	(3) CAGEC	(4) PART NUMBER	(5) DESCRIPTION AND USABLE ON CODES (UOC)	(6) QTY
				GROUP 0607 INSTRUMENT OR ENGINE CONTROL PANEL	
				FIG. 66 ELECTRIC GAGES AND INSTRUMENT PANEL	
1	PFOZZ	40152	947252	INDICATOR,TEMPERA	1
2	PFOZZ	40152	947254	INDICATOR,TEMPERA	1
3	XDOZZ	40152	547237	DISC	1
4	PFOZZ	40152	947250	GAGE,PRESSURE,DIAL	1
5	PFOZZ	40152	944803	ELEMENT,LIGHTER VEH	1
6	PFOZZ	40152	947248	GAGE,PRESSURE,DIAL ENGINE OIL PRESSURE	1
7	PFOZZ	12204	111607	CLAMP,HOSE	15
8	PFOZZ	96906	MS35790-1	WASHER,LOCK	10
9	PFOZZ	40152	23C-616	BOLT,MACHINE	3
10	PFOZZ	96906	MS35333-76	WASHER,LOCK	3
11	PFOZZ	73331	911246	LIGHT,PANEL	1
12	PFOZZ	96906	MS15570-623	LAMP,INCANDESCENT	1
13	PFOZZ	40152	18G-606	SCREW,MACHINE	2
14	PFOZZ	70040	1503496	STRAP,MOUNTING,FUE6	5
15	PFOZZ	96906	MS35335-32	WASHER,LOCK,	10
16	PFOZZ	40152	14010	NUT	10
17	PFOZZ	40152	572729	NUT,PLAIN,HEXAGON	1
18	PFOZZ	12603	549024	CONNECTOR,RECEPTACL	1
19	PF02Z	40152	944804	FUSE 20 AMP	1
20	PFOZZ	89749	600259	SWITCH,ENGINE START	1
21	XDOZZ	40152	857420	BOOT-	1
22	PFOZZ	40152	573548	SWITCH,IGNITION	1
23	PFOZZ	40152	2504975	SWITCH,ENGINE START	1
24	PFOZZ	40152	2514253	SWITCH,ROTARY	1
25	PFOZZ	24617	1914578	WASHER,LOCK	2
26	PFOZZ	40152	556489	RESISTOR,FIXED,COMP	1
27	PFOZZ	12603	6005	NUTISELF-LOCKING,CA	1
28	XDOZZ	40152	1544614	BRACKET	1
29	PFOZZ	40152	24C-516	BOLT,MACHINE	1
30	XDOFF	40152	1544683	PANEL	1
31	PFOZZ	12603	656672	WASHER,PLAIN	2
32	XDOZZ	40152	550743	BUSHING	1
33	PFOZZ	40152	550742	ROD,GROOVED,HEADLES	1
34	PFOZZ	40152	85G-608	SCREW,CAP,HEXAGON H	2
35	PFOZZ	40152	947261	VOLTMETER	1

END OF FIGURE

5
6 AND 7

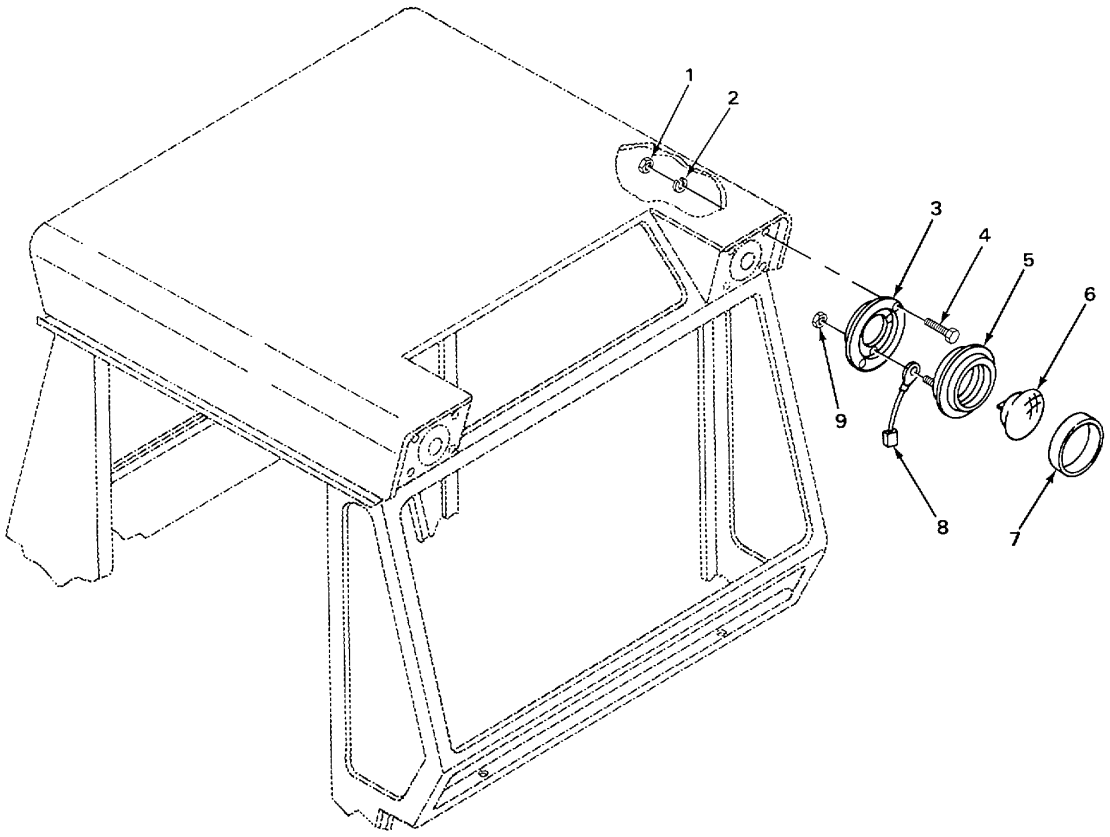

TA235531

FIGURE 67. CRAB HEADLIGHT.

(1) ITEM NO	(2) SMR CODE	(3) CAGEC	(4) PART NUMBER	(5) DESCRIPTION AND USABLE ON CODES (UOC)	(6) QTY
				GROUP 0609 LIGHTS	
				FIG. 67 CAB HEADLIGHT	
1	PFOZZ	96906	MS35649-202	NUT,PLAIN,HEXAGON	8
2	PFOZZ	16764	1880781	WASHER,LOCK	8
3	XDOZZ	40152	568675	ADAPTER	2
4	PFOZZ	40152	3G-1012	SCREW,CAP,HEXAGON H	8
5	XDOOO	40152	547006	LAMP HEADLIGHT ASSEMBLY	2
5	PFOZZ	40152	582057	FLOODLIGHT,ELECTRIC HEADLIGHT ASSEMBLY	2
6	XDOZZ	40152	551242	SEALED UNIT USE WITH P/N 547006	1
6	PFOZZ	96906	MS17165-4578	LAMP,INCANDESCENT USE WITH P/N 582057	1
7	XDOZZ	40152	944977	RETAINER,HEADLIGHT	1
8	XDOZZ	40152	540882	WIRE	2
9	PFOZZ	40152	500-10	NUT,PLAIN,HEXAGON	6

END OF FIGURE

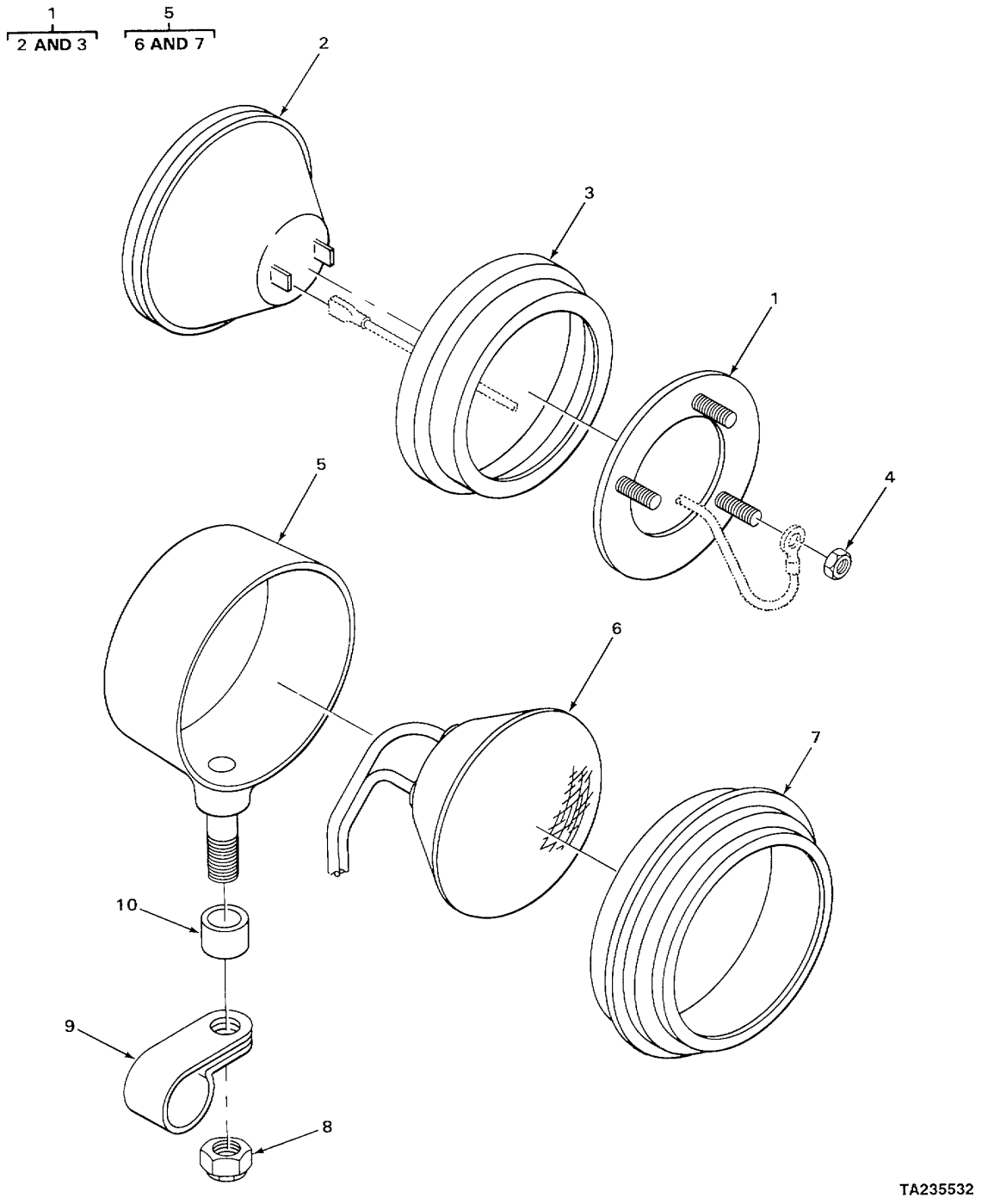

FIGURE 68. MISCELLANEOUS LIGHTS.

(1) ITEM NO	(2) SMR CODE	(3) CAGEC	(4) PART NUMBER	(5) DESCRIPTION AND USABLE ON CODES (UOC)	(6) QTY
				GROUP 0609 LIGHTS	
				FIG. 68 MISCELLANEOUS LIGHTS	
1	PFOZZ	40152	582057	FLOODLIGHT,ELECTRIC	2
2	PFOZZ	96906	MS17165-4578	LAMP,INCANDESCENT	1
3	XDOZZ	40152	944977	RETAINERIHEADLIGHT	1
4	PFOZZ	40152	50D-10	NUT,PLAIN,HEXAGON	6
5	PFOZZ	40152	548088	HEADLIGHT.....	2
6	PFOZZ	96906	MS17165-4578	LAMP,INCANDESCENT	1
7	XDOZZ	40152	944872	RETAINER FOR JOHN HOBBS	1
7	XDOZZ	40152	949364	RETAINER FOR GUIDE LAMP	1
8	PFOZZ	96906	MS21044N8	NUTISELF-LOCKING,HE	2
9	PFOZZ	40152	1522201	CLAMP,HOSE.....	2
10	PFOZZ	12603	652448	WASHER,SPECIAL	2

END OF FIGURE

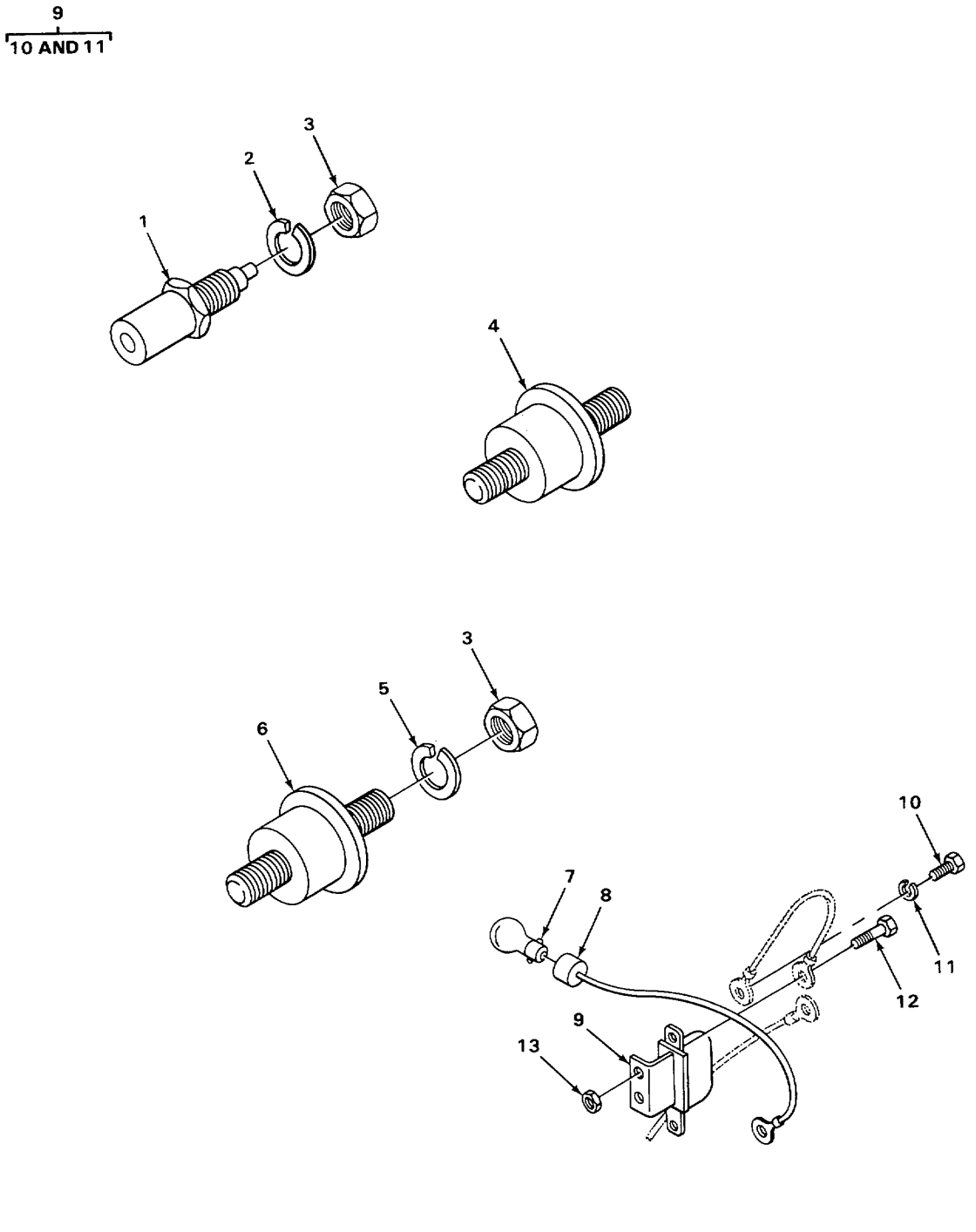

FIGURE 69. SENDING UNITS AND WARNING SWITCHES.

(1) ITEM NO	(2) SMR CODE	(3) CAGEC	(4) PART NUMBER	(5) DESCRIPTION AND USABLE ON CODES (UOC)	(6) QTY
				GROUP 0610 SENDING UNITS AND WARNING SWITCHES	
				FIG. 69 SENDING UNITS AND WARNING SWITCHES	
1	PFOZZ	6N299	4760149	TRANSMITTER,ENGINE	2
2	PFOZZ	96906	MS35335-32	WASHER,LOCK	2
3	PFOZZ	40152	14D10	NUT	3
4	PFOZZ	12603	1618574	TRANSMITTER,PRESSUR ENGINE OIL PRESSURE	1
5	XDOZZ	40152	12E-10	WASHER,LOCK	1
6	PFOZZ	40152	M2562384	TRANSMITTER,PRESSUR AIR PRESSURE	1
7	PFOZZ	40152	961458	LAMP,INCANDESCENT	1
8	PFOZZ	32498	2519680	LIGHT,INDICATOR	1
9	PFOZZ	40152	2528654	BUZZER	1
10	PFOZZ	40152	24C-516	BOLT,MACHINE	2
11	PFOZZ	96906	MS35338-45	WASHER,LOCK	2
12	PFOZZ	96906	MS90727-6	BOLT,MACHINE	2
13	PFOZZ	40152	60D-04	NUT,PLAIN,HEXAGON	2

END OF FIGURE

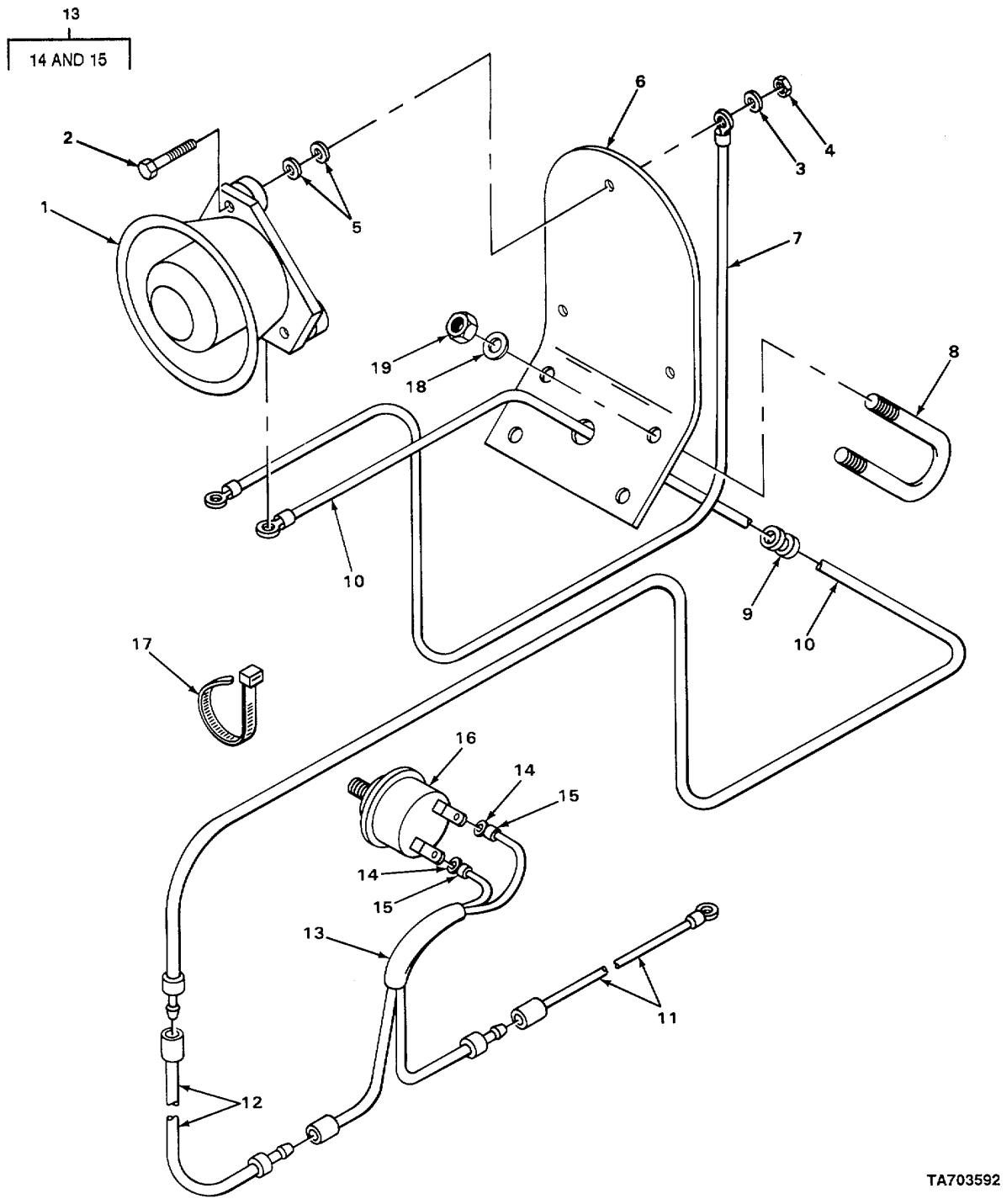

FIGURE 70. BACKUP ALARM.

SECTION II

(1) ITEM NO	(2) SMR CODE	(3) CAGEC	(4) PART NUMBER	(5) DESCRIPTION AND USABLE ON CODE (UOC)	(6) QTY
				GROUP 0611 HORN, SIREN FIGE 70 BACKUP ALARM	
1	PF000	40152	1542966	ALARM, BACK-UP	1
2	PFOZZ	40152	24C-556	BOLT, MACHINE	3
3	PFOZZ	12603	25E15	WASHER, FLAT	3
4	PFOZZ	12603	6005	NUT, SELF-LOCKING, CA	3
5	PFOZZ	40152	1508152	WASHER, FLAT PART OF KIT P/N 25003400	6
6	XDOZZ	40152	1548008	BRACKET	1
7	KFOZZ	40152	1543539	WIRE PART OF KIT P/N 2500340	1
8	PFOZZ	40152	1508514	BOLT,U	2
9	XDOZZ	40152	1010338	GROMMET	1
10	KFOZZ	40152	2512846	WIRE PART OF KIT P/N 2500340.	1
11	KFOZZ	40152	2512858	WIRE PART OF KIT P/N 2500340	1
12	KFOZZ	40152	2512859	WIRE PART OF KIT P/N 2500340	1
13	KFOOO	40152	2512844	HARNESS PART OF KIT P/N 2500340	1
14	XDOZZ	40152	2516092	•TERMINAL	2
15	XDOZZ	40152	614142	•SLEEVE	2
16	XDOZZ	40152	2506758	SWITCH	1
16	PFOZZ	40152	2531249	SWITCH, ALARM PART OF KIT P/N 2500340	1
17	KFOZZ	40152	1539058	CABLE TIE PART OF KIT P/N 2500340	6
18	PFOZZ	40152	25E18	WASHER, SPLIT	4
19	PFOZZ	12603	60D6	NUT, SELF-LOCKING, HE	4
				END OF FIGURE	

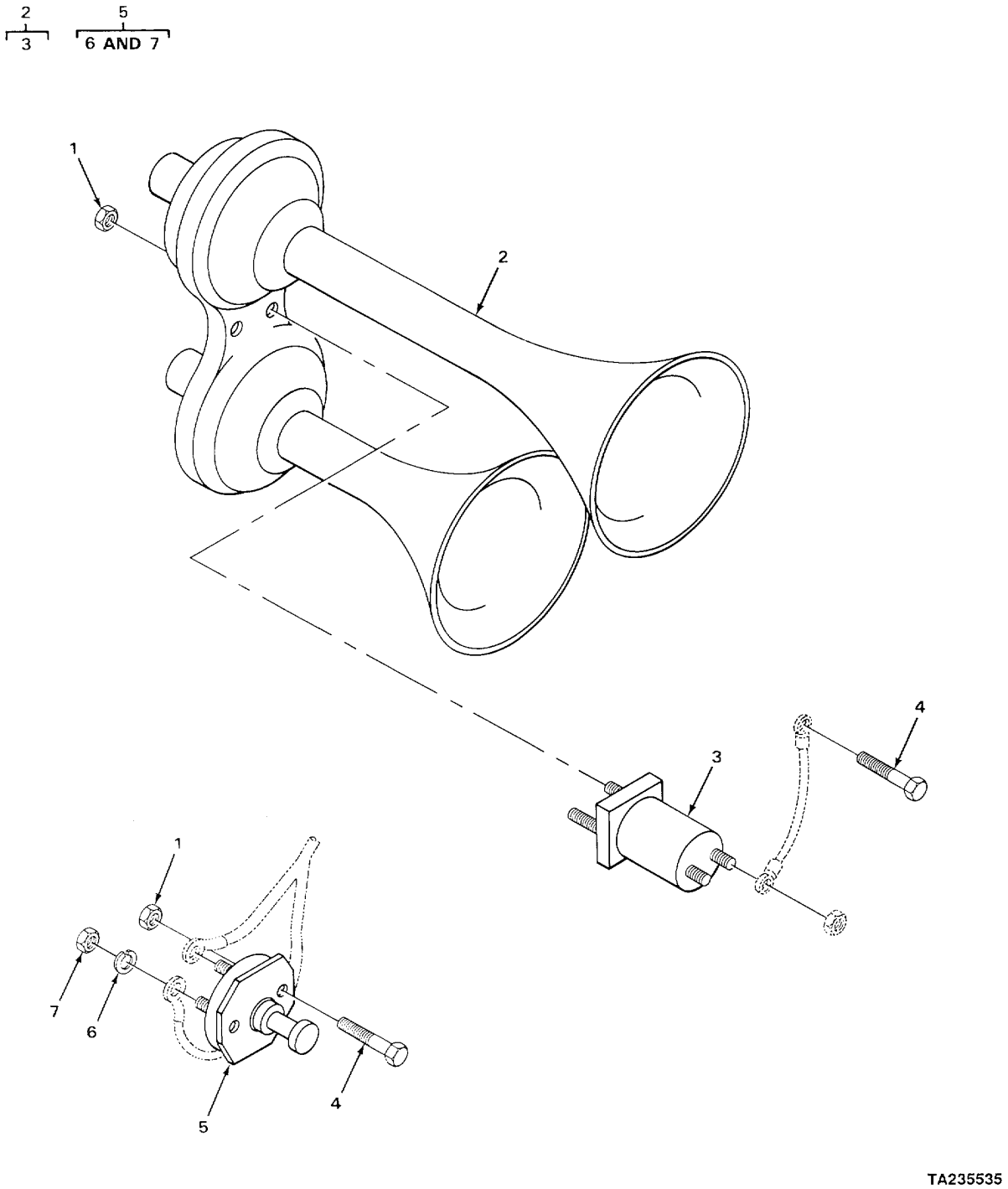

FIGURE 71. HORN.

SECTION II

(1) ITEM NO	(2) SMR CODE	(3) CAGEC	(4) PART NUMBER	(5) DESCRIPTION AND USABLE ON CODE (UOC)	(6) QTY
				GROUP 0611 HORN, SIREN FIG 71 HORN	
1	PFOZZ	96906	MS21044N4	NUTISELF-LOCKING HE.....	2
2	PFOZZ	96906	MS51301-1	HORN,FLUID OPERATED.....	1
3	XDOZZ	40152	947160	•SOLENOID.....	1
4	PFOZZ	40152	24C-416	BOLT, MACHINE.....	4
5	PFOZZ	40152	778570	SWITCH,PUSH	1
6	PFOZZ	96906	MS35335-35	•WASHER, LOCK.....	2
7	PFOZZ	12603	62006	•NUT,PLAIN,HEXAGON.....	2

END OF FIGURE

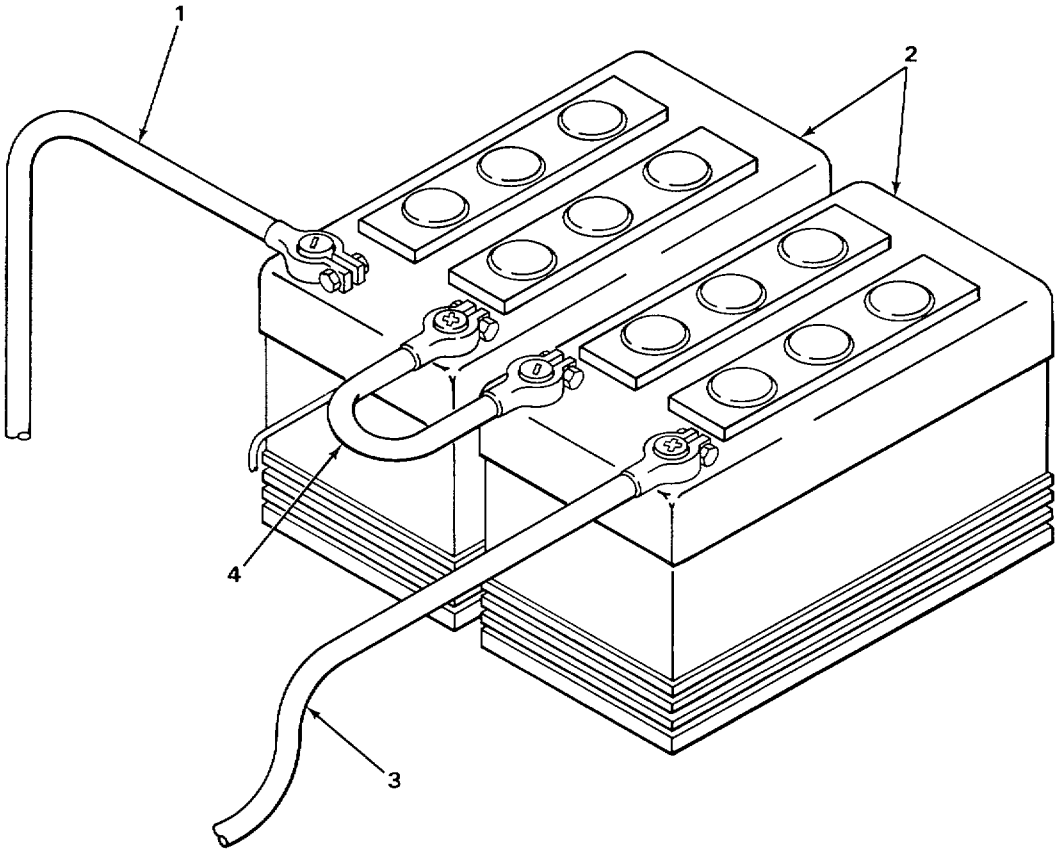

TA235536

FIGURE 72. BATTERIES AND CABLES.

SECTION II

(1) ITEM NO	(2) SMR CODE	(3) CAGEC	(4) PART NUMBER	(5) DESCRIPTION AND USABLE ON CODE (UOC)	(6) QTY
				GROUP 0612 BATTERIES, STORAGE FIG 72 BATTERIES AND CABLES	
1	XDOZZ	40152	1549608	CABLE	1
2	XDOFF	40152	1B01148	BATTERY	2
3	XDOZZ	40152	1546669	CABLE	1
4	PFOZZ	40152	529359	WIRE, ELECTRICAL	1
				END OF FIGURE	

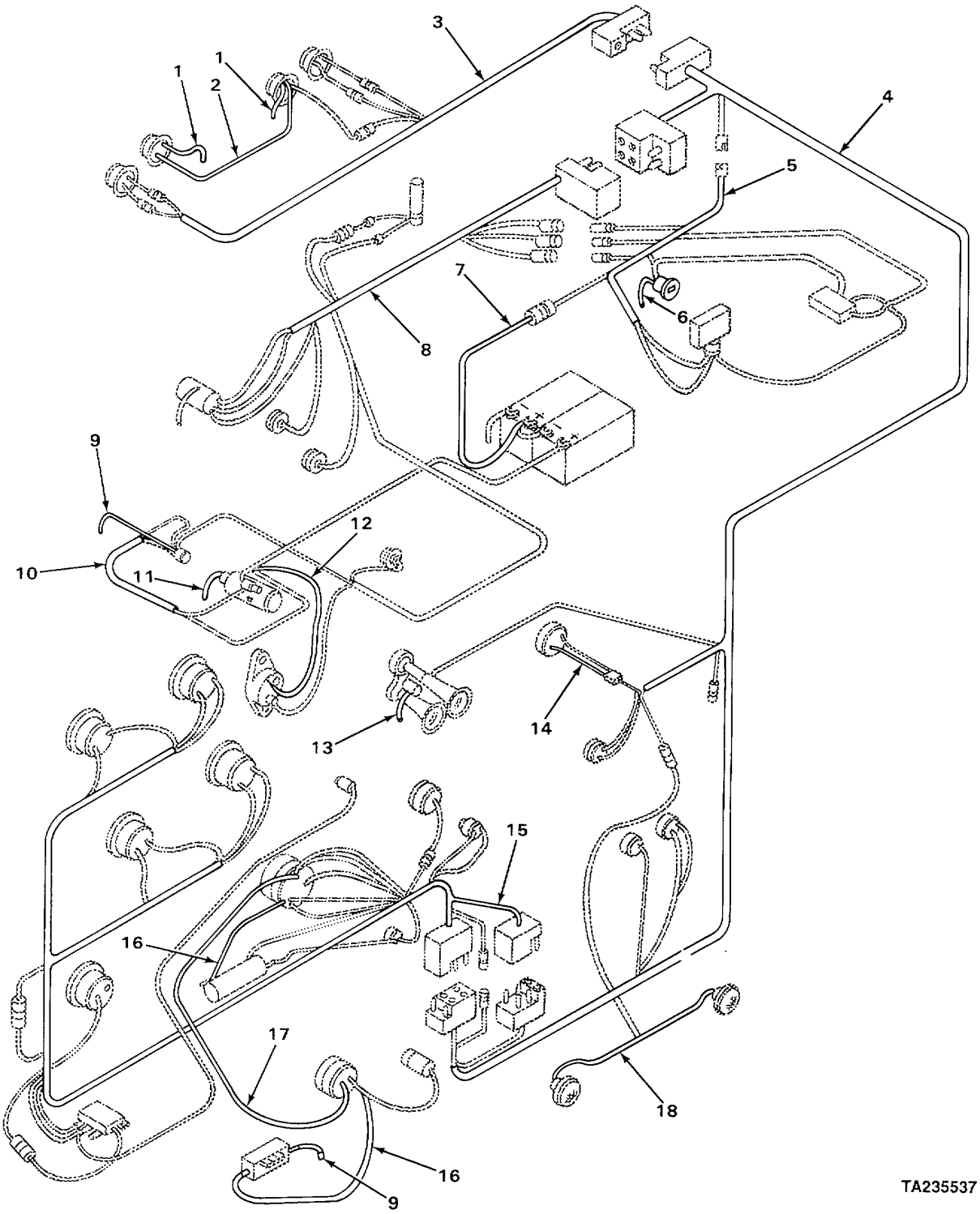

FIGURE 73. ELECTRICAL WIRING.

SECTION II

(1) ITEM NO	(2) SMR CODE	(3) CAGEC	(4) PART NUMBER	(5) DESCRIPTION AND USABLE ON CODE (UOC)	(6) QTY
				GROUP 0613 HULL OR CHASSIS WIRING HARNESS FIGE 73 ELECTRICAL WIRING	
1	XDFZZ	40152	540882	WIRE	2
2	XDFZZ	40152	1544146	WIRE	1
3	PFFZZ	40152	1542619	WIRING HARNESS, BRAN	1
4	PFFZZ	40152	2507337	WIRING HARNESS, BRAN	1
5	XDFFF	40152	1515165	WIRINGIHARNESS USE WITH SERIAL RANGE 427C601 THRU 427C658	1
5	XDFFF	40152	2500538	WIRING,HARNESS USE WITH SERIAL RANGE 427C659 AND AFTER	1
6	XDFZZ	40152	558960	WIRE	1
7	XDFFF	40152	2500520	WIRE ASSEMBLY	1
8	XDFFF	40152	2500345	HARNESS,ENGINE USE WITH SERIAL RANGE 427C601 THRU 427C658	1
8	XDFFF	40152	2513451	HARNESS, ENGINE USE WITH SERIAL RANGE 427C659 AND AFTER	1
9	XDFZZ	40152	543483	WIRE	2
10	XDFZZ	40152	1530361	WIRE	1
11	PFOZZ	40152	1525933	STRAP, GROUND, BATTER	1
12	XDFZZ	40152	2500354	WIRE	1
13	XDFZZ	40152	1523329	WIRE	1
14	XDFZZ	40152	1544144	WIRE,NEUTRAL START	1
15	PFFZZ	40152	2507338	WIRING HARNESS, BRAN INSTRUMENT PANEL	1
16	XDFZZ	40152	663579	WIRE	2
17	XDFZZ	40152	1548924	WIRE	1
18	XDFFF	40152	1512890	HARNESS, HEADLIGHT	1

END OF FIGURE

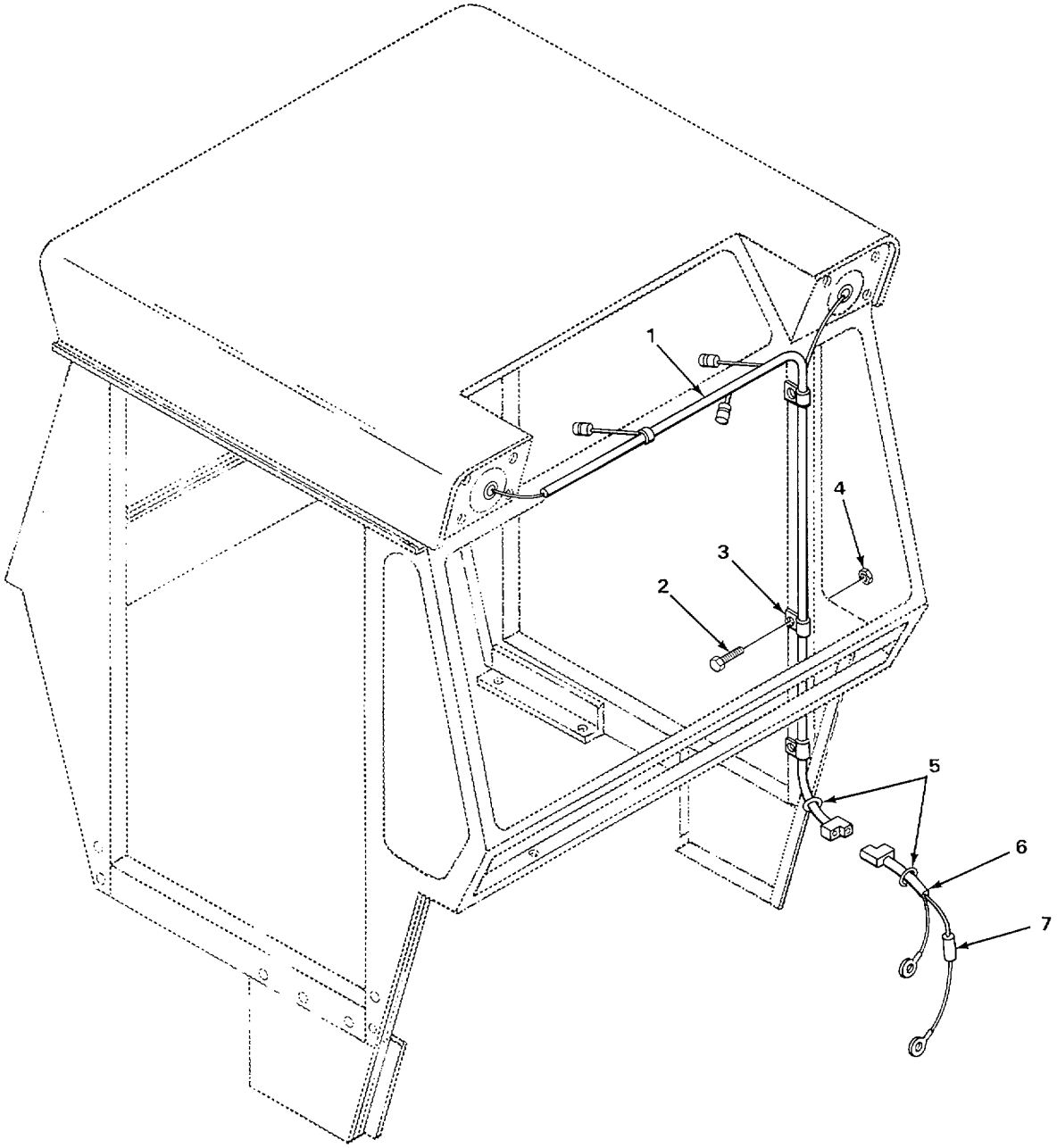

FIGURE 74. CAB LIGHT WIRING.

SECTION II

(1) ITEM NO	(2) SMR CODE	(3) CAGEC	(4) PART NUMBER	(5) DESCRIPTION AND USABLE ON CODE (UOC)	(6) QTY
				GROUP 0613 HULL OR CHASSIS WIRING HARNESS FIG 74 CAB LIGHT WIRING	
1	PFFZZ	40152	1544320	WIRING HARNESS, BRAN	1
2	PFFZZ	40152	24C-410	BOLT,MACHINE	3
3	PFFZZ	12603	30H14	CLAMP, LOOP	3
4	PFFZZ	96906	MS21044N4	NUTISELF-LOCKING, HE	3
5	XDFZZ	40152	515069	GROMMET-	2
6	PFFZZ	40152	1544319	WIRING HARNESS, BRAN	1
7	XDFZZ	40152	611074	FUSE 20 AMP	1
				END OF FIGURE	

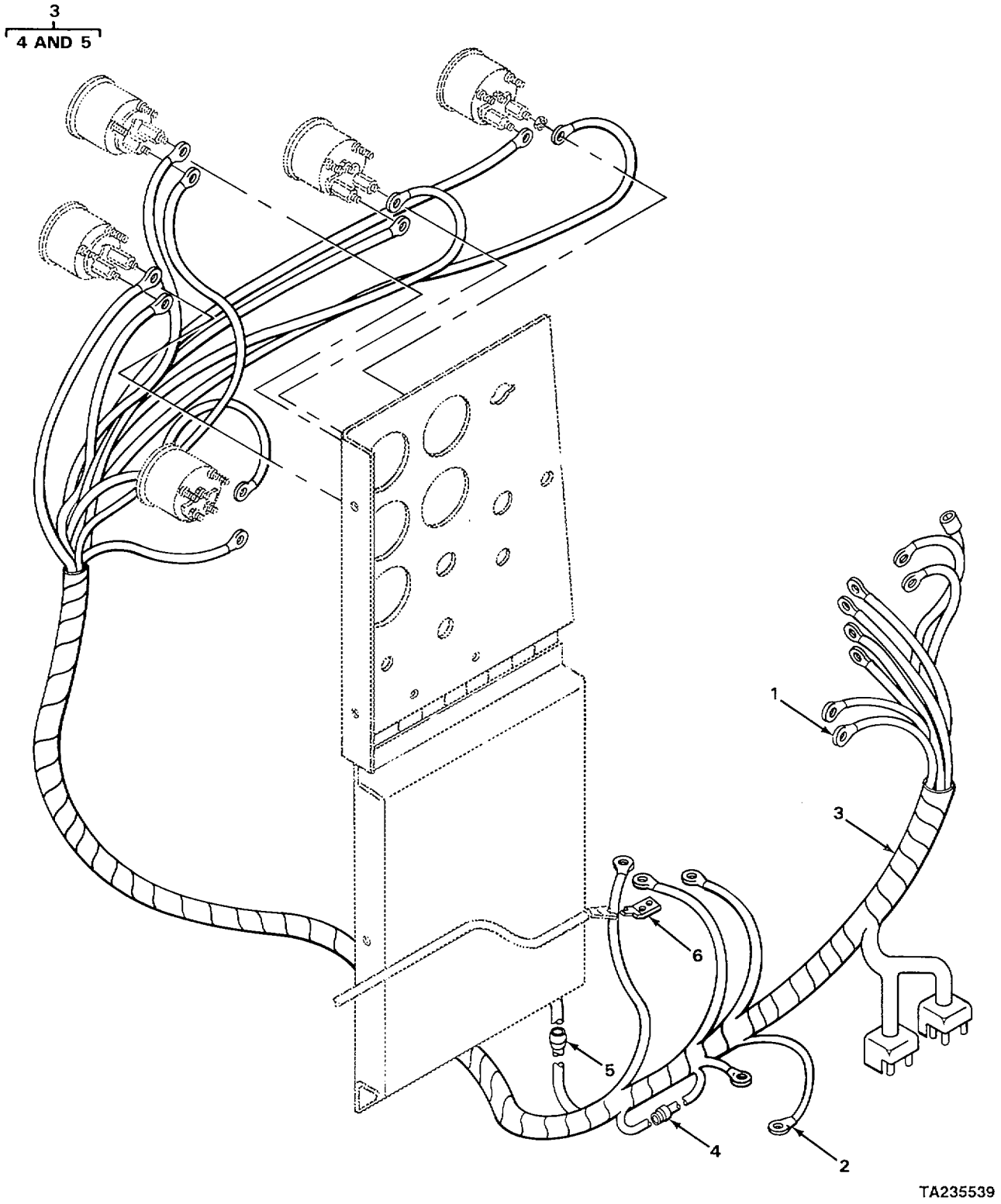

FIGURE 75. TRANSMISSION CONTROLS.

SECTION II

(1) ITEM NO	(2) SMR CODE	(3) CAGEC	(4) PART NUMBER	(5) DESCRIPTION AND USABLE ON CODE (UOC)	(6) QTY
				GROUP 0613 HULL OR CHASSIS WIRING HARNESS FIG 75 INSTRUMENT PANEL WIRING HARNESS	
1	XDFZZ	40152	630292	WIRE	1
2	XDFZZ	40152	663579	WIRE.	1
3	PFFZZ	40152	2503991	WIRING HARNESS, BRAN.....	1
4	XDFLZ	40152	611074	•FUSE 20 AMP	1
5	PFFZZ	40152	571021	•FUSE 0.75 AMP	1
6	XDFZZ	40152	574275	TAB.....	1
				END OF FIGURE	

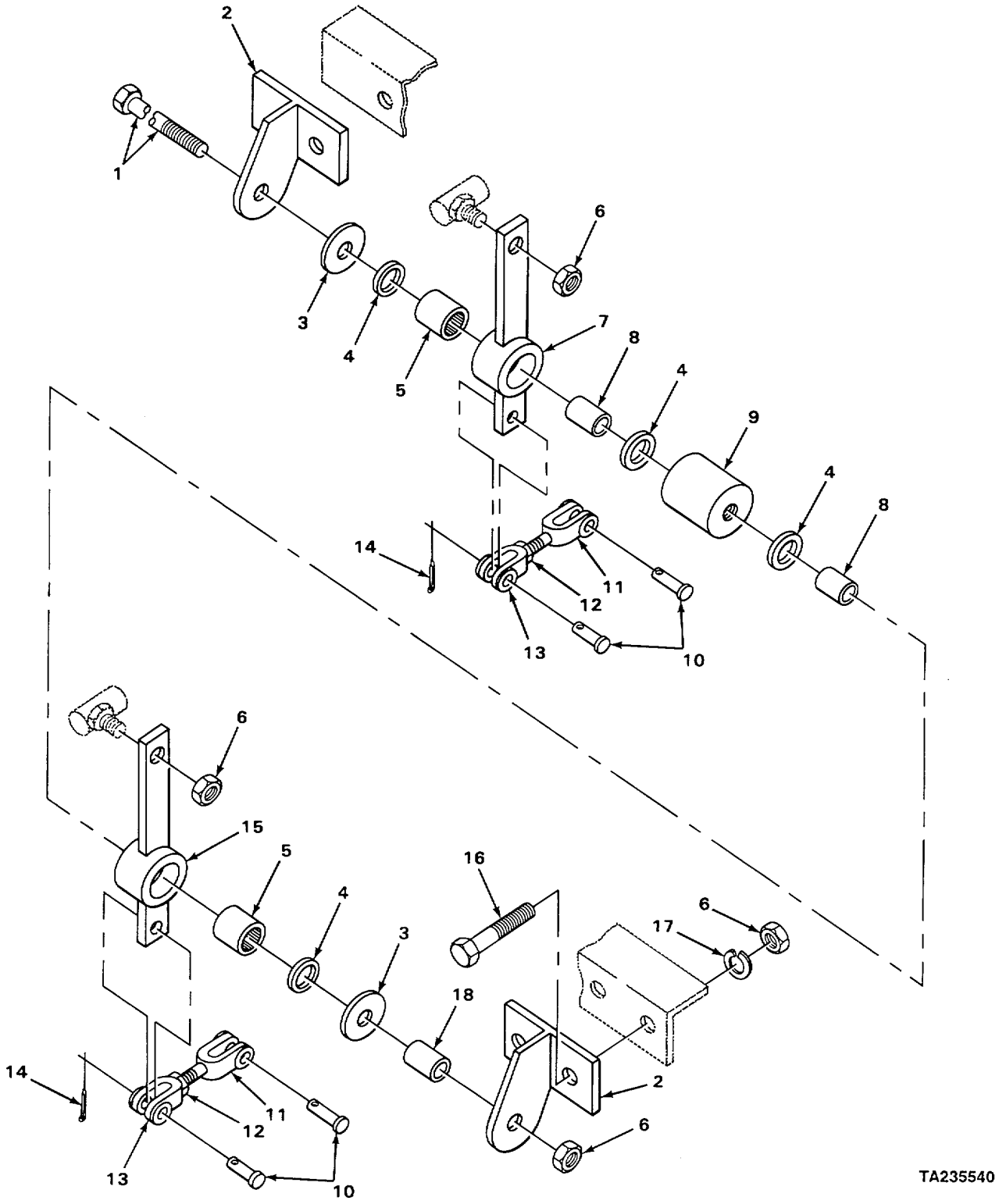

FIGURE 76. TRANSMISSION CONTROLS.

SECTION II

(1) ITEM NO	(2) SMR CODE	(3) CAGEC	(4) PART NUMBER	(5) DESCRIPTION AND USABLE ON CODE (UOC)	(6) QTY
				GROUP 07 TRANSMISSION GROUP 0705 TRANSMISSION SHIFTING COMPONENTS FIG 76 TRANSMISSION CONTROLS	
1	PFFZZ	12603	IBC-8120	BOLT, MACHINE	1
2	XDFZZ	73342	1514645	BRACKET	2
3	PFFZZ	40152	584502	WASHER,FLAT	2
4	XDFZZ	40152	1522535	SEAL, WIPER	4
5	PFFZZ	96906	MS17131-30	BEARING, ROLLER, NEED	2
6	PFFZZ	96906	MS21044N8	NUT, SELF-LOCKING, HE	4
7	XD FZZ	73342	1515215	BELLCRANK	1
8	XDFZZ	40152	1503251	SLEEVE	2
9	XDFZZ	73342	1514481	SPACER	1
10	XDFZZ	73342	4F05062	PIN	4
11	XDFZZ	73342	1515267	CLEVIS	2
12	PFFZZ	12603	8005	NUT, PLAIN, HEXAGON	2
13	PFFZZ	12603	2J5204	CLEVIS, ROD END	2
14	PFFZZ	96906	MS24665-283	PIN, COTTER	4
15	XDFZZ	73342	1515216	BELLCRANK	1
16	PFFZZ	40152	24C-828	BOLT, MACHINE	2
17	PFFZZ	73342	1508222	WASHER, LOCK	2
18	XDFZZ	73342	1514734	SPACER	1

END OF FIGURE

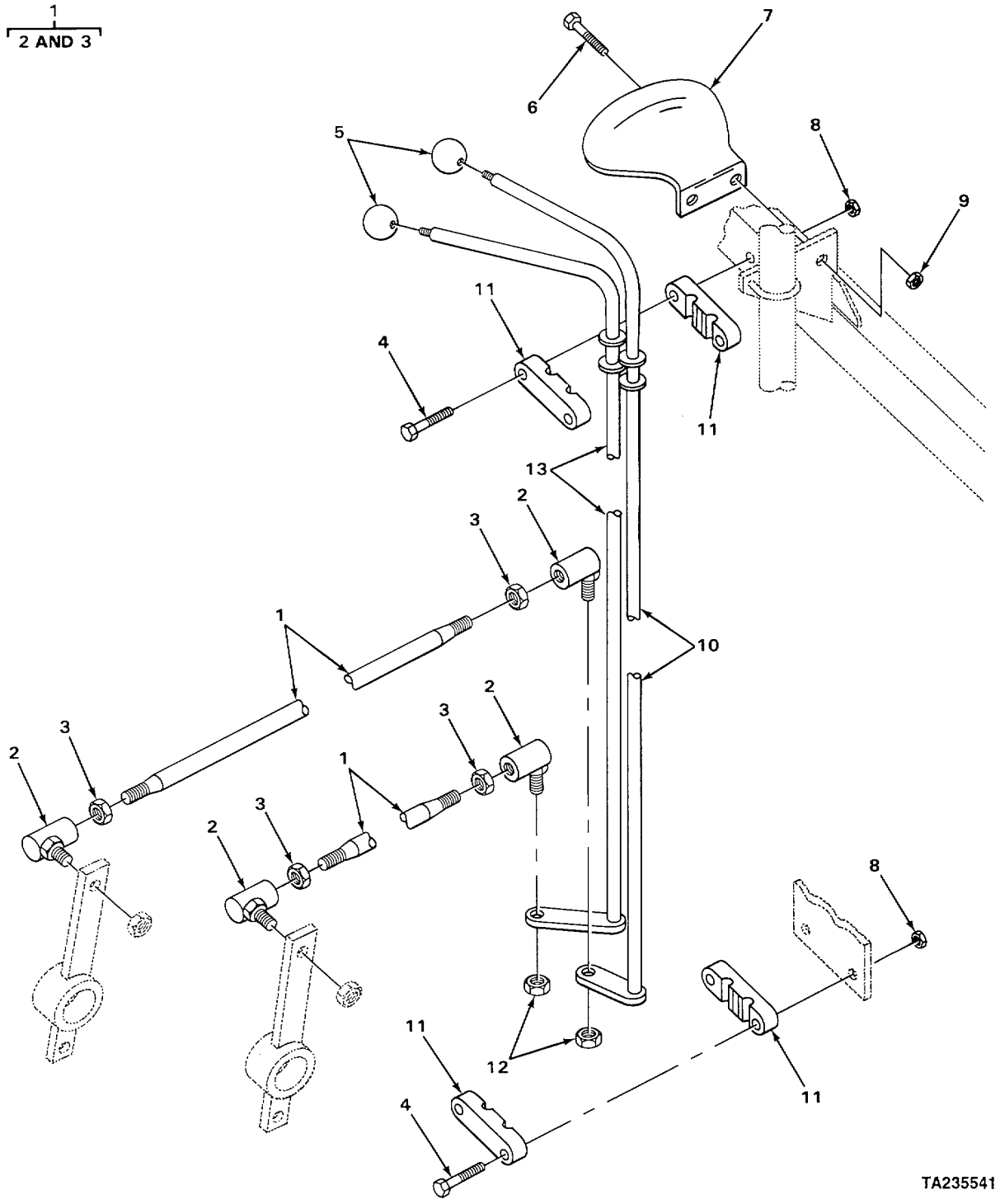

FIGURE 77.TRANSMISSION CONTROLS AND RELATED PARTS.

SECTION II

(1) ITEM NO	(2) SMR CODE	(3) CAGEC	(4) PART NUMBER	(5) DESCRIPTION AND USABLE ON CODE (UOC)	(6) QTY
				GROUP 0705 TRANSMISSION SHIFTING COMPONENTS FIG, 77 TRANSMISSION CONTROLS AND RELATED PARTS	
1	XDFFF	73342	1543935	ROD	2
2	XDFZZ	73342	1305485	• BALL JOINT	2
3	PFFZZ	12603	8008	•NUT, PLAIN, HEXAGON	2
4	PFFZZ	12603	18C-000-536	BOLT, MACHINE	1
5	PFFZZ	40152	509772	KNOB	2
6	PFFZZ	40152	24C-620	BOLT, MACHINE	1
7	XOFZZ	73342	568477	QUADRANT	1
8	PFFZZ	12603	6005	NUT, SELF-LOCKING, CA	4
9	PFFZZ	12603	60D6	NUT, SELF-LOCKING, HE	1
10	XDFZZ	12603	1514471	LEVER	1
11	XDFZZ	73342	1508846	SUPPORT	4
12	PFFZZ	96906	MS21044N8	NUT, SELF-LOCKING, HE	2
13	XDFZZ	73342	1543938	LEVER	1

END OF FIGURE

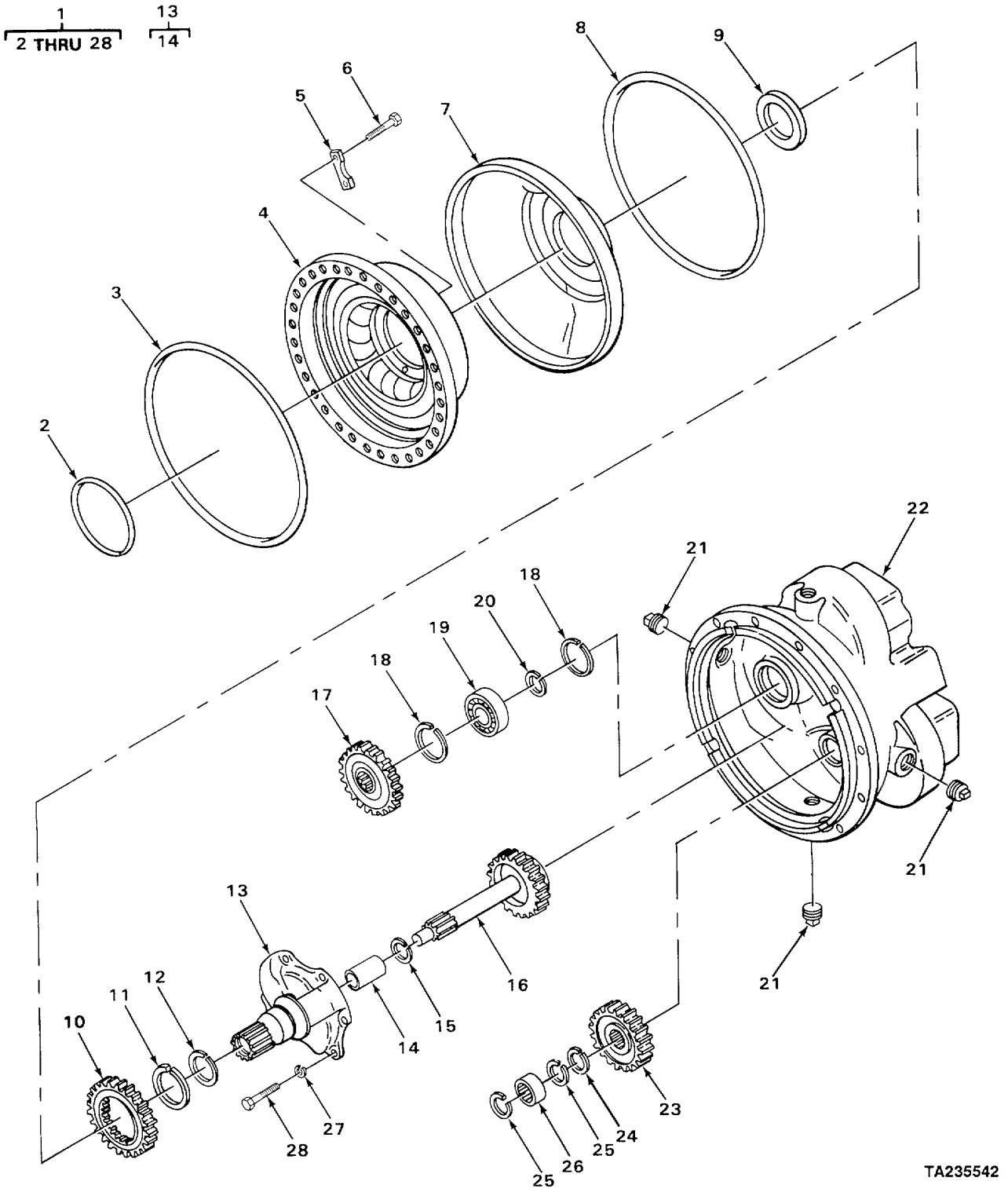

FIGURE 78. CONVERTER ASSEMBLY

SECTION II

(1) ITEM NO	(2) SMR CODE	(3) CAGEC	(4) PART NUMBER	(5) DESCRIPTION AND USABLE ON CODE (UOC)	(6) QTY
				GROUP 0708 TORQUE CONVERTER OR FLUID COUPLING FIG 18 CONVERTER ASSEMBLY	
1	PFFHH	2603	282940	TORQUE CONVERTER, TR	1
2	PFHZZ	12603	60K40700	•PACKING,PREFORMED	1
3	XDHZZ	40152	229805	•RING	1
4	XDHZZ	40152	229520	•IMPELLER ASSEMBLY	1
5	PFHZZ	12603	222019	•PLATE	4
6	PFHZZ	40152	222221	•BOLT, MACHINE	8
7	XDHZZ	40152	229813	•OIL BAFFLE	1
8	PFHZZ	12603	229804	•SEAL RING	1
9	PFHZZ	10988	A18000	•SEAL, PLAIN ENCASED	1
10	XDHZZ	40152	229807	•GEAR	1
11	PFHZZ	89881	224009	•RING, RETAINING	1
12	PFHZZ	76602	90136	•SEAL RING METAL	1
13	XDHHH	40152	229810	•STATOR SUPPORT	1
14	XDHZZ	40152	229806	•SLEEVE	1
15	PFHZZ	12603	2235T70	•RING,PISTON	1
16	XDHZZ	40152	229838	•TURBINE SHAFT	1
17	XDHZZ	40152	229784	•GEAR	3
18	PFHZZ	96906	MS16625-1354	•RING, RETAINING	6
19	PFHZZ	81349	111-05002-0000	•BEARING, BALL, ANNULA	3
20	PFHZZ	12603	224026	•RING, RETAINING	3
21	XDHZZ	40152	13F-16	•PLUG, PIPE	3
22	XDHZZ	40152	229792	•HOUSING	1
23	XDHZZ	40152	229777	•GEAR	1
24	XDHZZ	40152	660564	•RING	1
25	XDHZZ	40152	711406	•RING	1
26	XDHZZ	40152	229815	•BEARING	1
27	PFHZZ	95019	500357-13	•WASHER, LOCK	6
28	PFHZZ	12603	1C820	•SCREW,CAPIHEXAGON H	6

END OF FIGURE

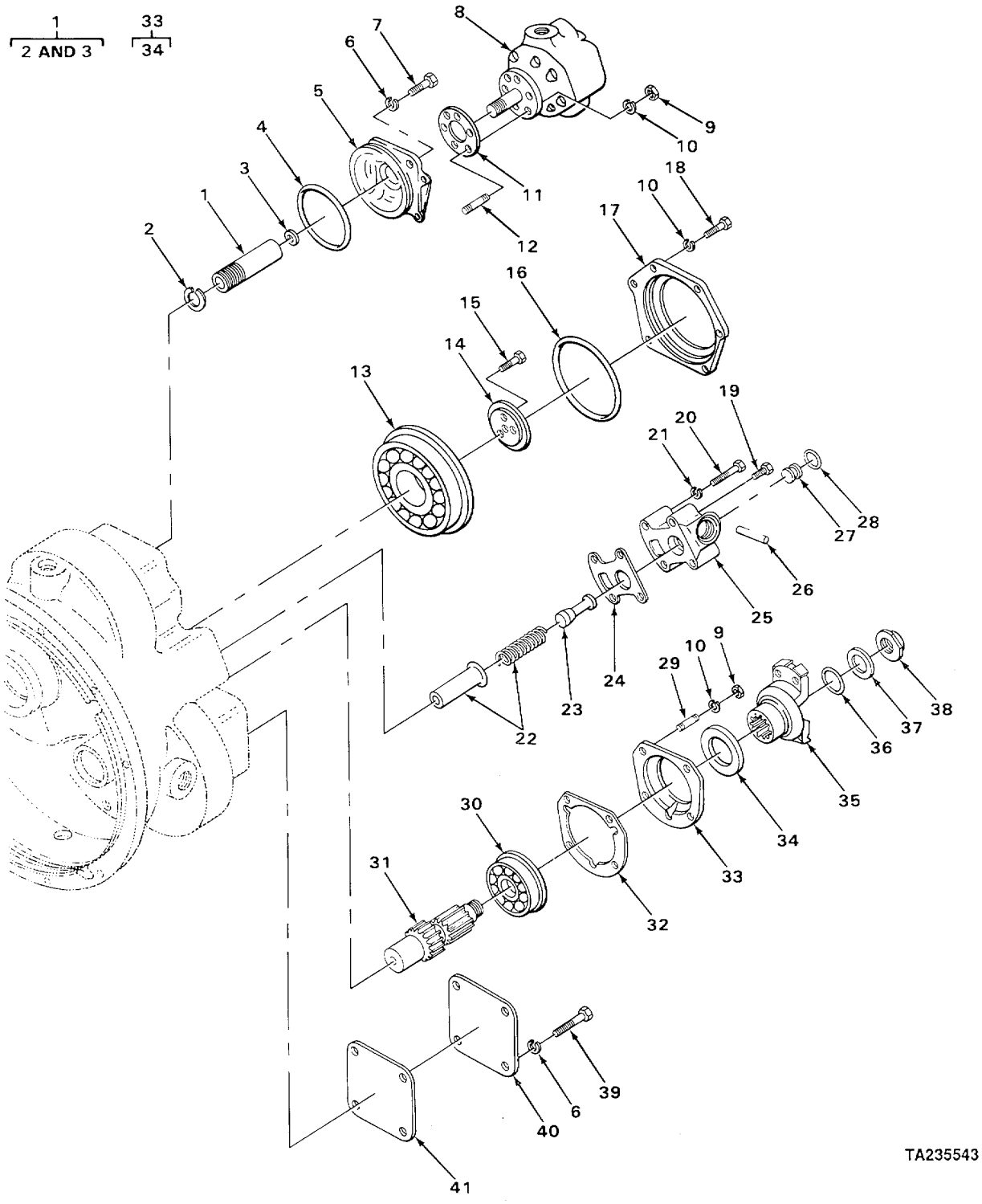

FIGURE 79. CONVERTER ASSEMBLY, EXPLODED VIEW.

SECTION II

(1) ITEM NO	(2) SMR CODE	(3) CAGEC	(4) PART NUMBER	(5) DESCRIPTION AND USABLE ON CODE (UOC)	(6) QTY
				GROUP 0708 TORQUE CONVERTER OR FLUID COUPLING FIG 79 CONVERTER ASSEMBLY, EXPLODED VIEW	
1	XDHHH	40152	230234	•SLEEVE	1
2	PFHZZ	40152	659041	••RING	1
3	PFHZZ	40152	224104	••RING RETAINING	1
4	XOHZZ	12603	25K40416	•SEAL,PLAIN ENCASED	1
5	XDHZZ	40152	227034	•ADAPTER	1
6	PFHZZ	95019	500357-13	•WASHER, LOCK	12
7	PFHZZ	12603	1C820	•SCREW,CAP,HEXAGON H	4
8	XDHZZ	40152	450245	•PUMP CONVERTER CHARGING	1
9	PFHZZ	96906	MS35691-21	•NUT,PLAIN, HEXAGON	10
10	PFHZZ	96906	MS35333-76	•WASHER, LOCK	10
11	PFHZZ	16662	7-551906	•GASKET	1
12	PFHZZ	12603	203253	•STUD, PLAIN	6
13	PFHZZ	89881	225781	•BEARING, BALL, ANNULA	1
14	XDHZZ	40152	229803	•RETAINER	1
15	PFHZZ	40152	4C-820	•BOLT, MACHINE	3
16	PFHZZ	40152	25K-40608	•PACKING, PREFORMED.	1
17	XDHZZ	40152	229798	•CAP	1
18	PFHZZ	09652	1328482	•BOLT, MACHINE	6
19	PFHZZ	21450	444618	•PLUG, PIPE	1
20	PFHZZ	96906	MS90725-95	•SCREW, CAP HEXAGON H	4
21	PFHZZ	96906	MS35338-47	•WASHER, LOCK.	4
22	XDH7Z	40152	229801	•RETAINER AND SPRING	1
23	XDHZZ	40152	228500	•PISTON	1
24	PFHZZ	40152	229788	•GASKET	1
25	XDHZZ	40152	229787	•BODY	1
26	XDHLZ	40152	633157	•PIN	1
27	PFHZZ	89346	304130C1	•PLUG, REGULATING	1
28	PFHZZ	40152	58K-210	•PACKING, PREFORMED	1
29	PFHZZ	12603	207647	•STUD, PLAIN	4
30	PFHZZ	03504	225842	•BEARING, BALL, ANNULA	1
31	XDHZZ	40152	229776	•SHAFT, OUTPUT	1
32	PFHZZ	40152	229793	•GASKET	1
33	XDHHH	40152	229794	•RETAINER	1
34	PFHZZ	80201	335FM212	•SEAL,PLAIN ENCASED	1
35	PFHZZ	12603	222029	•YOKE,UNIVERSAL JOIN	1
36	PFHZZ	40152	25K60116	•PACKING, PREFORMED	1
37	PFHZZ	12603	222179	•WASHER, FLAT	1
38	PFHZZ	12603	222960	•NUT, SELF-LOCKING, SI	1
39	PFHZZ	12603	lC814	•SCREW	8
40	PFHZZ	12603	216355	•COVER, PERMANENT PUM	2
41	PFHZZ	40152	552161	•GASKET	2

END OF FIGURE

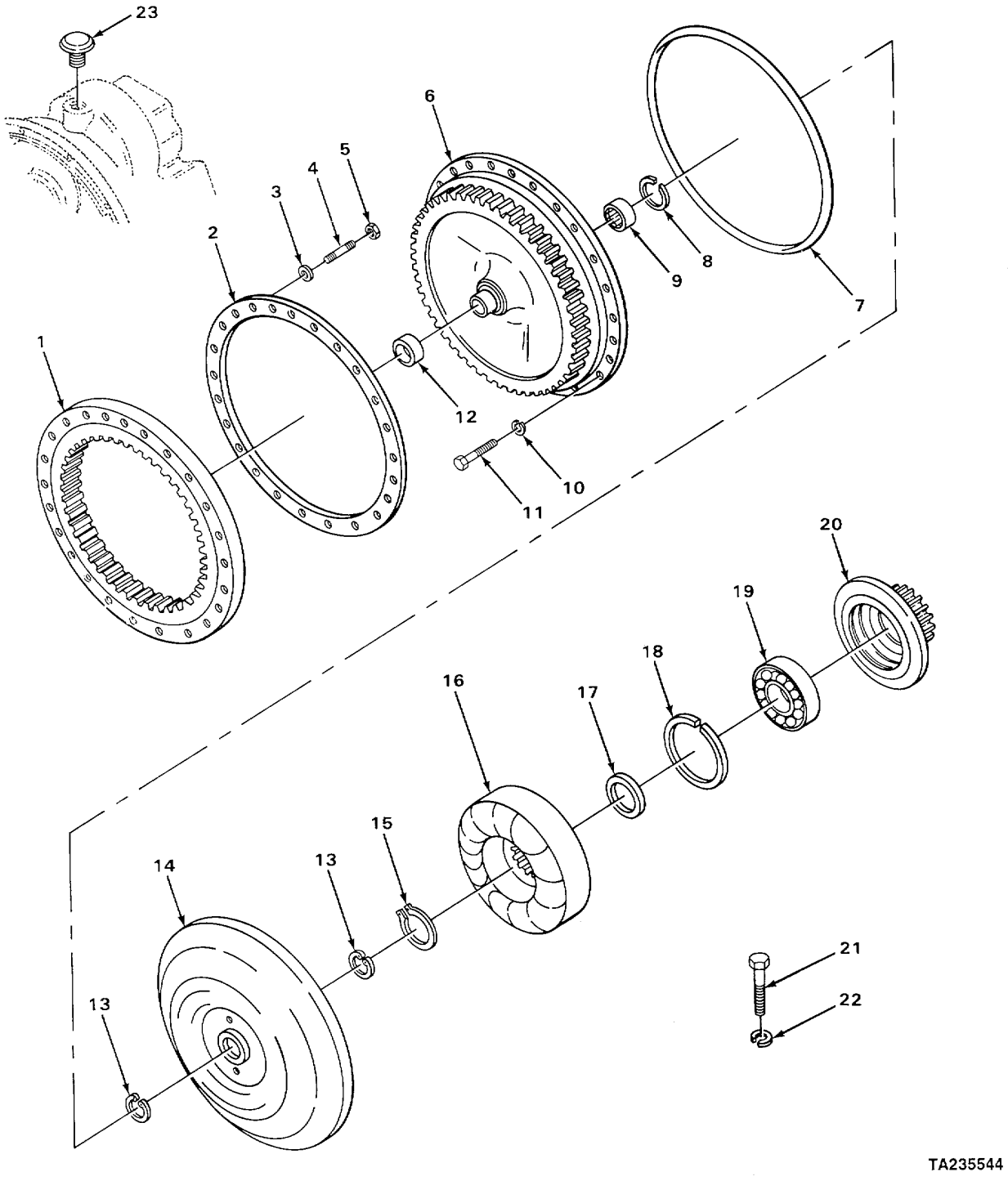

FIGURE 80. CONVERTER AND RELATED PARTS

SECTION II

(1) ITEM NO	(2) SMR CODE	(3) CAGEC	(4) PART NUMBER	(5) DESCRIPTION AND USABLE ON CODE (UOC)	(6) QTY
				GROUP 0708 TORQUE CONVERTER OR FLUID COUPLING	
				FIG 80 CONVERTER AND RELATED PARTS	
1	PFHZZ	12603	801874	•GEAR, INTERNAL	1
2	PFHZZ	15434	230594	•SPACER, RING	1
3	PFHZZ	12603	228987	•WASHER, SADDLE	24
4	PFHZZ	40152	235050	•STUD, PLAIN	24
5	PFHZZ	40152	229769	•NUT,PLAIN, HEXAGON	24
6	PFHZZ	12603	232692	•GEAR, SPUR	1
7	PFHZZ	12603	218776	•GASKET	1
8	PAHZZ	12603	223887	•RING, SPECIAL	1
9	XDHZZ	40152	229814	•BEARING	1
10	PFHZZ	96906	MS35338-47	•WASHERLOCK	32
11	PFHZZ	40152	1C724	•BOLT, MACHINE	32
12	PFHZZ	12603	222006	•ADAPTER SLEEVE, CONV	1
13	XDHZZ	40152	233307	•RING	1
14	XDHZZ	40152	801931	•TURBINE	1
15	PFHZZ	96906	MS16624-1275	•RING, RETAINING	1
16	XDHZZ	40152	229521	•REACTION MEMBER	1
17	XDHZZ	40152	229802	•SPACER	1
18	PFHZZ	12603	223988	•RING, RETAINING	1
19	XDHZZ	40152	230767	•BEARING	1
20	XDHZZ	40152	222266	•HUB IMPELLER	1
21	PFHZZ	40152	23C-728	•BOLT, MACHINE	12
22	PFHZZ	96906	MS35338-47	WASHER, LOCK	12
23	PFHZZ	12603	233598	VALVE, VACUUM BREAKI	1

END OF FIGURE

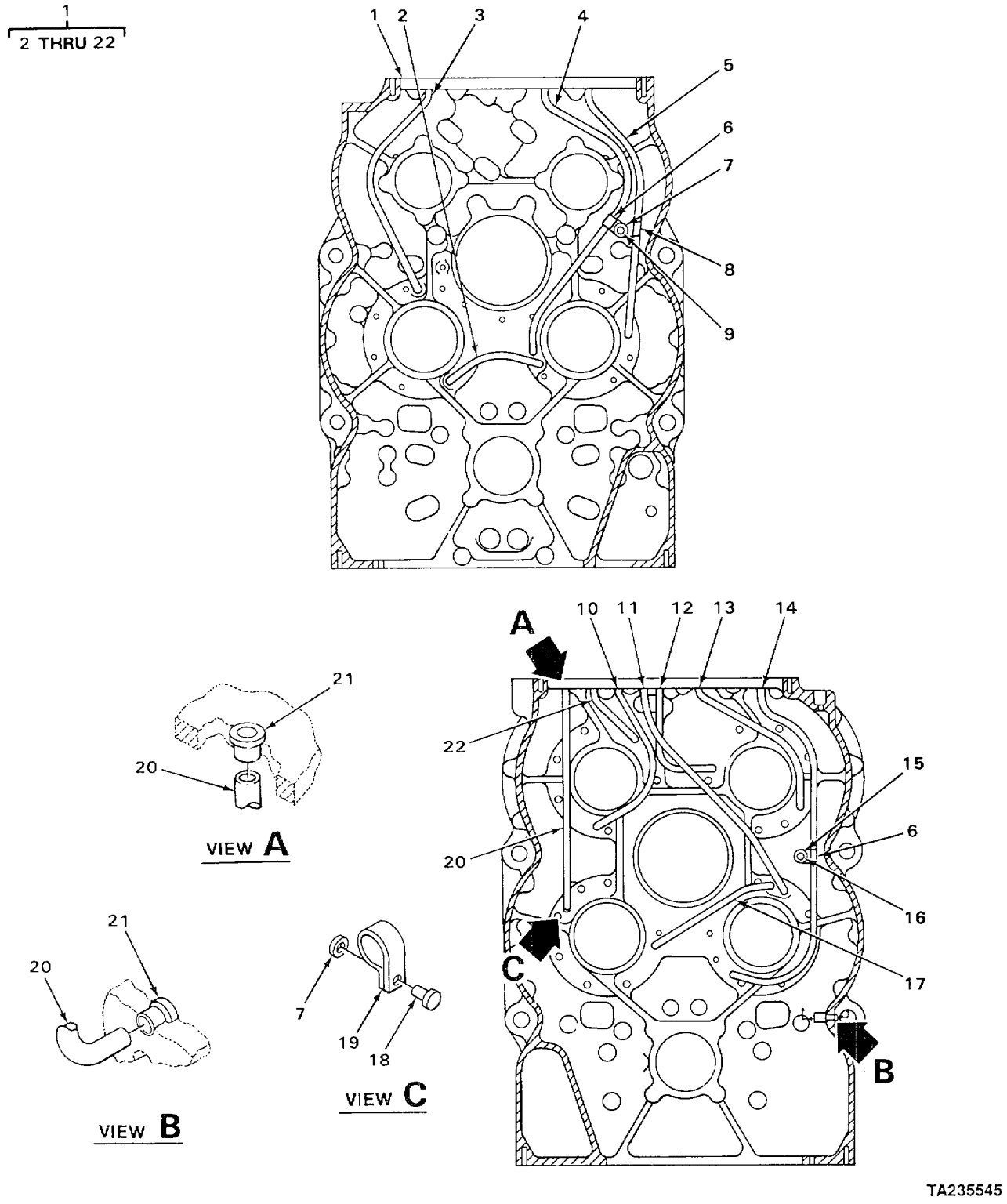

FIGURE 81. TRANSMISSION CASE.

SECTION II

(1) ITEM NO	(2) SMR CODE	(3) CAGEC	(4) PART NUMBER	(5) DESCRIPTION AND USABLE ON CODE (UOC)	(6) QTY
				GROUP 0710 TRANSMISSION ASSEMBLY AND ASSOCIATED PARTS FIG 81 TRANSMISSION CASE	
1	XDFHH	73342	232871	CASE ASSEMBLY	1
2	XDHZZ	73342	217578	•TUBE	1
3	PFHZZ	96906	MS24665-758	•PIN, COTTER	1
4	XDHZZ	73342	217577	•TUBE	1
5	XDHZZ	73342	217674	•TUBE	1
6	PFHZZ	12603	6H-29	•CLAMP, LOOP	2
7	PFHZZ	40152	13802619-0	•WASHER, FLAT	2
8	XDHZZ	73342	222167	•CLIP	1
9	XDHZZ	73342	1H-430	•RIVET	1
10	XDHZZ	73342	217581	•TUBE	1
11	XDHZZ	12603	217582	•TUBE	1
12	XDHZZ	12603	217583	•TUBE	1
13	XDHZZ	12603	217584	•TUBE	1
14	XDHZZ	12603	217585	•TUBE	1
15	XDHZZ	12603	1H534	•RIVET	1
16	PFHZZ	12603	25E15	•WASHER FLAT	1
17	XDHZZ	73342	217586	•TUBE	1
18	PFHZZ	12603	1H-416	•RIVET, SOLID	1
19	PFHZZ	12603	6H-32	•CLAMP, LOOP	1
20	XDHZZ	73342	217579	•TUBE	1
21	PFHZZ	12603	222067	•SLEEVE	24
22	XDHZZ	73342	217580	•TUBE	1

END Of FIGURE

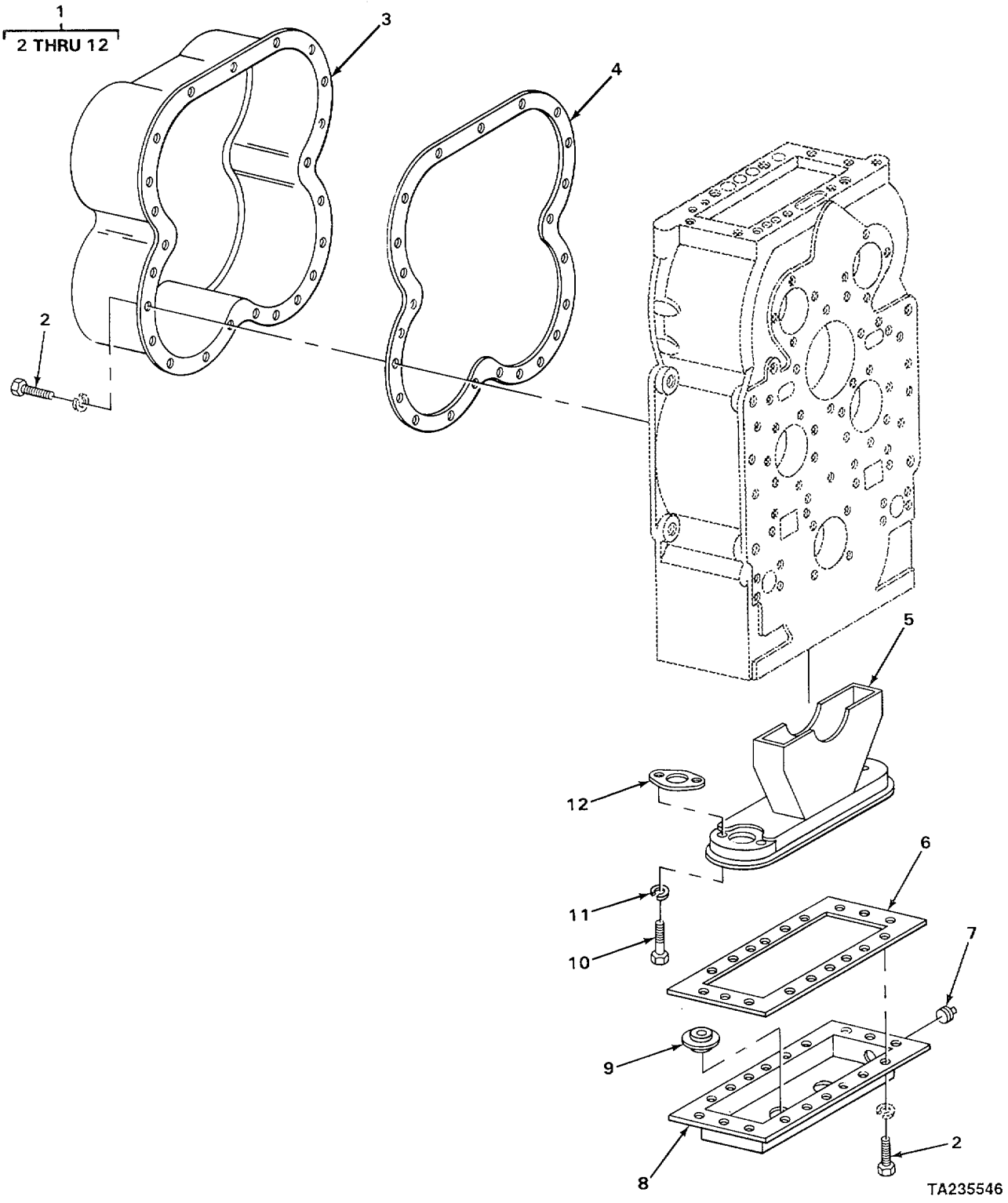

FIGURE 82. TRANSMISSION ASSEMBLY

SECTION II

(1) ITEM NO	(2) SMR CODE	(3) CAGEC	(4) PART NUMBER	(5) DESCRIPTION AND USABLE ON CODE (UOC)	(6) QTY
				GROUP 0710 TRANSMISSION ASSEMBLY AND ASSOCIATED PARTS FIG 82 TRANSMISSION ASSEMBLY	
1	PAFHD	12603	283926	TRANSMISSION,HYDRAU ASSEMBLY.....	1
2	PFHZZ	03504	5C612	•SCREW,CAP,HEXAGON H.....	41
3	XDHZZ	73342	217554	•COVER.....	1
4	PFHZZ	12603	217555	•GASKET.....	1
5	XDHZZ	73342	218357	•SCREEN	1
6	PFHZZ	12603	217563	•GASKET.....	1
7	PFOZZ	12603	13F12	•PLUG,PIPE	1
8	PFHZZ	12603	217562	•OIL PAN	1
9	PFHZZ	40152	525293	•MAGNET, PERMANENT	2
10	PFHZZ	12603	1C636	•SCREW,CAP,HEXAGON H.....	3
11	PFHZZ	96906	MS35333-76	•WASHER, LOCK.....	3
12	PFHZZ	12603	218376	GASKET	1

END OF FIGURE

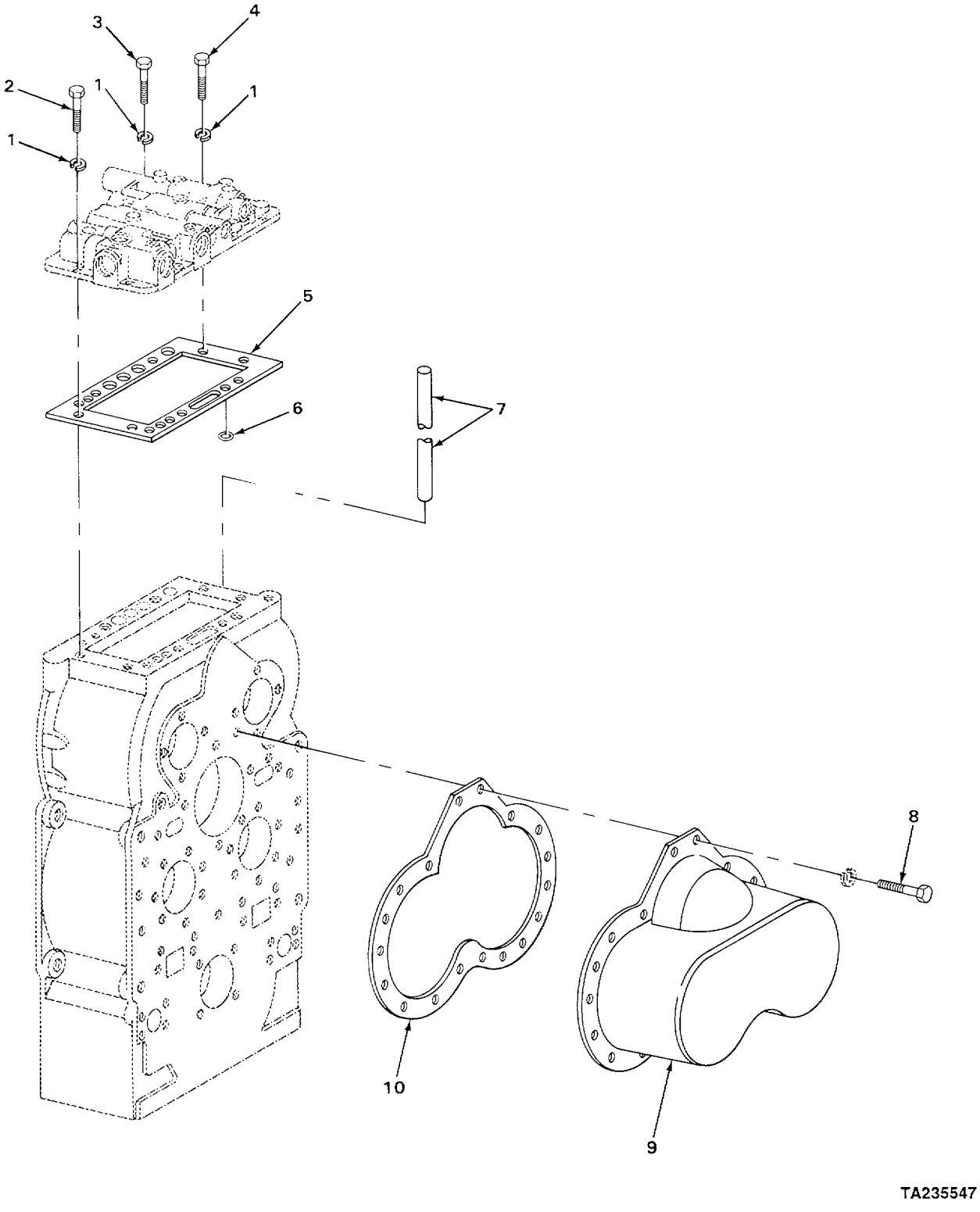

FIGURE 83. TRANSMISSION ASSSEMBLY AND RELATED PARTS.

SECTION II

(1) ITEM NO	(2) SMR CODE	(3) CAGEC	(4) PART NUMBER	(5) DESCRIPTION AND USABLE ON CODE (UOC)	(6) QTY
				GROUP 0710 TRANSMISSION ASSEMBLY AND ASSOCIATED PARTS FIG. 83 TRANSMISSION ASSEMBLY RELATED PARTS	
1	PFHZZ	96906	MS35333-76	•WASHER, LOCK	12
2	PFHZZ	96906	MS90728-66	•SCREW, CAP, HEXAGON	2
3	PFHZZ	33323	K41All9	•BOLT, MACHINE	4
4	PFHZZ	73342	1C-640	•BOLT, MACHINE	6
5	PFHZZ	12603	217653	•GASKET	1
6	PFHZZ	19206	25K40026	•SEAL, PLAIN, ENCASED	6
7	XDHZZ	73342	230605	•TUBE	1
8	PFHZZ	03504	5C612	•SCREW, CAP, HEXAGON H	18
9	XDHZZ	73342	232872	•COVER	1
10	PFHZZ	12603	217618	•GASKET	1

END OF FIGURE

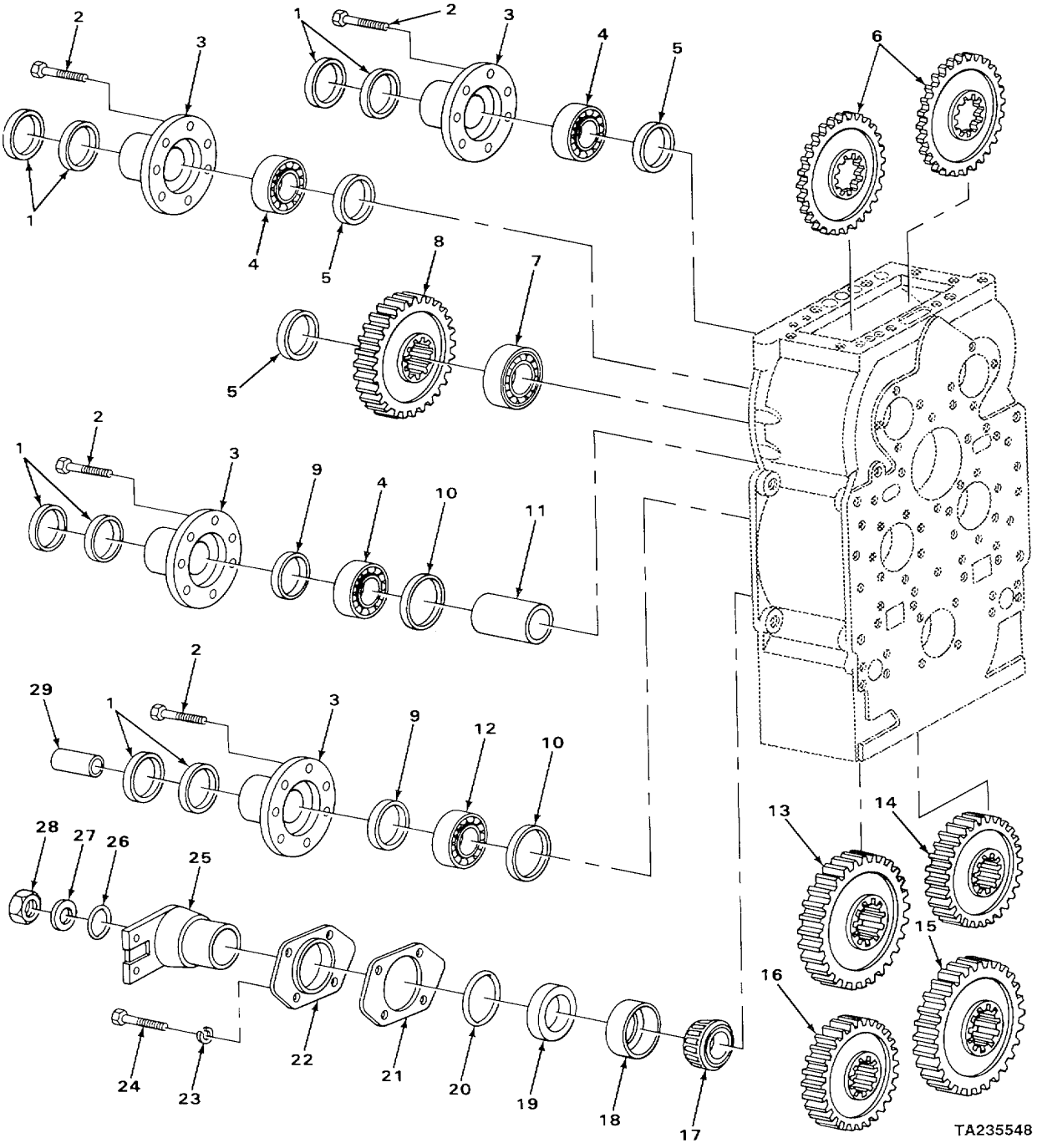

FIGURE 84. TRANSMISSION GEARS.

SECTION II

(1) ITEM NO	(2) SMR CODE	(3) CAGEC	(4) PART NUMBER	(5) DESCRIPTION AND USABLE ON CODE (UOC)	(6) QTY
				GROUP 0710 TRANSMISSION ASSEMBLY AND ASSOCIATED PARTS FIG 84 TRANSMISSION GEARS	
1	XDHZZ	73342	217600	RING	8
2	PFHZZ	73342	8C-820	BOLT, MACHINE	28
3	XDHZZ	73342	217146	SUPPORT	4
4	XDHZZ	73342	225840	BEARING,BALL, ANNULA	3
5	PFHZZ	96906	MS16624-250	RING,RETAINING	3
6	XDHZZ	73342	232873	GEAR	2
7	XDHZZ	73342	225835	BEARING	1
8	XDHZZ	73342	236406	GEAR	1
9	XDHZZ	12603	743669	RING, RETAINING	2
10	PFHZZ	40152	223882	RING, RETAINING	2
11	XDHZZ	12603	232876	SPACER	1
12	XDHZZ	73342	232895	BEARING	1
13	XDHZZ	73342	217465	GEAR	1
14	XDHZZ	73342	233169	GEAR	1
15	XDHZZ	73342	233170	GEAR	1
16	XDHZZ	73342	233030	GEAR	1
17	PFHZZ	26385	462	CONE AND ROLLER, VTA	1
18	XDHZZ	73342	1303281	CUP	1
19	PFHZZ	01212	415322R	SEAL,PLAIN ENCASED	1
20	PFHZZ	12603	25K40400	PACKING, PREFORMED	1
21	PFHZ	12603	231849	SHIM 0.007	V
21	PFHZZ	12603	231850	SHIM 0.010	V
21	PFHZZ	12603	231851	SHIM 0.020	V
22	XDHZZ	73342	231818	CAP	1
23	PFHZZ	96906	MS35338-49	WASHER, LOCK	4
24	PFHZZ	73342	1C-922	BOLT, MACHINE	4
25	XDHZZ	73342	231915	FLANGE	1
26	PFHZZ	89881	25K60128	PACKING, PREFORMED	1
27	PFHZZ	73342	231916	WASHER, FLAT	1
28	PFHZZ	12603	215634	NUT, SELF-LOCKING, HE	1
29	XDHZZ	73342	233111	SPACER	1

END OF FIGURE

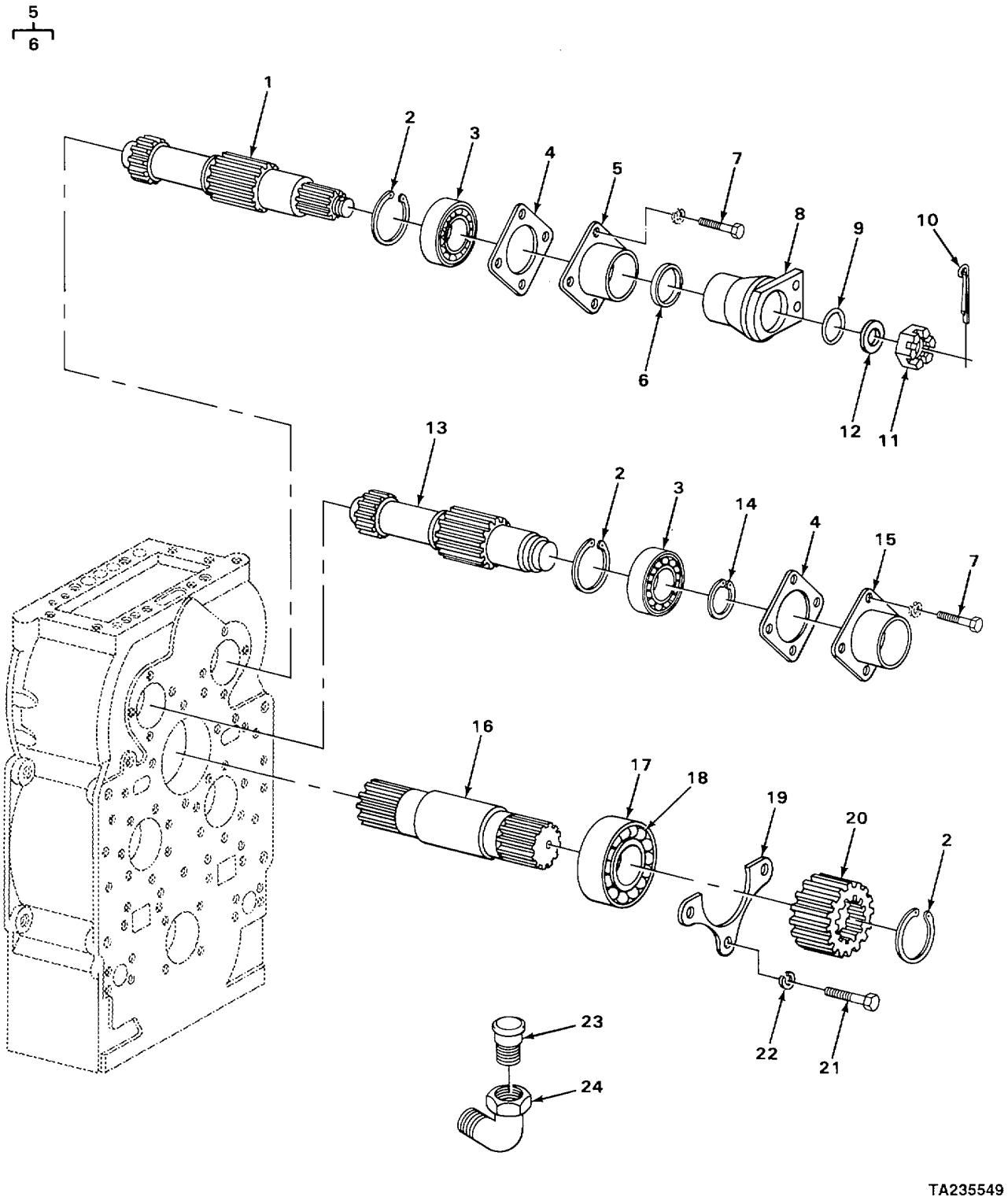

FIGURE 85. TRANSMISSION SHAFTS.

(1) ITEM NO	(2) SMR CODE	(3) CAGEC	(4) PART NUMBER	(5) DESCRIPTION AND USABLE ON CODES(UOC)	(6) QTY
				GROUP 0710 TRANSMISSION ASSEMBLY AND ASSOCIATED PARTS	
				FIG. 85 TRANSMISSION SHAFTS	
1	XDHZZ	73342	237010	SHAFT	1
2	PFHZZ	96906	MS16624-250	RING, RETAINING	3
3	XDHZZ	73342	225824	BEARING	2
4	XDHZZ	73342	217558	GASKET	2
5	XDHHH	73342	217607	CAP	1
6	PFHZZ	40152	206864	.SEAL, PLAIN ENCASED	1
7	PFHZZ	12603	233128	SCREW, CAP, HEXAGON H	4
8	PFHZZ	12603	214985	YOKE, UNIVERSAL JOIN	1
9	XDHZZ	73342	25K-40112	PACKING, PREFORMED	1
10	PFHZZ	96906	MS24665-360	PIN, COTTER	1
11	PFHZZ	24617	201951	NUT,PLAIN, CASTELLAT	1
12	PFHZZ	96906	MS27183-27	WASHER, FLAT	1
13	XDHZZ	73342	237009	SHAFT	1
14	PFHZZ	12603	224083	RING, RETAINING	1
15	XDHZZ	12603	217557	CAP	1
16	XDHZZ	73342	232890	SHAFT	1
17	XDHZZ	73342	232891	BEARING	1
18	PFHZZ	96906	MS19059-2414	BALL, BEARING	V
19	XDHZZ	73342	217560	RETAINER	1
20	XDHZZ	73342	233171	GEAR	1
21	PFHZZ	12603	1C716	BOLT, SPECIAL	3
22	PFHZZ	96906	MS35338-47	WASHER, LOCK	3
23	PFHZZ	12603	211433	BREATHER	1
24	PFHZZ	96906	M539230-3	ELBOW, PIPE	1

END OF FIGURE

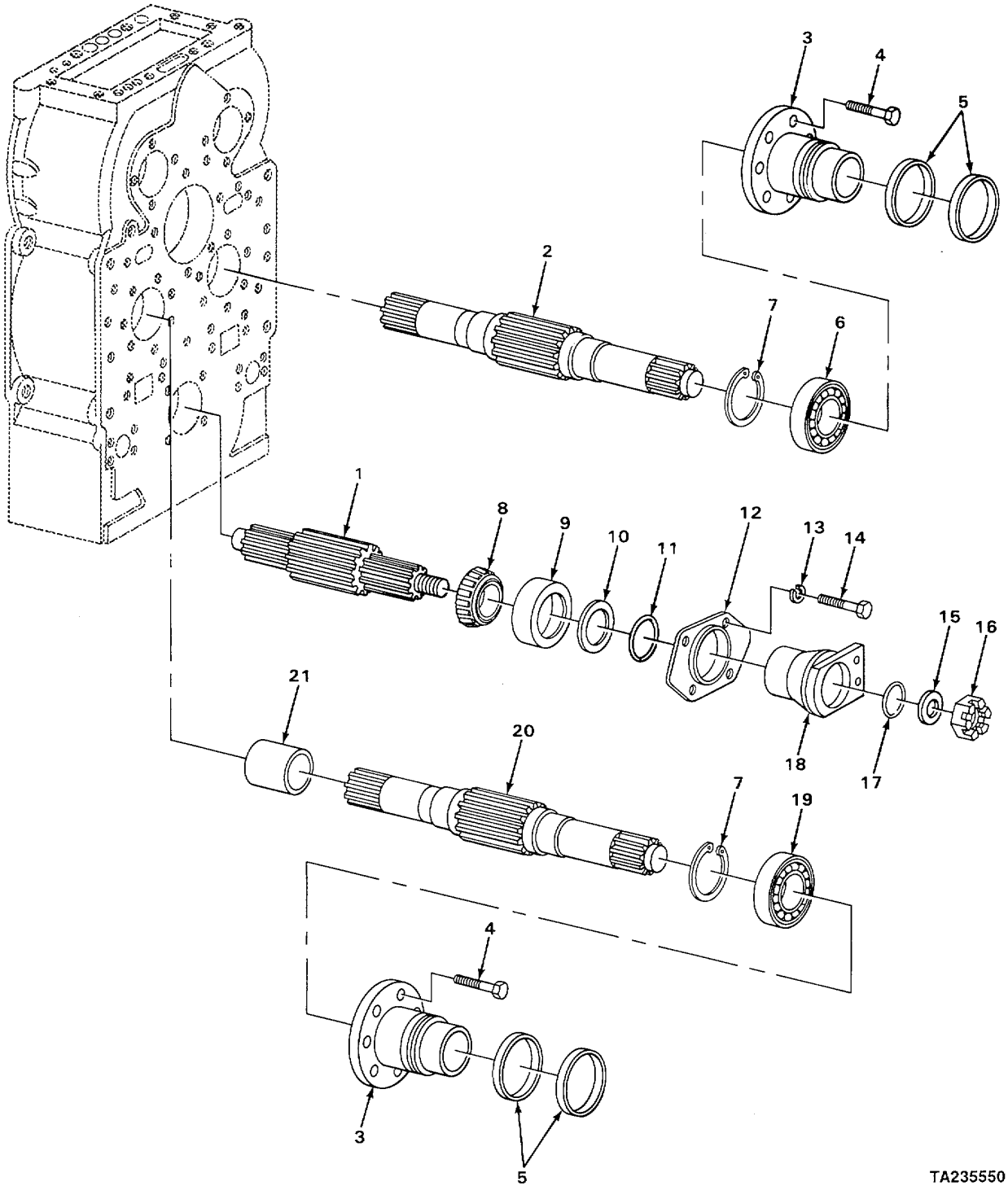

FIGURE 86. TRANSMISSION SHAFTS AND RELATED PARTS.

(1) ITEM NO	(2) SMR CODE	(3) CAGEC	(4) PART NUMBER	(5) DESCRIPTION AND USABLE ON CODES(UOC)	(6) QTY
				GROUP 0710 TRANSMISSION ASSEMBLY AND ASSOCIATED PARTS	
				FIG. 86 TRANSMISSION SHAFTS RELATED PARTS	
1	XDHZZ	73342	233063	SHAFT	1
2	XDHZZ	73342	237011	SHAFT	1
3	XDHZZ	73342	232879	SUPPORT	2
4	PFHZZ	73342	8C820	BOLT, MACHINE	14
5	PFHZZ	76602	90507	SEAL RING, METAL	4
6	XDHZZ	73342	225795	BEARING	1
7	PFHZZ	40152	223882	RING, RETAINING	2
8	PFHZZ	26385	462	CONE AND ROLLERS, TA	1
9	XDHZZ	73342	1303281	CUP	1
10	PAHZZ	01212	415322R	SEAL, PLAIN ENCASED	1
11	PFHZZ	12603	25K40400	PACKING, PREFORMED	1
12	XDHZZ	73342	231818	CAP	1
13	PFHZZ	96906	MS35338-49	WASHER, LOCK	4
14	PFHZZ	73342	1C-922	BOLT, MACHINE	4
15	PFHZZ	73342	231916	WASHER, FLAT	1
16	PFHZZ	12603	215634	NUT, SELF-LOCKING, HE	1
17	PFHZZ	89881	25K60128	PACKING, PREFORMED	1
18	XDHZZ	73342	231915	FLANGE	1
19	XDHZZ	73342	232877	BEARING	1
20	XDHZZ	73342	232874	SHAFT	1
21	XDHZZ	73342	233112	SPACER	1

END OF FIGURE

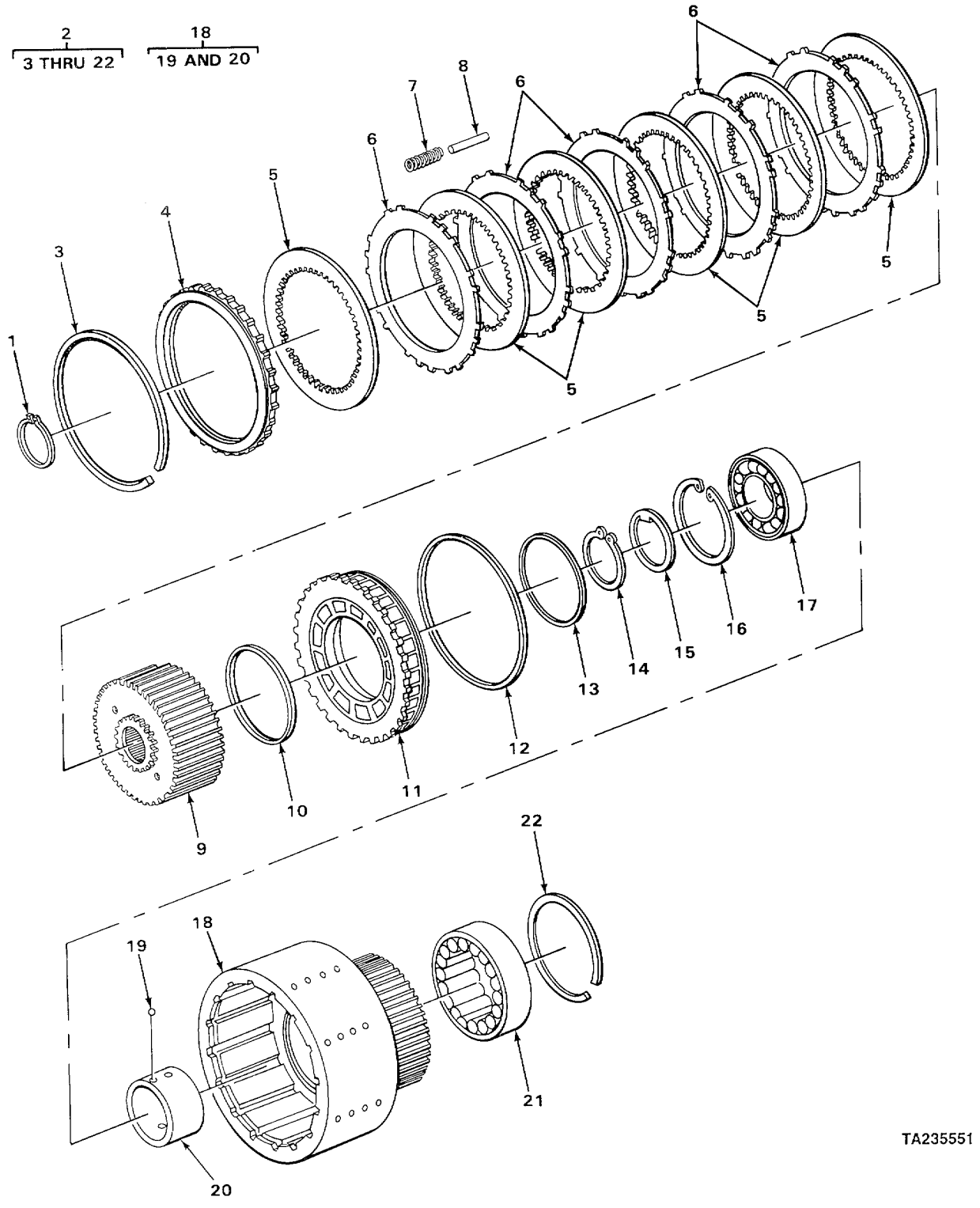

FIGURE 87. TRANSMISSION REVERSE, THIRD AND FOURTH CLUTCH ASSEMBLY.

(1) ITEM NO	(2) SMR CODE	(3) CAGEC	(4) PART NUMBER	(5) DESCRIPTION AND USABLE ON CODES(UOC)	(6) QTY
				GROUP 0710 TRANSMISSION ASSEMBLY AND ASSOCIATED PARTS	
				FIG. 87 TRANSMISSION RESERVE, THIRD AND FOURTH CLUTCH ASSEMBLY	
1	PFHZZ	12603	711418	RING, RETAINING	4
2	PFHHH	40152	233161	CLUTCH ASSEMBLY	4
3	PFHZZ	40152	217099	•RING, RETAINING	1
4	XDHZZ	73342	234814	•PLATE	1
5	PFHZZ	40152	232778	•DISK, CLUTCH	6
6	PFHZZ	12603	217162	•DISK, CLUTCH	5
7	PFHZZ	40152	217347	•SPRING, HELICAL, COMP	6
8	XDHZZ	73342	217601	•PIN	6
9	PFHZZ	40152	217148	•GEAR, SPUR	1
10	PFHZZ	40152	217509	•RING, RETAINING	1
11	XDHZZ	73342	234813	•PISTON	1
12	PFHZZ	03504	217361	•RING, PISTON	1
13	PFHZZ	12603	217411	•RING, PISTON	1
14	PFHZZ	12603	743669	•RING, RETAINING	1
15	PFHZZ	73342	217151	•WASHER, KEY	1
16	XDHZZ	89981	223901	•RING, RETAINING	1
17	XDHZZ	73342	223358	•BEARING	1
18	XDHHH	73342	217142	•DRUM, ASSEMBLY	1
19	PFHZZ	96906	MS19059-2414	••BALL, BEARING	1
20	XDHZZ	73342	218214	••RACE	1
21	XDHZZ	73342	225795	•BEARING	1
22	PFHZZ	40152	223855	•RING, RETAINING	1
				END OF FIGURE	

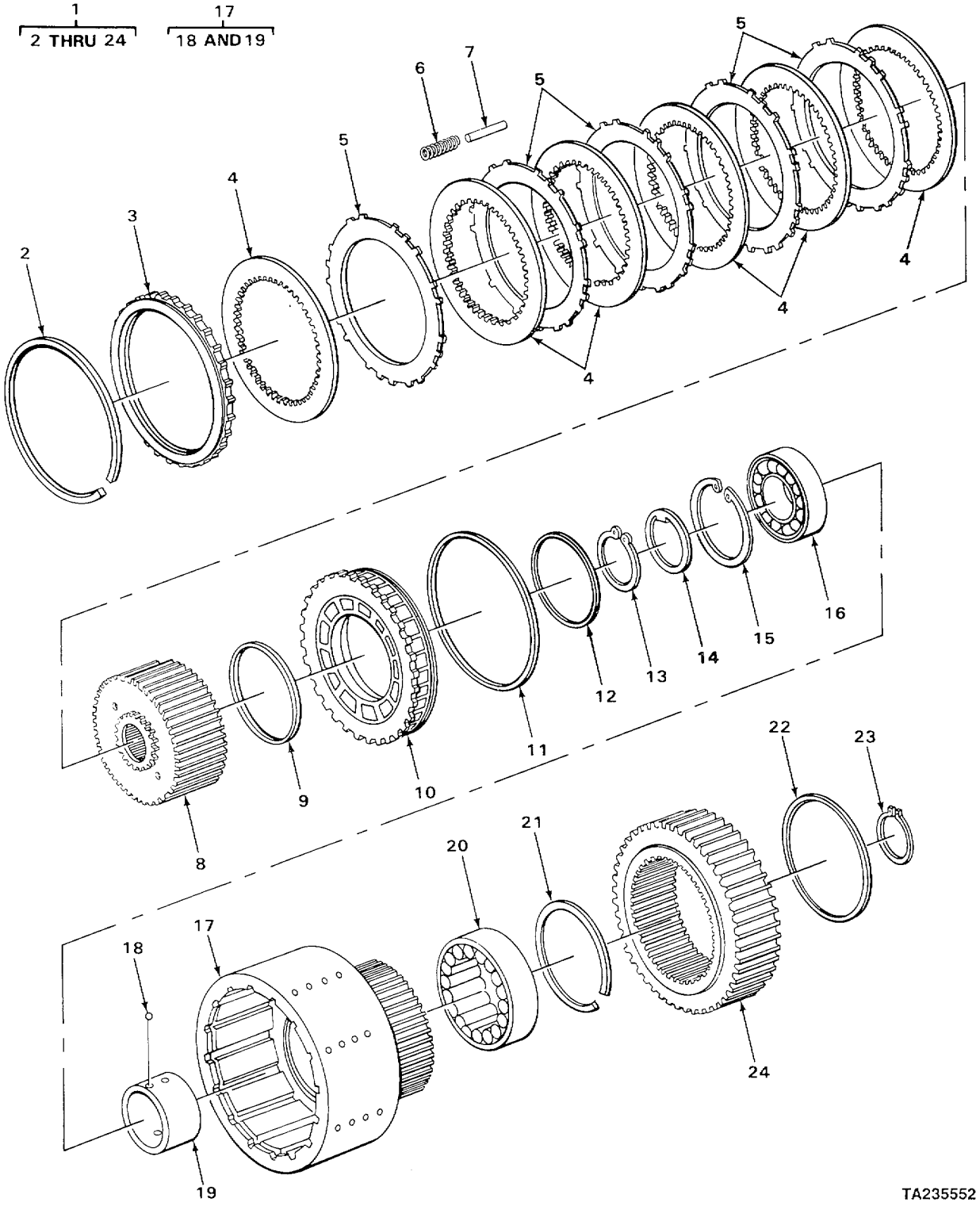

FIGURE 88. TRANSMISSION FIRST AND SECOND CLUTCH ASSEMBLY.

(1) ITEM NO	(2) SMR CODE	(3) CAGEC	(4) PART NUMBER	(5) DESCRIPTION AND USABLE ON CODES(UOC)	(6) QTY
				GROUP 0710 TRANSMISSION ASSEMBLY AND ASSOCIATED PARTS	
				FIG. 88 TRANSMISSION FIRST AND SECOND CLUTCH ASSEMBLY	
1	XDHHH	73342	233075	CLUTCH ASSEMBLY	2
2	PFHZZ	40152	217099	•RING, RETAINING	1
3	XDHZZ	73342	234814	•PLATE	1
4	PFHZZ	40152	232778	•DISK, CLUTCH	10
5	PFHZZ	12603	217162	•DISK, CLUTCH	9
6	PFHZZ	12603	217334	•SPRING, HELICAL, COMP	6
7	PFHZZ	12603	217599	•PIN, STRAIGHT, HEADLE	6
8	XDHZZ	73342	232888	•HUB ASSEMBLY	1
9	PFHZZ	40152	217509	•RING, RETAINING	1
10	XDHZZ	73342	234813	•PISTON	1
11	PFHZZ	03504	217361	•RING, PISTON	1
12	PFHZZ	12603	217411	•RING, PISTON	1
13	PFHZZ	96906	MS16624-3255	•RING, RETAINING	1
14	PFHZZ	73342	232886	•WASHER, KEY	1
15	XDHZZ	73342	223965	•RING	1
16	PFHZZ	12603	SK200-37	•BEARING, BALL, ANNULA	1
17	XDHHH	73342	232881	•DRUM ASSEMBLY	1
18	PFHZZ	96906	MS19059-2414	••BALL, BEARING	1
19	XDHZZ	73342	232887	••RACE	1
20	PFHZZ	03504	225796	•BEARING, ROLLER, CYLI	1
21	PFHZZ	40152	223997	•RING, RETAINING	1
22	PFHZZ	40152	217605	•RING, RETAINING	1
23	PFHZZ	12603	660516	•FASTENER, LIFT	1
24	XDHZZ	73342	233172	•GEAR	1

END OF FIGURE

1
2 THRU 20

19
20

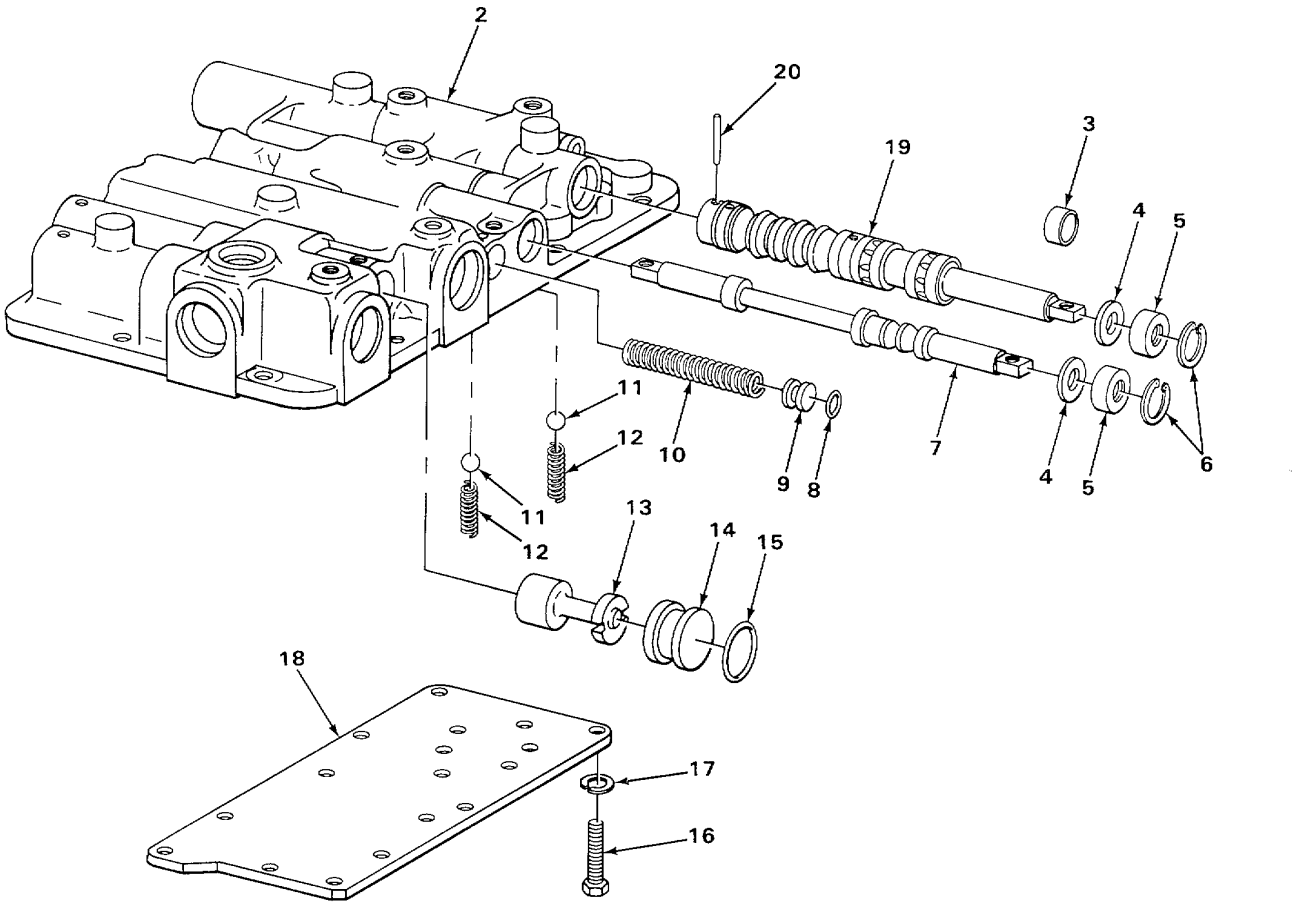

FIGURE 89. TRANSMISSION TOP COVER ASSEMBLY.

(1) ITEM NO	(2) SMR CODE	(3) CAGEC	(4) PART NUMBER	(5) DESCRIPTION AND USABLE ON CODES(UOC)	(6) QTY
				GROUP 0710 TRANSMISSION ASSEMBLY AND ASSOCIATED PARTS	
				FIG. 89 TRANSMISSION TOP COVER ASSEMBLY	
1	PFHHH	40152	233137	VALVE, LINEAR, DIRECT	1
2	XDHZZ	73342	229982	•COVER	1
3	PFHZZ	12603	226869	•SPACER, VALVE	1
4	PFHZZ	40152	217657	•WASHER, TRANSMISSION	2
5	PFHZZ	12603	233222	•SEAL, PLAIN ENCASED	2
6	PFHZZ	96906	MS16625-1112	•RING, RETAINING	2
7	PFHZZ	40152	217637	•SLIDE, DIRECTIONAL C	1
8	PFHZZ	75214	P383-2	•PACKING, PREFORMED	1
9	PFHZZ	40152	220983	•STOP PRESSURE REGUL	1
10	PFHZZ	12603	217645	•SPRING, HELICAL, COMP	1
11	PFHZZ	96906	MS19059-2418	•BALL, BEARING	2
12	XDHZZ	73342	Z32611	•SPRING	2
13	XDH2Z	73342	233138	•SPOOL	1
14	XDHZZ	89346	304130C1	•PLUG, REGULATING	1
15	PFHZZ	12603	25K-40024	•PACKING, PREFORMED	1
16	XDHZZ	12603	1C512	•SCREW	17
17	PFHZZ	73342	5E-05	•WASHER, LOCK	17
18	PFHZZ	12603	217632	•COVER, ACCESS	1
19	PFHZZ	12603	217633	•SLIDE, DIRECTIONAL C	1
20	PFHZZ	12603	667209	••PIN, ROLL	1

END OF FIGURE

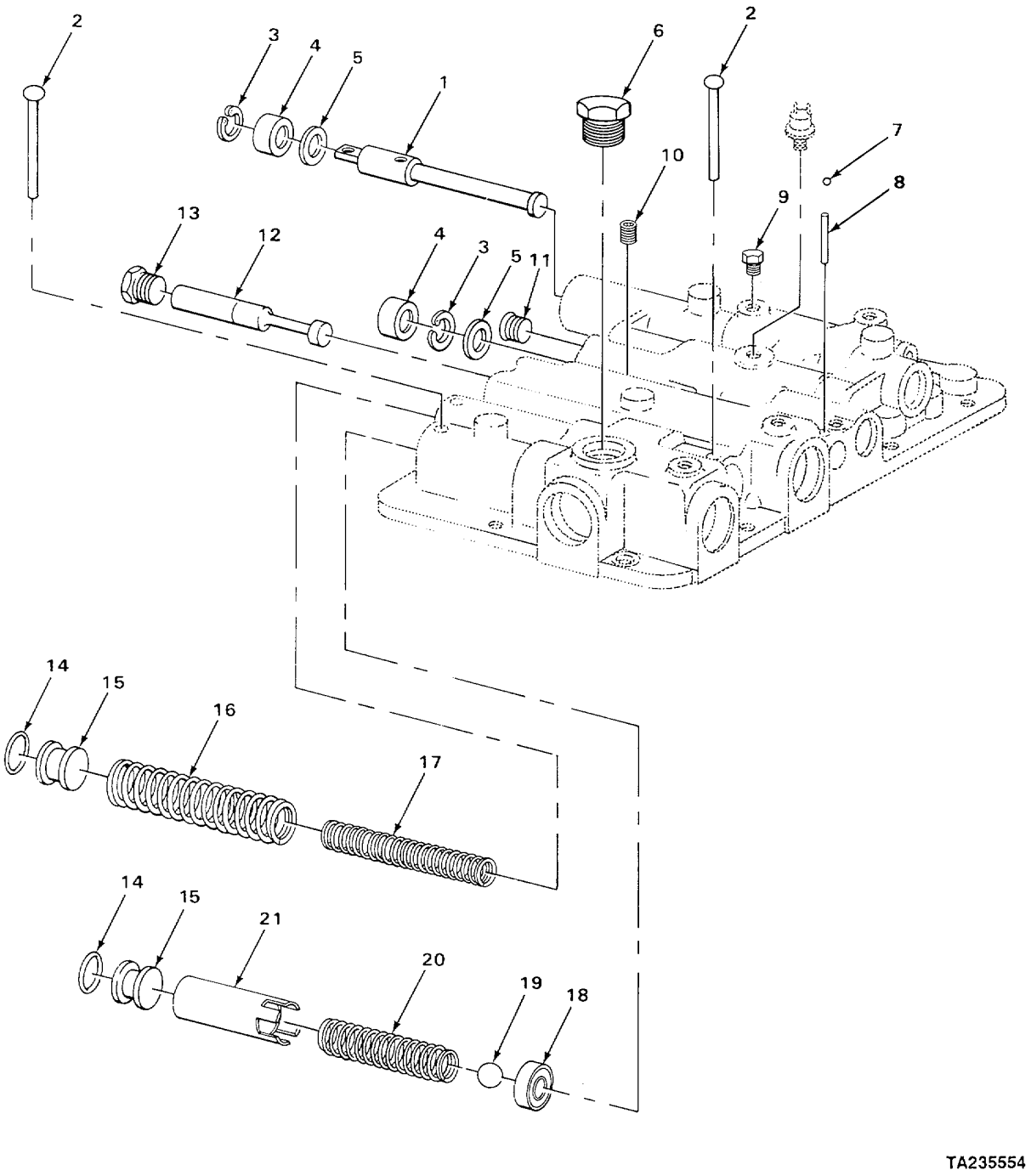

FIGURE 90. TOP COVER, EXPLODED VIEW.

(1) ITEM NO	(2) SMR CODE	(3) CAGEC	(4) PART NUMBER	(5) DESCRIPTION AND USABLE ON CODES(UOC)	(6) QTY
				GROUP 0710 TRANSMISSION ASSEMBLY AND ASSOCIATED PARTS	
				FIG. 90 TOP COVER, EXPLODED VIEW	
1	XDHZZ	73342	217635	••VALVE	1
2	PAHZZ	40152	300058	•PIN, STRAIGHT, HEADED	3
3	PFHZZ	96906	MS16625-1112	•RING, RETAINING	2
4	PFHZZ	12603	233222	•SEAL, PLAIN ENCASED	2
5	PFHZZ	40152	217657	•WASHER, TRANSMISSION	2
6	XDHZZ	73342	24K-10	•PLUG	1
7	PFHZZ	96906	MS19059-2418	•BALL, BEARING	1
8	PFHZZ	12603	654724	•PIN, SPECIAL	1
9	PFHZZ	21450	444618	•PLUG, PIPE	2
10	PFHZZ	81348	WW-P-471ACABCB	•PLUG, PIPE	1
11	PFHZZ	12603	851883	•PLUG, PIPE	1
12	PFHZZ	40152	217644	•SLIDE, DIRECTIONAL C	1
13	PFHZZ	12603	24K-7	•PLUG, PIPE	1
14	PFHZZ	40152	58K-210	•PACKING, PREFORMED	2
15	XDHZZ	89346	304130C1	•PLUG, REGULATING	1
16	XDHZZ	73342	233139	•SPRING	1
17	XDHZZ	12603	233140	•SPRING	1
18	PFHZZ	40152	217650	•SEAT, BALL SOCKET	1
19	PFHZZ	96906	MS19061-20019	•BALL, BEARING	1
20	PFHZZ	12603	217651	•SPRING, HELICAL, COMP	1
21	PFHZZ	40152	217652	•SPACER, TRANSMISSION	1
				END OF FIGURE	

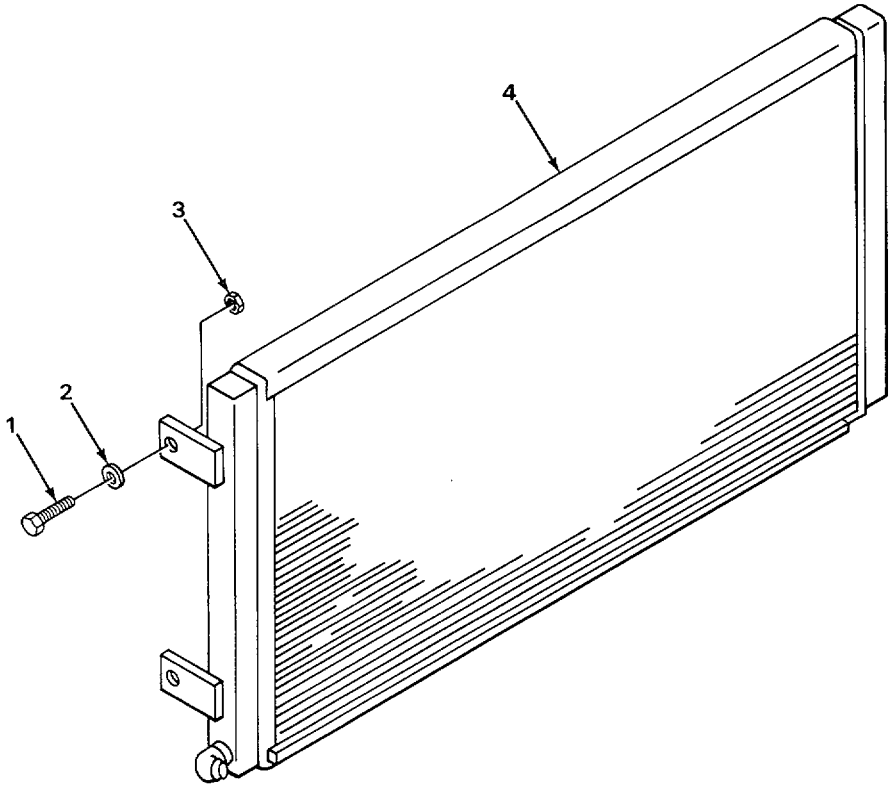

FIGURE 91. TRANSMISSION OIL COOLER.

(1) ITEM NO	(2) SMR CODE	(3) CAGEC	(4) PART NUMBER	(5) DESCRIPTION AND USABLE ON CODES(UOC)	(6) QTY
				GROUP 0721 COOLERS, PUMPS, MOTORS	
				FIG. 91 TRANSMISSION OIL COOLER	
1	PFFZZ	96906	MS18154-58	SCREW, CAP, HEXAGON H.....	4
2	PFFZZ	40152	947810	WASHER, FLAT	4
3	PFFZZ	40152	13803675-1	NUT, PLAIN, HEXAGON	4
4	PFFZZ	40152	962991	COOLER, FLUID, TRANSM	1

END OF FIGURE

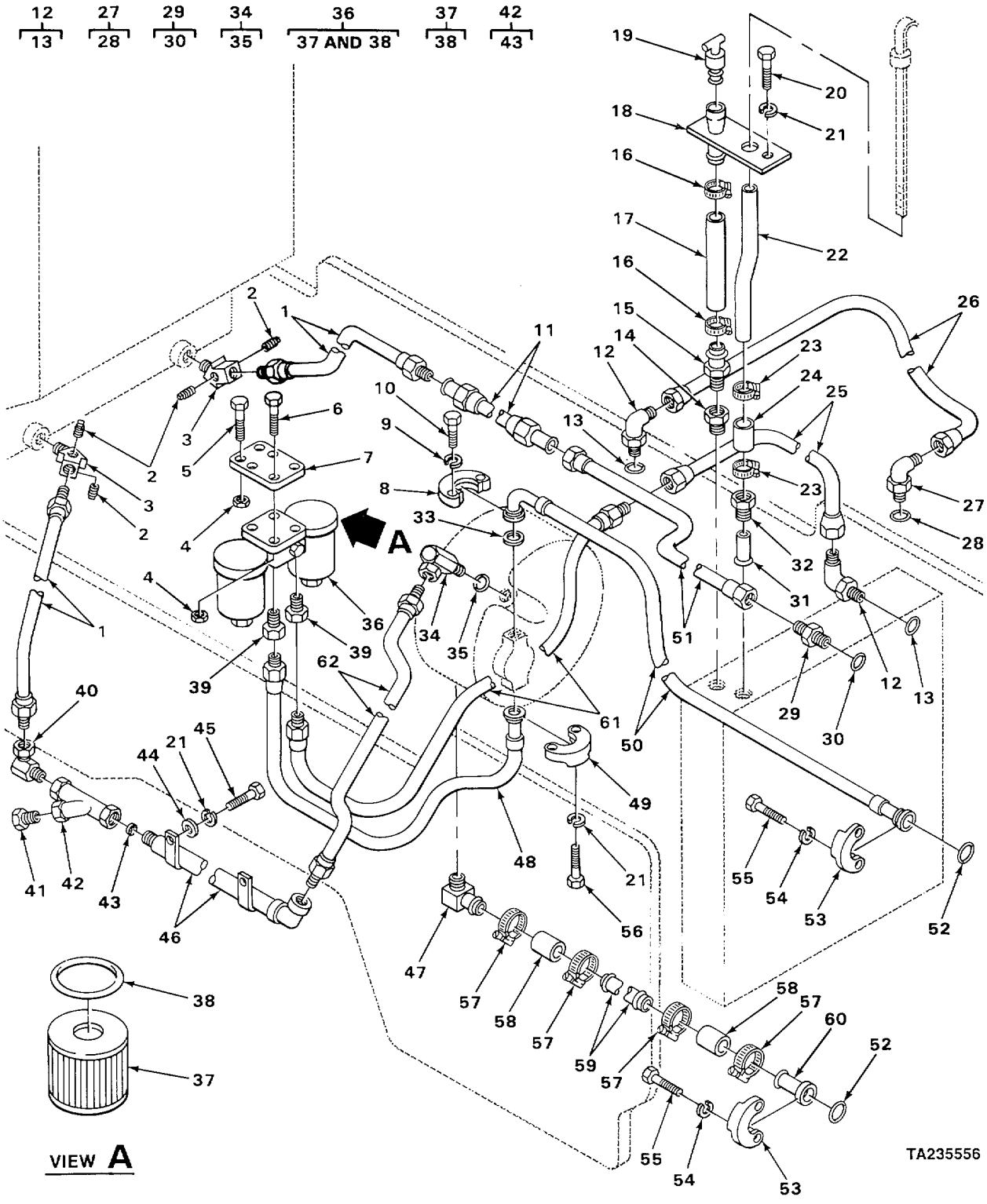

FIGURE 92. TRANSMISSION LINES, FILTER, AND RELATED PARTS.

(1) ITEM NO	(2) SMR CODE	(3) CAGEC	(4) PART NUMBER	(5) DESCRIPTION AND USABLE ON CODES(UOC)	(6) QTY
				GROUP 0721 COOLERS, PUMPS, MOTORS	
				FIG. 92 TRANSMISSION LINES, FILTER, AND RELATED PARTS	
1	XDOZZ	40152	547007	HOSE	2
2	PFOZZ	40152	40K02	PLUG, PIPE	4
3	XDOZZ	40152	1529949	ELBOW	2
4	PFOZZ	96906	MS21044N4	NUT, SELF-LOCKING, HE	6
5	PFOZZ	40152	24C-724	BOLT,MACHINE	4
6	PFOZZ	40152	24G-828	BOLT, MACHINE	2
7	XDOZZ	40152	2511431	BRACKET	1
8	XDOZZ	40152	19J-20	FLANGE, HALF	2
9	PFOZZ	96906	MS35338-47	WASHER, LOCK	4
10	PFOZZ	40152	23C-724	BOLT, MACHINE	4
11	XDOZZ	40152	1543525	TUBE	1
12	PFOZZ	12603	18K10	ELBOW,TUBE TO BOSS	2
13	PFOZZ	12603	91F10	•PACKING, PREFORMED	1
14	XDOZZ	40152	356621	BUSHING	1
15	XDOZZ	40152	667288	STEM	1
16	PFOZZ	40152	540103	CLAMP	2
17	XDOZZ	40152	568810	HOSE	1
18	XDOZZ	40152	568807	PLATE	1
19	PFOZZ	40152	568824	CAP, FILLER OPENING TRANSMISSION	1
20	PFOZZ	40152	23C-616	BOLT, MACHINE	2
21	PFOZZ	96906	MS35333-76	WASHER, LOCK	8
22	XDOZZ	40152	1502877	TUBE	1
23	XDOZZ	40152	521874	CLAMP	2
24	PFOZZ	40152	743563	HOSE, NONMETALLIC	1
25	XDOZZ	40152	1543730	TUBE	1
26	XDOZZ	40152	1501251	TUBE	1
27	PFOZZ	96906	MS51527A16	ELBOW, TUBE TO BOSS	1
28	PFCZZ	12603	91F10	•PACKING, PREFORMED	1
29	PFOZZ	96906	MS51525A16	ADAPTER, STRAIGHT, TU	1
30	PFOZZ	12603	91F10	•PACKING, PREFORMED	1
31	XDOZZ	12603	1502876	TUBE	1
32	PFOZZ	12603	92F-7	INVERTED NUT, TUBE C	1
33	PAOZZ	40152	58K-222	PACKING, PREORMED	1
34	XDOOO	40152	1520566	ADAPTER	1
35	PFOZZ	12603	91F10	•PACKING, PREFORMED	1
36	XDOOO	40152	234777	FILTER ASSEMBLY	1
37	PAOZZ	96906	MS35802-3	•FILTER ELEMENT,FLUI	2
38	XDOZZ	40152	25K-80500	••PACKING, PREFORMED	2
39	XDOZZ	40152	587075	ADAPTER	2
40	PFOZZ	81343	12-12-141030	COUPLING, PIPE	1
41	PFOZZ	12603	40K06	PLUG	1
42	XDOOO	40152	1532819	STRAINER	1
43	XDOZZ	40152	946943	•SCREEN	1
44	PFOZZ	12603	656672	WASHER, PLAIN	2
45	PFOZZ	40152	24C-616	BOLT, MACHINE	2
46	XDOZZ	40152	1543745	TUBE	1
47	XDOZZ	40152	1311282	ELBOW	1

(1) ITEM NO	(2) SMR CODE	(3) CAGEC	(4) PART NUMBER	(5) DESCRIPTION AND USABLE ON CODES(UOC)	(6) QTY
48	XDOZZ	40152	1543449	HOSE	1
49	XDOZZ	40152	19J-16	FLANGE, HALF	2
50	PFOZZ	12603	558793	HOSE ASSEMBLY, NONME	1
51	XDOZZ	40152	584263	HOSE	1
52	PFOZZ	40152	58K-225	PACKING, PREFORMED	2
53	XDOZZ	40152	19J-24	FLANGE, HALF	4
54	PFOZZ	95019	500357-13	WASHER, LOCK	8
55	PFOZZ	40152	23C-824	BOLT, MACHINE	8
56	PFOZZ	40152	23C-620	BOLT, MACHINE	4
57	XDOZZ	40152	1545004	CLAMP	4
58	PFOZZ	40152	536710	HOSE	2
59	XDOZZ	40152	1533267	TUBF	1
60	XDOZZ	40152	799020	STEM	1
61	XDOZ2	40152	582693	HOSE	1
62	XDOZZ	40152	546803	HOSE ASSEMLY, NO	1

END OF FIGURE

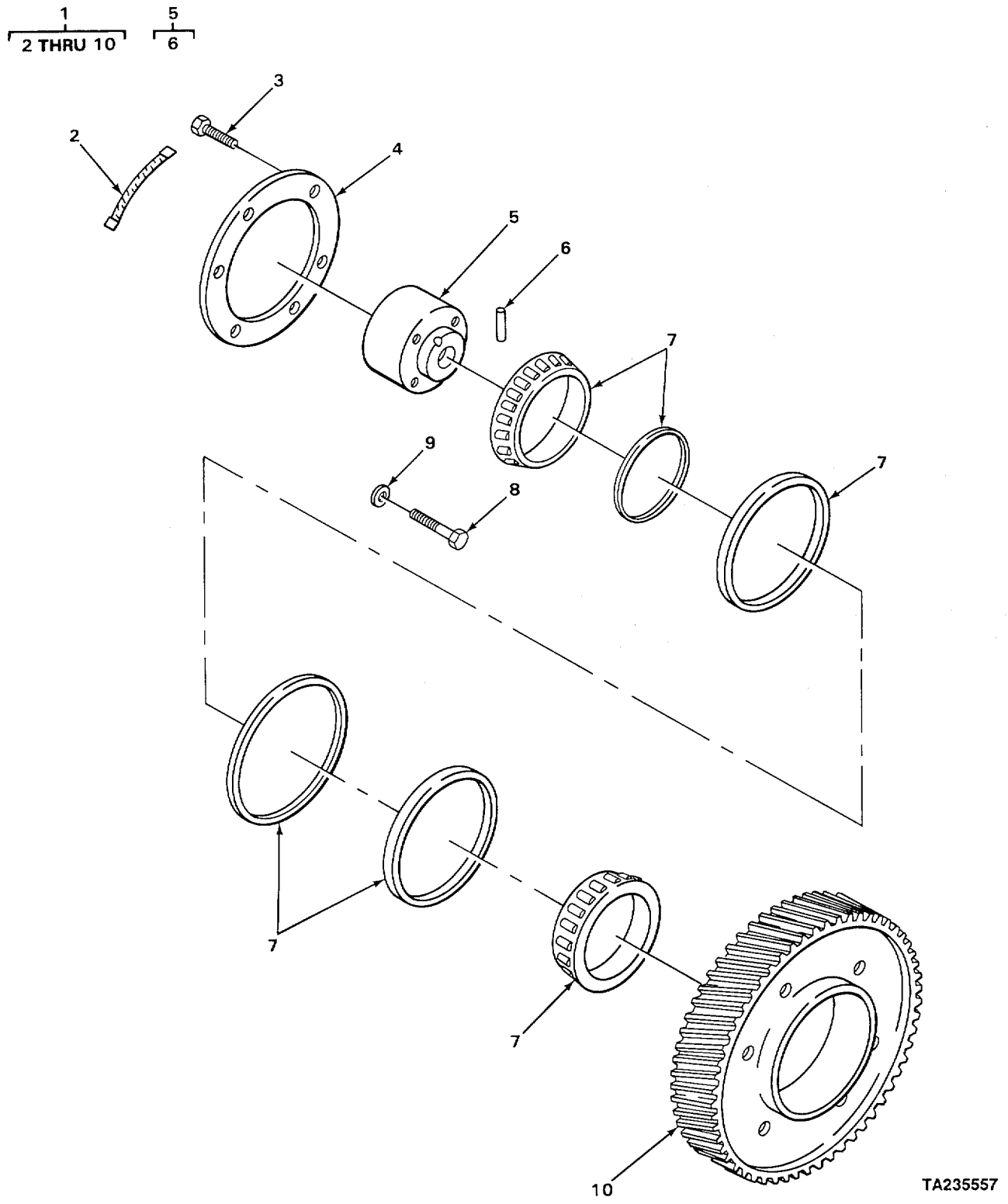

FIGURE 93. TRANSMISSION IDLER GEAR.

(1) ITEM NO	(2) SMR CODE	(3) CAGEC	(4) PART NUMBER	(5) DESCRIPTION AND USABLE ON CODES(UOC)	(6) QTY
				GROUP 0725 IDLER GEARS	
				FIG. 93 TRANSMISSION IDLER GEAR	
1	PFFFF	72582	5199383	GEAR, HELICAL LH HELIX	1
2	PFFZZ	72582	5103534	•BOLT	3
3	PFFZZ	96906	MS90727-29	•SCREW, CAP, HEXAGON H	6
4	PFFZZ	72582	5176998	•PLATE, RETAINING, BEA	1
5	PFFZZ	72582	5130135	•HUB, BODY	1
6	PAFZZ	24617	5151444	••PIN, HOLLOW	1
7	PFFZZ	43334	ES180379ZD	•BEARING, ROLLER, TAPE	1
8	XDFZZ	72582	454992	•SCREW, CAP, HEXAGON H	1
9	PFFZZ	38597	50-4-18-17-7	•WASHER, FLAT	1
10	PFFZZ	72582	5113817	•GEAR, HELICAL LH HELIX	1
				END OF FIGURE	

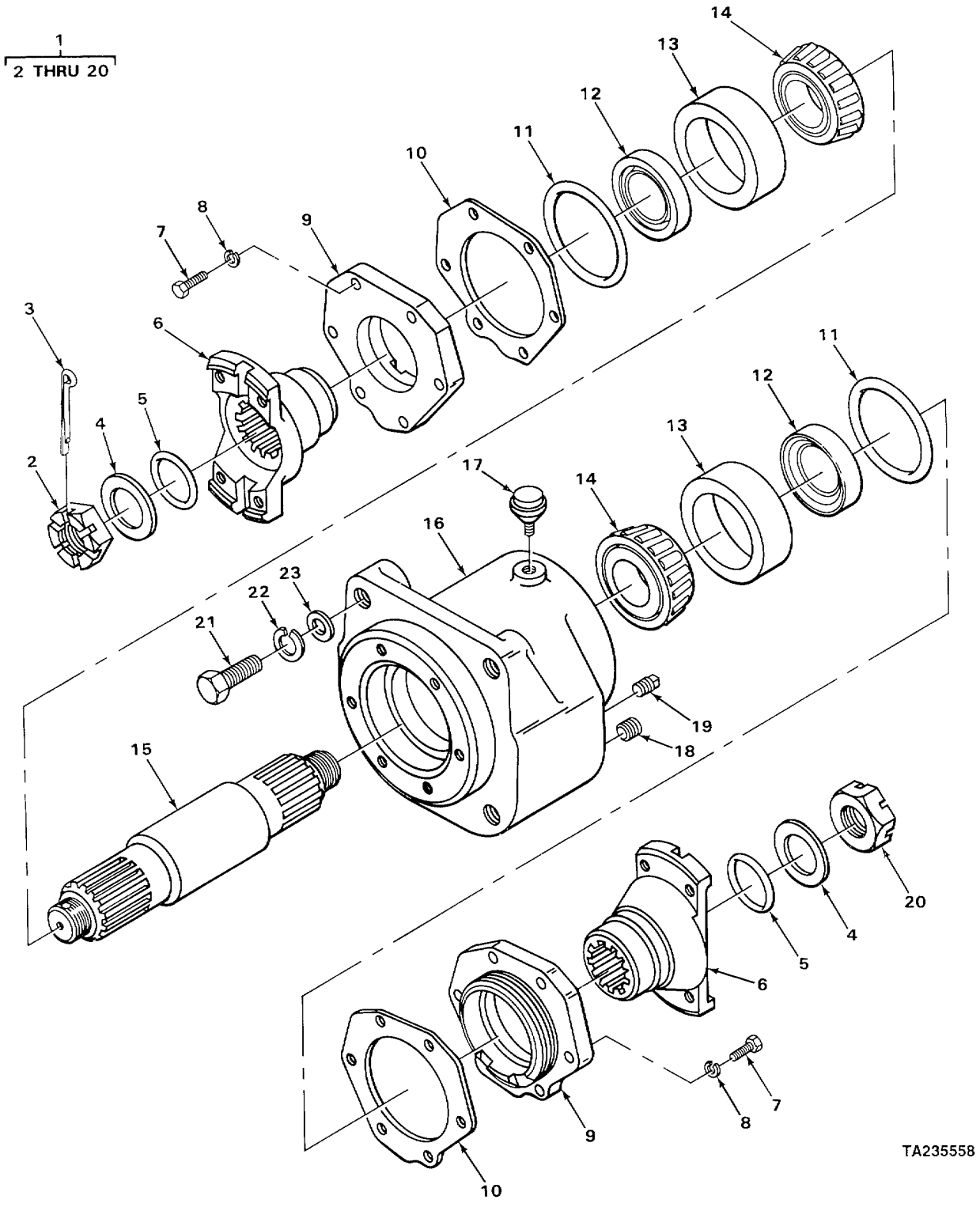

FIGURE 94. MIDMOUNT BEARING ASSEMBLY.

(1) ITEM NO	(2) SMR CODE	(3) CAGEC	(4) PART NUMBER	(5) DESCRIPTION AND USABLE ON CODES(UOC)	(6) QTY
				GROUP 09 PROPELLER, PROPELLER SHAFTS, UNIVERSAL JOINTS, COUPLER AND CLAMP ASSEMBLY	
				GROUP 0900 PROPELLER SHAFTS	
				FIG. 94 MIDMOUNT BEARING ASSEMBLY	
1	XDOOO	40152	230553	BEARING	1
2	XDOZZ	89749	205928	•NUT, PLAIN, SLOTTED, H	1
3	PFOZZ	96906	MS24665-361	•PIN, COTTER	1
4	PFOZZ	12603	222179	•WASHER, FLAT	2
5	PFOZZ	40152	25K60116	•PACKING, PREFORMED	2
6	PFOZZ	12603	222233	•YOKE, UNIVERSAL JOIN	2
7	PFOZZ	96906	MS90728-88	•SCREW, CAP, HEXAGON H	8
8	PFOZZ	96906	MS35338-47	•WASHER, LOCK	8
9	XDOZZ	40152	230690	•CAP	2
10	XDOZZ	40152	217566	•SHIM 0004 INCHES	V
10	XDOZZ	40152	217567	•SHIM 0.007 INCHES	V
10	XDOZZ	40152	217568	•SHIM 0.010 INCHES	V
11	PFOZZ	96906	MS28775-236	•PACKING, PREFORMED	2
12	PFOZZ	12603	225823	•SEAL, PLAIN ENCASED	2
13	PFOZZ	12603	856250	•CUP, TAPERED ROLLER	2
14	PFOZZ	08162	BF28580	•CONE AND ROLLERS, TA	2
15	XDOZZ	40152	233007	•SHAFT	1
16	XDOZZ	40152	230529	•HOUSING	1
17	PFOZZ	12603	211433	•BREATHER	1
18	PFOZZ	12603	215757	•PLUG, MACHINE THREAD	1
19	PFOZZ	12603	13F12	•PLUG, PIPE	1
20	PFOZZ	12603	222960	•NUT, SELF-LOCKING, SI	1
21	PFOZZ	40152	23C-1044	BOLT, MACHINE	4
22	PFOZZ	12603	4E10	WASHER, LOCK	4
23	PFOZZ	40152	942139	WASHER, FLAT	4

END OF FIGURE

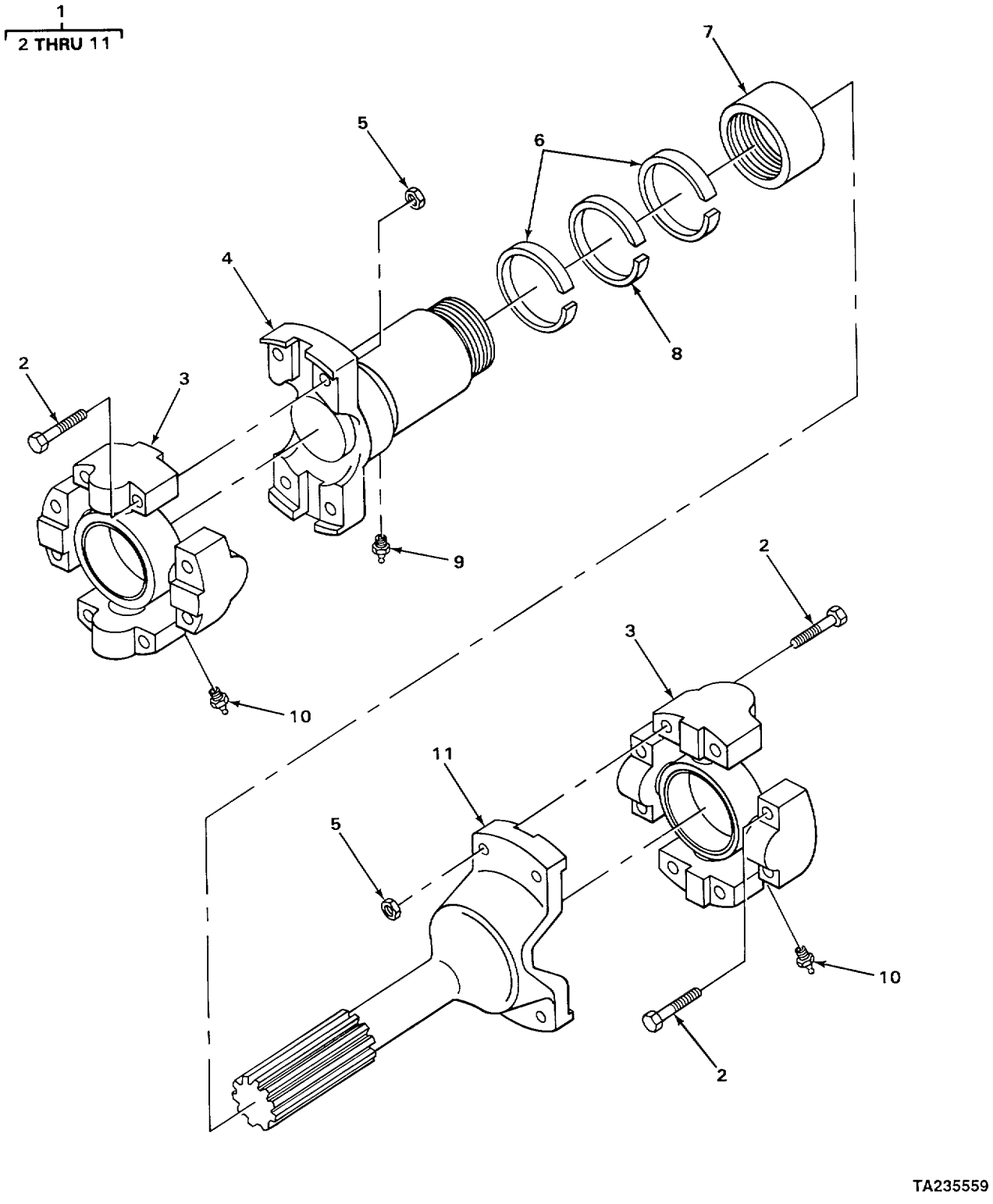

FIGURE 95. TRANSMISSION TO REAR AXLE PROPELLER SHAFT ASSEMBLY.

(1) ITEM NO	(2) SMR CODE	(3) CAGEC	(4) PART NUMBER	(5) DESCRIPTION AND USABLE ON CODES(UOC)	(6) QTY
				GROUP 0900 PROPELLER SHAFTS	
				FIG. 95 TRANSMISSION TO REAR AXLE PROPELLER SHAFT ASSEMBLY	
1	PFOOO	40152	1925664	PROPELLER SHAFT TRANSMISSION TO REAR AXLE	1
2	PFOZZ	40152	940229	•BOLT.....	16
3	PFOZZ	75535	CP72NI9	•PARTS KIT, UNIVERSAL.....	2
4	PFOZZ	40152	946643	•YOKE, UNIVERSAL JOIN	1
5	PFOZZ	12603	8D08	•NUT, PLAIN, HEXAGON	8
6	PFOZZ	40152	940251	•WASHER, SPLIT	2
7	XDOZZ	40152	940250	•RETAINER.....	1
8	PFOZZ	40152	942749	•WASHER, SPLIT	1
9	PFOZZ	12603	10H25	•FITTING, LUBRICATION.....	1
10	PFOZZ	96906	MS15001-1	•FITTING, LUBRICATION.....	2
11	XDOZZ	40152	946642	•TUBE	1
				END OF FIGURE	

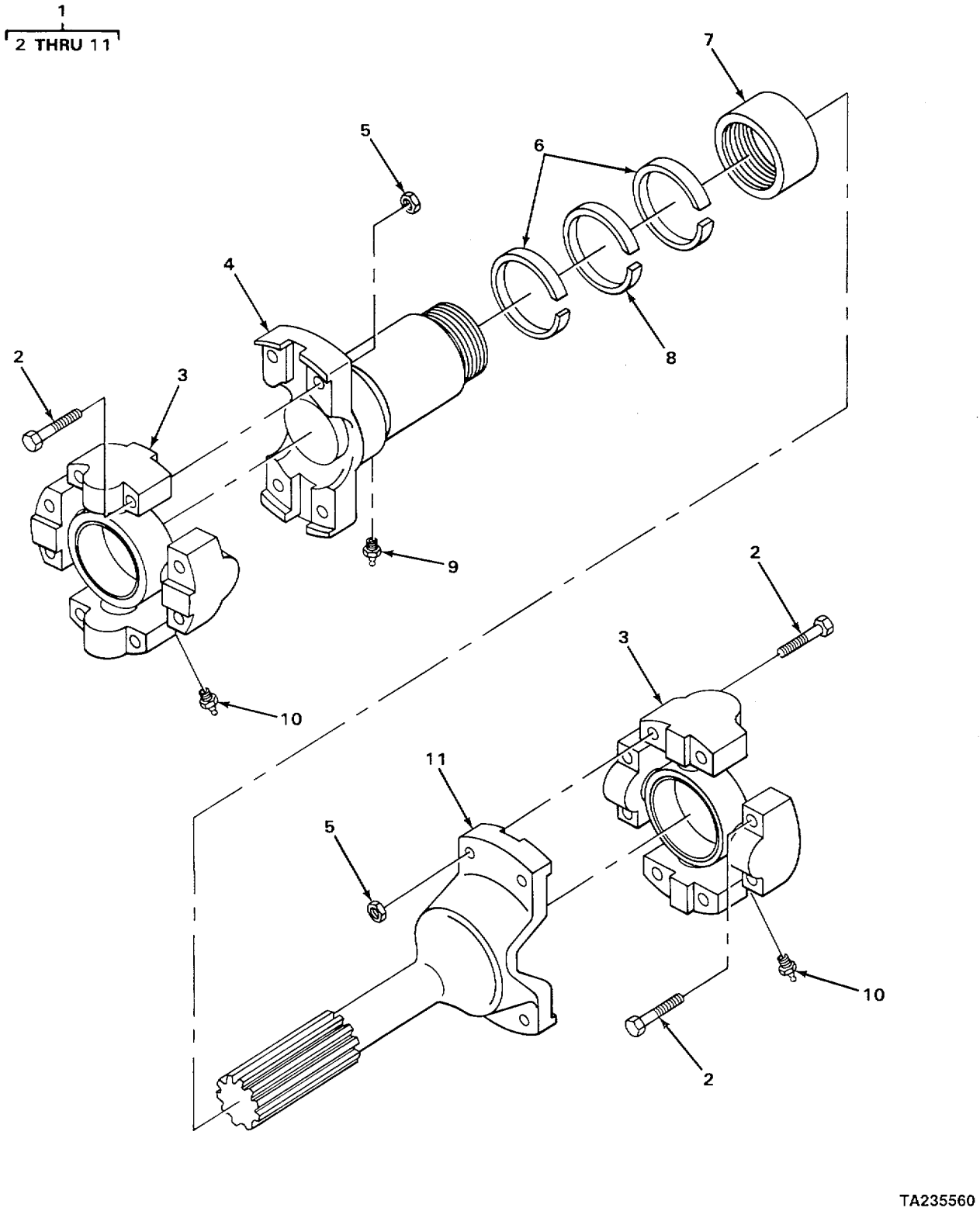

FIGURE 96. CONVERTER TO TRANSMISSION PROPELLER SHAFT ASSEMBLY.

(1) ITEM NO	(2) SMR CODE	(3) CAGEC	(4) PART NUMBER	(5) DESCRIPTION AND USABLE ON CODES(UOC)	(6) QTY
				GROUP 0900 PROPELLER SHAFTS	
				FIG. 96 CONVERTER TO TRANSMISSION PROPELLER SHAFT ASSEMBLY	
1	PFOOO	40152	2535726	PROPELLER SHAFT CONVERTER TO TRANSMISSION	1
2	PFOZZ	40152	940089	•SCREW, CAP, HEXAGON H	16
3	PFOZZ	78500	CP62N14	•PARTS KIT, UNIVERSAL	2
4	XDOZZ	40152	940093	•SLIP YOKE	1
5	PFOZZ	96906	MS35691-21	•NUT, PLAIN, HEXAGON	8
6	XDOZZ	77873	328J	•WASHER, SPLIT	2
7	PFOZZ	26385	MUJC0-863J	•PACKING NUT	1
8	PFOZZ	40152	940092	•FELT, MECHANICAL, PRE	1
9	PFOZZ	12603	10H25	•FITTING, LUBRICATION	1
10	PFOZZ	96906	MS15001-1	•FITTING, LUBRICATION	2
11	XDOZZ	40152	947245	•TUBE	1
				END OF FIGURE	

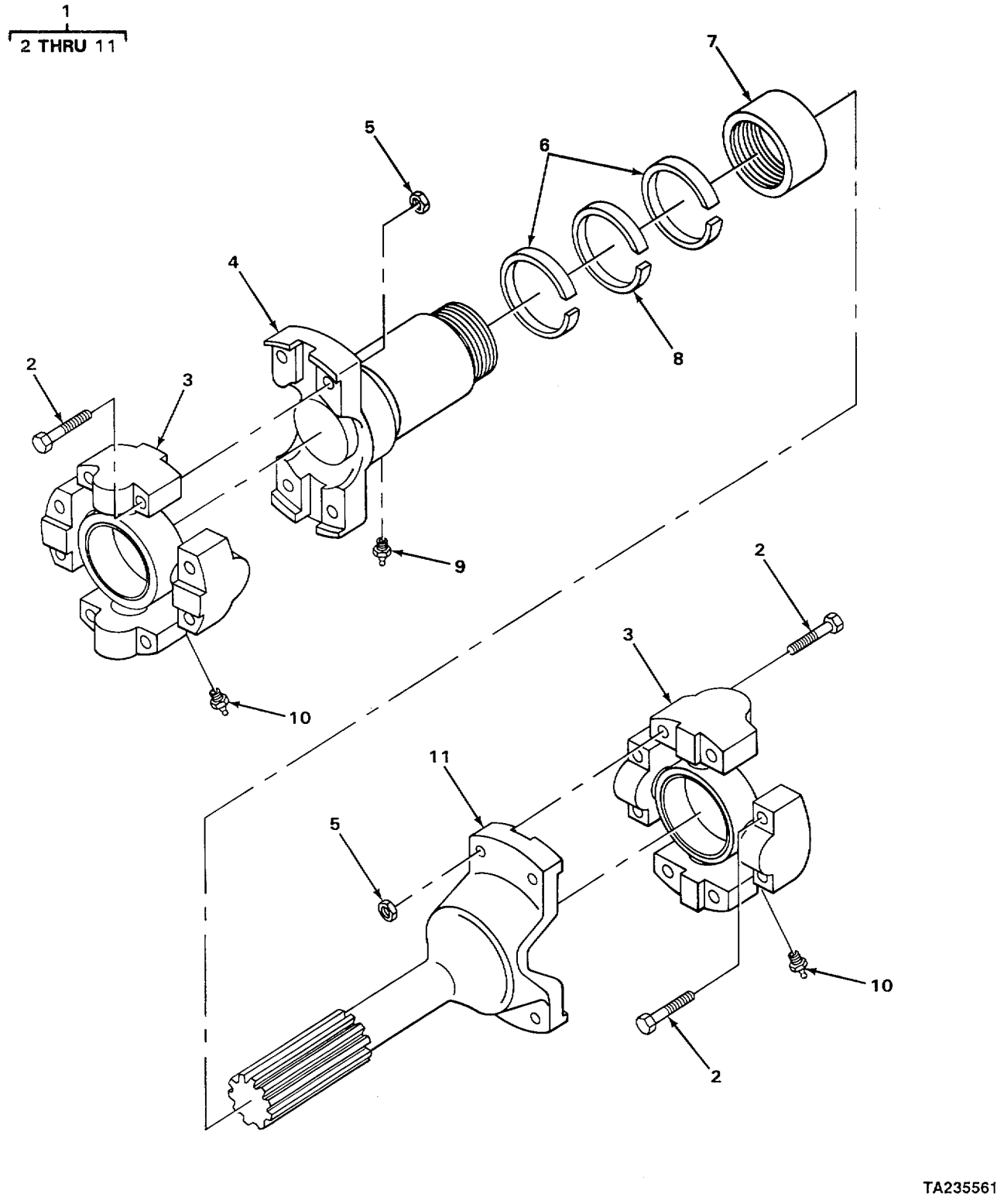

FIGURE 97. PROPELLER SHAFT ASSEMBLY.

(1) ITEM NO	(2) SMR CODE	(3) CAGEC	(4) PART NUMBER	(5) DESCRIPTION AND USABLE ON CODES(UOC)	(6) QTY
				GROUP 0900 PROPELLER SHAFTS	
				FIG. 97 PROPELLER SHAFT ASSEMBLY	
1	XDOOO	40152	1536787	PROPELLER SHAFT MID-MOUNT BEARING TO FRONT AXLE	1
2	PFOZZ	40152	940229	•BOLT.....	16
3	PFOZZ	75535	CP72N19	•PARTS KIT, UNIVERSAL	2
4	XDOZZ	40152	942734	•SLIP, YOKE	1
5	PFOZZ	12603	8008	•NUT, PLAIN, HEXAGON	8
6	PFOZZ	40152	940251	•WASHER, SPLIT	2
7	XDOZZ	40152	940250	•RETAINER.....	1
8	PFOZZ	40152	942749	•WASHER, FLAT	1
9	PFOZZ	12603	10H25	•FITTING, LUBRICATION 1.....	1
10	XDOZZ	40152	944688	•FITTING, GREASE.....	2
11	XDOZZ	40152	947821	•TUBE	1

END OF FIGURE

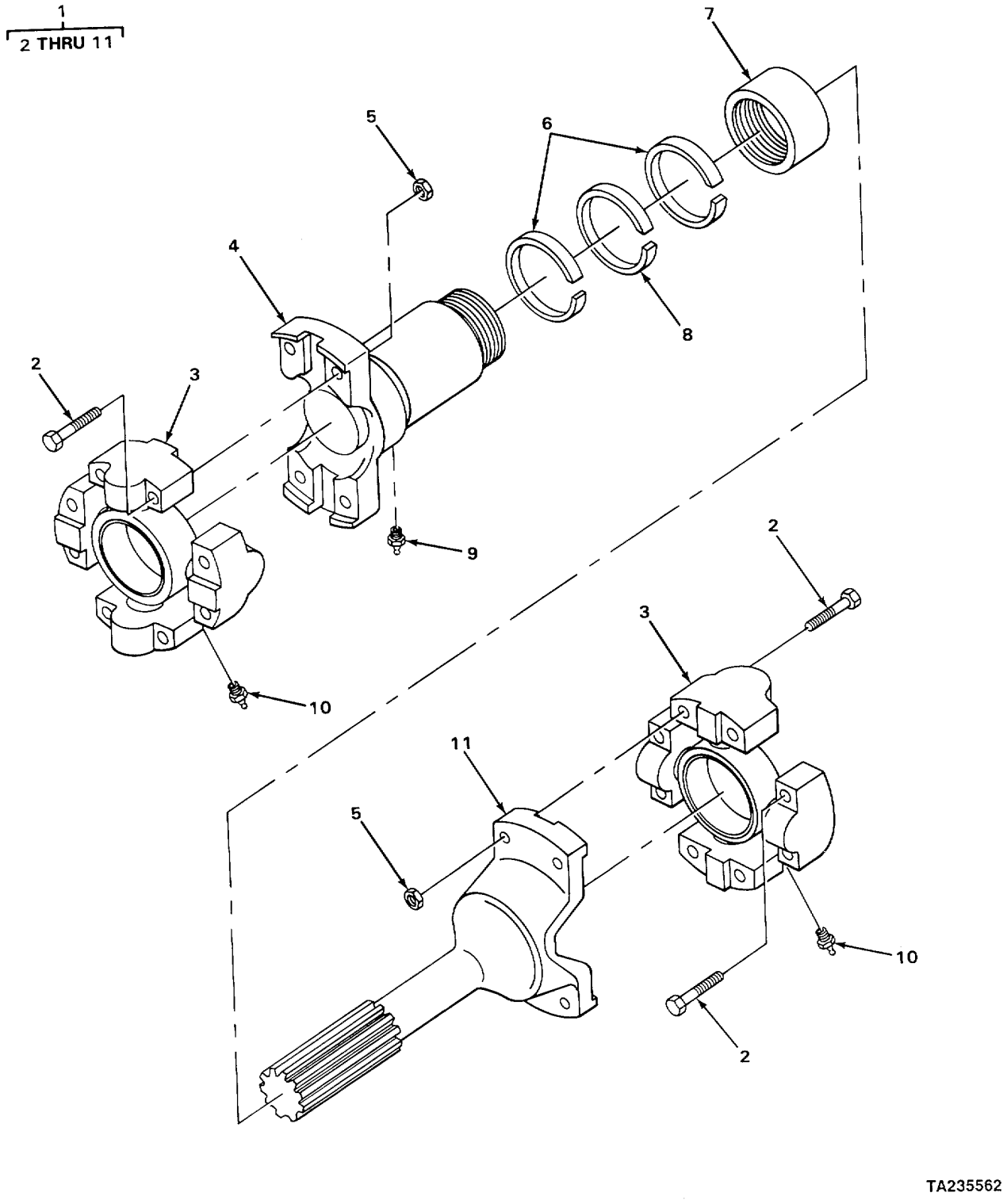

FIGURE 98. PROPELLER SHAFT ASSEMBLY AND RELATED PARTS.

(1) ITEM NO	(2) SMR CODE	(3) CAGEC	(4) PART NUMBER	(5) DESCRIPTION AND USABLE ON CODES(UOC)	(6) QTY
				GROUP 0900 PROPELLER SHAFTS	
				FIG. 98 PROPELLER SHAFT ASSEMBLY AND RELATED PARTS	
1	PFOOO	12603	2523854	PROPELLER SHAFT TRANSMISSION TO MID-MOUNT BEARING, REAR	1
2	PFOZZ	40152	940229	•BOLT	16
3	PFOZZ	75535	CP72N19	•PARTS KIT, UNIVERSAL	2
4	XDOZZ	40152	942734	•SLIP, YOKE	1
5	PFOZZ	12603	8D08	•NUT, PLAIN, HEXAGON	8
6	PFOZZ	40152	940251	•WASHER, SPLIT	2
7	XDOZZ	40152	940250	•RETAINER	1
8	PFOZZ	40152	942749	•WASHER, FLAT	1
9	PFOZZ	12603	10H25	•FITTING, LUBRICATION	1
10	PFOZZ	96906	MS15001-1	•FITTING, LUBRICATION	2
11	XDOZZ	40152	946101	•TUBE	1
				END OF FIGURE	

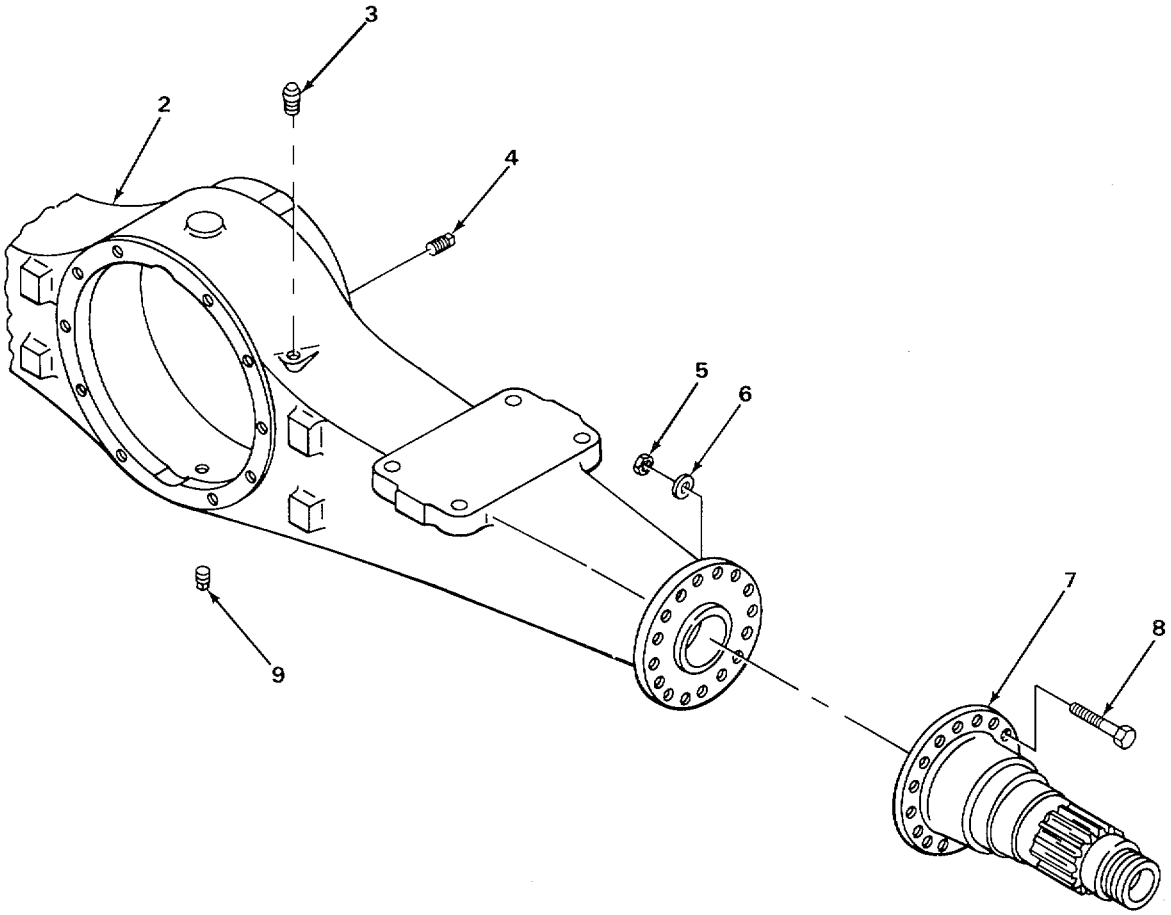

FIGURE 99. FRONT AXLE ASSEMBLY.

SECTION II

(1) ITEM NO	(2) SMR CODE	(3) CAGEC	(4) PART NUMBER	(5) DESCRIPTION AND USABLE ON CODE (UOC)	(6) QTY
				GROUP 10 FRONT AXLE	
				GROUP 1000 FRONT AXLE ASSEMBLY	
				FIG. 99 FRONT AXLE ASSEMBLY	
1	PAFDD	12603	188334	AXLE ASSEMBLYTAUTOM	1
2	XDHZZ	40152	124596	HOUSING	1
3	PFOZZ	03504	121214	BREATHER	1
4	XDOZZ	40152	226858	PLUG	1
5	PAHZZ	12603	64D-10H	.NUTVPLAINIHEXAGON	2
6	PFHZZ	35301	20-502	.WASHER,FLAT	32
7	XDHZZ	40152	125734	SPINDLE	2
8	PFHZZ	03504	118350	BOLT,BRAKE ATTACHED	32
9	PFOZZ	03504	119469	PLUG,PIPE,MAGNETIC	1

END OF FIGURE

SECTION II

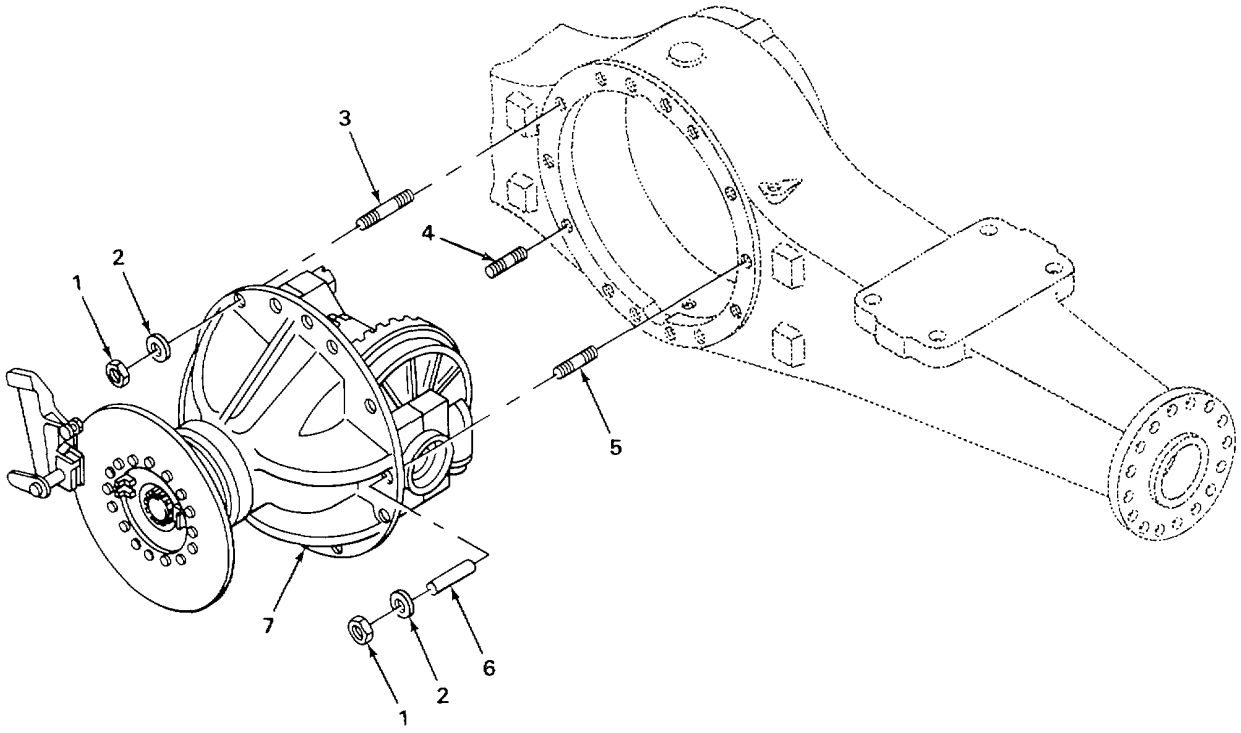

TA235564

FIGURE 100. FRONT DIFFERENTIAL CARRIER ASSEMBLY.

SECTION II

(1) ITEM NO	(2) SMR CODE	(3) CAGEC	(4) PART NUMBER	(5) DESCRIPTION AND USABLE ON CODE (UOC)	(6) QTY
				GROUP 1002 DIFFERENTIAL	
				FIG. 100 FRONT DIFFERENTIAL CARRIER ASSEMBLY	
1	PFFZZ	12603	64D-10H	NUT,PLAIN,HEXAGON	14
2	PFFZZ	35301	20-502	WASHER,FLAT	14
3	PFFZZ	40152	120771	STUD,PLAIN	6
4	PFFZZ	40152	117336	STUD,PLAIN	4
5	PFFZZ	40152	123793	STUD,PLAIN	4
6	XDFZZ	40152	119141	DOWEL PIN	4
7	PBFHH	03504	124520	DIFFERENTIAL,DRIVIN CARRIER ASSEMBLY	1

END OF FIGURE

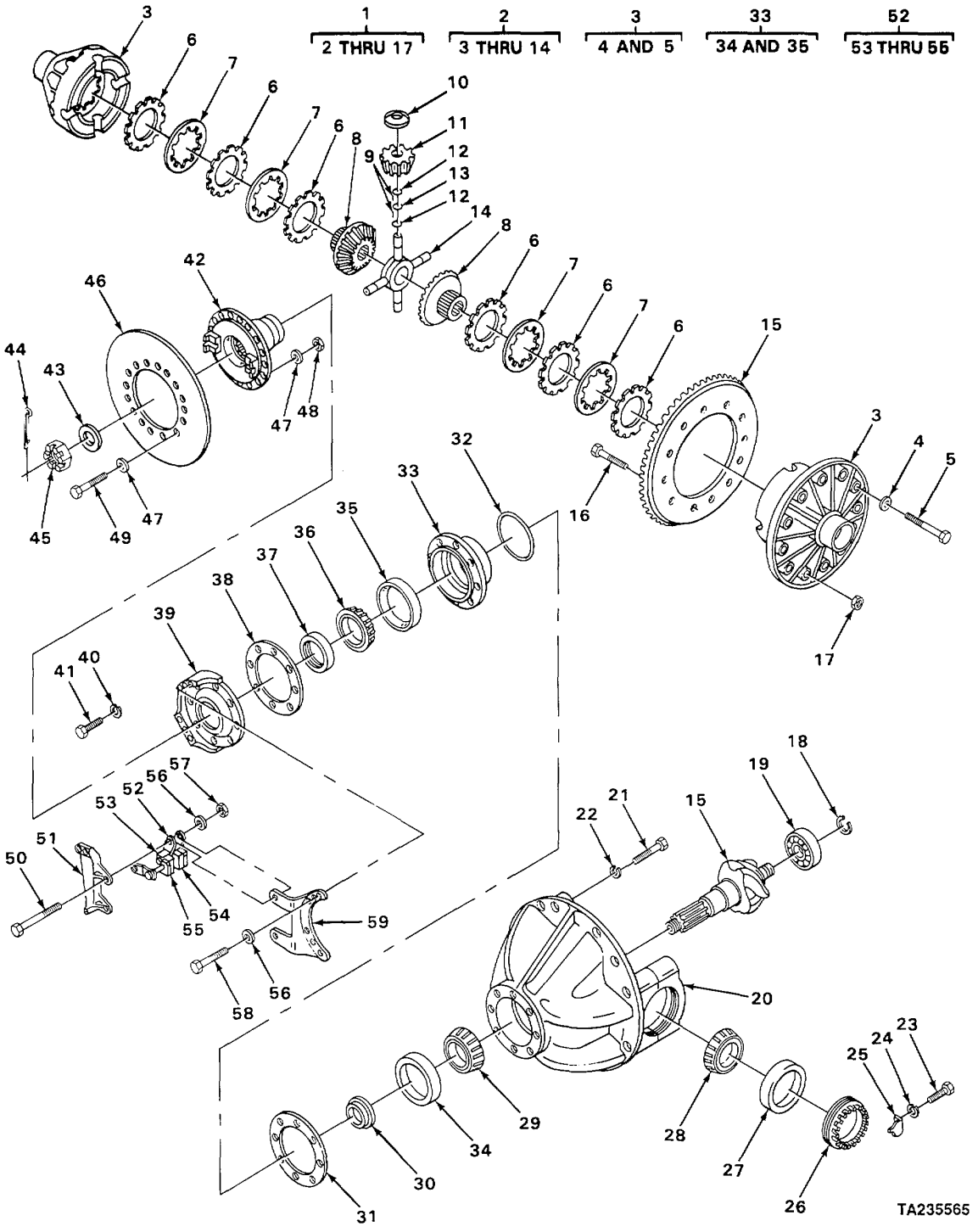

FIGURE 101. FRONT DIFFERENTIAL AND CARRIER, EXPLODED VIEW.

SECTION II

(1) ITEM NO	(2) SMR CODE	(3) CAGEC	(4) PART NUMBER	(5) DESCRIPTION AND USABLE ON CODE (UOC)	(6) QTY
				GROUP 1002 DIFFERENTIAL	
				FIG. 101 FRONT DIFFERENTIAL AND CARRIER, EXPLODED VIEW	
1	XDHHH	40152	123864	.DIFFERENTIAL ASSEMBLY	1
2	XDHHH	40152	124241	..BODY ASSEMBLY	1
3	XDHHH	40152	123865	...DIFFERENTIAL CASE KIT	1
4	PFHZZ	03504	106547	....WASHER,FLAT	12
5	PFHZZ	40152	128037	....BOLT,MACHINE	8
5	XDHZZ	40152	123869	....BOLT	4
6	XDHZZ	40152	123871	...DISC,OUTER	6
7	XDHZZ	40152	123872	...DISC,INNER	4
8	XDHZZ	40152	123870	...GEAR	2
9	XDHZZ	40152	124244	...ROLLER	232
10	PFHZZ	40152	123382	...WASHER,FLAT	4
11	XDHZZ	40152	816018	...PINION	4
12	XDHZZ	40152	124246	...SPACER	8
13	XDHZZ	40152	125069	...SPACER	4
14	XDHZZ	40152	124243	...SPIDER	1
15	XDHZZ	40152	114201	..GEAR SET	1
16	PFHZZ	40152	110522	..BOLT,MACHINE	12
17	PFHZZ	16764	9418881	.NUTISELF-LOCKING,HE	12
18	PFHZZ	12603	224083	.RING,RETAINING	1
19	PFHZZ	08162	MUS1309TM	.BEARINGIROLLER,CYLI	1
20	XDHZZ	40152	123873	.CARRIER ASSEMBLY	1
21	PFHZZ	40152	124090	.BOLT,MACHINE	4
22	PFHZZ	40152	3E-14	.WASHER,LOCK	4
23	PFHZZ	96906	MS51096-359	.SCREW,CAP,HEXAGON H.	2
24	PFHZZ	96906	MS35333-76	.WASHER,LOCK	2
25	PFHZZ	03504	100941	.LOCKING PLATE,NUT AD	2
26	XDHZZ	40152	123876	.LOCKNUT BEARING	2
27	PFHZZ	60038	JM718110	.CUP TAPERED ROLLER	2
28	PFHZZ	60038	JM718149	.CONE AND ROLLERS,TA BEARING	2
29	PFHZZ	12603	710034	.CONE AND ROLLERSITA BEARING	1
30	PFHZZ	89881	815377	.PARTS KIT, SPACERC	1
31	XDHZZ	40152	110543	.SHIM0.004 INCHES	V
31	XOHZZ	40152	125573	.SHIM0.007 INCHES	V
31	XDHZZ	40152	125574	.SHIM0.010 INCHES	V
31	XDHZZ	40152	125575	.SHIM0.020 INCHES	V
32	PFHZZ	12603	25K40616	.PACKING,PREFORMED	1
33	PFHHH	27401	204885	.CAGE ASSEMBLY	1
34	PFHZZ	12603	710035	..CUP,TAPERED ROLLER	1
35	PFHZZ	12603	774198	..CUP,TAPERED ROLLER	1
36	PFHZZ	12603	774197	.CONE AND ROLLERS,TA BEARING	1
37	PFHZZ	03504	111750	.SEAL,PLAIN ENCASED	1
38	XDHZZ	12603	277	.GASKET LOCTITE	1
39	XDHZZ	40152	124164	.RETAINER	1
40	PFHZZ	12603	4E10	.WASHER,LOCK	8
41	PFHZZ	96906	MS90728-165	.SCREWICAP,HEXAGON H	8
42	XDHZZ	40152	124165	.FLANGE	1
43	PFHZZ	40152	107978	.WASHER,FLAT	1

SECTION II

(1) ITEM NO	(2) SMR CODE	(3) CAGEC	(4) PART NUMBER	(5) DESCRIPTION AND USABLE ON CODE (UOC)	(6) QTY
44	PFHZZ	96906	MS24665-568	.PIN,COTTER	1
45	PFHZZ	40152	107977	.NUT,PLAIN,CASTELLAT	1
46	XDHZZ	40152	123655	DISC	1
47	PFHZZ	66640	34D23	WASHER,FLAT	16
48	PFHZZ	96906	MS21044N7	NUTISELF-LOCKING,HE	8
49	PFHZZ	96906	MS90727-90	SCREWICAPG,HEXAGON H	8
30	PFHZZ	96906	MS90727-174	SCREWTCAP,HEXAGON H	2
51	XDHZZ	40152	124425	BRACKET	1
52	PFHZZ	401512	29157	CALIPER ASSEMBLY,DI	1
53	XDHZZ	40152	949444	.SPRING	2
54	PFHZZ	12603	1990761	.HOLDER ASSEMBLY	2
55	XDHZZ	40152	949445	.CAM	1
56	PFHZZ	35301	20-502	WASHER,FLAT	8
57	PFHZZ	96906	MS21044N10	NUT,SELF-LOCKING,HE	2
58	PFHLZ	96906	MS90728-163	SCREW,CAP,HEXAGON H	6
59	PFHZZ	40152	123824	BRACKET,VEHICULAR C	1

END OF FIGURE

SECTION II

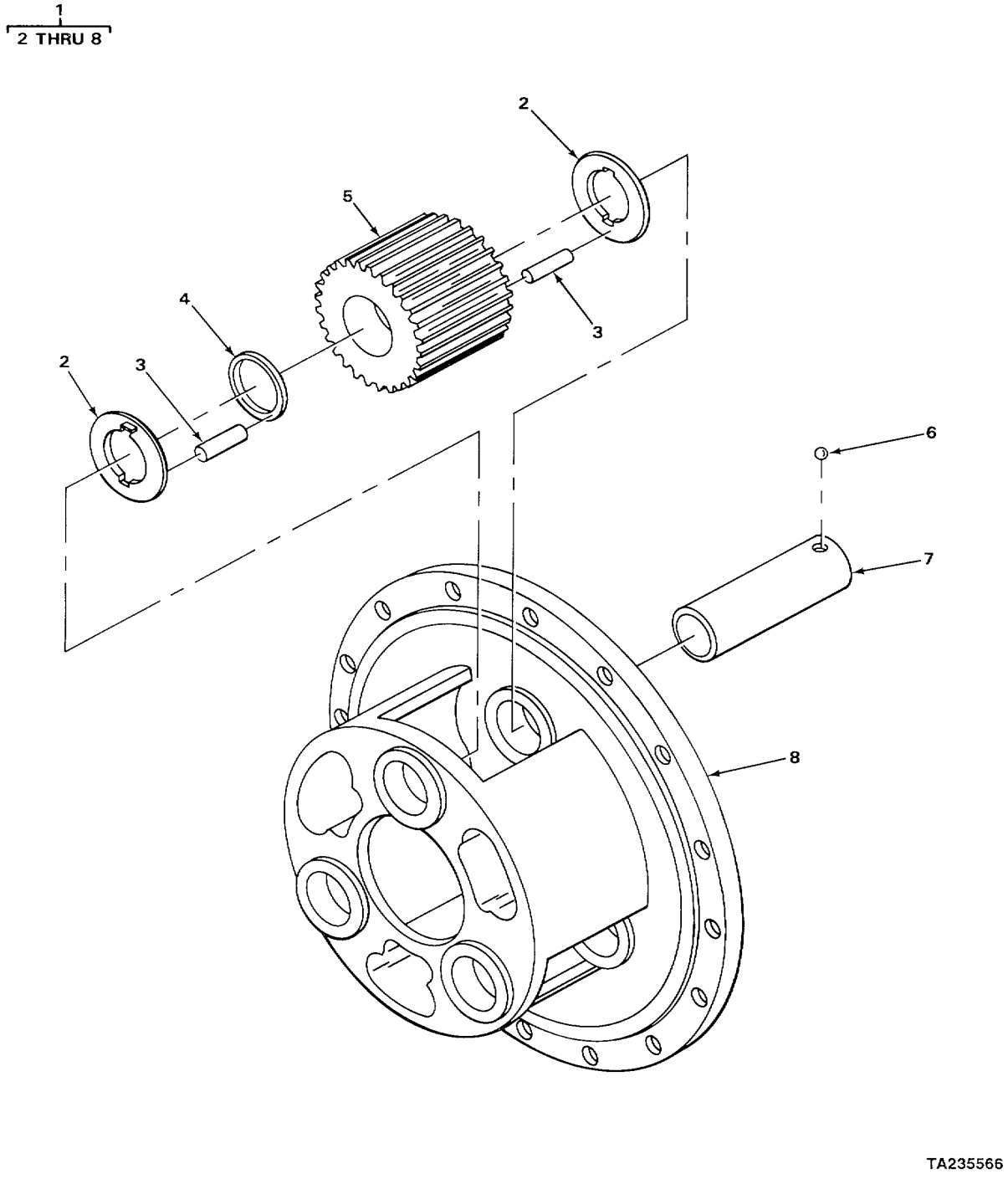

FIGURE 102. PLANETARY CARRIER, EXPLODED VIEW.

SECTION II

(1) ITEM NO	(2) SMR CODE	(3) CAGEC	(4) PART NUMBER	(5) DESCRIPTION AND USABLE ON CODE (UOC)	(6) QTY
				FIG. 102 PLANETARY CARRIER, EXPLODED VIEW	
1	XDFHH	12603	121933	CARRIER ASSEMBLY	2
2	PFHZZ	12603	118774	.WASHER,LOCK .	6
3	XDHZZ	12603	357049	.ROLLER	168
4	XDHZZ	12603	118775	.SPACER	3
5	XDHZZ	12603	118776	.PINION	3
6	PFHZZ	96906	MS19059-2418	.BALL,BEARING	3
7	XDHZZ	12603	118773	.SHAFT	3
8	XDHZZ	12603	121934	.CARRIER	1

END OF FIGURE

1
2 THRU 10

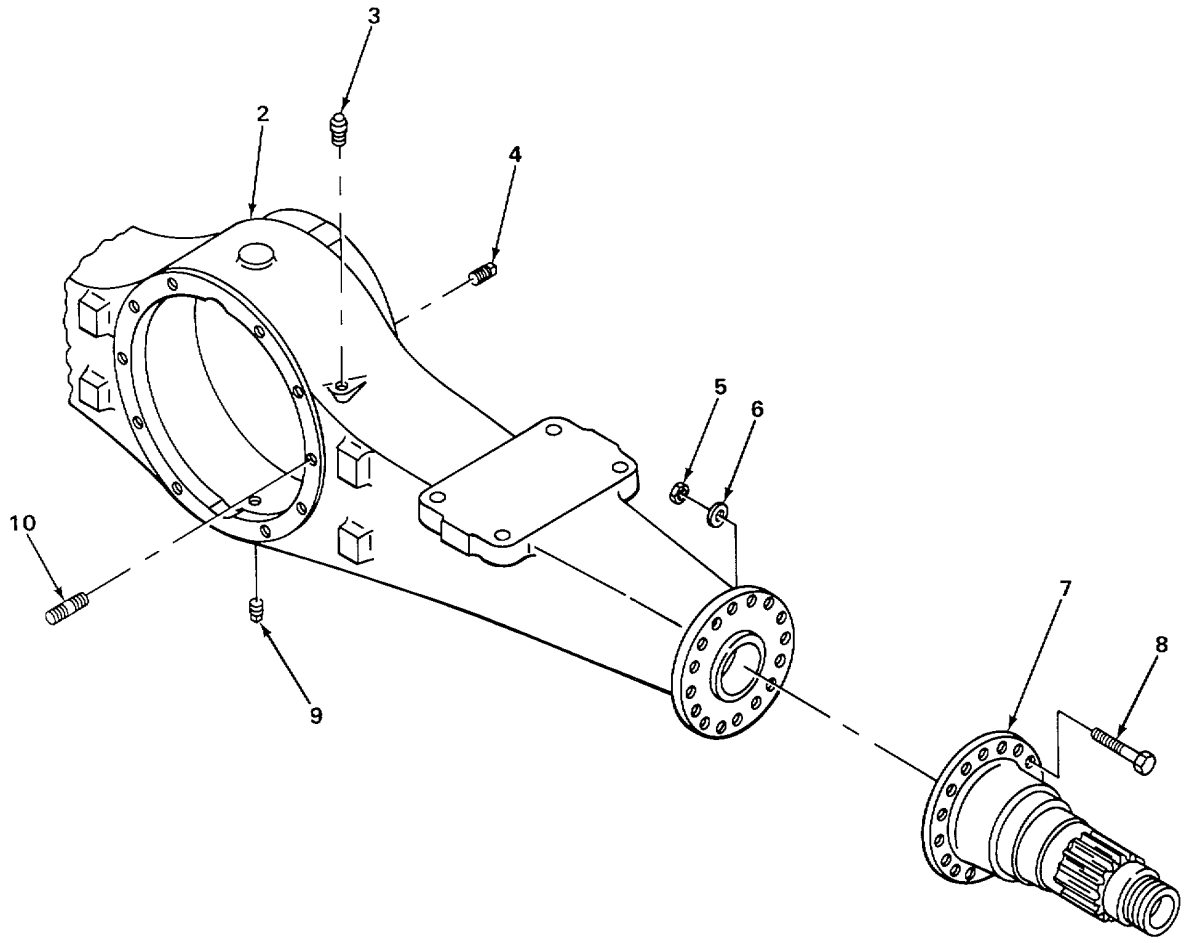

FIGURE 103. REAR AXLE ASSEMBLY.

SECTION II

(1) ITEM NO	(2) SMR CODE	(3) CAGEC	(4) PART NUMBER	(5) DESCRIPTION AND USABLE ON CODE (UOC)	(6) QTY
				GROUP 11 REAR AXLE	
				GROUP 1100 REAR AXLE ASSEMBLY	
				FIG. 103 REAR AXLE ASSEMBLY	
1	PAFHH	12603	192157	AXLE ASSEMBLYIAUTOM	1
2	XDHZZ	40152	124596	.HOUSING	1
3	PFDZZ	03504	121214	.BREATHER	1
4	XDOZZ	40152	226858	.PLUG	1
5	PFHZZ	12603	640-1OH	.NUT,PLAIN,HEXAGON	32
6	PFHZI	35301	20-502	.WASHER,FLAT	32
7	XDHZZ	40152	125734	.SPINDLE	2
8	PFHZZ	03504	118350	.BOLT,BRAKE ATTACHED	32
9	PFOZZ	03504	119469	.PLUG,PIPE,MAGNETIC	1
10	PFFZZ	40152	123793	.STUD,PLAIN	4

END OF FIGURE

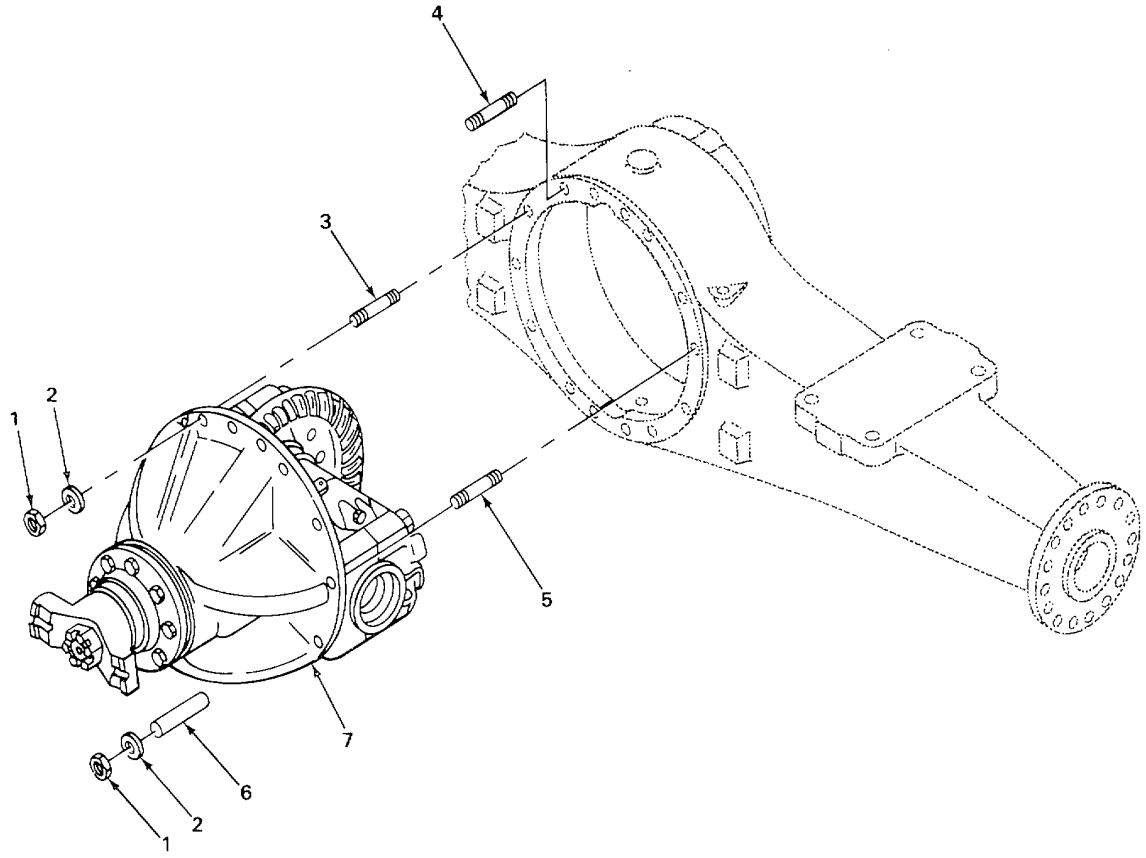

FIGURE 104. DIFFERENTIAL CARRIER ASSEMBLY.

SECTION II

(1) ITEM NO	(2) SMR CODE	(3) CAGEC	(4) PART NUMBER	(5) DESCRIPTION AND USABLE ON CODE (UOC)	(6) QTY
				GROUP 1102 DIFFERENTIAL	
				FIG. 104 DIFFERENTIAL CARRIER ASSEMBLY	
1	PFFZZ	12603	64D-10H	NUT,PLAIN,HEXAGON	14
2	PFFZZ	35301	20-502	WASHER,FLAT	14
3	PFFZZ	40152	117336	STUD,PLAIN	4
4	PFFZZ	40152	120771	STUD,PLAIN	6
5	PFFZZ	40152	123793	STUD,PLAIN	4
6	XDFZZ	40152	119141	DOWEL PIN	4
7	PBFHH	03504	124521	DIFFERENTIAL,DRIVIN CARRIER ASSEMBLY	1

END OF FIGURE

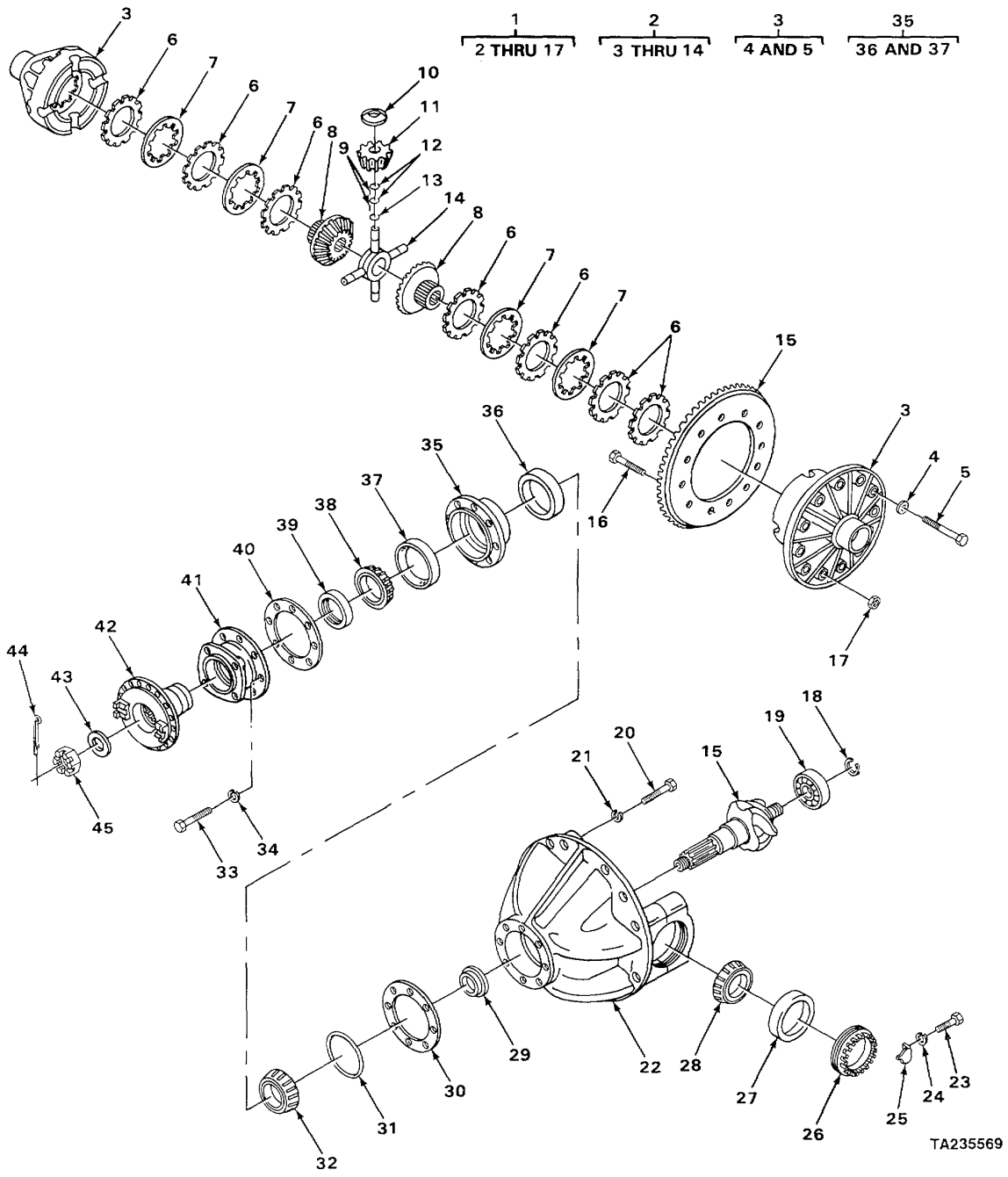

FIGURE 105. DIFFERENTIAL, EXPLODED VIEW.

SECTION II

(1) ITEM NO	(2) SMR CODE	(3) CAGEC	(4) PART NUMBER	(5) DESCRIPTION AND USABLE ON CODE (UOC)	(6) QTY
				GROUP 1102 DIFFERENTIAL	
				FIG 105 DIFFERENTIAL, EXPLODED VIEW	
1	XDHHH	40152	124522	.DIFFERENTIAL ASSEMBLY	1
2	XDHHH	40152	124241	..BODY ASSEMBLY	1
3	XDHHH	40152	123865	...DIFFERENTIAL CASE KIT.	1
4	PFHZZ	03504	106547	....WASHER,FLAT	12
5	PFHZZ	40152	128037	....BOLT,MACHINE	8
5	XDHZZ	40152	123869	....BOLT	4
6	XDHZZ	40152	123871	...DISC,OUTER	6
7	XDHZZ	40152	123872	...DISC,INNER	4
8	XDIIZZ	40152	123870	...GEAR	2
9	XDHZZ	40152	124244	...ROLLER	232
10	PFHZZ	40152	123382	...WASHER,FLAT	4
11	XOHZZ	40152	816018	...PINION	4
12	XDHZZ	40152	124246	...SPACER	8
13	XDHZZ	40152	125069	...SPACER	4
14	XDHZZ	40152	124243	...SPIDER	1
15	XDHZZ	40152	116901	..GEAR SET	1
16	PFHZZ	40152	110522	..BOLT,MACHINE	12
17	PFHZZ	16764	9418881	..NUT,SELF-LOCKING,HE	12
18	PFHZZ	12603	224083	.RING,RETAINING	1
19	XDHZZ	08162	MU1309TM	.BEARING,ROLLER,CYLI	1
20	PFHZZ	40152	124090	.BOLT,MACHINE	4
21	PFHZZ	40152	3E-14	.WASHER,LOCK	4
22	XDHZZ	40152	123873	.CARRIER ASSEMBLY1	1
23	PFHZZ	96906	MS51096-359	.SCREW,CAP,HEXAGON H	2
24	PFHZZ	96906	MS35333-76	.WASHER,LOCK	2
25	PFHZZ	03504	100941	.LOCKING PLATE,NUT A	2
26	XDHZIZ	40152	123876	.LOCKNUT BEARING	2
27	PFHZZ	60038	JM718110	.CUP,TAPERED ROLLER	2
28	PFHZZ	60038	JM718149	.CONE AND ROLLERS,TA BEARING	2
29	PFHZZ	89881	815377	.PARTS KIT, SPACER	1
30	XDHZZ	40152	110543	.SHIM0.004 INCHES	V
30	XDHZZ	40152	125573	.SHIM0.007 INCHES	V
30	XDHZZ	40152	125574	.SHIM0010 INCHES	V
30	XDHZZ	40152	125575	.SHIM0.020 INCHES	V
31	PFHZZ	12603	25K40616	.PACKING,PREFORMED	1
32	PFHZZ	12603	710034	.CONE AND ROLLERS,TA BEARING	1
33	PFHZZ	96906	MS90728-165	.SCREWVCAP,HEXAGON H	8
34	PFHZZ	12603	4E10	.WASHER,LOCK	8
35	PFHZZ	27401	204885	.CAGE ASSEMBLY	1
36	PFHZZ	12603	710035	..CUP,TAPERED ROLLER	1
37	PFHZZ	12603	774198	..CUP,TAPERED ROLLER	1
38	PFHZZ	12603	774197	.CONE AND ROLLERS,TA BEARING	1
39	PFHZZ	03504	111750	.SEAL,PLAIN ENCASED	1
40	XDHZZ	12603	277	.GASKET LOCTITE	1
41	XDHZZ	40152	119890	.RETAINER	1
42	PFHZZ	40152	2109465	FLANGE,STEERING	1
43	PFHZZ	40152	107978	.WASHER,FLAT	1
44	XDHZZ	40152	1F-748	.PIN,C0TTER	1
45	PFHZZ	40152	107977	.NUT,PLAIN,CASTELLAT	1
				END OF FIGURE	

SECTION II

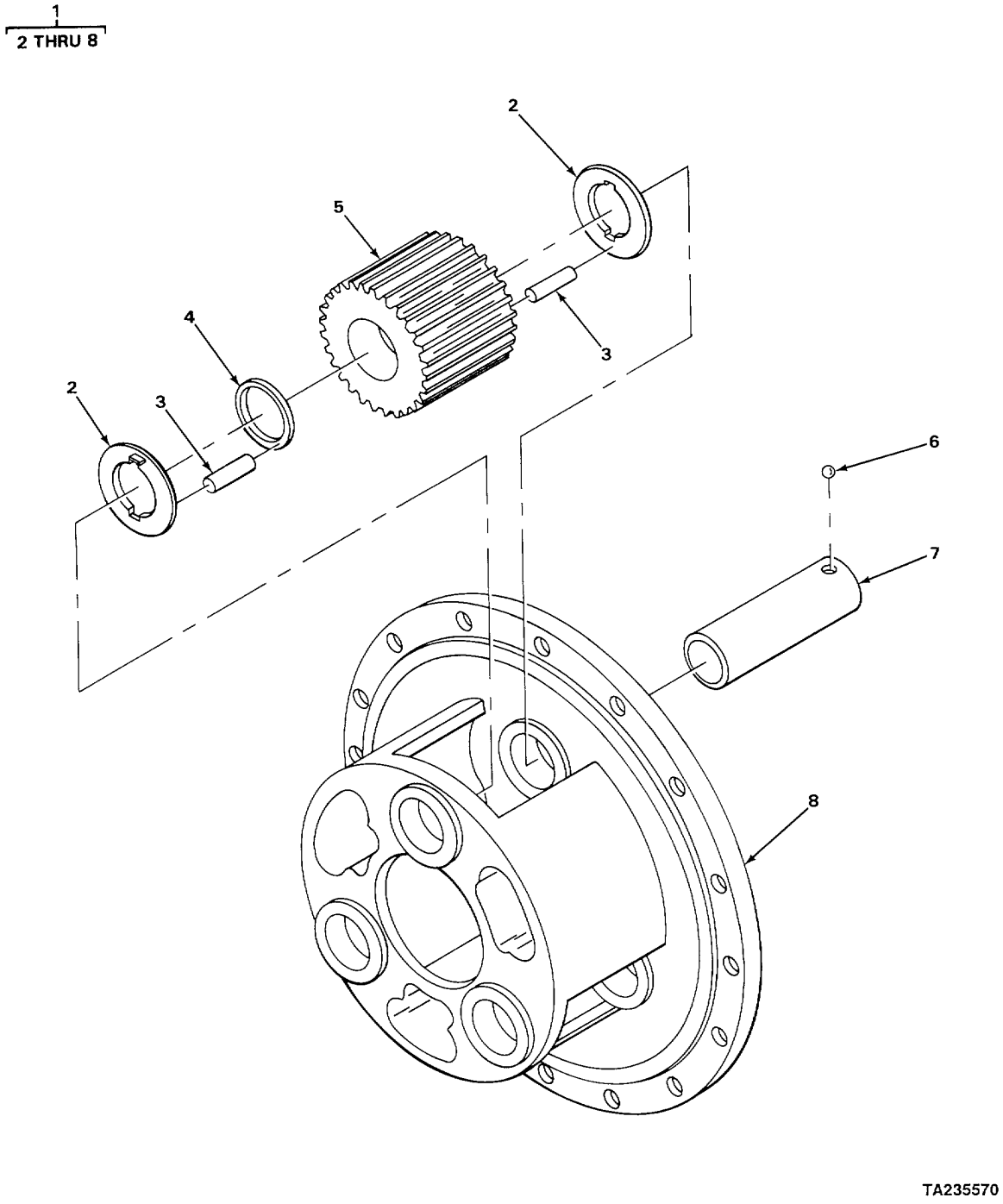

FIGURE 106. PLANETARY CARRIER, EXPLODED VIEW.

SECTION II

(1) ITEM NO	(2) SMR CODE	(3) CAGEC	(4) PART NUMBER	(5) DESCRIPTION AND USABLE ON CODE (UOC)	(6) QTY
				GROUP 1103 PLANETARY OR FINAL DRIVE FIG. 106 PLANETARY CARRIER, EXPLODED VIEW	
1	XDFHH	12603	121933	CARRIER ASSEMBLY	2
2	PFHZZ	12603	118774	.WASHERILOCK	6
3	XDHZZ	12603	357049	.ROLLER	168
4	XDHZZ	12603	118775	.SPACER	3
5	XDHZZ	12603	118776	.PINION	3
6	PFHZZ	96906	MS19059-2418	.BALL,BEARING	3
7	XDHZZ	12603	118773	.SHAFT	3
8	XOHZZ	12603	121934	.CARRIER	1

END OF FIGURE

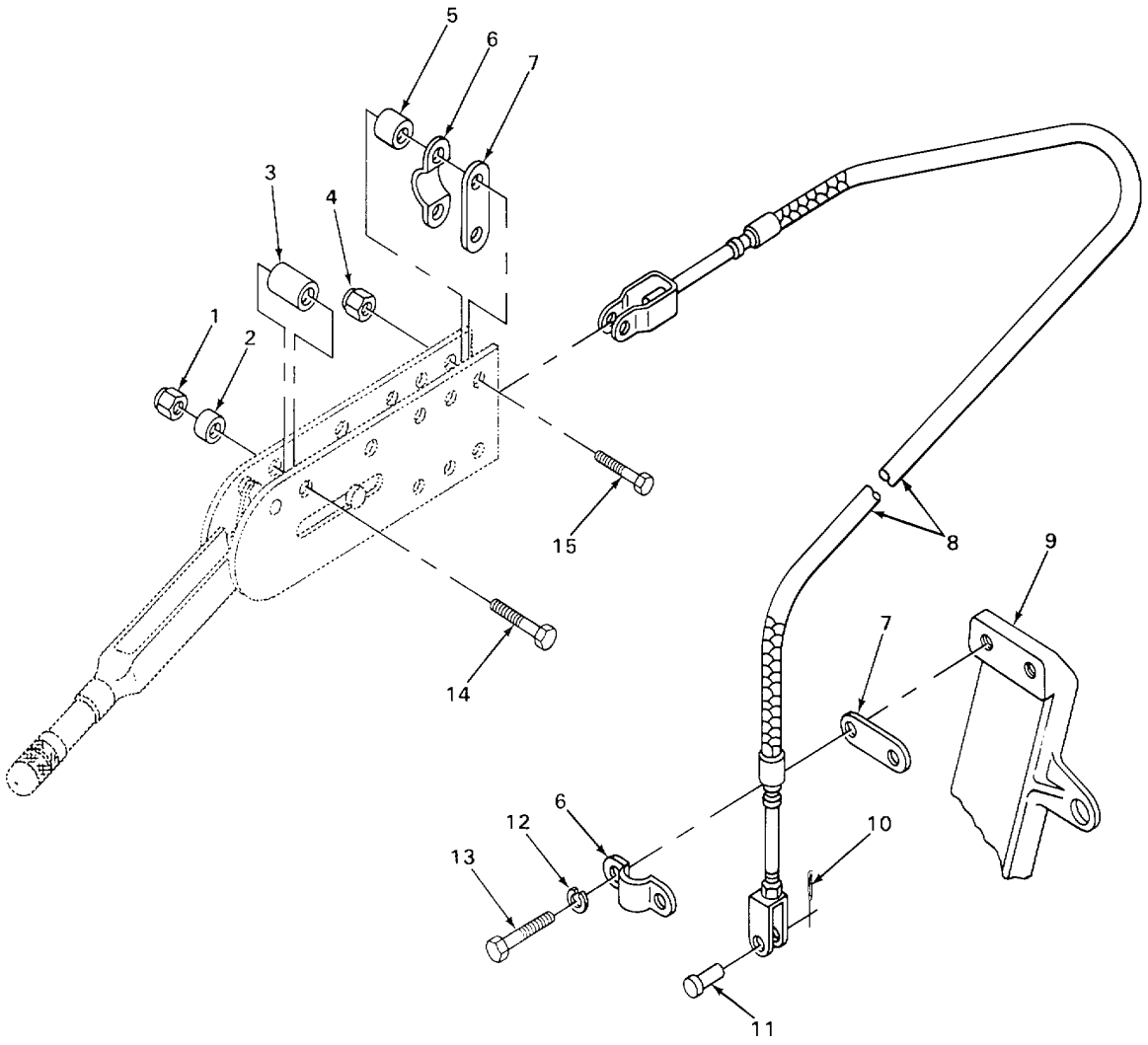

TA235571

FIGURE 107. PARKING BRAKE CONTROLS.

SECTION II

(1) ITEM NO	(2) SMR CODE	(3) CAGEC	(4) PART NUMBER	(5) DESCRIPTION AND USABLE ON CODE (UOC)	(6) QTY
				GROUP 12 BRAKES	
				GROUP 1201 HANDBRAKES	
				FIG 107 PARKING BRAKE CONTROLS	
1	PFFZZ	12603	60D6	NUTISELF-LOCKING,HE	2
2	XDFZZ	40152	545006	SPACER.	2
3	XDFZZ	40152	2504181	SPACER	2
4	PFFZZ	12603	60D5	NUTISELF-LOCKING	2
5	XDFZZ	40152	2504182	SPACER	2
6	PFFZZ	40152	544512	CLAMP	2
7	XDFZZ	40152	645092	LINK	2
8	PFFZZ	40152	1518445	CONTROL ASSEMBLY,PU	1
9	XDFZZ	40152	124425	BRACKET	1
10	PFFZZ	96906	MS24665-351	PINCOTTER	1
11	XDFZZ	40152	4F-06106	PIN	1
12	PFFZZ	96906	MS35333-76	WASHER,LOCK	2
13	PFFZZ	40152	23C-616	BOLTMACHINE	2
14	PFFZZ	40152	24C-644	BOLTGMACHINE	2
15	PFFZZ	40152	24C-528	BOLTIMACHINE	2

END OF FIGURE

SECTION II

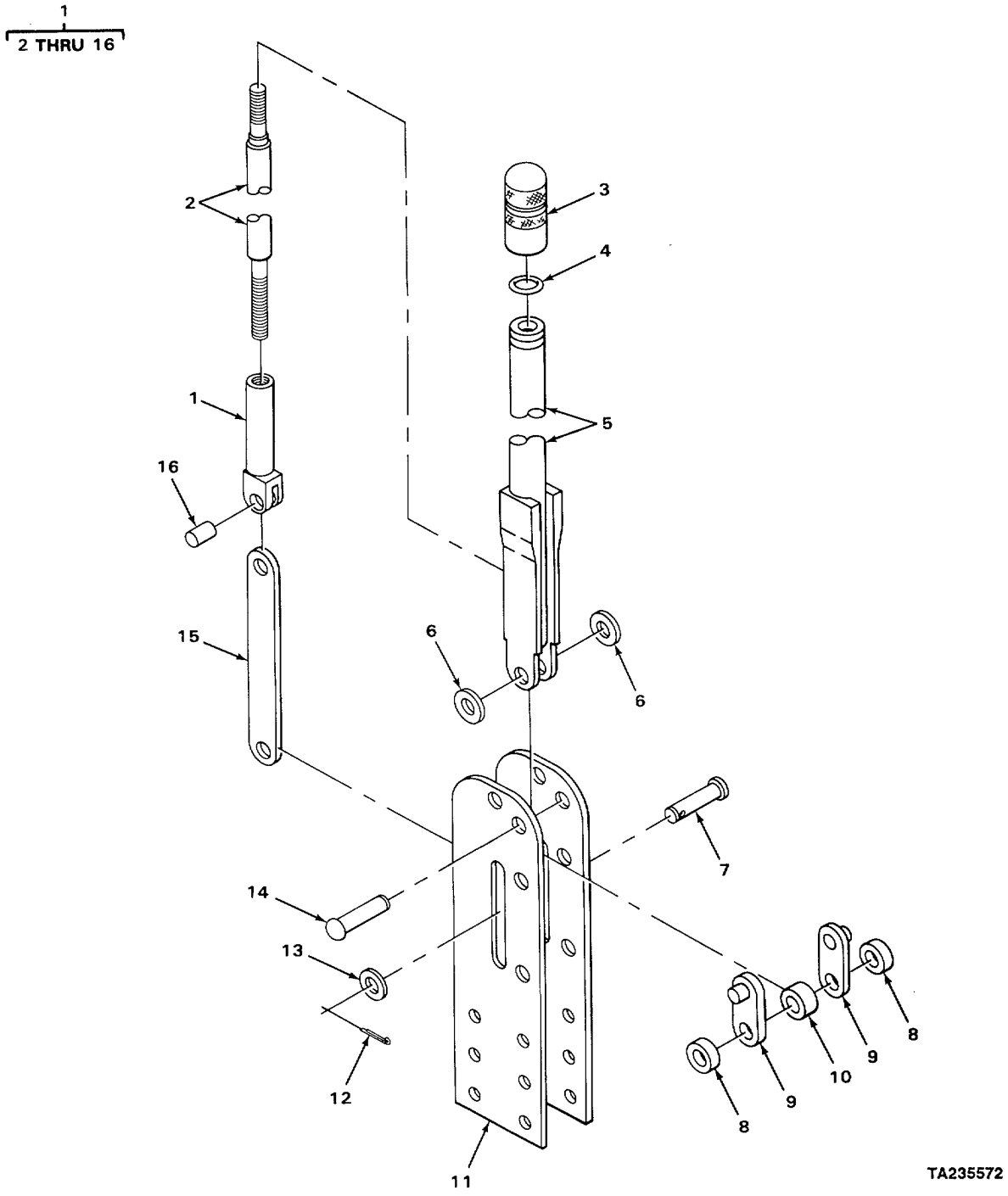

FIGURE 108. PARKING BRAKE LEVER ASSEMBLY.

SECTION II

(1) ITEM NO	(2) SMR CODE	(3) CAGEC	(4) PART NUMBER	(5) DESCRIPTION AND USABLE ON CODE (UOC)	(6) QTY
				GROUP 1201 HANOBRAKES	
				FIG. 108 PARKING BRAKE LEVER ASSEMBLY	
1	PAFZZ	12603	1511473	LEVER,MANUAL CONTRO	1
2	PFFZZ	40152	949460	.STUD,SHOULDERED	1
3	XDFZZ	40152	949999	.KNOB	1
4	PFFZZ	40152	25K30014	.PACKING, PREFORMED	1
5	XDFZZ	40152	949461	.LEVER BODY ASSEMBLY	1
6	PFFZZ	40152	946942	.WASHER,FLAT	2
7	XDFZZ	40152	949468	.PIN	1
8	XDFZZ	40152	949466	.SPACER	2
9	XDFZZ	40152	862653	.BRACKET	2
10	XDFZZ	40152	949467	.SPACER	1
11	XDFZZ	40152	949469	.BRACKET	1
12	PAFZZ	96906	MS24665-351	.PIN,COTTER	1
13	PFFZZ	40152	551480	.WASHER,FLAT	1
14	XDFZZ	40152	941233	.RIVET	1
15	XDFZZ	40152	949465	.LINK	1
16	XDFZZ	40152	949464	.PIN	1

END OF FIGURE

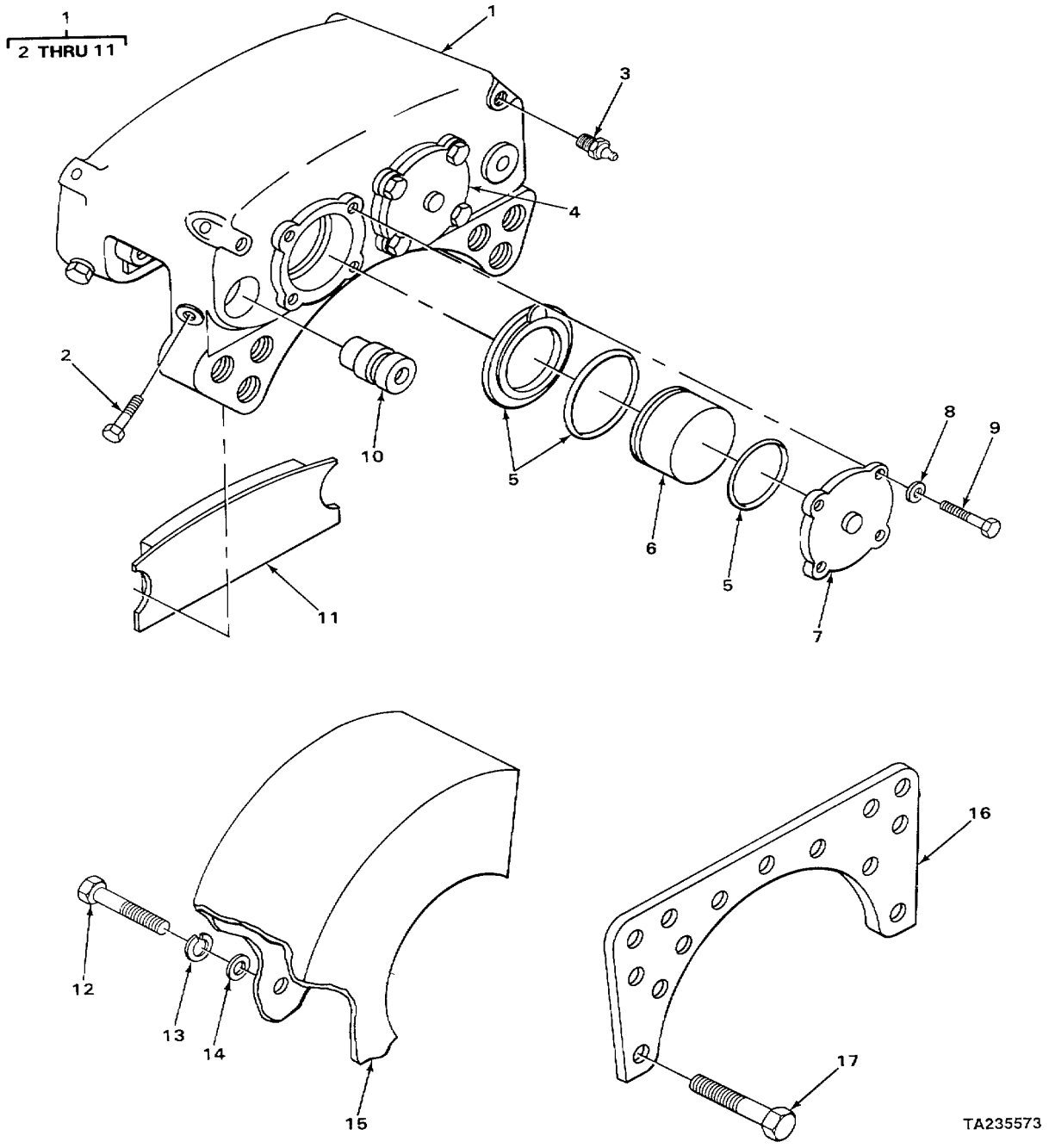

FIGURE 109. BRAKE HEAD ASSEMBLY.

SECTION II

(1) ITEM NO	(2) SMR CODE	(3) CAGEC	(4) PART NUMBER	(5) DESCRIPTION AND USABLE ON CODE (UOC)	(6) QTY
				GROUP 1202 SERVICE BRAKES FIG. 109 BRAKE HEAD ASSEMBLY	
1	PFFHH	12603	128344	CALIPER ASSEMBLYIDI FITS RH REAR OF FRONT AXLE,LH FRONT OF FRONT AXLE,RH FRONT OF REAR AXLEGAND LH REAR OF REAR AXLE	4
1	PFFHH	12603	128343	CALIPER,DISC BRAKE FITS RH FRONT OF FRONT AXLE,LH REAR OF FRONT AXLE, LH FRONT OF REAR AXLE,AND RH REAR OF REAR AXLE	4
2	PFFZZ	40152	947930	.BOLT,MACHINE	4
3	XDFZZ	40152	947927	.BLEEDER VALVE	2
4	XDHZZ	40152	947934	.CAP	1
5	PFHZZ	60250	306-142	.PARTS KIT,HYORAULIC	1
6	PFHZZ	40152	947935	.PISTON,HYDRAULIC BR	4
7	XDHZZ	40152	947933	.CAP	1
8	XDHZZ	40152	25E-17	.WASHERIFLAT	8
9	PFHZZ	96906	MS90728-62	.SCREW,CAP,HEXAGON H	8
10	XDFZZ	40152	947931	.PIN	4
11	PAFZZ	03504	840611	.LINING,FRICTION	2
12	PFFZZ	40152	17C-1232	BOLT,MACHINE	24
13	PFFZZ	40152	224727	WASHER,LOCK	24
14	PFFZZ	03504	111656	WASHER,FLAT	24
15	PFFZZ	40152	125592	GUARDTMECHANICAL DR	2
16	XDFZZ	40152	122624	PLATE	4
17	PFFZZ	03504	118350	BOLT,BRAKE ATTACHED	16

END OF FIGURE

SECTION II

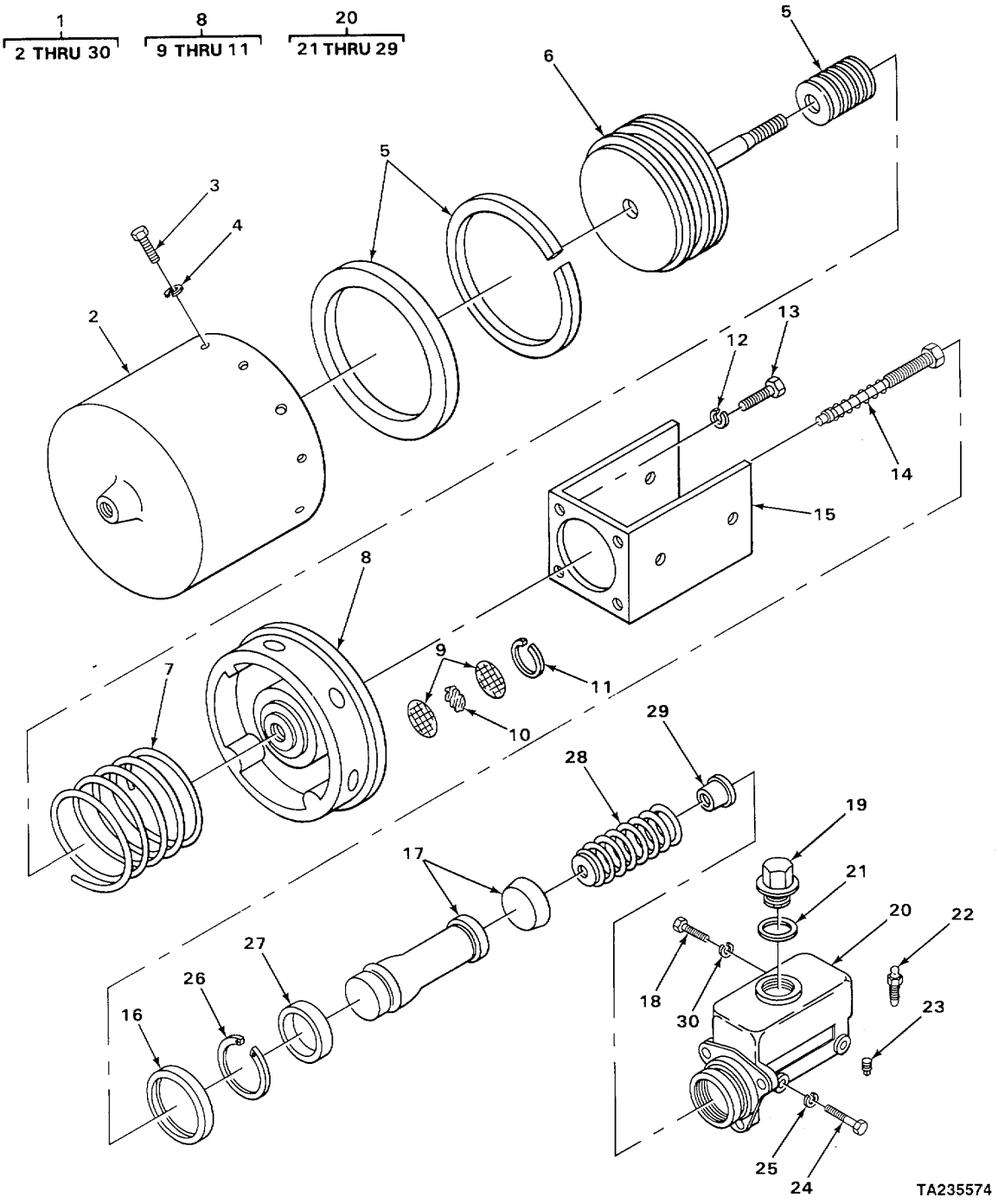

FIGURE 110. BRAKE POWER CLUSTER.

SECTION II

(1) ITEM NO	(2) SMR CODE	(3) CAGEC	(4) PART NUMBER	(5) DESCRIPTION AND USABLE ON CODE (UOC)	(6) QTY
				GROUP 1204 HYDRAULIC BRAKE SYSTEM	
				FIG 110 BRAKE POWER CLUSTER	
1	PFOFF	40152	2524866	MASTER CYLINDER POW ASSEMBLY,	1
2	PFFZZ	97907	2161149	CHAMBERVAIR BRAKE	1
3	XDFZZ	12603	lC512	SCREW	8
4	XDFZZ	12603	6E-05	WASHER,LOCK	8
5	PFFZZ	40152	949863	PARTSKIT,HYDRAULIC	1
6	XDFZZ	40152	945032	PISTON	1
7	XDFZZ	40152	945031	SPRING	1
8	XDFFF	40152	945028	HEAD	1
9	XDFZZ	40152	945029	SCREEN	2
10	XDFZZ	40152	992163	FILTER ELEMENT	1
11	XDFZZ	40152	992164	RING	1
12	PFFZ2	96906	MS35333-76	WASHERLOCK	4
13	PFFZZ	33323	K41A19	BOLT,MACHINE	4
14	XDFZZ	40152	945030	INDICATOR	1
15	XOFZZ	40152	945024	SUPPORT	1
16	XDFZZ	40152	945023	BAND	1
17	PFFZZ	12603	949848	PARTS KIT,HYDRAULIC	1
18	PFFZZ	40152	2C-714	BOLT,MACHINE	2
19	PFOZZ	12603	960005	PLUG MACHINE THREAD	1
20	PAFZZ	40152	945800	.CYLINDER HYDRAULIC1	1
21	PFOZZ	12603	850287	GASKET	1
22	PFFZZ	12603	851806	SCREW	1
23	PFFZZ	12603	10F02	PLUG,STEERING TRUNN	1
24	PFFZZ	40152	2C-714	.BOLT,MACHINE	2
25	PFFZZ	96906	MS35338-47	.WASHER,LOCK	2
26	XDFZZ	40152	874028	RING,RETAINING	1
27	XDFZZ	40152	874003	PLATE	1
28	PFFZZ	63477	F6431	SPRING,HELICAL,COMP	1
29	XDFZZ	40152	945042	RETAINER	1
30	PFFZZ	96906	MS35338-47	WASHER,LOCK	2

END OF FIGURE

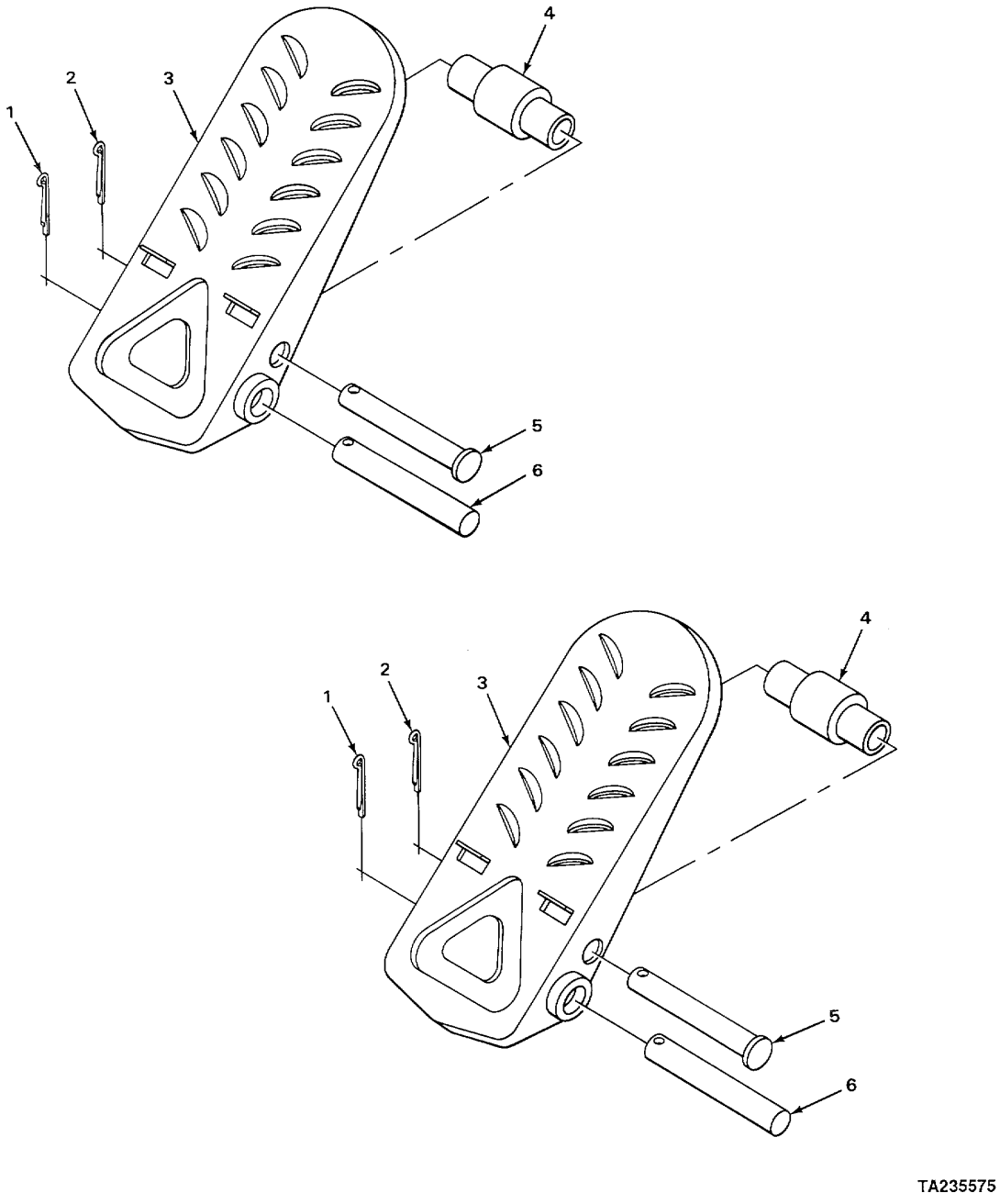

FIGURE 111. BRAKE PEDAL.

SECTION II

(1) ITEM NO	(2) SMR CODE	(3) CAGEC	(4) PART NUMBER	(5) DESCRIPTION AND USABLE ON CODE (UOC)	(6) QTY
				GROUP 1206 MECHANICAL BRAKE SYSTEM	
				FIG 111 BRAKE PEDAL	
1	PFOZZ	96906	MS24665-321	PINCOTTER	2
2	PAOZZ	96906	MS24665-351	PINICOTTER	2
3	XDOZZ	40152	513930	PEDAL	2
4	XDOZZ	40152	518259	ROLLER	2
5	PFOZZ	12603	875766	PING,ROLLER,BRAKE VA	2
6	XDOZZ	40152	875767	PIN	2

END OF FIGURE

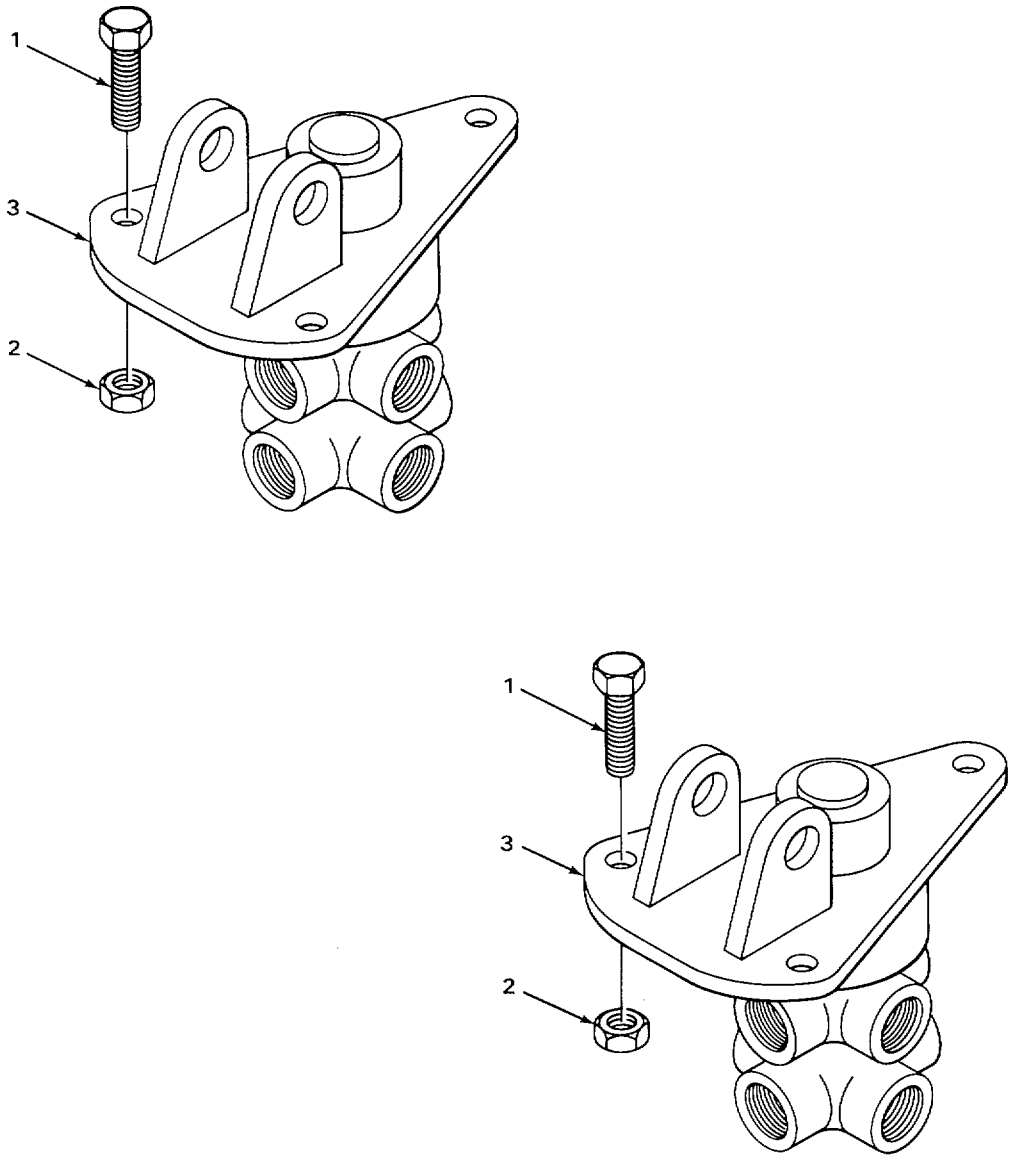

FIGURE 112. BRAKE PEDAL VALVE.

SECTION II

(1) ITEM NO	(2) SMR CODE	(3) CAGEC	(4) PART NUMBER	(5) DESCRIPTION AND USABLE ON CODE (UOC)	(6) QTY
				GROUP 1208 AIRBRAKE SYSTEM FIG. 112 BRAKE PEDAL VALVE	
1	PFOZZ	40152	24C-520	BOLT,MACHINE	6
2	PFOZZ	12603	60D5	NUT,SELF-LOCKING,CA	6
3	PFOZZ	40152	945996	VALVEIRELAY,AIR PRE	2

END OF FIGURE

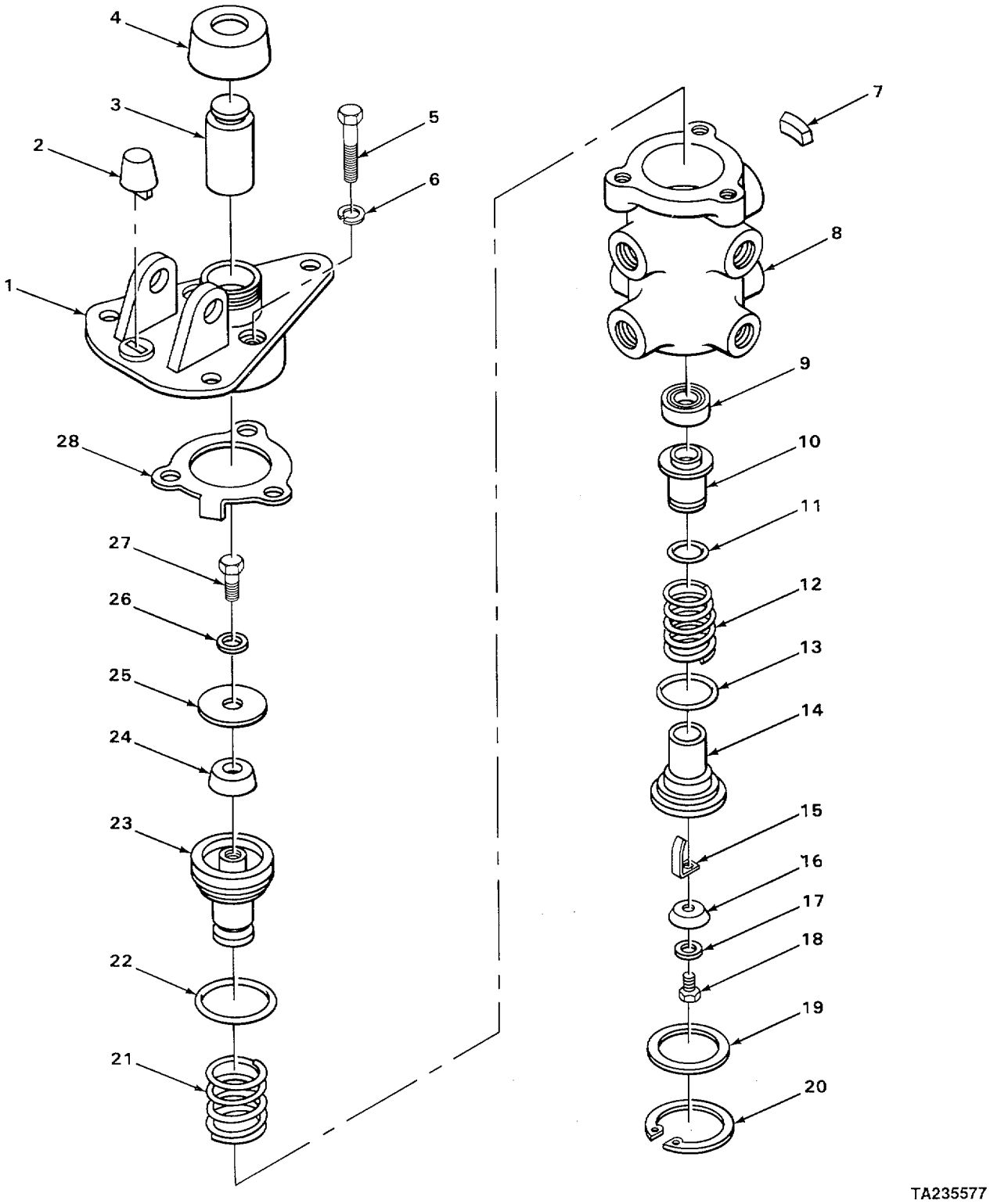

FIGURE 113. BRAKE PEDAL VALVE, EXPLODED VIEW.

SECTION II

(1) ITEM NO	(2) SMR CODE	(3) CAGEC	(4) PART NUMBER	(5) DESCRIPTION AND USABLE ON CODE (UOC)	(6) QTY
				GROUP 1208 AIRBRAKE SYSTEM FIG 113 BRAKE PEDAL VALVE, EXPLODED VIEW	
1	XDFZZ	40152	949260	.PLATE	1
2	KFFZZ	40152	513932	.STOP,RUBSER PART OF KIT P/N 3290125 PART OF KIT P/N 3290124	1
3	XDFZZ	12603	3290122	.PLUNGER	1
4	KFFZZ	40152	875762	.BOOT PART OF KIT P/N 3290125 PART OF KIT P/N 3290124	1
5	PFFZZ	96906	MS90728-36	.BOLT,MACHINE	3
6	PFFZZ	96906	MS35338-45	.WASHER,LOCK	3
7	KFFZZ	40152	949261	.FILTER PART OF KIT P/N 3290125.	1
8	XDFZZ	40152	3290105	.BODY	1
9	KFFZZ	40152	894537	.RETAINER PART OF KIT P/N 3290106	1
10	KFFZZ	40152	894538	.VALVEPART OF KIT P/N 3290125 PART OF KIT P/N 3290124 PART OF KIT P/N 3290106	1
11	PFFZZ	02697	2-016 N674-7	.PACKINGVPREFORMEO PART OF KIT P/N 3290125 PART OF KIT P/N 3290124 PART OF KIT PJN 3290106	1
12	KFFZZ	40152	894536	.SPRING PART OF KIT P/N 3290125 PART OF KIT P/N 3290106	1
13	KFFZZ	40152	25K-30112	.PACKING,PREFORMED PART OF KIT P/N 3290125 PART OF KIT P/N 3290124 PART OF KIT P/N 3290106	1
14	KFFZZ	40152	894535	.SEAT,VALVE PART OF KIT P/N 3290106	1
15	KFFZZ	40152	894534	.SPRING PART OF KIT P/N 3290125 PART OF KIT P/N 3290106	1
16	KFFZZ	40152	894533	.DIAPHRAGM PART OF KIT P/N 3290125 PART OF KIT P/N 3290124 PART OF KIT P/N 3290106	1
17	KFFZZ	40152	894532 WASHER	.PART OF KIT P/N 3290106	1
18	KFFZZ	40152	87G-806 SCREW	.PART OF KIT P/N 3290106	1
19	PFFZZ	40152	949264	.WASHER,FLAT	1
20	XDFZZ	89749	661415	.RETAINER,CONVERTER	1
21	KFFZZ	40152	875754	.SPRING PART OF KIT P/N 3290125	1
22	PFFZZ	12603	25K40204	.PACKING,PREFORMED PART OF KIT P/N 3290125	I .
23	KFFZZ	40152	894539	.PISTON PART OF KIT P/N 3290099	1
24	KFFZZ	40152	894540	.SPRING PART OF KIT P/N 3290125 PART OF KIT P/N 3290099	1
25	KFFZZ	40152	894541	.SEAT PART OF KIT P/N 3290099	1
26	PFFZZ	40152	894542	.WASHER,FLAT PART OF KIT P/N 3290099	1
27	PFFZZ	40152	21C-410	.BOLT,MACHINE PART OF KIT P/N 3290099	1
28	XDFZZ	40152	894543	.RETAINER	1

END OF FIGURE

1
2 THRU 6

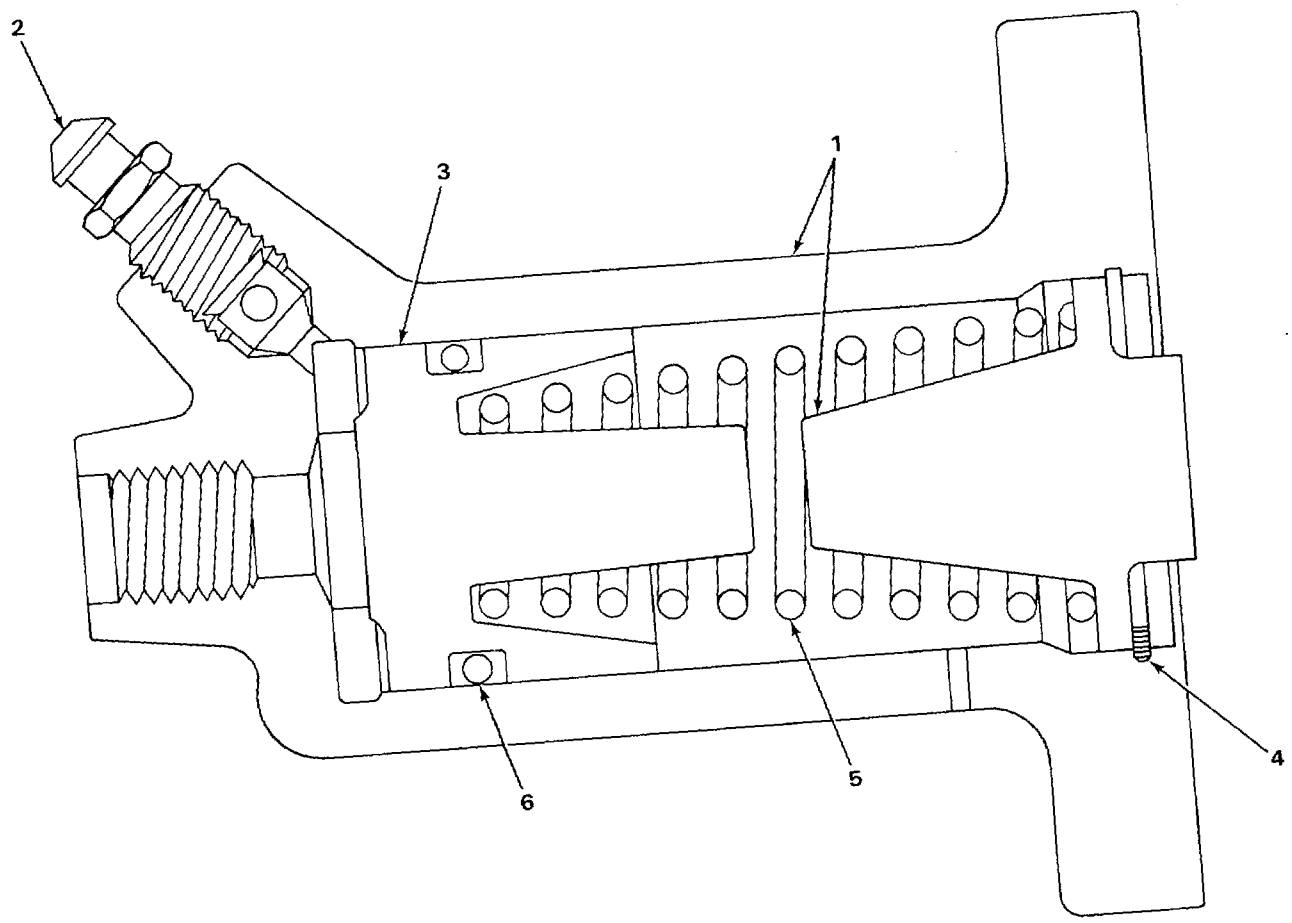

FIGURE 114 BRAKE COMPENSATOR ASSEMBLY.

(1) ITEM NO	(2) SMR CODE	(3) CAGEC	(4) PART NUMBER	(5) DESCRIPTION AND USABLE ON CODES (UOC)	(6) QTY
				GROUP 1208 AIRBRAKE SYSTEM	
				FIG. 114 BRAKE COMPENSATOR ASSEMBLY	
1	PAOFF	63477	FD-97746	CYLINDER, HYDRAULIC	1
2	PFFZZ	12603	851806	•SCREW.....	1
3	XDFZZ	12603	960520	•PISTON.....	1
4	XDFZZ	40152	1310605	•RING, RETAINER.....	1
5	XDFZZ	40152	898702	•SPRING	1
6	XDFZZ	40152	961026	•PACKING, PREFORMED.....	1

END OF FIGURE

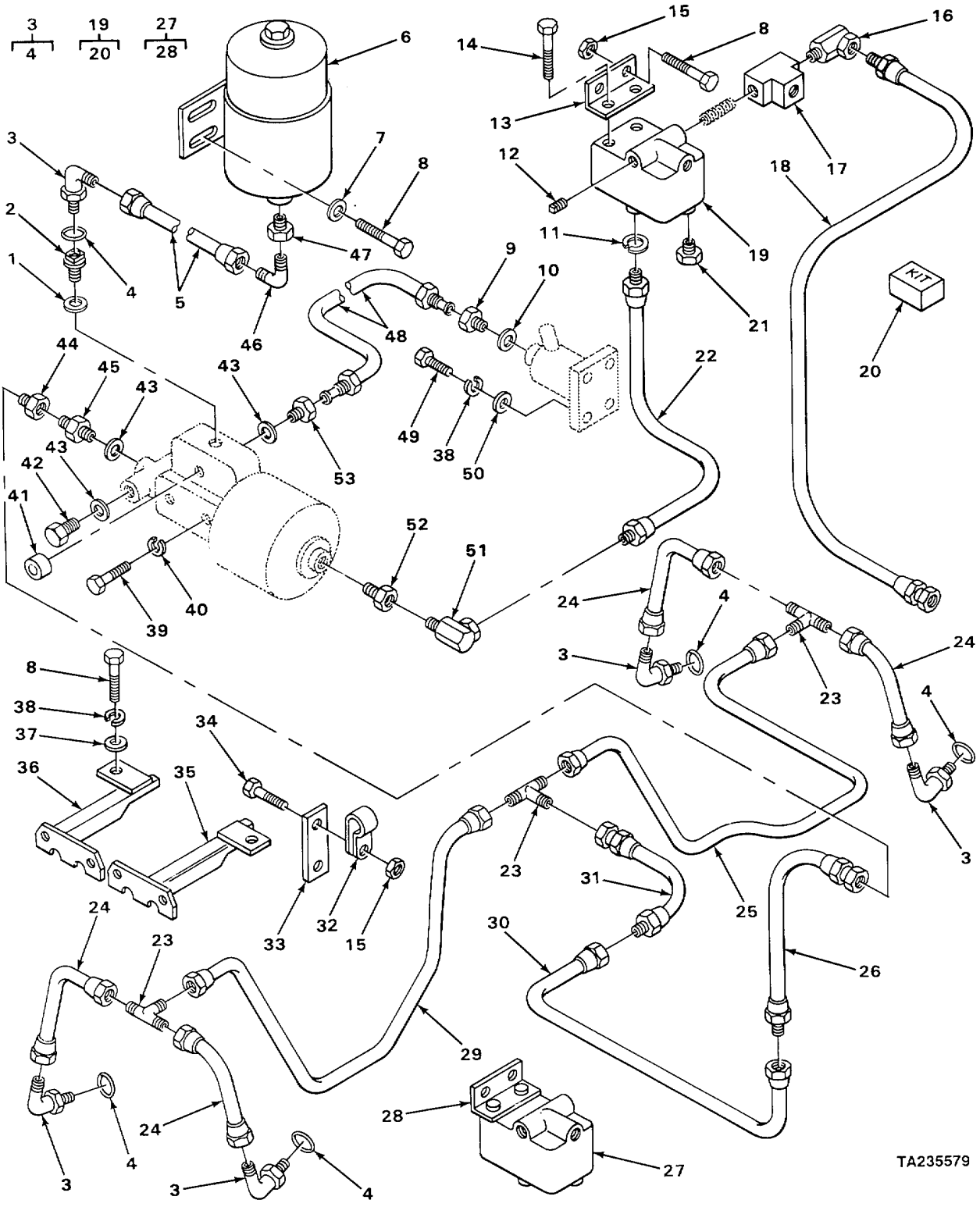

FIGURE 115. REAR AIR RESERVOIRS AND VALVS.

(1) ITEM NO	(2) SMR CODE	(3) CAGEC	(4) PART NUMBER	(5) DESCRIPTION AND USABLE ON CODES (UOC)	(6) QTY
				GROUP 1208 AIRBRAKE SYSTEM	
				FIG. 115 REAR AIR RESERVOIRS AND VALVES	
1	PFOZZ	12603	850287	GASKET	1
2	PFOZZ	12603	960005	PLUG, MACHINE THREAD	1
3	PFOZZ	96906	MS51527A5	ELBOW, TUBE TO BOSS	5
4	PFOZZ	12603	91F4	•PACKING, PREFORMED	1
5	XDOZZ	40152	2501470	HOSE	1
6	XDOZZ	40152	2501154	RESERVOIR	1
7	PFOZZ	12603	656672	WASHER, PLAIN	2
8	PFOZZ	40152	24C-612	BOLT, MACHINE	4
9	PFOZZ	40152	1675961	ADAPTER, STRAIGHT, PI	1
10	XDOZZ	40152	2506979	GASKET	1
11	PFOZZ	12603	25E15	WASHER, FLAT	2
12	PFOZZ	03504	16F06	PLUG, VENT	2
12	PFOZZ	12603	16F-12	PLUG, HOUSING FILLER	1
13	XDOZZ	40152	2511198	BRACKET	1
14	PFOZZ	96906	MS90728-38	BOLT, MACHINE	2
15	PFOZZ	12603	60D6	NUT, SELF-LOCKING, HE	3
16	PFOZZ	79470	141-15804	ELBOW, PIPE	1
17	XDOZZ	40152	30F-1	TEE	1
18	PFOZZ	40152	1549089	HOSE ASSEMBLY, NONME	1
19	PFOZZ	06853	281865	VALVE, RELAY, AIR PRE QUICK RELEASE	1
20	XDFZZ	40152	949959	•REPAIR KIT	1
21	XDOZZ	40152	16F-4	PLUG	1
22	XDOZZ	40152	1549086	HOSE	1
23	XDOZZ	40152	10K-4	TEE	3
24	PFOZZ	2B144	1512732	TUBE ASSEMBLY, METAL	4
25	PFOZZ	40152	1512642	TUBE ASSEMBLY, METAL	1
26	XDOZZ	40152	1544111	HOSE	1
27	PFOZZ	06853	281865	VALVE, RELAY, AIR PRE QUICK RELEASE	1
28	XAOZZ	40152	2511198	•BRACKET	1
29	XDOZZ	40152	1512643	TUBE	1
30	XDOZZ	40152	1544114	TUBE	1
31	PFOZZ	40152	1544112	HOSE ASSEMBLY, NONME	1
32	XDOZZ	40152	30H-20	CLIP	1
33	XDOZZ	40152	1544017	BRACKET	1
34	PPOZZ	40152	24G-612	BOLT, MACHINE	1
35	XDOZZ	40152	1512730	GUARD LH	1
36	XDOZZ	40152	1512729	GUARD RH	1
37	PFOZZ	19207	10875413	WASHER, FLAT	2
38	PFOZZ	96906	MS35333-76	WASHER, LOCK	4
39	PFOZZ	40152	24C-720	BOLT, MACHINE	3
40	PFOZZ	96906	MS35338-47	WASHER, LOCK	3
41	XDOZZ	40152	669829	WASHER	1
42	XDOZZ	40152	874007	PLUG	1
43	XDOZZ	40152	2511196	GASKET	3
44	XDOZZ	40152	89F-4	CONNECTOR	1
45	XDOZZ	40152	1543379	CONNECTOR	1
46	XDOZZ	40152	83F-4	ELBOW	1

(1) ITEM NO	(2) SMR CODE	(3) CAGEC	(4) PART NUMBER	(5) DESCRIPTION AND USABLE ON CODES (UOC)	(6) QTY
47	PFOZZ	72582	0112877	BUSHING, PIPE	1
48	XDOZZ	40152	2511377	TUBE	1
49	PFOZZ	40152	24C-620	BOLT, MACHINE	2
50	XDOZZ	40152	25E-17	WASHER, FLAT	2
51	PFOZZ	12603	31F3	ELBOW, PIPE	1
52	PFOZZ	89749	19F3	BUSHING, PIPE	1
53	PFOZZ	63477	F2952	ADAPTER, STRAIGHT, TU	1

END OF FIGURE

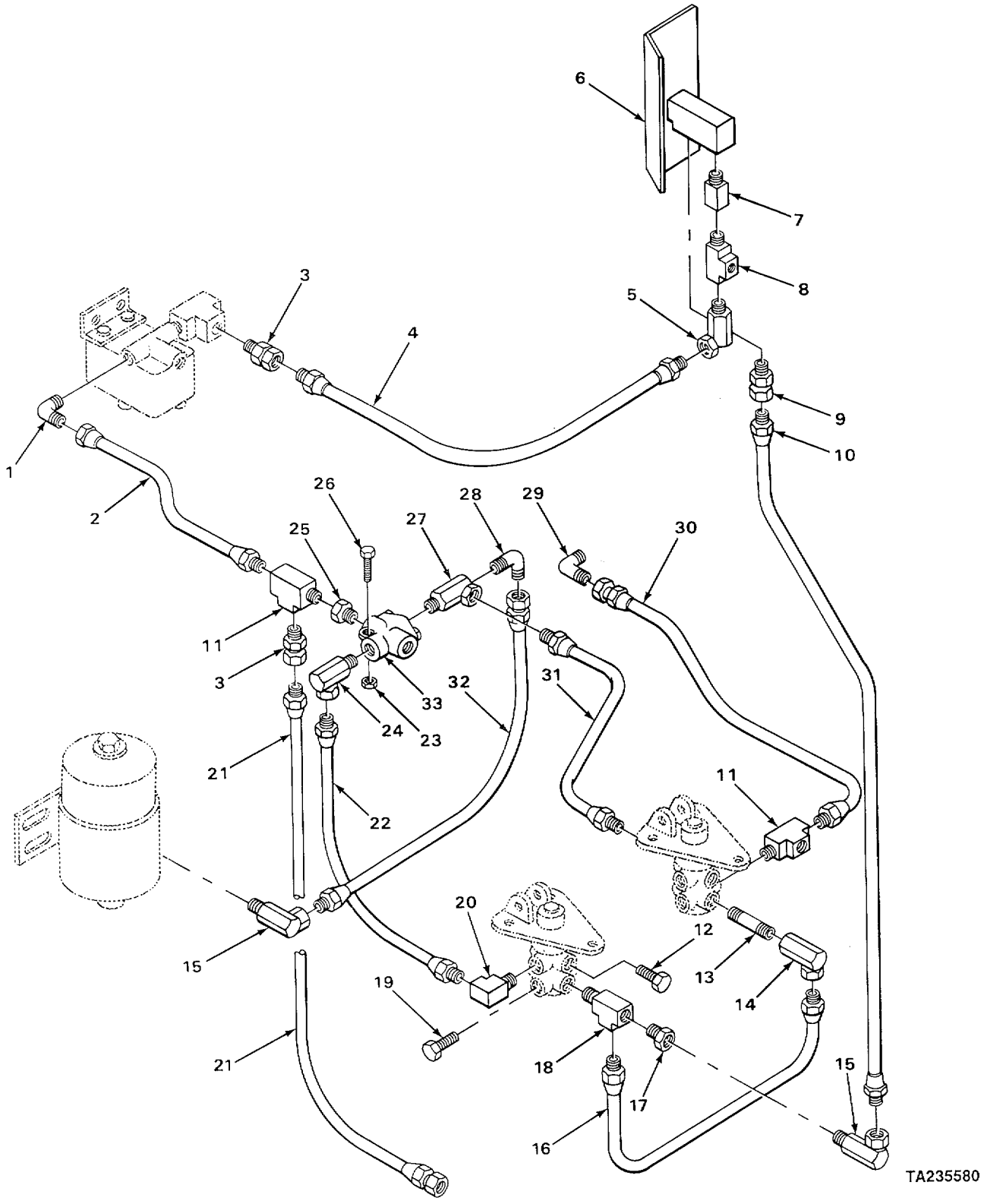

FIGURE 116. REAR AIRBRAKE LINES AND RELATED PARTS.

(1) ITEM NO	(2) SMR CODE	(3) CAGEC	(4) PART NUMBER	(5) DESCRIPTION AND USABLE ON CODES (UOC)	(6) QTY
				GROUP 1208 AIRBRAKE SYSTEM	
				FIG. 116 REAR AIRBRAKE LINES AND RELATED PARTS	
1	XDOZZ	40152	42F-6	ELBOW	1
2	XDOZZ	40152	1549088	HOSE	1
3	PFOZZ	01276	2045-4-4S	COUPLING, PIPE	2
4	XDOZZ	40152	1549087	HOSE	1
5	XDOZZ	40152	33F-1	ADAPTER	1
6	XDOZZ	40152	1548307	BRACKET	1
7	PFOZZ	12603	1545790	VALVE, BRAKE PNEUMAT	1
8	PFOZZ	98441	1-8MROS	TEE, PIPE	1
9	PFOZZ	12603	36F1	COUPLING, PIPE	1
10	XDOZZ	40152	1541553	HOSE	1
11	XDOZZ	40152	30F-1	TEE	2
12	PFOZZ	40152	40K-08	PLUG, PIPE	7
13	XDOZZ	40152	5K-420	NIPPLE, PIPE	1
14	PFOZZ	12603	32F4	ELBOW, PIPE	1
15	PFOZZ	40152	31F1	ELBOW, PIPE	2
16	XDOZZ	40152	592742	HOSE	1
17	XDOZZ	40152	19F-4	BUSHING	1
18	PFOZZ	12603	30F3	TEE, PIPE	1
19	PFOZZ	21450	444618	PLUG, PIPE	3
20	XDOZZ	40152	869712	ELBOW	1
21	PFOZZ	40152	1549089	HOSE ASSEMBLY, NONME	1
22	XDOZZ	40152	593658	HOSE	1
23	PFOZZ	12603	60D6	NUT, SELF-LOCKING, HE	1
24	PFOZZ	11083	4D3734	ELBOW, PIPE	1
25	XDOZZ	40152	19F-5	BUSHING	1
26	PFOZZ	40152	24C-644	BOLT, MACHINE	1
27	XDOZZ	4015.2	356609	TEE	I
28	PFOZZ	96906	MS20822-4	ELBOW, PIPE TO TUBE	1
29	PFOZZ	30327	E14A	ELBOW, PIPE TO TUBE	1
30	XDOZZ	40152	1543947	HOSE	1
31	PFOZZ	40152	593263	HOSE ASSEMBLY, NONME	1
32	XDOZZ	40152	541980	HOSE	1
33	PFOZ	40152	1532592	VALVE, BRAKE PNEUMAT CHECK	1

END OF FIGURE

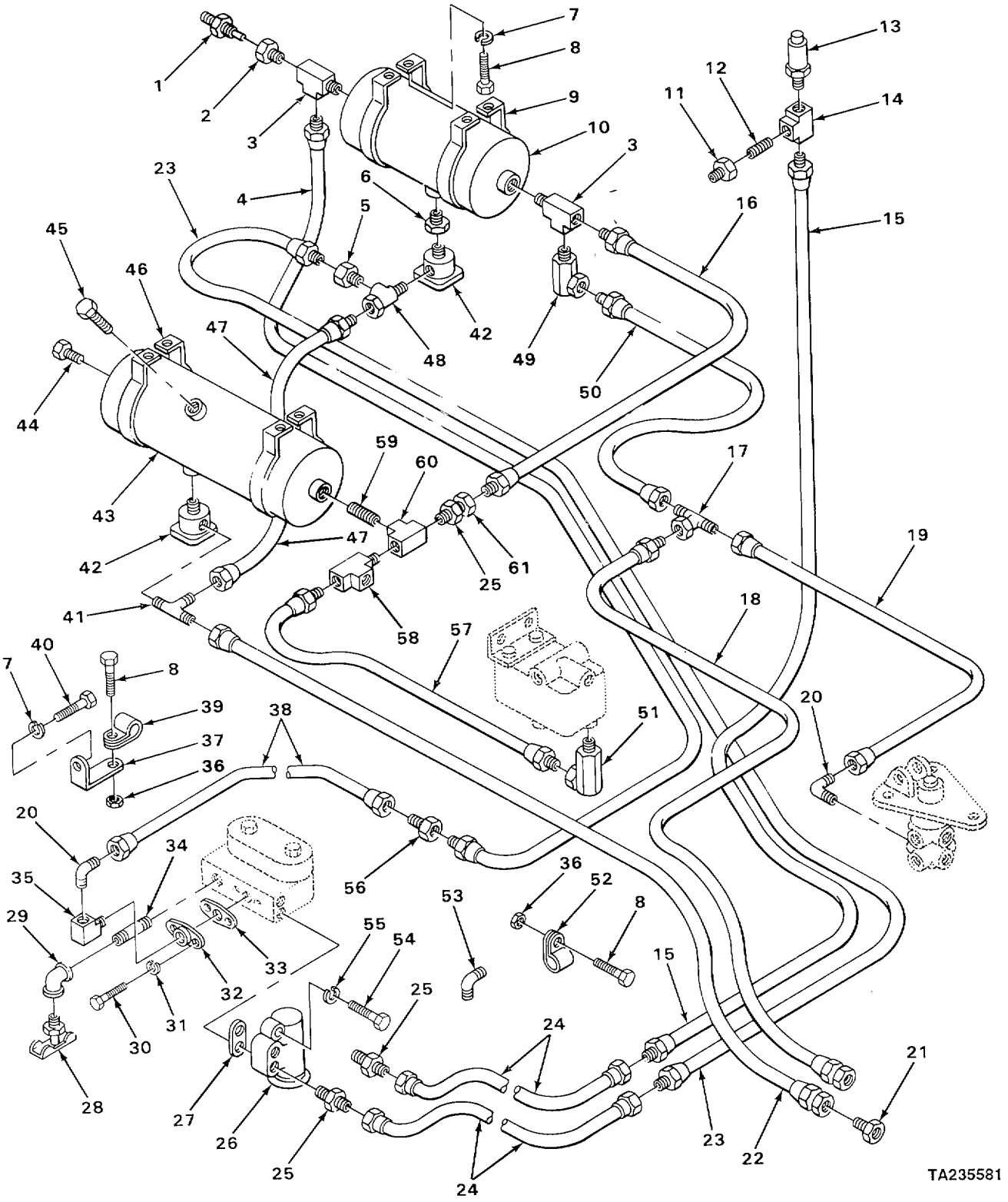

FIGURE 117. AIR VALVES AND RELATED PARTS.

(1) ITEM NO	(2) SMR CODE	(3) CAGEC	(4) PART NUMBER	(5) DESCRIPTION AND USABLE ON CODES (UOC)	(6) QTY
				GROUP 1208 AIRBRAKE SYSTEM	
				FIG. 117 AIR VALVES AND RELATED PARTS	
1	XDOZZ	40152	2515022	VALVE ASSEMBLY TANK	1
2	XDOZZ	40152	19F-4	BUSHING	1
3	PFOZZ	12603	30F3	TEE, PIPE	2
4	XDOZZ	40152	2504865	H0SE	1
5	XDOZZ	40152	637153	ADAPTER	1
6	PFOZZ	79470	C3109X8X6	BUSHING, PIPE	1
7	PFOZZ	96906	MS35333-76	WASHER, LOCK	7
8	PFOZZ	40152	24C-616	BOLT, MACHINE	9
9	XDOZZ	40152	941214	BRACKET	2
10	PFOZZ	2B144	540707	TANK, PRESSURE	1
11	XDOZZ	40152	19F-5	BUSHING	1
12	XDOZZ	40152	5K-207	NIPPLE, PIPE	1
13	PFOZZ	40152	507815	VALVE, SAFETY RELIEF	1
14	PFOZZ	12603	28F1	TEE, ELECTRICAL COND	1
15	XOOZZ	40152	1514085	HOSE	1
16	PFOZZ	40152	1512698	HOSE ASSEMBLY, NONME	1
17	XDOZZ	40152	44F-8	TEE	1
18	XDOZZ	40152	1549093	HOSE	1
19	XDOZZ	40152	1548504	TUBE	1
20	XDOZZ	40152	42F-9	ELBOW	2
21	XDOZZ	40152	38F-4	CONNECTOR	1
22	PFOZZ	40152	2507335	HOSE ASSEMBLY, NONME	1
23	PFOZZ	36378	529348	HOSE ASSEMBLY, NONME	1
24	XDOZZ	40152	1515259	TUBE	2
25	PFOZZ	81343	4-2010102BA	ADAPTER, STRAIGHT, PI	3
26	PFOZZ	03504	3215964	GOVERNOR	1
27	PFOZZ	46717	L2583-11	GASKET	1
28	XDOZZ	40152	72F-3	DRAINCOCK	1
29	XDOZZ	40152	24F-3	ELBOW	1
30	PFOZZ	40152	23C-514	BOLT, MACHINE	2
31	PFOZZ	96906	MS35338-45	WASHER, LOCK	2
32	PFOZZ	40152	510452	FLANGE, PIPE	1
33	XDOZZ	40152	951948	GASKET	1
34	XDOZZ	40152	5K-312	NIPPLE, PIPE	1
35	XDOZZ	40152	869712	ELBOW	1
36	PFOZZ	12603	60D6	NUT, SELF-LOCKING, HE	5
37	XDOZZ	40152	1513319	BRACKET	1
38	XDOZZ	40152	1515260	TUBE	1
39	PFOZZ	12603	30H38	CLIP, SPECIAL	1
40	PFOZZ	40152	23C-616	BOLT, MACHINE	1
41	XDOZZ	40152	46F-3	TEE	1
42	PFOZZ	12603	1519191	VALVE, PNEUMATIC TAN	1
43	XDOZZ	40152	527684	AIR RESERVOIR	1
44	PFOZZ	12603	40K06	PLUG	1
45	PFOZZ	21450	444618	PLUG, PIPE	1
46	XDOZZ	40152	527685	BRACKET	2
47	XDOZZ	40152	2507336	HOSE	1

(1) ITEM NO	(2) SMR CODE	(3) CAGEC	(4) PART NUMBER	(5) DESCRIPTION AND USABLE ON CODES (UOC)	(6) QTY
48	XDOZZ	40152	30F-1	TEE	1
49	PFOZZ	06021	AT 10503	ELBOW, PIPE	1
50	XDOZZ	40152	1549092	HOSE	1
51	PFOZZ	12603	31F3	ELBOW, PIPE	1
52	XDOZZ	40152	30H-20	CLIP	2
53	XDOZZ	40152	62F--1	ELBOW	1
54	XDOZZ	40152	23C-544	BOLT, MACHINE	2
55	PFOZZ	96906	MS35335-34	WASHER, LOCK	2
56	XDOZZ	40152	40F-8	CONNECTOR	1
57	PFOZZ	63906	6GABB6MB17	HOSE ASSEMBLY, NONME	1
53	XDOZZ	40152	30F-2	TEE	1
59	XDOZZ	40152	5K-308	NIPPLE, PIPE	1
60	XDOZZ	40152	28F-2	TEE	1
61	PFOZZ	40152	425413	VALVE, CHECK	1

END OF FIGURE

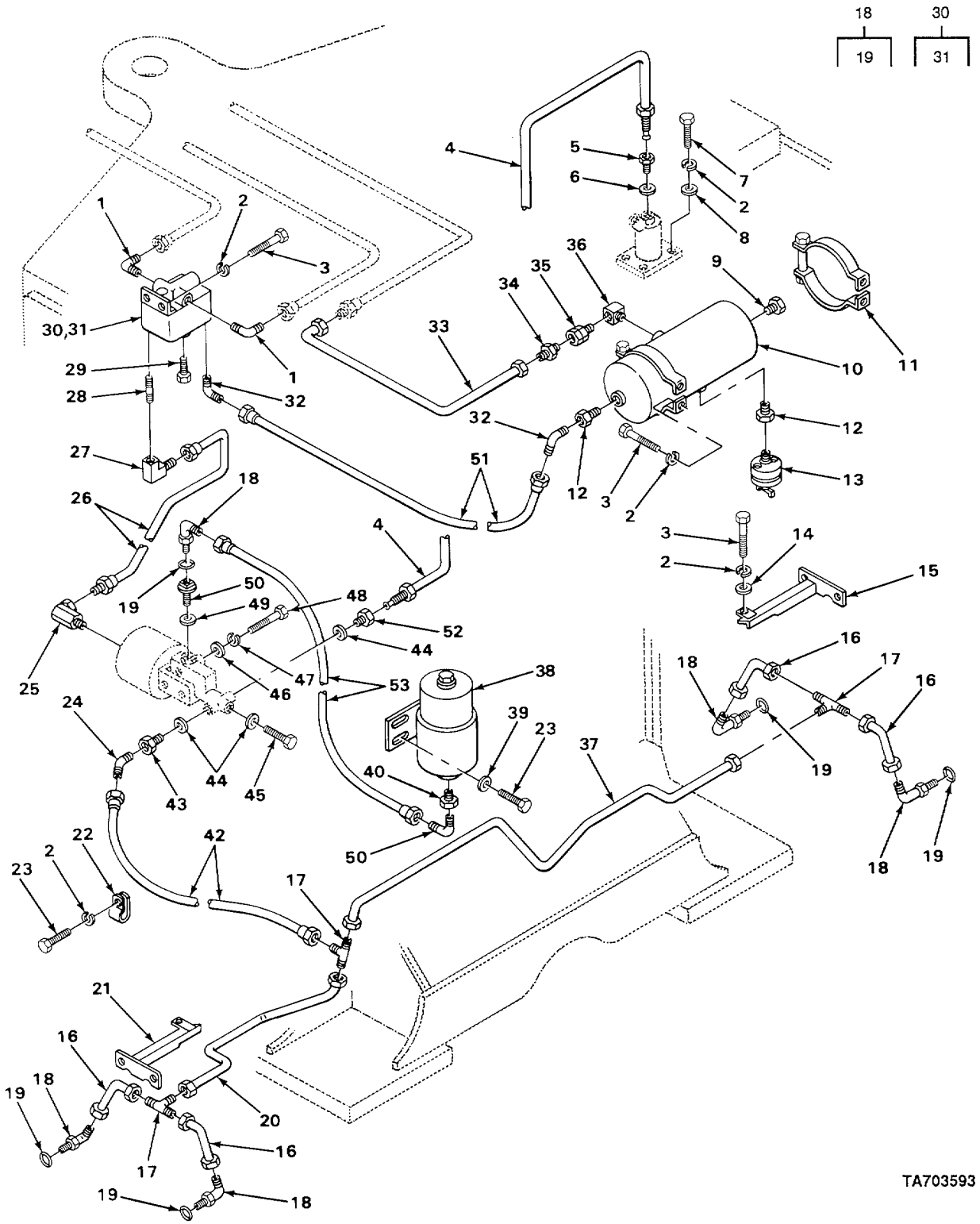

FIGURE 118. FRONT AIRBRAKE LINES AND VALVES.

(1) ITEM NO	(2) SMR CODE	(3) CAGEC	(4) PART NUMBER	(5) DESCRIPTION AND USABLE ON CODES (UOC)	(6) QTY
				GROUP 1208 AIRBRAKE SYSTEM	
				FIG. 118 FRONT AIRBRAKE LINES AND VALVES	
1	XDOZZ	40152	42F-6	ELBOW	2
2	PFOZZ	96906	MS35333-76	WASHER, LOCK	12
3	PFOZZ	40152	24C-616	BOLT, MACHINE	7
4	XDOZZ	40152	2511363	TUBE	1
5	PFOZZ	40152	1675961	ADAPTER, STRAIGHT, PI	1
6	XDOZZ	40152	2506979	GASKET	1
7	PFOZZ	40152	24C-620	BOLT, MACHINE	4
8	XDOZZ	40152	25E-17	WASHER, FLAT	4
9	PFOZZ	40152	40K-08	PLUG, PIPE	1
10	PFOZZ	2B144	540707	TANK, PRESSURE	1
11	XDOZZ	40152	941214	BRACKET	2
12	PFOZZ	79470	C3109X8X6	BUSHING, PIPE	2
13	PFOZZ	12603	1519191	VALVE, PNEUMATIC TAN	1
14	PFOZZ	19207	10875413	WASHER, FLAT	1
15	XDOZZ	40152	1512728	GUARD	1
16	PFOZZ	28144	1512732	TUBE ASSEMBLY, METAL	4
17	XDOZZ	40152	10K-4	TEE	3
18	PFOZZ	96906	MS51527A5	ELBOW, TUBE TO BOSS	5
19	PFOZZ	12603	91F4	PACKING, PREFORMED	1
29	XDOZZ	40152	1512658	TUBE	1
30	XDOZZ	40152	1512731	GUARD	1
31	PFOZZ	12603	30H38	CLIP, SPECIAL	1
32	PFOZZ	40152	24C-612	BOLT, MACHINE	3
33	XDOZZ	40152	84F-4	ELBOW	1
34	PFOZZ	12603	3lF3	ELBOW, PIPE	1
35	XDOZZ	40152	1549090	HOSE	1
36	PFOZZ	98441	1-4DOS	ELBOW, PIPE	1
37	XDOZZ	40152	5K-207	NIPPLE, PIPE	1
38	XDOZZ	40152	16F-4	PLUG	1
39	XDOFF	40152	1545789	VALVE, RELAY, AIR PRE QUICK RELEASE	1
40	XDFZZ	40152	949959	REPAIR KIT	1
41	PFOZZ	81343	8-8 010202B	ELBOW, PIPE TO TUBE	2
42	XDOZZ	40152	1548506	TUBE	1
43	XDOZZ	40152	38F-10	CONNECTOR	1
44	PFOZZ	06721	N13526H	VALVE, CHECK	1
45	PFOZZ	12603	29F3	ELBOW, PIPE	1
46	XDOZZ	40152	1512657	TUBE	1
47	XDOZZ	40152	2501154	RESERVOIR	1
48	PFOZZ	12603	656672	WASHER, PLAIN	2
49	PFOZZ	72582	0112877	BUSHING, PIPE	1
50	XDOZZ	40152	83F-4	ELBOW	1
51	XDOZZ	40152	1513402	HOSE	1
52	XDOZZ	40152	1543879	ADAPTER	1
53	XDOZZ	40152	2511196	GASKET	3
54	XDOZZ	40152	874007	PLUG	1
55	XDOZZ	40152	669829	WASHER	1
56	PFOZZ	96906	MS35338-47	WASHER, LOCK	3

(1) ITEM NO	(2) SMR CODE	(3) CAGEC	(4) PART NUMBER	(5) DESCRIPTION AND USABLE ON CODES (UOC)	(6) QTY
57	PFOZZ	40152	24C-720	BOLT, MACHINE	3
58	PFOZZ	12603	850287	GASKET	1
59	PFOZZ	12603	960005	PLUG, MACHINE THREAD	1
60	XDOZZ	40152	1512885	HOSE	1
61	PFOZZ	63477	F2952	ADAPTER, STRAIGHT, TU	1
62	XDOZZ	40152	2504480	HOSE	1

END OF FIGURE

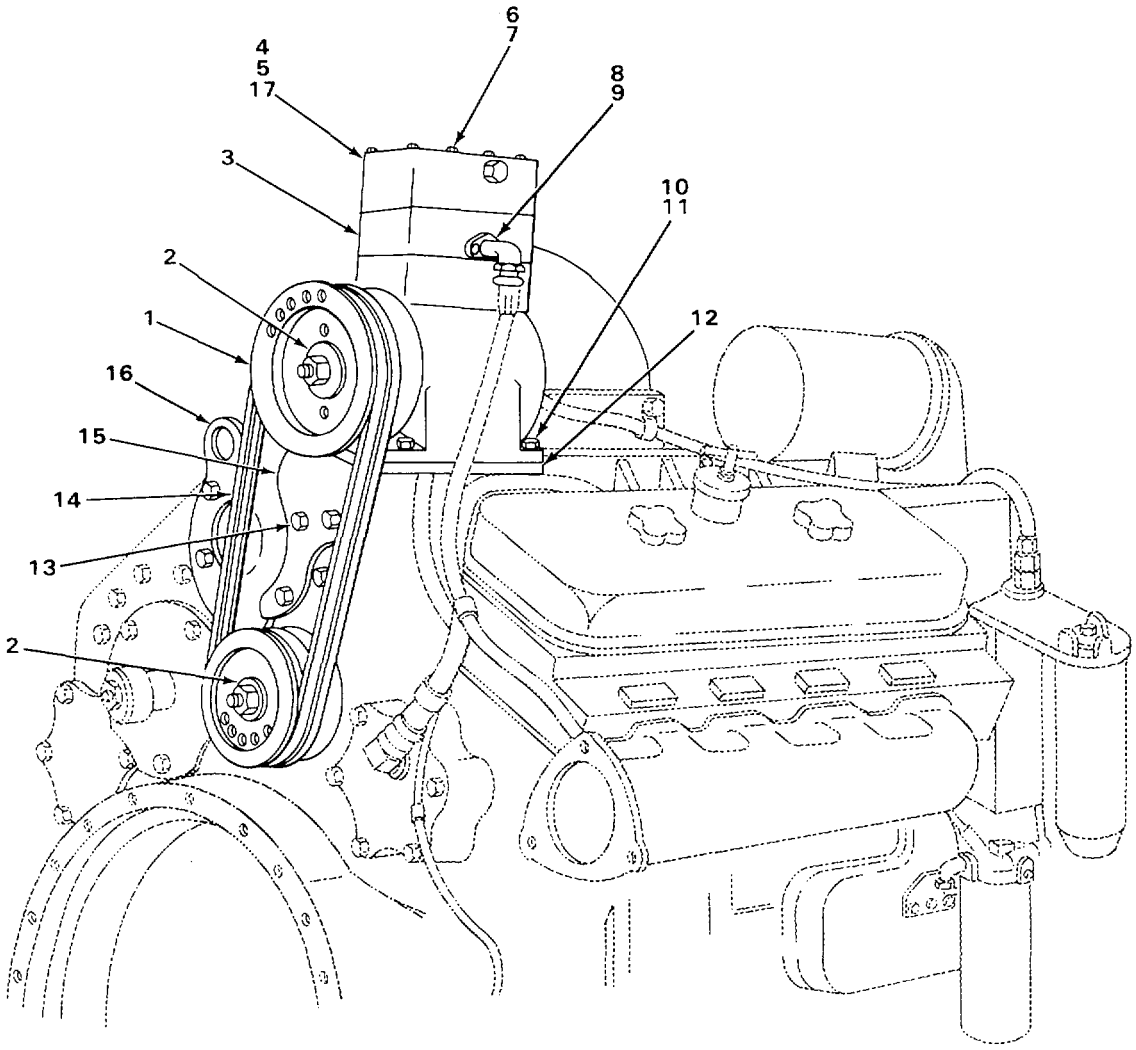

TA235583

FIGURE 119. AIR COMPRESSOR ASSEMBLY AND ATTACHING PARTS.

(1) ITEM NO	(2) SMR CODE	(3) CAGEC	(4) PART NUMBER	(5) DESCRIPTION AND USABLE ON CODES (UOC)	(6) QTY
				GROUP 1209 AIR COMPRESSOR ASSEMBLY	
				FIG. 119 AIR COMPRESSOR ASSEMBLY AND ATTACHING PARTS	
1	PFFZZ	72582	5117740	PULLEY, GROOVE	1
2	PFFZZ	72582	5164294	WASHER, FLAT	2
3	PFHZZ	72582	5131939	GASKET	1
4	PFFZZ	96906	MS24665-353	PIN, COTTER	1
5	PFFZZ	96906	MS35782-6	COCK, DRAIN	1
6	PFFZZ	72582	454933	SCREW, CAP, HEXAGON H	10
7	PFFZZ	96906	MS35338-47	WASHER, LOCK	12
8	PFFZZ	96906	MS27183-14	WASHER, FLAT	2
8	PFFZZ	96906	MS27183-16	WASHER, FLAT	6
9	PFFZZ	96906	MS90728-61	SCREW, CAP, HEXAGON H	3
9	PFFZZ	96906	MS35307-410	SCREW, CAP, HEXAGON H	1
9	PFFZZ	96906	MS90728-72	SCREW, CAP, HEXAGON H	2
10	PFFZZ	96906	MS90728-62	SCREW, CAP, HEXAGON H	2
10	PFFZZ	24617	5135182	SCREW	1
10	PFFZZ	63005	427564	BOLT, MACHINE	2
10	PFFZZ	24617	5128076	BOLT	1
11	PFFZZ	80045	23MS35338-10	WASHER, LOCK	1
11	PFFZZ	96906	MS35338-8	WASHER, LOCK	7
12	XDFZZ	72582	5145417	PLATE, SUPPORT	1
13	PFFZZ	72582	117049	NUT, PLAIN, HEXAGON	1
13	PFFZZ	24617	441292	NUT, SELF-LOCKING, HE	1
13	PFFZZ	96906	MS51967-8	NUT, PLAIN, HEXAGON	2
14	PFFZZ	30379	5137905	BELT	1
15	XDFZZ	72582	5102398	BRACKET	1
15	XDFZZ	72582	5102399	BRACKET	1
16	XDFZZ	72582	5138478	BRACKET	1
17	XDFHH	06853	285924	COMPRESSOR, RECIPROC	1

END OF FIGURE

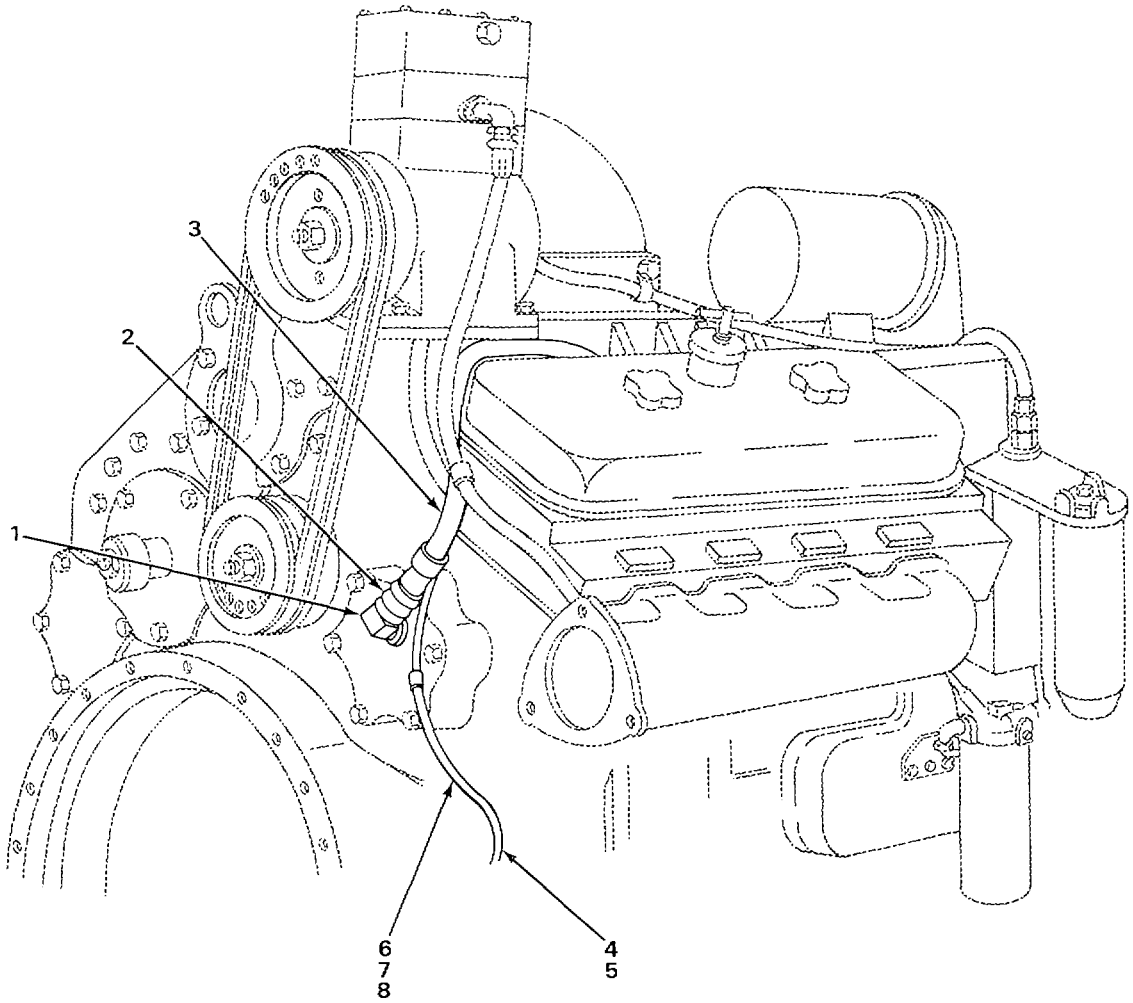

TA235584

FIGURE 120. AIR COMPRESSOR LUBRICATION SYSTEM.

(1) ITEM NO	(2) SMR CODE	(3) CAGEC	(4) PART NUMBER	(5) DESCRIPTION AND USABLE ON CODES (UOC)	(6) QTY
				GROUP 1209 AIR COMPRESSOR ASSEMBLY	
				FIG. 120 AIR COMPRESSOR LUBRICATION SYSTEM	
1	PFOZZ	30379	109429	ELBOW, PIPE TO TUBE	1
2	PFOZZ	24617	444004	COUPLING, PIPE	1
3	PFOZZ	72582	2337354	HOSE ASSEMBLY, NONME	1
4	PFOZZ	72582	8925607	ELBOW, PIPE.	1
5	XDOZZ	04594	179735	BUSHING	1
6	PFOZZ	72582	2289944	HOSE ASSEMBLY, METAL.....	1
7	PFOZZ	07334	A0563	ELBOW, PIPE	1
8	PFOZZ	07295	100740	ADAPTER, STRAIGHT, PI.....	1

END OF FIGURE

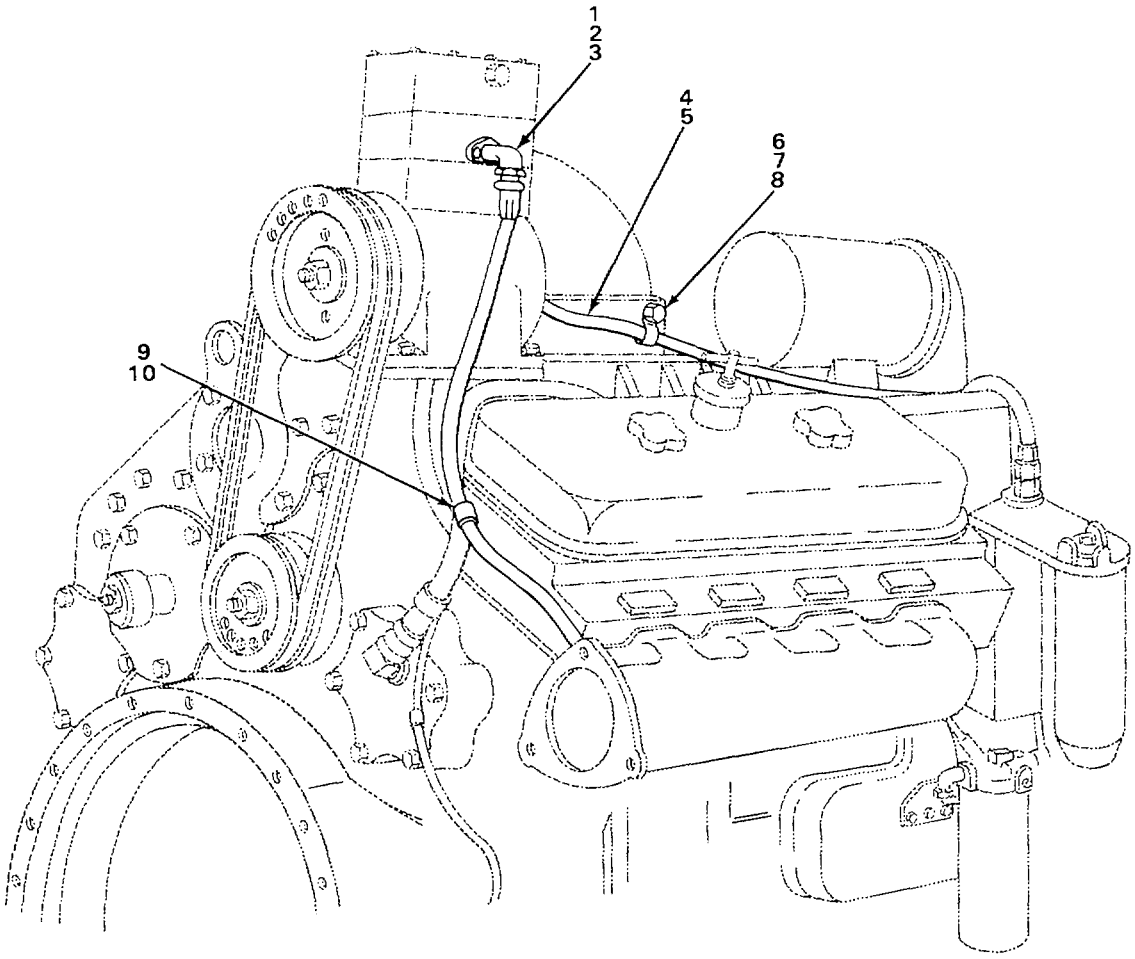

TA235585

FIGURE 121. AIR COMPRESSOR AIR INTAKE.

(1) ITEM NO	(2) SMR CODE	(3) CAGEC	(4) PART NUMBER	(5) DESCRIPTION AND USABLE ON CODES (UOC)	(6) QTY
				GROUP 1209 AIR COMPRESSOR ASSEMBLY	
				FIG. 121 AIR COMPRESSOR AIR INTAKE	
1	PFOZZ	72582	3291272	ELBOW, PIPE TO HOSE	2
2	PFOZZ	81348	WW-P-471BDQBUED	BUSHING, PIPE	1
3	PFOZZ	72582	5175705	SPACER, SLEEVE	1
4	PFOZZ	72582	5138542	HOSE, NONMETALLIC	1
5	XDOZZ	04594	5132103	FLANGE	1
6	PFOZZ	72582	9139801	CLAMP, HOSE	2
7	PFOZZ	96906	MS35338-45	WASHER, LOCK	2
8	PFOZZ	96906	MS90728-34	BOLT, MACHINE	2
9	PFOZZ	96906	MS21333-64	CLAMP, LOOP	1
10	PFOZZ	72582	427588	BOLT, SELF-LOCKING	1

END OF FIGURE

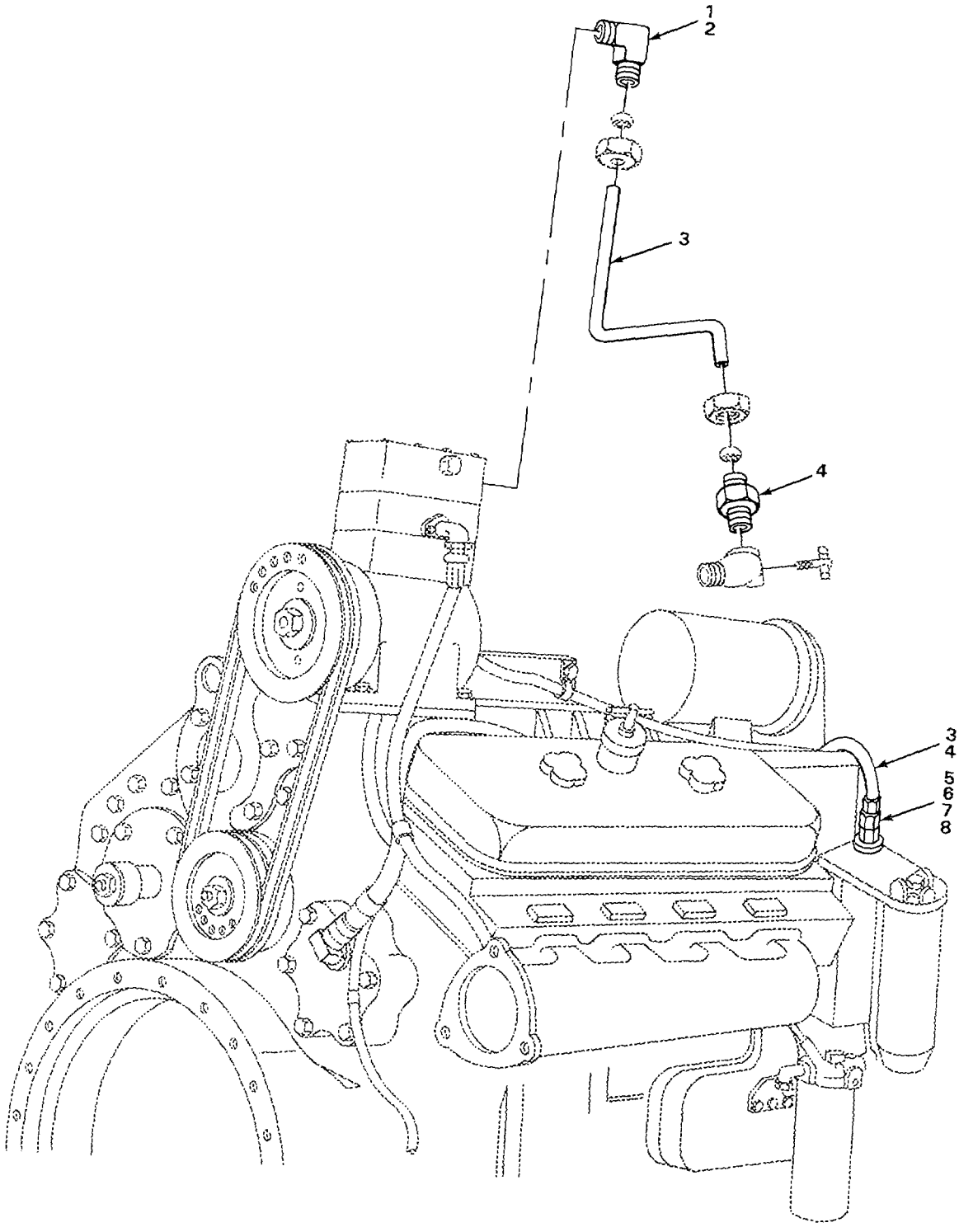

FIGURE 122. AIR COMPRESSOR COOLING SYSTEM.

(1) ITEM NO	(2) SMR CODE	(3) CAGEC	(4) PART NUMBER	(5) DESCRIPTION AND USABLE ON CODES (UOC)	(6) QTY
				GROUP 1209 AIR COMPRESSOR ASSEMBLY	
				FIG. 122 AIR COMPRESSOR COOLING SYSTEM	
1	PFOZZ	72582	5130294	ELBOW, PIPE TO TUBE	2
2	XDOZZ	04594	5127788	COVER.....	1
3	MOOZZ	19207	5129157-10	HOSE MAKE FROM HOSE P/N 5129157	2
4	PFOZZ	72582	5120020	ADAPTER, STRAIGHT, TU	4
5	PFOZZ	72582	118757	ELBOW, PIPE TO TUBE	1
6	PFOZZ	81348	WWP471BDQBUDC	BUSHING, PIPE.....	1
7	PFOZZ	96906	MS51887-15	BUSHING, PIPE.....	1
8	PFOZZ	72582	8924220	ELBOW, PIPE TO TUBE	1

END OF FIGURE

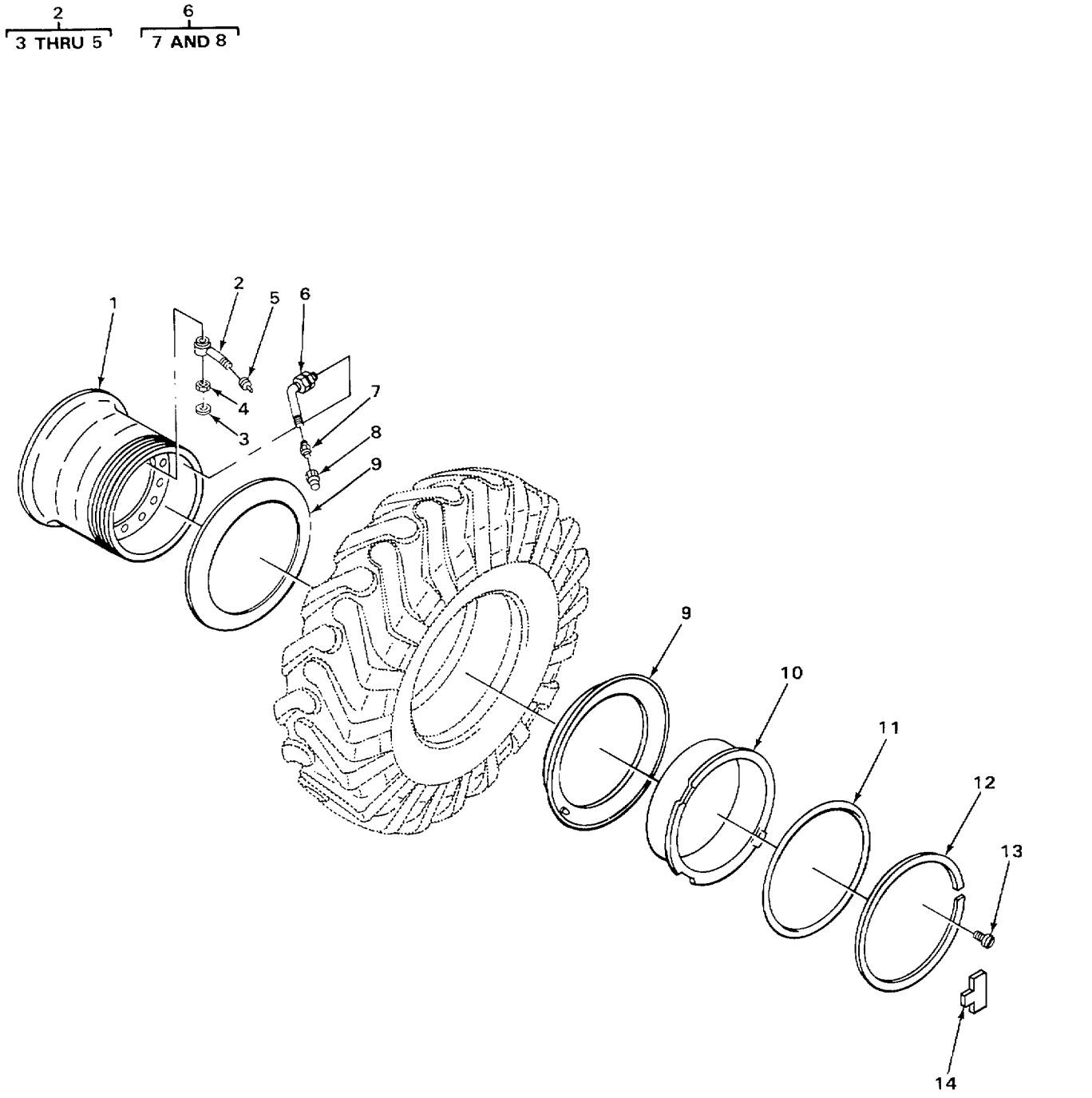

FIGURE 123. WHEEL ASSEMBLY.

(1) ITEM NO	(2) SMR CODE	(3) CAGEC	(4) PART NUMBER	(5) DESCRIPTION AND USABLE ON CODES (UOC)	(6) QTY
				GROUP 13 WHEELS AND TRACKS	
				GROUP 1311 WHEEL ASSEMBLY	
				FIG. 123 WHEEL ASSEMBLY	
1	PAOZZ	40152	1540529	WHEEL, PNEUMATIC TIR	4
2	XDOOO	40152	531112	STEM	4
3	XDOZZ	40152	529606	•GROMMET	1
4	PFOZZ	40152	529605	•NUT, PLAIN, HEXAGON	1
5	PFOZZ	17875	615	•CAP, PNEUMATIC VALVE	1
6	PFOZZ	02280	482352	VALVE, PNEUMATIC TIR	4
7	PAOZZ	40152	551684	•ADAPTER, TIRE VALVE	1
8	PAOZZ	40152	551685	•CAP, PNEUMATIC VALVE	1
9	XDOZZ	40152	516784	FLANGE	8
10	XDOZZ	40152	553956	BAND	4
11	PFOZZ	40152	580278	PACKING, PREFORMED	4
12	PFOZZ	73842	LR255TN	LOCK RING	4
13	PFOZZ	40152	15G-1212	SCREW, MACHINE	12
14	XDOZZ	12603	886799	DRIVER	4

END OF FIGURE

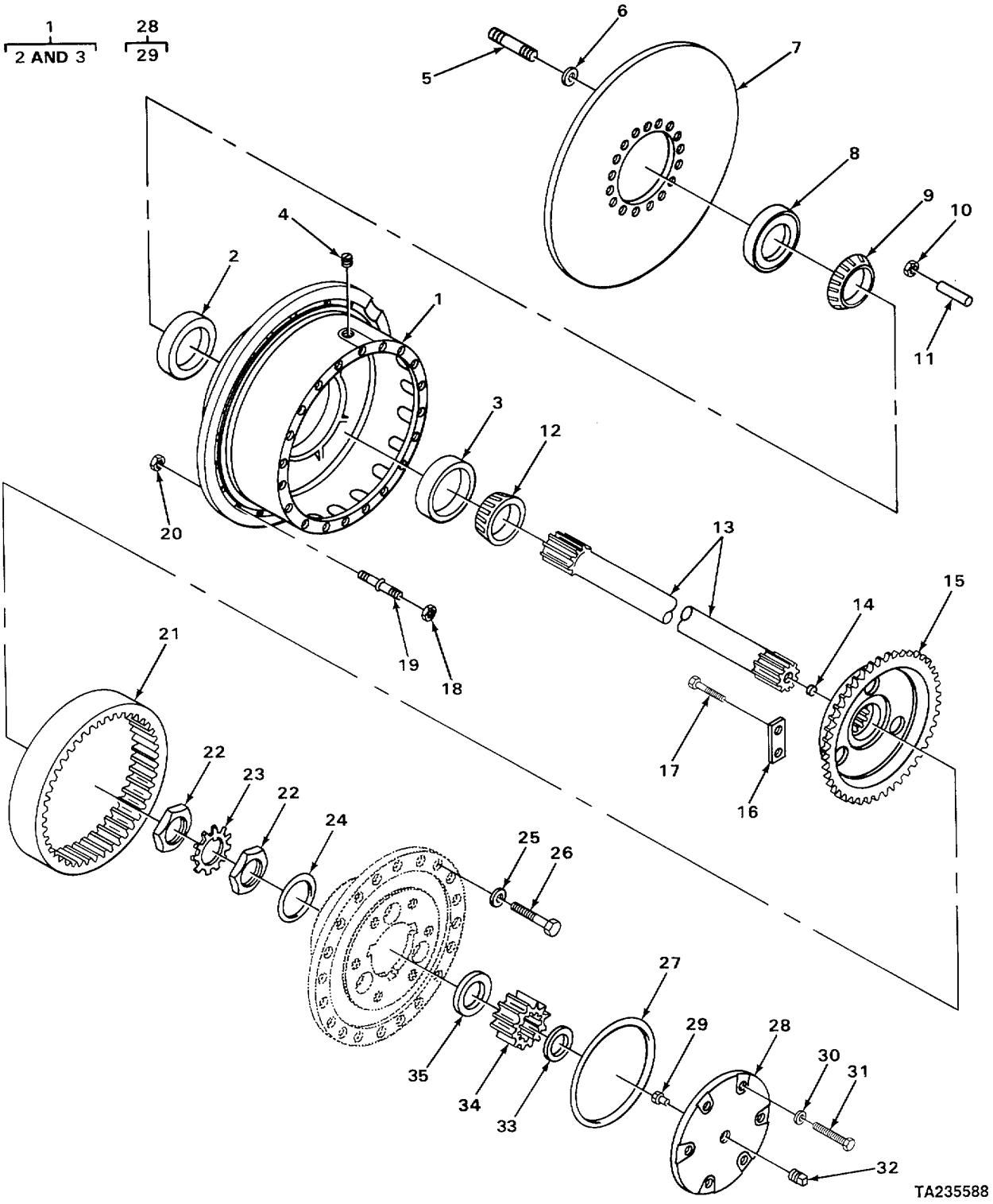

TA235588

FIGURE 124. WHEEL HUB, DISK, AND RELATED PARTS.

(1) ITEM NO	(2) SMR CODE	(3) CAGEC	(4) PART NUMBER	(5) DESCRIPTION AND USABLE ON CODES (UOC)	(6) QTY
				GROUP 1311 WHEEL ASSEMBLY	
				FIG. 124 WHEEL HUB, DISK, AND RELATED PARTS	
1	XDFFF	40152	122622	HUB	4
2	PFFZZ	60038	56662	•CUP, TAPERED ROLLER	1
3	PFOZZ	12603	1304047	•CUP, TAPERED ROLLER	1
4	PFOZZ	03504	119469	PLUG, PIPE, MAGNETIC	4
5	PFOZZ	40152	117336	STUD, PLAIN	64
6	PFOZZ	35301	20-502	WASHER, FLAT	64
7	PFOZZ	12603	128379	ROTOR, DISC BRAKE	4
8	PFOZZ	03504	125248	SEAL, PLAIN ENCASED	4
9	XDOZZ	40152	127819	CONE ROLLER BEARING	4
10	PFOZZ	40152	124543	NUT, PLAIN, HEXAGON	64
11	XDFZZ	40152	119141	DOWEL PIN	4
12	PFOZZ	12603	1304048	CONE AND ROLLERS, TA BEARING	4
13	PFOLZ	03504	118937	SHAFT, AXLE, AUTOMOTI	4
14	XDOZZ	40152	118785	BUTTON	4
15	XDOZZ	40152	119217	GEAR	4
16	XDOZZ	12603	122701	CONNECTING LINK, RIG	24
17	PFFZZ	12603	2C820	SCREW, CAP, HEXAGON H	48
18	PFOZZ	40152	1515484	NUT	76
19	XDOZZ	03501	120218	STUD, SHOULDERED	76
20	PFOZZ	03504	860-12H	NUT, SELF-LOCKING, HE	76
21	XDFZZ	40152	119218	HUB	4
22	PFOZZ	03504	110559	NUT	8
23	PAOZZ	03504	118786	WASHER, KEY	4
24	PFOZZ	03504	118791	PACKING, PREFORMED	4
25	PFOZZ	03504	106547	WASHER, FLAT	80
26	PFDZZ	03504	117225	SCREW, CAP, HEXAGON H	80
27	PFFZZ	03504	118790	GASKET	4
28	PFFZZ	40152	124472	CAP, VALVE	4
29	XDOZZ	40152	118785	•BUTTON	1
30	PFOZZ	12603	112278	WASHER, FLAT	36
31	PFFZZ	14351	X3362	BOLT, MACHINE	36
32	PFOZZ	12603	16F-12	PLUG, HOUSING FILLER	4
33	PFFZZ	12603	SK251-61	PACKING, PREFORMED	4
34	XDFZZ	40152	118782	GEAR	4
35	PFFZZ	40152	118787	WASHER, FLAT	4

END OF FIGURE

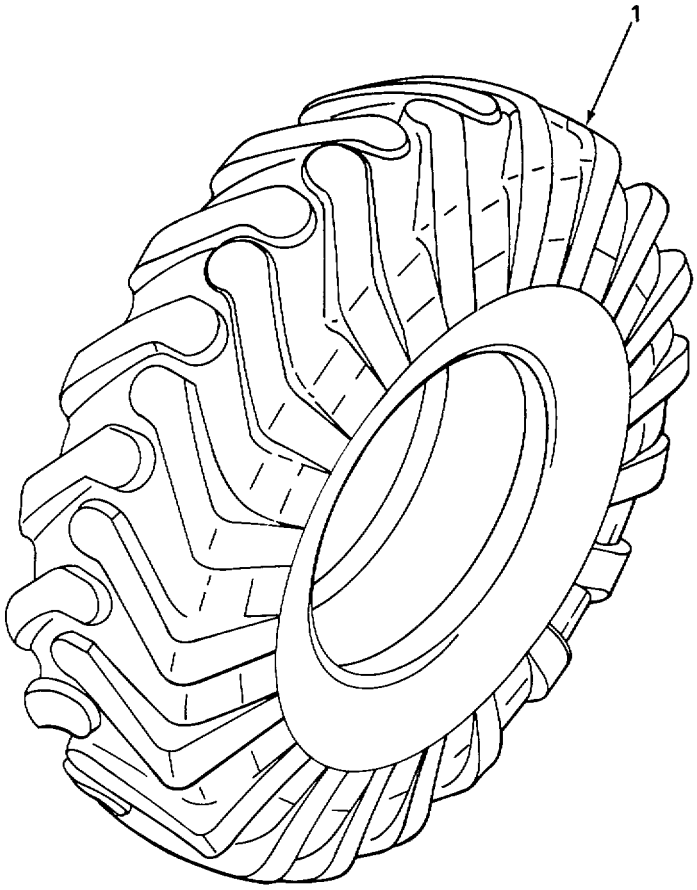

TA235589

FIGURE 125. TIRE.

(1) ITEM NO	(2) SMR CODE	(3) CAGEC	(4) PART NUMBER	(5) DESCRIPTION AND USABLE ON CODES (UOC)	(6) QTY
				GROUP 1313 TIRES, TUBES, TIRE CHAINS	
				FIG. 125 TIRE	
1	PAOOO	81348	ZZ-T-1083/G4A/26 .5-25/20P/LDKD	TIRE, PNEUMATIC.....	4

END OF FIGURE

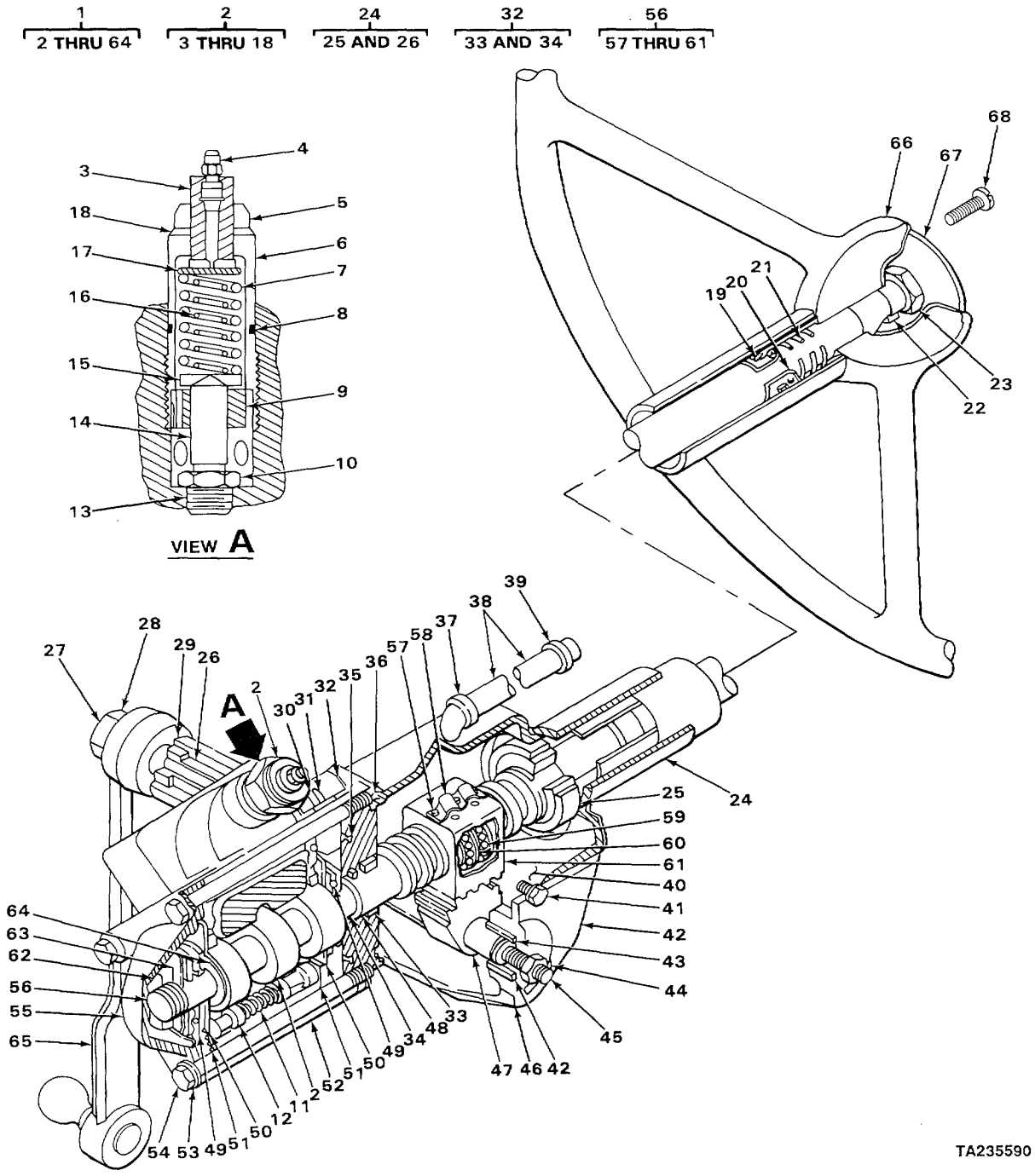

FIGURE 126. STEERING GEAR ASSEMBLY.

(1) ITEM NO	(2) SMR CODE	(3) CAGEC	(4) PART NUMBER	(5) DESCRIPTION AND USABLE ON CODES (UOC)	(6) QTY
				GROUP 14 STEERING	
				GROUP 1401 MECHANICAL STEERING GEAR ASSEMBLY	
				FIG. 126 STEERING GEAR ASSEMBLY	
1	PFFHH	40152	1529890	STEERING GEAR ASSEMBLY	1
2	PFHZZ	40152	946834	VALVEISAFETY RELIEF	1
3	PFHZZ	40152	946603	INSERTTSCREW THREAD	1
4	PFHZZ	40152	946602	BLEEDER VALVEIHYDRA	1
5	PFHZZ	12603	66D12	NUTVSELF-LOCKINGIHE	1
6	XDHZZ	40152	946599	HOUSING	1
7	XDHZZ	40152	946607	SPRING	1
8	XDHZZ	40152	949972	PACKINGGPREFORMEDO .	1
9	XDHZZ	40152	946598	GUIDE	1
10	XDHZZ	40152	946604	SEATIVALVE	1
11	XDHZZ	40152	944195	SPRING	2
12	XDHZZ	40152	944192	PLUNGER	4
13	PFHZZ	96906	MS28778-8	PACKINGVPREFORMED	1
14	XDHZZ	40152	946601	PLUNGER	1
15	PFHZZ	40152	946609	WASHIERIFLAT	1
16	XDHZZ	40152	946606	SPRING	1
17	XDHZZ	40152	946605	SEAT	1
18	XDHZZ	40152	946608	WASHER1FLAT	1
19	PFHZZ	12603	857729	BEARINGIBALL, STEERI	1
20	XDHZZ	24617	5664812	WASHERIFLAT	1
21	PFHZZ	12603	853395	SPRING	1
22	PFOZZ	29510	HS921	KEYIWOODRUFF STEERING SHAFT	1
23	PFOZZ	12603	648304	NUTIPLAINVHEXAGON	1
24	XDHHH	40152	946138	HOUSING	1
25	XDHZZ	12603	730143	BEARING	1
26	PFHZZ	52788	266036	BEARINGISLEEV	1
27	XDHZZ	12603	850756	NUT, PLAIN, HEXAGON	1
28	PFHZZ	96906	MS35338-54	WASHERILOCK	1
29	PFHZZ	77640	032068	SEAL, PLAIN	1
30	PFHZZ	40152	73G-728	SCREWICAPIHEXAGON H	4
31	PFHZZ	96906	MS35338-47	WASHERILOCK	4
32	XDHHH	12603	961181	ADAPTER	1
33	PFHZZ	60380	BH2012XOH	BEARINGIROLLER, NEED	1
34	XDHZZ	40152	873293	SEAL	1
35	PFHZZ	40152	58K-232	PACKINGVPREFORMED	1
36	PFHZZ	79150	24998	GASKET	1
37	PFHZZ	30780	1-2CD45-S	ELBOWIPIPE	1
38	PFHZZ	12603	5K432	NIPPLE, PIPE	1
39	XDHZZ	40152	22F-4	CAP	1
40	PFHZZ	96906	MS35333-76	WASHERILOCK	3
41	PFHZZ	96906	MS18154-58	SCREWICAPIHEXAGON H	3
42	XDHOZ	52788	267387	HOUSING, BEARING UNI	1
43	PFHZZ	24617	266909	WASHERIFLAT	1
44	PFHZA	40152	80D7	NUT, PLAIN, HEXAGON	1
45	XDHZZ	52788	266678	SETSCREW	1

(1) ITEM NO	(2) SMR CODE	(3) CAGEC	(4) PART NUMBER	(5) DESCRIPTION AND USABLE ON CODES (UOC)	(6) QTY
46	PFHZZ	05415	266674	GASKET	1
47	PFHZZ	40152	940111	GEARSHAFTISECTORSBE	1
48	XDHZZ	40152	949972	PACKING, PREFORMED	1
49	PFHZZ	12603	860997	BEARINGIBALL, THRUST	2
50	XDHZZ	52788	5662474	PIN AND WASHER ASS	2
51	XDHZZ	12603	58K-237	PACKINGIPREFORMED	2
52	XDHZZ	40152	944197	SPACER	1
53	PFHZZ	40152	3E-09	WASH-=RLOCK	4
54	PFHZZ	40152	944198	SCREWICAP, HEXAGON H	4
55	XDHZZ	40152	944667	COVER v	I
56	XDHHH	40152	946437	SHAFT	1
57	PFHZZ	12603	851762	SCREWIASSEMBLED WAS	3
58	PFHZZ	24617	266495	OSTRAPIRETAINING	1
59	XDHZZ	40152	10J-09	BALL	106
60	PFHZZ	52788	266497	GUIDE, BALL RETURN	4
61	XDHZZ	93343	lK6819	NUTTSTEERING	1
62	XDHZZ	52788	5682242	NUT, SLEEVE	1
63	PFHZZ	40152	943429	SPRING	1
64	PFHZZ	96906	MS29513-129	EPACKING, PREFORMED	1
65	XDHZZ	40152	1525483	PITMAN ARM	1
66	PFOZZ	52788	758262	STEERING WHEEL	1
67	PFOZZ	40152	1517393	PLATE, INSTRUCTION	1
68	PFOZZ	40152	65G-406	SCREWIMACHINE	4

END OF FIGURE

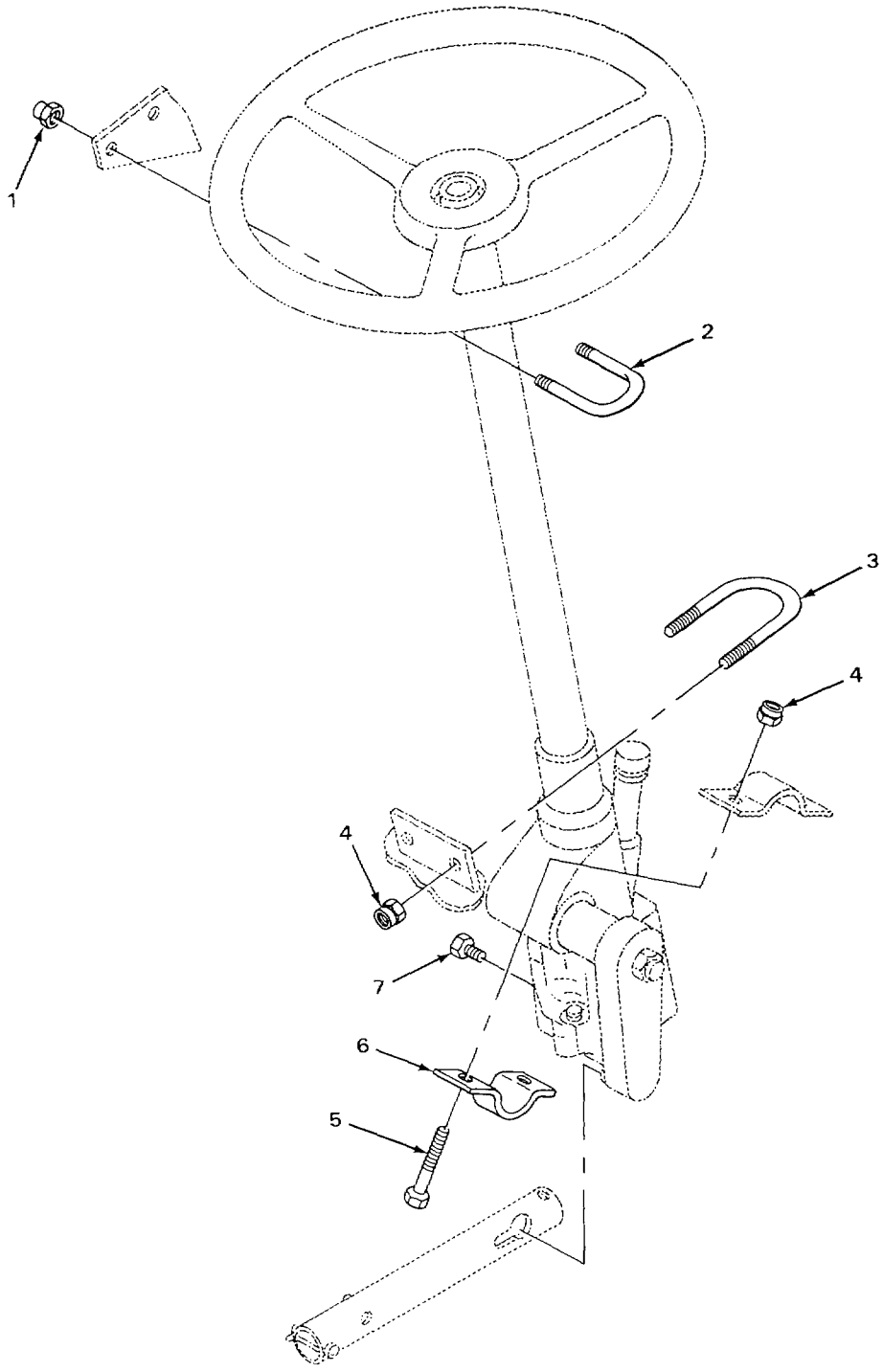

FIGURE 127. STEERING WHEEL SUPPORTS.

(1) ITEM NO	(2) SMR CODE	(3) CAGEC	(4) PART NUMBER	(5) DESCRIPTION AND USABLE ON CODES (UOC)	(6) QTY
				GROUP 1401 MECHANICAL STEERING GEAR ASSEMBLY	
				FIG. 127 STEERING WHEEL SUPPORTS	
1	PFFZZ	12603	60D6	NUT, SELF-LOCKING, HE.	2
2	XDFZZ	40152	571441	U-BOLT-	1
3	XDFZZ	40152	545941	U-BOLT	1
4	PFFZZ	96906	MS21044N8	NUTISELF-LOCKING1HE	4
5	PFFZZ	40152	24C-836	SCREW, CAP, HEXAGON H	2
6	XDFZZ	40152	550044	CLAMP	1
7	PFFZZ	40152	40K02	PLUGVPIPE	1

END OF FIGURE

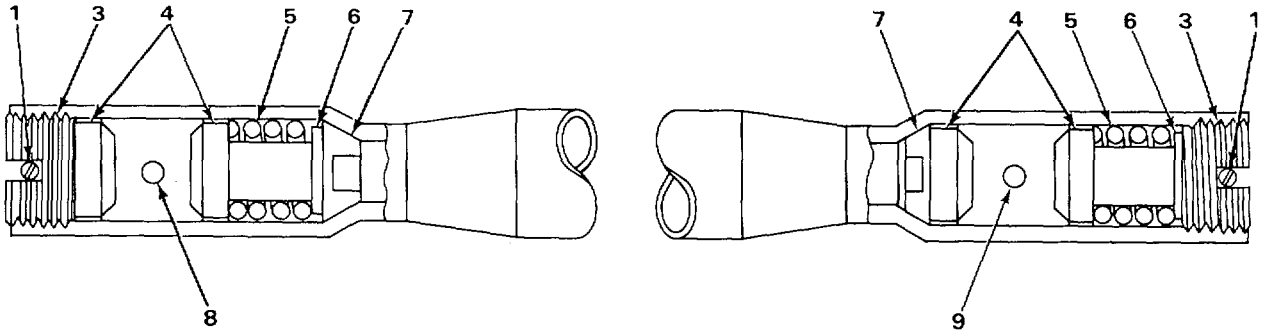

TA235592

FIGURE 128. STEERING DRAG LINK ASSEMBLY.

(1) ITEM NO	(2) SMR CODE	(3) CAGEC	(4) PART NUMBER	(5) DESCRIPTION AND USABLE ON CODES (UOC)	(6) QTY
				GROUP 1401 MECHANICAL STEERING GEAR ASSEMBLY	
				FIG. 128 STEERING DRAG LINK ASSEMBLY	
1	XDFZZ	40152	1F-432	PINI, OTTER	2
2	XDFHH	40152	568070	DRAG LINK ASSEMBLY	1
3	PFHZZ	40152	876575	.PLUG, ADJUSTINGIBALL	2
4	PFHZZ	40152	865965	.BALLSEAT	4
5	XDHZZ	40152	865961	.SPRING	2
6	XDHZZ	40152	662691	.SEAT	2
7	XDHZZ	40152	865963	.SEAT	2
8	PFOZZ	12603	12H15	FITTING, LUBRICATION	1
9	PFOZZ	12603	1OH25	FITTING, LUBRICATION	1

END OF FIGURE

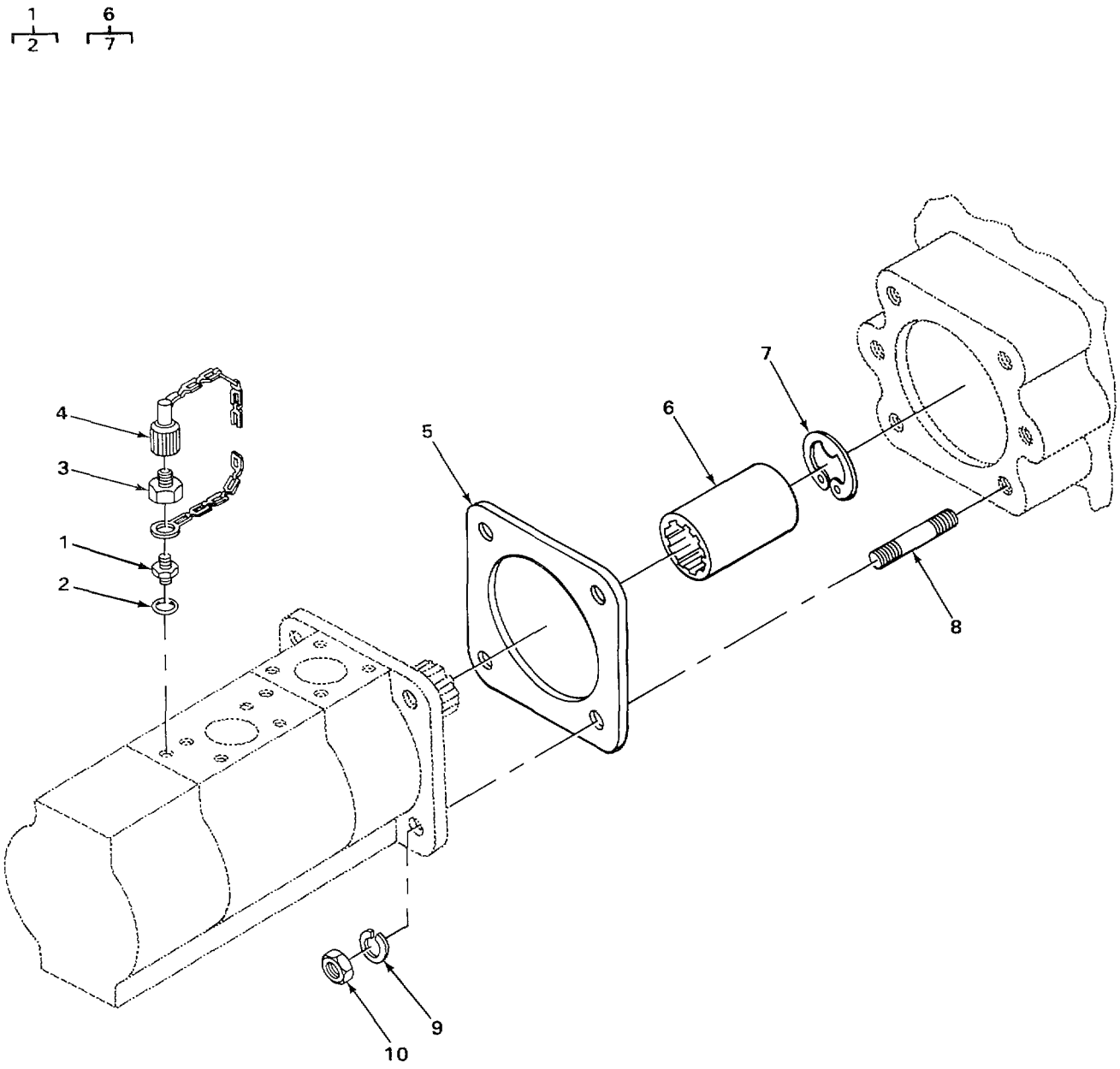

TA235593

FIGURE 129. STEERING PUMP ATTACIING PARTS.

(1) ITEM NO	(2) SMR CODE	(3) CAGEC	(4) PART NUMBER	(5) DESCRIPTION AND USABLE ON CODES (UOC)	(6) QTY
				GROUP 1410 HYDRAULIC PUMP OR FLUID MOTOR ASSEMBLY	
				FIG. 129 STEERING PUMP ATTACHING PARTS	
1	XDOOU	40152	1314178	CONNECTOR.	1
2	PFOZZ	12603	91F5	PACKING, PREFORMED	1
3	XDOZZ	40152	1306142	COUPLER.	1
4	PFOZZ	40152	6000689	CAP. HOSE	1
5	PFFZZ	40152	552161	GASKET.	1
6	XDFFF	40152	230151	SLEEVE DRIVE SHAFT	1
7	PFFZZ	40152	224104	RING RETAINING	1
8	PFFZZ	40152	1513241	STUD, PLAIN	4
9	PFFZZ	95019	500357-13	WASHERTLOCK	4
10	PFFZZ	96906	MS51968-14	NUT, PLAINIHEXAGON	4
				END OF FIGURE	

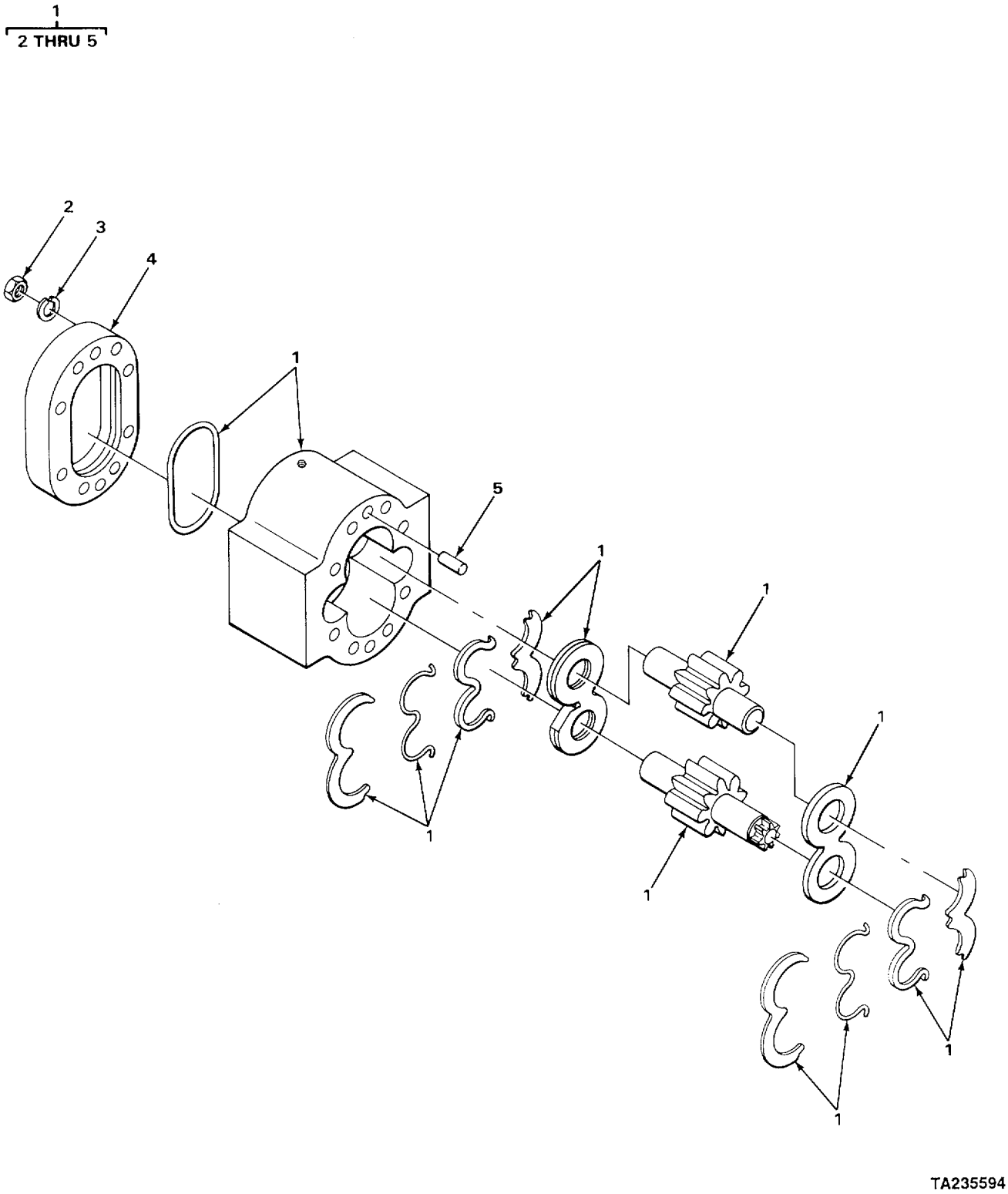

FIGURE 130 STERRING PUMP ATTACHING PARTS

(1) ITEM NO	(2) SMR CODE	(3) CAGEC	(4) PART NUMBER	(5) DESCRIPTION AND USABLE ON CODES (UOC)	(6) QTY
				GROUP 1410 HYDRAULIC PUMP OR FLUID MOTOR ASSEMBLY	
				FIG. 130 STEERING PUMP ASSEMBLY	
1	PAFZZ	40152	2514128	PUMPIROTARY	1
2	PFHZZ	40152	954277	NUT, PLAINIHEXAGON PART OF KIT P/N 961398	8
3	PFHZZ	40152	946271	WASHER, LOCK PART OF KIT P/N 961398	8
4	KFHZZ	40152	947208	COVER PART OF KIT P/N 961398	1
5	KFHZZ	40152	946100	DOWEL PART OF KIT P/N 961398	1
				END OF FIGURE	

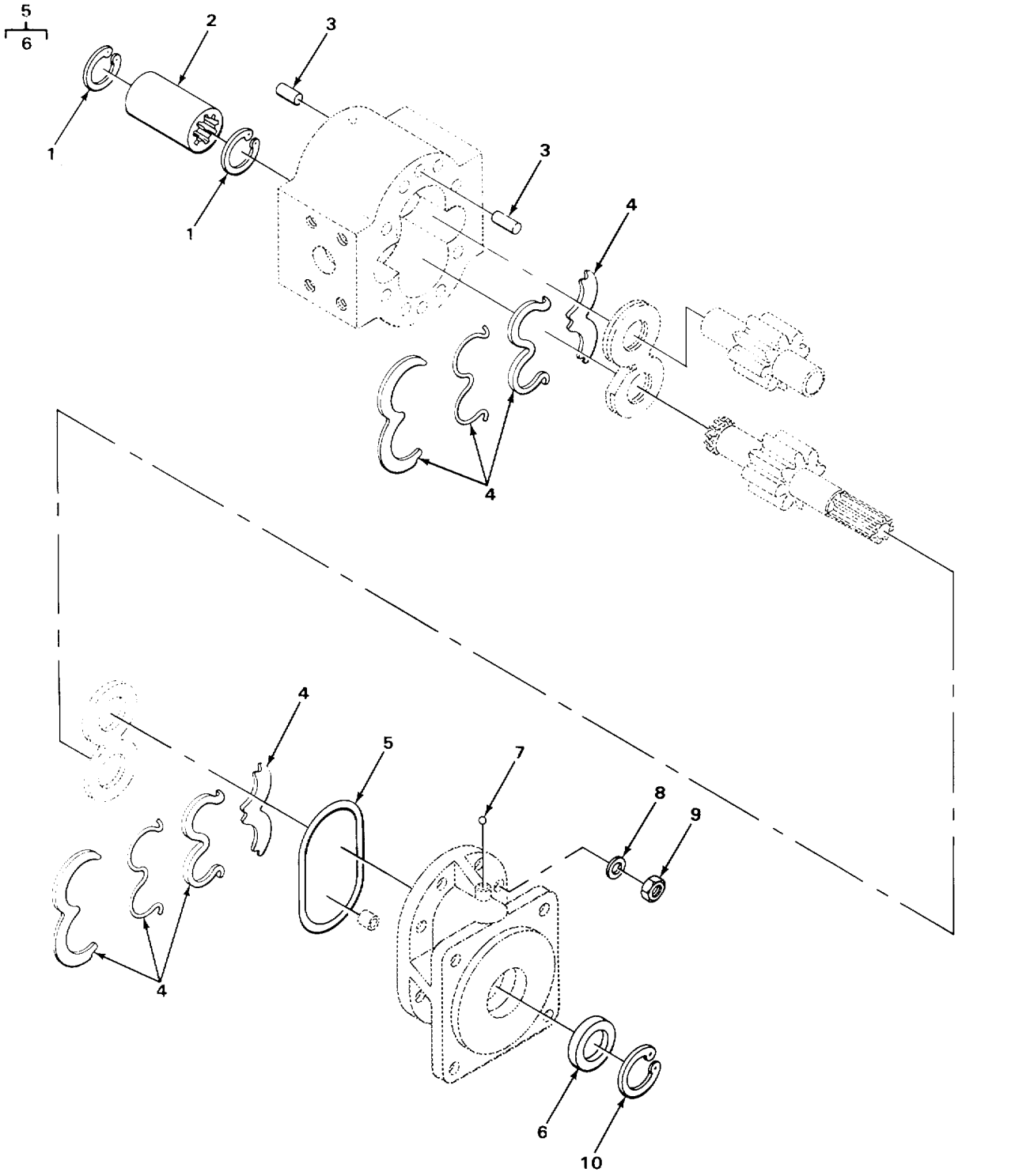

FIGURE 131 STEERING PUMP ASSEMBLY.

(1) ITEM NO	(2) SMR CODE	(3) CAGEC	(4) PART NUMBER	(5) DESCRIPTION AND USABLE ON CODES (UOC)	(6) QTY
				GROUP 1410 HYDRAULIC PUMP OR FLUID MOTOR ASSEMBLY	
				FIG. 131 REAR STEERING PUMP RELATED PARTS	
1	PFHZZ	96906	MS16625-1112	.RING, RETAINING PART OF KIT P/N 961398	2
2	KFHZZ	40152	6190217	.COUPLING, SPLINE PART OF KIT P/N 961398	1
3	KFHZZ	40152	946100	.DOWEL PART OF KIT P/N 960751.,	4
4	XDHZZ	40152	960749	.SERVICE KIT	1
5	PFHZZ	40152	960107	.PARTS KIT, ROTARY PU	1
6	KFHZZ	40152	963131	..SEAL PART OF KIT P/N 960751	1
7	PFHZZ	96906	MS19059-2414	.BALL, BEARING PART OF KIT P/N 960751	1
8	PFHZZ	40152	946271	.WASHER, LOCK PART OF KIT P/N 960751	8
9	PFHZZ	40152	954277	.NUT, PLAIN, IHEXAGON PART OF KIT P/N 960751	8
10	PFHZZ	40152	6661416	.RING, RETAINING PART OF KIT P/N 96075	I

END OF FIGURE

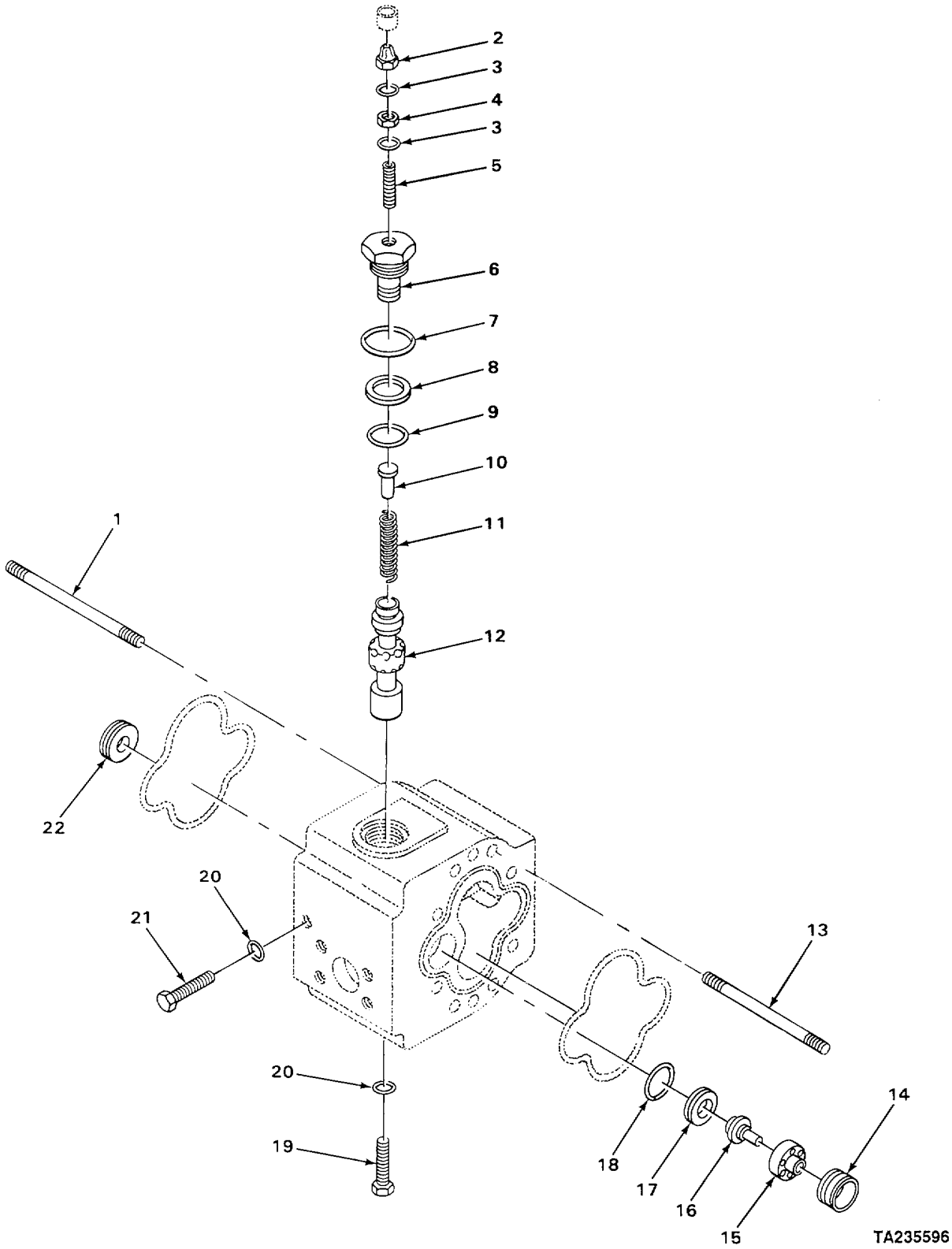

FIGURE 132. FRONT STEERING PUMP ATTACHING PARTS.

(1) ITEM NO	(2) SMR CODE	(3) CAGEC	(4) PART NUMBER	(5) DESCRIPTION AND USABLE ON CODES (UOC)	(6) QTY
				GROUP 1410 HYDRAULIC PUMP OR FLUID MOTOR ASSEMBLY	
				FIG. 132 FRONT STEERING PUMP ATTACHING PARTS	
1	PFHZZ	40152	960723	STUD, PLAIN PART OF KIT P/N 961398	8
2	PFHZ2	40152	948441	.NUT, PLAINICAP PART OF KIT P/N 961398	1
3	KFHZ2	12603	25K20014	.PACKING, PREFORMED PART OF KIT P/N 961398	2
4	PFHZZ	40152	948440	.NUTIPLAINIHEXAGON PART OF KIT PJN 961398	1
5	PFHZZ	40152	960726	SETSCREW PART OF KIT P/N 961398	1
6	KFHZZ	40152	961406	PLUG PART OF KIT P/N 961398	1
7	KFHZZ	40152	6190221	PACKING, PREFORMED PART OF KIT P/N 961398	1
8	KFHZZ	40152	73K217	.RINGIBACK-UP PART OF KIT P/N 961398	1
9	KFHZZ	40152	58K-217	.PACKING, PREFORMED PART OF KIT PIN 961398	1
10	KFHZZ	40152	948590	.RETAINER PART OF KIT P/N 961398	1
11	KFHZZ	40152	949019	.SPRING PART OF KIT PIN 961398	1
12	KFHZZ	40152	961402	.VALVE, SPOOL PART OF KIT P/N 961398.	1
13	PFHZZ	40152	6190213	.STUD, PLAIN	8
14	KFHZZ	40152	961283	.PLUG PART OF KIT P/N 961398.9	1
15	KFHZZ	40152	948570	.RETAINER PART OF KIT PIN 961398	1
16	KFHZZ	40152	948571	.PISTON PART OF KIT PIN 961398	1
17	KFHZZ	40152	960725	.SEAT PART OF KIT PJN 961398	1
18	KFHZZ	40152	25K-20108	.PACKING, PREFORMED PART OF KIT P/N 961398	1
19	KFHZZ	40152	24K-5	.PLUG PART OF KIT P/N 961398	1
20	PFHZZ	12603	91F5	.PACKING, PREFORMED PART OF KIT P/N 961398	3
21	KF2ZZ	40152	24K-5	.PLUG PART OF KIT PIN 961398	2
22	KFHZZ	40152	961446	.ORIFICE PART OF KIT P/N 961398	1

END OF FIGURE

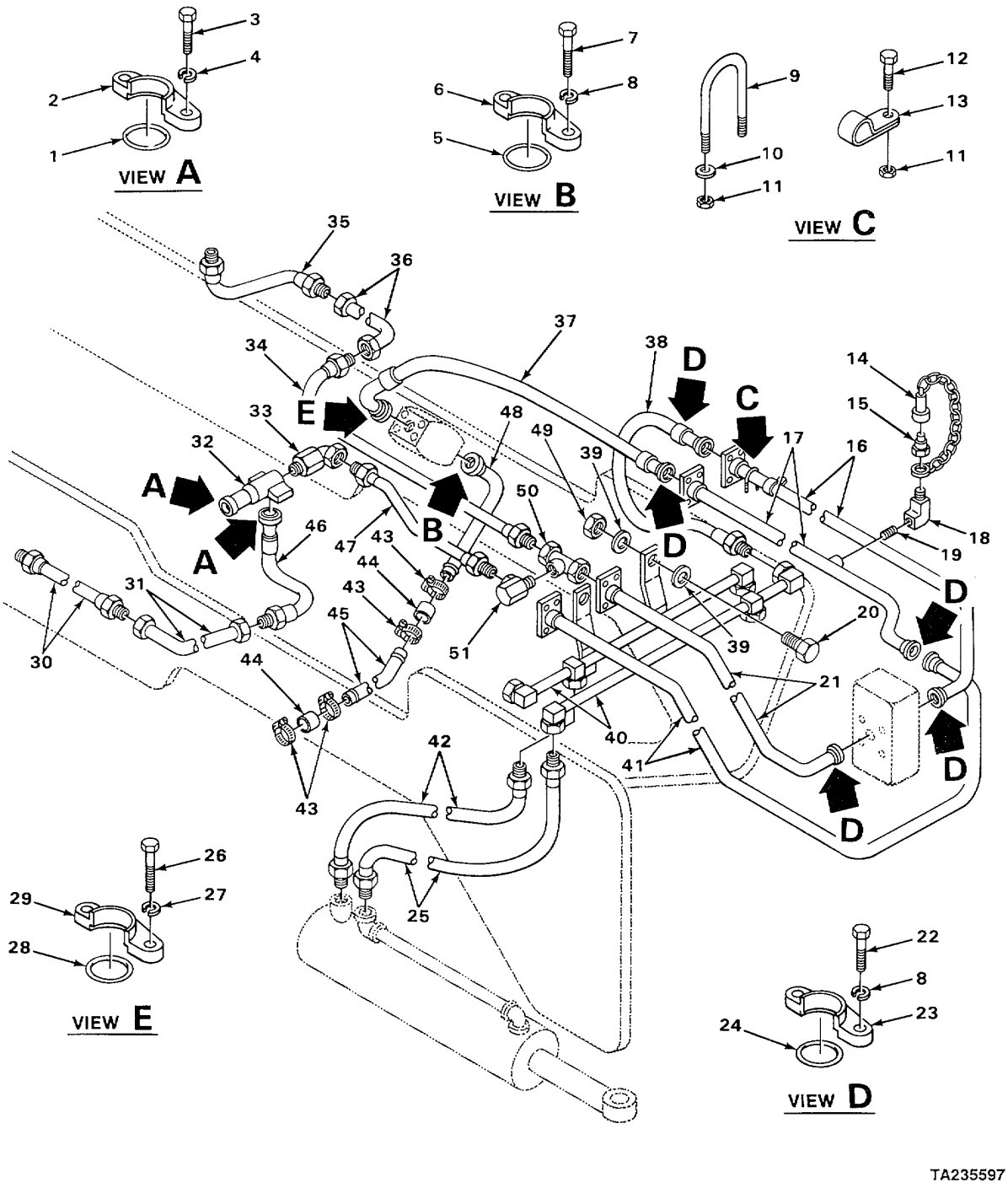
VIEW A
VIEW B
VIEW C
VIEW D
VIEW E
TA235597

(1) ITEM NO	(2) SMR CODE	(3) CAGEC	(4) PART NUMBER	(5) DESCRIPTION AND USABLE ON CODES (UOC)	(6) QTY
				GROUP 1411 HOSES, LINES, FITTINGS	
				FIG. 133 STEERING SYSTEM HOSES AND RELATED PARTS	
1	XDOZZ	40152	58K-222	PACKINGIPREFORMED	2
2	XDOZZ	40152	19J-20	FLANGE, HALF	2
3	PFOZZ	40152	17C-724	SCREWTCAPIHEXAGON H	8
4	PFOZZ	96906	MS35338-47	WASHER, LOCK	8
5	PFOZZ	40152	58K-232	PACKING, PREFORMED	1
6	XDOZZ	40152	19J-40	FLANGEVHALF	2
7	PFOZZ	96906	MS90728-114	SCREWTCAPIHEXAGON H	4
8	PFOZZ	95019	500357-13	WASHERILOCK	4
9	XDOZZ	40152	1508514	BOLT, V G	4
10	PFOZZ	12603	656672	WASHER8PLAIN	3
11	PFOZZ	72962	53N1610-064	NUT, SELF-LOCKINGIHE	10
12	PFOZZ	96906	MS90727-62	SCREW, CAP, HEXAGON H	2
13	XDOZZ	40152	6H-23	CLIP	2
14	PFOZ,	40152	6000689	CAP, HOSE-	1
15	XDOZZ	40152	1306142	COUPLER	1
16	XDOZZ	40152	1542375	TUBE	1
17	XDOZZ	40152	1542371	T	1
18	PFOZZ	21450	454097	ELBOW, PIPE	2
19	XDOZZ	40152	5K-208	NIPPLE	1
20	PF0ZZ	96906	MS90727-114	SCREWTCAP, HEXAGON H	2
21	XDOZZ	40152	1542369	TUBE	1
22	PFOZZ	80204	B1821BH05OC150N	SCREW, CAP, HEXAGON H	4
23	XDOZZ	40152	19J-24	FLANGE, HALF	2
24	PFOZZ	40152	58K-225	PACKINGVPREFORMED	1
25	XDOZZ	40152	657184	HOSE	1
26	PFOZZ	96906	MS90728-62	SCREW, CAP, HEXAGON H	24
27	PFOZZ	96906	MS35333-76	WASHERVLDCK.	24
28	XDOZZ	40152	58K-219	PACKING, PREFORMED	6
29	XDOZZ	40152	19J-16	FLANGEVHALF	12
30	XDOZZ	40152	1504099	HKOE	1
31	XDOZZ	40152	1543524	TUBE	1
32	XDOZZ	40152	1510327	T	1
33	PFOZZ	11083	4D3734	ELBOW, PIPE	1
34	XDOZZ	40152	1510417	HOSE	1
35	XDOZZ	40152	1504095	HOSE	1
36	XDOZZ	40152	1544067	TUBE	1
37	PFOZZ	40152	2507187	HOSE ASSEMBLYINONME	1
38	XDOZZ	40152	1546569	HOSE	2
39	PFOZ,	40152	25E-22	WASHERIFLAT	4
40	PAOZ,	40152	1543689	TUBE ASSEMBLYVMETAL	1
41	XDOZ,	40152	2515747	HOSE	1
42	PFO, Z	63906	12C12MS12UMS25-1	HOSE ASSEMBLYINONME	3
43	PFOZZ	89749	43H1394	CLAMP, HOSE	4
44	XDOZZ	40152	55887	HOSE	2
45	XDOZZ	40152	2507186	SUCTION TUBE.	1
46	XDOZZ	40152	1544800	HOSE	1

(1) ITEM NO	(2) SMR CODE	(3) CAGEC	(4) PART NUMBER	(5) DESCRIPTION AND USABLE ON CODES (UOC)	(6) QTY
47	XDOZZ	40152	1510416	HOSE	1
48	XDOZZ	40152	1546186	SUCTION TUBE	1
49	PFOZZ	40152	60D-08	NUTITPLAINIHEXAGON	2
50	XDOZZ	40152	1510326	TUBE	1
51	PFOZZ	06021	AT 10503	ELBOWVPIPE	1

END OF FIGURE

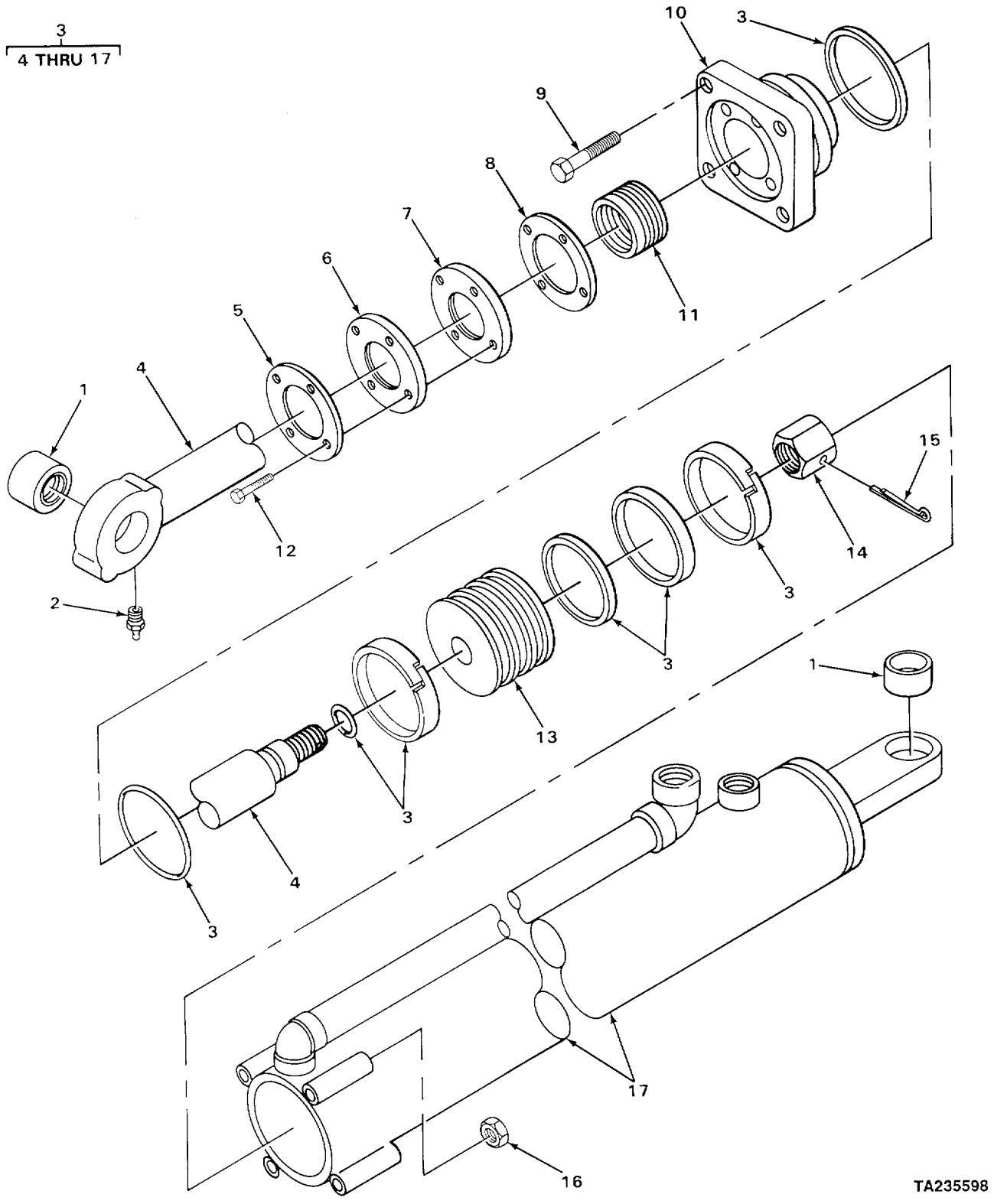

FIGURE 134. STEERING CYLINDER ASSEMBLY.

(1) ITEM NO	(2) SMR CODE	(3) CAGEC	(4) PART NUMBER	(5) DESCRIPTION AND USABLE ON CODES (UOC)	(6) QTY
				GROUP 1412 HYDRAULIC OR AIR CYLINDERS	
				FIG. 134 STEERING CYLINDER ASSEMBLY	
1	PFHZZ	51588	BZ4L	BEARING, PLAIN, SELF	4
2	PFOZZ	12603	11HI5	FITTING, LUBRICATION	2
3	PFHHH	40152	964586	CYLINDER ASSEMBLY, A	2
4	XDHZZ	40152	1539439	.PISTON ROD-u	1
5	XDHZZ	40152	1511544	.PLATE- 000	1
6	XDHZZ	40152	2511993	.FLANGE	1
7	KFHZZ	40152	1511539	.WIPER PART OF KIT P/N 2516151	1
8	XDHZZ	40152	1511543	.SPACER	4
9	PFHZZ	96906	MS90727-123	.SCREW, CAPI, HEXAGON H	4
10	XDHZZ	40152	2518118	.CAP	1
11	KFHZZ	40152	2517362	.PACKING PART OF KIT P/N 2516151	1
12	PFHZZ	40152	34C-622	.SCREWICAP, HEXAGON H	4
13	XDHZZ	40152	1503026	.PISTON	1
14	PFHZZ	40152	1514622	.NUT, SELF-LOCKING, HE	1
15	PFHZZ	96906	MS24665-629	.PIN, COTTER PART OF KIT PIN 2516151	1
16	PFHZZ	40152	68D-08	.NUT, PLAIN, HEXAGON	4
17	XDHZZ	40152	1539443	.CYLINDER	1

END OF FIGURE

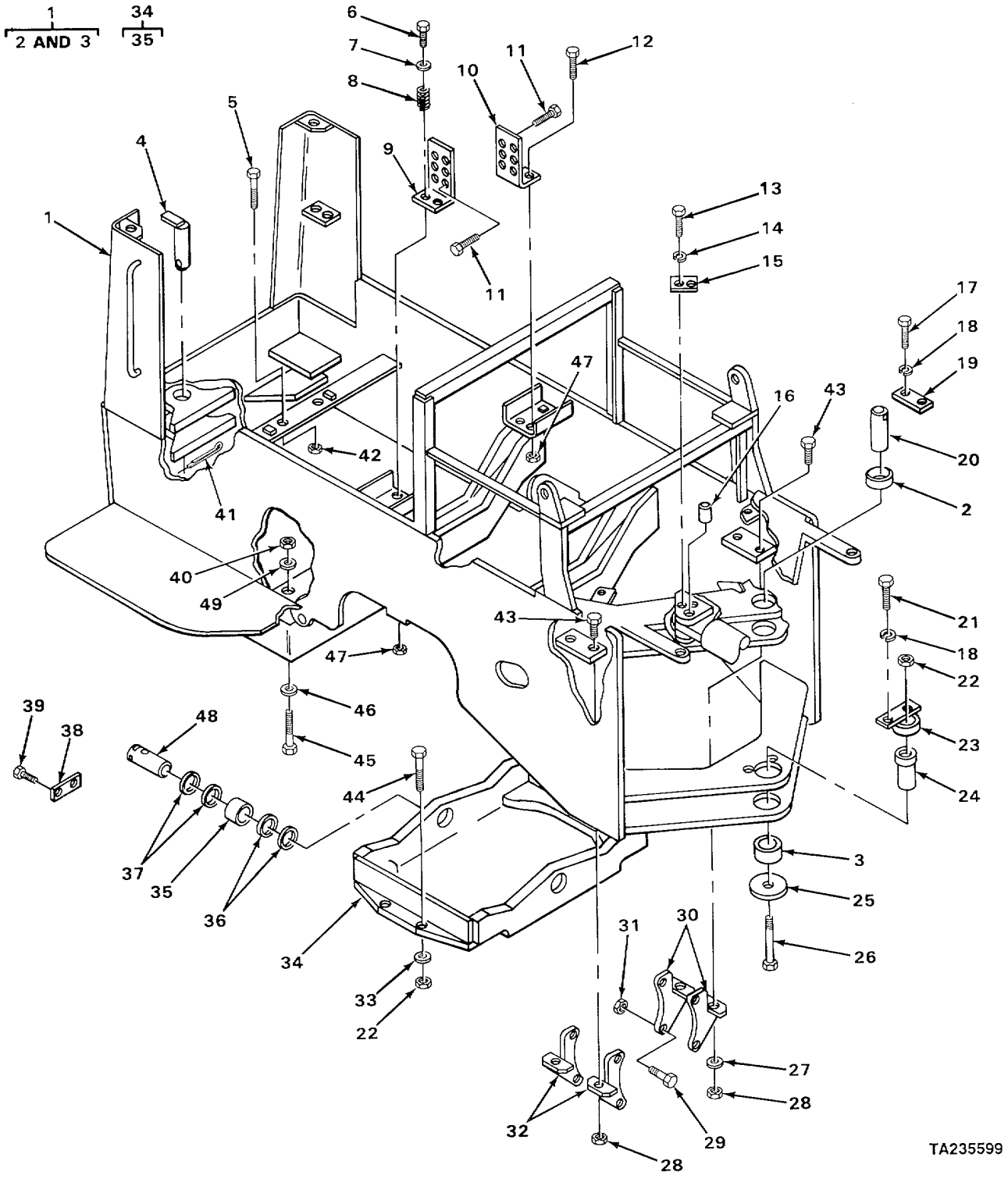

FIGURE 135. FRAME AND ATTACHING PARTS.

(1) ITEM NO	(2) SMR CODE	(3) CAGEC	(4) PART NUMBER	(5) DESCRIPTION AND USABLE ON CODES (UOC)	(6) QTY
				GROUP 15 FRAME, TOWING ATTACHMENTS, DRAWBARS, AND ARTICULATION SYSTEMS	
				GROUP 1501 FRAME ASSEMBLY	
				FIG. 135 FRAME AND ATTACHING PARTS	
1	XDHHH	40152	1518754	FRAME	1
2	PFHZZ	40152	572818	BUSHING, RUBBER.,	2
3	PFHZZ	12603	1514599	IBUSHING, SLEEVE	1
4	PFHZZ	12603	2529362	PINISTRAIGHTVHEADED	1
5	PFHZZ	40152	24C-1036	BOLTIMACHINE-c	2
6	PFHZZ	40152	24C-1280	BOLTVMACHINE	2
7	PFHZZ	12603	616809	WASHER, SPECIAL	2
3	XDHZZ	40152	570419	SPRING	2
9	XDHZZ	40152	569879	SUPPORT RH	1
10	XDHZZ	40152	569880	SUPPORT LH	1
11	PFHZZ	40152	8C-1028	BOLTVMACHINE	12
12	PFHZZ	40152	24C-1244	BOLTTMACHINE	2
13	PFHZZ	96906	MS90727-111	SCREW?CAP?HEXAGON H	8
14	PFHZZ	95019	500357-13	WASHERILOCK,	8
15	XDHZZ	40152	1507920	LOCKPLATE-	4
16	XOHZZ	40152	1545165	PIN-	4
17	PFHZZ	40152	24C-1220	BOLTIMACHINE	2
18	PFHZZ	96906	MS35338-51	WASHER, LOCK	4
19	PFHZZ	40152	1548429	LOCKPLATE	1
20	XDHZZ	40152	1538228	PIN	1
21	PFHZZ	40152	24C-1228	BOLTVMACHINE.,	2
22	PFHZZ	96906	MS21044N20	NUT, SELF-LOCKING, HE	9
23	XDHZZ	40152	1547432	RETAINER---	1
24	PFHZZ	40152	1514692	PINTPIVOTIFRAME	1
25	XDHZZ	40152	1518981	PLATE---m -m	1
26	PFHZZ	40152	18C-20160	BOLTVMACHINE	1
27	PFHZZ	40152	712285	WASHER, FLAT	2
28	PFHZZ	72962	51N1260-126	NUTISELF-LOCKINGIHE	4
29	PFHZZ	40152	24C-1452	BOLTIMACHINE	4
30	XDHZZ	40152	1539309	BRACKET LH	2
31	PFHZZ	40152	18D-14	NUTIPLAIN, HEXAGON	4
32	XDHZZ	40152	1539311	BRACKET	2
33	PFHZZ	40152	1504356	WASHER, FLAT	8
34	XDHHH	40152	1507454	CRADLE, AXLE, ,	1
35	XDHZZ	40152	562414	BUSHING	1
36	PFHZZ	40152	552146	WASHERIFLAT	V
37	PFHZZ	40152	552147	WASHER, FLAT	V
38	XIDHZZ	40152	1506190	LOCKPLATE	2
39	PFHZZ	40152	1506188	BOLT, MACHINE v,	4
40	PFHZZ	40152	68D-16	NUTVPLAINVHEXAGON	4
41	PFHZZ	96906	MS24665-753	PINVCDTTER	1
42	PFHZZ	96906	MS21044N10	NUT, SELF-LOCKINGVHE 9	2
43	PFHZZ	40152	24C-1256	BOLT, MACHINE	4
44	PFHZZ	40152	1512673	BOLT, MACHINE	8
45	PFHZZ	40152	24C-16184	BOLT, MACHINE	4

(1) ITEM NO	(2) SMR CODE	(3) CAGEC	(4) PART NUMBER	(5) DESCRIPTION AND USABLE ON CODES (UOC)	(6) QTY
46	PFHZZ	40152	573845	WASHER, FLAT	4
47	PFHZZ	40152	18D-12	NUTISELF-LOCKING, HE	4
48	XDHZZ	40152	568258	PIN2	2
49	PFHZZ	40152	589335	WASHER, FLAT	4

END OF FIGURE

9
10 THRU 14

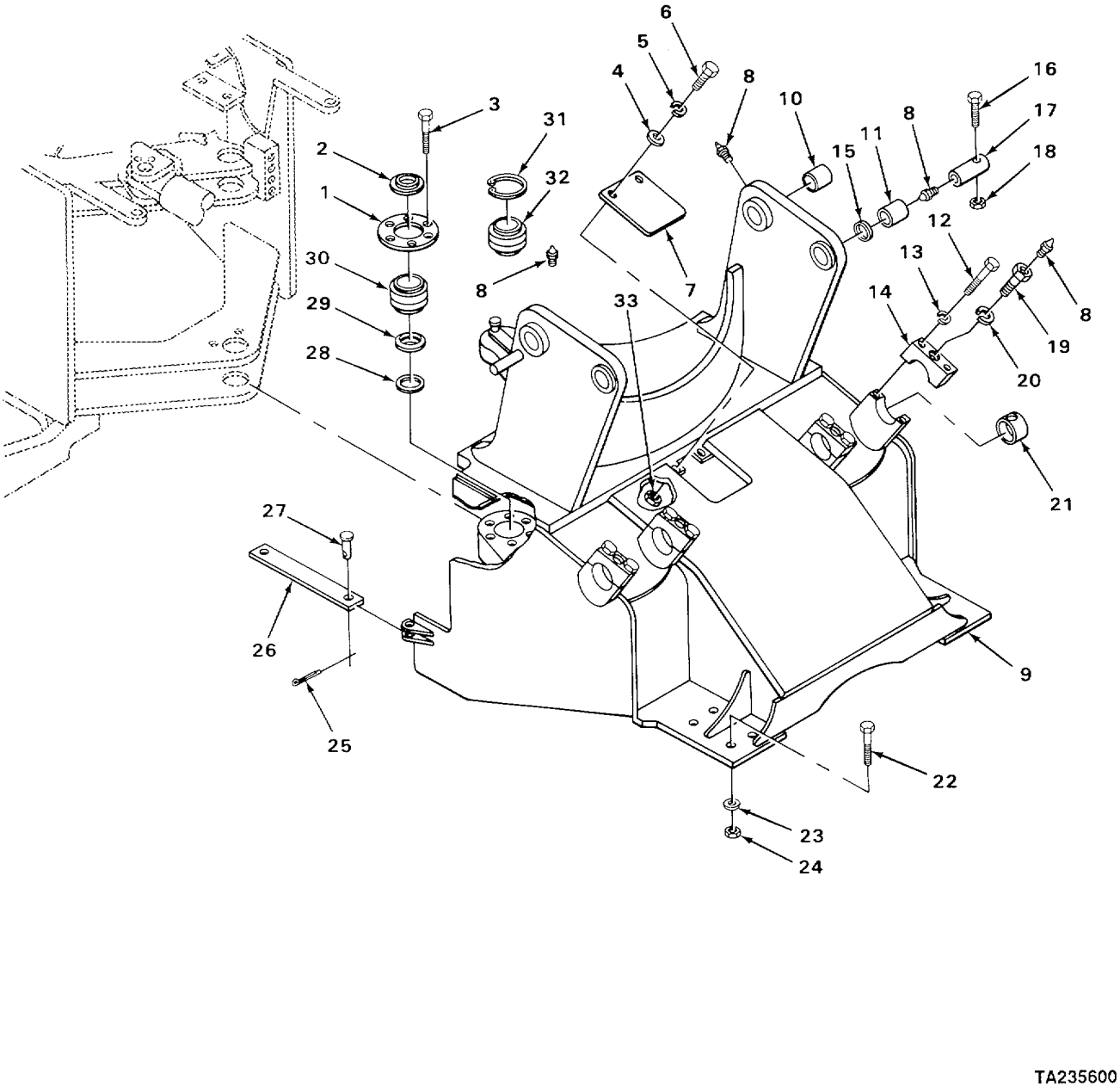

FIGURE 136. FRAME RELATED PARTS.

(1) ITEM NO	(2) SMR CODE	(3) CAGEC	(4) PART NUMBER	(5) DESCRIPTION AND USABLE ON CODES (UOC)	(6) QTY
				GROUP 1501 FRAME ASSEMBLY	
				FIG. 136 FRAME RELATED PARTS	
1	PFHZZ	40152	2515504	CAP, FILLER OPENING	1
2	XDHZZ	40152	1657104	SEAL	1
3	PFHZZ	40152	18C-1236	SCREWICAPIHEXAGON HI-I	6
4	PFHZZ	12603	656672	WASHERIPLAIN	2
5	PFHZZ	96906	MS35333-76	WASHER, LOCK- O	2
6	PFHZZ	40152	23C-620	BOLTIMACHINE	2
7	XDHZZ	40152	1545224	COVER	1
8	PFOZZ	12603	1OH25	FITTINGGLUBRICATION	10
9	XDHHH	40152	1519085	FRAME	1
10	XDHZZ	40152	1540037	BUSHING ¢OOOO	2
11	XDHZZ	40152	1546211	BUSHING	2
12	PFHZZ	40152	24C-1280	BOLT?MACHINE	8
13	PFHZZ	96906	MS35338-51	CWASHER?LOCK	8
14	XDHZZ	40152	1540008	CAP	4
15	XDHZZ	40152	1540169	SHIM@V	
16	PFHZZ	40152	24C-896	BOLT, MACHINE	2
17	XDHZZ	40152	556147	PIN	2
18	PFHZZ	96906	MS21044N8	NUT, SELF-LOCKINGIHE	2
19	PFHZZ	40152	1518313	BOLTTMACHINE	4
20	PFHZZ	96906	MS35338-51	WASHERILOCK	4
21	XDHZZ	40152	1540035	BUSHING	4
22	PFHZZ	40152	1512673	SOLT, MACHINE	8
23	PFHZZ	40152	1504356	WASHERIFLAT§	8
24	PFHZZ	96906	MS21044N20	NUT, SELF-LOCKING, HE	8
25	PFHZZ	40152	IF-532	PINCOTTER	2
26	PFHZZ	40152	1538388	BAR, METALLIC	1
27	XDHZZ	40152	1533279	PINICLEVIS	2
28	PFHZZ	89749	1530842	RINGIWIPER	1
29	XDHZZ	40152	1510348	SPACER	1
30	PFHZZ	40152	2507032	PARTS KIT, LINEAR AC	1
31	XDHZZ	12603	660517	RING, RETAINING	1
32	PFHZZ	40152	1526213	BUSHING, FRAME	1
33	PFHZZ	40152	572729	NUT, PLAIN, HEXAGON	2

END OF FIGURE

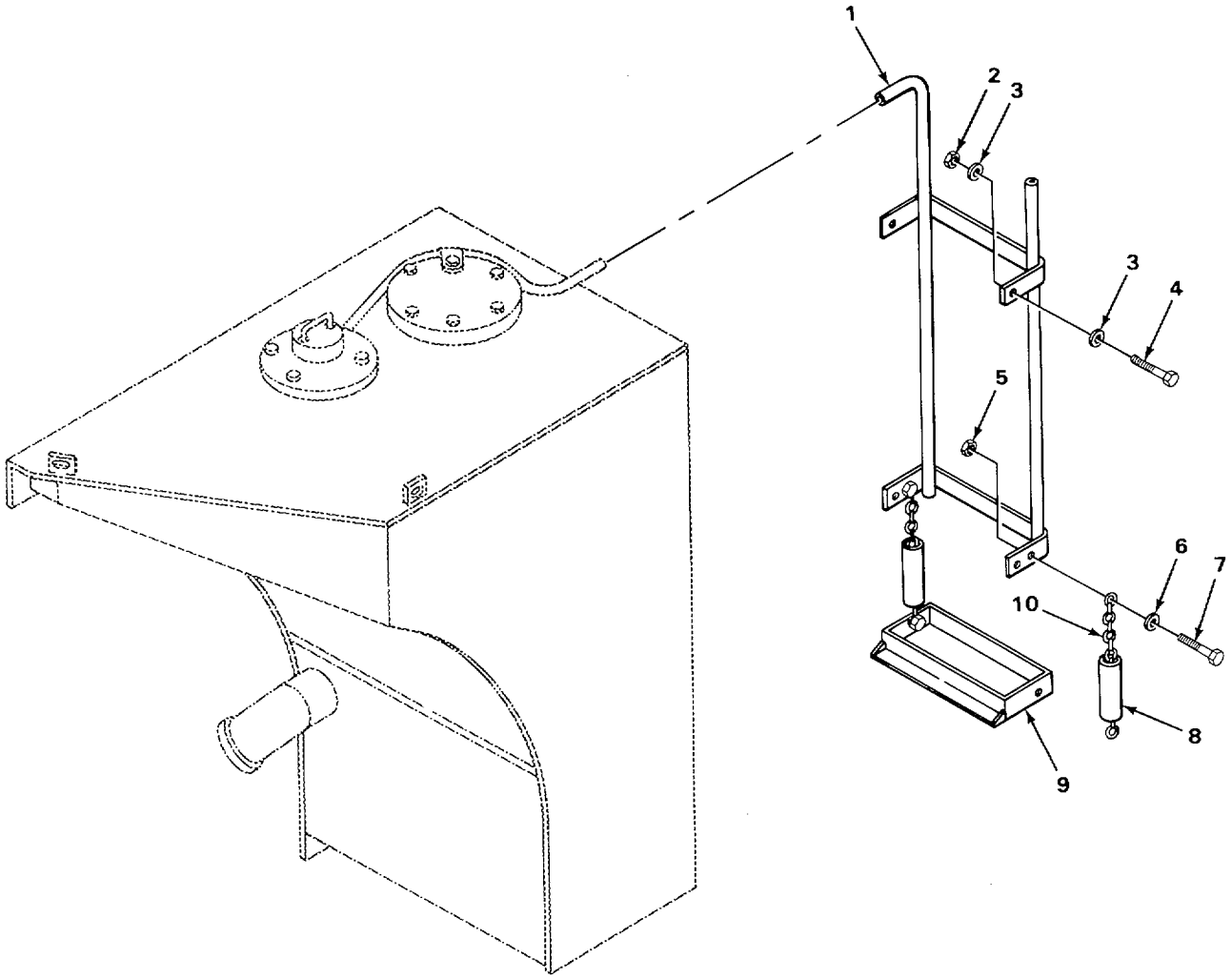

TA235601

FIGURE 137. LADDER AND STEP.

(1) ITEM NO	(2) SMR CODE	(3) CAGEC	(4) PART NUMBER	(5) DESCRIPTION AND USABLE ON CODES (UOC)	(6) QTY
				GROUP 1501 FRAME ASSEMBLY	
				FIG. 137 LADDER AND STEP	
1	XDFZZ	40152	1540666	LADDER RH	1
1	XDFZZ	40152	1540667	LADDER LH	1
2	PFFZZ	96906	MS21044N8	NUT, SELF-LOCKINGIHE&	8
3	PFFZZ	40152	619029	WASHERIFLAT	16
4	PFFZZ	40152	24C-828	BOLTMACHINE	8
5	PFFZZ	12603	6006	NUTISELF-LOCKING, HE	8
6	PFFZZ	12603	656672	WASHER8PLAINO	8
7	PFFZZ	40152	24C-624	BOLTIMACHINE	8
8	XDFZZ	40152	1M-08110	HOSE,	4
9	PFFZZ	40152	1547423	STEP, VEHICULAR	2
10	XDFZZ	40152	1535589	CHAIN	4
				END OF FIGURE	

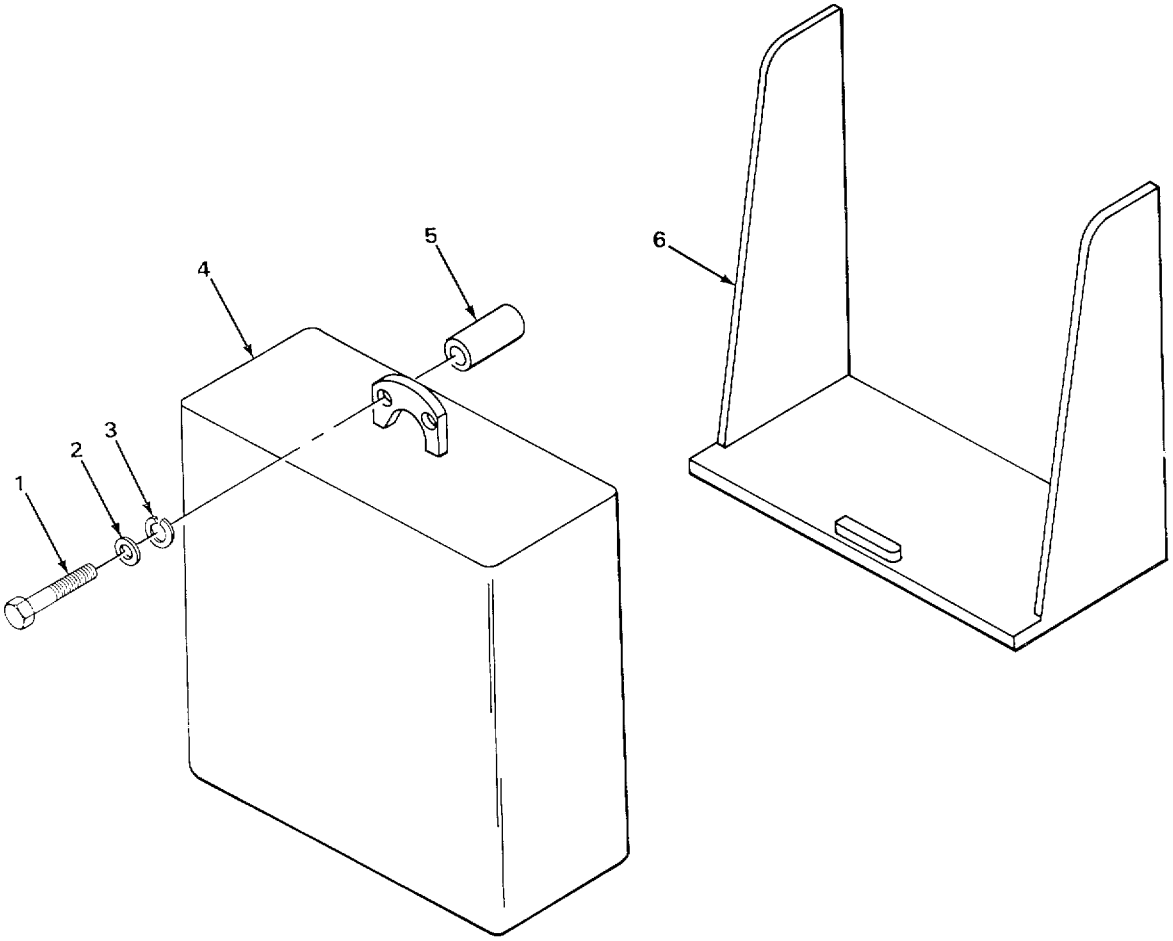

TA235602

FIGURE 138. COUNTERWEIGHT.

SECTION II

(1) ITEM NO	(2) SMR CODE	(3) CAGEC	(4) PART NUMBER	(5) DESCRIPTION AND USABLE ON CODE (UOC)	(6) QTY
				GROUP 1502 COUNTERWEIGHTS FIG 138 COUNTERWEIGHT	
1	PFFZZ	40152	24C-1244	BOLT, MACHINE	4
2	PFFZZ	40152	2513196	WASHER,FLAT	4
3	PFFZZ	96906	MS35338-51	WASHER, LOCK	4
4	PFFZZ	40152	1548843	WEIGHT, COUNTERBALAN	2
5	PFFZZ	40152	1548838	BUSHING,SLEEVE	4
6	PFFZZ	40152	1548842	BRACKET, MOUNTING	2
				END OF FIGURE	

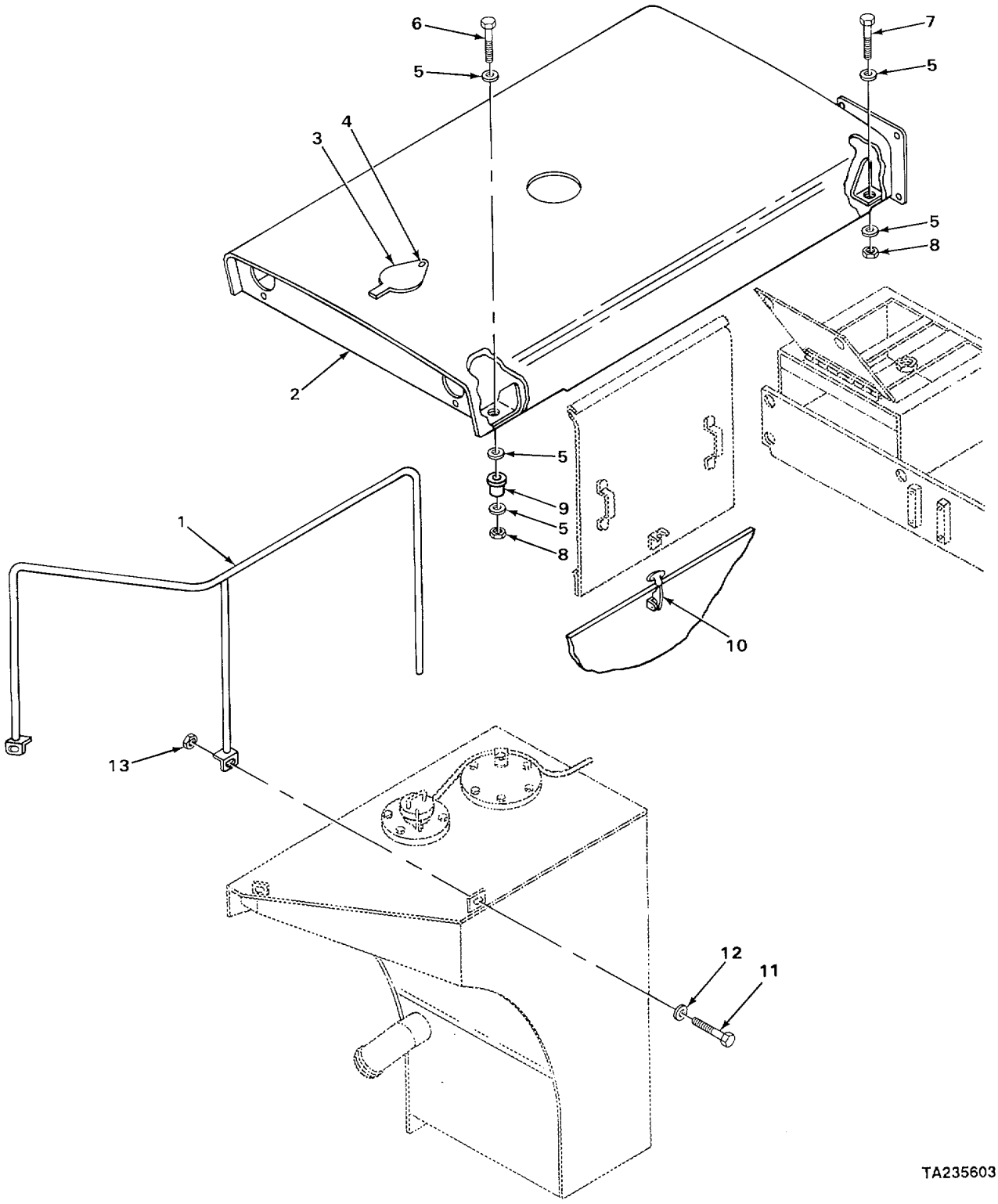

FIGURE 139. HOOD AND RELATED PARTS.

SECTION II

(1) ITEM NO	(2) SMR CODE	(3) CAGEC	(4) PART NUMBER	(5) DESCRIPTION AND USABLE ON CODE (UOC)	(6) QTY
				GROUP 18 BODY, CAB, HOOD, AND HULL GROUP 1801 BODY, CABT HOOD, AND HULL ASSEMBLIES FIG 139 HOOD AND RELATED PARTS	
1	PFFZZ	89749	2500059	HANDRAIL,TRACTOR RH	1
2	XDFFF	40152	1540216	HOOD	1
3	XDFZZ	40152	1544448	PLATE	1
4	XDFZZ	40152	1H-508	RIVET	1
5	PFFZZ	19207	10875413	WASHER, FLAT	8
6	PFFZZ	40152	24C-632	BOLT, MACHINE	2
7	PFFZZ	40152	24C-624	BOLT,MACHINE	2
8	PFFZZ	12603	60D6	NUT, SELF-LOCKING, HE	4
9	XDFZZ	40152	568276	DAMPENER, VIBRATION	2
10	PFFZZ	40152	1545622	LATCH, HOOD, VEHICULA	4
11	PFFZZ	40152	24C-828	BOLT, MACHINE	6
12	PFFZZ	40152	619029	WASHER, FLAT	6
13	PFFZZ	96906	MS21044N8	NUT,SELF-LOCKING, HE	6

END OF FIGURE

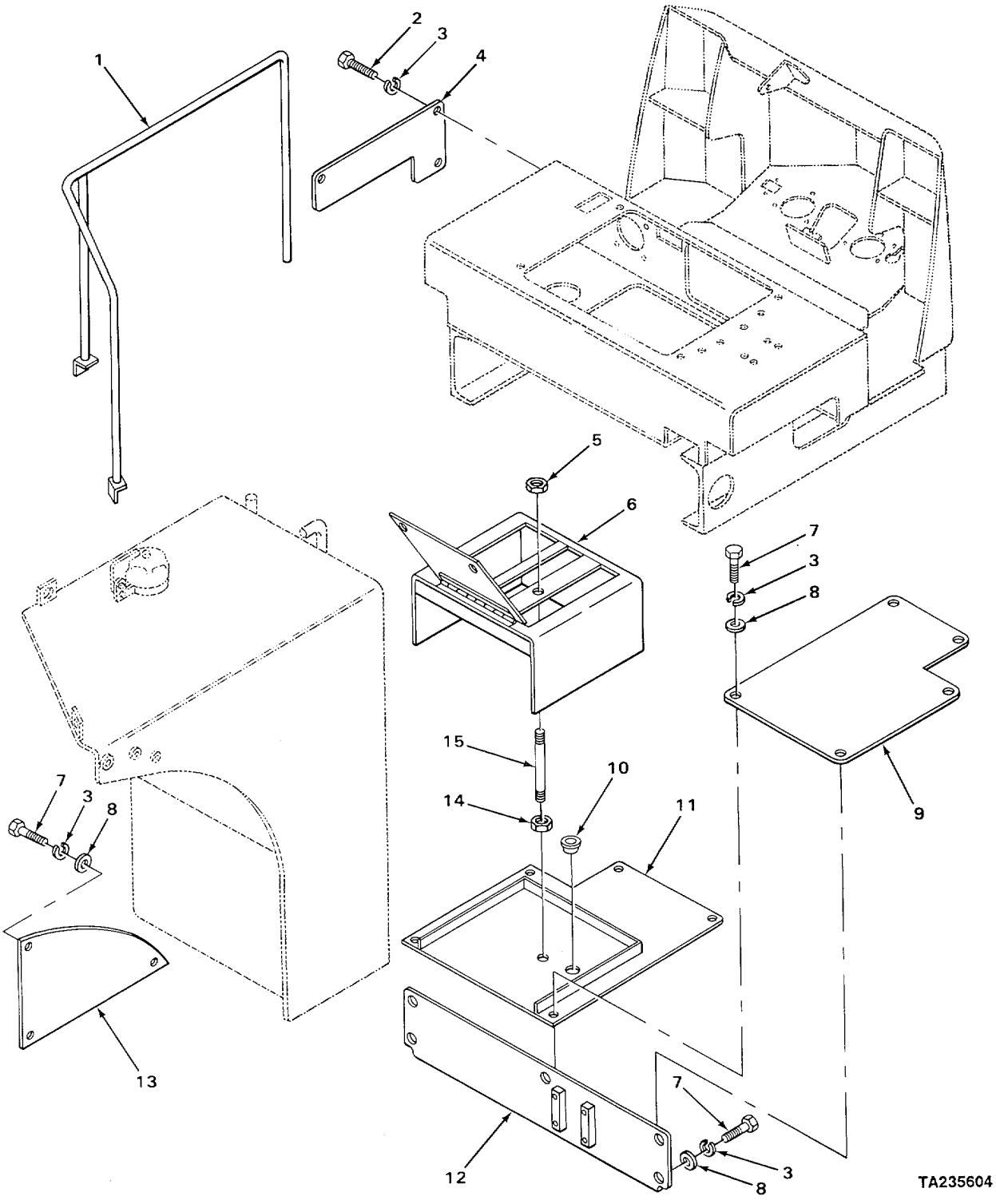

FIGURE 140. PLATES AND RELATED PARTS.

SECTION II

(1) ITEM NO	(2) SMR CODE	(3) CAGEC	(4) PART NUMBER	(5) DESCRIPTION AND USABLE ON CODE (UOC)	(6) QTY
				GROUP 1801 BODY, CAB, HOOD, AND HULL ASSEMBLIES FIG. 140 PLATES AND RELATED PARTS	
1	PFFZZ	89749	1514567	RAIL, TEE, RAILWAY LH	1
2	PFFZZ	40152	24C-616	BOLT, MACHINE	6
3	PFFZZ	96906	MS35333-76	WASHER, LOCK	6
4	PFFZZ	40152	568975	PLATE, CAB	2
5	PFFZZ	40152	13803675-1	NUT,PLAIN HEXAGON	2
6	PFFZZ	40152	1543393	COVER,STORAGE BOX,V	1
7	PFFZZ	40152	23C-616	BOLT, MACHINE	19
8	PFFZZ	12603	656672	WASHER, PLAIN	19
9	PFFZZ	40152	1540062	PLATE,STORAGE BOX RH	1
10	XDFZZ	40152	1513922	GROMMET	1
11	PFFZZ	40152	1540064	PLATE,BOX,STORAGE LH	1
12	XDFFF	40152	1518928	PLATE	1
13	XDFFF	40152	1540195	PLAT	2
14	PFFZZ	72962	21NE066	NUT,SELF-LOCKING,HE	2
15	PFFZZ	89749	1544171	STUD, PLAIN	1

END OF FIGURE

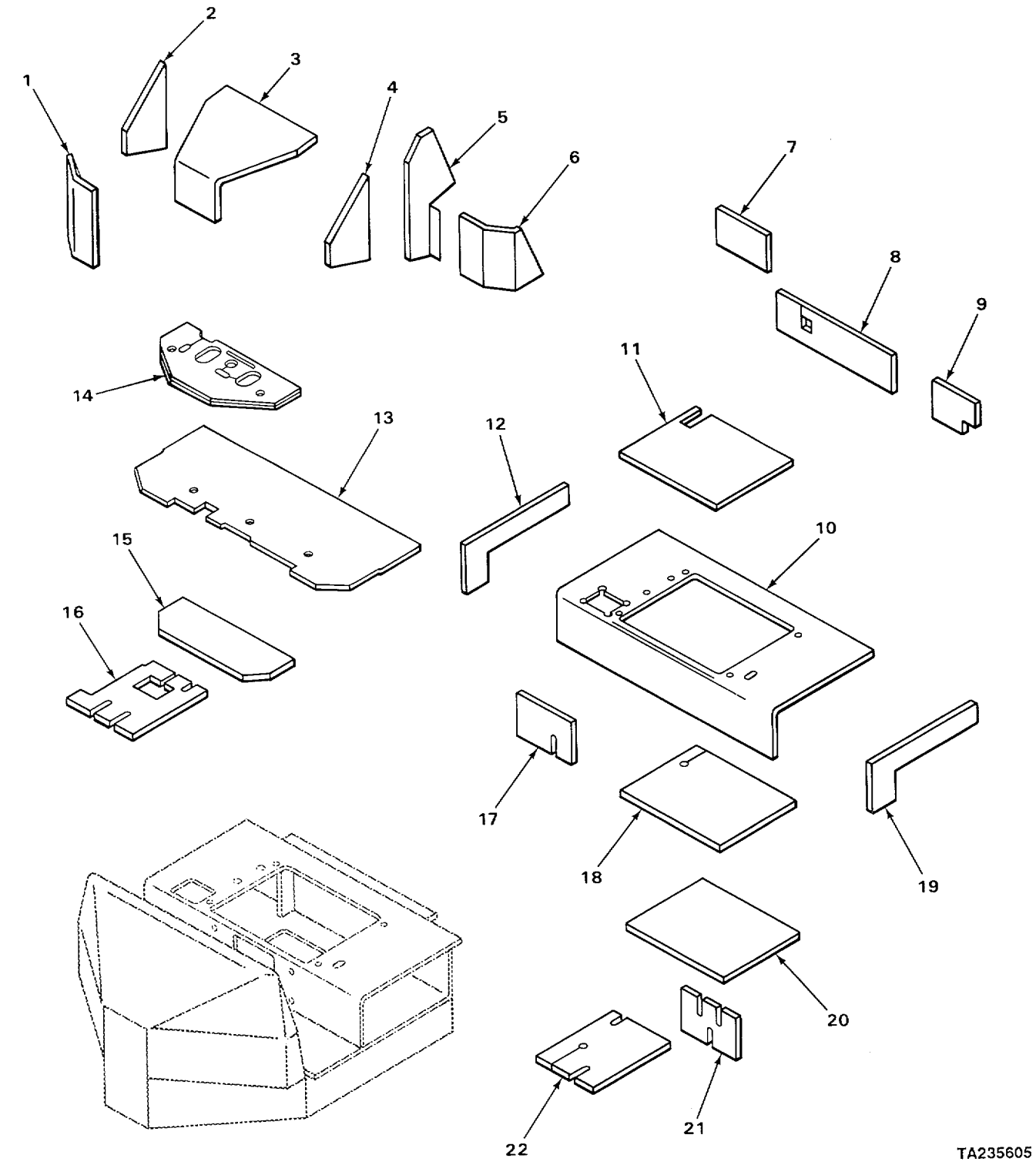

FIGURE 141. COCKPIT SOUNDPROOFING.

SECTION II

(1) ITEM NO	(2) SMR CODE	(3) CAGEC	(4) PART NUMBER	(5) DESCRIPTION AND USABLE ON CODE (UOC)	(6) QTY
				GROUP 1801 BODY, CAB, HOOD, AND HULL ASSEMBLIES FIG. 141 COCKPIT SOUNDPROOFING	
1	XDFZZ	40152	1515025	PANEL ,KICKPLATE RH	1
2	XDFZZ	40152	1515026	PANEL, KICKPLATE RH	1
3	PFFZZ	40152	1543819	PANEL, FRONT COCKPIT FRONT	1
4	PFFZZ	40152	1543817	PANEL, KICKPLATE LH	1
5	XDFZZ	40152	1543807	PANEL, KICKPLATE LH	1
6	XDFZZ	40152	1515057	PANEL. , KICKPLATE LH	1
7	PFFZZ	12603	1517379	SUPPORT,REAR SEAT REAR, RH	1
8	PFFZZ	12603	1544491	SUPPORT,REAR SEAT REAR	1
9	XDFZZ	40152	1515188	SUPPORT,SEAT REAR, LH	1
10	PFFZZ	12603	2520207	COVER, SEAT, VEHICULA MATTING	1
11	PFFZZ	12603	1543824	PANEL,BODY,VEHICULA BOTTOM	1
12	PFFZZ	12603	1515189	SUPPORT, SEAT RIGHT	1
13	PFFZZ	40152	1515030	MAT, FLOOR REAR	1
14	XDFZZ	40152	1515038	FLOORMAT FRONT	1
15	XDFZZ	40152	1515024	PANEL, FLOORPLATE	1
16	XDFZZ	40152	1515322	PANEL,SEAT LOWER	1
17	PFFZZ	40152	1515246	PANEL,BODY, VEHICULA INSIDE	1
18	XDFZZ	40152	1543821	PANEL,SEAT TRANSMISSION	1
19	PFFZZ	12603	1515190	SUPPORT, SEAT PANEL LEFT	1
20	XDFZZ	40152	1543820	PANEL, TRANSMISSION COVER	1
21	PFFZZ	12603	1544492	PANEL,BODY,VEHICULA LEFT	1
22	XDFZZ	40152	1515265	PANEL,SEAT SUPPORT LEFT	1
				END OF FIGURE	

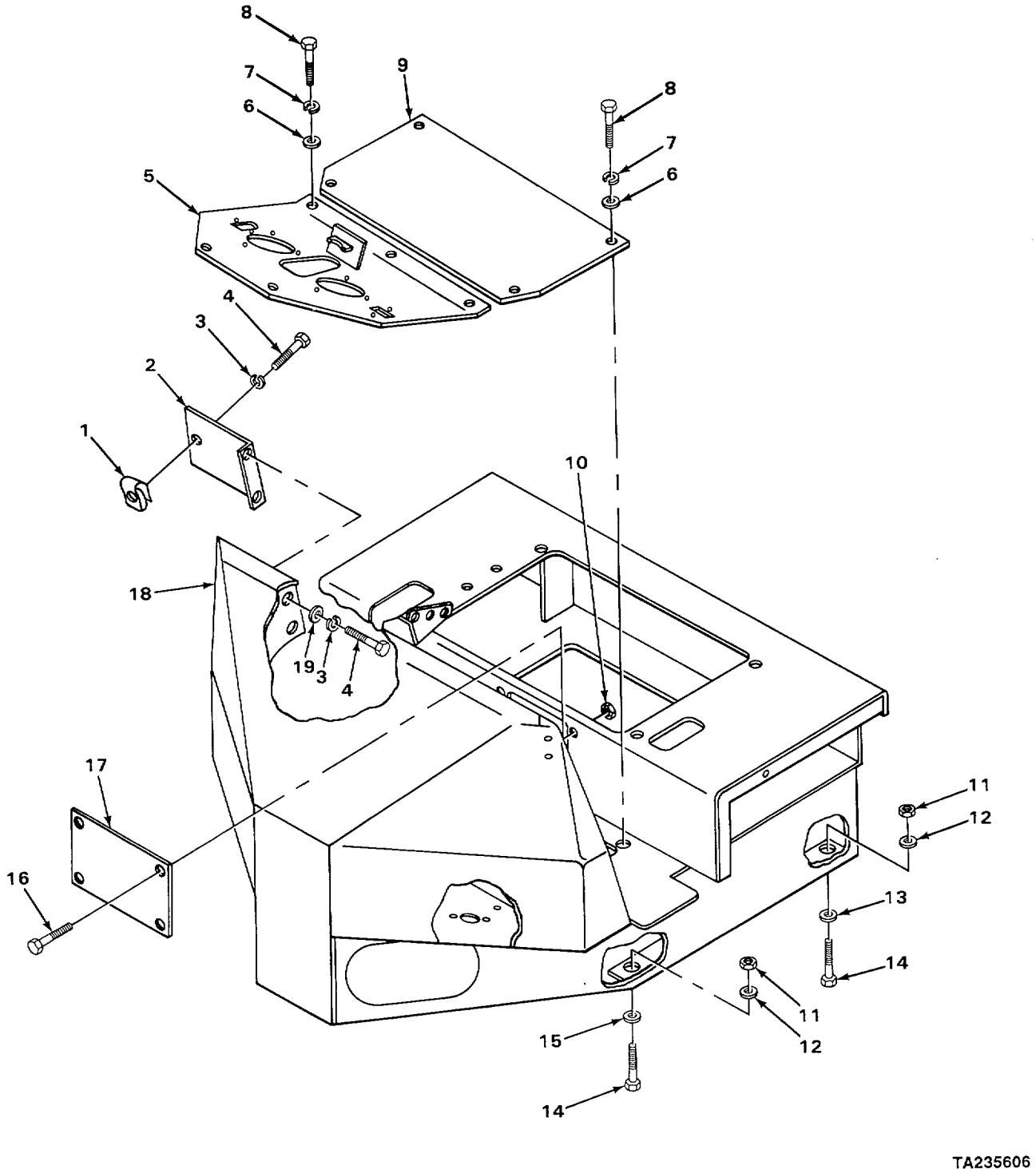

FIGURE 142. COCKPIT ASSEMBLY

SECTION II

(1) ITEM NO	(2) SMR CODE	(3) CAGEC	(4) PART NUMBER	(5) DESCRIPTION AND USABLE ON CODE (UOC)	(6) QTY
				GROUP 1801 BODY, CAB, HOOD, AND HULL ASSEMBLIES FIG. 142 COCKPIT ASSEMBLY	
1	PFFZZ	40152	572729	NUT, PLAIN, HEXAGON	1
2	XDFZZ	40152	574026	PANEL RH INSTRUMENT	1
3	PFFZZ	96906	MS35333-76	WASHER, LOCK	3
4	PFFZZ	40152	23C-616	BOLT, MACHINE	3
5	XDFZZ	40152	1545931	FLOORBOARD	1
6	PFFZZ	40152	619029	WASHER, FLAT	9
7	PFFZZ	95019	500357-13	WASHER, LOCK	9
8	PFFZZ	40152	13806273-2	BOLT, MACHINE	9
9	XDFZZ	40152	1526152	COVER	1
10	PFFZZ	72962	21NE066	NUTISELF-LOCKING, HE	4
11	PFFZZ	40152	70D-12	NUT, PLAIN, HEXAGON	4
12	PFFZZ	40152	71D-12	WASHER, FLAT BASE	4
13	PFFZZ	96906	MS27183-23	WASHER, FLAT	2
14	PFFZZ	40152	24C-1248	BOLT, MACHINE	4
15	PFFZZ	96906	MS27183-9	WASHER, FLAT	2
16	PFFZZ	40152	23C-612	BOLT, MACHINE	4
17	XDFZZ	40152	1508950	COVER	1
18	XDFZZ	40152	2501628	COCKPIT	1
19	PFFZZ	12603	656672	WASHER, PLAIN	2

END OF FIGURE

1
2 THRU 7

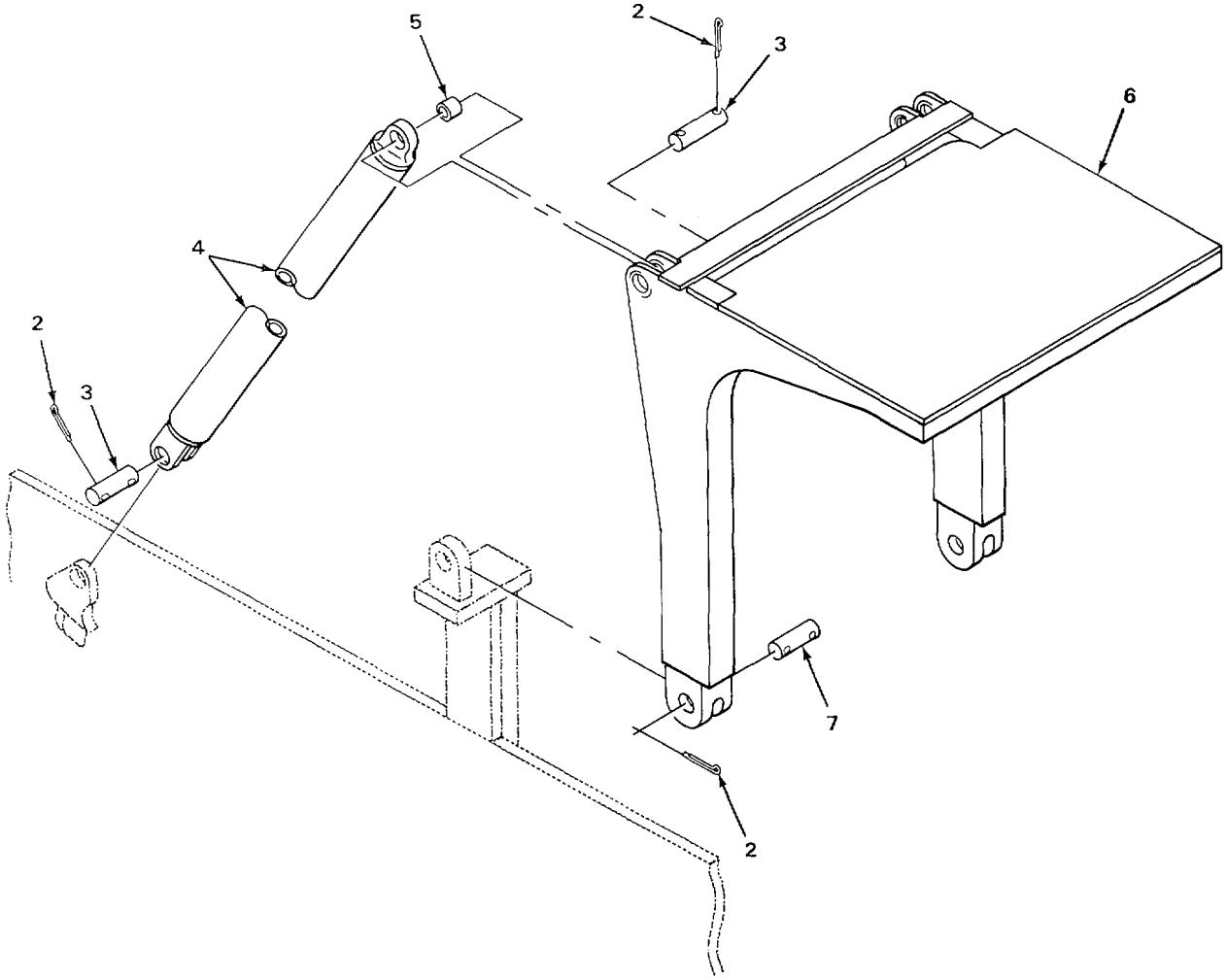

TA235607

FIGURE 143. ROLL-OVER PROTECTIVE STRUCTURE (ROPS).

SECTION II

(1) ITEM NO	(2) SMR CODE	(3) CAGEC	(4) PART NUMBER	(5) DESCRIPTION AND USABLE ON CODE (UOC)	(6) QTY
				GROUP 1801 BODY, CAB, HOOD, AND HULL ASSEMBLIES FIG. 143 ROLL-OVER PROTECTIVE STRUCTURE (ROPS)	
1	PFFZZ	40152	1515851	PROTECTION STRUCTUR	1
2	XDFZZ	40152	IF-1236	PIN, COTTER	12
3	PAFZZ	40152	1516040	•PIN	4
4	XDFZZ	40152	1547680	•BRACE	2
5	PFFZZ	12603	1519894	•BUSHING, SLEEVE	1
6	XDFZZ	40152	1547690	•CANOPY	1
7	PAFZZ	40152	1537424	•PIN, STRAIGHT HEADLE	2
				END OF FIGURE	

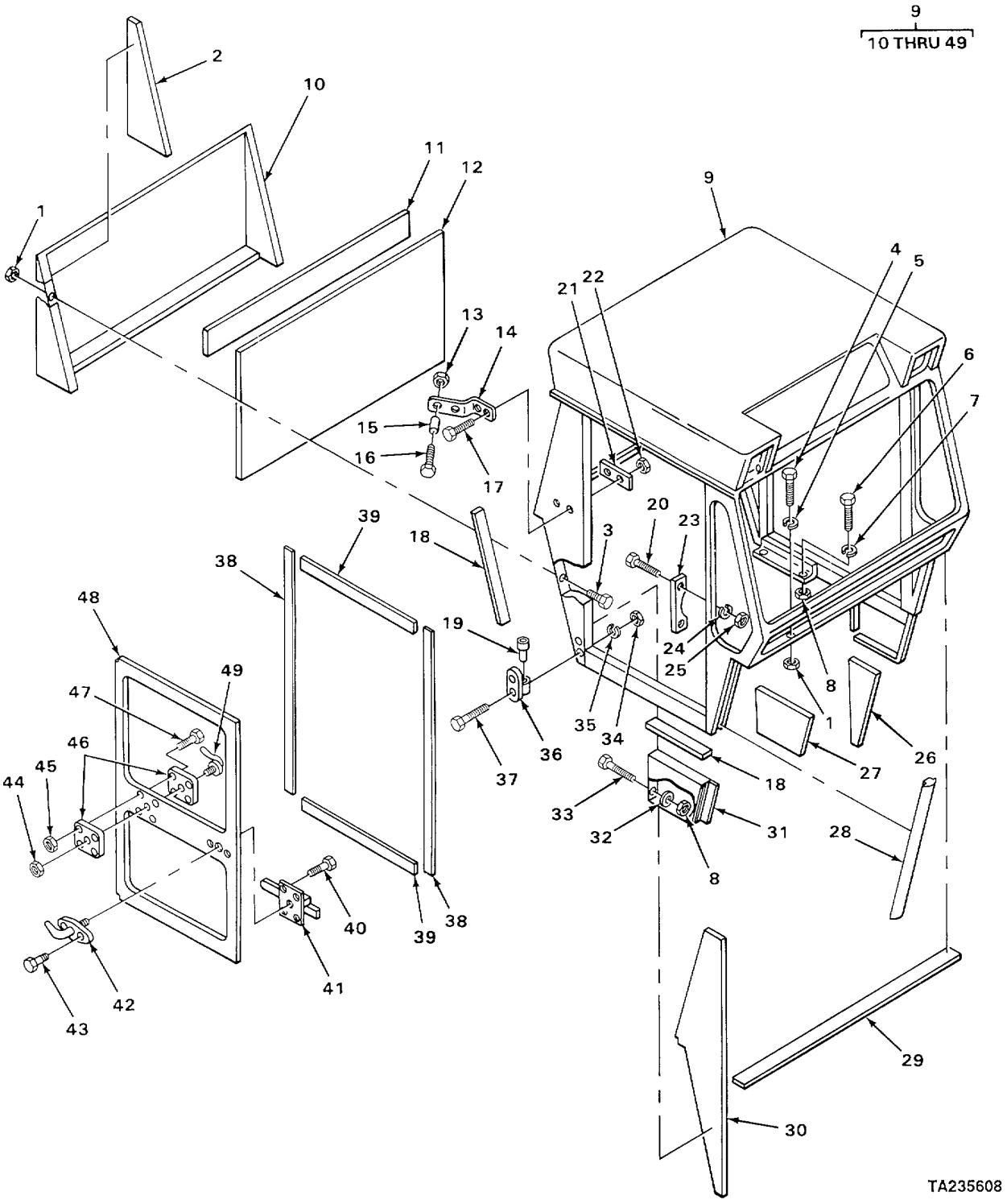

FIGURE 144. CAB ASSEMBLY AND PANELS.

SECTION II

(1) ITEM NO	(2) SMR CODE	(3) CAGEC	(4) PART NUMBER	(5) DESCRIPTION AND USABLE ON CODE (UOC)	(6) QTY
				GROUP 1801 BODY, CAB, HOOD, AND HULL ASSEMBLIES FIG. 144 CAB ASSEMBLY AND PANELS	
1	PFFZZ	12603	60D6	NUT,SELF-LOCKING,HE	7
2	PFFZZ	40152	1543803	FRAME SECTION,STRUC RIGHT HAND	1
2	XDFZZ	40152	1543801	PANEL,REAR LEFT HAND	1
3	PFFZZ	40152	24C-620	BOLT, MACHINE	5
4	PFFZZ	40152	24C-636	SCREW, CAP, HEXAGON H	2
5	XDFZZ	40152	616783	SPACER	1
6	PFFZZ	40152	24C-516	BOLT, MACHINE	4
7	PFFZZ	12603	25E15	WASHER, FLAT	4
8	PFFZZ	12603	60D5	NUT, SELF-LOCKING, CA	12
9	XDFFF	40152	2512412	CAB ASSEMBLY	1
10	XDFZZ	40152	571854	PANEL, CAB REAR	1
11	PFFZZ	40152	1543829	PANEL, DOOR	1
12	PFFZZ	40152	1543804	PANEL,BODY,VEHICULA	1
13	PFFZZ	96906	MS35649-202	NUT, PLAIN, HEXAGON	2
14	XDFZZ	40152	2513450	•STRIKE	2
15	PFFZZ	40152	949596	•BUSHING, SLEEVE	2
16	PFFZZ	40152	85G-1032	•SCREW, CAP,HEXAGON H	2
17	PFFZZ	40152	23C-616	•BOLT,MACHINE	4
18	MFFZZ	19207	943623-24	•WEATHER STRIP MAKE FROM SEAL P/N 943623	4
19	XDFZZ	40152	568700	•BUSHING	4
20	PFFZZ	40152	47G-412	•SCREW, CAP, HEXAGON H.	4
21	XDFZZ	40152	2512192	•PLATE	2
22	PFFZZ	72962	21NE066	•NUT,PLAIN,HEXAGON	4
23	XDFZZ	40152	945576	•STRIKE	2
24	PFFZZ	96906	MS35338-44	•WASHER, LOCK	4
25	PFFZZ	40152	610-04	•NUT, PLAIN, HEXAGON	4
26	PFFZZ	40152	1543800	•PANEL, BODY, VEHICULA RIGHT	1
26	PFFZZ	40152	1543799	•PANEL,BODY,VEHICULA LEFT	1
27	XDFZZ	40152	1543828	•KICKPLATE,PANEL RIGHT HAND	1
27	XDFZZ	40152	1543827	•KICKPLATE,PANEL LEFT HAND	1
28	MFFZZ	19207	569692-36	•WEATHER STRIP MAKE FROM WEATHER STRIP P/N 569692	2
29	MFFZZ	19207	1521844-48	•WEATHER STRIP MAKE FROM WEATHER STRIP P/N 1521844	1
30	XDFZZ	40152	1543809	•PANEL, REAR RIGHT HAND	1
30	XDFZZ	40152	1543808	•PANEL, REAR LEFT HAND	1
31	XDFZZ	40152	568686	•PANEL, LOWER RIGHT HAND	1
31	PFFZZ	40152	568687	•PANEL,BODY, VEHICULA LEFT HAND	1
32	PFFZZ	40152	25E16	•WASHER, FLAT	8
33	PFFZZ	40152	24C-516	•BOLT,MACHINE	8
34	PFFZZ	40152	610-05	•NUT,SELF-LOCKING HE	8
35	PFFZZ	96906	MS35338-45	•WASHER, LOCK	8
36	XDFZZ	40152	945555	•HINGE •RH LOWER,LH UPPER	2
36	XDFZZ	40152	945554	•HINGE •RH UPPER,LH LOWER	2
37	PFFZZ	40152	7G-512	•SCREW,CAP,HEXAGON H	8
38	MFFZZ	19207	943623-48	•WEATHER STRIP MAKE FROM WEATHER	4

SECTION II

(1) ITEM NO	(2) SMR CODE	(3) CAGEC	(4) PART NUMBER	(5) DESCRIPTION AND USABLE ON CODE (UOC)	(6) QTY
				STRIP P/N 943623	
39	MFFZZ	19207	943623-36	•WEATHER STRIP MAKE FROM WEATHER	4
				STRIP P/N 943623	
40	PFFZZ	40152	65G-1008	•SCREW,CAP, HEXAGON H	8
41	PFFZZ	40152	942874	•LATCH DOOR, VEHICULA RIGHT HAND	1
41	PFFZZ	40152	138249	•CYLINDER,LOCKIVEHIC LEFT HAND	1
42	XDFZZ	40152	1525710	•HANDLE	2
43	PFFZZ	40152	18G-1008	•SCREW,MACHINE	4
44	PFFZZ	40152	2512218	•NUT PLAIN, HEXAGON.....	2
45	PFFZZ	88044	AN365-420A	•NUT,SELF-LOCKING, HE.....	8
46	XDFZZ	40152	2512195	•PLATE	4
47	PFFZZ	40152	47G-432	•SCREW, MACHINE	8
48	XDFZZ	40152	2512200	•DOOR RIGHT HAND	1
48	XDFZZ	40152	2512201	•DOOR LEFT HAND.....	1
49	XDFZZ	40152	2512199	•HANDLE ASSEMBLY	2

END OF FIGURE

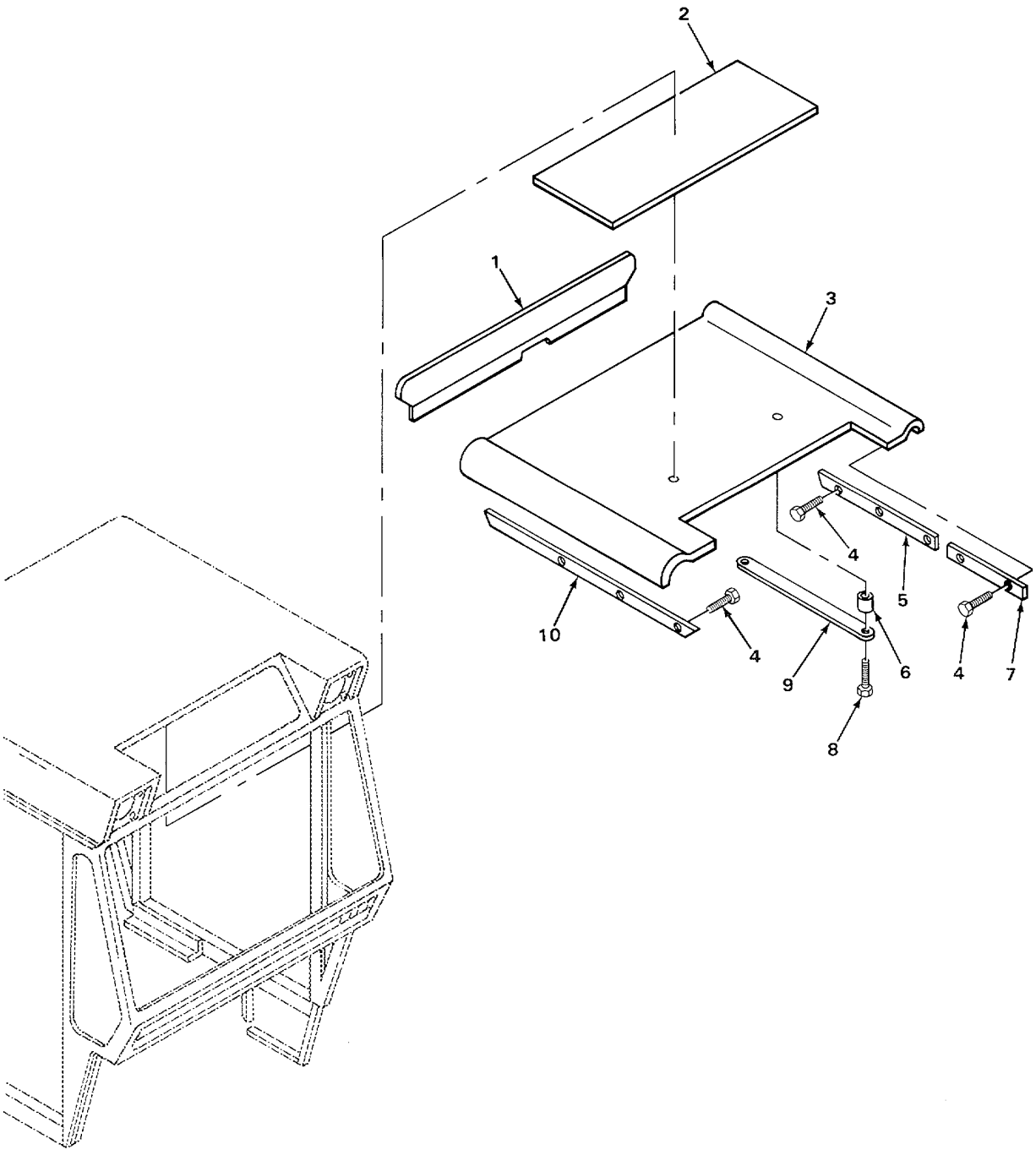

FIGURE 145. CAB TRIMSTRIPS.

SECTION II

(1) ITEM NO	(2) SMR CODE	(3) CAGEC	(4) PART NUMBER	(5) DESCRIPTION AND USABLE ON CODE (UOC)	(6) QTY
				GROUP 1801 BODY, CAB, HOOD, AND HULL ASSEMBLIES FIG. 145 CAB TRIMSTRIPS	
1	XDFZZ	40152	1543830	•PANEL	1
2	XDFZZ	40152	1543825	•BACKING	1
3	XDFZZ	40152	1543826	•HEADLINER	1
4	PFFZZ	40152	14G-608	•SCREW, MACHINE	9
5	XDFZZ	40152	1514767	•TRIMSTRIP LEFT HAND	1
6	XDFZZ	40152	1514763	•SPACER	4
7	XDFZZ	40152	1514765	•TRIMSTRIP LEFT HAND	1
8	PFFZZ	40152	14G-824	•SCREW, MACHINE	4
9	XDFZZ	40152	1514764	•STRAP	2
10	PFFZZ	40152	1514766	•MOLDING, PLASTIC RIGHT HAND	1

END OF FIGURE

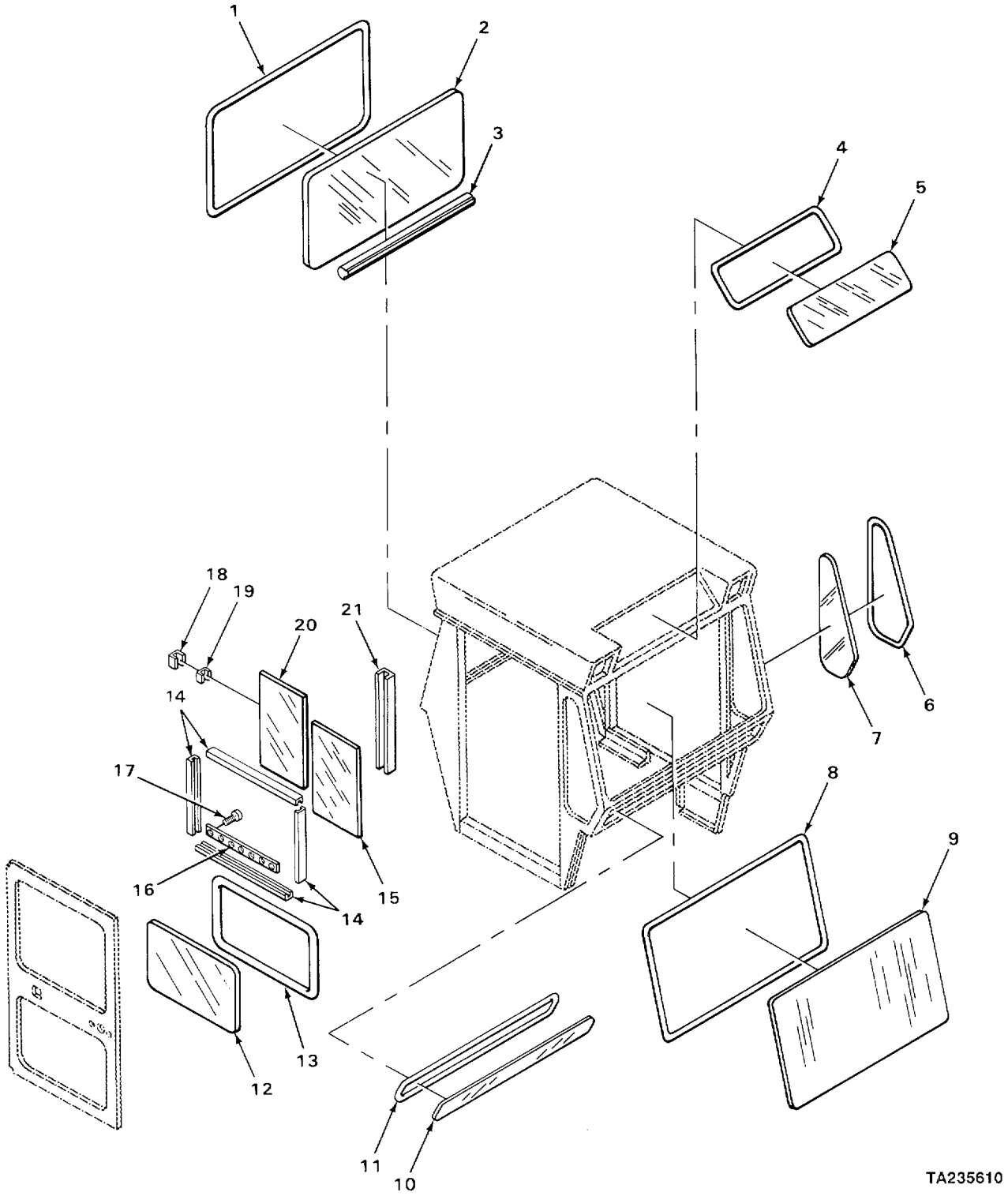

FIGURE 146. WINDSHIELD, GLASS AND MOLDING.

SECTION II

(1) ITEM NO	(2) SMR CODE	(3) CAGEC	(4) PART NUMBER	(5) DESCRIPTION AND USABLE ON CODE (UOC)	(6) QTY
				GROUP 1802 FENDERS, RUNNING BOARDS WITH MOUNTING AND ATTACHING PARTST OUTRIGGERS, WINDSHIELD, GLASS, ETC. FIG. 146 WINDSHIELD, GLASS, AND MOLDING	
1	MFFZZ	19207	1357680-132	MOLDING MAKE FROM MOLDING P/N 569694	1
2	MFFZZ	19207	945999-1	GLASS MAKE FROM PARTS KIT P/N 945;999	1
3	MFFZZ	19207	943623-60	WEATHER STRIP MAKE FROM WEATHER STRIP P/N 943623	1
4	MFFZZ	19207	1357680-72	MOLDING MAKE FROM MOLDING P/N 569694	1
5	MFFZZ	19207	945999-2	GLASS MAKE FROM PARTS KIT P/N 945999	1
6	MFFZZ	19207	1357680-120	MOLDING MAKE FROM MOLDING P/N 569694	1
7	MFFZZ	19207	945999-3	GLASS MAKE FROM PARTS KIT P/N 945999	1
8	MFFZZ	19207	1357680-144	MOLDING MAKE FROM MOLDING PIN 569694	1
9	MFFZZ	19207	945999-4	GLASS MAKE FROM PARTS KIT PIN 945999	1
10	MFFZZ	19207	945999-5	GLASS MAKE FROM PARTS KIT P/N 945999	1
11	MFFZZ	19207	1357680-121	MOLDING MAKE FROM MOLDING P/N 569694	1
12	MFFZZ	19207	945999-6	GLASS MAKE FROM PARTS KIT P/N 945999	2
13	MFFZZ	19207	1357680-122	MOLDING MAKE FROM MOLDING P/N 569694	2
14	MFFZZ	19207	569696-48	CHANNEL, GLASS MAKE FROM CHANNEL P/N 569696	4
15	MFFZZ	19207	945999-7	GLASS MAKE FROM PARTS KIT P/N 945999	2
16	XDFLZ	40152	945577	RETAINER,CHANNEL	2
17	PFFZZ	40152	65G-1008	SCREW, CAP, HEXAGON H.	14
18	XDFZZ	40152	589571	LOCK	4
19	MFFZZ	19207	589572-12	RUBBER,LOCK MAKE FROM RUBBER P/N 589572	4
20	MFFZZ	19207	945999-8	GLASS MAKE FROM PARTS KIT P/N 945999	2
21	MFFZZ	19207	139149-48	CHANNEL,GLASS MAKE FROM CHANNEL P/N 139149	1 9

ENO OF FIGURE

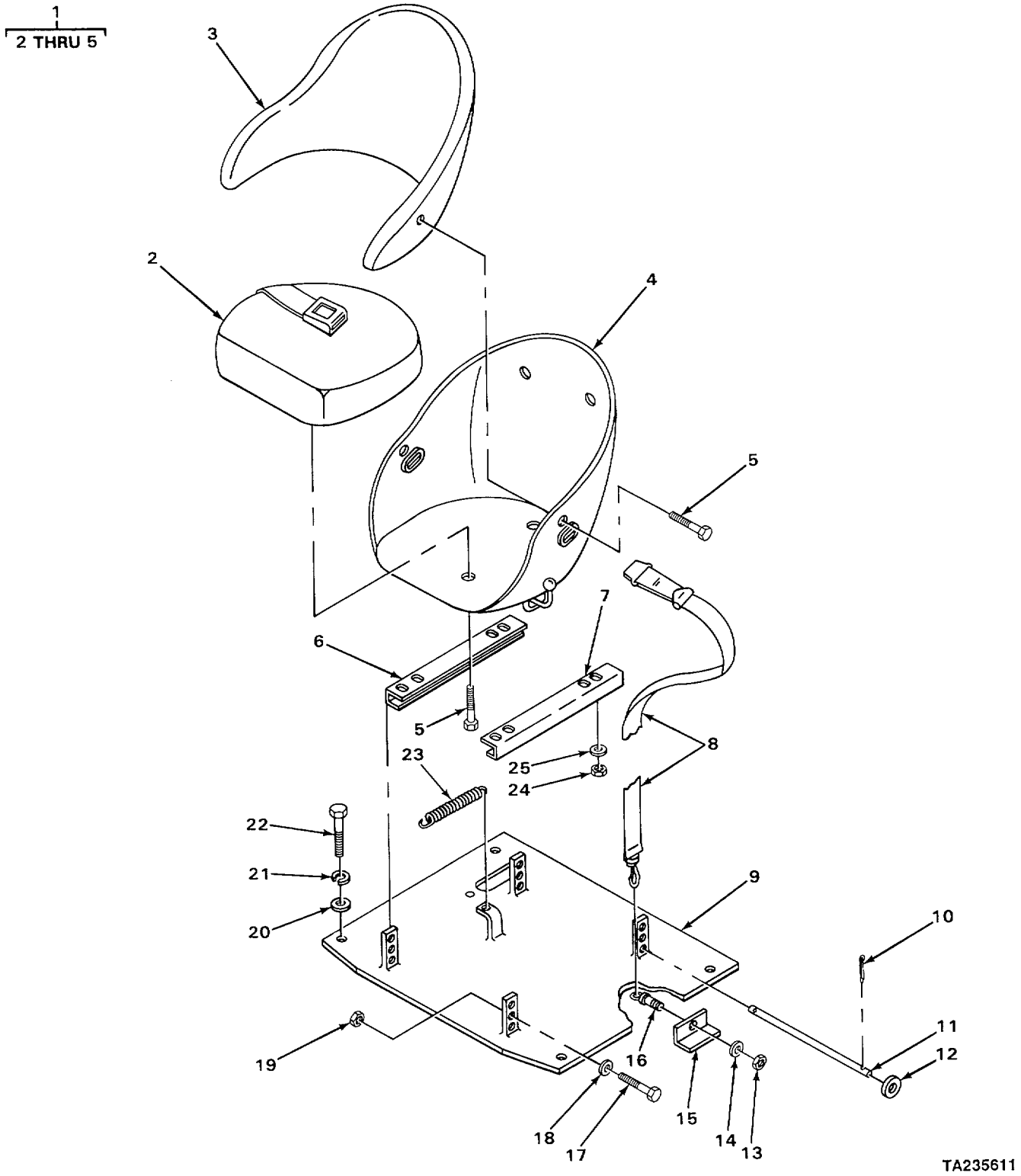

FIGURE 147. SEAT ATTACHING PARTS.

SECTION II

(1) ITEM NO	(2) SMR CODE	(3) CAGEC	(4) PART NUMBER	(5) DESCRIPTION AND USABLE ON CODE (UOC)	(6) QTY
				GROUP 1806 UPHOLSTERY? SEATSI AND CARPETS FIG. 147 SEAT AND ATTACHING PARTS	
1	PFOFF	40152	1572355	SEAT, VEHICULAR	1
2	PFFZZ	40152	82000231000002	CUSHION, SEAT, VEHICU	1
3	PFFZZ	40152	944981	CUSHION,SEAT,VEHICU	1
4	XDFZZ	40152	1567173	BUCKET, SEAT	1
5	PFFZZ	40152	23C-610	BOLT,MACHINE	7
6	XDOZZ	40152	558777	ANGLE IRON	1
7	XDOZZ	40152	558779	ANGLE IRON	1
8	KFOZZ	40152	1527745	SEAT BELT ASSEMBLY PART OF KIT P/N 1527816	1
9	XDFZZ	40152	568781	SEAT SUPPORT	1
10	XDOZZ	12603	1F420	PIN, COTTER	2
11	PFOZZ	40152	557458	ROD, STRAIGHT, HEADLE	1
12	PFOZZ	40152	25E-22	WASHER, FLAT	2
13	PFOZZ	96906	MS21245-7	NUT, SELF-LOCKING, HE PART OF KIT P/N 1527816	2
14	PFOZZ	12603	25E15	WASHER, FLAT PART OF KIT P/N 1527816	2
15	KFOZZ	40152	1547302	ANGLE IRON PART OF KIT P/N 1527816	2
16	KFOZZ	12603	2530346	BOLT, EYE PART OF KIT P/N 1527816	2
17	PFOZZ	40152	24C-824	BOLT, MACHINE	2
18	PFOZZ	40152	584092	WASHER, FLAT	2
19	PFOZZ	96906‘	MS21044N8	NUT,SELF-LOCKING, HE	2
20	PFOLZ	40152	619029	WASHER, FLAT	4
21	PFFZZ	95019	500357-13	WASHER,LOCK	4
22	PFFZZ	40152	23C-824	BOLT,MACHINE	4
23	PFOZZ	40152	550301	SPRING,HELICALIEXTE	1
24	PFOZZ	12603	60D5	NUTISELF-LOCKING , CA	4
25	PFOZZ	12603	25E15	WASHER, FLAT	4

END OF FIGURE

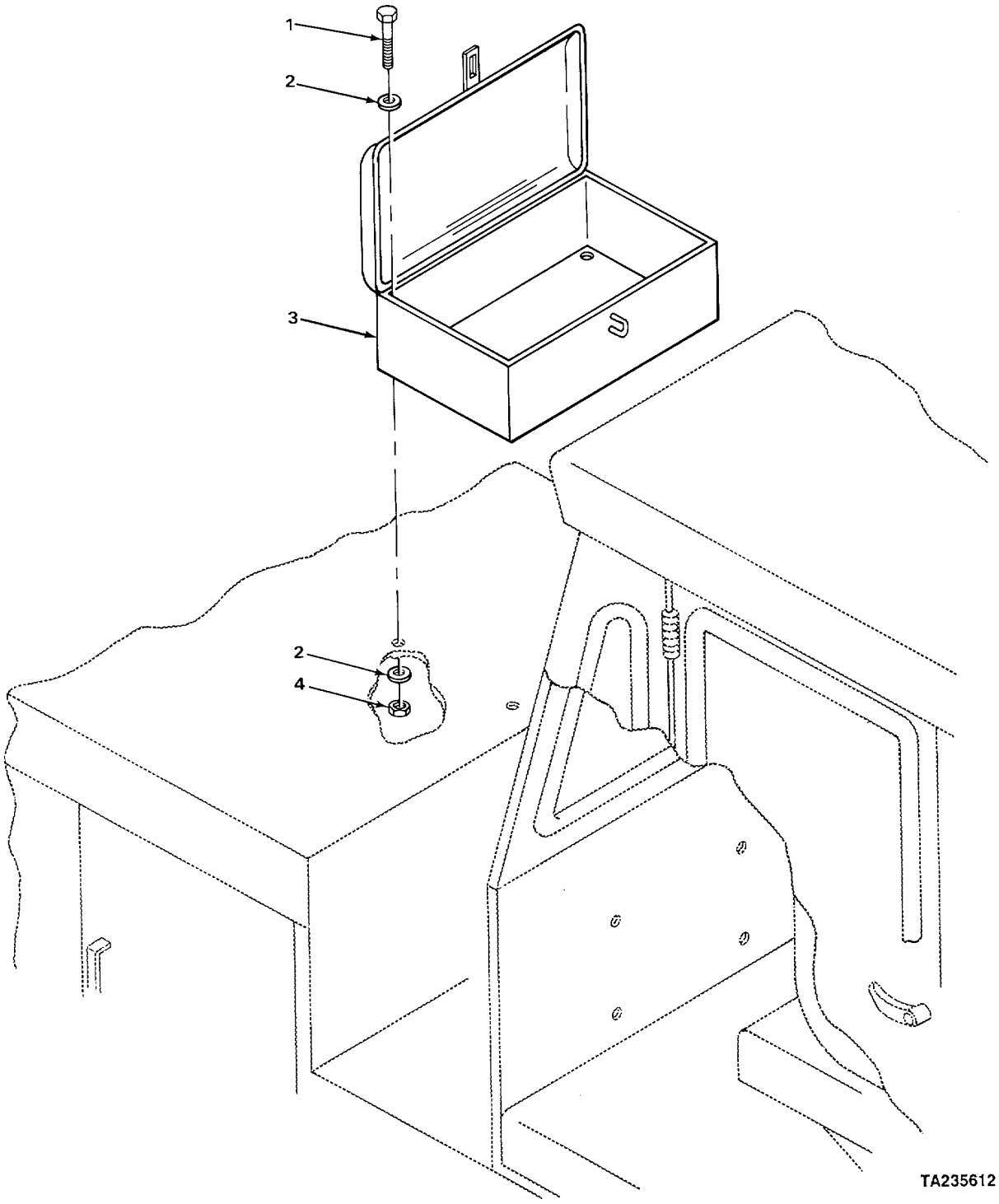

FIGURE 148. TOOLBOX

SECTION II

(1) ITEM NO	(2) SMR CODE	(3) CAGEC	(4) PART NUMBER	(5) DESCRIPTION AND USABLE ON CODE (UOC)	(6) QTY
				GROUP 1808 STOWAGE RACKS, BOXES, STRAPS, CARRYING CASES, CABLE REELS, HOSE REELS, ETC. FIG. 148 TOOLBOX	
1	PFOZZ	40152	24C-516	BOLT,MACHINE	4
2	PFOZZ	40152	567806	WASHER, FLAT	8
3	XDOZZ	40152	1548292	TOOLBOX	1
4	PFOZZ	12603	60D5	NUT,SELF-LOCKING,CA	4

END OF FIGURE

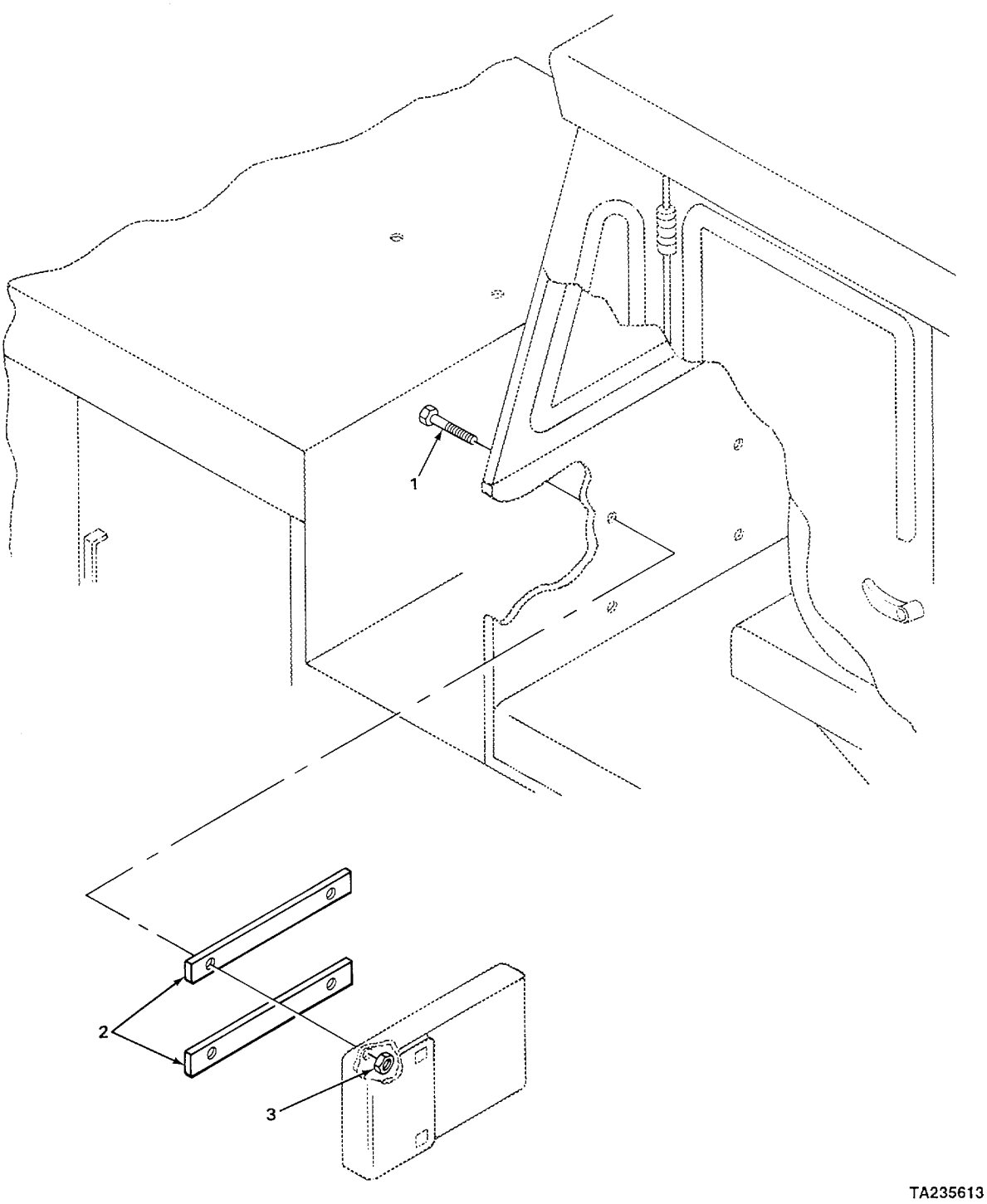

FIGURE 149. CANVAS BAG MOUNTING.

SECTION II

(1) ITEM NO	(2) SMR CODE	(3) CAGEC	(4) PART NUMBER	(5) DESCRIPTION AND USABLE ON CODE (UOC)	(6) QTY
				GROUP 22 BODY, CHASSIS, AND HULL ACCESSORY ITEMS GROUP 2201 CANVAS, RUBBER, OR PLASTIC ITEMS FIG. 149 CANVAS BAG MOUNTING	
1	PFOZZ	40152	24C-424	BOLT. , MACHINE.....	4
2	XDOZZ	40152	2511571	RECTANGULAR, FLAT.....	2
3	PFOZZ	96906	MS21044N4	NUT, SELF-LOCKING, HE.....	4
				END OF FIGURE	

3
4 THRU 10

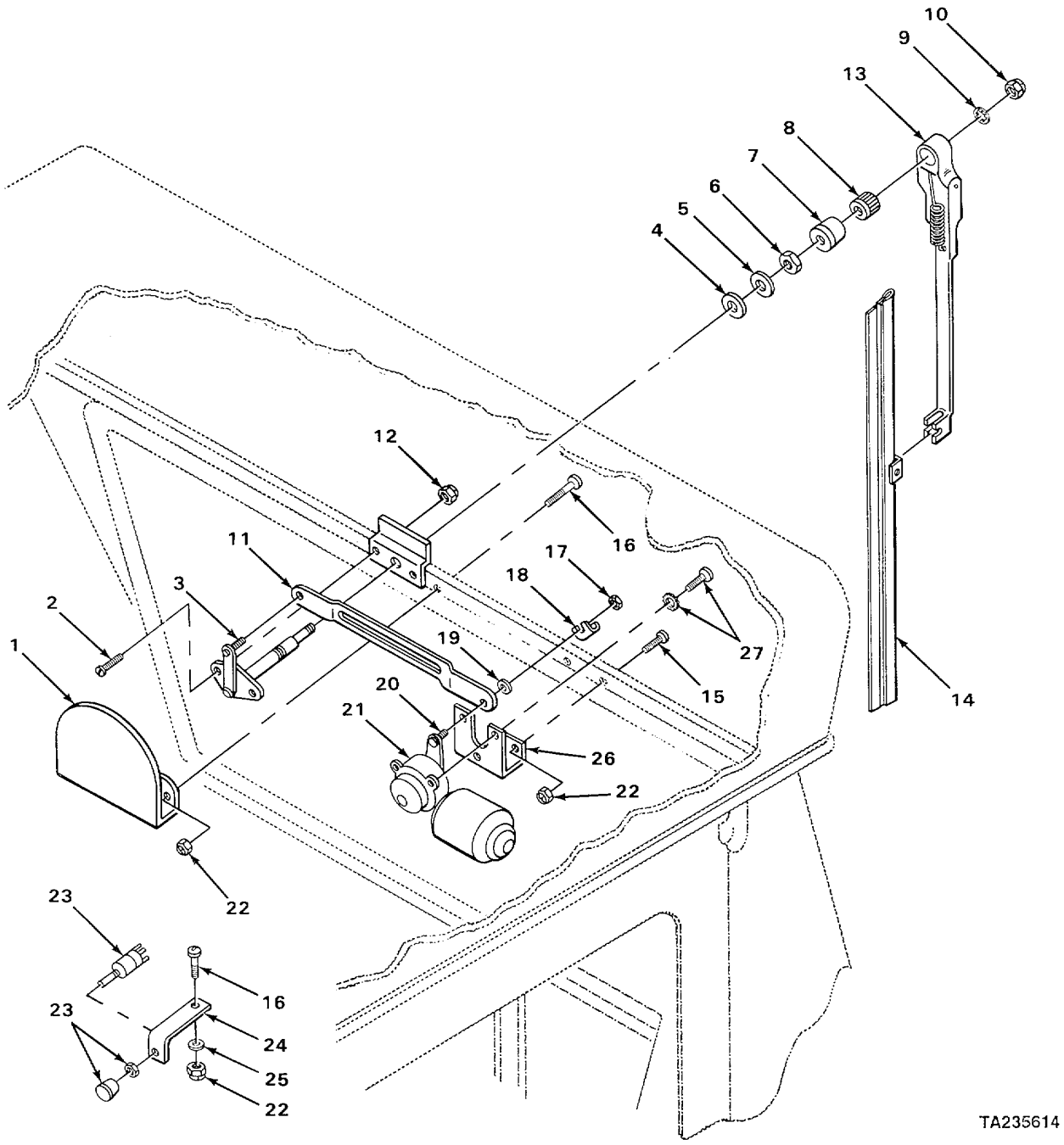

FIGURE 150. REAR WINDSHIELD.

SECTION II

(1) ITEM NO	(2) SMR CODE	(3) CAGEC	(4) PART NUMBER	(5) DESCRIPTION AND USABLE ON CODE (UOC)	(6) QTY
				GROUP 2202 ACCESSORY ITEMS FIG. 150 REAR WINDSHIELD WIPER	
1	PFOZZ	89749	1534346	SHIELD,WIPER MECHAN	1
2	PFOZZ	96906	MS35207-264	SCREW, MACHINE PART OF KIT P/N O	2
3	PFOZZ	40152	949185	SHAFT,WINDSHIELD WI	1
4	PFOZZ	40152	949180	•WASHER, FLAT	1
5	PFOZZ	40152	949181	•WASHER, FLAT	1
6	PFOZZ	40152	949182	•NUT, PLAIN, HEXAGON	1
7	XDOZZ	40152	949183	•CAP	1
8	PFOZZ	40152	949184	•GEAR,WORM WINDSHIEL	1
9	PFOZZ	96906	MS35333-41	•WASHER, LOCK	1
10	PFOZZ	40152	522028	•NUT, SELF-LOCKING, HE	1
11	PFOZZ	40152	574729	•CONNECTING LINK, RIG	1
12	PFOZZ	96906	MS21044N3	NUT, SELF-LOCKING, HE	2
13	PFOZZ	60703	87415-77ZT	ARM, WINDSHIELD WIPE.	1
14	PAOZZ	40152	568968	BLADE,WINDSHIELD WI	1
15	PFOZZ	40152	90G-412	BOLT, MACHINE	2
16	PFOZZ	40152	24C-412	BOLT, MACHINE	3
17	PFOZZ	40152	949144	NUT, PLAIN, HEXAGON	1
18	XDOZZ	40152	890374	CLIP	2
19	PFOZZ	40152	890375	WASHER,FLAT	2
20	XDOZZ	40152	949308	LEVER	1
21	PAOZZ	40152	964124	MOTOR,WINDSHIELD WI REAR	1
22	PFOZZ	96906	MS21044N4	NUTISELF-LOCKING, HE	5
23	PFOZZ	40152	2318002	SWITCH, ROTARY	1
24	XDOZZ	40152	546535	BRACKET	1
25	PFOZZ	40152	25E-14	WASHER, FLAT	1
26	XOOZZ	40152	574730	BRACKET	1
27	PFOZZ	40152	992896	SCREW, ASSEMBLY PANE	3
				END OF FIGURE	

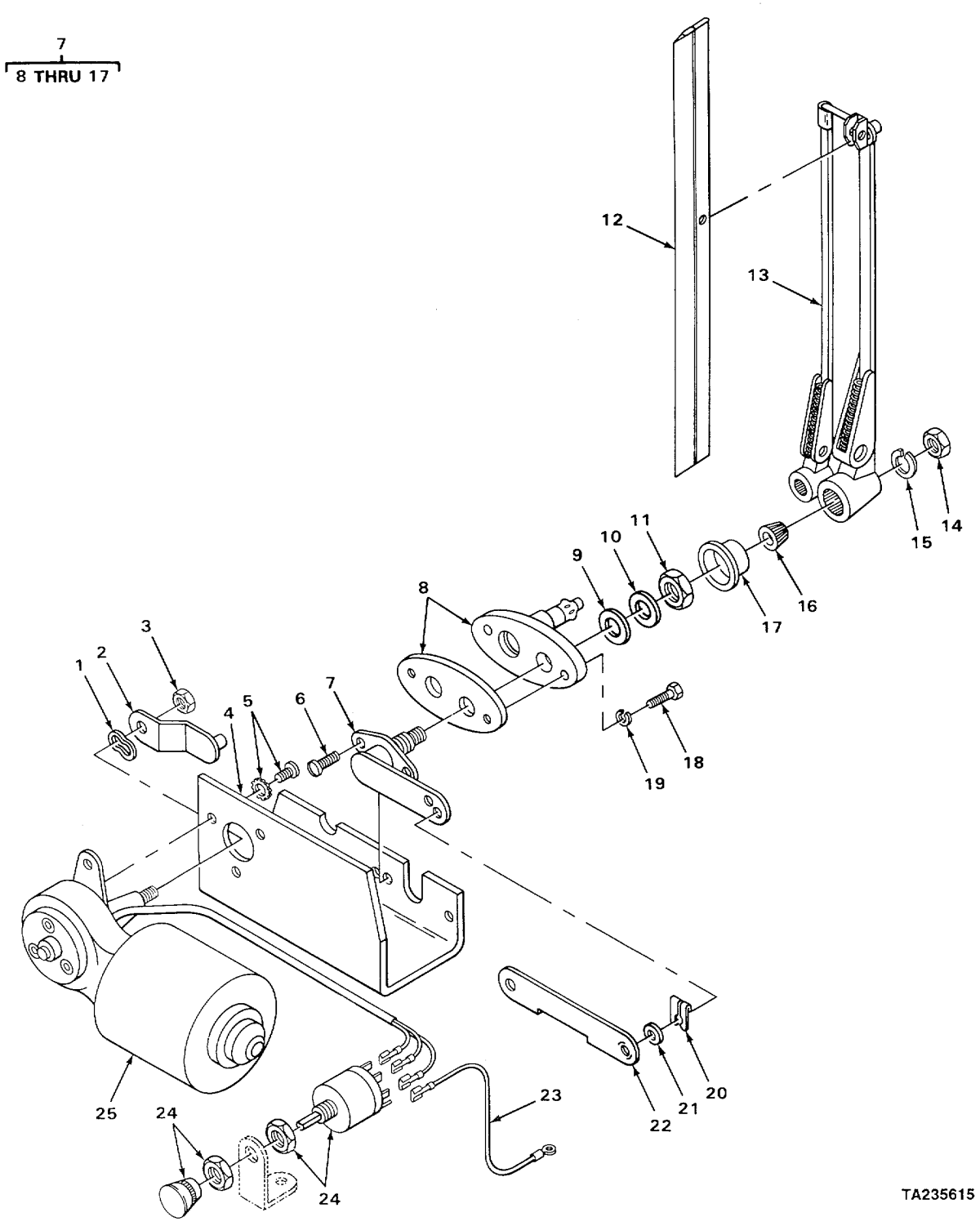

FIGURE 151. FRONT WINDSHIELD WIPER, MOTOR, AND RELATED PARTS.

SECTION II

(1) ITEM NO	(2) SMR CODE	(3) CAGEC	(4) PART NUMBER	(5) DESCRIPTION AND USABLE ON CODE (UOC)	(6) QTY
				GROUP 2202 ACCESSORY ITEMS FIG. 151 FRONT WINDSHIELD WIPER, MOTOR, AND RELATED PARTS	
1	PFOZZ	40152	993183	WASHER, FLAT	1
2	XDOZZ	40152	949308	LEVER	1
3	PFOZZ	40152	949144	NUT, PLAIN HEXAGON	1
4	XDOZZ	40152	992892	BRACKET	1
5	PFOZZ	40152	992896	SCREW,ASSEMBLY PANE	1
6	PFOZZ	40152	949143	SCREW, MACHRNE	2
7	PFOZZ	40152	960248	SHAFT, STRAIGHT	1
8	XDOZZ	40152	949785	•ADAPTER	1
9	PFOZZ	40152	5291919	•WASHER, FLAT	1
10	PFOZ7	40152	949181	•WASHER FLAT	1
11	PFOZZ	40152	949182	•NUT PLAIN, HEXAGON	1
12	XDOZZ	40152	992898	•BLADE, WIPER WINDSHIELD	1
13	XDOZZ	40152	2510200	•ARM,WIPER WINDSHIELD	1
14	PFOZZ	40152	522028	•NUTISELF-LOCKING HE	1
15	PFOZZ	96906	MS35333-41	•WASHERLOCK	1
16	XDOLZ	40152	949184	•GEAR,WORM WINDSHIELD	1
17	XDOZZ	40152	949183	•CAP	1
18	PFOZZ	40152	90G-41Z	BOLT MH	2
19	PFOZZ	96906	MS35335-33	WASHER LOCK	2
20	XDDZZ	40152	890374	CAP	2
21	PFOZZ	40152	890375	WASHER, FLAT	2
22	XDOZZ	40152	890373	LINK	1
23	PFOZZ	40152	1544319	WIRING HARNESS, BRAN	1
24	PFDZZ	40152	2318002	SWITCH, ROTARY	1
25	PFOZZ	40152	1580724	MOTOR,WINDSHIELD WI FRONT	1

END OF FIGURE

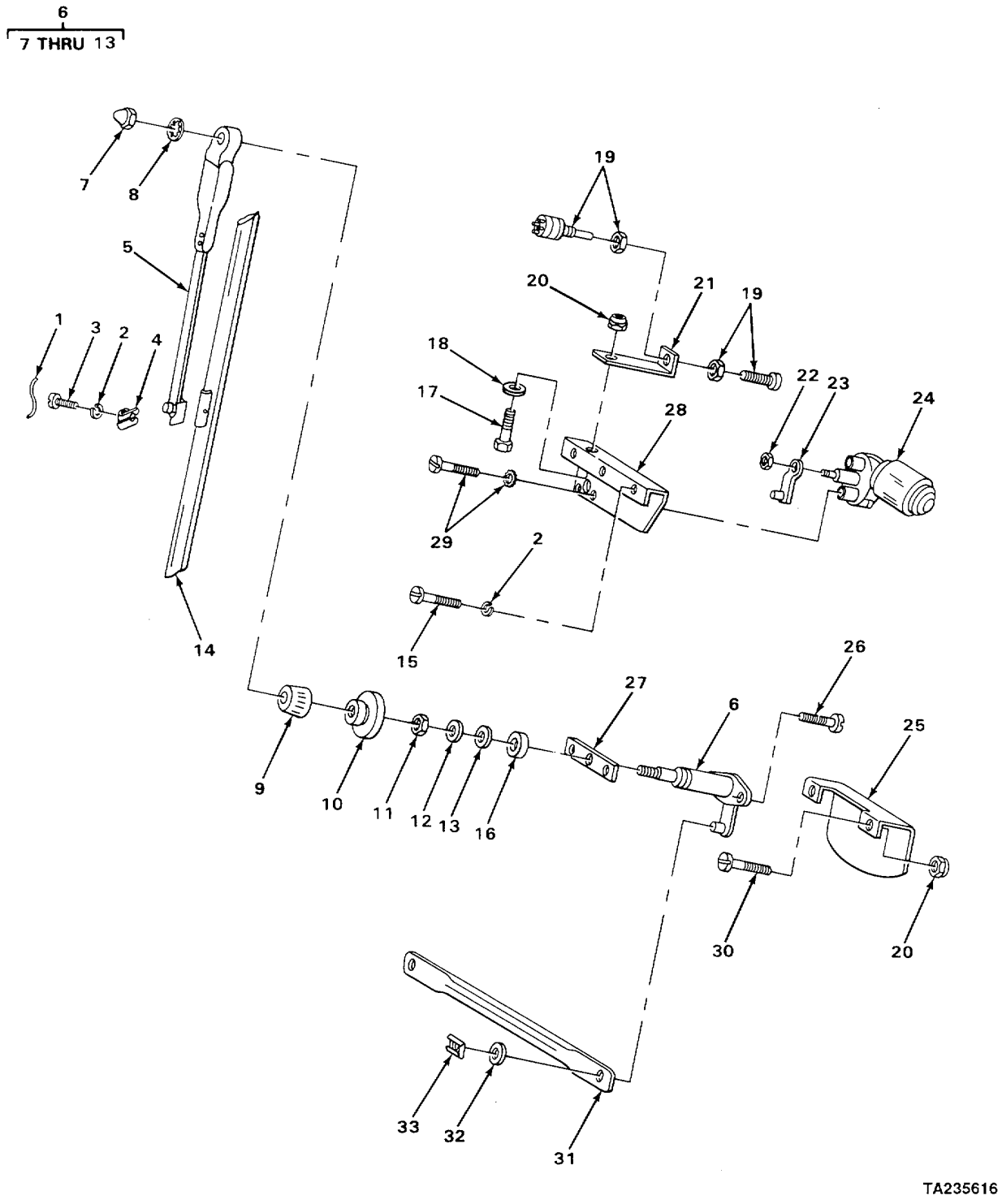

FIGURE 152. FRONT WINDSHIELD WIPER KIT.

SECTION II

(1) ITEM NO	(2) SMR CODE	(3) CAGEC	(4) PART NUMBER	(5) DESCRIPTION AND USABLE ON CODE (UOC)	(6) QTY
				GROUP 2202 ACCESSORY ITEMS FIG. 152 FRONT WINDSHIELD WIP ER KIT	
1	XDOZZ	40152	2503293	WIRE	1
2	PFOZZ	96906	MS35335-33	WASHER, LOCK	6
3	PFOZZ	40152	61G-408	SCREW, MACHINE	3
4	PFOZZ	12603	30H14	CLAMP, LOOP	3
5	PFOZZ	60703	87415-77ZT	ARM,WINDSHIELD WIPE	1
6	PFCOO	40152	949185	SHAFT,WINDSHIELD WI PART OF KIT P/N	1
7	PFOZZ	40152	522028	NUTM, SELF-LOCKING, HE	1
8	PFOZZ	96906	MS35333-41	•WASHER, LOCK	1
9	PFOZZ	40152	949184	•GEARPWORM WINDSHIELD	1
10	XDOZZ	40152	949183	•CAP	1
11	PFOZZ	40152	949182	•NUT, PLAIN HEXAGON	1
12	PFOZZ	40152	949180	•WASHER, FLAT	1
13	PFOLZ	40152	949181	•WASHER, FLAT	1
14	PAOZZ	40152	568968	BLADE,WINDSHIELD WI	1
15	PFOZZ	40152	90G-424	BOLT, MACHIN	3
16	XOOLZ	40152	713674	SPACER	1
17	PFOZZ	40152	24C-412	BOLT, MACHINE	1
18	PFDZZ	40152	25E-14	WASHER, FLAT	1
19	PFOZZ	40152	2318002	SWITCH, ROTARY	1
20	PFOZZ	96906	MS21044N4	NUT, SELF-LOCKING,HE	1
21	XDOZ2	40152	546535	BRACKET	1
22	PFOZZ	40152	949144	NUT, PLAIN, HEXAGON	1
23	XDOZZ	40152	949308	LEVER.	1
24	PFOZZ	40152	1580724	MOTOR, WINDSHIELD WI FRONT	1
25	XDOZZ	40152	1534346	SHIELD	1
26	PFOZZ	40152	949143	SCREW, MACHINE	2
27	XDOZZ	40152	1534345	SPACER	1
28	XDOZZ	40152	992892	BRACKET	1
29	PFOZZ	40152	992896	SCREW, ASSEMBLY PANE	3
30	PFOZZ	40152	90G-428	SCREW, MACHINE	2
31	PFOZZ	40152	574729	CONNECTING LINK,RIG	1
32	PFOZZ	40152	890375	WASHER, FLAT	2
33	XDOZl	40152	890374	CLIP	2

END OF FIGURE

1
2 THRU 11

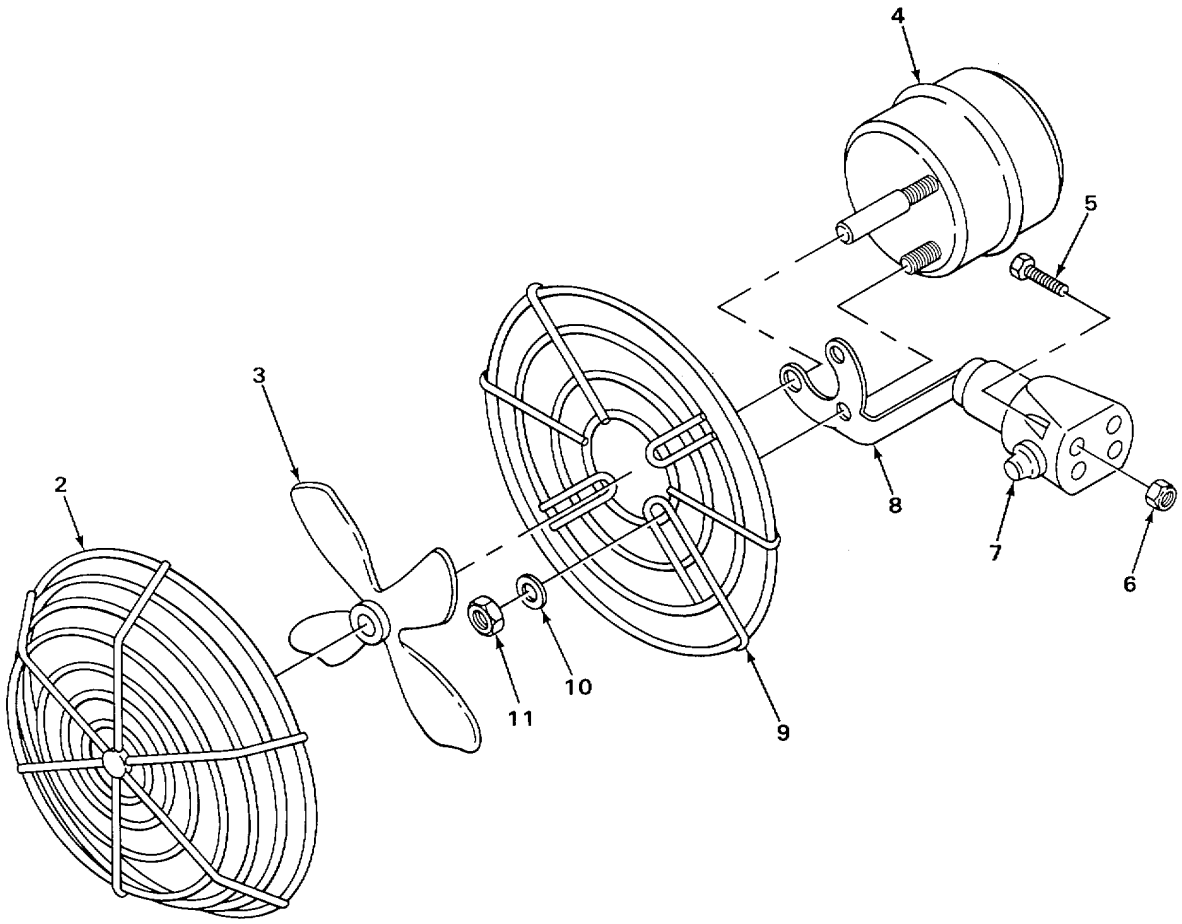

FIGURE 153. DEFROSTER FAN ASSEMBLY

(1) ITEM NO	(2) SMR CODE	(3) CAGEC	(4) PART NUMBER	(5) DESCRIPTION AND USABLE ON CODE (UOC)	(6) QTY
				GROUP 2202 ACCESSORY ITEMS	
				FIG. 153 DEFROSTER FAN ASSEMBLY	
1	PFOOO	12603	517847	FAN,CIRCULATNG	1
2	XDOZZ	40152	949036	.GUARD	1
3	XDOZZ	40152	949037	.FAN	1
4	XDOZZ	40152	949033	.MOTOR	1
5	XDOZZ	12603	41G1010	.SCREW,MACHINE	4
6	PFOZZ	40152	50D-10	.NUT,PLAIN,HEXAGON	4
7	XDOZZ	40152	949080	.SWITCH	1
8	XDOZZ	40152	949034	BASE	1
9	XDOZZ	40152	949039	GUARD	1
10	PFOZZ	40152	25E-10	WASHER,FLAT	2
11	PFOZZ	40152	949054	NUT,PLAIN,HEXAGON	2

END OF FIGURE

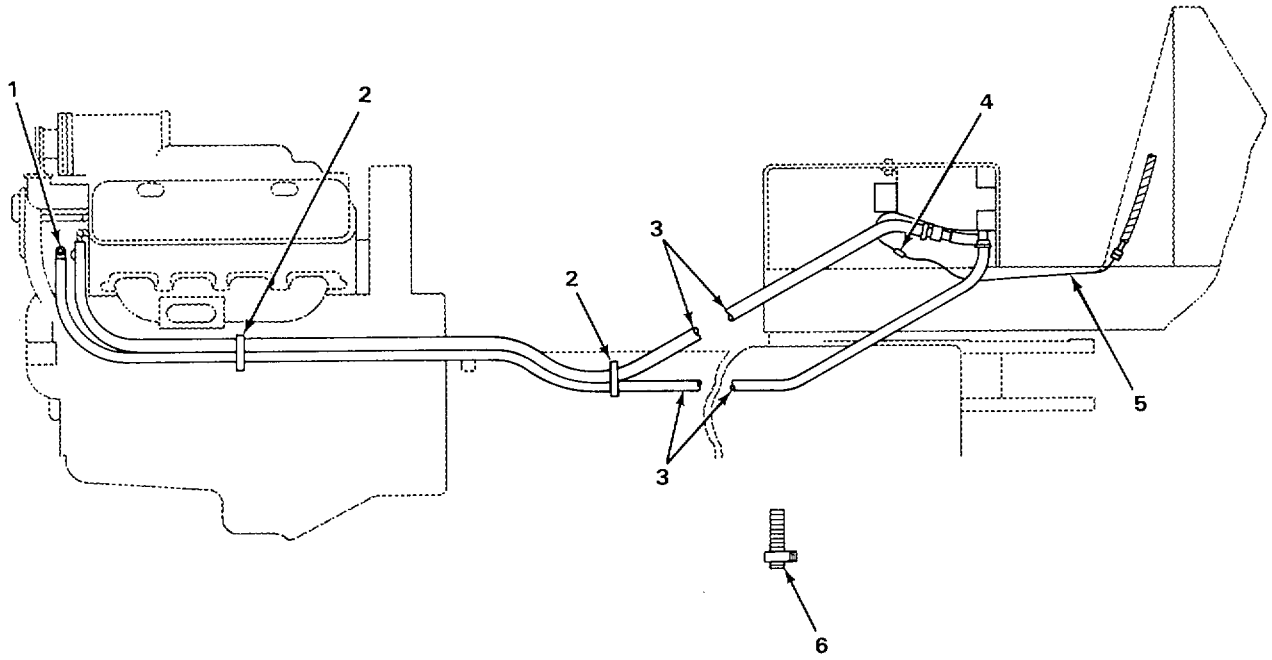

TA235618

FIGURE 154. HEATER HOSES AND RELATED PARTS.

(1) ITEM NO	(2) SMR CODE	(3) CAGEC	(4) PART NUMBER	(5) DESCRIPTION AND USABLE ON CODES (UOC)	(6) QTY
				GROUP 2202 ACCESSORY ITEMS	
				FIG. 154 HEATER HOSES AND RELATED PARTS	
1	XDOZZ	40152	356618	BUSHING	1
2	PFOZZ	12603	30H50	CLIP, RETAINING	2
3	XDOZZ	89749	1529688	HOSE	2
4	XDOZZ	40152	635583	FUSE	1
5	XDOZZ	40152	1511475	WIRE	1
6	XDOZZ	40152	521874	CLAMP	4
				END OF FIGURE	

SECTION II

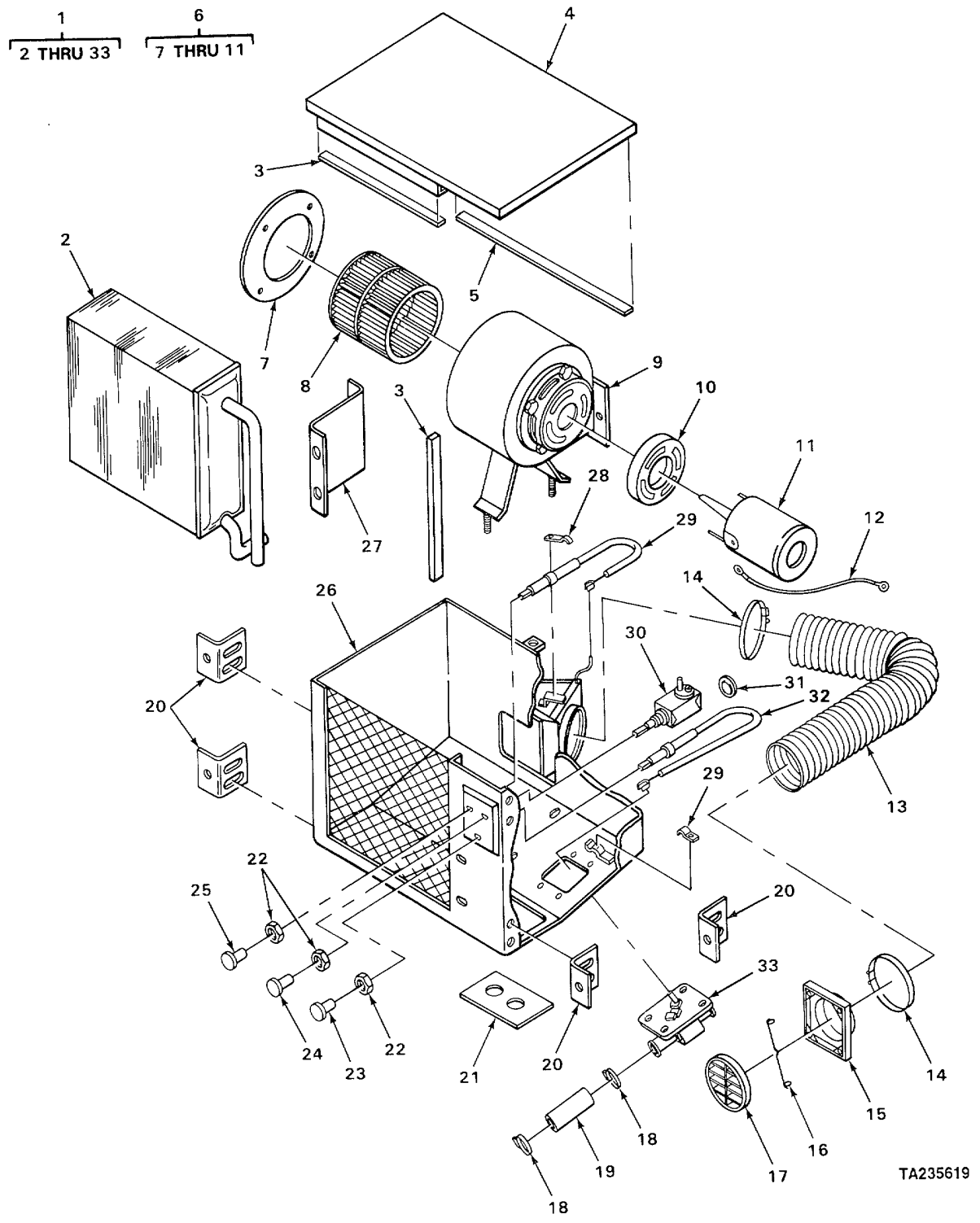

TA235619

FIGURE 155. HEATER ASSEMBLY.

(1) ITEM NO	(2) SMR CODE	(3) CAGEC	(4) PART NUMBER	(5) DESCRIPTION AND USABLE ON CODES (UOC)	(6) QTY
				GROUP 2202 ACCESSORY ITEMS	
				FIG 155 HEATER ASSEMBLY	
1	PFOZZ	12603	1510661	HEATER,VEHICULAR,CO	1
2	XDFZZ	40152	947948	.CORE	1
3	XDFZZ	40152	949047	.SEAL	2
4	XDFZZ	40152	947977	.COVER	1
5	XDFZZ	40152	947997	.SEAL	1
6	XDFFF	40152	948958	.BLOWER ASSEMBLY	1
7	XDFZZ	40152	949521	..PLATE	1
8	XDFZZ	40152	948992	..WHEEL	1
9	XDFZZ	40152	949522	..HOUSING	1
10	XDFZZ	40152	947978	..BAFFLE	1
11	XDFZZ	12603	948978	..MOTOR	1
12	XDFZZ	40152	947999	.WIRE	1
13	PFOZZ	40152	947995	.HOSE,AIR DUCT	1
14	PFOZZ	40152	528651	.CLAMP,HOSE	2
15	XDOZZ	40152	947994	.COLLAR	1
16	XDOZZ	40152	947993	.SPRING	1
17	PFOZZ	40152	947992	.COVER,ACCESS	1
18	XDFZZ	40152	949048	.CLAMP	2
19	PFFZZ	12603	889269	.HOSE,NONMETALLIC	1
20	XDOZZ	40152	947990	.BRACKET	4
21	XDFZZ	40152	947991	.GASKET	1
22	PFFZZ	40152	947989	.NUT,PLAIN,HEXAGON	3
23	XDOZZ	40152	947988	.KNOB	1
24	XDOZZ	40152	947987	.KNO8	1
25	PFOZZ	40152	947986	.KNOB	1
26	XDOZZ	40152	947985	.CASE	1
27	XDOZZ	12603	947976	.RETAINER	1
28	XDFZZ	40152	947984	.CLIP	2
29	XDFZZ	40152	947981	.CABLE	1
30	XDFZZ	40152	2507065	.SWITCH	1
31	XDFZZ	40152	947982	.GROMMET	1
32	XDFZZ	40152	947983	.CABLE	1
33	XDFZZ	40152	947950	.VALVE, HEATER CONTRO	1

END OF FIGURE

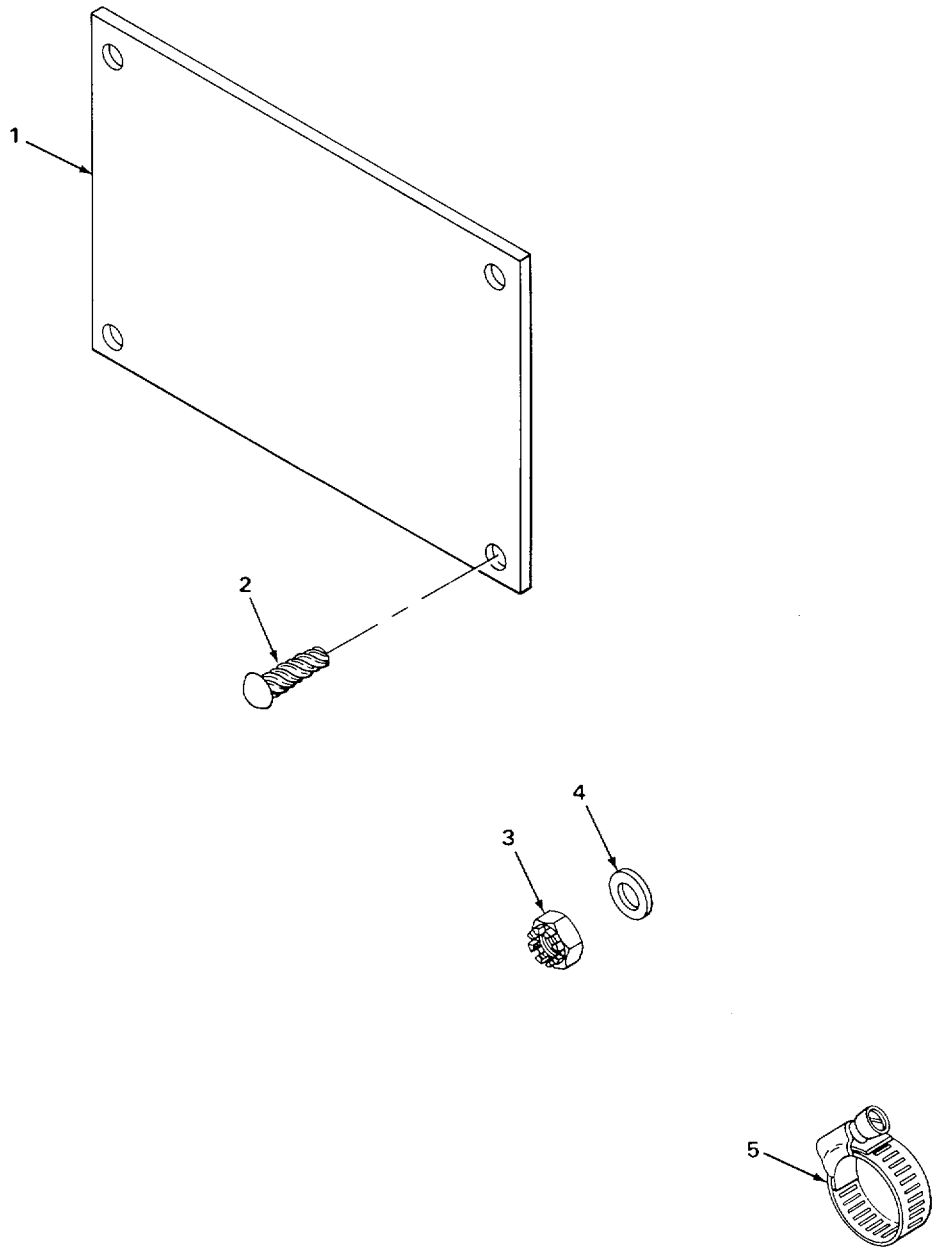

FIGURE 156. DATA PLATES.

(1) ITEM NO	(2) SMR CODE	(3) CAGEC	(4) PART NUMBER	(5) DESCRIPTION AND USABLE ON CODES (UOC)	(6) QTY
				GROUP 2210 DATA PLATES AND INSTRUCTION HOLDERS	
				FIG. 156 DATA PLATES	
1	XDOZZ	72582	1507422	PLATE,SERIAL NUMBER	1
1	XDOZZ	72582	2510783	DECAL,MICHIGAN	1
1	XDOLZ	72582	2510267	DECAL,WARNING	1
1	PFO7Z	24617	1511708	THERMOMETER,INDICAT	1
1	XDOZZ	72582	2510784	DECAL,MODEL	2
1	XDOZZ	72582	2511546	NAMEPLATE CLARK,USE WITH SERIAL RANGE 427C190 AND UP	1
1	XDOZZ	72582	2510268	DECAL LIFTING DATA	1
1	XDDZZ	72582	2507157	DECAL,QUICK START	1
1	XDOZZ	72582	2513296	SIGN KIT	1
1	XDOZZ	72582	2513352	DECAL,CLARK FOR USE WITH SERIAL RANGE 427C190 AND UP	2
1	XDOZZ	72582	2513628	DECAL,CLARK FRONT,USE WITH SERIAL RANGE 427C190 AND UP	1
1	XDOZZ	72582	2513631	DECAL,MICHIGAN USE WITH SERIAL RANGE 427C190 AND UP	2
2	PFOZZ	72582	2516995	SCREW, DRIVE USE WITH SERIAL RANGE 427C190 AND UP	4
3	PFOZZ	12603	60D5	NUT,SELF-LOCKING,CA	1
4	PFOLZ	72582	25E-16	WASHER,FLAT	1
5	XDOZZ	72582	1522201	CLAMP	1

END OF FIGURE

SECTION II

3 4 9 10

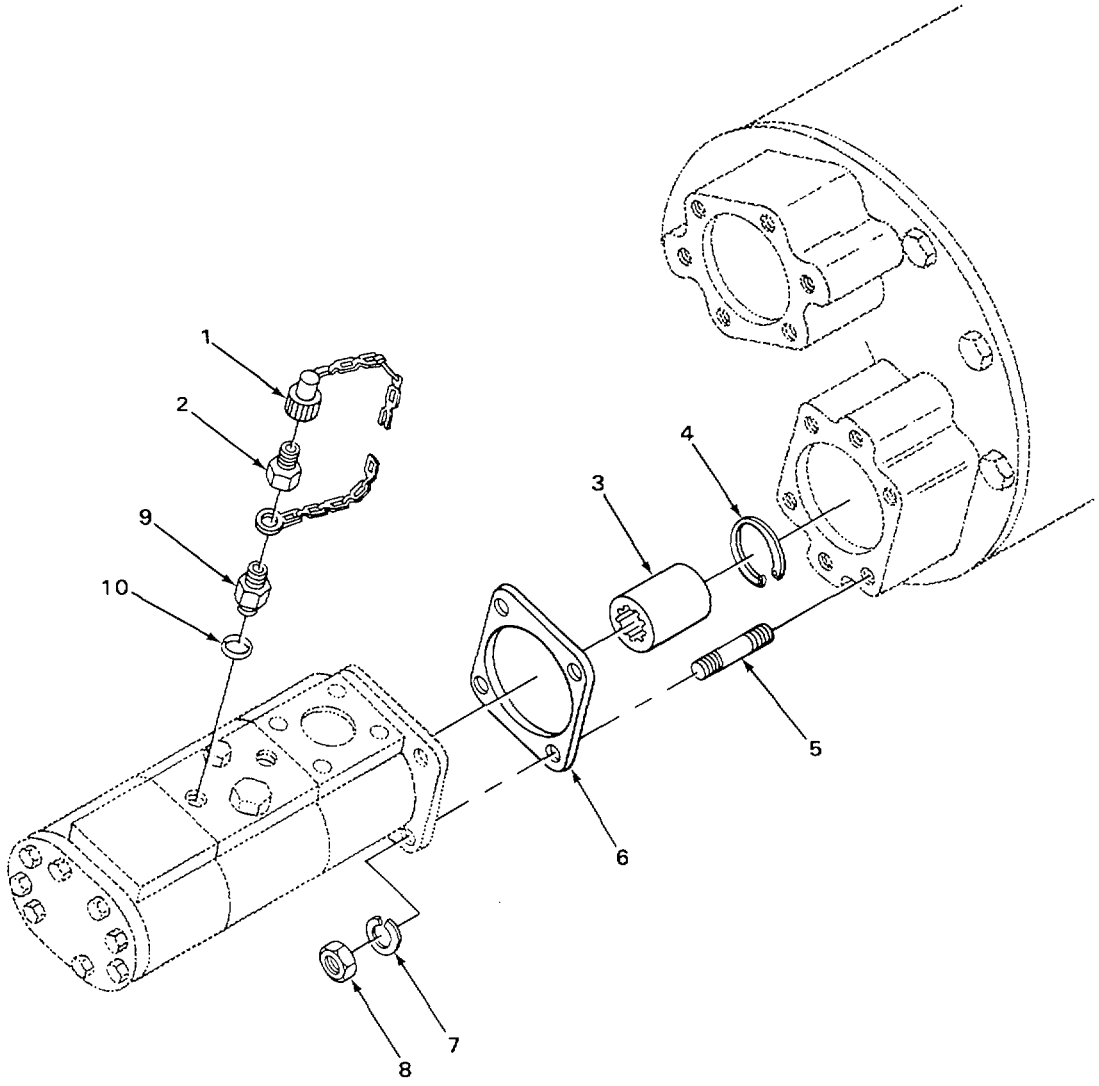

TA235621

FIGURE 157. MAIN PUMP ATTACHING PARTS.

(1) ITEM NO	(2) SMR CODE	(3) CAGEC	(4) PART NUMBER	(5) DESCRIPTION AND USABLE ON CODES (UOC)	(6) QTY
				GROUP 24 HYDRAULIC AND FLUID SYSTEMS GROUP 2401 PUMP AND MOTOR	
				FIG. 157 MAIN PUMP ATTACHING PARTS	
1	PFFZZ	40152	6000689	CAP,HOSE	1
2	XDFZZ	40152	1306142	COUPLER	1
3	XDFFF	40152	230151	SLEEVE DRIVE SHAFT	1
4	PFFZZ	40152	224104	RING RETAINING	1
5	PFFZZ	40152	1513241	STUD,PLAIN	4
6	PFFZZ	40152	552161	GASKET	1
7	PFFZZ	95019	500357-13	WASHER,LOCK	4
8	PFFLZ	96906	MS51968-14	NUT,PLAIN,HEXAGON	4
9	XDFFF	40152	1314178	CONNECTOR	1
10	PFFZZ	12603	91F5	PACKING,PREFORMED	1
				END OF FIGURE	

SECTION II

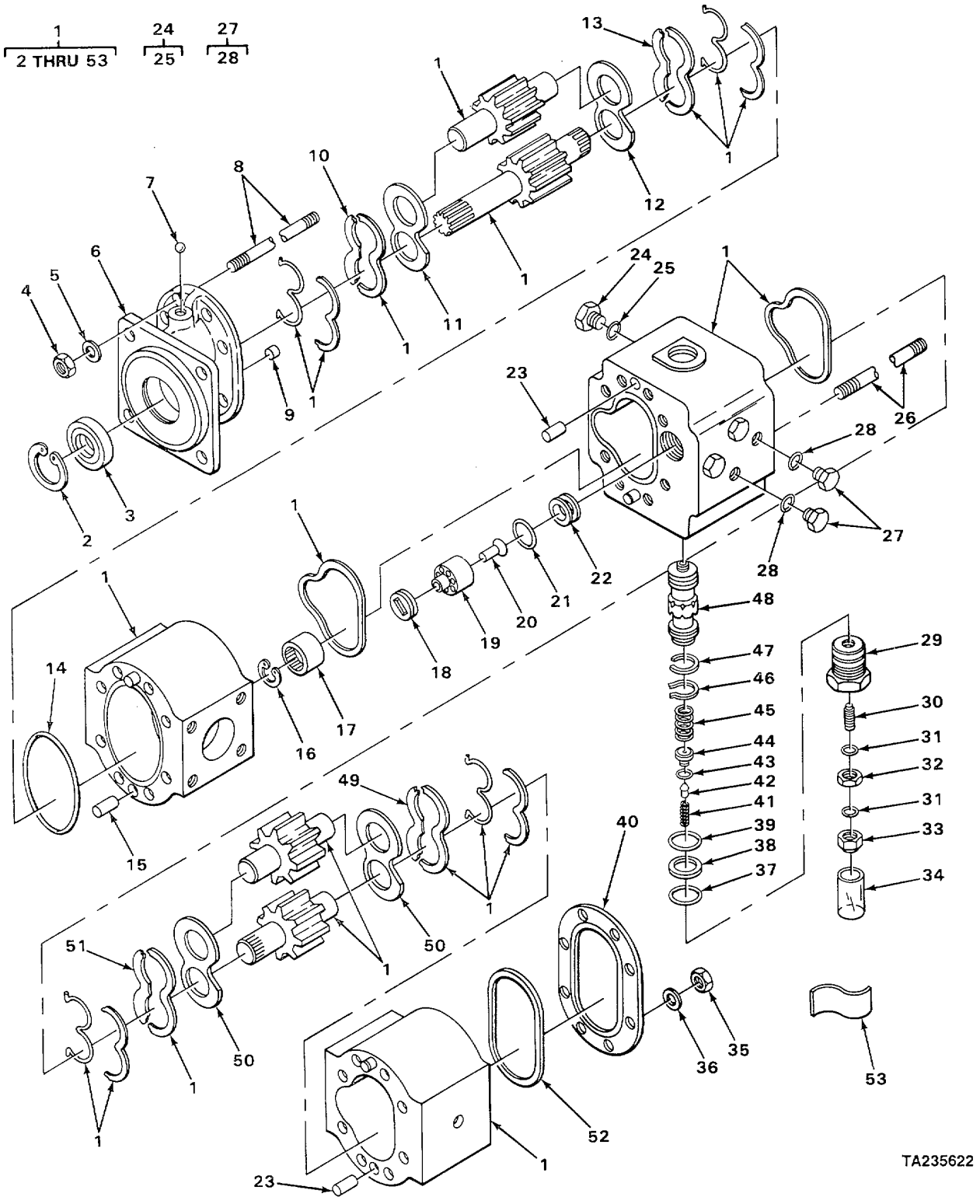

FIGURE 158. MAIN PUMP.

(1) ITEM NO	(2) SMR CODE	(3) CAGEC	(4) PART NUMBER	(5) DESCRIPTION AND USABLE ON CODES (UOC)	(6) QTY
				GROUP 2401 PUMP AND MOTOR	
				FIG. 158 MAIN PUMP	
1	PFFHH	12603	2526551	PUMP,ROTARY	1
2	PFHZZ	96906	MS16625-1200	.RING,RETAINING PART OF KIT P/N 963633	1
3	KFHZZ	40152	963131	.SEAL PART OF KIT P/N 963633	1
4	PFHZZ	40152	954277	.NUT,PLAIN,HEXAGON PART OF KIT P/N 963633	8
5	PFHZZ	40152	946271	.WASHER,LOCK PART OF KIT P/N 963633	8
6	KFHZZ	40152	961795	.FLANGE PART OF KIT P/N 963633	1
7	PFHZZ	96906	MS19059-2414	.BALL,BEARING PART OF KIT P/N 963633	1
8	PFHZZ	40152	6190213	.STUD,PLAIN	8
9	KFHZZ	40152	6190211	.PLUG PART OF KIT P/N 963633	1
10	KFHZZ	40152	5208889	.PLATE,ISOLATION PART OF KIT P/N 963633	1
11	KFHZZ	40152	5208887	.PLATE,PRESSURE PART OF KIT P/N 963118 PART OF KIT P/N 963633	1
12	KFHZZ	40152	5208887	.PLATE,PRESSURE PART OF KIT P/N 963633	1
13	KFHZZ	40152	5208838	.PLATE,ISOLATION PART OF KIT P/N 963633	1
14	KFHZZ	40152	963132	.PACKING,PREFORMED PART OF KIT P/N 963116 PART OF KIT P/N 963633	1
15	KFHZZ	40152	946100	.DOWEL PART OF KIT PN 963633	2
16	PFHZZ	96906	MS16625-1112	.RING,RETAINING PART OF KIT P/N 963119	1
17	KFHZZ	40152	948583	.COUPLING PART OF KIT P/N 963119	1
18	KFHZZ	40152	961283	.PLUG PART OF KIT P/N 963118 PART OF KIT P/N 963119	1
19	KFHZZ	40152	948570	.RETAINER PART OF KIT P/N 963118 PART OF KIT P/N 963119	1
20	KFHZZ	40152	948571	.PISTON PART OF KIT P/N 963118 PART OF KIT P/N 963119	1
21	KFHZZ	40152	77K026	.PACKING,PREFORMED PART OF KIT P/N 963118 PART OF KIT P/N 963119	1
22	KFHZZ	40152	960725	.SEAT PART OF KIT P/N 963118 PART OF KIT P/N 963119	1
23	KFHZZ	40152	946100	.DOWEL PART OF KIT P/N 963118 PART OF KIT PN 963119	4
24	PFHZZ	12603	24K-7	.PLUG, PIPE PART OF KIT PN 963118 PART OF KIT P/N 963119	1
25	XDHZZ	40152	963134	.PACKING,PREFORMED	1
26	PFHZZ	40152	949499	.STUD,PLAIN PART OF KIT P/N 963119	8
27	KFHHH	40152	24K-5	.PLUG PART OF KIT P/N 963118 PART OF KIT P/N 963119	4
28	XDHZZ	40152	963133	.PACKING,PREFORMED	1
29	KFHZZ	40152	960766	.PLUG PART OF KIT P/N 963118 PART OF KIT P/N 963119	1
30	PFHZZ	40152	960768	.SETSCREW PART OF KIT P/N 963118 PART OF KIT P/N 963119	1

(1) ITEM NO	(2) SMR CODE	(3) CAGEC	(4) PART NUMBER	(5) DESCRIPTION AND USABLE ON CODES (UOC)	(6) QTY
31	KFHZZ	40152	7K13	.PACKING,PREFORMED PART OF KIT P/N 963118 PART OF KIT PN 963119	2
32	PFHZZ	40152	948440	.NUT, PLAIN,HEXAGON H PART OF KIT P/N 963118 PART OF KIT P/N 9631190	1
33	PFHZZ	40152	948441	.NUT,PLAIN,CAP PART OF KIT P/N 963118 PART OF KIT P/N 963119	1
34	KFHZZ	40152	961449	.SLEEVE PART OF KIT P/N 963118 PART OF KIT P/N 963119	1
35	PFHZZ	40152	954277	.NUT,PLAIN,HEXAGON PART OF KIT P/N 963119	8
36	PFHZZ	40152	946271	.WASHER, LOCK PART OF KIT P/N 963119	8
37	KFHZZ	40152	963135	.PACKING,PREFORMED PART OF KIT P/N 963118 PART OF KIT P/N 963119	1
38	KFHZZ	40152	963080	.RING,BACK UP PART OF KIT P/N 963118 PART OF KIT P/N 963119	1
39	KFHZZ	40152	77K217	.PACKING, PREFORMED PART OF KIT P/N 963118 PART OF KIT P/N 963119	1
40	KFHZZ	40152	963553	.COVER PART OF KIT P/N 963119	1
41	KFHZZ	40152	1550490	.SPRING PART OF KIT P/N 963118 PART OF KIT P/N 963119	1
42	KFHZZ	40152	948438	.POPPET PART OF KIT PN 963118 PART OF KIT P/N 963119	1
43	KFHZZ	40152	963133	.PACKING, PREFORMED PART OF KIT P/N 963118 PART OF KIT P/N 963119	1
44	KFHZZ	40152	948439	.SEAT PART OF KIT P/N 963118 PART OF KIT P/N 963119	1
45	KFHZZ	40152	960767	.SPRING PART OF KIT P/N 963118 PART OF KIT P/N 963119	1
46	KFHZZ	40152	873246	.RING,SNAP PART OF KIT P/N 963118 PART OF KIT P/N 963119	1
47	KFHZZ	40152	960772	.RING, BACK UP PART OF KIT P/N 963118 PART OF KIT P/N 963119	1
48	KFHZ	40152	961402	.VALVE,SPOOL PART OF KIT P/N 963118 PART OF KIT P/N 963119	1
49	KFHZZ	40152	5208888	.PLATE,ISOLATION PART OF KIT P/N 963119	1
50	KFHZZ	40152	5208887	.PLATE,PRESSURE PART OF KIT P/N 963119	2
51	KFHZZ	40152	5208889	.PLATE, ISOLATION PART OF KIT P/N 963119	1
52	KFHZZ	40152	77K241	.PACKING,PREFORMED PART OF KIT P/N 963116 PART OF KIT P/N 963119	1
53	KFHZZ	40152	963115	.LABEL PART OF KIT P/N 963118 PART OF KIT P/N 963119	1

END OF FIGURE

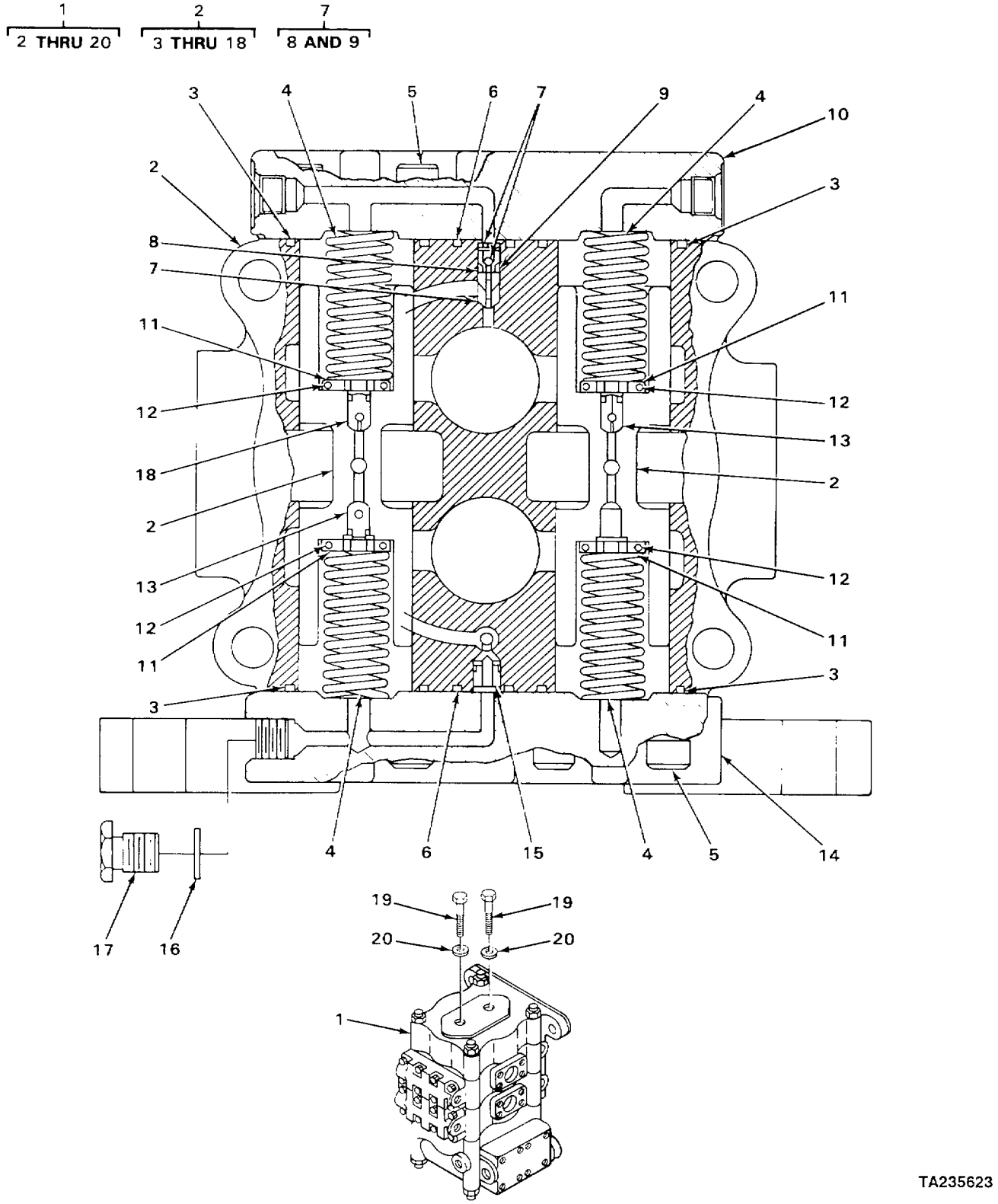

FIGURE 159. MAIN BOOM VALVE ASSEMBLY

(1) ITEM NO	(2) SMR CODE	(3) CAGEC	(4) PART NUMBER	(5) DESCRIPTION AND USABLE ON CODES (UOC)	(6) QTY
				GROUP 2402 MANIFOLD AND/OR CONTROL VALVES FIG. 159 MAIN BOOM VALVE ASSEMBLY	
1	XDFHH	40152	2504921	VALVE,CONTROL ASSEMBLY.....	1
2	XDHHH	40152	961206	.SECTION,BOOM	1
3	PFHZZ	40152	25K40200	..PACKING,PREFORMED	4
4	XDHZZ	40152	948818	..SPRING.....	4
5	XOHZZ	40152	11G-828	..SCREW,MACHINE	16
6	PFHZZ	40152	25K30022	..PACKING, PREFORMED	2
7	XDHHH	40152	949259	..POPPET ASSEMBLY	1
8	XDHZZ	40152	948794	...RING	1
9	XDHZZ	40152	948057	...PACKING,PREFORMED	1
10	XDHZZ	40152	948817	..COVER..... a	
1					
11	PFHZZ	40152	960382	..WASHER,SPRING TENSI	4
12	XDHZZ	40152	960383	..PACKING,PREFORMED	4
13	XDHZZ	40152	948789	..CHECK RED,.110 ORIFICE,.....	2
14	XDHZZ	40152	948816	..COVER.....	1
15	XDHZZ	40152	949255	..CHECK.....	1
16	PFHZZ	96906	MS28778-8	..PACKING,PREFORMED	1
17	XDHZZ	40152	948058	..PLUG.....	1
18	XDHZZ	40152	949283	..CHECK BLUE,.046 ORIFICE.....	1
19	XDHZZ	40152	948847	.PLUG.....	2
20	PFHZZ	12603	91F3	.PACKING,PREFORMED	2

END OF FIGURE

SECTION II

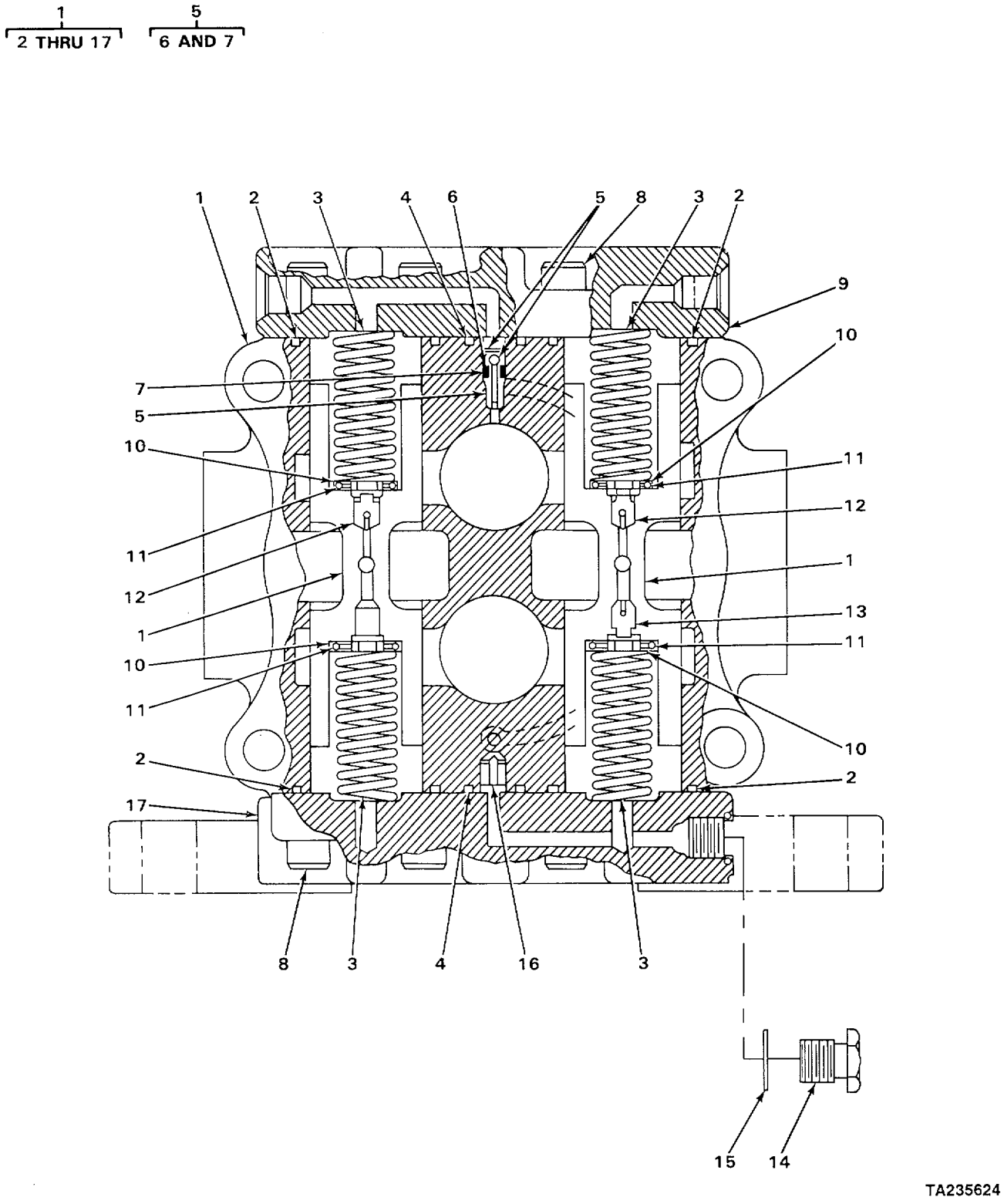

FIGURE 160. MAIN BUCKET SECTION VALVE.

(1) ITEM NO	(2) SMR CODE	(3) CAGEC	(4) PART NUMBER	(5) DESCRIPTION AND USABLE ON CODES (UOC)	(6) QTY
				GROUP 2402 MANIFOLD AND/OR CONTROL VALVES FIG. 160 MAIN BUCKET SECTION VALVE	
1	XDHHH	40152	961203	.SECTION,BUCKET	1
2	PFHZL	40152	25K40200	..PACKING,PREFORMED	4
3	XDHZZ	40152	9488184	..SPRING	4
4	PFHZZ	40152	25K30022	..PACKING,PREFORMED	1
5	XDHHH	40152	949259	..POPPET ASSEMBLY	1
6	XDHZZ	40152	948057	...PACKING, PREFORMED	1
7	XDHZZ	40152	948794	...RING	1
8	XDHZZ	40152	11G-828	..SCREW,MACHINE	16
9	XDHZZ	40152	948817	..COVER	1
10	PFHZZ	40152	960382	..WASHER,SPRING TENSI	4
11	XDHZZ	40152	960383	..PACKING, PREFORMED	4
12	XDHZZ	40152	948060	..CHECK WHITE,.63 ORIFICE	2
13	XDHZZ	40152	948054	..CHECK GREEN,.93 ORIFICE	1
14	XDHZZ	40152	948058	..PLUG	1
15	PFHZZ	96906	MS28778-8	..PACKING, PREFORMED	1
16	XDHZZ	40152	949255	..CHECK	1
17	XDHZZ	40152	948816	..COVER	1

END OF FIGURE

SECTION II

1
2 THRU 12

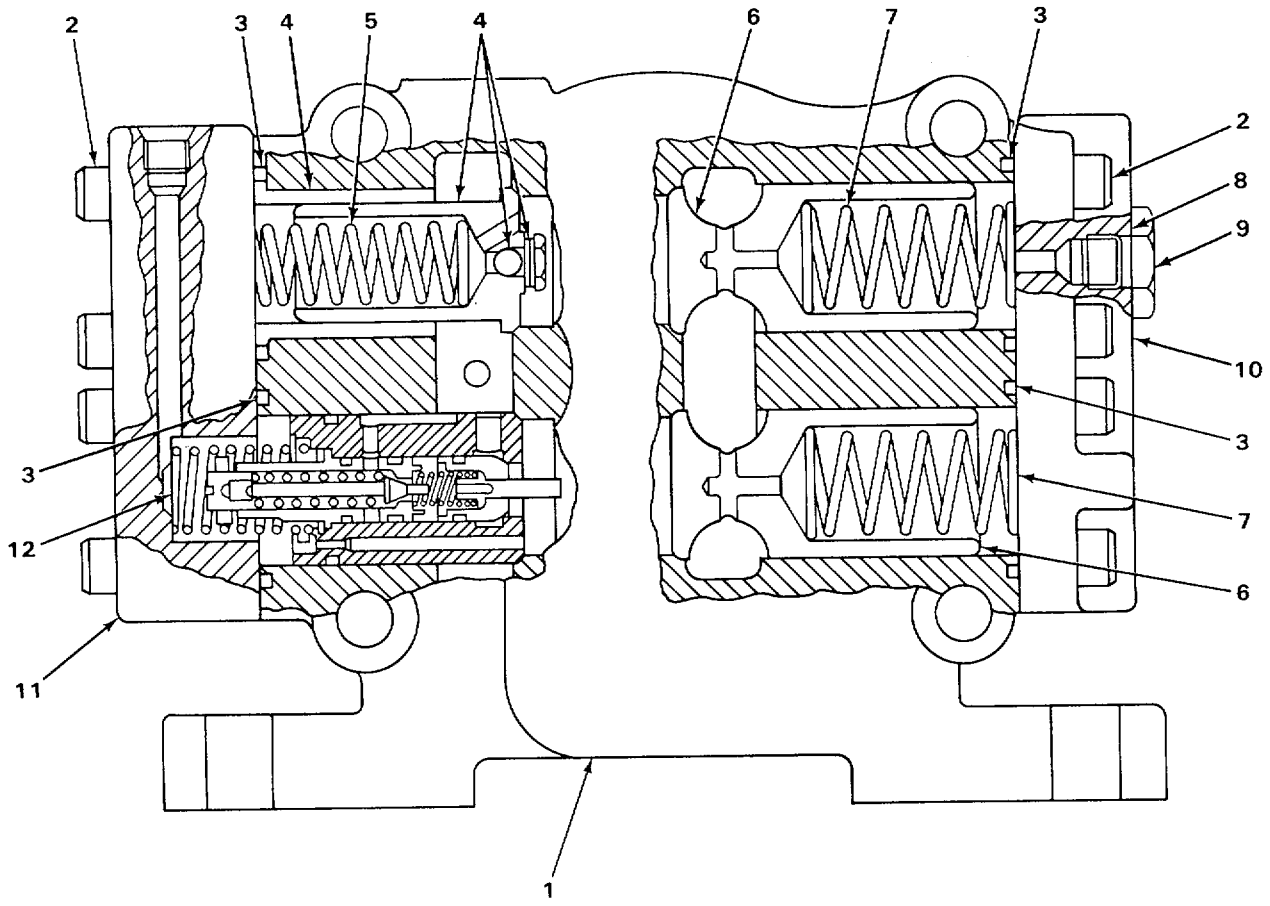

TA235625

FIGURE 161. MAIN CONTROL SECTION VALVE.

(1) ITEM NO	(2) SMR CODE	(3) CAGEC	(4) PART NUMBER	(5) DESCRIPTION AND USABLE ON CODES (UOC)	(6) QTY
				GROUP 2402 MANIFOLD AND/OR CONTROL VALVES FIG. 161 MAIN CONTROL SECTION VALVE	
1	XDHHH	40152	961202	.SECTION, CONTROL	1
2	XDHZZ	40152	11G-828	..SCREW,MACHINE	16
3	PFHZZ	40152	25K40200	..PACKING, PREFORMED	4
4	XDHZZ	40152	948859	..POPPET ASSEMBLY	1
5	XDHZZ	40152	948814	..SPRING	1
6	XDHZZ	40152	948821	..POPPET	2
7	XDHZZ	40152	948823	..SPRNG	2
8	PFHZZ	96906	MS28778-12	..PACKING,PREFORMED	1
9	XDHZZ	40152	949309	..PLUG	1
10	XDHZZ	40152	949298	..COVER	1
11	XDHZZ	40152	948820	..COVER	1
12	XDHZZ	40152	948815	..SPRING	1

END OF FIGURE

SECTION II

1
2 THRU 11

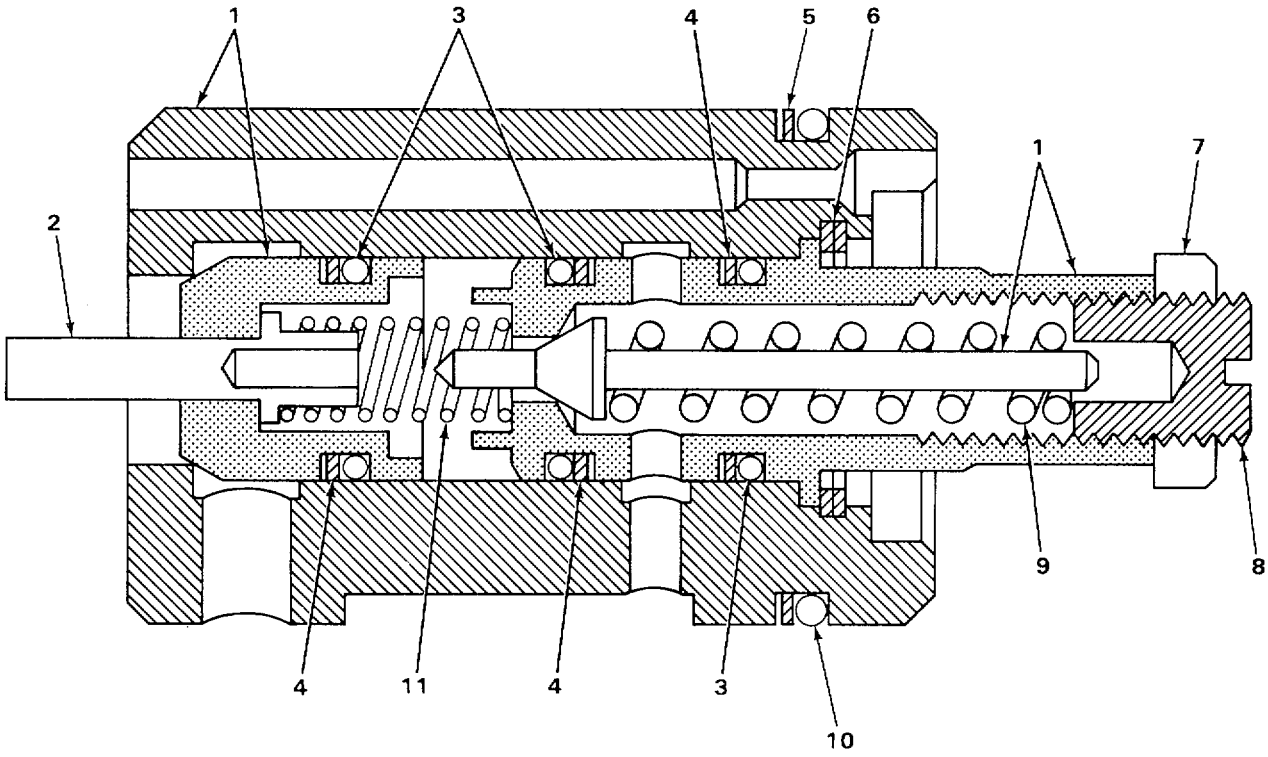

TA235626

FIGURE 162. MAIN RELIEF VALVE.

(1) ITEM NO	(2) SMR CODE	(3) CAGEC	(4) PART NUMBER	(5) DESCRIPTION AND USABLE ON CODES (UOC)	(6) QTY
				GROUP 2402 MANIFOLD AND/OR CONTROL VALVES FIG. 162 MAIN RELIEF VALVE	
1	XDHHH	40152	948854	.VALVE,RELIEF ASSEMBLY	1
2	XDHZZ	40152	948824	..PISTON	1
3	XDHLZ	40152	948063	..PACKING,PREFORMED	3
4	XDHZZ	40152	948849	..RING	3
5	XDHZZ	40152	948852	..RING.	1
6	XDHZZ	40152	9488502	..RING	2
7	PFHZZ	96906	MS35691-21	..NUT,PLAIN,HEXAGON	1
8	PFHZZ	40152	948848	..SETSCREW	1
9	XDHZZ	40152	9488Z5	..SPRING	1
10	XDHZZ	40152	948851	..PACKING,PREFORMED	1
11	XDHZZ	40152	948129	..SPRING	1

END OF FIGURE

SECTION II

1 — 2 THRU 13

6 — 7 AND 8

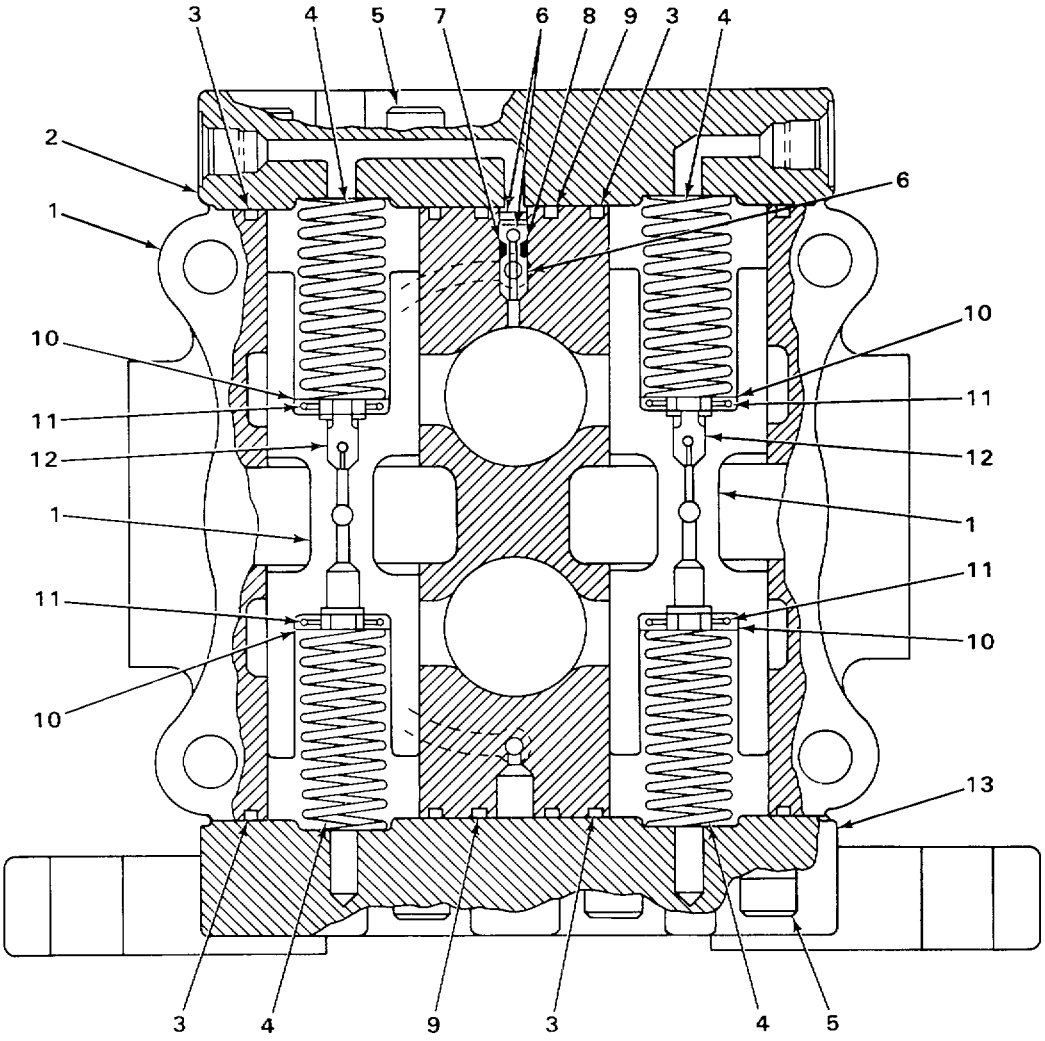

TA235627

FIGURE 163. TRIPLE SPOOL MAIN VALVE.

(1) ITEM NO	(2) SMR CODE	(3) CAGEC	(4) PART NUMBER	(5) DESCRIPTION AND USABLE ON CODES (UOC)	(6) QTY
				GROUP 2402 MANIFOLD AND/OR CONTROL VALVES FIG. 163 TRIPLE SPOOL MAIN VALVE	
1	XDHHH	40152	961205	.SECTION,OPTIONAL	1
2	XDHZZ	40152	948817	..COVER	1
3	PFHZZ	40152	25K40200	..PACKING,PREFORMED	4
4	XDHZZ	40152	948818	..SPRING	4
5	XDHZZ	40152	11G-828	..SCREW,MACHINE	16
6	XOHHH	40152	949259	..POPPET ASSEMBLY	1
7	XDHZZ	40152	948057	...PACKING,PREFORMED	1
8	XDHZZ	40152	948794	...RING	1
9	PFHZZ	40152	25K30022	..PACKING,PREFORMED	2
10	PFH7Z	40152	960382	..WASHER,SPRING TENSI	4
11	XDHZZ	40152	960383	..PACKING,PREFORMED	4
12	XDHZZ	40152	948060	..CHECK	2
13	XDHZZ	12603	948861	..COVER	1

END OF FIGURE

SECTION II

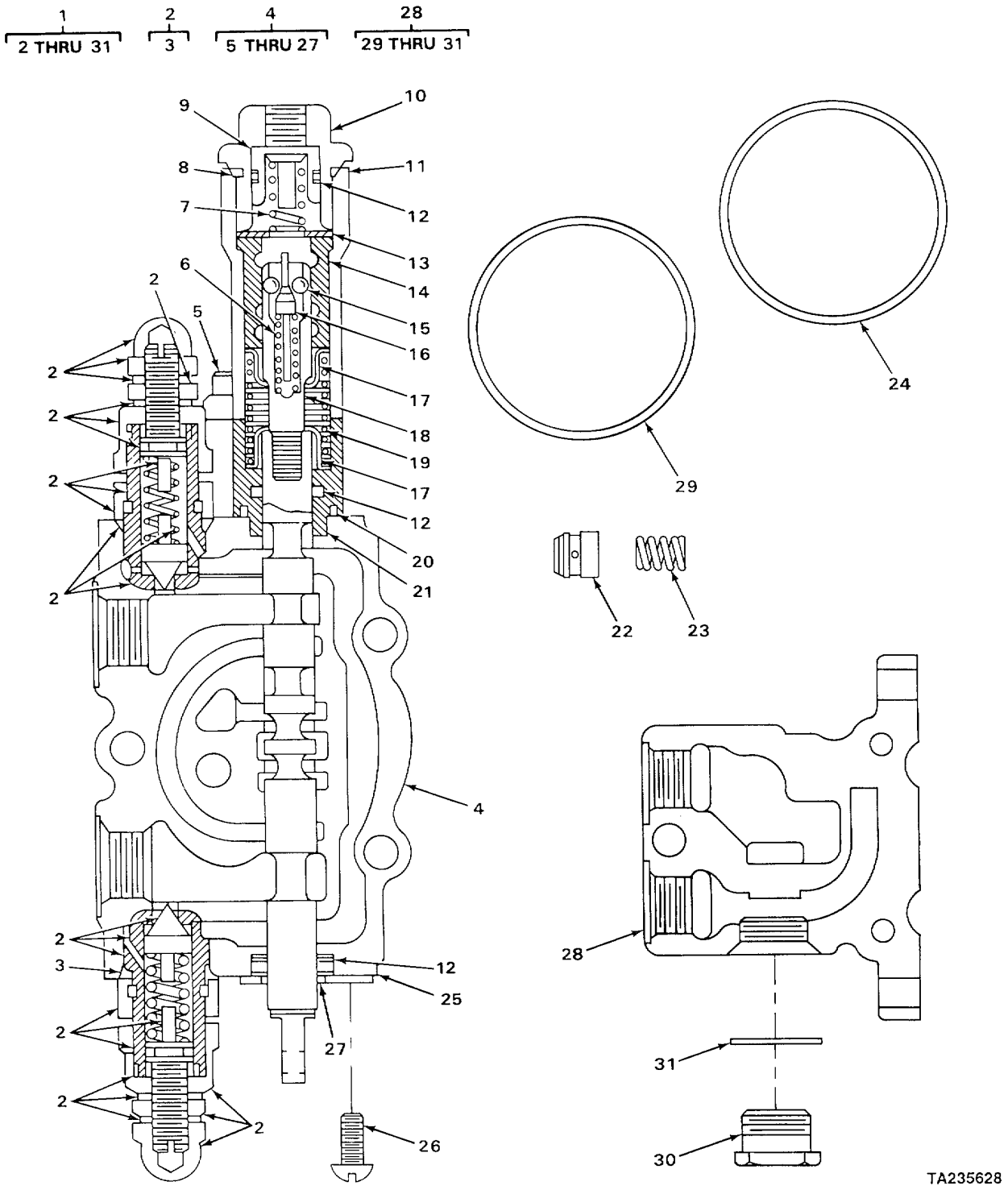

FIGURE 164. MAIN PILOT VALVE.

(1) ITEM NO	(2) SMR CODE	(3) CAGEC	(4) PART NUMBER	(5) DESCRIPTION AND USABLE ON CODES (UOC)	(6) QTY
				GROUP 2402 MANIFOLD AND/OR CONTROL VALVES FIG. 164 MAIN PILOT VALVE	
1	PFFHH	40152	2511902	VALVE,LINEAR,DIRECT	1
2	XDHHH	40152	948036	VALVE,RELIEF	4
3	PFHZZ	12603	91F7	PACKING,PREFORMED	1
4	XDHHH	40152	961305	PLUNGER ASSEMBLY	1
5	PFHZZ	40152	948032	SCREW,MACHINE	2
6	XDHZZ	40152	948020	SPRING	1
7	XDHZZ	40152	948026	SPRING	1
8	XDHZZ	40152	961196	PIN	1
9	PFHZZ	12603	961195	PISTON,VALVE	1
10	XDHZZ	40152	961243	PLUG	1
11	XDHZZ	40152	948980	CAP	1
12	PFHZZ	75214	P383-2	PACKING,PREFORMED	3
13	PFHZZ	12603	948030	SPACER,PLATE	1
14	XDHZZ	40152	961242	SLEEVE r	1
15	XDHZZ	40152	877420	BALL	4
16	XDHZZ	40152	961197	CAM	1
17	XDHZZ	40152	948017	SEAT	2
18	XDHZZ	40152	948019	VALVE,SEAT	1
19	XDHZZ	40152	948018	SPRING	1
20	PFHZZ	96906	MS28775-116	PACKING,PREFORMED	1
21	XDHZZ	40152	948982	SPACER	1
22	XDHZZ	40152	948015	POPPET	1
23	XDHZZ	40152	948022	SPRING	1
24	PFHZZ	96906	MS28775-218	PACKING,PREFORMED	1
25	XDHZZ	40152	948016	PLATE	1
26	PFHZ2	40152	89G-406	SCREW,MACHINE	2
27	PFHZZ	40152	948021	SEAL WIPER	1
28	XDHHH	40152	948805	SECTION,INLET	1
29	PFHZZ	96906	MS28775-218	PACKING,PREFORMED	1
30	XDHZZ	40152	948810	PLUG	1
31	XDHZZ	40152	961240	PACKING,PREFORMED	1

END OF FIGURE

SECTION II

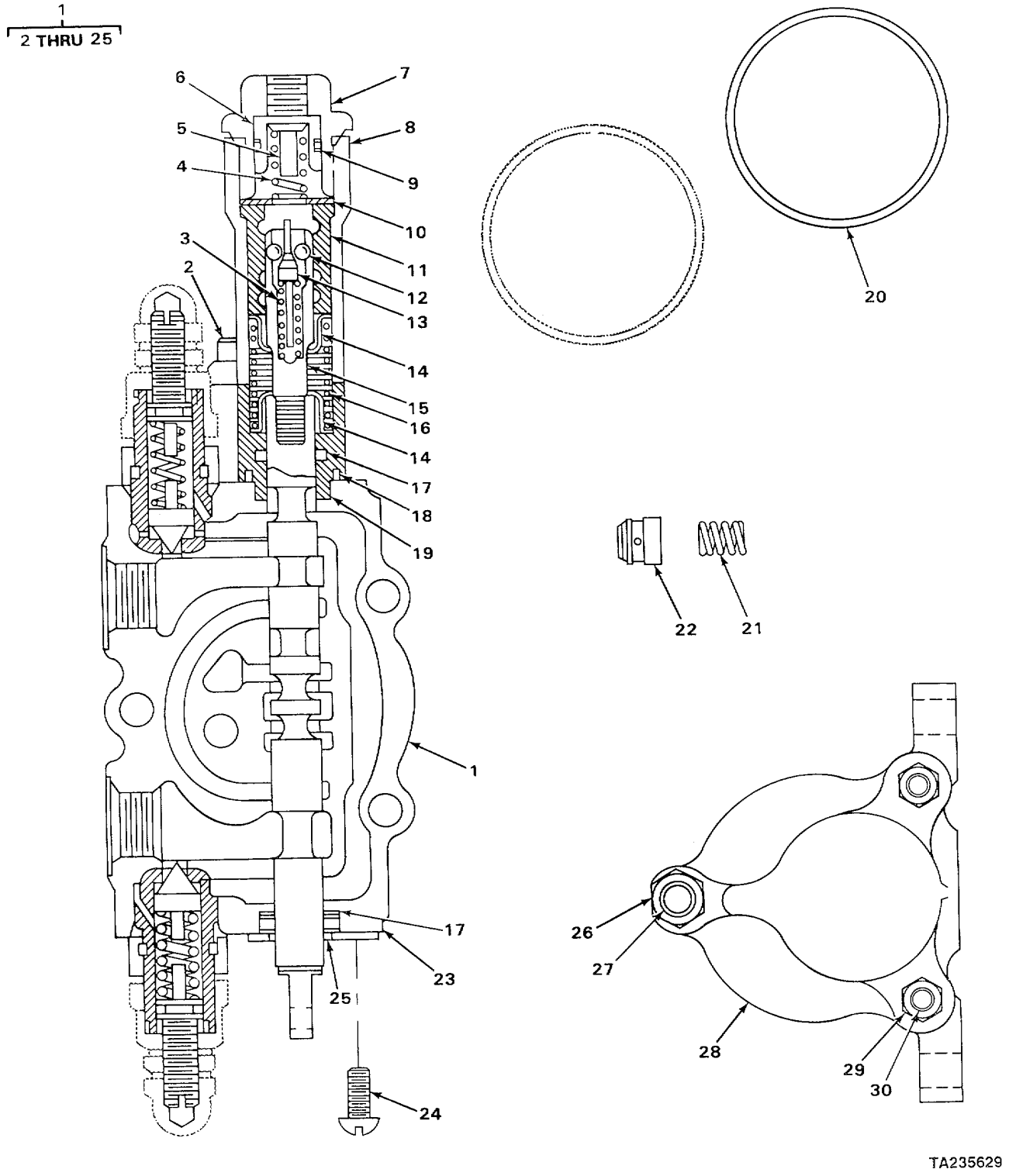

FIGURE 165. PILOT VALVE RELATED PARTS.

(1) ITEM NO	(2) SMR CODE	(3) CAGEC	(4) PART NUMBER	(5) DESCRIPTION AND USABLE ON CODES (UOC)	(6) QTY
				GROUP 2402 MANIFOLD AND/OR CONTROL VALVES FIG. 165 PILOT VALVE RELATED PARTS	
1	XDHHH	40152	961306	.PLUNGER ASSEMBLY	1
2	PFHZZ	40152	11G-428	..SCREW,MACHINE	2
3	XDHZZ	40152	9480Z0	..SPRING	1
4	XDHZZ	40152	948026	..SPRING	1
5	XDHZZ	40152	948025	..PIN	1
6	XDHZZ	40152	948024	..PISTON	1
7	XDHZZ	40152	948028	..PLUG	1
8	XDHZZ	40152	948980	..CAP	1
9	PFHZZ	75214	P383-2	..PACKING,PREFORMED	1
10	PFHZZ	12603	948030	..SPACER,PLATE	1
11	XDHZZ	40152	948034	..SLEEVE	1
12	XDHZZ	40152	877420	..BALL	4
13	XDHZZ	40152	948029	..CAM	1
14	XDHZZ	40152	948017	..SEAT	2
15	XDHZZ	40152	948033	..PIN,DETENT	1
16	XDHZZ	40152	948018	.SPRING	1
17	XDHZZ	40152	961933	..PACKING,PREFORMED	2
18	PFHZZ	96906	MS28775-116	..PACKING,PREFORMED	1
19	XDHZZ	40152	948981	..SPACER	1
20	PFHZZ	96906	MS28775-218	..PACKING,PREFORMED	1
21	XDHZZ	40152	961692	..SPRING	1
22	XDHZZ	40152	961693	..POPPET	1
23	XDHZZ	40152	948016	..PLATE	1
24	PFHZZ	40152	89G-406	..SCREW,MACHINE	1
25	XDHZZ	40152	961934	..WIPER	1
26	PFHZZ	12603	62D06	.NUT,PLAIN,HEXAGON	2
27	XDHZZ	40152	948014	.ROD,TIE	1
28	XOHZZ	40152	948010	.COVER	1
29	PFHZZ	40152	61D-05	.NUT,PLAIN,HEXAGON	4
30	XDHZZ	40152	948013	.ROD,TIE	2

END OF FIGURE

SECTION II

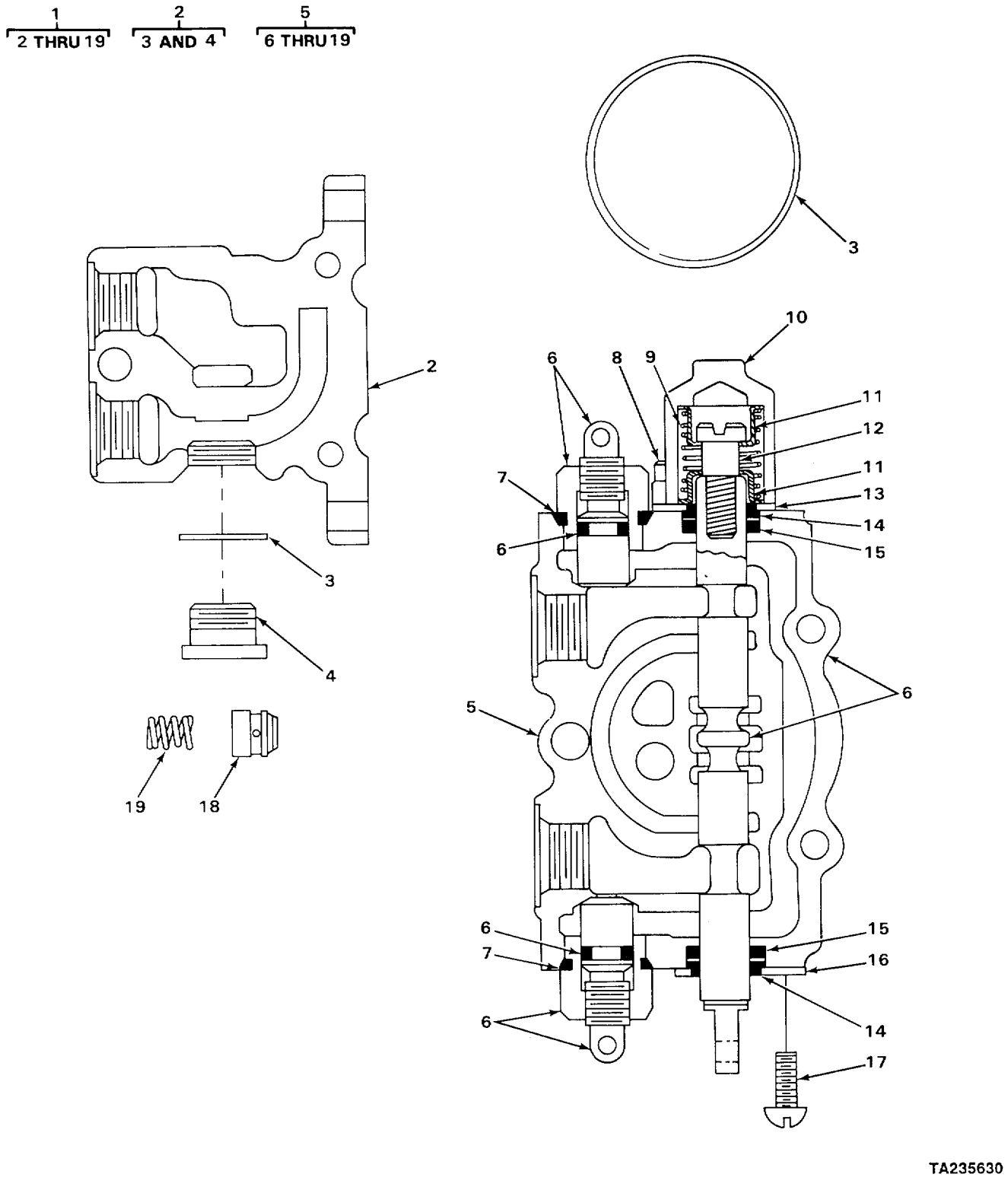

FIGURE 166. THREE SPOOL PILOT VALVE.

(1) ITEM NO	(2) SMR CODE	(3) CAGEC	(4) PART NUMBER	(5) DESCRIPTION AND USABLE ON CODES (UOC)	(6) QTY
				GROUP 2402 MANIFOLD AND/OR CONTROL VALVES FIG. 166 THREE SPOOL PILOT VALVE	
1	XDFHH	40152	2511903	VALVE,CONTROL ASSEMBLY	1
2	XDHHH	40152	961194	.IN AND OUT SECTION ASSEMBLY	1
3	XDHZZ	40152	76K-228	..PACKING,PREFORMED	2
4	XDHZZ	40152	948810	..PLUG	1
5	XDHHH	40152	961308	.PLUNGER ASSEMBLY	1
6	XDHZZ	40152	961192	..VALVE	2
7	XDHZZ	40152	961240	..PACKING,PREFORMED	2
8	PFHZZ	40152	948032	..SCREW,MACHINE	2
9	XDHZZ	40152	94B018	..SPRING	1
10	XDHZZ	40152	948192	..PLUG	1
11	XDHZZ	40152	948017	..SEAT	2
12	PFHZZ	40152	948191	..SCREW,SHOULDER	1
13	XDHZZ	40152	948031	..SPACER	1
14	XDHZZ	40152	76K-116	..PACKING,PREFORMED	2
15	XDHZZ	40152	948063	..PACKING,PREFORMED	2
16	XDHZZ	40152	948016	..PLATE	1
17	PFHZZ	40152	89G-406	..SCREW,MACHINE	2
18	XDHZZ	40152	948015	..POPPET	1
19	XDHZZ	40152	948022	..SPRING	1

END OF FIGURE

SECTION II

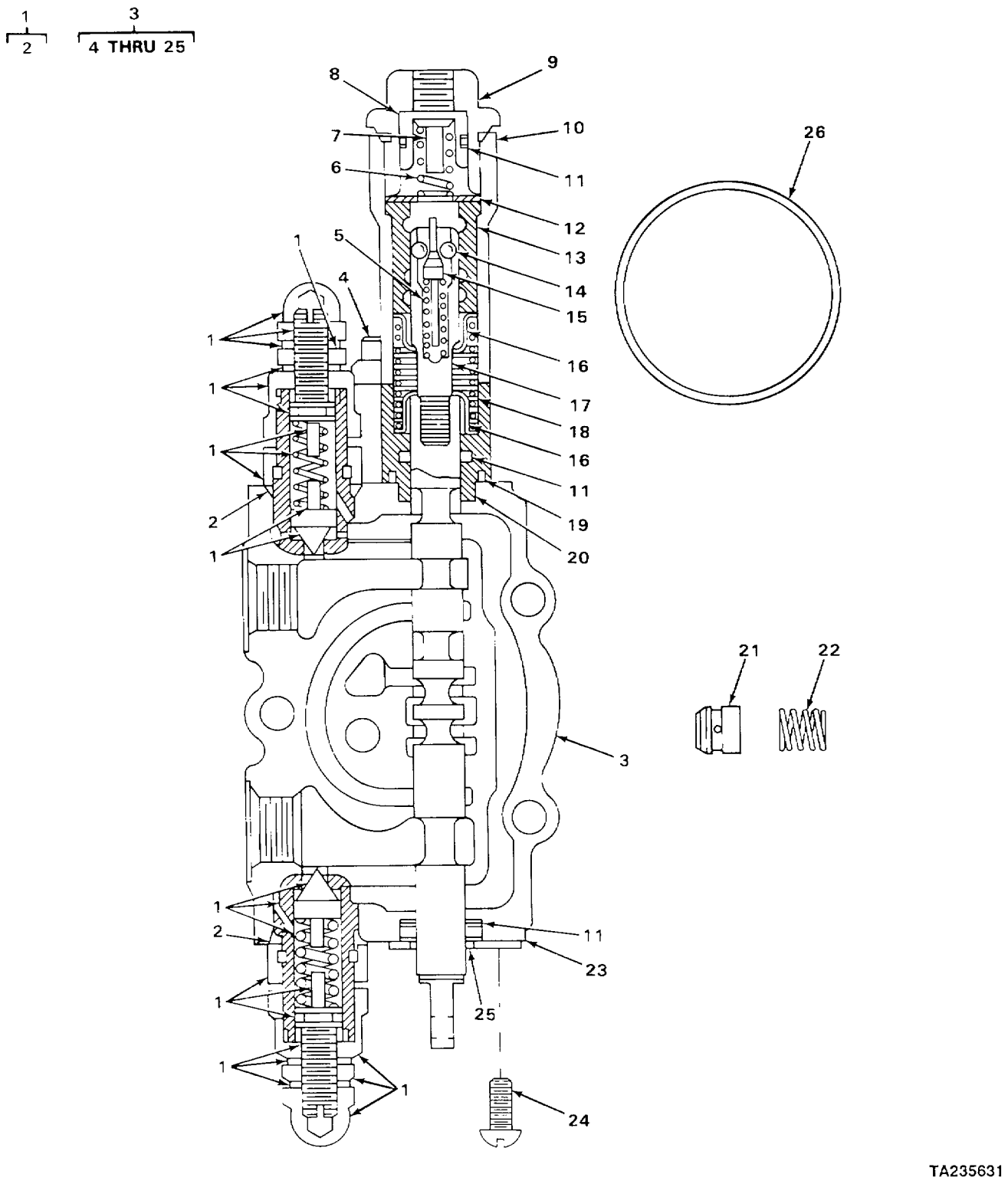

FIGURE 167. BUCKET PILOT VALVE.

(1) ITEM NO	(2) SMR CODE	(3) CAGEC	(4) PART NUMBER	(5) DESCRIPTION AND USABLE ON CODES (UOC)	(6) QTY
				GROUP 2402 MANIFOLD AND/OR CONTROL VALVES	
				FIG. 167 BUCKET PILOT VALVE	
1	XDHHH	40152	961193	.VALVE,RELIEF	4
2	XDHZZ	40152	961240	..PACKING,PREFORMED	1
3	XDHHH	40152	961307	.PLUNGER	1
4	PFH7Z	40152	948032	..SCREW,MACHINE,	2
5	XDHZZ	40152	948020	..SPRING	1
6	XDHZZ	40152	948026	..SPRING	1
7	XDHZZ	40152	961196	..PIN	1
8	PFHZZ	12603	961195	..PISTON,VALVE	1
9	XDHZZ	40152	961241	..PLUG	1
10	XDKZZ	40152	948980	..CAP	1
11	XDHZZ	40152	948063	..PACKING,PREFORMED	3
12	PFHZZ	12603	948030	..SPACER,PLATE	1
13	XDHZZ	40152	961242	..SLEEVE	1
14	XDHZZ	40152	877420	..BALL	4
15	XDHZZ	40152	961197	..CAM	1
16	XDHZZ	40152	948017	..SEAT	2
17	XDHZZ	40152	948019	..VALVE,SEAT	1
18	XDHZZ	40152	948018	..SPRING	1
19	XDHZZ	40152	76K-116	..PACKING,PREFORMED	1
20	XDHZZ	40152	948982	..SPACER	1
21	XDHZZ	40152	948015	..POPPET	1
22	XDHZZ	40152	948022	..SPRING	1
23	XDHZZ	40152	948016	..PLATE	1
24	PFHZZ	40152	89G-406	..SCREW,MACHINE	2
25	PFHZZ	40152	948021	..SEAL WIPER	1
26	XDHZZ	40152	76K-228	.PACKING,PREFORMED	2

END OF FIGURE

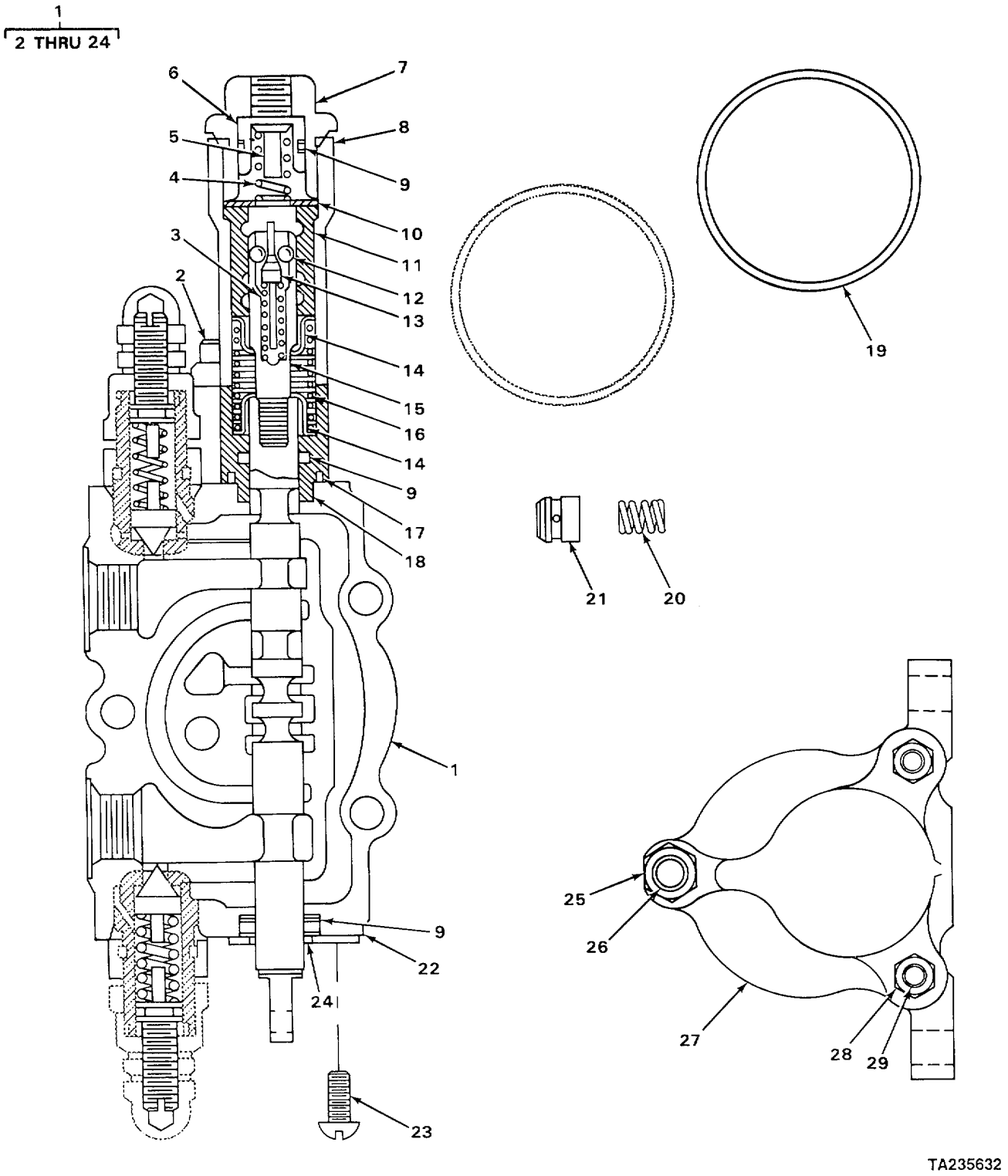

FIGURE 168. BOOM AND COVER END PILOT VALVE.

(1) ITEM NO	(2) SMR CODE	(3) CAGEC	(4) PART NUMBER	(5) DESCRIPTION AND USABLE ON CODES (UOC)	(6) QTY
				GROUP 2402 MANIFOLD AND/OR CONTROL VALVES	
				FIG. 168 BOOM AND COVER END PILOT VALVE	
1	XDHHH	40152	961309	.PLUNGER ASSEMBLY	1
2	PFHZZ	40152	948032	..SCREW,MACHINE	2
3	XDHZZ	40152	948020	..SPRING	1
4	XOHZZ	40152	948026	..SPRING	1
5	XDHZZ	40152	961196	..PIN	1
6	PFHZZ	12603	961195	..PISTON,VALVE	1
7	XDHZZ	40152	961243	..PLUG	1
8	XDHZZ	40152	948980	..CAP	1
9	XDHZZ	40152	948063	..PACKING,PREFORMED	1
10	PFHZZ	12603	948030	..SPACER,PLATE	1
11	XDHZZ	40152	961244	..SLEEVE	1
12	XDHZZ	40152	877420	..BALL	4
13	XDHZZ	40152	961197	..CAM	1
14	XDHZZ	40152	948017	..SEAT	2
15	XDHZZ	40152	948033	..PIN,DETENT	1
16	XDHZZ	40152	948018	..SPRING	1
17	XDHZZ	40152	76K-116	..PACKING,PREFORMED	1
18	XDHZZ	40152	948981	..SPACER	1
19	XDHZZ	40152	76K-228	..PACKING,PREFORMED	1
20	XDHZZ	40152	948022	..SPRING	1
21	XDHZZ	40152	948015	..POPPET	1
22	XDHZZ	40152	948016	..PLATE	1
23	PFHZZ	40152	71G-406	..SCREW,MACHINE	2
24	PFHZZ	40152	948021	..SEAL WIPER	1
25	PFHZZ	12603	62006	.NUT,PLAIN,HEXAGON	2
26	XDHZZ	40152	948188	.ROD,TIE	1
27	XDHZZ	40152	948010	.COVER	1
28	PFHZZ	40152	61D05	.NUT,PLAIN,HEXAGON	4
29	XDHZZ	40152	948107	.ROD, TIE,	2

END OF FIGURE

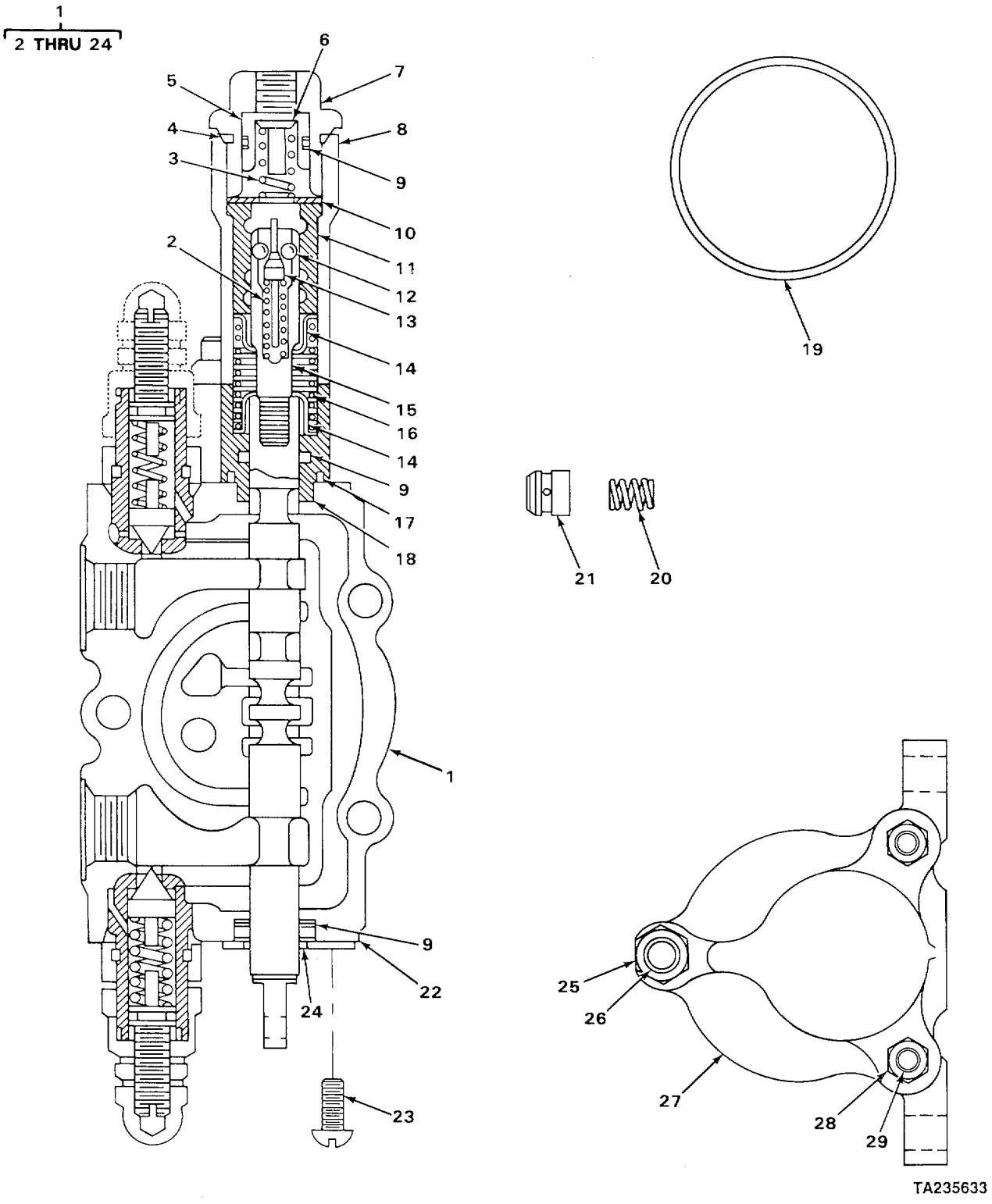

FIGURE 169. PILOT VALVE (INLET.OUTLET).

(1) ITEM NO	(2) SMR CODE	(3) CAGEC	(4) PART NUMBER	(5) DESCRIPTION AND USABLE ON CODES (UOC)	(6) QTY
				GROUP 2402 MANIFOLD AND/OR CONTROL VALVES	
				FIG. 169 PILOT VALVE (INLET/OUTLET)	
1	XDHHH	40152	948903	.PLUNGER	1
2	XDHZZ	40152	948020	..SPRING	1
3	XDHZZ	40152	948026	..SPRING	1
4	XDHZZ	40152	948025	..PIN	1
5	PFHZZ	40152	11G-428	..SCREW,MACHINE	2
6	XDHZZ	40152	948024	..PISTON	1
7	XDHZZ	40152	948028	..PLUG	1
8	XDHZZ	40152	948980	..CAP	1
9	PFHZZ	75214	P383-2	..PACKING,PREFORMED	3
10	PFHZ2	12603	948030	..SPACER,PLATE	1
11	XDHZZ	40152	948034	..SLEEVE	1
12	XDHZZ	40152	877420	..BALL	4
13	XDHZZ	40152	948029	..CAM	1
14	XDHZZ	40152	948017	..SEAT	2
15	XDHZZ	40152	948033	..PIN,DETENT	1
16	XDHZZ	40152	948018	..SPRING	1
17	PFHZZ	96906	MS28775-116	..PACKING,PREFORMED	1
18	XDHZZ	40152	948981	..SPACER	1
19	PFHZZ	96906	MS28775-218	..PACKING,PREFORMED	1
20	XDHZZ	40152	948022	..SPRING	1
21	XDHZZ	40152	948015	..POPPET	1
22	XDHZZ	40152	948016	..PLATE	1
23	PFHZZ	40152	71G-406	..SCREW,MACHINE	2
24	PFHZZ	40152	948021	..SEAL WIPER	1
25	PFHZZ	12603	62D06	.NUT,PLAIN,HEXAGON	2
26	XDHZZ	40152	948188	.ROD,TIE	1
27	XDHZZ	40152	948010	.COVER	1
28	PFHZZ	40152	13803675-1	.NUT,PLAIN,HEXAGON	4
29	XDHZZ	40152	948187	.ROD,TIE	2

END OF FIGURE

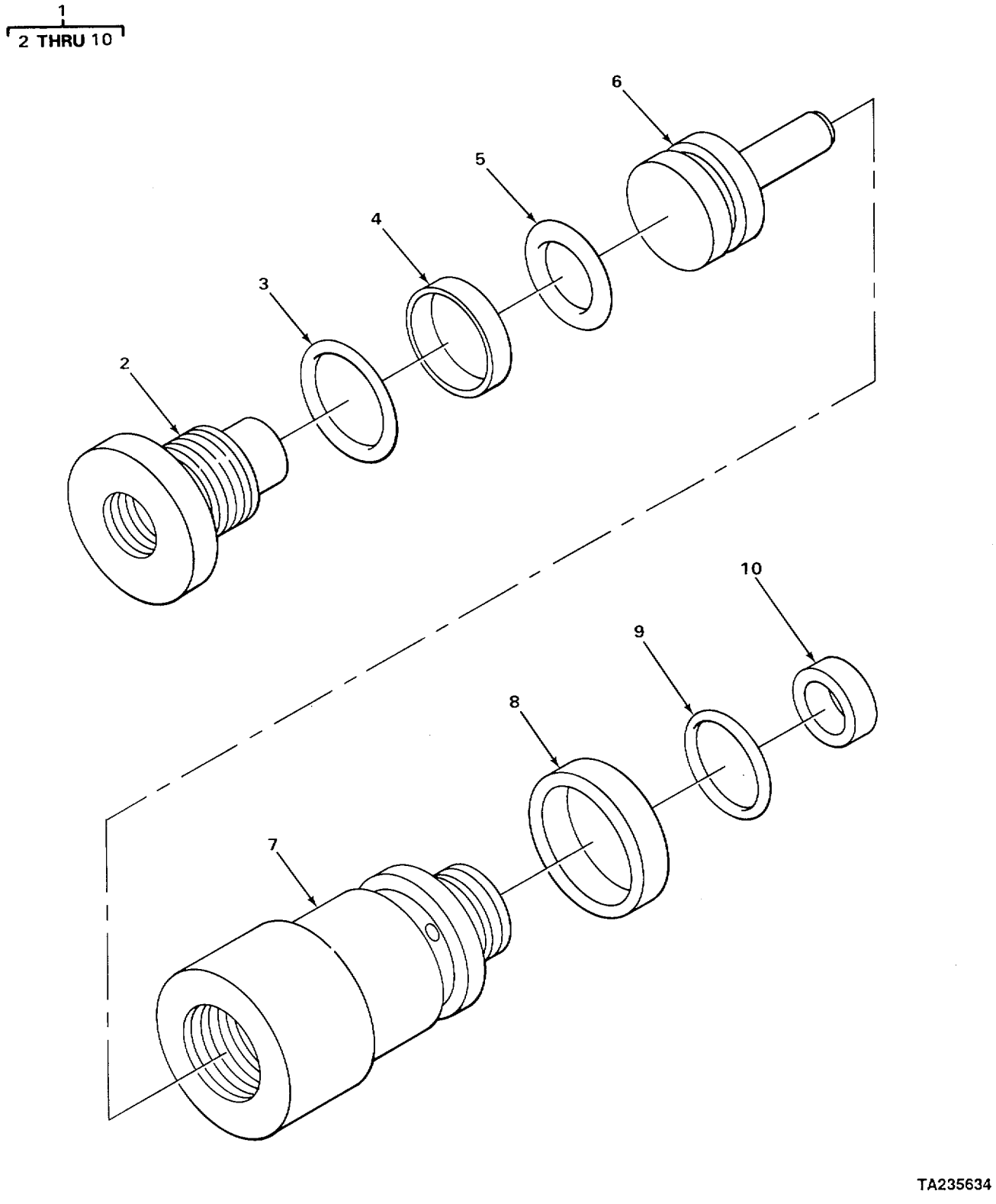

FIGURE 170. DECLUTCH VALVE ASSEMBLY.

(1) ITEM NO	(2) SMR CODE	(3) CAGEC	(4) PART NUMBER	(5) DESCRIPTION AND USABLE ON CODES (UOC)	(6) QTY
				GROUP 2402 MANIFOLD AND/OR CONTROL VALVES	
				FIG. 170 DECLUTCH VALVE ASSEMBLY	
1	XDFHH	40152	235958	VALVE ASSEMBLY.....	1
2	XDHZZ	40152	235095	.PLUG.....	1
3	PFHZZ	12603	91F10	.PACKING,PREFORMED	1
4	XDHZZ	40152	235138	.RING	1
5	PFHZZ	12603	25K30030	.PACKING,PREFORMED	1
6	XDHZZ	40152	235957	.PISTON	1
7	XDHZZ	40152	235956	.HOUSING.....	1
8	PFHZZ	12603	228931	.SEAL,OIL	1
9	PFHZZ	40152	25K30022	.PACKING,PREFORMED	1
10	PFHZZ	12603	229131	.SEAL	1
				END OF FIGURE	

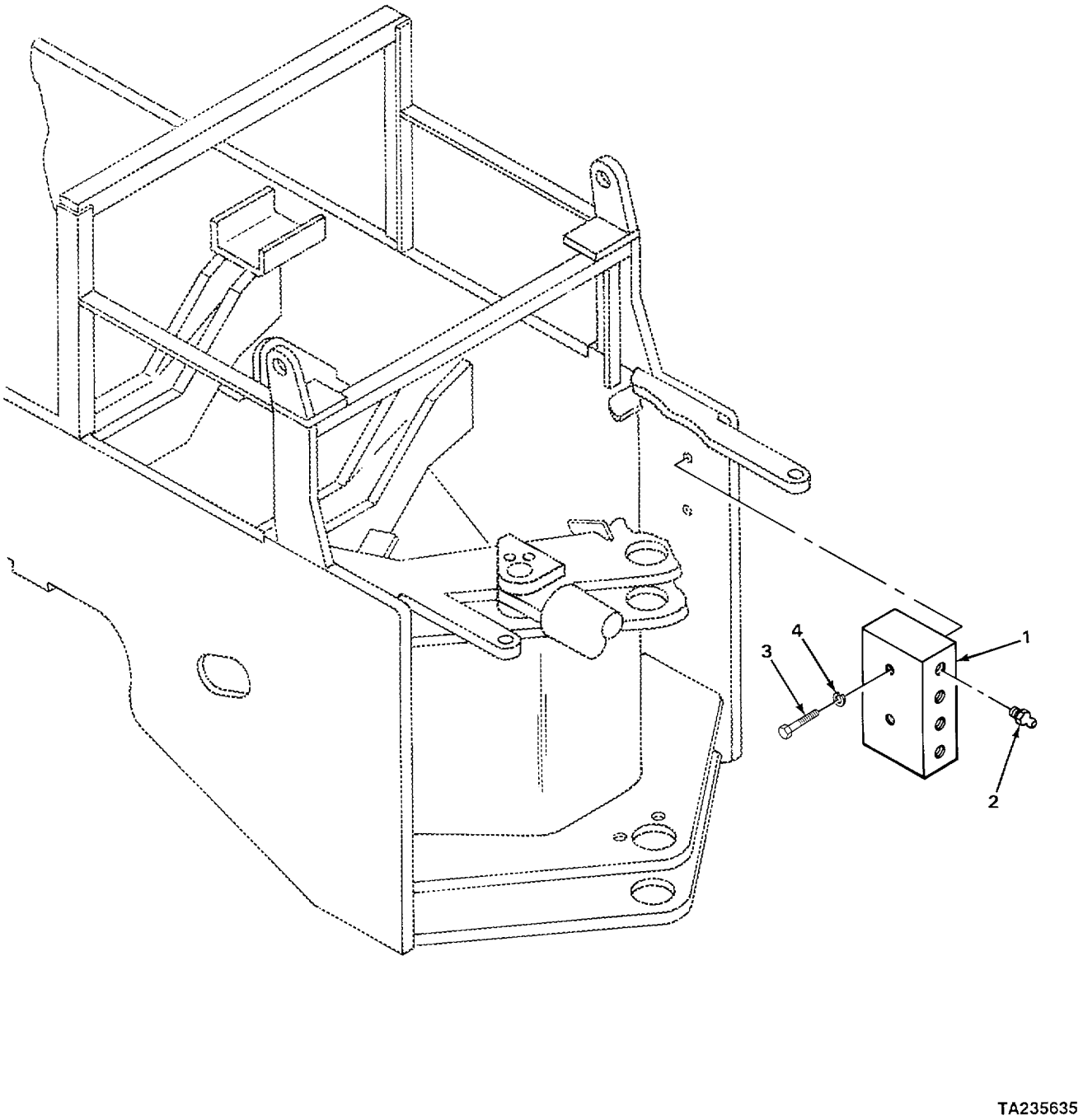

FIGURE 171. FEEDER MANIFOLD.

(1) ITEM NO	(2) SMR CODE	(3) CAGEC	(4) PART NUMBER	(5) DESCRIPTION AND USABLE ON CODES (UOC)	(6) QTY
				GROUP 2402 MANIFOLD AND/OR CONTROL VALVES	
				FIG. 171 FEEDER MANIFOLD	
1	XDFZZ	40152	1509182	FEEDER.....	1
2	PFOZZ	12603	10H25	FITTING,LUBRICATION.....	4
3	PFFZZ	40152	23C-620	BOLT,MACHINE	2
4	PFFZZ	96906	MS35333-76	WASHER,LOCK.....	2
				END OF FIGURE	

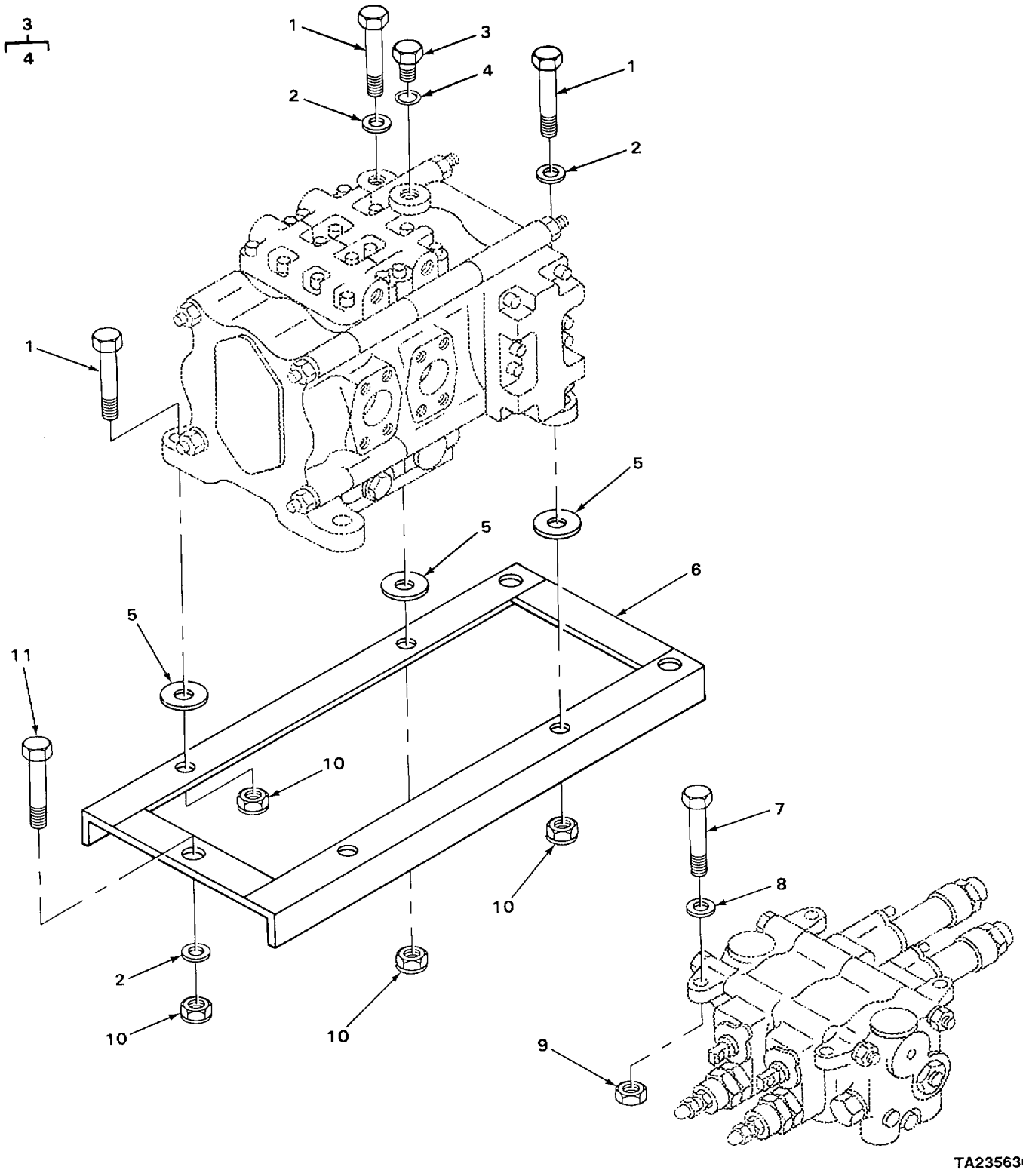

FIGURE 172. MOUNTING CONTROL VALVE.

(1) ITEM NO	(2) SMR CODE	(3) CAGEC	(4) PART NUMBER	(5) DESCRIPTION AND USABLE ON CODES (UOC)	(6) QTY
				GROUP 2402 MANIFOLD AND/OR CONTROL VALVES	
				FIG. 172 MOUNTING CONTROL VALVE	
1	PFFZZ	96906	MS90727-212	SCREW?CAPIHEXAGON H	4
2	PFFZZ	96906	MS27183-25	WASHER,FLAT	7
3	PFFZZ	12603	24K-7	PLUG,PIPE	1
4	PFFZZ	12603	91F7	PACKING,PREFORMED	1
5	PFFZZ	40152	1512415	WASHER,FLAT	4
6	XDFZZ	40152	1514880	BRACKET	1
7	PFFZZ	40152	24C-636	SCREW,CAP,HEXAGON H	4
8	PFFZZ	40152	25E18	WASHER,SPLIT	8
9	PFFZZ	12603	6006	NUT,SELF-LOCKING,HE	4
10	PFFZZ	40152	180-14	NUT,PLAIN,HEXAGON	7
11	PFFZZ	40152	24C-1436	BOLT,MACHINE	3

END OF FIGURE

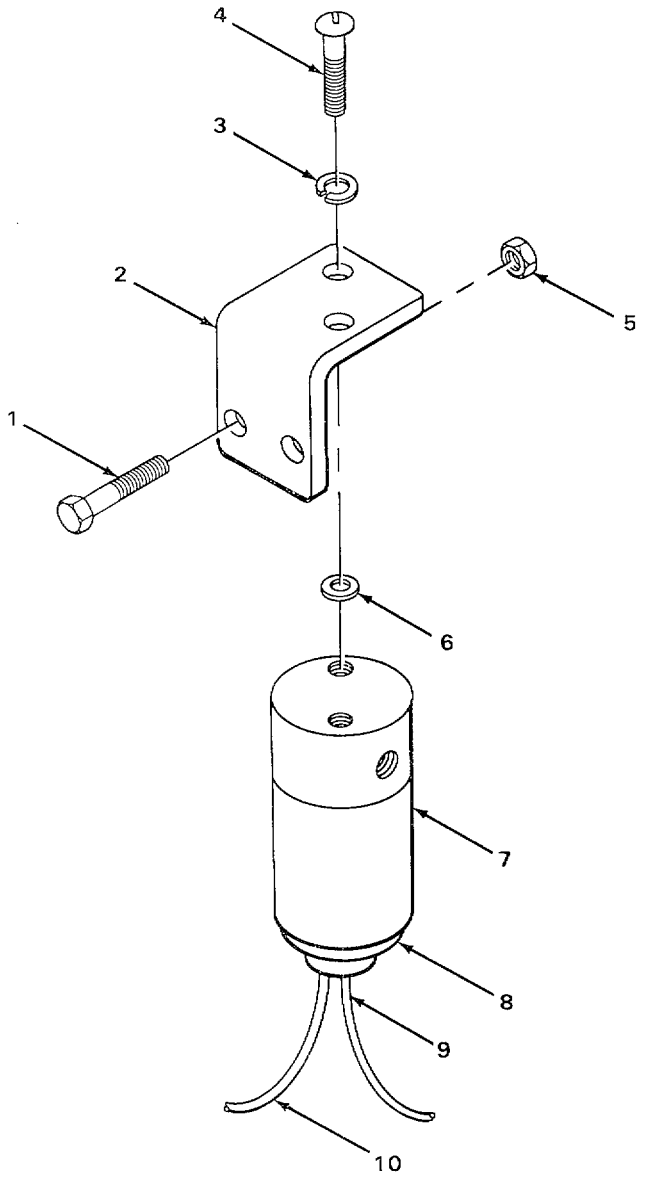

FIGURE 173. SOLENOID VALVE.

(1) ITEM NO	(2) SMR CODE	(3) CAGEC	(4) PART NUMBER	(5) DESCRIPTION AND USABLE ON CODES (UOC)	(6) QTY
				GROUP 2402 MANIFOLD AND/OR CONTROL VALVES	
				FIG. 173 SOLENOID VALVE	
1	PFOZZ	40152	24C-416	BOLT,MACHINE	4
2	XDOZZ	40152	1548001	BRACKET	2
3	XDOZZ	40152	12E-10	WASHER,LOCK	4
4	PFOZZ	40152	13804205	SCREW,CAP,SOCKET HE	4
5	PFOZZ	96906	MS21044N4	NUT,SELF-LOCKING HE	4
6	PFOZZ	40152	25E-10	WASHER,FLAT	4
7	PFOZZ	40152	2510009	VALVE,SOLENOID	2
8	XDOZZ	40152	949458	KIT,SEAL	2
9	XDOZZ	40152	1516111	WIRE	2
10	XDOZZ	40152	1510617	WIRE	2

END OF FIGURE

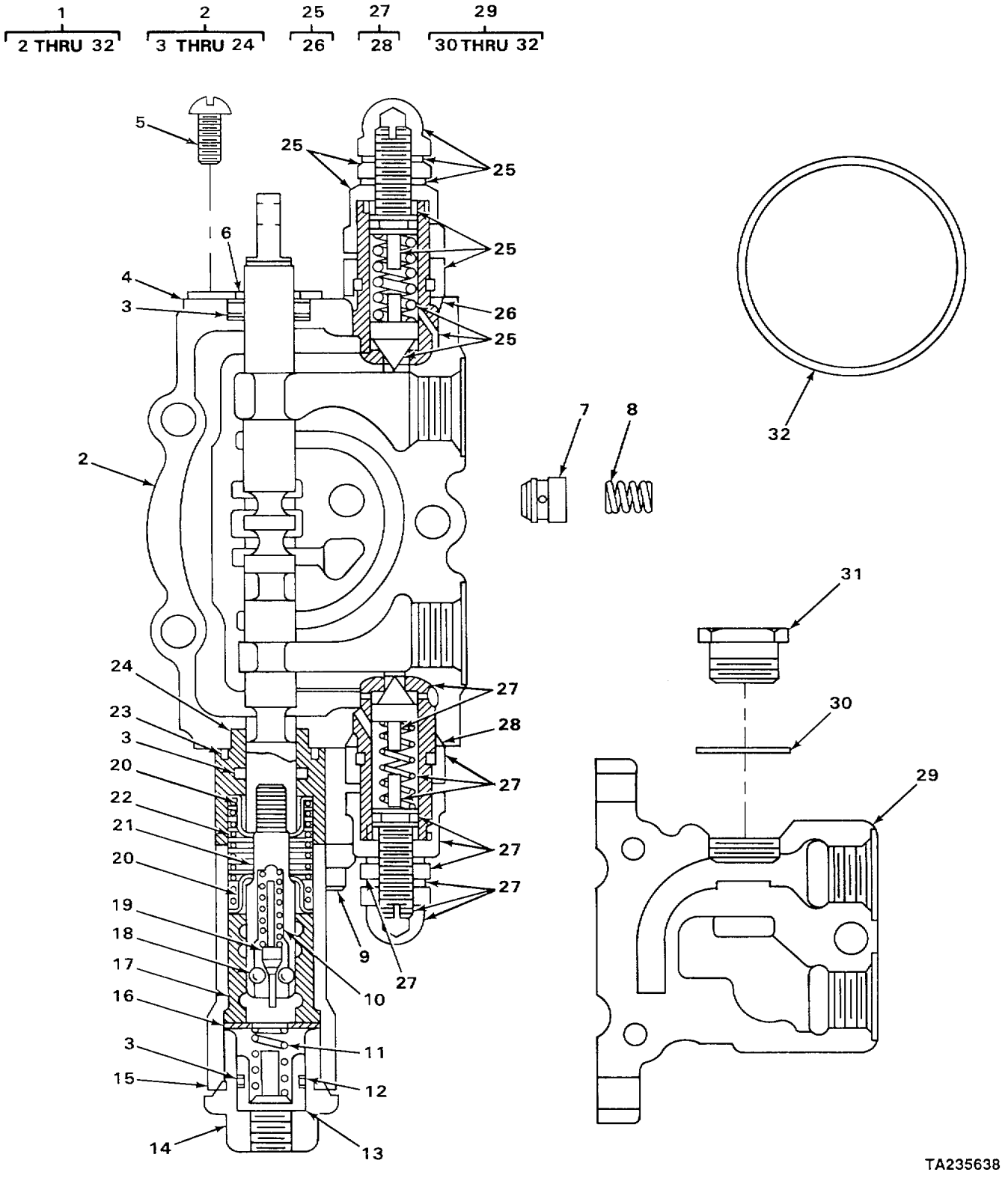

FIGURE 174. PLUNGER AND PILOT VALVE ASSEMBLY.

(1) ITEM NO	(2) SMR CODE	(3) CAGEC	(4) PART NUMBER	(5) DESCRIPTION AND USABLE ON CODES (UOC)	(6) QTY
				GROUP 2402 MANIFOLD AND/OR CNOTROL VALVES	
				FIG. 174 PLUNGER AND PILOT VALVE ASSEMBLY	
1	XDFHH	40152	1513270	VALVE ASSEMBLY	1
2	XDHHH	40152	949306	..PLUNGER ASSEMBLY	1
3	PFHZZ	75214	P383-2	..PACKING,PREFORMED	3
4	XDHZZ	40152	948016	..PLATE	1
5	PFHZZ	40152	71G-406	..SCREW,MACHINE	2
6	PFHZZ	40152	948021	..SEAL WIPER	1
7	XDHZZ	40152	948015	..POPPET	1
8	XDHZZ	40152	961692	..SPRING	1
9	PFHZZ	40152	948032	..SCREW,MACHINE	2
10	XDHZZ	40152	948020	..SPRING	1
11	XDHZZ	40152	948026	..SPRING	1
12	XDHZZ	40152	948025	..PIN	1
13	XDHZZ	40152	948024	..PISTON	1
14	XDHZZ	40152	948028	..PLUG	1
15	XDHZZ	40152	948980	..CAP	1
16	PFHZZ	12603	948030	..SPACER,PLATE	1
17	XDHZZ	40152	948023	..SLEEVE	1
18	XDHZZ	40152	877420	..BALL	4
19	XDHZZ	40152	948029	..CAM	1
20	XDHZZ	40152	948017	..SEAT	2
21	XDHZZ	40152	948019	..VALVE,SEAT	1
22	XDHZZ	40152	948018	..SPRING	1
23	PFHZZ	96906	MS28775-116	..PACKING,PREFORMED	1
24	XDHZZ	40152	948982	..SPACER	1
25	XDHHH	40152	1545915	.VALVE,RELIEF	1
26	PFHZZ	12603	91F7	..PACKING,PREFORMED	1
27	XDHHH	40152	1545916	.VALVE,RELIEF	1
28	PFHZZ	12603	91F7	..PACKING,PREFORMED	2
29	XDHHH	40152	948805	.SECTION,INLET	1
30	PFHZZ	12603	91F7	..PACKING,PREFORMED	1
31	XDHZZ	40152	948810	..PLUG	1
32	PFHZZ	96906	MS28775-218	..PACKING,PREFORMED	1

END OF FIGURE

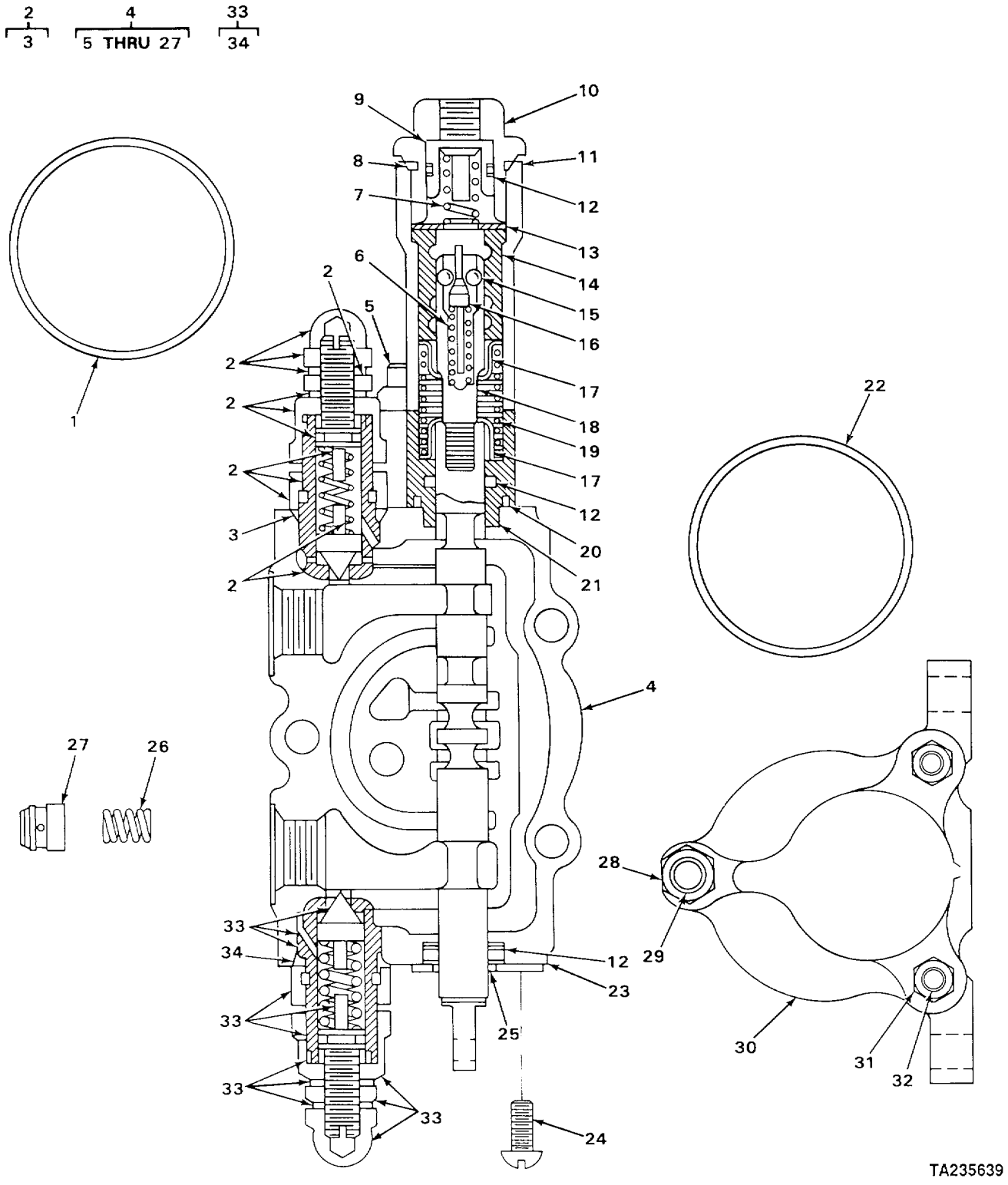

FIGURE 175. PILOT VALVE ASSOCIATED PARTS.

(1) ITEM NO	(2) SMR CODE	(3) CAGEC	(4) PART NUMBER	(5) DESCRIPTION AND USABLE ON CODES (UOC)	(6) QTY
				GROUP 2402 MANIFOLD AND/OR CONTROL VALVES	
				FIG. 175 PILOT VALVE ASSOCIATED PARTS	
1	PFHZZ	96906	MS28775-218	.PACKING,PREFORMED	1
2	XDHHH	40152	1545916	.VALVE,RELIEF	1
3	PFHZZ	12603	91F7	..PACKING,PREFORMED	1
4	XDHHH	40152	961309	.PLUNGER ASSEMBLY	1
5	PFHZZ	40152	11G-428	..SCREW MACHINE	2
6	XDHZZ	40152	948020	..SPRING	1
7	XDHZZ	40152	948026	..SPRING	1
8	XDHZZ	40152	948025	..PIN	1
9	XDHZZ	40152	948024	..PISTON	1
10	XDHZZ	40152	948028	..PLUG	1
11	XDHZZ	40152	948980	..CAP	1
12	PFHZZ	75214	P383-2	..PACKING,PREFORMED	3
13	PFHZZ	12603	948030	..SPACER,PLATE	1
14	XDHZZ	40152	948034	..SLEEVE	1
15	XDHZZ	40152	877420	..BALL	4
16	XDHZZ	40152	948029	..CAM	1
17	XDHZZ	40152	948017	..SEAT	2
18	XDHZZ	40152	948033	..PIN,DETENT	1
19	XDHZZ	40152	948018	..SPRING	1
20	PFHZZ	96906	MS28775-116	..PACKING,PREFORMED	1
21	XDHZZ	40152	948981	..SPACER	1
22	PFHZZ	96906	MS28775-218	..PACKING,PREFORMED	1
23	XDHZZ	40152	948016	..PLATE	1
24	PFHZZ	40152	71G-406	..SCREWIMACHINE	1
25	PFHZZ	40152	948021	..SEAL WIPER	1
26	XDHZZ	40152	961692	..SPRING	1
27	XDHZZ	40152	948015	..POPPET	1
28	PFHZZ	12603	62006	.NUT,PLAIN,HEXAGON	2
29	XDHZZ	40152	948014	.ROD,TIE	1
30	XDHZZ	40152	948010	.COVER	1
31	PFHZZ	40152	13803675-1	.NUT,PLAIN,HEXAGON	4
32	XDHZZ	40152	948013	.ROD,TIE	2
33	XDHHH	40152	1545915	.VALVE,RELIEF	1
34	PFHZZ	12603	91F7	..PACKING,PREFORMED	1

END OF FIGURE

5 6 9 10 AND 11 16 17

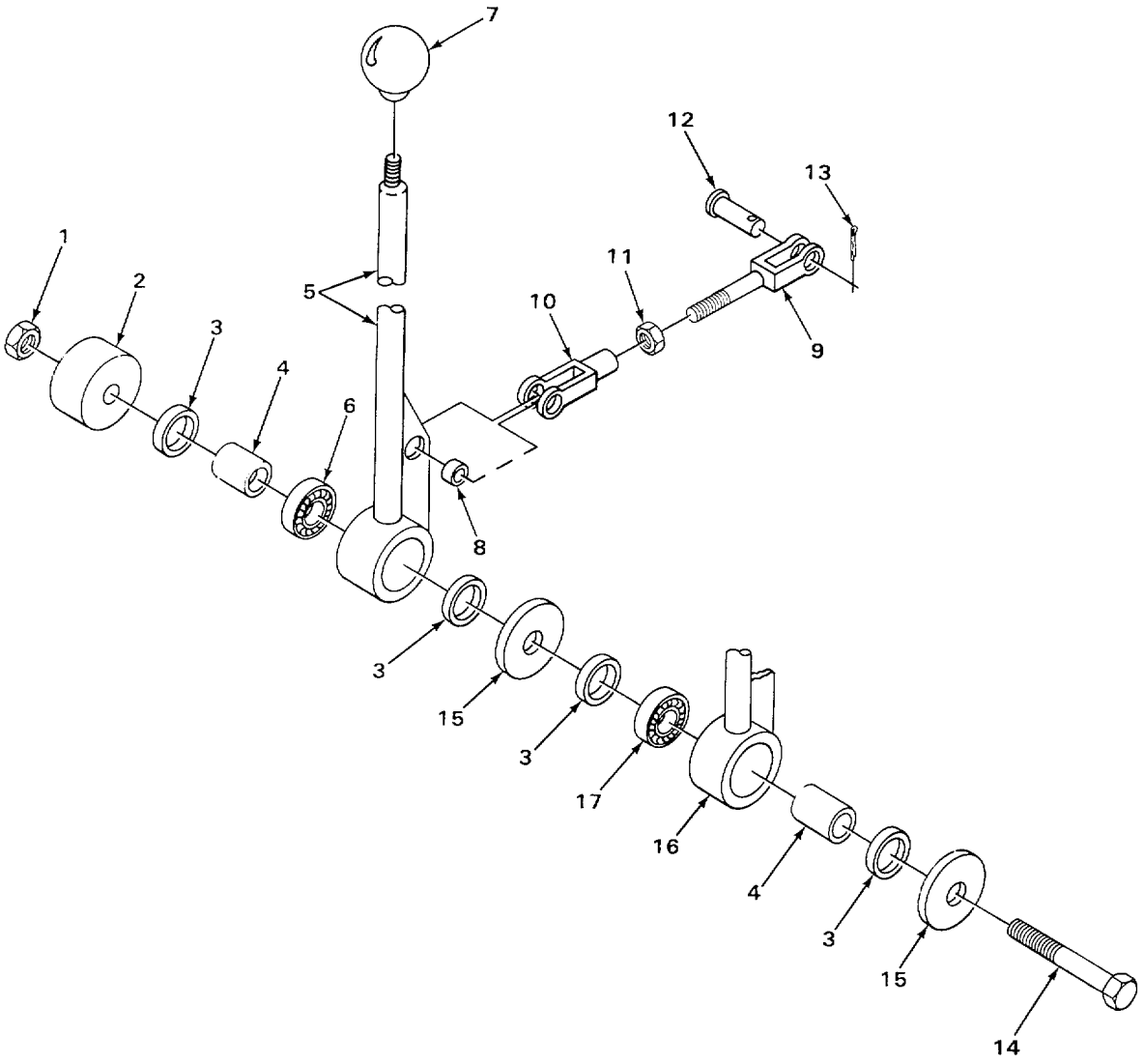

TA235640

FIGURE 176. CONTROL LEVER AND LINKAGE.

(1) ITEM NO	(2) SMR CODE	(3) CAGEC	(4) PART NUMBER	(5) DESCRIPTION AND USABLE ON CODES (UOC)	(6) QTY
				GROUP 2403 HYDRAULIC CONTROLS AND/OR MANUAL CONTROLS	
				FIG. 176 CONTROL LEVER AND LINKAGE	
1	PFFZZ	96906	MS21044N4	NUT,SELF-LOCKING,HE	1
2	XDFZZ	40152	730482	SPACER.....	1
3	XDFZZ	40152	1522535	SEAL,WIPER	3
4	XDFZZ	40152	1503251	SLEEVE	2
5	XDFHH	40152	1542767	LEVER,BOOM.....	1
6	PFHZZ	96906	MS17131-30	.BEARING,ROLLER,NEED.....	1
7	PFOZZ	40152	509772	KNOB	2
8	XDFZZ	40152	1542764	BUSHING	2
9	XDFHH	40152	1537881	ROD	2
10	PFHZZ	12603	2J4200	.CLEVIS,ROD END.....	2
11	PFHZZ	96906	MS35691-5	NUT,PLAIN,HEXAGON	2
12	XDFZZ	03504	10928M3	PIN,STRAIGHT,HEADED	4
13	PFFZZ	15434	109155	PIN,COTTER	4
14	PFFZZ	40152	24C-896	BOLT,MACHINE	1
15	PFFZZ	40152	584502	WASHER,FLAT.....	2
16	XDFHH	40152	1542769	LEVER,BUCKET.....	1
17	PFHZZ	96906	MS17131-30	.BEARING,ROLLER,NEED.....	1

END OF FIGURE

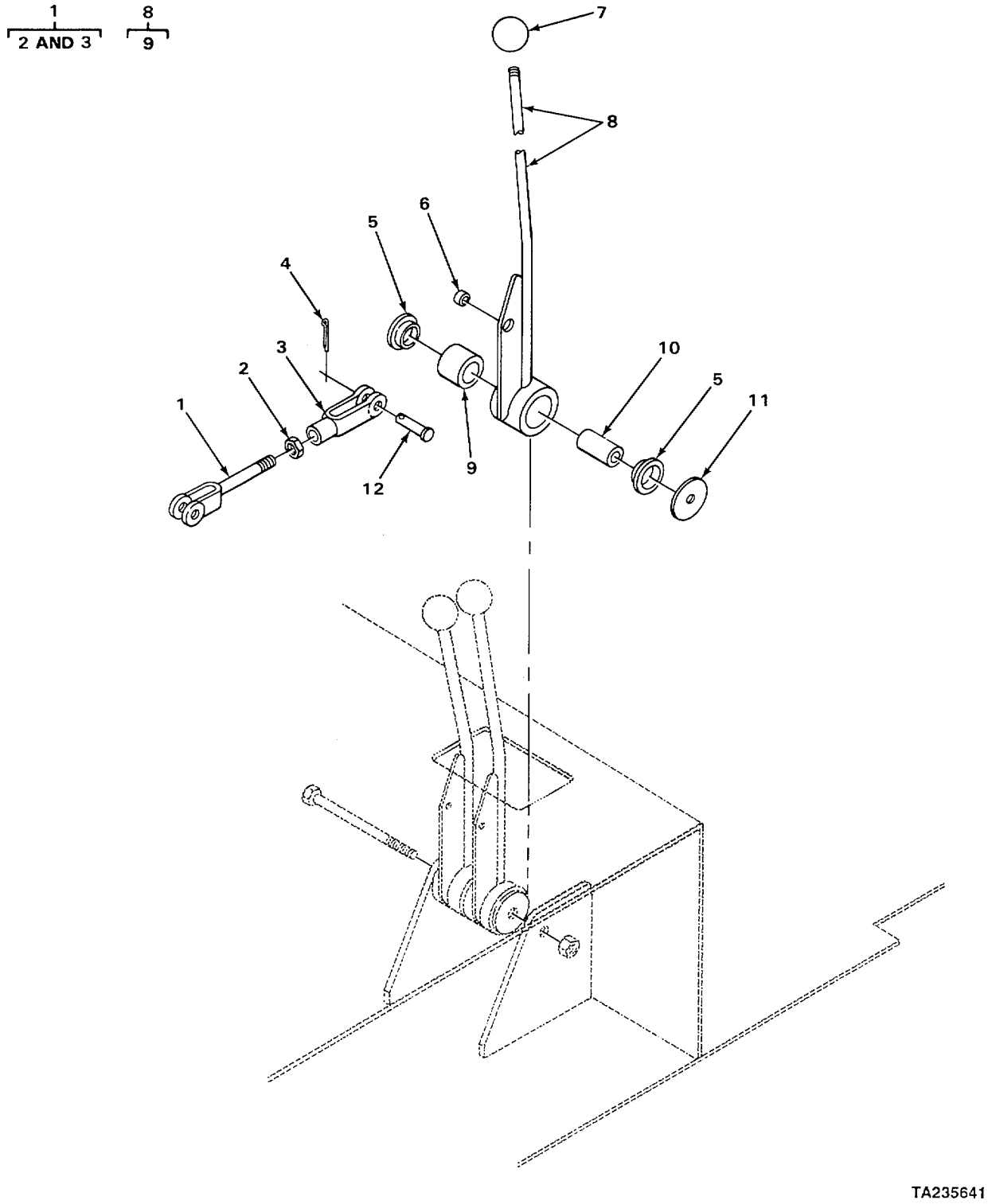

FIGURE 177. CONTROL LEVER AND LINKAGE)THREE SPOOL).

(1) ITEM NO	(2) SMR CODE	(3) CAGEC	(4) PART NUMBER	(5) DESCRIPTION AND USABLE ON CODES (UOC)	(6) QTY
				GROUP 2403 HYDRAULIC CONTROLS AND/OR MANUAL CONTROLS	
				FIG. 177 CONTROL LEVER AND LINKAGE (THREE SPOOL)	
1	XDFHH	40152	1537881	ROD	1
2	PFHZZ	96906	MS35691-5	.NUT,PLAIN,HEXAGON	1
3	PFHZZ	12603	2J4200	.CLEVIS,ROD END	1
4	PFFZZ	96906	MS24665-283	PIN,COTTER	2
5	XDFZZ	40152	1522535	SEAL,WIPER	2
6	XDFZZ	40152	1542764	BUSHING	1
7	PFOZZ	40152	509772	KNOB	1
8	XDFHH	40152	1542911	LEVER	1
9	PFHZZ	96906	MS17131-30	.BEARING,ROLLER,NEED	1
10	XDFZZ	40152	1503251	SLEEVE	1
11	PFFZZ	40152	584502	WASHER,FLAT	1
12	XDFZZ	03504	10928M3	PIN,STRAIGHT,HEADED	2

END OF FIGURE

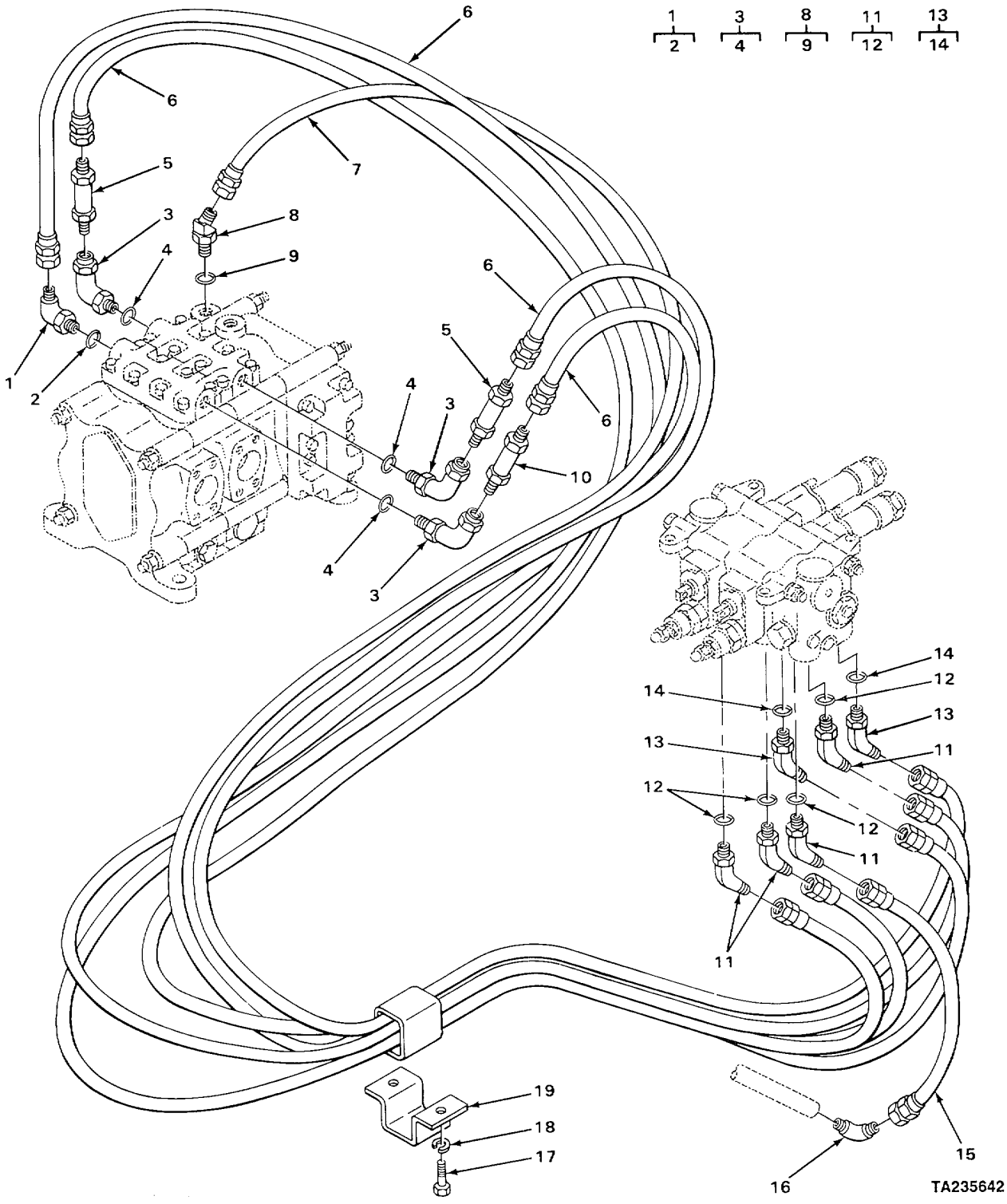

FIGURE 178. HYDRALIC LINES AND FITTINGS.

(1) ITEM NO	(2) SMR CODE	(3) CAGEC	(4) PART NUMBER	(5) DESCRIPTION AND USABLE ON CODES (UOC)	(6) QTY
				GROUP 2406 STRAINERS, FILTERS, LINES, AND FITTINGS, ETC.	
				FIG. 178 HYDRAULIC LINES AND FITTINGS	
1	PFOZZ	30379	9183500	ELBOW,TUBE TO BOSS	1
2	PFOZZ	96906	MS28778-8	.PACKING,PREFORMED	1
3	XDOZZ	40152	1304056	ELBOW	3
4	PFOZZ	96906	MS28778-8	.PACKING,PREFORMED	1
5	XDOZZ	40152	1510741	VALVE	2
6	XDOZZ	40152	1547168	HOSE	4
7	XDOZZ	40152	1300304	HOSE	1
8	XDOZZ	40152	1547152	ELBOW	1
9	PFOZZ	96906	MS28778-8	.PACKING,PREFORMED	1
10	XDOZZ	40152	1515868	VALVE	1
11	PFOZZ	96906	MS51528B8	ELBOW,TUBE TO BOSS	4
12	PFOZZ	96906	MS28778-8	.PACKING PREFORMED	1
13	XDOZZ	40152	18K-7	CONNECTOR	2
14	PFOZZ	12603	91F7	.PACKING,PREFORMED	1
15	XDOZZ	40152	572349	HOSE	1
16	XDOZZ	40152	84F-7	ELBOW	1
17	PFOZZ	40152	24C-820	BOLT,MACHINE	4
18	PFOZZ	95019	500357-13	WASHER,LOCK	4
19	XDOZZ	40152	1537986	CLAMP	2

END OF FIGURE

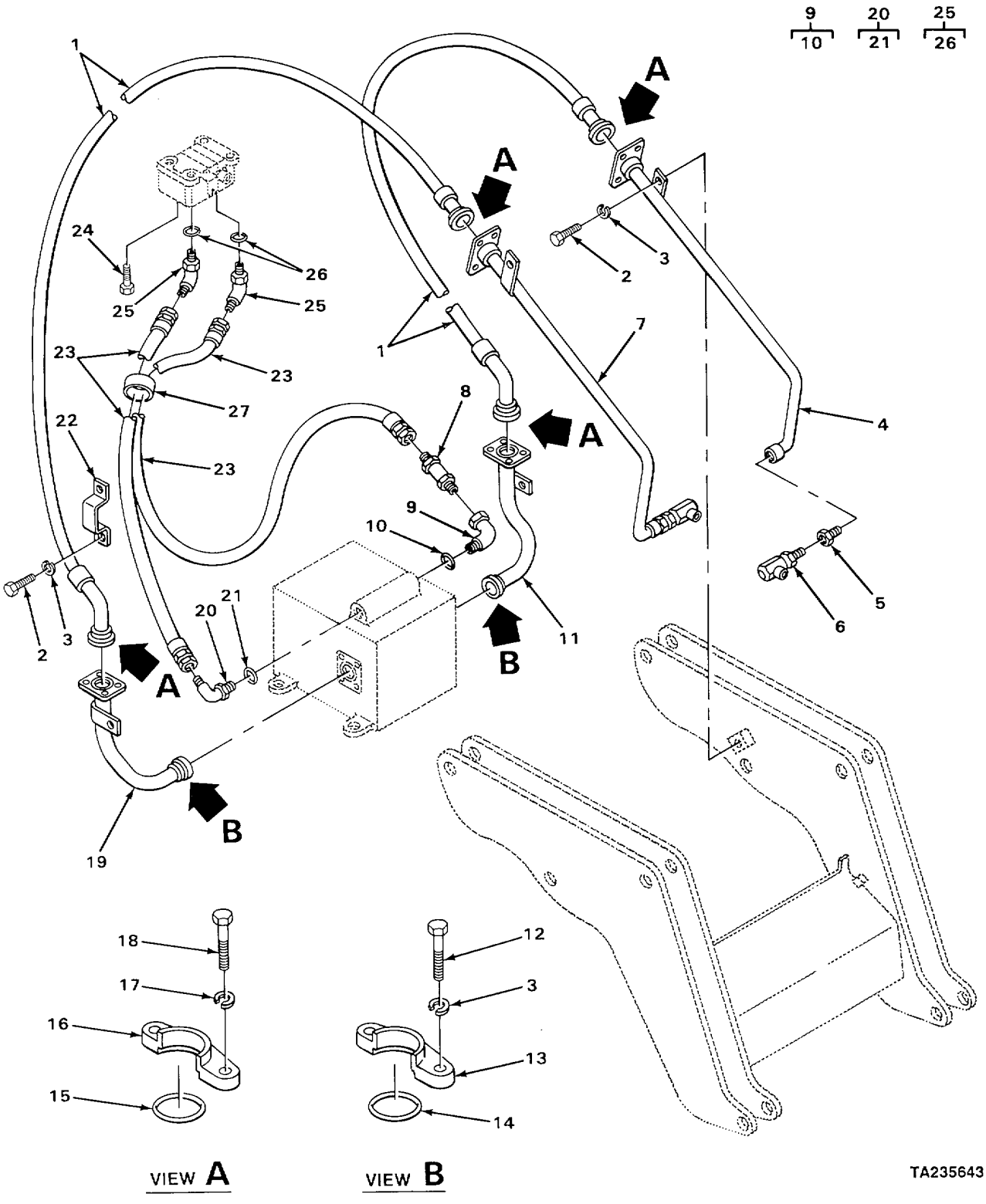

FIGURE 179. THREE SPOOL VALVE PIPING.

(1) ITEM NO	(2) SMR CODE	(3) CAGEC	(4) PART NUMBER	(5) DESCRIPTION AND USABLE ON CODES (UOC)	(6) QTY
				GROUP 2406 STRAINERS1 FILTERS, LINES, AND FITTINGS, ETC.	
				FIG. 179 THREE SPOOL VALVE PIPING	
1	XDOZZ	40152	1521839	HOSE	2
2	PFOZZ	40152	24C-820	BOLT,MACHINE	8
3	PFOZZ	95019	500357-13	WASHER,LOCK	16
4	XDOZZ	40152	2501323	TUBE	1
5	XDOZZ	40152	356627	FITTING,REDUCER	2
6	XDOZZ	40152	1509752	JOINT,SWIVEL	2
7	XDOZZ	40152	1544998	TUBE	1
8	XDOZZ	40152	1518621	VALVE	2
9	XDOZZ	40152	1304056	ELBOW	1
10	PFOZZ	96906	MS28778-8	.PACKING,PREFORMED	1
11	XDOZZ	40152	1544939	TUBE	1
12	PFOZZ	40152	23C-824	BOLT,MACHINE	8
13	XDOZZ	40152	19J-24	FLANGE,HALF	4
14	PFOZZ	40152	58K-225	PACKING,PREFORMED	2
15	PAOZZ	40152	58K-222	PACKING,PREFORMED	4
16	XDOZZ	40152	19J-20	FLANGE,HALF	8
17	PFOZZ	96906	MS35338-47	WASHER,LOCK	8
18	PFOZZ	40152	23C-724	BOLT,MACHINE	8
19	XDOZZ	40152	1544940	TUBE	1
20	PFOZZ	30379	9183500	ELBOW,TUBE TO BUSS	1
21	PFOZZ	96906	MS28778-8	.PACKING,PREFORMED	1
22	XDOZZ	40152	1537987	CLAMP	2
23	XDOZZ	40152	1547168	HOSE	2
24	PFOZZ	40152	24C-632	BOLT,MACHINE	2
25	PFOZZ	96906	MS51528B8	ELBOW,TUBE TO BOSS	2
26	PFOZZ	96906	MS28778-8	.PACKING,PREFORMED	1
27	XDOZZ	40152	1M-2040	HOSE	3

END OF FIGURE

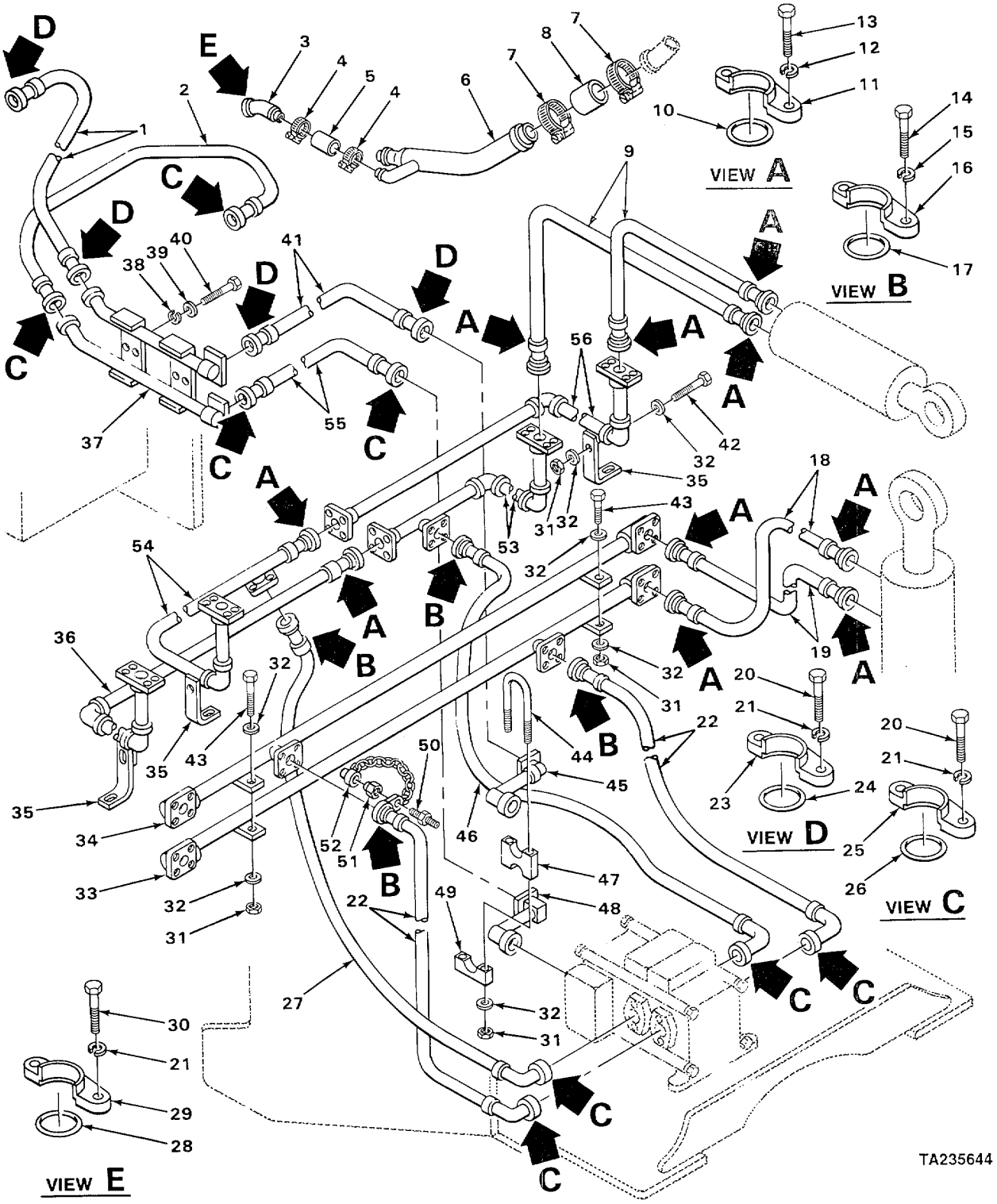

FIGURE 180. MAIN HYDRAULIC LINES.

(1) ITEM NO	(2) SMR CODE	(3) CAGEC	(4) PART NUMBER	(5) DESCRIPTION AND USABLE ON CODES (UOC)	(6) QTY
				GROUP 2406 STRAINERS, FILTERS, LINES, AND FITTINGS, ETC.	
				FIG. 180 MAIN HYDRAULIC LINES	
1	XDOZZ	40152	1547169	HOSE	1
2	PFOZZ	40152	1506073	HOSE ASSEMBLY,NONME	1
3	XDOZZ	40152	1539796	STEM	1
4	PFOZZ	89749	43H1394	CLAMP,HOSE	2
5	XDOZZ	40152	585887	HOSE	1
6	XDOZZ	40152	1513510	TUBE	1
7	PFOZZ	40152	540102	CLAMP,LOOP	2
8	PFOZZ	40152	1542512	HOSE,PREFORMED	1
9	PFOZZ	40152	1518511	HOSE ASSEMBLY,NONME	4
10	XDOZZ	40152	58K-219	PACKING,PREFORMED	10
11	XDOZZ	40152	19J-16	FLANGE,HALF	20
12	PFOZZ	96906	MS35333-76	WASHER,LOCK	40
13	PFOLZ	40152	23C-620	BOLT,MACHINE	40
14	PFOZZ	40152	23C-724	BOLT,MACHINE	16
15	PFOZZ	96906	MS35338-47	WASHER,LOCK	16
16	XDOZZ	40152	19J-20	FLANGE,HALF	8
17	PAOZZ	40152	58K-222	PACKING,PREFORMED	16
18	XDOZZ	40152	1544994	HOSE	2
19	XDOZZ	40152	1531418	HOSE	2
20	PFOZZ	80204	B1821BH050C150N	SCREW,CAP,HEXAGON H	48
21	PFOZZ	95019	500357-13	WASHER,LOCK	52
22	PFOZZ	40152	1548671	HOSE ASSEMBLY,NONME	2
23	XDOZZ	40152	19J-32	FLANGE,HALF	8
24	XDOZZ	40152	58K-228	PACKING,PREFORMED	4
25	XDOZZ	40152	19J-24	FLANGE,HALF	16
26	PFOZZ	40152	58K-225	PACKING,PREFORMED	8
27	XOOZZ	40152	1517383	HOSE	1
28	PFOZZ	40152	58K-23Z	PACKING,PREFORMED	1
29	XDOZZ	40152	19J-40	FLANGE,HALF	2
30	PFOZZ	40152	23C-828	BOLT,MACHINE	4
31	PFOZZ	96906	MS21044N8	NUT,SELF-LOCKING,E	12
32	PFDZZ	40152	584092	WASHER,FLAT	14
33	XDOZZ	40152	1544801	TUBE	1
34	XDOZZ	40152	1544845	TUBE	1
35	XDOZZ	40152	1514753	BRACKET	4
36	XDOZZ	40152	1514912	TUBE	1
37	XDOZZ	40152	1518913	TUBE	1
38	PFOZZ	96906	MS35338-51	WASHER,LOCK	4
39	PFOZZ	40152	712285	WASHER,FLAT	4
40	PFOZZ	40152	24C-1232	BOLT,MACHINE	4
41	XDOZZ	40152	1547042	HOSE	1
42	PFOZZ	40152	24C-828	BOLT,MACHINE	8
43	PFOLZ	40152	24C-836	SCREW,CAP,HEXAGON H	2
44	XDOZZ	40152	1547309	U-BOLT	1
45	XDOZZ	40152	1544673	TUBE	1
46	XDOZZ	40152	1517384	H0SE	1
47	XDOZZ	40152	1547310	CLAMP	1

(1) ITEM NO	(2) SMR CODE	(3) CAGEC	(4) PART NUMBER	(5) DESCRIPTION AND USABLE ON CODES (UOC)	(6) QTY
48	XDOZZ	40152	1544671	TUBE	1
49	XDOZZ	40152	1547311	CLAMP	1
50	XDOZZ	40152	5K-207	NIPPLE,PIPE	1
51	XDOZZ	40152	1306142	COUPLER	1
52	PFOZZ	40152	6000689	CAP,HOSE	1
53	XDOZZ	40152	1514910	TUBE	1
54	XDOZZ	40152	1514909	TUBE	1
55	XOOZZ	40152	1547041	HOSE	1
56	XOOZZ	40152	1514911	TUBE	1

END OF FIGURE

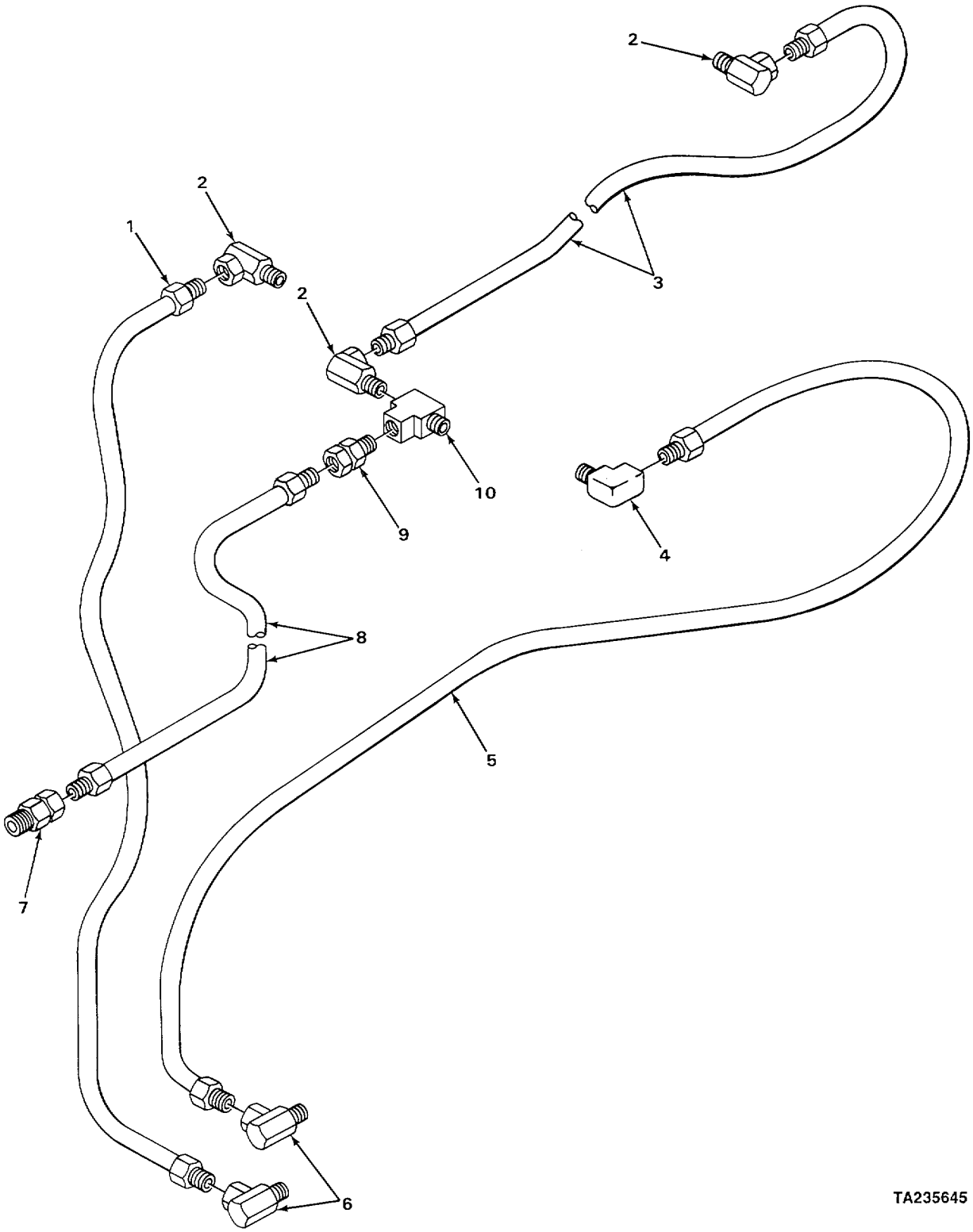

FIGURE 181. BOOM HYDRAULIC LINES AND FITTINGS.

(1) ITEM NO	(2) SMR CODE	(3) CAGEC	(4) PART NUMBER	(5) DESCRIPTION AND USABLE ON CODES (UOC)	(6) QTY
				GROUP 2406 STRAINERS FILTERS1 LINES, AND FITTINGS, ETC.	
				FIG. 181 BOOM HYDRAULIC LINES AND FITTINGS	
1	PFOZZ	40152	564636	HOSE ASSEMBLY NONME.....	1
2	PFOZZ	79470	141-15804	ELBOW,PIPE	3
3	XDOZZ	40152	1511077	HOSE	1
4	PFOZZ	21450	454097	ELBOW,PIPE	1
5	XDOZZ	40152	593495	HOSE	1
6	XDOZZ	40152	1311154	ADAPTER	2
7	XDOZZ	40152	33F-3	ADAPTER	1
8	XDOZZ	70434	6GABB6MB4MB161-2	HOSE ASSEMBLY,NONME.....	1
9	PFOZZ	01276	2045-4-4S	COUPLING,PIPE	1
10	XDOZZ	40152	30F-1	TEE	1

END OF FIGURE

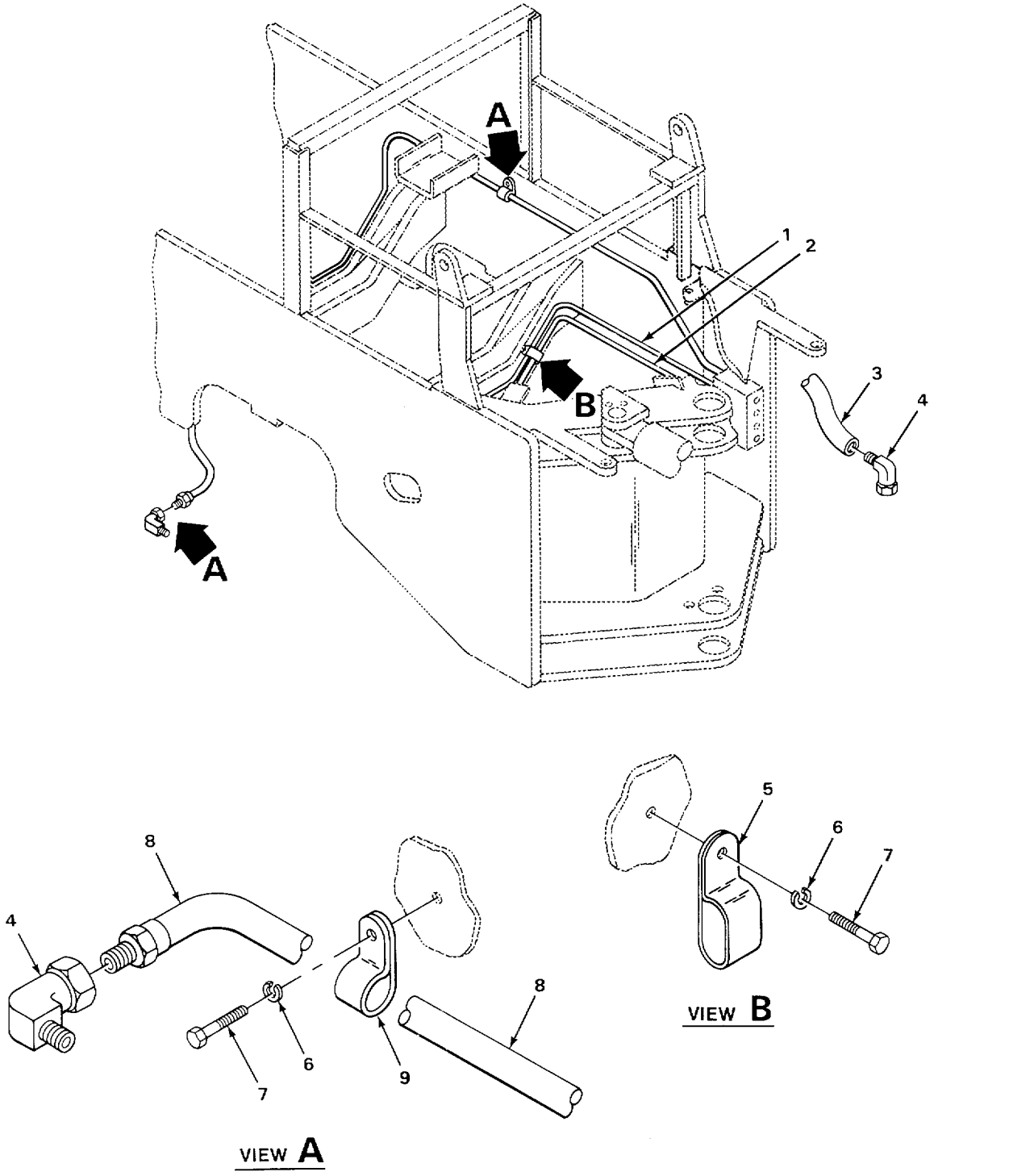

FIGURE 182. FEEDER LINES AND RELATED PARTS.

(1) ITEM NO	(2) SMR CODE	(3) CAGEC	(4) PART NUMBER	(5) DESCRIPTION AND USABLE ON CODES (UOC)	(6) QTY
				GROUP 2406 STRAINERS, FILTERS, LINES, AND FITTINGS ETC.	
				FIG. 182 FEEDER LINES AND RELATED PARTS	
1	XDOZZ	40152	541547	HOSE	1
2	XDOZZ	40152	549961	HOSE	1
3	PFOZZ	40152	549262	HOSE ASSEMBLY,NONME	1
4	PFOZZ	40152	31F1	ELBOW,PIPE	4
5	XDOZZ	40152	31H-31	CLIP	1
6	PFOZZ	96906	MS35333-76	WASHER,LOCK.....	1
7	PFOZZ	40152	24C-612	BOLT,MACHINE	4
8	XDOZZ	40152	1519137	HOSE	1
9	XDOZZ	40152	30H-35	CLIP	3

END OF FIGURE

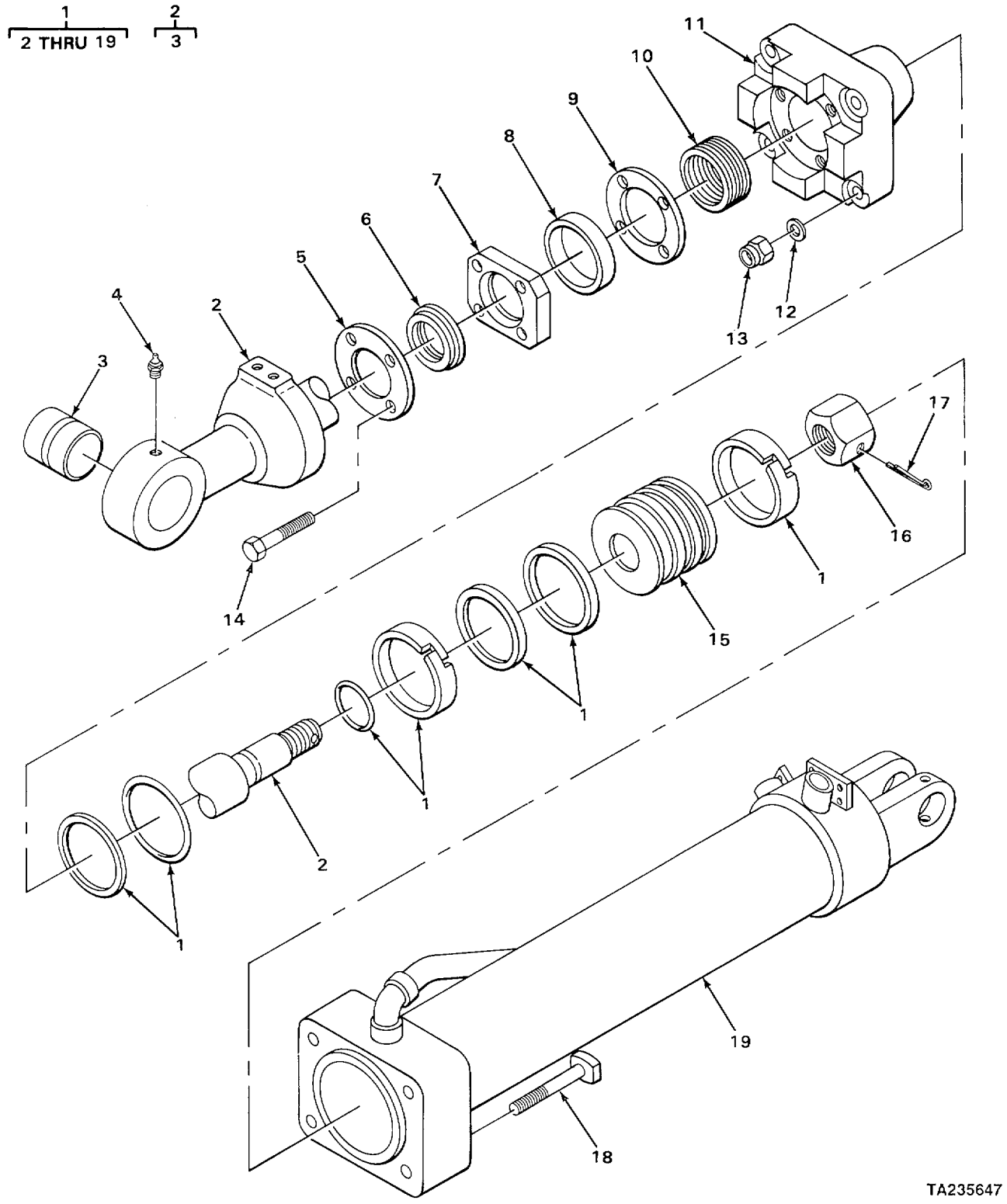

FIGURE 183. BUCKET CYLINDER.

(1) ITEM NO	(2) SMR CODE	(3) CAGEC	(4) PART NUMBER	(5) DESCRIPTION AND USABLE ON CODES (UOC)	(6) QTY
				GROUP 2407 HYDRAULIC CYLINDERS FIG. 183 BUCKET CYLINDER	
1	PFOHH	52993	964575	CYLINDER ASSEMBLY,A BUCKET	2
2	XDHHH	40152	1517274	.PISTON,ROD	1
3	XDZZ	40152	1544140	..BUSHING	1
4	PFOZZ	12603	12H15	.FITTING,LUBRICATION	1
5	XDHZZ	40152	1510142	.PLATEIRETAINING	1
6	PFHZZ	40152	1542646	.RING,WIPER PART OF KIT P/N 2518493	1
7	XDHZZ	40152	2505248	.FLANGE	1
8	XDHZZ	40152	1511232	.SLEEVE	1
9	XDHZZ	40152	1511230	.SPACER	4
10	PFHZZ	40152	2517364	.PACKING ASSEMBLY PART OF KIT P/N 2518493	1
11	XDHZZ	40152	2516029	.CAP,CYLINDER	1
12	PFHZZ	40152	1517840	.WASHER,FLAT	4
13	PFHZZ	40152	18D-14	.NUT,PLAIN,HEXAGON	4
14	PFHZZ	40152	1514633	.BOLT,MACHINE	4
15	XDHZZ	40152	1517846	.PISTON	1
16	PFHZZ	40152	1513540	NUT,PLAIN,HEXAGON	1
17	PFHZZ	96906	MS24665-692	.PIN,COTTER	1
18	PFHZZ	96906	MS90727-223	BOLTTMACHINE	4
19	XAHZZ	40152	1517849	.CYLINDER	1

END OF FIGURE

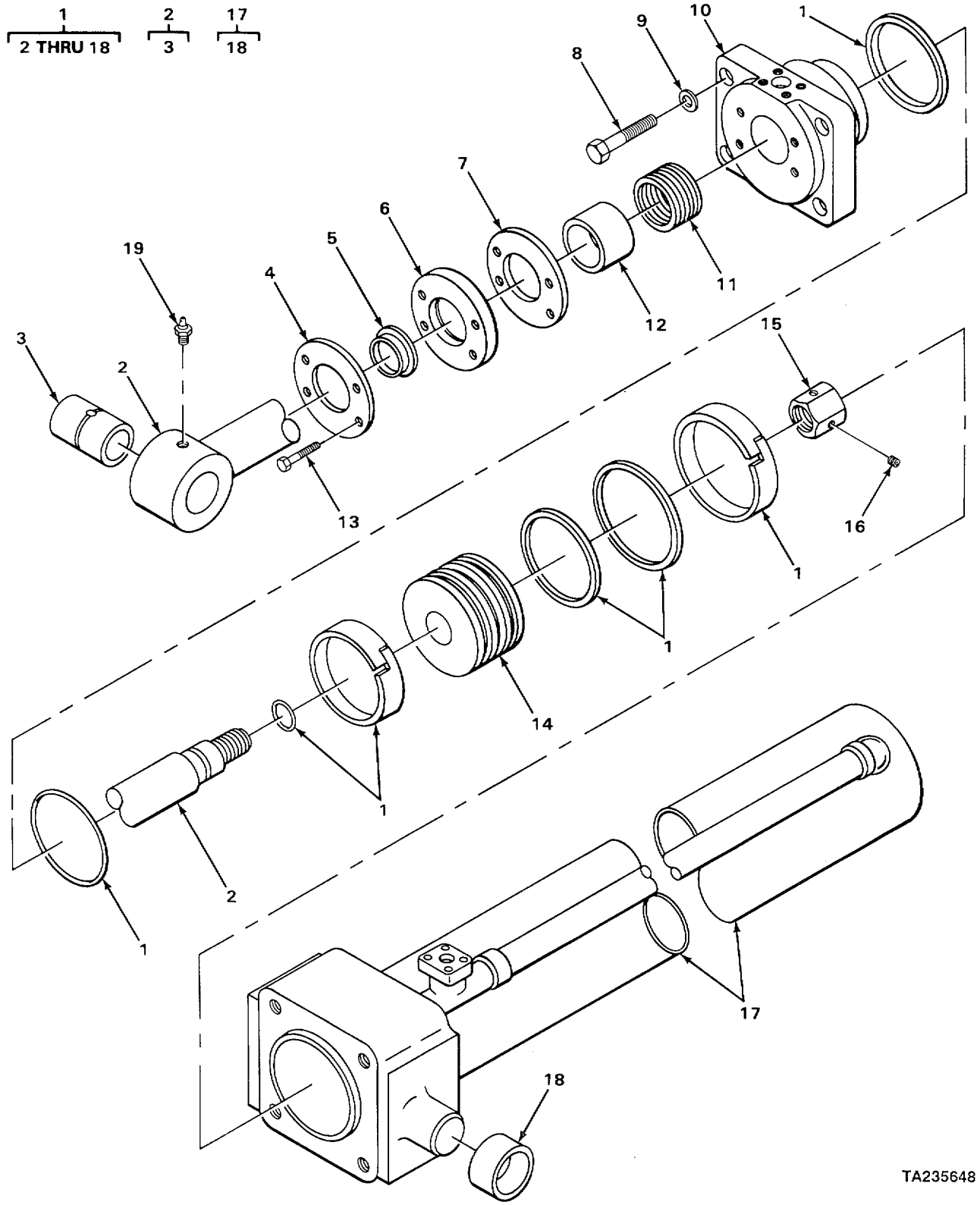

FIGURE 184. BOOM CYLINDER.

(1) ITEM NO	(2) SMR CODE	(3) CAGEC	(4) PART NUMBER	(5) DESCRIPTION AND USABLE ON CODES (UOC)	(6) QTY
				GROUP 2407 HYDRAULIC CYLINDERS FIG. 184 BOOM CYLINDER	
1	PFOHH	40152	2518119	CYLINDER ASSEMBLY	2
2	PFHZZ	40152	1512278	.ROD,PISTON,LINEAR A	1
3	XDHZZ	40152	588619	..BUSHINGC	1
4	XDHZZ	40152	1510142	.PLATE,RETAINING	1
5	PFHZZ	40152	1542646	.RING,WIPER PART OF KIT P/N 2518494	1
6	XDHZZ	40152	2505248	.FLANGE	1
7	KFHZZ	40152	1511230	.SPACER PART OF KIT P/N 2518494	4
8	PFHZZ	96906	M590727-192	.SCREW,CAP,HEXAGON H	4
9	PFHZZ	40152	655224	.WASHER,FLAT	4
10	PFHZZ	40152	2518120	.CAP,LINEAR ACTUATIN	1
11	PFHZZ	40152	2517364	.PACKING ASSEMBLY PART OF KIT P/N 2518494	1
12	XDHZZ	40152	1511232	.SLEEVE	1
13	PFHZZ	40152	34C-828	.BOLT,MACHINE	4
14	XDHZZ	40152	1512255	.PISTON	1
15	PFHZZ	40152	1514660	.NUT,PLAIN,HEXAGON	1
16	PFHZZ	40152	1513022	.SETSCREW	2
17	XDHHH	40152	1518398	.CYLINDER	1
18	XDHZZ	62259	A122080	..BUSHING	2
19	PFOZZ	12603	10H25	FITTING,LUBRICATION	2

END OF FIGURE

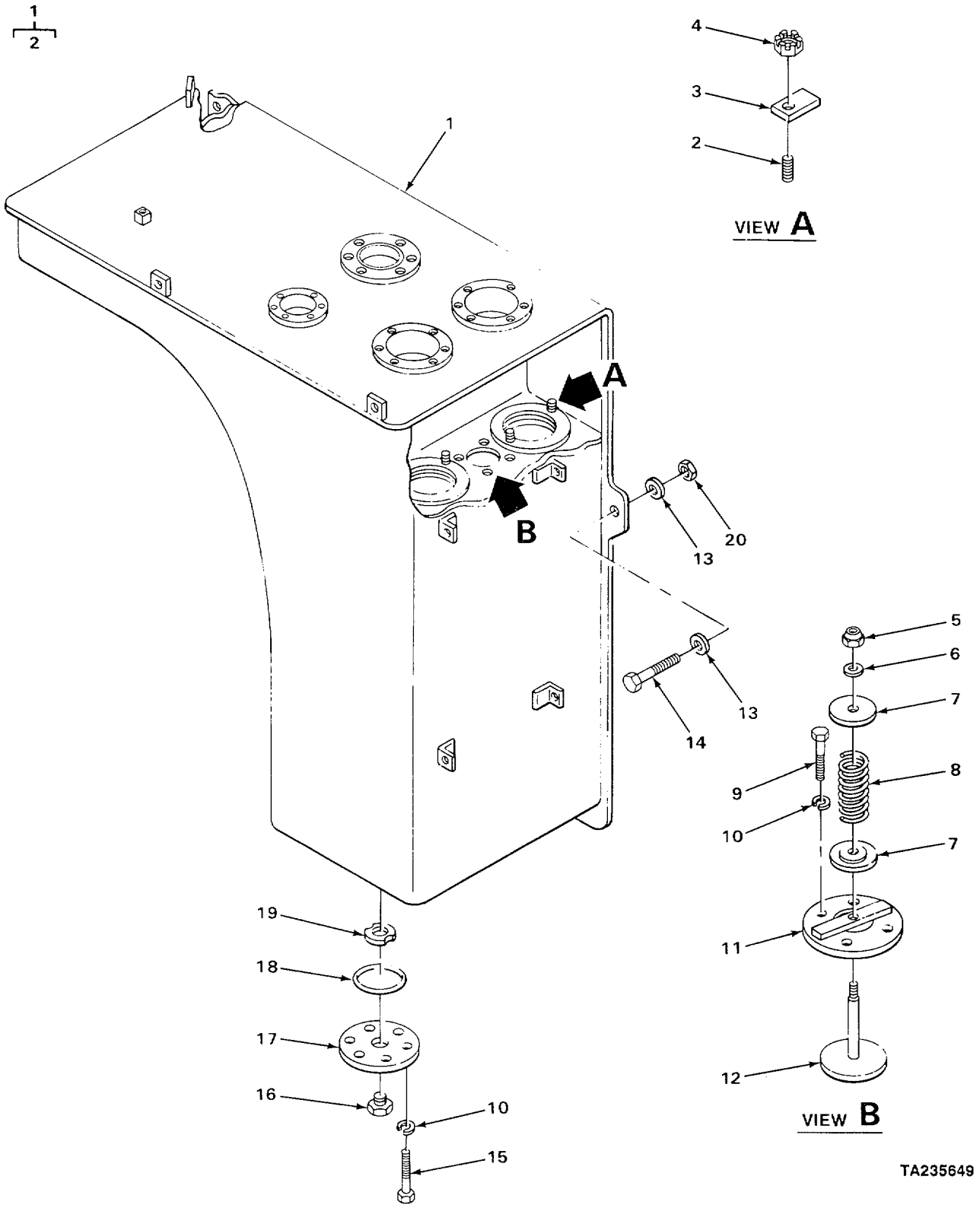

FIGURE 185. HYDRAULIC RESERVOIR.

(1) ITEM NO	(2) SMR CODE	(3) CAGEC	(4) PART NUMBER	(5) DESCRIPTION AND USABLE ON CODES (UOC)	(6) QTY
				GROUP 2408 LIQUID TANKS OR RESERVOIRS FIG. 185 HYDRAULIC RESERVOIR	
1	XDFHH	40152	2500073	RESERVOIR	1
2	PFHZZ	40152	1547619	.STUD,CONTINUOUS THR	4
3	XDHZZ	40152	537660	LUG	4
4	PFHZZ	40152	60D-08	NUT,PLAIN,HEXAGON	4
5	PFHZZ	40152	60D-04	NUT,PLAIN,HEXAGON	1
6	PFHZZ	40152	13802619-0	WASHER,FLAT	1
7	XDHZZ	40152	1515637	RETAINER	2
8	XDHZZ	40152	1530598	SPRING	1
9	PFHZZ	12603	18C628	SCREW,CAP,HEXAGON H	4
10	PFHZZ	96906	M535333-76	WASHER,LOCK	10
11	XDHZZ	40152	1515640	PLATE	1
12	XDHZZ	40152	1515634	ROD	1
13	PFFZZ	12603	616809	WASHER,SPECIAL	4
14	PFFZZ	40152	24C-1256	BOLT,MACHINE	2
15	PFHZZ	40152	24C-612	BOLT,MACHINE	6
16	PFHZZ	40152	40K-16	PLUG	1
17	PFHZZ	40152	587613	COVER,ACCESS	1
18	PFHZZ	40152	25K40428	PACKING,PREFORMEDO	1
19	PFHZZ	40152	525293	MAGNET,PERMANENT	1
20	PFFZZ	40152	18D-12	NUT,SELF-LOCKING,HE	2

END OF FIGURE

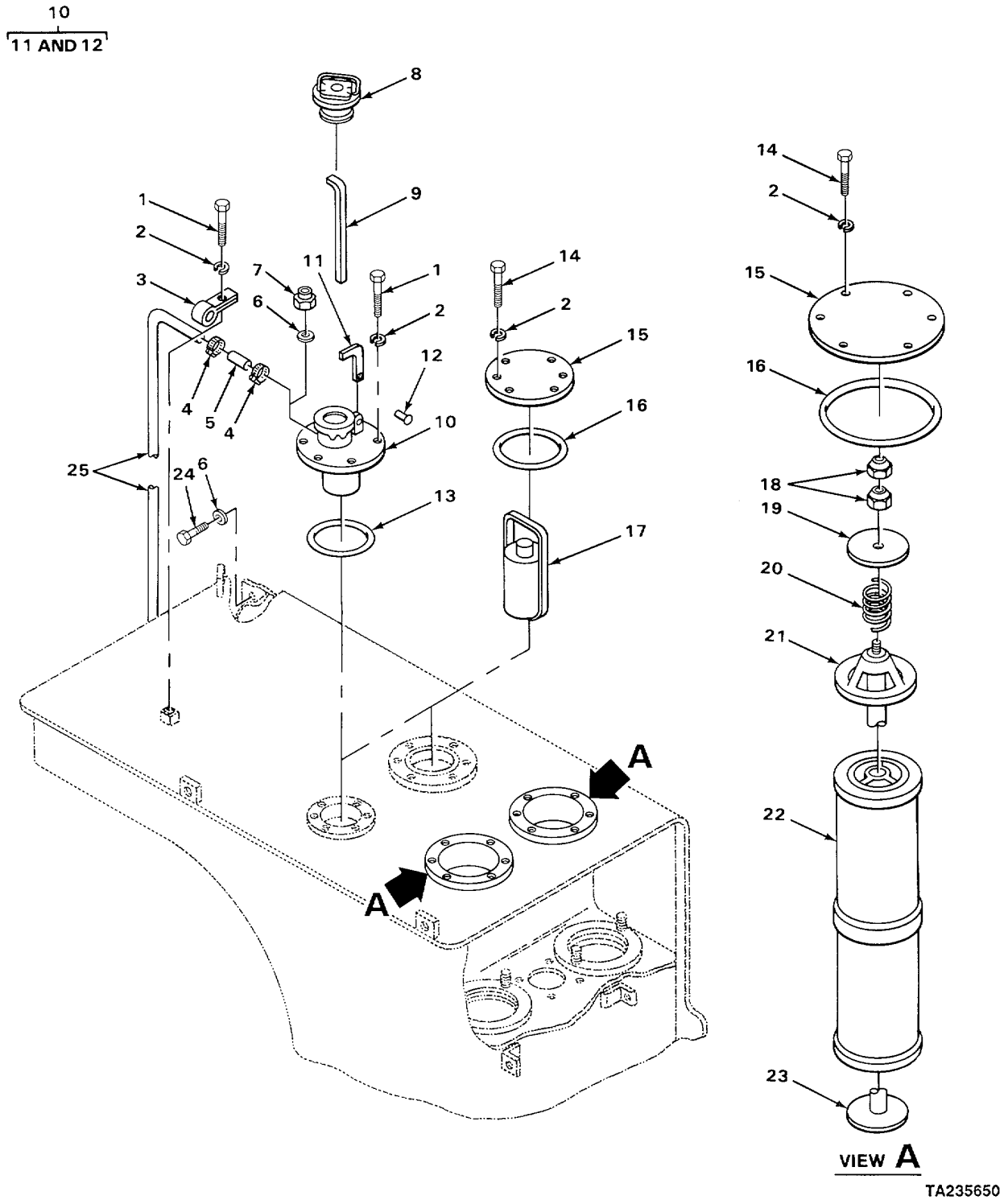

FIGURE 186. RESERVOIR RELATED PARTS.

(1) ITEM NO	(2) SMR CODE	(3) CAGEC	(4) PART NUMBER	(5) DESCRIPTION AND USABLE ON CODES (UOC)	(6) QTY
				GROUP 2408 LIQUID TANKS OR RESERVOIRS	
				FIG. 186 RESERVOIR RELATED PARTS	
1	PFOZZ	40152	24C-612	BOLT,MACHINE	7
2	PFOZZ	96906	MS35333-76	WASHER,LOCK	25
3	XDOZZ	40152	30H-46	CLIP	1
4	XDOZZ	40152	521874	CLAMP	2
5	PFOZZ	12603	755622	HOSE,NONMETALLIC	1
6	PFFZZ	12603	616809	WASHER,SPECIAL	2
7	PFFZZ	40152	18D-12	NUT,SELF-LOCKING,HE	1
8	PFOZZ	40152	554843	CAP,FILLER OPENING	1
9	XDOZZ	12603	2500050	DIPSTICK	1
10	XDFHH	40152	1515648	NECK,FILLER	1
11	XDHZZ	40152	1543512	.LATCH	1
12	XDHZZ	12603	1H414	.RIVET	1
13	XDFZZ	40152	25K-40624	PACKING,PREFORMED	1
14	PFOZZ	96906	MS90727-58	SCREW,CAP,HEXAGON H	18
15	XDOZZ	40152	1529896	PLATE	3
16	PFOZZ	12603	25K40808	PACKING,PREFORMED	3
17	PFOZZ	12603	1532445	FILTER ELEMENT,FLUI	2
18	XDOZZ	72582	514646	NUT,PLAIN,HEXAGON H	4
19	PFOZZ	40152	1517493	WASHER,FLAT	2
20	XDOZZ	40152	1530598	SPRING	2
21	XDOZZ	40152	1529679	RETAINER	2
22	PAOZZ	12658	PT-491	FILTER ELEMENT,FLUI	4
23	XDOZZ	40152	2517207	ROD	2
24	PFFZZ	40152	24C-1244	BOLT,MACHINE	1
25	PFOZZ	40152	2500500	TUBE,BENT,METALLIC	1

END OF FIGURE

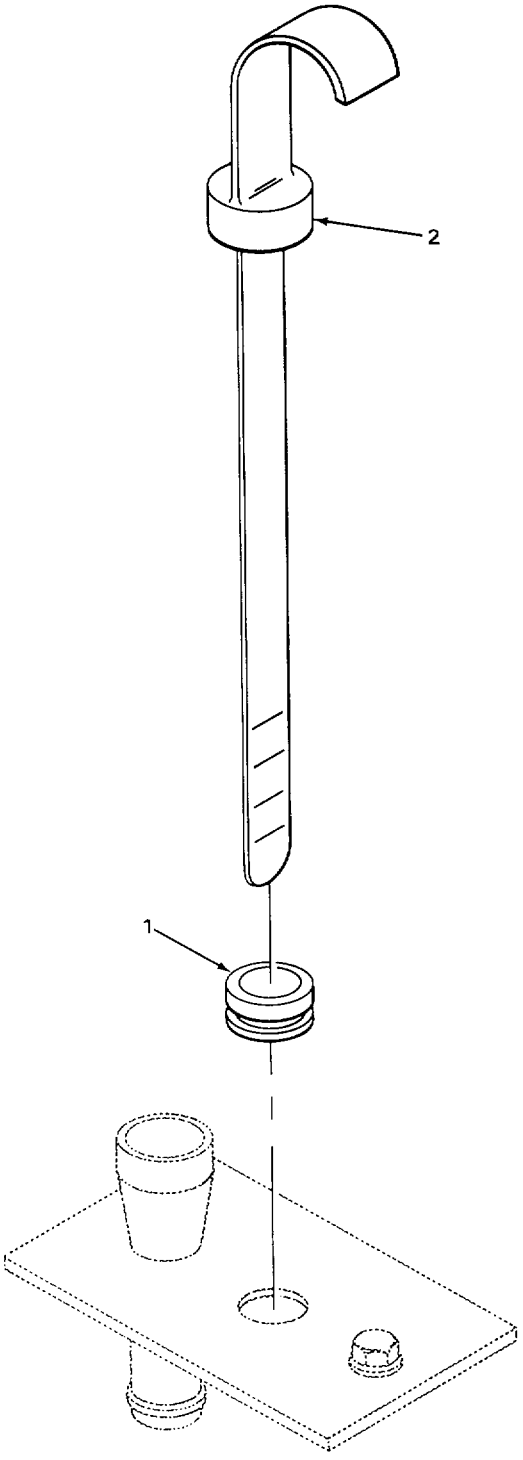

FIGURE 187. TRANSMISSION DIPSTICK.

(1) ITEM NO	(2) SMR CODE	(3) CAGEC	(4) PART NUMBER	(5) DESCRIPTION AND USABLE ON CODES (UOC)	(6) QTY
				GROUP 47 GAGES (NONELECTRICAL)t WEIGHING AND MEASURING DEVICES	
				GROUP 4702 GAGES9 MOUNTINGS1 LINES1 AND FITTINGS	
				FIG. 187 TRANSMISSION DIPSTICK	
1	XDOZZ	40152	560640	GROMMET	1
2	PFOZZ	40152	568823	GAGE ROD,LIQUID LEV TRANSMISSION.....	1
				END OF FIGURE	

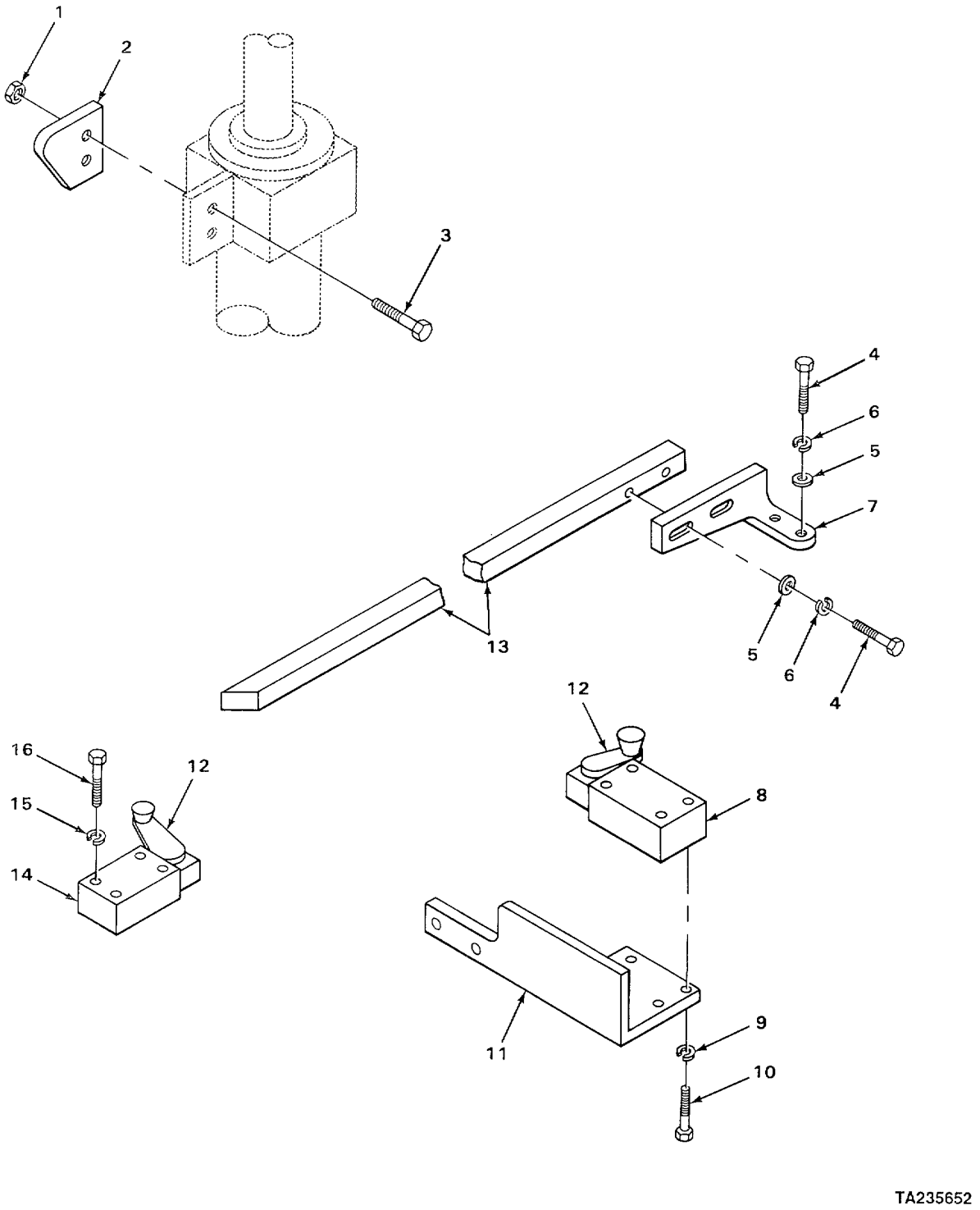

FIGURE 188. BOOM LIMIT SWITCH.

(1) ITEM NO	(2) SMR CODE	(3) CAGEC	(4) PART NUMBER	(5) DESCRIPTION AND USABLE ON CODES (UOC)	(6) QTY
				GROUP 74 CRANES, SHOVELS, AND EARTHMOVING EQUIPMENT COMPONENTS	
				GROUP 7404 ELECTRICAL CONTROLS FIG. 188 BOOM LIMIT SWITCH	
1	PFOZZ	12603	60D6	NUT,SELF-LOCKING,HE	2
2	XDOZZ	12603	1515763	CAM	1
3	PFOZZ	40152	24C-632	BOLTMACHINE	2
4	PFOZZ	40152	24C-620	BOLTMACHINE	4
5	PFOZZ	19207	10875413	WASHERFLAT.....	4
6	PFOZZ	96906	MS35333-76	WASHER,LOCK.....	4
7	XDOZZ	40152	1510618	BRACKET	1
8	PFOZZ	40152	308031	SWITCH SENSITIVE	1
9	PFOZZ	96906	MS35338-44	WASHER,LOCK,.....	4
10	PFOZZ	40152	23C-412	BOLT,MACHINE	4
11	XDOZZ	40152	1515761	BRACKET	1
12	PFOZZ	40152	990556	ACTUATOR,ELECTRO-ME.....	2
13	PFOZZ	40152	1528637	CAM,CONTROL.....	1
14	PFOZZ	40152	1767898	SWITCH,SENSITIVE.,, ...	1
15	PFOZZ	16764	1880781	WASHER,LOCK.....	4
16	PFOZZ	40152	41G-1024	SCREW,CAP,HEXAGON H.....	4

END OF FIGURE

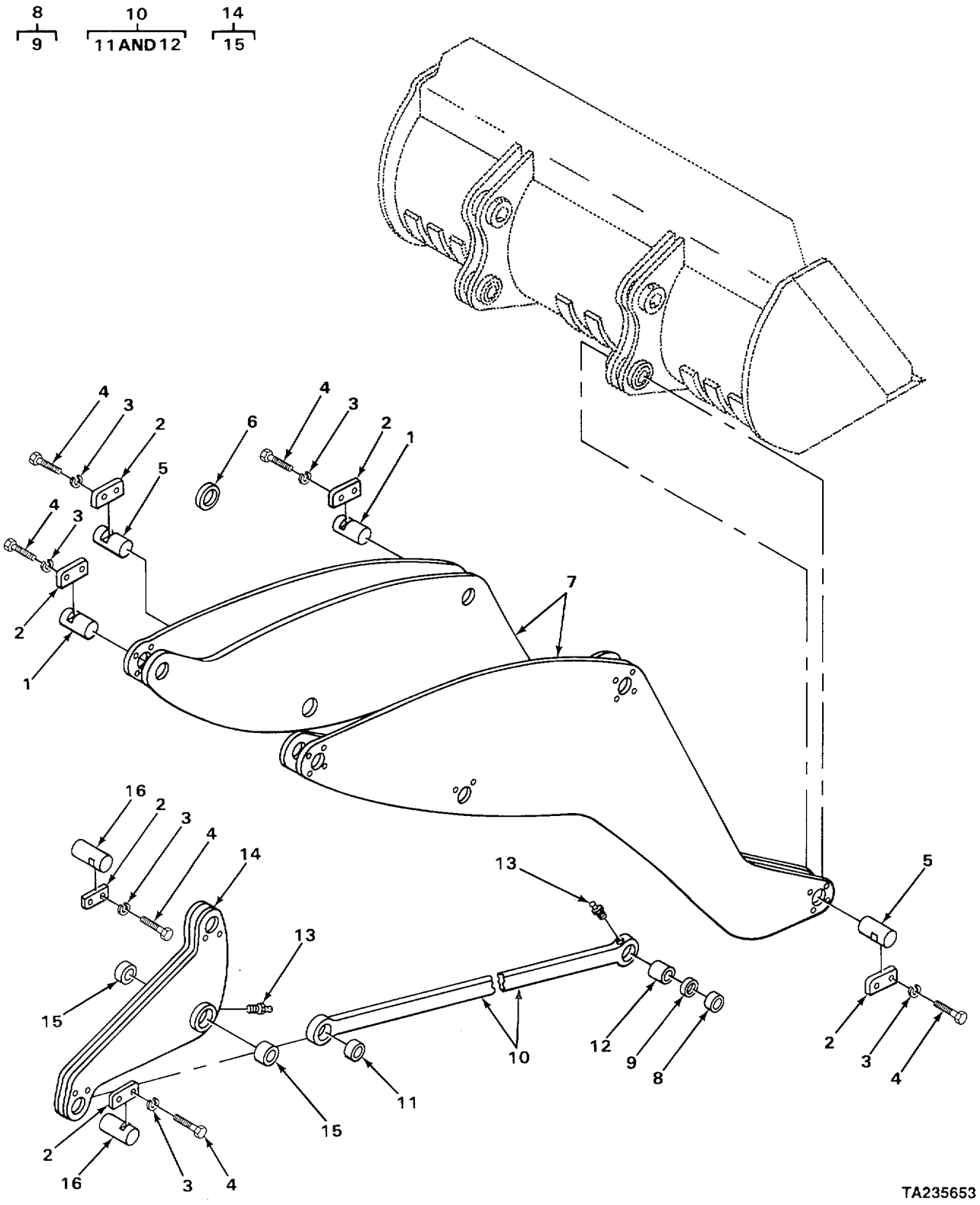

FIGURE 189. BOOM.

(1) ITEM NO	(2) SMR CODE	(3) CAGEC	(4) PART NUMBER	(5) DESCRIPTION AND USABLE ON CODES (UOC)	(6) QTY
				GROUP 7436 LIFT ARMS AND PIVOT ASSEMBLIES FIG. 189 BOOM	
1	XDOZZ	40152	1547147	PIN	4
2	PFOZZ	40152	1544087	PLATE,MENDING	18
3	PFOZZ	95019	500357-13	WASHERFLOCK	36
4	PFOZZ	40152	24C-820	BOLT,MACHINE	36
5	XDOZZ	40152	1547465	PIN	4
6	XDOZZ	40152	1516939	SHIM V	
6	XDOZZ	40152	1540169	SHIM V	
6	XDOZZ	40152	1516940	SHIM V	
7	XDOZZ	40152	1547170	BOOM	1
8	XDOFF	401522502842		SEAL AND GUARD ASSEMBLY	4
9	XDFZZ	40152	1519195	.SEAL	1
10	XDOFF	40152	3901175	PUSH ROD	2
11	XDFZZ	40152	549669	.BUSHING	1
12	XDFZZ	40152	2509317	.BUSHING	1
13	PFOZZ	12603	10H25	FITTINGILUBRICATION	4
14	XDOFF	40152	1516982	BELLCRANK ASSEMBLY	2
15	XDFZZ	40152	1539553	.BUSHING	2
16	XDOZZ	40152	1539586	PIN	2

END OF FIGURE

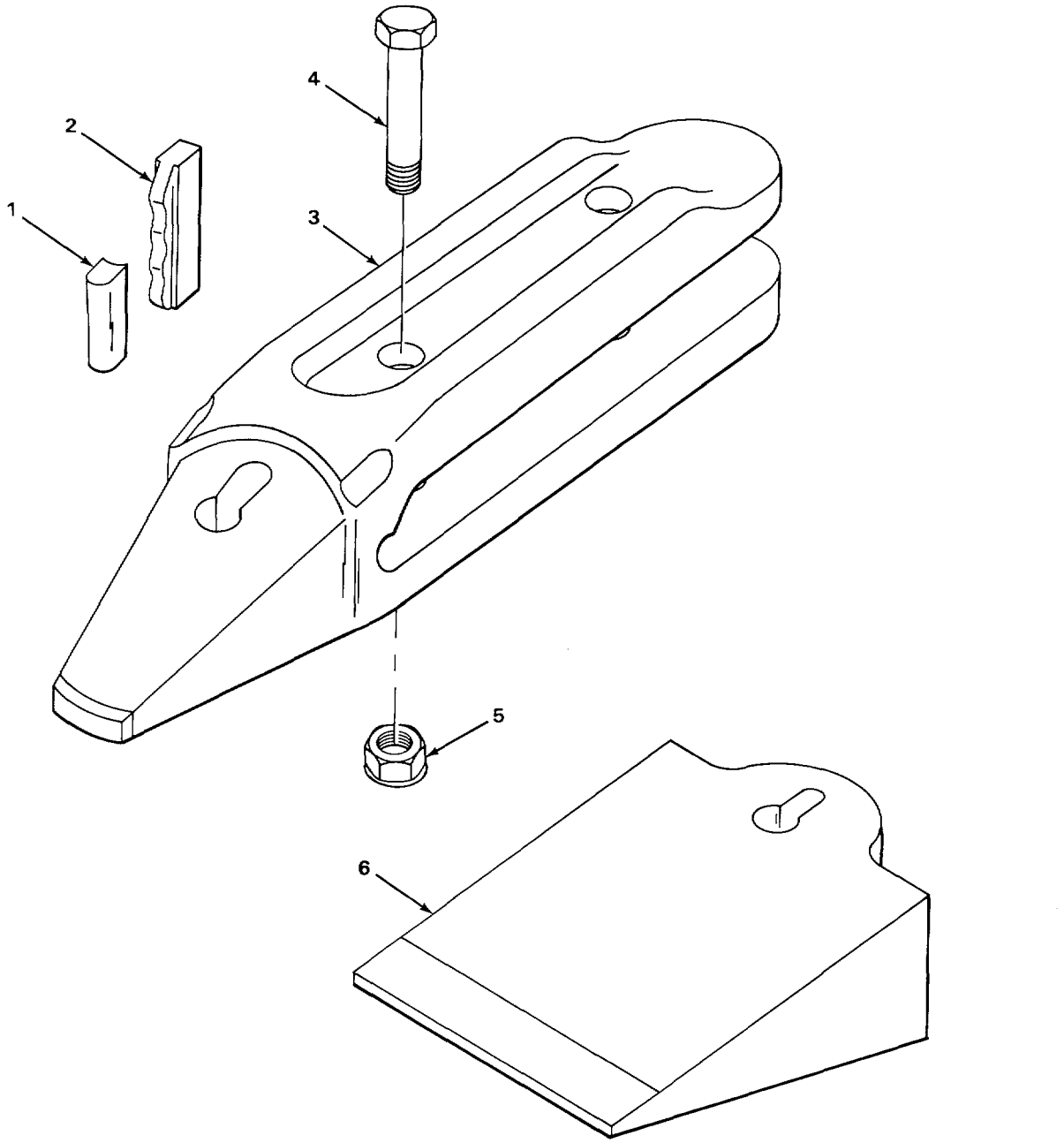

FIGURE 190. BUCKET TEETH AND ADAPTERS.

(1) ITEM NO	(2) SMR CODE	(3) CAGEC	(4) PART NUMBER	(5) DESCRIPTION AND USABLE ON CODES (UOC)	(6) QTY
				GROUP 7437 LOADER BUCKET ASSEMBLY OR FORKLIFT	
				FIG. 190 BUCKET TEETH AND ADAPTERS	
1	XDOZZ	401521504272		PIN.STANDARD,BOLT-ON ADAPTER	8
1	XDOZZ	401521542393		PIN.HOT-SLAG,BOLT-ON ADAPTER.....	8
2	XDOZZ	40152	1504271	PIN,LOCK STANDARDBOLT-ON ADAPTER.....	8
2	XDOZZ	40152	1542394	PIN,LOCK HOT-SLAGBOLT-ON ADAPTER	8
3	XDOZZ	40152	1504273	ADAPTER BOLT-ON3	8
4	PFOZZ	12603	23C-1260	BOLT,MACHINE	16
5	PFOZZ	96906	MS51967-23	NUT,PLAIN,HEXAGON	16
6	XDOZZ	12603	1504270	TOOTH POINT STANDARD.....	8
6	XDOZZ	12603	1542261	TOOTH POINT SHARP	8
6	XDOZZ	12603	1542260	TOOTH POINT CHISEL.....	8
6	XDOZZ	12603	1542259	TOOTH POINT ROCK	8

END OF FIGURE

SECTION II

6
7

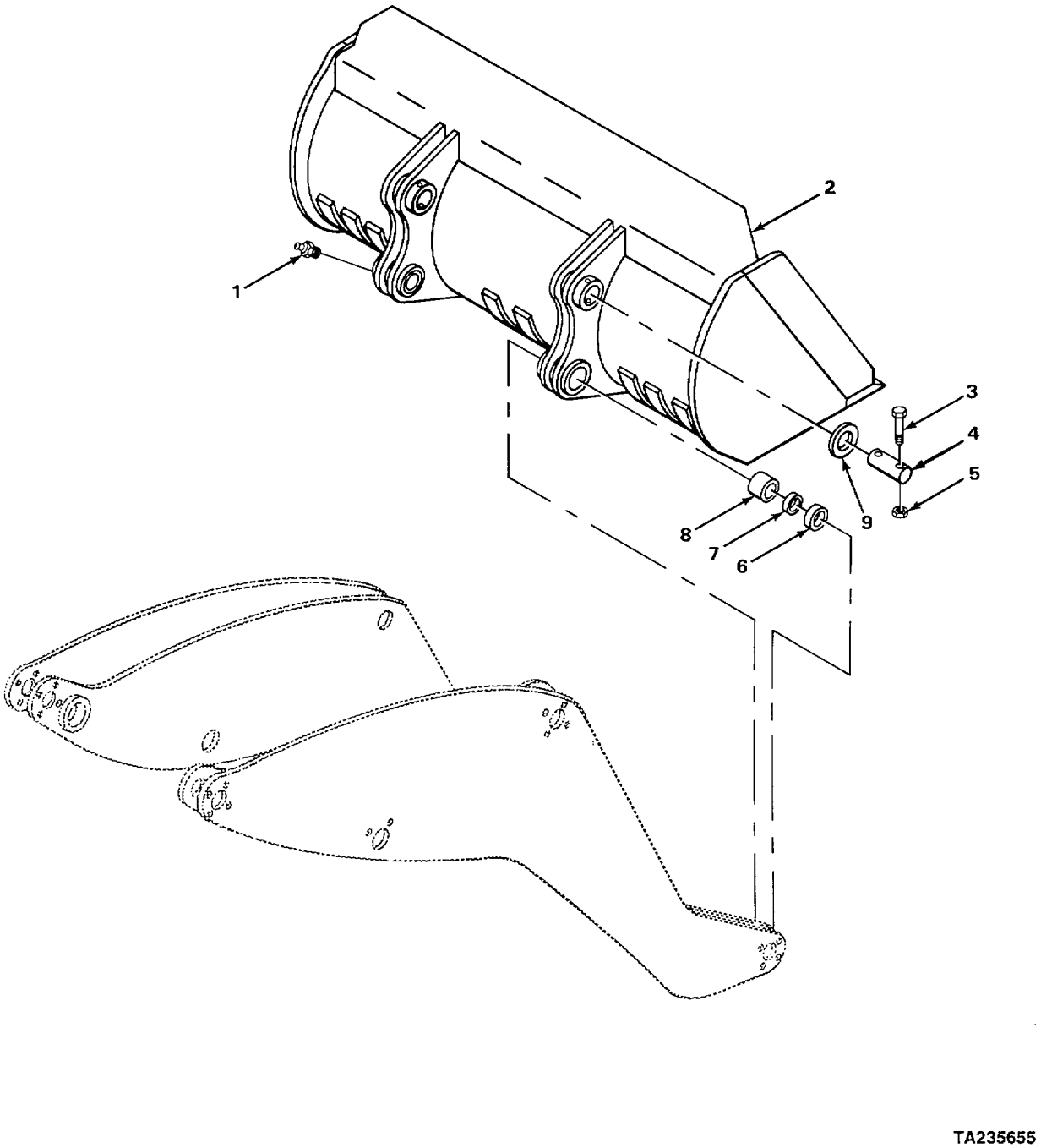

FIGURE 191. BUCKET.

(1) ITEM NO	(2) SMR CODE	(3) CAGEC	(4) PART NUMBER	(5) DESCRIPTION AND USABLE ON CODES (UOC)	(6) QTY
				GROUP 7437 LOADER BUCKET ASSEMBLY OR FORKLIFT FIG. 191 BUCKET	
1	PFOZZ	12603	10H25	FITTING LUBRICATION	2
2	XDOZZ	40152	2506079	BUCKET 4.5 CU YD UOC:T27	1
2	XDOZZ	40152	2505721	BUCKET 5 CU YD UOC:T26	1
3	PFOZZ	40152	24C-896	BOLTMACHINE	4
4	XDOZZ	40152	549907	PIN	2
5	PFOZZ	96906	MS21044N8	NUTSELF-LOCKINGHE	4
6	XDOFF	40152	2502843	SEAL AND GUARD ASSEMBLY	4
7	XDFZZ	40152	1519196	SEAL	2
8	XDOZZ	40152	3901168	BUSHING	2
9	XDOZZ	40152	1540169	SHIM	V

END OF FIGURE

(1) ITEM NO	(2) SMR CODE	(3) CAGEC	(4) PART NUMBER	(5) DESCRIPTION AND USABLE ON CODES (UOC)	(6) QTY
				GROUP 94 REPAIR KITS GROUP 9401 REPAIR KITS FIG KITS	
	PAOZZ	40152	1527816	PARTS KIT,SEAT BELT	1
				ANGLE IRON (2) 147-15	
				BOLTEYE ((.2) 147-16	
				NUT,SELF-LOCKING,HE (.2) 147-13	
				SEAT BELT (.1) 147-8	
				WASHERFLAT (.2) 147-14	
	PAOZZ	12603	2500340	KITBACKUP ALARM	1
				CABLE TIE (6) 70-17	
				HARNESS (.1) 70-13	
				SWITCHIALARM (.1) 70-16	
				WASHER,FLAT (.6) 70-5	
				WIRE (.1) 70-7	
				WIRE (.1) 70-10	
				WIRE (1) 70-11	
				WIRE (1) 70-12	
	PHAZZ	12603	2516151	PARTS KIT,LINEAR AC	2
				PACKING (1) 134-11	
				PINTCOTTER (.1) 134-15	
				WIPER (.1) 134-7	
	PAHZZ	40152	2518493	PISTON,LINEAR ACTUA	1
				PACKING ASSEMBLY (1) 183-10	
				RING,WIPER (1) 183-6	
	PHAZZ	12603	2518494	PARTS KIT,LINEAR AC	1
				PACKING ASSEMBLY (1) 184-11	
				RINGIWIPER (.1) 184-5	
				SPACER (4) 184-7	
	PAFZZ	40152	3290099	PARTS KIT,LINEAR DI	1
				BOLT,MACHINE (1) 113-27	
				PISTON (.1) 113-23	
				SEAT (1) 113-25	
				SPRING (1) 113-24	
				WASHERFLAT (1) 113-26	
	PAFZZ	40152	3290106	PARTS KIT,LINEAR DI	1
				DIAPHRAGM (.1) 113-16	
				PACKINGPREFORMED (1) 113-11	
				PACKINGPREFORMED (.1) 113-13	
				RETAINER (1) 113-9	
				SCREW (1) 113-18	
				SEATTVALVE (1) 113-14	
				SPRING (1) 113-12	
				SPRING (1) 113-15	
				VALVE (1) 113-10	
				WASHER (1) 113-17	
	PAFZZ	40152	3290124	PARTS KIT,LINEAR DI	1
				BOOT (1) 113-4	
				DIAPHRAGM (1) 113-16	

(1) ITEM NO	(2) SMR CODE	(3) CAGEC	(4) PART NUMBER	(5) DESCRIPTION AND USABLE ON CODES (UOC)	(6) QTY
				PACKING,PREFORMED (.1) 113-11	
				PACKING,PREFORMED (.1) 113-13	
				STOP1RUBBER (1) 113-	
				VALVE (1) 113-10	
	PAFZZ	40152	3290125	PARTS KIT,VALVE	1
				BOOT (.1) 113-4	
				DIAPHRAGM (.1) 113-16	
				FILTER (.1) 113-7	
				PACKING,PREFORMED (.1) 113-11	
				PACKING,PREFORMED (.1) 113-13	
				PACKINGIPREFORMED (.1) 113-22	
				SPRING (.1) 113-12	
				SPRING (1) 113-15	
				SPRING (.1) 113-21	
				SPRING (.1) 113-24	
				STOPTRUBBER (.1) 113-2	
				VALVE (.1) 113-10	
	PAHZZ	72582	5108120	PARTS KIT,DIESEL EN	1
				BEARING,ROLLER,CYLI (2) 36-10	
				BEARING,BALL,ANNULA (.2) 36-41	
				SEAL,PLAIN ENCASED (2) 36-15	
				SEAL,PLAIN ENCASED (2) 36-37	
				WASHER,KEY (2) 36-2	
	PAHZZ	72582	5149294	STABILIZER KIT	1
				STABILIZER,MAIN BEA (.1) 6-1	
				STABILIZER MAIN (1) 6-8	
				STABILIZER,MAIN (1) 6-4	
				STABILIZER,MAIN (.1) 6-5	
	PAHZZ	72582	5149644	PARTS KIT,BLOWER IN	1
				COVER (1) 37-14	
				GASKET (1) 36-8	
				PACKING,PREFORMED (1) 37-10	
				SEAL (1) 37-15	
				STRAINER ELEMENT,SE (14) 35-27	
				WASHER,KEY (.2) 36-2	
	PAFZZ	72582	5195078	PARTS KIT,ENGINE FU	1
				GASKET (1) 33-4	
				GASKET (1) 33-15	
				GEARSHAFTT,SPUR (1) 33-7	
				PIN,STRAIGHT,HEADLE (.1) 33-17	
				PLUG,PIPE (2) 33-19	
				SEAL,PLAIN ENCASED (.2) 33-3	
				SPRING,HELICAL,COMP (.1) 33-16	
				VALVE,RELIEF (1) 33-18	
	PAFZZ	72582	5196374	GASKET SET	1
				GASKET (1) 4-5	
				GASKET (1) 4-9	
				GASKET (2) 4-16	
				GASKET (.2) 4-22	
				GASKET (8) 4-23	
				GASKET (1) 4-24	
				GASKET (.1) 4-29	

(1) ITEM NO	(2) SMR CODE	(3) CAGEC	(4) PART NUMBER	(5) DESCRIPTION AND USABLE ON CODES (UOC)		(6) QTY
				GASKET	(.2)4-30	
				GASKET	(4)4-41	
				GASKET	(8)5-16	
				GASKET	(6)5-23	
				GASKET	(.1)9-1	
				GASKET	(2)9-4	
				GASKET	(.2)9-13	
				GASKET	(1)11-8	
				GASKET	(.1)15-5	
				GASKET	(.2)18-6	
				GASKET	(1)19-11	
				GASKET	(2)20-5	
				GASKET	(4)20-12	
				GASKET	(.1)21-8	
				GASKET	(1)22-18	
				GASKET	(1)22-22	
				GASKET	(2)23-8	
				GASKET	(.1)23-22	
				GASKET	(1)23-13	
				GASKET	(1)23-14	
				GASKET	(1)26-5	
				GASKET	(4)27-2	
				GASKET	(2)29-1	
				GASKET	(4)29-4	
				GASKET	(1)33-4	
				GASKET	(1)61-57	
				GASKET SET	(1)22-11	
				PACKING,PREFORMED	(1) 5-9	
				PACKING,PREFORMED	(1) 22-13	
				PACKING,PREFORMED	(1) 31-22	
				SEAL,PLAIN ENCASED	(.1) 7-1	
				SEAL,PLAIN ENCASED	(.1) 11-5	
				SHIM	(.2) 23-7	
				SPACER,RING	(2) 31-7	
				WASHER,FLAT	(1) 23-10	
PAHZZ	72582	5196381		GASKET AND SEAL SET CYLINDER HEAD		1
				OVERHAUL		
				GASKET	(8) 5-16	
				GASKET	(.6)5-23	
				GASKET	(.2)18-6	
				GASKET	(2)29-1	
				GASKET	(4)29-4	
				GASKET	(.1)33-4	
				PACKING,PREFORMED	(1)5-9	
				PACKING,PREFORMED	(1)31-22	
				SPACER,RING	(2)31-7	
PAHZZ	72582	5196761		PARTS KIT,BLOWER HU		1
				BOLT,MACHINE	(.8)36-53	
				CLAMP,HOSE	(1) 36-51	
				ASSEMBLY	(1) 36-58	
				GASKET	(1) 36-44	
				GASKET	(.1) 36-57	

(1) ITEM NO	(2) SMR CODE	(3) CAGEC	(4) PART NUMBER	(5) DESCRIPTION AND USABLE ON CODES (UOC)	(6) QTY
				PACKING,PREFORMED (1) 37-10	
				PLATETOIL TUBE (.1) 37-11	
				PLUG,BLOWER HOUSING (.1) 36-56	
				SCREW,CAP,HEXAGON H (.2) 37-13	
				SEAL (.1) 36-52	
				WASHER,FLAT (8) 36-55	
				WASHER,LOCK (8) 36-54	
				WASHER, LOCK (.2) 37-12	
	PAFZZ	72582	5197438	PARTS KIT,ENGINE WA	1
				BEARING,BALL,ANNULA (.1) 55-6	
				BEARING,,ALL,ANNULA (1) 55-7	
				GEAR,HELICAL (1) 55-3	
				RING,LOCK (.1) 55-4	
				SEAL,PLAIN ENCASED (.1) 55-8	
				SEAL,WATERPUMP (1) 55-16	
				SHAFT,SHOULDERED (1) 55-5	
	PAFZZ	72582	5197509	PARTS KIT,ENGINE WA.	1
				BEARING,BALL,ANNULA (1) 55-6	
				BEARING,BALL,ANNULA (.1) 55-7	
				GASKET (1) 55-12	
				IMPELLER,PUMP,CENTR (.1) 55-15	
				NUT,SELF-LOCKING,HE (.1) 55-13	
				PACKING,PREFORMED (1) 55-1	
				RING,LOCK (1) 55-4	
				SEAL,PLAIN ENCASED (1) 55-8	
				SEALIWATERPUMP (1) 55-16	
				SHAFT,SHOULDERED (1) 55-5	
	PAFZZ	72582	5199822	CYLINDER SLEEVE AND	1
				CYLINDER SLEEVE (8) 10-1	
				PISTON,INTERNAL COM (.8) 10-5	
	PAFZZ	72582	5228769	PARTS KIT,FUEL INJE	1
				SEAT,HELICAL CONPRE (.1) 31-18	
				SPRINGVHELICALVCOMP (.1) 31-17	
	PAHZZ	72582	5229649	PARTS KIT,FUEL INJE	1
				ADAPTER,STRAIGHTITU (.2) 31-6	
				FILTER ELEMENTIFLUI (.2) 31-8	
				PACKINGCPREFORMED (1) 31-22	
				SPACER1RING (2) 31-7	
	PAHZZ	40152	960751	PARTS KIT,POWER STE	1
				BALL,BEARING (1) 131-7	
				DOWEL (4) 131-3	
				NUT,PLAIN,HEXAGON (8) 131-9	
				RING,RETAINING (1) 131-10	
				SEAL (1) 131-6	
				WASHERTLOCK (8) 131-8	
	PAHZZ	40152	961398	PARTS KIT,POWER STE	1
				COUPLING,SPLINE (.1) 131-2	
				COVER (1) 130-4	
				DOWEL (.1) 130-5	
				NUT,PLAIN,HEXAGON (8) 130-2	
				NUT,PLAIN,CAP (.1) 132-2	
				NUT,PLAIN,HEXAGON (1) 132-4	

(1) ITEM NO	(2) SMR CODE	(3) CAGEC	(4) PART NUMBER	(5) DESCRIPTION AND USABLE ON CODES (UOC)	(6) QTY
				ORIFICE (1) 132-22	
				PACKINGPREFORMED (2) 132-3	
				PACKINGPREFORMED (1) 132-7	
				PACKINGPREFORMED (.1) 132-9	
				PACKINGPREFORMED (1) 132-18	
				PACKINGPREFORMED (.3) 132-20	
				PISTON (1) 132-16	
				PLUG (.1) 132-6	
				PLUG (1) 132-14	
				PLUG (1) 132-19	
				PLUG (2) 132-21	
				RETAINER (1) 132-10	
				RETAINER (.1) 132-15	
				RINGBACK-UP (1) 132-8	
				RING1RETAINING (2) 131-1	
				SEAT (1) 132-17	
				SETSCREW (1) 132-5	
				SPRING (1) 132-11	
				STUODPLAIN (8) 132-1	
				VALVESPOOL (1) 132-12	
				WASHERLOCK (8) 130-3	
	PAHZZ	40152	963116	PARTS KIT,SEAL REPL	1
				PACKINGPREFORMED(.1) 158-14	
				PACKINGPREFORMED (.1) 158-52	
	PAHZZ	5A662	963118	PARTS KIT,ROTARY PU	1
				DOWEL (.4) 158-23	
				LABEL (.1) 158-53	
				NUT,PLAIN,HEXAGON H(.1) 158-32	
				NUT,PLAIN?CAP (.1) 158-33	
				PACKINGPREFORMED (1) 158-21	
				PACKINGPREFORMEDO (2) 158-31	
				PACKINGPREFORMED (.1) 158-37	
				PACKINGPREFORMED (1) 158-39	
				PACKINGPREFORMED (.1) 158-43	
				PISTON (.1) 158-20	
				PLATEPRESSURE (.1) 158-11	
				PLUG (.1) 158-18	
				PLUG (.4) 158-27	
				PLUG (.1) 158-29	
				PLUGIPIPE (1) 158-24	
				POPPET (1) 158-42	
				RETAINER (1) 158-19	
				RINGBACK UP (.1) 158-38	
				RINGBACK UP (.1) 158-47	
				RINGSNAP (.1) 158-46	
				SEAT (1) 158-22	
				SEAT (.1) 158-44	
				SETSCREW (1) 158-30	
				SLEEVE (1) 158-34	
				SPRING (1) 158-41	
				SPRING (1) 158-45	
				VALVESPOOL (1) 158-48	

(1) ITEM NO	(2) SMR CODE	(3) CAGEC	(4) PART NUMBER	(5) DESCRIPTION AND USABLE ON CODES (UOC)	(6) QTY
	XDHZZ	5A662	963119	PARTS KIT,ROTARY PU	1
				COUPLING	(1) 158-17
				COVER	(1) 158-40
				DOWEL	(4) 158-23
				LABEL	(.1) 158-53
				NUTVPLAIN,HEXAGON H	(.1) 158-32
				NUTVPLAINICAP	(.1) 158-33
				NUTVPLAIN,HEXAGON	(8) 158-35
				PACKINGPREFORMED	(.1) 158-21
				PACKING,PREFORMED	(2) 158-31
				PACKINGPREFORMED	(.1) 158-37
				PACKINGPREFORMED	(1) 158-39
				PACKINGPREFORMED	(1) 158-43
				PACKINGIPREFORMED	(1) 158-52
				PISTON	(1) 158-20
				PLATE,ISOLATION	(.1) 158-49
				PLATEISOLATION	(1) 158-51
				PLATEIPRESSURE	(2) 158-50
				PLUG	(1) 158-18
				PLUG	(4) 158-27
				PLUG	(1) 158-29
				PLUGPIPE	(1) 158-24
				POPPET	(.1) 158-42
				RETAINER	(1) 158-19
				RING,BACK UP	(1) 158-38
				RINGBACK UP	(.1) 158-47
				RING,RETAINING	(1) 158-16
				RING,SNAP	(.1) 158-46
				SEAT	(.1) 158-22
				SEAT	(.1) 158-44
				SETSCREW	(1) 158-30
				SLEEVE	(1) 158-34
				SPRING	(1) 15B-41
				SPRING	(1) 158-45
				STUDGPLAIN	(8) 158-26
				VALVEGSPOOL	(1) 158-48
				WASHERGLOCK	(8) 158-36
	PAHZZ	40152	963633	PARTS KIT,ROTARY PU	1
				BALLTBEARING	(1) 158-7
				DOWEL	(2) 158-15
				FLANGE	(1) 158-6
				NUT,PLAINHEXAGON	(8) 158-4
				PACKINGPREFORMED	(1) 158-14
				PLATE,ISOLATION	(1) 158-10
				PLATE,ISOLATION	(1) 158-13
				PLATE,PRESSURE	(1) 158-11
				PRESSURE	(1) 158-12
				PLUG	(.1) 158-9
				RING,RETAINING	(.1) 158-2
				SEAL	(1) 158-3
				WASHERLOCK	(8) 158-5
				END OF FIGURE	

(1) ITEM NO	(2) SMR CODE	(3) CAGEC	(4) PART NUMBER	(5) DESCRIPTION AND USABLE ON CODES (UOC)	(6) QTY
				GROUP 95 GENERAL USE STANDARDIZED PARTS GROUP 9501 BULK MATERIEL FIG. BULK	
1	XDFZZ	40152	139149	CHANNEL,GLASS	V
2	XDFZZ	40152	569696	CHANNEL GLASS	V
3	PFOZZ	72582	5199576	HOSE,NONMETALLIC	V
4	PFFZZ	79470	H16606	HOSE,NONMETALLIC	V
5	PFOZZ	26095	5129157	HOSE,NONMETALLIC	V
6	PFOZZ	72582	5120022	HOSE,PREFORMED	V
7	PFFZZ	12603	569694	MOLDING,METAL	V
8	XDFZZ	40152	960911	PARTS KIT,VEHICULAR	V
9	XDFZZ	40152	589572	RUBBER,LOCK	V
10	XDFZZ	40152	943623	SEAL,NONMETALLIC ST	V
11	XDFZZ	40152	1521844	WEATHER STRIP	V
12	XDFZZ	40152	569692	WEATHER STRIP	V

END OF FIGURE

CROSS- REFERENCE-INDEXES
NATIONAL STOCK NUMBER INDEX

STOCK NUMBER	FIG.	ITEM
2910-00-003-0160	38	2
5310-00-003-9174	56	8
2910-00-004-3443	5	8
5310-00-004-5033	32	15
4730-00-005-7376	4	42
	7	9
	33	19
	36	18
	36	38
	40	32
	53	2
	54	17
5305-00-007-6338	48	3
2910-00-009-5236	40	51
5307-00-010-3196	4	11
5315-00-010-3709	33	17
3120-00-012-0632	40	36
5315-00-012-0685	41	8
5315-00-012-0707	40	50
5330-00-013-7T86	186	16
5315-00-014-1195	33	6
5315-00-014-1236	14	2
5315-00-014-1346	4	14
	7	13
4730-00-014-1539	45	9
	115	47
	118	49
5340-00-014-2583	40	54
5310-00-014-5850	40	28
5310-00-014-5855	140	14
	142	10
	144	22
2920-00-015-3058	61	35
5306-00-017-4723	80	11
5306-00-018-6649	37	7
4730-00-019-1456	13	42
6240-00-019-3093	66	12
2940-00-019-4775	22	9
5306-00-021-2545	58	28
5315-00-021-8211	11	9
5310-00-023-4457	9	12
5330-00-025-6606	124	33
4730-00-027-8720	116	15
	182	4
5340-00-032-4157	115	12
6695-00-034-3918	31	16
3040-00-034-4216	61	24
2920-00-034-4220	61	28
5970-00-034-5015	61	36
2920-00-034-7342	61	15
5306-00-038-1956	124	31
4730-00-044-4035	117	6
	118	12
2520-00-045-4021	79	40
2520-00-045-4025	78	5
2520-00-045-4063	92	41
	117	44
4730-00-050-4203	95	10
	96	10
	98	10
5305-00-051-4071	93	3
2520-00-051-5327	81	21
5315-00-051-9867	40	49
2520-00-051-9932	85	23
	94	17
5307-00-054-7036	55	10
3020-00-056-2382	93	1
5365-00-057-1589	7	2
2990-00-057-6941	36	22
5315-00-059-0184	94	3
5315-00-059-0238	135	41
5310-00-059-6112	12	12
5310-00-059-9264	47	1
2815-00-060-1125	17	12
5310-00-062-2051	61	5
4730-00-062-5470	178	11
	179	25
5330-00-064-7777	164	3
	172	4
	174	26
	174	28
	174	30
	175	3
	175	34
	178	14
5330-00-064-7796	92	13
	92	28
	92	30
	92	35
	170	3
5305-00-068-0508	16	23
	36	11
5305-00-068-0510	4	8
	9	16
	21	6
	23	3
	62	13
5305-00-068-0511	2	2
	9	17
	11	17

CROSS- REFERENCE-INDEXES
NATIONAL STOCK NUMBER INDEX

STOCK NUMBER	FIG.	ITEM
5305-00-068-0511	23	21
	28	10
	35	6
	43	11
	109	9
	119	10
	133	26
5306-00-068-0513	62	11
	69	12
5305-00-068-7837	32	14
5305-00-069-5572	9	8
5305-00-069-5579	79	20
5305-00-071-1783	2	6
5305-00-071-1789	94	7
5305-00-071-2055	55	17
	58	10
5305-00-071-2063	55	21
5305-00-071-2066	4	26
5305-00-071-2069	8	7
	133	22
	180	20
5305-00-071-2070	133	7
5305-00-071-2076	9	18
5305-00-071-2078	19	15
5305-00-071-2506	5	20
5305-00-071-2509	35	18
5305-00-071-2510	26	6
5315-00-072-0879	41	1
5307-00-072-6701	79	29
2530-00-073-2176	126	63
2910-00-073-3010	KITS	
2540-00-073-9849	150	13
	152	5
5330-00-078-8818	94	12
2815-00-080-4578	10	15
2815-00-080-5738	10	7
2815-00-080-5750	10	10
5310-00-080-6004	14	6
	15	4
	22	21
	35	4
	35	25
	43	2
	53	11
	54	19
	57	5
	119	8
5310-00-081-4219	4	32
	4	37
	20	15
5305-00-082-6977	184	8
5330-00-083-5406	61	27
3020-00-083-8021	11	18
3110-00-083-8457	41	17
5310-00-088-0552	101	48
2930-00-089-2149	KITS	
2910-00-089-2370	30	7
4730-00-089-2515	22	7
	79	19
	90	9
	116	19
	117	45
2940-00-089-2520	27	3
5365-00-089-6001	41	18
2990-00-089-6458	42	15
5340-00-089-8037	41	24
5315-00-089-8807	8	4
5305-00-090-4739	79	39
4730-00-090-9252	116	3
	181	9
3120-00-091-4679	10	13
2815-00-094-1663	10	5
3120-00-094-3552	10	9
5330-00-095-6670	36	48
3020-00-097-2475	33	13
5330-00-097-9838	36	15
	36	37
2520-00-097-9910	82	8
5310-00-098-2201	126	43
3110-00-100-0248	84	17
	86	8
3110-00-100-0506	101	34
	105	36
3110-00-100-0565	94	13
3110-00-100-3130	101	29
	105	32
2920-00-100-3403	61	18
3110-00-100-3561	94	14
3110-00-100-6151	85	18
	87	19
	88	18
	131	7
	158	7
3110-00-100-6155	89	11
	90	7
	102	6
	106	6
3110-00-101-1796	124	3
2815-00-101-2226	18	5
2530-00-102-9784	117	26

CROSS- REFERENCE-INDEXES
NATIONAL STOCK NUMBER INDEX

STOCK NUMBER	FIG.	ITEM
5305-00-103-9814	82	10
5305-00-104-2832	185	9
4730-00-105-2684	92	2
	127	7
4730-00-107-3184	126	37
2815-00-110-9631	18	4
5305-00-115-9526	91	1
	126	41
2910-00-117-9229	31	1
2910-00-117-9230	31	20
2910-00-119-2687	5	12
2990-00-121-0612	32	5
2910-00-126-9712	31	9
2910-00-126-9713	31	3
2920-00-133-0857	66	22
5305-00-135-5157	40	34
5310-00-136-5712	22	16
5360-00-137-6611	40	52
4730-00-138-8050	116	18
	117	3
3120-00-140-5143	36	20
	36	36
2815-00-140-5154	36	14
4730-00-141-9108	116	14
5365-00-142-1775	5	15
5365-00-144-6445	78	20
5340-00-146-9698	41	5
4730-00-148-4975	4	17
	9	21
	53	19
	54	10
	55	20
5310-00-148-5171	40	19
5340-00-151-7058	59	30
4710-00-152-1445	4	35
4730-00-152-6070	4	18
	28	9
	53	13
	54	16
	55	19
4730-00-152-6073	4	18
	5	18
	43	13
4730-00-153-7715	126	38
5365-00-153-8531	87	1
5330-00-154-8358	7	1
3110-00-156-1854	40	22
3110-00-157-0535	76	5
	176	6
	176	17
3110-00-157-0535	177	9
5330-00-157-3914	4	30
5310-00-158-8817	126	5
5340-00-159-8753	4	40
5340-00-159-8754	4	31
5340-00-161-5246	39	20
4730-00-163-4645	99	9
	103	9
	124	4
2530-00-164-1852	126	60
5330-00-164-3580	126	46
5365-00-164-6421	35	14
5305-00-165-8074	19	1
5305-00-165-8157	27	5
5306-00-166-8498	99	8
	103	8
	109	17
5310-00-167-0680	84	23
	86	13
5310-00-167-0721	150	9
	151	15
	152	8
5310-00-167-0822	9	9
	30	6
5310-00-167-0839	61	19
5305-00-169-8014	40	18
5330-00-171-8763	4	22
6685-00-174-6219	156	1
5365-00-175-1315	84	5
	85	2
2910-00-175-9250	33	1
5330-00-178-3773	33	3
5310-00-178-9612	61	34
5310-00-180-0277	34	3
	38	13
	44	6
	45	22
	46	25
	47	2
	57	2
	62	6
	63	10
	66	10
	79	10
	82	11
	83	1
	92	21
	101	24
	105	24
	107	12

CROSS- REFERENCE-INDEXES
NATIONAL STOCK NUMBER INDEX

STOCK NUMBER	FIG.	ITEM	STOCK NUMBER	FIG.	ITEM
5310-00-180-0277	110	12	5310-00-209-0965	80	22
	115	38		85	22
	117	7		92	9
	118	2		94	8
	126	40		110	25
	133	27		110	30
	136	5		115	40
	140	3		118	56
	142	3		119	7
	171	4		126	31
	180	12		133	4
	182	6		179	17
	185	10		180	15
	186	2	5310-00-209-1543	11	2
	188	6		12	2
3110-00-183-6912	36	41	5315-00-209-7977	31	11
5315-00-187-9379	111	1	5330-00-211-9601	170	10
5315-00-187-9593	183	17	5330-00-212-6290	33	4
4730-00-193-0871	122	6	4730-00-212-6331	16	26
4730-00-193-0875	121	2	2910-00-213-6478	40	6
5310-00-193-9753	4	4	5310-00-215-7524	4	19
	53	14		6	6
	54	24	3020-00-217-5707	11	3
	58	12	4730-00-217-5714	39	1
3930-00-195-0232	66	14	5305-00-218-6387	61	47
3110-00-198-1790	88	20	5310-00-220-6583	8	2
3110-00-198-2949	124	12	5310-00-220-6740	126	23
3020-00-200-1393	33	9	5310-00-220-6765	5	24
5365-00-200-7234	80	15	4730-00-221-6215	39	2
5330-00-202-2770	37	8	5305-00-224-1110	9	7
4730-00-202-6663	122	7	5305-00-224-1113	14	3
4730-00-202-7204	42	17		15	3
4730-00-203-1072	66	7		20	6
4730-00-204-3491	53	24	5305-00-225-3843	40	1
	54	2	5305-00-225-6943	61	29
5365-00-205-5139	40	8	5306-00-225-9088	58	25
5310-00-206-0000	5	21	5306-00-226-4825	4	36
	58	9	5306-00-226-4826	23	17
5305-00-206-6776	11	19	5306-00-226-4827	121	8
5305-00-206-6786	53	16	5306-00-226-4829	113	5
	54	22	5306-00-226-4831	115	14
	58	3	5306-00-226-4834	36	53
5310-00-208-1919	144	45	5306-00-226-4841	42	20
5310-00-208-7122	126	44	3110-00-227-2019	93	7
5310-00-209-0786	151	19	3110-00-227-3505	126	49
	152	2	3110-00-227-4834	126	19
5310-00-209-0965	55	18	4710-00-228-3453	53	9
	58	11		54	1
	79	21	4730-00-228-3454	121	1
	80	10	3040-00-228-3732	40	30

CROSS- REFERENCE-INDEXES
NATIONAL STOCK NUMBER INDEX

STOCK NUMBER	FIG.	ITEM	STOCK NUMBER	FIG.	ITEM
2930-00-228-3839	55	2	5360-00-252-8444	16	16
4730-00-229-3451	53	17	4730-00-253-4413	85	24
4730-00-229-3466	39	6	4730-00-254-6211	116	29
4730-00-229-3622	39	11	4730-00-254-6215	122	5
2815-00-229-3623	6	8	4730-00-254-6229	118	41
4730-00-230-2971	122	1	5365-00-255-0296	31	7
5305-00-230-9818	12	13	3110-00-256-7419	56	22
2815-00-231-0053	36	24	5340-00-257-3059	154	2
	36	30	5365-00-260-4875	78	18
5310-00-231-0290	40	41	5310-00-261-7340	2	3
5305-00-231-0525	3	4		4	7
	119	6		5	7
5340-00-231-0941	4	15		9	6
5330-00-231-0983	119	3		11	16
5340-00-231-1689	39	23		19	13
5340-00-231-1990	4	15		20	2
4730-00-231-4009	116	28		21	7
2520-00-231-6089	101	30		22	20
	105	29		23	4
2920-00-231-7385	60	31		26	3
5330-00-232-0671	124	24		27	4
4730-00-233-9988	39	4		28	11
5315-00-234-1678	81	3		35	7
5315-00-234-1848	134	15		35	26
5315-00-235-2257	53	1		43	7
	54	11		53	4
5365-00-236-6668	56	4		54	8
3110-00-237-6504	101	36		58	2
	105	38		58	24
3110-00-237-6616	101	35		119	11
	105	37	2815-00-262-1113	KITS	
5330-00-237-6928	60	33	5310-00-262-3105	40	40
	60	38	5365-00-262-4701	22	14
5315-00-238-0838	36	59	5310-00-262-4715	59	16
5315-00-241-7427	31	2		60	44
5315-00-241-7523	36	17	5310-00-262-4753	61	48
4720-00-241-8186	121	4	5310-00-262-5429	40	55
5306-00-242-5212	53	20		41	28
	54	23	5315-00-262-8163	101	44
5310-00-245-0107	66	25	5310-00-264-1888	36	2
3010-00-246-3099	58	17	5330-00-265-1097	126	64
5330-00-246-6380	53	22	5305-00-269-3217	14	7
	54	13		27	9
4730-00-247-9105	116	8	5305-00-269-3233	4	3
5330-00-250-5817	40	27	5305-00-269-3234	62	5
5330-00-251-8839	161	8		186	14
5315-00-251-9754	32	10	5305-00-269-3238	133	12
5315-00-251-9986	7	10	5310-00-270-7111	16	13
5315-00-251-9989	32	2		17	2
5315-00-252-5969	12	7	5305-00-272-2080	32	16

CROSS- REFERENCE-INDEXES
NATIONAL STOCK NUMBER INDEX

STOCK NUMBER	FIG.	ITEM	STOCK NUMBER	FIG.	ITEM
5306-00-272-4250	8	1	2815-00-333-4865	42	14
3020-00-272-6038	31	12	5310-00-333-7562	99	6
5306-00-273-6337	41	31		100	2
5307-00-273-9380	5	10		101	56
5310-00-274-4658	11	1		103	6
	12	1		104	2
5310-00-274-9232	41	30		124	6
5330-00-276-1826	36	50	5365-00-334-7180	32	9
	37	10	5306-00-338-5618	23	27
2930-00-276-1838	23	1	5306-00-340-4742	56	14
5330-00-276-1839	23	19	3805-00-340-7047	24	3
5365-00-276-1849	56	27	5330-00-345-5189	113	22
5365-00-276-1850	56	20	2815-00-345-6073	16	18
5310-00-276-3015	30	4	5340-00-349-8296	47	6
5315-00-276-4818	11	14	5310-00-349-8529	38	7
	12	9		135	7
5315-00-276-5713	126	22		185	13
4820-00-276-9041	4	12		186	6
	119	5	5365-00-349-8563	10	20
3110-00-277-0337	41	3	5310-00-350-3587	60	6
4730-00-277-7611	120	4		60	23
4730-00-278-0155	39	5	5940-00-351-8080	60	28
4730-00-278-3912	115	52	5330-00-352-9280	126	36
4730-00-279-0985	4	18	4730-00-353-2995	115	53
	35	5		118	61
5365-00-281-6660	40	42	5365-00-354-1308	33	14
5365-00-282-5031	16	14	2815-00-354-1466	2	7
5330-00-282-5906	7	14	5330-00-354-1521	4	23
5340-00-282-7526	121	9	5330-00-354-1528	10	21
2920-00-287-0342	63	3	2540-00-358-5054	46	11
5365-00-289-1578	23	9	5315-00-358-5055	46	13
4730-00-289-2357	118	45	5340-00-358-9940	101	25
5330-00-290-7860	22	18		105	25
5330-00-291-6658	110	21	4730-00-359-4709	116	24
	115	1		133	33
	118	58	4730-00-359-4717	44	8
3110-00-293-9305	79	30		117	49
2815-00-294-2313	6	1		133	51
2910-00-296-7216	32	8	4820-00-360-8299	22	10
	32	13	2815-00-362-9386	16	21
5310-00-297-7319	61	55	5340-00-363-7977	4	15
5315-00-298-1499	85	10		19	5
5330-00-304-9218	26	5	5340-00-363-7981	5	22
2815-00-317-1682	42	9	5305-00-363-8051	18	2
4730-00-324-1483	82	7	2815-00-363-8052	16	27
	94	19	2990-00-363-8080	41	32
5340-00-325-4965	26	8	2990-00-363-8094	41	20
2940-00-327-1745	27	10	5315-00-363-8099	41	21
2940-00-327-1746	27	1	5315-00-363-8100	41	13
3110-00-332-4820	58	22	3040-00-363-8122	32	7

CROSS- REFERENCE-INDEXES
NATIONAL STOCK NUMBER INDEX

STOCK NUMBER	FIG.	ITEM	STOCK NUMBER	FIG.	ITEM
2815-00-363-8131	40	5	2520-00-421-9477	99	3
2815-00-363-8135	37	5		103	3
3010-00-363-8136	37	1	5315-00-423-4861	93	6
2815-00-363-8145	37	3	2815-00-428-9722	KITS	
2815-00-363-8147	37	2	5330-00-429-3724	60	34
2815-00-363-8161	20	7	5330-00-431-7232	18	6
3040-00-364-3307	16	24	5330-00-439-8094	86	5
5340-00-364-3311	16	15	4730-00-446-6602	30	1
5365-00-364-3329	36	42	5360-00-447-9003	110	28
5340-00-364-3369	20	9	3040-00-450-0495	41	16
2815-00-364-3424	36	3	5305-00-450-5937	61	45
5330-00-364-3434	31	22	4820-00-450-9279	126	2
5330-00-364-3550	5	16	4730-00-451-6020	92	12
5306-00-369-4138	56	10	5365-00-454-7833	89	3
2910-00-374-4929	31	8	5340-00-454-7844	89	18
4730-00-374-8191	96	7	4820-00-455-5649	89	19
5310-00-375-0518	36	7	2815-00-457-0042	35	1
2990-00-377-8954	40	15	5340-00-457-0051	17	9
5306-00-400-3518	119	10	3020-00-457-0087	56	16
2520-00-400-6463	79	35		56	21
5315-00-400-6842	7	8	3020-00-457-8555	119	1
5307-00-401-0883	79	12	5930-00-458-6673	63	7
2520-00-401-3714	94	6	2520-00-461-3894	32	5
6620-00-406-7377	69	4	5310-00-462-4134	79	37
5310-00-407-3548	59	36		94	4
5310-00-407-6485	133	11	5310-00-464-4805	46	29
4310-00-407-8368	10	2		66	27
5310-00-407-9566	4	33		70	4
	20	14		77	8
	23	16		107	4
	29	11		112	2
	36	54		144	8
	37	6		147	24
	37	12		148	4
	40	24		156	3
	45	14	5330-00-465-6759	124	27
	48	2	5310-00-466-7039	66	16
	56	3		69	3
	69	11	5365-00-469-3620	121	3
	113	6	5310-00-469-3926	124	20
	117	31	5330-00-469-8264	170	8
	121	7	3110-00-470-0938	93	4
	144	35	5310-00-470-5846	101	4
5310-00-409-9031	40	39		105	4
6645-00-411-3733	64	1		124	25
3030-00-411-3741	56	28	5310-00-472-2865	46	23
5310-00-412-9861	147	13		46	35
5306-00-416-3967	40	23		76	12
5310-00-416-4070	119	2	4730-00-475-5168	120	2
5330-00-420-4419	80	12	5340-00-477-6038	43	8

CROSS- REFERENCE-INDEXES
NATIONAL STOCK NUMBER INDEX

STOCK NUMBER	FIG.	ITEM	STOCK NUMBER	FIG.	ITEM
4720-00-484-0577	120	3	5330-00-576-5279	79	11
4720-00-485-7161	BULK	3	5310-00-579-2016	49	5
5305-00-486-5585	119	10		77	3
5306-00-436-5616	119	10		95	5
2520-00-491-5098	56	23		97	5
5310-00-492-2616	119	13		98	5
2990-00-493-2886	42	3	5330-00-579-3156	164	20
2530-00-495-8580	110	2		165	18
4720-00-497-1750	155	19		169	17
5365-00-498-3947	80	2		174	23
5360-00-499-9353	126	21		175	20
5305-00-499-9360	126	57	5305-00-579-5818	36	40
4730-00-499-9837	90	11	5330-00-579-6861	94	11
5330-00-505-6066	126	29	5310-00-579-8232	41	29
5330-00-514-4804	40	38	2940-00-580-6283	22	17
5310-00-514-6674	117	55		92	37
5306-00-514-6973	10	12	5330-00-582-2855	89	8
5310-00-514-8078	49	6		164	12
5310-00-515-9627	93	9		165	9
3020-00-517-7586	9	27		169	9
5315-00-524-7660	4	14		174	3
2910-00-524-7862	33	2		175	12
5310-00-526-8841	124	23	5330-00-582-3790	85	6
5360-00-527-2312	23	11	5310-00-582-5965	16	22
2920-00-529-7299	66	20		39	21
2815-00-529-7992	17	4		40	2
2815-00-529-8193	17	5		144	24
5330-00-531-3197	117	27		188	9
3020-00-537-0153	12	3	5330-00-584-0263	164	24
4730-00-541-8018	36	51		164	29
3110-00-542-0021	78	19		165	20
5305-00-543-2419	23	15		169	19
	27	7		174	32
	35	24		175	1
	43	6		175	22
	119	9	5310-00-584-5272	4	25
2910-00-547-1499	33	5		9	20
5365-00-547-1552	26	7		19	2
5307-00-550-1879	29	8		56	11
5306-00-550-9129	61	17		58	15
3110-00-554-2906	41	27		119	11
5305-00-558-5429	119	9	5310-00-584-7888	135	18
5330-00-559-2632	108	4		136	13
5340-00-563-4690	76	13		136	20
2815-00-564-7192	16	1		138	3
2930-00-565-5758	23	12		180	38
4730-00-574-6579	115	3	3120-00-585-3282	11	15
	118	18	3120-00-587-4781	134	1
5305-00-576-0795	82	2	5365-00-590-1739	11	11
	83	8	5340-00-590-1741	5	5

CROSS- REFERENCE-INDEXES
NATIONAL STOCK NUMBER INDEX

STOCK NUMBER	FIG.	ITEM
3020-00-591-8122	36	43
3110-00-592-9967	88	16
3110-00-593-4289	124	2
2530-00-593-7164	123	12
4730-00-595-0792	24	1
4820-00-595-2761	117	13
5310-00-595-8121	29	7
5310-00-596-7691	66	15
	69	2
5315-00-597-4217	41	26
5365-00-597-4351	7	15
5365-00-597-7422	36	42
5365-00-597-7423	36	42
5340-00-598-5135	4	15
	36	23
	36	29
5330-00-599-0505	5	9
5330-00-599-2321	61	13
5330-00-599-5577	33	15
2815-00-600-5567	16	7
4730-00-604-7953	4	17
5330-00-604-8094	22	13
5365-00-608-0486	31	21
5360-00-608-1032	46	31
4730-00-613-9339	120	1
5306-00-613-9396	33	20
5310-00-616-1917	64	3
	66	8
5315-00-616-5514	58	20
5315-00-616-5520	7	7
5306-00-619-5935	56	9
5330-00-620-3829	78	12
3120-00-620-4779	16	20
5330-00-620-7359	9	13
2910-00-624-0736	33	18
5330-00-624-6296	23	22
5310-00-627-6128	71	6
5330-00-629-6340	22	15
2910-00-629-6387	KITS	
4820-00-633-3523	118	44
5307-00-637-8996	4	13
5310-00-637-9541	35	16
	36	12
4730-00-639-9730	120	7
4730-00-640-1051	4	39
5310-00-641-0468	18	1
5330-00-641-1457	36	13
5330-00-641-4504	20	12
6240-00-643-0687	67	6
	68	2
6240-00-643-0687	68	6
5315-00-652-3341	40	7
5970-00-657-8133	61	38
3120-00-661-7616	16	2
	16	8
3120-00-661-7640	16	9
3120-00-662-1651	16	6
	16	12
3120-00-662-2181	126	26
5315-00-662-9093	16	5
	16	11
5340-00-662-9735	16	4
	16	10
5310-00-663-7617	23	10
5360-00-664-7850	33	16
5310-00-671-4109	50	2
	78	27
	79	6
	92	54
	129	9
	133	8
	135	14
	142	7
	147	21
	157	7
	178	18
	179	3
	180	21
	189	3
5340-00-678-0944	36	16
5330-00-682-4620	79	34
5365-00-684-5973	35	15
5305-00-688-2111	20	8
5310-00-689-3690	68	10
5340-00-691-1097	40	26
3040-00-692-4152	11	20
	12	14
5310-00-693-7646	42	8
3040-00-697-4789	33	7
3040-00-698-2915	33	8
5340-00-700-0670	126	58
5330-00-706-3188	89	15
2815-00-706-5831	37	4
5315-00-707-1253	31	5
5305-00-709-8540	101	49
5330-00-714-5264	79	36
	94	5
5365-00-715-1152	61	11
5305-00-719-5219	36	1
	135	13

CROSS- REFERENCE-INDEXES
NATIONAL STOCK NUMBER INDEX

STOCK NUMBER	FIG.	ITEM	STOCK NUMBER	FIG.	ITEM
5305-00-719-5235	133	20	5310-00-737-5429	40	25
5305-00-719-5270	134	9		42	21
5310-00-719-5470	61	39	5330-00-738-6993	159	3
5305-00-721-5492	20	3		160	2
5340-00-721-9658	42	12		161	3
4720-00-722-1465	133	42		163	3
4710-00-722-3387	30	2	5306-00-741-7519	83	3
5310-00-724-3210	115	37		110	13
	118	14	2815-00-745-7664	21	2
	139	5	5330-00-745-7669	19	11
	188	5	5330-00-745-7732	9	4
5305-00-724-7221	101	58		27	2
5305-00-724-7223	101	41	3120-00-745-7736	11	7
	105	33	3020-00-745-7738	12	11
5305-00-725-2317	22	19	4730-00-745-7741	20	10
	53	15	2815-00-745-7772	4	1
	54	21	2815-00-745-7774	4	27
5305-00-726-2561	101	50	4730-00-745-7786	35	27
5340-00-728-3491	4	15	5360-00-745-7791	35	21
	5	3	5330-00-745-7820	28	1
4730-00-728-7434	122	4	5330-00-751-8883	KITS	
2815-00-731-4335	17	1	5306-00-753-8226	79	18
5310-00-732-0558	27	11	5365-00-753-9528	61	50
	43	4	5977-00-754-8153	61	33
	58	4	6110-00-757-7187	61	25
	119	13	6150-00-758-0332	61	3
5310-00-732-0560	129	10	3030-00-758-0716	58	7
	157	8	5330-00-758-2887	35	3
4710-00-733-1935	30	2	5340-00-759-0542	31	19
5330-00-733-9716	129	2	5330-00-759-6303	80	7
	132	20	5365-00-763-8872	80	18
	157	10	5310-00-763-8921	190	5
2815-00-734-5287	11	13	3110-00-764-0912	79	13
5310-00-734-8749	67	2	5330-00-764-5301	78	2
	188	15	5360-00-764-9005	59	7
5310-00-734-8959	61	14	6240-00-765-8443	69	7
2815-00-735-4202	7	11	5310-00-768-0318	27	8
5330-00-735-4289	11	8		58	27
5330-00-735-4291	21	8		61	22
2590-00-735-4292	24	4	5310-00-768-0319	39	18
2815-00-735-4295	12	8	5330-00-769-4882	4	16
5330-00-735-4296	40	47	3040-00-769-6426	126	47
5330-00-735-4298	22	22	6620-00-769-7303	69	1
2910-00-735-6187	30	5	5310-00-774-9545	4	20
5330-00-736-0228	36	44	5315-00-775-1359	35	2
	42	16	2910-00-775-1380	32	12
5330-00-736-0293	9	1	2640-00-779-2565	123	7
2815-00-736-3572	21	4	2640-00-780-4200	123	8
2910-00-737-0698	5	13	2815-00-780-4704	KITS	
2920-00-737-3225	61	43	4730-00-780-5228	39	7

CROSS- REFERENCE-INDEXES
NATIONAL STOCK NUMBER INDEX

STOCK NUMBER	FIG.	ITEM	STOCK NUMBER	FIG.	ITEM
5305-00-780-8105	40	33	5310-00-809-4058	35	17
5305-00-781-3927	19	14		39	19
	28	10	5310-00-809-4085	3	3
	235	8		55	14
	443	3		55	22
	453	3		119	8
	554	7	5310-00-809-5998	15	2
	119	9	5310-00-809-8533	142	13
5305-00-781-3928	2	4	5310-00-809-8540	172	2
5305-00-781-3929	28	10	5310-00-809-8541	85	12
3040-00-781-5619	40	53	5310-00-809-8591	150	19
3040-00-781-5622	41	19		151	21
5330-00-781-7117	53	23		152	32
	54	12	3120-00-810-3993	41	25
5305-00-782-9489	30	3	2990-00-810-3994	40	14
	83	2	3120-00-811-4699	16	3
5306-00-783-5183	61	51	5360-00-812-0196	61	9
5306-00-783-5188	61	41	5330-00-814-9196	4	21
2815-00-786-6441	8	8	5315-00-816-1794	46	12
	9	25	4730-00-817-1843	118	36
5977-00-786-9564	61	30	5360-00-818-2303	147	23
5330-00-788-2753	84	26	4730-00-819-3737	115	16
	86	17		181	2
5365-00-788-5951	40	43	5310-00-820-6653	56	15
2815-00-788-6639	35	12	5330-00-821-0817	78	9
5340-00-791-9113	46	19	5365-00-821-2502	78	11
	176	10	5310-00-822-2236	61	8
	177	3	5310-00-822-2241	61	10
5340-00-792-9020	10	11	2920-00-822-2287	61	6
5360-00-792-9771	31	4	5310-00-823-8804	142	15
4310-00-799-9844	87	13	5306-00-826-5257	5	25
	88	12	3120-00-831-8646	5	19
4310-00-799-9847	78	15	5340-00-833-0792	35	13
5365-00-801-2500	89	6	5340-00-833-0819	4	6
	90	3	5340-00-833-0822	14	4
	131	1	5330-00-833-0870	22	11
	158	16	2910-00-833-1000	31	10
5360-00-801-8731	22	8	5310-00-833-1013	31	23
4730-00-802-5653	62	3	2520-00-833-1024	41	22
5365-00-804-2784	158	2	5360-00-833-1025	42	11
5330-00-808-0794	126	13	3040-00-833-1026	40	16
	159	16	5330-00-834-2912	36	57
	2160	15	5310-00-834-8732	61	21
	4178	2	5365-00-837-1199	23	7
	4178	4	5365-00-837-8352	11	4
	5178	9		12	6
	178	12	5340-00-837-8448	31	18
	2179	10	5365-00-838-8715	85	14
	4179	21		101	18
	4179	26		105	18

CROSS- REFERENCE-INDEXES
NATIONAL STOCK NUMBER INDEX

STOCK NUMBER	FIG.	ITEM
5340-00-838-9696	31	15
9390-00-839-1864	61	4
5315-00-839-2325	32	1
	176	13
5315-00-839-5821	107	10
	108	12
	111	2
5315-00-839-5822	56	17
	119	4
5330-00-839-9358	96	8
4730-00-840-7236	92	27
5310-00-841-5700	10	17
5340-00-841-9141	16	25
2990-00-842-2579	36	34
3120-00-842-2691	42	5
5315-00-842-3044	76	14
	177	4
4730-00-842-3162	39	12
5305-00-842-4670	11	10
5360-00-842-5347	35	19
5360-00-842-6795	21	3
3020-00-842-7839	93	10
3020-00-842-7840	13	1
5306-00-842-8223	12	5
	13	2
5310-00-843-0588	62	14
	66	31
	92	44
	115	7
	118	48
	133	10
	136	4
	137	6
	140	8
	142	19
5305-00-843-0645	28	10
	36	4
3120-00-843-6994	11	12
5315-00-843-7986	18	3
2920-00-843-8211	61	40
5330-00-844-2907	23	8
5340-00-844-7921	59	14
5306-00-845-1621	33	12
5330-00-845-5674	KITS	
5315-00-846-5928	32	6
6620-00-846-9848	53	21
	54	14
2520-00-847-2970	95	3
	97	3
	98	3
5330-00-847-4967	4	29
4720-00-848-0431	186	5
6220-00-848-1561	68	5
5330-00-849-1028	4	5
5365-00-849-2283	31	13
5310-00-850-1611	126	28
5306-00-851-2918	7	16
2990-00-851-6933	36	28
5310-00-851-7171	6	3
	7	18
5330-00-851-7742	59	23
5306-00-852-1424	11	6
4720-00-856-3276	120	6
2815-00-857-2743	12	10
5330-00-860-2589	101	32
	105	31
5330-00-862-6929	29	4
5330-00-862-6934	15	5
2815-00-865-2079	9	3
5330-00-866-6175	29	1
4720-00-867-1098	52	2
5306-00-870-6222	22	12
2520-00-871-6818	96	3
4730-00-873-8800	28	7
5340-00-874-8677	17	7
5310-00-877-5795	49	8
	68	8
	76	6
	77	12
	127	4
	136	18
	137	2
	139	13
	147	19
	180	31
	191	5
5310-00-877-5796	45	21
	46	10
	63	1
	71	1
	74	4
	92	4
	149	3
	150	22
	152	20
	173	5
	176	1
5310-00-877-5797	150	12
5305-00-877-8051	41	15
2530-00-878-7045	126	66

CROSS- REFERENCE-INDEXES
NATIONAL STOCK NUMBER INDEX

STOCK NUMBER	FIG.	ITEM	STOCK NUMBER	FIG.	ITEM
5360-00-878-8214	17	8	5340-00-902-1767	9	5
4320-00-880-0456	33	11	3110-00-902-3754	126	33
5310-00-880-7745	29	9	5305-00-904-4005	172	1
5310-00-880-7746	4	34	5360-00-904-9293	89	10
5340-00-882-0740	80	8	5360-00-904-9918	90	20
5305-00-884-4803	17	3	2815-00-905-7917	22	3
5340-00-885-5731	16	17	4730-00-908-6292	53	6
5305-00-889-3002	61	31		54	5
5365-00-891-0214	90	21	5360-00-910-9726	40	31
5310-00-891-0217	89	4	5330-00-911-0158	35	29
	90	5	5330-00-911-4628	20	5
4730-00-891-0268	52	1	4730-00-911-5707	133	18
4730-00-891-0270	133	43		181	4
	180	4	2990-00-911-6304	40	12
4720-00-891-0276	92	58	5305-00-912-5113	101	23
3040-00-891-0680	46	24		105	23
	46	34	4720-00-913-1181	181	1
2805-00-891-0688	49	7	5330-00-914-0703	61	49
5310-00-891-5483	62	7	2640-00-914-4658	123	6
4730-00-891-7059	95	9	5310-00-914-5360	37	9
	96	9	5330-00-914-5828	83	6
	97	9	5360-00-914-8353	88	6
	98	9	5330-00-915-4511	36	8
	128	9	5305-00-915-8087	58	14
	136	8	3030-00-916-3452	119	14
	171	2	4730-00-917-4794	178	1
	184	19		179	20
	189	13	2520-00-918-5559	41	12
	191	1	2990-00-918-5561	40	21
5305-00-891-8886	56	6	4820-00-918-5565	21	1
5330-00-892-1764	5	23	2990-00-918-5587	32	4
3020-00-893-9100	80	1	3040-00-918-5588	32	3
5310-00-894-1947	40	20	2520-00-918-9649	35	22
	41	6	3040-00-918-9661	41	2
5306-00-894-2381	9	14	3020-00-919-2651	19	12
4710-00-898-4254	36	60	5360-00-919-6216	32	11
2815-00-898-4365	37	11	2990-00-920-3502	36	21
5340-00-898-4379	20	11	2910-00-920-7580	KITS	
5340-00-898-4490	3	2	5315-00-921-5332	21	9
5305-00-899-2109	40	29	5315-00-921-5346	41	4
	41	7	5315-00-921-5347	40	48
5305-00-899-6361	36	6	5340-00-921-5379	36	26
2590-00-900-1640	71	2		36	32
5340-00-900-2583	15	7	2815-00-921-5385	40	4
2815-00-900-2629	36	56	5340-00-921-6413	4	2
2815-00-900-2650	5	14		4	28
3130-00-900-2688	7	12	5306-00-921-6729	36	46
4730-00-900-3296	117	25	5340-00-921-6740	4	15
	120	8	2930-00-922-0293	KITS	
2815-00-901-0789	35	11	5340-00-922-1953	90	18

CROSS- REFERENCE-INDEXES
NATIONAL STOCK NUMBER INDEX

STOCK NUMBER	FIG.	ITEM
5315-00-923-0268	88	7
4730-00-929-3464	36	19
	36	39
5355-00-929-9698	77	5
	176	7
	177	7
5360-00-930-3251	42	13
5360-00-930-3264	22	4
5365-00-930-5141	87	3
	88	2
5365-00-930-5143	88	21
4730-00-930-5392	92	29
5315-00-930-6204	90	2
5365-00-932-1248	87	10
	88	9
5330-00-932-1252	159	20
4720-00-933-5878	92	24
5310-00-934-9758	67	1
	144	13
5365-00-935-8922	58	30
5330-00-936-6379	42	4
4730-00-937-0229	31	6
5340-00-939-1192	5	4
5310-00-939-1198	36	45
	58	16
2520-00-939-6605	87	6
	88	5
5307-00-939-9316	41	34
5306-00-940-9010	20	13
5306-00-940-9011	19	7
5306-00-940-9028	9	19
5305-00-942-2196	53	12
	54	20
	58	6
4720-00-943-5062	117	57
5310-00-944-5896	59	15
	60	45
	101	17
	105	17
4820-00-944-6249	22	5
4730-00-947-4290	25	2
3110-00-948-9797	90	19
5330-00-949-5955	82	6
5330-00-949-6241	83	5
4310-00-949-7688	87	12
	88	11
5330-00-950-7731	82	12
3110-00-950-8446	33	10
5305-00-952-1511	22	2
2815-00-953-2460	17	10
6220-00-953-4652	67	5
	68	1
4730-00-954-1281	5	2
	90	10
4730-00-958-0384	92	40
2815-00-961-9805	14	1
5310-00-964-0994	56	18
5310-00-965-6000	61	12
2815-00-970-1204	5	1
5310-00-971-7989	41	14
	42	7
	46	18
	176	11
	177	2
5306-00-972-0297	6	7
5340-00-972-8006	79	3
	129	7
	157	4
5330-00-973-1415	53	10
	54	15
3110-00-974-4124	36	10
5310-00-975-2075	79	9
	96	5
	162	7
5330-00-976-4695	61	54
5930-00-978-8846	63	8
5330-00-979-3466	79	41
	129	5
	157	6
2520-00-979-8765	89	9
5306-00-980-1542	10	16
5330-00-980-1546	61	57
2815-00-981-1319	93	5
4730-00-981-3229	110	23
5310-00-981-5144	109	14
5310-00-982-6809	49	9
	101	57
	135	42
5310-00-982-6812	135	22
	136	24
5330-00-984-3750	113	11
5340-00-986-0489	9	10
5360-00-986-7304	31	17
5305-00-989-7435	150	2
4720-00-990-3407	182	3
5305-00-990-8632	43	3
5315-00-992-0700	17	6
4730-00-995-1805	79	27
5310-00-995-9679	56	12
5999-00-996-3743	82	9

CROSS- REFERENCE-INDEXES
NATIONAL STOCK NUMBER INDEX

STOCK NUMBER	FIG.	ITEM	STOCK NUMBER	FIG.	ITEM
5999-00-996-3743	185	19	4720-01-025-2309	54	6
5310-00-997-0573	80	3	2520-01-025-3728	78	1
5340-00-999-0316	36	5	2815-01-025-3729	1	1
5310-00-999-0424	36	55	2520-01-025-3730	82	1
5310-00-999-2294	61	32	2520-01-025-3732	103	1
2920-00-999-2526	61	44	2520-01-025-3734	104	7
5310-00-999-2527	61	42	2520-01-025-3735	100	7
5940-00-999-2534	61	37	4730-01-025-7723	128	8
5315-00-999-4238	36	27		183	4
	36	33	4820-01-027-0552	34	19
2815-01-005-2914	40	35	5330-01-027-8849	89	5
4730-01-005-7253	26	10		90	4
4730-01-006-5532	115	51	4730-01-028-5038	39	14
	117	51	2540-01-030-8325	150	14
	118	34		152	14
5305-01-007-1534	85	7	5945-01-031-6507	62	12
4820-01-007-3486	80	23	5310-01-032-7048	71	7
3110-01-008-6403	101	33		165	26
	105	35		168	25
5330-01-008-6513	101	37		169	25
	105	39		175	28
5340-01-011-1438	24	2	3020-01-034-1701	19	9
5306-01-012-2284	29	10	3020-01-034-1702	19	6
5307-01-012-3560	18	7	5315-01-034-6390	111	5
5310-01-018-0683	79	38	6685-01-035-8642	66	1
	94	20	6685-01-035-8643	66	2
5310-01-018-0686	84	28	6620-01-036-2045	69	6
	86	16	6620-01-036-2060	66	6
5365-01-018-0810	84	21	6620-01-036-2061	66	4
5365-01-018-0811	84	21	2815-01-036-8685	16	1
5365-01-018-0812	84	21	5330-01-036-9681	124	8
5330-01-019-2610	84	20	5310-01-036-9684	124	18
	86	11	2530-01-037-1445	112	3
5910-01-019-6505	59	13	4720-01-037-1711	53	25
4730-01-021-2453	92	32		54	3
2530-01-021-3073	123	1	2530-01-037-1741	110	5
3930-01-021-4955	73	11	2530-01-037-1945	110	1
2940-01-021-9253	186	17	3805-01-037-2086	134	3
2910-01-022-8183	43	9	2590-01-037-4153	183	6
5340-01-024-3770	74	3		184	5
	152	4	2530-01-037-4362	109	11
5305-01-024-4775	37	13	3805-01-037-4464	183	1
	42	22	4320-01-037-4882	130	1
2815-01-024-9947	36	35	2520-01-037-5208	91	4
5330-01-025-1737	84	19	3110-01-037-5496	101	27
	86	10		105	27
4720-01-025-2309	23	24	5330-01-037-5949	123	11
	53	7	2530-01-037-5963	109	6
	53	8	5330-01-037-6127	79	16
	54	4	5330-01-037-7132	183	10

CROSS- REFERENCE-INDEXES
NATIONAL STOCK NUMBER INDEX

STOCK NUMBER	FIG.	ITEM	STOCK NUMBER	FIG.	ITEM
5330-01-037-7132	184	11	2990-01-058-4905	36	9
3110-01-037-7207	101	28	2815-01-060-9266	21	5
	105	28	3040-01-063-9810	16	19
3805-01-037-7297	184	1	5305-01-064-5196	56	13
2520-01-037-9216	87	2	5310-01-067-8382	41	35
4330-01-037-9285	186	22	2815-01-067-9819	10	8
2520-01-037-9385	124	13	4730-01-069-3216	39	13
4810-01-038-0510	164	1	5306-01-069-9211	28	3
3805-01-038-2259	186	8	4730-01-070-0146	90	13
2520-01-038-4378	89	1		158	24
2990-01-038-4594	47	15		172	3
2530-01-038-7462	101	52	4730-01-070-0664	121	6
2949-01-038-8787	34	12	2930-01-070-9132	55	9
2530-01-039-3802	116	33	2920-01-074-2030	61	53
5306-01-039-6470	6	2	4720-01-074-8373	BULK	4
	7	17	2930-01-077-4467	54	18
5305-01t039-9605	42	1	2930-01-077-4468	53	18
2930-01-040-2150	48	1	2815-01-077-6488	53	5
5940-01-041-1627	59	29	5310-01-077-6817	45	15
5330-01-041-9660	79	28	5340-01-078-2199	39	10
	90	14	5306-01-078-4981	93	2
2815-01-044-5116	29	6	5310-01-078-5993	56	2
5340-01-046-1965	5	17	2815-01-078-8806	10	4
5310-01-046-3910	135	28	2910-01-079-3494	43	5
4730-01-047-3667	29	13	3110-01-079-7024	59	28
5310-01-047-6064	59	8	2910-01-080-7243	45	1
	60	3	5305-01-081-0465	59	9
5310-01-048-0062	124	30	2990-01-082-1348	40	9
4320-01-050-3429	131	5	2990-01-082-2501	40	53
5330-01-053-2907	61	26	5330-01-083-3980	11	5
2920-01-053-4541	60	37	5340-01-083-9643	38	12
2920-01-053-4743	60	41		185	17
3040-01-053-4746	60	35	2990-01-083-9945	56	7
5330-01-053-4747	60	32	2910-01-084-0463	41	23
2920-01-053-4732	60	40	5340-01-084-5254	3	1
2910-01-053-5772	43	1	3120-01-084-5357	10	19
5330-01-053-7021	61	23	2815-01-084-9624	58	19
5330-01-053-9325	170	5	2530-01-085-5324	109	5
5305-01-054-2280	5	11	2590-01-085-8010	58	23
2920-01-054-4013	59	1	2990-01-085-8833	41	10
5961-01-054-8047	59	31	2990-01-086-3116	40	13
3110-01-055-3621	56	24	5305-01-086-3555	59	12
5305-01-056-8300	42	19	2990-01-086-3956	40	10
2010-01-057-0031	36	25	4730-01-086-9791	122	8
	36	31	4730-01-087-8916	36	47
2815-01-057-6570	19	8	5305-01-088-1970	27	6
2815-01-057-7128	19	3	5330-01-088-5984	58	18
3040-01-057-7129	19	10	3040-01-089-2055	58	21
4730-01-057-9598	36	49	5330-01-089-6878	36	52
5330-01-058-3197	4	9		37	15

CROSS- REFERENCE-INDEXES
NATIONAL STOCK NUMBER INDEX

STOCK NUMBER	FIG.	ITEM	STOCK NUMBER	FIG.	ITEM
2815-01-089-9598	37	14	5306-01-105-4308	98	2
5315-01-090-2097	42	6	5340-01-105-4328	107	6
4910-01-092-2564	17	11	4730-01-105-6857	115	12
5315-01-092-6153	4	14		124	32
5365-01-093-7766	40	3	5330-01-105-6889	40	45
5340-01-093-9216	60	21	5310-01-105-9397	94	22
2920-01-094-0483	60	8		101	40
2815-01-094-2693	12	4		105	34
2815-01-094-2788	10	3	4820-01-106-0998	128	4
2815-01-094-2789	10	14	5305-01-106-5087	110	22
2815-01-094-4322	2	5		114	2
2920-01-094-7515	60	9	5310-01-106-8250	99	5
2920-01-094-7746	60	10		100	1
2815-01-095-0341	4	10		103	5
2815-01-095-5636	2	1		104	1
2530-01-095-8752	115	19	4730-01-108-6226	23	20
	115	27	4710-01-108-7810	25	3
5995-01-096-4386	60	25	5305-01-116-5114	15	1
5910-01-097-2555	60	12	5315-01-116-7991	41	9
2920-01-097-6213	60	1	5305-01-116-8093	8	5
3110-01-098-0000	60	18	3120-01-117-3286	40	17
2520-01-098-8378	185	16	4820-01-117-3309	23	28
5935-01-098-8577	59	2	5305-01-117-3411	58	8
	60	20	5310-01-117-6261	5	6
3120-01-099-0024	60	7		9	2
2920-01-099-3085	59	19		15	6
2930-01-099-4405	59	18		20	16
	60	43		23	18
2920-01-099-4406	59	3		119	13
	60	19	5365-01-118-2819	87	14
2920-01-099-6368	59	37	5330-01-119-3281	78	8
3110-01-099-8007	60	16	2815-01-120-2722	26	1
2930-01-099-9343	55	11	5305-01-120-8180	9	23
5306-01-100-5149	59	26	5930-01-123-4495	188	14
5305-01-100-5150	59	5	4720-01-123-6894	117	23
5975-01-100-5681	117	14	2540-01-125-4735	66	5
5310-01-101-1494	59	33	4730-01-126-1490	28	5
2920-01-102-3520	61	1	5330-01-126-5159	4	24
2540-01-102-5433	147	2	3120-01-127-8007	7	3
3110-01-102-5449	59	25	5310-01-129-7508	61	20
5315-01-104-1026	88	23	5950-01-130-5209	61	46
5365-01-104-6200	88	13	4820-01-132-6317	4	12
4730-01-105-0807	117	32		29	12
5340-01-105-0829	92	16	2920-01-132-9012	KITS	
5330-01-105-0975	159	6	2530-01-135-7470	109	1
	160	4	2530-01-135-7652	124	7
	163	9	2590-01-135-7680	BULK	7
	170	9	2920-01-138-7045	61	52
5306-01-105-4308	95	2	5305-01-140-9118	9	11
	97	2		14	5

CROSS- REFERENCE-INDEXES
NATIONAL STOCK NUMBER INDEX

STOCK NUMBER	FIG.	ITEM	STOCK NUMBER	FIG.	ITEM
5305-01-140-9118	26	2	2520-01-184-1865	98	1
5340-01-144-1937	4	15	2530-01-184-4391	116	7
5310-01-151-7354	61	16	2590-01-184-4671	46	7
5306-01-157-3777	121	10	5305-01-185-7118	124	26
2920-01-161-1348	59	11	2510-01-185-8171	137	9
5305-01-163-5701	60	42	4820-01-187-1963	117	61
5305-01-163-5702	60	39	4730-01-189-8578	116	9
3120-01-164-0977	40	37	3040-01-190-0475	150	3
3120-01-164-0994	60	15		152	6
5310-01-164-1650	59	21	2530-01-190-0639	109	15
2590-01-164-1937	107	8	2520-01-190-4298	87	5
5315-01-164-5332	143	3		88	4
2920-01-164-7743	60	27	3020-01-191-4404	87	9
2920-01-164-7751	60	30	2920-01-192-5673	60	22
5310-01-164-8539	60	24	5310-01-192-8884	70	3
3110-01-165-1190	60	36		81	16
5305-01-165-3295	9	26		115	11
2940-01-165-8294	34	10		144	7
3040-01-166-1113	KITS	147		14	
5305-01-166-1549	60	11		147	25
2540-01-166-6238	140	6	4720-01-192-9674	155	13
2920-01-166-8902	59	20	5995-01-192-9758	73	3
5340-01-167-4216	60	17	5315-01-193-2723	135	24
5305-01-168-5422	60	26	2530-01-193-2824	110	20
2640-01-169-4703	123	5	5365-01-193-7137	87	22
5365-01-169-7207	94	18	5365-01-193-7139	84	10
4730-01-170-2397	38	5		86	7
6350-01-170-4536	69	9	5330-01-193-9390	126	35
5340-01-171-1414	180	7		133	5
4720-01-171-4302	180	8		180	28
2530-01-171-8843	KITS		5360-01-194-3159	87	7
4720-01-172-0483	116	31	5305-01-194-7050	78	28
5945-01-172-2513	63	4		79	7
3040-01-176-0523	35	10	5340-01-196-2347	45	12
5930-01-176-7219	63	12	2920-01-196-4882	59	4
4820-01-177-2171	117	42	5365-01-197-4049	135	2
	118	13	5365-01-197-4087	164	13
4720-01-177-8376	92	50		165	10
2920-01-177-8610	59	27		167	12
2540-01-178-8918	141	10		168	10
6350-01-178-9153	KITS			169	10
5315-01-179-5966	135	4		174	16
5340-01-179-5987	47	3		175	13
2990-01-179-6467	47	4	6145-01-197-6238	72	4
5995-01-181-3778	75	3	5365-01-198-2903	136	32
2530-01-182-6850	KITS		6210-01-198-3815	66	11
2530-01-182-7212	108	1	3120-01-198-8171	143	5
2530-01-183-4782	114	1	5365-01-198-8757	88	22
5310-01-183-5534	124	22	4140-01-199-2522	153	1
5306-01-183-8685	47	5	6680-01-199-3177	187	2

CROSS- REFERENCE-INDEXES
NATIONAL STOCK NUMBER INDEX

STOCK NUMBER	FIG.	ITEM	STOCK NUMBER	FIG.	ITEM
2540-01-199-8143	141	13	5930-01-212-5601	152	19
6210-01-199-9083	69	8	2530-01-212-7613	109	1
5930-01-200-2136	71	5	2540-01-212-8290	141	4
2590-01-200-2202	92	19	2510-01-212-8291	136	26
4320-01-200-4303	158	1	4730-01-214-1525	26	4
5355-01-201-2003	155	25	5340-01-214-2430	135	19
5330-01-201-3637	83	10	2510-01-214-7291	139	10
3120-01-201-3699	135	3	2510-01-215-1068	141	21
5340-01-201-3756	66	33	2510-01-215-1069	141	11
5340-01-201-4701	147	11	2540-01-215-3139	155	1
4720-01-202-4472	48	7	5305-01-215-5307	28	8
4810-01-202-4636	188	12	3805-01-215-8186	101	54
6645-01-202-4674	64	2	3040-01-216-2402	KITS	
4720-01-202-5792	BULK	6	3040-01-216-2494	150	11
6625-01-202-6016	66	35		152	31
3040-01-202-7785	136	30	2530-01-216-2505	126	1
2590-01-202-7918	46	6	2590-01-216-2702	136	28
5925-01-202-9278	62	10	3040-01-216-6526	188	13
5310-01-203-0103	144	32	2250-01-217-1178	140	1
5310-01-203-0120	70	18	2590-01-217-3212	139	1
	172	8	2510-01-218-1663	141	3
5995-01-203-2436	74	1	4820-01-218-5056	164	9
5340-01-203-2831	34	17		167	8
5365-01-203-3322	110	19		168	6
	115	2	5365-01-219-0168	58	29
	118	59	4720-01-219-1394	180	9
5905-01-203-9137	66	26	2540-01-219-2118	141	19
4710-01-204-8142	133	40	5995-01-219-4444	73	4
5930-01-204-8259	66	24	5995-01-219-4445	73	15
5935-01-205-4848	66	18	5920-31-219-5374	75	5
3020-01-205-7795	80	6	2510-01-220-2095	140	4
2520-01-205-7893	95	1	2930-01-222-7546	48	5
3040-01-205-9451	40	11	2520-01-222-7711	96	1
5310-01-206-7272	34	16	4810-01-223-5127	173	7
5365-01-207-0696	131	10	5330-01-223-6769	92	52
9905-01-207-8445	126	67		133	24
5995-01-209-4595	74	6		179	14
	151	23		180	26
4730-01-210-4253	4	17	2530-01-226-6097	110	17
	9	22	4720-01-226-8012	180	2
2815-01-210-9640	19	4	4720-01-226-8021	52	4
5305-01-211-1466	183	18	4720-01-226-8070	42	18
4720-01-211-3214	BULK	5	5307-01-227-3411	140	15
2940-01-211-4635	34	9	5330-01-228-4127	82	4
2540-01-211-5371	141	8	5330-01-229-4071	92	33
2540-01-211-5372	141	7		179	15
2540-01-211-5373	141	12		180	17
4720-01-212-2688	34	6	5305-01-231-0613	48	4
5930-01-212-5601	150	23	2510-01-234-1792	144	2
	151	24	5930-01-234-3399	70	16

CROSS- REFERENCE-INDEXES
NATIONAL STOCK NUMBER INDEX

STOCK NUMBER	FIG.	ITEM
5305-01-235-3055	59	35
5999-01-235-4031	59	34
2510-01-235-5688	144	12
2530-01-237-0221	KITS	
2530-01-237-0489	128	3
2530-01-237-1772	KITS	
2530-01-237-1773	KITS	
2530-01-237-1774	KITS	
2530-01-237-1775	KITS	
2540-01-237-1776	KITS	
2530-01-237-1815	126	4
4730-01-237-3517	116	12
	118	9
4320-01-237-3524	KITS	
5310-01-237-5024	59	32
4320-01-237-6300	KITS	
5306-01-238-0482	56	5
5305-01-238-0510	60	5
5305-01-238-0544	156	2
5306-01-238-1422	63	2
5306-01-238-1423	84	2
	86	4
5306-01-238-1424	76	1
5306-01-238-1425	77	4
5306-01-238-1426	112	1
5306-01-238-1427	135	5
5306-01-238-1428	135	39
5306-01-238-1429	135	44
	136	22
5306-01-238-1430	135	45
5306-01-238-1432	142	8
5306-01-238-1433	142	14
5306-01-238-1434	149	1
5310-01-238-1435	123	4
5310-01-238-1436	135	40
5310-01-238-1437	150	17
	151	3
	152	22
5310-01-238-1440	34	20
	47	12
	57	4
	70	19
	77	9
	107	1
	115	15
	116	23
	117	36
	127	1
	137	5
	139	8
5310-01-238-1440	144	1
	172	9
	188	1
5310-01-238-1441	150	10
	151	14
	152	7
5305-01-238-1442	45	5
5305-01-238-1443	63	6
5305-01-238-1444	66	13
5310-01-238-1445	81	7
	185	6
5310-01-238-1446	113	19
5310-01-238-1447	126	15
5310-01-238-1448	150	4
	152	12
5310-01-238-1449	150	5
	151	10
	152	13
5310-01-238-1450	109	13
5310-01-238-1451	130	3
	131	8
	158	5
	158	36
5305-01-238-1452	62	8
5305-01-238-1453	64	4
	66	34
5305-01-238-1454	67	4
5305-01-238-1455	144	16
5305-01-238-1456	144	20
5305-01-238-1457	144	40
	146	17
5305-01-238-1458	144	43
5305-01-238-1459	144	47
5306-01-238-3021	49	3
5306-01-238-3022	190	4
5310-01-238-3026	85	11
5310-01-238-3027	101	45
	105	45
5310-01-238-3031	62	2
	69	13
	185	5
5310-01-238-3032	66	17
	136	33
	142	1
5310-01-238-3033	80	5
5310-01-238-3034	133	49
	185	4
5310-01-238-3035	142	11
5310-01-238-3036	150	6
	151	11

CROSS- REFERENCE-INDEXES
NATIONAL STOCK NUMBER INDEX

STOCK NUMBER	FIG.	ITEM	STOCK NUMBER	FIG.	ITEM
5310-01-238-3036	152	11	5310-01-238-7167	135	31
5310-01-238-3037	183	16		172	10
5310-01-238-3038	184	15		183	13
5310-01-238-3039	144	44	5310-01-238-7168	144	25
5310-01-238-3042	87	15	5305-01-238-7182	126	68
5305-01-238-3067	51	1	5305-01-238-7183	151	6
5305-01-238-3071	60	2		152	26
5340-01-238-3085	126	3	5305-01-238-7184	152	3
5310-01-238-3094	142	12	5305-01-238-7185	165	2
5310-01-238-3095	147	18		169	5
	180	32		175	5
5307-01-238-3113	80	4	5305-01-238-7186	132	5
5307-01-238-3114	100	3	5305-01-238-7187	158	30
	104	4	5310-01-238-7190	108	13
5307-01-238-3115	100	4	5310-01-238-7192	94	23
	104	3	5310-01-238-7193	135	37
	124	5	5310-01-238-7194	135	46
5307-01-238-3116	100	5	5310-01-238-7195	135	49
	103	10	5310-01-238-7196	137	3
	104	5		139	12
5307-01-238-3117	129	8		142	6
	157	5		147	20
5307-01-238-3118	132	1	5310-01-238-7197	138	2
5307-01-238-3119	132	13	5310-01-238-7198	151	9
	158	8	5310-01-238-7199	56	19
5307-01-238-3120	158	26	5310-01-238-7200	183	12
5307-01-238-3121	185	2	5310-01-238-7201	184	9
5310-01-238-3152	45	6	5310-01-238-7209	95	6
5305-01-238-3164	150	27		97	6
	151	5		98	6
	152	29	5310-01-238-7210	159	11
2510-01-238-5035	144	11		160	10
5306-01-238-7150	113	27		163	10
5306-01-238-7152	115	39	5305-01-238-7223	127	5
	118	57		180	43
5306-01-238-7153	117	30	5305-01-238-7227	134	12
5306-01-238-7154	135	6	5306-01-238-8261	38	8
	136	12		135	12
5306-01-238-7155	135	11		138	1
5306-01-238-7156	178	17		186	24
	179	2	5306-01-238-8262	70	2
	189	4	5306-01-238-8263	101	5
5306-01-238-7157	135	17		105	5
5306-01-238-7158	135	21	5306-01-238-8264	101	16
5306-01-238-7159	135	26		105	16
5306-01-238-7160	135	29	5306-01-238-8265	109	2
5306-01-238-7161	142	16	5306-01-238-8266	147	5
5306-01-238-7162	152	15	5306-01-238-8267	92	55
5306-01-238-7163	180	30		147	22
5306-01-238-7164	188	10		179	12

CROSS- REFERENCE-INDEXES
NATIONAL STOCK NUMBER INDEX

STOCK NUMBER	FIG.	ITEM
5306-01-238-8268	150	15
	151	18
5306-01-238-8269	92	6
5306-01-238-8270	180	40
5310-01-238-8272	67	9
	68	4
	153	6
5310-01-238-8333	38	6
	135	47
	185	20
	186	7
5305-01-238-8350	123	13
5305-01-238-8351	152	30
5305-01-238-8352	164	5
	166	8
	167	4
	168	2
	174	9
5305-01-238-8353	164	26
	165	24
	166	17
	167	24
5305-01-238-8354	168	23
	169	23
	174	5
	175	24
5310-01-238-8379	49	11
5310-01-238-8380	101	43
	105	43
5310-01-238-8381	113	26
5310-01-238-8382	135	27
	180	39
5310-01-238-8383	148	2
5310-01-238-8384	150	25
	152	18
5310-01-238-8385	35	20
5310-01-238-8386	60	6
5310-01-238-8400	102	2
	106	2
5305-01-238-8435	188	16
5306-01-238-8845	76	16
	137	4
	139	11
	180	42
5306-01-238-8846	78	6
5306-01-238-8847	79	15
5306-01-238-8848	94	21
5310-01-238-8849	91	3
	140	5
	169	28
5310-01-238-8849	175	31
5310-01-238-8850	155	22
5306-01-238-8857	70	8
5310-01-238-8860	135	33
	136	23
5310-01-238-8861	151	1
5305-01-239-0626	126	54
5307-01-239-3416	108	2
5310-01-239-5836	76	3
	176	15
	177	11
5310-01-239-5837	135	36
5315-01-239-7071	136	25
2510-01-239-7584	144	26
5306-01-239-8552	34	4
	57	1
	66	9
	92	20
	107	13
	117	40
	140	7
	142	4
	144	17
5306-01-239-8553	34	21
	46	26
	47	14
	92	45
	117	8
	118	3
	140	2
5306-01-239-8554	38	10
	135	43
	185	14
5306-01-239-8555	38	14
	44	5
	63	9
	115	8
	118	32
	182	7
	185	15
	186	1
5306-01-239-8556	45	23
	46	28
5306-01-239-8557	45	25
	46	14
	63	5
	71	4
	173	1
5306-01-239-8558	46	8
5306-01-239-8559	47	8

CROSS- REFERENCE-INDEXES
NATIONAL STOCK NUMBER INDEX

STOCK NUMBER	FIG.	ITEM
5306-01-239-8559	92	56
	136	6
	171	3
	180	13
5306-01-239-8560	57	7
	77	6
	115	49
	118	7
	144	3
	188	4
5306-01-239-8562	83	4
5306-01-239-8563	84	24
	86	14
5306-01-239-8564	80	21
5306-01-239-8568	107	14
	116	26
5306-01-239-8569	107	15
5306-01-239-8570	110	18
	110	24
5306-01-239-8571	136	16
	176	14
	191	3
5306-01-239-8572	136	19
5306-01-239-8573	137	7
	139	7
5306-01-239-8574	50	1
	147	17
5306-01-239-8575	139	6
	179	24
	188	3
5306-01-239-8576	9	15
5306-01-239-8577	23	29
5306-01-239-8578	39	22
5306-01-239-8579	183	14
5306-01-239-8582	184	13
5306-01-239-8583	172	11
5310-01-239-8595	153	11
5310-01-239-8596	132	4
	158	32
5310-01-239-8674	134	14
5305-01-239-8694	63	11
5305-01-239-8695	145	4
5305-01-239-8696	145	8
5305-01-239-8701	162	8
5305-01-239-8702	184	16
5310-01-239-8739	108	6
5310-01-239-8740	186	19
5305-01-239-8762	46	2
5305-01-239-8763	46	5
	173	4
5305-01-239-8775	144	37
5306-01-239-9327	101	21
	105	20
5310-01-239-9417	84	27
	86	15
5310-01-239-9418	91	2
5310-01-239-9420	95	8
	97	8
	98	8
5310-01-240-0860	62	9
5310-01-240-0863	153	10
	173	6
5310-01-240-0872	126	53
5310-01-240-1285	45	13
	48	16
	144	34
	165	29
5310-01-240-1816	133	39
	147	12
5310-01-240-1819	101	22
	105	21
5310-01-240-2664	88	14
5310-01-240-2665	101	10
	105	10
5310-01-240-2668	89	17
5310-01-240-2669	76	17
5306-01-241-1386	66	29
	69	10
	144	6
	144	33
	148	1
5306-01-241-1387	74	2
5306-01-241-1389	92	10
	179	18
	180	14
5306-01-241-1390	92	5
5310-01-241-1392	132	2
	158	33
5310-01-241-1393	168	28
5310-01-241-1442	57	3
5310-01-241-1443	70	5
5310-01-241-1444	124	35
5310-01-241-1445	172	5
5310-01-241-1446	156	4
5305-01-241-1448	126	30
5305-01-241-1449	144	4
	172	7
5305-01-241-1482	166	12
5310-01-241-1527	46	27
5330-01-241-6655	KITS	

CROSS- REFERENCE-INDEXES
NATIONAL STOCK NUMBER INDEX

STOCK NUMBER	FIG.	ITEM
5306-01-242-4125	150	16
	152	17
5310-01-242-4126	130	2
	131	9
	158	4
	158	35
5305-01-242-4194	96	2
6350-01-243-0569	70	1
2510-01-243-5326	143	1
2540-01-244-0293	147	1
4730-01-244-7473	68	9
2815-01-247-2221	10	1
2510-01-251-3159	144	26
2530-01-251-3177	117	10
	118	10
4710-01-252-4395	115	24
	118	16
2540-01-252-6198	150	1
3120-01-254-2473	144	15
5310-01-254-4259	124	10
2590-01-255-2941	145	10
2510-01-261-2566	141	17
4710-01-261-5315	47	7
4730-01-266-2087	155	14
2940-01-268-8568	43	10
2520-01-268-9997	85	8
2590-01-270-2505	136	1
4820-01-270-4376	124	28
5310-01-271-5042	134	16
5306-01-273-5933	115	34
5930-01-273-6560	188	8
2920-01-274-3716	66	23
2540-01-274-3725	150	21
3120-01-274-9755	35	9
5305-01-275-3254	59	24
2540-01-275-5351	151	25
	152	24
4720-01-276-3433	117	22
2510-01-276-6982	144	31
3040-01-276-8682	151	7
4730-01-277-1422	129	4
	133	14
	157	1
	180	52
5340-01-277-2268	189	2
4720-01-277-5441	133	37
2990-01-277-5530	49	4
2940-01-277-5592	34	11
3040-01-280-4293	184	2
5340-01-280-7963	155	17
4720-01-281-2416	115	18
	116	21
2940-01-284-6247	22	6
5340-01-284-9779	138	6
5315-01-284-9814	143	7
3805-01-285-2913	138	4
3120-01-285-5530	138	5
2910-01-288-0850	45	16
4720-01-289-1017	180	22
5365-01-289-1919	40	46
4730-01-294-8132	115	9
	118	5
2540-01-295-0042	147	3
2520-01-295-2558	95	4
2540-01-296-8017	140	9
2540-01-297-9360	144	41
2590-01-298-5207	101	59
2540-01-298-5362	144	41
3020-01-298-5419	150	8
	152	9
2540-01-301-0380	140	11
3040-01-301-8104	46	21
3040-01-301-8105	46	33
4720-01-303-1252	117	16
4710-01-310-9547	115	25
2530-01-311-4216	105	42
4710-01-311-8323	186	25
3040-01-313-8047	184	10
4720-01-317-0634	115	31
2520-01-339-2331	99	1

NATIONAL STOCK NUMBER AND PART NUMBER INDEX
PART NUMBER INDEX

CAGEC	PART NUMBER	STOCK NUMBER	FIG.	ITEM
81321	AF2138		34	14
88044	AN150280	5315-00-597-4217	41	26
88044	AN365-420A	5310-00-208-1919	144	45
26385	AN746-14	4730-00-202-7204	42	17
88044	AN960-716	5310-00-167-0822	9	9
			30	6
88044	AN960-816L	5310-00-167-0839	61	19
06021	AT 10503	4730-00-359-4717	44	8
			117	49
			133	51
06021	AT12820		55	8
07334	A0563	4730-00-639-9730	120	7
58275	A058706	5330-00-178-3773	33	3
62259	A122080		184	18
34623	A1264	4820-00-360-8299	22	10
10988	A18000	5330-00-821-0817	78	9
77873	A30262300-4	5306-00-972-0297	6	7
24446	A3666784PT5		55	6
10988	A45228	5305-01-086-3555	59	12
41947	A6275	5306-00-619-5935	56	9
96152	A82-1	5315-00-839-2325	32	1
60380	BH2012XOH	3110-00-902-3754	126	33
08162	8T28580	3110-00-100-3561	94	14
80204	B1821BHO25C150N	5305-00-071-2509	35	18
80204	B1821BHO50C150N	5305-00-071-2069	8	7
			133	22
			180	20
80204	B18218H050C325N	5305-00-071-2076	9	18
83298	820504-52	3110-00-554-2906	41	27
51588	B24L	3120-00-587-4781	134	1
73370	CA502SY	2940-01-038-8787	34	12
61510	CKE42A	5310-00-375-0518	36	7
78500	CP62N14	2520-00-871-6818	96	3
75535	CP72N19	2520-00-847-2970	95	3
			97	3
			98	3
79470	C3109X8X6	4730-00-044-4035	117	6
			118	12
80072	D346-177	5330-00-364-3550	5	16
43334	EB180379ZD	3110-00-227-2019	93	7
49234	EX1784GF38	2910-00-003-0160	38	2
81782	E14-23-1408	5330-00-154-8358	7	1
30327	E14A	4730-00-254-6211	116	29
63477	FD-97746	2530-01-183-4782	114	1
81348	FFB475		61	7
63477	F2952	4730-00-353-2995	115	53
			118	61
63477	F6431	5360-00-447-9003	110	28
70040	G259	5330-00-290-7860	22	18
29510	HS921	5315-00-276-5713	126	22
79470	H16606	4720-01-074-8373	BULK	4

NATIONAL STOCK NUMBER AND PART NUMBER INDEX
PART NUMBER INDEX

CAGEC	PART NUMBER	STOCK NUMBER	FIG.	ITEM
40152	IF-1236		143	2
60380	JHT-1413-T1	3110-01-099-8007	60	16
60038	JM718110	3110-01-037-5496	101	27
			105	27
60038	JM718149	3110-01-037-7207	101	28
			105	28
18954	K-5196314	2815-00-706-5831	37	4
33323	K41A119	5306-00-741-7519	83	3
			110	13
73842	LR255TN	2530-00-593-7164	123	12
35311	L12105	5330-00-282-5906	7	14
46717	L2583-11	5330-00-531-3197	117	27
72582	M01392		39	3
96906	MS14314-IX	4730-01-047-3667	29	13
96906	MS15001-1	4730-00-050-4203	95	10
			96	10
			98	10
96906	MS15570-623	6240-00-019-3093	66	12
96906	MS16562-33	5315-00-843-7986	18	3
96906	MS16624-1037	5365-00-715-1152	61	11
96906	MS16624-1275	5365-00-200-7234	80	15
96906	MS16624-250	5365-00-175-1315	84	5
			85	2
96906	MS16624-3255	5365-01-104-6200	88	13
96906	MS16625-1112	5365-00-801-2500	89	6
			90	3
			131	1
			158	16
96906	MS16625-1200	5365-00-804-2784	158	2
96906	MS16625-1354	5365-00-260-4875	78	18
96906	MS17131-30	3110-00-157-0535	76	5
			176	6
			176	17
			177	9
96906	MS17131-9	3110-00-277-0337	41	3
96906	MS17165-4578	6240-00-643-0687	67	6
			68	2
			68	6
96906	MS18154-113	5305-00-915-8087	58	14
96906	MS18154-58	5305-00-115-9526	91	1
			126	41
96906	MS18154-60	5305-00-942-2196	53	12
			54	20
			58	6
96906	MS19059-2414	3110-00-100-6151	85	18
			87	19
			88	18
			131	7
			158	7
96906	MS19059-2418	3110-00-100-6155	89	11
			90	7

NATIONAL STOCK NUMBER AND PART NUMBER INDEX
PART NUMBER INDEX

CAGEC	PART NUMBER	STOCK NUMBER	FIG.	ITEM
96906	MS19059-2418	3110-00-100-6155	102	6
			106	6
96906	MS19061-20019	3110-00-948-9797	90	19
96906	MS19061-3	3110-00-950-8446	33	10
96906	MS20822-4	4730-00-231-4009	116	28
96906	MS21044N10	5310-00-982-6809	49	9
			101	57
			135	42
96906	MS21044N20	5310-00-982-6812	135	22
			136	24
96906	MS21044N3	5310-00-877-5797	150	12
96906	MS21044N4	5310-00-877-5796	45	21
			46	10
			63	1
			71	1
			74	4
			92	4
			149	3
			150	22
			152	20
			173	5
			176	1
96906	MS21044N7	5310-00-088-0552	101	48
96906	MS21044N8	5310-00-877-5795	49	8
			68	8
			76	6
			77	12
			127	4
			136	18
			137	2
			139	13
			147	19
			180	31
			191	5
96906	MS21245-7	5310-00-412-9861	147	13
96906	MS21333-64	5340-00-282-7526	121	9
96906	MS24665-283	5315-00-842-3044	76	14
			177	4
96906	MS24665-321	5315-00-187-9379	111	1
96906	MS24665-351	5315-00-839-5821	107	10
			108	12
			111	2
96906	MS24665-353	5315-00-839-5822	56	17
			119	4
96906	MS24665-360	5315-00-298-1499	85	10
96906	MS24665-361	5315-00-059-0184	94	3
96906	MS24665-568	5315-00-262-8163	101	44
96906	MS24665-629	5315-00-234-1848	134	15
96906	MS24665-692	5315-00-187-9593	183	17
96906	MS24665-753	5315-00-059-0238	135	41
96906	MS24665-758	5315-00-234-1678	81	3

NATIONAL STOCK NUMBER AND PART NUMBER INDEX
PART NUMBER INDEX

CAGEC	PART NUMBER	STOCK NUMBER	FIG.	ITEM
96906	MS24692-178	5315-00-051-9867	40	49
96906	MS27183-10	5310-00-809-4058	35	17
			39	19
96906	MS27183-12	5310-00-081-4219	4	32
			4	37
			20	15
96906	MS27183-14	5310-00-080-6004	14	6
			15	4
			22	21
			35	4
			35	25
			43	2
			53	11
			54	19
			57	5
			119	8
96906	MS27183-16	5310-00-809-4085	3	3
			55	14
			55	22
			119	8
96906	MS27183-18	5310-00-809-5998	15	2
96906	MS27183-23	5310-00-809-8533	142	13
96906	MS27183-25	5310-00-809-8540	172	2
96906	MS27183-27	5310-00-809-8541	85	12
96906	MS27183-42	5310-00-014-5850	40	28
96906	MS2713-9	5310-00-823-8804	142	15
96906	MS28775-116	5330-00-579-3156	164	20
			165	18
			169	17
			174	23
			175	20
96906	MS28775-218	5330-00-584-0263	164	24
			164	29
			165	20
			169	19
			174	32
			175	1
			175	22
96906	MS28775-236	5330-00-579-6861	94	11
96906	MS28778-12	5330-00-251-8839	161	8
96906	MS28778-8	5330-00-808-0794	126	13
			159	16
			160	15
			178	2
			178	4
			178	9
			178	12
			179	10
			179	21
			179	26
96906	MS29513-129	5330-00-265-1097	126	64

NATIONAL STOCK NUMBER AND PART NUMBER INDEX
PART NUMBER INDEX

CAGEC	PART NUMBER	STOCK NUMBER	FIG.	ITEM
96906	MS35206-242	5305-00-889-3002	61	31
96906	MS35207-264	5305-00-989-7435	150	2
96906	MS35307-410	5305-00-558-5429	119	9
96906	MS35333-41	5310-00-167-0721	150	9
			151	15
			152	8
96906	MS35333-76	5310-00-180-0277	34	3
			38	13
			44	6
			45	22
			46	25
			47	2
			57	2
			62	6
			63	10
			66	10
			79	10
			82	11
			83	1
			92	21
			101	24
			105	24
			107	12
			110	12
			115	38
			117	7
			118	2
			126	40
			133	27
			136	5
			140	3
			142	3
			171	4
			180	12
			182	6
			185	10
			186	z
			188	6
96906	MS35335-32	5310-00-596-7691	66	15
			69	2
96906	MS35335-33	5310-00-209-0786	151	19
			152	2
96906	MS35335-34	5310-00-514-6674	117	55
96906	MS35335-35	5310-00-627-6128	71	6
96906	MS35338-44	5310-00-582-5965	16	22
			39	21
			40	2
			144	24
			188	9
96906	MS35338-45	5310-00-407-9566	4	33
			20	14

NATIONAL STOCK NUMBER AND PART NUMBER INDEX
PART NUMBER INDEX

CAGEC	PART NUMBER	STOCK NUMBER	FIG.	ITEM
96906	MS35338-45	5310-00-407-9566	23	16
			29	11
			36	54
			37	6
			37	12
			40	24
			45	14
			48	2
			56	3
			69	11
			113	6
			117	31
			121	7
			44	35
96906	MS35338-46	5310-00-637-9541	35	16
96906	MS35338-47	5310-00-209-0965	55	18
			58	11
			79	21
			80	10
			80	22
			85	22
			92	9
			94	8
			110	25
			110	30
			115	40
			118	56
			119	7
			126	31
			133	4
			179	17
			180	15
96906	MS35338-48	5310-00-584-5272	4	25
96906	MS35338-49	5310-00-167-0680	84	23
			86	13
96906	MS35338-51	5310-00-584-7888	135	18
			136	13
			136	20
			138	3
			180	38
96906	MS35338-54	5310-00-850-1611	126	28
96906	MS35338-8	5310-00-261-7340	2	3
			4	7
			5	7
			9	6
			11	16
			19	13
			20	2
			21	7
			22	20
			23	4

CROSS-REFERENCE INDEXES
PART NUMBER INDEX

CAGEC	PART NUMBER	STOCK NUMBER	FIG.	ITEM
96906	MS35338-8	5310-00-261-7340	26	3
			27	4
			28	11
			35	7
			35	26
			43	7
			53	4
			54	8
			58	2
			58	24
			119	11
96906	MS35425-72	5310-01-077-6817	45	15
96906	MS35649-202	5310-00-934-9758	67	1
			144	13
96906	MS35671-24	5315-00-846-5928	32	6
96906	MS35672-47	5315-00-999-4238	36	27
			36	33
96906	MS35691-21	5310-00-975-2075	79	9
			96	5
			162	7
96906	MS35691-33	5310-00-834-8732	61	21
96906	MS35691-5	5310-00-971-7989	41	14
			42	7
			46	18
			176	11
			177	2
96906	MS35691-624	5310-01-078-5993	56	2
96906	MS35692-1024	5310-00-964-0994	56	18
96906	MS35692-7	5310-00-891-5483	62	7
96906	MS35756-14	5315-00-616-5520	7	7
96906	MS35756-35	5315-00-021-8211	11	9
96906	MS35756-6	5315-00-616-5514	58	20
96906	MS35763-1033	5306-00-842-8223	12	5
			13	2
96906	MS35769-18	5330-00-834-2912	36	57
96906	MS35782-6	4820-00-276-9041	4	12
			119	5
96906	MS35790-1	5310-00-616-1917	64	3
			66	8
96906	MS35802-3	2940-00-580-6283	22	17
			92	37
96906	MS35842-14	4730-00-908-6292	53	6
			54	5
96906	MS39230-3	4730-00-253-4413	85	24
96906	MS39326-26	4730-01-005-7253	26	10
96906	MS51095-420	5305-00-165-8074	19	1
96906	MS51096-359	5305-00-912-5113	101	23
			105	23
96906	MS51301-1	2590-00-900-1640	71	2
96906	MS51525A16	4730-00-930-5392	92	29
96906	MS51527A16	4730-00-840-7236	92	27

CROSS-REFERENCE INDEXES
PART NUMBER INDEX

CAGEC	PART NUMBER	STOCK NUMBER	FIG.	ITEM
96906	MS51527A5	4730-00-574-6579	115	3
			118	18
96906	MS5152888	4730-00-062-5470	178	11
			179	25
96906	MS51887-15	4730-00-202-6663	122	7
96906	MS51967-23	5310-00-763-8921	190	5
96906	MS51967-8	5310-00-732-0558	27	11
			43	4
			58	4
			119	13
96906	MS51968-11	5310-00-880-7745	29	9
96906	MS51968-14	5310-00-732-0560	129	10
			157	8
96906	MS51968-2	5310-00-768-0319	39	18
96906	MS51968-5	5310-00-880-7746	4	34
96906	MS90725-67	5305-00-269-3217	14	7
			27	9
96906	MS90725-84	5305-00-069-5572	9	8
96906	MS90725-95	5305-00-069-5579	79	20
96906	MS90726-33	5306-00-225-9088	58	25
96906	MS90727-111	5305-00-719-5219	36	1
			135	13
96906	MS90727-114	5305-00-719-5235	133	20
96906	MS90727-123	5305-00-719-5270	134	9
96906	MS90727-174	5305-00-726-2561	101	50
96906	MS90727-192	5305-00-082-6977	184	8
96906	MS90727-212	5305-00-904-4005	172	1
96906	MS90727-223	5305-01-211-1466	183	18
96906	MS90727-29	5305-00-051-4071	93	3
96906	MS90727-57	5305-00-269-3233	4	3
96906	MS90727-58	5305-00-269-3234	62	5
			186	14
96906	MS90727-6	5306-00-068-0513	62	11
			69	12
96906	MS90727-62	5305-00-269-3238	133	12
96906	MS90727-90	5305-00-709-8540	101	49
96906	MS90728-109	5305-00-071-2066	4	26
96906	MS90728-114	5305-00-071-2070	133	7
96906	MS90728-122	5305-00-071-2078	19	15
96906	MS90728-124	5305-00-071-1783	2	6
96906	MS90728-13	5305-00-071-2510	26	6
96906	MS90728-163	5305-00-724-7221	101	58
96906	MS90728-165	5305-00-724-7223	101	41
			105	33
96906	MS90728-3	5305-00-071-2506	5	20
96906	MS90728-32	5306-00-226-4825	4	36
96906	MS90728-33	5306-00-226-4826	23	17
96906	MS90728-34	5306-00-226-4827	121	8
96906	MS90728-36	5306-00-226-4829	113	5
96906	MS90728-38	5306-00-226-4831	115	14
96906	MS90728-41	5306-00-226-4834	36	53

CROSS-REFERENCE INDEXES
PART NUMBER INDEX

CAGEC	PART NUMBER	STOCK NUMBER	FIG.	ITEM
96906	MS90728-48	5306-00-226-4841	42	20
96906	MS90728-5	5305-00-068-7837	32	14
96906	MS90728-57	5305-00-721-5492	20	3
96906	MS90728-59	5305-01-140-9118	9	11
			14	5
			26	2
96906	MS90728-6	5305-00-068-0508	16	23
			36	11
96906	MS90728-60	5305-00-068-0510	4	8
			9	16
			21	6
			23	3
			62	13
96906	MS90728-61	5305-00-543-2419	23	15
			27	7
			35	24
			43	6
			119	9
96906	MS90728-62	5305-00-068-0511	2	2
			9	17
			11	17
			23	21
			28	10
			35	6
			43	11
			109	9
			119	10
			133	26
96906	MS90728-63	5305-00-688-2111	20	8
96906	MS90728-64	5305-00-725-2317	22	19
			53	15
			54	21
96906	MS90728-66	5305-00-782-9489	30	3
			83	2
96906	MS90728-72	5305-00-781-3927	19	14
			28	10
			35	8
			43	3
			53	3
			54	7
			119	9
96906	MS90728-73	5305-00-990-8632	43	3
96906	MS90728-74	5305-00-781-3928	2	4
96906	MS90728-75	5305-00-781-3929	28	10
96906	MS90728-8	5305-00-225-3843	40	1
96906	MS90728-88	5305-00-071-1789	94	7
96906	MS90728-89	5305-00-071-2055	55	17
			58	10
96906	MS90728-99	5305-00-071-2063	55	21
26385	MUJCO-863J	4730-00-374-8191	96	7
08162	MUS1309TM		101	19

CROSS-REFERENCE INDEXES
PART NUMBER INDEX

CAGEC	PART NUMBER	STOCK NUMBER	FIG.	ITEM
08162	MU1309TM		105	19
40152	M2562384	6620-01-036-2045	69	6
24617	NT1080OPC4	5330-00-212-6290	33	4
24617	NX12290PC7	5310-00-262-3105	40	40
06721	N13526H	4820-00-633-3523	118	44
24617	N24188-20	5315-00-241-7427	31	2
24617	N271-108PC5153623	5306-00-272-4250	8	1
08771	N80P19008C13	5305-00-952-1511	22	2
70040	OF203	2940-00-019-4775	22	9
00198	PK379	5315-00-816-1794	46	12
12658	PT-491	4330-01-037-9285	186	22
75214	P383-2	5330-00-582-2855	89	8
			164	12
			165	9
			169	9
			174	3
			175	12
08484	Q5300M68H	4730-00-541-8018	36	51
78280	QS4-4TC	2910-01-080-7248	45	1
72582	R5144848	2815-00-080-4578	10	15
12603	SK200-37	3110-00-592-9967	88	16
12603	SK251-61	5330-00-025-6606	124	33
76700	T-8123	2990-01-038-4594	47	15
43334	U1205TSIS	3110-00-974-4124	36	10
81348	WW-P-471AASBCB	4730-00-279-0985	4	18
			35	5
81348	WW-P-471ACABCB	4730-00-954-1281	5	2
			90	10
81348	WW-P-471BOQBUED	4730-00-193-0875	121	2
81348	WWP471BDQBUDC	4730-00-193-0871	122	6
79470	W400X5	4730-00-640-1051	4	39
14351	X3362	5306-00-038-1956	124	31
81348	ZZ-T-1083/G4A/26.5-25/20P/LDKD		125	1
43334	Z97509LR1	3110-00-256-7419	56	22
73342	00114498	5310-00-136-5712	22	16
14153	00513	5340-00-721-9658	42	12
72582	0112877	4730-00-014-1539	45	9
			115	47
			118	49
77640	032068	5330-00-505-6066	126	29
72582	05102373	5310-00-851-7171	6	3
72582	05106413	2815-00-362-9386	16	21
19207	05120012-1		26	11
72582	05147345	5315-00-251-9989	32	2
19207	0748373-17		39	26
19207	0748373-20		39	9
19207	0748373-26		39	15
19207	0748373-30		39	16
19207	0748373-40		39	17

CROSS-REFERENCE INDEXES
PART NUMBER INDEX

CAGEC	PART NUMBER	STOCK NUMBER	FIG.	ITEM
30780	1-2CD45-S	4730-00-107-3184	126	37
98441	1-4DDS	4730-00-817-1843	118	36
98441	1-8MROS	4730-00-247-9105	116	8
12603	1BC-8120	5306-01-238-1424	76	1
12603	1C-514	5305-01-231-0613	48	4
73342	1C-640	5306-01-239-8562	83	4
73342	1C-922	5306-01-239-8563	84	24
			86	14
12603	1C512	5305-00-007-6338	48	3
			89	16
			110	3
12603	1C636	5305-00-103-9814	82	10
12603	1C716		85	21
40152	1C724	5306-00-017-4723	80	11
12603	1C814	5305-00-090-4739	79	39
12603	1C820	5305-01-194-7050	78	28
			79	7
40152	1F-432		128	1
40152	1F-532	5315-01-239-7071	136	25
40152	1F-748		105	44
12603	1F208		46	3
12603	1F420		147	10
12603	1H-416		81	18
73342	1H-430		81	9
40152	1H-508		139	4
12603	1H414		186	12
12603	1H534		81	15
79500	1JH435OREVCPC	5330-00-514-4804	40	38
93343	1K6819		126	61
40152	1M-08110		137	8
40152	1M-2040		179	27
89749	1M-22044	4720-01-226-8021	52	4
12603	1Ml8040	4720-00-867-1098	52	2
12603	10F02	4730-00-981-3229	110	23
12603	10H25	4730-00-891-7059	95	9
			96	9
			97	9
			98	9
			128	9
			136	8
			171	2
			184	19
			189	13
			191	1
40152	10J-09		126	59
40152	10K-4		115	23
			118	17
07295	100740	4730-00-900-3296	120	8
72582	100918	4730-00-204-3491	53	24
			54	2
03504	100941	5340-00-358-9940	101	25

CROSS-REFERENCE INDEXES
PART NUMBER INDEX

CAGEC	PART NUMBER	STOCK NUMBER	FIG.	ITEM
03504	100941	5340-00-358-9940	105	25
40152	1010338		70	9
24617	103196	5307-00-010-3196	4	11
40152	103293	5310-01-241-1442	57	3
24617	103709	5315-00-010-3709	33	17
62793	104J005-28	5310-00-003-9174	56	8
03504	106547	5310-00-470-5846	101	4
			105	4
			124	25
40152	107977	5310-01-238-3027	101	45
			105	45
40152	107978	5310-01-238-8380	101	43
			105	43
19207	10875413	5310-00-724-3210	115	37
			118	14
			139	5
			188	5
15434	109155	5315-00-839-2325	176	13
03504	10928M3		46	17
			176	12
			177	12
30379	109429	4730-00-613-9339	120	1
40152	11G-428	5305-01-238-7185	165	2
			169	5
			175	5
40152	11G-828		159	5
			160	8
			161	2
			163	5
12603	l1HI5	4730-00-019-1456	134	2
16764	1100077	2920-01-054-4013	59	1
40152	110522	5306-01-238-8264	101	16
			105	16
40152	110543		101	31
			105	30
03504	110559	5310-01-183-5534	124	22
81349	111-05002-0000	3110-00-542-0021	78	19
16764	1114848	2920-01-102-3520	61	1
16764	111559		61	2
12204	111607	4730-00-203-1072	66	7
16764	1116405	2920-01-196-4882	59	4
16764	1116406	2920-01-192-5673	60	22
03504	111656	5310-00-981-5144	109	14
03504	111750	5330-01-008-6513	101	37
			105	39
16764	1117734	2920-01-097-6213	60	1
12603	112278	5310-01-048-0062	124	30
40152	114201		101	15
72582	114629	4730-01-087-8916	36	47
72582	114630	4730-01-057-9598	36	49
72582	114981	4820-01-117-3309	23	28

CROSS-REFERENCE INDEXES
PART NUMBER INDEX

CAGEC	PART NUMBER	STOCK NUMBER	FIG.	ITEM
16764	11504248	5310-01-129-7508	61	20
72582	116337	5340-00-089-8037	41	24
40152	116901		105	15
72582	117049	5310-01-117-6261	5	6
			9	2
			15	6
			20	16
			23	18
			119	13
03504	117225	5305-01-185-7118	124	26
24617	117296	5305-00-579-5818	36	40
40152	117336	5307-01-238-3115	100	4
			104	3
			124	5
03504	118350	5306-00-166-8498	99	8
			103	8
			109	17
72582	118757	4730-00-254-6215	122	5
12603	118773		102	7
			106	7
12603	118774	5310-01-238-8400	102	2
			106	2
12603	118775		102	4
			106	4
12603	118776		102	5
			106	5
40152	118782		124	34
40152	118785		124	14
			124	29
03504	118786	5310-00-526-8841	124	23
40152	118787	5310-01-241-1444	124	35
03504	118790	5330-00-465-6759	124	27
03504	1187915330-00-232-0671		124	24
03504	118937	2520-01-037-9385	124	13
40152	119141		100	6
			104	6
			124	11
40152	119217		124	15
40152	119218		124	21
03504	119469	4730-00-163-4645	99	9
			103	9
			124	4
40152	119890		105	41
81343	12-12-141030	4730-00-958-0384	92	40
63906	12C12M512UMS25-1 -2	4720-00-722-1465	133	42
40152	12E-10		69	5
			173	3
12603	12H15	4730-01-025-7723	128	8
			183	4
03501	120218		124	19

CROSS-REFERENCE INDEXES
PART NUMBER INDEX

CAGEC	PART NUMBER	STOCK NUMBER	FIG.	ITEM
40152	120771	5307-01-238-3114	100	3
			104	4
03504	121214	2520-00-421-9477	99	3
			103	3
12603	121933		102	1
			106	1
12603	121934		102	8
			106	8
24617	122408	5305-01-120-8180	9	23
40152	122622		124	1
40152	122624		109	16
12603	122701		124	16
40152	123382	5310-01-240-2665	101	10
			105	10
72582	123450	5306-01-239-8578	39	22
40152	123655		101	46
40152	123793	5307-01-238-3116	100	5
			103	10
			104	5
40152	123824	2590-01-298-5207	101	59
40152	123864		101	1
40152	123865		101	3
			105	3
40152	123869		101	5
			105	5
40152	123870		101	8
			105	8
40152	123871		101	6
			105	6
40152	123872		101	7
			105	7
40152	123873		101	20
			105	22
40152	123876		101	26
			105	26
40152	124090	5306-01-239-9327	101	21
			105	20
40152	124164		101	39
40152	124165		101	42
40152	124241		101	2
			105	2
40152	124243		101	14
			105	14
40152	124244		101	9
			105	9
40152	124246		101	12
			105	12
40152	124425		101	51
			107	9
40152	124472	4820-01-270-4376	124	28
03504	124520	2520-01-025-3735	100	7

CROSS-REFERENCE INDEXES
PART NUMBER INDEX

CAGEC	PART NUMBER	STOCK NUMBER	FIG.	ITEM
03504	124521	2520-01-025-3734	104	7
40152	124522		105	1
40152	124543	5310-01-254-4259	124	10
72582	124549	5315-00-400-6842	7	8
40152	124596		99	2
			103	2
40152	125069		101	13
			105	13
03504	125248	5330-01-036-9681	124	8
40152	125573		101	31
			105	30
40152	125574		101	31
			105	30
40152	125575		101	31
			105	30
40152	125592	2530-01-190-0639	109	15
40152	125734		99	7
			103	7
40152	127819		124	9
40152	128037	5306-01-238-8263	101	5
			105	5
12603	128343	2530-01-135-7470	109	1
12603	128344	2530-01-212-7613	109	1
12603	128379	2530-01-135-7652	124	7
40152	129157	2530-01-038-7462	101	52
40152	13F-16		78	21
12603	13F12	4730-00-324-1483	82	7
			94	19
40152	1300304		178	7
89749	1301361	3040-00-891-0680	46	24
			46	34
73342	1303281		84	18
			86	9
12603	1304047	3110-00-101-1796	124	3
12603	1304048	3110-00-198-2949	124	12
40152	1304056		178	3
			179	9
73342	1305485		77	2
40152	1306142		129	3
			133	15
			157	2
			180	51
40152	1310605		114	4
40152	1311154		181	6
40152	1311282		92	47
40152	1314178		129	1
			157	9
09652	1328482	5306-00-753-8226	79	18
19207	1357680-120		146	6
19207	1357680-121		146	11
19207	1357680-122		146	13

CROSS-REFERENCE INDEXES
PART NUMBER INDEX

CAGEC	PART NUMBER	STOCK NUMBER	FIG.	ITEM
19207	1357680-132		146	1
19207	1357680-144		146	8
19207	1357680-72		146	4
40152	13802619-0	5310-01-238-1445	81	7
			185	6
40152	13803675-1	5310-01-238-8849	91	3
			140	5
			169	28
			175	31
40152	13804205	5305-01-239-8763	46	5
			173	4
40152	13806273-2	5306-01-238-1432	142	8
40152	138249	2540-01-298-5362	144	41
40152	139149		BULK	1
19207	139149-48		146	21
40152	14D10	5310-00-466-7039	66	16
			69	3
40152	14G-608	5305-01-239-8695	145	4
40152	14G-824	5305-01-239-8696	145	8
79470	141-15804	4730-00-819-3737	115	16
			181	2
24617	141195	5315-00-014-1195	33	6
72582	141214	5315-01-092-6153	4	14
24617	141236	5315-00-014-1236	14	2
24617	141346	5315-00-014-1346	4	14
			7	13
24617	142583	5340-00-014-2583	40	54
24617	143338	4730-00-278-0155	39	5
72582	148402	3120-01-164-0977	40	37
40152	15G-1212	5305-01-238-8350	123	13
40152	1500793		34	5
40152	1501251		92	26
40152	1501478		65	1
12603	1502876		92	31
40152	1502877		92	22
40152	1503026		134	13
40152	1503251		76	8
			176	4
			177	10
70040	1503496	3930-00-195-0232	66	14
40152	1504095		133	35
40152	1504099		133	30
40152	1504256	2930-01-040-2150	48	1
12603	1504270		190	6
40152	1504271		190	2
40152	1504272		190	1
40152	1504273		190	3
40152	1504309		52	5
40152	1504310		52	6
40152	1504356	5310-01-238-8860	135	33
			136	23

CROSS-REFERENCE INDEXES
PART NUMBER INDEX

CAGEC	PART NUMBER	STOCK NUMBER	FIG.	ITEM
40152	1506073	4720-01-226-8012	180	2
40152	1506188	5306-01-238-1428	135	39
40152	1506190		135	38
72582	1507422		156	1
40152	1507454		135	34
40152	1507695		48	13
40152	1507920		135	15
40152	1508152	5310-01-241-1443	70	5
73342	1508222	5310-01-240-2669	76	17
40152	1508514	5306-01-238-8857	70	8
			133	9
73342	1508846		77	11
40152	1508950		142	17
40152	1509182		171	1
40152	1509752		179	6
40152	1510142		183	5
			184	4
40152	1510326		133	50
40152	1510327		133	32
40152	1510348		136	29
40152	1510416		133	47
40152	1510417		133	34
40152	1510617		173	10
40152	1510618		188	7
12603	1510661	2540-01-215-3139	155	1
40152	1510741		178	5
40152	1511077		181	3
40152	1511230		183	9
			184	7
40152	1511232		183	8
			184	12
12603	1511473	2530-01-182-7212	108	1
40152	1511475		154	5
40152	1511539		134	7
40152	1511543		134	8
40152	1511544		134	5
24617	1511708	6685-00-174-6219	156	1
40152	1512255		184	14
40152	1512278	3040-01-280-4293	184	2
40152	1512415	5310-01-241-1445	172	5
40152	1512642	4710-01-310-9547	115	25
40152	1512643		115	29
40152	1512657		118	46
40152	1512658		118	29
40152	1512673	5306-01-238-1429	135	44
			136	22
40152	1512688	5925-01-202-9278	62	10
40152	1512698	4720-01-303-1252	117	16
40152	1512728		118	15
40152	1512729		115	36
40152	1512730		115	35

CROSS-REFERENCE INDEXES
PART NUMBER INDEX

CAGEC	PART NUMBER	STOCK NUMBER	FIG.	ITEM
40152	1512731		118	30
2B144	1512732	4710-01-252-4895	115	24
			118	16
40152	1512885		118	60
40152	1512890		73	18
40152	1512898		47	11
40152	1513022	5305-01-239-8702	184	16
40152	1513241	5307-01-238-3117	129	8
			157	5
40152	1513270		174	1
40152	1513319		117	37
40152	1513402		118	51
40152	1513510		180	6
40152	1513540	5310-01-238-3037	183	16
40152	1513575		45	18
40152	1513577		45	20
40152	1513874	2940-01-277-5592	34	11
40152	1513922		140	10
40152	1514085		117	15
12603	1514471		77	10
73342	1514481		76	9
89749	1514567	2250-01-217-1178	140	1
12603	1514599	3120-01-201-3699	135	3
40152	1514622	5310-01-239-8674	134	14
40152	1514633	5306-01-239-8579	183	14
73342	1514645		76	2
40152	1514660	5310-01-238-3038	184	15
40152	1514692	5315-01-193-2723	135	24
73342	1514734		76	18
40152	1514753		180	35
40152	1514763		145	6
40152	1514764		145	9
40152	1514765		145	7
40152	1514766	2590-01-255-2941	145	10
40152	1514767		145	5
40152	1514880		172	6
40152	1514909		180	54
40152	1514910		180	53
40152	1514911		180	56
40152	1514912		180	36
40152	1515024		141	15
40152	1515025		141	1
40152	1515026		141	2
40152	1515030	2540-01-199-8143	141	13
40152	1515038		141	14
40152	1515057		141	6
40152	1515165		73	5
40152	1515188		141	9
12603	1515189	2540-01-211-5373	141	12
12603	1515190	2540-01-219-2118	141	19
73342	1515215		76	7

CROSS-REFERENCE INDEXES
PART NUMBER INDEX

CAGEC	PART NUMBER	STOCK NUMBER	FIG.	ITEM
73342	1515216		76	15
40152	1515246	2510-01-261-2566	141	17
40152	1515259		117	24
40152	1515260		117	38
40152	1515265		141	22
73342	1515267		76	11
40152	1515322		141	16
40152	1515484	5310-01-036-9684	124	18
40152	1515634		185	12
40152	1515637		185	7
40152	1515640		185	11
40152	1515648		186	10
40152	1515761		188	11
12603	1515763		188	2
40152	1515851	2510-01-243-5326	143	1
40152	1515868		178	10
40152	1516040	5315-01-164-5332	143	3
40152	1516111		173	9
40152	1516939		189	6
40152	1516940		189	6
40152	1516982		189	14
40152	1517274		183	2
12603	1517379	2540-01-211-5372	141	7
40152	1517383		180	27
40152	1517384		180	46
40152	1517393	9905-01-207-8445	126	67
40152	1517493	5310-01-239-8740	186	19
40152	1517840	5310-01-238-7200	183	12
40152	1517846		183	15
40152	1517849		183	19
40152	1518313	5306-01-239-8572	136	19
40152	1518398		184	17
40152	1518445	2590-01-164-1937	107	8
40152	1518511	4720-01-219-1394	180	9
40152	1518621		179	8
40152	1518754		135	1
40152	1518913		180	37
40152	1518928		140	12
40152	1518981		135	25
40152	1519085		136	9
40152	1519137		182	8
12603	1519191	4820-01-177-2171	117	42
			118	13
40152	1519195		189	9
40152	1519196		191	7
12603	1519894	3120-01-198-8171	143	5
40152	1520190	2590-01-202-7918	46	6
12603	1520193	2590-01-184-4671	46	7
40152	1520566		92	34
40152	1521839		179	1
40152	1521844		BULK	11

CROSS-REFERENCE INDEXES
PART NUMBER INDEX

CAGEC	PART NUMBER	STOCK NUMBER	FIG.	ITEM
19207	1521844-48		144	29
40152	1522201	4730-01-244-7473	68	9
			156	5
40152	1522535		76	4
			176	3
			177	5
40152	1523209		46	4
40152	1523210		46	1
40152	1523329		73	13
40152	1525483		126	65
40152	1525710		144	42
40152	1525933	3930-01-021-4955	73	11
40152	1526006	5945-01-172-2513	63	4
40152	1526152		142	9
40152	1526213	5365-01-198-2903	136	32
40152	1527276		49	10
40152	1527745		147	8
40152	1527816	2540-01-237-1776	KITS	
40152	1528637	3040-01-216-6526	188	13
40152	1529233	5945-01-031-6507	62	12
40152	1529298		34	2
40152	1529315		34	8
40152	1529549	3040-01-301-8104	46	21
40152	1529624		34	22
40152	1529679		186	21
89749	1529688		154	3
40152	1529890	2530-01-216-2505	126	1
40152	1529896		186	15
40152	1529949		92	3
40152	1530361		73	10
40152	1530598		185	8
			186	20
89749	1530842	2590-01-216-2702	136	28
40152	1531418		180	19
12603	1532445	2940-01-021-9253	186	17
40152	1532592	2530-01-039-3802	116	33
40152	1532819		92	42
40152	1533267		92	59
40152	1533279		136	27
40152	1534345		152	27
89749	1534346	2540-01-252-6198	150	1
			152	25
40152	1535306		46	36
40152	1535589		137	10
40152	1536787		97	1
12603	1537354	5930-01-176-7219	63	12
40152	1537424	5315-01-284-9814	143	7
40152	1537881		176	9
			177	1
40152	1537934		62	1
40152	1537986		178	19

CROSS-REFERENCE INDEXES
PART NUMBER INDEX

CAGEC	PART NUMBER	STOCK NUMBER	FIG.	ITEM
40152	1537987		179	22
40152	1538228		135	20
40152	1538388	2510-01-212-8291	136	26
40152	1539058		45	8
			70	17
40152	1539309		135	30
40152	1539311		135	32
40152	1539439		134	4
40152	1539443		134	17
40152	1539553		189	15
40152	1539586		189	16
40152	1539796		180	3
40152	1540008		136	14
40152	1540035		136	21
40152	1540037		136	10
40152	1540062	2540-01-296-8017	140	9
40152	1540064	2540-01-301-0380	140	11
40152	1540067		38	9
40152	1540169		136	15
			189	6
			191	9
40152	1540195		140	13
40152	1540216		139	2
40152	1540529	2530-01-021-3073	123	1
40152	1540666		137	1
40152	1540667		137	1
40152	1541553		116	10
40152	1542211	2990-01-277-5530	49	4
12603	1542259		190	6
12603	1542260		190	6
12603	1542261		190	6
40152	1542369		133	21
40152	1542371		133	17
40152	1542375		133	16
40152	1542393		190	1
40152	1542394		190	2
40152	1542512	4720-01-171-4302	180	8
40152	1542619	5995-01-192-9758	73	3
40152	1542646	2590-01-037-4153	183	6
			184	5
40152	1542764		176	8
			177	6
40152	1542767		176	5
40152	1542769		176	16
40152	1542911		177	8
40152	1542966	6350-01-243-0569	70	1
40152	1543304		46	20
40152	1543379		115	45
40152	1543393	2540-01-166-6238	140	6
40152	1543437		34	7
40152	1543449		92	48

CROSS-REFERENCE INDEXES
PART NUMBER INDEX

CAGEC	PART NUMBER	STOCK NUMBER	FIG.	ITEM
40152	1543512		186	11
40152	1543524		133	31
40152	1543525		92	11
40152	1543539		70	7
40152	1543689	4710-01-204-8142	133	40
40152	1543730		92	25
40152	1543745		92	46
40152	1543799	2510-01-251-3159	144	26
40152	1543800	2510-01-239-7584	144	26
40152	1543801		144	2
40152	1543803	2510-01-234-1792	144	2
40152	1543804	2510-01-235-5688	144	12
40152	1543807		141	5
40152	1543808		144	30
40152	1543809		144	30
40152	1543817	2540-01-212-8290	141	4
40152	1543819	2510-01-218-1663	141	3
40152	1543820		141	20
40152	1543821		141	18
12603	1543824	2510-01-215-1069	141	11
40152	1543825		145	2
40152	1543826		145	3
40152	1543827		144	27
40152	1543828		144	27
40152	1543829	2510-01-238-5035	144	11
40152	1543830		145	1
40152	1543879		118	52
73342	1543935		77	1
73342	1543938		77	13
40152	1543947		116	30
40152	1544017		115	33
40152	1544067		133	36
40152	1544087	5340-01-277-2268	189	2
40152	1544111		115	26
40152	1544112	4720-01-317-0634	115	31
40152	1544114		115	30
40152	1544140		183	3
40152	1544144		73	14
40152	1544146		73	2
89749	1544171	5307-01-227-3411	140	15
40152	1544319	5995-01-209-4595	74	6
			151	23
40152	1544320	5995-01-203-2436	74	1
40152	1544404	3040-01-301-8105	46	33
40152	1544448		139	3
12603	1544491	2540-01-211-5371	141	8
12603	1544492	2510-01-215-1068	141	21
40152	1544614		66	28
40152	1544671		180	48
40152	1544673		180	45
40152	1544683		66	30

CROSS-REFERENCE INDEXES
PART NUMBER INDEX

CAGEC	PART NUMBER	STOCK NUMBER	FIG.	ITEM
40152	1544695		46	15
40152	1544800		133	46
40152	1544801		180	33
40152	1544845		180	34
40152	1544939		179	11
40152	1544940		179	19
40152	1544994		180	18
40152	1544998		179	7
40152	1545004		92	57
40152	1545165		135	16
40152	1545224		136	7
40152	1545296		44	7
40152	1545333		44	3
40152	1545622	2510-01-214-7291	139	10
40152	1545789		118	39
12603	1545790	2530-01-184-4391	116	7
40152	1545915		174	25
			175	33
40152	1545916		174	27
			175	2
40152	1545931		142	5
40152	1546186		133	48
40152	1546211		136	11
40152	1546569		133	38
40152	1546669		72	3
40152	1547041		180	55
40152	1547042		180	41
40152	1547147		189	1
40152	1547152		178	8
40152	1547168		178	6
			179	23
40152	1547169		180	1
40152	1547170		189	7
40152	1547302		147	15
40152	1547309		180	44
40152	1547310		180	47
40152	1547311		180	49
40152	1547423	2510-01-185-8171	137	9
40152	1547432		135	23
40152	1547465		189	5
40152	1547619	5307-01-238-3121	185	2
40152	1547680		143	4
40152	1547690		143	6
40152	1548001		173	2
40152	1548008		70	6
40152	1548172		57	6
40152	1548292		148	3
40152	1548307		116	6
40152	1548429	5340-01-214-2430	135	19
40152	1548504		117	19
40152	1548506		118	42

CROSS-REFERENCE INDEXES
PART NUMBER INDEX

CAGEC	PART NUMBER	STOCK NUMBER	FIG.	ITEM
40152	1548671	4720-01-289-1017	180	22
40152	1548838	3120-01-285-5530	138	5
40152	1548842	5340-01-284-9779	138	6
40152	1548843	3805-01-285-2913	138	4
40152	1548924		73	17
40152	1549086		115	22
40152	1549087		116	4
40152	1549088		116	2
40152	1549089	4720-01-281-2416	115	18
			116	21
40152	1549090		118	35
40152	1549092		117	50
40152	1549093		117	18
40152	1549608		72	1
40152	1550490		158	41
40152	1567173		147	4
40152	1572143	2910-01-288-0850	45	16
40152	1572355	2540-01-244-0293	147	1
40152	1580724	2540-01-275-5351	151	25
			152	24
12603	16F-12	4730-01-105-6857	115	12
			124	32
40152	16F-4		115	21
			118	38
03504	16F06	5340-00-032-4157	115	12
12603	1618574	6620-00-406-7377	69	4
15434	162201	2920-00-287-0342	63	3
40152	1657104		136	2
66640	166D1		39	8
40152	1675961	4730-01-294-8132	115	9
			118	5
40152	17C-1232		109	12
40152	17C-724		133	3
12603	1743825	6645-01-202-4674	64	2
40152	1767898	5930-01-123-4495	188	14
04594	179735		120	5
72582	179827	5305-01-024-4775	37	13
			42	22
72582	179884	5305-01-116-8093	8	5
72582	179888	5305-01-116-5114	15	1
12603	18C-000-536	5306-01-238-1425	77	4
40152	18C-1236		136	3
40152	18C-20160	5306-01-238-7159	135	26
12603	18C-816	5306-01-238-3021	49	3
12603	!8C628	5305-00-104-2832	185	9
40152	180-12	5310-01-238-8333	38	6
			135	47
			185	20
			186	7
40152	18D-14	5310-01-238-7167	135	31
			172	10

CROSS-REFERENCE INDEXES
PART NUMBER INDEX

CAGEC	PART NUMBER	STOCK NUMBER	FIG.	ITEM
40152	18D-14	5310-01-238-7167	183	13
40152	18F-1		62	4
40152	18G-1008	5305-01-238-1458	144	43
40152	18G-606	5305-01-238-1444	66	13
40152	18K-7		178	13
12603	18K10	4730-00-451-6020	92	12
40152	1801148		72	2
72582	181371	5305-00-224-1113	14	3
			15	3
			20	6
16764	1846901	5940-01-041-1627	59	29
16764	1846955	5305-01-238-3071	60	2
16764	1847807	5305-00-218-6387	61	47
16764	1847933	5310-00-407-3548	59	36
16764	1851632	2920-00-100-3403	61	18
16764	1851808	5310-01-047-6064	59	8
			60	3
16764	1852002		59	6
16764	1852033	2920-01-161-1348	59	11
16764	1852038	2920-01-166-8902	59	20
16764	1852630	2920-01-177-8610	59	27
16764	1852726	2920-01-053-4541	60	37
72582	186315	5305-00-224-1110	9	7
72582	186618	5306-01-012-2284	29	10
24617	186627	5305-00-206-6776	11	19
72582	186647	5305-01-117-3411	58	8
72582	186649	5306-00-018-6649	37	7
72582	186658	5306-00-021-2545	58	28
16764	1869573	5340-00-844-7921	59	14
72582	187201	5305-01-064-5196	56	13
72582	187491	5305-00-843-0645	28	10
			36	4
11862	1876681	5305-01-081-0465	59	9
16764	1876760		60	14
16764	1876790	2920-01-164-7751	60	30
16764	1876797	2920-01-094-7515	60	9
16764	1876804	2920-01-164-7743	60	27
16764	1876805		60	29
11862	1876806	5340-01-093-9216	60	21
16764	1876807	5995-01-096-4386	60	25
16764	1876808	5305-01-100-5150	59	5
16764	1876813	5340-01-167-4216	60	17
16764	1876814		60	4
16764	1876895	5310-01-237-5024	59	32
16764	1876897	2920-01-094-0483	60	8
16764	1878873		59	10
16764	1880046	5910-01-097-2555	60	12
16764	1880118		60	13
16764	1880132	2920-01-094-7746	60	10
16764	1880781	5310-00-734-8749	67	2
			188	15

CROSS-REFERENCE INDEXES
PART NUMBER INDEX

CAGEC	PART NUMBER	STOCK NUMBER	FIG.	ITEM
12603	188334	2520-01-339-2331	99	1
24617	189060		29	3
16764	1892765	3120-01-164-0994	60	15
16764	1892914	2920-01-099-6368	59	37
16764	1894642	5330-01-053-7021	61	23
16764	1894643	5330-01-053-2907	61	26
40152	19F-4		116	17
			117	2
40152	19F-5		116	25
			117	11
89749	19F3	4730-00-278-3912	115	52
40152	19J-16		92	49
			133	29
			180	11
40152	19J-20		92	8
			133	2
			179	16
			180	16
40152	19J-24		92	53
			133	23
			179	13
			180	25
40152	19J-32		180	23
40152	19J-40		133	6
			180	29
16764	1905406	5310-00-262-4715	59	16
			60	44
16764	1911644	5310-00-297-7319	61	55
24617	191249	5305-00-206-6786	53	16
			54	22
			58	3
16764	1913084	5310-00-734-8959	61	14
16764	1913086	5310-00-262-4753	61	48
16764	1913846	5310-01-164-8539	60	24
24617	1914578	5310-00-245-0107	66	25
16764	1914842	5310-00-178-9612	61	34
16764	1914869	5306-00-550-9129	61	17
16764	1914873	2920-00-737-3225	61	43
16764	1916272	5330-00-599-2321	61	13
77445	191663	5310-00-215-7524	4	19
			6	6
16764	1919478	5310-01-238-8386	60	6
12603	192157	2520-01-025-3732	103	1
16764	1922457	5310-00-719-5470	61	39
40152	1925664	2520-01-205-7893	95	1
16764	1934478	2920-00-999-2526	61	44
16764	1936466	5310-00-999-2527	61	42
16764	1945356	5365-00-753-9528	61	50
16764	1945468	2920-00-843-8211	61	40
16764	1945476	5330-00-976-4695	61	54
16764	1945484	6110-00-757-7187	61	25

CROSS-REFERNCE INDEXS
PART NUMBER INDEX

CAGEC	PART NUMBER	STOCK NUMBER	FIG.	ITEM
16764	1945500	2920-00-015-3058	61	35
16764	1945515	2920-00-034-7342	61	15
16764	1946407	5977-00-754-8153	61	33
16764	1948512	5330-00-083-5406	61	27
16764	1948513	2920-00-034-4220	61	28
16764	1948515	5977-00-786-9564	61	30
16764	1948519	5310-00-062-2051	61	5
16764	1948520	5310-00-822-2236	61	S
16764	1948521	5360-00-812-0196	61	9
16764	1948522	2920-00-822-2287	61	6
16764	1948526	5310-00-822-2241	61	10
16764	1948529	3040-00-034-4216	61	24
16764	1948536	5306-00-783-5183	61	51
16764	1950561	5940-00-999-2534	61	37
16764	1953236	6150-00-758-0332	61	3
16764	1955990	5970-00-034-5015	61	36
16764	1957846	2920-01-138-7045	61	52
16764	1958509	5330-00-237-6928	60	33
			60	38
16764	1961323	5340-00-151-7058	59	30
16764	1961867	5330-00-851-7742	59	23
16764	1964117	5360-00-764-9005	59	7
16764	1964857	5330-00-914-0703	61	49
16764	1965472	5970-00-657-8133	61	38
16764	1966879	3120-01-099-0024	60	7
11862	1968396	5305-00-450-5937	61	45
16764	1968884	5330-00-429-3724	60	34
16764	1968885	3040-01-053-4746	60	35
16764	1968890	2920-01-053-4782	60	40
16764	1968891	2920-01-053-4743	60	41
16764	1968904	2920-00-231-7385	60	31
16764	1968945	5305-01-166-1549	60	11
16764	1968991	5305-01-163-5701	60	42
16764	1968994	5305-01-163-5702	60	39
16764	1969046	2920-01-099-3085	59	19
16764	1969070	5310-01-164-1650	59	21
16764	1969481	2930-01-099-4405	59	18
			60	43
16764	1969671	5940-00-351-8080	60	28
16764	1970145	5305-01-235-3055	59	35
16764	1970384	3110-01-102-5449	59	25
16764	1970407	5330-01-053-4747	60	32
16764	1971411	5910-01-019-6505	59	13
16764	1974929	5950-01-130-5209	61	46
16764	1976061	5305-01-168-5422	60	26
40152	1990278		45	7
40152	1990400	5340-01-196-2347	45	12
12603	1990761	3805-01-215-8186	101	54
02697	2-016 N674-7	5330-00-984-3750	113	11
81343	2-2 140137C	4730-00-802-5653	62	3
40152	2C-714	5306-01-239-8570	110	18

CROSS-REFERNCE INDEXS
PART NUMBER INDEX

CAGEC	PART NUMBER	STOCK NUMBER	FIG.	ITEM
40152	2C-714	5306-01-239-8570	110	24
12603	2C820		124	17
12603	2J4200	5340-00-791-9113	46	19
			176	10
			177	3
12603	2J5204	5340-00-563-4690	76	13
43999	2W1R64-46-32	5310-00-579-8232	41	29
35301	20-502	5310-00-333-7562	99	6
			100	2
			101	56
			103	6
			104	2
			124	6
24617	201951	5310-01-238-3026	85	11
12603	203253	5307-00-401-0883	79	12
01276	2045-4-45	4730-00-090-9252	116	3
			181	9
27401	204885	3110-01-008-6403	101	33
			105	35
89749	205928		94	2
40152	206864	5330-00-582-3790	85	6
12603	207647	5307-00-072-6701	79	29
40152	21C-410	5306-01-238-7150	113	27
72962	21NE066	5310-00-014-5855	140	14
			142	10
			144	22
40152	2109465	2530-01-311-4216	105	42
12603	211433	2520-00-051-9932	85	23
			94	17
12603	214985	2520-01-268-9997	85	8
72582	215404	5306-00-338-5618	23	27
12603	215634	5310-01-018-0686	84	28
			86	16
12603	215757	5365-01-169-7207	94	18
97907	2161149	2530-00-495-8580	110	2
12603	216355	2520-00-045-4021	79	40
40152	217099	5365-00-930-5141	87	3
			88	2
73342	217142		87	18
73342	217146		84	3
40152	217148	3020-01-191-4404	87	9
73342	217151	5310-01-238-3042	87	15
12603	217162	2520-00-939-6605	87	6
			88	5
72582	217220	5306-01-238-0482	56	5
12603	217334	5360-00-914-8353	88	6
40152	217347	5360-01-194-3159	87	7
03504	217361	4310-00-949-7688	87	12
			88	11
12603	217411	4310-00-799-9844	87	13
			88	12

CROSS-REFERNCE INDEXS
PART NUMBER INDEX

CAGEC	PART NUMBER	STOCK NUMBER	FIG.	ITEM
73342	217465		84	13
40152	217509	5365-00-932-1248	87	10
			88	9
73342	217554		82	3
12603	217555	5330-01-228-4127	*82*	4
12603	217557		85	15
73342	217558		85	4
73342	217560		85	19
12603	217562	2520-00-097-9910	82	8
12603	217563	5330-00-949-5955	82	6
40152	217566		94	10
40152	217567		94	10
40152	217568		94	10
73342	217577		81	4
73342	217578		81	2
73342	217579		81	20
73342	217580		81	22
73342	217581		81	10
12603	217582		81	11
12603	217583		81	12
12603	217584		81	13
12603	217585		81	14
73342	217586		81	17
12603	217599	5315-00-923-0268	88	7
73342	217600		84	1
73342	217601		87	8
40152	217605	5365-01-198-8757	88	22
73342	217607		85	5
12603	217618	5330-01-201-3637	83	10
12603	217632	5340-00-454-7844	89	18
12603	217633	4820-00-455-5649	89	19
73342	217635		90	1
40152	217637		89	7
40152	217644		90	12
12603	217645	5360-00-904-9293	89	10
40152	217650	5340-00-922-1953	90	18
12603	217651	5360-00-904-9918	90	20
40152	217652	5365-00-891-0214	90	21
12603	217653	5330-00-949-6241	83	5
40152	217657	5310-00-891-0217	89	4
			90	5
73342	217674		81	5
73342	218214		87	20
73342	218357		82	5
12603	218376	5330-00-950-7731	82	12
12603	218776	5330-00-759-6303	80	7
40152	22F-4		126	39
40152	220983	2520-00-979-8765	89	9
12603	222006	5330-00-420-4419	80	12
12603	222019	2520-00-045-4025	78	5
12603	222029	2520-00-400-6463	79	35

CROSS-REFERENCE INDEXES
PART NUMBER INDEX

CAGEC	PART NUMBER	STOCK NUMBER	FIG.	ITEM
12603	222067	2520-00-051-5327	81	21
73342	222167		81	8
12603	222179	5310-00-462-4134	79	37
			94	4
40152	222221	5306-01-238-8846	78	6
12603	222233	2520-00-401-3714	94	6
40152	222266		80	20
12603	222960	5310-01-018-0683	79	38
			94	20
73342	223358		87	17
12603	223570	4310-00-799-9847	78	15
40152	223855	5365-01-193-7137	87	22
40152	223882	5365-01-193-7139	84	10
			86	7
12603	223887	5340-00-882-0740	80	8
89981	223901		87	16
73342	223965		88	15
12603	223988	5365-00-763-8872	80	18
40152	223997	5365-00-930-5143	88	21
89881	224009	5365-00-821-2502	78	11
12603	224026	5365-00-144-6445	78	20
12603	224083	5365-00-838-8715	85	14
			101	18
			105	18
40152	224104	5340-00-972-8006	79	3
			129	7
			157	4
40152	224727	5310-01-238-1450	109	13
89881	225781	3110-00-764-0912	79	13
73342	225795		86	6
			87	21
03504	225796	3110-00-198-1790	88	20
12603	225823	5330-00-078-8818	94	12
73342	225824		85	3
72582	225828	4730-00-221-6215	39	2
73342	225835		84	7
73342	225840		84	4
03504	225842	3110-00-293-9305	79	30
40152	226858		99	4
			103	4
12603	226869	5365-00-454-7833	89	3
40152	227034		79	5
40152	228500		79	23
12603	228931	5330-00-469-8264	170	8
12603	228987	5310-00-997-0573	80	3
72582	2289944	4720-00-856-3276	120	6
12603	229131	5330-00-211-9601	170	10
40152	229520		78	4
40152	229521		80	16
40152	229769	5310-01-238-3033	80	5
40152	229776		79	31

CROSS-REFERENCE INDEXES
PART NUMBER INDEX

CAGEC	PART NUMBER	STOCK NUMBER	FIG.	ITEM
40152	229777		78	23
40152	229784		78	17
40152	229787		79	25
40152	229788		79	24
40152	229792		78	22
40152	229793		79	32
40152	229794		79	33
40152	229798		79	17
40152	229801		79	22
40152	229802		80	17
40152	229803		79	14
12603	229804	5330-01-119-3281	78	8
40152	229805		78	3
40152	229806		78	14
40152	229807		78	10
40152	229810		78	13
40152	229813		78	7
40152	229814		80	9
40152	229815		78	26
40152	229838		78	16
73342	229982		89	2
40152	23C-1044	5306-01-238-8848	94	21
12603	23C-1260	5306-01-238-3022	190	4
40152	23C-412	5306-01-238-7164	188	10
40152	23C-514	5306-01-238-7153	117	30
40152	23C-544		117	54
40152	23C-610	5306-01-238-8266	147	5
40152	23C-612	5306-01-238-7161	142	16
40152	23C-616	5306-01-239-8552	34	4
			57	1
			66	9
			92	20
			107	13
			117	40
			140	7
			142	4
			144	17
40152	23C-620	5306-01-239-8559	47	8
			92	56
			136	6
			171	3
			180	13
40152	23C-724	5306-01-241-1389	92	10
			179	18
			180	14
40152	23C-728	5306-01-239-8564	80	21
40152	23C-824	5306-01-238-8267	92	55
			147	22
			179	12
40152	23C-828	5306-01-238-7163	180	30
12603	23E10	5310-00-820-6653	56	15

CROSS REFERENCE INDEXES
PART NUMBER INDEX

CAGEC	PART NUMBER	STOCK NUMBER	FIG.	ITEM
80045	23MS35338-10	5310-00-584-5272	9	20
			19	2
			56	11
			58	15
			119	11
80045	23MS35338-46	5310-00-637-9541	36	12
40152	230151		129	6
			157	3
40152	230234		79	1
40152	230529		94	16
40152	230553		94	1
15434	230594	5365-00-498-3947	80	2
73342	230605		83	7
40152	230690		94	9
40152	230767		80	19
40152	2318002	5930-01-212-5601	150	23
			151	24
			152	19
73342	231818		84	22
			86	12
12603	231849	5365-01-018-0810	84	21
12603	231850	5365-01-018-0811	84	21
12603	231851	5365-01-018-0812	84	21
73342	231915		84	25
			86	18
73342	231916	5310-01-239-9417	84	27
			86	15
24161	23215	4720-01-212-2688	34	6
73342	232611		89	12
12603	232692	3020-01-205-7795	80	6
40152	232778	2520-01-190-4298	87	5
			88	4
73342	232871		81	1
73342	232872		83	9
73342	232873		84	6
73342	232874		86	20
12603	232876		84	11
73342	232877		86	19
73342	232879		86	3
73342	232881		88	17
73342	232886	5310-01-240-2664	88	14
73342	232887		88	19
73342	232888		88	8
73342	232890		85	16
73342	232891		85	17
73342	232895		84	12
40152	233007		94	15
73342	233030		84	16
73342	233063		86	1
73342	233075		88	1
73342	233111		84	29

CROSS REFERENCE INDEXES
PART NUMBER INDEX

CAGEC	PART NUMBER	STOCK NUMBER	FIG.	ITEM
73342	233112		86	21
12603	233128	5305-01-007-1534	85	7
40152	233137	2520-01-038-4378	89	1
73342	233138		89	13
73342	233139		90	16
12603	233140		90	17
40152	233161	2520-01-037-9216	87	2
73342	233169		84	14
73342	233170		84	15
73342	233171		85	20
73342	233172		88	24
12603	233222	5330-01-027-8849	89	5
			90	4
40152	233307		80	13
12603	233598	4820-01-007-3486	80	23
72582	2337354	4720-00-484-0577	120	3
40152	234777		92	36
73342	234813		87	11
			88	10
73342	234814		87	4
			88	3
72582	23500501	2815-00-529-7992	17	4
72582	23500533	5340-00-678-0944	36	16
72582	23500714	3040-00-364-3307	16	24
72582	23502022	2815-01-247-2221	10	1
40152	235050	5307-01-238-3113	80	4
40152	235095		170	2
40152	235138		170	4
40152	235956		170	7
40152	235957		170	6
40152	235958		170	1
12603	236395	5930-00-458-6673	63	7
73342	236406		84	8
73342	237009		85	13
73342	237010		85	1
73342	237011		86	2
40152	24C-1036	5306-01-238-1427	135	5
12603	24C-1060		49	2
40152	24C-1220	5306-01-238-7157	135	17
40152	24C-1228	5306-01-238-7158	135	21
40152	24C-1232	5306-01-238-8270	180	40
40152	24C-1244	5306-01-238-8261	38	8
			135	12
			138	1
			186	24
40152	24C-1248	5306-01-238-1433	142	14
40152	24C-1256	5306-01-239-8554	38	10
			135	43
			185	14
40152	24C-1280	5306-01-238-7154	135	6
			136	12

CROSS REFERENCE INDEXES
PART NUMBER INDEX

CAGEC	PART NUMBER	STOCK NUMBER	FIG.	ITEM
40152	24C-1436	5306-01-239-8583	172	11
40152	24C-1452	5306-01-238-7160	135	29
40152	24C-16184	5306-01-238-1430	135	45
40152	24C-410	5306-01-241-1387	74	2
40152	24C-412	5306-01-242-4125	150	16
			152	17
40152	24C-416	5306-01-239-8557	45	25
			46	14
			63	5
			71	4
			173	1
40152	24C-420	5306-01-238-1422	63	2
40152	24C-424	5306-01-238-1434	149	1
40152	24C-448	5306-01-239-8558	46	8
40152	24C-516	5306-01-241-1386	66	29
			69	10
			144	6
			144	33
			148	1
40152	24C-520	5306-01-238-1426	112	1
40152	24C-528	5306-01-239-8569	107	15
40152	24C-556	5306-01-238-8262	70	2
40152	24C-612	5306-01-239-8555	38	14
			44	5
			63	9
			115	8
			118	32
			182	7
			185	15
			186	1
40152	24C-616	5306-01-239-8553	34	21
			46	26
			47	14
			92	45
			117	8
			118	3
			140	2
40152	24C-620	5306-01-239-8560	57	7
			77	6
			115	49
			118	7
			144	3
			188	4
40152	24C-624	5306-01-239-8573	137	7
			139	7
40152	24C-632	5306-01-239-8575	139	6
			179	24
			188	3
40152	24C-636	5305-01-241-1449	144	4
			172	7
40152	24C-644	5306-01-239-8568	107	14

CROSS REFERENCE INDEXES
PART NUMBER INDEX

CAGEC	PART NUMBER	STOCK NUMBER	FIG.	ITEM
40152	24C-644	5306-01-239-8568	116	26
40152	24C-668	5306-01-239-8556	45	23
			46	28
40152	24C-720	5306-01-238-7152	115	39
			118	57
40152	24C-724	5306-01-241-1390	92	5
40152	24C-820	5306-01-238-7156	178	17
			179	2
			189	4
40152	24C-824	5306-01-239-8574	50	1
			147	17
40152	24C-828	5306-01-238-8845	76	16
			137	4
			139	11
			180	42
40152	24C-836	5305-01-238-7223	127	5
			180	43
40152	24C-896	5306-01-239-8571	136	16
			176	14
			191	3
40152	24F-3		117	29
40152	24G-612	5306-01-273-5933	115	34
40152	24G-828	5306-01-238-8269	92	6
73342	24K-10		90	6
40152	24K-5		132	19
			132	21
			158	27
12603	24K-7	4730-01-070-0146	90	13
			158	24
			172	3
72582	2488022	5340-00-161-5246	39	20
79150	24998	5330-00-352-9280	126	36
40152	25E-10	5310-01-240-0863	153	10
			173	6
40152	25E-14	5310-01-238-8384	150	25
			152	18
72582	25E-16	5310-01-241-1446	156	4
40152	25E-17		109	8
			115	50
			118	8
40152	25E-22	5310-01-240-1816	133	39
			147	12
12603	25E15	5310-01-192-8884	70	3
			81	16
			115	11
			144	7
			147	14
			147	25
40152	25E16	5310-01-203-0103	144	32
40152	25E18	5310-01-203-0120	70	18
			172	8

CROSS REFERENCE INDEXES
PART NUMBER INDEX

CAGEC	PART NUMBER	STOCK NUMBER	FIG.	ITEM
40152	25K-20108		132	18
40152	25K-30112		113	13
12603	25K-40024	5330-00-706-3188	89	15
73342	25K-40112		85	9
40152	25K-40608	5330-01-037-6127	79	16
40152	25K-40624		186	13
40152	25K-80500		92	38
12603	25K20014		132	3
40152	25K30014	5330-00-559-2632	108	4
40152	25K30022	5330-01-105-0975	159	6
			160	4
			163	9
			170	9
12603	25K30030	5330-01-053-9825	170	5
19206	25K40026	5330-00-914-5828	83	6
40152	25K40200	5330-00-738-6993	159	3
			160	2
			161	3
			163	3
12603	25K40204	5330-00-345-5189	113	22
12603	25K40400	5330-01-019-2610	84	20
			86	11
12603	25K40416		79	4
40152	25K40428		38	11
			185	18
12603	25K40616	5330-00-860-2589	101	32
			105	31
12603	25K40808	5330-00-013-7786	186	16
40152	25K60116	5330-00-714-5264	79	36
			94	5
89881	25K60128	5330-00-788-2753	84	26
			86	17
12603	2500050		186	9
89749	2500059	2590-01-217-3212	139	1
40152	2500073		185	1
12603	2500340	6350-01-178-9153	KITS	
40152	2500345		73	8
40152	2500354		73	12
40152	2500500	4710-01-311-8323	186	25
40152	2500520		73	7
40152	2500538		73	5
72582	25010793	2940-01-268-8568	43	10
40152	2501154		115	6
			118	47
40152	2501323		179	4
40152	2501470		115	5
40152	2501628		142	18
40152	2502842		189	8
40152	2502843		191	6
40152	2502936		65	3
40152	2502937		65	2

CROSS-REFERENCE INDEXES
PART NUMBER INDEX

CAGEC	PART NUMBER	STOCK NUMBER	FIG.	ITEM
40152	2503293		152	1
40152	2503991	5995-01-181-3778	75	3
40152	2504181		107	3
40152	2504182		107	5
40152	2504480		118	62
40152	2504865		117	4
40152	2504921		159	1
40152	2504973		45	24
40152	2504975	2920-01-274-3716	66	23
40152	2504977		45	10
40152	2505248		183	7
			184	6
40152	2505721		191	2
40152	2506079		191	2
40152	2506758		70	16
40152	2506979		115	10
			118	6
40152	2507032	3040-01-202-7785	136	30
40152	2507065		155	30
72582	2507157		156	1
40152	2507186		133	45
40152	2507187	4720-01-277-5441	133	37
40152	2507335	4720-01-276-3433	117	22
40152	2507336		117	47
40152	2507337	5995-01-219-4444	73	4
40152	2507338	5995-01-219-4445	73	15
40152	2509317		189	12
40152	2510009	4810-01-223-5127	173	7
40152	2510200		151	13
72582	2510267		156	1
72582	2510268		156	1
79150	25103	5330-00-892-1764	5	23
72582	2510783		156	1
72582	2510784		156	1
40152	2511196		115	43
			118	53
40152	2511198		115	13
			115	28
40152	2511363		118	4
40152	2511377		115	48
40152	2511431		92	7
40152	2511439		45	11
72582	2511546		156	1
40152	2511571		149	2
40152	2511902	4810-01-038-0510	164	1
40152	2511903		166	1
40152	2511993		134	6
40152	2512192		144	21
40152	2512195		144	46
40152	2512199		144	49
40152	2512200		144	48

CROSS-REFERENCE INDEXES
PART NUMBER INDEX

CAGEC	PART NUMBER	STOCK NUMBER	FIG.	ITEM
40152	2512201		144	48
40152	2512218	5310-01-238-3039	144	44
40152	2512412		144	9
40152	2512844		70	13
40152	2512846		70	10
40152	2512858		70	11
40152	2512859		70	12
40152	2513196	5310-01-238-7197	138	2
72582	2513296		156	1
72582	2513352		156	1
40152	2513450		144	14
40152	2513451		73	8
72582	2513628		156	1
72582	2513631		156	1
12603	2513804		50	4
40152	2514128	4320-01-037-4882	130	1
40152	2514253	5930-01-204-8259	66	24
40152	2515022		117	1
40152	2515504	2590-01-270-2505	136	1
40152	2515747		133	41
40152	2516029		183	11
40152	2516092		70	14
12603	2516151	2530-01-182-6850	KITS	
72582	2516995	5305-01-233-0544	156	2
40152	2517207		186	23
40152	2517362		134	11
40152	2517364	5330-01-037-7132	183	10
			184	11
40152	2518118		134	10
40152	2518119	3805-01-037-7297	184	1
40152	2518120	3040-01-313-8047	184	10
40152	2518493	3040-01-216-2402	KITS	
12603	2518494	3040-01-166-1113	KITS	
32498	2519680	6210-01-199-9083	69	
12603	2520207	2540-01-178-8918	141	10
12603	2523854	2520-01-184-1865	98	1
40152	2524866	2530-01-037-1945	110	1
12603	2526551	4320-01-200-4303	158	1
40152	2528654	6350-01-170-4536	69	9
12603	2529362	5315-01-179-5966	135	4
12603	2530346		147	16
40152	2531249	5930-01-234-3399	70	16
40152	2535726	2520-01-222-7711	96	1
40152	2553678	2940-01-211-4635	34	9
40152	2558972	2940-01-165-8294	34	10
10001	265850PC88	5310-00-193-9753	4	4
			53	14
			54	24
			58	12
52788	266036	3120-00-662-2181	126	26
24617	266495	5340-00-700-0670	126	58

CROSS-REFERENCE INDEXES
PART NUMBER INDEX

CAGEC	PART NUMBER	STOCK NUMBER	FIG.	ITEM
52788	266497	2530-00-164-1852	126	60
05415	266674	5330-00-164-3580	126	46
52788	266678		126	45
24617	266909	5310-00-098-2201	126	43
52788	267387		126	42
72582	271574	5306-00-340-4742	56	14
72582	272545	5305-01-056-8300	42	19
72582	273436	5315-00-775-1359	35	2
24617	274270	5365-00-788-5951	40	43
72582	274415		40	44
24617	274621	5365-00-935-8922	58	30
72582	274746		55	4
		5365-00-276-1850	56	20
12603	277		101	38
			105	40
40152	28F-2		117	60
12603	28F1	5975-01-100-5681	117	14
06853	281865	2530-01-095-8752	115	19
			115	27
12603	282940	2520-01-025-3728	78	1
12603	283926	2520-01-025-3730	82	1
06853	285924		119	17
12603	29F3	4730-00-289-2357	118	45
94231	3-07620-311	5310-00-004-5033	32	15
40152	3E-09	5310-01-240-0872	126	53
40152	3E-14	5310-01-240-1819	101	22
			105	21
40152	3G-1012	5305-01-238-1454	67	4
58312	3S9643-00	5330-00-246-6380	53	22
			54	13
40152	30F-1		115	17
			116	11
			117	48
			181	10
40152	30F-2		117	58
12603	30F3	4730-00-138-8050	116	18
			117	3
40152	30H-20		115	32
			117	52
40152	30H-35		182	9
40152	30H-46		186	3
12603	30H14	5340-01-024-3770	74	3
			152	4
12603	30H38		117	39
			118	31
12603	30H50	5340-00-257-3059	154	2
40152	300058	5315-00-930-6204	90	2
89346	304130C1	4730-00-995-1805	79	27
			89	14
			90	15
60250	306-142	2530-01-085-5324	109	5

CROSS-REFERENCE INDEXES
PART NUMBER INDEX

CAGEC	PART NUMBER	STOCK NUMBER	FIG.	ITEM
40152	308031	5930-01-273-6560	188	8
77445	30896	5310-00-148-5171	40	19
40152	31F1	4730-00-027-8720	116	15
			182	4
12603	31F3	4730-01-006-5532	115	51
			117	51
			118	34
40152	31H-31		182	5
12603	32F4	4730-00-141-9108	116	14
03504	3215964	2530-00-102-9784	117	26
77873	328J		96	6
40152	3290099	2530-01-237-1773	KITS	
40152	3290105		113	8
40152	3290106	2530-01-237-1774	KITS	
12603	3290122		113	3
40152	3290124	2530-01-237-1772	KITS	
40152	3290125	2530-01-171-8843	KITS	
72582	3291272	4730-00-228-3454	121	1
40152	33F-1		116	5
40152	33F-3		181	7
79396	33120	2910-01-022-8183	43	9
80201	335FM212	5330-00-682-4620	79	34
40152	34C-622	5305-01-238-7227	134	12
40152	34C-828	5306-01-239-8582	184	13
66640	34D23		101	47
12603	34F-04		48	12
40152	35G-502	5305-01-238-1442	45	5
40152	356609		116	27
40152	356618		154	1
40152	356621		92	14
40152	356627		179	5
12603	357049		102	3
			106	3
12603	36F1	4730-01-189-8578	116	9
11862	3719219	5306-00-845-1621	33	12
40152	38F-10		118	43
40152	38F-4		117	21
40152	3901168		191	8
40152	3901175		189	10
40152	3992704		34	15
81343	4-2010102BA	4730-00-900-3296	117	25
40152	4C-820	5306-01-238-8847	79	15
11083	4D3734	4730-00-359-4709	116	24
			133	33
12603	4E10	5310-01-105-9397	94	22
			101	40
			105	34
40152	4F-06106		107	11
73342	4F05062		76	10
40152	40F-8		117	56
40152	40K-08	4730-01-237-3517	116	12

CROSS-REFERENCE INDEXES
PART NUMBER INDEX

CAGEC	PART NUMBER	STOCK NUMBER	FIG.	ITEM
40152	40K-08	4730-01-237-3517	118	9
40152	40K-16	2520-01-098-8378	185	16
40152	40K02	4730-00-105-2684	92	2
			127	7
12603	40K06	2520-00-045-4063	92	41
			117	44
40152	41G-1024	5305-01-238-8435	188	16
12603	41G1010		153	5
01212	415322R	5330-01-025-1737	84	19
			86	10
40152	42F-6		116	1
			118	1
40152	42F-9		117	20
40152	425413	4820-01-187-1963	117	61
6N299	4255490	4730-00-005-7376	7	9
			33	19
			36	18
			36	38
			40	32
			53	2
			54	17
63005	427564	5306-00-400-3518	119	10
72582	427588	5306-01-157-3777	121	10
89749	43H1262	4730-00-891-0268	52	1
89749	43H1319		52	3
89749	43H1394	4730-00-891-0270	133	43
			180	4
40152	44F-8		117	17
24617	441292	5310-00-492-2616	119	13
72582	444002		39	25
24617	444004	4730-00-475-5168	120	2
21450	444618	4730-00-089-2515	22	7
			79	19
			90	9
			116	19
			117	45
24617	445520	5306-00-416-3967	40	23
40152	450245		79	8
72582	450517	5305-00-165-8157	27	5
16764	453434	5310-01-101-1494	59	33
21450	453844	5310-00-999-2294	61	32
21450	454097	4730-00-911-5707	133	18
			181	4
72582	454933	5305-00-231-0525	3	4
			119	6
72582	454992		93	8
72582	455537	5306-00-242-5212	53	20
			54	23
72582	457008	5315-00-921-5332	21	9
40152	46F-3		117	41
26385	462	3110-00-100-0248	84	17

CROSS-REFERENCE INDEXES
PART NUMBER INDEX

CAGEC	PART NUMBER	STOCK NUMBER	FIG.	ITEM
26385	462	3110-00-100-0248	86	8
40152	47G-412	5305-01-Z38-1456	144	20
40152	47G-432	5305-01-238-1459	144	47
6N299	4760149	6620-00-769-7303	69	1
02280	482352	2640-00-914-4658	123	6
19207	4857161-27		39	24
03504	5C612	5305-00-576-0795	82	2
			83	8
73342	5E-05	5310-01-240-2668	89	17
40152	5K-207		117	12
			118	37
			180	50
40152	5K-208		133	19
40152	5K-308		117	59
40152	5K-312		117	34
40152	5K-420		116	13
12603	5K432	4730-00-153-7715	126	38
38597	50-4-18-17-7	5310-00-515-9627	93	9
40152	50D-10	5310-01-238-8272	67	9
			68	4
			153	6
40152	500-12	5310-01-240-0860	62	9
95019	500357-13	5310-00-671-4109	50	2
			78	27
			79	6
			92	54
			129	9
			133	8
			135	14
			142	7
			147	21
			157	7
			178	18
			179	3
			180	21
			189	3
40152	507815	4820-00-595-2761	117	13
40152	509772	5355-00-929-9698	77	5
			176	7
			177	7
72962	51N1260-126	5310-01-046-3910	135	28
16764	510063		59	17
72582	5100929	3120-00-831-8646	5	19
72582	5101020	5340-01-078-2199	39	10
72582	5101101	2815-00-060-1125	17	12
72582	5101362	2990-01-083-9945	56	7
72582	5101377	5305-01-054-2280	5	11
72582	5101432	5315-01-090-2097	42	6
72582	5101691	5330-01-105-6889	40	45
72582	5101760	2940-00-089-2520	27	3
72582	5102019	2815-01-057-7128	19	3

CROSS-REFERENCE INDEXES
PART NUMBER INDEX

CAGEC	PART NUMBER	STOCK NUMBER	FIG.	ITEM
72582	5102020	2815-01-210-9640	19	4
72582	5102257	2910-00-524-7862	33	2
72582	5102270	5305-01-039-9605	42	1
72582	5102370	2815-00-229-3623	6	8
72582	5102373	5310-00-851-7171	7	18
72582	5102374	5306-01-039-6470	6	2
			7	17
72582	5102398		119	15
72582	5102399		119	15
72582	5102413	2815-00-294-2313	6	1
72582	5102506		23	14
72582	5102551	5330-01-058-3197	4	9
72582	5102558	2990-01-085-8833	41	10
72582	5102559	5315-01-116-7991	41	9
72582	5102562	2815-00-745-7772	4	1
72582	5102636	2990-01-082-2501	40	53
72582	5102735	2815-01-044-5116	29	6
72582	5102771	2815-00-970-1204	5	1
72582	5102968	2990-00-089-6458	42	15
72582	5103185	4730-01-126-1490	23	5
72582	5103187	4730-00-873-8800	28	7
72582	5103197		58	13
72582	5103295	5310-01-238-7199	56	19
72582	5103490	2815-01-024-9947	36	35
72582	5103526	2815-00-140-5154	36	14
72582	5103534	5306-01-078-4981	93	2
72582	5103602	4730-00-745-7786	35	27
72582	5103718	5365-00-236-6668	56	4
72582	5103903	2815-00-363-8052	16	27
72582	5103966	3020-00-457-0087	56	16
72582	5104303		6	5
72582	5104439	5310-00-595-8121	29	7
72582	5104507	5330-01-088-5984	58	18
40152	510452	4730-01-105-0807	117	32
72582	5104525		6	4
72582	5104775	2910-01-084-0463	41	23
72582	5104778	4730-00-780-5228	39	7
72582	5106222		8	6
72582	5106223	5330-01-083-3980	11	5
72582	5106813	3120-00-842-2691	42	5
72582	5108120	2815-00-428-9722	KITS	
72582	5108244		26	9
72582	5108876	5305-00-230-9818	12	13
72582	5109389	4730-00-929-3464	36	19
			36	39
72582	5109396		56	1
72582	5109652	2930-01-077-4468	53	18
72582	5109900	5340-01-084-5254	3	1
72582	5111332	2910-00-737-0698	5	13
72582	5111337	2815-00-529-8193	17	5
72582	5111424	3120-00-585-3282	11	15

CROSS-REFERENCE INDEXES
PART NUMBER INDEX

CAGEC	PART NUMBER	STOCK NUMBER	FIG.	ITEM
72582	5111798	4730-00-604-7953	4	17
72582	5111904	5360-00-745-7791	35	21
72582	5112785	5340-00-833-0792	35	13
24617	5112899	5307-00-550-1879	29	8
72582	5113412	5330-00-866-6175	29	1
72582	5113633	5365-00-684-5973	35	15
72582	5113734	2940-00-327-1746	27	1
72582	5113817	3020-00-842-7839	93	10
72582	5113825	3805-00-340-7047	24	3
72582	5113906	2990-01-082-1348	40	9
72582	5114974	2815-00-788-6639	35	12
72582	5115214	4730-00-152-6070	4	18
			28	9
			53	13
			54	16
			55	19
72582	5115322	2910-00-775-1380	32	12
72582	5115520	2815-00-101-2226	18	5
72582	5115572	5365-00-590-1739	11	11
72582	5116122	5310-00-774-9545	4	20
72582	5116353	5306-00-851-2918	7	16
72582	5116485	5365-00-837-8352	11	4
			12	6
72582	5117003	5306-00-826-5257	5	25
72582	5117005	2815-00-735-4202	7	11
72582	5117010		7	4
72582	5117011		7	5
72582	5117020	3020-00-919-2651	19	12
72582	5117058	5340-00-833-0819	4	6
72582	5117059	5330-00-849-1028	4	5
24617	5117061	5330-00-620-7359	9	13
72582	5117071	2010-01-057-0031	36	25
			36	31
72582	5117081	5306-00-921-6729	36	46
72582	5117082	5310-00-939-1198	36	45
			58	16
72582	5117102	3020-00-842-7840	13	1
72582	5117173	5330-00-736-0293	9	1
72582	5117186	5340-00-728-3491	4	15
			5	3
73342	5117191	3040-00-918-5588	32	3
72582	5117193	2990-00-918-5561	40	21
72582	5117210	3040-00-781-5619	40	53
72582	5117242	5330-00-911-4628	20	5
72582	5117243	5330-00-735-4289	11	8
72582	5117269	5330-00-735-4291	21	8
72582	5117344	5340-01-046-1965	5	17
72582	5117362	2590-00-735-4292	24	4
72582	5117369	4730-00-446-6602	30	1
72582	5117466	3040-01-057-7129	19	10
72582	5117535	5330-00-844-2907	23	8

CROSS-REFERENCE INDEXES
PART NUMBER INDEX

CAGEC	PART NUMBER	STOCK NUMBER	FIG.	ITEM
72582	5117546	2930-01-077-4467	54	18
72582	5117561	5360-00-878-8214	17	8
72582	5117563	5340-00-874-8677	17	7
72582	5117564	5315-00-992-0700	17	6
72582	5117565	2815-00-731-4335	17	1
72582	5117587	3020-01-034-1702	19	6
72582	5117588	3020-01-034-1701	19	9
72582	5117599	2815-01-057-6570	19	8
72582	5117629	5310-00-841-5700	10	17
72582	5117649	5305-00-842-4670	11	10
72582	5117693	5315-00-921-5346	41	4
72582	5117716	4710-00-898-4254	36	60
72582	5117733	5340-00-833-0822	14	4
72582	5117737	2990-00-911-6304	40	12
72582	5117738	2990-01-086-3116	40	13
72582	5117740	3020-00-457-8555	119	1
72582	5117786	5330-00-781-7117	53	23
			54	12
72582	5117853	2815-00-735-4295	12	8
72582	5117854	2815-00-734-5287	11	13
72582	5117927	5315-00-012-0707	40	50
72582	5117928	5315-00-921-5347	40	48
72582	5117935	2990-00-842-2579	36	34
72582	5117942	2990-00-918-5587	32	4
72582	5117950	2930-01-099-9343	55	11
72582	5117952	5307-00-939-9316	41	34
72582	511T7957	2815-00-745-7664	21	2
72582	5117962		55	1
72582	5117972		55	13
72582	5117975		55	12
72582	5117984	3120-00-745-7736	11	7
72582	5117989	4710-00-228-3453	53	9
			54	1
72582	5117993	5330-00-973-1415	53	10
			54	15
24617	5118219	5306-00-613-9396	33	20
72582	5118302	2815-00-363-8161	20	7
72532	5119826	6620-00-846-9848	53	21
			54	14
24617	5119944PC5119973	5330-00-171-8763	4	22
72582	5120020	4730-00-728-7434	122	4
72582	5120022	4720-01-202-5792	BULK	6
72582	5120224	5330-00-862-6929	29	4
72582	5120740	5306-00-870-6222	22	12
72582	5120753	2815-00-786-6441	8	8
			9	25
72582	5121098		29	5
72582	5121205	5330-00-735-4298	22	22
72582	5121259	2910-00-735-6187	30	5
72582	5121432		25	1
72582	5121459	5340-00-921-6413	4	2

CROSS REFERENCE INDEXES
PART NUMBER INDEX

CAGEC	PART NUMBER	STOCK NUMBER	FIG.	ITEM
72582	5121459	5340-00-921-6413	4	28
72582	5121466	5306-00-894-2381	9	14
72582	5121714	5330-00-745-7669	19	11
72582	5121745		23	19
72582	5121814	5340-00-999-0316	36	5
72582	5121815	3020-00-745-7738	12	11
72582	5121816	3020-00-083-8021	11	18
72582	5121835	5330-00-847-4967	4	29
72582	5122165	5360-00-930-3251	42	13
72582	5122214	5365-00-057-1589	7	2
72582	5122227	5330-00-745-7732	9	4
			27	2
72582	5122238		56	26
72582	5122251	3020-00-457-0087	56	21
72582	5122281	5340-00-986-0489	9	10
72582	5122294	2815-01-094-4322	2	5
72582	5122296	3040-01-176-0523	35	10
72582	5122321	4310-00-407-8368	10	2
72582	5122445	3120-00-811-4699	16	3
72582	5122680	5340-00-900-2583	15	7
72582	5122894	2815-01-060-9266	21	5
72582	5122895	4820-00-918-5565	21	1
72582	5122982	2815-00-901-0789	35	11
72582	5123150		55	5
72582	5123183		55	15
72582	5123250	5340-00-885-5731	16	17
72582	5123257	2815-01-089-9598	37	14
72582	5123439		36	58
72582	5123608		35	23
72582	5123610		35	28
72582	5123638	5330-00-862-6934	15	5
72582	5123644	2815-00-457-0042	35	1
72582	5123684	2520-00-918-9649	35	22
72582	5123700	3120-00-662-1651	16	6
			16	12
72582	5123703	5330-00-911-0158	35	29
72582	5123743	5360-00-842-5347	35	19
72582	5123862	5340-00-921-6740	4	15
72582	5123949		42	2
72582	5124142	5360-00-919-6216	32	11
72582	5124203	5305-00-891-8886	56	6
72582	5124272		41	11
72582	5124273	5360-00-137-6611	40	52
72582	5124274	2910-00-009-5236	40	51
72582	5124332	3120-00-810-3993	41	25
72582	5124519	5330-00-276-1826	36	50
			37	10
72582	5124520	5310-00-914-5360	37	9
72582	5124521	2815-00-898-4365	37	11
72582	5124551		42	10
72582	5125595		23	25

CROSS REFERENCE INDEXES
PART NUMBER INDEX

CAGEC	PART NUMBER	STOCK NUMBER	FIG.	ITEM
72582	5125596		23	13
72582	5125597		23	5
72582	5125598	4730-01-108-6226	23	20
72532	5125599	5330-00-276-1839	23	19
72582	5126143	4730-00-745-7741	20	10
72582	5126320	5340-00-898-4379	20	11
72582	5126327	5360-00-842-6795	21	3
72582	5126499	5330-00-736-0228	36	44
			42	16
72582	5126504	5340-00-231-1689	39	23
72582	5126904	3020-00-537-0153	12	3
72582	5127259	2815-01-005-2914	40	35
72582	5127267	3120-00-012-0632	40	36
72582	5127275	4710-00-722-3387	30	2
72582	5127276	4710-00-733-1935	30	2
72582	5127373	3040-00-918-9661	41	2
72582	5127375	5315-00-012-0685	41	8
72582	5127477	3120-00-140-5143	36	20
			36	36
72582	5127599		54	9
72582	5127600	2815-01-077-6488	53	5
04594	5127788		122	2
72582	5127923		23	6
24617	5128076	5306-00-486-5616	119	10
72582	5128122		8	3
72582	5128234	5315-00-235-2257	53	1
			54	11
72582	5128270		23	26
72582	5128578		8	9
72582	5128640	2815-00-345-6073	16	18
72582	5128927	4730-00-842-3162	39	12
72582	5129101	5305-00-884-4803	17	3
26095	5129157	4720-01-211-3214	BULK	5
19207	5129157-10		122	3
72582	5129474		56	25
72582	5129919	2815-00-953-2460	17	10
72582	5130135	2815-00-981-1319	93	5
72582	5130294	4730-00-230-2971	122	1
72582	5130305		29	2
72582	5130308		29	2
72582	5130509	2910-00-296-7216	32	8
			32	13
73342	5130896		4	18
72582	5130995	5330-00-980-1546	61	57
73342	5131099		28	6
73342	5131100		28	4
72582	5131304		20	1
72582	5131305		20	4
72582	5131368	5360-00-910-9726	40	31
72582	5131373		20	4
72582	5131685	5307-00-054-7036	55	10

CROSS REFERENCE INDEXES
PART NUMBER INDEX

CAGEC	PART NUMBER	STOCK NUMBER	FIG.	ITEM
24617	5131724	5315-00-089-8807	8	4
72582	5131939	5330-00-231-0983	119	3
72582	5131978	5310-00-995-9679	56	12
04594	5132103		121	5
72582	5132331	5330-00-304-9218	26	5
72582	5132383	5306-00-980-1542	10	16
72582	5132410	5340-00-231-0941	4	15
72582	5132422	2815-00-745-7774	4	27
72582	5132445	5330-01-126-5159	4	24
72582	5132458	5340-00-159-8753	4	40
72582	5132572	5330-00-157-3914	4	30
72582	5132747	3040-00-450-0495	41	16
72582	5132924		4	41
72582	5132962	5305-00-877-8051	41	15
72582	5133176	3030-00-758-0716	58	7
72582	5133431	4820-00-944-6249	22	5
72582	5133680	3040-00-781-5622	41	19
72582	5133682	5365-01-219-0168	58	29
72582	5133683	2590-01-085-8010	58	23
72582	5133686	5365-00-089-6001	41	18
72582	5133752	5330-00-936-6379	42	4
72512	5133762	3030-00-411-3741	56	28
72582	5133795	2520-00-918-5559	41	12
72582	5134307	2940-01-284-6247	22	6
72582	5134340	2990-00-057-6941	36	22
72582	5134341	2990-00-851-6933	36	28
72582	5134456	2815-00-905-7917	22	3
72582	5134477	5360-00-930-3264	22	4
72582	5134541		22	1
72582	5134560	4320-00-880-0456	33	11
24617	5135182	5305-00-486-5585	119	10
72582	5135455	2930-01-070-9132	55	9
72582	5136022		9	24
72582	5136160	5360-00-833-1025	42	11
72582	5137761	5340-00-898-4490	3	2
72582	5137851		58	1
30379	5137905	3030-00-916-3452	119	14
72582	5138335	2520-00-833-1024	41	22
72582	5138478		119	16
72582	5138542	4720-00-241-8186	121	4
72582	5138619	5310-00-023-4457	9	12
72582	5138646	5340-00-231-1990	4	15
72582	5138659	5330-00-769-4882	4	16
72582	5138710	5330-00-097-9838	36	15
			36	37
72582	5138717	3020-00-217-5707	11	3
40152	513930		111	3
40152	513932		113	2
72582	5139363	4710-01-108-7810	25	3
72582	5139545	3010-00-246-3399	58	17
72582	5139762	5365-01-289-1919	40	46

CROSS REFERENCE INDEXES
PART NUMBER INDEX

CAGEC	PART NUMBER	STOCK NUMBER	FIG.	ITEM
72582	5139809		23	23
73342	5139816		43	12
72582	5139988	5340-01-144-1937	4	15
72582	5141588	5330-00-915-4511	36	8
72582	5141661	2815-00-961-9805	14	1
72582	5141817		58	26
72582	5142549	4730-00-148-4975	4	17
			9	21
			53	19
			54	10
			55	20
72582	5143146	3040-00-228-3732	40	30
72582	5143233	3040-01-089-2055	58	21
72582	5143234	2815-01-084-9624	58	19
72582	5143406	5330-00-431-7232	18	6
72582	5143836	5365-00-164-6421	35	14
72582	5143865	5340-00-146-9698	41	5
72582	5143866	5315-00-072-0879	41	1
72582	5144028	5305-00-169-8014	40	18
72582	5144177	5310-00-231-0290	40	41
72582	5144178	5310-00-409-9031	40	39
72582	5144186	5340-00-159-8754	4	31
72582	5144275		7	6
72582	5144327	4710-00-152-1445	4	35
72582	5144424	5330-00-095-6670	36	48
72582	5144472		4	18
72582	5144734	4730-01-214-1525	26	4
72582	5144744	2815-00-080-5750	10	10
72582	5144798	2520-00-491-5098	56	23
72582	5144828		26	12
72582	5144836	2815-01-067-9819	10	8
72582	5144843	3120-00-094-3552	10	9
72582	5144846	3120-00-091-4679	10	13
72582	5145014	4730-00-152-6073	4	18
			5	18
			43	13
72582	5145417		119	12
72582	5145592	2940-00-327-1745	27	10
72582	5145612	2815-00-857-2743	12	10
72582	5145732	2815-01-094-2693	12	4
72582	5146040	5330-01-089-6878	36	52
			37	15
72582	5146248	5340-01-011-1438	24	2
72582	5146254		55	3
73342	5146304		28	2
72582	5146337	2910-00-547-1499	33	5
72582	5146369	5365-01-093-7766	40	3
72582	514646		186	18
72582	5146607	4730-00-229-3451	53	17
72582	5147103	3040-01-205-9451	40	11
72582	5147866	3120-01-117-3286	40	17

CROSS REFERENCE INDEXES
PART NUMBER INDEX

CAGEC	PART NUMBER	STOCK NUMBER	FIG.	ITEM
72582	5148023	2910-01-053-5772	43	1
72582	5148035	2815-01-094-2788	10	3
72582	5148171	2910-01-079-3494	43	5
72582	5148373	5306-00-514-6973	10	12
73342	5148407		58	5
72582	5148472	2815-01-036-8685	16	1
72582	5148475	2815-00-564-7192	16	1
72582	5148481	5305-01-215-5307	28	8
72582	5148482	5306-01-069-9211	28	3
72582	5148504	5307-01-012-3560	18	7
72582	5149294	2920-01-132-9012	KITS	
72582	5149326	2930-00-228-3839	55	2
72582	5149556	3120-01-127-8007	7	3
72582	5149572		10	18
		3120-01-084-5357	10	19
72582	5149644	2815-00-780-4704	KITS	
72582	5149982	2815-00-094-1663	10	5
			10	6
24617	5150013	5310-00-220-6765	5	24
24617	5150014	5340-00-363-7977	4	15
			19	5
24617	5150087	5310-00-274-4658	11	1
			12	1
72582	5150132	5340-00-939-1192	5	4
72582	5150147	4730-00-595-0792	24	1
24617	5150259	5315-00-251-9754	32	10,
72582	5150263	3040-00-363-8122	32	7
72582	5150268	5340-00-363-7981	5	22
72582	5150302	5340-00-364-3311	16	15
72582	5150303	5365-00-282-5031	16	14
72582	5150311	3120-00-661-7616	16	2
			16	8
72582	5150312	5340-00-662-9735	16	4
			16	10
72582	5150314	5315-00-662-9093	16	5
			16	11
72582	5150318	3120-00-661-7640	16	9
72582	5150325	4730-00-212-6331	16	26
72582	5150333	5310-00-641-0468	18	1
72582	5150344	3010-00-363-8136	37	1
72582	5150345	2815-00-363-8147	37	2
72582	5150346	2815-00-363-8145	37	3
72582	5150348	2815-00-363-8135	37	5
72582	5150349	5330-00-202-2770	37	8
72582	5150362	5307-00-273-9380	5	10
72582	5150372	5365-00-597-7422	36	42
72582	5150394	2990-00-363-8094	41	20
24617	5150542	5315-00-241-7523	36	17
40152	515069		74	5
72582	5150829	5340-00-921-5379	36	26
			36	32

CROSS REFERENCE INDEXES
PART NUMBER INDEX

CAGEC	PART NUMBER	STOCK NUMBER	FIG.	ITEM
24617	5150843	5365-00-334-7180	32	9
72582	5150855	5365-00-597-7423	36	42
72582	5150869	2815-00-231-0053	36	24
			36	30
24617	5150884	5306-00-273-6337	41	31
24617	5150894	5315-00-363-8099	41	21
72582	5150897	5310-00-274-9232	41	30
72582	5150923	3040-00-833-1026	40	16
72582	5150941	5310-00-262-5429	40	55
			41	28
24617	5150943	5315-00-363-8100	41	13
24617	5151272	5340-00-841-9141	16	25
72582	5151277	5315-00-276-4818	11	14
			12	9
72582	5151430	4730-00-947-4290	25	2
24617	5151444	5315-00-423-4861	93	6
24617	5151576	5315-00-524-7660	4	14
73342	5151601	5310-00-270-7111	16	13
			17	2
24617	5152121	5307-00-637-8996	4	13
24617	5152944	5330-00-250-5817	40	27
72582	5153284	5340-00-364-3369	20	9
72582	5153914	5315-00-252-5969	12	7
72582	5153938	5365-00-364-3329	36	42
72582	5154401	2815-00-364-3424	36	3
72915	5154453	5365-00-142-1775	5	15
24617	5154538	5365-00-262-4701	22	14
72582	5156612	5310-01-238-8385	35	20
72582	5157194	5305-00-363-8051	18	2
72582	5157930	5310-00-220-6583	8	2
24617	5157933	5315-00-238-0838	36	59
72582	5159490		4	38
72582	5159714	5310-00-999-0424	36	55
24617	5160037	5330-00-599-0505	5	9
72582	5160425	5365-00-547-1552	26	7
72582	5161003	5330-00-599-5577	33	15
24617	5161621	5310-00-276-3015	30	4
72582	5164294	5310-00-416-4070	119	2
72582	5164318	2815-00-363-8131	40	5
72582	5166664	3020-00-517-7586	9	27
24617	5167380	5330-00-641-4504	20	12
40152	516784		123	9
72582	5168749	2815-00-900-2629	36	56
72582	5172734	3040-00-692-4152	11	20
			12	14
72582	5172874	2910-00-119-2687	5	12
72582	5174286	5310-01-067-8382	41	35
24617	5174429	5365-00-281-6660	40	42
24617	5174971	5365-00-354-1308	33	14
72582	5174973	2910-00-624-0736	33	18
72582	5174975	3020-00-200-1393	33	9

CROSS REFERENCE INDEXES
PART NUMBER INDEX

CAGEC	PART NUMBER	STOCK NUMBER	FIG.	ITEM
72582	5175705	5365-00-469-3620	121	3
72582	5176228	5305-00-272-2080	32	16
72582	5176998	3110-00-470-0938	93	4
72582	517717		36	60
72582	5177528	5315-00-251-9986	7	10
72582	5177769	5310-00-209-1543	11	2
			12	2
24617	5177772	5365-00-289-1578	23	9
72582	5177777	2930-00-565-5758	23	12
72582	5177778	5360-00-527-2312	23	11
12603	517847	4140-01-199-2522	153	1
24617	5178581	5365-00-205-5139	40	8
72582	5178700	3040-00-698-2915	33	8
72582	5178857	2990-00-493-2886	42	3
72582	5178976	2815-00-900-2650	5	14
24617	5179017	5330-00-641-1457	36	13
72582	5179232	5330-00-758-2887	35	3
72582	5179345	2815-00-354-1466	2	7
72582	5179360	2815-01-095-5636	2	1
81381	5179709	5310-00-206-0000	5	21
			58	9
72582	5180250	5340-00-792-9020	10	11
72582	5181746	3040-00-697-4789	33	7
72582	5181747	3020-00-097-2475	33	13
72582	5182555	2815-00-333-4865	42	14
72582	5182557	2815-00-317-1682	42	9
72582	5182558	5310-00-693-7646	42	8
72582	5182559	5340-00-691-1097	40	26
40152	518259		111	4
72582	5183042	2815-00-921-5385	40	4
72582	5183268	2990-00-363-8080	41	32
72582	5183330	5330-00-354-1521	4	23
72582	5183624	2990-00-810-3994	40	14
24617	5183701	5305-00-780-8105	40	33
72582	5184291	5340-00-325-4965	26	8
72582	5184336	2990-00-377-8954	40	15
72582	5184484	5330-00-354-1528	10	21
72582	5184530	5360-00-664-7850	33	16
72582	5185153	5315-00-652-3341	40	7
72582	5186579	5330-00-814-9196	4	21
72582	5186858	5360-00-252-8444	16	16
72582	5187308	5360-00-801-8731	22	8
73342	5187309	5330-00-629-6340	22	15
72582	5187310	5330-00-604-8094	22	13
72582	5188194	5365-00-276-1849	56	27
72582	5188606	2990-01-086-3956	40	10
72582	5188969	5340-00-477-6038	43	8
24617	5192496	5365-00-597-4351	7	15
24617	5193541	5340-00-590-1741	5	5
72582	5195078	2910-00-629-6387	KITS	
72582	5196026	3120-00-843-6994	11	12

CROSS REFERENCE INDEXES
PART NUMBER INDEX

CAGEC	PART NUMBER	STOCK NUMBER	FIG.	ITEM
72582	5196148	5340-00-457-0051	17	9
72582	5196317	3130-00-900-2688	7	12
72582	5196321	3020-00-591-8122	36	43
72582	5196374	5330-00-751-8883	KITS	
72582	5196381	5330-00-845-5674	KITS	
72582	5196533	5330-00-745-7820	28	1
72582	5196748	2815-00-110-9631	18	4
72582	5196761	2815-00-262-1113	KITS	
72582	5197033	2815-01-120-2722	26	1
72582	5197427	2990-00-121-0612	32	5
72582	5197428	2520-00-461-3894	32	5
72582	5197438	2930-00-922-0293	KITS	
72582	5197509	2930-00-089-2149	KITS	
72582	5198156	2990-00-920-3502	36	21
72582	5198564	3120-01-274-9755	35	9
72582	5199137	2815-01-095-0341	4	10
72582	5199383	3020-00-056-2382	93	1
72582	5199527	2910-00-004-3443	5	8
72582	5199560	2910-00-175-9250	33	1
72582	5199569	5365-00-349-8563	10	20
72582	5199576	4720-00-485-7161	BULK	3
72582	5199579	4730-01-028-5038	39	14
72582	5199580	4730-00-217-5714	39	1
72582	5199588	4730-00-233-9988	39	4
72582	5199593	4730-00-229-3466	39	6
72582	5199597	4730-00-229-3622	39	11
72582	5199776	4720-01-037-1711	53	25
			54	3
72582	5199780	4720-01-025-2309	23	24
			53	7
			53	8
			54	4
			54	6
72582	5199822		KITS	
72582	5199827	2815-01-094-2789	10	14
72582	5199913	4910-01-092-2564	17	11
02978	520275	5310-00-737-5429	40	25
			42	21
43334	5205WL1450A	3110-00-183-6912	36	41
40152	5208838		158	13
40152	5208887		158	11
			158	12
			158	50
40152	5208888		158	49
40152	5208889		158	10
			158	51
40152	521434		46	32
40152	521874		44	2
			92	23
			154	6
			186	4

CROSS REFERENCE INDEXES
PART NUMBER INDEX

CAGEC	PART NUMBER	STOCK NUMBER	FIG.	ITEM
40152	522028	5310-01-238-1441	150	10
			151	14
			152	7
24617	5226186	5365-00-255-0296	31	7
71934	5226400	3020-00-272-6038	31	12
24617	5226416	5315-00-209-7977	31	11
72582	5226440	2910-00-089-2370	30	7
23862	5226719	2910-00-126-9712	31	9
72582	5228104	2910-00-126-9713	31	3
72582	5228109	5365-00-608-0486	31	21
72582	5228583	2910-00-833-1000	31	10
72582	5228586	5365-00-849-2283	31	13
72582	5228587	2910-00-374-4929	31	8
72582	5228588	4730-00-937-0229	31	6
72582	5228594	5340-00-759-0542	31	19
72582	5228596	5360-00-986-7304	31	17
72582	5228601	5310-00-833-1013	31	23
72582	5228608	5315-00-707-1253	31	5
81381	5228694	5340-00-838-9696	31	15
71934	5228696	6695-00-034-3918	31	16
71934	5228739	5360-00-792-9771	31	4
72582	5228766	5340-00-837-8448	31	18
72582	5228769	2910-00-920-7580	KITS	
72582	5228848		31	14
72582	5228928	2910-00-117-9229	31	1
72582	5229030	2910-00-117-9230	31	20
72582	5229167	5330-00-364-3434	31	22
72582	5229649	2910-00-073-3010	KITS	
40152	525293	5999-00-996-3743	82	9
			185	19
40152	527684		117	43
40152	527685		117	46
40152	528651	4730-01-266-2087	155	14
40152	5291919	5310-01-238-7198	151	9
36378	529348	4720-01-123-6894	117	23
40152	529359	6145-01-197-6238	72	4
40152	529605	5310-01-238-1435	123	4
40152	529606		123	3
72962	53N1610-064	5310-00-407-6485	133	11
40152	531112		123	2
40152	533286		34	1
40152	536710	4720-00-891-0276	92	58
40152	537660		185	3
40152	540102	5340-01-171-1414	180	7
40152	540103	5340-01-105-0829	92	16
2B144	540707	2530-01-251-3177	117	10
			118	10
40152	540882		67	8
			73	1
40152	541547		182	1
40152	541980		116	32

CROSS REFERENCE INDEXES
PART NUMBER INDEX

CAGEC	PART NUMBER	STOCK NUMBER	FIG.	ITEM
40152	542909		47	13
40152	543483		73	9
40152	544512	5340-01-105-4328	107	6
40152	545006		107	2
40152	545941		127	3
40152	546535		150	24
			152	21
40152	546803		92	62
40152	547006		67	5
40152	547007		92	1
12603	547058	2990-01-179-6467	47	4
40152	547237		66	3
40152	548088	6220-00-848-1561	68	5
12603	549024	5935-01-205-4848	66	18
40152	549262	4720-00-990-3407	182	3
40152	549669		189	11
40152	549907		191	4
40152	549961		182	2
40152	550044		127	6
40152	550301	5360-00-818-2303	147	23
40152	550619		46	16
40152	550742	5340-01-201-3756	66	33
40152	550743		66	32
40152	551016		46	9
40152	551090	5360-00-608-1032	46	31
40152	551242		67	6
40152	551251	6645-00-411-3733	64	1
40152	551480	5310-01-238-7190	108	13
40152	551684	2640-00-779-2565	123	7
40152	551685	2640-00-780-4200	123	8
40152	552146	5310-01-239-5837	135	36
40152	552147	5310-01-238-7193	135	37
40152	552161	5330-00-979-3466	79	41
			129	5
			157	6
40152	553956		123	10
40152	554843	3805-01-038-2259	186	8
43334	55604L1LD	3110-00-332-4820	58	22
40152	556147		136	17
40152	556489	5905-01-203-9137	66	26
40152	557458	5340-01-201-4701	147	11
40152	558777		147	6
40152	558779		147	7
12603	558793	4720-01-177-8376	92	50
40152	558960		73	6
40152	560640		187	1
40152	562414		135	35
12603	563813	5306-01-183-8685	47	5
12603	563860	5340-01-179-5987	47	3
40152	564353	4710-01-261-5315	47	7
40152	564354		47	9

CROSS REFERENCE INDEXES
PART NUMBER INDEX

CAGEC	PART NUMBER	STOCK NUMBER	FIG.	ITEM
40152	564636	4720-00-913-1181	181	1
40152	565295		38	15
52788	5662474		126	50
24617	5664812		126	20
60038	56662	3110-00-593-4289	124	2
40152	567806	5310-01-238-8383	148	2
40152	568070		128	2
52788	5682242		126	62
40152	568256		135	48
40152	568276		139	9
73342	568477		77	7
40152	568675		67	3
40152	568686		144	31
40152	568687	2510-01-276-6982	144	31
40152	568100		144	19
40152	568781		147	9
40152	568807		92	18
40152	568810		92	17
40152	568823	6680-01-199-3177	187	2
40152	568824	2590-01-200-2202	92	19
40152	568968	2540-01-030-8325	150	14
			152	14
40152	568975	2510-01-220-2095	140	4
40152	569070	5310-01-238-8379	49	11
40152	569151		46	22
40152	569692		BULK	12
19207	569692-36		144	28
12603	569694	2590-01-135-7680	BULK	7
40152	569696		BULK	2
19207	569696-48		146	14
40152	569739	2805-00-891-0688	49	7
40152	569879		135	9
40152	569880		135	10
40152	570419		135	8
40152	571021	5920-01-219-5374	75	5
40152	571441		127	2
40152	571854		144	10
40152	572349		178	15
40152	572729	5310-01-238-3032	66	17
			136	33
			142	1
40152	572818	5365-01-197-4049	135	2
40152	573434		38	1
40152	573548	2920-00-133-0857	66	22
40152	573845	5310-01-238-7194	135	46
40152	574026		142	2
40152	574275		75	6
40152	574555		46	30
40152	574729	3040-01-216-2494	150	11
			152	31
40152	574730		150	26

CROSS REFERENCE INDEXES
PART NUMBER INDEX

CAGEC	PART NUMBER	STOCK NUMBER	FIG.	ITEM
40152	58K-210	5330-01-041-9660	79	28
			90	14
40152	58K-217		132	9
40152	58K-219		133	28
			180	10
40152	58K-222	5330-01-229-4071	92	33
			133	1
			179	15
			180	17
40152	58K-225	5330-01-223-6769	92	52
			133	24
			179	14
			180	26
40152	58K-228		180	24
40152	58K-232	5330-01-193-9390	126	35
			133	5
			180	28
12603	58K-237		126	51
40152	580278	5330-01-037-5949	123	11
40152	580282	5340-00-349-8296	47	6
40152	582057	6220-00-953-4652	67	5
			68	1
40152	582693		92	61
40152	584092	5310-01-238-3095	147	18
			180	32
40152	584263		92	51
40152	584502	5310-01-239-5836	76	3
			176	15
			177	11
40152	585887		133	44
			180	5
40152	587075		92	39
40152	587613	5340-01-083-9643	38	12
			185	17
40152	588384		47	10
40152	588619		184	3
40152	589335	5310-01-238-7195	135	49
40152	589571		146	18
40152	589572		BULK	9
19207	589572-12		146	19
40152	592742		116	16
40152	593263	4720-01-172-0483	116	31
40152	593495		181	5
40152	593658		116	22
12603	6E-05		110	4
63906	6GABB6MB17	4720-00-943-5062	117	57
70434	6GABB6MB4MB161-2		181	8
40152	6H-23		133	13
12603	6H-29		81	6
12603	6H-32		81	19
40152	600-04	5310-01-238-3031	62	2

CROSS REFERENCE INDEXES
PART NUMBER INDEX

CAGEC	PART NUMBER	STOCK NUMBER	FIG.	ITEM
40152	600-04	5310-01-238-3031	69	13
			185	5
40152	60D-08	5310-01-238-3034	133	49
			185	4
12603	60D5	5310-00-464-4805	46	29
			66	27
			70	4
			77	8
			107	4
			112	2
			144	8
			147	24
			148	4
			156	3
12603	6006	5310-01-238-1440	34	20
			47	12
			57	4
			70	19
			77	9
			107	1
			115	15
			116	23
			117	36
			127	1
			137	5
			139	8
			144	1
			172	9
			188	1
12603	60K40700	5330-00-764-5301	78	2
40152	6000689	4730-01-277-1422	129	4
			133	14
			157	1
			180	52
52676	60007		41	33
89749	600259	2920-00-529-7299	66	20
15434	60598	5310-00-663-7617	23	10
40152	61D-04	5310-01-238-7168	144	25
40152	61D-05	5310-01-240-1285	45	13
			48	16
			144	34
			165	29
40152	61005	5310-01-241-1393	168	28
12603	61D8	5310-00-768-0318	27	8
40152	61G-408	5305-01-238-7184	152	3
40152	611074		74	7
			75	4
40152	614142		70	15
17875	615	2640-01-169-4703	123	5
40152	616783		144	5
12603	616809	5310-00-349-8529	38	7

CROSS REFERENCE INDEXES
PART NUMBER INDEX

CAGEC	PART NUMBER	STOCK NUMBER	FIG.	ITEM
12603	616809	5310-00-349-8529	135	7
			185	13
			186	6
40152	6190211		158	9
40152	6190213	5307-01-238-3119	132	13
			158	8
40152	6190217		131	2
40152	6190221		132	7
40152	619029	5310-01-238-7196	137	3
			139	12
			142	6
			147	20
12603	62D06	5310-01-032-7048	71	7
			165	26
			168	25
			169	25
			175	28
40152	62F-1		117	53
12603	623762	5315-00-358-5055	46	13
12603	623829	2540-00-358-5054	46	11
19207	6246296	5330-00-624-6296	23	22
40152	630-06	5310-00-059-9264	47	1
40152	630292		75	1
40152	633157		79	26
40152	635583		154	4
12603	635682		50	3
40152	636260	5930-00-978-8846	63	8
40152	637153		117	5
12603	64D-1OH	5310-01-106-8250	99	5
			100	1
			103	5
			104	1
70040	6437298	5330-00-833-0870	22	11
40152	645092		107	7
12603	648304	5310-00-220-6740	126	23
40152	65G-1008	5305-01-238-1457	144	40
			146	17
40152	65G-406	5305-01-238-7182	126	68
12603	652448	5310-00-689-3690	68	10
12603	654724		90	8
40152	655224	5310-01-238-7201	184	9
12603	656672	5310-00-843-0588	62	14
			66	31
			92	44
			115	7
			118	48
			133	10
			136	4
			137	6
			140	8
			142	19

CROSS REFERENCE INDEXES
PART NUMBER INDEX

CAGEC	PART NUMBER	STOCK NUMBER	FIG.	ITEM
40152	657184		133	25
40152	659041		79	2
40152	66D-05	5310-01-241-1527	46	27
12603	66D12	5310-00-158-8817	126	5
12603	660516	5315-01-104-1026	88	23
12603	660517		136	31
40152	660564		78	24
89749	661415		113	20
40152	662691		128	6
40152	663579		73	16
			75	2
24446	6655628	5310-00-514-8078	49	6
40152	6661416	5365-01-207-0696	131	10
40152	666842		44	4
40152	666867		44	1
12603	667209		89	20
40152	667288		92	15
40152	669829		115	41
			118	55
40152	68D-08	5310-01-271-5042	134	16
40152	680-16	5310-01-238-1436	135	40
16662	7-551906	5330-00-576-5279	79	11
40152	7G-512	5305-01-239-8775	144	37
40152	7K13		158	31
40152	70D-12	5310-01-238-3035	142	11
72582	7083-7000	2815-01-025-3729	1	1
40152	71D-12	5310-01-238-3094	142	12
40152	71G-406	5305-01-238-8354	168	23
			169	23
			174	5
			175	24
12603	710034	3110-00-100-3130	101	29
			105	32
12603	710035	3110-00-100-0506	101	34
			105	36
40152	711406		78	25
12603	711418	5365-00-153-8531	87	1
40152	712285	5310-01-238-8382	135	27
			180	39
40152	713674		152	16
12603	72F-2		49	1
40152	72F-3		117	28
40152	73G-728	5305-01-241-1448	126	30
40152	73K217		132	8
12603	730143		126	25
40152	730482		176	2
49671	73109-105	5310-00-894-1947	40	20
			41	6
40152	742175		45	19
40152	743563	4720-00-933-5878	92	24
12603	743669		84	9

CROSS REFERENCE INDEXES
PART NUMBER INDEX

CAGEC	PART NUMBER	STOCK NUMBER	FIG.	ITEM
12603	743669	5365-01-118-2819	87	14
19207	7520854	5310-00-264-1888	36	2
12603	755622	4720-00-848-0431	186	5
52788	758262	2530-00-878-7045	126	66
40152	76K-116		166	14
			167	19
			168	17
40152	76K-228		166	3
			167	26
			168	19
40152	77K026		158	21
40152	77K217		158	39
40152	77K241		158	52
12603	774197	3110-00-237-6604	101	36
			105	38
12603	774198	3110-00-237-6616	101	35
			105	37
19207	7748639	5306-00-783-5188	61	41
40152	778570	5930-01-200-2136	71	5
40152	799020		92	60
81343	8-8 010202B	4730-00-254-6229	118	41
40152	8C-1028	5306-01-238-7155	135	11
73342	8C-820	5306-01-238-1423	84	2
73342	8C820	5306-01-238-1423	86	4
12603	8D05	5310-00-472-2865	46	23
			46	35
			76	12
40152	8D007	5310-00-208-7122	126	44
12603	8D08	5310-00-579-2016	49	5
			77	3
			95	5
			97	5
			98	5
16764	801077	9390-00-839-1864	61	4
16764	801403		61	56
16764	801532	2920-01-099-4406	59	3
			60	19
11862	801810	5306-01-100-5149	59	26
16764	801828	5999-01-235-4031	59	34
12603	801874	3020-00-893-9100	80	1
40152	801931		80	14
16764	807295	5310-00-350-3587	60	6
			60	23
82340	81269-1	4820-01-027-0552	34	19
89881	815377	2520-00-231-6089	101	30
			105	29
40152	816018		101	11
			105	11
40152	82000231000002	2540-01-102-5433	147	2
40152	83F-4		115	46
			118	50

CROSS REFERENCE INDEXES
PART NUMBER INDEX

CAGEC	PART NUMBER	STOCK NUMBER	FIG.	ITEM
16764	830335	5305-01-238-0510	60	5
16764	830620	2920-01-074-2030	61	53
16764	830891	5961-01-054-8047	59	31
40152	84F-4		118	33
40152	84F-7		178	16
03504	840611	2530-01-037-4362	109	11
40152	85G-1004	5305-01-238-1443	63	6
40152	85G-1032	5305-01-238-1455	144	16
40152	85G-1218	5305-01-238-1452	62	8
40152	85G-608	5305-01-238-1453	64	4
			66	34
40152	85G-804	5305-01-239-8694	63	11
40152	85G-806	5305-01-239-8762	46	2
12603	850287	5330-00-291-6658	110	21
			115	1
			118	58
12603	850756		126	27
12603	851762	5305-00-499-9360	126	57
12603	851806	5305-01-106-5087	110	22
			114	2
12603	851883	4730-00-499-9837	90	11
72582	8528885		23	2
12603	853395	5360-00-499-9353	126	21
27462	8547547	2930-00-276-1838	23	1
12603	856250	3110-00-100-0565	94	13
40152	857420		66	21
12603	857729	3110-00-227-4834	126	19
03504	86D-12H	5310-00-469-3926	124	20
12603	860997	3110-00-227-3505	126	49
40152	862653		108	9
40152	863364	2930-01-222-7546	48	5
40152	865961		128	5
40152	865963		128	7
40152	865965	4820-01-106-0998	128	4
40152	869712		116	20
			117	35
40152	87G-806		113	18
40152	873246		158	46
40152	873293		126	34
40152	874003		110	27
40152	874007		115	42
			118	54
40152	874028		110	26
60703	87415-772T	2540-00-073-9849	150	13
			152	5
40152	875754		113	21
40152	875762		113	4
12603	875766	5315-01-034-6390	111	5
40152	875767		111	6
40152	876575	2530-01-237-0489	128	3
00501	87708-S	4730-00-005-7376	4	42

CROSS REFERENCE INDEXES
PART NUMBER INDEX

CAGEC	PART NUMBER	STOCK NUMBER	FIG.	ITEM
40152	877420		164	15
			165	12
			167	14
			168	12
			169	12
			174	18
			175	15
40152	886526	5310-01-206-7272	34	16
12603	886799		123	14
12603	889269	4720-00-497-1750	155	19
40152	89F-4		115	44
40152	89G-406	5305-01-238-8353	164	26
			165	24
			166	17
			167	24
12603	89G-408	5305-01-238-3067	51	1
40152	890373		151	22
40152	890374		150	18
			151	20
			152	33
40152	890375	5310-00-809-8591	150	19
			151	21
			152	32
72582	8920763	5365-00-837-1199	23	7
72582	8921497	2910-00-213-6478	40	6
72582	8921938	2990-01-058-4905	36	9
72582	8922221	2815-00-080-5738	10	7
72582	8922716	5340-00-902-1767	9	5
72582	8922740	2815-00-736-3572	21	4
72582	8923543	2815-00-600-5567	16	7
72582	8923814	3120-00-620-4779	16	20
72582	8924084	2815-01-078-8806	10	4
72582	8924140	4820-01-132-6317	4	12
			29	12
72582	8924171	4730-01-069-3216	39	13
72582	8924220	4730-01-086-9791	122	8
72582	8924267	4720-01-226-8070	42	18
72582	8924297		55	16
72582	8924439	3040-01-063-9810	16	19
72582	8924751	4730-01-210-4253	4	17
			9	22
72582	8924869	5330-00-735-4296	40	47
72582	8925184	2815-00-865-2079	9	3
72582	8925607	4730-00-277-7611	120	4
40152	894532		113	17
40152	894533		113	16
40152	894534		113	15
40152	894535		113	14
40152	894536		113	12
40152	894537		113	9
40152	894538		113	10

CROSS REFERENCE INDEXES
PART NUMBER INDEX

CAGEC	PART NUMBER	STOCK NUMBER	FIG.	ITEM
40152	894539		113	23
40152	894540		113	24
40152	894541		113	25
40152	894542	5310-01-238-8381	113	26
40152	894543		113	28
40152	898702		114	5
11083	9L6772	5935-01-098-8577	59	2
			60	20
40152	90G-412	5306-01-238-8268	150	15
			151	18
40152	90G-424	5306-01-238-7162	152	15
40152	90G-428	5305-01-238-8351	152	30
76602	90136	5330-00-620-3829	78	12
72582	903204		55	7
76602	90507	5330-00-439-8094	86	5
16764	907904		59	22
72582	908208	3110-01-055-3621	56	24
12603	91F10	5330-00-064-7796	92	13
			92	28
			92	30
			92	35
			170	3
12603	91F3	5330-00-932-1252	159	20
12603	91F4		115	4
			118	19
12603	91F5	5330-00-733-9716	129	2
			132	20
			157	10
12603	91F7	5330-00-064-7777	164	3
			172	4
			174	26
			174	28
			174	30
			175	3
			175	34
			178	14
73331	911246	6210-01-198-3815	66	11
72582	9139801	4730-01-070-0664	121	6
30379	9183500	4730-00-917-4794	178	1
			179	20
12603	92F-7	4730-01-021-2453	92	32
40152	940089	5305-01-242-4194	96	2
40152	940092	5330-00-839-9358	96	8
40152	940093		96	4
40152	940111	3040-00-769-6426	126	47
40152	940229	5306-01-105-4308	95	2
			97	2
			98	2
40152	940250		95	7
			97	7
			98	7

CROSS REFERENCE INDEXES
PART NUMBER INDEX

CAGEC	PART NUMBER	STOCK NUMBER	FIG.	ITEM
40152	940251	5310-01-238-7209	95	6
			97	6
			98	6
19207	9409010	5306-00-940-9010	20	13
24617	9409011	5306-00-940-9011	19	7
72582	9409028	5306-00-940-9028	9	19
72582	9409053	5306-00-369-4138	56	10
72582	9409248	5306-01-239-8576	9	15
72560	9411396	5305-01-275-3254	59	24
72582	9411488	5305-00-899-6361	36	6
72582	9412014	5305-01-165-3295	9	26
40152	941214		117	9
			118	11
16764	9412305	5310-00-965-6000	61	12
40152	941233		108	14
72582	9413341	5306-01-239-8577	23	29
24617	9413509	5310-00-768-0318	58	27
			61	22
24617	9413980	5310-00-059-6112	12	12
24617	9414268	5306-00-852-1424	11	6
16764	9414397	5305-00-225-6943	61	29
72582	9417926	5305-00-135-5157	40	34
16764	9418881	5310-00-944-5896	59	15
			60	45
			101	17
			105	17
72582	9418964	5305-01-088-1970	27	6
40152	942139	5310-01-238-7192	94	23
24617	9421423	5310-01-151-7354	61	16
24617	9421917	5305-00-899-2109	40	29
			41	7
40152	942734		97	4
			98	4
40152	942749	5310-01-239-9420	95	8
			97	8
			98	8
72582	9428477	5340-00-598-5135	4	15
			36	23
			36	29
40152	942874	2540-01-297-9360	144	41
72582	9431896	3110-00-083-8457	41	17
72582	9434171	3110-00-156-1854	40	22
40152	943429	2530-00-073-2176	126	63
16764	9436063	3110-01-098-0000	60	18
40152	943623		BULK	10
19207	943623-24		144	18
19207	943623-36		144	39
19207	943623-48		144	38
19207	943623-60		146	3
16764	9437171	3110-01-079-7024	59	28
40152	943957	4730-01-170-2397	38	5

CROSS REFERENCE INDEXES
PART NUMBER INDEX

CAGEC	PART NUMBER	STOCK NUMBER	FIG.	ITEM
16764	9439570	3110-01-165-1190	60	36
40152	944192		126	12
40152	944195		126	11
40152	944197		126	52
40152	944198	5305-01-239-0626	126	54
40152	944494		34	13
40152	944632		48	8
40152	944667		126	55
40152	944688		97	10
40152	944803	2540-01-125-4735	66	5
40152	944804		66	19
40152	944872		68	7
40152	944977		67	7
			68	3
40152	944981	2540-01-295-0042	147	3
40152	945021	5340-01-203-2831	34	17
40152	945023		110	16
40152	945024		110	15
40152	945028		110	8
40152	945029		110	9
40152	945030		110	14
40152	945031		110	7
40152	945032		110	6
40152	945042		110	29
40152	945554		144	36
40152	945555		144	36
40152	945576		144	23
40152	945577		146	16
40152	945800	2530-01-193-2824	110	20
40152	945996	2530-01-037-1445	112	3
19207	945999-1		146	2
19207	945999-2		146	5
19207	945999-3		146	7
19207	945999-4		146	9
19207	945999-5		146	10
19207	945999-6		146	12
19207	945999-7		146	15
19207	945999-8		146	20
40152	946100		130	5
			131	3
			158	15
			158	23
40152	946101		98	11
40152	946138		126	24
40152	946271	5310-01-238-1451	130	3
			131	8
			158	5
			158	36
40152	946437		126	56
40152	946598		126	9
40152	946599		126	6

CROSS-REFERENCE INDEXES

PART NUMBER INDEX

CAGEC	PART NUMBER	STOCK NUMBER	FIG.	ITEM
40152	946601		126	14
40152	946602	2530-01-237-1815	126	4
40152	946603	5340-01-238-3085	126	3
40152	946604		126	10
40152	946605		126	17
40152	946606		126	16
40152	946607		126	7
40152	946608		126	18
40152	946609	5310-01-238-1447	126	15
40152	946642		95	11
40152	946643	2520-01-295-2558	95	4
40152	946834	4820-00-450-9279	126	2
40152	946859		34	18
40152	946942	5310-01-239-8739	108	6
40152	946943		92	43
40152	946953		38	4
40152	946954		38	3
40152	947160		71	3
40152	947208		130	4
40152	947245		96	11
40152	947248	6620-01-036-2060	66	6
40152	947250	6620-01-036-2061	66	4
40152	947252	6685-01-035-8642	66	1
40152	947254	6685-01-035-8643	66	2
40152	947261	6625-01-202-6016	66	35
40152	947803		48	6
40152	947804		48	9
40152	947805		48	14
40152	947806		51	2
40152	947807		48	15
40152	947810	5310-01-239-9418	91	2
40152	947812		48	10
40152	947813		48	11
40152	947814	4720-01-202-4472	48	7
4015Z	947821		97	11
40152	947927		109	3
40152	947930	5306-01-238-8265	109	2
40152	947931		109	10
40152	947933		109	7
40152	947934		109	4
40152	947935	2530-01-037-5963	109	6
40152	947948		155	2
40152	947950		155	33
12603	947976		155	27
40152	947977		155	4
40152	947978		155	10
40152	947981		155	29
40152	947982		155	31
40152	947983		155	32
40152	947984		155	28
40152	947985		155	26

CROSS-REFERENCE INDEXES

PART NUMBER INDEX

CAGEC	PART NUMBER	STOCK NUMBER	FIG.	ITEM
40152	947986	5355-01-201-2003	155	25
40152	947987		155	24
40152	947988		155	23
40152	947989	5310-01-238-8850	155	22
40152	947990		155	20
40152	947991		155	21
40152	947992	5340-01-280-7963	155	17
40152	947993		155	16
40152	947994		155	15
40152	947995	4720-01-192-9674	155	13
40152	947997		155	5
40152	947999		155	12
40152	948010		165	28
			168	27
			169	27
			175	30
40152	948013		165	30
			175	32
40152	948014		165	27
			175	29
40152	948015		164	22
			166	18
			167	21
			168	21
			169	21
			174	7
			175	27
40152	948016		164	25
			165	23
			166	16
			167	23
			168	22
			169	22
			174	4
			175	23
40152	948017		164	17
			165	14
			166	11
			161	16
			168	14
			169	14
			174	20
			175	17
40152	948018		164	19
			165	16
			166	9
			167	18
			168	16
			169	16
			174	22
			175	19

CROSS-REFERENCE INDEXES

PART NUMBER INDEX

CAGEC	PART NUMBER	STOCK NUMBER	FIG.	ITEM
40152	948019		164	18
			167	17
			174	21
40152	948020		164	6
			165	3
			167	5
			168	3
			169	2
			174	10
			175	6
40152	948021		164	27
			167	25
			168	24
			169	24
			174	6
			175	25
40152	948022		164	23
			166	19
			167	22
			168	20
			169	20
40152	948023		174	17
40152	948024		165	6
			169	6
			174	13
			175	9
40152	948025		165	5
			169	4
			174	12
			175	8
40152	948026		164	7
			165	4
			167	6
			168	4
			169	3
			174	11
			175	7
40152	948028		165	7
			169	7
			174	14
			175	10
40152	948029		165	13
			169	13
			174	19
			175	16
12603	948030	5365-01-197-4087	164	13
			165	10
			167	12
			168	10
			169	10
			174	16

CROSS-REFERENCE INDEXES

PART NUMBER INDEX

CAGEC	PART NUMBER	STOCK NUMBER	FIG.	ITEM
12603	948030	5365-01-197-4087	175	13
40152	948031		166	13
40152	948032	5305-01-238-8352	164	5
			166	8
			167	4
			168	2
			174	9
40152	948033		165	15
			168	15
			169	15
			175	18
40152	948034		165	11
			169	11
			175	14
40152	948036		164	2
40152	948054		160	13
40152	948057		159	9
			160	6
			163	7
40152	948058		159	17
			160	14
40152	948060		160	12
			163	12
40152	948063		162	3
			166	15
			167	11
			168	9
40152	948129		162	11
40152	948187		168	29
			169	29
40152	948188		168	26
			169	26
40152	948191	5305-01-241-1482	166	12
40152	948192		166	10
40152	948438		158	42
40152	948439		158	44
40152	948440	5310-01-239-8596	132	4
			158	32
40152	948441	5310-01-2641-1392	132	2
			158	33
40152	948570		132	15
			158	19
40152	948571		132	16
			158	20
40152	948583		158	17
40152	948590		132	10
40152	948789		159	13
40152	948794		159	8
			160	7
			163	8
40152	948805		164	28

CROSS-REFERENCE INDEXES

PART NUMBER INDEX

CAGEC	PART NUMBER	STOCK NUMBER	FIG.	ITEM
40152	948805		174	29
40152	948810		164	30
			166	4
			174	31
40152	948814		161	5
40152	948815		161	12
40152	948816		159	14
			160	17
40152	948817		159	10
			160	9
			163	2
40152	948818		159	4
			160	3
			163	4
40152	948820		161	11
40152	948821		161	6
40152	948823		161	7
40152	948824		162	2
40152	948825		162	9
40152	948847		159	19
40152	948848	5305-01-239-8701	162	8
40152	948849		162	4
40152	948850		162	6
40152	948851		162	10
40152	948852		162	5
40152	948854		162	1
40152	948859		161	4
12603	948861		163	13
40152	948903		169	1
40152	948958		155	6
12603	948978		155	11
40152	948980		164	11
			165	8
			167	10
			168	8
			169	8
			174	15
			175	11
40152	9486981		165	19
			168	18
			169	18
			175	21
40152	948982		164	21
			167	20
			174	24
40152	948992		155	8
40152	949019		132	11
40152	949033		153	4
40152	949034		153	8
40152	949036		153	2
40152	949037		153	3

CROSS-REFERENCE INDEXES

PART NUMBER INDEX

CAGEC	PART NUMBER	STOCK NUMBER	FIG.	ITEM
40152	949039		153	9
40152	949047		155	3
40152	949048		155	18
40152	949054	5310-01-239-8595	153	11
40152	949080		153	7
40152	949143	5305-01-238-7183	151	6
			152	26
40152	949144	5310-01-238-1437	150	17
			151	3
			152	22
40152	949180	5310-01-238-1448	150	4
			152	12
40152	949181	5310-01-238-1449	150	5
			151	10
			152	13
40152	949182	5310-01-238-3036	150	6
			151	11
			152	11
40152	949183		150	7
			151	17
			152	10
40152	949184	3020-01-298-5419	150	8
			151	16
			152	9
40152	949185	3040-01-190-0475	150	3
			152	6
40152	949255		159	15
			160	16
40152	949259		159	7
			160	5
			163	6
40152	949260		113	1
40152	949261		113	7
40152	949264	5310-01-238-1446	113	19
40152	949283		159	18
40152	949298		161	10
40152	949306		174	2
40152	949308		150	20
			151	2
			152	23
40152	949309		161	9
40152	949364		68	7
40152	949444		101	53
40152	949445		101	55
40152	949458		173	8
40152	949460	5307-01-239-3416	108	2
40152	949461		108	5
40152	949464		108	16
40152	949465		108	15
40152	949466		108	8
40152	949467		108	10

CROSS-REFERENCE INDEXES

PART NUMBER INDEX

CAGEC	PART NUMBER	STOCK NUMBER	FIG.	ITEM
40152	949468		108	7
40152	949469		108	11
40152	949499	5307-01-238-3120	158	26
40152	949521		155	7
40152	949522		155	9
40152	949596	3120-01-254-2473	144	15
40152	949785		151	8
12603	949848	2530-01-226-6097	110	17
40152	949863	2530-01-037-1741	110	5
40152	949959		115	20
			118	40
40152	949972		126	8
			126	48
40152	949999		108	3
40152	951948		117	33
40152	954277	5310-01-242-4126	130	2
			131	9
			158	4
			158	35
12603	960005	5365-01-203-3322	110	19
			115	2
			118	59
40152	960107	4320-01-050-3429	131	5
40152	960248	3040-01-276-8682	151	7
40152	960382	5310-01-238-7210	159	11
			160	10
			163	10
40152	960383		159	12
			160	11
			163	11
12603	960520		114	3
40152	960723	5307-01-238-3118	132	1
40152	960725		132	17
			158	22
40152	960726	5305-01-238-7186	132	5
40152	960749		131	4
40152	960751	2530-01-237-0221	KITS	
40152	960766		158	29
40152	960767		158	45
40152	960768	5305-01-238-7187	158	30
40152	960772		158	47
40152	960800		45	2
40152	960801		45	4
40152	960802		45	3
40152	960803	5310-01-238-3152	45	6
40152	960911		BULK	8
40152	961026		114	6
12603	961181		126	32
40152	961192		166	6
40152	961193		167	1
40152	961194		166	2

CROSS-REFERENCE INDEXES

PART NUMBER INDEX

CAGEC	PART NUMBER	STOCK NUMBER	FIG.	ITEM
12603	961195	4820-01-218-5056	164	9
			167	8
			168	6
40152	961196		164	8
			167	7
			168	5
40152	961197		164	16
			167	15
			168	13
40152	961202		161	1
40152	961203		160	1
40152	961205		163	1
40152	961206		159	2
40152	961240		164	31
			166	7
			167	2
40152	961241		167	9
40152	961242		164	14
			167	13
40152	961243		164	10
			168	7
40152	961244		168	11
40152	961283		132	14
			158	18
40152	961305		164	4
40152	961306		165	1
40152	961307		167	3
40152	961308		166	5
40152	961309		168	1
			175	4
40152	961398	2530-01-237-1775	KITS	
40152	961402		132	12
			158	48
40152	961406		132	6
40152	961440		45	17
40152	961446		132	22
40152	961449		158	34
40152	961458 7	6240-00-765-8443		69
40152	961692		165	21
			174	8
			175	26
40152	961693		165	22
40152	961795		158	6
40152	961933		165	17
40152	961934		165	25
40152	962991	2520-01-037-5208	91	4
40152	963080		158	38
40152	963115		158	53
40152	963116	5330-01-241-6655	KITS	
5A662	963118	4320-01-237-3524	KITS	
5A662	963119		KITS	

CROSS-REFERENCE INDEXES

PART NUMBER INDEX

CAGEC	PART NUMBER	STOCK NUMBER	FIG.	ITEM
40152	963131		131	6
			158	3
40152	963132		158	14
40152	963133		158	28
			158	43
40152	963134		158	25
40152	963135		158	37
40152	963553		158	40
40152	963633	4320-01-237-6300	KITS	
40152	964124	2540-01-274-3725	150	21
52993	964575	3805-01-037-4464	183	1
40152	964586	3805-01-037-2086	134	3
40152	990556	4810-01-202-4636	188	12
40152	992163		110	10
40152	992164		110	11
40152	992892		151	4
			152	28
40152	992896	5305-01-238-3164	150	27
			151	5
			152	29
40152	992898		151	12
40152	993183	5310-01-238-8861	151	1

CROSS-REFERENCE INDEXES

FIGURE AND ITEM NUMBER INDEX

FIG.	ITEM	STOCK NUMBER	CAGEC	PART NUMBER
BULK	1		40152	139149
BULK	2		40152	569696
BULK	3	4720-00-485-7161	72582	5199576
BULK	4	4720-01-074-8373	79470	H16606
BULK	5	4720-01-211-3214	26095	5129157
BULK	6	4720-01-202-5792	72582	5120022
BULK	7	2590-01-135-7680	12603	569694
BULK	8		40152	960911
BULK	9		40152	589572
BULK	10		40152	943623
BULK	11		40152	1521844
BULK	12		40152	569692
KITS			5A662	963119
KITS			72582	5199822
KITS		2530-01-171-8843	40152	3290125
KITS		2530-01-182-6850	12603	2516151
KITS		2530-01-237-0221	40152	960751
KITS		2530-01-237-1772	40152	3290124
KITS		2530-01-237-1773	40152	3290099
KITS		2530-01-237-1774	40152	3290106
KITS		2530-01-237-1775	40152	961398
KITS		2540-01-237-1776	40152	1527816
KITS		2815-00-262-1113	72582	5196761
KITS		2815-00-428-9722	72582	5108120
KITS		2815-00-780-4704	72582	5149644
KITS		2910-00-073-3010	72582	5229649
KITS		2910-00-629-6387	72582	5195078
KITS		2910-00-920-7580	72582	5228769
KITS		2920-01-132-9012	72582	5149294
KITS		2930-00-089-2149	72582	5197509
KITS		2930-00-922-0293	72582	5197438
KITS		3040-01-166-1113	12603	2518494
KITS		3040-01-216-2402	40152	2518493
KITS		4320-01-237-3524	5A662	963118
KITS		4320-01-237-6300	40152	963633
KITS		5330-00-751-8883	72582	5196374
KITS		5330-00-845-5674	72582	5196381
KITS		5330-01-241-6655	40152	963116
KITS		6350-01-178-9153	12603	2500340
1	1	2815-01-025-3729	72582	7083-7000
2	1	2815-01-095-5636	72582	5179360
2	2	5305-00-068-0511	96906	MS90728-62
2	3	5310-00-261-7340	96906	MS35338-8
2	4	5305-00-781-3928	96906	MS90728-74
2	5	2815-01-094-4322	72582	5122294
2	6	5305-00-071-1783	96906	MS90728-124
2	7	2815-00-354-1466	72582	5179345
3	1	5340-01-084-5254	72582	5109900
3	2	5340-00-898-4490	72582	5137761
3	3	5310-00-809-4085	96906	MS27183-16
3	4	5305-00-231-0525	72582	454933

CROSS-REFERENCE INDEXES

FIGURE AND ITEM NUMBER INDEX

FIG.	ITEM	STOCK NUMBER	CAGEC	PART NUMBER
4	1	2815-00-745-7772	72582	5102562
4	2	5340-00-921-6413	72582	5121459
4	3	5305-00-269-3233	96906	MS90727-57
4	4	5310-00-193-9753	10001	265850PC88
4	5	5330-00-849-1028	72582	5117059
4	6	5340-00-833-0819	72582	5117058
4	7	5310-00-261-7340	96906	MS35338-8
4	8	5305-00-068-0510	96906	MS90728-60
4	9	5330-01-058-3197	72582	5102551
4	10	2815-01-095-0341	72582	5199137
4	11	5307-00-010-3196	24617	103196
4	12	4820-00-276-9041	96906	MS35782-6
4	12	4820-01-132-6317	72532	8924140
4	13	5307-00-637-8996	24617	5152121
4	14	5315-00-014-1346	24617	141346
4	14	5315-00-524-7660	24617	5151576
4	14	5315-01-092-6153	72582	141214
4	15	5340-00-231-0941	72582	5132410
4	15	5340-00-231-1990	72582	5138646
4	15	5340-00-363-7977	24617	5150014
4	15	5340-00-598-5135	72582	9428477
4	15	5340-00-728-3491	72582	5117186
4	15	5340-00-921-6740	72582	5123862
4	15	5340-01-144-1937	72582	5139988
4	16	5330-00-769-4882	72582	5138659
4	17	4730-00-148-4975	72582	5142549
4	17	4730-00-604-7953	72582	5111798
4	17	4730-01-210-4253	72582	8924751
4	18		72582	5144472
4	18		73342	5130896
4	18	4730-00-152-6070	72582	5115214
4	18	4730-00-152-6073	72582	5145014
4	18	4730-00-279-0985	81348	WW-P-471AASBCB
4	19	5310-00-215-7524	77445	191663
4	20	5310-00-774-9545	72582	5116122
4	21	5330-00-814-9196	72582	5186579
4	22	5330-00-171-8763	24617	5119944PC5119973
4	23	5330-00-354-1521	72582	5183330
4	24	5330-01-126-5159	72582	5132445
4	25	5310-00-584-5272	96906	MS35338-48
4	26	5305-00-071-2066	96906	MS90728-109
4	27	2815-00-745-7774	72582	5132422
4	28	5340-00-921-6413	72582	5121459
4	29	5330-00-847-4967	72582	5121835
4	30	5330-00-157-3914	72582	5132572
4	31	5340-00-159-8754	72582	5144186
4	32	5310-00-081-4219	96906	MS27183-12
4	33	5310-00-407-9566	96906	MS35338-45
4	34	5310-00-880-7746	96906	MS51968-5
4	35	4710-00-152-1445	72582	5144327
4	36	5306-00-226-4825	96906	MS90728-32

CROSS-REFERENCE INDEXES

FIGURE AND ITEM NUMBER INDEX

FIG.	ITEM	STOCK NUMBER	CAGEC	PART NUMBER
4	37	5310-00-081-4219	96906	MS27183-12
4	38	72582	5159490	
4	39	4730-00-640-1051	79470	W400X5
4	40	5340-00-159-8753	72582	5132458
4	41	72582	5132924	
4	42	4730-00-005-7376	00501	87708-S
5	1	2815-00-970-1204	72582	5102771
5	2	4730-00-954-1281	81348	WW-P-471ACABCB
5	3	5340-00-728-3491	72582	5117186
5	4	5340-00-939-1192	72582	5150132
5	5	5340-00-590-1741	24617	5193541
5	6	5310-01-117-6261	72582	117049
5	7	5310-00-261-7340	96906	MS35338-8
5	8	2910-00-004-3443	72582	5199527
5	9	5330-00-599-0505	24617	5160037
5	10	5307-00-273-9380	72582	5150362
5	11	5305-01-054-2280	72582	5101377
5	12	2910-00-119-2687	72582	5172874
5	13	2910-00-737-0698	72582	5111332
5	14	2815-00-900-2650	72582	5178976
5	15	5365-00-142-1775	72915	5154453
5	16	5330-00-364-3550	80072	0346-177
5	17	5340-01-046-1965	72582	5117344
5	18	4730-00-152-6073	72582	5145014
5	19	3120-00-831-8646	72582	5100929
5	20	5305-00-071-2506	96906	MS90728-3
5	21	5310-00-206-0000	81381	5179709
5	22	5340-00-363-7981	72582	5150268
5	23	5330-00-892-1764	79150	25103
5	24	5310-00-220-6765	24617	5150013
5	25	5306-00-826-5257	72582	5117003
6	1	2815-00-294-2313	72582	5102413
6	2	5306-01-039-6470	72582	5102374
6	3	5310-00-851-7171	72582	05102373
6	4		72582	5104525
6	5		72582	5104303
6	6	5310-00-215-7524	77445	191663
6	7	5306-00-972-0297	77873	A30262300-4
6	8	2815-00-229-3623	72582	5102370
7	1	5330-00-154-8358	81782	E14-23-140B
7	2	5365-00-057-1589	72582	5122214
7	3	3120-01-127-8007	72582	5149556
7	4		72582	5117010
7	5		72582	5117011
7	6		72582	5144275
7	7	5315-00-616-5520	96906	MS35756-14
7	8	5315-00-400-6842	72582	124549
7	9	4730-00-005-7376	6N299	4255490
7	10	5315-00-251-9986	72582	5177528
7	11	2815-00-735-4202	72582	5117005
7	12	3130-00-900-2688	72582	5196317

CROSS-REFERENCE INDEXES

FIGURE AND ITEM NUMBER INDEX

FIG.	ITEM	STOCK NUMBER	CAGEC	PART NUMBER
7	13	5315-00-014-1346	24617	141346
7	14	5330-00-282-5906	35311	L12105
7	15	5365-00-597-4351	24617	5192496
7	16	5306-00-851-2918	72582	5116353
7	17	5306-01-039-6470	72582	5102374
7	18	5310-00-851-7171	72582	5102373
8	1	5306-00-272-4250	24617	N271-108PC5153623
8	2	5310-00-220-6583	72582	5157930
8	3		72582	5128122
8	4	5315-00-089-8807	24617	5131724
8	5	5305-01-116-8093	72582	179884
8	6		72582	5106222
8	7	5305-00-071-2069	80204	B1821BH050C150N
8	8	2815-00-786-6441	72582	5120753
8	9		72582	5128578
9	1	5330-00-736-0293	72582	5117173
9	2	5310-01-117-6261	72582	117049
9	3	2815-00-865-2079	72582	8925184
9	4	5330-00-745-7732	72582	5122227
9	5	5340-00-902-1767	72582	8922716
9	6	5310-00-261-7340	96906	MS35338-8
9	7	5305-00-224-1110	72582	186315
9	8	5305-00-069-5572	96906	MS90725-84
9	9	5310-00-167-0822	88044	AN960-716
9	10	5340-00-986-0489	72582	5122281
9	11	5305-01-140-9118	96906	MS90728-59
9	12	5310-00-023-4457	72582	5138619
9	13	5330-00-620-7359	24617	5117061
9	14	5306-00-894-2381	72582	5121466
9	15	5306-01-239-8576	72582	9409248
9	16	5305-00-068-0510	96906	MS90728-60
9	17	5305-00-068-0511	96906	MS90728-62
9	18	5305-00-071-2076	80204	B1821BH050C325N
9	19	5306-00-940-9028	72582	9409028
9	20	5310-00-584-5272	80045	23MS35338-10
9	21	4730-00-148-4975	72582	5142549
9	22	4730-01-210-4253	72582	8924751
9	23	5305-01-120-8180	24617	122408
9	24		72582	5136022
9	25	2815-00-786-6441	72582	5120753
9	26	5305-01-165-3295	72582	9412014
9	27	3020-00-517-7586	72582	5166664
10	1	2815-01-247-2221	72582	23502022
10	2	4310-00-407-8368	72582	5122321
10	3	2815-01-094-2788	72582	5148035
10	4	2815-01-078-8806	72582	8924084
10	5	2815-00-094-1663	72582	5149982
10	6		72582	5149982
10	7	2815-00-080-5738	72582	8922221
10	8	2815-01-067-9819	72582	5144836

CROSS-REFERENCE INDEXES

FIGURE AND ITEM NUMBER INDEX

FIG.	ITEM	STOCK NUMBER	CAGEC	PART NUMBER
10	9	3120-00-094-3552	72582	5144843
10	10	2815-00-080-5750	72582	5144744
10	11	5340-00-792-9020	72582	5180250
10	12	5306-00-514-6973	72582	5148373
10	13	3120-00-091-4679	72582	5144846
10	14	2815-01-094-2789	72582	5199827
10	15	2815-00-080-4578	72582	R5144848
10	16	5306-00-980-1542	72582	5132383
10	17	5310-00-841-5700	72582	5117629
10	18		72582	5149572
10	19	3120-01-084-5357	72582	5149572
10	20	5365-00-349-8563	72582	5199569
10	21	5330-00-354-1528	72582	5184484
11	1	5310-00-274-4658	24617	5150087
11	2	5310-00-209-1543	72582	5177769
11	3	3020-00-217-5707	72582	5138717
11	4	5365-00-837-8352	72582	5116485
11	5	5330-01-083-3980	72532	5106223
11	6	5306-00-852-1424	24617	9414268
11	7	3120-00-745-7736	72582	5117984
11	8	5330-00-735-4289	72582	5117243
11	9	5315-00-021-8211	96906	MS35756-35
11	10	5305-00-842-4670	72582	5117649
11	11	5365-00-590-1739	72582	5115572
11	12	3120-00-843-6994	72582	5196026
11	13	2815-00-734-5287	72582	5117854
11	14	5315-00-276-4818	72582	5151277
11	15	3120-00-585-3282	72582	5111424
11	16	5310-00-261-7340	96906	MS35338-8
11	17	5305-00-068-0511	96906	MS90728-62
11	18	3020-00-083-8021	72582	5121816
11	19	5305-00-206-6776	24617	186627
11	20	3040-00-692-4152	72582	5172734
12	1	5310-00-274-4658	24617	5150087
12	2	5310-00-209-1543	72582	5177769
12	3	3020-00-537-0153	72582	5126904
12	4	2815-01-094-2693	72582	5145732
12	5	5306-00-842-8223	96906	MS35763-1033
12	6	5365-00-837-8352	72582	5116485
12	7	5315-00-252-5969	72582	5153914
12	8	2815-00-735-4295	72582	5117853
12	9	5315-00-276-4818	72582	5151277
12	10	2815-00-857-2743	72582	5145612
12	11	3020-00-745-7738	72582	5121815
12	12	5310-00-059-6112	24617	9413980
12	13	5305-00-230-9818	72582	5108876
12	14	3040-00-692-4152	72582	5172734
13	1	3020-00-842-7840	72582	5117102
13	2	5306-00-842-8223	96906	MS35763-1033
14	1	2815-00-961-9805	72582	5141661
14	2	5315-00-014-1236	24617	141236

CROSS-REFERENCE INDEXES

FIGURE AND ITEM NUMBER INDEX

FIG.	ITEM	STOCK NUMBER	CAGEC	PART NUMBER
14	3	5305-00-224-1113	72582	181371
14	4	5340-00-833-0822	72582	5117733
14	5	5305-01-140-9118	96906	MS90728-59
14	6	5310-00-080-6004	96906	MS27183-14
14	7	5305-00-269-3217	96906	MS90725-67
15	1	5305-01-116-5114	72582	179888
15	2	5310-00-809-5998	96906	MS27183-18
15	3	5305-00-224-1113	72582	181371
15	4	5310-00-080-6004	96906	MS27183-14
15	5	5330-00-862-6934	72582	5123638
15	6	5310-01-117-6261	72582	117049
15	7	5340-00-900-2583	72582	5122680
16	1	2815-00-564-7192	72582	5148475
16	1	2815-01-036-8685	72582	5148472
16	2	3120-00-661-7616	72582	5150311
16	3	3120-00-811-4699	72582	5122445
16	4	5340-00-662-9735	72582	5150312
16	5	5315-00-662-9093	72582	5150314
16	6	3120-00-662-1651	72582	5123700
16	7	2815-00-600-5567	72582	8923543
16	8	3120-00-661-7616	72582	5150311
16	9	3120-00-661-7640	72582	5150318
16	10	5340-00-662-9735	72582	5150312
16	11	5315-00-662-9093	72582	5150314
16	12	3120-00-662-1651	72582	5123700
16	13	5310-00-270-7111	73342	5151601
16	14	5365-00-282-5031	72582	5150303
16	15	5340-00-364-3311	72582	5150302
16	16	5360-00-252-8444	72582	5186858
16	17	5340-00-885-5731	72582	5123250
16	18	2815-00-345-6073	72582	5128640
16	19	3040-01-063-9810	72582	8924439
16	20	3120-00-620-4779	72582	8923814
16	21	2815-00-362-9386	72582	05106413
16	22	5310-00-582-5965	96906	MS35338-44
16	23	5305-00-068-0508	96906	MS90728-6
16	24	3040-00-364-3307	72582	23500714
16	25	5340-00-841-9141	24617	5151272
16	26	4730-00-212-6331	72582	5150325
16	27	2815-00-363-8052	72582	5103903
17	1	2815-00-731-4335	72582	5117565
17	2	5310-00-270-7111	73342	5151601
17	3	5305-00-884-4803	72582	5129101
17	4	2815-00-529-7992	72582	23500501
17	5	2815-00-529-8193	72582	5111337
17	6	5315-00-992-0700	72582	5117564
17	7	5340-00-874-8677	72582	5117563
17	8	5360-00-878-8214	72582	5117561
17	9	5340-00-457-0051	72582	5196148
17	10	2815-00-953-2460	72582	5129919
17	11	4910-01-092-2564	72582	5199913

CROSS-REFERENCE INDEXES

FIGURE AND ITEM NUMBER INDEX

FIG.	ITEM	STOCK NUMBER	CAGEC	PART NUMBER
17	12	2815-00-060-1125	72582	5101101
18	1	5310-00-641-0468	72582	5150333
18	2	5305-00-363-8051	72582	5157194
18	3	5315-00-843-7986	96906	MS16562-33
18	4	2815-00-110-9631	72582	5196748
18	5	2815-00-101-2226	72582	5115520
18	6	5330-00-431-7232	72582	5143406
18	7	5307-01-012-3560	72582	5148504
19	1	5305-00-165-8074	96906	MS51095-420
19	2	5310-00-584-5272	80045	23MS35338-10
19	3	2815-01-057-7128	72582	5102019
19	4	2815-01-210-9640	72582	5102020
19	5	5340-00-363-7977	24617	5150014
19	6	3020-01-034-1702	72582	5117587
19	7	5306-00-940-9011	24617	9409011
19	8	2815-01-057-6570	72582	5117599
19	9	3020-01-034-1701	72582	5117588
19	10	3040-01-057-7129	72582	5117466
19	11	5330-00-745-7669	72582	5121714
19	12	3020-00-919-2651	72582	5117020
19	13	5310-00-261-7340	96906	MS35338-8
19	14	5305-00-781-3927	96906	MS90728-72
19	15	5305-00-071-2078	96906	MS90728-122
20	1		72582	5131304
20	2	5310-00-261-7340	96906	MS35338-8
20	3	5305-00-721-5492	96906	MS90728-57
20	4		72582	5131305
20	4		72582	5131373
20	5	5330-00-911-4628	72582	5117242
20	6	5305-00-224-1113	72582	181371
20	7	2815-00-363-8161	72582	5118302
20	8	5305-00-688-2111	96906	MS90728-63
20	9	5340-00-364-3369	72582	5153284
20	10	4730-00-745-7741	72582	5126143
20	11	5340-00-898-4379	72582	5126320
20	12	5330-00-641-4504	24617	5167380
20	13	5306-00-940-9010	19207	9409010
20	14	5310-00-407-9566	96906	MS35338-45
20	15	5310-00-081-4219	96906	MS27183-12
20	16	5310-01-117-6261	72582	117049
21	1	4820-00-918-5565	72582	5122895
21	2	2815-00-745-7664	72582	5117957
21	3	5360-00-842-6795	72582	5126327
21	4	2815-00-736-3572	72582	8922740
21	5	2815-01-060-9266	72582	5122894
21	6	5305-00-068-0510	96906	MS90728-60
21	7	5310-00-261-7340	96906	MS35338-8
21	8	5330-00-735-4291	72582	5117269
21	9	5315-00-921-5332	72582	457008
22	1		72582	5134541
22	2	5305-00-952-1511	08771	N80P19008C13

CROSS-REFERENCE INDEXES

FIGURE AND ITEM NUMBER INDEX

FIG.	ITEM	STOCK NUMBER	CAGEC	PART NUMBER
22	3	2815-00-905-7917	72582	5134456
22	4	5360-00-930-3264	72582	5134477
22	5	4820-00-944-6249	72582	5133431
22	6	2940-01-284-6247	72582	5134307
22	7	4730-00-089-2515	21450	444618
22	8	5360-00-801-8731	72582	5187308
22	9	2940-00-019-4775	70040	OF203
22	10	4820-00-360-8299	34623	A1264
22	11	5330-00-833-0870	70040	6437298
22	12	5306-00-870-6222	72582	5120740
22	13	5330-00-604-8094	72582	5187310
22	14	5365-00-262-4701	24617	5154538
22	15	5330-00-629-6340	73342	5187309
22	16	5310-00-136-5712	73342	00114498
22	17	2940-00-580-6283	96906	MS35802-3
22	18	5330-00-290-7860	70040	G259
22	19	5305-00-725-2317	96906	MS90728-64
22	20	5310-00-261-7340	96906	MS35338-8
22	21	5310-00-080-6004	96906	MS27183-14
22	22	5330-00-735-4298	72582	5121205
23	1	2930-00-276-1838	27462	8547547
23	2		72582	8528885
23	3	5305-00-068-0510	96906	MS90728-60
23	4	5310-00-261-7340	96906	MS35338-8
23	5		72582	5125597
23	6		72582	5127923
23	7	5365-00-837-1199	72582	8920763
23	8	5330-00-844-2907	72582	5117535
23	9	5365-00-289-1578	24617	5177772
23	10	5310-00-663-7617	15434	60598
23	11	5360-00-527-2312	72582	5177778
23	12	2930-00-565-5758	72582	5177777
23	13		72582	5125596
23	14		72582	5102506
23	15	5305-00-543-2419	96906	MS90728-61
23	16	5310-00-407-9566	96906	MS35338-45
23	17	5306-00-226-4826	96906	MS90728-33
23	18	5310-01-117-6261	72582	117049
23	19		72582	5121745
23	19	5330-00-276-1839	72582	5125599
23	20	4730-01-108-6226	72582	5125598
23	21	5305-00-068-0511	96906	MS90728-62
23	22	5330-00-624-6296	19207	6246296
23	23		72582	5139809
23	24	4720-01-025-2309	72582	5199780
23	25		72582	5125595
23	26		72582	5128270
23	27	5306-00-338-5618	72582	215404
23	28	4820-01-117-3309	72582	114981
23	29	5306-01-239-8577	72582	9413341
24	1	4730-00-595-0792	72582	5150147

CROSS-REFERENCE INDEXES

FIGURE AND ITEM NUMBER INDEX

FIG.	ITEM	STOCK NUMBER	CAGEC	PART NUMBER
24	2	5340-01-011-1438	72582	5146248
24	3	3805-00-340-7047	72532	5113825
24	4	2590-00-735-4292	72582	5117362
25	1		72582	5121432
25	2	4730-00-947-4290	72582	5151430
25	3	4710-01-108-7810	72582	5139363
26	1	2815-01-120-2722	72582	5197033
26	2	5305-01-140-9118	96906	MS90728-59
26	3	5310-00-261-7340	96906	MS35338-8
26	4	4730-01-214-1525	72582	5144734
26	5	5330-00-304-9218	72582	5132331
26	6	5305-00-071-2510	96906	MS90728-13
26	7	5365-00-547-1552	72582	5160425
26	8	5340-00-325-4965	72582	5184291
26	9		72582	5108244
26	10	4730-01-005-7253	96906	MS39326-26
26	11		19207	05120012-1
26	12		72582	5144828
27	1	2940-00-327-1746	72582	5113734
27	2	5330-00-745-7732	72582	5122227
27	3	2940-00-089-2520	72582	5101760
27	4	5310-00-261-7340	96906	MS35338-8
27	5	5305-00-165-8157	72582	450517
27	6	5305-01-088-1970	72582	9418964
27	7	5305-00-543-2419	96906	MS90728-61
27	8	5310-00-768-0318	12603	6108
27	9	5305-00-269-3217	96906	MS90725-67
27	10	2940-00-327-1745	72582	5145592
27	11	5310-00-732-0558	96906	MS51967-8
28	1	5330-00-745-7820	72582	5196533
28	2		73342	5146304
28	3	5306-01-069-9211	72582	5148482
28	4		73342	5131100
28	5	4730-01-126-1490	72582	5103185
28	6		73342	5131099
28	7	4730-00-873-8800	72582	5103187
28	8	5305-01-215-5307	72582	5148481
28	9	4730-00-152-6070	72582	5115214
28	10	5305-00-068-0511	96906	MS90728-62
28	10	5305-00-781-3927	96906	MS90728-72
28	10	5305-00-781-3929	96906	MS90728-75
28	10	5305-00-843-0645	72582	187491
28	11	5310-00-261-7340	96906	MS35338-8
29	1	5330-00-866-6175	72582	5113412
29	2		72582	5130305
29	2		72582	5130308
29	3		24617	189060
29	4	5330-00-862-6929	72582	5120224
29	5		72582	5121098
29	6	2815-01-044-5116	72582	5102735
29	7	5310-00-595-8121	72582	5104439

CROSS-REFERENCE INDEXES

FIGURE AND ITEM NUMBER INDEX

FIG.	ITEM	STOCK NUMBER	CAGEC	PART NUMBER
29	8	5307-00-550-1879	24617	5112899
29	9	5310-00-880-7745	96906	MS51968-11
29	10	5306-01-012-2284	72582	186618
29	11	5310-00-407-9566	96906	MS35338-45
29	12	4820-01-132-6317	72582	8924140
29	13	4730-01-047-3667	96906	MS14314-1X
30	1	4730-00-446-6602	72582	5117369
30	2	4710-00-722-3387	72582	5127275
30	2	4710-00-733-1935	72582	5127276
30	3	5305-00-782-9489	96906	MS90728-66
30	4	5310-00-276-3015	24617	5161621
30	5	2910-00-735-6187	72582	5121259
30	6	5310-00-167-0822	88044	AN960-716
30	7	2910-00-089-2370	72582	5226440
31	1	2910-00-117-9229	72582	5228928
31	2	5315-00-241-7427	24617	N24188-20
31	3	2910-00-126-9713	72582	5228104
31	4	5360-00-792-9771	71934	5228739
31	5	5315-00-707-1253	72582	5228608
31	6	4730-00-937-0229	72582	5228588
31	7	5365-00-255-0296	24617	5226186
31	8	2910-00-374-4929	72582	5228587
31	9	2910-00-126-9712	23862	5226719
31	10	2910-00-833-1000	72582	5228583
31	11	5315-00-209-7977	24617	5226416
31	12	3020-00-272-6038	71934	5226400
31	13	5365-00-849-2283	72582	5228586
31	14		72582	5228848
31	15	5340-00-838-9696	81381	5228694
31	16	6695-00-034-3918	71934	5228696
31	17	5360-00-986-7304	72582	5228596
31	18	5340-00-837-8448	72582	5228766
31	19	5340-00-759-0542	72582	5228594
31	20	2910-00-117-9230	72582	5229030
31	21	5365-00-608-0486	72582	5228109
31	22	5330-00-364-3434	72582	5229167
31	23	5310-00-833-1013	72582	5228601
32	1	5315-00-839-2325	96152	A82-1
32	2	5315-00-251-9989	72582	05147345
32	3	3040-00-918-5588	73342	5117191
32	4	2990-00-918-5587	72582	5117942
32	5	2520-00-461-3894	72582	5197428
32	5	2990-00-121-0612	72582	5197427
32	6	5315-00-846-5928	96906	MS35671-24
32	7	3040-00-363-8122	72582	5150263
32	8	2910-00-296-7216	72582	5130509
32	9	5365-00-334-7180	24617	5150843
32	10	5315-00-251-9754	24617	5150259
32	11	5360-00-919-6216	72582	5124142
32	12	2910-00-775-1380	72582	5115322
32	13	2910-00-296-7216	72582	5130509

CROSS-REFERENCE INDEXES

FIGURE AND ITEM NUMBER INDEX

FIG.	ITEM	STOCK NUMBER	CAGEC	PART NUMBER
32	14	5305-00-068-7837	96906	MS90728-5
32	15	5310-00-004-5033	94231	3-07620-311
32	16	5305-00-272-2080	72582	5176228
33	1	2910-00-175-9250	72582	5199560
33	2	2910-00-524-7862	72582	5102257
33	3	5330-00-178-3773	58275	A058706
33	4	5330-00-212-6290	24617	NT10800PC4
33	5	2910-00-547-1499	72582	5146337
33	6	5315-00-014-1195	24617	141195
33	7	3040-00-697-4789	72582	5181746
33	8	3040-00-698-2915	72582	5178700
33	9	3020-00-200-1393	72582	5174975
33	10	3110-00-950-8446	96906	MS19061-3
33	11	4320-00-880-0456	72582	5134560
33	12	5306-00-845-1621	11862	3719219
33	13	3020-00-097-2475	72582	5181747
33	14	5365-00-354-1308	24617	5174971
33	15	5330-00-599-5577	72582	5161003
33	16	5360-00-664-7850	72582	5184530
33	17	5315-00-010-3709	24617	103709
33	18	2910-00-624-0736	72582	5174973
33	19	4730-00-005-7376	6N299	4255490
33	20	5306-00-613-9396	24617	5118219
34	1		40152	533286
34	2		40152	1529298
34	3	5310-00-180-0277	96906	MS35333-76
34	4	5306-01-239-8552	40152	23C-616
34	5		40152	1500793
34	6	4720-01-212-2688	24161	23215
34	7		40152	1543437
34	8		40152	1529315
34	9	2940-01-211-4635	40152	2553678
34	10	2940-01-165-8294	40152	2558972
34	11	2940-01-277-5592	40152	1513874
34	12	2940-01-038-8787	73370	CA502SY
34	13		40152	944494
34	14		81321	AF2138
34	15		40152	3992704
34	16	5310-01-206-7272	40152	886526
34	17	5340-01-203-2831	40152	945021
34	18		40152	946859
34	19	4820-01-027-0552	82340	81269-1
34	20	5310-01-238-1440	12603	60D6
34	21	5306-01-239-8553	40152	24C-616
34	22		40152	1529624
35	1	2815-00-457-0042	72582	5123644
35	2	5315-00-775-1359	72582	273436
35	3	5330-00-758-2887	72582	5179232
35	4	5310-00-080-6004	96906	MS27183-14
35	5	4730-00-279-0985	81348	WW-P-471AASBCB
35	6	5305-00-068-0511	96906	MS90728-62

CROSS-REFERENCE INDEXES

FIGURE AND ITEM NUMBER INDEX

FIG.	ITEM	STOCK NUMBER	CAGEC	PART NUMBER
35	7	5310-00-261-7340	96906	MS35338-8
35	8	5305-00-781-3927	96906	MS90728-72
35	9	3120-01-274-9755	72582	5198564
35	10	3040-01-176-0523	72582	5122296
35	11	2815-00-901-0789	72582	5122982
35	12	2815-00-788-6639	72582	5114974
35	13	5340-00-833-0792	72582	5112785
35	14	5365-00-164-6421	72582	5143836
35	15	5365-00-684-5973	72582	5113633
35	16	5310-00-637-9541	96906	MS35338-46
35	17	5310-00-809-4058	96906	MS27183-10
35	18	5305-00-071-2509	80204	818218HO25C150N
35	19	5360-00-842-5347	72582	5123743
35	20	5310-01-238-8385	72582	5156612
35	21	5360-00-745-7791	72582	5111904
35	22	2520-00-918-9649	72582	5123684
35	23		72582	5123608
35	24	5305-00-543-2419	96906	MS90728-61
35	25	5310-00-080-6004	96906	MS27183-14
35	26	5310-00-261-7340	96906	MS35338-8
35	27	4730-00-745-7786	72582	5103602
35	28		72582	5123610
35	29	5330-00-911-0158	72582	5123703
36	1	5305-00-719-5219	96906	MS90727-111
36	2	5310-00-264-1888	19207	7520854
36	3	2815-00-364-3424	72582	5154401
36	4	5305-00-843-0645	72582	187491
36	5	5340-00-999-0316	72582	5121814
36	6	5305-00-899-6361	72582	9411488
36	7	5310-00-375-0519	61510	CKE42A
36	8	5330-00-915-4511	72582	5141588
36	9	2990-01-058-4905	72582	8921938
36	10	3110-00-974-4124	43334	U1205TS18
36	11	5305-00-068-0508	96906	MS90728-6
36	12	5310-00-637-9541	80045	23MS35338-46
36	13	5330-00-641-1457	24617	5179017
36	14	2815-00-140-5154	72582	5103526
36	15	5330-00-097-9838	72582	5138710
36	16	5340-00-678-0944	72582	23500533
36	17	5315-00-241-7523	24617	5150542
36	18	4730-00-005-7376	6N299	4255490
36	19	4730-00-929-3464	72582	5109389
36	20	3120-00-140-5143	72582	5127477
36	21	2990-00-920-3502	72582	5198156
36	22	2990-00-057-6941	72582	5134340
36	23	5340-00-598-5135	72582	9428477
36	24	2815-00-231-0053	72582	5150869
36	25	2010-01-057-0031	72582	5117071
36	26	5340-00-921-5379	72582	5150829
36	27	5315-00-999-4238	96906	MS35672-47
36	28	2990-00-851-6933	72582	5134341

CROSS-REFERENCE INDEXES

FIGURE AND ITEM NUMBER INDEX

FIG.	ITEM	STOCK NUMBER	CAGEC	PART NUMBER
36	29	5340-00-598-5135	72582	9428477
36	30	2815-00-231-0053	72582	5150869
36	31	2010-01-057-0031	72582	5117071
36	32	5340-00-921-5379	72582	5150829
36	33	5315-00-999-4238	96906	MS35672-47
36	34	2990-00-842-2579	72582	5117935
36	35	2815-01-024-9947	72582	5103490
36	36	3120-00-140-5143	72582	5127477
36	37	5330-00-097-9838	72582	5138710
36	38	4730-00-005-7376	6N299	4255490
36	39	4730-00-929-3464	72582	5109389
36	40	5305-00-579-5818	24617	117296
36	41	3110-00-183-6912	43334	5205WL1450A
36	42	5365-00-364-3329	72582	5153938
36	42	5365-00-597-7422	72582	5150372
36	42	5365-00-597-7423	72582	5150855
36	43	3020-00-591-8122	72582	5196321
36	44	5330-00-736-0228	72582	5126499
36	45	5310-00-939-1198	72582	5117082
36	46	5306-00-921-6729	72582	5117081
36	47	4730-01-087-8916	72582	114629
36	48	5330-00-095-6670	72582	5144424
36	49	4730-01-057-9598	72582	114630
36	50	5330-00-276-1826	72582	5124519
36	51	4730-00-541-8018	08484	QS300M68H
36	52	5330-01-089-6878	72582	5146040
36	53	5306-00-226-4834	96906	MS90728-41
36	54	5310-00-407-9566	96906	MS35338-45
36	55	5310-00-999-0424	72582	5159714
36	56	2815-00-900-2629	72582	5168749
36	57	5330-00-834-2912	96906	MS35769-18
36	58		72582	5123439
36	59	5315-00-238-0838	24617	5157933
36	60		72582	517717
36	60	4710-00-898-4254	72582	5117716
37	1	3010-00-363-8136	72582	5150344
37	2	2815-00-363-8147	72582	5150345
37	3	2815-00-363-8145	72582	5150346
37	4	2815-00-706-5831	18954	K-5196314
37	5	2815-00-363-8135	72582	5150348
37	6	5310-00-407-9566	96906	MS35338-45
37	7	5306-00-018-6649	72582	186649
37	8	5330-00-202-2770	72582	5150349
37	9	5310-00-914-5360	72582	5124520
37	10	5330-00-276-1826	72582	5124519
37	11	2815-00-898-4365	72582	5124521
37	12	5310-00-407-9566	96906	MS35338-45
37	13	5305-01-024-4775	72582	179827
37	14	2815-01-089-9598	72582	5123257
37	15	5330-01-089-6878	72582	5146040
38	1		40152	573434

CROSS-REFERENCE INDEXES

FIGURE AND ITEM NUMBER INDEX

FIG.	ITEM	STOCK NUMBER	CAGEC	PART NUMBER
38	2	2910-00-003-0160	49234	EX1784GF38
38	3		40152	946954
38	4		40152	946953
38	5	4730-01-170-2397	40152	943957
38	6	5310-01-238-8333	40152	18D-12
38	7	5310-00-349-8529	12603	616809
38	8	5306-01-238-8261	40152	24C-1244
38	9		40152	1540067
38	10	5306-01-239-8554	40152	24C-1256
38	11		40152	25K40428
38	12	5340-01-083-9643	40152	587613
38	13	5310-00-180-0277	96906	MS35333-76
38	14	5306-01-239-8555	40152	24C-612
38	15		40152	565295
39	1	4730-00-217-5714	72582	5199580
39	2	4730-00-221-6215	72582	225828
39	3		72582	MD1392
39	4	4730-00-233-9988	72582	5199583
39	5	4730-00-278-0155	24617	143338
39	6	4730-00-229-3466	72582	5199593
39	7	4730-00-780-5228	72582	5104778
39	8		66640	166D01
39	9		19207	0748373-20
39	10	5340-01-078-2199	72582	5101020
39	11	4730-00-229-3622	72582	5199597
39	12	4730-00-842-3162	72582	5128927
39	13	4730-01-069-3216	72582	8924171
39	14	4730-01-028-5038	72582	5199579
39	15		19207	0748373-26
39	16		19207	0748373-30
39	17		19207	0748373-40
39	18	5310-00-768-0319	96906	MS51968-2
39	19	5310-00-809-4058	96906	MS27183-10
39	20	5340-00-161-5246	72582	2488022
39	21	5310-00-582-5965	96906	MS35338-44
39	22	5306-01-239-8578	72582	123450
39	23	5340-00-231-1689	72582	5126504
39	24		19207	4857161-27
39	25		72582	444002
39	26		19207	0748373-17
40	1	5305-00-225-3843	96906	MS90728-8
40	2	5310-00-582-5965	96906	MS35338-44
40	3	5365-01-093-7766	72582	5146369
40	4	2815-00-921-5385	72582	5183042
40	5	2815-00-363-8131	72532	5164318
40	6	2910-00-213-6478	72582	8921497
40	7	5315-00-652-3341	72582	5185153
40	8	5365-00-205-5139	24617	5178581
40	9	2990-01-082-1348	72582	5113906
40	10	2990-01-086-3956	72582	5188606
40	11	3040-01-205-9451	72582	5147103

CROSS-REFERENCE INDEXES

FIGURE AND ITEM NUMBER INDEX

FIG.	ITEM	STOCK NUMBER	CAGEC	PART NUMBER
40	12	2990-00-911-6304	72582	5117737
40	13	2990-01-086-3116	72582	5117738
40	14	2990-00-810-3994	72582	5183624
40	15	2990-00-377-8954	72582	5184336
40	16	3040-00-833-1026	72582	5150923
40	17	3120-01-117-3286	72582	5147866
40	18	5305-00-169-8014	72582	5144028
40	19	5310-00-148-5171	77445	30896
40	20	5310-00-894-1947	49671	73109-105
40	21	2990-00-918-5561	72582	5117193
40	22	3110-00-156-1854	72582	9434171
40	23	5306-00-416-3967	24617	445520
40	24	5310-00-407-9566	96906	MS35338-45
40	25	5310-00-737-5429	02978	520275
40	26	5340-00-691-1097	72582	5182559
40	27	5330-00-250-5817	24617	5152944
40	28	5310-00-014-5850	96906	MS27183-42
40	29	5305-00-899-2109	24617	9421917
40	30	3040-00-228-3732	72582	5143146
40	31	5360-00-910-9726	72582	5131368
40	32	4730-00-005-7376	6N299	4255490
40	33	5305-00-780-8105	24617	5183701
40	34	5305-00-135-5157	72582	9417926
40	35	2815-01-005-2914	72582	5127259
40	36	3120-00-012-0632	72582	5127267
40	37	3120-01-164-0977	72582	148402
40	38	5330-00-514-4804	79500	1JH4350REVCPC
40	39	5310-00-409-9031	72582	5144178
40	40	5310-00-262-3105	24617	NX1229OPC7
40	41	5310-00-231-0290	72582	5144177
40	42	5365-00-281-6660	24617	5174429
40	43	5365-00-788-5951	24617	274270
40	44		72582	274415
40	45	5330-01-105-6889	72582	5101691
40	46	5365-01-289-1919	72582	5139762
40	47	5330-00-735-4296	72582	8924869
40	48	5315-00-921-5347	72582	5117928
40	49	5315-00-051-9867	96906	MS24692-178
40	50	5315-00-012-0707	72582	5117927
40	51	2910-00-009-5236	72582	5124274
40	52	5360-00-137-6611	72582	5124273
40	53	2990-01-082-2501	72582	5102636
40	53	3040-00-781-5619	72582	5117210
40	54	5340-00-014-2583	24617	142583
40	55	5310-00-262-5429	72582	5150941
41	1	5315-00-072-0879	72582	5143866
41	2	3040-00-918-9661	72582	5127373
41	3	3110-00-277-0337	96906	MS17131-9
41	4	5315-00-921-5346	72582	5117693
41	5	5340-00-146-9698	72582	5143865
41	6	5310-00-894-1947	49671	73109-105

CROSS-REFERENCE INDEXES

FIGURE AND ITEM NUMBER INDEX

FIG.	ITEM	STOCK NUMBER	CAGEC	PART NUMBER
41	7	5305-00-899-2109	24617	9421917
41	8	5315-00-012-0685	72582	5127375
41	9	5315-01-116-7991	72582	5102559
41	10	2990-01-085-8833	72582	5102558
41	11		72582	5124272
41	12	2520-00-918-5559	72582	5133795
41	13	5315-00-363-8100	24617	5150943
41	14	5310-00-971-7989	96906	MS35691-5
41	15	5305-00-877-8051	72582	5132962
41	16	3040-00-450-0495	72582	5132747
41	17	3110-00-083-8457	72582	9431896
41	18	5365-00-089-6001	72582	5133686
41	19	3040-00-781-5622	72582	5133680
41	20	2990-00-363-8094	72582	5150394
41	21	5315-00-363-8099	24617	5150894
41	22	2520-00-833-1024	72582	5138335
41	23	2910-01-084-0463	72582	5104775
41	24	5340-00-089-8037	72582	116337
41	25	3120-00-810-3993	72582	5124332
41	26	5315-00-597-4217	88044	AN150280
41	27	3110-00-554-2906	83298	B20504-52
41	28	5310-00-262-5429	72582	5150941
41	29	5310-00-579-8232	43999	2W1R64-46-32
41	30	5310-00-274-9232	72582	5150897
41	31	5306-00-273-6337	24617	5150884
41	32	2990-00-363-8080	72582	5183268
41	33		52676	60007
41	34	5307-00-939-9316	72582	5117952
41	35	5310-01-067-8382	72582	5174286
42	1	5305-01-039-9605	72582	5102270
42	2		72582	5123949
42	3	2990-00-493-2886	72582	5178857
42	4	5330-00-936-6379	72582	5133752
42	5	3120-00-842-2691	72582	5106813
42	6	5315-01-090-2097	72582	5101432
42	7	5310-00-971-7989	96906	MS35691-5
42	8	5310-00-693-7646	72582	5182558
42	9	2815-00-317-1682	72582	5182557
42	10		72532	5124551
42	11	5360-00-833-1025	72582	5136160
42	12	5340-00-721-9658	14153	00513
42	13	5360-00-930-3251	72582	5122165
42	14	2815-00-333-4865	72582	5182555
42	15	2990-00-089-6458	72582	5102968
42	16	5330-00-736-0223	72582	5126499
42	17	4730-00-202-7204	26385	AN746-14
42	18	4720-01-226-8070	72582	8924267
42	19	5305-01-056-8300	72582	272545
42	20	5306-00-226-4841	96906	MS90728-48
42	21	5310-00-737-5429	02978	520275
42	22	5305-01-024-4775	72582	179827

CROSS-REFERENCE INDEXES

FIGURE AND ITEM NUMBER INDEX

FIG.	ITEM	STOCK NUMBER	CAGEC	PART NUMBER
43	1	2910-01-053-5772	72582	5148023
43	2	5310-00-080-6004	96906	MS27183-14
43	3	5305-00-781-3927	96906	MS90728-72
43	3	5305-00-990-8632	96906	MS90728-73
43	4	5310-00-732-0558	96906	MS51967-8
43	5	2910-01-079-3494	72582	5148171
43	6	5305-00-543-2419	96906	MS90728-61
43	7	5310-00-261-7340	96906	MS35338-8
43	8	5340-00-477-6038	72582	5188969
43	9	2910-01-022-8183	79396	33120
43	10	2940-01-268-8568	72582	25010793
43	11	5305-00-068-0511	96906	MS90728-62
43	12		73342	5139816
43	13	4730-00-152-6073	72582	5145014
44	1		40152	666867
44	2		40152	521874
44	3		40152	1545333
44	4		40152	666842
44	5	5306-01-239-8555	40152	24C-612
44	6	5310-00-180-0277	96906	MS35333-76
44	7		40152	1545296
44	8	4730-00-359-4717	06021	AT 10503
45	1	2910-01-080-7248	78280	QS4-4TC
45	2		40152	960800
45	3		40152	960802
45	4		40152	960801
45	5	5305-01-238-1442	40152	35G-502
45	6	5310-01-238-3152	40152	960803
45	7		40152	1990278
45	8		40152	1539058
45	9	4730-00-014-1539	72582	0112877
45	10		40152	2504977
45	11		40152	2511439
45	12	5340-01-196-2347	40152	1990400
45	13	5310-01-240-1285	40152	610-05
45	14	5310-00-407-9566	96906	MS35338-45
45	15	5310-01-077-6817	96906	MS35425-72
45	16	2910-01-288-0850	40152	1572143
45	17		40152	961440
45	18		40152	1513575
45	19		40152	742175
45	20		40152	1513577
45	21	5310-00-877-5796	96906	MS21044N4
45	22	5310-00-180-0277	96906	MS35333-76
45	23	5306-01-239-8556	40152	24C-668
45	24		40152	2504973
45	25	5306-01-239-8557	40152	24C-416
46	1		40152	1523210
46	2	5305-01-239-8762	40152	85G-806
46	3		12603	1F208
46	4		40152	1523209

CROSS-REFERENCE INDEXES

FIGURE AND ITEM NUMBER INDEX

FIG.	ITEM	STOCK NUMBER	CAGEC	PART NUMBER
46	5	5305-01-239-8763	40152	13804205
46	6	2590-01-202-7918	40152	1520190
46	7	2590-01-184-4671	12603	1520193
46	8	5306-01-239-8558	40152	24C-448
46	9		40152	551016
46	10	5310-00-877-5796	96906	MS21044N4
46	11	2540-00-358-5054	12603	623829
46	12	5315-00-816-1794	00198	PK379
46	13	5315-00-358-5055	12603	623762
46	14	5306-01-239-8557	40152	24C-416
46	15		40152	1544695
46	16		40152	550619
46	17		03504	10928M3
46	18	5310-00-971-7989	96906	MS35691-5
46	19	5340-00-791-9113	12603	2J4200
46	20		40152	1543304
46	21	3040-01-301-8104	40152	1529549
46	22		40152	569151
46	23	5310-00-472-2865	12603	8005
46	24	3040-00-891-0680	89749	1301361
46	25	5310-00-180-0277	96906	MS35333-76
46	26	5306-01-239-8553	40152	24C-616
46	27	5310-01-241-1527	40152	660-05
46	28	5306-01-239-8556	40152	24C-668
46	29	5310-00-464-4805	12603	6005
46	30		40152	574555
46	31	5360-00-608-1032	40152	551090
46	32		40152	521434
46	33	3040-01-301-8105	40152	1544404
46	34	3040-00-891-0680	89749	1301361
46	35	5310-00-472-2865	12603	8005
46	36		40152	1535306
47	1	5310-00-059-9264	40152	630-06
47	2	5310-00-180-0277	96906	M535333-76
47	3	5340-01-179-5987	12603	563860
47	4	2990-01-179-6467	12603	547058
47	5	5306-01-183-8635	12603	563813
47	6	5340-00-349-8296	40152	580282
47	7	4710-01-261-5315	40152	564353
47	8	5306-01-239-8559	40152	23C-620
47	9		40152	564354
47	10		40152	588384
47	11		40152	1512893
47	12	5310-01-238-1440	12603	6OD6
47	13		40152	542909
47	14	5306-01-239-8553	40152	24C-616
47	15	2990-01-038-4594	76700	T-8123
48	1	2930-01-040-2150	40152	1504256
48	2	5310-00-407-9566	96906	MS35338-45
48	3	5305-00-007-6338	12603	1C512
48	4	5305-01-231-0613	12603	1C-514

CROSS-REFERENCE INDEXES

FIGURE AND ITEM NUMBER INDEX

FIG.	ITEM	STOCK NUMBER	CAGEC	PART NUMBER
48	5	2930-01-222-7546	40152	863364
48	6		40152	947803
48	7	4720-01-202-4472	40152	947814
48	8		40152	944632
48	9		40152	947804
48	10		40152	947812
48	11		40152	947813
48	12		12603	34F-04
48	13		40152	1507695
48	14		40152	947805
48	15		40152	947807
48	16	5310-01-240-1285	40152	61D-05
49	1		12603	72F-2
49	2		12603	24C-1060
49	3	5306-01-238-3021	12603	18C-816
49	4	2990-01-277-5530	40152	1542211
49	5	5310-00-579-2016	12603	8D08
49	6	5310-00-514-8078	24446	6655628
49	7	2805-00-891-0688	40152	569739
49	8	5310-00-877-5795	96906	MS21044N8
49	9	5310-00-982-6809	96906	MS21044N1O
49	10		40152	1527276
49	11	5310-01-238-8379	40152	569070
50	1	5306-01-239-8574	40152	24C-824
50	2	5310-00-671-4109	95019	500357-13
50	3		12603	635682
50	4		12603	2513804
51	1	5305-01-238-3067	12603	89G-408
51	2		40152	947806
52	1	4730-00-891-0268	89749	43H1262
52	2	4720-00-867-1098	12603	1M18040
52	3		89749	43H1319
52	4	4720-01-226-8021	89749	1M-22044
52	5		40152	1504309
52	6		40152	1504310
53	1	5315-00-235-2257	72582	5128234
53	2	4730-00-005-7376	6N299	4255490
53	3	5305-00-781-3927	96906	MS90728-72
53	4	5310-00-261-7340	96906	MS35338-8
53	5	2815-01-077-6488	72582	5127600
53	6	4730-00-908-6292	96906	MS35842-14
53	7	4720-01-025-2309	72582	5199780
53	8	4720-01-025-2309	72582	5199780
53	9	4710-00-228-3453	72582	5117989
53	10	5330-00-973-1415	72582	5117993
53	11	5310-00-080-6004	96906	MS27183-14
53	12	5305-00-942-2196	96906	MS18154-60
53	13	4730-00-152-6070	72582	5115214
53	14	5310-00-193-9753	10001	265850PC88
53	15	5305-00-725-2317	96906	MS90728-64
53	16	5305-00-206-6786	24617	191249

CROSS-REFERENCE INDEXES

FIGURE AND ITEM NUMBER INDEX

FIG.	ITEM	STOCK NUMBER	CAGEC	PART NUMBER
53	17	4730-00-229-3451	72582	5146607
53	18	2930-01-077-4468	72582	5109652
53	19	4730-00-148-4975	72582	5142549
53	20	5306-00-242-5212	72582	455537
53	21	6620-00-846-9848	72582	5119826
53	22	5330-00-246-6380	58312	3S9643-00
53	23	5330-00-781-7117	72582	5117786
53	24	4730-00-204-3491	72582	100918
53	25	4720-01-037-1711	72582	5199776
54	1	4710-00-228-3453	72582	5117989
54	2	4730-00-204-3491	72582	100918
54	3	4720-01-037-1711	72582	5199776
54	4	4720-01-025-2309	72582	5199780
54	5	4730-00-908-6292	96906	MS35842-14
54	6	4720-01-025-2309	72582	5199780
54	7	5305-00-781-3927	96906	MS90728-72
54	8	5310-00-261-7340	96906	MS35338-8
54	9		72582	5127599
54	10	4730-00-148-4975	72582	5142549
54	11	5315-00-235-2257	72582	5128234
54	12	5330-00-781-7117	72582	5117786
54	13	5330-00-246-6380	58312	3S9643-00
54	14	6620-00-846-9848	72582	5119826
54	15	5330-00-973-1415	72582	5117993
54	16	4730-00-152-6070	72582	5115214
54	17	4730-00-005-7376	6N299	4255490
54	18	2930-01-077-4467	72582	5117546
54	19	5310-00-080-6004	96906	MS27183-14
54	20	5305-00-942-2196	96906	MS18154-60
54	21	5305-00-725-2317	96906	MS90728-64
54	22	5305-00-206-6786	24617	191249
54	23	5306-00-242-5212	72582	455537
54	24	5310-00-193-9753	10001	265850PC88
55	1		72582	5117962
55	2	2930-00-228-3839	72582	5149326
55	3		72582	5146254
55	4		72582	274746
55	5		72582	5123150
55	6		24446	A3666784PT5
55	7		72582	903204
55	8		06021	AT12820
55	9	2930-01-070-9132	72582	5135455
55	10	5307-00-054-7036	72582	5131685
55	11	2930-01-099-9343	72582	5117950
55	12		72582	5117975
55	13		72582	5117972
55	14	5310-00-809-4085	96906	MS27183-16
55	15		72582	5123183
55	16		72582	8924297
55	17	5305-00-071-2055	96906	MS90728-89
55	18	5310-00-209-0965	96906	MS35338-47

CROSS-REFERENCE INDEXES

FIGURE AND ITEM NUMBER INDEX

FIG.	ITEM	STOCK NUMBER	CAGEC	PART NUMBER
55	19	4730-00-152-6070	72582	5115214
55	20	4730-00-148-4975	72582	5142549
55	21	5305-00-071-2063	96906	MS90728-99
55	22	5310-00-809-4085	96906	MS27183-16
56	1		72582	5109396
56	2	5310-01-078-5993	96906	MS35691-624
56	3	5310-00-407-9566	96906	MS35338-45
56	4	5365-00-236-6668	72582	5103718
56	5	5306-01-238-0482	72582	217220
56	6	5305-00-891-8886	72582	5124203
56	7	2990-01-083-9945	72582	5101362
56	8	5310-00-003-9174	62793	104J005-28
56	9	5306-00-619-5935	41947	A6275
56	10	5306-00-369-4138	72582	9409053
56	11	5310-00-584-5272	80045	23MS35338-10
56	12	5310-00-995-9679	72582	5131978
56	13	5305-01-064-5196	72582	187201
56	14	5306-00-340-4742	72582	271574
56	15	5310-00-820-6653	12603	23E10
56	16	3020-00-457-0087	72582	5103966
56	17	5315-00-839-5822	96906	MS24665-353
56	18	5310-00-964-0994	96906	MS35692-1024
56	19	5310-01-238-7199	72582	5103295
56	20	5365-00-276-1850	72582	274746
56	21	3020-00-457-0087	72582	5122251
56	22	3110-00-256-7419	43334	Z97509LR1B
56	23	2520-00-491-5098	72582	5144798
56	24	3110-01-055-3621	72582	908208
56	25		72582	5129474
56	26		72582	5122238
56	27	5365-00-276-1849	72582	5188194
56	28	3030-00-411-3741	72582	5133762
57	1	5306-01-239-8552	40152	23C-616
57	2	5310-00-180-0277	96906	MS35333-76
57	3	5310-01-241-1442	40152	103293
57	4	5310-01-238-1440	12603	6006
57	5	5310-00-080-6004	96906	MS27183-14
57	6		40152	1548172
57	7	5306-01-239-8560	40152	24C-620
58	1		72582	5137851
58	2	5310-00-261-7340	96906	MS35338-8
58	3	5305-00-206-6786	24617	191249
58	4	5310-00-732-0558	96906	MS51967-8
58	5		73342	5148407
58	6	5305-00-942-2196	96906	MS18154-60
58	7	3030-00-758-0716	72582	5133176
58	3	5305-01-117-3411	72582	186647
58	9	5310-00-206-0000	81381	5179709
58	10	5305-00-071-2055	96906	MS90728-89
58	11	5310-00-209-0965	96906	MS35338-47
58	12	5310-00-193-9753	10001	265850PC88

CROSS REFERENCE INDEXES

FIGURE AND ITEM NUMBER INDEX

FIG.	ITEM	STOCK NUMBER	CAGEC	PART NUMBER
58	13		72582	5103197
58	14	5305-00-915-8087	96906	MS18154-113
58	15	5310-00-584-5272	80045	23MS35338-10
58	16	5310-00-939-1198	72582	5117082
58	17	3010-00-246-3099	72582	5139545
58	18	5330-01-088-5984	72582	5104507
58	19	2815-01-084-9624	72582	5143234
58	20	5315-00-616-5514	96906	MS35756-6
58	21	3040-01-089-2055	72582	5143233
58	22	3110-00-332-4820	43334	55604L1LD
58	23	2590-01-085-8010	72582	5133683
58	24	5310-00-261-7340	96906	MS35338-8
58	25	5306-00-225-9088	96906	MS90726-33
58	26		72582	5141817
58	27	5310-00-768-0318	24617	9413509
58	28	5306-00-021-2545	72582	186658
58	29	5365-01-219-0168	72582	5133682
58	30	5365-00-935-8922	24617	274621
59	1	2920-01-054-4013	16764	1100077
59	2	5935-01-098-8577	11083	9L6772
59	3	2920-01-099-4406	16764	801532
59	4	2920-01-196-4882	16764	1116405
59	5	5305-01-100-5150	16764	1876808
59	6		16764	1852002
59	7	5360-00-764-9005	16764	1964117
59	3	5310-01-047-6064	16764	1851808
59	9	5305-01-081-0465	11862	1876681
59	10		16764	1878873
59	11	2920-01-161-1348	16764	1852033
59	12	5305-01-086-3555	10988	A45228
59	13	5910-01-019-6505	16764	1971411
59	14	5340-00-844-7921	16764	1869573
59	15	5310-00-944-5896	16764	9418881
59	16	5310-00-262-4715	16764	1905406
59	17		16764	510063
59	18	2930-01-099-4405	16764	1969481
59	19	2920-01-099-3085	16764	1969046
59	20	2920-01-166-8902	16764	1852038
59	21	5310-01-164-1650	16764	1969070
59	22		16764	907904
59	23	5330-00-851-7742	16764	1961867
59	24	5305-01-275-3254	72560	9411396
59	25	3110-01-102-5449	16764	1970384
59	26	5306-01-100-5149	11862	801810
59	27	2920-01-177-8610	16764	1852630
59	28	3110-01-079-7024	16764	9437171
59	29	5940-01-041-1627	16764	1846901
59	30	5340-00-151-7058	16764	1961323
59	31	5961-01-054-8047	16764	830891
59	32	5310-01-237-5024	16764	1876895
59	33	5310-01-101-1494	16764	453434

CROSS REFERENCE INDEXES

FIGURE AND ITEM NUMBER INDEX

FIG.	ITEM	STOCK NUMBER	CAGEC	PART NUMBER
59	34	5999-01-235-4031	16764	801828
59	35	5305-01-235-3055	16764	1970145
59	36	5310-00-407-3548	16764	1847933
59	37	2920-01-099-6368	16764	1892914
60	1	2920-01-097-6213	16764	1117734
60	2	5305-01-238-3071	16764	1846955
60	3	5310-01-047-6064	16764	1851808
60	4		16764	1876814
60	5	5305-01-238-0510	16764	830335
60	6	5310-00-350-3587	16764	807295
60	6	5310-01-238-8386	16764	1919478
60	7	3120-01-099-0024	16764	1966879
60	8	2920-01-094-0483	16764	1876897
60	9	2920-01-094-7515	16764	1876797
60	10	2920-01-094-7746	16764	1880132
60	11	5305-01-166-1549	16764	1968945
60	12	5910-01-097-2555	16764	1880046
60	13		16764	1880118
60	14		16764	1876760
60	15	3120-01-164-0994	16764	1892765
60	16	3110-01-099-8007	60380	JHT-1413-T1
60	17	5340-01-167-4216	16764	1876813
60	18	3110-01-098-0000	16764	9436063
60	19	2920-01-099-4406	16764	801532
60	20	5935-01-098-8577	11083	9L6772
60	21	5340-01-093-9216	11862	1876806
60	22	2920-01-192-5673	16764	1116406
60	23	5310-00-350-3587	16764	807295
60	24	5310-01-164-8539	16764	1913846
60	25	5995-01-096-4386	16764	1876807
60	26	5305-01-168-5422	16764	1976061
60	27	2920-01-164-7743	16764	1876804
60	28	5940-00-351-8080	16764	1969671
60	29		16764	1876805
60	30	2920-01-164-7751	16764	1876790
60	31	2920-00-231-7385	16764	1968904
60	32	5330-01-053-4747	16764	1970407
60	33	5330-00-237-6928	16764	1958509
60	34	5330-00-429-3724	16764	1968884
60	35	3040-01-053-4746	16764	1968885
60	36	3110-01-165-1190	16764	9439570
60	37	2920-01-053-4541	16764	1852726
60	38	5330-00-237-6928	16764	1958509
60	39	5305-01-163-5702	16764	1968994
60	40	2920-01-053-4782	16764	1968890
60	41	2920-01-053-4743	16764	1968891
60	42	5305-01-163-5701	16764	1968991
60	43	2930-01-099-4405	16764	1969481
60	44	5310-00-262-4715	16764	1905406
60	45	5310-00-944-5896	16764	9418881
61	1	2920-01-102-3520	16764	1114848

CROSS REFERENCE INDEXES

FIGURE AND ITEM NUMBER INDEX

FIG.	ITEM	STOCK NUMBER	CAGEC	PART NUMBER
61	2		16764	111559
61	3	6150-00-758-0332	16764	1953236
61	4	9390-00-839-1864	16764	801077
61	5	5310-00-062-2051	16764	1948519
61	6	2920-00-822-2287	16764	1948522
61	7		81348	FF8475
61	8	5310-00-822-2236	16764	1948520
61	9	5360-00-812-0196	16764	1948521
61	10	5310-00-822-2241	16764	1948526
61	11	5365-00-715-1152	96906	MS16624-1037
61	12	5310-00-965-6000	16764	9412305
61	13	5330-00-599-2321	16764	1916272
61	14	5310-00-734-8959	16764	1913084
61	15	2920-00-034-7342	16764	1945515
61	16	5310-01-151-7354	24617	9421423
61	17	5306-00-550-9129	16764	1914869
61	18	2920-00-100-3403	16764	1851632
61	19	5310-00-167-0839	88044	AN960-816L
61	20	5310-01-129-7508	16764	11504248
61	21	5310-00-834-8732	96906	MS35691-33
61	22	5310-00-768-0318	24617	9413509
61	23	5330-01-053-7021	16764	1894642
61	24	3040-00-034-4216	16764	1948529
61	25	6110-00-757-7187	16764	1945484
61	26	5330-01-053-2907	16764	1894643
61	27	5330-00-083-5406	16764	1948512
61	28	2920-00-034-4220	16764	1948513
61	29	5305-00-225-6943	16764	9414397
61	30	5977-00-786-9564	16764	1948515
61	31	5305-00-889-3002	96906	MS35206-242
61	32	5310-00-999-2294	21450	453844
61	33	5977-00-754-8153	16764	1946407
61	34	5310-00-178-9612	16764	1914842
61	35	2920-00-015-3058	16764	1945500
61	36	5970-00-034-5015	16764	1955990
61	37	5940-00-999-2534	16764	1950561
61	38	5970-00-657-8133	16764	1965472
61	39	5310-00-719-5470	16764	1922457
61	40	2920-00-843-8211	16764	1945468
61	41	5306-00-783-5188	19207	7748639
61	42	5310-00-999-2527	16764	1936466
61	43	2920-00-737-3225	16764	1914873
61	44	2920-00-999-2526	16764	1934478
61	45	5305-00-450-5937	11862	1968396
61	46	5950-01-130-5209	16764	1974929
61	47	5305-00-218-6387	16764	1847807
61	48	5310-00-262-4753	16764	1913086
61	49	5330-00-914-0703	16764	1964857
61	50	5365-00-753-9528	16764	1945356
61	51	5306-00-783-5183	16764	1948536
61	52	2920-01-138-7045	16764	1957846

CROSS REFERENCE INDEXES

FIGURE AND ITEM NUMBER INDEX

FIG.	ITEM	STOCK NUMBER	CAGEC	PART NUMBER
61	53	2920-01-074-2030	16764	830620
61	54	5330-00-976-4695	16764	1945476
61	55	5310-00-297-7319	16764	1911644
61	56		16764	801403
61	57	5330-00-980-1546	72582	5130995
62	1		40152	1537934
62	2	5310-01-238-3031	40152	600-04
62	3	4730-00-802-5653	81343	2-2 140137C
62	4		40152	18F-1
62	5	5305-00-269-3234	96906	MS90727-58
62	6	5310-00-180-0277	96906	MS35333-76
62	7	5310-00-891-5483	96906	MS35692-7
62	8	5305-01-238-1452	40152	85G-1218
62	9	5310-01-240-0860	40152	500-12
62	10	5925-01-202-9278	40152	1512688
62	11	5306-00-068-0513	96906	MS90727-6
62	12	5945-01-031-6507	40152	1529233
62	13	5305-00-068-0510	96906	MS90728-60
62	14	5310-00-843-0588	12603	656672
63	1	5310-00-877-5796	96906	MS21044N4
63	Z	5306-01-238-1422	40152	24C-420
63	3	2920-00-287-0342	15434	162201
63	4	5945-01-172-2513	40152	1526006
63	5	5306-01-239-8557	40152	24C-416
63	6	5305-01-238-1443	40152	85G-1004
63	7	5930-00-458-6673	12603	236395
63	8	5930-00-978-8846	40152	636260
63	9	5306-01-239-8555	40152	24C-612
63	10	5310-00-180-0277	96906	MS35333-76
63	11	5305-01-239-8694	40152	85G-804
63	12	5930-01-176-7219	12603	1537354
64	1	6645-00-411-3733	40152	551251
64	2	6645-01-202-4674	12603	1743825
64	3	5310-00-616-1917	96906	MS35790-1
64	4	5305-01-238-1453	40152	85G-608
65	1		40152	1501478
65	2		40152	2502937
65	3		40152	2502936
66	1	6685-01-035-8642	40152	947252
66	2	6685-01-035-8643	40152	947254
66	3		40152	547237
66	4	6620-01-036-2061	40152	947250
66	5	2540-01-125-4735	40152	944803
66	6	6620-01-036-2060	40152	947248
66	7	4730-00-203-1072	12204	111607
66	8	5310-00-616-1917	96906	MS35790-1
66	9	5306-01-239-8552	40152	23C-616
66	10	5310-00-180-0277	96906	MS35333-76
66	11	6210-01-198-3815	73331	911246
66	12	6240-00-019-3093	96906	MS15570-623
66	13	5305-01-238-1444	40152	18G-606

CROSS REFERENCE INDEXES

FIGURE AND ITEM NUMBER INDEX

FIG.	ITEM	STOCK NUMBER	CAGEC	PART NUMBER
66	14	3930-00-195-0232	70040	1503496
66	15	5310-00-596-7691	96906	MS35335-32
66	16	5310-00-466-7039	40152	14010
66	17	5310-01-238-3032	40152	572729
66	18	5935-01-205-4848	12603	549024
66	19		40152	944804
66	20	2920-00-529-7299	89749	600259
66	21		40152	857420
66	22	2920-00-133-0857	40152	573548
66	23	2920-01-274-3716	40152	2504975
66	24	5930-01-204-8259	40152	2514253
66	25	5310-00-245-0107	24617	1914578
66	26	5905-01-203-9137	40152	556489
66	27	5310-00-464-4805	12603	6005
66	28		40152	1544614
66	29	5306-01-241-1386	40152	24C-516
66	30		40152	1544683
66	31	5310-00-843-0588	12603	656672
66	32		40152	550743
66	33	5340-01-201-3756	40152	550742
66	34	5305-01-238-1453	40152	85G-608
66	35	6625-01-202-6016	40152	947261
67	1	5310-00-934-9758	96906	MS35649-ZO2
67	2	5310-00-734-8749	16764	1880781
67	3		40152	568675
67	4	5305-01-238-1454	40152	3G-1012
67	5		40152	547006
67	5	6220-00-953-4652	40152	582057
67	6		40152	551242
67	6	6240-00-643-0687	96906	MS17165-4578
67	7		40152	944977
67	8		40152	540882
67	9	5310-01-238-8272	40152	500-10
68	1	6220-00-953-4652	40152	582057
68	2	6240-00-643-0687	96906	MS17165-4578
68	3		40152	944977
68	4	5310-01-238-8272	40152	500-10
68	5	6220-00-848-1561	40152	548088
68	6	6240-00-643-0687	96906	MS17165-4578
68	7		40152	944872
68	7		40152	949364
68	8	5310-00-877-5795	96906	MS21044N8
68	9	4730-01-244-7473	40152	1522201
68	10	5310-00-689-3690	12603	652448
69	1	6620-00-769-7303	6N299	4760149
69	2	5310-00-596-7691	96906	MS35335-32
69	3	5310-00-466-7039	40152	14010
69	4	6620-00-406-7377	12603	1618574
69	5	40152	12E-10	
69	6	6620-01-036-2045	40152	M2562384
69	7	6240-00-765-8443	40152	961458

CROSS REFERENCE INDEXES

FIGURE AND ITEM NUMBER INDEX

FIG.	ITEM	STOCK NUMBER	CAGEC	PART NUMBER
69	8	6210-01-199-9083	32498	2519680
69	9	6350-01-170-4536	40152	2528654
69	10	5306-01-241-1386	40152	24C-516
69	11	5310-00-407-9566	96906	MS35338-45
69	12	5306-00-068-0513	96906	MS90727-6
69	13	5310-01-238-3031	40152	60D-04
70	1	6350-01-243-0569	40152	1542966
70	2	5306-01-238-8262	40152	24C-556
70	3	5310-01-192-8884	12603	25E15
70	4	5310-00-464-4805	12603	6005
70	5	5310-01-241-1443	40152	1508152
70	6		40152	1548008
70	7		40152	1543539
70	8	5306-01-238-8857	40152	1508514
70	9		40152	1010338
70	10		40152	2512846
70	11		40152	2512858
70	12		40152	2512859
70	13		40152	2512844
70	14		40152	2516092
70	15		40152	614142
70	16		40152	2506758
70	16	5930-01-234-3399	40152	2531249
70	17		40152	1539058
70	18	5310-01-203-0120	40152	25E18
70	19	5310-01-238-1440	12603	60D6
71	1	5310-00-877-5796	96906	MS21044N4
71	2	2590-00-900-1640	96906	MS51301-1
71	3		40152	947160
71	4	5306-01-239-8557	40152	24C-416
71	5	5930-01-200-2136	40152	778570
71	6	5310-00-627-6128	96906	MS35335-35
71	7	5310-01-032-7048	12603	62D06
72	1		40152	1549608
72	2		40152	1801148
72	3		40152	1546669
72	4	6145-01-197-6238	40152	529359
73	1		40152	540882
73	2		40152	1544146
73	3	5995-01-192-9758	40152	1542619
73	4	5995-01-219-4444	40152	2507337
73	5		40152	1515165
73	5		40152	2500538
73	6		40152	558960
73	7		40152	2500520
73	8		40152	2500345
73	8		40152	2513451
73	9		40152	543483
73	10		40152	1530361
73	11	3930-01-021-4955	40152	1525933
73	12		40152	2500354

CROSS REFERENCE INDEXES

FIGURE AND ITEM NUMBER INDEX

FIG.	ITEM	STOCK NUMBER	CAGEC	PART NUMBER
73	13		40152	1523329
73	14		40152	1544144
73	15	5995-01-219-4445	40152	2507338
73	16		40152	663579
73	17		40152	1548924
73	18		40152	1512890
74	1	5995-01-203-2436	40152	1544320
74	2	5306-01-241-1387	40152	24C-410
74	3	5340-01-024-3770	12603	30H14
74	4	5310-00-877-5796	96906	MS21044N4
74	5		40152	515069
74	6	5995-01-209-4595	40152	1544319
74	7		40152	611074
75	1		40152	630292
75	2		40152	663579
75	3	5995-01-181-3778	40152	2503991
75	4		40152	611074
75	5	5920-01-219-5374	40152	571021
75	6		40152	574275
76	1	5306-01-238-1424	12603	1BC-8120
76	2		73342	1514645
76	3	5310-01-239-5836	40152	584502
76	4		40152	1522535
76	5	3110-00-157-0535	96906	MS17131-30
76	6	5310-00-877-5795	96906	MS21044N8
76	7		73342	1515215
76	8		40152	1503251
76	9		73342	1514481
76	10		73342	4F05062
76	11		73342	1515267
76	12	5310-00-472-2865	12603	8005
76	13	5340-00-563-4690	12603	2J5204
76	14	5315-00-842-3044	96906	MS24665-283
76	15		73342	1515216
76	16	5306-01-238-8845	40152	24C-828
76	17	5310-01-240-2669	73342	1508222
76	18		73342	1514734
77	1		73342	1543935
77	2		73342	1305485
77	3	5310-00-579-2016	12603	8008
77	4	5306-01-238-1425	12603	18C-000-536
77	5	5355-00-929-9698	40152	509772
77	6	5306-01-239-8560	40152	24C-620
77	7		73342	568477
77	8	5310-00-464-4805	12603	6005
77	9	5310-01-238-1440	12603	6006
77	10		12603	1514471
77	11		73342	1508846
77	12	5310-00-877-5795	96906	MS21044N8
77	13		73342	1543938
78	1	2520-01-025-3728	12603	282940

CROSS REFERENCE INDEXES

FIGURE AND ITEM NUMBER INDEX

FIG.	ITEM	STOCK NUMBER	CAGEC	PART NUMBER
78	2	5330-00-764-5301	12603	60K40700
78	3		40152	229805
78	4		40152	229520
78	5	2520-00-045-4025	12603	222019
78	6	5306-01-238-8846	40152	222221
78	7		40152	229813
78	8	5330-01-119-3281	12603	229804
78	9	5330-00-821-0817	10988	A18000
78	10		40152	229807
78	11	5365-00-821-2502	89881	224009
78	12	5330-00-620-3829	76602	90136
78	13		40152	229810
78	14		40152	229806
78	15	4310-00-799-9847	12603	223570
78	16		40152	229838
78	17		40152	229784
78	18	5365-00-260-4875	96906	MS16625-1354
78	19	3110-00-542-0021	81349	111-05002-0000
78	20	5365-00-144-6445	12603	224026
78	21		40152	13F-16
78	22		40152	229792
78	23		40152	229777
78	24		40152	660564
78	25		40152	711406
78	26		40152	229815
78	27	5310-00-671-4109	95019	500357-13
78	28	5305-01-194-7050	12603	1C820
79	1		40152	230234
79	2		40152	659041
79	3	5340-00-972-8006	40152	224104
79	4		12603	25K40416
79	5		40152	227034
79	6	5310-00-671-4109	95019	500357-13
79	7	5305-01-194-7050	12603	IC820
79	8		40152	450245
79	9	5310-00-975-2075	96906	MS35691-21
79	10	5310-00-180-0277	96906	MS35333-76
79	11	5330-00-576-5279	16662	7-551906
79	12	5307-00-401-0883	12603	203253
79	13	3110-00-764-0912	89881	225781
79	14		40152	229803
79	15	5306-01-238-8847	40152	4C-820
79	16	5330-01-037-6127	40152	25K-40608
79	17		40152	229798
79	18	5306-00-753-8226	09652	1328482
79	19	4730-00-089-2515	21450	444618
79	20	5305-00-069-5579	96906	MS90725-95
79	21	5310-00-209-0965	96906	MS35338-47
79	22		40152	229801
79	23		40152	228500
79	24		40152	229788

CROSS REFERENCE INDEXES

FIGURE AND ITEM NUMBER INDEX

FIG.	ITEM	STOCK NUMBER	CAGEC	PART NUMBER
79	25		40152	229787
79	26		40152	633157
79	27	4730-00-995-1805	89346	304130C1
79	28	5330-01-041-9660	40152	58K-210
79	29	5307-00-072-6701	12603	207647
79	30	3110-00-293-9305	03504	225842
79	31		40152	229776
79	32		40152	229793
79	33		40152	229794
79	34	5330-00-682-4620	80201	335FM212
79	35	2520-00-400-6463	12603	222029
79	36	5330-00-714-5264	40152	25K60116
79	37	5310-00-462-4134	12603	222179
79	38	5310-01-018-0683	12603	222960
79	39	5305-00-090-4739	12603	1C814
79	40	2520-00-045-4021	12603	216355
79	41	5330-00-979-3466	40152	552161
80	1	3020-00-893-9100	12603	801874
80	2	5365-00-498-3947	15434	230594
80	3	5310-00-997-0573	12603	228987
80	4	5307-01-238-3113	40152	235050
80	5	5310-01-238-3033	40152	229769
80	6	3020-01-205-7795	12603	232692
80	7	5330-00-759-6303	12603	218776
80	8	5340-00-882-0740	12603	223887
80	9		40152	229814
80	10	5310-00-209-0965	96906	MS35338-47
80	11	5306-00-017-4723	40152	1C724
80	12	5330-00-420-4419	12603	222006
80	13		40152	233307
80	14		40152	801931
80	15	5365-00-200-7234	96906	MS16624-1275
80	16		40152	229521
80	17		40152	229802
80	18	5365-00-763-8872	12603	223988
80	19		40152	230767
80	20		40152	222266
80	21	5306-01-239-8564	40152	23C-728
80	22	5310-00-209-0965	96906	MS35338-47
80	23	4820-01-007-3486	12603	233598
81	1		73342	232871
81	2		73342	217578
81	3	5315-00-234-1678	96906	MS24665-758
81	4		73342	217577
81	5		73342	217674
81	6		12603	6H-29
81	7	5310-01-238-1445	40152	13802619-0
81	8		73342	222167
81	9		73342	1H-430
81	10		73342	217581
81	11		12603	217582

CROSS REFERENCE INDEXES

FIGURE AND ITEM NUMBER INDEX

FIG.	ITEM	STOCK NUMBER	CAGEC	PART NUMBER
81	12		12603	217583
81	13		12603	217584
81	14		12603	217585
81	15		12603	1H534
81	16	5310-01-192-8884	12603	25E15
81	17		73342	217586
81	18		12603	1H-416
81	19		12603	6H-32
81	20		73342	217579
81	21	2520-00-051-5327	12603	222067
81	22		73342	217580
82	1	2520-01-025-3730	12603	283926
82	2	5305-00-576-0795	03504	5C612
82	3		73342	217554
82	4	5330-01-228-4127	12603	217555
82	5		73342	218357
82	6	5330-00-949-5955	12603	217563
82	7	4730-00-324-1483	12603	13F12
82	8	2520-00-097-9910	12603	217562
82	9	5999-00-996-3743	40152	525293
82	10	5305-00-103-9814	12603	1C636
82	11	5310-00-180-0277	96906	MS35333-76
82	12	5330-00-950-7731	12603	218376
83	1	5310-00-180-0277	96906	MS35333-76
83	2	5305-00-782-9489	96906	MS90728-66
83	3	5306-00-741-7519	33323	K41Al19
83	4	5306-01-239-8562	73342	1C-640
83	5	5330-00-949-6241	12603	217653
83	6	5330-00-914-5828	19206	25K40026
83	7		73342	230605
83	8	5305-00-576-0795	03504	5C612
83	9		73342	232872
83	10	5330-01-201-3637	12603	217618
84	1		73342	217600
84	2	5306-01-238-1423	73342	8C-820
84	3		73342	217146
84	4		73342	225840
84	5	5365-00-175-1315	96906	MS16624-250
84	6		73342	232873
84	7		73342	225835
84	8		73342	236406
84	9		12603	743669
84	10	5365-01-193-7139	40152	223882
84	11		12603	232876
84	12		73342	232895
84	13		73342	217465
84	14		73342	233169
84	15		73342	233170
84	16		73342	233030
84	17	3110-00-100-0248	26385	462
84	18		73342	1303281

CROSS REFERENCE INDEXES

FIGURE AND ITEM NUMBER INDEX

FIG.	ITEM	STOCK NUMBER	CAGEC	PART NUMBER
84	19	5330-01-025-1737	01212	415322R
84	20	5330-01-019-2610	12603	25K40400
84	21	5365-01-018-0810	12603	231849
84	21	5365-01-018-0811	12603	231850
84	21	5365-01-018-0812	12603	231851
84	22		73342	231818
84	23	5310-00-167-0680	96906	MS35338-49
84	24	5306-01-239-8563	73342	1C-922
84	25		73342	231915
84	26	5330-00-788-2753	89881	25K60128
84	27	5310-01-239-9417	73342	231916
84	28	5310-01-018-0686	12603	215634
84	29		73342	233111
85	1		73342	237010
85	2	5365-00-175-1315	96906	MS16624-250
85	3		73342	225824
85	4		73342	217558
85	5		73342	217607
85	6	5330-00-582-3790	40152	206864
85	7	5305-01-007-1534	12603	233128
85	8	2520-01-268-9997	12603	214985
85	9		73342	25K-40112
85	10	5315-00-298-1499	96906	MS24665-360
85	11	5310-01-238-3026	24617	201951
85	12	5310-00-809-8541	96906	MS27183-27
85	13		73342	237009
85	14	5365-00-838-8715	12603	224083
85	15		12603	217557
85	16		73342	232890
85	17		73342	232891
85	18	3110-00-100-6151	96906	MS19059-2414
85	19		73342	217560
85	20		73342	233171
85	21		12603	1C716
85	22	5310-00-209-0965	96906	MS35338-47
85	23	2520-00-051-9932	12603	211433
85	24	4730-00-253-4413	96906	MS39230-3
86	1		73342	233063
86	2		73342	237011
86	3		73342	232879
86	4	5306-01-238-1423	73342	8C820
86	5	5330-00-439-8094	76602	90507
86	6		73342	225795
86	7	5365-01-193-7139	40152	223882
86	8	3110-00-100-0248	26385	462
86	9		73342	1303281
86	10	5330-01-025-1737	01212	415322R
86	11	5330-01-019-2610	12603	25K40400
86	12		73342	231818
86	13	5310-00-167-0680	96906	MS35338-49
86	14	5306-01-239-8563	73342	1C-922

CROSS REFERENCE INDEXES

FIGURE AND ITEM NUMBER INDEX

FIG.	ITEM	STOCK NUMBER	CAGEC	PART NUMBER
86	15	5310-01-239-9417	73342	231916
86	16	5310-01-018-0686	12603	215634
86	17	5330-00-788-2753	89881	25K60128
86	18		73342	231915
86	19		73342	232877
86	20		73342	232874
86	21		73342	233112
87	1	5365-00-153-8531	12603	711418
87	2	2520-01-037-9216	40152	233161
87	3	5365-00-930-5141	40152	217099
87	4		73342	234814
87	5	2520-01-190-4298	40152	232778
87	6	2520-00-939-6605	12603	217162
87	7	5360-01-194-3159	40152	217347
87	8		73342	217601
87	9	3020-01-191-4404	40152	217148
87	10	5365-00-932-1248	40152	217509
87	11		73342	234813
87	12	4310-00-949-7688	03504	217361
87	13	4310-00-799-9844	12603	217411
87	14	5365-01-118-2819	12603	743669
87	15	5310-01-238-3042	73342	217151
87	16		89981	223901
87	17		73342	223358
87	18		73342	217142
87	19	3110-00-100-6151	96906	MS19059-2414
87	20		73342	218214
87	21		73342	225795
87	22	5365-01-193-7137	40152	223855
88	1		73342	233075
88	2	5365-00-930-5141	40152	217099
88	3		73342	234814
88	4	2520-01-190-4298	40152	232778
88	5	2520-00-939-6605	12603	217162
88	6	5360-00-914-8353	12603	217334
88	7	5315-00-923-0268	12603	217599
88	8		73342	232888
88	9	5365-00-932-1248	40152	217509
88	10		73342	234813
88	11	4310-00-949-7688	03504	217361
88	12	4310-00-799-9844	12603	217411
88	13	5365-01-104-6200	96906	MS16624-3255
88	14	5310-01-240-2664	73342	232886
88	15		73342	223965
88	16	3110-00-592-9967	12603	SK200-37
88	17		73342	232881
88	18	3110-00-100-6151	96906	MS19059-2414
88	19		73342	232887
88	20	3110-00-198-1790	03504	225796
88	21	5365-00-930-5143	40152	223997
88	22	5365-01-198-8757	40152	217605

CROSS REFERENCE INDEXES

FIGURE AND ITEM NUMBER INDEX

FIG.	ITEM	STOCK NUMBER	CAGEC	PART NUMBER
88	23	5315-01-104-1026	12603	660516
88	24		73342	233172
89	1	2520-01-038-4378	40152	233137
89	2		73342	229982
89	3	5365-00-454-7833	12603	226869
89	4	5310-00-891-0217	40152	217657
89	5	5330-01-027-8849	12603	233222
89	6	5365-00-801-2500	96906	MS16625-1112
89	7		40152	217637
89	8	5330-00-582-2855	75214	P383-2
89	9	2520-00-979-8765	40152	220983
89	10	5360-00-904-9293	12603	217645
89	11	3110-00-100-6155	96906	MS19059-2418
89	12		73342	232611
89	13		73342	233138
89	14		89346	304130C1
89	15	5330-00-706-3188	12603	25K-40024
89	16		12603	1C512
89	17	5310-01-240-2668	73342	5E-05
89	18	5340-00-454-7844	12603	217632
89	19	4820-00-455-5649	12603	217633
89	20		12603	667209
90	1		73342	217635
90	2	5315-00-930-6204	40152	300058
90	3	5365-00-801-2500	96906	MS16625-1112
90	4	5330-01-027-8849	12603	233222
90	5	5310-00-891-0217	40152	217657
90	6		73342	24K-10
90	7	3110-00-100-6155	96906	MS19059-2418
90	8		12603	654724
90	9	4730-00-089-2515	21450	444618
90	10	4730-00-954-1281	81348	WW-P-471ACABCB
90	11	4730-00-499-9837	12603	851883
90	12		40152	217644
90	13	4730-01-070-0146	12603	24K-7
90	14	5330-01-041-9660	40152	58K-210
90	15		89346	304130C1
90	16		73342	233139
90	17		12603	233140
90	18	5340-00-922-1953	40152	217650
90	19	3110-00-948-9797	96906	MS19061-20019
90	20	5360-00-904-9918	12603	217651
90	21	5365-00-891-0214	40152	217652
91	1	5305-00-115-9526	96906	MS18154-58
91	2	5310-01-239-9418	40152	947810
91	3	5310-01-238-8849	40152	13803675-1
91	4	2520-01-037-5208	40152	962991
92	1		40152	547007
92	2	4730-00-105-2684	40152	40K02
92	3		40152	1529949
92	4	5310-00-877-5796	96906	MS21044N4

CROSS REFERENCE INDEXES

FIGURE AND ITEM NUMBER INDEX

FIG.	ITEM	STOCK NUMBER	CAGEC	PART NUMBER
92	5	5306-01-241-1390	40152	24C-724
92	6	5306-01-238-8269	40152	24G-828
92	7		40152	2511431
92	8		40152	19J-20
92	9	5310-00-209-0965	96906	MS35338-47
92	10	5306-01-241-1389	40152	23C-724
92	11		40152	1543525
92	12	4730-00-451-6020	12603	18K10
92	13	5330-00-064-7796	12603	91FlO
92	14		40152	356621
92	15		40152	667288
92	16	5340-01-105-0829	40152	540103
92	17		40152	568810
92	18		40152	568807
92	19	2590-01-200-2202	40152	568824
92	20	5306-01-239-8552	40152	23C-616
92	21	5310-00-180-0277	96906	MS35333-76
92	22		40152	1502877
92	23		40152	521874
92	24	4720-00-933-5878	40152	743563
92	25		40152	1543730
92	26		40152	1501251
92	27	4730-00-840-7236	96906	MS51527A16
92	28	5330-00-064-7796	12603	91F10
92	29	4730-00-930-5392	96906	MS51525A16
92	30	5330-00-064-7796	12603	91F10
92	31		12603	1502876
92	32	4730-01-021-2453	12603	92F-7
92	33	5330-01-229-4071	40152	58K-222
92	34		40152	1520566
92	35	5330-00-064-7796	12603	91F10
92	36		40152	234777
92	37	2940-00-580-6283	96906	MS35802-3
92	38		40152	25K-80500
92	39		40152	587075
92	40	4730-00-958-0384	81343	12-12-141030
92	41	2520-00-045-4063	12603	40K06
92	42		40152	1532819
92	43		40152	946943
92	44	5310-00-843-0588	12603	656672
92	45	5306-01-239-8553	40152	24C-616
92	46		40152	1543745
92	47		40152	1311282
92	48		40152	1543449
92	49		40152	19J-16
92	50	4720-01-177-8376	12603	558793
92	51		40152	584263
92	52	5330-01-223-6769	40152	58K-225
92	53		40152	19J-24
92	54	5310-00-671-4109	95019	500357-13
92	55	5306-01-238-8267	40152	23C-824

CROSS REFERENCE INDEXES

FIGURE AND ITEM NUMBER INDEX

FIG.	ITEM	STOCK NUMBER	CAGEC	PART NUMBER
92	56	5306-01-239-8559	40152	23C-620
92	57		40152	1545004
92	58	4720-00-891-0276	40152	536710
92	59		40152	1533267
92	60		40152	799020
92	61		40152	582693
92	62		40152	546803
93	1	3020-00-056-2382	72582	5199383
93	2	5306-01-078-4981	72582	5103534
93	3	5305-00-051-4071	96906	MS90727-29
93	4	3110-00-470-0938	72582	5176998
93	5	2815-00-981-1319	72582	5130135
93	6	5315-00-423-4861	24617	5151444
93	7	3110-00-227-2019	43334	E8180379ZD
93	8		72582	454992
93	9	5310-00-515-9627	38597	50-4-18-17-7
93	10	3020-00-842-7839	72582	5113817
94	1		40152	230553
94	2		89749	205928
94	3	5315-00-059-0184	96906	MS24665-361
94	4	5310-00-462-4134	12603	222179
94	5	5330-00-714-5264	40152	25K60116
94	6	2520-00-401-3714	12603	222233
94	7	5305-00-071-1789	96906	MS90728-88
94	8	5310-00-209-0965	96906	MS35338-47
94	9		40152	230690
94	10		40152	217566
94	10		40152	217567
94	10		40152	217568
94	11	5330-00-579-6861	96906	MS28775-236
94	12	5330-00-078-8818	12603	225823
94	13	3110-00-100-0565	12603	856250
94	14	3110-00-100-3561	08162	BT28580
94	15		40152	233007
94	16		40152	230529
94	17	2520-00-051-9932	12603	211433
94	18	5365-01-169-7207	12603	215757
94	19	4730-00-324-1483	12603	13F12
94	20	5310-01-018-0683	12603	222960
94	21	5306-01-238-8848	40152	23C-1044
94	22	5310-01-105-9397	12603	4ElO
94	23	5310-01-238-7192	40152	942139
95	1	2520-01-205-7893	40152	1925664
95	2	5306-01-105-4308	40152	940229
95	3	2520-00-847-2970	75535	CP72N19
95	4	2520-01-295-2558	40152	946643
95	5	5310-00-579-2016	12603	8D08
95	6	5310-01-238-7209	40152	940251
95	7		40152	940250
95	8	5310-01-239-9420	40152	942749
95	9	4730-00-891-7059	12603	10H25

CROSS REFERENCE INDEXES

FIGURE AND ITEM NUMBER INDEX

FIG.	ITEM	STOCK NUMBER	CAGEC	PART NUMBER
95	10	4730-00-050-4203	96906	MS15001-1
95	11		40152	946642
96	1	2520-01-222-7711	40152	2535726
96	2	5305-01-242-4194	40152	940089
96	3	2520-00-871-6818	78500	CP62N14
96	4		40152	940093
96	5	5310-00-975-2075	96906	MS35691-21
96	6		77873	328J
96	7	4730-00-374-8191	25385	MUJCO-863J
96	8	5330-00-839-9358	40152	940092
96	9	4730-00-891-7059	12603	10H25
96	10	4730-00-050-4203	96906	MS15001-1
96	11		40152	947245
97	1		40152	1536787
97	2	5306-01-105-4308	40152	940229
97	3	2520-00-847-2970	75535	CP72N19
97	4		40152	942734
97	5	5310-00-579-2016	12603	8DOB
97	6	5310-01-238-7209	40152	940251
97	7		40152	940250
97	8	5310-01-239-9420	40152	942749
97	9	4730-00-891-7059	12603	10H25
97	10		40152	944688
97	11		40152	947821
98	1	2520-01-184-1865	12603	2523854
98	2	5306-01-105-4308	40152	940229
98	3	2520-00-847-2970	75535	CP72N19
98	4		40152	942734
98	5	5310-00-579-2016	12603	8008
98	6	5310-01-238-7209	40152	940251
98	7		40152	940250
98	8	5310-01-239-9420	40152	942749
98	9	4730-00-891-7059	12603	10H25
98	10	4730-00-050-4203	96906	MS15001-1
98	11		40152	946101
99	1	2520-01-339-2331	12603	188334
99	2		40152	124596
99	3	2520-00-421-9477	03504	121214
99	4		40152	226858
99	5	5310-01-106-8250	12603	64D-10H
99	6	5310-00-333-7562	35301	20-502
99	7		40152	125734
99	8	5306-00-166-8498	03504	118350
99	9	4730-00-163-4645	03504	119469
100	1	5310-01-106-8250	12603	64D-1OH
100	2	5310-00-333-7562	35301	20-502
100	3	5307-01-238-3114	40152	120771
100	4	5307-01-238-3115	40152	117336
100	5	5307-01-238-3116	40152	123793
100	6		40152	119141
100	7	2520-01-025-3735	03504	124520

CROSS REFERENCE INDEXES

FIGURE AND ITEM NUMBER INDEX

FIG.	ITEM	STOCK NUMBER	CAGEC	PART NUMBER
101	1		40152	123864
101	2		40152	124241
101	3		40152	123865
101	4	5310-00-470-5846	03504	106547
101	5		40152	123869
101	5	5306-01-238-8263	40152	128037
101	6		40152	123871
101	7		40152	123872
101	8		40152	123870
101	9		40152	124244
101	10	5310-01-240-2665	40152	123382
101	11		40152	816018
101	12		40152	124246
101	13		40152	125069
101	14		40152	124243
101	15		40152	114201
101	16	5306-01-238-8264	40152	110522
101	17	5310-00-944-5896	16764	9418881
101	18	5365-00-838-8715	12603	224083
101	19		08162	MUS1309TM
101	20		40152	123873
101	21	5306-01-239-9327	40152	124090
101	22	5310-01-240-1819	40152	3E-14
101	23	5305-00-912-5113	96906	MS51096-359
101	24	5310-00-180-0277	96906	MS35333-76
101	25	5340-00-358-9940	03504	100941
101	26		40152	123876
101	27	3110-01-037-5496	60038	JM718110
101	28	3110-01-037-7207	60038	JM718149
101	29	3110-00-100-3130	12603	710034
101	30	2520-00-231-6089	89881	815377
101	31		40152	110543
101	31		40152	125573
101	31		40152	125574
101	31		40152	125575
101	32	5330-00-860-2589	12603	25K40616
101	33	3110-01-008-6403	27401	204885
101	34	3110-00-100-0506	12603	710035
101	35	3110-00-237-6616	12603	774198
101	36	3110-00-237-6604	12603	774197
101	37	5330-01-008-6513	03504	111750
101	38		12603	277
101	39		40152	124164
101	40	5310-01-105-9397	12603	4E10
101	41	5305-00-724-7223	96906	MS90728-165
101	42		40152	124165
101	43	5310-01-238-8380	40152	107978
101	44	5315-00-262-8163	96906	MS24665-568
101	45	5310-01-238-3027	40152	107977
101	46		40152	123655
101	47		66640	34D23

CROSS REFERENCE INDEXES

FIGURE AND ITEM NUMBER INDEX

FIG.	ITEM	STOCK NUMBER	CAGEC	PART NUMBER
101	48	5310-00-088-0552	96906	MS21044N7
101	49	5305-00-709-8540	96906	MS90727-90O
101	50	5305-00-726-2561	96906	MS90727-174
101	51		40152	124425
101	52	2530-01-038-7462	40152	129157
101	53		40152	949444
101	54	3805-01-215-8186	12603	1990761
101	55		40152	949445
101	56	5310-00-333-7562	35301	20-502
101	57	5310-00-982-6809	96906	MS21044N10
101	58	5305-00-724-7221	96906	MS90728-163
101	59	2590-01-298-5207	40152	123824
102	1		12603	121933
102	2	5310-01-238-8400	12603	118774
102	3		12603	357049
102	4		12603	118775
102	5		12603	118776
102	6	3110-00-100-6155	96906	MS19059-2418
102	7		12603	118773
102	8		12603	121934
103	1	2520-01-025-3732	12603	192157
103	2		40152	124596
103	3	2520-00-421-9477	03504	121214
103	4		40152	226858
103	5	5310-01-106-8250	12603	64D-10H
103	6	5310-00-333-7562	35301	20-502
103	7		40152	125734
103	8	5306-00-166-8498	03504	118350
103	9	4730-00-163-4645	03504	119469
103	10	5307-01-238-3116	40152	123793
104	1	5310-01-106-8250	12603	64D-10H
104	2	5310-00-333-7562	35301	20-502
104	3	5307-01-238-3115	40152	117336
104	4	5307-01-238-3114	40152	120771
104	5	5307-01-238-3116	40152	123793
104	6		40152	119141
104	7	2520-01-025-3734	03504	124521
105	1		40152	124522
105	2		40152	124241
105	3		40152	123865
105	4	5310-00-470-5846	03504	106547
105	5		40152	123869
105	5	5306-01-238-8263	40152	128037
105	6		40152	123871
105	7		40152	123872
105	8		40152	123870
105	9		40152	124244
105	10	5310-01-240-2665	40152	123382
105	11		40152	816018
105	12		40152	124246
105	13		40152	125069

CROSS REFERENCE INDEXES

FIGURE AND ITEM NUMBER INDEX

FIG.	ITEM	STOCK NUMBER	CAGEC	PART NUMBER
105	14		40152	124243
105	15		40152	116901
105	16	5306-01-238-8264	40152	110522
105	17	5310-00-944-5896	16764	9418881
105	18	5365-00-838-8715	12603	224083
105	19		08162	MU1309TM
105	20	5306-01-239-9327	40152	124090
105	21	5310-01-240-1819	40152	3E-14
105	22		40152	123873
105	23	5305-00-912-5113	96906	MS51096-359
105	24	5310-00-180-0277	96906	MS35333-76
105	25	5340-00-358-9940	03504	100941
105	26		40152	123876
105	27	3110-01-037-5496	60038	JM718110
105	28	3110-01-037-7207	60038	JM718149
105	29	2520-00-231-6089	89881	815377
105	30		40152	110543
105	30		40152	125573
105	30		40152	125574
105	30		40152	125575
105	31	5330-00-860-2589	12603	25K40616
105	32	3110-00-100-3130	12603	710034
105	33	5305-00-724-7223	96906	MS90728-165
105	34	5310-01-105-9397	12603	4EIO
105	35	3110-01-008-6403	27401	204885
105	36	3110-00-100-0506	12603	710035
105	37	3110-00-237-6616	12603	774198
105	38	3110-00-237-6604	12603	774197
105	39	5330-01-008-6513	03504	111750
105	40		12603	277
105	41		40152	119890
105	42	2530-01-311-4216	40152	2109465
105	43	5310-01-238-8380	40152	107978
105	44		40152	1F-748
105	45	5310-01-238-3027	40152	107977
106	1		12603	121933
106	2	5310-01-238-8400	12603	118774
106	3		12603	357049
106	4		12603	118775
106	5		12603	118776
106	6	3110-00-100-6155	96906	MS19059-2418
106	7		12603	118773
106	8		12603	121934
107	1	5310-01-238-1440	12603	60D06
107	2		40152	545006
107	3		40152	2504181
107	4	5310-00-464-4805	12603	6005
107	5		40152	2504182
107	6	5340-01-105-4328	40152	544512
107	7		40152	645092
107	8	2590-01-164-1937	40152	1518445

CROSS REFERENCE INDEXES

FIGURE AND ITEM NUMBER INDEX

FIG.	ITEM	STOCK NUMBER	CAGEC	PART NUMBER
107	9		40152	124425
107	10	5315-00-839-5821	96906	MS24665-351
107	11		40152	4F-06106
107	12	5310-00-180-0277	96906	MS35333-76
107	13	5306-01-239-8552	40152	23C-616
107	14	5306-01-239-8568	40152	24C-644
107	15	5306-01-239-8569	40152	24C-528
108	1	2530-01-182-7212	12603	1511473
108	2	5307-01-239-3416	40152	949460
108	3		40152	949999
108	4	5330-00-559-2632	40152	25K30014
108	5		40152	949461
108	6	5310-01-239-8739	40152	946942
108	7		40152	949468
108	8		40152	949466
108	9		40152	862653
108	10		40152	949467
108	11		40152	949469
108	12	5315-00-839-5821	96906	MS24665-351
108	13	5310-01-238-7190	40152	551480
108	14		40152	941233
108	15		40152	949465
108	16		40152	949464
109	1	2530-01-135-7470	12603	128343
109	1	2530-01-212-7613	12603	128344
109	2	5306-01-238-8265	40152	947930
109	3		40152	947927
109	4		40152	947934
109	5	2530-01-085-5324	60250	306-142
109	6	2530-01-037-5963	40152	947935
109	7		40152	947933
109	8		40152	25E-17
109	9	5305-00-068-0511	96906	MS90728-62
109	10		40152	947931
109	11	2530-01-037-4362	03504	840611
109	12		40152	17C-1232
109	13	5310-01-238-1450	40152	224727
109	14	5310-00-981-5144	03504	111656
109	15	2530-01-190-0639	40152	125592
109	16		40152	122624
109	17	5306-00-166-8498	03504	118350
110	1	2530-01-037-1945	40152	2524866
110	2	2530-00-495-8580	97907	2161149
110	3		12603	1C512
110	4		12603	6E-05
110	5	2530-01-037-1741	40152	949863
110	6		40152	945032
110	7		40152	945031
110	8		40152	945028
110	9		40152	945029
110	10		40152	992163

CROSS REFERENCE INDEXES

FIGURE AND ITEM NUMBER INDEX

FIG.	ITEM	STOCK NUMBER	CAGEC	PART NUMBER
110	11		40152	992164
110	12	5310-00-180-0277	96906	MS35333-76
110	13	5306-00-741-7519	33323	K41AI19
110	14		40152	945030
110	15		40152	945024
110	16		40152	945023
110	17	2530-01-226-6097	12603	949848
110	18	5306-01-239-8570	40152	2C-714
110	19	5365-01-203-3322	12603	960005
110	20	2530-01-193-2824	40152	945800
110	21	5330-00-291-6658	12603	850287
110	22	5305-01-106-5087	12603	851806
110	23	4730-00-981-3229	12603	10F02
110	24	5306-01-239-8570	40152	2C-714
110	25	5310-00-209-0965	96906	MS35338-47
110	26		40152	874028
110	27		40152	874003
110	28	5360-00-447-9003	63477	F6431
110	29		40152	945042
110	30	5310-00-209-0965	96906	MS35338-47
111	1	5315-00-187-9379	96906	MS24665-321
111	2	5315-00-839-5821	96906	MS24665-351
111	3		40152	513930
111	4		40152	518259
111	5	5315-01-034-6390	12603	875766
111	6		40152	875767
112	1	5306-01-238-1426	40152	24C-520
112	2	5310-00-464-4805	12603	60D5
112	3	2530-01-037-1445	40152	945996
113	1		40152	949260
113	2		40152	513932
113	3		12603	3290122
113	4		40152	875762
113	5	5306-00-226-4829	96906	MS90728-36
113	6	5310-00-407-9566	96906	MS35338-45
113	7		40152	949261
113	8		40152	3290105
113	9		40152	894537
113	10		40152	894538
113	11	5330-00-984-3750	02697	2-016 N674-7
113	12		40152	894536
113	13		40152	25K-30112
113	14		40152	894535
113	15		40152	894534
113	16		40152	894533
113	17		40152	894532
113	18		40152	87G-806
113	19	5310-01-238-1446	40152	949264
113	20		89749	661415
113	21		40152	875754
113	22	5330-00-345-5189	12603	25K40204

CROSS REFERENCE INDEXES

FIGURE AND ITEM NUMBER INDEX

FIG.	ITEM	STOCK NUMBER	CAGEC	PART NUMBER
113	23		40152	894539
113	24		40152	894540
113	25		40152	894541
113	26	5310-01-238-8381	40152	894542
113	27	5306-01-238-7150	40152	21C-410
113	28		40152	894543
114	1	2530-01-183-4782	63477	FD-97746
114	2	5305-01-106-5087	12603	851806
114	3		12603	960520
114	4		40152	1310605
114	5		40152	898702
114	6		40152	961026
115	1	5330-00-291-6658	12603	850287
115	2	5365-01-203-3322	12603	960005
115	3	4730-00-574-6579	96906	MS51527A5
115	4		12603	91F4
115	5		40152	2501470
115	6		40152	2501154
115	7	5310-00-843-0588	12603	656672
115	8	5306-01-239-8555	40152	24C-612
115	9	4730-01-294-8132	40152	1675961
115	10		40152	2506979
115	11	5310-01-192-8884	12603	25E15
115	12	4730-01-105-6857	12603	16F-12
115	12	5340-00-032-4157	03504	16F06
115	13		40152	2511198
115	14	5306-00-226-4831	96906	MS90728-38
115	15	5310-01-238-1440	12603	60D6
115	16	4730-00-819-3737	79470	141-15804
115	17		40152	30F-1
115	18	4720-01-281-2416	40152	1549089
115	19	2530-01-095-8752	06853	281865
115	20		40152	949959
115	21		40152	16F-4
115	22		40152	1549086
115	23		40152	10K-4
115	24	4710-01-252-4895	2B144	1512732
115	25	4710-01-310-9547	40152	1512642
115	26		40152	1544111
115	27	2530-01-095-8752	06853	281865
115	28		40152	2511198
115	29		40152	1512643
115	30		40152	1544114
115	31	4720-01-317-0634	40152	1544112
115	32		40152	30H-20
115	33		40152	1544017
115	34	5306-01-273-5933	40152	24G-612
115	35		40152	1512730
115	36		40152	1512729
115	37	5310-00-724-3210	19207	10875413
115	38	5310-00-180-0277	96906	MS35333-76

CROSS REFERENCE INDEXES

FIGURE AND ITEM NUMBER INDEX

FIG.	ITEM	STOCK NUMBER	CAGEC	PART NUMBER
115	39	5306-01-238-7152	40152	24C-720
115	40	5310-00-209-0965	96906	MS35338-47
115	41		40152	669829
115	42		40152	874007
115	43		40152	2511196
115	44		40152	89F-4
115	45		40152	1543379
115	46		40152	83F-4
115	47	4730-00-014-1539	72582	0112877
115	48		40152	2511377
115	49	5306-01-239-8560	40152	24C-620
115	50		40152	25E-17
115	51	4730-01-006-5532	12603	31F3
115	52	4730-00-278-3912	89749	19F3
115	53	4730-00-353-2995	63477	F2952
116	1		40152	42F-6
116	2		40152	1549088
116	3	4730-00-090-9252	01276	2045-4-4S
116	4		40152	1549087
116	5		40152	33F-1
116	6		40152	1548307
116	7	2530-01-184-4391	12603	1545790
116	8	4730-00-247-9105	98441	1-8MROS
116	9	4730-01-189-8578	12603	36F1
116	10		40152	1541553
116	11		40152	30F-1
116	12	4730-01-237-3517	40152	40K-08
116	13		40152	5K-420
116	14	4730-00-141-9108	12603	32F4
116	15	4730-00-027-8720	40152	31F1
116	16		40152	592742
116	17		40152	19F-4
116	18	4730-00-138-8050	12603	30F3
116	19	4730-00-089-2515	21450	444618
116	20		40152	869712
116	21	4720-01-281-2416	40152	1549089
116	22		40152	593658
116	23	5310-01-238-1440	12603	6006
116	24	4730-00-359-4709	11083	4D3734
116	25		40152	19F-5
116	26	5306-01-239-8568	40152	24C-644
116	27		40152	356609
116	28	4730-00-231-4009	96906	MS20822-4
116	29	4730-00-254-6211	30327	E14A
116	30		40152	1543947
116	31	4720-01-172-0483	40152	593263
116	32		40152	541980
116	33	2530-01-039-3802	40152	1532592
117	1		40152	2515022
117	2		40152	19F-4
117	3	4730-00-138-8050	12603	30F3

CROSS REFERENCE INDEXES

FIGURE AND ITEM NUMBER INDEX

FIG.	ITEM	STOCK NUMBER	CAGEC	PART NUMBER
117	4		40152	2504865
117	5		40152	637153
117	6	4730-00-044-4035	79470	C3109X8X6
117	7	5310-00-180-0277	96906	MS35333-76
117	8	5306-01-239-8553	40152	24C-616
117	9		40152	941214
117	10	2530-01-251-3177	2B144	540707
117	11		40152	19F-5
117	12		40152	5K-207
117	13	4820-00-595-2761	40152	507815
117	14	5975-01-100-5681	12603	28F1
117	15		40152	1514085
117	16	4720-01-303-1252	40152	1512698
117	17		40152	44F-8
117	18		40152	1549093
117	19		40152	1548504
117	20		40152	42F-9
117	21		40152	38F-4
117	22	4720-01-276-3433	40152	2507335
117	23	4720-01-123-6894	36378	529348
117	24		40152	1515259
117	25	4730-00-900-3296	81343	4-2010102BA
117	26	2530-00-102-9784	03504	3215964
117	27	5330-00-531-3197	46717	L2583-11
117	28		40152	72F-3
117	29		40152	24F-3
117	30	5306-01-238-7153	40152	23C-514
I17	31	5310-00-407-9566	96906	MS35338-45
117	32	4730-01-105-0807	40152	510452
117	33		40152	951948
117	34		40152	5K-312
117	35		40152	869712
117	36	5310-01-238-1440	12603	60D6
117	37		40152	1513319
117	38		40152	1515260
117	39		12603	30H38
117	40	5306-01-239-8552	40152	23C-616
117	41		40152	46F-3
117	42	4820-01-177-2171	12603	1519191
117	43		40152	527684
117	44	2520-00-045-4063	12603	40K06
117	45	4730-00-089-2515	21450	444618
117	46		40152	527685
117	47		40152	2507336
117	48		40152	30F-1
X17	49	4730-00-359-4717	06021	AT 10503
117	50		40152	1549092
117	51	4730-01-006-5532	12603	31F3
117	52		40152	30H-20
117	53		40152	62F-1
117	54		40152	23C-544

CROSS REFERENCE INDEXES

FIGURE AND ITEM NUMBER INDEX

FIG.	ITEM	STOCK NUMBER	CAGEC	PART NUMBER
117	55	5310-00-514-6674	96906	MS35335-34
117	56		40152	40F-8
117	57	4720-00-943-5062	63906	6GABB6MB17
117	58		40152	30F-2
117	59		40152	5K-308
117	60		40152	28F-2
117	61	4820-01-187-1963	40152	425413
118	1		40152	42F-6
118	2	5310-00-180-0277	96906	MS35333-76
118	3	5306-01-239-8553	40152	24C-616
118	4		40152	2511363
118	5	4730-01-294-8132	40152	1675961
118	6		40152	2506979
118	7	5306-01-239-8560	40152	24C-620
118	8		40152	25E-17
118	9	4730-01-237-3517	40152	40K-08
118	10	2530-01-251-3177	28144	540707
118	11		40152	941214
118	12	4730-00-044-4035	79470	C3109X8X6
118	13	4820-01-177-2171	12603	1519191
118	14	5310-00-724-3210	19207	10875413
118	15		40152	1512728
118	16	4710-01-252-4895	2B144	1512732
118	17		40152	10K-4
118	18	4730-00-574-6579	96906	MS51527A5
118	19		12603	91F4
118	29		40152	1512658
118	30		40152	1512731
118	31		12603	30H38
118	32	5306-01-239-8555	40152	24C-612
118	33		40152	84F-4
118	34	4730-01-006-5532	12603	31F3
118	35		40152	1549090
118	36	4730-00-817-1843	98441	1-4DDS
118	37		40152	5K-207
118	38		40152	16F-4
118	39		40152	1545789
118	40		40152	949959
118	41	4730-00-254-6229	81343	8-8 010202B
118	42		40152	1548506
118	43		40152	38F-10
118	44	4820-00-633-3523	06721	N13526H
118	45	4730-00-289-2357	12603	29F3
118	46		40152	1512657
118	47		40152	2501154
118	48	5310-00-843-0588	12603	656672
118	49	4730-00-014-1539	72582	0112877
118	50		40152	83F-4
118	51		40152	1513402
118	52		40152	1543879
118	53		40152	2511196

CROSS REFERENCE INDEXES

FIGURE AND ITEM NUMBER INDEX

FIG.	ITEM	STOCK NUMBER	CAGEC	PART NUMBER
118	54		40152	874007
118	55		40152	669829
118	56	5310-00-209-0965	96906	MS35338-47
118	57	5306-01-238-7152	40152	24C-720
118	58	5330-00-291-6658	12603	850287
118	59	5365-01-203-3322	12603	960005
118	60		40152	1512885
118	61	4730-00-353-2995	63477	F2952
118	62		40152	2504480
119	1	3020-00-457-8555	72582	5117740
119	2	5310-00-416-4070	72582	5164294
119	3	5330-00-231-0983	72582	5131939
119	4	5315-00-839-5822	96906	MS24665-353
119	5	4820-00-276-9041	96906	MS35782-6
119	6	5305-00-231-0525	72582	454933
119	7	5310-00-209-0965	96906	MS35338-47
119	8	5310-00-080-6004	96906	MS27183-14
119	8	5310-00-809-4085	96906	MS27183-16
119	9	5305-00-543-2419	96906	MS90728-61
119	9	5305-00-558-5429	96906	MS35307-410
119	9	5305-00-781-3927	96906	MS90728-72
119	10	5305-00-068-0511	96906	MS90728-62
119	10	5305-00-486-5585	24617	5135182
119	10	5306-00-400-3518	63005	427564
119	10	5306-00-486-5616	24617	5128076
119	11	5310-00-261-7340	96906	MS35338-8
119	11	5310-00-584-5272	80045	23M5S35338-10
119	12		72582	5145417
119	13	5310-00-492-2616	24617	441292
119	13	5310-00-732-0558	96906	MS51967-8
119	13	5310-01-117-6261	72582	117049
119	14	3030-00-916-3452	30379	5137905
119	15		72582	5102398
119	15		72582	5102399
119	16		72582	5138478
119	17		06853	285924
120	1	4730-00-613-9339	30379	109429
120	2	4730-00-475-5168	24617	444004
120	3	4720-00-484-0577	72582	2337354
120	4	4730-00-277-7611	72582	8925607
120	5		04594	179735
120	6	4720-00-856-3276	72582	2289944
120	7	4730-00-639-9730	07334	A0563
120	8	4730-00-900-3296	07295	100740
121	1	4730-00-228-3454	72582	3291272
121	2	4730-00-193-0875	81348	WW-P-47180DQBUED
121	3	5365-00-469-3620	72582	5175705
121	4	4720-00-241-8186	72582	5138542
121	5		04594	5132103
121	6	4730-01-070-0664	72582	9139801
121	7	5310-00-407-9566	96906	MS35338-45

CROSS REFERENCE INDEXES

FIGURE AND ITEM NUMBER INDEX

FIG.	ITEM	STOCK NUMBER	CAGEC	PART NUMBER
121	8	5306-00-226-4827	96906	MS90728-34
121	9	5340-00-282-7526	96906	MS21333-64
121	10	5306-01-157-3777	72582	427588
122	1	4730-00-230-2971	72582	5130294
122	2		04594	5127788
122	3		19207	5129157-10
122	4	4730-00-728-7434	72582	5120020
122	5	4730-00-254-6215	72582	118757
122	6	4730-00-193-0871	81348	WWP471BDQBUDC
122	7	4730-00-202-6663	96906	MS51887-15
122	8	4730-01-086-9791	72582	8924220
123	1	2530-01-021-3073	40152	1540529
123	2		40152	531112
123	3		40152	529606
123	4	5310-01-238-1435	40152	529605
123	5	2640-01-169-4703	17875	615
123	6	2640-00-914-4658	02280	482352
123	7	2640-00-779-2565	40152	551684
123	8	2640-00-780-4200	40152	551685
123	9		40152	516784
123	10		40152	553956
123	11	5330-01-037-5949	40152	580278
123	12	2530-00-593-7164	73842	LR255TN
123	13	5305-01-238-8350	40152	15G-1212
123	14		12603	886799
124	1		40152	122622
124	2	3110-00-593-4289	60038	56662
124	3	3110-00-101-1796	12603	1304047
124	4	4730-00-163-4645	03504	119469
124	5	5307-01-238-3115	40152	117336
124	6	5310-00-333-7562	35301	20-502
124	7	2530-01-135-7652	12603	128379
124	8	5330-01-036-9681	03504	125248
124	9		40152	127819
124	10	5310-01-254-4259	40152	124543
124	11		40152	119141
124	12	3110-00-198-2949	12603	1304048
124	13	2520-01-037-9385	03504	118937
124	14		40152	118785
124	15		40152	119217
124	16		12603	122701
124	17		12603	2C820
124	18	5310-01-036-9684	40152	1515484
124	19		03501	120218
124	20	5310-00-469-3926	03504	86D-12H
124	21		40152	119218
124	22	5310-01-183-5534	03504	110559
124	23	5310-00-526-8841	03504	118786
124	24	5330-00-232-0671	03504	118791
124	25	5310-00-470-5846	03504	106547
124	26	5305-01-185-7118	03504	117225

CROSS REFERENCE INDEXES

FIGURE AND ITEM NUMBER INDEX

FIG.	ITEM	STOCK NUMBER	CAGEC	PART NUMBER
124	27	5330-00-465-6759	03504	118790
124	28	4820-01-270-4376	40152	124472
124	29		40152	118785
124	30	5310-01-048-0062	12603	112278
124	31	5306-00-038-1956	14351	X3362
124	32	4730-01-105-6857	12603	16F-12
124	33	5330-00-025-6606	12603	SK251-61
124	34		40152	118782
124	35	5310-01-241-1444	40152	118787
125	1		81348	ZZ-T-1083/G4A/26 .5-25/20P/LDKD
126	1	2530-01-216-2505	40152	1529890
126	2	4820-00-450-9279	40152	946834
126	3	5340-01-238-3085	40152	946603
126	4	2530-01-237-1815	40152	946602
126	5	5310-00-158-8817	12603	66012
126	6		40152	946599
126	7		40152	946607
126	8		40152	949972
126	9		40152	946598
126	10		40152	946604
126	11		40152	944195
126	12		40152	944192
126	13	5330-00-808-0794	96906	MS28778-8
126	14		40152	946601
126	15	5310-01-238-1447	40152	946609
126	16		40152	946606
126	17		40152	946605
126	18		40152	946608
126	19	3110-00-227-4834	12633	857729
126	20		24617	5664812
126	21	5360-00-499-9353	12603	853395
126	22	5315-00-276-5713	29510	HS921
126	23	5310-00-220-6740	12603	648304
126	24		40152	946138
126	25		12603	730143
126	26	3120-00-662-2181	52788	266036
126	27		12603	850756
126	28	5310-00-850-1611	96906	MS35338-54
126	29	5330-00-505-6066	77640	032068
126	30	5305-01-241-1443	40152	73G-728
126	31	5310-00-209-0965	96906	MS35338-47
126	32		12603	961181
126	33	3110-00-902-3754	60380	BH2012XOH
126	34		40152	873293
126	35	5330-01-193-9390	40152	58K-232
126	36	5330-00-352-9280	79150	24998
126	37	4730-00-107-3184	30780	1-2CD45-S
126	38	4730-00-153-7715	12603	5K432
126	39		40152	22F-4
126	40	5310-00-180-0277	96906	MS35333-76

CROSS REFERENCE INDEXES

FIGURE AND ITEM NUMBER INDEX

FIG.	ITEM	STOCK NUMBER	CAGEC	PART NUMBER
126	41	5305-00-115-9526	96906	MS18154-58
126	42		52788	267387
126	43	5310-00-098-2201	24617	266909
126	44	5310-00-208-7122	40152	8D07
126	45		52788	266678
126	46	5330-00-164-3580	05415	266674
126	47	3040-00-769-6426	40152	940111
126	48		40152	949972
126	49	3110-00-227-3505	12603	860997
126	50		52788	5662474
126	51		12603	58K-237
126	52		40152	944197
126	53	5310-01-240-0872	40152	3E-09
126	54	5305-01-239-0626	40152	944198
126	55		40152	944667
126	56		40152	946437
126	57	5305-00-499-9360	12603	851762
126	58	5340-00-700-0670	24617	266495
126	59		40152	10J-09
126	60	2530-00-164-1852	52788	266497
126	61		93343	1K6819
126	62		52788	5682242
126	63	2530-00-073-2176	40152	943429
126	64	5330-00-265-1097	96906	MS29513-129
126	65		40152	1525483
126	66	2530-00-878-7045	52788	758262
126	67	9905-01-207-8445	40152	1517393
126	68	5305-01-238-7182	40152	65G-406
127	1	5310-01-238-1440	12603	6006
127	2		40152	571441
127	3		40152	545941
127	4	5310-00-877-5795	96906	MS21044N8
127	5	5305-01-238-7223	40152	24C-836
127	6		40152	550044
127	7	4730-00-105-2684	40152	40K02
128	1		40152	1F-432
128	2		40152	568070
128	3	2530-01-237-0489	43152	876575
128	4	4820-01-106-0998	40152	865965
128	5		40152	865961
128	6		40152	662691
128	7		40152	365963
128	8	4730-01-025-7723	12603	12H15
128	9	4730-00-891-7059	12603	10H25
129	1		40152	1314178
129	2	5330-00-733-9716	12603	91F5
129	3		40152	1306142
129	4	4730-01-277-1422	40152	6000689
129	5	5330-00-979-3466	40152	552161
129	6		40152	230151
129	7	5340-00-972-8006	40152	224104

CROSS REFERENCE INDEXES

FIGURE AND ITEM NUMBER INDEX

FIG.	ITEM	STOCK NUMBER	CAGEC	PART NUMBER
129	8	5307-01-238-3117	40152	1513241
129	9	5310-00-671-4109	95019	500357-13
129	10	5310-00-732-0560	96906	MS51968-14
130	1	4320-01-037-4882	40152	2514128
130	2	5310-01-242-4126	40152	954277
130	3	5310-01-238-1451	40152	946271
130	4		40152	947208
130	5		40152	946100
131	1	5365-00-801-2500	96906	M516625-1112
131	2		40152	6190217
131	3		40152	946100
131	4		40152	960749
131	5	4320-01-050-3429	40152	960107
131	6		40152	963131
131	7	3110-00-100-6151	96906	MS19059-2414
131	8	5310-01-238-1451	40152	946271
131	9	5310-01-242-4126	40152	954277
131	10	5365-01-207-0696	40152	6661416
132	1	5307-01-238-3118	40152	960723
132	2	5310-01-241-1392	40152	948441
132	3		12603	25K20014
132	4	5310-01-239-8596	40152	948440
132	5	5305-01-238-7186	40152	960726
132	6		40152	961406
132	7		40152	6190221
132	8		40152	73K217
132	9		40152	58K-217
132	10		40152	948590
132	11		40152	949019
132	12		40152	961402
132	13	5307-01-238-3119	40152	6190213
132	14		40152	961283
132	15		40152	948570
132	16		40152	948571
132	17		40152	960725
132	18		40152	25K-20108
132	19		40152	24K-5
132	20	5330-00-733-9716	12603	91F5
132	21		40152	24K-5
132	22		40152	961446
133	1		40152	58K-222
133	2		40152	19J-20
133	3		40152	17C-724
133	4	5310-00-209-0965	96906	MS35338-47
133	5	5330-01-193-9390	40152	58K-232
133	6		40152	19J-40
133	7	5305-00-071-2070	96906	MS90728-114
133	8	5310-00-671-4109	95019	500357-13
133	9		40152	1508514
133	10	5310-00-843-0588	12603	656672
133	11	5310-00-407-6485	72962	53N1610-064

CROSS-REFERENCE INDEXES

FIGURE AND ITEM NUMBER INDEX

FIG.	ITEM	STOCK NUMBER	CAGEC	PART NUMBER
133	12	5305-00-269-3238	96906	MS90727-62
133	13		40152	6H-23
133	14	4730-01-277-1422	40152	6000689
133	15		40152	1306142
133	16		40152	1542375
133	17		40152	1542371
133	18	4730-00-911-5707	21450	454097
133	19		40152	5K-208
133	20	5305-00-719-5235	96906	MS90727-114
133	21		40152	1542369
133	22	5305-00-071-2069	80204	B1821BH050C150N
133	23		40152	19J-24
133	24	5330-01-223-6769	40152	58K-225
133	25		40152	657184
133	26	5305-00-068-0511	96906	MS90728-62
133	27	5310-00-180-0277	96906	MS35333-76
133	28		40152	58K-219
133	29		40152	19J-16
133	30		40152	1504099
133	31		40152	1543524
133	32		40152	1510327
133	33	4730-00-359-4709	11083	403734
133	34		40152	1510417
133	35		40152	1504095
133	36		40152	1544067
133	37	4720-01-277-5441	40152	2507187
133	38		40152	1546569
133	39	5310-01-240-1816	40152	25E-22
133	40	4710-01-204-8142	40152	1543689
133	41		40152	2515747
133	42	4720-00-722-1465	63906	12C12MS12UMS25-1 -2
133	43	4730-00-891-0270	89749	43H1394
133	44		40152	585887
133	45		40152	2507186
133	46		40152	1544800
133	47		40152	1510416
133	48		40152	1546186
133	49	5310-01-238-3034	40152	600-08
133	50		40152	1510326
133	51	4730-00-359-4717	06021	AT 10503
134	1	3120-00-587-4781	51588	B24L
134	2	4730-00-019-1456	12603	11H15
134	3	3805-01-037-2086	40152	964586
134	4		40152	1539439
134	5		40152	1511544
134	6		40152	2511993
134	7		40152	1511539
134	8		40152	1511543
134	9	5305-00-719-5270	96906	MS90727-123
134	10		40152	2518118

CROSS-REFERENCE INDEXES

FIGURE AND ITEM NUMBER INDEX

FIG.	ITEM	STOCK NUMBER	CAGEC	PART NUMBER
134	11		40152	2517362
134	12	5305-01-238-7227	40152	34C-622
134	13		40152	1503026
134	14	5310-01-239-8674	40152	1514622
134	15	5315-00-234-1848	96906	MS24665-629
134	16	5310-01-271-5042	40152	680-08
134	17		40152	1539443
135	1		40152	1518754
135	2	5365-01-197-4049	40152	572818
135	3	3120-01-201-3699	12603	1514599
135	4	5315-01-179-5966	12603	2529362
135	5	5306-01-238-1427	40152	24C-1036
135	6	5306-01-238-7154	40152	24C-1280
135	7	5310-00-349-8529	12603	616809
135	8		40152	570419
135	9		40152	569879
135	10		40152	569880
135	11	5306-01-238-7155	40152	8C-1028
135	12	5306-01-238-8261	40152	24C-1244
135	13	5305-00-719-5219	96906	MS90727-111
135	14	5310-00-671-4109	95019	500357-13
135	15		40152	1507920
135	16		40152	1545165
135	17	5306-01-238-7157	40152	24C-1220
135	18	5310-00-584-7888	96906	MS35338-51
135	19	5340-01-214-2430	40152	1548429
135	20		40152	1538228
135	21	5306-01-238-7158	40152	24C-1228
135	22	5310-00-982-6812	96906	MS21044N20
135	23		40152	1547432
135	24	5315-01-193-2723	40152	1514692
135	25		40152	1518981
135	26	5306-01-238-7159	40152	18C-20160
135	27	5310-01-238-8382	40152	712285
135	28	5310-01-046-3910	72962	51N1260-126
135	29	5306-01-238-7160	40152	24C-1452
135	30		40152	1539309
135	31	5310-01-238-7167	40152	180-14
135	32		40152	1539311
135	33	5310-01-238-8860	40152	1504356
135	34		40152	1507454
135	35		40152	562414
135	36	5310-01-239-5837	40152	552146
135	37	5310-01-238-7193	40152	552147
135	38		40152	1506190
135	39	5306-01-238-1428	40152	1506188
135	40	5310-01-238-1436	40152	68D-16
135	41	5315-00-059-0238	96906	MS24665-753
135	42	5310-00-982-6809	96906	MS21044N10
135	43	5306-01-239-8554	40152	24C-1256
135	44	5306-01-238-1429	40152	1512673

CROSS-REFERENCE INDEXES

FIGURE AND ITEM NUMBER INDEX

FIG.	ITEM	STOCK NUMBER	CAGEC	PART NUMBER
135	45	5306-01-238-1430	40152	24C-16184
135	46	5310-01-238-7194	40152	573845
135	47	5310-01-238-8333	40152	180-12
135	48		40152	568258
135	49	5310-01-238-7195	40152	589335
136	1	2590-01-270-2505	40152	2515504
136	2		40152	1657104
136	3		40152	18C-1236
136	4	5310-00-843-0588	12603	656672
136	5	5310-00-180-0277	96906	MS35333-76
136	6	5306-01-239-8559	40152	23C-620
136	7		40152	1545224
136	8	4730-00-891-7059	12603	10H25
136	9		40152	1519085
136	10		40152	1540037
136	11		40152	1546211
136	12	5306-01-238-7154	40152	24C-1280
136	13	5310-00-584-7888	96906	MS35338-51
136	14		40152	1540008
136	15		40152	1540169
136	16	5306-01-239-8571	40152	24C-896
136	17		40152	556147
136	18	5310-00-877-5795	96906	MS21044N8
136	19	5306-01-239-8572	40152	1518313
136	20	5310-00-584-7888	96906	MS35338-51
136	21		43152	1540035
136	22	5306-01-238-1429	40152	1512673
136	23	5310-01-238-8860	40152	1504356
136	24	5310-00-982-6812	96906	MS21044N20
136	25	5315-01-239-7071	40152	1F-532
136	26	2510-01-212-8291	40152	1538388
136	27		40152	1533279
136	28	2590-01-216-2702	89749	1530842
136	29		40152	1510348
136	30	3040-01-202-7785	40152	2507032
136	31		12603	660517
136	32	5365-01-198-2903	40152	1526213
136	33	5310-01-238-3032	40152	572729
137	1		40152	1540666
137	1		40152	1540667
137	2	5310-00-877-5795	96906	MS21044N8
137	3	5310-01-238-7196	40152	619029
137	4	5306-01-238-8845	40152	24C-828
137	5	5310-01-238-1440	12603	6006
137	6	5310-00-843-0588	12603	656672
137	7	5306-01-239-8573	40152	24C-624
137	8		40152	1M-08110
137	9	2510-01-185-8171	40152	1547423
137	10		40152	1535589
138	1	5306-01-238-8261	40152	24C-1244
138	2	5310-01-238-7197	40152	2513196

CROSS-REFERENCE INDEXES

FIGURE AND ITEM NUMBER INDEX

FIG.	ITEM	STOCK NUMBER	CAGEC	PART NUMBER
138	3	5310-00-584-7888	96906	MS35338-51
138	4	3805-01-285-2913	40152	1548843
138	5	3120-01-285-5530	40152	1548838
138	6	5340-01-284-9779	40152	1548842
139	1	2590-01-217-3212	89749	2500059
139	2		40152	1540216
139	3		40152	1544448
139	4		40152	1H-508
139	5	5310-00-724-3210	19207	10875413
139	6	5306-01-239-8575	40152	24C-632
139	7	5306-01-239-8573	40152	24C-624
139	8	5310-01-238-1440	12603	6006
139	9		40152	568276
139	10	2510-01-214-7291	40152	1545622
139	11	5306-01-238-8845	40152	24C-828
139	12	5310-01-238-7196	40152	619029
139	13	5310-00-877-5795	96906	MS21044N8
140	1	2250-01-217-1178	89749	1514567
140	2	5306-01-239-8553	40152	24C-616
140	3	5310-00-180-0277	96906	MS35333-76
140	4	2510-01-220-2095	40152	568975
140	5	5310-01-238-8849	40152	13803675-1
140	6	2540-01-166-6238	40152	1543393
140	7	5306-01-239-8552	40152	23C-616
140	8	5310-00-843-0588	12603	656672
140	9	2540-01-296-8017	40152	1540062
140	10		40152	1513922
140	11	2540-01-301-0380	40152	1540064
140	12		40152	1518928
140	13		40152	1540195
140	14	5310-00-014-5855	72962	21NE066
140	15	5307-01-227-3411	89749	1544171
141	1		40152	1515025
141	2		40152	1515026
141	3	2510-01-218-1663	40152	1543819
141	4	2540-01-212-8290	40152	1543817
141	5		40152	1543807
141	6		40152	1515057
141	7	2540-01-211-5372	12603	1517379
141	8	2540-01-211-5371	12603	1544491
141	9		40152	1515188
141	10	2540-01-178-8918	12603	2520207
141	11	2510-01-215-1069	12603	1543824
141	12	2540-01-211-5373	12603	1515189
141	13	2540-01-199-8143	40152	1515030
141	14		40152	1515038
141	15		40152	1515024
141	16		40152	1515322
141	17	2510-01-261-2566	40152	1515246
141	18		40152	1543821
141	19	2540-01-219-2118	12603	1515190

CROSS-REFERENCE INDEXES

FIGURE AND ITEM NUMBER INDEX

FIG.	ITEM	STOCK NUMBER	CAGEC	PART NUMBER
141	20		40152	1543820
141	21	2510-01-215-1068	12603	1544492
141	22		40152	1515265
142	1	5310-01-238-3032	40152	572729
142	2		40152	574026
142	3	5310-00-180-0277	96906	MS35333-76
142	4	5306-01-239-8552	40152	23C-616
142	5		40152	1545931
142	6	5310-01-238-7196	40152	619029
142	7	5310-00-671-4109	95019	500357-13
142	8	5306-01-238-1432	40152	13806273-2
142	9		40152	1526152
142	10	5310-00-014-5855	72962	21NE066
142	11	5310-01-238-3035	40152	700-12
142	12	5310-01-238-3094	40152	71D-12
142	13	5310-00-809-8533	96906	MS27183-23
142	14	5306-01-238-1433	40152	24C-1248
142	15	5310-00-823-8804	96906	MS27183-9
142	16	5306-01-238-7161	40152	23C-612
142	17		40152	1508950
142	18		40152	2501628
142	19	5310-00-843-0583	12603	656672
143	1	2510-01-243-5326	40152	1515851
143	2		40152	IF-1236
143	3	5315-01-164-5332	40152	1516040
143	4		40152	1547680
143	5	3120-01-198-8171	12603	1519894
143	6		40152	1547690
143	7	5315-01-284-9814	40152	1537424
144	1	5310-01-238-1440	12603	6006
144	2		40152	1543801
144	2	2510-01-234-1792	40152	1543803
144	3	5306-01-239-8560	40152	24C-620
144	4	5305-01-241-1449	40152	24C-636
144	5		40152	616783
144	6	5306-01-241-1386	40152	24C-516
144	7	5310-01-192-8884	12603	25E15
144	8	5310-00-464-4805	12603	6005
144	9		40152	2512412
144	10		40152	571854
144	11	2510-01-238-5035	40152	1543829
144	12	2510-01-235-5688	40152	1543804
144	13	5310-00-934-9758	96906	MS35649-202
144	14		40152	2513450
144	15	3120-01-254-2473	40152	949596
144	16	5305-01-238-1455	40152	85G-1032
144	17	5306-01-239-8552	40152	23C-616
144	18		19207	943623-24
144	19		40152	568700
144	20	5305-01-238-1456	40152	47G-412
144	21		40152	2512192

CROSS-REFERENCE INDEXES

FIGURE AND ITEM NUMBER INDEX

FIG.	ITEM	STOCK NUMBER	CAGEC	PART NUMBER
144	22	5310-00-014-5855	72962	21NE066
144	23		40152	945576
144	24	5310-00-582-5965	96906	MS35338-44
144	25	5310-01-238-7168	40152	610-04
144	26	2510-01-239-7584	40152	1543800
144	26	2510-01-251-3159	40152	1543799
144	27		40152	1543827
144	27		40152	1543828
144	28		19207	569692-36
144	29		19207	1521844-48
144	30		40152	1543808
144	30		40152	1543809
144	31		40152	568686
144	31	2510-01-276-6982	40152	568687
144	32	5310-01-203-0103	40152	25E16
144	33	5306-01-241-1386	40152	24C-516
144	34	5310-01-240-1285	40152	610-05
144	35	5310-00-407-9566	96906	MS35338-45
144	36		40152	945554
144	36		40152	945555
144	37	5305-01-239-8775	40152	7G-512
144	38		19207	943623-48
144	39		19207	943623-36
144	40	5305-01-238-1457	40152	65G-1008
144	41	2540-01-297-9360	40152	942874
144	41	2540-01-298-5362	40152	138249
144	42		40152	1525710
144	43	5305-01-238-1458	40152	18G-1008
144	44	5310-01-238-3039	40152	2512218
144	45	5310-00-208-1919	88044	AN365-420A
144	46		40152	2512195
144	47	5305-01-238-1459	40152	47G-432
144	48		40152	2512200
144	48		40152	2512201
144	49		40152	2512199
145	1		40152	1543830
145	2		40152	1543825
145	3		40152	1543826
145	4	5305-01-239-8695	40152	14G-608
145	5		40152	1514767
145	6		40152	1514763
145	7		40152	1514765
145	8	5305-01-239-8696	40152	14G-824
145	9		40152	1514764
145	10	2590-01-255-2941	40152	1514766
146	1		19207	1357680-132
146	2		19207	945999-1
146	3		19207	943623-60
146	4		19207	1357680-72
146	5		19207	945999-2
146	6		19207	1357680-120

CROSS-REFERENCE INDEXES

FIGURE AND ITEM NUMBER INDEX

FIG.	ITEM	STOCK NUMBER	CAGEC	PART NUMBER
146	7		19207	945999-3
146	8		19207	1357680-144
146	9		19207	945999-4
146	10		19207	945999-5
146	11		19207	1357680-121
146	12		19207	945999-6
146	13		19207	1357680-122
146	14		19207	569696-48
146	15		19207	945999-7
146	16		40152	945577
146	17	5305-01-238-1457	40152	65G-1008
146	18		40152	589571
146	19		19207	589572-12
146	20		19207	945999-8
146	21		19207	139149-48
147	1	2540-01-244-0293	40152	1572355
147	2	2540-01-102-5433	40152	82000231000002
147	3	2540-01-295-0042	40152	944981
147	4		40152	1567173
147	5	5306-01-238-8266	40152	23C-610
147	6		40152	558777
147	7		40152	558779
147	8		40152	1527745
147	9		40152	568781
147	10		12603	1F420
147	11	5340-01-201-4701	40152	557458
147	12	5310-01-240-1816	40152	25E-22
147	13	5310-00-412-9861	96906	MS21245-7
147	14	5310-01-192-8884	12603	25E15
147	15		40152	1547302
147	16		12603	2530346
147	17	5306-01-239-8574	40152	24C-824
147	18	5310-01-238-3095	40152	584092
147	19	5310-00-877-5795	96906	MS21044N8
147	20	5310-01-238-7196	40152	619029
147	21	5310-00-671-4109	95019	500357-13
147	22	5306-01-238-8267	40152	23C-824
147	23	5360-00-818-2303	40152	550301
147	24	5310-00-464-4805	12603	60D5
147	25	5310-01-192-8884	12603	25E15
148	1	5306-01-241-1386	40152	24C-516
148	2	5310-01-238-8383	40152	567806
148	3		40152	1548292
148	4	5310-00-464-4805	12603	6005
149	1	5306-01-238-1434	40152	24C-424
149	2		40152	2511571
149	3	5310-00-877-5796	96906	MS21044N4
150	1	2540-01-252-6198	89749	1534346
150	2	5305-00-989-7435	96906	MS35207-264
150	3	3040-01-190-0475	40152	949185
150	4	5310-01-238-1448	40152	949180

CROSS-REFERENCE INDEXES

FIGURE AND ITEM NUMBER INDEX

FIG.	ITEM	STOCK NUMBER	CAGEC	PART NUMBER
150	5	5310-01-238-1449	40152	949181
150	6	5310-01-238-3036	40152	949182
150	7		40152	949183
150	8	3020-01-298-5419	40152	949184
150	9	5310-00-167-0721	96906	MS35333-41
150	10	5310-01-238-1441	40152	522028
150	11	3040-01-216-2494	40152	574729
150	12	5310-00-877-5797	96906	MS21044N3
150	13	2540-00-073-9849	60703	87415-77ZT
150	14	2540-01-030-8325	40152	568968
150	15	5306-01-238-8268	40152	90G-412
150	16	5306-01-242-4125	40152	24C-412
150	17	5310-01-238-1437	40152	949144
150	18		40152	890374
150	19	5310-00-809-8591	40152	890375
150	20		40152	949308
150	21	2540-01-274-3725	40152	964124
150	22	5310-00-877-5796	96906	MS21044N4
150	23	5930-01-212-5601	40152	2318002
150	24		40152	546535
150	25	5310-01-238-8384	40152	25E-14
150	26		40152	574730
150	27	5305-01-238-3164	40152	992896
151	1	5310-01-238-8861	40152	993183
151	2		40152	949308
151	3	5310-01-238-1437	40152	949144
151	4		40152	992892
151	5	5305-01-238-3164	40152	992896
151	6	5305-01-238-7183	40152	949143
151	7	3040-01-276-8682	40152	960248
151	8		40152	949785
151	9	5310-01-238-7198	40152	5291919
151	10	5310-01-238-1449	40152	949181
151	11	5310-01-238-3036	40152	949182
151	12		40152	992898
151	13		40152	2510200
151	14	5310-01-238-1441	40152	522028
151	15	5310-00-167-0721	96906	MS35333-41
151	16		40152	949184
151	17		40152	949183
151	18	5306-01-238-8268	40152	90G-412
151	19	5310-00-209-0786	96906	MS35335-33
151	20		40152	890374
151	21	5310-00-809-8591	40152	890375
151	22		40152	890373
151	23	5995-01-209-4595	40152	1544319
151	24	5930-01-212-5601	40152	2318002
151	25	2540-01-275-5351	40152	1580724
152	1		40152	2503293
152	2	5310-00-209-0786	96906	MS35335-33
152	3	5305-01-238-7184	40152	61G-408

CROSS-REFERENCE INDEXES

FIGURE AND ITEM NUMBER INDEX

FIG.	ITEM	STOCK NUMBER	CAGEC	PART NUMBER
152	4	5340-01-024-3770	12603	30H14
152	5	2540-00-073-9849	60703	87415-77ZT
152	6	3040-01-190-0475	40152	949185
152	7	5310-01-238-1441	40152	522028
152	8	5310-00-167-0721	96906	MS35333-41
152	9	3020-01-298-5419	40152	949184
152	10		40152	949183
152	11	5310-01-238-3036	40152	949182
152	12	5310-01-238-1448	40152	949180
152	13	5310-01-238-1449	40152	949181
152	14	2540-01-030-8325	40152	568968
152	15	5306-01-238-7162	40152	90G-424
152	16		40152	713674
152	17	5306-01-242-4125	40152	24C-412
152	18	5310-01-238-8384	40152	25E-14
152	19	5930-01-212-5601	40152	2318002
152	20	5310-00-877-5796	96906	MS21044N4
152	21		40152	546535
152	22	5310-01-238-1437	40152	949144
152	23		40152	949308
152	24	2540-01-275-5351	40152	1580724
152	25		40152	1534346
152	26	5305-01-238-7183	40152	949143
152	27		40152	1534345
152	28		40152	992892
152	29	5305-01-238-3164	40152	992896
152	30	5305-01-238-8351	40152	90G-428
152	31	3040-01-216-2494	40152	574729
152	32	5310-00-809-8591	40152	890375
152	33		40152	890374
153	1	4140-01-199-2522	12603	517847
153	2		40152	949036
153	3		40152	949037
153	4		40152	949033
153	5		12603	41G101O
153	6	5310-01-238-8272	40152	50D-10
153	7		40152	949080
153	8		40152	949034
153	9		40152	949039
153	10	5310-01-240-0863	40152	25E-10
153	11	5310-01-239-8595	40152	949054
154	1		40152	356618
154	2	5340-00-257-3059	12603	30H50
154	3		89749	1529688
154	4		40152	635583
154	5		40152	1511475
154	6		40152	521874
155	1	2540-01-215-3139	12603	1510661
155	2		40152	947948
155	3		40152	949047
155	4		40152	947977

CROSS-REFERENCE INDEXES

FIGURE AND ITEM NUMBER INDEX

FIG.	ITEM	STOCK NUMBER	CAGEC	PART NUMBER
155	5		40152	947997
155	6		40152	948958
155	7		40152	949521
155	8		40152	948992
155	9		40152	949522
155	10		40152	947978
155	11		12603	948978
155	12		40152	947999
155	13	4720-01-192-9674	40152	947995
155	14	4730-01-266-2087	40152	528651
155	15		40152	947994
155	16		40152	947993
155	17	5340-01-280-7963	40152	947992
155	18		40152	949048
155	19	4720-00-497-1750	12603	889269
155	20		40152	947990
155	21		40152	947991
155	22	5310-01-238-8850	40152	947989
155	23		40152	947988
155	24		40152	947987
155	25	5355-01-201-2003	40152	947986
155	26		40152	947985
155	27		12603	947976
155	28		40152	947984
155	29		40152	947981
155	30		40152	2507065
155	31		40152	947982
155	32		40152	947983
155	33		40152	947950
156	1		72582	1507422
156	1		72582	2507157
156	1		72582	2510267
156	1		72582	2510268
156	1		72582	2510783
156	1		72582	2510784
156	1		72582	2511546
156	1		72582	2513296
156	1		72582	2513352
156	1		72582	2513628
156	1		72582	2513631
156	1	6685-00-174-6219	24617	1511708
156	2	5305-01-238-0544	72582	2516995
156	3	5310-00-464-4805	12603	6005
156	4	5310-01-241-1446	72582	25E-16
156	5		72582	1522201
157	1	4730-01-277-1422	40152	6000689
157	2		40152	1306142
157	3		40152	230151
157	4		5340-00-972-8006	40152 224104
157	5	5307-01-238-3117	40152	1513241
157	6	5330-00-979-3466	40152	552161

CROSS-REFERENCE INDEXES

FIGURE AND ITEM NUMBER INDEX

FIG.	ITEM	STOCK NUMBER	CAGEC	PART NUMBER
157	7	5310-00-671-4109	95019	500357-13
157	8	5310-00-732-0560	96906	MS51968-14
157	9		40152	1314178
157	10	5330-00-733-9716	12603	91F5
158	1	4320-01-200-4303	12603	2526551
158	2	5365-00-804-2784	96906	MS16625-1200
158	3		40152	963131
158	4	5310-01-242-4126	40152	954277
158	5	5310-01-238-1451	40152	946271
158	6		40152	961795
158	7	3110-00-100-6151	96906	MS19059-2414
158	8	5307-01-238-3119	40152	6190213
158	9		40152	6190211
158	10		40152	5208889
158	11		40152	5208887
158	12		40152	5208887
158	13		40152	5208838
158	14		40152	963132
158	15		40152	946100
158	16	5365-00-801-2500	96906	MS16625-1112
158	17		40152	948583
158	18		40152	961283
158	19		40152	948570
158	20		40152	948571
158	21		40152	77K026
158	22		40152	960725
158	23		40152	946100
158	24	4730-01-070-0146	12603	24K-7
158	25		40152	963134
158	26	5307-01-238-3120	40152	949499
158	27		40152	24K-5
158	28		40152	963133
158	29		40152	960766
158	30	5305-01-238-7187	40152	960768
158	31		40152	7K13
158	32	5310-01-239-8596	40152	948440
158	33	5310-01-241-1392	40152	948441
158	34		40152	961449
158	35	5310-01-242-4126	40152	954277
158	36	5310-01-238-1451	40152	946271
158	37		40152	963135
158	38		40152	963080
158	39		40152	77K217
158	40		40152	963553
158	41		40152	1550490
158	42		40152	948438
158	43		40152	963133
158	44		40152	948439
158	45		40152	960767
158	46		40152	873246
158	47		40152	960772

CROSS-REFERENCE INDEXES

FIGURE AND ITEM NUMBER INDEX

FIG.	ITEM	STOCK NUMBER	CAGEC	PART NUMBER
158	48		40152	961402
158	49		40152	5208888
158	50		40152	5208887
158	51		40152	5208889
158	52		40152	77K241
158	53		40152	963115
159	1		40152	2504921
159	2		40152	961206
159	3	5330-00-738-6993	40152	25K40200
159	4		40152	948818
159	5		40152	11G-828
159	6	5330-01-105-0975	40152	25K30022
159	7		40152	949259
159	8		40152	948794
159	9		40152	948057
159	10		40152	948817
159	11	5310-01-238-7210	40152	960382
159	12		40152	960383
159	13		40152	948789
159	14		40152	948816
159	15		40152	949255
159	16	5330-00-808-0794	96906	MS28778-8
159	17		40152	948058
159	18		40152	949283
159	19		40152	948847
159	20	5330-00-932-1252	12603	91F3
160	1		40152	961203
160	2	5330-00-738-6993	40152	25K40200
160	3		40152	948818
160	4	5330-01-105-0975	40152	25K30022
160	5		40152	949259
160	6		40152	948057
160	7		40152	948794
160	8		40152	11G-828
160	9		40152	948817
160	10	5310-01-238-7210	40152	960382
160	11		40152	960383
160	12		40152	948060
160	13		40152	948054
160	14		40152	948058
160	15	5330-00-808-0794	96906	MS28778-8
160	16		40152	949255
160	17		40152	948816
161	1		40152	961202
161	2		40152	1IG-828
161	3	5330-00-738-6993	40152	25K40200
161	4		40152	948859
161	5		40152	948814
161	6		40152	948821
161	7		40152	948823
161	8	5330-00-251-8839	96906	MS28778-12

CROSS-REFERENCE INDEXES

FIGURE AND ITEM NUMBER INDEX

FIG.	ITEM	STOCK NUMBER	CAGEC	PART NUMBER
161	9		40152	949309
161	10		40152	949298
161	11		40152	948820
161	12		40152	948815
162	1		40152	948854
162	2		40152	948824
162	3		40152	948063
162	4		40152	948849
162	5		40152	948852
162	6		40152	948850
162	7	5310-00-975-2075	96906	MS35691-21
162	8	5305-01-239-8701	40152	948848
162	9		40152	948825
162	10		40152	948851
162	11		40152	948129
163	1		40152	961205
163	2		40152	948817
163	3	5330-00-738-6993	40152	25K40200
163	4		40152	948818
163	5		40152	11G-828
163	6		40152	949259
163	7		40152	948057
163	8		40152	948794
163	9	5330-01-105-0975	40152	25K30022
163	10	5310-01-238-7210	40152	960382
163	11		40152	960383
163	12		40152	948060
163	13		12603	948861
164	1	4810-01-038-0510	40152	2511902
164	2		40152	948036
164	3	5330-00-064-7777	12603	91F7
164	4		40152	961305
164	5	5305-01-238-6352	40152	948032
164	6		40152	948020
164	7		40152	948026
164	8		40152	961196
164	9	4820-01-218-5056	12603	961195
164	10		40152	961243
164	11		40152	948980
164	12	5330-00-582-2855	75214	P383-2
164	13	5365-01-197-4087	12603	948030
164	14		40152	961242
164	15		40152	877420
164	16		40152	961197
164	17		40152	948017
164	18		40152	948019
164	19		40152	948018
164	20	5330-00-579-3156	96906	MS28775-116
164	21		40152	948982
164	22		40152	948015
164	23		40152	948022

CROSS-REFERENCE INDEXES

FIGURE AND ITEM NUMBER INDEX

FIG.	ITEM	STOCK NUMBER	CAGEC	PART NUMBER
164	24	5330-00-584-0263	96906	MS28775-218
164	25		40152	948016
164	26	5305-01-238-8353	40152	89G-406
164	27		40152	948021
164	28		40152	948805
164	29	5330-00-584-0263	96906	MS28775-218
164	30		40152	948810
164	31		40152	961240
165	1		40152	961306
165	2	5305-01-238-7185	40152	11G-428
165	3		40152	948020
165	4		40152	948026
165	5		40152	948025
165	6		40152	948024
165	7		40152	948028
165	8		40152	948980
165	9	5330-00-582-2855	75214	P383-2
165	10	5365-01-197-4087	12603	948030
165	11		40152	948034
165	12		40152	877420
165	13		40152	948029
165	14		40152	948017
165	15		40152	948033
165	16		40152	948018
165	17		40152	961933
165	18	5330-00-579-3156	96906	MS28775-116
165	19		40152	948981
165	20	5330-00-584-0263	96906	MS28775-218
165	21		40152	961692
165	22		40152	961693
165	23		40152	948016
165	24	5305-01-238-8353	40152	89G-406
165	25		40152	961934
165	26	5310-01-032-7048	12603	62006
165	27		40152	948014
165	28		40152	948010
165	29	5310-01-240-1285	40152	610-05
165	30		40152	948013
166	1		40152	2511903
166	2		40152	961194
166	3		40152	76K-228
166	4		40152	948810
166	5		40152	961308
166	6		40152	961192
166	7		40152	961240
166	8	5305-01-238-8352	40152	948032
166	9		40152	948018
166	10		40152	948192
166	11		40152	948017
166	12	5305-01-241-1482	40152	948191
166	13		40152	948031

CROSS-REFERENCE INDEXES

FIGURE AND ITEM NUMBER INDEX

FIG.	ITEM	STOCK NUMBER	CAGEC	PART NUMBER
166	14		40152	76K-116
166	15		40152	948063
166	16		40152	948016
166	17	5305-01-238-8353	40152	89G-406
166	18		40152	948015
166	19		40152	948022
167	1		40152	961193
167	2		40152	961240
167	3		40152	961307
167	4	5305-01-238-8352	40152	948032
167	5		40152	948020
167	6		40152	948026
167	7		40152	961196
167	8	4820-01-218-5056	12603	961195
167	9		40152	961241
167	10		40152	948980
167	11		40152	948063
167	12	5365-01-197-4087	12603	948030
167	13		40152	961242
167	14		40152	877420
167	15		40152	961197
167	16		40152	948017
167	17		40152	948019
167	18		40152	948018
167	19		40152	76K-116
167	20		40152	948982
167	21		40152	948015
167	22		40152	948022
167	23		40152	948016
167	24	5305-01-238-8353	40152	89G-406
167	25		40152	948021
167	26		40152	76K-228
168	1		40152	961309
168	2	5305-01-238-8352	40152	948032
168	3		40152	948020
168	4		40152	948026
168	5		40152	961196
168	6	4820-01-218-5056	12603	961195
168	7		40152	961243
168	8		40152	948980
168	9		40152	948063
168	10	5365-01-197-4087	12603	948030
168	11		40152	961244
168	12		40152	877420
168	13		40152	961197
168	14		40152	948017
168	15		40152	948033
168	16		40152	948018
168	17		40152	76K-116
168	18		40152	948981
168	19		40152	76K-228

CROSS-REFERENCE INDEXES

FIGURE AND ITEM NUMBER INDEX

FIG.	ITEM	STOCK NUMBER	CAGEC	PART NUMBER
168	20		40152	948022
168	21		40152	948015
168	22		40152	948016
168	23	5305-01-238-8354	40152	71G-406
168	24		40152	948021
168	25	5310-01-032-7048	12603	62006
168	26		40152	948188
168	27		40152	948010
168	28	5310-01-241-1393	40152	61D05
168	29		40152	948187
169	1		40152	948903
169	2		40152	948020
169	3		40152	948026
169	4		40152	948025
169	5	5305-01-238-7185	40152	I1G-428
169	6		40152	948024
169	7		40152	948028
169	8		40152	948980
169	9	5330-00-582-2855	75214	P383-2
169	10	5365-01-197-4087	12603	948030
169	11		40152	948034
169	12		40152	877420
169	13		40152	948029
169	14		40152	948017
169	15		40152	948033
169	16		40152	948018
169	17	5330-00-579-3156	96906	MS28775-116
169	18		40152	948981
169	19	5330-00-584-0263	96906	MS28775-218
169	20		40152	948022
169	21		40152	948015
169	22		40152	948016
169	23	5305-01-238-8354	40152	71G-406
169	24		40152	948021
169	25	5310-01-032-7048	12603	62006
169	26		40152	948188
169	27		40152	948010
169	28	5310-01-238-8849	40152	13803675-1
169	29		40152	948187
170	1		40152	235958
170	2		40152	235095
170	3	5330-00-064-7796	12603	91F10
170	4		40152	235138
170	5	5330-01-053-9825	12603	25K30030
170	6		40152	235957
170	7		40152	235956
170	8	5330-00-469-8264	12603	228931
170	9	5330-01-105-0975	40152	25K30022
170	10	5330-00-211-9601	12603	229131
171	1		40152	1509182
171	2	4730-00-891-7059	12603	10H25

CROSS-REFERENCE INDEXES

FIGURE AND ITEM NUMBER INDEX

FIG.	ITEM	STOCK NUMBER	CAGEC	PART NUMBER
171	3	5306-01-239-8559	40152	23C-620
171	4	5310-00-180-0277	96906	MS35333-76
172	1	5305-00-904-4005	96906	MS90727-212
172	2	5310-00-809-8540	96906	MS27183-25
172	3	4730-01-070-0146	12603	24K-7
172	4	5330-00-064-7777	12603	91F7
172	5	5310-01-241-1445	40152	1512415
172	6		40152	1514880
172	7	5305-01-241-1449	40152	24C-636
172	8	5310-01-203-0120	40152	25E18
172	9	5310-01-238-1440	12603	6006
172	10	5310-01-238-7167	40152	180-14
172	11	5306-01-239-8583	40152	24C-1436
173	1	5306-01-239-8557	40152	24C-416
173	2		40152	1548001
173	3		40152	12E-10
173	4	5305-01-239-8763	40152	13804205
173	5	5310-00-877-5796	96906	MS21044N4
173	6	5310-01-240-0863	40152	25E-10
173	7	4810-01-223-5127	40152	2510009
173	8		40152	949458
173	9		40152	1516111
173	10		40152	1510617
174	1		40152	1513270
174	2		40152	949306
174	3	5330-00-582-2855	75214	P383-2
174	4		40152	948016
174	5	5305-01-238-8354	40152	71G-406
174	6		40152	948021
174	7		40152	948015
174	8		40152	961692
174	9	5305-01-238-8352	40152	948032
174	10		40152	948020
174	11		40152	948026
174	12		40152	948025
174	13		40152	948024
174	14		40152	948028
174	15		40152	948980
174	16	5365-01-197-4087	12603	948030
174	17		40152	948023
174	18		40152	877420
174	19		40152	948029
174	20		40152	948017
174	21		40152	948019
174	22		40152	948018
174	23	5330-00-579-3156	96906	MS28775-116
174	24		40152	948982
174	25		40152	1545915
174	26	5330-00-064-7777	12603	91F7
174	27		40152	1545916
174	28	5330-00-064-7777	12603	91F7

CROSS-REFERENCE INDEXES

FIGURE AND ITEM NUMBER INDEX

FIG.	ITEM	STOCK NUMBER	CAGEC	PART NUMBER
174	29		40152	948805
174	30	5330-00-064-7777	12603	91F7
174	31		40152	948810
174	32	5330-00-584-0263	96906	MS28775-218
175	1	5330-00-584-0263	96906	MS28775-218
175	2		40152	1545916
175	3	5330-00-064-7777	12603	91F7
175	4		40152	961309
175	5	5305-01-238-7185	40152	11G-428
175	6		40152	948020
175	7		40152	948026
175	8		40152	948025
175	9		40152	948024
175	10		40152	948028
175	11		40152	948980
175	12	5330-00-582-2855	75214	P383-2
175	13	5365-01-197-4087	12603	948030
175	14		40152	948034
175	15		40152	877420
175	16		40152	948029
175	17		40152	948017
175	18		40152	948033
175	19		40152	948018
175	20	5330-00-579-3156	96906	MS28775-116
175	21		40152	948981
175	22	5330-00-584-0263	96906	MS28775-218
175	23		40152	948016
175	24	5305-01-238-8354	40152	71G-406
175	25		40152	948021
175	26		40152	961692
175	27		40152	948015
175	28	5310-01-032-7048	12603	62006
175	29		40152	948014
175	30		40152	948010
175	31	5310-01-238-8849	40152	13803675-1
175	32		40152	948013
175	33		40152	1545915
175	34	5330-00-064-7777	12603	91F7
176	1	5310-00-877-5796	96906	MS21044N4
176	2		40152	730482
176	3		40152	1522535
176	4		40152	1503251
176	5		40152	1542767
176	6	3110-00-157-0535	96906	MS17131-30
176	7	5355-00-929-9698	40152	509772
176	8		40152	1542764
176	9		40152	1537881
176	10	5340-00-791-9113	12603	2J4200
176	11	5310-00-971-7989	96906	MS35691-5
176	12		03504	10928M3
176	13	5315-00-839-2325	15434	109155

CROSS-REFERENCE INDEXES

FIGURE AND ITEM NUMBER INDEX

FIG.	ITEM	STOCK NUMBER	CAGEC	PART NUMBER
176	14	5306-01-239-8571	40152	24C-896
176	15	5310-01-239-5836	40152	584502
176	16		40152	1542769
176	17	3110-00-157-0535	96906	MS17131-30
177	1		40152	1537881
177	2	5310-00-971 1989	96906	MS35691-5
177	3	5340-00-791-9113	12603	2J4200
177	4	5315-00-842-3044	96906	MS24665-283
177	5		40152	1522535
177	6		40152	1542764
177	7	5355-00-929-9698	40152	509772
177	8		40152	1542911
177	9	3110-00-157-0535	96906	MS17131-30
177	10		40152	1503251
177	11	5310-01-239-5836	40152	584502
177	12		03504	10928M3
178	1	4730-00-917-4794	30379	9183500
178	2	5330-00-808-0794	96906	MS28778-8
178	3		40152	1304056
178	4	5330-00-808-0794	96906	MS28778-8
178	5		40152	1510741
178	6		40152	1547168
178	7		40152	1300304
178	8		40152	1547152
178	9	5330-00-808-0794	96906	MS28778-8
178	10		40152	1515868
178	11	4730-00-062-5470	96906	MS5152888
178	12	5330-00-808-0794	96906	MS28778-8
178	13		40152	18K-7
178	14	5330-00-064-7777	12603	91F7
178	15		40152	572349
178	16		40152	84F-7
178	17	5306-01-238-7156	40152	24C-820
178	18	5310-00-671-4109	95019	500357-13
178	19		40152	1537986
179	1		40152	1521839
179	2	5306-01-238-7156	40152	24C-820
179	3	5310-00-671-4109	95019	500357-13
179	4		40152	2501323
179	5		40152	356627
179	6		40152	1509752
179	7		40152	1544998
179	8		40152	1518621
179	9		40152	1304056
179	10	5330-00-808-0794	96906	MS28778-8
179	11		40152	1544939
179	12	5306-01-238-8267	40152	23C-824
179	13		40152	19J-24
179	14	5330-01-223-6769	40152	58K-225
179	15	5330-01-229-4071	40152	58K-222
179	16		40152	19J-20

CROSS-REFERENCE INDEXES

FIGURE AND ITEM NUMBER INDEX

FIG.	ITEM	STOCK NUMBER	CAGEC	PART NUMBER
179	17	5310-00-209-0965	96906	MS35338-47
179	18	5306-01-241-1389	40152	23C-724
179	19		40152	1544940
179	20	4730-00-917-4794	30379	9183500
179	21	5330-00-808-0794	96906	MS28778-8
179	22		40152	1537987
179	23		40152	1547168
179	24	5306-01-239-8575	40152	24C-632
179	25	4730-00-062-5470	96906	MS51528B8
179	26	5330-00-808-0794	96906	MS28778-8
179	27		40152	1M-2040
180	1		40152	1547169
180	2	4720-01-226-8012	40152	1506073
180	3		40152	1539796
180	4	4730-00-891-0270	89749	43H1394
180	5		40152	585887
180	6		40152	1513510
180	7	5340-01-171-1414	40152	540102
180	8	4720-01-171-4302	40152	1542512
180	9	4720-01-219-1394	40152	1518511
180	10		40152	58K-219
180	11		40152	I9J-16
180	12	5310-00-180-0277	96906	MS35333-76
180	13	5306-01-239-8559	40152	23C-620
180	14	5306-01-241-1389	40152	23C-724
180	15	5310-00-209-0965	96906	MS35338-47
180	16		40152	19J-20
180	17	5330-01-229-4071	40152	58K-222
180	18		40152	1544994
180	19		40152	1531418
180	20	5305-00-071-2069	80204	B18215H050C150N
180	21	5310-00-671-4109	95019	500357-13
180	22	4720-01-289-1017	40152	1548671
180	23		40152	19J-32
180	24		40152	58K-228
180	25		40152	19J-24
180	26	5330-01-223-6769	40152	58K-225
180	27		40152	1517383
180	28	5330-01-193-9390	40152	58K-232
180	29		40152	19J-40
180	30	5306-01-238-7163	40152	23C-828
180	31	5310-00-877-5795	96906	MS21044N8
180	32	5310-01-238-3095	40152	584092
180	33		40152	1544801
180	34		40152	1544845
180	35		40152	1514753
180	36		40152	1514912
180	37		40152	1518913
180	38	5310-00-584-7888	96906	MS35338-51
180	39	5310-01-238-8382	40152	712285
180	40	5306-01-238-8270	40152	24C-1232

CROSS-REFERENCE INDEXES

FIGURE AND ITEM NUMBER INDEX

FIG.	ITEM	STOCK NUMBER	CAGEC	PART NUMBER
180	41		40152	1547042
180	42	5306-01-238-8845	40152	24C-828
180	43	5305-01-238-7223	40152	24C-836
180	44		40152	1547309
180	45		40152	1544673
180	46		40152	1517384
180	47		40152	1547310
180	48		40152	1544671
180	49		40152	1547311
180	50		40152	5K-207
180	51		40152	1306142
180	52	4730-01-277-1422	40152	6000689
180	53		40152	1514910
180	54		40152	1514909
180	55		40152	1547041
180	56		40152	1514911
181	1	4720-00-913-1181	40152	564636
181	2	4730-00-819-3737	79470	141-15804
181	3		40152	1511077
181	4	4730-00-911-5707	21450	454097
181	5		40152	593495
181	6		40152	1311154
181	7		40152	33F-3
181	8		70434	6GABB6MB4MB161-2
181	9	4730-00-090-9252	01276	2045-4-4S
181	10		40152	3OF-1
182	1		40152	541547
182	2		40152	549961
182	3	4720-00-990-3407	40152	549262
182	4	4730-00-027-8720	40152	31F1
182	5		40152	31H-31
182	6	5310-00-180-0277	96906	MS35333-76
182	7	5306-01-239-8555	40152	24C-612
182	8		40152	1519137
182	9		40152	30H-35
183	1	3805-01-037-4464	52993	964575
183	2		40152	1517274
183	3		40152	1544140
183	4	4730-01-025-7723	12603	12H15
183	5		40152	1510142
183	6	2590-01-037-4153	40152	1542646
183	7		40152	2505248
183	8		40152	1511232
183	9		40152	1511230
183	10	5330-01-037-7132	40152	2517364
183	11		40152	2516029
183	12	5310-01-238-7200	40152	1517840
183	13	5310-01-238-7167	40152	18D-14
183	14	5306-01-239-8579	40152	1514633
183	15		40152	1517846
183	16	5310-01-238-3037	40152	1513540

CROSS-REFERENCE INDEXES

FIGURE AND ITEM NUMBER INDEX

FIG.	ITEM	STOCK NUMBER	CAGEC	PART NUMBER
183	17	5315-00-187-9593	96906	MS24665-692
183	18	5305-01-211-1466	96906	MS90727-223
183	19		40152	1517849
184	1	3805-01-037-7297	40152	2518119
184	2	3040-01-280-4293	40152	1512278
184	3		40152	588619
184	4		40152	1510142
184	5	2590-01-037-4153	40152	1542646
184	6		40152	2505248
184	7		40152	1511230
184	8	5305-00-082-6977	96906	MS90727-192
184	9	5310-01-238-7201	40152	655224
184	10	3040-01-313-8047	40152	2518120
184	11	5330-01-037-7132	40152	2517364
184	12		40152	1511232
184	13	5306-01-239-8582	40152	34C-828
184	14		40152	1512255
184	15	5310-01-238-3038	40152	1514660
184	16	5305-01-239-8702	40152	1513022
184	17		40152	1518398
184	18		62259	A122080
184	19	4730-00-891-7059	12603	10H25
185	1		40152	2500073
185	2	5307-01-238-3121	40152	1547619
185	3		40152	537660
185	4	5310-01-238-3034	40152	60D-08
185	5	5310-01-238-3031	40152	60D-04
185	6	5310-01-238-1445	40152	13802619-0
185	7		40152	1515637
185	8		40152	1530598
185	9	5305-00-104-2832	12603	18C628
185	10	5310-00-180-0277	96906	MS35333-76
185	11		40152	1515640
185	12		40152	1515634
185	13	5310-00-349-8529	12603	616809
185	14	5306-01-239-8554	40152	24C-1256
185	15	5306-01-239-8555	40152	24C-612
185	16	2520-01-098-8378	40152	40K-16
185	17	5340-01-083-9643	40152	587613
185	18		40152	25K40428
185	19	5999-00-996-3743	40152	525293
185	20	5310-01-238-8333	40152	18D-12
186	1	5306-01-239-8555	40152	24C-612
186	2	5310-00-180-0277	96906	MS35333-76
186	3		40152	30H-46
186	4		40152	521874
186	5	4720-00-848-0431	12603	755622
186	6	5310-00-349-8529	12603	616809
186	7	5310-01-238-8333	40152	18D-12
186	8	3805-01-038-2259	40152	554843
186	9		12603	2500050

CROSS-REFERENCE INDEXES

FIGURE AND ITEM NUMBER INDEX

FIG.	ITEM	STOCK NUMBER	CAGEC	PART NUMBER
186	10		40152	1515648
186	11		40152	1543512
186	12		12603	1H414
186	13		40152	25K-40624
186	14	5305-00-269-3234	96906	MS90727-58
186	15		40152	1529896
186	16	5330-00-013-7786	12603	25K40808
186	17	2940-01-021-9253	12603	1532445
186	18		72582	514646
186	19	5310-01-239-8740	40152	1517493
186	20		40152	1530598
186	21		40152	1529679
186	22	4330-01-037-9285	12658	PT-491
186	23		40152	2517207
186	24	5306-01-238-8261	40152	24C-1244
186	25	4710-01-311-8323	40152	2500500
187	1		40152	560640
187	2	6680-01-199-3177	40152	568823
188	1	5310-01-238-1440	12603	60D6
188	2		12603	1515763
188	3	5306-01-239-8575	40152	24C-632
188	4	5306-01-239-8560	40152	24C-620
188	5	5310-00-724-3210	19207	10875413
188	6	5310-00-180-0277	96906	MS35333-76
188	7		40152	1510618
188	8	5930-01-273-6560	40152	308031
188	9	5310-00-582-5965	96906	MS35338-44
188	10	5306-01-238-7164	40152	23C-412
188	11		40152	1515761
188	12	4810-01-202-4636	40152	990556
188	13	3040-01-216-6526	40152	1528637
188	14	5930-01-123-4495	40152	1767898
188	15	5310-00-734-8749	16764	1880781
188	16	5305-01-238-8435	40152	41G-1024
189	1		40152	1547147
189	2	5340-01-277-2268	40152	1544087
189	3	5310-00-671-4109	95019	500357-13
189	4	5306-01-238-7156	40152	24C-820
189	5		40152	1547465
189	6		40152	1516939
189	6		40152	1516940
189	6		40152	1540169
189	7		40152	1547170
189	8		40152	2502842
189	9		40152	1519195
189	10		40152	3901175
189	11		40152	549669
189	12		40152	2509317
189	13	4730-00-891-7059	12603	10H25
189	14		40152	1516982
189	15		40152	1539553

CROSS-REFERENCE INDEXES

FIGURE AND ITEM NUMBER INDEX

FIG.	ITEM	STOCK NUMBER	CAGEC	PART NUMBER
189	16		40152	1539586
190	1		40152	1504272
190	1		40152	1542393
190	2		40152	1504271
190	2		40152	1542394
190	3		40152	1504273
190	4	5306-01-238-3022	12603	23C-1260
190	5	5310-00-763-8921	96906	MS51967-23
190	6		12603	1504270
190	6		12603	1542259
190	6		12603	1542260
190	6		12603	1542261
191	1	4730-00-891-7059	12603	10H25
191	2		40152	2505721
191	2		40152	2506079
191	3	5306-01-239-8571	40152	24C-896
191	4		40152	549907
191	5	5310-00-877-5795	96906	MS21044N8
191	6		40152	2502843
191	7		40152	1519196
191	8		40152	3901168
191	9		40152	1540169

Displays the next page

By Order of the Secretary of the Army:

GORDON R. SULLIVAN
General, United States Army
Chief of Staff

Official:

MILTON H. HAMILTON
Administrative Assistant to the
Secretary of the Army
05406

Distribution:
To be distributed in accordance with DA Form 12-25-E (Block 6173) requirements for TM 5-3805-257-24P.

*U.S. GOVERNMENT PRINTING OFFICE: 1993-746-017/80297

TEAR ALONG PERFORATED LINE

RECOMMENDED CHANGES TO EQUIPMENT TECHNICAL PUBLICATIONS



SOMETHING WRONG WITH THIS PUBLICATION?

FROM: (PRINT YOUR UNIT'S COMPLETE ADDRESS)

DATE SENT

PUBLICATION NUMBER	PUBLICATION DATE	PUBLICATION TITLE

BE EXACT. . .PIN-POINT WHERE IT IS

PAGE NO.	PARA-GRAPH	FIGURE NO.	TABLE NO.

IN THIS SPACE TELL WHAT IS WRONG AND WHAT SHOULD BE DONE ABOUT IT:

PRINTED NAME, GRADE OR TITLE, AND TELEPHONE NUMBER	SIGN HERE:

DA FORM 1 JUL 79 2028-2

PREVIOUS EDITIONS ▸ ARE OBSOLETE.

P.S.—IF YOUR OUTFIT WANTS TO KNOW ABOUT YOUR RECOMMENDATION MAKE A CARBON COPY OF THIS AND GIVE IT TO YOUR HEADQUARTERS.

PIN: 071903-000