# 1A2



## INTRODUCTION AND CUSTOMER INFORMATION

T208371A -UN-10FEB05

RUTHZIL TRATOR COMERCIAL DE PEÇAS LTDA 11 97083-6812 ROLANDO




*LEFT-HAND SIDE VIEW OF JOHN DEERE 180 CW EXCAVATOR*
*(MANUFACTURED 2003- )*

## TO THE CUSTOMER

THE PART NUMBERS IN THIS PARTS CATALOG WERE CORRECT AT THE TIME YOUR CATALOG WAS PUBLISHED. IT IS OUR POLICY TO CONSTANTLY IMPROVE OUR MACHINES AND, THEREFORE, PART NUMBERS MAY CHANGE. WHEN ORDERING PARTS, VERIFY PART NUMBERS THROUGH YOUR DEALER WHO HAS AN UP-TO-DATE PARTS LISTING.

*(SPECIFICATIONS AND DESIGN SUBJECT TO CHANGE WITHOUT NOTICE.)*


COPYRIGHT © 2005 DEERE & COMPANY Moline, Illinois All rights reserved

## SERIAL NUMBER LOCATIONS

EACH 180 CW EXCAVATOR HAS SEVEN SERIAL NUMBER PLATES:

A PRODUCT IDENTIFICATION NUMBER PLATE, AN ENGINE SERIAL NUMBER PLATE, A HYDRAULIC PUMP SERIAL NUMBER PLATE, A LEFT-HAND PROPEL MOTOR SERIAL NUMBER PLATE, A RIGHT-HAND PROPEL MOTOR SERIAL NUMBER PLATE, A SWING MOTOR SERIAL NUMBER PLATE AND A CONTROL VALVE SERIAL NUMBER PLATE.

THE PRODUCT IDENTIFICATION PLATE IS LOCATED ON THE RIGHT-HAND SIDE FRAME NEAR THE FRONT SUPPORT.

THE ENGINE SERIAL NUMBER PLATE IS LOCATED ON THE RIGHT SIDE OF THE CYLINDER BLOCK NEAR THE

THE HYDRAULIC PUMP SERIAL NUMBER PLATE IS LOCATED NEAR THE FRONT OF THE HYDRAULIC PUMP.

THE SWING MOTOR SERIAL NUMBER PLATE IS LOCATED ON THE TOP OF THE SWING MOTOR.

THE PROPEL MOTOR SERIAL NUMBER PLATE IS LOCATED ON THE REAR OF THE PROPEL MOTOR.

THE CONTROL VALVE SERIAL NUMBER PLATE IS LOCATED ON THE UPPER LEFT-HAND SIDE OF THE CONTROL VALVE.

LEFT SIDE, RIGHT SIDE, FRONT AND REAR OF THE EXCAVATOR ARE VIEWED BY FACING IN THE DIRECTION OF THE EXCAVATOR FORWARD TRAVEL.

IF PRODUCT IDENTIFICATION NUMBERS OR SERIAL NUMBERS ARE REQUIRED FOR WARRANTY CLAIMS OR CORRESPONDENSE PERTAINING TO THIS PRODUCT. IT IS EXTREMELY IMPORTANT THAT ALL CHARACTERS BE FURNISHED. THIS POINT CANNOT BE OVEREMPHASIZED.

## PRODUCT IDENTIFICATION NUMBER

T149014 -UN-07DEC01

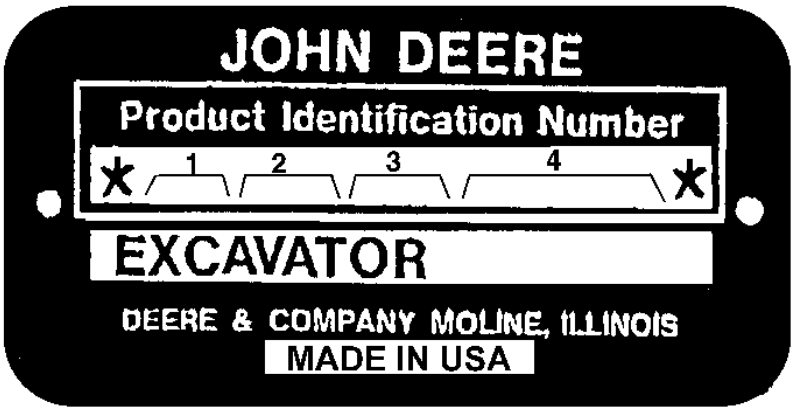


**T149014**

| | |
|---|---|
| 1. DESIGNATES EXCAVATOR MANUFACTURER | FF - JOHN DEERE-HITACHI |
| 2. DESIGNATES EXCAVATOR MODEL | 180 CW |
| 3. DESIGNATES EXCAVATOR CONFIGURATION | E |
| 4. DESIGNATES EXCAVATOR SERIAL NUMBER | 000000 |

## ENGINE SERIAL NUMBER

TP66723 -UN-01OCT99

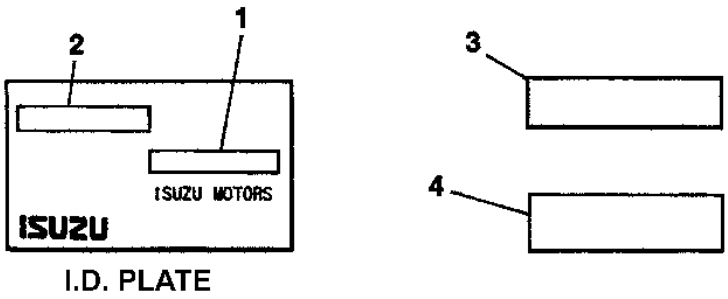


I.D. PLATE

TP66723

1. DESIGNATES MANUFACTURE DATE CODE
2. DESIGNATES ENGINE MODEL NAME
3. DESIGNATES ENGINE SERIAL NUMBER
4. DESIGNATES ENGINE MODEL NUMBER

## SERIAL NUMBER LISTING INFORMATION

SERIAL NUMBER INFORMATION IS LISTED TO SHOW ON WHICH MACHINES EACH PART CAN BE USED; FOR EXAMPLE:

| | |
|---|---|
| - | THE PART CAN BE USED ON ALL MACHINES. |
| 000000- | THE PART CAN BE USED ON ALL MACHINES BEGINNING WITH THE SERIAL NUMBER LISTED. |
| -000000 | THE PART CAN BE USED ON ALL MACHINES UP TO AND INCLUDING THE SERIAL NUMBER LISTED. |
| 000000-000000 | THE PART CAN BE USED ON ALL MACHINES BETWEEN AND INCLUDING THE SERIAL NUMBERS LISTED. |

WHEN XXXXXX'S ARE LISTED IN PLACE OF A SERIAL NUMBER, A SERIAL NUMBER CHANGE WAS MADE BUT THE EXACT SERIAL NUMBER WAS NOT AVAILABLE WHEN THE CATALOG WAS PRODUCED.

## DIRECTION ARROW

ARROWS ARE USED WITH ILLUSTRATIONS TO INDICATE THE FRONT OF THE UNIT. "RIGHT-HAND" AND "LEFT-HAND" SIDES ARE DETERMINED BY FACING IN THE DIRECTION OF MACHINE FORWARD TRAVEL.

## BOX-ENCLOSED ILLUSTRATIONS

A KEY NUMBER, SHOWN IN THE PARTS LIST, IS ASSIGNED TO A BOX ENCLOSING ALL PARTS SOLD AS A SERVICE ASSEMBLY.

## COMPLETE GOODS LISTINGS

COMPLETE GOODS ARE LISTED IN BOLD FACE TYPE. ORDER SEPARATELY. DO NOT INCLUDE ON REPLACEMENT PARTS ORDER.

## SI UNITS OF MEASURE

METRIC DIMENSIONS ARE GIVEN, WHERE APPLICABLE, THROUGHOUT THIS PARTS CATALOG.

## CHANGE INDICATOR LINE

CHANGES AFFECTING THE ORDERING OF PARTS ARE IDENTIFIED BY VERTICAL LINES MARKED IN THE LEFT-HAND MARGIN OF REVISED PARTS LISTING IMAGES. A LINE IS ALSO AT THE LEFT-HAND EDGE OF THE SAME PART NUMBER IN THE NUMERICAL INDEX TO SHOW THE LOCATION OF REVISED INFORMATION.

## ALPHABETICAL INDEX


| GRID | | PAGE |
|---|---|---|
| | A | |
| 2G17 | A/C COMPRESSOR DRIVE BELT | 1830 - 8 |
| 2G17 | A/C COMPRESSOR DRIVE BELT TENSION PULLEY | 1830 - 8 |
| 2H13 | ACCESS DOOR, HYDRAULIC PUMP COMPARTMENT | 1910 - 2 |
| 2H13 | ACCESS DOOR, RADIATOR COMPARTMENT | 1910 - 2 |
| 3K7 | ACCUMULATOR TO RETURN LINES | 3363 - 32 |
| 3K7 | ACCUMULATOR, BRAKE LINES | 3363 - 32 |
| 3K1 | ACCUMULATOR, TRANSMISSION LINES | 3363 - 26 |
| 1I17 | ADAPTER, AIR PRE-CLEANER | 0520 - 4 |
| 1G7 | ADAPTER, FEED PUMP | 0413 - 4 |
| 1I23 | ADAPTER, FUEL TANK | 0560 - 2 |
| 1H7 | ADAPTER, FUEL TRANSFER PUMP AND HOSES | 0421 - 2 |
| 1J20 | ADAPTER, STEERING VALVE | 0963 - 2 |
| 2G3 | ADJUSTER,SEAT | 1821 - 2 |
| 1I15 | AIR CLEANER | 0520 - 2 |
| 1I19 | AIR CLEANER HOSE | 0520 - 6 |
| 1I19 | AIR CLEANER PIPE | 0520 - 6 |
| 2G11 | AIR CONDITIONER | 1830 - 2 |
| 2G19 | AIR CONDITIONER COMPRESSOR | 1830 - 10 |
| 2G21 | AIR CONDITIONER COMPRESSOR | 1830 - 12 |
| 2G19 | AIR CONDITIONER CONDENSER | 1830 - 10 |
| 2G13 | AIR CONDITIONER EVAPORATOR | 1830 - 4 |
| 2G13 | AIR CONDITIONER EVAPORATOR HOSE | 1830 - 4 |
| 2G13 | AIR CONDITIONER PRESSURE SWITCH | 1830 - 4 |
| 2G19 | AIR CONDITIONER RECEIVER/DRYER | 1830 - 10 |
| 2G19 | AIR CONDITIONER SENSOR | 1830 - 10 |
| 2G13 | AIR CONDITIONER UNIT COMPONENTS | 1830 - 4 |
| 2G15 | AIR CONDITIONER UNIT COMPONENTS | 1830 - 6 |
| 2H3 | AIR DIFFUSER, CAB REAR | 1830 - 18 |
| 2H1 | AIR DISCHARGE DUCT, CAB HEATER AND A/C | 1830 - 16 |
| 2G11 | AIR DUCT, AIR CONDITIONER UNIT | 1830 - 2 |
| 2H1 | AIR DUCT, CAB LOWER RIGHT | 1830 - 16 |
| 2H1 | AIR INTAKE DUCT, CAB HEATER AND A/C | 1830 - 16 |
| 1G13 | AIR INTAKE MANIFOLD, ENGINE | 0414 - 2 |
| 1I17 | AIR PRE-CLEANER | 0520 - 4 |
| 1I15 | AIR RESTRICTION INDICATOR | 0520 - 2 |
| 1J12 | ALARM, TRAVEL WARNING (STEERING COLUMN) | 0920 - 4 |
| 1H10 | ALTERNATOR | 0423 - 2 |
| 1H13 | ALTERNATOR | 0423 - 6 |
| 1H11 | ALTERNATOR ASSEMBLY | 0423 - 4 |
| 1H15 | ALTERNATOR MOUNTING | 0429 - 2 |
| 2F3 | ANTENNA, RADIO | 1810 - 18 |
| 3D7 | ARM ASSEMBLY, BUCKET | 3344 - 4 |
| 3L5 | ARM CYLINDER | 3365 - 10 |
| 3L5 | ARM CYLINDER SEAL KIT | 3365 - 10 |
| 3D11 | ARM LINKS, BUCKET | 3344 - 8 |
| 3D7 | ARM, BUCKET | 3344 - 4 |
| 1G1 | ARM, ROCKER (ENGINE) | 0409 - 4 |
| 2F3 | ARM, WINDSHIELD WIPER | 1810 - 18 |
| 2G5 | ARMREST, CONSOLE | 1821 - 4 |
| 2G3 | ARMREST,SEAT | 1821 - 2 |
| 2E19 | ASHTRAY, CONSOLE | 1810 - 10 |
| 3J15 | AUXILIARY HYDRAULIC LINE (TO CONTROL VALVE) | 3363 - 16 |
| 3K15 | AUXILIARY PLUMBING BOOM LINES | 3363 - 40 |
| 1B24 | AXLE HOUSING, REAR | 0250 - 22 |
| 1E17 | AXLE LOCK CYLINDER | 0265 - 2 |
| 1E13 | AXLE LOCK CYLINDER CHECK VALVE | 0262 - 2 |
| 1D1 | AXLE, DIFFERENTIAL, REAR | 0250 - 48 |
| 1C7 | AXLE, REAR, TRANSMISSION SHAFT | 0250 - 30 |
| | B | |
| 3B9 | BACKFILL BLADE | 3301 - 2 |
| 2G9 | BASE, SEAT | 1821 - 8 |
| 2C3 | BATTERY | 1671 - 2 |
| 2C3 | BATTERY CABLE | 1671 - 2 |
| 2C3 | BATTERY COVER | 1671 - 2 |
| 2C3 | BATTERY RELAY | 1671 - 2 |
| 1H11 | BEARING, ALTERNATOR | 0423 - 4 |
| 2D24 | BEARING, SWING | 1740 - 14 |
| 1F7 | BEARINGS, MAIN, ENGINE | 0401 - 2 |
| 2G17 | BELT, A/C COMPRESSOR DRIVE | 1830 - 8 |
| 2G7 | BELT, SEAT | 1821 - 6 |
| 1B6 | BEVEL GEAR AND HUB ASSEMBLY, FRONT AXLE | 0250 - 4 |
| 1B8 | BEVEL GEAR AND HUB ASSEMBLY, FRONT AXLE (CONTINUED) | 0250 - 6 |
| 1C19 | BEVEL GEAR, REAR AXLE | 0250 - 42 |
| 2E21 | BEVERAGE HOLDER | 1810 - 12 |
| 3B9 | BLADE | 3301 - 2 |
| 3D3 | BLADE CONTROL LEVER AND VALVE | 3315 - 6 |
| 3D3 | BLADE CONTROL VALVE HOSES (BLADE VALVE TO MAIN CONTROL VALVE) | 3315 - 6 |
| 1E19 | BLADE CYLINDER | 0265 - 4 |
| 1E15 | BLADE CYLINDER CHECK VALVE | 0262 - 4 |
| 3B11 | BLADE LINES | 3301 - 4 |
| 1D17 | BLADE LINES, ROTARY MANIFOLD | 0260 - 14 |
| 1D19 | BLADE LINES, ROTARY MANIFOLD | 0260 - 16 |
| 1E3 | BLADE LINES, ROTARY MANIFOLD | 0260 - 24 |
| 2F3 | BLADE, WINDSHIELD WIPER | 1810 - 18 |
| 1B12 | BLEED VALVE, FRONT AXLE HOUSING | 0250 - 10 |
| 1B14 | BLEED VALVE, FRONT AXLE HOUSING (CONTINUED) | 0250 - 12 |
| 1F11 | BLOCK, CYLINDER | 0404 - 2 |
| 2G23 | BOLT, WING, CONDENSOR SCREEN | 1830 - 14 |
| 1F23 | BOLTS, HEAD, ENGINE | 0409 - 2 |
| 3D19 | BOOM ARM CYLINDER (MONO) | 3344 - 16 |
| 3E1 | BOOM ASSEMBLY (2 PIECE) | 3344 - 22 |
| 3G15 | BOOM BOTTOM HYDRAULIC LINE (FROM CONTROL VALVE) | 3360 - 32 |
| 3L3 | BOOM CYLINDER, LEFT (2 PIECE BOOM) | 3365 - 8 |
| 3K23 | BOOM CYLINDER, LH (MONO BOOM) | 3365 - 4 |
| 3K21 | BOOM CYLINDER, RH (MONO BOOM) | 3365 - 2 |
| 3L1 | BOOM CYLINDER, RIGHT (2 PIECE BOOM) | 3365 - 6 |
| 3G1 | BOOM DRAIN LINES, 2 PIECE | 3360 - 18 |
| 2D20 | BOOM FOOT PIN | 1740 - 10 |
| 3D13 | BOOM HYDRAULIC LINES (MONO) | 3344 - 10 |
| 2C16 | BOOM LIGHT | 1674 - 12 |
| 2C10 | BOOM LIGHT WIRING HARNESS (MONO BOOM) | 1674 - 6 |
| 2D9 | BOOM LIGHT WIRING HARNESS (MONO BOOM) | 1674 - 30 |
| 2C8 | BOOM LIGHT WIRING HARNESS (2 PIECE) | 1674 - 4 |
| 2C18 | BOOM LIGHT, 2 PIECE | 1674 - 14 |
| 3K15 | BOOM LINE (AUXILIARY PLUMBING) | 3363 - 40 |
| 3K15 | BOOM LINE TO BOOM LINE HOSE (AUXILIARY PLUMBING) | 3363 - 40 |
| 3D23 | BOOM LINES, LUBRICATION (MONO) | 3344 - 20 |
| 3D5 | BOOM, MONO | 3344 - 2 |
| 2B10 | BOOT, BRAKE VALVE | 1063 - 2 |
| 3C24 | BOOT, DIG AND SWING PILOT VAVE, CONTROL LEVER AND COMPONENTS | 3315 - 2 |
| 2I9 | BOTTOM STRUCTURE COVERS | 1910 - 22 |
| 2C12 | BOX, CIRCUIT (CAB) | 1674 - 8 |
| 2C12 | BOX, FUSE (CAB) | 1674 - 8 |
| 1I13 | BRACKET (ENGINE CONTROL MOTOR) | 0515 - 4 |

**ALPHABETICAL INDEX - CONTINUED**


| GRID | | PAGE |
|---|---|---|
| 1I15 | BRACKET, AIR CLEANER | 0520 - 2 |
| 1H10 | BRACKET, ALTERNATOR | 0423 - 2 |
| 3E1 | BRACKET, BOOM ASSEMBLY (2 PIECE) | 3344 - 22 |
| 2B12 | BRACKET, BRAKE VALVE | 1063 - 4 |
| 1I5 | BRACKET, CHARGE AIR COOLER SCREEN MOUNTING BRACKET | 0510 - 8 |
| 2G23 | BRACKET, CONDENSER SCREEN | 1830 - 14 |
| 3I23 | BRACKET, CONTROL VALVE MOUNTING | 3362 - 56 |
| 3F21 | BRACKET, CONTROL VALVE RETURN LINE TO OIL COOLER | 3360 - 14 |
| 3K17 | BRACKET, COVER, HYDRAULIC TANK AND FILTER | 3364 - 2 |
| 2H21 | BRACKET, FRONT MIDDLE DECK COVER SUPPORT | 1910 - 10 |
| 1H5 | BRACKET, FUEL FILTER (ENGINE) | 0420 - 4 |
| 1H7 | BRACKET, FUEL TRANSFER PUMP AND HOSES | 0421 - 2 |
| 2C16 | BRACKET, HEAD, TAIL AND MONO BOOM LIGHTS | 1674 - 12 |
| 2H15 | BRACKET, HYDRAULIC PUMP COMPARTMENT COVER SUPPORT | 1910 - 4 |
| 2C12 | BRACKET, KEY SWITCH | 1674 - 8 |
| 3D5 | BRACKET, MONO BOOM | 3344 - 2 |
| 1I21 | BRACKET, MUFFLER | 0530 - 2 |
| 3F19 | BRACKET, OIL COOLER AND CONTROL VALVE RETURN LINES TO OIL TANK | 3360 - 12 |
| 3D1 | BRACKET, PILOT SHUT-OFF LEVER | 3315 - 4 |
| 3J21 | BRACKET, PILOT SIGNAL MANIFOLD MOUNTING | 3363 - 22 |
| 3L12 | BRACKET, PTO CONTROL VALVE AND COMPONENTS | 4060 - 2 |
| 1H23 | BRACKET, RADIATOR AND OIL COOLER | 0510 - 2 |
| 2H17 | BRACKET, RADIATOR COMPARTMENT COVER | 1910 - 6 |
| 2H19 | BRACKET, RADIATOR COMPARTMENT COVER | 1910 - 8 |
| 2H17 | BRACKET, RADIATOR COMPARTMENT PANEL | 1910 - 6 |
| 2H19 | BRACKET, RADIATOR COMPARTMENT PANEL | 1910 - 8 |
| 1I9 | BRACKET, RESERVE WATER TANK | 0510 - 12 |
| 1D9 | BRACKET, ROTARY MANIFOLD (UPPERSTRUCTURE) | 0260 - 6 |
| 1E1 | BRACKET, ROTARY MANIFOLD TO STABLIZER OUTRIGGER | 0260 - 22 |
| 2G9 | BRACKET, SEAT BASE | 1821 - 8 |
| 2G7 | BRACKET, SEAT BELT | 1821 - 6 |
| 1J12 | BRACKET, STEERING COLUMN | 0920 - 4 |
| 2E15 | BRACKET, SWING LOCK | 1810 - 6 |
| 2C18 | BRACKET, 2 PIECE BOOM LIGHT | 1674 - 14 |
| 2B4 | BRAKE ACCUMULATOR PRESSURE SWITCH | 1062 - 4 |
| 2B4 | BRAKE ACCUMULATOR TO BRAKE PEDAL LINES | 1062 - 4 |
| 2B4 | BRAKE ACCUMULATORS TO OIL TANK LINES | 1062 - 4 |
| 2B2 | BRAKE LINE TO CHECK VALVE | 1062 - 2 |
| 2B2 | BRAKE LINE TO FILTER | 1062 - 2 |
| 2B2 | BRAKE LINE TO ROTARY MANIFOLD | 1062 - 2 |
| 1E5 | BRAKE LINES | 0260 - 26 |
| 2B2 | BRAKE LINES | 1062 - 2 |
| 2B8 | BRAKE PEDAL | 1062 - 8 |
| 2B8 | BRAKE PEDAL LINKAGE | 1062 - 8 |
| 2E11 | BRAKE PEDAL LINKAGE | 1810 - 2 |
| 2B6 | BRAKE PEDAL PRESSURE SWITCH | 1062 - 6 |
| 2B4 | BRAKE PEDAL TO BRAKE ACCUMULATOR LINES | 1062 - 4 |
| 2B4 | BRAKE PEDAL TO OIL TANK LINES | 1062 - 4 |
| 2B6 | BRAKE PEDAL TO ROTARY MANIFOLD LINES | 1062 - 6 |
| 2B4 | BRAKE PEDAL, LINES AND LINKAGE | 1062 - 4 |
| 3H23 | BRAKE SOLENOID VALVE | 3362 - 32 |
| 1D21 | BRAKE VALVE | 0260 - 18 |
| 2B10 | BRAKE VALVE | 1063 - 2 |
| 3I21 | BRAKE VALVE | 3362 - 54 |
| 2B12 | BRAKE VALVES | 1063 - 4 |
| 1C1 | BRAKES, DISC, REAR AXLE | 0250 - 24 |
| 1C3 | BRAKES, DISC, REAR AXLE | 0250 - 26 |
| 1B18 | BRAKES, FRONT AXLE DISC | 0250 - 16 |
| 1B20 | BRAKES, FRONT AXLE DISC (CONTINUED) | 0250 - 18 |
| 1F13 | BREATHER, ENGINE VENTILATION | 0404 - 4 |
| 1H11 | BRUSH HOLDER, ALTERNATOR | 0423 - 4 |
| 3D7 | BUCKET ARM ASSEMBLY | 3344 - 4 |
| 3D11 | BUCKET ARM LINKS | 3344 - 8 |
| 3L7 | BUCKET CYLINDER | 3365 - 12 |
| 3D21 | BUCKET CYLINDER (MONO) | 3344 - 18 |
| 3L7 | BUCKET CYLINDER SEAL KIT | 3365 - 12 |
| 3C23 | BUCKET DATA SHEET | 3302 - 36 |
| 3C3 | BUCKET KIT, ROADBUILDER | 3302 - 16 |
| 3D9 | BUCKET LINK | 3344 - 6 |
| 3B23 | BUCKET, DITCH CLEANING, SUPER LONG FRONT | 3302 - 12 |
| 3B21 | BUCKET, DITCHING | 3302 - 10 |
| 3C1 | BUCKET, GENERAL PURPOSE | 3302 - 14 |
| 3B13 | BUCKET, GENERAL PURPOSE, HIGH CAPACITY | 3302 - 2 |
| 3B19 | BUCKET, SUPER LONG FRONT, 30 INCH | 3302 - 8 |
| 3C19 | BUCKET, TOOTH ASSEMBLY | 3302 - 32 |
| 3C21 | BUCKET, TOOTH ASSEMBLY | 3302 - 34 |
| 3C7 | BUCKET, TOOTH ASSEMBLY, HIGH CAPACITY | 3302 - 20 |
| 3C9 | BUCKET, TOOTH ASSEMBLY, HIGH CAPACITY | 3302 - 22 |
| 3C11 | BUCKET, TOOTH ASSEMBLY, HIGH CAPACITY | 3302 - 24 |
| 3C13 | BUCKET, TOOTH ASSEMBLY, HIGH CAPACITY | 3302 - 26 |
| 3C15 | BUCKET, TOOTH ASSEMBLY, HIGH CAPACITY | 3302 - 28 |
| 3C17 | BUCKET, TOOTH ASSEMBLY, HIGH CAPACITY | 3302 - 30 |
| 3B15 | BUCKETS, HEAVY-DUTY | 3302 - 4 |
| 3B17 | BUCKETS, HEAVY-DUTY | 3302 - 6 |
| 3B15 | BUCKETS, HEAVY-DUTY HIGH CAPACITY | 3302 - 4 |
| 3B17 | BUCKETS, HEAVY-DUTY HIGH CAPACITY | 3302 - 6 |
| 2D5 | BULB, FRONT HEAD LIGHT | 1674 - 26 |
| 2C16 | BULB, HEAD, TAIL AND MONO BOOM LIGHTS | 1674 - 12 |
| 2D7 | BULB, REAR HEAD LIGHT | 1674 - 28 |
| 2C18 | BULB, 2 PIECE BOOM LIGHT | 1674 - 14 |
| 2D18 | BUSHING, COUNTERWEIGHT REMOVAL HARDWARE | 1740 - 8 |
| 2B12 | BUSHING, BRAKE VALVE | 1063 - 4 |
| 2G7 | BUSHING, SEAT BELT | 1821 - 6 |
| 2D14 | BUSHINGS, MAIN FRAME | 1740 - 4 |


C


| | | |
|---|---|---|
| 2C22 | CAB DISPLAY MONITOR | 1674 - 18 |
| 2C22 | CAB DISPLAY MONITOR WIRING HARNESS | 1674 - 18 |
| 2C22 | CAB DISPLAY MONITOR WIRING HARNESS DIODE | 1674 - 18 |
| 2F7 | CAB DOOR COMPONENTS | 1810 - 22 |
| 2F15 | CAB DOOR HOLD OPEN LATCH COMPONENTS | 1810 - 30 |
| 2F15 | CAB DOOR HOLD OPEN LATCH HANDLE | 1810 - 30 |
| 2F7 | CAB DOOR INSIDE HANDRAIL | 1810 - 22 |
| 2F7 | CAB DOOR LATCH | 1810 - 22 |
| 2F7 | CAB DOOR LOCK | 1810 - 22 |
| 2F7 | CAB DOOR WINDOW | 1810 - 22 |
| 2C12 | CAB ELECTRICAL COMPONENTS | 1674 - 8 |
| 2C14 | CAB ELECTRICAL COMPONENTS (CONTINUED) | 1674 - 10 |
| 2F23 | CAB FLOOR PARTS | 1810 - 38 |
| 2F9 | CAB FRONT WINDOW | 1810 - 24 |
| 2F9 | CAB FRONT WINDOW HANDLE | 1810 - 24 |
| 2F9 | CAB FRONT WINDOW TRACK | 1810 - 24 |
| 2H1 | CAB HEATER AND A/C AIR DISCHARGE DUCT | 1830 - 16 |
| 2H1 | CAB HEATER AND A/C AIR INTAKE FILTER | 1830 - 16 |
| 2H1 | CAB HEATER/AIR CONDITIONER AIR INTAKE DUCT | 1830 - 16 |
| 2E21 | CAB INSIDE LOWER RIGHT COVER | 1810 - 12 |
| 2E17 | CAB LEFT CONSOLE | 1810 - 8 |
| 2E19 | CAB LEFT CONSOLE COVER | 1810 - 10 |
| 2F5 | CAB LEFT HANDRAIL | 1810 - 20 |
| 2F5 | CAB LEFT WINDOW | 1810 - 20 |
| 2H1 | CAB LOWER RIGHT AIR DUCT | 1830 - 16 |

**ALPHABETICAL INDEX - CONTINUED**


| GRID | | PAGE |
|---|---|---|
| 2E23 | CAB MOUNT ISOLATOR (TO MAIN FRAME) | 1810 - 14 |
| 2E23 | CAB MOUNTING (TO MAIN FRAME) | 1810 - 14 |
| 2H3 | CAB REAR AIR DIFFUSER | 1830 - 18 |
| 2H3 | CAB REAR CONSOLE COVER | 1830 - 18 |
| 2H3 | CAB REAR POWER SUPPLY | 1830 - 18 |
| 2H3 | CAB REAR POWER SUPPLY WIRING HARNESS | 1830 - 18 |
| 2F5 | CAB REAR WINDOW | 1810 - 20 |
| 2E17 | CAB RIGHT CONSOLE | 1810 - 8 |
| 2E19 | CAB RIGHT CONSOLE COVER | 1810 - 10 |
| 2F11 | CAB RIGHT WINDOW | 1810 - 26 |
| 2F11 | CAB RIGHT WINDOW GUARD | 1810 - 26 |
| 2F5 | CAB ROOF | 1810 - 20 |
| 2F13 | CAB TOP HATCH | 1810 - 28 |
| 2F13 | CAB TOP HATCH CYLINDER | 1810 - 28 |
| 2F13 | CAB TOP SUN SHADE | 1810 - 28 |
| 2F13 | CAB TOP WINDOW | 1810 - 28 |
| 2F5 | CAB TOP, HEADLINER | 1810 - 20 |
| 2C12 | CAB WIRING HARNESS | 1674 - 8 |
| 2C14 | CAB WIRING HARNESS (CONTINUED) | 1674 - 10 |
| 2G1 | CAB, FLOOR PLATE | 1810 - 40 |
| 2F1 | CAB,COMPLETE | 1810 - 16 |
| 2C3 | CABLE, BATTERY | 1671 - 2 |
| 1I11 | CABLE, ENGINE CONTROL | 0515 - 2 |
| 1J7 | CABLE, STOP (ENGINE) | 0560 - 10 |
| 1G1 | CAMSHAFT (ENGINE) | 0409 - 4 |
| 1I23 | CAP, FILLER, FUEL TANK | 0560 - 2 |
| 1F9 | CAP, FILLER, ROCKER ARM COVER | 0402 - 2 |
| 1H23 | CAP, RADIATOR AND OIL COOLER | 0510 - 2 |
| 1I9 | CAP, RESERVE WATER TANK | 0510 - 12 |
| 1B20 | CARRIER, DISC BRAKES, FRONT AXLE (CONTINUED) | 0250 - 18 |
| 3L15 | CARRIER, PLANET PINION CARRIER, GEARBOX, SWING MOTOR | 4360 - 2 |
| 1J14 | CASE (STEERING COLUMN INDICATOR PANEL) | 0920 - 6 |
| 2J1 | CASE, MAIN HYDRAULIC PUMP DRIVE | 2160 - 4 |
| 1H17 | CASE, TIMING GEAR | 0433 - 2 |
| 1C5 | CASE, TRANSMISSION, REAR AXLE | 0250 - 28 |
| 2B15 | CAUTION LABELS | 1322 - 2 |
| 1I5 | CHARGE AIR COOLER SCREEN | 0510 - 8 |
| 1I5 | CHARGE AIR COOLER SCREEN MOUNTING BRACKET | 0510 - 8 |
| 2B2 | CHECK VALVE TO BRAKE LINE | 1062 - 2 |
| 2B2 | CHECK VALVE TO BRAKE LINE FILTER | 1062 - 2 |
| 1E13 | CHECK VALVE, AXLE LOCK CLINDER | 0262 - 2 |
| 1E17 | CHECK VALVE, AXLE LOCK CYLINDER | 0265 - 2 |
| 1E15 | CHECK VALVE, BLADE CYLINDER | 0262 - 4 |
| 1E9 | CHECK VALVE, FRONT AXLE LOCK LINES | 0260 - 30 |
| 2H3 | CIGARETTE LIGHTER | 1830 - 18 |
| 2C12 | CIRCUIT BOX (CAB) | 1674 - 8 |
| 1I15 | CLEANER, AIR | 0520 - 2 |
| 1C15 | CLUTCH PACK, REAR AXLE | 0250 - 38 |
| 2G21 | CLUTCH, COMPRESSOR, AIR CONDITIONER | 1830 - 12 |
| 1C13 | CLUTCH, TRANSMISSION, REAR AXLE | 0250 - 36 |
| 1H11 | COIL, ALTERNATOR | 0423 - 4 |
| 1J12 | COLUMN, STEERING (ASSEMBLY) | 0920 - 4 |
| 1J10 | COLUMN, STEERING (COMPLETE) | 0920 - 2 |
| 2H23 | COMPARTMENT COVER DOORS | 1910 - 12 |
| 2H23 | COMPARTMENT DOOR LOCK | 1910 - 12 |
| 2F1 | COMPLETE CAB | 1810 - 16 |
| 1G17 | COMPONENTS, TURBOCHARGER | 0416 - 4 |
| 2G17 | COMPRESSOR TO CONDENSER REFRIDGERANT HOSE | 1830 - 8 |
| 2H5 | COMPRESSOR TO HVAC UNIT HOSE (REFRIDGERANT) | 1830 - 20 |
| 2G19 | COMPRESSOR, AIR CONDITIONER | 1830 - 10 |
| 2G21 | COMPRESSOR, AIR CONDITIONER | 1830 - 12 |
| 2G23 | CONDENSER SCREEN | 1830 - 14 |
| 2G17 | CONDENSER TO COMPRESSOR REFRIDGERANT HOSE | 1830 - 8 |
| 2G17 | CONDENSER TO RECEIVER/DRYER REFRIDGERANT HOSE | 1830 - 8 |
| 2G19 | CONDENSER, AIR CONDITIONER | 1830 - 10 |
| 1F7 | CONNECTING RODS | 0401 - 2 |
| 2G5 | CONSOLE ARMREST | 1821 - 4 |
| 2E19 | CONSOLE COVER, CAB LEFT | 1810 - 10 |
| 2H3 | CONSOLE COVER, CAB REAR | 1830 - 18 |
| 2E19 | CONSOLE COVER, CAB RIGHT | 1810 - 10 |
| 2E19 | CONSOLE STORAGE COMPARTMENT, LEFT | 1810 - 10 |
| 2E17 | CONSOLE, CAB LEFT | 1810 - 8 |
| 2E17 | CONSOLE, CAB RIGHT | 1810 - 8 |
| 3C24 | CONTROL LEVER COMPONENTS, PILOT (DIG AND SWING) | 3315 - 2 |
| 3D3 | CONTROL LEVER, BLADE | 3315 - 6 |
| 1I13 | CONTROL MOTOR, ENGINE | 0515 - 4 |
| 2B8 | CONTROL PEDAL (ACCELERATOR, BRAKE) | 1062 - 8 |
| 3H11 | CONTROL VALVE | 3362 - 20 |
| 3G19 | CONTROL VALVE (1/8) | 3362 - 4 |
| 3G21 | CONTROL VALVE (2/8) | 3362 - 6 |
| 3G23 | CONTROL VALVE (3/8) | 3362 - 8 |
| 3H1 | CONTROL VALVE (4/8) | 3362 - 10 |
| 3H3 | CONTROL VALVE (5/8) | 3362 - 12 |
| 3H5 | CONTROL VALVE (6/8) | 3362 - 14 |
| 3H7 | CONTROL VALVE (7/8) | 3362 - 16 |
| 3H9 | CONTROL VALVE (8/8) | 3362 - 18 |
| 3J21 | CONTROL VALVE BOTTOM TO PILOT SIGNAL MANIFOLD LINE | 3363 - 22 |
| 3D3 | CONTROL VALVE HOSES, BLADE (BLADE VALVE TO MAIN CONTROL VALVE) | 3315 - 6 |
| 3G7 | CONTROL VALVE HYDRAULIC LINES (MONO BOOM) | 3360 - 24 |
| 3G9 | CONTROL VALVE HYDRAULIC LINES (2 PIECE BOOM) | 3360 - 26 |
| 3G11 | CONTROL VALVE LINES TO SWING MOTOR | 3360 - 28 |
| 3G3 | CONTROL VALVE MAIN HYDRAULIC HOSES (MONO BOOM) | 3360 - 20 |
| 3G5 | CONTROL VALVE MAIN HYDRAULIC HOSES (2 PIECE BOOM) | 3360 - 22 |
| 3I23 | CONTROL VALVE MOUNTING BRACKET | 3362 - 56 |
| 3J19 | CONTROL VALVE PIPINGS TO SHUTTLE VALVE | 3363 - 20 |
| 3J19 | CONTROL VALVE PRESSURE SENSOR | 3363 - 20 |
| 3J21 | CONTROL VALVE PRESSURE SENSOR | 3363 - 22 |
| 3F21 | CONTROL VALVE RETURN LINE TO OIL COOLER | 3360 - 14 |
| 3I11 | CONTROL VALVE SIDE, PILOT SIGNAL MANIFOLD | 3362 - 44 |
| 3J1 | CONTROL VALVE TO HYDRAULIC PUMP HOSE (HIGH PRESSURE) | 3363 - 2 |
| 3J3 | CONTROL VALVE TO HYDRAULIC PUMP HOSES | 3363 - 4 |
| 3J3 | CONTROL VALVE TO HYDRAULIC PUMP LINES | 3363 - 4 |
| 3J5 | CONTROL VALVE TO PILOT RELIEF VALVE LINE | 3363 - 6 |
| 3J9 | CONTROL VALVE TO PILOT SIGNAL MANIFOLD HOSES | 3363 - 10 |
| 3J7 | CONTROL VALVE TO ROTARY MANIFOLD HOSE | 3363 - 8 |
| 3D3 | CONTROL VALVE, BLADE | 3315 - 6 |
| 3I17 | CONTROL VALVE, FLOW | 3362 - 50 |
| 3G13 | CONTROL VALVE, MAIN | 3360 - 30 |
| 3L12 | CONTROL VALVE, PTO | 4060 - 2 |
| 3I15 | CONTROL VALVE, SOLENOID | 3362 - 48 |
| 2C6 | CONTROLLER | 1674 - 2 |
| 2G11 | CONTROLLER, AIR CONDITIONER | 1830 - 2 |
| 2D1 | CONTROLLER, MIC | 1674 - 22 |
| 1G19 | COOLANT WATER PUMP | 0417 - 2 |
| 1H1 | COOLER, ENGINE OIL | 0419 - 2 |
| 1H23 | COOLER, OIL | 0510 - 2 |
| 1G19 | CORROSION RESISTOR (WATER PUMP) | 0417 - 2 |

**ALPHABETICAL INDEX - CONTINUED**


| GRID | | PAGE |
|---|---|---|
| 2D16 | COUNTERWEIGHT | 1740 - 6 |
| 2D18 | COUNTERWEIGHT REMOVAL HARDWARE | 1740 - 8 |
| 3F21 | COUPLING, CONTROL VALVE RETURN LINE TO OIL COOLER | 3360 - 14 |
| 1G11 | COUPLING, INJECTION PUMP | 0413 - 8 |
| 3F19 | COUPLING, OIL COOLER AND CONTROL VALVE RETURN LINES TO OIL TANK | 3360 - 12 |
| 1F9 | COVER VALVE | 0402 - 2 |
| 2D18 | COVER, COUNTERWEIGHT REMOVAL HARDWARE | 1740 - 8 |
| 2C3 | COVER, BATTERY | 1671 - 2 |
| 2I9 | COVER, BOTTOM STRUCTURE | 1910 - 22 |
| 2E21 | COVER, CAB INSIDE LOWER RIGHT | 1810 - 12 |
| 2E19 | COVER, CAB LEFT CONSOLE | 1810 - 10 |
| 2H3 | COVER, CAB REAR CONSOLE | 1830 - 18 |
| 2E19 | COVER, CAB RIGHT CONSOLE | 1810 - 10 |
| 2I5 | COVER, ENGINE | 1910 - 18 |
| 1F13 | COVER, ENGINE SIDE | 0404 - 4 |
| 2E13 | COVER, FOOT REST | 1810 - 4 |
| 1B12 | COVER, FRONT AXLE HOUSING | 0250 - 10 |
| 1B14 | COVER, FRONT AXLE HOUSING (CONTINUED) | 0250 - 12 |
| 2H21 | COVER, FRONT MIDDLE DECK | 1910 - 10 |
| 2C16 | COVER, HEAD LIGHTS | 1674 - 12 |
| 2H15 | COVER, HYDRAULIC PUMP COMPARTMENT | 1910 - 4 |
| 2H13 | COVER, HYDRAULIC PUMP COMPARTMENT ACCESS | 1910 - 2 |
| 3F17 | COVER, PILOT HYDRAULIC PUMP | 3360 - 10 |
| 1F13 | COVER, PUSH ROD | 0404 - 4 |
| 2H17 | COVER, RADIATOR COMPARTMENT | 1910 - 6 |
| 2H19 | COVER, RADIATOR COMPARTMENT | 1910 - 8 |
| 2H21 | COVER, RADIATOR COMPARTMENT | 1910 - 10 |
| 2H13 | COVER, RADIATOR COMPARTMENT ACCESS | 1910 - 2 |
| 1I7 | COVER, RADIATOR TOP | 0510 - 10 |
| 1F9 | COVER, ROCKER ARM | 0402 - 2 |
| 1D9 | COVER, ROTARY MANIFOLD (UPPERSTRUCTURE) | 0260 - 6 |
| 3F5 | COVER, STABILIZER LINES | 3348 - 10 |
| 3F7 | COVER, STABILIZER LINES | 3348 - 12 |
| 1H17 | COVER, TIMING GEAR | 0433 - 2 |
| 1C21 | COVER, TRANSMISSION PUMP HOUSING (REAR AXLE) | 0250 - 44 |
| 2F19 | COVER, WINDOW | 1810 - 34 |
| 2F17 | COVER, WITHOUT RADIO | 1810 - 32 |
| 1H11 | COVERS, ALTERNATOR | 0423 - 4 |
| 1D21 | COVERS, BRAKE VALVE | 0260 - 18 |
| 2C12 | COVERS, FUSE BOX (CAB) | 1674 - 8 |
| 3F15 | COVERS, LH REGULATOR (MAIN HYDRAULIC PUMP) | 3360 - 8 |
| 3F13 | COVERS, RH REGULATOR (MAIN HYDRAULIC PUMP) | 3360 - 6 |
| 1J12 | COVERS, STEERING COLUMN | 0920 - 4 |
| 1F7 | CRANKSHAFT | 0401 - 2 |
| 1F7 | CRANKSHAFT DAMPER PULLEY | 0401 - 2 |
| 1F7 | CRANKSHAFT GEAR | 0401 - 2 |
| 1B16 | CROSS JOINT, FRONT AXLE | 0250 - 14 |
| 2G3 | CUSHION,SEAT | 1821 - 2 |
| 3C5 | CUTTING EDGE,ESCO BUCKET | 3302 - 18 |
| 1F11 | CYLINDER BLOCK | 0404 - 2 |
| 1F13 | CYLINDER BLOCK SIDE COVERS | 0404 - 4 |
| 1F23 | CYLINDER HEAD, ENGINE | 0409 - 2 |
| 3F9 | CYLINDER HEAD, MAIN HYDRAULIC PUMP | 3360 - 2 |
| 1F11 | CYLINDER LINER | 0404 - 2 |
| 1F11 | CYLINDER LINER KITS | 0404 - 2 |
| 3L5 | CYLINDER, ARM | 3365 - 10 |
| 1E17 | CYLINDER, AXLE LOCK | 0265 - 2 |
| 1E19 | CYLINDER, BLADE | 0265 - 4 |
| 3B11 | CYLINDER, BLADE LINES | 3301 - 4 |
| 3D19 | CYLINDER, BOOM (MONO) | 3344 - 16 |
| 3L3 | CYLINDER, BOOM, LEFT (2 PIECE BOOM) | 3365 - 8 |
| 3L1 | CYLINDER, BOOM, RIGHT (2 PIECE BOOM) | 3365 - 6 |
| 2B10 | CYLINDER, BRAKE VALVE | 1063 - 2 |
| 2B12 | CYLINDER, BRAKE VALVE | 1063 - 4 |
| 3L7 | CYLINDER, BUCKET | 3365 - 12 |
| 3D21 | CYLINDER, BUCKET (MONO) | 3344 - 18 |
| 2F13 | CYLINDER, CAB TOP HATCH | 1810 - 28 |
| 1E9 | CYLINDER, FRONT AXLE LOCK LINES | 0260 - 30 |
| 3K23 | CYLINDER, LH BOOM (MONO BOOM) | 3365 - 4 |
| 3L9 | CYLINDER, POSITIONING | 3365 - 14 |
| 1D13 | CYLINDER, PROPEL MOTOR | 0260 - 10 |
| 1D15 | CYLINDER, PROPEL MOTOR | 0260 - 12 |
| 3K21 | CYLINDER, RH BOOM (MONO BOOM) | 3365 - 2 |
| 1E21 | CYLINDER, STABILIZER | 0265 - 6 |
| 3L17 | CYLINDER, SWING MOTOR | 4360 - 4 |


D


| | | |
|---|---|---|
| 1F7 | DAMPER PULLEY, CRANKSHAFT | 0401 - 2 |
| 2B19 | DECALS | 1322 - 6 |
| 2B21 | DECALS | 1322 - 8 |
| 2B17 | DECALS, IDENTIFICATION | 1322 - 4 |
| 2B15 | DECALS, WARNING | 1322 - 2 |
| 2H21 | DECK COVER, FRONT MIDDLE | 1910 - 10 |
| 1F5 | DIESEL ENGINE (WHOLE ASSEMBLY) | 0400 - 2 |
| 1D1 | DIFFERENTIAL, REAR AXLE | 0250 - 48 |
| 2H3 | DIFFUSER, CAB REAR AIR | 1830 - 18 |
| 3C24 | DIG AND SWING PILOT VAVE, CONTROL LEVER AND COMPONENTS | 3315 - 2 |
| 2C22 | DIODE, CAB DISPLAY MONITOR WIRING HARNESS | 1674 - 18 |
| 2C12 | DIODES (CAB ELECTRICAL COMPONENTS) | 1674 - 8 |
| 1F21 | DIPSTICK, ENGINE | 0407 - 8 |
| 2J1 | DIPSTICK, MAIN HYDRAULIC PUMP DRIVE | 2160 - 4 |
| 3L15 | DIPSTICK, SWING MOTOR AND GEARBOX | 4360 - 2 |
| 1B18 | DISC BRAKES, FRONT AXLE | 0250 - 16 |
| 1B20 | DISC BRAKES, FRONT AXLE (CONTINUED) | 0250 - 18 |
| 1C1 | DISC BRAKES, REAR AXLE | 0250 - 24 |
| 1C3 | DISC BRAKES, REAR AXLE | 0250 - 26 |
| 2C22 | DISPLAY MONITOR, CAB | 1674 - 18 |
| 3B23 | DITCH CLEANING BUCKET, SUPER LONG FRONT | 3302 - 12 |
| 3B21 | DITCHING BUCKET | 3302 - 10 |
| 2F3 | DOME LIGHT WIRING HARNESS | 1810 - 18 |
| 2F3 | DOME LIGHT, CAB | 1810 - 18 |
| 2F7 | DOOR COMPONENTS, CAB | 1810 - 22 |
| 2I3 | DOOR HANDLE | 1910 - 16 |
| 2F7 | DOOR LATCH, CAB | 1810 - 22 |
| 2I1 | DOOR LOCK | 1910 - 14 |
| 2F7 | DOOR LOCK, CAB | 1810 - 22 |
| 2F7 | DOOR WINDOW, CAB | 1810 - 22 |
| 2H13 | DOOR, HYDRAULIC PUMP COMPARTMENT ACCESS | 1910 - 2 |
| 2H13 | DOOR, RADIATOR COMPARTMENT ACCESS | 1910 - 2 |
| 2H23 | DOORS,COMPARTMENT COVER | 1910 - 12 |
| 1G15 | DRAIN LINE, TURBOCHARGER | 0416 - 2 |
| 1B12 | DRAIN PLUG, FRONT AXLE HOUSING | 0250 - 10 |
| 1B14 | DRAIN PLUG, FRONT AXLE HOUSING (CONTINUED) | 0250 - 12 |
| 1I23 | DRAIN VALVE, FUEL TANK | 0560 - 2 |
| 2G11 | DUCT, AIR CONDITIONER UNIT | 1830 - 2 |
| 2H1 | DUCT, CAB HEATER AND A/C AIR DISCHARGE | 1830 - 16 |
| 2H1 | DUCT, CAB HEATER AND A/C AIR INTAKE | 1830 - 16 |
| 2H1 | DUCT, CAB LOWER RIGHT AIR | 1830 - 16 |

## ALPHABETICAL INDEX - CONTINUED


| GRID | | PAGE |
|---|---|---|
| 2H3 | DUCT, REAR TRAY | 1830 - 18 |

E

| | | |
|---|---|---|
| 2C12 | ELECTRICAL COMPONENTS (CAB) | 1674 - 8 |
| 2C14 | ELECTRICAL COMPONENTS (CAB) (CONTINUED) | 1674 - 10 |
| 2C12 | ELECTRICAL COMPONENTS, CAB | 1674 - 8 |
| 2C14 | ELECTRICAL COMPONENTS, CAB (CONTINUED) | 1674 - 10 |
| 2C5 | ELECTRICAL WIRING HARNESS KIT | 1674 - 1 |
| 1I15 | ELEMENT, AIR CLEANER | 0520 - 2 |
| 1H5 | ELEMENT, FUEL FILTER (ENGINE) | 0420 - 4 |
| 1H15 | ENGINE ALTERNATOR MOUNTING | 0429 - 2 |
| 1F11 | ENGINE BLOCK FITTINGS AND SEALS | 0404 - 2 |
| 1G1 | ENGINE CAMSHAFT | 0409 - 4 |
| 1I11 | ENGINE CONTROL CABLE | 0515 - 2 |
| 1I13 | ENGINE CONTROL MOTOR | 0515 - 4 |
| 2D3 | ENGINE CONTROL, SWITCH BOX | 1674 - 24 |
| 2I5 | ENGINE COVER | 1910 - 18 |
| 1F23 | ENGINE CYLINDER HEAD | 0409 - 2 |
| 1G3 | ENGINE EXHAUST MANIFOLD | 0410 - 2 |
| 1G3 | ENGINE EXHAUST MANIFOLD (ENGINE) | 0410 - 2 |
| 1G3 | ENGINE EXHAUST MANIFOLD GASKET | 0410 - 2 |
| 1H15 | ENGINE FAN BELT | 0429 - 2 |
| 2H21 | ENGINE FRONT FIREWALL PANEL | 1910 - 10 |
| 1H3 | ENGINE FUEL FILTER | 0420 - 2 |
| 1H5 | ENGINE FUEL FILTER | 0420 - 4 |
| 1H5 | ENGINE FUEL FILTER BRACKET | 0420 - 4 |
| 1H5 | ENGINE FUEL FILTER LINES | 0420 - 4 |
| 1G9 | ENGINE FUEL INJECTION PUMP COLLAR | 0413 - 6 |
| 1G5 | ENGINE FUEL INJECTOR | 0413 - 2 |
| 1F23 | ENGINE GLOW PLUGS | 0409 - 2 |
| 1F23 | ENGINE HANGERS | 0409 - 2 |
| 1F23 | ENGINE HEAD BOLTS | 0409 - 2 |
| 1F23 | ENGINE HEAD GASKET | 0409 - 2 |
| 1G9 | ENGINE INJECTION PUMP MOUNTING | 0413 - 6 |
| 1G13 | ENGINE INTAKE MANIFOLD | 0414 - 2 |
| 1F7 | ENGINE MAIN BEARINGS | 0401 - 2 |
| 1G13 | ENGINE MANIFOLD, INTAKE | 0414 - 2 |
| 1H1 | ENGINE OIL COOLER | 0419 - 2 |
| 1F21 | ENGINE OIL DIPSTICK | 0407 - 8 |
| 1F17 | ENGINE OIL FILTER | 0407 - 4 |
| 1F17 | ENGINE OIL FILTER HEAD | 0407 - 4 |
| 1F17 | ENGINE OIL FILTER HOSES | 0407 - 4 |
| 1F19 | ENGINE OIL LINES,(TO TURBOCHARGER AND INJECTION PUMP) | 0407 - 6 |
| 1F21 | ENGINE OIL PAN | 0407 - 8 |
| 1F15 | ENGINE OIL PUMP | 0407 - 2 |
| 1H19 | ENGINE OVERHAUL GASKET SETS | 0452 - 2 |
| 1J3 | ENGINE PIPING TO FUEL TANK | 0560 - 6 |
| 1G1 | ENGINE PUSH RODS | 0409 - 4 |
| 1G1 | ENGINE ROCKER ARM | 0409 - 4 |
| 1H9 | ENGINE STARTING MOTOR | 0422 - 2 |
| 1J7 | ENGINE STOP CABLE | 0560 - 10 |
| 1F19 | ENGINE VACUUM LINES | 0407 - 6 |
| 1G1 | ENGINE VALVES | 0409 - 4 |
| 1F13 | ENGINE VENTILATION SYSTEM | 0404 - 4 |
| 2C24 | ENGINE WIRING HARNESS | 1674 - 20 |
| 1H13 | ENGINE, ALTERNATOR | 0423 - 6 |
| 1F5 | ENGINE, DIESEL (WHOLE ASSEMBLY) | 0400 - 2 |
| 1H15 | ENGINE, FAN | 0429 - 2 |
| 1G5 | ENGINE, FUEL INJECTION PUMP | 0413 - 2 |
| 1G5 | ENGINE, FUEL INJECTOR | 0413 - 2 |
| 1H13 | ENGINE, GENERATOR | 0423 - 6 |
| 1H13 | ENGINE, GLOW PLUG CONTROLLER | 0423 - 6 |
| 1G5 | ENGINE, LINES, FUEL INJECTION PUMP | 0413 - 2 |
| 1G5 | ENGINE, NOZZLE, FUEL INJECTOR | 0413 - 2 |
| 1H13 | ENGINE, STARTER | 0423 - 6 |
| 2F3 | ESCAPE HAMMER | 1810 - 18 |
| 3C5 | ESCO BUCKET CUTTING EDGE | 3302 - 18 |
| 3C5 | ESCO BUCKET TEETH | 3302 - 18 |
| 2G13 | EVAPORATOR, AIR CONDITIONER | 1830 - 4 |
| 1G3 | EXHAUST MANIFOLD (ENGINE) | 0410 - 2 |
| 1I21 | EXHAUST PIPE | 0530 - 2 |
| 1G1 | EXHAUST VALVE (ENGINE) | 0409 - 4 |
| 1G15 | EXHAUST, TURBOCHARGER | 0416 - 2 |

F

| | | |
|---|---|---|
| 1H15 | FAN BELT | 0429 - 2 |
| 1H15 | FAN, ENGINE | 0429 - 2 |
| 1G7 | FEED PUMP, FUEL | 0413 - 4 |
| 1H7 | FEED PUMP, PRIMARY FUEL | 0421 - 2 |
| 1I23 | FILLER CAP, FUEL TANK | 0560 - 2 |
| 1F9 | FILLER CAP, ROCKER ARM COVER | 0402 - 2 |
| 3K17 | FILTER ELEMENT, HYDRAULIC TANK AND FILTER | 3364 - 2 |
| 1I15 | FILTER ELEMENT, AIR CLEANER | 0520 - 2 |
| 1I17 | FILTER ELEMENT, AIR PRE-CLEANER | 0520 - 4 |
| 1F17 | FILTER HEAD, ENGINE OIL | 0407 - 4 |
| 2B2 | FILTER TO BRAKE LINE | 1062 - 2 |
| 1I15 | FILTER, AIR CLEANER | 0520 - 2 |
| 2G11 | FILTER, AIR CONDITIONING AIR DUCT | 1830 - 2 |
| 2H1 | FILTER, CAB HEATER AND A/C AIR INTAKE | 1830 - 16 |
| 1F17 | FILTER, ENGINE OIL | 0407 - 4 |
| 1H5 | FILTER, FUEL (ENGINE) | 0420 - 4 |
| 1J5 | FILTER, FUEL PRIMARY AND WATER SEPARATOR HOSES AND FITTINGS | 0560 - 8 |
| 1I23 | FILTER, FUEL TANK | 0560 - 2 |
| 3K17 | FILTER, HYDRAULIC OIL TANK | 3364 - 2 |
| 3K19 | FILTER, HYDRAULIC OIL TANK | 3364 - 4 |
| 3K3 | FILTER, LEFT PILOT CONTROLLER TO SHUT-OFF VALVE | 3363 - 28 |
| 1J22 | FILTER, OIL, HOSE TO STEERING PRESSURE SENSOR | 0963 - 4 |
| 1H3 | FILTER, PRIMARY FUEL | 0420 - 2 |
| 3K5 | FILTER, RIGHT PILOT CONTROLLER TO SHUT-OFF VALVE | 3363 - 30 |
| 1C21 | FILTER, TRANSMISSION PUMP (REAR AXLE) | 0250 - 44 |
| 1I17 | FILTER,ELEMENT, AIR PRE-CLEANER | 0520 - 4 |
| 1B12 | FITTING PLUG, FRONT AXLE HOUSING | 0250 - 10 |
| 2B8 | FITTING, BRAKE PEDAL AND LINKAGE | 1062 - 8 |
| 3K7 | FITTING, RETURN LINES TO ACCUMULATOR | 3363 - 32 |
| 3F23 | FITTING, TEE (MONO BOOM DRAIN LINES) | 3360 - 16 |
| 3G1 | FITTING, TEE (2 PIECE BOOM DRAIN LINES) | 3360 - 18 |
| 1J5 | FITTINGS AND HOSES , PRIMARY FUEL FILTER AND WATER SEPARATOR | 0560 - 8 |
| 1F11 | FITTINGS AND SEALS, ENGINE BLOCK | 0404 - 2 |
| 1B14 | FITTNG PLUG, FRONT AXLE HOUSING (CONTINUED) | 0250 - 12 |
| 2B10 | FLANGE, BRAKE VALVE | 1063 - 2 |
| 2C14 | FLASHER, CAB (CONTINUED) | 1674 - 10 |
| 2F23 | FLOOR MAT | 1810 - 38 |
| 2G1 | FLOOR PLATE | 1810 - 40 |
| 1I15 | FLOW CONTROL HYDRAULIC VALVE, AIR CLEANER | 0520 - 2 |

## ALPHABETICAL INDEX - CONTINUED


| GRID | | PAGE |
|---|---|---|
| 1I17 | FLOW CONTROL HYDRAULIC VALVE, AIR PRE-CLEANER | 0520 - 4 |
| 3I17 | FLOW CONTROL VALVE | 3362 - 50 |
| 1G7 | FLOW CONTROL VALVE, HYDRAULIC, FEED PUMP | 0413 - 4 |
| 1F7 | FLYWHEEL | 0401 - 2 |
| 1H17 | FLYWHEEL HOUSING | 0433 - 2 |
| 3K11 | FOOT PEDAL LINES | 3363 - 36 |
| 2E13 | FOOT REST | 1810 - 4 |
| 2D12 | FRAME, MAIN | 1740 - 2 |
| 2D22 | FRAME, MAIN | 1740 - 12 |
| 2D20 | FRAME, MAIN, BOOM FOOT PIN | 1740 - 10 |
| 2D14 | FRAME, MAIN, BUSHINGS | 1740 - 4 |
| 2C18 | FRAME, 2 PIECE BOOM LIGHT | 1674 - 14 |
| 1B6 | FRONT AXLE BEVEL GEAR AND HUB ASSEMBLY | 0250 - 4 |
| 1B8 | FRONT AXLE BEVEL GEAR AND HUB ASSEMBLY (CONTINUED) | 0250 - 6 |
| 1B12 | FRONT AXLE HOUSING | 0250 - 10 |
| 1B14 | FRONT AXLE HOUSING (CONTINUED) | 0250 - 12 |
| 1E9 | FRONT AXLE LOCK LINES | 0260 - 30 |
| 1B18 | FRONT AXLE ROTORS AND DISC BRAKES | 0250 - 16 |
| 1B20 | FRONT AXLE ROTORS AND DISC BRAKES (CONTINUED) | 0250 - 18 |
| 1D23 | FRONT AXLE STEERING HOSES | 0260 - 20 |
| 1B22 | FRONT AXLE STEERING SHAFT | 0250 - 20 |
| 1B10 | FRONT AXLE UNIVERSAL JOINT AND SPUR GEAR | 0250 - 8 |
| 1B16 | FRONT AXLE YOKE AND UNIVERSAL JOINTS | 0250 - 14 |
| 3E3 | FRONT BOOM HYDRAULIC LINES (2 PIECE) | 3344 - 24 |
| 3E5 | FRONT BOOM HYDRAULIC LINES (2 PIECE) | 3344 - 26 |
| 2D5 | FRONT CAB HEAD LIGHT AND HARNESS | 1674 - 26 |
| 2H21 | FRONT MIDDLE DECK COVER | 1910 - 10 |
| 2H21 | FRONT MIDDLE DECK COVER SUPPORT BRACKET | 1910 - 10 |
| 2F9 | FRONT WINDOW, CAB | 1810 - 24 |
| 1G7 | FUEL FEED PUMP | 0413 - 4 |
| 1H5 | FUEL FILTER (ENGINE) | 0420 - 4 |
| 1H5 | FUEL FILTER BRACKET (ENGINE) | 0420 - 4 |
| 1H3 | FUEL FILTER, PRIMARY | 0420 - 2 |
| 1J5 | FUEL FILTER, PRIMARY AND WATER SEPARATOR HOSES AND FITTINGS | 0560 - 8 |
| 1J3 | FUEL HOSES, FUEL TRANSFER PUMP | 0560 - 6 |
| 1G5 | FUEL INJECTION PUMP | 0413 - 2 |
| 1G9 | FUEL INJECTION PUMP COLLAR | 0413 - 6 |
| 1G11 | FUEL INJECTION PUMP COUPLING | 0413 - 8 |
| 1G5 | FUEL INJECTOR | 0413 - 2 |
| 1G7 | FUEL PUMP, FEED | 0413 - 4 |
| 1I23 | FUEL TANK | 0560 - 2 |
| 1J3 | FUEL TANK PIPING TO ENGINE | 0560 - 6 |
| 1J1 | FUEL TANK SUPPORT MOUNTING HARDWARE | 0560 - 4 |
| 1H7 | FUEL TRANSFER PUMP AND HOSES | 0421 - 2 |
| 1J3 | FUEL TRANSFER PUMP, HOSES AND STRAINER | 0560 - 6 |
| 1H7 | FUEL TRANSFER PUMP, PRIMARY | 0421 - 2 |
| 2C12 | FUSE BOX (CAB) | 1674 - 8 |
| 2C12 | FUSES (CAB) | 1674 - 8 |

G

| | | |
|---|---|---|
| 1H19 | GASKET SETS, ENGINE OVERHAUL | 0452 - 2 |
| 1G3 | GASKET, ENGINE EXHAUST MANIFOLD (ENGINE) | 0410 - 2 |
| 1G7 | GASKET, FEED PUMP | 0413 - 4 |
| 1H3 | GASKET, FUEL FILTER | 0420 - 2 |
| 1F23 | GASKET, HEAD, ENGINE | 0409 - 2 |
| 1G9 | GASKET, INJECTION PUMP MOUNTING | 0413 - 6 |
| 1G13 | GASKET, INTAKE MANIFOLD | 0414 - 2 |
| 1I21 | GASKET, MUFFLER | 0530 - 2 |
| 1F21 | GASKET, OIL PAN, ENGINE | 0407 - 8 |
| 1F9 | GASKET, ROCKER ARM COVER | 0402 - 2 |
| 1G21 | GASKET, THERMOSTAT | 0418 - 2 |
| 1C21 | GASKET, TRANSMISSION PUMP HOUSING (REAR AXLE) | 0250 - 44 |
| 1G15 | GASKET, TURBOCHARGER | 0416 - 2 |
| 1F9 | GASKET, VALVE COVER | 0402 - 2 |
| 2C18 | GASKET, 2 PIECE BOOM LIGHT | 1674 - 14 |
| 2J1 | GASKETS, MAIN HYDRAULIC PUMP DRIVE | 2160 - 4 |
| 1I23 | GAUGE, LEVEL, FUEL TANK | 0560 - 2 |
| 2J1 | GEAR PUMP (MAIN HYDRAULIC PUMP DRIVE) | 2160 - 4 |
| 2J3 | GEAR PUMP ASSEMBLY (BLADE) (MAIN HYDRAULIC PUMP) | 2160 - 20 |
| 1B6 | GEAR, BEVEL, FRONT AXLE | 0250 - 4 |
| 1C19 | GEAR, BEVEL, REAR AXLE | 0250 - 42 |
| 1F7 | GEAR, CRANKSHAFT | 0401 - 2 |
| 1B10 | GEAR, SPUR (FRONT AXLE) | 0250 - 8 |
| 3L15 | GEARBOX AND SWING MOTOR | 4360 - 2 |
| 3L15 | GEARBOX COMPONENTS, SWING | 4360 - 2 |
| 3F17 | GEARS, PILOT HYDRAULIC PUMP | 3360 - 10 |
| 1C23 | GEARS, REDUCTION, TRANSMISSION REAR AXLE | 0250 - 46 |
| 3C1 | GENERAL PURPOSE BUCKET | 3302 - 14 |
| 3B13 | GENERAL PURPOSE BUCKET, HIGH CAPACITY | 3302 - 2 |
| 1H10 | GENERATOR | 0423 - 2 |
| 1H13 | GENERATOR | 0423 - 6 |
| 1H13 | GLOW PLUG CONTROLLER | 0423 - 6 |
| 1F23 | GLOW PLUGS, ENGINE | 0409 - 2 |
| 2D14 | GROMMET, MAIN FRAME | 1740 - 4 |
| 3K17 | GUAGE, SIGHT, HYDRAULIC OIL TANK | 3364 - 2 |
| 2F19 | GUARD KIT, VANDAL | 1810 - 34 |
| 2F11 | GUARD, CAB RIGHT WINDOW | 1810 - 26 |
| 3J11 | GUARD, HOSE (CONTROL VALVE TO ROTARY MANIFOLD) | 3363 - 12 |
| 3G11 | GUARD, HOSE (CONTROL VALVE TO SWING MOTOR) | 3360 - 28 |
| 3F23 | GUARD, HYDRAULIC HOSE (MONO BOOM DRAIN LINES) | 3360 - 16 |
| 3G7 | GUARD, HYDRAULIC HOSE (MONO BOOM) | 3360 - 24 |
| 3G1 | GUARD, HYDRAULIC HOSE (2 PIECE BOOM DRAIN LINES) | 3360 - 18 |
| 3G9 | GUARD, HYDRAULIC HOSE (2 PIECE BOOM) | 3360 - 26 |
| 3J17 | GUARD, HYDRAULIC HOSE (2 PIECE) | 3363 - 18 |
| 2F19 | GUARDS, WINDOW | 1810 - 34 |

H

| | | |
|---|---|---|
| 2F3 | HAMMER, ESCAPE | 1810 - 18 |
| 1G7 | HAND PRIMER, FEED PUMP | 0413 - 4 |
| 2I7 | HANDHOLD, TOOL BOX | 1910 - 20 |
| 2F15 | HANDLE, CAB DOOR HOLD OPEN LATCH | 1810 - 30 |
| 2F9 | HANDLE, CAB FRONT WINDOW | 1810 - 24 |
| 2I3 | HANDLE, DOOR | 1910 - 16 |
| 2F5 | HANDRAIL, CAB LEFT | 1810 - 20 |
| 2F5 | HANDRAIL, CAB LEFT SIDE | 1810 - 20 |
| 2F7 | HANDRAIL, INSIDE DOOR | 1810 - 22 |
| 1J1 | HARDWARE, MOUNTING, FUEL TANK SUPPORT | 0560 - 4 |
| 2C10 | HARNESS, BOOM LIGHT WIRING (MONO BOOM) | 1674 - 6 |
| 2D9 | HARNESS, BOOM LIGHT WIRING (MONO BOOM) | 1674 - 30 |
| 2C22 | HARNESS, CAB DISPLAY MONITOR WIRING | 1674 - 18 |

**ALPHABETICAL INDEX - CONTINUED**


| GRID | | PAGE |
|---|---|---|
| 2H3 | HARNESS, CAB REAR POWER SUPPLY WIRING | 1830 - 18 |
| 2C12 | HARNESS, CAB WIRING | 1674 - 8 |
| 2C14 | HARNESS, CAB WIRING (CONTINUED) | 1674 - 10 |
| 2F3 | HARNESS, DOME LIGHT WIRING | 1810 - 18 |
| 2C24 | HARNESS, ENGINE WIRING | 1674 - 20 |
| 2D5 | HARNESS, FRONT HEAD LIGHT | 1674 - 26 |
| 2I18 | HARNESS, HORN WIRING | 2004 - 2 |
| 2F3 | HARNESS, RADIO ANTENNA WIRING | 1810 - 18 |
| 2F3 | HARNESS, RADIO SPEAKER WIRING | 1810 - 18 |
| 2D7 | HARNESS, REAR HEAD LIGHT | 1674 - 28 |
| 2C3 | HARNESS, STARTER RELAY WIRING | 1671 - 2 |
| 2C20 | HARNESS, VEHICLE MAIN WIRING | 1674 - 16 |
| 2H9 | HARNESS, WIRE, POWER UNIT | 1830 - 24 |
| 1J14 | HARNESS, WIRING (STEERING COLUMN INDICATOR PANEL) | 0920 - 6 |
| 1H7 | HARNESS, WIRING, FUEL TRANSFER PUMP AND HOSES | 0421 - 2 |
| 2C5 | HARNESS, WIRING, KIT | 1674 - 1 |
| 1E3 | HARNESS, WIRING, ROTARY MANIFOLD BLADE LINES | 0260 - 24 |
| 2F13 | HATCH, CAB TOP | 1810 - 28 |
| 1F23 | HEAD BOLTS, ENGINE | 0409 - 2 |
| 1F23 | HEAD GASKET, ENGINE | 0409 - 2 |
| 2C16 | HEAD LIGHTS | 1674 - 12 |
| 1F23 | HEAD, CYLINDER, ENGINE | 0409 - 2 |
| 1F17 | HEAD, ENGINE OIL FILTER | 0407 - 4 |
| 2C16 | HEAD, TAIL AND MONO BOOM LIGHTS | 1674 - 12 |
| 2F5 | HEADLINER, CAB TOP | 1810 - 20 |
| 2H7 | HEATER HOSES | 1830 - 22 |
| 2H7 | HEATER LINES | 1830 - 22 |
| 3B15 | HEAVY-DUTY BUCKETS | 3302 - 4 |
| 3B17 | HEAVY-DUTY BUCKETS | 3302 - 6 |
| 3B17 | HEAVY-DUTY, HIGH CAPACITY BUCKETS | 3302 - 6 |
| 3B13 | HIGH CAPACITY BUCKET, GENERAL PURPOSE | 3302 - 2 |
| 3B15 | HIGH CAPACITY HEAVY-DUTY BUCKETS | 3302 - 4 |
| 3B17 | HIGH CAPACITY HEAVY-DUTY BUCKETS | 3302 - 6 |
| 3J3 | HIGH PRESSURE HYDRAULIC HOSES (PUMP TO CONTROL VALVE) | 3363 - 4 |
| 3J3 | HIGH PRESSURE HYDRAULIC LINES (PUMP TO CONTROL VALVE) | 3363 - 4 |
| 2F15 | HOLD OPEN LATCH COMPONENTS, CAB DOOR | 1810 - 30 |
| 2E21 | HOLDER, BEVERAGE | 1810 - 12 |
| 1H11 | HOLDER, BRUSH, ALTERNATOR | 0423 - 4 |
| 1F23 | HOOKS, ENGINE HANGERS | 0409 - 2 |
| 2I18 | HORN | 2004 - 2 |
| 2I18 | HORN WIRING HARNESS | 2004 - 2 |
| 3F23 | HOSE (BOOM CYLINDER TO CONTROL VALVE) (MONO BOOM DRAIN LINES) | 3360 - 16 |
| 3G1 | HOSE (BOOM CYLINDER TO CONTROL VALVE) (2 PIECE BOOM DRAIN LINES) | 3360 - 18 |
| 3F23 | HOSE (CONTROL VALVE TO BOOM CYLINDER) (MONO BOOM DRAIN LINES) | 3360 - 16 |
| 3G1 | HOSE (CONTROL VALVE TO BOOM CYLINDER) (2 PIECE BOOM DRAIN LINES) | 3360 - 18 |
| 3J11 | HOSE GUARD (CONTROL VALVE TO ROTARY MANIFOLD) | 3363 - 12 |
| 3G11 | HOSE GUARD (CONTROL VALVE TO SWING MOTOR) | 3360 - 28 |
| 3F23 | HOSE GUARD, HYDRAULIC (MONO BOOM DRAIN LINES) | 3360 - 16 |
| 3G7 | HOSE GUARD, HYDRAULIC (MONO BOOM) | 3360 - 24 |
| 3G1 | HOSE GUARD, HYDRAULIC (2 PIECE BOOM DRAIN LINES) | 3360 - 18 |
| 3G9 | HOSE GUARD, HYDRAULIC (2 PIECE BOOM) | 3360 - 26 |
| 3J17 | HOSE GUARD, HYDRAULIC (2 PIECE) | 3363 - 18 |
| 3E15 | HOSE GUARD, PILOT HOSES (2 PIECE) | 3344 - 36 |
| 1I15 | HOSE, AIR CLEANER | 0520 - 2 |
| 2G13 | HOSE, AIR CONDITIONER EVAPORATOR | 1830 - 4 |
| 1I17 | HOSE, AIR PRE-CLEANER | 0520 - 4 |
| 3K15 | HOSE, BOOM LINE TO BOOM LINE (AUXILIARY PLUMBING) | 3363 - 40 |
| 2B2 | HOSE, BRAKE | 1062 - 2 |
| 3D7 | HOSE, BUCKET ARM ASSEMBLY | 3344 - 4 |
| 2G17 | HOSE, COMPRESSOR TO CONDENSER (REFRIDGERANT) | 1830 - 8 |
| 2H5 | HOSE, COMPRESSOR TO HVAC UNIT (REFRIDGERANT) | 1830 - 20 |
| 2G17 | HOSE, CONDENSER TO COMPRESSOR (REFRIDGERANT) | 1830 - 8 |
| 2G17 | HOSE, CONDENSER TO RECEIVER/DRYER (REFRIDGERANT) | 1830 - 8 |
| 3J5 | HOSE, CONTROL TO PILOT RELIEF VALVE | 3363 - 6 |
| 3J1 | HOSE, CONTROL VALVE TO HYDRAULIC PUMP (HIGH PRESSURE) | 3363 - 2 |
| 3J7 | HOSE, CONTROL VALVE TO ROTARY MANIFOLD | 3363 - 8 |
| 3J19 | HOSE, CONTROL VALVE TO SHUTTLE VALVE | 3363 - 20 |
| 1J3 | HOSE, ENGINE TO FUEL TANK | 0560 - 6 |
| 2G11 | HOSE, FROM AIR CONDITIONER UNIT | 1830 - 2 |
| 1E9 | HOSE, FRONT AXLE LOCK LINES | 0260 - 30 |
| 1J3 | HOSE, FUEL TANK TO ENGINE | 0560 - 6 |
| 2H5 | HOSE, HVAC UNIT TO COMPRESSOR (REFRIDGERANT) | 1830 - 20 |
| 2H5 | HOSE, HVAC UNIT TO RECEIVER/DRYER (REFRIDGERANT) | 1830 - 20 |
| 3J23 | HOSE, HYDRAULIC PUMP REGULATOR TO RESERVOIR | 3363 - 24 |
| 3J23 | HOSE, HYDRAULIC PUMP REGULATOR TO PILOT FILTER SOLENOID VALVE | 3363 - 24 |
| 3J23 | HOSE, HYDRAULIC PUMP REGULATOR TO PILOT SIGNAL MANIFOLD | 3363 - 24 |
| 3J1 | HOSE, HYDRAULIC PUMP TO CONTROL VALVE (HIGH PRESSURE) | 3363 - 2 |
| 3K9 | HOSE, HYDRAULIC RESERVOIR TO PILOT SHUT-OFF VALVE | 3363 - 34 |
| 3J23 | HOSE, HYDRAULIC RESERVOIR TO PUMP REGULATOR | 3363 - 24 |
| 3K3 | HOSE, LEFT PILOT CONTROLLER TO SHUT-OFF VALVE | 3363 - 28 |
| 3K3 | HOSE, LEFT PILOT CONTROLLER TO SIGNAL MANIFOLD | 3363 - 28 |
| 3F15 | HOSE, LH REGULATOR HYDRAULIC (MAIN HYDRAULIC PUMP) | 3360 - 8 |
| 1I21 | HOSE, MUFFLER | 0530 - 2 |
| 3J23 | HOSE, PILOT FILTER SOLENOID VALVE TO HYDRAULIC PUMP REGULATOR | 3363 - 24 |
| 3K9 | HOSE, PILOT SHUT-OFF VALVE TO HYDRAULIC RESERVOIR | 3363 - 34 |
| 3K3 | HOSE, PILOT SHUT-OFF VALVE TO LEFT PILOT CONTROLLER | 3363 - 28 |
| 3K5 | HOSE, PILOT SHUT-OFF VALVE TO RIGHT PILOT CONTROLLER | 3363 - 30 |
| 3K9 | HOSE, PILOT SHUT-OFF VALVE TO SIGNAL MANIFOLD | 3363 - 34 |
| 3K9 | HOSE, PILOT SHUT-OFF VALVE TO SOLENOID VALVE | 3363 - 34 |
| 3J23 | HOSE, PILOT SIGNAL MANIFOLD TO HYDRAULIC PUMP REGULATOR | 3363 - 24 |
| 3K3 | HOSE, PILOT SIGNAL MANIFOLD TO LEFT PILOT CONTROLLER | 3363 - 28 |
| 3K5 | HOSE, PILOT SIGNAL MANIFOLD TO RIGHT PILOT CONTROLLER | 3363 - 30 |

## ALPHABETICAL INDEX - CONTINUED


| GRID | | PAGE |
|---|---|---|
| 3K9 | HOSE, PILOT SIGNAL MANIFOLD TO SHUT-OFF VALVE | 3363 - 34 |
| 1B4 | HOSE, POWER TRAIN | 0250 - 2 |
| 1J22 | HOSE, PRESSURE SENSOR STEERING TO OIL FILTER | 0963 - 4 |
| 3L12 | HOSE, PTO CONTROL VALVE | 4060 - 2 |
| 1I1 | HOSE, RADIATOR | 0510 - 4 |
| 1I3 | HOSE, RADIATOR | 0510 - 6 |
| 1H23 | HOSE, RADIATOR AND OIL COOLER | 0510 - 2 |
| 2G17 | HOSE, RECEIVER/DRYER TO CONDENSER (REFRIDGERANT) | 1830 - 8 |
| 2H5 | HOSE, RECEIVER/DRYER TO HVAC UNIT (REFRIDGERANT) | 1830 - 20 |
| 3J7 | HOSE, RELIEF VALVE/ACCUMULATOR TO CONTROL VALVE | 3363 - 8 |
| 1I9 | HOSE, RESERVE WATER TANK | 0510 - 12 |
| 3K5 | HOSE, RIGHT PILOT CONTROLLER TO SHUT-OFF VALVE | 3363 - 30 |
| 3K5 | HOSE, RIGHT PILOT CONTROLLER TO SIGNAL MANIFOLD | 3363 - 30 |
| 3J7 | HOSE, ROTARY MANIFOLD TO CONTROL VALVE | 3363 - 8 |
| 3J19 | HOSE, SHUTTLE VALVE TO CONTROL VALVE | 3363 - 20 |
| 3J5 | HOSE, SIGNAL MANIFOLD TO PILOT RELIEF VALVE | 3363 - 6 |
| 3K9 | HOSE, SOLENOID VALVE TO PILOT SHUT-OFF VALVE | 3363 - 34 |
| 1J3 | HOSE, STRAINER, FUEL TRANSFER PUMP | 0560 - 6 |
| 1I9 | HOSE, WATER TANK TO RADIATOR | 0510 - 12 |
| 2F3 | HOSE, WINDSHIELD WASHER | 1810 - 18 |
| 1I19 | HOSE,AIR CLEANER | 0520 - 6 |
| 3G3 | HOSES (BOOM CYLINDER TO CONTROL VALVE) (MONO BOOM) | 3360 - 20 |
| 3G5 | HOSES (BOOM CYLINDER TO CONTROL VALVE) (2 PIECE BOOM) | 3360 - 22 |
| 3G7 | HOSES (BOOM TO CONTROL VALVE) (MONO BOOM) | 3360 - 24 |
| 3G9 | HOSES (BOOM TO CONTROL VALVE) (2 PIECE BOOM) | 3360 - 26 |
| 3G3 | HOSES (CONTROL VALVE TO BOOM CYLINDER) (MONO BOOM) | 3360 - 20 |
| 3G5 | HOSES (CONTROL VALVE TO BOOM CYLINDER) (2 PIECE BOOM) | 3360 - 22 |
| 3G7 | HOSES (CONTROL VALVE TO BOOM) (MONO BOOM) | 3360 - 24 |
| 3G9 | HOSES (CONTROL VALVE TO BOOM) (2 PIECE BOOM) | 3360 - 26 |
| 1J20 | HOSES (HYDRAULIC) AND STEERING VALVE | 0963 - 2 |
| 1J5 | HOSES AND FITTINGS, PRIMARY FUEL FILTER AND WATER SEPARATOR | 0560 - 8 |
| 3K1 | HOSES TO OIL TANK, TRANSMISSION | 3363 - 26 |
| 3D3 | HOSES, BLADE CONTROL VALVE | 3315 - 6 |
| 3D3 | HOSES, BLADE CONTROL VALVE (BLADE VALVE TO MAIN CONTROL VALVE) | 3315 - 6 |
| 3D13 | HOSES, BOOM HYDRAULIC (MONO) | 3344 - 10 |
| 3D23 | HOSES, BOOM, LUBRICATION (MONO) | 3344 - 20 |
| 3K7 | HOSES, BRAKE LINE, ACCUMULATOR | 3363 - 32 |
| 2B4 | HOSES, BRAKE PEDAL | 1062 - 4 |
| 2B6 | HOSES, BRAKE PEDAL TO ROTARY MANIFOLD | 1062 - 6 |
| 3G3 | HOSES, CONTROL VALVE MAIN HYDRAULIC (MONO BOOM) | 3360 - 20 |
| 3G5 | HOSES, CONTROL VALVE MAIN HYDRAULIC (2 PIECE BOOM) | 3360 - 22 |
| 1F17 | HOSES, ENGINE OIL FILTER | 0407 - 4 |
| 3K11 | HOSES, FOOT PEDAL | 3363 - 36 |
| 1J3 | HOSES, FUEL TRANSFER PUMP | 0560 - 6 |
| 2H7 | HOSES, HEATER | 1830 - 22 |
| 3J3 | HOSES, HIGH PRESSURE HYDRAULIC (PUMP TO CONTROL VALVE) | 3363 - 4 |
| 3J17 | HOSES, HYDRAULIC (BOOM TO CONTROL VALVE) (2 PIECE) | 3363 - 18 |
| 3J11 | HOSES, HYDRAULIC (CONTROL VALVE TO ROTARY MANIFOLD) | 3363 - 12 |
| 3J17 | HOSES, HYDRAULIC (CONTROL VALVE TO BOOM) (2 PIECE) | 3363 - 18 |
| 3J13 | HOSES, INLET HYDRAULIC PUMP | 3363 - 14 |
| 3E13 | HOSES, LUBRICATION (2 PIECE) | 3344 - 34 |
| 3E15 | HOSES, PILOT (2 PIECE) | 3344 - 36 |
| 3J9 | HOSES, PILOT SIGNAL MANIFOLD HOSES TO CONTROL VALVE | 3363 - 10 |
| 3K13 | HOSES, RELIEF MANIFOLD TO FOOT PEDAL | 3363 - 38 |
| 1E3 | HOSES, ROTARY MANIFOLD BLADE LINES | 0260 - 24 |
| 1E1 | HOSES, ROTARY MANIFOLD TO STABLIZER OUTRIGGER | 0260 - 22 |
| 2B6 | HOSES, ROTARY MANIFOLD TO BRAKE PEDAL | 1062 - 6 |
| 1D23 | HOSES, STEERING, TO FRONT AXLE | 0260 - 20 |
| 3G11 | HOSES, SWING MOTOR HYDRAULIC | 3360 - 28 |
| 1H7 | HOSES, TRANSFER PUMP | 0421 - 2 |
| 1G23 | HOSES, WATER FROM WATER PUMP TO THERMOSTAT | 0418 - 4 |
| 3I5 | HOUSING AND GASKETS, PILOT SIGNAL MANIFOLD | 3362 - 38 |
| 1I17 | HOUSING, AIR PRE-CLEANER | 0520 - 4 |
| 1E17 | HOUSING, AXLE LOCK CYLINDER | 0265 - 2 |
| 1E13 | HOUSING, AXLE LOCK CYLINDER CHECK VALVE | 0262 - 2 |
| 1B24 | HOUSING, AXLE, REAR | 0250 - 22 |
| 3H23 | HOUSING, BRAKE SOLENOID VALVE | 3362 - 32 |
| 1D21 | HOUSING, BRAKE VALVE | 0260 - 18 |
| 1H17 | HOUSING, FLYWHEEL | 0433 - 2 |
| 1B12 | HOUSING, FRONT AXLE | 0250 - 10 |
| 1B14 | HOUSING, FRONT AXLE (CONTINUED) | 0250 - 12 |
| 3L15 | HOUSING, GEARBOX, SWING MOTOR | 4360 - 2 |
| 3K17 | HOUSING, HYDRAULIC OIL TANK AND FILTER | 3364 - 2 |
| 3F15 | HOUSING, LH REGULATOR (MAIN HYDRAULIC PUMP) | 3360 - 8 |
| 3F9 | HOUSING, MAIN HYDRAULIC PUMP | 3360 - 2 |
| 3F17 | HOUSING, PILOT HYDRAULIC PUMP | 3360 - 10 |
| 1D11 | HOUSING, PROPEL MOTOR | 0260 - 8 |
| 3H21 | HOUSING, PROPEL SOLENOID VALVE | 3362 - 30 |
| 3F13 | HOUSING, RH REGULATOR (MAIN HYDRAULIC PUMP) | 3360 - 6 |
| 3L17 | HOUSING, SWING MOTOR | 4360 - 4 |
| 1G21 | HOUSING, THERMOSTAT | 0418 - 2 |
| 1C21 | HOUSING, TRANSMISSION PUMP (REAR AXLE) | 0250 - 44 |
| 1C9 | HOUSING, TRANSMISSION, REAR AXLE | 0250 - 32 |
| 1G17 | HOUSING, TURBOCHARGER | 0416 - 4 |
| 1B6 | HUB ASSEMBLY AND BEVEL GEAR, FRONT AXLE | 0250 - 4 |
| 1B8 | HUB ASSEMBLY AND BEVEL GEAR, FRONT AXLE (CONTINUED) | 0250 - 6 |
| 2J1 | HUB, MAIN HYDRAULIC PUMP DRIVE | 2160 - 4 |
| 2H5 | HVAC UNIT TO COMPRESSOR HOSE (REFRIDGERANT) | 1830 - 20 |
| 2H5 | HVAC UNIT TO RECEIVER/DRYER HOSE (REFRIDGERANT) | 1830 - 20 |
| 1G7 | HYDRAULIC FLOW CONTROL VALVE, FEED PUMP | 0413 - 4 |
| 1J20 | HYDRAULIC HOSES AND STEERING VALVE | 0963 - 2 |
| 3K1 | HYDRAULIC HOSES TO OIL TANK, TRANSMISSION | 3363 - 26 |
| 3J11 | HYDRAULIC LINES (CONTROL VALVE TO ROTARY MANIFOLD) | 3363 - 12 |
| 3D13 | HYDRAULIC LINES, BOOM (MONO) | 3344 - 10 |

**ALPHABETICAL INDEX - CONTINUED**


| GRID | | PAGE |
|---|---|---|
| 3L15 | HYDRAULIC MOTOR, SWING MOTOR AND GEARBOX | 4360 - 2 |
| 3K17 | HYDRAULIC OIL RESERVOIR | 3364 - 2 |
| 3K17 | HYDRAULIC OIL RESERVOIR AND FILTER | 3364 - 2 |
| 3K17 | HYDRAULIC OIL RESERVOIR FILTER | 3364 - 2 |
| 3K17 | HYDRAULIC OIL TANK AND FILTER | 3364 - 2 |
| 3K19 | HYDRAULIC OIL TANK AND FILTER | 3364 - 4 |
| 3K17 | HYDRAULIC OIL TANK FILTER | 3364 - 2 |
| 3K17 | HYDRAULIC OIL TANK SIGHT GAUGE | 3364 - 2 |
| 2J1 | HYDRAULIC PUMP ASSEMBLY, MAIN | 2160 - 4 |
| 2H13 | HYDRAULIC PUMP COMPARTMENT ACCESS DOOR | 1910 - 2 |
| 2H15 | HYDRAULIC PUMP COMPARTMENT COVER | 1910 - 4 |
| 2H15 | HYDRAULIC PUMP COMPARTMENT COVER SUPPORT BRACKET | 1910 - 4 |
| 3F9 | HYDRAULIC PUMP COMPONENTS, MAIN | 3360 - 2 |
| 3F11 | HYDRAULIC PUMP COMPONENTS, MAIN | 3360 - 4 |
| 3F11 | HYDRAULIC PUMP PRESSURE SENSORS, MAIN | 3360 - 4 |
| 3J23 | HYDRAULIC PUMP REGULATOR TO PILOT FILTER SOLENOID VALVE HOSE | 3363 - 24 |
| 3J23 | HYDRAULIC PUMP REGULATOR TO PILOT SIGNAL MANIFOLD HOSE | 3363 - 24 |
| 3J23 | HYDRAULIC PUMP REGULATOR TO RESERVOIR HOSE | 3363 - 24 |
| 3F11 | HYDRAULIC PUMP REGULATORS, MAIN | 3360 - 4 |
| 3F11 | HYDRAULIC PUMP SEAL KIT, MAIN | 3360 - 4 |
| 3J3 | HYDRAULIC PUMP TO CONTROL VALVE LINES | 3363 - 4 |
| 3J1 | HYDRAULIC PUMP TO CONTROL VALVE HOSE (HIGH PRESSURE) | 3363 - 2 |
| 3J3 | HYDRAULIC PUMP TO CONTROL VALVE HOSES | 3363 - 4 |
| 2I23 | HYDRAULIC PUMP, MAIN | 2160 - 2 |
| 3F11 | HYDRAULIC PUMP, MAIN | 3360 - 4 |
| 3K9 | HYDRAULIC RESERVOIR TO PILOT SHUT-OFF VALVE HOSE | 3363 - 34 |
| 3J23 | HYDRAULIC RESERVOIR TO PUMP REGULATOR HOSE | 3363 - 24 |
| 3J19 | HYDRAULIC VALVE TO PILOT SIGNAL MANIFOLD (PILOT LINES) | 3363 - 20 |

I

| | | |
|---|---|---|
| 2B17 | IDENTIFICATION LABELS | 1322 - 4 |
| 1I15 | INDICATOR, AIR RESTRICTION | 0520 - 2 |
| 1I17 | INDICATOR, RESTRICTION AIR PRE-CLEANER | 0520 - 4 |
| 1G9 | INJECTION PUMP COLLAR | 0413 - 6 |
| 1G11 | INJECTION PUMP COUPLING | 0413 - 8 |
| 1G9 | INJECTION PUMP MOUNTING | 0413 - 6 |
| 1G5 | INJECTION PUMP, FUEL | 0413 - 2 |
| 1H7 | INJECTION PUMP, PRIMARY FUEL (TRANSFER PUMP) | 0421 - 2 |
| 1G5 | INJECTOR, FUEL | 0413 - 2 |
| 3J13 | INLET HYDRAULIC PUMP HOSES TO OIL TANK | 3363 - 14 |
| 1G13 | INLET MANIFOLD | 0414 - 2 |
| 1G13 | INTAKE MANIFOLD | 0414 - 2 |
| 1G1 | INTAKE VALVE (ENGINE) | 0409 - 4 |
| 2I9 | ISOLATOR, BOTTOM STRUCTURE COVERS | 1910 - 22 |
| 2E23 | ISOLATOR, CAB MOUNT (TO MAIN FRAME) | 1810 - 14 |
| 2D16 | ISOLATOR, COUNTERWEIGHT | 1740 - 6 |
| 1H23 | ISOLATOR, RADIATOR AND OIL COOLER | 0510 - 2 |
| 2H17 | ISOLATOR, RADIATOR COMPARTMENT | 1910 - 6 |
| 2H19 | ISOLATOR, RADIATOR COMPARTMENT | 1910 - 8 |
| 1I7 | ISOLATOR, RADIATOR TOP COVER | 0510 - 10 |

J

| | | |
|---|---|---|
| 1B10 | JOINT, UNIVERSAL (FRONT AXLE) | 0250 - 8 |
| 1D3 | JOINT, UNIVERSAL, REAR AXLE | 0250 - 50 |

K

| | | |
|---|---|---|
| 2C12 | KEY (CAB ELECTRICAL COMPONENTS) | 1674 - 8 |
| 2C12 | KEY SWITCH | 1674 - 8 |
| 2C12 | KEY SWITCH BRACKET | 1674 - 8 |
| 3F17 | KEYS, PILOT HYDRAULIC PUMP SHAFT | 3360 - 10 |
| 3D9 | KIT, BUCKET LINK | 3344 - 6 |
| 2J3 | KIT, GEAR PUMP SEAL | 2160 - 20 |
| 3F15 | KIT, LH REGULATOR SEAL (MAIN HYDRAULIC PUMP) | 3360 - 8 |
| 3F11 | KIT, MAIN HYDRAULIC PUMP SEAL | 3360 - 4 |
| 3F13 | KIT, RH REGULATOR SEAL (MAIN HYDRAULIC PUMP) | 3360 - 6 |
| 3C3 | KIT, ROADBUILDER BUCKET | 3302 - 16 |
| 3L5 | KIT, SEAL, ARM CYLINDER | 3365 - 10 |
| 3L7 | KIT, SEAL, ARM CYLINDER | 3365 - 12 |
| 3K23 | KIT, SEAL, LH BOOM CYLINDER (MONO BOOM) | 3365 - 4 |
| 3F17 | KIT, SEAL, PILOT HYDRAULIC PUMP | 3360 - 10 |
| 3L9 | KIT, SEAL, POSITIONING CYLINDER | 3365 - 14 |
| 3K21 | KIT, SEAL, RH BOOM CYLINDER (MONO BOOM) | 3365 - 2 |
| 2G3 | KIT, SEAT LUMBAR | 1821 - 2 |
| 2G9 | KIT, SEAT SLIDE TRACK | 1821 - 8 |
| 3L17 | KIT, SWING MOTOR SEAL | 4360 - 4 |
| 1G17 | KIT, TURBOCHARGER COMPONENTS | 0416 - 4 |
| 2F19 | KIT, VANDAL PROTECTION | 1810 - 34 |
| 2F19 | KIT, WINDOW GUARDS | 1810 - 34 |
| 2C5 | KIT, WIRING HARNESS | 1674 - 1 |
| 2I12 | KIT,RADIO | 2001 - 2 |
| 1F11 | KITS, PISTON- CYLINDER LINER | 0404 - 2 |
| 1J12 | KNOB (STEERING COLUMN ASSEMBLY) | 0920 - 4 |
| 2E15 | KNOB, SWING LOCK | 1810 - 6 |
| 1J14 | KNOBS (STEERING COLUMN INDICATOR PANEL ASSEMBLY) | 0920 - 6 |

L

| | | |
|---|---|---|
| 1I15 | LABEL, AIR CLEANER | 0520 - 2 |
| 1I17 | LABEL, AIR PRE-CLEANER | 0520 - 4 |
| 2B19 | LABELS | 1322 - 6 |
| 2B21 | LABELS | 1322 - 8 |
| 2B17 | LABELS, IDENTIFICATION | 1322 - 4 |
| 2B15 | LABELS, WARNING | 1322 - 2 |
| 2C16 | LAMP, HEAD, TAIL AND MONO BOOM LIGHTS | 1674 - 12 |
| 1J14 | LAMP, METER (STEERING COLUMN INDICATOR PANEL) | 0920 - 6 |
| 2C18 | LAMP, 2 PIECE BOOM LIGHT | 1674 - 14 |
| 2F15 | LATCH COMPONENTS, CAB DOOR HOLD OPEN | 1810 - 30 |
| 2F7 | LATCH, CAB DOOR | 1810 - 22 |
| 2I3 | LATCH, DOOR | 1910 - 16 |
| 2I1 | LATCH, DOOR LOCK | 1910 - 14 |
| 1I3 | LATCH, RADIATOR SUPPORT AND MOUNTING BRACKET | 0510 - 6 |
| 1I7 | LATCH, RADIATOR TOP COVER | 0510 - 10 |
| 3L3 | LEFT BOOM CYLINDER (2 PIECE BOOM) | 3365 - 8 |
| 3L3 | LEFT BOOM CYLINDER SEAL KIT (2 PIECE BOOM) | 3365 - 8 |

**ALPHABETICAL INDEX - CONTINUED**


| GRID | | PAGE |
|---|---|---|
| 3K3 | LEFT PILOT CONTROLLER TO SHUT-OFF VALVE FILTER | 3363 - 28 |
| 3K3 | LEFT PILOT CONTROLLER TO SHUT-OFF VALVE HOSE | 3363 - 28 |
| 3K3 | LEFT PILOT CONTROLLER TO SIGNAL MANIFOLD HOSE | 3363 - 28 |
| 2I14 | LEFT REAR VIEW MIRROR | 2002 - 2 |
| 2F5 | LEFT WINDOW, CAB | 1810 - 20 |
| 2D5 | LENS, FRONT HEAD LIGHT | 1674 - 26 |
| 2C16 | LENS, HEAD, TAIL AND MONO BOOM LIGHTS | 1674 - 12 |
| 2D7 | LENS, REAR HEAD LIGHT | 1674 - 28 |
| 2C18 | LENS, 2 PIECE BOOM LIGHT | 1674 - 14 |
| 1I23 | LEVEL GAUGE, FUEL TANK | 0560 - 2 |
| 3D3 | LEVER, BLADE CONTROL | 3315 - 6 |
| 2I1 | LEVER, DOOR LOCK | 1910 - 14 |
| 1I13 | LEVER, ENGINE CONTROL MOTOR | 0515 - 4 |
| 3C24 | LEVER, PILOT CONTROL (DIG AND SWING) | 3315 - 2 |
| 3D1 | LEVER, PILOT SHUT-OFF | 3315 - 4 |
| 3K23 | LH BOOM CYLINDER (MONO BOOM) | 3365 - 4 |
| 3D17 | LH BOOM CYLINDER (MONO) | 3344 - 14 |
| 3E9 | LH BOOM CYLINDER (2 PIECE) | 3344 - 30 |
| 3K23 | LH BOOM CYLINDER SEAL KIT (MONO BOOM) | 3365 - 4 |
| 3D17 | LH CYLINDER, BOOM (MONO) | 3344 - 14 |
| 3E9 | LH CYLINDER, BOOM (2 PIECE) | 3344 - 30 |
| 2C10 | LIGHT WIRING HARNESS, BOOM (MONO BOOM) | 1674 - 6 |
| 2D9 | LIGHT WIRING HARNESS, BOOM (MONO BOOM) | 1674 - 30 |
| 2C8 | LIGHT WIRING HARNESS, BOOM (2 PIECE) | 1674 - 4 |
| 2F3 | LIGHT, DOME, CAB | 1810 - 18 |
| 2D5 | LIGHT, HEAD, FRONT | 1674 - 26 |
| 2D7 | LIGHT, HEAD, REAR | 1674 - 28 |
| 2C18 | LIGHT, 2 PIECE BOOM | 1674 - 14 |
| 2H3 | LIGHTER, REAR TRAY | 1830 - 18 |
| 3F23 | LINE (BOOM CYLINDER TO CONTROL VALVE) (MONO BOOM DRAIN LINES) | 3360 - 16 |
| 3G1 | LINE (BOOM CYLINDER TO CONTROL VALVE) (2 PIECE BOOM DRAIN LINES) | 3360 - 18 |
| 3F23 | LINE (CONTROL VALVE TO BOOM CYLINDER) (MONO BOOM DRAIN LINES) | 3360 - 16 |
| 3G1 | LINE (CONTROL VALVE TO BOOM CYLINDER) (2 PIECE BOOM DRAIN LINES) | 3360 - 18 |
| 3J15 | LINE, AUXILIARY HYDRAULIC (TO CONTROL VALVE) | 3363 - 16 |
| 3K15 | LINE, BOOM (AUXILIARY PLUMBING) | 3363 - 40 |
| 3G15 | LINE, BOOM BOTTOM HYDRAULIC (FROM CONTROL VALVE) | 3360 - 32 |
| 3J5 | LINE, CONTROL TO PILOT RELIEF VALVE | 3363 - 6 |
| 3J21 | LINE, CONTROL VALVE BOTTOM TO PILOT SIGNAL MANIFOLD | 3363 - 22 |
| 3J19 | LINE, CONTROL VALVE TO SHUTTLE VALVE | 3363 - 20 |
| 1G15 | LINE, DRAIN, TURBOCHARGER | 0416 - 2 |
| 1J3 | LINE, ENGINE TO FUEL TANK | 0560 - 6 |
| 1J3 | LINE, FUEL TANK TO ENGINE | 0560 - 6 |
| 3J17 | LINE, HYDRAULIC DRAIN (TO SWING DEVICE) (2 PIECE) | 3363 - 18 |
| 3F15 | LINE, LH REGULATOR OIL (MAIN HYDRAULIC PUMP) | 3360 - 8 |
| 2J1 | LINE, MAIN HYDRAULIC PUMP OIL | 2160 - 4 |
| 3J21 | LINE, PILOT SIGNAL MANIFOLD TO CONTROL VALVE BOTTOM | 3363 - 22 |
| 3F21 | LINE, RETURN, CONTROL VALVE TO OIL COOLER | 3360 - 14 |
| 3J19 | LINE, SHUTTLE VALVE TO CONTROL VALVE | 3363 - 20 |
| 3J5 | LINE, SIGNAL MANIFOLD TO PILOT RELIEF VALVE | 3363 - 6 |
| 1F11 | LINER, CYLINDER | 0404 - 2 |
| 3G3 | LINES (BOOM CYLINDER TO CONTROL VALVE) (MONO BOOM) | 3360 - 20 |
| 3G5 | LINES (BOOM CYLINDER TO CONTROL VALVE) (2 PIECE BOOM) | 3360 - 22 |
| 3G7 | LINES (BOOM TO CONTROL VALVE) (MONO BOOM) | 3360 - 24 |
| 3G9 | LINES (BOOM TO CONTROL VALVE) (2 PIECE BOOM) | 3360 - 26 |
| 3G3 | LINES (CONTROL VALVE TO BOOM CYLINDER) (MONO BOOM) | 3360 - 20 |
| 3G5 | LINES (CONTROL VALVE TO BOOM CYLINDER) (2 PIECE BOOM) | 3360 - 22 |
| 3G7 | LINES (CONTROL VALVE TO BOOM) (MONO BOOM) | 3360 - 24 |
| 3G9 | LINES (CONTROL VALVE TO BOOM) (2 PIECE BOOM) | 3360 - 26 |
| 3K1 | LINES TO OIL TANK, TRANSMISSION | 3363 - 26 |
| 3B11 | LINES, BLADE | 3301 - 4 |
| 3D3 | LINES, BLADE CONTROL VALVE (BLADE VALVE TO MAIN CONTROL VALVE) | 3315 - 6 |
| 3D13 | LINES, BOOM HYDRAULIC (MONO) | 3344 - 10 |
| 3D23 | LINES, BOOM, LUBRICATION (MONO) | 3344 - 20 |
| 2B2 | LINES, BRAKE | 1062 - 2 |
| 2B4 | LINES, BRAKE PEDAL | 1062 - 4 |
| 2B6 | LINES, BRAKE PEDAL TO ROTARY MANIFOLD | 1062 - 6 |
| 3G7 | LINES, CONTROL VALVE HYDRAULIC (MONO BOOM) | 3360 - 24 |
| 3G9 | LINES, CONTROL VALVE HYDRAULIC (2 PIECE BOOM) | 3360 - 26 |
| 3K11 | LINES, FOOT PEDAL | 3363 - 36 |
| 3K13 | LINES, FOOT PEDAL TO RELIEF MANIFOLD | 3363 - 38 |
| 3E3 | LINES, FRONT BOOM (2 PIECE) | 3344 - 24 |
| 3E5 | LINES, FRONT BOOM (2 PIECE) | 3344 - 26 |
| 1H5 | LINES, FUEL FILTER (ENGINE) | 0420 - 4 |
| 1G5 | LINES, FUEL INJECTION PUMP | 0413 - 2 |
| 3J3 | LINES, HIGH PRESSURE HYDRAULIC (PUMP TO CONTROL VALVE) | 3363 - 4 |
| 3J17 | LINES, HYDRAULIC (BOOM TO CONTROL VALVE) (2 PIECE) | 3363 - 18 |
| 3J11 | LINES, HYDRAULIC (CONTROL VALVE TO ROTARY MANIFOLD) | 3363 - 12 |
| 3J17 | LINES, HYDRAULIC (CONTROL VALVE TO BOOM) (2 PIECE) | 3363 - 18 |
| 3E13 | LINES, LUBRICATION (2 PIECE) | 3344 - 34 |
| 3E23 | LINES, OUTRIGGER (UPPERSTRUCTURE) | 3348 - 4 |
| 3G17 | LINES, PILOT | 3362 - 2 |
| 1E11 | LINES, PROPEL | 0260 - 32 |
| 1C11 | LINES, PUMP, REAR AXLE | 0250 - 34 |
| 3K7 | LINES, RETURN TO ACCUMULATOR | 3363 - 32 |
| 3F19 | LINES, RETURN, OIL COOLER AND CONTROL VALVE TO OIL TANK | 3360 - 12 |
| 1E1 | LINES, ROTARY MANIFOLD TO STABLIZER OUTRIGGER | 0260 - 22 |
| 2B6 | LINES, ROTARY MANIFOLD TO BRAKE PEDAL | 1062 - 6 |
| 1D17 | LINES, ROTARY MANIFOLD TO CARRIER | 0260 - 14 |
| 1D19 | LINES, ROTARY MANIFOLD TO CARRIER | 0260 - 16 |
| 3F5 | LINES, STABILIZER | 3348 - 10 |
| 3F7 | LINES, STABILIZER | 3348 - 12 |
| 3G11 | LINES, SWING MOTOR HYDRAULIC | 3360 - 28 |
| 1E7 | LINES, TRANSMISSION CARRIER | 0260 - 28 |
| 1F19 | LINES, VACUUM (ENGINE) | 0407 - 6 |
| 1G23 | LINES, WATER FROM WATER PUMP TO THERMOSTAT | 0418 - 4 |

**ALPHABETICAL INDEX - CONTINUED**


| GRID | | PAGE |
|---|---|---|
| 1F19 | LINES,OIL (TO TURBOCHARGER AND INJECTION PUMP) (ENGINE) | 0407 - 6 |
| 2B10 | LINK, BRAKE VALVE | 1063 - 2 |
| 3D9 | LINK, BUCKET | 3344 - 6 |
| 2B8 | LINKAGE, BRAKE PEDAL | 1062 - 8 |
| 2E11 | LINKAGE, BRAKE PEDAL | 1810 - 2 |
| 3D11 | LINKS, BUCKET ARM | 3344 - 8 |
| 3I19 | LOCK VALVE | 3362 - 52 |
| 1E17 | LOCK, AXLE (CYLINDER) | 0265 - 2 |
| 2F7 | LOCK, CAB DOOR | 1810 - 22 |
| 2F13 | LOCK, CAB TOP HATCH | 1810 - 28 |
| 2I1 | LOCK, DOOR | 1910 - 14 |
| 1I3 | LOCK, RADIATOR SUPPORT AND MOUNTING BRACKET | 0510 - 6 |
| 2E15 | LOCK, SWING | 1810 - 6 |
| 2H23 | LOCK,COMPARTMENT DOOR | 1910 - 12 |
| 3B19 | LONG FRONT BUCKET, SUPER, 30 INCH | 3302 - 8 |
| 3B23 | LONG FRONT, SUPER, DITCH CLEANING BUCKET | 3302 - 12 |
| 2E21 | LOWER RIGHT COVER, CAB INSIDE | 1810 - 12 |
| 3D23 | LUBRICATION BOOM LINES (MONO) | 3344 - 20 |
| 3E13 | LUBRICATION LINES (2 PIECE) | 3344 - 34 |

M

| | | |
|---|---|---|
| 1F7 | MAIN BEARINGS, ENGINE | 0401 - 2 |
| 3G13 | MAIN CONTROL VALVE | 3360 - 30 |
| 2D12 | MAIN FRAME | 1740 - 2 |
| 2D22 | MAIN FRAME | 1740 - 12 |
| 2D20 | MAIN FRAME BOOM FOOT PIN | 1740 - 10 |
| 2D14 | MAIN FRAME BUSHINGS | 1740 - 4 |
| 2I23 | MAIN HYDRAULIC PUMP | 2160 - 2 |
| 2J1 | MAIN HYDRAULIC PUMP DRIVE ASSEMBLY | 2160 - 4 |
| 2C20 | MAIN WIRING HARNESS, VEHICLE | 1674 - 16 |
| 2B6 | MANIFOLD (BRAKE PEDAL TO ROTARY MANIFOLD) | 1062 - 6 |
| 3K1 | MANIFOLD PRESSURE SWITCH, TRANSMISSION LINES | 3363 - 26 |
| 3E1 | MANIFOLD, BOOM ASSEMBLY (2 PIECE) | 3344 - 22 |
| 1G3 | MANIFOLD, EXHAUST (ENGINE) | 0410 - 2 |
| 3J13 | MANIFOLD, HYDRAULIC PUMP | 3363 - 14 |
| 3J13 | MANIFOLD, HYDRAULIC PUMP ATTENUATOR | 3363 - 14 |
| 1G13 | MANIFOLD, INLET | 0414 - 2 |
| 1G13 | MANIFOLD, INTAKE | 0414 - 2 |
| 3D5 | MANIFOLD, MONO BOOM | 3344 - 2 |
| 1D5 | MANIFOLD, ROTARY | 0260 - 2 |
| 1D9 | MANIFOLD, ROTARY (UPPERSTRUCTURE) | 0260 - 6 |
| 2D3 | MANUAL ENGINE CONTROL SWITCH BOX | 1674 - 24 |
| 2F23 | MAT, CAB FLOOR | 1810 - 38 |
| 1J14 | METER, STEERING COLUMN INDICATOR PANEL | 0920 - 6 |
| 2D1 | MIC CONTROLLER | 1674 - 22 |
| 2H21 | MIDDLE DECK COVER, FRONT | 1910 - 10 |
| 2I14 | MIRROR, LEFT REAR VIEW | 2002 - 2 |
| 2I16 | MIRROR, RIGHT REAR VIEW | 2002 - 4 |
| 2C22 | MONITOR, CAB DISPLAY | 1674 - 18 |
| 3D5 | MONO BOOM | 3344 - 2 |
| 3L17 | MOTOR COMPONENTS, SWING | 4360 - 4 |
| 1I13 | MOTOR, ENGINE CONTROL | 0515 - 4 |
| 1B4 | MOTOR, POWER TRAIN | 0250 - 2 |
| 1D11 | MOTOR, PROPEL | 0260 - 8 |
| 1D13 | MOTOR, PROPEL | 0260 - 10 |
| 1D15 | MOTOR, PROPEL | 0260 - 12 |
| 3L15 | MOTOR, SWING AND GEARBOX | 4360 - 2 |
| 2F3 | MOTOR, WINDSHIELD WIPER | 1810 - 18 |
| 1I3 | MOUNTING BRACKET, RADIATOR | 0510 - 6 |
| 2E1 | MOUNTING COMPONENTS, SWING BEARING | 1740 - 16 |
| 1J1 | MOUNTING HARDWARE, FUEL TANK SUPPORT | 0560 - 4 |
| 1H5 | MOUNTING, FUEL FILTER (ENGINE) | 0420 - 4 |
| 1I21 | MUFFLER | 0530 - 2 |
| 1I21 | MUFFLER PIPE | 0530 - 2 |

N

| | | |
|---|---|---|
| 2D5 | NAMEPLATE, FRONT HEAD LIGHT | 1674 - 26 |
| 2D7 | NAMEPLATE, REAR HEAD LIGHT | 1674 - 28 |
| 1G5 | NOZZLE, FUEL INJECTOR | 0413 - 2 |
| 2F3 | NOZZLE, WINDSHIELD WASHER | 1810 - 18 |

O

| | | |
|---|---|---|
| 3F19 | OIL COOLER AND CONTROL VALVE RETURN LINES TO OIL TANK | 3360 - 12 |
| 1H23 | OIL COOLER AND RADIATOR | 0510 - 2 |
| 1H1 | OIL COOLER, ENGINE | 0419 - 2 |
| 1J22 | OIL FILTER HOSE TO STEERING PRESSURE SENSOR | 0963 - 4 |
| 1F17 | OIL FILTER LINES, ENGINE | 0407 - 4 |
| 1F17 | OIL FILTER, ENGINE | 0407 - 4 |
| 1F21 | OIL LEVEL GAUGE, ENGINE | 0407 - 8 |
| 3F15 | OIL LINE, LH REGULATOR (MAIN HYDRAULIC PUMP) | 3360 - 8 |
| 2J1 | OIL LINE, MAIN HYDRAULIC PUMP DRIVE | 2160 - 4 |
| 1G15 | OIL LINE, TURBOCHARGER | 0416 - 2 |
| 1F19 | OIL LINES,(TO TURBOCHARGER AND INJECTION PUMP) (ENGINE) | 0407 - 6 |
| 1F21 | OIL PAN, ENGINE | 0407 - 8 |
| 1F15 | OIL PUMP, ENGINE | 0407 - 2 |
| 3K17 | OIL RESERVOIR, HYDRAULIC | 3364 - 2 |
| 1F15 | OIL STRAINER, ENGINE | 0407 - 2 |
| 2B4 | OIL TANK TO BRAKE ACCUMULATORS LINES | 1062 - 4 |
| 2B4 | OIL TANK TO BRAKE PEDAL LINES | 1062 - 4 |
| 3K17 | OIL TANK, HYDRAULIC | 3364 - 2 |
| 3E23 | OUTRIGGER LINES (UPPERSTRUCTURE) | 3348 - 4 |
| 3F5 | OUTRIGGER, STABILIZER LINES | 3348 - 10 |
| 3F7 | OUTRIGGER, STABILIZER LINES | 3348 - 12 |
| 1H19 | OVERHAUL GASKET SETS | 0452 - 2 |

P

| | | |
|---|---|---|
| 1C15 | PACK, CLUTCH, REAR AXLE | 0250 - 38 |
| 1F21 | PAN, OIL, ENGINE | 0407 - 8 |
| 1J14 | PANEL ASSEMBLY, STEERING COLUMN INDICATOR | 0920 - 6 |
| 2H21 | PANEL, ENGINE FRONT FIREWALL | 1910 - 10 |
| 2H17 | PANEL, RADIATOR COMPARTMENT | 1910 - 6 |
| 2H19 | PANEL, RADIATOR COMPARTMENT | 1910 - 8 |
| 1J12 | PANEL, STEERING COLUMN (COMPLETE) | 0920 - 4 |
| 2B4 | PEDAL, BRAKE | 1062 - 4 |
| 2B8 | PEDAL, BRAKE | 1062 - 8 |
| 2B12 | PEDAL, BRAKE VALVE | 1063 - 4 |
| 3K11 | PEDAL, FOOT, LINES | 3363 - 36 |
| 2E11 | PEDAL, SPARE | 1810 - 2 |
| 3C24 | PILOT CONTROL LEVER COMPONENTS (DIG AND SWING) | 3315 - 2 |
| 3I9 | PILOT CONTROLLER SIDE, PILOT SIGNAL MANIFOLD | 3362 - 42 |
| 3J23 | PILOT FILTER SOLENOID VALVE TO PUMP REGULATOR HOSE | 3363 - 24 |
| 3E15 | PILOT HOSES (2 PIECE) | 3344 - 36 |

**ALPHABETICAL INDEX - CONTINUED**


| GRID | | PAGE |
|---|---|---|
| 3F17 | PILOT HYDRAULIC PUMP | 3360 - 10 |
| 3F17 | PILOT HYDRAULIC PUMP SEAL KIT | 3360 - 10 |
| 3G17 | PILOT LINES | 3362 - 2 |
| 3J19 | PILOT LINES (HYDRAULIC VALVE TO PILOT SIGNAL MANIFOLD) | 3363 - 20 |
| 3J19 | PILOT LINES (PILOT SIGNAL MANIFOLD TO CONTROL VALVE) | 3363 - 20 |
| 3D3 | PILOT LINES, BLADE CONTROL VALVE | 3315 - 6 |
| 3J19 | PILOT PIPINGS (CONTROL VALVE TO SHUTTLE VALVE) | 3363 - 20 |
| 3J5 | PILOT RELIEF VALVE TO CONTROL VALVE LINE | 3363 - 6 |
| 3J5 | PILOT RELIEF VALVE TO SIGNAL MANIFOLD LINE | 3363 - 6 |
| 3D1 | PILOT SHUT-OFF LEVER | 3315 - 4 |
| 3D1 | PILOT SHUT-OFF LEVER BRACKET | 3315 - 4 |
| 3K9 | PILOT SHUT-OFF VALVE TO HYDRAULIC RESERVOIR HOSE | 3363 - 34 |
| 3K3 | PILOT SHUT-OFF VALVE TO LEFT PILOT CONTROLLER HOSE | 3363 - 28 |
| 3K5 | PILOT SHUT-OFF VALVE TO RIGHT PILOT CONTROLLER HOSE | 3363 - 30 |
| 3K9 | PILOT SHUT-OFF VALVE TO SIGNAL MANIFOLD HOSE | 3363 - 34 |
| 3K9 | PILOT SHUT-OFF VALVE TO SOLENOID VALVE HOSE | 3363 - 34 |
| 3I11 | PILOT SIGNAL MANIFOLD (CONTROL VALVE SIDE) | 3362 - 44 |
| 3I5 | PILOT SIGNAL MANIFOLD (HOUSING AND GASKETS) | 3362 - 38 |
| 3I9 | PILOT SIGNAL MANIFOLD (PILOT CONTROLLER SIDE) | 3362 - 42 |
| 3I7 | PILOT SIGNAL MANIFOLD (VALVE SECTION) | 3362 - 40 |
| 3J9 | PILOT SIGNAL MANIFOLD HOSES TO CONTROL VALVE | 3363 - 10 |
| 3J21 | PILOT SIGNAL MANIFOLD MOUNTING BRACKET | 3363 - 22 |
| 3J21 | PILOT SIGNAL MANIFOLD TO CONTROL VALVE BOTTOM LINE | 3363 - 22 |
| 3J23 | PILOT SIGNAL MANIFOLD TO HYDRAULIC PUMP REGULATOR HOSE | 3363 - 24 |
| 3K3 | PILOT SIGNAL MANIFOLD TO LEFT PILOT CONTROLLER HOSE | 3363 - 28 |
| 3K5 | PILOT SIGNAL MANIFOLD TO RIGHT PILOT CONTROLLER HOSE | 3363 - 30 |
| 3K9 | PILOT SIGNAL MANIFOLD TO SHUT-OFF VALVE HOSE | 3363 - 34 |
| 3I13 | PILOT SIGNAL MANIFOLD VALVES | 3362 - 46 |
| 3H15 | PILOT VALVE | 3362 - 24 |
| 3C24 | PILOT VALVE (DIG AND SWING) | 3315 - 2 |
| 3H13 | PILOT VALVE (FRONT AND SWING) | 3362 - 22 |
| 2D12 | PIN FASTENER, MAIN FRAME | 1740 - 2 |
| 2D20 | PIN, BOOM FOOT | 1740 - 10 |
| 1C17 | PINION GEAR, REAR AXLE | 0250 - 40 |
| 3E15 | PIPE PLUG, PILOT HOSES (2 PIECE) | 3344 - 36 |
| 1I21 | PIPE, EXHAUST | 0530 - 2 |
| 1I19 | PIPE,AIR CLEANER | 0520 - 6 |
| 3E13 | PIPES, LUBRICATION (2 PIECE) | 3344 - 34 |
| 3J19 | PIPING, CONTROL VALVE TO SHUTTLE VALVE | 3363 - 20 |
| 1J3 | PIPING, FUEL TANK TO ENGINE | 0560 - 6 |
| 3J19 | PIPING, SHUTTLE VALVE TO CONTROL VALVE | 3363 - 20 |
| 3J19 | PIPINGS, PILOT (CONTROL VALVE TO SHUTTLE VALVE) | 3363 - 20 |
| 1F11 | PISTON - CYLINDER LINER KITS | 0404 - 2 |
| 1F7 | PISTON CONNECTING RODS | 0401 - 2 |
| 1F7 | PISTON RINGS | 0401 - 2 |
| 1E13 | PISTON, AXLE LOCK CYLINDER CHECK VALVE | 0262 - 2 |
| 1D21 | PISTON, BRAKE VALVE | 0260 - 18 |
| 1G7 | PISTON, FEED PUMP | 0413 - 4 |
| 1D11 | PISTON, PROPEL MOTOR | 0260 - 8 |
| 1F7 | PISTONS | 0401 - 2 |
| 3F15 | PISTONS, LH REGULATOR (MAIN HYDRAULIC PUMP) | 3360 - 8 |
| 3F9 | PISTONS, MAIN HYDRAULIC PUMP | 3360 - 2 |
| 1D13 | PISTONS, PROPEL MOTOR | 0260 - 10 |
| 1D15 | PISTONS, PROPEL MOTOR | 0260 - 12 |
| 3F13 | PISTONS, RH REGULATOR (MAIN HYDRAULIC PUMP) | 3360 - 6 |
| 3L17 | PISTONS, SWING MOTOR | 4360 - 4 |
| 3E1 | PLATE, BOOM ASSEMBLY (2 PIECE) | 3344 - 22 |
| 2G1 | PLATE, CAB FLOOR | 1810 - 40 |
| 1H23 | PLATE, RADIATOR AND OIL COOLER | 0510 - 2 |
| 3H23 | PLUG, BRAKE SOLENOID VALVE | 3362 - 32 |
| 1B12 | PLUG, DRAIN, FRONT AXLE HOUSING | 0250 - 10 |
| 1B14 | PLUG, DRAIN, FRONT AXLE HOUSING (CONTINUED) | 0250 - 12 |
| 1G7 | PLUG, FEED PUMP | 0413 - 4 |
| 3K19 | PLUG, HYDRAULIC OIL TANK AND FILTER | 3364 - 4 |
| 3H21 | PLUG, PROPEL SOLENOID VALVE | 3362 - 30 |
| 1F23 | PLUGS, GLOW, ENGINE | 0409 - 2 |
| 3F19 | PLUGS, RETURN LINE (OIL COOLER TO OIL TANK) | 3360 - 12 |
| 3E11 | POSITIONING BOOM CYLINDER (2 PIECE) | 3344 - 32 |
| 3L9 | POSITIONING CYLINDER | 3365 - 14 |
| 3E11 | POSITIONING CYLINDER, BOOM (2 PIECE) | 3344 - 32 |
| 2H3 | POWER SUPPLY, CAB REAR | 1830 - 18 |
| 1B4 | POWER TRAIN | 0250 - 2 |
| 2H9 | POWER UNIT | 1830 - 24 |
| 1I17 | PRE-CLEANER, AIR | 0520 - 4 |
| 1J22 | PRESSURE SENSOR STEERING HOSE TO OIL FILTER | 0963 - 4 |
| 3J19 | PRESSURE SENSOR, CONTROL VALVE | 3363 - 20 |
| 3J21 | PRESSURE SENSOR, CONTROL VALVE | 3363 - 22 |
| 2G13 | PRESSURE SWITCH, AIR CONDITIONER | 1830 - 4 |
| 2B4 | PRESSURE SWITCH, BRAKE ACCUMULATOR | 1062 - 4 |
| 2B6 | PRESSURE SWITCH, BRAKE PEDAL | 1062 - 6 |
| 3K1 | PRESSURE SWITCH, TRANSMISSION LINES MANIFOLD | 3363 - 26 |
| 1H3 | PRIMARY FUEL FILTER | 0420 - 2 |
| 1J5 | PRIMARY FUEL FILTER AND WATER SEPARATOR HOSES AND FITTINGS | 0560 - 8 |
| 1E11 | PROPEL LINES | 0260 - 32 |
| 1D11 | PROPEL MOTOR | 0260 - 8 |
| 1D13 | PROPEL MOTOR | 0260 - 10 |
| 1D15 | PROPEL MOTOR | 0260 - 12 |
| 3H21 | PROPEL SOLENOID VALVE | 3362 - 30 |
| 3L12 | PTO CONTROL VALVE AND COMPONENTS | 4060 - 2 |
| 2G17 | PULLEY, A/C COMPRESSOR DRIVE BELT TENSION | 1830 - 8 |
| 1H11 | PULLEY, ALTERNATOR | 0423 - 4 |
| 1F7 | PULLEY, CRANKSHAFT DAMPER | 0401 - 2 |
| 1G19 | PULLEY, WATER PUMP | 0417 - 2 |
| 2J3 | PUMP ASSEMBLY, GEAR (BLADE) (MAIN HYDRAULIC PUMP) | 2160 - 20 |
| 2H15 | PUMP COMPARTMENT COVER, HYDRAULIC | 1910 - 4 |
| 3F9 | PUMP COMPONENTS, MAIN HYDRAULIC | 3360 - 2 |
| 3F11 | PUMP COMPONENTS, MAIN HYDRAULIC | 3360 - 4 |
| 3F17 | PUMP COVER, PILOT HYDRAULIC | 3360 - 10 |
| 2J1 | PUMP DRIVE ASSEMBLY, MAIN HYDRAULIC | 2160 - 4 |
| 3F17 | PUMP HOUSING, PILOT HYDRAULIC | 3360 - 10 |
| 1C11 | PUMP LINES, REAR AXLE | 0250 - 34 |
| 3F11 | PUMP PRESSURE SENSORS, MAIN HYDRAULIC | 3360 - 4 |
| 3F11 | PUMP REGULATORS, MAIN HYDRAULIC | 3360 - 4 |
| 3F11 | PUMP SEAL KIT, MAIN HYDRAULIC | 3360 - 4 |
| 1G5 | PUMP, FUEL INJECTION | 0413 - 2 |

**ALPHABETICAL INDEX - CONTINUED**


| GRID | | PAGE |
|---|---|---|
| 2J1 | PUMP, GEAR (MAIN HYDRAULIC PUMP DRIVE) | 2160 - 4 |
| 3J13 | PUMP, HYDRAULIC, INLET HOSES | 3363 - 14 |
| 3J3 | PUMP, HYDRAULIC, TO CONTROL VALVE HOSES | 3363 - 4 |
| 3J3 | PUMP, HYDRAULIC, TO CONTROL VALVE LINES | 3363 - 4 |
| 1G11 | PUMP, INJECTION, COUPLING | 0413 - 8 |
| 1G9 | PUMP, INJECTION, MOUNTING COLLAR | 0413 - 6 |
| 2I23 | PUMP, MAIN HYDRAULIC | 2160 - 2 |
| 3F11 | PUMP, MAIN HYDRAULIC | 3360 - 4 |
| 1F15 | PUMP, OIL, ENGINE | 0407 - 2 |
| 3F17 | PUMP, PILOT HYDRAULIC | 3360 - 10 |
| 1H7 | PUMP, PRIMARY FUEL TRANSFER | 0421 - 2 |
| 1C9 | PUMP, TRANSMISSION, REAR AXLE | 0250 - 32 |
| 1C21 | PUMP, TRANSMISSION, REAR AXLE | 0250 - 44 |
| 1G19 | PUMP, WATER | 0417 - 2 |
| 2F21 | PUMP, WINDSHIELD WASHER | 1810 - 36 |
| 1F13 | PUSH ROD ACCESS COVER | 0404 - 4 |
| 1G1 | PUSH RODS (ENGINE) | 0409 - 4 |

R

| | | |
|---|---|---|
| 2D24 | RACE, SWING BEARING | 1740 - 14 |
| 1H23 | RADIATOR AND OIL COOLER | 0510 - 2 |
| 2H13 | RADIATOR COMPARTMENT ACCESS DOOR | 1910 - 2 |
| 2H17 | RADIATOR COMPARTMENT COVER | 1910 - 6 |
| 2H19 | RADIATOR COMPARTMENT COVER | 1910 - 8 |
| 2H21 | RADIATOR COMPARTMENT COVER | 1910 - 10 |
| 2H17 | RADIATOR COMPARTMENT COVER BRACKET | 1910 - 6 |
| 2H19 | RADIATOR COMPARTMENT COVER BRACKET | 1910 - 8 |
| 2H17 | RADIATOR COMPARTMENT ISOLATOR | 1910 - 6 |
| 2H19 | RADIATOR COMPARTMENT ISOLATOR | 1910 - 8 |
| 2H17 | RADIATOR COMPARTMENT PANEL | 1910 - 6 |
| 2H19 | RADIATOR COMPARTMENT PANEL | 1910 - 8 |
| 2H17 | RADIATOR COMPARTMENT PANEL BRACKET | 1910 - 6 |
| 2H19 | RADIATOR COMPARTMENT PANEL BRACKET | 1910 - 8 |
| 1I1 | RADIATOR HOSE | 0510 - 4 |
| 1I3 | RADIATOR HOSE | 0510 - 6 |
| 1I9 | RADIATOR HOSE TO RESERVE WATER TANK | 0510 - 12 |
| 1I3 | RADIATOR PIPING | 0510 - 6 |
| 1I9 | RADIATOR RESERVE WATER TANK | 0510 - 12 |
| 1I3 | RADIATOR SUPPORT AND MOUNTING BRACKET | 0510 - 6 |
| 1I7 | RADIATOR TOP COVER | 0510 - 10 |
| 1I1 | RADIATOR TUBE | 0510 - 4 |
| 2I12 | RADIO | 2001 - 2 |
| 2F3 | RADIO ANTENNA | 1810 - 18 |
| 2I12 | RADIO KIT | 2001 - 2 |
| 2F3 | RADIO SPEAKER | 1810 - 18 |
| 2F3 | RADIO SPEAKER WIRING HARNESS | 1810 - 18 |
| 2I12 | RADIO WIRE HARNESS | 2001 - 2 |
| 2H3 | REAR AIR DIFFUSER, CAB | 1830 - 18 |
| 1C19 | REAR AXLE BEVEL GEAR | 0250 - 42 |
| 1C15 | REAR AXLE CLUTCH PACK | 0250 - 38 |
| 1D1 | REAR AXLE DIFFERENTIAL | 0250 - 48 |
| 1C1 | REAR AXLE DISC BRAKES | 0250 - 24 |
| 1C3 | REAR AXLE DISC BRAKES | 0250 - 26 |
| 1B24 | REAR AXLE HOUSING | 0250 - 22 |
| 1C17 | REAR AXLE PINION GEAR AND SHAFT | 0250 - 40 |
| 1C11 | REAR AXLE PUMP LINES | 0250 - 34 |
| 1C5 | REAR AXLE TRANSMISSION CASE | 0250 - 28 |
| 1C13 | REAR AXLE TRANSMISSION CLUTCHES | 0250 - 36 |
| 1C9 | REAR AXLE TRANSMISSION HOUSING AND PUMP | 0250 - 32 |
| 1C21 | REAR AXLE TRANSMISSION PUMP | 0250 - 44 |
| 1C23 | REAR AXLE TRANSMISSION REDUCTION GEARS | 0250 - 46 |
| 1C7 | REAR AXLE TRANSMISSION SHAFT | 0250 - 30 |
| 1D3 | REAR AXLE UNIVERSAL JOINT | 0250 - 50 |
| 2H3 | REAR CONSOLE COVER, CAB | 1830 - 18 |
| 2D7 | REAR HEAD LIGHT AND HARNESS | 1674 - 28 |
| 2H3 | REAR TRAY | 1830 - 18 |
| 2I14 | REAR VIEW MIRROR, LEFT | 2002 - 2 |
| 2I16 | REAR VIEW MIRROR, RIGHT | 2002 - 4 |
| 2F5 | REAR WINDOW, CAB | 1810 - 20 |
| 2G17 | RECEIVER/DRYER TO CONDENSER REFRIDGERANT HOSE | 1830 - 8 |
| 2H5 | RECEIVER/DRYER TO HVAC UNIT HOSE (REFRIDGERANT) | 1830 - 20 |
| 2G19 | RECEIVER/DRYER, AIR CONDITIONER | 1830 - 10 |
| 1H11 | RECTIFIER, ALTERNATOR | 0423 - 4 |
| 1C23 | REDUCTION GEARS, TRANSMISSION REAR AXLE | 0250 - 46 |
| 3F15 | REGULATOR COMPONENTS, LH (MAIN HYDRAULIC PUMP) | 3360 - 8 |
| 3F13 | REGULATOR COMPONENTS, RH (MAIN HYDRAULIC PUMP) | 3360 - 6 |
| 3F15 | REGULATOR HOUSING, LH (MAIN HYDRAULIC PUMP) | 3360 - 8 |
| 3F13 | REGULATOR HOUSING, RH (MAIN HYDRAUALIC PUMP) | 3360 - 6 |
| 3F15 | REGULATOR OIL LINE, LH (MAIN HYDRAULIC PUMP) | 3360 - 8 |
| 3F15 | REGULATOR PRESSURE SENSOR, LH (MAIN HYDRAULIC PUMP) | 3360 - 8 |
| 3F13 | REGULATOR PRESSURE SENSOR, RH (MAIN HYDRAULIC PUMP) | 3360 - 6 |
| 1H11 | REGULATOR, ALTERNATOR VOLTAGE | 0423 - 4 |
| 3F11 | REGULATORS, MAIN HYDRAULIC PUMP | 3360 - 4 |
| 2C3 | RELAY, BATTERY | 1671 - 2 |
| 2C12 | RELAY, CAB | 1674 - 8 |
| 1H13 | RELAY, ENGINE | 0423 - 6 |
| 2D5 | RELAY, FRONT HEAD LIGHT AND HARNESS | 1674 - 26 |
| 2D7 | RELAY, REAR HEAD LIGHT AND HARNESS | 1674 - 28 |
| 3E17 | RELAY, SPARE FLOW RATE SELECTOR (2 PIECE) | 3344 - 38 |
| 2C3 | RELAY, STARTER | 1671 - 2 |
| 2C14 | RELAYS, CAB (CONTINUED) | 1674 - 10 |
| 3K13 | RELIEF MANIFOLD TO FOOT PEDAL LINES | 3363 - 38 |
| 3K7 | RELIEF VALVE TO BRAKE LINES | 3363 - 32 |
| 3K7 | RELIEF VALVE TO RETURN LINES | 3363 - 32 |
| 3J7 | RELIEF VALVE/ACCUMULATOR HOSE TO CONTROL VALVE | 3363 - 8 |
| 3I3 | RELIEF VALVE, OIL TANK | 3362 - 36 |
| 3H11 | RELIEF VALVE, PRESSURE | 3362 - 20 |
| 1F17 | REMOTE ENGINE OIL FILTER HOSES | 0407 - 4 |
| 1I9 | RESERVE WATER TANK | 0510 - 12 |
| 3K17 | RESERVOIR, HYDRAULIC OIL | 3364 - 2 |
| 1I17 | RESTRICTION INDICATOR, AIR PRE-CLEANER | 0520 - 4 |
| 3K21 | RH BOOM CYLINDER (MONO BOOM) | 3365 - 2 |
| 3D15 | RH BOOM CYLINDER (MONO) | 3344 - 12 |
| 3E7 | RH BOOM CYLINDER (2 PIECE) | 3344 - 28 |
| 3K21 | RH BOOM CYLINDER SEAL KIT (MONO BOOM) | 3365 - 2 |
| 3D15 | RH CYLINDER, BOOM (MONO) | 3344 - 12 |
| 3E7 | RH CYLINDER, BOOM (2 PIECE) | 3344 - 28 |
| 3L1 | RIGHT BOOM CYLINDER (2 PIECE BOOM) | 3365 - 6 |
| 3L1 | RIGHT BOOM CYLINDER SEAL KIT (2 PIECE BOOM) | 3365 - 6 |
| 2E21 | RIGHT COVER, CAB INSIDE LOWER | 1810 - 12 |
| 3K5 | RIGHT PILOT CONTROLLER TO SHUT-OFF VALVE FILTER | 3363 - 30 |
| 3K5 | RIGHT PILOT CONTROLLER TO SHUT-OFF VALVE HOSE | 3363 - 30 |

**ALPHABETICAL INDEX - CONTINUED**


| GRID | | PAGE |
|---|---|---|
| 3K5 | RIGHT PILOT CONTROLLER TO SIGNAL MANIFOLD HOSE | 3363 - 30 |
| 2I16 | RIGHT REAR VIEW MIRROR | 2002 - 4 |
| 2F11 | RIGHT WINDOW GUARD, CAB | 1810 - 26 |
| 2F11 | RIGHT WINDOW, CAB | 1810 - 26 |
| 2G21 | RING, AIR CONDITIONER COMPRESSOR | 1830 - 12 |
| 1F7 | RINGS, PISTON | 0401 - 2 |
| 3C3 | ROADBUILDER BUCKET KIT | 3302 - 16 |
| 1G1 | ROCKER ARM (ENGINE) | 0409 - 4 |
| 1F9 | ROCKER ARM COVER | 0402 - 2 |
| 1F9 | ROCKER ARM COVER GASKET | 0402 - 2 |
| 1E17 | ROD, AXLE LOCK CYLINDER | 0265 - 2 |
| 1G1 | ROD, PUSH (ENGINE) | 0409 - 4 |
| 2B12 | ROLLER, BRAKE VALVE | 1063 - 4 |
| 2F5 | ROOF, CAB | 1810 - 20 |
| 1D5 | ROTARY MANIFOLD | 0260 - 2 |
| 1D9 | ROTARY MANIFOLD (UPPERSTRUCTURE) | 0260 - 6 |
| 1E3 | ROTARY MANIFOLD BLADE LINES | 0260 - 24 |
| 1E1 | ROTARY MANIFOLD LINES TO STABLIZER OUTRIGGER | 0260 - 22 |
| 1D17 | ROTARY MANIFOLD LINES TO CARRIER | 0260 - 14 |
| 1D19 | ROTARY MANIFOLD LINES TO CARRIER | 0260 - 16 |
| 1D7 | ROTARY MANIFOLD SUPPORT | 0260 - 4 |
| 2B2 | ROTARY MANIFOLD TO BRAKE LINE | 1062 - 2 |
| 2B6 | ROTARY MANIFOLD TO BRAKE PEDAL LINES | 1062 - 6 |
| 3J7 | ROTARY MANIFOLD TO CONTROL VALVE HOSE | 3363 - 8 |
| 1H11 | ROTOR, ALTERNATOR | 0423 - 4 |
| 1B18 | ROTORS, FRONT AXLE | 0250 - 16 |
| 1B20 | ROTORS, FRONT AXLE (CONTINUED) | 0250 - 18 |
| 3F9 | ROTORS, MAIN HYDRAULIC PUMP | 3360 - 2 |

S

| | | |
|---|---|---|
| 1I5 | SCREEN, CHARGE AIR COOLER | 0510 - 8 |
| 2G23 | SCREEN, CONDENSOR | 1830 - 14 |
| 1H23 | SCREEN, RADIATOR AND OIL COOLER | 0510 - 2 |
| 3L5 | SEAL KIT, ARM CYLINDER | 3365 - 10 |
| 3L7 | SEAL KIT, BUCKET CYLINDER | 3365 - 12 |
| 3K23 | SEAL KIT, LH BOOM CYLINDER (MONO BOOM) | 3365 - 4 |
| 3F15 | SEAL KIT, LH REGULATOR (MAIN HYDRAULIC PUMP) | 3360 - 8 |
| 3F11 | SEAL KIT, MAIN HYDRAULIC PUMP | 3360 - 4 |
| 3F17 | SEAL KIT, PILOT HYDRAULIC PUMP | 3360 - 10 |
| 3L9 | SEAL KIT, POSITIONING CYLINDER | 3365 - 14 |
| 2J3 | SEAL KIT, PUMP GEAR | 2160 - 20 |
| 3K21 | SEAL KIT, RH BOOM CYLINDER (MONO BOOM) | 3365 - 2 |
| 3F13 | SEAL KIT, RH REGULATOR (MAIN HYDRAULIC PUMP) | 3360 - 6 |
| 3L17 | SEAL KIT, SWING MOTOR | 4360 - 4 |
| 2J1 | SEAL, MAIN HYDRAULIC PUMP | 2160 - 4 |
| 3L15 | SEAL, SWING MOTOR AND GEARBOX | 4360 - 2 |
| 1H19 | SEALS AND GASKETS, ENGINE OVERHAUL | 0452 - 2 |
| 2G3 | SEAT | 1821 - 2 |
| 2G3 | SEAT ADJUSTER | 1821 - 2 |
| 2G9 | SEAT BASE | 1821 - 8 |
| 2G9 | SEAT BASE BRACKET | 1821 - 8 |
| 2G7 | SEAT BELT | 1821 - 6 |
| 2G7 | SEAT BELT BRACKET | 1821 - 6 |
| 2G3 | SEAT CUSHION | 1821 - 2 |
| 2G3 | SEAT LUMBAR KIT | 1821 - 2 |
| 2G9 | SEAT SLIDE TRACK KIT | 1821 - 8 |
| 2G3 | SEAT SUSPENSION | 1821 - 2 |
| 1H3 | SEDIMENTARY BOWL, FUEL FILTER | 0420 - 2 |
| 2G19 | SENSOR, AIR CONDITIONER | 1830 - 10 |
| 3J21 | SENSOR, CONTROL VALVE PRESSURE | 3363 - 22 |
| 1F11 | SENSOR, CYLINDER BLOCK | 0404 - 2 |
| 1H13 | SENSOR, ENGINE | 0423 - 6 |
| 1F21 | SENSOR, ENGINE OIL | 0407 - 8 |
| 3F15 | SENSOR, LH REGULATOR PRESSURE (MAIN HYDRAULIC PUMP) | 3360 - 8 |
| 2J1 | SENSOR, MAIN HYDRAULIC PUMP | 2160 - 4 |
| 3J19 | SENSOR, PRESSURE, CONTROL VALVE | 3363 - 20 |
| 3F13 | SENSOR, RH REGULATOR PRESSURE (MAIN HYDRAULIC PUMP) | 3360 - 6 |
| 1J22 | SENSOR,PRESSURE, STEERING HOSE TO OIL FILTER | 0963 - 4 |
| 3F11 | SENSORS, MAIN HYDRAULIC PUMP PRESSURE | 3360 - 4 |
| 1J5 | SEPARATOR, WATER AND PRIMARY FUEL FILTER HOSES AND FITTINGS | 0560 - 8 |
| 1H3 | SEPERATOR, WATER, PRIMARY FUEL FILTER | 0420 - 2 |
| 2F13 | SHADE, CAB TOP SUN | 1810 - 28 |
| 1G1 | SHAFT, CAM (ENGINE) | 0409 - 4 |
| 2J1 | SHAFT, GEAR (MAIN HYDRAULIC PUMP DRIVE) | 2160 - 4 |
| 1C17 | SHAFT, PINION GEAR, REAR AXLE | 0250 - 40 |
| 1B4 | SHAFT, POWER TRAIN | 0250 - 2 |
| 1D11 | SHAFT, PROPEL MOTOR | 0260 - 8 |
| 1B22 | SHAFT, STEERING, FRONT AXLE | 0250 - 20 |
| 3L17 | SHAFT, SWING MOTOR | 4360 - 4 |
| 3L15 | SHAFT, SWING MOTOR AND GEARBOX | 4360 - 2 |
| 1C7 | SHAFT, TRANSMISSION, REAR AXLE | 0250 - 30 |
| 3F9 | SHAFTS, MAIN HYDRAULIC PUMP | 3360 - 2 |
| 3F17 | SHAFTS, PILOT HYDRAULIC PUMP | 3360 - 10 |
| 3C19 | SHANK, BUCKET TOOTH | 3302 - 32 |
| 3C21 | SHANK, BUCKET TOOTH | 3302 - 34 |
| 3C23 | SHEET,BUCKET DATA | 3302 - 36 |
| 1H23 | SHROUD, RADIATOR AND OIL COOLER | 0510 - 2 |
| 3J19 | SHUTTLE VALVE PIPINGS TO CONTROL VALVE | 3363 - 20 |
| 3E1 | SIDEBOOM, BOOM ASSEMBLY (2 PIECE) | 3344 - 22 |
| 3K17 | SIGHT GAUGE, HYDRAULIC OIL TANK | 3364 - 2 |
| 3J5 | SIGNAL MANIFOLD TO PILOT RELIEF VALVE LINE | 3363 - 6 |
| 3L15 | SLEEVE, SWING MOTOR AND GEARBOX | 4360 - 2 |
| 3I15 | SOLENOID CONTROL VALVE | 3362 - 48 |
| 3H17 | SOLENOID VALVE BANK | 3362 - 26 |
| 3K9 | SOLENOID VALVE TO PILOT SHUT-OFF VALVE HOSE | 3363 - 34 |
| 3H23 | SOLENOID VALVE, BRAKE | 3362 - 32 |
| 3F15 | SOLENOID VALVE, LH REGULATOR (MAIN HYDRAULIC PUMP) | 3360 - 8 |
| 3H19 | SOLENOID VALVE, OIL TANK SOLENOID VALVE (2) | 3362 - 28 |
| 3I1 | SOLENOID VALVE, OIL TANK SOLENOID VALVE (5) | 3362 - 34 |
| 3H21 | SOLENOID VALVE, PROPEL | 3362 - 30 |
| 1E3 | SOLENOID VALVE, ROTARY MANIFOLD BLADE LINES | 0260 - 24 |
| 1E1 | SOLENOID VALVE, ROTARY MANIFOLD TO STABLIZER OUTRIGGER | 0260 - 22 |
| 3K1 | SOLENOID VALVE, TRANSMISSION LINES | 3363 - 26 |
| 3I17 | SOLENOID, FLOW CONTROL VALVE | 3362 - 50 |
| 2G7 | SPACER, SEAT BELT | 1821 - 6 |
| 3E17 | SPARE FLOW RATE SELECTOR (2 PIECE) | 3344 - 38 |
| 2E11 | SPARE PEDAL | 1810 - 2 |
| 2F3 | SPEAKER, RADIO | 1810 - 18 |
| 1G7 | SPRING, FEED PUMP | 0413 - 4 |
| 3F15 | SPRINGS, LH REGULATOR COMPRESSION (MAIN HYDRAULIC PUMP) | 3360 - 8 |
| 3F13 | SPRINGS, RH REGULATOR COMPRESSION (MAIN HYDRAULIC PUMP) | 3360 - 6 |
| 3L17 | SPRINGS, SWING MOTOR | 4360 - 4 |

**ALPHABETICAL INDEX - CONTINUED**


| GRID | | PAGE |
|---|---|---|
| 1B10 | SPUR GEAR AND UNIVERSAL JOINT (FRONT AXLE) | 0250 - 8 |
| 3E21 | STABILIZER | 3348 - 2 |
| 1E21 | STABILIZER CYLINDER | 0265 - 6 |
| 3F5 | STABILIZER LINES | 3348 - 10 |
| 3F7 | STABILIZER LINES | 3348 - 12 |
| 1H9 | STARTER | 0422 - 2 |
| 2C3 | STARTER RELAY | 1671 - 2 |
| 2C3 | STARTER RELAY WIRING HARNESS | 1671 - 2 |
| 1H13 | STARTER, ENGINE | 0423 - 6 |
| 1H9 | STARTING MOTOR | 0422 - 2 |
| 1H9 | STARTING MOTOR, ENGINE | 0422 - 2 |
| 1H11 | STATOR, ALTERNATOR | 0423 - 4 |
| 1I7 | STAY, RADIATOR TOP COVER | 0510 - 10 |
| 1J12 | STEERING COLUMN (ASSEMBLY) | 0920 - 4 |
| 1J10 | STEERING COLUMN (COMPLETE) | 0920 - 2 |
| 1J14 | STEERING COLUMN INDICATOR PANEL ASSEMBLY | 0920 - 6 |
| 1J22 | STEERING HOSE, PRESSURE SENSOR TO OIL FILTER | 0963 - 4 |
| 1D23 | STEERING HOSES TO FRONT AXLE | 0260 - 20 |
| 1B22 | STEERING SHAFT, FRONT AXLE | 0250 - 20 |
| 1J16 | STEERING VALVE | 0962 - 2 |
| 1J18 | STEERING VALVE | 0962 - 4 |
| 1J20 | STEERING VALVE ADAPTER | 0963 - 2 |
| 1J20 | STEERING VALVE AND HYDRAULIC HOSES | 0963 - 2 |
| 1J10 | STEERING WHEEL | 0920 - 2 |
| 2D12 | STEP, MAIN FRAME | 1740 - 2 |
| 1J7 | STOP CABLE, ENGINE | 0560 - 10 |
| 3D7 | STOP, BUCKET ARM ASSEMBLY | 3344 - 4 |
| 3D5 | STOP, MONO BOOM | 3344 - 2 |
| 2E19 | STORAGE COMPARTMENT, LEFT CONSOLE | 1810 - 10 |
| 1I23 | STRAINER, FUEL TANK | 0560 - 2 |
| 1J3 | STRAINER, HOSE, FUEL TRANSFER PUMP | 0560 - 6 |
| 1F15 | STRAINER, OIL, ENGINE | 0407 - 2 |
| 2D18 | STRAP, COUNTERWEIGHT REMOVAL HARDWARE | 1740 - 8 |
| 3E1 | STRAP, BOOM ASSEMBLY (2 PIECE) | 3344 - 22 |
| 2F13 | SUN SHADE, CAB TOP | 1810 - 28 |
| 2I20 | SUNVISOR | 2007 - 2 |
| 3B19 | SUPER LONG FRONT BUCKET, 30 INCH | 3302 - 8 |
| 3B23 | SUPER LONG FRONT DITCH CLEANING BUCKET | 3302 - 12 |
| 3E1 | SUPPORT, BOOM ASSEMBLY (2 PIECE) | 3344 - 22 |
| 1I3 | SUPPORT, RADIATOR | 0510 - 6 |
| 1D7 | SUPPORT, ROTARY MANIFOLD | 0260 - 4 |
| 3L15 | SUPPORT, SWING MOTOR AND GEARBOX | 4360 - 2 |
| 2G3 | SUSPENSION, SEAT | 1821 - 2 |
| 2D24 | SWING BEARING | 1740 - 14 |
| 2E1 | SWING BEARING MOUNTING COMPONENTS | 1740 - 16 |
| 2E15 | SWING LOCK | 1810 - 6 |
| 3L15 | SWING MOTOR AND GEARBOX | 4360 - 2 |
| 3L17 | SWING MOTOR COMPONENTS | 4360 - 4 |
| 3G11 | SWING MOTOR LINES TO CONTROL VALVE | 3360 - 28 |
| 2D3 | SWITCH BOX, MANUAL ENGINE CONTROL | 1674 - 24 |
| 2C14 | SWITCH, CAB WIRING HARNESS (CONTINUED) | 1674 - 10 |
| 1H13 | SWITCH, ENGINE | 0423 - 6 |
| 2D5 | SWITCH, FRONT HEAD LIGHT AND HARNESS | 1674 - 26 |
| 2C12 | SWITCH, KEY | 1674 - 8 |
| 2B4 | SWITCH, PRESSURE, BRAKE ACCUMULATOR | 1062 - 4 |
| 2B6 | SWITCH, PRESSURE, BRAKE PEDAL | 1062 - 6 |
| 3K1 | SWITCH, PRESSURE, TRANSMISSION LINES MANIFOLD | 3363 - 26 |
| 2D7 | SWITCH, REAR HEAD LIGHT AND HARNESS | 1674 - 28 |
| 1J14 | SWITCHES (STEERING COLUMN INDICATOR PANEL) | 0920 - 6 |
| 1J10 | SWITCHES, STEERING COLUMN | 0920 - 2 |

T

| | | |
|---|---|---|
| 2C16 | TAIL LIGHTS | 1674 - 12 |
| 1I23 | TANK, FUEL | 0560 - 2 |
| 3K17 | TANK, HYDRAULIC OIL | 3364 - 2 |
| 3K19 | TANK, HYDRAULIC OIL | 3364 - 4 |
| 1I9 | TANK, WATER, RADIATOR | 0510 - 12 |
| 2F21 | TANK, WINDSHIELD WASHER | 1810 - 36 |
| 3F23 | TEE FITTING (MONO BOOM DRAIN LINES) | 3360 - 16 |
| 3G1 | TEE FITTING (2 PIECE BOOM DRAIN LINES) | 3360 - 18 |
| 3C19 | TEETH, BUCKET | 3302 - 32 |
| 3C21 | TEETH, BUCKET | 3302 - 34 |
| 3C7 | TEETH, BUCKET, HICH CAPACITY | 3302 - 20 |
| 3C9 | TEETH, BUCKET, HICH CAPACITY | 3302 - 22 |
| 3C11 | TEETH, BUCKET, HICH CAPACITY | 3302 - 24 |
| 3C13 | TEETH, BUCKET, HICH CAPACITY | 3302 - 26 |
| 3C15 | TEETH, BUCKET, HICH CAPACITY | 3302 - 28 |
| 3C17 | TEETH, BUCKET, HICH CAPACITY | 3302 - 30 |
| 3B19 | TEETH, SUPER LONG FRONT BUCKET, 30 INCH | 3302 - 8 |
| 3C5 | TEETH,ESCO BUCKET | 3302 - 18 |
| 1G21 | THERMOSTAT | 0418 - 2 |
| 1G21 | THERMOSTAT HOUSING | 0418 - 2 |
| 2G13 | THERMOSTAT, AIR CONDITIONER UNIT | 1830 - 4 |
| 1H17 | TIMING GEAR CASE | 0433 - 2 |
| 1H17 | TIMING GEAR COVER | 0433 - 2 |
| 1G1 | TIMING GEAR, CAMSHAFT (ENGINE) | 0409 - 4 |
| 2I7 | TOOL BOX | 1910 - 20 |
| 3C19 | TOOTH ASSEMBLY | 3302 - 32 |
| 3C21 | TOOTH ASSEMBLY | 3302 - 34 |
| 3C7 | TOOTH ASSEMBLY, HIGH CAPACITY BUCKET | 3302 - 20 |
| 3C9 | TOOTH ASSEMBLY, HIGH CAPACITY BUCKET | 3302 - 22 |
| 3C11 | TOOTH ASSEMBLY, HIGH CAPACITY BUCKET | 3302 - 24 |
| 3C13 | TOOTH ASSEMBLY, HIGH CAPACITY BUCKET | 3302 - 26 |
| 3C15 | TOOTH ASSEMBLY, HIGH CAPACITY BUCKET | 3302 - 28 |
| 3C17 | TOOTH ASSEMBLY, HIGH CAPACITY BUCKET | 3302 - 30 |
| 3B19 | TOOTH, BUCKET, SUPER LONG FRONT, 30 INCH | 3302 - 8 |
| 2F13 | TOP HATCH, CAB | 1810 - 28 |
| 2F9 | TRACK, CAB FRONT WINDOW OPENING | 1810 - 24 |
| 1H7 | TRANSFER PUMP, PRIMARY FUEL | 0421 - 2 |
| 1E7 | TRANSMISSION CARRIER LINES | 0260 - 28 |
| 1C5 | TRANSMISSION CASE, REAR AXLE | 0250 - 28 |
| 1C13 | TRANSMISSION CLUTCH, REAR AXLE | 0250 - 36 |
| 1C9 | TRANSMISSION HOUSING AND PUMP, REAR AXLE | 0250 - 32 |
| 3K1 | TRANSMISSION LINES TO OIL TANK | 3363 - 26 |
| 1C21 | TRANSMISSION PUMP, REAR AXLE | 0250 - 44 |
| 1C23 | TRANSMISSION REDUCTION GEARS, REAR AXLE | 0250 - 46 |
| 1C7 | TRANSMISSION SHAFT, REAR AXLE | 0250 - 30 |
| 1J12 | TRAVEL WARNING ALARM (STEERING COLUMN) | 0920 - 4 |
| 2H3 | TRAY, REAR | 1830 - 18 |
| 2J1 | TUBE, MAIN HYDRAULIC PUMP DRIVE DIPSTICK | 2160 - 4 |
| 1I1 | TUBE, RADIATOR | 0510 - 4 |
| 1G15 | TURBOCHARGER | 0416 - 2 |
| 1G17 | TURBOCHARGER COMPONENTS | 0416 - 4 |
| 2C8 | TWO-PIECE BOOM LIGHT WIRING HARNESS | 1674 - 4 |

U

| | | |
|---|---|---|
| 1B10 | UNIVERSAL JOINT AND SPUR GEAR (FRONT AXLE) | 0250 - 8 |
| 1D3 | UNIVERSAL JOINT, REAR AXLE | 0250 - 50 |
| 1B16 | UNIVERSAL JOINTS AND YOKE, FRONT AXLE | 0250 - 14 |

**ALPHABETICAL INDEX - CONTINUED**


| GRID | | PAGE |
|---|---|---|
| | V | |
| 1F19 | VACUUM LINES (ENGINE) | 0407 - 6 |
| 1J20 | VALVE AND HYDRAULIC HOSES, STEERING | 0963 - 2 |
| 1F9 | VALVE COVER | 0402 - 2 |
| 1F9 | VALVE COVER GASKET | 0402 - 2 |
| 1F23 | VALVE GUIDE, ENGINE | 0409 - 2 |
| 3D3 | VALVE HOSES, BLADE CONTROL (BLADE VALVE TO MAIN CONTROL VALVE) | 3315 - 6 |
| 3I7 | VALVE SECTION, PILOT SIGNAL MANIFOLD | 3362 - 40 |
| 1G1 | VALVE SPRINGS (ENGINE) | 0409 - 4 |
| 3D3 | VALVE, BLADE CONTROL | 3315 - 6 |
| 1B12 | VALVE, BLEED, FRONT AXLE HOUSING | 0250 - 10 |
| 1B14 | VALVE, BLEED, FRONT AXLE HOUSING (CONTINUED) | 0250 - 12 |
| 1D21 | VALVE, BRAKE | 0260 - 18 |
| 2B10 | VALVE, BRAKE | 1063 - 2 |
| 2B12 | VALVE, BRAKE | 1063 - 4 |
| 3I21 | VALVE, BRAKE | 3362 - 54 |
| 2B8 | VALVE, BRAKE PEDAL | 1062 - 8 |
| 3B11 | VALVE, CHECK | 3301 - 4 |
| 1E13 | VALVE, CHECK, (AXLE LOCK CYLINDER) | 0262 - 2 |
| 1E15 | VALVE, CHECK, (BLADE CYLINDER) | 0262 - 4 |
| 1E9 | VALVE, CHECK, FRONT AXLE LOCK LINES | 0260 - 30 |
| 3H11 | VALVE, CONTROL | 3362 - 20 |
| 3G19 | VALVE, CONTROL (1/8) | 3362 - 4 |
| 3G21 | VALVE, CONTROL (2/8) | 3362 - 6 |
| 3G23 | VALVE, CONTROL (3/8) | 3362 - 8 |
| 3H1 | VALVE, CONTROL (4/8) | 3362 - 10 |
| 3H3 | VALVE, CONTROL (5/8) | 3362 - 12 |
| 3H5 | VALVE, CONTROL (6/8) | 3362 - 14 |
| 3H7 | VALVE, CONTROL (7/8) | 3362 - 16 |
| 3H9 | VALVE, CONTROL (8/8) | 3362 - 18 |
| 3L12 | VALVE, CONTROL, PTO | 4060 - 2 |
| 3J3 | VALVE, CONTROL, TO HYDRAULIC PUMP LINES | 3363 - 4 |
| 1G1 | VALVE, EXHAUST (ENGINE) | 0409 - 4 |
| 3I17 | VALVE, FLOW CONTROL | 3362 - 50 |
| 1G7 | VALVE, FLOW CONTROL, HYDRAULIC, FEED PUMP | 0413 - 4 |
| 1G1 | VALVE, INTAKE (ENGINE) | 0409 - 4 |
| 3F15 | VALVE, LH REGULATOR FLOW CONTROL (MAIN HYDRAULIC PUMP) | 3360 - 8 |
| 3F15 | VALVE, LH REGULATOR SOLENOID (MAIN HYDRAULIC PUMP) | 3360 - 8 |
| 3I19 | VALVE, LOCK | 3362 - 52 |
| 3G13 | VALVE, MAIN CONTROL | 3360 - 30 |
| 3F19 | VALVE, OIL COOLER AND CONTROL VALVE RETURN LINES TO OIL TANK | 3360 - 12 |
| 3H15 | VALVE, PILOT | 3362 - 24 |
| 3C24 | VALVE, PILOT (DIG AND SWING) | 3315 - 2 |
| 3H13 | VALVE, PILOT (FRONT AND SWING) | 3362 - 22 |
| 3H11 | VALVE, PRESSURE RELIEF | 3362 - 20 |
| 3L17 | VALVE, PRESSURE RELIEF, SWING MOTOR | 4360 - 4 |
| 1D11 | VALVE, PROPEL MOTOR RELIEF | 0260 - 8 |
| 3K7 | VALVE, RELIEF TO BRAKE LINES | 3363 - 32 |
| 3K7 | VALVE, RELIEF TO RETURN LINES | 3363 - 32 |
| 3I3 | VALVE, RELIEF, OIL TANK | 3362 - 36 |
| 3F13 | VALVE, RH REGULATOR FLOW CONTROL (MAIN HYDRAULIC PUMP) | 3360 - 6 |
| 1D21 | VALVE, SHUTTLE (BRAKE VALVE) | 0260 - 18 |
| 3I15 | VALVE, SOLENOID CONTROL | 3362 - 48 |
| 3H17 | VALVE, SOLENOID VALVE BANK | 3362 - 26 |
| 3H23 | VALVE, SOLENOID, BRAKE | 3362 - 32 |
| 3H19 | VALVE, SOLENOID, OIL TANK SOLENOID VALVE (2) | 3362 - 28 |
| 3I1 | VALVE, SOLENOID, OIL TANK SOLENOID VALVE (5) | 3362 - 34 |
| 3H21 | VALVE, SOLENOID, PROPEL | 3362 - 30 |
| 1E3 | VALVE, SOLENOID, ROTARY MANIFOLD BLADE LINES | 0260 - 24 |
| 1E1 | VALVE, SOLENOID, ROTARY MANIFOLD TO STABLIZER OUTRIGGER | 0260 - 22 |
| 3K1 | VALVE, SOLENOID, TRANSMISSION LINES | 3363 - 26 |
| 2E11 | VALVE, SPARE PEDAL | 1810 - 2 |
| 1J16 | VALVE, STEERING | 0962 - 2 |
| 1J18 | VALVE, STEERING | 0962 - 4 |
| 3F9 | VALVES, FLOW CONTROL HYDRAULIC | 3360 - 2 |
| 3I13 | VALVES, PILOT SIGNAL MANIFOLD | 3362 - 46 |
| 2F19 | VANDAL COVER KIT | 1810 - 34 |
| 2F19 | VANDAL GUARD KIT | 1810 - 34 |
| 2F1 | VANDAL HOOK, CAB | 1810 - 16 |
| 2F19 | VANDAL PROTECTION | 1810 - 34 |
| 2C20 | VEHICLE MAIN WIRING HARNESS | 1674 - 16 |
| 1F13 | VENTILATION, ENGINE | 0404 - 4 |
| 1H11 | VOLTAGE REGULATOR, ALTERNATOR | 0423 - 4 |
| | W | |
| 1J12 | WARNING ALARM, TRAVEL (STEERING COLUMN) | 0920 - 4 |
| 2B15 | WARNING LABELS | 1322 - 2 |
| 1G23 | WATER LINES FROM WATER PUMP TO THERMOSTAT | 0418 - 4 |
| 1G19 | WATER PUMP | 0417 - 2 |
| 1J5 | WATER SEPARATOR AND PRIMARY FUEL FILTER HOSES AND FITTINGS | 0560 - 8 |
| 1H3 | WATER SEPERATOR, PRIMARY FUEL FILTER | 0420 - 2 |
| 1D9 | WHEEL SEAL O-RING, ROTARY MANIFOLD (UPPERSTRUCTURE) | 0260 - 6 |
| 1J10 | WHEEL, STEERING | 0920 - 2 |
| 2F11 | WINDOW GUARD, CAB RIGHT | 1810 - 26 |
| 2F19 | WINDOW GUARDS | 1810 - 34 |
| 2F21 | WINDOW WASHER PUMP | 1810 - 36 |
| 2F21 | WINDOW WASHER TANK | 1810 - 36 |
| 2F7 | WINDOW, CAB DOOR | 1810 - 22 |
| 2F9 | WINDOW, CAB FRONT | 1810 - 24 |
| 2F5 | WINDOW, CAB LEFT | 1810 - 20 |
| 2F5 | WINDOW, CAB REAR | 1810 - 20 |
| 2F11 | WINDOW, CAB RIGHT | 1810 - 26 |
| 2F13 | WINDOW, CAB TOP | 1810 - 28 |
| 2F9 | WINDSHIELD | 1810 - 24 |
| 2F3 | WINDSHIELD WASHER HOSE | 1810 - 18 |
| 2F3 | WINDSHIELD WASHER NOZZLE | 1810 - 18 |
| 2F21 | WINDSHIELD WASHER PUMP | 1810 - 36 |
| 2F21 | WINDSHIELD WASHER TANK | 1810 - 36 |
| 2F3 | WINDSHIELD WIPER | 1810 - 18 |
| 2F3 | WINDSHIELD WIPER ARM | 1810 - 18 |
| 2F3 | WINDSHIELD WIPER BLADE | 1810 - 18 |
| 2F3 | WINDSHIELD WIPER MOTOR | 1810 - 18 |
| 2F3 | WINDSHIELD WIPER MOTOR WIRING HARNESS | 1810 - 18 |
| 2G23 | WING BOLT, CONDENSOR SCREEN | 1830 - 14 |
| 2F3 | WIPER, WINDSHIELD | 1810 - 18 |
| 2H9 | WIRE HARNESS, POWER UNIT | 1830 - 24 |
| 2I12 | WIRE HARNESS, RADIO | 2001 - 2 |
| 1J14 | WIRING HARNESS (STEERING COLUMN INDICATOR PANEL) | 0920 - 6 |
| 2C5 | WIRING HARNESS KIT | 1674 - 1 |
| 2C10 | WIRING HARNESS, BOOM LIGHT (MONO BOOM) | 1674 - 6 |
| 2D9 | WIRING HARNESS, BOOM LIGHT (MONO BOOM) | 1674 - 30 |

**ALPHABETICAL INDEX - CONTINUED**


| GRID | | PAGE |
|---|---|---|
| 2C8 | WIRING HARNESS, BOOM LIGHT (2 PIECE) | 1674 - 4 |
| 2C12 | WIRING HARNESS, CAB | 1674 - 8 |
| 2C14 | WIRING HARNESS, CAB (CONTINUED) | 1674 - 10 |
| 2C22 | WIRING HARNESS, CAB DISPLAY MONITOR | 1674 - 18 |
| 2H3 | WIRING HARNESS, CAB REAR POWER SUPPLY | 1830 - 18 |
| 2F3 | WIRING HARNESS, DOME LIGHT | 1810 - 18 |
| 2C24 | WIRING HARNESS, ENGINE | 1674 - 20 |
| 2G11 | WIRING HARNESS, FROM A/C CONTROLLER | 1830 - 2 |
| 1H7 | WIRING HARNESS, FUEL TRANSFER PUMP AND HOSES | 0421 - 2 |
| 2C16 | WIRING HARNESS, HEAD, TAIL AND MONO BOOM LIGHTS | 1674 - 12 |
| 2I18 | WIRING HARNESS, HORN | 2004 - 2 |
| 2F3 | WIRING HARNESS, RADIO SPEAKER | 1810 - 18 |
| 1E3 | WIRING HARNESS, ROTARY MANIFOLD BLADE LINES | 0260 - 24 |
| 1E1 | WIRING HARNESS, ROTARY MANIFOLD TO STABLIZER OUTRIGGER | 0260 - 22 |
| 2C3 | WIRING HARNESS, STARTER RELAY | 1671 - 2 |
| 2C20 | WIRING HARNESS, VEHICLE MAIN | 1674 - 16 |
| 2F3 | WIRING HARNESS, WINDSHIELD WIPER MOTOR | 1810 - 18 |
| 2C18 | WIRING HARNESS, 2 PIECE BOOM LIGHT | 1674 - 14 |
| 3E17 | WIRING, SPARE FLOW RATE SELECTOR (2 PIECE) | 3344 - 38 |
| 2G5 | WRIST REST, CONSOLE | 1821 - 4 |

Y

| | | |
|---|---|---|
| 1B16 | YOKE AND UNIVERSAL JOINTS, FRONT AXLE | 0250 - 14 |
| 2B12 | YOKE, BRAKE VALVE | 1063 - 4 |

**WHEELS**

T207794 -UN-03FEB05

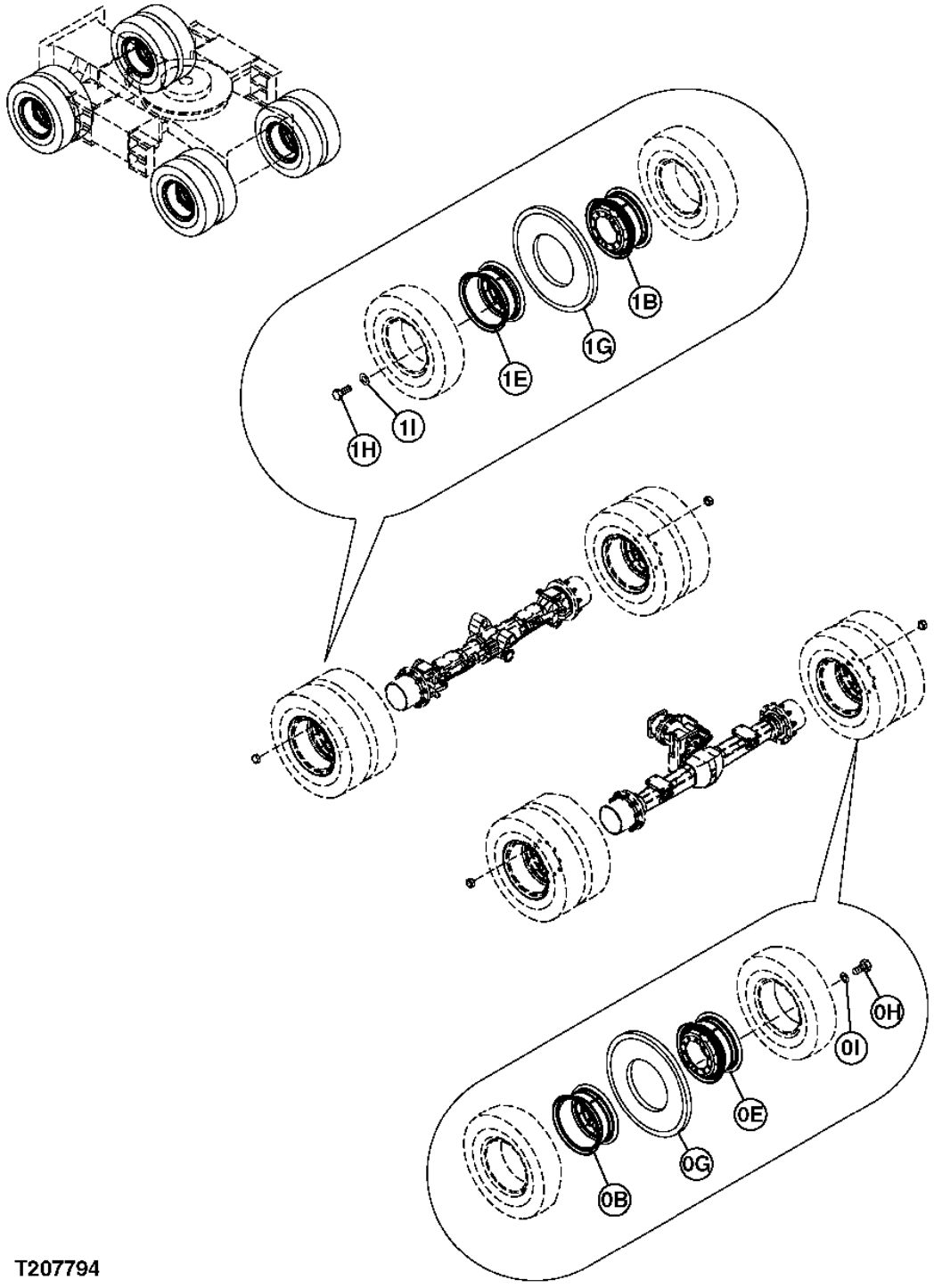


T207794

**WHEELS**

| KEY | PART NO. | PART NAME | QTY | SERIAL NO. | REMARKS |
|---|---|---|---|---|---|
| 0B | 4482512 | RIM | 1 | | |
| 0E | 4601000 | RIM | 1 | | |
| 0G | 4464656 | SPACER | 1 | | |
| 0H | 19M7402 | CAP SCREW | 2 | | M10 X 25, (SUB FOR J901025) |
| 0I | 24M7101 | WASHER | 2 | | 11 X 34 X 3 MM, (SUB FOR J217083) |
| 1B | 4482512 | RIM | 1 | | |
| 1E | 4601000 | RIM | 1 | | |
| 1G | 4464656 | SPACER | 1 | | |
| 1H | 19M7402 | CAP SCREW | 2 | | M10 X 25, (SUB FOR J901025) |
| 1I | 24M7101 | WASHER | 2 | | 11 X 34 X 3 MM, (SUB FOR J217083) |

**POWER TRAIN**

T207793 -UN-03FEB05

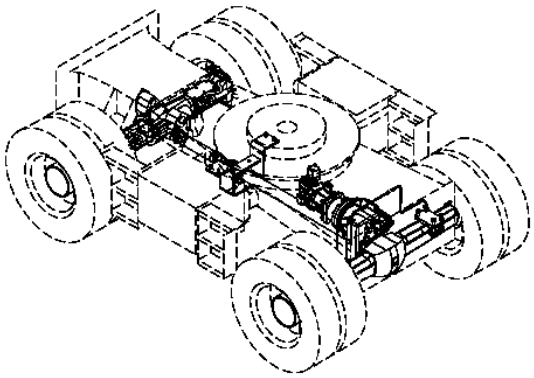

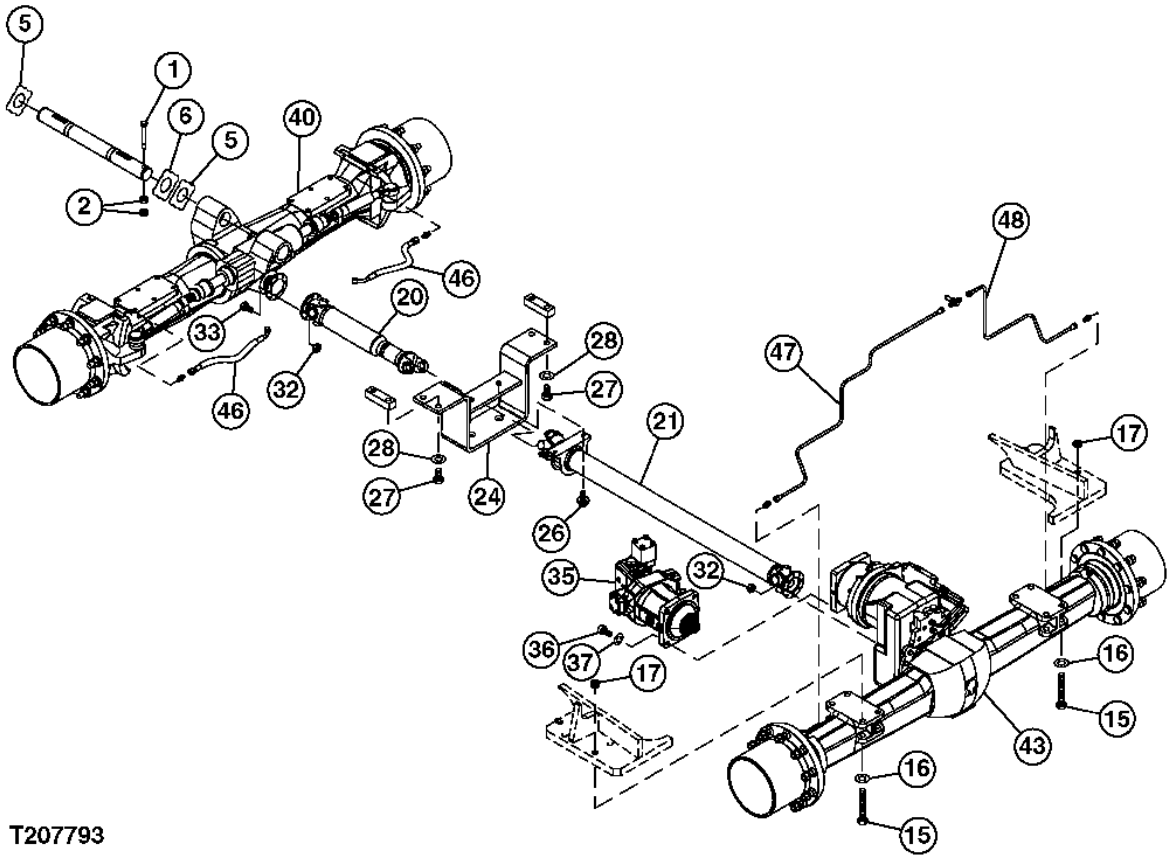


T207793

**POWER TRAIN**

| KEY | PART NO. | PART NAME | QTY | SERIAL NO. | REMARKS |
|---|---|---|---|---|---|
| 1 | 4435123 | PIN FASTENER | 1 | | |
| 2 | 14M7276 | NUT | 2 | | M16, (SUB FOR J950016) |
| 5 | 4444839 | PLATE | 2 | | |
| 6 | 4444840 | PLATE | 1 | | |
| 15 | 19M8503 | CAP SCREW | 8 | | M20 X 160, (SUB FOR J932011) |
| 16 | N231749 | WASHER | 8 | | (SUB FOR 4018545) |
| 17 | 14M7277 | NUT | 8 | | M20, (SUB FOR J951020) |
| 20 | 4473740 | SHAFT | 1 | | |
| 21 | 4485977 | SHAFT | 1 | | |
| 24 | 8089522 | BRACKET | 1 | | |
| 26 | ..... | CAP SCREW | 2 | | ( J271035 NO LONGER AVAILABLE) |
| | 19M7550 | CAP SCREW | 1 | | M10 X 35, (SUB FOR J901035) |
| | 24M7346 | WASHER | 1 | | 11 X 20 X 2 MM, (SUB FOR J222010) |
| 27 | 19M8002 | CAP SCREW | 4 | | M20 X 55, (SUB FOR J922055) |
| 28 | J222020 | WASHER | 4 | | |
| 32 | 4600531 | NUT | 16 | | |
| 33 | AT321936 | BOLT | 8 | | (SUB FOR 4602951) |
| 35 | 4475800 | HYDRAULIC MOTOR | 1 | | |
| 36 | M341656 | BOLT | 4 | | |
| 37 | 12H294 | LOCK WASHER | 4 | | 15.875 MM, (SUB FOR A590916) |
| 40 | AT321934 | AXLE | 1 | | (FRONT) (SUB FOR 4479182) |
| 43 | AT321935 | AXLE | 1 | | (REAR) (SUB FOR 4479264) |
| 46 | 4481615 | HOSE | 2 | | |
| 47 | 3097221 | PIPE | 1 | | |
| 48 | 3097222 | PIPE | 1 | | |

**FRONT AXLE BEVEL GEAR AND HUB ASSEMBLY**

T207638 -UN-18FEB05

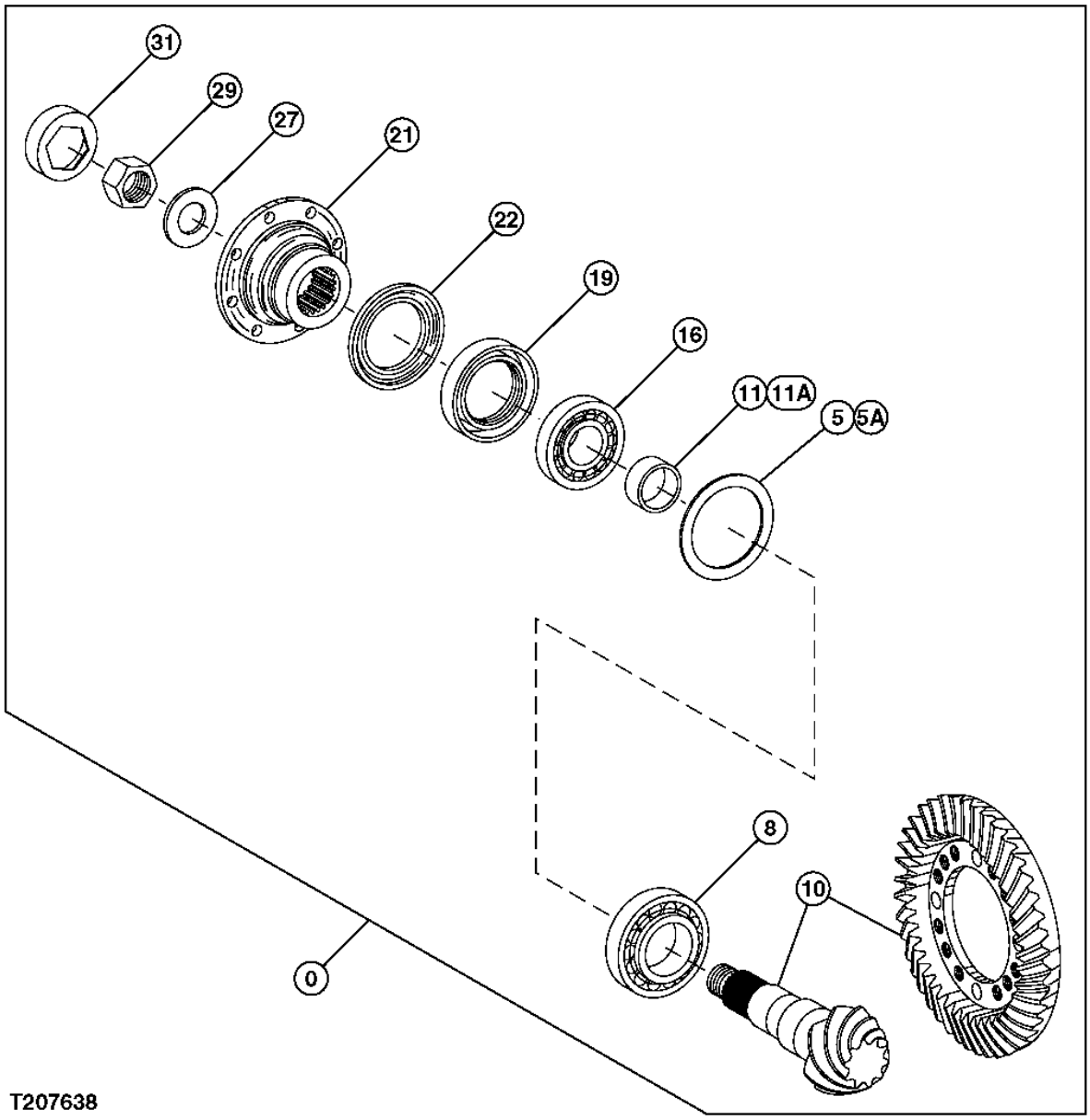

**FRONT AXLE BEVEL GEAR AND HUB ASSEMBLY**

| KEY | PART NO. | PART NAME | QTY | SERIAL NO. | REMARKS |
|---|---|---|---|---|---|
| 0 | AT321934 | AXLE | 1 | | (CONTAINS ALL PARTS ON THIS PAGE - ADDITIONAL COMPONENTS LISTED ON FOLLOWING PAGES) (SUB FOR 4479182) |
| 5 | ..... | WASHER | 1 | | ASSEMBLY |
| 5A | T82527 | SHIM | 1 | | (SUB FOR 0880002) |
| | T82518 | SHIM | 1 | | (SUB FOR 0880003) |
| | T82519 | SHIM | 1 | | (SUB FOR 0880004) |
| | T82520 | SHIM | 1 | | (SUB FOR 0880005) |
| | T82521 | SHIM | 1 | | (SUB FOR 0880006) |
| | T82522 | SHIM | 1 | | (SUB FOR 0880007) |
| | T82523 | SHIM | 1 | | (SUB FOR 0880008) |
| | T82524 | SHIM | 1 | | (SUB FOR 0880009) |
| | T82525 | SHIM | 1 | | (SUB FOR 0880010) |
| | T82526 | SHIM | 1 | | (SUB FOR 0880011) |
| | AT322116 | WASHER | 1 | | (SUB FOR 0880012) |
| | AT322117 | WASHER | 1 | | (SUB FOR 0880013) |
| | AT322118 | WASHER | 1 | | (SUB FOR 0880014) |
| | AT322119 | WASHER | 1 | | (SUB FOR 0880015) |
| 8 | AT322120 | TAPERED ROLLER BEARING | 1 | | (SUB FOR 0880016) |
| 10 | AT322115 | GEAR | 1 | | (SUB FOR 0880001) |
| 11 | ..... | RING | 1 | | |
| 11A | AT322121 | RING | 1 | | (SUB FOR 0880017) |
| | AT322122 | RING | 1 | | (SUB FOR 0880018) |
| | AT322123 | RING | 1 | | (SUB FOR 0880019) |
| | AT322124 | RING | 1 | | (SUB FOR 0880020) |
| | AT322125 | RING | 1 | | (SUB FOR 0880021) |
| | AT322126 | RING | 1 | | (SUB FOR 0880022) |
| | AT321560 | RING | 1 | | (SUB FOR 0880023) |
| | AT321561 | RING | 1 | | (SUB FOR 0880024) |
| | AT321562 | RING | 1 | | (SUB FOR 0880025) |
| | AT321563 | RING | 1 | | (SUB FOR 0880026) |
| | AT321564 | RING | 1 | | (SUB FOR 0880027) |
| | AT321565 | RING | 1 | | (SUB FOR 0880028) |
| | AT321566 | RING | 1 | | (SUB FOR 0880029) |
| | AT321567 | RING | 1 | | (SUB FOR 0880030) |
| | AT321568 | RING | 1 | | (SUB FOR 0880031) |
| | AT321569 | RING | 1 | | (SUB FOR 0880032) |
| | AT321570 | RING | 1 | | (SUB FOR 0880033) |
| | AT321571 | RING | 1 | | (SUB FOR 0880034) |
| | AT321572 | RING | 1 | | (SUB FOR 0880035) |

THIS PARTS LISTING IS CONTINUED

**FRONT AXLE BEVEL GEAR AND HUB ASSEMBLY (CONTINUED)**

T207638 -UN-18FEB05

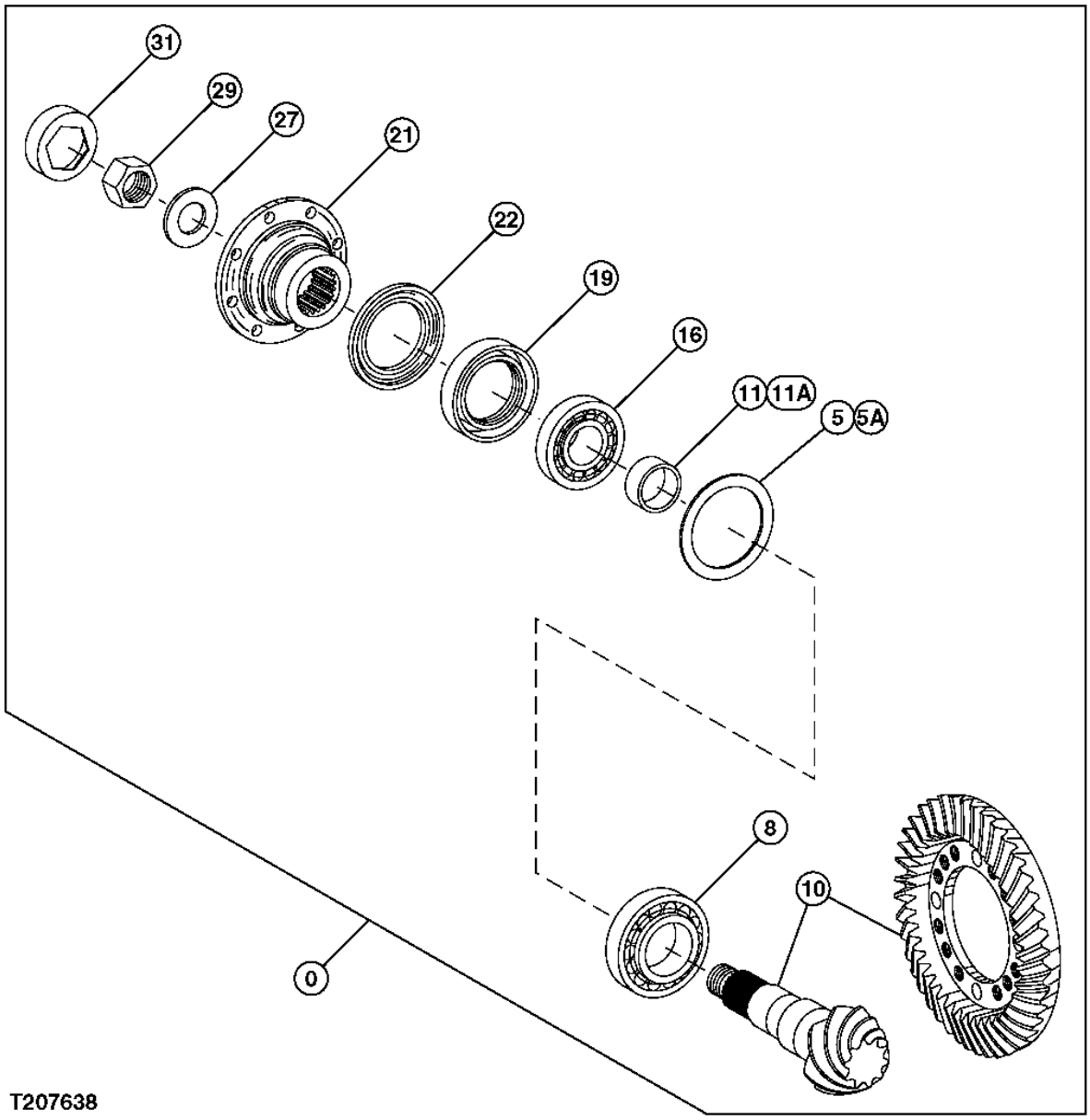

**FRONT AXLE BEVEL GEAR AND HUB ASSEMBLY (CONTINUED)**

| KEY | PART NO. | PART NAME | QTY | SERIAL NO. | REMARKS |
|---|---|---|---|---|---|
| 11A | AT321573 | RING | 1 | | (SUB FOR 0880036) |
| | AT321574 | RING | 1 | | (SUB FOR 0880037) |
| | AT321575 | RING | 1 | | (SUB FOR 0880038) |
| | AT321576 | RING | 1 | | (SUB FOR 0880039) |
| | AT321577 | RING | 1 | | (SUB FOR 0880040) |
| | AT321578 | RING | 1 | | (SUB FOR 0880041) |
| | AT321579 | RING | 1 | | (SUB FOR 0880042) |
| | AT321580 | RING | 1 | | (SUB FOR 0880043) |
| | AT321581 | RING | 1 | | (SUB FOR 0880044) |
| | AT321582 | RING | 1 | | (SUB FOR 0880045) |
| | AT321583 | RING | 1 | | (SUB FOR 0880046) |
| | AT321584 | RING | 1 | | (SUB FOR 0880047) |
| | AT321585 | RING | 1 | | (SUB FOR 0880048) |
| | AT321586 | RING | 1 | | (SUB FOR 0880049) |
| | AT321587 | RING | 1 | | (SUB FOR 0880050) |
| | AT321588 | RING | 1 | | (SUB FOR 0880051) |
| | AT321589 | RING | 1 | | (SUB FOR 0880052) |
| | AT321590 | RING | 1 | | (SUB FOR 0880053) |
| | AT321591 | RING | 1 | | (SUB FOR 0880054) |
| | AT321592 | RING | 1 | | (SUB FOR 0880055) |
| | AT321593 | RING | 1 | | (SUB FOR 0880056) |
| | AT321594 | RING | 1 | | (SUB FOR 0880057) |
| | AT321595 | RING | 1 | | (SUB FOR 0880058) |
| | AT321596 | RING | 1 | | (SUB FOR 0880059) |
| | AT321597 | RING | 1 | | (SUB FOR 0880060) |
| | AT321598 | RING | 1 | | (SUB FOR 0880061) |
| | AT321599 | RING | 1 | | (SUB FOR 0880062) |
| | AT321600 | RING | 1 | | (SUB FOR 0880063) |
| | AT321601 | RING | 1 | | (SUB FOR 0880064) |
| | AT321602 | RING | 1 | | (SUB FOR 0880065) |
| 16 | AT321603 | TAPERED ROLLER BEARING | 1 | | (SUB FOR 0880066) |
| 19 | AT321949 | SEAL | 1 | | (SUB FOR 0877401) |
| 21 | AT321604 | FLANGE | 1 | | (SUB FOR 0880068) |
| 22 | AT321605 | SCREEN | 1 | | (SUB FOR 0880069) |
| 27 | AT321606 | WASHER | 1 | | (SUB FOR 0880070) |
| 29 | AT321607 | NUT | 1 | | (SUB FOR 0880071) |
| 31 | AT321608 | WASHER | 1 | | (SUB FOR 0880072) |

**FRONT AXLE UNIVERSAL JOINT AND SPUR GEAR**

T207639 -UN-18FEB05

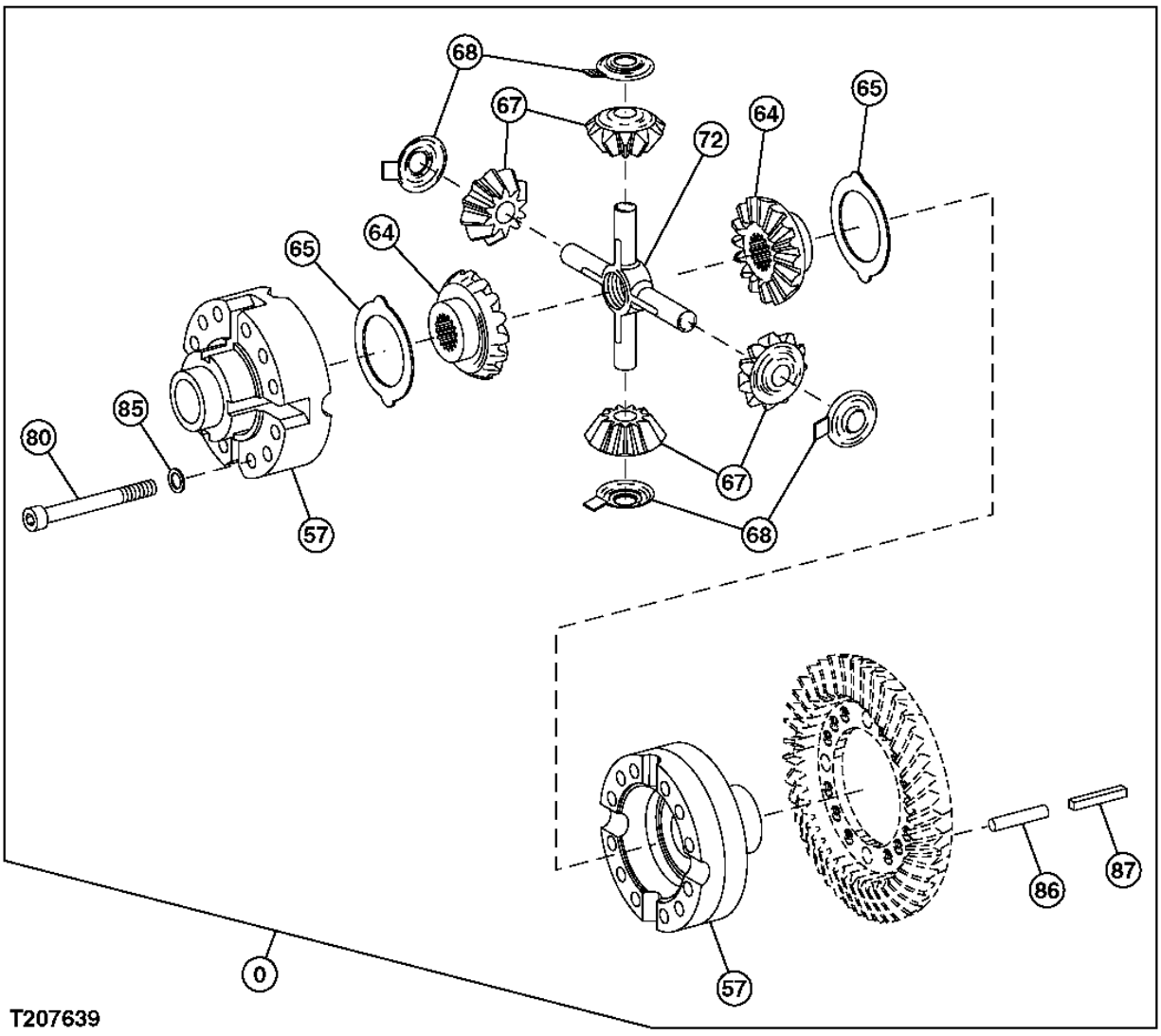

**FRONT AXLE UNIVERSAL JOINT AND SPUR GEAR**

| KEY | PART NO. | PART NAME | QTY | SERIAL NO. | REMARKS |
|---|---|---|---|---|---|
| 0 | AT321934 | AXLE | 1 | | (CONTAINS ALL PARTS ON THIS PAGE - ADDITIONAL COMPONENTS LISTED ON PREVIOUS AND FOLLOWING PAGES) (SUB FOR 4479182) |
| 57 | AT321609 | CASE | 1 | | (SUB FOR 0880101) |
| 64 | AT192224 | BEVEL GEAR | 2 | | (SUB FOR 0880102) |
| 65 | AT321610 | THRUST WASHER | 2 | | (SUB FOR 0880103) |
| 67 | AT321611 | GEAR | 4 | | (SUB FOR 0880104) |
| 68 | AT321612 | THRUST WASHER | 4 | | (SUB FOR 0880105) |
| 72 | AT192225 | GEAR | 1 | | (SUB FOR 0880106) |
| 80 | AT321613 | BOLT | 12 | | (SUB FOR 0880107) |
| 85 | AT321614 | WASHER | 12 | | (SUB FOR 0880108) |
| 86 | AT321399 | PIN FASTENER | 4 | | (SUB FOR 0880109) |
| 87 | AT321400 | PIN FASTENER | 4 | | (SUB FOR 0880110) |

**FRONT AXLE HOUSING, TIE RODS AND SHAFT**

T207640 -UN-18FEB05

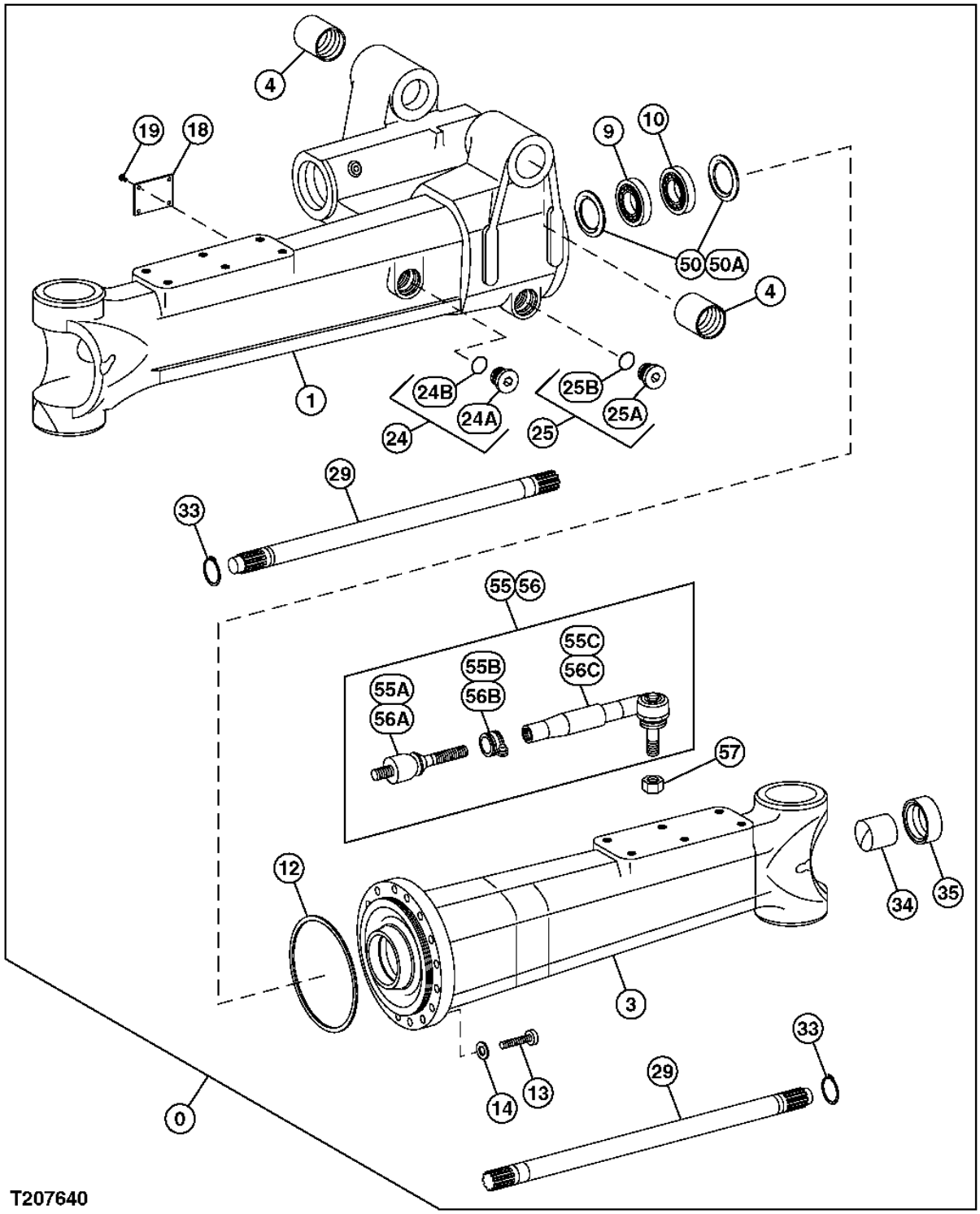

**FRONT AXLE HOUSING, TIE RODS AND SHAFT**

| KEY | PART NO. | PART NAME | QTY | SERIAL NO. | REMARKS |
|---|---|---|---|---|---|
| 0 | AT321934 | AXLE | 1 | | (CONTAINS ALL PARTS ON THIS PAGE - ADDITIONAL COMPONENTS LISTED ON PREVIOUS AND FOLLOWING PAGES) (SUB FOR 4479182) |
| 1 | AT321907 | CASE | 1 | | (SUB FOR 0915201) |
| 3 | AT321908 | CASE | 1 | | (SUB FOR 0915202) |
| 4 | AT321615 | BUSHING | 2 | | (SUB FOR 0884301) |
| 9 | AT321645 | TAPERED ROLLER BEARING | 1 | | (SUB FOR 0884342) |
| 10 | T182370 | BALL BEARING | 1 | | (SUB FOR 0884343) |
| 12 | AT321401 | O-RING | 1 | | (SUB FOR 0884344) |
| 13 | AT321402 | BOLT | 16 | | (SUB FOR 0884345) |
| 14 | AT321646 | WASHER | 16 | | (SUB FOR 0884346) |
| 18 | AT321994 | LABEL | 1 | | (SUB FOR 0879020) |
| 19 | AT321995 | SCREW | 4 | | (SUB FOR 0879021) |
| 24 | ..... | PLUG | 1 | | |
| 24A | AT321647 | PLUG | 1 | | (SUB FOR 0884347) |
| 24B | AT321403 | O-RING | 1 | | (SUB FOR 0884348) |
| 25 | ..... | PLUG | 1 | | |
| 25A | AT321648 | PLUG | 1 | | (SUB FOR 0884349) |
| 25B | AT321403 | O-RING | 1 | | (SUB FOR 0884348) |
| 29 | AT321909 | SHAFT | 2 | | (SUB FOR 0915203) |
| 33 | AT321649 | SNAP RING | 2 | | (SUB FOR 0884350) |
| 34 | AT321404 | BUSHING | 2 | | (SUB FOR 0884351) |
| 35 | AT321650 | SEAL | 2 | | (SUB FOR 0884352) |
| 50 | ..... | SHIM | 2 | | |
| 50A | AT321950 | SHIM | 1 | | (SUB FOR 0877601) |
| | AT321696 | SHIM | 1 | | (SUB FOR 0885303) |
| | AT321616 | SHIM | 1 | | (SUB FOR 0884303) |
| | AT321617 | SHIM | 1 | | (SUB FOR 0884304) |
| | AT321618 | SHIM | 1 | | (SUB FOR 0884305) |
| | AT321619 | SHIM | 1 | | (SUB FOR 0884306) |
| | AT321620 | SHIM | 1 | | (SUB FOR 0884307) |
| | AT321621 | SHIM | 1 | | (SUB FOR 0884308) |
| | AT321622 | SHIM | 1 | | (SUB FOR 0884309) |
| | AT321623 | SHIM | 1 | | (SUB FOR 0884310) |
| | AT321624 | SHIM | 1 | | (SUB FOR 0884311) |
| | AT321625 | SHIM | 1 | | (SUB FOR 0884312) |
| | AT321626 | SHIM | 1 | | (SUB FOR 0884313) |
| | AT321627 | SHIM | 1 | | (SUB FOR 0884314) |
| | AT321628 | SHIM | 1 | | (SUB FOR 0884315) |

THIS PARTS LISTING IS CONTINUED

**FRONT AXLE HOUSING, TIE RODS AND SHAFT (CONTINUED)**

T207640 -UN-18FEB05

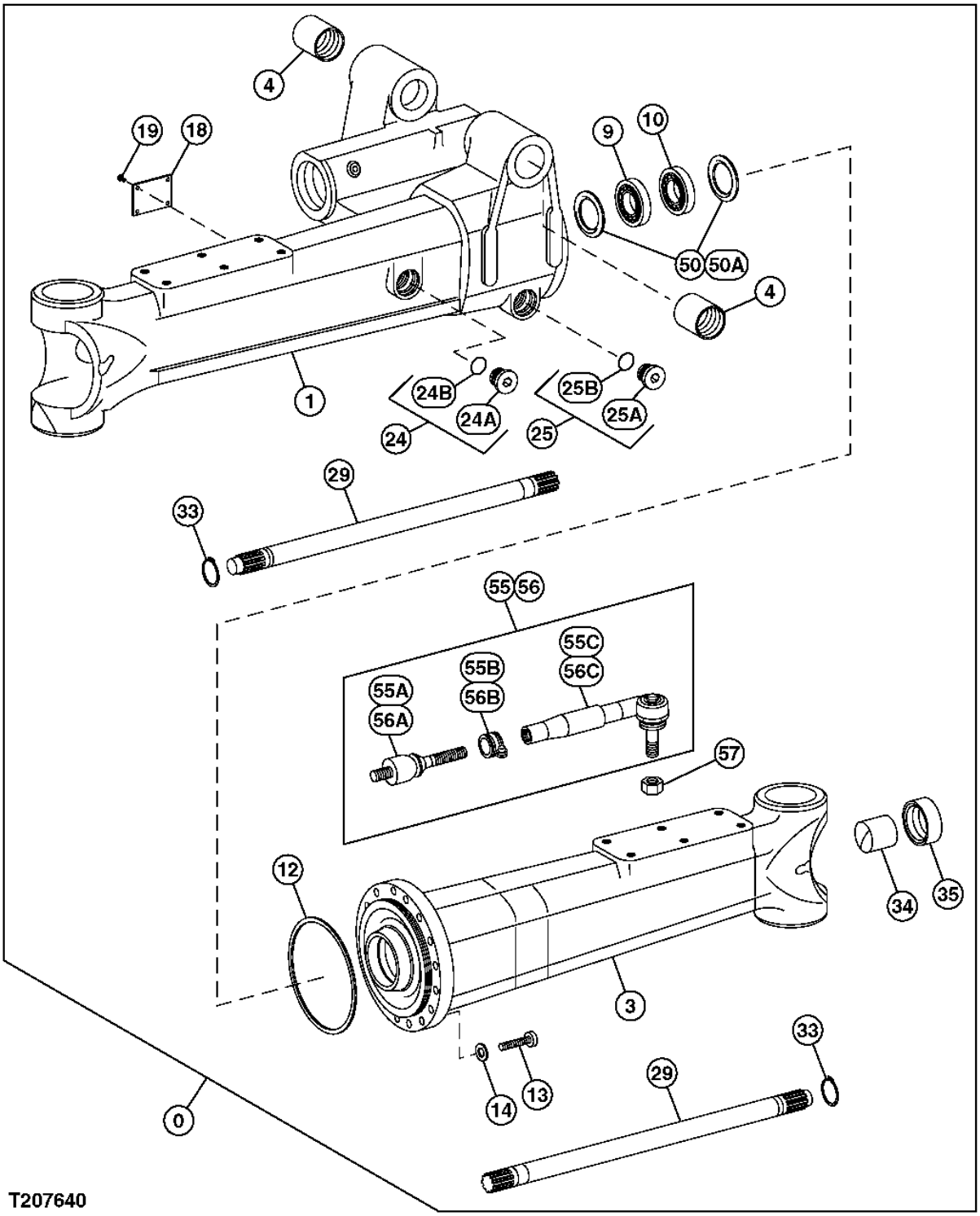

**FRONT AXLE HOUSING, TIE RODS AND SHAFT (CONTINUED)**

| KEY | PART NO. | PART NAME | QTY | SERIAL NO. | REMARKS |
|---|---|---|---|---|---|
| 50A | AT321629 | SHIM | 1 | | (SUB FOR 0884316) |
| | AT321630 | SHIM | 1 | | (SUB FOR 0884317) |
| | AT321631 | SHIM | 1 | | (SUB FOR 0884318) |
| | AT321632 | SHIM | 1 | | (SUB FOR 0884319) |
| | AT321633 | SHIM | 1 | | (SUB FOR 0884320) |
| | AT321634 | SHIM | 1 | | (SUB FOR 0884321) |
| | AT321635 | SHIM | 1 | | (SUB FOR 0884322) |
| | AT321636 | SHIM | 1 | | (SUB FOR 0884323) |
| | AT321951 | SHIM | 1 | | (SUB FOR 0877602) |
| | AT321952 | SHIM | 1 | | (SUB FOR 0877603) |
| | AT321637 | SHIM | 1 | | (SUB FOR 0884326) |
| | AT321638 | SHIM | 1 | | (SUB FOR 0884327) |
| | AT321639 | SHIM | 1 | | (SUB FOR 0884328) |
| | AT321640 | SHIM | 1 | | (SUB FOR 0884329) |
| | AT321641 | SHIM | 1 | | (SUB FOR 0884330) |
| | AT321642 | SHIM | 1 | | (SUB FOR 0884331) |
| | AT321953 | SHIM | 1 | | (SUB FOR 0877604) |
| | AT321643 | SHIM | 1 | | (SUB FOR 0884333) |
| | T181388 | SHIM | 1 | | (SUB FOR 0884334) |
| | T181389 | SHIM | 1 | | (SUB FOR 0884335) |
| | T181390 | SHIM | 1 | | (SUB FOR 0884336) |
| | AT321954 | SHIM | 1 | | (SUB FOR 0877605) |
| | AT321644 | SHIM | 1 | | (SUB FOR 0884338) |
| | AT321955 | SHIM | 1 | | (SUB FOR 0877606) |
| | T181394 | SHIM | 1 | | (SUB FOR 0884340) |
| | T181395 | SHIM | 1 | | (SUB FOR 0884341) |
| 55 | AT321477 | ROD | 1 | | (SUB FOR 0915204) (LEFT) |
| 55A | AT321405 | BALL JOINT | 1 | | (SUB FOR 0884353) |
| 55B | AT321406 | CLIP | 1 | | (SUB FOR 0884354) |
| 55C | AT321478 | BALL JOINT | 1 | | (SUB FOR 0915205) |
| 56 | AT321479 | ROD | 1 | | (SUB FOR 0915206) (RIGHT) |
| 56A | AT321405 | BALL JOINT | 1 | | (SUB FOR 0884353) |
| 56B | AT321406 | CLIP | 1 | | (SUB FOR 0884354) |
| 56C | AT321480 | BALL JOINT | 1 | | (SUB FOR 0915207) |
| 57 | AT321481 | NUT | 2 | | (SUB FOR 0915208) |

**FRONT AXLE YOKE AND UNIVERSAL JOINTS**

T207641 -UN-18FEB05

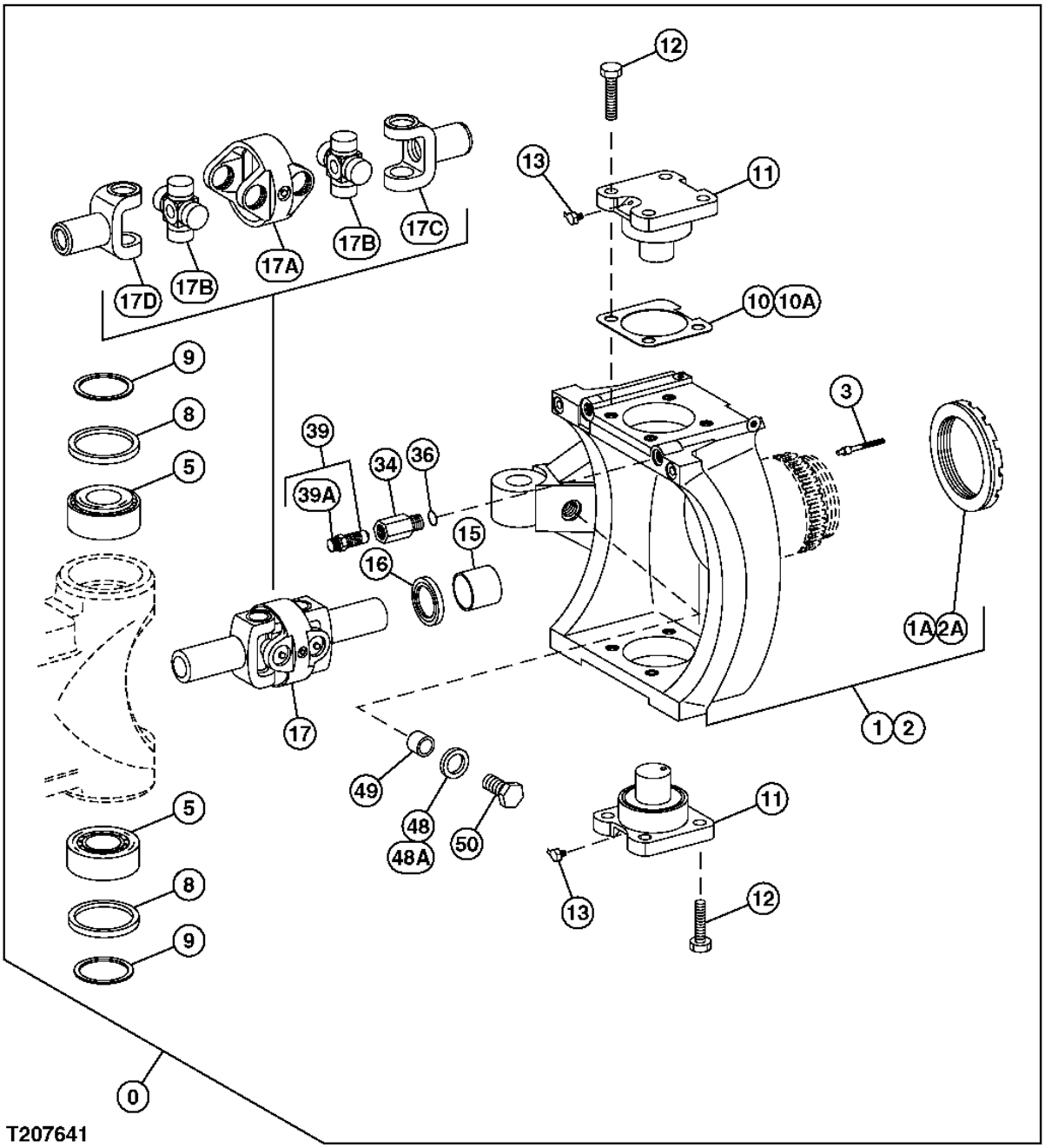

**FRONT AXLE YOKE AND UNIVERSAL JOINTS**

| KEY | PART NO. | PART NAME | QTY | SERIAL NO. | REMARKS |
|---|---|---|---|---|---|
| 0 | AT321934 | AXLE | 1 | | (CONTAINS ALL PARTS ON THIS PAGE - ADDITIONAL COMPONENTS LISTED ON PREVIOUS AND FOLLOWING PAGES) (SUB FOR 4479182) |
| 1 | AT321913 | HOUSING | 1 | | (SUB FOR 0917701) |
| 1A | AT321756 | NUT | 1 | | (SUB FOR 0886902) |
| 2 | AT321914 | HOUSING | 1 | | (SUB FOR 0917702) |
| 2A | AT321756 | NUT | 1 | | (SUB FOR 0886902) |
| 3 | AT321410 | PLUG | 8 | | (SUB FOR 0884424) |
| 5 | AT321651 | TAPERED ROLLER BEARING | 4 | | (SUB FOR 0884404) |
| 8 | AT321652 | SEAL | 4 | | (SUB FOR 0884405) |
| 9 | AT321407 | O-RING | 4 | | (SUB FOR 0884406) |
| 10 | ..... | SHIM | 2 | | |
| 10A | AT321653 | SHIM | 1 | | (SUB FOR 0884407) |
| | AT321654 | SHIM | 1 | | (SUB FOR 0884408) |
| | AT321655 | SHIM | 1 | | (SUB FOR 0884409) |
| | AT321656 | SHIM | 1 | | (SUB FOR 0884410) |
| | AT321657 | SHIM | 1 | | (SUB FOR 0884411) |
| | AT321658 | SHIM | 1 | | (SUB FOR 0884412) |
| | AT321659 | SHIM | 1 | | (SUB FOR 0884413) |
| | AT321660 | SHIM | 1 | | (SUB FOR 0884414) |
| 11 | AT321661 | PIN FASTENER | 4 | | (SUB FOR 0884415) |
| 12 | AT321408 | BOLT | 16 | | (SUB FOR 0884416) |
| 13 | AT321409 | ELBOW FITTING | 4 | | (SUB FOR 0884417) |
| 15 | AT321697 | BUSHING | 2 | | (SUB FOR 0885401) |
| 16 | AT321650 | SEAL | 2 | | (SUB FOR 0884352) |
| 17 | AT321482 | BALL JOINT | 2 | | (SUB FOR 0917703) |
| 17A | AT321483 | UNIVERSAL JOINT | 1 | | (SUB FOR 0917704) |
| 17B | AT321484 | BALL JOINT | 2 | | (SUB FOR 0917705) |
| 17C | AT321485 | FORK | 1 | | (SUB FOR 0917706) |
| 17D | AT321486 | FORK | 1 | | (SUB FOR 0917707) |
| 34 | AT321915 | ADAPTER | 2 | | (SUB FOR 0917708) |
| 36 | AT321487 | O-RING | 2 | | (SUB FOR 0917709) |
| 39 | AT321411 | VALVE | 2 | | (SUB FOR 0884425) |
| 39A | AT321412 | CAP | 1 | | (SUB FOR 0884426) |
| 48 | ..... | WASHER | 2 | | |
| 48A | AT321774 | WASHER | 1 | | (SUB FOR 0886928) |
| | AT321775 | WASHER | 1 | | (SUB FOR 0886929) |
| | AT321776 | WASHER | 1 | | (SUB FOR 0886930) |
| | AT321777 | WASHER | 1 | | (SUB FOR 0886931) |
| 49 | AT321916 | PIPE | 2 | | (SUB FOR 0917710) |
| 50 | AT321780 | BOLT | 2 | | (SUB FOR 0917711 OR 0886934) |

**FRONT AXLE ROTORS AND DISC BRAKES**

T207642 -UN-01MAR05

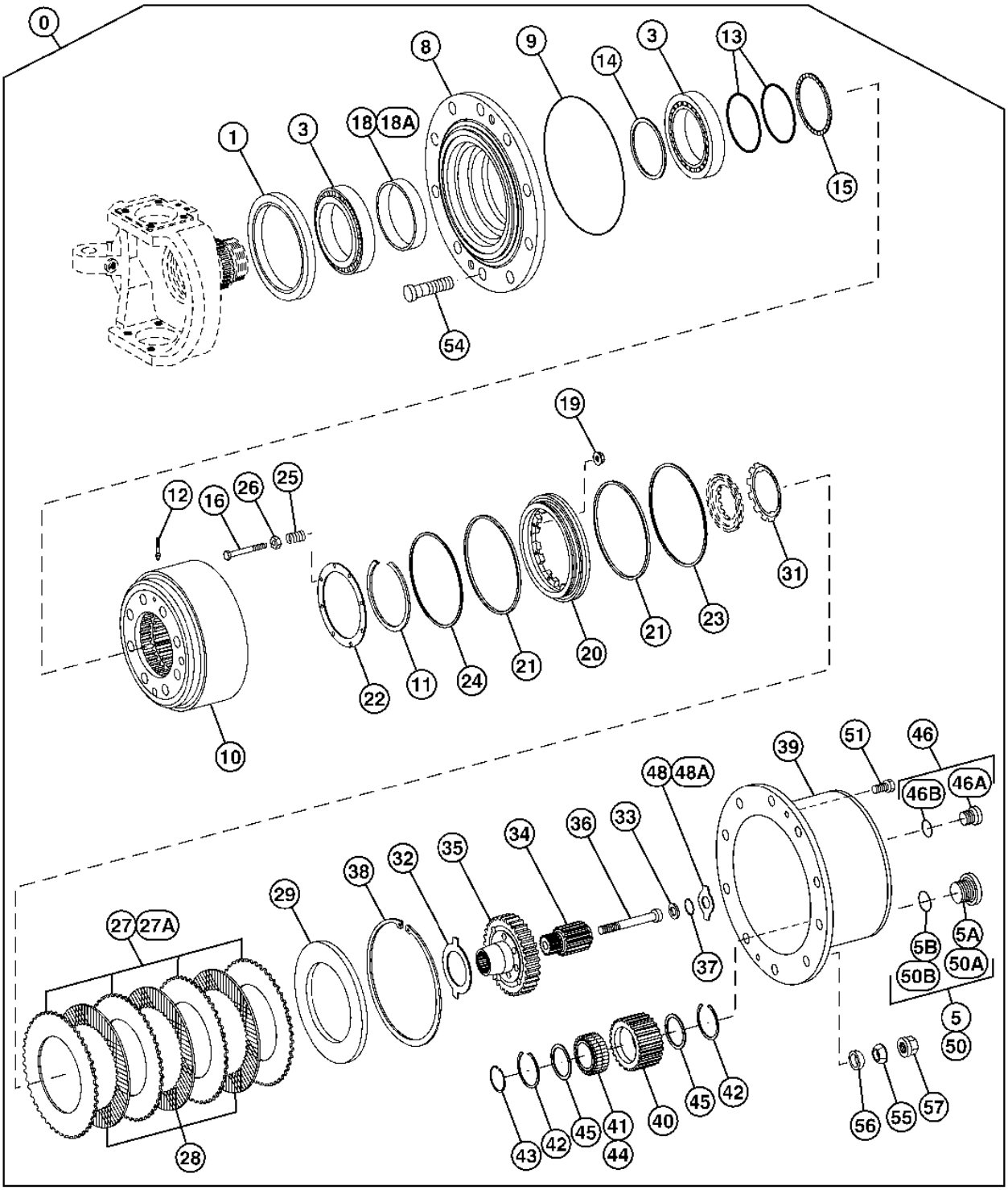


T207642

**FRONT AXLE ROTORS AND DISC BRAKES**

| KEY | PART NO. | PART NAME | QTY | SERIAL NO. | REMARKS |
|---|---|---|---|---|---|
| 0 | AT321934 | AXLE | 1 | | (CONTAINS ALL PARTS ON THIS PAGE - ADDITIONAL COMPONENTS LISTED ON PREVIOUS AND FOLLOWING PAGES) (SUB FOR 4479182) |
| 1 | T187684 | SEAL | 2 | | (SUB FOR 0917801) |
| 3 | AT321782 | TAPERED ROLLER BEARING | 4 | | (SUB FOR 0887002) |
| 5 | ..... | PLUG | 2 | | |
| 5A | AT321746 | PLUG | 1 | | (SUB FOR 0886804) |
| 5B | T170119 | O-RING | 1 | | (SUB FOR 0886805) |
| 8 | AT321783 | HUB | 2 | | (SUB FOR 0887003) |
| 9 | AT321413 | O-RING | 2 | | (SUB FOR 0884517) |
| 10 | AT321784 | RING GEAR | 2 | | (SUB FOR 0887004) |
| 12 | AT321414 | PLUG | 4 | | (SUB FOR 0884518) |
| 13 | AT321445 | O-RING | 4 | | (SUB FOR 0887005) |
| 14 | AT321446 | RING | 2 | | (SUB FOR 0887006) |
| 15 | AT321447 | RING | 2 | | (SUB FOR 0887007) |
| 16 | AT321449 | BOLT | 16 | | (SUB FOR 0887026) |
| 18 | ..... | BUSHING | 2 | | |
| 18A | AT321789 | BUSHING | 1 | | (SUB FOR 0887012) |
| | AT321792 | BUSHING | 1 | | (SUB FOR 0887015) |
| | AT321793 | BUSHING | 1 | | (SUB FOR 0887016) |
| | AT321794 | BUSHING | 1 | | (SUB FOR 0887017) |
| | AT321795 | BUSHING | 1 | | (SUB FOR 0887018) |
| | AT321796 | BUSHING | 1 | | (SUB FOR 0887019) |
| | AT321846 | BUSHING | 1 | | (SUB FOR 0895701) |
| | AT321847 | BUSHING | 1 | | (SUB FOR 0895702) |
| | AT321848 | BUSHING | 1 | | (SUB FOR 0895703) |
| | AT321849 | BUSHING | 1 | | (SUB FOR 0895704) |
| | AT321850 | BUSHING | 1 | | (SUB FOR 0895705) |
| 19 | AT321662 | NUT | 16 | | (SUB FOR 0884528) |
| 20 | AT321797 | PISTON | 2 | | (SUB FOR 0887020) |
| 21 | AT321798 | RING | 4 | | (SUB FOR 0887021) |
| 22 | AT321801 | SHIM | 2 | | (SUB FOR 0887024) |
| 23 | AT321800 | RING | 2 | | (SUB FOR 0887023) |
| 24 | AT321799 | RING | 2 | | (SUB FOR 0887022) |
| 25 | AT321415 | COMPRESSION SPRING | 16 | | (SUB FOR 0884527) |
| 26 | AT321663 | SLEEVE | 16 | | (SUB FOR 0884530) |
| 27 | ..... | KIT | 8 | | PLATE |
| 27A | AT321802 | PLATE | 1 | | (SUB FOR 0887027) |
| | AT321803 | PLATE | 1 | | (SUB FOR 0887028) |
| | AT321804 | PLATE | 1 | | (SUB FOR 0887029) |

**FRONT AXLE ROTORS AND DISC BRAKES (CONTINUED)**

T207642 -UN-01MAR05

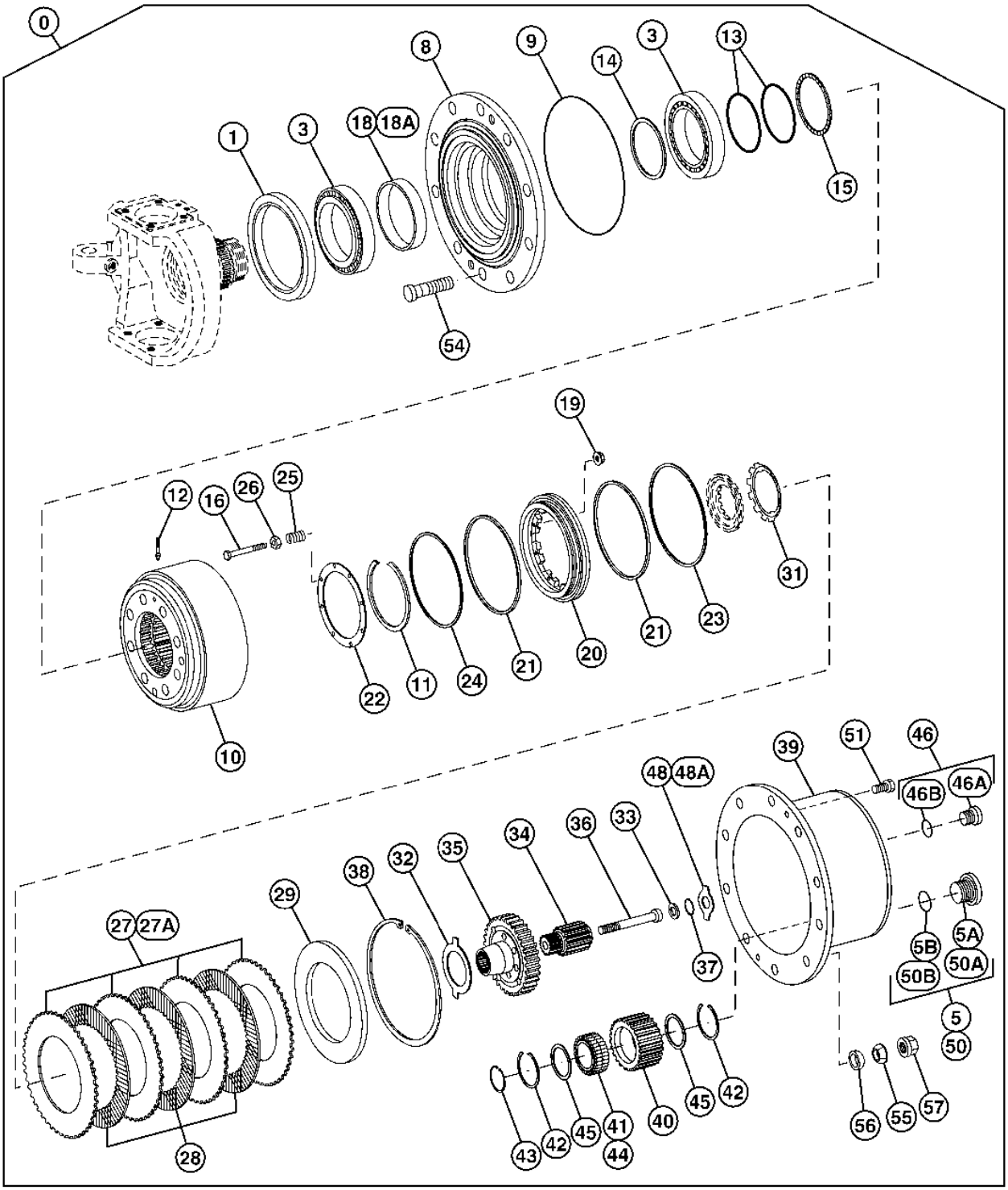


T207642

**FRONT AXLE ROTORS AND DISC BRAKES (CONTINUED)**

| KEY | PART NO. | PART NAME | QTY | SERIAL NO. | REMARKS |
|---|---|---|---|---|---|
| 28 | AT321450 | PLATE | 6 | | FRICTION, (SUB FOR 0887030) |
| 29 | AT321805 | SHIM | 2 | | (SUB FOR 0887031) |
| 31 | AT321806 | WASHER | 2 | | (SUB FOR 0887032) |
| 32 | AT321807 | THRUST WASHER | 2 | | (SUB FOR 0887033) |
| 33 | T129614 | SHIM | 2 | | (SUB FOR 0887035) |
| 34 | AT321808 | SUN GEAR | 2 | | (SUB FOR 0887037) |
| 35 | AT321809 | GEAR | 2 | | (SUB FOR 0887038) |
| 36 | T158754 | CAP SCREW | 2 | | (SUB FOR 0887034) |
| 37 | AT321451 | SNAP RING | 2 | | (SUB FOR 0887036) |
| 38 | AT321452 | SNAP RING | 2 | | (SUB FOR 0887039) |
| 39 | AT321810 | PLANET PINION CARRIER | 2 | | (SUB FOR 0887040) |
| 40 | AT321811 | GEAR | 6 | | (SUB FOR 0887041) |
| 41 | AT321813 | TAPERED ROLLER BEARING | 6 | | (SUB FOR 0887042 OR 0887043) |
| 42 | T183923 | SNAP RING | 12 | | (SUB FOR 0887045) |
| 43 | AT321453 | SNAP RING | 6 | | (SUB FOR 0887046) |
| 44 | AT321813 | TAPERED ROLLER BEARING | 6 | | (SUB FOR 0887043) |
| 45 | T183922 | WASHER | 12 | | (SUB FOR 0887044) |
| 46 | ..... | PLUG | 2 | | |
| 46A | AT321668 | PLUG | 1 | | (SUB FOR 0884560) |
| 46B | AT322106 | O-RING | 1 | | (SUB FOR 0879636) |
| 48 | ..... | THRUST WASHER | 2 | | |
| 48A | AT321814 | THRUST WASHER | 1 | | (SUB FOR 0917802 OR 0887047) |
| | AT321815 | THRUST WASHER | 1 | | (SUB FOR 0887048) |
| | AT321816 | THRUST WASHER | 1 | | (SUB FOR 0887049) |
| | AT321817 | THRUST WASHER | 1 | | (SUB FOR 0887050) |
| | AT321818 | THRUST WASHER | 1 | | (SUB FOR 0887051) |
| | AT321819 | THRUST WASHER | 1 | | (SUB FOR 0887052) |
| | AT321820 | THRUST WASHER | 1 | | (SUB FOR 0887053) |
| 50 | ..... | PLUG | 2 | | |
| 50A | AT321746 | PLUG | 1 | | (SUB FOR 0886804) |
| 50B | AT321462 | O-RING | 1 | | (SUB FOR 0895102) |
| 51 | AT321664 | BOLT | 4 | | (SUB FOR 0884555) |
| 54 | AT321665 | WHEEL BOLT | 20 | | (SUB FOR 0884556) |
| 55 | AT321416 | SPRING WASHER | 20 | | (SUB FOR 0884557) |
| 56 | AT321666 | RING | 20 | | (SUB FOR 0884558) |
| 57 | AT321667 | WHEEL BOLT | 20 | | (SUB FOR 0884559) |

**FRONT AXLE STEERING SHAFT**

T207643 -UN-18FEB05

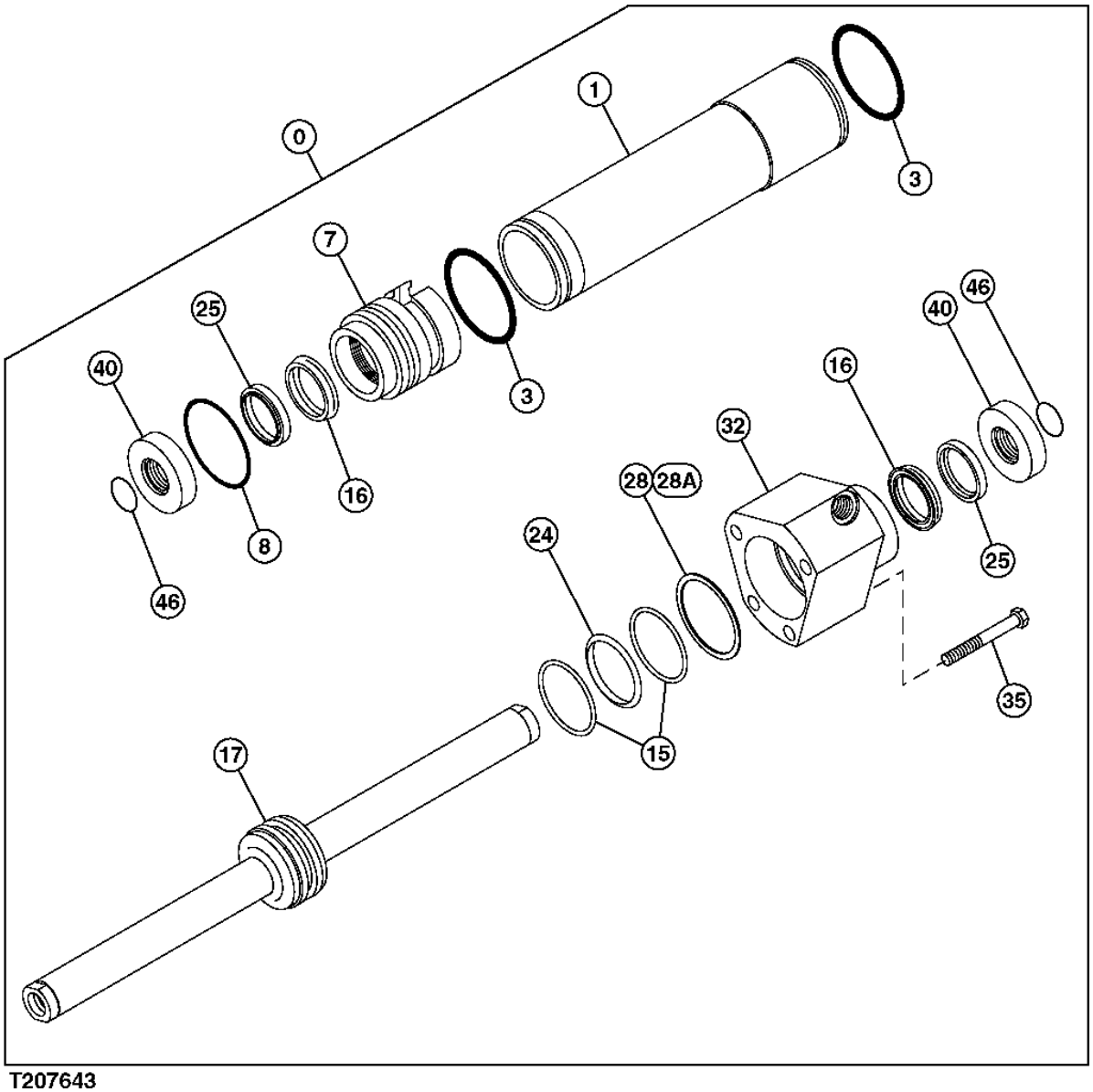


T207643

**FRONT AXLE STEERING SHAFT**

| KEY | PART NO. | PART NAME | QTY | SERIAL NO. | REMARKS |
|---|---|---|---|---|---|
| 0 | AT321934 | AXLE | 1 | | (CONTAINS ALL PARTS ON THIS PAGE - ADDITIONAL COMPONENTS LISTED ON PREVIOUS AND FOLLOWING PAGES) (SUB FOR 4479182) |
| 1 | AT321910 | CYLINDER | 1 | | (SUB FOR 0915501) |
| 3 | AT321417 | O-RING | 2 | | (SUB FOR 0884602) |
| 7 | AT321669 | GUIDE | 1 | | (SUB FOR 0884603) |
| 8 | AT321418 | O-RING | 1 | | (SUB FOR 0884604) |
| 15 | AT321670 | RING | 2 | | (SUB FOR 0884605) |
| 16 | AT321671 | RING | 2 | | (SUB FOR 0884606) |
| 17 | AT321419 | ROD | 1 | | (SUB FOR 0884607) |
| 24 | AT321672 | SEALING RING | 1 | | (SUB FOR 0884608) |
| 25 | AT321673 | WIPER ARM | 2 | | (SUB FOR 0884609) |
| 28 | ..... | SHIM | 1 | | |
| 28A | AT321674 | SHIM | 1 | | (SUB FOR 0884610) |
| | AT321675 | SHIM | 1 | | (SUB FOR 0884611) |
| | AT321676 | SHIM | 1 | | (SUB FOR 0884612) |
| | AT321677 | SHIM | 1 | | (SUB FOR 0884613) |
| | AT321678 | SHIM | 1 | | (SUB FOR 0884614) |
| | AT321679 | SHIM | 1 | | (SUB FOR 0884615) |
| | AT321680 | SHIM | 1 | | (SUB FOR 0884616) |
| | AT321681 | SHIM | 1 | | (SUB FOR 0884617) |
| | AT321682 | SHIM | 1 | | (SUB FOR 0884618) |
| | AT321683 | SHIM | 1 | | (SUB FOR 0884619) |
| | AT321684 | SHIM | 1 | | (SUB FOR 0884620) |
| | AT321685 | SHIM | 1 | | (SUB FOR 0884621) |
| | AT321686 | SHIM | 1 | | (SUB FOR 0884622) |
| | AT321911 | SHIM | 1 | | (SUB FOR 0915502) |
| | AT321687 | SHIM | 1 | | (SUB FOR 0884624) |
| | AT321688 | SHIM | 1 | | (SUB FOR 0884625) |
| | AT321689 | SHIM | 1 | | (SUB FOR 0884626) |
| | AT321690 | SHIM | 1 | | (SUB FOR 0884627) |
| | AT321691 | SHIM | 1 | | (SUB FOR 0884628) |
| | AT321692 | SHIM | 1 | | (SUB FOR 0884629) |
| 32 | AT321912 | GUIDE | 1 | | (SUB FOR 0915503) |
| 35 | AT321421 | BOLT | 4 | | (SUB FOR 0884631) |
| 40 | AT321693 | RING | 2 | | (SUB FOR 0884632) |
| 46 | T123707 | O-RING | 2 | | (SUB FOR 0884633) |

**REAR AXLE HOUSING**

T207644 -UN-18FEB05

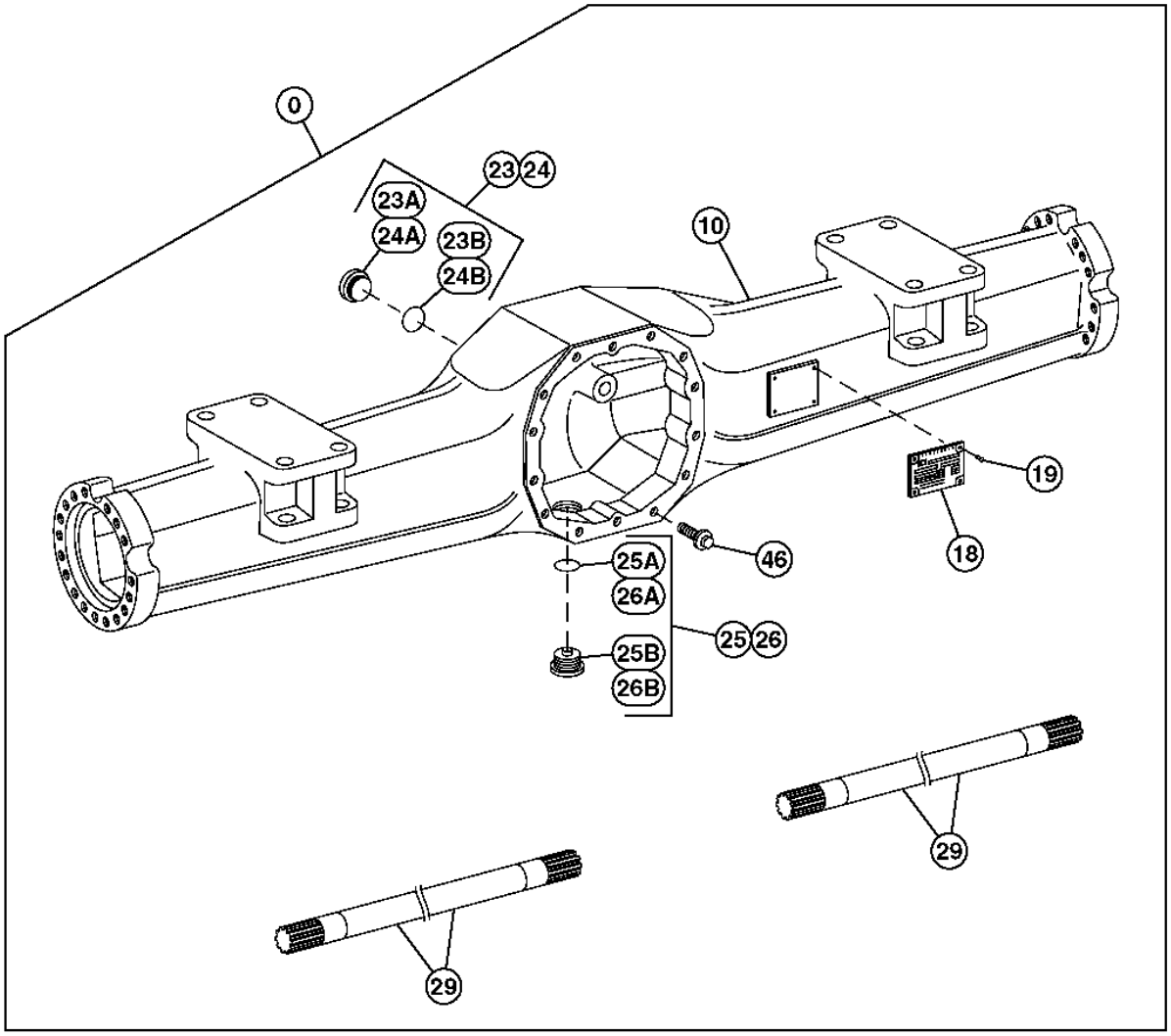


T207644

**REAR AXLE HOUSING**

| KEY | PART NO. | PART NAME | QTY | SERIAL NO. | REMARKS |
|---|---|---|---|---|---|
| 0 | AT321935 | AXLE | 1 | | (CONTAINS ALL PARTS ON THIS PAGE - ADDITIONAL COMPONENTS LISTED ON FOLLOWING PAGES) (SUB FOR 4479264) |
| 10 | ..... | HOUSING | 1 | | ( 0918001 NOT AVAILABLE FOR SERVICE) |
| 18 | AT321994 | LABEL | 1 | | (SUB FOR 0879020) |
| 19 | AT321995 | SCREW | 4 | | (SUB FOR 0879021) |
| 23 | ..... | PLUG | 1 | | |
| 23A | AT321746 | PLUG | 1 | | (SUB FOR 0886804) |
| 23B | AT321462 | O-RING | 1 | | (SUB FOR 0895102) |
| 24 | ..... | PLUG | 1 | | |
| 24A | AT321746 | PLUG | 1 | | (SUB FOR 0886804) |
| 24B | T170119 | O-RING | 1 | | (SUB FOR 0886805) |
| 25 | ..... | PLUG | 1 | | |
| 25A | AT321747 | PLUG | 1 | | (SUB FOR 0886806) |
| 25B | T170119 | O-RING | 1 | | (SUB FOR 0886805) |
| 26 | ..... | PLUG | 1 | | |
| 26A | AT321747 | PLUG | 1 | | (SUB FOR 0886806) |
| 26B | AT321462 | O-RING | 1 | | (SUB FOR 0895102) |
| 29 | AT321919 | SHAFT | 2 | | (SUB FOR 0918002) |
| 46 | 19M8031 | SCREW | 14 | | M14 X 40, (SUB FOR 0895903) |

**REAR AXLE DISC BRAKES**

T207645 -UN-18FEB05

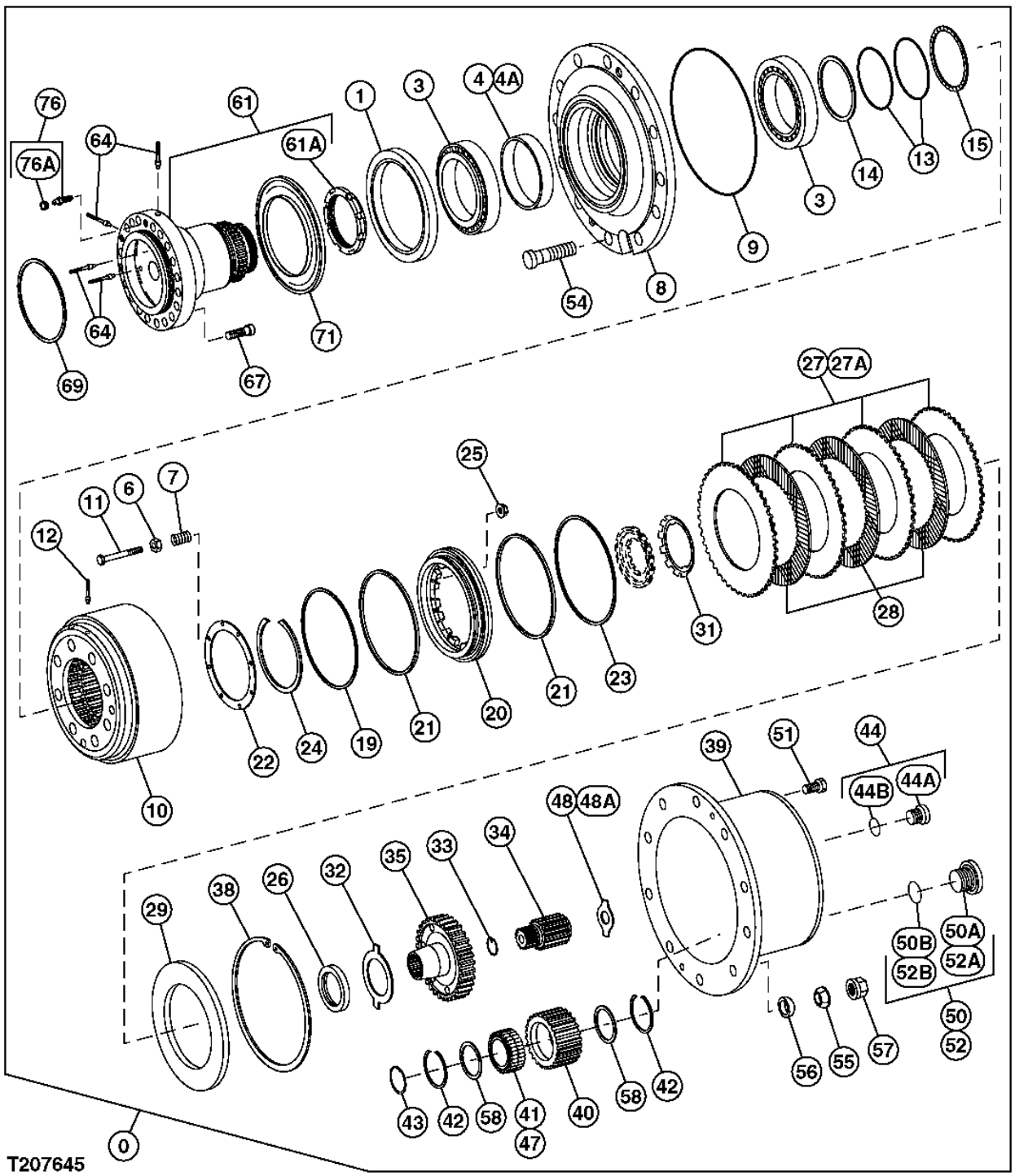

**REAR AXLE DISC BRAKES**

| KEY | PART NO. | PART NAME | QTY | SERIAL NO. | REMARKS |
|---|---|---|---|---|---|
| 0 | AT321935 | AXLE | 1 | | (CONTAINS ALL PARTS ON THIS PAGE - ADDITIONAL COMPONENTS LISTED ON PREVIOUS AND FOLLOWING PAGES) (SUB FOR 4479264) |
| 1 | AT321694 | SEAL | 2 | | (SUB FOR 0885001) |
| 3 | AT321782 | TAPERED ROLLER BEARING | 4 | | (SUB FOR 0887002) |
| 4 | ..... | BUSHING | 2 | | |
| 4A | AT321789 | BUSHING | 1 | | (SUB FOR 0887012) |
| | AT321792 | BUSHING | 1 | | (SUB FOR 0887015) |
| | AT321793 | BUSHING | 1 | | (SUB FOR 0887016) |
| | AT321794 | BUSHING | 1 | | (SUB FOR 0887017) |
| | AT321795 | BUSHING | 1 | | (SUB FOR 0887018) |
| | AT321796 | BUSHING | 1 | | (SUB FOR 0887019) |
| | AT321847 | BUSHING | 1 | | (SUB FOR 0895702) |
| | AT321848 | BUSHING | 1 | | (SUB FOR 0895703) |
| | AT321849 | BUSHING | 1 | | (SUB FOR 0895704) |
| | AT321850 | BUSHING | 1 | | (SUB FOR 0895705) |
| | AT321846 | BUSHING | 1 | | (SUB FOR 0895701) |
| 6 | AT321663 | SLEEVE | 16 | | (SUB FOR 0884530) |
| 7 | AT321415 | COMPRESSION SPRING | 16 | | (SUB FOR 0884527) |
| 8 | AT321920 | HUB | 2 | | (SUB FOR 0918101) |
| 9 | AT321413 | O-RING | 2 | | (SUB FOR 0884517) |
| 10 | AT321784 | RING GEAR | 2 | | (SUB FOR 0887004) |
| 11 | AT321449 | BOLT | 16 | | (SUB FOR 0887026) |
| 12 | AT321414 | PLUG | 4 | | (SUB FOR 0884518) |
| 13 | AT321445 | O-RING | 4 | | (SUB FOR 0887005) |
| 14 | AT321446 | RING | 2 | | (SUB FOR 0887006) |
| 15 | AT321447 | RING | 2 | | (SUB FOR 0887007) |
| 19 | AT321799 | RING | 2 | | (SUB FOR 0887022) |
| 20 | AT321797 | PISTON | 2 | | (SUB FOR 0887020) |
| 21 | AT321798 | RING | 4 | | (SUB FOR 0887021) |
| 22 | AT321801 | SHIM | 2 | | (SUB FOR 0887024) |
| 23 | AT321800 | RING | 2 | | (SUB FOR 0887023) |
| 24 | AT321448 | SNAP RING | 2 | | (SUB FOR 0887025) |
| 25 | AT321662 | NUT | 16 | | (SUB FOR 0884528) |
| 26 | AT321853 | SEAL | 2 | | (SUB FOR 0896001) |
| 27 | ..... | PLATE | 8 | | |
| 27A | AT321802 | PLATE | 1 | | (SUB FOR 0887027) |
| | AT321803 | PLATE | 1 | | (SUB FOR 0887028) |
| | AT321804 | PLATE | 1 | | (SUB FOR 0887029) |
| 28 | AT321450 | PLATE | 6 | | (SUB FOR 0887030) |
| 29 | AT321805 | SHIM | 2 | | (SUB FOR 0887031) |
| 31 | AT321806 | WASHER | 2 | | (SUB FOR 0887032) |
| 32 | AT321807 | THRUST WASHER | 2 | | (SUB FOR 0887033) |
| 33 | AT321470 | O-RING | 2 | | (SUB FOR 0896003) |
| 34 | AT321854 | SUN GEAR | 2 | | (SUB FOR 0896002) |
| 35 | AT321809 | GEAR | 2 | | (SUB FOR 0887038) |
| 38 | AT321452 | SNAP RING | 2 | | (SUB FOR 0887039) |
| 39 | AT321810 | PLANET PINION CARRIER | 2 | | (SUB FOR 0887040) |
| 40 | AT321811 | GEAR | 6 | | (SUB FOR 0887041) |

THIS PARTS LISTING IS CONTINUED

**REAR AXLE DISC BRAKES (CONTINUED)**

T207645 -UN-18FEB05

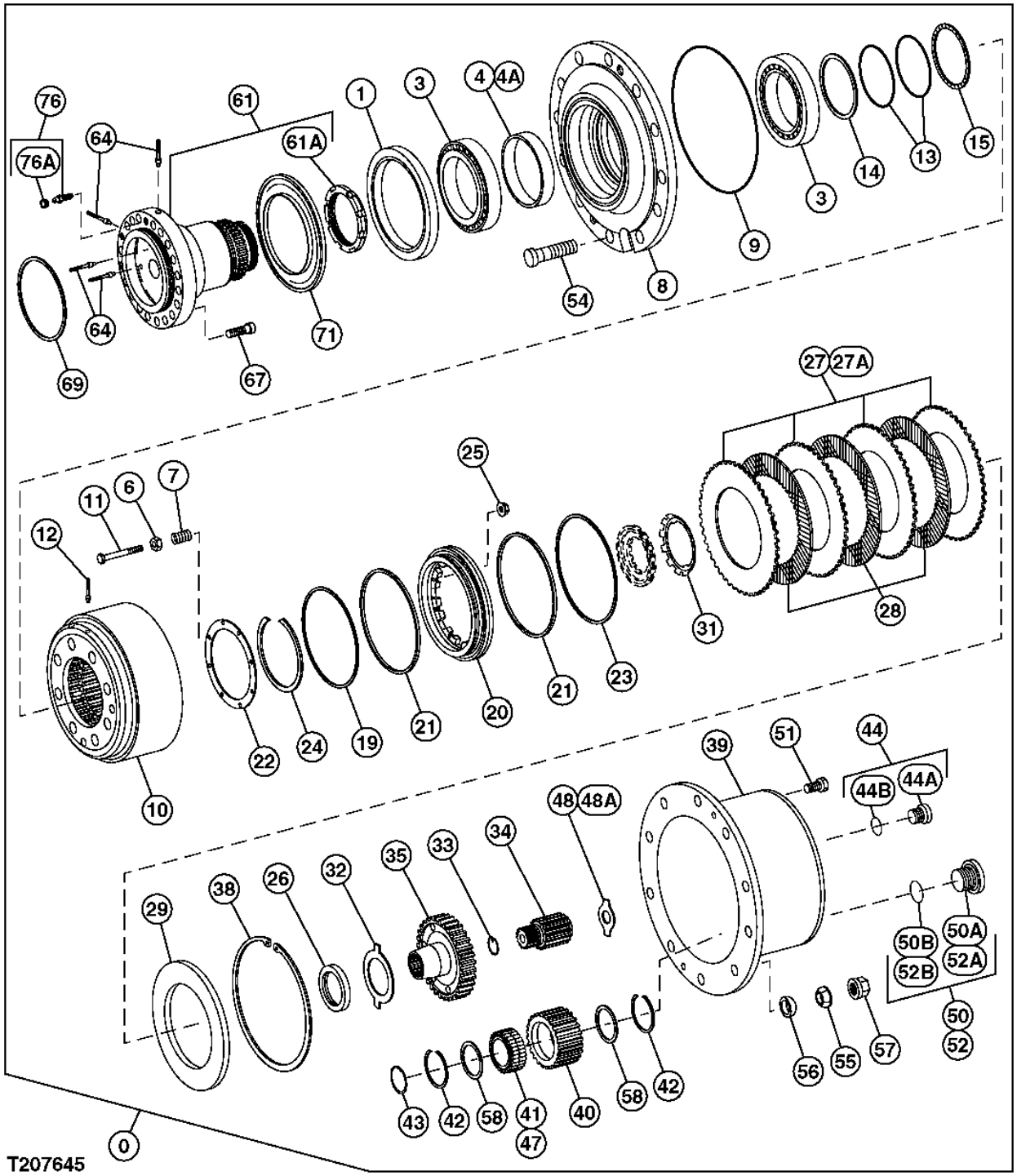

**REAR AXLE DISC BRAKES (CONTINUED)**

| KEY | PART NO. | PART NAME | QTY | SERIAL NO. | REMARKS |
|---|---|---|---|---|---|
| 41 | AT321813 | TAPERED ROLLER BEARING | 6 | | (SUB FOR 0887042 OR 0918102 OR 0887043) |
| 42 | T183923 | SNAP RING | 12 | | (SUB FOR 0887045) |
| 43 | AT321453 | SNAP RING | 6 | | (SUB FOR 0887046) |
| 44 | ..... | PLUG | 2 | | |
| 45 | AT321668 | PLUG | 1 | | (SUB FOR 0884560) |
| 46 | AT322106 | O-RING | 1 | | (SUB FOR 0879636) |
| 47 | AT321813 | TAPERED ROLLER BEARING | 6 | | (SUB FOR 0887043) |
| 48 | ..... | THRUST WASHER | 2 | | |
| 48A | AT321814 | THRUST WASHER | 1 | | (SUB FOR 0917802 OR 0887047) |
| | AT321815 | THRUST WASHER | 1 | | (SUB FOR 0887048) |
| | AT321816 | THRUST WASHER | 1 | | (SUB FOR 0887049) |
| | AT321817 | THRUST WASHER | 1 | | (SUB FOR 0887050) |
| | AT321818 | THRUST WASHER | 1 | | (SUB FOR 0887051) |
| | AT321819 | THRUST WASHER | 1 | | (SUB FOR 0887052) |
| | AT321820 | THRUST WASHER | 1 | | (SUB FOR 0887053) |
| 50 | ..... | PLUG | 2 | | |
| 50A | AT321746 | PLUG | 1 | | (SUB FOR 0886804) |
| 50B | T170119 | O-RING | 1 | | (SUB FOR 0886805) |
| 51 | AT321664 | BOLT | 4 | | (SUB FOR 0884555) |
| 52 | ..... | PLUG | 2 | | |
| 52A | AT321746 | PLUG | 1 | | (SUB FOR 0886804) |
| | AT321462 | O-RING | 1 | | (SUB FOR 0895102) |
| 54 | AT321665 | WHEEL BOLT | 20 | | (SUB FOR 0884556) |
| 55 | AT321416 | SPRING WASHER | 20 | | (SUB FOR 0884557) |
| 56 | AT321666 | RING | 20 | | (SUB FOR 0884558) |
| 57 | AT321667 | WHEEL BOLT | 20 | | (SUB FOR 0884559) |
| 61 | AT321922 | HUB | 2 | | (SUB FOR 0918103) |
| 61A | AT321756 | NUT | 1 | | (SUB FOR 0886902) |
| 64 | AT321471 | PLUG | 8 | | (SUB FOR 0896005) |
| 67 | AT321698 | BOLT | 36 | | (SUB FOR 0886113) |
| 69 | AT321423 | O-RING | 2 | | (SUB FOR 0885041) |
| 71 | AT321695 | PLATE | 2 | | (SUB FOR 0885042) |
| 76 | AT321411 | VALVE | 2 | | (SUB FOR 0884425) |
| 76A | AT321412 | CAP | 1 | | (SUB FOR 0884426) |

**REAR AXLE TRANSMISSION CASE**

T207646 -UN-18FEB05

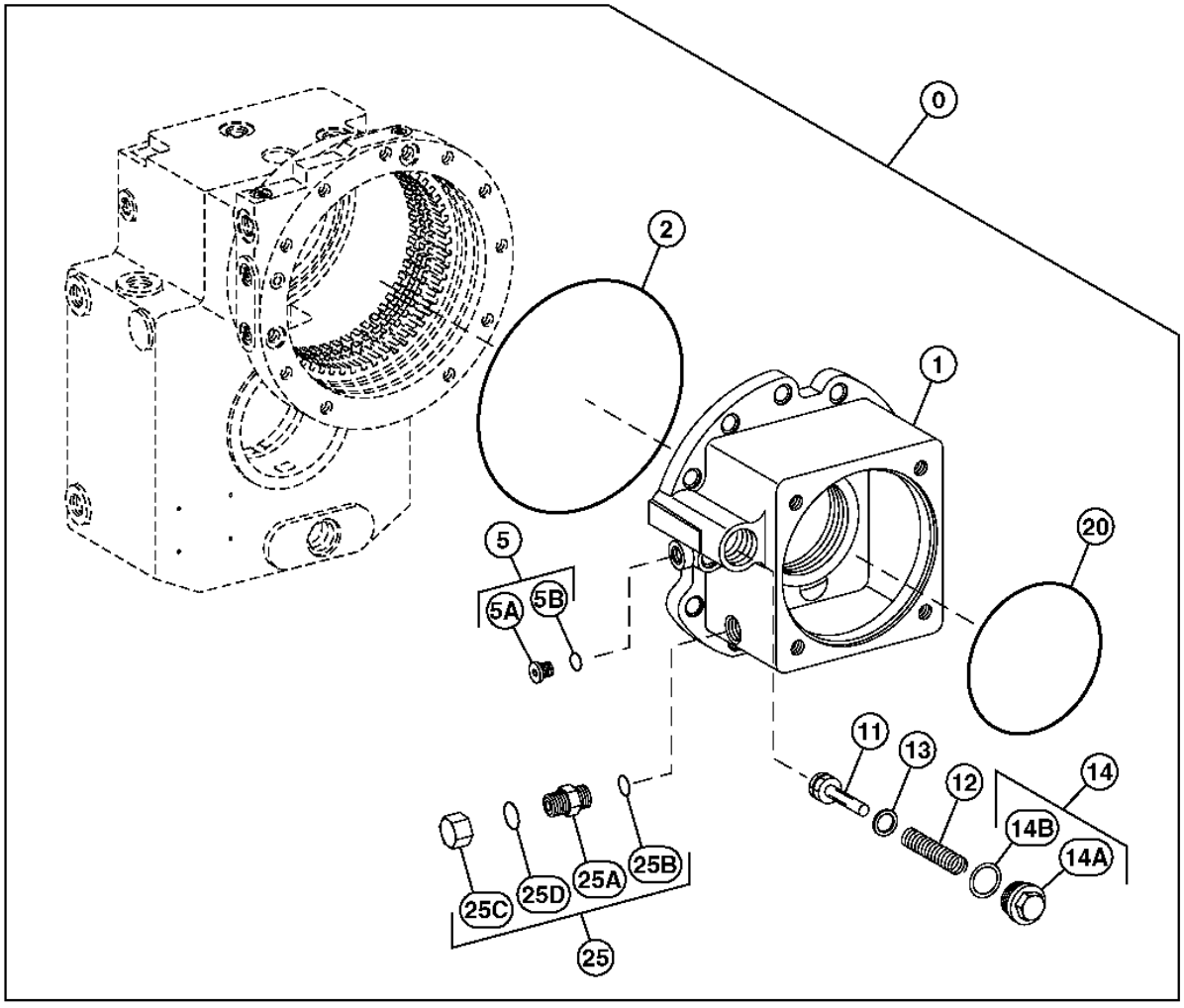


T207646

**REAR AXLE TRANSMISSION CASE**

| KEY | PART NO. | PART NAME | QTY | SERIAL NO. | REMARKS |
|---|---|---|---|---|---|
| 0 | AT321935 | AXLE | 1 | | (CONTAINS ALL PARTS ON THIS PAGE - ADDITIONAL COMPONENTS LISTED ON PREVIOUS AND FOLLOWING PAGES) (SUB FOR 4479264) |
| 1 | AT321956 | CASE | 1 | | (SUB FOR 0878801) |
| 2 | AT321957 | O-RING | 1 | | (SUB FOR 0878802) |
| 5 | ..... | PLUG | 1 | | |
| 5A | AT321958 | PLUG | 1 | | (SUB FOR 0878803) |
| 5B | AT321959 | O-RING | 1 | | (SUB FOR 0878804) |
| 11 | AT321960 | PISTON | 1 | | (SUB FOR 0878805) |
| 12 | AT321961 | COMPRESSION SPRING | 1 | | (SUB FOR 0878806) |
| 13 | AT321962 | GASKET | 1 | | (SUB FOR 0878807) |
| 14 | ..... | PLUG | 1 | | |
| 14A | AT321963 | PLUG | 1 | | (SUB FOR 0878808) |
| 14B | AT321964 | O-RING | 1 | | (SUB FOR 0878809) |
| 20 | AT321965 | O-RING | 1 | | (SUB FOR 0878810) |
| 25 | ..... | KIT | 1 | | ADAPTER |
| 25A | AT321860 | ADAPTER | 1 | | (SUB FOR 0896301) |
| 25B | T116420 | O-RING | 1 | | (SUB FOR 0879106) |
| 25C | AT321861 | CAP | 1 | | (SUB FOR 0896302) |
| 25D | AT321473 | O-RING | 1 | | (SUB FOR 0896303) |

**REAR AXLE TRANSMISSION SHAFT**

T207647 -UN-18FEB05

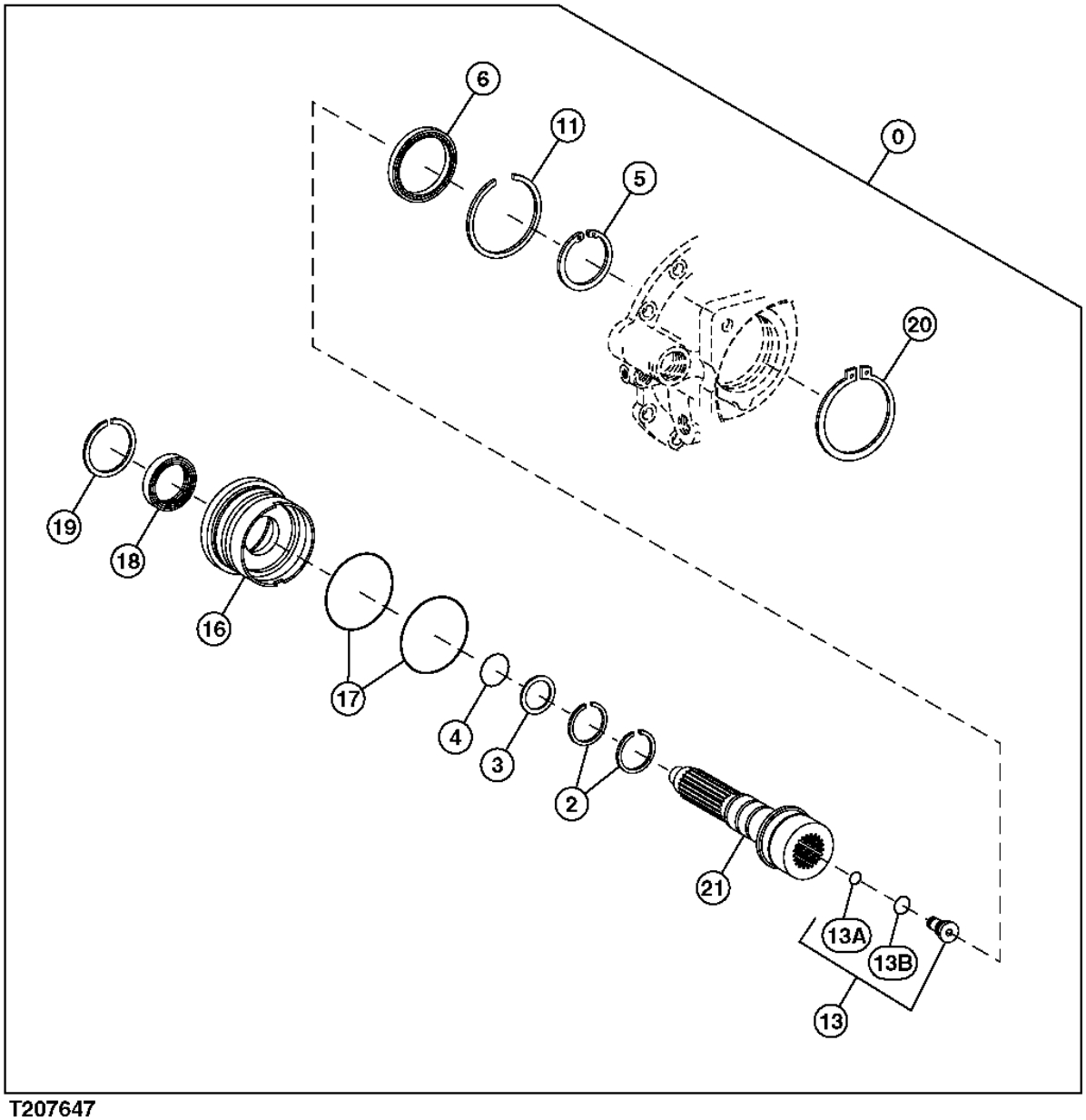


T207647

**REAR AXLE TRANSMISSION SHAFT**

| KEY | PART NO. | PART NAME | QTY | SERIAL NO. | REMARKS |
|---|---|---|---|---|---|
| 0 | AT321935 | AXLE | 1 | | (CONTAINS ALL PARTS ON THIS PAGE - ADDITIONAL COMPONENTS LISTED ON PREVIOUS AND FOLLOWING PAGES) (SUB FOR 4479264) |
| 2 | AT321966 | PISTON RING | 2 | | (SUB FOR 0878901) |
| 3 | AT321967 | GASKET | 1 | | (SUB FOR 0878902) |
| 4 | AT321968 | O-RING | 1 | | (SUB FOR 0878903) |
| 5 | T159575 | SNAP RING | 1 | | (SUB FOR 0878904) |
| 6 | AT321969 | BALL BEARING | 1 | | (SUB FOR 0878905) |
| 11 | AT321970 | RING | 1 | | (SUB FOR 0878906) |
| 13 | AT321971 | VALVE | 1 | | (SUB FOR 0878907) |
| 13A | AT321488 | O-RING | 1 | | (SUB FOR 0918301) |
| 13B | AT321474 | O-RING | 1 | | (SUB FOR 0896401) |
| 16 | AT321972 | BUSHING | 1 | | (SUB FOR 0878910) |
| 17 | AT321973 | O-RING | 2 | | (SUB FOR 0878911) |
| 18 | AT321974 | SEAL | 1 | | (SUB FOR 0878912) |
| 19 | AT258958 | SNAP RING | 1 | | (SUB FOR 0878913) |
| 20 | AT321975 | SNAP RING | 1 | | (SUB FOR 0878914) |
| 21 | AT321976 | SHAFT | 1 | | (SUB FOR 0878915) |

**REAR AXLE TRANSMISSION HOUSING AND PUMP**

T207648 -UN-22FEB05

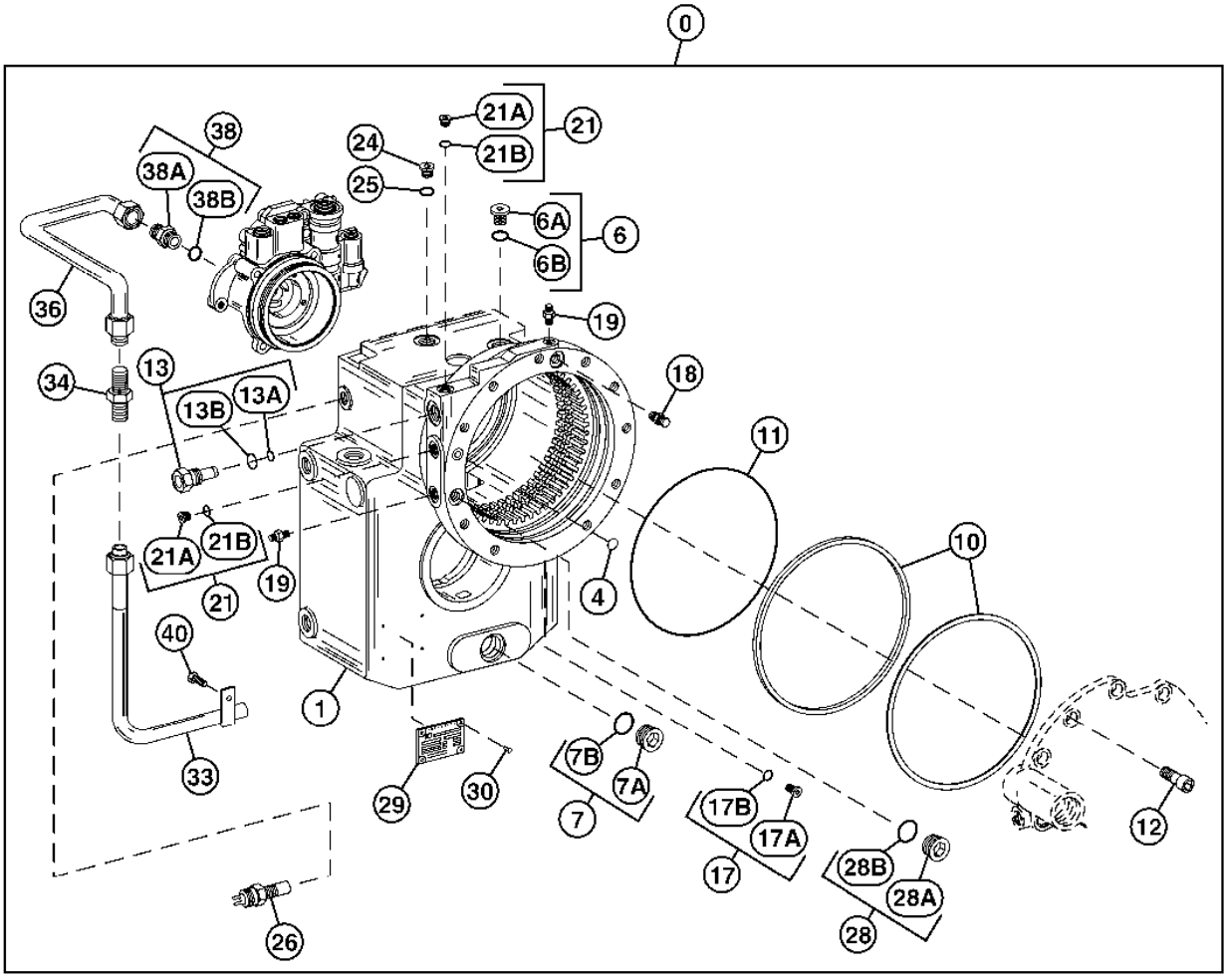


T207648

**REAR AXLE TRANSMISSION HOUSING AND PUMP**

| KEY | PART NO. | PART NAME | QTY | SERIAL NO. | REMARKS |
|---|---|---|---|---|---|
| 0 | AT321935 | AXLE | 1 | | (CONTAINS ALL PARTS ON THIS PAGE - ADDITIONAL COMPONENTS LISTED ON PREVIOUS AND FOLLOWING PAGES) (SUB FOR 4479264) |
| 1 | AT321977 | HOUSING | 1 | | (SUB FOR 0879001) |
| 4 | AT321978 | O-RING | 1 | | (SUB FOR 0879002) |
| 6 | ..... | PLUG | 1 | | |
| 6A | AT321979 | PLUG | 1 | | (SUB FOR 0879003) |
| 6B | AT321980 | O-RING | 1 | | (SUB FOR 0879004) |
| 7 | ..... | PLUG | 1 | | |
| 7A | AT321981 | PLUG | 1 | | (SUB FOR 0879005) |
| 7B | T202753 | O-RING | 1 | | (SUB FOR 0879006) |
| 10 | AT321982 | GASKET | 1 | | (SUB FOR 0879007) |
| 11 | AT321983 | O-RING | 1 | | (SUB FOR 0879008) |
| 12 | AT321984 | BOLT | 10 | | (SUB FOR 0879009) |
| 13 | AT321985 | VALVE | 1 | | (SUB FOR 0879010) |
| 13A | AT321986 | O-RING | 1 | | (SUB FOR 0879011) |
| 13B | AT321987 | O-RING | 1 | | (SUB FOR 0879012) |
| 17 | ..... | KIT | 2 | | PLUG |
| 17A | AT321988 | PLUG | 1 | | (SUB FOR 0879013) |
| 17B | AT321989 | O-RING | 1 | | (SUB FOR 0879014) |
| 18 | AT321990 | VALVE | 1 | | (SUB FOR 0879015) |
| 19 | AT321991 | PLUG | 2 | | (SUB FOR 0879016) |
| 21 | ..... | PLUG | 2 | | |
| 21A | AT321958 | PLUG | 1 | | (SUB FOR 0878803) |
| 21B | AT321959 | O-RING | 1 | | (SUB FOR 0878804) |
| 24 | T113570 | DRAIN PLUG | 1 | | (SUB FOR 0879017) |
| 25 | AT321992 | SEALING RING | 1 | | (SUB FOR 0879018) |
| 26 | AT321993 | TRANSMITTER | 1 | | (SUB FOR 0879019) |
| 28 | ..... | PLUG | 1 | | |
| 28A | AT321981 | PLUG | 1 | | (SUB FOR 0879005) |
| 28B | T202753 | O-RING | 1 | | (SUB FOR 0879006) |
| 29 | AT321994 | LABEL | 1 | | (SUB FOR 0879020) |
| 30 | AT321995 | SCREW | 4 | | (SUB FOR 0879021) |
| 33 | AT321862 | FITTING | 1 | | (SUB FOR 0896502) |
| 34 | AT321996 | FITTING | 1 | | (SUB FOR 0879023) |
| 36 | AT321997 | FITTING | 1 | | (SUB FOR 0879024) |
| 38 | ..... | SLEEVE | 1 | | |
| 38A | AT321998 | SOCKET | 1 | | (SUB FOR 0879025) |
| 38B | AT321999 | O-RING | 1 | | (SUB FOR 0879026) |
| 40 | AT322000 | BOLT | 1 | | (SUB FOR 0879027) |

**REAR AXLE PUMP LINES**

T207649 -UN-22FEB05

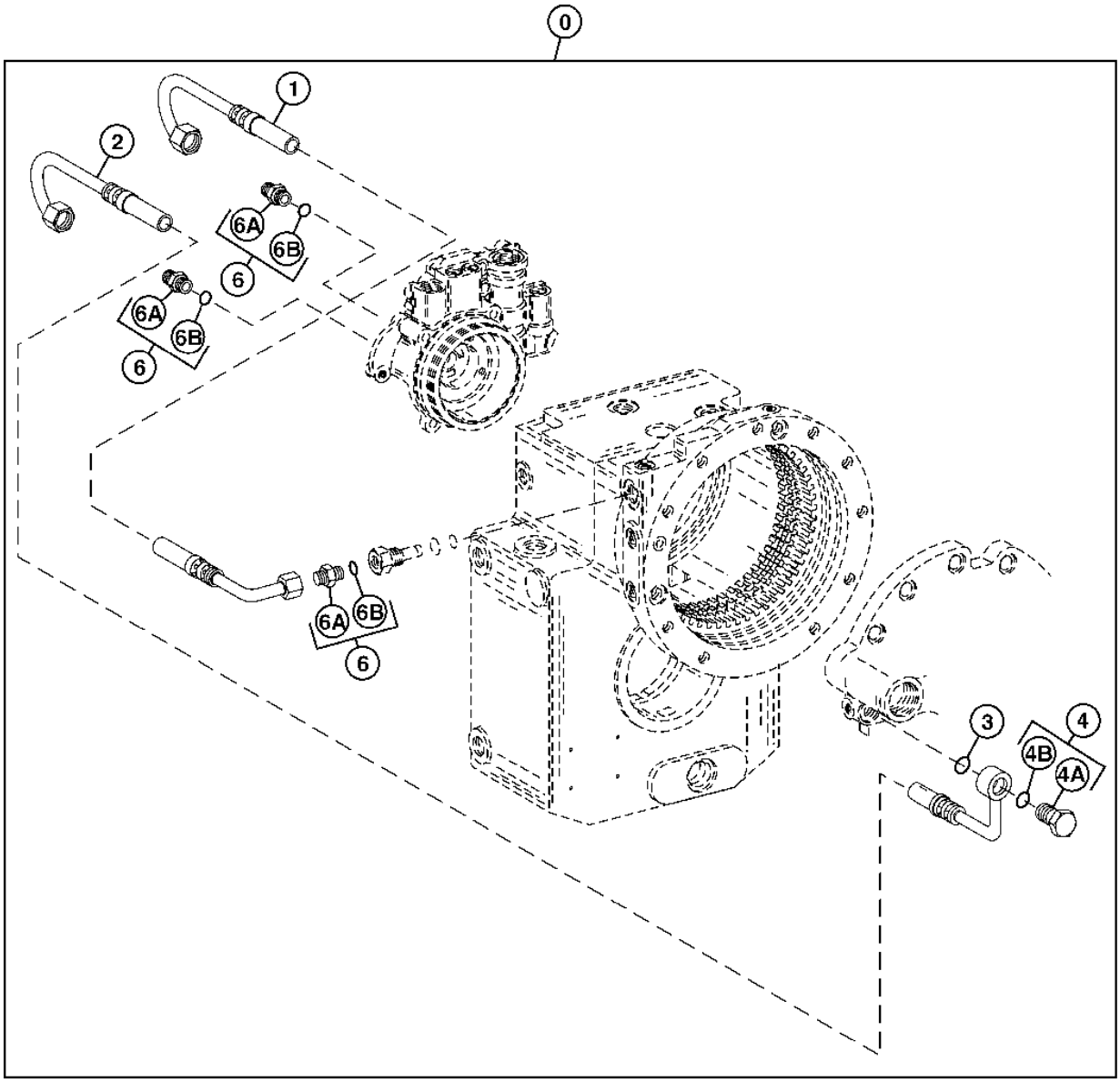


T207649

**REAR AXLE PUMP LINES**

| KEY | PART NO. | PART NAME | QTY | SERIAL NO. | REMARKS |
|---|---|---|---|---|---|
| 0 | AT321935 | AXLE | 1 | | (CONTAINS ALL PARTS ON THIS PAGE - ADDITIONAL COMPONENTS LISTED ON PREVIOUS AND FOLLOWING PAGES) (SUB FOR 4479264) |
| 1 | AT322001 | HOSE | 1 | | (SUB FOR 0879101) |
| 2 | AT322002 | HOSE | 1 | | (SUB FOR 0879102) |
| 3 | AT322003 | O-RING | 1 | | (SUB FOR 0879103) |
| 4 | ..... | UNION FITTING | 1 | | |
| 4A | AT322004 | UNION FITTING | 1 | | (SUB FOR 0879104) |
| 4B | AT321959 | O-RING | 1 | | (SUB FOR 0878804) |
| 6 | ..... | SLEEVE | 3 | | |
| 6A | AT322005 | SOCKET | 1 | | (SUB FOR 0879105) |
| 6B | T116420 | O-RING | 1 | | (SUB FOR 0879106) |

**REAR AXLE TRANSMISSION CLUTCHES**

T207650 -UN-22FEB05

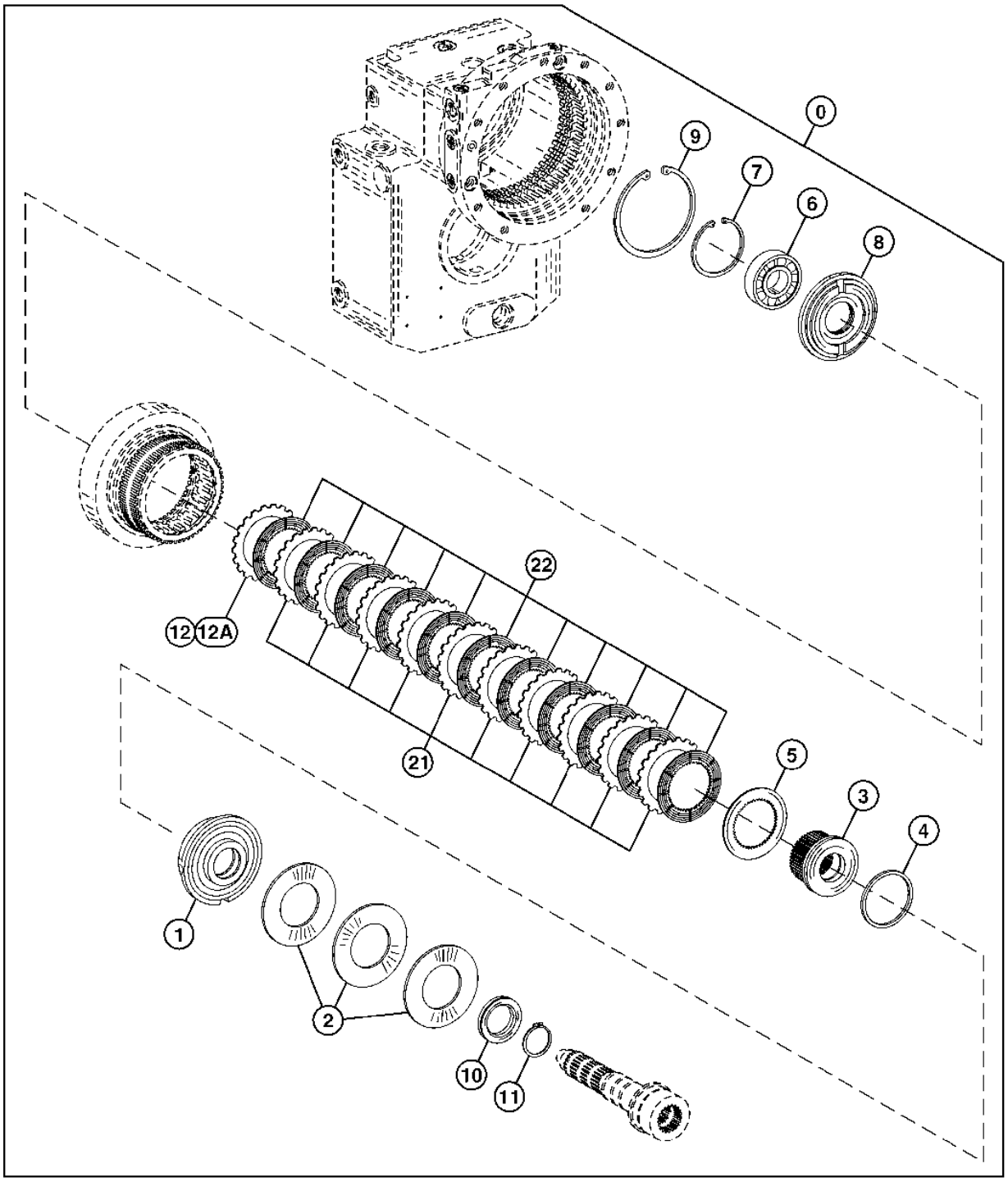


T207650

**REAR AXLE TRANSMISSION CLUTCHES**

| KEY | PART NO. | PART NAME | QTY | SERIAL NO. | REMARKS |
|---|---|---|---|---|---|
| 0 | AT321935 | AXLE | 1 | | (CONTAINS ALL PARTS ON THIS PAGE - ADDITIONAL COMPONENTS LISTED ON PREVIOUS AND FOLLOWING PAGES) (SUB FOR 4479264) |
| 1 | AT322006 | PISTON | 1 | | (SUB FOR 0879201) |
| 2 | AT322007 | PLATE | 1 | | (SUB FOR 0879202) |
| 3 | AT322008 | PLANET PINION CARRIER | 1 | | (SUB FOR 0879203) |
| 4 | AT322009 | GASKET | 1 | | (SUB FOR 0879204) |
| 5 | AT322010 | PLATE | 1 | | (SUB FOR 0879205) |
| 6 | AT322011 | BALL BEARING | 1 | | (SUB FOR 0879206) |
| 7 | AT322012 | SNAP RING | 1 | | (SUB FOR 0879207) |
| 8 | AT322013 | BRAKE DISK | 1 | | (SUB FOR 0879208) |
| 9 | 40M7178 | SNAP RING | 1 | | (SUB FOR 0879209) |
| 10 | AT322014 | SHIM | 1 | | (SUB FOR 0879210) |
| 11 | AT322015 | SNAP RING | 1 | | (SUB FOR 0879211) |
| 12 | ..... | PLATE | 1 | | |
| 12A | AT322016 | PLATE | 1 | | (SUB FOR 0879212) |
| | AT322017 | PLATE | 1 | | (SUB FOR 0879213) |
| | AT322018 | PLATE | 1 | | (SUB FOR 0879214) |
| | AT322019 | PLATE | 1 | | (SUB FOR 0879215) |
| | AT322020 | PLATE | 1 | | (SUB FOR 0879216) |
| 21 | AT322016 | PLATE | 10 | | (SUB FOR 0879212) |
| 22 | AT322021 | PLATE | 11 | | (SUB FOR 0879217) |

**REAR AXLE CLUTCH PACK**

T207651 -UN-22FEB05

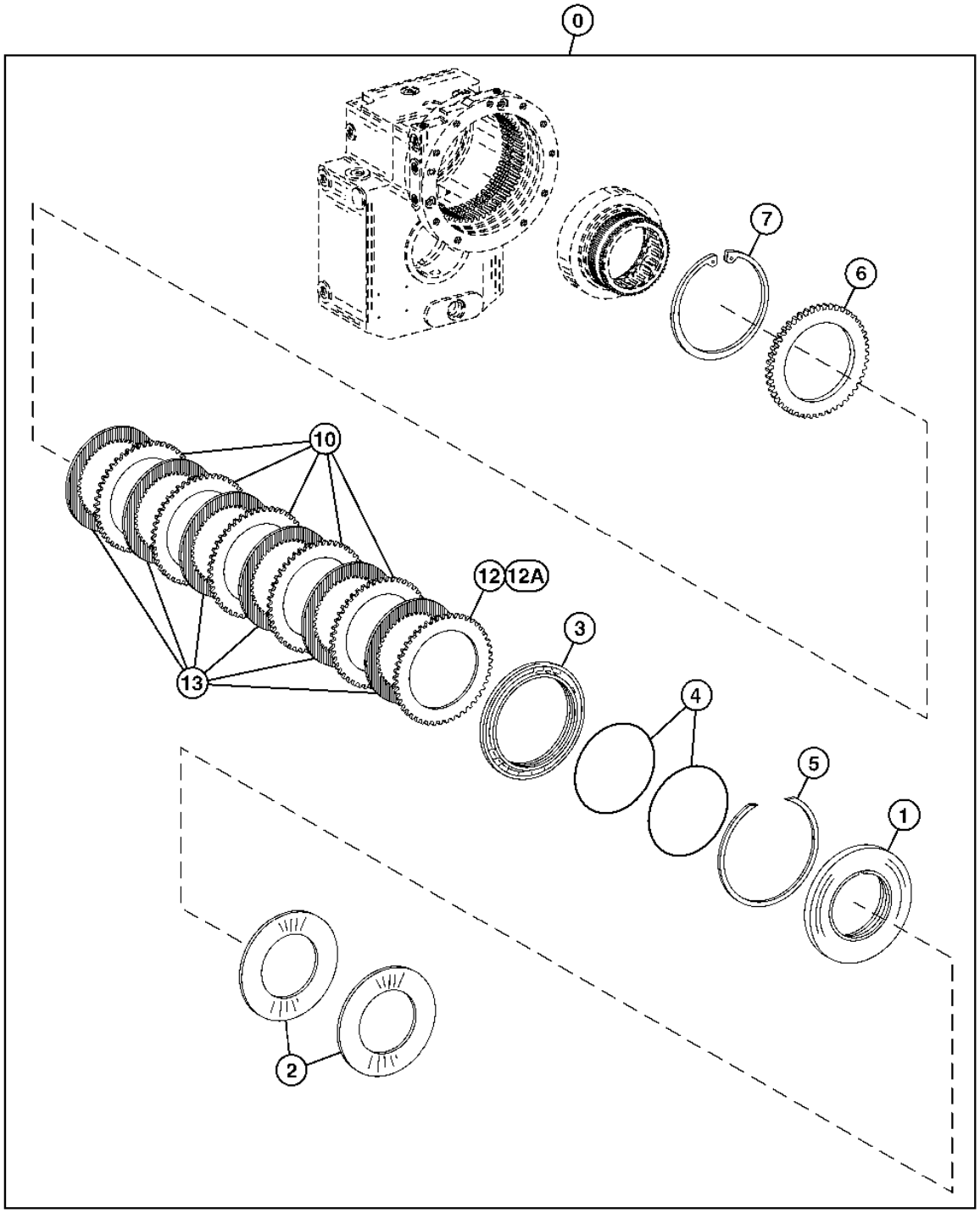


T207651

**REAR AXLE CLUTCH PACK**

| KEY | PART NO. | PART NAME | QTY | SERIAL NO. | REMARKS |
|---|---|---|---|---|---|
| 0 | AT321935 | AXLE | 1 | | (CONTAINS ALL PARTS ON THIS PAGE - ADDITIONAL COMPONENTS LISTED ON PREVIOUS AND FOLLOWING PAGES) (SUB FOR 4479264) |
| 1 | AT322022 | PISTON | 1 | | (SUB FOR 0879301) |
| 2 | AT322023 | PLATE | 1 | | (SUB FOR 0879302) |
| 3 | AT322024 | WASHER | 1 | | (SUB FOR 0879303) |
| 4 | AT322025 | GASKET | 1 | | (SUB FOR 0879304) |
| 5 | AT322026 | SNAP RING | 1 | | (SUB FOR 0879305) |
| 6 | AT322027 | SHIM | 1 | | (SUB FOR 0879306) |
| 7 | AT322028 | SNAP RING | 1 | | (SUB FOR 0879307) |
| 10 | AT322029 | CLUTCH PLATE | 5 | | (SUB FOR 0879308) |
| 12 | ..... | CLUTCH PLATE | 1 | | |
| 12A | AT322030 | PLATE | 1 | | (SUB FOR 0879309) |
| | AT322031 | PLATE | 1 | | (SUB FOR 0879310) |
| | AT322029 | PLATE | 1 | | (SUB FOR 0879308) |
| | AT322032 | PLATE | 1 | | (SUB FOR 0879311) |
| | AT322033 | PLATE | 1 | | (SUB FOR 0879312) |
| | AT322034 | PLATE | 1 | | (SUB FOR 0879313) |
| | AT322035 | PLATE | 1 | | (SUB FOR 0879314) |
| 13 | AT322036 | CLUTCH PLATE | 6 | | (SUB FOR 0879315) |

**REAR AXLE PINION GEAR AND SHAFT**

T207652 -UN-22FEB05

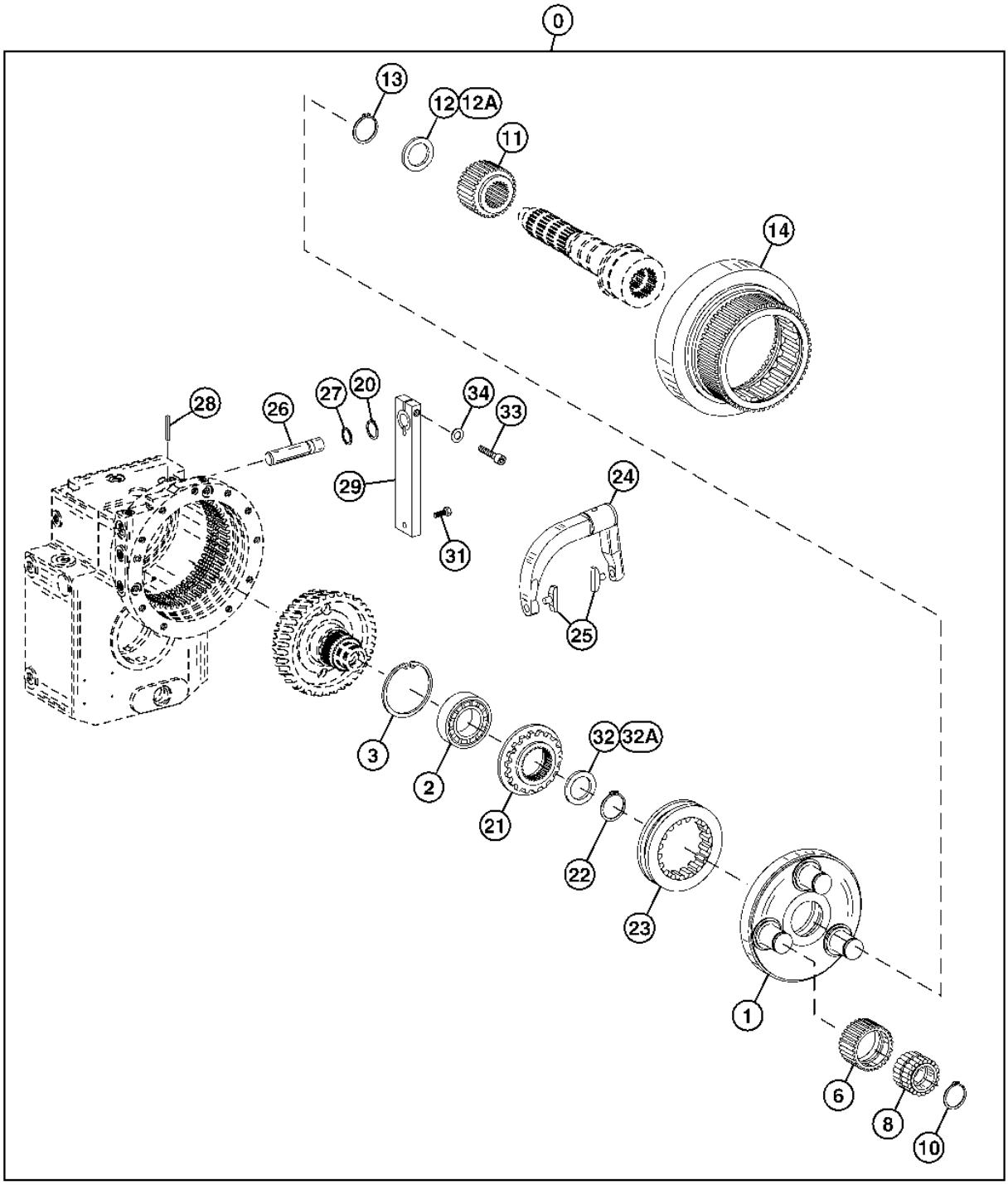


T207652

**REAR AXLE PINION GEAR AND SHAFT**

| KEY | PART NO. | PART NAME | QTY | SERIAL NO. | REMARKS |
|---|---|---|---|---|---|
| 0 | AT321935 | AXLE | 1 | | (CONTAINS ALL PARTS ON THIS PAGE - ADDITIONAL COMPONENTS LISTED ON PREVIOUS AND FOLLOWING PAGES) (SUB FOR 4479264) |
| 1 | AT322037 | PLANET PINION CARRIER | 1 | | (SUB FOR 0879401) |
| 2 | AT321923 | BALL BEARING | 1 | | (SUB FOR 0918801) |
| 3 | AT322038 | SNAP RING | 1 | | (SUB FOR 0879403) |
| 6 | AT322039 | GEAR | 3 | | (SUB FOR 0879404) |
| 8 | AT322040 | TAPERED ROLLER BEARING | 3 | | (SUB FOR 0879405) |
| 10 | AT322041 | SNAP RING | 3 | | (SUB FOR 0879406) |
| 11 | AT322042 | SUN GEAR | 1 | | (SUB FOR 0879407) |
| 12 | ..... | WASHER | 1 | | |
| 12A | AT322043 | WASHER | 1 | | (SUB FOR 0879408) |
| | AT321555 | WASHER | 1 | | (SUB FOR 0879409) |
| | AT322044 | WASHER | 1 | | (SUB FOR 0879410) |
| | AT322045 | WASHER | 1 | | (SUB FOR 0879411) |
| | AT322046 | WASHER | 1 | | (SUB FOR 0879412) |
| | AT322047 | WASHER | 1 | | (SUB FOR 0879413) |
| | AT322048 | WASHER | 1 | | (SUB FOR 0879414) |
| | AT322049 | WASHER | 1 | | (SUB FOR 0879415) |
| | AT322050 | WASHER | 1 | | (SUB FOR 0879416) |
| | AT322051 | WASHER | 1 | | (SUB FOR 0879417) |
| 13 | AT322052 | SNAP RING | 1 | | (SUB FOR 0879418) |
| 14 | AT322053 | RING GEAR | 1 | | (SUB FOR 0879419) |
| 21 | AT322054 | RETAINER | 1 | | (SUB FOR 0879420) |
| 22 | T158718 | SNAP RING | 1 | | (SUB FOR 0879421) |
| 23 | AT322055 | SLEEVE | 1 | | (SUB FOR 0879422) |
| 24 | AT322056 | FORK | 1 | | (SUB FOR 0879423) |
| 25 | AT322057 | PAD | 2 | | (SUB FOR 0879424) |
| 26 | AT322058 | PIN FASTENER | 1 | | (SUB FOR 0879425) |
| 27 | R73821 | O-RING | 1 | | (SUB FOR 0879426) |
| 28 | TTZF210223 | PIN FASTENER | 1 | | (SUB FOR 0879427) |
| 29 | AT322060 | LEVER | 1 | | (SUB FOR 0879429) |
| 31 | AT322061 | BOLT | 1 | | (SUB FOR 0879430) |
| 32 | ..... | WASHER | 1 | | |
| 32A | AT322062 | WASHER | 1 | | (SUB FOR 0879431) |
| | AT322063 | WASHER | 1 | | (SUB FOR 0879432) |
| | AT322064 | WASHER | 1 | | (SUB FOR 0879433) |
| | AT322065 | WASHER | 1 | | (SUB FOR 0879434) |
| | AT322066 | WASHER | 1 | | (SUB FOR 0879435) |
| | AT322067 | WASHER | 1 | | (SUB FOR 0879436) |
| | AT322068 | WASHER | 1 | | (SUB FOR 0879437) |
| 33 | AT322069 | BOLT | 1 | | (SUB FOR 0879438) |
| 34 | AT322070 | WASHER | 1 | | (SUB FOR 0879439) |

**REAR AXLE BEVEL GEAR**

T207653 -UN-22FEB05

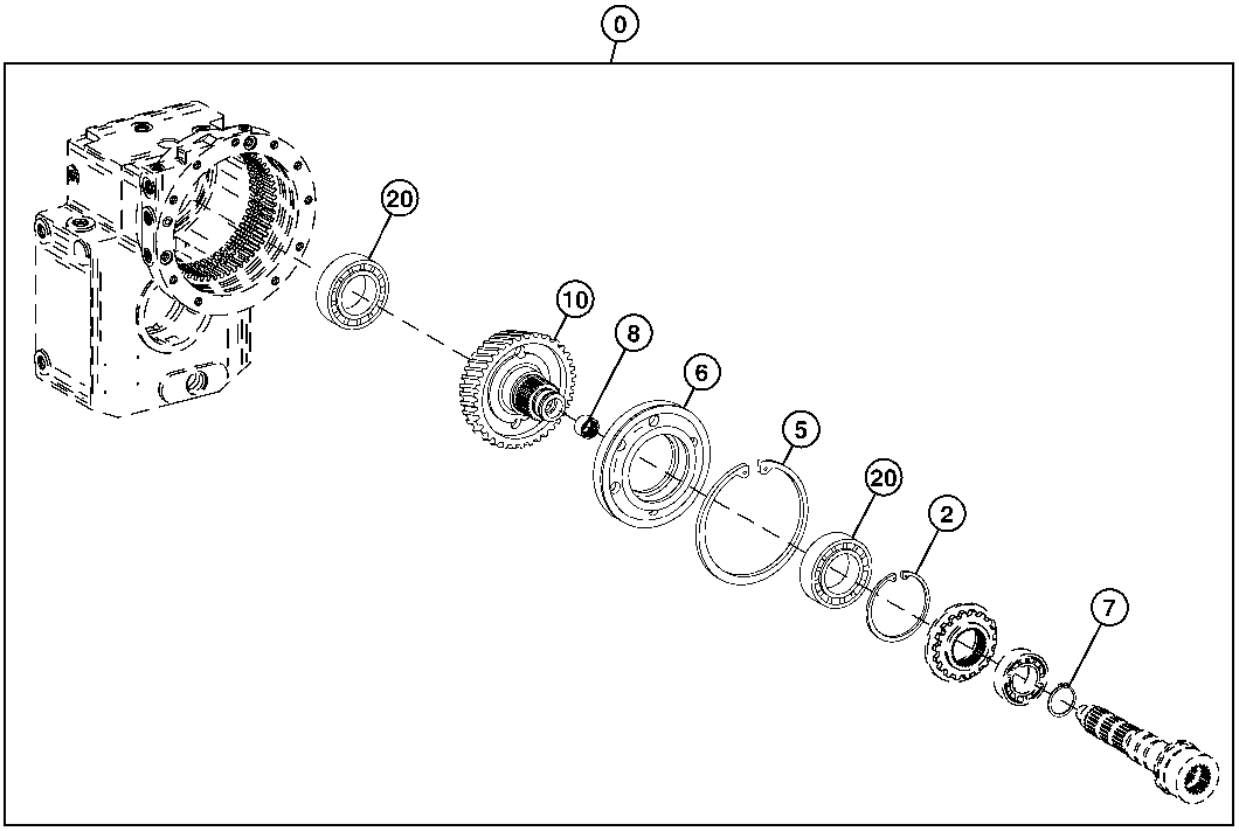


T207653

**REAR AXLE BEVEL GEAR**

| KEY | PART NO. | PART NAME | QTY | SERIAL NO. | REMARKS |
|---|---|---|---|---|---|
| 0 | AT321935 | AXLE | 1 | | (CONTAINS ALL PARTS ON THIS PAGE - ADDITIONAL COMPONENTS LISTED ON PREVIOUS AND FOLLOWING PAGES) (SUB FOR 4479264) |
| 2 | AT322071 | SNAP RING | 1 | | (SUB FOR 0879501) |
| 5 | AT322028 | SNAP RING | 1 | | (SUB FOR 0879307) |
| 6 | AT322072 | COVER | 1 | | (SUB FOR 0879502) |
| 7 | AT322073 | SNAP RING | 1 | | (SUB FOR 0879503) |
| 8 | AT322074 | SLEEVE | 1 | | (SUB FOR 0879504) |
| 10 | AT322075 | GEAR | 1 | | (SUB FOR 0879505) |
| 20 | AT322076 | BALL BEARING | 2 | | (SUB FOR 0879506) |

**REAR AXLE TRANSMISSION PUMP**

T207654 -UN-22FEB05

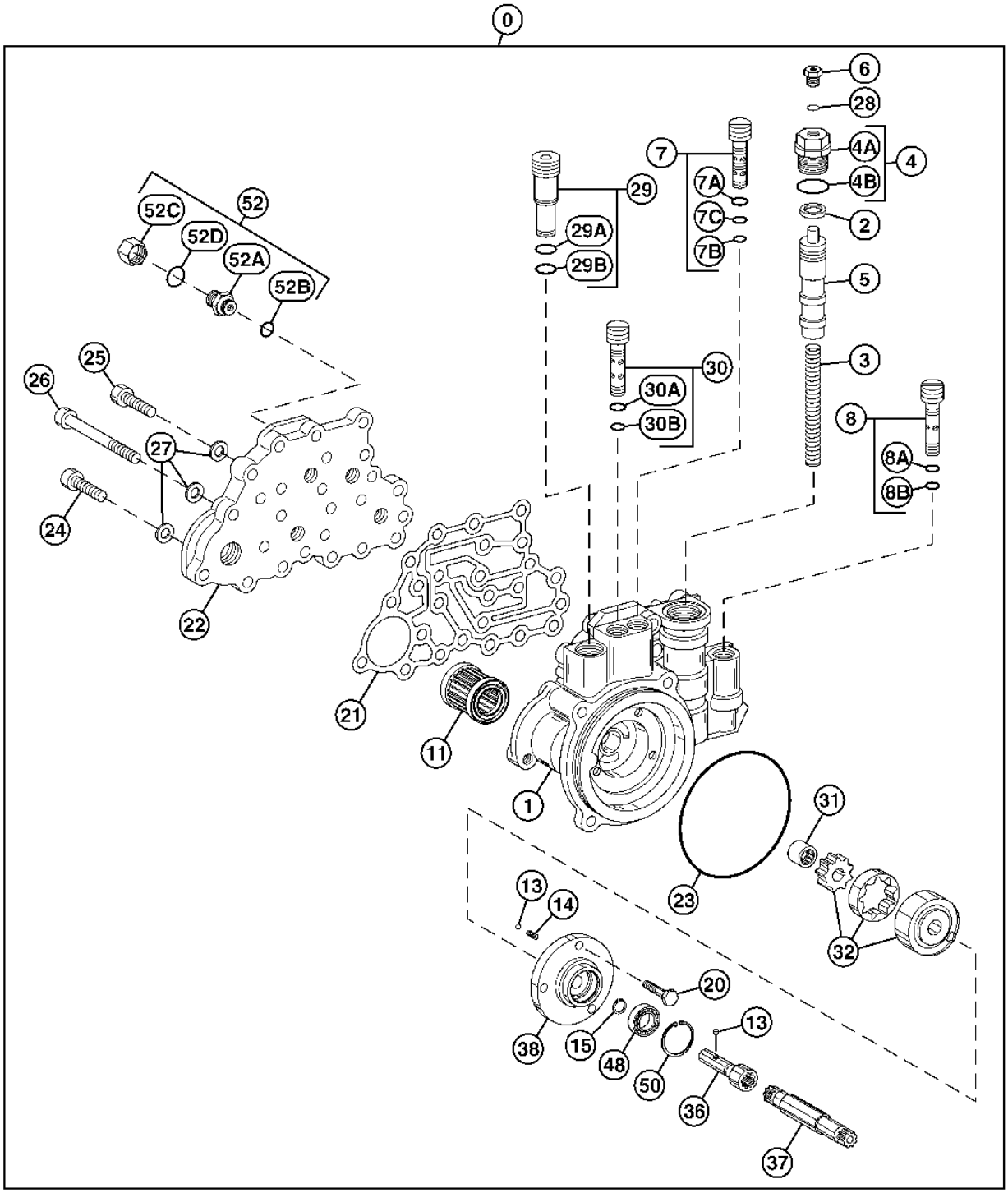


T207654

**REAR AXLE TRANSMISSION PUMP**

| KEY | PART NO. | PART NAME | QTY | SERIAL NO. | REMARKS |
|---|---|---|---|---|---|
| 0 | AT321935 | AXLE | 1 | | (CONTAINS ALL PARTS ON THIS PAGE - ADDITIONAL COMPONENTS LISTED ON PREVIOUS AND FOLLOWING PAGES) (SUB FOR 4479264) |
| 1 | AT322077 | HOUSING | 1 | | (SUB FOR 0879601) |
| 2 | AT322078 | GASKET | 1 | | (SUB FOR 0879602) |
| 3 | AT322079 | COMPRESSION SPRING | 1 | | (SUB FOR 0879603) |
| 4 | ..... | PLUG | 1 | | |
| 4A | AT322080 | PLUG | 1 | | (SUB FOR 0879604) |
| 4B | R82198 | O-RING | 1 | | (SUB FOR 0879605) |
| 5 | AT322082 | PISTON | 1 | | (SUB FOR 0879607) |
| 6 | AT321988 | PLUG | 1 | | (SUB FOR 0879013) |
| 7 | AT322087 | CHECK VALVE | 1 | | (SUB FOR 0879614) |
| 7A | T159487 | O-RING | 1 | | (SUB FOR 0879612) |
| 7B | AT322086 | O-RING | 1 | | (SUB FOR 0879613) |
| 7C | AT321989 | O-RING | 1 | | (SUB FOR 0879014) |
| 8 | AT322088 | CHECK VALVE | 1 | | (SUB FOR 0879615) |
| 8A | T159487 | O-RING | 1 | | (SUB FOR 0879612) |
| 8B | AT322086 | O-RING | 1 | | (SUB FOR 0879613) |
| 11 | AT322090 | FILTER | 1 | | (SUB FOR 0879618) |
| 13 | AT322091 | BALL | 4 | | (SUB FOR 0879619) |
| 14 | AT322092 | COMPRESSION SPRING | 3 | | (SUB FOR 0879620) |
| 15 | AT322093 | SNAP RING | 1 | | (SUB FOR 0879621) |
| 20 | AT322094 | BOLT | 3 | | (SUB FOR 0879622) |
| 21 | AT322095 | GASKET | 1 | | (SUB FOR 0879623) |
| 22 | AT322096 | COVER | 1 | | (SUB FOR 0879624) |
| 23 | AT322097 | O-RING | 1 | | (SUB FOR 0879625) |
| 24 | AT322098 | BOLT | 1 | | (SUB FOR 0879626) |
| 25 | AT322099 | BOLT | 23 | | (SUB FOR 0879627) |
| 26 | AT322100 | BOLT | 2 | | (SUB FOR 0879628) |
| 27 | TTZF100201 | WASHER | 26 | | (SUB FOR 0879629) |
| 28 | AT322081 | SEALING RING | 1 | | (SUB FOR 0879606) |
| 29 | AT322083 | VALVE | 1 | | (SUB FOR 0879608) |
| 29A | T76617 | BRACKET | 1 | | (SUB FOR 0879609) |
| 29B | AT322084 | O-RING | 1 | | (SUB FOR 0879610) |
| 30 | AT322085 | CHECK VALVE | 1 | | (SUB FOR 0879611) |
| 30A | T159487 | O-RING | 1 | | (SUB FOR 0879612) |
| 30B | AT322086 | O-RING | 1 | | (SUB FOR 0879613) |
| 31 | AT322089 | SLEEVE | 1 | | (SUB FOR 0879616) |
| 32 | AT321397 | HYDRAULIC HEAD AND ROTOR | 1 | | (SUB FOR 0879617) |
| 36 | AT322102 | SHAFT | 1 | | (SUB FOR 0879631) |
| 37 | AT322101 | SHAFT | 1 | | (SUB FOR 0879630) |
| 38 | AT322103 | COVER | 1 | | (SUB FOR 0879632) |
| 48 | AT322104 | BALL BEARING | 1 | | (SUB FOR 0879633) |
| 50 | AT322105 | SNAP RING | 1 | | (SUB FOR 0879634) |
| 52 | ..... | ADAPTER | 2 | | |
| 52A | AT321864 | ADAPTER | 1 | | (SUB FOR 0897101) |
| 52B | T74552 | O-RING | 1 | | (SUB FOR 0897102) |
| 52C | AT321861 | CAP | 1 | | (SUB FOR 0896302) |
| 52D | AT321473 | O-RING | 1 | | (SUB FOR 0896303) |

**REAR AXLE TRANSMISSION REDUCTION GEARS**

T207655 -UN-22FEB05

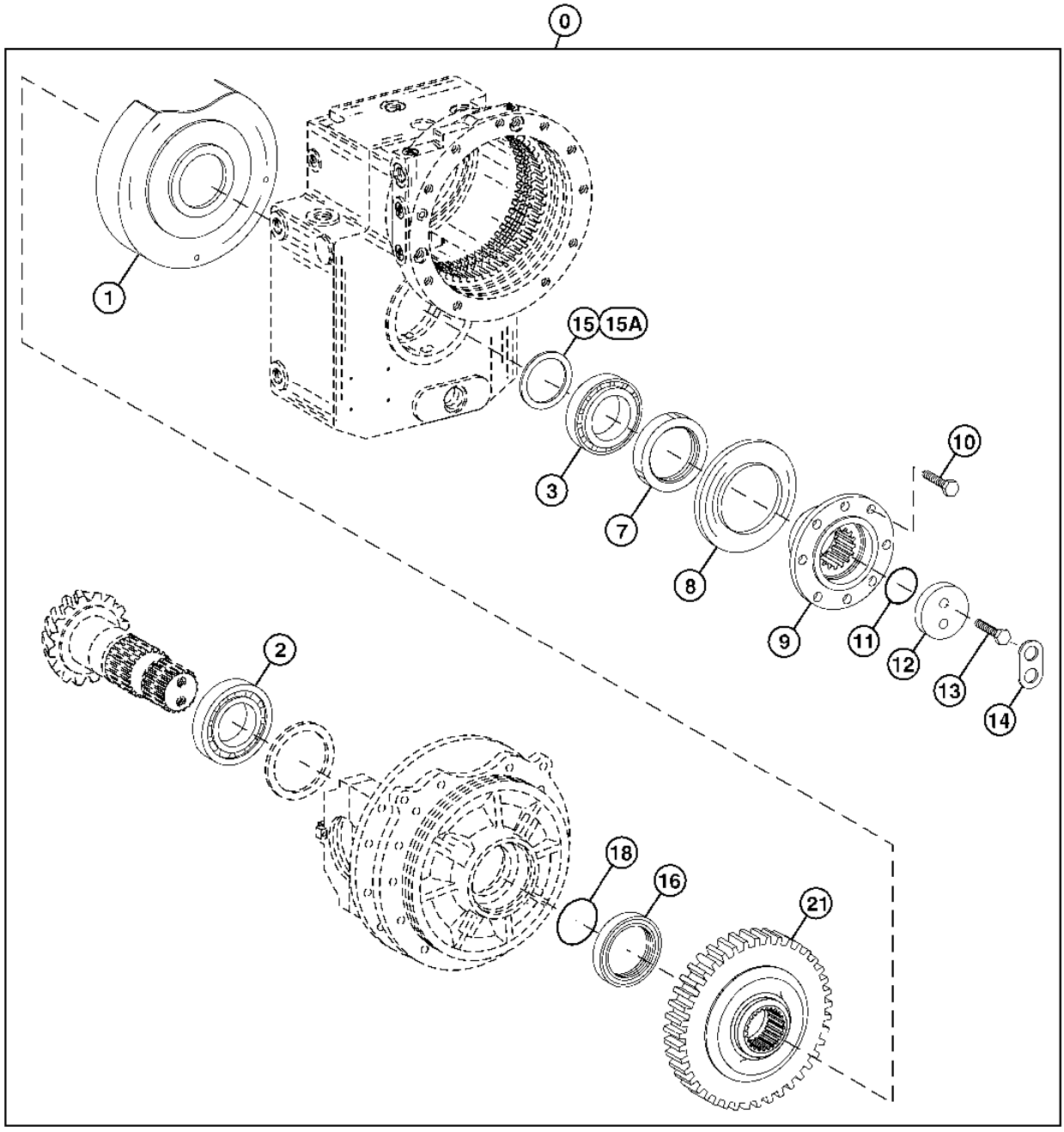


T207655

**REAR AXLE TRANSMISSION REDUCTION GEARS**

| KEY | PART NO. | PART NAME | QTY | SERIAL NO. | REMARKS |
|---|---|---|---|---|---|
| 0 | AT321935 | AXLE | 1 | | (CONTAINS ALL PARTS ON THIS PAGE - ADDITIONAL COMPONENTS LISTED ON PREVIOUS AND FOLLOWING PAGES) (SUB FOR 4479264) |
| 1 | AT322107 | SCREEN | 1 | | (SUB FOR 0879701) |
| 2 | AT321865 | TAPERED ROLLER BEARING | 1 | | (SUB FOR 0897201) |
| 3 | AT321866 | TAPERED ROLLER BEARING | 1 | | (SUB FOR 0897202) |
| 7 | AT322109 | SEAL | 1 | | (SUB FOR 0879707) |
| 8 | AT322110 | SHEET | 1 | | (SUB FOR 0879710) |
| 9 | AT321559 | FLANGE | 1 | | (SUB FOR 0919101 OR 0879712) |
| 10 | AT322111 | BOLT | 8 | | (SUB FOR 0879714) |
| 11 | AT322112 | O-RING | 1 | | (SUB FOR 0879715) |
| 12 | AT322113 | WASHER | 1 | | (SUB FOR 0879716) |
| 13 | AT322114 | BOLT | 2 | | (SUB FOR 0879717) |
| 14 | T116928 | WASHER | 1 | | (SUB FOR 0879718) |
| 15 | ..... | RING | 1 | | |
| 15A | AT321867 | RING | 1 | | (SUB FOR 0897203) |
| | AT321868 | RING | 1 | | (SUB FOR 0897204) |
| | AT321869 | RING | 1 | | (SUB FOR 0897205) |
| | AT321870 | RING | 1 | | (SUB FOR 0897206) |
| | AT321871 | RING | 1 | | (SUB FOR 0897207) |
| | AT321872 | RING | 1 | | (SUB FOR 0897208) |
| | AT321873 | RING | 1 | | (SUB FOR 0897209) |
| | AT321874 | RING | 1 | | (SUB FOR 0897210) |
| | AT321875 | RING | 1 | | (SUB FOR 0897211) |
| | AT321876 | RING | 1 | | (SUB FOR 0897212) |
| | AT321877 | RING | 1 | | (SUB FOR 0897213) |
| | AT321878 | RING | 1 | | (SUB FOR 0897214) |
| | AT321879 | RING | 1 | | (SUB FOR 0897215) |
| | AT321880 | RING | 1 | | (SUB FOR 0897216) |
| | AT321881 | RING | 1 | | (SUB FOR 0897217) |
| | AT321882 | RING | 1 | | (SUB FOR 0897218) |
| | AT321883 | RING | 1 | | (SUB FOR 0897219) |
| | AT321884 | RING | 1 | | (SUB FOR 0897220) |
| | AT321885 | RING | 1 | | (SUB FOR 0897221) |
| | AT321886 | RING | 1 | | (SUB FOR 0897222) |
| | AT321887 | RING | 1 | | (SUB FOR 0897223) |
| | AT321888 | RING | 1 | | (SUB FOR 0897224) |
| | AT321889 | RING | 1 | | (SUB FOR 0897225) |
| | AT321890 | RING | 1 | | (SUB FOR 0897226) |
| | AT321891 | RING | 1 | | (SUB FOR 0897227) |
| | AT321892 | RING | 1 | | (SUB FOR 0897228) |
| | AT321893 | RING | 1 | | (SUB FOR 0897229) |
| | AT321894 | RING | 1 | | (SUB FOR 0897230) |
| | AT321895 | RING | 1 | | (SUB FOR 0897231) |
| | AT321896 | RING | 1 | | (SUB FOR 0897232) |
| | AT321897 | RING | 1 | | (SUB FOR 0897233) |
| | AT321898 | RING | 1 | | (SUB FOR 0897234) |
| | AT321899 | RING | 1 | | (SUB FOR 0897235) |
| | AT321900 | RING | 1 | | (SUB FOR 0897236) |
| | AT321901 | RING | 1 | | (SUB FOR 0897237) |
| | AT321902 | RING | 1 | | (SUB FOR 0897238) |
| | AT321903 | RING | 1 | | (SUB FOR 0897239) |
| | AT321904 | RING | 1 | | (SUB FOR 0897240) |
| 16 | AT321905 | SEAL | 1 | | (SUB FOR 0897241) |
| 18 | AT321476 | O-RING | 1 | | (SUB FOR 0897242) |
| 21 | AT321906 | GEAR | 1 | | (SUB FOR 0897243) |

**REAR AXLE DIFFERENTIAL**

T207656 -UN-22FEB05

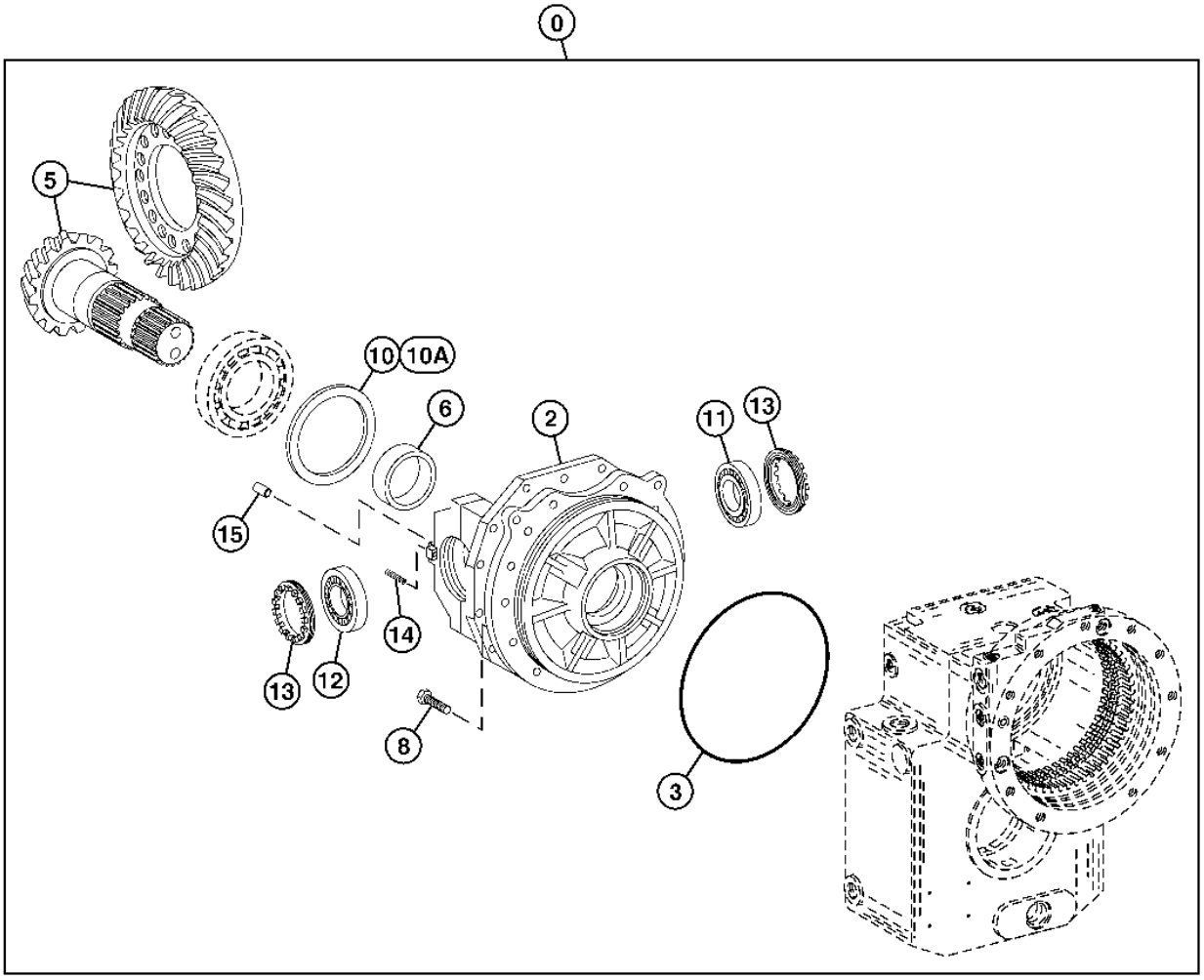


T207656

**REAR AXLE DIFFERENTIAL**

| KEY | PART NO. | PART NAME | QTY | SERIAL NO. | REMARKS |
|---|---|---|---|---|---|
| 0 | AT321935 | AXLE | 1 | | (CONTAINS ALL PARTS ON THIS PAGE - ADDITIONAL COMPONENTS LISTED ON PREVIOUS AND FOLLOWING PAGES) (SUB FOR 4479264) |
| 2 | AT321926 | HOUSING | 1 | | (SUB FOR 0919201) |
| 3 | AT322108 | O-RING | 1 | | (SUB FOR 0879704) |
| 5 | AT321927 | BEVEL GEAR DRIVE | 1 | | (SUB FOR 0919202) |
| 6 | AT321928 | BUSHING | 1 | | (SUB FOR 0919203) |
| 8 | AT321472 | BOLT | 15 | | (SUB FOR 0896104) |
| 10 | ..... | SHIM | 1 | | |
| 10A | T159307 | SHIM | 1 | | (SUB FOR 0886703) |
| | T159308 | SHIM | 1 | | (SUB FOR 0886704) |
| | T159309 | SHIM | 1 | | (SUB FOR 0886705) |
| | T159310 | SHIM | 1 | | (SUB FOR 0886706) |
| | T159311 | SHIM | 1 | | (SUB FOR 0886707) |
| | AT321701 | SHIM | 1 | | (SUB FOR 0886708) |
| | T159313 | SHIM | 1 | | (SUB FOR 0886709) |
| | T159314 | SHIM | 1 | | (SUB FOR 0886710) |
| | T159315 | SHIM | 1 | | (SUB FOR 0886711) |
| | AT321702 | SHIM | 1 | | (SUB FOR 0886712) |
| | AT321703 | SHIM | 1 | | (SUB FOR 0886713) |
| | AT321704 | SHIM | 1 | | (SUB FOR 0886714) |
| | AT321705 | SHIM | 1 | | (SUB FOR 0886715) |
| | AT321706 | SHIM | 1 | | (SUB FOR 0886716) |
| | AT321707 | SHIM | 1 | | (SUB FOR 0886717) |
| | AT321708 | SHIM | 1 | | (SUB FOR 0886718) |
| | AT321709 | SHIM | 1 | | (SUB FOR 0886719) |
| | AT321710 | SHIM | 1 | | (SUB FOR 0886720) |
| | AT321711 | SHIM | 1 | | (SUB FOR 0886721) |
| | AT321712 | SHIM | 1 | | (SUB FOR 0886722) |
| | AT321713 | SHIM | 1 | | (SUB FOR 0886723) |
| | AT321714 | SHIM | 1 | | (SUB FOR 0886724) |
| | AT321715 | SHIM | 1 | | (SUB FOR 0886725) |
| | AT321716 | SHIM | 1 | | (SUB FOR 0886726) |
| | AT321717 | SHIM | 1 | | (SUB FOR 0886727) |
| | AT321718 | SHIM | 1 | | (SUB FOR 0886728) |
| | AT321719 | SHIM | 24 | | (SUB FOR 0886729) |
| 11 | AT321645 | TAPERED ROLLER BEARING | 1 | | (SUB FOR 0884342) |
| 12 | T182370 | BALL BEARING | 1 | | (SUB FOR 0884343) |
| 13 | T82529 | NUT | 2 | | (SUB FOR 0877802) |
| 14 | TTZF100074 | SPRING PIN | 2 | | (SUB FOR 0886734) |
| 15 | T82528 | DOWEL PIN | 2 | | (SUB FOR 0877803) |

**REAR AXLE UNIVERSAL JOINT**

T207657 -UN-22FEB05

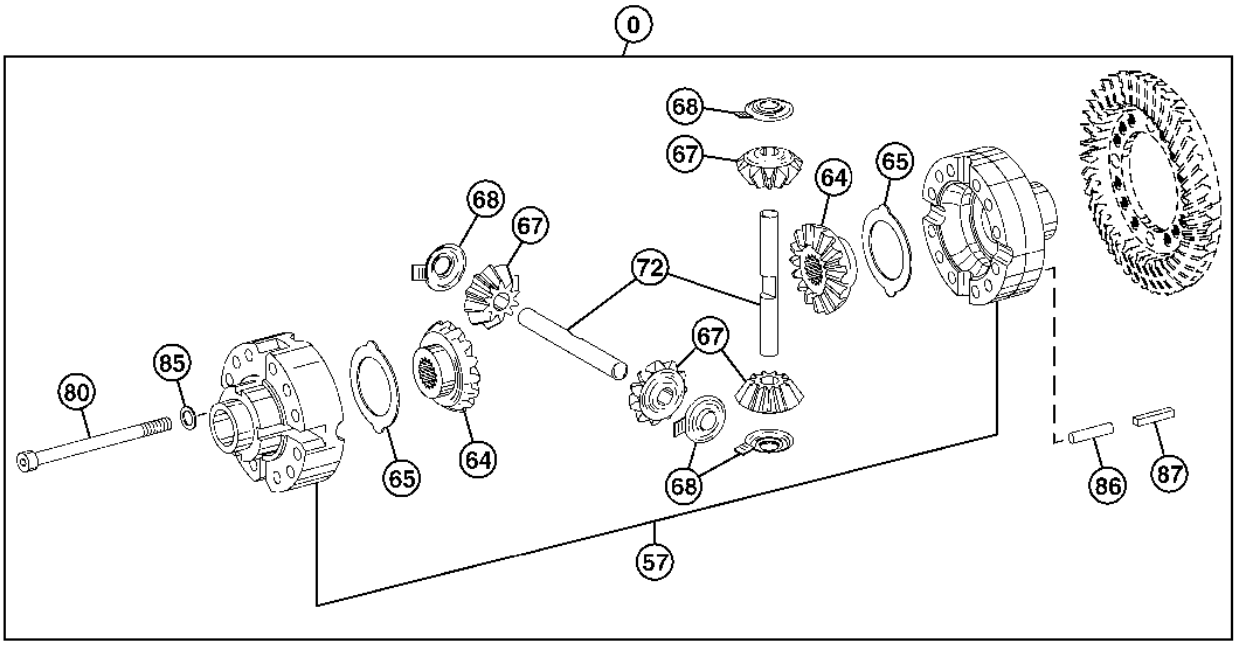


T207657

**REAR AXLE UNIVERSAL JOINT**

| KEY | PART NO. | PART NAME | QTY | SERIAL NO. | REMARKS |
|---|---|---|---|---|---|
| 0 | AT321935 | AXLE | 1 | | (CONTAINS ALL PARTS ON THIS PAGE - ADDITIONAL COMPONENTS LISTED ON PREVIOUS PAGES) (SUB FOR 4479264) |
| 57 | AT321929 | CASE | 1 | | (SUB FOR 0919301) |
| 64 | AT192224 | BEVEL GEAR | 2 | | (SUB FOR 0880102) |
| 65 | AT321610 | THRUST WASHER | 2 | | (SUB FOR 0880103) |
| 67 | AT321611 | GEAR | 4 | | (SUB FOR 0880104) |
| 68 | AT321612 | THRUST WASHER | 4 | | (SUB FOR 0880105) |
| 72 | AT192225 | GEAR | 2 | | (SUB FOR 0880106) |
| 80 | AT321613 | BOLT | 12 | | (SUB FOR 0880107) |
| 85 | AT321614 | WASHER | 12 | | (SUB FOR 0880108) |
| 86 | AT321399 | PIN FASTENER | 4 | | (SUB FOR 0880109) |
| 87 | AT321400 | PIN FASTENER | 4 | | (SUB FOR 0880110) |

**ROTARY MANIFOLD**

T207741 -UN-09FEB05

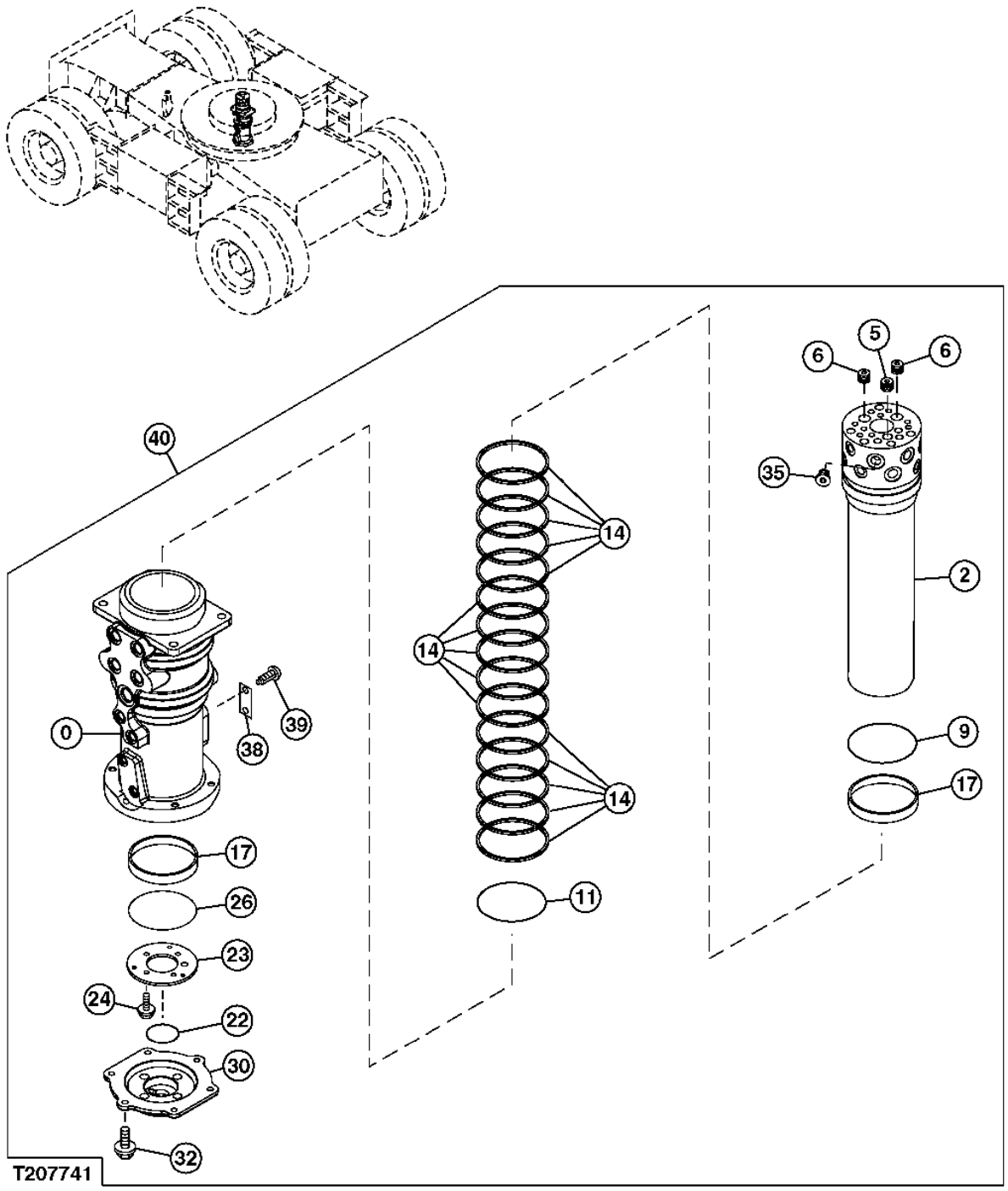

**ROTARY MANIFOLD**

| KEY | PART NO. | PART NAME | QTY | SERIAL NO. | REMARKS |
|---|---|---|---|---|---|
| 0 | 0004440 | HOUSING | 1 | | |
| 2 | 9209435 | SPINDLE | 1 | | |
| 5 | 94-2013 | FITTING PLUG | 1 | | |
| 6 | 4241426 | FITTING PLUG | 2 | | (SUB FOR 94-2014) |
| 9 | AT264274 | O-RING | 1 | | (SUB FOR 4267138) |
| 11 | 4258633 | O-RING | 1 | | |
| 14 | 4289595 | SEAL | 15 | | |
| 17 | 4487197 | BUSHING | 2 | | |
| 22 | 4289599 | O-RING | 1 | | |
| 23 | 4467367 | PLATE | 1 | | |
| 24 | ..... | CAP SCREW | 4 | | ( J271025 NOT AVAILABLE FOR SERVICE) |
| | 19M7402 | CAP SCREW | 1 | | M10 X 25, (SUB FOR J901025) |
| | 24M7346 | WASHER | 1 | | 11 X 20 X 2 MM, (SUB FOR J222010) |
| 26 | A810165 | O-RING | 1 | | |
| 30 | 2047677 | COVER | 1 | | |
| 32 | ..... | CAP SCREW | 6 | | ( J271030 NOT AVAILABLE FOR SERVICE) |
| | 19M7662 | CAP SCREW | 1 | | M10 X 30, (SUB FOR J901030) |
| | 24M7346 | WASHER | 1 | | 11 X 20 X 2 MM, (SUB FOR J222010) |
| 35 | 9134112 | FITTING PLUG | 1 | | |
| 38 | 3053559 | LABEL | 1 | | |
| 39 | 37H99 | SCREW | 2 | | 0.100" X 1/4", (SUB FOR M492564) |
| 40 | 9209434 | KIT | 1 | | ROTARY MANIFOLD |

**ROTARY MANIFOLD SUPPORT**

T207742 -UN-09FEB05

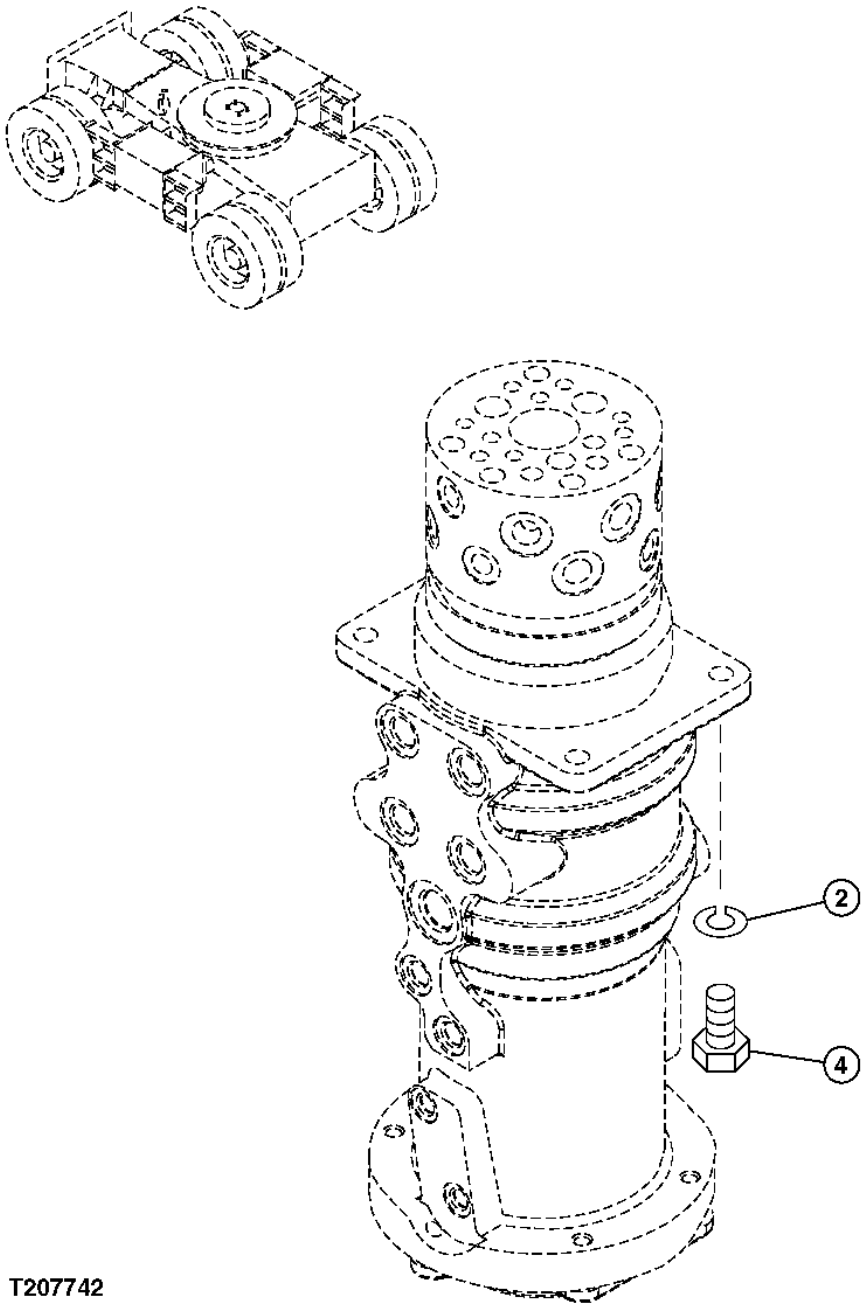


T207742

**ROTARY MANIFOLD SUPPORT**

| KEY | PART NO. | PART NAME | QTY | SERIAL NO. | REMARKS |
|---|---|---|---|---|---|
| 2 | 12H317 | LOCK WASHER | 4 | | 9/16", (SUB FOR A590914) |
| 4 | J921440 | CAP SCREW | 4 | | |

**ROTARY MANIFOLD (UPPERSTRUCTURE)**

T207743 -UN-09FEB05

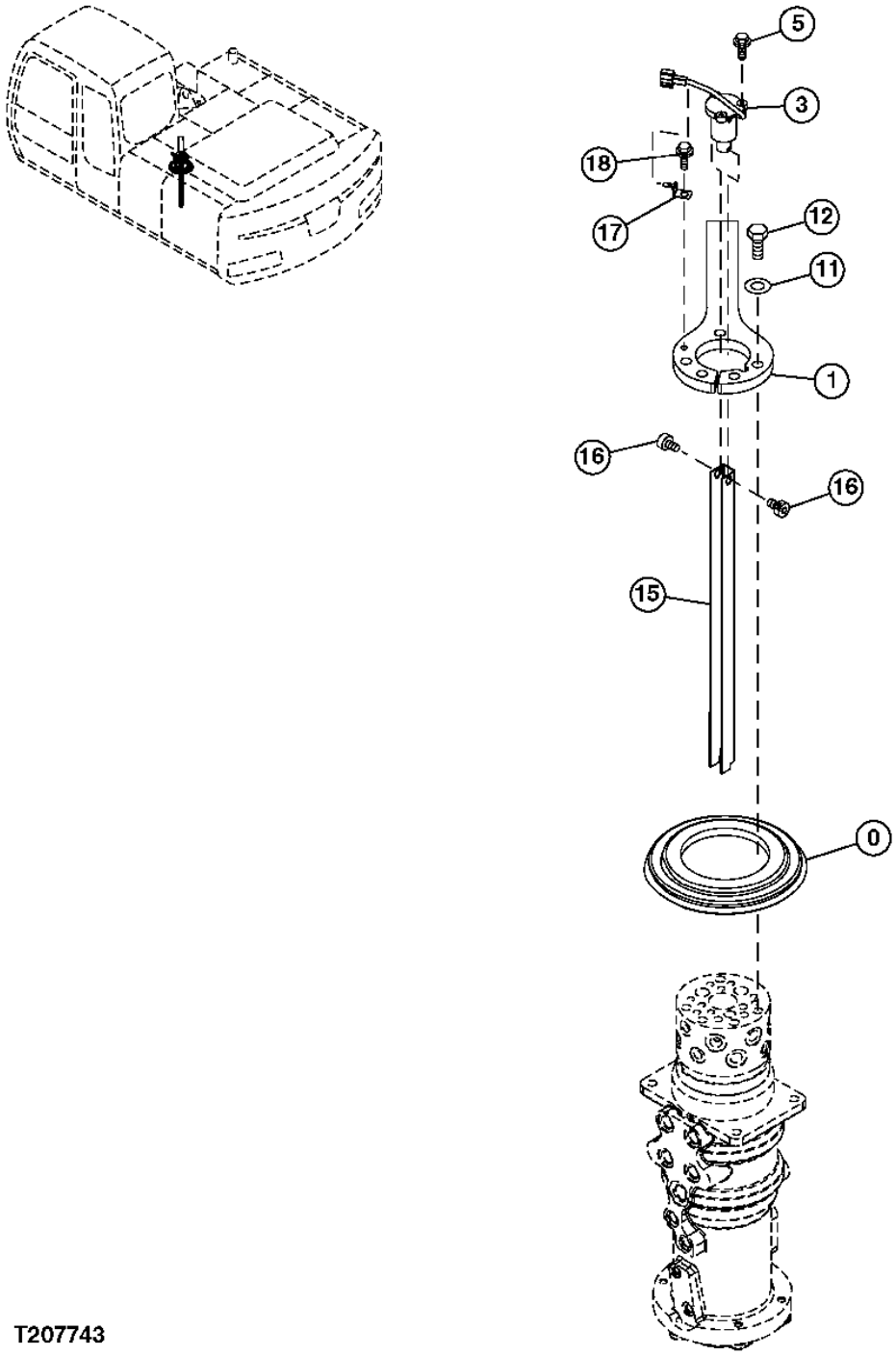


T207743

**ROTARY MANIFOLD (UPPERSTRUCTURE)**

| KEY | PART NO. | PART NAME | QTY | SERIAL NO. | REMARKS |
|---|---|---|---|---|---|
| 0 | 4196097 | COVER | 1 | | |
| 1 | 3095497 | STOP | 1 | | |
| 3 | 4474339 | WHEEL SEAL O-RING | 1 | | |
| 5 | ..... | CAP SCREW | 3 | | ( J260620 NOT AVAILABLE FOR SERVICE) |
| | 19M7077 | CAP SCREW | 1 | | M6 X 20, (SUB FOR J900620) |
| | 24M7054 | WASHER | 1 | | 6.400 X 12 X 1.600 MM, (SUB FOR A590106) |
| 11 | 24M7338 | WASHER | 5 | | 17 X 30 X 3 MM, (SUB FOR J222016) |
| 12 | J831645 | BOLT | 5 | | |
| 15 | 3095887 | BRACKET | 1 | | |
| 16 | J780505 | BOLT | 2 | | |
| 17 | 4282175 | BRACKET | 1 | | |
| 18 | ..... | CAP SCREW | 1 | | ( J271020 NOT AVAILABLE FOR SERVICE) |
| | 19M7938 | CAP SCREW | 1 | | M10 X 20, (SUB FOR J901020) |
| | 24M7346 | WASHER | 1 | | 11 X 20 X 2 MM, (SUB FOR J222010) |

**PROPEL MOTOR**

T207041 -UN-01FEB05

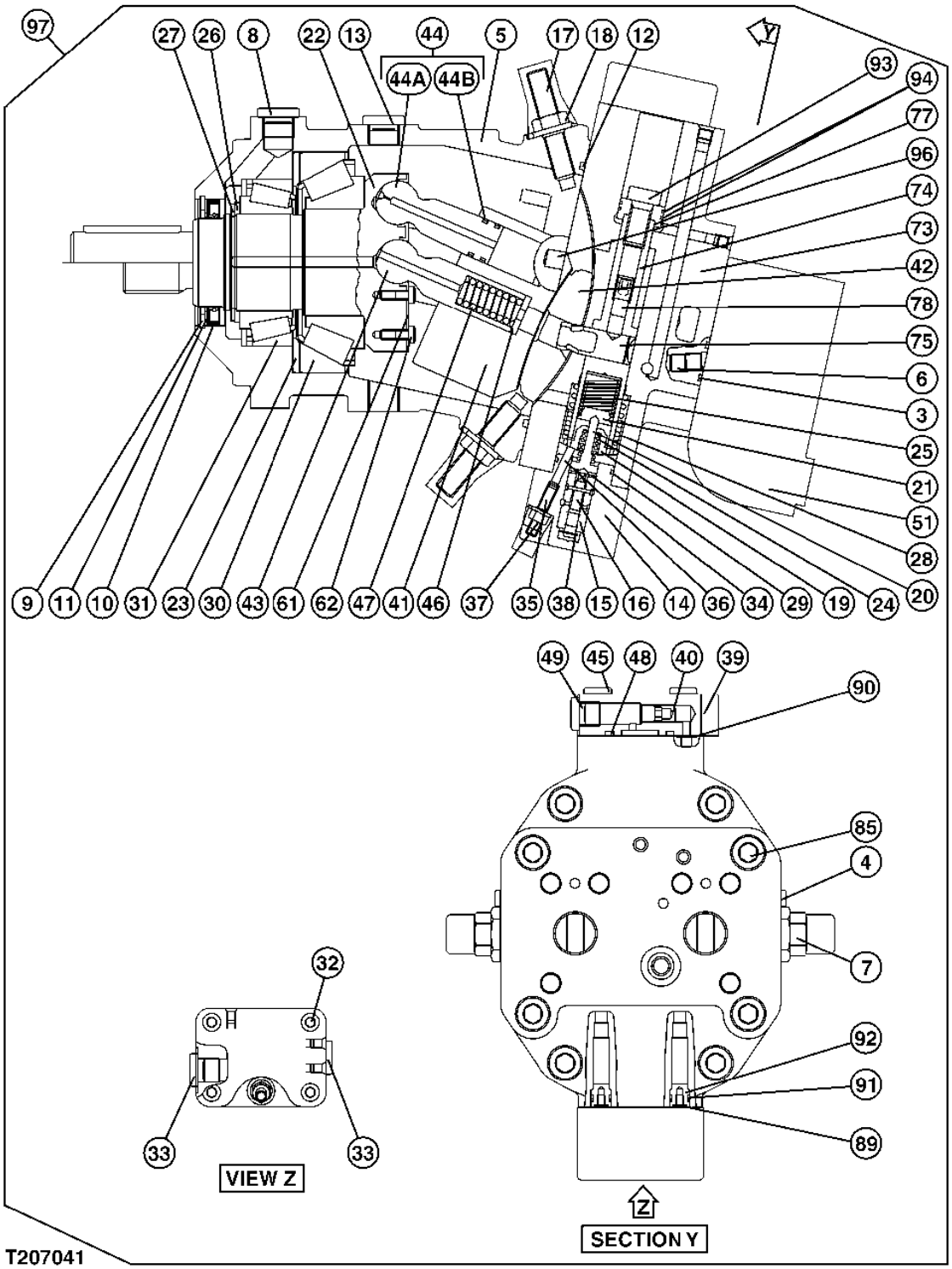

**PROPEL MOTOR**

| KEY | PART NO. | PART NAME | QTY | SERIAL NO. | REMARKS |
|---|---|---|---|---|---|
| 3 | 0898850 | O-RING | 1 | | |
| 4 | 0838619 | PIPE PLUG | 2 | | |
| 5 | ..... | HOUSING | 1 | | ( 0898801 NOT AVAILABLE FOR SERVICE) |
| 6 | 0898851 | PIN FASTENER | 2 | | |
| 7 | 0898852 | PRESSURE RELIEF VALVE | 2 | | |
| 8 | 0898802 | PLUG | 1 | | |
| 9 | 0898803 | SNAP RING | 1 | | |
| 10 | 0898804 | SEALING RING | 1 | | |
| 11 | 0898805 | BACK-UP RING | 1 | | |
| 12 | 0898806 | O-RING | 1 | | |
| 13 | 0898802 | PLUG | 1 | | |
| 14 | 0898853 | HOUSING | 1 | | |
| 15 | 0898854 | BUSHING | 1 | | |
| 16 | 0898855 | PISTON | 1 | | |
| 17 | 0898807 | PIN FASTENER | 2 | | |
| 18 | 0898808 | NUT | 2 | | |
| 19 | 0898856 | BUSHING | 1 | | |
| 20 | 0898857 | BUSHING | 1 | | |
| 21 | 0898858 | BUSHING | 1 | | |
| 22 | 0898809 | SHAFT | 1 | | |
| 23 | 0898810 | SHIM | 1 | | |
| 24 | 0898859 | SPRING | 1 | | |
| 25 | 0898860 | SPRING | 1 | | |
| 26 | 0898811 | BACK-UP RING | 1 | | |
| | 0898812 | BACK-UP RING | 1 | | |
| | 0898813 | BACK-UP RING | 1 | | |
| | 0898814 | BACK-UP RING | 1 | | |
| | 0898815 | BACK-UP RING | 1 | | |
| | 0898816 | BACK-UP RING | 1 | | |
| | 0898817 | BACK-UP RING | 1 | | |
| | 0898818 | BACK-UP RING | 1 | | |
| 27 | 0898819 | SNAP RING | 1 | | |
| 28 | 0898861 | SPRING | 1 | | |
| 29 | 0898862 | O-RING | 1 | | |
| 30 | 0898820 | TAPERED ROLLER BEARING | 1 | | |

THIS PARTS LISTING IS CONTINUED

**PROPEL MOTOR (CONTINUED)**

T207041 -UN-01FEB05

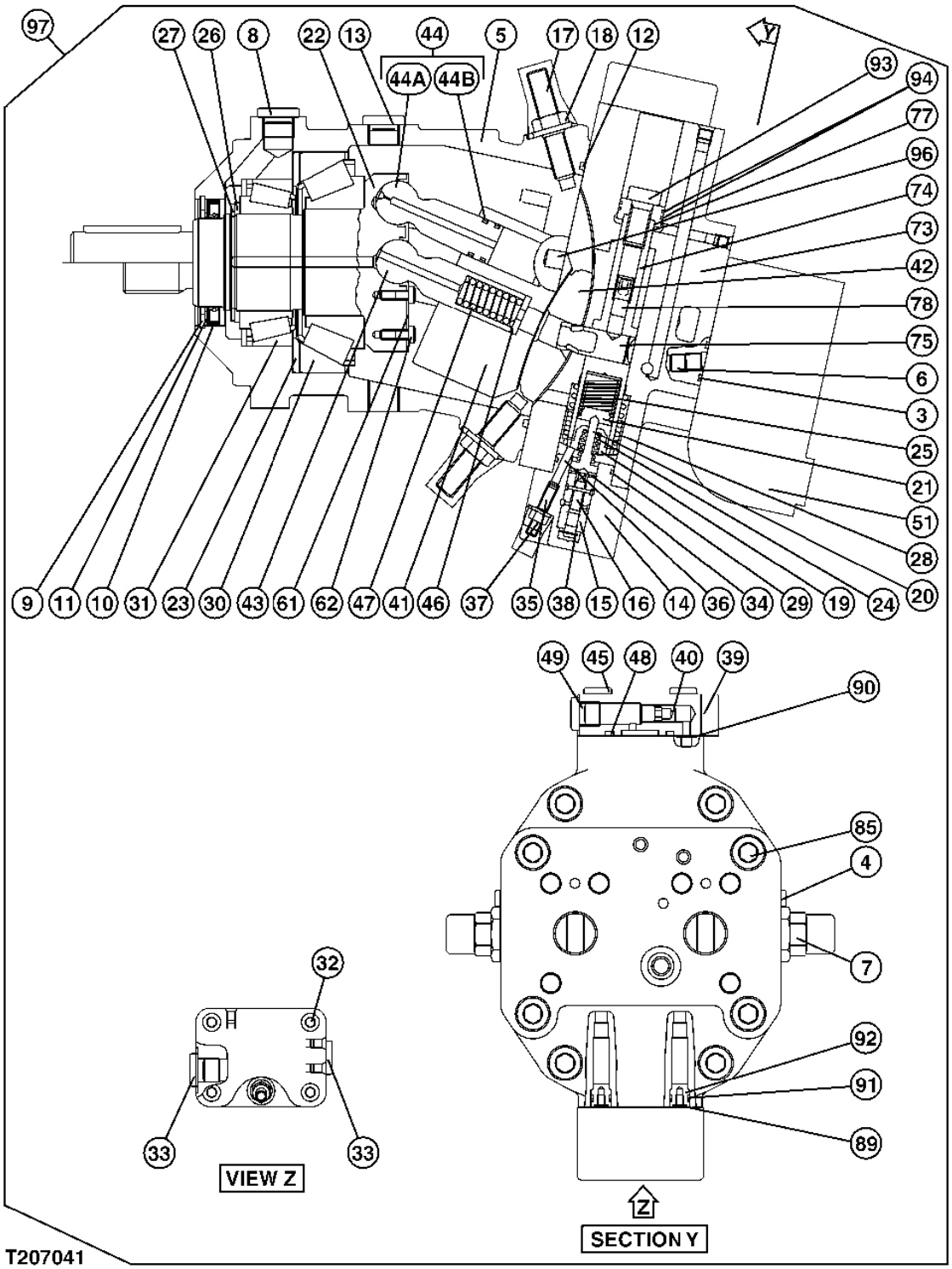

**PROPEL MOTOR (CONTINUED)**

| KEY | PART NO. | PART NAME | QTY | SERIAL NO. | REMARKS |
|---|---|---|---|---|---|
| 31 | 0898821 | TAPERED ROLLER BEARING | 1 | | |
| 32 | 0898863 | BOLT | 4 | | |
| 33 | 0838619 | PIPE PLUG | 2 | | |
| 34 | 0898864 | SNAP RING | 1 | | |
| 35 | 0898865 | PIN FASTENER | 1 | | |
| 36 | 0898866 | PIN FASTENER | 1 | | |
| 37 | 0838604 | NUT | 1 | | |
| 38 | 0898867 | SNAP RING | 1 | | |
| 39 | 0898868 | COVER | 1 | | |
| 40 | 0898869 | SCREW | 1 | | |
| 41 | 0898822 | CYLINDER | 1 | | |
| 42 | 0898823 | PLATE | 1 | | |
| 43 | 0898824 | PIN FASTENER | 1 | | |
| 44 | 0898825 | PISTON | 7 | | |
| 44A | 0898826 | PISTON | 1 | | |
| 44B | 0898827 | RING | 2 | | |
| 45 | 0898870 | BOLT | 4 | | |
| 46 | 0898828 | SHIM | 1 | | |
| | 0898829 | SHIM | 1 | | |
| | 0898830 | SHIM | 1 | | |
| | 0898831 | SHIM | 1 | | |
| | 0898832 | SHIM | 1 | | |
| | 0898833 | SHIM | 1 | | |
| 47 | 0898834 | SPRING | 1 | | |
| 48 | 0898871 | O-RING | 1 | | |
| 49 | 0838619 | PIPE PLUG | 1 | | |
| 51 | 4614460 | VALVE | 1 | | |
| 61 | 0898835 | PLATE | 1 | | |
| 62 | 0898836 | SCREW | 14 | | |
| 73 | 0898837 | PLATE | 1 | | |
| 74 | 0898838 | PISTON | 1 | | |
| 75 | 0898839 | TRUNNION | 1 | | |
| 77 | 0898840 | PISTON | 1 | | |
| 78 | 0898841 | PIN FASTENER | 1 | | |
| 85 | 0898842 | BOLT | 8 | | |
| 89 | 0898843 | O-RING | 2 | | |
| 90 | 0898844 | O-RING | 3 | | |
| 91 | 0898845 | O-RING | 2 | | |
| 92 | 0915902 | PLUG | 2 | | (SUB FOR 0898849) |
| 93 | 0898846 | BOLT | 1 | | |
| 94 | 0898847 | RING | 3 | | |
| 96 | 0898848 | PIN FASTENER | 2 | | |
| 97 | 4475800 | HYDRAULIC MOTOR | 1 | | |

**PROPEL MOTOR**

T207744 -UN-09FEB05

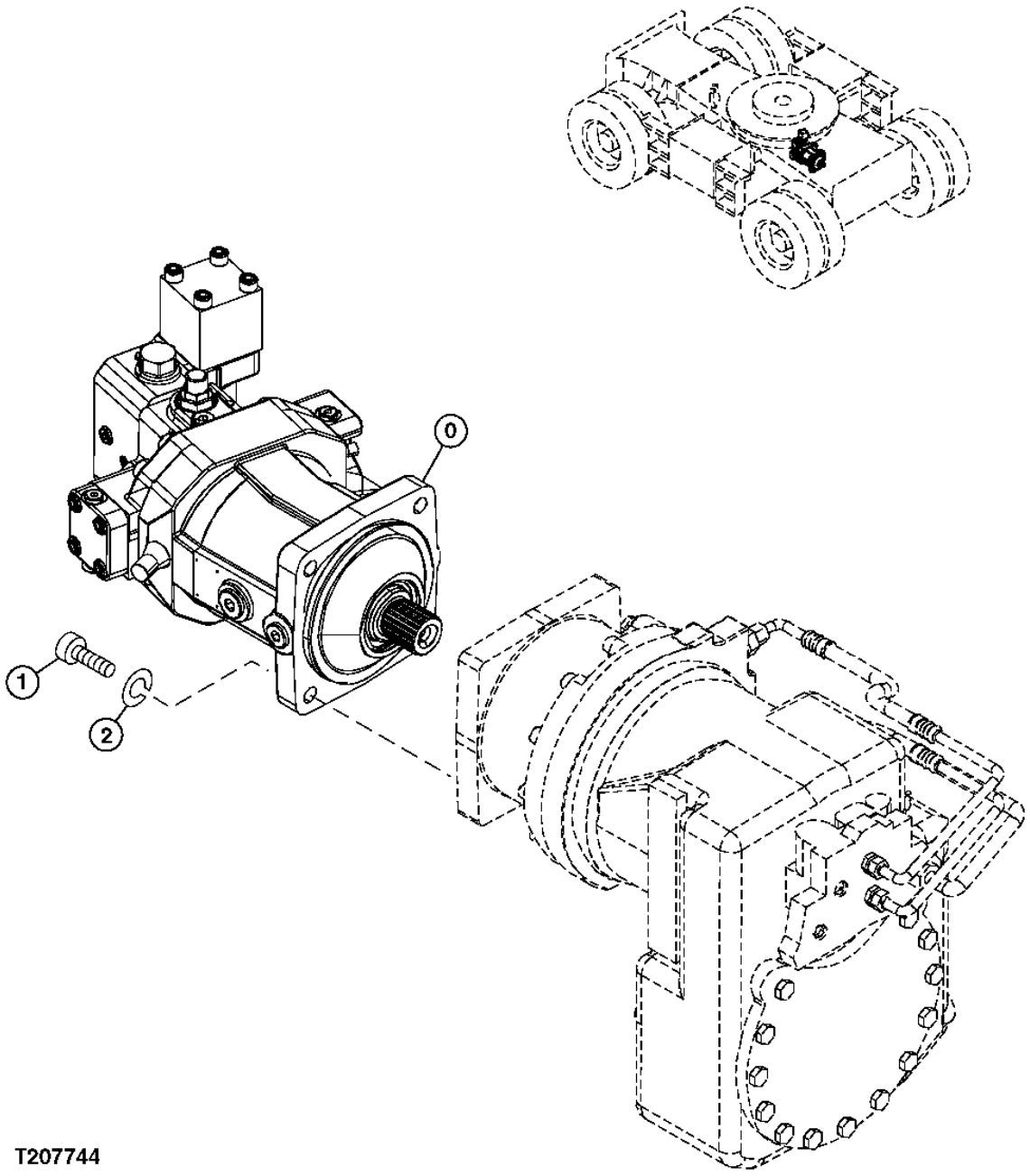


T207744

**PROPEL MOTOR**

| KEY | PART NO. | PART NAME | QTY | SERIAL NO. | REMARKS |
|---|---|---|---|---|---|
| 0 | 4612002 | HYDRAULIC MOTOR | 1 | | |
| 1 | M341656 | BOLT | 4 | | |
| 2 | 12H294 | LOCK WASHER | 4 | | 5/8", (SUB FOR A590916) |

**ROTARY MANIFOLD FRONT LINES TO CARRIER**

T207745 -UN-09FEB05

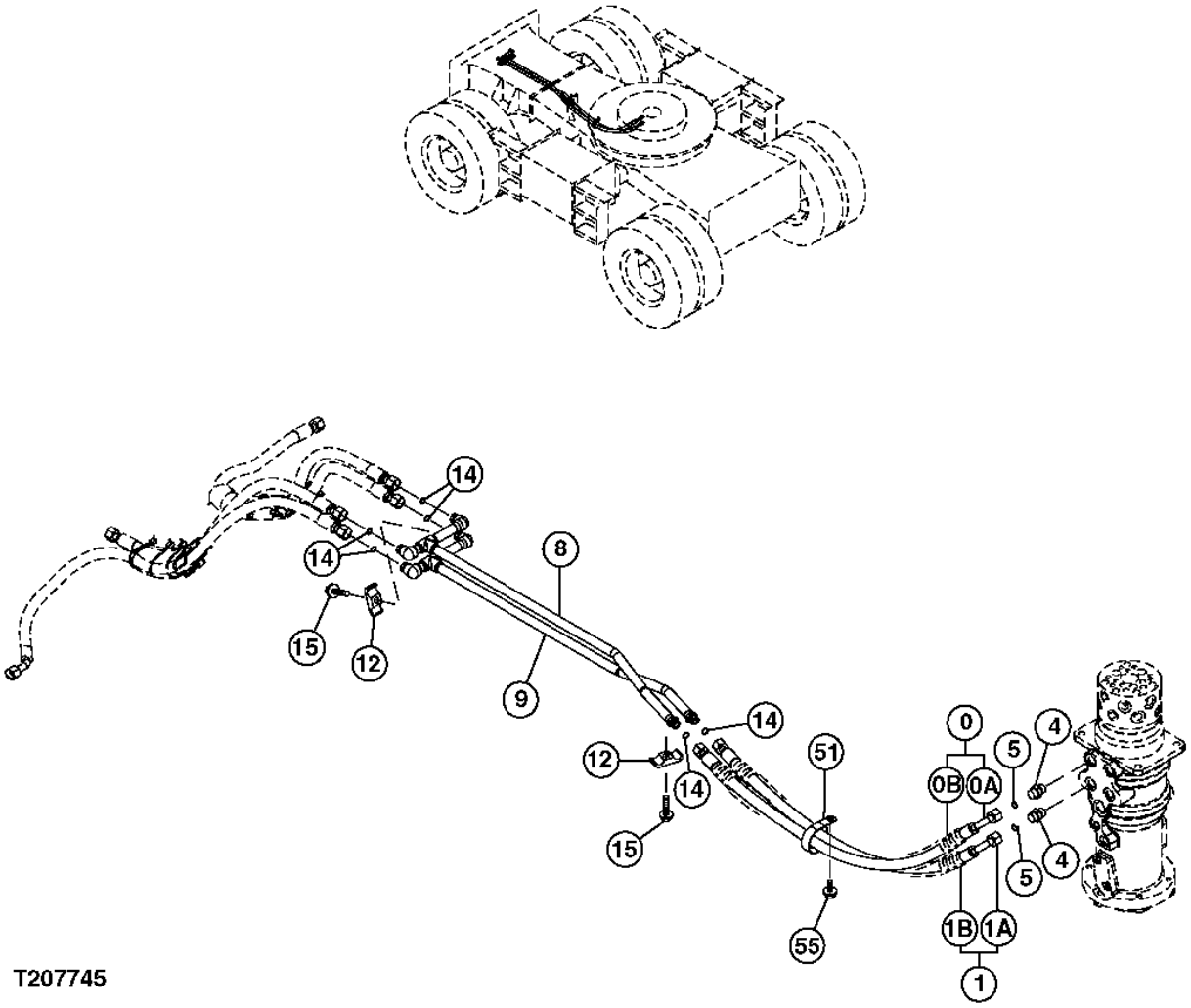

**ROTARY MANIFOLD FRONT LINES TO CARRIER**

| KEY | PART NO. | PART NAME | QTY | SERIAL NO. | REMARKS |
|---|---|---|---|---|---|
| 0 | ..... | HOSE | 1 | | ( 9223958 NOT AVAILABLE FOR SERVICE) |
| 0A | 4389104 | HOSE | 1 | | |
| 0B | 4327294 | HOSE GUARD | 2 | | |
| 1 | ..... | HOSE | 1 | | ( 9223961 NOT AVAILABLE FOR SERVICE) |
| 1A | 4422973 | HOSE | 1 | | |
| 1B | 4327294 | HOSE GUARD | 2 | | |
| 4 | A853144 | ADAPTER | 2 | | |
| | 4506418 | O-RING | 1 | | |
| 5 | T77857 | O-RING | 2 | | (SUB FOR 4138938) |
| 8 | 8089056 | PIPE | 1 | | |
| 9 | 8089055 | PIPE | 1 | | |
| 12 | 4189858 | CLAMP | 2 | | |
| 14 | T77857 | O-RING | 6 | | (SUB FOR 4138938) |
| 15 | ..... | CAP SCREW | 2 | | ( J271255 NOT AVAILABLE FOR SERVICE) |
| | 19M7362 | CAP SCREW | 1 | | M12 X 55, (SUB FOR J901255) |
| | 24M7345 | WASHER | 1 | | 13.500 X 24 X 2.500 MM, (SUB FOR J222012) |
| 51 | 4193816 | CLIP | 1 | | |
| 55 | ..... | CAP SCREW | 1 | | ( J271020 NOT AVAILABLE FOR SERVICE) |
| | 19M7938 | CAP SCREW | 1 | | M10 X 20, (SUB FOR J901020) |
| | 24M7346 | WASHER | 1 | | 11 X 20 X 2 MM, (SUB FOR J222010) |

**ROTARY MANIFOLD TRANSMISSION LINES TO SOLENOID VALVES**

T207746 -UN-09FEB05

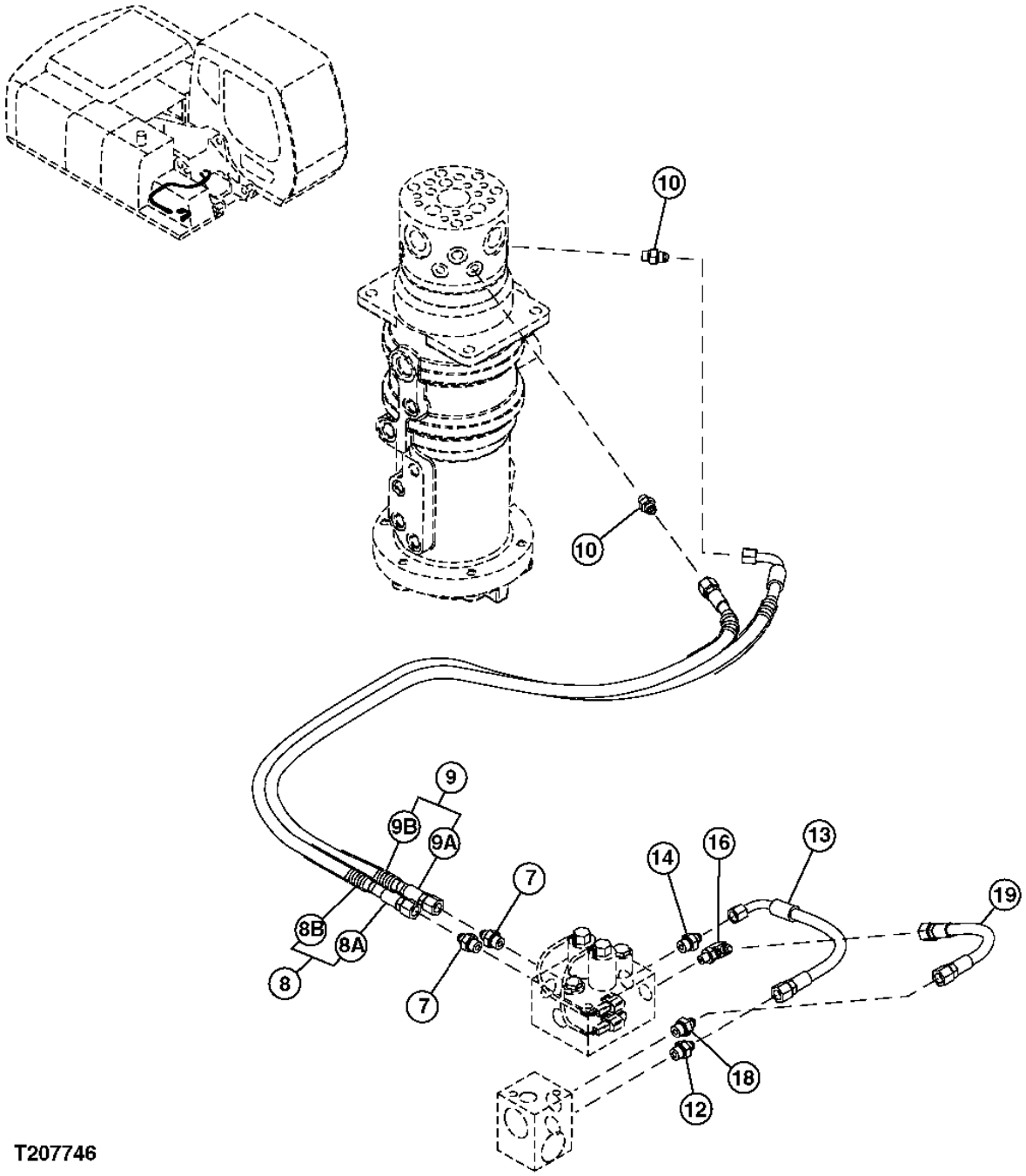

**ROTARY MANIFOLD TRANSMISSION LINES TO SOLENOID VALVES**

| KEY | PART NO. | PART NAME | QTY | SERIAL NO. | REMARKS |
|---|---|---|---|---|---|
| 7 | A852133 | ADAPTER | 2 | | |
| | CH11570 | O-RING | 1 | | (SUB FOR 4509180) |
| 8 | ..... | HOSE | 1 | | ( 9232911 NOT AVAILABLE FOR SERVICE) |
| 8A | 4611513 | HOSE | 1 | | |
| 8B | 4327293 | HOSE GUARD | 3 | | |
| 9 | ..... | HOSE | 1 | | ( 9232912 NOT AVAILABLE FOR SERVICE) |
| 9A | 4611605 | HOSE | 1 | | |
| 9B | 4327293 | HOSE GUARD | 3 | | |
| 10 | A852123 | ADAPTER | 2 | | |
| | M800650 | PACKING | 1 | | (SUB FOR 957366) |
| 12 | A852133 | ADAPTER | 1 | | |
| | CH11570 | O-RING | 1 | | (SUB FOR 4509180) |
| 13 | 4487172 | HOSE | 1 | | |
| 14 | A852133 | ADAPTER | 1 | | |
| | CH11570 | O-RING | 1 | | (SUB FOR 4509180) |
| 16 | A852323 | ELBOW FITTING | 1 | | |
| | M800650 | PACKING | 1 | | (SUB FOR 957366) |
| 18 | A852133 | ADAPTER | 1 | | |
| | CH11570 | O-RING | 1 | | (SUB FOR 4509180) |
| 19 | 4605465 | HOSE | 1 | | |

**BRAKE VALVE**

T207042 -UN-01FEB05

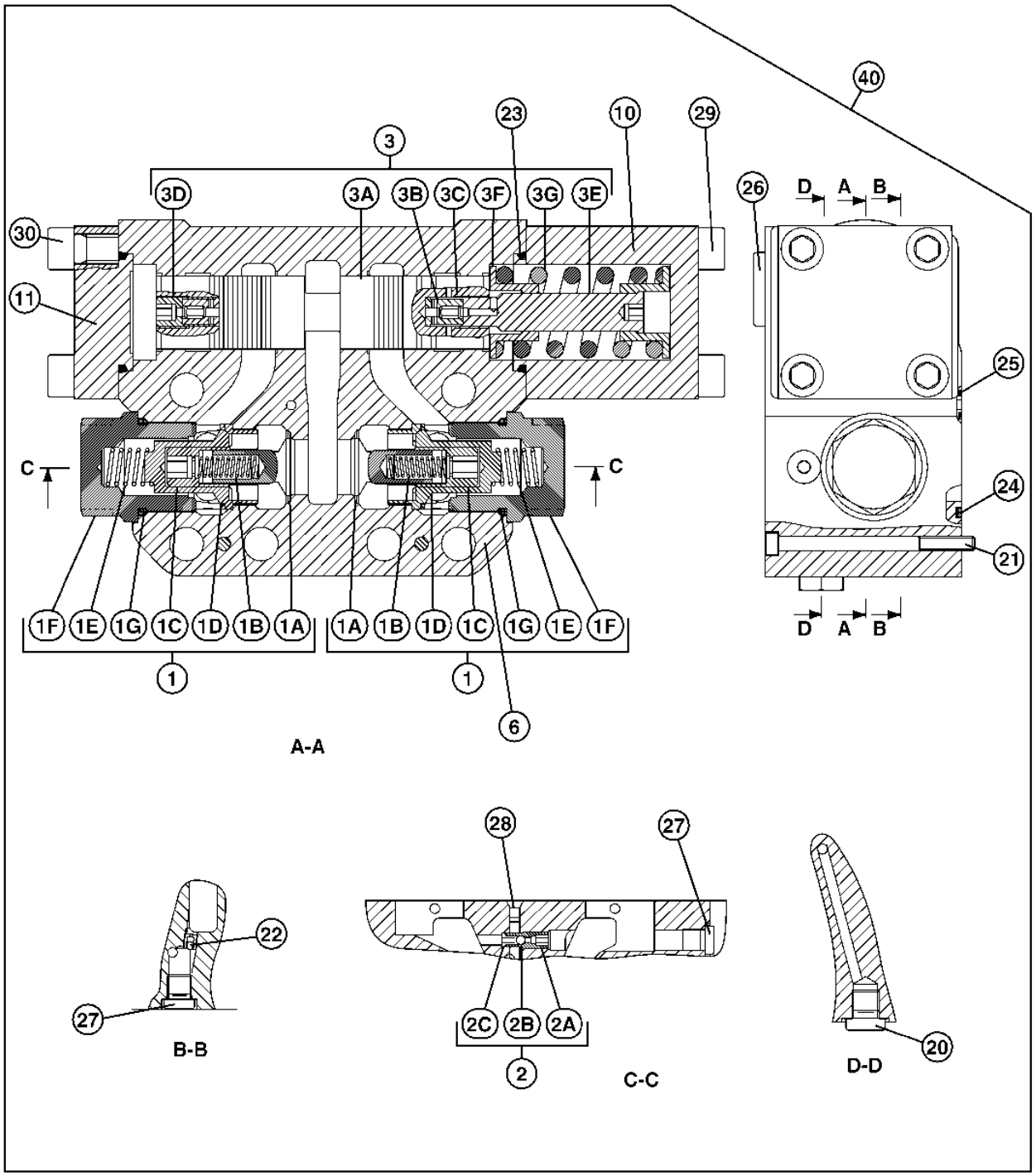


T207042

**BRAKE VALVE**

| KEY | PART NO. | PART NAME | QTY | SERIAL NO. | REMARKS |
|---|---|---|---|---|---|
| 1 | 0901901 | VALVE | 2 | | |
| 1A | 0901902 | POPPET | 1 | | |
| 1B | 0901903 | SPRING | 1 | | |
| 1C | 0901904 | SEAT | 1 | | |
| 1D | 0901905 | POPPET | 1 | | |
| 1E | 0901906 | SPRING | 1 | | |
| 1F | 0901907 | PLUG | 1 | | |
| 1G | 0901908 | O-RING | 1 | | |
| 2 | 0901909 | VALVE | 1 | | SHUTTLE |
| 2A | 0901910 | VALVE | 1 | | |
| 2B | 0901911 | BALL | 1 | | |
| 2C | 0901912 | BUSHING | 1 | | |
| 3 | 0901913 | PISTON | 1 | | |
| 3A | 0901914 | PISTON | 1 | | |
| 3B | 0901915 | BUSHING | 2 | | |
| 3C | 0901916 | PIN FASTENER | 2 | | |
| 3D | 0901917 | SCREW | 1 | | |
| 3E | 0901918 | BOLT | 1 | | |
| 3F | 0901919 | PLATE | 2 | | |
| 3G | 0901920 | SPRING | 1 | | |
| 6 | 0901921 | HOUSING | 1 | | |
| 10 | 0901922 | COVER | 1 | | |
| 11 | 0901923 | COVER | 1 | | |
| 20 | 0901924 | PLUG | 1 | | |
| 21 | 0901925 | BOLT | 2 | | |
| 22 | 0901926 | PLUG | 1 | | |
| 23 | 0901927 | O-RING | 2 | | |
| 24 | 0898878 | O-RING | 2 | | |
| 25 | 0901928 | O-RING | 2 | | |
| 26 | 0901929 | PLUG | 1 | | |
| 27 | 0901930 | PLUG | 2 | | |
| 28 | 0901931 | PLUG | 1 | | |
| 29 | 0901932 | BOLT | 4 | | |
| 30 | 0901933 | BOLT | 4 | | |
| 40 | 4614460 | VALVE | 1 | | |

**STEERING HOSES TO FRONT AXLE**

T207747 -UN-09FEB05

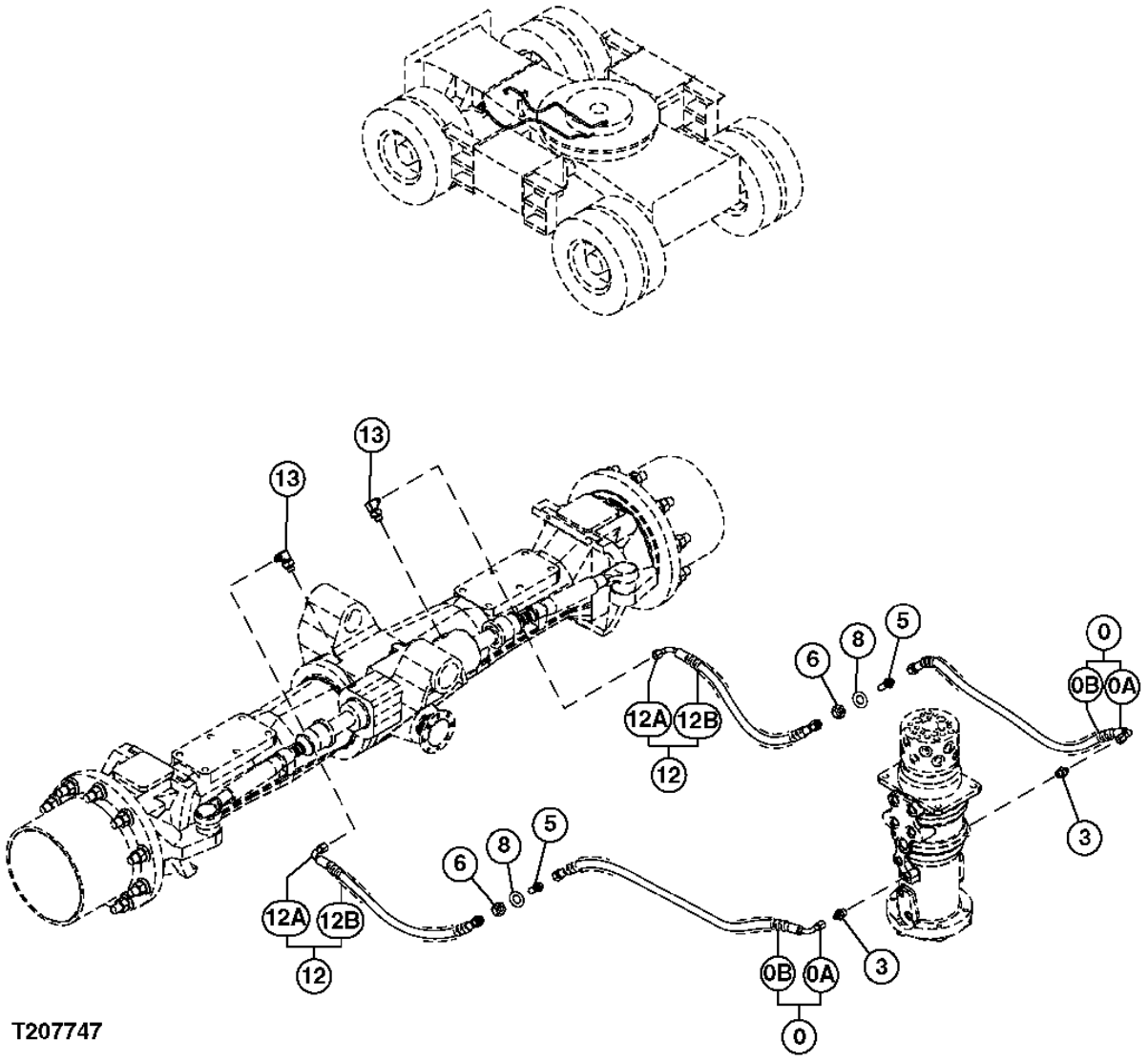

**STEERING HOSES TO FRONT AXLE**

| KEY | PART NO. | PART NAME | QTY | SERIAL NO. | REMARKS |
|---|---|---|---|---|---|
| 0 | ..... | HOSE | 2 | | ( 9219214 NOT AVAILABLE FOR SERVICE) |
| 0A | 4315337 | HOSE | 1 | | |
| 0B | 4327293 | HOSE GUARD | 2 | | |
| 3 | A852133 | ADAPTER | 2 | | |
| | CH11570 | O-RING | 1 | | (SUB FOR 4509180) |
| 5 | 4317426 | ADAPTER | 2 | | |
| 6 | 14H888 | NUT | 2 | | 9/16", (SUB FOR 4202531) |
| 8 | 24M7085 | WASHER | 2 | | 15 X 28 X 2.500 MM, (SUB FOR A590114) |
| 12 | ..... | HOSE | 2 | | ( 9209265 NOT AVAILABLE FOR SERVICE) |
| 12A | ..... | HOSE | 1 | | ( 4295824 NOT AVAILABLE FOR SERVICE) |
| 12B | 4327294 | HOSE GUARD | 1 | | |
| 13 | 4466884 | ELBOW FITTING | 2 | | |

**ROTARY MANIFOLD LINES TO STABLIZER OUTRIGGER**

T207808 -UN-08FEB05

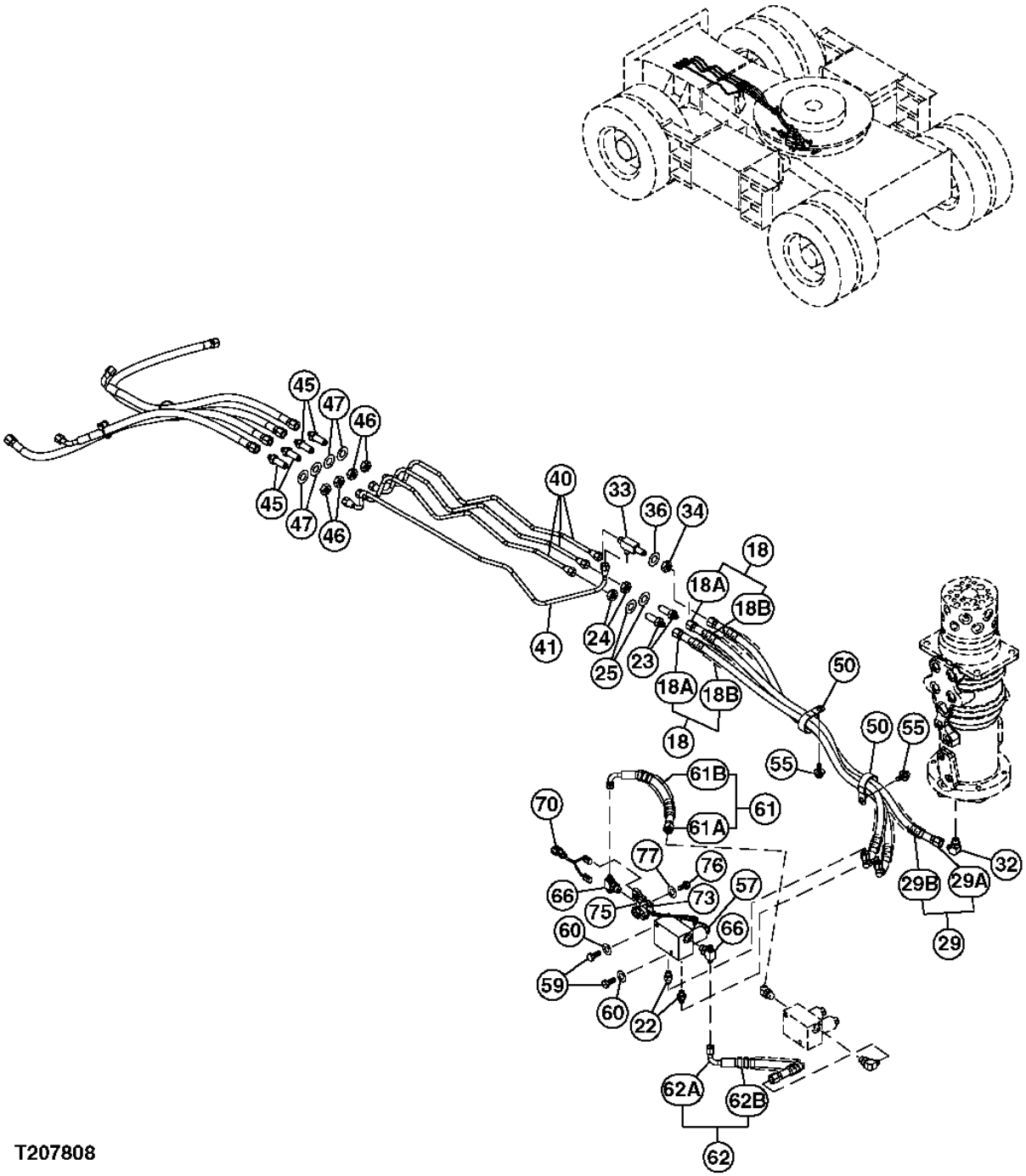

**ROTARY MANIFOLD LINES TO STABLIZER OUTRIGGER**

| KEY | PART NO. | PART NAME | QTY | SERIAL NO. | REMARKS |
|---|---|---|---|---|---|
| 18 | ..... | HOSE | 2 | | |
| | 4479838 | HOSE | 1 | | |
| | 4327293 | HOSE GUARD | 2 | | |
| 22 | A852123 | ADAPTER | 2 | | |
| | M800650 | PACKING | 1 | | (SUB FOR 957366) |
| 23 | 4183224 | ADAPTER | 2 | | |
| 24 | ..... | NUT | 2 | | |
| 25 | 24M7053 | WASHER | 2 | | (SUB FOR (2) A590116) |
| 29 | ..... | HOSE | 1 | | |
| 29A | 4606526 | HOSE | 1 | | |
| 29B | 4327293 | HOSE GUARD | 2 | | |
| 32 | A852333 | ELBOW FITTING | 1 | | |
| | CH11570 | O-RING | 1 | | (SUB FOR 4509180) |
| 33 | 3048482 | TEE FITTING | 1 | | |
| 34 | 14H888 | NUT | 1 | | (SUB FOR 4202531) |
| 36 | 24M7085 | WASHER | 1 | | 15 X 28 X 2.500 MM, (SUB FOR A590114) |
| 40 | 3095853 | PIPE | 3 | | |
| 41 | 3095852 | PIPE | 1 | | |
| 45 | 4183224 | ADAPTER | 4 | | |
| 46 | J952016 | NUT | 4 | | |
| 47 | 24M7053 | WASHER | 4 | | (SUB FOR (4) A590116) |
| 50 | 4193848 | CLIP | 2 | | (SUB FOR (2) 4190264) |
| 55 | J271020 | SCREW WITH WASHER | 2 | | |
| | J901020 | BOLT | 1 | | |
| | J222010 | WASHER | 1 | | |
| 57 | 4463199 | SOLENOID VALVE | 1 | | |
| 59 | 19M7938 | CAP SCREW | 2 | | (SUB FOR (2) J901020) |
| 60 | 24M7028 | WASHER | 2 | | (SUB FOR (2) A590110) |
| 61 | ..... | HOSE | 1 | | |
| 61A | 4472731 | HOSE | 1 | | |
| 61B | 4327293 | HOSE GUARD | 1 | | |
| 62 | ..... | HOSE | 1 | | |
| 62A | 4473366 | HOSE | 1 | | |
| 62B | 4327293 | HOSE GUARD | 1 | | |
| 66 | A852533 | TEE FITTING | 2 | | |
| | CH11570 | O-RING | 1 | | (SUB FOR 4509180) |
| 70 | 4468438 | WIRING HARNESS | 1 | | |
| 73 | 4190261 | CLIP | 1 | | |
| 75 | 4602634 | BRACKET | 1 | | |
| 76 | 19M7938 | CAP SCREW | 1 | | (SUB FOR J901020) |
| 77 | 24M7028 | WASHER | 1 | | (SUB FOR A590110) |

**ROTARY MANIFOLD BLADE LINES**

T207749 -UN-09FEB05

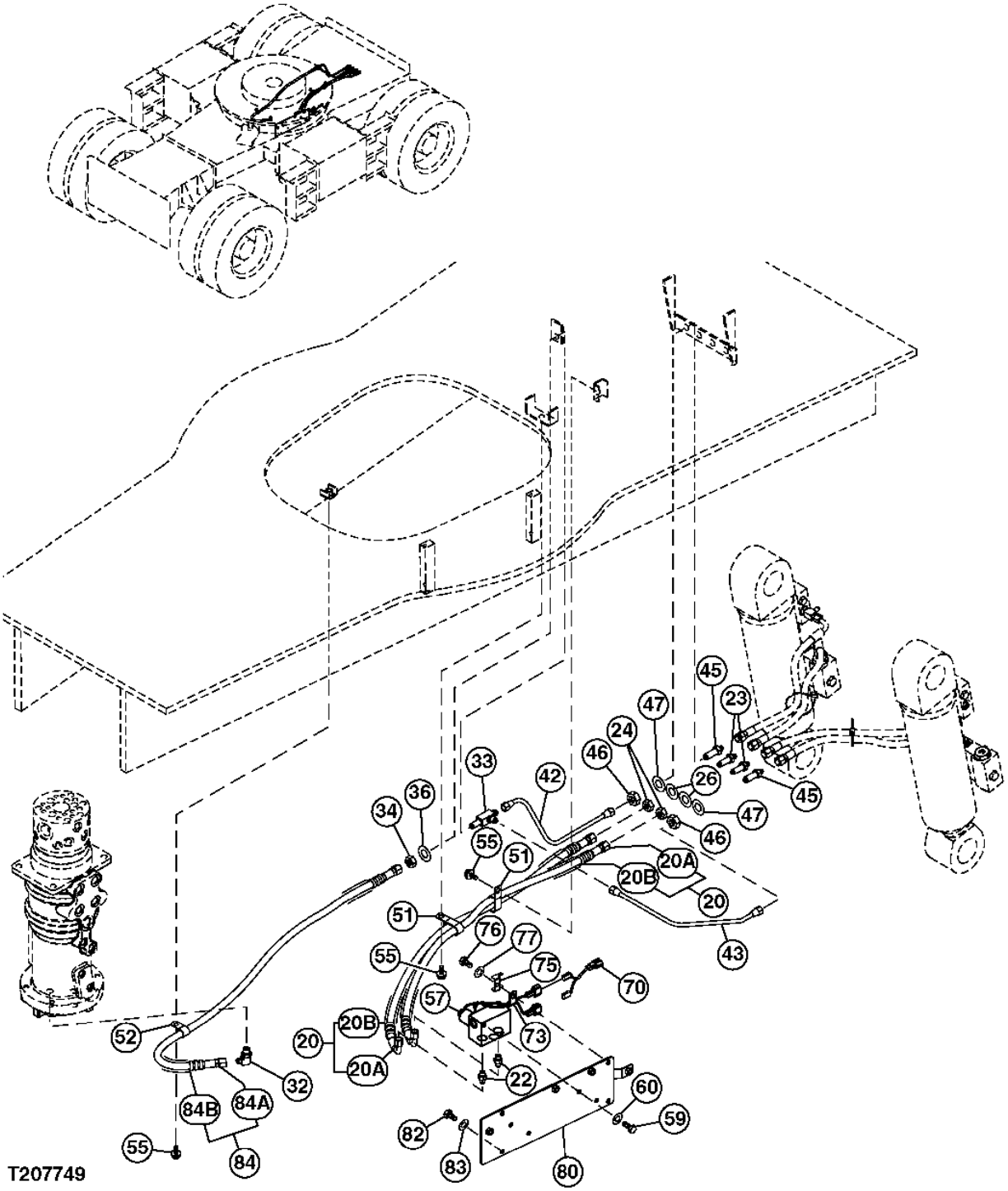

**ROTARY MANIFOLD BLADE LINES**

| KEY | PART NO. | PART NAME | QTY | SERIAL NO. | REMARKS |
|---|---|---|---|---|---|
| 20 | ..... | HOSE | 2 | | ( 9223211 NOT AVAILABLE FOR SERVICE) |
| 20A | 4479838 | HOSE | 1 | | |
| 20B | 4327293 | HOSE GUARD | 2 | | |
| 22 | A852123 | ADAPTER | 2 | | |
| | M800650 | PACKING | 1 | | (SUB FOR 957366) |
| 23 | 4317426 | ADAPTER | 2 | | |
| 24 | 14H888 | NUT | 2 | | 9/16", (SUB FOR 4202531) |
| 26 | 24M7085 | WASHER | 2 | | 15 X 28 X 2.500 MM, (SUB FOR A590114) |
| 32 | A852333 | ELBOW FITTING | 1 | | |
| | CH11570 | O-RING | 1 | | (SUB FOR 4509180) |
| 33 | 3048482 | TEE FITTING | 1 | | |
| 34 | 14H888 | NUT | 1 | | 9/16", (SUB FOR 4202531) |
| 36 | 24M7085 | WASHER | 1 | | 15 X 28 X 2.500 MM, (SUB FOR A590114) |
| 42 | 4614750 | PIPE | 1 | | |
| 43 | 4614751 | PIPE | 1 | | |
| 45 | 4183224 | ADAPTER | 2 | | |
| 46 | 14M7289 | NUT | 2 | | M16, (SUB FOR J952016) |
| 47 | 24M7053 | WASHER | 2 | | 17 X 30 X 3 MM, (SUB FOR A590116) |
| 51 | 4190266 | CLIP | 2 | | |
| 52 | 4190274 | CLIP | 1 | | |
| 55 | ..... | CAP SCREW | 3 | | ( J271020 NOT AVAILABLE FOR SERVICE) |
| | 19M7938 | CAP SCREW | 1 | | M10 X 20, (SUB FOR J901020) |
| | 24M7346 | WASHER | 1 | | 11 X 20 X 2 MM, (SUB FOR J222010) |
| 57 | 4463199 | SOLENOID VALVE | 1 | | |
| 59 | 19M7938 | CAP SCREW | 2 | | M10 X 20, (SUB FOR J901020) |
| 60 | 24M7028 | WASHER | 2 | | 10.500 X 20 X 2 MM, (SUB FOR A590110) |
| 70 | 4468438 | WIRING HARNESS | 1 | | |
| 73 | 4190261 | CLIP | 1 | | |
| 75 | 4602634 | BRACKET | 1 | | |
| 76 | 19M8324 | CAP SCREW | 1 | | M10 X 16, (SUB FOR J901016) |
| 77 | 24M7028 | WASHER | 1 | | 10.500 X 20 X 2 MM, (SUB FOR A590110) |
| 80 | 9760487 | BRACKET | 1 | | |
| 82 | 19M7938 | CAP SCREW | 4 | | M10 X 20, (SUB FOR J901020) |
| 83 | 24M7028 | WASHER | 4 | | 10.500 X 20 X 2 MM, (SUB FOR A590110) |
| 84 | ..... | HOSE | 1 | | ( 9218852 NOT AVAILABLE FOR SERVICE) |
| 84A | 4481627 | HOSE | 1 | | |
| 84B | 4327293 | HOSE GUARD | 2 | | |

**BRAKE LINES**

T207809 -UN-08FEB05

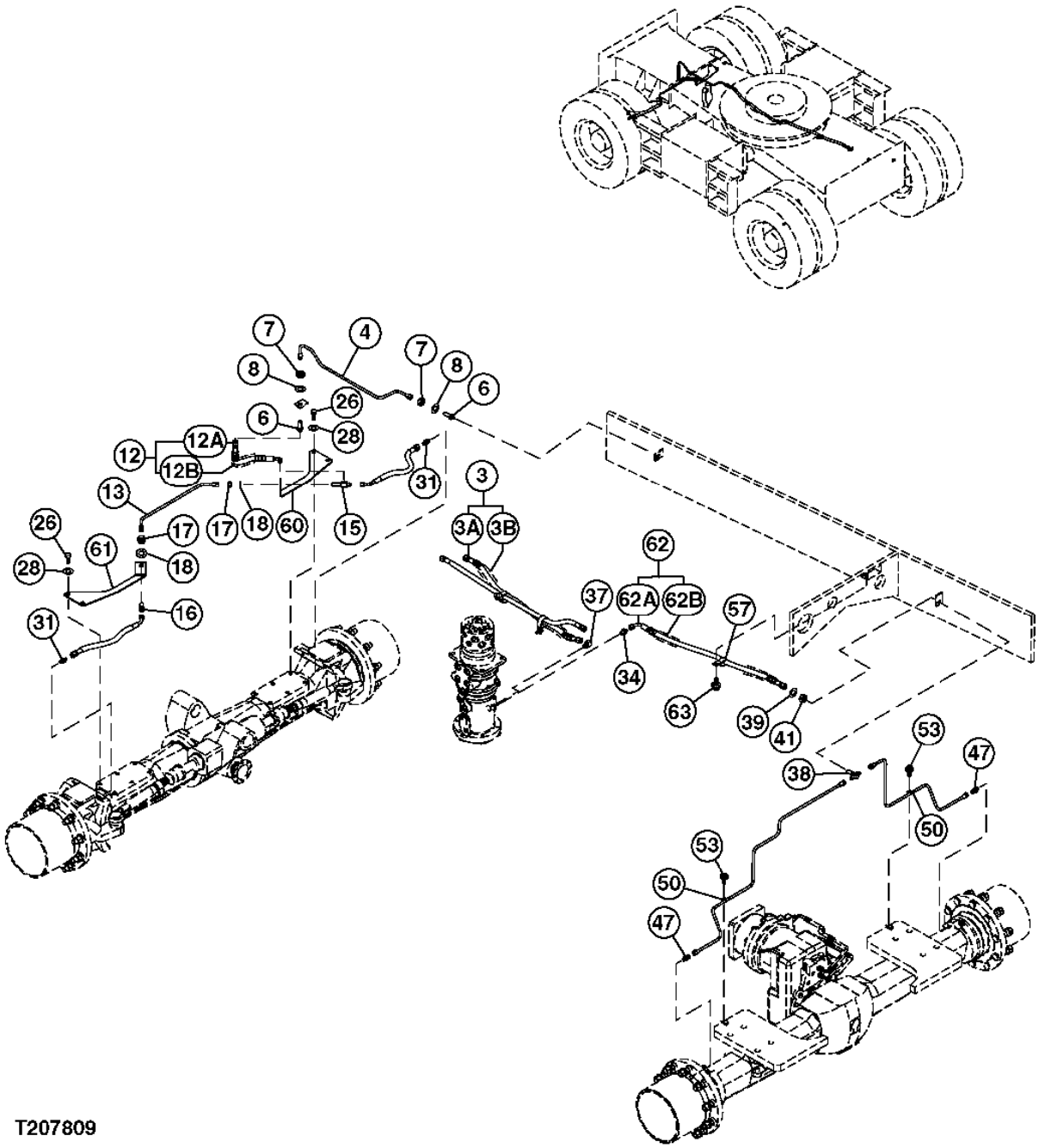

**BRAKE LINES**

| KEY | PART NO. | PART NAME | QTY | SERIAL NO. | REMARKS |
|---|---|---|---|---|---|
| 3 | ..... | HOSE | 1 | | ( 9231773 NOT AVAILABLE FOR SERVICE) |
| 3A | 4610532 | HOSE | 1 | | |
| 3B | 4327293 | HOSE GUARD | 2 | | |
| 4 | 3097220 | PIPE | 1 | | |
| 6 | 4183224 | ADAPTER | 2 | | |
| 7 | 14M7289 | NUT | 2 | | M16, (SUB FOR J952016) |
| 8 | 24M7053 | WASHER | 2 | | 17 X 30 X 3 MM, (SUB FOR A590116) |
| 12 | ..... | HOSE | 1 | | ( 9236298 NOT AVAILABLE FOR SERVICE) |
| 12A | 4615987 | HOSE | 1 | | |
| 12B | 4327293 | HOSE GUARD | 1 | | |
| 13 | 4480088 | PIPE | 1 | | |
| 15 | 4479546 | TEE FITTING | 1 | | |
| 16 | 4183224 | ADAPTER | 1 | | |
| 17 | 14M7289 | NUT | 2 | | M16, (SUB FOR J952016) |
| 18 | 24M7053 | WASHER | 2 | | 17 X 30 X 3 MM, (SUB FOR A590116) |
| 26 | 19M8029 | CAP SCREW | 4 | | M16 X 30, (SUB FOR J901630) |
| 28 | 24M7053 | WASHER | 4 | | (SUB FOR A590116) |
| 31 | 4472817 | ADAPTER | 2 | | |
| | 4472733 | O-RING | 1 | | |
| 34 | A852133 | ADAPTER | 1 | | |
| | CH11570 | O-RING | 1 | | (SUB FOR 4509180) |
| 37 | A852333 | ELBOW FITTING | 1 | | |
| | CH11570 | O-RING | 1 | | (SUB FOR 4509180) |
| 38 | 4280282 | TEE FITTING | 1 | | |
| 39 | 14H888 | NUT | 1 | | 9/16", (SUB FOR 4202531) |
| 41 | 24M7085 | WASHER | 1 | | 15 X 28 X 2.500 MM, (SUB FOR A590114) |
| 47 | 4602370 | ADAPTER | 2 | | |
| 50 | 4000855 | SEALING WASHER | 2 | | |
| 53 | ..... | CAP SCREW | 2 | | ( J260610 NOT AVAILABLE FOR SERVICE) |
| | 19M7300 | CAP SCREW | 1 | | M6 X 10, (SUB FOR J900610) |
| | 24M7054 | WASHER | 1 | | 6.400 X 12 X 1.600 MM, (SUB FOR A590106) |
| 57 | 4190266 | CLIP | 1 | | |
| 60 | 4613396 | BRACKET | 1 | | |
| 61 | 4613397 | BRACKET | 1 | | |
| 62 | ..... | HOSE | 1 | | ( 9223172 NOT AVAILABLE FOR SERVICE) |
| 62A | 4313765 | HOSE | 1 | | |
| 62B | 4327293 | HOSE GUARD | 2 | | |
| 63 | ..... | CAP SCREW | 1 | | ( J271020 NOT AVAILABLE FOR SERVICE) |
| | 19M7938 | CAP SCREW | 1 | | M10 X 20, (SUB FOR J901020) |
| | 24M7346 | WASHER | 1 | | 11 X 20 X 2 MM, (SUB FOR J222010) |

**TRANSMISSION LINES**

T207810 -UN-08FEB05

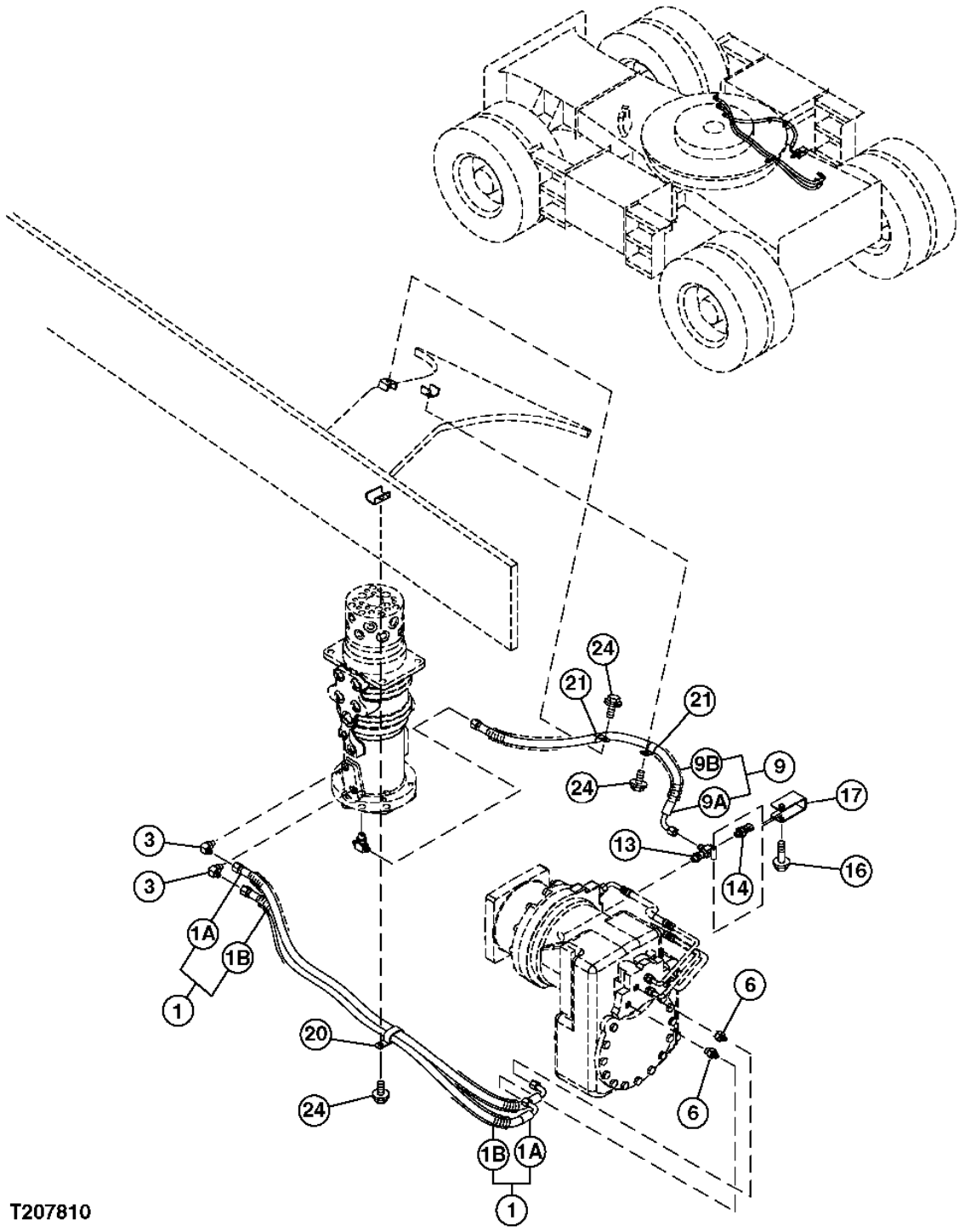

**TRANSMISSION LINES**

| KEY | PART NO. | PART NAME | QTY | SERIAL NO. | REMARKS |
|---|---|---|---|---|---|
| 1 | ..... | HOSE | 2 | | ( 9223255 NOT AVAILABLE FOR SERVICE) |
| 1A | 4351912 | HOSE | 1 | | |
| 1B | 4327293 | HOSE GUARD | 2 | | |
| 3 | A852323 | ELBOW FITTING | 2 | | |
| | M800650 | PACKING | 1 | | (SUB FOR 957366) |
| 6 | 4489344 | ADAPTER | 2 | | |
| | CH11570 | O-RING | 1 | | (SUB FOR 4509180) |
| 9 | ..... | HOSE | 1 | | ( 9223273 NOT AVAILABLE FOR SERVICE) |
| 9A | 4452732 | HYDRAULIC HOSE - FABRICATE | 1 | | |
| 9B | 4327293 | HOSE GUARD | 2 | | |
| 13 | 4605449 | TEE FITTING | 1 | | |
| | 4506412 | PACKING | 1 | | |
| 14 | 4436535 | SENSOR | 1 | | |
| 16 | ..... | CAP SCREW | 1 | | ( J260850 NOT AVAILABLE FOR SERVICE) |
| | 19M8397 | CAP SCREW | 1 | | M8 X 50, (SUB FOR J900850) |
| | 24M7055 | WASHER | 1 | | 8.400 X 16 X 1.600 MM, (SUB FOR A590108) |
| 17 | 9760957 | COVER | 1 | | |
| 20 | 4190266 | CLIP | 1 | | |
| 21 | 4190274 | CLIP | 2 | | |
| 24 | ..... | CAP SCREW | 3 | | ( J271020 NOT AVAILABLE FOR SERVICE) |
| | 19M7938 | CAP SCREW | 1 | | M10 X 20, (SUB FOR J901020) |
| | 24M7346 | WASHER | 1 | | 11 X 20 X 2 MM, (SUB FOR J222010) |

**FRONT AXLE LOCK LINES**

T207811 -UN-08FEB05

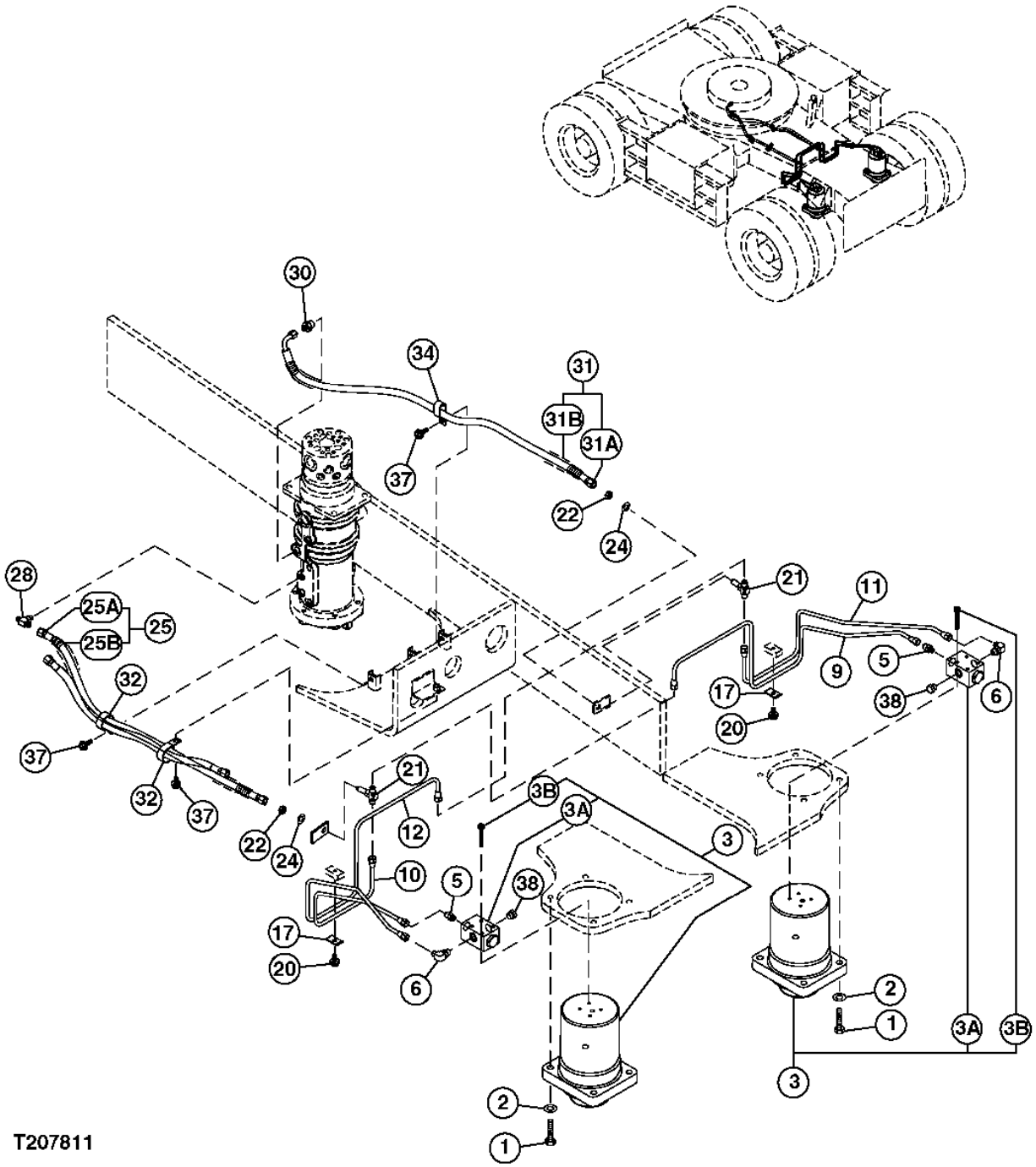

**FRONT AXLE LOCK LINES**

| KEY | PART NO. | PART NAME | QTY | SERIAL NO. | REMARKS |
|---|---|---|---|---|---|
| 1 | 19M7719 | CAP SCREW | 8 | | M16 X 70, (SUB FOR J901670) |
| 2 | 24M7053 | WASHER | 8 | | 17 X 30 X 3 MM, (SUB FOR A590116) |
| 3 | 9208714 | CYLINDER | 2 | | |
| 3A | 9208795 | CHECK VALVE | 1 | | |
| 3B | 19M8506 | CAP SCREW | 4 | | M8 X 60, (SUB FOR M340860) |
| 5 | 4344025 | ADAPTER | 2 | | |
| | M800650 | PACKING | 1 | | (SUB FOR 957366) |
| 6 | 4209704 | ELBOW FITTING | 2 | | |
| | CH11570 | O-RING | 1 | | (SUB FOR 4509180) |
| 9 | 3097147 | PIPE | 1 | | |
| 10 | 3097148 | PIPE | 1 | | |
| 11 | 3097149 | PIPE | 1 | | |
| 12 | 3097150 | PIPE | 1 | | |
| 17 | 4043942 | CLAMP | 2 | | |
| 20 | ..... | CAP SCREW | 2 | | ( J260825 NOT AVAILABLE FOR SERVICE) |
| | 19M7163 | CAP SCREW | 1 | | M8 X 25, (SUB FOR J900825) |
| | 24M7055 | WASHER | 1 | | 8.400 X 16 X 1.600 MM, (SUB FOR A590108) |
| 21 | 4280282 | TEE FITTING | 2 | | |
| 22 | 14H888 | NUT | 2 | | 9/16", (SUB FOR 4202531) |
| 24 | 24M7085 | WASHER | 2 | | 15 X 28 X 2.500 MM, (SUB FOR A590114) |
| 25 | ..... | HOSE | 1 | | ( 9228659 NOT AVAILABLE FOR SERVICE) |
| 25A | 4606526 | HOSE | 1 | | |
| 25B | 4327293 | HOSE GUARD | 2 | | |
| 28 | A852523 | TEE FITTING | 1 | | |
| | M800650 | PACKING | 1 | | (SUB FOR 957366) |
| 30 | A852143 | ADAPTER | 1 | | |
| | 4506418 | O-RING | 1 | | |
| 31 | ..... | HOSE | 1 | | ( 9228658 NOT AVAILABLE FOR SERVICE) |
| 31A | 4606702 | HOSE | 1 | | |
| 31B | 4327293 | HOSE GUARD | 2 | | |
| 32 | 4193848 | CLIP | 2 | | |
| 34 | 4190266 | CLIP | 1 | | |
| 37 | ..... | CAP SCREW | 3 | | ( J271020 NOT AVAILABLE FOR SERVICE) |
| | 19M7938 | CAP SCREW | 1 | | M10 X 20, (SUB FOR J901020) |
| | 24M7346 | WASHER | 1 | | 11 X 20 X 2 MM, (SUB FOR J222010) |
| 38 | A885003 | PIPE PLUG | 2 | | |
| | CH11570 | O-RING | 1 | | (SUB FOR 4509180) |

**PROPEL LINES**

T207812 -UN-23FEB05

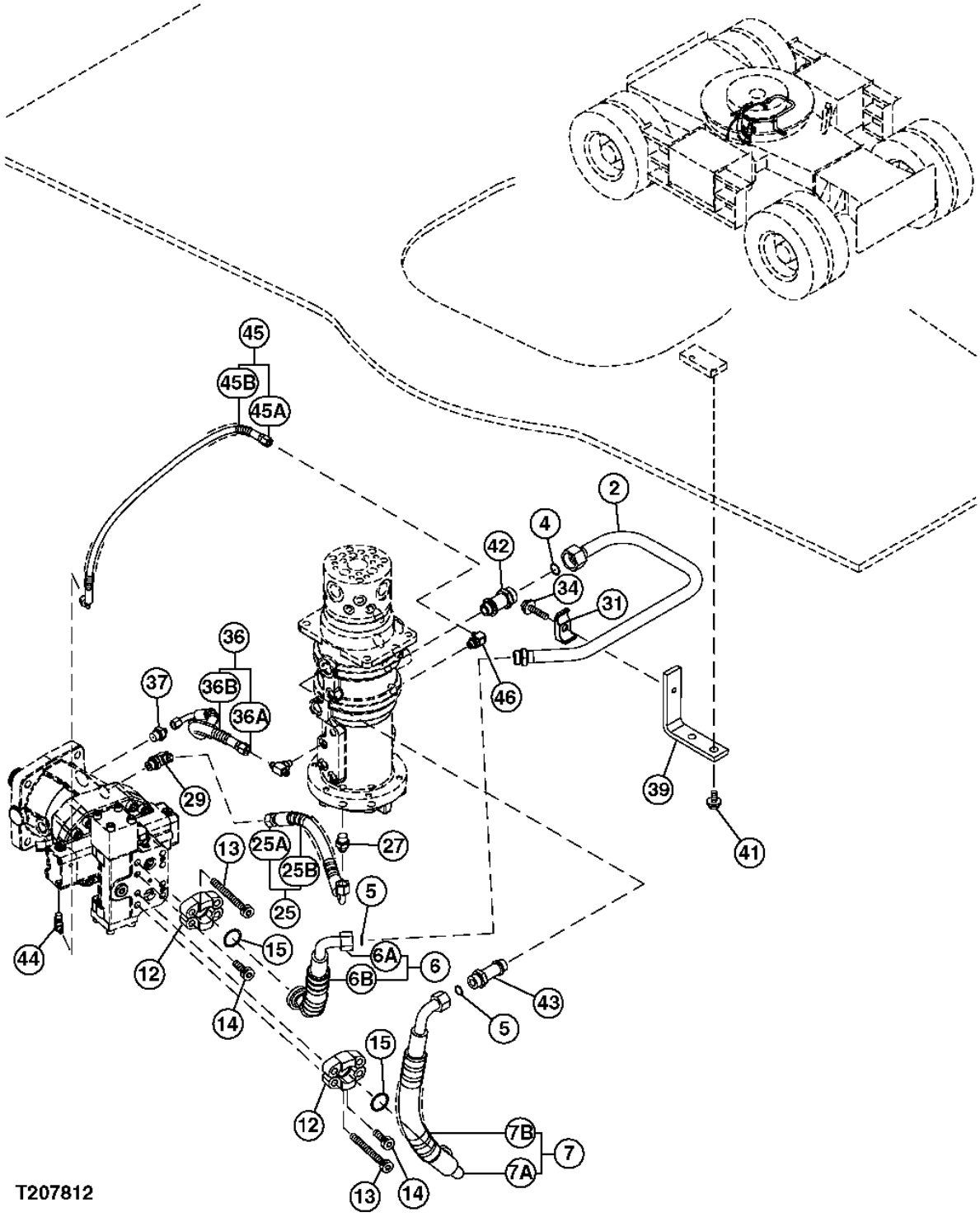

**PROPEL LINES**

| KEY | PART NO. | PART NAME | QTY | SERIAL NO. | REMARKS |
|---|---|---|---|---|---|
| 2 | 8092222 | PIPE | 1 | | |
| 4 | T76938 | O-RING | 1 | | (SUB FOR 4187328) |
| 5 | T77858 | O-RING | 2 | | (SUB FOR 4187308) |
| 6 | ..... | HOSE | 1 | | ( 9231788 NOT AVAILABLE FOR SERVICE) |
| 6A | 4610490 | HOSE | 1 | | |
| 6B | 4327294 | HOSE GUARD | 1 | | |
| 7 | ..... | HOSE | 1 | | ( 9231789 NOT AVAILABLE FOR SERVICE) |
| 7A | 4610491 | HOSE | 1 | | |
| 7B | 4327294 | HOSE GUARD | 1 | | |
| 12 | AT131685 | FLANGE FITTING | 4 | | (SUB FOR 4089703) |
| 13 | J781406 | CAP SCREW | 6 | | |
| 14 | J781445 | CAP SCREW | 2 | | |
| 15 | T72216 | O-RING | 2 | | (SUB FOR 4508805) |
| 25 | ..... | HOSE | 1 | | ( 9228664 NOT AVAILABLE FOR SERVICE) |
| 25A | 4217384 | HYDRAULIC HOSE | 1 | | |
| 25B | 4327294 | HOSE GUARD | 1 | | |
| 27 | A852144 | ADAPTER | 1 | | |
| | 4506418 | O-RING | 1 | | |
| 29 | A852344 | ELBOW FITTING | 1 | | |
| | 4506418 | O-RING | 1 | | |
| 31 | 4190126 | CLAMP | 1 | | |
| 34 | ..... | CAP SCREW | 1 | | ( J271255 NOT AVAILABLE FOR SERVICE) |
| | 19M7362 | CAP SCREW | 1 | | M12 X 55, (SUB FOR J901255) |
| | 24M7345 | WASHER | 1 | | 13.500 X 24 X 2.500 MM, (SUB FOR J222012) |
| 36 | ..... | HOSE | 1 | | ( 9223933 NOT AVAILABLE FOR SERVICE) |
| 36A | 4489631 | HOSE | 1 | | |
| 36B | 4327293 | HOSE GUARD | 1 | | |
| 37 | 4603159 | ADAPTER | 1 | | |
| 39 | 4610459 | SUPPORT | 1 | | |
| 41 | ..... | CAP SCREW | 2 | | ( J271225 NOT AVAILABLE FOR SERVICE) |
| | 19M7872 | CAP SCREW | 1 | | M12 X 25, (SUB FOR J901225) |
| | 24M7345 | WASHER | 1 | | 13.500 X 24 X 2.500 MM, (SUB FOR J222012) |
| 42 | 4341132 | ADAPTER | 1 | | |
| | AT318035 | O-RING | 1 | | (SUB FOR 4506424) |
| 43 | 4230904 | ADAPTER | 1 | | |
| | AT318035 | O-RING | 1 | | (SUB FOR 4506424) |
| 44 | A852322 | ELBOW FITTING | 1 | | |
| | M800650 | PACKING | 1 | | (SUB FOR 957366) |
| 45 | ..... | HOSE | 1 | | ( 9231914 NOT AVAILABLE FOR SERVICE) |
| 45A | 4480439 | HOSE | 1 | | |
| 45B | 4327293 | HOSE GUARD | 1 | | |
| 46 | A852332 | ELBOW FITTING | 1 | | |
| | CH11570 | O-RING | 1 | | (SUB FOR 4509180) |

**AXLE LOCK CYLINDER CHECK VALVE**

T207564 -UN-10FEB05

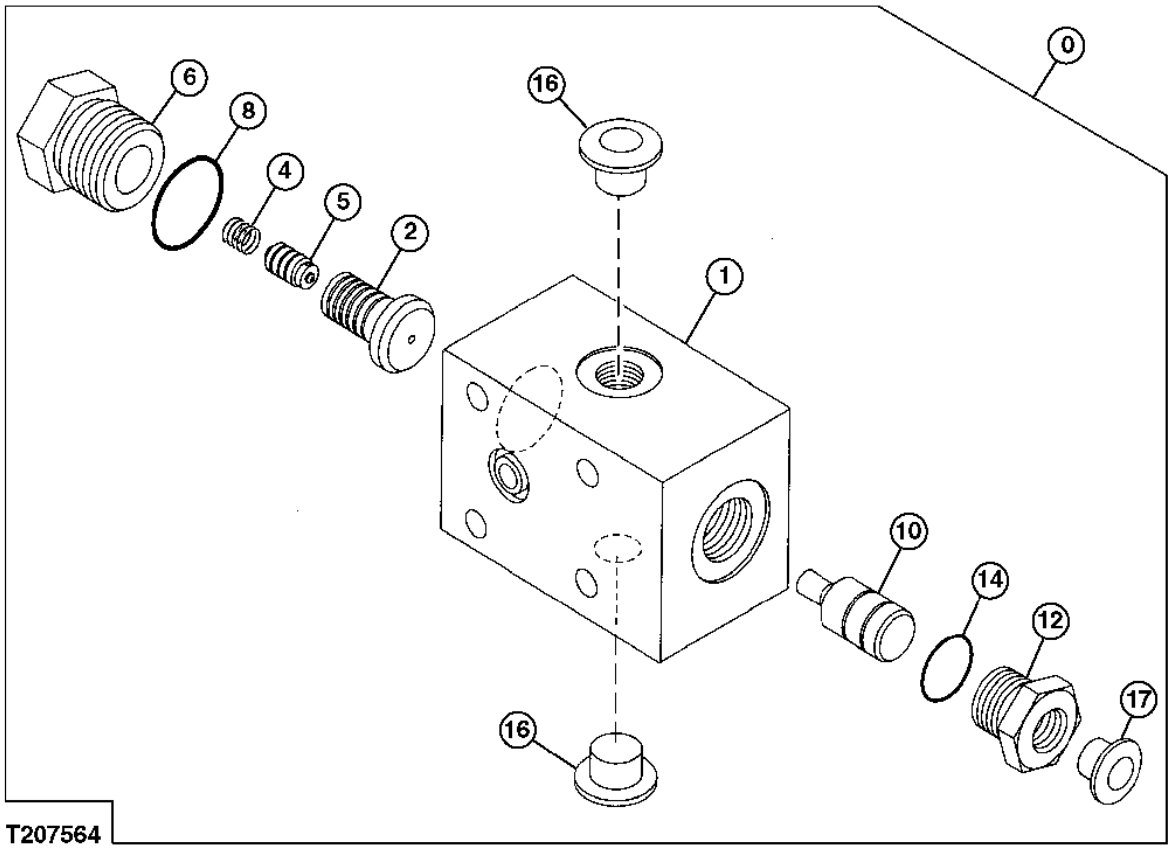

**AXLE LOCK CYLINDER CHECK VALVE**

| KEY | PART NO. | PART NAME | QTY | SERIAL NO. | REMARKS |
|---|---|---|---|---|---|
| 0 | 9208795 | CHECK VALVE | 1 | | |
| 1 | ..... | HOUSING | 1 | | ( 2047713 NOT AVAILABLE FOR SERVICE) |
| 2 | 4474185 | SLEEVE | 1 | | |
| 4 | 4466215 | COMPRESSION SPRING | 1 | | |
| 5 | 4474184 | POPPET | 1 | | |
| 6 | 4465993 | PLUG | 1 | | |
| 8 | 4509182 | PACKING | 1 | | (SUB FOR CH17886) |
| 10 | 4465992 | PISTON | 1 | | |
| 12 | 4465994 | PLUG | 1 | | |
| 14 | 4506418 | O-RING | 1 | | |
| 16 | 2046526 | PLUG | 2 | | |
| 17 | 2046523 | PLUG | 1 | | |

**BLADE CYLINDER CHECK VALVE**

T207566 -UN-10FEB05

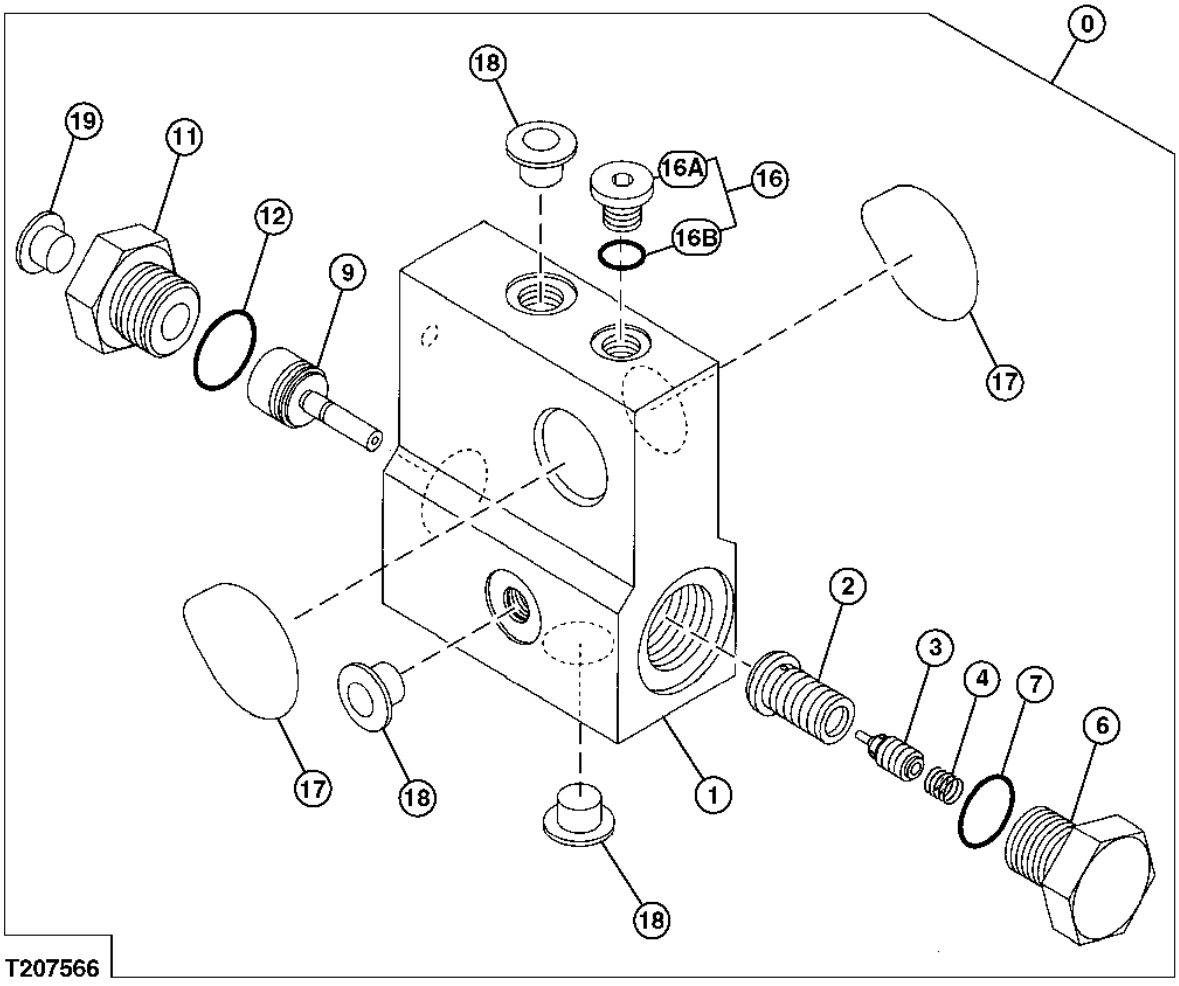

**BLADE CYLINDER CHECK VALVE**

| KEY | PART NO. | PART NAME | QTY | SERIAL NO. | REMARKS |
|---|---|---|---|---|---|
| 0 | 9220919 | CHECK VALVE | 1 | | (SUB FOR 1030928) |
| 1 | ..... | HOUSING | 1 | | |
| 2 | 4484280 | SLEEVE | 1 | | |
| 3 | 4474184 | POPPET | 1 | | |
| 4 | 4484650 | COMPRESSION SPRING | 1 | | |
| 6 | 4486216 | PLUG | 1 | | |
| 7 | CH17886 | PACKING | 1 | | (SUB FOR 4509182) |
| 9 | 4484279 | PISTON | 1 | | |
| 11 | 4484431 | PLUG | 1 | | |
| 12 | AT318035 | O-RING | 1 | | (SUB FOR 4506424) |
| 16 | 9134110 | PIPE PLUG | 1 | | |
| 16A | 4336166 | PIPE PLUG | 1 | | |
| 16B | M800650 | PACKING | 1 | | (SUB FOR 957366) |
| 17 | 2047092 | SHEET | 2 | | |
| 18 | 2046526 | PLUG | 3 | | |
| 19 | 2046523 | PLUG | 1 | | |

**AXLE LOCK CYLINDER**

T207563 -UN-10FEB05

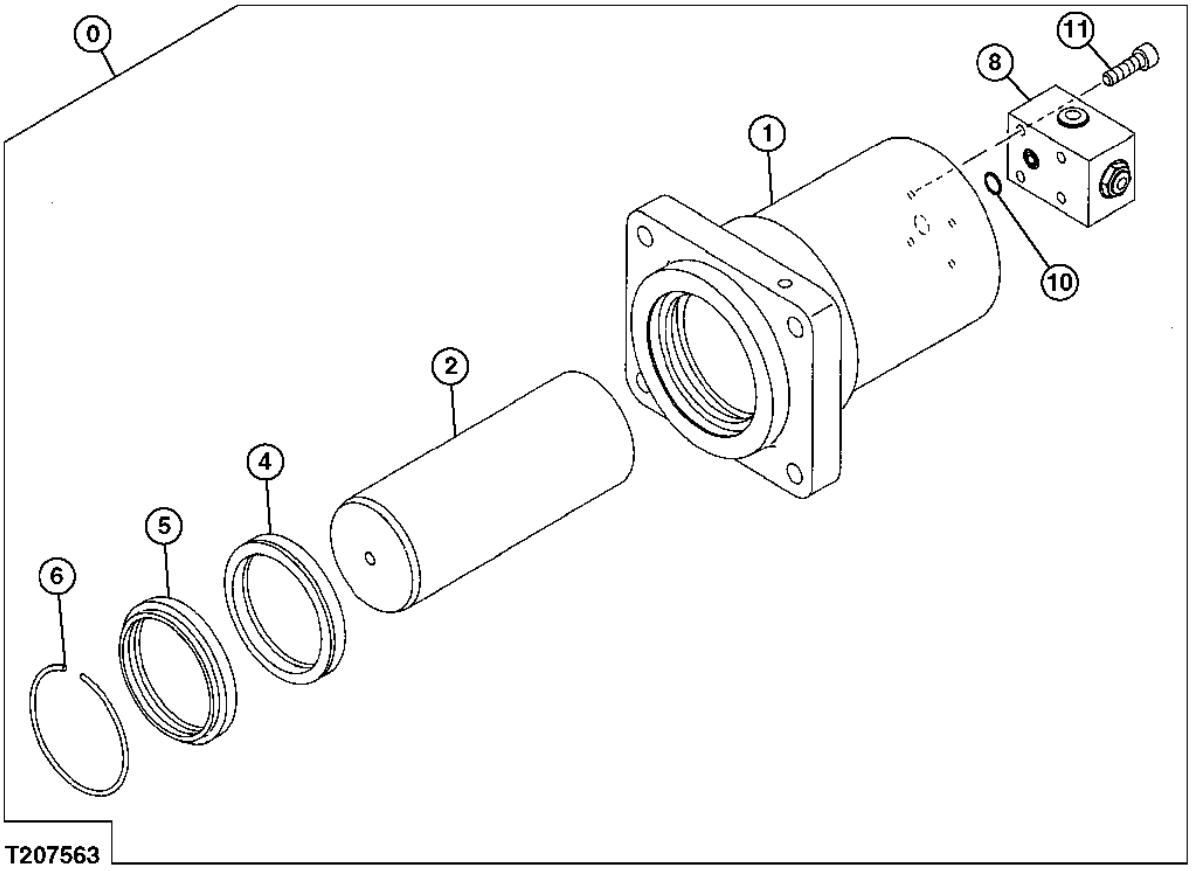

**AXLE LOCK CYLINDER**

| KEY | PART NO. | PART NAME | QTY | SERIAL NO. | REMARKS |
|---|---|---|---|---|---|
| 0 | 9208714 | CYLINDER | 1 | | |
| 1 | 2047736 | HOUSING | 1 | | |
| 2 | 3094010 | ROD | 1 | | |
| 4 | 4466499 | SEAL | 1 | | |
| 5 | 4466500 | SEAL | 1 | | |
| 6 | 4466516 | SNAP RING | 1 | | |
| 8 | 9208795 | CHECK VALVE | 1 | | |
| 10 | 4506416 | O-RING | 1 | | |
| 11 | ..... | SOCKET HEAD SCREW | 4 | | ( M340860 NOT AVAILABLE FOR SERVICE) |

**BLADE CYLINDER**

T207565 -UN-21FEB05

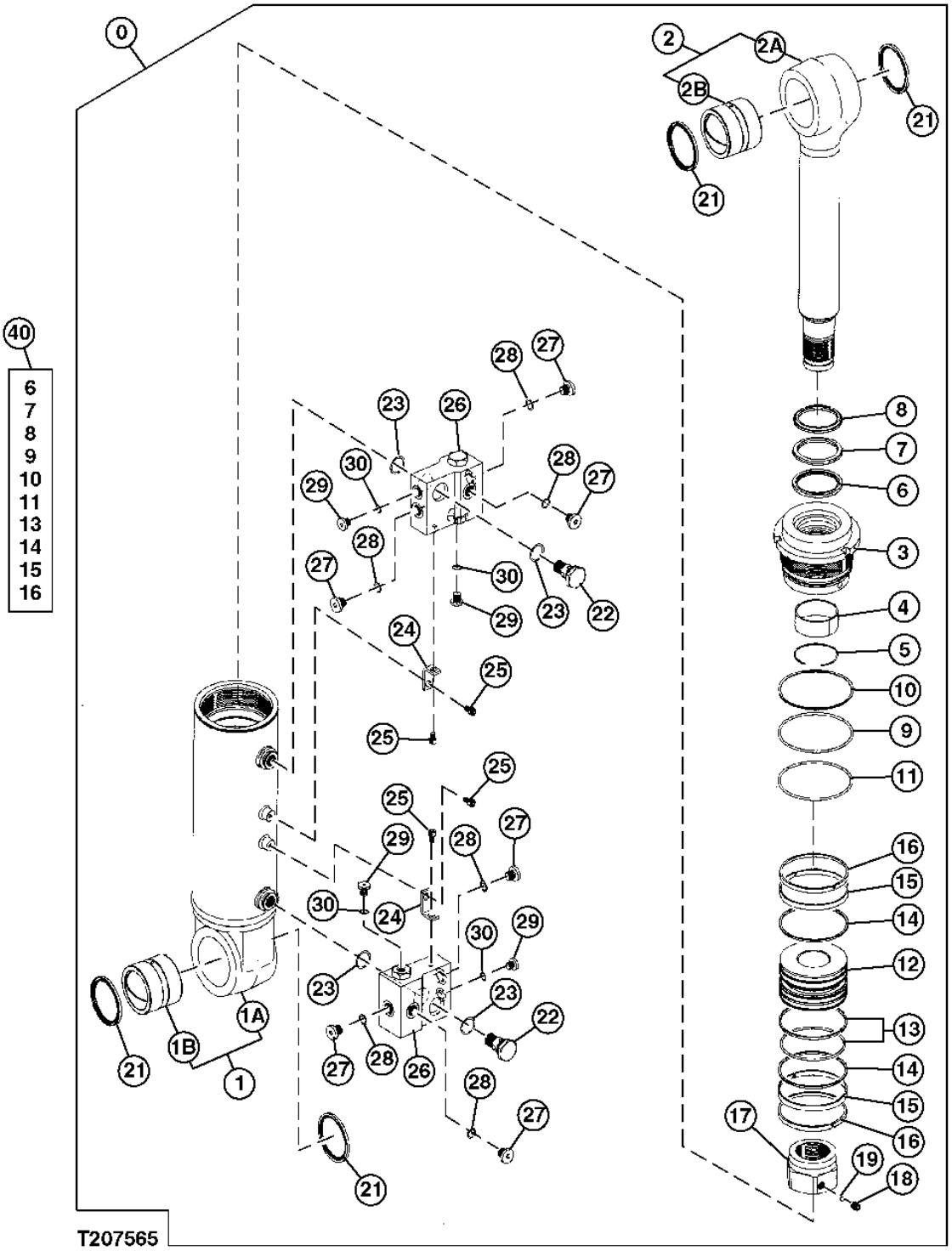

**BLADE CYLINDER**

| KEY | PART NO. | PART NAME | QTY | SERIAL NO. | REMARKS |
|---|---|---|---|---|---|
| 0 | 4486447 | CYLINDER | 1 | | |
| 1 | 0866801 | STRUCTURAL TUBING | 1 | | |
| 1A | ..... | OIL TUBE | 1 | | |
| 1B | 0866802 | BUSHING | 1 | | |
| 2 | 0866803 | ROD | 1 | | |
| 2A | ..... | ROD | 1 | | |
| 2B | 0866802 | BUSHING | 1 | | |
| 3 | 0866804 | CYLINDER HEAD | 1 | | |
| 4 | AT133645 | BUSHING | 1 | | (SUB FOR 0310304) |
| 5 | 0271304 | SNAP RING | 1 | | |
| 6 | 0408804 | RING | 1 | | (SUB FOR 0408804) |
| 7 | AT133645 | BUSHING | 1 | | (SUB FOR 0271309) |
| 8 | H158453 | SCRAPER RING | 1 | | (SUB FOR 0666806) |
| 9 | AT264342 | O-RING | 1 | | (SUB FOR A811115) |
| 10 | 0814207 | BACK-UP RING | 1 | | |
| 11 | A810120 | O-RING | 1 | | |
| 12 | 0866805 | PISTON | 1 | | |
| 13 | AT264355 | SEAL | 1 | | (SUB FOR 0258205) |
| 14 | H155196 | HYDR. CYLINDER ROD GUIDE | 2 | | (SUB FOR 0409709) |
| 15 | H155917 | SEAL | 2 | | (SUB FOR 0667206) |
| 16 | AT264365 | SEAL | 2 | | (SUB FOR 0261308) |
| 17 | 0814209 | NUT | 1 | | |
| 18 | 22M6684 | SET SCREW | 1 | | (SUB FOR 0309011) |
| 19 | T13624 | BALL | 1 | | (SUB FOR 0111707) |
| 21 | ..... | RING | 4 | | ( 0857404 NOT AVAILABLE FOR SERVICE) |
| 22 | 0826814 | PIPE PLUG | 2 | | |
| 23 | CH17886 | PACKING | 4 | | (SUB FOR 4509182) |
| 24 | 0866806 | PLATE | 2 | | |
| 25 | 0866807 | BOLT | 4 | | |
| 26 | 9220919 | CHECK VALVE | 2 | | (SUB FOR 1030928) |
| 27 | 0695008 | PLUG | 6 | | |
| 28 | CH11570 | O-RING | 6 | | (SUB FOR 4509180) |
| 29 | 0866808 | PLUG | 4 | | |
| 30 | M800650 | PACKING | 4 | | (SUB FOR 957366) |
| 40 | 4616885 | KIT | 1 | | |

**STABILIZER CYLINDER**

T207567 -UN-21FEB05

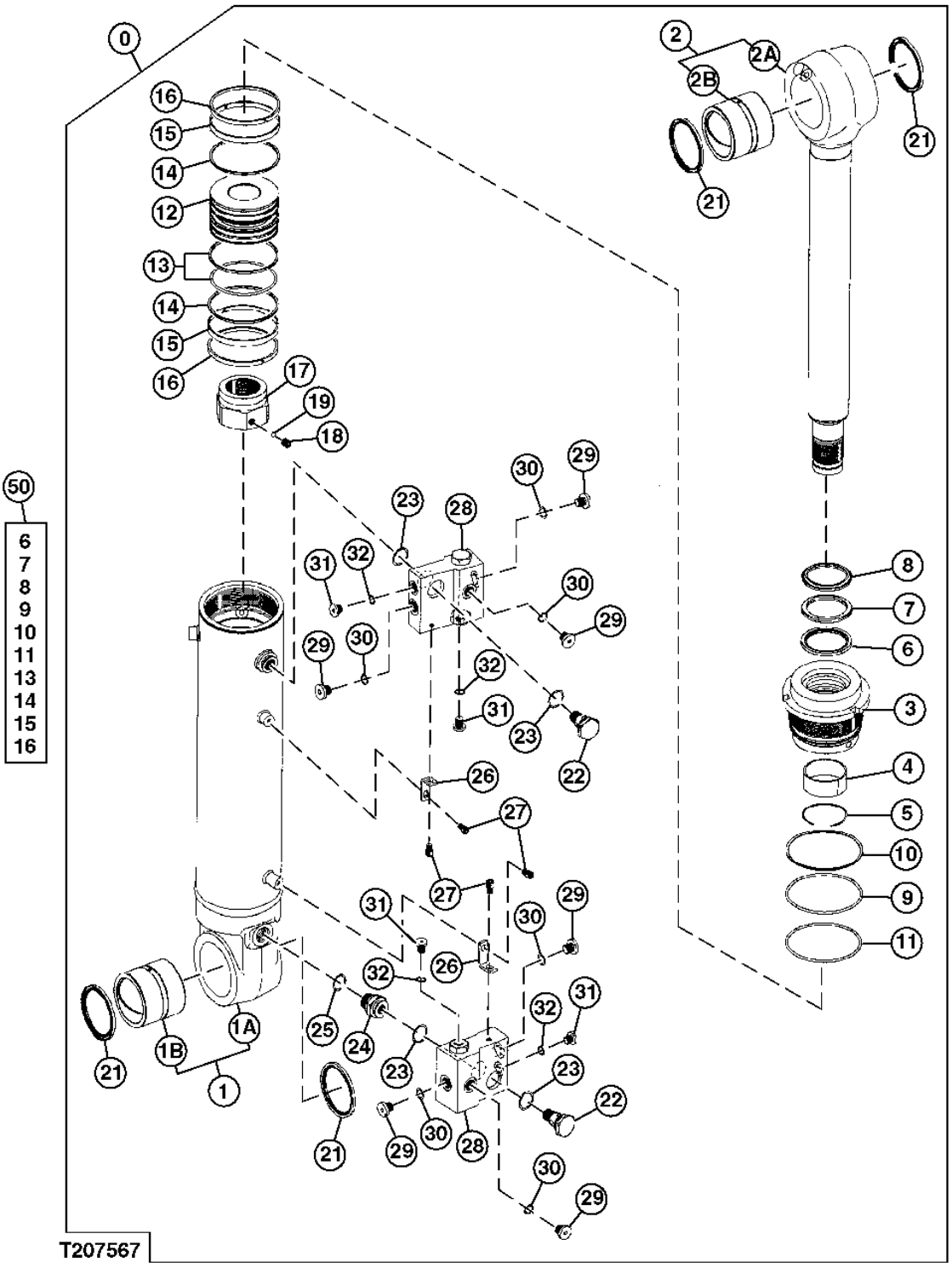

**STABILIZER CYLINDER**

| KEY | PART NO. | PART NAME | QTY | SERIAL NO. | REMARKS |
|---|---|---|---|---|---|
| 0 | 4486405 | CYLINDER | 1 | | |
| 1 | 0878001 | STRUCTURAL TUBING | 1 | | |
| 1A | ..... | TUBE | 1 | | |
| 1B | 0208326-P | BUSHING | 1 | | (SUB FOR 0208326) |
| 2 | 0878002 | ROD | 1 | | |
| 2A | ..... | ROD | 1 | | |
| 2B | 0208326 | BUSHING | 1 | | (SUB FOR 0208326) |
| 3 | 0866804 | CYLINDER HEAD | 1 | | |
| 4 | 0208326-P | BUSHING | 1 | | (SUB FOR 0310304) |
| 5 | 0271304 | SNAP RING | 1 | | |
| 6 | AT153914 | RING | 1 | | (SUB FOR 0408804) |
| 7 | AT264256 | PACKING | 1 | | (SUB FOR 0271309) |
| 8 | H158453 | SCRAPER RING | 1 | | (SUB FOR 0666806) |
| 9 | AT264342 | O-RING | 1 | | (SUB FOR A811115) |
| 10 | 0814207 | BACK-UP RING | 1 | | |
| 11 | A810120 | O-RING | 1 | | |
| 12 | 0866805 | PISTON | 1 | | |
| 13 | AT264355 | SEAL | 1 | | (SUB FOR 0258205) |
| 14 | H155916 | BACK-UP RING | 2 | | (SUB FOR 0409709) |
| 15 | H155917 | SEAL | 2 | | (SUB FOR 0667206) |
| 16 | AT264356 | WEAR RING | 2 | | (SUB FOR 0261308) |
| 17 | 0814209 | NUT | 1 | | |
| 18 | 22M6684 | SET SCREW | 1 | | (SUB FOR 0309011) |
| 19 | T13624 | BALL | 1 | | (SUB FOR 0111707) |
| 21 | 0815901 | RING | 4 | | |
| 22 | 4480022 | PLUG | 2 | | |
| 23 | CH17886 | PACKING | 4 | | (SUB FOR 4509182) |
| 24 | 0863404 | ADAPTER | 1 | | |
| 25 | AT318035 | O-RING | 1 | | (SUB FOR 4506424) |
| 26 | 0866806 | PLATE | 2 | | |
| 27 | 0866807 | BOLT | 4 | | |
| 28 | 9220919 | CHECK VALVE | 2 | | (SUB FOR 1030928) |
| 29 | 0695008 | PLUG | 6 | | |
| 30 | CH11570 | O-RING | 6 | | (SUB FOR 4509180) |
| 31 | 0866808 | PLUG | 4 | | |
| 32 | M800650 | PACKING | 4 | | (SUB FOR 957366) |
| 50 | 4616885 | KIT | 1 | | |

**ENGINE**

T162023 -UN-12DEC02

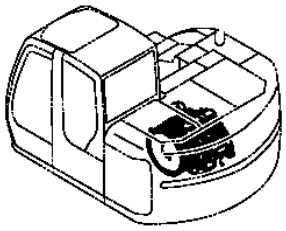

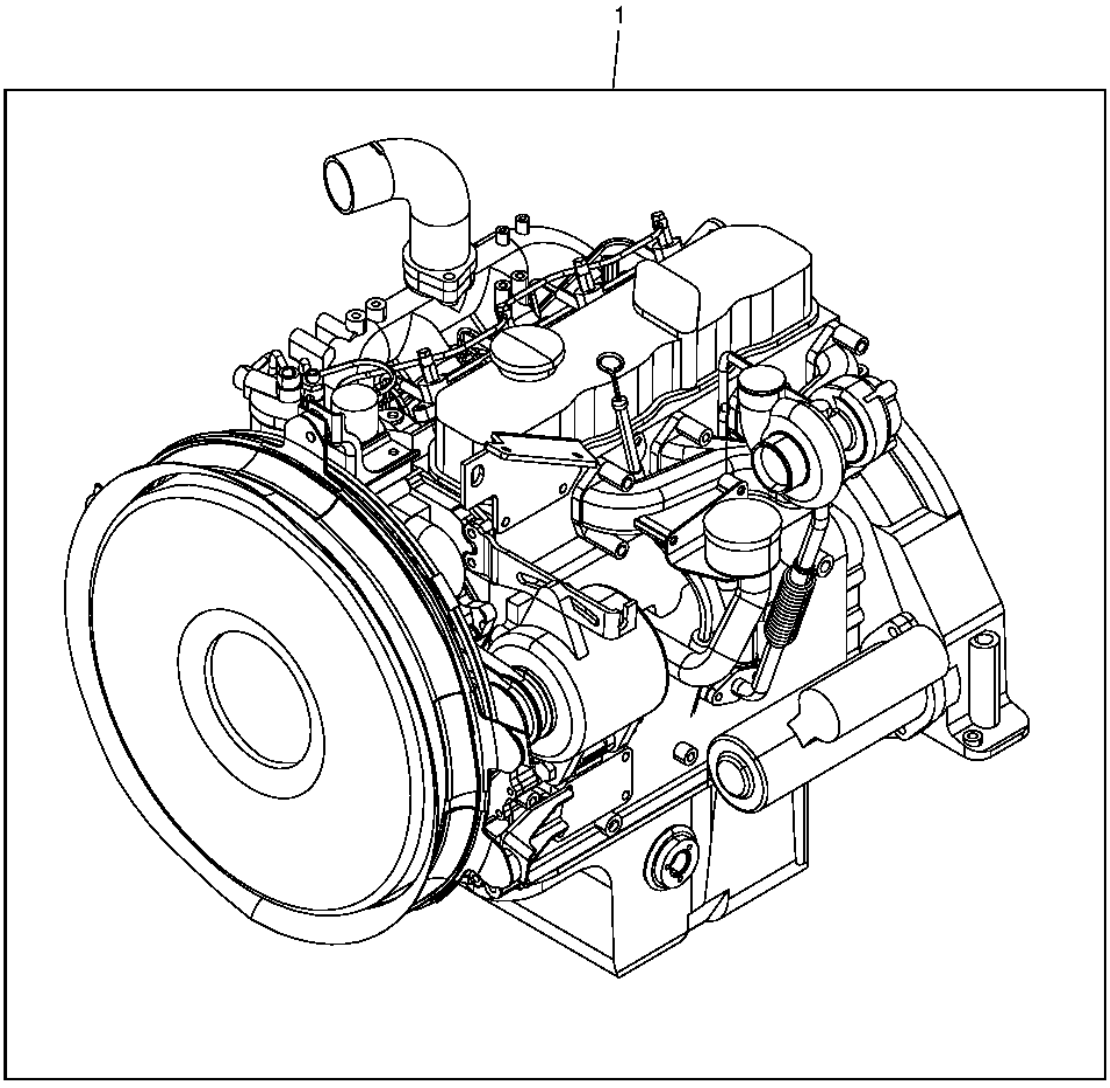


**T162023**

**ENGINE**

| KEY | PART NO. | PART NAME | QTY | ENGINE SERIAL NO. | REMARKS |
|---|---|---|---|---|---|
| 1 | 4BG1TCG | DIESEL ENGINE | 1 | | |

**CRANKSHAFT, MAIN BEARINGS, FLYWHEEL, AND PISTONS**

T208903 -UN-02MAR05

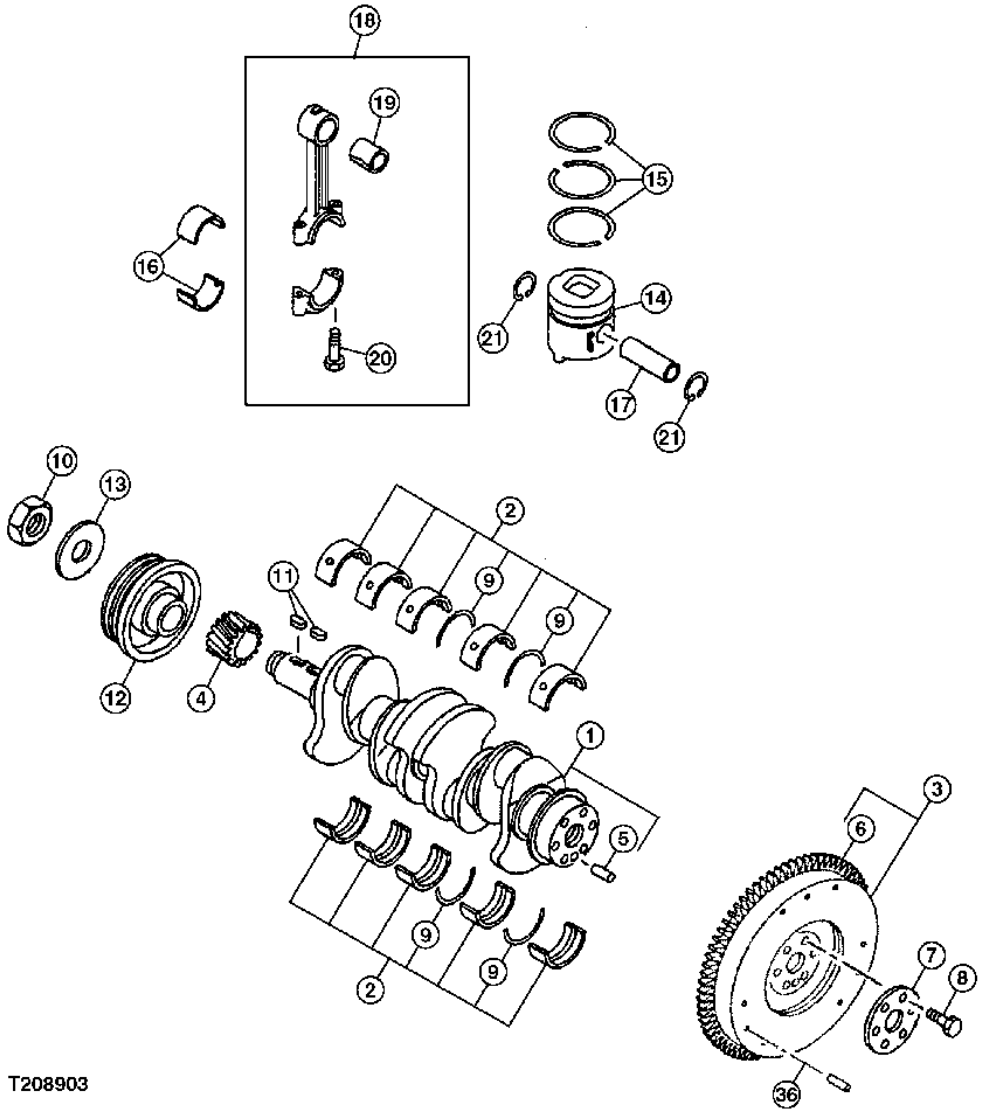

**CRANKSHAFT, MAIN BEARINGS, FLYWHEEL, AND PISTONS**

| KEY | PART NO. | PART NAME | QTY | SERIAL NO. | REMARKS |
|---|---|---|---|---|---|
| 1 | 8943398951 | CRANKSHAFT | 1 | | |
| 2 | 8970716610 | BEARING | 1 | | |
| 3 | 8973558532 | FLYWHEEL | 1 | | |
| 4 | 8971379102 | GEAR | 1 | | (SUB FOR 8971379101) |
| 5 | 9081612200 | PIN FASTENER | 1 | | |
| 6 | 8943931320 | GEAR | 1 | | |
| 7 | 5123360030 | MOUNTING PARTS | 1 | | |
| 8 | 5123340030 | BOLT | 6 | | |
| 9 | 8970713580 | WASHER | 2 | | |
| 10 | 5123780020 | NUT | 1 | | |
| 11 | 8941075970 | SHAFT KEY | 2 | | |
| 12 | 8971720400 | PULLEY | 1 | | |
| 13 | 5095030240 | WASHER | 1 | | |
| 14 | 8973585740 | PISTON | 4 | | GRADE=AX |
| | 8973585750 | PISTON | 4 | | GRADE=CX |
| 15 | 1121211460 | PISTON RING KIT | 4 | | |
| 16 | 8970110310 | KIT | 4 | | (SUB FOR 9122716080) |
| 17 | 1122110332 | PIN FASTENER | 4 | | |
| 18 | 1122301291 | CONNECTING ROD | 4 | | |
| 19 | 1122510320 | BUSHING | 4 | | |
| 20 | 1122350271 | BOLT | 8 | | |
| 21 | 8941075751 | RING | 8 | | |
| 36 | ..... | INSERT | AR | | |

**ROCKER ARM COVER**

T162729 -UN-11JAN03

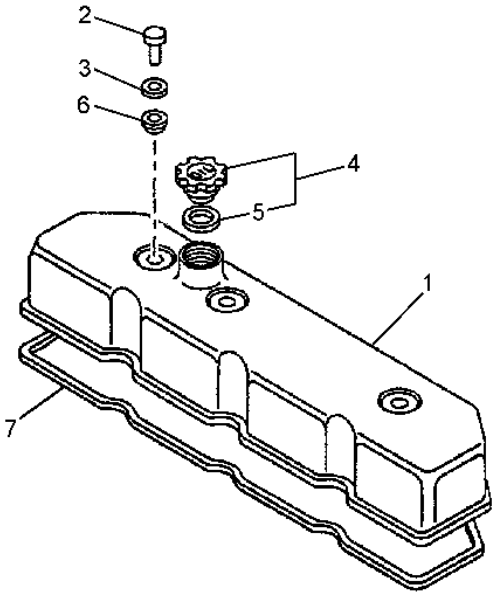


T162729

**ROCKER ARM COVER**

| KEY | PART NO. | PART NAME | QTY | SERIAL NO. | REMARKS |
|---|---|---|---|---|---|
| 1 | 8972237600 | COVER | 1 | | |
| 2 | 9111750120 | NUT | 3 | | |
| 3 | 9111791050 | WASHER | 3 | | |
| 4 | 8943997230 | FILLER CAP | 1 | | |
| 5 | 8943996890 | O-RING | 1 | | |
| 6 | 1096390320 | PACKING | 3 | | (SUB FOR 9111790300) |
| 7 | 8973262510 | PACKING | 1 | | (SUB FOR 5111730160) |

**CYLINDER BLOCK**

T208972 -UN-02MAR05

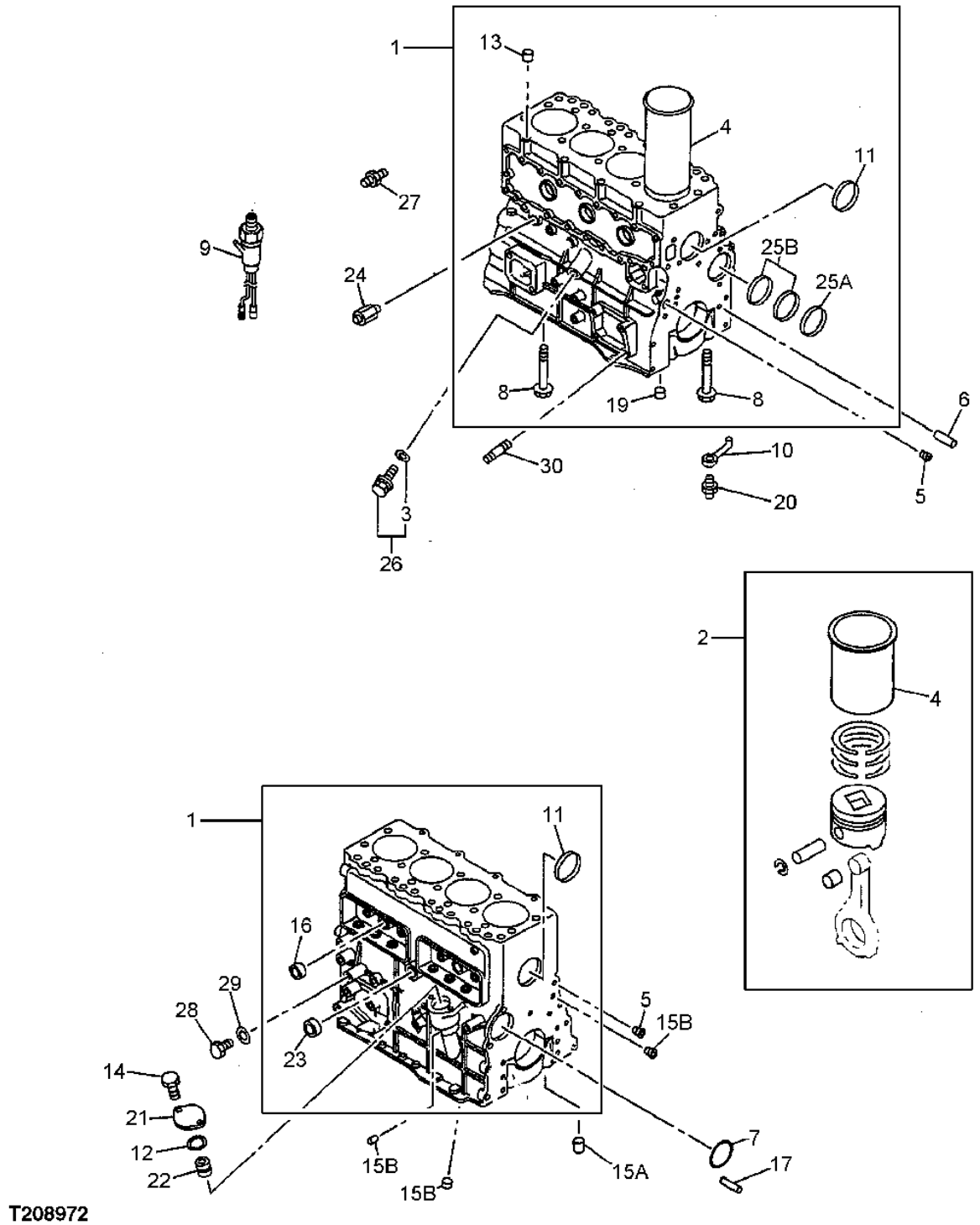

**CYLINDER BLOCK**

| KEY | PART NO. | PART NAME | QTY | SERIAL NO. | REMARKS |
|---|---|---|---|---|---|
| 1 | 8971239542 | MANIFOLD | 1 | | |
| 2 | 5878146610 | CYLINDER AND PISTON KIT | 4 | | (SUB FOR 5878141000) GRADE=1 |
| | 5878146620 | CYLINDER AND PISTON KIT | 4 | | (SUB FOR 5878141010) GRADE=2 |
| | 5878146630 | CYLINDER AND PISTON KIT | 4 | | (SUB FOR 5878141020) GRADE=3 |
| | 5878144640 | CYLINDER AND PISTON KIT | 4 | | (SUB FOR 5878141030) GRADE=4 |
| 3 | 5096230350 | GASKET | 1 | | |
| 4 | 1112613820 | CYLINDER LINER | 4 | | OD GRADE=1, ID GRADE=AX |
| | 1112613830 | CYLINDER LINER | 4 | | OD GRADE=1, ID GRADE=CX |
| | 1112613840 | CYLINDER LINER | 4 | | OD GRADE=2, ID GRADE=AX |
| | 1112613850 | CYLINDER LINER | 4 | | OD GRADE=2, ID GRADE=CX |
| | 1112613860 | CYLINDER LINER | 4 | | OD GRADE=3, ID GRADE=AX |
| | 1112613870 | CYLINDER LINER | 4 | | OD GRADE=3, ID GRADE=CX |
| | 1112613880 | CYLINDER LINER | 4 | | OD GRADE=4, ID GRADE=AX |
| | 1112613890 | CYLINDER LINER | 4 | | OD GRADE=4, ID GRADE=CX |
| 5 | 1096050681 | PIPE PLUG | 2 | | |
| 6 | 1097400780 | PIN FASTENER | 1 | | |
| 7 | 8943444620 | PACKING | 1 | | |
| 8 | 1090004692 | BOLT | 10 | | (SUB FOR 1090004691) |
| 9 | 1824101990 | OIL PRESSURE WARNING SWITCH | 1 | | |
| 10 | 1133421320 | JET | 4 | | |
| 11 | 1096000520 | BEARING CUP | 2 | | |
| 12 | 1096234650 | GASKET | 1 | | |
| 13 | 8941480790 | DOWEL PIN | 2 | | |
| 14 | 0280808200 | BOLT | 2 | | (SUB FOR 0286808200) M8 X 20 |
| 15A | 5096050050 | PIPE PLUG | 1 | | (SUB FOR 9992055170) |
| 15B | 5096050180 | PLUG | 7 | | |
| 16 | 1096000121 | BEARING CUP | 2 | | |
| 17 | 9081510180 | DOWEL PIN | 2 | | |
| 19 | 5112570011 | DOWEL PIN | 1 | | |
| 20 | 1131610120 | FLOW CONTROL HYD. VALVE | 4 | | |
| 21 | 1112191291 | COVER | 1 | | |
| 22 | 5112240040 | BUSHING | 1 | | |
| 23 | 5112190140 | PACKING | 1 | | |
| 24 | 1096800250 | HAND OPERATED VALVE | 1 | | |
| 25A | 9116910480 | KIT | 1 | | |
| 25B | 9116930350 | BEARING | 2 | | |
| 26 | 8970233390 | VALVE | 1 | | |
| 27 | 5096600330 | THREADED NIPPLE | 1 | | |
| 28 | 9992023140 | PIPE PLUG | 1 | | |
| 29 | 9095720140 | PACKING | 1 | | |
| 30 | 1093000130 | STUD | 1 | | (SUB FOR 1093000550) |

**CYLINDER BLOCK SIDE COVERS**

T208973 -UN-02MAR05

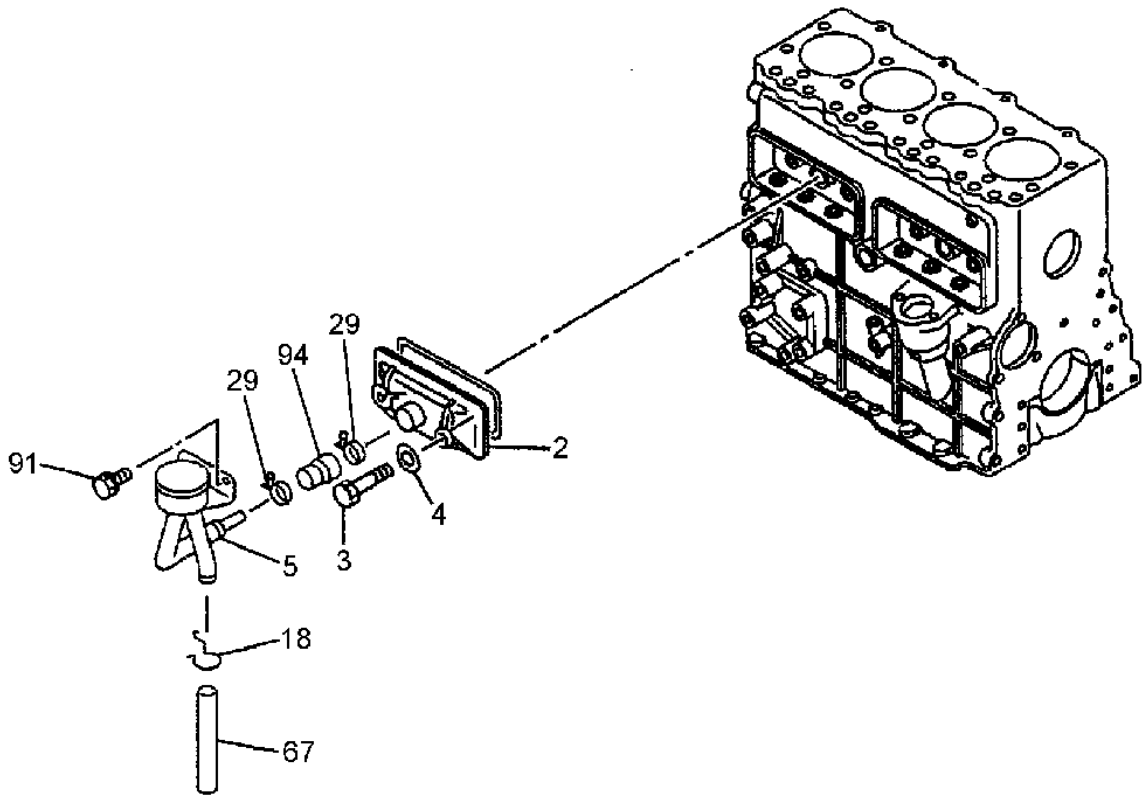


T208973

**CYLINDER BLOCK SIDE COVERS**

| KEY | PART NO. | PART NAME | QTY | SERIAL NO. | REMARKS |
|---|---|---|---|---|---|
| 2 | 1112902541 | COVER | 1 | | |
| 3 | 8943675301 | BOLT | 2 | | M8 X 56, FLANGE |
| | 8944299951 | BOLT | 2 | | M8 X 84 |
| 4 | 9095720080 | GASKET | 4 | | |
| 5 | 8972533510 | BREATHER | 1 | | |
| 6 | ..... | GASKET | 2 | | ( 8943673681 NO LONGER AVAILABLE) |
| 18 | 5097040331 | CLIP | 1 | | |
| 29 | 9099155121 | CLIP | 1 | | |
| | 1097040660 | CLIP | 1 | | |
| 67 | 8941376820 | HOSE | 1 | | |
| 91 | 0280808120 | BOLT | 2 | | M8 X 12 |
| 94 | 8972242050 | HOSE | 1 | | |

**ENGINE OIL PUMP**

T162964 -UN-11JAN03

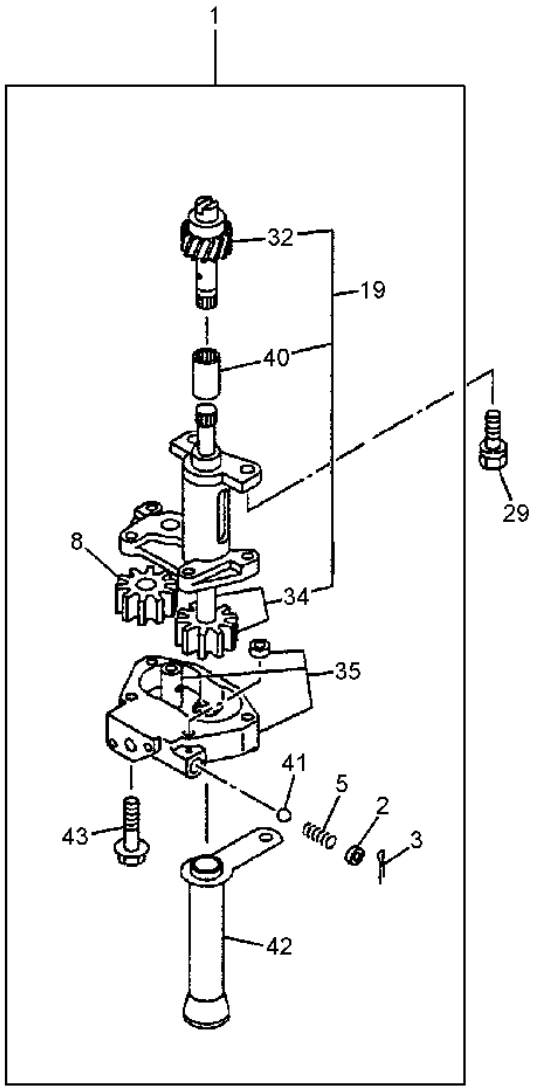


T162964

**ENGINE OIL PUMP**

| KEY | PART NO. | PART NAME | QTY | SERIAL NO. | REMARKS |
|---|---|---|---|---|---|
| 1 | 8970653840 | HYDRAULIC PUMP | 1 | | |
| 2 | 5131650040 | VALVE SEAT | 1 | | |
| 3 | 9081140300 | PIN FASTENER | 1 | | |
| 5 | 5095800980 | SPRING | 1 | | |
| 8 | 8941635950 | GEAR | 1 | | |
| 19 | 5878120080 | GEAR | 1 | | |
| 29 | 0280210250 | BOLT | 2 | | |
| 32 | 1131280180 | PINION | 1 | | |
| 34 | 8941635940 | SHAFT | 1 | | |
| 35 | 8941635970 | COVER | 1 | | |
| 40 | 1131230160 | COUPLING | 1 | | |
| 41 | 5098430030 | BALL | 1 | | |
| 42 | 1131401160 | STRAINER | 1 | | |
| 43 | 8943445910 | BOLT | 4 | | |

**ENGINE OIL FILTER AND HOSES**

T206723 -UN-02MAR05

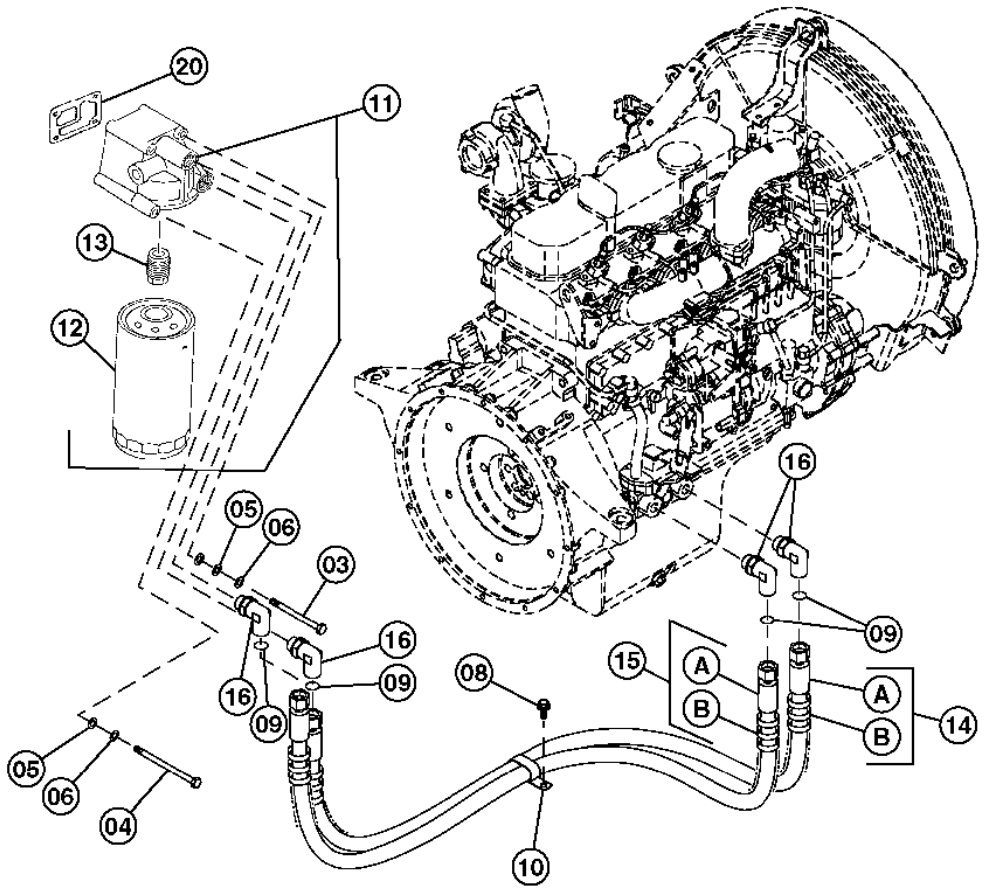


T206723

**ENGINE OIL FILTER AND HOSES**

| KEY | PART NO. | PART NAME | QTY | SERIAL NO. | REMARKS |
|---|---|---|---|---|---|
| 3 | 19M8343 | CAP SCREW | 2 | | (SUB FOR J901004) |
| 4 | 19M8003 | CAP SCREW | 2 | | (SUB FOR J901010) |
| 5 | 24M7026 | WASHER | 4 | | (SUB FOR A590110) |
| 6 | 12M7066 | LOCK WASHER | 4 | | (SUB FOR A590910) |
| 8 | ..... | BOLT | 1 | | ( J271020 NOT AVAILABLE FOR SERVICE) |
| | 19M7938 | CAP SCREW | 1 | | (SUB FOR J901020) |
| | 24M7346 | WASHER | 1 | | (SUB FOR J222010) |
| 9 | 4430912 | O-RING | 4 | | |
| 10 | 4411911 | HOSE CLAMP | 1 | | |
| 11 | 8973243860 | FILTER | 1 | | |
| 12 | AT308576 | FILTER ELEMENT | 1 | | (SUB FOR 1132402321) |
| 13 | 8972221250 | THREADED NIPPLE | 1 | | |
| 14 | ..... | HOSE | 1 | | ( 9212059 IS NOT AVAILABLE FOR SERVICE) |
| 14A | 4437250 | HYDRAULIC HOSE - FABRICATE | 1 | | |
| 14B | 4446406 | HOSE GUARD | 1 | | |
| 15 | ..... | HOSE | 1 | | ( 9212060 IS NOT AVAILABLE FOR SERVICE) |
| 15A | 4470863 | HYDRAULIC HOSE - FABRICATE | 1 | | |
| 15B | 4446406 | HOSE GUARD | 1 | | |
| 16 | 4473870 | FITTING | 4 | | |
| | 4153103 | O-RING | 1 | | |
| 20 | 8943706700 | GASKET | 1 | | |

**ENGINE OIL AND VACUUM LINES**

T208905 -UN-02MAR05

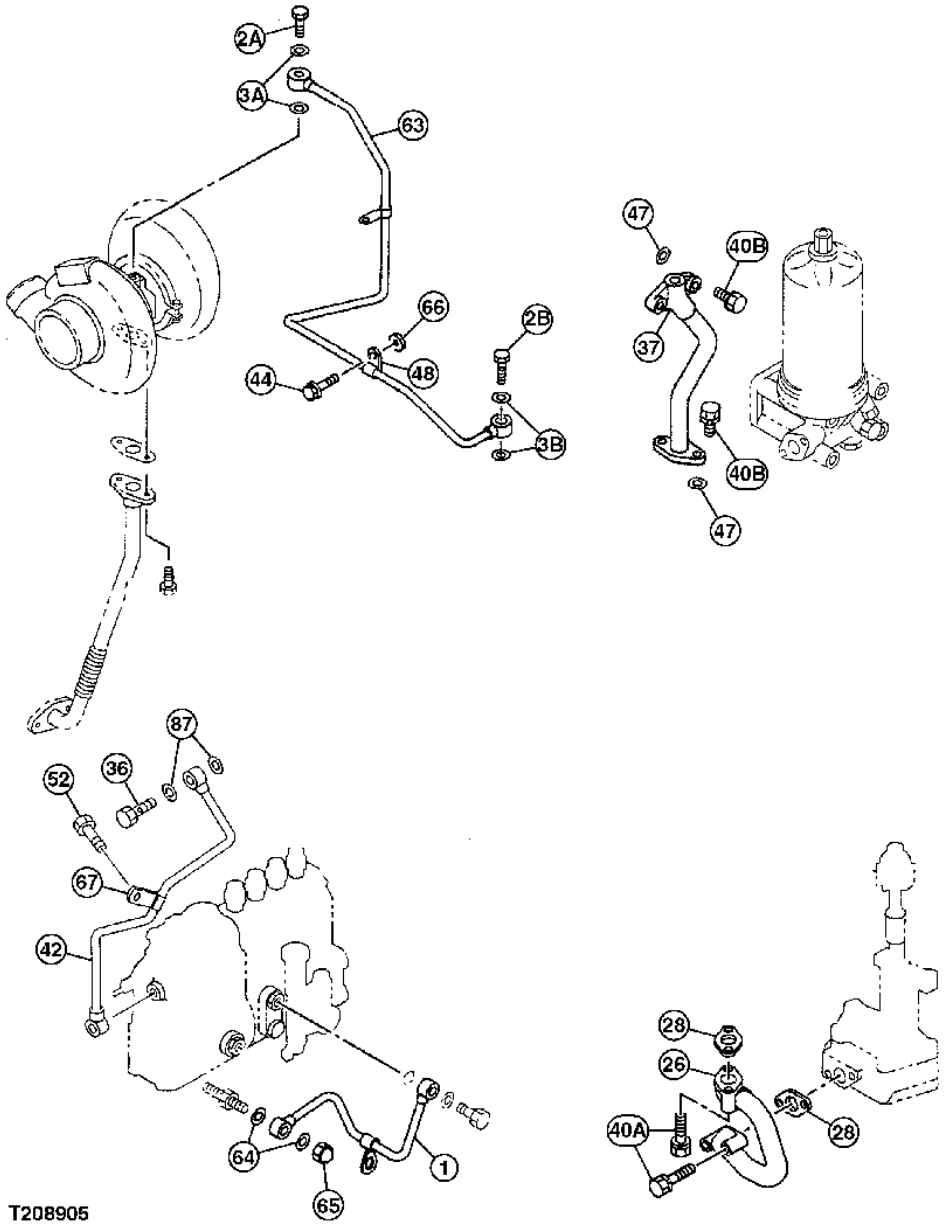

**ENGINE OIL AND VACUUM LINES**

| KEY | PART NO. | PART NAME | QTY | SERIAL NO. | REMARKS |
|---|---|---|---|---|---|
| 1 | 8972523211 | PIPE | 1 | | |
| 2A | 9099062051 | BOLT | 1 | | |
| 2B | 1096751600 | BOLT | 1 | | (SUB FOR 1096750810) |
| 3A | 9095714100 | GASKET | 2 | | |
| 3B | 1096300840 | GASKET | 2 | | |
| 26 | 8941310603 | PIPE | 1 | | |
| 28 | ..... | GASKET | 2 | | ( 9099211880 NO LONGER AVAILABLE) |
| 36 | 1096750770 | BOLT | 1 | | |
| 37 | 8972221220 | PIPE | 1 | | |
| 40A | 0500408450 | BOLT | 4 | | M8 X 45 MM (WITH LOCK WASHER) |
| 40B | 0286808350 | BOLT | 1 | | M8 X 35 MM |
| | 19M7866 | SCREW | 3 | | (SUB FOR 0280808200) M8 X 20 MM |
| 42 | 8972543692 | PIPE | 1 | | |
| 44 | 0280808120 | BOLT | 1 | | M8 X 12 MM |
| | 0280810300 | BOLT | 1 | | M10 X 30 MM |
| 47 | 8970265900 | GASKET | 1 | | |
| | 1096234620 | GASKET | 1 | | |
| 48 | 1097006952 | CLIP | 1 | | |
| 52 | 0280808120 | BOLT | 1 | | |
| 63 | 8972221201 | PIPE | 1 | | |
| 64 | 9095720100 | GASKET | 2 | | |
| 65 | 9098440220 | NUT | 1 | | |
| 66 | 5123790010 | SPACER | 1 | | |
| 67 | 1097004440 | CLIP | 2 | | |
| 87 | 9095714100 | GASKET | 2 | | |

**ENGINE OIL PAN AND DIPSTICK**

T208906 -UN-02MAR05

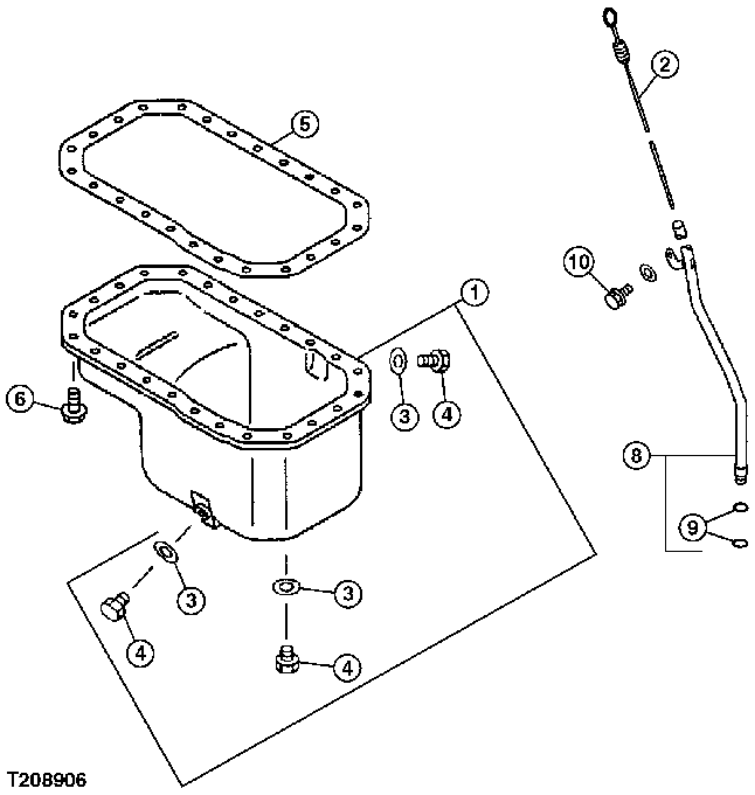

**ENGINE OIL PAN AND DIPSTICK**

| KEY | PART NO. | PART NAME | QTY | SERIAL NO. | REMARKS |
|---|---|---|---|---|---|
| 1 | 8971764140 | OIL PAN | 1 | | |
| 2 | 8972321350 | DIPSTICK | 1 | | LENGTH=473MM |
| 3 | 1096231830 | GASKET | 1 | | (SUB FOR 1096230570) |
| 4 | 9096620120 | PIPE PLUG | 1 | | |
| 5 | 8973524030 | GASKET | 1 | | |
| 6 | 0500408180 | BOLT | 24 | | M8 X 18 |
| 7 | 8973105620 | SENSOR | 1 | | ENGINE OIL LEVEL |
| 8 | 8970209320 | TUBE | 1 | | |
| 9 | 5096230020 | GASKET | 2 | | |
| 10 | 0280808120 | BOLT | 1 | | M8 X 12 |

**ENGINE CYLINDER HEAD**

T162731 -UN-11JAN03

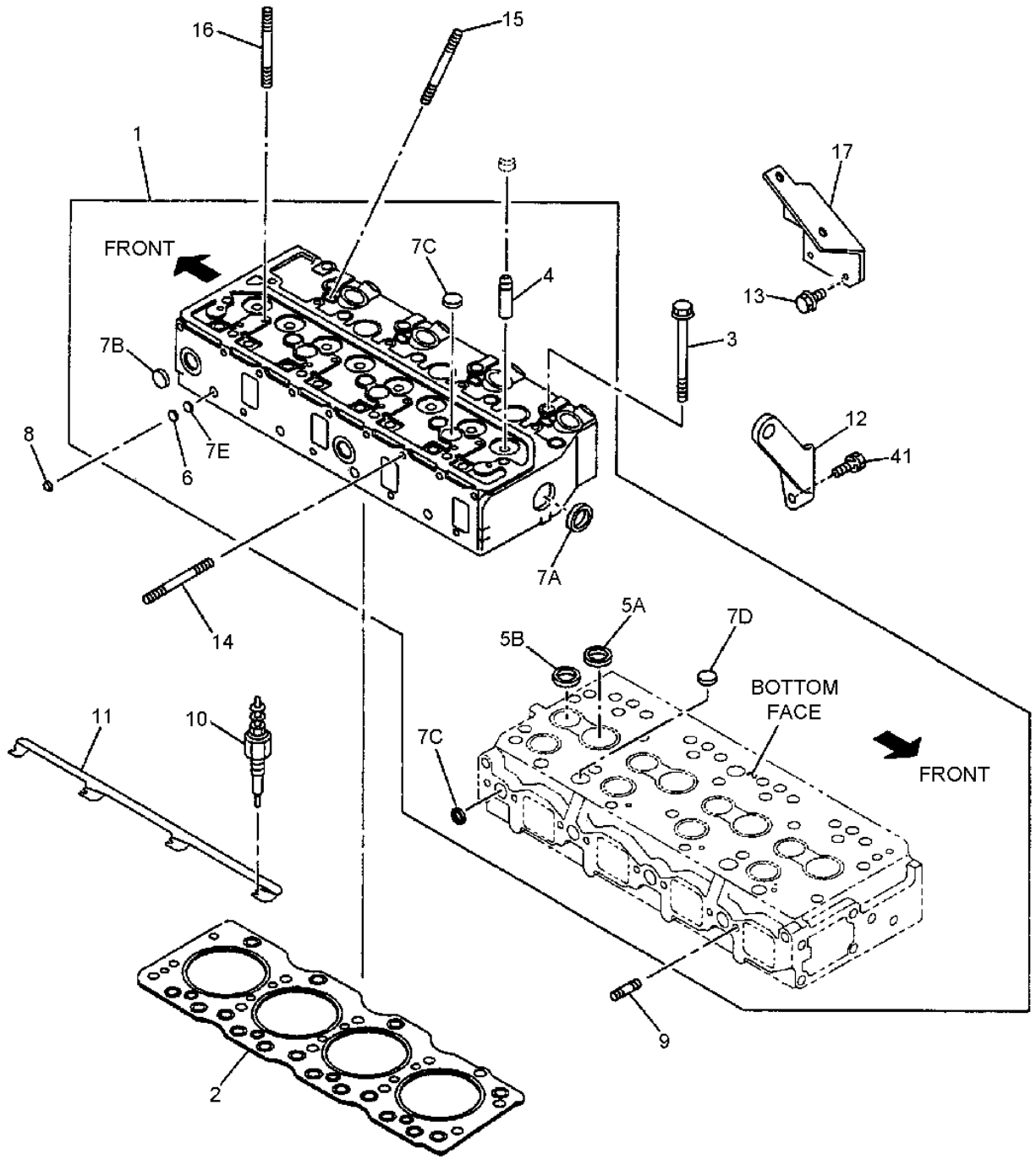


T162731

**ENGINE CYLINDER HEAD**

| KEY | PART NO. | PART NAME | QTY | SERIAL NO. | REMARKS |
|---|---|---|---|---|---|
| 1 | 8972221090 | CYLINDER HEAD | 1 | | |
| 2 | 8972221171 | ENGINE CYLINDER HEAD GASKET | 1 | | (SUB FOR 8972221170) |
| 3 | 1090701001 | BOLT | 4 | | M12 X 100 |
| | 1090701011 | BOLT | 14 | | (SUB FOR 1090701010) M12 X 113 |
| 4 | 1117210130 | GUIDE | 8 | | |
| 5A | 8970376860 | VALVE SEAT | 4 | | OD=47 (INLET) |
| 5B | 5117110280 | INSERT | 4 | | OD=39 (EXHAUST) |
| 6 | 9096600340 | PLATE | 4 | | |
| 7A | 1096000580 | BEARING CUP | 1 | | |
| 7B | 1096000121 | BEARING CUP | 2 | | (SUB FOR AT254809) |
| 7C | 1096000160 | BEARING CUP | 7 | | |
| 7D | 9111291280 | BEARING CUP | 2 | | |
| 7E | 5096000130 | BEARING CUP | 4 | | (SUB FOR AT254823) |
| 8 | 9111296010 | BEARING CUP | 4 | | |
| 9 | 9041108250 | STUD | 4 | | |
| 10 | 1825130451 | PLUG | 4 | | |
| 11 | 5197320022 | ELECTRICAL CONNECTOR ASSY | 1 | | |
| 12 | 9117778050 | HANGER | 1 | | |
| 13 | 4447335 | BOLT | 2 | | (SUB FOR AT196259, AT259931, 0500410200) |
| 14 | 8941569390 | STUD | 2 | | M8 X 75 L=87 |
| | 8941569400 | STUD | 2 | | M8 X 60 L=72 |
| 15 | 1093000180 | STUD | 8 | | |
| 16 | 5093000650 | STUD | 3 | | (SUB FOR AT254819) |
| 17 | 8971315880 | HANGER | 1 | | |
| 41 | 4447335 | BOLT | 2 | | (SUB FOR AT196259, AT259931, 0500410200) |

**ENGINE CAMSHAFT AND VALVES**

T162744 -UN-11JAN03

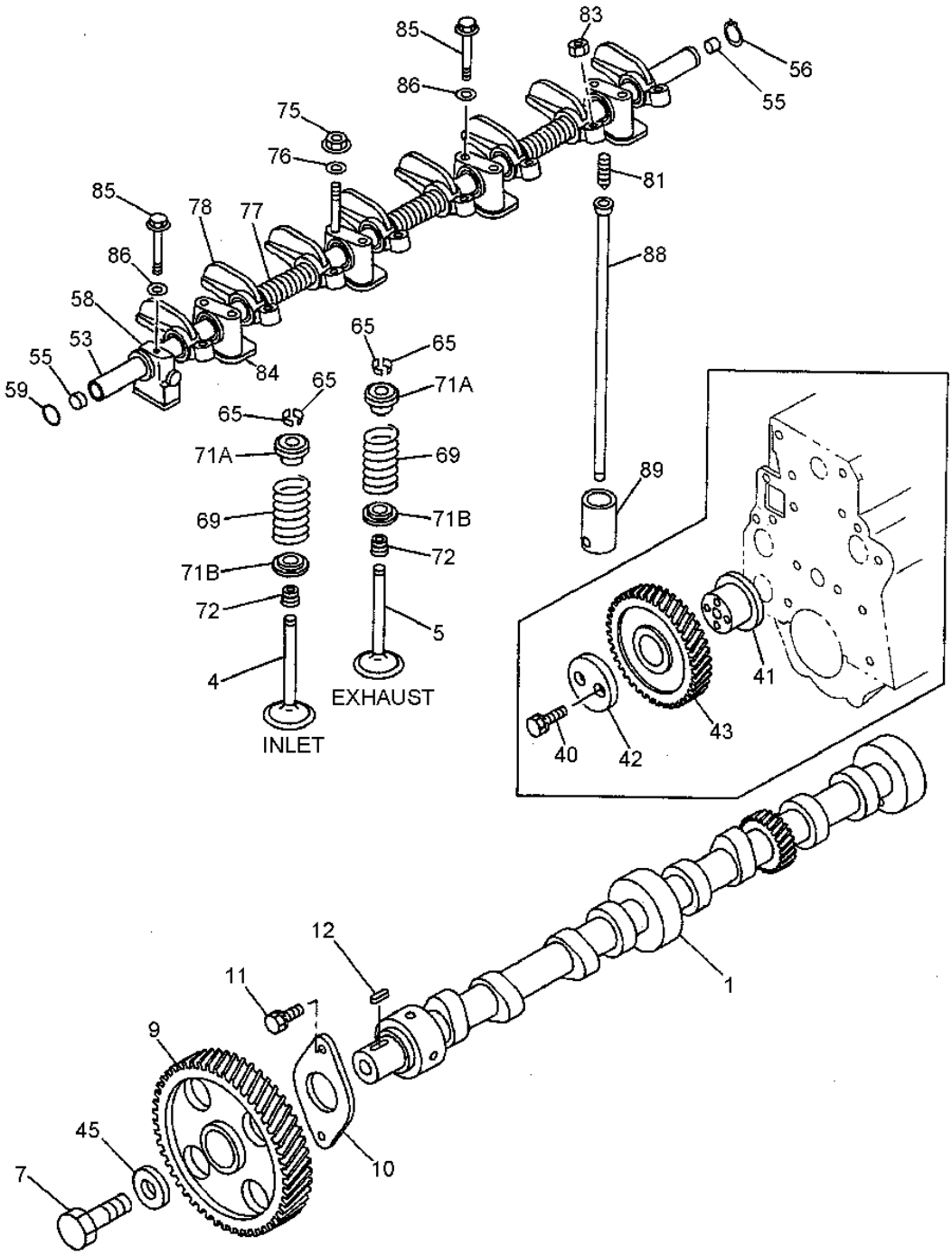


T162744

**ENGINE CAMSHAFT AND VALVES**

| KEY | PART NO. | PART NAME | QTY | SERIAL NO. | REMARKS |
|---|---|---|---|---|---|
| 1 | 8970145731 | CAMSHAFT | 1 | | (SUB FOR 8944094120) |
| 4 | 1125511650 | INTAKE VALVE | 4 | | |
| 5 | 1125521110 | EXHAUST VALVE | 4 | | |
| 7 | 5090002360 | BOLT | 1 | | |
| 9 | 1125220162 | GEAR | 1 | | |
| 10 | 9116810150 | PLATE | 1 | | |
| 11 | 0500408250 | BOLT | 2 | | |
| 12 | 9080107200 | SHAFT KEY | 1 | | |
| 40 | 5090300381 | BOLT | 2 | | |
| 41 | 8971012810 | SHAFT | 1 | | (SUB FOR 9125310300) |
| 42 | 5125350011 | BUSHING | 1 | | |
| 43 | 8941339373 | GEAR | 1 | | |
| 45 | 9098518503 | WASHER | 1 | | |
| 53 | 8972222450 | SHAFT | 1 | | |
| 55 | 9126260050 | PLUG | 2 | | |
| 56 | 9091800190 | RING | 1 | | |
| 58 | 5126280120 | BRACKET | 1 | | |
| 59 | 5096230600 | GASKET | 1 | | |
| 65 | 5125650060 | BUSHING | 12 | | |
| 69 | 1125610991 | SPRING | 8 | | (SUB FOR 1125610990) |
| 71A | 8941145790 | VALVE SEAT | 8 | | UPPER |
| 71B | 5125630010 | VALVE SEAT | 8 | | LOWER |
| 72 | 8971201670 | SEAL | 8 | | |
| 75 | 1094001160 | NUT | 3 | | |
| 76 | 5095000120 | WASHER | 3 | | |
| 77 | 1095803350 | SPRING | 3 | | |
| 78 | 1126112490 | ROCKER ARM | 8 | | |
| 81 | 9126160420 | SCREW | 8 | | |
| 83 | 9091115080 | NUT | 8 | | |
| 84 | 9126281050 | BRACKET | 4 | | |
| 85 | 1090005670 | BOLT | 6 | | |
| 86 | 5095000120 | WASHER | 6 | | |
| 88 | 1125750360 | PUSH ROD | 8 | | |
| 89 | 5125710033 | TAPPET | 8 | | (SUB FOR 5125710032) |

**ENGINE EXHAUST MANIFOLD**

T162784 -UN-11JAN03

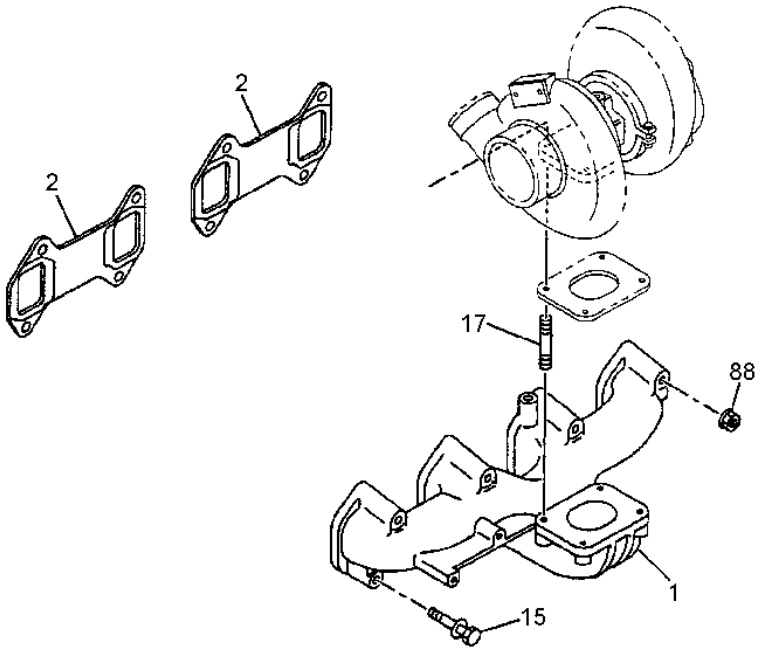


T162784

**ENGINE EXHAUST MANIFOLD**

| KEY | PART NO. | PART NAME | QTY | SERIAL NO. | REMARKS |
|---|---|---|---|---|---|
| 1 | 8943660210 | EXHAUST MANIFOLD | 1 | | |
| 2 | ..... | GASKET | 2 | | ( 8944046100 IS NOT AVAILABLE FOR SERVICE) |
| 15 | 8943185540 | BOLT | 2 | | M8 X 63 |
| | 8943185550 | BOLT | 2 | | M8 X 75 |
| 17 | 8973780610 | STUD | 4 | | |
| 88 | 14M7298 | FLANGE NUT | 4 | | M8 |

**FUEL INJECTION PUMP**

T208907 -UN-02MAR05

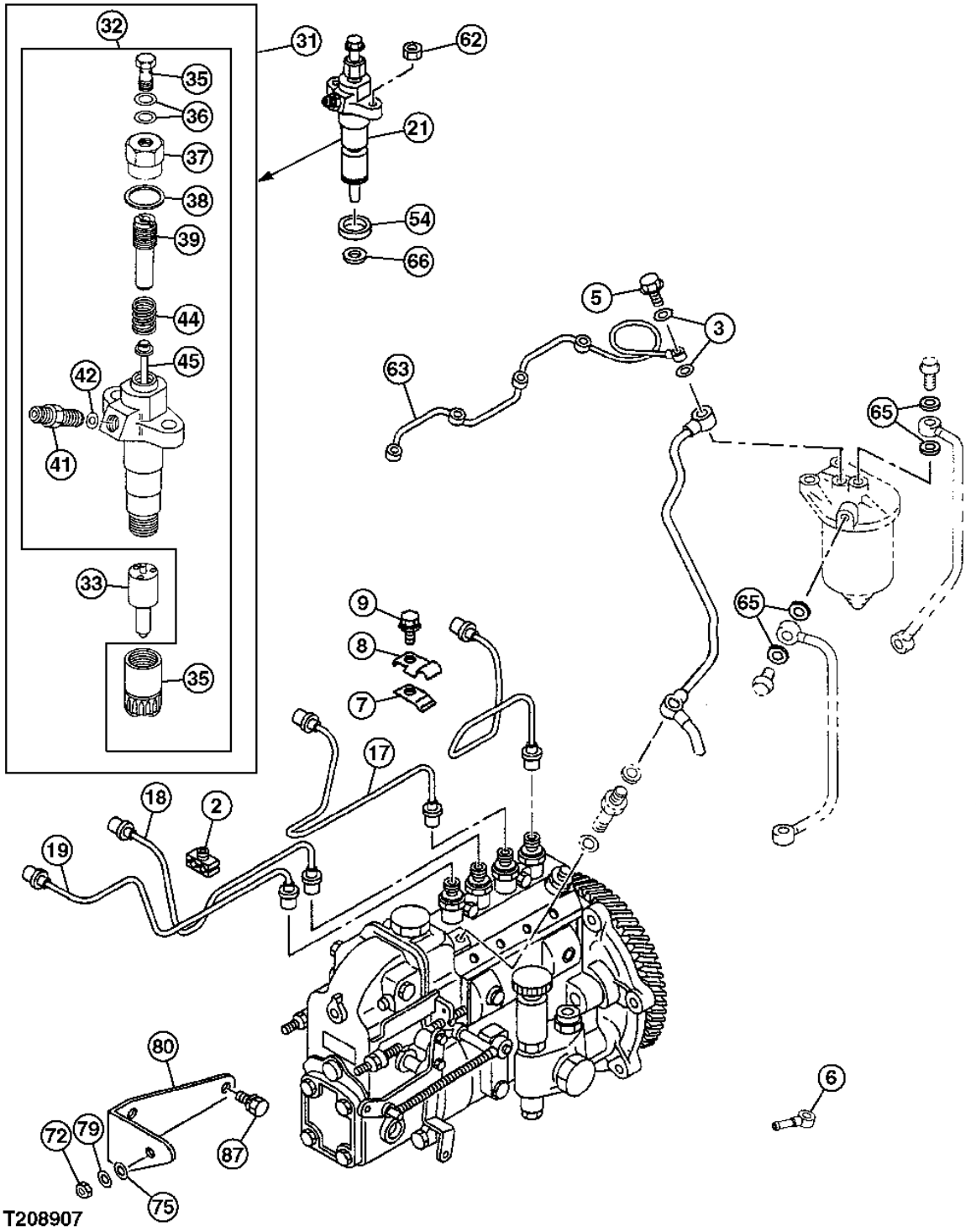

**FUEL INJECTION PUMP**

| KEY | PART NO. | PART NAME | QTY | SERIAL NO. | REMARKS |
|---|---|---|---|---|---|
| 1 | 8973238371 | FUEL INJECTION PUMP | 1 | | |
| 2 | 5154190131 | CLIP | 3 | | |
| 3 | 9095714080 | GASKET | 2 | | |
| 4 | 8972572570 | PIPE | 1 | | |
| 5 | 1096750371 | BOLT | 1 | | |
| 6 | 5154112231 | PIPE | 3 | | |
| 7 | 5154190051 | CLIP | 1 | | |
| 8 | 5154190040 | CLIP | 1 | | |
| 9 | 0286806160 | BOLT | 1 | | |
| 15 | 8973299400 | COUPLING | 1 | | |
| 16 | 8972520600 | PIPE | 1 | | (SUB FOR 8970314671) |
| 17 | 8972520610 | PIPE | 1 | | (SUB FOR 8970314681) |
| 18 | 8972520620 | PIPE | 1 | | (SUB FOR 8970314691) |
| 19 | 8972520630 | PIPE | 1 | | (SUB FOR 8970314701) |
| 31 | 1153004210 | NOZZLE | 4 | | |
| 32 | 8971348410 | HOLDER | 4 | | |
| 33 | 1153113160 | NOZZLE | 4 | | |
| 34 | 1096750371 | BOLT | 4 | | |
| 35 | 1153320170 | NUT | 4 | | |
| 36 | 1096300820 | GASKET | 8 | | |
| 37 | 5153320060 | NUT | 4 | | |
| 38 | 5153390600 | GASKET | 4 | | |
| 39 | 8941695030 | SCREW | 4 | | |
| 41 | 8943203080 | ELECTRICAL CONNECTOR ASSY | 4 | | |
| 42 | 5513390030 | GASKET | 4 | | |
| 44 | 5153430050 | SPRING | 4 | | |
| 45 | 8941695020 | ROD | 4 | | |
| 54 | 9153390510 | DUST SHIELD | 4 | | |
| 62 | 4447338 | NUT | 8 | | (SUB FOR 0911501080) |
| 63 | 8970209371 | PIPE | 1 | | |
| 65 | 9095720140 | PACKING | 1 | | |
| 66 | 5153150030 | PACKING | 4 | | |
| 72 | 0911502100 | NUT | 1 | | |
| 75 | 9091607100 | WASHER | 1 | | |
| 79 | 9091605100 | WASHER | 1 | | |
| 80 | 8972221710 | BRACKET | 1 | | |
| 87 | 4447335 | BOLT | 2 | | (SUB FOR 0280810200) |

**FUEL FEED PUMP**

T208988 -UN-02MAR05

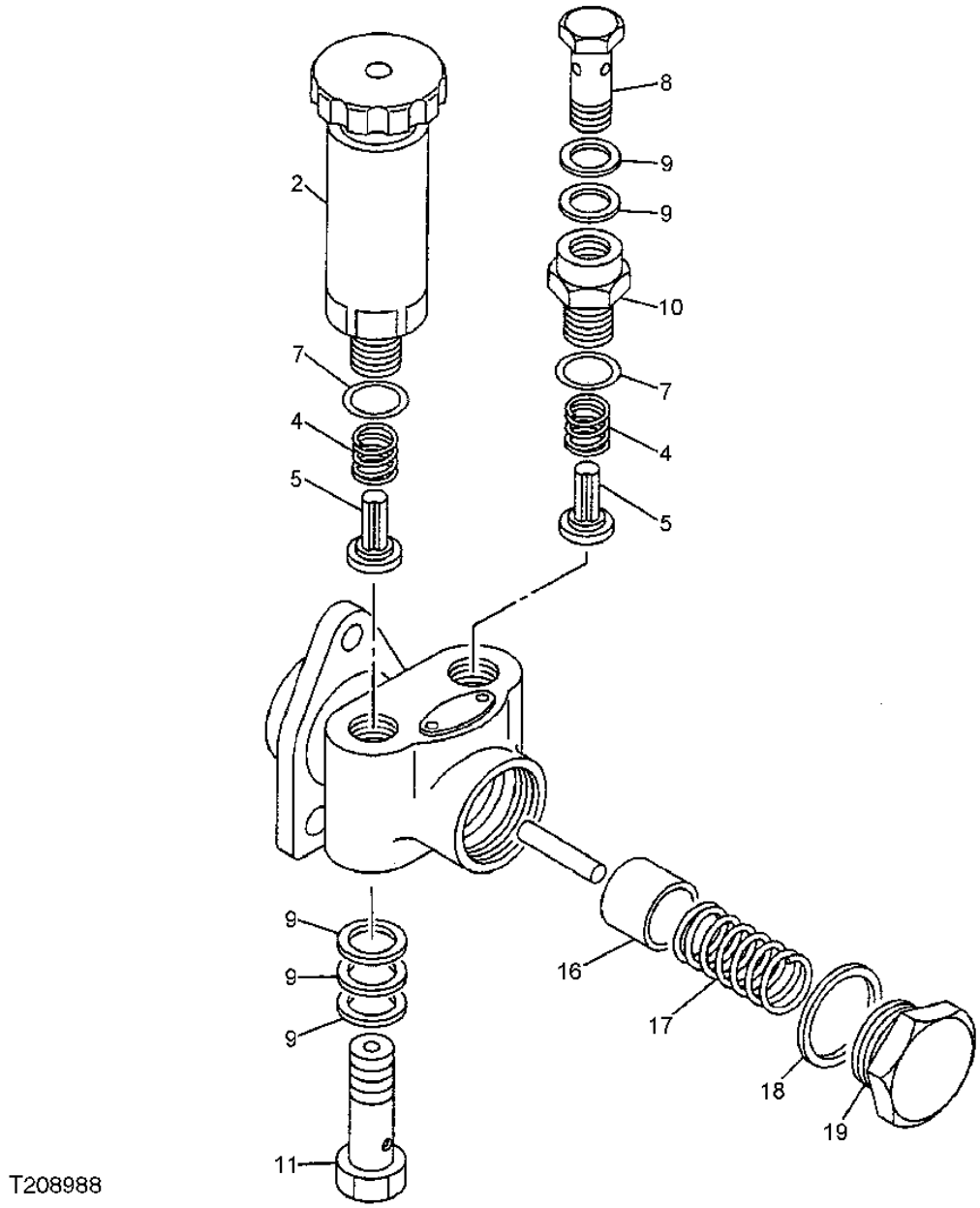

**FUEL FEED PUMP**

| KEY | PART NO. | PART NAME | QTY | SERIAL NO. | REMARKS |
|---|---|---|---|---|---|
| 1 | 8973572640 | FUEL PUMP | 1 | | (SUB FOR 8971219100) |
| 2 | 1157610061 | HAND PRIMER | 1 | | (SUB FOR 1157610060) |
| 4 | 9813517020 | SPRING | 2 | | |
| 5 | 1157550020 | FLOW CONTROL HYD. VALVE | 2 | | |
| 7 | 1156230160 | O-RING | 2 | | |
| 8 | 1156190820 | BOLT | 1 | | |
| 9 | 9095720140 | PACKING | 5 | | (SUB FOR 1157590010) |
| 10 | 1157590030 | ADAPTER | 1 | | |
| 11 | 5157590270 | BOLT | 1 | | |
| 13 | 9813550250 | RING | 1 | | |
| 15 | 5157510120 | HOUSING | 1 | | |
| 16 | 9813512050 | PISTON | 1 | | |
| 17 | 9813513020 | SPRING | 1 | | |
| 18 | 9813550350 | GASKET | 1 | | |
| 19 | 8941711850 | PLUG | 1 | | |
| 28 | 5157540010 | TAPPET | 1 | | |
| 29 | 9813514030 | ROLLER | 1 | | |
| 30 | 9813514100 | PIN FASTENER | 1 | | |
| 31 | 1157590020 | GUIDE | 2 | | |

**FUEL INJECTION PUMP COLLAR AND MOUNTING**

T162981 -UN-11JAN03

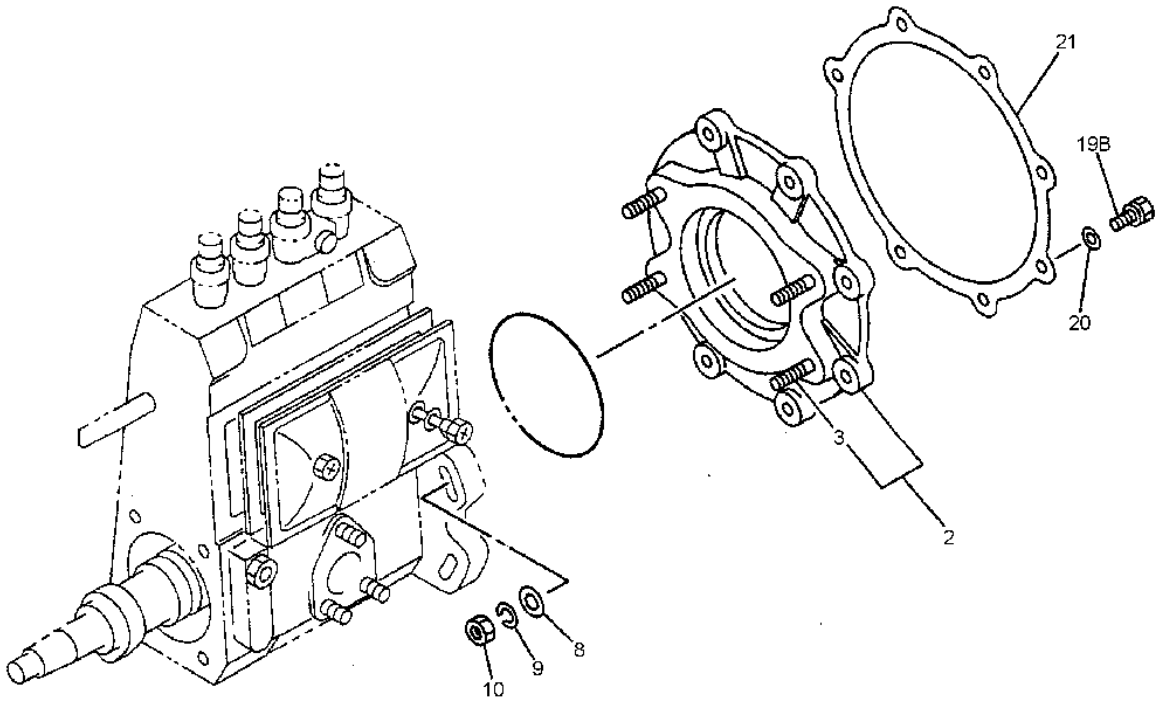


T162981

**FUEL INJECTION PUMP COLLAR AND MOUNTING**

| KEY | PART NO. | PART NAME | QTY | SERIAL NO. | REMARKS |
|---|---|---|---|---|---|
| 2 | 8972519090 | BRACKET | 1 | | |
| 3 | ..... | STUD | 4 | | |
| 8 | 9091645100 | WASHER | 4 | | |
| 9 | 1099851850 | WASHER | 4 | | (SUB FOR 9091506100) |
| 10 | 5156390020 | NUT | 4 | | |
| 19B | 5090002221 | BOLT | 1 | | |
| | 1090440711 | BOLT | 6 | | |
| 20 | 9095720080 | GASKET | 1 | | |
| 21 | 8943706750 | GASKET | 1 | | |

**FUEL INJECTION PUMP COUPLING**

T208934 -UN-02MAR05

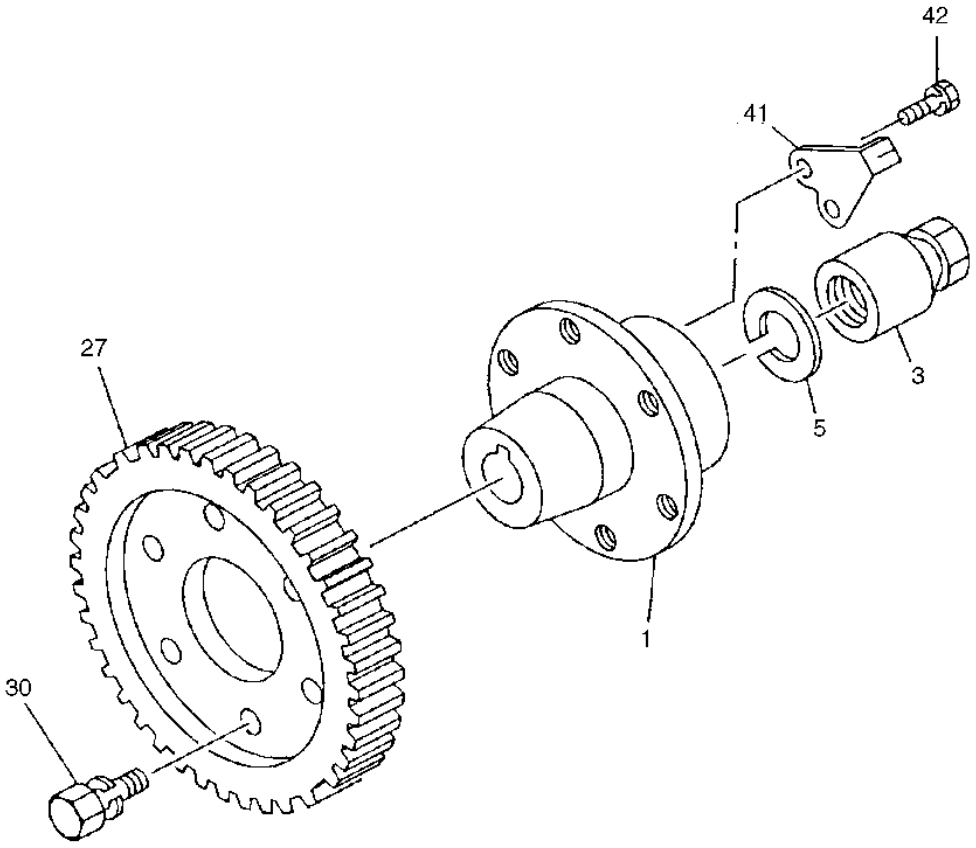


**T208934**

**FUEL INJECTION PUMP COUPLING**

| KEY | PART NO. | PART NAME | QTY | SERIAL NO. | REMARKS |
|---|---|---|---|---|---|
| 1 | 8971177760 | COUPLING | 1 | | |
| 3 | 1157491440 | NUT | 1 | | |
| 5 | 1157491450 | WASHER | 1 | | |
| 27 | 8971360130 | GEAR | 1 | | |
| 30 | 8944575170 | BOLT | 6 | | |
| 41 | 8971177770 | POINTER | 1 | | |
| 42 | 0500406120 | BOLT | 2 | | (SUB FOR 9019106120) |

**ENGINE AIR INTAKE MANIFOLD**

T162782 -UN-11JAN03

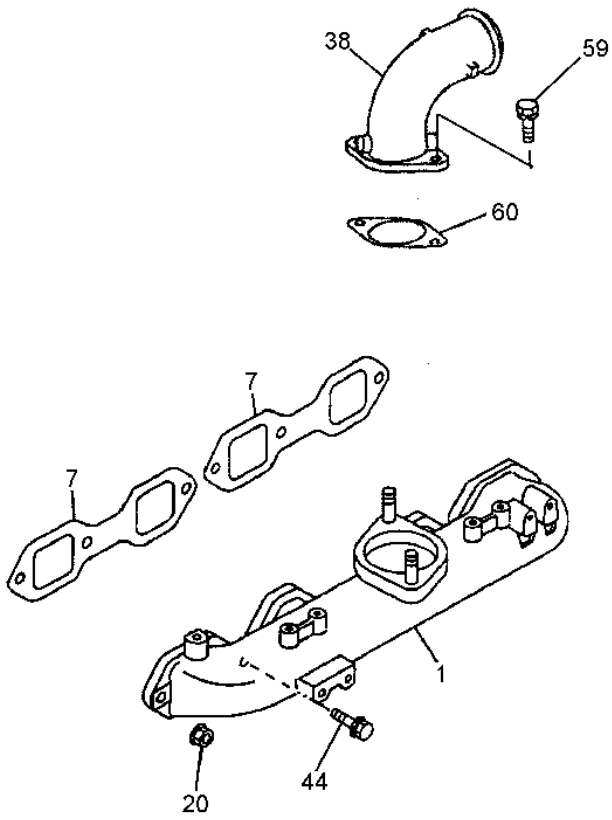


T162782

**ENGINE AIR INTAKE MANIFOLD**

| KEY | PART NO. | PART NAME | QTY | SERIAL NO. | REMARKS |
|---|---|---|---|---|---|
| 1 | 8972488530 | INTAKE MANIFOLD | 1 | | |
| 7 | 8972357881 | GASKET | 2 | | |
| 20 | 4447338 | NUT | 4 | | (SUB FOR 0911501080) |
| 38 | 8972612310 | PIPE | 1 | | |
| 44 | 0500408250 | BOLT | 4 | | |
| 59 | 0287810300 | BOLT | 2 | | |
| 60 | ..... | PACKING | 1 | | ( 8943706760 NOT AVAILABLE FOR SERVICE) |

**TURBOCHARGER AND MOUNTING**

T162802 -UN-11JAN03

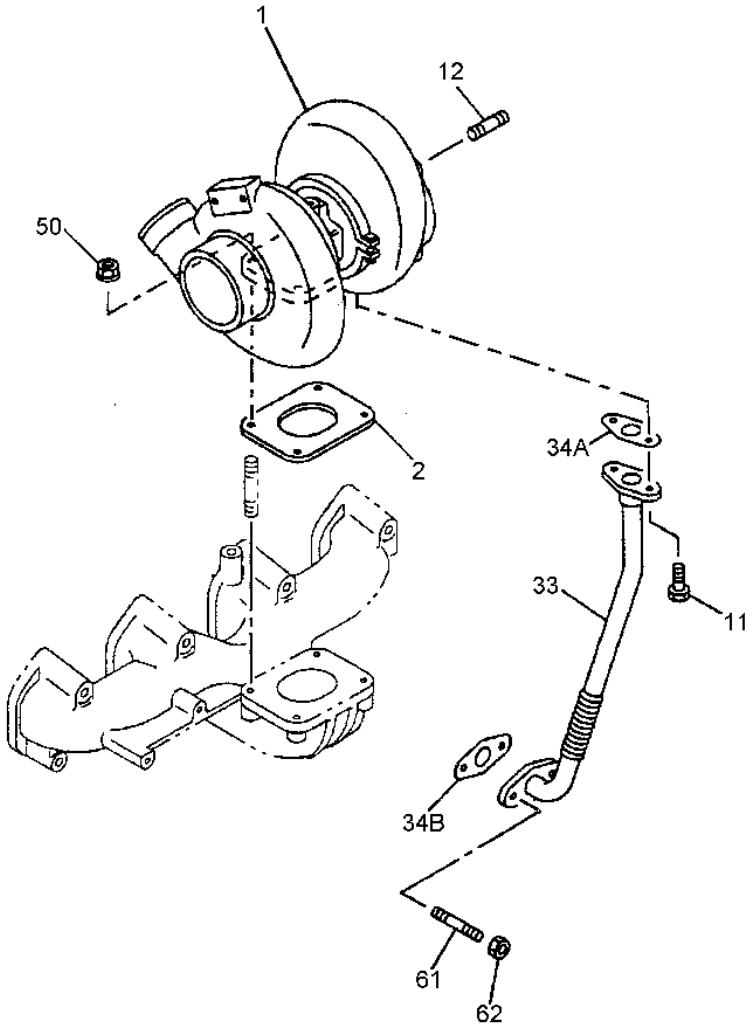


T162802

**TURBOCHARGER AND MOUNTING**

| KEY | PART NO. | PART NAME | QTY | SERIAL NO. | REMARKS |
|---|---|---|---|---|---|
| 1 | 8972894430 | TURBOCHARGER | 1 | | |
| 2 | 8943690230 | GASKET | 1 | | |
| 11 | 0280906160 | BOLT | 2 | | (SUB FOR 0280806160) |
| 12 | 8944762820 | STUD | 3 | | |
| 33 | 8972221210 | PIPE | 1 | | |
| 34A | 8943690220 | PACKING | 1 | | |
| 34B | ..... | GASKET | 1 | | ( 8943706630 NO LONGER AVAILABLE) |
| 50 | 14M7298 | FLANGE NUT | 4 | | M8, (SUB FOR 8970614011) |
| 61 | 9041108220 | STUD | 2 | | |
| 62 | 4447338 | NUT | 2 | | |

**TURBOCHARGER COMPONENTS**

T162805 -UN-11JAN03

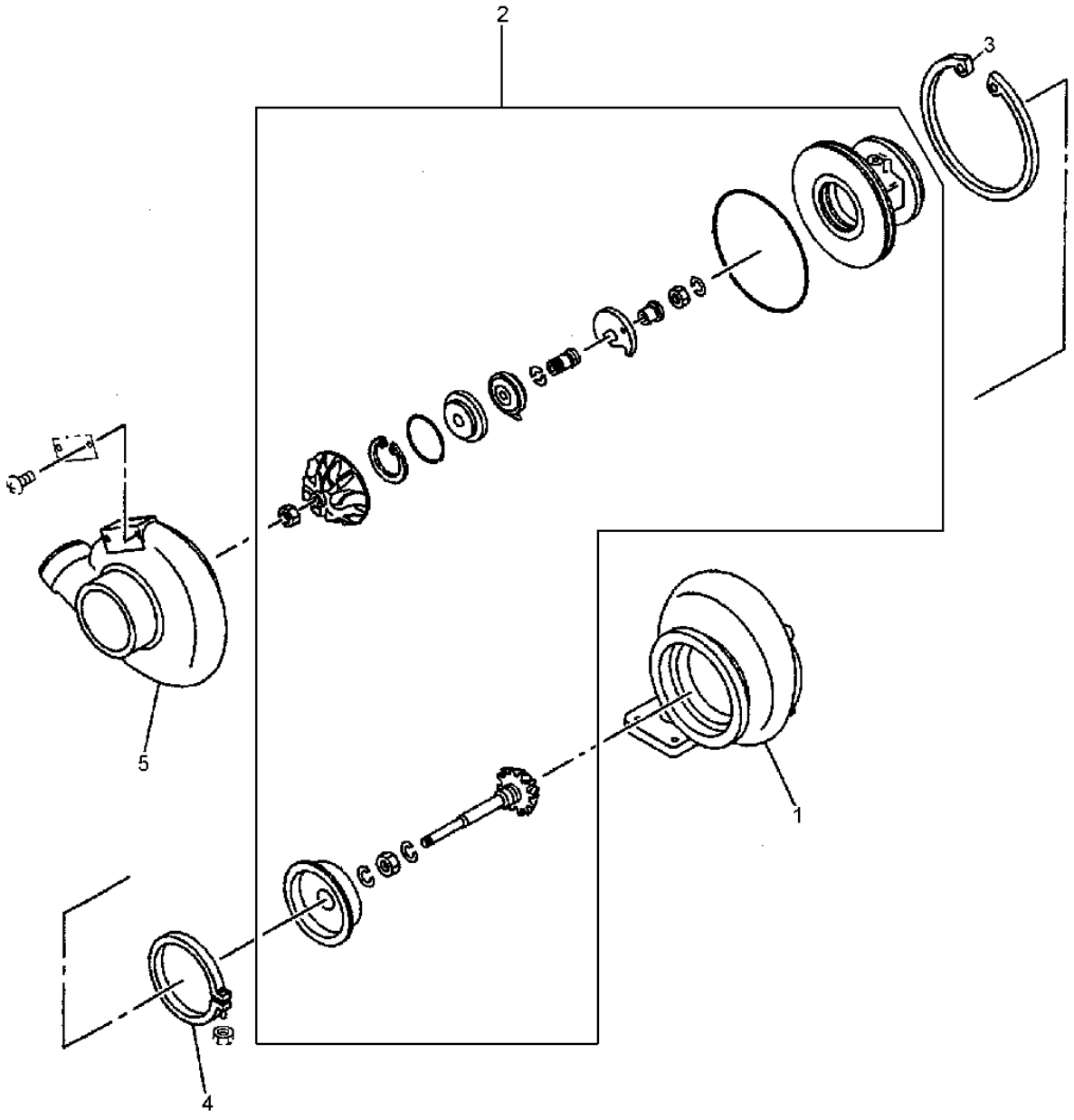


T162805

**TURBOCHARGER COMPONENTS**

| KEY | PART NO. | PART NAME | QTY | SERIAL NO. | REMARKS |
|---|---|---|---|---|---|
| 1 | 8971731310 | HOUSING | 1 | | |
| 2 | 8972333090 | KIT | 1 | | |
| 3 | 8971731470 | RING | 1 | | |
| 4 | 8971731460 | CLAMP | 1 | | |
| 5 | 8972333080 | HOUSING | 1 | | |

**WATER PUMP**

T162794 -UN-11JAN03

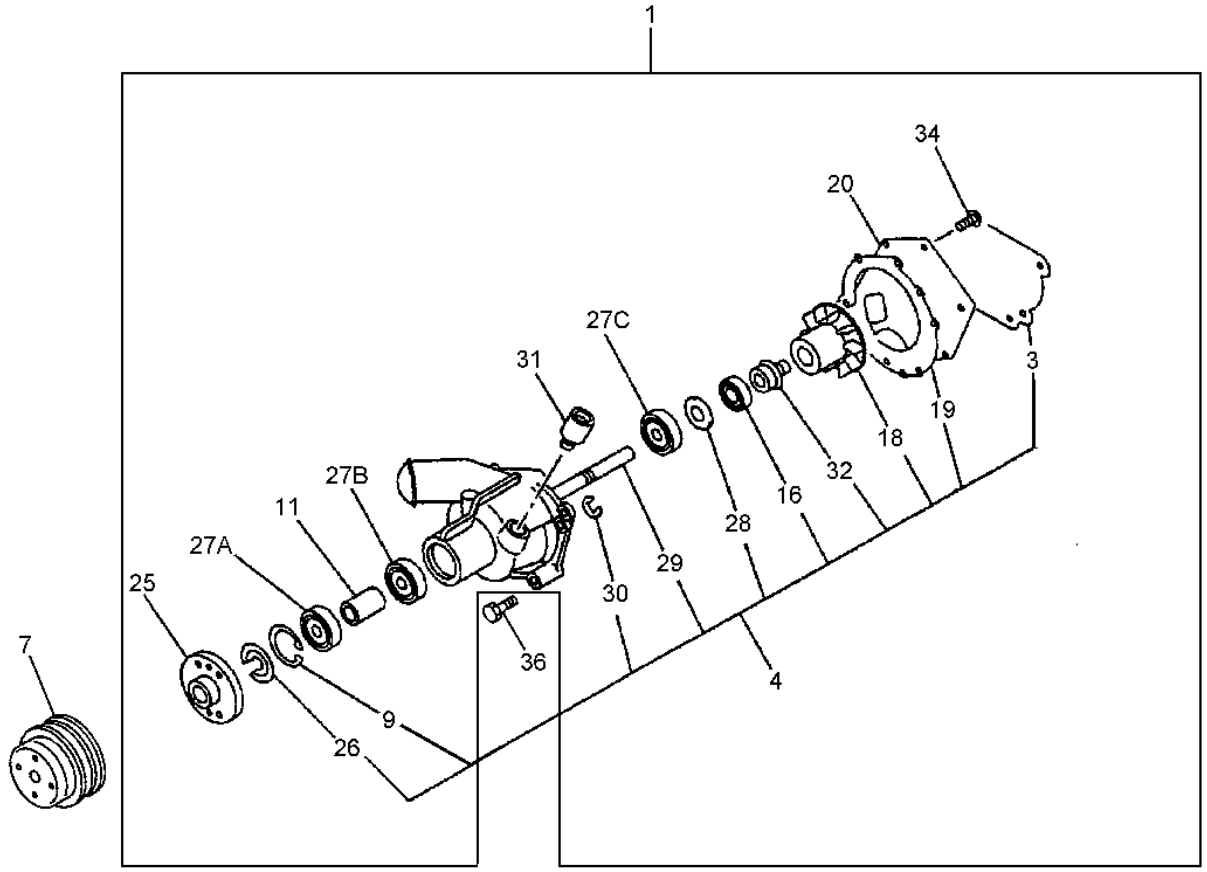


T162794

**WATER PUMP**

| KEY | PART NO. | PART NAME | QTY | SERIAL NO. | REMARKS |
|---|---|---|---|---|---|
| 1 | 8972530281 | WATER PUMP | 1 | | |
| 3 | 4210234 | PACKING | 1 | | (SUB FOR 8943706610) |
| 4 | 5878143200 | PUMP | 1 | | |
| 7 | 1136411910 | PULLEY | 1 | | |
| 9 | 9091801520 | RING | 1 | | |
| 11 | 5136340020 | SPACER | 1 | | |
| 16 | 1096255450 | SEAL | 1 | | |
| 18 | 8972322500 | IMPELLER | 1 | | |
| 19 | 8972322480 | GASKET | 1 | | |
| 20 | 8972322470 | COVER | 1 | | |
| 25 | 5136420072 | CENTER LINK | 1 | | |
| 26 | 5136390010 | COVER | 1 | | |
| 27A | 5098000510 | BEARING | 1 | | |
| 27B | 5098000500 | BEARING | 1 | | |
| 27C | 1098001700 | BEARING | 1 | | |
| 28 | 1095030700 | WASHER | 1 | | |
| 29 | 1136310740 | SHAFT | 1 | | |
| 30 | 9099521430 | SNAP RING | 1 | | |
| 31 | 8972498951 | PIPE | 1 | | |
| 32 | 1136200230 | UNIT STANDARD | 1 | | (SUB FOR 8972322490) |
| 34 | 9030908200 | SCREW | 3 | | (SUB FOR AT260103) |
| 36 | 0280810350 | BOLT | 1 | | M10 X 35 |
| | 0280810450 | EYEBOLT | 2 | | M10 X 45 |
| | 0280810700 | BOLT | 1 | | M10 X 70 |

**THERMOSTAT AND HOUSING**

T208904 -UN-02MAR05

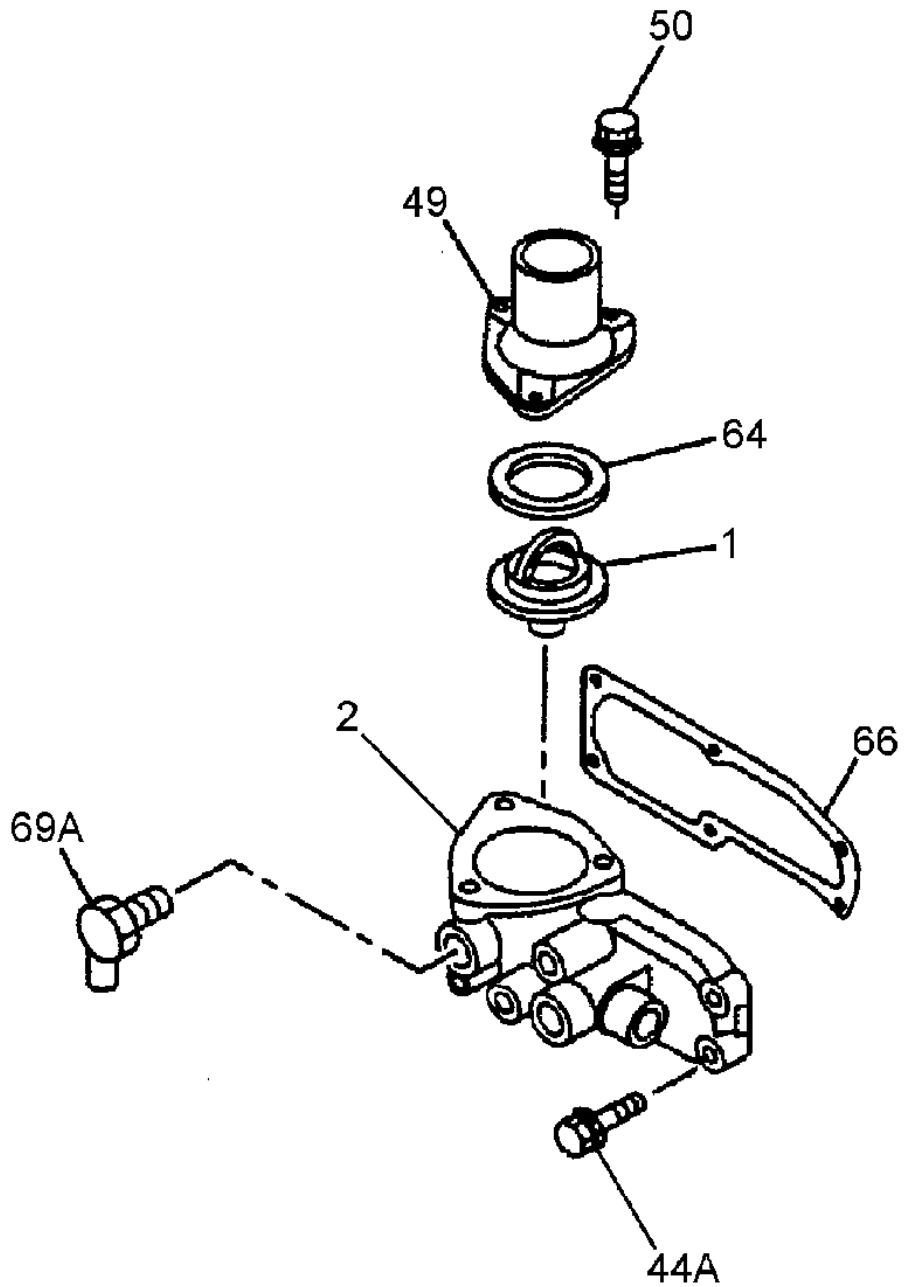


T208904

**THERMOSTAT AND HOUSING**

| KEY | PART NO. | PART NAME | QTY | SERIAL NO. | REMARKS |
|---|---|---|---|---|---|
| 1 | 1137700700 | THERMOSTAT | 1 | | |
| 2 | 1137118042 | HOUSING | 1 | | |
| 44A | 0280810300 | BOLT | 1 | | |
| | 0280810350 | BOLT | 2 | | |
| | 0280810900 | BOLT | 3 | | |
| 49 | 8973243870 | PIPE | 1 | | |
| 50 | 0280808220 | BOLT | 1 | | |
| | 0280808300 | BOLT | 2 | | (SUB FOR AT259926) |
| 64 | 1137430160 | GASKET | 1 | | |
| 66 | ..... | GASKET | 1 | | ( 8972357891 NO LONGER AVAILABLE) |
| 69A | 4421067 | PIPE | 1 | | (SUB FOR 5137210341) |

**WATER LINES FROM PUMP TO THERMOSTAT**

T162797 -UN-11JAN03

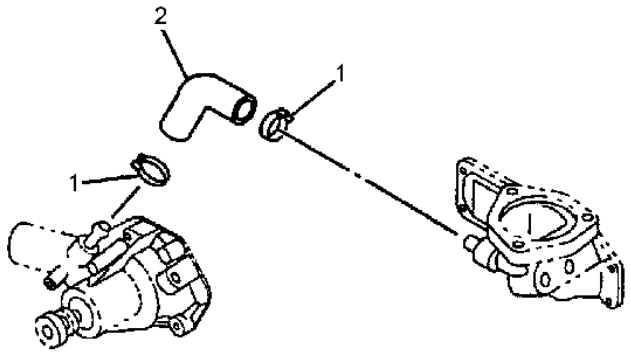


T162797

**WATER LINES FROM PUMP TO THERMOSTAT**

| KEY | PART NO. | PART NAME | QTY | SERIAL NO. | REMARKS |
|---|---|---|---|---|---|
| 1 | TY22467 | CLAMP | 2 | | (SUB FOR 5097040460) |
| 2 | 8972242040 | HOSE | 1 | | |

**ENGINE OIL COOLER**

T208909 -UN-02MAR05

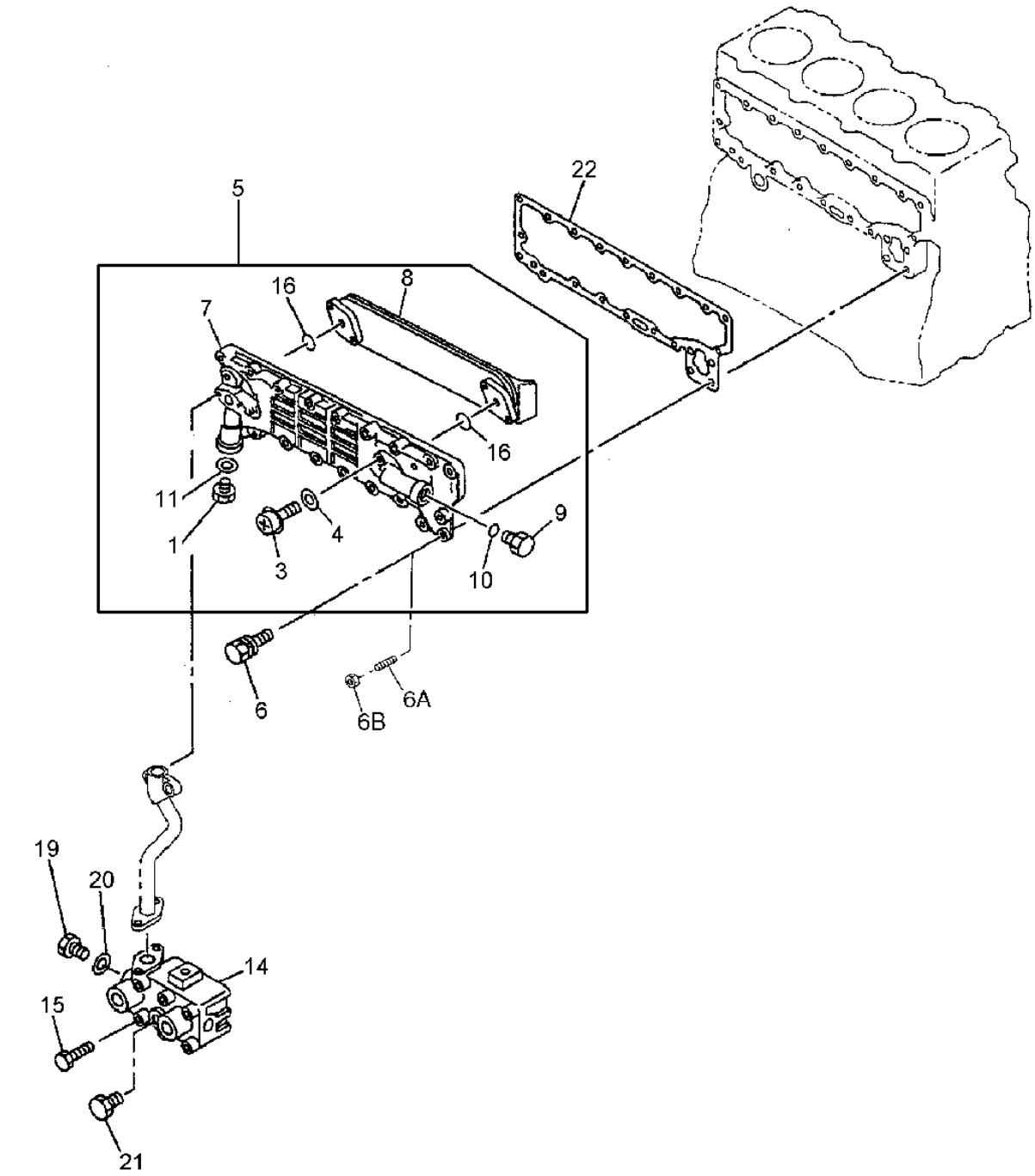


T208909

**ENGINE OIL COOLER**

| KEY | PART NO. | PART NAME | QTY | SERIAL NO. | REMARKS |
|---|---|---|---|---|---|
| 1 | 5112880020 | FLOW CONTROL HYD. VALVE | 1 | | |
| 3 | 0280808160 | BOLT | 4 | | |
| 4 | 1217290430 | GASKET | 4 | | |
| 5 | 8970200372 | OIL COOLER | 1 | | |
| 6 | 0500408250 | BOLT | 11 | | |
| | 0500408200 | BOLT | 2 | | |
| | 8942059861 | BOLT | 1 | | |
| | 0500408450 | BOLT | 12 | | |
| 6A | 8942172270 | STUD | 2 | | |
| 6B | 4447338 | NUT | 2 | | (SUB FOR 0911502080) |
| 7 | 8970200372 | OIL COOLER | 1 | | (SUB FOR 8944496450) |
| 8 | 8970320250 | CORE | 1 | | (SUB FOR 5112890030) |
| 9 | 8971281500 | PLUG | 1 | | |
| 10 | 9095652250 | GASKET | 1 | | |
| 11 | 9095716200 | GASKET | 1 | | |
| 14 | 8972234300 | COVER | 1 | | |
| 15 | 0280810900 | BOLT | 4 | | |
| 16 | 5112820110 | GASKET | 2 | | |
| 19 | 8943109170 | PLUG | 1 | | |
| 20 | 9095714200 | GASKET | 1 | | (SUB FOR AT256023) |
| 21 | 1132600980 | PRESSURE RELIEF VALVE | 1 | | |
| 22 | ..... | GASKET | 1 | | ( 8972333022 NO LONGER AVAILABLE) |

**PRIMARY FUEL FILTER (WATER/SEDIMENTARY BOWL)**

T163104 -UN-11JAN03

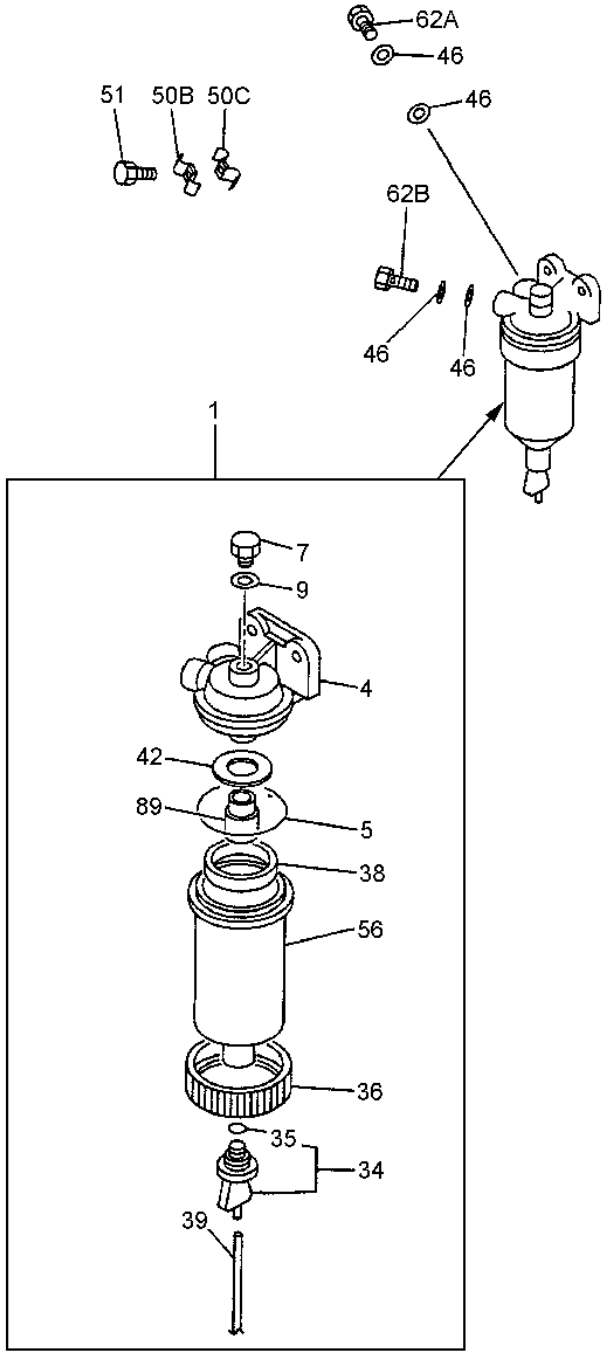


T163104

**PRIMARY FUEL FILTER (WATER/SEDIMENTARY BOWL)**

| KEY | PART NO. | PART NAME | QTY | SERIAL NO. | REMARKS |
|---|---|---|---|---|---|
| 1 | 8972186470 | FUEL FILTER | 1 | | |
| 4 | 8972891170 | COVER | 1 | | |
| 5 | 0286806200 | BOLT | 1 | | |
| 7 | 8972134730 | PLUG | 1 | | |
| 9 | 51M7105 | O-RING | 1 | | (SUB FOR 8972134740) |
| 34 | 8972891320 | PLUG | 1 | | |
| 35 | 8972891330 | GASKET | 1 | | |
| 36 | 8972891310 | RING | 1 | | |
| 38 | 8972891250 | FLOAT | 1 | | |
| 39 | TY24396 | BULK HOSE | 1 | | (SUB FOR 8972891360) |
| 42 | 8972891340 | PLATE | 1 | | |
| 50B | 1097007590 | CLIP | 2 | | |
| 50C | 1097007600 | CLIP | 2 | | |
| 51 | 19M7866 | SCREW | 2 | | (SUB FOR AT259925) M6 X 20 MM |
| 56 | 8972891180 | SEDIMENT BOWL | 1 | | |
| 62B | 1096750630 | BOLT | 1 | | |
| 89 | 8972891350 | ADAPTER | 1 | | |

**FUEL FILTER AND BRACKET**

T208908 -UN-02MAR05

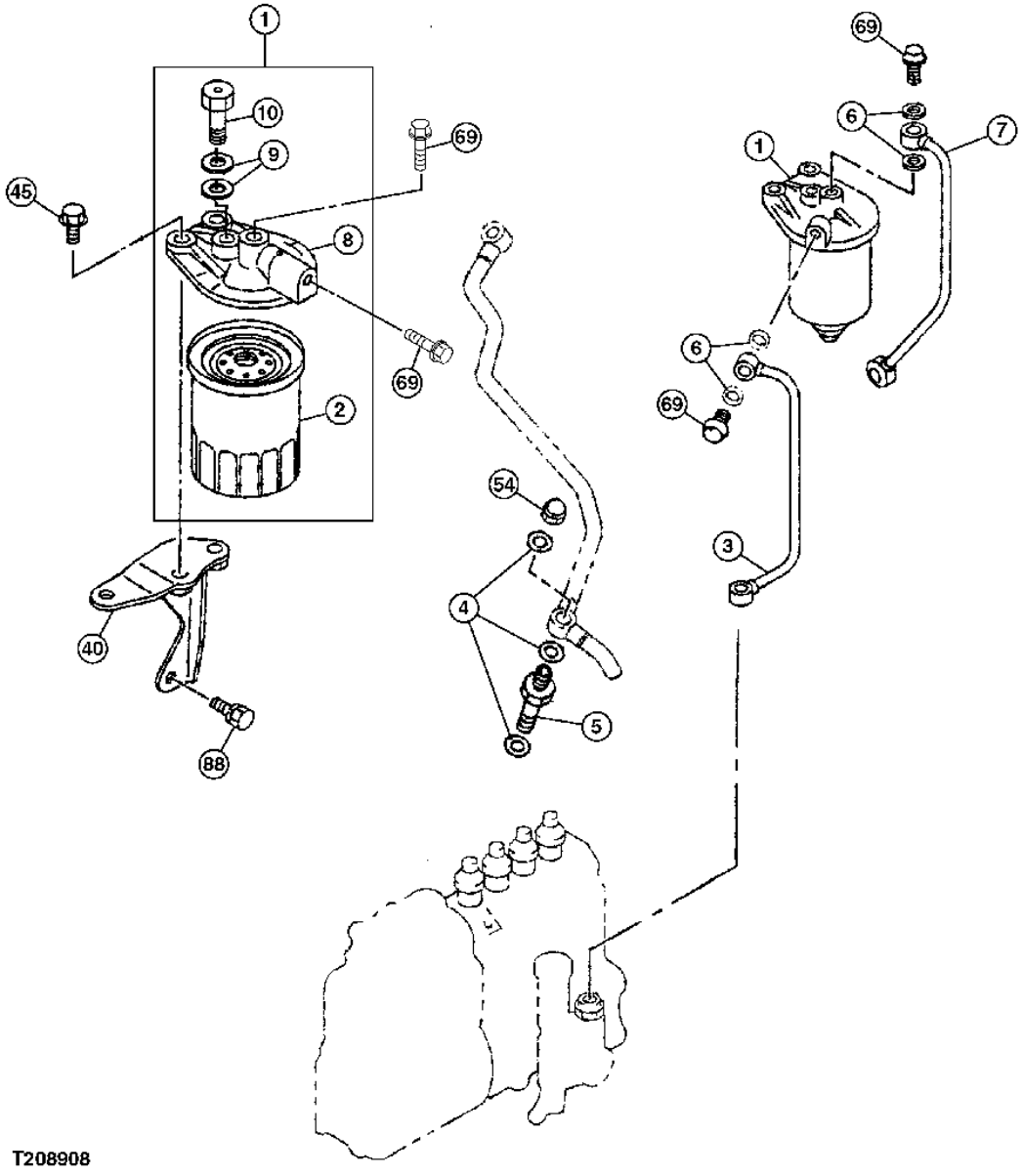


T208908

**FUEL FILTER AND BRACKET**

| KEY | PART NO. | PART NAME | QTY | SERIAL NO. | REMARKS |
|---|---|---|---|---|---|
| 1 | 8971798541 | FILTER | 1 | | |
| 2 | 4S00246 | FILTER ELEMENT | 1 | | (SUB FOR 8971725491) |
| 3 | 8970209330 | PIPE | 1 | | |
| 4 | ..... | PACKING | 3 | | (SUB FOR 4452165) |
| 5 | 8972254470 | FLOW CONTROL HYD. VALVE | 1 | | |
| 6 | 9095720140 | PACKING | 2 | | |
| 7 | 8970209340 | PIPE | 1 | | |
| 8 | 8941329480 | COVER | 1 | | |
| 9 | 4452165 | PACKING | 2 | | (SUB FOR 1096300850) |
| 10 | 1132600470 | BOLT | 1 | | |
| 40 | 5197550010 | BRACKET | 1 | | |
| 45 | 0280810300 | BOLT | 2 | | (SUB FOR 0286810300) |
| 69 | 9099063251 | BOLT | 2 | | |
| 88 | 4447335 | BOLT | 2 | | (SUB FOR 0280810200) |

**FUEL TRANSFER PUMP AND HOSES**

T202604 -UN-02SEP04

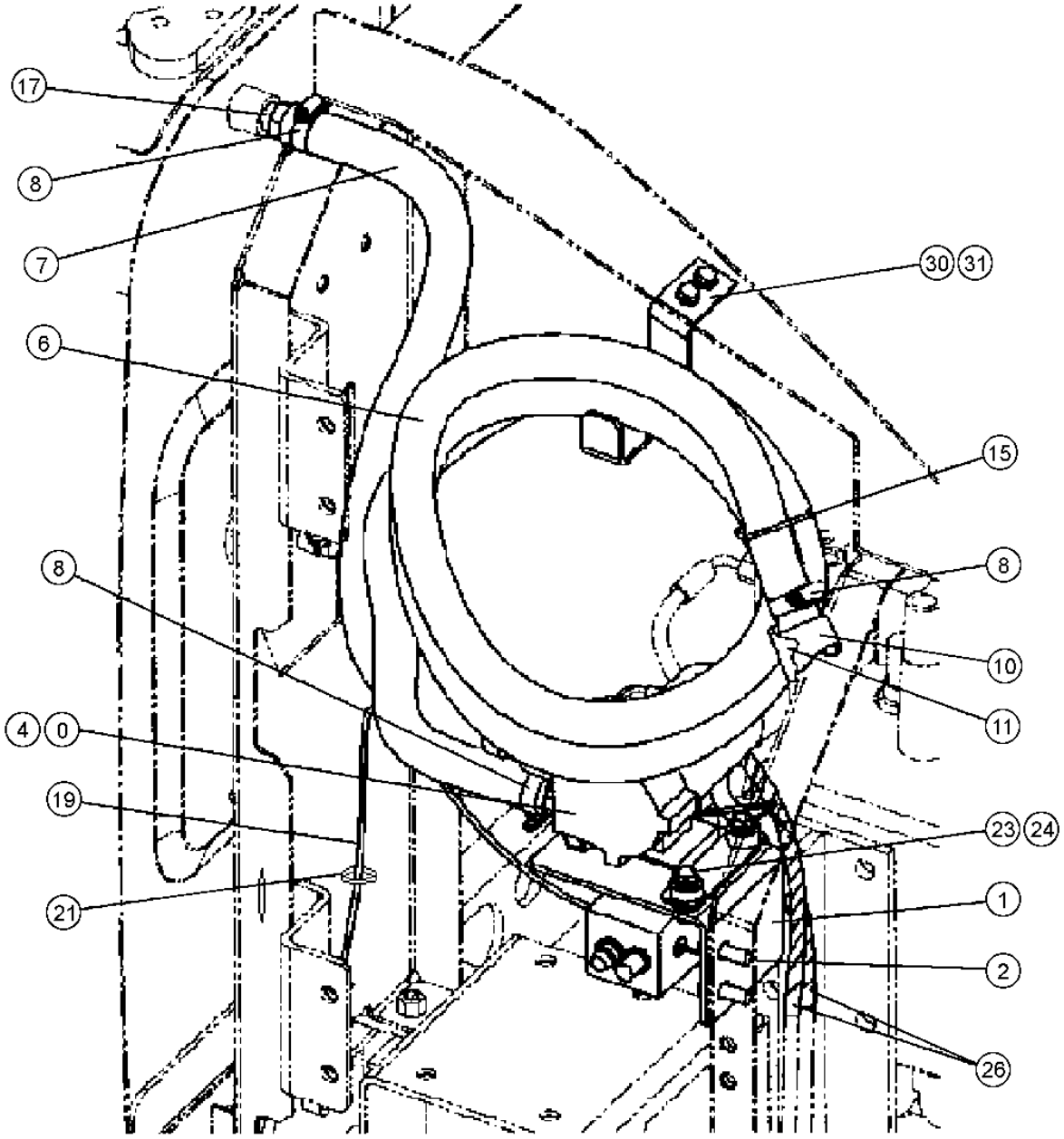


T202604

**FUEL TRANSFER PUMP AND HOSES**

| KEY | PART NO. | PART NAME | QTY | SERIAL NO. | REMARKS |
|---|---|---|---|---|---|
| 0 | 4455541 | PUMP | 1 | | |
| 1 | 8091483 | BRACKET | 1 | | |
| 2 | 19M7662 | CAP SCREW | 2 | | M10 X 30, (ALSO ORDER 24M7346) (SUB FOR J271030) |
| | 24M7346 | WASHER | 2 | | 11 X 20 X 2 MM |
| 4 | 21M7267 | SCREW | 2 | | M6 X 20, (ALSO ORDER 24M7293 AND 12M7006) (SUB FOR J460620) |
| | 24M7293 | WASHER | 2 | | 6.500 X 13 X 1.600 MM |
| | 12M7006 | LOCK WASHER | 2 | | 6 MM |
| 6 | 4051160 | HOSE | 1 | | |
| 7 | 4602161 | HOSE | 1 | | |
| 8 | 4504367 | HOSE CLAMP | 1 | | |
| 10 | 4103527 | STRAINER | 1 | | |
| 11 | 4507650 | CAP | 1 | | |
| 13 | 9760447 | BRACKET | 1 | | |
| 14 | 19M7402 | CAP SCREW | 1 | | M10 X 25, (SUB FOR J271025) |
| 15 | 4055312 | TIE BAND | 1 | | |
| 17 | 4004589 | ADAPTER | 1 | | |
| 19 | 4600161 | WIRING HARNESS | 1 | | |
| 21 | H77698 | TIE BAND | 15 | | (SUB FOR 4055312) |
| 23 | 19M7298 | CAP SCREW | 3 | | M8 X 35, (ALSO ORDER 19M7298 AND 24M7055) (SUB FOR J260835) |
| | 24M7055 | WASHER | 3 | | 8.400 X 16 X 1.600 MM |
| 24 | 24M7055 | WASHER | 3 | | 8.400 X 16 X 1.600 MM, (SUB FOR A590108) |
| 26 | 4327293 | HOSE GUARD | 2 | | |
| 30 | 8099268 | BRACKET | 1 | | |
| 31 | 19M7139 | CAP SCREW | 1 | | M8 X 20, (ALSO ORDER 24M7055) (SUB FOR J260820) |
| | 24M7055 | WASHER | 1 | | 8.400 X 16 X 1.600 MM |

**STARTER MOTOR**

T208981 -UN-02MAR05

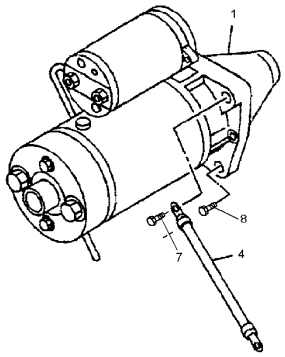


T208981

| KEY | PART NO. | PART NAME | QTY | ENGINE SERIAL NO. | REMARKS |
|---|---|---|---|---|---|
| 1 | 1811001411 | STARTER MOTOR | 1 | | (24V - 4.5KW) |
| 4 | 8971805560 | GROUND CABLE | 1 | | |
| 7 | 0500512280 | BOLT | 1 | | |
| 8 | 0287812350 | BOLT | 2 | | FLANGE |

**MEMORANDA**

**ALTERNATOR**

T163187 -UN-23JAN03

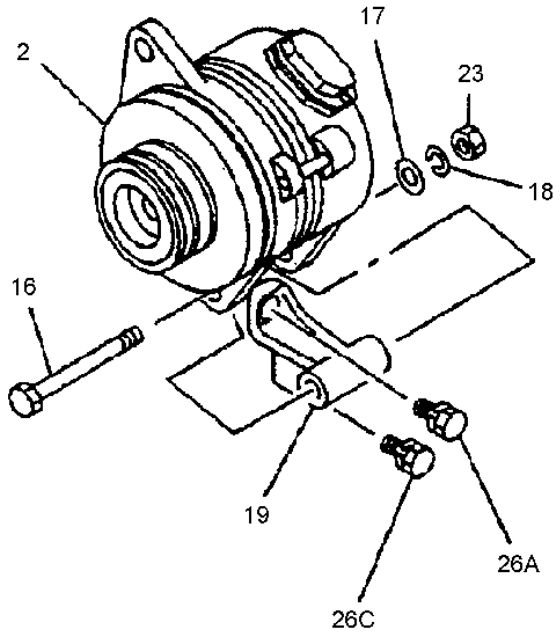


T163187

| KEY | PART NO. | PART NAME | QTY | ENGINE SERIAL NO. | REMARKS |
|---|---|---|---|---|---|
| 2 | 1812004710 | ALTERNATOR | 1 | | (SUB FOR 1812005303) |
| 16 | 1090001331 | BOLT | 1 | | |
| 17 | 9091605140 | WASHER | 1 | | |
| 18 | 9091508140 | LOCK WASHER | 1 | | (SUB FOR 9091505140) |
| 19 | 1197110450 | BRACKET | 1 | | (SUB FOR 5197110312) |
| 23 | 9991105140 | NUT | 1 | | (SUB FOR 9991104140) |
| 26A | 0280210250 | BOLT | 1 | | (SUB FOR 0280810250) |
| 26C | 0286810350 | BOLT | 2 | | |

**MEMORANDA**

**ALTERNATOR COMPONENTS**

T208990 -UN-02MAR05

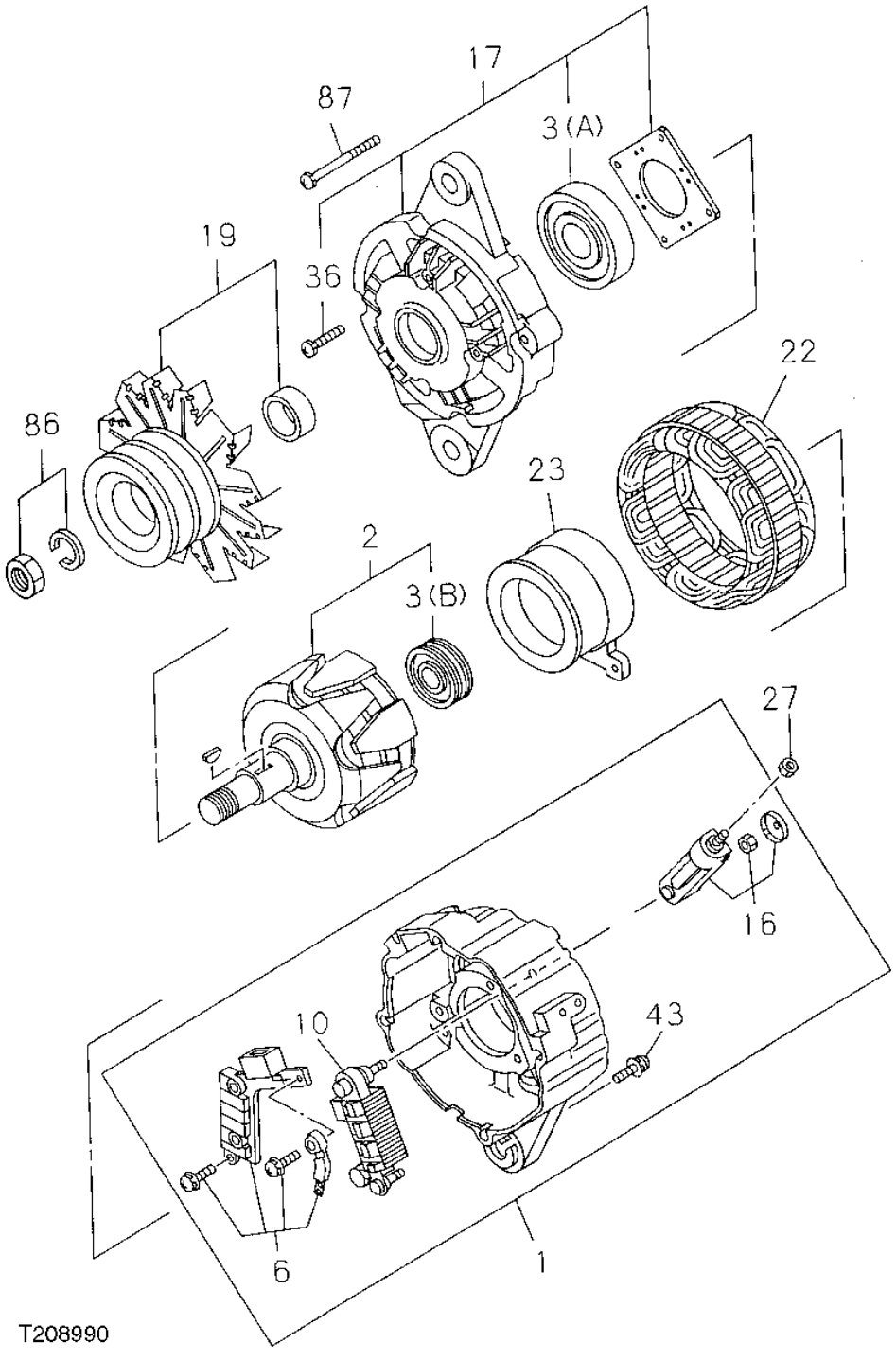

**ALTERNATOR ASSEMBLY**

| KEY | PART NO. | PART NAME | QTY | ENGINE SERIAL NO. | REMARKS |
|---|---|---|---|---|---|
| 1 | 1812143670 | COVER | 1 | | |
| 2 | 1812211020 | ROTOR | 1 | | |
| 3A | ..... | BEARING | 1 | | ( 1812297690 NOT AVAILABLE FOR SERVICE) |
| 3B | ..... | BEARING | 1 | | ( 1812297700 NOT AVAILABLE FOR SERVICE) |
| 6 | 1812600170 | VOLTAGE REGULATOR | 1 | | |
| 10 | 1812298330 | RECTIFIER | 1 | | |
| 16 | 1812297710 | ELECTRICAL CONNECTOR ASSY | 1 | | |
| 17 | 1812131010 | COVER | 1 | | |
| 19 | 1812221301 | PULLEY | 1 | | |
| 22 | 1812111290 | STATOR | 1 | | |
| 23 | 1812120160 | ELECTRICAL COIL | 1 | | |
| 27 | 1812297720 | NUT | 1 | | |
| 36 | 1812297680 | SCREW | 1 | | |
| 43 | 1812298320 | SCREW | 1 | | |
| 86 | ..... | NUT | 1 | | ( 8971781340 NOT AVAILABLE FOR SERVICE) |
| 87 | 1812297670 | BOLT | 1 | | |

**ENGINE ELECTRICAL CONTROL COMPONENTS**

T208357 -UN-02MAR05

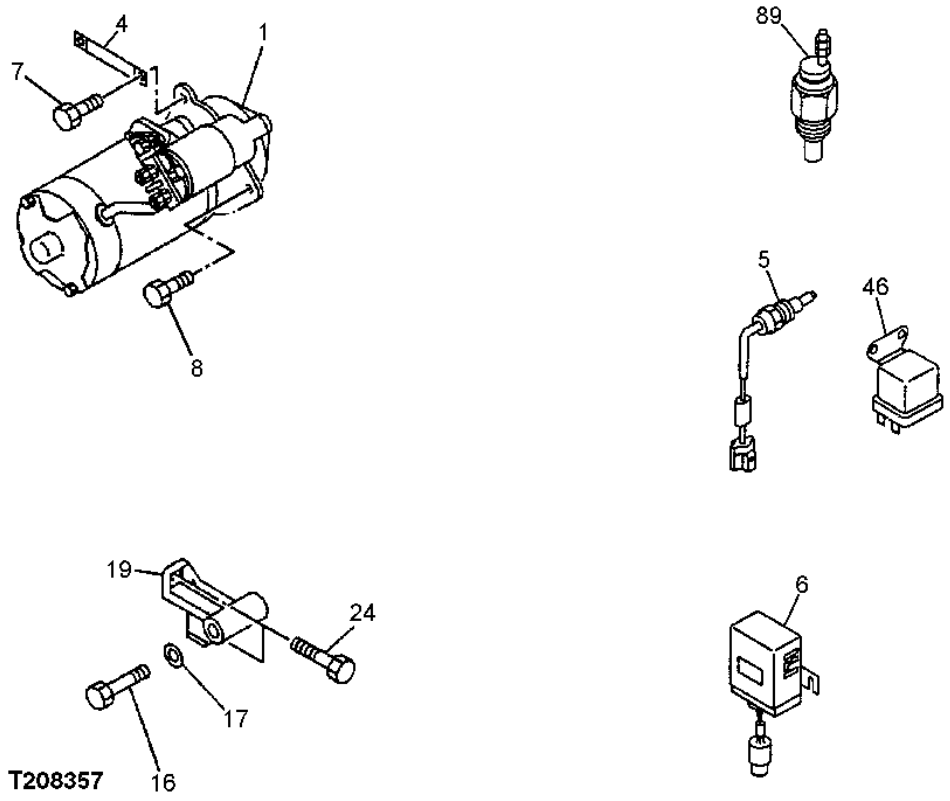

**ENGINE ELECTRICAL CONTROL COMPONENTS**

| KEY | PART NO. | PART NAME | QTY | SERIAL NO. | REMARKS |
|---|---|---|---|---|---|
| 2 | ..... | ALTERNATOR | 1 | | |
| 5 | 1831610330 | SWITCH | 1 | | COOLANT TEMPERATURE SWITCH |
| 6 | 1825503250 | CENTRAL CONTROL UNIT | 1 | | GLOW PLUG TIMER |
| 16 | 1090001331 | BOLT | 1 | | M14 X 135 MM |
| 17 | 9091645140 | WASHER | 1 | | ID=14, OD=26, T=2.3 |
| 19 | 8970324991 | BRACKET | 1 | | |
| 24 | 0280810250 | BOLT | 1 | | M10 X 25 MM |
| | 0280810350 | BOLT | 3 | | M10 X 35 MM |
| 46 | 8944233140 | RELAY | 1 | | GLOW PLUG, (SUB FOR 8942580140) |
| 89 | 8971256011 | SWITCH | 1 | | |

**FAN AND FAN BELT**

T208910 -UN-02MAR05

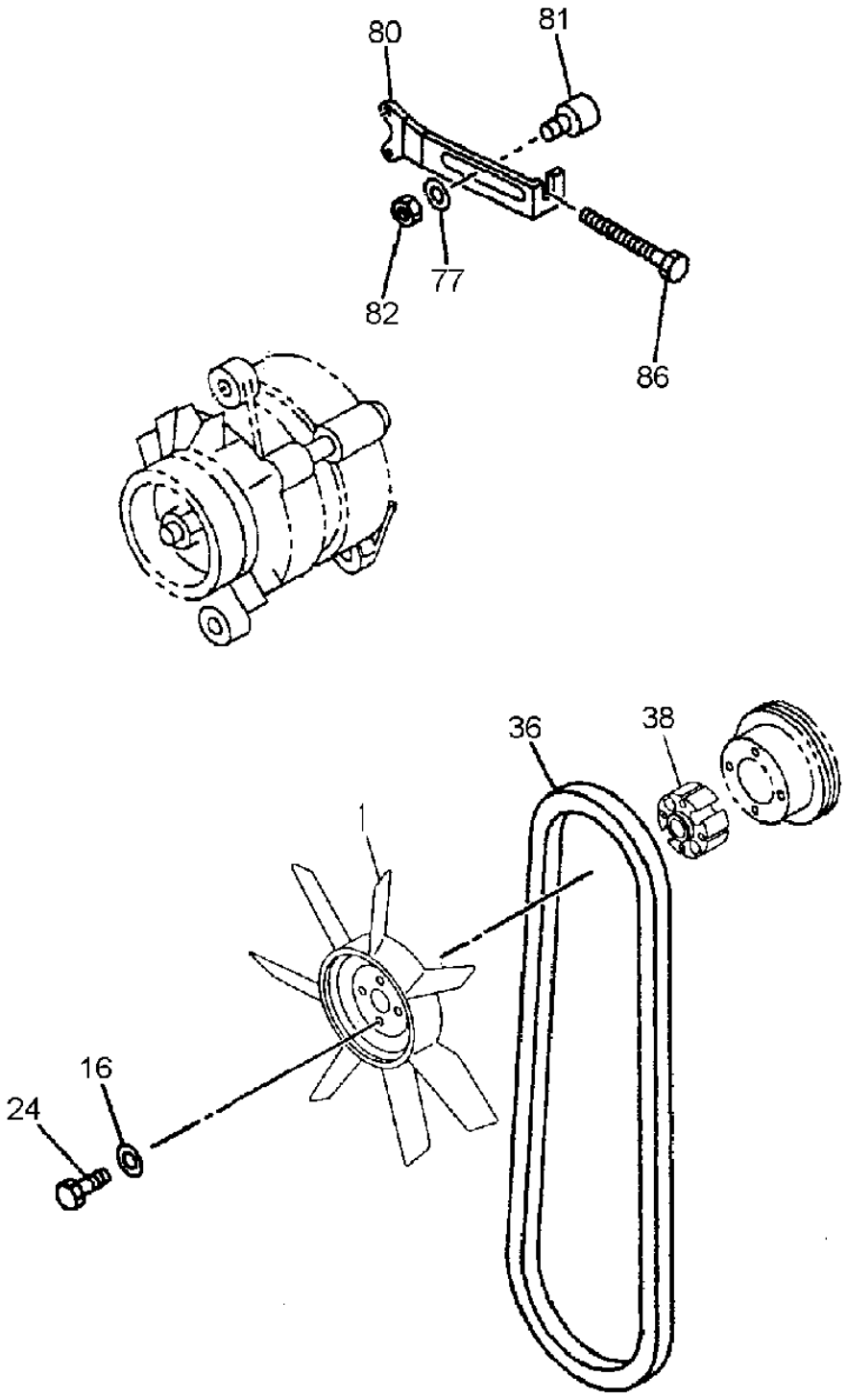

**FAN AND FAN BELT**

| KEY | PART NO. | PART NAME | QTY | SERIAL NO. | REMARKS |
|---|---|---|---|---|---|
| 1 | 1136603370 | FAN | 1 | | D=550-7 |
| 11 | 9034906100 | SCREW | 2 | | |
| 16 | 9091606080 | WASHER | 4 | | (SUB FOR 1143190342) |
| 24 | 0500408900 | BOLT | 4 | | |
| 36 | 8973105690 | V-BELT | 1 | | 2-PIECE SET, L=1246 |
| 38 | 1136420510 | SPACER | 1 | | |
| 77 | 9091647120 | WASHER | 1 | | |
| 80 | 1136741192 | PLATE | 1 | | |
| 81 | 1136741600 | PLATE | 1 | | |
| 82 | 0911501120 | NUT | 1 | | (SUB FOR AT259943) |
| 86 | 1090091131 | BOLT | 1 | | M10 X 135 |

**TIMING GEAR CASE AND FLYWHEEL HOUSING**

T208911 -UN-02MAR05

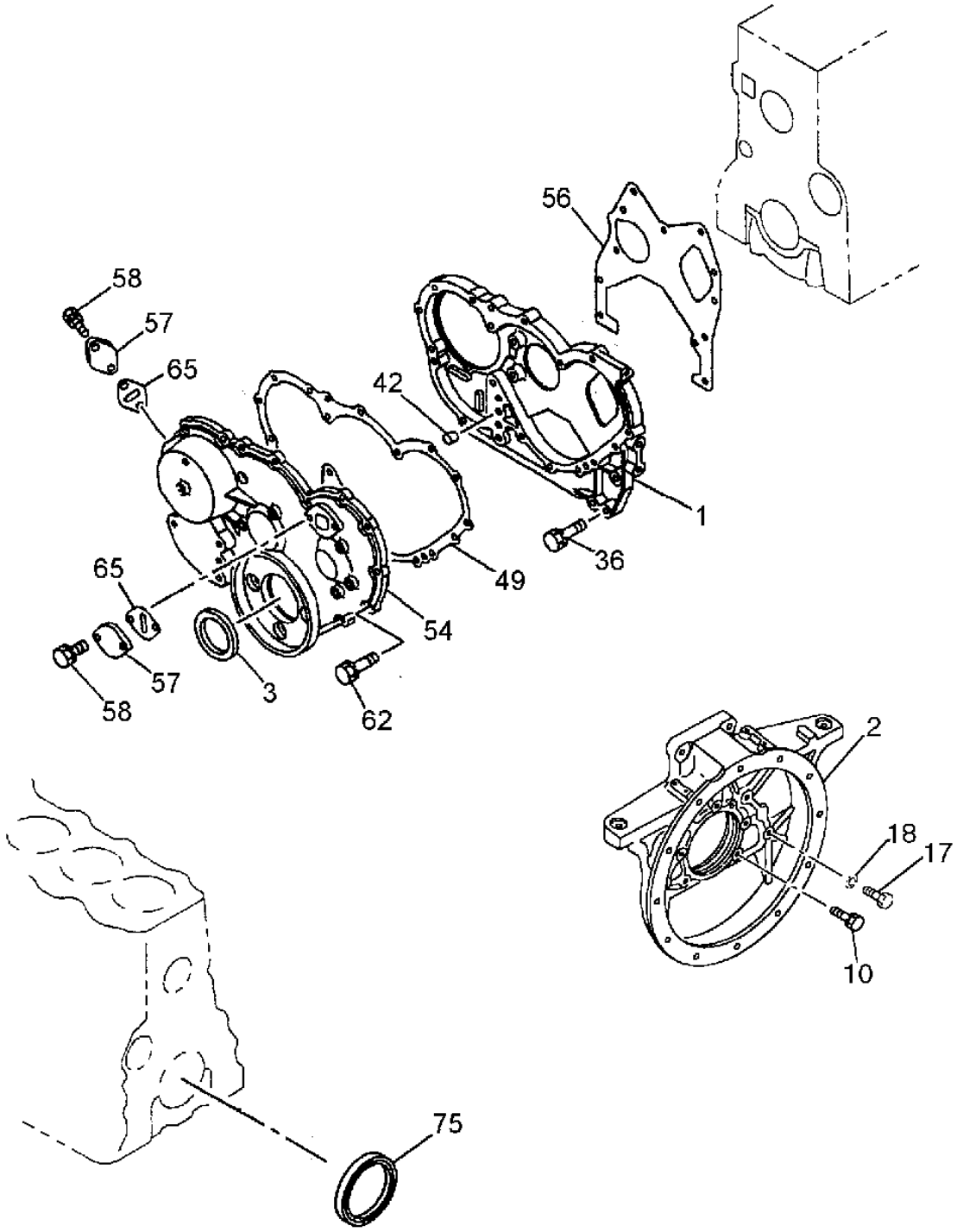


T208911

**TIMING GEAR CASE AND FLYWHEEL HOUSING**

| KEY | PART NO. | PART NAME | QTY | SERIAL NO. | REMARKS |
|---|---|---|---|---|---|
| 1 | 8944509752 | CASE | 1 | | |
| 2 | 1113415850 | HOUSING | 1 | | |
| 3 | 1096254380 | SEAL | 1 | | |
| 10 | 0500408250 | BOLT | 7 | | |
| 11 | AT263853 | SCREW | 6 | | |
| 17 | 0108064500 | BOLT | 4 | | |
| 18 | 9091508140 | LOCK WASHER | 6 | | |
| 36 | 0280808220 | BOLT | 4 | | M8 X 22 |
| | AT259927 | BOLT | 2 | | M8 X 40 |
| 42 | 9112290581 | DOWEL PIN | 1 | | |
| 48 | 8970428010 | COVER | 1 | | |
| 49 | ..... | GASKET | 1 | | ( 8972333010 NO LONGER AVAILABLE) |
| 51 | 9113491341 | COVER | 1 | | |
| 54 | 8971298300 | COVER | 1 | | |
| 56 | 8943706710 | GASKET | 1 | | |
| 57 | 5113210090 | COVER | 2 | | |
| 58 | 0280806120 | BOLT | 4 | | |
| 62 | 0280808800 | BOLT | 1 | | M8 X 80 |
| | 0280810500 | BOLT | 3 | | M10 X 50 |
| | 1090440711 | BOLT | 3 | | M8 X 22 |
| | 0280808220 | BOLT | 4 | | M8 X 50 |
| 65 | ..... | GASKET | 2 | | ( 8971186980 NO LONGER AVAILABLE) |
| 75 | 8970728231 | SEAL | 1 | | |

**ENGINE OVERHAUL GASKET SETS**

T208912 -UN-02MAR05

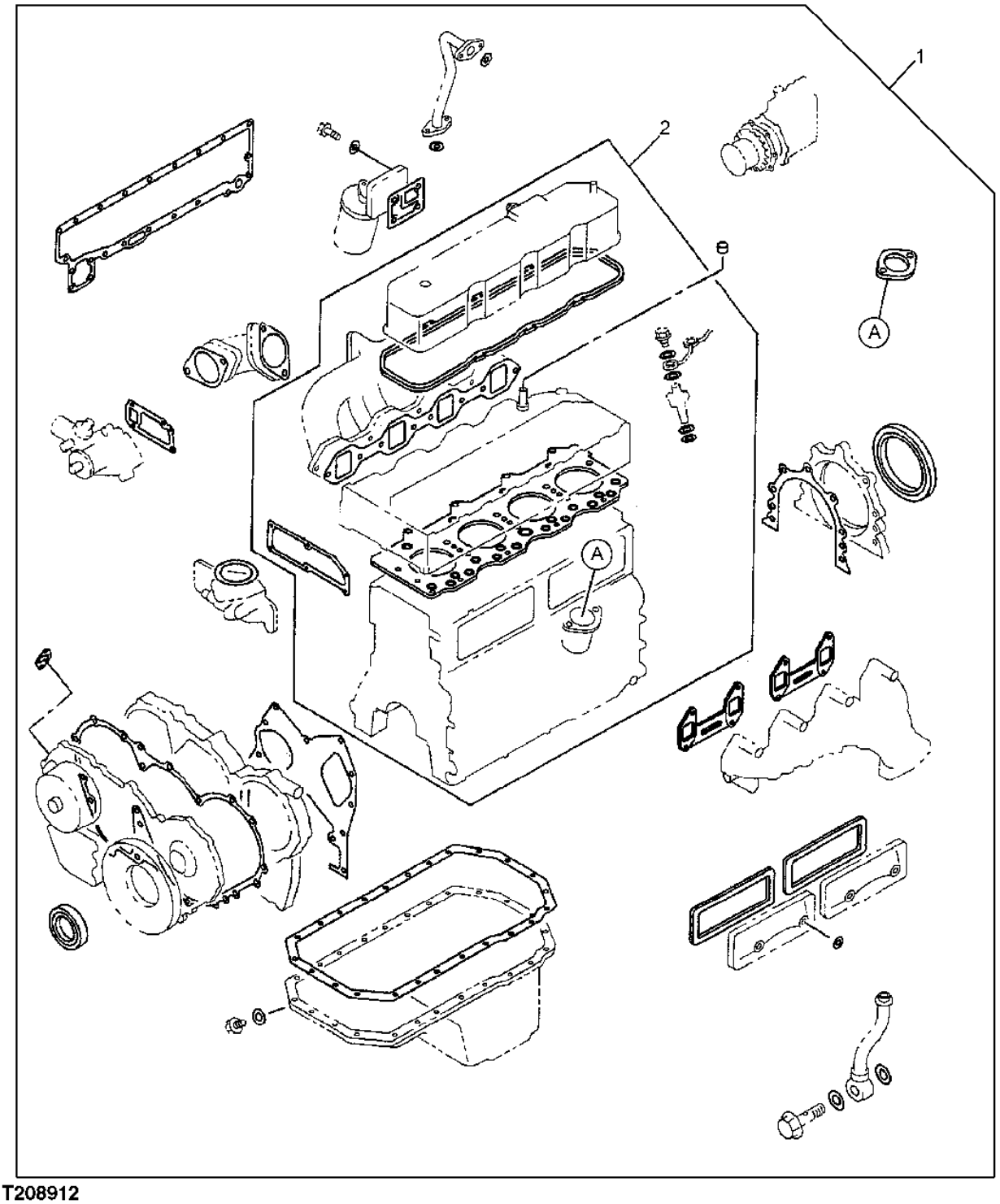


T208912

**ENGINE OVERHAUL GASKET SETS**

| KEY | PART NO. | PART NAME | QTY | SERIAL NO. | REMARKS |
|---|---|---|---|---|---|
| 1 | 5878142811 | GASKET KIT | 1 | | ENGINE REBUILD KIT |
| 2 | 5878138421 | GASKET KIT | 1 | | ENGINE CYLINDER HEAD GASKET SET |

**RADIATOR AND OIL COOLER**

T206875 -UN-13JAN05

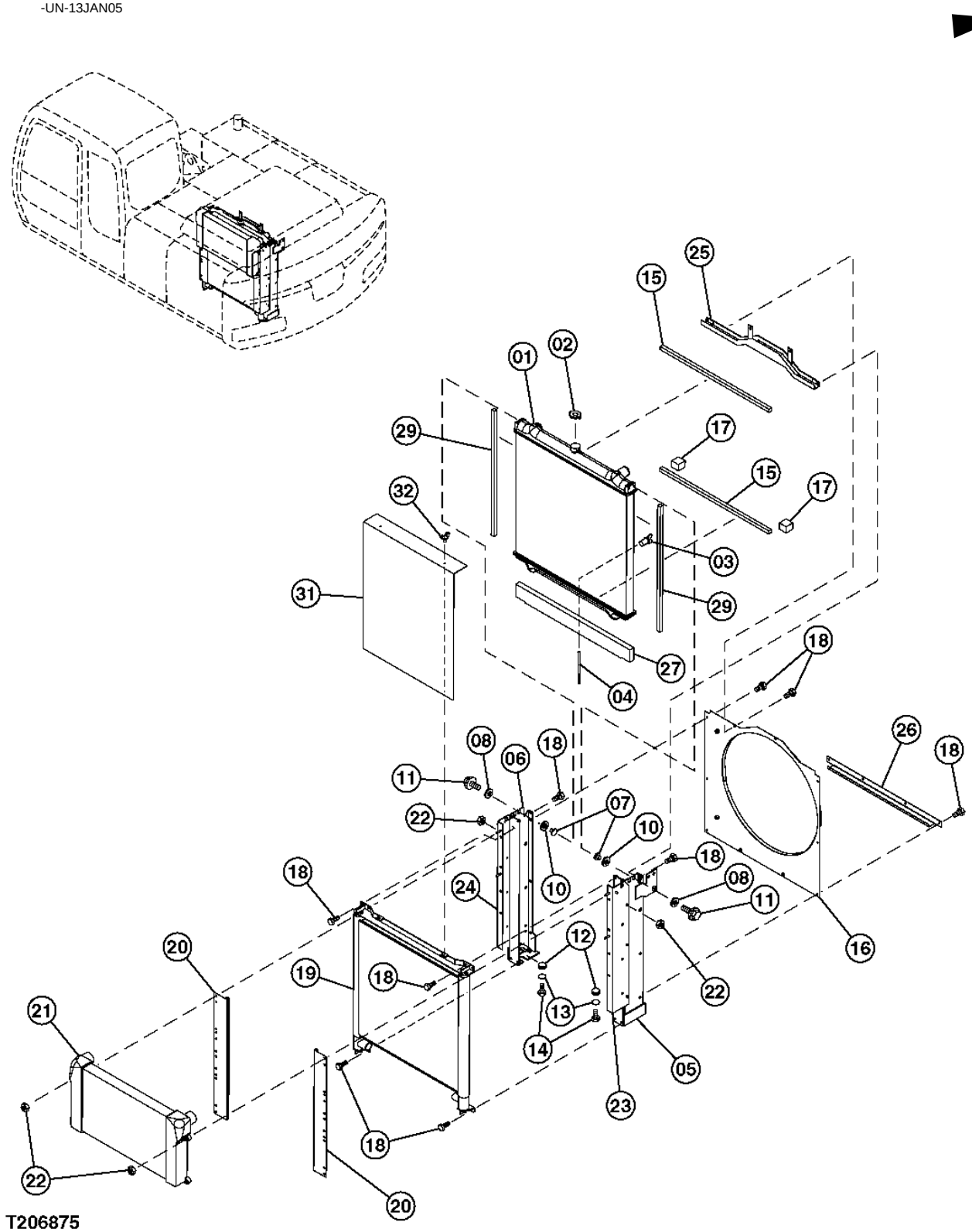

**RADIATOR AND OIL COOLER**

| KEY | PART NO. | PART NAME | QTY | SERIAL NO. | REMARKS |
|---|---|---|---|---|---|
| 1 | 4467355 | RADIATOR | 1 | | |
| 2 | 4343268 | CAP | 1 | | |
| 3 | 4454090 | PIPE PLUG | 1 | | |
| 4 | 4454091 | HOSE | 1 | | |
| 5 | 4453604 | BRACKET | 1 | | |
| 6 | 4454052 | BRACKET | 1 | | |
| 7 | 4454094 | BUSHING | 4 | | |
| 8 | 4454095 | ISOLATOR | 4 | | |
| 10 | 4454097 | ISOLATOR | 4 | | |
| 11 | 4472152 | BOLT | 4 | | |
| 12 | 4454099 | ISOLATOR | 2 | | |
| 13 | 4454100 | WASHER | 2 | | |
| 14 | R516181 | SCREW | 2 | | (SUB FOR 4371242) |
| 15 | 4471936 | ISOLATOR | 2 | | |
| 16 | 4615996 | SHROUD | 1 | | |
| 17 | 4454103 | PACKING | 2 | | |
| 18 | 4382207 | BOLT | 20 | | (SUB FOR 4371258) |
| 19 | 4467356 | OIL COOLER | 1 | | |
| 20 | 4454057 | BRACKET | 2 | | |
| 21 | 4459212 | INTERCOOLER | 10 | | |
| 22 | 4454105 | NUT | 1 | | |
| 23 | 4471939 | BRACKET | 1 | | |
| 24 | 4471940 | BRACKET | 1 | | |
| 25 | 4471941 | BRACKET | 1 | | |
| 26 | 4454109 | PLATE | 1 | | |
| 27 | 4454110 | PACKING | 1 | | |
| 29 | 4462862 | ISOLATOR | 2 | | |
| 31 | 4471942 | SCREEN | 1 | | |
| 32 | 4217593 | WING SCREW | 2 | | (SUB FOR 4229973) |

**RADIATOR HOSES**

T206724 -UN-10JAN05

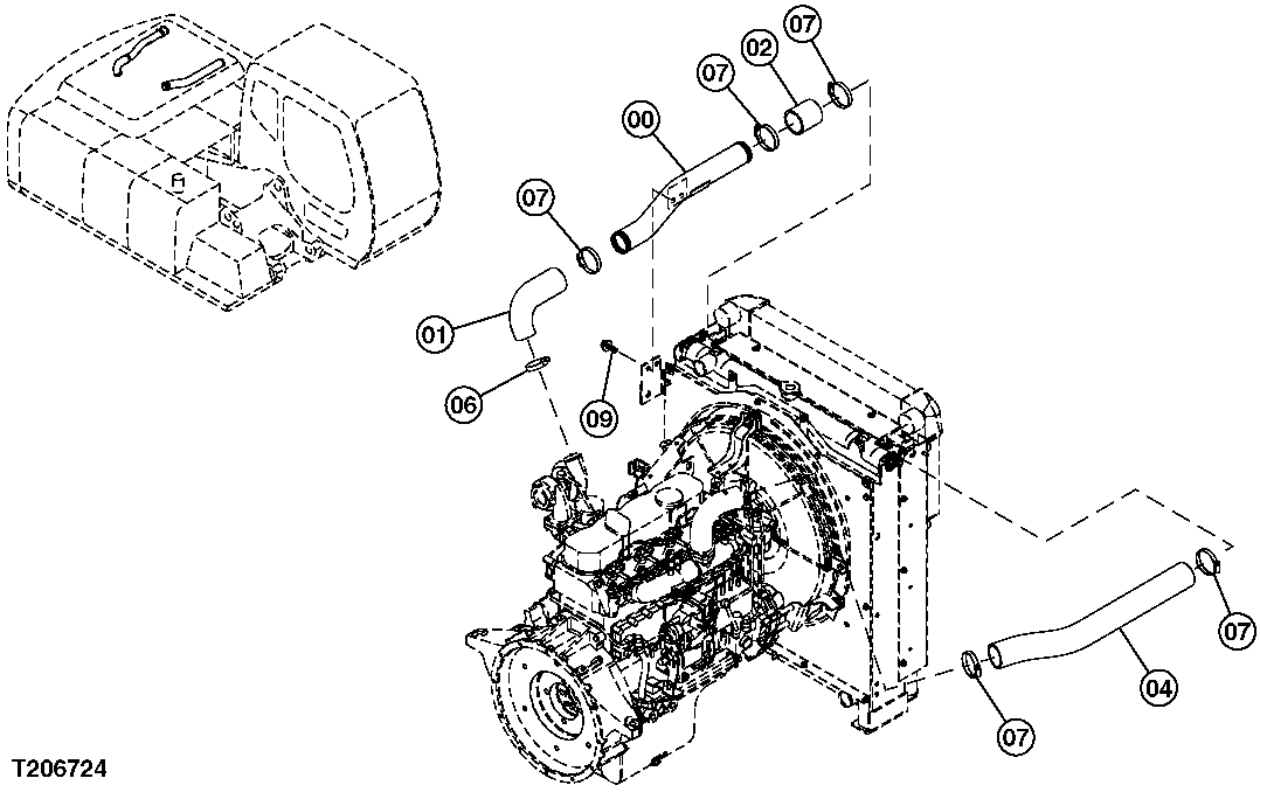


T206724

**RADIATOR HOSES**

| KEY | PART NO. | PART NAME | QTY | SERIAL NO. | REMARKS |
|---|---|---|---|---|---|
| 0 | 8090381 | TUBE | 1 | | |
| 1 | 4423995 | HOSE | 1 | | |
| 2 | 4411793 | HOSE | 1 | | |
| 4 | 4485206 | HOSE | 1 | | |
| 6 | 4504199 | CLAMP | 1 | | |
| 7 | 4504491 | CLAMP | 5 | | |
| 9 | ..... | BOLT | 2 | | |
| | 19M5536 | CAP SCREW | 1 | | M10 X 60, (SUB FOR J901060) |
| | 4486055 | WASHER | 1 | | |

**RADIATOR SUPPORT AND MOUNTING BRACKET**

T206876 -UN-13JAN05

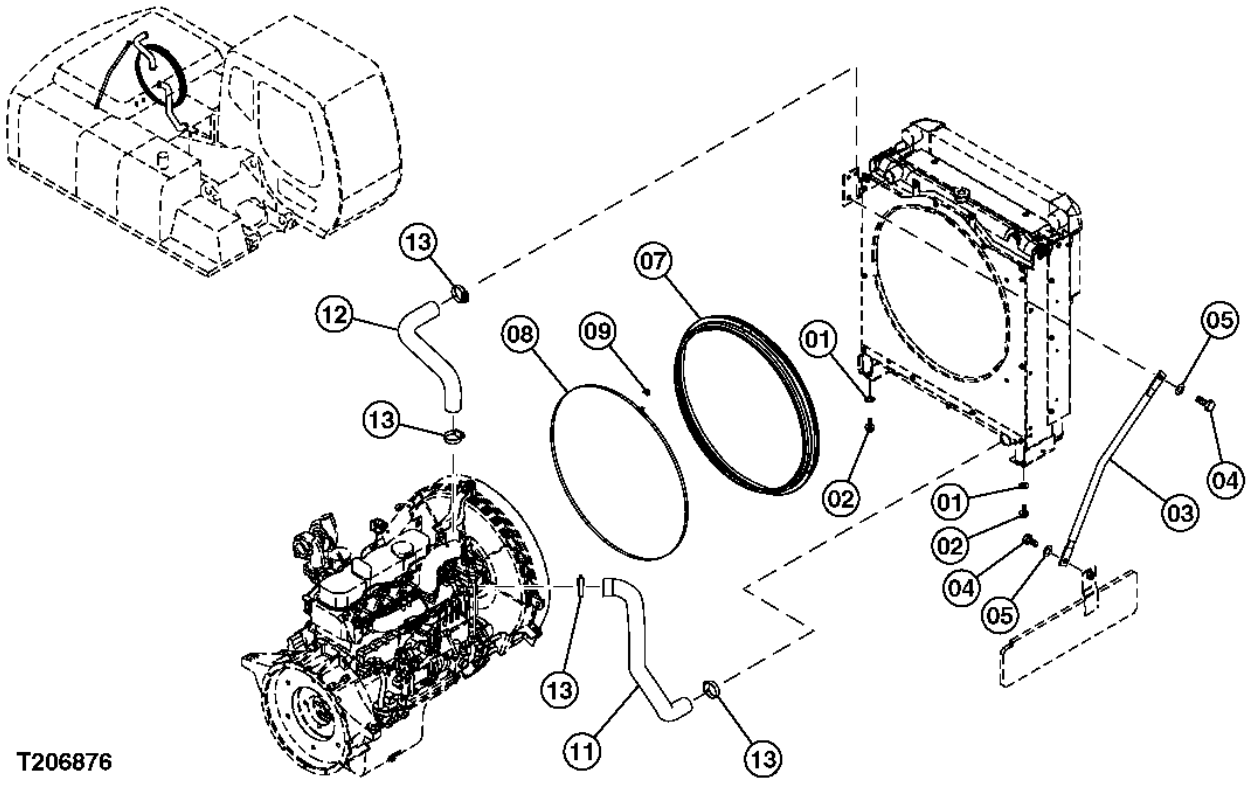

**RADIATOR SUPPORT AND MOUNTING BRACKET**

| KEY | PART NO. | PART NAME | QTY | SERIAL NO. | REMARKS |
|---|---|---|---|---|---|
| 1 | 24M7345 | WASHER | 4 | | (SUB FOR J222012) |
| 2 | 4609016 | BOLT | 4 | | |
| 3 | 3088910 | LATCH | 1 | | |
| 4 | 19M8035 | CAP SCREW | 2 | | (SUB FOR J901635) |
| 5 | 12H294 | LOCK WASHER | 2 | | (SUB FOR A590916) |
| 7 | 4466100 | ISOLATOR | 1 | | |
| 8 | 4426045 | BAND | 1 | | |
| 9 | 4426044 | LOCK | 1 | | |
| 11 | 3096921 | RADIATOR HOSE | 1 | | |
| 12 | 4618767 | RADIATOR HOSE | 1 | | |
| 13 | 4357297 | HOSE CLAMP | 4 | | |

**CHARGE AIR COOLER SCREEN**

T206725 -UN-10JAN05

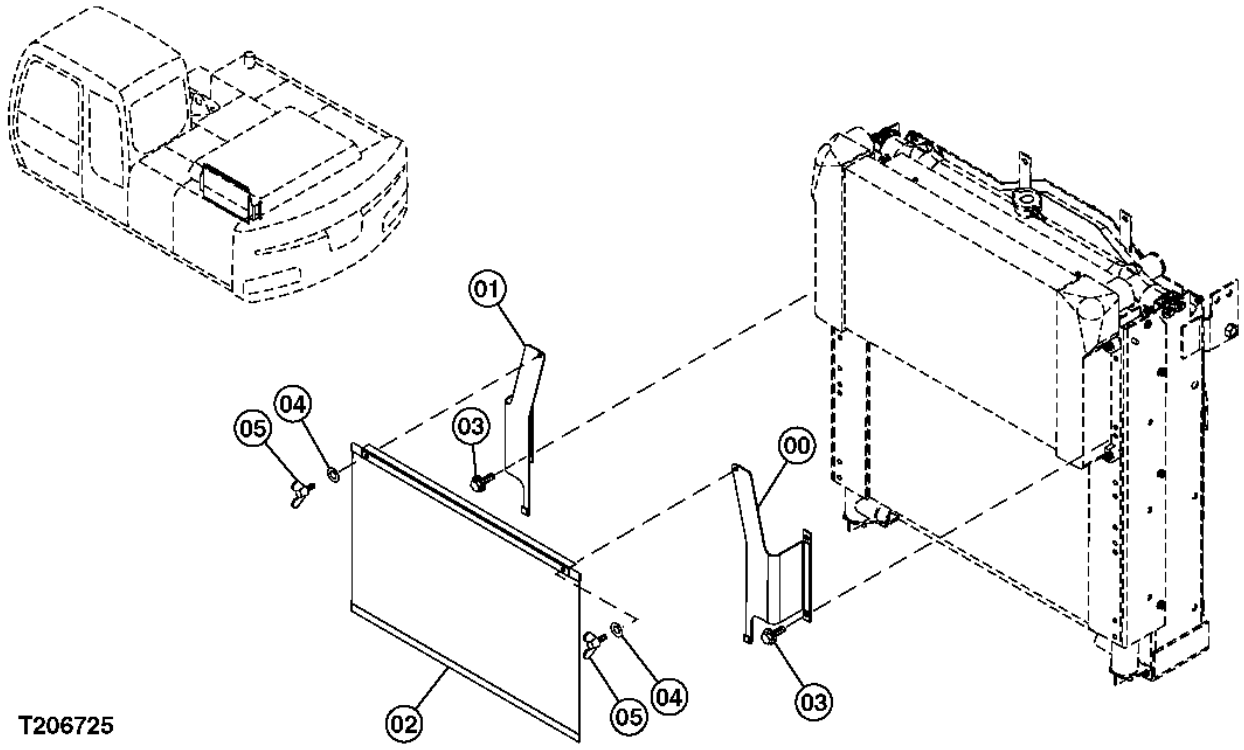

**CHARGE AIR COOLER SCREEN**

| KEY | PART NO. | PART NAME | QTY | SERIAL NO. | REMARKS |
|---|---|---|---|---|---|
| 0 | 4453639 | BRACKET | 1 | | |
| 1 | 4453637 | BRACKET | 1 | | |
| 2 | 4457448 | SCREEN | 1 | | |
| 3 | ..... | BOLT | 4 | | ( J260816 IS NOT AVAILABLE FOR SERVICE) |
| | 19M7162 | CAP SCREW | 1 | | (SUB FOR J900816) |
| | 24M7055 | WASHER | 1 | | (SUB FOR A590108) |
| 4 | 24M7054 | WASHER | 2 | | 6.400 X 12 X 1.600 MM, (SUB FOR A590106) |
| 5 | 21M1690 | WING SCREW | 2 | | M6 X 16, (SUB FOR M360614) |

**RADIATOR TOP COVER**

T206877 -UN-13JAN05

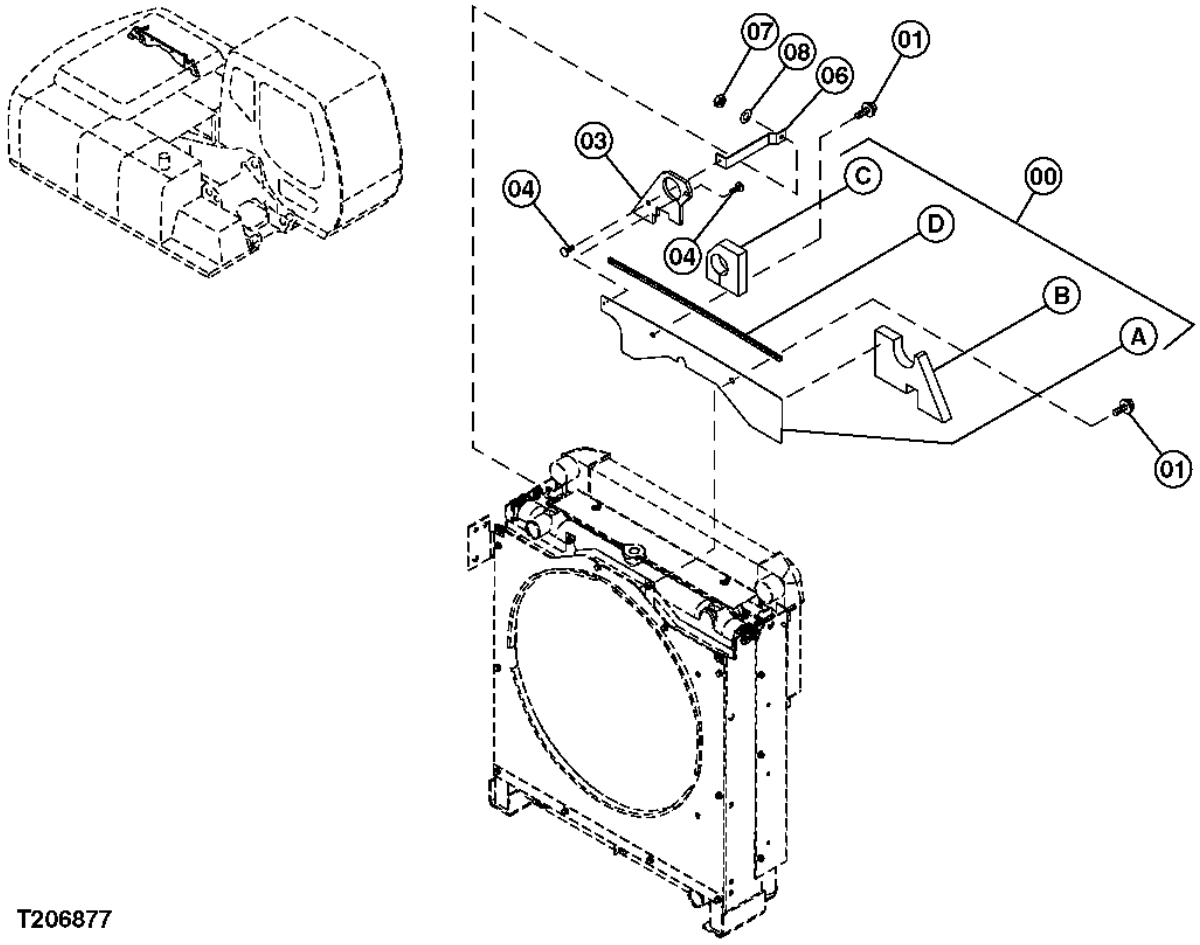


T206877

**RADIATOR TOP COVER**

| KEY | PART NO. | PART NAME | QTY | SERIAL NO. | REMARKS |
|---|---|---|---|---|---|
| 0 | 9760443 | COVER | 1 | | |
| 0A | 3097766 | COVER | 1 | | |
| 0B | 4489828 | ISOLATOR | 1 | | |
| 0C | 4489827 | ISOLATOR | 1 | | |
| 0D | 4458000 | ISOLATOR | 1 | | |
| 1 | ..... | BOLT | 2 | | RADIATOR SUPPORT AND MOUNTING BRACKET |
| | 19M7938 | CAP SCREW | 1 | | (SUB FOR J901020) |
| | 24M7346 | WASHER | 1 | | (SUB FOR J222010) |
| 3 | 4489826 | ISOLATOR | 1 | | |
| 4 | 4443487 | SNAP RING | 2 | | |
| 6 | 4458157 | LATCH | 1 | | |
| 7 | J950008 | NUT | 1 | | |
| 8 | A590108 | WASHER | 1 | | |

**RESERVE WATER TANK**

T206878 -UN-13JAN05

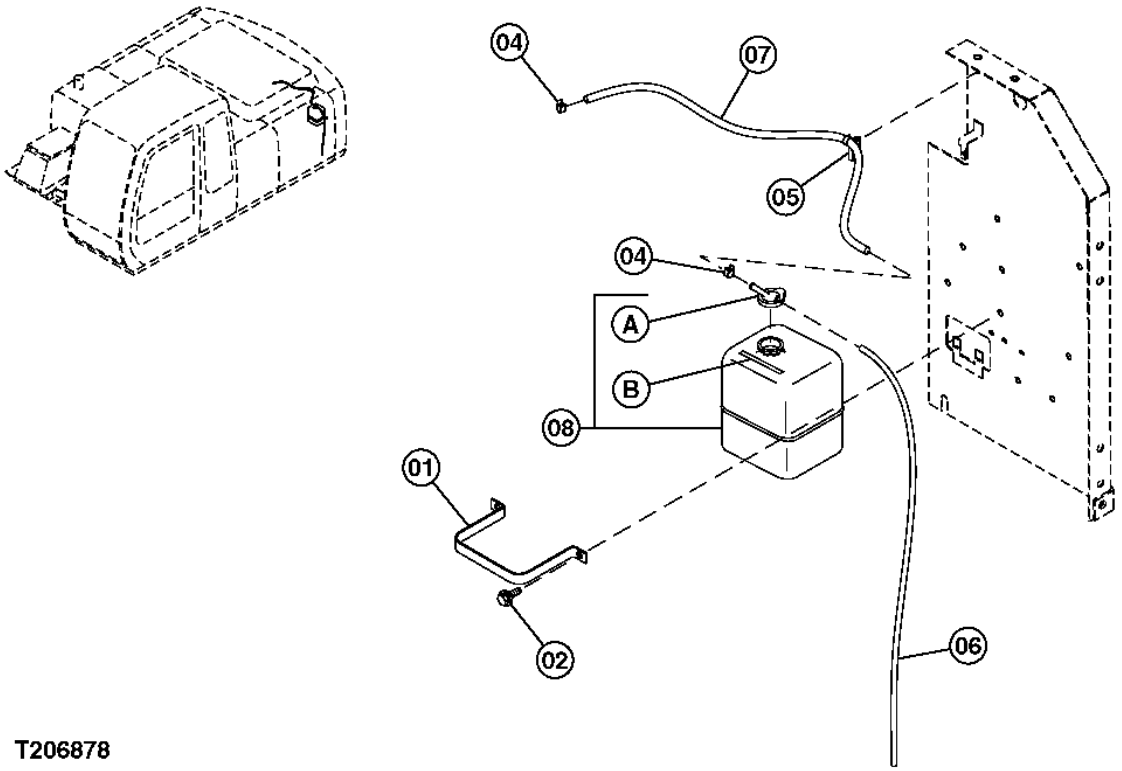


T206878

**RESERVE WATER TANK**

| KEY | PART NO. | PART NAME | QTY | SERIAL NO. | REMARKS |
|---|---|---|---|---|---|
| 1 | 4180555 | BRACKET | 1 | | |
| 2 | ..... | BOLT | 2 | | ( J260820 NOT AVAILABLE FOR SERVICE) |
| | 19M7139 | CAP SCREW | 1 | | M8 X 20, (SUB FOR J900820) |
| | 24M7055 | WASHER | 1 | | 8.400 X 16 X 1.600 MM, (SUB FOR A590108) |
| 4 | ..... | CLAMP | 1 | | ( 4425139 NOT AVAILABLE FOR SERVICE) |
| 5 | 4254600 | CLIP | 1 | | |
| 6 | T79477 | HOSE | 1 | | (SUB FOR 4142844) |
| 7 | ..... | HOSE | 1 | | ( 4384188 NOT AVAILABLE FOR SERVICE) |
| 8 | 4197948 | TANK | 1 | | |
| 8A | 4396809 | CAP | 1 | | |
| 8B | 4288260 | PLATE | 1 | | |

**ENGINE CONTROL CABLE**

T207569 -UN-24FEB05

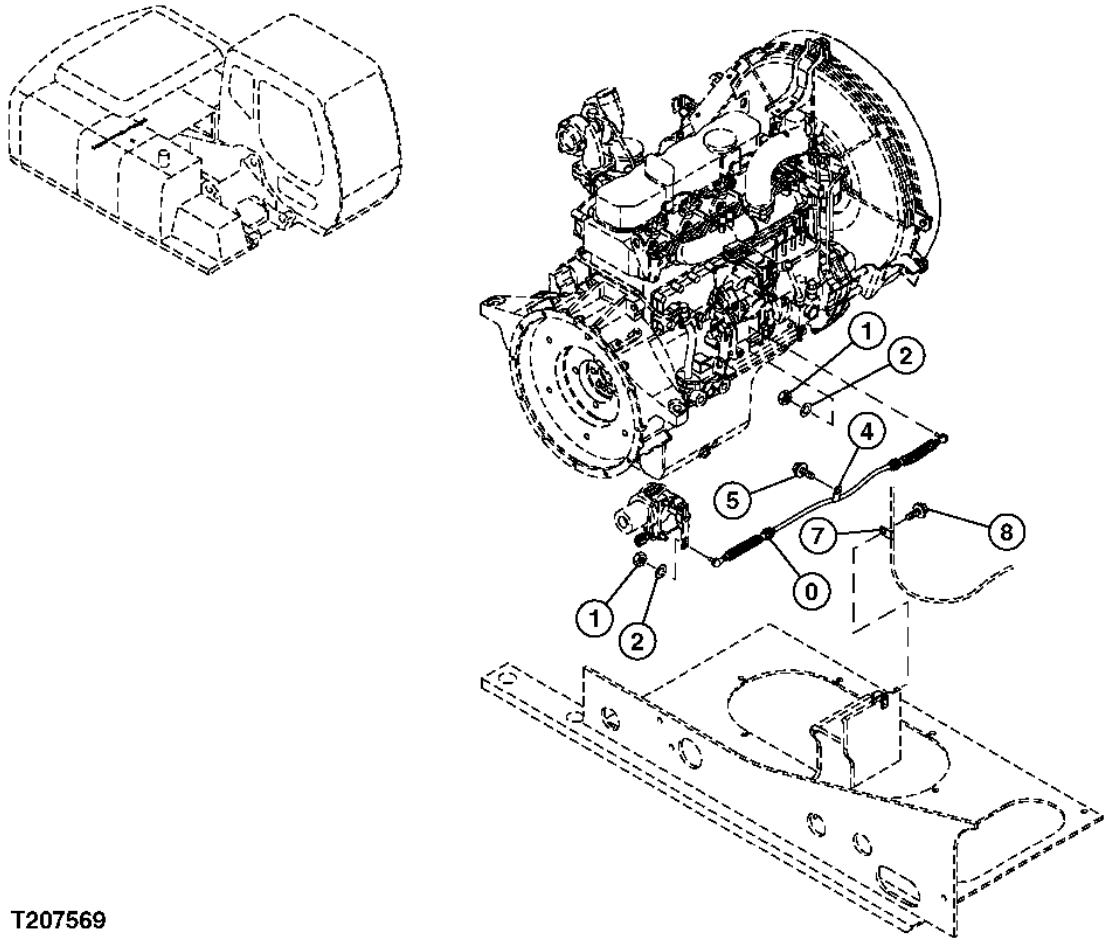


T207569

**ENGINE CONTROL CABLE**

| KEY | PART NO. | PART NAME | QTY | SERIAL NO. | REMARKS |
|---|---|---|---|---|---|
| 0 | 4489598 | CABLE | 1 | | |
| 1 | 14M7272 | NUT | 2 | | M6, (SUB FOR M500605) |
| 2 | 12M7006 | LOCK WASHER | 2 | | (SUB FOR A590906) |
| 4 | 4190261 | CLIP | 1 | | |
| 5 | ..... | CAP SCREW | 1 | | ( J271025 IS NOT AVAILABLE FOR SERVICE) |
| | 19M7402 | CAP SCREW | 1 | | M10 X 25, (SUB FOR J901025) |
| | 24M7346 | WASHER | 1 | | 11 X 20 X 2 MM, (SUB FOR J222010) |
| 7 | T38377 | CLAMP | 1 | | (SUB FOR 4190276) |
| 8 | ..... | CAP SCREW | 1 | | ( J271020 IS NOT AVAILABLE FOR SERVICE) |
| | 19M7938 | CAP SCREW | 1 | | (SUB FOR J901020) |
| | 24M7346 | WASHER | 1 | | (SUB FOR J222010) |

**ENGINE CONTROL MOTOR**

T207329 -UN-02MAR05

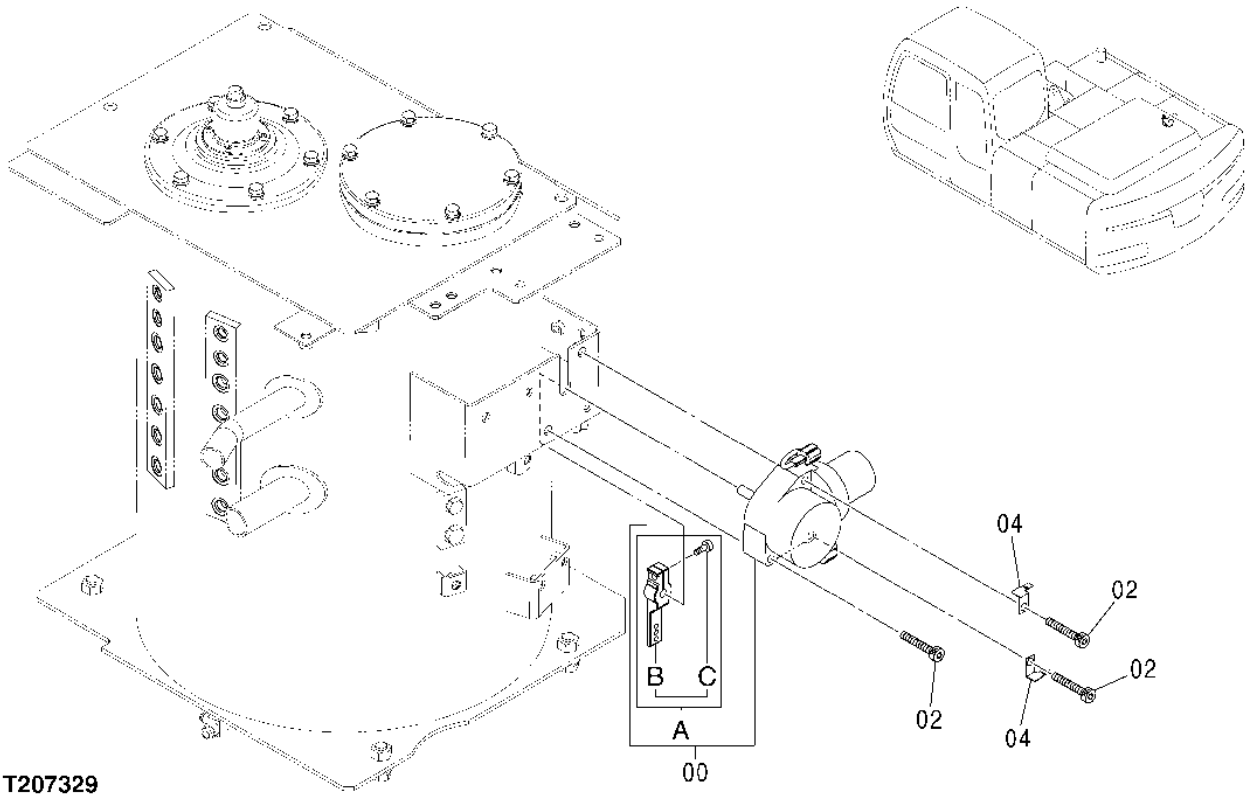


T207329

**ENGINE CONTROL MOTOR**

| KEY | PART NO. | PART NAME | QTY | SERIAL NO. | REMARKS |
|---|---|---|---|---|---|
| 0 | 4614911 | MOTOR | 1 | | (SUB FOR 4360509) |
| 0A | 9207252 | LEVER | 1 | | |
| 0B | 9756079 | LEVER | 1 | | |
| 0C | J780820 | CAP SCREW | 1 | | |
| 2 | J781060 | SCREW | 2 | | |
| 4 | 4257159 | BRACKET | 3 | | |

**AIR CLEANER**

T206879 -UN-13JAN05

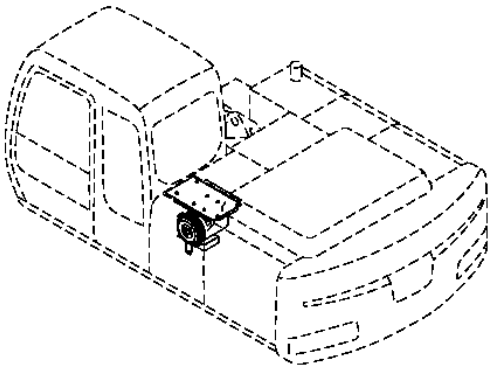

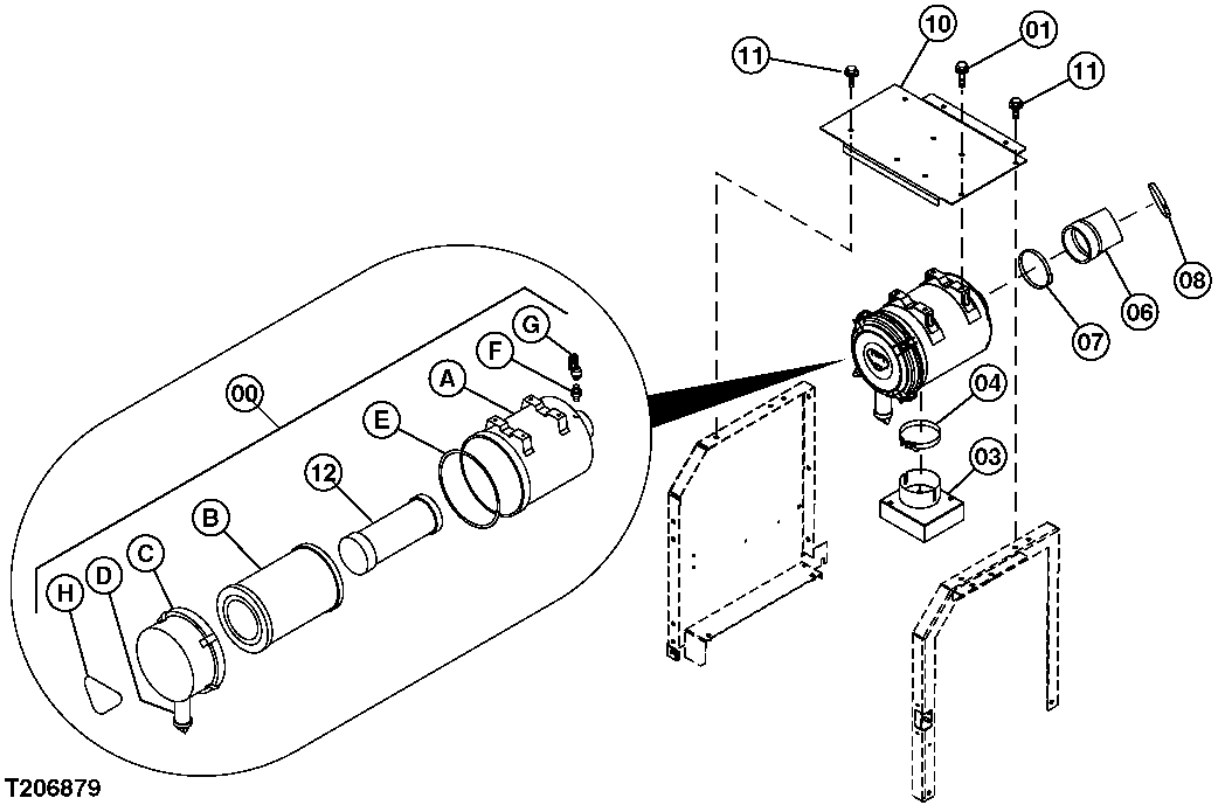

**AIR CLEANER**

| KEY | PART NO. | PART NAME | QTY | SERIAL NO. | REMARKS |
|---|---|---|---|---|---|
| 0 | 4473347 | AIR CLEANER | 1 | | |
| 0A | ..... | HOUSING | 1 | | ( 4459250 IS NOT AVAILABLE FOR SERVICE) |
| 0B | AT280662 | FILTER ELEMENT | 1 | | (SUB FOR 4286128) |
| 0C | 4453909 | COVER | 1 | | |
| 0D | 4453910 | FLOW CONTROL HYD. VALVE | 1 | | |
| 0E | 4453911 | GASKET | 1 | | |
| 0F | P100089 | FILTER | 1 | | (SUB FOR D911521) |
| 0G | 4419601 | INDICATOR | 1 | | |
| 0H | 4453912 | LABEL | 1 | | |
| 1 | ..... | CAP SCREW | 4 | | ( J271045 IS NOT AVAILABLE FOR SERVICE) |
| | 19M7572 | CAP SCREW | 1 | | M10 X 45, (SUB FOR J901045) |
| | 24M7346 | WASHER | 1 | | 11 X 20 X 2 MM, (SUB FOR J222010) |
| 3 | 7035639 | COVER | 1 | | |
| 4 | AT115060 | HOSE CLAMP | 1 | | (SUB FOR 4282490) |
| 6 | 4605447 | HOSE | 1 | | |
| 7 | AT145652 | HOSE CLAMP | 1 | | (SUB FOR 4512716) |
| 8 | AH103182 | HOSE CLAMP | 1 | | (SUB FOR 4507397) |
| 10 | 8093517 | COVER | 1 | | |
| 11 | ..... | CAP SCREW | 4 | | ( J271030 IS NOT AVAILABLE FOR SERVICE) |
| | 19M7662 | CAP SCREW | 1 | | M10 X 30, (SUB FOR J901030) |
| | 24M7346 | WASHER | 1 | | 11 X 20 X 2 MM, (SUB FOR J222010) |
| 12 | AT280663 | FILTER ELEMENT | 1 | | (SUB FOR 4286130) |

**AIR PRE-CLEANER**

T206880 -UN-17JAN05

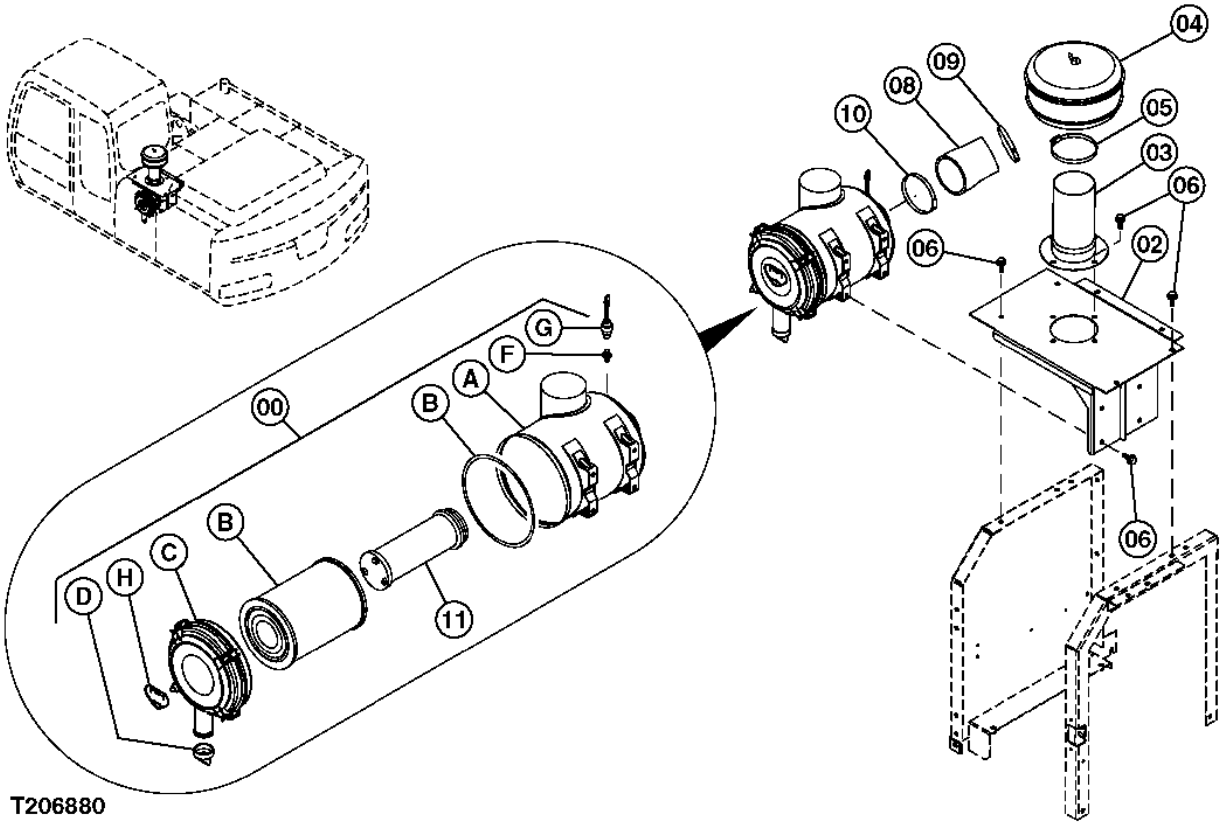

**AIR PRE-CLEANER**

| KEY | PART NO. | PART NAME | QTY | SERIAL NO. | REMARKS |
|---|---|---|---|---|---|
| 0 | 4430601 | FILTER | 1 | | |
| 0A | 4453908 | HOUSING | 1 | | |
| 0B | AT280662 | FILTER ELEMENT | 1 | | (SUB FOR 4286128) |
| 0C | 4453909 | COVER | 1 | | |
| 0D | 4453910 | FLOW CONTROL HYD. VALVE | 1 | | |
| 0E | 4453911 | GASKET | 1 | | |
| 0F | D911521 | ADAPTER | 1 | | |
| 0G | AT131922 | INDICATOR | 1 | | (SUB FOR 4224238) |
| 0H | 4453912 | LABEL | 1 | | |
| 2 | ..... | COVER | 1 | | ( 7045022 IS NOT AVAILABLE FOR SERVICE) |
| 3 | ..... | FLANGE FITTING | 1 | | ( 8093518 IS NOT AVAILABLE FOR SERVICE) |
| 4 | 4090405 | PRECLEANER | 1 | | |
| 5 | 4245194 | HOSE CLAMP | 1 | | |
| 6 | ..... | CAP SCREW | 4 | | ( J271030 IS NOT AVAILABLE FOR SERVICE) |
| | 19M7662 | CAP SCREW | 1 | | M10 X 30, (SUB FOR J901030) |
| | 24M7346 | WASHER | 1 | | 11 X 20 X 2 MM, (SUB FOR J222010) |
| 8 | 4605447 | HOSE | 1 | | |
| 9 | AH103182 | HOSE CLAMP | 1 | | (SUB FOR 4507397) |
| 10 | AT145652 | HOSE CLAMP | 1 | | (SUB FOR 4512716) |
| 11 | AT280663 | FILTER ELEMENT | 1 | | (SUB FOR 4286130) |

**AIR CLEANER HOSES AND PIPE**

T207562 -UN-24FEB05

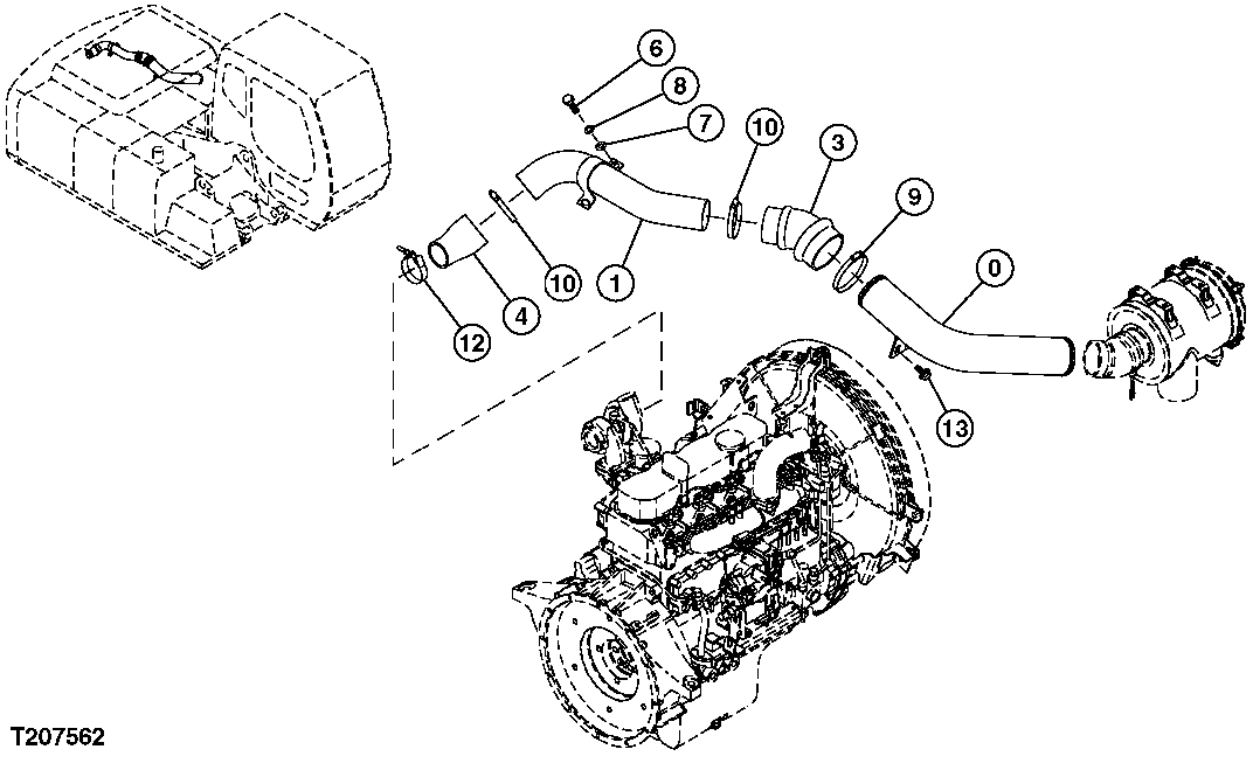


T207562

**AIR CLEANER HOSES AND PIPE**

| KEY | PART NO. | PART NAME | QTY | SERIAL NO. | REMARKS |
|---|---|---|---|---|---|
| 0 | 8090938 | PIPE | 1 | | |
| 1 | 8082618 | PIPE | 1 | | |
| 3 | 4447869 | HOSE | 1 | | |
| 4 | 4447493 | HOSE | 1 | | |
| 6 | T116333 | BOLT | 2 | | (SUB FOR M111030) |
| 7 | 24M7028 | WASHER | 2 | | 10.500 X 20 X 2 MM, (SUB FOR A590110) |
| 8 | 12M7066 | LOCK WASHER | 2 | | 10 MM, (SUB FOR A590910) |
| 9 | AH103182 | HOSE CLAMP | 1 | | (SUB FOR 4507397) |
| 10 | AH104837 | HOSE CLAMP | 2 | | (SUB FOR 4503469) |
| 12 | RE35791 | CLAMP | 1 | | (SUB FOR 4282479) |
| 13 | ..... | CAP SCREW | 2 | | ( J281030 NO LONGER AVAILABLE) |
| | 19M7662 | CAP SCREW | 1 | | M10 X 30, (SUB FOR J901030) |
| | 4486055 | WASHER | 1 | | |

**MUFFLER**

T206881 -UN-13JAN05

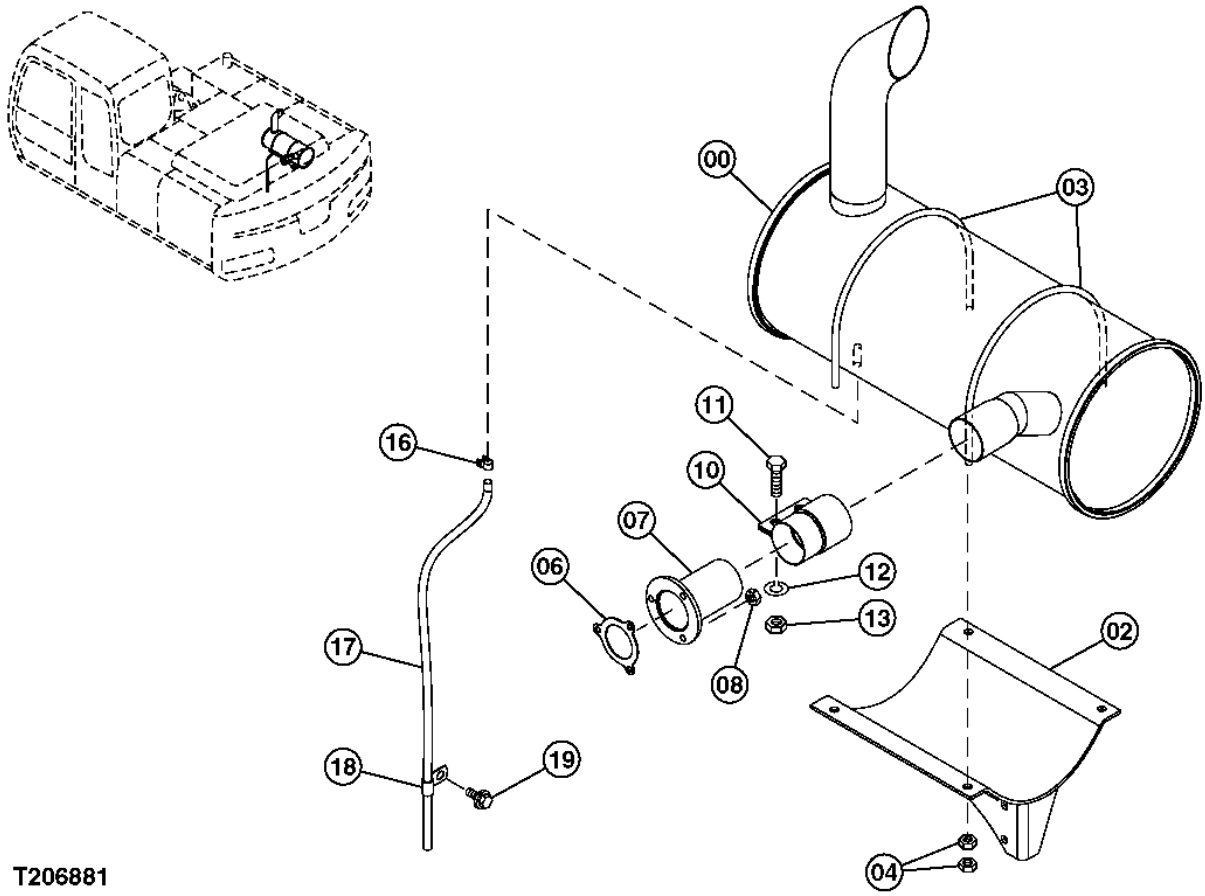


T206881

**MUFFLER**

| KEY | PART NO. | PART NAME | QTY | SERIAL NO. | REMARKS |
|---|---|---|---|---|---|
| 0 | 4479646 | MUFFLER | 1 | | |
| 2 | 7043516 | BRACKET | 1 | | |
| 3 | 4427493 | BOLT | 2 | | |
| 4 | 14M7274 | NUT | 8 | | (SUB FOR J950010) |
| 6 | 4263386 | GASKET | 1 | | |
| 7 | 8060437 | PIPE | 1 | | |
| 8 | E64256 | LOCK NUT | 3 | | (SUB FOR 4252898) |
| 10 | 4213017 | CLAMP | 1 | | |
| 11 | 19M7493 | CAP SCREW | 2 | | (SUB FOR J901240) |
| 12 | 12H301 | LOCK WASHER | 2 | | (SUB FOR A590912) |
| 13 | 14M7275 | NUT | 2 | | (SUB FOR M520012) |
| 14 | 4S00286 | HOSE CLAMP | 1 | | |
| 16 | AR48236 | CLAMP | 1 | | (SUB FOR 4396451) |
| 17 | 4297136 | TUBE | 1 | | (SUB FOR 4611353) |
| 18 | 4344303 | CLIP | 1 | | |
| 19 | ..... | CAP SCREW | 1 | | |
| | 19M7938 | CAP SCREW | 1 | | (SUB FOR J901020) |
| | 24M7346 | WASHER | 1 | | (SUB FOR J222010) |

**FUEL TANK**

T206882 -UN-13JAN05

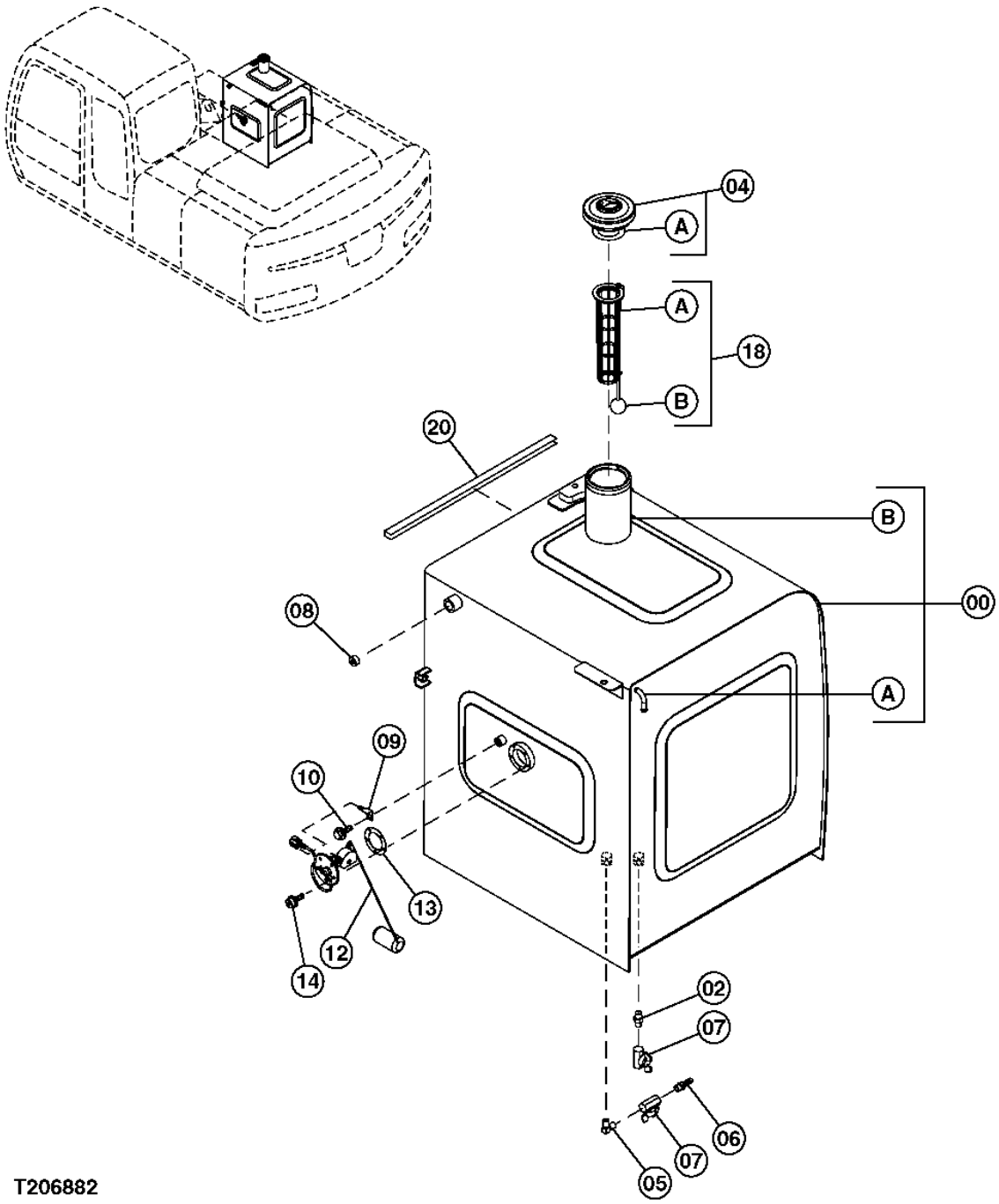

**FUEL TANK**

| KEY | PART NO. | PART NAME | QTY | SERIAL NO. | REMARKS |
|---|---|---|---|---|---|
| 0 | 6021346 | FUEL TANK | 1 | | |
| 0A | 4249777 | PIPE | 1 | | |
| 0B | 4121497 | BUSHING | 1 | | |
| 2 | T116057 | FITTING | 1 | | (SUB FOR J70782) |
| 4 | AT175989 | FILLER CAP | 1 | | (SUB FOR 4361638) |
| 4A | 4168820 | PACKING | 1 | | |
| 5 | 4449361 | ELBOW FITTING | 1 | | |
| 6 | 4449362 | ADAPTER | 1 | | |
| 7 | AT177419 | DRAIN VALVE | 2 | | (SUB FOR 4374265) |
| 8 | 94-2013 | FITTING PLUG | 1 | | |
| 9 | 4257159 | BRACKET | 1 | | |
| 10 | ..... | CAP SCREW | 5 | | ( J271016 NOT AVAILABLE FOR SERVICE) |
| | 19M8324 | CAP SCREW | 1 | | (SUB FOR J901016) |
| | 24M7346 | WASHER | 1 | | (SUB FOR J222010) |
| 12 | 4257128 | FLOAT | 1 | | |
| 13 | U42323 | GASKET | 1 | | (SUB FOR 4269607) |
| 14 | 21M7278 | SCREW | 1 | | (SUB FOR J450510) |
| 18 | 4353560 | STRAINER | 1 | | |
| 18A | ..... | STRAINER | 1 | | ( 4372619 NOT AVAILABLE FOR SERVICE) |
| 18B | 4372620 | FLOAT | 1 | | |
| 20 | 4601878 | SEALING TRIM | 1 | | |

**FUEL TANK SUPPORT MOUNTING HARDWARE**

T206883 -UN-13JAN05

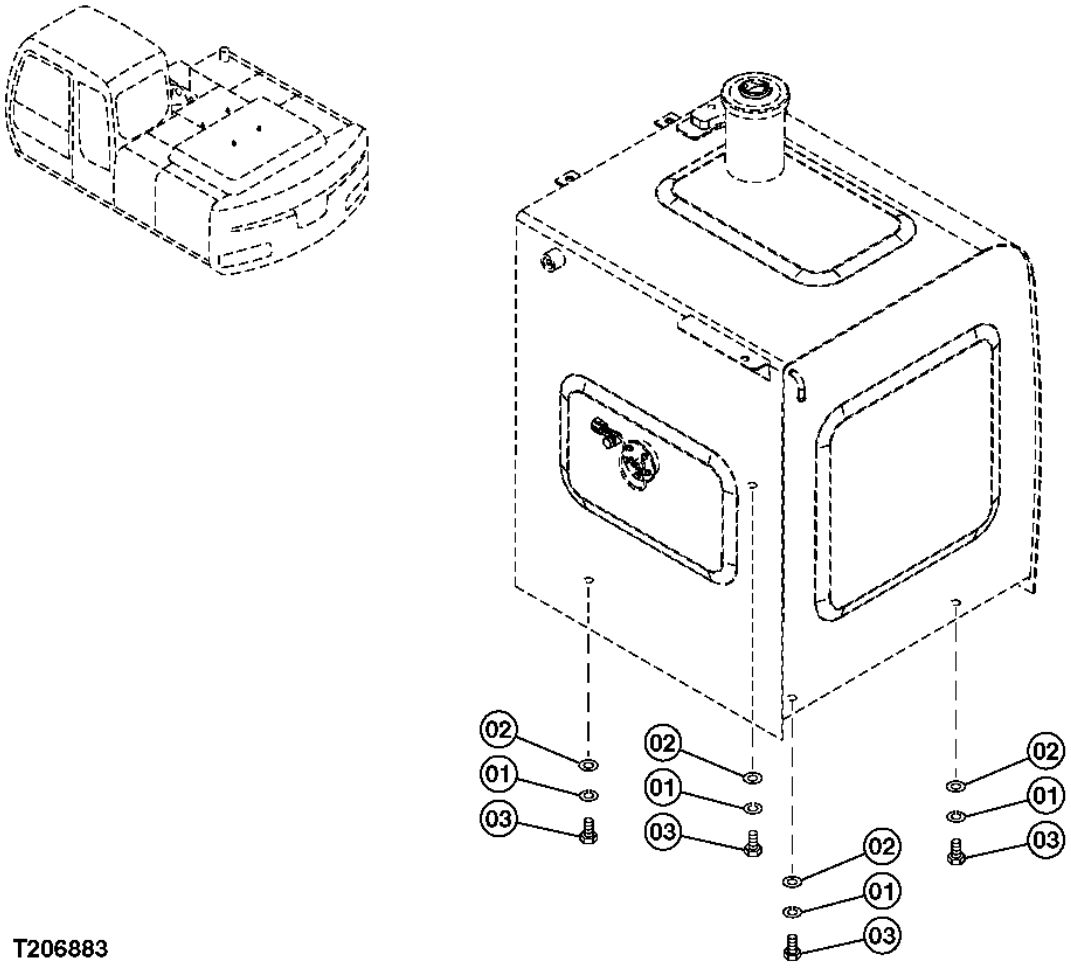


T206883

**FUEL TANK SUPPORT**

| KEY | PART NO. | PART NAME | QTY | SERIAL NO. | REMARKS |
|---|---|---|---|---|---|
| 1 | 12H294 | LOCK WASHER | 4 | | (SUB FOR A590916) |
| 2 | 24M7338 | WASHER | 4 | | (SUB FOR J222016) |
| 3 | 4288155 | BOLT | 4 | | |

**FUEL TRANSFER PUMP, HOSES AND STRAINER**

T206950 -UN-20JAN05

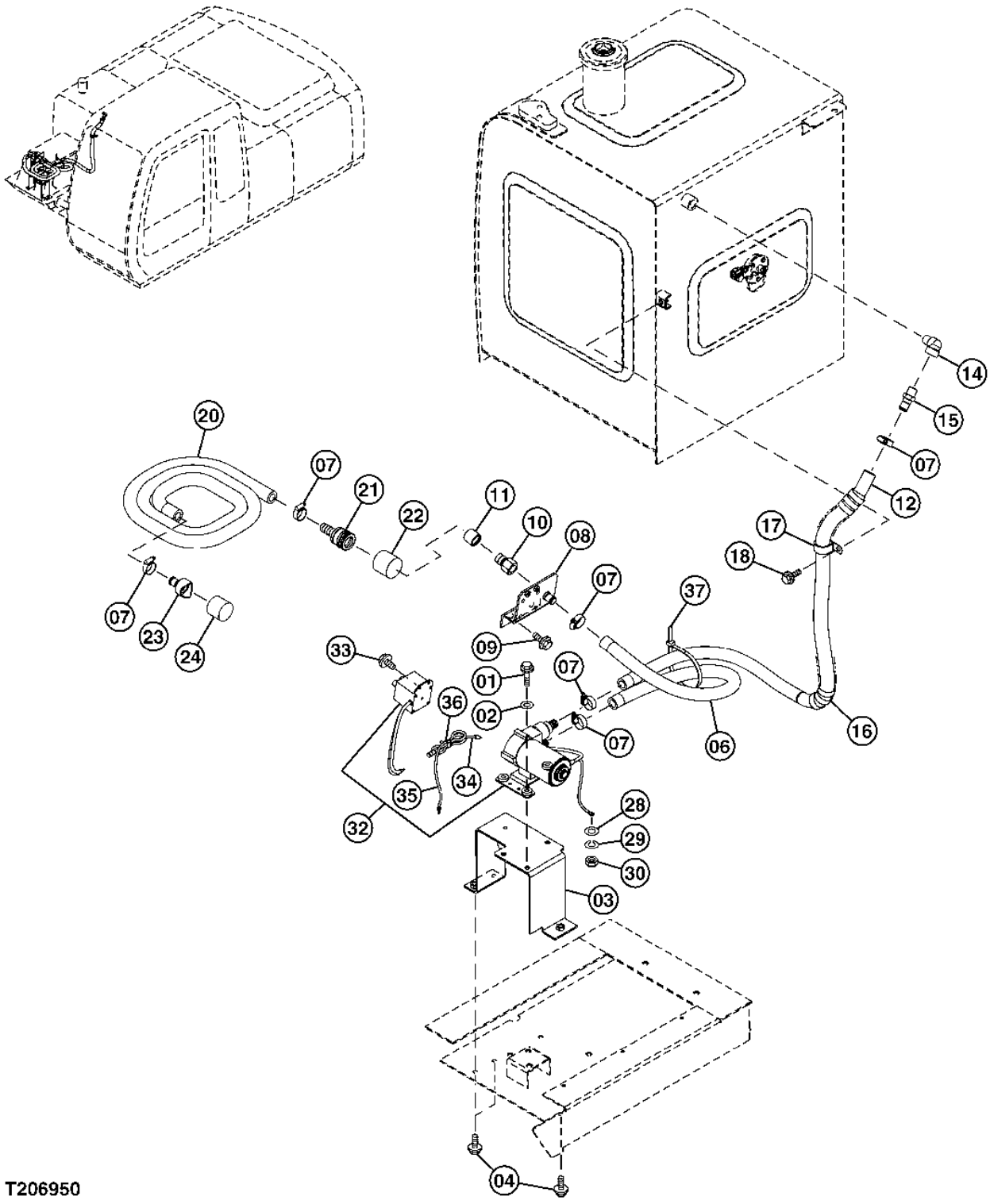

**FUEL TRANSFER PUMP, HOSES AND STRAINER**

| KEY | PART NO. | PART NAME | QTY | SERIAL NO. | REMARKS |
|---|---|---|---|---|---|
| 1 | ..... | BOLT | 3 | | ( J260835 NOT AVAILABLE FOR SERVICE) |
| | J900835 | CAP SCREW | 1 | | |
| | A590108 | WASHER | 1 | | |
| 2 | A590108 | WASHER | 3 | | |
| 3 | ..... | BRACKET | 1 | | ( 8092659 NOT AVAILABLE FOR SERVICE) |
| 4 | ..... | BOLT | 3 | | ( J271025 NOT AVAILABLE FOR SERVICE) |
| | J901025 | CAP SCREW | 1 | | |
| | J222010 | WASHER | 1 | | |
| 6 | ..... | HOSE | 1 | | |
| 7 | 4504367 | HOSE CLAMP | 7 | | |
| 8 | ..... | BRACKET | 1 | | ( 8092662 NOT AVAILABLE FOR SERVICE) |
| 9 | ..... | BOLT | 1 | | ( J271025 NOT AVAILABLE FOR SERVICE) |
| | J901025 | CAP SCREW | 1 | | |
| | J222010 | WASHER | 1 | | |
| 10 | ..... | PLUG | 1 | | ( 4122884 NOT AVAILABLE FOR SERVICE) |
| 11 | ..... | CAP | 1 | | ( 4122886 NOT AVAILABLE FOR SERVICE) |
| 14 | 94-0632 | ELBOW FITTING | 1 | | |
| 15 | 4004589 | ADAPTER | 1 | | |
| 16 | 4327294 | HOSE GUARD | 2 | | |
| 17 | 4190264 | CLIP | 1 | | |
| 18 | ..... | BOLT | 1 | | ( J271025 NOT AVAILABLE FOR SERVICE) |
| | J901025 | CAP SCREW | 1 | | |
| | J222010 | WASHER | 1 | | |
| 20 | 4051160 | HOSE | 1 | | |
| 21 | ..... | SOCKET | 1 | | ( 4122883 NOT AVAILABLE FOR SERVICE) |
| 22 | 4122885 | CAP | 1 | | |
| 23 | 4103527 | STRAINER | 1 | | |
| 24 | 4507650 | CAP | 1 | | |
| 28 | 24M7054 | WASHER | 1 | | (SUB FOR A590106) |
| 29 | 12M7006 | LOCK WASHER | 1 | | (SUB FOR A590906) |
| 30 | 14M7272 | NUT | 1 | | (SUB FOR M500605) |
| 32 | 4455541 | PUMP | 1 | | |
| | A590105 | WASHER | 2 | | |
| 33 | ..... | CAP SCREW | 2 | | ( J260616 NOT AVAILABLE FOR SERVICE) |
| | J900616 | CAP SCREW | 1 | | |
| | 24M7054 | WASHER | 1 | | (SUB FOR A590106) |
| 34 | ..... | WIRING HARNESS | 1 | | ( 4605353 NOT AVAILABLE FOR SERVICE) |
| 35 | ..... | WIRING HARNESS | 1 | | ( 4455876 NOT AVAILABLE FOR SERVICE) |
| 36 | 4259220 | CLIP | 1 | | |
| 37 | 4121859 | TIE BAND | 1 | | |

**PRIMARY FUEL FILTER AND WATER SEPARATOR HOSES AND FITTINGS**

T207460 -UN-11FEB05

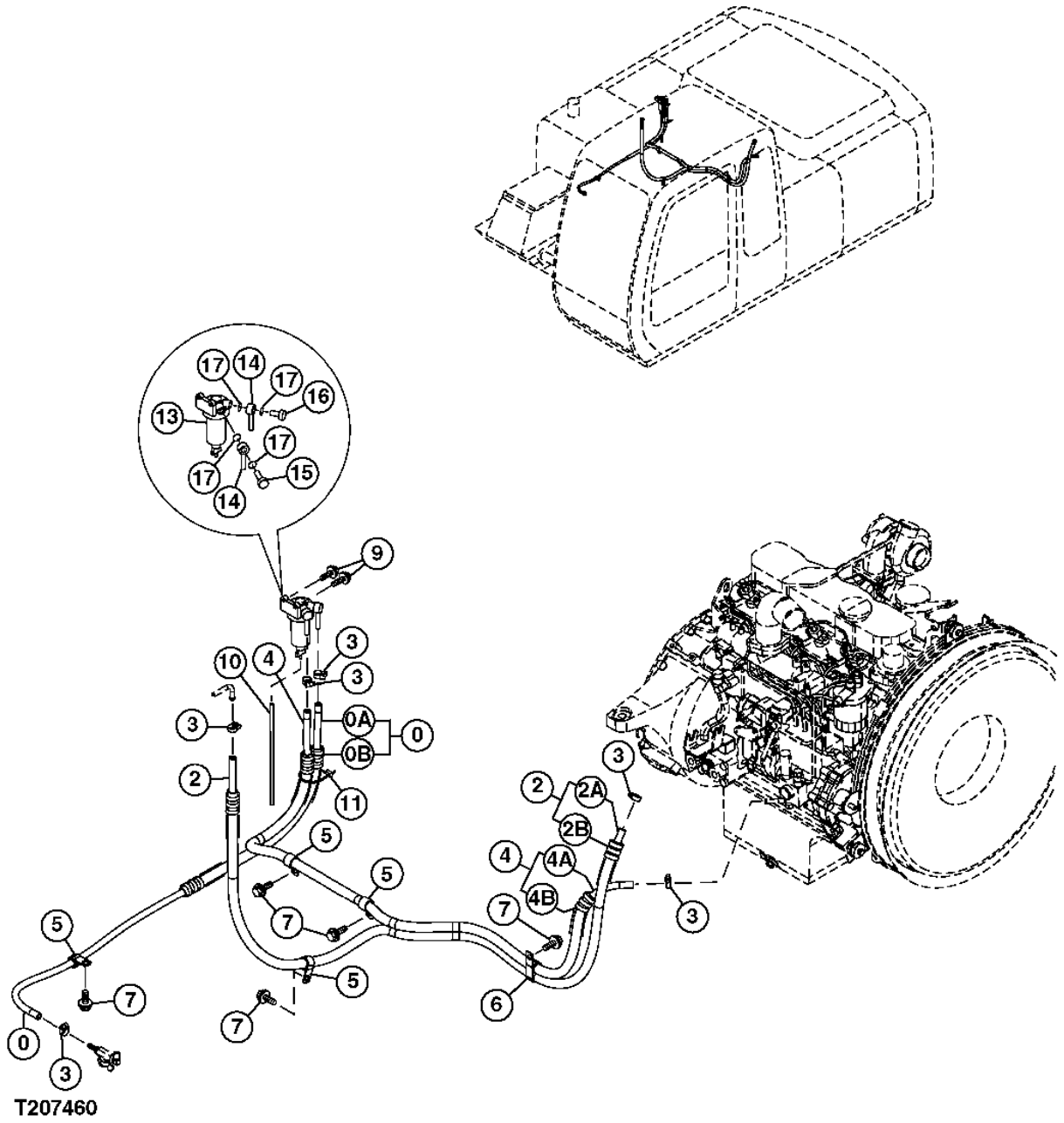


T207460

**PRIMARY FUEL FILTER AND WATER SEPARATOR HOSES AND FITTINGS**

| KEY | PART NO. | PART NAME | QTY | SERIAL NO. | REMARKS |
|---|---|---|---|---|---|
| 0 | ..... | HOSE | 1 | | ( 9203824 NOT AVAILABLE FOR SERVICE) |
| 0A | 4457960 | HOSE | 1 | | |
| 0B | 4457965 | SLEEVE | 1 | | |
| 2 | TY24398 | BULK HOSE | 1 | | (CUT TO LENGTH) (SUB FOR 9193283) |
| 2A | ..... | HOSE | 1 | | ( 4332701 NOT AVAILABLE FOR SERVICE) |
| 2B | 4455515 | SLEEVE | 1 | | (SUB FOR 4441725) |
| 3 | TY22464 | CLAMP | 6 | | (SUB FOR 4514700) |
| 4 | TY24398 | BULK HOSE | 1 | | (CUT TO LENGTH) (SUB FOR 9188357) |
| 4A | ..... | HOSE | 1 | | ( 4433619 NOT AVAILABLE FOR SERVICE) |
| 4B | 4235654 | CLIP | 1 | | (SUB FOR 4190263) |
| 5 | 4190263 | CLIP | 1 | | |
| 6 | 4192034 | CLIP | 1 | | |
| 7 | ..... | CAP SCREW | 5 | | ( J271020 NOT FOR AVAILABLE FOR SERVICE) |
| | 19M7938 | CAP SCREW | 1 | | M10 X 20, (SUB FOR J901020) |
| | 24M7346 | WASHER | 1 | | 11 X 20 X 2 MM, (SUB FOR J222010) |
| 9 | ..... | CAP SCREW | 2 | | ( J260830 NOT FOR AVAILABLE FOR SERVICE) |
| | 19M7288 | CAP SCREW | 1 | | M8 X 30, (SUB FOR J900830) |
| | 24M7055 | WASHER | 1 | | 8.400 X 16 X 1.600 MM, (SUB FOR A590108) |
| 10 | ..... | HOSE | 1 | | ( 4454462 NOT FOR AVAILABLE FOR SERVICE) |
| 11 | 4055312 | TIE BAND | 1 | | |
| 13 | 4452161 | SEPARATOR | 1 | | |
| 14 | 4452162 | PIPE | 2 | | |
| 15 | 4452163 | BOLT | 1 | | |
| 16 | 4452164 | BOLT | 1 | | |
| 17 | 4452165 | PACKING | 4 | | |

**ENGINE STOP CABLE**

T207464 -UN-11FEB05

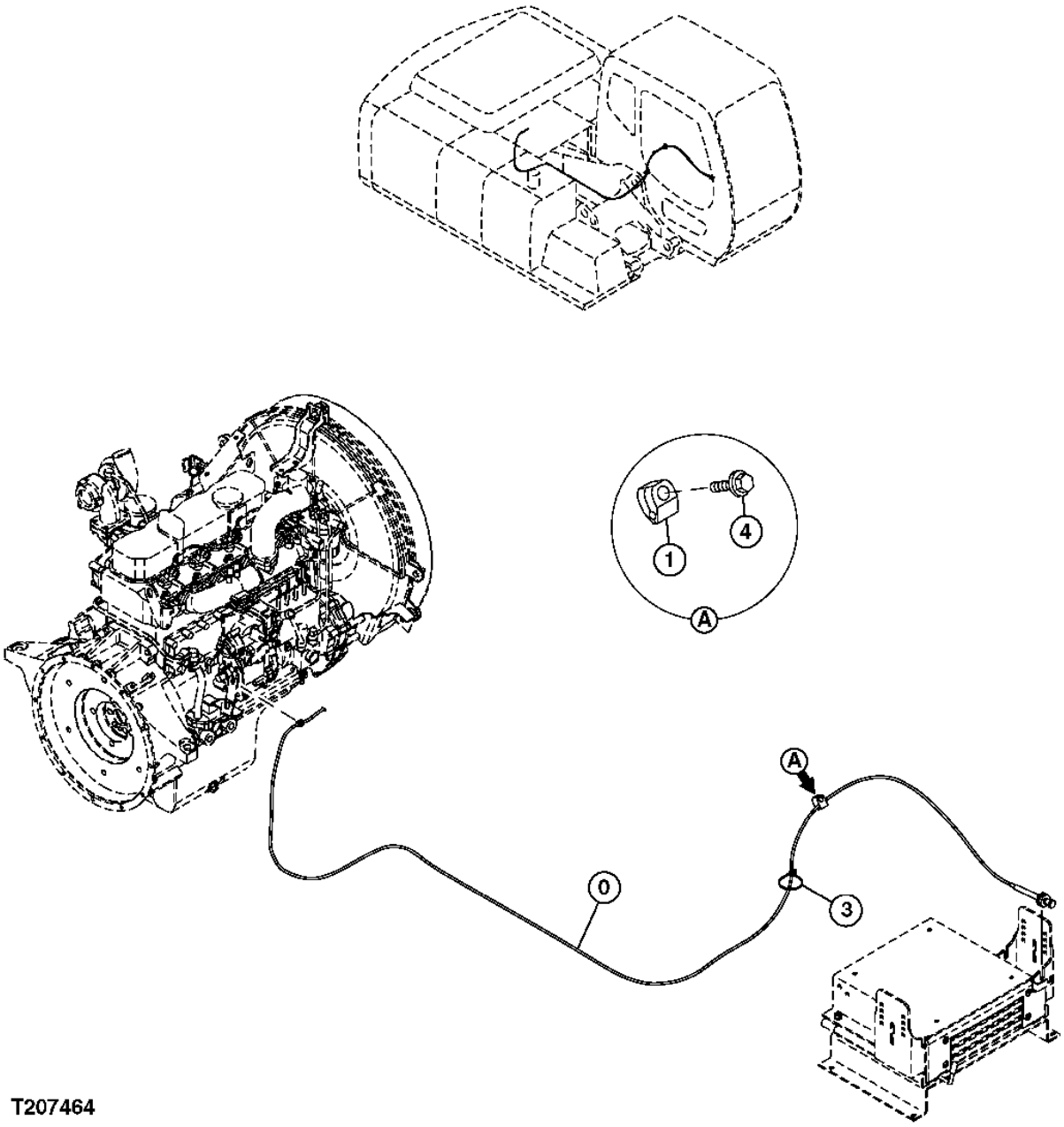


T207464

**ENGINE STOP CABLE**

| KEY | PART NO. | PART NAME | QTY | SERIAL NO. | REMARKS |
|---|---|---|---|---|---|
| 0 | 4467973 | CABLE | 1 | | |
| 1 | 4441190 | CLIP | 1 | | |
| 3 | H77698 | TIE BAND | 1 | | (SUB FOR 4055312) |
| 4 | ..... | CAP SCREW | 1 | | ( J260830 NO LONGER AVAILABLE) |
| | 19M7288 | CAP SCREW | 1 | | M8 X 30, (SUB FOR J900830) |
| | 24M7055 | WASHER | 1 | | 8.400 X 16 X 1.600 MM, (SUB FOR A590108) |

**STEERING COLUMN AND STEERING WHEEL**

T207596 -UN-03FEB05

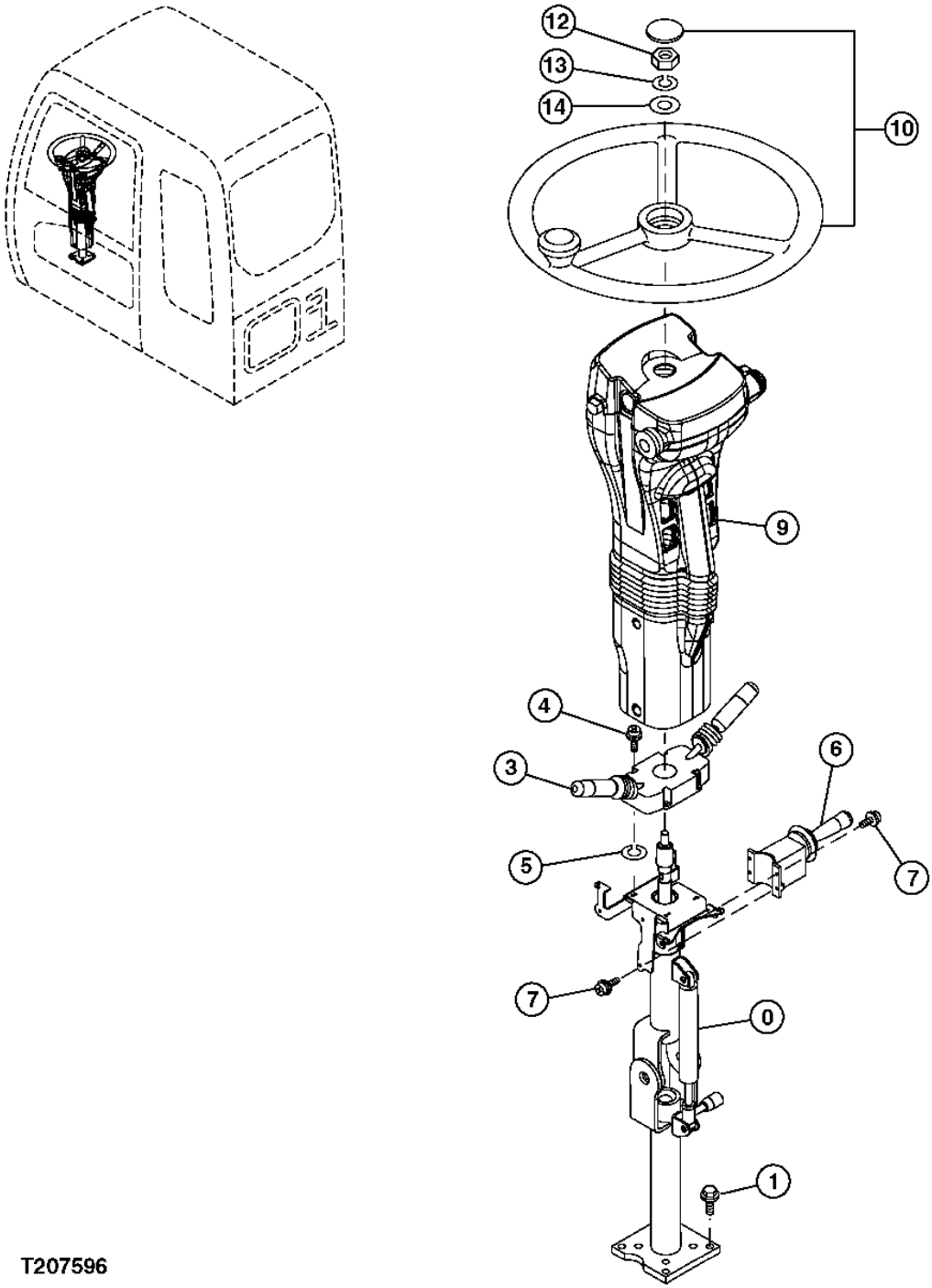

**STEERING COLUMN AND STEERING WHEEL**

| KEY | PART NO. | PART NAME | QTY | SERIAL NO. | REMARKS |
|---|---|---|---|---|---|
| 0 | 4465121 | STEERING COLUMN | 1 | | |
| 1 | ..... | CAP SCREW | 4 | | |
| | J901035 | CAP SCREW | 1 | | |
| | J222010 | WASHER | 1 | | |
| 3 | 4462366 | SWITCH | 1 | | |
| 4 | ..... | CAP SCREW | 4 | | |
| 5 | ..... | WASHER | 4 | | |
| 6 | 4411058 | SWITCH | 1 | | |
| 7 | J450416 | SCREW | 4 | | |
| 9 | 4479026 | STEERING COLUMN | 1 | | |
| 10 | 4413969 | WHEEL | 1 | | ASSEMBLY |
| 12 | J950012 | NUT | 1 | | |
| 13 | A590912 | LOCK WASHER | 1 | | |
| 14 | 449490 | WASHER | 1 | | |

**STEERING COLUMN ASSEMBLY**

T207597 -UN-02MAR05

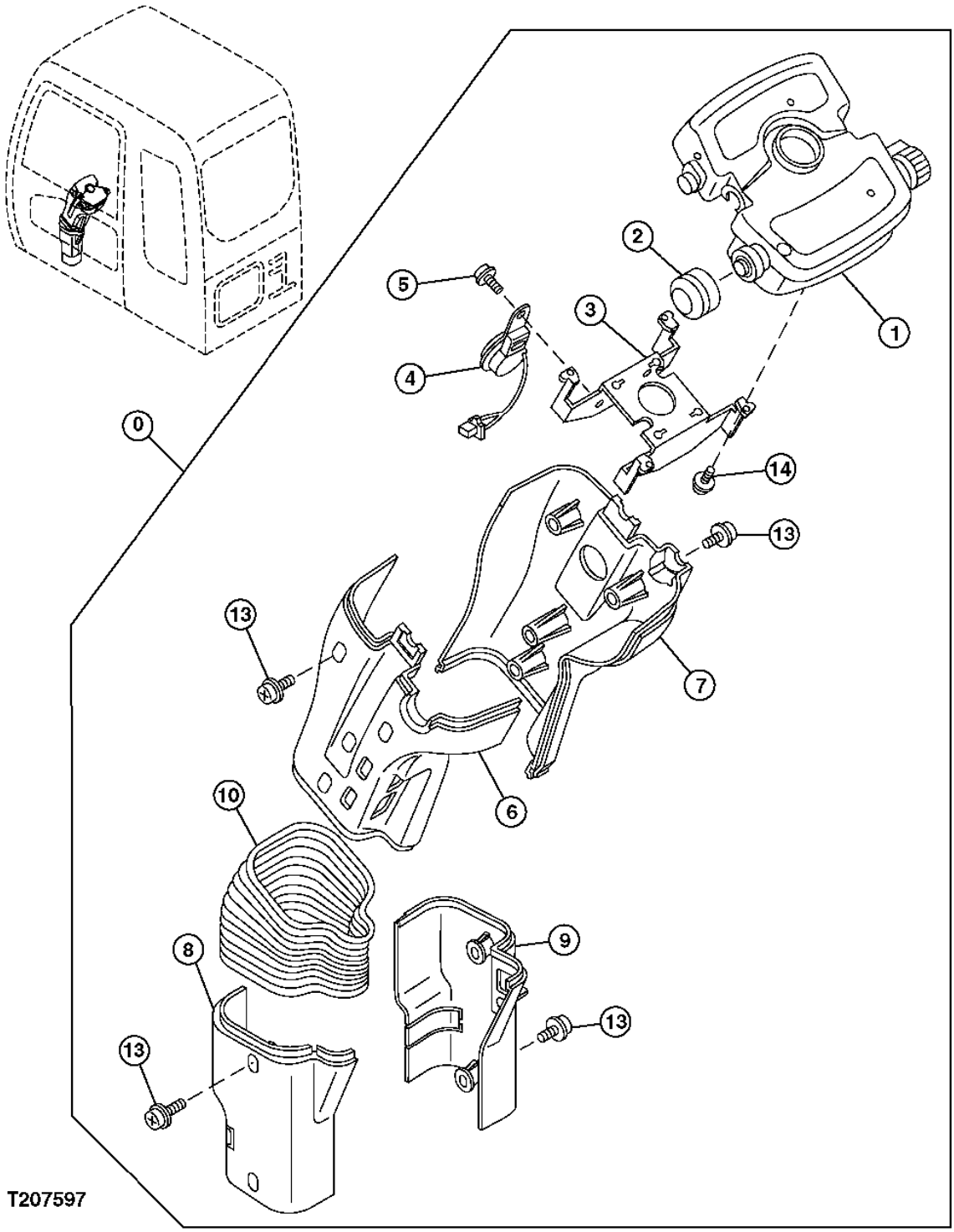

**STEERING COLUMN ASSEMBLY**

| KEY | PART NO. | PART NAME | QTY | SERIAL NO. | REMARKS |
|---|---|---|---|---|---|
| 0 | 4479026 | STEERING COLUMN | 1 | | |
| 1 | 4479397 | PANEL | 1 | | |
| 2 | 4425215 | KNOB | 1 | | |
| 3 | 4425214 | BRACKET | 1 | | |
| 4 | 4297188 | TRAVEL WARNING ALARM | 1 | | |
| 5 | 4295000 | SCREW | 1 | | |
| 6 | 4479056 | COVER | 1 | | |
| 7 | 4479055 | COVER | 1 | | |
| 8 | 4603067 | COVER | 1 | | |
| 9 | 4603066 | COVER | 1 | | |
| 10 | 4425218 | COVER | 1 | | |
| 13 | 4295000 | SCREW | 10 | | |
| 14 | 4294999 | SCREW | 4 | | |

**STEERING COLUMN INDICATOR PANEL ASSEMBLY**

T207598 -UN-02MAR05

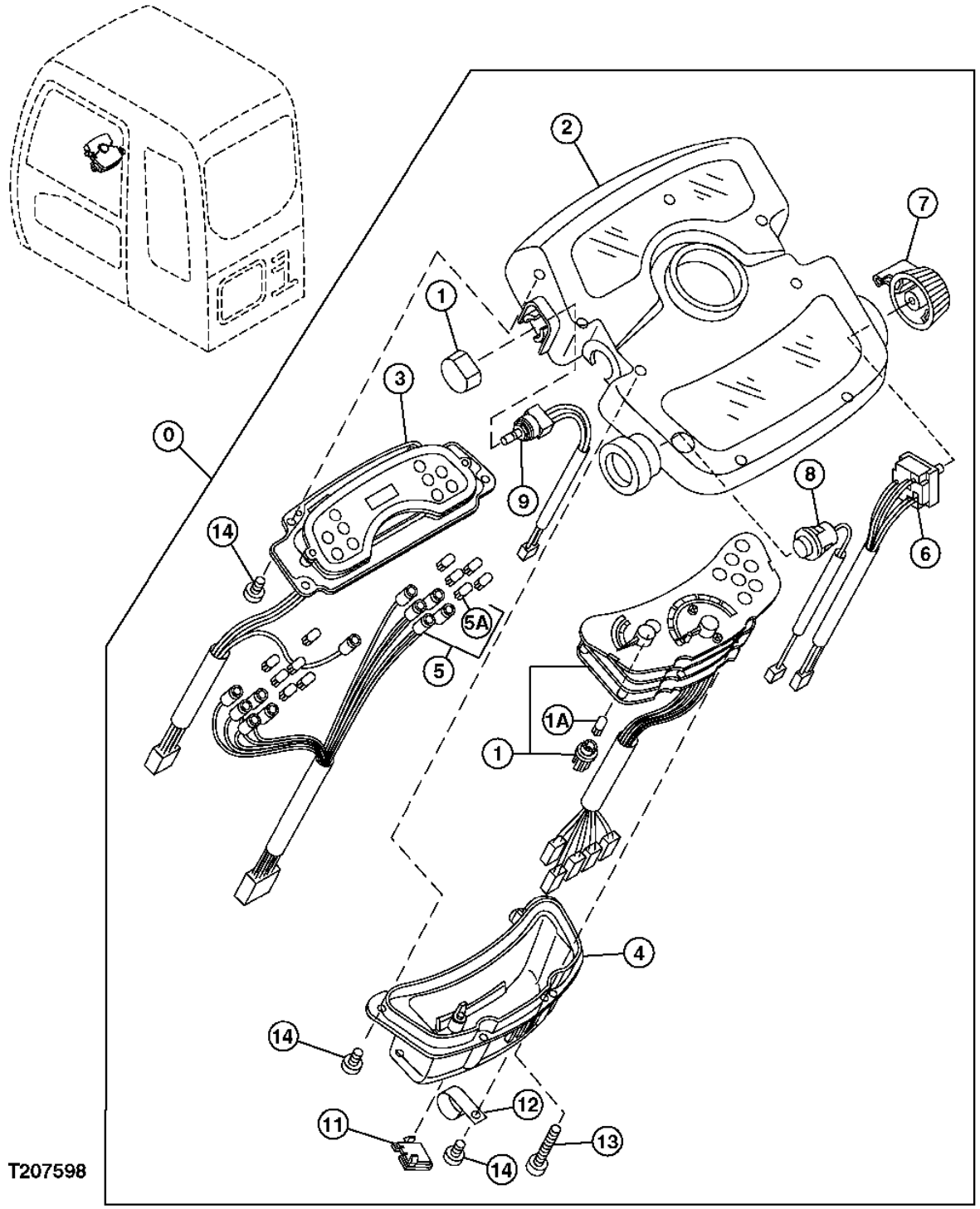

**STEERING COLUMN INDICATOR PANEL ASSEMBLY**

| KEY | PART NO. | PART NAME | QTY | SERIAL NO. | REMARKS |
|---|---|---|---|---|---|
| 0 | 4479397 | PANEL | 1 | | |
| 1 | 4608327 | METER | 1 | | |
| 1A | 4426362 | LAMP | 1 | | |
| 2 | 4608329 | CASE | 1 | | |
| 3 | 4608330 | CASE | 1 | | |
| 4 | 4426365 | CASE | 1 | | |
| 5 | 4426366 | WIRING HARNESS | 1 | | |
| 5A | 4370152 | LAMP | 10 | | |
| 6 | 4426367 | SWITCH | 1 | | |
| 7 | 4425216 | KNOB | 1 | | |
| 8 | 4426368 | SWITCH | 1 | | |
| 9 | 4426369 | SWITCH | 1 | | |
| 10 | 4425217 | KNOB | 1 | | |
| 11 | 4310825 | GROMMET | 1 | | |
| 12 | 4381573 | CLIP | 1 | | |
| 13 | 4426370 | SCREW | 5 | | |
| 14 | 4294999 | SCREW | 9 | | |

**STEERING VALVE**

T207440 -UN-11FEB05

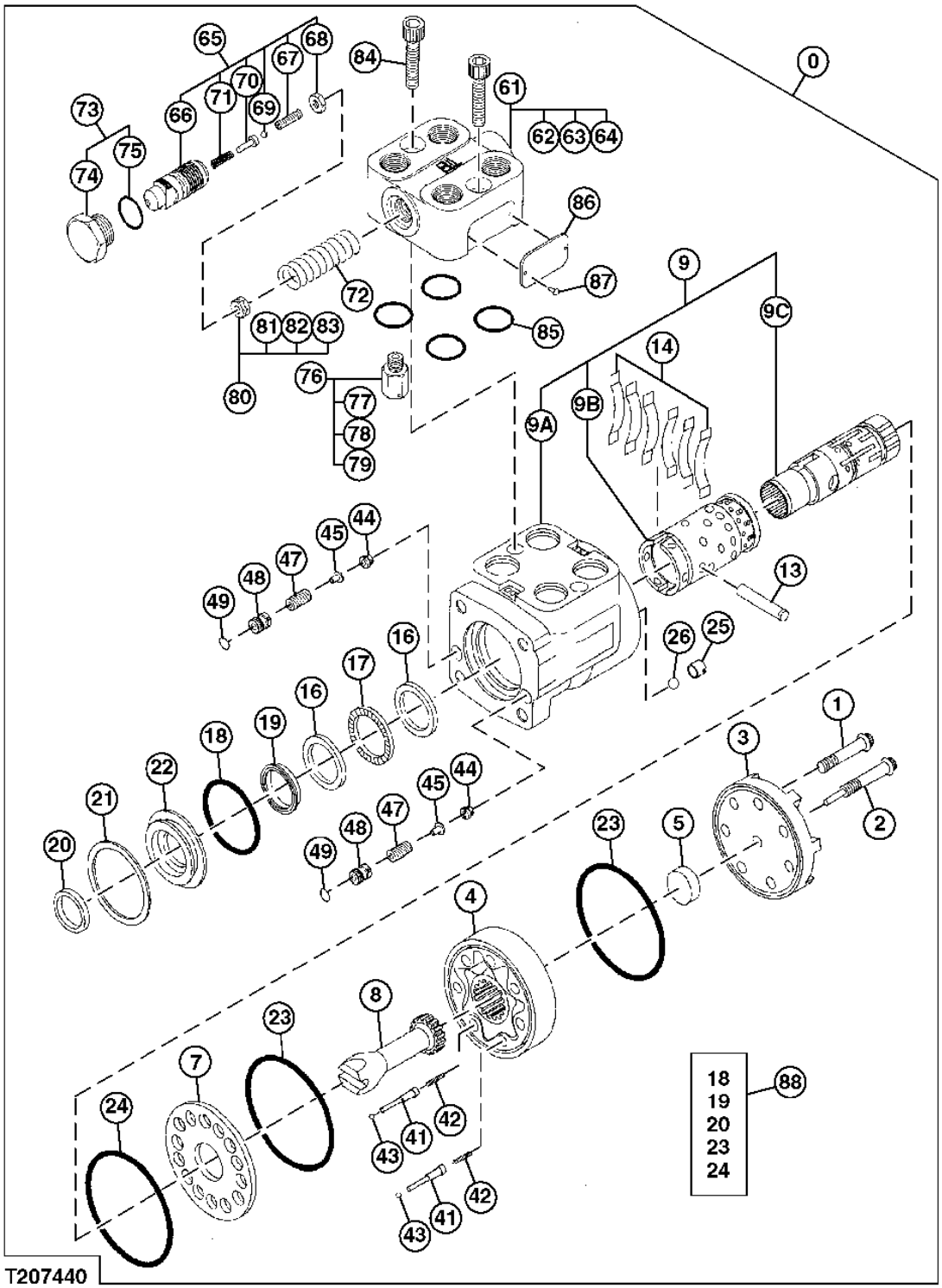

**STEERING VALVE**

| KEY | PART NO. | PART NAME | QTY | SERIAL NO. | REMARKS |
|---|---|---|---|---|---|
| 0 | 4608305 | VALVE | 1 | | |
| 1 | 0670601 | SCREW | 6 | | |
| 2 | 0879901 | SCREW | 1 | | |
| 3 | 0341102 | CAP | 1 | | |
| 4 | 0670602 | ROTOR | 1 | | |
| 5 | 0919501 | SPACER | 1 | | |
| 7 | ..... | PLATE | 1 | | ( 0263205 NOT AVAILABLE FOR SERVICE) |
| 8 | ..... | DRIVE | 1 | | ( 0263206 NOT AVAILABLE FOR SERVICE) |
| 9 | ..... | CONTROL VALVE | 1 | | |
| 9A | ..... | HOUSING | 1 | | |
| 9B | ..... | CONTROL VALVE | 1 | | |
| 9C | ..... | HOUSING | 1 | | |
| 13 | ..... | PIN | 1 | | |
| 14 | ..... | SPRING | 6 | | |
| 16 | ..... | BEARING RACE | 2 | | |
| 17 | ..... | NEEDLE | 1 | | |
| 18 | ..... | O-RING | 1 | | |
| 19 | ..... | SEAL | 1 | | |
| 20 | ..... | SEAL | 1 | | |
| 21 | ..... | SNAP RING | 1 | | |
| 22 | ..... | BUSHING | 1 | | |
| 23 | ..... | O-RING | 1 | | |
| 24 | 0730804 | O-RING | 1 | | |
| 25 | 0730805 | SCREW | 1 | | |
| 26 | 0730806 | BALL | 1 | | |
| 41 | 0469903 | ROD | 2 | | |
| 42 | 0469904 | SPRING | 2 | | |
| 43 | 0469905 | BALL | 2 | | |
| 44 | ..... | SEAT | 2 | | |
| 45 | ..... | POPPET | 2 | | |
| 47 | ..... | SPRING | 2 | | |
| 48 | ..... | PLUG | 2 | | |
| 49 | ..... | O-RING | 2 | | |
| 61 | ..... | HOUSING | 1 | | |
| 62 | ..... | HOUSING | 1 | | |
| 63 | ..... | PLUG | 1 | | |
| 64 | ..... | PLUG | 1 | | |

THIS PARTS LISTING IS CONTINUED

**STEERING VALVE (CONTINUED)**

T207440 -UN-11FEB05

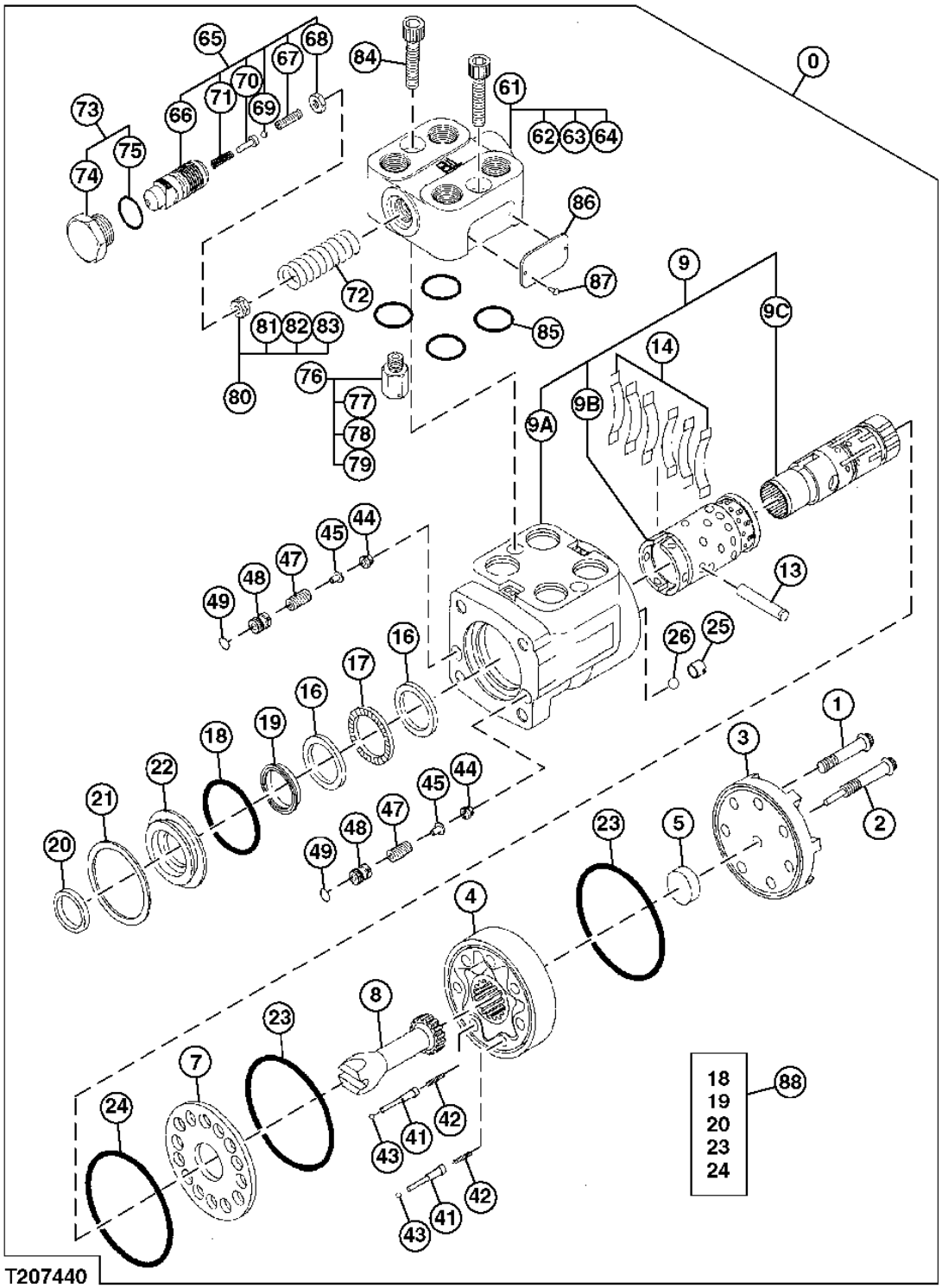

**STEERING VALVE (CONTINUED)**

| KEY | PART NO. | PART NAME | QTY | SERIAL NO. | REMARKS |
|---|---|---|---|---|---|
| 65 | ..... | VALVE | 1 | | |
| 66 | ..... | SPOOL | 1 | | |
| 67 | ..... | VALVE SEAT INSERT | 1 | | |
| 68 | ..... | LOCK NUT | 1 | | |
| 69 | ..... | BALL | 1 | | |
| 70 | ..... | GUIDE | 1 | | |
| 71 | ..... | SPRING | 1 | | |
| 72 | ..... | SPRING | 1 | | |
| 73 | ..... | PLUG | 1 | | ( 0364704 NOT AVAILABLE FOR SERVICE) |
| 74 | 0364705 | FITTING PLUG | 1 | | |
| 75 | ..... | O-RING | 1 | | ( 0364706 NOT AVAILABLE FOR SERVICE) |
| 76 | 0919502 | CHECK VALVE | 1 | | |
| 77 | ..... | HOUSING | 1 | | |
| 78 | ..... | BALL | 1 | | |
| 79 | ..... | PIN | 1 | | |
| 80 | 0364709 | FILTER | 1 | | |
| 81 | ..... | NUT | 1 | | |
| 82 | ..... | RING | 1 | | |
| 83 | ..... | FILTER | 1 | | |
| 84 | 0364708 | BOLT | 2 | | |
| 85 | AT264354 | O-RING | 4 | | (SUB FOR (4) 4509181) |
| 86 | ..... | PLATE | 1 | | |
| 87 | ..... | RIVET | 1 | | |
| 88 | 4417500 | KIT | 1 | | |

**STEERING VALVE AND HYDRAULIC HOSES**

T207463 -UN-11FEB05

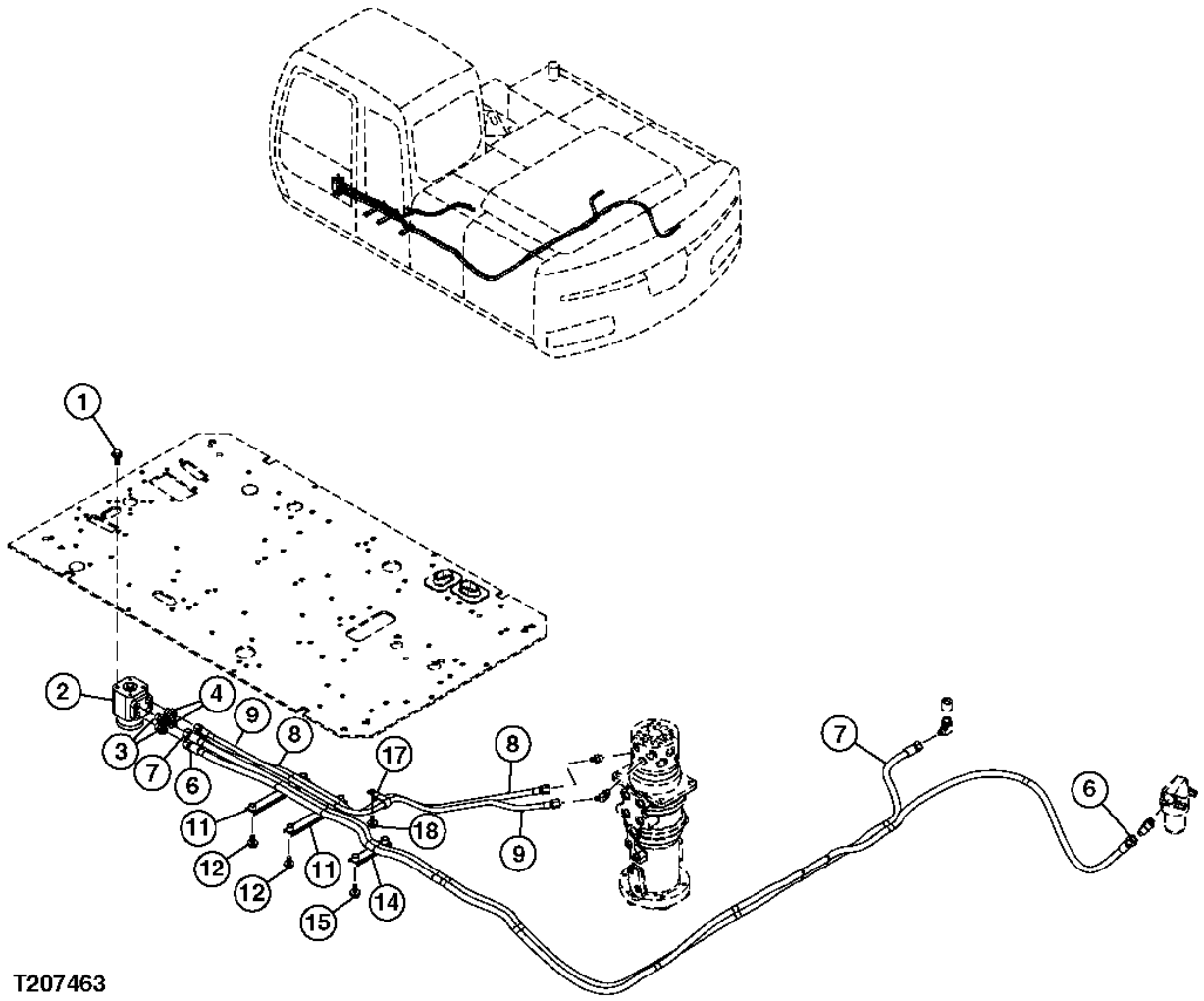

**STEERING VALVE AND HYDRAULIC HOSES**

| KEY | PART NO. | PART NAME | QTY | SERIAL NO. | REMARKS |
|---|---|---|---|---|---|
| 1 | ..... | CAP SCREW | 4 | | ( J271035 IS NOT AVAILABLE FOR SERVICE) |
| | 19M7550 | CAP SCREW | 1 | | M10 X 35, (SUB FOR J901035) |
| | 24M7346 | WASHER | 1 | | 11 X 20 X 2 MM, (SUB FOR J222010) |
| 2 | 4608305 | VALVE | 1 | | |
| 3 | A852134 | ADAPTER | 2 | | |
| | CH11570 | O-RING | 1 | | (SUB FOR 4509180) |
| 4 | A852133 | ADAPTER | 2 | | |
| | CH11570 | O-RING | 1 | | (SUB FOR 4509180) |
| 6 | 4611607 | HOSE | 1 | | |
| 7 | 4483414 | HOSE | 1 | | |
| 8 | 4483411 | HOSE | 1 | | |
| 9 | 4483412 | HOSE | 1 | | |
| 11 | 9760910 | HOSE CLAMP | 1 | | |
| 12 | ..... | CAP SCREW | 4 | | ( J271030 IS NOT AVAILABLE FOR SERVICE) |
| | 19M7662 | CAP SCREW | 1 | | M10 X 30, (SUB FOR J901030) |
| | 24M7346 | WASHER | 1 | | 11 X 20 X 2 MM, (SUB FOR J222010) |
| 15 | ..... | CAP SCREW | 2 | | ( J271030 IS NOT AVAILABLE FOR SERVICE) |
| | 19M7662 | CAP SCREW | 1 | | M10 X 30, (SUB FOR J901030) |
| | 24M7346 | WASHER | 1 | | 11 X 20 X 2 MM, (SUB FOR J222010) |
| 17 | 4190266 | CLIP | 1 | | |
| 18 | ..... | CAP SCREW | 1 | | ( J271025 IS NOT AVAILABLE FOR SERVICE) |
| | 19M7402 | CAP SCREW | 1 | | M10 X 25, (SUB FOR J901025) |
| | 24M7346 | WASHER | 1 | | 11 X 20 X 2 MM, (SUB FOR J222010) |

**PRESSURE SENSOR STEERING HOSE TO OIL FILTER**

T207459 -UN-11FEB05

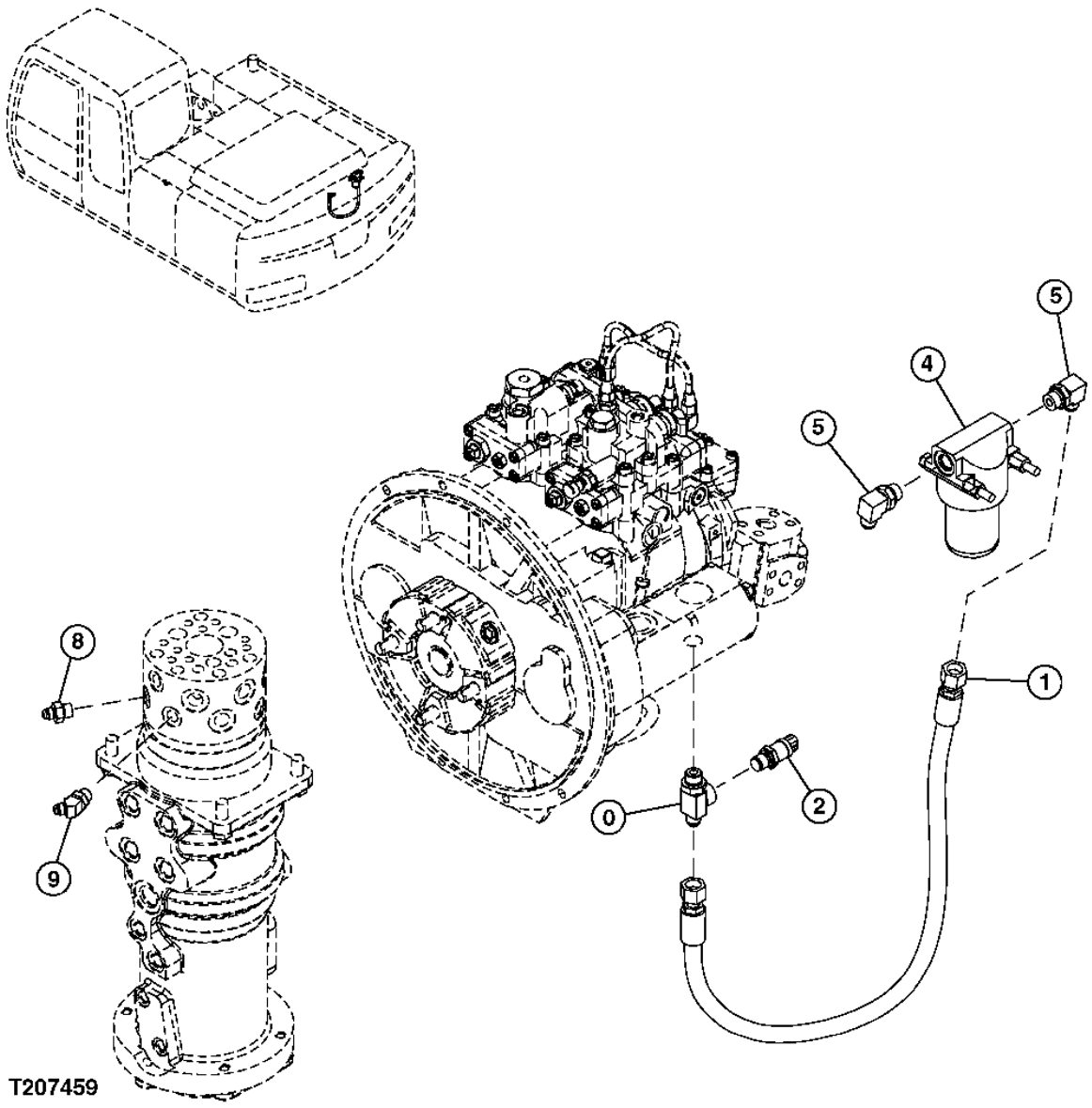

**PRESSURE SENSOR STEERING HOSE TO OIL FILTER**

| KEY | PART NO. | PART NAME | QTY | SERIAL NO. | REMARKS |
|---|---|---|---|---|---|
| 0 | 4465713 | TEE FITTING | 1 | | ( J271035 IS NOT AVAILABLE FOR SERVICE) |
| | 4506418 | O-RING | 1 | | |
| 1 | 4305263 | HOSE | 1 | | ( J271035 IS NOT AVAILABLE FOR SERVICE) |
| 2 | 4436271 | SENSOR | 1 | | |
| | 4365826 | O-RING | 1 | | |
| 4 | 4459194 | FILTER | 1 | | |
| 5 | A852344 | ELBOW FITTING | 2 | | |
| | 4506418 | O-RING | 1 | | |
| 8 | 4483411 | HOSE | 1 | | |
| | CH11570 | O-RING | 1 | | (SUB FOR 4509180) |
| 9 | 4483412 | HOSE | 1 | | |
| | CH11570 | O-RING | 1 | | (SUB FOR 4509180) |

**BRAKE LINES**

T207477 -UN-10FEB05

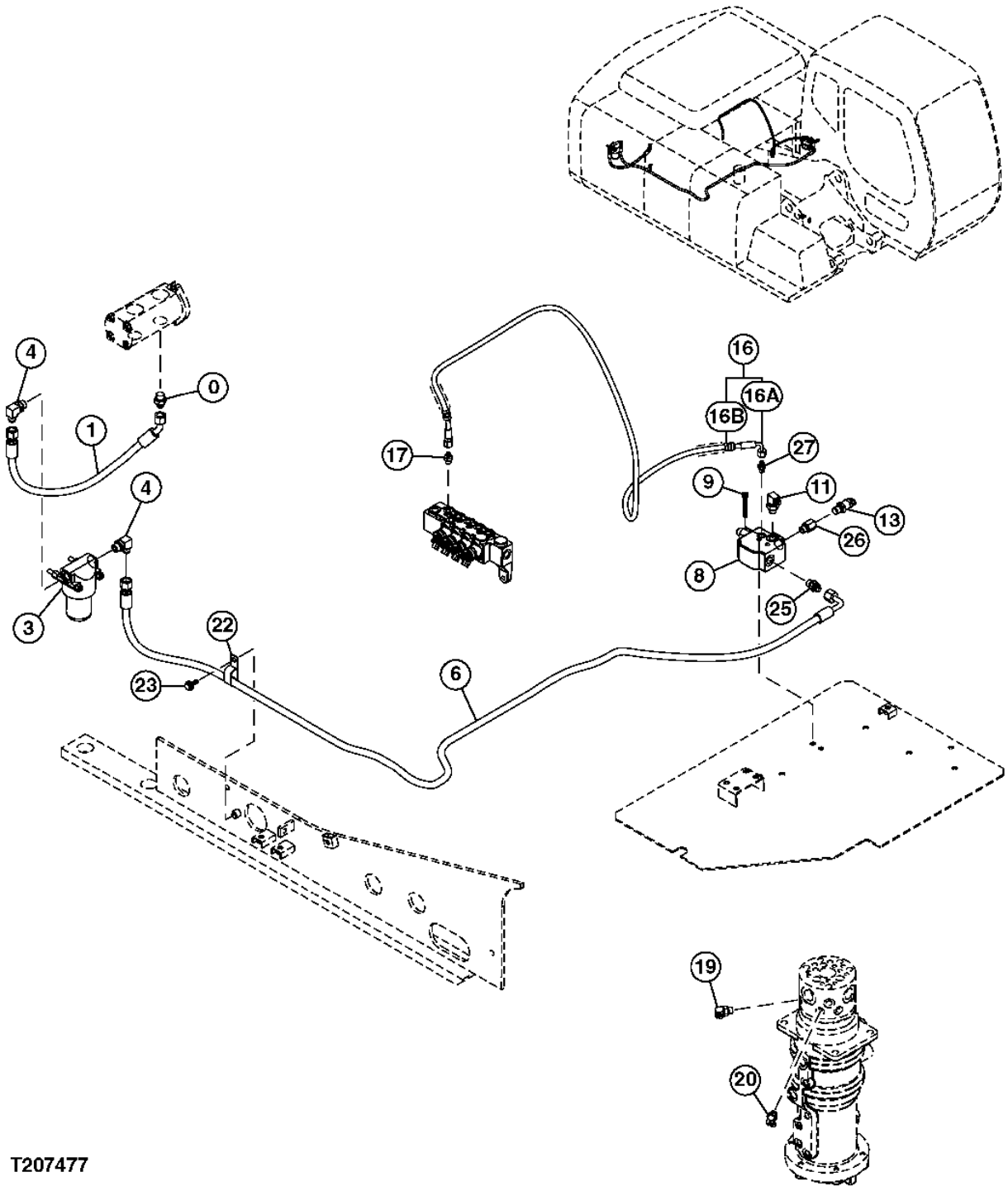


T207477

**BRAKE LINES**

| KEY | PART NO. | PART NAME | QTY | SERIAL NO. | REMARKS |
|---|---|---|---|---|---|
| 0 | A852144 | ADAPTER | 1 | | |
| | 4506418 | O-RING | 1 | | |
| 1 | 4471093 | HOSE | 1 | | |
| 3 | 4459194 | FILTER | 1 | | |
| 4 | A852344 | ELBOW FITTING | 2 | | |
| | 4506418 | O-RING | 1 | | |
| 6 | 4611602 | HOSE | 1 | | |
| 8 | 4465009 | VALVE | 1 | | |
| 9 | J780665 | BOLT | 2 | | |
| 11 | 4466884 | ELBOW FITTING | 1 | | |
| 13 | 4436271 | SENSOR | 1 | | (PRESSURE) |
| | 4365826 | O-RING | 1 | | |
| 16 | ..... | HYDRAULIC HOSE | 1 | | ( 9206005 IS NOT AVAILABLE FOR SERVICE) |
| 16A | 4461097 | HOSE | 1 | | |
| 16B | 4327293 | HOSE GUARD | 3 | | |
| 17 | A852122 | ADAPTER | 1 | | |
| | M800650 | PACKING | 1 | | (SUB FOR 957366) |
| 19 | A852333 | ELBOW FITTING | 1 | | |
| | CH11570 | O-RING | 1 | | (SUB FOR 4509180) |
| 20 | THA852233 | ELBOW FITTING | 1 | | (SUB FOR A852233) |
| 20A | CH11570 | O-RING | 1 | | (SUB FOR 4509180) |
| 22 | 4190266 | CLIP | 1 | | |
| 23 | ..... | CAP SCREW | 1 | | ( J271025 NO LONGER AVAILABLE) |
| | 19M7402 | CAP SCREW | 1 | | M10 X 25, (SUB FOR J901025) |
| | 24M7346 | WASHER | 1 | | 11 X 20 X 2 MM, (SUB FOR J222010) |
| 25 | 4489342 | ADAPTER | 1 | | |
| 26 | 4489341 | SOCKET | 1 | | |
| 27 | 4489347 | ADAPTER | 1 | | |

**BRAKE PEDAL, LINES AND LINKAGE**

T207478 -UN-10FEB05

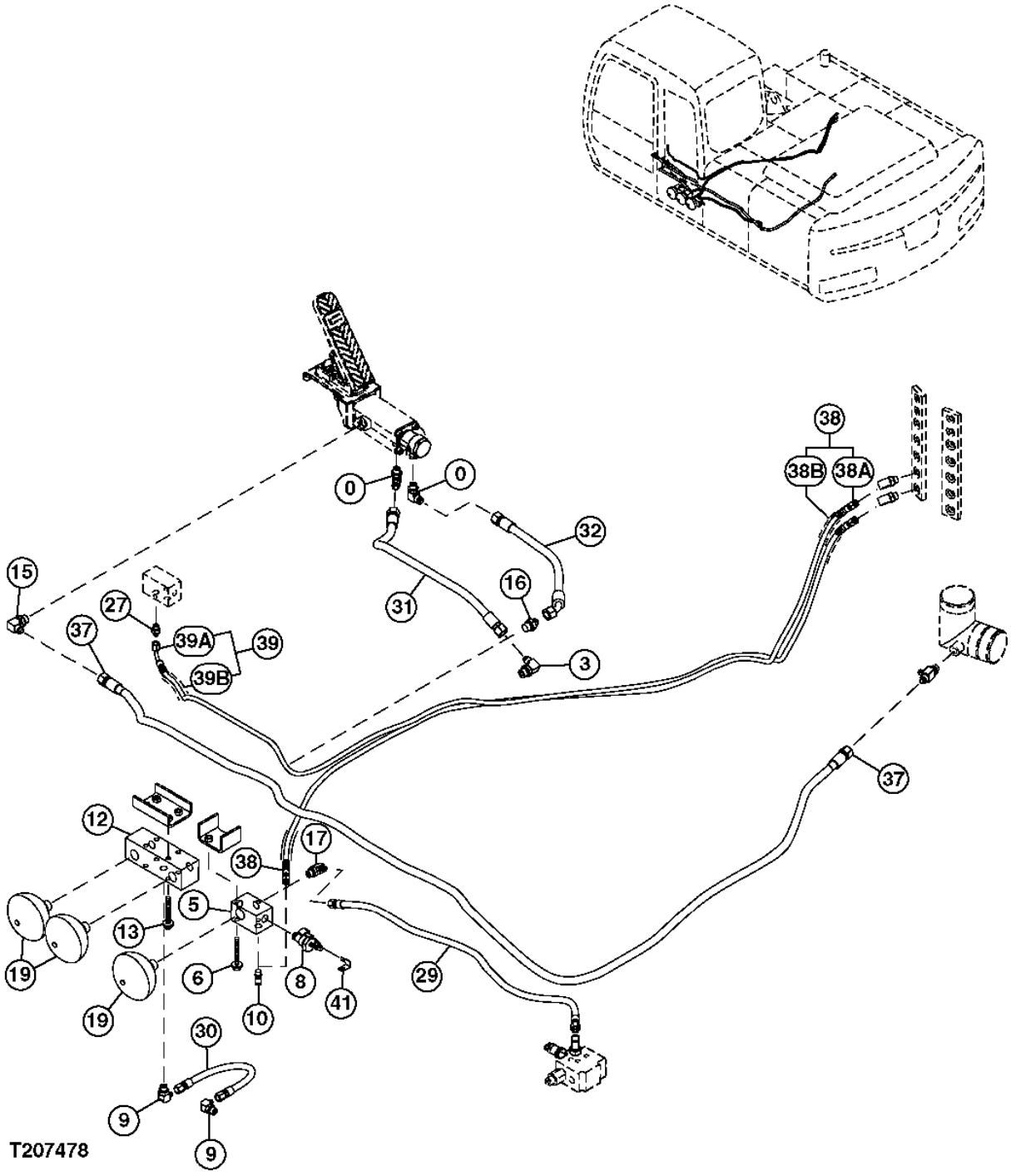

**BRAKE PEDAL, LINES AND LINKAGE**

| KEY | PART NO. | PART NAME | QTY | SERIAL NO. | REMARKS |
|---|---|---|---|---|---|
| 0 | A852334 | ELBOW FITTING | 2 | | |
| | CH11570 | O-RING | 1 | | (SUB FOR 4509180) |
| 3 | A852344 | ELBOW FITTING | 1 | | |
| | 4506418 | O-RING | 1 | | |
| 5 | 4475645 | MANIFOLD | 1 | | |
| 6 | ..... | CAP SCREW | 2 | | ( J271080 NO LONGER AVAILABLE) |
| | 19M8081 | CAP SCREW | 1 | | M10 X 80, (SUB FOR J901080) |
| | 24M7346 | WASHER | 1 | | 11 X 20 X 2 MM, (SUB FOR J222010) |
| 8 | 4459498 | PRESSURE SWITCH | 1 | | |
| 9 | A852333 | ELBOW FITTING | 2 | | |
| | CH11570 | O-RING | 1 | | (SUB FOR 4509180) |
| 10 | A852322 | ELBOW FITTING | 1 | | |
| | M800650 | PACKING | 1 | | (SUB FOR 957366) |
| 12 | 4447589 | VALVE | 1 | | |
| 13 | ..... | CAP SCREW | 4 | | ( J271085 NO LONGER AVAILABLE) |
| | 19M8197 | CAP SCREW | 1 | | M10 X 85, (SUB FOR J901085) |
| | 24M7346 | WASHER | 1 | | 11 X 20 X 2 MM, (SUB FOR J222010) |
| 15 | A852344 | ELBOW FITTING | 1 | | |
| | 4506418 | O-RING | 1 | | |
| 16 | A852144 | ADAPTER | 1 | | |
| | 4506418 | O-RING | 1 | | |
| 17 | A852333 | ELBOW FITTING | 1 | | |
| | CH11570 | O-RING | 1 | | (SUB FOR 4509180) |
| 19 | 4459332 | HYDRAULIC ACCUMULATOR | 3 | | |
| | CH11570 | O-RING | 1 | | (SUB FOR 4509180) |
| 27 | A852122 | ADAPTER | 1 | | |
| | M800650 | PACKING | 1 | | (SUB FOR 957366) |
| 29 | 4611609 | HOSE | 1 | | |
| 30 | 4295828 | HOSE | 1 | | |
| 31 | 4466518 | HOSE | 1 | | |
| 32 | 4466512 | HOSE | 1 | | |
| 37 | 4488334 | HOSE | 1 | | |
| 38 | ..... | HYDRAULIC HOSE | 1 | | ( 9232914 IS NOT AVAILABLE FOR SERVICE) |
| 38A | 4483928 | HOSE | 1 | | |
| 38B | 4327293 | HOSE GUARD | 3 | | |
| 39 | ..... | HYDRAULIC HOSE | 1 | | ( 9232915 IS NOT AVAILABLE FOR SERVICE) |
| 39A | 4600153 | HOSE | 1 | | |
| 39B | 4327293 | HOSE GUARD | 3 | | |
| 41 | 4257159 | BRACKET | 1 | | |

**BRAKE PEDAL TO ROTARY MANIFOLD LINES**

T207479 -UN-10FEB05

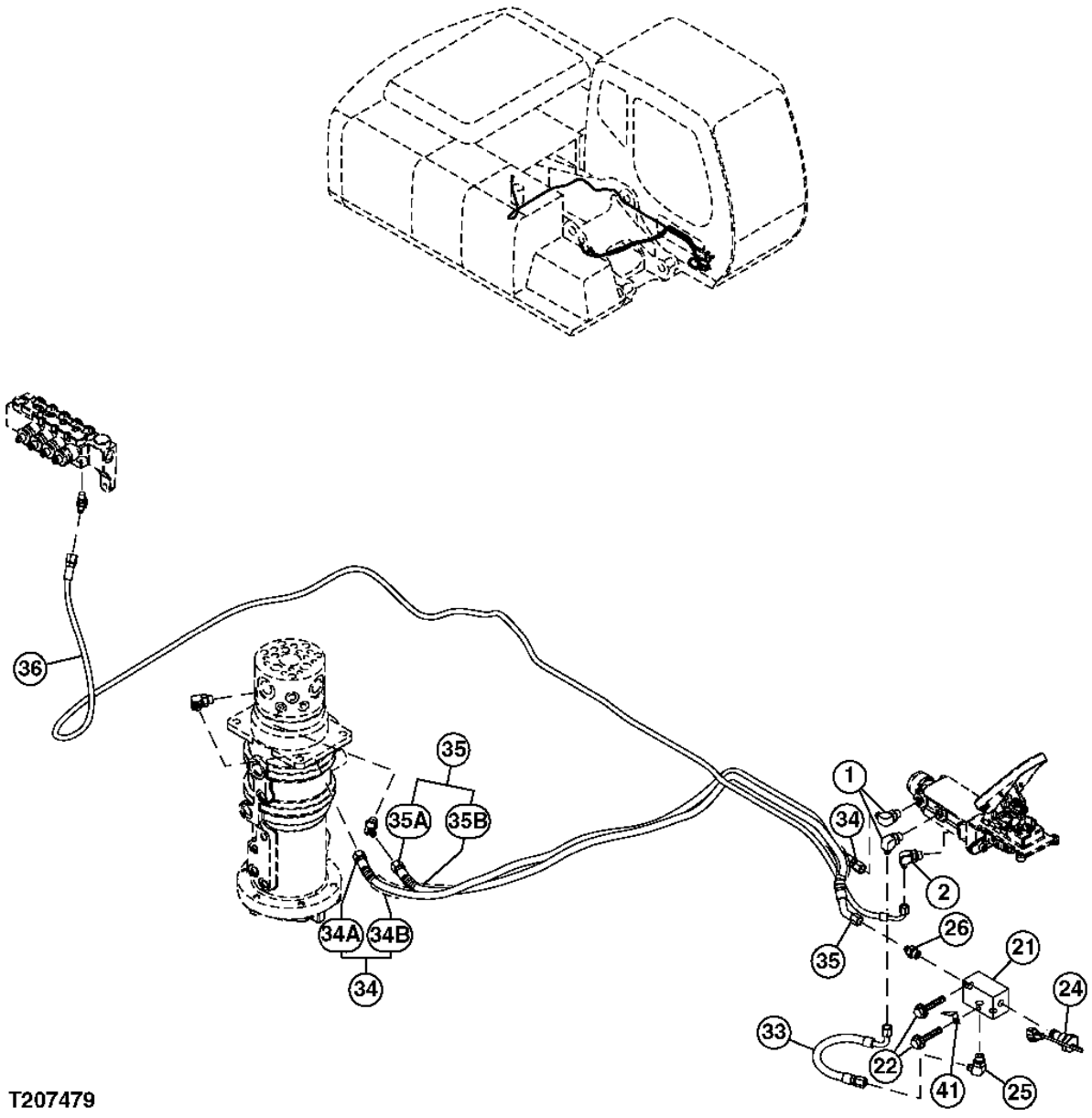


T207479

**BRAKE PEDAL TO ROTARY MANIFOLD LINES**

| KEY | PART NO. | PART NAME | QTY | SERIAL NO. | REMARKS |
|---|---|---|---|---|---|
| 1 | A852333 | ELBOW FITTING | 2 | | |
| | CH11570 | O-RING | 1 | | (SUB FOR 4509180) |
| 2 | A852332 | ELBOW FITTING | 1 | | |
| | CH11570 | O-RING | 1 | | (SUB FOR 4509180) |
| 21 | 4475647 | MANIFOLD | 1 | | |
| 22 | ..... | CAP SCREW | 2 | | ( J271065 NO LONGER AVAILABLE) |
| | 19M7742 | CAP SCREW | 1 | | M10 X 65, (SUB FOR J901065) |
| | 24M7346 | WASHER | 1 | | 11 X 20 X 2 MM, (SUB FOR J222010) |
| 24 | 4459497 | PRESSURE SWITCH | 1 | | |
| 25 | A852333 | ELBOW FITTING | 1 | | |
| | CH11570 | O-RING | 1 | | (SUB FOR 4509180) |
| 26 | A852133 | ADAPTER | 1 | | |
| | CH11570 | O-RING | 1 | | (SUB FOR 4509180) |
| 33 | 4315330 | HOSE | 1 | | |
| 34 | ..... | HYDRAULIC HOSE | 1 | | ( 9223182 IS NOT AVAILABLE FOR SERVICE) |
| 34A | 4488774 | HOSE | 1 | | |
| 34B | 4327293 | HOSE GUARD | 2 | | |
| 35 | ..... | HYDRAULIC HOSE | 1 | | ( 9223183 IS NOT AVAILABLE FOR SERVICE) |
| 35A | 4488775 | HOSE | 1 | | |
| 35B | 4327293 | HOSE GUARD | 2 | | |
| 36 | 4484587 | HOSE | 1 | | |
| 41 | 4257159 | BRACKET | 1 | | |

**BRAKE PEDAL AND LINKAGE**

T207571 -UN-24FEB05

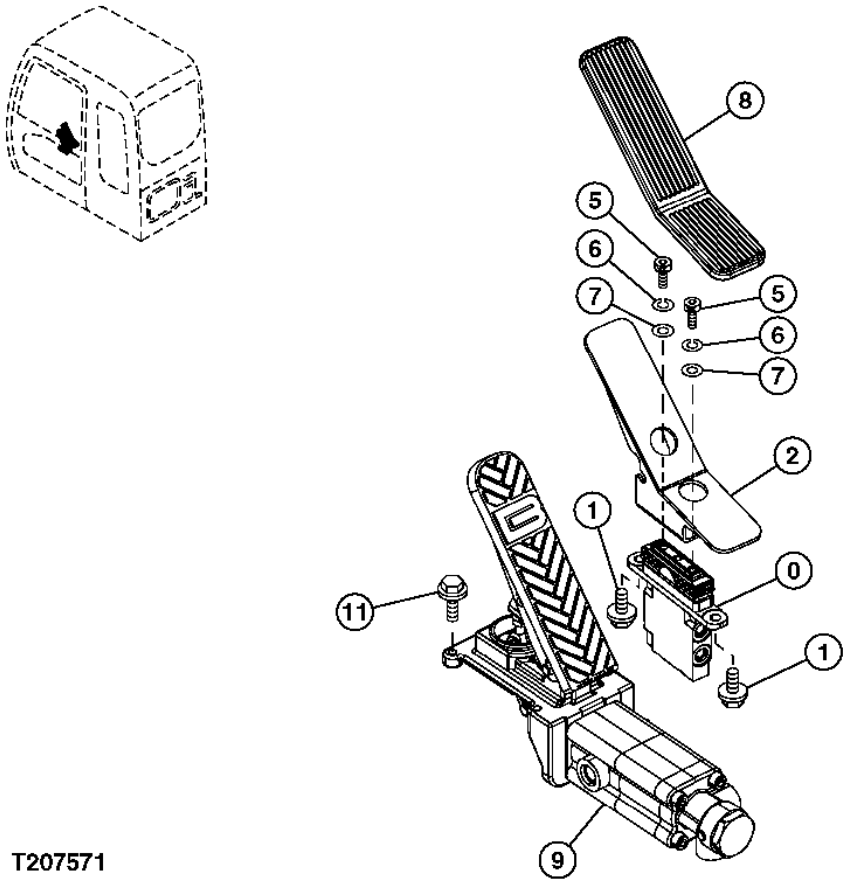


T207571

**BRAKE PEDAL AND LINKAGE**

| KEY | PART NO. | PART NAME | QTY | SERIAL NO. | REMARKS |
|---|---|---|---|---|---|
| 0 | 4465183 | HYDR./PILOT CONTROL VALVE | 1 | | |
| 1 | ..... | CAP SCREW | 2 | | ( J271020 NO LONGER AVAILABLE) |
| | 19M7938 | CAP SCREW | 1 | | M10 X 20, (SUB FOR J901020) |
| | 24M7346 | WASHER | 1 | | 11 X 20 X 2 MM, (SUB FOR J222010) |
| 2 | 8089323 | PEDAL | 1 | | |
| 5 | J780816 | BOLT | 2 | | |
| 6 | 12M7065 | LOCK WASHER | 2 | | 8 MM, (SUB FOR A590908) |
| 7 | 24M7055 | WASHER | 2 | | 8.400 X 16 X 1.600 MM, (SUB FOR A590108) |
| 8 | 3096428 | COVER | 1 | | |
| 9 | 4462949 | VALVE | 1 | | |
| 11 | ..... | CAP SCREW | 4 | | ( J271025 NO LONGER AVAILABLE) |
| | 19M7402 | CAP SCREW | 1 | | M10 X 25, (SUB FOR J901025) |
| | 24M7346 | WASHER | 1 | | 11 X 20 X 2 MM, (SUB FOR J222010) |

**BRAKE VALVE**

T207441 -UN-11FEB05

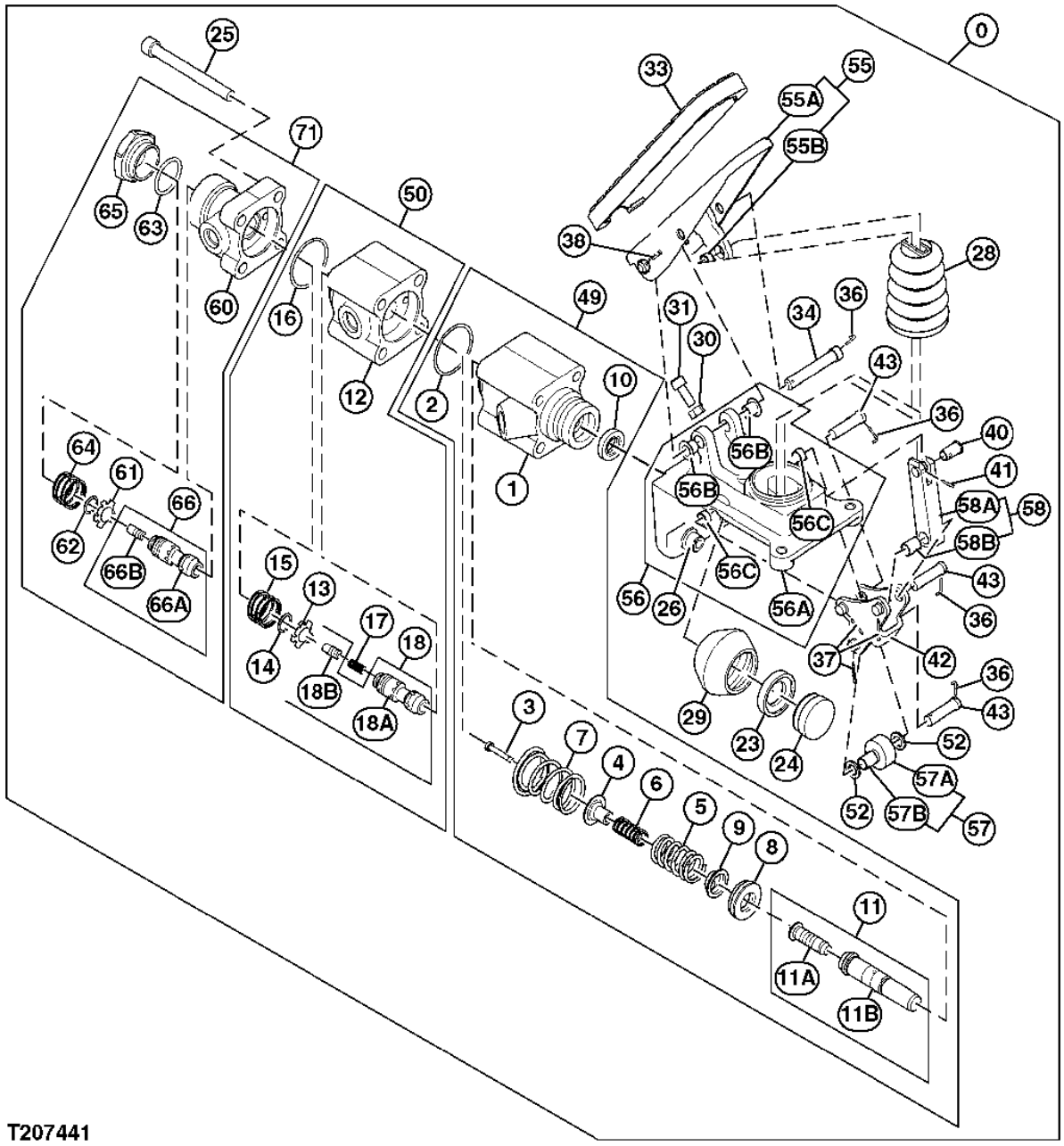


T207441

**BRAKE VALVE**

| KEY | PART NO. | PART NAME | QTY | SERIAL NO. | REMARKS |
|---|---|---|---|---|---|
| 0 | 4462949 | VALVE | 1 | | |
| 1 | ..... | FLANGE | 1 | | |
| 2 | 0898719 | O-RING | 1 | | |
| 3 | ..... | ROD | 1 | | |
| 4 | ..... | HOLDER | 1 | | |
| 5 | ..... | SPRING | 1 | | |
| 6 | ..... | SPRING | 1 | | |
| 7 | ..... | SPRING | 1 | | |
| 8 | ..... | RETAINER | 1 | | |
| 9 | ..... | RETAINER | 1 | | |
| 10 | 0898720 | SEAL | 1 | | |
| 11 | ..... | PISTON | 1 | | |
| 11A | ..... | PISTON | 1 | | |
| 11B | ..... | ROD | 1 | | |
| 12 | ..... | CYLINDER | 1 | | |
| 13 | ..... | RETAINER | 1 | | |
| 14 | 0898722 | SNAP RING | 1 | | |
| 15 | 0898723 | SPRING | 1 | | |
| 16 | 0898719 | O-RING | 1 | | |
| 17 | 0898724 | SPRING | 1 | | |
| 18 | ..... | SPOOL | 1 | | |
| 18A | ..... | SPOOL | 1 | | |
| 18B | ..... | PLUNGER | 1 | | |
| 23 | 0898701 | STOP | 1 | | |
| 24 | 0898702 | SEAT | 1 | | |
| 25 | 0898703 | BOLT | 4 | | |
| 26 | 0898704 | BOLT | 4 | | |
| 28 | 0898705 | BOOT | 1 | | |
| 29 | 0898706 | BOOT | 1 | | |
| 30 | 0898707 | NUT | 1 | | |
| 31 | 0898708 | BOLT | 1 | | |
| 33 | 0898709 | PAD | 1 | | |
| 34 | 0898710 | PIN FASTENER | 4 | | |
| 36 | 0898711 | PIN FASTENER | 3 | | |
| 37 | 0898712 | PIN FASTENER | 1 | | |
| 38 | 0898713 | PIN FASTENER | 1 | | |
| 40 | 0898714 | PIN FASTENER | 1 | | |
| 41 | 0898715 | SPRING PIN | 1 | | |
| 42 | 0898716 | LINK | 1 | | |
| 43 | 0898717 | PIN FASTENER | 3 | | |
| 49 | 0898718 | FLANGE | 1 | | |
| 50 | 0898721 | CYLINDER | 1 | | |

**BRAKE VALVES (CONTINUED)**

T207441 -UN-11FEB05

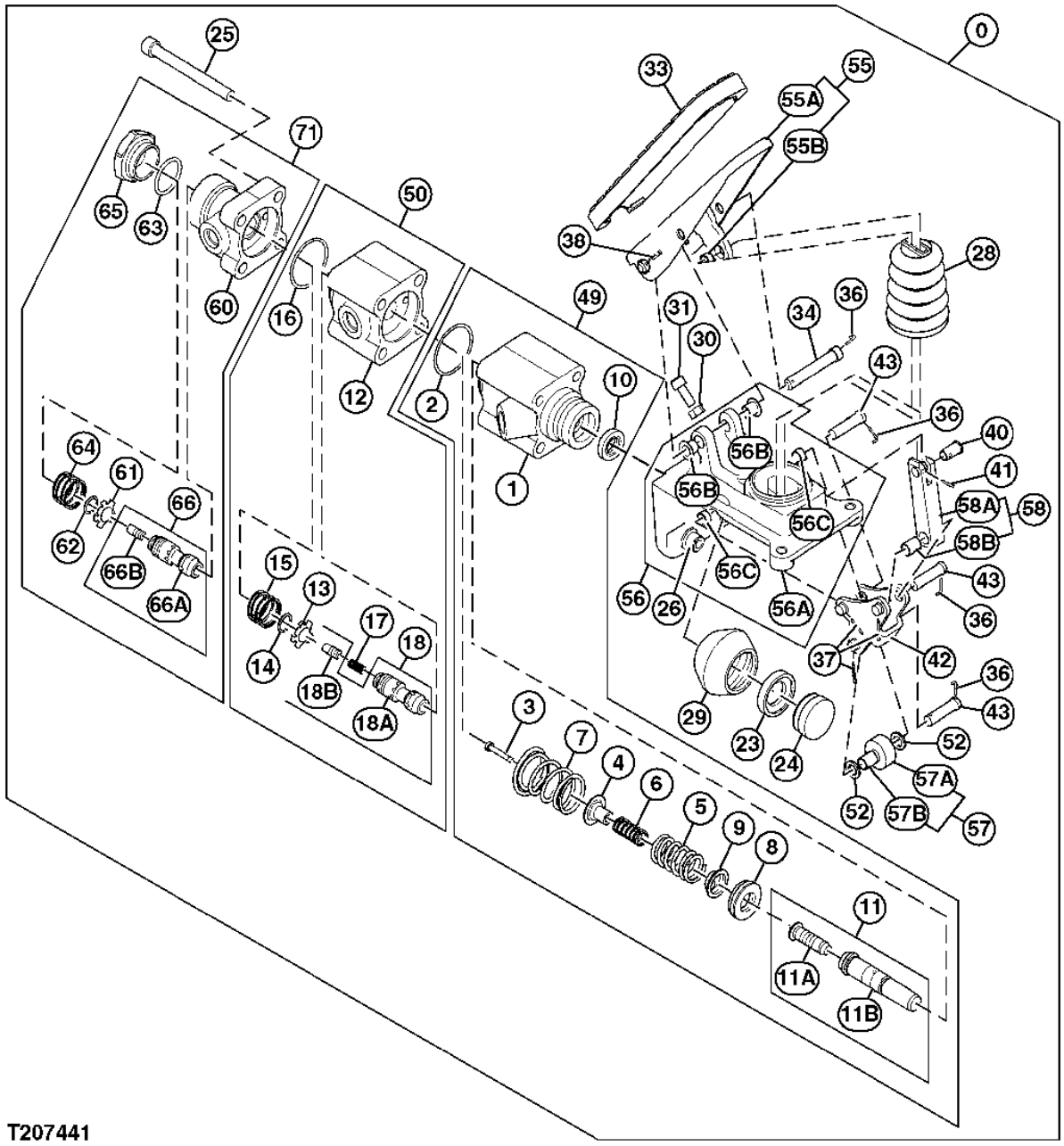


T207441

**BRAKE VALVES (CONTINUED)**

| KEY | PART NO. | PART NAME | QTY | SERIAL NO. | REMARKS |
|---|---|---|---|---|---|
| 52 | 0898727 | WASHER | 2 | | |
| 55 | 0898728 | PEDAL | 1 | | |
| 55A | ..... | PEDAL | 1 | | |
| 55B | 0898729 | BUSHING | 1 | | |
| 56 | 0898730 | BRACKET | 1 | | |
| 56A | ..... | BRACKET | 1 | | |
| 56B | 0898731 | BUSHING | 2 | | |
| 56C | 0898729 | BUSHING | 2 | | |
| 57 | 0898732 | ROLLER | 1 | | |
| 57A | ..... | ROLLER | 1 | | |
| 57B | 0898733 | BUSHING | 1 | | |
| 58 | 0898734 | YOKE | 1 | | |
| 58A | ..... | PEDAL | 1 | | |
| 58B | 0898733 | BUSHING | 1 | | |
| 60 | ..... | CYLINDER | 1 | | |
| 61 | ..... | RETAINER | 1 | | |
| 62 | 0898722 | SNAP RING | 1 | | |
| 63 | 0898726 | O-RING | 1 | | |
| 64 | 0898723 | SPRING | 1 | | |
| 65 | ..... | NUT | 1 | | |
| 66 | ..... | SPOOL | 1 | | |
| 66A | ..... | SPOOL | 1 | | |
| 66B | ..... | PLUNGER | 1 | | |
| 71 | 0898725 | CYLINDER | 1 | | |

**WARNING LABELS**

T208482 -UN-25FEB05




T208482

**WARNING LABELS**

| KEY | PART NO. | PART NAME | QTY | SERIAL NO. | REMARKS |
|---|---|---|---|---|---|
| 1 | T159887 | SAFETY SIGN | 1 | | ENGLISH (CAUTION) |
| 2 | 3076246 | LABEL | 1 | | (TIPOVER WARNING) |
| 3 | T190310 | SAFETY SIGN | 1 | | (WARNING - STAY CLEAR) |
| 4 | T146667 | SAFETY SIGN | 1 | | (DANGER ELECTROCUTION) |
| 5 | T187535 | LABEL | 1 | | (CAUTION WINDOW LOCK - INSIDE CAB) |
| 6 | T146668 | SAFETY SIGN | 1 | | (WARNING - AVOID CRUSHING) |
| 7 | T163879 | LABEL | 1 | | (PRESSURE WARNING - PARK BRAKE ACCUMULATOR) |
| 8 | T146097 | LABEL | 1 | | ENGLISH (WARNING - SEAT BELT) |
| 9 | T190393 | LABEL | 1 | | (IMPORTANT - BREAK WINDOW FOR SECONDARY EXIT) |
| 10 | T146671 | SAFETY SIGN | 1 | | (CAUTION)(LOCATED ON RADIATOR CAP) |
| 11 | T215210 | LABEL | 1 | | (REPOSITION STEERING COLUMN WHILE OPENING OR CLOSING WINDOW) |

**IDENTIFICATION LABELS**

T208483 -UN-25FEB05

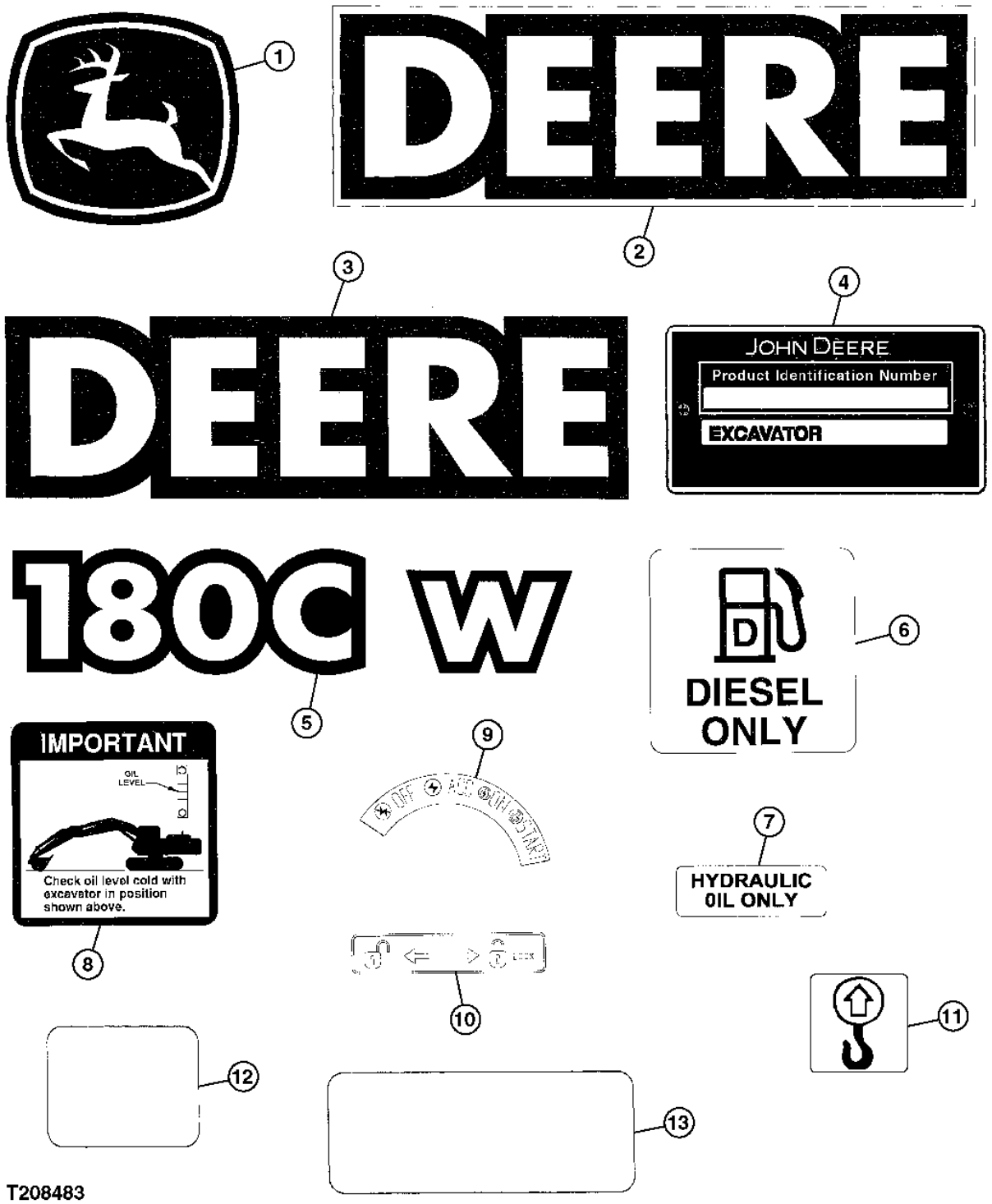

**IDENTIFICATION LABELS**

| KEY | PART NO. | PART NAME | QTY | SERIAL NO. | REMARKS |
|---|---|---|---|---|---|
| 1 | JD5706 | LABEL | 1 | | (LEAPING DEER - TRADEMARK LABEL) |
| 2 | T184759 | LABEL | 1 | | (DEERE - ON COUNTERWEIGHT) |
| 3 | T184023 | LABEL | 1 | | (DEERE - ON BOOM) |
| 4 | 4473732 | LABEL | 1 | | (PRODUCT IDENTIFICATION NUMBER) |
| 5 | T207903 | LABEL | 1 | | (SERIES DESIGNATION) |
| 6 | T79632 | LABEL | 1 | | ENGLISH (DIESEL ONLY) |
| 7 | T101942 | LABEL | 1 | | (HYDRAULIC OIL) |
| 8 | T149983 | LABEL | 1 | | (IMPORTANT - OIL LEVEL)(INSIDE RIGHT PUMP COMPARTMENT) |
| 9 | AT155730 | LABEL | 1 | | (KEY POSITION) |
| 10 | T138886 | LABEL | 1 | | (HYDRAULIC LOCKOUT) |
| 11 | 4357593 | LABEL | 1 | | (LIFT) |
| 12 | TH106654 | MAT | 1 | | (NON SLIP) |
| 13 | H21259 | MAT | 1 | | (NON SLIP) |

**LABELS**

T208485 -UN-25FEB05

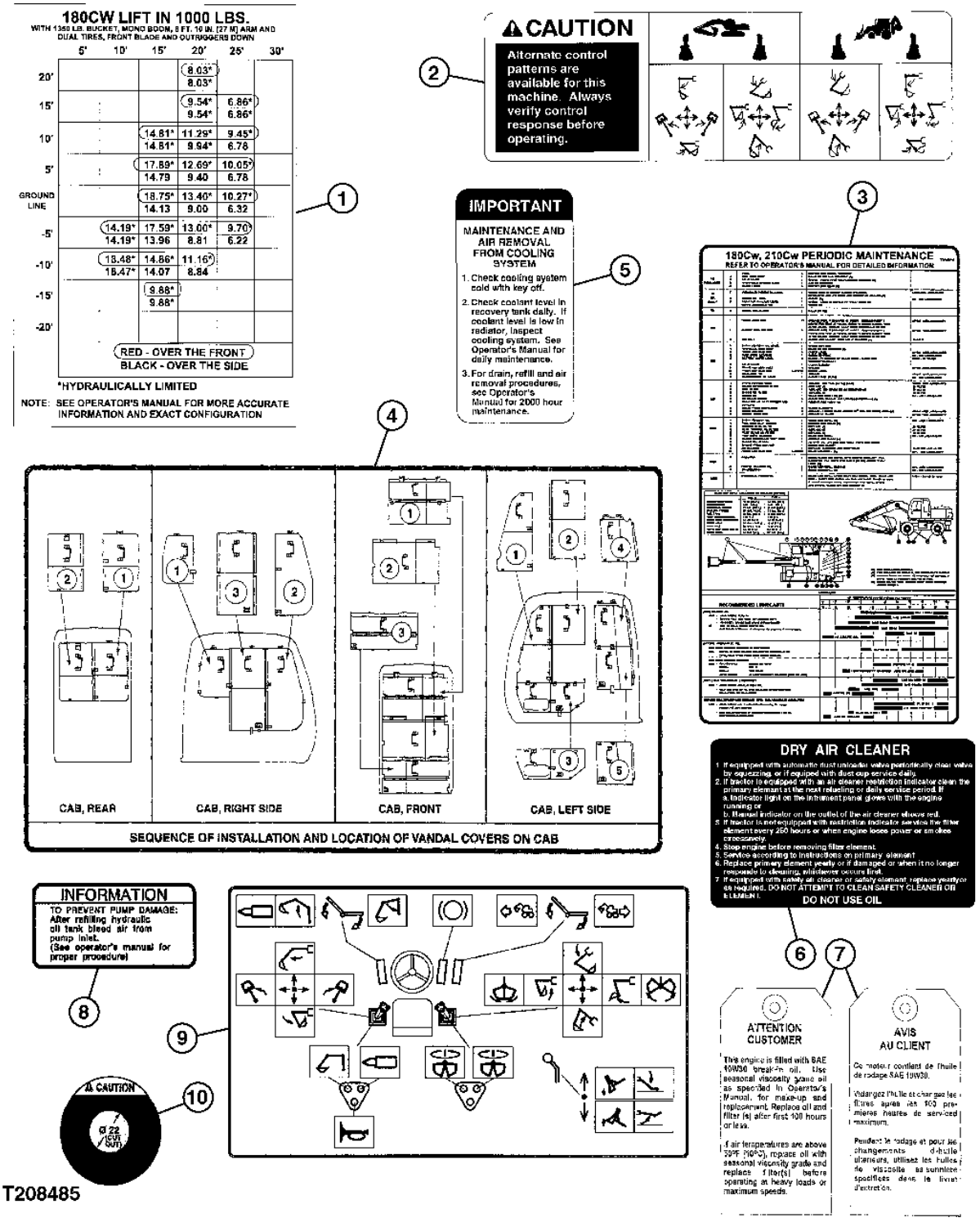

**LABELS**

| KEY | PART NO. | PART NAME | QTY | SERIAL NO. | REMARKS |
|---|---|---|---|---|---|
| 1 | T214814 | LABEL | 1 | | (LIFT CHART) |
| 2 | T201519 | LABEL | 1 | | (PATTERN CHANGER DECAL) |
| 3 | T214016 | LABEL | 1 | | (PERIODIC MAINTENANCE) |
| 4 | T188737 | LABEL | 1 | | (WINDOW GUARD INSTALLATION) |
| 5 | T152657 | SAFETY SIGN | 1 | | (IMPORTANT - RADIATOR) |
| 6 | R56902 | LABEL | 1 | | (DRY AIR CLEANER) |
| 7 | T84064 | TAG | 1 | | (ENGINE OIL FILL TAGS) |
| 8 | P63448 | LABEL | 1 | | (INFORMATION - HYDRAULIC PUMP OIL CHANGE) |
| 9 | 2049574 | LABEL | 1 | | (OPERATOR DECALS) |
| 10 | T187710 | LABEL | 1 | | (HYDRAULIC RESEVOIR CAP) |

**LABELS**

T208913 -UN-02MAR05

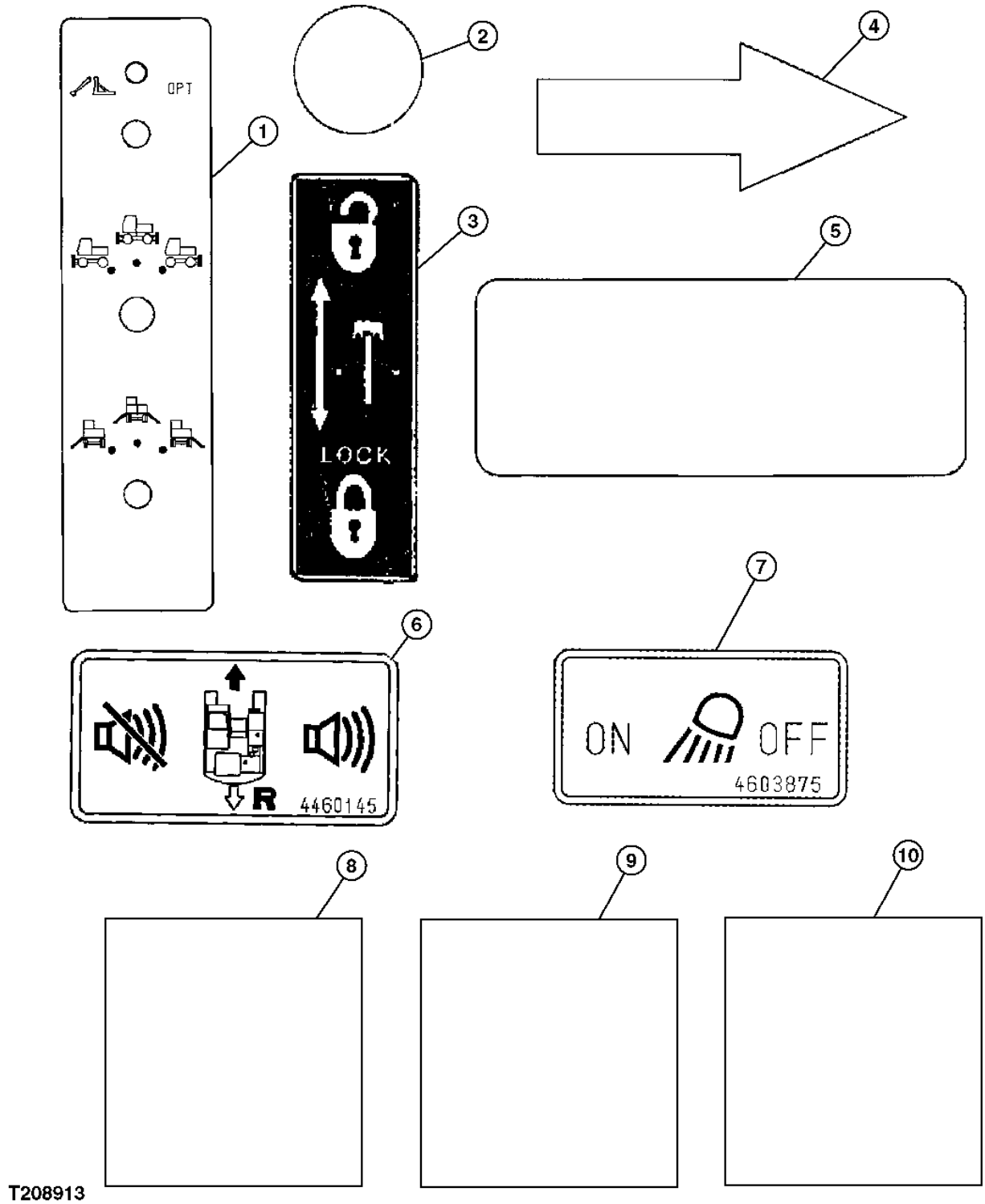


T208913

**LABELS**

| KEY | PART NO. | PART NAME | QTY | SERIAL NO. | REMARKS |
|---|---|---|---|---|---|
| 1 | 3100094 | LABEL | 1 | | (BLADE AND OUTRIGGER) |
| 2 | 4087559 | LABEL | 1 | | (RUBBER STOPPER ADHESIVE) |
| 3 | 4300644 | LABEL | 1 | | (SWING LOCK) |
| 4 | 4363931 | LABEL | 1 | | |
| 5 | 4386712 | LABEL | 1 | | (REFLECTOR) |
| 6 | 4460145 | LABEL | 1 | | (TRAVEL ALARM) |
| 7 | 4603875 | LABEL | 1 | | (OPERATE) |
| 8 | 4487132 | REFLECTOR | 1 | | (RED REFLECTOR) |
| 9 | 4487133 | REFLECTOR | 1 | | (AMBER REFLECTOR) |
| 10 | 4489223 | REFLECTOR | 1 | | (RED REFLECTOR) |

**BATTERY, BATTERY CABLES, RELAY, AND COVER**

T207633 -UN-23FEB05

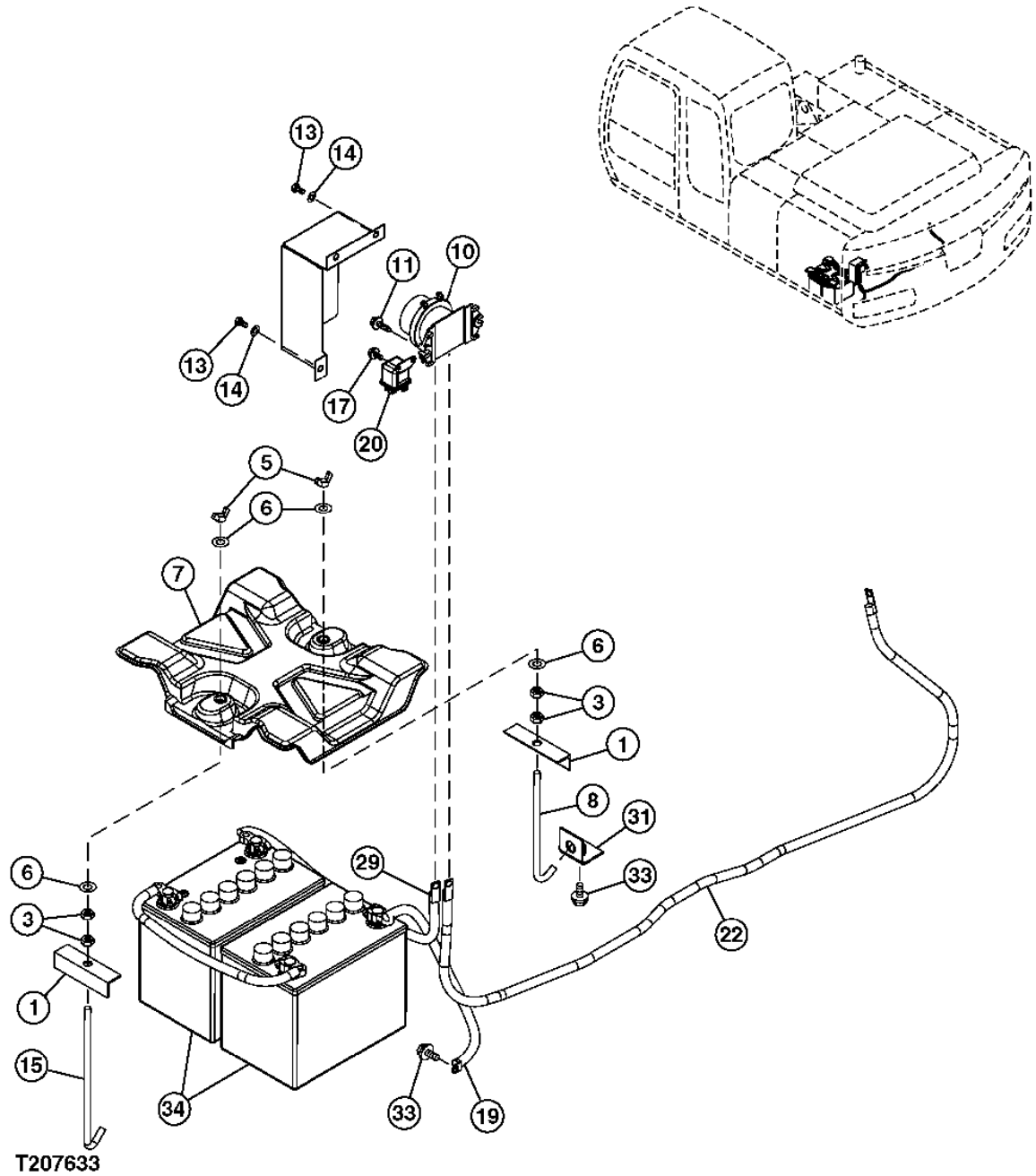

**BATTERY, BATTERY CABLES, RELAY, AND COVER**

| KEY | PART NO. | PART NAME | QTY | SERIAL NO. | REMARKS |
|---|---|---|---|---|---|
| 1 | 4257035 | ANGLE | 2 | | |
| 3 | 14M7274 | NUT | 4 | | M10, (SUB FOR J950010) |
| 5 | 14M7275 | NUT | 2 | | M12, (SUB FOR M570010) |
| 6 | 24M7028 | WASHER | 4 | | 10.500 X 20 X 2 MM, (SUB FOR A590110) |
| 7 | 4351057 | COVER | 1 | | |
| 8 | 4359331 | BOLT | 1 | | |
| 10 | 8943795431 | RELAY | 1 | | (SUB FOR 4255762) |
| 11 | ..... | CAP SCREW | 2 | | ( J260830 NO LONGER AVAILABLE) |
| | 19M7288 | CAP SCREW | 1 | | M8 X 30, (SUB FOR J900830) |
| | 24M7055 | WASHER | 1 | | 8.400 X 16 X 1.600 MM, (SUB FOR A590108) |
| 13 | 19M7162 | CAP SCREW | 3 | | M8 X 16, (SUB FOR J900816) |
| 14 | 24M7055 | WASHER | 3 | | 8.400 X 16 X 1.600 MM, (SUB FOR A590108) |
| 15 | 4257034 | HOOK BOLT | 1 | | |
| 17 | ..... | CAP SCREW | 2 | | ( J260620 NO LONGER AVAILABLE) |
| | 19M7077 | CAP SCREW | 1 | | M6 X 20, (SUB FOR J900620) |
| | 24M7054 | WASHER | 1 | | 6.400 X 12 X 1.600 MM, (SUB FOR A590106) |
| 19 | AT45925 | LINE | 1 | | (SUB FOR 4420775) |
| 20 | 4452159 | RELAY | 1 | | |
| 22 | 4425444 | WIRING HARNESS | 1 | | |
| 29 | 4446688 | WIRING HARNESS | 1 | | |
| 31 | 9746365 | BRACKET | 1 | | |
| 33 | ..... | CAP SCREW | 2 | | ( J271025 NO LONGER AVAILABLE) |
| | 19M7402 | CAP SCREW | 1 | | M10 X 25, (SUB FOR J901025) |
| | 24M7346 | WASHER | 1 | | 11 X 20 X 2 MM, (SUB FOR J222010) |
| 34 | ..... | DRY CHARGED BATTERY | 1 | | (SUB FOR 4601757) |

**MEMORANDA**

**WIRING HARNESS KIT**

TP42519 -UN-01JAN94

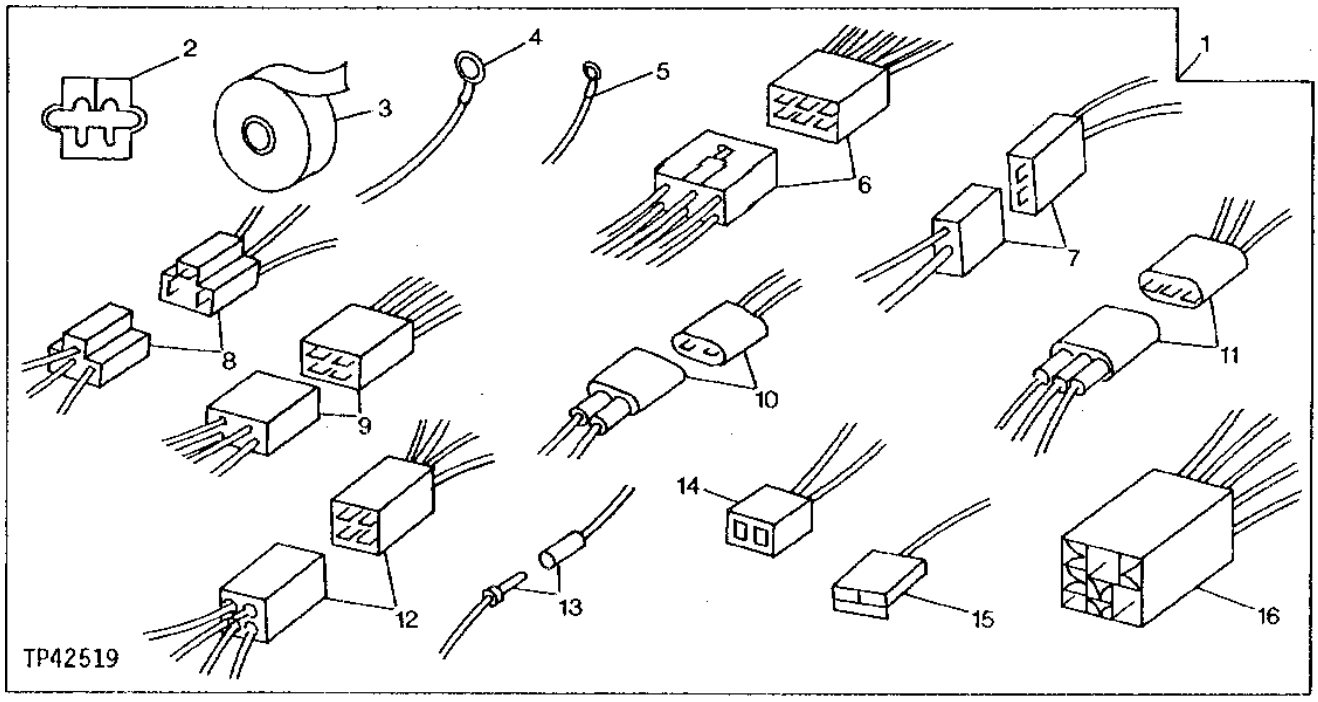


| KEY | PART NO. | PART NAME | QTY | SERIAL NO. | REMARKS |
|---|---|---|---|---|---|
| 1 | 4369817 | ELECTRICAL CONNECTOR ASSY | 1 | | |
| 2 | ..... | CONNECTOR | 100 | | |
| 3 | ..... | TAPE | 1 | | (BLACK) |
| 4 | ..... | EYELET | 2 | | |
| 5 | ..... | EYELET | 2 | | |
| 6 | ..... | CONNECTOR | 1 | | (6 WIRES) |
| 7 | ..... | CONNECTOR | 1 | | (2 WIRES) |
| 8 | ..... | CONNECTOR | 1 | | (3 WIRES) |
| 9 | ..... | CONNECTOR | 1 | | (4 WIRES) |
| 10 | ..... | CONNECTOR | 4 | | (2 WIRES) |
| 11 | ..... | CONNECTOR | 2 | | (3 WIRES) |
| 12 | ..... | CONNECTOR | 1 | | (4 WIRES) |
| 13 | ..... | CONNECTOR | 2 | | (BULLET) |
| 14 | ..... | CONNECTOR | 3 | | |
| 15 | ..... | CONNECTOR | 2 | | |
| 16 | ..... | CONNECTOR | 2 | | (5 WIRES) |

**CONTROLLER**

T207632 -UN-09FEB05

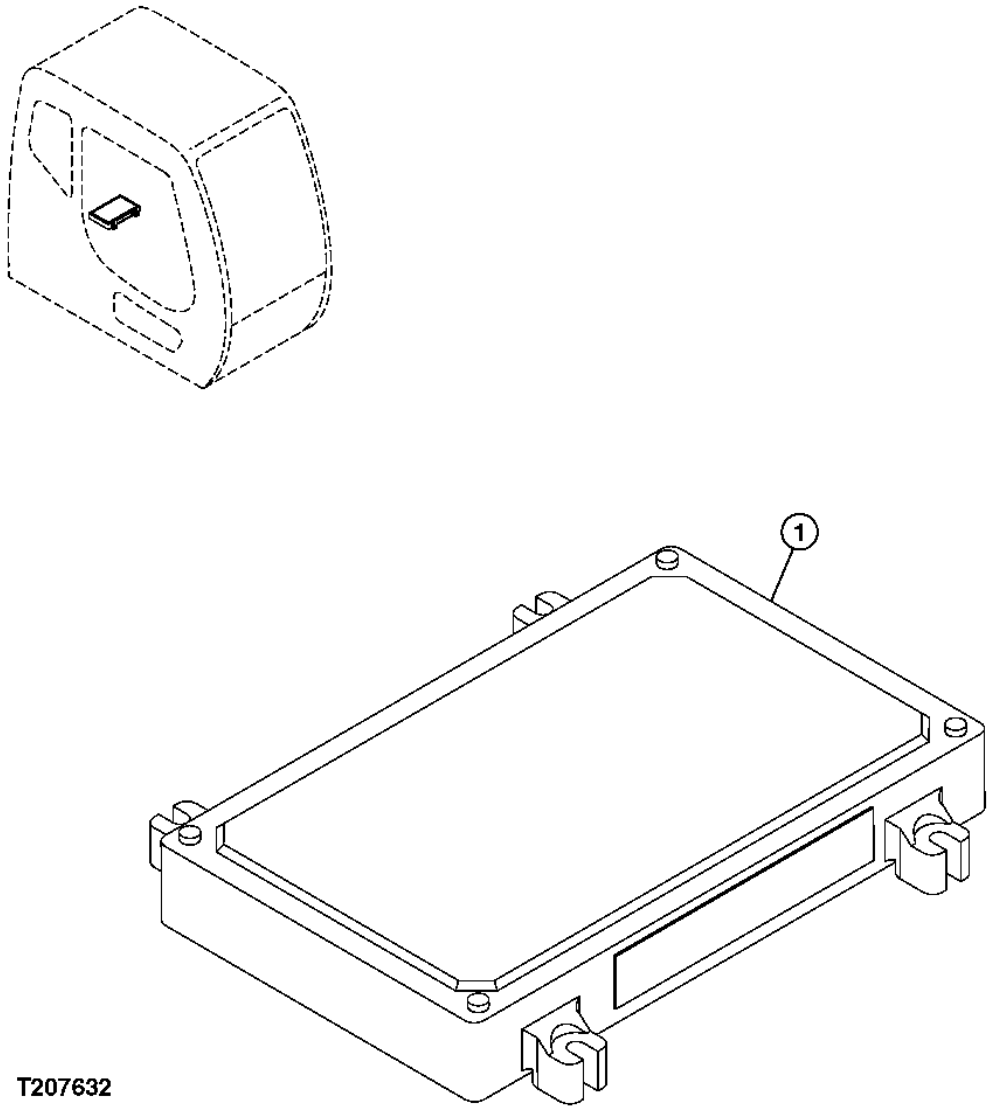

**CONTROLLER**

| KEY | PART NO. | PART NAME | QTY | SERIAL NO. | REMARKS |
|---|---|---|---|---|---|
| 1 | 9230378 | ENGINE CONTROLLER | 1 | | |

**2 PIECE BOOM LIGHT WIRING HARNESS**

T207663 -UN-09FEB05

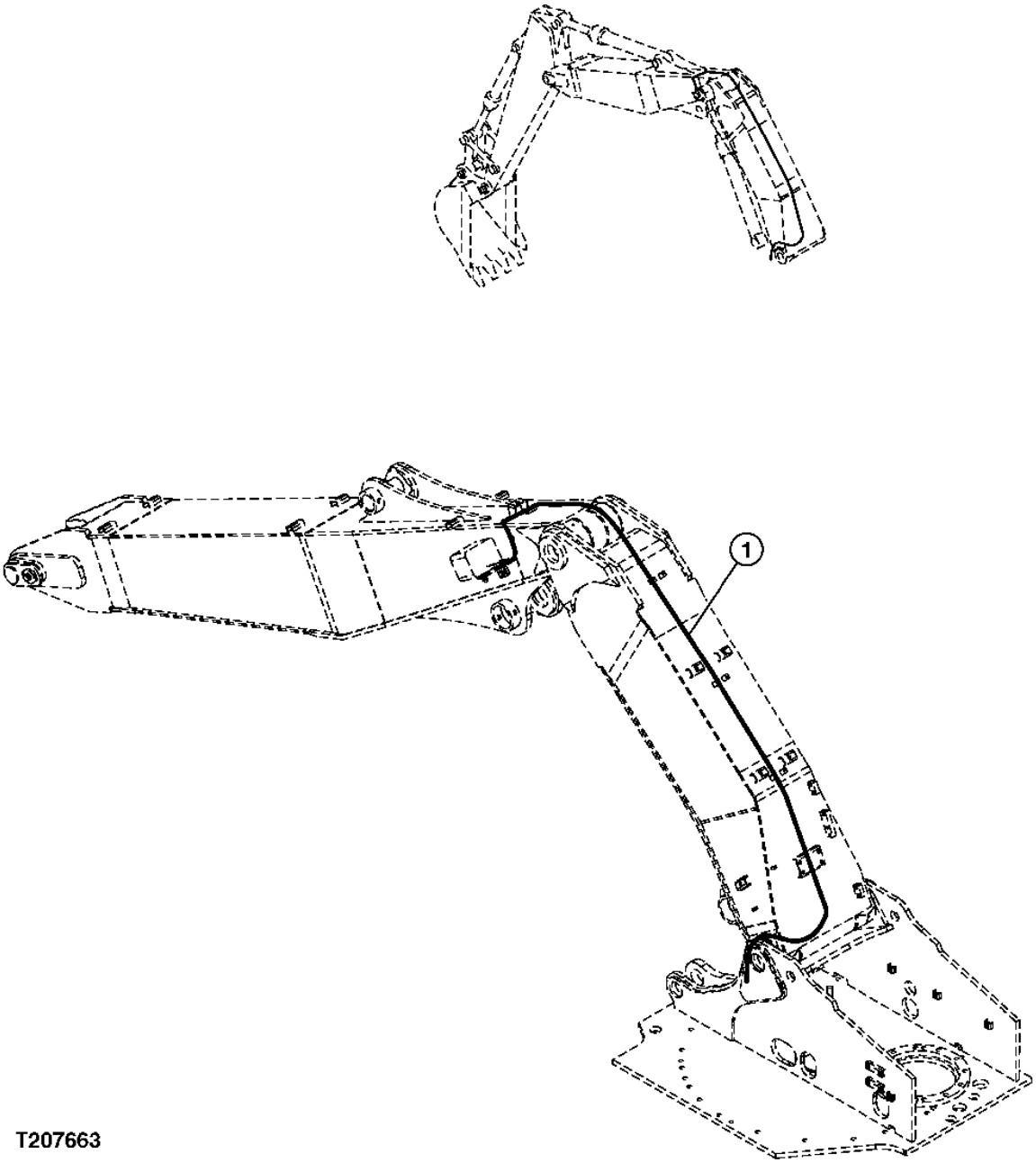


T207663

**2 PIECE BOOM LIGHT WIRING HARNESS**

| KEY | PART NO. | PART NAME | QTY | SERIAL NO. | REMARKS |
|---|---|---|---|---|---|
| 1 | 4437513 | WIRING HARNESS | 1 | | |

**MONO BOOM LIGHT WIRING HARNESS**

T143274 -UN-28JUN01

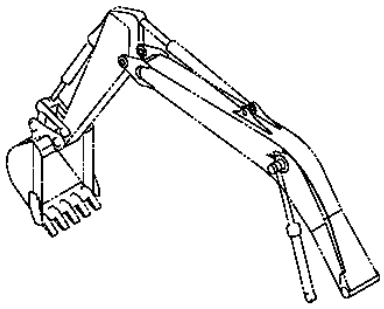

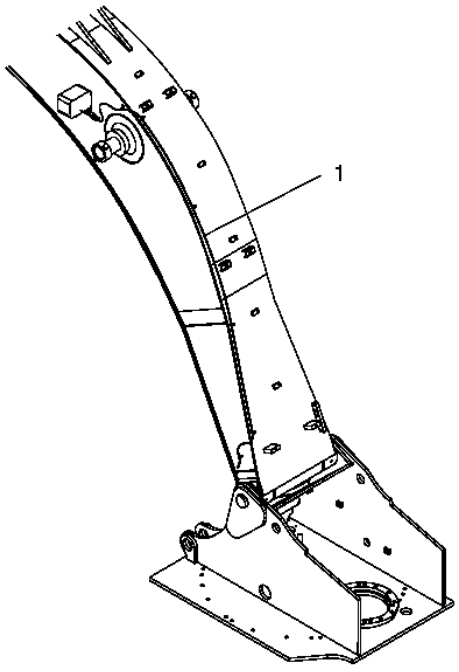


T143274

**MONO BOOM LIGHT WIRING HARNESS**

| KEY | PART NO. | PART NAME | QTY | SERIAL NO. | REMARKS |
|---|---|---|---|---|---|
| 1 | 4437513 | WIRING HARNESS | 1 | | |

**ELECTRICAL COMPONENTS (CAB)**

T207658 -UN-09FEB05

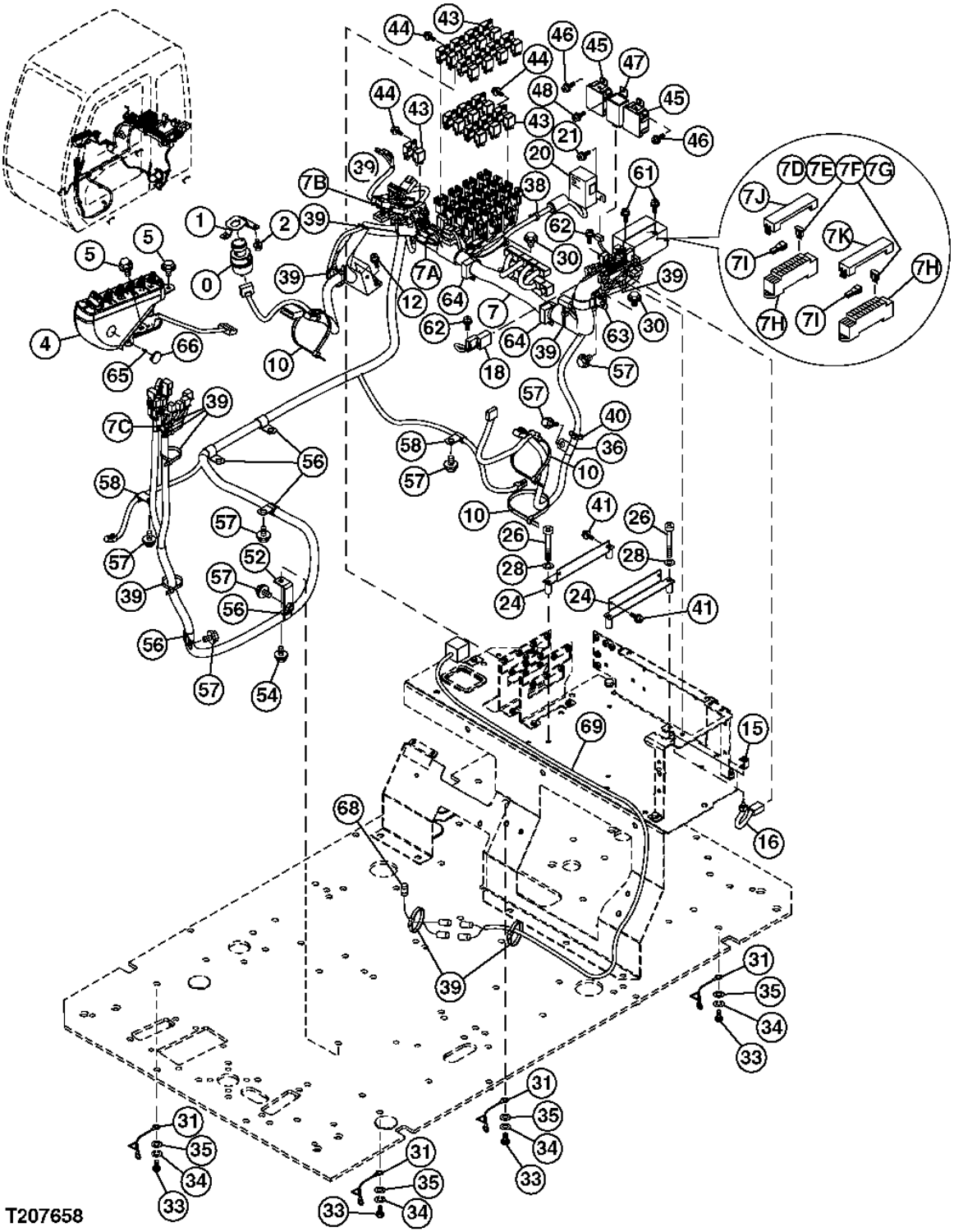

**ELECTRICAL COMPONENTS (CAB)**

| KEY | PART NO. | PART NAME | QTY | SERIAL NO. | REMARKS |
|---|---|---|---|---|---|
| 0 | 4477373 | SWITCH | 1 | | |
| | AT194969 | KEY | 1 | | |
| 1 | 3087882 | BRACKET | 1 | | |
| 2 | 4361800 | SCREW | 3 | | |
| 4 | 4462381 | CIRCUIT BOX | 1 | | |
| 5 | ..... | CAP SCREW | 3 | | ( J260814 IS NOT AVAIBLE FOR SERVICE) |
| | 19M7162 | CAP SCREW | 1 | | M8 X 16, (SUB FOR J900816) |
| | 24M7055 | WASHER | 1 | | 8.400 X 16 X 1.600 MM, (SUB FOR A590108) |
| 7 | 0004429 | WIRING HARNESS | 1 | | |
| 7A | 4456778 | DIODE | 13 | | |
| 7B | 4611526 | DIODE | 6 | | |
| 7C | 4611527 | DIODE | 2 | | |
| 7D | 4428910 | FUSE | 14 | | (5 AMP) |
| 7E | 4428911 | FUSE | 28 | | (10 AMP) |
| 7F | 4438015 | FUSE | 2 | | (15 AMP) |
| 7G | 4436736 | FUSE | 3 | | (20 AMP) |
| 7H | 4460037 | FUSE BOX | 2 | | (SUB FOR 4456735) |
| 7I | 4436736 | FUSE | 2 | | |
| 7J | 4466497 | COVER | 1 | | |
| 7K | 4604473 | COVER | 1 | | |
| 10 | H77698 | TIE BAND | 3 | | (SUB FOR 4121859) |
| 12 | 21M7267 | SCREW | 2 | | M6 X 20, (SUB FOR J460620) |
| | 24M7293 | WASHER | 2 | | 6.500 X 13 X 1.600 MM |
| | 12M7006 | LOCK WASHER | 2 | | 6 MM |
| 15 | 4367375 | BRACKET | 1 | | |
| 16 | 4617012 | SWITCH | 1 | | (SUB FOR 4359384) |
| 18 | 4439897 | WIRING HARNESS | 1 | | |
| 20 | 4452160 | RELAY | 1 | | |
| 21 | 19M8425 | CAP SCREW | 2 | | M6 X 16, (SUB FOR J460616) |
| | 12M7006 | LOCK WASHER | 1 | | 6 MM |
| | 24M7293 | WASHER | 1 | | 6.500 X 13 X 1.600 MM |
| 24 | 8082329 | BRACKET | 2 | | |
| 26 | M430660 | SCREW | 4 | | |
| 28 | 24M7054 | WASHER | 4 | | 6.400 X 12 X 1.600 MM, (SUB FOR A590106) |
| 30 | ..... | CAP SCREW | 4 | | ( J260816 IS NOT AVAILABLE FOR SERVICE) |
| | 19M7162 | CAP SCREW | 1 | | M8 X 16, (SUB FOR J900816) |
| | 24M7055 | WASHER | 1 | | 8.400 X 16 X 1.600 MM, (SUB FOR A590108) |
| 31 | 4464075 | WIRING HARNESS | 4 | | |

THIS PARTS LISTING IS CONTINUED

**ELECTRICAL COMPONENTS (CAB) (CONTINUED)**

T207658 -UN-09FEB05

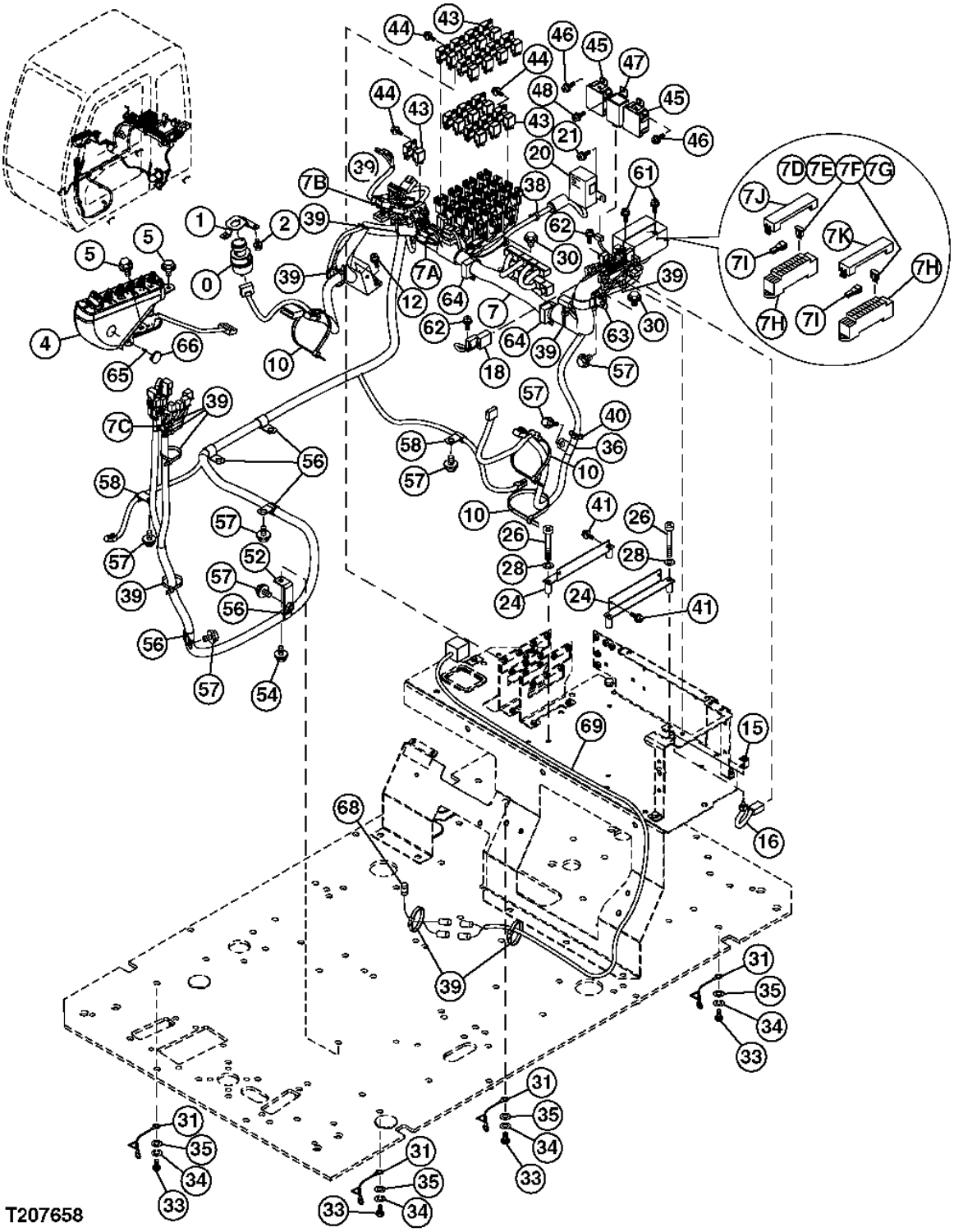

**ELECTRICAL COMPONENTS (CAB) (CONTINUED)**

| KEY | PART NO. | PART NAME | QTY | SERIAL NO. | REMARKS |
|---|---|---|---|---|---|
| 33 | 19M8324 | CAP SCREW | 4 | | M10 X 16, (SUB FOR J901016) |
| 34 | 12M7066 | LOCK WASHER | 4 | | 10 MM, (SUB FOR A590910) |
| 35 | 24M7028 | WASHER | 4 | | 10.500 X 20 X 2 MM, (SUB FOR A590110) |
| 36 | 4190261 | CLIP | 1 | | |
| 38 | 4190253 | CLIP | 1 | | |
| 39 | H77698 | TIE BAND | 12 | | (SUB FOR 4055312) |
| 40 | H77698 | TIE BAND | 1 | | (SUB FOR 4055311) |
| 41 | 19M7700 | CAP SCREW | 4 | | M5 X 10 |
| | 12M7064 | LOCK WASHER | 1 | | 5 MM |
| | 24M7348 | WASHER | 1 | | 5.500 X 10 X 1 MM |
| 43 | 4414207 | RELAY | 30 | | |
| 44 | J900614 | BOLT | 15 | | (SUB FOR J460614) |
| | 12M7006 | LOCK WASHER | 1 | | 6 MM |
| | 24M7293 | WASHER | 1 | | 6.500 X 13 X 1.600 MM |
| 45 | 4428213 | UNIT STANDARD | 1 | | |
| 46 | J900614 | BOLT | 2 | | (SUB FOR J460614) |
| | 12M7006 | LOCK WASHER | 1 | | 6 MM |
| | 24M7293 | WASHER | 1 | | 6.500 X 13 X 1.600 MM |
| 47 | 4413974 | FLASHER | 1 | | |
| 48 | J900614 | BOLT | 1 | | (SUB FOR J460614) |
| | 12M7006 | LOCK WASHER | 1 | | 6 MM |
| | 24M7293 | WASHER | 1 | | 6.500 X 13 X 1.600 MM |
| 52 | 9759327 | BRACKET | 1 | | |
| 54 | ..... | CAP SCREW | 1 | | ( J271025 IS NOT AVAILABLE FOR SERVICE) |
| | 19M7402 | CAP SCREW | 1 | | (SUB FOR J901025) |
| | 24M7346 | WASHER | 1 | | 11 X 20 X 2 MM, (SUB FOR J222010) |
| 56 | 4190274 | CLIP | 5 | | |
| 57 | ..... | CAP SCREW | 7 | | ( J271020 IS NOT AVAILABLE FOR SERVICE) |
| | 19M7938 | CAP SCREW | 1 | | M10 X 20, (SUB FOR J901020) |
| | 24M7346 | WASHER | 1 | | 11 X 20 X 2 MM, (SUB FOR J222010) |
| 58 | 4190261 | CLIP | 2 | | |
| 61 | 21M7267 | SCREW | 4 | | M6 X 20, (SUB FOR J460620) |
| | 24M7293 | WASHER | 1 | | 6.500 X 13 X 1.600 MM |
| | 12M7006 | LOCK WASHER | 1 | | 6 MM |
| 62 | J460310 | SCREW | 4 | | |
| 63 | 4193848 | CLIP | 1 | | (SUB FOR 4190291) |
| 64 | 4449019 | CLIP | 3 | | |
| 65 | 4381572 | SCREW | 1 | | |
| 66 | 4426354 | CAP | 1 | | |
| 68 | 4384758 | SWITCH | 1 | | |
| 69 | 4638278 | WIRING HARNESS | 1 | | |

**HEAD, TAIL AND MONO BOOM LIGHTS**

T207634 -UN-09FEB05

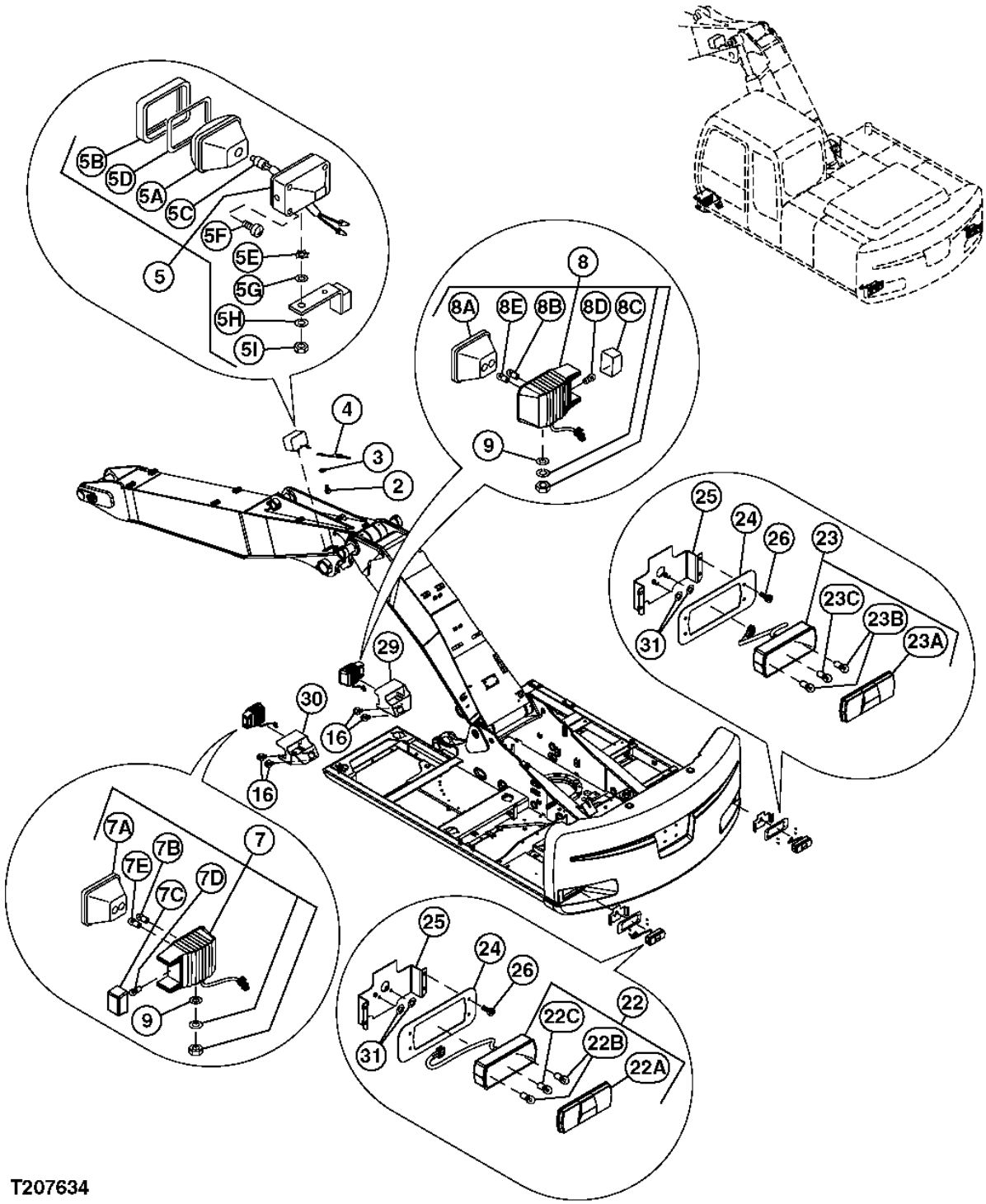


T207634

**HEAD, TAIL AND MONO BOOM LIGHTS**

| KEY | PART NO. | PART NAME | QTY | SERIAL NO. | REMARKS |
|---|---|---|---|---|---|
| 2 | 21M7285 | SCREW | 1 | | M6 X 12, (SUB FOR M430613) |
| 3 | 12M7006 | LOCK WASHER | 1 | | 6 MM, (SUB FOR A590906) |
| 4 | 4254604 | WIRING HARNESS | 1 | | |
| 5 | ..... | LAMP | 1 | | ( 4336570 FOR PRODUCTION ONLY) (SERVICE 4326800) |
| | 4326800 | LAMP | 1 | | |
| 5A | 4326801 | LENS | 1 | | |
| 5B | 4326802 | FRAME | 1 | | |
| 5C | AT154990 | BULB | 1 | | (SUB FOR 4285648) |
| 5D | 4326803 | GASKET | 1 | | |
| 5E | 4307026 | WASHER | 1 | | |
| 5F | 4307027 | SCREW | 4 | | |
| 5G | 24M7085 | WASHER | 1 | | 15 X 28 X 2.500 MM, (SUB FOR A590114) |
| 5H | 12H317 | LOCK WASHER | 1 | | 14.288 MM, (SUB FOR A590914) |
| 5I | J952014 | NUT | 1 | | |
| 7 | 4465175 | LAMP | 1 | | |
| 7A | 4609979 | LENS | 1 | | |
| 7B | 4610056 | BULB | 1 | | |
| 7C | 4610054 | LENS | 1 | | |
| 7D | 4610058 | BULB | 1 | | |
| 7E | 4610057 | BULB | 1 | | |
| 8 | 4465176 | LAMP | 1 | | |
| 8A | 4609979 | LENS | 1 | | |
| 8B | 4610056 | BULB | 1 | | |
| 8C | 4610055 | LENS | 1 | | |
| 8D | 4610058 | BULB | 1 | | |
| 8E | 4610057 | BULB | 1 | | |
| 9 | 24M7047 | WASHER | 2 | | 13 X 24 X 2.500 MM, (SUB FOR A590112) |
| 16 | ..... | CAP SCREW | 8 | | ( J271030 NO LONGER AVAILABLE) |
| | 19M7662 | CAP SCREW | 1 | | M10 X 30, (SUB FOR J901030) |
| | 24M7346 | WASHER | 1 | | 11 X 20 X 2 MM, (SUB FOR J222010) |
| 22 | 4482452 | LAMP | 1 | | |
| 22A | 4610059 | LENS | 1 | | |
| 22B | 4610061 | BULB | 2 | | |
| 22C | 4610062 | BULB | 1 | | |
| 23 | 4482453 | LAMP | 1 | | |
| 23A | 4610060 | LENS | 1 | | |
| 23B | 4610061 | BULB | 2 | | |
| 23C | 4610062 | BULB | 1 | | |
| 24 | ..... | PLATE | 2 | | ( 4600079 NOT AVAILABLE FOR SERVICE) |
| 25 | 8091528 | BRACKET | 2 | | |
| 26 | 19M7768 | SCREW | 8 | | M6 X 16, (SUB FOR J780616) |
| 29 | 7044269 | COVER | 1 | | |
| 30 | 7044270 | COVER | 1 | | |
| 31 | 24M7054 | WASHER | 4 | | 6.400 X 12 X 1.600 MM, (SUB FOR A590106) |

**2 PIECE BOOM LIGHT**

T207664 -UN-09FEB05

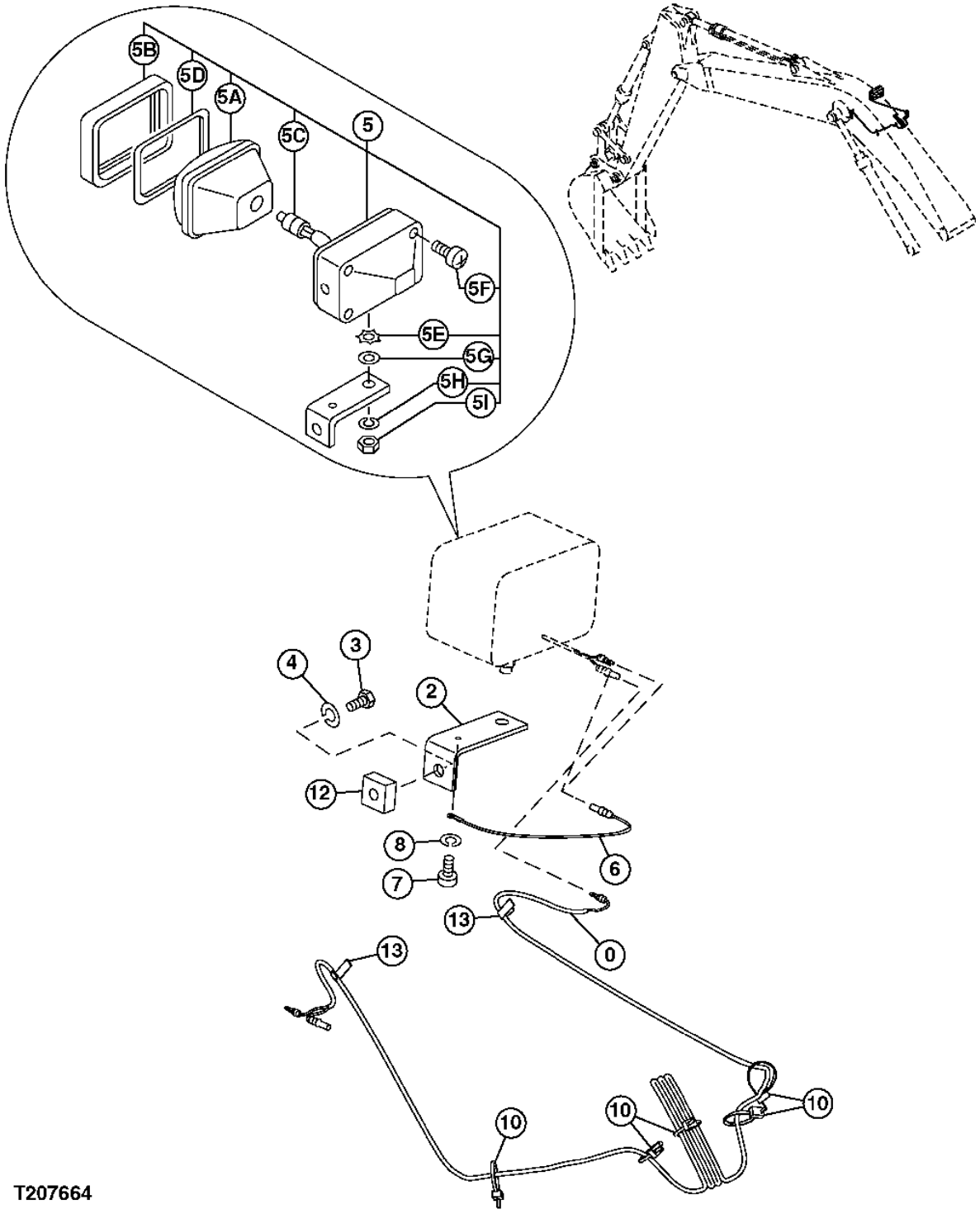

**2 PIECE BOOM LIGHT**

| KEY | PART NO. | PART NAME | QTY | SERIAL NO. | REMARKS |
|---|---|---|---|---|---|
| 0 | 4344125 | WIRING HARNESS | 1 | | |
| 2 | 4224631 | BRACKET | 1 | | |
| 3 | J901425 | CAP SCREW | 1 | | |
| 4 | 12H317 | LOCK WASHER | 1 | | 14.288 MM, (SUB FOR A590914) |
| 5 | ..... | LAMP | 1 | | ( 4336570 FOR PRODUCTION ONLY) (SERVICE 4326800) |
| | 4326800 | LAMP | 1 | | |
| 5A | 4326801 | LENS | 1 | | |
| 5B | 4326802 | FRAME | 1 | | |
| 5C | AT154990 | BULB | 1 | | (SUB FOR 4285648) |
| 5D | 4326803 | GASKET | 1 | | |
| 5E | 4307026 | WASHER | 1 | | |
| 5F | 4307027 | SCREW | 4 | | |
| 5G | 24M7085 | WASHER | 1 | | 15 X 28 X 2.500 MM, (SUB FOR A590114) |
| 5H | 12H317 | LOCK WASHER | 1 | | 14.288 MM, (SUB FOR A590914) |
| 5I | J952014 | NUT | 1 | | |
| 6 | 4254604 | WIRING HARNESS | 1 | | |
| 7 | 21M7285 | SCREW | 1 | | M6 X 12, (SUB FOR M430613) |
| 8 | 12M7006 | LOCK WASHER | 1 | | 6 MM, (SUB FOR A590906) |
| 10 | H77698 | TIE BAND | 5 | | (SUB FOR 4055311) |
| 12 | 4224632 | BUSHING | 1 | | |
| 13 | 4272256 | CLIP | 2 | | |

**VEHICLE MAIN WIRING HARNESS**

T207635 -UN-09FEB05

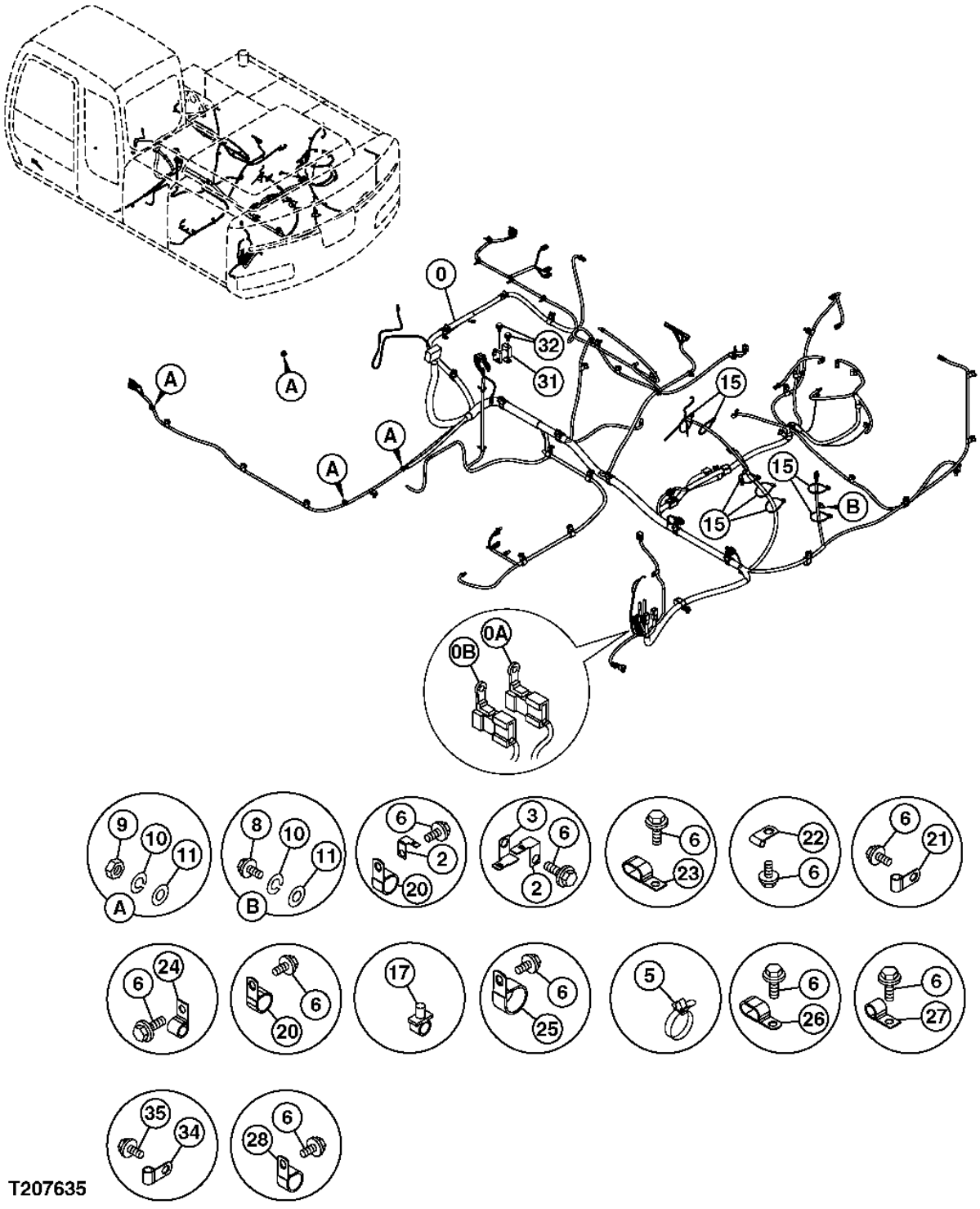


T207635

**VEHICLE MAIN WIRING HARNESS**

| KEY | PART NO. | PART NAME | QTY | SERIAL NO. | REMARKS |
|---|---|---|---|---|---|
| 0 | 0004778 | WIRING HARNESS | 1 | | |
| 0A | 4423418 | WIRE | 1 | | |
| 0B | 4315323 | LINK | 1 | | |
| 2 | 4257159 | BRACKET | 4 | | |
| 3 | 4418301 | BRACKET | 1 | | |
| 5 | 4254600 | CLIP | 6 | | |
| 6 | ..... | CAP SCREW | 35 | | ( J271020 NO LONGER AVAILABLE) |
| | 19M7938 | CAP SCREW | 1 | | M10 X 20, (SUB FOR J901020) |
| | 24M7346 | WASHER | 1 | | 11 X 20 X 2 MM, (SUB FOR J222010) |
| 8 | 19M7402 | CAP SCREW | 1 | | M10 X 25, (SUB FOR J901025) |
| 9 | 14M7274 | NUT | 4 | | M10, (SUB FOR J950010) |
| 10 | 12M7066 | LOCK WASHER | 5 | | 10 MM, (SUB FOR A590910) |
| 11 | 24M7028 | WASHER | 5 | | 10.500 X 20 X 2 MM, (SUB FOR A590110) |
| 15 | H77698 | TIE BAND | 7 | | (SUB FOR 4055312) |
| 17 | 4449250 | CLIP | 2 | | |
| 20 | 4192035 | CLIP | 2 | | |
| 21 | 4190275 | CLIP | 7 | | |
| 22 | 4190261 | CLIP | 13 | | |
| 23 | T32854 | CLAMP | 1 | | (SUB FOR 4190282) |
| 24 | 4190273 | CLIP | 2 | | |
| 25 | 4190274 | CLIP | 5 | | |
| 26 | 4192034 | CLIP | 1 | | |
| 27 | 4190291 | CLIP | 3 | | (SUB FOR 4190264) |
| 28 | T24432 | CLAMP | 4 | | (SUB FOR 4190277) |
| 31 | 4279835 | RELAY | 1 | | (SUB FOR 4452158) |
| 32 | ..... | CAP SCREW | 2 | | ( J260816 NO LONGER AVAILABLE) |
| | 19M7162 | CAP SCREW | 1 | | M8 X 16, (SUB FOR J900816) |
| | 24M7055 | WASHER | 1 | | 8.400 X 16 X 1.600 MM, (SUB FOR A590108) |
| 34 | 4450494 | CLIP | 3 | | |
| 35 | ..... | CAP SCREW | 3 | | ( J260616 NO LONGER AVAILABLE) |
| | 19M7560 | CAP SCREW | 1 | | M6 X 16, (SUB FOR J900616) |
| | 24M7054 | WASHER | 1 | | 6.400 X 12 X 1.600 MM, (SUB FOR A590106) |

**CAB DISPLAY MONITOR AND WIRING HARNESS**

T143273 -UN-28JUN01

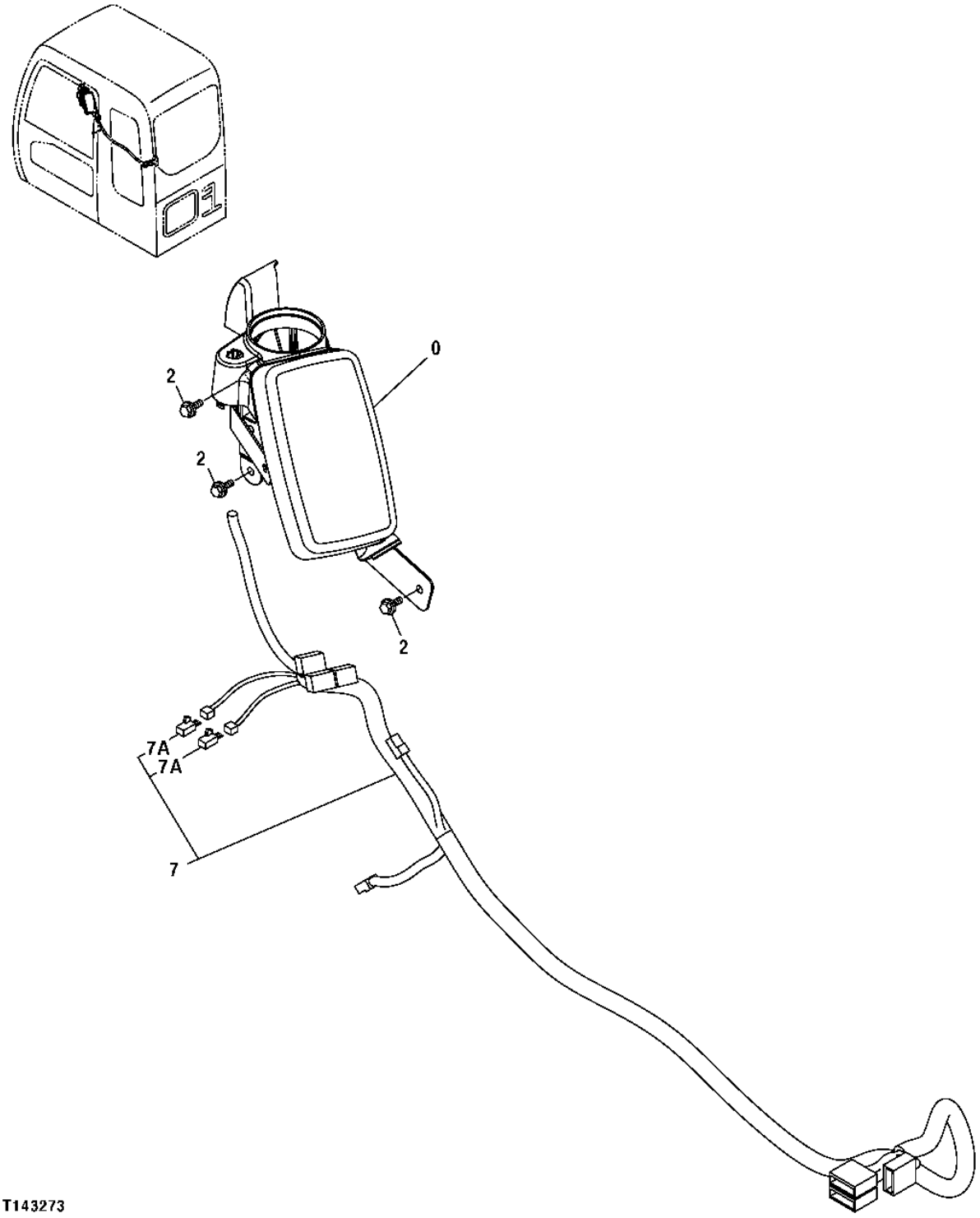

**CAB DISPLAY MONITOR AND WIRING HARNESS**

| KEY | PART NO. | PART NAME | QTY | SERIAL NO. | REMARKS |
|---|---|---|---|---|---|
| 0 | 4474747 | MONITOR | 1 | | |
| 2 | ..... | CAP SCREW | 3 | | ( J260816 NO LONGER AVAILABLE) |
| | 19M7162 | CAP SCREW | 1 | | M8 X 16, (SUB FOR J900816) |
| | 24M7055 | WASHER | 1 | | 8.400 X 16 X 1.600 MM, (SUB FOR A590108) |
| 7 | 1030601 | WIRING HARNESS | 1 | | |
| 7A | 4456778 | DIODE | 2 | | |

**ENGINE WIRING HARNESS**

T148745 -UN-08DEC01

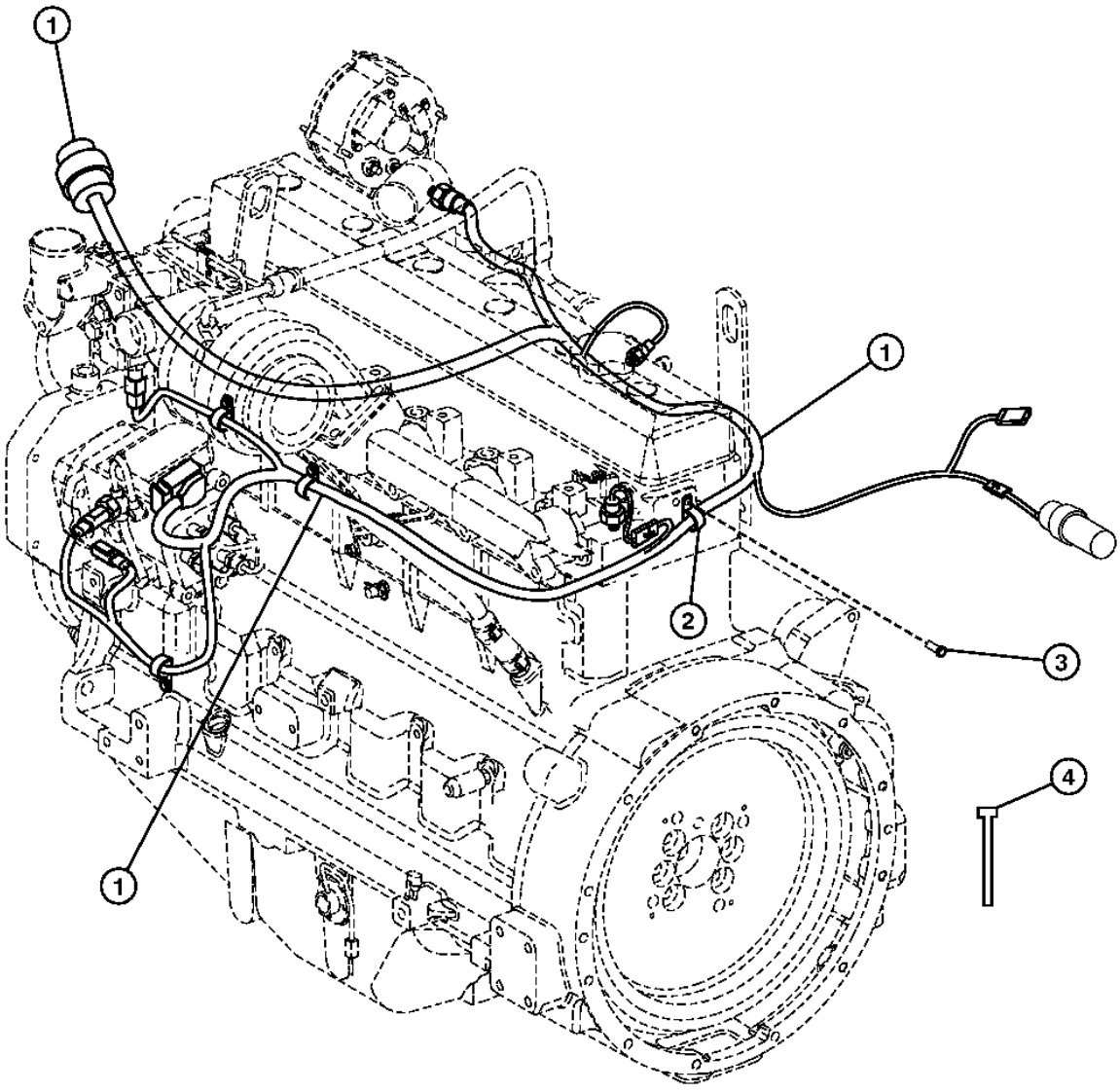


T148745

**ENGINE WIRING HARNESS**

| KEY | PART NO. | PART NAME | QTY | SERIAL NO. | REMARKS |
|---|---|---|---|---|---|
| 1 | AT191463 | WIRING HARNESS | 1 | | |
| 2 | T75197 | CLAMP | 4 | | |
| 3 | 19M7783 | SCREW | 4 | | M10 X 16 |
| 4 | R44302 | TIE BAND | 8 | | |

**MIC CONTROLLER**

T151219 -UN-11FEB02

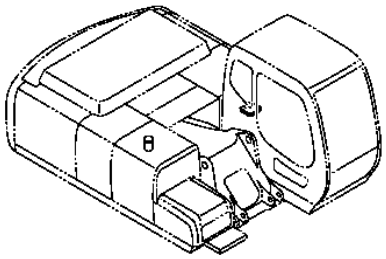

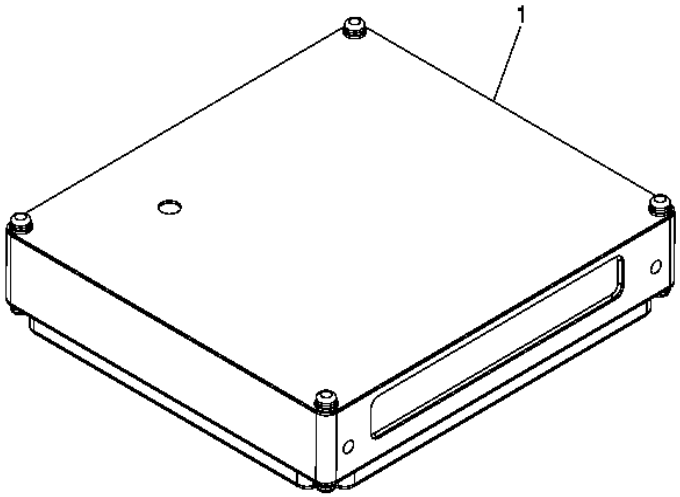


T151219

**MIC CONTROLLER**

| KEY | PART NO. | PART NAME | QTY | SERIAL NO. | REMARKS |
|---|---|---|---|---|---|
| 1 | 9239568 | VEHICLE CONTROLLER | 1 | | (SUB FOR 9212472) |

**MANUAL ENGINE CONTROL SWITCH BOX**

T207659 -UN-09FEB05

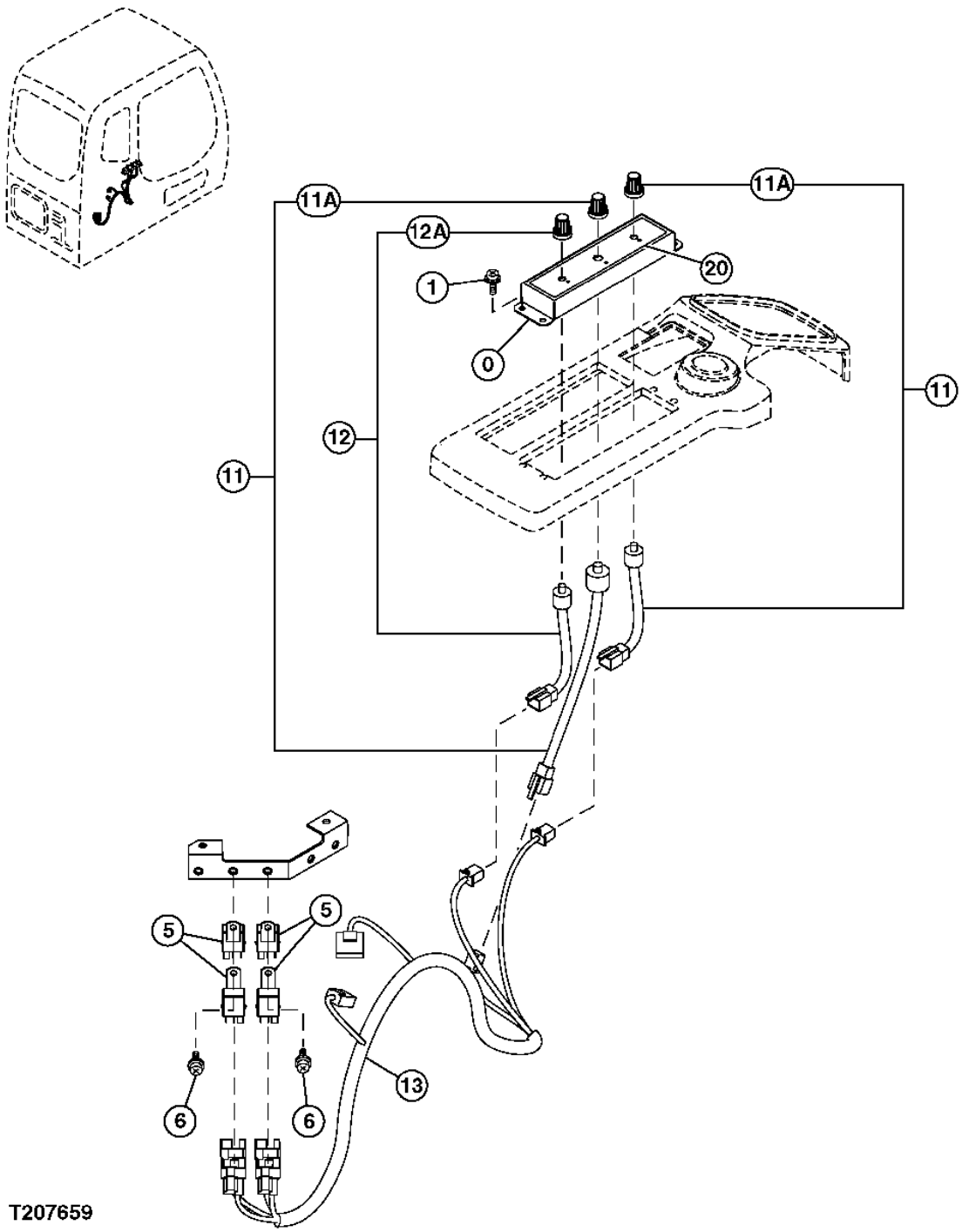

**MANUAL ENGINE CONTROL SWITCH BOX**

| KEY | PART NO. | PART NAME | QTY | SERIAL NO. | REMARKS |
|---|---|---|---|---|---|
| 0 | 3094033 | PANEL | 1 | | |
| 1 | ..... | CAP SCREW | 4 | | ( J460512 NO LONGER AVAILABLE) |
| | 21M7265 | SCREW | 1 | | M5 X 12 |
| | 24M7027 | WASHER | 1 | | 5.300 X 10 X 1 MM |
| | 12M7064 | LOCK WASHER | 1 | | 5 MM |
| 5 | 4414207 | RELAY | 4 | | |
| 6 | ..... | CAP SCREW | 2 | | ( J460616 NO LONGER AVAILABLE) |
| | 19M8425 | CAP SCREW | 1 | | M6 X 16 |
| | 24M7293 | WASHER | 1 | | 6.500 X 13 X 1.600 MM |
| | 12M7006 | LOCK WASHER | 1 | | 6 MM |
| 11 | 4468555 | ROTARY SWITCH | 2 | | |
| 11A | 4483208 | DIAL KNOB | 1 | | |
| 12 | 4472873 | ROTARY SWITCH | 1 | | |
| 12A | 4483208 | DIAL KNOB | 1 | | |
| 13 | 2048897 | WIRING HARNESS | 1 | | |
| 20 | 3100094 | LABEL | 1 | | |

**FRONT CAB LIGHTING AND ALARM WIRING HARNESS**

T207660 -UN-23FEB05

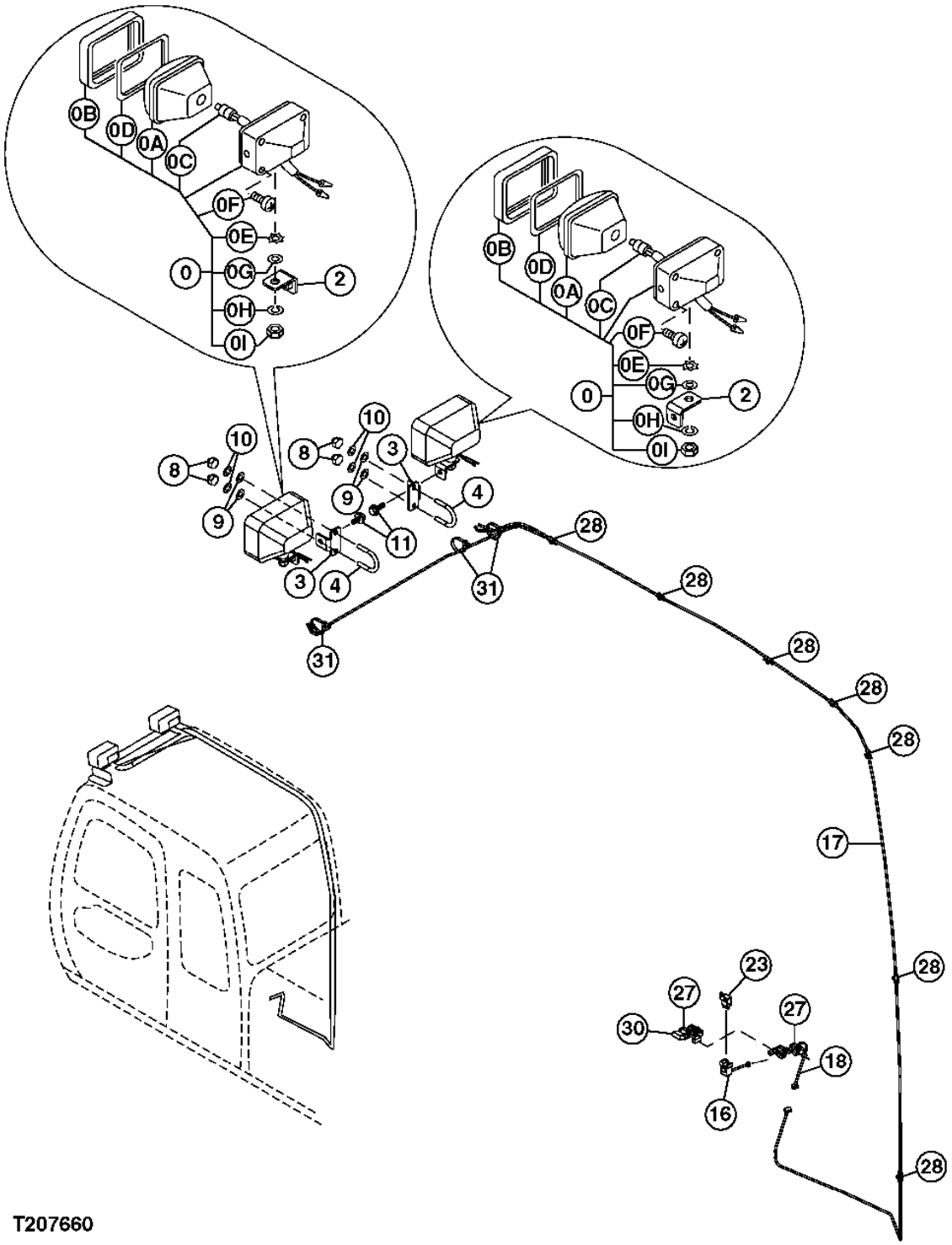


T207660

**FRONT CAB LIGHTING AND ALARM WIRING HARNESS**

| KEY | PART NO. | PART NAME | QTY | SERIAL NO. | REMARKS |
|---|---|---|---|---|---|
| 0 | ..... | LAMP | 2 | | ( 4336570 FOR PRODUCTION ONLY) (SERVICE 4326800) |
| | 4326800 | LAMP | 2 | | |
| 0A | 4326801 | LENS | 1 | | |
| 0B | 4326802 | FRAME | 1 | | |
| 0C | AT154990 | BULB | 1 | | (SUB FOR 4285648) |
| 0D | 4326803 | GASKET | 1 | | |
| 0E | 4307026 | WASHER | 1 | | |
| 0F | 4307027 | SCREW | 4 | | |
| 0G | 24M7085 | WASHER | 1 | | 15 X 28 X 2.500 MM, (SUB FOR A590114) |
| 0H | 12H317 | LOCK WASHER | 1 | | 14.288 MM, (SUB FOR A590914) |
| 0I | J952014 | NUT | 1 | | |
| 2 | 9756005 | BRACKET | 2 | | |
| 3 | 4447765 | BRACKET | 2 | | |
| 4 | 4447868 | U-BOLT | 2 | | |
| 8 | 4447870 | NUT | 4 | | |
| 9 | 24M7028 | WASHER | 4 | | (SUB FOR J253110 OR A590110) |
| 10 | 12M7066 | LOCK WASHER | 4 | | 10 MM, (SUB FOR J252210) |
| 11 | ..... | CAP SCREW | 2 | | ( J271030 NO LONGER AVAILABLE) |
| | 19M7662 | CAP SCREW | 1 | | M10 X 30, (SUB FOR J901030) |
| | 24M7346 | WASHER | 1 | | 11 X 20 X 2 MM, (SUB FOR J222010) |
| 16 | 4451681 | WIRING HARNESS | 1 | | |
| 17 | 4362178 | WIRING HARNESS | 1 | | |
| 18 | 4366592 | WIRING HARNESS | 1 | | |
| 23 | 4414207 | RELAY | 1 | | |
| 27 | 4289708 | TIE BAND | 6 | | |
| 28 | 4050373 | CLIP | 7 | | |
| 30 | 3074559 | WIRING HARNESS | 1 | | |
| 31 | H77698 | TIE BAND | 3 | | (SUB FOR 4055312) |

**REAR HEAD LIGHT AND HARNESS**

T207661 -UN-09FEB05

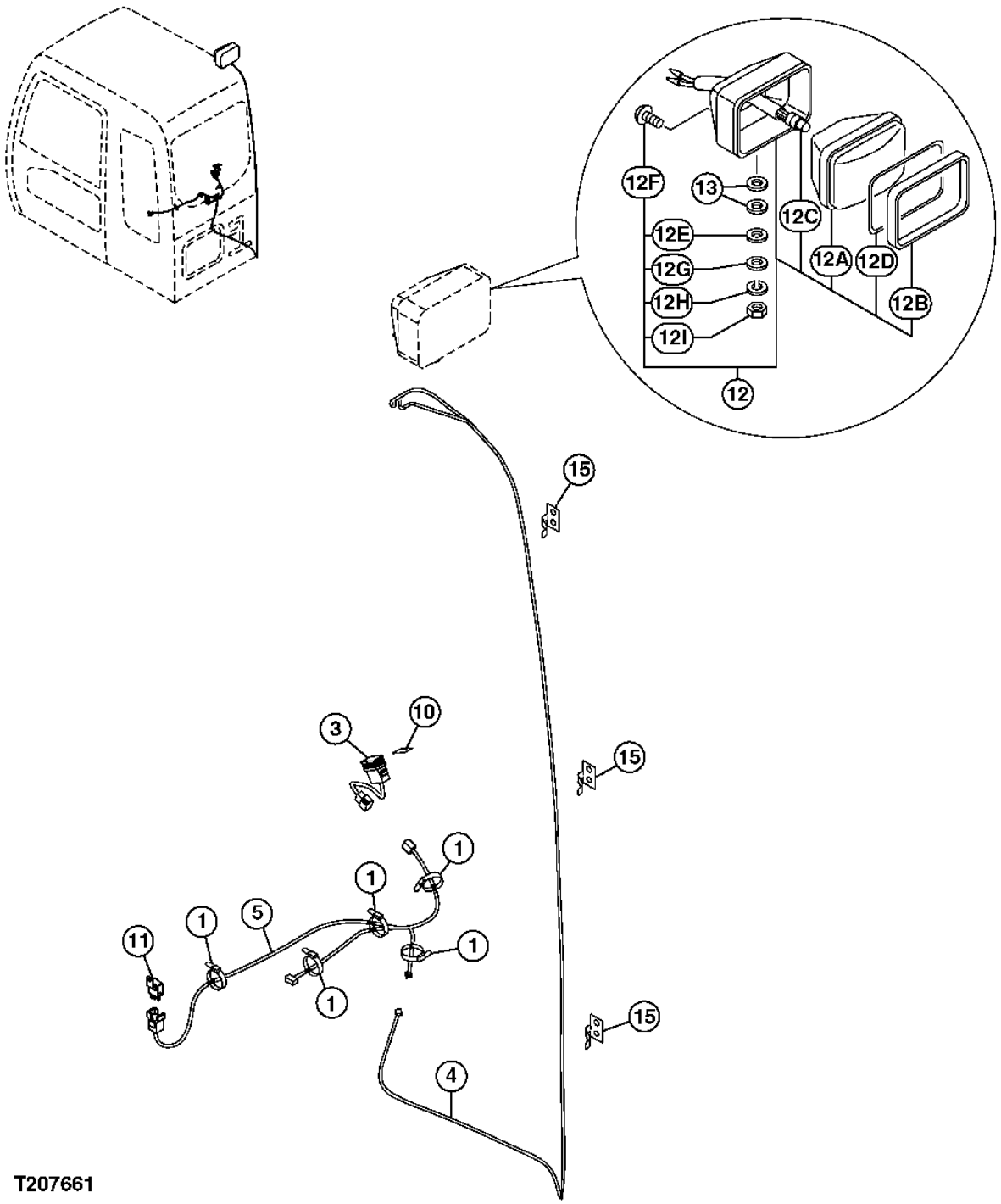

**REAR HEAD LIGHT AND HARNESS**

| KEY | PART NO. | PART NAME | QTY | SERIAL NO. | REMARKS |
|---|---|---|---|---|---|
| 1 | 4289708 | TIE BAND | 5 | | |
| 3 | 4352947 | SWITCH | 1 | | |
| 4 | 4369932 | WIRING HARNESS | 1 | | |
| 5 | 4603695 | WIRING HARNESS | 1 | | |
| 10 | 4603875 | LABEL | 1 | | |
| 11 | 4414207 | RELAY | 1 | | |
| 12 | ..... | LAMP | 1 | | ( 4336570 FOR PRODUCTION ONLY) (SERVICE 4326800) |
| | 4326800 | LAMP | 1 | | |
| 12A | 4326801 | LENS | 1 | | |
| 12B | 4326802 | FRAME | 1 | | |
| 12C | AT154990 | BULB | 1 | | (SUB FOR 4285648) |
| 12D | 4326803 | GASKET | 1 | | |
| 12E | 4307026 | WASHER | 1 | | |
| 12F | 4307027 | SCREW | 4 | | |
| 12G | 24M7085 | WASHER | 1 | | 15 X 28 X 2.500 MM, (SUB FOR A590114) |
| 12H | 12H317 | LOCK WASHER | 1 | | 14.288 MM, (SUB FOR A590914) |
| 12I | J952014 | NUT | 1 | | |
| 13 | J253114 | WASHER | 2 | | |
| 15 | 4050373 | CLIP | 3 | | |

**MONO BOOM LIGHT WIRING HARNESS**

T207662 -UN-09FEB05

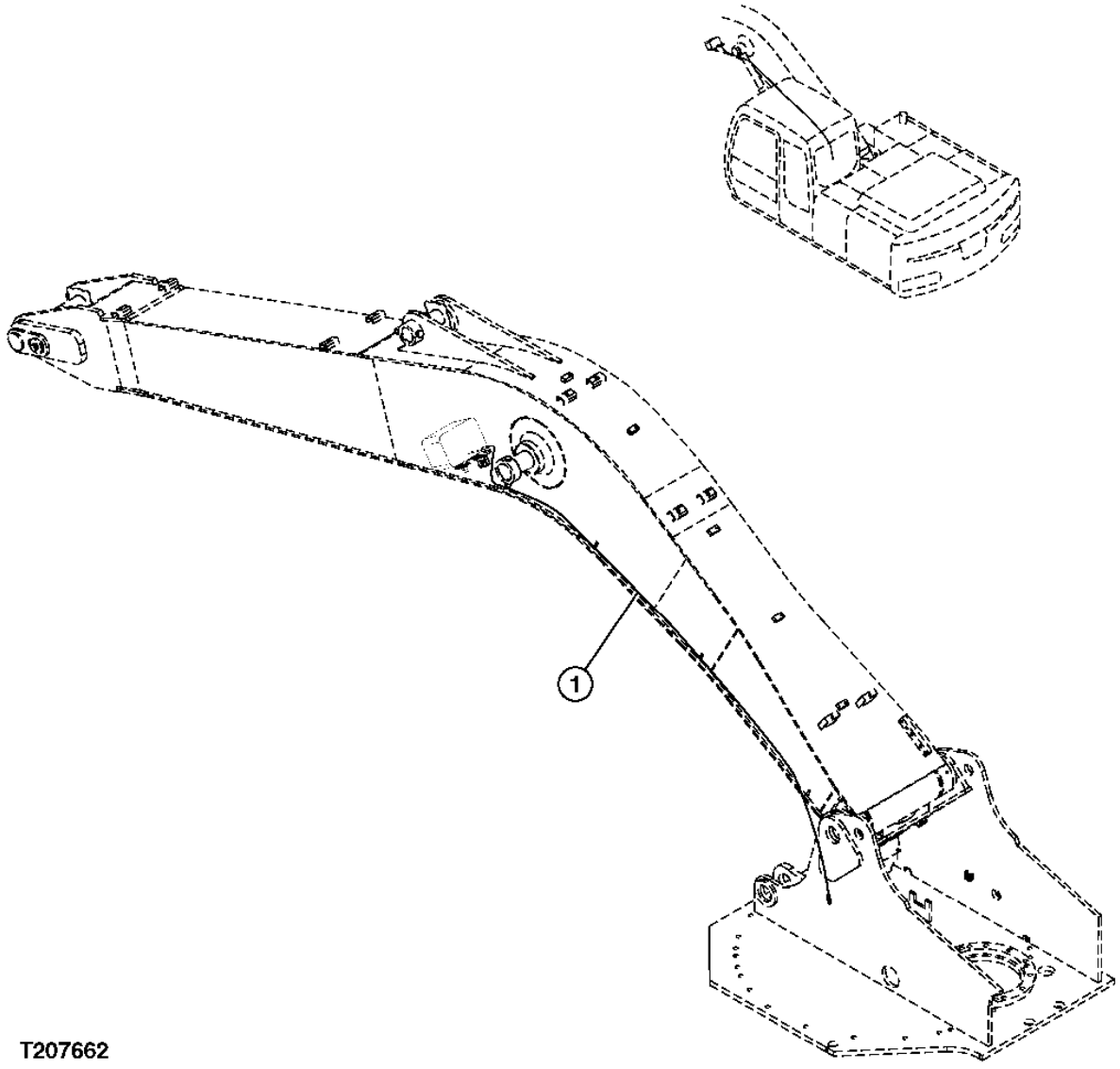


T207662

**MONO BOOM LIGHT WIRING HARNESS**

| KEY | PART NO. | PART NAME | QTY | SERIAL NO. | REMARKS |
|---|---|---|---|---|---|
| 1 | 4430382 | WIRING HARNESS | 1 | | |

**MAIN FRAME**

T156644 -UN-28JUN02

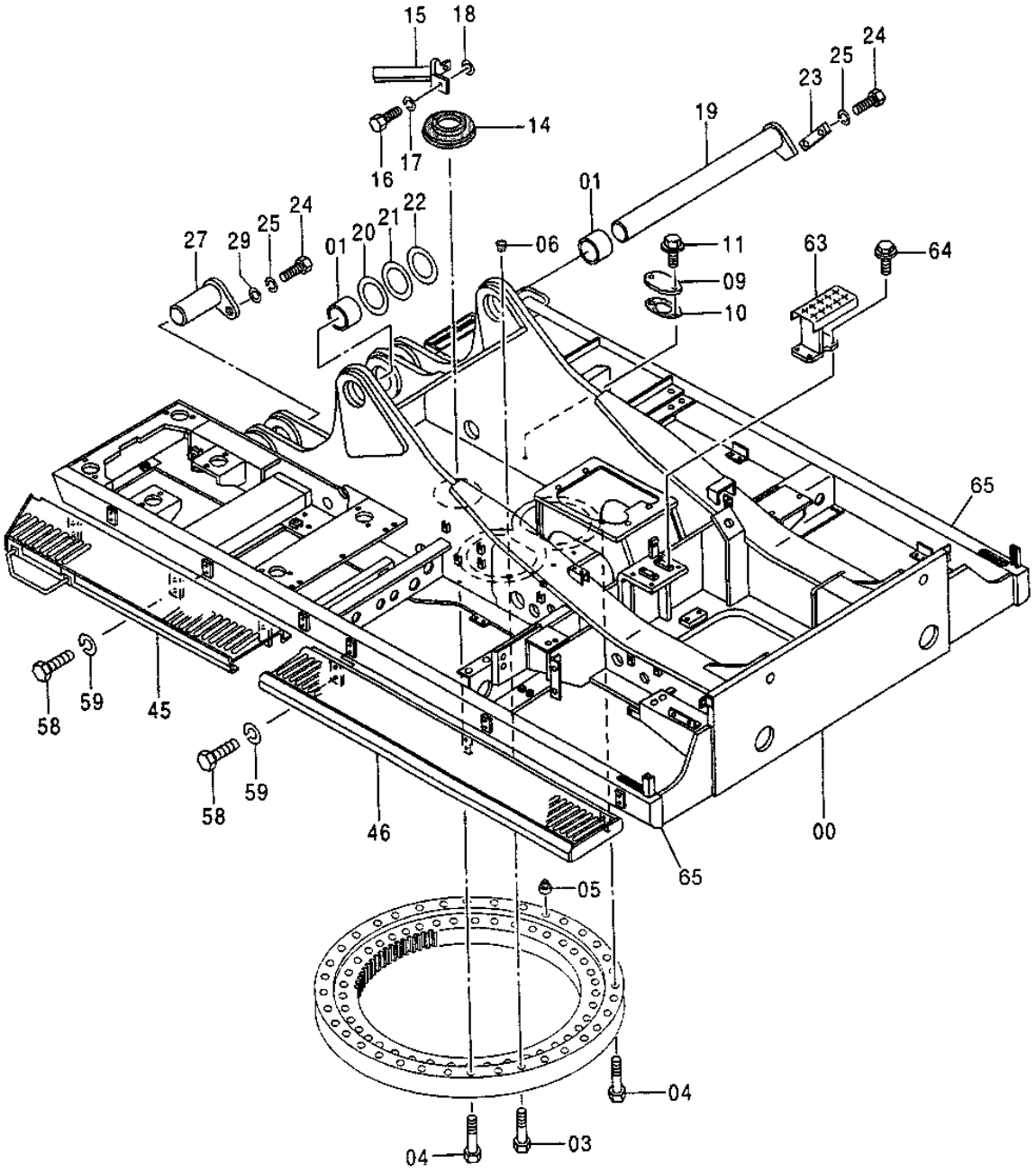


T156644

**MAIN FRAME**

| KEY | PART NO. | PART NAME | QTY | SERIAL NO. | REMARKS |
|---|---|---|---|---|---|
| 0 | 5005575 | MAIN FRAME | 1 | | (SUB FOR TH5005575) (CONVENIENCE ASSEMBLY) |
| 1 | 4296258 | BUSHING | 2 | | (SUB FOR TH4296258) |
| 3 | J833012 | CAP SCREW | 32 | | (SUB FOR THJ833012) |
| 4 | J833016 | CAP SCREW | 4 | | (SUB FOR THJ833016) |
| 5 | 4292932 | PLUG | 2 | | (SUB FOR TH4292932) |
| 6 | 429135 | PLUG | 8 | | (SUB FOR TH429135) |
| 9 | 4292764 | COVER | 1 | | (SUB FOR TH4292764) |
| 10 | 4292765 | PACKING | 1 | | (SUB FOR TH4292765) |
| 11 | 19M8324 | CAP SCREW | 2 | | M10 X 16 |
| | 12M7066 | LOCK WASHER | 2 | | 10 MM (0.394") |
| 14 | 4205476 | COVER | 1 | | (SUB FOR AT131790) |
| 15 | 8056744 | STOP | 1 | | (SUB FOR AT202369) |
| 16 | 19M6332 | CAP SCREW | 2 | | M14 X 35 |
| 17 | 12H317 | LOCK WASHER | 2 | | 9/16" |
| 18 | 4114404 | WASHER | 2 | | (SUB FOR AT130666) |
| 19 | 8053517 | PIN FASTENER | 1 | | (SUB FOR TH8053517) |
| 20 | 4296543 | SHIM | 1 | | (SUB FOR TH4296543) (3.2) |
| 21 | 4296542 | SHIM | 1 | | (SUB FOR TH4296542) (2.3) |
| 22 | 4296541 | SHIM | 2 | | (SUB FOR TH4296541) (1.0) |
| 23 | 4179432 | STRAP | 1 | | (SUB FOR TH4179432) |
| 24 | 19M7950 | CAP SCREW | 4 | | M20 X 45 |
| 25 | 12M7070 | LOCK WASHER | 4 | | 20 MM |
| 27 | 8053518 | PIN FASTENER | 2 | | (SUB FOR TH8053518) |
| 29 | 4040826 | BUSHING | 2 | | (SUB FOR AT131671) |
| 45 | 6021929 | STEP | 1 | | (SUB FOR TH6014819, 6014819) |
| 46 | 6021931 | STEP | 1 | | (SUB FOR TH6014673, 6017693) |
| 58 | 19M7872 | CAP SCREW | 12 | | M12 X 25 |
| 59 | 12H301 | LOCK WASHER | 12 | | 12.700 MM (1/2") |
| 63 | 7030793 | STEP | 1 | | (SUB FOR TH7030793) |
| 64 | 19M7662 | CAP SCREW | 4 | | M10 X 30 |
| | 12M7066 | LOCK WASHER | 4 | | 10 MM (0.394") |
| 65 | 4455818 | FRAME | 1 | | |

**MAIN FRAME BUSHINGS**

T206949 -UN-20JAN05

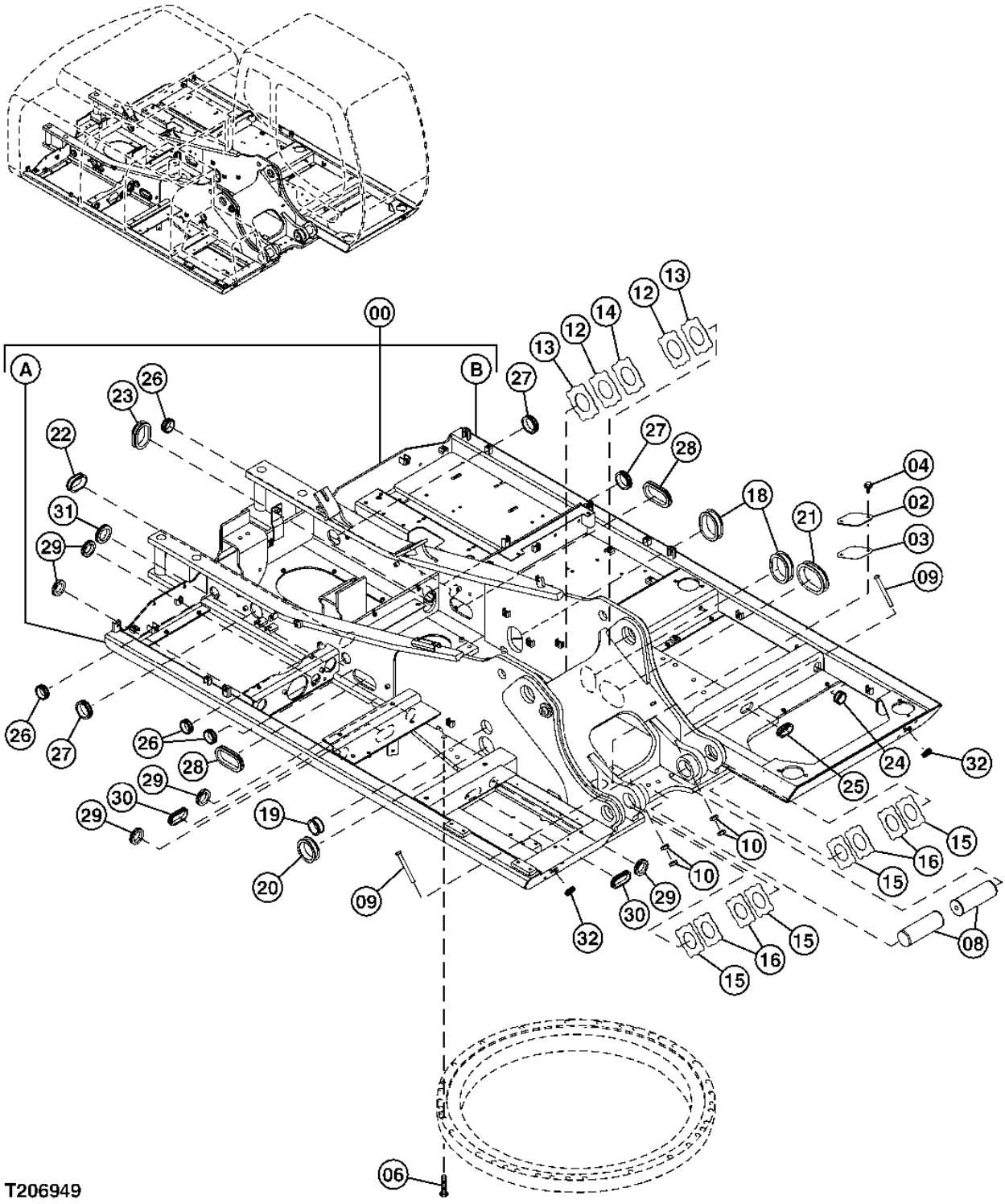

**MAIN FRAME BUSHINGS**

| KEY | PART NO. | PART NAME | QTY | SERIAL NO. | REMARKS |
|---|---|---|---|---|---|
| 0 | 5008613 | FRAME | 1 | | |
| 0A | ..... | RAIL | 1 | | ( 3096318 NOT AVAILABLE FOR SERVICE) |
| 0B | ..... | RAIL | 1 | | ( 3096327 NOT AVAILABLE FOR SERVICE) |
| 2 | 4255799 | COVER | 1 | | |
| 3 | 4161735 | GASKET | 1 | | |
| 4 | ..... | BOLT | 2 | | ( J271025 NOT AVAILABLE FOR SERVICE) |
| | J901025 | CAP SCREW | 1 | | |
| | J222010 | WASHER | 1 | | |
| 6 | J922095 | CAP SCREW | 31 | | |
| 8 | 3094647 | PIN FASTENER | 2 | | |
| 9 | 4435129 | PIN FASTENER | 2 | | |
| 10 | J950016 | NUT | 4 | | |
| 12 | 4444284 | THRUST WASHER | 2 | | |
| 13 | 4444285 | THRUST WASHER | 2 | | |
| 14 | 4460370 | PLATE | 1 | | |
| 15 | 4444286 | THRUST WASHER | 4 | | |
| 16 | 4444287 | THRUST WASHER | 4 | | |
| 18 | 4272435 | GROMMET | 2 | | |
| 19 | 4259340 | GROMMET | 1 | | |
| 20 | 4191977 | GROMMET | 1 | | |
| 21 | 4191978 | GROMMET | 1 | | |
| 22 | 4259765 | BUSHING | 1 | | |
| 23 | 4201750 | GROMMET | 1 | | |
| 24 | 4200176 | GROMMET | 1 | | |
| 25 | 4240700 | BUSHING | 1 | | |
| 26 | 4201749 | GROMMET | 4 | | |
| 27 | 4292762 | BUSHING | 3 | | |
| 28 | 4347447 | BUSHING | 2 | | |
| 29 | 4509404 | GROMMET | 5 | | |
| 30 | 4293795 | BUSHING | 2 | | |
| 31 | 4211191 | GROMMET | 1 | | |
| 32 | 4312368 | BUSHING | 2 | | |

**COUNTERWEIGHT**

T206722 -UN-10JAN05

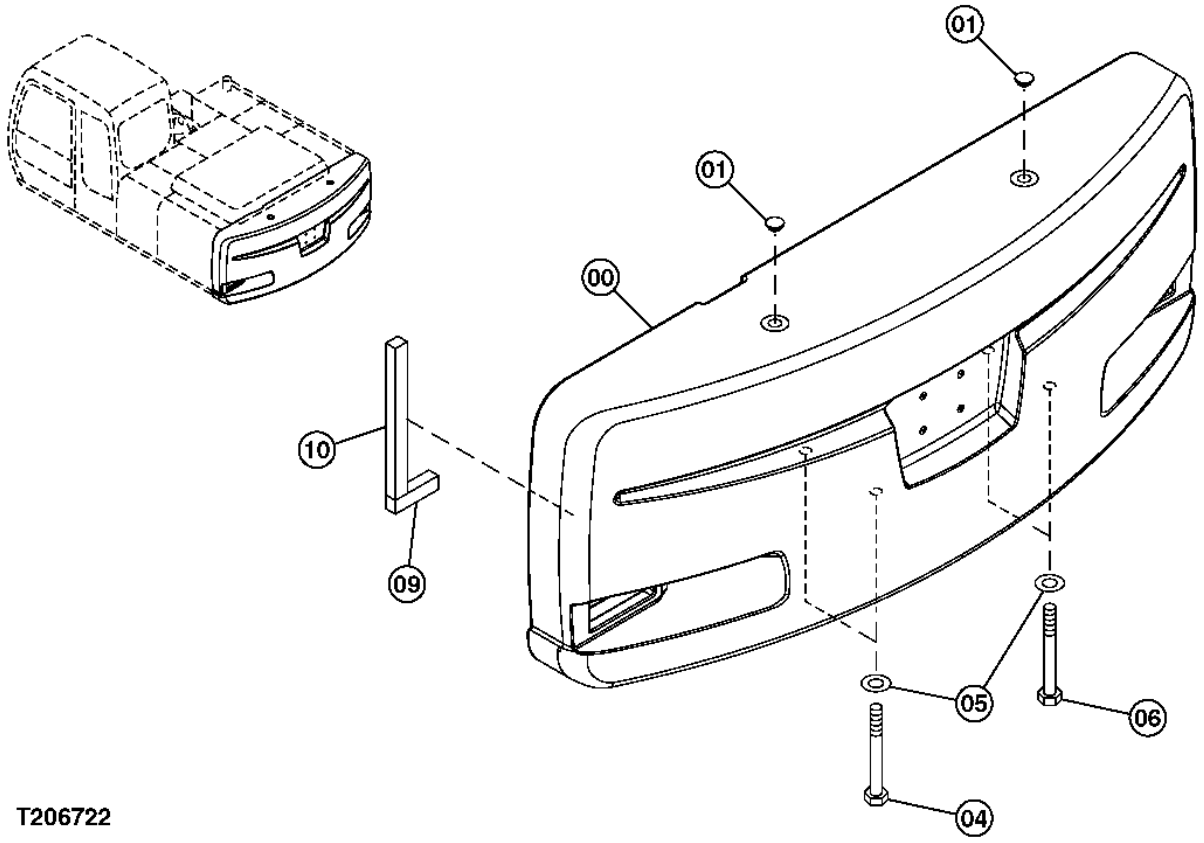


T206722

**COUNTERWEIGHT**

| KEY | PART NO. | PART NAME | QTY | SERIAL NO. | REMARKS |
|---|---|---|---|---|---|
| 0 | 5009211 | COUNTERWEIGHT | 1 | | |
| 1 | 4139583 | CAP | 2 | | |
| 4 | J833326 | BOLT | 2 | | |
| 5 | 4083438 | WASHER | 4 | | |
| 6 | 4472392 | BOLT | 2 | | |
| 9 | 4614353 | ISOLATOR | 1 | | |
| 10 | 4614354 | ISOLATOR | 1 | | |

**COUNTERWEIGHT REMOVAL HARDWARE**

TP45288 -UN-01JAN94

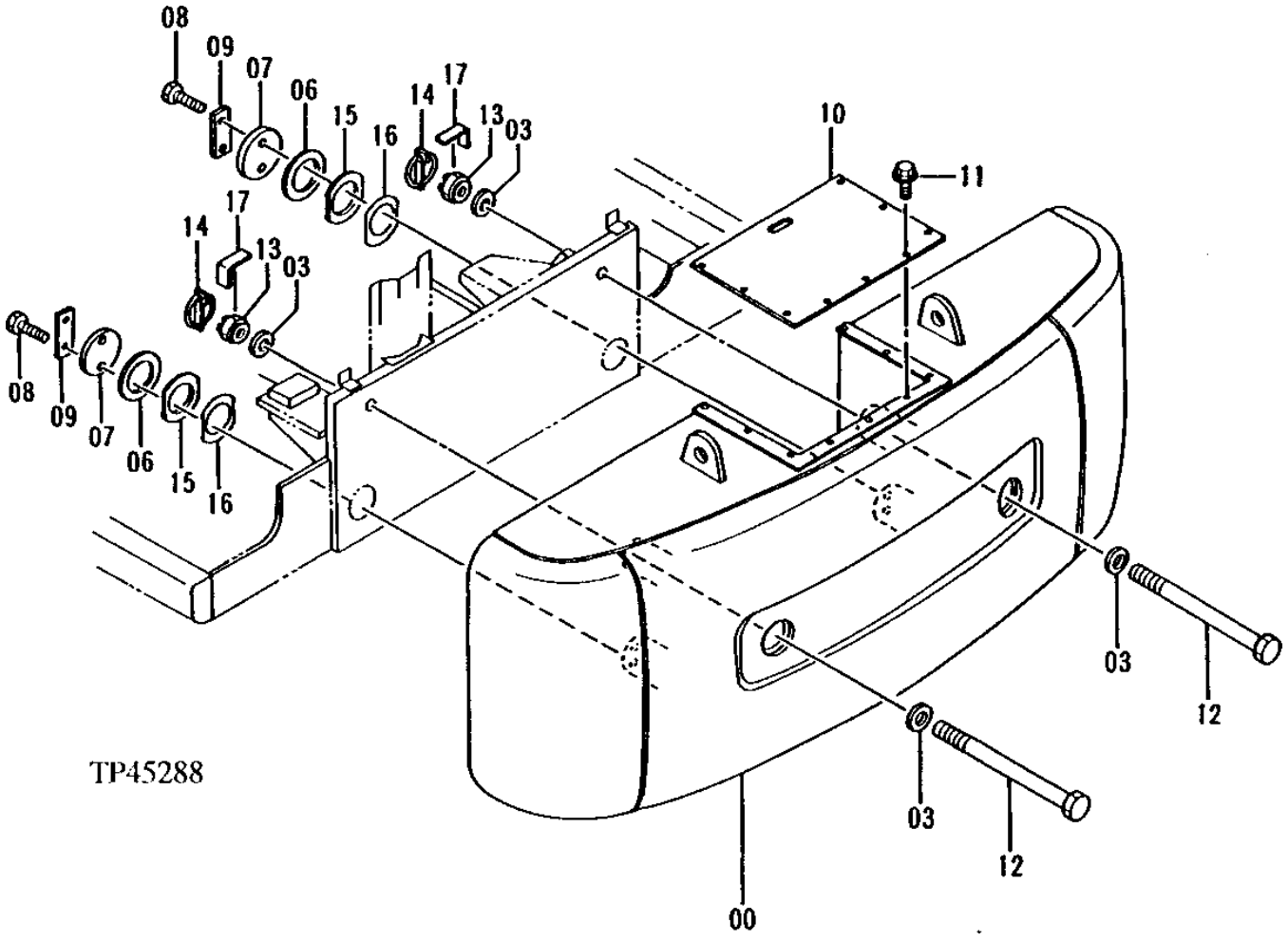

**COUNTERWEIGHT REMOVAL HARDWARE**

| KEY | PART NO. | PART NAME | QTY | SERIAL NO. | REMARKS |
|---|---|---|---|---|---|
| 0 | 5005506 | COUNTERWEIGHT | 1 | | WHOLEGOODS (CONVENIENCE ASSEMBLY) (SUB FOR TH5005506) |
| 3 | 4103743 | BUSHING | 4 | | (SUB FOR AT131690) |
| 6 | 4270268 | WASHER | 2 | | (SUB FOR AT202395) |
| 7 | 4270269 | WASHER | 2 | | (SUB FOR AT201731) |
| 8 | J912455 | BOLT | 4 | | (SUB FOR AT131548) |
| 9 | 4070952 | STRAP | 2 | | (SUB FOR AT131678) |
| 10 | 4338256 | COVER | 1 | | (SUB FOR AT201813) |
| 11 | 19M7932 | CAP SCREW | 9 | | M8 X 16 |
| | 12M7056 | LOCK WASHER | 9 | | 8 MM (0.315") |
| 12 | 4341856 | CAP SCREW | 2 | | (SUB FOR AT202396) |
| 13 | 4246150 | NUT | 2 | | M45, (SUB FOR AT132682) |
| 14 | 9701925 | QUICK LOCK PIN | 2 | | (SUB FOR AT132681) |
| 15 | 4207762 | WASHER | 4 | | (SUB FOR AT131842) |
| 16 | 4207763 | SHIM | 2 | | (SUB FOR AT131843) |
| 17 | 4345741 | SHIM | 2 | | (SUB FOR AT202397) |

**MAIN FRAME BOOM FOOT PIN**

T143224 -UN-28JUN01

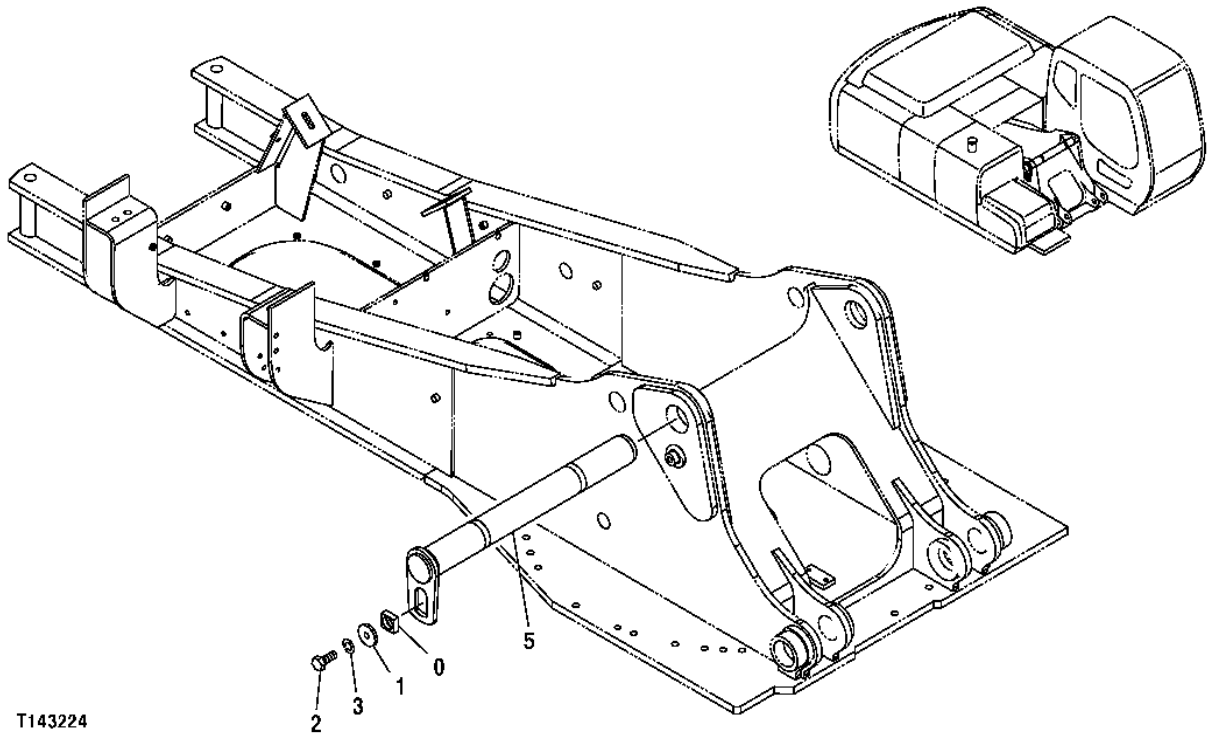

**MAIN FRAME BOOM FOOT PIN**

| KEY | PART NO. | PART NAME | QTY | SERIAL NO. | REMARKS |
|---|---|---|---|---|---|
| 0 | 4424425 | MANIFOLD | 1 | | |
| 1 | J257218 | LOCK WASHER | 1 | | |
| 2 | J921840 | BOLT | 1 | | |
| 3 | 4426128 | WASHER | 1 | | |
| 5 | 8087225 | PIN FASTENER | 1 | | |

**MAIN FRAME**

T207787 -UN-03FEB05

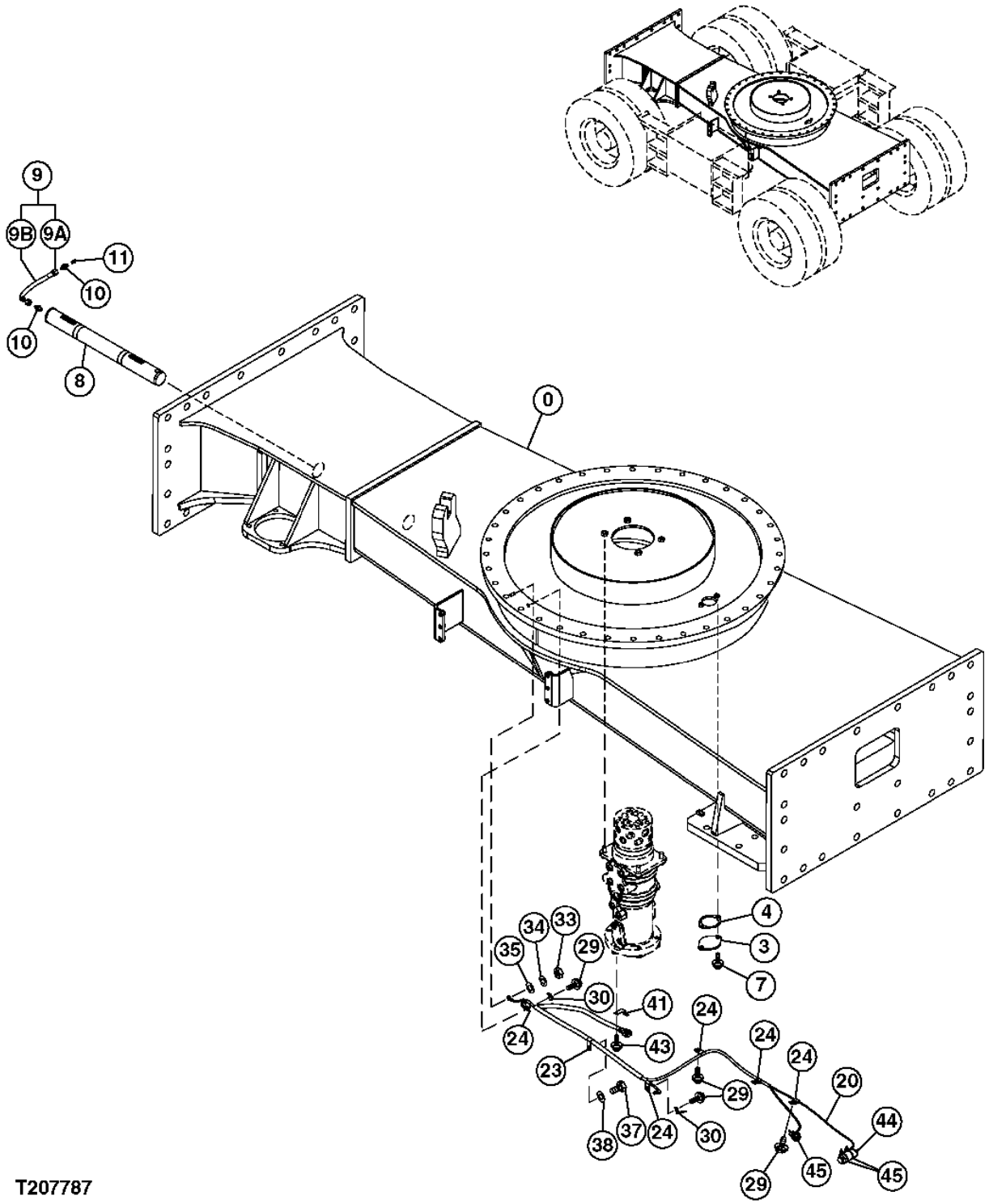


T207787

**MAIN FRAME**

| KEY | PART NO. | PART NAME | QTY | SERIAL NO. | REMARKS |
|---|---|---|---|---|---|
| 0 | 5008666 | FRAME | 1 | | |
| 3 | 4218863 | PLATE | 1 | | |
| 4 | 4272297 | GASKET | 1 | | |
| 7 | ..... | CAP SCREW | 2 | | ( J271030 NO LONGER AVAILABLE) |
| | 19M7662 | CAP SCREW | 1 | | M10 X 30, (SUB FOR J901030) |
| | 24M7346 | WASHER | 1 | | 11 X 20 X 2 MM, (SUB FOR J222010) |
| 8 | 3094002 | PIN FASTENER | 1 | | |
| 9 | 9224611 | HYDRAULIC HOSE | 1 | | |
| 9A | ..... | HYDRAULIC HOSE | 1 | | ( 4600723 NOT AVAILABLE FOR SERVICE) |
| 9B | 4327293 | HOSE GUARD | 1 | | |
| 10 | 4154651 | ADAPTER | 2 | | |
| 11 | TH100074 | LUBRICATION FITTING | 1 | | (SUB FOR J75481) |
| 20 | 3094698 | WIRING HARNESS | 1 | | |
| 23 | 4190253 | CLIP | 1 | | |
| 24 | 4190261 | CLIP | 5 | | |
| 29 | ..... | CAP SCREW | 4 | | ( J271020 NO LONGER AVAILABLE) |
| | 19M7938 | CAP SCREW | 1 | | M10 X 20, (SUB FOR J901020) |
| | 24M7346 | WASHER | 1 | | 11 X 20 X 2 MM, (SUB FOR J222010) |
| 30 | 4257159 | BRACKET | 2 | | |
| 33 | 14M7274 | NUT | 1 | | M10, (SUB FOR J950010) |
| 34 | 12M7066 | LOCK WASHER | 1 | | 10 MM, (SUB FOR A590910) |
| 35 | 24M7028 | WASHER | 1 | | 10.500 X 20 X 2 MM, (SUB FOR A590110) |
| 37 | 19M7938 | CAP SCREW | 1 | | M10 X 20, (SUB FOR J901020) |
| 38 | 24M7028 | WASHER | 1 | | 10.500 X 20 X 2 MM, (SUB FOR A590110) |
| 41 | 4602633 | BRACKET | 1 | | |
| 43 | ..... | CAP SCREW | 1 | | ( J260612 NO LONGER AVAILABLE) |
| | 19M6614 | CAP SCREW | 1 | | M6 X 12, (SUB FOR J900612) |
| | 24M7054 | WASHER | 1 | | 6.400 X 12 X 1.600 MM, (SUB FOR A590106) |
| 44 | 4207236 | TEE FITTING | 1 | | |
| 45 | H77698 | TIE BAND | 3 | | (SUB FOR 4055311) |

**SWING BEARING**

T207791 -UN-23FEB05

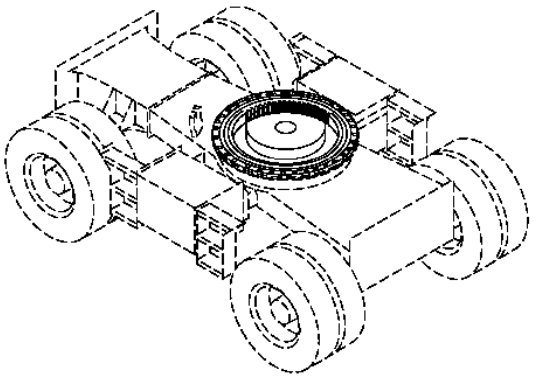

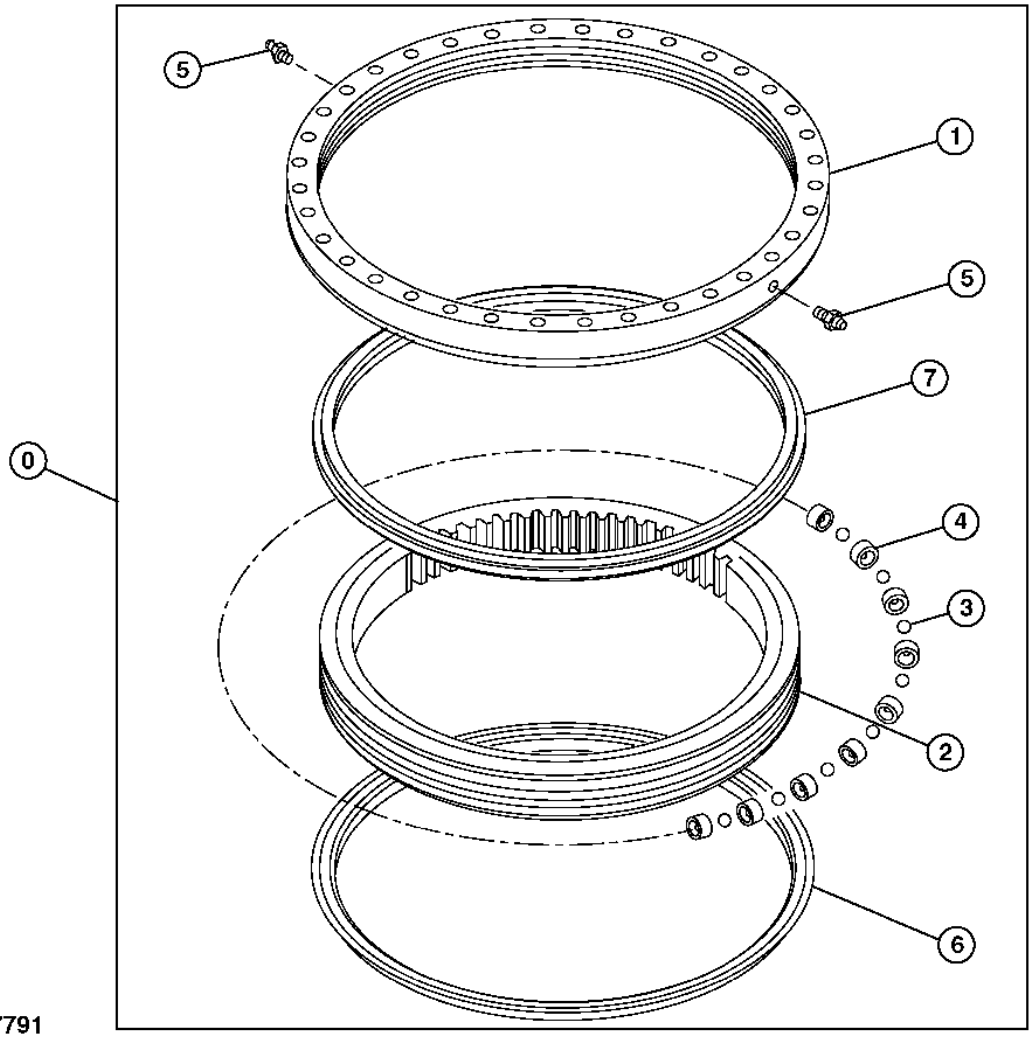


T207791

**SWING BEARING**

| KEY | PART NO. | PART NAME | QTY | SERIAL NO. | REMARKS |
|---|---|---|---|---|---|
| 0 | 9169646 | SWING BEARING | 1 | | |
| 1 | ..... | BEARING RACE | 1 | | (OUTER) |
| 2 | ..... | BEARING RACE | 1 | | (INNER) |
| 3 | 4428919 | BALL | 121 | | |
| 4 | 4127708 | SPACER | 121 | | |
| 5 | TH100074 | LUBRICATION FITTING | 2 | | (SUB FOR J75481) |
| 6 | 4199645 | SEAL | 1 | | (SUB FOR 4188065) |
| 7 | 4199645 | SEAL | 1 | | (SUB FOR 4188066) |

**SWING BEARING MOUNTING COMPONENTS**

T207792 -UN-03FEB05

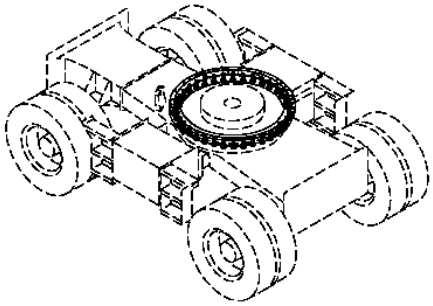

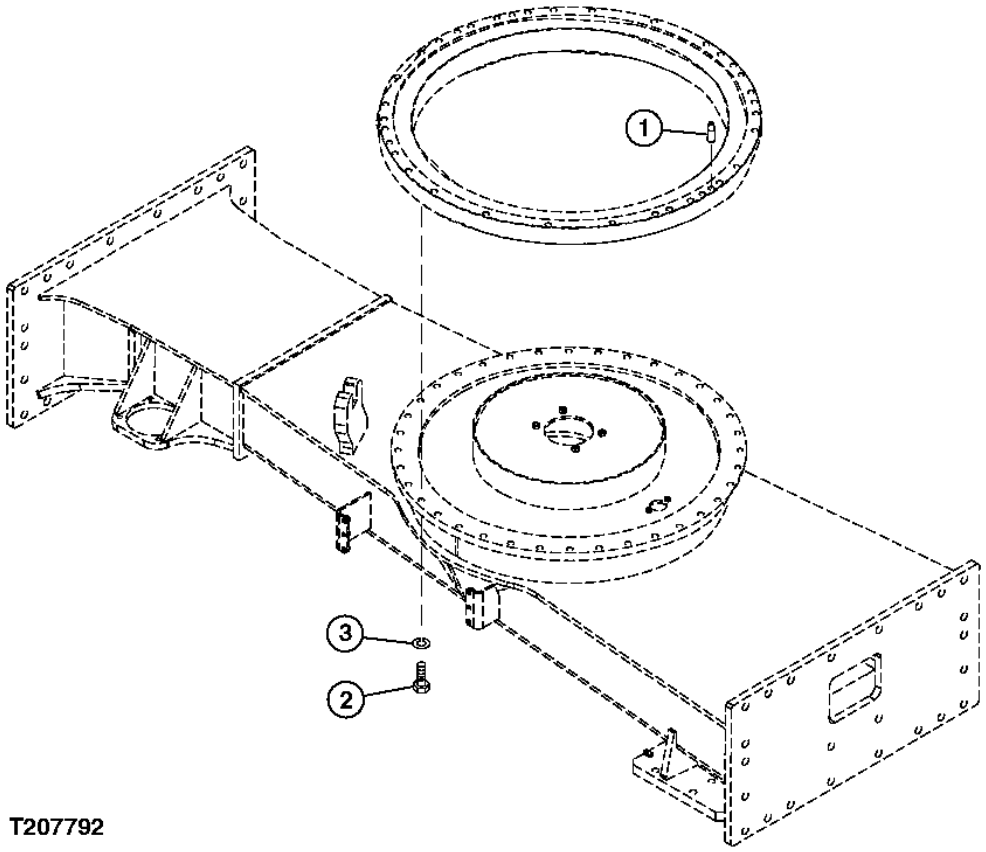


T207792

**SWING BEARING MOUNTING COMPONENTS**

| KEY | PART NO. | PART NAME | QTY | SERIAL NO. | REMARKS |
|---|---|---|---|---|---|
| 1 | 4425980 | PIN FASTENER | 1 | | |
| 2 | 4348589 | CAP SCREW | 36 | | |
| 3 | J257220 | SPRING WASHER | 36 | | |

**TOOL BOX (CHASSIS)**

T207796 -UN-03FEB05

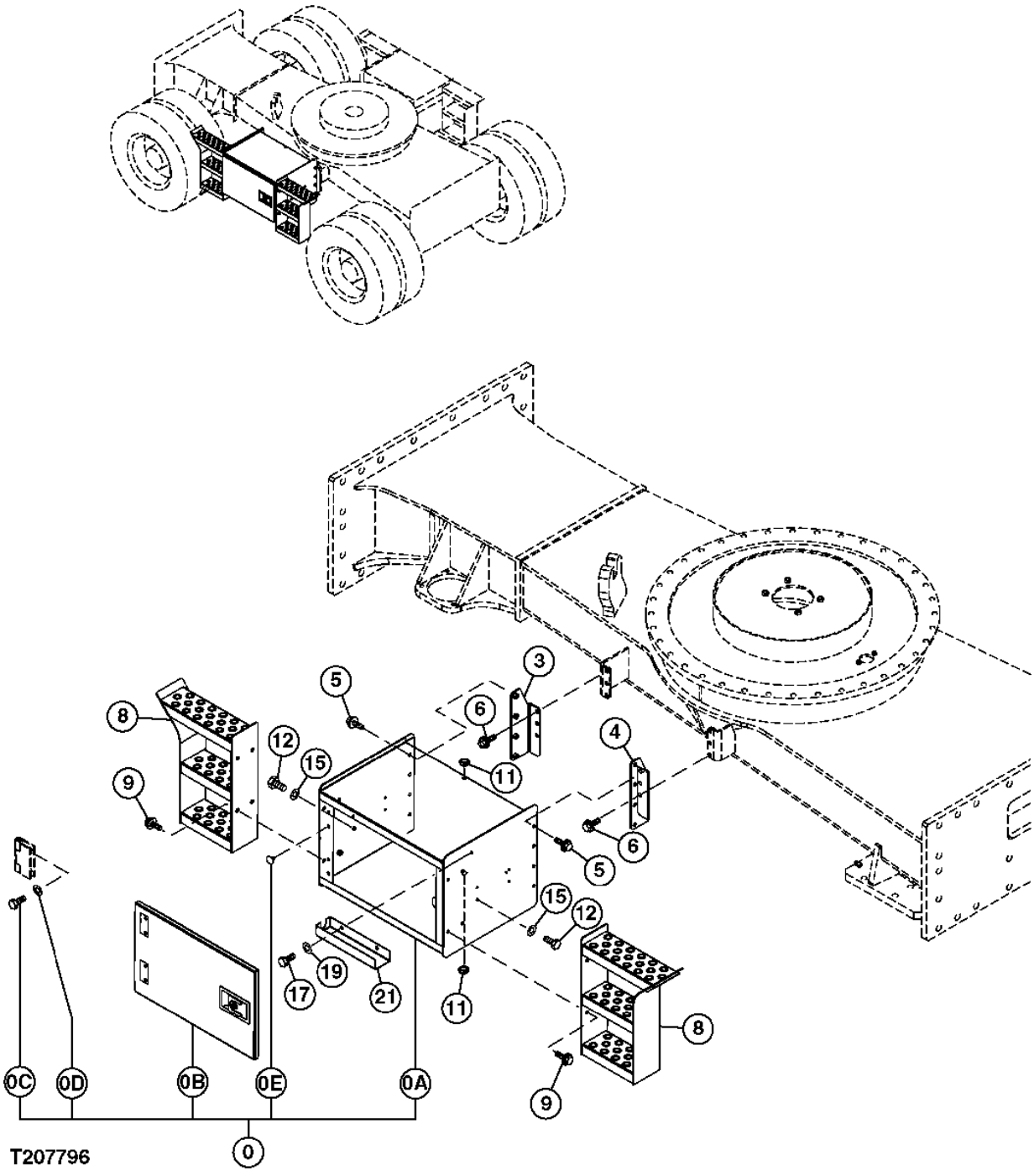

**TOOL BOX (CHASSIS)**

| KEY | PART NO. | PART NAME | QTY | SERIAL NO. | REMARKS |
|---|---|---|---|---|---|
| 0 | 9209017 | TOOLBOX | 1 | | |
| 0A | 6020622 | TOOLBOX | 1 | | |
| 0B | 7041537 | COVER | 1 | | |
| 0C | 19M7402 | CAP SCREW | 4 | | M10 X 25, (SUB FOR J901025) |
| 0D | 24M7028 | WASHER | 4 | | 10.500 X 20 X 2 MM, (SUB FOR A590110) |
| 0E | 4293335 | STOP | 1 | | |
| 3 | 8090550 | BRACKET | 1 | | |
| 4 | 8090549 | BRACKET | 1 | | |
| 5 | ..... | CAP SCREW | 8 | | ( J271225 NOT AVAILABLE FOR SERVICE) |
| | 19M7872 | CAP SCREW | 1 | | M12 X 25, (SUB FOR J901225) |
| | 24M7345 | WASHER | 1 | | 13.500 X 24 X 2.500 MM, (SUB FOR J222012) |
| 6 | ..... | SCREW WITH WASHER | 6 | | ( J271235 NOT AVAILABLE FOR SERVICE) |
| | 19M7403 | CAP SCREW | 1 | | M12 X 35, (SUB FOR J901235) |
| | 24M7345 | WASHER | 1 | | 13.500 X 24 X 2.500 MM, (SUB FOR J222012) |
| 8 | 7044111 | STEP | 2 | | |
| 9 | ..... | CAP SCREW | 8 | | ( J271225 NOT AVAILABLE FOR SERVICE) |
| | 19M7872 | CAP SCREW | 1 | | M12 X 25, (SUB FOR J901225) |
| | 24M7345 | WASHER | 1 | | 13.500 X 24 X 2.500 MM, (SUB FOR J222012) |
| 11 | 4233076 | BUSHING | 2 | | |
| 12 | 19M6614 | CAP SCREW | 8 | | M6 X 12, (SUB FOR J900612) |
| 15 | 24M7054 | WASHER | 8 | | 6.400 X 12 X 1.600 MM, (SUB FOR A590106) |
| 17 | 19M7938 | CAP SCREW | 2 | | M10 X 20, (SUB FOR J901020) |
| 19 | 24M7028 | WASHER | 2 | | 10.500 X 20 X 2 MM, (SUB FOR A590110) |
| 21 | 3099214 | BRACKET | 1 | | |

**STEP (CHASSIS)**

T207797 -UN-03FEB05

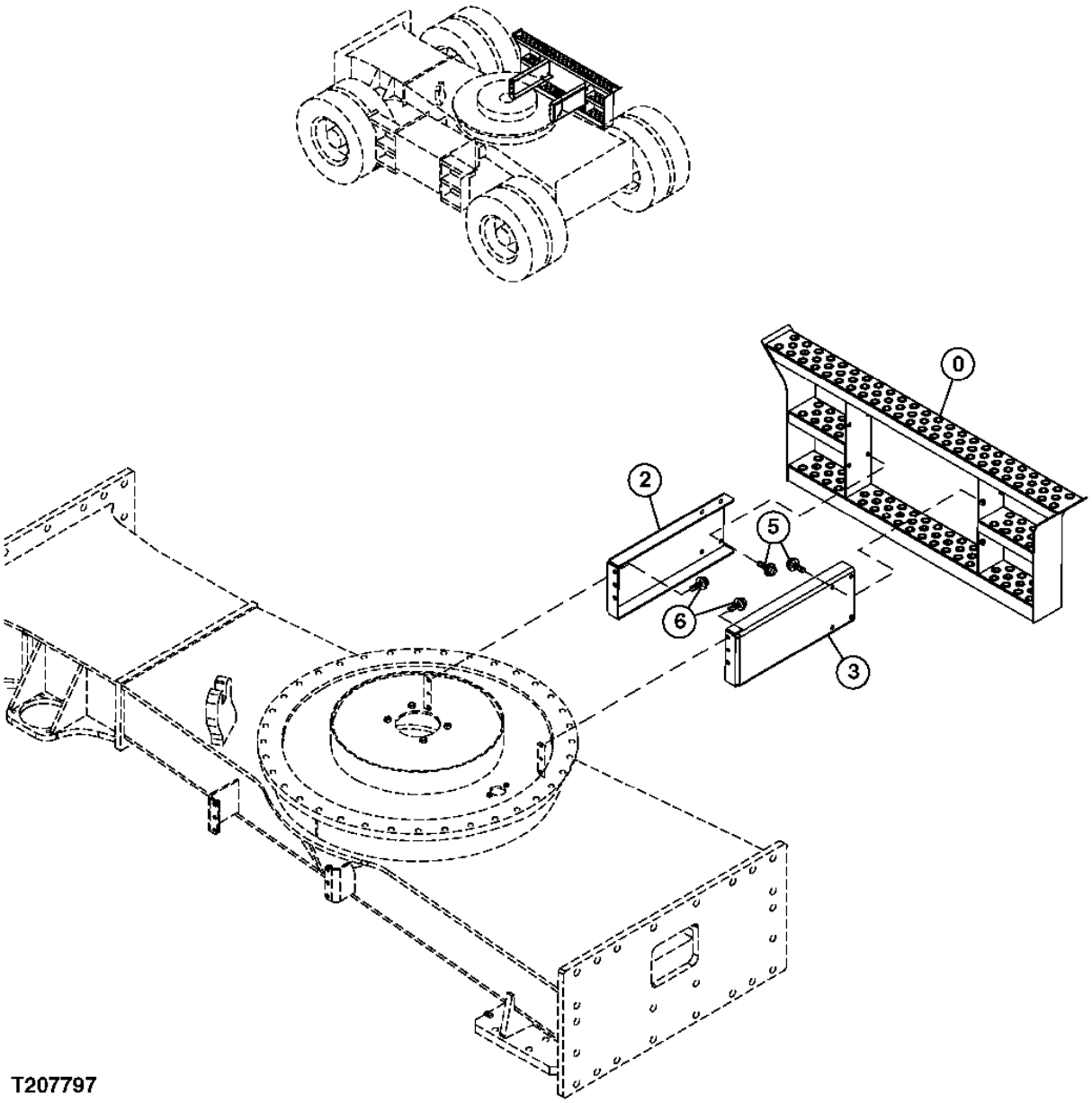

**STEP (CHASSIS)**

| KEY | PART NO. | PART NAME | QTY | SERIAL NO. | REMARKS |
|---|---|---|---|---|---|
| 0 | 6021735 | STEP | 1 | | |
| 2 | 3097101 | SUPPORT | 1 | | |
| 3 | 3097102 | SUPPORT | 1 | | |
| 5 | ..... | CAP SCREW | 8 | | ( J271230 NO LONGER AVAILABLE) |
| | 19M8011 | CAP SCREW | 1 | | M12 X 30, (SUB FOR J901230) |
| | 24M7345 | WASHER | 1 | | 13.500 X 24 X 2.500 MM, (SUB FOR J222012) |
| 6 | ..... | CAP SCREW | 6 | | ( J271235 NO LONGER AVAILABLE) |
| | 19M7403 | CAP SCREW | 1 | | M12 X 35, (SUB FOR J901235) |
| | 24M7345 | WASHER | 1 | | 13.500 X 24 X 2.500 MM, (SUB FOR J222012) |

**SPARE PEDAL**

T207572 -UN-24FEB05

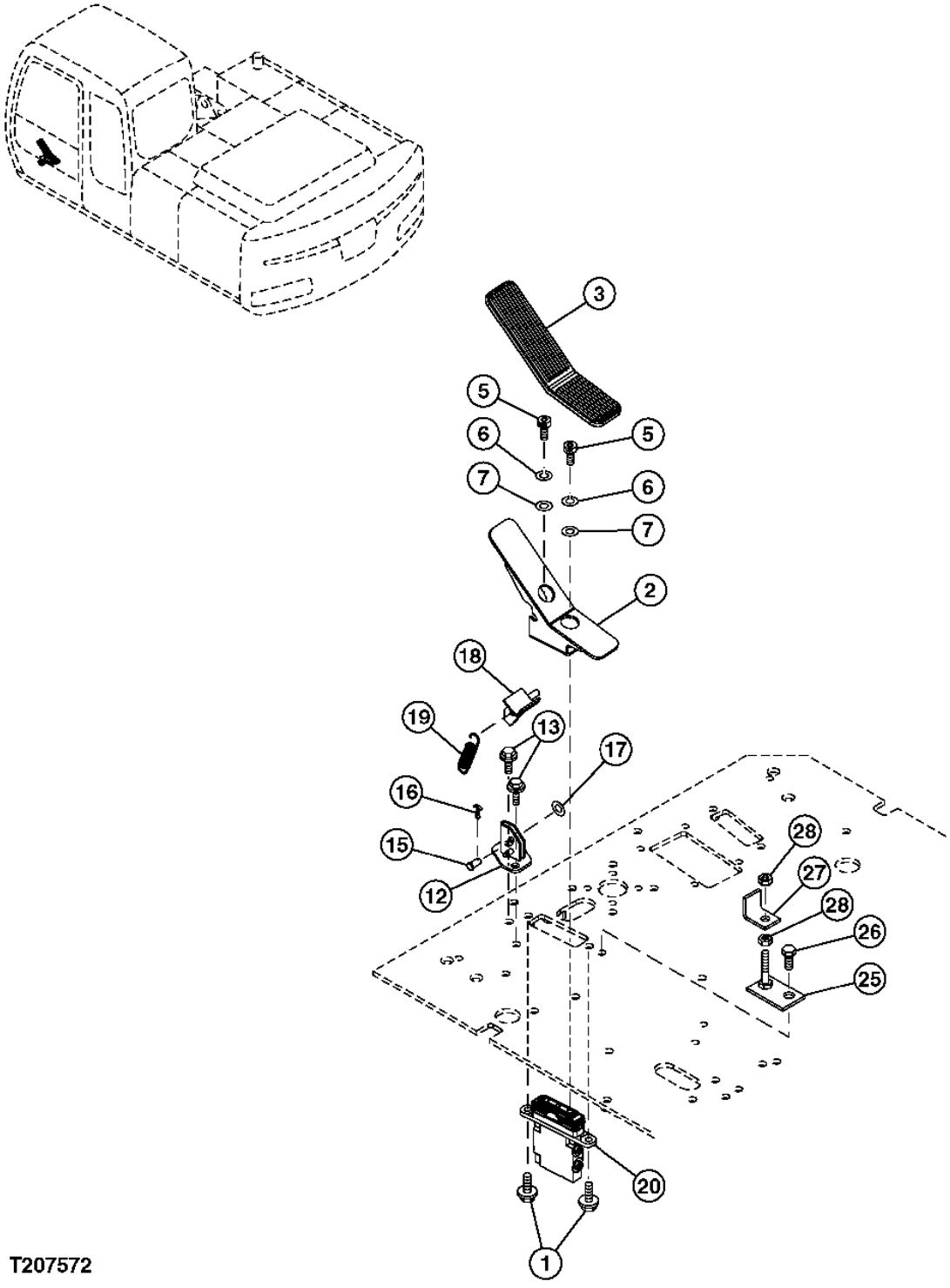

**SPARE PEDAL**

| KEY | PART NO. | PART NAME | QTY | SERIAL NO. | REMARKS |
|---|---|---|---|---|---|
| 1 | ..... | CAP SCREW | 2 | | ( J271020 NO LONGER AVAILABLE) |
| | 19M7938 | CAP SCREW | 1 | | M10 X 20, (SUB FOR J901020) |
| | 24M7346 | WASHER | 1 | | 11 X 20 X 2 MM, (SUB FOR J222010) |
| 2 | 8089323 | PEDAL | 1 | | |
| 3 | 3096428 | COVER | 1 | | |
| 5 | J780816 | BOLT | 2 | | |
| 6 | 12M7065 | LOCK WASHER | 2 | | 8 MM, (SUB FOR A590908) |
| 7 | 24M7055 | WASHER | 2 | | 8.400 X 16 X 1.600 MM, (SUB FOR A590108) |
| 12 | 8083371 | BRACKET | 1 | | |
| 13 | ..... | CAP SCREW | 2 | | ( J271025 NO LONGER AVAILABLE) |
| | 19M7402 | CAP SCREW | 1 | | M10 X 25, (SUB FOR J901025) |
| | 24M7346 | WASHER | 1 | | 11 X 20 X 2 MM, (SUB FOR J222010) |
| 15 | 4287795 | PIN | 1 | | |
| 16 | 11M7080 | COTTER PIN | 1 | | 2.500 X 16 MM, (SUB FOR A763016) |
| 17 | 24M7028 | WASHER | 1 | | 10.500 X 20 X 2 MM, (SUB FOR A590110) |
| 18 | 8090228 | STOP | 1 | | |
| 19 | 4279604 | SPRING | 1 | | |
| 20 | 4483993 | HYDR./PILOT CONTROL VALVE | 1 | | |
| 25 | 9761438 | BRACKET | 1 | | |
| 26 | 19M7402 | CAP SCREW | 1 | | M10 X 25, (SUB FOR J901025) |
| 27 | 4609638 | PLATE | 1 | | |
| 28 | 14M7273 | NUT | 2 | | M8, (SUB FOR J950008) |

**FOOT REST**

T207595 -UN-03FEB05

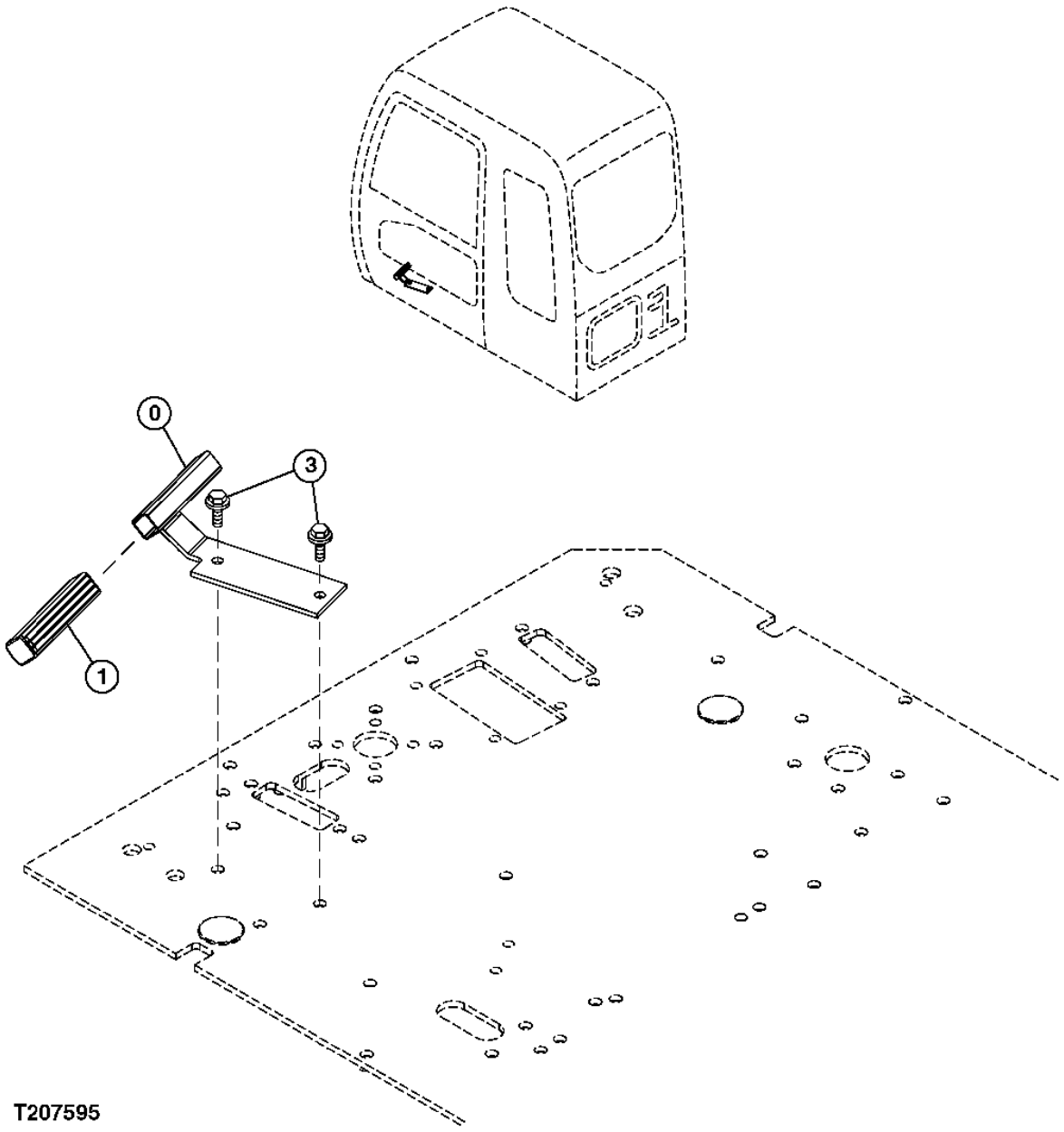

**FOOT REST**

| KEY | PART NO. | PART NAME | QTY | SERIAL NO. | REMARKS |
|---|---|---|---|---|---|
| 0 | 8089471 | FOOTREST | 1 | | |
| 1 | 3096154 | COVER | 1 | | |
| 3 | ..... | CAP SCREW | 2 | | ( J271030 NO LONGER AVAILABLE) |
| | 19M7662 | CAP SCREW | 1 | | M10 X 30, (SUB FOR J901030) |
| | 24M7346 | WASHER | 1 | | 11 X 20 X 2 MM, (SUB FOR J222010) |

**SWING LOCK**

T207600 -UN-03FEB05

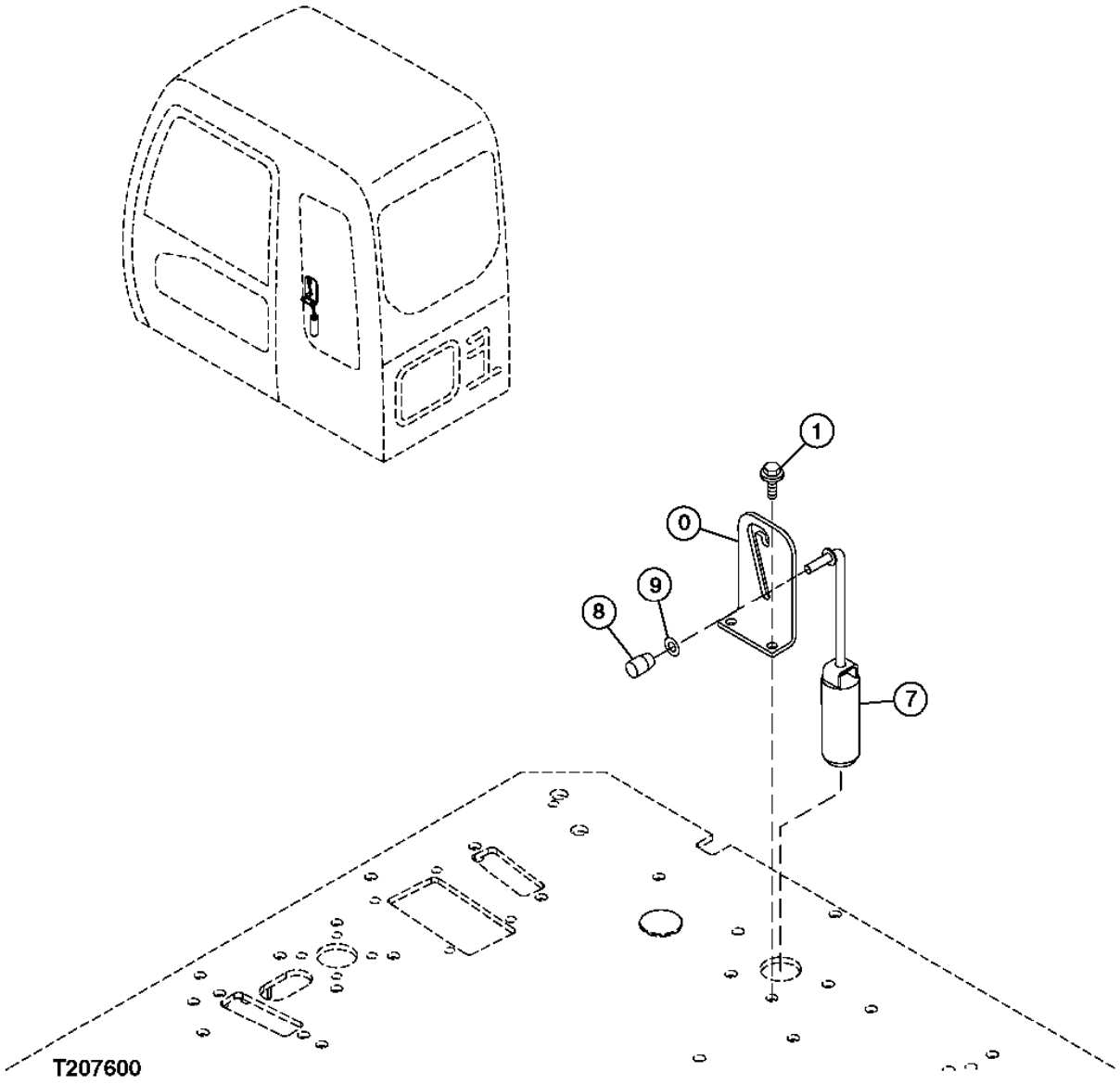

# 2E16



**SWING LOCK**

| KEY | PART NO. | PART NAME | QTY | SERIAL NO. | REMARKS |
|---|---|---|---|---|---|
| 0 | 4465156 | BRACKET | 1 | | |
| 1 | ..... | CAP SCREW | 2 | | ( J271030 NO LONGER AVAILABLE) |
| | 19M7662 | CAP SCREW | 1 | | M10 X 30, (SUB FOR J901030) |
| | 24M7346 | WASHER | 1 | | 11 X 20 X 2 MM, (SUB FOR J222010) |
| 7 | 8088757 | LOCK | 1 | | |
| 8 | 4286834 | KNOB | 1 | | |
| 9 | 24M7028 | WASHER | 1 | | 10.500 X 20 X 2 MM, (SUB FOR A590110) |

**CAB LEFT AND RIGHT CONSOLES**

T207618 -UN-09FEB05

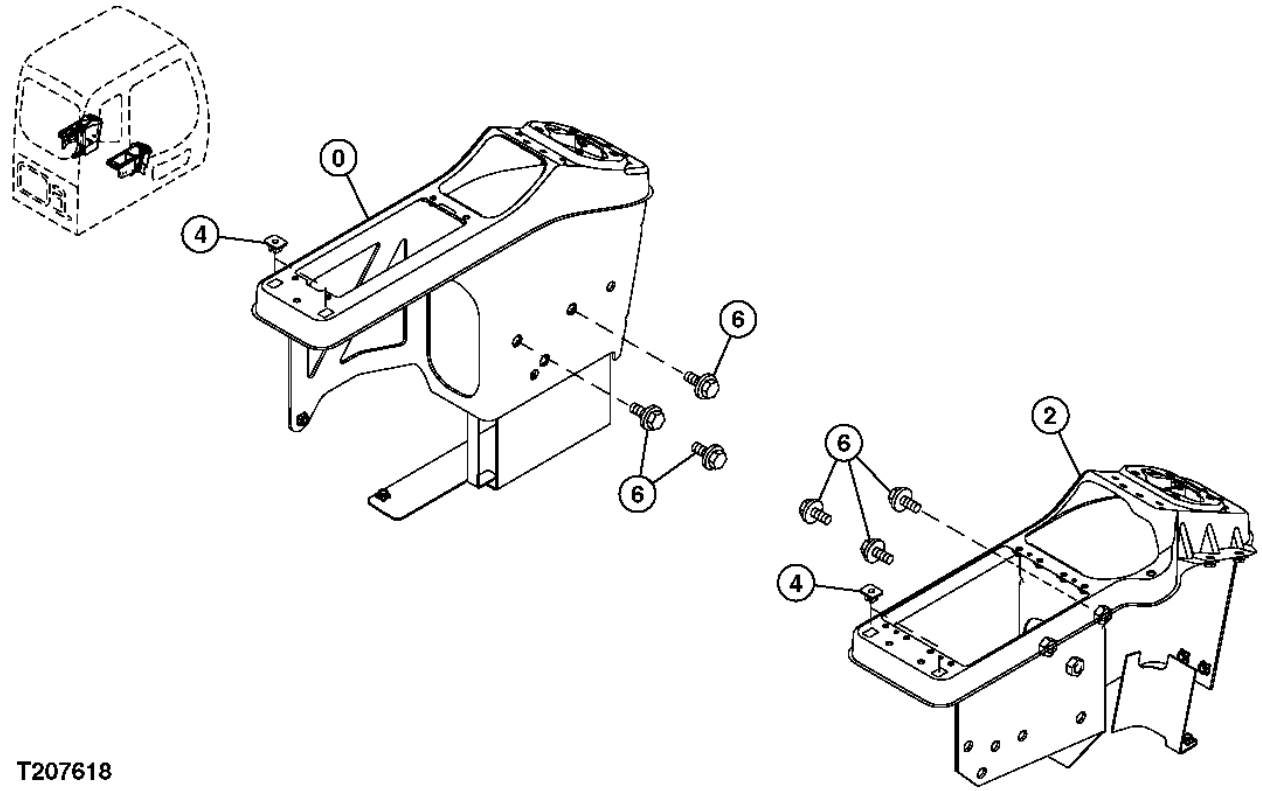


T207618

**CAB LEFT AND RIGHT CONSOLES**

| KEY | PART NO. | PART NAME | QTY | SERIAL NO. | REMARKS |
|---|---|---|---|---|---|
| 0 | 7036594 | CONSOLE | 1 | | LEFT |
| 2 | 7036595 | CONSOLE | 1 | | RIGHT |
| 4 | 4351255 | CLIP | 4 | | |
| 6 | ..... | CAP SCREW | 6 | | ( J271025 NO LONGER AVAILABLE) |
| | 19M7402 | CAP SCREW | 1 | | M10 X 25, (SUB FOR J901025) |
| | 24M7346 | WASHER | 1 | | 11 X 20 X 2 MM, (SUB FOR J222010) |

**CAB LEFT AND RIGHT CONSOLE COVERS**

T207619 -UN-09FEB05

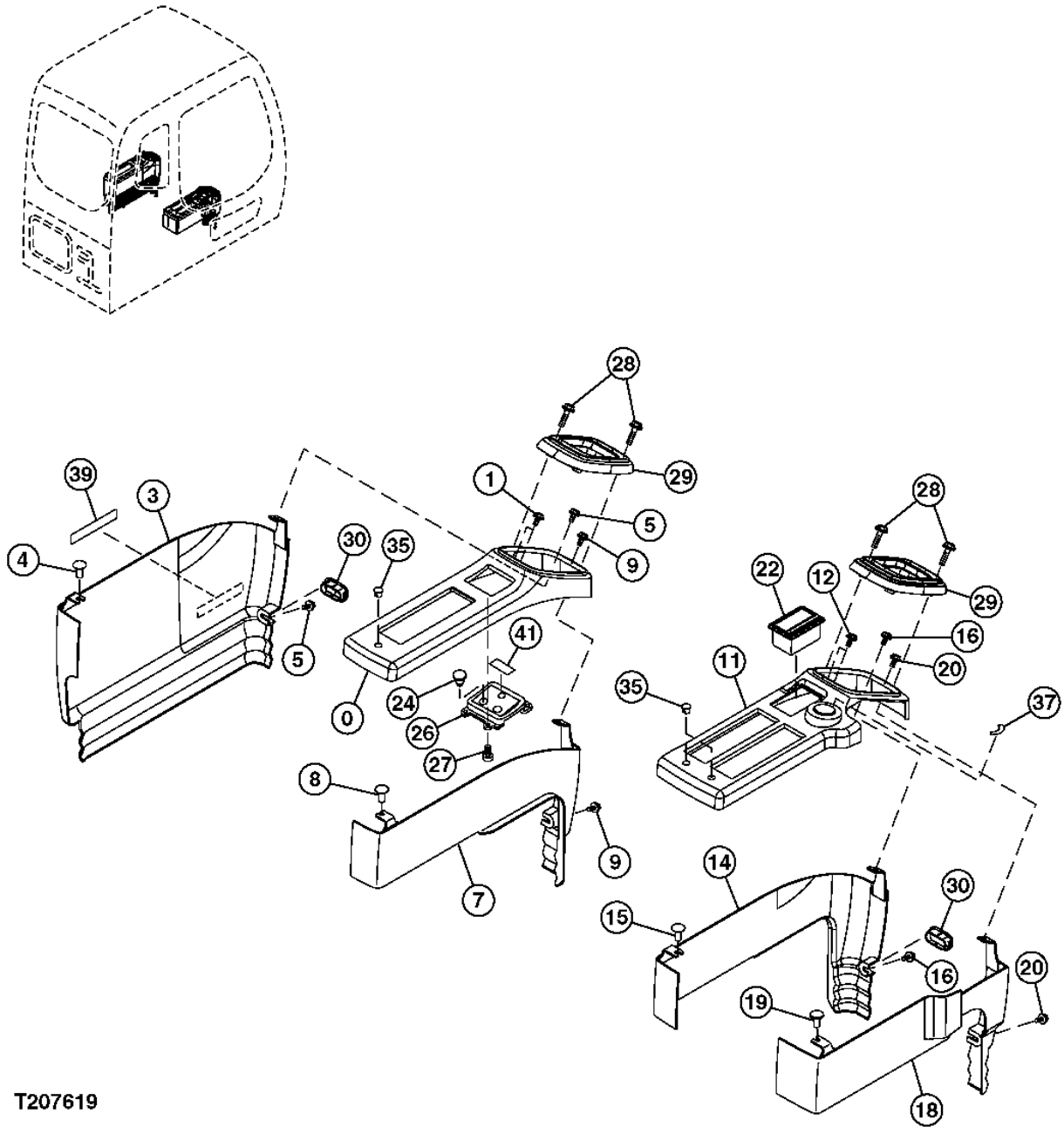

**CAB LEFT AND RIGHT CONSOLE COVERS**

| KEY | PART NO. | PART NAME | QTY | SERIAL NO. | REMARKS |
|---|---|---|---|---|---|
| 0 | 4420875 | COVER | 1 | | |
| 1 | J680616 | SCREW | 3 | | |
| 3 | 4420876 | COVER | 1 | | |
| 4 | 4361802 | SCREW | 1 | | |
| 5 | J680616 | SCREW | 5 | | |
| 7 | 4420877 | COVER | 1 | | |
| 8 | 4361802 | SCREW | 1 | | |
| 9 | J680616 | SCREW | 2 | | |
| 11 | 4420878 | COVER | 1 | | |
| 12 | J680616 | SCREW | 4 | | |
| 14 | 4420879 | COVER | 1 | | |
| 15 | 4361802 | SCREW | 1 | | |
| 16 | J680616 | SCREW | 2 | | |
| 18 | 4420880 | COVER | 1 | | |
| 19 | 4361802 | SCREW | 1 | | |
| 20 | J680616 | SCREW | 2 | | |
| 22 | 4415024 | ASHTRAY | 1 | | |
| 24 | 4294437 | CAP | 1 | | |
| 26 | 3091842 | PANEL | 1 | | |
| 27 | 4452613 | SCREW | 4 | | |
| 28 | 12M7006 | LOCK WASHER | 8 | | 6 MM, (SUB FOR J460635) |
| 29 | 2045509 | COVER | 2 | | |
| 30 | 4441117 | CAP | 2 | | |
| 35 | 4448990 | CAP | 3 | | |
| 37 | 4264805 | LABEL | 1 | | (SUB FOR AT155730) |
| 39 | 4299059 | LABEL | 1 | | |
| 41 | ..... | LABEL | 1 | | ( 4459435 NOT AVAILABLE FOR SERVICE) |

**CAB INSIDE LOWER RIGHT COVER AND BEVERAGE HOLDER**

T207622 -UN-09FEB05

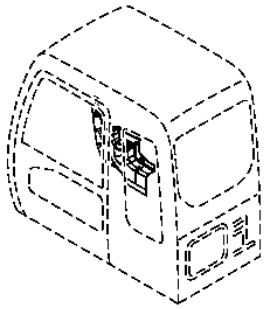

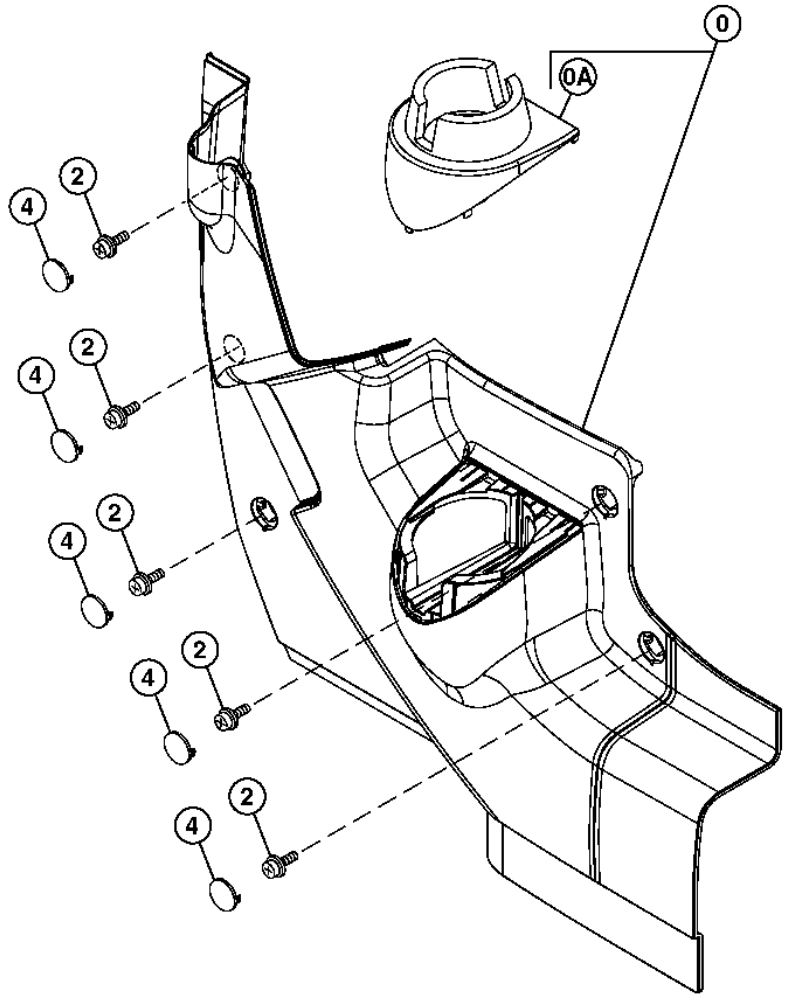


T207622

**CAB INSIDE LOWER RIGHT COVER AND BEVERAGE HOLDER**

| KEY | PART NO. | PART NAME | QTY | SERIAL NO. | REMARKS |
|---|---|---|---|---|---|
| 0 | 4445917 | COVER | 1 | | |
| 0A | 4445932 | HOLDER | 1 | | |
| 2 | ..... | CAP SCREW | 5 | | ( J460616 NO LONGER AVALABLE) |
| | 19M8425 | CAP SCREW | 1 | | M6 X 16 |
| | 12M7006 | LOCK WASHER | 1 | | 6 MM |
| | 24M7293 | WASHER | 1 | | 6.500 X 13 X 1.600 MM |
| 4 | 4426354 | CAP | 5 | | |

**CAB TO MAIN FRAME MOUNTING**

T207678 -UN-07FEB05

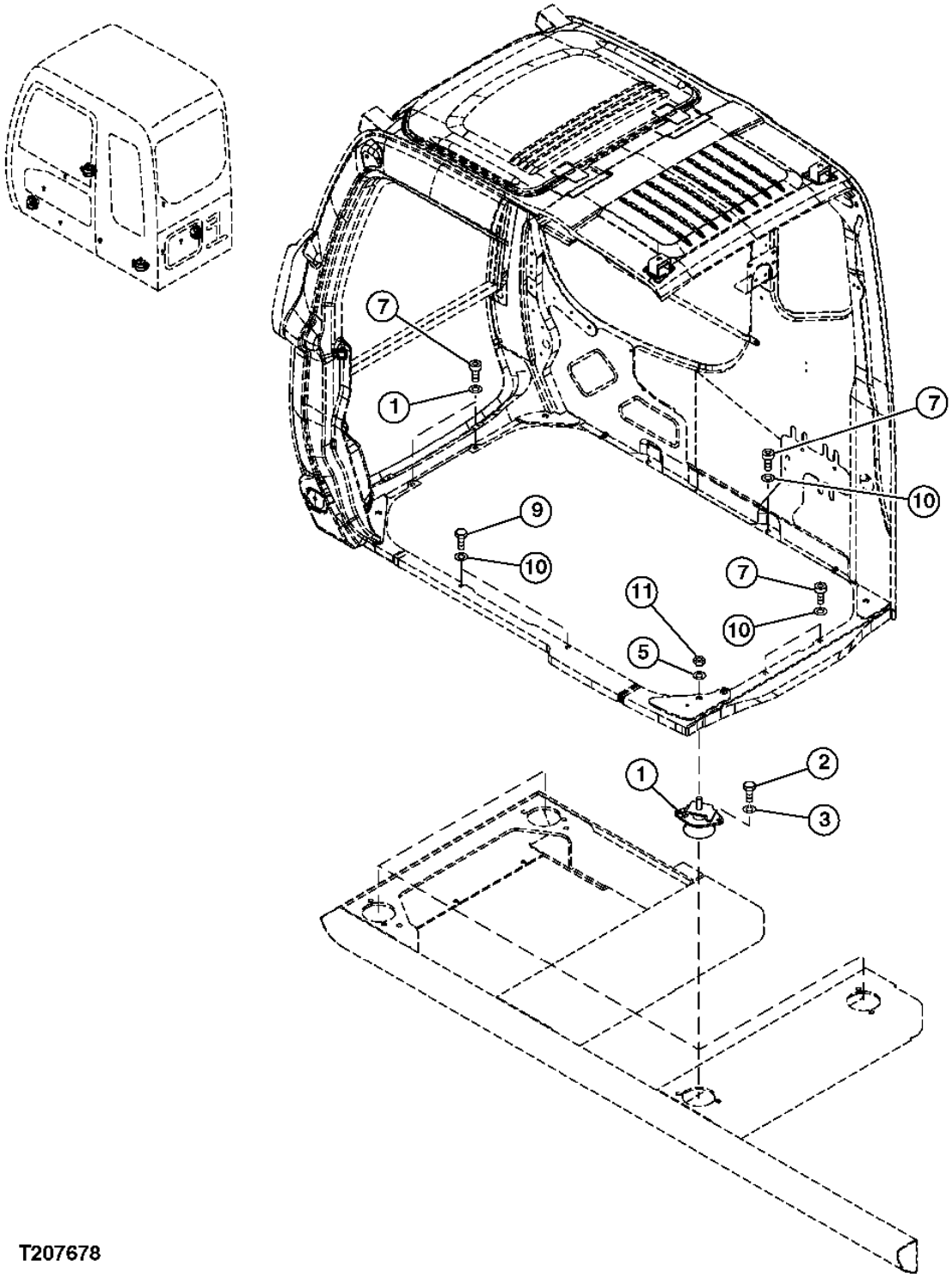


T207678

# 2E24



**CAB TO MAIN FRAME MOUNTING**

| KEY | PART NO. | PART NAME | QTY | SERIAL NO. | REMARKS |
|---|---|---|---|---|---|
| 1 | 4409999 | ISOLATOR | 4 | | |
| 2 | AT218150 | BOLT | 8 | | (SUB FOR 4330785) |
| 3 | 12H301 | LOCK WASHER | 8 | | 1/2", (SUB FOR A590912) |
| 5 | 24M7338 | WASHER | 4 | | 17 X 30 X 3 MM, (SUB FOR J222016) |
| 7 | 19M8337 | SCREW | 4 | | M10 X 30, (SUB FOR J781035) |
| 9 | 19M7662 | CAP SCREW | 5 | | M10 X 30, (SUB FOR J901030) |
| 10 | 24M7346 | WASHER | 9 | | 11 X 20 X 2 MM, (SUB FOR J222010) |
| 11 | 14M7328 | LOCK NUT | 4 | | M16, (SUB FOR 4423699) |

**CAB (WITH VANDAL HOOK)**

T207679 -UN-07FEB05

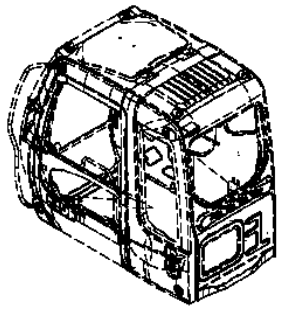

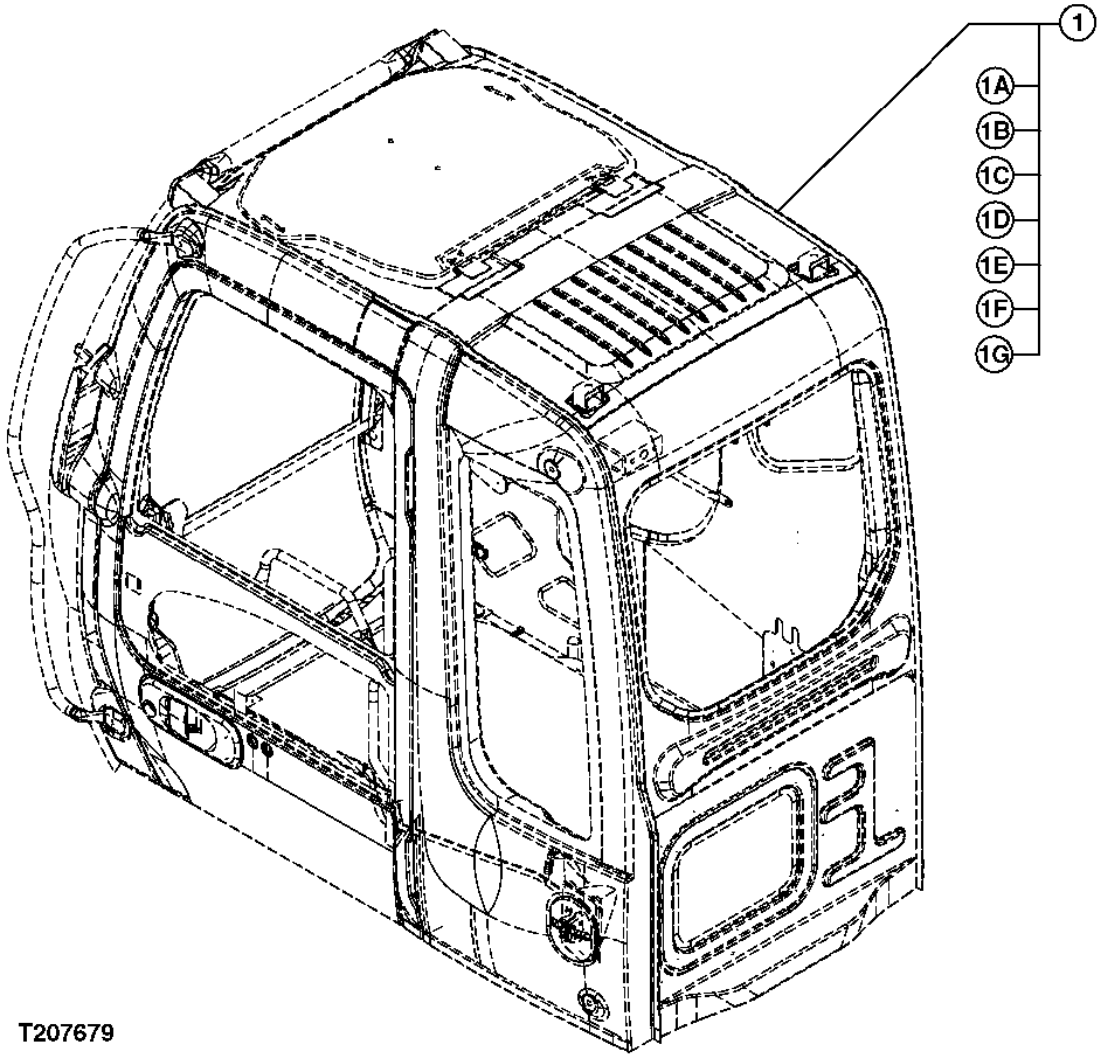

# 2F2



**CAB**

| KEY | PART NO. | PART NAME | QTY | SERIAL NO. | REMARKS |
|---|---|---|---|---|---|
| 1 | 9248228 | CAB | 1 | | (SEE FOLLOWING PAGES FOR COMPONENTS) |
| 1A | ..... | CAB | 1 | | |
| 1B | ..... | CAB | 1 | | ( 4486187 NOT AVAILABLE FOR SERVICE) |
| 1C | ..... | CAB | 1 | | |
| 1D | ..... | CAB | 1 | | |
| 1E | ..... | CAB | 1 | | |
| 1F | ..... | CAB | 1 | | |
| 1G | ..... | CAB | 1 | | |

**WINDSHIELD WIPER, RADIO SPEAKERS, AND ANTENNA**

T207680 -UN-07FEB05

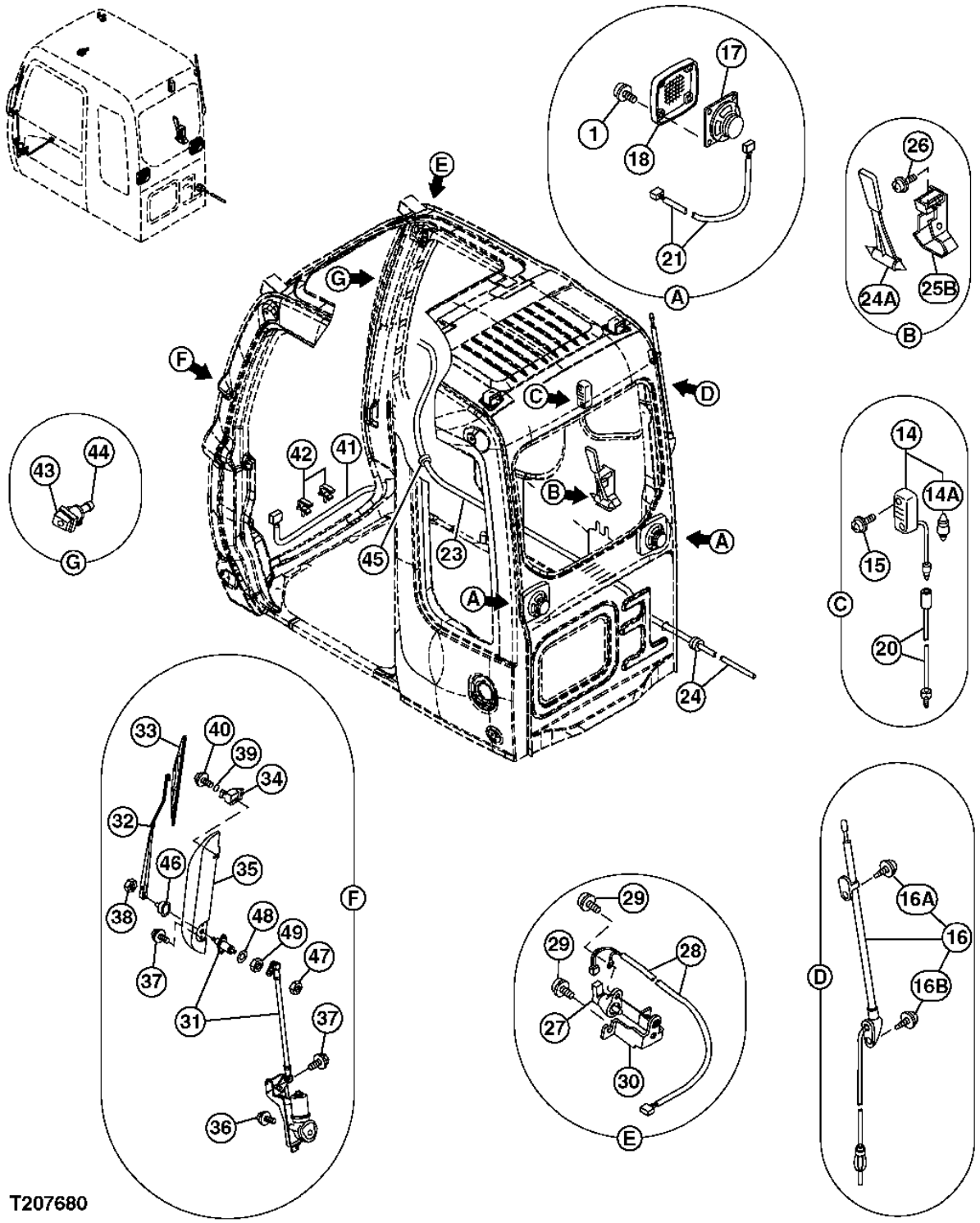

**WINDSHIELD WIPER, RADIO SPEAKERS, AND ANTENNA**

| KEY | PART NO. | PART NAME | QTY | SERIAL NO. | REMARKS |
|---|---|---|---|---|---|
| 1 | 4456427 | SCREW | 8 | | |
| 14 | 4187082 | LAMP | 1 | | |
| 14A | 4187083 | BULB | 1 | | |
| 15 | 4456428 | SCREW | 2 | | |
| 16 | 4123177 | ANTENNA | 1 | | |
| 16A | 4210412 | SCREW | 1 | | |
| 16B | 4210413 | SCREW | 1 | | |
| 17 | 4361302 | SPEAKER | 2 | | |
| 18 | 4364504 | GRILLE | 2 | | |
| 20 | 4260369 | WIRING HARNESS | 1 | | |
| 21 | 4369547 | WIRING HARNESS | 2 | | |
| 23 | 4369549 | HOSE | 1 | | |
| 24 | 4287903 | GROMMET | 1 | | |
| 25A | 4362700 | HAMMER | 1 | | |
| 25B | 2038764 | BRACKET | 1 | | |
| 26 | 4456428 | SCREW | 2 | | |
| 27 | 4387837 | SWITCH | 1 | | |
| 28 | 4402476 | WIRING HARNESS | 1 | | |
| 29 | 4456428 | SCREW | 3 | | |
| 30 | 4456429 | BRACKET | 1 | | |
| 31 | 4453690 | WIPER MOTOR | 1 | | |
| 32 | 4453687 | WIPER ARM | 1 | | |
| 33 | 4453686 | WIPER BLADE | 1 | | |
| 34 | 4456433 | HOLDER | 1 | | |
| 35 | 4456434 | GUARD | 1 | | |
| 36 | ..... | CAP SCREW | 3 | | ( J260820 NO LONGER AVAILABLE) |
| | 19M7139 | CAP SCREW | 1 | | M8 X 20, (SUB FOR J900820) |
| | 24M7055 | WASHER | 1 | | 8.400 X 16 X 1.600 MM, (SUB FOR A590108) |
| 37 | 4456238 | BOLT | 4 | | |
| 38 | 14M7273 | NUT | 1 | | M8, (SUB FOR M500807) |
| 39 | 4092111 | O-RING | 1 | | |
| 40 | 4456458 | BOLT | 1 | | |
| 41 | 4456435 | WIRING HARNESS | 1 | | |
| 42 | 4456436 | CLIP | 2 | | |
| 43 | 4456450 | NOZZLE | 1 | | |
| 44 | 4367481 | FLOW CONTROL HYD. VALVE | 1 | | |
| 45 | 4369569 | GROMMET | 1 | | |
| 46 | 4603011 | CAP | 1 | | |
| 47 | 4603012 | NUT | 1 | | |
| 48 | 4603013 | WASHER | 1 | | |
| 49 | 4431859 | NUT | 1 | | |

**CAB LEFT AND REAR WINDOWS, ROOF, AND HANDRAIL**

T207681 -UN-02MAR05

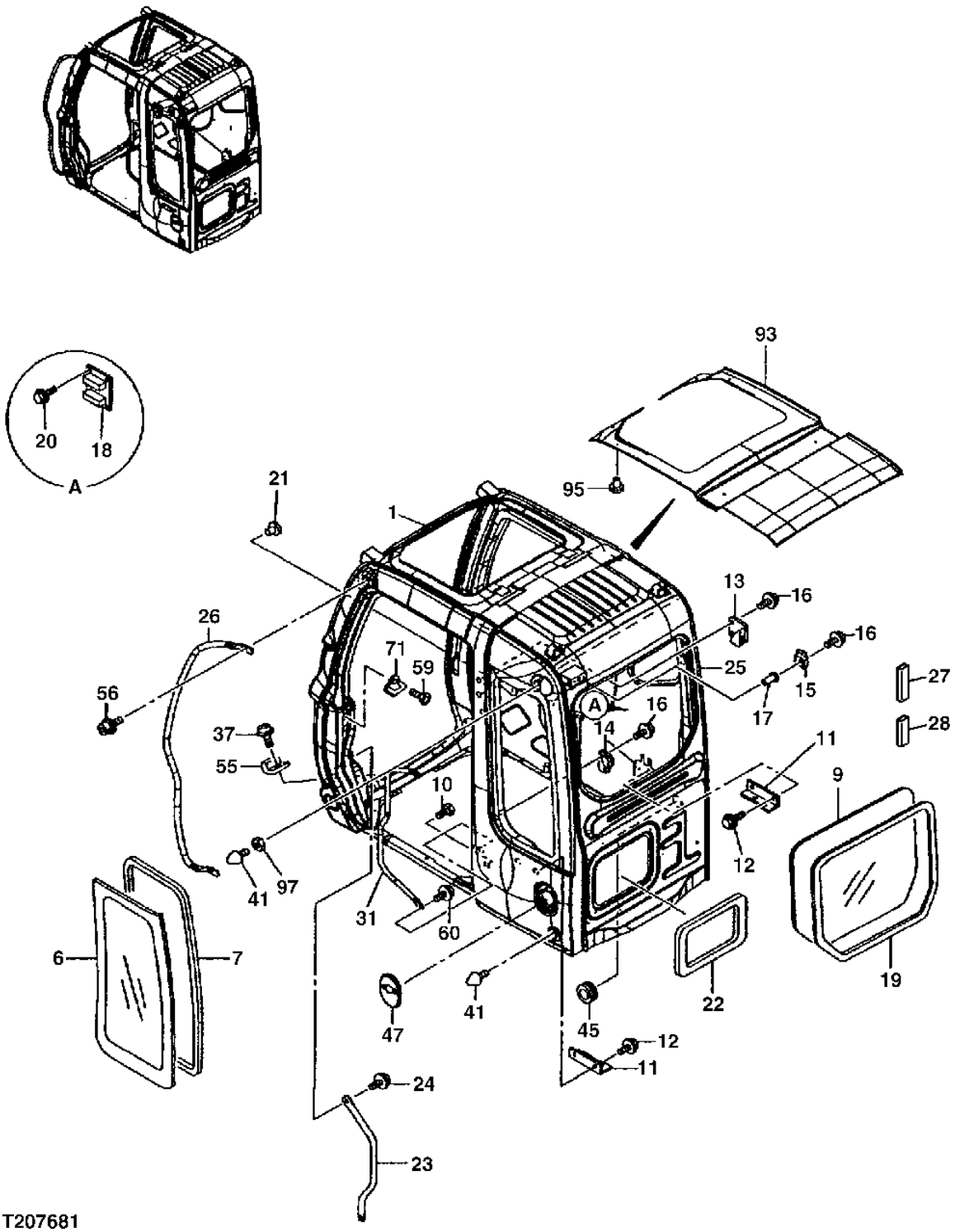

**CAB LEFT AND REAR WINDOWS, ROOF, AND HANDRAIL**

| KEY | PART NO. | PART NAME | QTY | SERIAL NO. | REMARKS |
|---|---|---|---|---|---|
| 1 | ..... | CAB | 1 | | ( 4486187 NOT AVAILABLE FOR SERVICE) |
| 6 | 4602567 | WINDOWPANE | 1 | | |
| 7 | 4400079 | SEAL | 1 | | |
| 9 | 4602569 | WINDOWPANE | 1 | | |
| 10 | ..... | CAP SCREW | 1 | | ( 4320150 NO LONGER AVAILABLE) |
| | 19M8425 | CAP SCREW | 1 | | M6 X 16 |
| | 24H1287 | WASHER | 1 | | 7.137 X 15.875 X 1.651 MM |
| | 12M7006 | LOCK WASHER | 1 | | 6 MM |
| 11 | 4456181 | BRACKET | 2 | | |
| 12 | ..... | CAP SCREW | 4 | | ( J271025 NO LONGER AVAILABLE) |
| | 19M7402 | CAP SCREW | 1 | | M10 X 25, (SUB FOR J901025) |
| | 24M7346 | WASHER | 1 | | 11 X 20 X 2 MM, (SUB FOR J222010) |
| 13 | 4456182 | ISOLATOR | 1 | | |
| 14 | 4456183 | ISOLATOR | 1 | | |
| 15 | 4456184 | ISOLATOR | 1 | | |
| 16 | 4372224 | SCREW WITH WASHER | 5 | | |
| 17 | 4456185 | NUT | 1 | | |
| 18 | 4477457 | BRACKET | 1 | | |
| 19 | 4602577 | ISOLATOR | 1 | | |
| 20 | 4372219 | SCREW WITH WASHER | 4 | | |
| 21 | 4372088 | CLIP | 2 | | |
| 22 | 4453667 | ISOLATOR | 1 | | |
| 23 | 4610143 | HANDRAIL | 1 | | |
| 24 | ..... | CAP SCREW | 2 | | ( J271025 NO LONGER AVAILABLE) |
| | 19M7402 | CAP SCREW | 1 | | M10 X 25, (SUB FOR J901025) |
| | 24M7346 | WASHER | 1 | | 11 X 20 X 2 MM, (SUB FOR J222010) |
| 25 | 4456175 | ISOLATOR | 2 | | |
| 26 | 4453662 | HANDRAIL | 1 | | |
| 27 | 4453672 | ISOLATOR | 1 | | |
| 28 | 4603008 | ISOLATOR | 1 | | |
| 31 | 4453663 | HANDRAIL | 1 | | |
| 37 | 21M7420 | SCREW | 2 | | M6 X 16, (SUB FOR M470616) |
| 41 | 4607408 | STOP | 2 | | |
| 45 | 4607409 | BUSHING | 1 | | |
| 47 | 4456654 | COVER | 1 | | |
| 55 | 4369675 | ISOLATOR | 2 | | |
| 56 | ..... | CAP SCREW | 2 | | ( 4320149 NO LONGER AVAILABLE) |
| | 19M7550 | CAP SCREW | 1 | | M10 X 35 |
| | 24H1305 | WASHER | 1 | | 10.312 X 20.625 X 1.651 MM |
| | 12M7066 | LOCK WASHER | 1 | | 10 MM |
| 59 | 4320163 | SCREW | 2 | | |
| 60 | 4372219 | SCREW WITH WASHER | 2 | | |
| 71 | 4369627 | STRIKER | 1 | | |
| 93 | 4453665 | SHEET | 1 | | |
| 95 | 4453666 | CLIP | 14 | | |
| 97 | 4295662 | NUT | 1 | | |

**CAB DOOR ASSEMBLY, LATCH, AND WINDOWS**

T207676 -UN-23FEB05

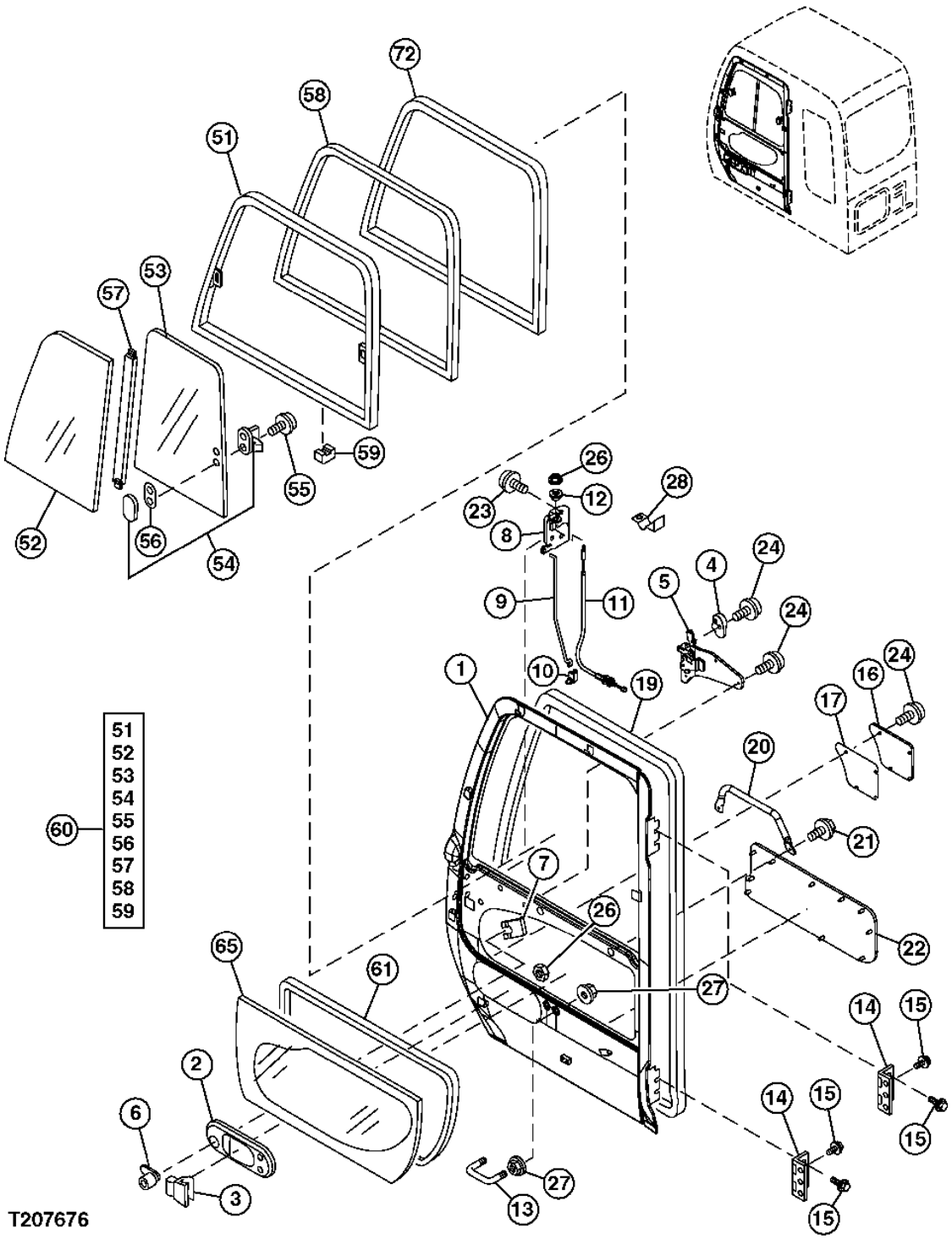

**CAB DOOR ASSEMBLY, LATCH, AND WINDOWS**

| KEY | PART NO. | PART NAME | QTY | SERIAL NO. | REMARKS |
|---|---|---|---|---|---|
| 0 | 4639479 | DOOR | 1 | | (NOT ILLUSTRATED) (CONTAINS ALL ITEMS ON THIS PAGE - ADDITIONAL COMPONENTS LISTED ON PREVIOUS AND FOLLOWING PAGES) |
| 1 | ..... | DOOR | 1 | | (ASSEMBLY) ( 4639480 NOT AVAILABLE FOR SERVICE) |
| 2 | 4455979 | COVER | 1 | | |
| 3 | 4369645 | HANDLE | 1 | | (OUTER) |
| 4 | 4455975 | HANDLE | 1 | | |
| 5 | 4620431 | HANDLE | 1 | | (INNER) |
| 6 | 4362135 | LOCK | 1 | | |
| 7 | 4372091 | CLIP | 1 | | |
| 8 | 4455982 | LOCK | 1 | | |
| 9 | 4455983 | ROD | 1 | | |
| 10 | 4444664 | HOLDER | 1 | | |
| 11 | 4623165 | WIRE | 1 | | |
| 12 | 4455981 | BUSHING | 1 | | |
| 13 | 4369661 | U-BOLT | 1 | | |
| 14 | 4455980 | HINGE | 2 | | |
| 15 | 4356695 | BOLT | 6 | | (SUB FOR 4372261) |
| 16 | 4455976 | COVER | 1 | | |
| 17 | 4455977 | ISOLATOR | 1 | | |
| 19 | 4455978 | WEATHERSTRIP | 1 | | |
| 20 | 4453670 | HANDRAIL | 1 | | |
| 21 | 4372212 | SCREW WITH WASHER | 2 | | |
| 22 | 4453671 | SHEET | 1 | | |
| 23 | 4382885 | BOLT | 3 | | |
| 24 | ..... | CAP SCREW | 8 | | ( J680612 NO LONGER AVAILABLE) |
| | 21M7285 | SCREW | 1 | | M6 X 12 |
| | 24M7293 | WASHER | 1 | | 6.500 X 13 X 1.600 MM |
| | 12M7006 | LOCK WASHER | 1 | | 6 MM |
| 26 | 4456172 | NUT | 1 | | |
| 27 | 4295662 | NUT | 4 | | |
| 28 | 4623166 | CLIP | 1 | | |
| 51 | 4610124 | FRAME | 1 | | |
| 52 | 4610142 | WINDOWPANE | 1 | | |
| 53 | 4602565 | WINDOWPANE | 1 | | |
| 54 | 4369653 | LOCK | 2 | | |
| 55 | J680410 | SCREW WITH WASHER | 4 | | |
| 56 | 4420531 | SPACER | 2 | | (SUB FOR 4372093) |
| 57 | 4453675 | ISOLATOR | 1 | | |
| 58 | 4610125 | FRAME | 1 | | |
| 59 | 4147896 | SPACER | 3 | | |
| 60 | ..... | FRAME | 1 | | ( 4610123 NOT AVAILABLE FOR SERVICE) |
| 61 | 4400087 | SEAL | 1 | | |
| 65 | 4602566 | WINDOWPANE | 1 | | (SUB FOR 4468943) |
| 72 | 4448315 | ISOLATOR | 1 | | |

**CAB FRONT WINDOWS, HANDLES, AND OPENING TRACKS**

T207750 -UN-07FEB05

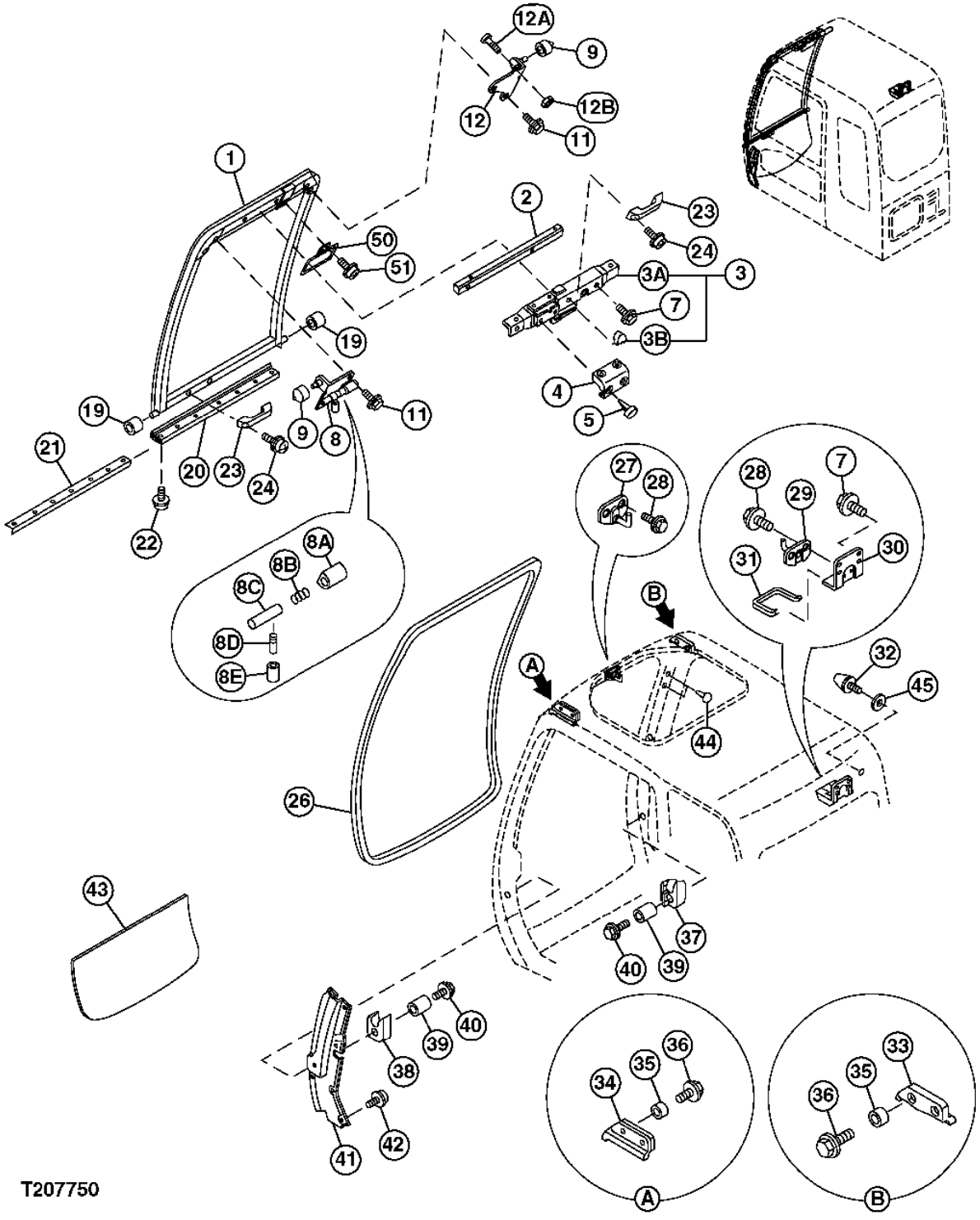

**CAB FRONT WINDOWS, HANDLES, AND OPENING TRACKS**

| KEY | PART NO. | PART NAME | QTY | SERIAL NO. | REMARKS |
|---|---|---|---|---|---|
| 1 | 4610122 | FRAME | 1 | | |
| 2 | 4456218 | WELD NUT | 1 | | |
| 3 | 4456219 | LOCK | 1 | | |
| 3A | 4456222 | COVER | 1 | | |
| 3B | 4638688 | COVER | 1 | | |
| 4 | 4456220 | COVER | 1 | | |
| 5 | 4456221 | CLIP | 4 | | |
| 7 | 4372225 | SCREW WITH WASHER | 4 | | |
| 8 | 4633401 | BRACKET | 1 | | |
| 8A | 4456227 | COVER | 1 | | |
| 8B | Z494918 | SPRING | 1 | | |
| 8C | 4403327 | UNIVERSAL DRIVESHAFT | 1 | | |
| 8D | 4295480 | LEVER | 1 | | |
| 8E | 4295876 | COVER | 1 | | |
| 9 | 4456224 | ROLLER | 2 | | |
| 11 | 4372219 | SCREW WITH WASHER | 4 | | |
| 12 | ..... | BRACKET | 1 | | ( 4456226 NOT AVAILABLE FOR SERVICE) |
| | 4633400 | BRACKET | 1 | | |
| | 4633401 | BRACKET | 1 | | |
| 12A | 4456225 | SCREW | 1 | | |
| 12B | ..... | NUT | 1 | | ( J230006 NOT AVAILABLE FOR SERVICE) |
| 19 | 4204558 | ROLLER | 2 | | |
| 20 | 4456228 | ISOLATOR | 1 | | |
| 21 | 4456229 | PLATE | 1 | | |
| 22 | 4372214 | SCREW | 4 | | |
| 23 | 4204579 | HANDLE | 2 | | |
| 24 | ..... | CAP SCREW | 4 | | ( J460620 NOT AVAILABLE FOR SERVICE) |
| | 21M7267 | SCREW | 1 | | M6 X 20 |
| | 24M7293 | WASHER | 1 | | 6.500 X 13 X 1.600 MM |
| | 12M7006 | LOCK WASHER | 1 | | 6 MM |
| 26 | 4456230 | ISOLATOR | 1 | | |
| 27 | 4456231 | STRIKER | 1 | | |
| 28 | 4372210 | SCREW WITH WASHER | 4 | | |
| 29 | 4456232 | STRIKER | 1 | | |
| 30 | 4456233 | BRACKET | 1 | | |
| 31 | 4456234 | ISOLATOR | 1 | | |
| 32 | 4204586 | STOP | 1 | | |
| 33 | 4456235 | ISOLATOR | 1 | | |
| 34 | 4456236 | ISOLATOR | 1 | | |
| 35 | 4456237 | BUSHING | 4 | | |
| 36 | 4456238 | BOLT | 4 | | |
| 37 | 4456239 | STOP | 1 | | |
| 38 | 4456240 | STOP | 1 | | |
| 39 | 4456241 | BUSHING | 2 | | |
| 40 | 4456242 | BOLT | 2 | | |
| 41 | 4610144 | COVER | 1 | | |
| 42 | ..... | CAP SCREW | 6 | | ( J680614 NOT AVAILABLE FOR SERVICE) |
| | 21M7246 | SCREW | 1 | | M6 X 16 |
| | 24M7293 | WASHER | 1 | | 6.500 X 13 X 1.600 MM |
| | 12M7006 | LOCK WASHER | 1 | | 6 MM |
| 43 | 4602563 | WINDOWPANE | 1 | | |
| 44 | 4377817 | CLIP | 2 | | |
| 45 | 4607053 | SPACER | 1 | | |
| 50 | 965452 | REAR VIEW MIRROR | 1 | | |
| 51 | ..... | CAP SCREW | 2 | | ( J680614 NOT AVAILABLE FOR SERVICE) |
| | 21M7246 | SCREW | 1 | | M6 X 16 |
| | 24M7293 | WASHER | 1 | | 6.500 X 13 X 1.600 MM |
| | 12M7006 | LOCK WASHER | 1 | | 6 MM |

**CAB RIGHT WINDOWS AND GUARDS**

T207751 -UN-23FEB05

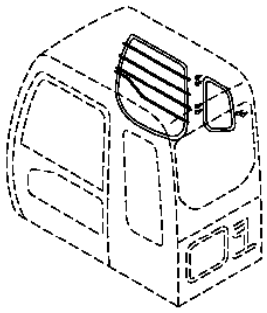

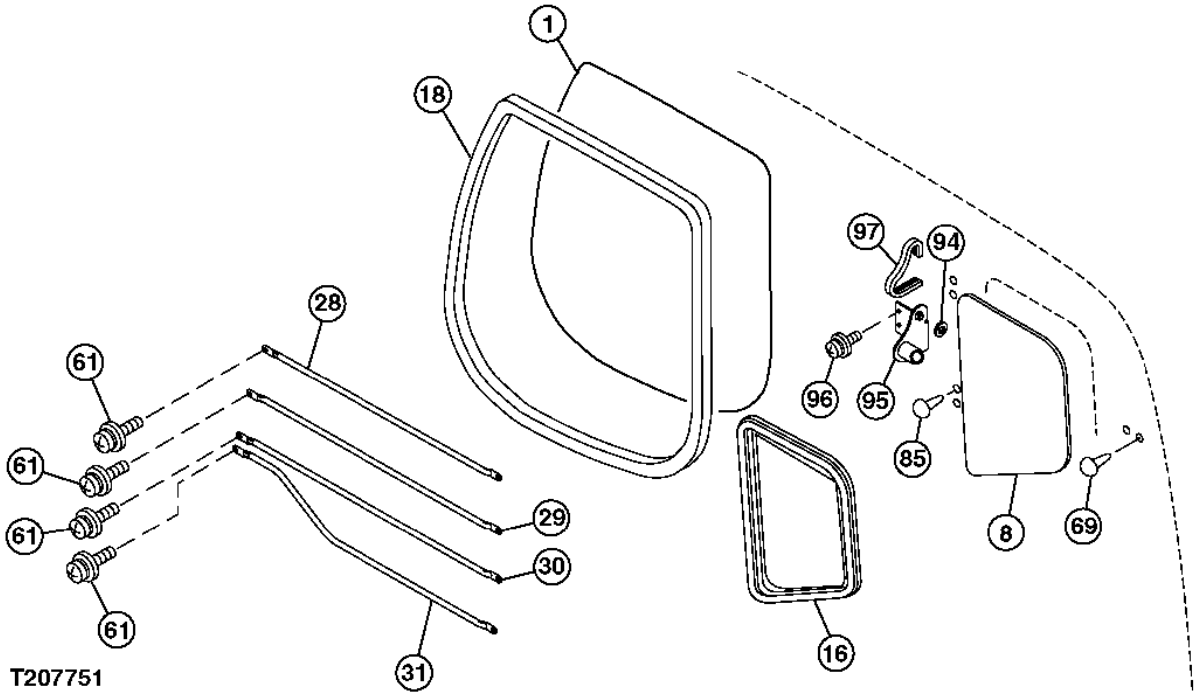

# 2F12



**CAB RIGHT WINDOWS AND GUARDS**

| KEY | PART NO. | PART NAME | QTY | SERIAL NO. | REMARKS |
|---|---|---|---|---|---|
| 1 | 4602568 | WINDOWPANE | 1 | | |
| 8 | 4602570 | WINDOWPANE | 1 | | |
| 16 | 4602576 | ISOLATOR | 1 | | |
| 18 | 4448318 | ISOLATOR | 1 | | |
| 28 | 4463391 | GUARD | 1 | | |
| 29 | 4463392 | GUARD | 1 | | |
| 30 | 4463393 | GUARD | 1 | | |
| 31 | 4463394 | GUARD | 1 | | |
| 61 | 4372212 | SCREW WITH WASHER | 8 | | |
| 69 | 4377817 | CLIP | 2 | | |
| 85 | 4372088 | CLIP | 1 | | |
| 94 | 4607412 | BUSHING | 1 | | |
| 95 | 4607410 | BRACKET | 1 | | |
| 96 | J680620 | SCREW WITH WASHER | 2 | | |
| 97 | 4607411 | ISOLATOR | 1 | | |

**CAB TOP HATCH AND SUN SHADE**

T207752 -UN-23FEB05

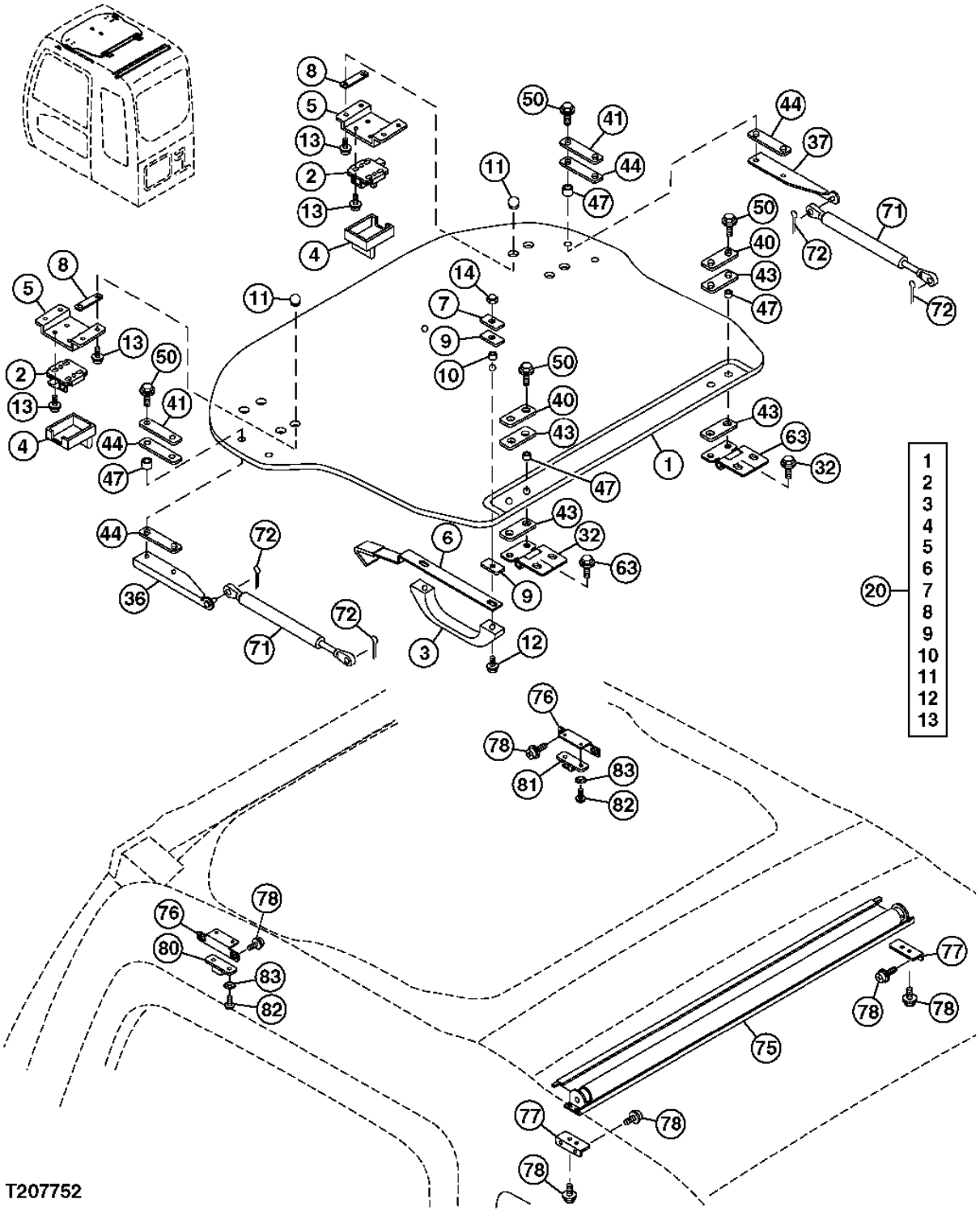

**CAB TOP HATCH AND SUN SHADE**

| KEY | PART NO. | PART NAME | QTY | SERIAL NO. | REMARKS |
|---|---|---|---|---|---|
| 1 | 4460405 | WINDOW | 1 | | |
| 2 | 4369615 | LOCK | 2 | | |
| 3 | 4204579 | HANDLE | 1 | | (SUB FOR 4411821) |
| 4 | 4369616 | COVER | 2 | | |
| 5 | 4474479 | BRACKET | 2 | | |
| 6 | 4474498 | BRACKET | 1 | | |
| 7 | 4386452 | PLATE | 2 | | |
| 8 | 4474480 | PACKING | 4 | | |
| 9 | 4386450 | PACKING | 4 | | |
| 10 | 4474494 | BUSHING | 2 | | |
| 11 | 4369674 | BUSHING | 8 | | |
| 12 | J680630 | SCREW | 2 | | |
| 13 | J680514 | SCREW WITH WASHER | 16 | | |
| 14 | 4474493 | NUT | 2 | | |
| 20 | 4456952 | ROOF | 1 | | |
| 32 | 4474478 | HINGE | 2 | | |
| 36 | 4477219 | BRACKET | 1 | | |
| 37 | 4477218 | BRACKET | 1 | | |
| 40 | 4474477 | PLATE | 2 | | |
| 41 | 4477217 | PLATE | 2 | | |
| 43 | 4474476 | PACKING | 4 | | |
| 44 | 4477216 | PACKING | 4 | | |
| 47 | 4474482 | BUSHING | 8 | | |
| 50 | 4372221 | SCREW WITH WASHER | 8 | | |
| 63 | 4372220 | SCREW WITH WASHER | 4 | | |
| 71 | 4369619 | CYLINDER | 2 | | |
| 72 | H132922 | COTTER PIN | 4 | | (SUB FOR 4022697) |
| 75 | 4474499 | ROLLER | 1 | | |
| 76 | 4474514 | BRACKET | 2 | | |
| 77 | ..... | BRACKET | 2 | | ( 4474513 NO LONGER AVAILABLE) (RIGHT BRACKET) |
| | 4609478 | BRACKET | 1 | | |
| | 4609477 | BRACKET | 1 | | |
| | 4609479 | SCREW | 8 | | |
| | 4609480 | ISOLATOR | 2 | | |
| 78 | 4444634 | SCREW | 12 | | |
| 80 | 4474518 | STOP | 1 | | |
| 81 | 4474517 | STOP | 1 | | |
| 82 | 21M7258 | SCREW | 4 | | (SUB FOR M470410) |
| 83 | 4459249 | WASHER | 4 | | |

**CAB DOOR HOLD OPEN LATCH COMPONENTS**

T207753 -UN-23FEB05

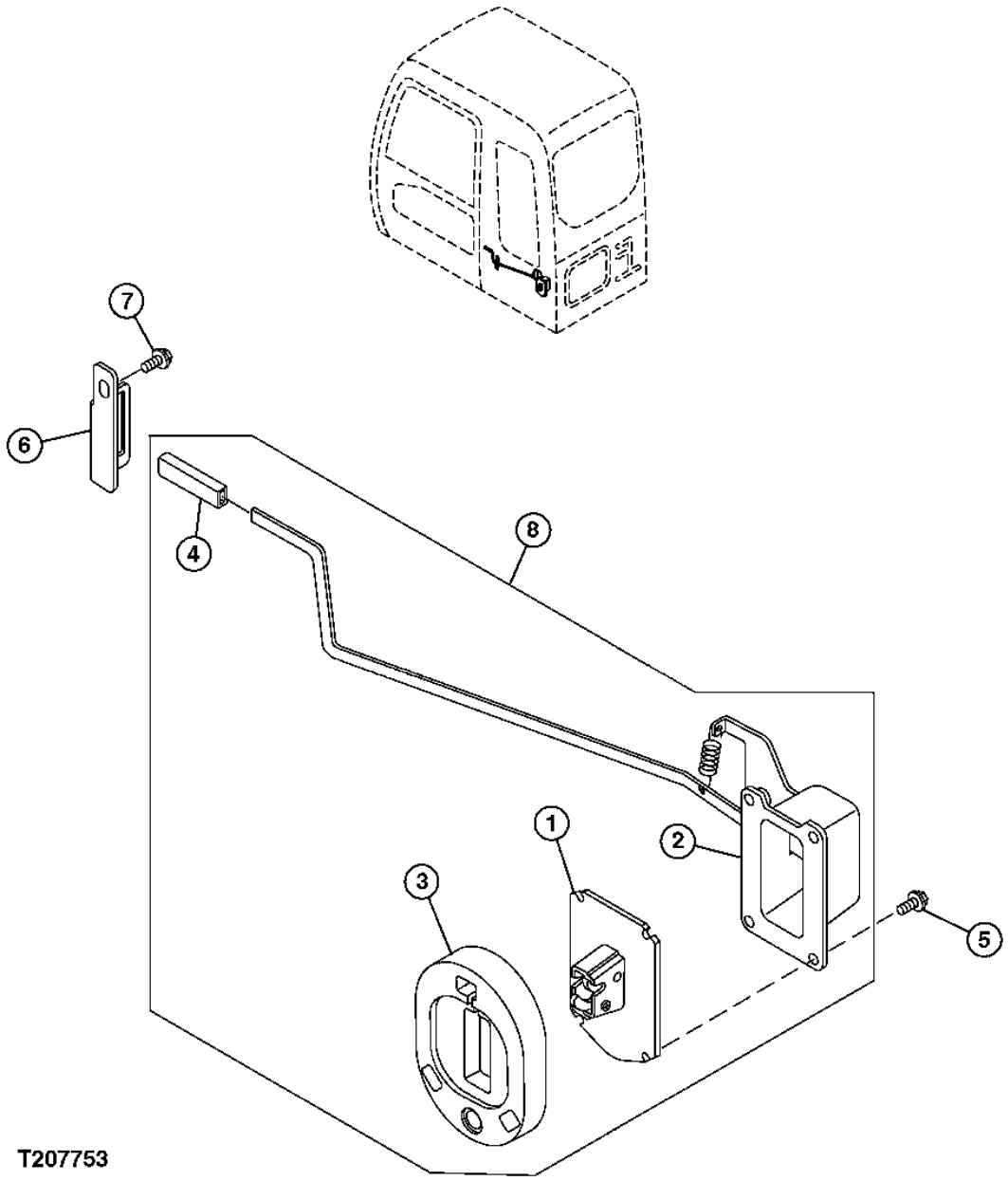

**CAB DOOR HOLD OPEN LATCH COMPONENTS**

| KEY | PART NO. | PART NAME | QTY | SERIAL NO. | REMARKS |
|---|---|---|---|---|---|
| 1 | 4456245 | CATCH | 1 | | |
| 2 | 4456246 | CASE | 1 | | |
| 3 | 4456247 | STOP | 1 | | |
| 4 | 4089012 | CAP | 4 | | |
| 5 | ..... | CAP SCREW | 4 | | ( J260820 NO LONGER AVAILABLE) |
| | 19M7139 | CAP SCREW | 1 | | M8 X 20, (SUB FOR J900820) |
| | 24M7055 | WASHER | 1 | | 8.400 X 16 X 1.600 MM, (SUB FOR A590108) |
| 6 | 4456248 | STOP | 1 | | |
| 7 | ..... | CAP SCREW | 1 | | ( J271025 NO LONGER AVAILABLE) |
| | 19M7402 | CAP SCREW | 1 | | M10 X 25, (SUB FOR J901025) |
| | 24M7346 | WASHER | 1 | | 11 X 20 X 2 MM, (SUB FOR J222010) |
| 8 | ..... | CATCH | 1 | | DOOR CATCH ASSEMBLY ( 4456244 NO LONGER AVAILABLE) |

**COVER (FOR USE WITHOUT RADIO)**

T146240 -UN-11OCT01

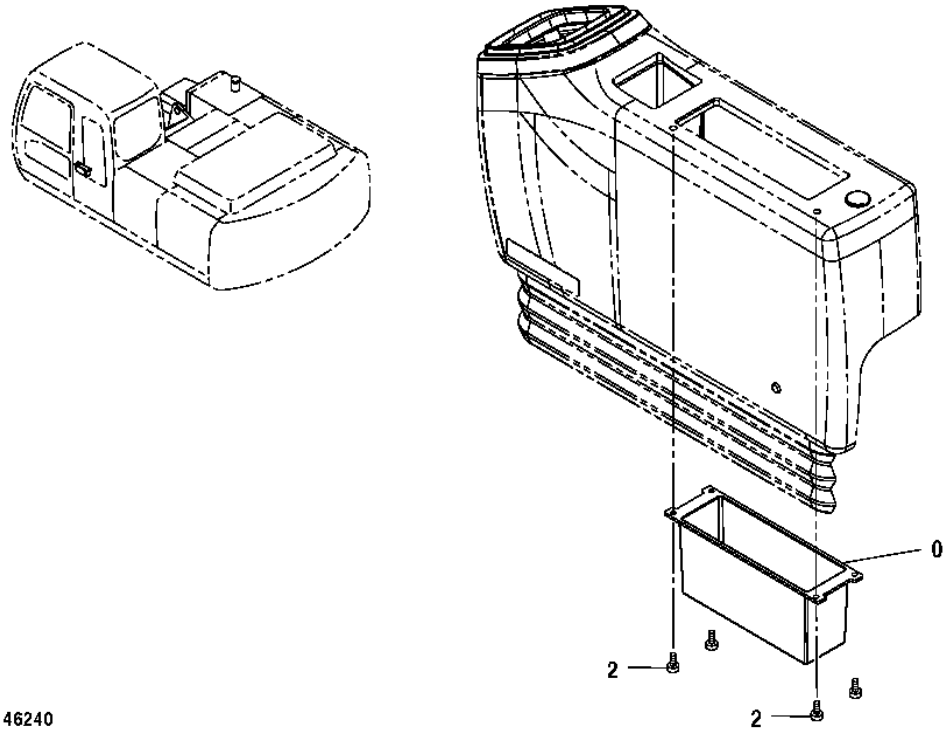


T146240

# 2F18



**COVER (FOR USE WITHOUT RADIO)**

| KEY | PART NO. | PART NAME | QTY | SERIAL NO. | REMARKS |
|---|---|---|---|---|---|
| 0 | 3090025 | HOLDER | 1 | | |
| 2 | 4361800 | SCREW | 4 | | |

**WINDOW GUARDS**

T207759 -UN-04FEB05

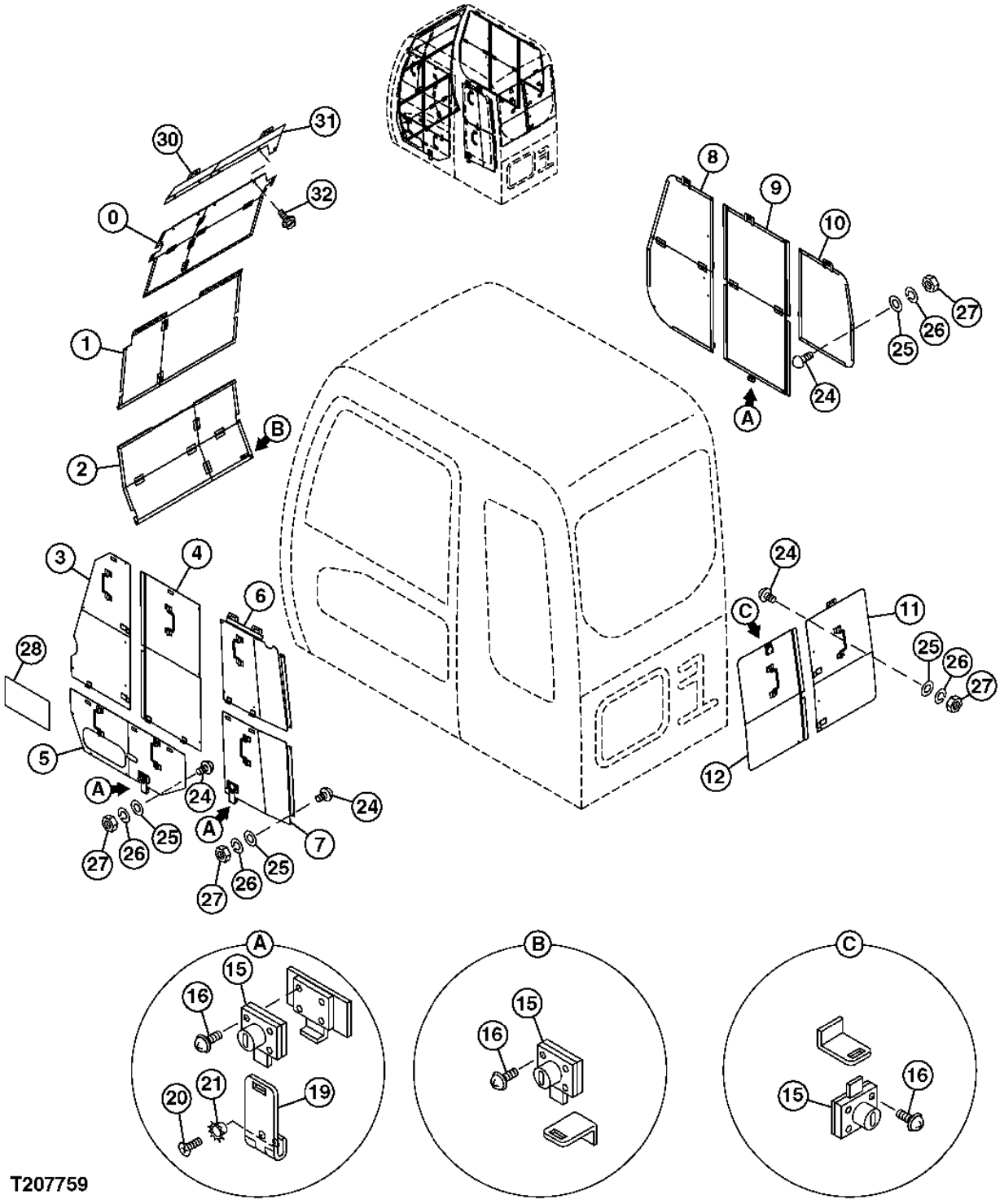

**WINDOW GUARDS**

| KEY | PART NO. | PART NAME | QTY | SERIAL NO. | REMARKS |
|---|---|---|---|---|---|
| 0 | 7041842 | COVER | 1 | | |
| 1 | 7041843 | COVER | 1 | | |
| 2 | 7047820 | COVER | 1 | | |
| 3 | 7041828 | COVER | 1 | | |
| 4 | 7041827 | COVER | 1 | | |
| 5 | 8087015 | COVER | 1 | | |
| 6 | 7041821 | COVER | 1 | | |
| 7 | 8086988 | COVER | 1 | | |
| 8 | 7041811 | COVER | 1 | | |
| 9 | 7041810 | COVER | 1 | | |
| 10 | 8086966 | COVER | 1 | | |
| 11 | 8086950 | COVER | 1 | | |
| 12 | 8081708 | COVER | 1 | | |
| 15 | 4361601 | LOCK | 5 | | |
| 16 | 21M7022 | SCREW | 20 | | M5 X 20, (SUB FOR J450520) |
| 19 | TH108983 | HINGE | 3 | | (SUB FOR 4207538) |
| 20 | 21M7249 | SCREW | 6 | | M5 X 10, (SUB FOR M470510) |
| 21 | T205218 | WASHER | 6 | | (SUB FOR 4107762) |
| 24 | 9738682 | STOP | 33 | | |
| 25 | 24M7027 | WASHER | 33 | | 5.300 X 10 X 1 MM, (SUB FOR A590105) |
| 26 | 12M7064 | LOCK WASHER | 33 | | 5 MM, (SUB FOR A590905) |
| 27 | 14M7294 | NUT | 33 | | M10, (SUB FOR M500504) |
| 28 | ..... | LABEL | 1 | | ( 2049977 NOT AVAILABLE FOR SERVICE) |
| 30 | ..... | COVER | 1 | | |
| 31 | ..... | COVER | 1 | | |
| 32 | ..... | CAP SCREW | 5 | | |

**WINDOW WASHER**

T207767 -UN-04FEB05

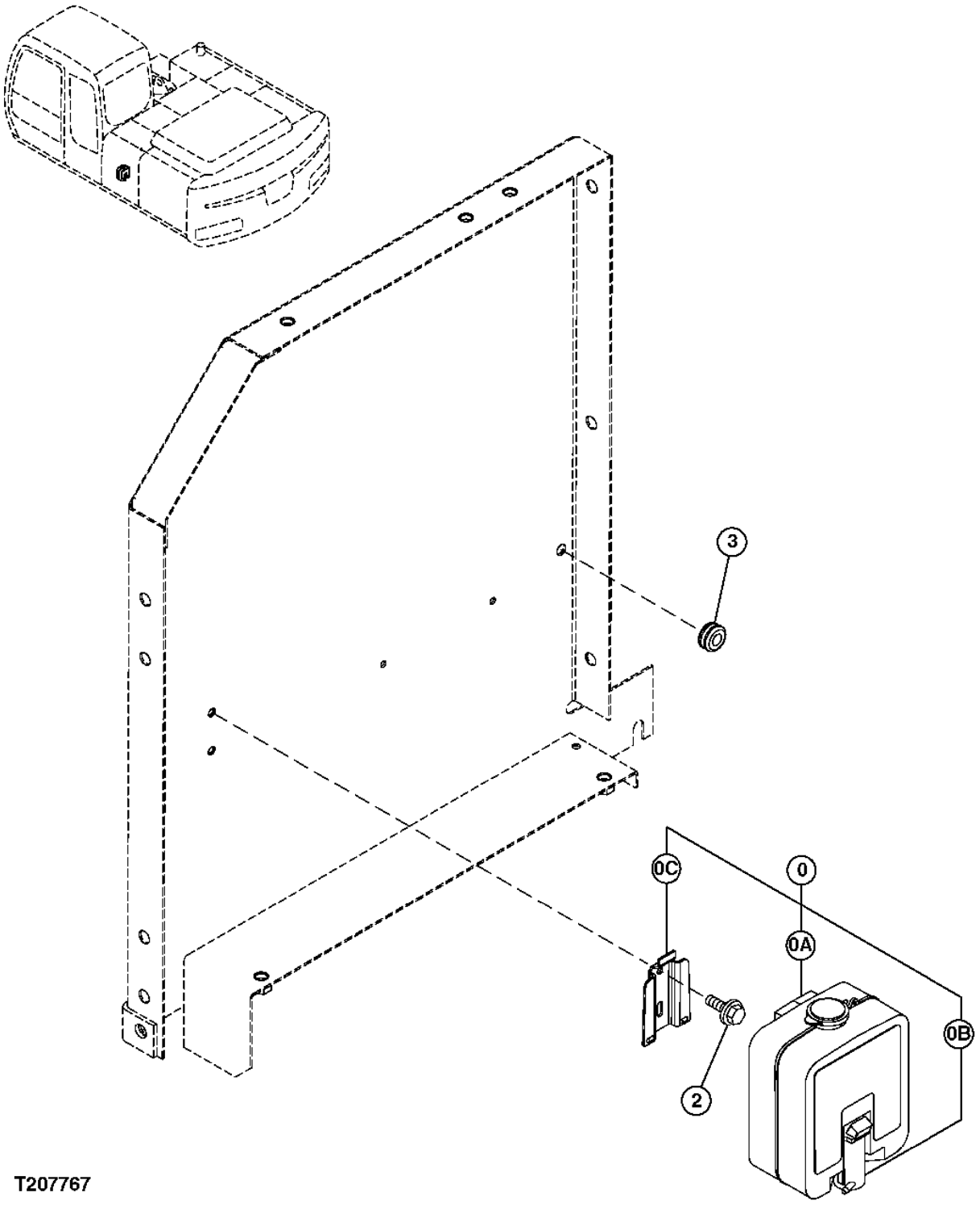

# 2F22



**WINDOW WASHER**

| KEY | PART NO. | PART NAME | QTY | SERIAL NO. | REMARKS |
|---|---|---|---|---|---|
| 0 | 4333185 | WINDSHIELD WASHER | 1 | | |
| 0A | 4369472 | RESERVOIR | 1 | | |
| 0B | 4326095 | PUMP | 1 | | |
| 0C | 4338974 | BRACKET | 1 | | |
| 2 | ..... | CAP SCREW | 2 | | ( J260616 NO LONGER AVAILABLE) |
| | 19M7560 | CAP SCREW | 1 | | M6 X 16, (SUB FOR J900616) |
| | 24M7054 | WASHER | 1 | | 6.400 X 12 X 1.600 MM, (SUB FOR A590106) |
| 3 | 94-2817 | GROMMET | 1 | | |

**CAB FLOOR PARTS**

T207768 -UN-04FEB05

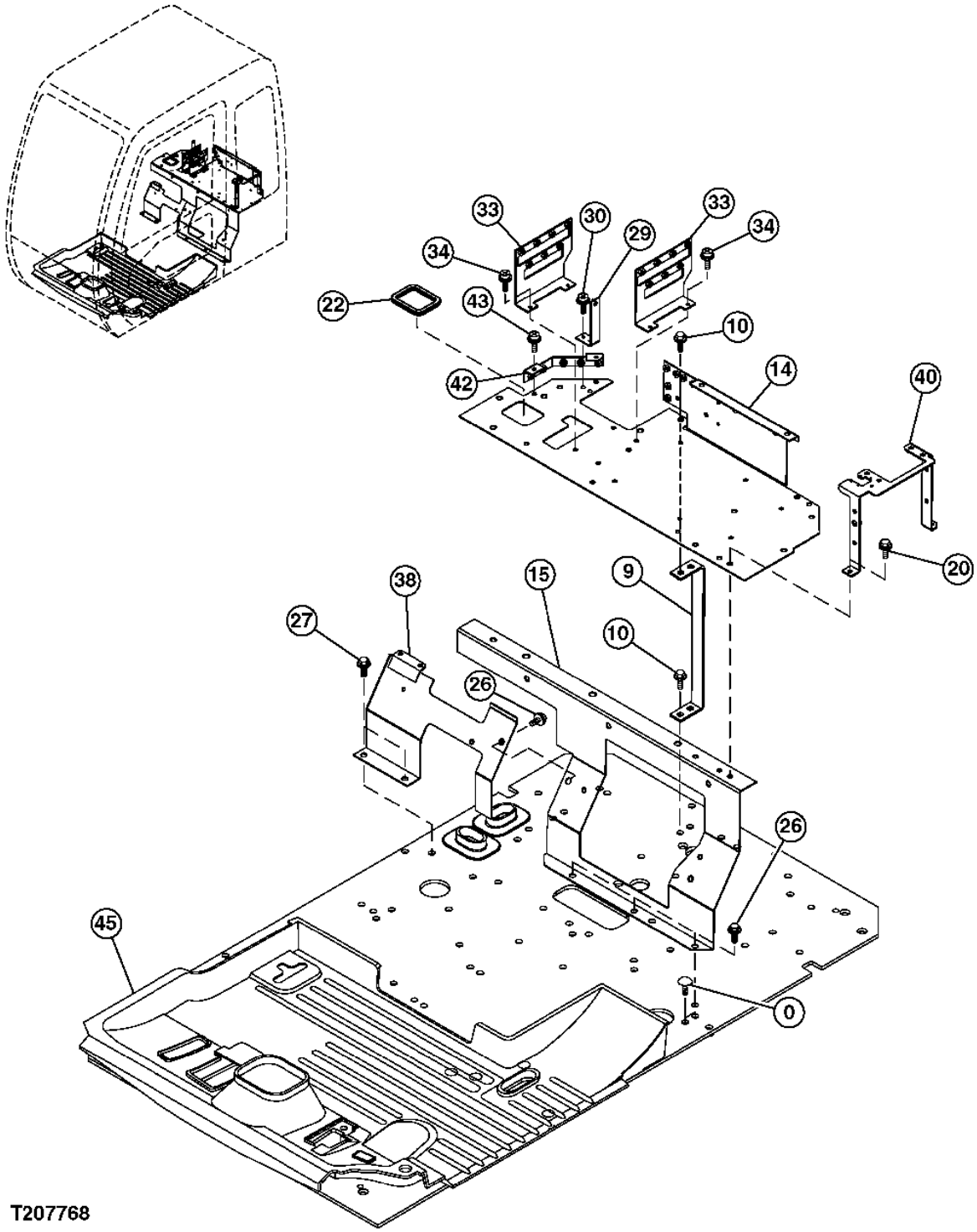

**CAB FLOOR PARTS**

| KEY | PART NO. | PART NAME | QTY | SERIAL NO. | REMARKS |
|---|---|---|---|---|---|
| 0 | 4280359 | PLUG | 2 | | |
| 9 | 8076619 | SUPPORT | 1 | | |
| 10 | ..... | CAP SCREW | 2 | | ( J271025 NO LONGER AVAILABLE) |
| | 19M7402 | CAP SCREW | 1 | | M10 X 25, (SUB FOR J901025) |
| | 24M7346 | WASHER | 1 | | 11 X 20 X 2 MM, (SUB FOR J222010) |
| 14 | 6020615 | BRACKET | 1 | | |
| 15 | 5007342 | BRACKET | 1 | | |
| 20 | ..... | CAP SCREW | 2 | | ( J260820 NO LONGER AVAILABLE) |
| | 19M7139 | CAP SCREW | 1 | | M8 X 20, (SUB FOR J900820) |
| | 24M7055 | WASHER | 1 | | 8.400 X 16 X 1.600 MM, (SUB FOR A590108) |
| 22 | 4445220 | BUSHING | 1 | | |
| 26 | ..... | CAP SCREW | 5 | | ( J271025 NO LONGER AVAILABLE) |
| | 19M7402 | CAP SCREW | 1 | | M10 X 25, (SUB FOR J901025) |
| | 24M7346 | WASHER | 1 | | 11 X 20 X 2 MM, (SUB FOR J222010) |
| 27 | ..... | CAP SCREW | 2 | | ( J271025 NO LONGER AVAILABLE) |
| | 19M7402 | CAP SCREW | 1 | | M10 X 25, (SUB FOR J901025) |
| | 24M7346 | WASHER | 1 | | 11 X 20 X 2 MM, (SUB FOR J222010) |
| 29 | 9757192 | BRACKET | 1 | | |
| 30 | ..... | CAP SCREW | 2 | | ( J460616 NO LONGER AVAILABLE) |
| | 19M8425 | CAP SCREW | 1 | | M6 X 16 |
| | 24M7293 | WASHER | 1 | | 6.500 X 13 X 1.600 MM |
| | 12M7006 | LOCK WASHER | 1 | | 6 MM |
| 33 | 8086354 | BRACKET | 2 | | |
| 34 | ..... | CAP SCREW | 1 | | ( J460616 NO LONGER AVAILABLE) |
| | 19M8425 | CAP SCREW | 1 | | M6 X 16 |
| | 24M7293 | WASHER | 1 | | 6.500 X 13 X 1.600 MM |
| | 12M7006 | LOCK WASHER | 1 | | 6 MM |
| 38 | 6021398 | BRACKET | 1 | | |
| 40 | 7044539 | BRACKET | 1 | | |
| 42 | 8088673 | BRACKET | 1 | | |
| 43 | ..... | CAP SCREW | 2 | | ( J460616 NO LONGER AVAILABLE) |
| | 19M8425 | CAP SCREW | 1 | | M6 X 16 |
| | 24M7293 | WASHER | 1 | | 6.500 X 13 X 1.600 MM |
| | 12M7006 | LOCK WASHER | 1 | | 6 MM |
| 45 | 0004661 | MAT | 1 | | |

**FLOOR PLATE**

T207769 -UN-04FEB05

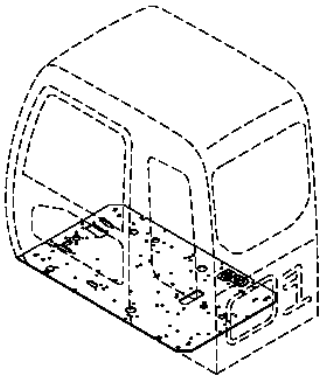

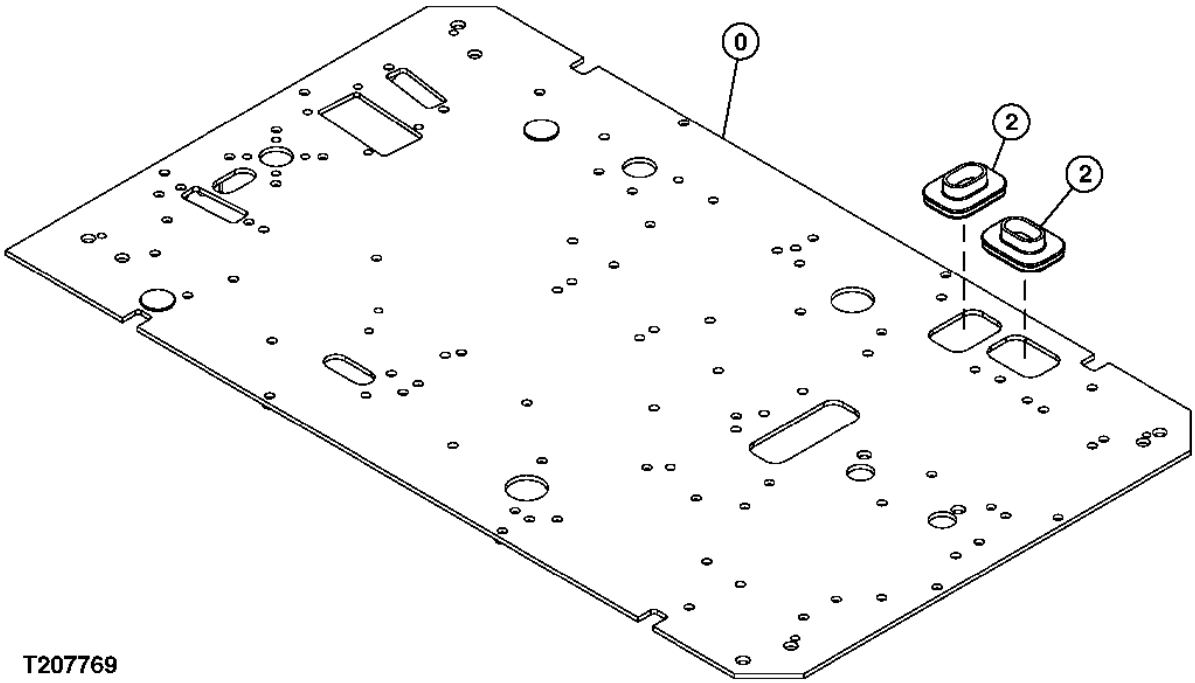


T207769

**FLOOR PLATE**

| KEY | PART NO. | PART NAME | QTY | SERIAL NO. | REMARKS |
|---|---|---|---|---|---|
| 0 | 6020550 | PLATE | 1 | | |
| 2 | 4351011 | GROMMET | 2 | | |

**SEAT AND SEAT SUSPENSION**

T207771 -UN-28FEB05

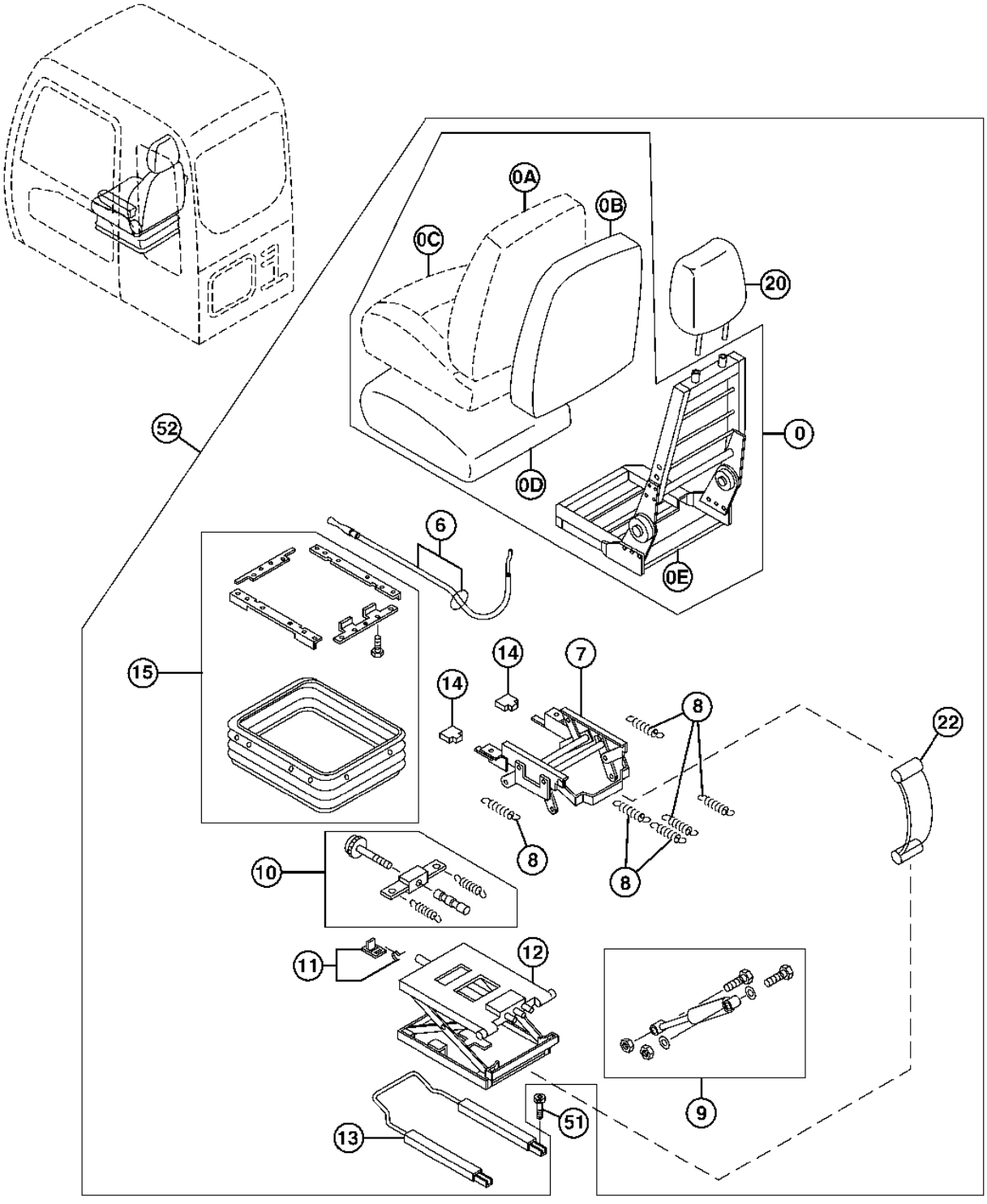


T207771

**SEAT AND SEAT SUSPENSION**

| KEY | PART NO. | PART NAME | QTY | SERIAL NO. | REMARKS |
|---|---|---|---|---|---|
| 0 | AT195286 | SEAT BACK | 1 | | (SUB FOR 4486189) |
| 0A | AT309264 | PAD | 1 | | (SUB FOR 4486190) |
| 0B | ..... | PAD | 1 | | ( 4392796 NO LONGER AVAILABLE) |
| 0C | AT195278 | CUSHION | 1 | | (FABRIC) (SUB FOR 4486191) |
| 0D | AT195279 | PAD | 1 | | (SEAT) (SUB FOR 4392798) |
| 0E | ..... | FRAME | 1 | | ( 4392799 NO LONGER AVAILABLE) |
| 6 | AT216522 | CABLE | 1 | | (SUB FOR 4392800) |
| 7 | ..... | STAND | 1 | | ( 4607311 NO LONGER AVAILABLE) |
| 8 | AT195287 | SPRING | 1 | | (SUB FOR 4392802) |
| 9 | ..... | TORSIONAL DAMPER | 1 | | (KIT) ( 4600090 NO LONGER AVAILABLE) |
| 10 | AT138346 | ADJUSTER | 1 | | (SUB FOR 4607627) HEIGHT RISER SPRING |
| 11 | ..... | STOP | 1 | | ( 4392805 NO LONGER AVAILABLE) |
| 12 | ..... | SEAT SUSPENSION | 1 | | ( 4607314 NO LONGER AVAILABLE) |
| 13 | ..... | SEAT SLIDE TRACK KIT | 1 | | ( 4607638 NO LONGER AVAILABLE) |
| 14 | ..... | HANDLE | 2 | | ( 4607637 NO LONGER AVAILABLE) |
| 15 | AT216531 | COVER | 1 | | (SUB FOR 4607629) (SUSPENSION COVER KIT) |
| 20 | ..... | HEAD RESTRAINT | 1 | | ( 4486192 NOT AVAILABLE FOR SERVICE) |
| 22 | ..... | SEAT BELT | 1 | | ( 4607310 NO LONGER AVAILABLE) |
| 51 | 19M7647 | SCREW | 4 | | M8 X 16, (SUB FOR M340816) |
| 52 | 4631864 | SEAT | 1 | | |

**ARMRESTS**

T207773 -UN-04FEB05

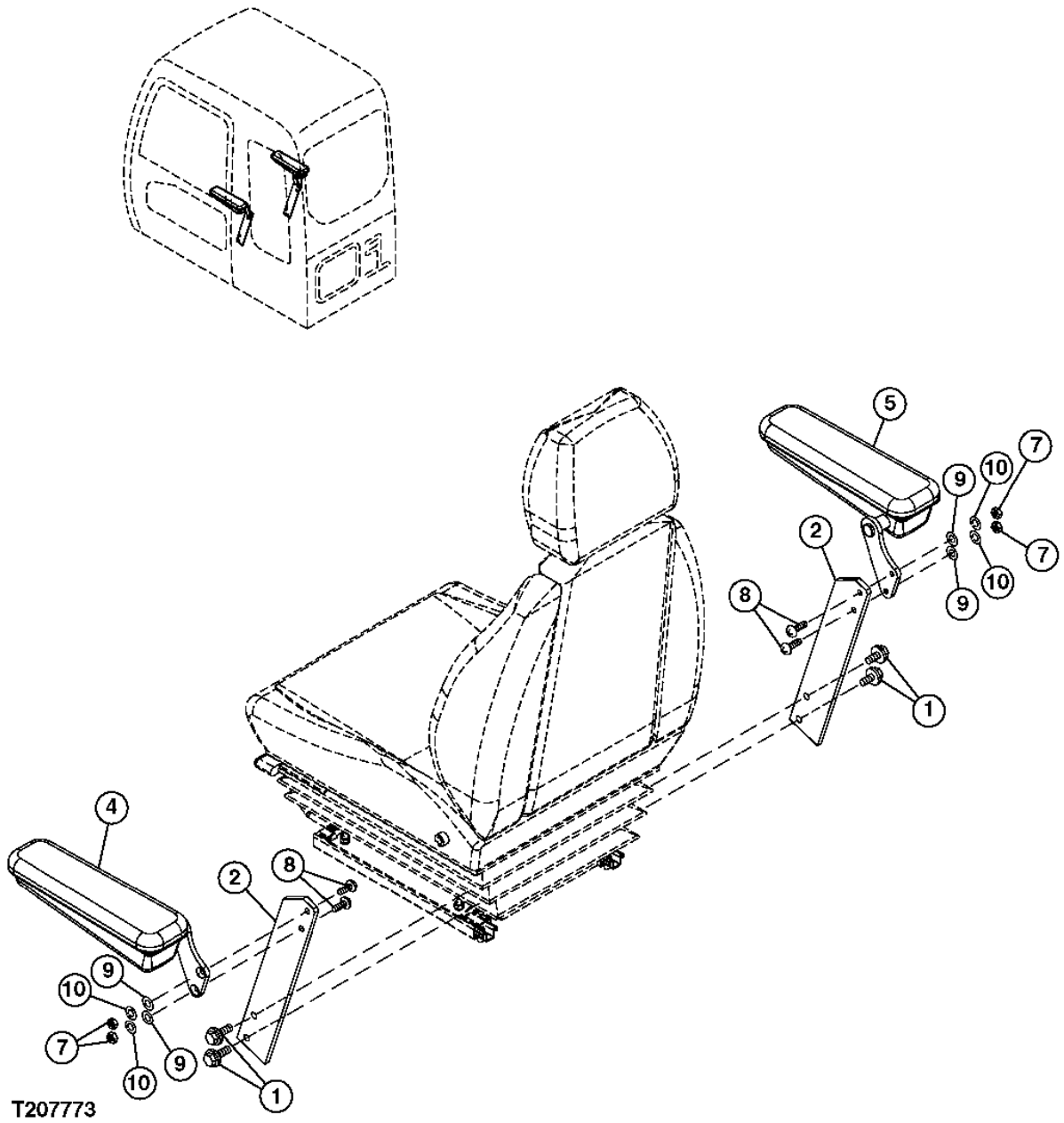

**ARMRESTS**

| KEY | PART NO. | PART NAME | QTY | SERIAL NO. | REMARKS |
|---|---|---|---|---|---|
| 1 | ..... | CAP SCREW | 4 | | ( J271030 NO LONGER AVAILABLE) |
| | 19M7662 | CAP SCREW | 1 | | M10 X 30, (SUB FOR J901030) |
| | 24M7346 | WASHER | 1 | | 11 X 20 X 2 MM, (SUB FOR J222010) |
| 2 | 8099405 | BRACKET | 2 | | |
| 4 | 4463702 | ARMREST | 1 | | |
| 5 | 4463703 | ARMREST | 1 | | |
| 7 | 14M7273 | NUT | 4 | | M8, (SUB FOR M500807) |
| 8 | 21M7161 | SCREW | 4 | | M8 X 30, (SUB FOR J650830) |
| 9 | 24M7101 | WASHER | 4 | | 11 X 34 X 3 MM, (SUB FOR J217083) |
| 10 | 12M7065 | LOCK WASHER | 4 | | 8 MM, (SUB FOR A590908) |

**SEAT BELT**

T208010 -UN-14FEB05

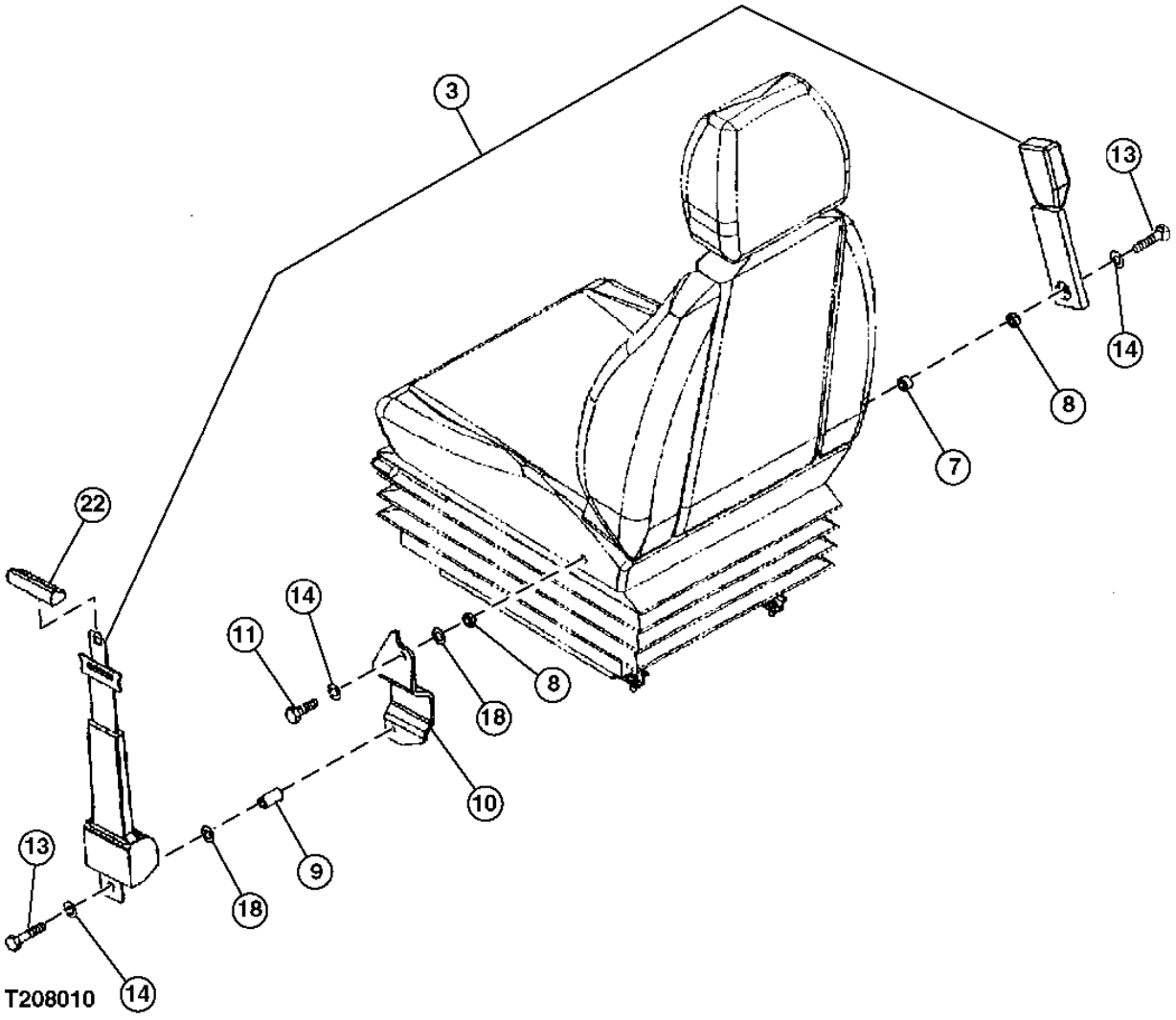

**SEAT BELT**

| KEY | PART NO. | PART NAME | QTY | SERIAL NO. | REMARKS |
|---|---|---|---|---|---|
| 3 | 4384239 | SEAT BELT | 1 | | |
| 7 | 4453874 | SPACER | 1 | | |
| 8 | 4372200 | SPACER | 2 | | |
| 9 | 4382432 | SLEEVE | 1 | | |
| 10 | 7042657 | BRACKET | 1 | | |
| 13 | 4380534 | CAP SCREW | 2 | | |
| 18 | 24M7047 | WASHER | 2 | | 13 X 24 X 2.500 MM, (SUB FOR A590112) |
| 22 | 3097862 | BUSHING | 1 | | |

**SEAT BASE**

T207775 -UN-04FEB05

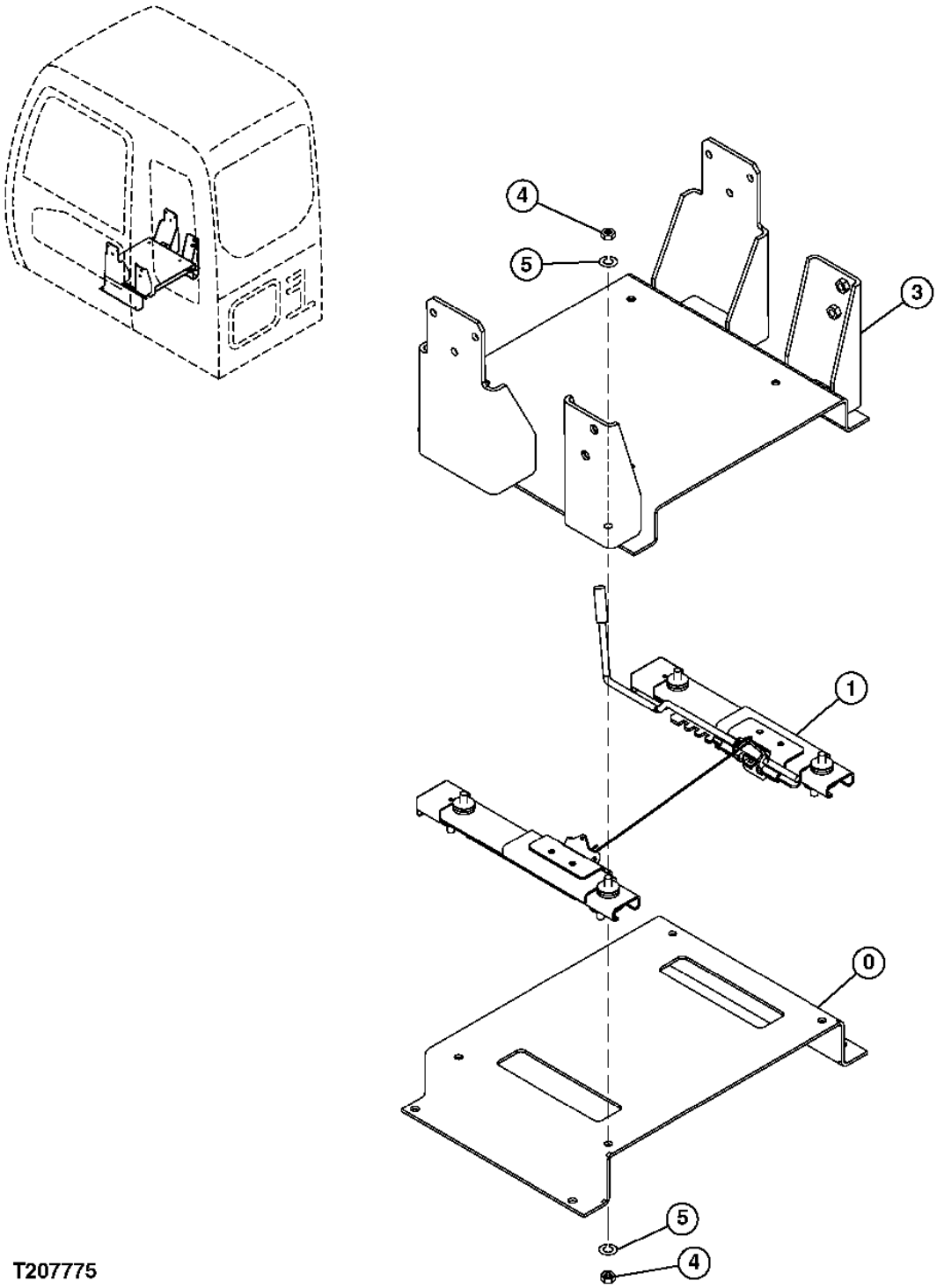


T207775

**SEAT BASE**

| KEY | PART NO. | PART NAME | QTY | SERIAL NO. | REMARKS |
|---|---|---|---|---|---|
| 0 | 3089486 | BRACKET | 1 | | |
| 1 | 4405128 | SEAT SLIDE TRACK KIT | 1 | | |
| 3 | 6023458 | PLANET PINION CARRIER | 1 | | |
| 4 | J952010 | NUT | 8 | | |
| 5 | 12M7066 | LOCK WASHER | 8 | | 10 MM, (SUB FOR A590910) |

**AIR CONDITIONER UNIT DUCTS AND HOSES**

T207666 -UN-18FEB05

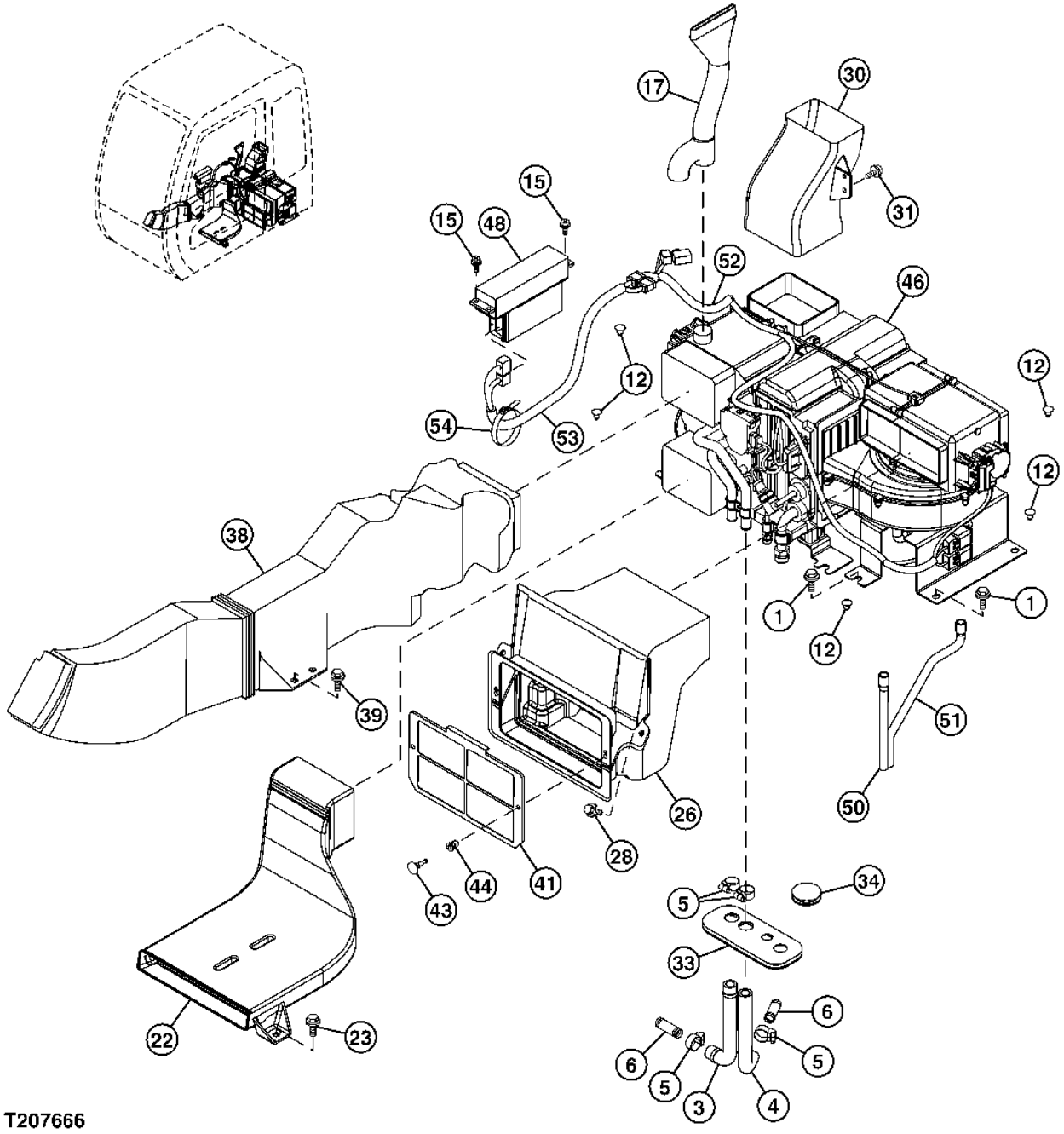


T207666

**AIR CONDITIONER UNIT DUCTS AND HOSES**

| KEY | PART NO. | PART NAME | QTY | SERIAL NO. | REMARKS |
|---|---|---|---|---|---|
| 1 | ..... | CAP SCREW | 8 | | ( J271025 NO LONGER AVAILABLE) |
| | 19M7402 | CAP SCREW | 1 | | M10 X 25, (SUB FOR J901025) |
| | 24M7346 | WASHER | 1 | | 11 X 20 X 2 MM, (SUB FOR J222010) |
| 3 | 4366623 | HOSE | 1 | | |
| 4 | 4366623 | HOSE | 1 | | (SUB FOR 4344638) |
| 5 | AA34965 | HOSE CLAMP | 4 | | (SUB FOR 4514699) |
| 6 | 4347396 | FITTING | 2 | | |
| 12 | 4280359 | PLUG | 5 | | |
| 15 | 21M7265 | SCREW | 4 | | M5 X 12, (SUB FOR J460514) |
| 17 | 4436442 | AIR DUCT | 1 | | |
| 22 | 4426155 | AIR DUCT | 1 | | |
| 23 | ..... | CAP SCREW | 2 | | ( J271030 NO LONGER AVAILABLE) |
| | 19M7662 | CAP SCREW | 1 | | M10 X 30, (SUB FOR J901030) |
| | 24M7346 | WASHER | 1 | | 11 X 20 X 2 MM, (SUB FOR J222010) |
| 26 | 4431227 | AIR DUCT | 1 | | |
| 28 | ..... | CAP SCREW | 2 | | ( J260820 NO LONGER AVAILABLE) |
| | 19M7139 | CAP SCREW | 1 | | M8 X 20, (SUB FOR J900820) |
| | 24M7055 | WASHER | 1 | | 8.400 X 16 X 1.600 MM, (SUB FOR A590108) |
| 30 | 4426157 | AIR DUCT | 1 | | |
| 31 | ..... | CAP SCREW | 2 | | ( J460616 NO LONGER AVAILABLE) |
| | 19M8425 | CAP SCREW | 1 | | M6 X 16 |
| | 12M7006 | LOCK WASHER | 1 | | 6 MM |
| | 24M7293 | WASHER | 1 | | 6.500 X 13 X 1.600 MM |
| 33 | 2044923 | BUSHING | 1 | | |
| 34 | 4288445 | BUSHING | 1 | | |
| 38 | 4426158 | AIR DUCT | 1 | | |
| 39 | ..... | CAP SCREW | 2 | | ( J271030 NO LONGER AVAILABLE) |
| | 19M7662 | CAP SCREW | 1 | | M10 X 30, (SUB FOR J901030) |
| | 24M7346 | WASHER | 1 | | 11 X 20 X 2 MM, (SUB FOR J222010) |
| 41 | 4441139 | GRILLE | 1 | | |
| 43 | 4441059 | CLIP | 2 | | |
| 44 | 4441061 | CLIP | 2 | | |
| 46 | 4431079 | AIR CONDITIONER | 1 | | |
| 48 | 4431080 | AIR HEATER CONTROLLER | 1 | | |
| 50 | 4441130 | REFRIGERANT HOSE | 1 | | |
| 51 | 4441131 | REFRIGERANT HOSE | 1 | | |
| 52 | 4452187 | WIRING HARNESS | 1 | | |
| 53 | 4452188 | WIRING HARNESS | 1 | | |
| 54 | H77698 | TIE BAND | 1 | | (SUB FOR 4121859) |

# 2G13



**AIR CONDITIONER UNIT COMPONENTS**

T207667 -UN-01MAR05

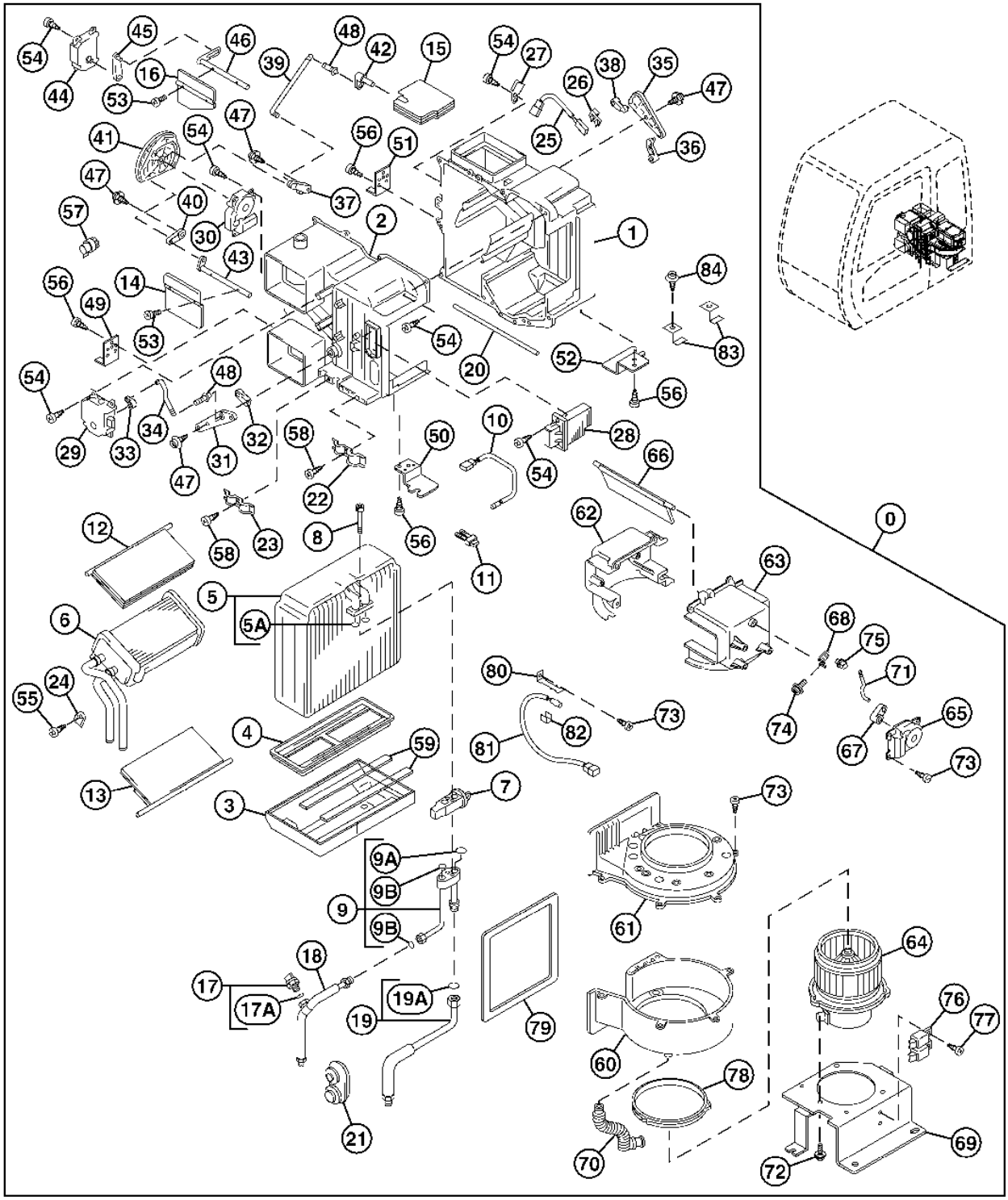


T207667

**AIR CONDITIONER UNIT COMPONENTS**

| KEY | PART NO. | PART NAME | QTY | SERIAL NO. | REMARKS |
|---|---|---|---|---|---|
| 0 | 4431079 | AIR CONDITIONER | 1 | | (COMPLETE) (CONTAINS ALL ITEMS ON THIS PAGE - ADDITIONAL COMPONENTS LISTED ON ANOTHER PAGE) |
| 1 | 4475264 | CASE | 1 | | |
| 2 | 4475265 | CASE | 1 | | |
| 3 | 4475283 | CASE | 1 | | |
| 4 | 4475284 | PLATE | 1 | | |
| 5 | 4469056 | EVAPORATOR | 1 | | |
| 5A | 4509180 | O-RING | 2 | | (SUB FOR 4350206) |
| 6 | 4469057 | CORE | 1 | | |
| 7 | 4465995 | FLOW CONTROL HYD. VALVE | 1 | | |
| 8 | 4475285 | BOLT | 2 | | |
| 9 | 4475286 | STRUCTURAL TUBING | 1 | | |
| 9A | 4450206 | ISOLATOR | 1 | | |
| 9B | 4226445 | O-RING | 2 | | (SUB FOR 4350187) |
| 10 | 4469058 | THERMOSTAT | 1 | | |
| 11 | 4475287 | CLIP | 2 | | |
| 12 | 4475288 | DOOR | 1 | | |
| 13 | 4475289 | DOOR | 1 | | |
| 14 | 4475290 | DOOR | 1 | | |
| 15 | 4475291 | PULLEY WITH DAMPENER | 1 | | |
| 16 | 4475345 | DOOR | 1 | | |
| 17 | 4382816 | PRESSURE SWITCH | 1 | | (SUB FOR 4469059) (PRESSURE) |
| 17A | 4475346 | O-RING | 1 | | |
| 18 | 4475347 | HOSE | 1 | | |
| 19 | 4475348 | HOSE | 1 | | |
| 19A | 4509180 | O-RING | 1 | | (SUB FOR 4350206) |
| 20 | 4475349 | PACKING | 1 | | |
| 21 | 4475350 | ISOLATOR | 1 | | |
| 22 | 4475351 | CLIP | 1 | | |
| 23 | 4475352 | CLIP | 1 | | |
| 24 | 4475353 | BRACKET | 1 | | |
| 25 | 4418144 | THERMOSTAT | 1 | | |
| 26 | 4418143 | CLAMP | 1 | | |
| 27 | 4418142 | BRACKET | 1 | | |
| 28 | 4469060 | INTEGRATED CIRCUIT | 1 | | |
| 29 | 4469061 | MOTOR | 1 | | |
| 30 | 4469062 | MOTOR | 1 | | |
| 31 | 4475364 | PLATE | 1 | | |
| 32 | 4475365 | LEVER | 1 | | |
| 33 | 4475366 | LEVER | 1 | | |
| 34 | 4475367 | ROD | 1 | | |
| 35 | 4475368 | PLATE | 1 | | |
| 36 | 4475369 | LEVER | 1 | | |
| 37 | 4475370 | PLATE | 1 | | |
| 38 | 4475371 | LEVER | 1 | | |
| 39 | 4475372 | ROD | 1 | | |
| 40 | 4475399 | PLATE | 1 | | |
| 41 | 4475400 | PLATE | 1 | | |
| 42 | 4475401 | LEVER | 1 | | |
| 43 | 4475402 | LEVER | 1 | | |
| 44 | 4469063 | MOTOR | 1 | | |
| 45 | 4475403 | LEVER | 1 | | |
| 46 | 4475404 | LEVER | 1 | | |
| 47 | 4475405 | BOLT | 4 | | (TAPPING SCREW) |
| 48 | 4469047 | CLAMP | 2 | | |
| 49 | 4475406 | BRACKET | 1 | | |
| 50 | 4391755 | ELECTRIC MOTOR | 1 | | |
| 51 | 4475430 | BRACKET | 1 | | |
| 52 | 4475431 | BRACKET | 1 | | |
| 53 | 4475432 | BOLT | 4 | | |
| 54 | 4382883 | SCREW | 23 | | (TAPPING) |
| 55 | 4236448 | SCREW | 1 | | |
| 56 | 4382882 | BOLT | 8 | | (TAPPING SCREW) |
| 57 | 4475433 | BUSHING | 1 | | |
| 58 | 4475434 | BOLT | 2 | | (TAPPING SCREW) |
| 59 | 4475435 | PACKING | 2 | | |

**AIR CONDITIONER UNIT COMPONENTS**

T207667 -UN-01MAR05

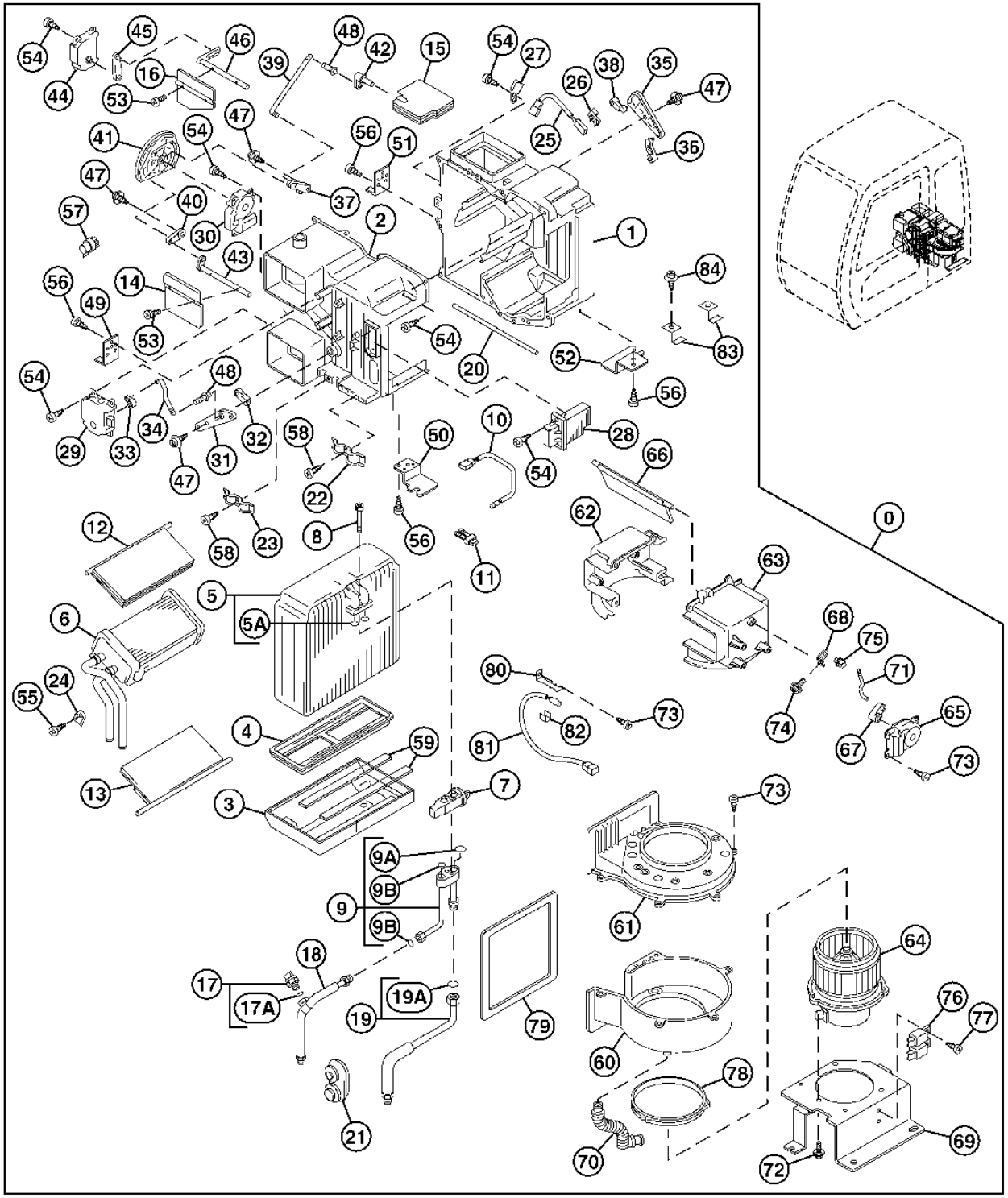


T207667

**AIR CONDITIONER UNIT COMPONENTS**

| KEY | PART NO. | PART NAME | QTY | SERIAL NO. | REMARKS |
|---|---|---|---|---|---|
| 0 | 4431079 | AIR CONDITIONER | 1 | | COMPLETE (CONTAINS ALL ITEMS LISTED ON THIS PAGE - ADDITIONAL COMPONENTS LISTED ON ANOTHER PAGE) |
| 60 | 4475247 | CASE | 1 | | |
| 61 | 4475248 | CASE | 1 | | |
| 62 | 4475249 | CASE | 1 | | |
| 63 | 4475250 | CASE | 1 | | |
| 64 | 4469040 | ELECTRIC MOTOR | 1 | | |
| 65 | 4469063 | MOTOR | 1 | | |
| 66 | ..... | DOOR | 1 | | |
| 67 | ..... | LEVER | 1 | | |
| 68 | ..... | LEVER | 1 | | |
| 69 | 4475257 | BRACKET | 1 | | |
| 70 | 4475258 | HOSE | 1 | | |
| 71 | ..... | SHAFT | 1 | | |
| 72 | 4475259 | BOLT | 3 | | |
| 73 | 4482883 | BOLT | 17 | | |
| 74 | 4475260 | BOLT | 1 | | |
| 75 | 4469047 | CLAMP | 1 | | |
| 76 | 4382860 | RELAY | 2 | | (SUB FOR 4469048) |
| 77 | 4382832 | SCREW | 2 | | |
| 78 | 4475261 | PACKING | 1 | | |
| 79 | 4475262 | PACKING | 1 | | |
| 80 | 4475263 | BRACKET | 1 | | |
| 81 | 4418147 | THERMOSTAT | 1 | | |
| 82 | 4418149 | CLAMP | 1 | | |
| 83 | 4475229 | BRACKET | 2 | | |
| 84 | 4382882 | BOLT | 2 | | |
| 85 | 4487704 | BLOWER | 1 | | |

**A/C COMPRESSOR BRACKET, DRIVE BELT, AND REFRIDGERANT HOSES**

T207668 -UN-18FEB05

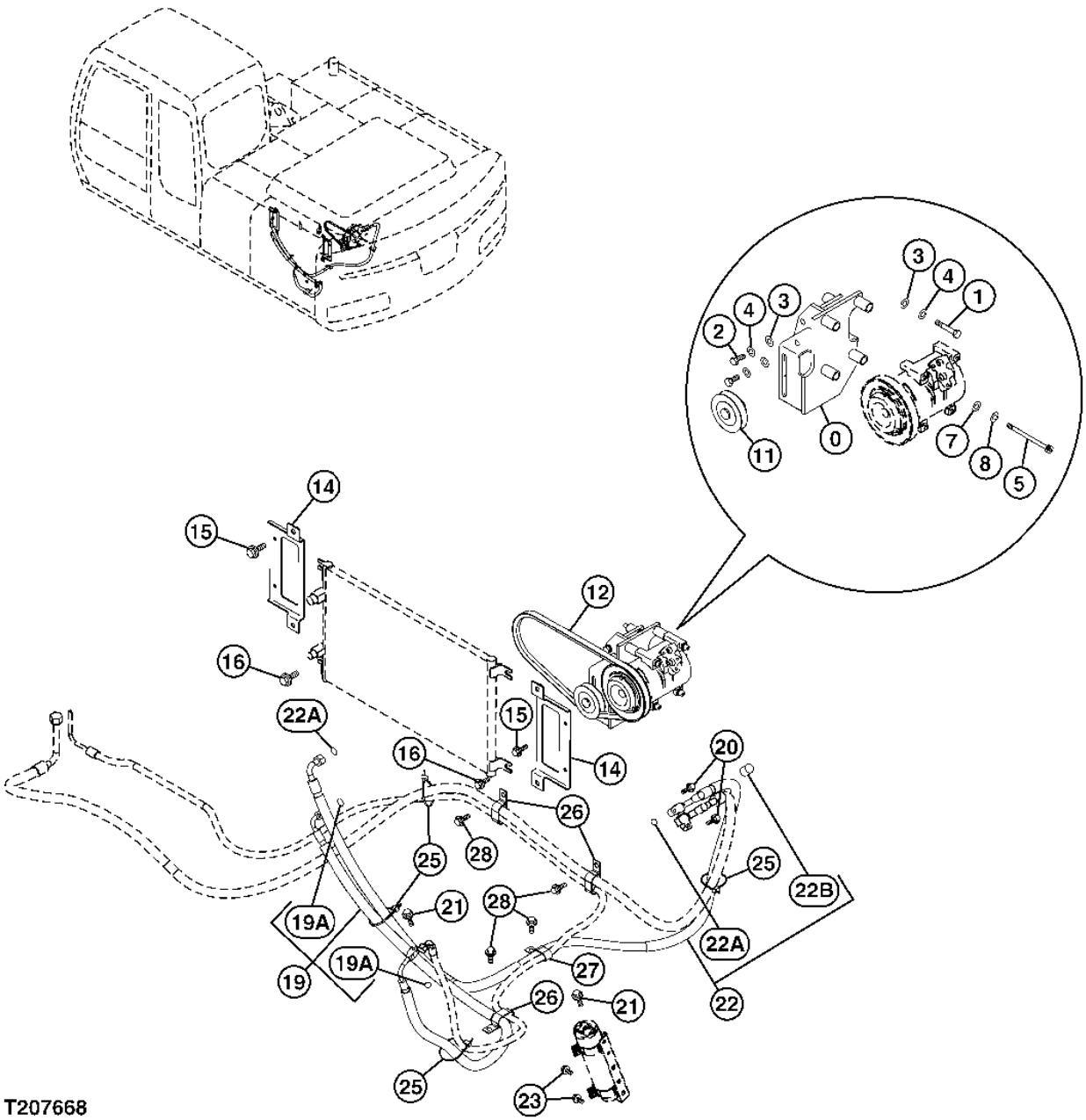

**A/C COMPRESSOR BRACKET, DRIVE BELT, AND REFRIDERANT HOSES**

| KEY | PART NO. | PART NAME | QTY | SERIAL NO. | REMARKS |
|---|---|---|---|---|---|
| 0 | 7037600 | BRACKET | 1 | | |
| 1 | J241055 | BOLT | 2 | | |
| 2 | J241030 | BOLT | 2 | | |
| 3 | 24M7028 | WASHER | 4 | | 10.500 X 20 X 2 MM, (SUB FOR A590110) |
| 4 | 12M7066 | LOCK WASHER | 4 | | 10 MM, (SUB FOR A590910) |
| 5 | J780802 | BOLT | 4 | | |
| 7 | 24M7055 | WASHER | 4 | | 8.400 X 16 X 1.600 MM, (SUB FOR A590108) |
| 8 | 12M7065 | LOCK WASHER | 4 | | 8 MM, (SUB FOR A590908) |
| 11 | 4346770 | PULLEY | 1 | | |
| 12 | 4612328 | V-BELT | 1 | | (SUB FOR 4439003) |
| 14 | 8082606 | BRACKET | 2 | | |
| 15 | ..... | CAP SCREW | 4 | | ( J260820 NO LONGER AVAILABLE) |
| | 19M7139 | CAP SCREW | 1 | | M8 X 20, (SUB FOR J900820) |
| | 24M7055 | WASHER | 1 | | 8.400 X 16 X 1.600 MM, (SUB FOR A590108) |
| 16 | ..... | CAP SCREW | 4 | | ( J271020 NO LONGER AVAILABLE) |
| | 19M7938 | CAP SCREW | 1 | | M10 X 20, (SUB FOR J901020) |
| | 24M7346 | WASHER | 1 | | 11 X 20 X 2 MM, (SUB FOR J222010) |
| 19 | 4447722 | REFRIGERANT HOSE | 1 | | |
| 19A | 4226445 | O-RING | 2 | | (SUB FOR 4350187) |
| 20 | ..... | CAP SCREW | 2 | | ( J260630 NO LONGER AVAILABLE) |
| | 19M7318 | SCREW | 1 | | M6 X 30, (SUB FOR J900630) |
| | 24M7054 | WASHER | 1 | | 6.400 X 12 X 1.600 MM, (SUB FOR A590106) |
| 21 | ..... | CAP SCREW | 2 | | ( J260625 NO LONGER AVAILABLE) |
| | 19M7286 | CAP SCREW | 1 | | M6 X 25, (SUB FOR J900625) |
| | 24M7054 | WASHER | 1 | | 6.400 X 12 X 1.600 MM, (SUB FOR A590106) |
| 22 | ..... | HOSE | 1 | | ( 4484485 NO LONGER AVAILABLE) |
| | 957366 | PACKING | 2 | | (SUB FOR 4350207) |
| | 4475232 | CAP | 1 | | |
| 23 | ..... | CAP SCREW | 2 | | ( J260820 NO LONGER AVAILABLE) |
| | 19M7139 | CAP SCREW | 1 | | M8 X 20, (SUB FOR J900820) |
| | 24M7055 | WASHER | 1 | | 8.400 X 16 X 1.600 MM, (SUB FOR A590108) |
| 25 | H77698 | TIE BAND | 4 | | (SUB FOR 4055312) |
| 26 | 4192034 | CLIP | 3 | | |
| 27 | T32854 | CLAMP | 1 | | (SUB FOR 4190282) |
| 28 | ..... | CAP SCREW | 4 | | ( J271020 NO LONGER AVAILABLE) |
| | 19M7938 | CAP SCREW | 1 | | M10 X 20, (SUB FOR J901020) |
| | 24M7346 | WASHER | 1 | | 11 X 20 X 2 MM, (SUB FOR J222010) |

**AIR CONDITIONER COMPRESSOR, CONDENSOR, AND RECEIVER/DRYER**

T207670 -UN-18FEB05

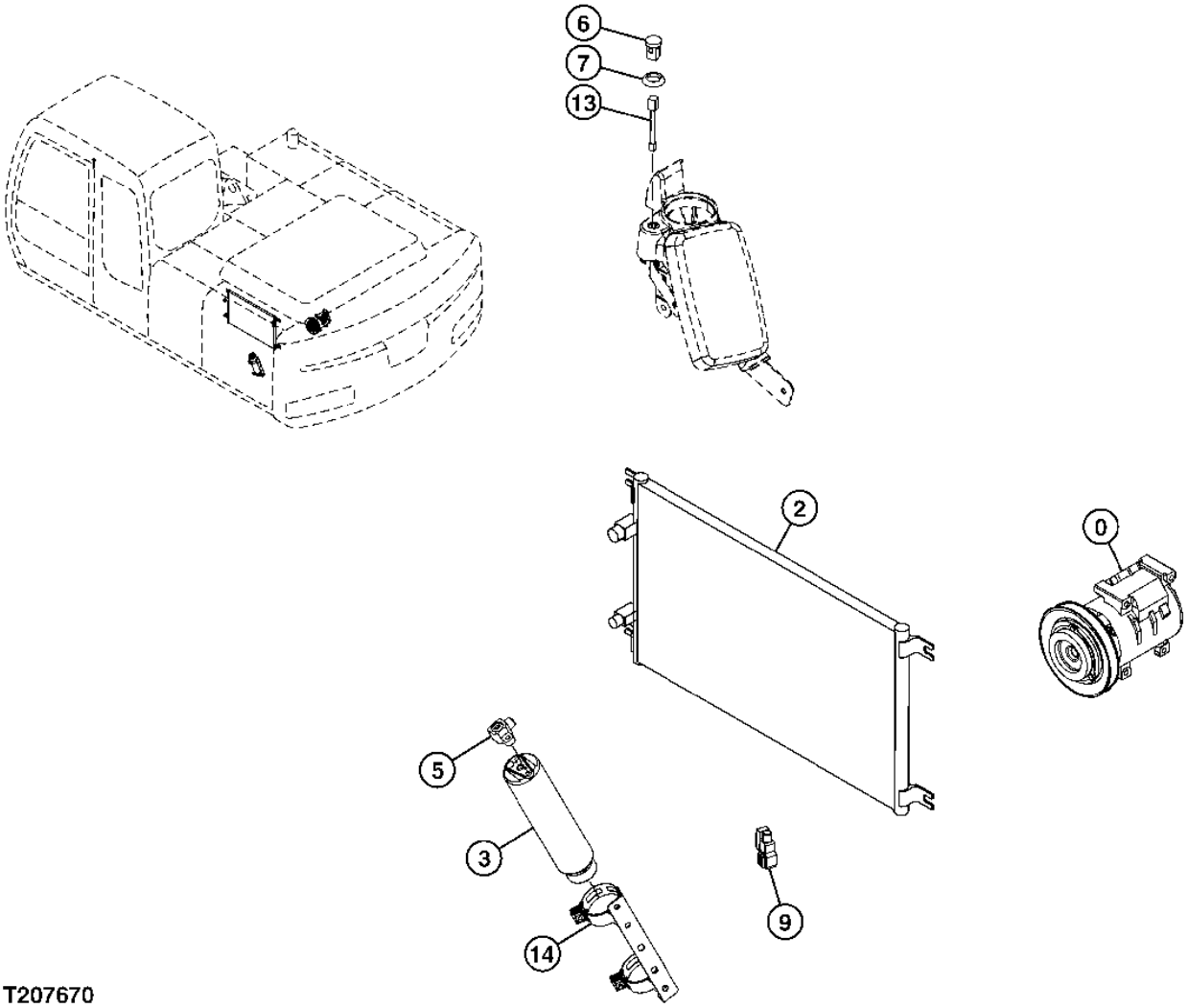

**AIR CONDITIONER COMPRESSOR, CONDENSOR, AND RECEIVER/DRYER**

| KEY | PART NO. | PART NAME | QTY | SERIAL NO. | REMARKS |
|---|---|---|---|---|---|
| 0 | 4431081 | COMPRESSOR | 1 | | |
| 2 | 4617327 | VAPOR CONDENSER | 1 | | (SUB FOR 4431082) |
| | 8082202 | BRACKET | 1 | | |
| | 4618721 | BUSHING | 4 | | |
| | 19M7513 | CAP SCREW | 4 | | M8 X 30 |
| | 24M7055 | WASHER | 4 | | 8.400 X 16 X 1.600 MM |
| 3 | 4333461 | TANK | 1 | | |
| 5 | 4374958 | ADAPTER | 1 | | |
| 6 | 4405814 | SENSOR | 1 | | |
| 7 | 4405194 | SPACER | 1 | | |
| 9 | 4405815 | SENSOR | 1 | | |
| 13 | 4413801 | WIRING HARNESS | 1 | | |
| 14 | 4446657 | HOLDER | 1 | | |

**AIR CONDITIONER COMPRESSOR**

T207671 -UN-01MAR05

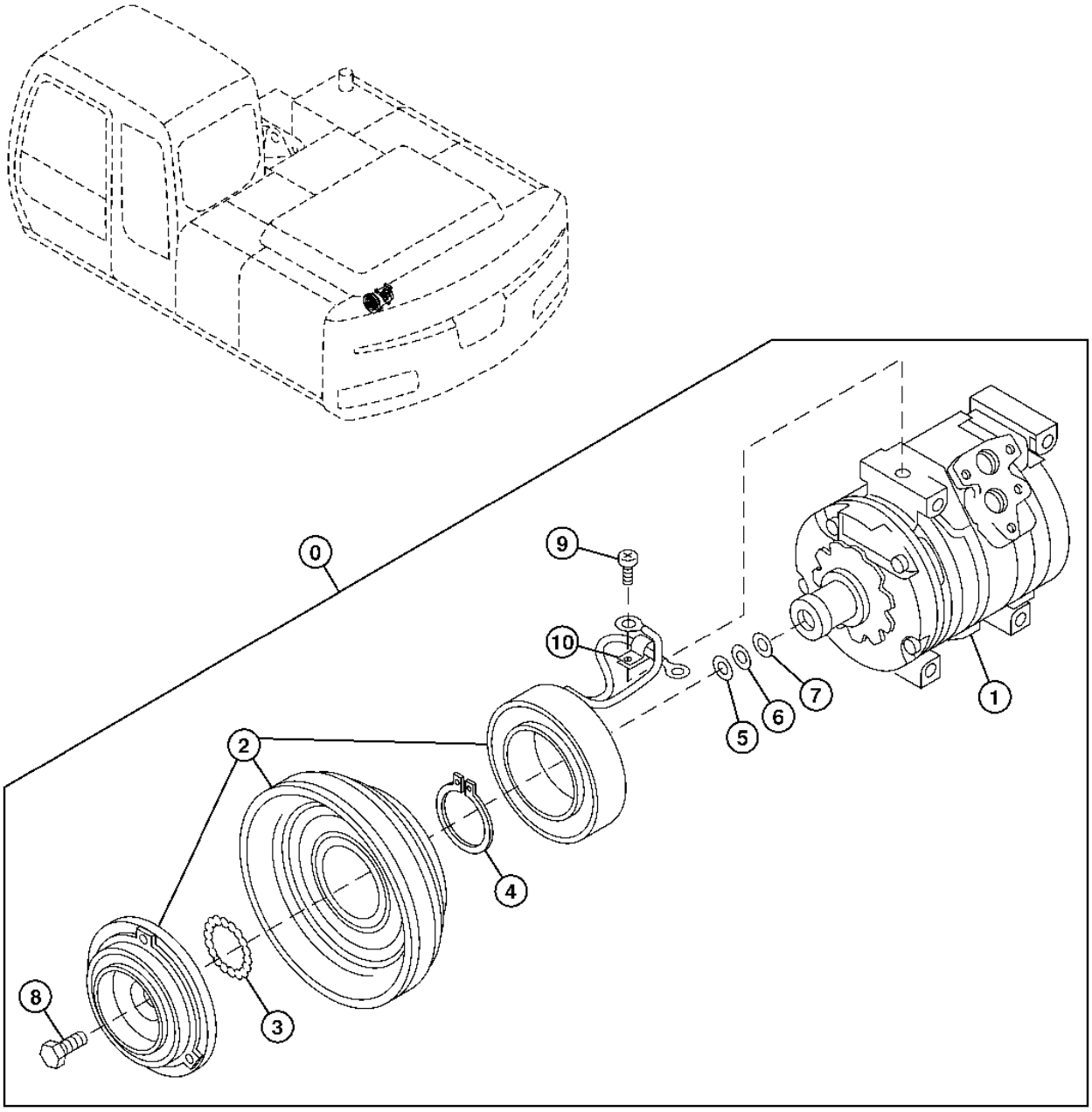


T207671

**AIR CONDITIONER COMPRESSOR**

| KEY | PART NO. | PART NAME | QTY | SERIAL NO. | REMARKS |
|---|---|---|---|---|---|
| 0 | 4431081 | COMPRESSOR | 1 | | |
| 1 | 4469049 | COMPRESSOR | 1 | | |
| 2 | 4469051 | CLUTCH | 1 | | |
| 3 | 4475230 | RING | 1 | | |
| 4 | 4475236 | RING | 1 | | |
| 5 | 4475237 | WASHER | 1 | | |
| 6 | 4475242 | WASHER | 1 | | |
| 7 | 4475243 | WASHER | 1 | | |
| 8 | 4475244 | BOLT | 1 | | |
| 9 | 4475245 | SCREW | 1 | | |
| 10 | 4475246 | CLAMP | 1 | | |

# 2G23



**CONDENSOR SCREEN**

T207672 -UN-18FEB05

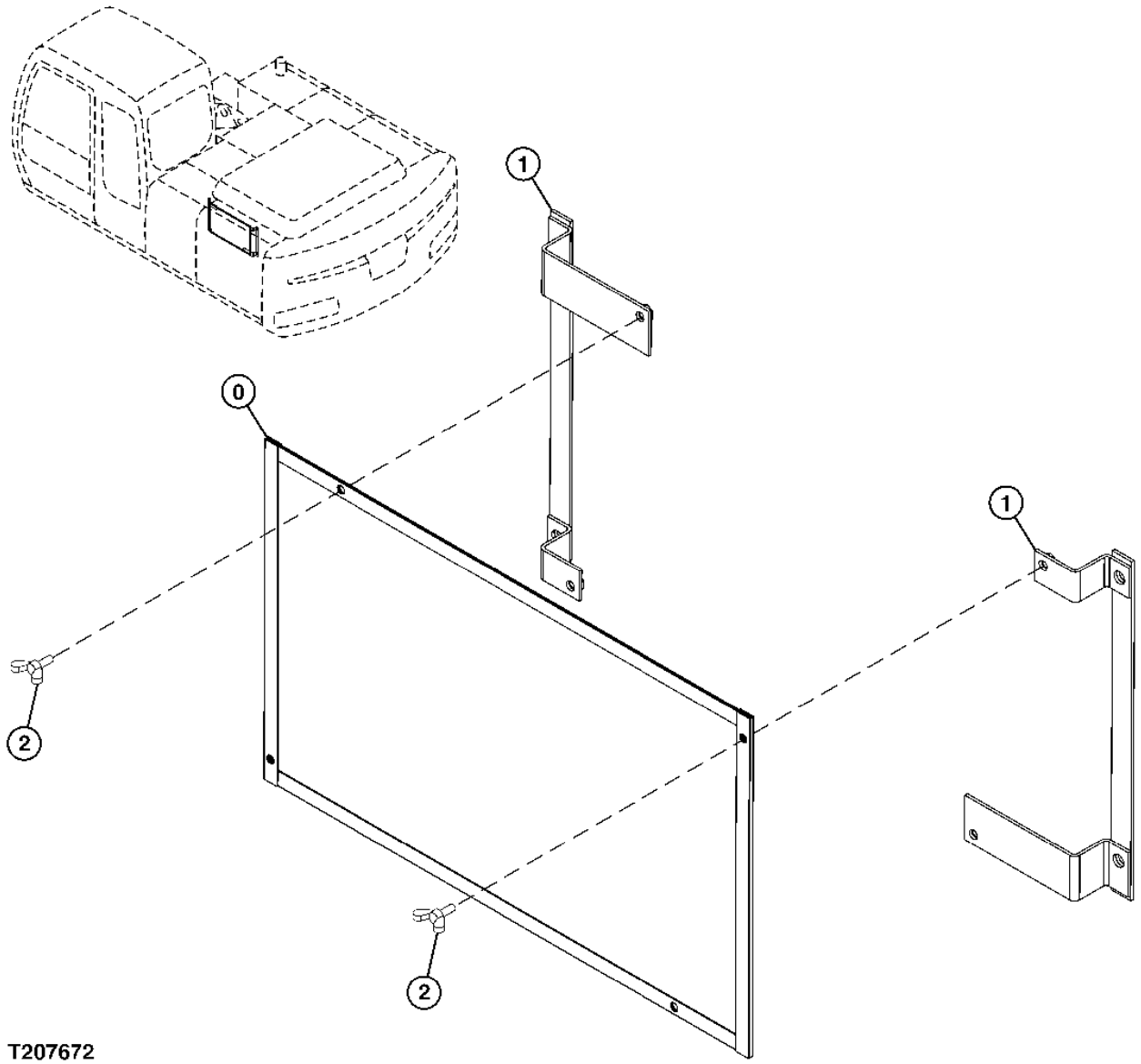

**CONDENSOR SCREEN**

| KEY | PART NO. | PART NAME | QTY | SERIAL NO. | REMARKS |
|---|---|---|---|---|---|
| 0 | 8082826 | SCREEN | 1 | | |
| 1 | 8082827 | BRACKET | 2 | | |
| 2 | M360616 | SCREW | 4 | | |

**CAB HEATER/AIR CONDITIONER AIR INTAKE AND DISCHARGE DUCTS**

T207674 -UN-18FEB05

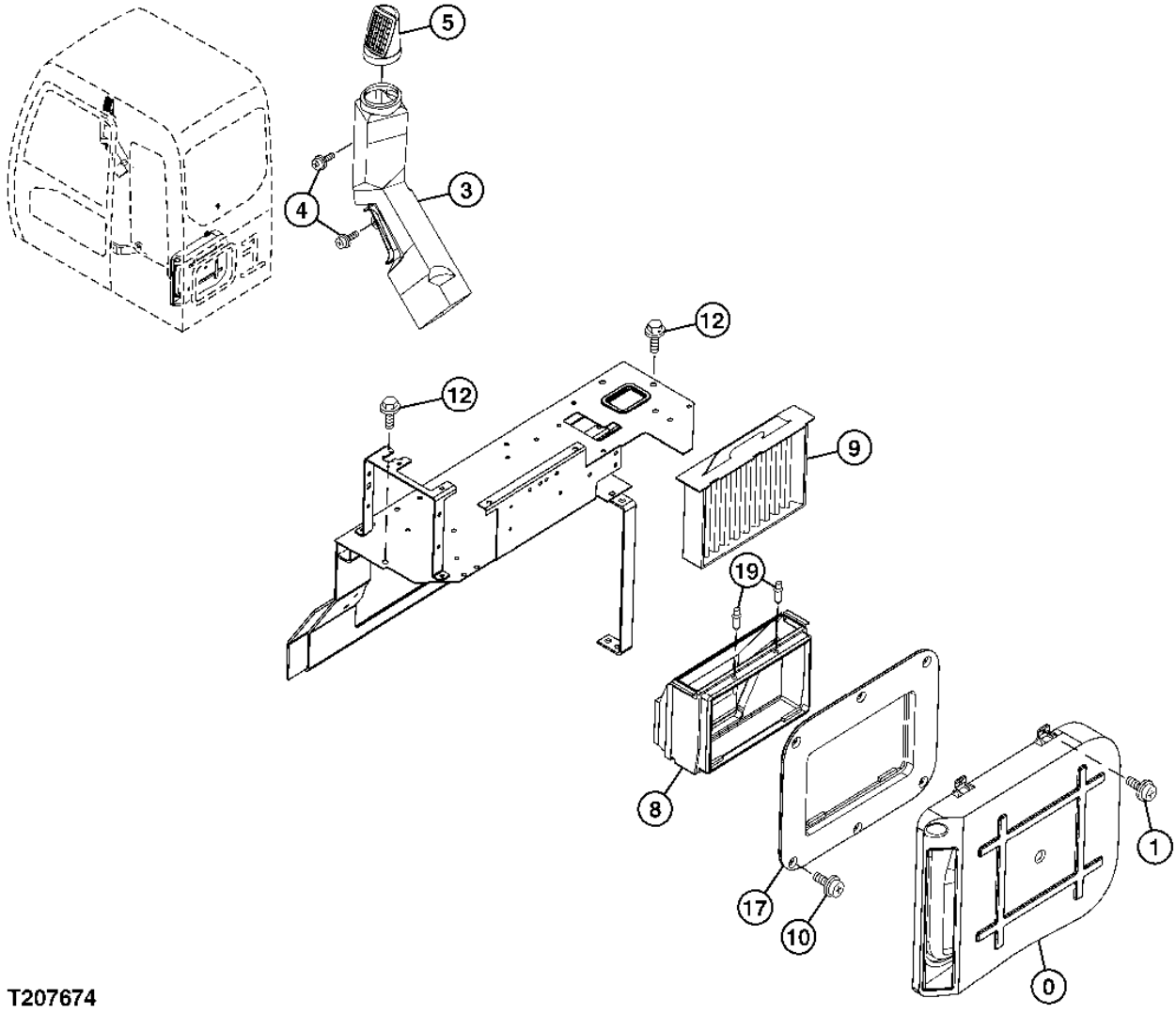


T207674

**CAB HEATER/AIR CONDITIONER AIR INTAKE AND DISCHARGE DUCTS**

| KEY | PART NO. | PART NAME | QTY | SERIAL NO. | REMARKS |
|---|---|---|---|---|---|
| 0 | 4426160 | AIR DUCT | 1 | | |
| 1 | ..... | CAP SCREW | 6 | | ( J460616 NO LONGER AVAILABLE) |
| | 19M8425 | CAP SCREW | 1 | | M6 X 16 |
| | 12M7006 | LOCK WASHER | 1 | | 6 MM |
| | 24M7293 | WASHER | 1 | | 6.500 X 13 X 1.600 MM |
| 3 | 4426159 | AIR DUCT | 1 | | |
| 4 | ..... | CAP SCREW | 2 | | ( J460616 NO LONGER AVAILABLE) |
| | 19M8425 | CAP SCREW | 1 | | M6 X 16 |
| | 12M7006 | LOCK WASHER | 1 | | 6 MM |
| | 24M7293 | WASHER | 1 | | 6.500 X 13 X 1.600 MM |
| 5 | 4449068 | AIR DUCT | 1 | | |
| 8 | 4433064 | AIR DUCT | 1 | | |
| 9 | 4350249 | FILTER ELEMENT | 1 | | |
| 10 | ..... | CAP SCREW | 6 | | ( J460616 NO LONGER AVAILABLE) |
| | 19M8425 | CAP SCREW | 1 | | M6 X 16 |
| | 12M7006 | LOCK WASHER | 1 | | 6 MM |
| | 24M7293 | WASHER | 1 | | 6.500 X 13 X 1.600 MM |
| 12 | ..... | CAP SCREW | 2 | | ( J281025 NO LONGER AVAILABLE) |
| | 19M7402 | CAP SCREW | 1 | | M10 X 25, (SUB FOR J901025) |
| | 4486055 | WASHER | 1 | | |
| 17 | 4449348 | AIR DUCT | 1 | | |
| 19 | 4445916 | CLIP | 2 | | |

**CAB REAR CONSOLE COVER, POWER SUPPLY, AND AIR DIFFUSER**

T207675 -UN-07FEB05

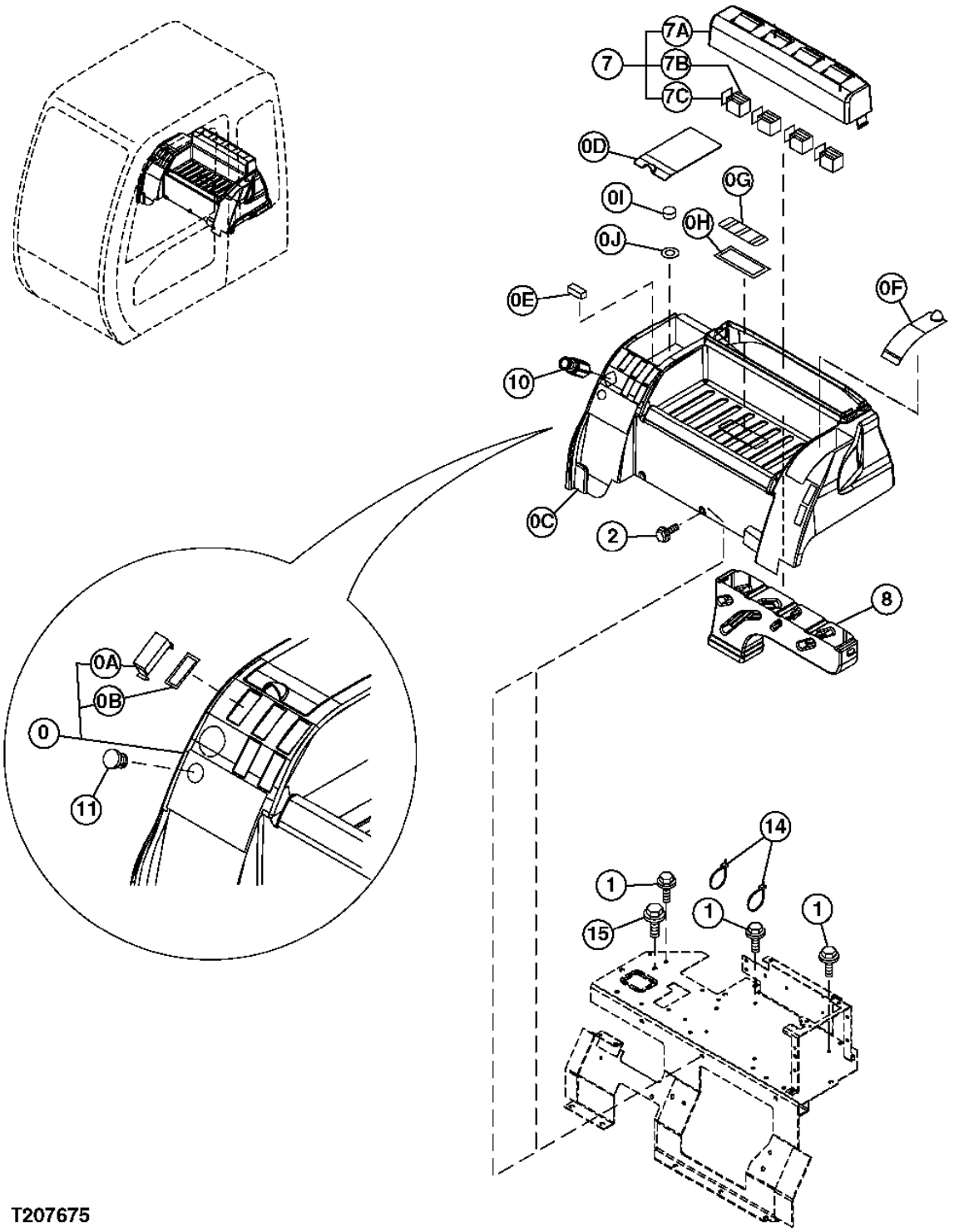


T207675

**CAB REAR CONSOLE COVER, POWER SUPPLY, AND AIR DIFFUSER**

| KEY | PART NO. | PART NAME | QTY | SERIAL NO. | REMARKS |
|---|---|---|---|---|---|
| 0 | 4433793 | TRAY | 1 | | |
| 0A | 4456725 | COVER | 7 | | |
| 0B | 4456723 | ISOLATOR | 7 | | |
| 0C | 4458227 | TRAY | 1 | | |
| 0D | 4458228 | COVER | 1 | | (RELAY) |
| 0E | 4458229 | MAGNET | 1 | | |
| 0F | 4458230 | COVER | 1 | | (FUSE) |
| 0G | 4458231 | COVER | 1 | | (CENTER) |
| 0H | 4458232 | SEAL | 1 | | |
| 0I | 4458233 | COVER | 1 | | |
| 0J | 4458234 | SEAL | 1 | | |
| 1 | ..... | CAP SCREW | 3 | | ( J260820 NO LONGER AVAILABLE) |
| | 19M7139 | CAP SCREW | 1 | | M8 X 20, (SUB FOR J900820) |
| | 24M7055 | WASHER | 1 | | 8.400 X 16 X 1.600 MM, (SUB FOR A590108) |
| 2 | ..... | CAP SCREW | 2 | | ( J271025 NO LONGER AVAILABLE) |
| | 19M7402 | CAP SCREW | 1 | | M10 X 25, (SUB FOR J901025) |
| | 24M7346 | WASHER | 1 | | 11 X 20 X 2 MM, (SUB FOR J222010) |
| 7 | 4433794 | COVER | 1 | | |
| 7A | 4458235 | COVER | 1 | | |
| 7B | 4458236 | LOUVER | 4 | | |
| 7C | 4458237 | BRACKET | 4 | | |
| 8 | 4426156 | AIR DUCT | 1 | | |
| 10 | 4357862 | ELECTRICAL LIGHTER | 1 | | |
| 11 | 4432965 | ELEC. CONNECTOR TERMINAL | 1 | | (AIR CONDITIONING) |
| | 4447072 | BUSHING | 1 | | (HEATER) |
| 14 | H77698 | TIE BAND | 5 | | (SUB FOR 4055312) |
| 15 | ..... | CAP SCREW | 1 | | ( J271020 NO LONGER AVAILABLE) |
| | 19M7938 | CAP SCREW | 1 | | M10 X 20, (SUB FOR J901020) |
| | 24M7346 | WASHER | 1 | | 11 X 20 X 2 MM, (SUB FOR J222010) |

**REFRIDGERANT HOSES (HVAC UNIT TO COMPRESSOR AND RECEIVER/DRYER)**

T207669 -UN-18FEB05

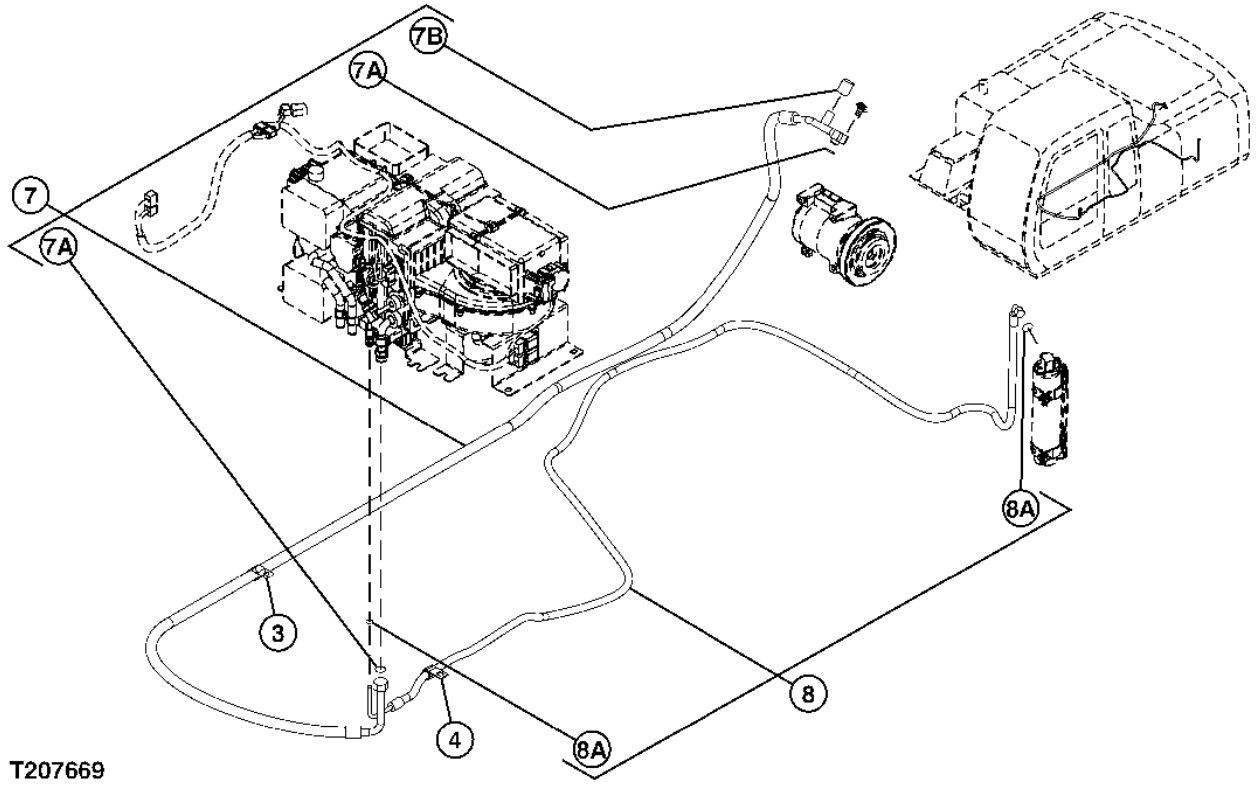

**REFRIDGERANT HOSES (HVAC UNIT TO COMPRESSOR AND RECEIVER/DRYER)**

| KEY | PART NO. | PART NAME | QTY | SERIAL NO. | REMARKS |
|---|---|---|---|---|---|
| 3 | T24432 | CLAMP | 1 | | (SUB FOR 4190277) |
| 4 | 4190273 | CLIP | 1 | | |
| 7 | 4466439 | HOSE | 1 | | |
| 7A | 4509180 | O-RING | 2 | | (SUB FOR 4350206) |
| 7B | 4475235 | CAP | 1 | | |
| 8 | 4459461 | HOSE | 1 | | |
| 8A | 4226445 | O-RING | 2 | | (SUB FOR 4350187) |

**HEATER LINES**

T207673 -UN-18FEB05

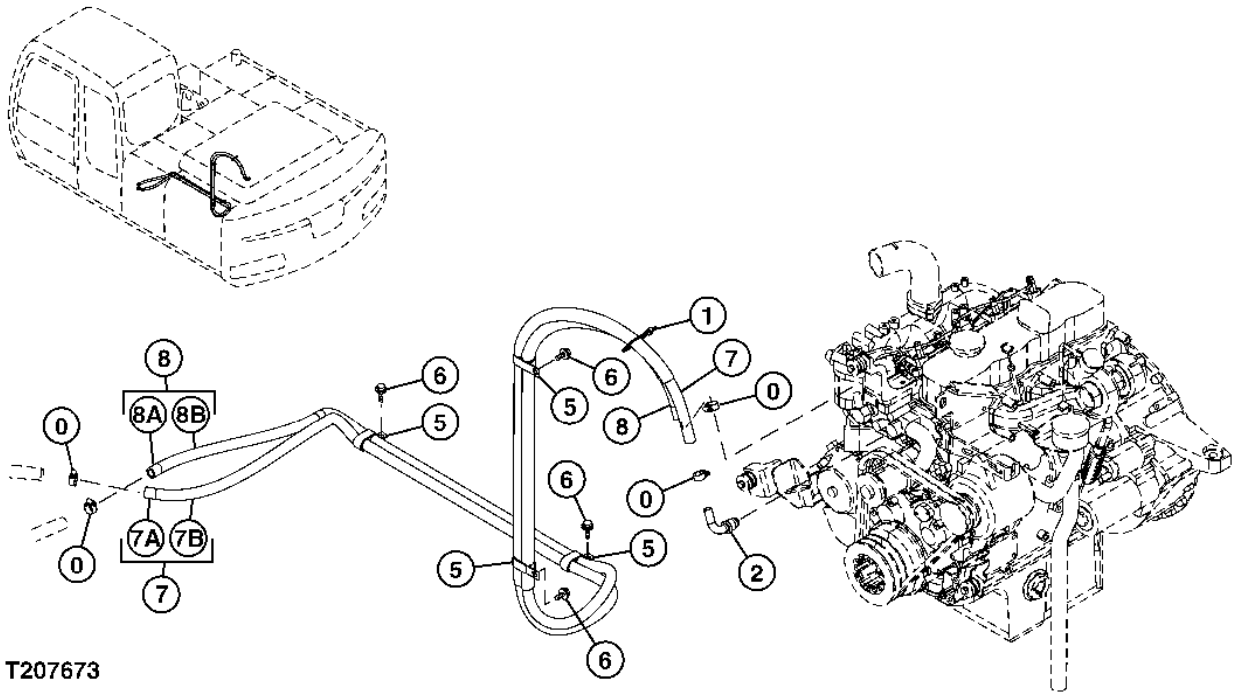

**HEATER LINES**

| KEY | PART NO. | PART NAME | QTY | SERIAL NO. | REMARKS |
|---|---|---|---|---|---|
| 0 | 4514699 | HOSE CLAMP | 4 | | |
| 1 | 4055312 | TIE BAND | 1 | | |
| 2 | 9745899 | FITTING | 1 | | |
| 5 | 4192034 | CLIP | 4 | | |
| 6 | ..... | CAP SCREW | 4 | | ( J271020 IS NOT AVAILABLE FOR SERVICE) |
| | 19M7938 | CAP SCREW | 1 | | M10 X 20, (SUB FOR J901020) |
| | 24M7346 | WASHER | 1 | | 11 X 20 X 2 MM, (SUB FOR J222010) |
| 7 | 9208960 | RADIATOR HOSE | 1 | | ( 9208960 NOT AVAILABLE FOR SERVICE) |
| 7A | 4436646 | HOSE | 1 | | (SUB FOR 4369308) |
| 7B | 4327294 | HOSE GUARD | 2 | | (SUB FOR 4320661) |
| 8 | ..... | HOSE | 1 | | ( 9208961 NOT AVAILABLE FOR SERVICE) |
| 8A | 4436646 | HOSE | 1 | | (SUB FOR 4427997) |
| 8B | 4327294 | HOSE GUARD | 2 | | (SUB FOR 4320661) |

**POWER UNIT (12V)**

T207677 -UN-07FEB05

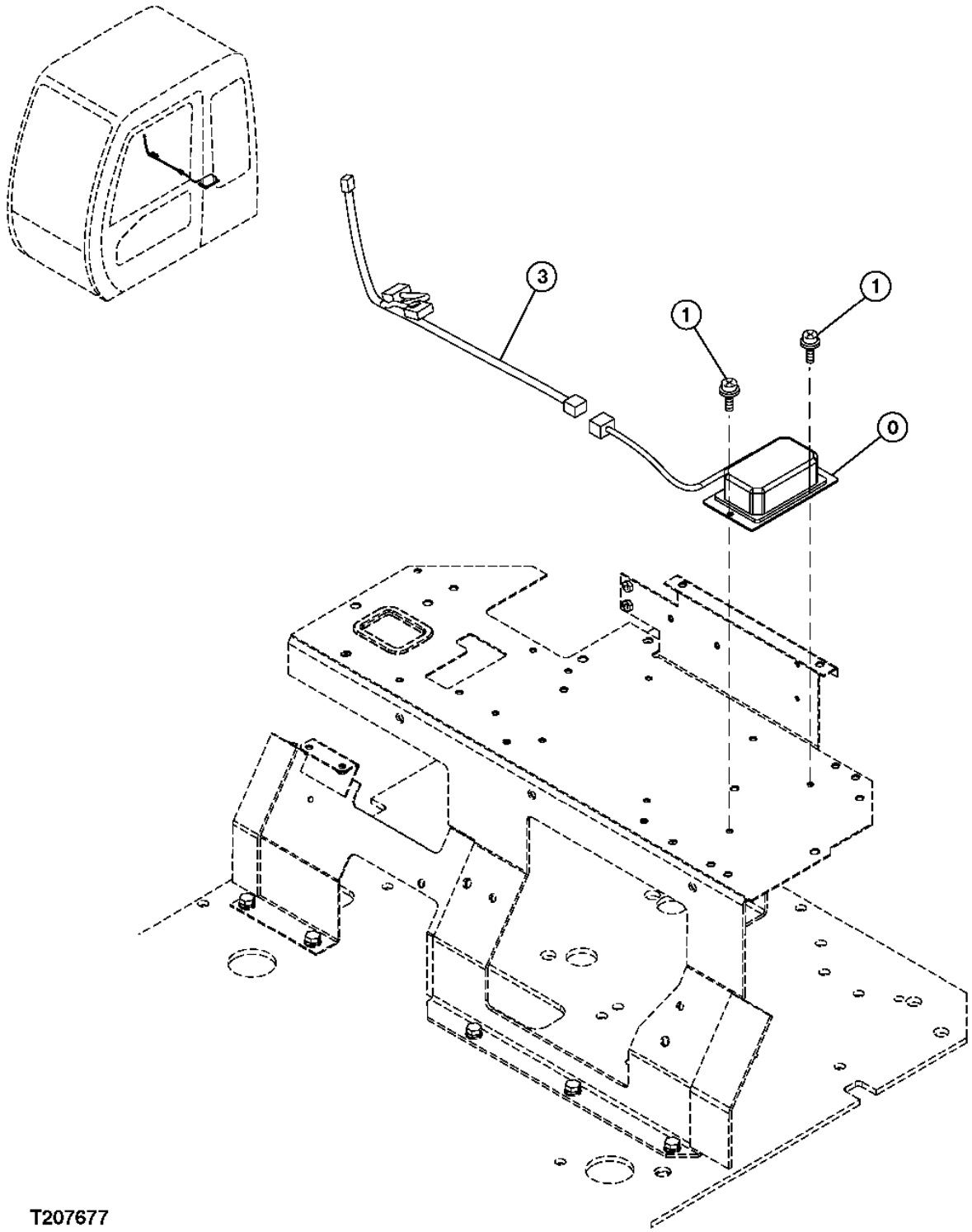

**POWER UNIT (12V)**

| KEY | PART NO. | PART NAME | QTY | SERIAL NO. | REMARKS |
|---|---|---|---|---|---|
| 0 | 4450008 | POWER SUPPLY | 1 | | |
| 1 | ..... | CAP SCREW | 2 | | ( J460616 NO LONGER AVAILABLE) |
| | 19M8425 | CAP SCREW | 1 | | M6 X 16 |
| | 24M7293 | WASHER | 1 | | 6.500 X 13 X 1.600 MM |
| | 12M7006 | LOCK WASHER | 1 | | 6 MM |
| 3 | 3091204 | WIRING HARNESS | 1 | | |

**RADIATOR AND HYDRAULIC PUMP COMPARTMENT ACCESS DOORS**

T207782 -UN-03FEB05

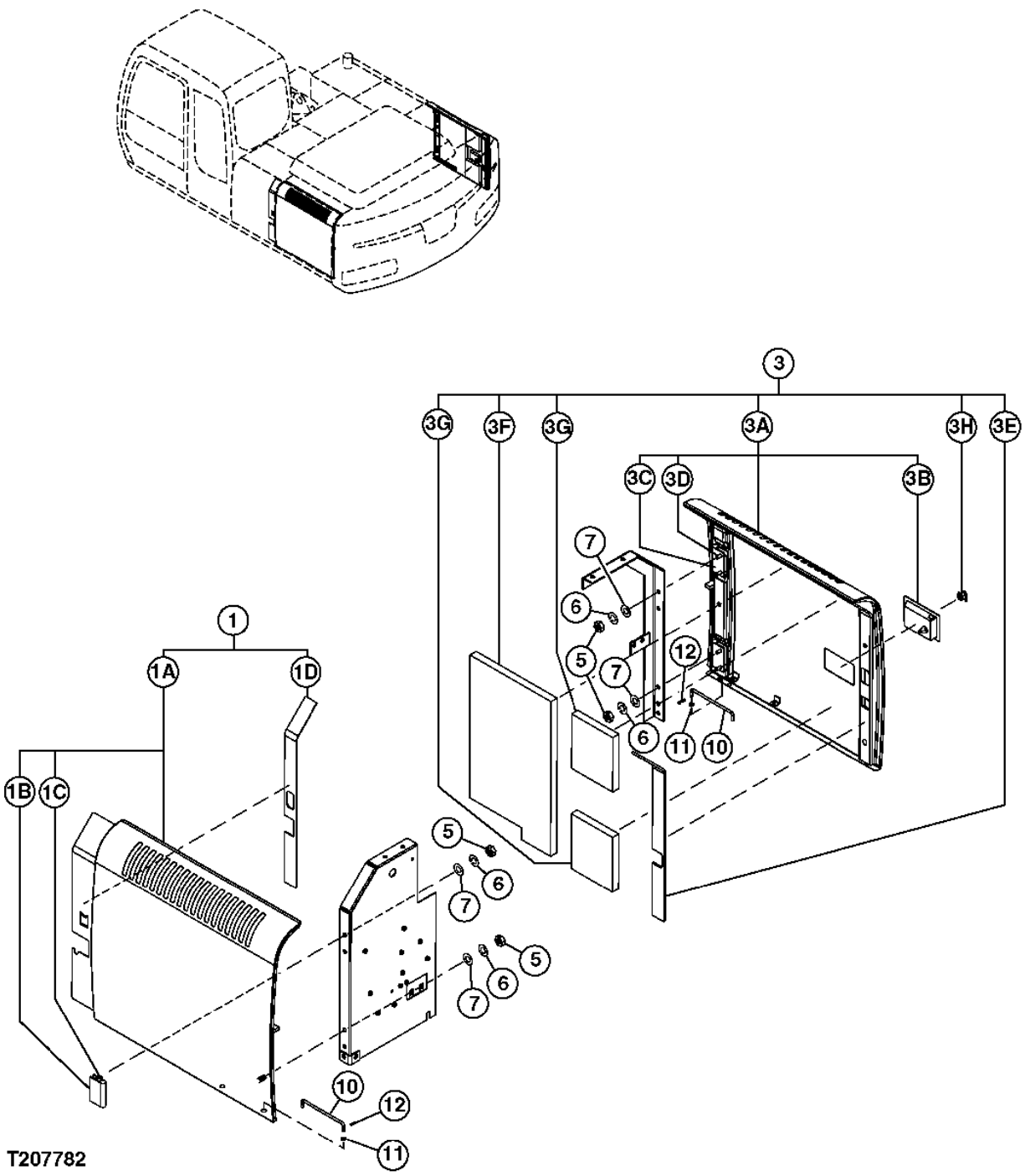

**RADIATOR AND HYDRAULIC PUMP COMPARTMENT ACCESS DOORS**

| KEY | PART NO. | PART NAME | QTY | SERIAL NO. | REMARKS |
|---|---|---|---|---|---|
| 1 | 7044095 | DOOR | 1 | | |
| 1A | ..... | DOOR | 1 | | ( 6021720 FOR PRODUCTION ONLY) (SERVICE 7044095) |
| 1B | ..... | HINGE | 2 | | ( 3072015 NO LONGER AVAILABLE) |
| 1C | 19M7402 | CAP SCREW | 4 | | M10 X 25, (SUB FOR J901025) |
| 1D | 4425576 | ISOLATOR | 1 | | |
| 3 | 7044096 | DOOR | 1 | | |
| 3A | ..... | DOOR | 1 | | ( 6021710 FOR PRODUCTION ONLY) (SERVICE 7044096) |
| 3B | ..... | LOCK | 1 | | ( 4409447 FOR PRODUCTION ONLY) (SERVICE 4409446) |
| | 4409446 | LOCK | 1 | | |
| 3C | ..... | HINGE | 2 | | ( 3072015 NO LONGER AVAILABLE) |
| 3D | 19M7402 | CAP SCREW | 4 | | M10 X 25, (SUB FOR J901025) |
| 3E | 4425575 | ISOLATOR | 1 | | |
| 3F | 4412573 | ISOLATOR | 1 | | |
| 3G | 4600780 | ISOLATOR | 2 | | |
| 3H | ..... | LOCK | 1 | | ( 4409396 FOR PRODUCTION ONLY) (SERVICE 4409446) |
| | 4409446 | LOCK | 1 | | |
| 5 | 14M7274 | NUT | 8 | | M10, (SUB FOR J950010) |
| 6 | 12M7066 | LOCK WASHER | 8 | | 10 MM, (SUB FOR A590910) |
| 7 | 24M7028 | WASHER | 8 | | 10.500 X 20 X 2 MM, (SUB FOR A590110) |
| 10 | 4341788 | ROD | 2 | | |
| 11 | 24M7055 | WASHER | 2 | | 8.400 X 16 X 1.600 MM, (SUB FOR A590108) |
| 12 | H132922 | COTTER PIN | 2 | | (SUB FOR 4022697) |

**HYDRAULIC PUMP COMPARTMENT TOP COVER AND SUPPORTS**

T207783 -UN-03FEB05

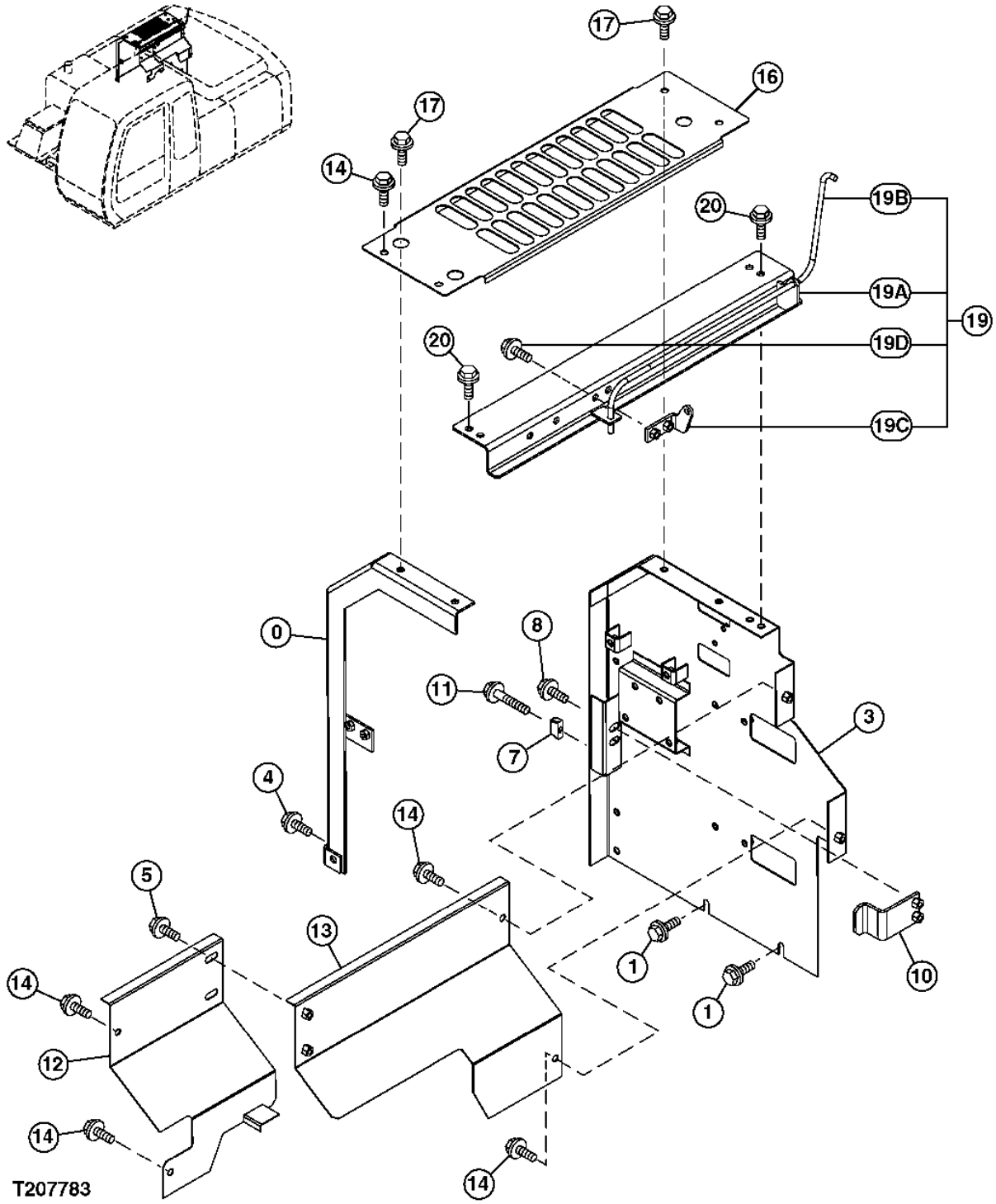

**HYDRAULIC PUMP COMPARTMENT TOP COVER AND SUPPORTS**

| KEY | PART NO. | PART NAME | QTY | SERIAL NO. | REMARKS |
|---|---|---|---|---|---|
| 0 | ..... | SUPPORT | 1 | | ( 8090180 NOT AVAILABLE FOR SERVICE) |
| 1 | ..... | CAP SCREW | 3 | | ( J271030 NO LONGER AVAILABLE) |
| | 19M7662 | CAP SCREW | 1 | | M10 X 30, (SUB FOR J901030) |
| | 24M7346 | WASHER | 1 | | 11 X 20 X 2 MM, (SUB FOR J222010) |
| 3 | 7043460 | COVER | 1 | | |
| 4 | ..... | CAP SCREW | 1 | | ( J271025 NO LONGER AVAILABLE) |
| | 19M7402 | CAP SCREW | 1 | | M10 X 25, (SUB FOR J901025) |
| | 24M7346 | WASHER | 1 | | 11 X 20 X 2 MM, (SUB FOR J222010) |
| 5 | ..... | CAP SCREW | 2 | | ( J281030 NO LONGER AVAILABLE) |
| | 19M7662 | CAP SCREW | 1 | | M10 X 30, (SUB FOR J901030) |
| | 4486055 | WASHER | 1 | | |
| 7 | 9757954 | STOP | 1 | | |
| 8 | ..... | CAP SCREW | 2 | | ( J281030 NO LONGER AVAILABLE) |
| | 19M7662 | CAP SCREW | 1 | | M10 X 30, (SUB FOR J901030) |
| | 4486055 | WASHER | 1 | | |
| 10 | 4424157 | STOP | 1 | | |
| 11 | ..... | CAP SCREW | 1 | | ( J260635 NO LONGER AVAILABLE) |
| | 19M7177 | CAP SCREW | 1 | | M6 X 35, (SUB FOR J900635) |
| | 24M7054 | WASHER | 1 | | 6.400 X 12 X 1.600 MM, (SUB FOR A590106) |
| 12 | 8092071 | COVER | 1 | | |
| 13 | 8090177 | COVER | 1 | | |
| 14 | ..... | CAP SCREW | 6 | | ( J271025 NO LONGER AVAILABLE) |
| | 19M7402 | CAP SCREW | 1 | | M10 X 25, (SUB FOR J901025) |
| | 24M7346 | WASHER | 1 | | 11 X 20 X 2 MM, (SUB FOR J222010) |
| 16 | 3096632 | COVER | 1 | | |
| 17 | ..... | CAP SCREW | 4 | | ( J271025 NO LONGER AVAILABLE) |
| | 19M7402 | CAP SCREW | 1 | | M10 X 25, (SUB FOR J901025) |
| | 24M7346 | WASHER | 1 | | 11 X 20 X 2 MM, (SUB FOR J222010) |
| 19 | 9230959 | COVER | 1 | | |
| 19A | ..... | COVER | 1 | | ( 8090179 FOR PRODUCTION ONLY) (SERVICE 9230959) |
| 19B | 3087440 | BAR | 1 | | |
| 19C | 9754651 | BRACKET | 1 | | |
| 19D | ..... | CAP SCREW | 2 | | ( J271030 NO LONGER AVAILABLE) |
| | 19M7662 | CAP SCREW | 1 | | M10 X 30, (SUB FOR J901030) |
| | 24M7346 | WASHER | 1 | | 11 X 20 X 2 MM, (SUB FOR J222010) |
| 20 | ..... | CAP SCREW | 4 | | ( J271030 NO LONGER AVAILABLE) |
| | 19M7662 | CAP SCREW | 1 | | M10 X 30, (SUB FOR J901030) |
| | 24M7346 | WASHER | 1 | | 11 X 20 X 2 MM, (SUB FOR J222010) |

# 2H17



**RADIATOR COMPARTMENT PANELS, COVER AND ISOLATORS**

T207780 -UN-03FEB05

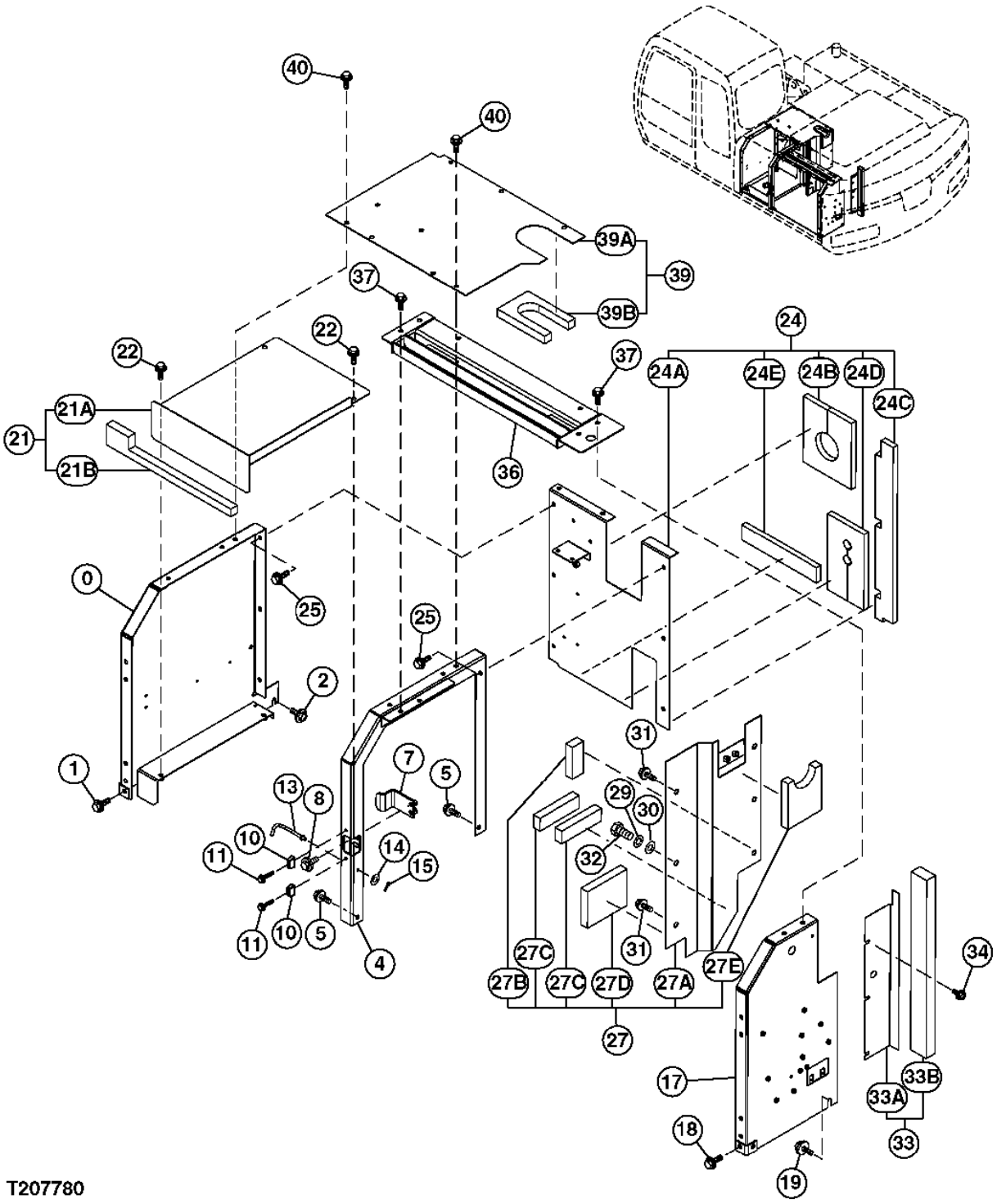


T207780

**RADIATOR COMPARTMENT PANELS, COVER AND ISOLATORS**

| KEY | PART NO. | PART NAME | QTY | SERIAL NO. | REMARKS |
|---|---|---|---|---|---|
| 0 | 7043457 | COVER | 1 | | |
| 1 | ..... | CAP SCREW | 1 | | ( J271030 NO LONGER AVAILABLE) |
| | 19M7762 | CAP SCREW | 1 | | M5 X 5, (SUB FOR J901030) |
| | 24M7346 | WASHER | 1 | | 11 X 20 X 2 MM, (SUB FOR J222010) |
| 2 | ..... | CAP SCREW | 1 | | ( J281030 NO LONGER AVAILABLE) |
| | 19M7662 | CAP SCREW | 1 | | M10 X 30, (SUB FOR J901030) |
| | 4486055 | WASHER | 1 | | |
| 4 | 7043458 | SUPPORT | 1 | | |
| 5 | ..... | CAP SCREW | 2 | | ( J271025 NO LONGER AVAILABLE) |
| | 19M7402 | CAP SCREW | 1 | | M10 X 25, (SUB FOR J901025) |
| | 24M7346 | WASHER | 1 | | 11 X 20 X 2 MM, (SUB FOR J222010) |
| 7 | 9757954 | STOP | 1 | | |
| 8 | ..... | CAP SCREW | 2 | | ( J281030 NO LONGER AVAILABLE) |
| | 19M7662 | CAP SCREW | 1 | | M10 X 30, (SUB FOR J901030) |
| | 4486055 | WASHER | 1 | | |
| 10 | 4424157 | STOP | 2 | | |
| 11 | ..... | CAP SCREW | 2 | | ( J260635 NO LONGER AVAILABLE) |
| | 19M7177 | CAP SCREW | 1 | | M6 X 35, (SUB FOR J900635) |
| | 24M7054 | WASHER | 1 | | 6.400 X 12 X 1.600 MM, (SUB FOR A590106) |
| 13 | 9751797 | LATCH | 1 | | |
| 14 | 24M7054 | WASHER | 1 | | 6.400 X 12 X 1.600 MM, (SUB FOR A590106) |
| 15 | M800051 | PIN | 1 | | (SUB FOR 4022696) |
| 17 | 7040103 | COVER | 1 | | |
| 18 | ..... | CAP SCREW | 1 | | ( J271030 NO LONGER AVAILABLE) |
| | 19M7662 | CAP SCREW | 1 | | M10 X 30, (SUB FOR J901030) |
| | 24M7346 | WASHER | 1 | | 11 X 20 X 2 MM, (SUB FOR J222010) |
| 19 | ..... | CAP SCREW | 1 | | ( J281025 NO LONGER AVAILABLE) |
| | 19M7402 | CAP SCREW | 1 | | M10 X 25, (SUB FOR J901025) |
| | 4486055 | WASHER | 1 | | |
| 21 | 8093717 | COVER | 1 | | |
| 21A | ..... | COVER | 1 | | ( 8092493 FOR PRODUCTION ONLY) (SERVICE 8093717) |
| 21B | 4600582 | ISOLATOR | 1 | | |
| 22 | ..... | CAP SCREW | 4 | | ( J271025 NO LONGER AVAILABLE) |
| | 19M7402 | CAP SCREW | 1 | | M10 X 25, (SUB FOR J901025) |
| | 24M7346 | WASHER | 1 | | 11 X 20 X 2 MM, (SUB FOR J222010) |
| 24 | 8093757 | COVER | 1 | | |
| 24A | ..... | COVER | 1 | | ( 8090176 FOR PRODUCTION ONLY) (SERVICE 8093757) |
| 24B | 4600575 | ISOLATOR | 1 | | |
| 24C | 4600574 | ISOLATOR | 1 | | |
| 24D | 4600576 | ISOLATOR | 1 | | |
| 24E | 4600583 | ISOLATOR | 1 | | |
| 25 | ..... | CAP SCREW | 6 | | ( J271025 NO LONGER AVAILABLE) |
| | 19M7402 | CAP SCREW | 1 | | M10 X 25, (SUB FOR J901025) |
| | 24M7346 | WASHER | 1 | | 11 X 20 X 2 MM, (SUB FOR J222010) |
| 27 | 8092568 | COVER | 1 | | |
| 27A | 8090815 | COVER | 1 | | |
| 27B | ..... | ISOLATOR | 1 | | ( 4600578 NOT AVAILABLE FOR SERVICE) |
| 27C | ..... | ISOLATOR | 2 | | ( 4600579 NOT AVAILABLE FOR SERVICE) |
| 27D | 4600581 | ISOLATOR | 1 | | |
| 27E | 4600946 | ISOLATOR | 1 | | |
| 29 | 12H294 | LOCK WASHER | 1 | | 15.875 MM, (SUB FOR A590916) |
| 30 | 24M7053 | WASHER | 1 | | 17 X 30 X 3 MM, (SUB FOR A590116) |
| 31 | ..... | CAP SCREW | 2 | | ( J271025 NO LONGER AVAILABLE) |
| | 19M7402 | CAP SCREW | 1 | | M10 X 25, (SUB FOR J901025) |
| | 24M7346 | WASHER | 1 | | 11 X 20 X 2 MM, (SUB FOR J222010) |
| 32 | 19M8035 | CAP SCREW | 1 | | M16 X 35, (SUB FOR J921635) |
| 33 | 8084557 | COVER | 1 | | |
| 33A | 4456596 | ISOLATOR | 1 | | |
| 33B | ..... | COVER | 1 | | ( 3093565 NO LONGER AVAILABLE) |

THIS PARTS LISTING IS CONTINUED

**RADIATOR COMPARTMENT PANELS, COVER AND ISOLATORS (CONTINUED)**

T207780 -UN-03FEB05

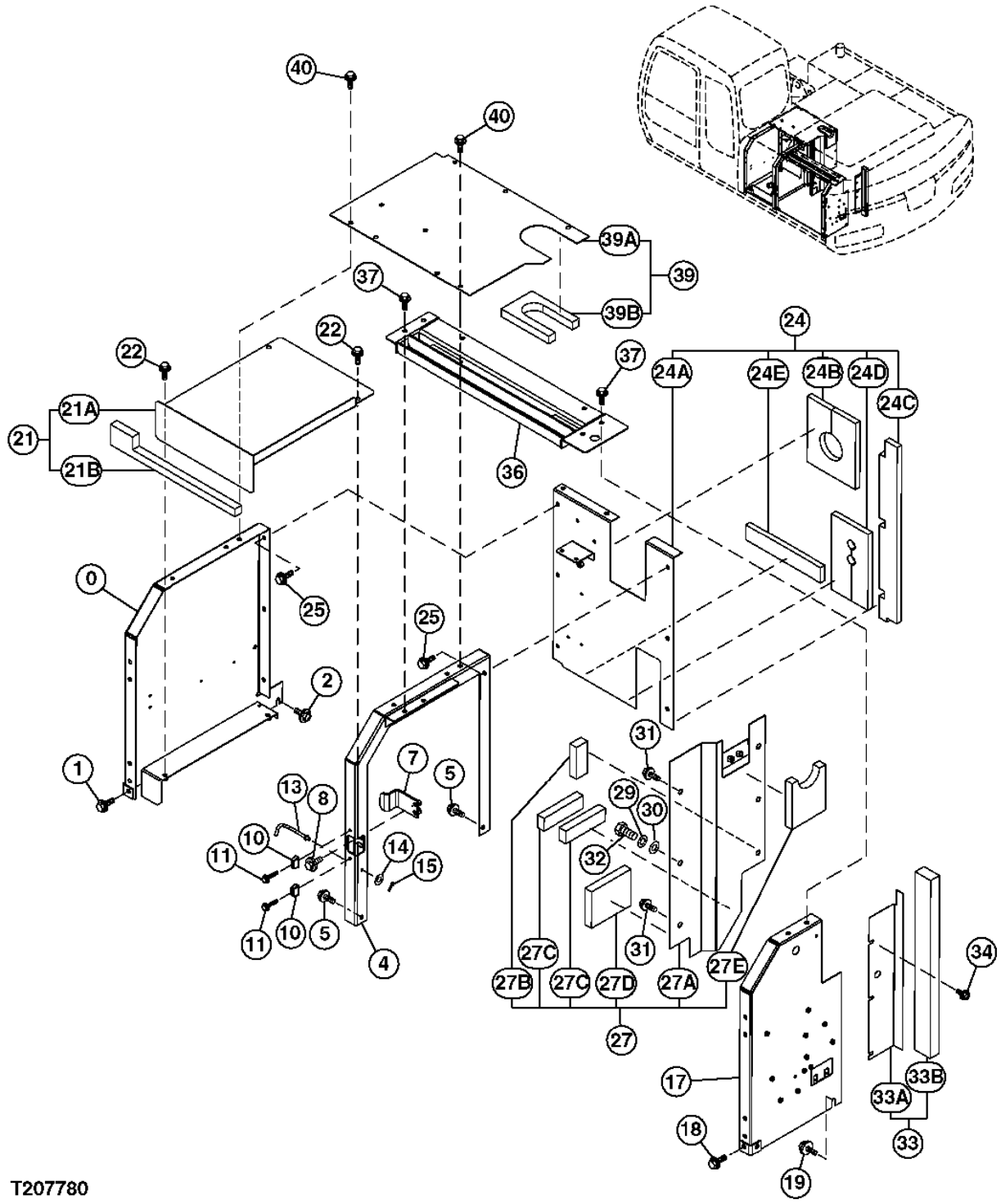


T207780

**RADIATOR COMPARTMENT PANELS, COVER AND ISOLATORS (CONTINUED)**

| KEY | PART NO. | PART NAME | QTY | SERIAL NO. | REMARKS |
|---|---|---|---|---|---|
| 34 | ..... | CAP SCREW | 3 | | ( J260820 NO LONGER AVAILABLE) |
| | 19M7139 | CAP SCREW | 1 | | M8 X 20, (SUB FOR J900820) |
| | 24M7055 | WASHER | 1 | | 8.400 X 16 X 1.600 MM, (SUB FOR A590108) |
| 36 | 8090175 | COVER | 1 | | |
| 37 | ..... | CAP SCREW | 4 | | ( J271025 NO LONGER AVAILABLE) |
| | 19M7402 | CAP SCREW | 1 | | M10 X 25, (SUB FOR J901025) |
| | 24M7346 | WASHER | 1 | | 11 X 20 X 2 MM, (SUB FOR J222010) |
| 39 | 8093719 | COVER | 1 | | |
| 39A | ..... | COVER | 1 | | ( 3096630 FOR PRODUCTION ONLY) (SERVICE 8093719) |
| 39B | ..... | ISOLATOR | 1 | | ( 4600577 NOT AVAILABLE FOR SERVICE) |
| 40 | ..... | CAP SCREW | 9 | | ( J271025 NO LONGER AVAILABLE) |
| | 19M7402 | CAP SCREW | 1 | | M10 X 25, (SUB FOR J901025) |
| | 24M7346 | WASHER | 1 | | 11 X 20 X 2 MM, (SUB FOR J222010) |

**RADIATOR AND FRONT MIDDLE DECK COVERS**

T207784 -UN-03FEB05

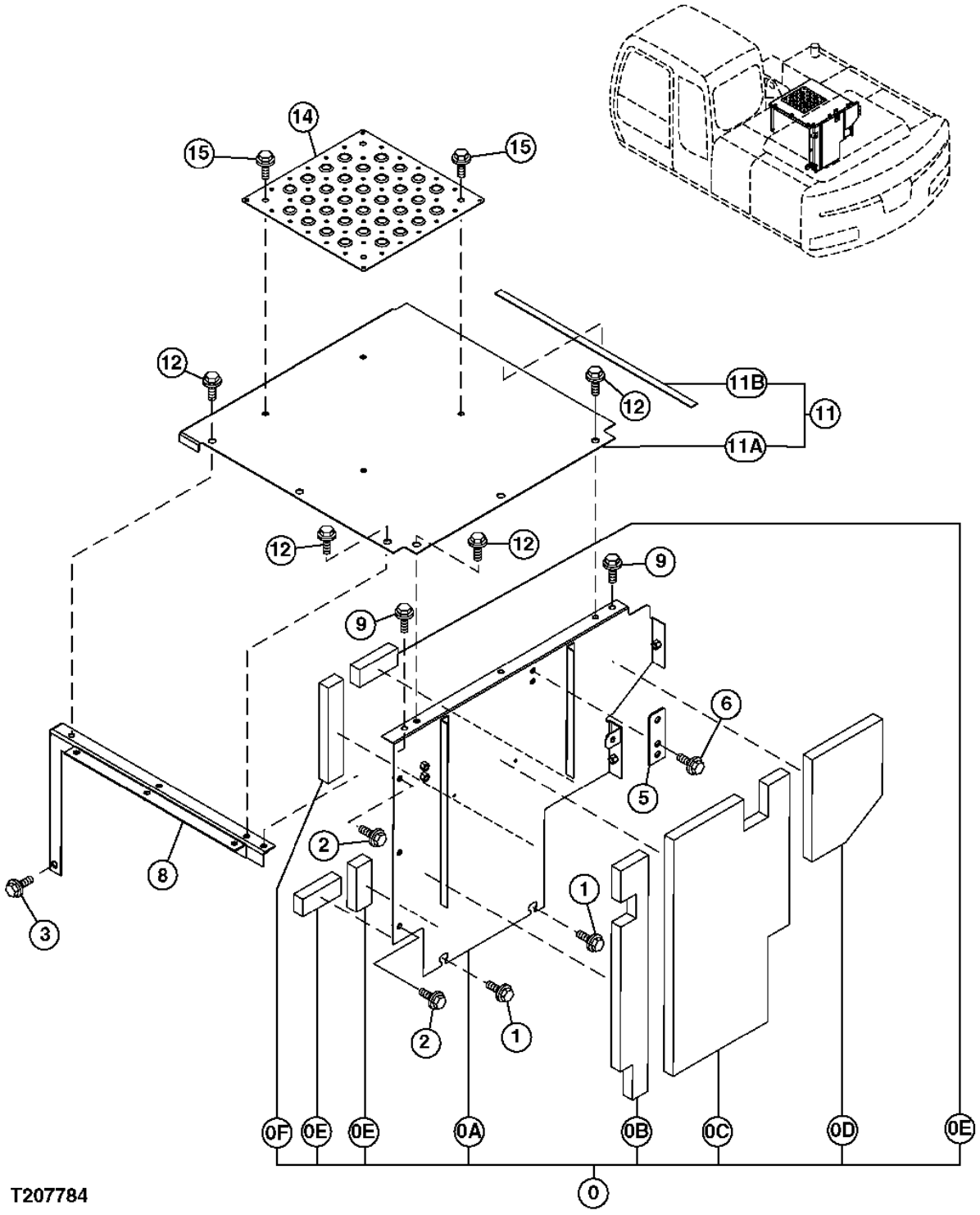

**RADIATOR AND FRONT MIDDLE DECK COVERS**

| KEY | PART NO. | PART NAME | QTY | SERIAL NO. | REMARKS |
|---|---|---|---|---|---|
| 0 | 7045099 | COVER | 1 | | |
| 0A | ..... | COVER | 1 | | ( 7043461 FOR PRODUCTION ONLY) (SERVICE 7045099) |
| 0B | 4600570 | ISOLATOR | 1 | | |
| 0C | 4600571 | ISOLATOR | 1 | | |
| 0D | 4600572 | ISOLATOR | 1 | | |
| 0E | ..... | ISOLATOR | 3 | | ( 4600578 NOT AVAILABLE FOR SERVICE) |
| 0F | ..... | ISOLATOR | 1 | | ( 4600579 NOT AVAILABLE FOR SERVICE) |
| 1 | ..... | CAP SCREW | 2 | | ( J281035 NO LONGER AVAILABLE) |
| | 19M7550 | CAP SCREW | 1 | | M10 X 35, (SUB FOR J901035) |
| | 4486055 | WASHER | 1 | | |
| 2 | ..... | CAP SCREW | 3 | | ( J281025 NO LONGER AVAILABLE) |
| | 19M7402 | CAP SCREW | 1 | | M10 X 25, (SUB FOR J901025) |
| | 4486055 | WASHER | 1 | | |
| 3 | ..... | CAP SCREW | 1 | | ( J271025 NO LONGER AVAILABLE) |
| | 19M7402 | CAP SCREW | 1 | | M10 X 25, (SUB FOR J901025) |
| | 24M7346 | WASHER | 1 | | 11 X 20 X 2 MM, (SUB FOR J222010) |
| 5 | 4484449 | PLATE | 1 | | |
| 6 | ..... | CAP SCREW | 2 | | ( J271025 NO LONGER AVAILABLE) |
| | 19M7402 | CAP SCREW | 1 | | M10 X 25, (SUB FOR J901025) |
| | 24M7346 | WASHER | 1 | | 11 X 20 X 2 MM, (SUB FOR J222010) |
| 8 | 8090181 | SUPPORT | 1 | | |
| 9 | ..... | CAP SCREW | 2 | | ( J281030 NO LONGER AVAILABLE) |
| | 19M7662 | CAP SCREW | 1 | | M10 X 30, (SUB FOR J901030) |
| | 4486055 | WASHER | 1 | | |
| 11 | 8086655 | COVER | 1 | | |
| 11A | ..... | COVER | 1 | | ( 7041523 FOR PRODUCTION ONLY) (SERVICE 8086655) |
| 11B | 4470675 | ISOLATOR | 1 | | |
| 12 | ..... | CAP SCREW | 6 | | ( J281030 NO LONGER AVAILABLE) |
| | 19M7662 | CAP SCREW | 1 | | M10 X 30, (SUB FOR J901030) |
| | 4486055 | WASHER | 1 | | |
| 14 | 3091337 | COVER | 1 | | |
| 15 | ..... | CAP SCREW | 4 | | ( J271025 NO LONGER AVAILABLE) |
| | 19M7402 | CAP SCREW | 1 | | M10 X 25, (SUB FOR J901025) |
| | 24M7346 | WASHER | 1 | | 11 X 20 X 2 MM, (SUB FOR J222010) |

**COMPARTMENT COVER DOORS**

T207781 -UN-03FEB05

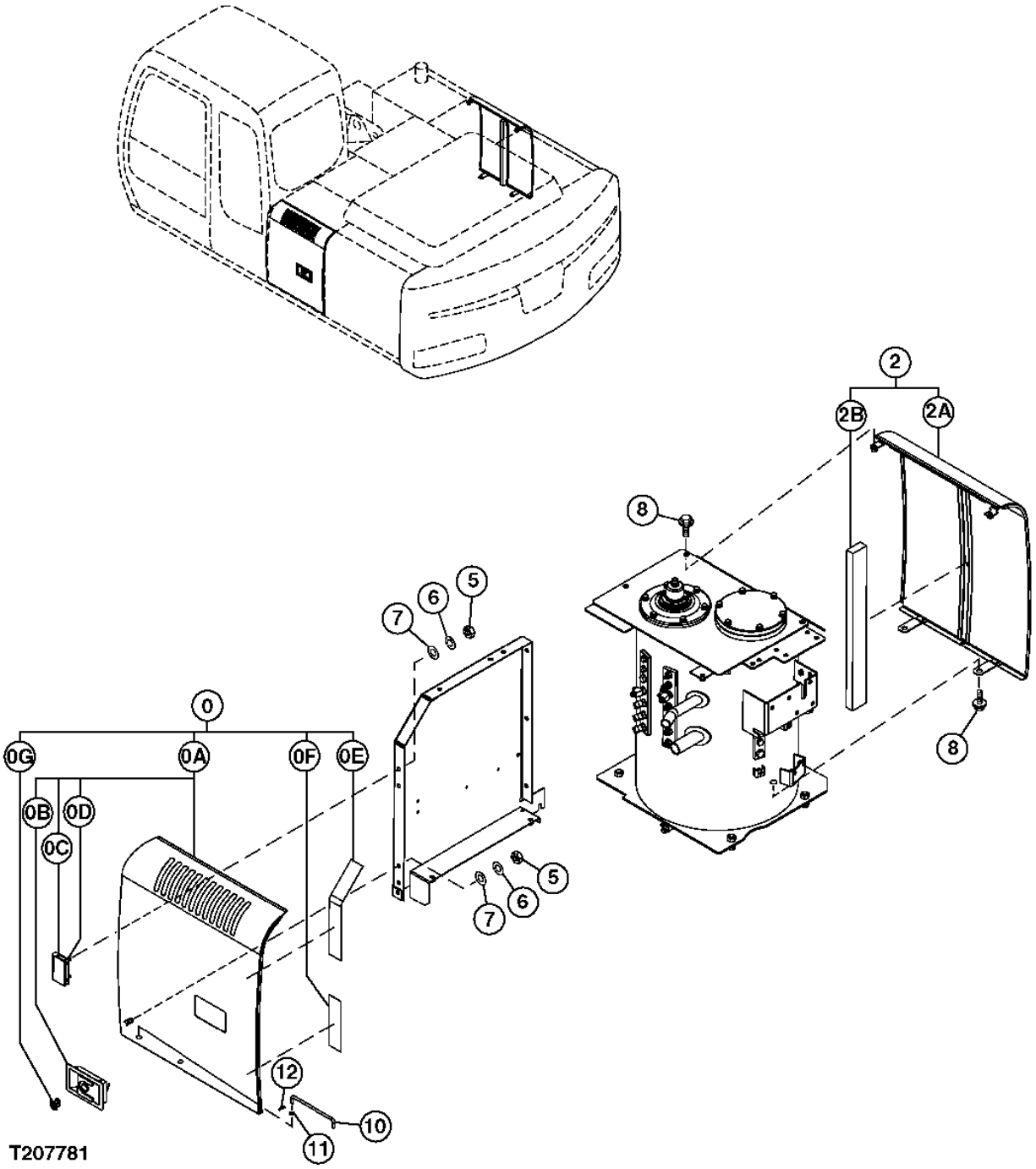

**COMPARTMENT COVER DOORS**

| KEY | PART NO. | PART NAME | QTY | SERIAL NO. | REMARKS |
|---|---|---|---|---|---|
| 0 | 7044094 | DOOR | 1 | | |
| 0A | ..... | DOOR | 1 | | ( 6021709 FOR PRODUCTION ONLY) (SERVICE 7044094) |
| 0B | 4409395 | LOCK | 1 | | |
| | 4409394 | LOCK | 1 | | |
| 0C | ..... | HINGE | 2 | | ( 3072015 NO LONGER AVAILABLE) |
| 0D | 19M7402 | CAP SCREW | 4 | | M10 X 25, (SUB FOR J901025) |
| 0E | 4453760 | ISOLATOR | 1 | | |
| 0F | 4453765 | ISOLATOR | 1 | | |
| 0G | 4409396 | LOCK | 1 | | |
| | 4409394 | LOCK | 1 | | |
| 2 | 8094328 | COVER | 1 | | |
| 2A | ..... | COVER | 1 | | ( 7044075 FOR PRODUCTION ONLY) (SERVICE 8094328) |
| 2B | 4612589 | ISOLATOR | 1 | | |
| 5 | 14M7474 | FLANGE NUT | 4 | | M20, (SUB FOR J950010) |
| 6 | 12M7066 | LOCK WASHER | 4 | | 10 MM, (SUB FOR A590910) |
| 7 | 24M7028 | WASHER | 4 | | 10.500 X 20 X 2 MM, (SUB FOR A590110) |
| 8 | ..... | CAP SCREW | 4 | | ( J281030 NO LONGER AVAILABLE) |
| | 19M7662 | CAP SCREW | 1 | | M10 X 30, (SUB FOR J901030) |
| | 4486055 | WASHER | 1 | | |
| 10 | 4341788 | ROD | 1 | | |
| 11 | 24M7055 | WASHER | 1 | | 8.400 X 16 X 1.600 MM, (SUB FOR A590108) |
| 12 | H132922 | COTTER PIN | 1 | | (SUB FOR 4022697) |

**DOOR LOCK**

T207785 -UN-02MAR05

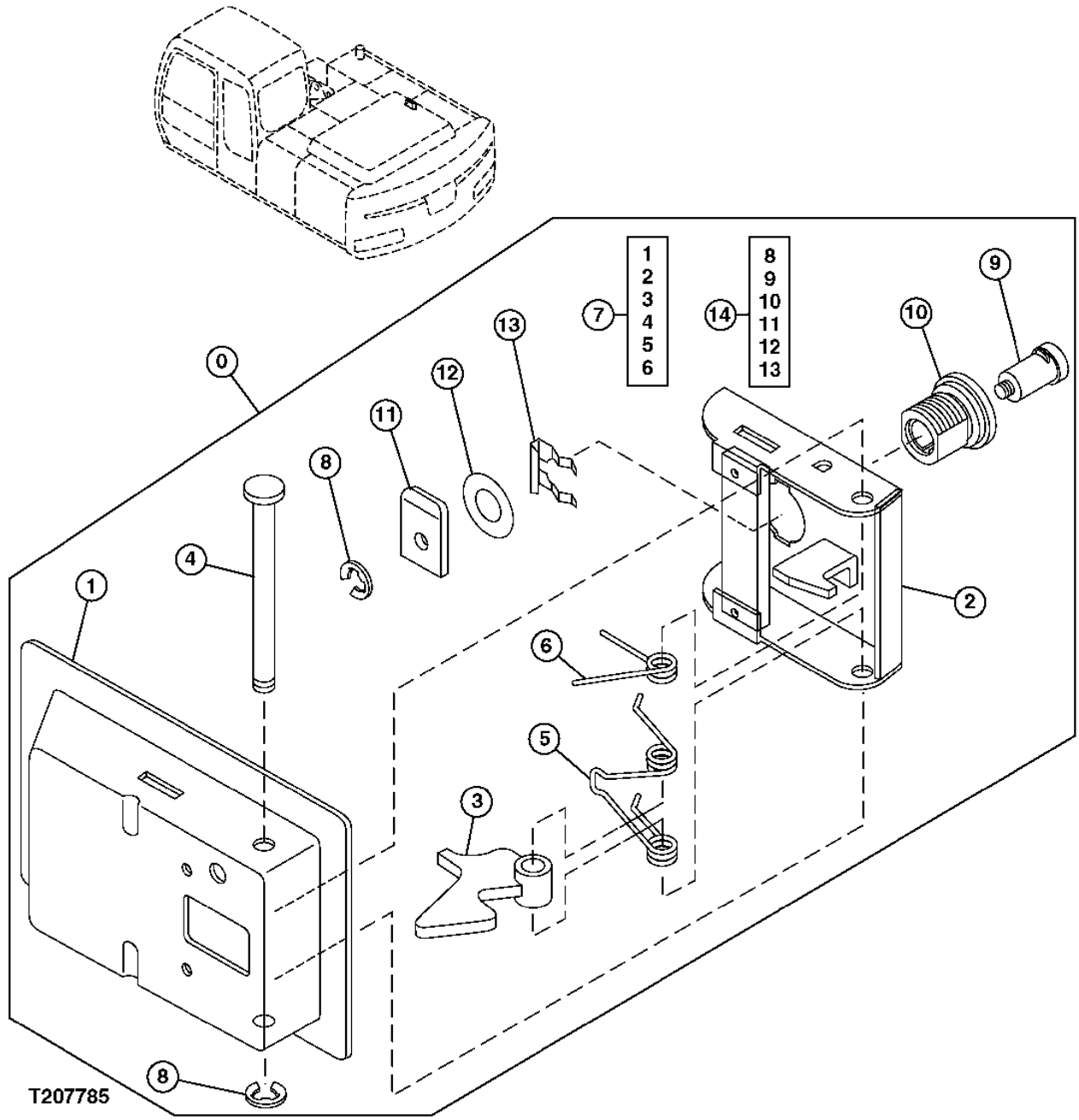

**DOOR LOCK**

| KEY | PART NO. | PART NAME | QTY | SERIAL NO. | REMARKS |
|---|---|---|---|---|---|
| 0 | 4409446 | LOCK | 1 | | |
| 1 | 4461343 | COVER | 1 | | |
| 2 | 4461344 | LATCH | 1 | | |
| 3 | 4461345 | LEVER | 1 | | |
| 4 | 4461346 | SHAFT | 1 | | |
| 5 | 4461347 | SPRING | 1 | | |
| 6 | 4461348 | SPRING | 1 | | |
| 7 | 4409447 | LOCK | 1 | | |
| 8 | 4461337 | RING | 2 | | |
| 9 | ..... | LOCK | 1 | | ( 4461338 NOT AVAILABLE FOR SERVICE) |
| 10 | ..... | CASE | 1 | | ( 4461339 NOT AVAILABLE FOR SERVICE) |
| 11 | ..... | PLATE | 1 | | ( 4461340 NOT AVAILABLE FOR SERVICE) |
| 12 | ..... | WASHER | 2 | | ( 4461341 NOT AVAILABLE FOR SERVICE) |
| 13 | 4461342 | CLIP | 1 | | |
| 14 | 4409396 | LOCK | 1 | | |

**DOOR HANDLE**

T207786 -UN-02MAR05

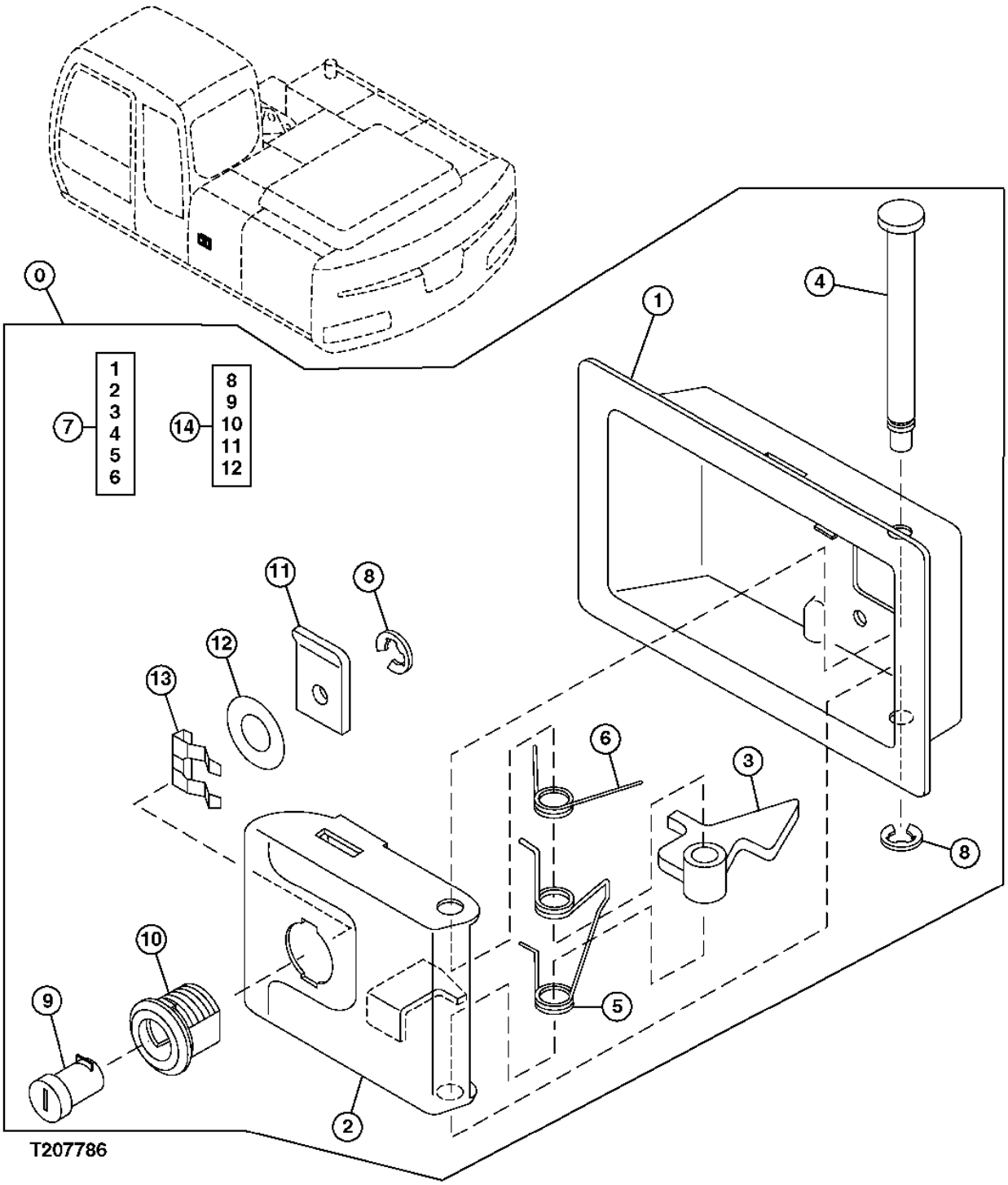

**DOOR HANDLE**

| KEY | PART NO. | PART NAME | QTY | SERIAL NO. | REMARKS |
|---|---|---|---|---|---|
| 0 | 4409394 | LOCK | 1 | | |
| 1 | 4461343 | COVER | 1 | | |
| 2 | 4461344 | LATCH | 1 | | |
| 3 | 4461345 | LEVER | 1 | | |
| 4 | 4461346 | SHAFT | 1 | | |
| 5 | 4461347 | SPRING | 1 | | |
| 6 | 4461348 | SPRING | 1 | | |
| 7 | 4409395 | LOCK | 1 | | |
| 8 | 4461337 | RING | 2 | | |
| 9 | ..... | LOCK | 1 | | ( 4461338 NOT AVAILABLE FOR SERVICE) |
| 10 | ..... | CASE | 1 | | ( 4461339 NOT AVAILABLE FOR SERVICE) |
| 11 | ..... | PLATE | 1 | | ( 4461340 NOT AVAILABLE FOR SERVICE) |
| 12 | ..... | WASHER | 2 | | ( 4461341 NOT AVAILABLE FOR SERVICE) |
| 13 | 4461342 | CLIP | 1 | | |
| 14 | 4409396 | LOCK | 1 | | |

**ENGINE COVER**

T207788 -UN-03FEB05

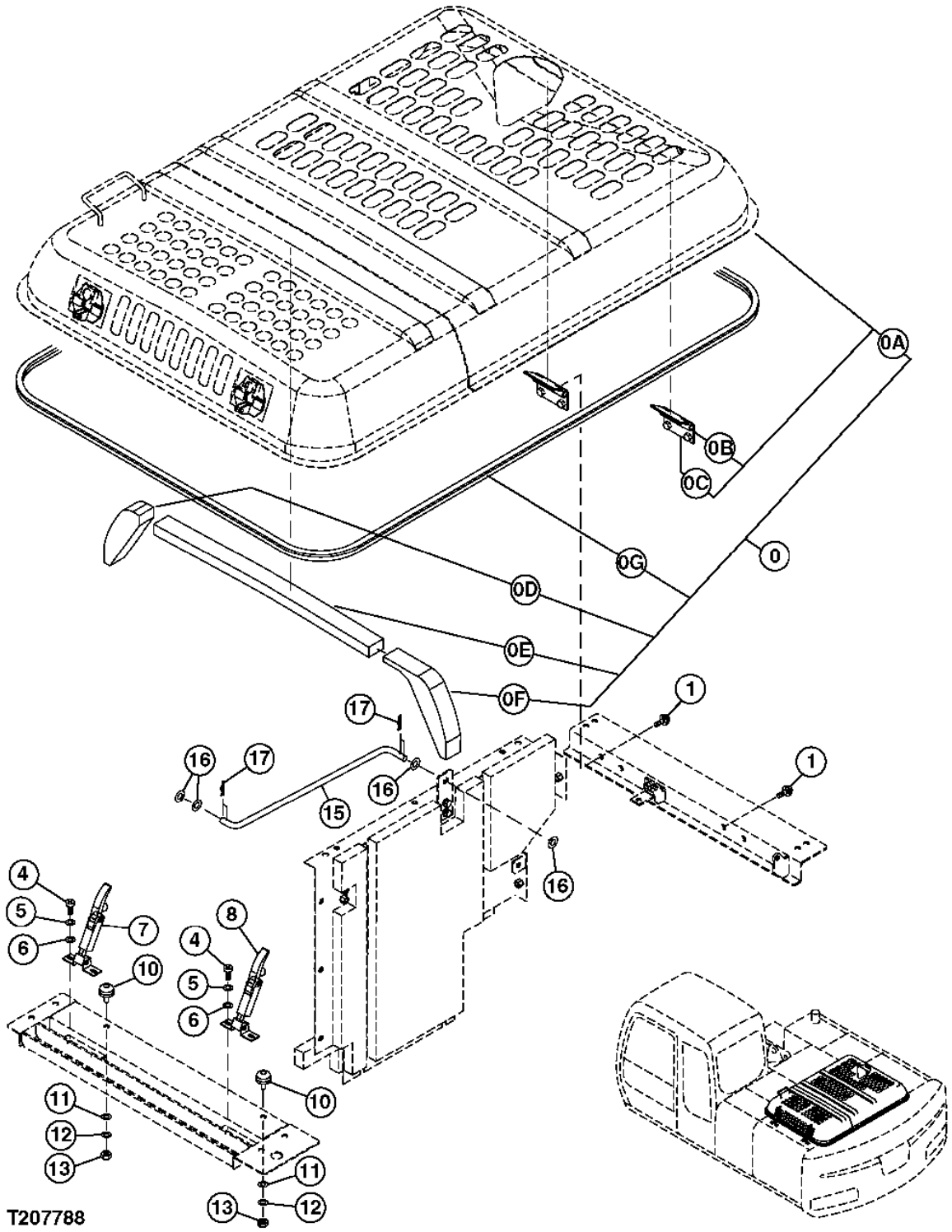

**ENGINE COVER**

| KEY | PART NO. | PART NAME | QTY | SERIAL NO. | REMARKS |
|---|---|---|---|---|---|
| 0 | 9223588 | COVER | 1 | | |
| 0A | ..... | COVER | 1 | | ( 5008705 FOR PRODUCTION ONLY) (SERVICE 9223588) |
| 0B | 3080209 | HINGE | 2 | | |
| 0C | ..... | NUT | 4 | | ( M650010 NO LONGER AVAILABLE) |
| 0D | 4458089 | ISOLATOR | 1 | | |
| 0E | 4458090 | ISOLATOR | 1 | | |
| 0F | 4458091 | ISOLATOR | 1 | | |
| 0G | 4438324 | ISOLATOR | 1 | | |
| 1 | ..... | CAP SCREW | 4 | | ( J271030 NO LONGER AVAILABLE) |
| | 19M7662 | CAP SCREW | 1 | | M10 X 30, (SUB FOR J901030) |
| | 24M7346 | WASHER | 1 | | 11 X 20 X 2 MM, (SUB FOR J222010) |
| 4 | 21M7397 | SCREW | 4 | | M8 X 25, (SUB FOR M430825) |
| 5 | 12M7065 | LOCK WASHER | 4 | | 8 MM, (SUB FOR A590908) |
| 6 | 24M7055 | WASHER | 4 | | 8.400 X 16 X 1.600 MM, (SUB FOR A590108) |
| 7 | 4429045 | CATCH | 1 | | |
| 8 | 4429044 | CATCH | 1 | | |
| 10 | 4294508 | BUMPER | 2 | | |
| 11 | 24M7028 | WASHER | 2 | | 10.500 X 20 X 2 MM, (SUB FOR A590110) |
| 12 | 12M7066 | LOCK WASHER | 2 | | 10 MM, (SUB FOR A590910) |
| 13 | 14M7274 | NUT | 2 | | M10, (SUB FOR J950010) |
| 15 | 4426247 | LATCH | 1 | | |
| 16 | 24M7085 | WASHER | 4 | | 15 X 28 X 2.500 MM, (SUB FOR A590114) |
| 17 | L12622 | SPRING LOCKING PIN | 4 | | (SUB FOR 4022700) |

**TOOL BOX**

T207789 -UN-03FEB05

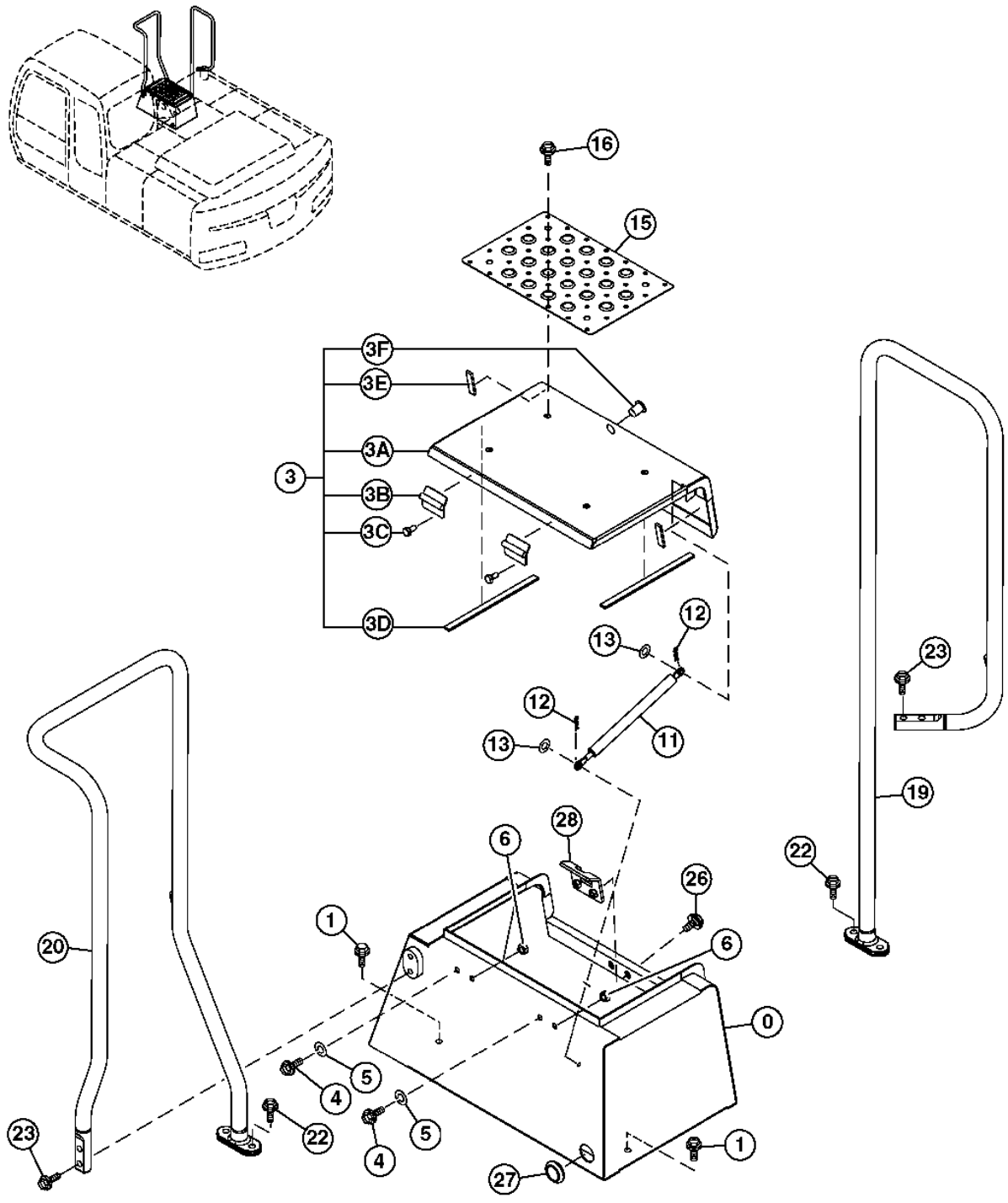

**TOOL BOX**

| KEY | PART NO. | PART NAME | QTY | SERIAL NO. | REMARKS |
|---|---|---|---|---|---|
| 0 | 6020696 | TOOLBOX | 1 | | |
| 1 | ..... | CAP SCREW | 4 | | ( J271025 NO LONGER AVAILABLE) |
| | 19M7402 | CAP SCREW | 1 | | M10 X 25, (SUB FOR J901025) |
| | 24M7346 | WASHER | 1 | | 11 X 20 X 2 MM, (SUB FOR J222010) |
| 3 | 7042494 | COVER | 1 | | |
| 3A | ..... | COVER | 1 | | ( 6021017 FOR PRODUCTION ONLY) (SERVICE 7042494) |
| 3B | 9746541 | HINGE | 2 | | |
| 3C | 19M8761 | SCREW | 4 | | M10 X 22, (SUB FOR J901022) |
| 3D | 4417026 | ISOLATOR | 2 | | |
| 3E | 4453654 | ISOLATOR | 2 | | |
| 3F | 4379989 | CYLINDER | 1 | | |
| 4 | ..... | CAP SCREW | 2 | | ( J271025 NO LONGER AVAILABLE) |
| | 19M7402 | CAP SCREW | 1 | | M10 X 25, (SUB FOR J901025) |
| | 24M7346 | WASHER | 1 | | 11 X 20 X 2 MM, (SUB FOR J222010) |
| 5 | 12M7066 | LOCK WASHER | 2 | | 10 MM, (SUB FOR A590910) |
| 6 | 14M7474 | FLANGE NUT | 2 | | M20, (SUB FOR J950010) |
| 11 | 4196560 | GAS OPERATED CYLINDER | 1 | | |
| 12 | H132922 | COTTER PIN | 2 | | (SUB FOR 4022697) |
| 13 | 24M7028 | WASHER | 2 | | 10.500 X 20 X 2 MM, (SUB FOR A590110) |
| 15 | 3092277 | COVER | 1 | | |
| 16 | ..... | CAP SCREW | 4 | | ( J271030 NO LONGER AVAILABLE) |
| | 19M7662 | CAP SCREW | 1 | | M10 X 30, (SUB FOR J901030) |
| | 24M7346 | WASHER | 1 | | 11 X 20 X 2 MM, (SUB FOR J222010) |
| 19 | 7043286 | LATCH | 1 | | |
| 20 | 7043287 | LATCH | 1 | | |
| 22 | ..... | CAP SCREW | 4 | | ( J271230 NO LONGER AVAILABLE) |
| | 19M8011 | CAP SCREW | 1 | | M12 X 30, (SUB FOR J901230) |
| | 24M7345 | WASHER | 1 | | 13.500 X 24 X 2.500 MM, (SUB FOR J222012) |
| 23 | ..... | CAP SCREW | 4 | | ( J271240 NO LONGER AVAILABLE) |
| | 19M7493 | CAP SCREW | 1 | | M12 X 40, (SUB FOR J901240) |
| | 24M7345 | WASHER | 1 | | 13.500 X 24 X 2.500 MM, (SUB FOR J222012) |
| 26 | ..... | CAP SCREW | 2 | | ( J281030 NO LONGER AVAILABLE) |
| | 19M7662 | CAP SCREW | 1 | | M10 X 30, (SUB FOR J901030) |
| | 4486055 | WASHER | 1 | | |
| 27 | 4276215 | GROMMET | 1 | | |
| 28 | 9745798 | CATCH | 1 | | |

**BOTTOM STRUCTURE COVERS**

T207790 -UN-03FEB05

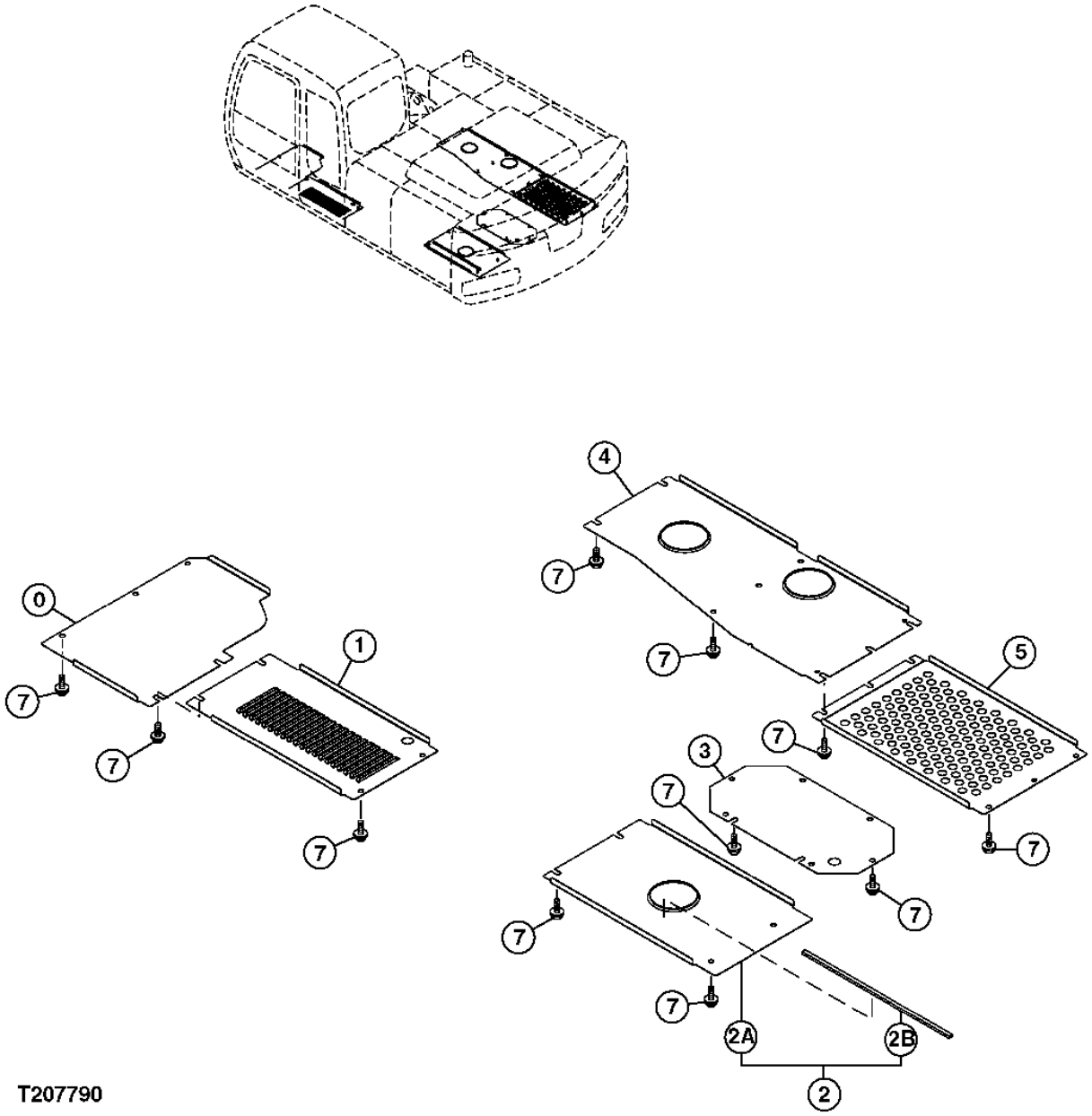

**BOTTOM STRUCTURE COVERS**

| KEY | PART NO. | PART NAME | QTY | SERIAL NO. | REMARKS |
|---|---|---|---|---|---|
| 0 | 3094689 | COVER | 1 | | |
| 1 | 3094690 | COVER | 1 | | |
| 2 | 8092775 | COVER | 1 | | |
| 2A | ..... | COVER | 1 | | ( 3099326 NOT AVAILABLE FOR SERVICE) |
| 2B | 4448658 | ISOLATOR | 1 | | |
| 3 | 3087323 | COVER | 1 | | |
| 4 | 2047978 | COVER | 1 | | |
| 5 | 3096634 | COVER | 1 | | |
| 7 | ..... | CAP SCREW | 28 | | ( J281035 NO LONGER AVAILABLE) |
| | 19M7550 | CAP SCREW | 1 | | M10 X 35, (SUB FOR J901035) |
| | 4486055 | WASHER | 1 | | |

**RADIO KIT**

TP54582 -UN-07FEB97

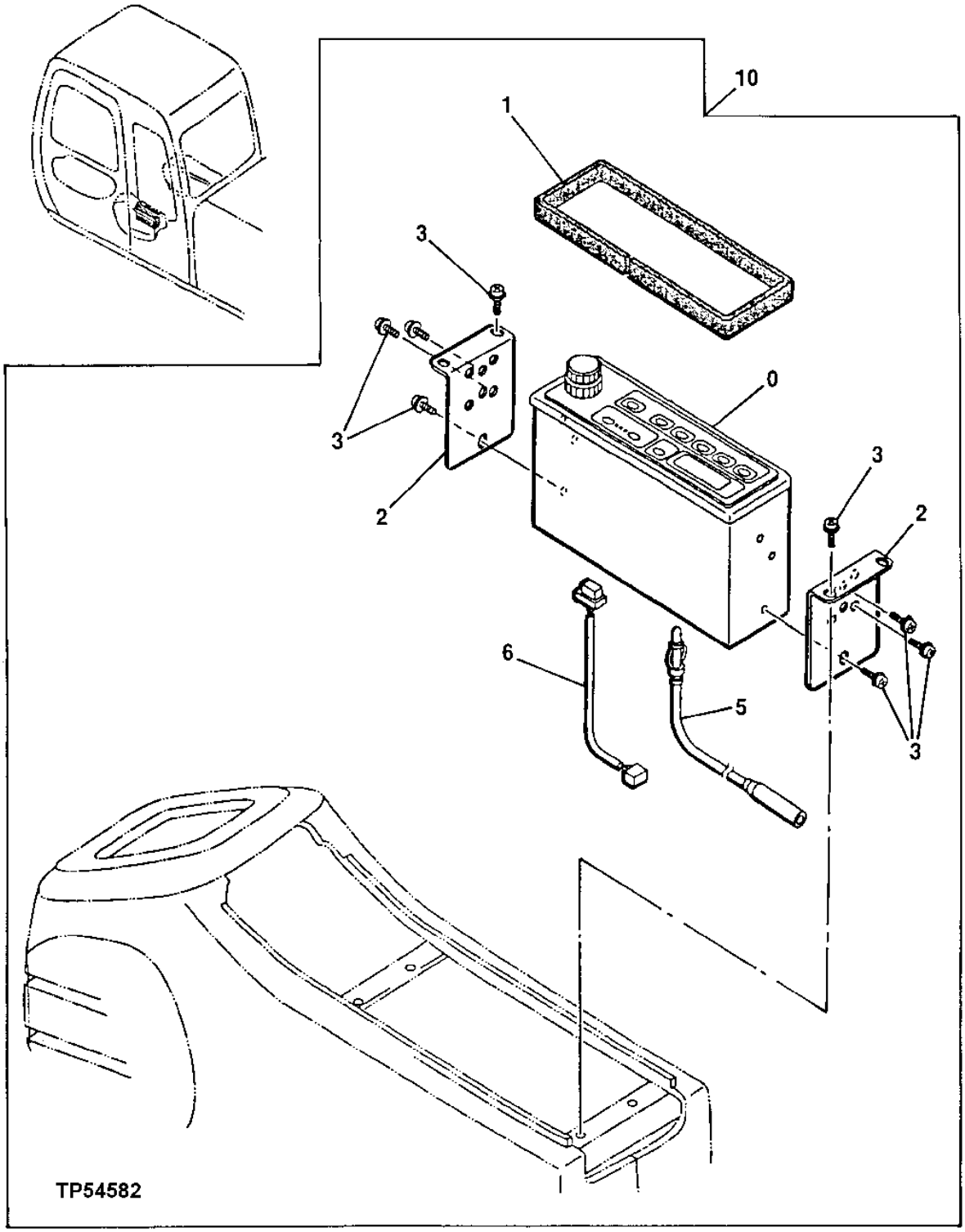

**RADIO KIT**

| KEY | PART NO. | PART NAME | QTY | SERIAL NO. | REMARKS |
|---|---|---|---|---|---|
| 0 | 4640468 | RADIO | 1 | | |
| 1 | 4368973 | ISOLATOR | 1 | | |
| 2 | 4341706 | BRACKET | 2 | | |
| 3 | 19M7700 | CAP SCREW | 10 | | M5 X 10 |
| | 12M7064 | LOCK WASHER | 10 | | 5 MM |
| | 24M7348 | WASHER | 10 | | 5.500 X 10 X 1 MM |
| 5 | 4102096 | WIRING HARNESS | 1 | | |
| 6 | 2037305 | WIRING HARNESS | 1 | | |
| **10** | **AT181125** | **KIT** | **1** | | **RADIO (WHOLEGOODS)** |

**LEFT REAR VIEW MIRROR**

T207765 -UN-04FEB05

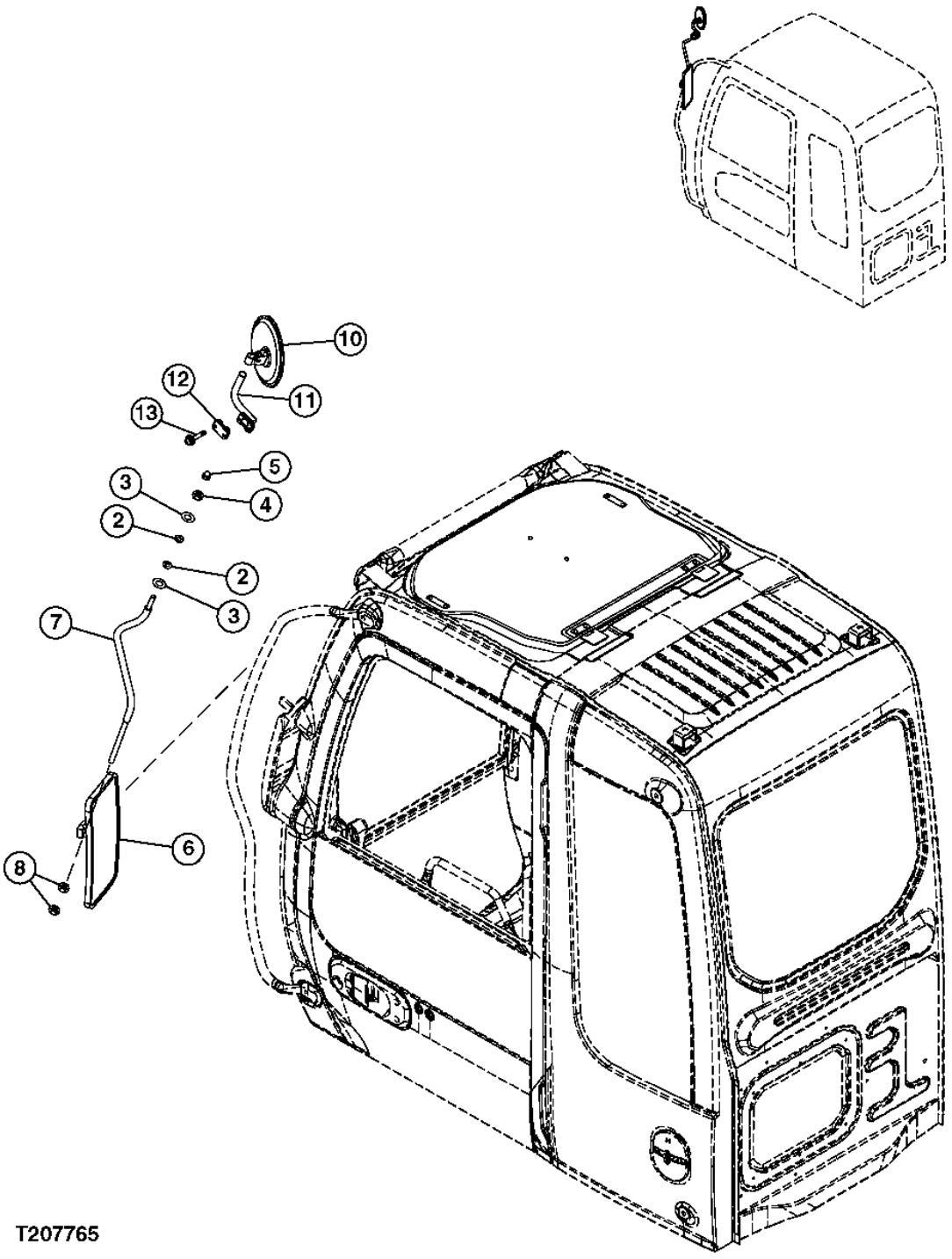

**LEFT REAR VIEW MIRROR**

| KEY | PART NO. | PART NAME | QTY | SERIAL NO. | REMARKS |
|---|---|---|---|---|---|
| 2 | 4172172 | WASHER | 2 | | |
| 3 | 24M7047 | WASHER | 2 | | (SUB FOR J253112 OR A590112) |
| 4 | 14M7275 | NUT | 1 | | M12, (SUB FOR J231212) |
| 5 | 4449509 | NUT | 1 | | |
| 6 | 4483924 | REAR VIEW MIRROR | 1 | | |
| 7 | 3097121 | LATCH | 1 | | |
| 8 | 14M7435 | NUT | 2 | | M14, (SUB FOR J231214) |
| 10 | 4603387 | REAR VIEW MIRROR | 1 | | |
| 11 | 8090629 | LATCH | 1 | | |
| 12 | 4454285 | CLAMP | 1 | | |
| 13 | ..... | CAP SCREW | 2 | | ( J260845 NO LONGER AVAILABLE) |
| | 19M8359 | CAP SCREW | 1 | | M8 X 45, (SUB FOR J900845) |
| | 24M7055 | WASHER | 1 | | 8.400 X 16 X 1.600 MM, (SUB FOR A590108) |

**RIGHT REAR VIEW MIRROR**

T207766 -UN-04FEB05

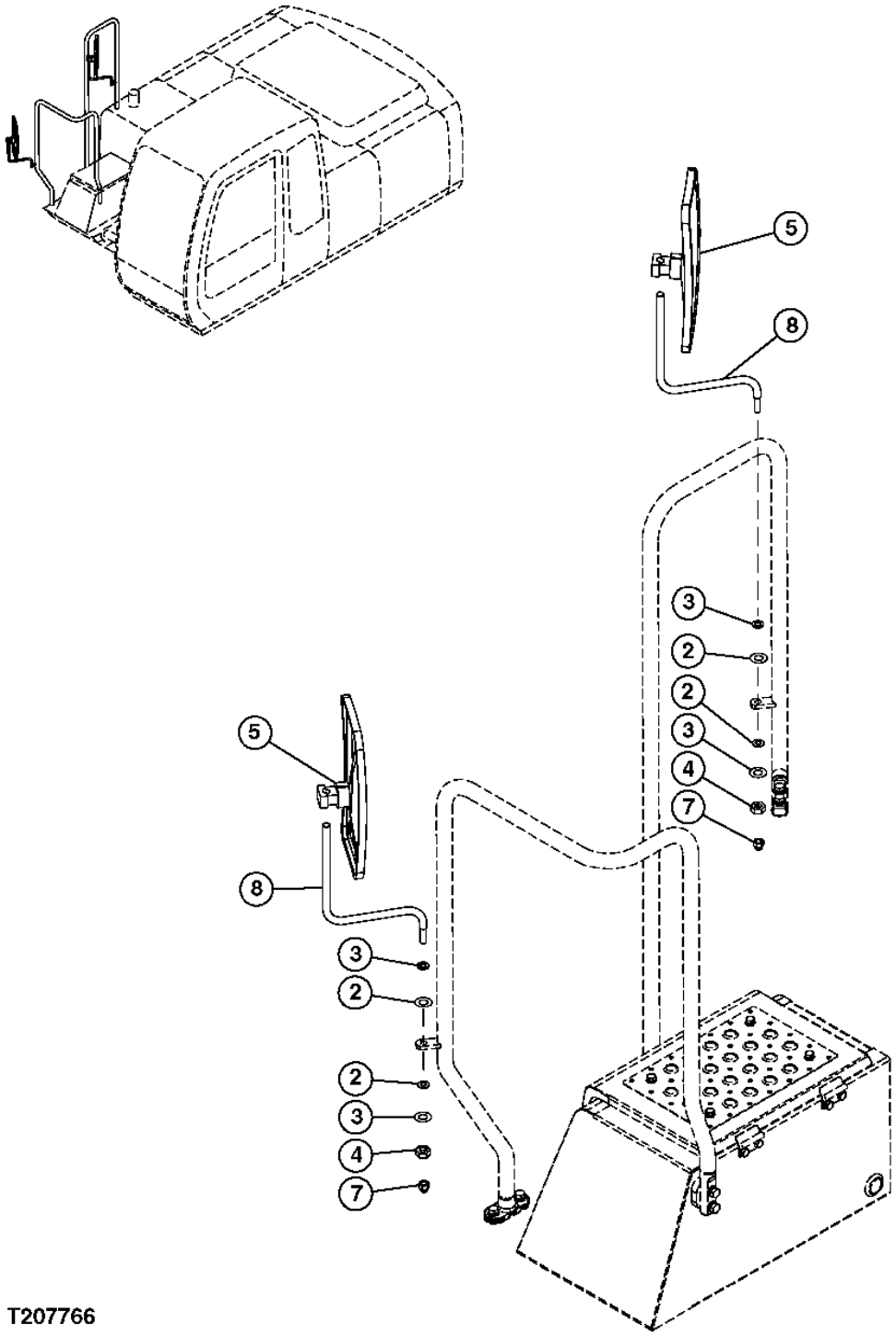

**RIGHT REAR VIEW MIRROR**

| KEY | PART NO. | PART NAME | QTY | SERIAL NO. | REMARKS |
|---|---|---|---|---|---|
| 2 | 4172172 | WASHER | 4 | | |
| 3 | 24M7047 | WASHER | 4 | | (SUB FOR J253112 OR A590112) |
| 4 | 14M7275 | NUT | 2 | | M12, (SUB FOR J231212) |
| 5 | 4483924 | REAR VIEW MIRROR | 2 | | |
| 7 | 4449509 | NUT | 2 | | |
| 8 | 4485116 | LATCH | 2 | | |

**HORN AND WIRING HARNESS**

T207665 -UN-09FEB05

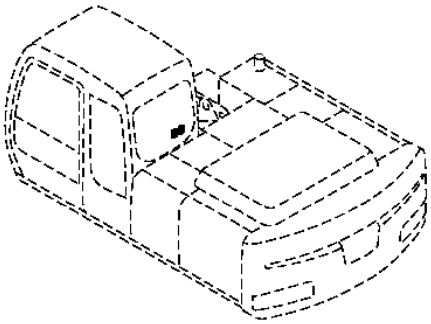

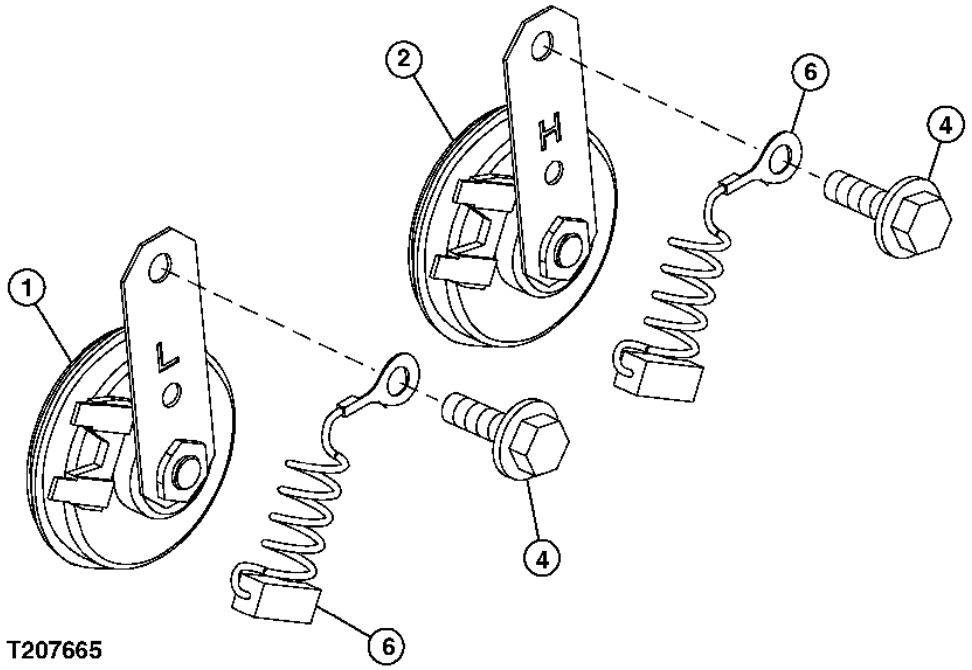

**HORN AND WIRING HARNESS**

| KEY | PART NO. | PART NAME | QTY | SERIAL NO. | REMARKS |
|---|---|---|---|---|---|
| 1 | 4449757 | HORN | 1 | | (SUB FOR 4439228) |
| 2 | 4449758 | HORN | 1 | | (SUB FOR 4439229) |
| 4 | ..... | CAP SCREW | 2 | | ( J260825 NO LONGER AVAILABLE) |
| | 19M7163 | CAP SCREW | 1 | | M8 X 25, (SUB FOR J900825) |
| | 24M7055 | WASHER | 1 | | 8.400 X 16 X 1.600 MM, (SUB FOR A590108) |
| 6 | 4254603 | WIRING HARNESS | 2 | | |

**SUN VISOR**

T207758 -UN-04FEB05

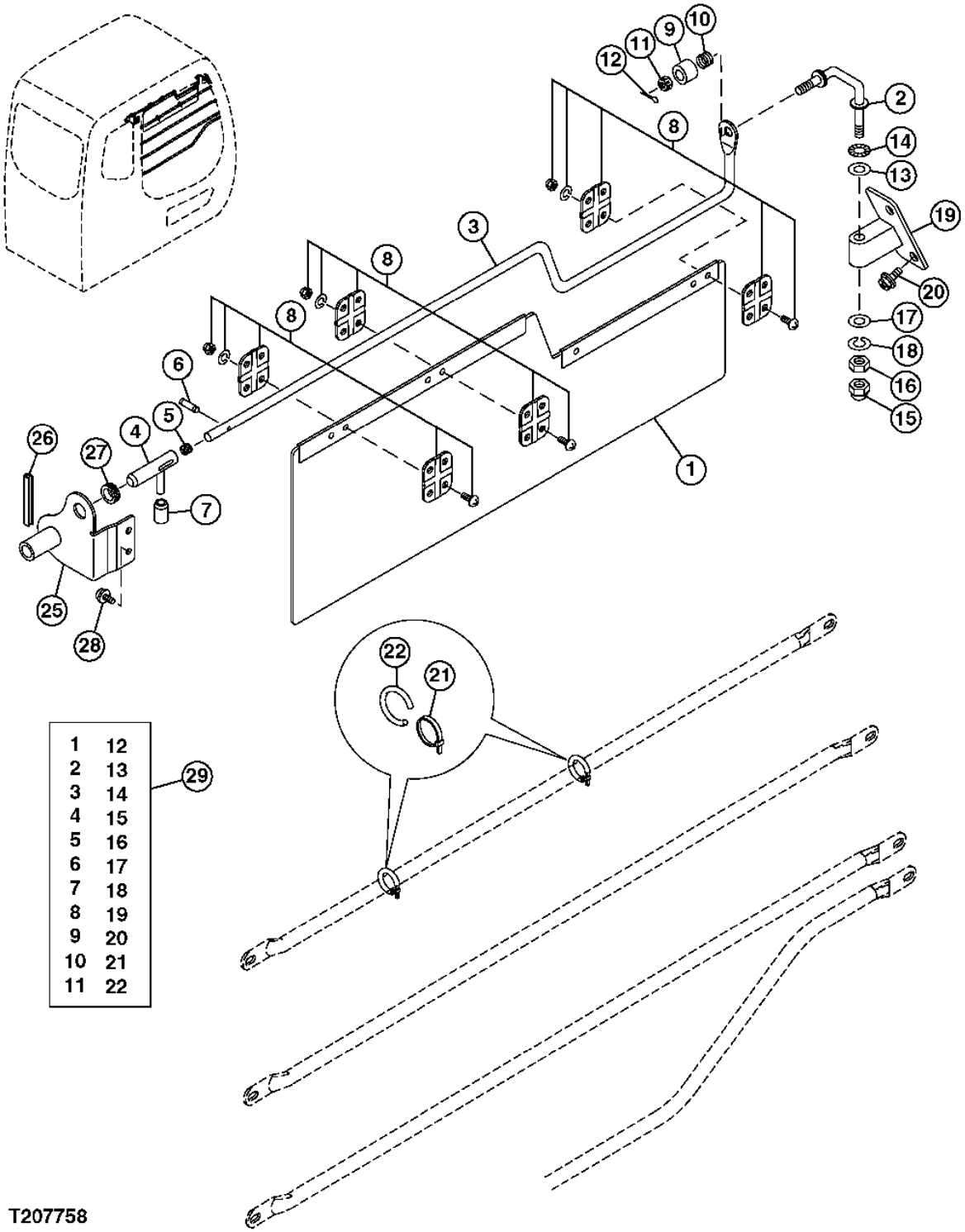

**SUN VISOR**

| KEY | PART NO. | PART NAME | QTY | SERIAL NO. | REMARKS |
|---|---|---|---|---|---|
| 1 | 4610146 | SUN VISOR | 1 | | |
| 2 | 4610147 | LATCH | 1 | | |
| 3 | 4610148 | LATCH | 1 | | |
| 4 | 4607644 | STRIKER | 1 | | |
| 5 | 4607645 | SPRING | 1 | | |
| 6 | 4116300 | SPRING PIN | 1 | | |
| 7 | 4607646 | COVER | 1 | | |
| 8 | 4607748 | BRACKET | 3 | | |
| 9 | 4607751 | COVER | 1 | | |
| 10 | 4607755 | SPRING | 1 | | |
| 11 | 4607757 | NUT | 1 | | |
| 12 | 11M7077 | COTTER PIN | 1 | | 1.600 X 25 MM, (SUB FOR A761620) |
| 13 | 24M7028 | WASHER | 2 | | 10.500 X 20 X 2 MM, (SUB FOR A590110) |
| 14 | 4607775 | WASHER | 1 | | |
| 15 | 4607776 | NUT | 1 | | |
| 16 | 14M7273 | NUT | 1 | | M8, (SUB FOR J950008) |
| 17 | 24M7055 | WASHER | 1 | | 8.400 X 16 X 1.600 MM, (SUB FOR A590108) |
| 18 | 12M7065 | LOCK WASHER | 1 | | 8 MM, (SUB FOR A590908) |
| 19 | 4607778 | BRACKET | 1 | | |
| 20 | 4600275 | SCREW | 2 | | |
| 21 | 4605834 | CLIP | 2 | | |
| 22 | 4607779 | ISOLATOR | 2 | | |
| 25 | 4607410 | BRACKET | 1 | | |
| 26 | 4456234 | ISOLATOR | 1 | | |
| 27 | 4458515 | BUSHING | 1 | | |
| 28 | J680620 | SCREW WITH WASHER | 2 | | |
| 29 | 4610145 | SUN VISOR | 1 | | |

**MAIN HYDRAULIC PUMP**

T206952 -UN-20JAN05

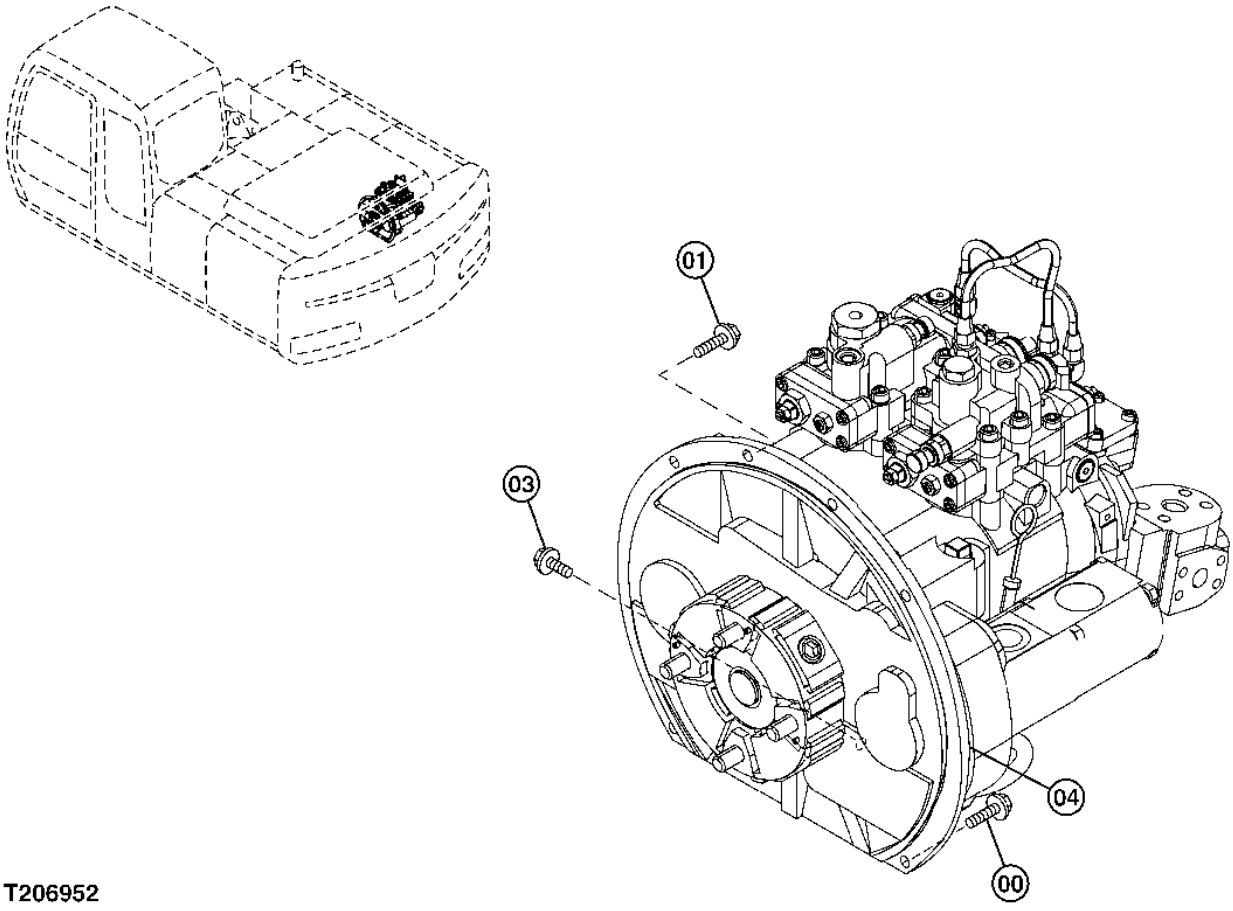


T206952

**MAIN HYDRAULIC PUMP**

| KEY | PART NO. | PART NAME | QTY | SERIAL NO. | REMARKS |
|---|---|---|---|---|---|
| 0 | 4609014 | BOLT | 3 | | |
| 1 | 4609015 | BOLT | 3 | | |
| 3 | ..... | BOLT | 1 | | ( J271020 NOT AVAILABLE FOR SERVICE) |
| | 19M7938 | CAP SCREW | 1 | | M10 X 20, (SUB FOR J901020) |
| | 24M7346 | WASHER | 1 | | 11 X 20 X 2 MM, (SUB FOR J222010) |
| 4 | 9236929 | HYDRAULIC PUMP | 1 | | (SUB FOR 9217221) |

**MAIN HYDRAULIC PUMP DRIVE ASSEMBLY**

T207034 -UN-01FEB05

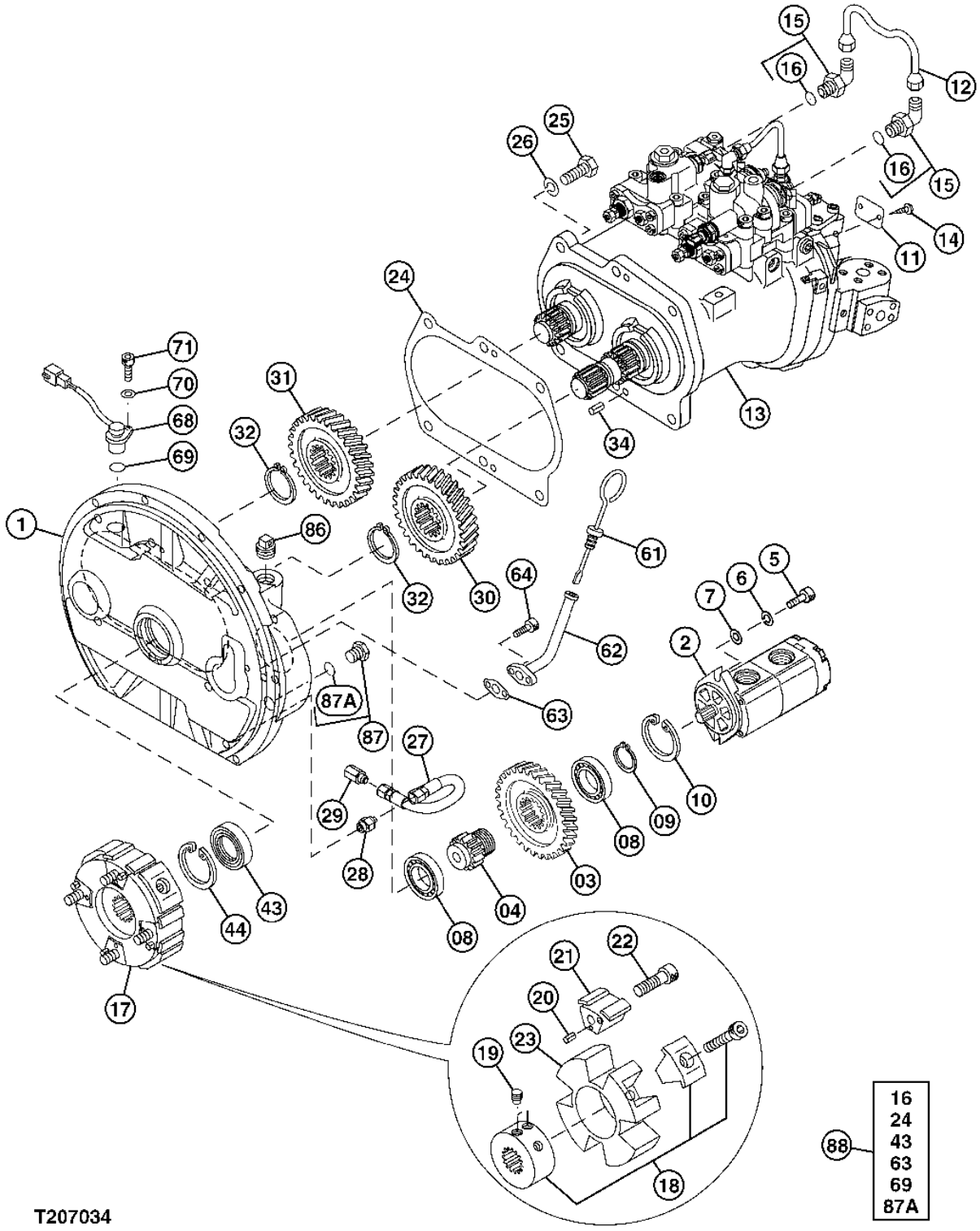

**MAIN HYDRAULIC PUMP DRIVE ASSEMBLY**

| KEY | PART NO. | PART NAME | QTY | SERIAL NO. | REMARKS |
|---|---|---|---|---|---|
| 1 | 1030682 | CASE | 1 | | |
| 2 | 9218033 | PUMP | 1 | | GEAR, (SUB FOR 4278696) |
| 3 | 3100991 | GEAR | 1 | | |
| 4 | 3055594 | SHAFT | 1 | | |
| 5 | 19M8337 | CAP SCREW | 2 | | M10 X 30, (SUB FOR M341030) |
| 6 | 12M7135 | LOCK WASHER | 2 | | 10 MM, (SUB FOR 984054) |
| 7 | 4114402 | WASHER | 2 | | |
| 8 | 6008X | BALL BEARING | 2 | | (SUB FOR 958740) |
| 9 | 962002 | SNAP RING | 1 | | |
| 10 | 40M7090 | SNAP RING | 1 | | (SUB FOR 991725) |
| 11 | ..... | PLATE | 1 | | NAME |
| 12 | 4369148 | OIL LINE | 1 | | |
| 13 | ..... | HYDRAULIC PUMP | 1 | | |
| 14 | 37H99 | SCREW | 2 | | 0.100" X 1/4", (SUB FOR M492564) |
| 15 | 4293950 | ELBOW FITTING | 2 | | |
| 16 | M800650 | PACKING | 1 | | (SUB FOR 957366) |
| 17 | 4416605 | COUPLING | 1 | | |
| 18 | 4463992 | HUB | 1 | | |
| 19 | 4334899 | SET SCREW | 2 | | |
| 20 | 34M7117 | SPRING PIN | 4 | | (SUB FOR 4101345) |
| 21 | 4463993 | INSERT | 4 | | |
| 22 | 4334894 | BOLT | 4 | | |
| 23 | 4463994 | GEAR | 1 | | |
| 24 | 8058352 | GASKET | 1 | | |
| 25 | 19M7489 | CAP SCREW | 6 | | M16 X 45, (SUB FOR J901645) |
| 26 | 12H294 | LOCK WASHER | 6 | | 5/8", (SUB FOR A590916) |
| 27 | 4613307 | HOSE | 1 | | |
| 28 | A852133 | ADAPTER | 1 | | |
| 29 | 4444381 | PIPE PLUG | 1 | | |
| 30 | 3100993 | GEAR | 1 | | |
| 31 | 3100994 | GEAR | 1 | | |
| 32 | 4274552 | SNAP RING | 2 | | |
| 34 | 34M7061 | SPRING PIN | 2 | | 8 X 20 MM, (SUB FOR 4099290) |
| 43 | 4310055 | SEAL | 1 | | |
| 44 | 40M7090 | SNAP RING | 1 | | (SUB FOR 991725) |
| 61 | 4438059 | DIPSTICK | 1 | | |
| 62 | 9743977 | DIPSTICK TUBE | 1 | | |
| 63 | 9742779 | GASKET | 1 | | |
| 64 | 19M7647 | CAP SCREW | 2 | | M8 X 16, (SUB FOR M340816) |
| 68 | 4265372 | SENSOR | 1 | | |
| 69 | 4306888 | O-RING | 1 | | |
| 70 | 24M7054 | WASHER | 1 | | 6.400 X 12 X 1.600 MM, (SUB FOR A590106) |
| 71 | 19M8553 | CAP SCREW | 1 | | M6 X 16, (SUB FOR M340616) |
| 86 | 4234782 | PLUG | 1 | | |
| 87 | 0309805 | PIPE PLUG | 1 | | (SUB FOR 4092534) |
| 87A | CH11570 | O-RING | 1 | | (SUB FOR 4509180) |
| 88 | 4451036 | SEAL KIT | 1 | | |

**GEAR PUMP ASSEMBLY (BLADE)**

T207035 -UN-01FEB05

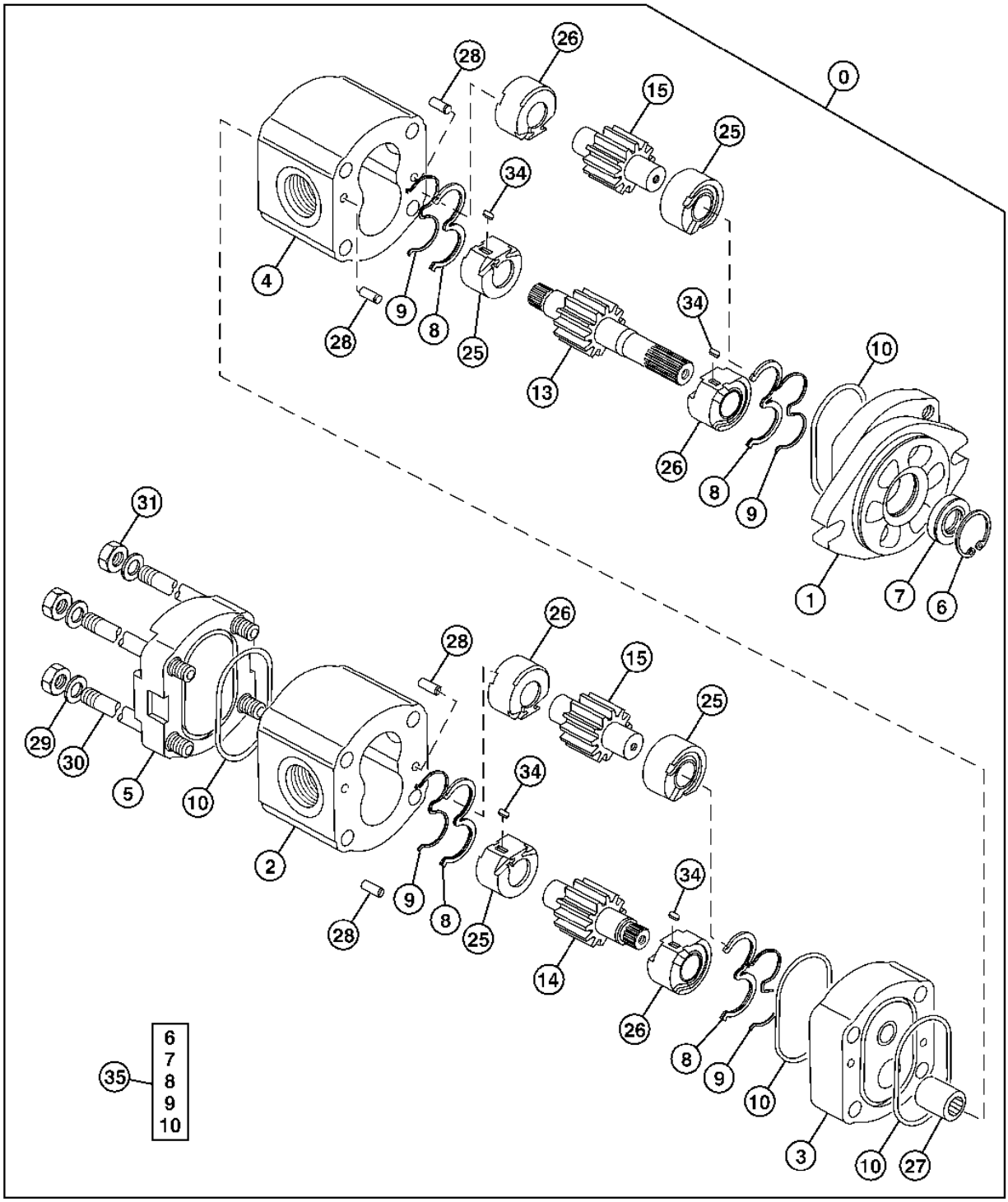


T207035

**GEAR PUMP ASSEMBLY (BLADE)**

| KEY | PART NO. | PART NAME | QTY | SERIAL NO. | REMARKS |
|---|---|---|---|---|---|
| 0 | 9218033 | PUMP | 1 | | GEAR, (SUB FOR AT183093, 4278696) |
| 1 | AT203653 | FLANGE | 1 | | |
| 2 | ..... | HOUSING | 1 | | |
| 3 | 0424901 | FLANGE | 1 | | (SUB FOR AT183922) |
| 4 | ..... | HOUSING | 1 | | |
| 5 | ..... | COVER | 1 | | |
| 6 | ..... | SNAP RING | 1 | | (K) |
| 7 | 0408202 | SEAL | 1 | | (K) (SUB FOR AT153880) |
| 8 | ..... | SEAL | 4 | | (K) |
| 9 | ..... | BACK-UP RING | 4 | | (K) |
| 10 | AT153835 | O-RING | 4 | | (K) |
| 13 | ..... | GEAR | 1 | | |
| 14 | ..... | GEAR | 1 | | |
| 15 | ..... | GEAR | 1 | | |
| 25 | ..... | BUSHING | 4 | | |
| 26 | ..... | BUSHING | 4 | | |
| 27 | 0424902 | COUPLING | 1 | | (SUB FOR AT183923) |
| 28 | ..... | PIN | 6 | | |
| 29 | AT153837 | WASHER | 4 | | 10.400 X 18 X 2 MM (0.409" X 0.709" X 0.079") |
| 30 | 0415302 | BOLT | 4 | | (SUB FOR AT183924) |
| 31 | 0354613 | NUT | 4 | | (SUB FOR AT183925) |
| 34 | AT153838 | SHAFT KEY | 4 | | |
| 35 | 0424903 | SEAL KIT | 1 | | (INCLUDES ALL (K) PARTS) (SUB FOR AT183921) |

**BLADE, CYLINDER, & HARDWARE**

T207858 -UN-21FEB05

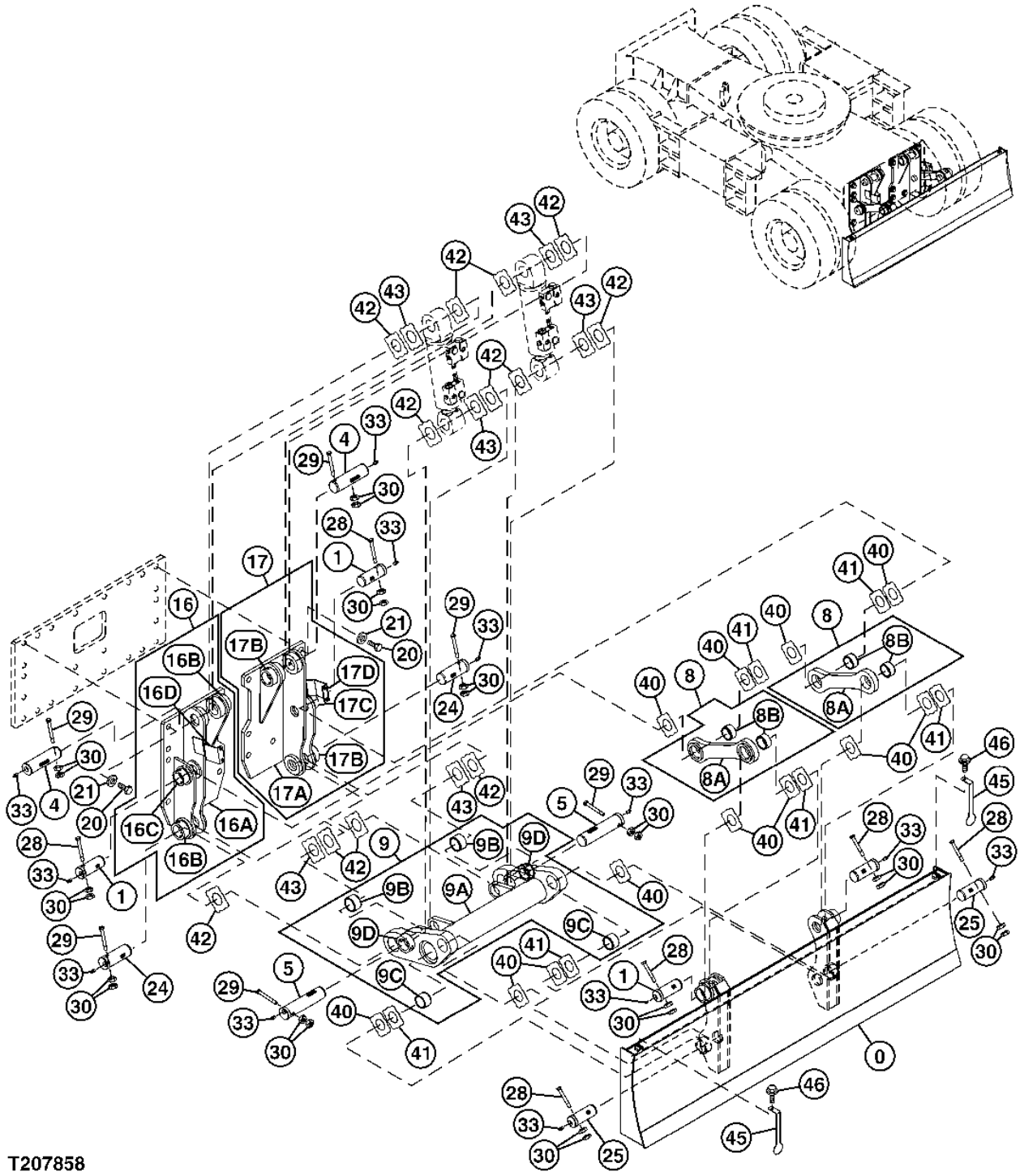

**BLADE, CYLINDER, & HARDWARE**

| KEY | PART NO. | PART NAME | QTY | SERIAL NO. | REMARKS |
|---|---|---|---|---|---|
| 0 | 6022069 | BLADE | 1 | | |
| 1 | 3095395 | PIN FASTENER | 4 | | |
| 4 | 3096994 | PIN FASTENER | 2 | | |
| 5 | 3096995 | PIN FASTENER | 2 | | |
| 8 | 8090790 | LINK | 2 | | |
| 8A | ..... | LINK | 1 | | ( 8090791 FOR PRODUCTION ONLY) (SERVICE 8090790) |
| 8B | 4107837 | BUSHING | 2 | | |
| 9 | 8090791 | LINK | 1 | | |
| 9A | ..... | LINK | 1 | | ( 7043737 FOR PRODUCTION ONLY) (SERVICE 8090791) |
| 9B | T104249 | BUSHING | 2 | | (SUB FOR 4196106) |
| 9C | AT122209 | BUSHING | 2 | | (SUB FOR 4196558) |
| 9D | 4435239 | STOP | 2 | | |
| 16 | 7043734 | BRACKET | 1 | | |
| 16A | 7043733 | BRACKET | 1 | | |
| 16B | 4435239 | STOP | 2 | | |
| 16C | 4434951 | STOP | 1 | | |
| 16D | 9760438 | BRACKET | 1 | | |
| 17 | 7043736 | BRACKET | 1 | | |
| 17A | 7043735 | BRACKET | 1 | | |
| 17B | 4435239 | STOP | 2 | | |
| 17C | 4434951 | STOP | 1 | | |
| 17D | 9760438 | BRACKET | 1 | | |
| 20 | J933065 | BOLT | 16 | | |
| 21 | 4114408 | WASHER | 16 | | |
| 24 | 3095396 | PIN FASTENER | 2 | | |
| 25 | 3095395 | PIN FASTENER | 2 | | |
| 28 | 4435123 | PIN FASTENER | 6 | | |
| 29 | 4435124 | PIN FASTENER | 6 | | |
| 30 | 14M7276 | NUT | 24 | | M16, (SUB FOR J950016) |
| 33 | TH100074 | LUBRICATION FITTING | 12 | | (SUB FOR J75481) |
| 40 | 4444290 | PLATE | 12 | | |
| 41 | 4444291 | THRUST WASHER | 6 | | |
| 42 | 4444288 | THRUST WASHER | 12 | | |
| 43 | 4444289 | THRUST WASHER | 6 | | |
| 45 | 4603188 | BRACKET | 2 | | |
| 46 | ..... | SCREW | 1 | | ( J271025 NOT AVAILABLE FOR SERVICE) |
| | 19M7402 | CAP SCREW | 1 | | M10 X 25, (SUB FOR J901025) |
| | 24M7346 | WASHER | 1 | | 11 X 20 X 2 MM, (SUB FOR J222010) |

**BLADE LINES**

T207830 -UN-11FEB05

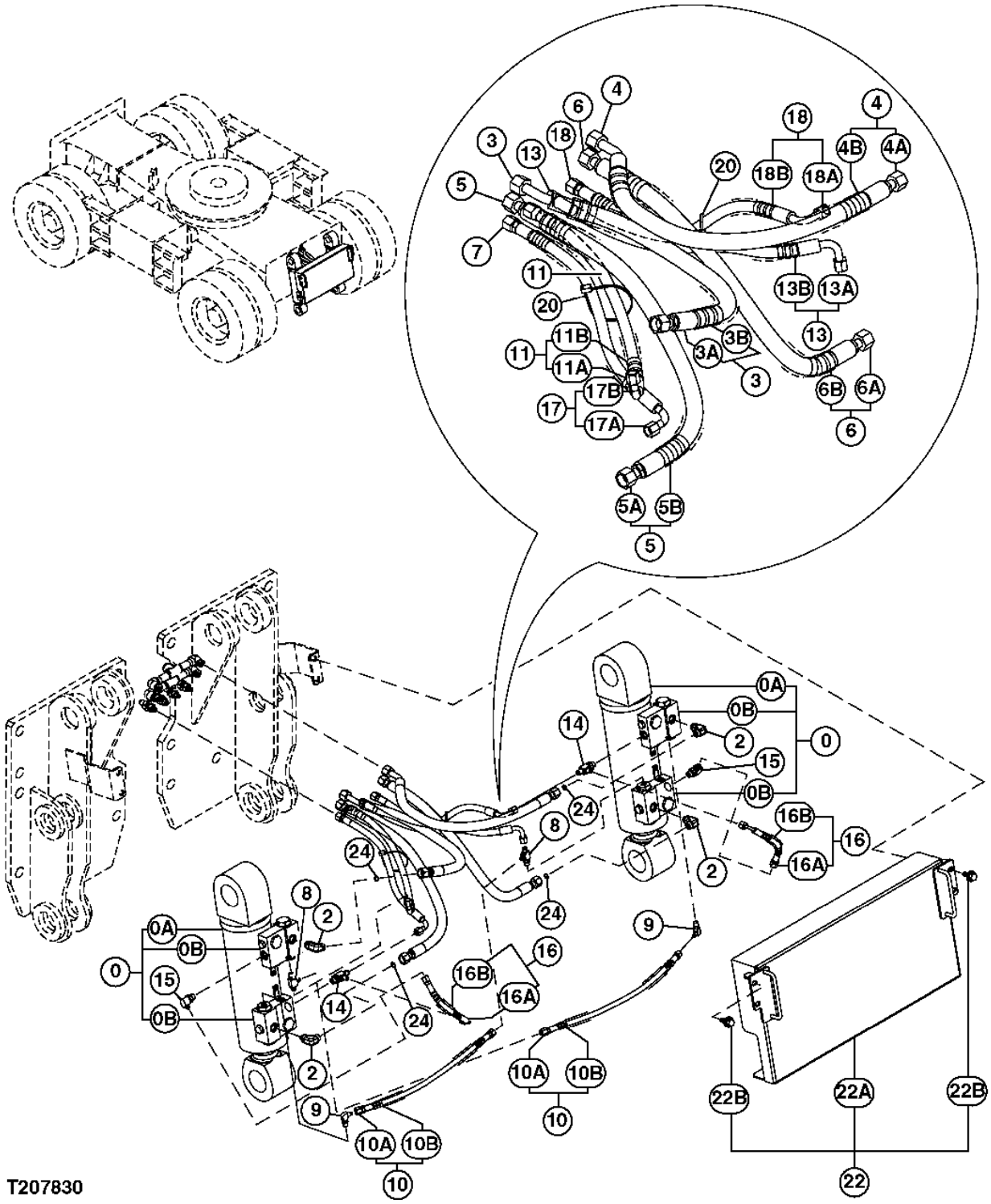

**BLADE LINES**

| KEY | PART NO. | PART NAME | QTY | SERIAL NO. | REMARKS |
|---|---|---|---|---|---|
| 0 | ..... | CYLINDER | 2 | | ( 9225025 IS NOT AVAILABLE FOR SERVICE) |
| 0A | 4486447 | CYLINDER | 1 | | |
| 0B | 9220919 | CHECK VALVE | 2 | | (SUB FOR 1030928) |
| 2 | 4202112 | ELBOW FITTING | 4 | | |
| | CH11570 | O-RING | 1 | | (SUB FOR 4509180) |
| 3 | ..... | HOSE | 1 | | ( 9224470 IS NOT AVAILABLE FOR SERVICE) |
| 3A | 4603525 | HOSE | 1 | | |
| 3B | 4327294 | HOSE GUARD | 1 | | |
| 4 | ..... | HOSE | 1 | | ( 9231237 IS NOT AVAILABLE FOR SERVICE) |
| 4A | 4609601 | HOSE | 1 | | |
| 4B | 4327294 | HOSE GUARD | 2 | | |
| 5 | ..... | HOSE | 1 | | ( 9231236 IS NOT AVAILABLE FOR SERVICE) |
| 5A | 4285799 | HOSE | 1 | | |
| 5B | 4327294 | HOSE GUARD | 2 | | |
| 6 | ..... | CAP SCREW | 2 | | ( 9224448 IS NOT AVAILABLE FOR SERVICE) |
| 6A | 4285797 | HOSE | 1 | | |
| 6B | 4327294 | HOSE GUARD | 1 | | |
| 8 | 4219346 | TEE FITTING | 2 | | |
| | M800650 | PACKING | 1 | | (SUB FOR 957366) |
| 9 | 4154670 | ELBOW FITTING | 2 | | (SUB FOR A852322) |
| | M800650 | PACKING | 1 | | (SUB FOR 957366) |
| 10 | ..... | HOSE | 2 | | ( 9224009 IS NOT AVAILABLE FOR SERVICE) |
| 10A | AE42718 | HYDRAULIC HOSE | 1 | | (SUB FOR 4340881) |
| 10B | 4327293 | HOSE GUARD | 1 | | |
| 11 | ..... | HOSE | 1 | | ( 9223929 IS NOT AVAILABLE FOR SERVICE) |
| 11A | 4489626 | HOSE | 1 | | |
| 11B | 4327293 | HOSE GUARD | 1 | | |
| 13 | ..... | HOSE | 1 | | ( 9219217 IS NOT AVAILABLE FOR SERVICE) |
| 13A | 4439953 | HOSE | 1 | | (SUB FOR 4482581) |
| 13B | 4327293 | HOSE GUARD | 1 | | |
| 14 | 4246385 | TEE FITTING | 2 | | |
| | CH11570 | O-RING | 1 | | (SUB FOR 4509180) |
| 15 | A852332 | ELBOW FITTING | 2 | | |
| | CH11570 | O-RING | 1 | | (SUB FOR 4509180) |
| 16 | ..... | HOSE | 2 | | ( 9224010 IS NOT AVAILABLE FOR SERVICE) |
| 16A | AT202223 | HYDRAULIC HOSE - FABRICATE | 1 | | (SUB FOR 4366745) |
| 16B | 4327293 | HOSE GUARD | 1 | | |
| 17 | ..... | HOSE | 1 | | ( 9231238 IS NOT AVAILABLE FOR SERVICE) |
| 17A | 4609608 | HOSE | 1 | | |
| 17B | 4327293 | HOSE GUARD | 1 | | |
| 18 | ..... | HOSE | 1 | | ( 9231239 IS NOT AVAILABLE FOR SERVICE) |
| 18A | 4488227 | HOSE | 1 | | |
| 18B | 4327293 | HOSE GUARD | 1 | | |
| 20 | H77698 | TIE BAND | 2 | | (SUB FOR 4055312) |
| 22 | ..... | COVER | 1 | | ( 9223937 IS NOT AVAILABLE FOR SERVICE) |
| 22A | 8091488 | COVER | 1 | | |
| 22B | ..... | CAP SCREW | 4 | | ( J271230 IS NOT AVAILABLE FOR SERVICE) |
| | 19M8011 | CAP SCREW | 1 | | M12 X 30, (SUB FOR J901230) |
| | 24M7345 | WASHER | 1 | | 13.500 X 24 X 2.500 MM, (SUB FOR J222012) |
| 24 | 4138938 | O-RING | 4 | | |

**BUCKET**
**(GENERAL PURPOSE HIGH CAPACITY BUCKET)**
**(ALSO ORDER BUCKET TOOTH ASSEMBLIES)**

T134589 -UN-12OCT00

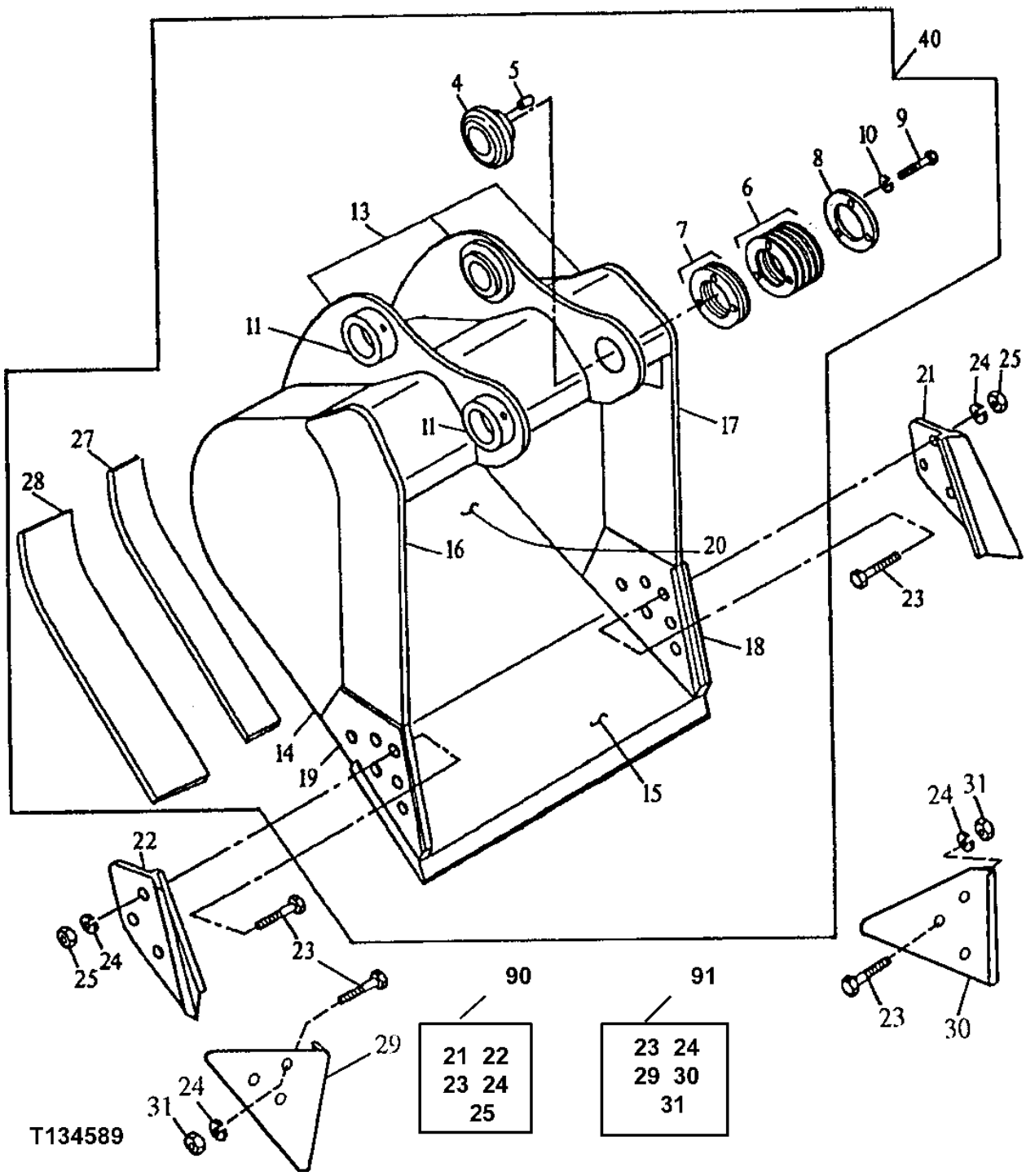

**BUCKET**
**(GENERAL PURPOSE HIGH CAPACITY BUCKET)**
**(ALSO ORDER BUCKET TOOTH ASSEMBLIES)**

| KEY | PART NO. | PART NAME | QTY | SERIAL NO. | REMARKS |
|---|---|---|---|---|---|
| 4 | AT131083 | SELF-ALIGNING BUSHING | 1 | | (1 INCH HEAD THICKNESS) |
| 5 | R48685 | DOWEL PIN | 1 | | |
| 6 | TH104512 | WASHER | 9 | | |
| 7 | TH104513 | SHIM | 1 | | |
| 8 | TH104514 | WASHER | 1 | | |
| 9 | 19H2706 | CAP SCREW | 3 | | 5/8" X 2" |
| 10 | 12H294 | LOCK WASHER | 3 | | 5/8", (1" HEAD THICKNESS) |
| 11 | TH104509 | BUSHING | 2 | | |
| 13 | C607480 | PIVOT | 1 | | (BUCKET EAR BLANK ASSEMBLY) (ORDER FROM CENTRAL FABRICATORS) |
| 14 | 300536 | PLATE | 2 | | (RIGHT AND LEFT SIDE) (ORDER FROM CENTRAL FABRICATORS) |
| 15 | ..... | CUTTING EDGE | 1 | | (CUT TO LENGTH FROM AT131090 BULK MATERIAL) |
| 16 | 300534 | VERTICAL CUTTER | 1 | | (UPPER RIGHT SIDE) (ORDER FROM CENTRAL FABRICATORS) |
| 17 | 300535 | VERTICAL CUTTER | 1 | | (UPPER LEFT SIDE) (ORDER FROM CENTRAL FABRICATORS) |
| 18 | 300482 | VERTICAL CUTTER | 1 | | (LEFT INSERT) (ORDER FROM CENTRAL FABRICATORS) |
| 19 | 300481 | VERTICAL CUTTER | 1 | | (RIGHT INSERT) (ORDER FROM CENTRAL FABRICATORS) |
| 20 | 600318 | MOLDBOARD | 1 | | (30 INCH) (ORDER FROM CENTRAL FABRICATORS) |
| | 600319 | MOLDBOARD | 1 | | (36 INCH) (ORDER FROM CENTRAL FABRICATORS) |
| | 600320 | MOLDBOARD | 1 | | (42 INCH) (ORDER FROM CENTRAL FABRICATORS) |
| | 600321 | MOLDBOARD | 1 | | (48 INCH) (ORDER FROM CENTRAL FABRICATORS) |
| 21 | ..... | CUTTING EDGE | 1 | | (SUB AT131080) |
| 22 | ..... | CUTTING EDGE | 1 | | (SUB AT131080) |
| 23 | 09H1770 | BOLT | 6 | | 7/8" X 2-1/2" |
| 24 | 12H245 | LOCK WASHER | 6 | | 7/8" |
| 25 | 14H1077 | NUT | 6 | | 7/8" |
| 27 | 300524 | BAR | 1 | | (INNER WEAR) (ORDER FROM CENTRAL FABRICATORS) |
| 28 | 306974 | BAR | 2 | | (OUTER WEAR) (ORDER FROM CENTRAL FABRICATORS) |
| 29 | ..... | SHROUD | 1 | | (WEAR SHROUD) (SUB AT167874) |
| 30 | ..... | SHROUD | 1 | | (WEAR SHROUD) (SUB AT167874) |
| 31 | 14H1044 | NUT | 6 | | 22.225 MM (7/8") |
| **40** | **AT163607** | **EXCAVATOR BUCKET** | **1** | | **WHOLEGOODS (30 INCH - .95 CUBIC YARD) (AVAILABLE TOOTH ASSEMBLIES ON SEPARATE PAGE)** |
| | **AT163608** | **EXCAVATOR BUCKET** | **1** | | **WHOLEGOODS (36 INCH - 1.16 CUBIC YARD) (AVAILABLE TOOTH ASSEMBLIES ON SEPARATE PAGE)** |
| | **AT163609** | **EXCAVATOR BUCKET** | **1** | | **WHOLEGOODS (42 INCH - 1.38 CUBIC YARD) (AVAILABLE TOOTH ASSEMBLIES ON SEPARATE PAGE)** |
| | **AT163610** | **EXCAVATOR BUCKET** | **1** | | **WHOLEGOODS (48 INCH - 1.60 CUBIC YARD) (AVAILABLE TOOTH ASSEMBLIES ON SEPARATE PAGE)** |
| **90** | **AT131080** | **END BIT** | **1** | | **(SIDE CUTTER KIT)** |
| 91 | AT167874 | KIT | 1 | | (EDGE PROTECTOR) |

**BUCKET**
**(HEAVY DUTY)**
**(ALSO ORDER BUCKET TOOTH ASSEMBLIES)**

TP50702 -UN-17OCT97

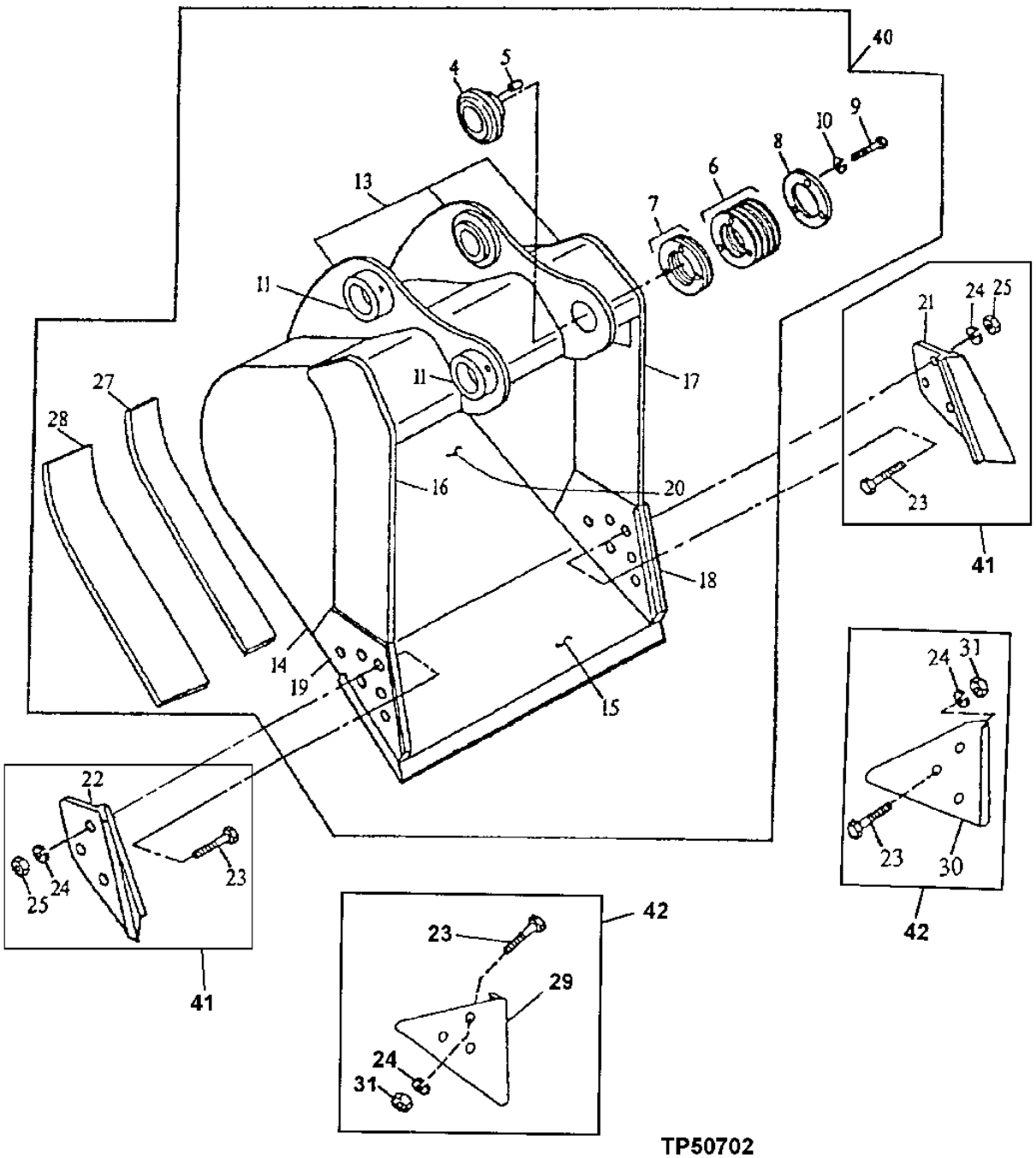

**BUCKET**
**(HEAVY DUTY)**
**(ALSO ORDER BUCKET TOOTH ASSEMBLIES)**

| KEY | PART NO. | PART NAME | QTY | SERIAL NO. | REMARKS |
|---|---|---|---|---|---|
| 4 | AT131083 | SELF-ALIGNING BUSHING | 1 | | (1 INCH HEAD THICKNESS) |
| 5 | R48685 | DOWEL PIN | 1 | | |
| 6 | TH104512 | WASHER | 9 | | |
| 7 | TH104513 | SHIM | 1 | | |
| 8 | TH104514 | WASHER | 1 | | |
| 9 | 19H2706 | CAP SCREW | 3 | | 5/8" X 2" |
| 10 | 12H294 | LOCK WASHER | 3 | | 5/8" |
| 11 | TH104509 | BUSHING | 2 | | (LOCKING COLLAR) |
| 13 | C607480 | PIVOT | 1 | | (BUCKET EAR BLANK ASSEMBLY) (ORDER FROM CENTRAL FABRICATORS) |
| 14 | 300804 | PLATE | 2 | | (RIGHT AND LEFT SIDE) (ORDER FROM CENTRAL FABRICATORS) |
| 15 | ..... | CUTTING EDGE | 1 | | (CUT TO LENGTH FROM AT131082 BULK MATERIAL) |
| 16 | 300526 | VERTICAL CUTTER | 1 | | (UPPER RIGHT SIDE) (ORDER FROM CENTRAL FABRICATORS) |
| 17 | 300527 | VERTICAL CUTTER | 1 | | (UPPER LEFT SIDE) (ORDER FROM CENTRAL FABRICATORS) |
| 18 | 304568 | VERTICAL CUTTER | 1 | | (LEFT INSERT) (ORDER FROM CENTRAL FABRICATORS) |
| 19 | 304567 | VERTICAL CUTTER | 1 | | (RIGHT INSERT) (ORDER FROM CENTRAL FABRICATORS) |
| 20 | 600417 | MOLDBOARD | 1 | | (24 INCH) (ORDER FROM CENTRAL FABRICATORS) |
| | 600418 | MOLDBOARD | 1 | | (30 INCH) (ORDER FROM CENTRAL FABRICATORS) |
| | 600419 | MOLDBOARD | 1 | | (36 INCH) (ORDER FROM CENTRAL FABRICATORS) |
| | 600420 | MOLDBOARD | 1 | | (42 INCH) (ORDER FROM CENTRAL FABRICATORS) |
| | 600122 | MOLDBOARD | 1 | | (48 INCH) (ORDER FROM CENTRAL FABRICATORS) |
| 21 | ..... | CUTTING EDGE | 1 | | (SUB AT131085) (LEFT) |
| 22 | ..... | CUTTING EDGE | 1 | | (SUB AT131085) (RIGHT) |
| 23 | 09H1771 | BOLT | 6 | | 7/8" X 3" |
| 24 | 12H245 | LOCK WASHER | 6 | | 7/8" |
| 25 | 14H1077 | NUT | 6 | | 7/8" |
| 27 | 300524 | BAR | 1 | | (INNER WEAR) (ORDER FROM CENTRAL FABRICATORS) |
| 28 | 304564 | BAR | 2 | | (OUTER WEAR) (ORDER FROM CENTRAL FABRICATORS) |
| 29 | ..... | SHROUD | 1 | | (WEAR SHROUD) (SUB AT167876) |
| 30 | ..... | SHROUD | 1 | | (WEAR SHROUD) (SUB AT167876) |
| 31 | 14H1044 | NUT | 6 | | 22.225 MM (7/8") |
| **40** | **AT163611** | **EXCAVATOR BUCKET** | **1** | | **WHOLEGOODS (24 INCH - .59 CUBIC YARD) (AVAILABLE TOOTH ASSEMBLIES ON SEPARATE PAGE)** |
| | **AT163612** | **EXCAVATOR BUCKET** | **1** | | **WHOLEGOODS (30 INCH - .77 CUBIC YARD) (AVAILABLE TOOTH ASSEMBLIES ON SEPARATE PAGE)** |
| | **AT163613** | **EXCAVATOR BUCKET** | **1** | | **WHOLEGOODS (36 INCH - .95 CUBIC YARD) (AVAILABLE TOOTH ASSEMBLIES ON SEPARATE PAGE)** |
| | **AT163614** | **EXCAVATOR BUCKET** | **1** | | **WHOLEGOODS (42 INCH - 1.12 CUBIC YARD) (AVAILABLE TOOTH ASSEMBLIES ON SEPARATE PAGE)** |
| | **AT163615** | **EXCAVATOR BUCKET** | **1** | | **WHOLEGOODS (48 INCH - 1.30 CUBIC YARD) (AVAILABLE TOOTH ASSEMBLIES ON SEPARATE PAGE)** |
| 41 | AT131085 | KIT | 1 | | (CUTTING EDGE) WHOLEGOODS |
| 42 | AT167876 | KIT | 1 | | (WEAR) WHOLEGOODS |

**BUCKET**
**(HEAVY DUTY HIGH CAPACITY)**
**(ALSO ORDER BUCKET TOOTH ASSEMBLIES)**

TP50702 -UN-17OCT97

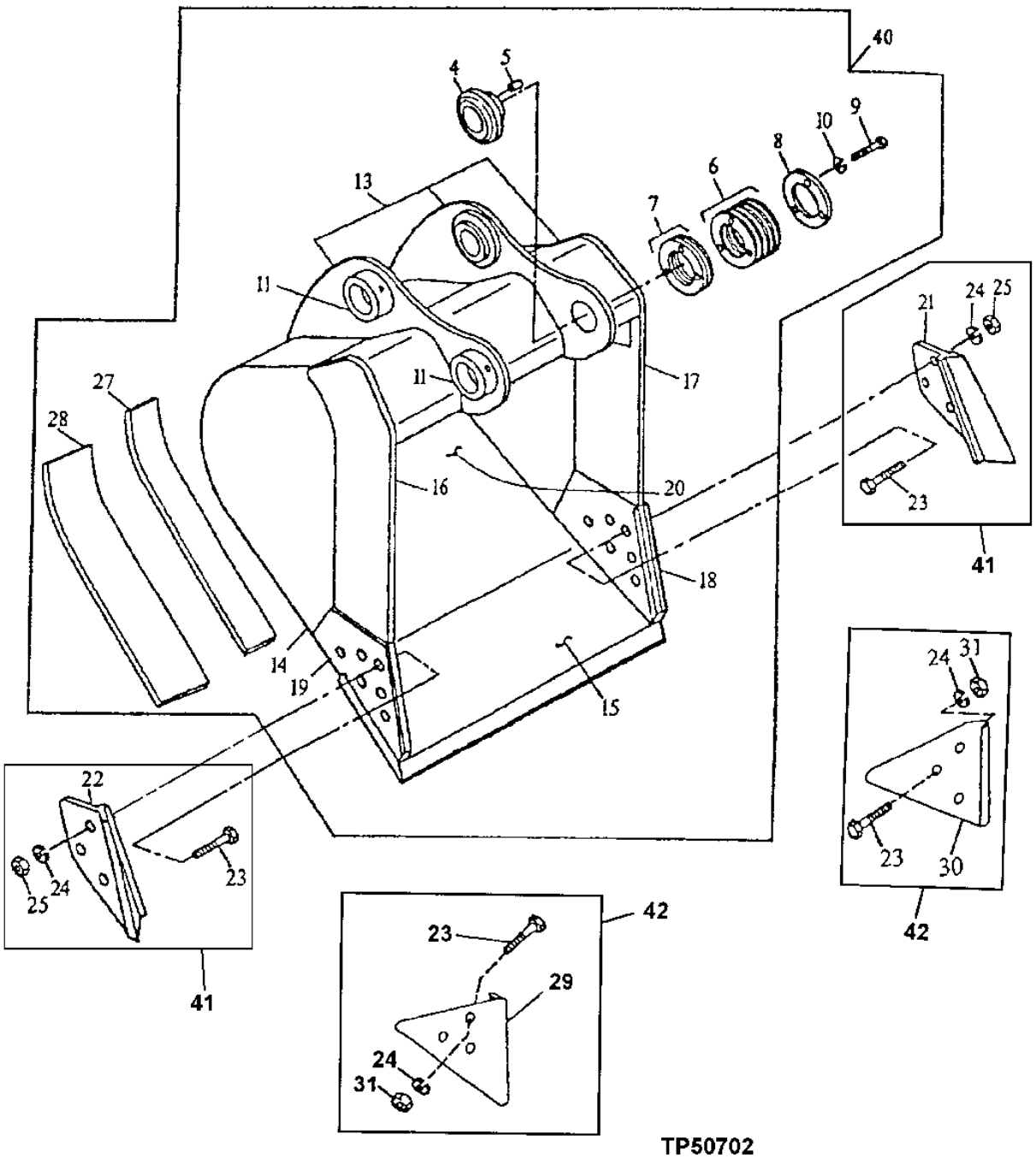

**BUCKET**
**(HEAVY DUTY HIGH CAPACITY)**
**(ALSO ORDER BUCKET TOOTH ASSEMBIES)**

| KEY | PART NO. | PART NAME | QTY | SERIAL NO. | REMARKS |
|---|---|---|---|---|---|
| 4 | AT131083 | SELF-ALIGNING BUSHING | 1 | | (1 INCH HEAD THICKNESS) |
| 5 | R48685 | DOWEL PIN | 1 | | |
| 6 | TH104512 | WASHER | 9 | | |
| 7 | TH104513 | SHIM | 1 | | |
| 8 | TH104514 | WASHER | 1 | | |
| 9 | 19H2706 | CAP SCREW | 3 | | 5/8" X 2" |
| 10 | 12H294 | LOCK WASHER | 3 | | 5/8" |
| 11 | TH104509 | BUSHING | 2 | | (LOCKING COLLAR) |
| 13 | C607480 | PIVOT | 1 | | (BUCKET EAR BLANK ASSEMBLY) (ORDER FROM CENTRAL FABRICATORS) |
| 14 | 300167 | PLATE | 2 | | (RIGHT AND LEFT SIDE) (ORDER FROM CENTRAL FABRICATORS) |
| 15 | ..... | CUTTING EDGE | 1 | | (CUT TO LENGTH FROM AT131090 BULK MATERIAL) |
| | C252567 | CUTTING EDGE | 1 | | (CUT TO LENGTH) USE WITH 36 INCH BUCKET, (ORDER FROM CENTRAL FABRICATORS) |
| 16 | 300159 | VERTICAL CUTTER | 1 | | (UPPER RIGHT SIDE) (ORDER FROM CENTRAL FABRICATORS) |
| 17 | 300160 | VERTICAL CUTTER | 1 | | (UPPER LEFT SIDE) (ORDER FROM CENTRAL FABRICATORS) |
| 18 | 300158 | VERTICAL CUTTER | 1 | | (LEFT INSERT) (ORDER FROM CENTRAL FABRICATORS) |
| 19 | 300157 | VERTICAL CUTTER | 1 | | (RIGHT INSERT) (ORDER FROM CENTRAL FABRICATORS) |
| 20 | 600118 | MOLDBOARD | 1 | | (24 INCH) (ORDER FROM CENTRAL FABRICATORS) |
| | 600119 | MOLDBOARD | 1 | | (30 INCH) (ORDER FROM CENTRAL FABRICATORS) |
| | 600120 | MOLDBOARD | 1 | | (36 INCH) (ORDER FROM CENTRAL FABRICATORS) |
| | 600121 | MOLDBOARD | 1 | | (42 INCH) (ORDER FROM CENTRAL FABRICATORS) |
| | 600122 | MOLDBOARD | 1 | | (48 INCH) (ORDER FROM CENTRAL FABRICATORS) |
| 21 | ..... | CUTTING EDGE | 1 | | (SUB AT131085) (LEFT) |
| 22 | ..... | CUTTING EDGE | 1 | | (SUB AT131085) (RIGHT) |
| 23 | 09H1771 | BOLT | 6 | | 7/8" X 3" |
| 24 | 12H245 | LOCK WASHER | 6 | | 7/8" |
| 25 | 14H1077 | NUT | 6 | | 7/8" |
| 27 | 300156 | BAR | 1 | | (INNER WEAR) (ORDER FROM CENTRAL FABRICATORS) |
| 28 | 306452 | BAR | 2 | | (OUTER WEAR) (ORDER FROM CENTRAL FABRICATORS) |
| 29 | ..... | SHROUD | 1 | | (WEAR SHROUD) (SUB AT167876) |
| 30 | ..... | SHROUD | 1 | | (WEAR SHROUD) (SUB AT167876) |
| 31 | 14H1044 | NUT | 6 | | 22.225 MM (7/8") |
| **40** | **AT163616** | **EXCAVATOR BUCKET** | **1** | | **WHOLEGOODS (24 INCH - .73 CUBIC YARD) (AVAILABLE TOOTH ASSEMBLIES ON SEPARATE PAGE)** |
| | **AT163617** | **EXCAVATOR BUCKET** | **1** | | **WHOLEGOODS (30 INCH - .95 CUBIC YARD) (AVAILABLE TOOTH ASSEMBLIES ON SEPARATE PAGE)** |
| | **AT163618** | **EXCAVATOR BUCKET** | **1** | | **WHOLEGOODS (36 INCH - 1.16 CUBIC YARD) (AVAILABLE TOOTH ASSEMBLIES ON SEPARATE PAGE)** |
| | **AT163620** | **EXCAVATOR BUCKET** | **1** | | **WHOLEGOODS (42 INCH - 1.38 CUBIC YARD) (AVAILABLE TOOTH ASSEMBLIES ON SEPARATE PAGE)** |
| | **AT199358** | **EXCAVATOR BUCKET** | **1** | | **WHOLEGOODS (48 INCH - X.XX CUBIC YARD) (AVAILABLE TOOTH ASSEMBLIES ON SEPARATE PAGE)** |
| 41 | AT131085 | KIT | 1 | | (CUTTING EDGE) WHOLEGOODS |
| 42 | AT167876 | KIT | 1 | | (WEAR) WHOLEGOODS |

**SUPER LONG FRONT BUCKET, 30 INCH**
**(SEVERE DUTY PLATE LIP)**
**(ALSO ORDER BUCKET TOOTH ASSEMBLIES)**

T202734 -UN-07SEP04

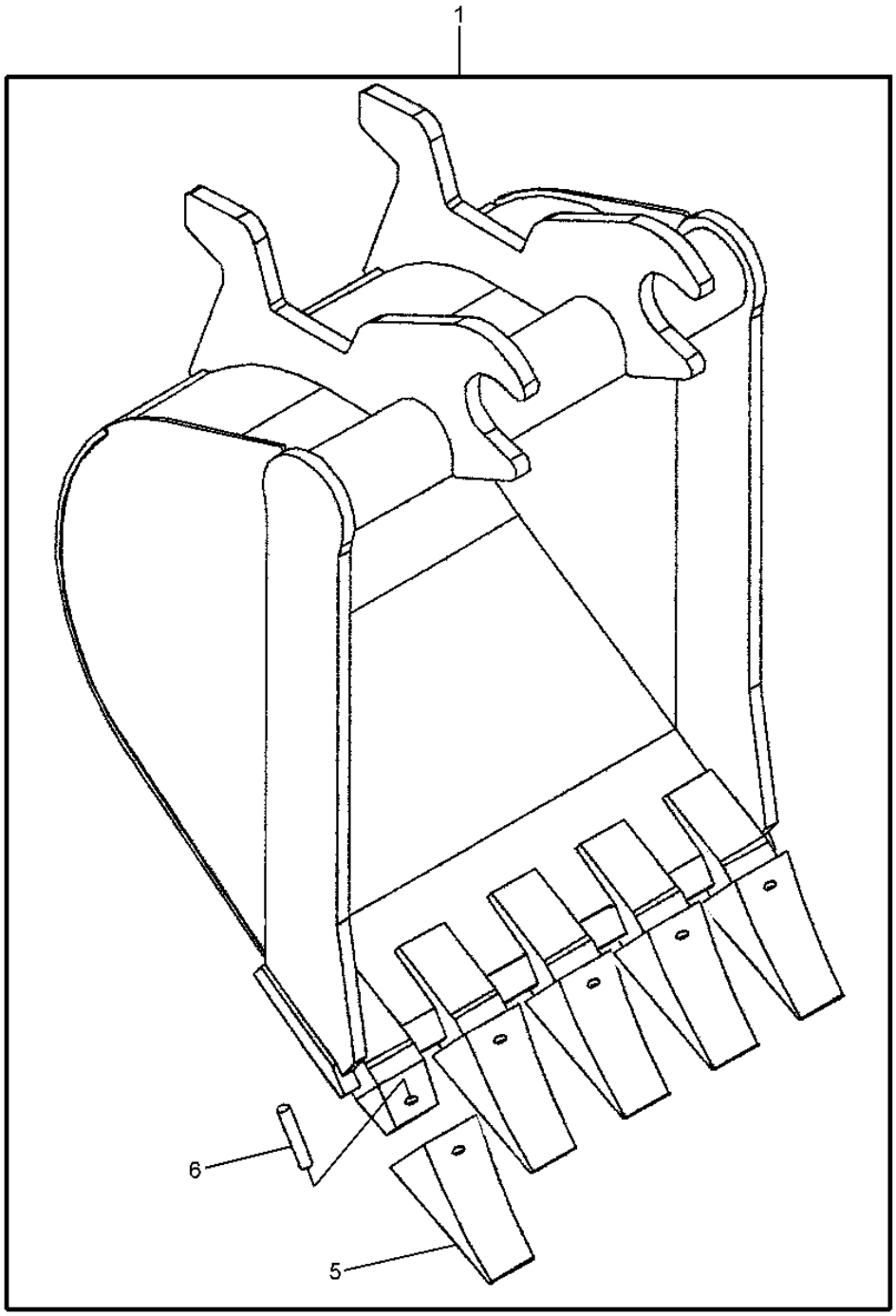


T202734

**SUPER LONG FRONT BUCKET, 30 INCH**
**(SEVERE DUTY PLATE LIP)**
**(ALSO ORDER BUCKET TOOTH ASSEMBLIES)**

| KEY | PART NO. | PART NAME | QTY | SERIAL NO. | REMARKS |
|---|---|---|---|---|---|
| **1** | **AT317199** | **EXCAVATOR BUCKET** | **1** | | **(WHOLEGOODS)** |
| 5 | TF220 | TOOTH | 5 | | |
| 6 | TP160L | SPRING PIN | 5 | | |

**DITCHING BUCKET**

TP32968 -UN-01JAN94

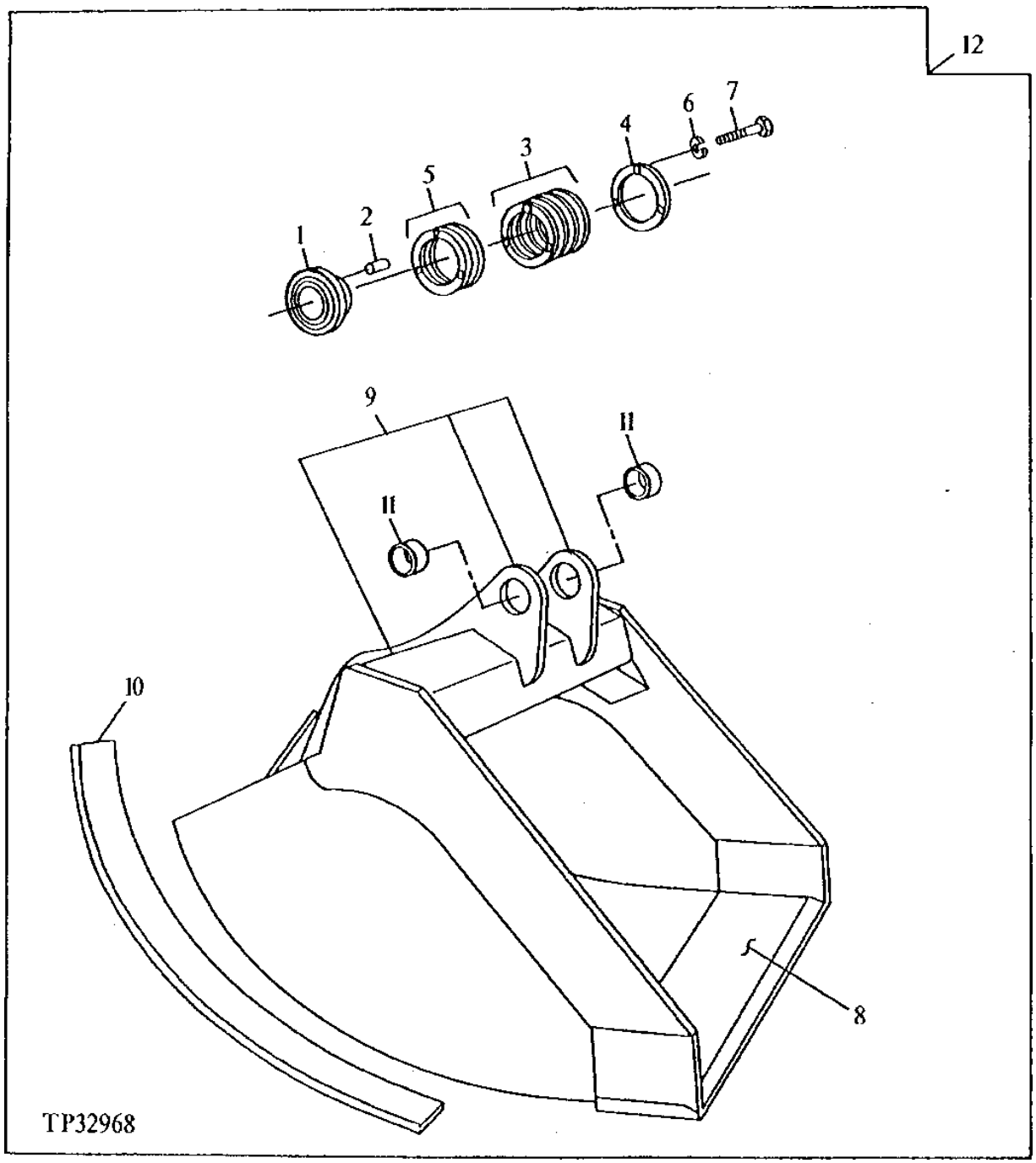

**DITCHING BUCKET**

| KEY | PART NO. | PART NAME | QTY | SERIAL NO. | REMARKS |
|---|---|---|---|---|---|
| 1 | AT131083 | SELF-ALIGNING BUSHING | 1 | | (1" HEAD THICKNESS) |
| 2 | R48685 | DOWEL PIN | 1 | | |
| 3 | TH104512 | WASHER | 9 | | |
| 4 | TH104514 | WASHER | 1 | | |
| 5 | TH104513 | SHIM | 1 | | |
| 6 | 12H294 | LOCK WASHER | 3 | | 5/8" |
| 7 | 19H2706 | CAP SCREW | 3 | | 5/8" X 2" |
| 9 | C607480 | PIVOT | 1 | | (BUCKET EAR BLANK ASSEMBLY) (ORDER FROM CENTRAL FABRICATORS) |
| 10 | 300204 | BAR | 5 | | (WEAR STRIP) (ORDER FROM CENTRAL FABRICATORS) |
| 11 | TH104509 | BUSHING | 2 | | (USE WITH AT161005 BUCKET) |
| | TH108649 | BUSHING | 2 | | (USE WITH AT160685 BUCKET) |
| **12** | **AT131117** | **EXCAVATOR BUCKET** | **1** | | **WHOLEGOODS (72 INCH - 1.06 CUBIC YARD)** |
| | **AT161005** | **EXCAVATOR BUCKET** | **1** | | **WHOLEGOODS 60" WIDE (.90 CU. YD.)** |
| | **AT199362** | **EXCAVATOR BUCKET** | **1** | | **WHOLEGOODS (60 INCH - 1.13 CUBIC YARD)** |
| | **AT199363** | **EXCAVATOR BUCKET** | **1** | | **WHOLEGOODS (72 INCH - 1.34 CUBIC YARD)** |
| | **AT317398** | **EXCAVATOR BUCKET** | **1** | | **WHOLEGOODS** |

**SUPER LONG FRONT DITCH CLEANING BUCKET**

T202735 -UN-07SEP04

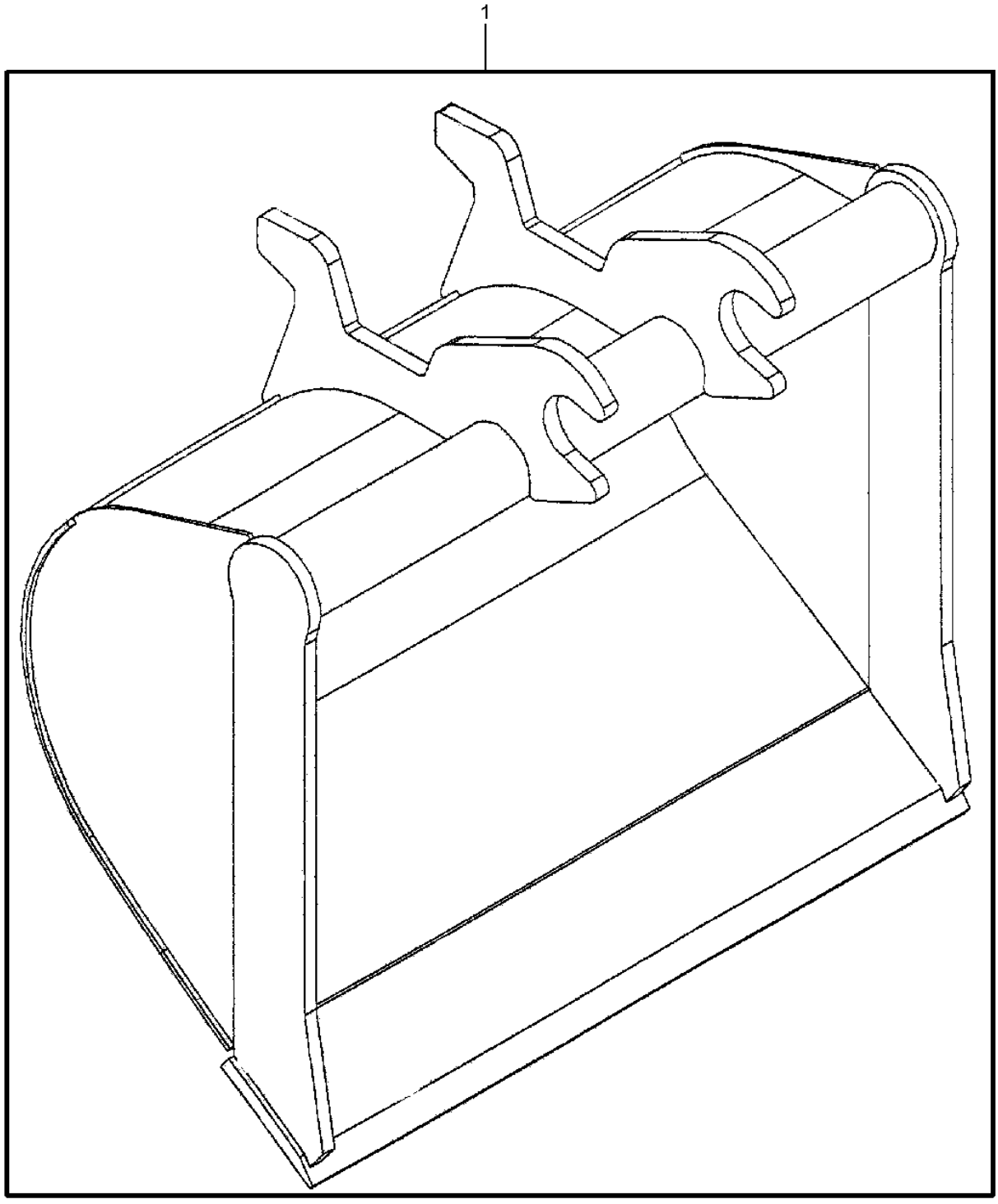


T202735

**SUPER LONG FRONT DITCH CLEANING BUCKET**

| KEY | PART NO. | PART NAME | QTY | SERIAL NO. | REMARKS |
|---|---|---|---|---|---|
| **1** | **AT317201** | **EXCAVATOR BUCKET** | **1** | | **(WHOLEGOODS) (60 INCH)** |

**BUCKET**
**(GENERAL PURPOSE)**
**(ALSO ORDER BUCKET TOOTH ASSEMBLIES)**

T149120 -UN-14DEC01

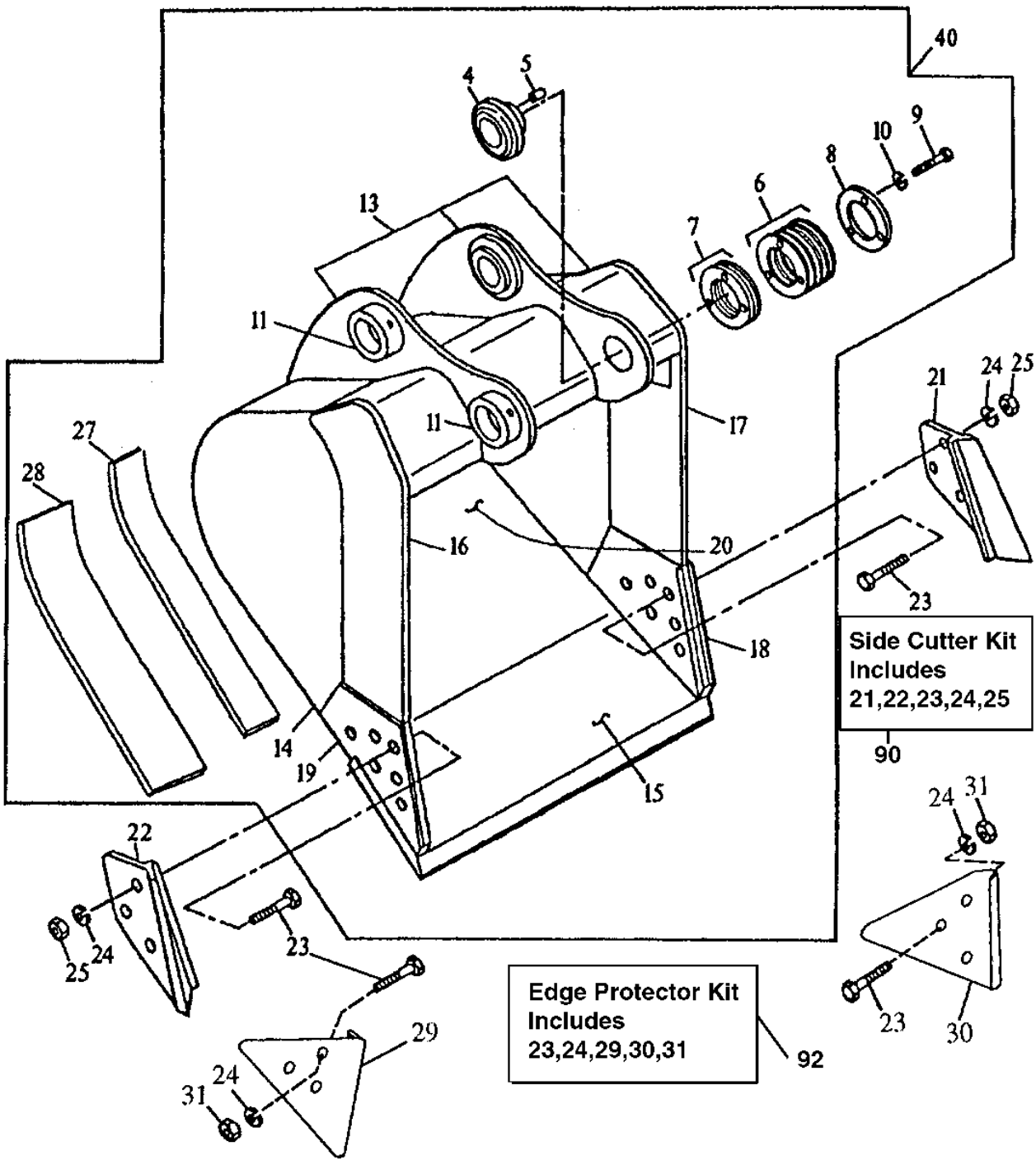


T149120

**BUCKET**
**(GENERAL PURPOSE)**
**(ALSO ORDER BUCKET TOOTH ASSEMBLIES)**

| KEY | PART NO. | PART NAME | QTY | SERIAL NO. | REMARKS |
|---|---|---|---|---|---|
| 4 | AT131083 | SELF-ALIGNING BUSHING | 1 | | (1 INCH HEAD THICKNESS) |
| 5 | R48685 | DOWEL PIN | 1 | | |
| 6 | TH104512 | WASHER | 9 | | |
| 7 | TH104513 | SHIM | 1 | | |
| 8 | TH104514 | WASHER | 1 | | |
| 9 | 19H2706 | CAP SCREW | 3 | | 5/8" X 2" |
| 10 | 12H294 | LOCK WASHER | 3 | | 5/8" |
| 11 | TH104509 | BUSHING | 2 | | (LOCKING COLLAR) |
| 13 | C607480 | PIVOT | 1 | | (BUCKET EAR BLANK ASSEMBLY) (ORDER FROM CENTRAL FABRICATORS) |
| 14 | 300536 | PLATE | 2 | | (RIGHT AND LEFT SIDE) (ORDER FROM CENTRAL FABRICATORS) |
| 15 | ..... | CUTTING EDGE | 1 | | (CUT TO LENGTH FROM AT131082) |
| 16 | 300534 | VERTICAL CUTTER | 1 | | (UPPER RIGHT SIDE) (ORDER FROM CENTRAL FABRICATORS) |
| 17 | 300535 | VERTICAL CUTTER | 1 | | (UPPER LEFT SIDE) (ORDER FROM CENTRAL FABRICATORS) |
| 18 | 300482 | VERTICAL CUTTER | 1 | | (LEFT INSERT) (ORDER FROM CENTRAL FABRICATORS) |
| 19 | 300481 | VERTICAL CUTTER | 1 | | (RIGHT INSERT) (ORDER FROM CENTRAL FABRICATORS) |
| 20 | 600318 | MOLDBOARD | 1 | | (30 INCH) (ORDER FROM CENTRAL FABRICATORS) |
| | 600319 | MOLDBOARD | 1 | | (36 INCH) (ORDER FROM CENTRAL FABRICATORS) |
| | 600320 | MOLDBOARD | 1 | | (42 INCH) (ORDER FROM CENTRAL FABRICATORS) |
| | 600321 | MOLDBOARD | 1 | | (48 INCH) (ORDER FROM CENTRAL FABRICATORS) |
| 21 | ..... | CUTTING EDGE | 1 | | (SUB AT131080) (LEFT) |
| 22 | ..... | CUTTING EDGE | 1 | | (SUB AT131080) (RIGHT) |
| 23 | 09H1771 | BOLT | 6 | | (A) 7/8" X 3" |
| 24 | 12H245 | LOCK WASHER | 6 | | (A) 7/8" |
| 25 | 14H1077 | NUT | 6 | | 7/8" |
| 27 | 300524 | BAR | 1 | | (INNER WEAR) (ORDER FROM CENTRAL FABRICATORS) |
| 28 | 306974 | BAR | 1 | | (OUTER WEAR) (ORDER FROM CENTRAL FABRICATORS) |
| 29 | ..... | SHROUD | 1 | | (A) (WEAR SHROUD) (SUB AT167874) |
| 30 | ..... | SHROUD | 1 | | (A) (WEAR SHROUD) (SUB AT167874) |
| 31 | 14H1044 | NUT | 1 | | (A) 22.225 MM (7/8") |
| **40** | **AT163600** | **EXCAVATOR BUCKET** | **1** | | **WHOLEGOODS (24 INCH - .59 CUBIC YARD) (AVAILABLE TOOTH ASSEMBLIES ON SEPARATE PAGE)** |
| | **AT163602** | **EXCAVATOR BUCKET** | **1** | | **WHOLEGOODS (30 INCH - .77 CUBIC YARD) (AVAILABLE TOOTH ASSEMBLIES ON SEPARATE PAGE)** |
| | **AT163603** | **EXCAVATOR BUCKET** | **1** | | **WHOLEGOODS (36 INCH - .95 CUBIC YARD) (AVAILABLE TOOTH ASSEMBLIES ON SEPARATE PAGE)** |
| | **AT163604** | **EXCAVATOR BUCKET** | **1** | | **WHOLEGOODS (42 INCH - 1.12 CUBIC YARD) (AVAILABLE TOOTH ASSEMBLIES ON SEPARATE PAGE)** |
| | **AT163605** | **EXCAVATOR BUCKET** | **1** | | **WHOLEGOODS (48 INCH - X.XX CUBIC YARD) (AVAILABLE TOOTH ASSEMBLIES ON SEPARATE PAGE)** |
| 90 | AT131080 | END BIT | 1 | | |
| 92 | AT167874 | KIT | 1 | | (INCLUDES PARTS MARKED (A)) |

**ROADBUILDER BUCKET KIT**
**(ORDER HEAVY DUTY BUCKET TOOTH ASSEMBLIES)**

T141043 -UN-05APR01

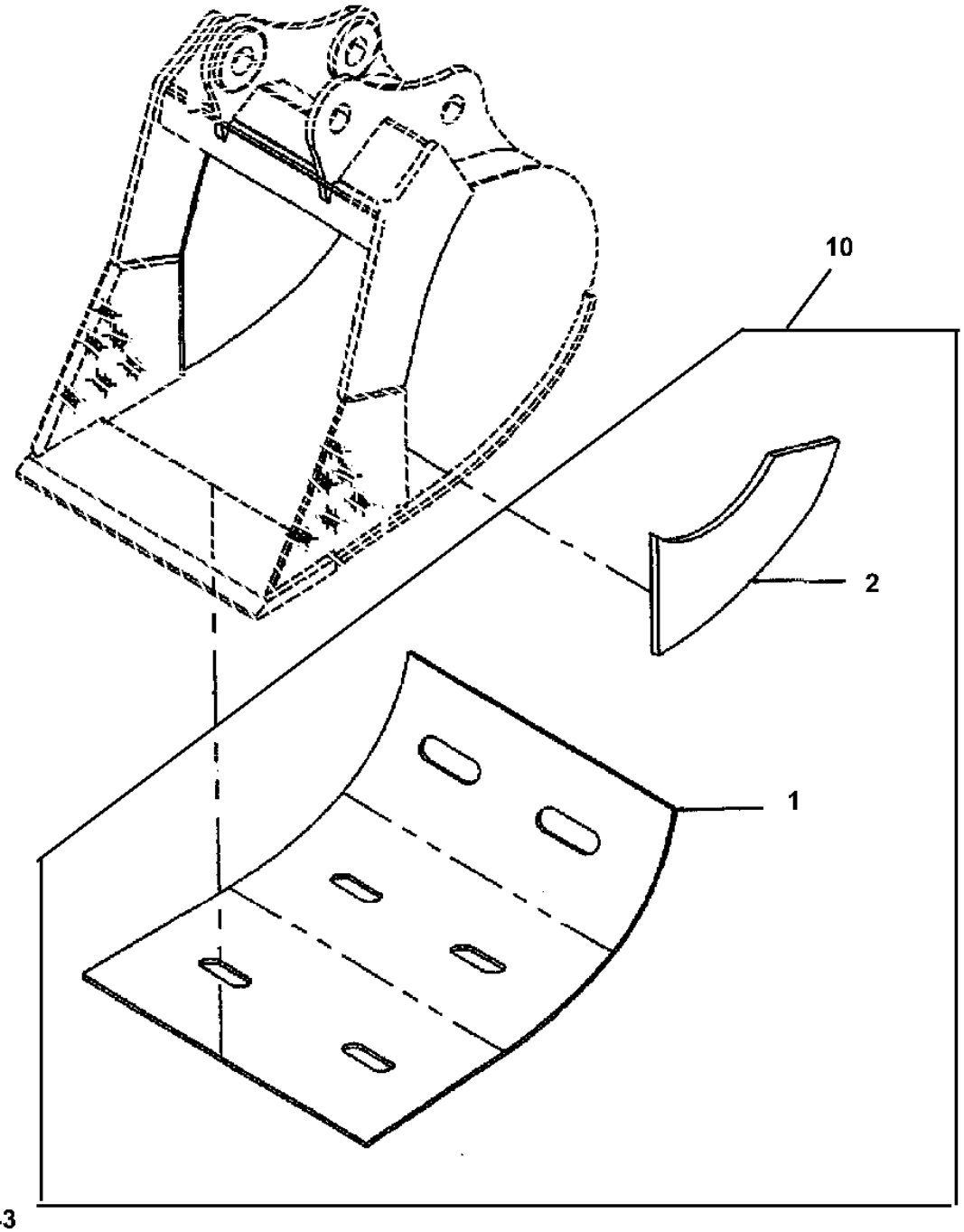

**ROADBUILDER BUCKET KIT**
**(ORDER HEAVY DUTY BUCKET TOOTH ASSEMBLIES)**

| KEY | PART NO. | PART NAME | QTY | SERIAL NO. | REMARKS |
|---|---|---|---|---|---|
| 1 | 605995 | PLATE | 1 | | (USE WITH 30 INCH BUCKET) (ORDER FROM CENTRAL FABRICATORS) |
| | 605996 | PLATE | 1 | | (USE WITH 36 INCH BUCKET) (ORDER FROM CENTRAL FABRICATORS) |
| 2 | 322555 | PLATE | 2 | | (ORDER FROM CENTRAL FABRICATORS) |
| **10** | **AT199589** | **KIT** | **1** | | **(ROADBUILDER KIT)(ALSO ORDER 42 INCH SEVERE DUTY BUCKET)** |

**ESCO BUCKET CUTTING EDGES, TEETH AND ADAPTERS**

T149713 -UN-04JAN02

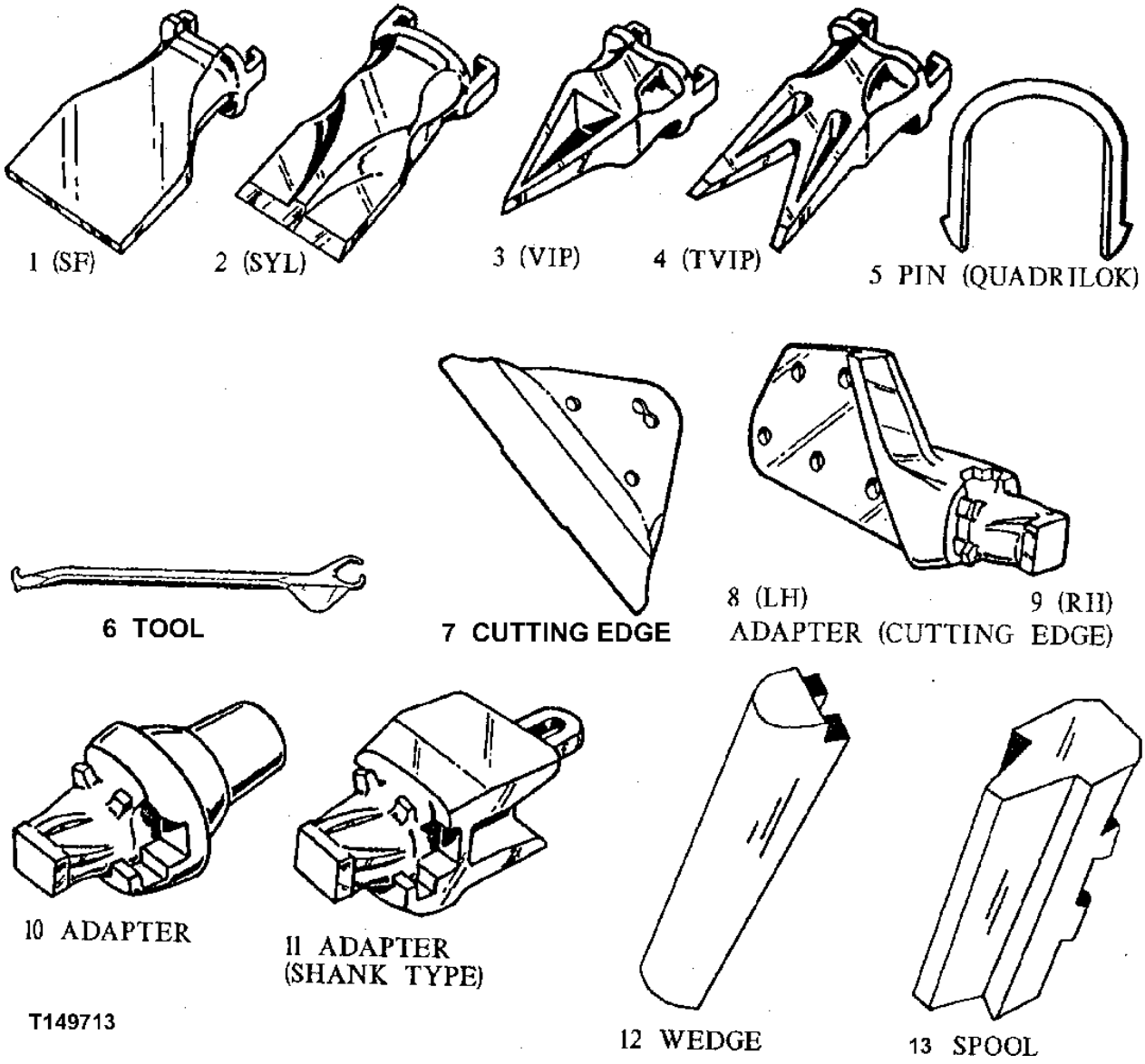

**ESCO BUCKET CUTTING EDGES, TEETH AND ADAPTERS**

| KEY | PART NO. | PART NAME | QTY | SERIAL NO. | REMARKS |
|---|---|---|---|---|---|
| 1 | EX37S7F | TOOTH | AR | | |
| 2 | EX37SYL | TOOTH | AR | | |
| | EX47SYL | TOOTH | AR | | |
| | EX21SYL | TOOTH | AR | | |
| | EX27SYL | TOOTH | AR | | |
| 3 | EX37VIP | TOOTH | AR | | |
| 4 | EX37TVIP | TOOTH | AR | | |
| 5 | EX37LKS | TOOTH RETAINER | AR | | (SUB FOR EX37LK) |
| | EX47LK | PIN | AR | | |
| | EX21LKS | TOOTH RETAINER | AR | | (SUB FOR EX21LK) |
| | EX27LK | PIN | AR | | |
| | EX27VPN | PIN | AR | | |
| 6 | EX3-4-57QRT | TOOL | AR | | |
| 7 | TPDE31329 | SHROUD | AR | | (SUB FOR EX31329-X) |
| 8 | EX1506-37 | BUCKET TOOTH ADAPTER | AR | | |
| 9 | EX1507-37 | BUCKET TOOTH ADAPTER | AR | | |
| 10 | EX450-37 | BUCKET TOOTH ADAPTER | AR | | |
| 11 | EX129A-37 | BUCKET TOOTH ADAPTER | AR | | |
| | EX5824-37 | BUCKET TOOTH ADAPTER | AR | | |
| | EX1829A-47 | BUCKET TOOTH ADAPTER | AR | | |
| | EX5850-27V | BUCKET TOOTH ADAPTER | AR | | (SUB FOR EX5827-27, ALONG WITH EX27VPN AND EX27VPL) |
| | EX5849-21 | BUCKET TOOTH ADAPTER | AR | | (SUB FOR EX4894-21) |
| 12 | EX29W1 | WEDGE | AR | | (SUB FOR T52975) |
| | EX20W1 | WEDGE | AR | | (SUB FOR T38819) |
| 13 | EX20SP | SPOOL | AR | | (SUB FOR T38818) |
| | EX29SP | SPOOL | AR | | (SUB FOR T52974) |
| 14 | EX27VPL | PLUG | AR | | (NOT ILLUSTRATED) |

**GENERAL PURPOSE HIGH CAPACITY BUCKET TOOTH ASSEMBLY**
**(30, 36, 42 OR 48 INCH BUCKET)**

TP43771 -UN-01JAN94

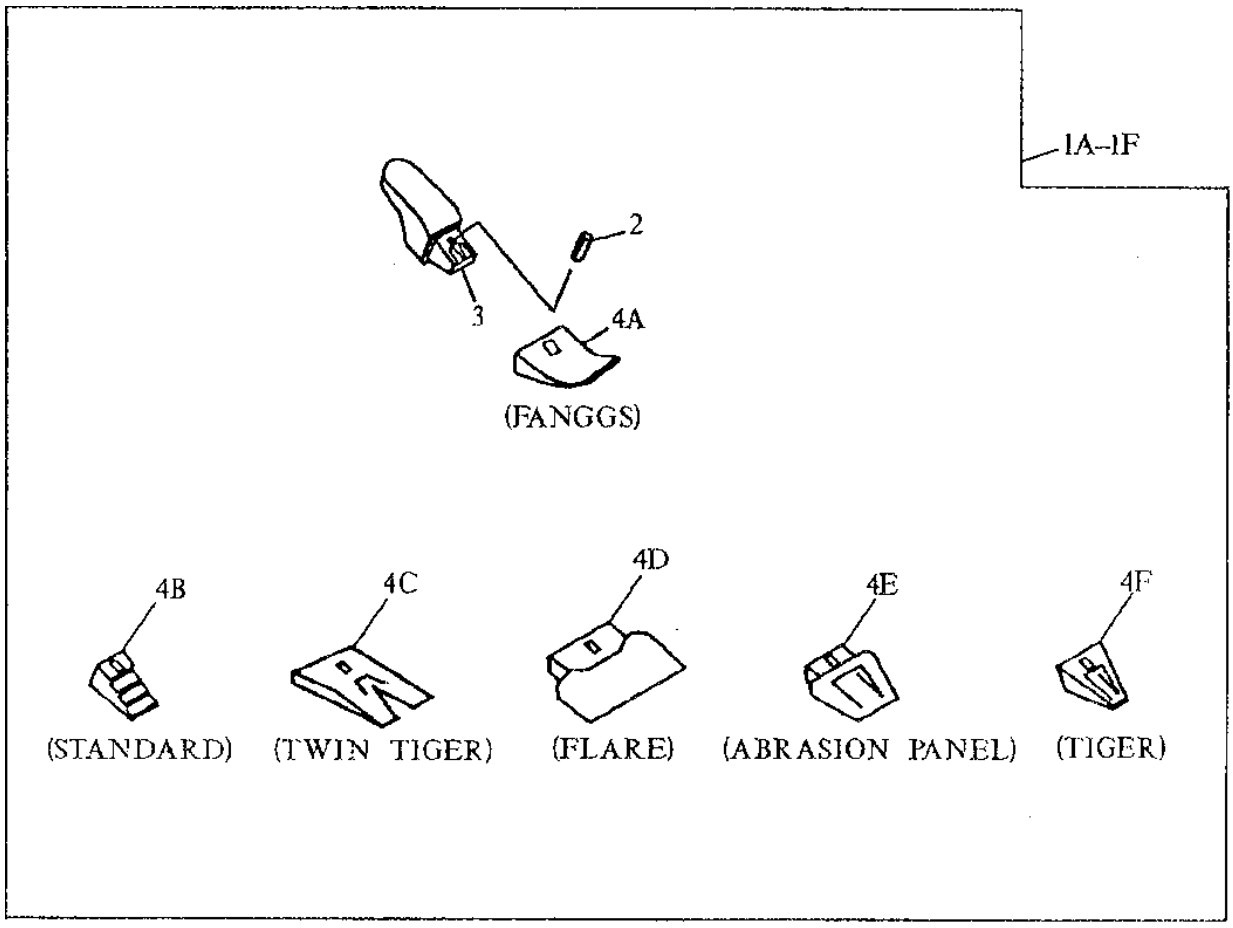


ORDER 3 SETS WITH 18 INCH BUCKET
ORDER 4 SETS WITH 24 INCH BUCKET
ORDER 4 SETS WITH 30 INCH BUCKET
ORDER 5 SETS WITH 36 INCH BUCKET
ORDER 5 SETS WITH 42 INCH BUCKET
ORDER 6 SETS WITH 48 INCH BUCKET
TP43771 ORDER 7 SETS WITH 54 INCH BUCKET

**GENERAL PURPOSE HIGH CAPACITY BUCKET TOOTH ASSEMBLY**
**(30, 36, 42 OR 48 INCH BUCKET)**

| KEY | PART NO. | PART NAME | QTY | SERIAL NO. | REMARKS |
|---|---|---|---|---|---|
| 1A | AT162538 | KIT | 1 | | (TOOTH) WHOLEGOODS (FANGGS 310 TOOTH ASSEMBLY) |
| | AT178530 | KIT | 1 | | (TOOTH) WHOLEGOODS (FANGGS 330 TOOTH ASSEMBLY) |
| | AT178531 | KIT | 1 | | (TOOTH) WHOLEGOODS (FANGGS 290 TOOTH ASSEMBLY) |
| 1B | AT163539 | KIT | 1 | | (TOOTH) WHOLEGOODS (STANDARD 310 TOOTH ASSEMBLY) |
| | AT178532 | KIT | 1 | | (TOOTH) WHOLEGOODS (STANDARD 330 TOOTH ASSEMBLY) |
| | AT178533 | KIT | 1 | | (TOOTH) WHOLEGOODS (STANDARD 290 TOOTH ASSEMBLY) |
| 1C | AT163543 | KIT | 1 | | (TOOTH) WHOLEGOODS (TWIN TIGER 310 TOOTH ASSEMBLY) |
| | AT178536 | KIT | 1 | | (TOOTH) WHOLEGOODS (TWIN TIGER 330 TOOTH ASSEMBLY) |
| | AT178537 | KIT | 1 | | (TOOTH) WHOLEGOODS (TWIN TIGER 290 TOOTH ASSEMBLY) |
| 1D | AT163542 | KIT | 1 | | (TOOTH) WHOLEGOODS (FLARE) |
| 1E | AT163541 | KIT | 1 | | (TOOTH) WHOLEGOODS (ABRASION PANEL) |
| 1F | AT163540 | KIT | 1 | | (TOOTH) WHOLEGOODS (TIGER 310 TOOTH ASSEMBLY) |
| | AT178534 | KIT | 1 | | (TOOTH) WHOLEGOODS (TIGER 330 TOOTH ASSEMBLY) |
| | AT178535 | KIT | 1 | | (TOOTH) WHOLEGOODS (TIGER 290 TOOTH ASSEMBLY) |
| 1G | AT163544 | KIT | 1 | | (TOOTH) WHOLEGOODS (ESCO STANDARD TOOTH ASSEMBLY) (NOT ILLUSTRATED) |
| 1H | AT163547 | KIT | 1 | | (TOOTH) WHOLEGOODS (ESCO TWIN TIGER TOOTH ASSEMBLY) (NOT ILLUSTRATED) |
| 1I | AT163546 | KIT | 1 | | (TOOTH) WHOLEGOODS (ESCO FLARE TOOTH ASSEMBLY) (NOT ILLUSTRATED) |
| 1J | AT163545 | KIT | 1 | | (TOOTH) WHOLEGOODS (ESCO TIGER TOOTH ASSEMBLY) (NOT ILLUSTRATED) |
| 1K | AT167192 | KIT | 1 | | (TOOTH) WHOLEGOODS (CATERPILLAR REPLACEMENT FANGGS TOOTH ASSEMBLY) (NOT ILLUSTRATED) |
| 1L | AT167193 | KIT | 1 | | (TOOTH) WHOLEGOODS (CATERPILLAR REPLACEMENT STANDARD TOOTH ASSEMBLY) (NOT ILLUSTRATED) |
| 1M | AT167195 | KIT | 1 | | (TOOTH) WHOLEGOODS (CATERPILLAR REPLACEMENT TWIN TIGER TOOTH ASSEMBLY) (NOT ILLUSTRATED) |
| 1N | AT167194 | KIT | 1 | | (TOOTH) WHOLEGOODS (CATERPILLAR REPLACEMENT TIGER TOOTH ASSEMBLY) (NOT ILLUSTRATED) |

THIS PARTS LISTING IS CONTINUED

**GENERAL PURPOSE HIGH CAPACITY BUCKET TOOTH ASSEMBLY (CONTINUED)**
**(30, 36, 42 OR 48 INCH BUCKET)**

TP43771 -UN-01JAN94

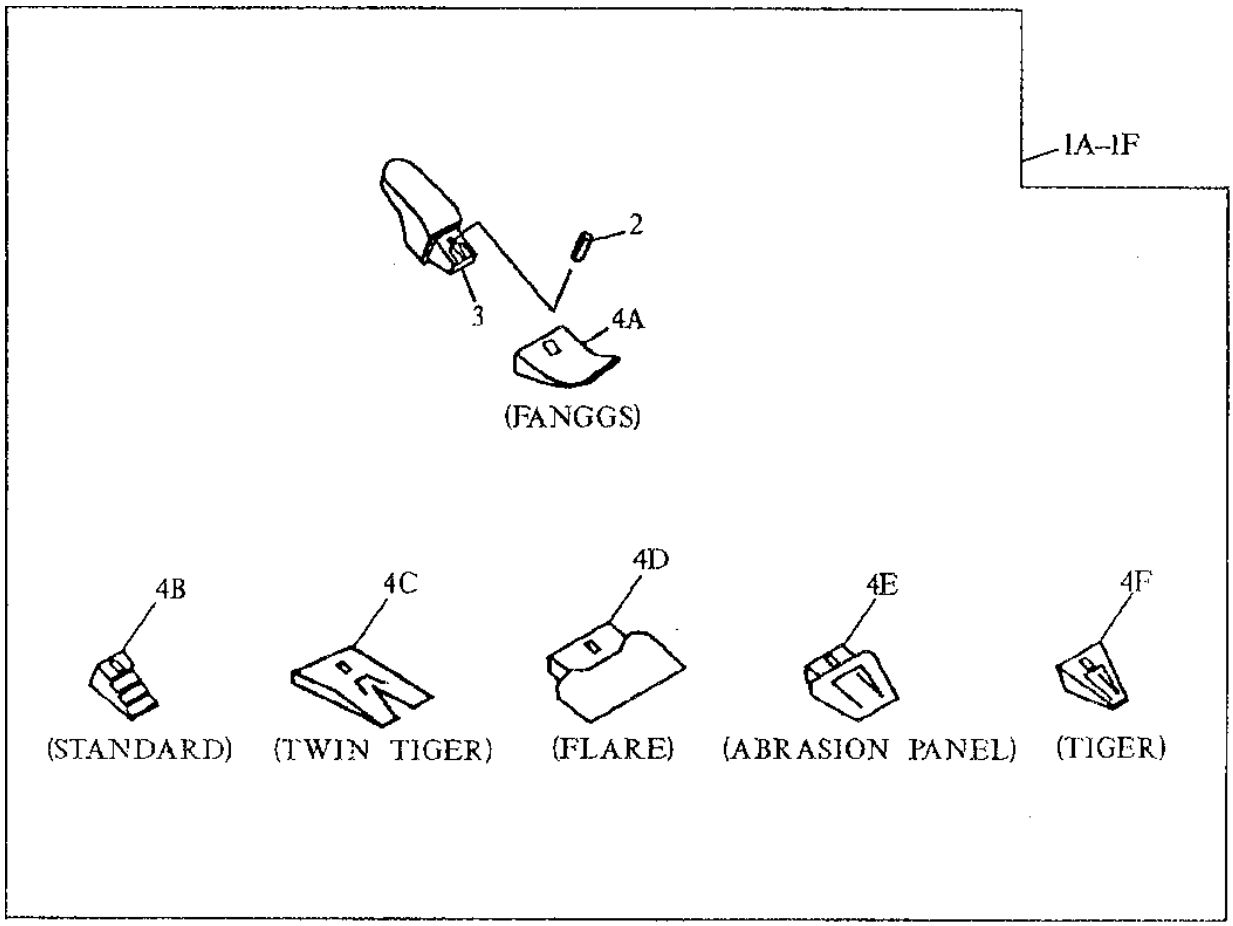


ORDER 3 SETS WITH 18 INCH BUCKET
ORDER 4 SETS WITH 24 INCH BUCKET
ORDER 4 SETS WITH 30 INCH BUCKET
ORDER 5 SETS WITH 36 INCH BUCKET
ORDER 5 SETS WITH 42 INCH BUCKET
ORDER 6 SETS WITH 48 INCH BUCKET
TP43771 ORDER 7 SETS WITH 54 INCH BUCKET

**GENERAL PURPOSE HIGH CAPACITY BUCKET TOOTH ASSEMBLY (CONTINUED)**
**(30, 36, 42 OR 48 INCH BUCKET)**

| KEY | PART NO. | PART NAME | QTY | SERIAL NO. | REMARKS |
|---|---|---|---|---|---|
| 2 | TP160 | PIN | 1 | | (SUB FOR TP160L, THIS APPLICATION) (USE WITH 310 TOOTH ASSEMBLIES) |
| | TK330 | PIN | 1 | | (USE WITH 330 TOOTH ASSEMBLIES) |
| | TK290 | PIN | 1 | | (USE WITH 290 TOOTH ASSEMBLIES) |
| | EX27VPN | PIN | 1 | | (ESCO) (NOT ILLUSTRATED ON THIS PAGE - SEE ESCO TOOTH PAGE) |
| | T9J2358 | PIN FASTENER | 1 | | (CATERPILLAR REPLACEMENT) (NOT ILLUSTRATED) |
| | EV39PN | PIN FASTENER | 1 | | (FOR SUPER V-STYLE EV39SYL TOOTH KIT) (NOT ILLUSTRATED) |
| 3 | T153X310 | BUCKET TOOTH ADAPTER | 1 | | (USE WITH 310 TOOTH ASSEMBLIES) |
| | T158X330 | BUCKET TOOTH ADAPTER | 1 | | (USE WITH 330 TOOTH ASSEMBLIES) |
| | T158X290 | BUCKET TOOTH ADAPTER | 1 | | (USE WITH 290 TOOTH ASSEMBLIES) |
| | EX5850-27V | BUCKET TOOTH ADAPTER | 1 | | (ESCO) (NOT ILLUSTRATED ON THIS PAGE - SEE ESCO TOOTH PAGE) |
| | T3G8354 | BUCKET TOOTH ADAPTER | 1 | | (CATERPILLAR REPLACEMENT) (NOT ILLUSTRATED) |
| | EV5856-V39 | BUCKET TOOTH ADAPTER | 1 | | (FOR SUPER V-STYLE EV39SYL TOOTH KIT) (NOT ILLUSTRATED) |
| 4A | TF310 | TOOTH | 1 | | (ALSO ORDER TP160L) (FANGGS) |
| | TF330 | TOOTH | 1 | | (FANGGS) |
| | TF290 | TOOTH | 1 | | (FANGGS) |
| 4B | TX310 | TOOTH | 1 | | (ALSO ORDER TP160L) (STANDARD) |
| | TX330 | TOOTH | 1 | | (STANDARD) |
| | TX290 | TOOTH | 1 | | (STANDARD) |
| 4C | TX310WT | TOOTH | 1 | | (ALSO ORDER TP160L) (TWIN TIGER) |
| | TX330WT | TOOTH | 1 | | (TWIN TIGER) |
| | TX290WT | TOOTH | 1 | | (TWIN TIGER) |
| 4D | TX310F | TOOTH | 1 | | (ALSO ORDER TP160L) |
| 4E | TX310AP | TOOTH | 1 | | (ALSO ORDER TP160L) |
| 4F | TT310 | TOOTH | 1 | | (ALSO ORDER TP160L) (TIGER) |
| | TT330 | TOOTH | 1 | | (TIGER) |
| | TT290 | TOOTH | 1 | | (TIGER) |
| 4G | EX27SYL | TOOTH | 1 | | (ESCO STANDARD) (NOT ILLUSTRATED ON THIS PAGE - SEE ESCO TOOTH PAGE) |
| 4H | EX27TVIP | TOOTH | 1 | | (ESCO TWIN TIGER) (NOT ILLUSTRATED ON THIS PAGE - SEE ESCO TOOTH PAGE) |
| 4I | EX27S6F | TOOTH | 1 | | (ESCO FLARE) (NOT ILLUSTRATED ON THIS PAGE - SEE ESCO TOOTH PAGE) |
| 4J | EX27VIP | TOOTH | 1 | | (ESCO TIGER) (NOT ILLUSTRATED ON THIS PAGE - SEE ESCO TOOTH PAGE) |
| 4K | TF1U3352D | TOOTH | 1 | | (CATERPILLAR REPLACEMENT FANGGS) (NOT ILLUSTRATED) |
| 4L | T1U3352 | TOOTH | 1 | | (CATERPILLAR REPLACEMENT STANDARD) (NOT ILLUSTRATED) |
| 4M | TX1U3352WT | TOOTH | 1 | | (CATERPILLAR REPLACEMENT TWIN TIGER) (NOT ILLUSTRATED) |
| 4N | TT1U3352 | TOOTH | 1 | | (CATERPILLAR REPLACEMENT TIGER) (NOT ILLUSTRATED) |
| 4O | EV39SYL | TOOTH | 1 | | (FOR SUPER V-STYLE EV39SYL TOOTH KIT) (NOT ILLUSTRATED) |
| 5 | T3G9549 | RETAINER | 1 | | (CATERPILLAR REPLACEMENT) (NOT ILLUSTRATED) |
| 6 | EX27VPL | PLUG | 1 | | (NOT ILLUSTRATED ON THIS PAGE - SEE ESCO TOOTH PAGE) |

**HEAVY DUTY BUCKET TOOTH ASSEMBLY**
**(24, 30, 36, 42 OR 48 INCH BUCKET)**

TP43771 -UN-01JAN94

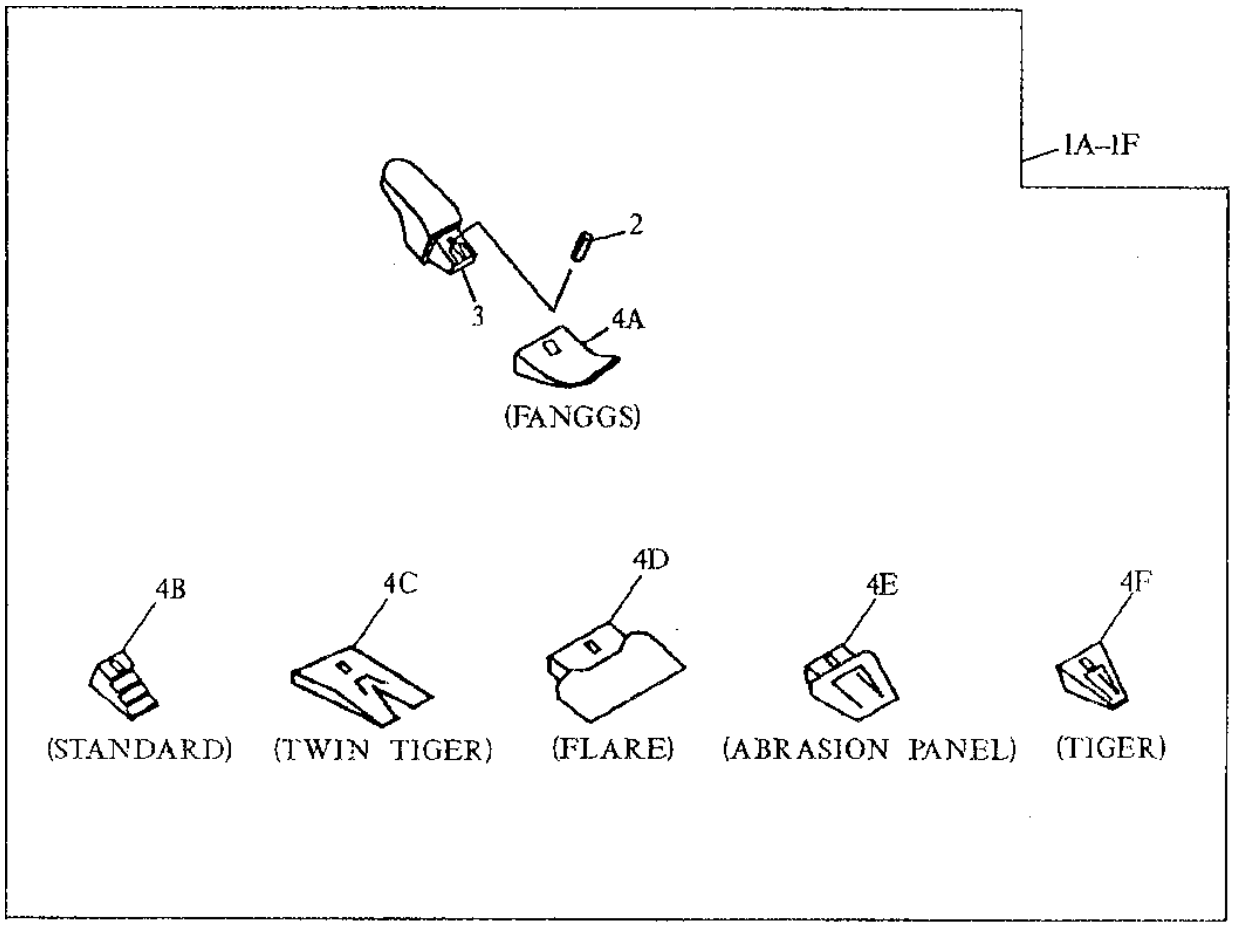


ORDER 3 SETS WITH 18 INCH BUCKET
ORDER 4 SETS WITH 24 INCH BUCKET
ORDER 4 SETS WITH 30 INCH BUCKET
ORDER 5 SETS WITH 36 INCH BUCKET
ORDER 5 SETS WITH 42 INCH BUCKET
ORDER 6 SETS WITH 48 INCH BUCKET
TP43771 ORDER 7 SETS WITH 54 INCH BUCKET

**HEAVY DUTY BUCKET TOOTH ASSEMBLY**
**(24, 30, 36, 42 OR 48 INCH BUCKET)**

| KEY | PART NO. | PART NAME | QTY | SERIAL NO. | REMARKS |
|---|---|---|---|---|---|
| 1A | AT163538 | KIT | 1 | | (TOOTH) WHOLEGOODS (FANGGS 310 TOOTH ASSEMBLY) |
| | AT178530 | KIT | 1 | | (TOOTH) WHOLEGOODS (FANGGS 330 TOOTH ASSEMBLY) |
| | AT178531 | KIT | 1 | | (TOOTH) WHOLEGOODS (FANGGS 290 TOOTH ASSEMBLY) |
| 1B | AT163539 | KIT | 1 | | (TOOTH) WHOLEGOODS (STANDARD 310 TOOTH ASSEMBLY) |
| | AT178532 | KIT | 1 | | (TOOTH) WHOLEGOODS (STANDARD 330 TOOTH ASSEMBLY) |
| | AT178533 | KIT | 1 | | (TOOTH) WHOLEGOODS (STANDARD 290 TOOTH ASSEMBLY) |
| 1C | AT163543 | KIT | 1 | | (TOOTH) WHOLEGOODS (TWIN TIGER 310 TOOTH ASSEMBLY) |
| | AT178536 | KIT | 1 | | (TOOTH) WHOLEGOODS (TWIN TIGER 330 TOOTH ASSEMBLY) |
| | AT178537 | KIT | 1 | | (TOOTH) WHOLEGOODS (TWIN TIGER 290 TOOTH ASSEMBLY) |
| 1D | AT163542 | KIT | 1 | | (TOOTH) WHOLEGOODS (FLARE) |
| 1E | AT163541 | KIT | 1 | | (TOOTH) WHOLEGOODS (ABRASION PANEL) |
| 1F | AT163540 | KIT | 1 | | (TOOTH) WHOLEGOODS (TIGER 310 TOOTH ASSEMBLY) |
| | AT178534 | KIT | 1 | | (TOOTH) WHOLEGOODS (TIGER 330 TOOTH ASSEMBLY) |
| | AT178535 | KIT | 1 | | (TOOTH) WHOLEGOODS (TIGER 290 TOOTH ASSEMBLY) |
| 1G | AT163544 | KIT | 1 | | (TOOTH) WHOLEGOODS (ESCO STANDARD TOOTH ASSEMBLY) (NOT ILLUSTRATED) |
| 1H | AT163547 | KIT | 1 | | (TOOTH) WHOLEGOODS (ESCO TWIN TIGER TOOTH ASSEMBLY) (NOT ILLUSTRATED) |
| 1I | AT163546 | KIT | 1 | | (TOOTH) WHOLEGOODS (ESCO FLARE TOOTH ASSEMBLY) (NOT ILLUSTRATED) |
| 1J | AT163545 | KIT | 1 | | (TOOTH) WHOLEGOODS (ESCO TIGER TOOTH ASSEMBLY) (NOT ILLUSTRATED) |
| 1K | AT167192 | KIT | 1 | | (TOOTH) WHOLEGOODS (CATERPILLAR REPLACEMENT FANGGS TOOTH ASSEMBLY) (NOT ILLUSTRATED) |
| 1L | AT167193 | KIT | 1 | | (TOOTH) WHOLEGOODS (CATERPILLAR REPLACEMENT STANDARD TOOTH ASSEMBLY) (NOT ILLUSTRATED) |
| 1M | AT167195 | KIT | 1 | | (TOOTH) WHOLEGOODS (CATERPILLAR REPLACEMENT TWIN TIGER TOOTH ASSEMBLY) (NOT ILLUSTRATED) |
| 1N | AT167194 | KIT | 1 | | (TOOTH) WHOLEGOODS (CATERPILLAR REPLACEMENT TIGER TOOTH ASSEMBLY) (NOT ILLUSTRATED) |

THIS PARTS LISTING IS CONTINUED

**HEAVY DUTY BUCKET TOOTH ASSEMBLY (CONTINUED)**
**(24, 30, 36, 42 OR 48 INCH BUCKET)**

TP43771 -UN-01JAN94

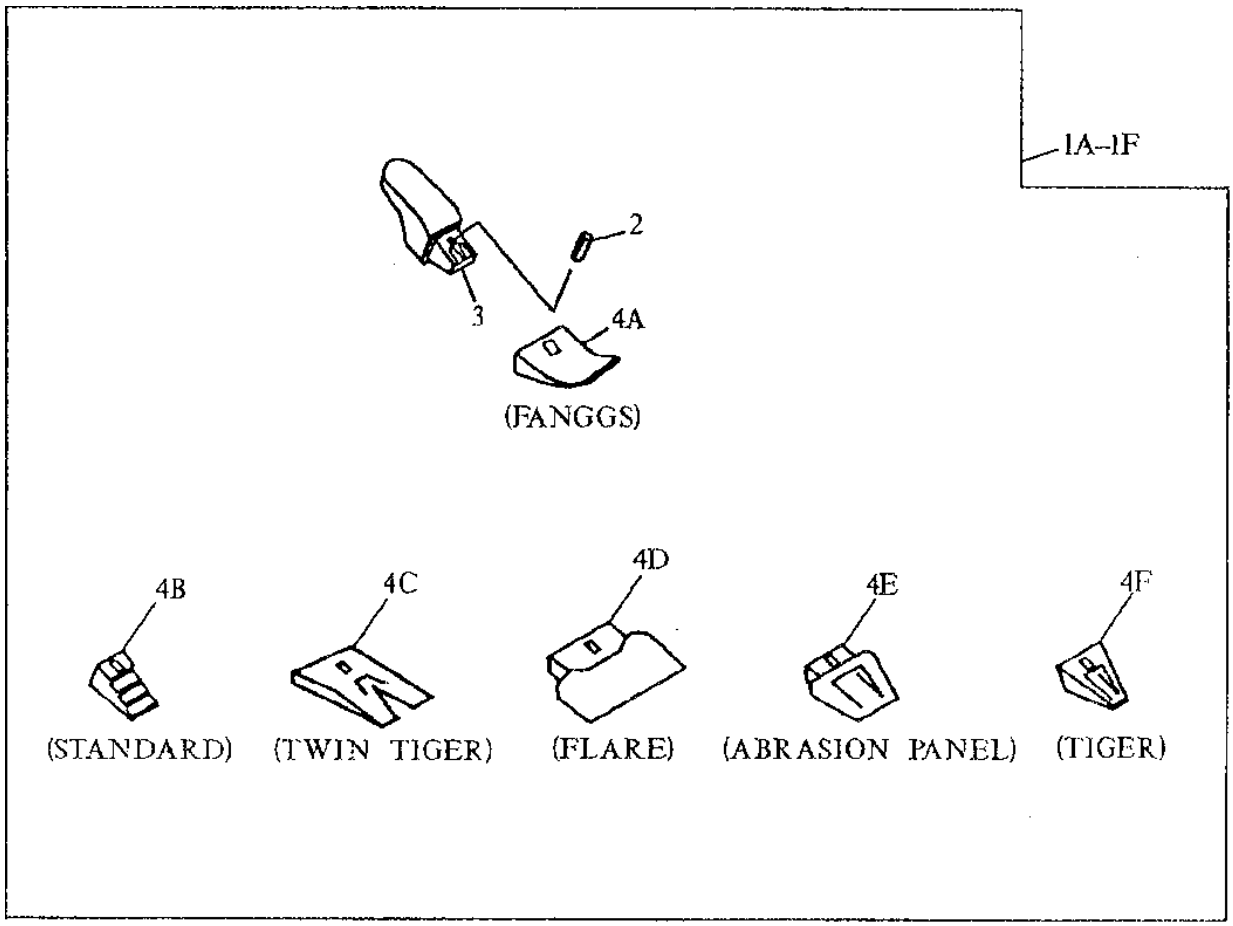


ORDER 3 SETS WITH 18 INCH BUCKET
ORDER 4 SETS WITH 24 INCH BUCKET
ORDER 4 SETS WITH 30 INCH BUCKET
ORDER 5 SETS WITH 36 INCH BUCKET
ORDER 5 SETS WITH 42 INCH BUCKET
ORDER 6 SETS WITH 48 INCH BUCKET
TP43771 ORDER 7 SETS WITH 54 INCH BUCKET

**HEAVY DUTY BUCKET TOOTH ASSEMBLY (CONTINUED)**
**(24, 30, 36, 42 OR 48 INCH BUCKET)**

| KEY | PART NO. | PART NAME | QTY | SERIAL NO. | REMARKS |
|---|---|---|---|---|---|
| 2 | TP160 | PIN | 1 | | (SUB FOR TP160L, THIS APPLICATION) (USE WITH 310 TOOTH ASSEMBLY) |
| | TK330 | PIN | 1 | | (USE WITH 330 TOOTH ASSEMBLIES) |
| | TK290 | PIN | 1 | | (USE WITH 290 TOOTH ASSEMBLIES) |
| | EX27VPN | PIN | 1 | | (ESCO) (NOT ILLUSTRATED ON THIS PAGE - SEE ESCO TOOTH PAGE) |
| | T9J2358 | PIN FASTENER | 1 | | (CATERPILLAR REPLACEMENT) (NOT ILLUSTRATED) |
| 3 | T153X310 | BUCKET TOOTH ADAPTER | 1 | | (USE WITH 310 TOOTH ASSEMBLIES) |
| | T158X330 | BUCKET TOOTH ADAPTER | 1 | | (USE WITH 330 TOOTH ASSEMBLIES) |
| | T158X290 | BUCKET TOOTH ADAPTER | 1 | | (USE WITH 290 TOOTH ASSEMBLIES) |
| | EX5850-27V | BUCKET TOOTH ADAPTER | 1 | | (ESCO) (NOT ILLUSTRATED ON THIS PAGE - SEE ESCO TOOTH PAGE) |
| | T3G8354 | BUCKET TOOTH ADAPTER | 1 | | (CATERPILLAR REPLACEMENT) (NOT ILLUSTRATED) |
| 4A | TF310 | TOOTH | 1 | | (ALSO ORDER TP160L) (FANGGS) |
| | TF330 | TOOTH | 1 | | (FANGGS) |
| | TF290 | TOOTH | 1 | | (FANGGS) |
| 4B | TX310 | TOOTH | 1 | | (ALSO ORDER TP160L) (STANDARD) |
| | TX330 | TOOTH | 1 | | (STANDARD) |
| | TX290 | TOOTH | 1 | | (STANDARD) |
| 4C | TX310WT | TOOTH | 1 | | (ALSO ORDER TP160L) (TWIN TIGER) |
| | TX330WT | TOOTH | 1 | | (TWIN TIGER) |
| | TX290WT | TOOTH | 1 | | (TWIN TIGER) |
| 4D | TX310F | TOOTH | 1 | | (ALSO ORDER TP160L) |
| 4E | TX310AP | TOOTH | 1 | | (ALSO ORDER TP160L) |
| 4F | TT310 | TOOTH | 1 | | (ALSO ORDER TP160L) (TIGER) |
| | TT330 | TOOTH | 1 | | (TIGER) |
| | TT290 | TOOTH | 1 | | (TIGER) |
| 4G | EX27SYL | TOOTH | 1 | | (ESCO STANDARD) (NOT ILLUSTRATED ON THIS PAGE - SEE ESCO TOOTH PAGE) |
| 4H | EX27TVIP | TOOTH | 1 | | (ESCO TWIN TIGER) (NOT ILLUSTRATED ON THIS PAGE - SEE ESCO TOOTH PAGE) |
| 4I | EX27S6F | TOOTH | 1 | | (ESCO FLARE) (NOT ILLUSTRATED ON THIS PAGE - SEE ESCO TOOTH PAGE) |
| 4J | EX27VIP | TOOTH | 1 | | (ESCO TIGER) (NOT ILLUSTRATED ON THIS PAGE - SEE ESCO TOOTH PAGE) |
| 4K | TF1U3352D | TOOTH | 1 | | (CATERPILLAR REPLACEMENT FANGGS) (NOT ILLUSTRATED) |
| 4L | T1U3352 | TOOTH | 1 | | (CATERPILLAR REPLACEMENT STANDARD) (NOT ILLUSTRATED) |
| 4M | TX1U3352WT | TOOTH | 1 | | (CATERPILLAR REPLACEMENT TWIN TIGER) (NOT ILLUSTRATED) |
| 4N | TT1U3352 | TOOTH | 1 | | (CATERPILLAR REPLACEMENT TIGER) (NOT ILLUSTRATED) |
| 5 | T3G9549 | RETAINER | 1 | | (CATERPILLAR REPLACEMENT) (NOT ILLUSTRATED) |
| 6 | EX27VPL | PLUG | 1 | | (NOT ILLUSTRATED ON THIS PAGE - SEE ESCO TOOTH PAGE) |

**HEAVY DUTY HIGH CAPACITY BUCKET TOOTH ASSEMBLY**
**(310 SERIES TEETH)**
**(24, 30, 36 OR 42 INCH BUCKET)**

TP43771 -UN-01JAN94

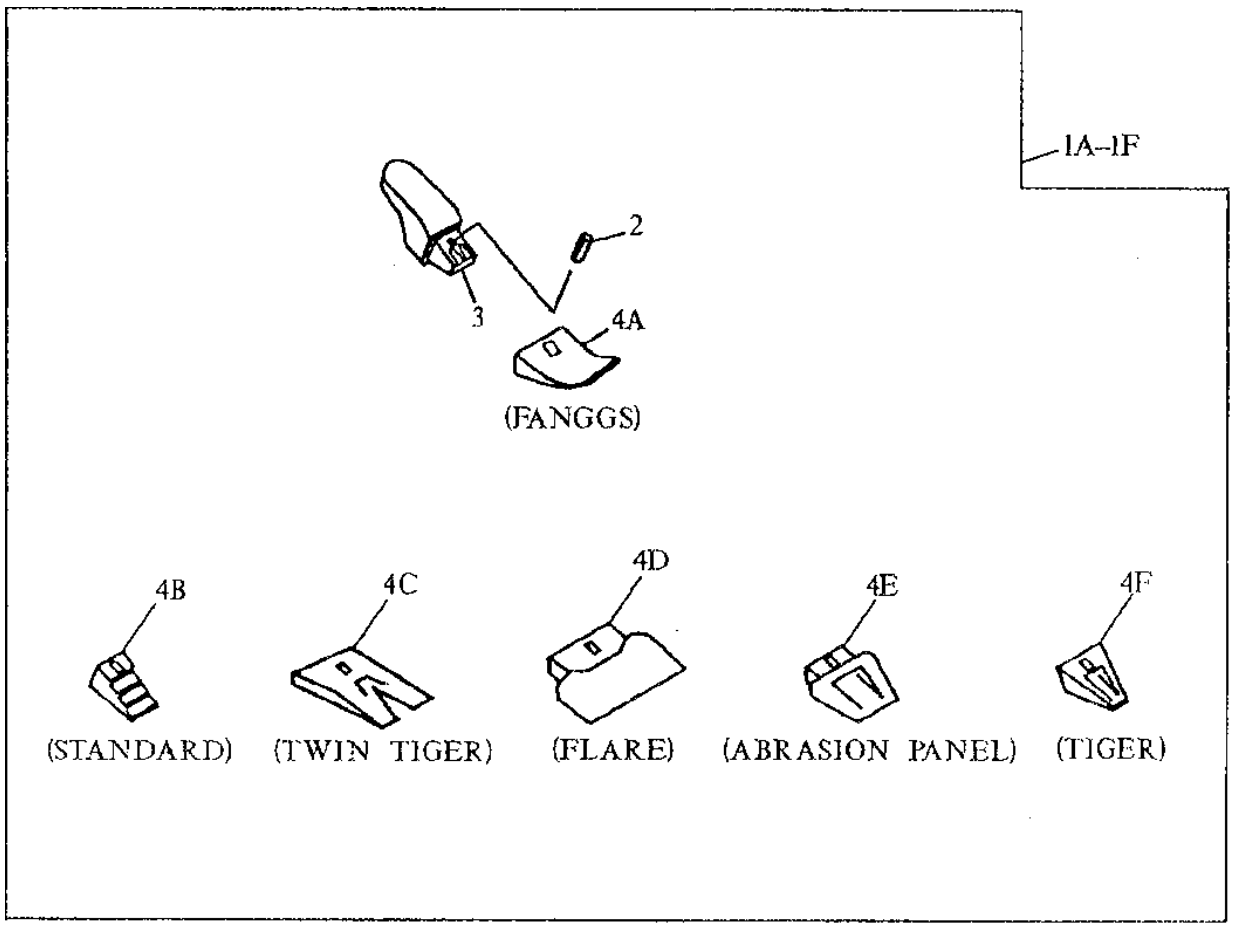


ORDER 3 SETS WITH 18 INCH BUCKET
ORDER 4 SETS WITH 24 INCH BUCKET
ORDER 4 SETS WITH 30 INCH BUCKET
ORDER 5 SETS WITH 36 INCH BUCKET
ORDER 5 SETS WITH 42 INCH BUCKET
ORDER 6 SETS WITH 48 INCH BUCKET
TP43771 ORDER 7 SETS WITH 54 INCH BUCKET

**HEAVY DUTY HIGH CAPACITY BUCKET TOOTH ASSEMBLY**
**(24, 30, 36 OR 42 INCH BUCKET)**

| KEY | PART NO. | PART NAME | QTY | SERIAL NO. | REMARKS |
|---|---|---|---|---|---|
| 1A | AT163538 | KIT | 1 | | (TOOTH) WHOLEGOODS (FANGGS 310 TOOTH ASSEMBLY) |
| | AT178530 | KIT | 1 | | (TOOTH) WHOLEGOODS (FANGGS 330 TOOTH ASSEMBLY) |
| | AT178531 | KIT | 1 | | (TOOTH) WHOLEGOODS (FANGGS 290 TOOTH ASSEMBLY) |
| 1B | AT163539 | KIT | 1 | | (TOOTH) WHOLEGOODS (STANDARD 310 TOOTH ASSEMBLY) |
| | AT178532 | KIT | 1 | | (TOOTH) WHOLEGOODS (STANDARD 330 TOOTH ASSEMBLY) |
| | AT178533 | KIT | 1 | | (TOOTH) WHOLEGOODS (STANDARD 290 TOOTH ASSEMBLY) |
| 1C | AT163543 | KIT | 1 | | (TOOTH) WHOLEGOODS (TWIN TIGER 310 TOOTH ASSEMBLY) |
| | AT178536 | KIT | 1 | | (TOOTH) WHOLEGOODS (TWIN TIGER 330 TOOTH ASSEMBLY) |
| | AT178537 | KIT | 1 | | (TOOTH) WHOLEGOODS (TWIN TIGER 290 TOOTH ASSEMBLY) |
| 1D | AT163542 | KIT | 1 | | (TOOTH) WHOLEGOODS (FLARE) |
| 1E | AT163541 | KIT | 1 | | (TOOTH) WHOLEGOODS (ABRASION PANEL) |
| 1F | AT163540 | KIT | 1 | | (TOOTH) WHOLEGOODS (TIGER 310 TOOTH ASSEMBLY) |
| | AT178534 | KIT | 1 | | (TOOTH) WHOLEGOODS (TIGER 330 TOOTH ASSEMBLY) |
| | AT178535 | KIT | 1 | | (TOOTH) WHOLEGOODS (TIGER 290 TOOTH ASSEMBLY) |
| 1G | AT163544 | KIT | 1 | | (TOOTH) WHOLEGOODS (ESCO STANDARD TOOTH ASSEMBLY) (NOT ILLUSTRATED) |
| 1H | AT163547 | KIT | 1 | | (TOOTH) WHOLEGOODS (ESCO TWIN TIGER TOOTH ASSEMBLY) (NOT ILLUSTRATED) |
| 1I | AT163546 | KIT | 1 | | (TOOTH) WHOLEGOODS (ESCO FLARE TOOTH ASSEMBLY) (NOT ILLUSTRATED) |
| 1J | AT163545 | KIT | 1 | | (TOOTH) WHOLEGOODS (ESCO TIGER TOOTH ASSEMBLY) (NOT ILLUSTRATED) |
| 1K | AT167192 | KIT | 1 | | (TOOTH) WHOLEGOODS (CATERPILLAR REPLACEMENT FANGGS TOOTH ASSEMBLY) (NOT ILLUSTRATED) |
| 1L | AT167193 | KIT | 1 | | (TOOTH) WHOLEGOODS (CATERPILLAR REPLACEMENT STANDARD TOOTH ASSEMBLY) (NOT ILLUSTRATED) |
| 1M | AT167195 | KIT | 1 | | (TOOTH) WHOLEGOODS (CATERPILLAR REPLACEMENT TWIN TIGER TOOTH ASSEMBLY) (NOT ILLUSTRATED) |

THIS PARTS LISTING IS CONTINUED

**HEAVY DUTY HIGH CAPACITY BUCKET TOOTH ASSEMBLY (CONTINUED)**
**(310 SERIES TEETH)**
**(24, 30, 36 OR 42 INCH BUCKET)**

TP43771 -UN-01JAN94

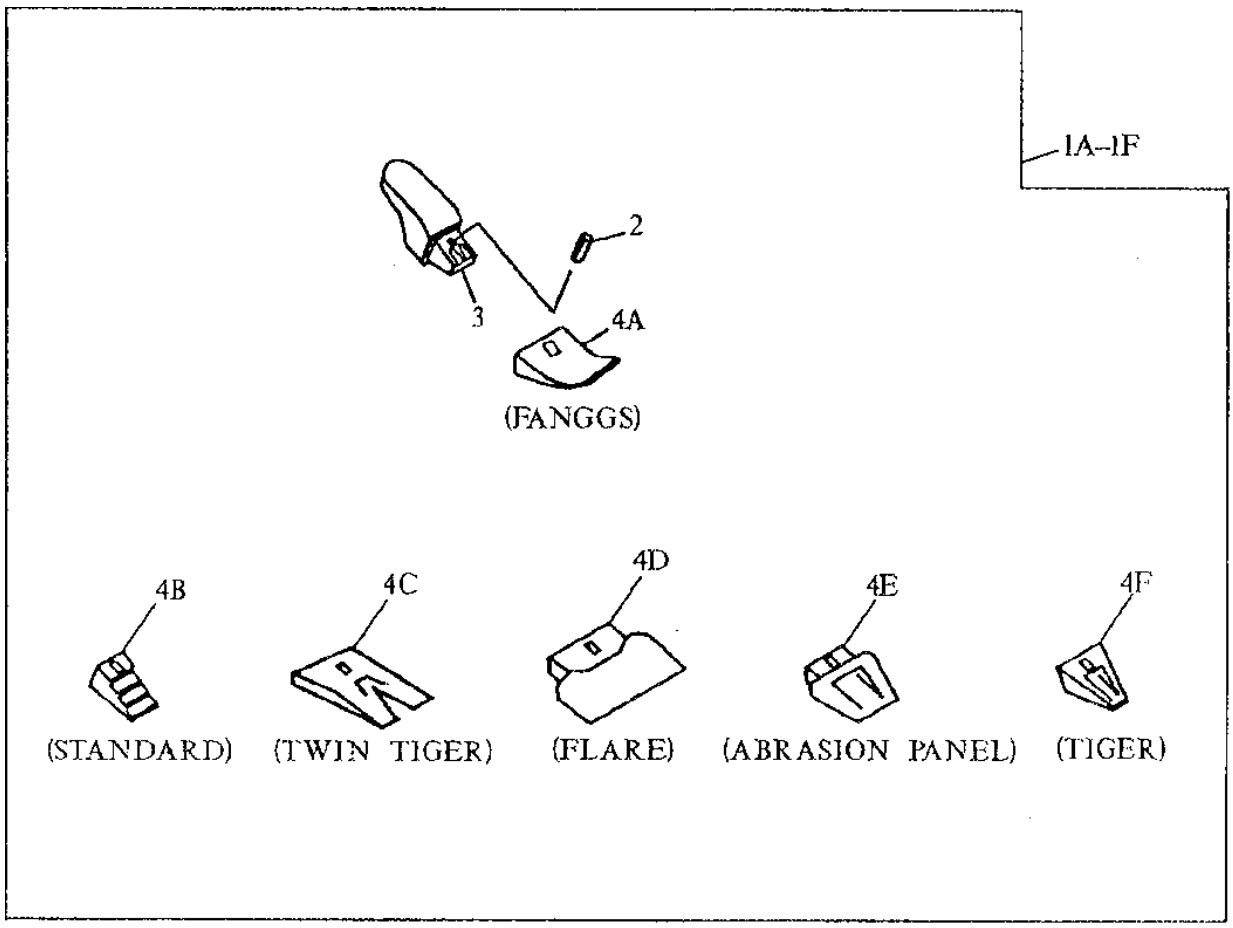


ORDER 3 SETS WITH 18 INCH BUCKET
ORDER 4 SETS WITH 24 INCH BUCKET
ORDER 4 SETS WITH 30 INCH BUCKET
ORDER 5 SETS WITH 36 INCH BUCKET
ORDER 5 SETS WITH 42 INCH BUCKET
ORDER 6 SETS WITH 48 INCH BUCKET
TP43771 ORDER 7 SETS WITH 54 INCH BUCKET

**HEAVY DUTY HIGH CAPACITY BUCKET TOOTH ASSEMBLY (CONTINUED)**
**(24, 30, 36 OR 42 INCH BUCKET)**

| KEY | PART NO. | PART NAME | QTY | SERIAL NO. | REMARKS |
|---|---|---|---|---|---|
| 1N | ..... | KIT | 1 | | (TOOTH) WHOLEGOODS (CATERPILLAR REPLACEMENT TIGER TOOTH ASSEMBLY) (NOT ILLUSTRATED) ( AT167194 ONLY AVAILABLE WHEN ORDERING BUCKET) |
| 1O | ..... | KIT | 1 | | (TOOTH) WHOLEGOODS (V-STYLE EV29SYL TOOTH KIT) (NOT ILLUSTRATED) ( AT199355 ONLY AVAILABLE WHEN ORDERING BUCKET) |
| 2 | TP160 | PIN | 1 | | (SUB FOR TP160L, THIS APPLICATION) (USE WITH 310 TOOTH ASSEMBLIES) |
| | TK330 | PIN | 1 | | (USE WITH 330 TOOTH ASSEMBLIES) |
| | TK290 | PIN | 1 | | (USE WITH 290 TOOTH ASSEMBLIES) |
| | EX27VPN | PIN | 1 | | (ESCO) (NOT ILLUSTRATED ON THIS PAGE - SEE ESCO TOOTH PAGE) |
| | T9J2358 | PIN FASTENER | 1 | | (CATERPILLAR REPLACEMENT) (NOT ILLUSTRATED) |
| | EV29PN | PIN FASTENER | 1 | | (FOR V-STYLE EV29SYL TOOTH KIT) (NOT ILLUSTRATED) |
| 3 | T153X310 | BUCKET TOOTH ADAPTER | 1 | | (USE WITH 310 TOOTH ASSEMBLIES) |
| | T158X330 | BUCKET TOOTH ADAPTER | 1 | | (USE WITH 330 TOOTH ASSEMBLIES) |
| | T158X290 | BUCKET TOOTH ADAPTER | 1 | | (USE WITH 290 TOOTH ASSEMBLIES) |
| | EX5850-27V | BUCKET TOOTH ADAPTER | 1 | | (ESCO) (NOT ILLUSTRATED ON THIS PAGE - SEE ESCO TOOTH PAGE) |
| | T3G8354 | BUCKET TOOTH ADAPTER | 1 | | (CATERPILLAR REPLACEMENT) (NOT ILLUSTRATED) |
| | EV5850-V29 | BUCKET TOOTH ADAPTER | 1 | | (FOR V-STYLE EV29SYL TOOTH KIT) (NOT ILLUSTRATED) |
| 4A | TF310 | TOOTH | 1 | | (ALSO ORDER TP160L) (FANGGS) |
| | TF330 | TOOTH | 1 | | (FANGGS) |
| | TF290 | TOOTH | 1 | | (FANGGS) |
| 4B | TX310 | TOOTH | 1 | | (ALSO ORDER TP160L) (STANDARD) |
| | TX330 | TOOTH | 1 | | (STANDARD) |
| | TX290 | TOOTH | 1 | | (STANDARD) |
| 4C | TX310WT | TOOTH | 1 | | (ALSO ORDER TP160L) (TWIN TIGER) |
| | TX330WT | TOOTH | 1 | | (TWIN TIGER) |
| | TX290WT | TOOTH | 1 | | (TWIN TIGER) |
| 4D | TX310F | TOOTH | 1 | | (ALSO ORDER TP160L) |
| 4E | TX310AP | TOOTH | 1 | | (ALSO ORDER TP160L) |
| 4F | TT310 | TOOTH | 1 | | (ALSO ORDER TP160L) (TIGER) |
| | TT330 | TOOTH | 1 | | (TIGER) |
| | TT290 | TOOTH | 1 | | (TIGER) |
| 4G | EX27SYL | TOOTH | 1 | | (ESCO STANDARD) (NOT ILLUSTRATED ON THIS PAGE - SEE ESCO TOOTH PAGE) |
| 4H | EX27TVIP | TOOTH | 1 | | (ESCO TWIN TIGER) (NOT ILLUSTRATED ON THIS PAGE - SEE ESCO TOOTH PAGE) |
| 4I | EX27S6F | TOOTH | 1 | | (ESCO FLARE) (NOT ILLUSTRATED ON THIS PAGE - SEE ESCO TOOTH PAGE) |
| 4J | EX27VIP | TOOTH | 1 | | (ESCO TIGER) (NOT ILLUSTRATED ON THIS PAGE - SEE ESCO TOOTH PAGE) |
| 4K | TF1U3352D | TOOTH | 1 | | (CATERPILLAR REPLACEMENT FANGGS) (NOT ILLUSTRATED) |
| 4L | T1U3352 | TOOTH | 1 | | (CATERPILLAR REPLACEMENT STANDARD) (NOT ILLUSTRATED) |
| 4M | TX1U3352WT | TOOTH | 1 | | (CATERPILLAR REPLACEMENT TWIN TIGER) (NOT ILLUSTRATED) |
| 4N | TT1U3352 | TOOTH | 1 | | (CATERPILLAR REPLACEMENT TIGER) (NOT ILLUSTRATED) |
| 4O | EV29SYL | TOOTH | 1 | | (FOR V-STYLE EV29SYL TOOTH KIT) (NOT ILLUSTRATED) |
| 5 | T3G9549 | RETAINER | 1 | | (CATERPILLAR REPLACEMENT) (NOT ILLUSTRATED) |
| 6 | EX27VPL | PLUG | 1 | | (NOT ILLUSTRATED ON THIS PAGE - SEE ESCO TOOTH PAGE) |

**GENERAL PURPOSE BUCKET TOOTH ASSEMBLY**
**(24, 30, 36, 42 OR 48 INCH BUCKET)**

TP43771 -UN-01JAN94

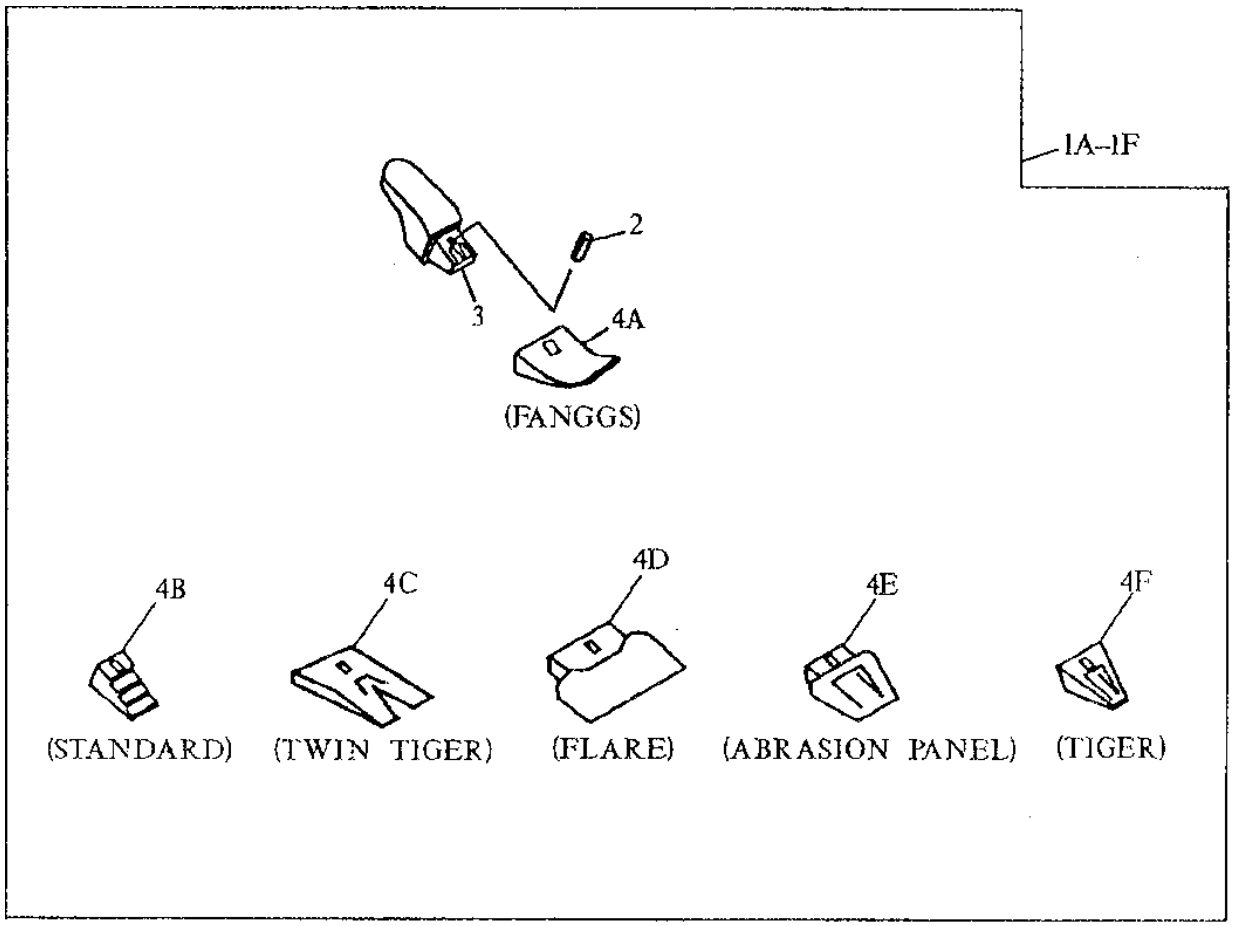


ORDER 3 SETS WITH 18 INCH BUCKET
ORDER 4 SETS WITH 24 INCH BUCKET
ORDER 4 SETS WITH 30 INCH BUCKET
ORDER 5 SETS WITH 36 INCH BUCKET
ORDER 5 SETS WITH 42 INCH BUCKET
ORDER 6 SETS WITH 48 INCH BUCKET
TP43771 ORDER 7 SETS WITH 54 INCH BUCKET

**GENERAL PURPOSE BUCKET TOOTH ASSEMBLY**
**(24, 30, 36, 42 OR 48 INCH BUCKET)**

| KEY | PART NO. | PART NAME | QTY | SERIAL NO. | REMARKS |
|---|---|---|---|---|---|
| 1A | AT163538 | KIT | 1 | | (TOOTH) WHOLEGOODS (FANGGS 310 TOOTH ASSEMBLY) |
| | AT178530 | KIT | 1 | | (TOOTH) WHOLEGOODS (FANGGS 330 TOOTH ASSEMBLY) |
| | AT178531 | KIT | 1 | | (TOOTH) WHOLEGOODS (FANGGS 290 TOOTH ASSEMBLY) |
| 1B | AT163539 | KIT | 1 | | (TOOTH) WHOLEGOODS (STANDARD 310 TOOTH ASSEMBLY) |
| | AT178532 | KIT | 1 | | (TOOTH) WHOLEGOODS (STANDARD 330 TOOTH ASSEMBLY) |
| | AT178533 | KIT | 1 | | (TOOTH) WHOLEGOODS (STANDARD 290 TOOTH ASSEMBLY) |
| 1C | AT163543 | KIT | 1 | | (TOOTH) WHOLEGOODS (TWIN TIGER 310 TOOTH ASSEMBLY) |
| | AT178536 | KIT | 1 | | (TOOTH) WHOLEGOODS (TWIN TIGER 330 TOOTH ASSEMBLY) |
| | AT178537 | KIT | 1 | | (TOOTH) WHOLEGOODS (TWIN TIGER 290 TOOTH ASSEMBLY) |
| 1D | AT163542 | KIT | 1 | | (TOOTH) WHOLEGOODS (FLARE) |
| 1E | AT163541 | KIT | 1 | | (TOOTH) WHOLEGOODS (ABRASION PANEL) |
| 1F | AT163540 | KIT | 1 | | (TOOTH) WHOLEGOODS (TIGER 310 TOOTH ASSEMBLY) |
| | AT178534 | KIT | 1 | | (TOOTH) WHOLEGOODS (TIGER 330 TOOTH ASSEMBLY) |
| | AT178535 | KIT | 1 | | (TOOTH) WHOLEGOODS (TIGER 290 TOOTH ASSEMBLY) |
| 1G | AT163544 | KIT | 1 | | (TOOTH) WHOLEGOODS (ESCO STANDARD TOOTH ASSEMBLY) (NOT ILLUSTRATED) |
| 1H | AT163547 | KIT | 1 | | (TOOTH) WHOLEGOODS (ESCO TWIN TIGER TOOTH ASSEMBLY) (NOT ILLUSTRATED) |
| 1I | AT163546 | KIT | 1 | | (TOOTH) WHOLEGOODS (ESCO FLARE TOOTH ASSEMBLY) (NOT ILLUSTRATED) |
| 1J | AT163545 | KIT | 1 | | (TOOTH) WHOLEGOODS (ESCO TIGER TOOTH ASSEMBLY) (NOT ILLUSTRATED) |
| 1K | AT167192 | KIT | 1 | | (TOOTH) WHOLEGOODS (CATERPILLAR REPLACEMENT FANGGS TOOTH ASSEMBLY) (NOT ILLUSTRATED) |
| 1L | AT167193 | KIT | 1 | | (TOOTH) WHOLEGOODS (CATERPILLAR REPLACEMENT STANDARD TOOTH ASSEMBLY) (NOT ILLUSTRATED) |
| 1M | AT167195 | KIT | 1 | | (TOOTH) WHOLEGOODS (CATERPILLAR REPLACEMENT TWIN TIGER TOOTH ASSEMBLY) (NOT ILLUSTRATED) |
| 1N | AT167194 | KIT | 1 | | (TOOTH) WHOLEGOODS (CATERPILLAR REPLACEMENT TIGER TOOTH ASSEMBLY) (NOT ILLUSTRATED) |
| 1O | AT167197 | KIT | 1 | | (TOOTH) WHOLEGOODS (STANDARD BUCKET) (NOT ILLUSTRATED) |

THIS PARTS LISTING IS CONTINUED

**GENERAL PURPOSE BUCKET TOOTH ASSEMBLY (CONTINUED)**
**(24, 30, 36, 42 OR 48 INCH BUCKET)**

TP43771 -UN-01JAN94

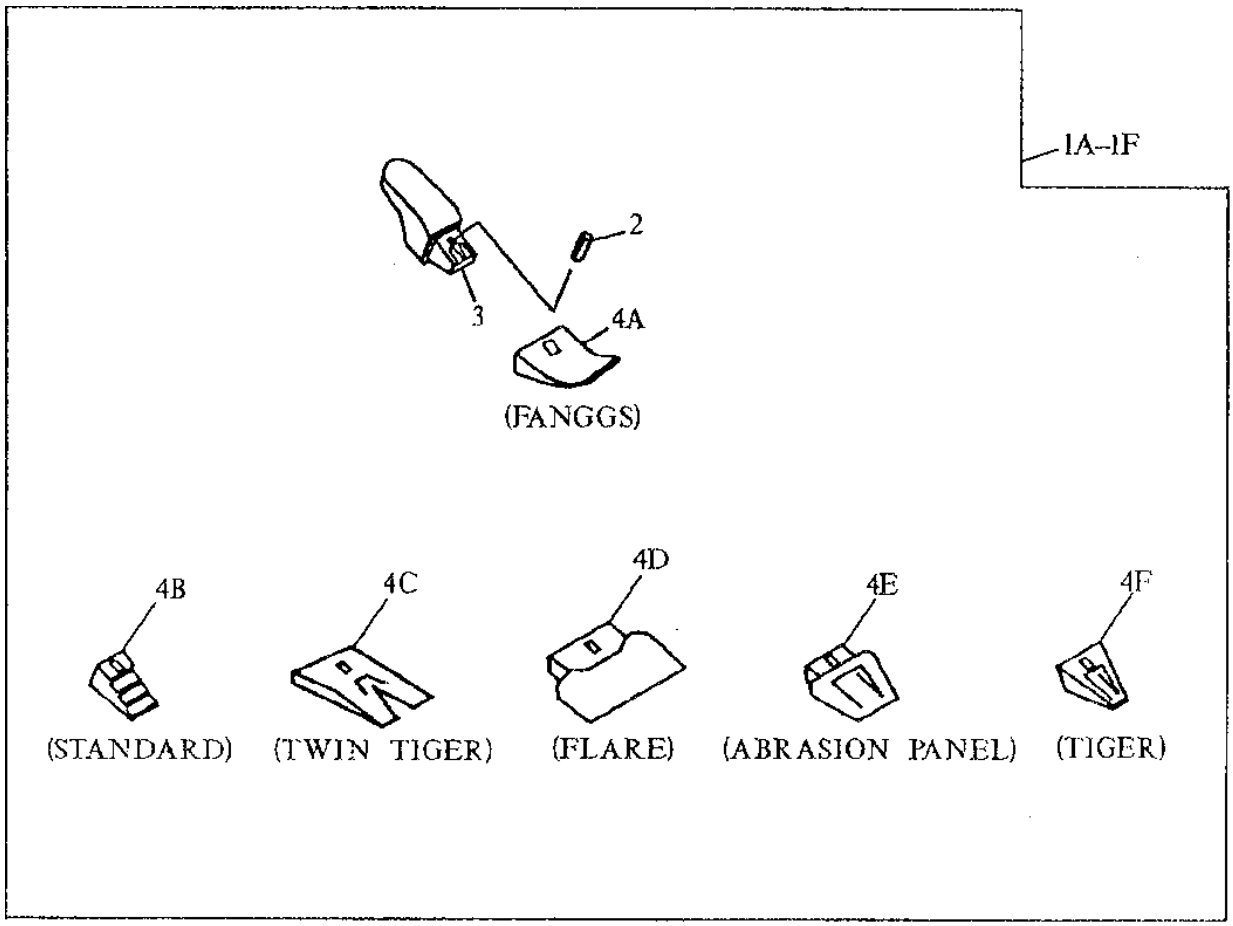


ORDER 3 SETS WITH 18 INCH BUCKET
ORDER 4 SETS WITH 24 INCH BUCKET
ORDER 4 SETS WITH 30 INCH BUCKET
ORDER 5 SETS WITH 36 INCH BUCKET
ORDER 5 SETS WITH 42 INCH BUCKET
ORDER 6 SETS WITH 48 INCH BUCKET
TP43771 ORDER 7 SETS WITH 54 INCH BUCKET

**GENERAL PURPOSE BUCKET TOOTH ASSEMBLY (CONTINUED)**
**(24, 30, 36, 42 OR 48 INCH BUCKET)**

| KEY | PART NO. | PART NAME | QTY | SERIAL NO. | REMARKS |
|---|---|---|---|---|---|
| 2 | TP160 | PIN | 1 | | (SUB FOR TP160L, THIS APPLICATION) (USE WITH 310 TOOTH ASSEMBLIES) |
| | TK330 | PIN | 1 | | (USE WITH 330 TOOTH ASSEMBLIES) |
| | TK290 | PIN | 1 | | (USE WITH 290 TOOTH ASSEMBLIES) |
| | EX27VPN | PIN | 1 | | (ESCO) (NOT ILLUSTRATED ON THIS PAGE - SEE ESCO TOOTH PAGE) |
| | T9J2358 | PIN FASTENER | 1 | | (CATERPILLAR REPLACEMENT) (NOT ILLUSTRATED) |
| 3 | T153X310 | BUCKET TOOTH ADAPTER | 1 | | (USE WITH 310 TOOTH ASSEMBLIES) |
| | T158X330 | BUCKET TOOTH ADAPTER | 1 | | (USE WITH 330 TOOTH ASSEMBLIES) |
| | T158X290 | BUCKET TOOTH ADAPTER | 1 | | (USE WITH 290 TOOTH ASSEMBLIES) |
| | EX5850-27V | BUCKET TOOTH ADAPTER | 1 | | (ESCO) (NOT ILLUSTRATED ON THIS PAGE - SEE ESCO TOOTH PAGE) |
| | T3G8354 | BUCKET TOOTH ADAPTER | 1 | | (CATERPILLAR REPLACMENT) (NOT ILLUSTRATED) |
| 4A | TF310 | TOOTH | 1 | | (ALSO ORDER TP160L) (FANGGS) |
| | TF330 | TOOTH | 1 | | (FANGGS) |
| | TF290 | TOOTH | 1 | | (FANGGS) |
| 4B | TX310 | TOOTH | 1 | | (ALSO ORDER TP160L) (STANDARD) |
| | TX330 | TOOTH | 1 | | (STANDARD) |
| | TX290 | TOOTH | 1 | | (STANDARD) |
| 4C | TX310WT | TOOTH | 1 | | (ALSO ORDER TP160L) (TWIN TIGER) |
| | TX330WT | TOOTH | 1 | | (TWIN TIGER) |
| | TX290WT | TOOTH | 1 | | (TWIN TIGER) |
| 4D | TX310F | TOOTH | 1 | | (ALSO ORDER TP160L) |
| 4E | TX310AP | TOOTH | 1 | | (ALSO ORDER TP160L) |
| 4F | TT310 | TOOTH | 1 | | (ALSO ORDER TP160L) (TIGER) |
| | TT330 | TOOTH | 1 | | (TIGER) |
| | TT290 | TOOTH | 1 | | (TIGER) |
| 4G | EX27SYL | TOOTH | 1 | | (ESCO STANDARD) (NOT ILLUSTRATED ON THIS PAGE - SEE ESCO TOOTH PAGE) |
| 4H | EX27TVIP | TOOTH | 1 | | (ESCO TWIN TIGER) (NOT ILLUSTRATED ON THIS PAGE - SEE ESCO TOOTH PAGE) |
| 4I | EX27S6F | TOOTH | 1 | | (ESCO FLARE) (NOT ILLUSTRATED ON THIS PAGE - SEE ESCO TOOTH PAGE) |
| 4J | EX27VIP | TOOTH | 1 | | (ESCO TIGER) (NOT ILLUSTRATED ON THIS PAGE - SEE ESCO TOOTH PAGE) |
| 4K | TF1U3352D | TOOTH | 1 | | (CATERPILLAR REPLACEMENT FANGGS) (NOT ILLUSTRATED) |
| 4L | T1U3352 | TOOTH | 1 | | (CATERPILLAR REPLACEMENT STANDARD) (NOT ILLUSTRATED) |
| 4M | TX1U3352WT | TOOTH | 1 | | (CATERPILLAR REPLACEMENT TWIN TIGER) (NOT ILLUSTRATED) |
| 4N | TT1U3352 | TOOTH | 1 | | (CATERPILLAR REPLACEMENT TIGER) (NOT ILLUSTRATED) |
| 5 | T3G9549 | RETAINER | 1 | | (CATERPILLAR REPLACEMENT) (NOT ILLUSTRATED) |
| 6 | EX27VPL | PLUG | 1 | | (NOT ILLUSTRATED ON THIS PAGE - SEE ESCO TOOTH PAGE) |

BUCKET DATA SHEET

T147427 -UN-26OCT01

## EXCAVATOR BUCKET PIN-UP DATA

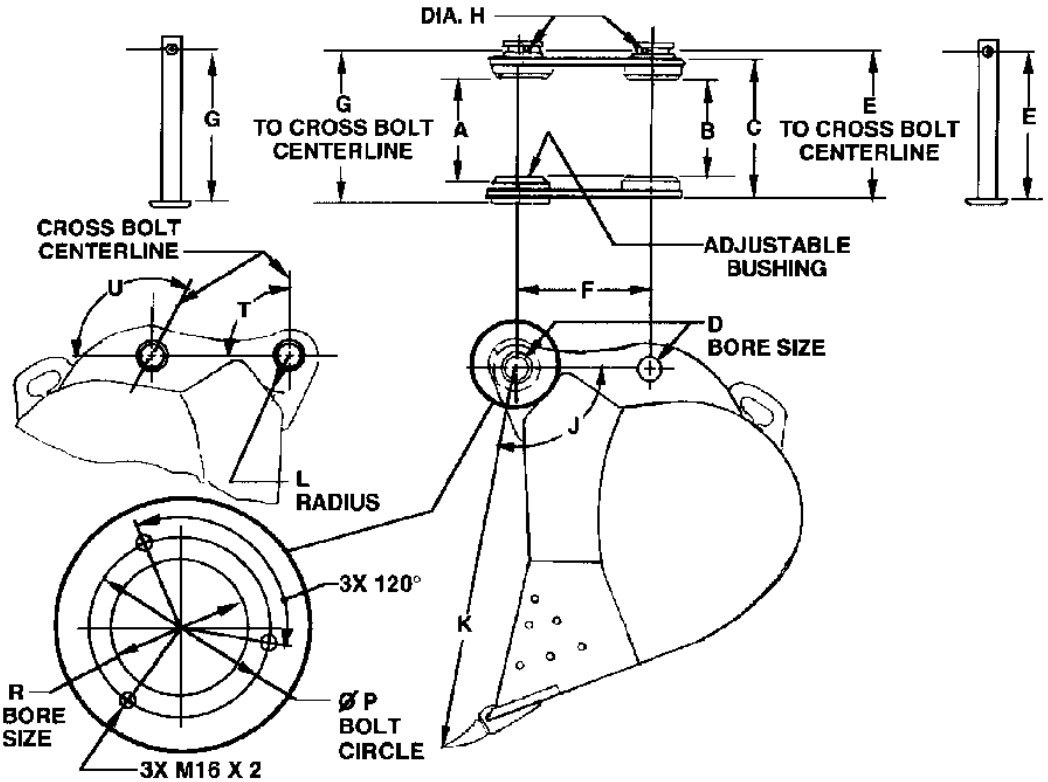


| MODEL | 200C LC 690D 690E LC | LONG FRONTS 690E LC, 790E LC, 892E LC | MODEL | 200C LC 690D 690E LC | LONG FRONTS 690E LC, 790E LC, 892E LC |
|---|---|---|---|---|---|
| A | [324] 12.76 | [224] 8.82 | J (ANGLE) | 99° | 104° |
| B | [307] 12.09 | [224] 8.82 | K | [1422] 56.00 | [940] 37.01 |
| C | [413] 16.26 | [335] 13.19 | L | [111] 4.37 | [149] 5.87 |
| D | [80] 3.15 | [65] 2.559 | P | [150] 5.91 | [65] 2.559 |
| E | [438] 17.24 | [352] 13.85 | R | [120] 4.72 | N.A. |
| F | [472] 18.58 | [325] 12.80 | S (3 HOLES) | M16 X 2 | N.A. |
| G | [454] 17.87 | [352] 13.85 | T (ANGLE) | 105° | 185° |
| H | [17] 0.67 | [17] 0.67 | U (ANGLE) | 105° | 75° |

Company policy limits the use of the enclosed drawings and information to your company and any other usage is expressly prohibited without the written consent of Deere & Company. We regret we cannot keep you informed of subsequent changes in the specifications furnished. You are, therefore, responsible for the risks involved in their use.

It is to be understood that furnishing you with the requested material does not automatically constitute a Deere & Company endorsement of your products on or with any John Deere product.

(13SEP96)

T147427

**MEMORANDA**

**DIG AND SWING PILOT VAVE, CONTROL LEVER AND COMPONENTS**

T207516 -UN-08FEB05

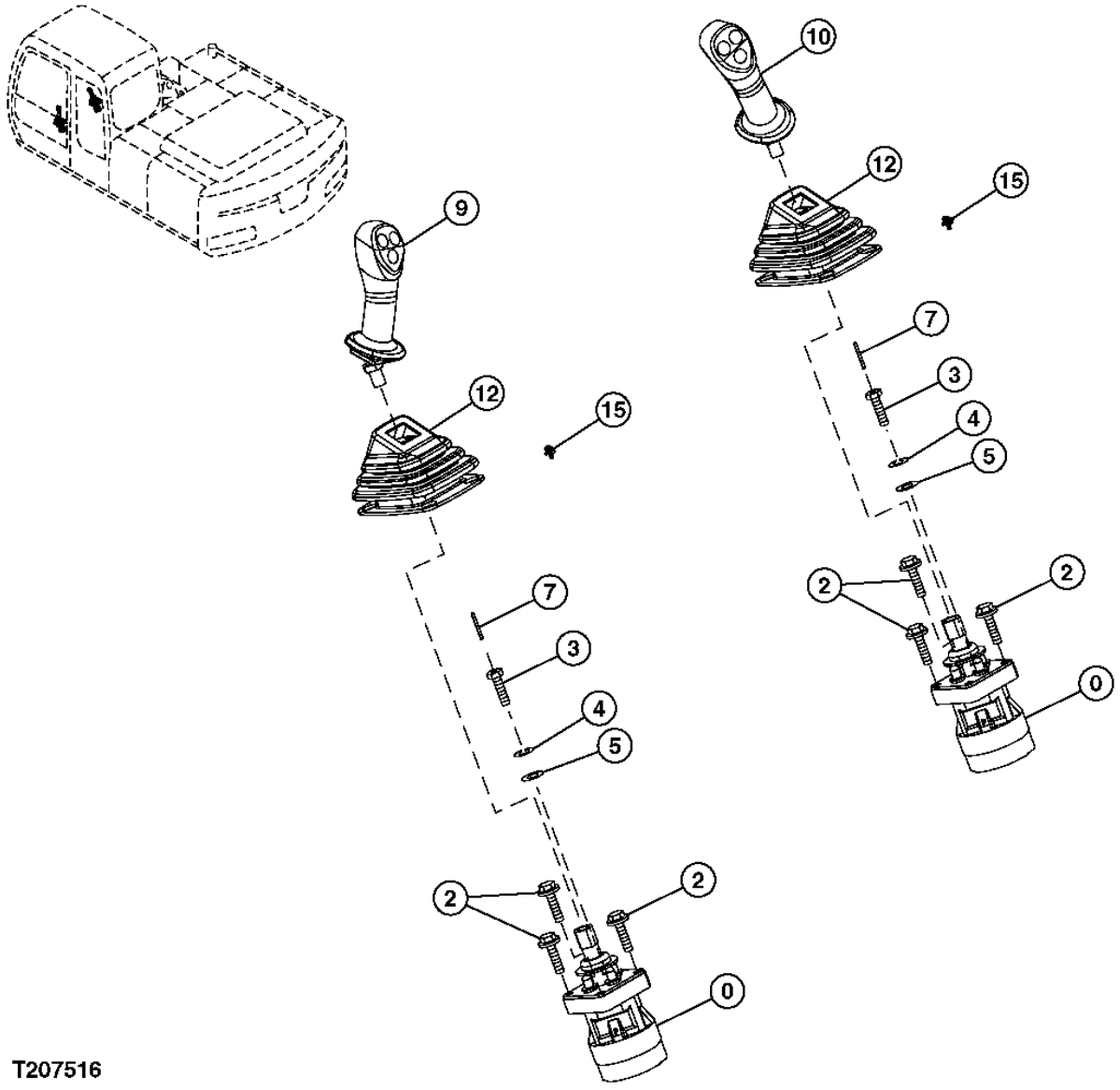

**DIG AND SWING PILOT VAVE, CONTROL LEVER AND COMPONENTS**

| KEY | PART NO. | PART NAME | QTY | SERIAL NO. | REMARKS |
|---|---|---|---|---|---|
| 0 | 4476331 | HYDR./PILOT CONTROL VALVE | 2 | | |
| 2 | ..... | CAP SCREW | 2 | | ( J260830 NO LONGER AVAILABLE) |
| | 19M7288 | CAP SCREW | 1 | | M8 X 30, (SUB FOR J900830) |
| | 24M7055 | WASHER | 1 | | 8.400 X 16 X 1.600 MM, (SUB FOR A590108) |
| 3 | 4479300 | BOLT | 2 | | |
| 4 | 12M7065 | LOCK WASHER | 1 | | 8 MM, (SUB FOR A590908) |
| 5 | 24M7055 | WASHER | 2 | | 8.400 X 16 X 1.600 MM, (SUB FOR A590108) |
| 7 | 34M7086 | SPRING PIN | 2 | | 3 X 32 MM, (SUB FOR 4144011) |
| 9 | 4484769 | GRIP | 1 | | |
| 10 | 4484770 | GRIP | 1 | | |
| 12 | 1030750 | BOOT | 2 | | |
| 15 | H77698 | TIE BAND | 2 | | (SUB FOR 4300351) |

**PILOT SHUT-OFF LEVER AND MOUNTING BRACKET**

T207599 -UN-01MAR05

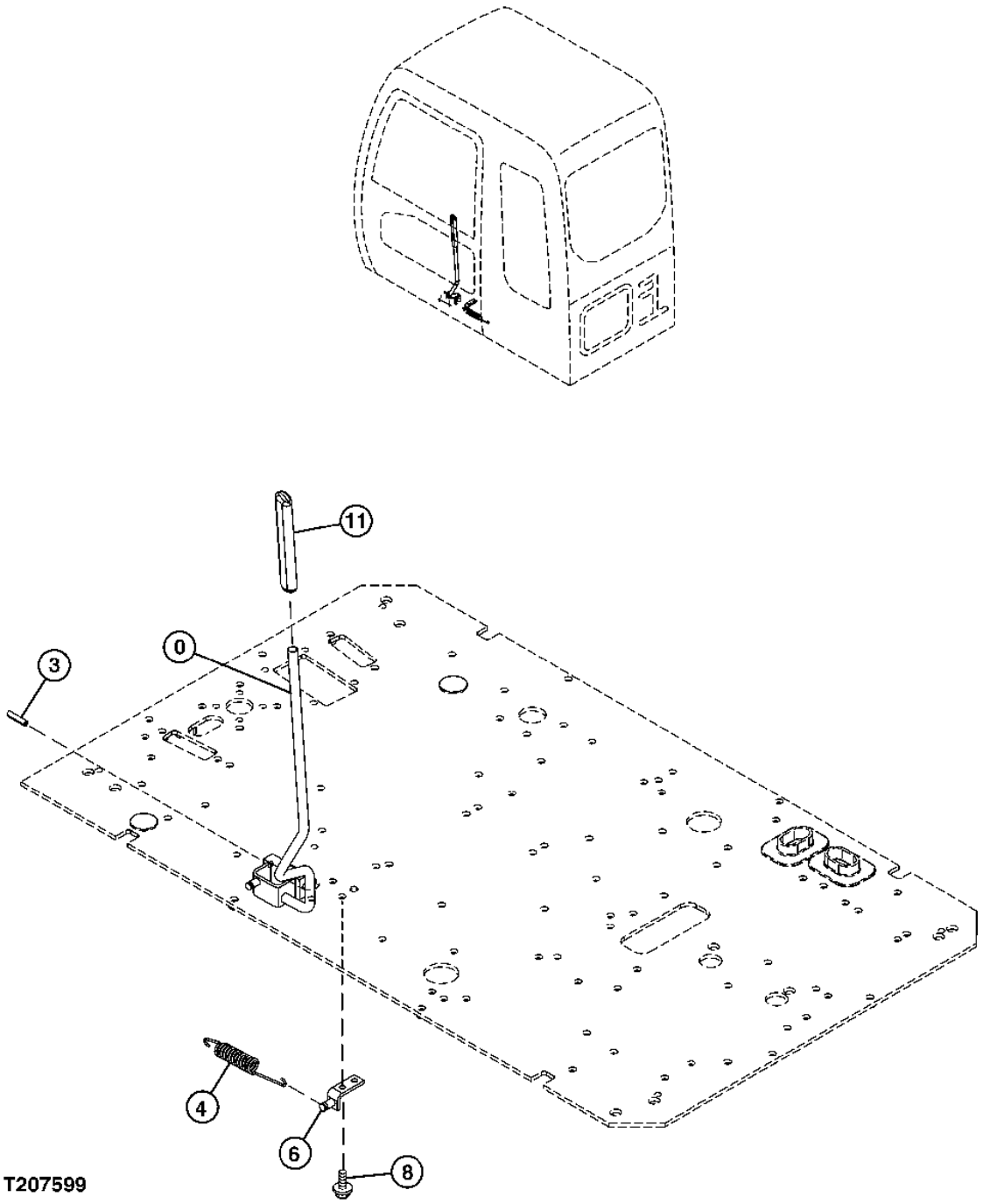

**PILOT SHUT-OFF LEVER AND MOUNTING BRACKET**

| KEY | PART NO. | PART NAME | QTY | SERIAL NO. | REMARKS |
|---|---|---|---|---|---|
| 0 | 7043021 | LEVER | 1 | | |
| 3 | 4116310 | SPRING PIN | 1 | | |
| 4 | 4189184 | EXTENSION SPRING | 1 | | |
| 6 | 8086257 | BRACKET | 1 | | |
| 8 | ..... | CAP SCREW | 2 | | ( J271030 NO LONGER AVAILABLE) |
| | 19M7662 | CAP SCREW | 1 | | M10 X 30, (SUB FOR J901030) |
| | 24M7346 | WASHER | 1 | | 11 X 20 X 2 MM, (SUB FOR J222010) |
| 11 | 3089848 | GRIP | 1 | | |

**BLADE CONTROL LEVER, VALVE, PILOT LINES AND HOSES**

T207570 -UN-24FEB05

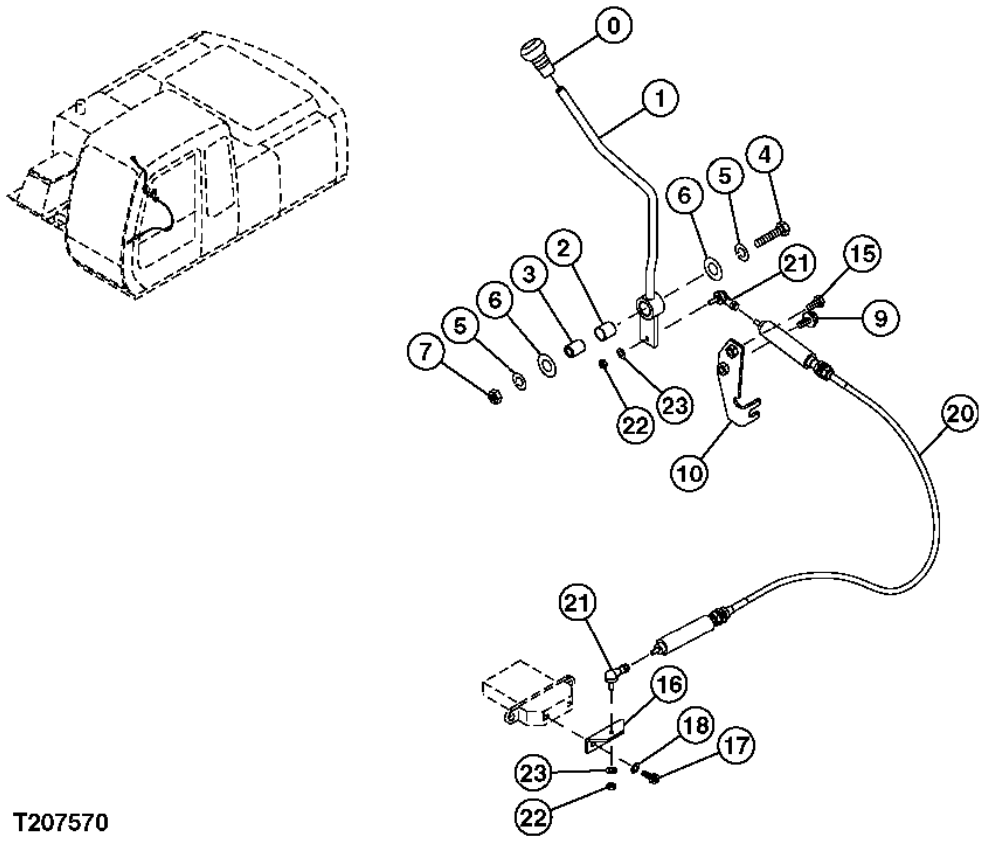


T207570

**BLADE CONTROL LEVER, VALVE, PILOT LINES AND HOSES**

| KEY | PART NO. | PART NAME | QTY | SERIAL NO. | REMARKS |
|---|---|---|---|---|---|
| 0 | 4280117 | GRIP | 1 | | |
| 1 | 4363754 | GRIP | 1 | | (SUB FOR 8081981) |
| 2 | 4396083 | BUSHING | 1 | | |
| 3 | 4279507 | BUSHING | 1 | | |
| 4 | 19M7362 | CAP SCREW | 1 | | M12 X 55, (SUB FOR J901255) |
| 5 | 12H301 | LOCK WASHER | 2 | | 12.700 MM, (SUB FOR A590912) |
| 6 | 24H1748 | WASHER | 2 | | 12.700 X 31.750 X 2.667 MM, (SUB FOR 449490) |
| 7 | 14M7275 | NUT | 1 | | M12, (SUB FOR J950012) |
| 9 | ..... | CAP SCREW | 1 | | ( J271025 NO LONGER AVAILABLE) |
| | 19M7402 | CAP SCREW | 1 | | M10 X 25, (SUB FOR J901025) |
| | 24M7346 | WASHER | 1 | | 11 X 20 X 2 MM, (SUB FOR J222010) |
| 10 | 8087268 | BRACKET | 1 | | |
| 15 | 19M7938 | CAP SCREW | 1 | | M10 X 20, (SUB FOR J901020) |
| 16 | 4465665 | BRACKET | 1 | | |
| 17 | J780816 | BOLT | 2 | | |
| 18 | 12M7065 | LOCK WASHER | 2 | | 8 MM, (SUB FOR A590908) |
| 20 | 4466542 | CABLE | 1 | | |
| 21 | 4056017 | BALL JOINT | 2 | | |
| 22 | 14M7272 | NUT | 2 | | M6, (SUB FOR M500605) |
| 23 | 12M7006 | LOCK WASHER | 2 | | 6 MM, (SUB FOR A590906) |

**MONO BOOM**

T207847 -UN-21FEB05

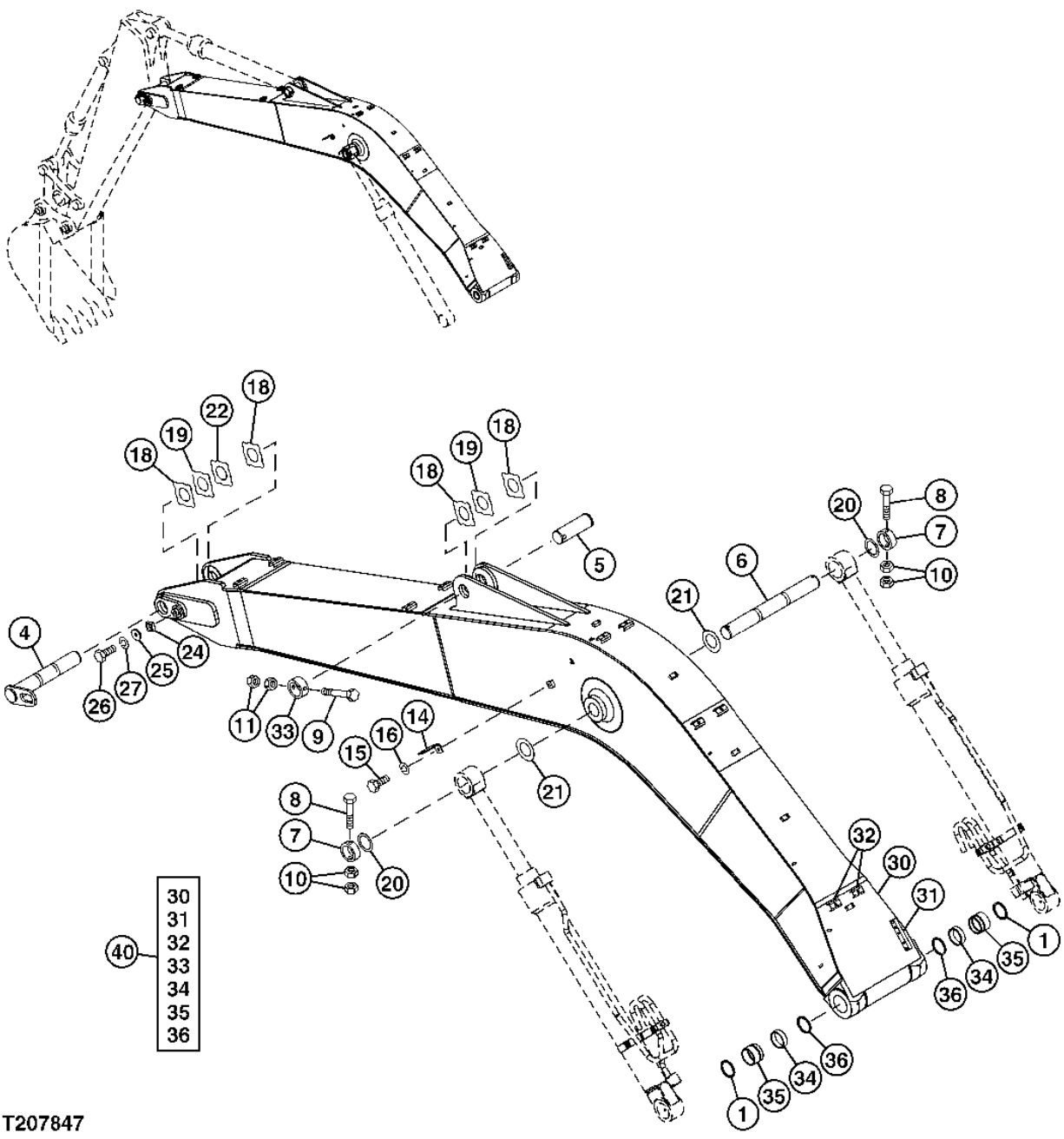

**MONO BOOM**

| KEY | PART NO. | PART NAME | QTY | SERIAL NO. | REMARKS |
|---|---|---|---|---|---|
| 1 | 4067901 | SEAL | 2 | | |
| 4 | 8087367 | PIN FASTENER | 1 | | |
| 5 | 3094627 | PIN FASTENER | 1 | | |
| 6 | 3094602 | PIN FASTENER | 1 | | |
| 7 | 4435240 | STOP | 2 | | |
| 8 | 4435129 | PIN FASTENER | 2 | | |
| 9 | 4435126 | PIN FASTENER | 1 | | |
| 10 | 14M7276 | NUT | 4 | | M16, (SUB FOR J950016) |
| 11 | 3063826 | NUT | 2 | | (SUB FOR J950020) |
| 14 | 4224631 | BRACKET | 1 | | |
| 15 | J901425 | CAP SCREW | 1 | | |
| 16 | 12H317 | LOCK WASHER | 1 | | 9/16", (SUB FOR A590914) |
| 18 | 4444286 | THRUST WASHER | 4 | | |
| 19 | 4444287 | THRUST WASHER | 2 | | |
| 20 | 4447890 | THRUST WASHER | 2 | | |
| 21 | 4450012 | THRUST WASHER | 2 | | |
| 22 | 4462624 | THRUST WASHER | 1 | | |
| 24 | 4424425 | MANIFOLD | 1 | | |
| 25 | 4426128 | WASHER | 1 | | |
| 26 | J921840 | BOLT | 1 | | |
| 27 | J257218 | LOCK WASHER | 1 | | |
| 30 | 5008272 | EXCAVATOR BOOM | 1 | | |
| 31 | 4208631 | JOINTER | 1 | | |
| 32 | 9738322 | SUPPORT | 10 | | |
| 33 | 4434953 | STOP | 1 | | |
| 34 | 4402460 | BUSHING | 2 | | |
| 35 | 4443880 | BUSHING | 2 | | |
| 36 | 4067901 | SEAL | 2 | | |
| 40 | 7042208 | EXCAVATOR BOOM | 1 | | |
| | **AT317399** | **KIT** | **1** | | **WHOLEGOODS (BOOM)** |
| | **AT317400** | **KIT** | **1** | | **WHOLEGOODS (BOOM, VA HYDRAULIC ADJ.)** |

**BUCKET ARM ASSEMBLY**

T207848 -UN-21FEB05

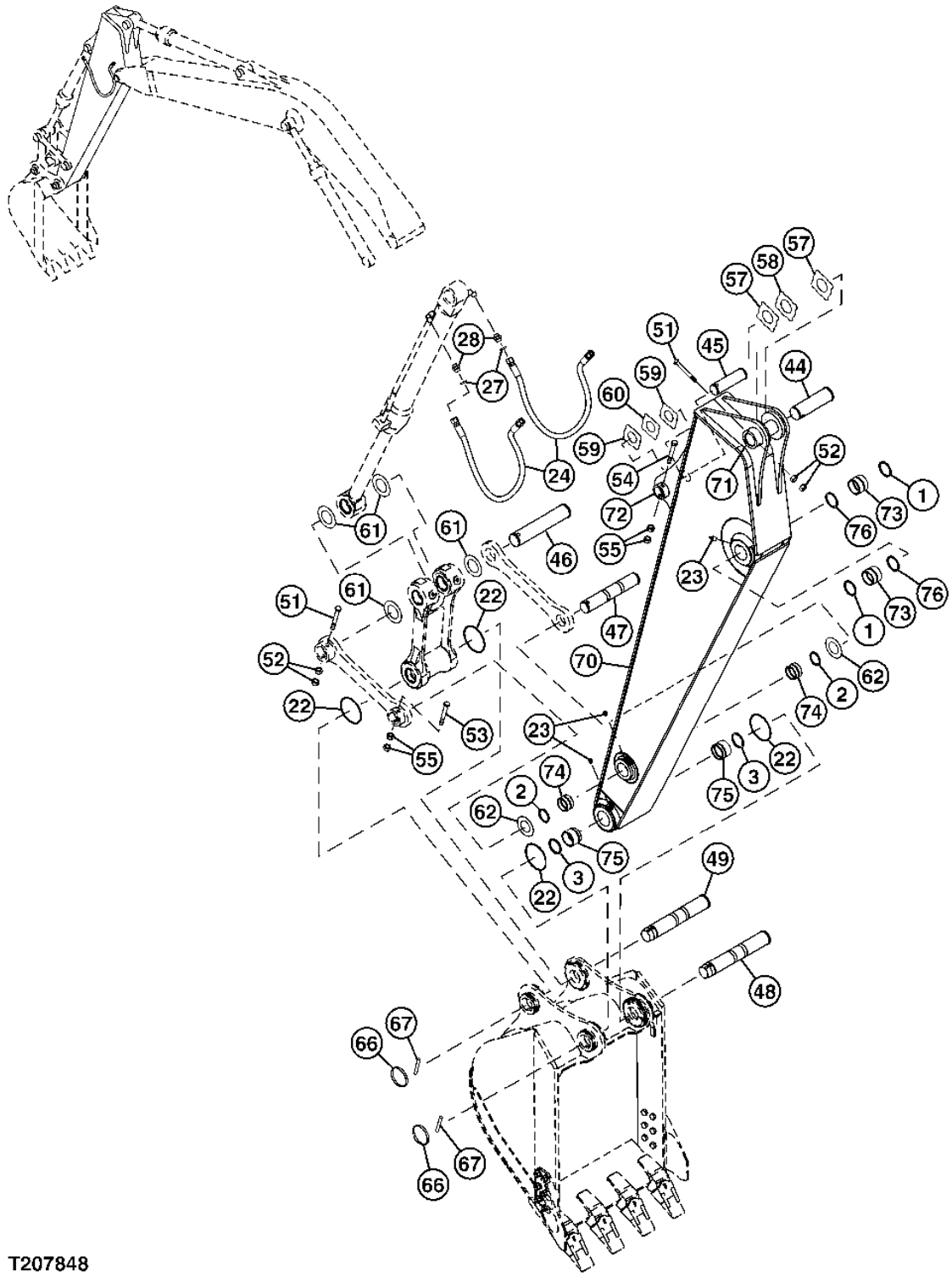

**BUCKET ARM ASSEMBLY**

| KEY | PART NO. | PART NAME | QTY | SERIAL NO. | REMARKS |
|---|---|---|---|---|---|
| 1 | TH102446 | SEAL | 2 | | (SUB FOR 4067902) |
| 2 | TH104472 | SEAL | 2 | | (SUB FOR 4084578) |
| 3 | TH102446 | SEAL | 2 | | (SUB FOR 4067902) |
| 22 | 4089028 | O-RING | 4 | | |
| 23 | TH100074 | LUBRICATION FITTING | 6 | | (SUB FOR J75481) |
| 24 | 4296268 | HYDRAULIC HOSE - FABRICATE | 2 | | |
| 27 | T77858 | O-RING | 2 | | (SUB FOR 4187308) |
| 28 | A853166 | ADAPTER | 2 | | |
| | AT318035 | O-RING | 1 | | (SUB FOR 4506424) |
| 44 | 3094627 | PIN FASTENER | 1 | | |
| 45 | ..... | PIN | 1 | | (3076168 IS NOT AVAILABLE FOR SERVICE) |
| 46 | AT317252 | PIN FASTENER | 1 | | (SUB FOR 3088581) |
| 47 | 3088579 | PIN FASTENER | 1 | | |
| 48 | 3088577 | PIN FASTENER | 1 | | |
| 49 | 3088580 | PIN FASTENER | 1 | | |
| 51 | 4435126 | PIN FASTENER | 2 | | |
| 52 | 3063826 | NUT | 4 | | (SUB FOR J950020) |
| 53 | 4435124 | PIN FASTENER | 1 | | |
| 54 | 4435123 | PIN FASTENER | 1 | | |
| 55 | 14M7276 | NUT | 4 | | M16, (SUB FOR J950016) |
| 57 | 4444286 | THRUST WASHER | 2 | | |
| 58 | 4444287 | THRUST WASHER | 1 | | |
| 59 | 4444290 | PLATE | 2 | | |
| 60 | 4444291 | THRUST WASHER | 1 | | |
| 61 | 4450012 | THRUST WASHER | 4 | | |
| 62 | 4450011 | THRUST WASHER | 2 | | |
| 66 | 4454561 | BUSHING | 2 | | |
| 67 | 4454560 | PIN FASTENER | 2 | | |
| 70 | 6020879 | ARM | 1 | | |
| 71 | 4434953 | STOP | 1 | | |
| 72 | 4434951 | STOP | 1 | | |
| 73 | 4447016 | BUSHING | 2 | | |
| 74 | 4409122 | BUSHING | 2 | | |
| 75 | 4409178 | BUSHING | 2 | | |
| 76 | TH102446 | SEAL | 2 | | (SUB FOR 4067902) |
| 80 | 7042157 | ARM | 1 | | NOT ILLUSTRATED |
| | **AT317402** | **ARM** | **1** | | **(2.7M ARM W/BUCKET) WHOLEGOODS** |

**BUCKET LINK**

T207849 -UN-21FEB05

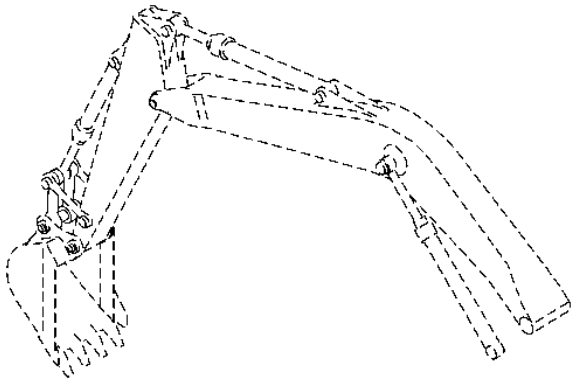

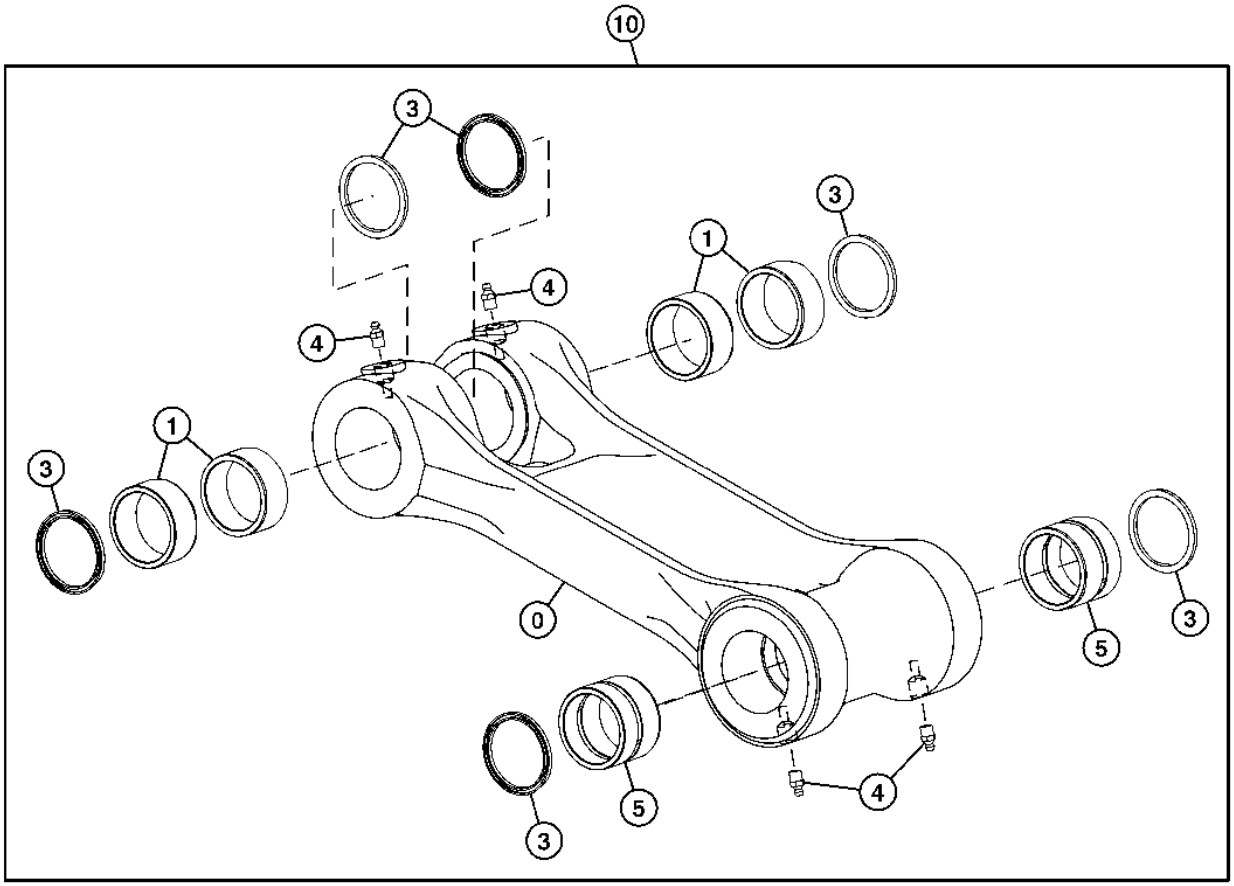


T207849

**BUCKET LINK**

| KEY | PART NO. | PART NAME | QTY | SERIAL NO. | REMARKS |
|---|---|---|---|---|---|
| 0 | 8076541 | LINK | 1 | | (SUB FOR 1027222) |
| 1 | 4352398 | BUSHING | 4 | | |
| 3 | TH102446 | SEAL | 6 | | (SUB FOR 4067902) |
| 4 | TH100074 | LUBRICATION FITTING | 4 | | (SUB FOR J75481) |
| 5 | 4443882 | BUSHING | 2 | | |
| 10 | 8076541 | KIT | 1 | | LINK |

**BUCKET ARM LINKS**

T207850 -UN-21FEB05

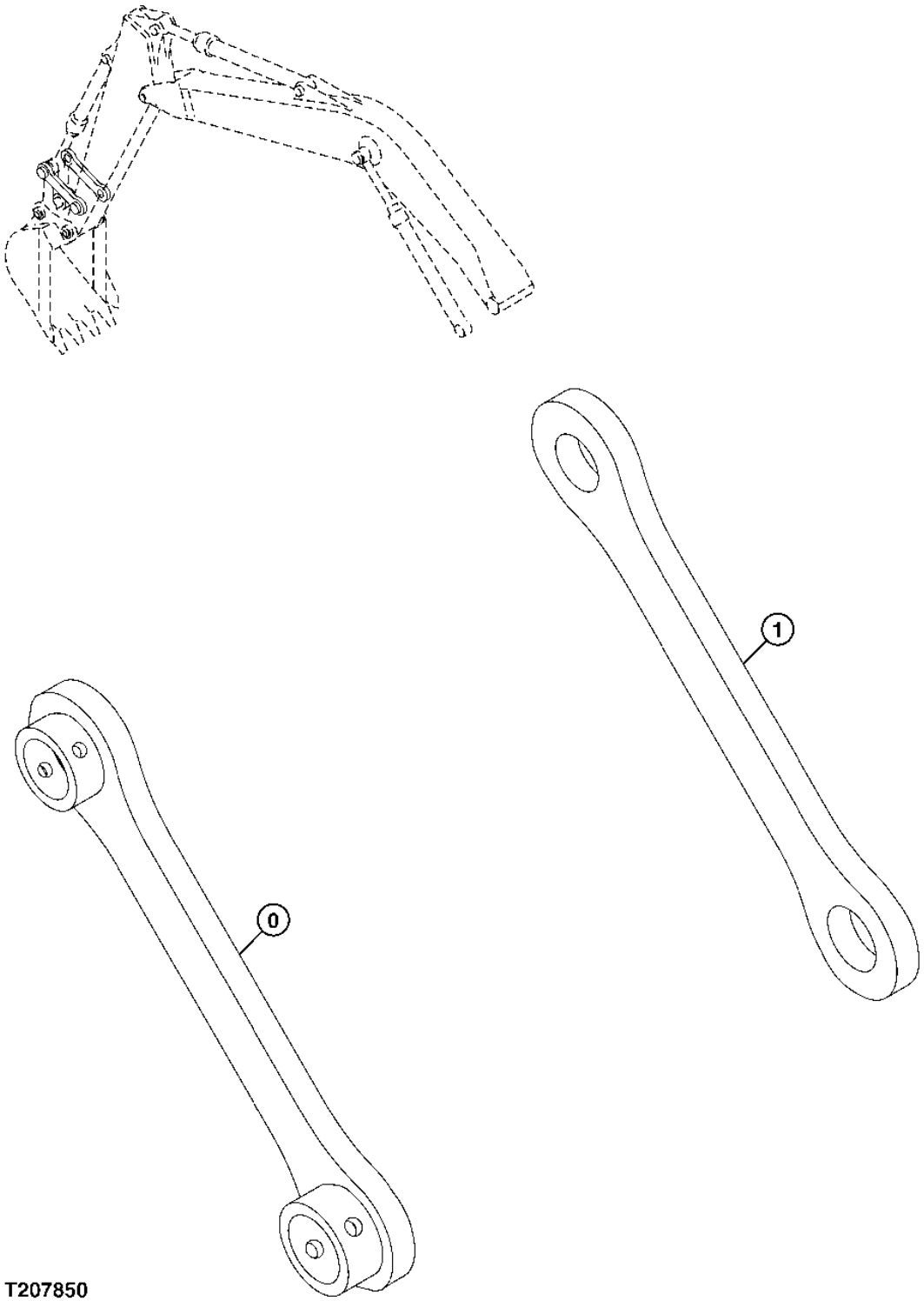

**BUCKET ARM LINKS**

| KEY | PART NO. | PART NAME | QTY | SERIAL NO. | REMARKS |
|---|---|---|---|---|---|
| 0 | 8074315 | LINK | 1 | | |
| 1 | 3084173 | LINK | 1 | | |

**BOOM HYDRAULIC LINES (MONO)**

T207851 -UN-21FEB05

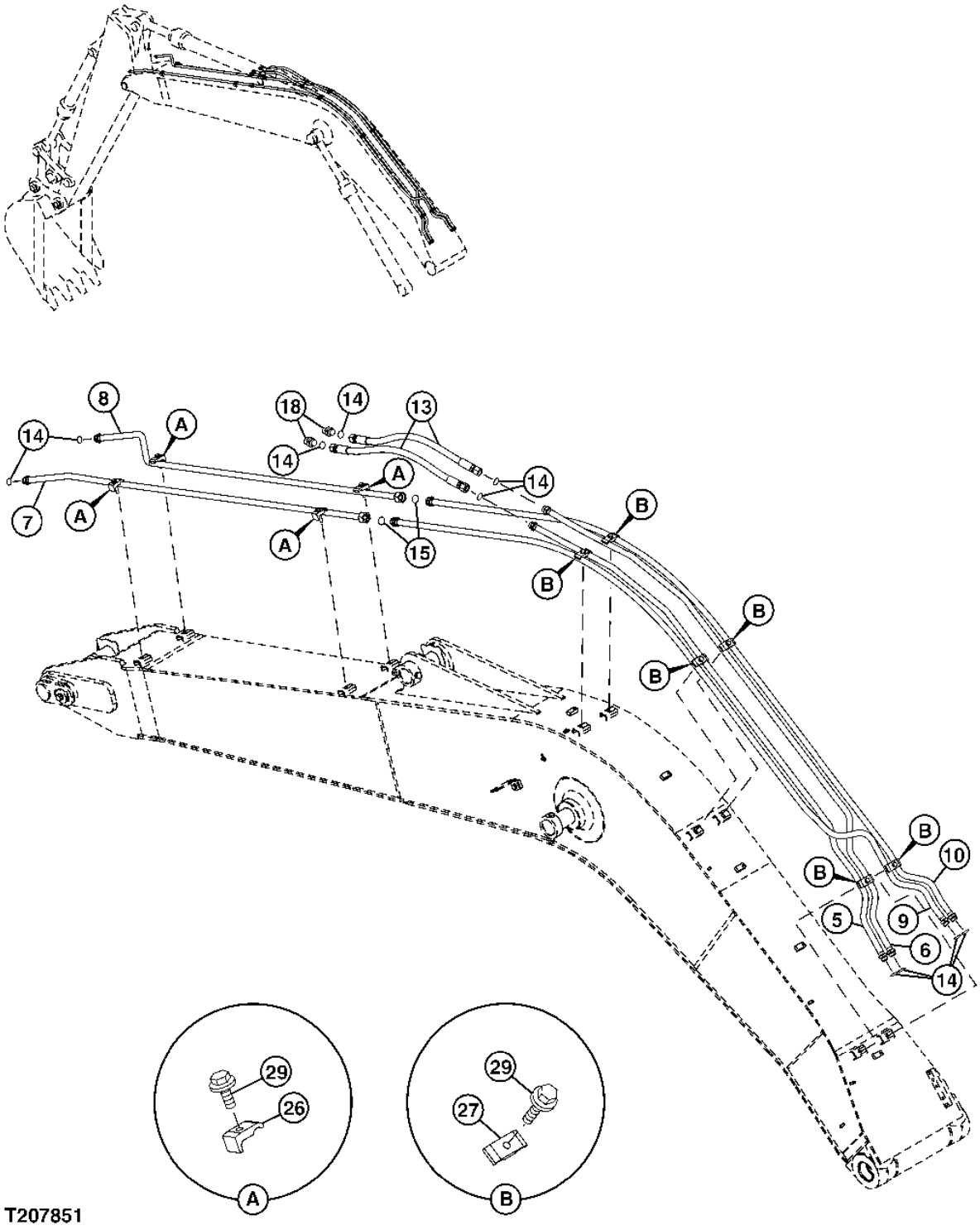

**BOOM HYDRAULIC LINES (MONO)**

| KEY | PART NO. | PART NAME | QTY | SERIAL NO. | REMARKS |
|---|---|---|---|---|---|
| 5 | 8087867 | LINE | 1 | | |
| 6 | 8087868 | LINE | 1 | | |
| 7 | 8087461 | LINE | 1 | | |
| 8 | 8087462 | LINE | 1 | | |
| 9 | 8087869 | LINE | 1 | | |
| 10 | 8087870 | LINE | 1 | | |
| 13 | AT168311 | HYDRAULIC HOSE - FABRICATE | 2 | | (SUB FOR 4249334) |
| 14 | T77858 | O-RING | 10 | | (SUB FOR 4187308) |
| 15 | T76938 | O-RING | 2 | | (SUB FOR 4187328) |
| 18 | A853166 | ADAPTER | 2 | | |
| | AT318035 | O-RING | 1 | | (SUB FOR 4506424) |
| 26 | 4190126 | CLAMP | 4 | | |
| 27 | 4189859 | CLAMP | 6 | | |
| 29 | ..... | SCREW | 10 | | ( J271260 IS NOT AVAILABLE FOR SERVICE) |
| | 19M7363 | CAP SCREW | 1 | | M12 X 60, (SUB FOR J901260) |
| | 24M7345 | WASHER | 1 | | 13.500 X 24 X 2.500 MM, (SUB FOR J222012) |

**RH BOOM CYLINDER (MONO)**

T207852 -UN-21FEB05

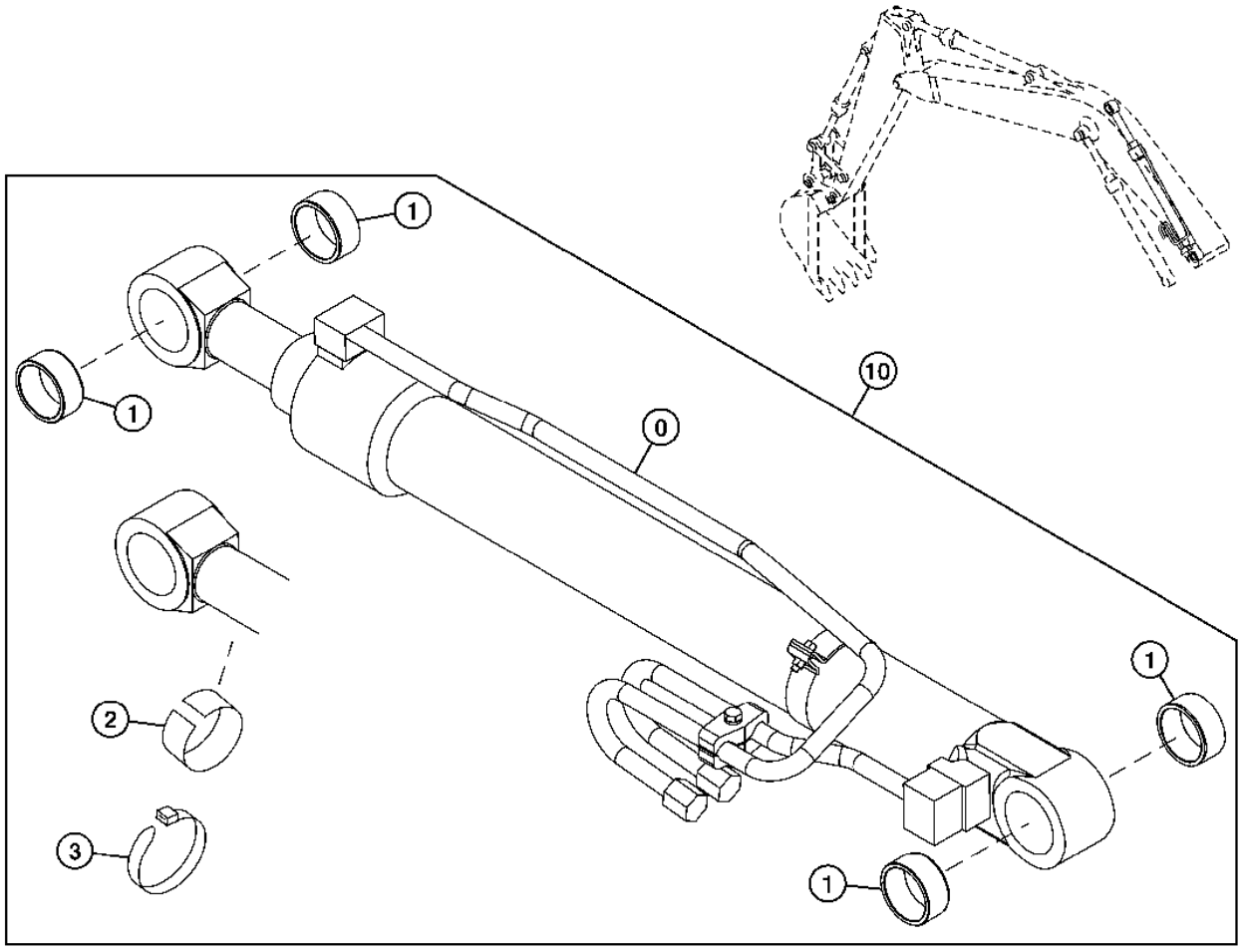


**T207852**

**RH BOOM CYLINDER (MONO)**

| KEY | PART NO. | PART NAME | QTY | SERIAL NO. | REMARKS |
|---|---|---|---|---|---|
| 0 | 4488929 | CYLINDER | 1 | | |
| 1 | 4352398 | BUSHING | 4 | | |
| 2 | ..... | FELT | 1 | | ( 4451668 IS NOT AVAILABLE FOR SERVICE) |
| 3 | 4467676 | CLIP | 1 | | (SUB FOR 4167948) |
| 10 | 9223324 | HYDRAULIC CYLINDER | 1 | | |

**LH BOOM CYLINDER (MONO)**

T207853 -UN-21FEB05

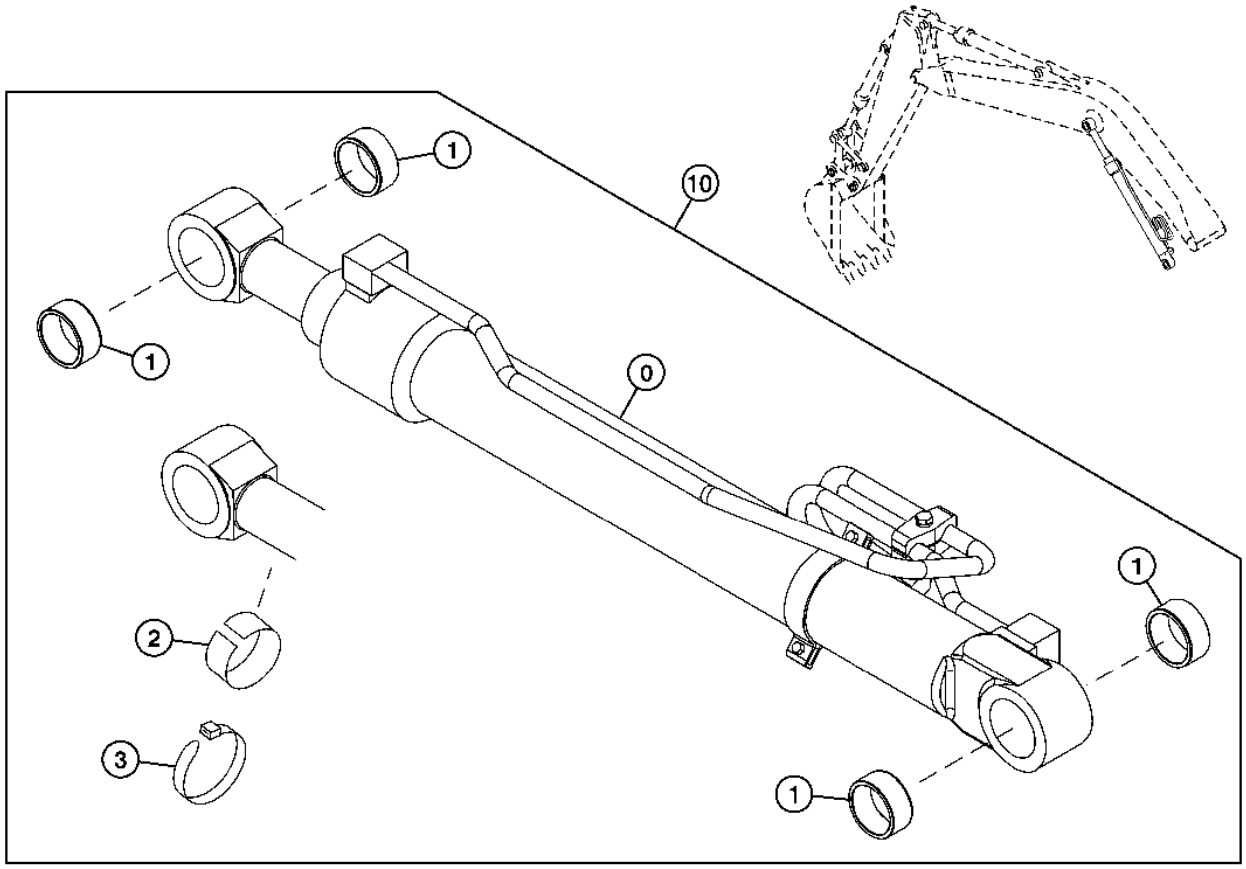


T207853

**LH BOOM CYLINDER (MONO)**

| KEY | PART NO. | PART NAME | QTY | SERIAL NO. | REMARKS |
|---|---|---|---|---|---|
| 0 | 4488928 | CYLINDER | 1 | | |
| 1 | 4352398 | BUSHING | 4 | | |
| 2 | ..... | FELT | 1 | | ( 4451668 IS NOT AVAILABLE FOR SERVICE) |
| 3 | 4467676 | CLIP | 1 | | (SUB FOR 4167948) |
| 10 | 9223323 | HYDRAULIC CYLINDER | 1 | | |

**BOOM ARM CYLINDER (MONO)**

T207859 -UN-21FEB05

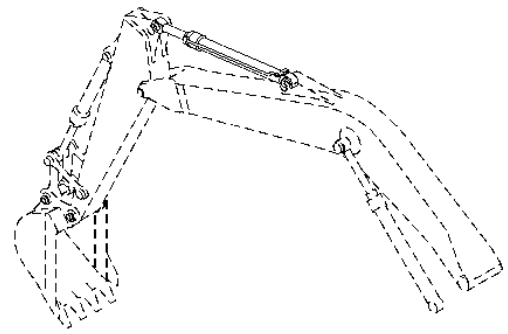

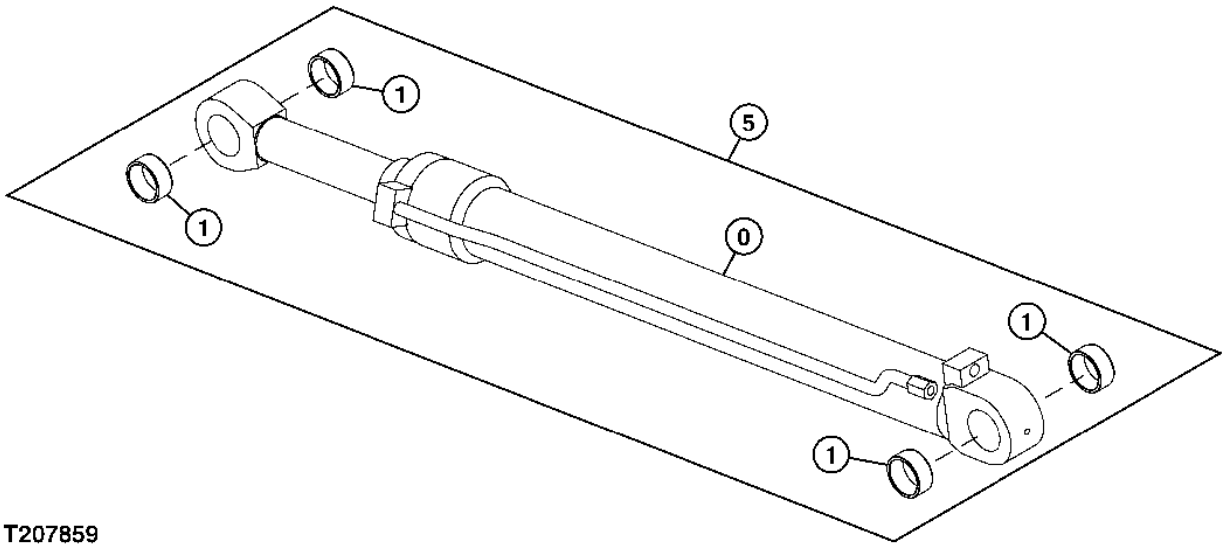


T207859

**BOOM ARM CYLINDER (MONO)**

| KEY | PART NO. | PART NAME | QTY | SERIAL NO. | REMARKS |
|---|---|---|---|---|---|
| 0 | 9212472 | CYLINDER | 1 | | (SUB FOR 4471462) |
| 1 | 4352398 | BUSHING | 4 | | |
| 5 | 9212472 | CYLINDER | 1 | | |

**BUCKET CYLINDER (MONO)**

T207860 -UN-21FEB05

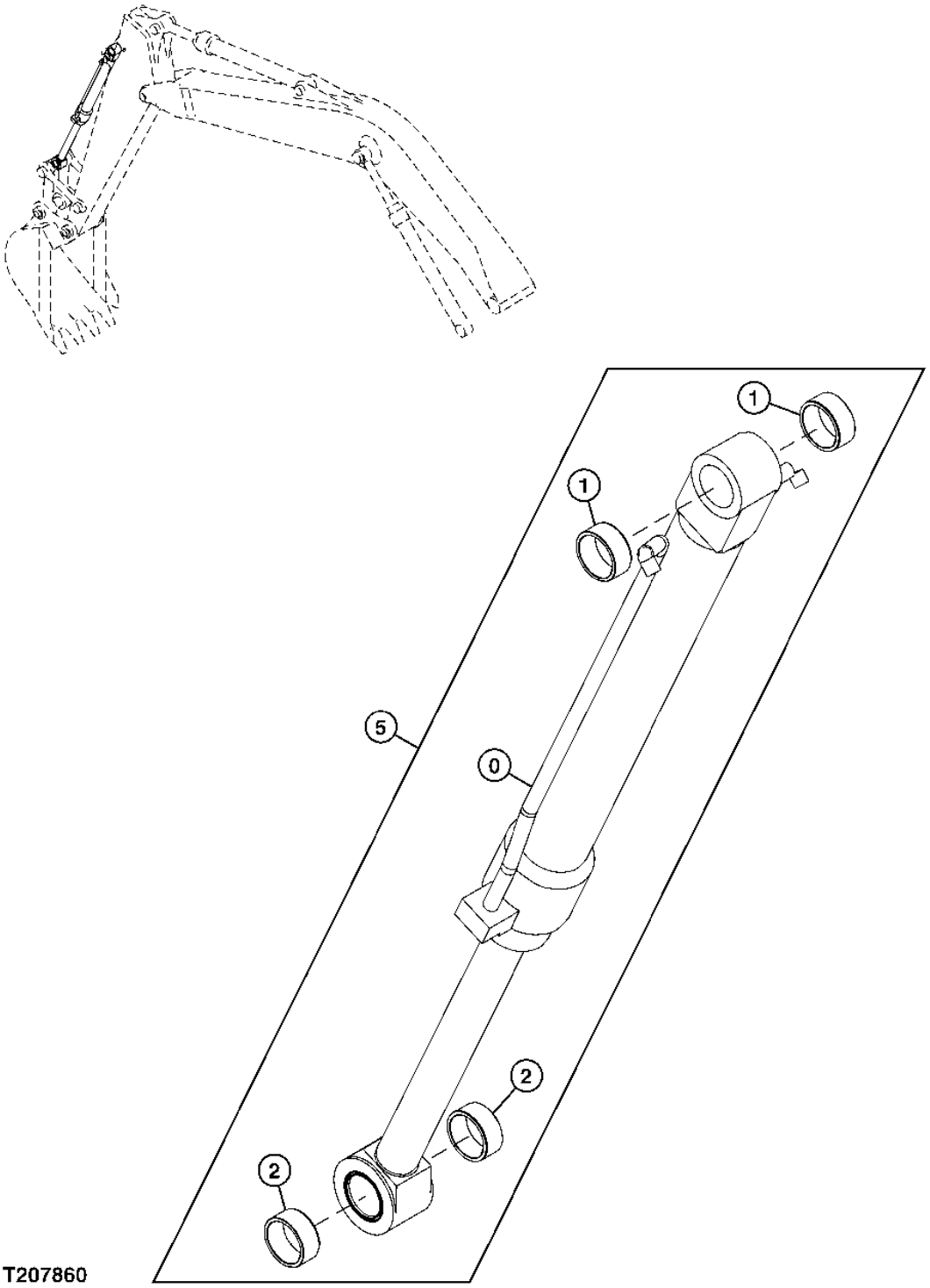

**BUCKET CYLINDER (MONO)**

| KEY | PART NO. | PART NAME | QTY | SERIAL NO. | REMARKS |
|---|---|---|---|---|---|
| 0 | 9212473 | CYLINDER | 1 | | (SUB FOR 4471463) |
| 1 | 4352398 | BUSHING | 2 | | |
| 2 | 4362025 | BUSHING | 2 | | |
| 5 | 9212473 | CYLINDER | 1 | | |

**LUBRICATION BOOM LINES (MONO)**

T207882 -UN-18FEB05

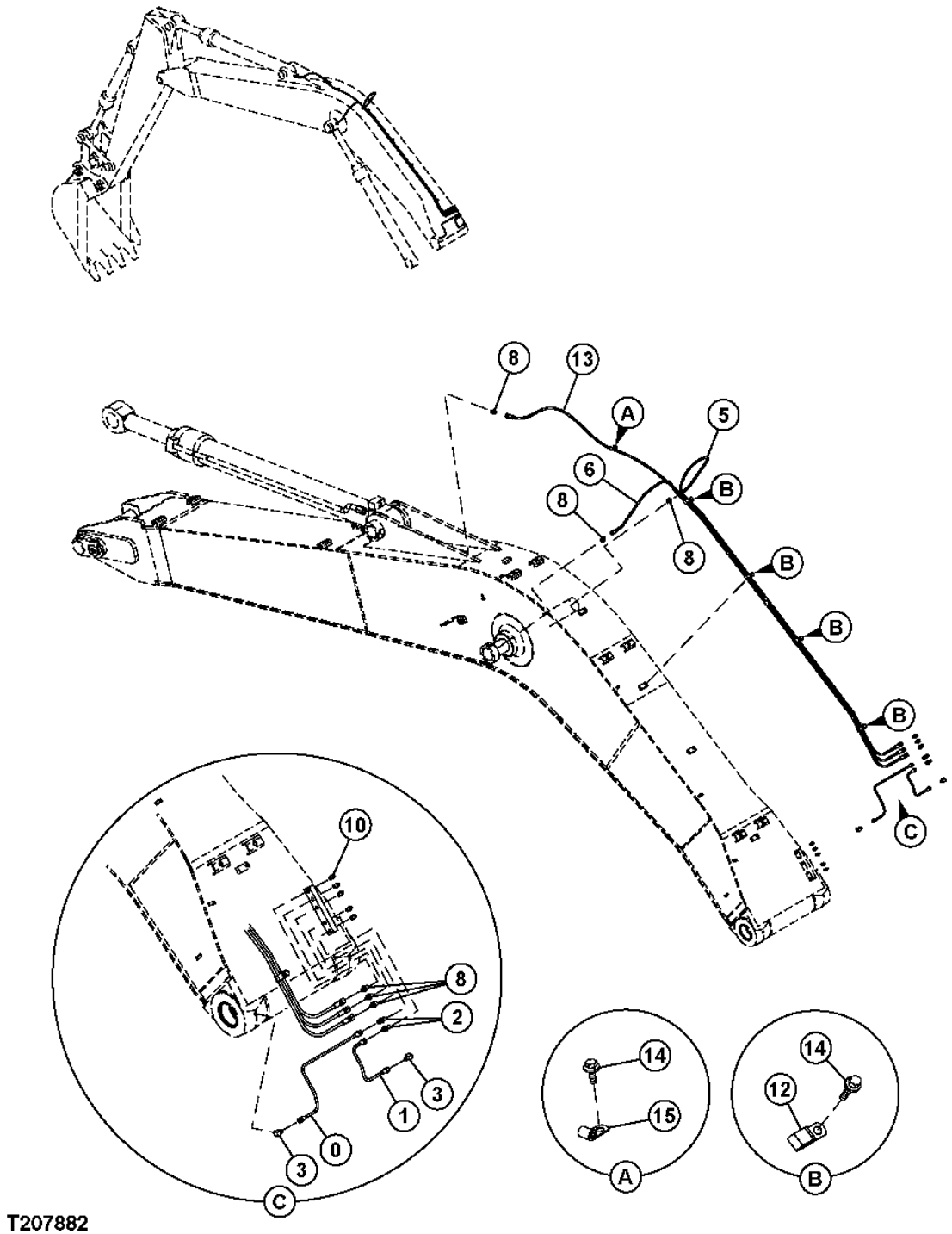


T207882

**LUBRICATION BOOM LINES (MONO)**

| KEY | PART NO. | PART NAME | QTY | SERIAL NO. | REMARKS |
|---|---|---|---|---|---|
| 0 | 4472210 | LINE | 1 | | |
| 1 | 4472211 | LINE | 1 | | |
| 2 | 4360981 | ADAPTER | 2 | | |
| 3 | 4345297 | ELBOW FITTING | 2 | | |
| 5 | 4429017 | HYDRAULIC HOSE - FABRICATE | 1 | | |
| 6 | 4437104 | HOSE | 1 | | |
| 8 | 4154651 | ADAPTER | 6 | | |
| 10 | TH100364 | LUBRICATION FITTING | 5 | | (SUB FOR J75482) |
| 12 | T152608 | CLAMP | 4 | | (SUB FOR 4252877) |
| 13 | 4472419 | HOSE | 1 | | |
| 14 | ..... | SCREW | 5 | | ( J271016 IS NOT AVAILABLE FOR SERVICE) |
| | 19M8324 | CAP SCREW | 1 | | M10 X 16, (SUB FOR J901016) |
| | 24M7346 | WASHER | 1 | | 11 X 20 X 2 MM, (SUB FOR J222010) |
| 15 | 4190261 | CLIP | 1 | | |

**BOOM ASSEMBLY (2 PIECE)**

T207883 -UN-18FEB05

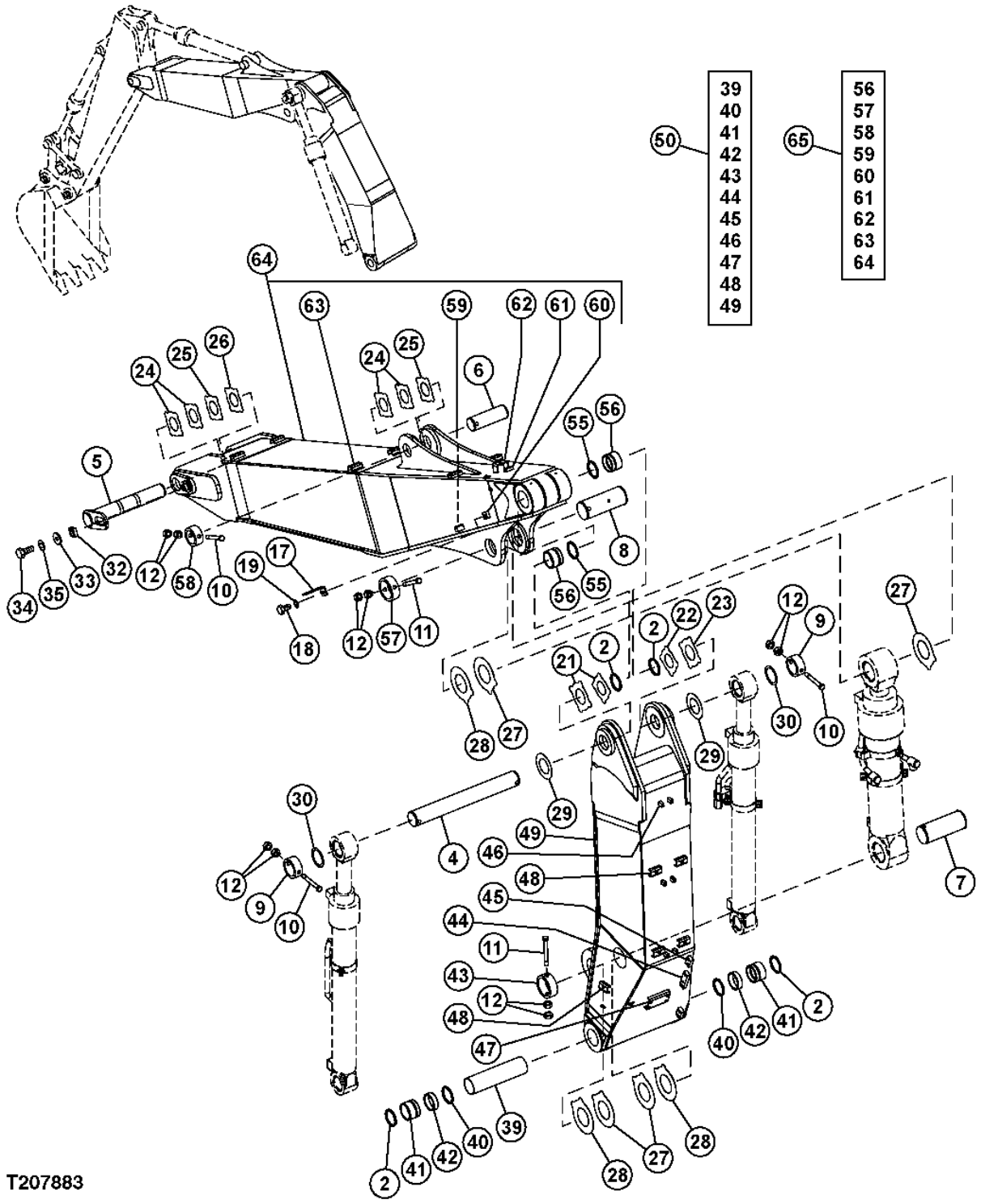

**BOOM ASSEMBLY (2 PIECE)**

| KEY | PART NO. | PART NAME | QTY | SERIAL NO. | REMARKS |
|---|---|---|---|---|---|
| 2 | 4067901 | SEAL | 4 | | |
| 4 | 3096008 | PIN FASTENER | 1 | | |
| 5 | 8087367 | PIN FASTENER | 1 | | |
| 6 | 3094627 | PIN FASTENER | 1 | | |
| 7 | 3093877 | PIN FASTENER | 1 | | |
| 8 | 3099606 | PIN FASTENER | 1 | | |
| 9 | TH102409 | BUSHING | 2 | | (SUB FOR 4067720) |
| 10 | 4435126 | PIN FASTENER | 3 | | |
| 11 | 4435584 | PIN FASTENER | 2 | | |
| 12 | 3063826 | NUT | 10 | | (SUB FOR J950020) |
| 17 | 4224631 | BRACKET | 1 | | |
| 18 | J901425 | CAP SCREW | 1 | | |
| 19 | 12H317 | LOCK WASHER | 1 | | 9/16", (SUB FOR A590914) |
| 21 | 4470743 | THRUST WASHER | 2 | | (SUB FOR 4444284) |
| 22 | 4470744 | PLATE | 1 | | (SUB FOR 4444285) |
| 23 | 4460370 | PLATE | 1 | | |
| 24 | 4444286 | THRUST WASHER | 4 | | |
| 25 | 4444287 | THRUST WASHER | 2 | | |
| 26 | 4462624 | THRUST WASHER | 1 | | |
| 27 | 4469095 | SHIM | 4 | | |
| 28 | 4469097 | SHIM | 3 | | |
| 29 | 4476062 | THRUST WASHER | 2 | | (SUB FOR 4450013) |
| 30 | 4444755 | THRUST WASHER | 2 | | |
| 32 | 4424425 | MANIFOLD | 1 | | |
| 33 | 4426128 | WASHER | 1 | | |
| 34 | J921840 | BOLT | 1 | | |
| 35 | J257218 | LOCK WASHER | 1 | | |
| 39 | 4469600 | SPACER | 1 | | |
| 40 | 4067901 | SEAL | 2 | | |
| 41 | 4443880 | BUSHING | 2 | | |
| 42 | 4402460 | BUSHING | 2 | | |
| 43 | 4205110 | STOP | 1 | | |
| 44 | 4218355 | MANIFOLD | 1 | | |
| 45 | 4218354 | MANIFOLD | 2 | | |
| 46 | 4474852 | MANIFOLD | 6 | | |
| 47 | 9757701 | SCREW | 1 | | |
| 48 | 9738322 | SUPPORT | 6 | | |
| 49 | 7042996 | EXCAVATOR BOOM | 1 | | (SUB FOR 5008507) |
| 50 | 7042996 | EXCAVATOR BOOM | 1 | | |
| 55 | 4067901 | SEAL | 2 | | |
| 56 | 4443880 | BUSHING | 2 | | |
| 57 | 4205110 | STOP | 1 | | |
| 58 | 4434953 | STOP | 1 | | |
| 59 | 4218353 | MANIFOLD | 2 | | |
| 60 | 4224632 | BUSHING | 1 | | |
| 61 | 4195689 | STRAP | 1 | | |
| 62 | 9758879 | SCREW | 1 | | |
| 63 | 9738322 | SUPPORT | 6 | | |
| 64 | 7043013 | SIDEBOOM | 1 | | (SUB FOR 5008512) |
| 65 | 7043013 | SIDEBOOM | 1 | | |
| | **AT317400** | **KIT** | **1** | | **WHOLEGOODS (VARIABLE HYDRAULIC ADJUSTABLE BOOM)** |

**FRONT BOOM HYDRAULIC LINES (2 PIECE)**

T207885 -UN-18FEB05

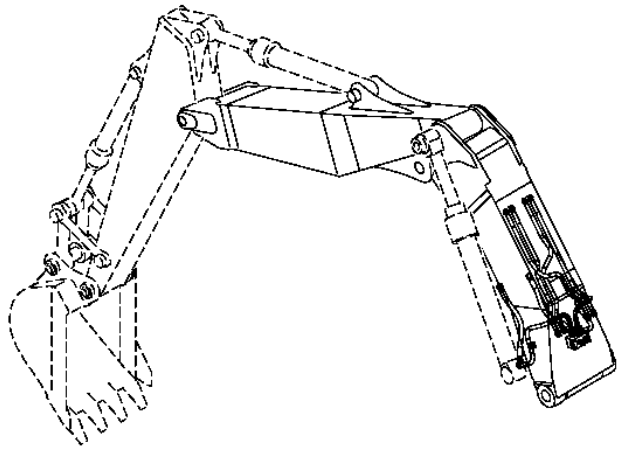

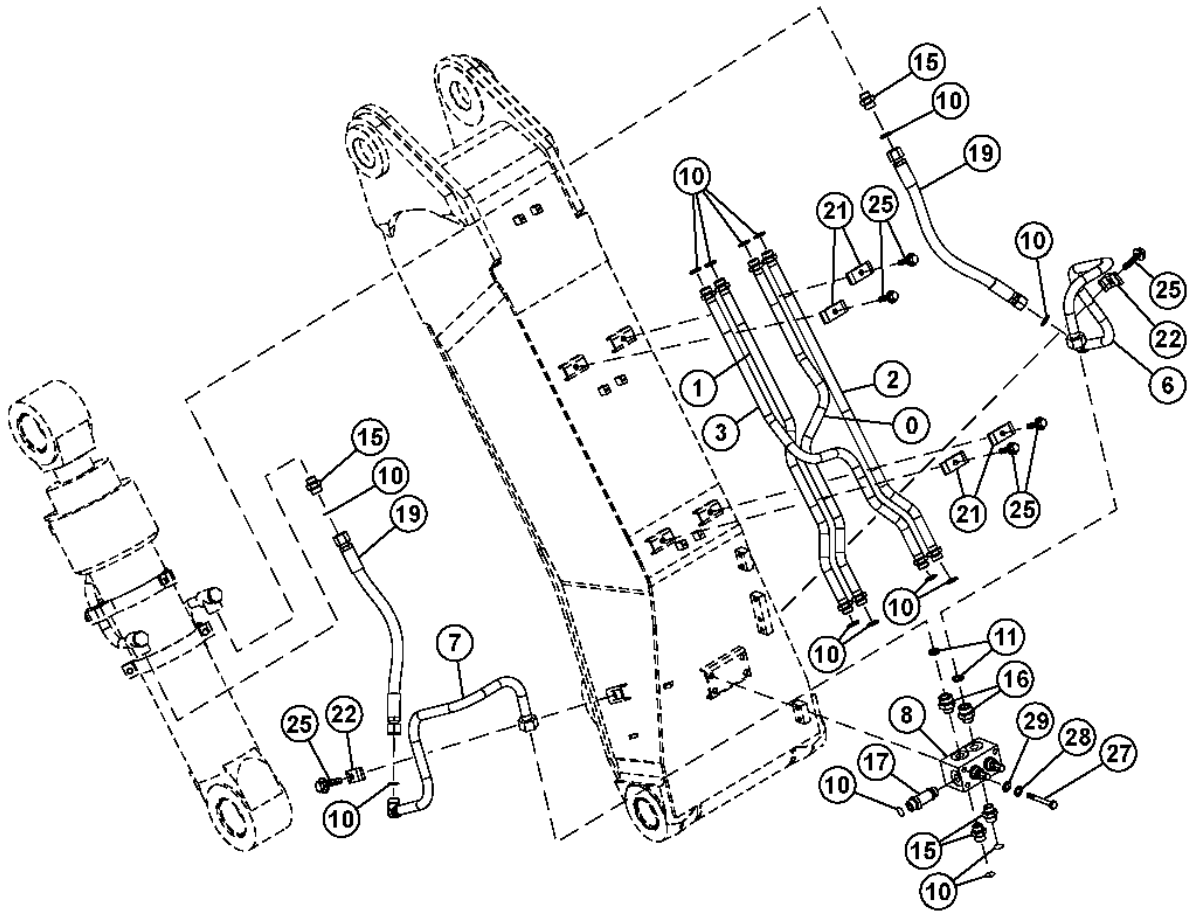


T207885

**FRONT BOOM HYDRAULIC LINES (2 PIECE)**

| KEY | PART NO. | PART NAME | QTY | SERIAL NO. | REMARKS |
|---|---|---|---|---|---|
| 0 | 8089212 | LINE | 1 | | |
| 1 | 8089213 | LINE | 1 | | |
| 2 | 8089207 | LINE | 1 | | |
| 3 | 8089208 | LINE | 1 | | |
| 6 | 8089214 | LINE | 1 | | |
| 7 | 8089215 | LINE | 1 | | |
| 8 | 9204069 | VALVE | 1 | | |
| 10 | T77858 | O-RING | 15 | | (SUB FOR 4187308) |
| 11 | T76938 | O-RING | 2 | | (SUB FOR 4187328) |
| 15 | A853166 | ADAPTER | 4 | | |
| | AT318035 | O-RING | 1 | | (SUB FOR 4506424) |
| 16 | A853168 | ADAPTER | 2 | | |
| | AT318035 | O-RING | 1 | | (SUB FOR 4506424) |
| 17 | 4230904 | ADAPTER | 1 | | |
| | AT318035 | O-RING | 1 | | (SUB FOR 4506424) |
| 19 | 4286265 | HOSE | 2 | | |
| 21 | 4189859 | CLAMP | 4 | | |
| 22 | 4190126 | CLAMP | 2 | | |
| 25 | ..... | SCREW | 6 | | ( J271260 IS NOT AVAILABLE FOR SERVICE) |
| | 19M7363 | CAP SCREW | 1 | | M12 X 60, (SUB FOR J901260) |
| | 24M7345 | WASHER | 1 | | 13.500 X 24 X 2.500 MM, (SUB FOR J222012) |
| 27 | 19M7908 | CAP SCREW | 4 | | M12 X 110, (SUB FOR J901202) |
| 28 | 12H301 | LOCK WASHER | 4 | | 1/2", (SUB FOR A590912) |
| 29 | 24M7047 | WASHER | 4 | | 13 X 24 X 2.500 MM, (SUB FOR A590112) |

**FRONT BOOM HYDRAULIC LINES (2 PIECE)**

T207887 -UN-18FEB05

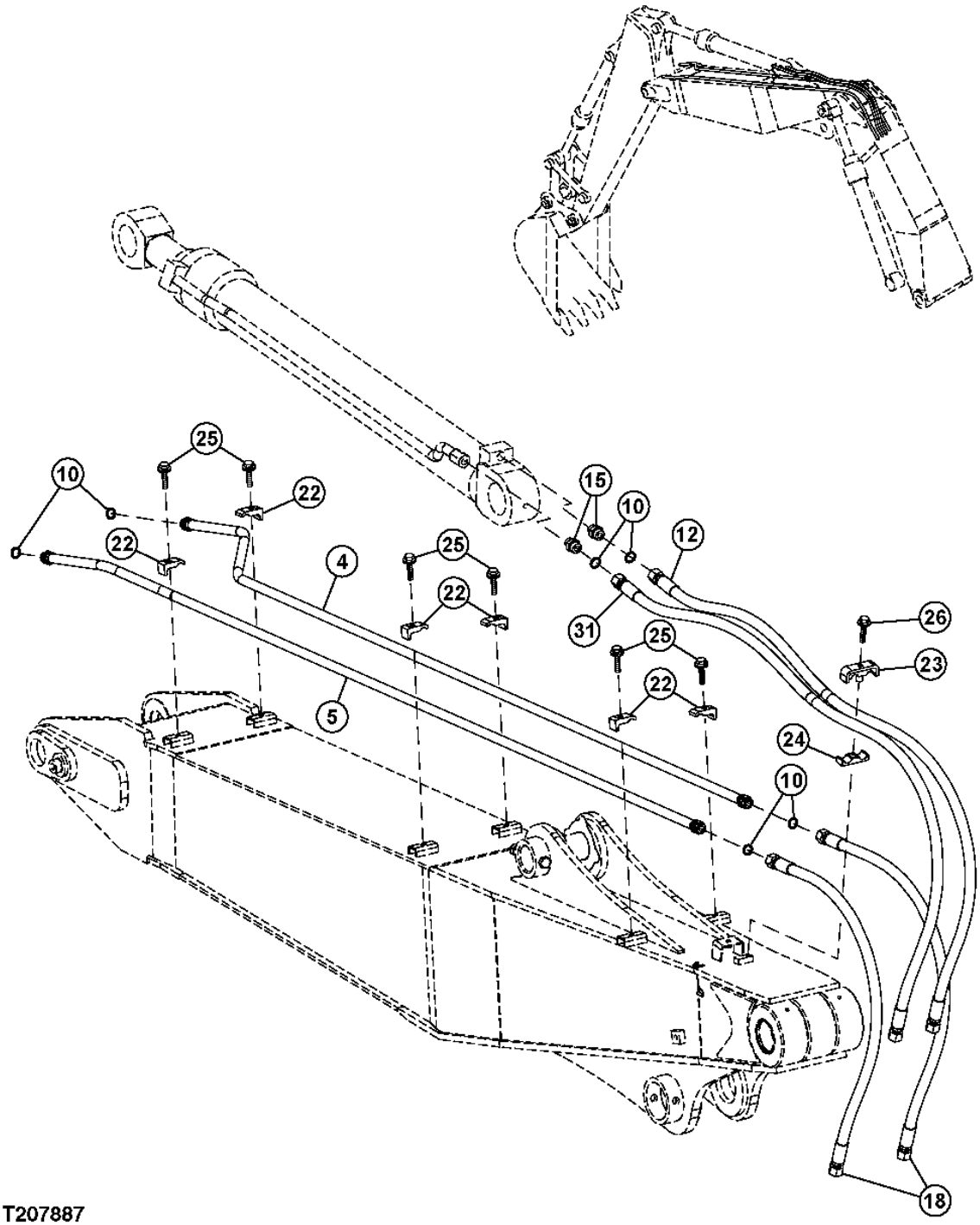

**FRONT BOOM HYDRAULIC LINES (2 PIECE)**

| KEY | PART NO. | PART NAME | QTY | SERIAL NO. | REMARKS |
|---|---|---|---|---|---|
| 4 | 8089205 | LINE | 1 | | |
| 5 | 8089206 | LINE | 1 | | |
| 10 | T77858 | O-RING | 6 | | (SUB FOR 4187308) |
| 12 | 4286286 | HOSE | 1 | | |
| 15 | A853166 | ADAPTER | 2 | | |
| | AT318035 | O-RING | 1 | | (SUB FOR 4506424) |
| 18 | 4286269 | HOSE | 2 | | |
| 22 | 4190126 | CLAMP | 6 | | |
| 23 | 4285723 | CLAMP | 1 | | |
| 24 | AT318021 | CLAMP | 1 | | (SUB FOR 4285722) |
| 25 | ..... | CAP SCREW | 6 | | ( J271260 IS NOT AVAILABLE FOR SERVICE) |
| | 19M7363 | CAP SCREW | 1 | | M12 X 60, (SUB FOR J901260) |
| | 24M7345 | WASHER | 1 | | 13.500 X 24 X 2.500 MM, (SUB FOR J222012) |
| 26 | J271270 | BOLT | 1 | | |
| | 19M7753 | CAP SCREW | 1 | | M12 X 70, (SUB FOR J901270) |
| | 24M7345 | WASHER | 1 | | 13.500 X 24 X 2.500 MM, (SUB FOR J222012) |
| 31 | 4286286 | HOSE | 1 | | |
| | 4286284 | HOSE | 1 | | |

**RH BOOM CYLINDER (2 PIECE)**

T207889 -UN-18FEB05

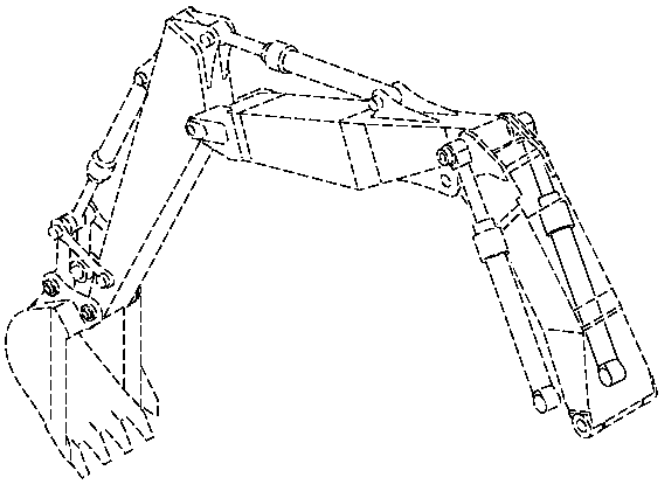

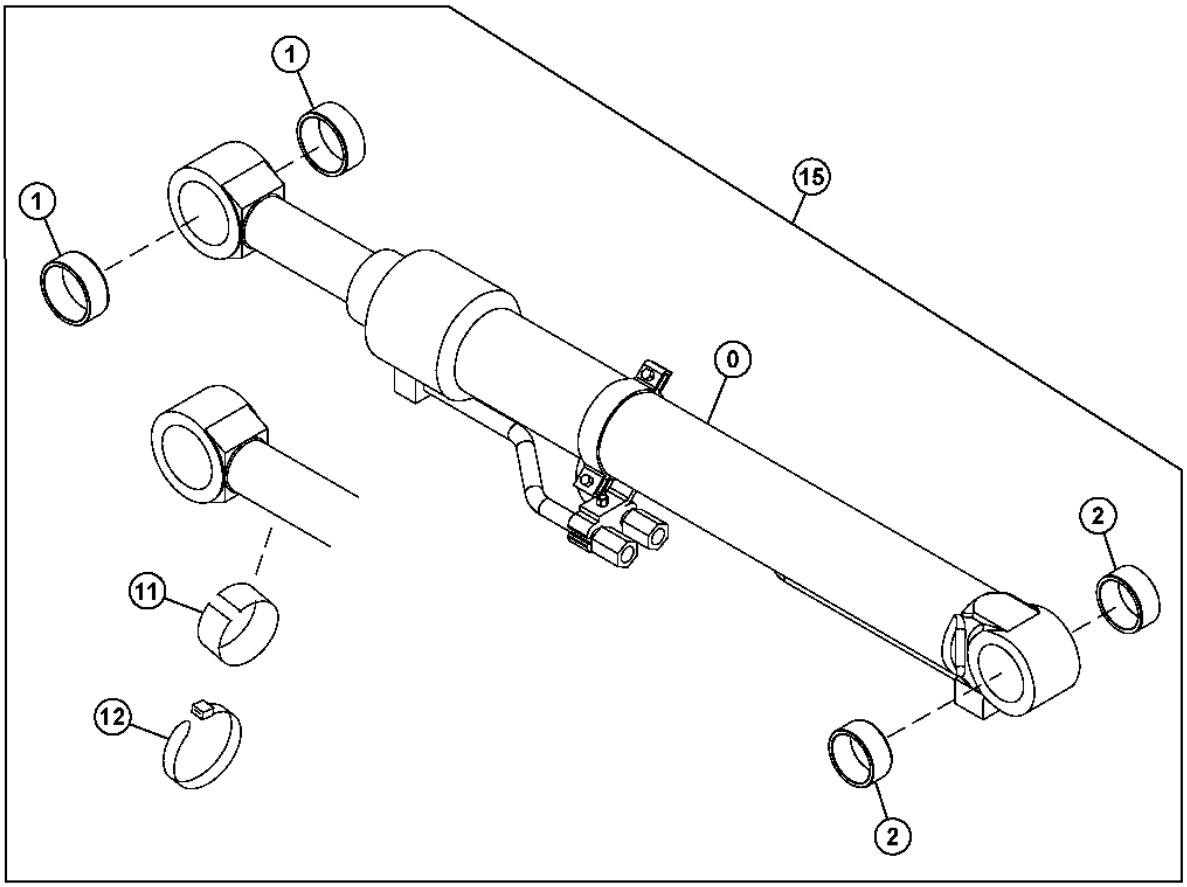


T207889

**RH BOOM CYLINDER (2 PIECE)**

| KEY | PART NO. | PART NAME | QTY | SERIAL NO. | REMARKS |
|---|---|---|---|---|---|
| 0 | 4480119 | CYLINDER | 1 | | |
| 1 | 4355875 | BUSHING | 2 | | |
| 2 | 4352398 | BUSHING | 2 | | |
| 11 | ..... | FELT | 1 | | ( 4451668 IS NOT AVAILABLE FOR SERVICE) |
| 12 | 4467676 | CLIP | 1 | | (SUB FOR 4167948) |
| 15 | 9217736 | HYDRAULIC CYLINDER | 1 | | |

**LH BOOM CYLINDER (2 PIECE)**

T207890 -UN-18FEB05

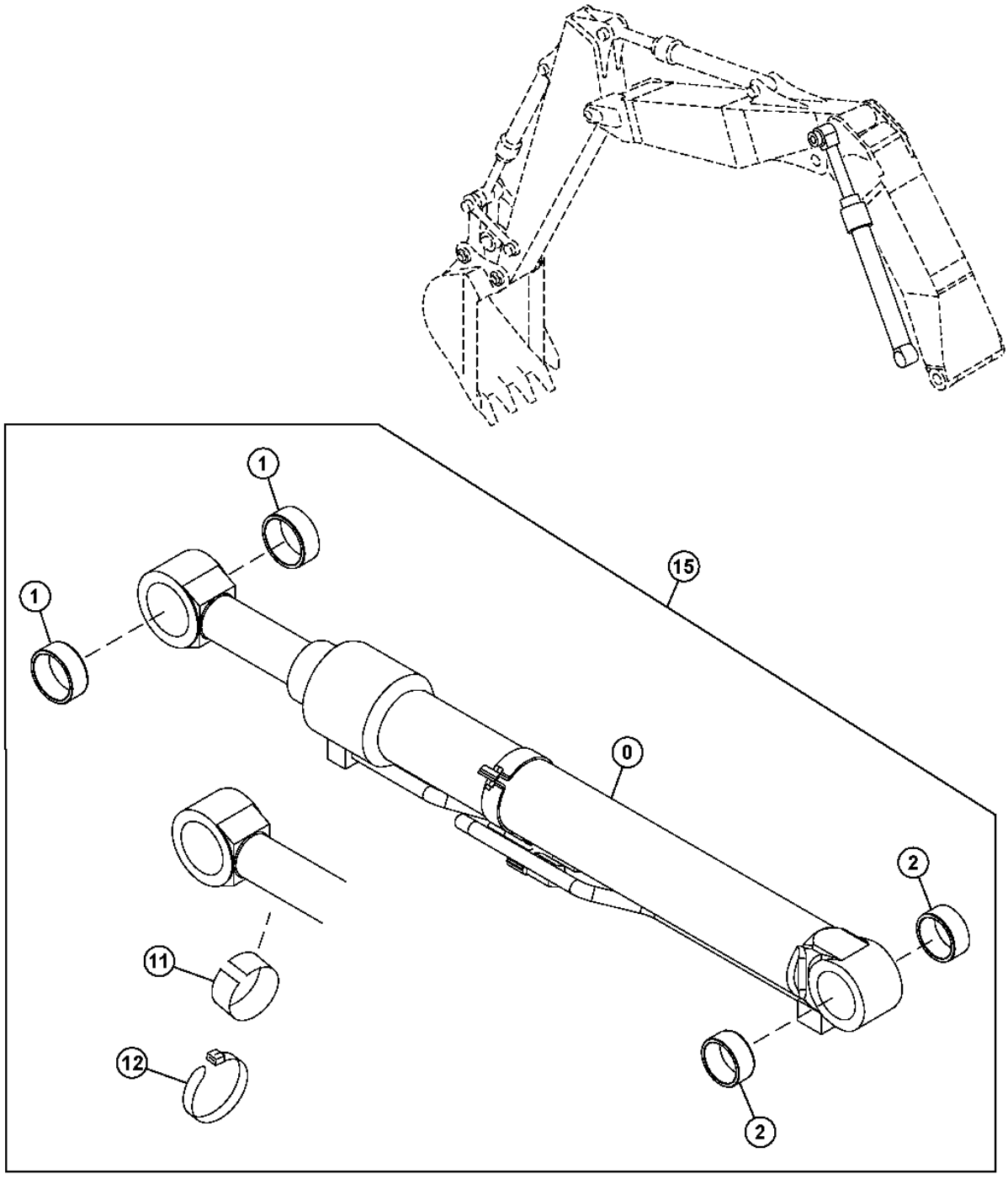


T207890

**LH BOOM CYLINDER (2 PIECE)**

| KEY | PART NO. | PART NAME | QTY | SERIAL NO. | REMARKS |
|---|---|---|---|---|---|
| 0 | 4480118 | CYLINDER | 1 | | |
| 1 | 4355875 | BUSHING | 2 | | |
| 2 | 4352398 | BUSHING | 2 | | |
| 11 | ..... | FELT | 1 | | ( 4451668 IS NOT AVAILABLE FOR SERVICE) |
| 12 | 4467676 | CLIP | 1 | | (SUB FOR 4167948) |
| 15 | 9217735 | HYDRAULIC CYLINDER | 1 | | |

**POSITIONING BOOM CYLINDER (2 PIECE)**

T207891 -UN-18FEB05

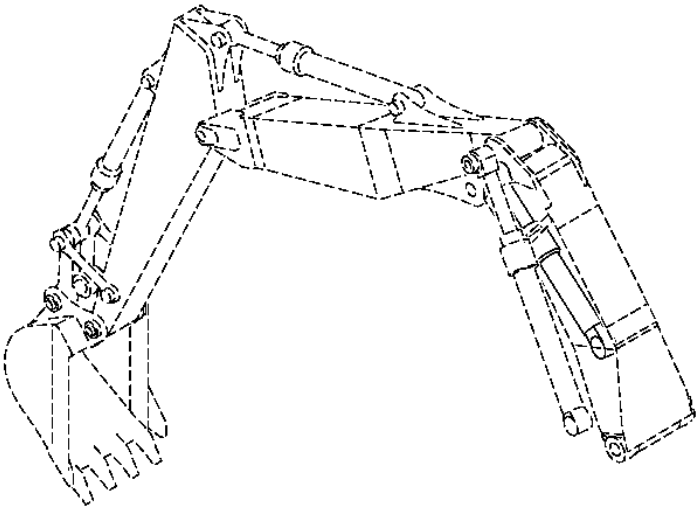

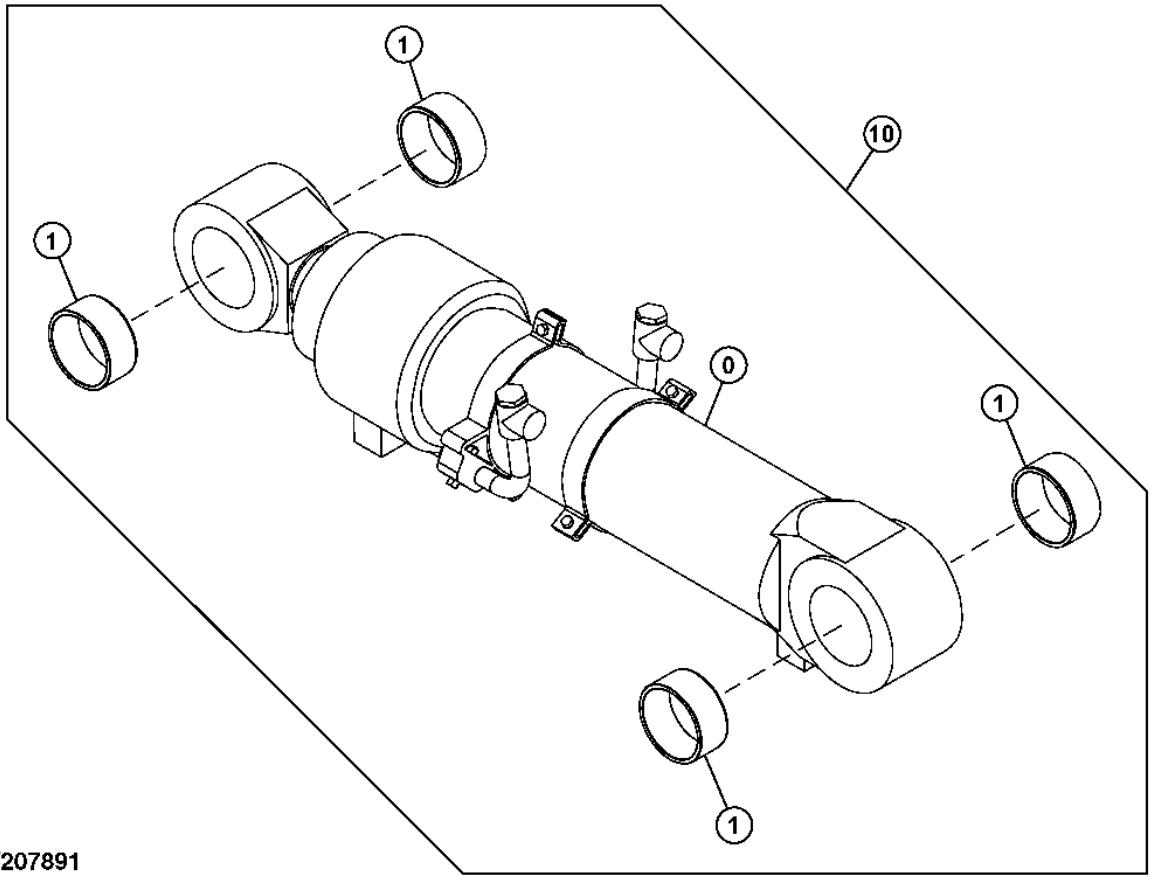

**POSITIONING BOOM CYLINDER (2 PIECE)**

| KEY | PART NO. | PART NAME | QTY | SERIAL NO. | REMARKS |
|---|---|---|---|---|---|
| 0 | 4480120 | CYLINDER | 1 | | |
| 1 | 4381859 | BUSHING | 4 | | |
| 10 | 9217737 | CYLINDER | 1 | | |

**LUBRICATION LINES (2 PIECE)**

T207854 -UN-21FEB05

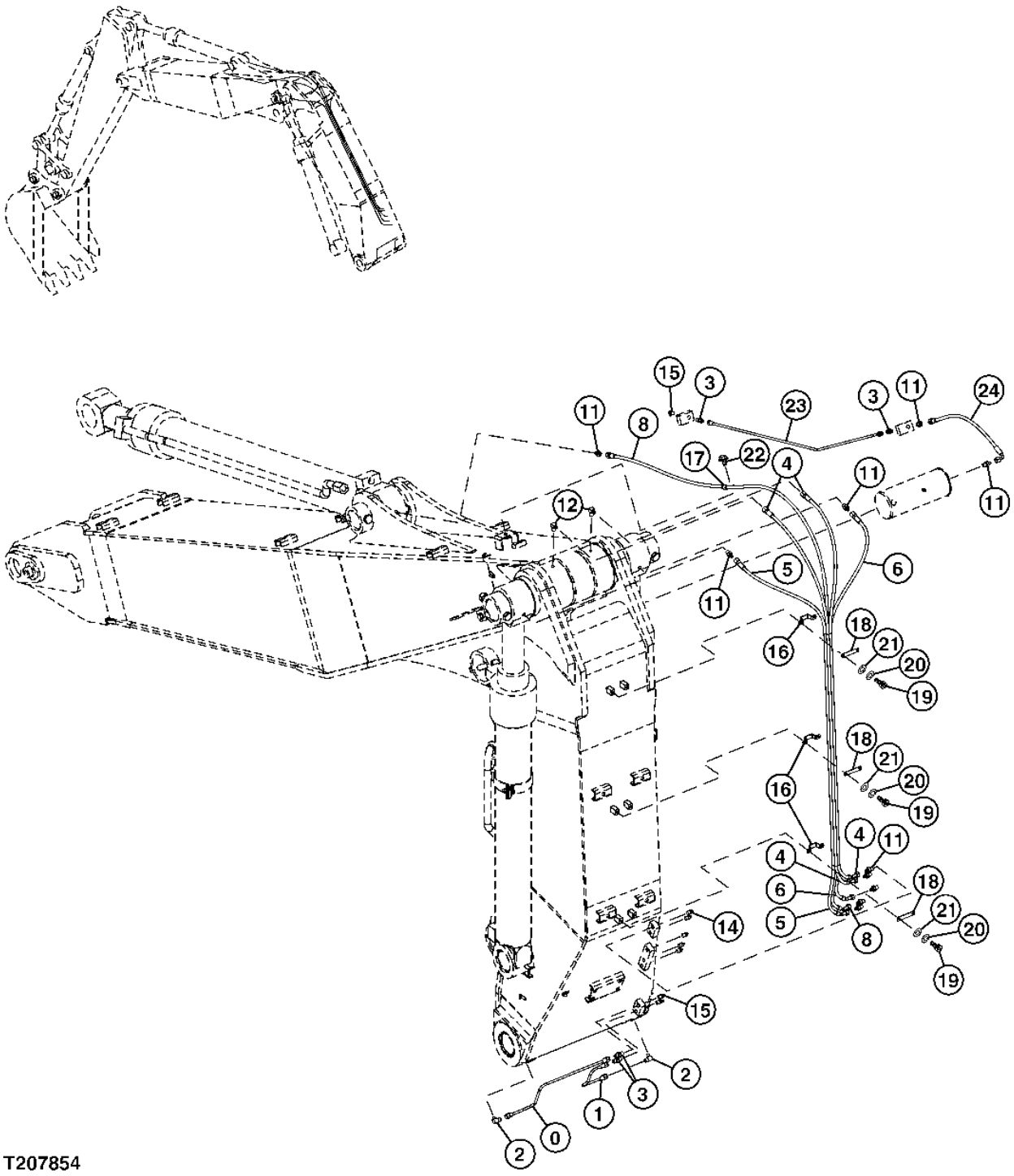

**LUBRICATION LINES (2 PIECE)**

| KEY | PART NO. | PART NAME | QTY | SERIAL NO. | REMARKS |
|---|---|---|---|---|---|
| 0 | 4472210 | PIPE | 1 | | |
| 1 | 4472211 | PIPE | 1 | | |
| 2 | 4345297 | ELBOW FITTING | 2 | | |
| 3 | 4360981 | ADAPTER | 4 | | |
| 4 | 4478776 | HOSE | 2 | | |
| 5 | 4466587 | HOSE | 1 | | |
| 6 | 4466585 | HOSE | 1 | | |
| 8 | 4601639 | HOSE | 1 | | |
| 11 | 4154651 | ADAPTER | 10 | | |
| 12 | 4298746 | ELBOW FITTING | 2 | | |
| 14 | TH100364 | LUBRICATION FITTING | 5 | | (SUB FOR J75482) |
| 15 | 4148896 | LUBRICATION FITTING | 3 | | |
| 16 | 4474796 | CLAMP | 3 | | |
| 17 | 4190261 | CLIP | 1 | | |
| 18 | 4474797 | CLAMP | 3 | | |
| 19 | J780620 | BOLT | 3 | | |
| 20 | 12M7006 | LOCK WASHER | 6 | | 6 MM, (SUB FOR A590906) |
| 21 | 24M7054 | WASHER | 6 | | 6.400 X 12 X 1.600 MM, (SUB FOR A590106) |
| 22 | ..... | SCREW | 1 | | ( J271016 NOT AVAILABLE FOR SERVICE) |
| | 19M8324 | CAP SCREW | 1 | | M10 X 16, (SUB FOR J901016) |
| | 24M7346 | WASHER | 1 | | 11 X 20 X 2 MM, (SUB FOR J222010) |
| 23 | 3099607 | PIPE | 1 | | |
| 24 | 4480218 | HOSE | 1 | | |

**PILOT HOSES (2 PIECE)**

T207855 -UN-21FEB05

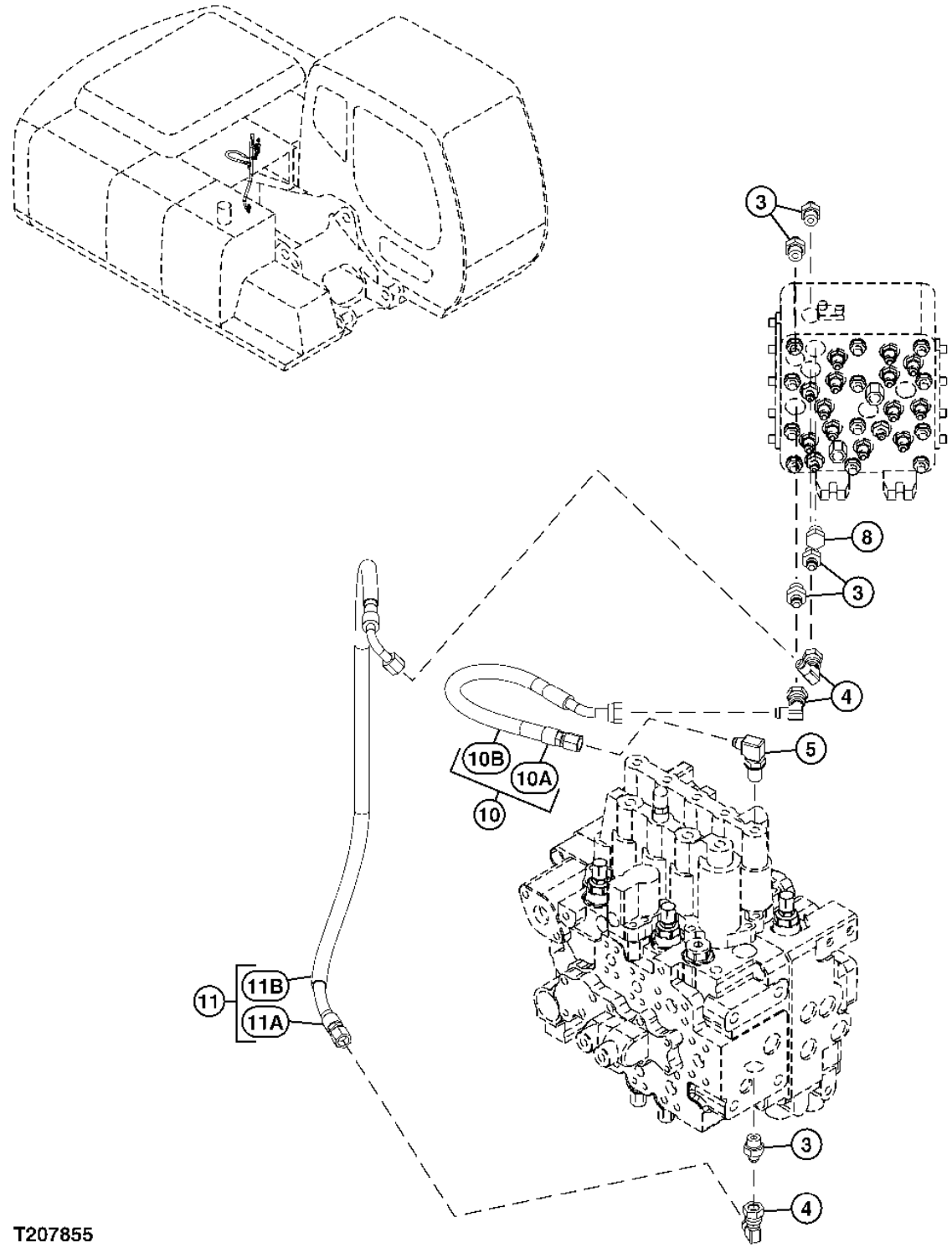

**PILOT HOSES (2 PIECE)**

| KEY | PART NO. | PART NAME | QTY | SERIAL NO. | REMARKS |
|---|---|---|---|---|---|
| 3 | A852133 | ADAPTER | 5 | | |
| | CH11570 | O-RING | 1 | | (SUB FOR 4509180) |
| 4 | 4239976 | UNION FITTING | 3 | | |
| 5 | AT318017 | ADAPTER | 1 | | (SUB FOR 4208913) |
| | CH11570 | O-RING | 1 | | (SUB FOR 4509180) |
| 8 | A885003 | PIPE PLUG | 1 | | |
| | CH11570 | O-RING | 1 | | (SUB FOR 4509180) |
| 10 | ..... | HYDRAULIC HOSE | 1 | | ( 9225807 NOT AVAILABLE FOR SERVICE) |
| 10A | 4436264 | HOSE | 1 | | |
| 10B | 4327293 | HOSE GUARD | 1 | | |
| 11 | ..... | HYDRAULIC HOSE | 1 | | ( 9225808 NOT AVAILABLE FOR SERVICE) |
| 11A | 4437738 | HYDRAULIC HOSE - FABRICATE | 1 | | |
| 11B | 4327293 | HOSE GUARD | 2 | | |

**SPARE FLOW RATE SELECTOR (2 PIECE)**

T207857 -UN-21FEB05

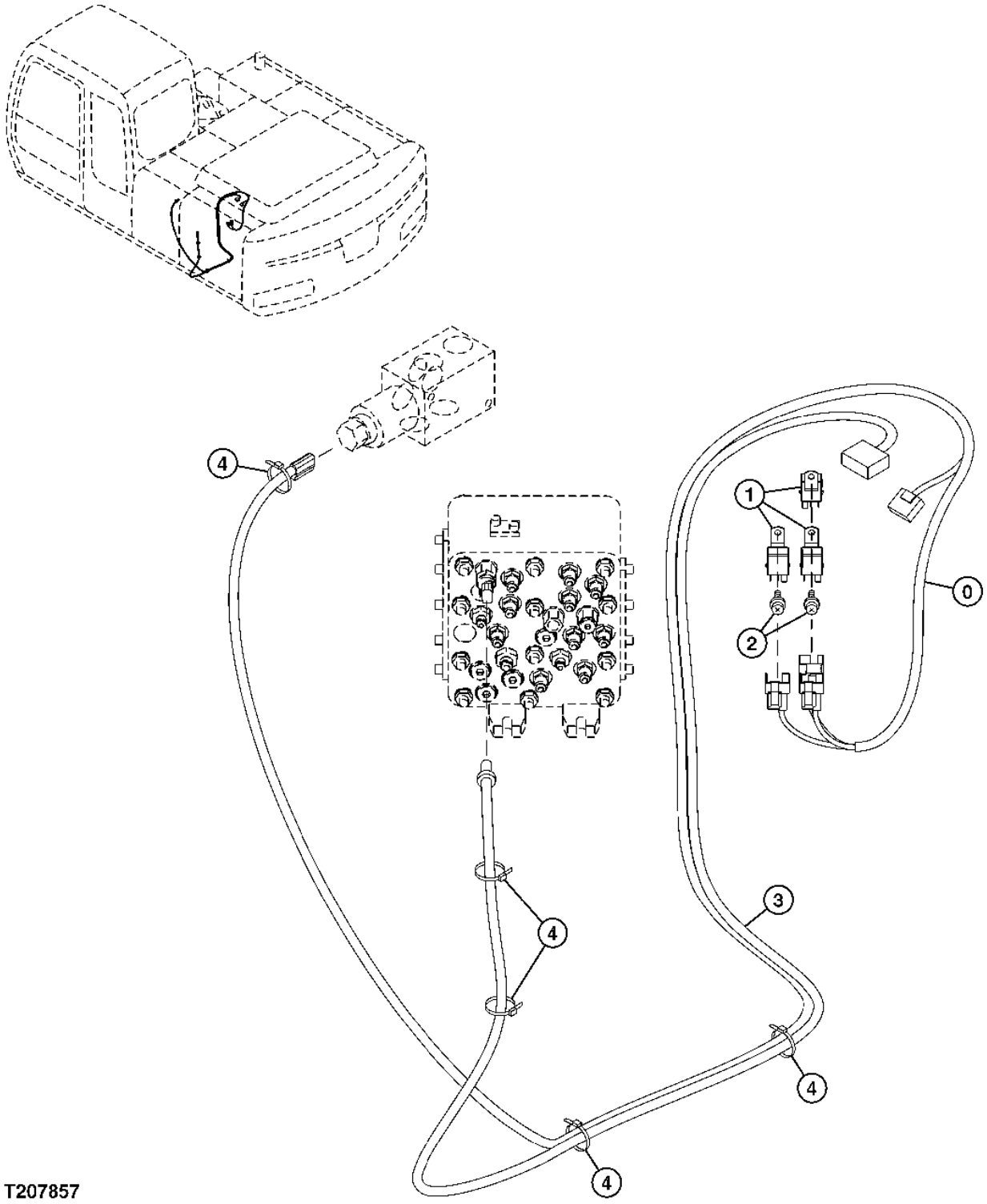

**SPARE FLOW RATE SELECTOR (2 PIECE)**

| KEY | PART NO. | PART NAME | QTY | SERIAL NO. | REMARKS |
|---|---|---|---|---|---|
| 0 | 3096800 | WIRING HARNESS | 1 | | |
| 1 | 4414207 | RELAY | 3 | | |
| 2 | J460614 | SCREW | 2 | | |
| 3 | 4452432 | WIRING HARNESS | 1 | | |
| 4 | H77698 | TIE BAND | 5 | | (SUB FOR 4055312) |

**ANTI-DRIFT LINES**

T207856 -UN-21FEB05

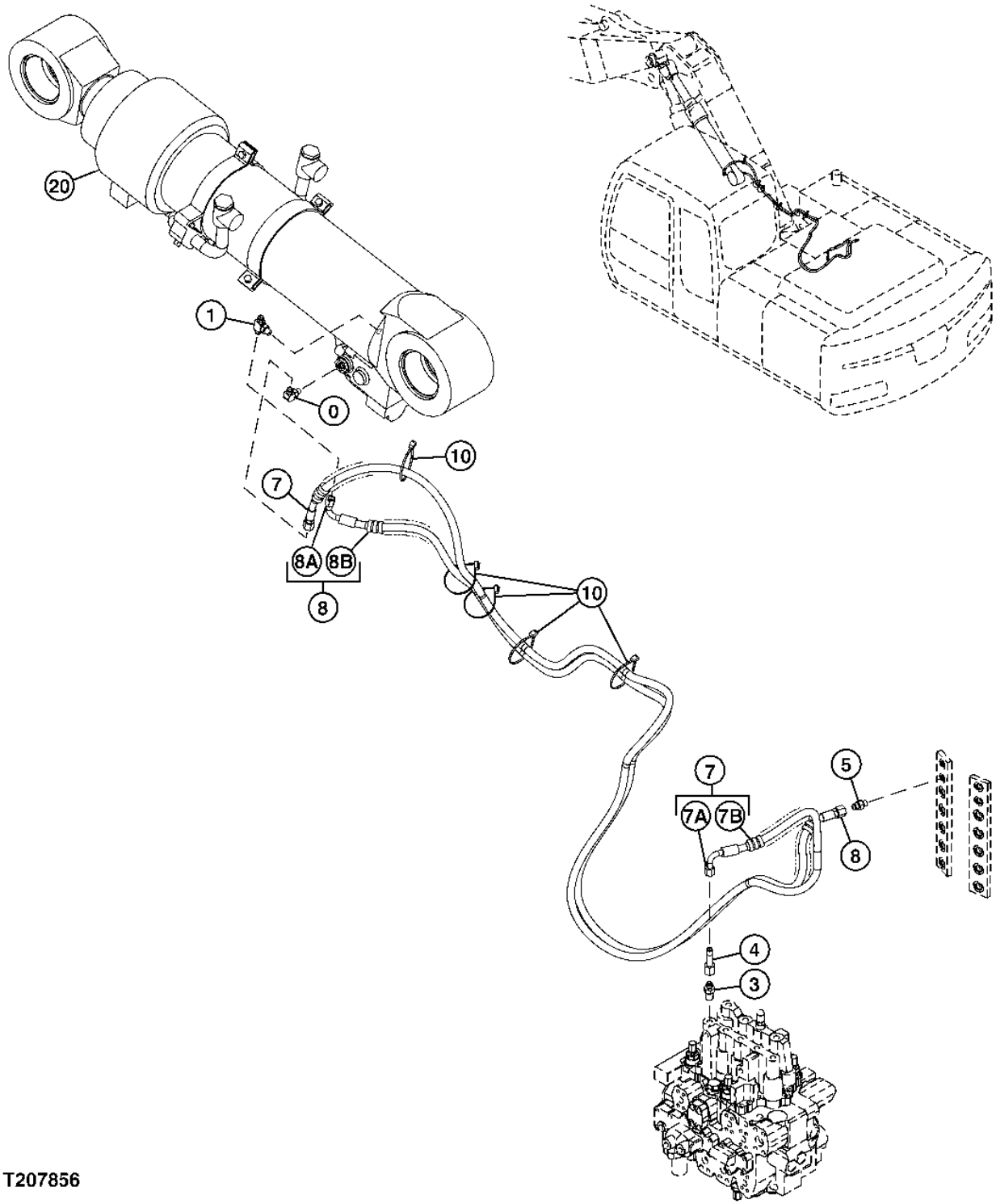

**ANTI-DRIFT LINES**

| KEY | PART NO. | PART NAME | QTY | SERIAL NO. | REMARKS |
|---|---|---|---|---|---|
| 0 | A852323 | ELBOW FITTING | 1 | | |
| | M800650 | PACKING | 1 | | (SUB FOR 957366) |
| 1 | A852523 | TEE FITTING | 1 | | |
| | M800650 | PACKING | 1 | | (SUB FOR 957366) |
| 3 | 4202422 | ADAPTER | 1 | | |
| | CH11570 | O-RING | 1 | | (SUB FOR 4509180) |
| 4 | 4246672 | TEE FITTING | 1 | | |
| 5 | A852123 | ADAPTER | 1 | | |
| | M800650 | PACKING | 1 | | (SUB FOR 957366) |
| 7 | ..... | HOSE | 1 | | ( 9234054 NOT AVAILABLE FOR SERVICE) |
| 7A | 4612610 | HOSE | 1 | | |
| 7B | 4327293 | HOSE GUARD | 9 | | |
| 8 | ..... | HOSE | 1 | | ( 9228577 NOT AVAILABLE FOR SERVICE) |
| 8A | 4606597 | HOSE | 1 | | |
| 8B | 4327293 | HOSE GUARD | 7 | | |
| 10 | H77698 | TIE BAND | 5 | | (SUB FOR 4055312) |
| 20 | 4606742 | CYLINDER | 1 | | |

**STABILIZER**

T207831 -UN-11FEB05

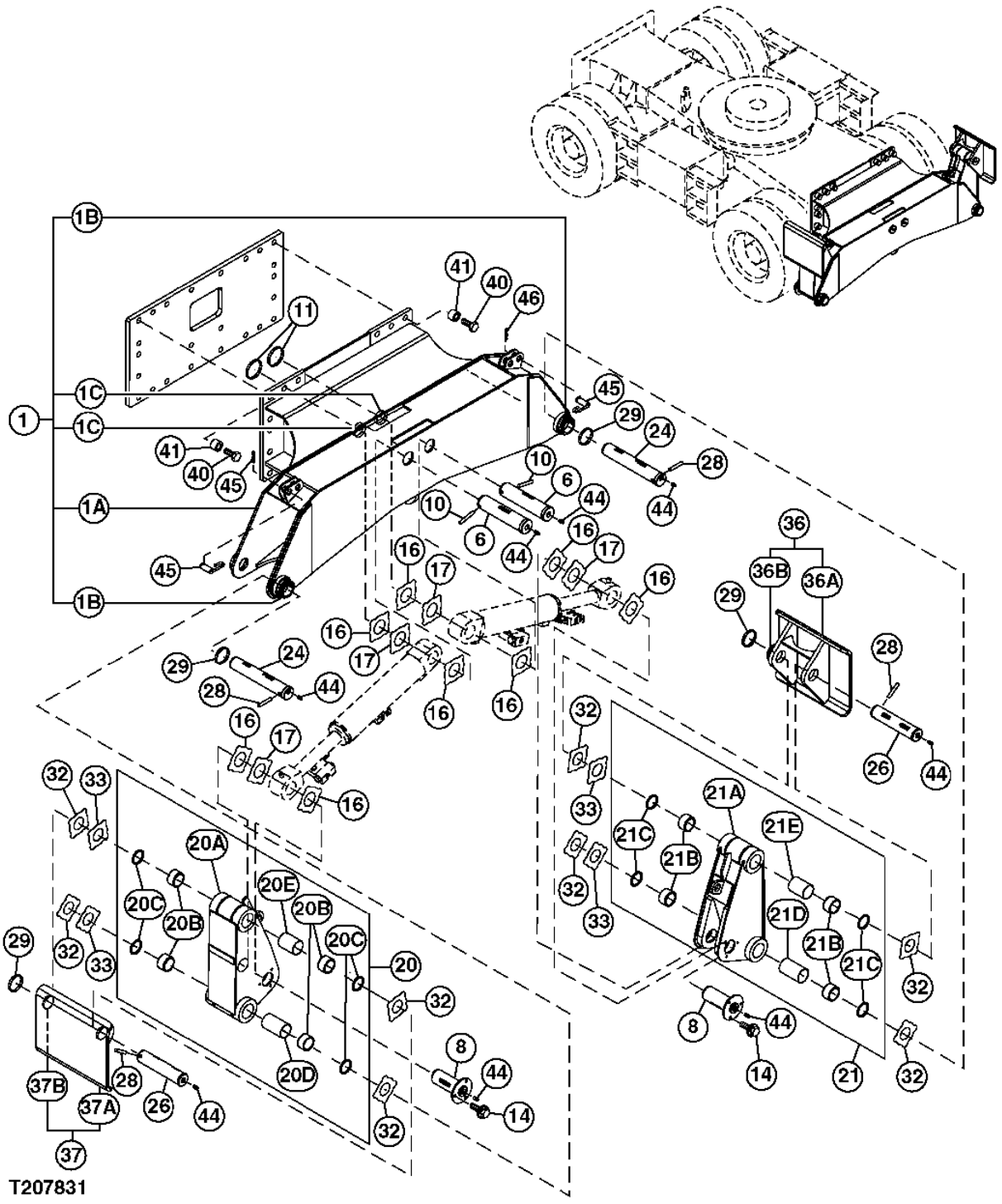

**STABILIZER**

| KEY | PART NO. | PART NAME | QTY | SERIAL NO. | REMARKS |
|---|---|---|---|---|---|
| 1 | 7044104 | OUTRIGGER | 1 | | (SUB FOR J900890) |
| 1A | ..... | BEAM | 1 | | ( 6021611 NOT AVAILABLE FOR SERVICE) (ORDER 7044104) |
| 1B | T104251 | BUSHING | 2 | | (SUB FOR 4197034) |
| 1C | TH104509 | BUSHING | 2 | | (SUB FOR 4197035) |
| 6 | 3096935 | PIN FASTENER | 2 | | |
| 8 | 8090454 | PIN FASTENER | 2 | | |
| 10 | 4098713 | PIN | 2 | | |
| 11 | 4098712 | RING | 2 | | |
| 14 | ..... | CAP SCREW | 6 | | ( J271230 NOT AVAILABLE FOR SERVICE) |
| | 19M8011 | CAP SCREW | 1 | | M12 X 30, (SUB FOR J901230) |
| | 24M7345 | WASHER | 1 | | 13.500 X 24 X 2.500 MM, (SUB FOR J222012) |
| 16 | 4444286 | THRUST WASHER | 8 | | |
| 17 | 4444287 | THRUST WASHER | 4 | | |
| 20 | 8087077 | OUTRIGGER | 1 | | |
| 20A | 7041851 | OUTRIGGER | 1 | | |
| 20B | T104249 | BUSHING | 4 | | (SUB FOR 4196106) |
| 20C | TH104472 | SEAL | 4 | | (SUB FOR 4084578) |
| 20D | 4485027 | SPACER | 1 | | |
| 20E | 4600302 | SPACER | 1 | | |
| 21 | 8086130 | OUTRIGGER | 1 | | |
| 21A | ..... | OUTRIGGER | 1 | | ( 7041850 NOT AVAILABLE FOR SERVICE) (ORDER 8086130) |
| 21B | T104249 | BUSHING | 4 | | (SUB FOR 4196106) |
| 21C | TH104472 | SEAL | 4 | | (SUB FOR 4084578) |
| 21D | 4485027 | SPACER | 1 | | |
| 21E | 4600302 | SPACER | 1 | | |
| 24 | 3096936 | PIN FASTENER | 2 | | |
| 26 | 3094466 | PIN FASTENER | 2 | | |
| 28 | 4098717 | PIN | 4 | | |
| 29 | 4098716 | RING | 4 | | |
| 32 | 4444288 | THRUST WASHER | 8 | | |
| 33 | 4444289 | THRUST WASHER | 4 | | |
| 36 | 9760237 | FLOAT | 1 | | |
| 36A | ..... | FLOAT | 1 | | ( 8090940 NOT AVAILABLE FOR SERVICE) (ORDER 9760237) |
| 36B | T104251 | BUSHING | 1 | | (SUB FOR 4197034) |
| 37 | 9760238 | FLOAT | 1 | | |
| 37A | ..... | FLOAT | 1 | | ( 8091012 NOT AVAILABLE FOR SERVICE) (ORDER 9760238) |
| 37B | T104251 | BUSHING | 1 | | (SUB FOR 4197034) |
| 40 | J933000 | CAP SCREW | 18 | | |
| 41 | 4483517 | SPACER | 18 | | |
| 44 | TH100074 | LUBRICATION FITTING | 8 | | (SUB FOR J75481) |
| 45 | 9726346 | PIN FASTENER | 2 | | |
| 46 | 99M7080 | SPRING LOCKING PIN | 2 | | (SUB FOR 487041) |

**OUTRIGGER LINES (UPPERSTRUCTURE)**

T207832 -UN-11FEB05

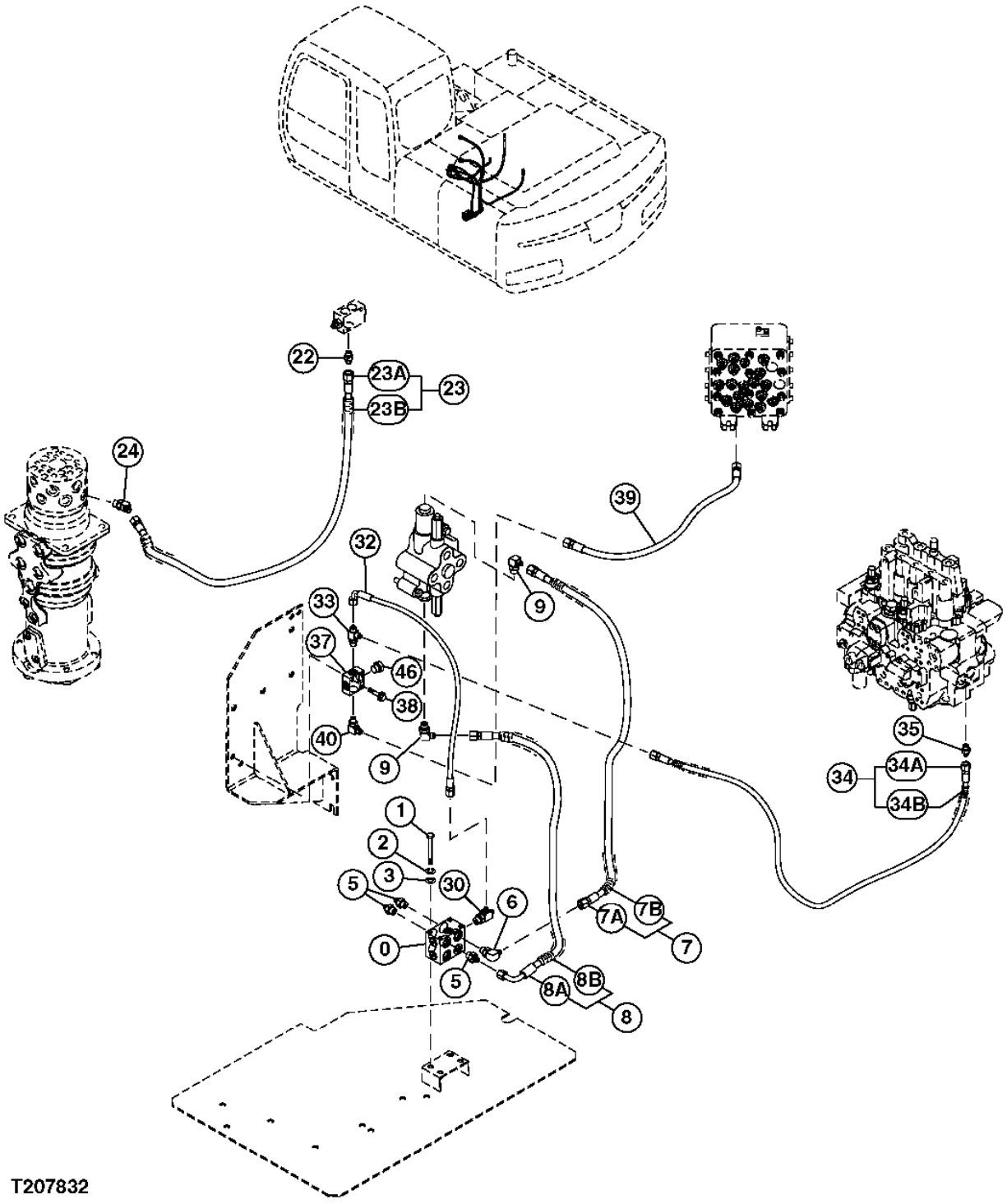

**OUTRIGGER LINES (UPPERSTRUCTURE)**

| KEY | PART NO. | PART NAME | QTY | SERIAL NO. | REMARKS |
|---|---|---|---|---|---|
| 0 | 4470134 | VALVE | 1 | | SHUTTLE |
| 1 | 19M8539 | CAP SCREW | 4 | | M8 X 90, (SUB FOR J900890) |
| 2 | 12M7056 | LOCK WASHER | 4 | | 8 MM, (SUB FOR A590908) |
| 3 | 24M7055 | WASHER | 4 | | 8.400 X 16 X 1.600 MM, (SUB FOR A590108) |
| 5 | A852133 | ADAPTER | 3 | | |
| | CH11570 | O-RING | 1 | | (SUB FOR 4509180) |
| 6 | A852333 | ELBOW FITTING | 1 | | |
| | CH11570 | O-RING | 1 | | (SUB FOR 4509180) |
| 7 | ..... | HOSE | 1 | | ( 9233239 NOT AVAILABLE FOR SERVICE) |
| 7A | 4611611 | HOSE | 1 | | |
| 7B | 4327293 | HOSE GUARD | 2 | | |
| 8 | ..... | HOSE | 1 | | ( 9233240 NOT AVAILABLE FOR SERVICE) |
| 8A | 4611612 | HOSE | 1 | | |
| 8B | 4327293 | HOSE GUARD | 2 | | |
| 9 | A852333 | ELBOW FITTING | 2 | | |
| | CH11570 | O-RING | 1 | | (SUB FOR 4509180) |
| 22 | A852123 | ADAPTER | 1 | | |
| | M800650 | PACKING | 1 | | (SUB FOR 957366) |
| 23 | ..... | HOSE | 1 | | ( 9232922 NOT AVAILABLE FOR SERVICE) |
| 23A | 4437652 | HOSE | 1 | | |
| 23B | 4327293 | HOSE GUARD | 3 | | |
| 24 | 4190244 | ELBOW FITTING | 1 | | (SUB FOR A852233) |
| | CH11570 | O-RING | 1 | | (SUB FOR 4509180) |
| 30 | A852432 | TEE FITTING | 1 | | |
| | CH11570 | O-RING | 1 | | (SUB FOR 4509180) |
| 32 | 4427782 | HYDRAULIC HOSE - FABRICATE | 1 | | |
| 33 | A852422 | TEE FITTING | 1 | | |
| | M800650 | PACKING | 1 | | (SUB FOR 957366) |
| 34 | ..... | HOSE | 1 | | ( 9233241 NOT AVAILABLE FOR SERVICE) |
| 34A | 4611827 | HOSE | 1 | | |
| 34B | 4327293 | HOSE GUARD | 2 | | |
| 35 | A852122 | ADAPTER | 1 | | |
| | M800650 | PACKING | 1 | | (SUB FOR 957366) |
| 37 | 4411001 | FLOW CONTROL HYD. VALVE | 1 | | |
| 38 | ..... | CAP SCREW | 2 | | ( J260845 NOT AVAILABLE FOR SERVICE) |
| | 19M8359 | CAP SCREW | 1 | | (SUB FOR J900845) |
| | 24M7055 | WASHER | 1 | | (SUB FOR A590108) |
| 39 | 4615440 | HOSE | 1 | | |
| 40 | A852323 | ELBOW FITTING | 1 | | |
| | M800650 | PACKING | 1 | | (SUB FOR 957366) |
| 46 | A885003 | PIPE PLUG | 1 | | |
| | CH11570 | O-RING | 1 | | (SUB FOR 4509180) |

**OUTRIGGER STABILIZER LINES**

T207833 -UN-17FEB05

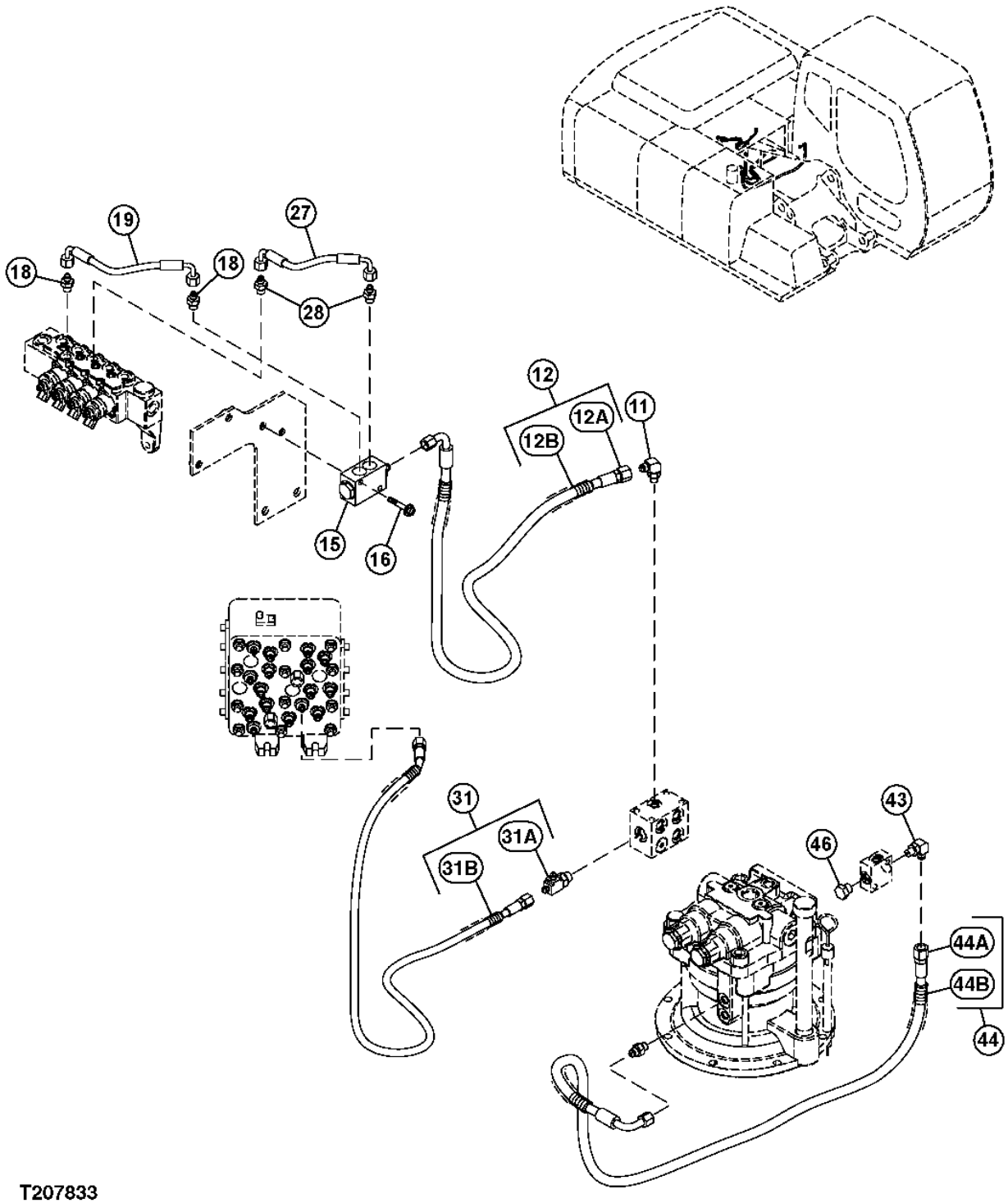

**OUTRIGGER STABILIZER LINES**

| KEY | PART NO. | PART NAME | QTY | SERIAL NO. | REMARKS |
|---|---|---|---|---|---|
| 11 | A852323 | ELBOW FITTING | 1 | | |
| | M800650 | PACKING | 1 | | (SUB FOR 957366) |
| 12 | ..... | HYDRAULIC HOSE | 1 | | ( 9232921 NOT AVAILABLE FOR SERVICE) |
| 12A | 4611614 | HOSE | 1 | | |
| 12B | 4327293 | HOSE GUARD | 3 | | |
| 15 | 4337928 | FLOW CONTROL HYD. VALVE | 1 | | |
| 16 | ..... | CAP SCREW | 2 | | ( J260850 NOT AVAILABLE FOR SERVICE) |
| | 19M8397 | CAP SCREW | 1 | | M8 X 50, (SUB FOR J900850) |
| | 24M7055 | WASHER | 1 | | 8.400 X 16 X 1.600 MM, (SUB FOR A590108) |
| 18 | A852122 | ADAPTER | 2 | | |
| | M800650 | PACKING | 1 | | (SUB FOR 957366) |
| 19 | 4484976 | HOSE | 1 | | |
| 27 | 4484975 | HOSE | 1 | | |
| 28 | A852122 | ADAPTER | 2 | | |
| | M800650 | PACKING | 1 | | (SUB FOR 957366) |
| 31 | ..... | HYDRAULIC HOSE | 1 | | ( 9232923 NOT AVAILABLE FOR SERVICE) |
| 31A | 4611616 | HOSE | 1 | | |
| 31B | 4327293 | HOSE GUARD | 2 | | |
| 43 | A852323 | ELBOW FITTING | 1 | | |
| | M800650 | PACKING | 1 | | (SUB FOR 957366) |
| 44 | ..... | HYDRAULIC HOSE | 1 | | ( 9233242 NOT AVAILABLE FOR SERVICE) |
| 44A | 4611829 | HOSE | 1 | | |
| 44B | 4327293 | HOSE GUARD | 3 | | |
| 46 | A885003 | PIPE PLUG | 1 | | |
| | CH11570 | O-RING | 1 | | (SUB FOR 4509180) |

**STABILIZER LINES**

T207834 -UN-17FEB05

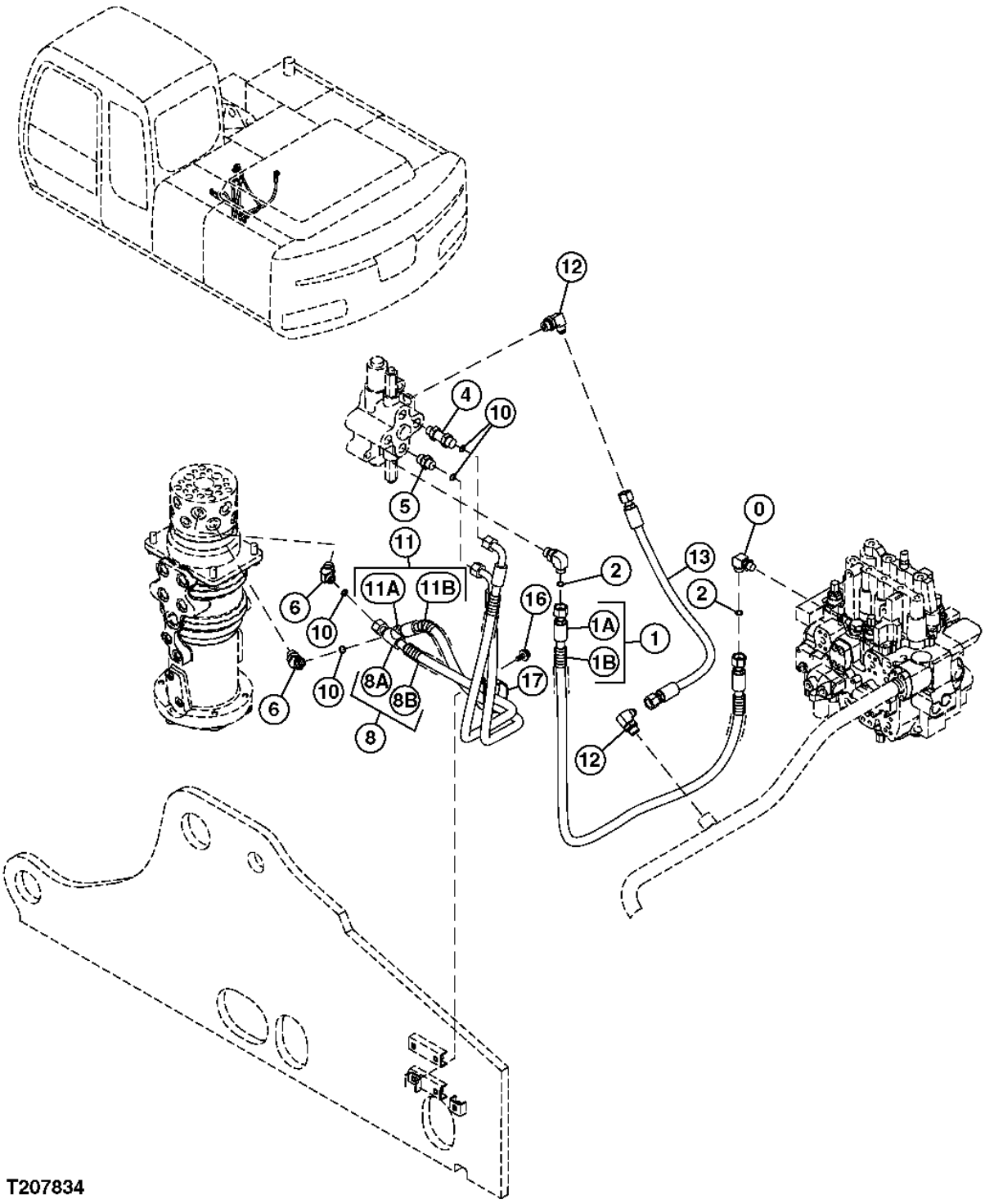

**STABILIZER LINES**

| KEY | PART NO. | PART NAME | QTY | SERIAL NO. | REMARKS |
|---|---|---|---|---|---|
| 0 | 4202112 | ELBOW FITTING | 1 | | |
| | CH11570 | O-RING | 1 | | (SUB FOR 4509180) |
| 1 | ..... | HYDRAULIC HOSE | 1 | | ( 9232924 NOT AVAILABLE FOR SERVICE) |
| 1A | 4611617 | HOSE | 1 | | |
| 1B | 4327294 | HOSE GUARD | 2 | | |
| 2 | T77857 | O-RING | 2 | | (SUB FOR 4138938) |
| 4 | 4199247 | ADAPTER | 1 | | |
| | 4506418 | O-RING | 1 | | |
| 5 | A853144 | ADAPTER | 1 | | |
| | 4506418 | O-RING | 1 | | |
| 6 | A853244 | ELBOW FITTING | 2 | | |
| | 4506418 | O-RING | 1 | | |
| 8 | ..... | HYDRAULIC HOSE | 1 | | ( 9232925 NOT AVAILABLE FOR SERVICE) |
| 8A | 4488926 | HOSE | 1 | | |
| 8B | 4327294 | HOSE GUARD | 2 | | |
| 10 | T77857 | O-RING | 4 | | (SUB FOR 4138938) |
| 11 | ..... | HYDRAULIC HOSE | 1 | | ( 9222146 NOT AVAILABLE FOR SERVICE) |
| 11A | 4487213 | HOSE | 1 | | |
| 11B | 4327294 | HOSE GUARD | 2 | | |
| 12 | A852344 | ELBOW FITTING | 2 | | |
| | 4506418 | O-RING | 1 | | |
| 13 | AT69450 | HYDRAULIC HOSE - FABRICATE | 1 | | (SUB FOR 4385325) |
| 16 | ..... | CAP SCREW | 1 | | ( J271025 NOT AVAILABLE FOR SERVICE) |
| | 19M7402 | CAP SCREW | 1 | | M10 X 25, (SUB FOR J901025) |
| | 24M7346 | WASHER | 1 | | 11 X 20 X 2 MM, (SUB FOR J222010) |
| 17 | 4204136 | CLIP | 1 | | |

**STABILIZER LINES**

T207835 -UN-17FEB05

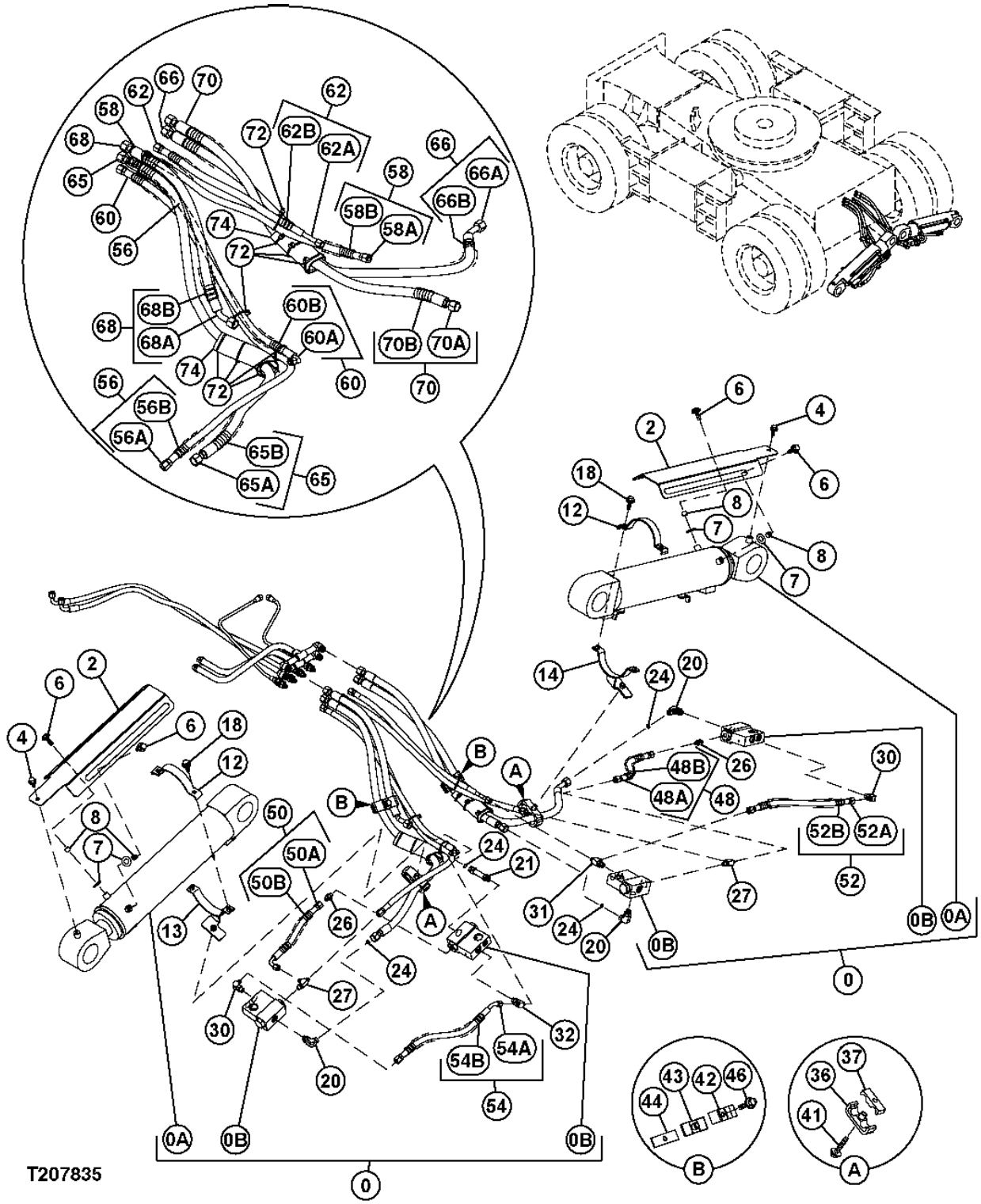

**STABILIZER LINES**

| KEY | PART NO. | PART NAME | QTY | SERIAL NO. | REMARKS |
|---|---|---|---|---|---|
| 0 | 9224867 | OUTRIGGER | 2 | | |
| 0A | 4486405 | CYLINDER | 1 | | |
| 0B | 9220919 | CHECK VALVE | 2 | | (SUB FOR 1030928) |
| 2 | 3097573 | COVER | 2 | | |
| 4 | ..... | CAP SCREW | 2 | | ( J271020 NOT AVAILABLE FOR SERVICE) |
| | 19M7938 | CAP SCREW | 1 | | M10 X 20, (SUB FOR J901020) |
| | 24M7346 | WASHER | 1 | | 11 X 20 X 2 MM, (SUB FOR J222010) |
| 6 | ..... | CAP SCREW | 4 | | ( J281035 NOT AVAILABLE FOR SERVICE) |
| | 19M7550 | CAP SCREW | 1 | | M10 X 35, (SUB FOR J901035) |
| | 4486055 | WASHER | 1 | | |
| 7 | 24M7101 | WASHER | 4 | | 11 X 34 X 3 MM, (SUB FOR J217083) |
| 8 | 4488863 | BUSHING | 4 | | |
| 12 | 3050114 | CLAMP | 2 | | |
| 13 | 8092349 | CLAMP | 1 | | |
| 14 | 8092350 | CLAMP | 1 | | |
| 18 | ..... | CAP SCREW | 4 | | ( J271035 NOT AVAILABLE FOR SERVICE) |
| | 19M7550 | CAP SCREW | 1 | | M10 X 35, (SUB FOR J901035) |
| | 24M7346 | WASHER | 1 | | 11 X 20 X 2 MM, (SUB FOR J222010) |
| 20 | 4202112 | ELBOW FITTING | 3 | | |
| | CH11570 | O-RING | 1 | | (SUB FOR 4509180) |
| 21 | 4342171 | ADAPTER | 1 | | |
| | CH11570 | O-RING | 1 | | (SUB FOR 4509180) |
| 24 | T77857 | O-RING | 4 | | (SUB FOR 4138938) |
| 26 | A852123 | ADAPTER | 2 | | |
| | M800650 | PACKING | 1 | | (SUB FOR 957366) |
| 27 | A852423 | TEE FITTING | 2 | | |
| | M800650 | PACKING | 1 | | (SUB FOR 957366) |
| 30 | A852333 | ELBOW FITTING | 2 | | |
| | CH11570 | O-RING | 1 | | (SUB FOR 4509180) |
| 31 | A852433 | TEE FITTING | 1 | | |
| | CH11570 | O-RING | 1 | | (SUB FOR 4509180) |
| 32 | A852533 | TEE FITTING | 1 | | |
| | CH11570 | O-RING | 1 | | (SUB FOR 4509180) |
| 36 | 8082431 | CLAMP | 2 | | |
| 37 | AT318021 | CLAMP | 2 | | (SUB FOR 4285722) |
| 41 | ..... | CAP SCREW | 2 | | ( J271275 NOT AVAILABLE FOR SERVICE) |
| | 19M8088 | CAP SCREW | 1 | | M12 X 75, (SUB FOR J901275) |
| | 24M7345 | WASHER | 1 | | 13.500 X 24 X 2.500 MM, (SUB FOR J222012) |
| 42 | 4202103 | CLAMP | 2 | | |
| 43 | 9727634 | CLAMP | 2 | | |

THIS PARTS LISTING IS CONTINUED

**STABILIZER LINES (CONTINUED)**

T207835 -UN-17FEB05

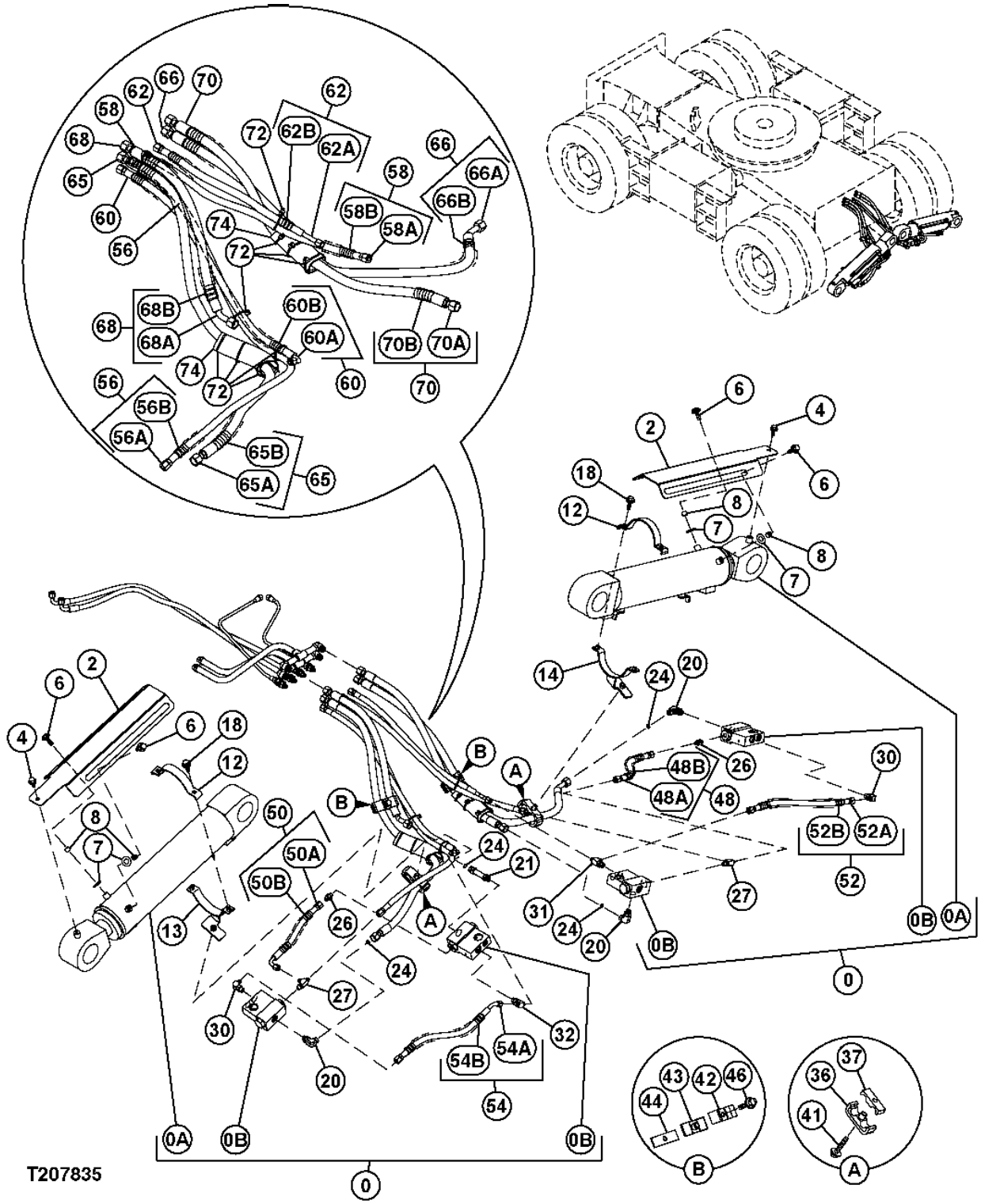

**STABILIZER LINES (CONTINUED)**

| KEY | PART NO. | PART NAME | QTY | SERIAL NO. | REMARKS |
|---|---|---|---|---|---|
| 44 | 9738975 | CLAMP | 2 | | |
| 46 | ..... | CAP SCREW | 2 | | ( J271250 NOT AVAILABLE FOR SERVICE) |
| | 19M7361 | CAP SCREW | 1 | | M12 X 50, (SUB FOR J901250) |
| | 24M7345 | WASHER | 1 | | 13.500 X 24 X 2.500 MM, (SUB FOR J222012) |
| 48 | ..... | HYDRAULIC HOSE | 1 | | ( 9223467 NOT AVAILABLE FOR SERVICE) |
| 48A | 4489054 | HOSE | 1 | | |
| 48B | 4327293 | HOSE GUARD | 1 | | |
| 50 | ..... | HYDRAULIC HOSE | 1 | | ( 9223465 NOT AVAILABLE FOR SERVICE) |
| 50A | 4487172 | HOSE | 1 | | |
| 50B | 4327293 | HOSE GUARD | 1 | | |
| 52 | ..... | HYDRAULIC HOSE | 1 | | ( 9223911 NOT AVAILABLE FOR SERVICE) |
| 52A | 4489599 | HOSE | 1 | | |
| 52B | 4327293 | HOSE GUARD | 1 | | |
| 54 | ..... | HYDRAULIC HOSE | 1 | | ( 9223916 NOT AVAILABLE FOR SERVICE) |
| 54A | 4489604 | HOSE | 1 | | |
| 54B | 4327293 | HOSE GUARD | 1 | | |
| 56 | ..... | HYDRAULIC HOSE | 1 | | ( 9228660 NOT AVAILABLE FOR SERVICE) |
| 56A | 4606527 | HOSE | 1 | | |
| 56B | 4327293 | HOSE GUARD | 2 | | |
| 58 | ..... | HYDRAULIC HOSE | 1 | | ( 9228663 NOT AVAILABLE FOR SERVICE) |
| 58A | 4474667 | HOSE | 1 | | |
| 58B | 4327293 | HOSE GUARD | 2 | | |
| 60 | ..... | HYDRAULIC HOSE | 1 | | ( 9227679 NOT AVAILABLE FOR SERVICE) |
| 60A | 4453023 | HYDRAULIC HOSE - FABRICATE | 1 | | |
| 60B | 4327293 | HOSE GUARD | 2 | | |
| 62 | ..... | HYDRAULIC HOSE | 1 | | ( 9223919 NOT AVAILABLE FOR SERVICE) |
| 62A | 4489607 | HOSE | 1 | | |
| 62B | 4327293 | HOSE GUARD | 1 | | |
| 65 | ..... | HYDRAULIC HOSE | 1 | | ( 9227683 NOT AVAILABLE FOR SERVICE) |
| 65A | 4296276 | HYDRAULIC HOSE - FABRICATE | 1 | | (SUB FOR 4260263) |
| 65B | 4327294 | HOSE GUARD | 3 | | |
| 66 | ..... | HYDRAULIC HOSE | 1 | | ( 9228661 NOT AVAILABLE FOR SERVICE) |
| 66A | 4606528 | HOSE | 1 | | |
| 66B | 4327294 | HOSE GUARD | 3 | | |
| 68 | ..... | HYDRAULIC HOSE | 1 | | (9225992 NOT AVAILABLE FOR SERVICE) |
| 68A | 4489114 | HOSE | 1 | | |
| 68B | 4327294 | HOSE GUARD | 1 | | |
| 70 | ..... | HYDRAULIC HOSE | 1 | | ( 9224574 NOT AVAILABLE FOR SERVICE) |
| 70A | 4285802 | HOSE | 1 | | |
| 70B | 4327294 | HOSE GUARD | 2 | | |
| 72 | H77698 | TIE BAND | 9 | | (SUB FOR 4055312) |
| 74 | 4219918 | BUSHING | 2 | | |

**MAIN HYDRAULIC PUMP COMPONENTS**

T207036 -UN-22FEB05

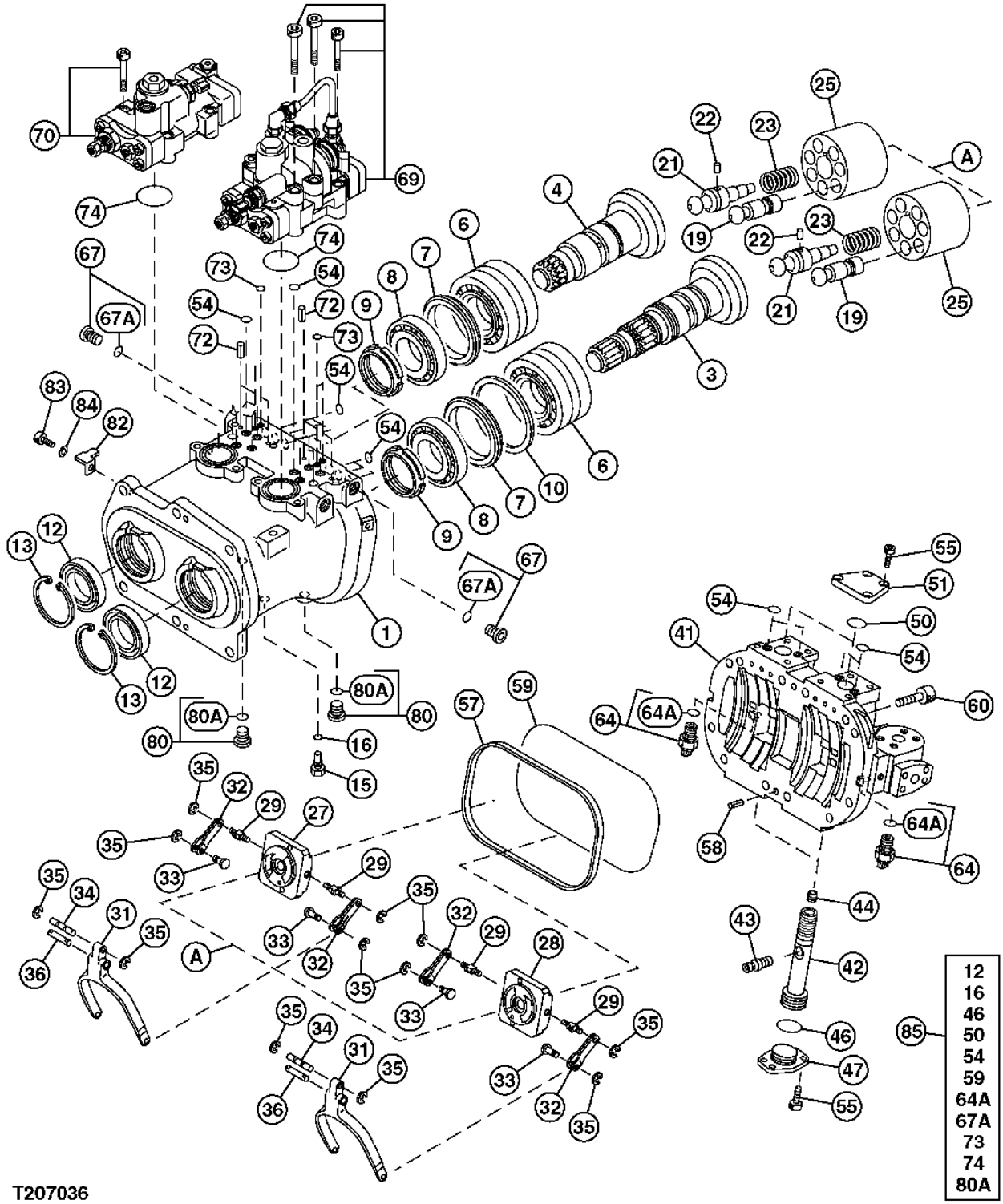

**MAIN HYDRAULIC PUMP COMPONENTS**

| KEY | PART NO. | PART NAME | QTY | SERIAL NO. | REMARKS |
|---|---|---|---|---|---|
| 1 | 1026679 | GEAR CASE | 1 | | |
| 3 | 2036807 | SHAFT | 1 | | LH |
| 4 | 2036808 | SHAFT | 1 | | RH |
| 6 | 4337419 | CYLINDRICAL ROLLER BEARING | 2 | | |
| 7 | 4348182 | RING | 2 | | |
| 8 | 4337483 | CYLINDRICAL ROLLER BEARING | 2 | | |
| 9 | 4178173 | NUT | 2 | | |
| 10 | 4330054 | THRUST WASHER | 1 | | (SUB FOR 4338907) |
| 12 | AT213847 | SEAL | 2 | | (SUB FOR 4333170) |
| 13 | 4116290 | SNAP RING | 2 | | |
| 15 | 4233165 | FITTING | 1 | | |
| 16 | M800650 | PACKING | 1 | | (SUB FOR 957366) |
| 19 | 8059452 | PISTON | 14 | | |
| 21 | 4337035 | SHAFT | 2 | | |
| 22 | 4198956 | PIN FASTENER | 2 | | |
| 23 | 4179181 | COMPRESSION SPRING | 2 | | |
| 25 | 2036744 | ROTOR | 2 | | |
| 27 | 2036795 | FLOW CONTROL HYD. VALVE | 1 | | |
| 28 | 2036786 | FLOW CONTROL HYD. VALVE | 1 | | |
| 29 | 4179179 | DOWEL PIN | 4 | | |
| 31 | 3075674 | LINK | 2 | | |
| 32 | 9724756 | LEVER | 4 | | |
| 33 | 4179177 | DOWEL PIN | 4 | | |
| 34 | 4179176 | DOWEL PIN | 2 | | |
| 35 | CH17951 | RING | 12 | | (SUB FOR 4146370) |
| 36 | 4200227 | DOWEL PIN | 2 | | |
| 41 | 1028267 | CYLINDER HEAD | 1 | | (SUB FOR 1027131) |
| 42 | 3069541 | PISTON | 2 | | |
| 43 | 4338053 | PIN | 2 | | |
| 44 | 4337812 | SET SCREW | 2 | | |

THIS PARTS LISTING IS CONTINUED

**MAIN HYDRAULIC PUMP COMPONENTS (CONTINUED)**

T207036 -UN-22FEB05

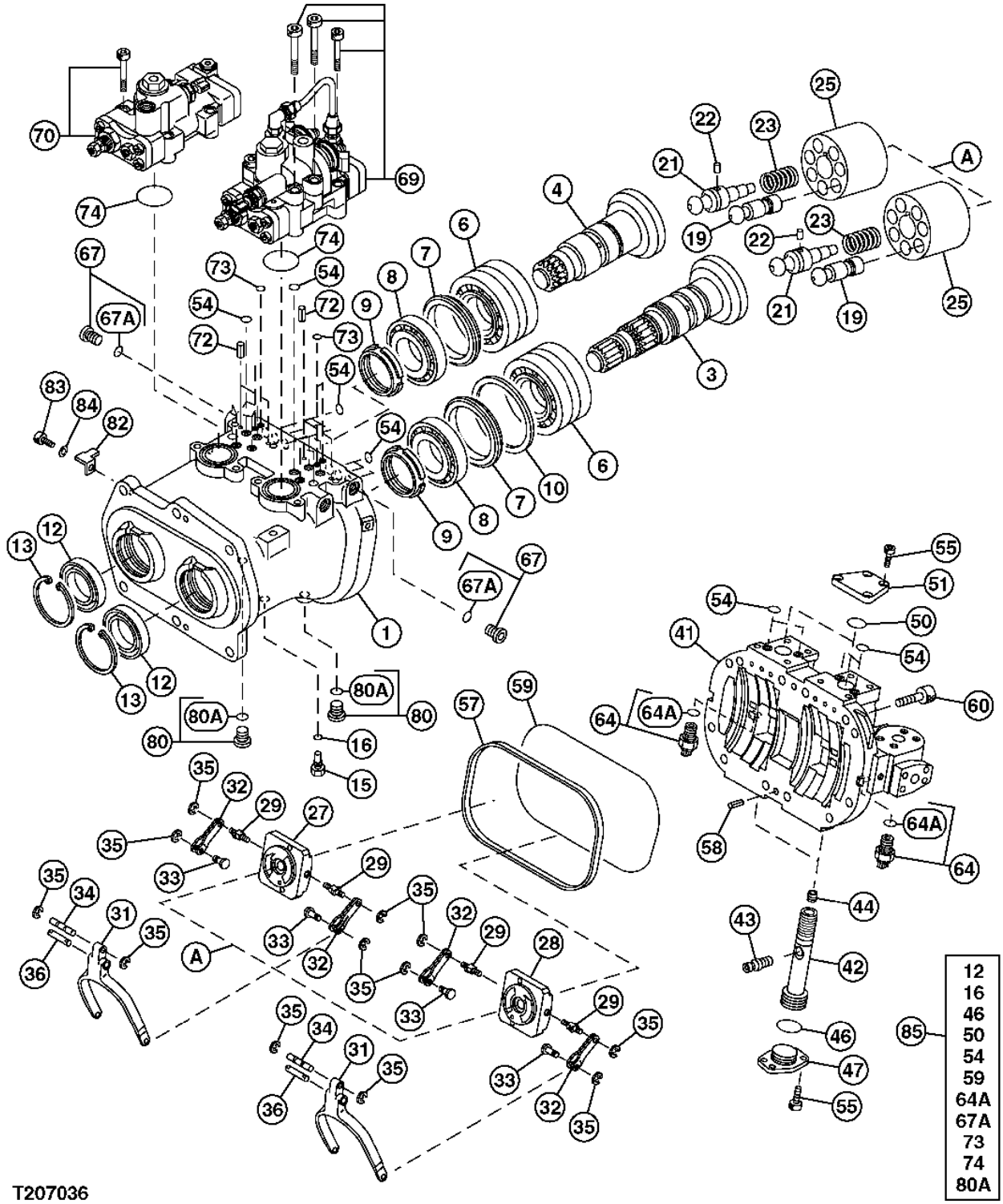

**MAIN HYDRAULIC PUMP COMPONENTS (CONTINUED)**

| KEY | PART NO. | PART NAME | QTY | SERIAL NO. | REMARKS |
|---|---|---|---|---|---|
| 46 | 4355085 | O-RING | 2 | | |
| 47 | 4338060 | STOP | 2 | | |
| 50 | 4355083 | O-RING | 2 | | |
| 51 | 4338061 | COVER | 2 | | |
| 54 | CH11560 | PACKING | 20 | | (SUB FOR 4180349) |
| 55 | 19M8439 | SCREW | 16 | | M8 X 25, (SUB FOR M340825 OR TH105051) |
| 57 | 3070581 | PACKING | 1 | | |
| 58 | 34M7061 | SPRING PIN | 2 | | 8 X 20 MM, (SUB FOR 4099290) |
| 59 | 4342840 | O-RING | 1 | | |
| 60 | 19M8341 | SCREW | 12 | | M12 X 45, (SUB FOR M341245) |
| 64 | 4436271 | SENSOR | 2 | | (PUMP PRESSURE) |
| 64A | 4365826 | O-RING | 1 | | |
| 67 | 9134110 | PIPE PLUG | 2 | | |
| 67A | M800650 | PACKING | 1 | | (SUB FOR 957366) |
| 69 | 9198935 | REGULATOR | 1 | | LH |
| 70 | 9198936 | REGULATOR | 1 | | RH |
| 72 | 34M3845 | SPRING PIN | 4 | | 4 X 10 MM, (SUB FOR 4515041) |
| 73 | 4343074 | O-RING | 4 | | |
| 74 | 4348665 | O-RING | 2 | | |
| 80 | 9134111 | PIPE PLUG | 2 | | |
| 80A | CH11570 | O-RING | 1 | | 13.800 X 2.400 MM (0.543" X 0.094") (SUB FOR 4509180) |
| 82 | 4252767 | BRACKET | 1 | | |
| 83 | J780612 | BOLT | 1 | | (SUB FOR M340613) |
| 84 | 12M7133 | LOCK WASHER | 1 | | 6 MM, (SUB FOR 4169516) |
| 85 | 4451039 | SEAL KIT | 1 | | |

**MAIN HYDRAULIC PUMP RIGHT-HAND REGULATOR**

T207037 -UN-21FEB05

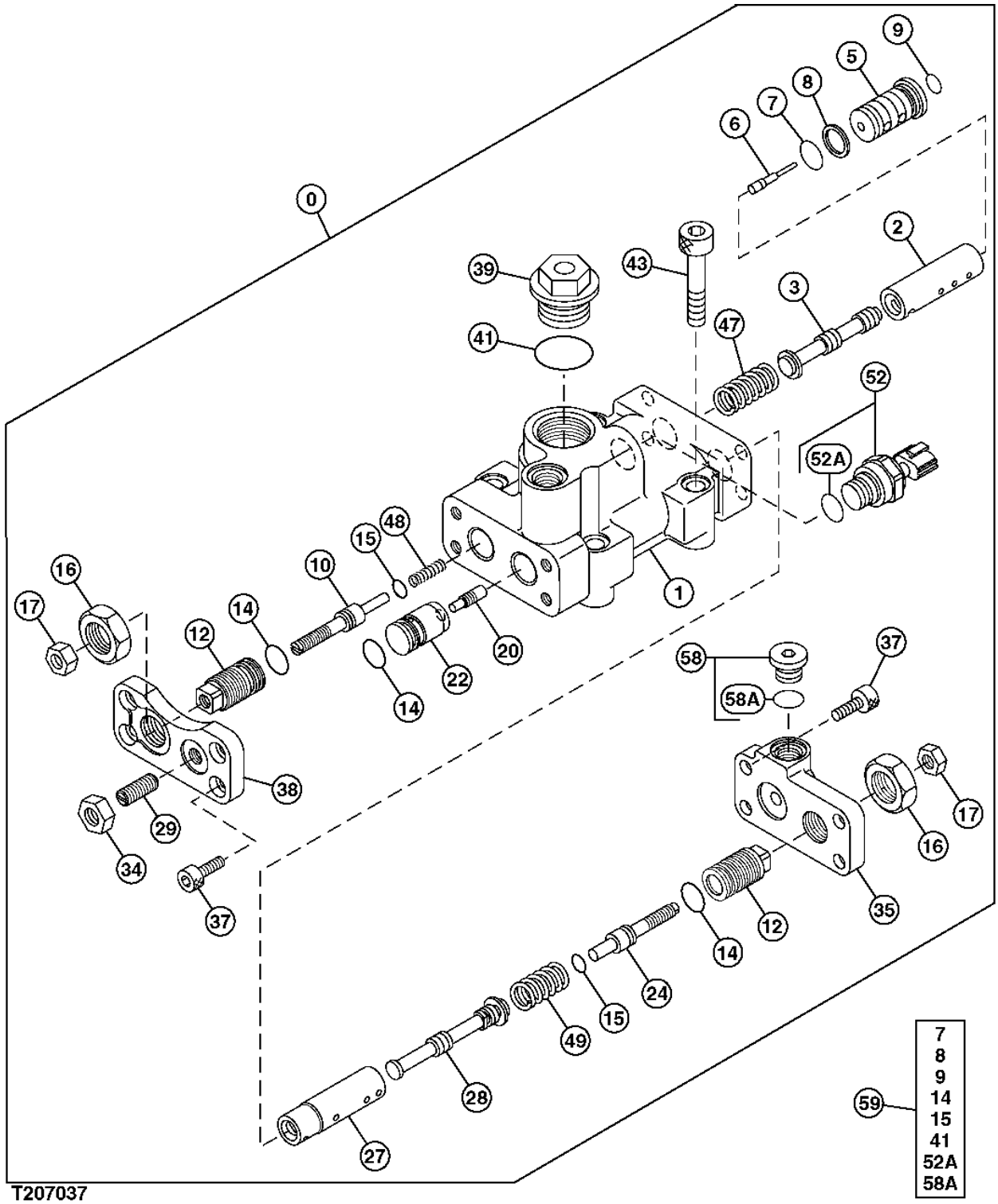

**MAIN HYDRAULIC PUMP RIGHT-HAND REGULATOR**

| KEY | PART NO. | PART NAME | QTY | SERIAL NO. | REMARKS |
|---|---|---|---|---|---|
| 0 | 9198936 | REGULATOR | 1 | | |
| 1 | ..... | HOUSING | 1 | | ( 1027149 NOT AVAILABLE FOR SERVICE) |
| 2 | 4179155 | SLEEVE | 1 | | |
| 3 | 4179156 | SPOOL | 1 | | |
| 5 | 4435025 | PISTON | 1 | | |
| 6 | 4435024 | FLOW CONTROL HYD. VALVE | 1 | | |
| 7 | TH102560 | O-RING | 1 | | (SUB FOR 4150302) |
| 8 | 4085607 | BACK-UP RING | 1 | | |
| 9 | CH11560 | PACKING | 1 | | (SUB FOR 4180349) |
| 10 | 4179162 | STOP | 1 | | |
| 12 | 4179161 | STOP | 2 | | |
| 14 | 4342843 | O-RING | 3 | | |
| 15 | 4342841 | O-RING | 2 | | |
| 16 | 4068898 | NUT | 2 | | |
| 17 | 14M7273 | NUT | 2 | | M8, (SUB FOR M500807) |
| 20 | 4179171 | PISTON | 1 | | |
| 22 | 4451498 | PISTON | 1 | | |
| 24 | 4347107 | STOP | 1 | | |
| 27 | 4346522 | SLEEVE | 1 | | |
| 28 | 4346521 | VALVE SPOOL | 1 | | |
| 29 | 4265964 | SET SCREW | 1 | | |
| 34 | 14M7274 | NUT | 1 | | M10, (SUB FOR J950010) |
| 35 | 3075775 | END PLATE | 1 | | |
| 37 | 19M8446 | SCREW | 8 | | M8 X 20, (SUB FOR M340820) |
| 38 | 4433327 | COVER | 1 | | |
| 39 | 4447264 | PIPE PLUG | 1 | | |
| 41 | 4342846 | O-RING | 1 | | |
| 43 | 19M8339 | SCREW | 4 | | M10 X 55, (SUB FOR M341056) |
| 47 | 4194176 | COMPRESSION SPRING | 1 | | |
| 48 | 4423345 | SPRING | 1 | | |
| 49 | 4350928 | COMPRESSION SPRING | 1 | | |
| 52 | 4436536 | SENSOR | 1 | | |
| 52A | 4153095 | O-RING | 1 | | |
| 58 | 9134110 | PIPE PLUG | 1 | | |
| 58A | M800650 | PACKING | 1 | | (SUB FOR 957366) |
| 59 | 4455719 | SEAL KIT | 1 | | |

**MAIN HYDRAULIC PUMP LH REGULATOR**

T207038 -UN-21FEB05

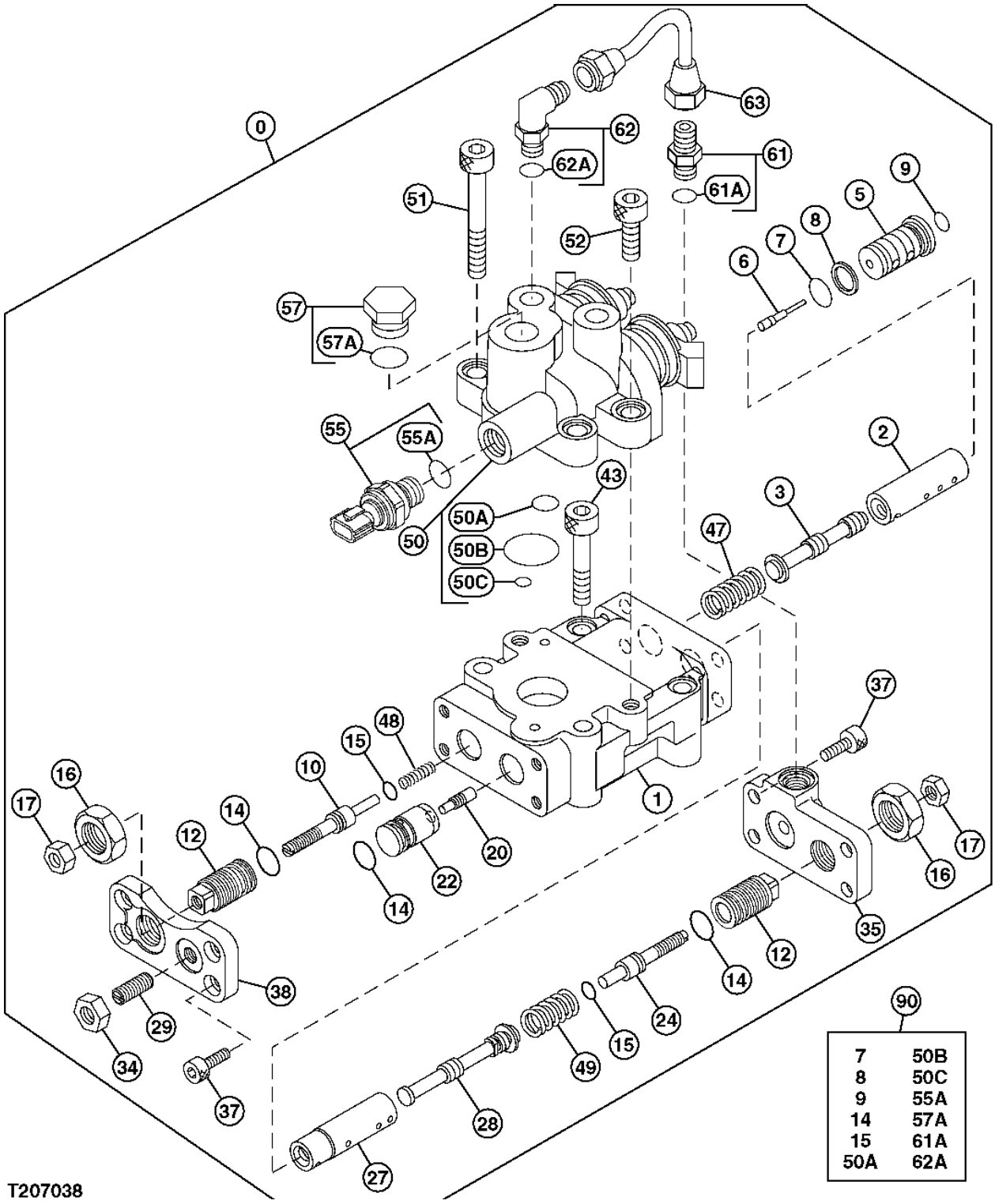


THIS PARTS LISTING IS CONTINUED

**MAIN HYDRAULIC PUMP LH REGULATOR**

| KEY | PART NO. | PART NAME | QTY | SERIAL NO. | REMARKS |
|---|---|---|---|---|---|
| 0 | 9198935 | REGULATOR | 1 | | |
| 1 | ..... | HOUSING | 1 | | (1026282 NOT AVAILABLE FOR SERVICE) |
| 2 | 4179155 | SLEEVE | 1 | | |
| 3 | 4179156 | SPOOL | 1 | | |
| 5 | 4435025 | PISTON | 1 | | |
| 6 | 4435024 | FLOW CONTROL HYD. VALVE | 1 | | |
| 7 | TH102560 | O-RING | 1 | | (SUB FOR 4150302) |
| 8 | 4085607 | BACK-UP RING | 1 | | |
| 9 | CH11560 | PACKING | 1 | | (SUB FOR 4180349) |
| 10 | 4179162 | STOP | 1 | | |
| 12 | 4179161 | STOP | 2 | | |
| 14 | 4342843 | O-RING | 3 | | |
| 15 | 4342841 | O-RING | 2 | | |
| 16 | 4068898 | NUT | 2 | | |
| 17 | 14M7273 | NUT | 2 | | M8, (SUB FOR M500807) |
| 20 | 4179171 | PISTON | 1 | | |
| 22 | 4451498 | PISTON | 1 | | |
| 24 | 4347107 | STOP | 1 | | |
| 27 | 4346522 | SLEEVE | 1 | | |
| 28 | 4346521 | VALVE SPOOL | 1 | | |
| 29 | 4265964 | SET SCREW | 1 | | |
| 34 | 14M7274 | NUT | 1 | | M10, (SUB FOR J950010) |
| 35 | 3075775 | END PLATE | 1 | | |
| 37 | 19M8446 | SCREW | 8 | | M8 X 20, (SUB FOR M340820) |
| 38 | 4433327 | COVER | 1 | | |
| 43 | 19M8446 | SCREW | 2 | | M8 X 20 |
| 47 | 4194176 | COMPRESSION SPRING | 1 | | |
| 48 | 4423345 | SPRING | 1 | | |
| 49 | 4350928 | COMPRESSION SPRING | 1 | | |
| 50 | 9218269 | SOLENOID VALVE | 1 | | (SUB FOR 4400442) |
| 50A | TH102560 | O-RING | 1 | | (SUB FOR 4150302) |
| 50B | 4153534 | O-RING | 1 | | |
| 50C | 4153087 | O-RING | 1 | | |
| 51 | M341080 | BOLT | 2 | | |
| 52 | 19M8337 | SCREW | 2 | | M10 X 30, (SUB FOR M341030) |
| 55 | 4436536 | SENSOR | 1 | | |
| 55A | 4153095 | O-RING | 1 | | |
| 57 | 4174541 | DRAIN PLUG | 1 | | |
| 57A | 4506418 | O-RING | 1 | | |
| 61 | 4255304 | ADAPTER | 1 | | |
| 61A | M800650 | PACKING | 1 | | (SUB FOR 957366) |
| 62 | 4293950 | ELBOW FITTING | 1 | | |
| 62A | M800650 | PACKING | 1 | | (SUB FOR 957366) |
| 63 | 4436800 | OIL LINE | 1 | | |
| 90 | 4455733 | SEAL KIT | 1 | | |

**PILOT AND BRAKE SYSTEM PUMP**

T207039 -UN-01FEB05

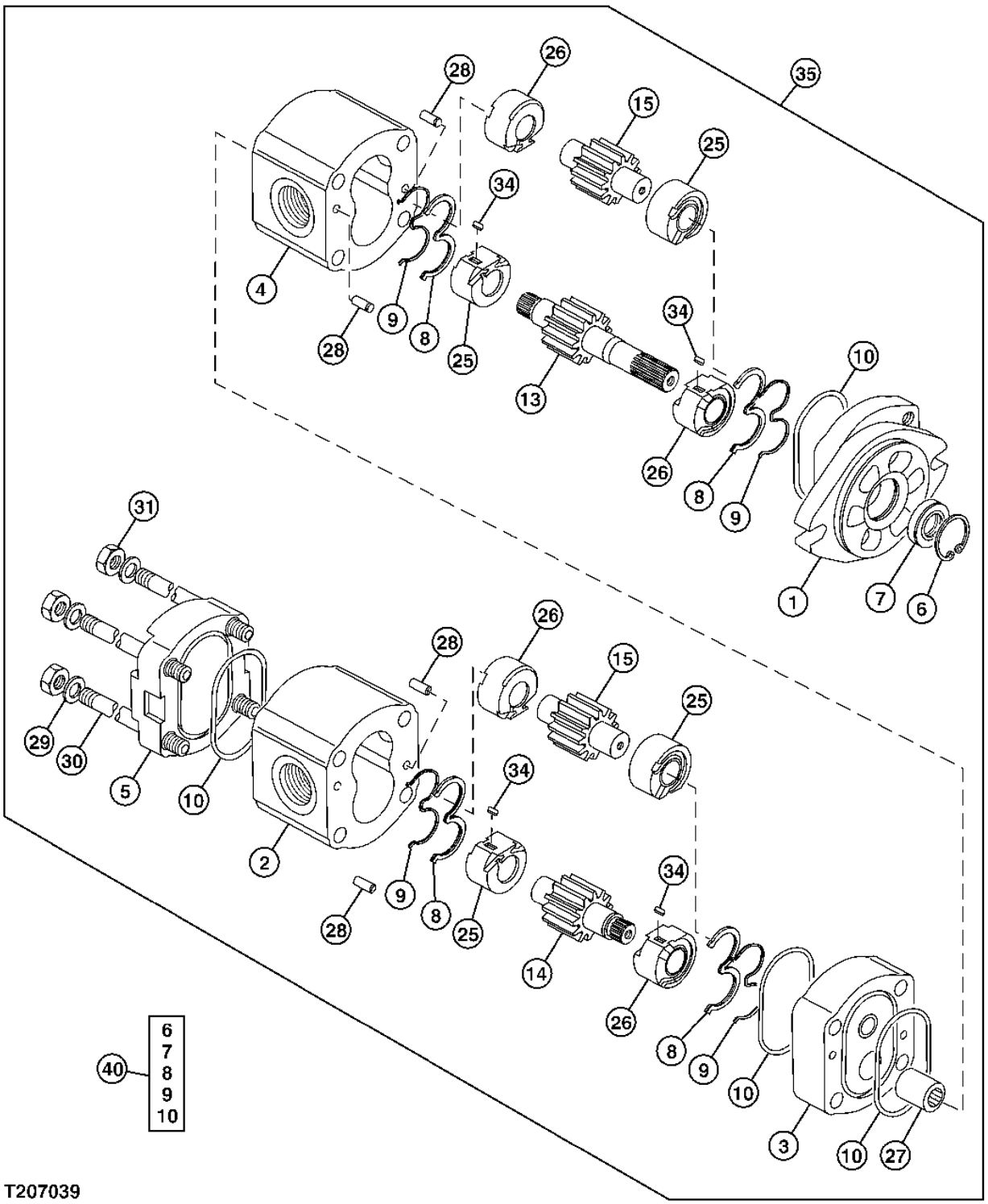

**PILOT AND BRAKE SYSTEM PUMP**

| KEY | PART NO. | PART NAME | QTY | SERIAL NO. | REMARKS |
|---|---|---|---|---|---|
| 1 | ..... | FLANGE | 1 | | ( 0354601 NOT AVAILABLE FOR SERVICE) |
| 2 | ..... | HOUSING | 1 | | |
| 3 | 0424901 | FLANGE | 1 | | |
| 4 | ..... | HOUSING | 1 | | |
| 5 | ..... | COVER | 1 | | ( 0354603 NOT AVAILABLE FOR SERVICE) |
| 6 | ..... | SNAP RING | 1 | | ( 0354604 NOT AVAILABLE FOR SERVICE) |
| 7 | 3097272 | SEAL | 1 | | (SUB FOR 0408202) |
| 8 | 1031045 | SEAL | 4 | | (SUB FOR 0408203) |
| 9 | 0354607 | BEARING | 4 | | |
| 10 | 0354608 | SEAL | 4 | | |
| 13 | ..... | PINION SHAFT | 1 | | |
| 14 | ..... | PINION SHAFT | 1 | | |
| 15 | ..... | GEAR | 1 | | |
| 25 | ..... | BUSHING | 1 | | |
| 26 | ..... | BUSHING | 1 | | |
| 27 | 0424902 | COUPLING | 1 | | |
| 28 | ..... | PIN | 6 | | |
| 29 | ..... | WASHER | 4 | | |
| 30 | 0415302 | BOLT | 4 | | |
| 31 | 0354613 | NUT | 4 | | |
| 34 | 0354614 | SHAFT KEY | 4 | | |
| 35 | 9218033 | PUMP | 4 | | (SUB FOR 4278696) |
| 40 | 9225505 | SEAL KIT | 1 | | (SUB FOR 0424903) |

**OIL COOLER AND CONTROL VALVE RETURN LINES TO OIL TANK**

T207116 -UN-31JAN05

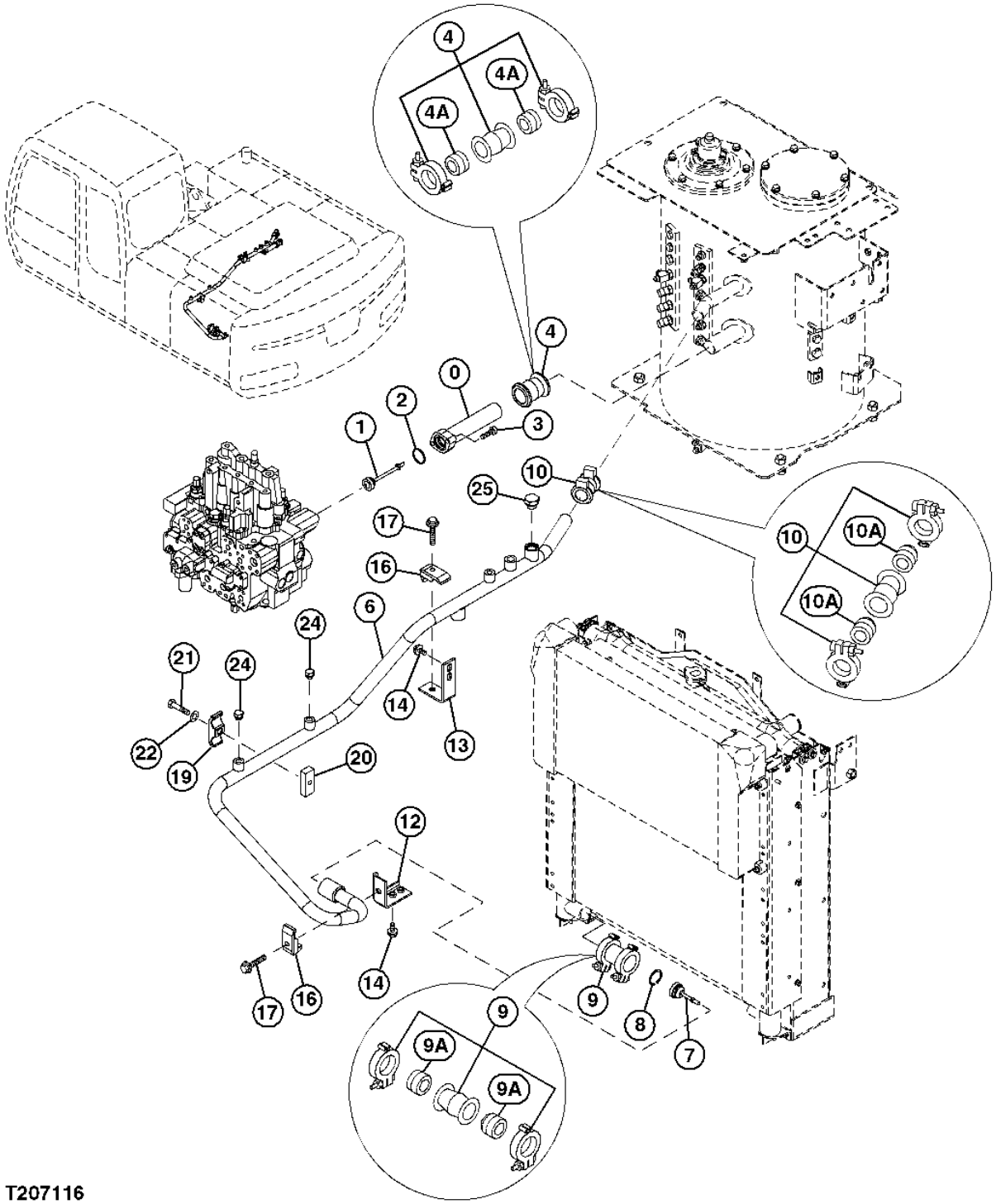

**OIL COOLER AND CONTROL VALVE RETURN LINES TO OIL TANK**

| KEY | PART NO. | PART NAME | QTY | SERIAL NO. | REMARKS |
|---|---|---|---|---|---|
| 0 | 8064356 | LINE | 1 | | |
| 1 | 4455119 | FLOW CONTROL HYD. VALVE | 1 | | |
| 2 | A811040 | O-RING | 1 | | |
| 3 | L159272 | SCREW | 2 | | (SUB FOR J781040) |
| 4 | 4069801 | COUPLING | 1 | | |
| | 4196259 | SEAL | 2 | | |
| 6 | 7043956 | LINE | 1 | | |
| 7 | 4483948 | VALVE | 1 | | |
| 8 | 40M7225 | SNAP RING | 1 | | (SUB FOR 991718) |
| 9 | 4067834 | COUPLING | 1 | | |
| 9A | 4196260 | SEAL | 2 | | |
| 10 | 4071213 | COUPLING | 1 | | |
| 10A | 4196258 | SEAL | 2 | | |
| 12 | 8087481 | BRACKET | 1 | | |
| 13 | 8077342 | BRACKET | 1 | | |
| 14 | ..... | CAP SCREW | 4 | | ( J271030 NOT AVAILABLE FOR SERVICE) |
| | 19M7662 | CAP SCREW | 1 | | M10 X 30, (SUB FOR J901030) |
| | 24M7346 | WASHER | 1 | | 11 X 20 X 2 MM, (SUB FOR J222010) |
| 16 | 4190127 | CLAMP | 2 | | (SUB FOR TH108302) |
| 17 | ..... | CAP SCREW | 2 | | ( J271270 NOT AVAILABLE FOR SERVICE) |
| | 19M7753 | CAP SCREW | 1 | | M12 X 70, (SUB FOR J901270) |
| | 24M7345 | WASHER | 1 | | 13.500 X 24 X 2.500 MM, (SUB FOR J222012) |
| 19 | 4189860 | CLAMP | 1 | | |
| 20 | 4369262 | MANIFOLD | 1 | | |
| 21 | 19M8348 | CAP SCREW | 1 | | M12 X 65, (SUB FOR J901265) |
| 22 | 12H301 | LOCK WASHER | 1 | | 12.700 MM, (SUB FOR A590912) |
| 24 | A885003 | PIPE PLUG | 2 | | |
| | 4509180 | O-RING | 2 | | |
| 25 | A885006 | PLUG | 1 | | |
| | 4506424 | O-RING | 1 | | |

**CONTROL VALVE RETURN LINE TO OIL COOLER**

T207117 -UN-31JAN05

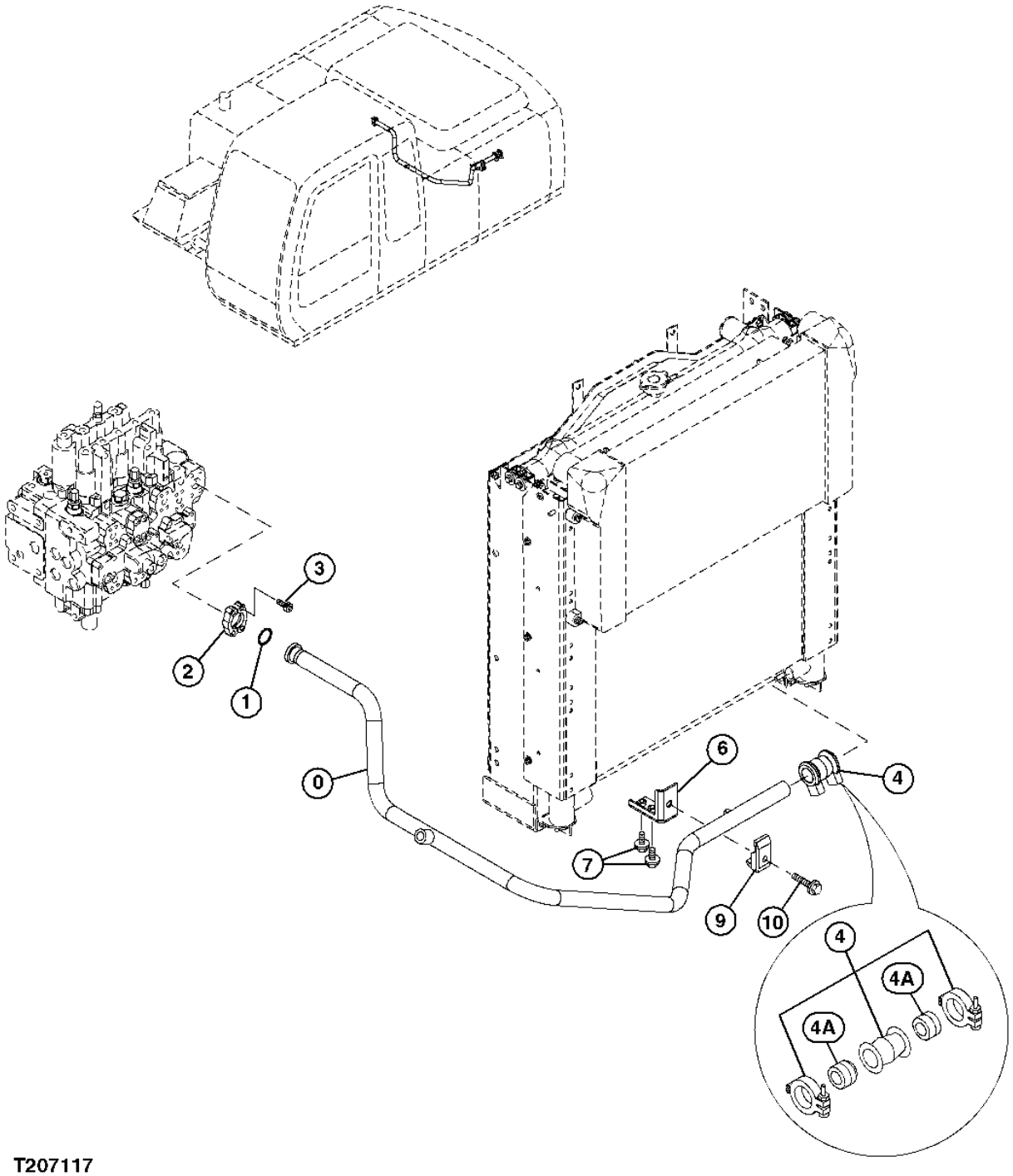


T207117

**CONTROL VALVE RETURN LINE TO OIL COOLER**

| KEY | PART NO. | PART NAME | QTY | SERIAL NO. | REMARKS |
|---|---|---|---|---|---|
| 0 | 7043957 | LINE | 1 | | |
| 1 | T78313 | O-RING | 1 | | (SUB FOR 966993) |
| 2 | H61354 | FLANGE FITTING | 2 | | (SUB FOR 962453) |
| 3 | J781030 | SCREW | 4 | | |
| 4 | 4071213 | COUPLING | 1 | | |
| 4A | 4196258 | SEAL | 1 | | |
| 6 | 8087481 | BRACKET | 1 | | |
| 7 | ..... | CAP SCREW | 1 | | ( J271030 IS NOT AVAILABLE FOR SERVICE) |
| | 19M7662 | CAP SCREW | 1 | | M10 X 30, (SUB FOR J901030) |
| | 24M7346 | WASHER | 1 | | 11 X 20 X 2 MM, (SUB FOR J222010) |
| 9 | 4190127 | CLAMP | 1 | | |
| 10 | ..... | CAP SCREW | 1 | | ( J271270 IS NOT AVAILABLE FOR SERVICE) |
| | 19M7753 | CAP SCREW | 1 | | M12 X 70, (SUB FOR J901030) |
| | 24M7345 | WASHER | 1 | | 13.500 X 24 X 2.500 MM, (SUB FOR J222010) |

**MONO BOOM DRAIN LINES**

T207118 -UN-31JAN05

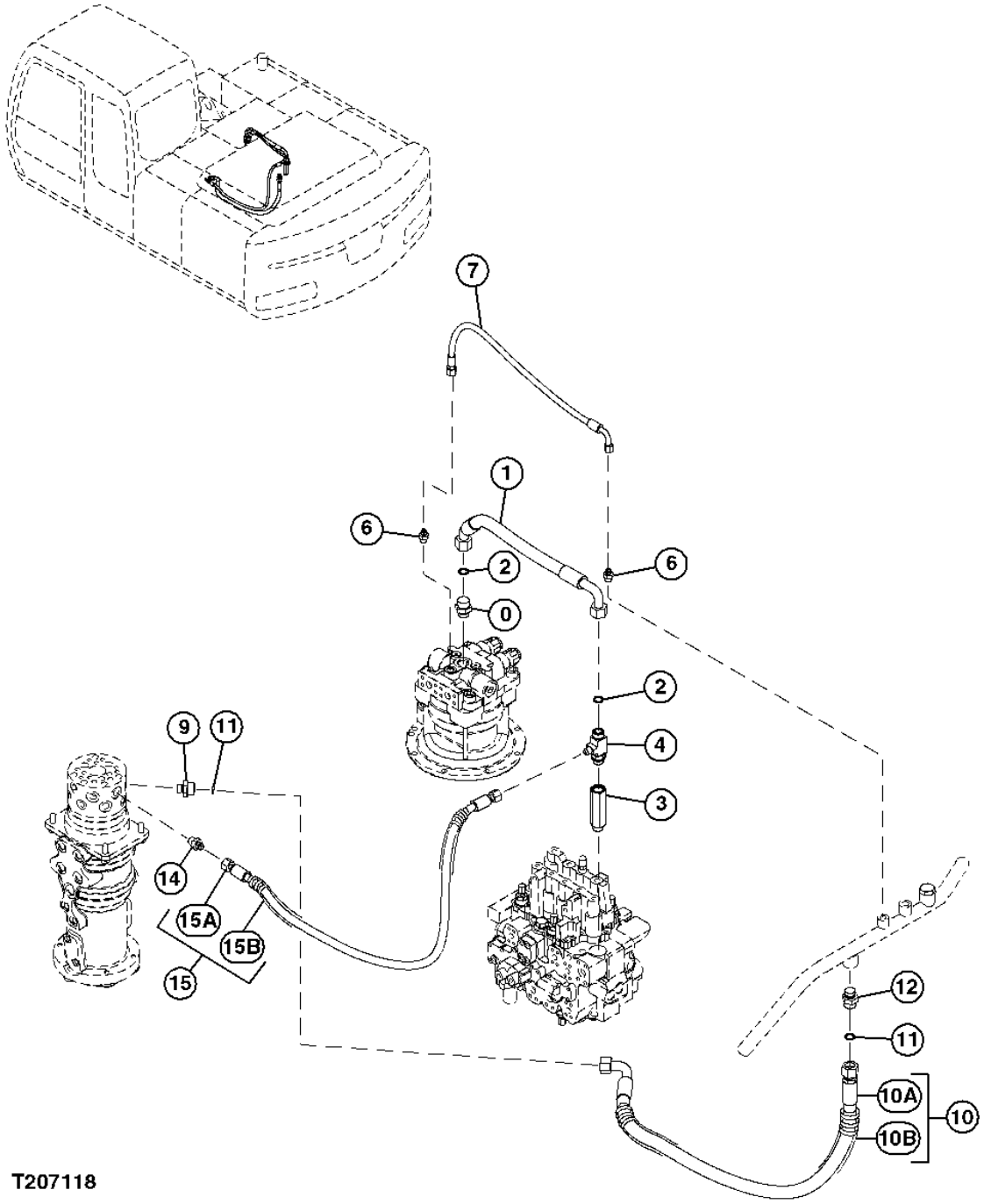

**MONO BOOM DRAIN LINES**

| KEY | PART NO. | PART NAME | QTY | SERIAL NO. | REMARKS |
|---|---|---|---|---|---|
| 0 | A853166 | ADAPTER | 1 | | (ONE POSITION BOOM) |
| | 4506424 | O-RING | 1 | | (DUAL BOOM) |
| 1 | ..... | HYDRAULIC HOSE | 1 | | |
| 2 | T77858 | O-RING | 1 | | (SUB FOR 4187307) |
| 3 | 4478931 | SOCKET | 1 | | |
| 4 | 4266328 | TEE FITTING | 1 | | |
| | 4506424 | O-RING | 1 | | |
| 6 | A852133 | ADAPTER | 2 | | |
| | CH11570 | O-RING | 1 | | (SUB FOR 4509180) |
| 7 | 4452737 | HYDRAULIC HOSE - FABRICATE | 1 | | |
| 9 | A853146 | ADAPTER | 1 | | |
| | 4506415 | O-RING | 1 | | |
| 10 | ..... | HOSE | 1 | | ( 9216111 NOT AVAILABLE FOR SERVICE) |
| 10A | 4479998 | HOSE | 1 | | |
| 10B | 4327294 | HOSE GUARD | 3 | | |
| 11 | T77858 | O-RING | 2 | | (SUB FOR 4187308) |
| 12 | A853166 | ADAPTER | 1 | | |
| | 4506424 | O-RING | 1 | | |
| 14 | A852144 | ADAPTER | 1 | | |
| | 4506418 | O-RING | 1 | | |
| 15 | 9221928 | HOSE | 1 | | |
| 15A | 4484602 | HOSE | 1 | | |
| 15B | 4327294 | HOSE GUARD | 1 | | |

**2 PIECE BOOM DRAIN LINES**

T207623 -UN-09FEB05

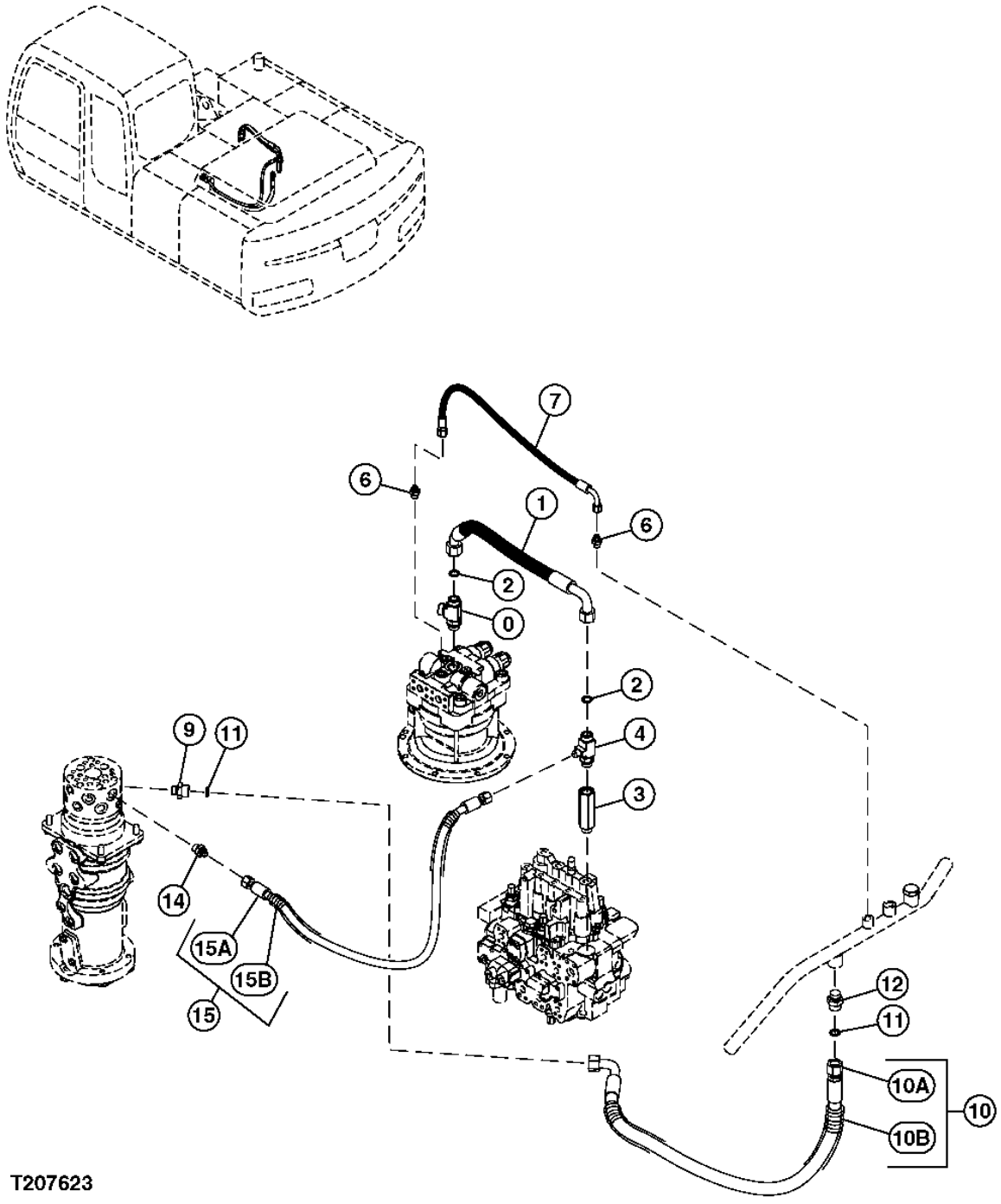

**2 PIECE BOOM DRAIN LINES**

| KEY | PART NO. | PART NAME | QTY | SERIAL NO. | REMARKS |
|---|---|---|---|---|---|
| 0 | A853466 | TEE FITTING | 1 | | |
| | 4506424 | O-RING | 1 | | |
| 1 | ..... | HYDRAULIC HOSE | 1 | | |
| 2 | T77858 | O-RING | 1 | | (SUB FOR 4187307) |
| 3 | 4478931 | SOCKET | 1 | | |
| 4 | 4266328 | TEE FITTING | 1 | | |
| | 4506424 | O-RING | 1 | | |
| 6 | A852133 | ADAPTER | 2 | | |
| | CH11570 | O-RING | 1 | | (SUB FOR 4509180) |
| 7 | 4452737 | HYDRAULIC HOSE - FABRICATE | 1 | | |
| 9 | A853146 | ADAPTER | 1 | | |
| | 4506415 | O-RING | 1 | | |
| 10 | ..... | HOSE | 1 | | ( 9216111 NOT AVAILABLE FOR SERVICE) |
| 10A | 4479998 | HOSE | 1 | | |
| 10B | 4327294 | HOSE GUARD | 3 | | |
| 11 | T77858 | O-RING | 2 | | (SUB FOR 4187308) |
| 12 | A853166 | ADAPTER | 1 | | |
| | 4506424 | O-RING | 1 | | |
| 14 | A852144 | ADAPTER | 1 | | |
| | 4506418 | O-RING | 1 | | |
| 15 | 9221928 | HOSE | 1 | | |
| 15A | 4484602 | HOSE | 1 | | |
| 15B | 4327294 | HOSE GUARD | 1 | | |

**CONTROL VALVE MAIN HYDRAULIC LINES (MONO BOOM)**

T207119 -UN-31JAN05

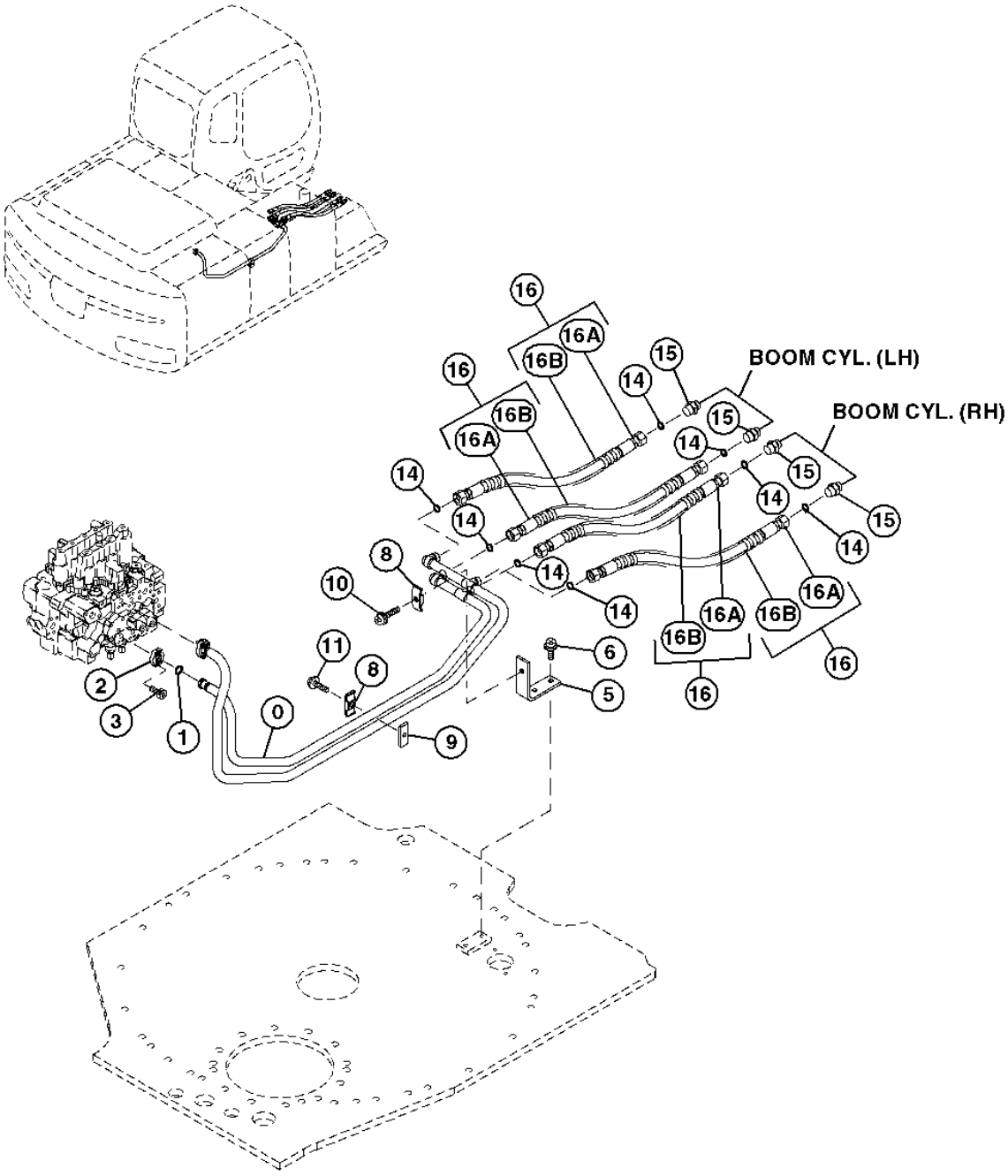


T207119

**CONTROL VALVE MAIN HYDRAULIC LINES (MONO BOOM)**

| KEY | PART NO. | PART NAME | QTY | SERIAL NO. | REMARKS |
|---|---|---|---|---|---|
| 0 | 8086601 | PIPE | 1 | | |
| 1 | 4510167 | O-RING | 1 | | |
| 2 | 4510173 | FLANGE FITTING | 1 | | |
| 3 | J780825 | SCREW | 1 | | |
| 5 | 8082661 | SUPPORT | 1 | | |
| 6 | ..... | BOLT | 2 | | ( J271225 NOT AVAILABLE FOR SERVICE) |
| | J901225 | CAP SCREW | 1 | | |
| | J222012 | WASHER | 1 | | |
| 8 | 4189859 | CLAMP | 1 | | |
| 9 | 4474780 | WELD NUT | 1 | | |
| 10 | ..... | BOLT | 1 | | ( J271260 NOT AVAILABLE FOR SERVICE) |
| | J901260 | CAP SCREW | 1 | | |
| | J222012 | WASHER | 1 | | |
| 11 | ..... | BOLT | 1 | | ( J271250 NOT AVAILABLE FOR SERVICE) |
| | J901250 | CAP SCREW | 1 | | |
| | J222010 | WASHER | 1 | | |
| 14 | 4187308 | O-RING | 8 | | |
| 15 | A853166 | ADAPTER | 1 | | |
| | 4506424 | O-RING | 4 | | |
| 16 | ..... | HOSE | 4 | | ( 9233820 NOT AVAILABLE FOR SERVICE) |
| 16A | 4612973 | HOSE | 1 | | |
| 16B | 4327294 | HOSE GUARD | 2 | | |

**CONTROL VALVE MAIN HYDRAULIC LINES (2 PIECE BOOM)**

T207124 -UN-31JAN05

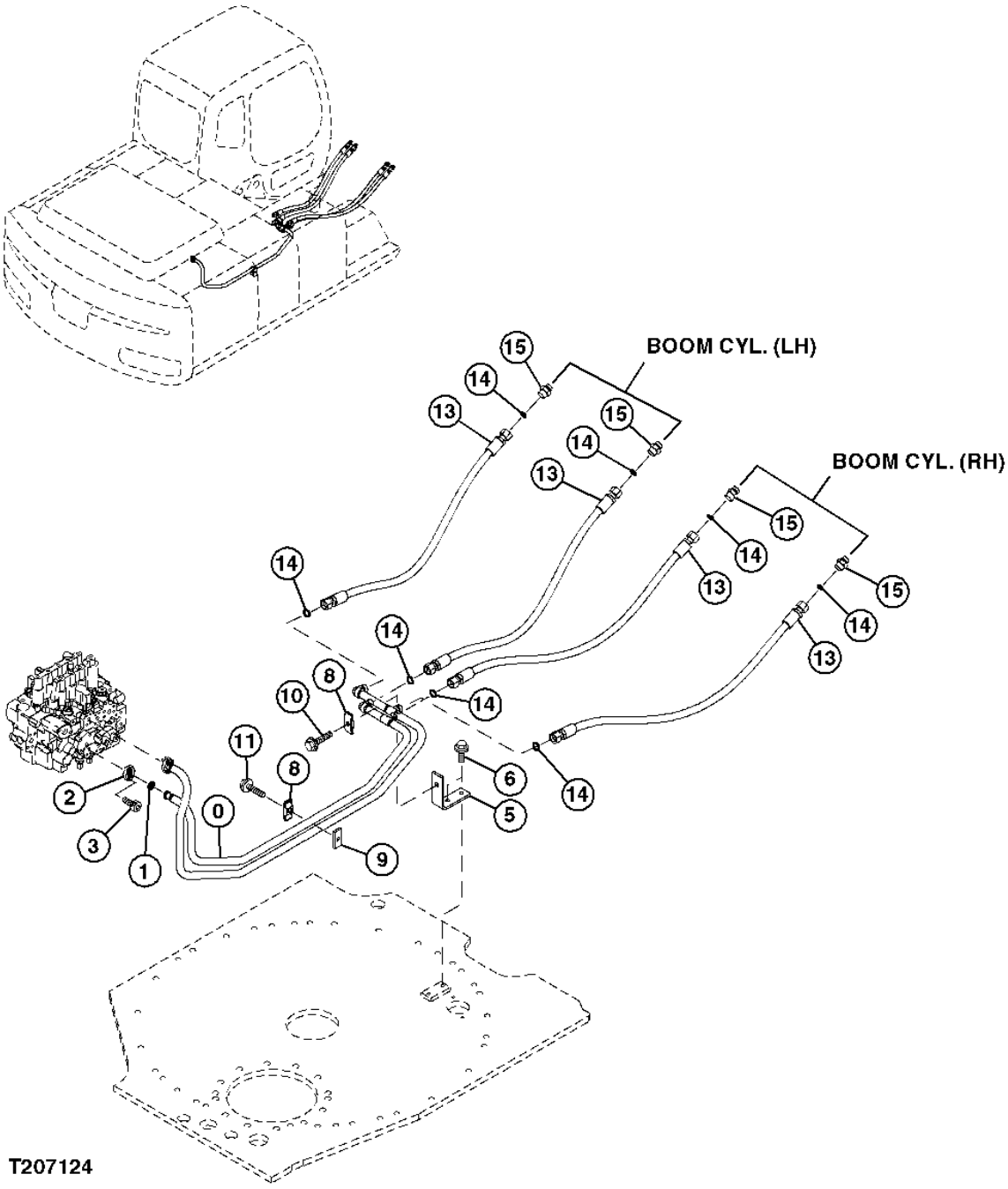

**CONTROL VALVE MAIN HYDRAULIC LINES (2 PIECE BOOM)**

| KEY | PART NO. | PART NAME | QTY | SERIAL NO. | REMARKS |
|---|---|---|---|---|---|
| 0 | 8086601 | PIPE | 1 | | |
| 1 | 4510167 | O-RING | 1 | | |
| 2 | 4510173 | FLANGE FITTING | 1 | | |
| 3 | J780825 | SCREW | 1 | | |
| 5 | 8082661 | SUPPORT | 1 | | |
| 6 | ..... | BOLT | 2 | | ( J271225 NOT AVAILABLE FOR SERVICE) |
| | J901225 | CAP SCREW | 1 | | |
| | J222012 | WASHER | 1 | | |
| 8 | 4189859 | CLAMP | 1 | | |
| 9 | 4474780 | WELD NUT | 1 | | |
| 10 | ..... | BOLT | 1 | | ( J271260 NOT AVAILABLE FOR SERVICE) |
| | J901260 | CAP SCREW | 1 | | |
| | J222012 | WASHER | 1 | | |
| 11 | ..... | BOLT | 1 | | ( J271250 NOT AVAILABLE FOR SERVICE) |
| | J901250 | CAP SCREW | 1 | | |
| | J222012 | WASHER | 1 | | |
| 13 | 4611516 | HOSE | 4 | | |
| 14 | 4187308 | O-RING | 8 | | |
| 15 | A853166 | ADAPTER | 1 | | |
| | 4506424 | O-RING | 4 | | |

**CONTROL VALVE HYDRAULIC LINES (MONO BOOM)**

T207120 -UN-31JAN05

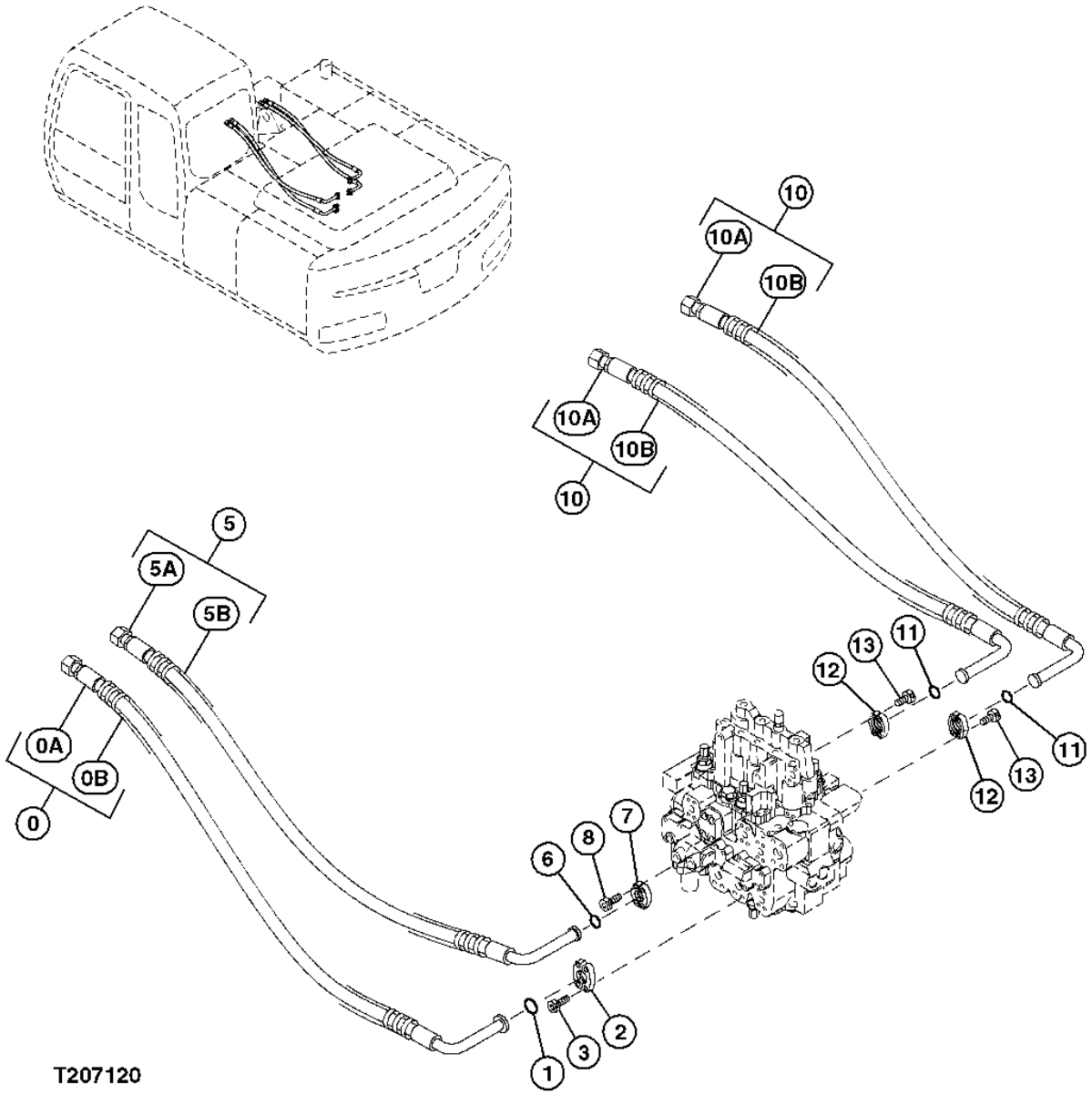

**CONTROL VALVE HYDRAULIC LINES (MONO BOOM)**

| KEY | PART NO. | PART NAME | QTY | SERIAL NO. | REMARKS |
|---|---|---|---|---|---|
| 0 | ..... | HOSE | 1 | | ( 9222054 NOT AVAILABLE FOR SERVICE) |
| 0A | 4487100 | HOSE | 1 | | |
| 0B | 4327294 | HOSE GUARD | 2 | | |
| 1 | 971489 | O-RING | 1 | | |
| 2 | 986910 | FLANGE FITTING | 2 | | |
| 3 | J781030 | SCREW | 4 | | |
| 5 | ..... | HOSE | 1 | | ( 9160517 NOT AVAILABLE FOR SERVICE) |
| 5A | 4385202 | HOSE | 1 | | |
| 5B | 4327294 | HOSE GUARD | 2 | | |
| 6 | 4510167 | O-RING | 1 | | |
| 7 | 4510173 | FLANGE FITTING | 2 | | |
| 8 | J780825 | SCREW | 4 | | |
| 10 | ..... | HOSE | 8 | | ( 9232931 NOT AVAILABLE FOR SERVICE) |
| 10A | 4611873 | HOSE | 1 | | |
| 10B | 4327294 | HOSE GUARD | 3 | | |
| 11 | 4510167 | O-RING | 2 | | |
| 12 | 4510173 | FLANGE FITTING | 4 | | |
| 13 | J780825 | SCREW | 8 | | |

**CONTROL VALVE HYDRAULIC LINES (2 PIECE BOOM)**

T207120 -UN-31JAN05

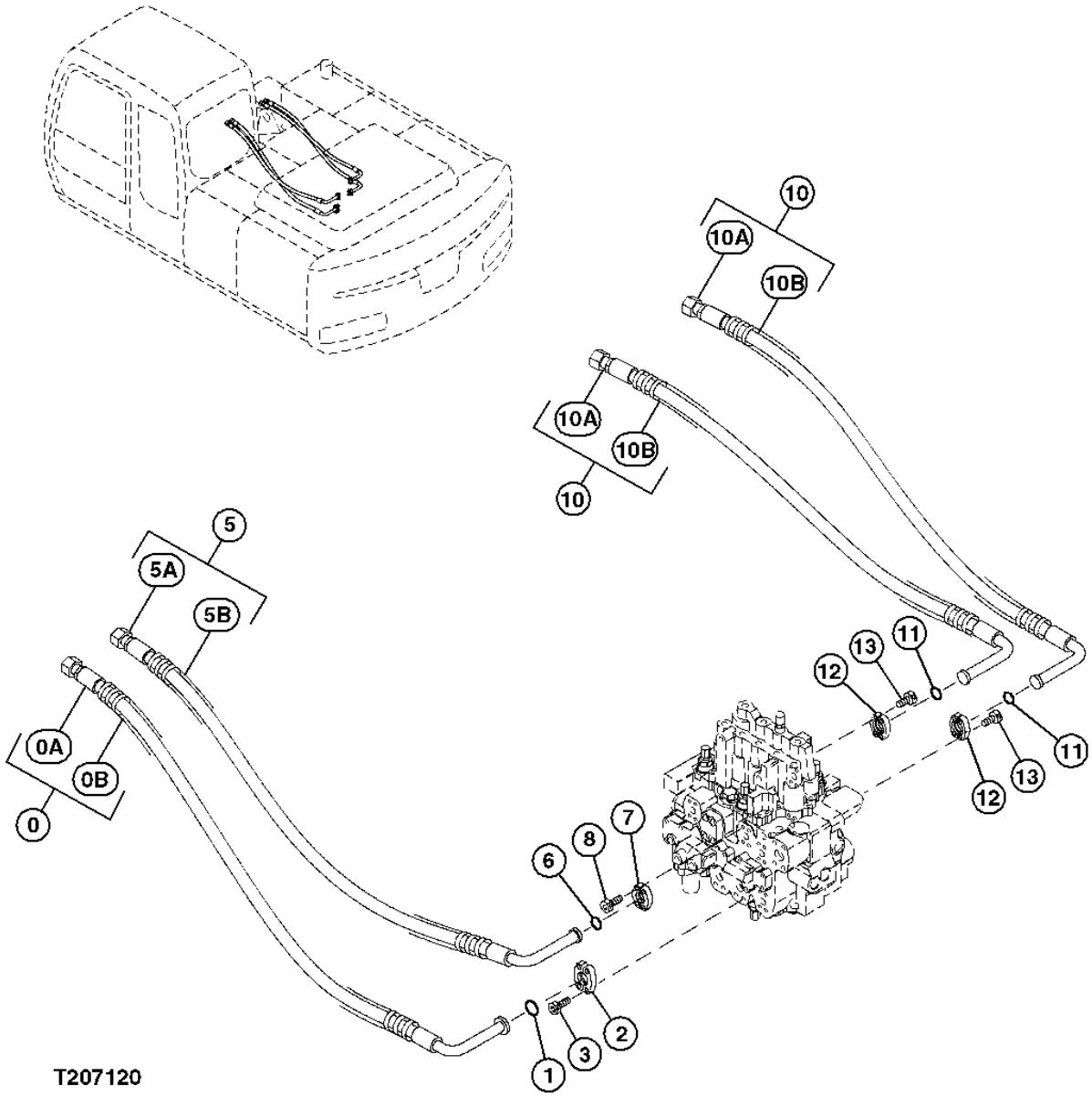

**CONTROL VALVE HYDRAULIC LINES (2 PIECE BOOM)**

| KEY | PART NO. | PART NAME | QTY | SERIAL NO. | REMARKS |
|---|---|---|---|---|---|
| 0 | ..... | HOSE | 1 | | ( 9222054 NOT AVAILABLE FOR SERVICE) |
| 0A | 4488365 | HOSE | 1 | | |
| 0B | 4327294 | HOSE GUARD | 4 | | |
| 1 | 971489 | O-RING | 1 | | |
| 2 | 986910 | FLANGE FITTING | 2 | | |
| 3 | J781030 | SCREW | 4 | | |
| 5 | ..... | HOSE | 1 | | ( 9160517 NOT AVAILABLE FOR SERVICE) |
| 5A | 4488366 | HOSE | 1 | | |
| 5B | 4327294 | HOSE GUARD | 4 | | |
| 6 | 4510167 | O-RING | 1 | | |
| 7 | 4510173 | FLANGE FITTING | 2 | | |
| 8 | J780825 | SCREW | 4 | | |
| 10 | ..... | HOSE | 2 | | ( 9232931 NOT AVAILABLE FOR SERVICE) |
| 10A | 4474042 | HOSE | 1 | | |
| 10B | 4327294 | HOSE GUARD | 4 | | |
| 11 | 4510167 | O-RING | 2 | | |
| 12 | 4510173 | FLANGE FITTING | 4 | | |
| 13 | J780825 | SCREW | 8 | | |

**CONTROL VALVE HYDRAULIC LINES (CONTROL VALVE TO SWING MOTOR)**

T207323 -UN-31JAN05

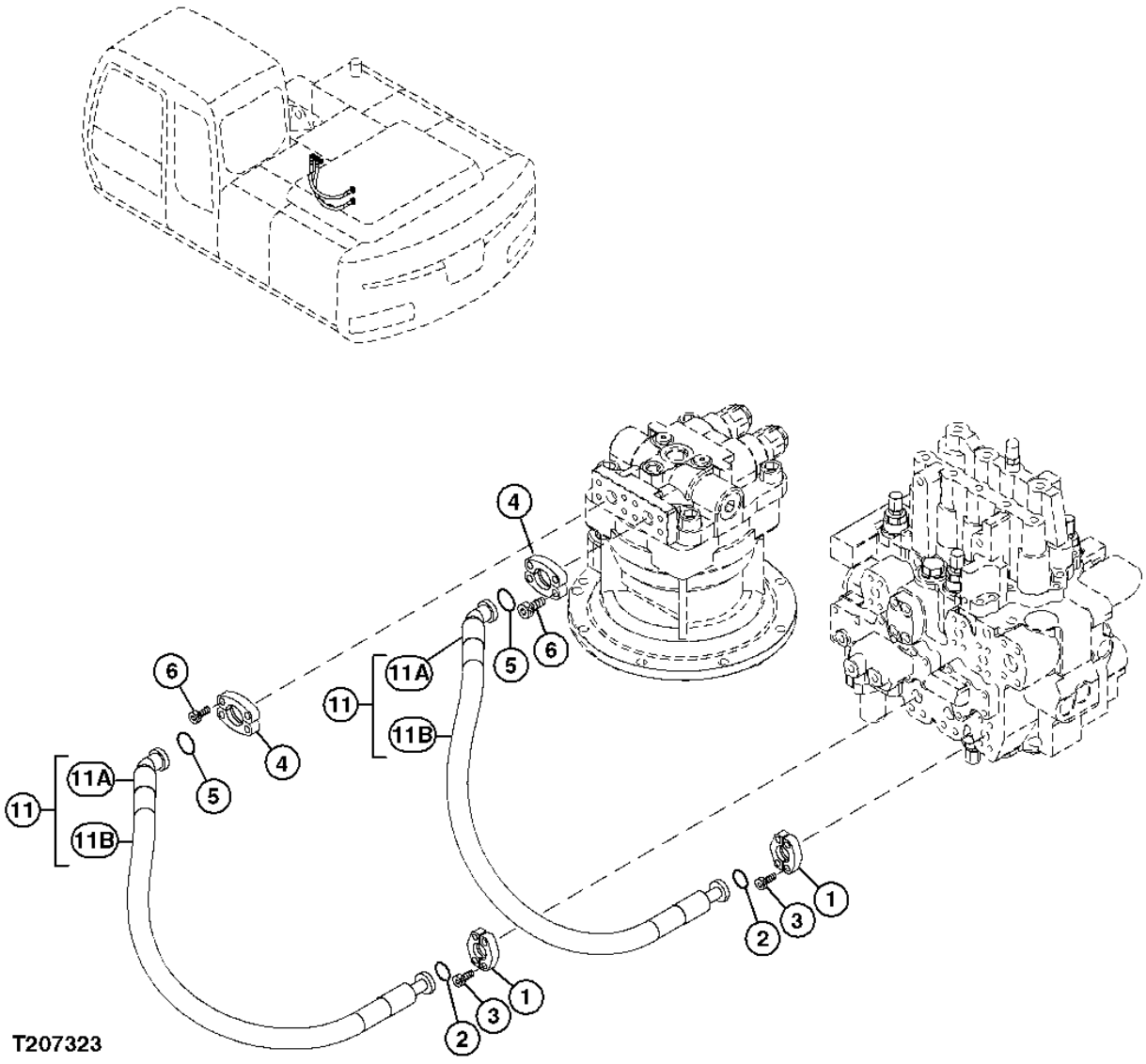

**CONTROL VALVE HYDRAULIC LINES (CONTROL VALVE TO SWING MOTOR)**

| KEY | PART NO. | PART NAME | QTY | SERIAL NO. | REMARKS |
|---|---|---|---|---|---|
| 1 | 4510173 | FLANGE FITTING | 4 | | |
| 2 | 4510167 | O-RING | 2 | | |
| 3 | J780825 | SCREW | 8 | | |
| 4 | 986910 | FLANGE FITTING | 4 | | |
| 5 | 971489 | O-RING | 2 | | |
| 6 | J781030 | SCREW | 1 | | |
| 11 | ..... | HOSE | 2 | | |
| 11A | 4467629 | HOSE | 1 | | |
| 11B | 4327294 | HOSE GUARD | 1 | | |

**MAIN CONTROL VALVE**

T207601 -UN-03FEB05

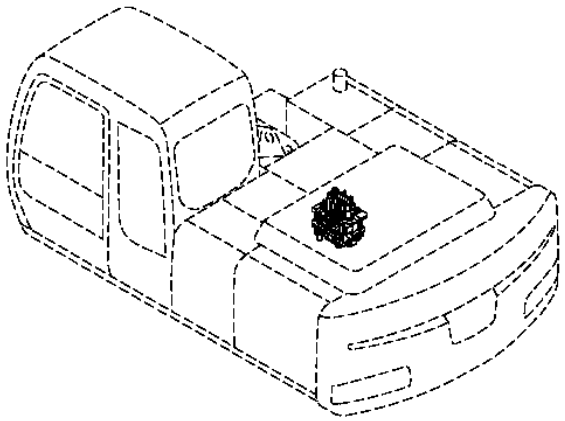

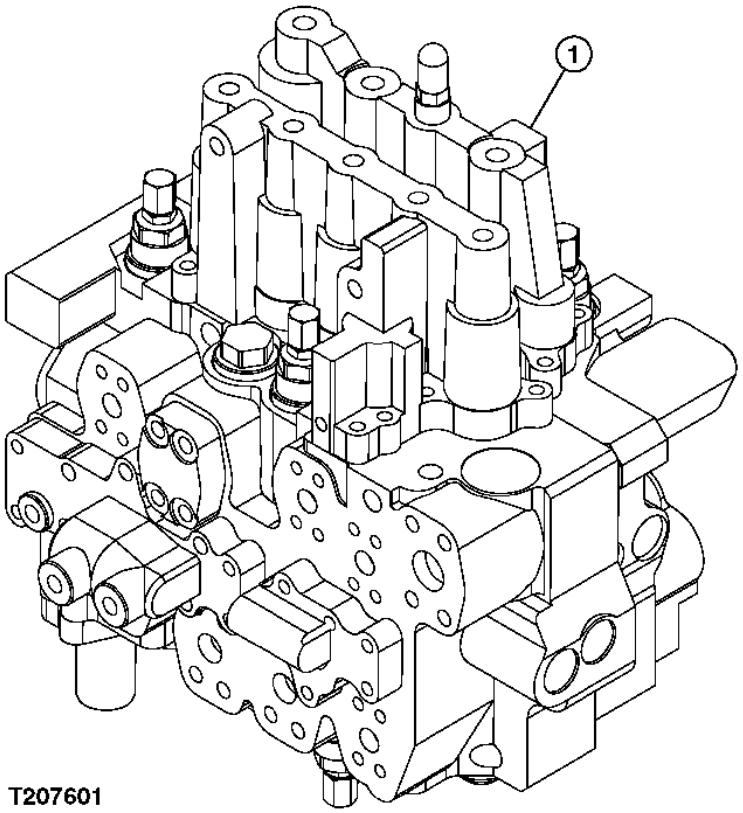

**MAIN CONTROL VALVE**

| KEY | PART NO. | PART NAME | QTY | SERIAL NO. | REMARKS |
|---|---|---|---|---|---|
| 1 | ..... | CONTROL VALVE | 1 | | |

**BOOM BOTTOM HYDRAULIC LINE**

T207328 -UN-31JAN05

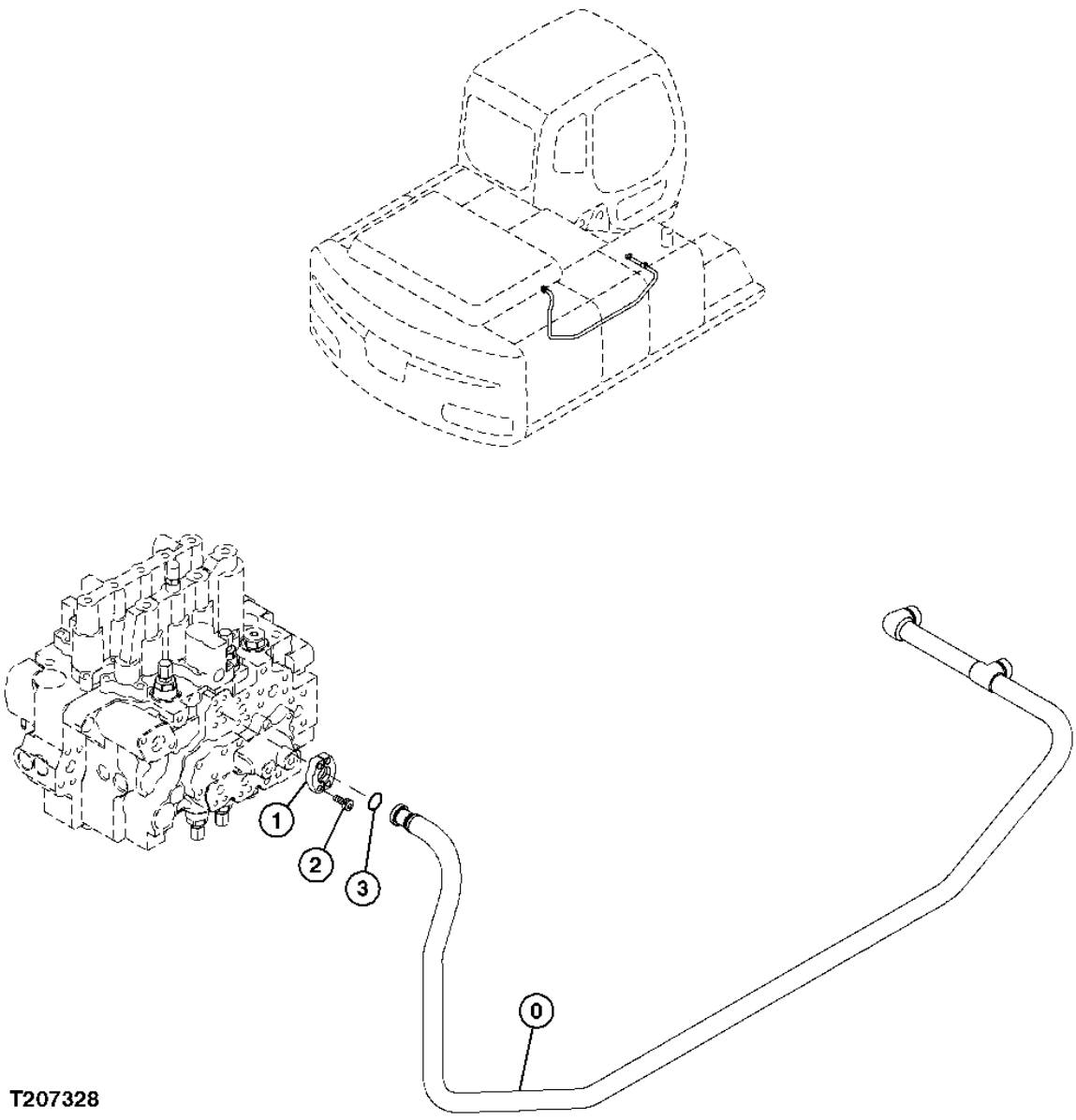

**BOOM BOTTOM HYDRAULIC LINE**

| KEY | PART NO. | PART NAME | QTY | SERIAL NO. | REMARKS |
|---|---|---|---|---|---|
| 0 | 8086600 | PIPE | 1 | | |
| 1 | 4510173 | FLANGE FITTING | 2 | | |
| 2 | J780825 | SCREW | 4 | | |
| 3 | 4510167 | O-RING | 1 | | |

**PILOT LINES**

T207836 -UN-17FEB05

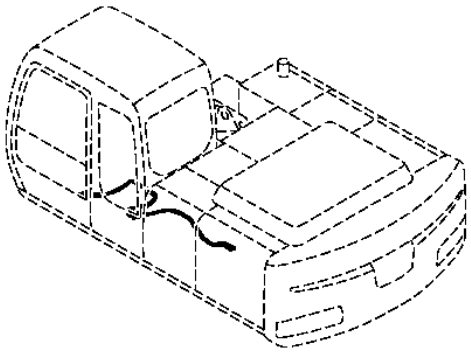

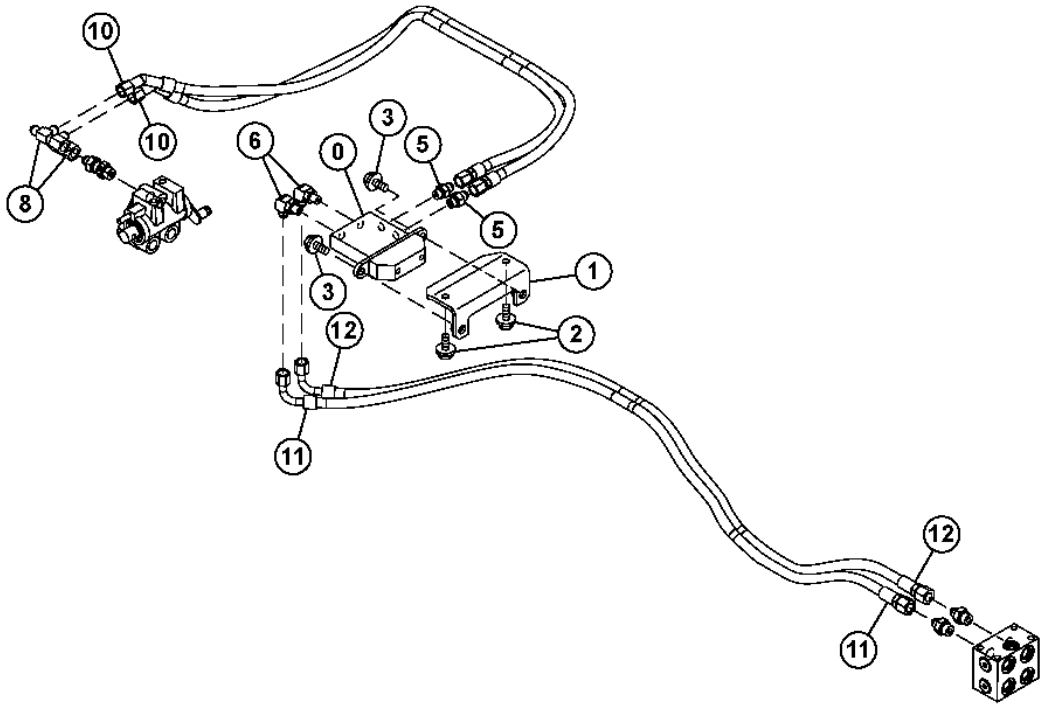


T207836

**PILOT LINES**

| KEY | PART NO. | PART NAME | QTY | SERIAL NO. | REMARKS |
|---|---|---|---|---|---|
| 0 | 4465183 | HYDR./PILOT CONTROL VALVE | 1 | | |
| 1 | 8086254 | BRACKET | 1 | | |
| 2 | ..... | SCREW | 2 | | ( J271030 NOT AVAILABLE FOR SERVICE) |
| | 19M7662 | CAP SCREW | 1 | | (SUB FOR J901030) |
| | 24M7346 | WASHER | 1 | | (SUB FOR J222010) |
| 3 | ..... | SCREW | 2 | | ( J271025 NOT AVAILABLE FOR SERVICE) |
| | 19M7402 | CAP SCREW | 1 | | (SUB FOR J901025) |
| | 24M7346 | WASHER | 1 | | (SUB FOR J222010) |
| 5 | A852123 | ADAPTER | 2 | | |
| | M800650 | PACKING | 1 | | (SUB FOR 957366) |
| 6 | A852323 | ELBOW FITTING | 2 | | |
| | M800650 | PACKING | 1 | | (SUB FOR 957366) |
| 8 | 4246672 | TEE FITTING | 2 | | |
| 10 | 4466511 | HOSE | 2 | | |
| 11 | 4484606 | HOSE | 1 | | |
| 12 | 4484607 | HOSE | 1 | | |

**CONTROL VALVE (1/8)**

T207043 -UN-01FEB05

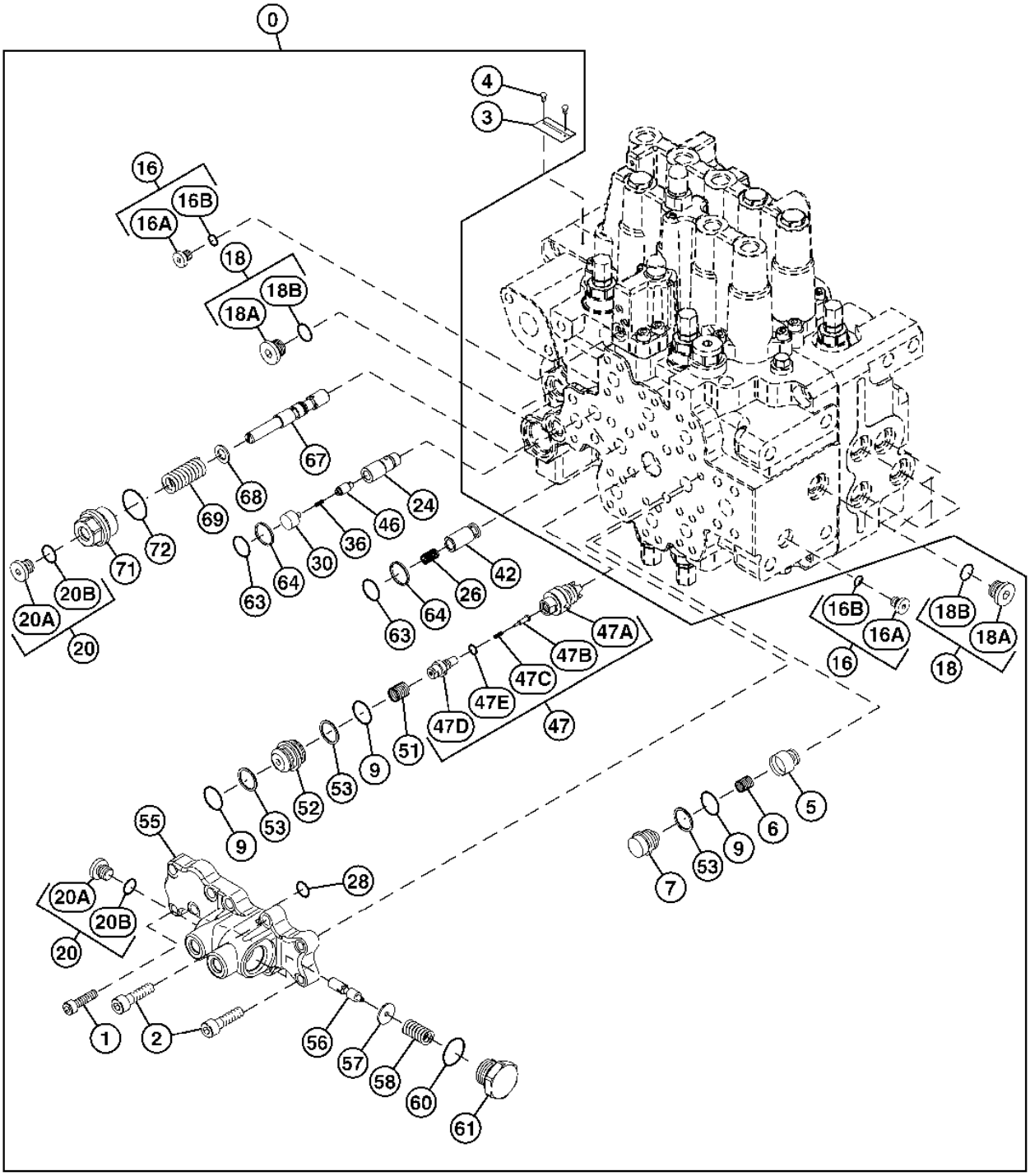


T207043

**CONTROL VALVE (1/8)**

| KEY | PART NO. | PART NAME | QTY | SERIAL NO. | REMARKS |
|---|---|---|---|---|---|
| 0 | 9235988 | CONTROL VALVE | 1 | | (ADDITIONAL COMPONENTS LISTED ON FOLLOWING PAGES) (SUB FOR 9230193) |
| 1 | 19M8735 | SCREW | 1 | | (SUB FOR M340830) |
| 2 | 19M8447 | SCREW | 9 | | (SUB FOR M341036) |
| 3 | ..... | PLATE | 1 | | |
| 4 | ..... | SCREW | 2 | | |
| 5 | 2046396 | CHECK VALVE | 1 | | |
| 6 | 2046423 | SPRING | 1 | | |
| 7 | 4477415 | PLUG | 1 | | |
| 9 | 985099 | O-RING | 3 | | |
| 16 | 9134109 | DRAIN PLUG | 2 | | |
| 16A | 9134109 | DRAIN PLUG | 1 | | (SUB FOR 4336165) |
| 16B | 4506408 | O-RING | 1 | | |
| 18 | 9134111 | PIPE PLUG | 7 | | |
| 18A | 4336167 | FITTING PLUG | 1 | | |
| 18B | CH11570 | O-RING | 1 | | (SUB FOR 4509180) |
| 20 | 9134110 | PIPE PLUG | 2 | | |
| 20A | 4336166 | PIPE PLUG | 1 | | |
| 20B | M800650 | PACKING | 1 | | (SUB FOR 957366) |
| 24 | 2046614 | BUSHING | 1 | | |
| 26 | 2046415 | SPRING | 2 | | |
| 28 | 4506412 | PACKING | 1 | | |
| 30 | 2046621 | PIPE PLUG | 1 | | |
| 36 | 2046607 | SPRING | 1 | | |
| 42 | 2046395 | CHECK VALVE | 2 | | |
| 46 | 2046602 | CHECK VALVE | 1 | | |
| 47 | 9200478 | VALVE SEAT | 1 | | |
| 47A | ..... | VALVE SEAT | 1 | | |
| 47B | 2046394 | FLOW CONTROL HYD. VALVE | 1 | | |
| 47C | 2046420 | SPRING | 1 | | |
| 47D | 2046453 | PIPE PLUG | 1 | | |
| 47E | 4506408 | O-RING | 1 | | |
| 51 | 2046423 | SPRING | 1 | | |
| 52 | 2046405 | BUSHING | 1 | | |
| 53 | 2046501 | RING | 3 | | |
| 55 | ..... | PLATE | 1 | | |
| 56 | 2046381 | SPOOL | 1 | | |
| 57 | 2046482 | WASHER | 1 | | |
| 58 | 2046425 | SPRING | 1 | | |
| 60 | AT318035 | O-RING | 1 | | (SUB FOR 4506424) |
| 61 | 2046620 | PIPE PLUG | 1 | | |
| 63 | 0669624 | O-RING | 3 | | (SUB FOR 2046490) |
| 64 | 2046502 | RING | 3 | | |
| 67 | 3095721 | SPOOL | 1 | | |
| 68 | 2046481 | WASHER | 1 | | |
| 69 | 2046612 | SPRING | 1 | | |
| 71 | 2046625 | PIPE PLUG | 1 | | |
| 72 | AT264347 | O-RING | 1 | | (SUB FOR 4506428) |

**CONTROL VALVE (2/8)**

T207044 -UN-01FEB05

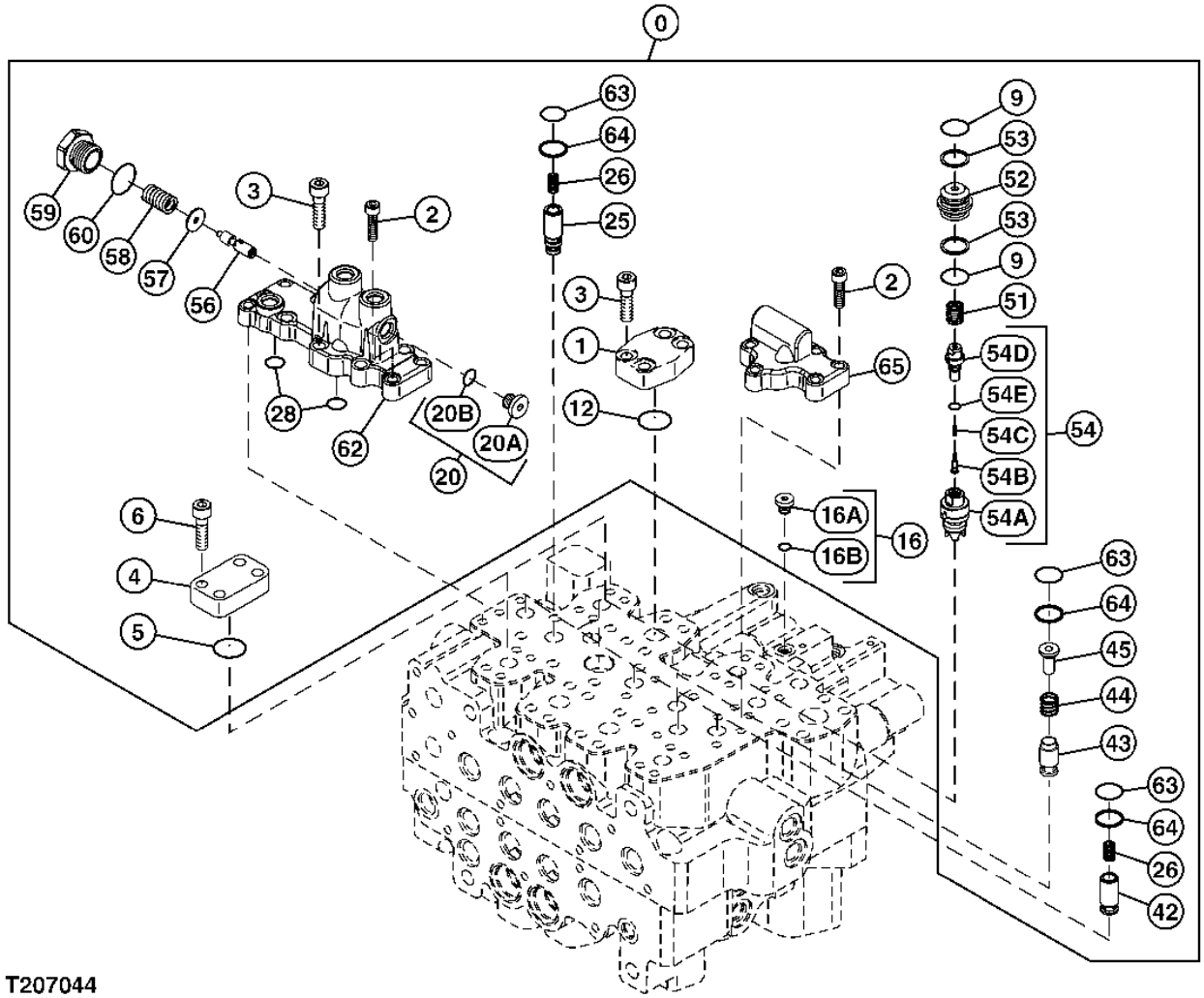


T207044

**CONTROL VALVE (2/8)**

| KEY | PART NO. | PART NAME | QTY | SERIAL NO. | REMARKS |
|---|---|---|---|---|---|
| 0 | 9235988 | CONTROL VALVE | 1 | | (ADDITIONAL COMPONENTS LISTED ON PREVIOUS AND FOLLOWING PAGES) (SUB FOR 9230193) |
| 1 | 2046512 | PLATE | 1 | | |
| 2 | 19M8735 | SCREW | 11 | | (SUB FOR M340830) |
| 3 | 19M8447 | SCREW | 10 | | (SUB FOR M341036) |
| 4 | 2046510 | PLATE | 2 | | |
| 5 | CH12329 | PACKING | 2 | | (SUB FOR 4506420) |
| 6 | 4614698 | BOLT | 8 | | |
| 9 | 985099 | O-RING | 2 | | |
| 12 | 0411901 | O-RING | 1 | | (SUB FOR 4314064) |
| 16 | 9134109 | DRAIN PLUG | 1 | | |
| 16A | 9134109 | DRAIN PLUG | 1 | | (SUB FOR 4336165) |
| 16B | 4506408 | O-RING | 1 | | |
| 20 | 9134110 | PIPE PLUG | 1 | | |
| 20A | 4336166 | PIPE PLUG | 1 | | |
| 20B | M800650 | PACKING | 1 | | (SUB FOR 957366) |
| 25 | 2046605 | FLOW CONTROL HYD. VALVE | 1 | | |
| 26 | 2046415 | SPRING | 5 | | |
| 28 | 4506412 | PACKING | 2 | | |
| 42 | 2046395 | CHECK VALVE | 4 | | |
| 43 | 2046398 | CHECK VALVE | 2 | | |
| 44 | 2046424 | SPRING | 2 | | |
| 45 | 2046412 | VALVE SEAT | 2 | | |
| 51 | 2046423 | SPRING | 1 | | |
| 52 | 2046405 | BUSHING | 1 | | |
| 53 | 2046501 | RING | 2 | | |
| 54 | 9200481 | VALVE SEAT | 1 | | |
| 54A | ..... | VALVE SEAT | 1 | | ( 1029246 NOT AVAILABLE FOR SERVICE) |
| 54B | ..... | CHECK VALVE | 1 | | ( 2046394 NOT AVAILABLE FOR SERVICE) |
| 54C | ..... | SPRING | 1 | | ( 2046420 NOT AVAILABLE FOR SERVICE) |
| 54D | ..... | PLUG | 1 | | ( 2046453 NOT AVAILABLE FOR SERVICE) |
| 54E | 4506408 | O-RING | 1 | | |
| 56 | 2046381 | SPOOL | 1 | | |
| 57 | 2046482 | WASHER | 1 | | |
| 58 | 2046425 | SPRING | 1 | | |
| 59 | 2046447 | PIPE PLUG | 1 | | |
| 60 | AT318035 | O-RING | 1 | | (SUB FOR 4506424) |
| 62 | 0004163 | PLATE | 1 | | |
| 63 | 0669624 | O-RING | 7 | | (SUB FOR 2046490) |
| 64 | 2046502 | RING | 7 | | |
| 65 | 2048807 | PLATE | 1 | | |

**CONTROL VALVE (3/8)**

T207045 -UN-01FEB05

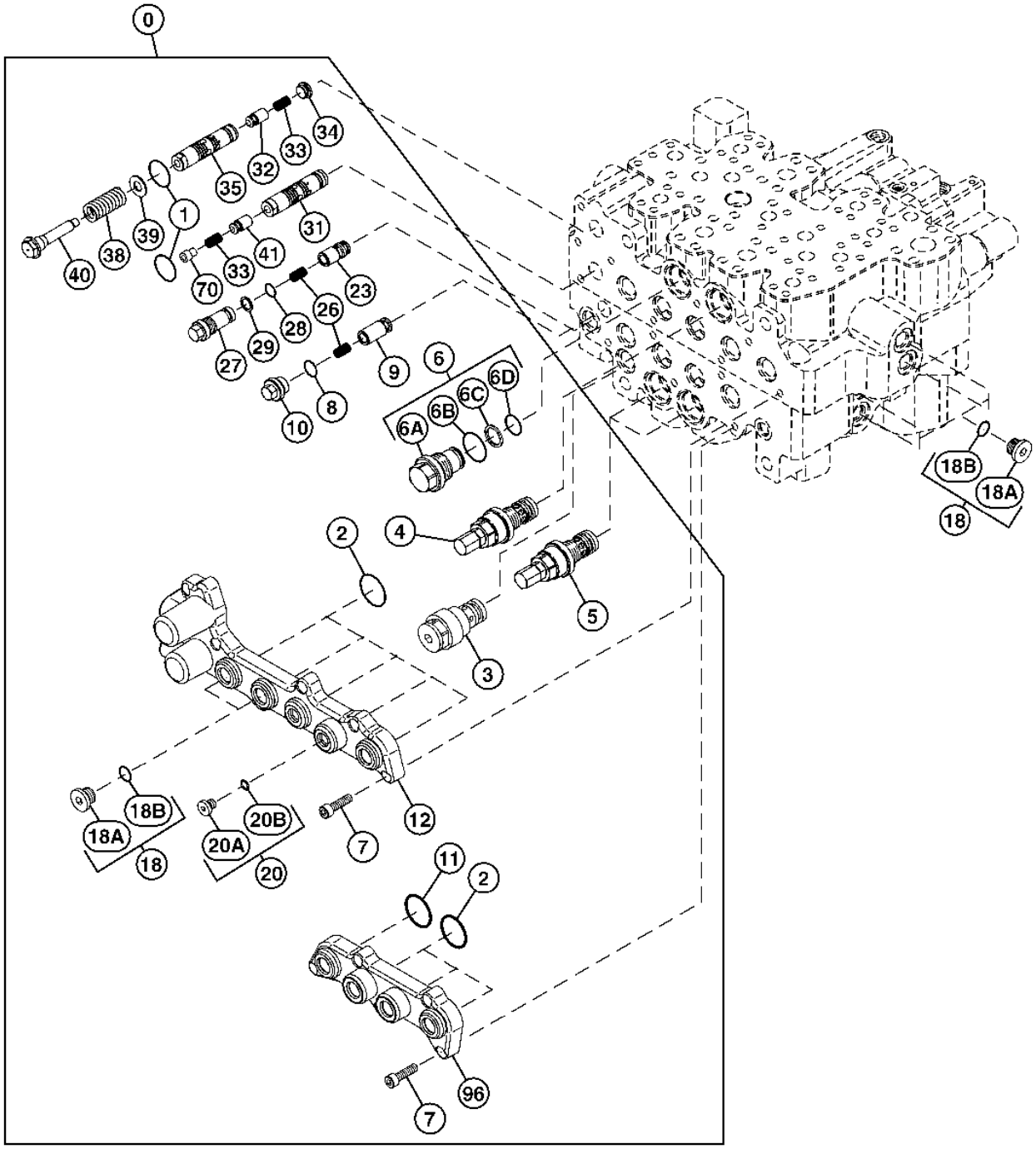


T207045

**CONTROL VALVE (3/8)**

| KEY | PART NO. | PART NAME | QTY | SERIAL NO. | REMARKS |
|---|---|---|---|---|---|
| 0 | 9235988 | CONTROL VALVE | 1 | | (ADDITIONAL COMPONENTS LISTED ON PREVIOUS AND FOLLOWING PAGES) (SUB FOR 9230193) |
| 1 | 0393902 | O-RING | 2 | | (SUB FOR 2046488) |
| 2 | 0669902 | FITTING PLUG | 8 | | (SUB FOR 2046491) |
| 3 | 9218915 | VALVE | 1 | | |
| 4 | 9200492 | FLOW CONTROL HYD. VALVE | 1 | | |
| 5 | 9200495 | FLOW CONTROL HYD. VALVE | 2 | | |
| 6 | 9200483 | PIPE PLUG | 1 | | |
| 6A | 2046444 | PIPE PLUG | 1 | | |
| 6B | AT264347 | O-RING | 1 | | (SUB FOR 4506428) |
| 6C | 2046498 | SNAP RING | 1 | | |
| 6D | CH12329 | PACKING | 1 | | (SUB FOR 4506420) |
| 7 | 19M8735 | SCREW | 14 | | (SUB FOR M340830) |
| 8 | 4506416 | O-RING | 1 | | |
| 9 | 2046603 | CHECK VALVE | 1 | | |
| 10 | 2046623 | PIPE PLUG | 1 | | |
| 11 | 0411803 | O-RING | 1 | | (SUB FOR 2046489) |
| 12 | 0004654 | HOUSING | 1 | | |
| 18 | 9134111 | PIPE PLUG | 6 | | |
| 18A | 4336167 | FITTING PLUG | 1 | | |
| 18B | CH11570 | O-RING | 1 | | (SUB FOR 4509180) |
| 20 | 9134110 | PIPE PLUG | 1 | | |
| 20A | 4336166 | PIPE PLUG | 1 | | |
| 20B | 957366 | PACKING | 1 | | (SUB FOR M800650) |
| 23 | 2046604 | FLOW CONTROL HYD. VALVE | 1 | | |
| 26 | 2046415 | SPRING | 2 | | |
| 27 | 2046449 | PIPE PLUG | 1 | | |
| 28 | 4506412 | PACKING | 1 | | |
| 29 | 2046494 | BACK-UP RING | 1 | | |
| 31 | 3095719 | SPOOL | 1 | | |
| 32 | 2046601 | CHECK VALVE | 1 | | |
| 33 | 2046609 | SPRING | 2 | | |
| 34 | 2046622 | PIPE PLUG | 1 | | |
| 35 | 2046595 | SPOOL | 1 | | |
| 38 | 2046611 | SPRING | 1 | | |
| 39 | 2046615 | WASHER | 1 | | |
| 40 | 2046619 | BOLT | 1 | | |
| 41 | 3095720 | CHECK VALVE | 1 | | |
| 70 | 4477416 | BUSHING | 1 | | |
| 96 | 1030778 | HOUSING | 1 | | |

**CONTROL VALVE (4/8)**

T207046 -UN-01FEB05

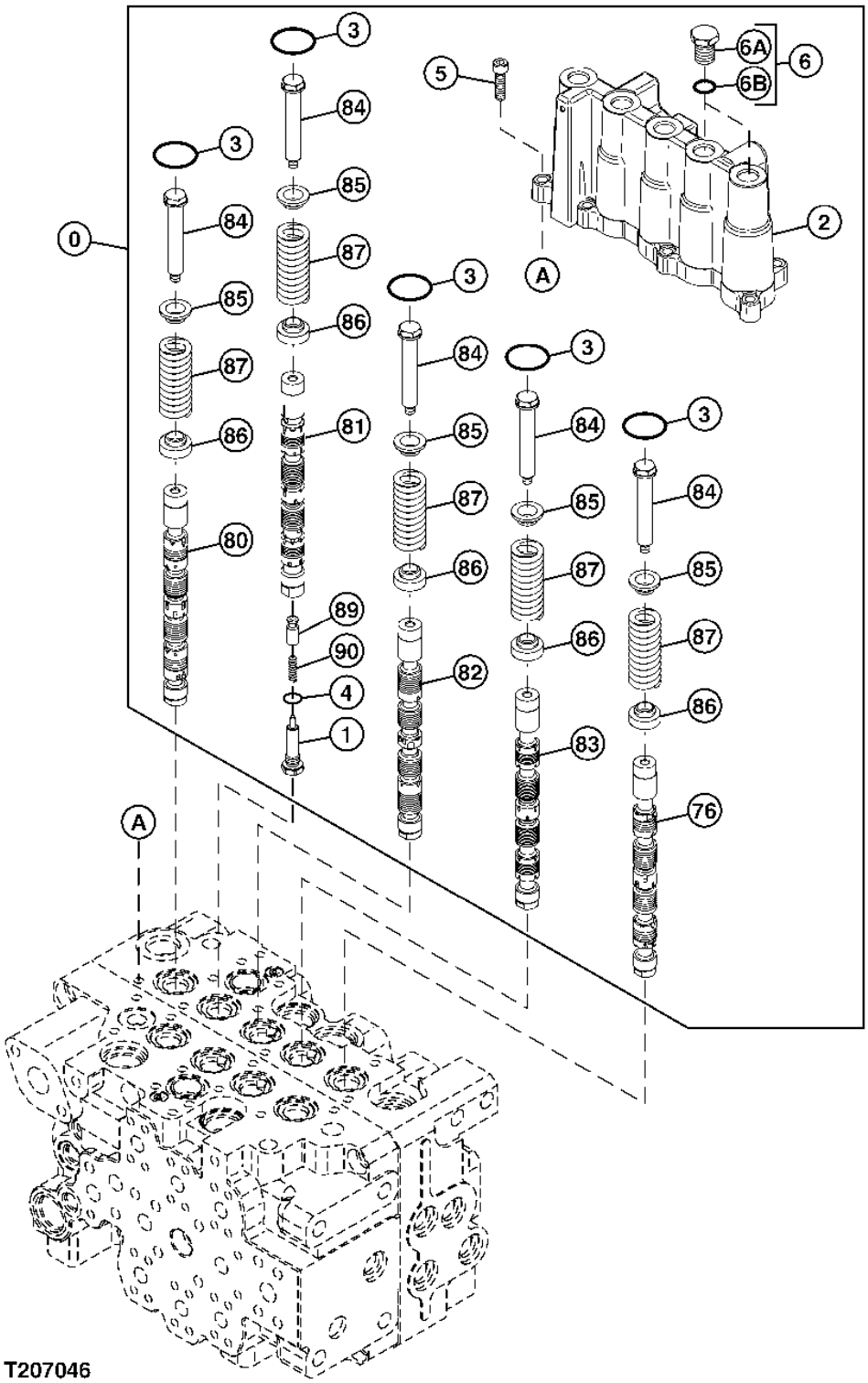


T207046

**CONTROL VALVE (4/8)**

| KEY | PART NO. | PART NAME | QTY | SERIAL NO. | REMARKS |
|---|---|---|---|---|---|
| 0 | 9235988 | CONTROL VALVE | 1 | | (ADDITIONAL COMPONENTS LISTED ON PREVIOUS AND FOLLOWING PAGES) (SUB FOR 9230193) |
| 1 | 2046451 | PIPE PLUG | 1 | | |
| 2 | 0004167 | HOUSING | 1 | | |
| 3 | 0669906 | O-RING | 5 | | (SUB FOR 2046491) |
| 4 | CH17167 | O-RING | 1 | | (SUB FOR 4506320) |
| 5 | 19M8735 | SCREW | 10 | | (SUB FOR M340830) |
| 6 | 9201529 | PIPE PLUG | 2 | | |
| 6A | 2046654 | PIPE PLUG | 1 | | |
| 6B | CH11570 | O-RING | 1 | | (SUB FOR 4509180) |
| 76 | ..... | VALVE SPOOL | 1 | | |
| 80 | ..... | VALVE SPOOL | 1 | | |
| 81 | ..... | VALVE SPOOL | 1 | | |
| 82 | ..... | VALVE SPOOL | 1 | | |
| 83 | ..... | VALVE SPOOL | 1 | | |
| 84 | ..... | BOLT | 5 | | ( 2045457 NOT AVAILABLE FOR SERVICE) |
| 85 | 2046410 | VALVE SEAT | 5 | | |
| 86 | 2046411 | VALVE SEAT | 5 | | |
| 87 | 2046613 | SPRING | 5 | | |
| 89 | 2046392 | FLOW CONTROL HYD. VALVE | 1 | | |
| 90 | 2046419 | SPRING | 1 | | |

**CONTROL VALVE (5/8)**

T207047 -UN-01FEB05

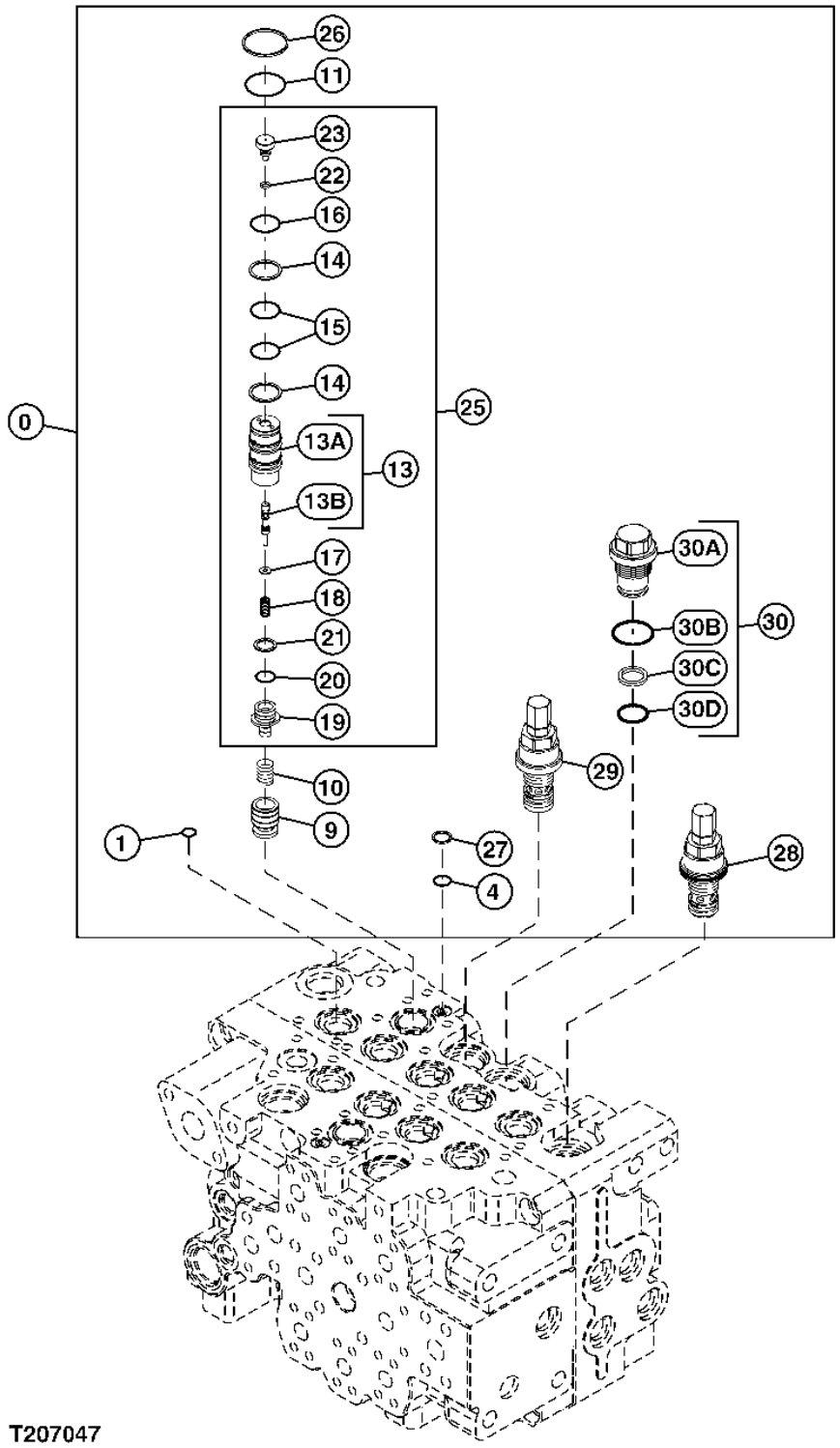

**CONTROL VALVE (5/8)**

| KEY | PART NO. | PART NAME | QTY | SERIAL NO. | REMARKS |
|---|---|---|---|---|---|
| 0 | 9235988 | CONTROL VALVE | 1 | | (ADDITIONAL COMPONENTS LISTED ON PREVIOUS AND FOLLOWING PAGES) |
| 1 | 4506408 | O-RING | 1 | | |
| 4 | CH17167 | O-RING | 1 | | (SUB FOR 4506320) |
| 9 | 2046592 | FLOW CONTROL HYD. VALVE | 1 | | |
| 10 | 2046418 | SPRING | 1 | | |
| 11 | 0309402 | O-RING | 1 | | (SUB FOR 4303809) |
| 13 | ..... | HOUSING | 1 | | |
| 13A | ..... | HOUSING | 1 | | |
| 13B | ..... | SPOOL | 1 | | |
| 14 | 2046504 | RING | 2 | | |
| 15 | AT264354 | O-RING | 2 | | (SUB FOR 4509181) |
| 16 | CH12329 | PACKING | 1 | | (SUB FOR 4506420) |
| 17 | 2046484 | WASHER | 1 | | |
| 18 | 2046608 | SPRING | 1 | | |
| 19 | 2046455 | PIPE PLUG | 1 | | |
| 20 | CH11570 | O-RING | 1 | | (SUB FOR 4509180) |
| 21 | 2046499 | RING | 1 | | |
| 22 | 4506405 | O-RING | 1 | | |
| 23 | 2046593 | STOP | 1 | | |
| 25 | 9201381 | SPOOL VALVE | 1 | | |
| 26 | 2046626 | RING | 1 | | |
| 27 | 2046627 | RING | 1 | | |
| 28 | 9226533 | PRESSURE RELIEF VALVE | 1 | | |
| 29 | 9200491 | FLOW CONTROL HYD. VALVE | 1 | | |
| 30 | 9200483 | PIPE PLUG | 1 | | |
| 30A | 2046444 | PIPE PLUG | 1 | | |
| 30B | AT264347 | O-RING | 1 | | (SUB FOR 4506428) |
| 30C | 2046498 | SNAP RING | 1 | | |
| 30D | CH12329 | PACKING | 1 | | (SUB FOR 4506420) |

**CONTROL VALVE (6/8)**

T207048 -UN-01FEB05

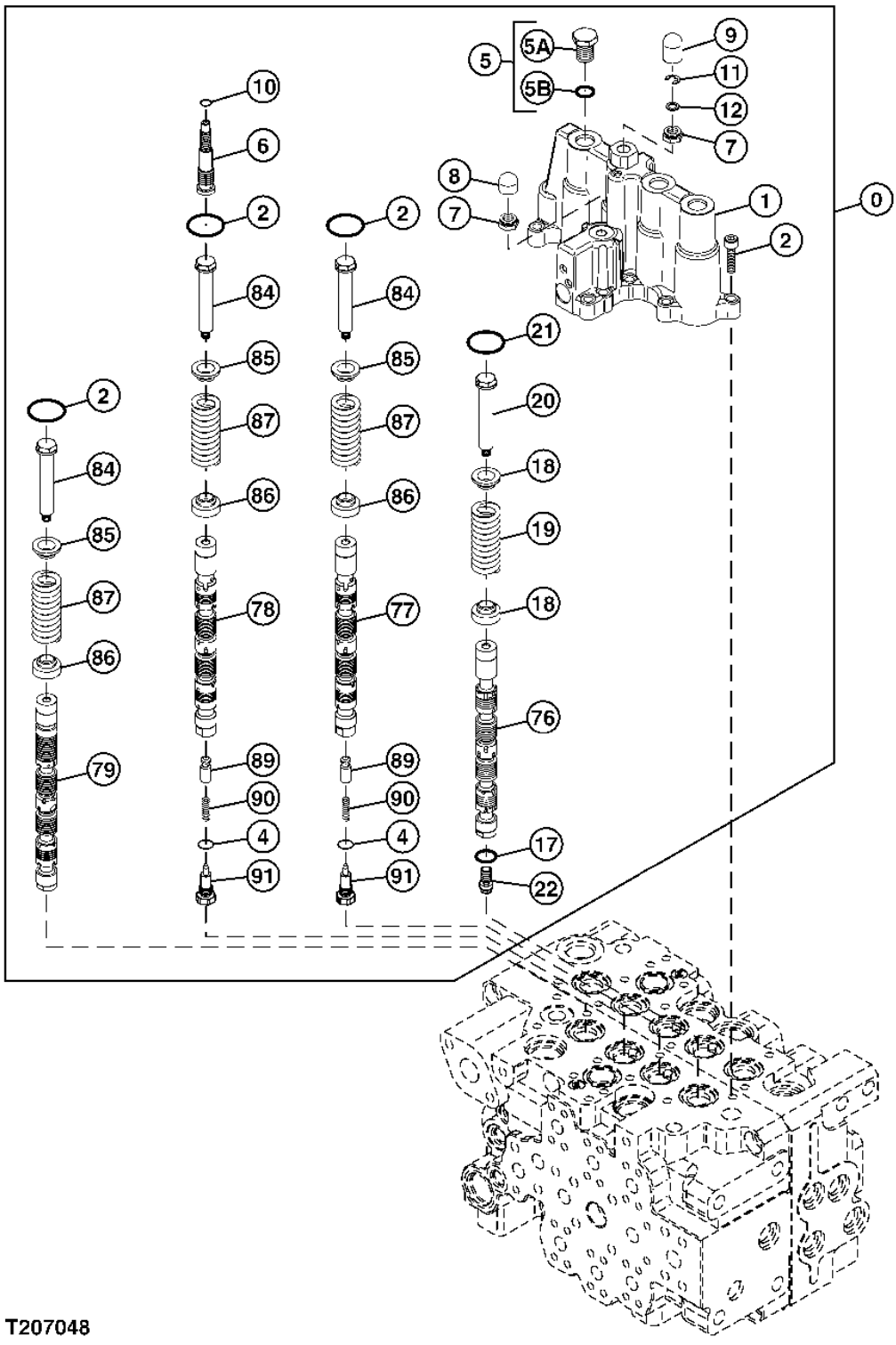

**CONTROL VALVE (6/8)**

| KEY | PART NO. | PART NAME | QTY | SERIAL NO. | REMARKS |
|---|---|---|---|---|---|
| 0 | 9235988 | CONTROL VALVE | 1 | | (ADDITIONAL COMPONENTS LISTED ON PREVIOUS AND FOLLOWING PAGES) (SUB FOR 9230193) |
| 1 | 0004652 | HOUSING | 1 | | |
| 2 | 0669906 | O-RING | 3 | | (SUB FOR 2046491) |
| 3 | 19M8735 | SCREW | 11 | | (SUB FOR M340830) |
| 4 | CH17167 | O-RING | 2 | | (SUB FOR 4506320) |
| 5 | 9201529 | PIPE PLUG | 1 | | |
| 5A | 2046654 | PIPE PLUG | 1 | | |
| 5B | CH11570 | O-RING | 1 | | (SUB FOR 4509180) |
| 6 | 2046462 | SCREW | 1 | | |
| 7 | 2046469 | NUT | 2 | | |
| 8 | 2046527 | CAP | 1 | | |
| 9 | 2046528 | CAP | 1 | | |
| 10 | CH11569 | PACKING | 1 | | (SUB FOR 4509180) |
| 11 | 4453198 | RING | 1 | | |
| 12 | 2046480 | WASHER | 1 | | |
| 17 | 4506408 | O-RING | 1 | | |
| 18 | 2046976 | PLATE | 2 | | |
| 19 | 4477414 | COMPRESSION SPRING | 1 | | |
| 20 | 2046978 | BOLT | 1 | | |
| 21 | R67590 | O-RING | 1 | | (SUB FOR 2046981) |
| 22 | 4474123 | PLUG | 1 | | |
| 76 | ..... | SPOOL | 1 | | |
| 77 | ..... | SPOOL | 1 | | |
| 78 | ..... | SPOOL | 1 | | |
| 79 | ..... | SPOOL | 1 | | |
| 84 | 2045457 | BOLT | 3 | | |
| 85 | 2046410 | VALVE SEAT | 3 | | |
| 86 | 2046411 | VALVE SEAT | 3 | | |
| 87 | 2046613 | SPRING | 3 | | |
| 89 | 2046392 | FLOW CONTROL HYD. VALVE | 2 | | |
| 90 | 2046419 | SPRING | 2 | | |
| 91 | 2046452 | PIPE PLUG | 2 | | |

**CONTROL VALVE (7/8)**

T207049 -UN-01FEB05

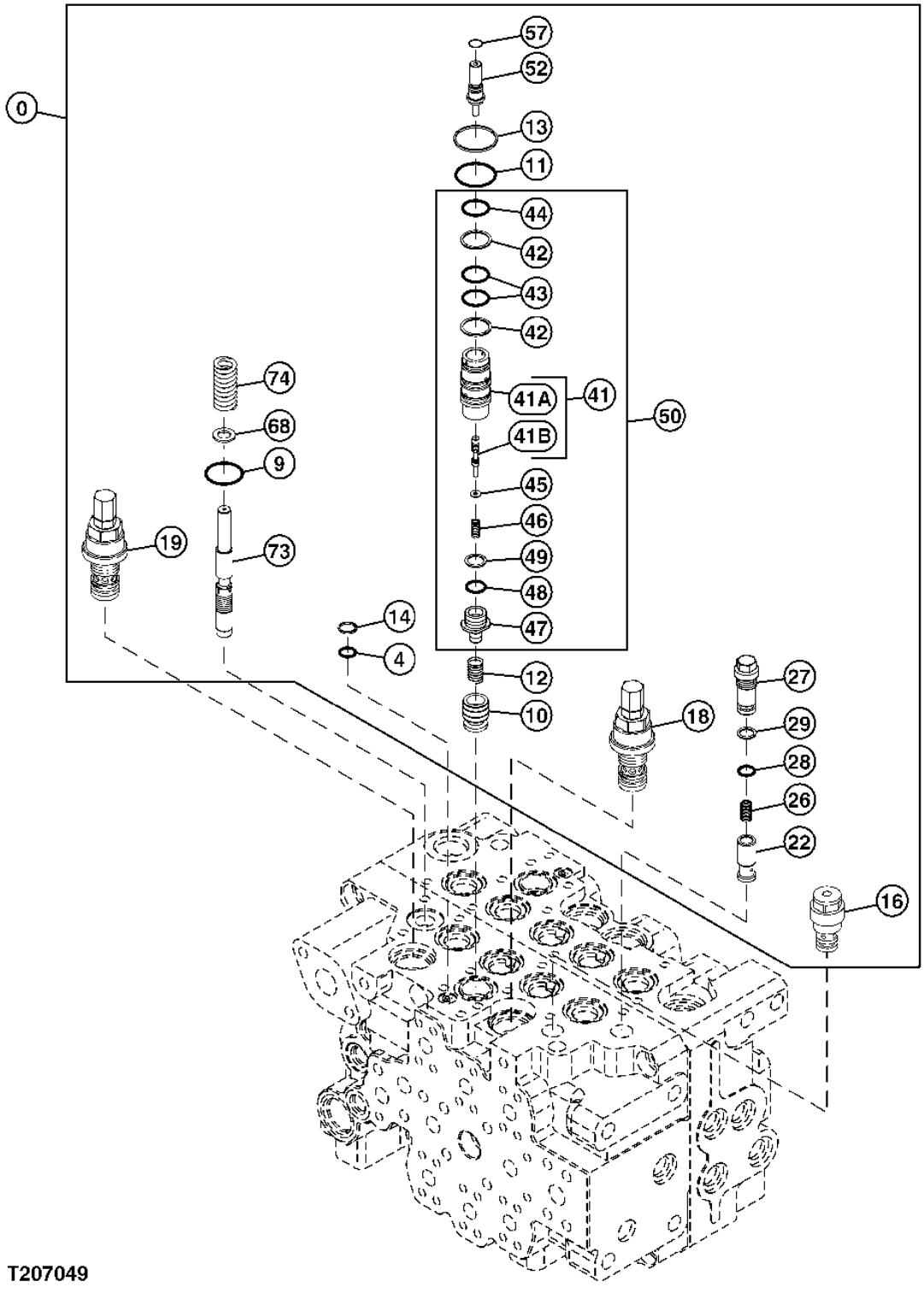


T207049

**CONTROL VALVE (7/8)**

| KEY | PART NO. | PART NAME | QTY | SERIAL NO. | REMARKS |
|---|---|---|---|---|---|
| 0 | 9235988 | CONTROL VALVE | 1 | | (ADDITIONAL COMPONENTS LISTED ON PREVIOUS AND FOLLOWING PAGES) (SUB FOR 9230193) |
| 4 | CH17167 | O-RING | 1 | | (SUB FOR 4506320) |
| 9 | 0393902 | O-RING | 1 | | (SUB FOR 2046488) |
| 10 | 2046592 | FLOW CONTROL HYD. VALVE | 1 | | |
| 11 | 0309402 | O-RING | 1 | | (SUB FOR 4303809) |
| 12 | 2046418 | SPRING | 1 | | |
| 13 | 2046626 | RING | 1 | | |
| 14 | 2046627 | RING | 1 | | |
| 16 | 9218915 | VALVE | 1 | | |
| 18 | 9200491 | FLOW CONTROL HYD. VALVE | 1 | | |
| 19 | 9200492 | FLOW CONTROL HYD. VALVE | 1 | | |
| 22 | 2046600 | CHECK VALVE | 1 | | |
| 26 | 2046415 | SPRING | 1 | | |
| 27 | 2046449 | PIPE PLUG | 1 | | |
| 28 | 4506412 | PACKING | 1 | | |
| 29 | 2046494 | BACK-UP RING | 1 | | |
| 41 | ..... | HOUSING | 1 | | ( 9229429 NOT AVAILABLE FOR SERVICE) |
| 41A | ..... | HOUSING | 1 | | |
| 41B | ..... | SPOOL | 1 | | |
| 42 | 2046504 | RING | 2 | | |
| 43 | AT264354 | O-RING | 2 | | (SUB FOR 4509181) |
| 44 | CH12329 | PACKING | 1 | | (SUB FOR 4506420) |
| 45 | 2046484 | WASHER | 1 | | |
| 46 | 2046608 | SPRING | 1 | | |
| 47 | 2046455 | PIPE PLUG | 1 | | |
| 48 | CH11570 | O-RING | 1 | | (SUB FOR 4509180) |
| 49 | 2046499 | RING | 1 | | |
| 50 | 9229428 | VALVE | 1 | | BODY |
| 52 | 2046618 | SCREW | 1 | | |
| 57 | CH11569 | PACKING | 1 | | (SUB FOR 4506409) |
| 68 | 2046481 | WASHER | 1 | | |
| 73 | 3096930 | SPOOL | 1 | | |
| 74 | 2046431 | SPRING | 1 | | |

**CONTROL VALVE (8/8)**

T207050 -UN-01FEB05

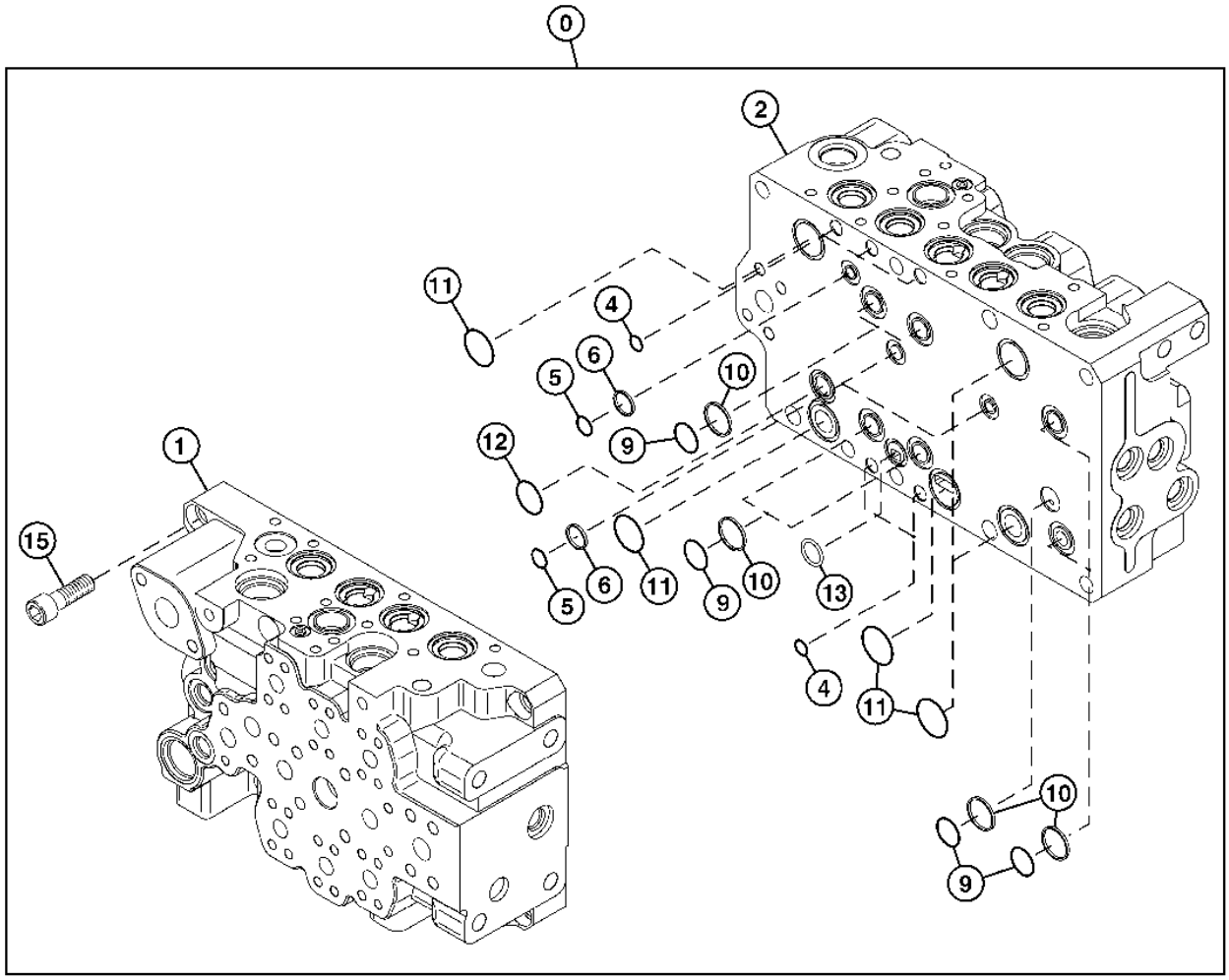


T207050

**CONTROL VALVE (8/8)**

| KEY | PART NO. | PART NAME | QTY | SERIAL NO. | REMARKS |
|---|---|---|---|---|---|
| 0 | 9235988 | CONTROL VALVE | 1 | | (ADDITIONAL COMPONENTS LISTED ON PREVIOUS PAGES) (SUB FOR 9230193) |
| 1 | ..... | HOUSING | 1 | | |
| 2 | ..... | HOUSING | 1 | | |
| 4 | CH17167 | O-RING | 5 | | (SUB FOR 4506320) |
| 5 | CH11570 | O-RING | 3 | | (SUB FOR 4509180) |
| 6 | 2046493 | BACK-UP RING | 3 | | |
| 9 | 985099 | O-RING | 7 | | |
| 10 | 2046492 | BACK-UP RING | 7 | | |
| 11 | 0309402 | O-RING | 5 | | (SUB FOR 4303809) |
| 12 | 0411901 | O-RING | 1 | | (SUB FOR 4314064) |
| 13 | CH12329 | PACKING | 1 | | (SUB FOR 4506420) |
| 15 | 19M8734 | SCREW | 9 | | (SUB FOR M341445) |

**CONTROL VALVE**

T207293 -UN-01FEB05

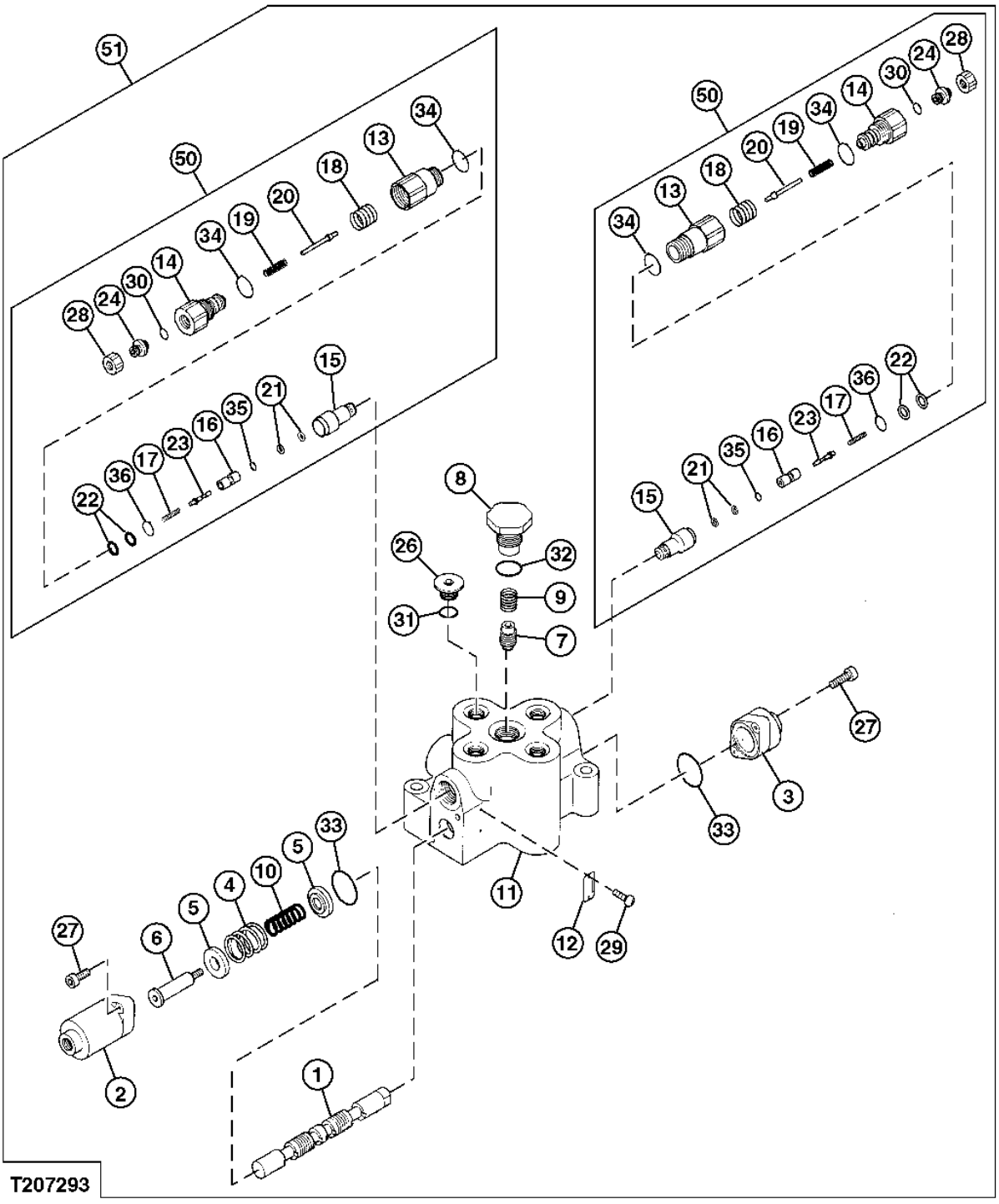

**CONTROL VALVE**

| KEY | PART NO. | PART NAME | QTY | SERIAL NO. | REMARKS |
|---|---|---|---|---|---|
| 1 | ..... | SPOOL | 1 | | |
| 2 | 0766501 | COVER | 1 | | |
| 3 | 0766502 | COVER | 1 | | |
| 4 | 0766503 | SPRING | 1 | | |
| 5 | 0766504 | HOLDER | 2 | | |
| 6 | 0766505 | END | 1 | | |
| 7 | ..... | PLUNGER | 1 | | ( 0757602 NOT AVAILABLE FOR SERVICE) |
| 8 | 0878601 | PLUG | 1 | | |
| 9 | 0766508 | SPRING | 1 | | |
| 10 | 0766509 | SPRING | 1 | | |
| 11 | ..... | HOUSING | 1 | | |
| 12 | ..... | PLATE | 1 | | |
| 13 | ..... | ADAPTER | 1 | | |
| 14 | ..... | HOUSING | 1 | | |
| 15 | ..... | POPPET | 1 | | |
| 16 | ..... | POPPET | 1 | | |
| 17 | ..... | COMPRESSION SPRING | 1 | | |
| 18 | ..... | COMPRESSION SPRING | 1 | | |
| 19 | ..... | COMPRESSION SPRING | 1 | | |
| 20 | ..... | VALVE | 1 | | |
| 21 | ..... | BACK-UP RING | 2 | | |
| 22 | ..... | BACK-UP RING | 2 | | |
| 23 | ..... | PIN | 1 | | |
| 24 | ..... | SCREW | 1 | | |
| 26 | 0343611 | FITTING PLUG | 1 | | |
| 27 | 0370410 | BOLT | 4 | | |
| 28 | ..... | NUT | 1 | | |
| 29 | 0794701 | SCREW | 2 | | |
| 30 | ..... | O-RING | 1 | | |
| 31 | 4506418 | O-RING | 1 | | |
| 32 | AT318035 | O-RING | 1 | | (SUB FOR 4506424) |
| 33 | 0766510 | O-RING | 2 | | |
| 34 | ..... | O-RING | 1 | | |
| 35 | ..... | O-RING | 1 | | |
| 36 | ..... | O-RING | 1 | | |
| 50 | 0878602 | PRESSURE RELIEF VALVE | 2 | | |
| 51 | 4467405 | CONTROL VALVE | 1 | | |

**PILOT VALVE (FRONT AND SWING)**

T207294 -UN-01FEB05

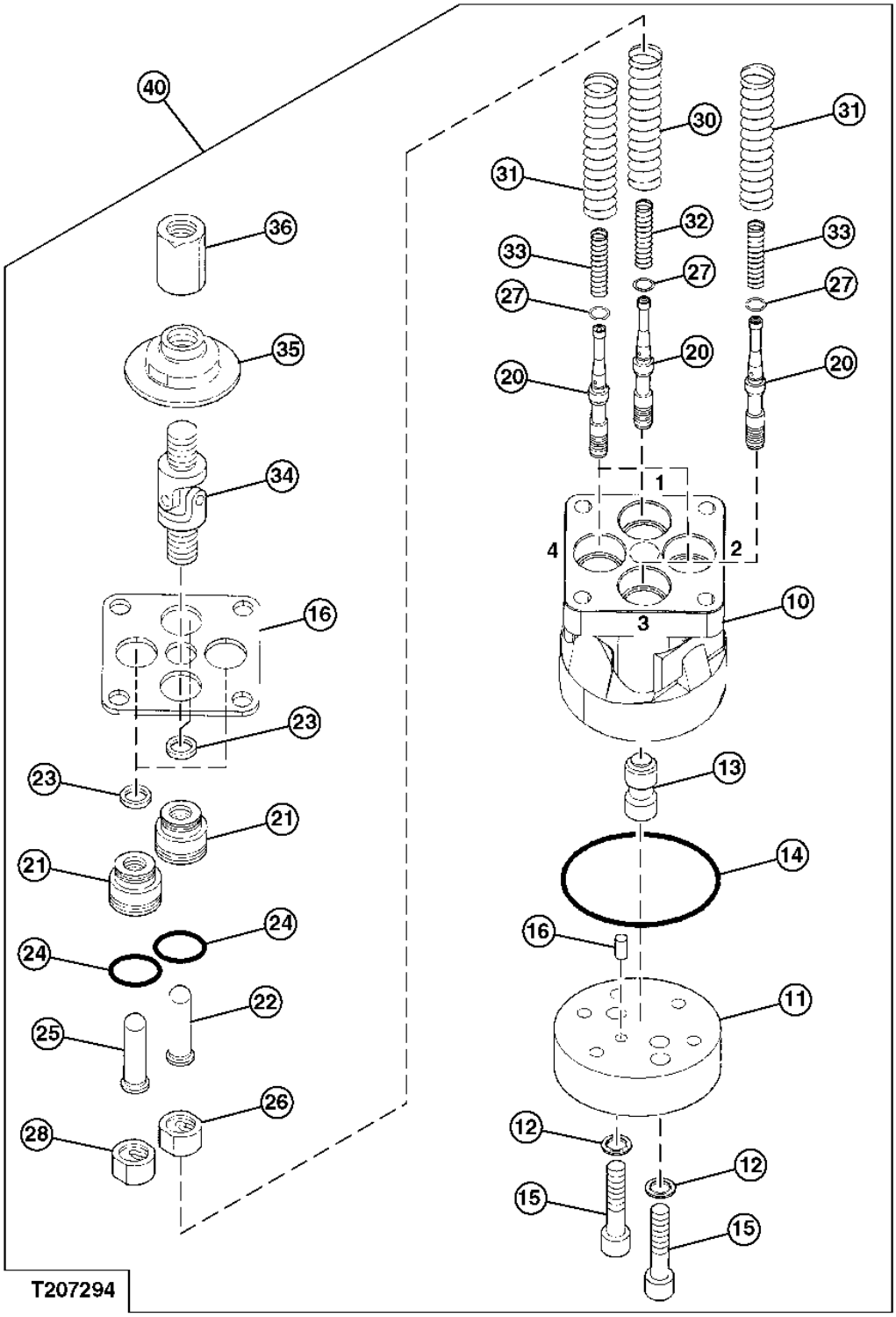

**PILOT VALVE (FRONT AND SWING)**

| KEY | PART NO. | PART NAME | QTY | SERIAL NO. | REMARKS |
|---|---|---|---|---|---|
| 10 | ..... | HOUSING | 1 | | |
| 11 | 0799901 | PLATE | 1 | | |
| 12 | 0708402 | SEALING WASHER | 2 | | |
| 13 | ..... | BUSHING | 1 | | ( 0799904 NOT AVAILABLE FOR SERVICE) |
| 14 | 0799902 | O-RING | 1 | | |
| 15 | ..... | BOLT | 2 | | |
| 16 | 34M7117 | SPRING PIN | 1 | | (SUB FOR 4101345) |
| 17 | 0870001 | PLATE | 1 | | |
| 20 | ..... | SPOOL | 4 | | |
| 21 | ..... | PLUG | 4 | | ( 0629003 NOT AVAILABLE FOR SERVICE) |
| 22 | 0799906 | ROD | 2 | | |
| 23 | 0628908 | SEAL | 4 | | |
| 24 | CH12329 | PACKING | 2 | | (SUB FOR (4) 4506420) |
| 25 | 0870002 | ROD | 2 | | |
| 26 | ..... | PLATE | 2 | | ( 0799907 NOT AVAILABLE FOR SERVICE) |
| 27 | 0428907 | WASHER | 4 | | |
| 28 | 0870003 | PLATE | 2 | | |
| 30 | 0870004 | SPRING | 1 | | |
| 31 | 0869404 | SPRING | 3 | | |
| 32 | 0870005 | SPRING | 2 | | |
| 33 | 0870006 | SPRING | 2 | | |
| 34 | ..... | SWIVEL | 1 | | ( 0799910 NOT AVAILABLE FOR SERVICE) |
| 35 | ..... | PLATE | 1 | | ( 0799911 NOT AVAILABLE FOR SERVICE) |
| 36 | ..... | NUT | 1 | | ( 0799912 NOT AVAILABLE FOR SERVICE) |
| 40 | 4476331 | HYDR./PILOT CONTROL VALVE | 1 | | |

**PILOT VALVE**

T207295 -UN-01FEB05

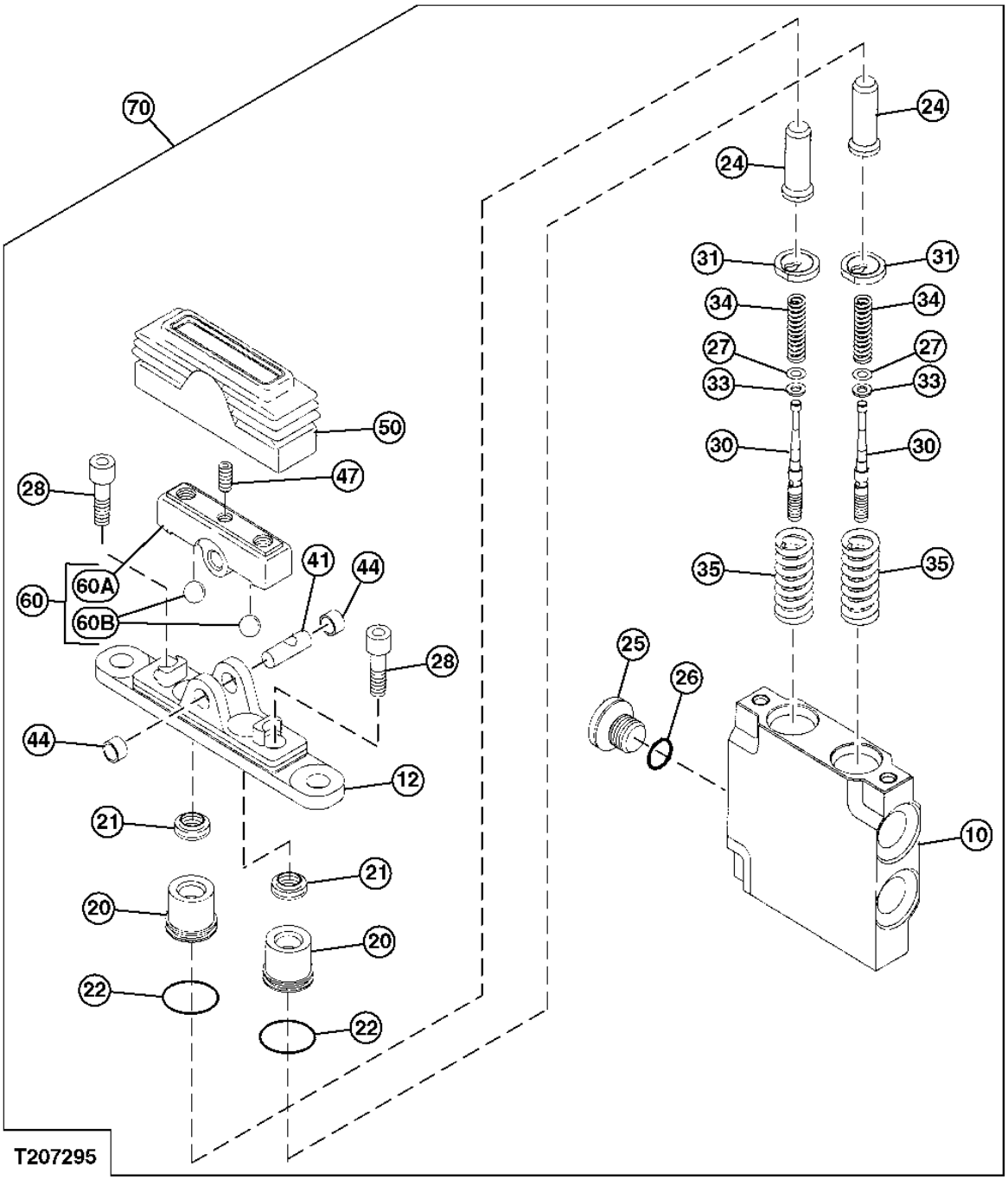

**PILOT VALVE**

| KEY | PART NO. | PART NAME | QTY | SERIAL NO. | REMARKS |
|---|---|---|---|---|---|
| 10 | ..... | HOUSING | 1 | | |
| 12 | 0870101 | COVER | 1 | | |
| 20 | 0846702 | PLUG | 2 | | |
| 21 | 0870102 | PACKING | 2 | | |
| 22 | 0870103 | O-RING | 2 | | |
| 24 | 0870104 | ROD | 2 | | |
| 25 | 0629404 | FITTING PLUG | 1 | | |
| 26 | M800650 | PACKING | 1 | | (SUB FOR 957366) |
| 27 | 0846603 | SHIM | 2 | | |
| 28 | 19M8553 | SCREW | 2 | | (SUB FOR (2) 0237902) |
| 30 | ..... | SPOOL | 2 | | |
| 31 | 0846704 | VALVE SEAT | 2 | | |
| 33 | 0846612 | WASHER | 2 | | |
| 34 | 0846613 | SPRING | 2 | | |
| 35 | 0870105 | SPRING | 2 | | |
| | 0870201 | SPRING | 2 | | |
| 41 | 0870106 | SHAFT | 1 | | |
| 44 | 0870107 | BUSHING | 2 | | |
| 47 | 0846616 | SCREW | 2 | | |
| 50 | 0846701 | BOOT | 1 | | |
| 60 | 0870108 | CAM | 1 | | |
| 60A | ..... | CAM | 1 | | |
| 60B | ..... | BALL | 2 | | |
| 70 | 4465183 | HYDR./PILOT CONTROL VALVE | 1 | | |
| | 4483993 | HYDR./PILOT CONTROL VALVE | 1 | | |

**SOLENOID VALVE BANK**

T207296 -UN-01FEB05

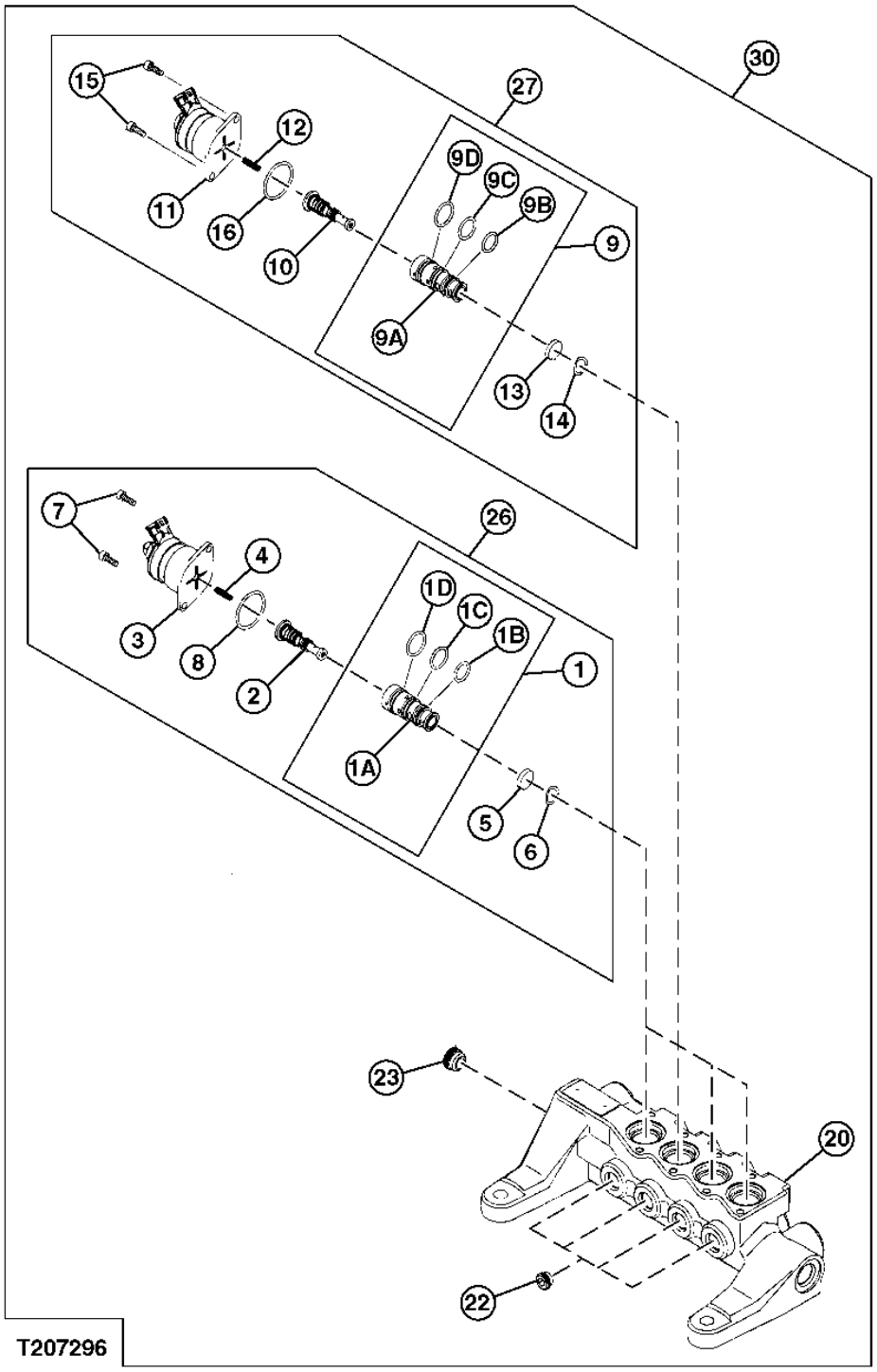

**SOLENOID VALVE BANK**

| KEY | PART NO. | PART NAME | QTY | SERIAL NO. | REMARKS |
|---|---|---|---|---|---|
| 1 | ..... | SLEEVE | 1 | | |
| 1A | ..... | SLEEVE | 1 | | |
| 1B | 4185600 | O-RING | 1 | | |
| 1C | R99052 | O-RING | 1 | | (SUB FOR 4484118) |
| 1D | 0408411 | O-RING | 1 | | (SUB FOR 4484116) |
| 2 | ..... | SPOOL | 1 | | |
| 3 | ..... | SOLENOID | 1 | | |
| 4 | ..... | COMPRESSION SPRING | 1 | | |
| 5 | ..... | PLATE | 1 | | |
| 6 | 4489678 | WASHER | 1 | | |
| 7 | T111645 | SCREW | 2 | | (SUB FOR (2) M340513) |
| 8 | 0670802 | O-RING | 1 | | (SUB FOR 4484114) |
| 9 | ..... | SLEEVE | 1 | | |
| 9A | ..... | SLEEVE | 1 | | |
| 9B | 4185600 | O-RING | 1 | | |
| 9C | R99052 | O-RING | 1 | | (SUB FOR 4484118) |
| 9D | 0408411 | O-RING | 1 | | (SUB FOR 4484116) |
| 10 | ..... | SPOOL | 1 | | |
| 11 | ..... | SOLENOID | 1 | | |
| 12 | ..... | COMPRESSION SPRING | 1 | | |
| 13 | ..... | PLATE | 1 | | |
| 14 | 4489678 | WASHER | 1 | | |
| 15 | T111645 | SCREW | 2 | | (SUB FOR (2) M340513) |
| 16 | 0408411 | O-RING | 1 | | (SUB FOR 4484114) |
| 20 | ..... | HOUSING | 1 | | |
| 22 | 4478552 | PLUG | 4 | | |
| 23 | 4487536 | PLUG | 1 | | |
| 26 | 9218234 | SOLENOID VALVE | 3 | | |
| 27 | 9223051 | SOLENOID VALVE | 1 | | |
| 30 | 9223056 | SOLENOID VALVE | 1 | | |

**SOLENOID VALVE (2)**

T207297 -UN-01FEB05

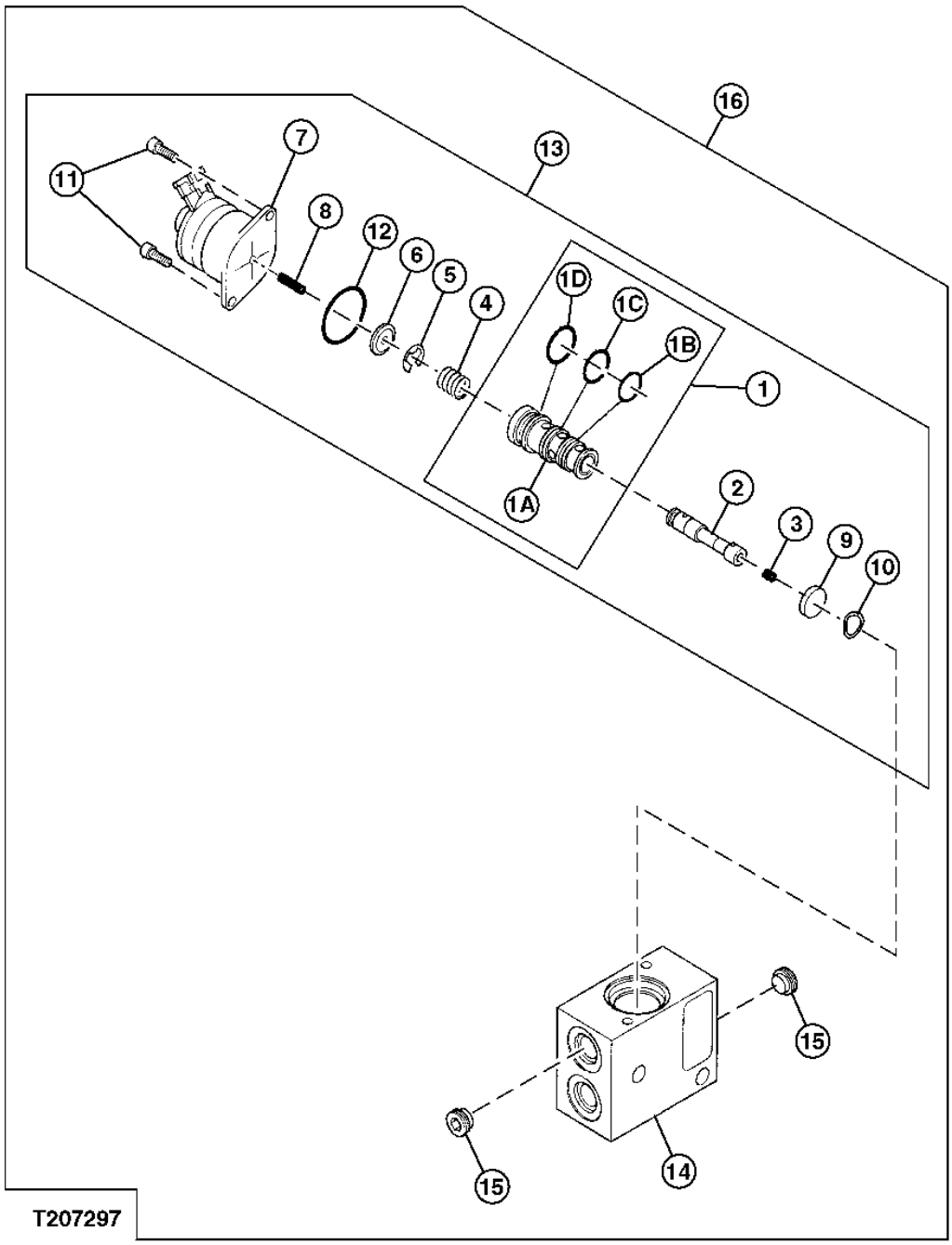

**SOLENOID VALVE (2)**

| KEY | PART NO. | PART NAME | QTY | SERIAL NO. | REMARKS |
|---|---|---|---|---|---|
| 1 | ..... | SLEEVE | 1 | | |
| 1A | ..... | SLEEVE | 1 | | |
| 1B | 4185600 | O-RING | 1 | | |
| 1C | R99052 | O-RING | 1 | | (SUB FOR 4484118) |
| 1D | 0408411 | O-RING | 1 | | (SUB FOR 4484116) |
| 2 | ..... | SPOOL | 1 | | |
| 3 | ..... | ORIFICE | 1 | | |
| 4 | ..... | SPRING | 1 | | |
| 5 | ..... | SNAP RING | 1 | | |
| 6 | ..... | DIAPHRAGM | 1 | | |
| 7 | ..... | SOLENOID | 1 | | |
| 8 | ..... | COMPRESSION SPRING | 1 | | |
| 10 | 4489678 | WASHER | 1 | | |
| 11 | T111645 | SCREW | 2 | | (SUB FOR (2) M340513) |
| 12 | 0670802 | O-RING | 1 | | (SUB FOR 4484114) |
| 13 | 9221114 | SOLENOID VALVE | 1 | | |
| 14 | ..... | HOUSING | 1 | | |
| 15 | 9761179 | FILTER | 2 | | |
| 16 | 9218273 | SOLENOID VALVE | 1 | | |

**PROPEL SOLENOID VALVE**

T207298 -UN-01FEB05

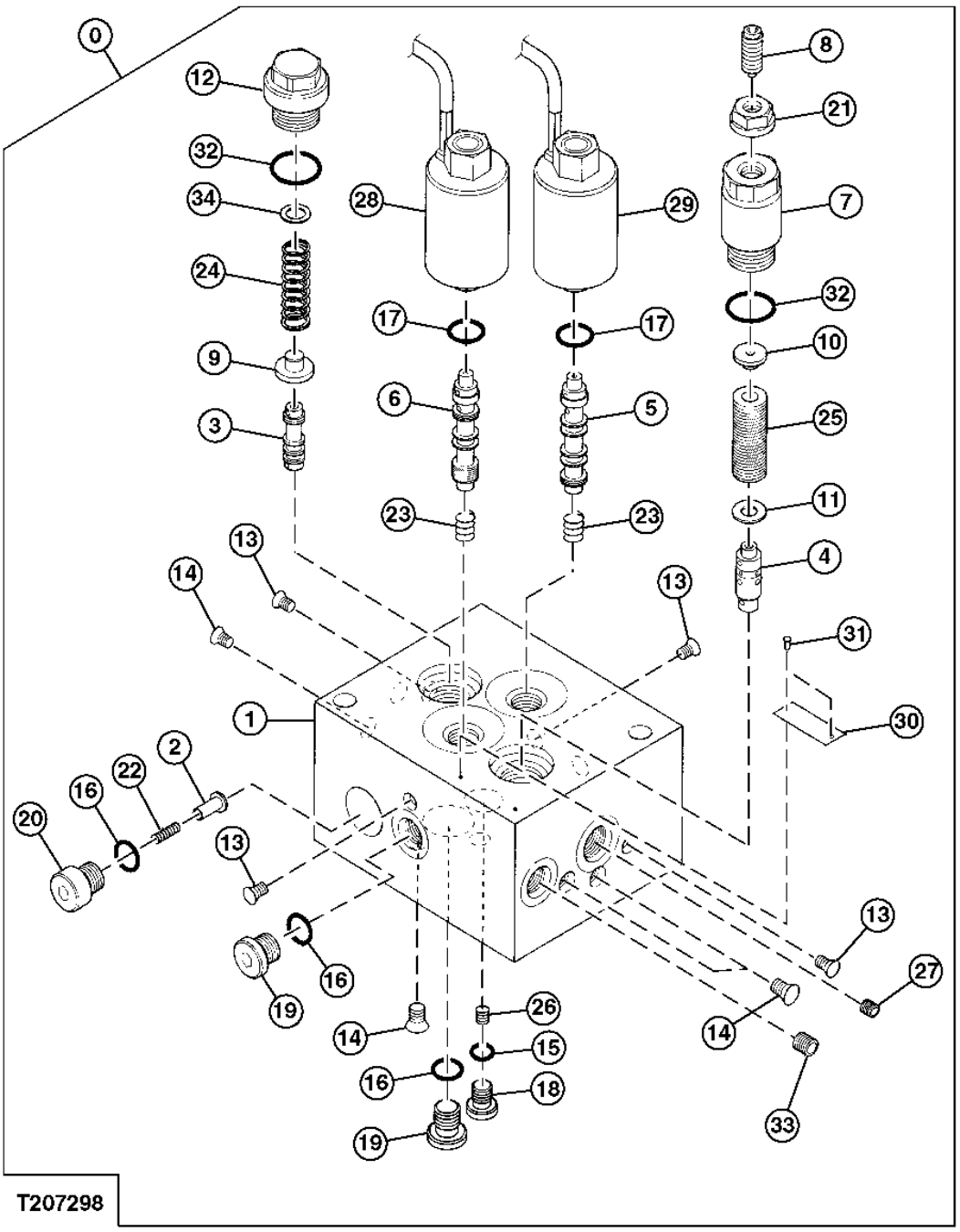

**PROPEL SOLENOID VALVE**

| KEY | PART NO. | PART NAME | QTY | SERIAL NO. | REMARKS |
|---|---|---|---|---|---|
| 0 | 4464292 | SOLENOID VALVE | 1 | | |
| 1 | ..... | HOUSING | 1 | | |
| 2 | 0435210 | PLUNGER | 1 | | |
| 3 | ..... | SPOOL | 1 | | |
| 4 | ..... | SPOOL | 1 | | |
| 5 | ..... | SPOOL | 1 | | |
| 6 | ..... | SPOOL | 1 | | |
| 7 | 0685601 | GUIDE | 1 | | |
| 8 | 0499105 | SCREW | 1 | | |
| 9 | 0903301 | PLATE | 1 | | |
| 10 | 0685602 | GUIDE | 1 | | |
| 11 | 0903302 | PLATE | 1 | | |
| 12 | 0767001 | PLUG | 1 | | |
| 13 | ..... | PLUG | 4 | | |
| 14 | ..... | PLUG | 3 | | |
| 15 | 4506408 | O-RING | 1 | | |
| 16 | M800650 | PACKING | 3 | | (SUB FOR (3) 957366) |
| 17 | CH11570 | O-RING | 2 | | (SUB FOR (2) 4509180) |
| 18 | 0215220 | FITTING PLUG | 1 | | |
| 19 | 0624504 | PIPE PLUG | 2 | | |
| 20 | 0435209 | PLUG | 1 | | |
| 21 | 0499108 | NUT | 1 | | |
| 22 | 0435211 | SPRING | 1 | | |
| 23 | 0768101 | SPRING | 1 | | |
| 24 | 0903303 | SPRING | 2 | | |
| 25 | 0903304 | SPRING | 1 | | |
| 26 | ..... | ORIFICE | 1 | | |
| 27 | ..... | ORIFICE | 1 | | |
| 28 | 0870401 | SOLENOID HYDRAULIC VALVE | 1 | | |
| 29 | 0870402 | SOLENOID HYDRAULIC VALVE | 1 | | |
| 30 | ..... | PLATE | 1 | | |
| 31 | ..... | SCREW | 2 | | |
| 32 | CH12329 | PACKING | 2 | | (SUB FOR (2) 4506420) |
| 33 | ..... | ORIFICE | 1 | | |
| 34 | 0748108 | SHIM | 1 | | |

**BRAKE SOLENOID VALVE**

T207299 -UN-01FEB05

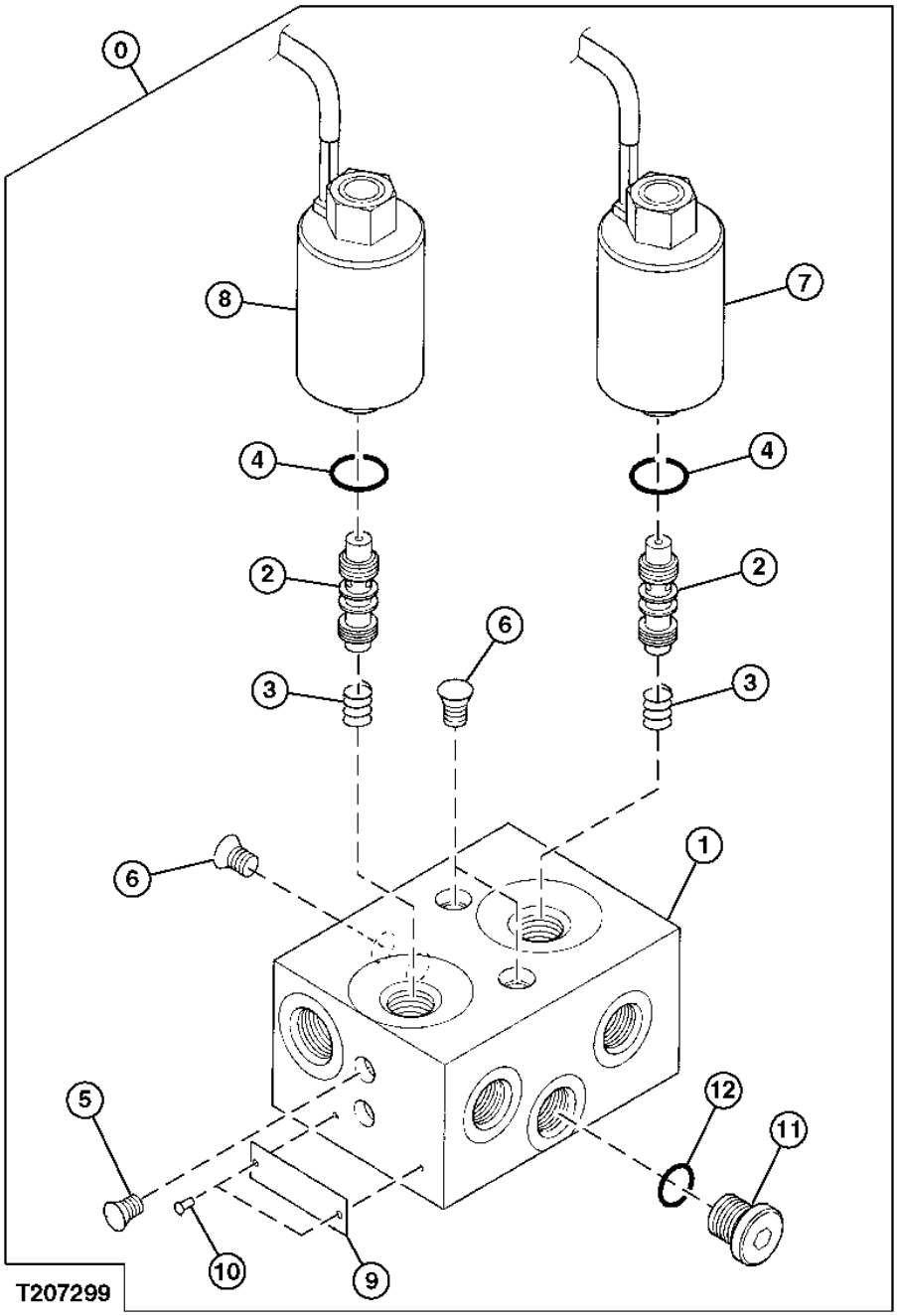

**BRAKE SOLENOID VALVE**

| KEY | PART NO. | PART NAME | QTY | SERIAL NO. | REMARKS |
|---|---|---|---|---|---|
| 0 | 4463199 | SOLENOID VALVE | 1 | | |
| 1 | ..... | HOUSING | 1 | | |
| 2 | ..... | SPOOL | 2 | | |
| 3 | 0768101 | SPRING | 2 | | |
| 4 | CH11570 | O-RING | 2 | | (SUB FOR 4509180) |
| 5 | ..... | PLUG | 1 | | |
| 6 | ..... | PLUG | 2 | | |
| 7 | 0870401 | SOLENOID HYDRAULIC VALVE | 1 | | |
| 8 | 0870402 | SOLENOID HYDRAULIC VALVE | 1 | | |
| 9 | ..... | PLATE | 1 | | |
| 10 | ..... | SCREW | 2 | | |
| 11 | 0624504 | PIPE PLUG | 1 | | |
| 12 | M800650 | PACKING | 1 | | (SUB FOR 957366) |

**SOLENOID VALVE (5)**

T207300 -UN-01FEB05

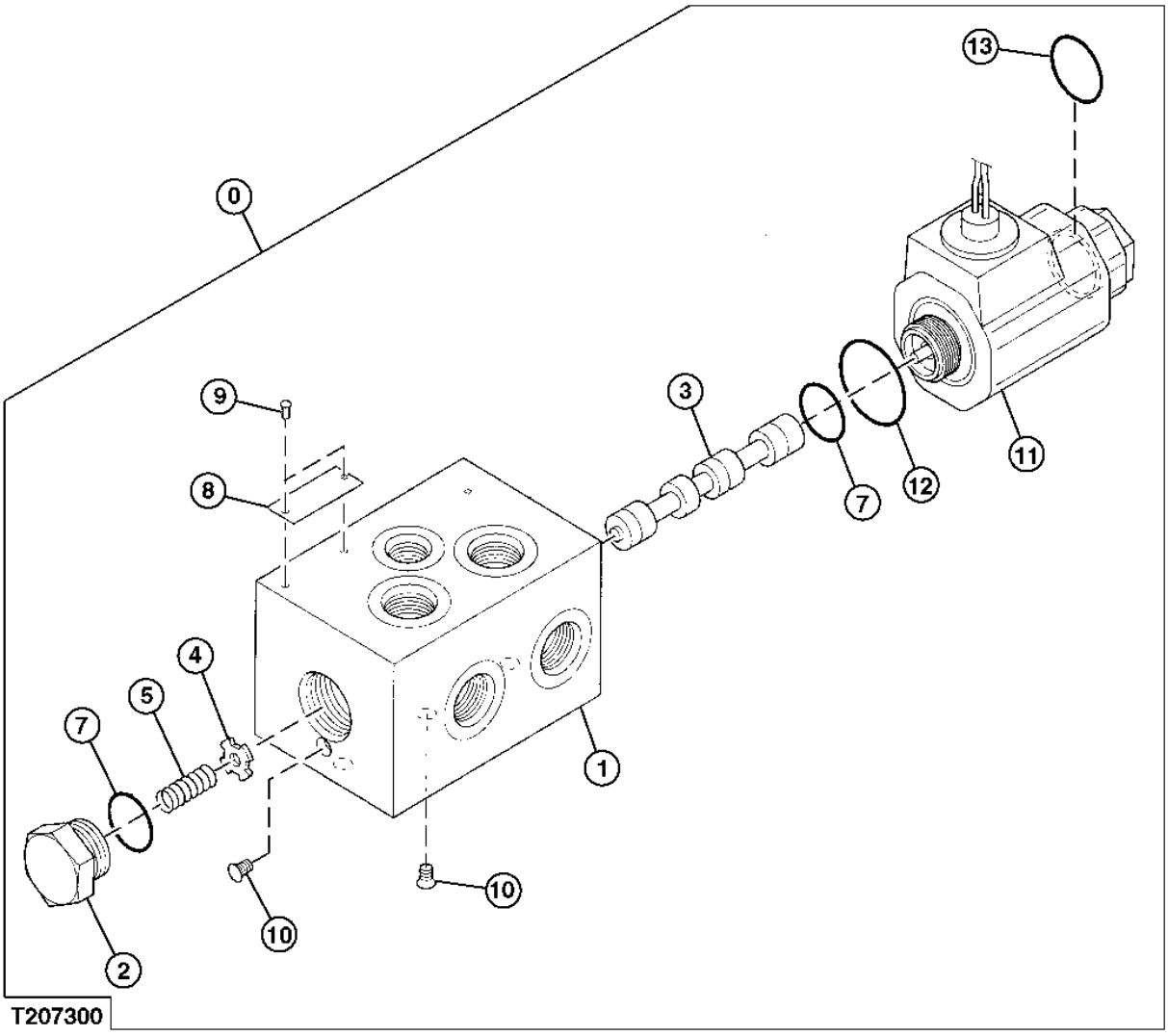

**SOLENOID VALVE (5)**

| KEY | PART NO. | PART NAME | QTY | SERIAL NO. | REMARKS |
|---|---|---|---|---|---|
| 0 | 4462737 | SOLENOID VALVE | 1 | | |
| 1 | ..... | HOUSING | 1 | | |
| 2 | 0654301 | PLUG | 1 | | |
| 3 | ..... | SPOOL | 1 | | |
| 4 | 0322304 | RETAINER | 1 | | |
| 5 | 0322602 | SPRING | 1 | | |
| 7 | 0215710 | O-RING | 2 | | |
| 8 | ..... | PLATE | 1 | | |
| 9 | 0242006 | SCREW | 2 | | |
| 10 | ..... | PLUG | 2 | | |
| 11 | 0870501 | SOLENOID HYDRAULIC VALVE | 1 | | |
| 12 | 0397302 | O-RING | 1 | | |
| 13 | 0775203 | O-RING | 1 | | |

**RELIEF VALVE**

T207301 -UN-01FEB05

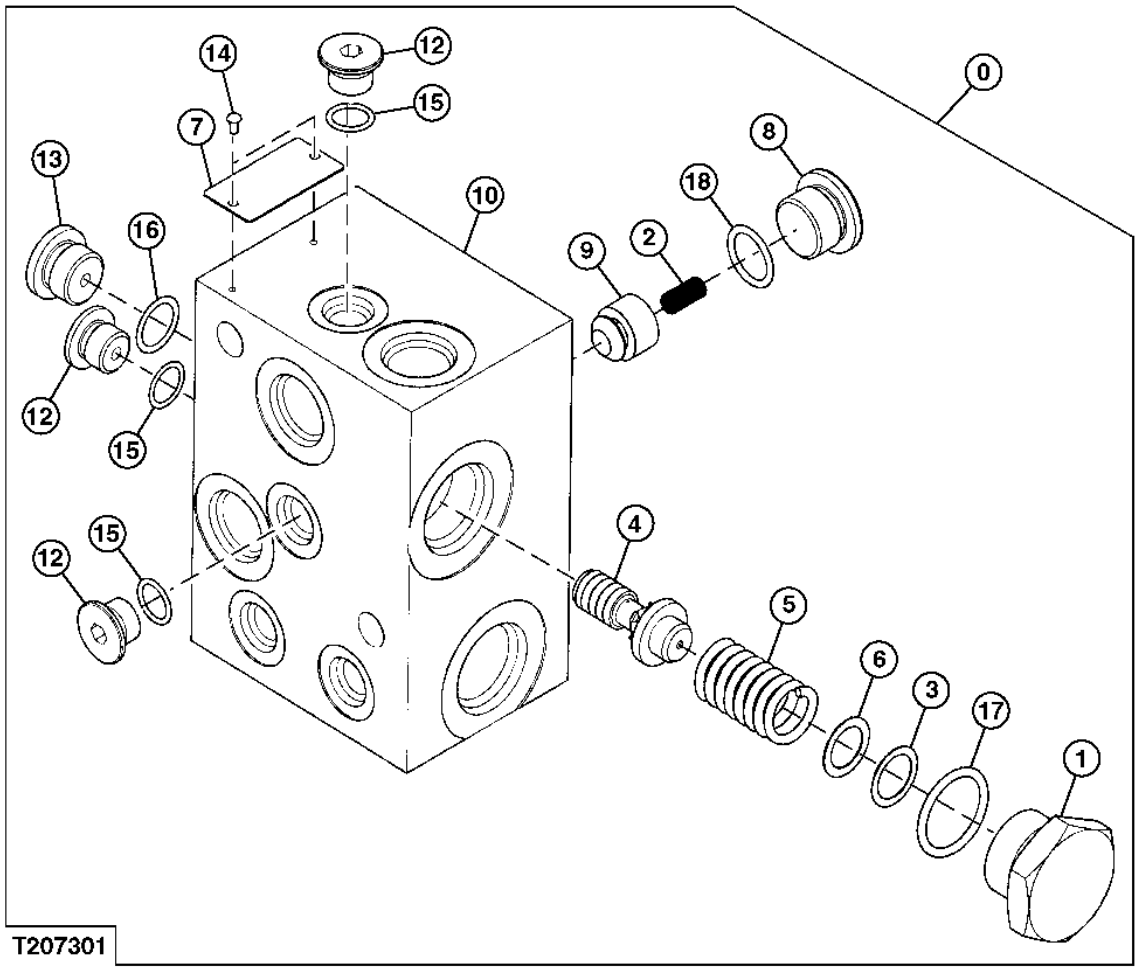

**RELIEF VALVE**

| KEY | PART NO. | PART NAME | QTY | SERIAL NO. | REMARKS |
|---|---|---|---|---|---|
| 0 | 4467200 | PRESSURE RELIEF VALVE | 1 | | (SUB FOR 0870605) |
| 1 | 0333803 | PIPE PLUG | 1 | | |
| 2 | 0870601 | COMPRESSION SPRING | 1 | | |
| 3 | 0349402 | SHIM | 1 | | |
| 4 | 0670502 | POPPET | 1 | | |
| 5 | 0670503 | COMPRESSION SPRING | 1 | | |
| 6 | 0870602 | SHIM | 1 | | |
| 7 | ..... | PLATE | 1 | | |
| 8 | 0870603 | PLUG | 1 | | |
| 9 | 0870604 | POPPET | 1 | | |
| 10 | ..... | HOUSING | 1 | | |
| 12 | AT120949 | FITTING PLUG | 3 | | (SUB FOR (3) 0314205) |
| 13 | 0309805 | PIPE PLUG | 1 | | |
| 14 | 0794701 | SCREW | 2 | | |
| 15 | M800650 | PACKING | 3 | | (SUB FOR (3) 957366) |
| 16 | CH11570 | O-RING | 1 | | (SUB FOR 4509180) |
| 17 | 4506424 | O-RING | 1 | | |
| 18 | 0229213 | O-RING | 1 | | |

**PILOT SIGNAL MANIFOLD (HOUSING AND GASKETS)**

T153960 -UN-16APR02

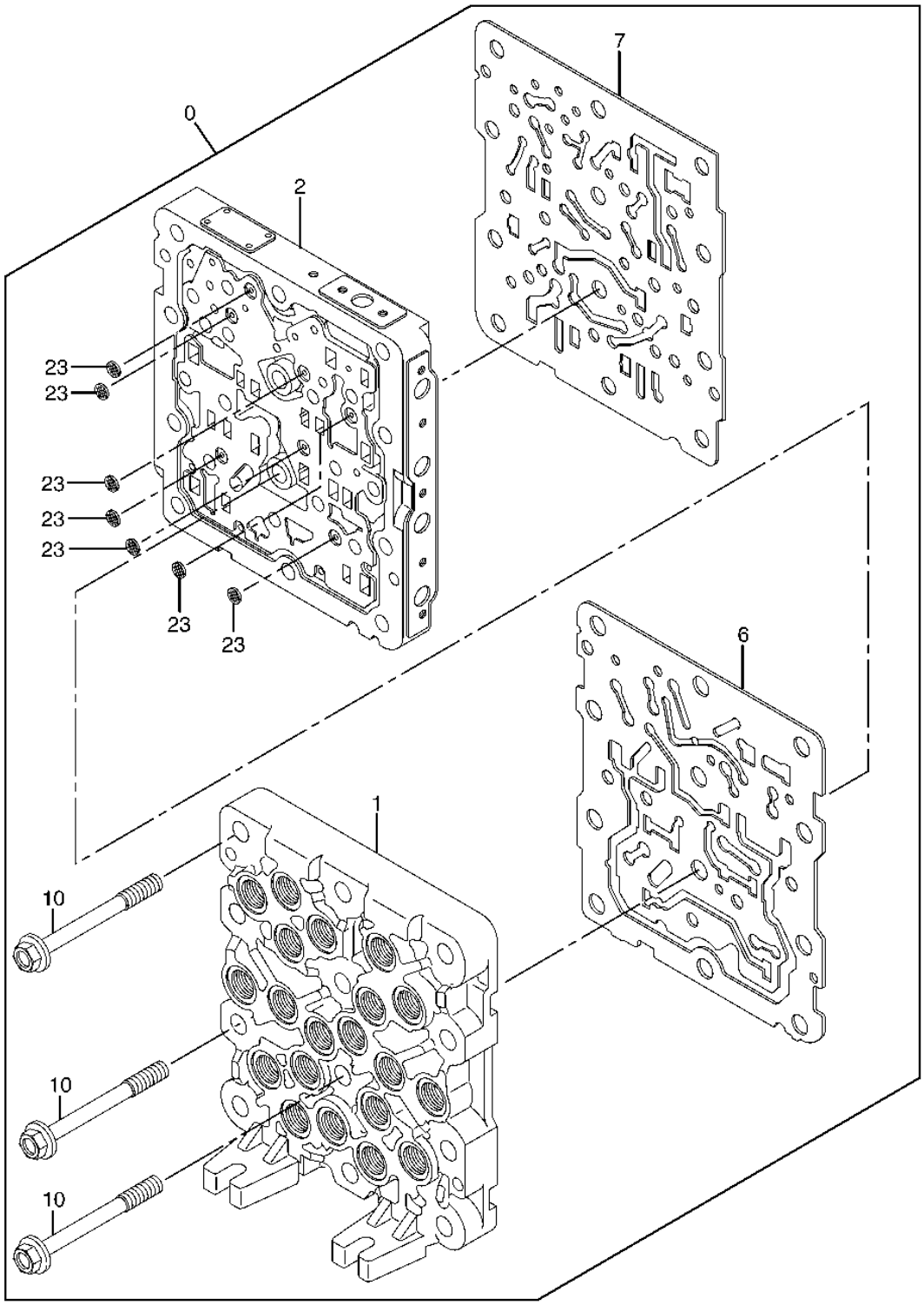

**PILOT SIGNAL MANIFOLD (HOUSING AND GASKETS)**

| KEY | PART NO. | PART NAME | QTY | SERIAL NO. | REMARKS |
|---|---|---|---|---|---|
| 0 | 4468336 | FLOW CONTROL HYD. VALVE | 1 | | (CONTAINS ALL PARTS ON THIS PAGE - ADDITIONAL COMPONENTS LISTED ON FOLLOWING PAGES) |
| 1 | ..... | HOUSING | 1 | | |
| 2 | ..... | HOUSING | 1 | | |
| 6 | ..... | GASKET | 1 | | |
| 7 | ..... | GASKET | 1 | | |
| 10 | ..... | CAP SCREW | 12 | | |
| 23 | ..... | FILTER | 7 | | |

**PILOT SIGNAL MANIFOLD (VALVE SECTION)**

T153961 -UN-16APR02

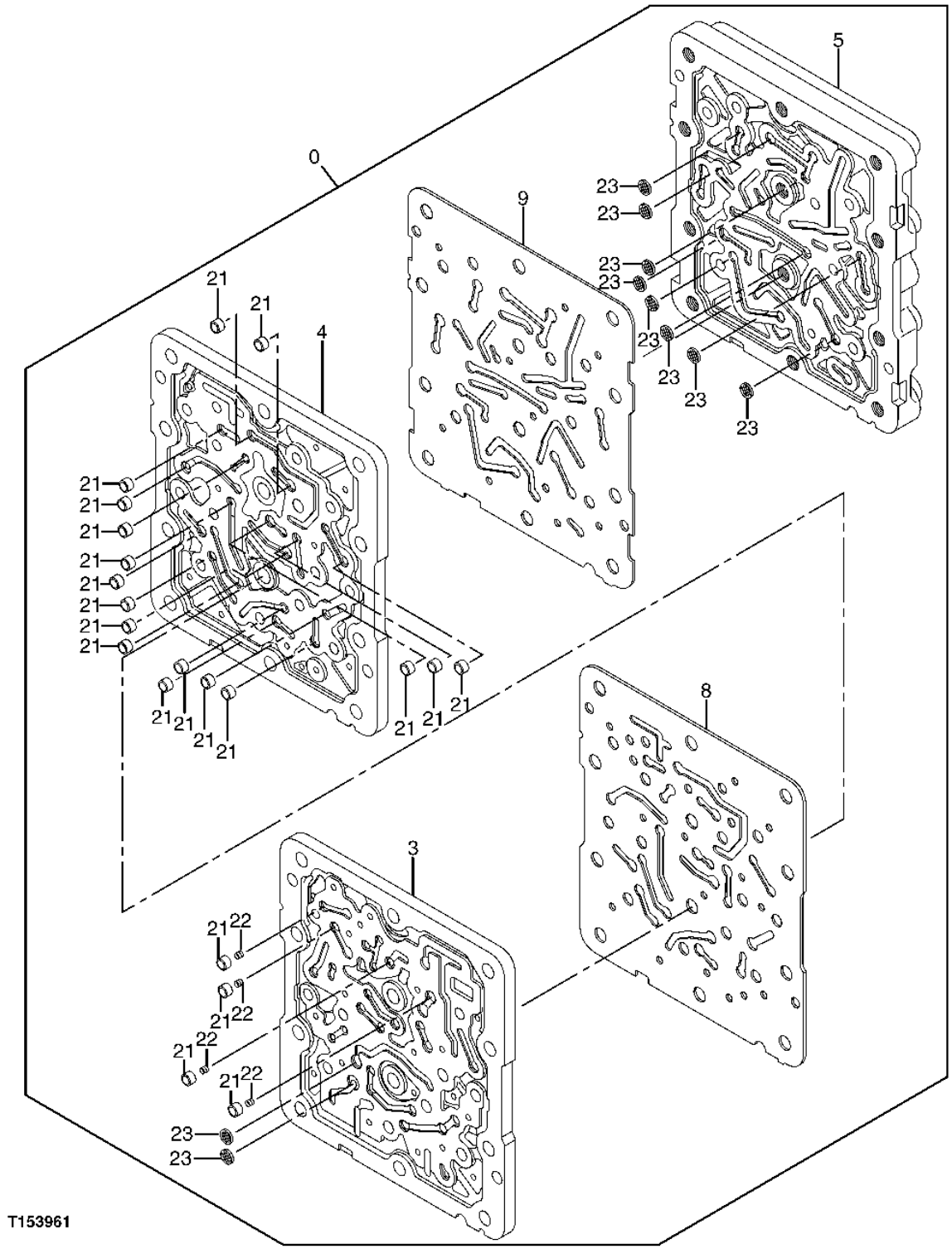

**PILOT SIGNAL MANIFOLD (VALVE SECTION)**

| KEY | PART NO. | PART NAME | QTY | SERIAL NO. | REMARKS |
|---|---|---|---|---|---|
| 0 | 4468336 | FLOW CONTROL HYD. VALVE | 1 | | (CONTAINS ALL PARTS ON THIS PAGE - ADDITIONAL COMPONENTS LISTED ON PREVIOUS AND FOLLOWING PAGES) |
| 3 | ..... | HOUSING | 1 | | |
| 4 | ..... | HOUSING | 1 | | |
| 5 | ..... | HOUSING | 1 | | |
| 8 | ..... | GASKET | 1 | | |
| 9 | ..... | GASKET | 1 | | |
| 21 | ..... | SLEEVE | 21 | | |
| 22 | ..... | SPRING | 4 | | |
| 23 | ..... | FILTER | 10 | | |

**PILOT SIGNAL MANIFOLD (PILOT CONTROLLER SIDE)**

T153964 -UN-16APR02

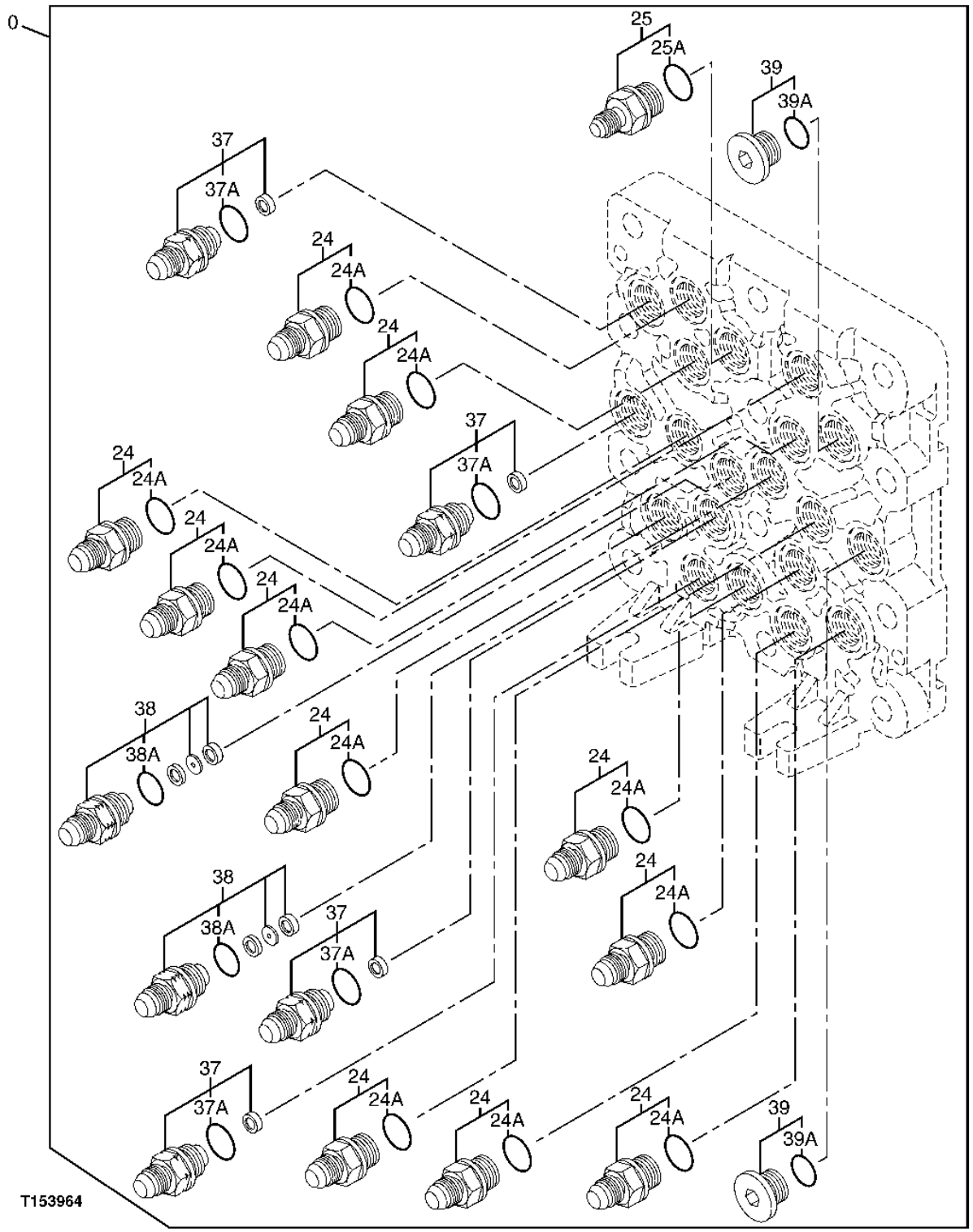

**PILOT SIGNAL MANIFOLD (PILOT CONTROLLER SIDE)**

| KEY | PART NO. | PART NAME | QTY | SERIAL NO. | REMARKS |
|---|---|---|---|---|---|
| 0 | 4468336 | FLOW CONTROL HYD. VALVE | 1 | | (CONTAINS ALL PARTS ON THIS PAGE - ADDITIONAL COMPONENTS LISTED ON PREVIOUS AND FOLLOWING PAGES) |
| 24 | 4451784 | ADAPTER | 11 | | |
| 24A | CH11570 | O-RING | 1 | | (SUB FOR 4509180) |
| 25 | 4451785 | ADAPTER | 1 | | |
| 25A | CH11570 | O-RING | 1 | | (SUB FOR 4509180) |
| 37 | 4451787 | ADAPTER | 4 | | |
| 37A | CH11570 | O-RING | 1 | | (SUB FOR 4509180) |
| 38 | 4451788 | ADAPTER | 2 | | |
| 38A | CH11570 | O-RING | 1 | | (SUB FOR 4509180) |
| 39 | 4451789 | PIPE PLUG | 2 | | |
| 39A | CH11570 | O-RING | 1 | | (SUB FOR 4509180) |

**PILOT SIGNAL MANIFOLD (CONTROL VALVE SIDE)**

T153963 -UN-16APR02

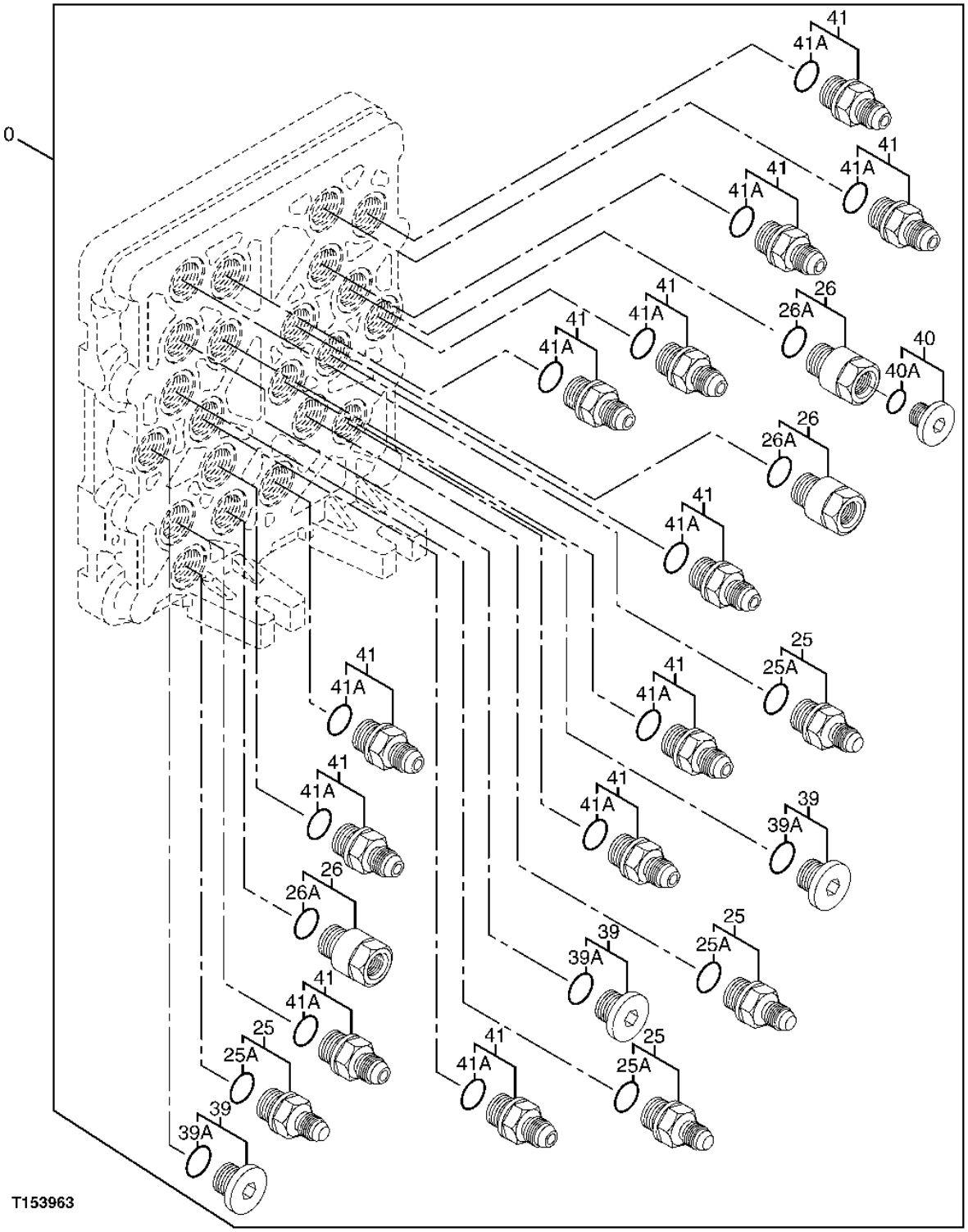

**PILOT SIGNAL MANIFOLD (CONTROL VALVE SIDE)**

| KEY | PART NO. | PART NAME | QTY | SERIAL NO. | REMARKS |
|---|---|---|---|---|---|
| 0 | 4468336 | FLOW CONTROL HYD. VALVE | 1 | | (CONTAINS ALL PARTS ON THIS PAGE -ADDITIONAL COMPONENTS LISTED ON PREVIOUS AND FOLLOWING PAGES) |
| 25 | 4451785 | ADAPTER | 4 | | |
| 25A | CH11570 | O-RING | 1 | | (SUB FOR 4509180) |
| 26 | 4451786 | REDUCER | 3 | | |
| 26A | CH11570 | O-RING | 1 | | (SUB FOR 4509180) |
| 39 | 4451789 | PIPE PLUG | 3 | | |
| 39A | CH11570 | O-RING | 1 | | (SUB FOR 4509180) |
| 40 | 4451790 | PIPE PLUG | 1 | | |
| 40A | M800650 | PACKING | 1 | | (SUB FOR 957366) |
| 41 | 4451797 | ADAPTER | 12 | | |
| 41A | CH11570 | O-RING | 1 | | (SUB FOR 4509180) |

**PILOT SIGNAL MANIFOLD VALVES**

T153962 -UN-16APR02

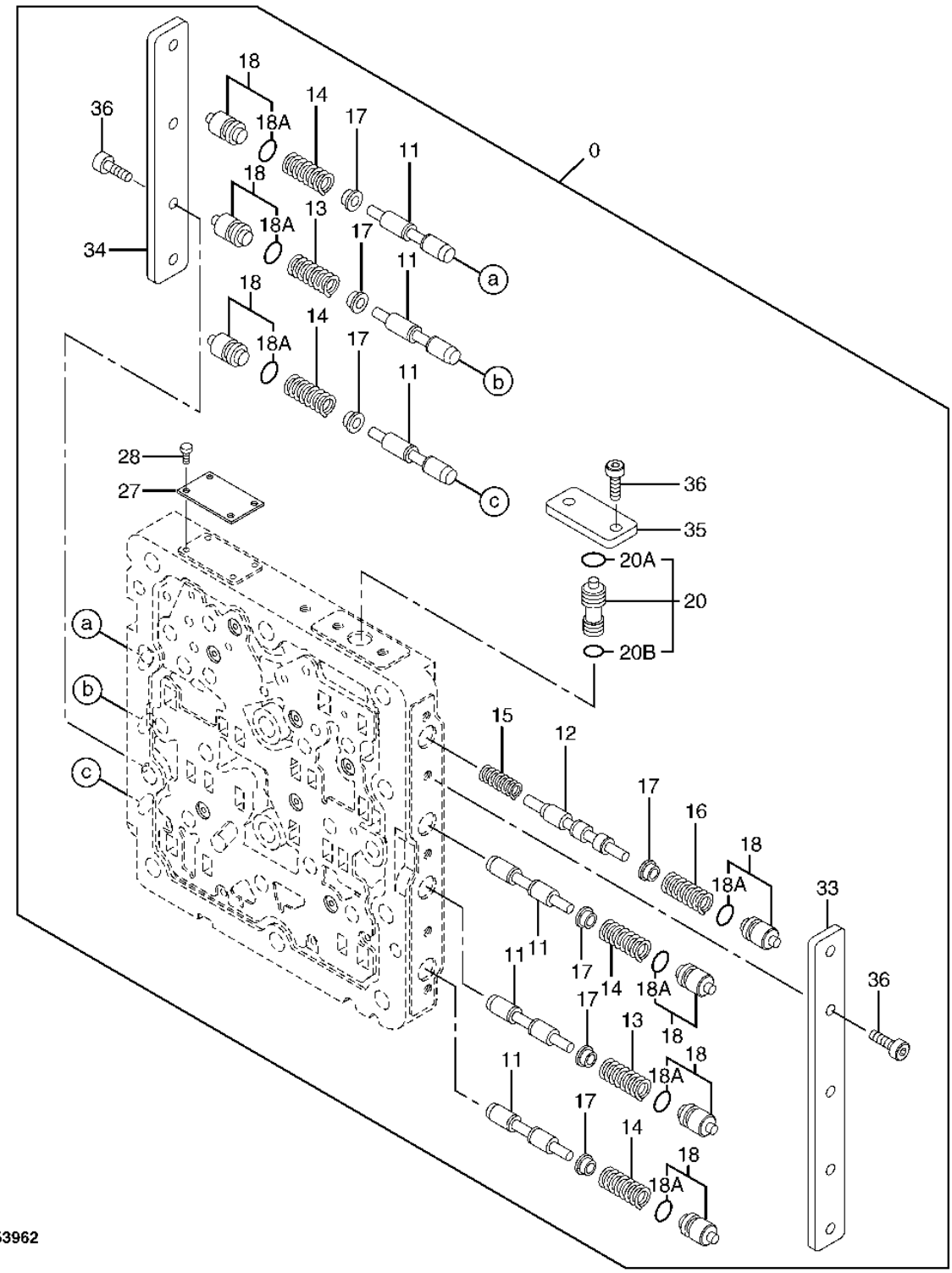

**PILOT SIGNAL MANIFOLD VALVES**

| KEY | PART NO. | PART NAME | QTY | SERIAL NO. | REMARKS |
|---|---|---|---|---|---|
| 0 | 4468336 | FLOW CONTROL HYD. VALVE | 1 | | (CONTAINS ALL PARTS ON THIS PAGE - ADDITIONAL COMPONENTS LISTED ON PREVIOUS PAGES) |
| 11 | 4453819 | SPOOL VALVE | 6 | | |
| 12 | 4453820 | SPOOL VALVE | 1 | | |
| 13 | 0788703 | SPRING | 2 | | |
| 14 | 0788704 | SPRING | 4 | | |
| 15 | 0788705 | SPRING | 1 | | |
| 16 | 0788706 | SPRING | 1 | | |
| 17 | 0788707 | VALVE SEAT | 7 | | |
| 18 | 4452647 | PIPE PLUG | 7 | | |
| 18A | CH11560 | PACKING | 1 | | (SUB FOR 4140436) |
| 20 | 4452648 | SPOOL VALVE | 1 | | (SUB FOR TH4452648) |
| 20A | CH11560 | PACKING | 1 | | (SUB FOR 4140436) |
| 20B | CH10567 | PACKING | 1 | | (SUB FOR 992526) |
| 27 | ..... | PLATE | 1 | | NOT AVAILABLE |
| 28 | ..... | BOLT | 1 | | |
| 33 | 0788710 | PLATE | 1 | | |
| 34 | 0788711 | PLATE | 1 | | |
| 35 | 0788712 | PLATE | 1 | | |
| 36 | 0788713 | BOLT | 11 | | |

**SOLENOID CONTROL VALVE**

T207438 -UN-11FEB05

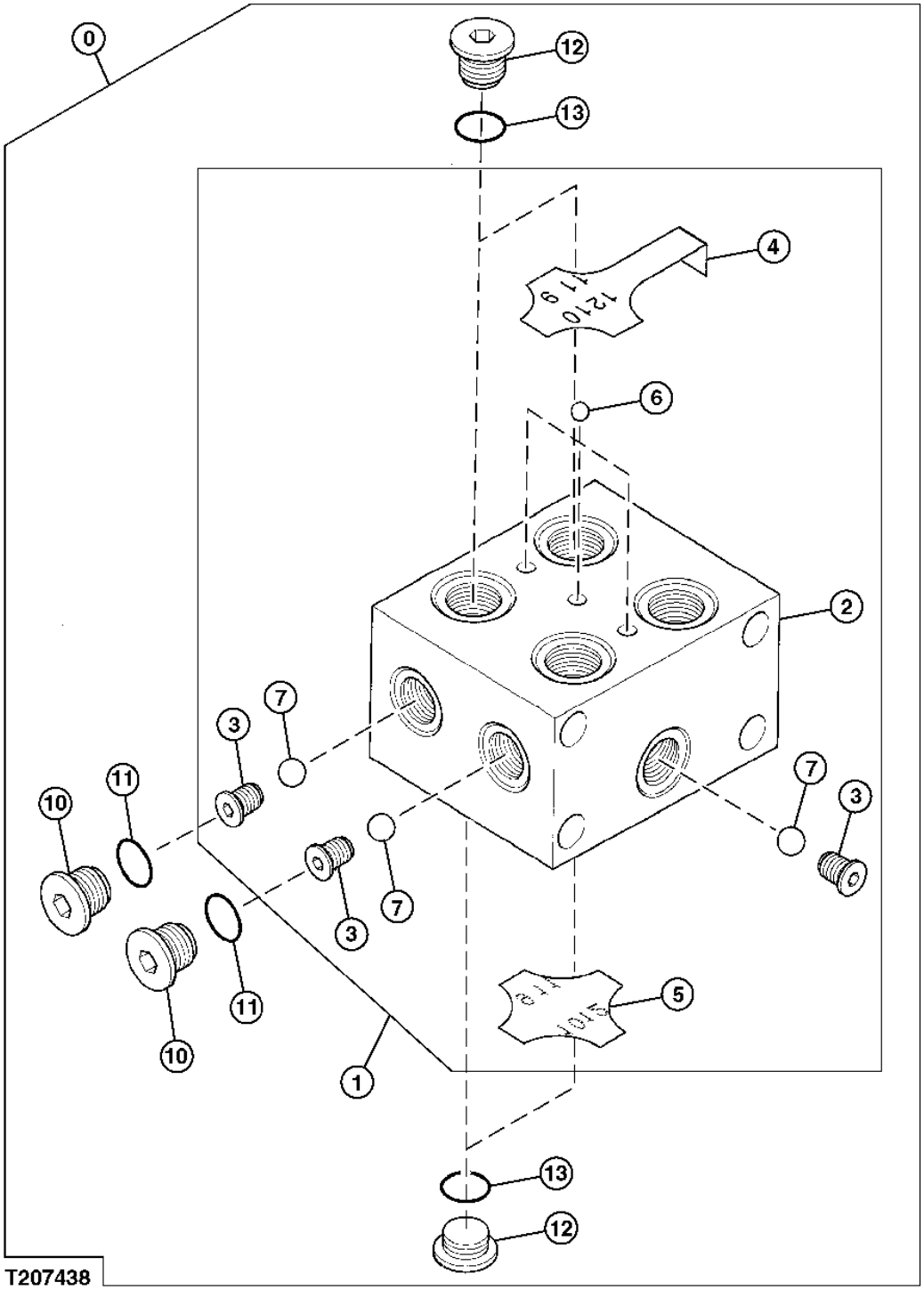

**SOLENOID CONTROL VALVE**

| KEY | PART NO. | PART NAME | QTY | SERIAL NO. | REMARKS |
|---|---|---|---|---|---|
| 0 | 4470134 | VALVE | 1 | | |
| 1 | ..... | HOUSING | 1 | | ( 0408601 NOT AVAILABLE FOR SERVICE) |
| 2 | ..... | HOUSING | 1 | | |
| 3 | ..... | SEAT | 3 | | |
| 4 | ..... | SEAL | 1 | | |
| 5 | ..... | SEAL | 1 | | |
| 6 | ..... | BALL | 3 | | |
| 7 | ..... | BALL | 3 | | |
| 10 | AT120949 | FITTING PLUG | 2 | | (SUB FOR (2) 0314205) |
| 11 | M800650 | PACKING | 2 | | (SUB FOR (2) 957366) |
| 12 | 0309805 | PIPE PLUG | 4 | | |
| 13 | CH11570 | O-RING | 4 | | (SUB FOR (4) 4509180) |

**FLOW CONTROL VALVE**

T207439 -UN-11FEB05

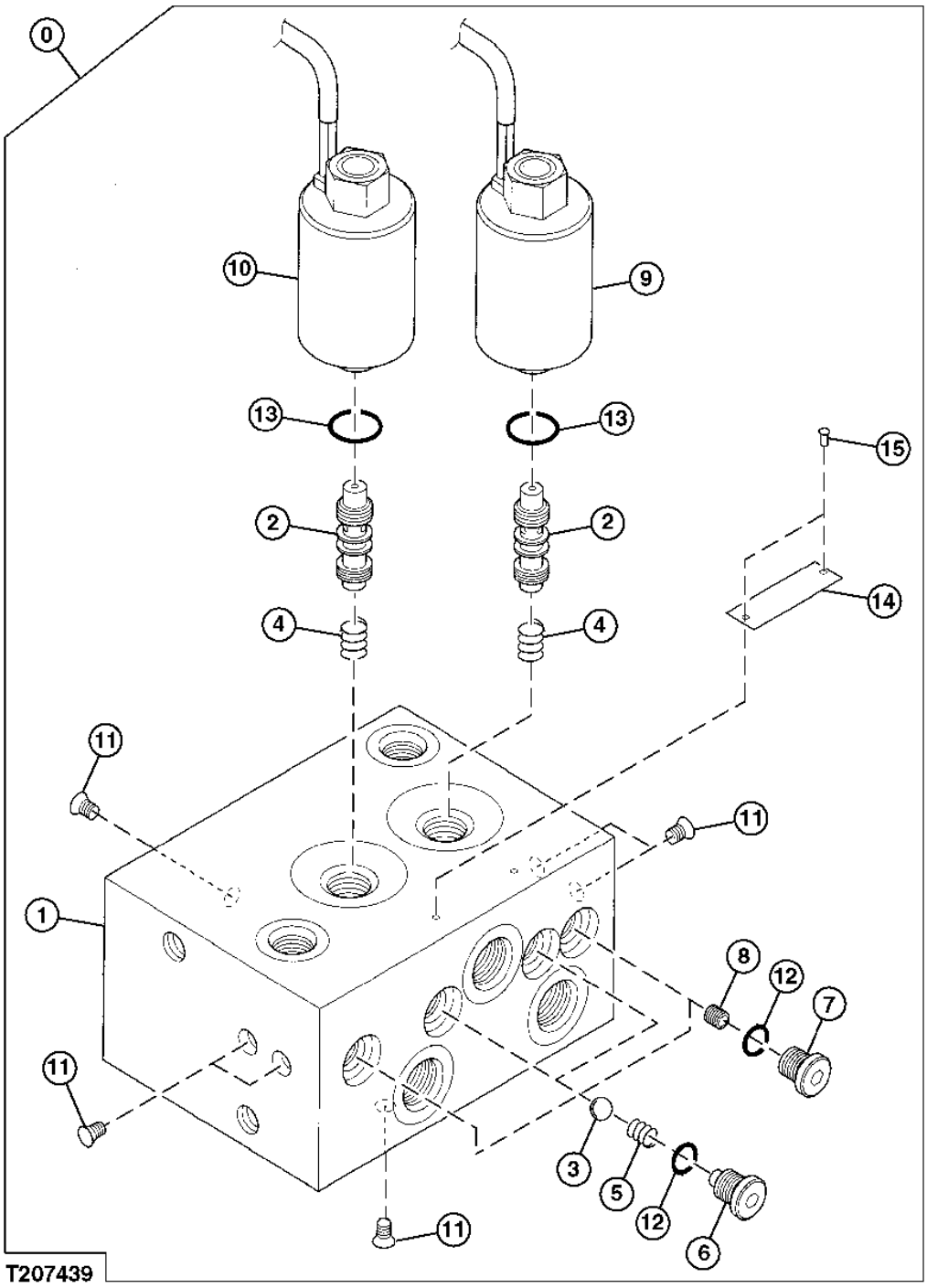

**FLOW CONTROL VALVE**

| KEY | PART NO. | PART NAME | QTY | SERIAL NO. | REMARKS |
|---|---|---|---|---|---|
| 0 | 4454840 | VALVE | 1 | | |
| 1 | ..... | HOUSING | 1 | | |
| 2 | ..... | SPOOL | 2 | | |
| 3 | 0369812 | BALL | 2 | | |
| 4 | 0768101 | SPRING | 2 | | |
| 5 | 0323807 | SPRING | 2 | | |
| 6 | 0323806 | PIPE PLUG | 2 | | |
| 7 | 0215220 | FITTING PLUG | 2 | | |
| 8 | ..... | ORIFICE | 2 | | |
| 9 | 0870402 | SOLENOID HYDRAULIC VALVE | 1 | | |
| 10 | 0870401 | SOLENOID HYDRAULIC VALVE | 1 | | |
| 11 | ..... | PLUG | 6 | | |
| 12 | 4506408 | O-RING | 4 | | |
| 13 | 4509180 | O-RING | 2 | | |
| 14 | ..... | PLATE | 1 | | |
| 15 | ..... | BOLT | 2 | | |

**LOCK VALVE**

T147718 -UN-03DEC01

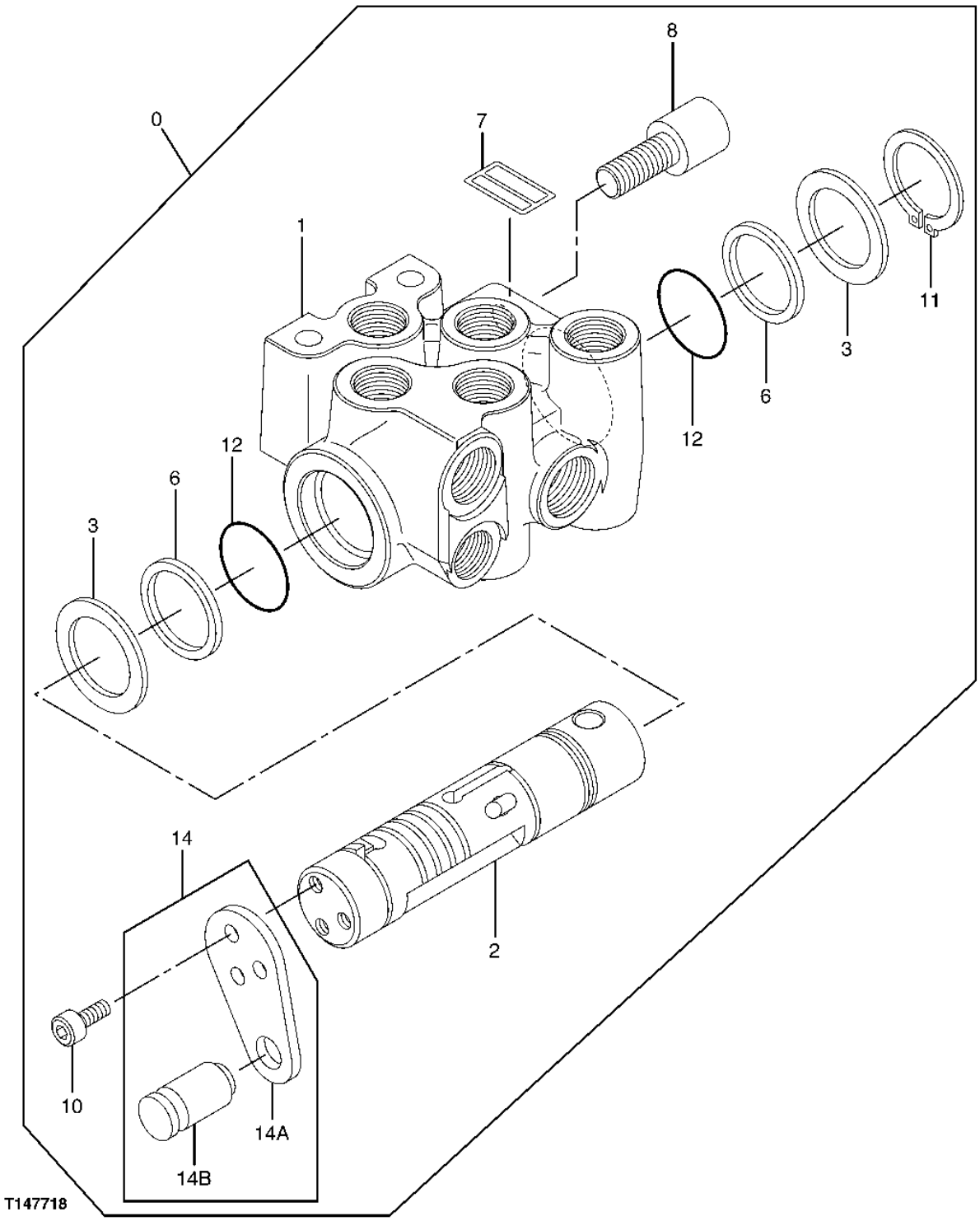

**LOCK VALVE**

| KEY | PART NO. | PART NAME | QTY | SERIAL NO. | REMARKS |
|---|---|---|---|---|---|
| 0 | 4407253 | FLOW CONTROL HYD. VALVE | 1 | | |
| 1 | ..... | HOUSING | 1 | | |
| 2 | ..... | SPOOL VALVE | 1 | | |
| 3 | 0794201 | WASHER | 2 | | (SUB FOR TH0794201) |
| 6 | 0794202 | RING | 2 | | (SUB FOR TH0794202) |
| 7 | ..... | IDENTIFICATION PLATE | 1 | | |
| 8 | 0794203 | PIN FASTENER | 1 | | (SUB FOR TH0794203) |
| 10 | 0794204 | BOLT | 3 | | (SUB FOR TH0794204) |
| 11 | 0794205 | SNAP RING | 1 | | (SUB FOR TH0794205) |
| 12 | 0794206 | O-RING | 2 | | (SUB FOR TH0794206) |
| 14 | 0794207 | BRACKET | 1 | | (SUB FOR TH0794207) |
| 14A | ..... | BRACKET | 1 | | |
| 14B | ..... | PIN | 1 | | |

**BRAKE VALVE**

T207442 -UN-11FEB05

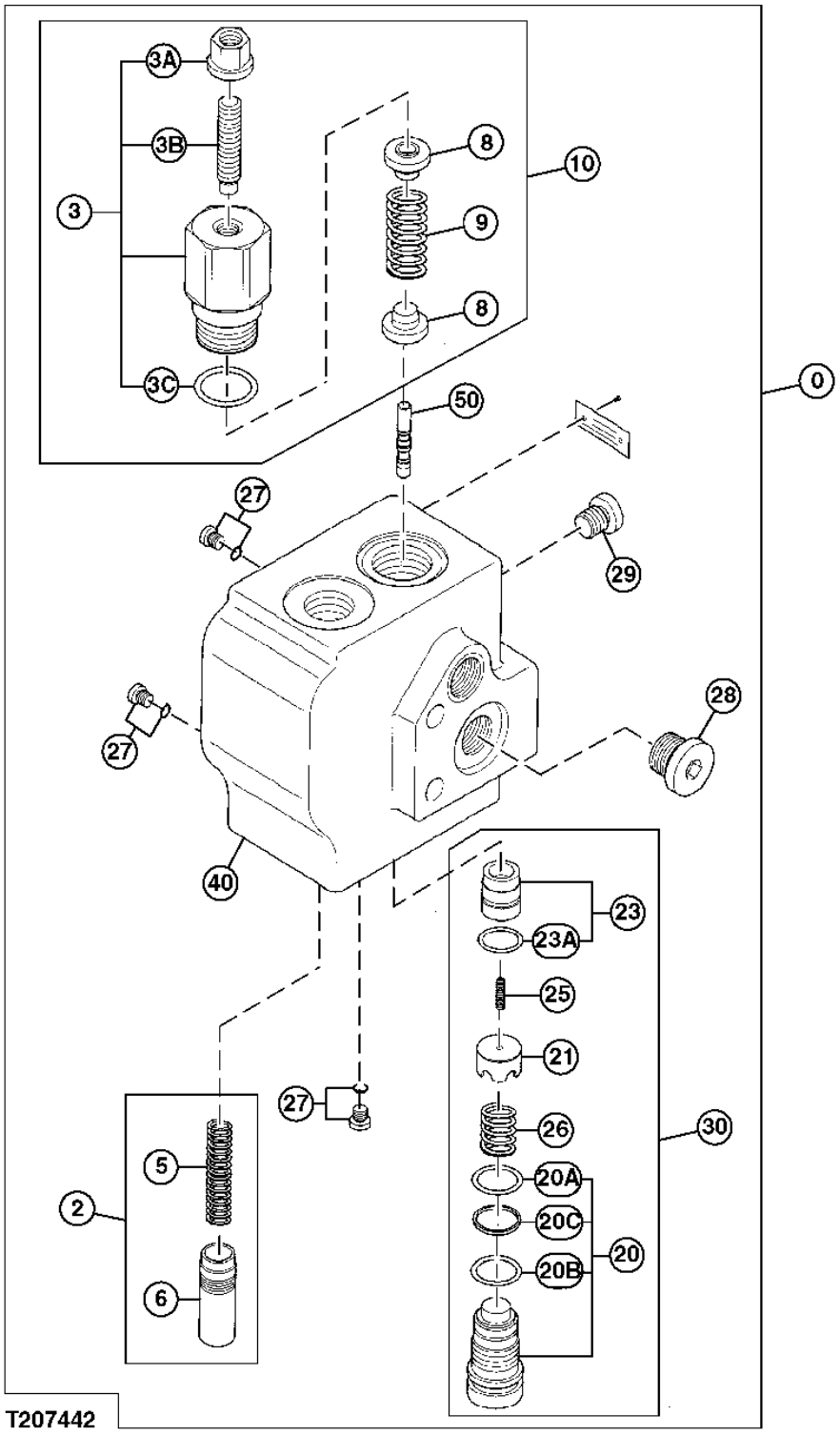

**BRAKE VALVE**

| KEY | PART NO. | PART NAME | QTY | SERIAL NO. | REMARKS |
|---|---|---|---|---|---|
| 0 | 4465009 | VALVE | 1 | | |
| 2 | ..... | SPOOL | 1 | | |
| 3 | ..... | REDUCER | 1 | | |
| 3A | ..... | NUT | 1 | | |
| 3B | ..... | BOLT | 1 | | |
| 3C | ..... | O-RING | 1 | | |
| 5 | 0870303 | COMPRESSION SPRING | 1 | | |
| 6 | 0870304 | SPOOL | 1 | | |
| 8 | 0870301 | PLATE | 2 | | |
| 9 | 0870302 | COMPRESSION SPRING | 1 | | |
| 10 | ..... | VALVE | 1 | | |
| 20 | 0870305 | BASIC CONTROL UNIT | 1 | | |
| 20A | ..... | O-RING | 1 | | |
| 20B | ..... | O-RING | 1 | | |
| 20C | ..... | THRUST RING | 1 | | |
| 21 | 0870307 | SLEEVE | 1 | | |
| 23A | ..... | O-RING | 1 | | |
| 25 | 0870308 | COMPRESSION SPRING | 1 | | |
| 26 | 0870309 | COMPRESSION SPRING | 1 | | |
| 27 | 0870310 | PLUG | 3 | | |
| 28 | 0870312 | PLUG | 1 | | |
| 29 | 0870311 | PLUG | 1 | | |
| 30 | ..... | VALVE | 1 | | |
| 40 | ..... | HOUSING | 1 | | |
| 50 | ..... | SPOOL | 1 | | |

**CONTROL VALVE MOUNTING BRACKETS**

T207602 -UN-03FEB05

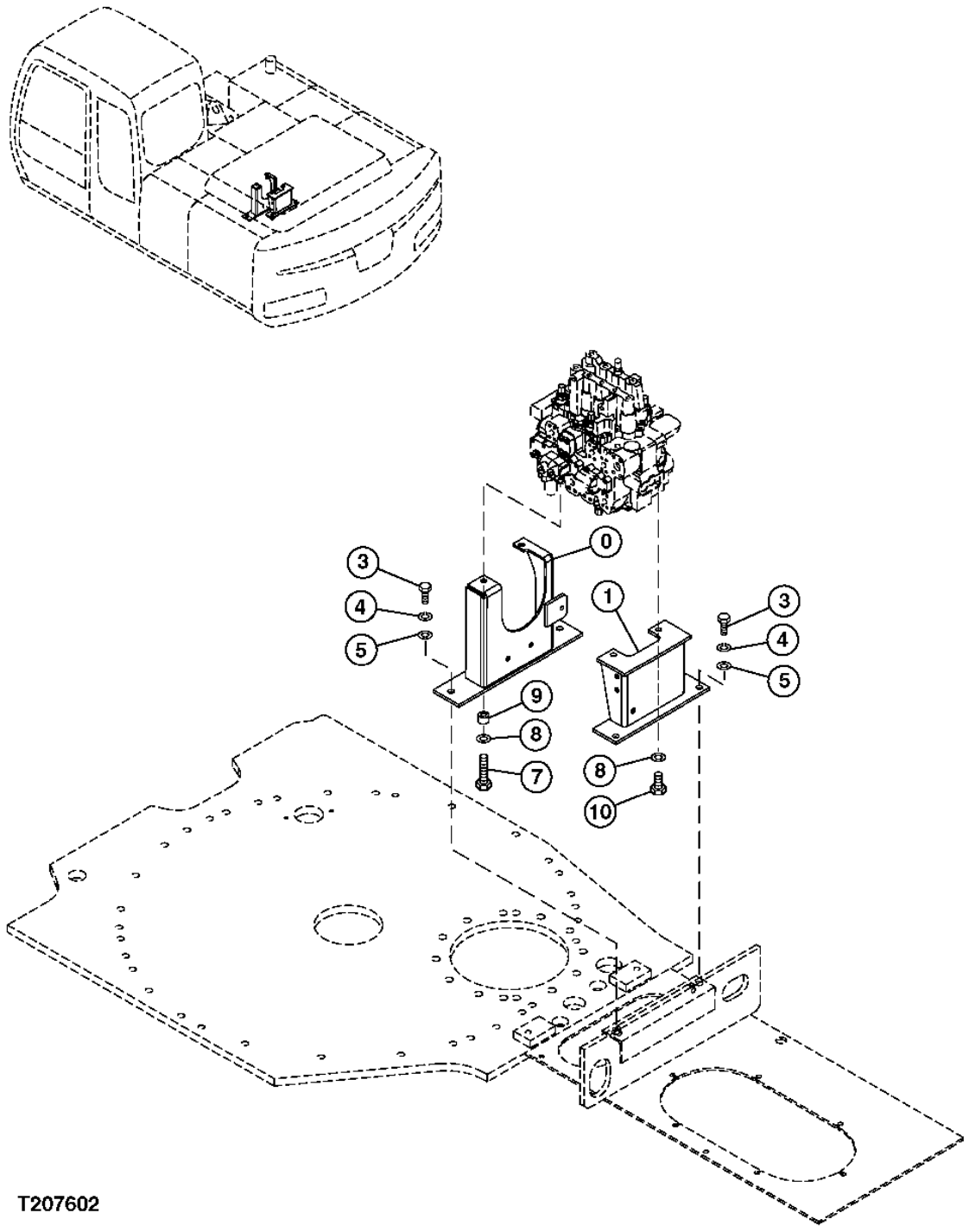

**CONTROL VALVE MOUNTING BRACKETS**

| KEY | PART NO. | PART NAME | QTY | SERIAL NO. | REMARKS |
|---|---|---|---|---|---|
| 0 | 8086522 | BRACKET | 1 | | |
| 1 | 8077221 | BRACKET | 1 | | |
| 3 | 19M7488 | CAP SCREW | 4 | | M16 X 40, (SUB FOR J921640) |
| 4 | 12H294 | LOCK WASHER | 4 | | 15.875 MM, (SUB FOR A590916) |
| 5 | 24M7053 | WASHER | 4 | | 17 X 30 X 3 MM, (SUB FOR A590116) |
| 7 | J921450 | BOLT | 2 | | |
| 8 | J222014 | WASHER | 4 | | |
| 9 | 4364009 | SPACER | 2 | | |
| 10 | 19M7877 | CAP SCREW | 2 | | M14 X 30, (SUB FOR J921430) |

**HYDRAULIC PUMP TO CONTROL VALVE HIGH PRESSURE HOSES**

T207607 -UN-09FEB05

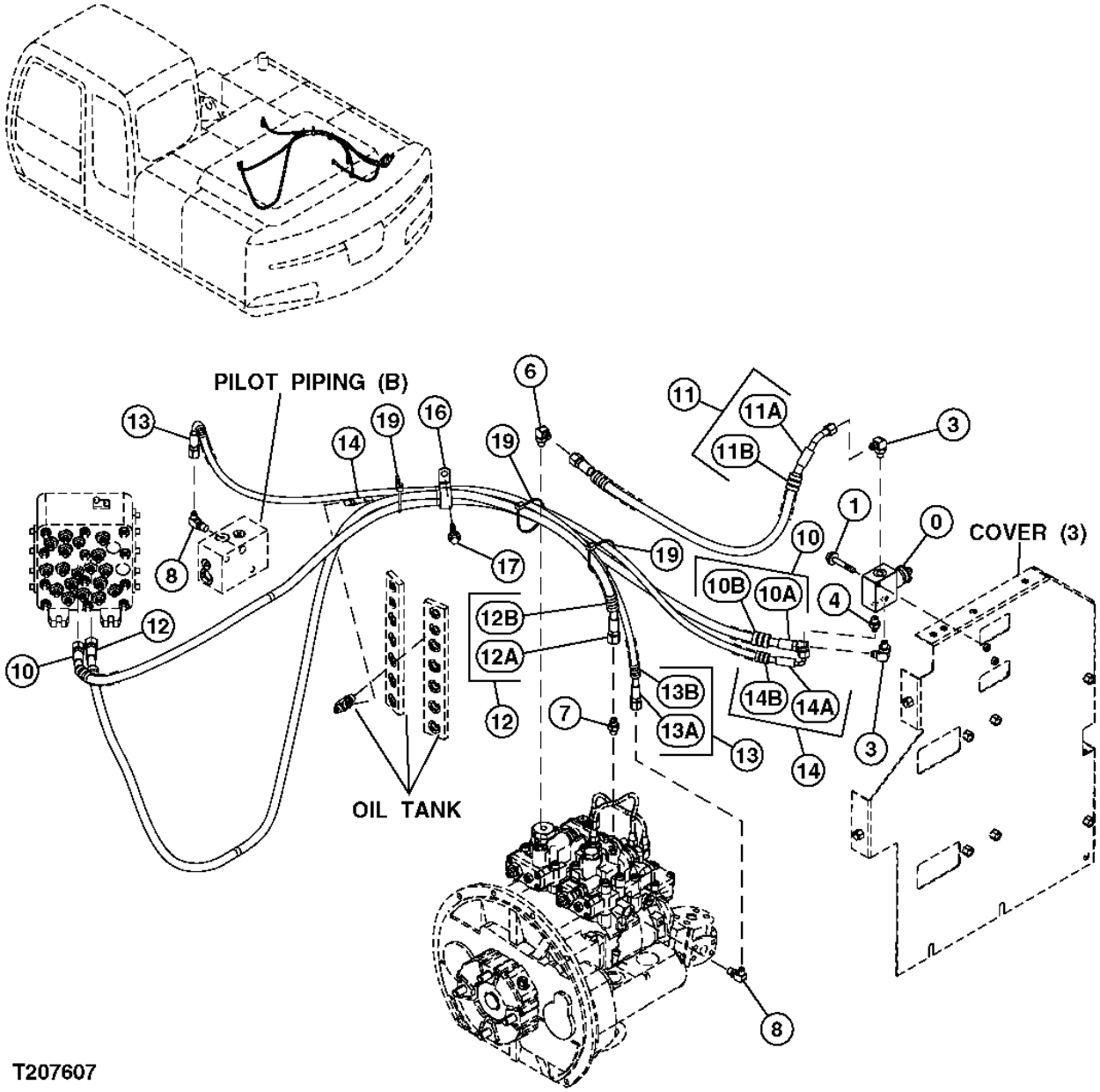

**HYDRAULIC PUMP TO CONTROL VALVE HIGH PRESSURE HOSES**

| KEY | PART NO. | PART NAME | QTY | SERIAL NO. | REMARKS |
|---|---|---|---|---|---|
| 0 | 9218273 | SOLENOID VALVE | 1 | | |
| 1 | ..... | CAP SCREW | 2 | | ( J260855 NO LONGER AVAILABLE) |
| | 19M7184 | CAP SCREW | 1 | | M8 X 55, (SUB FOR J900855) |
| | 24M7055 | WASHER | 1 | | 8.400 X 16 X 1.600 MM, (SUB FOR A590108) |
| 3 | A852323 | ELBOW FITTING | 2 | | |
| 3A | M800650 | PACKING | 1 | | (SUB FOR 957366) |
| 4 | A852122 | ADAPTER | 1 | | |
| 4A | M800650 | PACKING | 1 | | (SUB FOR 957366) |
| 6 | A852323 | ELBOW FITTING | 1 | | |
| 6A | M800650 | PACKING | 1 | | (SUB FOR 957366) |
| 7 | A852123 | ADAPTER | 1 | | |
| 7A | M800650 | PACKING | 1 | | (SUB FOR 957366) |
| 8 | 4154670 | ELBOW FITTING | 2 | | (SUB FOR A852322) |
| 8A | M800650 | PACKING | 1 | | (SUB FOR 957366) |
| 10 | 4327293 | HOSE GUARD | 1 | | (SUB FOR 9204536) |
| 10A | 4449272 | HYDRAULIC HOSE | 1 | | |
| 10B | 4327293 | HOSE GUARD | 3 | | |
| 11 | ..... | HYDRAULIC HOSE | 1 | | ( 9223921 NOT AVAILABLE FOR SERVICE) |
| 11A | 4489612 | HOSE | 1 | | |
| 11B | 4327293 | HOSE GUARD | 1 | | |
| 12 | ..... | HYDRAULIC HOSE | 1 | | ( 9232900 NOT AVAILABLE FOR SERVICE) |
| 12A | 4488921 | HOSE | 1 | | |
| 12B | 4327293 | HOSE GUARD | 6 | | |
| 13 | ..... | HYDRAULIC HOSE | 1 | | ( 9232901 NOT AVAILABLE FOR SERVICE) |
| 13A | 4611509 | HOSE | 1 | | |
| 13B | 4327293 | HOSE GUARD | 2 | | |
| 14 | ..... | HYDRAULIC HOSE | 1 | | ( 9232902 NOT AVAILABLE FOR SERVICE) |
| 14A | 4611510 | HOSE | 1 | | |
| 14B | 4327293 | HOSE GUARD | 2 | | |
| 16 | AT131725 | CLIP | 1 | | (SUB FOR 4190291) |
| 17 | ..... | CAP SCREW | 1 | | ( J271025 NO LONGER AVAILABLE) |
| | 19M7402 | CAP SCREW | 1 | | M10 X 25, (SUB FOR J901025) |
| | 24M7346 | WASHER | 1 | | 11 X 20 X 2 MM, (SUB FOR J222010) |
| 19 | H77698 | TIE BAND | 3 | | (SUB FOR 4055312) |

**HIGH PRESSURE HYDRAULIC LINES (PUMP TO CONTROL VALVE)**

T207115 -UN-31JAN05

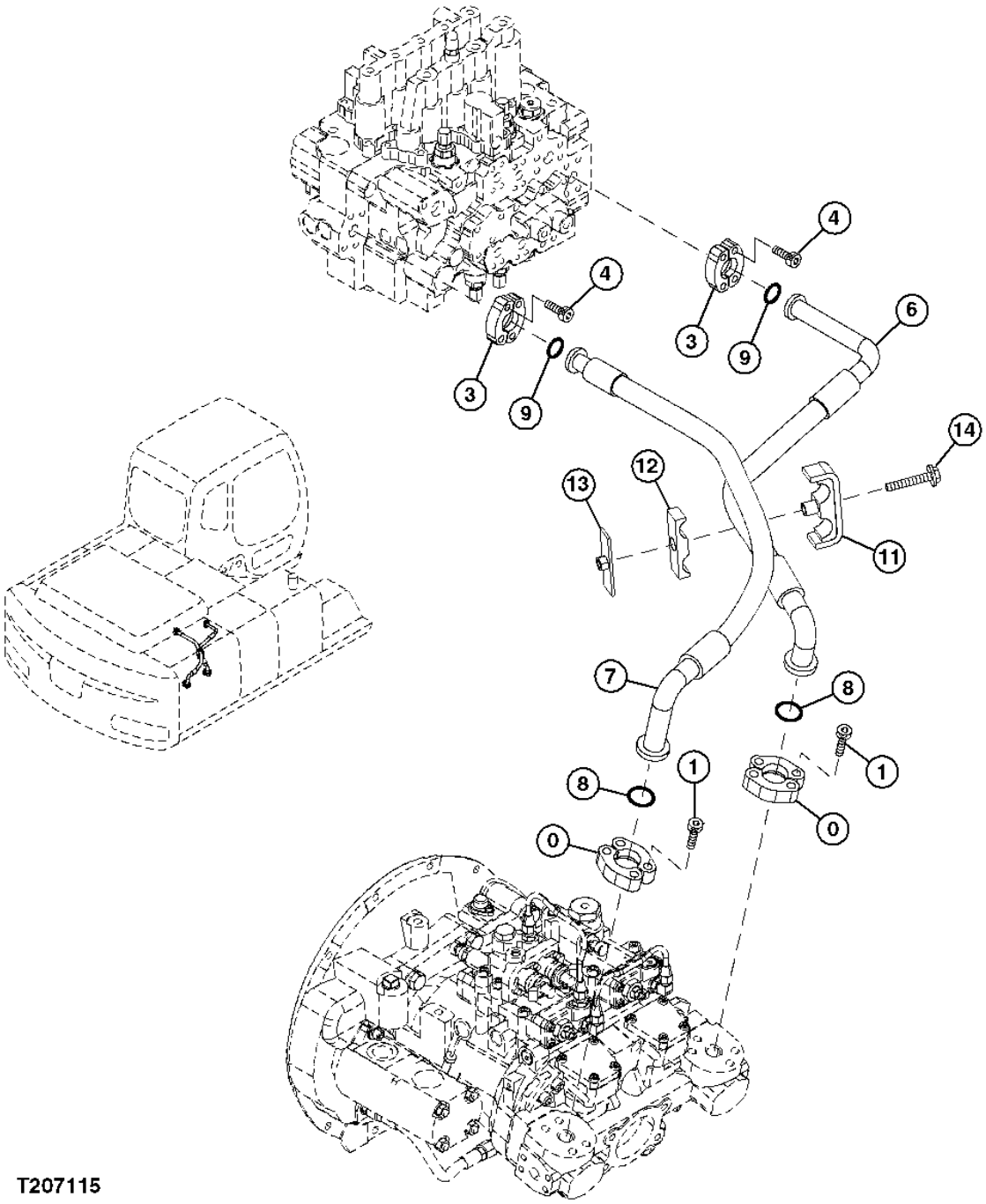


T207115

**HIGH PRESSURE HYDRAULIC LINES (PUMP TO CONTROL VALVE)**

| KEY | PART NO. | PART NAME | QTY | SERIAL NO. | REMARKS |
|---|---|---|---|---|---|
| 0 | 4085560 | FLANGE FITTING | 8 | | |
| 1 | J781240 | BOLT | 8 | | |
| 3 | T107446 | FLANGE FITTING | 4 | | (SUB FOR 4506459) |
| 4 | J781030 | SCREW | 1 | | |
| 6 | 4488217 | HOSE | 3 | | |
| 7 | 4488220 | HOSE | 1 | | |
| 8 | T78313 | O-RING | 2 | | (SUB FOR 966993) |
| 9 | T59014 | O-RING | 2 | | (SUB FOR 971489) |
| 11 | 8062021 | CLAMP | 1 | | |
| 12 | 3072291 | CLAMP | 1 | | |
| 13 | 9738975 | CLAMP | 1 | | |
| 14 | ..... | BOLT | 1 | | ( J271275 NOT AVAILABLE FOR SERVICE) |
| | 19M8088 | CAP SCREW | 1 | | M12 X 75, (SUB FOR J901275) |
| | 24M7345 | WASHER | 1 | | 13.500 X 24 X 2.500 MM, (SUB FOR J222012) |

**CONTROL VALVE, SIGNAL MANIFOLD TO PILOT RELIEF VALVE**

T207616 -UN-22FEB05

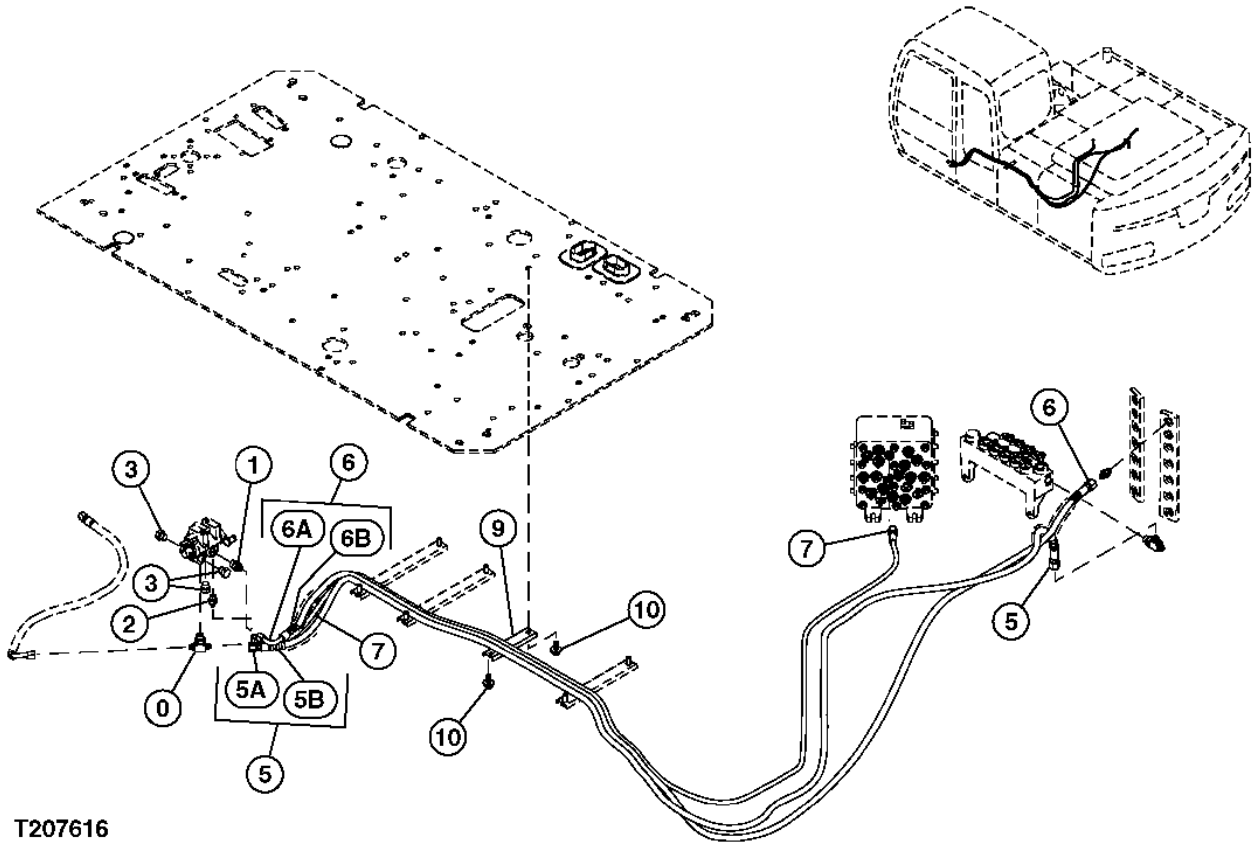

**CONTROL VALVE, SIGNAL MANIFOLD TO PILOT RELIEF VALVE**

| KEY | PART NO. | PART NAME | QTY | SERIAL NO. | REMARKS |
|---|---|---|---|---|---|
| 0 | A852533 | TEE FITTING | 1 | | |
| 0A | CH11570 | O-RING | 1 | | (SUB FOR 4509180) |
| 1 | A852133 | ADAPTER | 1 | | |
| 1A | CH11570 | O-RING | 1 | | (SUB FOR 4509180) |
| 2 | A852122 | ADAPTER | 1 | | |
| 2A | M800650 | PACKING | 1 | | (SUB FOR 957366) |
| 3 | A885003 | PIPE PLUG | 3 | | |
| 3A | CH11570 | O-RING | 1 | | (SUB FOR 4509180) |
| 5 | ..... | HYDRAULIC HOSE | 1 | | ( 9232916 NOT AVAILABLE FOR SERVICE) |
| 5A | 4488333 | HOSE | 1 | | |
| 5B | 4327293 | HOSE GUARD | 4 | | |
| 6 | ..... | HYDRAULIC HOSE | 1 | | ( 9232919 NOT AVAILABLE FOR SERVICE) |
| 6A | 4442322 | HOSE | 1 | | (SUB FOR 4600154) |
| 6B | 4327293 | HOSE GUARD | 4 | | |
| 7 | 4602039 | HOSE | 1 | | |
| 9 | 4342692 | CHANNEL | 1 | | |
| 10 | ..... | CAP SCREW | 2 | | ( J271025 NO LONGER AVAILABLE) |
| | 19M7402 | CAP SCREW | 1 | | M10 X 25, (SUB FOR J901025) |
| | 24M7346 | WASHER | 1 | | 11 X 20 X 2 MM, (SUB FOR J222010) |

**ROTARY MANIFOLD AND RELIEF VALVE/ACCUMULATOR HOSES TO CONTROL VALVE**

T207519 -UN-08FEB05

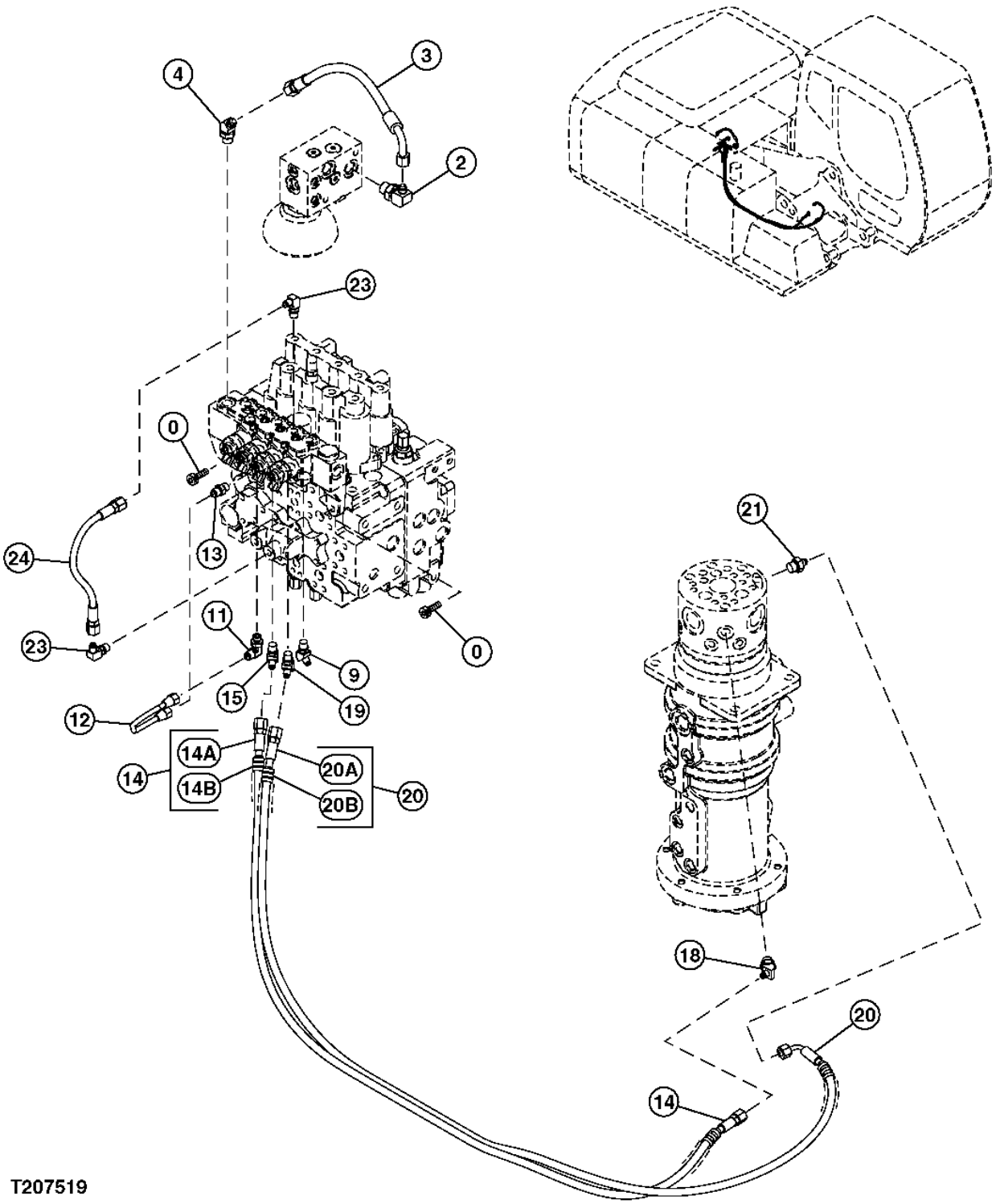

**ROTARY MANIFOLD AND RELIEF VALVE/ACCUMULATOR HOSES TO CONTROL VALVE**

| KEY | PART NO. | PART NAME | QTY | SERIAL NO. | REMARKS |
|---|---|---|---|---|---|
| 0 | J781030 | SCREW | 2 | | |
| 2 | A852343 | ELBOW FITTING | 1 | | |
| | 4506418 | O-RING | 1 | | |
| 3 | 4436254 | HYDRAULIC HOSE | 1 | | |
| 4 | 4190244 | ELBOW FITTING | 1 | | (SUB FOR A852233) |
| | CH11570 | O-RING | 1 | | |
| 9 | A852222 | ELBOW FITTING | 1 | | |
| | M800650 | PACKING | 1 | | (SUB FOR 957366) |
| 11 | 4293950 | ELBOW FITTING | 1 | | |
| | M800650 | PACKING | 1 | | (SUB FOR 957366) |
| 12 | 4480238 | LINE | 1 | | |
| 13 | 4255304 | ADAPTER | 1 | | |
| | M800650 | PACKING | 1 | | (SUB FOR 957366) |
| 14 | ..... | HOSE | 1 | | ( 9233238 IS NOT AVAILABLE FOR SERVICE) |
| 14A | 4611826 | HOSE | 1 | | |
| 14B | 4327293 | HOSE GUARD | 3 | | |
| 15 | A852222 | ELBOW FITTING | 1 | | |
| | M800650 | PACKING | 1 | | (SUB FOR 957366) |
| 18 | A852232 | FITTING PLUG | 1 | | |
| | CH11570 | O-RING | 1 | | |
| 19 | A852222 | ELBOW FITTING | 1 | | |
| | M800650 | PACKING | 1 | | (SUB FOR 957366) |
| 20 | ..... | HOSE | 1 | | ( 9221986 IS NOT AVAILABLE FOR SERVICE) |
| 20A | 4484583 | HOSE | 1 | | |
| 20B | 4327293 | HOSE GUARD | 3 | | |
| 21 | A852132 | ADAPTER | 1 | | |
| | CH11570 | O-RING | 1 | | |
| 23 | 4154670 | ELBOW FITTING | 2 | | (SUB FOR A852322) |
| | M800650 | PACKING | 1 | | (SUB FOR 957366) |
| 24 | 4437397 | HYDRAULIC HOSE - FABRICATE | 1 | | (SUB FOR 4451995) |

**PILOT SIGNAL MANIFOLD HOSES TO CONTROL VALVE**

T207520 -UN-08FEB05

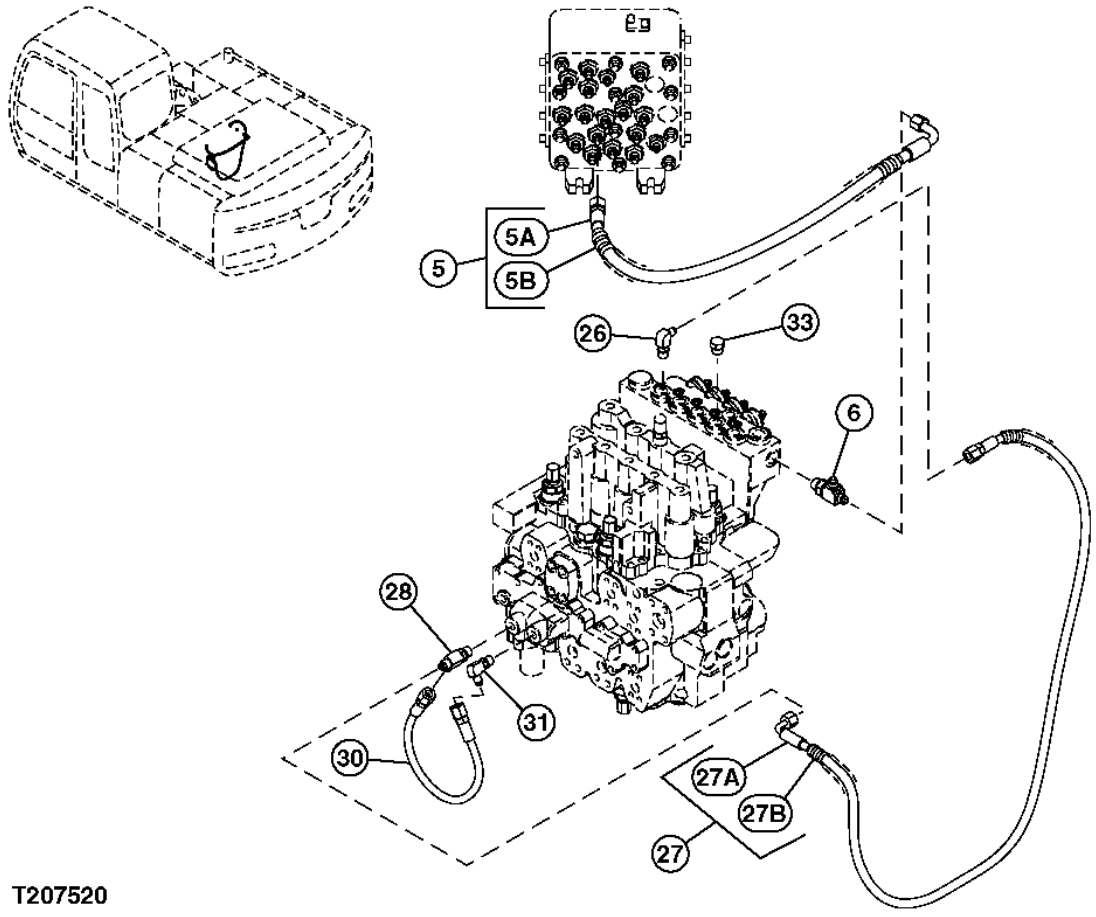


T207520

**PILOT SIGNAL MANIFOLD HOSES TO CONTROL VALVE**

| KEY | PART NO. | PART NAME | QTY | SERIAL NO. | REMARKS |
|---|---|---|---|---|---|
| 5 | ..... | HOSE | 1 | | ( 9235883 IS NOT AVAILABLE FOR SERVICE) |
| 5A | 4615475 | HOSE | 1 | | |
| 5B | 4327293 | HOSE GUARD | 2 | | |
| 6 | A852433 | TEE FITTING | 1 | | |
| | CH11570 | O-RING | 1 | | (SUB FOR 4509180) |
| 26 | 4154670 | ELBOW FITTING | 1 | | (SUB FOR A852322) |
| | M800650 | PACKING | 1 | | (SUB FOR 957366) |
| 27 | ..... | HOSE | 1 | | ( 9221987 IS NOT AVAILABLE FOR SERVICE) |
| 27A | 4484584 | HOSE | 1 | | |
| 27B | 4327293 | HOSE GUARD | 2 | | |
| 28 | A852422 | TEE FITTING | 1 | | |
| | M800650 | PACKING | 1 | | (SUB FOR 957366) |
| 30 | 4442331 | HYDRAULIC HOSE - FABRICATE | 1 | | |
| 31 | 4154670 | ELBOW FITTING | 1 | | |
| | M800650 | PACKING | 1 | | (SUB FOR 957366) |
| 33 | A885002 | PLUG | 1 | | |
| | M800650 | PACKING | 1 | | (SUB FOR 957366) |

**HYDRAULIC LINES (CONTROL VALVE TO ROTARY MANIFOLD)**

T207325 -UN-31JAN05

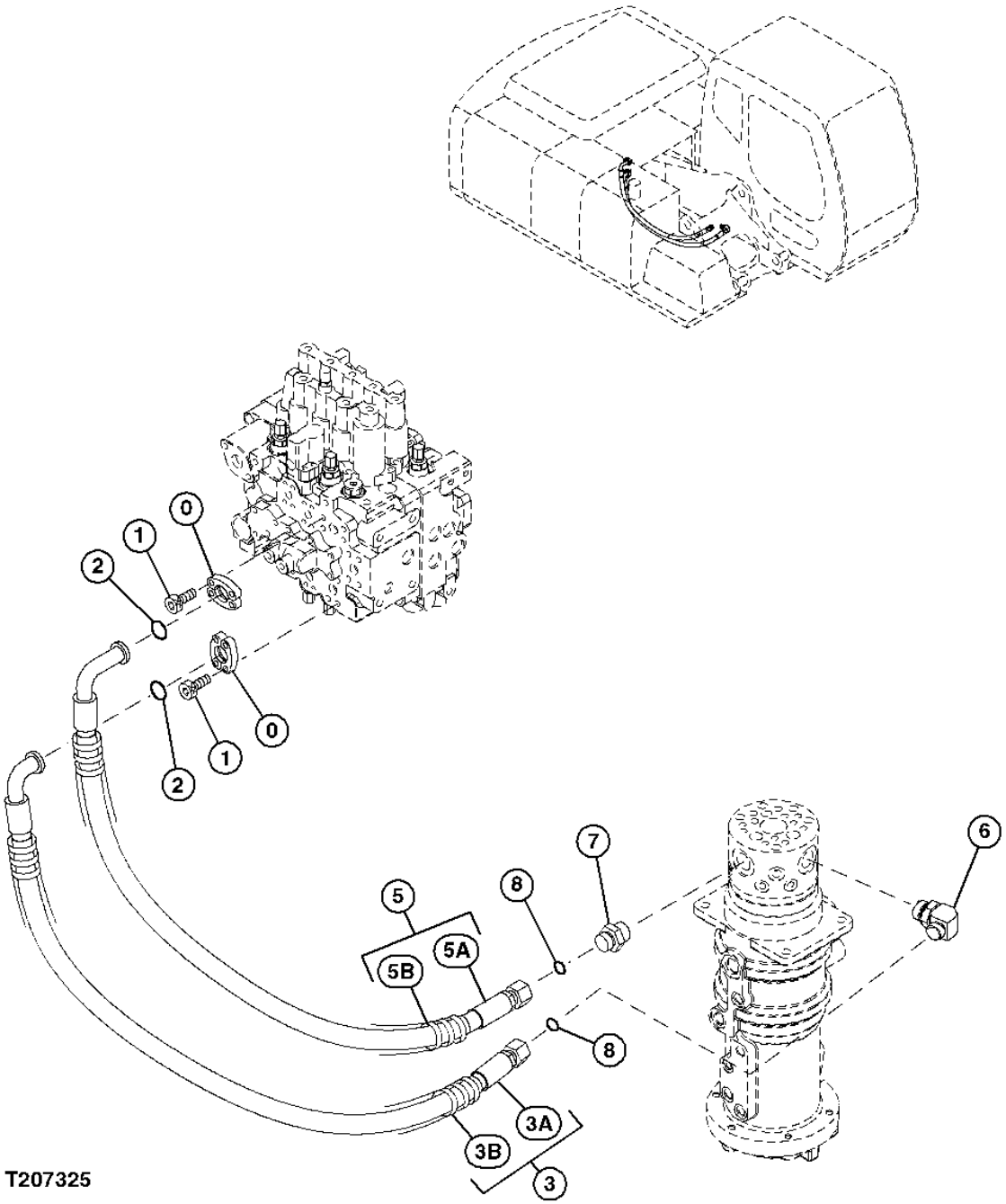

**HYDRAULIC LINES (CONTROL VALVE TO ROTARY MANIFOLD)**

| KEY | PART NO. | PART NAME | QTY | SERIAL NO. | REMARKS |
|---|---|---|---|---|---|
| 0 | 986910 | FLANGE FITTING | 4 | | |
| 1 | J781030 | SCREW | 8 | | |
| 2 | 971489 | O-RING | 2 | | |
| 3 | ..... | HOSE | 1 | | ( 9235877 NOT AVAILABLE FOR SERVICE) |
| 3A | 4615471 | HOSE | 1 | | |
| 3B | 4327294 | HOSE GUARD | 4 | | |
| 5 | ..... | HOSE | 1 | | ( 9232894 NOT AVAILABLE FOR SERVICE) |
| 5A | 4466540 | HOSE | 1 | | |
| 5B | 4327294 | HOSE GUARD | 3 | | |
| 6 | A853386 | ELBOW FITTING | 1 | | |
| | 4506429 | O-RING | 1 | | |
| 7 | A853166 | ADAPTER | 1 | | |
| | 4506429 | O-RING | 1 | | |
| 8 | 4187308 | O-RING | 2 | | |

**INLET HYDRAULIC PUMP HOSES TO OIL TANK**

T206955 -UN-20JAN05

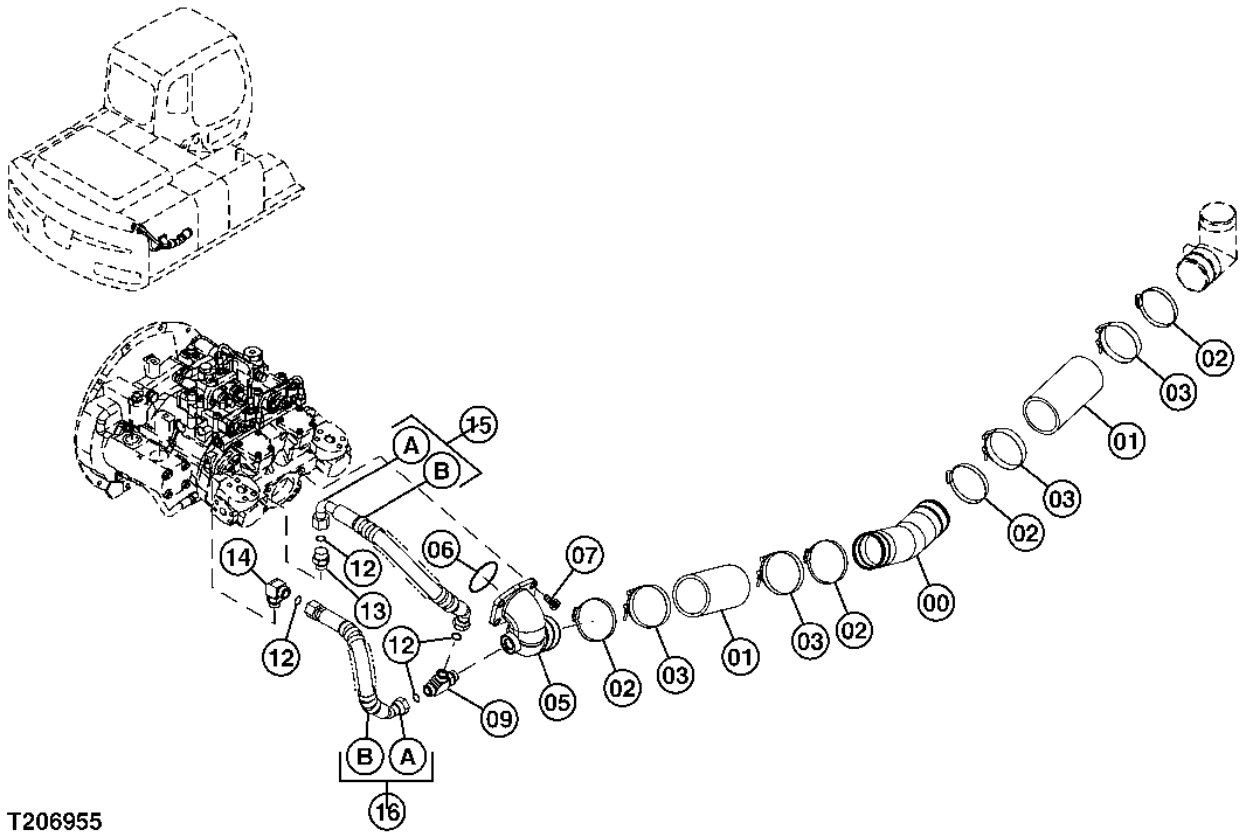


T206955

**INLET HYDRAULIC PUMP HOSES TO OIL TANK**

| KEY | PART NO. | PART NAME | QTY | SERIAL NO. | REMARKS |
|---|---|---|---|---|---|
| 0 | 4485068 | LINE | 1 | | |
| 1 | 4348414 | HOSE | 2 | | |
| 2 | AH103182 | HOSE CLAMP | 4 | | (SUB FOR 4507397) |
| 3 | AT56658 | HOSE CLAMP | 4 | | (SUB FOR 4283535) |
| 5 | 2037825 | MANIFOLD | 1 | | |
| 6 | CH17854 | PACKING | 2 | | (SUB FOR A811085) |
| 7 | J781230 | SCREW | 4 | | |
| 9 | A853466 | FUEL TANK | 1 | | |
| | 4506424 | O-RING | 1 | | |
| 12 | T77858 | O-RING | 4 | | (SUB FOR 4187308) |
| 13 | A853166 | ADAPTER | 1 | | |
| | 4506424 | O-RING | 1 | | |
| 14 | A853366 | ELBOW FITTING | 1 | | |
| | 4506424 | O-RING | 1 | | |
| 15 | ..... | HOSE | 1 | | ( 9227754 IS NOT AVAILABLE FOR SERVICE) |
| 15A | 4605450 | HOSE | 1 | | |
| 15B | 4327294 | HOSE GUARD | 1 | | |
| 16 | ..... | HOSE | 1 | | ( 9227755 IS NOT AVAILABLE FOR SERVICE) |
| 16A | 4605451 | HOSE | 1 | | |
| 16B | 4327294 | HOSE GUARD | 1 | | |

**AUXILIARY HYDRAULIC LINE (TO CONTROL VALVE)**

T207326 -UN-31JAN05

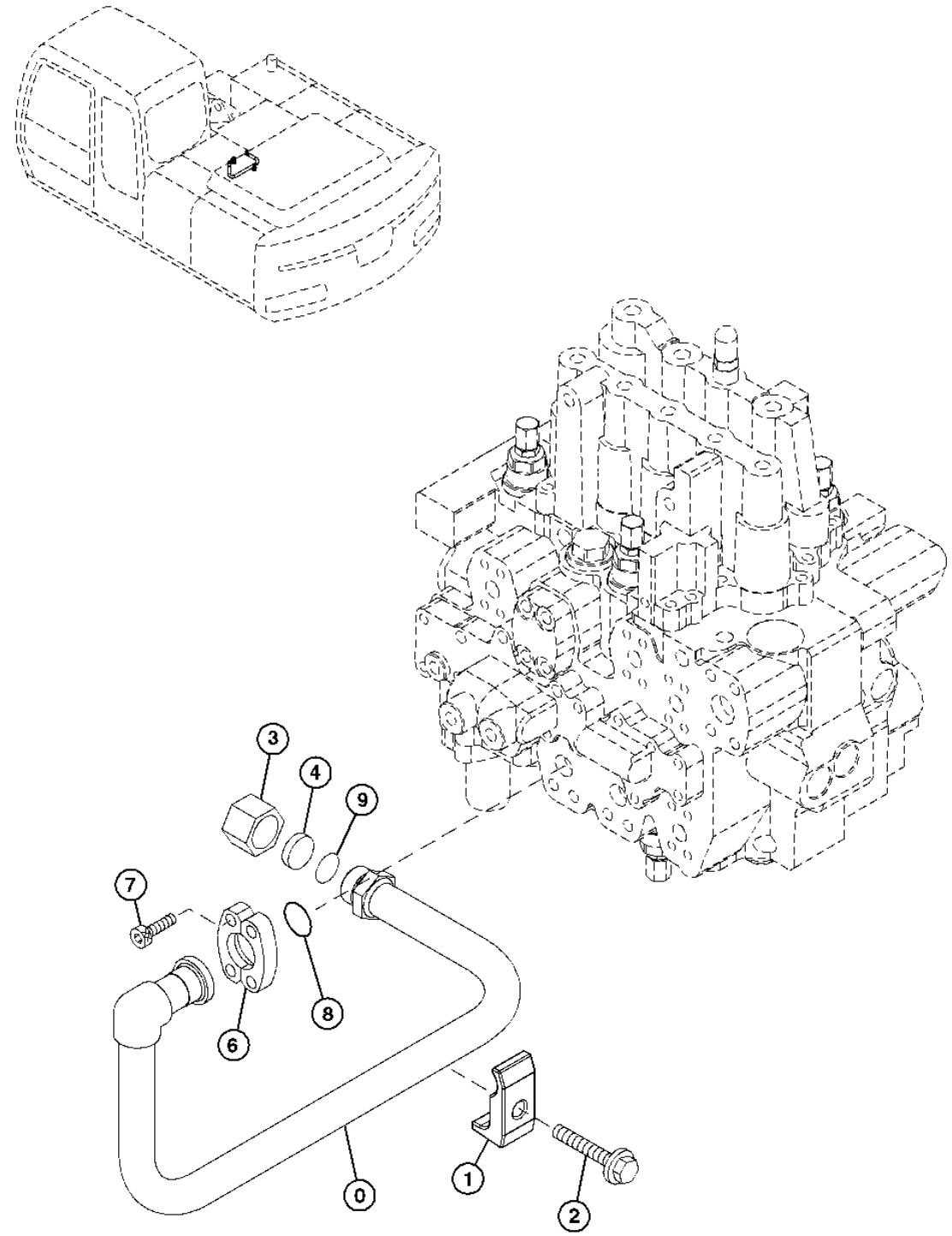


T207326

**AUXILIARY HYDRAULIC LINE (TO CONTROL VALVE)**

| KEY | PART NO. | PART NAME | QTY | SERIAL NO. | REMARKS |
|---|---|---|---|---|---|
| 0 | 8080641 | PIPE | 1 | | |
| 1 | 4190126 | CLAMP | 1 | | |
| 2 | ..... | BOLT | 1 | | ( J271265 NOT AVAILABLE FOR SERVICE) |
| | J901265 | CAP SCREW | 1 | | |
| | J222012 | WASHER | 1 | | |
| 3 | 4188136 | TUBE NUT | 2 | | |
| 4 | 4189094 | FITTING PLUG | 1 | | |
| 6 | 986910 | FLANGE FITTING | 2 | | |
| 7 | J781030 | SCREW | 4 | | |
| 8 | 971489 | O-RING | 1 | | |
| 9 | 4187308 | O-RING | 1 | | |

**2 PIECE BOOM HYDRAULIC LINES**

T207327 -UN-31JAN05

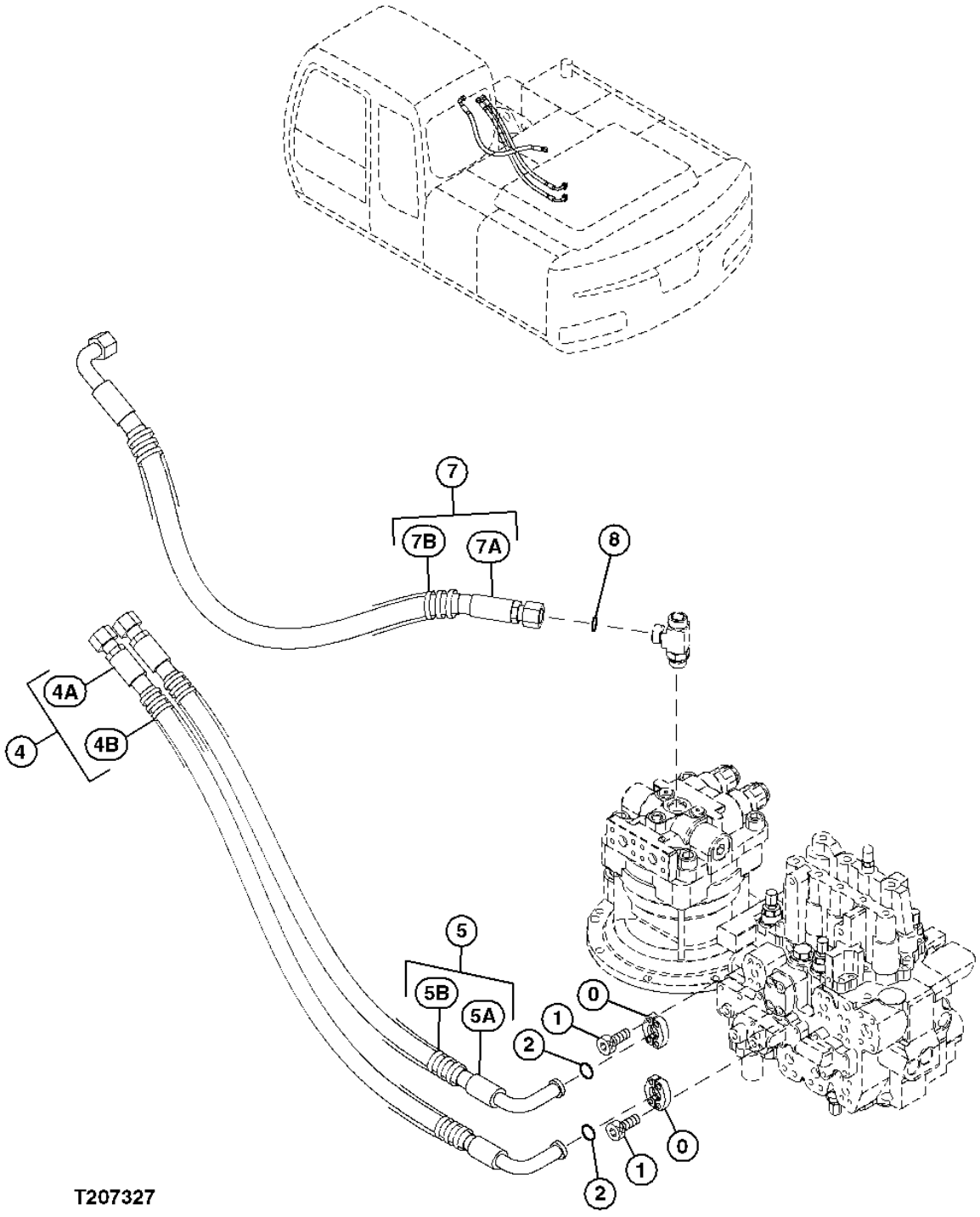

**2 PIECE BOOM HYDRAULIC LINES**

| KEY | PART NO. | PART NAME | QTY | SERIAL NO. | REMARKS |
|---|---|---|---|---|---|
| 0 | 4510173 | FLANGE FITTING | 4 | | |
| 1 | J780825 | SCREW | 8 | | |
| 2 | 4510167 | O-RING | 2 | | |
| 4 | ..... | HOSE | 1 | | ( 9209494 NOT AVAILABLE FOR SERVICE) |
| 4A | 4467272 | HOSE | 1 | | |
| 4B | 4327294 | HOSE GUARD | 2 | | |
| 5 | 9197392 | HYDRAULIC HOSE | 1 | | |
| 5A | 4448755 | HYDRAULIC HOSE | 1 | | |
| 5B | 4327294 | HOSE GUARD | 2 | | |
| 7 | ..... | HOSE | 1 | | ( 9152468 NOT AVAILABLE FOR SERVICE) |
| 7A | 4369448 | HOSE | 1 | | |
| 7B | 4327294 | HOSE GUARD | 3 | | |
| 8 | 4187308 | O-RING | 1 | | |

**PILOT LINES (HYDRAULIC VALVE TO PILOT SIGNAL MANIFOLD)**

T207523 -UN-08FEB05

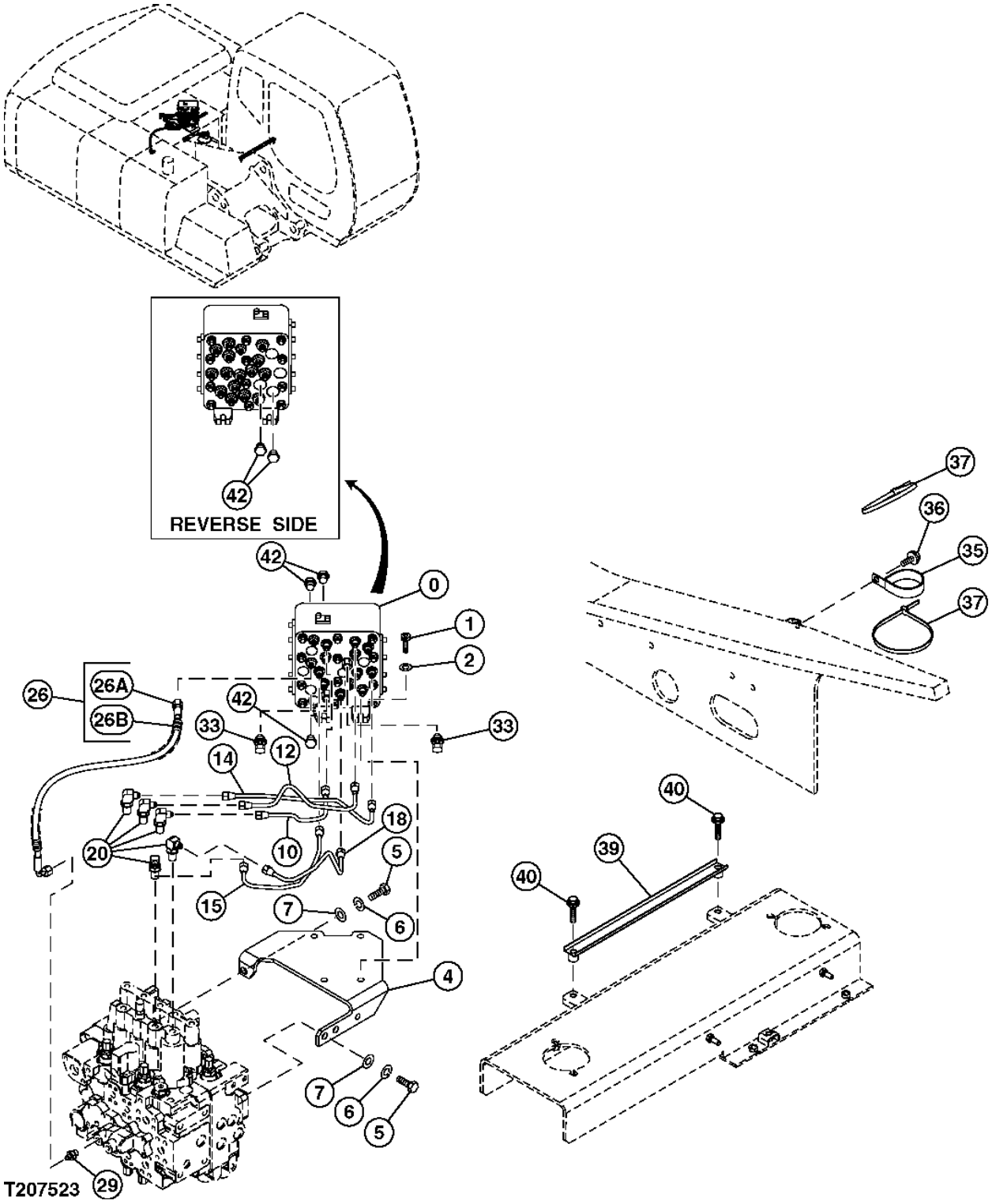

**PILOT LINES (HYDRAULIC VALVE TO PILOT SIGNAL MANIFOLD)**

| KEY | PART NO. | PART NAME | QTY | SERIAL NO. | REMARKS |
|---|---|---|---|---|---|
| 0 | 4468336 | FLOW CONTROL HYD. VALVE | 1 | | |
| 1 | L159272 | SCREW | 4 | | (SUB FOR J781040) |
| 2 | 24M7028 | WASHER | 4 | | 10.500 X 20 X 2 MM, (SUB FOR A590110) |
| 4 | 8081659 | BRACKET | 1 | | |
| 5 | 19M6332 | CAP SCREW | 3 | | M14 X 35, (SUB FOR J901435) |
| 6 | 12H317 | LOCK WASHER | 3 | | 14.288 MM, (SUB FOR A590914) |
| 7 | 24M7085 | WASHER | 3 | | 15 X 28 X 2.500 MM, (SUB FOR A590114) |
| 10 | 4452290 | PIPE | 1 | | |
| 12 | 4452341 | PIPE | 1 | | |
| 14 | 4452342 | PIPE | 1 | | |
| 15 | 4468704 | PIPE | 1 | | |
| 18 | 4468706 | PIPE | 1 | | |
| 20 | 4420392 | FITTING | 5 | | |
| | CH11570 | O-RING | 1 | | (SUB FOR 4509180) |
| 26 | ..... | HYDRAULIC HOSE | 1 | | ( 9227377 NOT AVAILABLE FOR SERVICE) |
| 26A | 4480168 | HOSE | 1 | | |
| 26B | 4327293 | HOSE GUARD | 1 | | |
| 29 | A852122 | ADAPTER | 1 | | |
| | M800650 | PACKING | 1 | | (SUB FOR 957366) |
| 33 | 4436535 | SENSOR | 2 | | |
| 35 | 4204136 | CLIP | 1 | | |
| 36 | ..... | CAP SCREW | 1 | | ( J271030 NO LONGER AVAILABLE) |
| | 19M7662 | CAP SCREW | 1 | | M10 X 30, (SUB FOR J901030) |
| | 24M7346 | WASHER | 1 | | 11 X 20 X 2 MM, (SUB FOR J222010) |
| 37 | H77698 | TIE BAND | 2 | | (SUB FOR 4121859) |
| 39 | 9759797 | HOSE CLAMP | 1 | | |
| 40 | ..... | CAP SCREW | 2 | | ( J271050 NO LONGER AVAILABLE) |
| | 19M7658 | CAP SCREW | 1 | | M10 X 50, (SUB FOR J901050) |
| | 24M7346 | WASHER | 1 | | 11 X 20 X 2 MM, (SUB FOR J222010) |
| 42 | A885003 | PIPE PLUG | 4 | | |

**PILOT LINES (PILOT SIGNAL MANIFOLD TO BOTTOM OF CONTROL VALVE)**

T207528 -UN-08FEB05

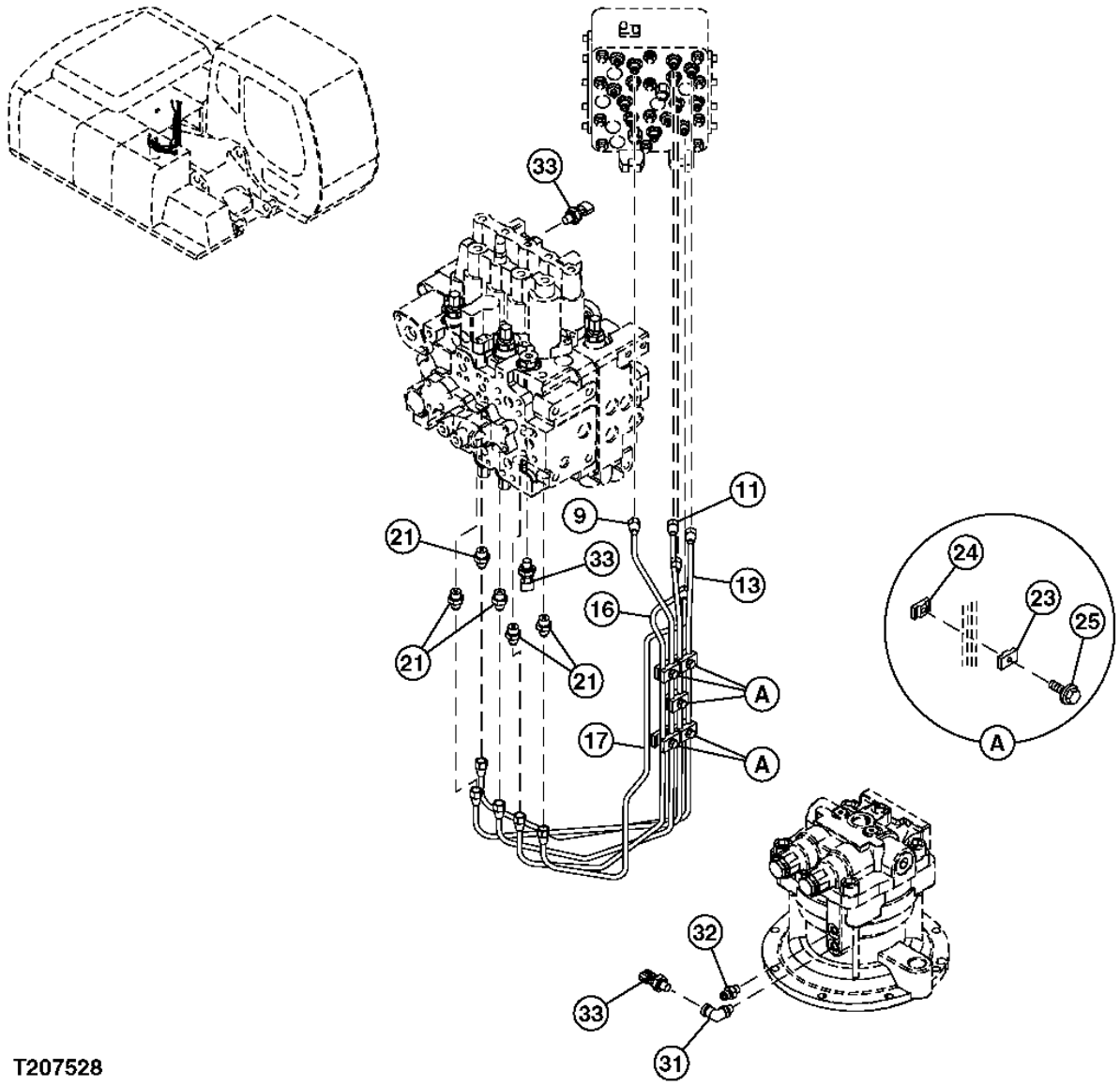


T207528

**PILOT LINES (PILOT SIGNAL MANIFOLD TO BOTTOM OF CONTROL VALVE)**

| KEY | PART NO. | PART NAME | QTY | SERIAL NO. | REMARKS |
|---|---|---|---|---|---|
| 9 | 3094354 | PIPE | 1 | | |
| 11 | 3094355 | PIPE | 1 | | |
| 13 | 3094533 | PIPE | 1 | | |
| 16 | 3094356 | PIPE | 1 | | |
| 17 | 3094358 | PIPE | 1 | | |
| 21 | 4255305 | ADAPTER | 5 | | |
| | CH11570 | O-RING | 1 | | (SUB FOR 4509180) |
| 23 | 9735305 | CLAMP | 5 | | |
| 24 | 9735306 | CLAMP | 5 | | |
| 25 | ..... | CAP SCREW | 5 | | ( J260825 NO LONGER AVAILABLE) |
| | 19M7163 | CAP SCREW | 1 | | M8 X 25, (SUB FOR J900825) |
| | 24M7055 | WASHER | 1 | | 8.400 X 16 X 1.600 MM, (SUB FOR A590108) |
| 31 | 4376846 | ELBOW FITTING | 1 | | |
| | M800650 | PACKING | 1 | | (SUB FOR 957366) |
| 32 | A852123 | ADAPTER | 1 | | |
| | M800650 | PACKING | 1 | | (SUB FOR 957366) |
| 33 | 4436535 | SENSOR | 3 | | |

**PILOT HOSES (PUMP REGULATOR TO SOLENOID VALVE, SIGNAL MANIFOLD)**

T207609 -UN-09FEB05

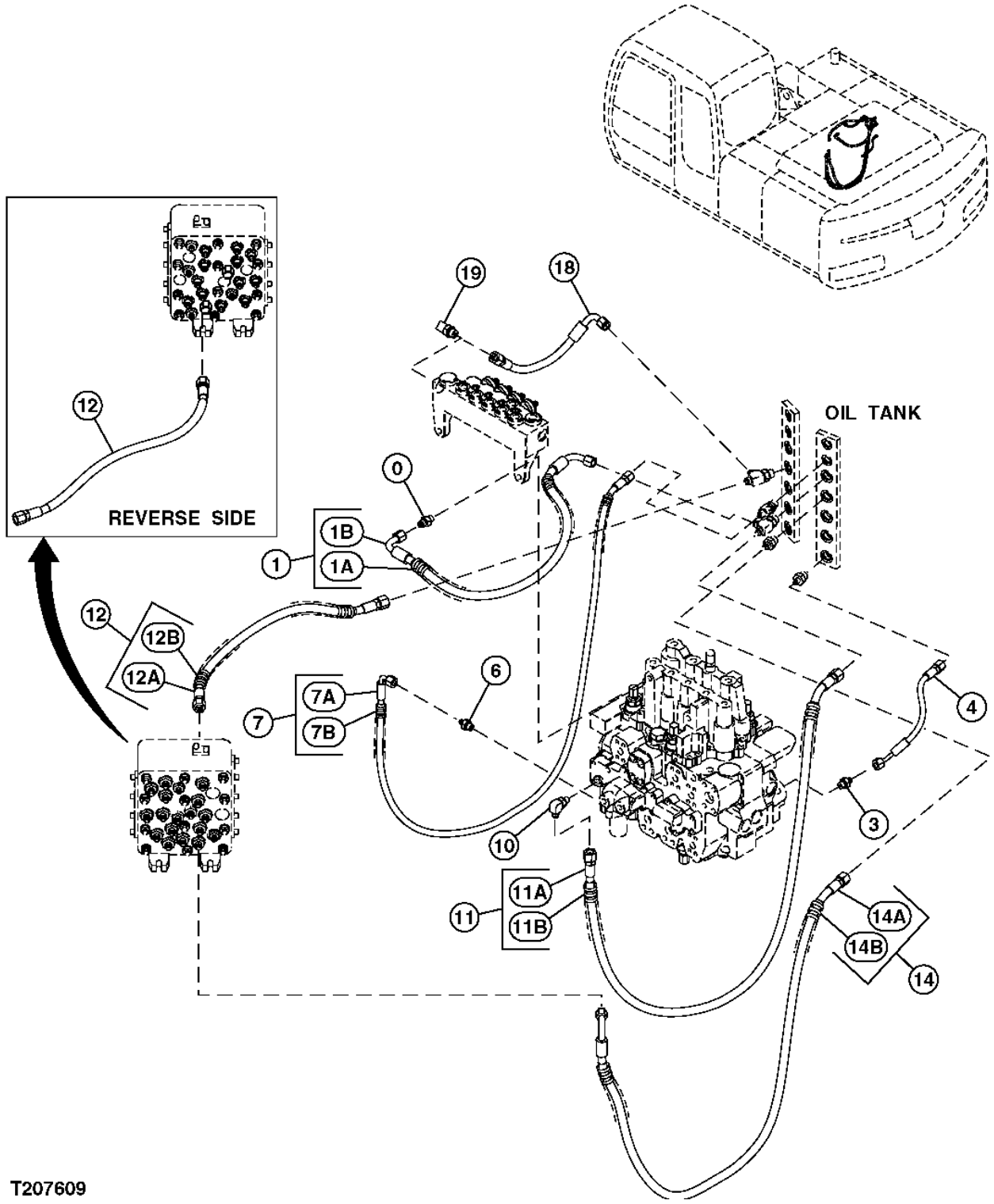

**PILOT HOSES (PUMP REGULATOR TO SOLENOID VALVE, SIGNAL MANIFOLD)**

| KEY | PART NO. | PART NAME | QTY | SERIAL NO. | REMARKS |
|---|---|---|---|---|---|
| 0 | A852123 | ADAPTER | 1 | | |
| | M800650 | PACKING | 1 | | (SUB FOR 957366) |
| 1 | ..... | HYDRAULIC HOSE | 1 | | ( 9232905 NOT AVAILABLE FOR SERVICE) |
| 1A | 4611825 | HOSE | 1 | | |
| 1B | 4327293 | HOSE GUARD | 2 | | |
| 3 | A852122 | ADAPTER | 1 | | |
| | M800650 | PACKING | 1 | | (SUB FOR 957366) |
| 4 | 4478278 | HOSE | 1 | | |
| 6 | A852122 | ADAPTER | 1 | | |
| | M800650 | PACKING | 1 | | (SUB FOR 957366) |
| 7 | ..... | HYDRAULIC HOSE | 1 | | ( 9197465 NOT AVAILABLE FOR SERVICE) |
| 7A | 4448872 | HYDRAULIC HOSE | 1 | | (SUB FOR 4448872) |
| 7B | 4327293 | HOSE GUARD | 3 | | |
| 10 | A852323 | ELBOW FITTING | 1 | | |
| | M800650 | PACKING | 1 | | (SUB FOR 957366) |
| 11 | ..... | HYDRAULIC HOSE | 1 | | ( 9232907 NOT AVAILABLE FOR SERVICE) |
| 11A | 4442272 | HOSE | 1 | | (SUB FOR 4611511) |
| 11B | 4327293 | HOSE GUARD | 3 | | |
| 12 | ..... | HYDRAULIC HOSE | 1 | | ( 9235879 NOT AVAILABLE FOR SERVICE) |
| 12A | 4450427 | HYDRAULIC HOSE | 1 | | (SUB FOR 4450428) |
| 12B | 4327293 | HOSE GUARD | 1 | | |
| 14 | ..... | HYDRAULIC HOSE | 1 | | ( 9232909 NOT AVAILABLE FOR SERVICE) |
| 14A | 4611603 | HOSE | 1 | | |
| 14B | 4327293 | HOSE GUARD | 3 | | |
| 18 | 4487172 | HOSE | 1 | | |
| 19 | A852333 | ELBOW FITTING | 1 | | |
| | CH11570 | O-RING | 1 | | (SUB FOR 4509180) |

**TRANSMISSION LINES TO OIL TANK**

T207795 -UN-22FEB05

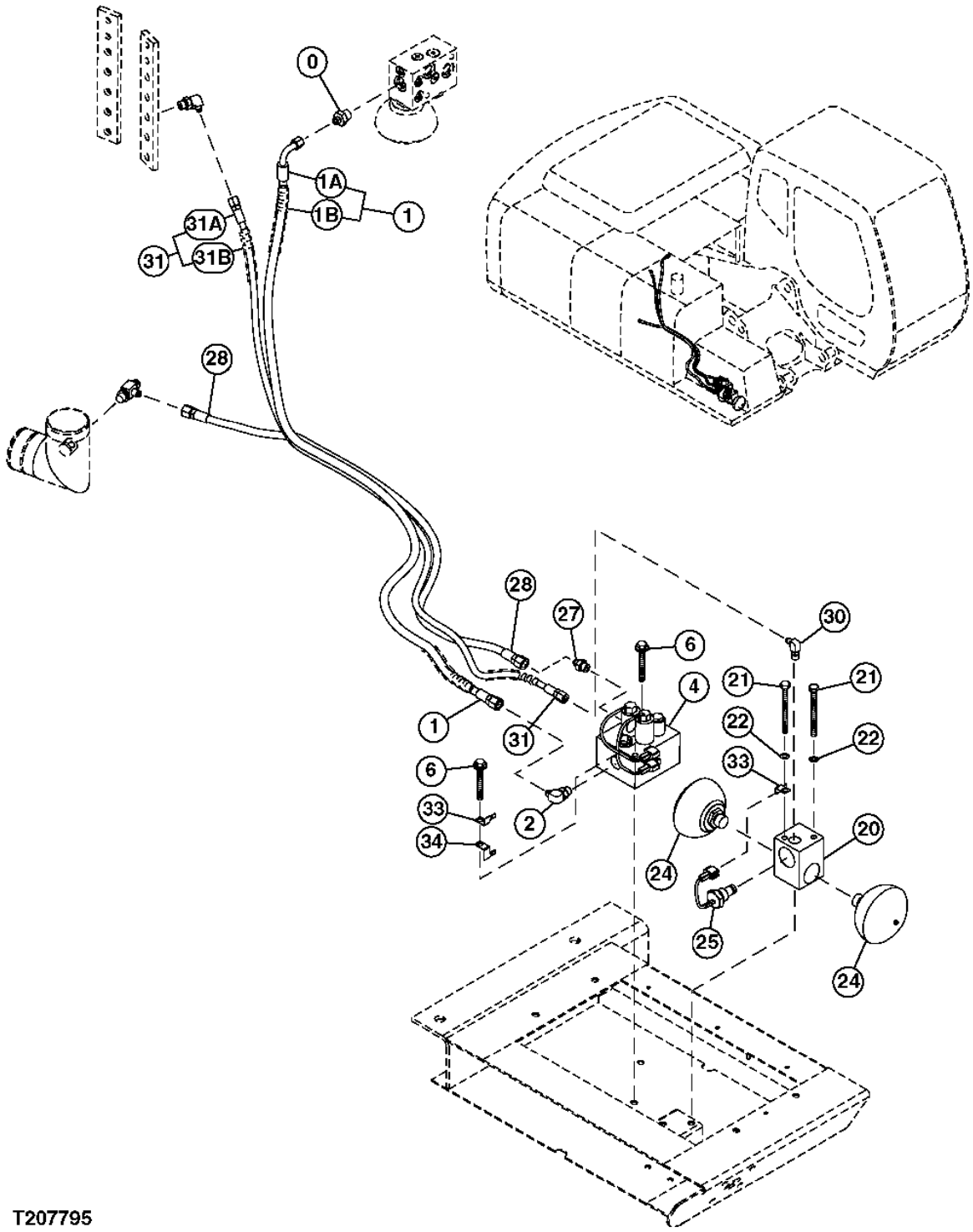

**TRANSMISSION LINES TO OIL TANK**

| KEY | PART NO. | PART NAME | QTY | SERIAL NO. | REMARKS |
|---|---|---|---|---|---|
| 0 | A852143 | ADAPTER | 1 | | |
| | 4506418 | O-RING | 1 | | |
| 1 | ..... | HYDRAULIC HOSE | 1 | | ( 9232910 NOT AVAILABLE FOR SERVICE) |
| 1A | 4611512 | HOSE | 1 | | |
| 1B | 4327293 | HOSE GUARD | 4 | | |
| 2 | A852333 | ELBOW FITTING | 1 | | |
| | CH11570 | O-RING | 1 | | (SUB FOR 4509180) |
| 4 | 4464292 | SOLENOID VALVE | 1 | | |
| 6 | ..... | CAP SCREW | 2 | | ( J271090 NO LONGER AVAILABLE) |
| | 19M7183 | CAP SCREW | 1 | | M10 X 40, (SUB FOR J901090) |
| | 24M7346 | WASHER | 1 | | 11 X 20 X 2 MM, (SUB FOR J222010) |
| 20 | 4475646 | MANIFOLD | 1 | | |
| 21 | 19M8343 | CAP SCREW | 2 | | M10 X 120, (SUB FOR J901004) |
| 22 | 12M7066 | LOCK WASHER | 2 | | 10 MM, (SUB FOR A590910) |
| 24 | 4459333 | HYDRAULIC ACCUMULATOR | 2 | | |
| 25 | 4459499 | PRESSURE SWITCH | 1 | | |
| 27 | A852133 | ADAPTER | 1 | | |
| | CH11570 | O-RING | 1 | | (SUB FOR 4509180) |
| 28 | 4401378 | HOSE | 1 | | |
| 30 | 4154670 | ELBOW FITTING | 1 | | (SUB FOR A852322) |
| | M800650 | PACKING | 1 | | (SUB FOR 957366) |
| 31 | ..... | HYDRAULIC HOSE | 1 | | ( 9232913 NOT AVAILABLE FOR SERVICE) |
| 31A | 4611606 | HOSE | 1 | | |
| 31B | 4327293 | HOSE GUARD | 3 | | |
| 33 | 4257159 | BRACKET | 2 | | |
| 34 | 4402599 | BRACKET | 1 | | |

**PILOT HOSES (LEFT CONTROLLER TO SIGNAL MANIFOLD, SHUTOFF VALVE)**

T207611 -UN-09FEB05

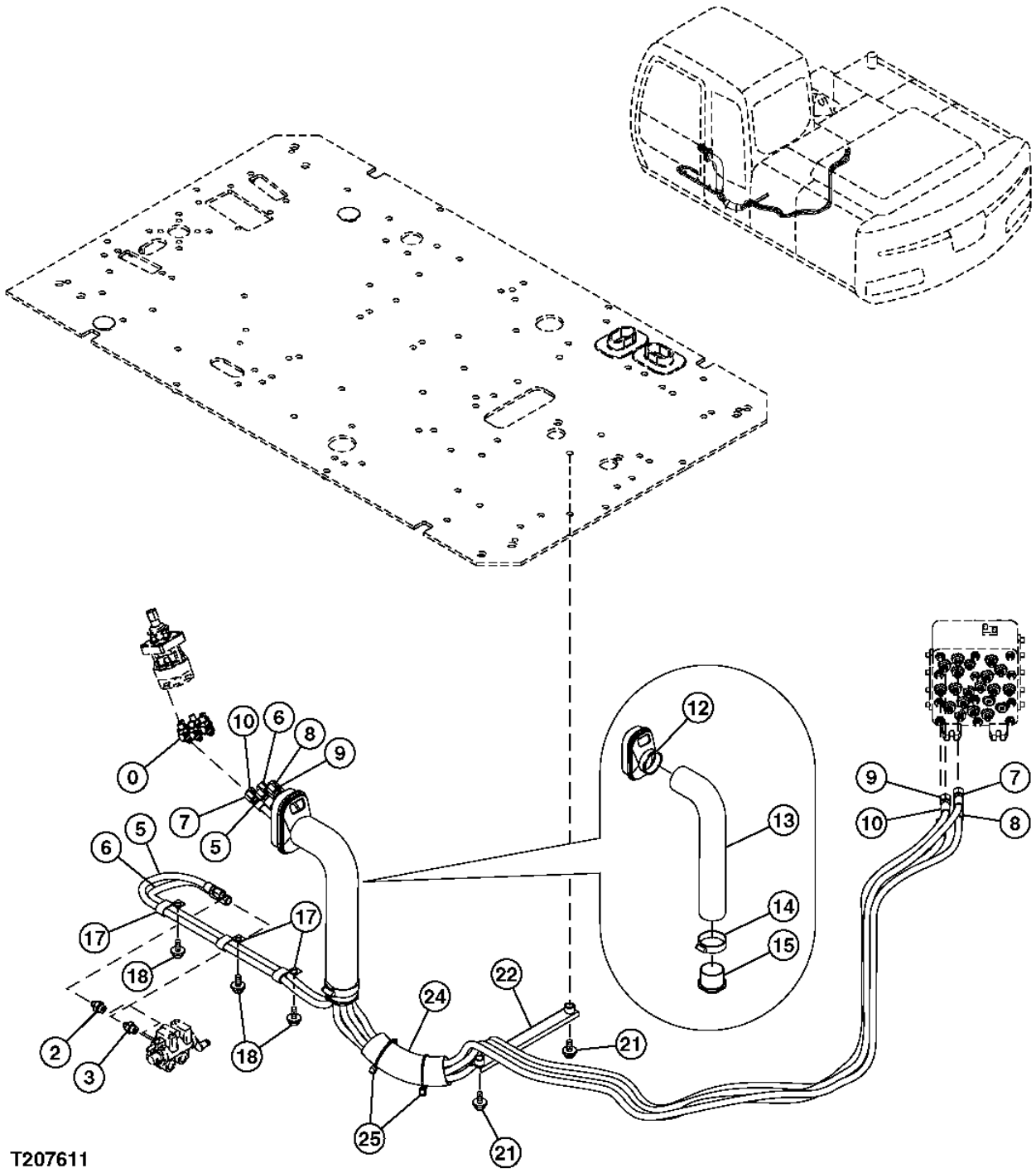

**PILOT HOSES (LEFT CONTROLLER TO SIGNAL MANIFOLD, SHUTOFF VALVE)**

| KEY | PART NO. | PART NAME | QTY | SERIAL NO. | REMARKS |
|---|---|---|---|---|---|
| 0 | A852223 | ELBOW FITTING | 6 | | |
| | M800650 | PACKING | 1 | | (SUB FOR 957366) |
| 2 | 4261938 | FITTING | 1 | | |
| | CH11570 | O-RING | 1 | | (SUB FOR 4509180) |
| 3 | A852133 | ADAPTER | 1 | | |
| | CH11570 | O-RING | 1 | | (SUB FOR 4509180) |
| 5 | 4466509 | HOSE | 1 | | |
| 6 | 4450439 | HOSE | 1 | | |
| 7 | 4450437 | HYDRAULIC HOSE - FABRICATE | 1 | | |
| 8 | 4450435 | HYDRAULIC HOSE - FABRICATE | 1 | | |
| 9 | 4455188 | HYDRAULIC HOSE - FABRICATE | 1 | | |
| 10 | 4450436 | HYDRAULIC HOSE - FABRICATE | 1 | | |
| 12 | 2045998 | BUSHING | 1 | | |
| 13 | 4601568 | HOSE | 1 | | (SUB FOR 4351175) |
| 14 | 4351774 | CLAMP | 1 | | |
| 15 | 3079728 | BUSHING | 1 | | |
| 17 | T32854 | CLAMP | 3 | | (SUB FOR 4190282) |
| 18 | ..... | CAP SCREW | 3 | | ( J271025 NO LONGER AVAILABLE) |
| | 19M7402 | CAP SCREW | 1 | | M10 X 25, (SUB FOR J901025) |
| | 24M7346 | WASHER | 1 | | 11 X 20 X 2 MM, (SUB FOR J222010) |
| 21 | ..... | CAP SCREW | 2 | | ( J271025 NO LONGER AVAILABLE) |
| | 19M7402 | CAP SCREW | 1 | | M10 X 25, (SUB FOR J901025) |
| | 24M7346 | WASHER | 1 | | 11 X 20 X 2 MM, (SUB FOR J222010) |
| 22 | 9760911 | HOSE CLAMP | 1 | | |
| 24 | 4219918 | BUSHING | 1 | | |
| 25 | H77698 | TIE BAND | 2 | | (SUB FOR 4055312) |

**PILOT HOSES (RIGHT CONTROLLER TO SIGNAL MANIFOLD, SHUTOFF VALVE)**

T207612 -UN-09FEB05

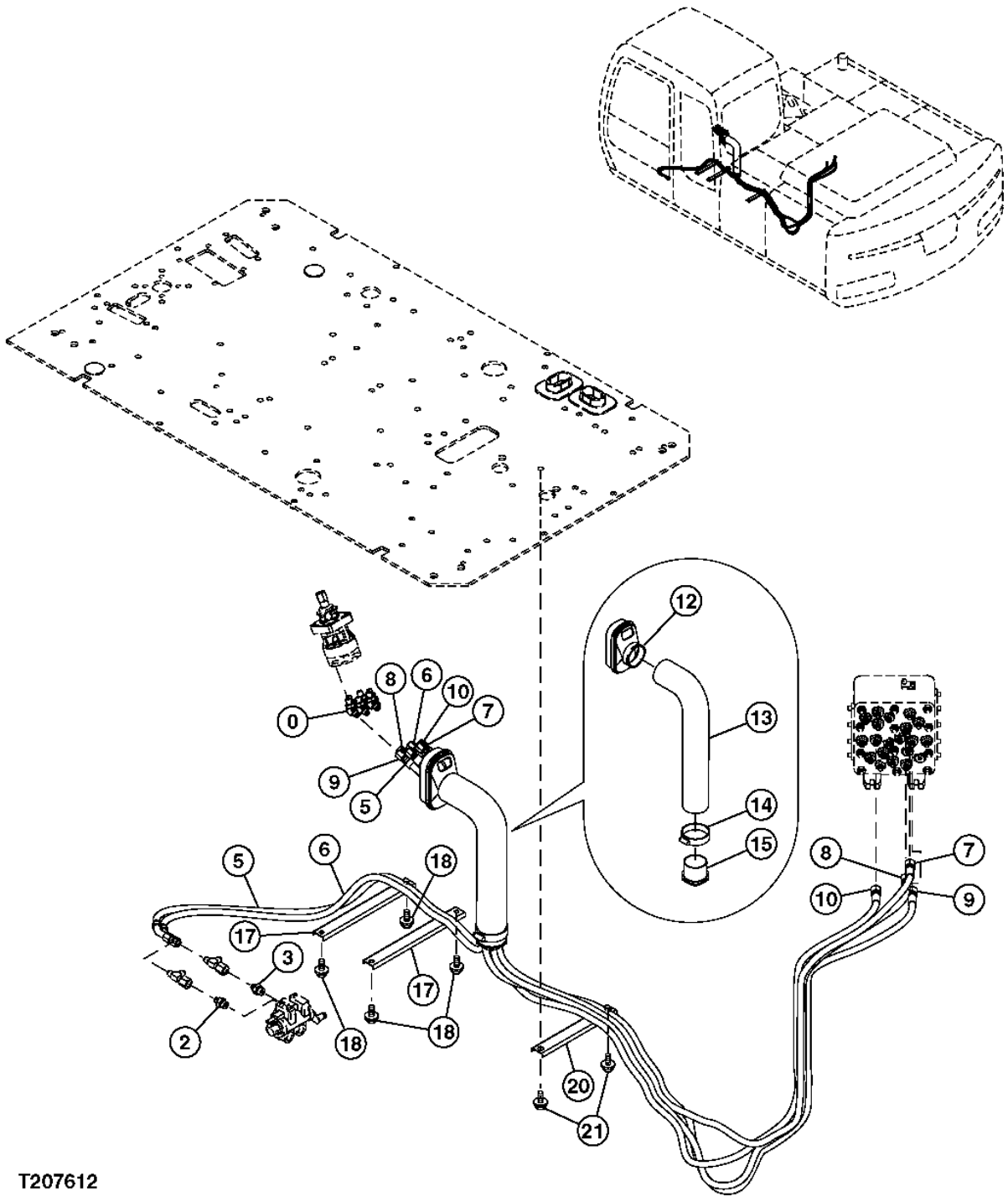

**PILOT HOSES (RIGHT CONTROLLER TO SIGNAL MANIFOLD, SHUTOFF VALVE)**

| KEY | PART NO. | PART NAME | QTY | SERIAL NO. | REMARKS |
|---|---|---|---|---|---|
| 0 | A852223 | ELBOW FITTING | 6 | | |
| | M800650 | PACKING | 1 | | (SUB FOR 957366) |
| 2 | 4261938 | FITTING | 1 | | |
| | CH11570 | O-RING | 1 | | (SUB FOR 4509180) |
| 3 | A852133 | ADAPTER | 1 | | |
| | CH11570 | O-RING | 1 | | (SUB FOR 4509180) |
| 5 | 4436696 | HOSE | 1 | | |
| 6 | 4436697 | HOSE | 1 | | |
| 7 | 4438258 | HYDRAULIC HOSE | 1 | | |
| 8 | 4438258 | HYDRAULIC HOSE | 1 | | (SUB FOR 4438260) |
| 9 | 4438258 | HYDRAULIC HOSE | 1 | | (SUB FOR 4437088) |
| 10 | 4455196 | HYDRAULIC HOSE - FABRICATE | 1 | | |
| 12 | 2045998 | BUSHING | 1 | | |
| 13 | 4601568 | HOSE | 1 | | (SUB FOR 4351175) |
| 14 | 4351774 | CLAMP | 1 | | |
| 15 | 3079728 | BUSHING | 1 | | |
| 17 | 4341877 | CHANNEL | 2 | | |
| 18 | ..... | CAP SCREW | 4 | | ( J271025 NO LONGER AVAILABLE) |
| | 19M7402 | CAP SCREW | 1 | | M10 X 25, (SUB FOR J901025) |
| | 24M7346 | WASHER | 1 | | 11 X 20 X 2 MM, (SUB FOR J222010) |
| 20 | 4465377 | HOSE CLAMP | 1 | | |
| 21 | ..... | CAP SCREW | 2 | | ( J271025 NO LONGER AVAILABLE) |
| | 19M7402 | CAP SCREW | 1 | | M10 X 25, (SUB FOR J901025) |
| | 24M7346 | WASHER | 1 | | 11 X 20 X 2 MM, (SUB FOR J222010) |

**ACCUMULATOR, BRAKE LINES**

T207604 -UN-03FEB05

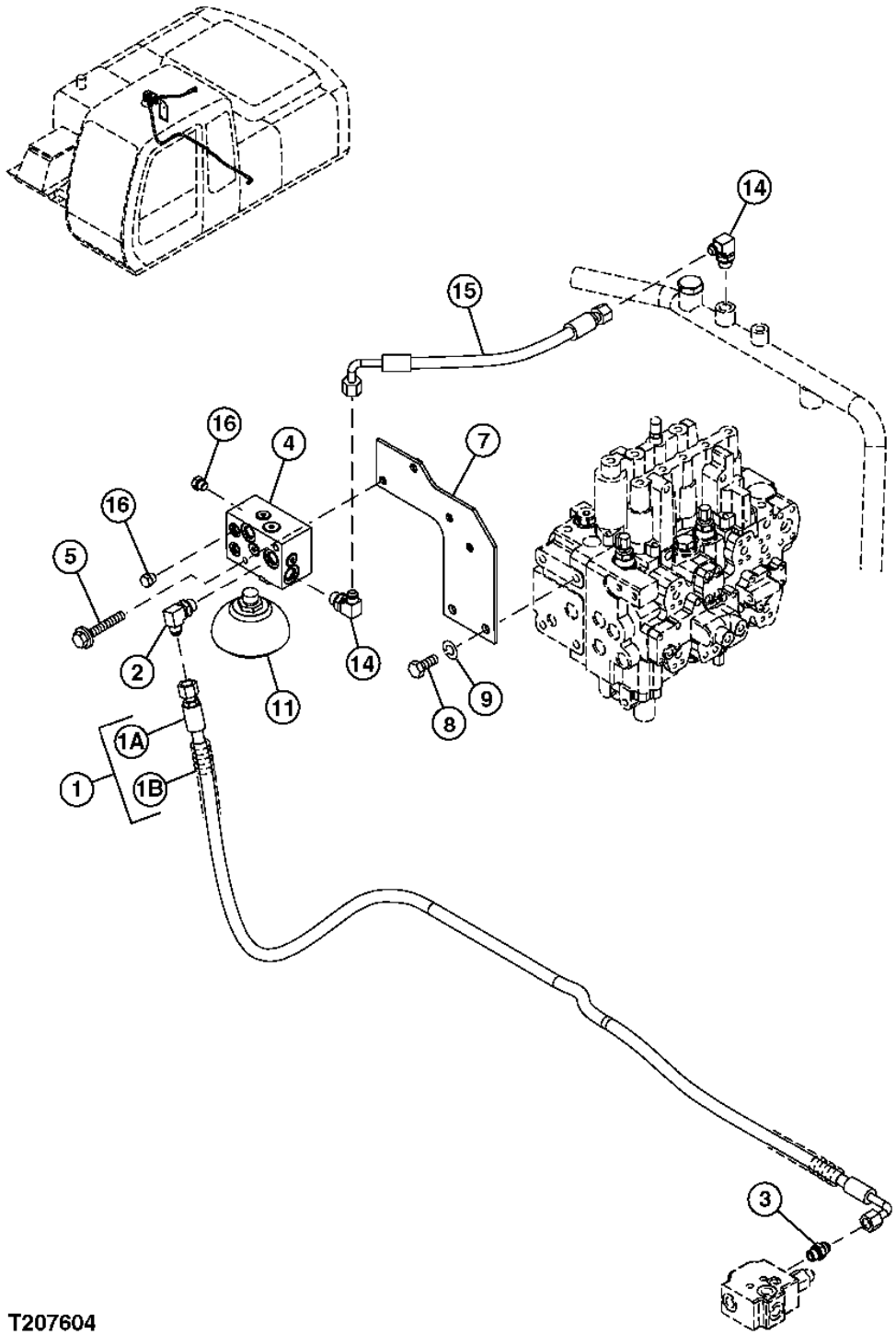

**ACCUMULATOR, BRAKE LINES**

| KEY | PART NO. | PART NAME | QTY | SERIAL NO. | REMARKS |
|---|---|---|---|---|---|
| 1 | ..... | HYDRAULIC HOSE | 1 | | ( 9232896 NOT AVAILABLE FOR SERVICE) |
| 1A | 4389011 | HOSE | 1 | | |
| 1B | 4327294 | HOSE GUARD | 4 | | |
| 2 | A852344 | ELBOW FITTING | 1 | | |
| | 4506418 | O-RING | 1 | | |
| 3 | 4489342 | ADAPTER | 1 | | |
| | 4506416 | O-RING | 1 | | |
| 4 | 4467200 | PRESSURE RELIEF VALVE | 1 | | (SUB FOR 0870605) |
| 5 | ..... | CAP SCREW | 2 | | ( J271090 NO LONGER AVAILABLE) |
| | 19M8183 | CAP SCREW | 1 | | M10 X 90, (SUB FOR J901090) |
| | 24M7346 | WASHER | 1 | | 11 X 20 X 2 MM, (SUB FOR J222010) |
| 7 | 9759462 | BRACKET | 1 | | |
| 8 | J901425 | CAP SCREW | 2 | | |
| 9 | 12H317 | LOCK WASHER | 2 | | 14.288 MM, (SUB FOR A590914) |
| 11 | 4459334 | HYDRAULIC ACCUMULATOR | 1 | | |
| 14 | A852344 | ELBOW FITTING | 2 | | |
| | 4506418 | O-RING | 1 | | |
| 15 | 4420423 | HYDRAULIC HOSE - FABRICATE | 1 | | |
| 16 | A885002 | PLUG | 2 | | |
| | M800650 | PACKING | 1 | | (SUB FOR 957366) |

**PILOT HOSES (PILOT SHUT-OFF VALVE TO SIGNAL MANIFOLD, RESERVOIR)**

T207606 -UN-09FEB05

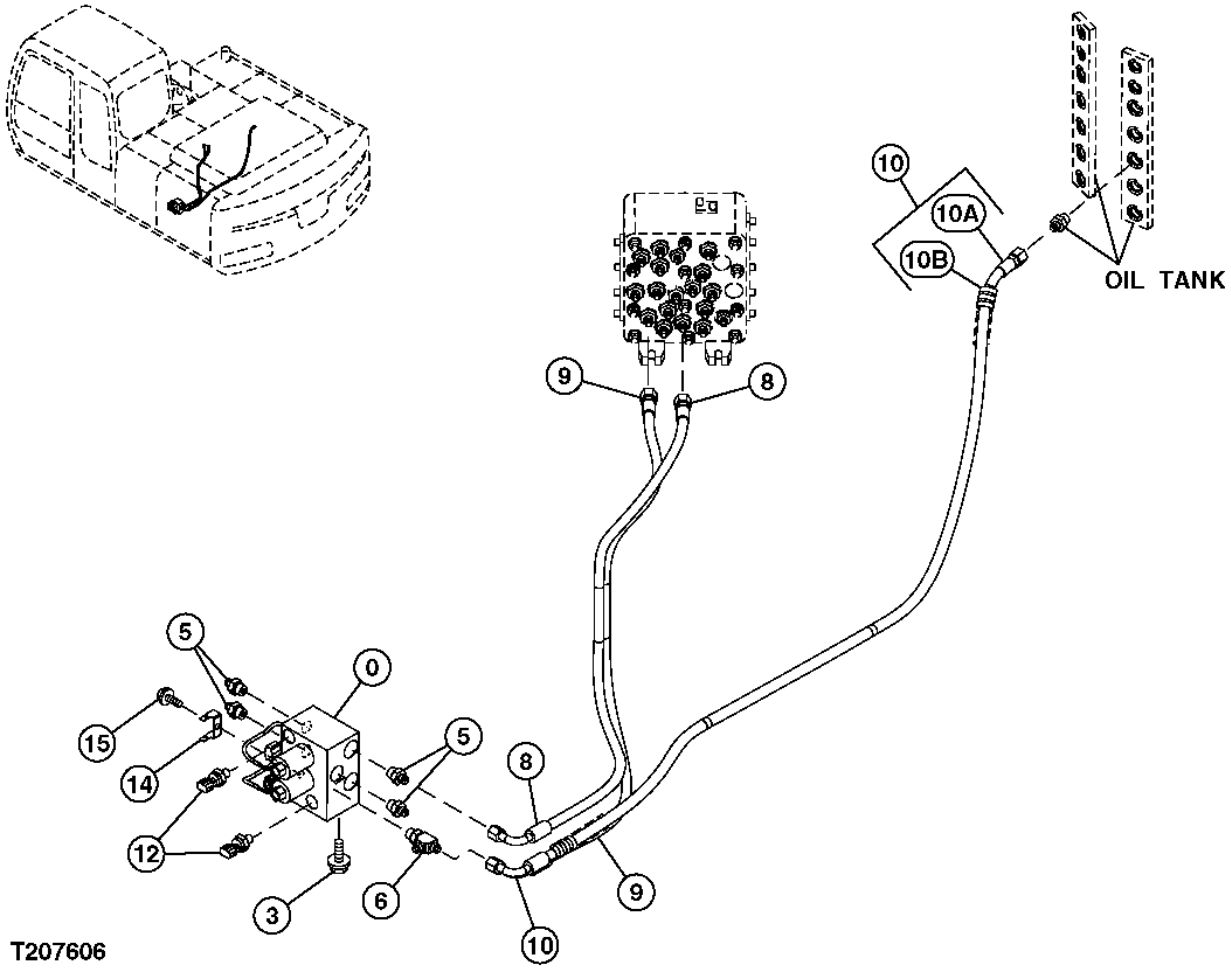

**PILOT HOSES (PILOT SHUT-OFF VALVE TO SIGNAL MANIFOLD, RESERVOIR)**

| KEY | PART NO. | PART NAME | QTY | SERIAL NO. | REMARKS |
|---|---|---|---|---|---|
| 0 | 4454840 | VALVE | 1 | | |
| 3 | ..... | CAP SCREW | 2 | | ( J271025 NO LONGER AVAILABLE) |
| | 19M7402 | CAP SCREW | 1 | | M10 X 25, (SUB FOR J901025) |
| | 24M7346 | WASHER | 1 | | 11 X 20 X 2 MM, (SUB FOR J222010) |
| 5 | A852133 | ADAPTER | 4 | | |
| | CH11570 | O-RING | 1 | | (SUB FOR 4509180) |
| 6 | A852433 | TEE FITTING | 1 | | |
| | CH11570 | O-RING | 1 | | (SUB FOR 4509180) |
| 8 | 4611507 | HOSE | 1 | | |
| 9 | 4488360 | HOSE | 1 | | |
| 10 | ..... | HYDRAULIC HOSE | 1 | | ( 9232897 NOT AVAILABLE FOR SERVICE) |
| 10A | 4611508 | HOSE | 1 | | |
| 10B | 4327293 | HOSE GUARD | 3 | | |
| 12 | 4436535 | SENSOR | 2 | | |
| 14 | 4602634 | BRACKET | 1 | | |
| 15 | ..... | CAP SCREW | 1 | | ( J271016 NO LONGER AVAILABLE) |
| | 19M8324 | CAP SCREW | 1 | | M10 X 16, (SUB FOR J901016) |
| | 24M7346 | WASHER | 1 | | 11 X 20 X 2 MM, (SUB FOR J222010) |

**FOOT PEDAL LINES**

T207608 -UN-09FEB05

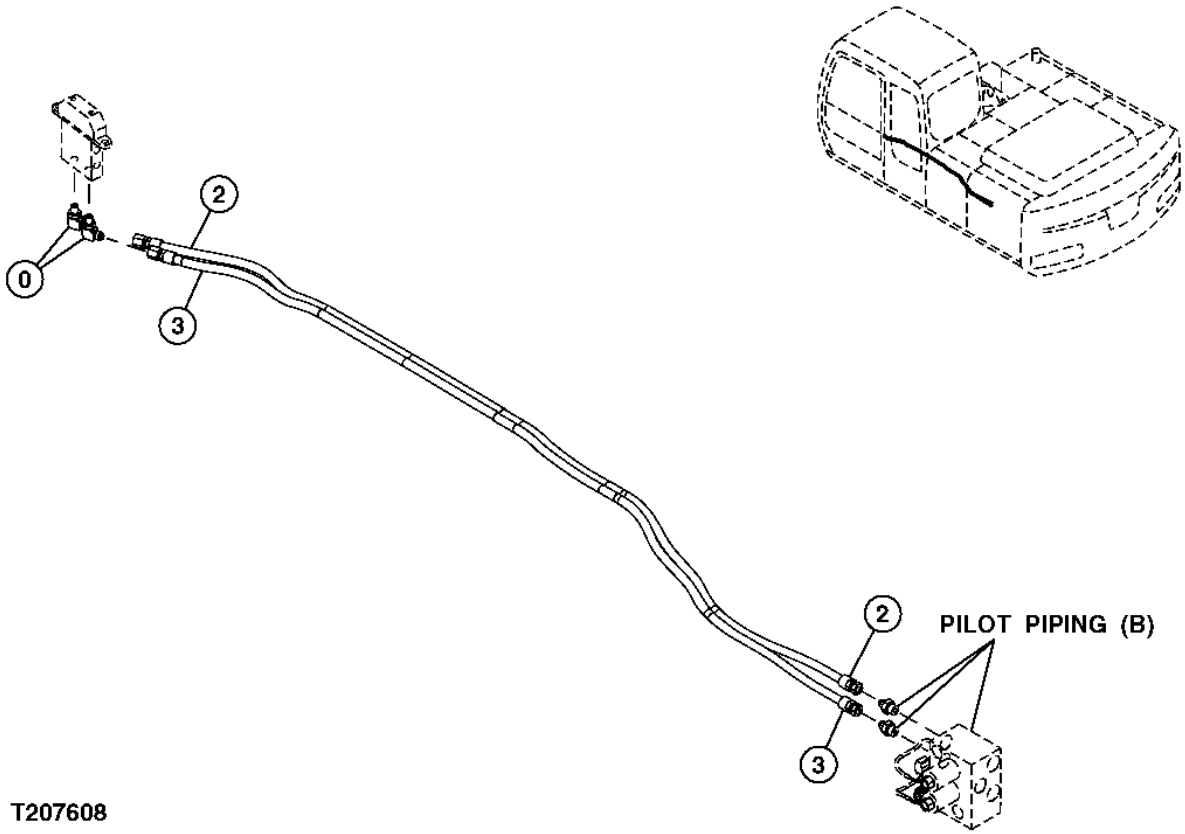

**FOOT PEDAL LINES**

| KEY | PART NO. | PART NAME | QTY | SERIAL NO. | REMARKS |
|---|---|---|---|---|---|
| 0 | A852323 | ELBOW FITTING | 2 | | |
| | M800650 | PACKING | 1 | | (SUB FOR 957366) |
| 2 | AT217122 | HYDRAULIC HOSE | 1 | | |
| 3 | 4477038 | HOSE | 1 | | |

**RELIEF MANIFOLD TO FOOT PEDAL LINES**

T207610 -UN-09FEB05

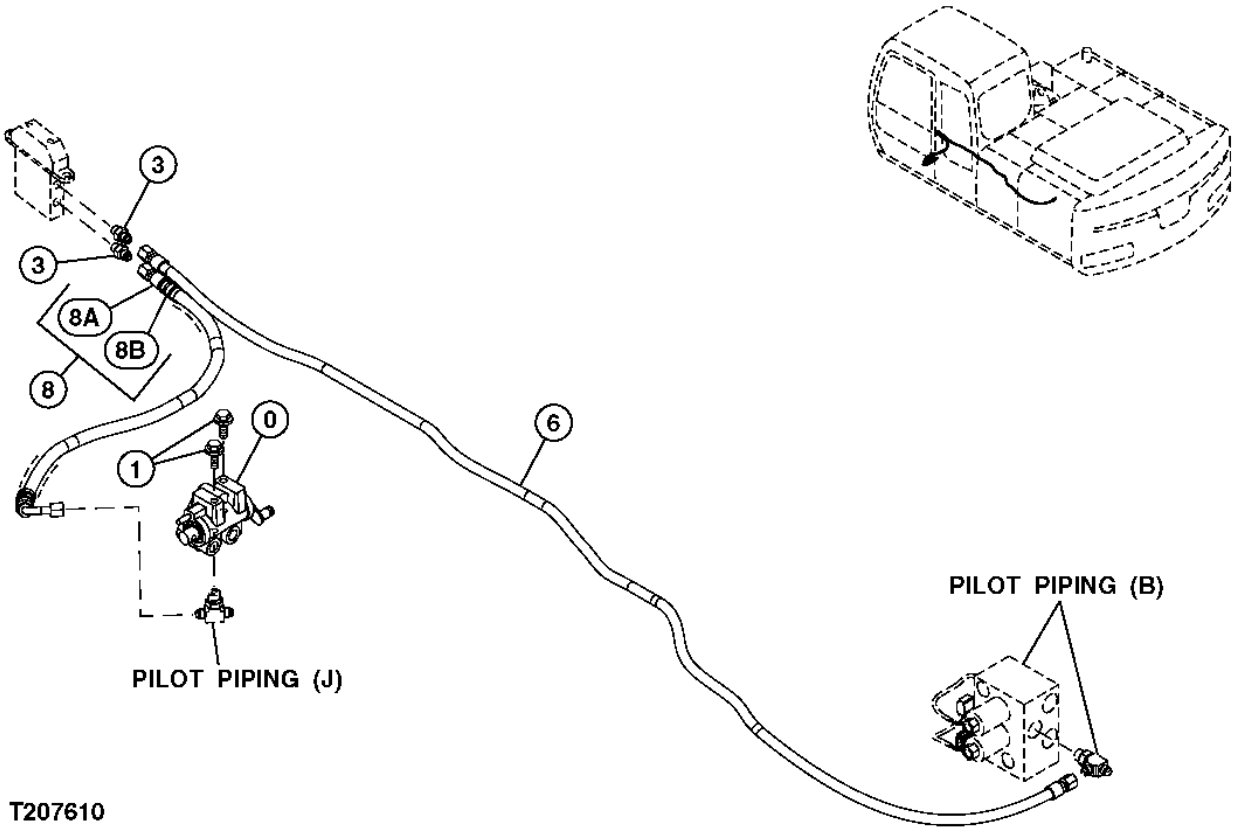

**RELIEF MANIFOLD TO FOOT PEDAL LINES**

| KEY | PART NO. | PART NAME | QTY | SERIAL NO. | REMARKS |
|---|---|---|---|---|---|
| 0 | 4407253 | FLOW CONTROL HYD. VALVE | 1 | | |
| 1 | ..... | CAP SCREW | 2 | | ( J271025 NO LONGER AVAILABLE) |
| | 19M7402 | CAP SCREW | 1 | | M10 X 25, (SUB FOR J901025) |
| | 24M7346 | WASHER | 1 | | 11 X 20 X 2 MM, (SUB FOR J222010) |
| 3 | A852123 | ADAPTER | 2 | | |
| | M800650 | PACKING | 1 | | (SUB FOR 957366) |
| 6 | 4484599 | HOSE | 1 | | |
| 8 | ..... | HYDRAULIC HOSE | 1 | | ( 9226074 NOT AVAILABLE FOR SERVICE) |
| 8A | 4452737 | HYDRAULIC HOSE - FABRICATE | 1 | | |
| 8B | 4327293 | HOSE GUARD | 2 | | |

**BOOM HOSES AND LINES**

T207568 -UN-24FEB05

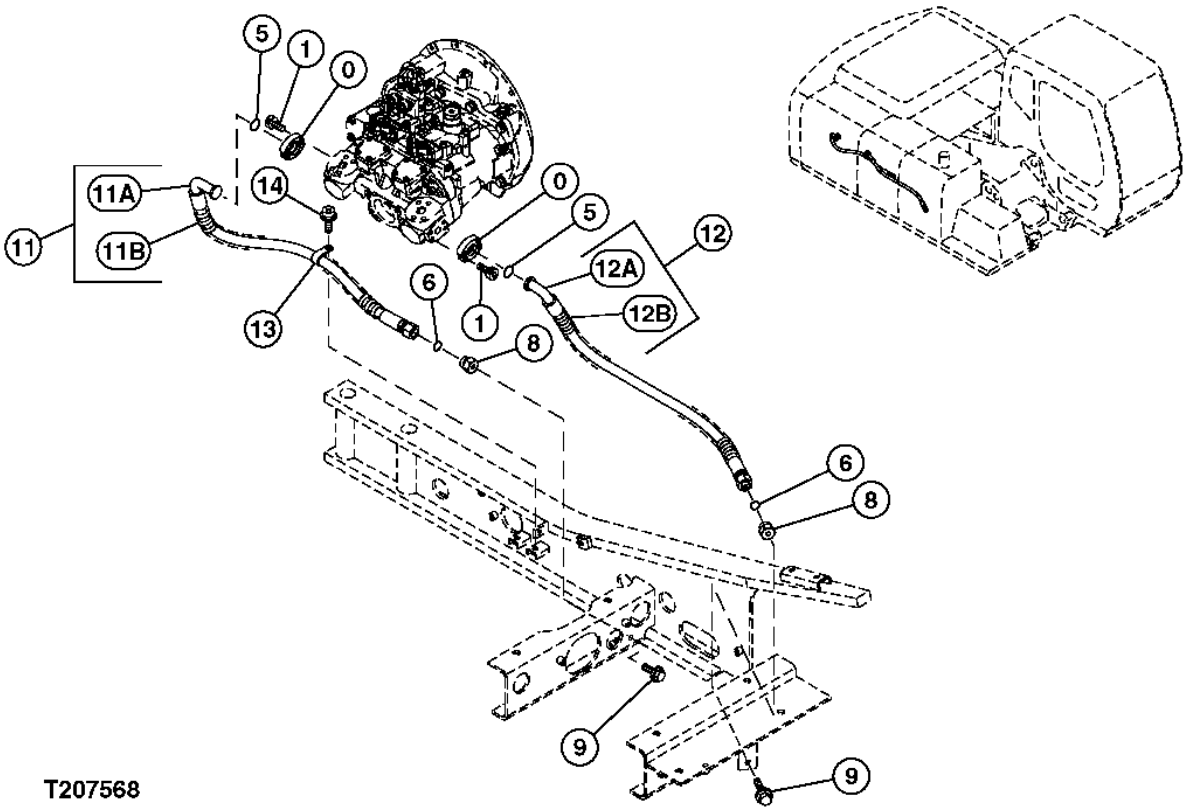

**BOOM HOSES AND LINES**

| KEY | PART NO. | PART NAME | QTY | SERIAL NO. | REMARKS |
|---|---|---|---|---|---|
| 0 | T107446 | FLANGE FITTING | 4 | | (SUB FOR 4506459) |
| 1 | 19M8337 | SCREW | 8 | | M10 X 30, (SUB FOR J781035) |
| 5 | T59014 | O-RING | 2 | | (SUB FOR 971489) |
| 6 | T77858 | O-RING | 2 | | (SUB FOR 4187308) |
| 8 | 4204882 | FITTING PLUG | 2 | | |
| 9 | ..... | CAP SCREW | 2 | | ( J271225 NO LONGER AVAILABLE) |
| | 19M7872 | CAP SCREW | 1 | | M12 X 25, (SUB FOR J901225) |
| | 24M7345 | WASHER | 1 | | 13.500 X 24 X 2.500 MM, (SUB FOR J222012) |
| 11 | ..... | HYDRAULIC HOSE | 1 | | ( 9235930 NOT AVAILABLE FOR SERVICE) |
| 11A | 4612211 | HOSE | 1 | | |
| 11B | 4327294 | HOSE GUARD | 3 | | |
| 12 | ..... | HYDRAULIC HOSE | 1 | | ( 9235929 NOT AVAILABLE FOR SERVICE) |
| 12A | 4612212 | HOSE | 1 | | |
| 12B | 4327294 | HOSE GUARD | 3 | | |
| 13 | 4192035 | CLIP | 1 | | |
| 14 | ..... | CAP SCREW | 1 | | ( J271025 NO LONGER AVAILABLE) |
| | 19M7402 | CAP SCREW | 1 | | M10 X 25, (SUB FOR J901025) |
| | 24M7346 | WASHER | 1 | | 11 X 20 X 2 MM, (SUB FOR J222010) |

**HYDRAULIC OIL TANK AND FILTER**

T206954 -UN-22FEB05

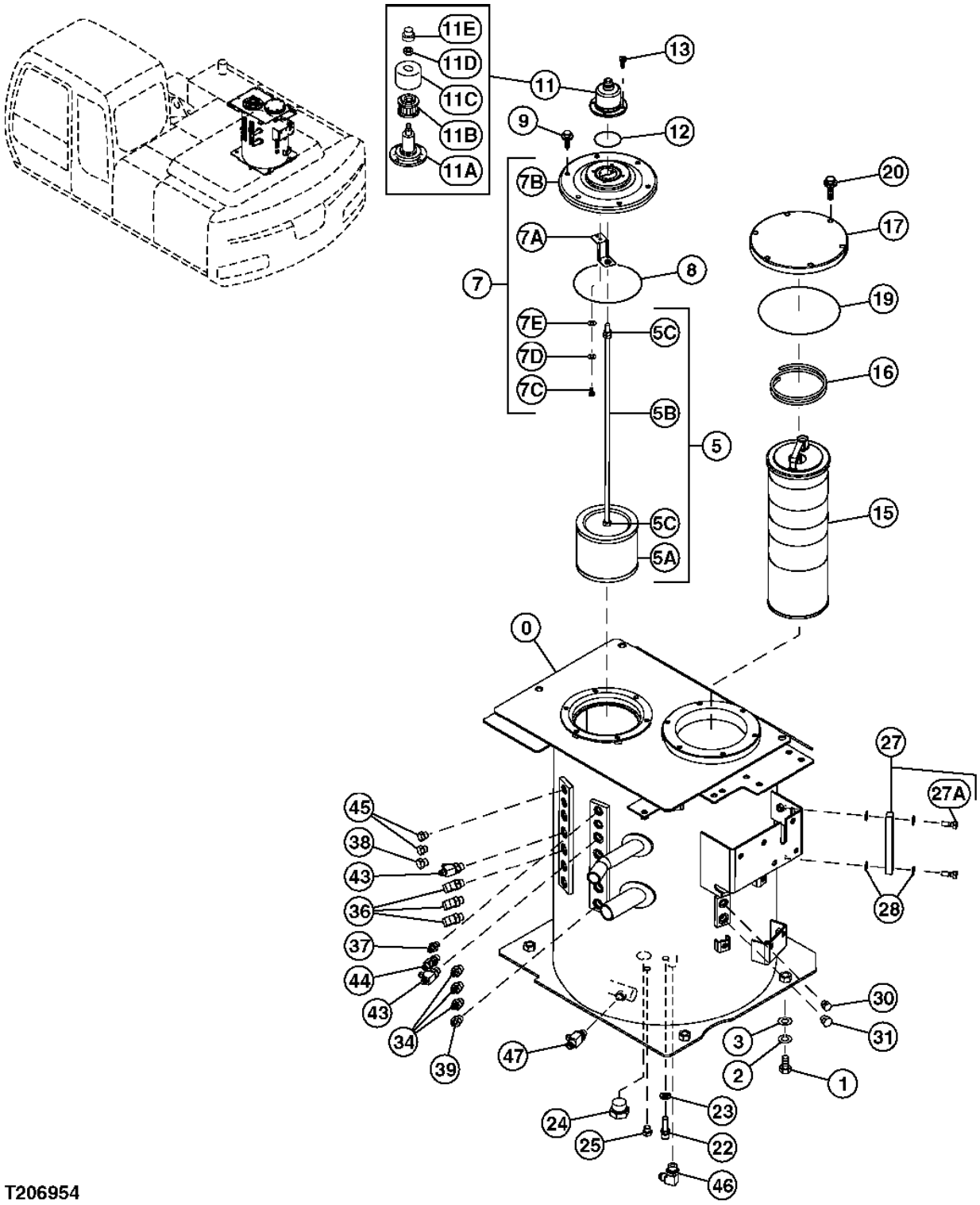

**HYDRAULIC OIL TANK AND FILTER**

| KEY | PART NO. | PART NAME | QTY | SERIAL NO. | REMARKS |
|---|---|---|---|---|---|
| 0 | 5009061 | TANK | 1 | | |
| 1 | 19M7488 | CAP SCREW | 4 | | M16 X 40, (SUB FOR J921640) |
| 2 | 12H294 | LOCK WASHER | 4 | | 15.875 MM, (SUB FOR A590916) |
| 3 | 24M7338 | WASHER | 4 | | 17 X 30 X 3 MM, (SUB FOR J222010) |
| 5 | 4481823 | FILTER | 1 | | |
| 5A | 4210224 | STRAINER | 1 | | |
| 5B | 4454418 | ROD | 1 | | |
| 5C | 14M7274 | NUT | 3 | | (SUB FOR J950010) |
| 7 | 9184556 | COVER | 1 | | |
| 7A | 4408661 | BRACKET | 1 | | |
| 7B | 1025093 | COVER | 1 | | |
| 7C | 4350623 | BOLT | 1 | | |
| 7D | 4225466 | WASHER | 1 | | |
| 7E | 4225472 | WASHER | 1 | | |
| 8 | TH100679 | O-RING | 1 | | (SUB FOR A810160) |
| 9 | ..... | BOLT | 6 | | ( J271025 NOT AVAILABLE FOR SERVICE) |
| | 19M7402 | CAP SCREW | 1 | | M10 X 25, (SUB FOR J901025) |
| | 24M7346 | WASHER | 1 | | 11 X 20 X 2 MM, (SUB FOR J222010) |
| 11 | 4434017 | FILTER | 1 | | |
| 11A | 4437833 | HOUSING | 1 | | |
| 11B | 4437838 | FILTER ELEMENT | 1 | | |
| 11C | 4437837 | COVER | 1 | | |
| 11D | 4371825 | NUT | 1 | | |
| 11E | 4437836 | CAP | 1 | | |
| 12 | A810060 | PACKING | 4 | | |
| 13 | 19M7768 | SCREW | 1 | | (SUB FOR J770616) |
| 15 | 4448402 | FILTER ELEMENT | 1 | | (SUB FOR 4443773) |
| 16 | 4472673 | SPRING | 1 | | |
| 19 | A810190 | O-RING | 1 | | |
| 20 | ..... | CAP SCREW | 6 | | ( J271035 NOT AVAILABLE FOR SERVICE) |
| | 19M7550 | CAP SCREW | 1 | | M10 X 35, (SUB FOR J901035) |
| | 24M7346 | WASHER | 1 | | 11 X 20 X 2 MM, (SUB FOR J222010) |
| 22 | 4250260 | SENSOR | 1 | | |
| 23 | 4250261 | GASKET | 1 | | |
| 24 | A885008 | PIPE PLUG | 1 | | |
| | 4506429 | O-RING | 1 | | |
| 25 | A885002 | PLUG | 1 | | |
| | M800650 | PACKING | 1 | | (SUB FOR 957366) |
| 27 | 8053499 | LEVEL GAUGE | 1 | | |
| | 4100967 | FITTING | 2 | | |
| 28 | 449558 | WASHER | 4 | | |

THIS PARTS LISTING IS CONTINUED

**HYDRAULIC OIL TANK AND FILTER (CONTINUED)**

T206954 -UN-22FEB05

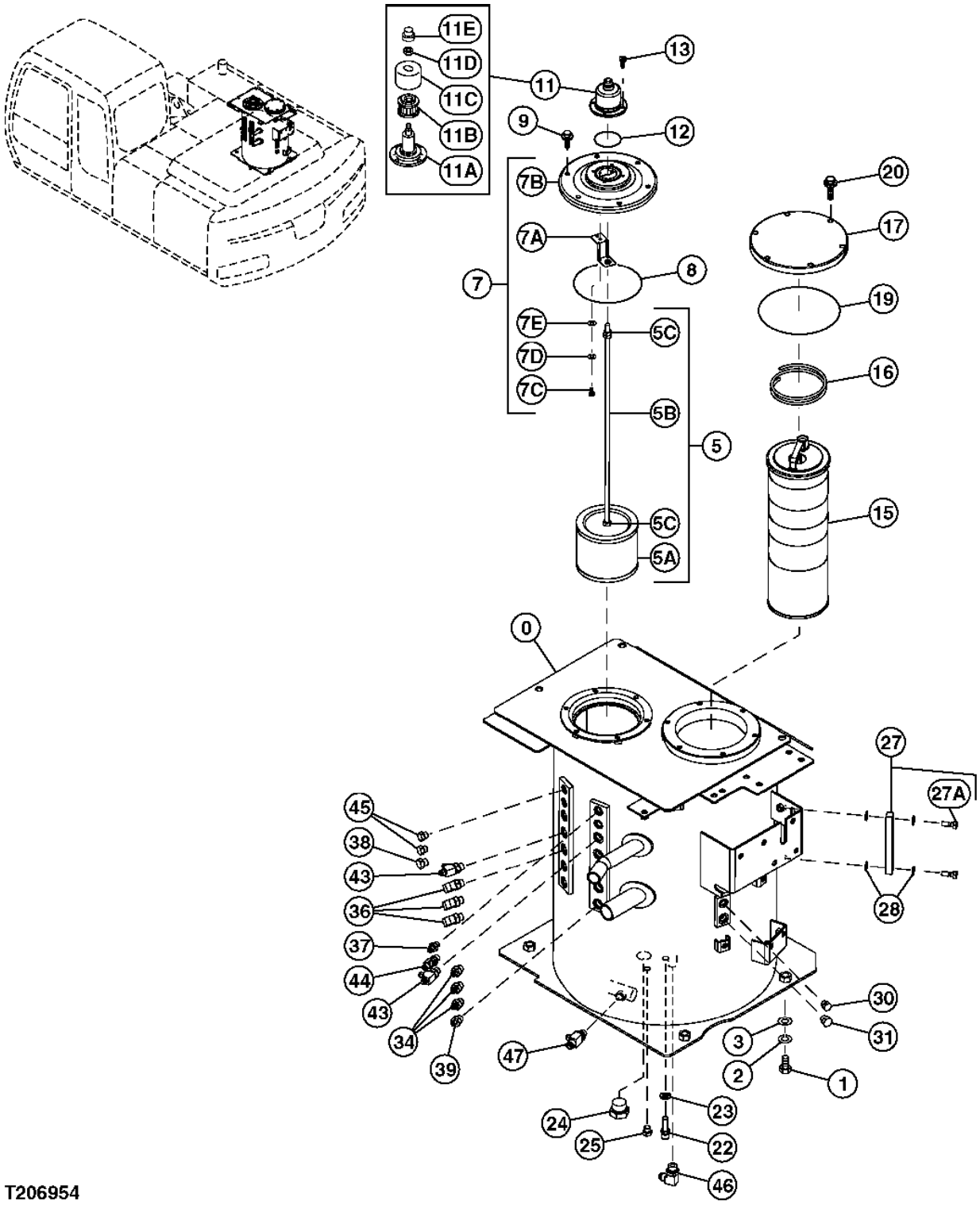


T206954

**HYDRAULIC OIL TANK AND FILTER (CONTINUED)**

| KEY | PART NO. | PART NAME | QTY | SERIAL NO. | REMARKS |
|---|---|---|---|---|---|
| 30 | A885002 | PLUG | 1 | | |
| | M800650 | PACKING | 1 | | (SUB FOR 957366) |
| 31 | A885003 | PIPE PLUG | 1 | | |
| | CH11570 | O-RING | 1 | | (SUB FOR 4509180) |
| 34 | A852133 | ADAPTER | 3 | | |
| | CH11570 | O-RING | 1 | | (SUB FOR 4509180) |
| 36 | 4250260 | SENSOR | 3 | | |
| | CH11570 | O-RING | 1 | | (SUB FOR 4509180) |
| 37 | A852123 | ADAPTER | 1 | | |
| | M800650 | PACKING | 1 | | (SUB FOR 957366) |
| 38 | A885003 | PIPE PLUG | 1 | | |
| | CH11570 | O-RING | 1 | | (SUB FOR 4509180) |
| 39 | A852132 | ADAPTER | 1 | | |
| | CH11570 | O-RING | 1 | | (SUB FOR 4509180) |
| 43 | A852433 | TEE FITTING | 2 | | |
| | 4509180 | O-RING | 1 | | (SUB FOR 4509180) |
| 44 | A852422 | TEE FITTING | 1 | | |
| | M800650 | PACKING | 1 | | (SUB FOR 957366) |
| 45 | A885002 | PLUG | 2 | | |
| | M800650 | PACKING | 1 | | (SUB FOR 957366) |
| 46 | A852344 | ELBOW FITTING | 1 | | |
| | 4506418 | O-RING | 1 | | |
| 47 | 4234371 | TEE FITTING | 1 | | |
| | CH11570 | O-RING | 1 | | (SUB FOR 4509180) |

**BOOM CYLINDER, RH (MONO BOOM)**

T207466 -UN-01MAR05

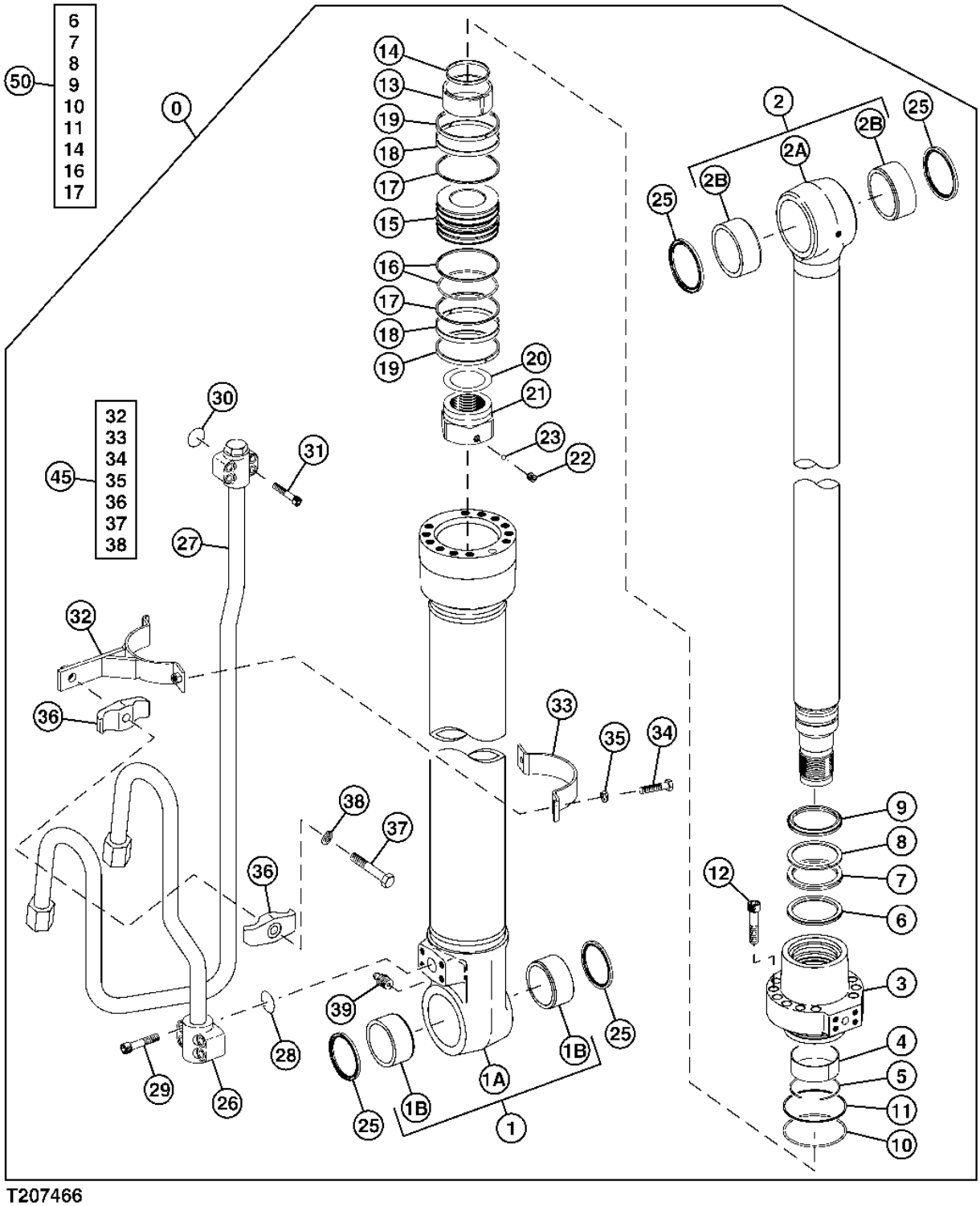


T207466

**BOOM CYLINDER, RH (MONO BOOM)**

| KEY | PART NO. | PART NAME | QTY | SERIAL NO. | REMARKS |
|---|---|---|---|---|---|
| 0 | 4488929 | CYLINDER | 1 | | |
| 1 | 0883101 | STRUCTURAL TUBING | 1 | | |
| 1A | ..... | TUBE | 1 | | |
| 1B | 4352398 | BUSHING | 2 | | |
| 2 | 0883102 | ROD | 1 | | |
| 2A | ..... | ROD | 2 | | |
| 2B | 4352398 | BUSHING | 1 | | |
| 3 | 0788905 | CYLINDER HEAD | 1 | | |
| 4 | AT264272 | BUSHING | 1 | | (SUB FOR 0309004) |
| 5 | 0208304 | SNAP RING | 1 | | |
| 6 | 0788906 | BACK-UP RING | 1 | | |
| 7 | AT309613 | SEAL | 1 | | (SUB FOR 0208305) |
| 8 | AT309614 | BACK-UP RING | 1 | | (SUB FOR 0208306) |
| 9 | H155911 | SEAL | 1 | | (SUB FOR 0667204) |
| 10 | AT264342 | O-RING | 1 | | (SUB FOR A811115) |
| 11 | 4S00175 | BACK-UP RING | 1 | | (SUB FOR 0261310) |
| 12 | 0407705 | SEAL | 12 | | |
| 13 | H155920 | RING | 1 | | (SUB FOR 0409706) |
| 14 | H155919 | SEAL | 1 | | (SUB FOR 0667205) |
| 15 | H155921 | PISTON | 1 | | (SUB FOR 0409708) |
| 16 | AT264355 | SEAL | 1 | | (SUB FOR 0258205) |
| 17 | H155916 | BACK-UP RING | 2 | | (SUB FOR 0409709) |
| 18 | 0788908 | RING | 2 | | |
| 19 | AT264356 | WEAR RING | 2 | | (SUB FOR 0261308) |
| 20 | 0309013 | SHIM | 1 | | |
| 21 | 0788907 | NUT | 1 | | |
| 22 | 22M6684 | SET SCREW | 1 | | M12 X 12, (SUB FOR 0309011) |
| 23 | T13624 | BALL | 1 | | (SUB FOR 0111707) |
| 25 | TH102446 | SEAL | 4 | | (SUB FOR 4067902) |
| 26 | 0883107 | PIPE | 1 | | (SUB FOR 0883103) |
| 27 | 0883108 | PIPE | 1 | | (SUB FOR 0883104) |
| 28 | 984614 | O-RING | 1 | | |
| 29 | M800636 | BOLT | 4 | | (SUB FOR 0309020) |
| 30 | AT264360 | O-RING | 1 | | (SUB FOR 4506430) |
| 31 | 19M8213 | SCREW | 4 | | M10 X 50, (SUB FOR 0309019) |
| 32 | 0883106 | BAND | 1 | | |
| 33 | 0309314 | CLAMP | 1 | | |
| 34 | 19M7550 | CAP SCREW | 2 | | M10 X 35, (SUB FOR J021035) |
| 35 | 12M7066 | LOCK WASHER | 2 | | 10 MM, (SUB FOR A590910) |
| 36 | 0236915 | HALF CLAMP | 2 | | |
| 37 | 19M4789 | CAP SCREW | 1 | | M14 X 80, (SUB FOR 0254312) |
| 38 | 12H317 | LOCK WASHER | 1 | | 9/16", (SUB FOR A590914) |
| 39 | TH100074 | LUBRICATION FITTING | 1 | | (SUB FOR J75481) |
| 45 | 0883105 | KIT | 1 | | |
| 50 | 4448398 | SEAL KIT | 1 | | |

**BOOM CYLINDER, LH (MONO BOOM)**

T207467 -UN-01MAR05

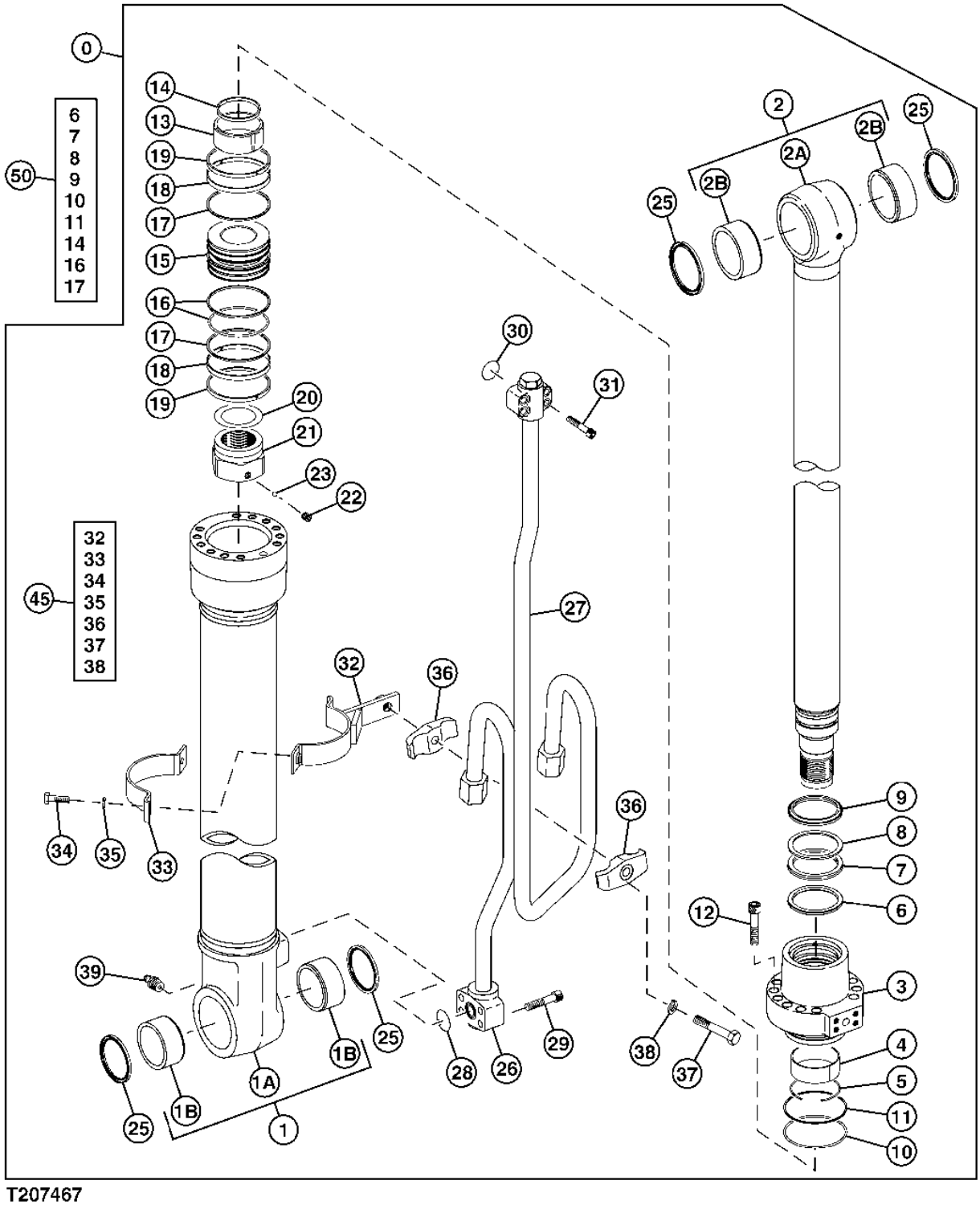


T207467

**BOOM CYLINDER, LH (MONO BOOM)**

| KEY | PART NO. | PART NAME | QTY | SERIAL NO. | REMARKS |
|---|---|---|---|---|---|
| 0 | 4488928 | CYLINDER | 1 | | |
| 1 | 0916301 | STRUCTURAL TUBING | 1 | | |
| 1A | ..... | TUBE | 1 | | |
| 1B | 4352398 | BUSHING | 2 | | |
| 2 | 0883102 | ROD | 1 | | |
| 2A | ..... | ROD | 1 | | |
| 2B | 4352398 | BUSHING | 2 | | |
| 3 | 0788905 | CYLINDER HEAD | 1 | | |
| 4 | AT264272 | BUSHING | 1 | | (SUB FOR 0309004) |
| 5 | 0208304 | SNAP RING | 1 | | |
| 6 | 0788906 | BACK-UP RING | 1 | | |
| 7 | AT309613 | SEAL | 1 | | (SUB FOR 0208305) |
| 8 | AT309614 | BACK-UP RING | 1 | | (SUB FOR 0208306) |
| 9 | H155911 | SEAL | 1 | | (SUB FOR 0667204) |
| 10 | AT264342 | O-RING | 1 | | (SUB FOR A811115) |
| 11 | 4S00175 | BACK-UP RING | 1 | | (SUB FOR 0261310) |
| 12 | 0409705 | SCREW | 12 | | |
| 13 | H155911 | SEAL | 1 | | (SUB FOR 0409706) |
| 14 | H155919 | SEAL | 1 | | (SUB FOR 0667205) |
| 15 | H155921 | PISTON | 1 | | (SUB FOR 0409708) |
| 16 | AT264356 | WEAR RING | 1 | | (SUB FOR 0258205) |
| 17 | H155916 | BACK-UP RING | 2 | | (SUB FOR 0409709) |
| 18 | 0788908 | RING | 2 | | |
| 19 | AT264356 | WEAR RING | 2 | | (SUB FOR 0261308) |
| 20 | 0309013 | SHIM | 1 | | |
| 21 | 0788907 | NUT | 1 | | |
| 22 | 0309011 | SET SCREW | 1 | | (SUB FOR 0309013) |
| 23 | T13624 | BALL | 1 | | (SUB FOR 0111707) |
| 25 | TH102446 | SEAL | 4 | | (SUB FOR 4067902) |
| 26 | 0916304 | PIPE | 1 | | (SUB FOR 0916302) |
| 27 | 0916305 | PIPE | 1 | | (SUB FOR 0916303) |
| 28 | 984614 | O-RING | 1 | | |
| 29 | M800636 | BOLT | 4 | | (SUB FOR 0309020) |
| 30 | AT264360 | O-RING | 1 | | (SUB FOR 4506430) |
| 31 | 19M8213 | SCREW | 4 | | M10 X 50, (SUB FOR 0309019) |
| 32 | 0883106 | BAND | 1 | | |
| 33 | 0309314 | CLAMP | 1 | | |
| 34 | 19M7550 | CAP SCREW | 2 | | M10 X 35, (SUB FOR J021035) |
| 35 | 12M7066 | LOCK WASHER | 2 | | 10 MM, (SUB FOR A590910) |
| 36 | 0236915 | HALF CLAMP | 2 | | |
| 37 | 19M4789 | CAP SCREW | 1 | | M14 X 80, (SUB FOR 0254312) |
| 38 | 12H317 | LOCK WASHER | 1 | | 9/16", (SUB FOR A590914) |
| 39 | TH100074 | LUBRICATION FITTING | 1 | | (SUB FOR J75481) |
| 45 | 0883105 | KIT | 1 | | |
| 50 | 4448398 | SEAL KIT | 1 | | |

**RIGHT BOOM CYLINDER (2 PIECE BOOM)**

T207468 -UN-01MAR05

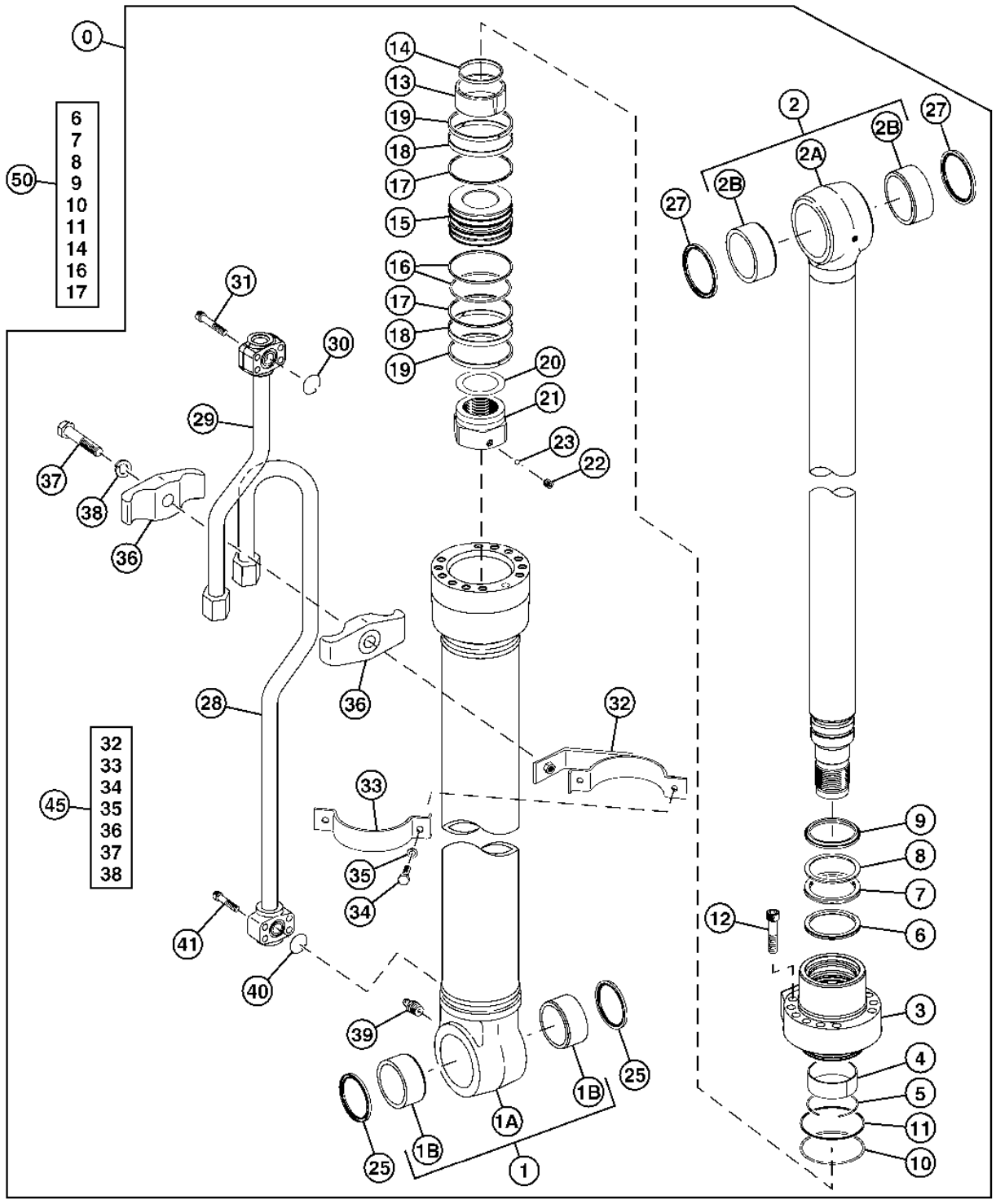


T207468

**RIGHT BOOM CYLINDER (2 PIECE BOOM)**

| KEY | PART NO. | PART NAME | QTY | SERIAL NO. | REMARKS |
|---|---|---|---|---|---|
| 0 | 4480119 | CYLINDER | 1 | | |
| 1 | 0916601 | STRUCTURAL TUBING | 1 | | |
| 1A | ..... | TUBE | 1 | | |
| 1B | 4352398 | BUSHING | 2 | | |
| 2 | 0916602 | ROD | 1 | | |
| 2A | ..... | ROD | 1 | | |
| 2B | 4355875 | BUSHING | 2 | | |
| 3 | 0788905 | CYLINDER HEAD | 1 | | |
| 4 | AT264272 | BUSHING | 1 | | (SUB FOR 0309004) |
| 5 | 0208304 | SNAP RING | 1 | | |
| 6 | 0788906 | BACK-UP RING | 1 | | |
| 7 | AT309613 | SEAL | 1 | | (SUB FOR 0208305) |
| 8 | AT309614 | BACK-UP RING | 1 | | (SUB FOR 0208306) |
| 9 | H155911 | SEAL | 1 | | (SUB FOR 0667204) |
| 10 | AT264342 | O-RING | 1 | | (SUB FOR A811115) |
| 11 | 4S00175 | BACK-UP RING | 1 | | (SUB FOR 0261310) |
| 12 | 0409705 | SCREW | 12 | | |
| 13 | H155920 | RING | 1 | | (SUB FOR 0409706) |
| 14 | H155919 | SEAL | 1 | | (SUB FOR 0667205) |
| 15 | H155921 | PISTON | 1 | | (SUB FOR 0409708) |
| 16 | AT264356 | WEAR RING | 1 | | (SUB FOR 0258205) |
| 17 | H155916 | BACK-UP RING | 2 | | (SUB FOR 0409709) |
| 18 | 0788908 | RING | 2 | | |
| 19 | AT264356 | WEAR RING | 2 | | (SUB FOR 0261308) |
| 20 | 0309013 | SHIM | 1 | | |
| 21 | 0788907 | NUT | 1 | | |
| 22 | 22M6684 | SET SCREW | 1 | | (SUB FOR 0309011) |
| 23 | T13624 | BALL | 1 | | (SUB FOR 0111707) |
| 25 | TH102446 | SEAL | 2 | | (SUB FOR 4067902) |
| 27 | 4067901 | SEAL | 2 | | (SUB FOR 0400902) |
| 28 | 0916607 | MUFFLER EXTENSION | 1 | | (SUB FOR 0916603) |
| 29 | 4606769 | PIPE | 1 | | |
| 30 | AT264360 | O-RING | 1 | | (SUB FOR 0409016) |
| 31 | 19M8213 | SCREW | 4 | | M10 X 50, (SUB FOR 0309019) |
| 32 | 0916605 | BAND | 1 | | |
| 33 | 0309314 | CLAMP | 1 | | |
| 34 | 19M7550 | CAP SCREW | 2 | | M10 X 35, (SUB FOR J021035) |
| 35 | 12M7066 | LOCK WASHER | 2 | | 10 MM, (SUB FOR A590910) |
| 36 | 0236915 | HALF CLAMP | 2 | | |
| 37 | 19M4789 | CAP SCREW | 1 | | M14 X 80, (SUB FOR 0254312) |
| 38 | 12H317 | LOCK WASHER | 1 | | 9/16", (SUB FOR A590914) |
| 39 | TH100074 | LUBRICATION FITTING | 1 | | (SUB FOR J75481) |
| 40 | 984614 | O-RING | 1 | | |
| 41 | M800636 | BOLT | 4 | | (SUB FOR 0309020) |
| 45 | 0916604 | KIT | 1 | | |
| 50 | 4448398 | SEAL KIT | 1 | | |

**LEFT BOOM CYLINDER (2 PIECE BOOM)**

T207469 -UN-01MAR05

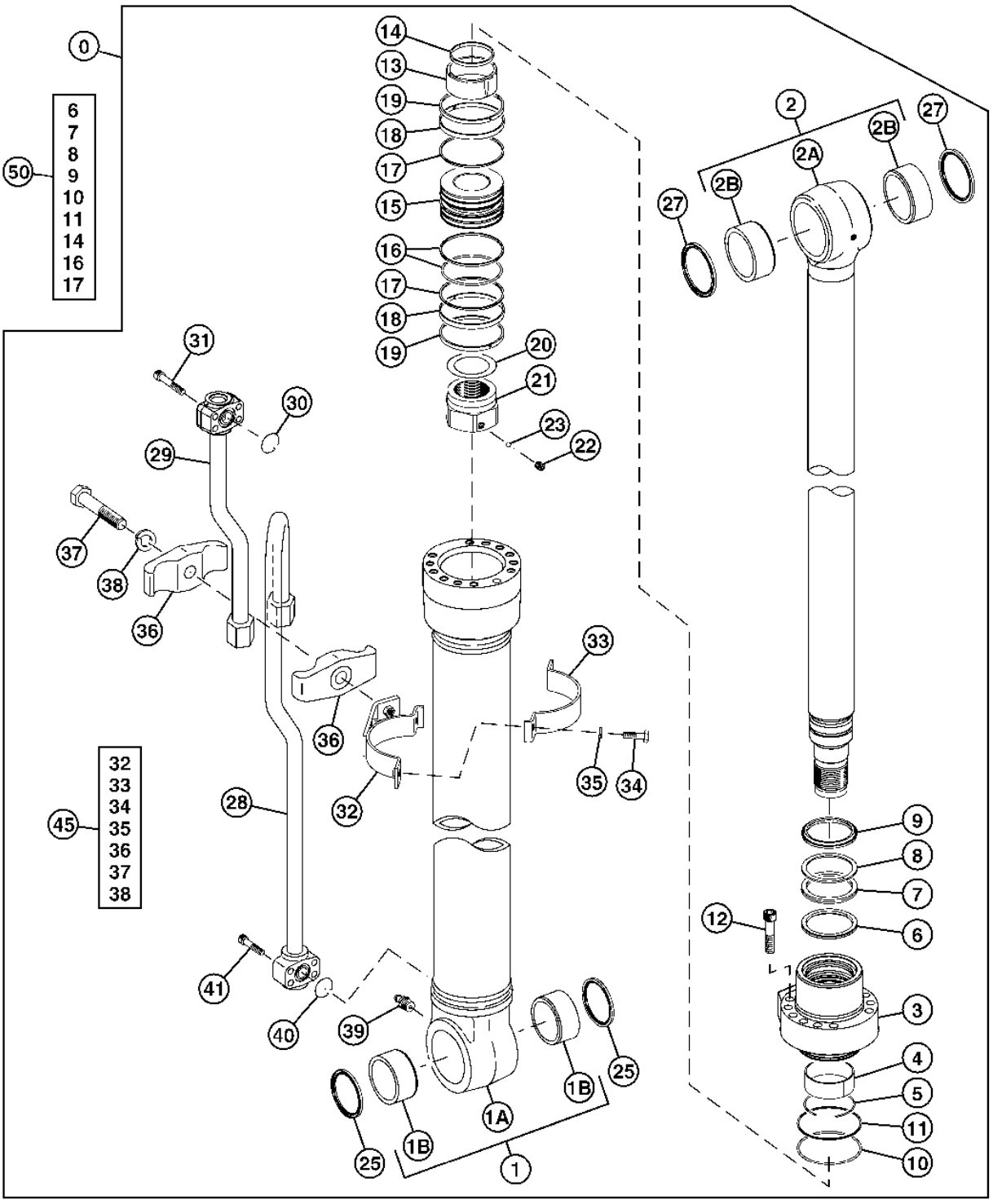


T207469

**LEFT BOOM CYLINDER (2 PIECE BOOM)**

| KEY | PART NO. | PART NAME | QTY | SERIAL NO. | REMARKS |
|---|---|---|---|---|---|
| 0 | 4480118 | CYLINDER | 1 | | |
| 1 | 0916601 | STRUCTURAL TUBING | 1 | | |
| 1A | ..... | TUBE | 1 | | |
| 1B | 4352398 | BUSHING | 2 | | |
| 2 | 0916602 | ROD | 1 | | |
| 2A | ..... | ROD | 1 | | |
| 2B | 4355875 | BUSHING | 2 | | |
| 3 | 0788905 | CYLINDER HEAD | 1 | | |
| 4 | AT264272 | BUSHING | 1 | | (SUB FOR 0309004) |
| 5 | 0208304 | SNAP RING | 1 | | |
| 6 | 0788906 | BACK-UP RING | 1 | | |
| 7 | AT309613 | SEAL | 1 | | (SUB FOR 0208305) |
| 8 | AT309614 | BACK-UP RING | 1 | | (SUB FOR 0208306) |
| 9 | H155911 | SEAL | 1 | | (SUB FOR 0667204) |
| 10 | AT264342 | O-RING | 1 | | (SUB FOR A811115) |
| 11 | 4S00175 | BACK-UP RING | 1 | | (SUB FOR 0261310) |
| 12 | 0409705 | SCREW | 12 | | |
| 13 | H155920 | RING | 1 | | (SUB FOR 0409706) |
| 14 | H155919 | SEAL | 1 | | (SUB FOR 0667205) |
| 15 | H155921 | PISTON | 1 | | (SUB FOR 0409708) |
| 16 | AT264356 | WEAR RING | 1 | | (SUB FOR 0258205) |
| 17 | H155916 | BACK-UP RING | 2 | | (SUB FOR 0409709) |
| 18 | 0788908 | RING | 2 | | |
| 19 | AT264356 | WEAR RING | 2 | | (SUB FOR 0261308) |
| 20 | 0309013 | SHIM | 1 | | |
| 21 | 0788907 | NUT | 1 | | |
| 22 | 22M6684 | SET SCREW | 1 | | (SUB FOR 0309011) |
| 23 | T13624 | BALL | 1 | | (SUB FOR 0111707) |
| 25 | TH102446 | SEAL | 2 | | (SUB FOR 4067902) |
| 27 | 4067901 | SEAL | 2 | | (SUB FOR 0400902) |
| 28 | 0916802 | PIPE | 1 | | (SUB FOR 0916801) |
| 29 | 4606770 | PIPE | 1 | | |
| 30 | AT264360 | O-RING | 1 | | (SUB FOR 4506430) |
| 31 | 19M8213 | SCREW | 4 | | M10 X 50, (SUB FOR 0309019) |
| 32 | 0916605 | BAND | 1 | | |
| 33 | 0309314 | CLAMP | 1 | | |
| 34 | 19M7550 | CAP SCREW | 2 | | M10 X 35, (SUB FOR J021035) |
| 35 | 12M7066 | LOCK WASHER | 2 | | 10 MM, (SUB FOR A590910) |
| 36 | 0236915 | HALF CLAMP | 2 | | |
| 37 | 19M4789 | CAP SCREW | 1 | | M14 X 80, (SUB FOR 0254312) |
| 38 | 12H317 | LOCK WASHER | 1 | | 9/16", (SUB FOR A590914) |
| 39 | TH100074 | LUBRICATION FITTING | 1 | | (SUB FOR J75481) |
| 40 | 984614 | O-RING | 1 | | |
| 41 | M800636 | BOLT | 4 | | (SUB FOR 0309020) |
| 45 | 0916604 | KIT | 1 | | |
| 50 | 4448398 | SEAL KIT | 1 | | |

**ARM CYLINDER**

T207470 -UN-01MAR05

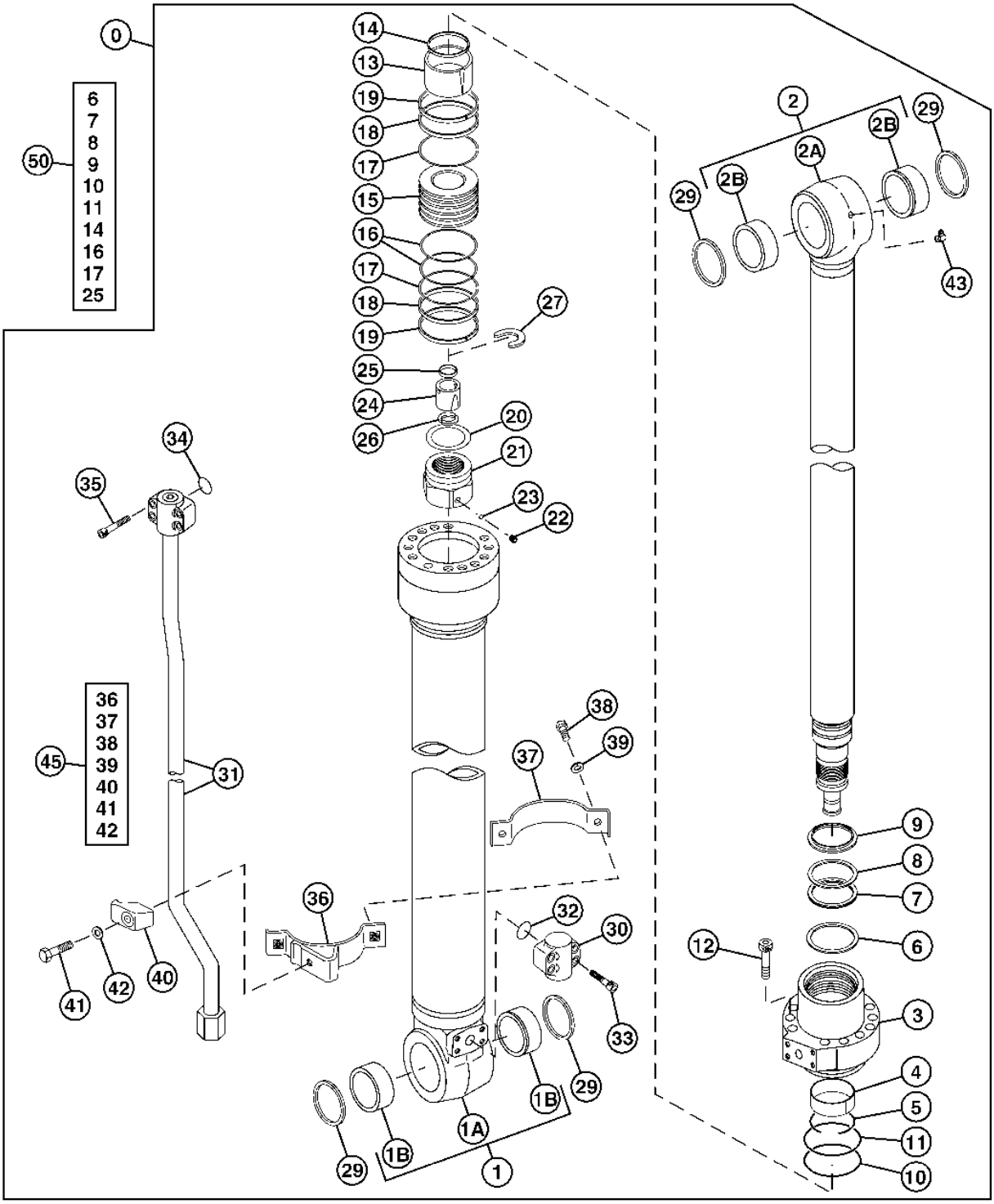


T207470

**ARM CYLINDER**

| KEY | PART NO. | PART NAME | QTY | SERIAL NO. | REMARKS |
|---|---|---|---|---|---|
| 0 | 4471462 | CYLINDER | 1 | | |
| 1 | 0871301 | STRUCTURAL TUBING | 1 | | |
| 1A | ..... | TUBE | 1 | | |
| 1B | 4352398 | BUSHING | 2 | | |
| 2 | 0871309 | ROD | 1 | | |
| 2A | ..... | ROD | 1 | | |
| 2B | 4352398 | BUSHING | 2 | | |
| 3 | 0871310 | CYLINDER HEAD | 1 | | |
| 4 | AT264321 | BUSHING | 1 | | (SUB FOR 0325904) |
| 5 | 0237407 | RING | 1 | | |
| 6 | 0829304 | RING | 1 | | |
| 7 | 0105301 | PACKING | 1 | | |
| 8 | 0237419 | BACK-UP RING | 1 | | |
| 9 | 0829305 | RING | 1 | | |
| 10 | AT264339 | O-RING | 1 | | (SUB FOR A811120) |
| 11 | TH104956 | BACK-UP RING | 1 | | (SUB FOR 0223704) |
| 12 | 0409705 | SCREW | 12 | | |
| 13 | 0871304 | BALL BEARING | 1 | | |
| 14 | 0829307 | SEAL | 1 | | |
| 15 | 0737505 | PISTON | 1 | | |
| 16 | 0223706 | SEAL | 1 | | |
| 17 | 0496706 | BACK-UP RING | 2 | | |
| 18 | 0737506 | RING | 2 | | |
| 19 | AT264362 | PISTON RING | 2 | | (SUB FOR (2) 0223713) |
| 20 | 0400909 | SHIM | 1 | | |
| 21 | 0776406 | NUT | 1 | | |
| 22 | 22M6684 | SET SCREW | 1 | | (SUB FOR 0309011) |
| 23 | T13624 | BALL | 1 | | (SUB FOR 0111707) |
| 24 | H155321 | SPACER | 1 | | (SUB FOR H155321) |
| 25 | H155322 | SEAL | 1 | | (SUB FOR H155321) |
| 26 | H155329 | RING | 2 | | (SUB FOR (2) 0409915) |
| 27 | H163222 | SNAP RING | 1 | | (SUB FOR 0686406) |
| 29 | TH102446 | SEAL | 4 | | (SUB FOR (4) 4067902) |
| 30 | ..... | SUPPORT | 1 | | ( 0409016 NOT AVAILABLE FOR SERVICE) |
| 31 | 0871305 | PIPE | 1 | | |
| 32 | AT264360 | O-RING | 1 | | (SUB FOR 4506430) |
| 33 | 19M8213 | SCREW | 4 | | M10 X 50, (SUB FOR (4) 0309019) |
| 34 | 984614 | O-RING | 1 | | |
| 35 | M800636 | BOLT | 1 | | (SUB FOR (4) 0309020) |
| 36 | 0871307 | BAND | 1 | | |
| 37 | 0871308 | BAND | 1 | | |
| 38 | 19M7550 | CAP SCREW | 2 | | M10 X 35, (SUB FOR (2) 0408815) |
| 39 | 12M7066 | LOCK WASHER | 2 | | 10 MM, (SUB FOR (2) 0325913) |
| 40 | T108036 | CLAMP | 1 | | (SUB FOR 0309021) |
| 41 | 19M7361 | CAP SCREW | 1 | | M12 X 50, (SUB FOR 0309022) |
| 42 | 12M7067 | LOCK WASHER | 1 | | 12 MM, (SUB FOR 0208516) |
| 43 | CH18478 | FITTING | 1 | | (SUB FOR 0225709) |
| 45 | 0871306 | KIT | 1 | | |
| 50 | 4483194 | HOSE | 1 | | (SUB FOR 4483914) |

**BUCKET CYLINDER**

T207471 -UN-17FEB05

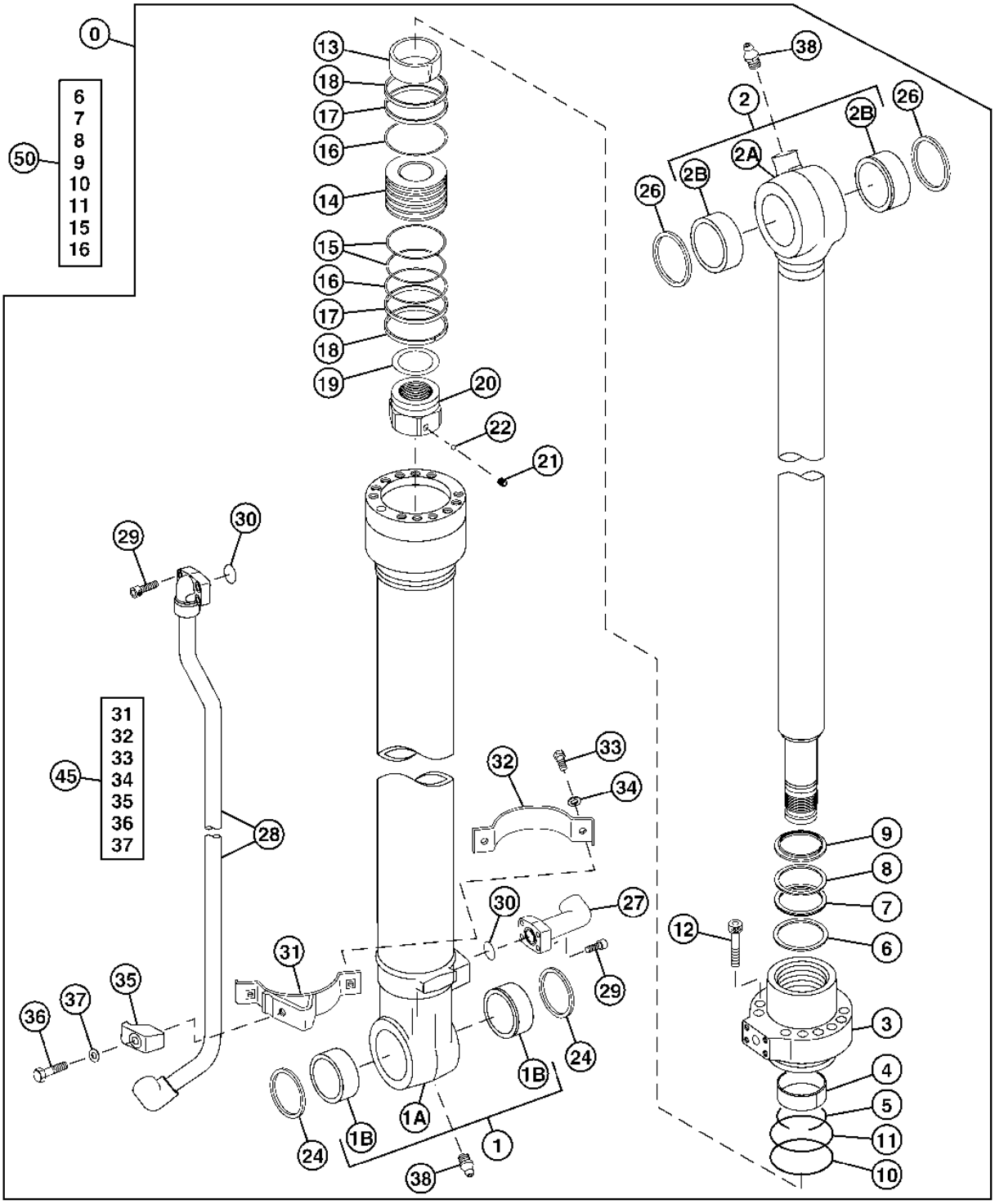


T207471

**BUCKET CYLINDER**

| KEY | PART NO. | PART NAME | QTY | SERIAL NO. | REMARKS |
|---|---|---|---|---|---|
| 0 | 4471463 | CYLINDER | 1 | | |
| 1 | 0871401 | STRUCTURAL TUBING | 1 | | |
| 1A | ..... | TUBE | 1 | | |
| 1B | 4352398 | BUSHING | 2 | | |
| 2 | 0871405 | ROD | 1 | | |
| 2A | ..... | ROD | 1 | | |
| 2B | 4352398 | BUSHING | 2 | | |
| 3 | 0789905 | CYLINDER HEAD | 1 | | |
| 4 | TH109311 | WEAR RING | 1 | | (SUB FOR 0310504) |
| 5 | 0240904 | SNAP RING | 1 | | |
| 6 | 0789906 | RING | 1 | | |
| 7 | 4S00189 | PACKING | 1 | | (SUB FOR 0240911) |
| 8 | 4S00190 | BACK-UP RING | 1 | | (SUB FOR 0240912) |
| 9 | 0667504 | SEAL | 1 | | |
| 10 | AT264319 | O-RING | 1 | | (SUB FOR A811100) |
| 11 | TH109318 | BACK-UP RING | 1 | | (SUB FOR 0310506) |
| 12 | 19M8930 | SCREW | 1 | | M14 X 65, (SUB FOR (12) 0408805) |
| 13 | H163452 | RING | 1 | | (SUB FOR 0694403) |
| 14 | 0408808 | PISTON | 1 | | |
| 15 | AT264387 | RING | 1 | | (SUB FOR 0310508) |
| 16 | AT153919 | BACK-UP RING | 2 | | (SUB FOR (2) 0408809) |
| 17 | H158459 | SCRAPER RING | 2 | | (SUB FOR (2) 0666808) |
| 18 | AT264388 | RING | 2 | | (SUB FOR (2) 0310510) |
| 19 | 0310514 | SHIM | 1 | | |
| 20 | 0789307 | NUT | 1 | | |
| 21 | 22M6684 | SET SCREW | 1 | | (SUB FOR 0309011) |
| 22 | T13624 | BALL | 1 | | (SUB FOR 0111707) |
| 24 | TH100374 | SEAL | 2 | | (SUB FOR (2) 4065687) |
| 26 | TH102446 | SEAL | 2 | | (SUB FOR (2) 4067902) |
| 27 | 8086114 | ELBOW FITTING | 1 | | (SUB FOR 0309312) |
| 28 | 0871404 | PIPE | 1 | | |
| 29 | 19M8337 | SCREW | 8 | | M10 X 30, (SUB FOR (8) 0158855) |
| 30 | AT264360 | O-RING | 2 | | (SUB FOR (2) 4506430) |
| 31 | AH152929 | CLAMP | 1 | | (SUB FOR 0675108) |
| 32 | H159705 | BAND | 1 | | (SUB FOR 0409612) |
| 33 | 19M7550 | CAP SCREW | 2 | | M10 X 35, (SUB FOR (2) 0408815) |
| 34 | 12M7066 | LOCK WASHER | 2 | | 10 MM, (SUB FOR (2) 0325913) |
| 35 | T108036 | CLAMP | 1 | | (SUB FOR 0309021) |
| 36 | 19M7362 | CAP SCREW | 1 | | M12 X 55, (SUB FOR 0667013) |
| 37 | 12M7058 | LOCK WASHER | 1 | | 12 MM, (SUB FOR 0208516) |
| 38 | TH100074 | LUBRICATION FITTING | 2 | | (SUB FOR (2) J75481) |
| 45 | 0675109 | KIT | 1 | | |
| 50 | 4467381 | SEAL KIT | 1 | | |

**POSITIONING CYLINDER**

T207472 -UN-01MAR05

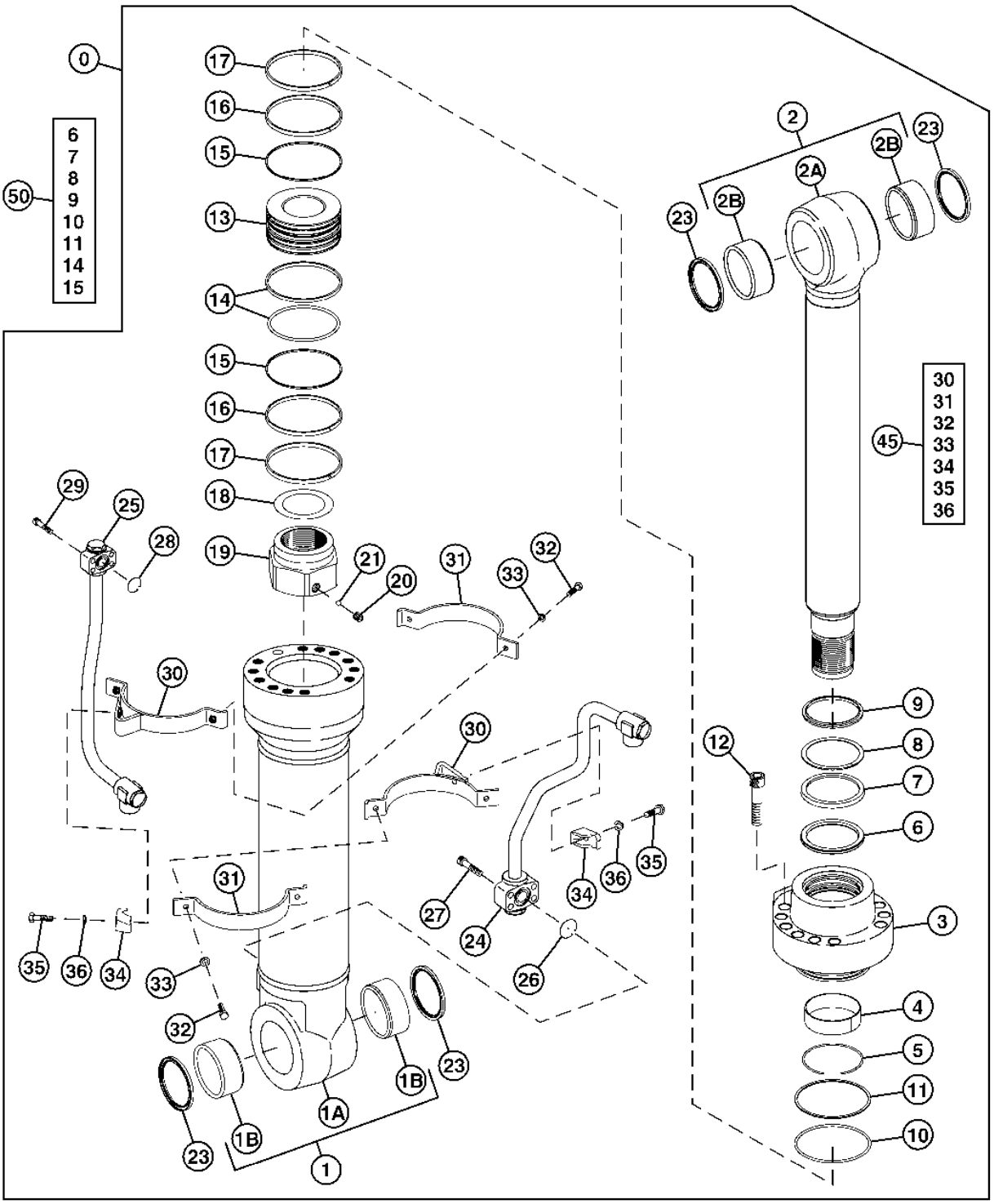


T207472

**POSITIONING CYLINDER**

| KEY | PART NO. | PART NAME | QTY | SERIAL NO. | REMARKS |
|---|---|---|---|---|---|
| 0 | 4480120 | CYLINDER | 1 | | |
| 1 | 0917101 | STRUCTURAL TUBING | 1 | | |
| 1A | ..... | TUBE | 1 | | |
| 1B | 4381859 | BUSHING | 2 | | |
| 2 | 0917102 | ROD | 1 | | |
| 2A | ..... | ROD | 1 | | |
| 2B | 4381859 | BUSHING | 2 | | |
| 3 | 0917103 | CYLINDER HEAD | 1 | | |
| 4 | 0461206 | BUSHING | 1 | | |
| 5 | 0161503 | SNAP RING | 1 | | |
| 6 | 0917104 | BACK-UP RING | 1 | | |
| 7 | 4S00095 | RING | 1 | | (SUB FOR 4069701) |
| 8 | 4S00077 | BACK-UP RING | 1 | | (SUB FOR 0237309) |
| 9 | 0779704 | WHEEL SEAL O-RING | 1 | | |
| 10 | A811160 | O-RING | 1 | | |
| 11 | AT264252 | BACK-UP RING | 1 | | (SUB FOR 4170546) |
| 12 | 0875605 | BOLT | 12 | | |
| 13 | 0917105 | PISTON | 1 | | |
| 14 | AT264253 | RING | 1 | | (SUB FOR 4170547) |
| 15 | 0875607 | BACK-UP RING | 2 | | |
| 16 | AT264289 | RING | 2 | | (SUB FOR 0420109) |
| 17 | 0259307 | RING | 2 | | |
| 18 | 0450511 | SHIM | 1 | | |
| 19 | 0917106 | NUT | 1 | | |
| 20 | 0353012 | SET SCREW | 1 | | |
| 21 | 0353011 | BALL | 1 | | |
| 23 | AT201578 | RING | 4 | | (SUB FOR 0420110) |
| 24 | 0917107 | PIPE | 1 | | |
| 25 | 0917201 | PIPE | 1 | | (SUB FOR 0917108) |
| 26 | 984614 | O-RING | 1 | | |
| 27 | M800636 | BOLT | 4 | | (SUB FOR 0309020) |
| 28 | AT264360 | O-RING | 1 | | (SUB FOR 4506430) |
| 29 | 19M8213 | SCREW | 4 | | M10 X 50, (SUB FOR 0309019) |
| 30 | 0875612 | HALF CLAMP | 2 | | |
| 31 | 0352721 | BAND | 2 | | |
| 32 | 19M7550 | CAP SCREW | 4 | | (SUB FOR J021035) |
| 33 | 12M7066 | LOCK WASHER | 4 | | 10 MM, (SUB FOR A590910) |
| 34 | T108036 | CLAMP | 2 | | (SUB FOR 0309021) |
| 35 | 19M7362 | CAP SCREW | 1 | | (SUB FOR 0667013) |
| 36 | 12M7058 | LOCK WASHER | 1 | | 12 MM, (SUB FOR 0208516) |
| 45 | 0875611 | KIT | 1 | | |
| 50 | 4618229 | KIT | 1 | | |

**PTO CONTROL VALVE AND COMPONENTS**

T207837 -UN-17FEB05

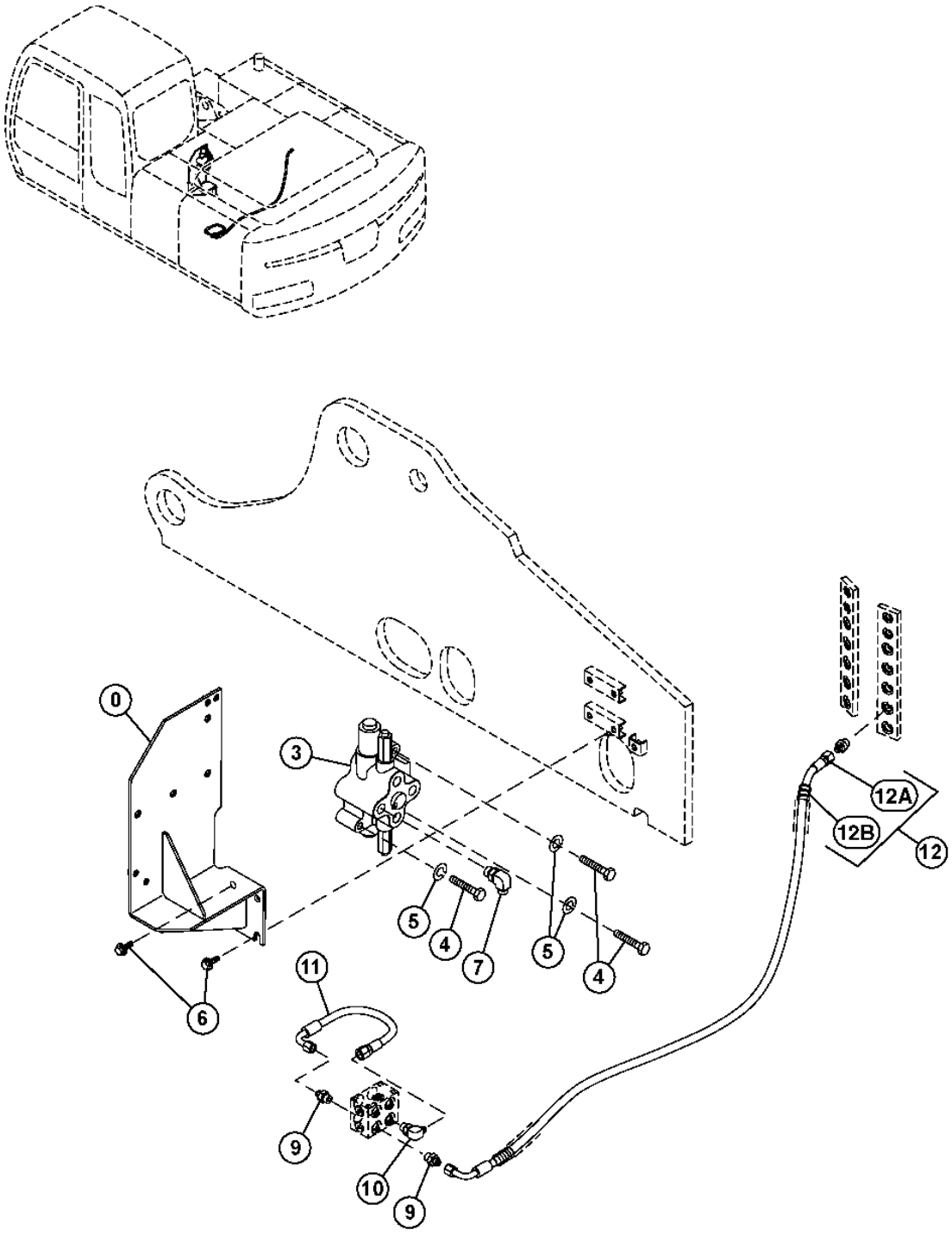


T207837

# 3L13



**PTO CONTROL VALVE AND COMPONENTS**

| KEY | PART NO. | PART NAME | QTY | SERIAL NO. | REMARKS |
|---|---|---|---|---|---|
| 0 | 8089920 | BRACKET | 1 | | |
| 3 | 4467405 | CONTROL VALVE | 1 | | |
| 4 | 19M7364 | CAP SCREW | 3 | | (SUB FOR J921280) |
| 5 | 12H301 | LOCK WASHER | 3 | | (SUB FOR A590912) |
| 6 | ..... | SCREW | 4 | | ( J281025 NOT AVAILABLE FOR SERVICE) |
| | 19M7402 | CAP SCREW | 1 | | (SUB FOR J901025) |
| | 4486055 | WASHER | 1 | | |
| 7 | A853344 | ELBOW FITTING | 1 | | |
| | 4506418 | O-RING | 1 | | |
| 9 | A852133 | ADAPTER | 2 | | |
| | CH11570 | O-RING | 1 | | (SUB FOR 4509180) |
| 10 | A852333 | ELBOW FITTING | 1 | | |
| | CH11570 | O-RING | 1 | | (SUB FOR 4509180) |
| 11 | 4445714 | HYDRAULIC HOSE - FABRICATE | 1 | | |
| 12 | ..... | HOSE | 1 | | ( 9232920 NOT AVAILABLE FOR SERVICE) |
| | 4611610 | HOSE | 1 | | |
| | 4327293 | HOSE GUARD | 3 | | |

**SWING MOTOR AND GEARBOX**

T206953 -UN-20JAN05

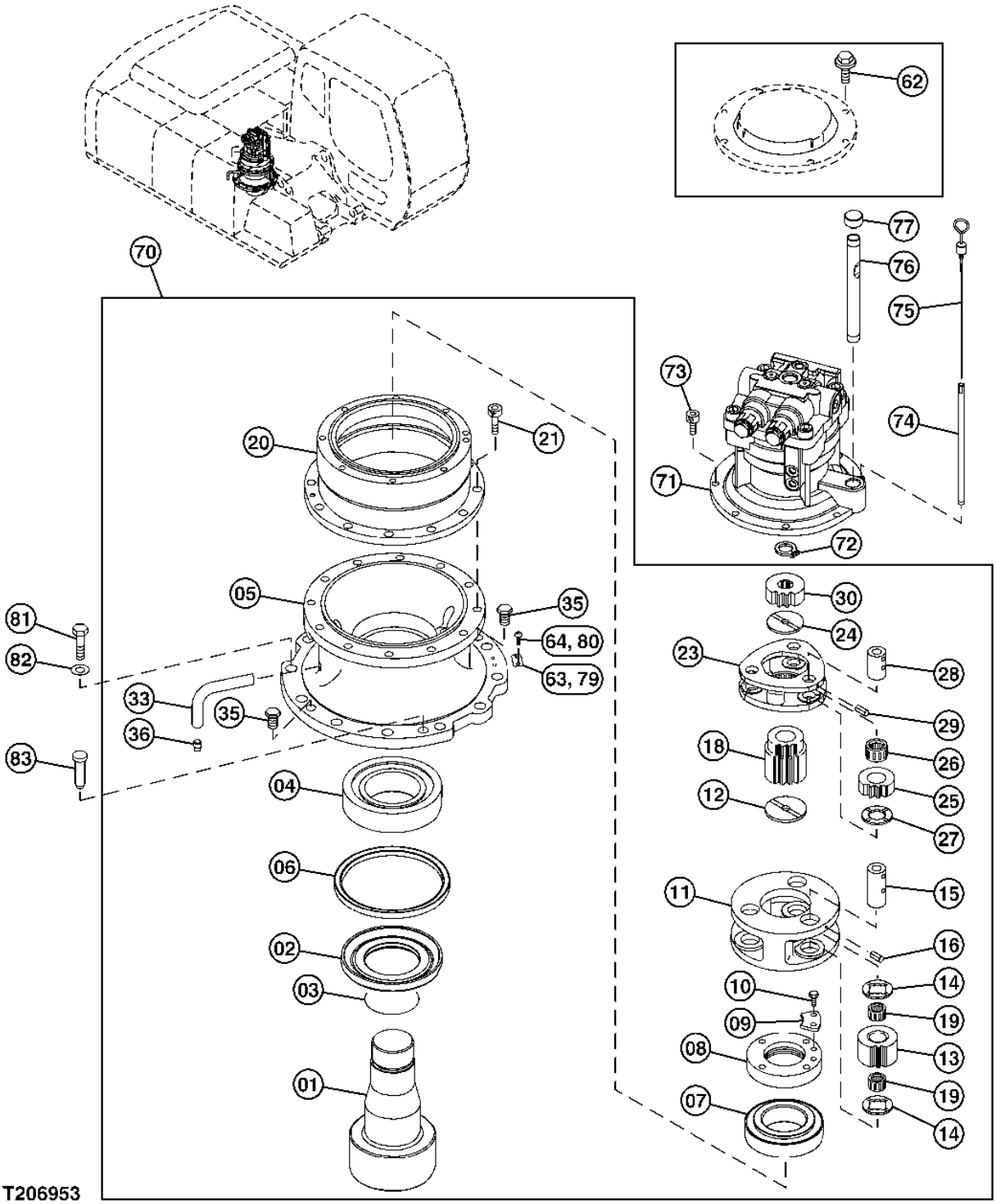

**SWING MOTOR AND GEARBOX**

| KEY | PART NO. | PART NAME | QTY | SERIAL NO. | REMARKS |
|---|---|---|---|---|---|
| 1 | 2044634 | SHAFT | 1 | | |
| 2 | 3083742 | SLEEVE | 1 | | |
| 3 | AT264339 | O-RING | 1 | | (SUB FOR A811120) |
| 4 | 4402481 | CYLINDRICAL ROLLER BEARING | 1 | | |
| 5 | 1027617 | HOUSING | 1 | | |
| 6 | 4411535 | SEAL | 1 | | |
| 7 | 4402637 | CYLINDRICAL ROLLER BEARING | 1 | | |
| 8 | 3086064 | NUT | 1 | | |
| 9 | 4474191 | PLATE | 1 | | |
| 10 | 19M8324 | CAP SCREW | 2 | | M10 X 16, (SUB FOR J901016) |
| 11 | 1026662 | PLANET PINION CARRIER | 1 | | |
| 12 | 4187590 | PLATE | 1 | | |
| 13 | 3084729 | GEAR | 3 | | |
| 14 | 4336929 | WEAR PLATE | 6 | | |
| 15 | 4336925 | PIN | 3 | | |
| 16 | 34M6402 | SPRING PIN | 3 | | 8 X 28 MM (0.315" X 1.102") (SUB FOR 4027427) |
| 18 | 3080912 | SUN GEAR | 1 | | |
| 19 | 4631475 | NEEDLE BEARING | 6 | | (SUB FOR 4461644) |
| 20 | 1025957 | RING GEAR | 1 | | |
| 21 | 19M8445 | SCREW | 12 | | M16 X 45, (SUB FOR M341645) |
| 23 | 1025912 | PLANET PINION CARRIER | 1 | | |
| 24 | 4403371 | PLATE | 1 | | |
| 25 | 3082517 | GEAR | 3 | | |
| 26 | 4404506 | NEEDLE BEARING | 3 | | |
| 27 | 4403082 | PLATE | 3 | | |
| 28 | 4336923 | PIN | 3 | | |
| 29 | 4051262 | SPRING PIN | 3 | | |
| 30 | 3084056 | SUN GEAR | 1 | | |
| 33 | 3089362 | PIPE | 1 | | |
| 35 | 4445352 | PIPE PLUG | 2 | | |
| 36 | 94-2012 | FITTING PLUG | 1 | | |
| 62 | ..... | CAP SCREW | 8 | | ( J271230 NOT AVAILABLE FOR SERVICE) |
| | 19M8011 | CAP SCREW | 1 | | M12 X 30, (SUB FOR J901230) |
| | 24M7345 | WASHER | 1 | | 13.500 X 24 X 2.500 MM, (SUB FOR J222012) |
| 63 | 3053093 | PLATE | 1 | | |
| 64 | 37H99 | SCREW | 2 | | 0.100" X 1/4", (SUB FOR M492564) |
| 70 | 9196963 | HYDRAULIC MOTOR | 1 | | |
| 71 | 4479815 | HYDRAULIC MOTOR | 1 | | |
| 72 | 40M7046 | SNAP RING | 1 | | (SUB FOR 991342) |
| 73 | 19M8168 | SCREW | 8 | | M12 X 25, (SUB FOR M341228) |
| 74 | 4264452 | TUBE | 1 | | |
| 75 | 3074223 | DIPSTICK | 1 | | |
| 76 | 4332658 | TUBE | 1 | | |
| 77 | 4343365 | CAP | 1 | | |
| 79 | 3053093 | PLATE | 1 | | |
| 80 | 37H99 | SCREW | 2 | | 0.100" X 1/4", (SUB FOR M492564) |
| 81 | J922060 | CAP SCREW | 12 | | |
| 82 | J222020 | WASHER | 12 | | |
| 83 | TH101880 | PIN FASTENER | 2 | | |

**SWING MOTOR COMPONENTS**

T207040 -UN-01FEB05

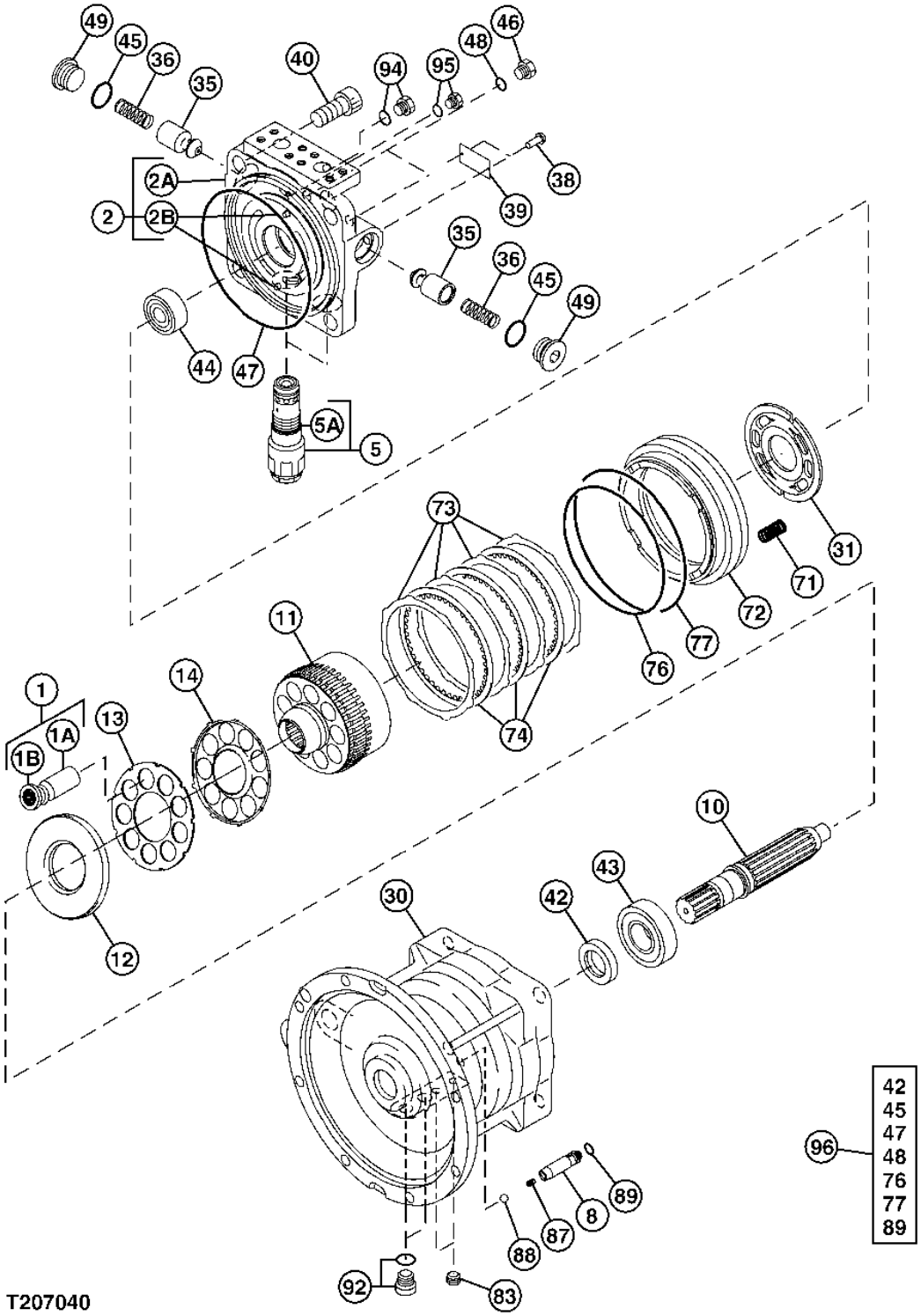

**SWING MOTOR COMPONENTS**

| KEY | PART NO. | PART NAME | QTY | SERIAL NO. | REMARKS |
|---|---|---|---|---|---|
| 1 | 0788801 | PISTON | 1 | | |
| 1A | ..... | PISTON | 9 | | |
| 1B | ..... | SHOE | 9 | | |
| 2 | 0788802 | COVER | 1 | | |
| 2A | ..... | HOUSING | 1 | | |
| 2B | ..... | SPRING PIN | 2 | | |
| 5 | 0871601 | PRESSURE RELIEF VALVE | 2 | | |
| 5A | A811030 | O-RING | 2 | | |
| 8 | 0788803 | PLUNGER | 1 | | |
| 10 | 0788804 | SHAFT | 1 | | |
| 11 | 0788805 | MANIFOLD | 1 | | |
| 12 | 0788808 | PLATE | 1 | | |
| 13 | 0788807 | RETAINER | 1 | | |
| 14 | 0788806 | PLATE | 1 | | |
| 30 | ..... | HOUSING | 1 | | ( 0814401 NOT AVAILABLE FOR SERVICE) |
| 31 | 0788809 | PLATE | 1 | | |
| 35 | 0409215 | PLUNGER | 2 | | |
| 36 | 0409216 | SPRING | 2 | | |
| 38 | 0625509 | CAP SCREW | 2 | | |
| 39 | ..... | IDENTIFICATION PLATE | 1 | | ( 0625508 NOT AVAILABLE FOR SERVICE) |
| 40 | M342045 | BOLT | 4 | | (SUB FOR 0365318) |
| 42 | 0788813 | SEAL | 1 | | (A) |
| 43 | 0788811 | CYLINDRICAL ROLLER BEARING | 1 | | |
| 44 | 0788812 | CYLINDRICAL ROLLER BEARING | 1 | | |
| 45 | AT264347 | O-RING | 2 | | (A) (SUB FOR 4506428) |
| 46 | 0629404 | FITTING PLUG | 2 | | |
| 47 | 0425115 | O-RING | 1 | | (A) |
| 48 | M800650 | PACKING | 2 | | (A) (SUB FOR 957366) |
| 49 | 0692708 | FITTING PLUG | 2 | | |
| 71 | 0788815 | SPRING | 24 | | |
| 72 | 0788814 | PISTON | 1 | | |
| 73 | 0788817 | THRUST WASHER | 4 | | |
| 74 | 0788816 | THRUST WASHER | 3 | | |
| 76 | 4S00218 | O-RING | 1 | | (A) (SUB FOR 0353321) |
| 77 | T80622 | O-RING | 1 | | (A) (SUB FOR 0425117) |
| 83 | 15H560 | PIPE PLUG | 1 | | (SUB FOR 0263019) |
| 87 | 0788818 | SPRING | 1 | | |
| 88 | R63075 | BALL | 1 | | (SUB FOR 0221509) |
| 89 | CH11568 | PACKING | 1 | | (A) (SUB FOR 4506407) |
| 92 | 0628705 | PIPE PLUG | 2 | | |
| 94 | 0694825 | PIPE PLUG | 1 | | |
| 95 | 0788819 | PIPE PLUG | 1 | | |
| 96 | 0814402 | SEAL KIT | 1 | | INCLUDES PARTS MARKED (A) |

**MEMORANDA**

# 1K11



## NUMERICAL INDEX

| PART NO. | GRID | KEY | PAGE |
|---|---|---|---|
| AA34965 | 2G12 | 5 | 1830 - 3 |
| AE42718 | 3B12 | 10A | 3301 - 5 |
| AH103182 | 1I16 | 8 | 0520 - 3 |
| AH103182 | 1I18 | 9 | 0520 - 5 |
| AH103182 | 1I20 | 9 | 0520 - 7 |
| AH103182 | 3J14 | 2 | 3363 - 15 |
| AH104837 | 1I20 | 10 | 0520 - 7 |
| AH152929 | 3L8 | 31 | 3365 - 13 |
| AR48236 | 1I22 | 16 | 0530 - 3 |
| AT115060 | 1I16 | 4 | 0520 - 3 |
| AT120949 | 3I4 | 12 | 3362 - 37 |
| AT120949 | 3I16 | 10 | 3362 - 49 |
| AT122209 | 3B10 | 9C | 3301 - 3 |
| AT130666 | 2D13 | 18 | 1740 - 3 |
| AT131080 | 3B14 | 21 | 3302 - 3 |
| AT131080 | 3B14 | 22 | 3302 - 3 |
| AT131080 | 3B14 | 90 | 3302 - 3 |
| AT131080 | 3C2 | 21 | 3302 - 15 |
| AT131080 | 3C2 | 22 | 3302 - 15 |
| AT131080 | 3C2 | 90 | 3302 - 15 |
| AT131082 | 3B16 | 15 | 3302 - 5 |
| AT131083 | 3B14 | 4 | 3302 - 3 |
| AT131083 | 3B16 | 4 | 3302 - 5 |
| AT131083 | 3B18 | 4 | 3302 - 7 |
| AT131083 | 3B22 | 1 | 3302 - 11 |
| AT131083 | 3C2 | 4 | 3302 - 15 |
| AT131085 | 3B16 | 21 | 3302 - 5 |
| AT131085 | 3B16 | 22 | 3302 - 5 |
| AT131085 | 3B16 | 41 | 3302 - 5 |
| AT131085 | 3B18 | 21 | 3302 - 7 |
| AT131085 | 3B18 | 22 | 3302 - 7 |
| AT131085 | 3B18 | 41 | 3302 - 7 |
| AT131090 | 3B14 | 15 | 3302 - 3 |
| AT131090 | 3B18 | 15 | 3302 - 7 |
| AT131117 | 3B22 | 12 | 3302 - 11 |
| AT131548 | 2D19 | 8 | 1740 - 9 |
| AT131671 | 2D13 | 29 | 1740 - 3 |
| AT131678 | 2D19 | 9 | 1740 - 9 |
| AT131685 | 1E12 | 12 | 0260 - 33 |
| AT131690 | 2D19 | 3 | 1740 - 9 |
| AT131725 | 3J2 | 16 | 3363 - 3 |
| AT131790 | 2D13 | 14 | 1740 - 3 |
| AT131842 | 2D19 | 15 | 1740 - 9 |
| AT131843 | 2D19 | 16 | 1740 - 9 |
| AT131922 | 1I18 | 0G | 0520 - 5 |
| AT132681 | 2D19 | 14 | 1740 - 9 |
| AT132682 | 2D19 | 13 | 1740 - 9 |
| AT133645 | 1E20 | 4 | 0265 - 5 |
| AT133645 | 1E20 | 7 | 0265 - 5 |
| AT138346 | 2G4 | 10 | 1821 - 3 |
| AT145652 | 1I16 | 7 | 0520 - 3 |
| AT145652 | 1I18 | 10 | 0520 - 5 |
| AT153835 | 2J4 | 10 | 2160 - 21 |
| AT153837 | 2J4 | 29 | 2160 - 21 |
| AT153838 | 2J4 | 34 | 2160 - 21 |
| AT153880 | 2J4 | 7 | 2160 - 21 |
| AT153914 | 1E22 | 6 | 0265 - 7 |
| AT153919 | 3L8 | 16 | 3365 - 13 |
| AT154990 | 2C17 | 5C | 1674 - 13 |
| AT154990 | 2C19 | 5C | 1674 - 15 |
| AT154990 | 2D6 | 0C | 1674 - 27 |
| AT154990 | 2D8 | 12C | 1674 - 29 |
| AT155730 | 2B18 | 9 | 1322 - 5 |
| AT155730 | 2E20 | 37 | 1810 - 11 |
| AT160685 | 3B22 | 11 | 3302 - 11 |
| AT161005 | 3B22 | 11 | 3302 - 11 |
| AT161005 | 3B22 | 12 | 3302 - 11 |
| AT162538 | 3C8 | 1A | 3302 - 21 |
| AT163538 | 3C12 | 1A | 3302 - 25 |
| AT163538 | 3C16 | 1A | 3302 - 29 |
| AT163538 | 3C20 | 1A | 3302 - 33 |
| AT163539 | 3C8 | 1B | 3302 - 21 |
| AT163539 | 3C12 | 1B | 3302 - 25 |
| AT163539 | 3C16 | 1B | 3302 - 29 |
| AT163539 | 3C20 | 1B | 3302 - 33 |
| AT163540 | 3C8 | 1F | 3302 - 21 |
| AT163540 | 3C12 | 1F | 3302 - 25 |
| AT163540 | 3C16 | 1F | 3302 - 29 |
| AT163540 | 3C20 | 1F | 3302 - 33 |
| AT163541 | 3C8 | 1E | 3302 - 21 |
| AT163541 | 3C12 | 1E | 3302 - 25 |
| AT163541 | 3C16 | 1E | 3302 - 29 |
| AT163541 | 3C20 | 1E | 3302 - 33 |
| AT163542 | 3C8 | 1D | 3302 - 21 |
| AT163542 | 3C12 | 1D | 3302 - 25 |
| AT163542 | 3C16 | 1D | 3302 - 29 |
| AT163542 | 3C20 | 1D | 3302 - 33 |
| AT163543 | 3C8 | 1C | 3302 - 21 |
| AT163543 | 3C12 | 1C | 3302 - 25 |
| AT163543 | 3C16 | 1C | 3302 - 29 |
| AT163543 | 3C20 | 1C | 3302 - 33 |
| AT163544 | 3C8 | 1G | 3302 - 21 |
| AT163544 | 3C12 | 1G | 3302 - 25 |
| AT163544 | 3C16 | 1G | 3302 - 29 |
| AT163544 | 3C20 | 1G | 3302 - 33 |
| AT163545 | 3C8 | 1J | 3302 - 21 |
| AT163545 | 3C12 | 1J | 3302 - 25 |
| AT163545 | 3C16 | 1J | 3302 - 29 |
| AT163545 | 3C20 | 1J | 3302 - 33 |
| AT163546 | 3C8 | 1I | 3302 - 21 |
| AT163546 | 3C12 | 1I | 3302 - 25 |
| AT163546 | 3C16 | 1I | 3302 - 29 |
| AT163546 | 3C20 | 1I | 3302 - 33 |
| AT163547 | 3C8 | 1H | 3302 - 21 |
| AT163547 | 3C12 | 1H | 3302 - 25 |
| AT163547 | 3C16 | 1H | 3302 - 29 |
| AT163547 | 3C20 | 1H | 3302 - 33 |
| AT163600 | 3C2 | 40 | 3302 - 15 |
| AT163602 | 3C2 | 40 | 3302 - 15 |
| AT163603 | 3C2 | 40 | 3302 - 15 |
| AT163604 | 3C2 | 40 | 3302 - 15 |
| AT163605 | 3C2 | 40 | 3302 - 15 |
| AT163607 | 3B14 | 40 | 3302 - 3 |
| AT163608 | 3B14 | 40 | 3302 - 3 |
| AT163609 | 3B14 | 40 | 3302 - 3 |
| AT163610 | 3B14 | 40 | 3302 - 3 |
| AT163611 | 3B16 | 40 | 3302 - 5 |
| AT163612 | 3B16 | 40 | 3302 - 5 |
| AT163613 | 3B16 | 40 | 3302 - 5 |
| AT163614 | 3B16 | 40 | 3302 - 5 |
| AT163615 | 3B16 | 40 | 3302 - 5 |
| AT163616 | 3B18 | 40 | 3302 - 7 |
| AT163617 | 3B18 | 40 | 3302 - 7 |
| AT163618 | 3B18 | 40 | 3302 - 7 |
| AT163620 | 3B18 | 40 | 3302 - 7 |
| AT167192 | 3C8 | 1K | 3302 - 21 |
| AT167192 | 3C12 | 1K | 3302 - 25 |
| AT167192 | 3C16 | 1K | 3302 - 29 |
| AT167192 | 3C20 | 1K | 3302 - 33 |
| AT167193 | 3C8 | 1L | 3302 - 21 |
| AT167193 | 3C12 | 1L | 3302 - 25 |
| AT167193 | 3C16 | 1L | 3302 - 29 |
| AT167193 | 3C20 | 1L | 3302 - 33 |
| AT167194 | 3C8 | 1N | 3302 - 21 |
| AT167194 | 3C12 | 1N | 3302 - 25 |
| AT167194 | 3C18 | 1N | 3302 - 31 |
| AT167194 | 3C20 | 1N | 3302 - 33 |
| AT167195 | 3C8 | 1M | 3302 - 21 |
| AT167195 | 3C12 | 1M | 3302 - 25 |
| AT167195 | 3C16 | 1M | 3302 - 29 |
| AT167195 | 3C20 | 1M | 3302 - 33 |
| AT167197 | 3C20 | 1O | 3302 - 33 |
| AT167874 | 3B14 | 29 | 3302 - 3 |
| AT167874 | 3B14 | 30 | 3302 - 3 |
| AT167874 | 3B14 | 91 | 3302 - 3 |
| AT167874 | 3C2 | 29 | 3302 - 15 |
| AT167874 | 3C2 | 30 | 3302 - 15 |
| AT167874 | 3C2 | 92 | 3302 - 15 |
| AT167876 | 3B16 | 29 | 3302 - 5 |
| AT167876 | 3B16 | 30 | 3302 - 5 |
| AT167876 | 3B16 | 42 | 3302 - 5 |
| AT167876 | 3B18 | 29 | 3302 - 7 |
| AT167876 | 3B18 | 30 | 3302 - 7 |
| AT167876 | 3B18 | 42 | 3302 - 7 |
| AT168311 | 3D14 | 13 | 3344 - 11 |
| AT175989 | 1I24 | 4 | 0560 - 3 |
| AT177419 | 1I24 | 7 | 0560 - 3 |
| AT178530 | 3C8 | 1A | 3302 - 21 |
| AT178530 | 3C12 | 1A | 3302 - 25 |
| AT178530 | 3C16 | 1A | 3302 - 29 |
| AT178530 | 3C20 | 1A | 3302 - 33 |
| AT178531 | 3C8 | 1A | 3302 - 21 |
| AT178531 | 3C12 | 1A | 3302 - 25 |
| AT178531 | 3C16 | 1A | 3302 - 29 |
| AT178531 | 3C20 | 1A | 3302 - 33 |
| AT178532 | 3C8 | 1B | 3302 - 21 |
| AT178532 | 3C12 | 1B | 3302 - 25 |
| AT178532 | 3C16 | 1B | 3302 - 29 |
| AT178532 | 3C20 | 1B | 3302 - 33 |
| AT178533 | 3C8 | 1B | 3302 - 21 |
| AT178533 | 3C12 | 1B | 3302 - 25 |
| AT178533 | 3C16 | 1B | 3302 - 29 |
| AT178533 | 3C20 | 1B | 3302 - 33 |
| AT178534 | 3C8 | 1F | 3302 - 21 |
| AT178534 | 3C12 | 1F | 3302 - 25 |
| AT178534 | 3C16 | 1F | 3302 - 29 |
| AT178534 | 3C20 | 1F | 3302 - 33 |
| AT178535 | 3C8 | 1F | 3302 - 21 |
| AT178535 | 3C12 | 1F | 3302 - 25 |
| AT178535 | 3C16 | 1F | 3302 - 29 |
| AT178535 | 3C20 | 1F | 3302 - 33 |
| AT178536 | 3C8 | 1C | 3302 - 21 |
| AT178536 | 3C12 | 1C | 3302 - 25 |
| AT178536 | 3C16 | 1C | 3302 - 29 |
| AT178536 | 3C20 | 1C | 3302 - 33 |
| AT178537 | 3C8 | 1C | 3302 - 21 |
| AT178537 | 3C12 | 1C | 3302 - 25 |
| AT178537 | 3C16 | 1C | 3302 - 29 |
| AT178537 | 3C20 | 1C | 3302 - 33 |
| AT181125 | 2I13 | 10 | 2001 - 3 |
| AT183093 | 2J4 | 0 | 2160 - 21 |
| AT183921 | 2J4 | 35 | 2160 - 21 |
| AT183922 | 2J4 | 3 | 2160 - 21 |
| AT183923 | 2J4 | 27 | 2160 - 21 |
| AT183924 | 2J4 | 30 | 2160 - 21 |
| AT183925 | 2J4 | 31 | 2160 - 21 |
| AT191463 | 2C25 | 1 | 1674 - 21 |
| AT192224 | 1B11 | 64 | 0250 - 9 |
| AT192224 | 1D4 | 64 | 0250 - 51 |
| AT192225 | 1B11 | 72 | 0250 - 9 |
| AT192225 | 1D4 | 72 | 0250 - 51 |

**NUMERICAL INDEX - CONTINUED**


| PART NO. | GRID | KEY | PAGE |
|---|---|---|---|
| AT194969 | 2C13 | 0 | 1674 - 9 |
| AT195278 | 2G4 | 0C | 1821 - 3 |
| AT195279 | 2G4 | 0D | 1821 - 3 |
| AT195286 | 2G4 | 0 | 1821 - 3 |
| AT195287 | 2G4 | 8 | 1821 - 3 |
| AT196259 | 1F24 | 13 | 0409 - 3 |
| AT196259 | 1F24 | 41 | 0409 - 3 |
| AT199355 | 3C18 | 1O | 3302 - 31 |
| AT199358 | 3B18 | 40 | 3302 - 7 |
| AT199362 | 3B22 | 12 | 3302 - 11 |
| AT199363 | 3B22 | 12 | 3302 - 11 |
| AT199589 | 3C4 | 10 | 3302 - 17 |
| AT201578 | 3L10 | 23 | 3365 - 15 |
| AT201731 | 2D19 | 7 | 1740 - 9 |
| AT201813 | 2D19 | 10 | 1740 - 9 |
| AT202223 | 3B12 | 16A | 3301 - 5 |
| AT202369 | 2D13 | 15 | 1740 - 3 |
| AT202395 | 2D19 | 6 | 1740 - 9 |
| AT202396 | 2D19 | 12 | 1740 - 9 |
| AT202397 | 2D19 | 17 | 1740 - 9 |
| AT203653 | 2J4 | 1 | 2160 - 21 |
| AT213847 | 3F10 | 12 | 3360 - 3 |
| AT216522 | 2G4 | 6 | 1821 - 3 |
| AT216531 | 2G4 | 15 | 1821 - 3 |
| AT217122 | 3K12 | 2 | 3363 - 37 |
| AT218150 | 2E24 | 2 | 1810 - 15 |
| AT254809 | 1F24 | 7B | 0409 - 3 |
| AT254819 | 1F24 | 16 | 0409 - 3 |
| AT254823 | 1F24 | 7E | 0409 - 3 |
| AT256023 | 1H2 | 20 | 0419 - 3 |
| AT258958 | 1C8 | 19 | 0250 - 31 |
| AT259925 | 1H4 | 51 | 0420 - 3 |
| AT259926 | 1G22 | 50 | 0418 - 3 |
| AT259927 | 1H18 | 36 | 0433 - 3 |
| AT259931 | 1F24 | 13 | 0409 - 3 |
| AT259931 | 1F24 | 41 | 0409 - 3 |
| AT259943 | 1H16 | 82 | 0429 - 3 |
| AT260103 | 1G20 | 34 | 0417 - 3 |
| AT263853 | 1H18 | 11 | 0433 - 3 |
| AT264252 | 3L10 | 11 | 3365 - 15 |
| AT264253 | 3L10 | 14 | 3365 - 15 |
| AT264256 | 1E22 | 7 | 0265 - 7 |
| AT264272 | 3K22 | 4 | 3365 - 3 |
| AT264272 | 3K24 | 4 | 3365 - 5 |
| AT264272 | 3L2 | 4 | 3365 - 7 |
| AT264272 | 3L4 | 4 | 3365 - 9 |
| AT264274 | 1D6 | 9 | 0260 - 3 |
| AT264289 | 3L10 | 16 | 3365 - 15 |
| AT264319 | 3L8 | 10 | 3365 - 13 |
| AT264321 | 3L6 | 4 | 3365 - 11 |
| AT264339 | 3L6 | 10 | 3365 - 11 |
| AT264339 | 3L16 | 3 | 4360 - 3 |
| AT264342 | 1E20 | 9 | 0265 - 5 |
| AT264342 | 1E22 | 9 | 0265 - 7 |
| AT264342 | 3K22 | 10 | 3365 - 3 |
| AT264342 | 3K24 | 10 | 3365 - 5 |
| AT264342 | 3L2 | 10 | 3365 - 7 |
| AT264342 | 3L4 | 10 | 3365 - 9 |
| AT264347 | 3G20 | 72 | 3362 - 5 |
| AT264347 | 3G24 | 6B | 3362 - 9 |
| AT264347 | 3H4 | 30B | 3362 - 13 |
| AT264347 | 3L18 | 45 | 4360 - 5 |
| AT264354 | 1J19 | 85 | 0962 - 5 |
| AT264354 | 3H4 | 15 | 3362 - 13 |
| AT264354 | 3H8 | 43 | 3362 - 17 |
| AT264355 | 1E20 | 13 | 0265 - 5 |
| AT264355 | 1E22 | 13 | 0265 - 7 |
| AT264355 | 3K22 | 16 | 3365 - 3 |
| AT264356 | 1E22 | 16 | 0265 - 7 |
| AT264356 | 3K22 | 19 | 3365 - 3 |
| AT264356 | 3K24 | 16 | 3365 - 5 |
| AT264356 | 3K24 | 19 | 3365 - 5 |
| AT264356 | 3L2 | 16 | 3365 - 7 |
| AT264356 | 3L2 | 19 | 3365 - 7 |
| AT264356 | 3L4 | 16 | 3365 - 9 |
| AT264356 | 3L4 | 19 | 3365 - 9 |
| AT264360 | 3K22 | 30 | 3365 - 3 |
| AT264360 | 3K24 | 30 | 3365 - 5 |
| AT264360 | 3L2 | 30 | 3365 - 7 |
| AT264360 | 3L4 | 30 | 3365 - 9 |
| AT264360 | 3L6 | 32 | 3365 - 11 |
| AT264360 | 3L8 | 30 | 3365 - 13 |
| AT264360 | 3L10 | 28 | 3365 - 15 |
| AT264362 | 3L6 | 19 | 3365 - 11 |
| AT264365 | 1E20 | 16 | 0265 - 5 |
| AT264387 | 3L8 | 15 | 3365 - 13 |
| AT264388 | 3L8 | 18 | 3365 - 13 |
| AT280662 | 1I16 | 0B | 0520 - 3 |
| AT280662 | 1I18 | 0B | 0520 - 5 |
| AT280663 | 1I16 | 12 | 0520 - 3 |
| AT280663 | 1I18 | 11 | 0520 - 5 |
| AT308576 | 1F18 | 12 | 0407 - 5 |
| AT309264 | 2G4 | 0A | 1821 - 3 |
| AT309613 | 3K22 | 7 | 3365 - 3 |
| AT309613 | 3K24 | 7 | 3365 - 5 |
| AT309613 | 3L2 | 7 | 3365 - 7 |
| AT309613 | 3L4 | 7 | 3365 - 9 |
| AT309614 | 3K22 | 8 | 3365 - 3 |
| AT309614 | 3K24 | 8 | 3365 - 5 |
| AT309614 | 3L2 | 8 | 3365 - 7 |
| AT309614 | 3L4 | 8 | 3365 - 9 |
| AT317199 | 3B20 | 1 | 3302 - 9 |
| AT317201 | 3B24 | 1 | 3302 - 13 |
| AT317252 | 3D8 | 46 | 3344 - 5 |
| AT317398 | 3B22 | 12 | 3302 - 11 |
| AT317399 | 3D6 | 40 | 3344 - 3 |
| AT317400 | 3D6 | 40 | 3344 - 3 |
| AT317400 | 3E2 | 65 | 3344 - 23 |
| AT317402 | 3D8 | 80 | 3344 - 5 |
| AT318017 | 3E16 | 5 | 3344 - 37 |
| AT318021 | 3E6 | 24 | 3344 - 27 |
| AT318021 | 3F6 | 37 | 3348 - 11 |
| AT318035 | 1E12 | 42 | 0260 - 33 |
| AT318035 | 1E12 | 43 | 0260 - 33 |
| AT318035 | 1E16 | 12 | 0262 - 5 |
| AT318035 | 1E22 | 25 | 0265 - 7 |
| AT318035 | 3D8 | 28 | 3344 - 5 |
| AT318035 | 3D14 | 18 | 3344 - 11 |
| AT318035 | 3E4 | 15 | 3344 - 25 |
| AT318035 | 3E4 | 16 | 3344 - 25 |
| AT318035 | 3E4 | 17 | 3344 - 25 |
| AT318035 | 3E6 | 15 | 3344 - 27 |
| AT318035 | 3G20 | 60 | 3362 - 5 |
| AT318035 | 3G22 | 60 | 3362 - 7 |
| AT318035 | 3H12 | 32 | 3362 - 21 |
| AT321397 | 1C22 | 32 | 0250 - 45 |
| AT321399 | 1B11 | 86 | 0250 - 9 |
| AT321399 | 1D4 | 86 | 0250 - 51 |
| AT321400 | 1B11 | 87 | 0250 - 9 |
| AT321400 | 1D4 | 87 | 0250 - 51 |
| AT321401 | 1B13 | 12 | 0250 - 11 |
| AT321402 | 1B13 | 13 | 0250 - 11 |
| AT321403 | 1B13 | 24B | 0250 - 11 |
| AT321403 | 1B13 | 25B | 0250 - 11 |
| AT321404 | 1B13 | 34 | 0250 - 11 |
| AT321405 | 1B15 | 55A | 0250 - 13 |
| AT321405 | 1B15 | 56A | 0250 - 13 |
| AT321406 | 1B15 | 55B | 0250 - 13 |
| AT321406 | 1B15 | 56B | 0250 - 13 |
| AT321407 | 1B17 | 9 | 0250 - 15 |
| AT321408 | 1B17 | 12 | 0250 - 15 |
| AT321409 | 1B17 | 13 | 0250 - 15 |
| AT321410 | 1B17 | 3 | 0250 - 15 |
| AT321411 | 1B17 | 39 | 0250 - 15 |
| AT321411 | 1C4 | 76 | 0250 - 27 |
| AT321412 | 1B17 | 39A | 0250 - 15 |
| AT321412 | 1C4 | 76A | 0250 - 27 |
| AT321413 | 1B19 | 9 | 0250 - 17 |
| AT321413 | 1C2 | 9 | 0250 - 25 |
| AT321414 | 1B19 | 12 | 0250 - 17 |
| AT321414 | 1C2 | 12 | 0250 - 25 |
| AT321415 | 1B19 | 25 | 0250 - 17 |
| AT321415 | 1C2 | 7 | 0250 - 25 |
| AT321416 | 1B21 | 55 | 0250 - 19 |
| AT321416 | 1C4 | 55 | 0250 - 27 |
| AT321417 | 1B23 | 3 | 0250 - 21 |
| AT321418 | 1B23 | 8 | 0250 - 21 |
| AT321419 | 1B23 | 17 | 0250 - 21 |
| AT321421 | 1B23 | 35 | 0250 - 21 |
| AT321423 | 1C4 | 69 | 0250 - 27 |
| AT321445 | 1B19 | 13 | 0250 - 17 |
| AT321445 | 1C2 | 13 | 0250 - 25 |
| AT321446 | 1B19 | 14 | 0250 - 17 |
| AT321446 | 1C2 | 14 | 0250 - 25 |
| AT321447 | 1B19 | 15 | 0250 - 17 |
| AT321447 | 1C2 | 15 | 0250 - 25 |
| AT321448 | 1C2 | 24 | 0250 - 25 |
| AT321449 | 1B19 | 16 | 0250 - 17 |
| AT321449 | 1C2 | 11 | 0250 - 25 |
| AT321450 | 1B21 | 28 | 0250 - 19 |
| AT321450 | 1C2 | 28 | 0250 - 25 |
| AT321451 | 1B21 | 37 | 0250 - 19 |
| AT321452 | 1B21 | 38 | 0250 - 19 |
| AT321452 | 1C2 | 38 | 0250 - 25 |
| AT321453 | 1B21 | 43 | 0250 - 19 |
| AT321453 | 1C4 | 43 | 0250 - 27 |
| AT321462 | 1B21 | 50B | 0250 - 19 |
| AT321462 | 1B25 | 23B | 0250 - 23 |
| AT321462 | 1B25 | 26B | 0250 - 23 |
| AT321462 | 1C4 | 52A | 0250 - 27 |
| AT321470 | 1C2 | 33 | 0250 - 25 |
| AT321471 | 1C4 | 64 | 0250 - 27 |
| AT321472 | 1D2 | 8 | 0250 - 49 |
| AT321473 | 1C6 | 25D | 0250 - 29 |
| AT321473 | 1C22 | 52D | 0250 - 45 |
| AT321474 | 1C8 | 13B | 0250 - 31 |
| AT321476 | 1C24 | 18 | 0250 - 47 |
| AT321477 | 1B15 | 55 | 0250 - 13 |
| AT321478 | 1B15 | 55C | 0250 - 13 |
| AT321479 | 1B15 | 56 | 0250 - 13 |
| AT321480 | 1B15 | 56C | 0250 - 13 |
| AT321481 | 1B15 | 57 | 0250 - 13 |
| AT321482 | 1B17 | 17 | 0250 - 15 |
| AT321483 | 1B17 | 17A | 0250 - 15 |
| AT321484 | 1B17 | 17B | 0250 - 15 |
| AT321485 | 1B17 | 17C | 0250 - 15 |
| AT321486 | 1B17 | 17D | 0250 - 15 |
| AT321487 | 1B17 | 36 | 0250 - 15 |
| AT321488 | 1C8 | 13A | 0250 - 31 |
| AT321555 | 1C18 | 12A | 0250 - 41 |
| AT321559 | 1C24 | 9 | 0250 - 47 |

**NUMERICAL INDEX - CONTINUED**

| PART NO. | GRID | KEY | PAGE |
|---|---|---|---|
| AT321560 | 1B7 | 11A | 0250 - 5 |
| AT321561 | 1B7 | 11A | 0250 - 5 |
| AT321562 | 1B7 | 11A | 0250 - 5 |
| AT321563 | 1B7 | 11A | 0250 - 5 |
| AT321564 | 1B7 | 11A | 0250 - 5 |
| AT321565 | 1B7 | 11A | 0250 - 5 |
| AT321566 | 1B7 | 11A | 0250 - 5 |
| AT321567 | 1B7 | 11A | 0250 - 5 |
| AT321568 | 1B7 | 11A | 0250 - 5 |
| AT321569 | 1B7 | 11A | 0250 - 5 |
| AT321570 | 1B7 | 11A | 0250 - 5 |
| AT321571 | 1B7 | 11A | 0250 - 5 |
| AT321572 | 1B7 | 11A | 0250 - 5 |
| AT321573 | 1B9 | 11A | 0250 - 7 |
| AT321574 | 1B9 | 11A | 0250 - 7 |
| AT321575 | 1B9 | 11A | 0250 - 7 |
| AT321576 | 1B9 | 11A | 0250 - 7 |
| AT321577 | 1B9 | 11A | 0250 - 7 |
| AT321578 | 1B9 | 11A | 0250 - 7 |
| AT321579 | 1B9 | 11A | 0250 - 7 |
| AT321580 | 1B9 | 11A | 0250 - 7 |
| AT321581 | 1B9 | 11A | 0250 - 7 |
| AT321582 | 1B9 | 11A | 0250 - 7 |
| AT321583 | 1B9 | 11A | 0250 - 7 |
| AT321584 | 1B9 | 11A | 0250 - 7 |
| AT321585 | 1B9 | 11A | 0250 - 7 |
| AT321586 | 1B9 | 11A | 0250 - 7 |
| AT321587 | 1B9 | 11A | 0250 - 7 |
| AT321588 | 1B9 | 11A | 0250 - 7 |
| AT321589 | 1B9 | 11A | 0250 - 7 |
| AT321590 | 1B9 | 11A | 0250 - 7 |
| AT321591 | 1B9 | 11A | 0250 - 7 |
| AT321592 | 1B9 | 11A | 0250 - 7 |
| AT321593 | 1B9 | 11A | 0250 - 7 |
| AT321594 | 1B9 | 11A | 0250 - 7 |
| AT321595 | 1B9 | 11A | 0250 - 7 |
| AT321596 | 1B9 | 11A | 0250 - 7 |
| AT321597 | 1B9 | 11A | 0250 - 7 |
| AT321598 | 1B9 | 11A | 0250 - 7 |
| AT321599 | 1B9 | 11A | 0250 - 7 |
| AT321600 | 1B9 | 11A | 0250 - 7 |
| AT321601 | 1B9 | 11A | 0250 - 7 |
| AT321602 | 1B9 | 11A | 0250 - 7 |
| AT321603 | 1B9 | 16 | 0250 - 7 |
| AT321604 | 1B9 | 21 | 0250 - 7 |
| AT321605 | 1B9 | 22 | 0250 - 7 |
| AT321606 | 1B9 | 27 | 0250 - 7 |
| AT321607 | 1B9 | 29 | 0250 - 7 |
| AT321608 | 1B9 | 31 | 0250 - 7 |
| AT321609 | 1B11 | 57 | 0250 - 9 |
| AT321610 | 1B11 | 65 | 0250 - 9 |
| AT321610 | 1D4 | 65 | 0250 - 51 |
| AT321611 | 1B11 | 67 | 0250 - 9 |
| AT321611 | 1D4 | 67 | 0250 - 51 |
| AT321612 | 1B11 | 68 | 0250 - 9 |
| AT321612 | 1D4 | 68 | 0250 - 51 |
| AT321613 | 1B11 | 80 | 0250 - 9 |
| AT321613 | 1D4 | 80 | 0250 - 51 |
| AT321614 | 1B11 | 85 | 0250 - 9 |
| AT321614 | 1D4 | 85 | 0250 - 51 |
| AT321615 | 1B13 | 4 | 0250 - 11 |
| AT321616 | 1B13 | 50A | 0250 - 11 |
| AT321617 | 1B13 | 50A | 0250 - 11 |
| AT321618 | 1B13 | 50A | 0250 - 11 |
| AT321619 | 1B13 | 50A | 0250 - 11 |
| AT321620 | 1B13 | 50A | 0250 - 11 |
| AT321621 | 1B13 | 50A | 0250 - 11 |
| AT321622 | 1B13 | 50A | 0250 - 11 |
| AT321623 | 1B13 | 50A | 0250 - 11 |
| AT321624 | 1B13 | 50A | 0250 - 11 |
| AT321625 | 1B13 | 50A | 0250 - 11 |
| AT321626 | 1B13 | 50A | 0250 - 11 |
| AT321627 | 1B13 | 50A | 0250 - 11 |
| AT321628 | 1B13 | 50A | 0250 - 11 |
| AT321629 | 1B15 | 50A | 0250 - 13 |
| AT321630 | 1B15 | 50A | 0250 - 13 |
| AT321631 | 1B15 | 50A | 0250 - 13 |
| AT321632 | 1B15 | 50A | 0250 - 13 |
| AT321633 | 1B15 | 50A | 0250 - 13 |
| AT321634 | 1B15 | 50A | 0250 - 13 |
| AT321635 | 1B15 | 50A | 0250 - 13 |
| AT321636 | 1B15 | 50A | 0250 - 13 |
| AT321637 | 1B15 | 50A | 0250 - 13 |
| AT321638 | 1B15 | 50A | 0250 - 13 |
| AT321639 | 1B15 | 50A | 0250 - 13 |
| AT321640 | 1B15 | 50A | 0250 - 13 |
| AT321641 | 1B15 | 50A | 0250 - 13 |
| AT321642 | 1B15 | 50A | 0250 - 13 |
| AT321643 | 1B15 | 50A | 0250 - 13 |
| AT321644 | 1B15 | 50A | 0250 - 13 |
| AT321645 | 1B13 | 9 | 0250 - 11 |
| AT321645 | 1D2 | 11 | 0250 - 49 |
| AT321646 | 1B13 | 14 | 0250 - 11 |
| AT321647 | 1B13 | 24A | 0250 - 11 |
| AT321648 | 1B13 | 25A | 0250 - 11 |
| AT321649 | 1B13 | 33 | 0250 - 11 |
| AT321650 | 1B13 | 35 | 0250 - 11 |
| AT321650 | 1B17 | 16 | 0250 - 15 |
| AT321651 | 1B17 | 5 | 0250 - 15 |
| AT321652 | 1B17 | 8 | 0250 - 15 |
| AT321653 | 1B17 | 10A | 0250 - 15 |
| AT321654 | 1B17 | 10A | 0250 - 15 |
| AT321655 | 1B17 | 10A | 0250 - 15 |
| AT321656 | 1B17 | 10A | 0250 - 15 |
| AT321657 | 1B17 | 10A | 0250 - 15 |
| AT321658 | 1B17 | 10A | 0250 - 15 |
| AT321659 | 1B17 | 10A | 0250 - 15 |
| AT321660 | 1B17 | 10A | 0250 - 15 |
| AT321661 | 1B17 | 11 | 0250 - 15 |
| AT321662 | 1B19 | 19 | 0250 - 17 |
| AT321662 | 1C2 | 25 | 0250 - 25 |
| AT321663 | 1B19 | 26 | 0250 - 17 |
| AT321663 | 1C2 | 6 | 0250 - 25 |
| AT321664 | 1B21 | 51 | 0250 - 19 |
| AT321664 | 1C4 | 51 | 0250 - 27 |
| AT321665 | 1B21 | 54 | 0250 - 19 |
| AT321665 | 1C4 | 54 | 0250 - 27 |
| AT321666 | 1B21 | 56 | 0250 - 19 |
| AT321666 | 1C4 | 56 | 0250 - 27 |
| AT321667 | 1B21 | 57 | 0250 - 19 |
| AT321667 | 1C4 | 57 | 0250 - 27 |
| AT321668 | 1B21 | 46A | 0250 - 19 |
| AT321668 | 1C4 | 45 | 0250 - 27 |
| AT321669 | 1B23 | 7 | 0250 - 21 |
| AT321670 | 1B23 | 15 | 0250 - 21 |
| AT321671 | 1B23 | 16 | 0250 - 21 |
| AT321672 | 1B23 | 24 | 0250 - 21 |
| AT321673 | 1B23 | 25 | 0250 - 21 |
| AT321674 | 1B23 | 28A | 0250 - 21 |
| AT321675 | 1B23 | 28A | 0250 - 21 |
| AT321676 | 1B23 | 28A | 0250 - 21 |
| AT321677 | 1B23 | 28A | 0250 - 21 |
| AT321678 | 1B23 | 28A | 0250 - 21 |
| AT321679 | 1B23 | 28A | 0250 - 21 |
| AT321680 | 1B23 | 28A | 0250 - 21 |
| AT321681 | 1B23 | 28A | 0250 - 21 |
| AT321682 | 1B23 | 28A | 0250 - 21 |
| AT321683 | 1B23 | 28A | 0250 - 21 |
| AT321684 | 1B23 | 28A | 0250 - 21 |
| AT321685 | 1B23 | 28A | 0250 - 21 |
| AT321686 | 1B23 | 28A | 0250 - 21 |
| AT321687 | 1B23 | 28A | 0250 - 21 |
| AT321688 | 1B23 | 28A | 0250 - 21 |
| AT321689 | 1B23 | 28A | 0250 - 21 |
| AT321690 | 1B23 | 28A | 0250 - 21 |
| AT321691 | 1B23 | 28A | 0250 - 21 |
| AT321692 | 1B23 | 28A | 0250 - 21 |
| AT321693 | 1B23 | 40 | 0250 - 21 |
| AT321694 | 1C2 | 1 | 0250 - 25 |
| AT321695 | 1C4 | 71 | 0250 - 27 |
| AT321696 | 1B13 | 50A | 0250 - 11 |
| AT321697 | 1B17 | 15 | 0250 - 15 |
| AT321698 | 1C4 | 67 | 0250 - 27 |
| AT321701 | 1D2 | 10A | 0250 - 49 |
| AT321702 | 1D2 | 10A | 0250 - 49 |
| AT321703 | 1D2 | 10A | 0250 - 49 |
| AT321704 | 1D2 | 10A | 0250 - 49 |
| AT321705 | 1D2 | 10A | 0250 - 49 |
| AT321706 | 1D2 | 10A | 0250 - 49 |
| AT321707 | 1D2 | 10A | 0250 - 49 |
| AT321708 | 1D2 | 10A | 0250 - 49 |
| AT321709 | 1D2 | 10A | 0250 - 49 |
| AT321710 | 1D2 | 10A | 0250 - 49 |
| AT321711 | 1D2 | 10A | 0250 - 49 |
| AT321712 | 1D2 | 10A | 0250 - 49 |
| AT321713 | 1D2 | 10A | 0250 - 49 |
| AT321714 | 1D2 | 10A | 0250 - 49 |
| AT321715 | 1D2 | 10A | 0250 - 49 |
| AT321716 | 1D2 | 10A | 0250 - 49 |
| AT321717 | 1D2 | 10A | 0250 - 49 |
| AT321718 | 1D2 | 10A | 0250 - 49 |
| AT321719 | 1D2 | 10A | 0250 - 49 |
| AT321746 | 1B19 | 5A | 0250 - 17 |
| AT321746 | 1B21 | 50A | 0250 - 19 |
| AT321746 | 1B25 | 23A | 0250 - 23 |
| AT321746 | 1B25 | 24A | 0250 - 23 |
| AT321746 | 1C4 | 50A | 0250 - 27 |
| AT321746 | 1C4 | 52A | 0250 - 27 |
| AT321747 | 1B25 | 25A | 0250 - 23 |
| AT321747 | 1B25 | 26A | 0250 - 23 |
| AT321756 | 1B17 | 1A | 0250 - 15 |
| AT321756 | 1B17 | 2A | 0250 - 15 |
| AT321756 | 1C4 | 61A | 0250 - 27 |
| AT321774 | 1B17 | 48A | 0250 - 15 |
| AT321775 | 1B17 | 48A | 0250 - 15 |
| AT321776 | 1B17 | 48A | 0250 - 15 |
| AT321777 | 1B17 | 48A | 0250 - 15 |
| AT321780 | 1B17 | 50 | 0250 - 15 |
| AT321782 | 1B19 | 3 | 0250 - 17 |
| AT321782 | 1C2 | 3 | 0250 - 25 |
| AT321783 | 1B19 | 8 | 0250 - 17 |
| AT321784 | 1B19 | 10 | 0250 - 17 |
| AT321784 | 1C2 | 10 | 0250 - 25 |
| AT321789 | 1B19 | 18A | 0250 - 17 |
| AT321789 | 1C2 | 4A | 0250 - 25 |
| AT321792 | 1B19 | 18A | 0250 - 17 |
| AT321792 | 1C2 | 4A | 0250 - 25 |
| AT321793 | 1B19 | 18A | 0250 - 17 |
| AT321793 | 1C2 | 4A | 0250 - 25 |
| AT321794 | 1B19 | 18A | 0250 - 17 |
| AT321794 | 1C2 | 4A | 0250 - 25 |

**NUMERICAL INDEX - CONTINUED**

| PART NO. | GRID | KEY | PAGE |
|---|---|---|---|
| AT321795 | 1B19 | 18A | 0250 - 17 |
| AT321795 | 1C2 | 4A | 0250 - 25 |
| AT321796 | 1B19 | 18A | 0250 - 17 |
| AT321796 | 1C2 | 4A | 0250 - 25 |
| AT321797 | 1B19 | 20 | 0250 - 17 |
| AT321797 | 1C2 | 20 | 0250 - 25 |
| AT321798 | 1B19 | 21 | 0250 - 17 |
| AT321798 | 1C2 | 21 | 0250 - 25 |
| AT321799 | 1B19 | 24 | 0250 - 17 |
| AT321799 | 1C2 | 19 | 0250 - 25 |
| AT321800 | 1B19 | 23 | 0250 - 17 |
| AT321800 | 1C2 | 23 | 0250 - 25 |
| AT321801 | 1B19 | 22 | 0250 - 17 |
| AT321801 | 1C2 | 22 | 0250 - 25 |
| AT321802 | 1B19 | 27A | 0250 - 17 |
| AT321802 | 1C2 | 27A | 0250 - 25 |
| AT321803 | 1B19 | 27A | 0250 - 17 |
| AT321803 | 1C2 | 27A | 0250 - 25 |
| AT321804 | 1B19 | 27A | 0250 - 17 |
| AT321804 | 1C2 | 27A | 0250 - 25 |
| AT321805 | 1B21 | 29 | 0250 - 19 |
| AT321805 | 1C2 | 29 | 0250 - 25 |
| AT321806 | 1B21 | 31 | 0250 - 19 |
| AT321806 | 1C2 | 31 | 0250 - 25 |
| AT321807 | 1B21 | 32 | 0250 - 19 |
| AT321807 | 1C2 | 32 | 0250 - 25 |
| AT321808 | 1B21 | 34 | 0250 - 19 |
| AT321809 | 1B21 | 35 | 0250 - 19 |
| AT321809 | 1C2 | 35 | 0250 - 25 |
| AT321810 | 1B21 | 39 | 0250 - 19 |
| AT321810 | 1C2 | 39 | 0250 - 25 |
| AT321811 | 1B21 | 40 | 0250 - 19 |
| AT321811 | 1C2 | 40 | 0250 - 25 |
| AT321813 | 1B21 | 41 | 0250 - 19 |
| AT321813 | 1B21 | 44 | 0250 - 19 |
| AT321813 | 1C4 | 41 | 0250 - 27 |
| AT321813 | 1C4 | 47 | 0250 - 27 |
| AT321814 | 1B21 | 48A | 0250 - 19 |
| AT321814 | 1C4 | 48A | 0250 - 27 |
| AT321815 | 1B21 | 48A | 0250 - 19 |
| AT321815 | 1C4 | 48A | 0250 - 27 |
| AT321816 | 1B21 | 48A | 0250 - 19 |
| AT321816 | 1C4 | 48A | 0250 - 27 |
| AT321817 | 1B21 | 48A | 0250 - 19 |
| AT321817 | 1C4 | 48A | 0250 - 27 |
| AT321818 | 1B21 | 48A | 0250 - 19 |
| AT321818 | 1C4 | 48A | 0250 - 27 |
| AT321819 | 1B21 | 48A | 0250 - 19 |
| AT321819 | 1C4 | 48A | 0250 - 27 |
| AT321820 | 1B21 | 48A | 0250 - 19 |
| AT321820 | 1C4 | 48A | 0250 - 27 |
| AT321846 | 1B19 | 18A | 0250 - 17 |
| AT321846 | 1C2 | 4A | 0250 - 25 |
| AT321847 | 1B19 | 18A | 0250 - 17 |
| AT321847 | 1C2 | 4A | 0250 - 25 |
| AT321848 | 1B19 | 18A | 0250 - 17 |
| AT321848 | 1C2 | 4A | 0250 - 25 |
| AT321849 | 1B19 | 18A | 0250 - 17 |
| AT321849 | 1C2 | 4A | 0250 - 25 |
| AT321850 | 1B19 | 18A | 0250 - 17 |
| AT321850 | 1C2 | 4A | 0250 - 25 |
| AT321853 | 1C2 | 26 | 0250 - 25 |
| AT321854 | 1C2 | 34 | 0250 - 25 |
| AT321860 | 1C6 | 25A | 0250 - 29 |
| AT321861 | 1C6 | 25C | 0250 - 29 |
| AT321861 | 1C22 | 52C | 0250 - 45 |
| AT321862 | 1C10 | 33 | 0250 - 33 |
| AT321864 | 1C22 | 52A | 0250 - 45 |
| AT321865 | 1C24 | 2 | 0250 - 47 |
| AT321866 | 1C24 | 3 | 0250 - 47 |
| AT321867 | 1C24 | 15A | 0250 - 47 |
| AT321868 | 1C24 | 15A | 0250 - 47 |
| AT321869 | 1C24 | 15A | 0250 - 47 |
| AT321870 | 1C24 | 15A | 0250 - 47 |
| AT321871 | 1C24 | 15A | 0250 - 47 |
| AT321872 | 1C24 | 15A | 0250 - 47 |
| AT321873 | 1C24 | 15A | 0250 - 47 |
| AT321874 | 1C24 | 15A | 0250 - 47 |
| AT321875 | 1C24 | 15A | 0250 - 47 |
| AT321876 | 1C24 | 15A | 0250 - 47 |
| AT321877 | 1C24 | 15A | 0250 - 47 |
| AT321878 | 1C24 | 15A | 0250 - 47 |
| AT321879 | 1C24 | 15A | 0250 - 47 |
| AT321880 | 1C24 | 15A | 0250 - 47 |
| AT321881 | 1C24 | 15A | 0250 - 47 |
| AT321882 | 1C24 | 15A | 0250 - 47 |
| AT321883 | 1C24 | 15A | 0250 - 47 |
| AT321884 | 1C24 | 15A | 0250 - 47 |
| AT321885 | 1C24 | 15A | 0250 - 47 |
| AT321886 | 1C24 | 15A | 0250 - 47 |
| AT321887 | 1C24 | 15A | 0250 - 47 |
| AT321888 | 1C24 | 15A | 0250 - 47 |
| AT321889 | 1C24 | 15A | 0250 - 47 |
| AT321890 | 1C24 | 15A | 0250 - 47 |
| AT321891 | 1C24 | 15A | 0250 - 47 |
| AT321892 | 1C24 | 15A | 0250 - 47 |
| AT321893 | 1C24 | 15A | 0250 - 47 |
| AT321894 | 1C24 | 15A | 0250 - 47 |
| AT321895 | 1C24 | 15A | 0250 - 47 |
| AT321896 | 1C24 | 15A | 0250 - 47 |
| AT321897 | 1C24 | 15A | 0250 - 47 |
| AT321898 | 1C24 | 15A | 0250 - 47 |
| AT321899 | 1C24 | 15A | 0250 - 47 |
| AT321900 | 1C24 | 15A | 0250 - 47 |
| AT321901 | 1C24 | 15A | 0250 - 47 |
| AT321902 | 1C24 | 15A | 0250 - 47 |
| AT321903 | 1C24 | 15A | 0250 - 47 |
| AT321904 | 1C24 | 15A | 0250 - 47 |
| AT321905 | 1C24 | 16 | 0250 - 47 |
| AT321906 | 1C24 | 21 | 0250 - 47 |
| AT321907 | 1B13 | 1 | 0250 - 11 |
| AT321908 | 1B13 | 3 | 0250 - 11 |
| AT321909 | 1B13 | 29 | 0250 - 11 |
| AT321910 | 1B23 | 1 | 0250 - 21 |
| AT321911 | 1B23 | 28A | 0250 - 21 |
| AT321912 | 1B23 | 32 | 0250 - 21 |
| AT321913 | 1B17 | 1 | 0250 - 15 |
| AT321914 | 1B17 | 2 | 0250 - 15 |
| AT321915 | 1B17 | 34 | 0250 - 15 |
| AT321916 | 1B17 | 49 | 0250 - 15 |
| AT321919 | 1B25 | 29 | 0250 - 23 |
| AT321920 | 1C2 | 8 | 0250 - 25 |
| AT321922 | 1C4 | 61 | 0250 - 27 |
| AT321923 | 1C18 | 2 | 0250 - 41 |
| AT321926 | 1D2 | 2 | 0250 - 49 |
| AT321927 | 1D2 | 5 | 0250 - 49 |
| AT321928 | 1D2 | 6 | 0250 - 49 |
| AT321929 | 1D4 | 57 | 0250 - 51 |
| AT321934 | 1B5 | 40 | 0250 - 3 |
| AT321934 | 1B7 | 0 | 0250 - 5 |
| AT321934 | 1B11 | 0 | 0250 - 9 |
| AT321934 | 1B13 | 0 | 0250 - 11 |
| AT321934 | 1B17 | 0 | 0250 - 15 |
| AT321934 | 1B19 | 0 | 0250 - 17 |
| AT321934 | 1B23 | 0 | 0250 - 21 |
| AT321935 | 1B5 | 43 | 0250 - 3 |
| AT321935 | 1B25 | 0 | 0250 - 23 |
| AT321935 | 1C2 | 0 | 0250 - 25 |
| AT321935 | 1C6 | 0 | 0250 - 29 |
| AT321935 | 1C8 | 0 | 0250 - 31 |
| AT321935 | 1C10 | 0 | 0250 - 33 |
| AT321935 | 1C12 | 0 | 0250 - 35 |
| AT321935 | 1C14 | 0 | 0250 - 37 |
| AT321935 | 1C16 | 0 | 0250 - 39 |
| AT321935 | 1C18 | 0 | 0250 - 41 |
| AT321935 | 1C20 | 0 | 0250 - 43 |
| AT321935 | 1C22 | 0 | 0250 - 45 |
| AT321935 | 1C24 | 0 | 0250 - 47 |
| AT321935 | 1D2 | 0 | 0250 - 49 |
| AT321935 | 1D4 | 0 | 0250 - 51 |
| AT321936 | 1B5 | 33 | 0250 - 3 |
| AT321949 | 1B9 | 19 | 0250 - 7 |
| AT321950 | 1B13 | 50A | 0250 - 11 |
| AT321951 | 1B15 | 50A | 0250 - 13 |
| AT321952 | 1B15 | 50A | 0250 - 13 |
| AT321953 | 1B15 | 50A | 0250 - 13 |
| AT321954 | 1B15 | 50A | 0250 - 13 |
| AT321955 | 1B15 | 50A | 0250 - 13 |
| AT321956 | 1C6 | 1 | 0250 - 29 |
| AT321957 | 1C6 | 2 | 0250 - 29 |
| AT321958 | 1C6 | 5A | 0250 - 29 |
| AT321958 | 1C10 | 21A | 0250 - 33 |
| AT321959 | 1C6 | 5B | 0250 - 29 |
| AT321959 | 1C10 | 21B | 0250 - 33 |
| AT321959 | 1C12 | 4B | 0250 - 35 |
| AT321960 | 1C6 | 11 | 0250 - 29 |
| AT321961 | 1C6 | 12 | 0250 - 29 |
| AT321962 | 1C6 | 13 | 0250 - 29 |
| AT321963 | 1C6 | 14A | 0250 - 29 |
| AT321964 | 1C6 | 14B | 0250 - 29 |
| AT321965 | 1C6 | 20 | 0250 - 29 |
| AT321966 | 1C8 | 2 | 0250 - 31 |
| AT321967 | 1C8 | 3 | 0250 - 31 |
| AT321968 | 1C8 | 4 | 0250 - 31 |
| AT321969 | 1C8 | 6 | 0250 - 31 |
| AT321970 | 1C8 | 11 | 0250 - 31 |
| AT321971 | 1C8 | 13 | 0250 - 31 |
| AT321972 | 1C8 | 16 | 0250 - 31 |
| AT321973 | 1C8 | 17 | 0250 - 31 |
| AT321974 | 1C8 | 18 | 0250 - 31 |
| AT321975 | 1C8 | 20 | 0250 - 31 |
| AT321976 | 1C8 | 21 | 0250 - 31 |
| AT321977 | 1C10 | 1 | 0250 - 33 |
| AT321978 | 1C10 | 4 | 0250 - 33 |
| AT321979 | 1C10 | 6A | 0250 - 33 |
| AT321980 | 1C10 | 6B | 0250 - 33 |
| AT321981 | 1C10 | 7A | 0250 - 33 |
| AT321981 | 1C10 | 28A | 0250 - 33 |
| AT321982 | 1C10 | 10 | 0250 - 33 |
| AT321983 | 1C10 | 11 | 0250 - 33 |
| AT321984 | 1C10 | 12 | 0250 - 33 |
| AT321985 | 1C10 | 13 | 0250 - 33 |
| AT321986 | 1C10 | 13A | 0250 - 33 |
| AT321987 | 1C10 | 13B | 0250 - 33 |
| AT321988 | 1C10 | 17A | 0250 - 33 |
| AT321988 | 1C22 | 6 | 0250 - 45 |
| AT321989 | 1C10 | 17B | 0250 - 33 |
| AT321989 | 1C22 | 7C | 0250 - 45 |
| AT321990 | 1C10 | 18 | 0250 - 33 |
| AT321991 | 1C10 | 19 | 0250 - 33 |
| AT321992 | 1C10 | 25 | 0250 - 33 |

## NUMERICAL INDEX - CONTINUED

| PART NO. | GRID | KEY | PAGE |
|---|---|---|---|
| AT321993 | 1C10 | 26 | 0250 - 33 |
| AT321994 | 1B13 | 18 | 0250 - 11 |
| AT321994 | 1B25 | 18 | 0250 - 23 |
| AT321994 | 1C10 | 29 | 0250 - 33 |
| AT321995 | 1B13 | 19 | 0250 - 11 |
| AT321995 | 1B25 | 19 | 0250 - 23 |
| AT321995 | 1C10 | 30 | 0250 - 33 |
| AT321996 | 1C10 | 34 | 0250 - 33 |
| AT321997 | 1C10 | 36 | 0250 - 33 |
| AT321998 | 1C10 | 38A | 0250 - 33 |
| AT321999 | 1C10 | 38B | 0250 - 33 |
| AT322000 | 1C10 | 40 | 0250 - 33 |
| AT322001 | 1C12 | 1 | 0250 - 35 |
| AT322002 | 1C12 | 2 | 0250 - 35 |
| AT322003 | 1C12 | 3 | 0250 - 35 |
| AT322004 | 1C12 | 4A | 0250 - 35 |
| AT322005 | 1C12 | 6A | 0250 - 35 |
| AT322006 | 1C14 | 1 | 0250 - 37 |
| AT322007 | 1C14 | 2 | 0250 - 37 |
| AT322008 | 1C14 | 3 | 0250 - 37 |
| AT322009 | 1C14 | 4 | 0250 - 37 |
| AT322010 | 1C14 | 5 | 0250 - 37 |
| AT322011 | 1C14 | 6 | 0250 - 37 |
| AT322012 | 1C14 | 7 | 0250 - 37 |
| AT322013 | 1C14 | 8 | 0250 - 37 |
| AT322014 | 1C14 | 10 | 0250 - 37 |
| AT322015 | 1C14 | 11 | 0250 - 37 |
| AT322016 | 1C14 | 12A | 0250 - 37 |
| AT322016 | 1C14 | 21 | 0250 - 37 |
| AT322017 | 1C14 | 12A | 0250 - 37 |
| AT322018 | 1C14 | 12A | 0250 - 37 |
| AT322019 | 1C14 | 12A | 0250 - 37 |
| AT322020 | 1C14 | 12A | 0250 - 37 |
| AT322021 | 1C14 | 22 | 0250 - 37 |
| AT322022 | 1C16 | 1 | 0250 - 39 |
| AT322023 | 1C16 | 2 | 0250 - 39 |
| AT322024 | 1C16 | 3 | 0250 - 39 |
| AT322025 | 1C16 | 4 | 0250 - 39 |
| AT322026 | 1C16 | 5 | 0250 - 39 |
| AT322027 | 1C16 | 6 | 0250 - 39 |
| AT322028 | 1C16 | 7 | 0250 - 39 |
| AT322028 | 1C20 | 5 | 0250 - 43 |
| AT322029 | 1C16 | 10 | 0250 - 39 |
| AT322029 | 1C16 | 12A | 0250 - 39 |
| AT322030 | 1C16 | 12A | 0250 - 39 |
| AT322031 | 1C16 | 12A | 0250 - 39 |
| AT322032 | 1C16 | 12A | 0250 - 39 |
| AT322033 | 1C16 | 12A | 0250 - 39 |
| AT322034 | 1C16 | 12A | 0250 - 39 |
| AT322035 | 1C16 | 12A | 0250 - 39 |
| AT322036 | 1C16 | 13 | 0250 - 39 |
| AT322037 | 1C18 | 1 | 0250 - 41 |
| AT322038 | 1C18 | 3 | 0250 - 41 |
| AT322039 | 1C18 | 6 | 0250 - 41 |
| AT322040 | 1C18 | 8 | 0250 - 41 |
| AT322041 | 1C18 | 10 | 0250 - 41 |
| AT322042 | 1C18 | 11 | 0250 - 41 |
| AT322043 | 1C18 | 12A | 0250 - 41 |
| AT322044 | 1C18 | 12A | 0250 - 41 |
| AT322045 | 1C18 | 12A | 0250 - 41 |
| AT322046 | 1C18 | 12A | 0250 - 41 |
| AT322047 | 1C18 | 12A | 0250 - 41 |
| AT322048 | 1C18 | 12A | 0250 - 41 |
| AT322049 | 1C18 | 12A | 0250 - 41 |
| AT322050 | 1C18 | 12A | 0250 - 41 |
| AT322051 | 1C18 | 12A | 0250 - 41 |
| AT322052 | 1C18 | 13 | 0250 - 41 |
| AT322053 | 1C18 | 14 | 0250 - 41 |
| AT322054 | 1C18 | 21 | 0250 - 41 |
| AT322055 | 1C18 | 23 | 0250 - 41 |
| AT322056 | 1C18 | 24 | 0250 - 41 |
| AT322057 | 1C18 | 25 | 0250 - 41 |
| AT322058 | 1C18 | 26 | 0250 - 41 |
| AT322060 | 1C18 | 29 | 0250 - 41 |
| AT322061 | 1C18 | 31 | 0250 - 41 |
| AT322062 | 1C18 | 32A | 0250 - 41 |
| AT322063 | 1C18 | 32A | 0250 - 41 |
| AT322064 | 1C18 | 32A | 0250 - 41 |
| AT322065 | 1C18 | 32A | 0250 - 41 |
| AT322066 | 1C18 | 32A | 0250 - 41 |
| AT322067 | 1C18 | 32A | 0250 - 41 |
| AT322068 | 1C18 | 32A | 0250 - 41 |
| AT322069 | 1C18 | 33 | 0250 - 41 |
| AT322070 | 1C18 | 34 | 0250 - 41 |
| AT322071 | 1C20 | 2 | 0250 - 43 |
| AT322072 | 1C20 | 6 | 0250 - 43 |
| AT322073 | 1C20 | 7 | 0250 - 43 |
| AT322074 | 1C20 | 8 | 0250 - 43 |
| AT322075 | 1C20 | 10 | 0250 - 43 |
| AT322076 | 1C20 | 20 | 0250 - 43 |
| AT322077 | 1C22 | 1 | 0250 - 45 |
| AT322078 | 1C22 | 2 | 0250 - 45 |
| AT322079 | 1C22 | 3 | 0250 - 45 |
| AT322080 | 1C22 | 4A | 0250 - 45 |
| AT322081 | 1C22 | 28 | 0250 - 45 |
| AT322082 | 1C22 | 5 | 0250 - 45 |
| AT322083 | 1C22 | 29 | 0250 - 45 |
| AT322084 | 1C22 | 29B | 0250 - 45 |
| AT322085 | 1C22 | 30 | 0250 - 45 |
| AT322086 | 1C22 | 7B | 0250 - 45 |
| AT322086 | 1C22 | 8B | 0250 - 45 |
| AT322086 | 1C22 | 30B | 0250 - 45 |
| AT322087 | 1C22 | 7 | 0250 - 45 |
| AT322088 | 1C22 | 8 | 0250 - 45 |
| AT322089 | 1C22 | 31 | 0250 - 45 |
| AT322090 | 1C22 | 11 | 0250 - 45 |
| AT322091 | 1C22 | 13 | 0250 - 45 |
| AT322092 | 1C22 | 14 | 0250 - 45 |
| AT322093 | 1C22 | 15 | 0250 - 45 |
| AT322094 | 1C22 | 20 | 0250 - 45 |
| AT322095 | 1C22 | 21 | 0250 - 45 |
| AT322096 | 1C22 | 22 | 0250 - 45 |
| AT322097 | 1C22 | 23 | 0250 - 45 |
| AT322098 | 1C22 | 24 | 0250 - 45 |
| AT322099 | 1C22 | 25 | 0250 - 45 |
| AT322100 | 1C22 | 26 | 0250 - 45 |
| AT322101 | 1C22 | 37 | 0250 - 45 |
| AT322102 | 1C22 | 36 | 0250 - 45 |
| AT322103 | 1C22 | 38 | 0250 - 45 |
| AT322104 | 1C22 | 48 | 0250 - 45 |
| AT322105 | 1C22 | 50 | 0250 - 45 |
| AT322106 | 1B21 | 46B | 0250 - 19 |
| AT322106 | 1C4 | 46 | 0250 - 27 |
| AT322107 | 1C24 | 1 | 0250 - 47 |
| AT322108 | 1D2 | 3 | 0250 - 49 |
| AT322109 | 1C24 | 7 | 0250 - 47 |
| AT322110 | 1C24 | 8 | 0250 - 47 |
| AT322111 | 1C24 | 10 | 0250 - 47 |
| AT322112 | 1C24 | 11 | 0250 - 47 |
| AT322113 | 1C24 | 12 | 0250 - 47 |
| AT322114 | 1C24 | 13 | 0250 - 47 |
| AT322115 | 1B7 | 10 | 0250 - 5 |
| AT322116 | 1B7 | 5A | 0250 - 5 |
| AT322117 | 1B7 | 5A | 0250 - 5 |
| AT322118 | 1B7 | 5A | 0250 - 5 |
| AT322119 | 1B7 | 5A | 0250 - 5 |
| AT322120 | 1B7 | 8 | 0250 - 5 |
| AT322121 | 1B7 | 11A | 0250 - 5 |
| AT322122 | 1B7 | 11A | 0250 - 5 |
| AT322123 | 1B7 | 11A | 0250 - 5 |
| AT322124 | 1B7 | 11A | 0250 - 5 |
| AT322125 | 1B7 | 11A | 0250 - 5 |
| AT322126 | 1B7 | 11A | 0250 - 5 |
| AT45925 | 2C4 | 19 | 1671 - 3 |
| AT56658 | 3J14 | 3 | 3363 - 15 |
| AT69450 | 3F4 | 13 | 3348 - 9 |
| A590105 | 1J4 | 32 | 0560 - 7 |
| A590105 | 2F20 | 25 | 1810 - 35 |
| A590106 | 1D10 | 5 | 0260 - 7 |
| A590106 | 1E6 | 53 | 0260 - 27 |
| A590106 | 1I6 | 4 | 0510 - 9 |
| A590106 | 1J4 | 28 | 0560 - 7 |
| A590106 | 1J4 | 33 | 0560 - 7 |
| A590106 | 2C4 | 17 | 1671 - 3 |
| A590106 | 2C13 | 28 | 1674 - 9 |
| A590106 | 2C17 | 31 | 1674 - 13 |
| A590106 | 2C21 | 35 | 1674 - 17 |
| A590106 | 2D23 | 43 | 1740 - 13 |
| A590106 | 2E4 | 15 | 1740 - 19 |
| A590106 | 2F22 | 2 | 1810 - 37 |
| A590106 | 2G18 | 20 | 1830 - 9 |
| A590106 | 2G18 | 21 | 1830 - 9 |
| A590106 | 2H16 | 11 | 1910 - 5 |
| A590106 | 2H18 | 11 | 1910 - 7 |
| A590106 | 2H18 | 14 | 1910 - 7 |
| A590106 | 2J2 | 70 | 2160 - 5 |
| A590106 | 3E14 | 21 | 3344 - 35 |
| A590108 | 1E8 | 16 | 0260 - 29 |
| A590108 | 1E10 | 20 | 0260 - 31 |
| A590108 | 1H8 | 24 | 0421 - 3 |
| A590108 | 1I6 | 3 | 0510 - 9 |
| A590108 | 1I8 | 8 | 0510 - 11 |
| A590108 | 1I10 | 2 | 0510 - 13 |
| A590108 | 1J4 | 1 | 0560 - 7 |
| A590108 | 1J4 | 2 | 0560 - 7 |
| A590108 | 1J6 | 9 | 0560 - 9 |
| A590108 | 1J8 | 4 | 0560 - 11 |
| A590108 | 2B9 | 7 | 1062 - 9 |
| A590108 | 2C4 | 11 | 1671 - 3 |
| A590108 | 2C4 | 14 | 1671 - 3 |
| A590108 | 2C13 | 5 | 1674 - 9 |
| A590108 | 2C13 | 30 | 1674 - 9 |
| A590108 | 2C21 | 32 | 1674 - 17 |
| A590108 | 2C23 | 2 | 1674 - 19 |
| A590108 | 2E12 | 7 | 1810 - 3 |
| A590108 | 2F4 | 36 | 1810 - 19 |
| A590108 | 2F16 | 5 | 1810 - 31 |
| A590108 | 2F24 | 20 | 1810 - 39 |
| A590108 | 2G12 | 28 | 1830 - 3 |
| A590108 | 2G18 | 7 | 1830 - 9 |
| A590108 | 2G18 | 15 | 1830 - 9 |
| A590108 | 2G18 | 23 | 1830 - 9 |
| A590108 | 2H4 | 1 | 1830 - 19 |
| A590108 | 2H14 | 11 | 1910 - 3 |
| A590108 | 2H20 | 34 | 1910 - 9 |
| A590108 | 2H24 | 11 | 1910 - 13 |
| A590108 | 2I6 | 6 | 1910 - 19 |
| A590108 | 2I15 | 13 | 2002 - 3 |
| A590108 | 2I19 | 4 | 2004 - 3 |
| A590108 | 2I21 | 17 | 2007 - 3 |
| A590108 | 3C25 | 2 | 3315 - 3 |

**NUMERICAL INDEX - CONTINUED**

| PART NO. | GRID | KEY | PAGE |
|---|---|---|---|
| A590108 | 3C25 | 5 | 3315 - 3 |
| A590108 | 3E24 | 3 | 3348 - 5 |
| A590108 | 3E24 | 38 | 3348 - 5 |
| A590108 | 3F2 | 16 | 3348 - 7 |
| A590108 | 3J2 | 1 | 3363 - 3 |
| A590108 | 3J22 | 25 | 3363 - 23 |
| A590110 | 1E2 | 60 | 0260 - 23 |
| A590110 | 1E2 | 77 | 0260 - 23 |
| A590110 | 1E4 | 60 | 0260 - 25 |
| A590110 | 1E4 | 77 | 0260 - 25 |
| A590110 | 1E4 | 83 | 0260 - 25 |
| A590110 | 1F18 | 5 | 0407 - 5 |
| A590110 | 1I20 | 7 | 0520 - 7 |
| A590110 | 2C4 | 6 | 1671 - 3 |
| A590110 | 2C15 | 35 | 1674 - 11 |
| A590110 | 2C21 | 11 | 1674 - 17 |
| A590110 | 2D6 | 9 | 1674 - 27 |
| A590110 | 2D23 | 35 | 1740 - 13 |
| A590110 | 2D23 | 38 | 1740 - 13 |
| A590110 | 2E4 | 0D | 1740 - 19 |
| A590110 | 2E4 | 19 | 1740 - 19 |
| A590110 | 2E12 | 17 | 1810 - 3 |
| A590110 | 2E16 | 9 | 1810 - 7 |
| A590110 | 2G18 | 3 | 1830 - 9 |
| A590110 | 2H14 | 7 | 1910 - 3 |
| A590110 | 2H24 | 7 | 1910 - 13 |
| A590110 | 2I6 | 11 | 1910 - 19 |
| A590110 | 2I8 | 13 | 1910 - 21 |
| A590110 | 2I21 | 13 | 2007 - 3 |
| A590110 | 3J20 | 2 | 3363 - 21 |
| A590112 | 2C17 | 9 | 1674 - 13 |
| A590112 | 2G8 | 18 | 1821 - 7 |
| A590112 | 2I15 | 3 | 2002 - 3 |
| A590112 | 2I17 | 3 | 2002 - 5 |
| A590112 | 3E4 | 29 | 3344 - 25 |
| A590114 | 1D24 | 8 | 0260 - 21 |
| A590114 | 1E2 | 36 | 0260 - 23 |
| A590114 | 1E4 | 26 | 0260 - 25 |
| A590114 | 1E4 | 36 | 0260 - 25 |
| A590114 | 1E6 | 41 | 0260 - 27 |
| A590114 | 1E10 | 24 | 0260 - 31 |
| A590114 | 2C17 | 5G | 1674 - 13 |
| A590114 | 2C19 | 5G | 1674 - 15 |
| A590114 | 2D6 | 0G | 1674 - 27 |
| A590114 | 2D8 | 12G | 1674 - 29 |
| A590114 | 2I6 | 16 | 1910 - 19 |
| A590114 | 3J20 | 7 | 3363 - 21 |
| A590116 | 1E2 | 25 | 0260 - 23 |
| A590116 | 1E2 | 47 | 0260 - 23 |
| A590116 | 1E4 | 47 | 0260 - 25 |
| A590116 | 1E6 | 8 | 0260 - 27 |
| A590116 | 1E6 | 18 | 0260 - 27 |
| A590116 | 1E6 | 28 | 0260 - 27 |
| A590116 | 1E10 | 2 | 0260 - 31 |
| A590116 | 2H18 | 30 | 1910 - 7 |
| A590116 | 3I24 | 5 | 3362 - 57 |
| A590905 | 2F20 | 26 | 1810 - 35 |
| A590906 | 1I12 | 2 | 0515 - 3 |
| A590906 | 1J4 | 29 | 0560 - 7 |
| A590906 | 2C17 | 3 | 1674 - 13 |
| A590906 | 2C19 | 8 | 1674 - 15 |
| A590906 | 3D4 | 23 | 3315 - 7 |
| A590906 | 3E14 | 20 | 3344 - 35 |
| A590908 | 2B9 | 6 | 1062 - 9 |
| A590908 | 2E12 | 6 | 1810 - 3 |
| A590908 | 2G6 | 10 | 1821 - 5 |
| A590908 | 2G18 | 8 | 1830 - 9 |
| A590908 | 2I6 | 5 | 1910 - 19 |
| A590908 | 2I21 | 18 | 2007 - 3 |
| A590908 | 3C25 | 4 | 3315 - 3 |
| A590908 | 3D4 | 18 | 3315 - 7 |
| A590908 | 3E24 | 2 | 3348 - 5 |
| A590910 | 1F18 | 6 | 0407 - 5 |
| A590910 | 1I20 | 8 | 0520 - 7 |
| A590910 | 2C15 | 34 | 1674 - 11 |
| A590910 | 2C21 | 10 | 1674 - 17 |
| A590910 | 2D23 | 34 | 1740 - 13 |
| A590910 | 2G10 | 5 | 1821 - 9 |
| A590910 | 2G18 | 4 | 1830 - 9 |
| A590910 | 2H14 | 6 | 1910 - 3 |
| A590910 | 2H24 | 6 | 1910 - 13 |
| A590910 | 2I6 | 12 | 1910 - 19 |
| A590910 | 2I8 | 5 | 1910 - 21 |
| A590910 | 3K2 | 22 | 3363 - 27 |
| A590910 | 3K22 | 35 | 3365 - 3 |
| A590910 | 3K24 | 35 | 3365 - 5 |
| A590910 | 3L2 | 35 | 3365 - 7 |
| A590910 | 3L4 | 35 | 3365 - 9 |
| A590910 | 3L10 | 33 | 3365 - 15 |
| A590912 | 1I22 | 12 | 0530 - 3 |
| A590912 | 1J11 | 13 | 0920 - 3 |
| A590912 | 2E24 | 3 | 1810 - 15 |
| A590912 | 3D4 | 5 | 3315 - 7 |
| A590912 | 3E4 | 28 | 3344 - 25 |
| A590912 | 3F20 | 22 | 3360 - 13 |
| A590912 | 3L13 | 5 | 4060 - 3 |
| A590914 | 1D8 | 2 | 0260 - 5 |
| A590914 | 2C17 | 5H | 1674 - 13 |
| A590914 | 2C19 | 4 | 1674 - 15 |
| A590914 | 2C19 | 5H | 1674 - 15 |
| A590914 | 2D6 | 0H | 1674 - 27 |
| A590914 | 2D8 | 12H | 1674 - 29 |
| A590914 | 3D6 | 16 | 3344 - 3 |
| A590914 | 3E2 | 19 | 3344 - 23 |
| A590914 | 3J20 | 6 | 3363 - 21 |
| A590914 | 3K8 | 9 | 3363 - 33 |
| A590914 | 3K22 | 38 | 3365 - 3 |
| A590914 | 3K24 | 38 | 3365 - 5 |
| A590914 | 3L2 | 38 | 3365 - 7 |
| A590914 | 3L4 | 38 | 3365 - 9 |
| A590916 | 1B5 | 37 | 0250 - 3 |
| A590916 | 1D16 | 2 | 0260 - 13 |
| A590916 | 1I4 | 5 | 0510 - 7 |
| A590916 | 1J2 | 1 | 0560 - 5 |
| A590916 | 2H18 | 29 | 1910 - 7 |
| A590916 | 2J2 | 26 | 2160 - 5 |
| A590916 | 3I24 | 4 | 3362 - 57 |
| A590916 | 3K18 | 2 | 3364 - 3 |
| A761620 | 2I21 | 12 | 2007 - 3 |
| A763016 | 2E12 | 16 | 1810 - 3 |
| A810060 | 3K18 | 12 | 3364 - 3 |
| A810120 | 1E20 | 11 | 0265 - 5 |
| A810120 | 1E22 | 11 | 0265 - 7 |
| A810160 | 3K18 | 8 | 3364 - 3 |
| A810165 | 1D6 | 26 | 0260 - 3 |
| A810190 | 3K18 | 19 | 3364 - 3 |
| A811030 | 3L18 | 5A | 4360 - 5 |
| A811040 | 3F20 | 2 | 3360 - 13 |
| A811085 | 3J14 | 6 | 3363 - 15 |
| A811100 | 3L8 | 10 | 3365 - 13 |
| A811115 | 1E20 | 9 | 0265 - 5 |
| A811115 | 1E22 | 9 | 0265 - 7 |
| A811115 | 3K22 | 10 | 3365 - 3 |
| A811115 | 3K24 | 10 | 3365 - 5 |
| A811115 | 3L2 | 10 | 3365 - 7 |
| A811115 | 3L4 | 10 | 3365 - 9 |
| A811120 | 3L6 | 10 | 3365 - 11 |
| A811120 | 3L16 | 3 | 4360 - 3 |
| A811160 | 3L10 | 10 | 3365 - 15 |
| A852122 | 2B3 | 17 | 1062 - 3 |
| A852122 | 2B5 | 27 | 1062 - 5 |
| A852122 | 3E24 | 35 | 3348 - 5 |
| A852122 | 3F2 | 18 | 3348 - 7 |
| A852122 | 3F2 | 28 | 3348 - 7 |
| A852122 | 3J2 | 4 | 3363 - 3 |
| A852122 | 3J6 | 2 | 3363 - 7 |
| A852122 | 3J20 | 29 | 3363 - 21 |
| A852122 | 3J24 | 3 | 3363 - 25 |
| A852122 | 3J24 | 6 | 3363 - 25 |
| A852123 | 1D20 | 10 | 0260 - 17 |
| A852123 | 1E2 | 22 | 0260 - 23 |
| A852123 | 1E4 | 22 | 0260 - 25 |
| A852123 | 3E20 | 5 | 3344 - 41 |
| A852123 | 3E24 | 22 | 3348 - 5 |
| A852123 | 3F6 | 26 | 3348 - 11 |
| A852123 | 3G18 | 5 | 3362 - 3 |
| A852123 | 3J2 | 7 | 3363 - 3 |
| A852123 | 3J22 | 32 | 3363 - 23 |
| A852123 | 3J24 | 0 | 3363 - 25 |
| A852123 | 3K14 | 3 | 3363 - 39 |
| A852123 | 3K20 | 37 | 3364 - 5 |
| A852132 | 3J8 | 21 | 3363 - 9 |
| A852132 | 3K20 | 39 | 3364 - 5 |
| A852133 | 1D20 | 7 | 0260 - 17 |
| A852133 | 1D20 | 12 | 0260 - 17 |
| A852133 | 1D20 | 14 | 0260 - 17 |
| A852133 | 1D20 | 18 | 0260 - 17 |
| A852133 | 1D24 | 3 | 0260 - 21 |
| A852133 | 1E6 | 34 | 0260 - 27 |
| A852133 | 1J21 | 4 | 0963 - 3 |
| A852133 | 2B7 | 26 | 1062 - 7 |
| A852133 | 2J2 | 28 | 2160 - 5 |
| A852133 | 3E16 | 3 | 3344 - 37 |
| A852133 | 3E24 | 5 | 3348 - 5 |
| A852133 | 3F24 | 6 | 3360 - 17 |
| A852133 | 3G2 | 6 | 3360 - 19 |
| A852133 | 3J6 | 1 | 3363 - 7 |
| A852133 | 3K2 | 27 | 3363 - 27 |
| A852133 | 3K4 | 3 | 3363 - 29 |
| A852133 | 3K6 | 3 | 3363 - 31 |
| A852133 | 3K10 | 5 | 3363 - 35 |
| A852133 | 3K20 | 34 | 3364 - 5 |
| A852133 | 3L13 | 9 | 4060 - 3 |
| A852134 | 1J21 | 3 | 0963 - 3 |
| A852143 | 1E10 | 30 | 0260 - 31 |
| A852143 | 3K2 | 0 | 3363 - 27 |
| A852144 | 1E12 | 27 | 0260 - 33 |
| A852144 | 2B3 | 0 | 1062 - 3 |
| A852144 | 2B5 | 16 | 1062 - 5 |
| A852144 | 3F24 | 14 | 3360 - 17 |
| A852144 | 3G2 | 14 | 3360 - 19 |
| A852222 | 3J8 | 9 | 3363 - 9 |
| A852222 | 3J8 | 15 | 3363 - 9 |
| A852222 | 3J8 | 19 | 3363 - 9 |
| A852223 | 3K4 | 0 | 3363 - 29 |
| A852223 | 3K6 | 0 | 3363 - 31 |
| A852232 | 3J8 | 18 | 3363 - 9 |
| A852233 | 2B3 | 20 | 1062 - 3 |
| A852233 | 3E24 | 24 | 3348 - 5 |
| A852233 | 3J8 | 4 | 3363 - 9 |
| A852322 | 1E12 | 44 | 0260 - 33 |

**NUMERICAL INDEX - CONTINUED**

| PART NO. | GRID | KEY | PAGE |
|---|---|---|---|
| A852322 | 2B5 | 10 | 1062 - 5 |
| A852322 | 3B12 | 9 | 3301 - 5 |
| A852322 | 3J2 | 8 | 3363 - 3 |
| A852322 | 3J8 | 23 | 3363 - 9 |
| A852322 | 3J10 | 26 | 3363 - 11 |
| A852322 | 3K2 | 30 | 3363 - 27 |
| A852323 | 1D20 | 16 | 0260 - 17 |
| A852323 | 1E8 | 3 | 0260 - 29 |
| A852323 | 3E20 | 0 | 3344 - 41 |
| A852323 | 3E24 | 40 | 3348 - 5 |
| A852323 | 3F2 | 11 | 3348 - 7 |
| A852323 | 3F2 | 43 | 3348 - 7 |
| A852323 | 3G18 | 6 | 3362 - 3 |
| A852323 | 3J2 | 3 | 3363 - 3 |
| A852323 | 3J2 | 6 | 3363 - 3 |
| A852323 | 3J24 | 10 | 3363 - 25 |
| A852323 | 3K12 | 0 | 3363 - 37 |
| A852332 | 1E12 | 46 | 0260 - 33 |
| A852332 | 2B7 | 2 | 1062 - 7 |
| A852332 | 3B12 | 15 | 3301 - 5 |
| A852333 | 1E2 | 32 | 0260 - 23 |
| A852333 | 1E4 | 32 | 0260 - 25 |
| A852333 | 1E6 | 37 | 0260 - 27 |
| A852333 | 2B3 | 19 | 1062 - 3 |
| A852333 | 2B5 | 9 | 1062 - 5 |
| A852333 | 2B5 | 17 | 1062 - 5 |
| A852333 | 2B7 | 1 | 1062 - 7 |
| A852333 | 2B7 | 25 | 1062 - 7 |
| A852333 | 3E24 | 6 | 3348 - 5 |
| A852333 | 3E24 | 9 | 3348 - 5 |
| A852333 | 3F6 | 30 | 3348 - 11 |
| A852333 | 3J24 | 19 | 3363 - 25 |
| A852333 | 3K2 | 2 | 3363 - 27 |
| A852333 | 3L13 | 10 | 4060 - 3 |
| A852334 | 2B5 | 0 | 1062 - 5 |
| A852343 | 3J8 | 2 | 3363 - 9 |
| A852344 | 1E12 | 29 | 0260 - 33 |
| A852344 | 1J23 | 5 | 0963 - 5 |
| A852344 | 2B3 | 4 | 1062 - 3 |
| A852344 | 2B5 | 3 | 1062 - 5 |
| A852344 | 2B5 | 15 | 1062 - 5 |
| A852344 | 3F4 | 12 | 3348 - 9 |
| A852344 | 3K8 | 2 | 3363 - 33 |
| A852344 | 3K8 | 14 | 3363 - 33 |
| A852344 | 3K20 | 46 | 3364 - 5 |
| A852422 | 3E24 | 33 | 3348 - 5 |
| A852422 | 3J10 | 28 | 3363 - 11 |
| A852422 | 3K20 | 44 | 3364 - 5 |
| A852423 | 3F6 | 27 | 3348 - 11 |
| A852432 | 3E24 | 30 | 3348 - 5 |
| A852433 | 3F6 | 31 | 3348 - 11 |
| A852433 | 3J10 | 6 | 3363 - 11 |
| A852433 | 3K10 | 6 | 3363 - 35 |
| A852433 | 3K20 | 43 | 3364 - 5 |
| A852523 | 1E10 | 28 | 0260 - 31 |
| A852523 | 3E20 | 1 | 3344 - 41 |
| A852533 | 1E2 | 66 | 0260 - 23 |
| A852533 | 3F6 | 32 | 3348 - 11 |
| A852533 | 3J6 | 0 | 3363 - 7 |
| A853144 | 1D18 | 4 | 0260 - 15 |
| A853144 | 3F4 | 5 | 3348 - 9 |
| A853146 | 3F24 | 9 | 3360 - 17 |
| A853146 | 3G2 | 9 | 3360 - 19 |
| A853166 | 3D8 | 28 | 3344 - 5 |
| A853166 | 3D14 | 18 | 3344 - 11 |
| A853166 | 3E4 | 15 | 3344 - 25 |
| A853166 | 3E6 | 15 | 3344 - 27 |
| A853166 | 3F24 | 0 | 3360 - 17 |
| A853166 | 3F24 | 12 | 3360 - 17 |
| A853166 | 3G2 | 12 | 3360 - 19 |
| A853166 | 3G4 | 15 | 3360 - 21 |
| A853166 | 3G6 | 15 | 3360 - 23 |
| A853166 | 3J12 | 7 | 3363 - 13 |
| A853166 | 3J14 | 13 | 3363 - 15 |
| A853168 | 3E4 | 16 | 3344 - 25 |
| A853244 | 3F4 | 6 | 3348 - 9 |
| A853344 | 3L13 | 7 | 4060 - 3 |
| A853366 | 3J14 | 14 | 3363 - 15 |
| A853386 | 3J12 | 6 | 3363 - 13 |
| A853466 | 3G2 | 0 | 3360 - 19 |
| A853466 | 3J14 | 9 | 3363 - 15 |
| A885002 | 3J10 | 33 | 3363 - 11 |
| A885002 | 3K8 | 16 | 3363 - 33 |
| A885002 | 3K18 | 25 | 3364 - 3 |
| A885002 | 3K20 | 30 | 3364 - 5 |
| A885002 | 3K20 | 45 | 3364 - 5 |
| A885003 | 1E10 | 38 | 0260 - 31 |
| A885003 | 3E16 | 8 | 3344 - 37 |
| A885003 | 3E24 | 46 | 3348 - 5 |
| A885003 | 3F2 | 46 | 3348 - 7 |
| A885003 | 3F20 | 24 | 3360 - 13 |
| A885003 | 3J6 | 3 | 3363 - 7 |
| A885003 | 3J20 | 42 | 3363 - 21 |
| A885003 | 3K20 | 31 | 3364 - 5 |
| A885003 | 3K20 | 38 | 3364 - 5 |
| A885006 | 3F20 | 25 | 3360 - 13 |
| A885008 | 3K18 | 24 | 3364 - 3 |
| CH10567 | 3I14 | 20B | 3362 - 47 |
| CH11560 | 3F12 | 54 | 3360 - 5 |
| CH11560 | 3F14 | 9 | 3360 - 7 |
| CH11560 | 3F16 | 9 | 3360 - 9 |
| CH11560 | 3I14 | 18A | 3362 - 47 |
| CH11560 | 3I14 | 20A | 3362 - 47 |
| CH11568 | 3L18 | 89 | 4360 - 5 |
| CH11569 | 3H6 | 10 | 3362 - 15 |
| CH11569 | 3H8 | 57 | 3362 - 17 |
| CH11570 | 1D20 | 7 | 0260 - 17 |
| CH11570 | 1D20 | 12 | 0260 - 17 |
| CH11570 | 1D20 | 14 | 0260 - 17 |
| CH11570 | 1D20 | 18 | 0260 - 17 |
| CH11570 | 1D24 | 3 | 0260 - 21 |
| CH11570 | 1E2 | 32 | 0260 - 23 |
| CH11570 | 1E2 | 66 | 0260 - 23 |
| CH11570 | 1E4 | 32 | 0260 - 25 |
| CH11570 | 1E6 | 34 | 0260 - 27 |
| CH11570 | 1E6 | 37 | 0260 - 27 |
| CH11570 | 1E8 | 6 | 0260 - 29 |
| CH11570 | 1E10 | 6 | 0260 - 31 |
| CH11570 | 1E10 | 38 | 0260 - 31 |
| CH11570 | 1E12 | 46 | 0260 - 33 |
| CH11570 | 1E20 | 28 | 0265 - 5 |
| CH11570 | 1E22 | 30 | 0265 - 7 |
| CH11570 | 1J21 | 3 | 0963 - 3 |
| CH11570 | 1J21 | 4 | 0963 - 3 |
| CH11570 | 1J23 | 8 | 0963 - 5 |
| CH11570 | 1J23 | 9 | 0963 - 5 |
| CH11570 | 2B3 | 19 | 1062 - 3 |
| CH11570 | 2B3 | 20A | 1062 - 3 |
| CH11570 | 2B5 | 0 | 1062 - 5 |
| CH11570 | 2B5 | 9 | 1062 - 5 |
| CH11570 | 2B5 | 17 | 1062 - 5 |
| CH11570 | 2B5 | 19 | 1062 - 5 |
| CH11570 | 2B7 | 1 | 1062 - 7 |
| CH11570 | 2B7 | 2 | 1062 - 7 |
| CH11570 | 2B7 | 25 | 1062 - 7 |
| CH11570 | 2B7 | 26 | 1062 - 7 |
| CH11570 | 2J2 | 87A | 2160 - 5 |
| CH11570 | 3B12 | 2 | 3301 - 5 |
| CH11570 | 3B12 | 14 | 3301 - 5 |
| CH11570 | 3B12 | 15 | 3301 - 5 |
| CH11570 | 3E16 | 3 | 3344 - 37 |
| CH11570 | 3E16 | 5 | 3344 - 37 |
| CH11570 | 3E16 | 8 | 3344 - 37 |
| CH11570 | 3E20 | 3 | 3344 - 41 |
| CH11570 | 3E24 | 5 | 3348 - 5 |
| CH11570 | 3E24 | 6 | 3348 - 5 |
| CH11570 | 3E24 | 9 | 3348 - 5 |
| CH11570 | 3E24 | 24 | 3348 - 5 |
| CH11570 | 3E24 | 30 | 3348 - 5 |
| CH11570 | 3E24 | 46 | 3348 - 5 |
| CH11570 | 3F2 | 46 | 3348 - 7 |
| CH11570 | 3F4 | 0 | 3348 - 9 |
| CH11570 | 3F6 | 20 | 3348 - 11 |
| CH11570 | 3F6 | 21 | 3348 - 11 |
| CH11570 | 3F6 | 30 | 3348 - 11 |
| CH11570 | 3F6 | 31 | 3348 - 11 |
| CH11570 | 3F6 | 32 | 3348 - 11 |
| CH11570 | 3F12 | 80A | 3360 - 5 |
| CH11570 | 3F24 | 6 | 3360 - 17 |
| CH11570 | 3G2 | 6 | 3360 - 19 |
| CH11570 | 3G20 | 18B | 3362 - 5 |
| CH11570 | 3G24 | 18B | 3362 - 9 |
| CH11570 | 3H2 | 6B | 3362 - 11 |
| CH11570 | 3H4 | 20 | 3362 - 13 |
| CH11570 | 3H6 | 5B | 3362 - 15 |
| CH11570 | 3H8 | 48 | 3362 - 17 |
| CH11570 | 3H10 | 5 | 3362 - 19 |
| CH11570 | 3H22 | 17 | 3362 - 31 |
| CH11570 | 3H24 | 4 | 3362 - 33 |
| CH11570 | 3I4 | 16 | 3362 - 37 |
| CH11570 | 3I10 | 24A | 3362 - 43 |
| CH11570 | 3I10 | 25A | 3362 - 43 |
| CH11570 | 3I10 | 37A | 3362 - 43 |
| CH11570 | 3I10 | 38A | 3362 - 43 |
| CH11570 | 3I10 | 39A | 3362 - 43 |
| CH11570 | 3I12 | 25A | 3362 - 45 |
| CH11570 | 3I12 | 26A | 3362 - 45 |
| CH11570 | 3I12 | 39A | 3362 - 45 |
| CH11570 | 3I12 | 41A | 3362 - 45 |
| CH11570 | 3I16 | 13 | 3362 - 49 |
| CH11570 | 3J6 | 0A | 3363 - 7 |
| CH11570 | 3J6 | 1A | 3363 - 7 |
| CH11570 | 3J6 | 3A | 3363 - 7 |
| CH11570 | 3J8 | 4 | 3363 - 9 |
| CH11570 | 3J8 | 18 | 3363 - 9 |
| CH11570 | 3J8 | 21 | 3363 - 9 |
| CH11570 | 3J10 | 6 | 3363 - 11 |
| CH11570 | 3J20 | 20 | 3363 - 21 |
| CH11570 | 3J22 | 21 | 3363 - 23 |
| CH11570 | 3J24 | 19 | 3363 - 25 |
| CH11570 | 3K2 | 2 | 3363 - 27 |
| CH11570 | 3K2 | 27 | 3363 - 27 |
| CH11570 | 3K4 | 2 | 3363 - 29 |
| CH11570 | 3K4 | 3 | 3363 - 29 |
| CH11570 | 3K6 | 2 | 3363 - 31 |
| CH11570 | 3K6 | 3 | 3363 - 31 |
| CH11570 | 3K10 | 5 | 3363 - 35 |
| CH11570 | 3K10 | 6 | 3363 - 35 |
| CH11570 | 3K20 | 31 | 3364 - 5 |
| CH11570 | 3K20 | 34 | 3364 - 5 |
| CH11570 | 3K20 | 36 | 3364 - 5 |

**NUMERICAL INDEX - CONTINUED**


| PART NO. | GRID | KEY | PAGE |
|---|---|---|---|
| CH11570 | 3K20 | 38 | 3364 - 5 |
| CH11570 | 3K20 | 39 | 3364 - 5 |
| CH11570 | 3K20 | 47 | 3364 - 5 |
| CH11570 | 3L13 | 9 | 4060 - 3 |
| CH11570 | 3L13 | 10 | 4060 - 3 |
| CH12329 | 3G22 | 5 | 3362 - 7 |
| CH12329 | 3G24 | 6D | 3362 - 9 |
| CH12329 | 3H4 | 16 | 3362 - 13 |
| CH12329 | 3H4 | 30D | 3362 - 13 |
| CH12329 | 3H8 | 44 | 3362 - 17 |
| CH12329 | 3H10 | 13 | 3362 - 19 |
| CH12329 | 3H14 | 24 | 3362 - 23 |
| CH12329 | 3H22 | 32 | 3362 - 31 |
| CH17167 | 3H2 | 4 | 3362 - 11 |
| CH17167 | 3H4 | 4 | 3362 - 13 |
| CH17167 | 3H6 | 4 | 3362 - 15 |
| CH17167 | 3H8 | 4 | 3362 - 17 |
| CH17167 | 3H10 | 4 | 3362 - 19 |
| CH17854 | 3J14 | 6 | 3363 - 15 |
| CH17886 | 1E14 | 8 | 0262 - 3 |
| CH17886 | 1E16 | 7 | 0262 - 5 |
| CH17886 | 1E20 | 23 | 0265 - 5 |
| CH17886 | 1E22 | 23 | 0265 - 7 |
| CH17951 | 3F10 | 35 | 3360 - 3 |
| CH18478 | 3L6 | 43 | 3365 - 11 |
| C252567 | 3B18 | 15 | 3302 - 7 |
| C607480 | 3B14 | 13 | 3302 - 3 |
| C607480 | 3B16 | 13 | 3302 - 5 |
| C607480 | 3B18 | 13 | 3302 - 7 |
| C607480 | 3B22 | 9 | 3302 - 11 |
| C607480 | 3C2 | 13 | 3302 - 15 |
| D911521 | 1I16 | 0F | 0520 - 3 |
| D911521 | 1I18 | 0F | 0520 - 5 |
| EV29PN | 3C18 | 2 | 3302 - 31 |
| EV29SYL | 3C18 | 4O | 3302 - 31 |
| EV39PN | 3C10 | 2 | 3302 - 23 |
| EV39SYL | 3C10 | 4O | 3302 - 23 |
| EV5850-V29 | 3C18 | 3 | 3302 - 31 |
| EV5856-V39 | 3C10 | 3 | 3302 - 23 |
| EX129A-37 | 3C6 | 11 | 3302 - 19 |
| EX1506-37 | 3C6 | 8 | 3302 - 19 |
| EX1507-37 | 3C6 | 9 | 3302 - 19 |
| EX1829A-47 | 3C6 | 11 | 3302 - 19 |
| EX20SP | 3C6 | 13 | 3302 - 19 |
| EX20W1 | 3C6 | 12 | 3302 - 19 |
| EX21LK | 3C6 | 5 | 3302 - 19 |
| EX21LKS | 3C6 | 5 | 3302 - 19 |
| EX21SYL | 3C6 | 2 | 3302 - 19 |
| EX27LK | 3C6 | 5 | 3302 - 19 |
| EX27SYL | 3C6 | 2 | 3302 - 19 |
| EX27SYL | 3C10 | 4G | 3302 - 23 |
| EX27SYL | 3C14 | 4G | 3302 - 27 |
| EX27SYL | 3C18 | 4G | 3302 - 31 |
| EX27SYL | 3C22 | 4G | 3302 - 35 |
| EX27S6F | 3C10 | 4I | 3302 - 23 |
| EX27S6F | 3C14 | 4I | 3302 - 27 |
| EX27S6F | 3C18 | 4I | 3302 - 31 |
| EX27S6F | 3C22 | 4I | 3302 - 35 |
| EX27TVIP | 3C10 | 4H | 3302 - 23 |
| EX27TVIP | 3C14 | 4H | 3302 - 27 |
| EX27TVIP | 3C18 | 4H | 3302 - 31 |
| EX27TVIP | 3C22 | 4H | 3302 - 35 |
| EX27VIP | 3C10 | 4J | 3302 - 23 |
| EX27VIP | 3C14 | 4J | 3302 - 27 |
| EX27VIP | 3C18 | 4J | 3302 - 31 |
| EX27VIP | 3C22 | 4J | 3302 - 35 |
| EX27VPL | 3C6 | 11 | 3302 - 19 |
| EX27VPL | 3C6 | 14 | 3302 - 19 |
| EX27VPL | 3C10 | 6 | 3302 - 23 |
| EX27VPL | 3C14 | 6 | 3302 - 27 |
| EX27VPL | 3C18 | 6 | 3302 - 31 |
| EX27VPL | 3C22 | 6 | 3302 - 35 |
| EX27VPN | 3C6 | 5 | 3302 - 19 |
| EX27VPN | 3C6 | 11 | 3302 - 19 |
| EX27VPN | 3C10 | 2 | 3302 - 23 |
| EX27VPN | 3C14 | 2 | 3302 - 27 |
| EX27VPN | 3C18 | 2 | 3302 - 31 |
| EX27VPN | 3C22 | 2 | 3302 - 35 |
| EX29SP | 3C6 | 13 | 3302 - 19 |
| EX29W1 | 3C6 | 12 | 3302 - 19 |
| EX3-4-57QRT | 3C6 | 6 | 3302 - 19 |
| EX31329-X | 3C6 | 7 | 3302 - 19 |
| EX37LK | 3C6 | 5 | 3302 - 19 |
| EX37LKS | 3C6 | 5 | 3302 - 19 |
| EX37SYL | 3C6 | 2 | 3302 - 19 |
| EX37S7F | 3C6 | 1 | 3302 - 19 |
| EX37TVIP | 3C6 | 4 | 3302 - 19 |
| EX37VIP | 3C6 | 3 | 3302 - 19 |
| EX450-37 | 3C6 | 10 | 3302 - 19 |
| EX47LK | 3C6 | 5 | 3302 - 19 |
| EX47SYL | 3C6 | 2 | 3302 - 19 |
| EX4894-21 | 3C6 | 11 | 3302 - 19 |
| EX5824-37 | 3C6 | 11 | 3302 - 19 |
| EX5827-27 | 3C6 | 11 | 3302 - 19 |
| EX5849-21 | 3C6 | 11 | 3302 - 19 |
| EX5850-27V | 3C6 | 11 | 3302 - 19 |
| EX5850-27V | 3C10 | 3 | 3302 - 23 |
| EX5850-27V | 3C14 | 3 | 3302 - 27 |
| EX5850-27V | 3C18 | 3 | 3302 - 31 |
| EX5850-27V | 3C22 | 3 | 3302 - 35 |
| E64256 | 1I22 | 8 | 0530 - 3 |
| H132922 | 2F14 | 72 | 1810 - 29 |
| H132922 | 2H14 | 12 | 1910 - 3 |
| H132922 | 2H24 | 12 | 1910 - 13 |
| H132922 | 2I8 | 12 | 1910 - 21 |
| H155196 | 1E20 | 14 | 0265 - 5 |
| H155321 | 3L6 | 24 | 3365 - 11 |
| H155321 | 3L6 | 25 | 3365 - 11 |
| H155322 | 3L6 | 25 | 3365 - 11 |
| H155329 | 3L6 | 26 | 3365 - 11 |
| H155911 | 3K22 | 9 | 3365 - 3 |
| H155911 | 3K24 | 9 | 3365 - 5 |
| H155911 | 3K24 | 13 | 3365 - 5 |
| H155911 | 3L2 | 9 | 3365 - 7 |
| H155911 | 3L4 | 9 | 3365 - 9 |
| H155916 | 1E22 | 14 | 0265 - 7 |
| H155916 | 3K22 | 17 | 3365 - 3 |
| H155916 | 3K24 | 17 | 3365 - 5 |
| H155916 | 3L2 | 17 | 3365 - 7 |
| H155916 | 3L4 | 17 | 3365 - 9 |
| H155917 | 1E20 | 15 | 0265 - 5 |
| H155917 | 1E22 | 15 | 0265 - 7 |
| H155919 | 3K22 | 14 | 3365 - 3 |
| H155919 | 3K24 | 14 | 3365 - 5 |
| H155919 | 3L2 | 14 | 3365 - 7 |
| H155919 | 3L4 | 14 | 3365 - 9 |
| H155920 | 3K22 | 13 | 3365 - 3 |
| H155920 | 3L2 | 13 | 3365 - 7 |
| H155920 | 3L4 | 13 | 3365 - 9 |
| H155921 | 3K22 | 15 | 3365 - 3 |
| H155921 | 3K24 | 15 | 3365 - 5 |
| H155921 | 3L2 | 15 | 3365 - 7 |
| H155921 | 3L4 | 15 | 3365 - 9 |
| H158453 | 1E20 | 8 | 0265 - 5 |
| H158453 | 1E22 | 8 | 0265 - 7 |
| H158459 | 3L8 | 17 | 3365 - 13 |
| H159705 | 3L8 | 32 | 3365 - 13 |
| H163222 | 3L6 | 27 | 3365 - 11 |
| H163452 | 3L8 | 13 | 3365 - 13 |
| H21259 | 2B18 | 13 | 1322 - 5 |
| H61354 | 3F22 | 2 | 3360 - 15 |
| H77698 | 1H8 | 21 | 0421 - 3 |
| H77698 | 1J8 | 3 | 0560 - 11 |
| H77698 | 2C13 | 10 | 1674 - 9 |
| H77698 | 2C15 | 39 | 1674 - 11 |
| H77698 | 2C15 | 40 | 1674 - 11 |
| H77698 | 2C19 | 10 | 1674 - 15 |
| H77698 | 2C21 | 15 | 1674 - 17 |
| H77698 | 2D6 | 31 | 1674 - 27 |
| H77698 | 2D23 | 45 | 1740 - 13 |
| H77698 | 2G12 | 54 | 1830 - 3 |
| H77698 | 2G18 | 25 | 1830 - 9 |
| H77698 | 2H4 | 14 | 1830 - 19 |
| H77698 | 3B12 | 20 | 3301 - 5 |
| H77698 | 3C25 | 15 | 3315 - 3 |
| H77698 | 3E18 | 4 | 3344 - 39 |
| H77698 | 3E20 | 10 | 3344 - 41 |
| H77698 | 3F8 | 72 | 3348 - 13 |
| H77698 | 3J2 | 19 | 3363 - 3 |
| H77698 | 3J20 | 37 | 3363 - 21 |
| H77698 | 3K4 | 25 | 3363 - 29 |
| JD5706 | 2B18 | 1 | 1322 - 5 |
| J021035 | 3K22 | 34 | 3365 - 3 |
| J021035 | 3K24 | 34 | 3365 - 5 |
| J021035 | 3L2 | 34 | 3365 - 7 |
| J021035 | 3L4 | 34 | 3365 - 9 |
| J021035 | 3L10 | 32 | 3365 - 15 |
| J217083 | 1A24 | 0I | 0110 - 3 |
| J217083 | 1A24 | 1I | 0110 - 3 |
| J217083 | 2G6 | 9 | 1821 - 5 |
| J217083 | 3F6 | 7 | 3348 - 11 |
| J222010 | 1B5 | 26 | 0250 - 3 |
| J222010 | 1D6 | 24 | 0260 - 3 |
| J222010 | 1D6 | 32 | 0260 - 3 |
| J222010 | 1D10 | 18 | 0260 - 7 |
| J222010 | 1D18 | 55 | 0260 - 15 |
| J222010 | 1E2 | 55 | 0260 - 23 |
| J222010 | 1E4 | 55 | 0260 - 25 |
| J222010 | 1E6 | 63 | 0260 - 27 |
| J222010 | 1E8 | 24 | 0260 - 29 |
| J222010 | 1E10 | 37 | 0260 - 31 |
| J222010 | 1F18 | 8 | 0407 - 5 |
| J222010 | 1I8 | 1 | 0510 - 11 |
| J222010 | 1I12 | 5 | 0515 - 3 |
| J222010 | 1I12 | 8 | 0515 - 3 |
| J222010 | 1I16 | 1 | 0520 - 3 |
| J222010 | 1I16 | 11 | 0520 - 3 |
| J222010 | 1I18 | 6 | 0520 - 5 |
| J222010 | 1I22 | 19 | 0530 - 3 |
| J222010 | 1I24 | 10 | 0560 - 3 |
| J222010 | 1J4 | 4 | 0560 - 7 |
| J222010 | 1J4 | 9 | 0560 - 7 |
| J222010 | 1J4 | 18 | 0560 - 7 |
| J222010 | 1J6 | 7 | 0560 - 9 |
| J222010 | 1J11 | 1 | 0920 - 3 |
| J222010 | 1J21 | 1 | 0963 - 3 |
| J222010 | 1J21 | 12 | 0963 - 3 |
| J222010 | 1J21 | 15 | 0963 - 3 |
| J222010 | 1J21 | 18 | 0963 - 3 |
| J222010 | 2B3 | 23 | 1062 - 3 |
| J222010 | 2B5 | 6 | 1062 - 5 |

**NUMERICAL INDEX - CONTINUED**

| PART NO. | GRID | KEY | PAGE |
|---|---|---|---|
| J222010 | 2B5 | 13 | 1062 - 5 |
| J222010 | 2B7 | 22 | 1062 - 7 |
| J222010 | 2B9 | 1 | 1062 - 9 |
| J222010 | 2B9 | 11 | 1062 - 9 |
| J222010 | 2C4 | 33 | 1671 - 3 |
| J222010 | 2C15 | 54 | 1674 - 11 |
| J222010 | 2C15 | 57 | 1674 - 11 |
| J222010 | 2C17 | 16 | 1674 - 13 |
| J222010 | 2C21 | 6 | 1674 - 17 |
| J222010 | 2D6 | 11 | 1674 - 27 |
| J222010 | 2D15 | 4 | 1740 - 5 |
| J222010 | 2D23 | 7 | 1740 - 13 |
| J222010 | 2D23 | 29 | 1740 - 13 |
| J222010 | 2E12 | 1 | 1810 - 3 |
| J222010 | 2E12 | 13 | 1810 - 3 |
| J222010 | 2E14 | 3 | 1810 - 5 |
| J222010 | 2E16 | 1 | 1810 - 7 |
| J222010 | 2E18 | 6 | 1810 - 9 |
| J222010 | 2E24 | 10 | 1810 - 15 |
| J222010 | 2F6 | 12 | 1810 - 21 |
| J222010 | 2F6 | 24 | 1810 - 21 |
| J222010 | 2F16 | 7 | 1810 - 31 |
| J222010 | 2F24 | 10 | 1810 - 39 |
| J222010 | 2F24 | 26 | 1810 - 39 |
| J222010 | 2F24 | 27 | 1810 - 39 |
| J222010 | 2G6 | 1 | 1821 - 5 |
| J222010 | 2G12 | 1 | 1830 - 3 |
| J222010 | 2G12 | 23 | 1830 - 3 |
| J222010 | 2G12 | 39 | 1830 - 3 |
| J222010 | 2G18 | 16 | 1830 - 9 |
| J222010 | 2G18 | 28 | 1830 - 9 |
| J222010 | 2H4 | 2 | 1830 - 19 |
| J222010 | 2H4 | 15 | 1830 - 19 |
| J222010 | 2H8 | 6 | 1830 - 23 |
| J222010 | 2H16 | 1 | 1910 - 5 |
| J222010 | 2H16 | 4 | 1910 - 5 |
| J222010 | 2H16 | 14 | 1910 - 5 |
| J222010 | 2H16 | 17 | 1910 - 5 |
| J222010 | 2H16 | 19D | 1910 - 5 |
| J222010 | 2H16 | 20 | 1910 - 5 |
| J222010 | 2H18 | 1 | 1910 - 7 |
| J222010 | 2H18 | 5 | 1910 - 7 |
| J222010 | 2H18 | 18 | 1910 - 7 |
| J222010 | 2H18 | 22 | 1910 - 7 |
| J222010 | 2H18 | 25 | 1910 - 7 |
| J222010 | 2H18 | 31 | 1910 - 7 |
| J222010 | 2H20 | 37 | 1910 - 9 |
| J222010 | 2H20 | 40 | 1910 - 9 |
| J222010 | 2H22 | 3 | 1910 - 11 |
| J222010 | 2H22 | 6 | 1910 - 11 |
| J222010 | 2H22 | 15 | 1910 - 11 |
| J222010 | 2I6 | 1 | 1910 - 19 |
| J222010 | 2I8 | 1 | 1910 - 21 |
| J222010 | 2I8 | 4 | 1910 - 21 |
| J222010 | 2I8 | 16 | 1910 - 21 |
| J222010 | 2I24 | 3 | 2160 - 3 |
| J222010 | 3B10 | 46 | 3301 - 3 |
| J222010 | 3D2 | 8 | 3315 - 5 |
| J222010 | 3D4 | 9 | 3315 - 7 |
| J222010 | 3D24 | 14 | 3344 - 21 |
| J222010 | 3E14 | 22 | 3344 - 35 |
| J222010 | 3F4 | 16 | 3348 - 9 |
| J222010 | 3F6 | 4 | 3348 - 11 |
| J222010 | 3F6 | 18 | 3348 - 11 |
| J222010 | 3F20 | 14 | 3360 - 13 |
| J222010 | 3F22 | 7 | 3360 - 15 |
| J222010 | 3F22 | 10 | 3360 - 15 |
| J222010 | 3G4 | 11 | 3360 - 21 |
| J222010 | 3G18 | 2 | 3362 - 3 |
| J222010 | 3G18 | 3 | 3362 - 3 |
| J222010 | 3J2 | 17 | 3363 - 3 |
| J222010 | 3J6 | 10 | 3363 - 7 |
| J222010 | 3J20 | 36 | 3363 - 21 |
| J222010 | 3J20 | 40 | 3363 - 21 |
| J222010 | 3K2 | 6 | 3363 - 27 |
| J222010 | 3K4 | 18 | 3363 - 29 |
| J222010 | 3K4 | 21 | 3363 - 29 |
| J222010 | 3K6 | 18 | 3363 - 31 |
| J222010 | 3K6 | 21 | 3363 - 31 |
| J222010 | 3K8 | 5 | 3363 - 33 |
| J222010 | 3K10 | 3 | 3363 - 35 |
| J222010 | 3K10 | 15 | 3363 - 35 |
| J222010 | 3K14 | 1 | 3363 - 39 |
| J222010 | 3K16 | 14 | 3363 - 41 |
| J222010 | 3K18 | 3 | 3364 - 3 |
| J222010 | 3K18 | 9 | 3364 - 3 |
| J222010 | 3K18 | 20 | 3364 - 3 |
| J222012 | 1D18 | 15 | 0260 - 15 |
| J222012 | 1E12 | 34 | 0260 - 33 |
| J222012 | 1E12 | 41 | 0260 - 33 |
| J222012 | 1I4 | 1 | 0510 - 7 |
| J222012 | 2E4 | 5 | 1740 - 19 |
| J222012 | 2E4 | 6 | 1740 - 19 |
| J222012 | 2E4 | 9 | 1740 - 19 |
| J222012 | 2E6 | 5 | 1740 - 21 |
| J222012 | 2E6 | 6 | 1740 - 21 |
| J222012 | 2I8 | 22 | 1910 - 21 |
| J222012 | 2I8 | 23 | 1910 - 21 |
| J222012 | 3B12 | 22B | 3301 - 5 |
| J222012 | 3D14 | 29 | 3344 - 11 |
| J222012 | 3E4 | 25 | 3344 - 25 |
| J222012 | 3E6 | 25 | 3344 - 27 |
| J222012 | 3E6 | 26 | 3344 - 27 |
| J222012 | 3E22 | 14 | 3348 - 3 |
| J222012 | 3F6 | 41 | 3348 - 11 |
| J222012 | 3F8 | 46 | 3348 - 13 |
| J222012 | 3F20 | 17 | 3360 - 13 |
| J222012 | 3G4 | 6 | 3360 - 21 |
| J222012 | 3G4 | 10 | 3360 - 21 |
| J222012 | 3G6 | 6 | 3360 - 23 |
| J222012 | 3G6 | 10 | 3360 - 23 |
| J222012 | 3G6 | 11 | 3360 - 23 |
| J222012 | 3J4 | 14 | 3363 - 5 |
| J222012 | 3J16 | 2 | 3363 - 17 |
| J222012 | 3K16 | 9 | 3363 - 41 |
| J222012 | 3L16 | 62 | 4360 - 3 |
| J222014 | 3I24 | 8 | 3362 - 57 |
| J222016 | 1D10 | 11 | 0260 - 7 |
| J222016 | 1J2 | 2 | 0560 - 5 |
| J222016 | 2E24 | 5 | 1810 - 15 |
| J222020 | 1B5 | 28 | 0250 - 3 |
| J222020 | 3L16 | 82 | 4360 - 3 |
| J230006 | 2F10 | 12B | 1810 - 25 |
| J231212 | 2I15 | 4 | 2002 - 3 |
| J231212 | 2I17 | 4 | 2002 - 5 |
| J231214 | 2I15 | 8 | 2002 - 3 |
| J241030 | 2G18 | 2 | 1830 - 9 |
| J241055 | 2G18 | 1 | 1830 - 9 |
| J252210 | 2D6 | 10 | 1674 - 27 |
| J253110 | 2D6 | 9 | 1674 - 27 |
| J253112 | 2I15 | 3 | 2002 - 3 |
| J253112 | 2I17 | 3 | 2002 - 5 |
| J253114 | 2D8 | 13 | 1674 - 29 |
| J257218 | 2D21 | 1 | 1740 - 11 |
| J257218 | 3D6 | 27 | 3344 - 3 |
| J257218 | 3E2 | 35 | 3344 - 23 |
| J257220 | 2E2 | 3 | 1740 - 17 |
| J260610 | 1E6 | 53 | 0260 - 27 |
| J260612 | 2D23 | 43 | 1740 - 13 |
| J260616 | 1J4 | 33 | 0560 - 7 |
| J260616 | 2C21 | 35 | 1674 - 17 |
| J260616 | 2F22 | 2 | 1810 - 37 |
| J260620 | 1D10 | 5 | 0260 - 7 |
| J260620 | 2C4 | 17 | 1671 - 3 |
| J260625 | 2G18 | 21 | 1830 - 9 |
| J260630 | 2G18 | 20 | 1830 - 9 |
| J260635 | 2H16 | 11 | 1910 - 5 |
| J260635 | 2H18 | 11 | 1910 - 7 |
| J260814 | 2C13 | 5 | 1674 - 9 |
| J260816 | 1I6 | 3 | 0510 - 9 |
| J260816 | 2C13 | 30 | 1674 - 9 |
| J260816 | 2C21 | 32 | 1674 - 17 |
| J260816 | 2C23 | 2 | 1674 - 19 |
| J260820 | 1H8 | 31 | 0421 - 3 |
| J260820 | 1I10 | 2 | 0510 - 13 |
| J260820 | 2F4 | 36 | 1810 - 19 |
| J260820 | 2F16 | 5 | 1810 - 31 |
| J260820 | 2F24 | 20 | 1810 - 39 |
| J260820 | 2G12 | 28 | 1830 - 3 |
| J260820 | 2G18 | 15 | 1830 - 9 |
| J260820 | 2G18 | 23 | 1830 - 9 |
| J260820 | 2H4 | 1 | 1830 - 19 |
| J260820 | 2H20 | 34 | 1910 - 9 |
| J260825 | 1E10 | 20 | 0260 - 31 |
| J260825 | 2I19 | 4 | 2004 - 3 |
| J260825 | 3J22 | 25 | 3363 - 23 |
| J260830 | 1J6 | 9 | 0560 - 9 |
| J260830 | 1J8 | 4 | 0560 - 11 |
| J260830 | 2C4 | 11 | 1671 - 3 |
| J260830 | 3C25 | 2 | 3315 - 3 |
| J260835 | 1H8 | 23 | 0421 - 3 |
| J260835 | 1J4 | 1 | 0560 - 7 |
| J260845 | 2I15 | 13 | 2002 - 3 |
| J260845 | 3E24 | 38 | 3348 - 5 |
| J260850 | 1E8 | 16 | 0260 - 29 |
| J260850 | 3F2 | 16 | 3348 - 7 |
| J260855 | 3J2 | 1 | 3363 - 3 |
| J271016 | 1I24 | 10 | 0560 - 3 |
| J271016 | 3D24 | 14 | 3344 - 21 |
| J271016 | 3E14 | 22 | 3344 - 35 |
| J271016 | 3K10 | 15 | 3363 - 35 |
| J271020 | 1D10 | 18 | 0260 - 7 |
| J271020 | 1D18 | 55 | 0260 - 15 |
| J271020 | 1E2 | 55 | 0260 - 23 |
| J271020 | 1E4 | 55 | 0260 - 25 |
| J271020 | 1E6 | 63 | 0260 - 27 |
| J271020 | 1E8 | 24 | 0260 - 29 |
| J271020 | 1E10 | 37 | 0260 - 31 |
| J271020 | 1F18 | 8 | 0407 - 5 |
| J271020 | 1I12 | 8 | 0515 - 3 |
| J271020 | 1J6 | 7 | 0560 - 9 |
| J271020 | 2B9 | 1 | 1062 - 9 |
| J271020 | 2C15 | 57 | 1674 - 11 |
| J271020 | 2C21 | 6 | 1674 - 17 |
| J271020 | 2D23 | 29 | 1740 - 13 |
| J271020 | 2E12 | 1 | 1810 - 3 |
| J271020 | 2G18 | 16 | 1830 - 9 |
| J271020 | 2G18 | 28 | 1830 - 9 |
| J271020 | 2H4 | 15 | 1830 - 19 |
| J271020 | 2H8 | 6 | 1830 - 23 |
| J271020 | 2I24 | 3 | 2160 - 3 |

**NUMERICAL INDEX - CONTINUED**


| PART NO. | GRID | KEY | PAGE |
|---|---|---|---|
| J271020 | 3F6 | 4 | 3348 - 11 |
| J271025 | 1D6 | 24 | 0260 - 3 |
| J271025 | 1H8 | 14 | 0421 - 3 |
| J271025 | 1I12 | 5 | 0515 - 3 |
| J271025 | 1J4 | 4 | 0560 - 7 |
| J271025 | 1J4 | 9 | 0560 - 7 |
| J271025 | 1J4 | 18 | 0560 - 7 |
| J271025 | 1J21 | 18 | 0963 - 3 |
| J271025 | 2B3 | 23 | 1062 - 3 |
| J271025 | 2B9 | 11 | 1062 - 9 |
| J271025 | 2C4 | 33 | 1671 - 3 |
| J271025 | 2C15 | 54 | 1674 - 11 |
| J271025 | 2D15 | 4 | 1740 - 5 |
| J271025 | 2E12 | 13 | 1810 - 3 |
| J271025 | 2E18 | 6 | 1810 - 9 |
| J271025 | 2F6 | 12 | 1810 - 21 |
| J271025 | 2F6 | 24 | 1810 - 21 |
| J271025 | 2F16 | 7 | 1810 - 31 |
| J271025 | 2F24 | 10 | 1810 - 39 |
| J271025 | 2F24 | 26 | 1810 - 39 |
| J271025 | 2F24 | 27 | 1810 - 39 |
| J271025 | 2G12 | 1 | 1830 - 3 |
| J271025 | 2H4 | 2 | 1830 - 19 |
| J271025 | 2H16 | 4 | 1910 - 5 |
| J271025 | 2H16 | 14 | 1910 - 5 |
| J271025 | 2H16 | 17 | 1910 - 5 |
| J271025 | 2H18 | 5 | 1910 - 7 |
| J271025 | 2H18 | 22 | 1910 - 7 |
| J271025 | 2H18 | 25 | 1910 - 7 |
| J271025 | 2H18 | 31 | 1910 - 7 |
| J271025 | 2H20 | 37 | 1910 - 9 |
| J271025 | 2H20 | 40 | 1910 - 9 |
| J271025 | 2H22 | 3 | 1910 - 11 |
| J271025 | 2H22 | 6 | 1910 - 11 |
| J271025 | 2H22 | 15 | 1910 - 11 |
| J271025 | 2I8 | 1 | 1910 - 21 |
| J271025 | 2I8 | 4 | 1910 - 21 |
| J271025 | 3B10 | 46 | 3301 - 3 |
| J271025 | 3D4 | 9 | 3315 - 7 |
| J271025 | 3F4 | 16 | 3348 - 9 |
| J271025 | 3G18 | 3 | 3362 - 3 |
| J271025 | 3J2 | 17 | 3363 - 3 |
| J271025 | 3J6 | 10 | 3363 - 7 |
| J271025 | 3K4 | 18 | 3363 - 29 |
| J271025 | 3K4 | 21 | 3363 - 29 |
| J271025 | 3K6 | 18 | 3363 - 31 |
| J271025 | 3K6 | 21 | 3363 - 31 |
| J271025 | 3K10 | 3 | 3363 - 35 |
| J271025 | 3K14 | 1 | 3363 - 39 |
| J271025 | 3K16 | 14 | 3363 - 41 |
| J271025 | 3K18 | 9 | 3364 - 3 |
| J271030 | 1D6 | 32 | 0260 - 3 |
| J271030 | 1H8 | 2 | 0421 - 3 |
| J271030 | 1I16 | 11 | 0520 - 3 |
| J271030 | 1I18 | 6 | 0520 - 5 |
| J271030 | 1J21 | 12 | 0963 - 3 |
| J271030 | 1J21 | 15 | 0963 - 3 |
| J271030 | 2C17 | 16 | 1674 - 13 |
| J271030 | 2D6 | 11 | 1674 - 27 |
| J271030 | 2D23 | 7 | 1740 - 13 |
| J271030 | 2E14 | 3 | 1810 - 5 |
| J271030 | 2E16 | 1 | 1810 - 7 |
| J271030 | 2G6 | 1 | 1821 - 5 |
| J271030 | 2G12 | 23 | 1830 - 3 |
| J271030 | 2G12 | 39 | 1830 - 3 |
| J271030 | 2H16 | 1 | 1910 - 5 |
| J271030 | 2H16 | 19D | 1910 - 5 |
| J271030 | 2H16 | 20 | 1910 - 5 |
| J271030 | 2H18 | 1 | 1910 - 7 |
| J271030 | 2H18 | 18 | 1910 - 7 |
| J271030 | 2I6 | 1 | 1910 - 19 |
| J271030 | 2I8 | 16 | 1910 - 21 |
| J271030 | 3D2 | 8 | 3315 - 5 |
| J271030 | 3F20 | 14 | 3360 - 13 |
| J271030 | 3F22 | 7 | 3360 - 15 |
| J271030 | 3G18 | 2 | 3362 - 3 |
| J271030 | 3J20 | 36 | 3363 - 21 |
| J271035 | 1B5 | 26 | 0250 - 3 |
| J271035 | 1J21 | 1 | 0963 - 3 |
| J271035 | 1J23 | 0 | 0963 - 5 |
| J271035 | 1J23 | 1 | 0963 - 5 |
| J271035 | 3F6 | 18 | 3348 - 11 |
| J271035 | 3K18 | 20 | 3364 - 3 |
| J271045 | 1I16 | 1 | 0520 - 3 |
| J271050 | 3J20 | 40 | 3363 - 21 |
| J271065 | 2B7 | 22 | 1062 - 7 |
| J271080 | 2B5 | 6 | 1062 - 5 |
| J271085 | 2B5 | 13 | 1062 - 5 |
| J271090 | 3K2 | 6 | 3363 - 27 |
| J271090 | 3K8 | 5 | 3363 - 33 |
| J271225 | 1E12 | 41 | 0260 - 33 |
| J271225 | 2E4 | 5 | 1740 - 19 |
| J271225 | 2E4 | 9 | 1740 - 19 |
| J271225 | 3G4 | 6 | 3360 - 21 |
| J271225 | 3G6 | 6 | 3360 - 23 |
| J271225 | 3K16 | 9 | 3363 - 41 |
| J271230 | 2E6 | 5 | 1740 - 21 |
| J271230 | 2I8 | 22 | 1910 - 21 |
| J271230 | 3B12 | 22B | 3301 - 5 |
| J271230 | 3E22 | 14 | 3348 - 3 |
| J271230 | 3L16 | 62 | 4360 - 3 |
| J271235 | 2E4 | 6 | 1740 - 19 |
| J271235 | 2E6 | 6 | 1740 - 21 |
| J271240 | 2I8 | 23 | 1910 - 21 |
| J271250 | 3F8 | 46 | 3348 - 13 |
| J271250 | 3G4 | 11 | 3360 - 21 |
| J271250 | 3G6 | 11 | 3360 - 23 |
| J271255 | 1D18 | 15 | 0260 - 15 |
| J271255 | 1E12 | 34 | 0260 - 33 |
| J271260 | 3D14 | 29 | 3344 - 11 |
| J271260 | 3E4 | 25 | 3344 - 25 |
| J271260 | 3E6 | 25 | 3344 - 27 |
| J271260 | 3G4 | 10 | 3360 - 21 |
| J271260 | 3G6 | 10 | 3360 - 23 |
| J271265 | 3J16 | 2 | 3363 - 17 |
| J271270 | 3E6 | 26 | 3344 - 27 |
| J271270 | 3F20 | 17 | 3360 - 13 |
| J271270 | 3F22 | 10 | 3360 - 15 |
| J271275 | 3F6 | 41 | 3348 - 11 |
| J271275 | 3J4 | 14 | 3363 - 5 |
| J281025 | 2H2 | 12 | 1830 - 17 |
| J281025 | 2H18 | 19 | 1910 - 7 |
| J281025 | 2H22 | 2 | 1910 - 11 |
| J281025 | 3L13 | 6 | 4060 - 3 |
| J281030 | 1I20 | 13 | 0520 - 7 |
| J281030 | 2H16 | 5 | 1910 - 5 |
| J281030 | 2H16 | 8 | 1910 - 5 |
| J281030 | 2H18 | 2 | 1910 - 7 |
| J281030 | 2H18 | 8 | 1910 - 7 |
| J281030 | 2H22 | 9 | 1910 - 11 |
| J281030 | 2H22 | 12 | 1910 - 11 |
| J281030 | 2H24 | 8 | 1910 - 13 |
| J281030 | 2I8 | 26 | 1910 - 21 |
| J281035 | 2H22 | 1 | 1910 - 11 |
| J281035 | 2I10 | 7 | 1910 - 23 |
| J281035 | 3F6 | 6 | 3348 - 11 |
| J450416 | 1J11 | 7 | 0920 - 3 |
| J450510 | 1I24 | 14 | 0560 - 3 |
| J450520 | 2F20 | 16 | 1810 - 35 |
| J460310 | 2C15 | 62 | 1674 - 11 |
| J460512 | 2D4 | 1 | 1674 - 25 |
| J460514 | 2G12 | 15 | 1830 - 3 |
| J460614 | 2C15 | 44 | 1674 - 11 |
| J460614 | 2C15 | 46 | 1674 - 11 |
| J460614 | 2C15 | 48 | 1674 - 11 |
| J460614 | 3E18 | 2 | 3344 - 39 |
| J460616 | 2C13 | 21 | 1674 - 9 |
| J460616 | 2D4 | 6 | 1674 - 25 |
| J460616 | 2E22 | 2 | 1810 - 13 |
| J460616 | 2F24 | 30 | 1810 - 39 |
| J460616 | 2F24 | 34 | 1810 - 39 |
| J460616 | 2F24 | 43 | 1810 - 39 |
| J460616 | 2G12 | 31 | 1830 - 3 |
| J460616 | 2H2 | 1 | 1830 - 17 |
| J460616 | 2H2 | 4 | 1830 - 17 |
| J460616 | 2H2 | 10 | 1830 - 17 |
| J460616 | 2H10 | 1 | 1830 - 25 |
| J460620 | 1H8 | 4 | 0421 - 3 |
| J460620 | 2C13 | 12 | 1674 - 9 |
| J460620 | 2C15 | 61 | 1674 - 11 |
| J460620 | 2F10 | 24 | 1810 - 25 |
| J460635 | 2E20 | 28 | 1810 - 11 |
| J650830 | 2G6 | 8 | 1821 - 5 |
| J680410 | 2F8 | 55 | 1810 - 23 |
| J680514 | 2F14 | 13 | 1810 - 29 |
| J680612 | 2F8 | 24 | 1810 - 23 |
| J680614 | 2F10 | 42 | 1810 - 25 |
| J680614 | 2F10 | 51 | 1810 - 25 |
| J680616 | 2E20 | 1 | 1810 - 11 |
| J680616 | 2E20 | 5 | 1810 - 11 |
| J680616 | 2E20 | 9 | 1810 - 11 |
| J680616 | 2E20 | 12 | 1810 - 11 |
| J680616 | 2E20 | 16 | 1810 - 11 |
| J680616 | 2E20 | 20 | 1810 - 11 |
| J680620 | 2F12 | 96 | 1810 - 27 |
| J680620 | 2I21 | 28 | 2007 - 3 |
| J680630 | 2F14 | 12 | 1810 - 29 |
| J70782 | 1I24 | 2 | 0560 - 3 |
| J75481 | 2D23 | 11 | 1740 - 13 |
| J75481 | 2D25 | 5 | 1740 - 15 |
| J75481 | 3B10 | 33 | 3301 - 3 |
| J75481 | 3D8 | 23 | 3344 - 5 |
| J75481 | 3D10 | 4 | 3344 - 7 |
| J75481 | 3E22 | 44 | 3348 - 3 |
| J75481 | 3K22 | 39 | 3365 - 3 |
| J75481 | 3K24 | 39 | 3365 - 5 |
| J75481 | 3L2 | 39 | 3365 - 7 |
| J75481 | 3L4 | 39 | 3365 - 9 |
| J75481 | 3L8 | 38 | 3365 - 13 |
| J75482 | 3D24 | 10 | 3344 - 21 |
| J75482 | 3E14 | 14 | 3344 - 35 |
| J770616 | 3K18 | 13 | 3364 - 3 |
| J780505 | 1D10 | 16 | 0260 - 7 |
| J780612 | 3F12 | 83 | 3360 - 5 |
| J780616 | 2C17 | 26 | 1674 - 13 |
| J780620 | 3E14 | 19 | 3344 - 35 |
| J780665 | 2B3 | 9 | 1062 - 3 |
| J780802 | 2G18 | 5 | 1830 - 9 |
| J780816 | 2B9 | 5 | 1062 - 9 |
| J780816 | 2E12 | 5 | 1810 - 3 |
| J780816 | 3D4 | 17 | 3315 - 7 |

## NUMERICAL INDEX - CONTINUED

| PART NO. | GRID | KEY | PAGE |
|---|---|---|---|
| J780820 | 1I14 | 0C | 0515 - 5 |
| J780825 | 3G4 | 3 | 3360 - 21 |
| J780825 | 3G6 | 3 | 3360 - 23 |
| J780825 | 3G8 | 8 | 3360 - 25 |
| J780825 | 3G8 | 13 | 3360 - 25 |
| J780825 | 3G10 | 8 | 3360 - 27 |
| J780825 | 3G10 | 13 | 3360 - 27 |
| J780825 | 3G12 | 3 | 3360 - 29 |
| J780825 | 3G16 | 2 | 3360 - 33 |
| J780825 | 3J18 | 1 | 3363 - 19 |
| J781030 | 3F22 | 3 | 3360 - 15 |
| J781030 | 3G8 | 3 | 3360 - 25 |
| J781030 | 3G10 | 3 | 3360 - 27 |
| J781030 | 3G12 | 6 | 3360 - 29 |
| J781030 | 3J4 | 4 | 3363 - 5 |
| J781030 | 3J8 | 0 | 3363 - 9 |
| J781030 | 3J12 | 1 | 3363 - 13 |
| J781030 | 3J16 | 7 | 3363 - 17 |
| J781035 | 2E24 | 7 | 1810 - 15 |
| J781035 | 3K16 | 1 | 3363 - 41 |
| J781040 | 3F20 | 3 | 3360 - 13 |
| J781040 | 3J20 | 1 | 3363 - 21 |
| J781060 | 1I14 | 2 | 0515 - 5 |
| J781230 | 3J14 | 7 | 3363 - 15 |
| J781240 | 3J4 | 1 | 3363 - 5 |
| J781406 | 1E12 | 13 | 0260 - 33 |
| J781445 | 1E12 | 14 | 0260 - 33 |
| J831645 | 1D10 | 12 | 0260 - 7 |
| J833012 | 2D13 | 3 | 1740 - 3 |
| J833016 | 2D13 | 4 | 1740 - 3 |
| J833326 | 2D17 | 4 | 1740 - 7 |
| J900610 | 1E6 | 53 | 0260 - 27 |
| J900612 | 2D23 | 43 | 1740 - 13 |
| J900612 | 2E4 | 12 | 1740 - 19 |
| J900614 | 2C15 | 44 | 1674 - 11 |
| J900614 | 2C15 | 46 | 1674 - 11 |
| J900614 | 2C15 | 48 | 1674 - 11 |
| J900616 | 1J4 | 33 | 0560 - 7 |
| J900616 | 2C21 | 35 | 1674 - 17 |
| J900616 | 2F22 | 2 | 1810 - 37 |
| J900620 | 1D10 | 5 | 0260 - 7 |
| J900620 | 2C4 | 17 | 1671 - 3 |
| J900625 | 2G18 | 21 | 1830 - 9 |
| J900630 | 2G18 | 20 | 1830 - 9 |
| J900635 | 2H16 | 11 | 1910 - 5 |
| J900635 | 2H18 | 11 | 1910 - 7 |
| J900816 | 1I6 | 3 | 0510 - 9 |
| J900816 | 2C4 | 13 | 1671 - 3 |
| J900816 | 2C13 | 5 | 1674 - 9 |
| J900816 | 2C13 | 30 | 1674 - 9 |
| J900816 | 2C21 | 32 | 1674 - 17 |
| J900816 | 2C23 | 2 | 1674 - 19 |
| J900820 | 1I10 | 2 | 0510 - 13 |
| J900820 | 2F4 | 36 | 1810 - 19 |
| J900820 | 2F16 | 5 | 1810 - 31 |
| J900820 | 2F24 | 20 | 1810 - 39 |
| J900820 | 2G12 | 28 | 1830 - 3 |
| J900820 | 2G18 | 15 | 1830 - 9 |
| J900820 | 2G18 | 23 | 1830 - 9 |
| J900820 | 2H4 | 1 | 1830 - 19 |
| J900820 | 2H20 | 34 | 1910 - 9 |
| J900825 | 1E10 | 20 | 0260 - 31 |
| J900825 | 2I19 | 4 | 2004 - 3 |
| J900825 | 3J22 | 25 | 3363 - 23 |
| J900830 | 1J6 | 9 | 0560 - 9 |
| J900830 | 1J8 | 4 | 0560 - 11 |
| J900830 | 2C4 | 11 | 1671 - 3 |
| J900830 | 3C25 | 2 | 3315 - 3 |
| J900835 | 1J4 | 1 | 0560 - 7 |
| J900845 | 2I15 | 13 | 2002 - 3 |
| J900845 | 3E24 | 38 | 3348 - 5 |
| J900850 | 1E8 | 16 | 0260 - 29 |
| J900850 | 3F2 | 16 | 3348 - 7 |
| J900855 | 3J2 | 1 | 3363 - 3 |
| J900890 | 3E22 | 1 | 3348 - 3 |
| J900890 | 3E24 | 1 | 3348 - 5 |
| J901004 | 1F18 | 3 | 0407 - 5 |
| J901004 | 3K2 | 21 | 3363 - 27 |
| J901010 | 1F18 | 4 | 0407 - 5 |
| J901016 | 1E4 | 76 | 0260 - 25 |
| J901016 | 1I24 | 10 | 0560 - 3 |
| J901016 | 2C15 | 33 | 1674 - 11 |
| J901016 | 3D24 | 14 | 3344 - 21 |
| J901016 | 3E14 | 22 | 3344 - 35 |
| J901016 | 3K10 | 15 | 3363 - 35 |
| J901016 | 3L16 | 10 | 4360 - 3 |
| J901020 | 1D10 | 18 | 0260 - 7 |
| J901020 | 1D18 | 55 | 0260 - 15 |
| J901020 | 1E2 | 55 | 0260 - 23 |
| J901020 | 1E2 | 59 | 0260 - 23 |
| J901020 | 1E2 | 76 | 0260 - 23 |
| J901020 | 1E4 | 55 | 0260 - 25 |
| J901020 | 1E4 | 59 | 0260 - 25 |
| J901020 | 1E4 | 82 | 0260 - 25 |
| J901020 | 1E6 | 63 | 0260 - 27 |
| J901020 | 1E8 | 24 | 0260 - 29 |
| J901020 | 1E10 | 37 | 0260 - 31 |
| J901020 | 1F18 | 8 | 0407 - 5 |
| J901020 | 1I8 | 1 | 0510 - 11 |
| J901020 | 1I12 | 8 | 0515 - 3 |
| J901020 | 1I22 | 19 | 0530 - 3 |
| J901020 | 1J6 | 7 | 0560 - 9 |
| J901020 | 2B9 | 1 | 1062 - 9 |
| J901020 | 2C15 | 57 | 1674 - 11 |
| J901020 | 2C21 | 6 | 1674 - 17 |
| J901020 | 2D23 | 29 | 1740 - 13 |
| J901020 | 2D23 | 37 | 1740 - 13 |
| J901020 | 2E4 | 17 | 1740 - 19 |
| J901020 | 2E12 | 1 | 1810 - 3 |
| J901020 | 2G18 | 16 | 1830 - 9 |
| J901020 | 2G18 | 28 | 1830 - 9 |
| J901020 | 2H4 | 15 | 1830 - 19 |
| J901020 | 2H8 | 6 | 1830 - 23 |
| J901020 | 2I24 | 3 | 2160 - 3 |
| J901020 | 3D4 | 15 | 3315 - 7 |
| J901020 | 3F6 | 4 | 3348 - 11 |
| J901022 | 2I8 | 3C | 1910 - 21 |
| J901025 | 1A24 | 0H | 0110 - 3 |
| J901025 | 1A24 | 1H | 0110 - 3 |
| J901025 | 1D6 | 24 | 0260 - 3 |
| J901025 | 1I12 | 5 | 0515 - 3 |
| J901025 | 1J4 | 4 | 0560 - 7 |
| J901025 | 1J4 | 9 | 0560 - 7 |
| J901025 | 1J4 | 18 | 0560 - 7 |
| J901025 | 1J21 | 18 | 0963 - 3 |
| J901025 | 2B3 | 23 | 1062 - 3 |
| J901025 | 2B9 | 11 | 1062 - 9 |
| J901025 | 2C4 | 33 | 1671 - 3 |
| J901025 | 2C15 | 54 | 1674 - 11 |
| J901025 | 2C21 | 8 | 1674 - 17 |
| J901025 | 2D15 | 4 | 1740 - 5 |
| J901025 | 2E4 | 0C | 1740 - 19 |
| J901025 | 2E12 | 13 | 1810 - 3 |
| J901025 | 2E12 | 26 | 1810 - 3 |
| J901025 | 2E18 | 6 | 1810 - 9 |
| J901025 | 2F6 | 12 | 1810 - 21 |
| J901025 | 2F6 | 24 | 1810 - 21 |
| J901025 | 2F16 | 7 | 1810 - 31 |
| J901025 | 2F24 | 10 | 1810 - 39 |
| J901025 | 2F24 | 26 | 1810 - 39 |
| J901025 | 2F24 | 27 | 1810 - 39 |
| J901025 | 2G12 | 1 | 1830 - 3 |
| J901025 | 2H2 | 12 | 1830 - 17 |
| J901025 | 2H4 | 2 | 1830 - 19 |
| J901025 | 2H14 | 1C | 1910 - 3 |
| J901025 | 2H14 | 3D | 1910 - 3 |
| J901025 | 2H16 | 4 | 1910 - 5 |
| J901025 | 2H16 | 14 | 1910 - 5 |
| J901025 | 2H16 | 17 | 1910 - 5 |
| J901025 | 2H18 | 5 | 1910 - 7 |
| J901025 | 2H18 | 19 | 1910 - 7 |
| J901025 | 2H18 | 22 | 1910 - 7 |
| J901025 | 2H18 | 25 | 1910 - 7 |
| J901025 | 2H18 | 31 | 1910 - 7 |
| J901025 | 2H20 | 37 | 1910 - 9 |
| J901025 | 2H20 | 40 | 1910 - 9 |
| J901025 | 2H22 | 2 | 1910 - 11 |
| J901025 | 2H22 | 3 | 1910 - 11 |
| J901025 | 2H22 | 6 | 1910 - 11 |
| J901025 | 2H22 | 15 | 1910 - 11 |
| J901025 | 2H24 | 0D | 1910 - 13 |
| J901025 | 2I8 | 1 | 1910 - 21 |
| J901025 | 2I8 | 4 | 1910 - 21 |
| J901025 | 3B10 | 46 | 3301 - 3 |
| J901025 | 3D4 | 9 | 3315 - 7 |
| J901025 | 3F4 | 16 | 3348 - 9 |
| J901025 | 3G18 | 3 | 3362 - 3 |
| J901025 | 3J2 | 17 | 3363 - 3 |
| J901025 | 3J6 | 10 | 3363 - 7 |
| J901025 | 3K4 | 18 | 3363 - 29 |
| J901025 | 3K4 | 21 | 3363 - 29 |
| J901025 | 3K6 | 18 | 3363 - 31 |
| J901025 | 3K6 | 21 | 3363 - 31 |
| J901025 | 3K10 | 3 | 3363 - 35 |
| J901025 | 3K14 | 1 | 3363 - 39 |
| J901025 | 3K16 | 14 | 3363 - 41 |
| J901025 | 3K18 | 9 | 3364 - 3 |
| J901025 | 3L13 | 6 | 4060 - 3 |
| J901030 | 1D6 | 32 | 0260 - 3 |
| J901030 | 1I16 | 11 | 0520 - 3 |
| J901030 | 1I18 | 6 | 0520 - 5 |
| J901030 | 1I20 | 13 | 0520 - 7 |
| J901030 | 1J21 | 12 | 0963 - 3 |
| J901030 | 1J21 | 15 | 0963 - 3 |
| J901030 | 2C17 | 16 | 1674 - 13 |
| J901030 | 2D6 | 11 | 1674 - 27 |
| J901030 | 2D23 | 7 | 1740 - 13 |
| J901030 | 2E14 | 3 | 1810 - 5 |
| J901030 | 2E16 | 1 | 1810 - 7 |
| J901030 | 2E24 | 9 | 1810 - 15 |
| J901030 | 2G6 | 1 | 1821 - 5 |
| J901030 | 2G12 | 23 | 1830 - 3 |
| J901030 | 2G12 | 39 | 1830 - 3 |
| J901030 | 2H16 | 1 | 1910 - 5 |
| J901030 | 2H16 | 5 | 1910 - 5 |
| J901030 | 2H16 | 8 | 1910 - 5 |
| J901030 | 2H16 | 19D | 1910 - 5 |
| J901030 | 2H16 | 20 | 1910 - 5 |
| J901030 | 2H18 | 1 | 1910 - 7 |
| J901030 | 2H18 | 2 | 1910 - 7 |
| J901030 | 2H18 | 8 | 1910 - 7 |

**NUMERICAL INDEX - CONTINUED**


| PART NO. | GRID | KEY | PAGE |
|---|---|---|---|
| J901030 | 2H18 | 18 | 1910 - 7 |
| J901030 | 2H22 | 9 | 1910 - 11 |
| J901030 | 2H22 | 12 | 1910 - 11 |
| J901030 | 2H24 | 8 | 1910 - 13 |
| J901030 | 2I6 | 1 | 1910 - 19 |
| J901030 | 2I8 | 16 | 1910 - 21 |
| J901030 | 2I8 | 26 | 1910 - 21 |
| J901030 | 3D2 | 8 | 3315 - 5 |
| J901030 | 3F20 | 14 | 3360 - 13 |
| J901030 | 3F22 | 7 | 3360 - 15 |
| J901030 | 3F22 | 10 | 3360 - 15 |
| J901030 | 3G18 | 2 | 3362 - 3 |
| J901030 | 3J20 | 36 | 3363 - 21 |
| J901035 | 1B5 | 26 | 0250 - 3 |
| J901035 | 1J11 | 1 | 0920 - 3 |
| J901035 | 1J21 | 1 | 0963 - 3 |
| J901035 | 2H22 | 1 | 1910 - 11 |
| J901035 | 2I10 | 7 | 1910 - 23 |
| J901035 | 3F6 | 6 | 3348 - 11 |
| J901035 | 3F6 | 18 | 3348 - 11 |
| J901035 | 3K18 | 20 | 3364 - 3 |
| J901045 | 1I16 | 1 | 0520 - 3 |
| J901050 | 3J20 | 40 | 3363 - 21 |
| J901060 | 1I2 | 9 | 0510 - 5 |
| J901065 | 2B7 | 22 | 1062 - 7 |
| J901080 | 2B5 | 6 | 1062 - 5 |
| J901085 | 2B5 | 13 | 1062 - 5 |
| J901090 | 3K2 | 6 | 3363 - 27 |
| J901090 | 3K8 | 5 | 3363 - 33 |
| J901202 | 3E4 | 27 | 3344 - 25 |
| J901225 | 1E12 | 41 | 0260 - 33 |
| J901225 | 2E4 | 5 | 1740 - 19 |
| J901225 | 2E4 | 9 | 1740 - 19 |
| J901225 | 3G4 | 6 | 3360 - 21 |
| J901225 | 3G6 | 6 | 3360 - 23 |
| J901225 | 3K16 | 9 | 3363 - 41 |
| J901230 | 2E6 | 5 | 1740 - 21 |
| J901230 | 2I8 | 22 | 1910 - 21 |
| J901230 | 3B12 | 22B | 3301 - 5 |
| J901230 | 3E22 | 14 | 3348 - 3 |
| J901230 | 3L16 | 62 | 4360 - 3 |
| J901235 | 2E4 | 6 | 1740 - 19 |
| J901235 | 2E6 | 6 | 1740 - 21 |
| J901240 | 1I22 | 11 | 0530 - 3 |
| J901240 | 2I8 | 23 | 1910 - 21 |
| J901250 | 3F8 | 46 | 3348 - 13 |
| J901250 | 3G4 | 11 | 3360 - 21 |
| J901250 | 3G6 | 11 | 3360 - 23 |
| J901255 | 1D18 | 15 | 0260 - 15 |
| J901255 | 1E12 | 34 | 0260 - 33 |
| J901255 | 3D4 | 4 | 3315 - 7 |
| J901260 | 3D14 | 29 | 3344 - 11 |
| J901260 | 3E4 | 25 | 3344 - 25 |
| J901260 | 3E6 | 25 | 3344 - 27 |
| J901260 | 3G4 | 10 | 3360 - 21 |
| J901260 | 3G6 | 10 | 3360 - 23 |
| J901265 | 3F20 | 21 | 3360 - 13 |
| J901265 | 3J16 | 2 | 3363 - 17 |
| J901270 | 3E6 | 26 | 3344 - 27 |
| J901270 | 3F20 | 17 | 3360 - 13 |
| J901275 | 3F6 | 41 | 3348 - 11 |
| J901275 | 3J4 | 14 | 3363 - 5 |
| J901425 | 2C19 | 3 | 1674 - 15 |
| J901425 | 3D6 | 15 | 3344 - 3 |
| J901425 | 3E2 | 18 | 3344 - 23 |
| J901425 | 3K8 | 8 | 3363 - 33 |
| J901435 | 3J20 | 5 | 3363 - 21 |
| J901630 | 1E6 | 26 | 0260 - 27 |
| J901635 | 1I4 | 4 | 0510 - 7 |
| J901645 | 2J2 | 25 | 2160 - 5 |
| J901670 | 1E10 | 1 | 0260 - 31 |
| J912455 | 2D19 | 8 | 1740 - 9 |
| J921280 | 3L13 | 4 | 4060 - 3 |
| J921430 | 3I24 | 10 | 3362 - 57 |
| J921440 | 1D8 | 4 | 0260 - 5 |
| J921450 | 3I24 | 7 | 3362 - 57 |
| J921635 | 2H18 | 32 | 1910 - 7 |
| J921640 | 3I24 | 3 | 3362 - 57 |
| J921640 | 3K18 | 1 | 3364 - 3 |
| J921840 | 2D21 | 2 | 1740 - 11 |
| J921840 | 3D6 | 26 | 3344 - 3 |
| J921840 | 3E2 | 34 | 3344 - 23 |
| J922055 | 1B5 | 27 | 0250 - 3 |
| J922060 | 3L16 | 81 | 4360 - 3 |
| J922095 | 2D15 | 6 | 1740 - 5 |
| J932011 | 1B5 | 15 | 0250 - 3 |
| J933000 | 3E22 | 40 | 3348 - 3 |
| J933065 | 3B10 | 20 | 3301 - 3 |
| J950008 | 1I8 | 7 | 0510 - 11 |
| J950008 | 2E12 | 28 | 1810 - 3 |
| J950008 | 2I21 | 16 | 2007 - 3 |
| J950010 | 1I22 | 4 | 0530 - 3 |
| J950010 | 2C4 | 3 | 1671 - 3 |
| J950010 | 2C21 | 9 | 1674 - 17 |
| J950010 | 2D23 | 33 | 1740 - 13 |
| J950010 | 2H14 | 5 | 1910 - 3 |
| J950010 | 2H24 | 5 | 1910 - 13 |
| J950010 | 2I6 | 13 | 1910 - 19 |
| J950010 | 2I8 | 6 | 1910 - 21 |
| J950010 | 3F14 | 34 | 3360 - 7 |
| J950010 | 3F16 | 34 | 3360 - 9 |
| J950010 | 3K18 | 5C | 3364 - 3 |
| J950012 | 1J11 | 12 | 0920 - 3 |
| J950012 | 3D4 | 7 | 3315 - 7 |
| J950016 | 1B5 | 2 | 0250 - 3 |
| J950016 | 2D15 | 10 | 1740 - 5 |
| J950016 | 3B10 | 30 | 3301 - 3 |
| J950016 | 3D6 | 10 | 3344 - 3 |
| J950016 | 3D8 | 55 | 3344 - 5 |
| J950020 | 3D6 | 11 | 3344 - 3 |
| J950020 | 3D8 | 52 | 3344 - 5 |
| J950020 | 3E2 | 12 | 3344 - 23 |
| J951020 | 1B5 | 17 | 0250 - 3 |
| J952010 | 2G10 | 4 | 1821 - 9 |
| J952014 | 2C17 | 5I | 1674 - 13 |
| J952014 | 2C19 | 5I | 1674 - 15 |
| J952014 | 2D6 | 0I | 1674 - 27 |
| J952014 | 2D8 | 12I | 1674 - 29 |
| J952016 | 1E2 | 46 | 0260 - 23 |
| J952016 | 1E4 | 46 | 0260 - 25 |
| J952016 | 1E6 | 7 | 0260 - 27 |
| J952016 | 1E6 | 17 | 0260 - 27 |
| L12622 | 2I6 | 17 | 1910 - 19 |
| L159272 | 3F20 | 3 | 3360 - 13 |
| L159272 | 3J20 | 1 | 3363 - 21 |
| M111030 | 1I20 | 6 | 0520 - 7 |
| M340513 | 3H18 | 7 | 3362 - 27 |
| M340513 | 3H18 | 15 | 3362 - 27 |
| M340513 | 3H20 | 11 | 3362 - 29 |
| M340613 | 3F12 | 83 | 3360 - 5 |
| M340616 | 2J2 | 71 | 2160 - 5 |
| M340816 | 2G4 | 51 | 1821 - 3 |
| M340816 | 2J2 | 64 | 2160 - 5 |
| M340820 | 3F14 | 37 | 3360 - 7 |
| M340820 | 3F16 | 37 | 3360 - 9 |
| M340825 | 3F12 | 55 | 3360 - 5 |
| M340830 | 3G20 | 1 | 3362 - 5 |
| M340830 | 3G22 | 2 | 3362 - 7 |
| M340830 | 3G24 | 7 | 3362 - 9 |
| M340830 | 3H2 | 5 | 3362 - 11 |
| M340830 | 3H6 | 3 | 3362 - 15 |
| M340860 | 1E10 | 3B | 0260 - 31 |
| M340860 | 1E18 | 11 | 0265 - 3 |
| M341030 | 2J2 | 5 | 2160 - 5 |
| M341030 | 3F16 | 52 | 3360 - 9 |
| M341036 | 3G20 | 2 | 3362 - 5 |
| M341036 | 3G22 | 3 | 3362 - 7 |
| M341056 | 3F14 | 43 | 3360 - 7 |
| M341080 | 3F16 | 51 | 3360 - 9 |
| M341228 | 3L16 | 73 | 4360 - 3 |
| M341245 | 3F12 | 60 | 3360 - 5 |
| M341445 | 3H10 | 15 | 3362 - 19 |
| M341645 | 3L16 | 21 | 4360 - 3 |
| M341656 | 1B5 | 36 | 0250 - 3 |
| M341656 | 1D16 | 1 | 0260 - 13 |
| M342045 | 3L18 | 40 | 4360 - 5 |
| M360614 | 1I6 | 5 | 0510 - 9 |
| M360616 | 2G24 | 2 | 1830 - 15 |
| M430613 | 2C17 | 2 | 1674 - 13 |
| M430613 | 2C19 | 7 | 1674 - 15 |
| M430660 | 2C13 | 26 | 1674 - 9 |
| M430825 | 2I6 | 4 | 1910 - 19 |
| M470410 | 2F14 | 82 | 1810 - 29 |
| M470510 | 2F20 | 20 | 1810 - 35 |
| M470616 | 2F6 | 37 | 1810 - 21 |
| M492564 | 1D6 | 39 | 0260 - 3 |
| M492564 | 2J2 | 14 | 2160 - 5 |
| M492564 | 3L16 | 64 | 4360 - 3 |
| M492564 | 3L16 | 80 | 4360 - 3 |
| M500504 | 2F20 | 27 | 1810 - 35 |
| M500605 | 1I12 | 1 | 0515 - 3 |
| M500605 | 1J4 | 30 | 0560 - 7 |
| M500605 | 3D4 | 22 | 3315 - 7 |
| M500807 | 2F4 | 38 | 1810 - 19 |
| M500807 | 2G6 | 7 | 1821 - 5 |
| M500807 | 3F14 | 17 | 3360 - 7 |
| M500807 | 3F16 | 17 | 3360 - 9 |
| M520012 | 1I22 | 13 | 0530 - 3 |
| M570010 | 2C4 | 5 | 1671 - 3 |
| M650010 | 2I6 | 0C | 1910 - 19 |
| M800051 | 2H18 | 15 | 1910 - 7 |
| M800636 | 3K22 | 29 | 3365 - 3 |
| M800636 | 3K24 | 29 | 3365 - 5 |
| M800636 | 3L2 | 41 | 3365 - 7 |
| M800636 | 3L4 | 41 | 3365 - 9 |
| M800636 | 3L6 | 35 | 3365 - 11 |
| M800636 | 3L10 | 27 | 3365 - 15 |
| M800650 | 1D20 | 10 | 0260 - 17 |
| M800650 | 1D20 | 16 | 0260 - 17 |
| M800650 | 1E2 | 22 | 0260 - 23 |
| M800650 | 1E4 | 22 | 0260 - 25 |
| M800650 | 1E8 | 3 | 0260 - 29 |
| M800650 | 1E10 | 5 | 0260 - 31 |
| M800650 | 1E10 | 28 | 0260 - 31 |
| M800650 | 1E12 | 44 | 0260 - 33 |
| M800650 | 1E16 | 16B | 0262 - 5 |
| M800650 | 1E20 | 30 | 0265 - 5 |
| M800650 | 1E22 | 32 | 0265 - 7 |
| M800650 | 2B3 | 17 | 1062 - 3 |
| M800650 | 2B5 | 10 | 1062 - 5 |
| M800650 | 2B5 | 27 | 1062 - 5 |

**NUMERICAL INDEX - CONTINUED**

| PART NO. | GRID | KEY | PAGE |
|---|---|---|---|
| M800650 | 2J2 | 16 | 2160 - 5 |
| M800650 | 3B12 | 8 | 3301 - 5 |
| M800650 | 3B12 | 9 | 3301 - 5 |
| M800650 | 3E20 | 0 | 3344 - 41 |
| M800650 | 3E20 | 1 | 3344 - 41 |
| M800650 | 3E20 | 5 | 3344 - 41 |
| M800650 | 3E24 | 22 | 3348 - 5 |
| M800650 | 3E24 | 33 | 3348 - 5 |
| M800650 | 3E24 | 35 | 3348 - 5 |
| M800650 | 3E24 | 40 | 3348 - 5 |
| M800650 | 3F2 | 11 | 3348 - 7 |
| M800650 | 3F2 | 18 | 3348 - 7 |
| M800650 | 3F2 | 28 | 3348 - 7 |
| M800650 | 3F2 | 43 | 3348 - 7 |
| M800650 | 3F6 | 26 | 3348 - 11 |
| M800650 | 3F6 | 27 | 3348 - 11 |
| M800650 | 3F10 | 16 | 3360 - 3 |
| M800650 | 3F12 | 67A | 3360 - 5 |
| M800650 | 3F14 | 58A | 3360 - 7 |
| M800650 | 3F16 | 61A | 3360 - 9 |
| M800650 | 3F16 | 62A | 3360 - 9 |
| M800650 | 3G18 | 5 | 3362 - 3 |
| M800650 | 3G18 | 6 | 3362 - 3 |
| M800650 | 3G20 | 20B | 3362 - 5 |
| M800650 | 3G22 | 20B | 3362 - 7 |
| M800650 | 3G24 | 20B | 3362 - 9 |
| M800650 | 3H16 | 26 | 3362 - 25 |
| M800650 | 3H22 | 16 | 3362 - 31 |
| M800650 | 3H24 | 12 | 3362 - 33 |
| M800650 | 3I4 | 15 | 3362 - 37 |
| M800650 | 3I12 | 40A | 3362 - 45 |
| M800650 | 3I16 | 11 | 3362 - 49 |
| M800650 | 3J2 | 3A | 3363 - 3 |
| M800650 | 3J2 | 4A | 3363 - 3 |
| M800650 | 3J2 | 6A | 3363 - 3 |
| M800650 | 3J2 | 7A | 3363 - 3 |
| M800650 | 3J2 | 8A | 3363 - 3 |
| M800650 | 3J6 | 2A | 3363 - 7 |
| M800650 | 3J8 | 9 | 3363 - 9 |
| M800650 | 3J8 | 11 | 3363 - 9 |
| M800650 | 3J8 | 13 | 3363 - 9 |
| M800650 | 3J8 | 15 | 3363 - 9 |
| M800650 | 3J8 | 19 | 3363 - 9 |
| M800650 | 3J8 | 23 | 3363 - 9 |
| M800650 | 3J10 | 26 | 3363 - 11 |
| M800650 | 3J10 | 28 | 3363 - 11 |
| M800650 | 3J10 | 31 | 3363 - 11 |
| M800650 | 3J10 | 33 | 3363 - 11 |
| M800650 | 3J20 | 29 | 3363 - 21 |
| M800650 | 3J22 | 31 | 3363 - 23 |
| M800650 | 3J22 | 32 | 3363 - 23 |
| M800650 | 3J24 | 0 | 3363 - 25 |
| M800650 | 3J24 | 3 | 3363 - 25 |
| M800650 | 3J24 | 6 | 3363 - 25 |
| M800650 | 3J24 | 10 | 3363 - 25 |
| M800650 | 3K2 | 30 | 3363 - 27 |
| M800650 | 3K4 | 0 | 3363 - 29 |
| M800650 | 3K6 | 0 | 3363 - 31 |
| M800650 | 3K8 | 16 | 3363 - 33 |
| M800650 | 3K12 | 0 | 3363 - 37 |
| M800650 | 3K14 | 3 | 3363 - 39 |
| M800650 | 3K18 | 25 | 3364 - 3 |
| M800650 | 3K20 | 30 | 3364 - 5 |
| M800650 | 3K20 | 37 | 3364 - 5 |
| M800650 | 3K20 | 44 | 3364 - 5 |
| M800650 | 3K20 | 45 | 3364 - 5 |
| M800650 | 3L18 | 48 | 4360 - 5 |
| N231749 | 1B5 | 16 | 0250 - 3 |
| P100089 | 1I16 | 0F | 0520 - 3 |
| P63448 | 2B20 | 8 | 1322 - 7 |
| RE35791 | 1I20 | 12 | 0520 - 7 |
| R44302 | 2C25 | 4 | 1674 - 21 |
| R48685 | 3B14 | 5 | 3302 - 3 |
| R48685 | 3B16 | 5 | 3302 - 5 |
| R48685 | 3B18 | 5 | 3302 - 7 |
| R48685 | 3B22 | 2 | 3302 - 11 |
| R48685 | 3C2 | 5 | 3302 - 15 |
| R516181 | 1H24 | 14 | 0510 - 3 |
| R56902 | 2B20 | 6 | 1322 - 7 |
| R63075 | 3L18 | 88 | 4360 - 5 |
| R67590 | 3H6 | 21 | 3362 - 15 |
| R73821 | 1C18 | 27 | 0250 - 41 |
| R82198 | 1C22 | 4B | 0250 - 45 |
| R99052 | 3H18 | 1C | 3362 - 27 |
| R99052 | 3H18 | 9C | 3362 - 27 |
| R99052 | 3H20 | 1C | 3362 - 29 |
| TF1U3352D | 3C10 | 4K | 3302 - 23 |
| TF1U3352D | 3C14 | 4K | 3302 - 27 |
| TF1U3352D | 3C18 | 4K | 3302 - 31 |
| TF1U3352D | 3C22 | 4K | 3302 - 35 |
| TF220 | 3B20 | 5 | 3302 - 9 |
| TF290 | 3C10 | 4A | 3302 - 23 |
| TF290 | 3C14 | 4A | 3302 - 27 |
| TF290 | 3C18 | 4A | 3302 - 31 |
| TF290 | 3C22 | 4A | 3302 - 35 |
| TF310 | 3C10 | 4A | 3302 - 23 |
| TF310 | 3C14 | 4A | 3302 - 27 |
| TF310 | 3C18 | 4A | 3302 - 31 |
| TF310 | 3C22 | 4A | 3302 - 35 |
| TF330 | 3C10 | 4A | 3302 - 23 |
| TF330 | 3C14 | 4A | 3302 - 27 |
| TF330 | 3C18 | 4A | 3302 - 31 |
| TF330 | 3C22 | 4A | 3302 - 35 |
| THA852233 | 2B3 | 20 | 1062 - 3 |
| THJ833012 | 2D13 | 3 | 1740 - 3 |
| THJ833016 | 2D13 | 4 | 1740 - 3 |
| TH0794201 | 3I20 | 3 | 3362 - 53 |
| TH0794202 | 3I20 | 6 | 3362 - 53 |
| TH0794203 | 3I20 | 8 | 3362 - 53 |
| TH0794204 | 3I20 | 10 | 3362 - 53 |
| TH0794205 | 3I20 | 11 | 3362 - 53 |
| TH0794206 | 3I20 | 12 | 3362 - 53 |
| TH0794207 | 3I20 | 14 | 3362 - 53 |
| TH100074 | 2D23 | 11 | 1740 - 13 |
| TH100074 | 2D25 | 5 | 1740 - 15 |
| TH100074 | 3B10 | 33 | 3301 - 3 |
| TH100074 | 3D8 | 23 | 3344 - 5 |
| TH100074 | 3D10 | 4 | 3344 - 7 |
| TH100074 | 3E22 | 44 | 3348 - 3 |
| TH100074 | 3K22 | 39 | 3365 - 3 |
| TH100074 | 3K24 | 39 | 3365 - 5 |
| TH100074 | 3L2 | 39 | 3365 - 7 |
| TH100074 | 3L4 | 39 | 3365 - 9 |
| TH100074 | 3L8 | 38 | 3365 - 13 |
| TH100364 | 3D24 | 10 | 3344 - 21 |
| TH100364 | 3E14 | 14 | 3344 - 35 |
| TH100374 | 3L8 | 24 | 3365 - 13 |
| TH100679 | 3K18 | 8 | 3364 - 3 |
| TH101880 | 3L16 | 83 | 4360 - 3 |
| TH102409 | 3E2 | 9 | 3344 - 23 |
| TH102446 | 3D8 | 1 | 3344 - 5 |
| TH102446 | 3D8 | 3 | 3344 - 5 |
| TH102446 | 3D8 | 76 | 3344 - 5 |
| TH102446 | 3D10 | 3 | 3344 - 7 |
| TH102446 | 3K22 | 25 | 3365 - 3 |
| TH102446 | 3K24 | 25 | 3365 - 5 |
| TH102446 | 3L2 | 25 | 3365 - 7 |
| TH102446 | 3L4 | 25 | 3365 - 9 |
| TH102446 | 3L6 | 29 | 3365 - 11 |
| TH102446 | 3L8 | 26 | 3365 - 13 |
| TH102560 | 3F14 | 7 | 3360 - 7 |
| TH102560 | 3F16 | 7 | 3360 - 9 |
| TH102560 | 3F16 | 50A | 3360 - 9 |
| TH104472 | 3D8 | 2 | 3344 - 5 |
| TH104472 | 3E22 | 20C | 3348 - 3 |
| TH104472 | 3E22 | 21C | 3348 - 3 |
| TH104509 | 3B14 | 11 | 3302 - 3 |
| TH104509 | 3B16 | 11 | 3302 - 5 |
| TH104509 | 3B18 | 11 | 3302 - 7 |
| TH104509 | 3B22 | 11 | 3302 - 11 |
| TH104509 | 3C2 | 11 | 3302 - 15 |
| TH104509 | 3E22 | 1C | 3348 - 3 |
| TH104512 | 3B14 | 6 | 3302 - 3 |
| TH104512 | 3B16 | 6 | 3302 - 5 |
| TH104512 | 3B18 | 6 | 3302 - 7 |
| TH104512 | 3B22 | 3 | 3302 - 11 |
| TH104512 | 3C2 | 6 | 3302 - 15 |
| TH104513 | 3B14 | 7 | 3302 - 3 |
| TH104513 | 3B16 | 7 | 3302 - 5 |
| TH104513 | 3B18 | 7 | 3302 - 7 |
| TH104513 | 3B22 | 5 | 3302 - 11 |
| TH104513 | 3C2 | 7 | 3302 - 15 |
| TH104514 | 3B14 | 8 | 3302 - 3 |
| TH104514 | 3B16 | 8 | 3302 - 5 |
| TH104514 | 3B18 | 8 | 3302 - 7 |
| TH104514 | 3B22 | 4 | 3302 - 11 |
| TH104514 | 3C2 | 8 | 3302 - 15 |
| TH104956 | 3L6 | 11 | 3365 - 11 |
| TH105051 | 3F12 | 55 | 3360 - 5 |
| TH106654 | 2B18 | 12 | 1322 - 5 |
| TH108302 | 3F20 | 16 | 3360 - 13 |
| TH108649 | 3B22 | 11 | 3302 - 11 |
| TH108983 | 2F20 | 19 | 1810 - 35 |
| TH109311 | 3L8 | 4 | 3365 - 13 |
| TH109318 | 3L8 | 11 | 3365 - 13 |
| TH4179432 | 2D13 | 23 | 1740 - 3 |
| TH429135 | 2D13 | 6 | 1740 - 3 |
| TH4292764 | 2D13 | 9 | 1740 - 3 |
| TH4292765 | 2D13 | 10 | 1740 - 3 |
| TH4292932 | 2D13 | 5 | 1740 - 3 |
| TH4296258 | 2D13 | 1 | 1740 - 3 |
| TH4296541 | 2D13 | 22 | 1740 - 3 |
| TH4296542 | 2D13 | 21 | 1740 - 3 |
| TH4296543 | 2D13 | 20 | 1740 - 3 |
| TH4452648 | 3I14 | 20 | 3362 - 47 |
| TH5005506 | 2D19 | 0 | 1740 - 9 |
| TH5005575 | 2D13 | 0 | 1740 - 3 |
| TH6014673 | 2D13 | 46 | 1740 - 3 |
| TH6014819 | 2D13 | 45 | 1740 - 3 |
| TH7030793 | 2D13 | 63 | 1740 - 3 |
| TH8053517 | 2D13 | 19 | 1740 - 3 |
| TH8053518 | 2D13 | 27 | 1740 - 3 |
| TK290 | 3C10 | 2 | 3302 - 23 |
| TK290 | 3C14 | 2 | 3302 - 27 |
| TK290 | 3C18 | 2 | 3302 - 31 |
| TK290 | 3C22 | 2 | 3302 - 35 |
| TK330 | 3C10 | 2 | 3302 - 23 |
| TK330 | 3C14 | 2 | 3302 - 27 |
| TK330 | 3C18 | 2 | 3302 - 31 |
| TK330 | 3C22 | 2 | 3302 - 35 |
| TPDE31329 | 3C6 | 7 | 3302 - 19 |

**NUMERICAL INDEX - CONTINUED**


| PART NO. | GRID | KEY | PAGE |
|---|---|---|---|
| TP160 | 3C10 | 2 | 3302 - 23 |
| TP160 | 3C14 | 2 | 3302 - 27 |
| TP160 | 3C18 | 2 | 3302 - 31 |
| TP160 | 3C22 | 2 | 3302 - 35 |
| TP160L | 3B20 | 6 | 3302 - 9 |
| TP160L | 3C10 | 2 | 3302 - 23 |
| TP160L | 3C10 | 4A | 3302 - 23 |
| TP160L | 3C10 | 4B | 3302 - 23 |
| TP160L | 3C10 | 4C | 3302 - 23 |
| TP160L | 3C10 | 4D | 3302 - 23 |
| TP160L | 3C10 | 4E | 3302 - 23 |
| TP160L | 3C10 | 4F | 3302 - 23 |
| TP160L | 3C14 | 2 | 3302 - 27 |
| TP160L | 3C14 | 4A | 3302 - 27 |
| TP160L | 3C14 | 4B | 3302 - 27 |
| TP160L | 3C14 | 4C | 3302 - 27 |
| TP160L | 3C14 | 4D | 3302 - 27 |
| TP160L | 3C14 | 4E | 3302 - 27 |
| TP160L | 3C14 | 4F | 3302 - 27 |
| TP160L | 3C18 | 2 | 3302 - 31 |
| TP160L | 3C18 | 4A | 3302 - 31 |
| TP160L | 3C18 | 4B | 3302 - 31 |
| TP160L | 3C18 | 4C | 3302 - 31 |
| TP160L | 3C18 | 4D | 3302 - 31 |
| TP160L | 3C18 | 4E | 3302 - 31 |
| TP160L | 3C18 | 4F | 3302 - 31 |
| TP160L | 3C22 | 2 | 3302 - 35 |
| TP160L | 3C22 | 4A | 3302 - 35 |
| TP160L | 3C22 | 4B | 3302 - 35 |
| TP160L | 3C22 | 4C | 3302 - 35 |
| TP160L | 3C22 | 4D | 3302 - 35 |
| TP160L | 3C22 | 4E | 3302 - 35 |
| TP160L | 3C22 | 4F | 3302 - 35 |
| TTZF100074 | 1D2 | 14 | 0250 - 49 |
| TTZF100201 | 1C22 | 27 | 0250 - 45 |
| TTZF210223 | 1C18 | 28 | 0250 - 41 |
| TT1U3352 | 3C10 | 4N | 3302 - 23 |
| TT1U3352 | 3C14 | 4N | 3302 - 27 |
| TT1U3352 | 3C18 | 4N | 3302 - 31 |
| TT1U3352 | 3C22 | 4N | 3302 - 35 |
| TT290 | 3C10 | 4F | 3302 - 23 |
| TT290 | 3C14 | 4F | 3302 - 27 |
| TT290 | 3C18 | 4F | 3302 - 31 |
| TT290 | 3C22 | 4F | 3302 - 35 |
| TT310 | 3C10 | 4F | 3302 - 23 |
| TT310 | 3C14 | 4F | 3302 - 27 |
| TT310 | 3C18 | 4F | 3302 - 31 |
| TT310 | 3C22 | 4F | 3302 - 35 |
| TT330 | 3C10 | 4F | 3302 - 23 |
| TT330 | 3C14 | 4F | 3302 - 27 |
| TT330 | 3C18 | 4F | 3302 - 31 |
| TT330 | 3C22 | 4F | 3302 - 35 |
| TX1U3352WT | 3C10 | 4M | 3302 - 23 |
| TX1U3352WT | 3C14 | 4M | 3302 - 27 |
| TX1U3352WT | 3C18 | 4M | 3302 - 31 |
| TX1U3352WT | 3C22 | 4M | 3302 - 35 |
| TX290 | 3C10 | 4B | 3302 - 23 |
| TX290 | 3C14 | 4B | 3302 - 27 |
| TX290 | 3C18 | 4B | 3302 - 31 |
| TX290 | 3C22 | 4B | 3302 - 35 |
| TX290WT | 3C10 | 4C | 3302 - 23 |
| TX290WT | 3C14 | 4C | 3302 - 27 |
| TX290WT | 3C18 | 4C | 3302 - 31 |
| TX290WT | 3C22 | 4C | 3302 - 35 |
| TX310 | 3C10 | 4B | 3302 - 23 |
| TX310 | 3C14 | 4B | 3302 - 27 |
| TX310 | 3C18 | 4B | 3302 - 31 |
| TX310 | 3C22 | 4B | 3302 - 35 |
| TX310AP | 3C10 | 4E | 3302 - 23 |
| TX310AP | 3C14 | 4E | 3302 - 27 |
| TX310AP | 3C18 | 4E | 3302 - 31 |
| TX310AP | 3C22 | 4E | 3302 - 35 |
| TX310F | 3C10 | 4D | 3302 - 23 |
| TX310F | 3C14 | 4D | 3302 - 27 |
| TX310F | 3C18 | 4D | 3302 - 31 |
| TX310F | 3C22 | 4D | 3302 - 35 |
| TX310WT | 3C10 | 4C | 3302 - 23 |
| TX310WT | 3C14 | 4C | 3302 - 27 |
| TX310WT | 3C18 | 4C | 3302 - 31 |
| TX310WT | 3C22 | 4C | 3302 - 35 |
| TX330 | 3C10 | 4B | 3302 - 23 |
| TX330 | 3C14 | 4B | 3302 - 27 |
| TX330 | 3C18 | 4B | 3302 - 31 |
| TX330 | 3C22 | 4B | 3302 - 35 |
| TX330WT | 3C10 | 4C | 3302 - 23 |
| TX330WT | 3C14 | 4C | 3302 - 27 |
| TX330WT | 3C18 | 4C | 3302 - 31 |
| TX330WT | 3C22 | 4C | 3302 - 35 |
| TY22464 | 1J6 | 3 | 0560 - 9 |
| TY22467 | 1G24 | 1 | 0418 - 5 |
| TY24396 | 1H4 | 39 | 0420 - 3 |
| TY24398 | 1J6 | 2 | 0560 - 9 |
| TY24398 | 1J6 | 4 | 0560 - 9 |
| T1U3352 | 3C10 | 4L | 3302 - 23 |
| T1U3352 | 3C14 | 4L | 3302 - 27 |
| T1U3352 | 3C18 | 4L | 3302 - 31 |
| T1U3352 | 3C22 | 4L | 3302 - 35 |
| T101942 | 2B18 | 7 | 1322 - 5 |
| T104249 | 3B10 | 9B | 3301 - 3 |
| T104249 | 3E22 | 20B | 3348 - 3 |
| T104249 | 3E22 | 21B | 3348 - 3 |
| T104251 | 3E22 | 1B | 3348 - 3 |
| T104251 | 3E22 | 36B | 3348 - 3 |
| T104251 | 3E22 | 37B | 3348 - 3 |
| T107446 | 3J4 | 3 | 3363 - 5 |
| T107446 | 3K16 | 0 | 3363 - 41 |
| T108036 | 3L6 | 40 | 3365 - 11 |
| T108036 | 3L8 | 35 | 3365 - 13 |
| T108036 | 3L10 | 34 | 3365 - 15 |
| T111645 | 3H18 | 7 | 3362 - 27 |
| T111645 | 3H18 | 15 | 3362 - 27 |
| T111645 | 3H20 | 11 | 3362 - 29 |
| T113570 | 1C10 | 24 | 0250 - 33 |
| T116057 | 1I24 | 2 | 0560 - 3 |
| T116333 | 1I20 | 6 | 0520 - 7 |
| T116420 | 1C6 | 25B | 0250 - 29 |
| T116420 | 1C12 | 6B | 0250 - 35 |
| T116928 | 1C24 | 14 | 0250 - 47 |
| T123707 | 1B23 | 46 | 0250 - 21 |
| T129614 | 1B21 | 33 | 0250 - 19 |
| T13624 | 1E20 | 19 | 0265 - 5 |
| T13624 | 1E22 | 19 | 0265 - 7 |
| T13624 | 3K22 | 23 | 3365 - 3 |
| T13624 | 3K24 | 23 | 3365 - 5 |
| T13624 | 3L2 | 23 | 3365 - 7 |
| T13624 | 3L4 | 23 | 3365 - 9 |
| T13624 | 3L6 | 23 | 3365 - 11 |
| T13624 | 3L8 | 22 | 3365 - 13 |
| T138886 | 2B18 | 10 | 1322 - 5 |
| T146097 | 2B16 | 8 | 1322 - 3 |
| T146667 | 2B16 | 4 | 1322 - 3 |
| T146668 | 2B16 | 6 | 1322 - 3 |
| T146671 | 2B16 | 10 | 1322 - 3 |
| T149983 | 2B18 | 8 | 1322 - 5 |
| T152608 | 3D24 | 12 | 3344 - 21 |
| T152657 | 2B20 | 5 | 1322 - 7 |
| T153X310 | 3C10 | 3 | 3302 - 23 |
| T153X310 | 3C14 | 3 | 3302 - 27 |
| T153X310 | 3C18 | 3 | 3302 - 31 |
| T153X310 | 3C22 | 3 | 3302 - 35 |
| T158X290 | 3C10 | 3 | 3302 - 23 |
| T158X290 | 3C14 | 3 | 3302 - 27 |
| T158X290 | 3C18 | 3 | 3302 - 31 |
| T158X290 | 3C22 | 3 | 3302 - 35 |
| T158X330 | 3C10 | 3 | 3302 - 23 |
| T158X330 | 3C14 | 3 | 3302 - 27 |
| T158X330 | 3C18 | 3 | 3302 - 31 |
| T158X330 | 3C22 | 3 | 3302 - 35 |
| T158718 | 1C18 | 22 | 0250 - 41 |
| T158754 | 1B21 | 36 | 0250 - 19 |
| T159307 | 1D2 | 10A | 0250 - 49 |
| T159308 | 1D2 | 10A | 0250 - 49 |
| T159309 | 1D2 | 10A | 0250 - 49 |
| T159310 | 1D2 | 10A | 0250 - 49 |
| T159311 | 1D2 | 10A | 0250 - 49 |
| T159313 | 1D2 | 10A | 0250 - 49 |
| T159314 | 1D2 | 10A | 0250 - 49 |
| T159315 | 1D2 | 10A | 0250 - 49 |
| T159487 | 1C22 | 7A | 0250 - 45 |
| T159487 | 1C22 | 8A | 0250 - 45 |
| T159487 | 1C22 | 30A | 0250 - 45 |
| T159575 | 1C8 | 5 | 0250 - 31 |
| T159887 | 2B16 | 1 | 1322 - 3 |
| T163879 | 2B16 | 7 | 1322 - 3 |
| T170119 | 1B19 | 5B | 0250 - 17 |
| T170119 | 1B25 | 24B | 0250 - 23 |
| T170119 | 1B25 | 25B | 0250 - 23 |
| T170119 | 1C4 | 50B | 0250 - 27 |
| T181388 | 1B15 | 50A | 0250 - 13 |
| T181389 | 1B15 | 50A | 0250 - 13 |
| T181390 | 1B15 | 50A | 0250 - 13 |
| T181394 | 1B15 | 50A | 0250 - 13 |
| T181395 | 1B15 | 50A | 0250 - 13 |
| T182370 | 1B13 | 10 | 0250 - 11 |
| T182370 | 1D2 | 12 | 0250 - 49 |
| T183922 | 1B21 | 45 | 0250 - 19 |
| T183923 | 1B21 | 42 | 0250 - 19 |
| T183923 | 1C4 | 42 | 0250 - 27 |
| T184023 | 2B18 | 3 | 1322 - 5 |
| T184759 | 2B18 | 2 | 1322 - 5 |
| T187535 | 2B16 | 5 | 1322 - 3 |
| T187684 | 1B19 | 1 | 0250 - 17 |
| T187710 | 2B20 | 10 | 1322 - 7 |
| T188737 | 2B20 | 4 | 1322 - 7 |
| T190310 | 2B16 | 3 | 1322 - 3 |
| T190393 | 2B16 | 9 | 1322 - 3 |
| T201519 | 2B20 | 2 | 1322 - 7 |
| T202753 | 1C10 | 7B | 0250 - 33 |
| T202753 | 1C10 | 28B | 0250 - 33 |
| T205218 | 2F20 | 21 | 1810 - 35 |
| T207903 | 2B18 | 5 | 1322 - 5 |
| T214016 | 2B20 | 3 | 1322 - 7 |
| T214814 | 2B20 | 1 | 1322 - 7 |
| T215210 | 2B16 | 11 | 1322 - 3 |
| T24432 | 2C21 | 28 | 1674 - 17 |
| T24432 | 2H6 | 3 | 1830 - 21 |
| T3G8354 | 3C10 | 3 | 3302 - 23 |
| T3G8354 | 3C14 | 3 | 3302 - 27 |
| T3G8354 | 3C18 | 3 | 3302 - 31 |
| T3G8354 | 3C22 | 3 | 3302 - 35 |
| T3G9549 | 3C10 | 5 | 3302 - 23 |

**NUMERICAL INDEX - CONTINUED**


| PART NO. | GRID | KEY | PAGE |
|---|---|---|---|
| T3G9549 | 3C14 | 5 | 3302 - 27 |
| T3G9549 | 3C18 | 5 | 3302 - 31 |
| T3G9549 | 3C22 | 5 | 3302 - 35 |
| T32854 | 2C21 | 23 | 1674 - 17 |
| T32854 | 2G18 | 27 | 1830 - 9 |
| T32854 | 3K4 | 17 | 3363 - 29 |
| T38377 | 1I12 | 7 | 0515 - 3 |
| T38818 | 3C6 | 13 | 3302 - 19 |
| T38819 | 3C6 | 12 | 3302 - 19 |
| T52974 | 3C6 | 13 | 3302 - 19 |
| T52975 | 3C6 | 12 | 3302 - 19 |
| T59014 | 3J4 | 9 | 3363 - 5 |
| T59014 | 3K16 | 5 | 3363 - 41 |
| T72216 | 1E12 | 15 | 0260 - 33 |
| T74552 | 1C22 | 52B | 0250 - 45 |
| T75197 | 2C25 | 2 | 1674 - 21 |
| T76617 | 1C22 | 29A | 0250 - 45 |
| T76938 | 1E12 | 4 | 0260 - 33 |
| T76938 | 3D14 | 15 | 3344 - 11 |
| T76938 | 3E4 | 11 | 3344 - 25 |
| T77857 | 1D18 | 5 | 0260 - 15 |
| T77857 | 1D18 | 14 | 0260 - 15 |
| T77857 | 3F4 | 2 | 3348 - 9 |
| T77857 | 3F4 | 10 | 3348 - 9 |
| T77857 | 3F6 | 24 | 3348 - 11 |
| T77858 | 1E12 | 5 | 0260 - 33 |
| T77858 | 3D8 | 27 | 3344 - 5 |
| T77858 | 3D14 | 14 | 3344 - 11 |
| T77858 | 3E4 | 10 | 3344 - 25 |
| T77858 | 3E6 | 10 | 3344 - 27 |
| T77858 | 3F24 | 2 | 3360 - 17 |
| T77858 | 3F24 | 11 | 3360 - 17 |
| T77858 | 3G2 | 2 | 3360 - 19 |
| T77858 | 3G2 | 11 | 3360 - 19 |
| T77858 | 3J14 | 12 | 3363 - 15 |
| T77858 | 3K16 | 6 | 3363 - 41 |
| T78313 | 3F22 | 1 | 3360 - 15 |
| T78313 | 3J4 | 8 | 3363 - 5 |
| T79477 | 1I10 | 6 | 0510 - 13 |
| T79632 | 2B18 | 6 | 1322 - 5 |
| T80622 | 3L18 | 77 | 4360 - 5 |
| T82518 | 1B7 | 5A | 0250 - 5 |
| T82519 | 1B7 | 5A | 0250 - 5 |
| T82520 | 1B7 | 5A | 0250 - 5 |
| T82521 | 1B7 | 5A | 0250 - 5 |
| T82522 | 1B7 | 5A | 0250 - 5 |
| T82523 | 1B7 | 5A | 0250 - 5 |
| T82524 | 1B7 | 5A | 0250 - 5 |
| T82525 | 1B7 | 5A | 0250 - 5 |
| T82526 | 1B7 | 5A | 0250 - 5 |
| T82527 | 1B7 | 5A | 0250 - 5 |
| T82528 | 1D2 | 15 | 0250 - 49 |
| T82529 | 1D2 | 13 | 0250 - 49 |
| T84064 | 2B20 | 7 | 1322 - 7 |
| T9J2358 | 3C10 | 2 | 3302 - 23 |
| T9J2358 | 3C14 | 2 | 3302 - 27 |
| T9J2358 | 3C18 | 2 | 3302 - 31 |
| T9J2358 | 3C22 | 2 | 3302 - 35 |
| U42323 | 1I24 | 13 | 0560 - 3 |
| Z494918 | 2F10 | 8B | 1810 - 25 |
| 0004163 | 3G22 | 62 | 3362 - 7 |
| 0004167 | 3H2 | 2 | 3362 - 11 |
| 0004429 | 2C13 | 7 | 1674 - 9 |
| 0004440 | 1D6 | 0 | 0260 - 3 |
| 0004652 | 3H6 | 1 | 3362 - 15 |
| 0004654 | 3G24 | 12 | 3362 - 9 |
| 0004661 | 2F24 | 45 | 1810 - 39 |
| 0004778 | 2C21 | 0 | 1674 - 17 |
| 0105301 | 3L6 | 7 | 3365 - 11 |
| 0108064500 | 1H18 | 17 | 0433 - 3 |
| 0111707 | 1E20 | 19 | 0265 - 5 |
| 0111707 | 1E22 | 19 | 0265 - 7 |
| 0111707 | 3K22 | 23 | 3365 - 3 |
| 0111707 | 3K24 | 23 | 3365 - 5 |
| 0111707 | 3L2 | 23 | 3365 - 7 |
| 0111707 | 3L4 | 23 | 3365 - 9 |
| 0111707 | 3L6 | 23 | 3365 - 11 |
| 0111707 | 3L8 | 22 | 3365 - 13 |
| 0158855 | 3L8 | 29 | 3365 - 13 |
| 0161503 | 3L10 | 5 | 3365 - 15 |
| 0208304 | 3K22 | 5 | 3365 - 3 |
| 0208304 | 3K24 | 5 | 3365 - 5 |
| 0208304 | 3L2 | 5 | 3365 - 7 |
| 0208304 | 3L4 | 5 | 3365 - 9 |
| 0208305 | 3K22 | 7 | 3365 - 3 |
| 0208305 | 3K24 | 7 | 3365 - 5 |
| 0208305 | 3L2 | 7 | 3365 - 7 |
| 0208305 | 3L4 | 7 | 3365 - 9 |
| 0208306 | 3K22 | 8 | 3365 - 3 |
| 0208306 | 3K24 | 8 | 3365 - 5 |
| 0208306 | 3L2 | 8 | 3365 - 7 |
| 0208306 | 3L4 | 8 | 3365 - 9 |
| 0208326 | 1E22 | 1B | 0265 - 7 |
| 0208326 | 1E22 | 2B | 0265 - 7 |
| 0208326-P | 1E22 | 1B | 0265 - 7 |
| 0208326-P | 1E22 | 4 | 0265 - 7 |
| 0208516 | 3L6 | 42 | 3365 - 11 |
| 0208516 | 3L8 | 37 | 3365 - 13 |
| 0208516 | 3L10 | 36 | 3365 - 15 |
| 0215220 | 3H22 | 18 | 3362 - 31 |
| 0215220 | 3I18 | 7 | 3362 - 51 |
| 0215710 | 3I2 | 7 | 3362 - 35 |
| 0221509 | 3L18 | 88 | 4360 - 5 |
| 0223704 | 3L6 | 11 | 3365 - 11 |
| 0223706 | 3L6 | 16 | 3365 - 11 |
| 0223713 | 3L6 | 19 | 3365 - 11 |
| 0225709 | 3L6 | 43 | 3365 - 11 |
| 0229213 | 3I4 | 18 | 3362 - 37 |
| 0236915 | 3K22 | 36 | 3365 - 3 |
| 0236915 | 3K24 | 36 | 3365 - 5 |
| 0236915 | 3L2 | 36 | 3365 - 7 |
| 0236915 | 3L4 | 36 | 3365 - 9 |
| 0237309 | 3L10 | 8 | 3365 - 15 |
| 0237407 | 3L6 | 5 | 3365 - 11 |
| 0237419 | 3L6 | 8 | 3365 - 11 |
| 0237902 | 3H16 | 28 | 3362 - 25 |
| 0240904 | 3L8 | 5 | 3365 - 13 |
| 0240911 | 3L8 | 7 | 3365 - 13 |
| 0240912 | 3L8 | 8 | 3365 - 13 |
| 0242006 | 3I2 | 9 | 3362 - 35 |
| 0254312 | 3K22 | 37 | 3365 - 3 |
| 0254312 | 3K24 | 37 | 3365 - 5 |
| 0254312 | 3L2 | 37 | 3365 - 7 |
| 0254312 | 3L4 | 37 | 3365 - 9 |
| 0258205 | 1E20 | 13 | 0265 - 5 |
| 0258205 | 1E22 | 13 | 0265 - 7 |
| 0258205 | 3K22 | 16 | 3365 - 3 |
| 0258205 | 3K24 | 16 | 3365 - 5 |
| 0258205 | 3L2 | 16 | 3365 - 7 |
| 0258205 | 3L4 | 16 | 3365 - 9 |
| 0259307 | 3L10 | 17 | 3365 - 15 |
| 0261308 | 1E20 | 16 | 0265 - 5 |
| 0261308 | 1E22 | 16 | 0265 - 7 |
| 0261308 | 3K22 | 19 | 3365 - 3 |
| 0261308 | 3K24 | 19 | 3365 - 5 |
| 0261308 | 3L2 | 19 | 3365 - 7 |
| 0261308 | 3L4 | 19 | 3365 - 9 |
| 0261310 | 3K22 | 11 | 3365 - 3 |
| 0261310 | 3K24 | 11 | 3365 - 5 |
| 0261310 | 3L2 | 11 | 3365 - 7 |
| 0261310 | 3L4 | 11 | 3365 - 9 |
| 0263019 | 3L18 | 83 | 4360 - 5 |
| 0263205 | 1J17 | 7 | 0962 - 3 |
| 0263206 | 1J17 | 8 | 0962 - 3 |
| 0271304 | 1E20 | 5 | 0265 - 5 |
| 0271304 | 1E22 | 5 | 0265 - 7 |
| 0271309 | 1E20 | 7 | 0265 - 5 |
| 0271309 | 1E22 | 7 | 0265 - 7 |
| 0280210250 | 1F16 | 29 | 0407 - 3 |
| 0280210250 | 1H10 | 26A | 0423 - 2 |
| 0280806120 | 1H18 | 58 | 0433 - 3 |
| 0280806160 | 1G16 | 11 | 0416 - 3 |
| 0280808120 | 1F14 | 91 | 0404 - 5 |
| 0280808120 | 1F20 | 44 | 0407 - 7 |
| 0280808120 | 1F20 | 52 | 0407 - 7 |
| 0280808120 | 1F22 | 10 | 0407 - 9 |
| 0280808160 | 1H2 | 3 | 0419 - 3 |
| 0280808200 | 1F12 | 14 | 0404 - 3 |
| 0280808200 | 1F20 | 40B | 0407 - 7 |
| 0280808220 | 1G22 | 50 | 0418 - 3 |
| 0280808220 | 1H18 | 36 | 0433 - 3 |
| 0280808220 | 1H18 | 62 | 0433 - 3 |
| 0280808300 | 1G22 | 50 | 0418 - 3 |
| 0280808800 | 1H18 | 62 | 0433 - 3 |
| 0280810200 | 1G6 | 87 | 0413 - 3 |
| 0280810200 | 1H6 | 88 | 0420 - 5 |
| 0280810250 | 1H10 | 26A | 0423 - 2 |
| 0280810250 | 1H14 | 24 | 0423 - 7 |
| 0280810300 | 1F20 | 44 | 0407 - 7 |
| 0280810300 | 1G22 | 44A | 0418 - 3 |
| 0280810300 | 1H6 | 45 | 0420 - 5 |
| 0280810350 | 1G20 | 36 | 0417 - 3 |
| 0280810350 | 1G22 | 44A | 0418 - 3 |
| 0280810350 | 1H14 | 24 | 0423 - 7 |
| 0280810450 | 1G20 | 36 | 0417 - 3 |
| 0280810500 | 1H18 | 62 | 0433 - 3 |
| 0280810700 | 1G20 | 36 | 0417 - 3 |
| 0280810900 | 1G22 | 44A | 0418 - 3 |
| 0280810900 | 1H2 | 15 | 0419 - 3 |
| 0280906160 | 1G16 | 11 | 0416 - 3 |
| 0286806160 | 1G6 | 9 | 0413 - 3 |
| 0286806200 | 1H4 | 5 | 0420 - 3 |
| 0286808200 | 1F12 | 14 | 0404 - 3 |
| 0286808350 | 1F20 | 40B | 0407 - 7 |
| 0286810300 | 1H6 | 45 | 0420 - 5 |
| 0286810350 | 1H10 | 26C | 0423 - 2 |
| 0287810300 | 1G14 | 59 | 0414 - 3 |
| 0287812350 | 1H9 | 8 | 0422 - 2 |
| 0309004 | 3K22 | 4 | 3365 - 3 |
| 0309004 | 3K24 | 4 | 3365 - 5 |
| 0309004 | 3L2 | 4 | 3365 - 7 |
| 0309004 | 3L4 | 4 | 3365 - 9 |
| 0309011 | 1E20 | 18 | 0265 - 5 |
| 0309011 | 1E22 | 18 | 0265 - 7 |
| 0309011 | 3K22 | 22 | 3365 - 3 |
| 0309011 | 3K24 | 22 | 3365 - 5 |
| 0309011 | 3L2 | 22 | 3365 - 7 |
| 0309011 | 3L4 | 22 | 3365 - 9 |
| 0309011 | 3L6 | 22 | 3365 - 11 |
| 0309011 | 3L8 | 21 | 3365 - 13 |
| 0309013 | 3K22 | 20 | 3365 - 3 |

**NUMERICAL INDEX - CONTINUED**

| PART NO. | GRID | KEY | PAGE |
|---|---|---|---|
| 0309013 | 3K24 | 20 | 3365 - 5 |
| 0309013 | 3K24 | 22 | 3365 - 5 |
| 0309013 | 3L2 | 20 | 3365 - 7 |
| 0309013 | 3L4 | 20 | 3365 - 9 |
| 0309019 | 3K22 | 31 | 3365 - 3 |
| 0309019 | 3K24 | 31 | 3365 - 5 |
| 0309019 | 3L2 | 31 | 3365 - 7 |
| 0309019 | 3L4 | 31 | 3365 - 9 |
| 0309019 | 3L6 | 33 | 3365 - 11 |
| 0309019 | 3L10 | 29 | 3365 - 15 |
| 0309020 | 3K22 | 29 | 3365 - 3 |
| 0309020 | 3K24 | 29 | 3365 - 5 |
| 0309020 | 3L2 | 41 | 3365 - 7 |
| 0309020 | 3L4 | 41 | 3365 - 9 |
| 0309020 | 3L6 | 35 | 3365 - 11 |
| 0309020 | 3L10 | 27 | 3365 - 15 |
| 0309021 | 3L6 | 40 | 3365 - 11 |
| 0309021 | 3L8 | 35 | 3365 - 13 |
| 0309021 | 3L10 | 34 | 3365 - 15 |
| 0309022 | 3L6 | 41 | 3365 - 11 |
| 0309312 | 3L8 | 27 | 3365 - 13 |
| 0309314 | 3K22 | 33 | 3365 - 3 |
| 0309314 | 3K24 | 33 | 3365 - 5 |
| 0309314 | 3L2 | 33 | 3365 - 7 |
| 0309314 | 3L4 | 33 | 3365 - 9 |
| 0309402 | 3H4 | 11 | 3362 - 13 |
| 0309402 | 3H8 | 11 | 3362 - 17 |
| 0309402 | 3H10 | 11 | 3362 - 19 |
| 0309805 | 2J2 | 87 | 2160 - 5 |
| 0309805 | 3I4 | 13 | 3362 - 37 |
| 0309805 | 3I16 | 12 | 3362 - 49 |
| 0310304 | 1E20 | 4 | 0265 - 5 |
| 0310304 | 1E22 | 4 | 0265 - 7 |
| 0310504 | 3L8 | 4 | 3365 - 13 |
| 0310506 | 3L8 | 11 | 3365 - 13 |
| 0310508 | 3L8 | 15 | 3365 - 13 |
| 0310510 | 3L8 | 18 | 3365 - 13 |
| 0310514 | 3L8 | 19 | 3365 - 13 |
| 0314205 | 3I4 | 12 | 3362 - 37 |
| 0314205 | 3I16 | 10 | 3362 - 49 |
| 0322304 | 3I2 | 4 | 3362 - 35 |
| 0322602 | 3I2 | 5 | 3362 - 35 |
| 0323806 | 3I18 | 6 | 3362 - 51 |
| 0323807 | 3I18 | 5 | 3362 - 51 |
| 0325904 | 3L6 | 4 | 3365 - 11 |
| 0325913 | 3L6 | 39 | 3365 - 11 |
| 0325913 | 3L8 | 34 | 3365 - 13 |
| 0333803 | 3I4 | 1 | 3362 - 37 |
| 0341102 | 1J17 | 3 | 0962 - 3 |
| 0343611 | 3H12 | 26 | 3362 - 21 |
| 0349402 | 3I4 | 3 | 3362 - 37 |
| 0352721 | 3L10 | 31 | 3365 - 15 |
| 0353011 | 3L10 | 21 | 3365 - 15 |
| 0353012 | 3L10 | 20 | 3365 - 15 |
| 0353321 | 3L18 | 76 | 4360 - 5 |
| 0354601 | 3F18 | 1 | 3360 - 11 |
| 0354603 | 3F18 | 5 | 3360 - 11 |
| 0354604 | 3F18 | 6 | 3360 - 11 |
| 0354607 | 3F18 | 9 | 3360 - 11 |
| 0354608 | 3F18 | 10 | 3360 - 11 |
| 0354613 | 2J4 | 31 | 2160 - 21 |
| 0354613 | 3F18 | 31 | 3360 - 11 |
| 0354614 | 3F18 | 34 | 3360 - 11 |
| 0364704 | 1J19 | 73 | 0962 - 5 |
| 0364705 | 1J19 | 74 | 0962 - 5 |
| 0364706 | 1J19 | 75 | 0962 - 5 |
| 0364708 | 1J19 | 84 | 0962 - 5 |
| 0364709 | 1J19 | 80 | 0962 - 5 |
| 0365318 | 3L18 | 40 | 4360 - 5 |
| 0369812 | 3I18 | 3 | 3362 - 51 |
| 0370410 | 3H12 | 27 | 3362 - 21 |
| 0393902 | 3G24 | 1 | 3362 - 9 |
| 0393902 | 3H8 | 9 | 3362 - 17 |
| 0397302 | 3I2 | 12 | 3362 - 35 |
| 0400902 | 3L2 | 27 | 3365 - 7 |
| 0400902 | 3L4 | 27 | 3365 - 9 |
| 0400909 | 3L6 | 20 | 3365 - 11 |
| 0407705 | 3K22 | 12 | 3365 - 3 |
| 0408202 | 2J4 | 7 | 2160 - 21 |
| 0408202 | 3F18 | 7 | 3360 - 11 |
| 0408203 | 3F18 | 8 | 3360 - 11 |
| 0408411 | 3H18 | 1D | 3362 - 27 |
| 0408411 | 3H18 | 9D | 3362 - 27 |
| 0408411 | 3H18 | 16 | 3362 - 27 |
| 0408411 | 3H20 | 1D | 3362 - 29 |
| 0408601 | 3I16 | 1 | 3362 - 49 |
| 0408804 | 1E20 | 6 | 0265 - 5 |
| 0408804 | 1E22 | 6 | 0265 - 7 |
| 0408805 | 3L8 | 12 | 3365 - 13 |
| 0408808 | 3L8 | 14 | 3365 - 13 |
| 0408809 | 3L8 | 16 | 3365 - 13 |
| 0408815 | 3L6 | 38 | 3365 - 11 |
| 0408815 | 3L8 | 33 | 3365 - 13 |
| 0409016 | 3L2 | 30 | 3365 - 7 |
| 0409016 | 3L6 | 30 | 3365 - 11 |
| 0409215 | 3L18 | 35 | 4360 - 5 |
| 0409216 | 3L18 | 36 | 4360 - 5 |
| 0409612 | 3L8 | 32 | 3365 - 13 |
| 0409705 | 3K24 | 12 | 3365 - 5 |
| 0409705 | 3L2 | 12 | 3365 - 7 |
| 0409705 | 3L4 | 12 | 3365 - 9 |
| 0409705 | 3L6 | 12 | 3365 - 11 |
| 0409706 | 3K22 | 13 | 3365 - 3 |
| 0409706 | 3K24 | 13 | 3365 - 5 |
| 0409706 | 3L2 | 13 | 3365 - 7 |
| 0409706 | 3L4 | 13 | 3365 - 9 |
| 0409708 | 3K22 | 15 | 3365 - 3 |
| 0409708 | 3K24 | 15 | 3365 - 5 |
| 0409708 | 3L2 | 15 | 3365 - 7 |
| 0409708 | 3L4 | 15 | 3365 - 9 |
| 0409709 | 1E20 | 14 | 0265 - 5 |
| 0409709 | 1E22 | 14 | 0265 - 7 |
| 0409709 | 3K22 | 17 | 3365 - 3 |
| 0409709 | 3K24 | 17 | 3365 - 5 |
| 0409709 | 3L2 | 17 | 3365 - 7 |
| 0409709 | 3L4 | 17 | 3365 - 9 |
| 0409915 | 3L6 | 26 | 3365 - 11 |
| 0411803 | 3G24 | 11 | 3362 - 9 |
| 0411901 | 3G22 | 12 | 3362 - 7 |
| 0411901 | 3H10 | 12 | 3362 - 19 |
| 0415302 | 2J4 | 30 | 2160 - 21 |
| 0415302 | 3F18 | 30 | 3360 - 11 |
| 0420109 | 3L10 | 16 | 3365 - 15 |
| 0420110 | 3L10 | 23 | 3365 - 15 |
| 0424901 | 2J4 | 3 | 2160 - 21 |
| 0424901 | 3F18 | 3 | 3360 - 11 |
| 0424902 | 2J4 | 27 | 2160 - 21 |
| 0424902 | 3F18 | 27 | 3360 - 11 |
| 0424903 | 2J4 | 35 | 2160 - 21 |
| 0424903 | 3F18 | 40 | 3360 - 11 |
| 0425115 | 3L18 | 47 | 4360 - 5 |
| 0425117 | 3L18 | 77 | 4360 - 5 |
| 0428907 | 3H14 | 27 | 3362 - 23 |
| 0435209 | 3H22 | 20 | 3362 - 31 |
| 0435210 | 3H22 | 2 | 3362 - 31 |
| 0435211 | 3H22 | 22 | 3362 - 31 |
| 0450511 | 3L10 | 18 | 3365 - 15 |
| 0461206 | 3L10 | 4 | 3365 - 15 |
| 0469903 | 1J17 | 41 | 0962 - 3 |
| 0469904 | 1J17 | 42 | 0962 - 3 |
| 0469905 | 1J17 | 43 | 0962 - 3 |
| 0496706 | 3L6 | 17 | 3365 - 11 |
| 0499105 | 3H22 | 8 | 3362 - 31 |
| 0499108 | 3H22 | 21 | 3362 - 31 |
| 0500406120 | 1G12 | 42 | 0413 - 9 |
| 0500408180 | 1F22 | 6 | 0407 - 9 |
| 0500408200 | 1H2 | 6 | 0419 - 3 |
| 0500408250 | 1G2 | 11 | 0409 - 5 |
| 0500408250 | 1G14 | 44 | 0414 - 3 |
| 0500408250 | 1H2 | 6 | 0419 - 3 |
| 0500408250 | 1H18 | 10 | 0433 - 3 |
| 0500408450 | 1F20 | 40A | 0407 - 7 |
| 0500408450 | 1H2 | 6 | 0419 - 3 |
| 0500408900 | 1H16 | 24 | 0429 - 3 |
| 0500410200 | 1F24 | 13 | 0409 - 3 |
| 0500410200 | 1F24 | 41 | 0409 - 3 |
| 0500512280 | 1H9 | 7 | 0422 - 2 |
| 0624504 | 3H22 | 19 | 3362 - 31 |
| 0624504 | 3H24 | 11 | 3362 - 33 |
| 0625508 | 3L18 | 39 | 4360 - 5 |
| 0625509 | 3L18 | 38 | 4360 - 5 |
| 0628705 | 3L18 | 92 | 4360 - 5 |
| 0628908 | 3H14 | 23 | 3362 - 23 |
| 0629003 | 3H14 | 21 | 3362 - 23 |
| 0629404 | 3H16 | 25 | 3362 - 25 |
| 0629404 | 3L18 | 46 | 4360 - 5 |
| 0654301 | 3I2 | 2 | 3362 - 35 |
| 0666806 | 1E20 | 8 | 0265 - 5 |
| 0666806 | 1E22 | 8 | 0265 - 7 |
| 0666808 | 3L8 | 17 | 3365 - 13 |
| 0667013 | 3L8 | 36 | 3365 - 13 |
| 0667013 | 3L10 | 35 | 3365 - 15 |
| 0667204 | 3K22 | 9 | 3365 - 3 |
| 0667204 | 3K24 | 9 | 3365 - 5 |
| 0667204 | 3L2 | 9 | 3365 - 7 |
| 0667204 | 3L4 | 9 | 3365 - 9 |
| 0667205 | 3K22 | 14 | 3365 - 3 |
| 0667205 | 3K24 | 14 | 3365 - 5 |
| 0667205 | 3L2 | 14 | 3365 - 7 |
| 0667205 | 3L4 | 14 | 3365 - 9 |
| 0667206 | 1E20 | 15 | 0265 - 5 |
| 0667206 | 1E22 | 15 | 0265 - 7 |
| 0667504 | 3L8 | 9 | 3365 - 13 |
| 0669624 | 3G20 | 63 | 3362 - 5 |
| 0669624 | 3G22 | 63 | 3362 - 7 |
| 0669902 | 3G24 | 2 | 3362 - 9 |
| 0669906 | 3H2 | 3 | 3362 - 11 |
| 0669906 | 3H6 | 2 | 3362 - 15 |
| 0670502 | 3I4 | 4 | 3362 - 37 |
| 0670503 | 3I4 | 5 | 3362 - 37 |
| 0670601 | 1J17 | 1 | 0962 - 3 |
| 0670602 | 1J17 | 4 | 0962 - 3 |
| 0670802 | 3H18 | 8 | 3362 - 27 |
| 0670802 | 3H20 | 12 | 3362 - 29 |
| 0675108 | 3L8 | 31 | 3365 - 13 |
| 0675109 | 3L8 | 45 | 3365 - 13 |
| 0685601 | 3H22 | 7 | 3362 - 31 |
| 0685602 | 3H22 | 10 | 3362 - 31 |
| 0686406 | 3L6 | 27 | 3365 - 11 |
| 0692708 | 3L18 | 49 | 4360 - 5 |
| 0694403 | 3L8 | 13 | 3365 - 13 |

**NUMERICAL INDEX - CONTINUED**

| PART NO. | GRID | KEY | PAGE |
|---|---|---|---|
| 0694825 | 3L18 | 94 | 4360 - 5 |
| 0695008 | 1E20 | 27 | 0265 - 5 |
| 0695008 | 1E22 | 29 | 0265 - 7 |
| 0708402 | 3H14 | 12 | 3362 - 23 |
| 0730804 | 1J17 | 24 | 0962 - 3 |
| 0730805 | 1J17 | 25 | 0962 - 3 |
| 0730806 | 1J17 | 26 | 0962 - 3 |
| 0737505 | 3L6 | 15 | 3365 - 11 |
| 0737506 | 3L6 | 18 | 3365 - 11 |
| 0748108 | 3H22 | 34 | 3362 - 31 |
| 0757602 | 3H12 | 7 | 3362 - 21 |
| 0766501 | 3H12 | 2 | 3362 - 21 |
| 0766502 | 3H12 | 3 | 3362 - 21 |
| 0766503 | 3H12 | 4 | 3362 - 21 |
| 0766504 | 3H12 | 5 | 3362 - 21 |
| 0766505 | 3H12 | 6 | 3362 - 21 |
| 0766508 | 3H12 | 9 | 3362 - 21 |
| 0766509 | 3H12 | 10 | 3362 - 21 |
| 0766510 | 3H12 | 33 | 3362 - 21 |
| 0767001 | 3H22 | 12 | 3362 - 31 |
| 0768101 | 3H22 | 23 | 3362 - 31 |
| 0768101 | 3H24 | 3 | 3362 - 33 |
| 0768101 | 3I18 | 4 | 3362 - 51 |
| 0775203 | 3I2 | 13 | 3362 - 35 |
| 0776406 | 3L6 | 21 | 3365 - 11 |
| 0779704 | 3L10 | 9 | 3365 - 15 |
| 0788703 | 3I14 | 13 | 3362 - 47 |
| 0788704 | 3I14 | 14 | 3362 - 47 |
| 0788705 | 3I14 | 15 | 3362 - 47 |
| 0788706 | 3I14 | 16 | 3362 - 47 |
| 0788707 | 3I14 | 17 | 3362 - 47 |
| 0788710 | 3I14 | 33 | 3362 - 47 |
| 0788711 | 3I14 | 34 | 3362 - 47 |
| 0788712 | 3I14 | 35 | 3362 - 47 |
| 0788713 | 3I14 | 36 | 3362 - 47 |
| 0788801 | 3L18 | 1 | 4360 - 5 |
| 0788802 | 3L18 | 2 | 4360 - 5 |
| 0788803 | 3L18 | 8 | 4360 - 5 |
| 0788804 | 3L18 | 10 | 4360 - 5 |
| 0788805 | 3L18 | 11 | 4360 - 5 |
| 0788806 | 3L18 | 14 | 4360 - 5 |
| 0788807 | 3L18 | 13 | 4360 - 5 |
| 0788808 | 3L18 | 12 | 4360 - 5 |
| 0788809 | 3L18 | 31 | 4360 - 5 |
| 0788811 | 3L18 | 43 | 4360 - 5 |
| 0788812 | 3L18 | 44 | 4360 - 5 |
| 0788813 | 3L18 | 42 | 4360 - 5 |
| 0788814 | 3L18 | 72 | 4360 - 5 |
| 0788815 | 3L18 | 71 | 4360 - 5 |
| 0788816 | 3L18 | 74 | 4360 - 5 |
| 0788817 | 3L18 | 73 | 4360 - 5 |
| 0788818 | 3L18 | 87 | 4360 - 5 |
| 0788819 | 3L18 | 95 | 4360 - 5 |
| 0788905 | 3K22 | 3 | 3365 - 3 |
| 0788905 | 3K24 | 3 | 3365 - 5 |
| 0788905 | 3L2 | 3 | 3365 - 7 |
| 0788905 | 3L4 | 3 | 3365 - 9 |
| 0788906 | 3K22 | 6 | 3365 - 3 |
| 0788906 | 3K24 | 6 | 3365 - 5 |
| 0788906 | 3L2 | 6 | 3365 - 7 |
| 0788906 | 3L4 | 6 | 3365 - 9 |
| 0788907 | 3K22 | 21 | 3365 - 3 |
| 0788907 | 3K24 | 21 | 3365 - 5 |
| 0788907 | 3L2 | 21 | 3365 - 7 |
| 0788907 | 3L4 | 21 | 3365 - 9 |
| 0788908 | 3K22 | 18 | 3365 - 3 |
| 0788908 | 3K24 | 18 | 3365 - 5 |
| 0788908 | 3L2 | 18 | 3365 - 7 |
| 0788908 | 3L4 | 18 | 3365 - 9 |
| 0789307 | 3L8 | 20 | 3365 - 13 |
| 0789905 | 3L8 | 3 | 3365 - 13 |
| 0789906 | 3L8 | 6 | 3365 - 13 |
| 0794201 | 3I20 | 3 | 3362 - 53 |
| 0794202 | 3I20 | 6 | 3362 - 53 |
| 0794203 | 3I20 | 8 | 3362 - 53 |
| 0794204 | 3I20 | 10 | 3362 - 53 |
| 0794205 | 3I20 | 11 | 3362 - 53 |
| 0794206 | 3I20 | 12 | 3362 - 53 |
| 0794207 | 3I20 | 14 | 3362 - 53 |
| 0794701 | 3H12 | 29 | 3362 - 21 |
| 0794701 | 3I4 | 14 | 3362 - 37 |
| 0799901 | 3H14 | 11 | 3362 - 23 |
| 0799902 | 3H14 | 14 | 3362 - 23 |
| 0799904 | 3H14 | 13 | 3362 - 23 |
| 0799906 | 3H14 | 22 | 3362 - 23 |
| 0799907 | 3H14 | 26 | 3362 - 23 |
| 0799910 | 3H14 | 34 | 3362 - 23 |
| 0799911 | 3H14 | 35 | 3362 - 23 |
| 0799912 | 3H14 | 36 | 3362 - 23 |
| 0814207 | 1E20 | 10 | 0265 - 5 |
| 0814207 | 1E22 | 10 | 0265 - 7 |
| 0814209 | 1E20 | 17 | 0265 - 5 |
| 0814209 | 1E22 | 17 | 0265 - 7 |
| 0814401 | 3L18 | 30 | 4360 - 5 |
| 0814402 | 3L18 | 96 | 4360 - 5 |
| 0815901 | 1E22 | 21 | 0265 - 7 |
| 0826814 | 1E20 | 22 | 0265 - 5 |
| 0829304 | 3L6 | 6 | 3365 - 11 |
| 0829305 | 3L6 | 9 | 3365 - 11 |
| 0829307 | 3L6 | 14 | 3365 - 11 |
| 0838604 | 1D14 | 37 | 0260 - 11 |
| 0838619 | 1D12 | 4 | 0260 - 9 |
| 0838619 | 1D14 | 33 | 0260 - 11 |
| 0838619 | 1D14 | 49 | 0260 - 11 |
| 0846603 | 3H16 | 27 | 3362 - 25 |
| 0846612 | 3H16 | 33 | 3362 - 25 |
| 0846613 | 3H16 | 34 | 3362 - 25 |
| 0846616 | 3H16 | 47 | 3362 - 25 |
| 0846701 | 3H16 | 50 | 3362 - 25 |
| 0846702 | 3H16 | 20 | 3362 - 25 |
| 0846704 | 3H16 | 31 | 3362 - 25 |
| 0857404 | 1E20 | 21 | 0265 - 5 |
| 0863404 | 1E22 | 24 | 0265 - 7 |
| 0866801 | 1E20 | 1 | 0265 - 5 |
| 0866802 | 1E20 | 1B | 0265 - 5 |
| 0866802 | 1E20 | 2B | 0265 - 5 |
| 0866803 | 1E20 | 2 | 0265 - 5 |
| 0866804 | 1E20 | 3 | 0265 - 5 |
| 0866804 | 1E22 | 3 | 0265 - 7 |
| 0866805 | 1E20 | 12 | 0265 - 5 |
| 0866805 | 1E22 | 12 | 0265 - 7 |
| 0866806 | 1E20 | 24 | 0265 - 5 |
| 0866806 | 1E22 | 26 | 0265 - 7 |
| 0866807 | 1E20 | 25 | 0265 - 5 |
| 0866807 | 1E22 | 27 | 0265 - 7 |
| 0866808 | 1E20 | 29 | 0265 - 5 |
| 0866808 | 1E22 | 31 | 0265 - 7 |
| 0869404 | 3H14 | 31 | 3362 - 23 |
| 0870001 | 3H14 | 17 | 3362 - 23 |
| 0870002 | 3H14 | 25 | 3362 - 23 |
| 0870003 | 3H14 | 28 | 3362 - 23 |
| 0870004 | 3H14 | 30 | 3362 - 23 |
| 0870005 | 3H14 | 32 | 3362 - 23 |
| 0870006 | 3H14 | 33 | 3362 - 23 |
| 0870101 | 3H16 | 12 | 3362 - 25 |
| 0870102 | 3H16 | 21 | 3362 - 25 |
| 0870103 | 3H16 | 22 | 3362 - 25 |
| 0870104 | 3H16 | 24 | 3362 - 25 |
| 0870105 | 3H16 | 35 | 3362 - 25 |
| 0870106 | 3H16 | 41 | 3362 - 25 |
| 0870107 | 3H16 | 44 | 3362 - 25 |
| 0870108 | 3H16 | 60 | 3362 - 25 |
| 0870201 | 3H16 | 35 | 3362 - 25 |
| 0870301 | 3I22 | 8 | 3362 - 55 |
| 0870302 | 3I22 | 9 | 3362 - 55 |
| 0870303 | 3I22 | 5 | 3362 - 55 |
| 0870304 | 3I22 | 6 | 3362 - 55 |
| 0870305 | 3I22 | 20 | 3362 - 55 |
| 0870307 | 3I22 | 21 | 3362 - 55 |
| 0870308 | 3I22 | 25 | 3362 - 55 |
| 0870309 | 3I22 | 26 | 3362 - 55 |
| 0870310 | 3I22 | 27 | 3362 - 55 |
| 0870311 | 3I22 | 29 | 3362 - 55 |
| 0870312 | 3I22 | 28 | 3362 - 55 |
| 0870401 | 3H22 | 28 | 3362 - 31 |
| 0870401 | 3H24 | 7 | 3362 - 33 |
| 0870401 | 3I18 | 10 | 3362 - 51 |
| 0870402 | 3H22 | 29 | 3362 - 31 |
| 0870402 | 3H24 | 8 | 3362 - 33 |
| 0870402 | 3I18 | 9 | 3362 - 51 |
| 0870501 | 3I2 | 11 | 3362 - 35 |
| 0870601 | 3I4 | 2 | 3362 - 37 |
| 0870602 | 3I4 | 6 | 3362 - 37 |
| 0870603 | 3I4 | 8 | 3362 - 37 |
| 0870604 | 3I4 | 9 | 3362 - 37 |
| 0870605 | 3I4 | 0 | 3362 - 37 |
| 0870605 | 3K8 | 4 | 3363 - 33 |
| 0871301 | 3L6 | 1 | 3365 - 11 |
| 0871304 | 3L6 | 13 | 3365 - 11 |
| 0871305 | 3L6 | 31 | 3365 - 11 |
| 0871306 | 3L6 | 45 | 3365 - 11 |
| 0871307 | 3L6 | 36 | 3365 - 11 |
| 0871308 | 3L6 | 37 | 3365 - 11 |
| 0871309 | 3L6 | 2 | 3365 - 11 |
| 0871310 | 3L6 | 3 | 3365 - 11 |
| 0871401 | 3L8 | 1 | 3365 - 13 |
| 0871404 | 3L8 | 28 | 3365 - 13 |
| 0871405 | 3L8 | 2 | 3365 - 13 |
| 0871601 | 3L18 | 5 | 4360 - 5 |
| 0875605 | 3L10 | 12 | 3365 - 15 |
| 0875607 | 3L10 | 15 | 3365 - 15 |
| 0875611 | 3L10 | 45 | 3365 - 15 |
| 0875612 | 3L10 | 30 | 3365 - 15 |
| 0877401 | 1B9 | 19 | 0250 - 7 |
| 0877601 | 1B13 | 50A | 0250 - 11 |
| 0877602 | 1B15 | 50A | 0250 - 13 |
| 0877603 | 1B15 | 50A | 0250 - 13 |
| 0877604 | 1B15 | 50A | 0250 - 13 |
| 0877605 | 1B15 | 50A | 0250 - 13 |
| 0877606 | 1B15 | 50A | 0250 - 13 |
| 0877802 | 1D2 | 13 | 0250 - 49 |
| 0877803 | 1D2 | 15 | 0250 - 49 |
| 0878001 | 1E22 | 1 | 0265 - 7 |
| 0878002 | 1E22 | 2 | 0265 - 7 |
| 0878601 | 3H12 | 8 | 3362 - 21 |
| 0878602 | 3H12 | 50 | 3362 - 21 |
| 0878801 | 1C6 | 1 | 0250 - 29 |
| 0878802 | 1C6 | 2 | 0250 - 29 |
| 0878803 | 1C6 | 5A | 0250 - 29 |
| 0878803 | 1C10 | 21A | 0250 - 33 |
| 0878804 | 1C6 | 5B | 0250 - 29 |

**NUMERICAL INDEX - CONTINUED**

| PART NO. | GRID | KEY | PAGE |
|---|---|---|---|
| 0878804 | 1C10 | 21B | 0250 - 33 |
| 0878804 | 1C12 | 4B | 0250 - 35 |
| 0878805 | 1C6 | 11 | 0250 - 29 |
| 0878806 | 1C6 | 12 | 0250 - 29 |
| 0878807 | 1C6 | 13 | 0250 - 29 |
| 0878808 | 1C6 | 14A | 0250 - 29 |
| 0878809 | 1C6 | 14B | 0250 - 29 |
| 0878810 | 1C6 | 20 | 0250 - 29 |
| 0878901 | 1C8 | 2 | 0250 - 31 |
| 0878902 | 1C8 | 3 | 0250 - 31 |
| 0878903 | 1C8 | 4 | 0250 - 31 |
| 0878904 | 1C8 | 5 | 0250 - 31 |
| 0878905 | 1C8 | 6 | 0250 - 31 |
| 0878906 | 1C8 | 11 | 0250 - 31 |
| 0878907 | 1C8 | 13 | 0250 - 31 |
| 0878910 | 1C8 | 16 | 0250 - 31 |
| 0878911 | 1C8 | 17 | 0250 - 31 |
| 0878912 | 1C8 | 18 | 0250 - 31 |
| 0878913 | 1C8 | 19 | 0250 - 31 |
| 0878914 | 1C8 | 20 | 0250 - 31 |
| 0878915 | 1C8 | 21 | 0250 - 31 |
| 0879001 | 1C10 | 1 | 0250 - 33 |
| 0879002 | 1C10 | 4 | 0250 - 33 |
| 0879003 | 1C10 | 6A | 0250 - 33 |
| 0879004 | 1C10 | 6B | 0250 - 33 |
| 0879005 | 1C10 | 7A | 0250 - 33 |
| 0879005 | 1C10 | 28A | 0250 - 33 |
| 0879006 | 1C10 | 7B | 0250 - 33 |
| 0879006 | 1C10 | 28B | 0250 - 33 |
| 0879007 | 1C10 | 10 | 0250 - 33 |
| 0879008 | 1C10 | 11 | 0250 - 33 |
| 0879009 | 1C10 | 12 | 0250 - 33 |
| 0879010 | 1C10 | 13 | 0250 - 33 |
| 0879011 | 1C10 | 13A | 0250 - 33 |
| 0879012 | 1C10 | 13B | 0250 - 33 |
| 0879013 | 1C10 | 17A | 0250 - 33 |
| 0879013 | 1C22 | 6 | 0250 - 45 |
| 0879014 | 1C10 | 17B | 0250 - 33 |
| 0879014 | 1C22 | 7C | 0250 - 45 |
| 0879015 | 1C10 | 18 | 0250 - 33 |
| 0879016 | 1C10 | 19 | 0250 - 33 |
| 0879017 | 1C10 | 24 | 0250 - 33 |
| 0879018 | 1C10 | 25 | 0250 - 33 |
| 0879019 | 1C10 | 26 | 0250 - 33 |
| 0879020 | 1B13 | 18 | 0250 - 11 |
| 0879020 | 1B25 | 18 | 0250 - 23 |
| 0879020 | 1C10 | 29 | 0250 - 33 |
| 0879021 | 1B13 | 19 | 0250 - 11 |
| 0879021 | 1B25 | 19 | 0250 - 23 |
| 0879021 | 1C10 | 30 | 0250 - 33 |
| 0879023 | 1C10 | 34 | 0250 - 33 |
| 0879024 | 1C10 | 36 | 0250 - 33 |
| 0879025 | 1C10 | 38A | 0250 - 33 |
| 0879026 | 1C10 | 38B | 0250 - 33 |
| 0879027 | 1C10 | 40 | 0250 - 33 |
| 0879101 | 1C12 | 1 | 0250 - 35 |
| 0879102 | 1C12 | 2 | 0250 - 35 |
| 0879103 | 1C12 | 3 | 0250 - 35 |
| 0879104 | 1C12 | 4A | 0250 - 35 |
| 0879105 | 1C12 | 6A | 0250 - 35 |
| 0879106 | 1C6 | 25B | 0250 - 29 |
| 0879106 | 1C12 | 6B | 0250 - 35 |
| 0879201 | 1C14 | 1 | 0250 - 37 |
| 0879202 | 1C14 | 2 | 0250 - 37 |
| 0879203 | 1C14 | 3 | 0250 - 37 |
| 0879204 | 1C14 | 4 | 0250 - 37 |
| 0879205 | 1C14 | 5 | 0250 - 37 |
| 0879206 | 1C14 | 6 | 0250 - 37 |
| 0879207 | 1C14 | 7 | 0250 - 37 |
| 0879208 | 1C14 | 8 | 0250 - 37 |
| 0879209 | 1C14 | 9 | 0250 - 37 |
| 0879210 | 1C14 | 10 | 0250 - 37 |
| 0879211 | 1C14 | 11 | 0250 - 37 |
| 0879212 | 1C14 | 12A | 0250 - 37 |
| 0879212 | 1C14 | 21 | 0250 - 37 |
| 0879213 | 1C14 | 12A | 0250 - 37 |
| 0879214 | 1C14 | 12A | 0250 - 37 |
| 0879215 | 1C14 | 12A | 0250 - 37 |
| 0879216 | 1C14 | 12A | 0250 - 37 |
| 0879217 | 1C14 | 22 | 0250 - 37 |
| 0879301 | 1C16 | 1 | 0250 - 39 |
| 0879302 | 1C16 | 2 | 0250 - 39 |
| 0879303 | 1C16 | 3 | 0250 - 39 |
| 0879304 | 1C16 | 4 | 0250 - 39 |
| 0879305 | 1C16 | 5 | 0250 - 39 |
| 0879306 | 1C16 | 6 | 0250 - 39 |
| 0879307 | 1C16 | 7 | 0250 - 39 |
| 0879307 | 1C20 | 5 | 0250 - 43 |
| 0879308 | 1C16 | 10 | 0250 - 39 |
| 0879308 | 1C16 | 12A | 0250 - 39 |
| 0879309 | 1C16 | 12A | 0250 - 39 |
| 0879310 | 1C16 | 12A | 0250 - 39 |
| 0879311 | 1C16 | 12A | 0250 - 39 |
| 0879312 | 1C16 | 12A | 0250 - 39 |
| 0879313 | 1C16 | 12A | 0250 - 39 |
| 0879314 | 1C16 | 12A | 0250 - 39 |
| 0879315 | 1C16 | 13 | 0250 - 39 |
| 0879401 | 1C18 | 1 | 0250 - 41 |
| 0879403 | 1C18 | 3 | 0250 - 41 |
| 0879404 | 1C18 | 6 | 0250 - 41 |
| 0879405 | 1C18 | 8 | 0250 - 41 |
| 0879406 | 1C18 | 10 | 0250 - 41 |
| 0879407 | 1C18 | 11 | 0250 - 41 |
| 0879408 | 1C18 | 12A | 0250 - 41 |
| 0879409 | 1C18 | 12A | 0250 - 41 |
| 0879410 | 1C18 | 12A | 0250 - 41 |
| 0879411 | 1C18 | 12A | 0250 - 41 |
| 0879412 | 1C18 | 12A | 0250 - 41 |
| 0879413 | 1C18 | 12A | 0250 - 41 |
| 0879414 | 1C18 | 12A | 0250 - 41 |
| 0879415 | 1C18 | 12A | 0250 - 41 |
| 0879416 | 1C18 | 12A | 0250 - 41 |
| 0879417 | 1C18 | 12A | 0250 - 41 |
| 0879418 | 1C18 | 13 | 0250 - 41 |
| 0879419 | 1C18 | 14 | 0250 - 41 |
| 0879420 | 1C18 | 21 | 0250 - 41 |
| 0879421 | 1C18 | 22 | 0250 - 41 |
| 0879422 | 1C18 | 23 | 0250 - 41 |
| 0879423 | 1C18 | 24 | 0250 - 41 |
| 0879424 | 1C18 | 25 | 0250 - 41 |
| 0879425 | 1C18 | 26 | 0250 - 41 |
| 0879426 | 1C18 | 27 | 0250 - 41 |
| 0879427 | 1C18 | 28 | 0250 - 41 |
| 0879429 | 1C18 | 29 | 0250 - 41 |
| 0879430 | 1C18 | 31 | 0250 - 41 |
| 0879431 | 1C18 | 32A | 0250 - 41 |
| 0879432 | 1C18 | 32A | 0250 - 41 |
| 0879433 | 1C18 | 32A | 0250 - 41 |
| 0879434 | 1C18 | 32A | 0250 - 41 |
| 0879435 | 1C18 | 32A | 0250 - 41 |
| 0879436 | 1C18 | 32A | 0250 - 41 |
| 0879437 | 1C18 | 32A | 0250 - 41 |
| 0879438 | 1C18 | 33 | 0250 - 41 |
| 0879439 | 1C18 | 34 | 0250 - 41 |
| 0879501 | 1C20 | 2 | 0250 - 43 |
| 0879502 | 1C20 | 6 | 0250 - 43 |
| 0879503 | 1C20 | 7 | 0250 - 43 |
| 0879504 | 1C20 | 8 | 0250 - 43 |
| 0879505 | 1C20 | 10 | 0250 - 43 |
| 0879506 | 1C20 | 20 | 0250 - 43 |
| 0879601 | 1C22 | 1 | 0250 - 45 |
| 0879602 | 1C22 | 2 | 0250 - 45 |
| 0879603 | 1C22 | 3 | 0250 - 45 |
| 0879604 | 1C22 | 4A | 0250 - 45 |
| 0879605 | 1C22 | 4B | 0250 - 45 |
| 0879606 | 1C22 | 28 | 0250 - 45 |
| 0879607 | 1C22 | 5 | 0250 - 45 |
| 0879608 | 1C22 | 29 | 0250 - 45 |
| 0879609 | 1C22 | 29A | 0250 - 45 |
| 0879610 | 1C22 | 29B | 0250 - 45 |
| 0879611 | 1C22 | 30 | 0250 - 45 |
| 0879612 | 1C22 | 7A | 0250 - 45 |
| 0879612 | 1C22 | 8A | 0250 - 45 |
| 0879612 | 1C22 | 30A | 0250 - 45 |
| 0879613 | 1C22 | 7B | 0250 - 45 |
| 0879613 | 1C22 | 8B | 0250 - 45 |
| 0879613 | 1C22 | 30B | 0250 - 45 |
| 0879614 | 1C22 | 7 | 0250 - 45 |
| 0879615 | 1C22 | 8 | 0250 - 45 |
| 0879616 | 1C22 | 31 | 0250 - 45 |
| 0879617 | 1C22 | 32 | 0250 - 45 |
| 0879618 | 1C22 | 11 | 0250 - 45 |
| 0879619 | 1C22 | 13 | 0250 - 45 |
| 0879620 | 1C22 | 14 | 0250 - 45 |
| 0879621 | 1C22 | 15 | 0250 - 45 |
| 0879622 | 1C22 | 20 | 0250 - 45 |
| 0879623 | 1C22 | 21 | 0250 - 45 |
| 0879624 | 1C22 | 22 | 0250 - 45 |
| 0879625 | 1C22 | 23 | 0250 - 45 |
| 0879626 | 1C22 | 24 | 0250 - 45 |
| 0879627 | 1C22 | 25 | 0250 - 45 |
| 0879628 | 1C22 | 26 | 0250 - 45 |
| 0879629 | 1C22 | 27 | 0250 - 45 |
| 0879630 | 1C22 | 37 | 0250 - 45 |
| 0879631 | 1C22 | 36 | 0250 - 45 |
| 0879632 | 1C22 | 38 | 0250 - 45 |
| 0879633 | 1C22 | 48 | 0250 - 45 |
| 0879634 | 1C22 | 50 | 0250 - 45 |
| 0879636 | 1B21 | 46B | 0250 - 19 |
| 0879636 | 1C4 | 46 | 0250 - 27 |
| 0879701 | 1C24 | 1 | 0250 - 47 |
| 0879704 | 1D2 | 3 | 0250 - 49 |
| 0879707 | 1C24 | 7 | 0250 - 47 |
| 0879710 | 1C24 | 8 | 0250 - 47 |
| 0879712 | 1C24 | 9 | 0250 - 47 |
| 0879714 | 1C24 | 10 | 0250 - 47 |
| 0879715 | 1C24 | 11 | 0250 - 47 |
| 0879716 | 1C24 | 12 | 0250 - 47 |
| 0879717 | 1C24 | 13 | 0250 - 47 |
| 0879718 | 1C24 | 14 | 0250 - 47 |
| 0879901 | 1J17 | 2 | 0962 - 3 |
| 0880001 | 1B7 | 10 | 0250 - 5 |
| 0880002 | 1B7 | 5A | 0250 - 5 |
| 0880003 | 1B7 | 5A | 0250 - 5 |
| 0880004 | 1B7 | 5A | 0250 - 5 |
| 0880005 | 1B7 | 5A | 0250 - 5 |
| 0880006 | 1B7 | 5A | 0250 - 5 |
| 0880007 | 1B7 | 5A | 0250 - 5 |
| 0880008 | 1B7 | 5A | 0250 - 5 |
| 0880009 | 1B7 | 5A | 0250 - 5 |
| 0880010 | 1B7 | 5A | 0250 - 5 |

**NUMERICAL INDEX - CONTINUED**

| PART NO. | GRID | KEY | PAGE |
|---|---|---|---|
| 0880011 | 1B7 | 5A | 0250 - 5 |
| 0880012 | 1B7 | 5A | 0250 - 5 |
| 0880013 | 1B7 | 5A | 0250 - 5 |
| 0880014 | 1B7 | 5A | 0250 - 5 |
| 0880015 | 1B7 | 5A | 0250 - 5 |
| 0880016 | 1B7 | 8 | 0250 - 5 |
| 0880017 | 1B7 | 11A | 0250 - 5 |
| 0880018 | 1B7 | 11A | 0250 - 5 |
| 0880019 | 1B7 | 11A | 0250 - 5 |
| 0880020 | 1B7 | 11A | 0250 - 5 |
| 0880021 | 1B7 | 11A | 0250 - 5 |
| 0880022 | 1B7 | 11A | 0250 - 5 |
| 0880023 | 1B7 | 11A | 0250 - 5 |
| 0880024 | 1B7 | 11A | 0250 - 5 |
| 0880025 | 1B7 | 11A | 0250 - 5 |
| 0880026 | 1B7 | 11A | 0250 - 5 |
| 0880027 | 1B7 | 11A | 0250 - 5 |
| 0880028 | 1B7 | 11A | 0250 - 5 |
| 0880029 | 1B7 | 11A | 0250 - 5 |
| 0880030 | 1B7 | 11A | 0250 - 5 |
| 0880031 | 1B7 | 11A | 0250 - 5 |
| 0880032 | 1B7 | 11A | 0250 - 5 |
| 0880033 | 1B7 | 11A | 0250 - 5 |
| 0880034 | 1B7 | 11A | 0250 - 5 |
| 0880035 | 1B7 | 11A | 0250 - 5 |
| 0880036 | 1B9 | 11A | 0250 - 7 |
| 0880037 | 1B9 | 11A | 0250 - 7 |
| 0880038 | 1B9 | 11A | 0250 - 7 |
| 0880039 | 1B9 | 11A | 0250 - 7 |
| 0880040 | 1B9 | 11A | 0250 - 7 |
| 0880041 | 1B9 | 11A | 0250 - 7 |
| 0880042 | 1B9 | 11A | 0250 - 7 |
| 0880043 | 1B9 | 11A | 0250 - 7 |
| 0880044 | 1B9 | 11A | 0250 - 7 |
| 0880045 | 1B9 | 11A | 0250 - 7 |
| 0880046 | 1B9 | 11A | 0250 - 7 |
| 0880047 | 1B9 | 11A | 0250 - 7 |
| 0880048 | 1B9 | 11A | 0250 - 7 |
| 0880049 | 1B9 | 11A | 0250 - 7 |
| 0880050 | 1B9 | 11A | 0250 - 7 |
| 0880051 | 1B9 | 11A | 0250 - 7 |
| 0880052 | 1B9 | 11A | 0250 - 7 |
| 0880053 | 1B9 | 11A | 0250 - 7 |
| 0880054 | 1B9 | 11A | 0250 - 7 |
| 0880055 | 1B9 | 11A | 0250 - 7 |
| 0880056 | 1B9 | 11A | 0250 - 7 |
| 0880057 | 1B9 | 11A | 0250 - 7 |
| 0880058 | 1B9 | 11A | 0250 - 7 |
| 0880059 | 1B9 | 11A | 0250 - 7 |
| 0880060 | 1B9 | 11A | 0250 - 7 |
| 0880061 | 1B9 | 11A | 0250 - 7 |
| 0880062 | 1B9 | 11A | 0250 - 7 |
| 0880063 | 1B9 | 11A | 0250 - 7 |
| 0880064 | 1B9 | 11A | 0250 - 7 |
| 0880065 | 1B9 | 11A | 0250 - 7 |
| 0880066 | 1B9 | 16 | 0250 - 7 |
| 0880068 | 1B9 | 21 | 0250 - 7 |
| 0880069 | 1B9 | 22 | 0250 - 7 |
| 0880070 | 1B9 | 27 | 0250 - 7 |
| 0880071 | 1B9 | 29 | 0250 - 7 |
| 0880072 | 1B9 | 31 | 0250 - 7 |
| 0880101 | 1B11 | 57 | 0250 - 9 |
| 0880102 | 1B11 | 64 | 0250 - 9 |
| 0880102 | 1D4 | 64 | 0250 - 51 |
| 0880103 | 1B11 | 65 | 0250 - 9 |
| 0880103 | 1D4 | 65 | 0250 - 51 |
| 0880104 | 1B11 | 67 | 0250 - 9 |
| 0880104 | 1D4 | 67 | 0250 - 51 |
| 0880105 | 1B11 | 68 | 0250 - 9 |
| 0880105 | 1D4 | 68 | 0250 - 51 |
| 0880106 | 1B11 | 72 | 0250 - 9 |
| 0880106 | 1D4 | 72 | 0250 - 51 |
| 0880107 | 1B11 | 80 | 0250 - 9 |
| 0880107 | 1D4 | 80 | 0250 - 51 |
| 0880108 | 1B11 | 85 | 0250 - 9 |
| 0880108 | 1D4 | 85 | 0250 - 51 |
| 0880109 | 1B11 | 86 | 0250 - 9 |
| 0880109 | 1D4 | 86 | 0250 - 51 |
| 0880110 | 1B11 | 87 | 0250 - 9 |
| 0880110 | 1D4 | 87 | 0250 - 51 |
| 0883101 | 3K22 | 1 | 3365 - 3 |
| 0883102 | 3K22 | 2 | 3365 - 3 |
| 0883102 | 3K24 | 2 | 3365 - 5 |
| 0883103 | 3K22 | 26 | 3365 - 3 |
| 0883104 | 3K22 | 27 | 3365 - 3 |
| 0883105 | 3K22 | 45 | 3365 - 3 |
| 0883105 | 3K24 | 45 | 3365 - 5 |
| 0883106 | 3K22 | 32 | 3365 - 3 |
| 0883106 | 3K24 | 32 | 3365 - 5 |
| 0883107 | 3K22 | 26 | 3365 - 3 |
| 0883108 | 3K22 | 27 | 3365 - 3 |
| 0884301 | 1B13 | 4 | 0250 - 11 |
| 0884303 | 1B13 | 50A | 0250 - 11 |
| 0884304 | 1B13 | 50A | 0250 - 11 |
| 0884305 | 1B13 | 50A | 0250 - 11 |
| 0884306 | 1B13 | 50A | 0250 - 11 |
| 0884307 | 1B13 | 50A | 0250 - 11 |
| 0884308 | 1B13 | 50A | 0250 - 11 |
| 0884309 | 1B13 | 50A | 0250 - 11 |
| 0884310 | 1B13 | 50A | 0250 - 11 |
| 0884311 | 1B13 | 50A | 0250 - 11 |
| 0884312 | 1B13 | 50A | 0250 - 11 |
| 0884313 | 1B13 | 50A | 0250 - 11 |
| 0884314 | 1B13 | 50A | 0250 - 11 |
| 0884315 | 1B13 | 50A | 0250 - 11 |
| 0884316 | 1B15 | 50A | 0250 - 13 |
| 0884317 | 1B15 | 50A | 0250 - 13 |
| 0884318 | 1B15 | 50A | 0250 - 13 |
| 0884319 | 1B15 | 50A | 0250 - 13 |
| 0884320 | 1B15 | 50A | 0250 - 13 |
| 0884321 | 1B15 | 50A | 0250 - 13 |
| 0884322 | 1B15 | 50A | 0250 - 13 |
| 0884323 | 1B15 | 50A | 0250 - 13 |
| 0884326 | 1B15 | 50A | 0250 - 13 |
| 0884327 | 1B15 | 50A | 0250 - 13 |
| 0884328 | 1B15 | 50A | 0250 - 13 |
| 0884329 | 1B15 | 50A | 0250 - 13 |
| 0884330 | 1B15 | 50A | 0250 - 13 |
| 0884331 | 1B15 | 50A | 0250 - 13 |
| 0884333 | 1B15 | 50A | 0250 - 13 |
| 0884334 | 1B15 | 50A | 0250 - 13 |
| 0884335 | 1B15 | 50A | 0250 - 13 |
| 0884336 | 1B15 | 50A | 0250 - 13 |
| 0884338 | 1B15 | 50A | 0250 - 13 |
| 0884340 | 1B15 | 50A | 0250 - 13 |
| 0884341 | 1B15 | 50A | 0250 - 13 |
| 0884342 | 1B13 | 9 | 0250 - 11 |
| 0884342 | 1D2 | 11 | 0250 - 49 |
| 0884343 | 1B13 | 10 | 0250 - 11 |
| 0884343 | 1D2 | 12 | 0250 - 49 |
| 0884344 | 1B13 | 12 | 0250 - 11 |
| 0884345 | 1B13 | 13 | 0250 - 11 |
| 0884346 | 1B13 | 14 | 0250 - 11 |
| 0884347 | 1B13 | 24A | 0250 - 11 |
| 0884348 | 1B13 | 24B | 0250 - 11 |
| 0884348 | 1B13 | 25B | 0250 - 11 |
| 0884349 | 1B13 | 25A | 0250 - 11 |
| 0884350 | 1B13 | 33 | 0250 - 11 |
| 0884351 | 1B13 | 34 | 0250 - 11 |
| 0884352 | 1B13 | 35 | 0250 - 11 |
| 0884352 | 1B17 | 16 | 0250 - 15 |
| 0884353 | 1B15 | 55A | 0250 - 13 |
| 0884353 | 1B15 | 56A | 0250 - 13 |
| 0884354 | 1B15 | 55B | 0250 - 13 |
| 0884354 | 1B15 | 56B | 0250 - 13 |
| 0884404 | 1B17 | 5 | 0250 - 15 |
| 0884405 | 1B17 | 8 | 0250 - 15 |
| 0884406 | 1B17 | 9 | 0250 - 15 |
| 0884407 | 1B17 | 10A | 0250 - 15 |
| 0884408 | 1B17 | 10A | 0250 - 15 |
| 0884409 | 1B17 | 10A | 0250 - 15 |
| 0884410 | 1B17 | 10A | 0250 - 15 |
| 0884411 | 1B17 | 10A | 0250 - 15 |
| 0884412 | 1B17 | 10A | 0250 - 15 |
| 0884413 | 1B17 | 10A | 0250 - 15 |
| 0884414 | 1B17 | 10A | 0250 - 15 |
| 0884415 | 1B17 | 11 | 0250 - 15 |
| 0884416 | 1B17 | 12 | 0250 - 15 |
| 0884417 | 1B17 | 13 | 0250 - 15 |
| 0884424 | 1B17 | 3 | 0250 - 15 |
| 0884425 | 1B17 | 39 | 0250 - 15 |
| 0884425 | 1C4 | 76 | 0250 - 27 |
| 0884426 | 1B17 | 39A | 0250 - 15 |
| 0884426 | 1C4 | 76A | 0250 - 27 |
| 0884517 | 1B19 | 9 | 0250 - 17 |
| 0884517 | 1C2 | 9 | 0250 - 25 |
| 0884518 | 1B19 | 12 | 0250 - 17 |
| 0884518 | 1C2 | 12 | 0250 - 25 |
| 0884527 | 1B19 | 25 | 0250 - 17 |
| 0884527 | 1C2 | 7 | 0250 - 25 |
| 0884528 | 1B19 | 19 | 0250 - 17 |
| 0884528 | 1C2 | 25 | 0250 - 25 |
| 0884530 | 1B19 | 26 | 0250 - 17 |
| 0884530 | 1C2 | 6 | 0250 - 25 |
| 0884555 | 1B21 | 51 | 0250 - 19 |
| 0884555 | 1C4 | 51 | 0250 - 27 |
| 0884556 | 1B21 | 54 | 0250 - 19 |
| 0884556 | 1C4 | 54 | 0250 - 27 |
| 0884557 | 1B21 | 55 | 0250 - 19 |
| 0884557 | 1C4 | 55 | 0250 - 27 |
| 0884558 | 1B21 | 56 | 0250 - 19 |
| 0884558 | 1C4 | 56 | 0250 - 27 |
| 0884559 | 1B21 | 57 | 0250 - 19 |
| 0884559 | 1C4 | 57 | 0250 - 27 |
| 0884560 | 1B21 | 46A | 0250 - 19 |
| 0884560 | 1C4 | 45 | 0250 - 27 |
| 0884602 | 1B23 | 3 | 0250 - 21 |
| 0884603 | 1B23 | 7 | 0250 - 21 |
| 0884604 | 1B23 | 8 | 0250 - 21 |
| 0884605 | 1B23 | 15 | 0250 - 21 |
| 0884606 | 1B23 | 16 | 0250 - 21 |
| 0884607 | 1B23 | 17 | 0250 - 21 |
| 0884608 | 1B23 | 24 | 0250 - 21 |
| 0884609 | 1B23 | 25 | 0250 - 21 |
| 0884610 | 1B23 | 28A | 0250 - 21 |
| 0884611 | 1B23 | 28A | 0250 - 21 |
| 0884612 | 1B23 | 28A | 0250 - 21 |
| 0884613 | 1B23 | 28A | 0250 - 21 |
| 0884614 | 1B23 | 28A | 0250 - 21 |
| 0884615 | 1B23 | 28A | 0250 - 21 |
| 0884616 | 1B23 | 28A | 0250 - 21 |

**NUMERICAL INDEX - CONTINUED**

| PART NO. | GRID | KEY | PAGE |
|---|---|---|---|
| 0884617 | 1B23 | 28A | 0250 - 21 |
| 0884618 | 1B23 | 28A | 0250 - 21 |
| 0884619 | 1B23 | 28A | 0250 - 21 |
| 0884620 | 1B23 | 28A | 0250 - 21 |
| 0884621 | 1B23 | 28A | 0250 - 21 |
| 0884622 | 1B23 | 28A | 0250 - 21 |
| 0884624 | 1B23 | 28A | 0250 - 21 |
| 0884625 | 1B23 | 28A | 0250 - 21 |
| 0884626 | 1B23 | 28A | 0250 - 21 |
| 0884627 | 1B23 | 28A | 0250 - 21 |
| 0884628 | 1B23 | 28A | 0250 - 21 |
| 0884629 | 1B23 | 28A | 0250 - 21 |
| 0884631 | 1B23 | 35 | 0250 - 21 |
| 0884632 | 1B23 | 40 | 0250 - 21 |
| 0884633 | 1B23 | 46 | 0250 - 21 |
| 0885001 | 1C2 | 1 | 0250 - 25 |
| 0885041 | 1C4 | 69 | 0250 - 27 |
| 0885042 | 1C4 | 71 | 0250 - 27 |
| 0885303 | 1B13 | 50A | 0250 - 11 |
| 0885401 | 1B17 | 15 | 0250 - 15 |
| 0886113 | 1C4 | 67 | 0250 - 27 |
| 0886703 | 1D2 | 10A | 0250 - 49 |
| 0886704 | 1D2 | 10A | 0250 - 49 |
| 0886705 | 1D2 | 10A | 0250 - 49 |
| 0886706 | 1D2 | 10A | 0250 - 49 |
| 0886707 | 1D2 | 10A | 0250 - 49 |
| 0886708 | 1D2 | 10A | 0250 - 49 |
| 0886709 | 1D2 | 10A | 0250 - 49 |
| 0886710 | 1D2 | 10A | 0250 - 49 |
| 0886711 | 1D2 | 10A | 0250 - 49 |
| 0886712 | 1D2 | 10A | 0250 - 49 |
| 0886713 | 1D2 | 10A | 0250 - 49 |
| 0886714 | 1D2 | 10A | 0250 - 49 |
| 0886715 | 1D2 | 10A | 0250 - 49 |
| 0886716 | 1D2 | 10A | 0250 - 49 |
| 0886717 | 1D2 | 10A | 0250 - 49 |
| 0886718 | 1D2 | 10A | 0250 - 49 |
| 0886719 | 1D2 | 10A | 0250 - 49 |
| 0886720 | 1D2 | 10A | 0250 - 49 |
| 0886721 | 1D2 | 10A | 0250 - 49 |
| 0886722 | 1D2 | 10A | 0250 - 49 |
| 0886723 | 1D2 | 10A | 0250 - 49 |
| 0886724 | 1D2 | 10A | 0250 - 49 |
| 0886725 | 1D2 | 10A | 0250 - 49 |
| 0886726 | 1D2 | 10A | 0250 - 49 |
| 0886727 | 1D2 | 10A | 0250 - 49 |
| 0886728 | 1D2 | 10A | 0250 - 49 |
| 0886729 | 1D2 | 10A | 0250 - 49 |
| 0886734 | 1D2 | 14 | 0250 - 49 |
| 0886804 | 1B19 | 5A | 0250 - 17 |
| 0886804 | 1B21 | 50A | 0250 - 19 |
| 0886804 | 1B25 | 23A | 0250 - 23 |
| 0886804 | 1B25 | 24A | 0250 - 23 |
| 0886804 | 1C4 | 50A | 0250 - 27 |
| 0886804 | 1C4 | 52A | 0250 - 27 |
| 0886805 | 1B19 | 5B | 0250 - 17 |
| 0886805 | 1B25 | 24B | 0250 - 23 |
| 0886805 | 1B25 | 25B | 0250 - 23 |
| 0886805 | 1C4 | 50B | 0250 - 27 |
| 0886806 | 1B25 | 25A | 0250 - 23 |
| 0886806 | 1B25 | 26A | 0250 - 23 |
| 0886902 | 1B17 | 1A | 0250 - 15 |
| 0886902 | 1B17 | 2A | 0250 - 15 |
| 0886902 | 1C4 | 61A | 0250 - 27 |
| 0886928 | 1B17 | 48A | 0250 - 15 |
| 0886929 | 1B17 | 48A | 0250 - 15 |
| 0886930 | 1B17 | 48A | 0250 - 15 |
| 0886931 | 1B17 | 48A | 0250 - 15 |
| 0886934 | 1B17 | 50 | 0250 - 15 |
| 0887002 | 1B19 | 3 | 0250 - 17 |
| 0887002 | 1C2 | 3 | 0250 - 25 |
| 0887003 | 1B19 | 8 | 0250 - 17 |
| 0887004 | 1B19 | 10 | 0250 - 17 |
| 0887004 | 1C2 | 10 | 0250 - 25 |
| 0887005 | 1B19 | 13 | 0250 - 17 |
| 0887005 | 1C2 | 13 | 0250 - 25 |
| 0887006 | 1B19 | 14 | 0250 - 17 |
| 0887006 | 1C2 | 14 | 0250 - 25 |
| 0887007 | 1B19 | 15 | 0250 - 17 |
| 0887007 | 1C2 | 15 | 0250 - 25 |
| 0887012 | 1B19 | 18A | 0250 - 17 |
| 0887012 | 1C2 | 4A | 0250 - 25 |
| 0887015 | 1B19 | 18A | 0250 - 17 |
| 0887015 | 1C2 | 4A | 0250 - 25 |
| 0887016 | 1B19 | 18A | 0250 - 17 |
| 0887016 | 1C2 | 4A | 0250 - 25 |
| 0887017 | 1B19 | 18A | 0250 - 17 |
| 0887017 | 1C2 | 4A | 0250 - 25 |
| 0887018 | 1B19 | 18A | 0250 - 17 |
| 0887018 | 1C2 | 4A | 0250 - 25 |
| 0887019 | 1B19 | 18A | 0250 - 17 |
| 0887019 | 1C2 | 4A | 0250 - 25 |
| 0887020 | 1B19 | 20 | 0250 - 17 |
| 0887020 | 1C2 | 20 | 0250 - 25 |
| 0887021 | 1B19 | 21 | 0250 - 17 |
| 0887021 | 1C2 | 21 | 0250 - 25 |
| 0887022 | 1B19 | 24 | 0250 - 17 |
| 0887022 | 1C2 | 19 | 0250 - 25 |
| 0887023 | 1B19 | 23 | 0250 - 17 |
| 0887023 | 1C2 | 23 | 0250 - 25 |
| 0887024 | 1B19 | 22 | 0250 - 17 |
| 0887024 | 1C2 | 22 | 0250 - 25 |
| 0887025 | 1C2 | 24 | 0250 - 25 |
| 0887026 | 1B19 | 16 | 0250 - 17 |
| 0887026 | 1C2 | 11 | 0250 - 25 |
| 0887027 | 1B19 | 27A | 0250 - 17 |
| 0887027 | 1C2 | 27A | 0250 - 25 |
| 0887028 | 1B19 | 27A | 0250 - 17 |
| 0887028 | 1C2 | 27A | 0250 - 25 |
| 0887029 | 1B19 | 27A | 0250 - 17 |
| 0887029 | 1C2 | 27A | 0250 - 25 |
| 0887030 | 1B21 | 28 | 0250 - 19 |
| 0887030 | 1C2 | 28 | 0250 - 25 |
| 0887031 | 1B21 | 29 | 0250 - 19 |
| 0887031 | 1C2 | 29 | 0250 - 25 |
| 0887032 | 1B21 | 31 | 0250 - 19 |
| 0887032 | 1C2 | 31 | 0250 - 25 |
| 0887033 | 1B21 | 32 | 0250 - 19 |
| 0887033 | 1C2 | 32 | 0250 - 25 |
| 0887034 | 1B21 | 36 | 0250 - 19 |
| 0887035 | 1B21 | 33 | 0250 - 19 |
| 0887036 | 1B21 | 37 | 0250 - 19 |
| 0887037 | 1B21 | 34 | 0250 - 19 |
| 0887038 | 1B21 | 35 | 0250 - 19 |
| 0887038 | 1C2 | 35 | 0250 - 25 |
| 0887039 | 1B21 | 38 | 0250 - 19 |
| 0887039 | 1C2 | 38 | 0250 - 25 |
| 0887040 | 1B21 | 39 | 0250 - 19 |
| 0887040 | 1C2 | 39 | 0250 - 25 |
| 0887041 | 1B21 | 40 | 0250 - 19 |
| 0887041 | 1C2 | 40 | 0250 - 25 |
| 0887042 | 1B21 | 41 | 0250 - 19 |
| 0887042 | 1C4 | 41 | 0250 - 27 |
| 0887043 | 1B21 | 41 | 0250 - 19 |
| 0887043 | 1B21 | 44 | 0250 - 19 |
| 0887043 | 1C4 | 41 | 0250 - 27 |
| 0887043 | 1C4 | 47 | 0250 - 27 |
| 0887044 | 1B21 | 45 | 0250 - 19 |
| 0887045 | 1B21 | 42 | 0250 - 19 |
| 0887045 | 1C4 | 42 | 0250 - 27 |
| 0887046 | 1B21 | 43 | 0250 - 19 |
| 0887046 | 1C4 | 43 | 0250 - 27 |
| 0887047 | 1B21 | 48A | 0250 - 19 |
| 0887047 | 1C4 | 48A | 0250 - 27 |
| 0887048 | 1B21 | 48A | 0250 - 19 |
| 0887048 | 1C4 | 48A | 0250 - 27 |
| 0887049 | 1B21 | 48A | 0250 - 19 |
| 0887049 | 1C4 | 48A | 0250 - 27 |
| 0887050 | 1B21 | 48A | 0250 - 19 |
| 0887050 | 1C4 | 48A | 0250 - 27 |
| 0887051 | 1B21 | 48A | 0250 - 19 |
| 0887051 | 1C4 | 48A | 0250 - 27 |
| 0887052 | 1B21 | 48A | 0250 - 19 |
| 0887052 | 1C4 | 48A | 0250 - 27 |
| 0887053 | 1B21 | 48A | 0250 - 19 |
| 0887053 | 1C4 | 48A | 0250 - 27 |
| 0895102 | 1B21 | 50B | 0250 - 19 |
| 0895102 | 1B25 | 23B | 0250 - 23 |
| 0895102 | 1B25 | 26B | 0250 - 23 |
| 0895102 | 1C4 | 52A | 0250 - 27 |
| 0895701 | 1B19 | 18A | 0250 - 17 |
| 0895701 | 1C2 | 4A | 0250 - 25 |
| 0895702 | 1B19 | 18A | 0250 - 17 |
| 0895702 | 1C2 | 4A | 0250 - 25 |
| 0895703 | 1B19 | 18A | 0250 - 17 |
| 0895703 | 1C2 | 4A | 0250 - 25 |
| 0895704 | 1B19 | 18A | 0250 - 17 |
| 0895704 | 1C2 | 4A | 0250 - 25 |
| 0895705 | 1B19 | 18A | 0250 - 17 |
| 0895705 | 1C2 | 4A | 0250 - 25 |
| 0895903 | 1B25 | 46 | 0250 - 23 |
| 0896001 | 1C2 | 26 | 0250 - 25 |
| 0896002 | 1C2 | 34 | 0250 - 25 |
| 0896003 | 1C2 | 33 | 0250 - 25 |
| 0896005 | 1C4 | 64 | 0250 - 27 |
| 0896104 | 1D2 | 8 | 0250 - 49 |
| 0896301 | 1C6 | 25A | 0250 - 29 |
| 0896302 | 1C6 | 25C | 0250 - 29 |
| 0896302 | 1C22 | 52C | 0250 - 45 |
| 0896303 | 1C6 | 25D | 0250 - 29 |
| 0896303 | 1C22 | 52D | 0250 - 45 |
| 0896401 | 1C8 | 13B | 0250 - 31 |
| 0896502 | 1C10 | 33 | 0250 - 33 |
| 0897101 | 1C22 | 52A | 0250 - 45 |
| 0897102 | 1C22 | 52B | 0250 - 45 |
| 0897201 | 1C24 | 2 | 0250 - 47 |
| 0897202 | 1C24 | 3 | 0250 - 47 |
| 0897203 | 1C24 | 15A | 0250 - 47 |
| 0897204 | 1C24 | 15A | 0250 - 47 |
| 0897205 | 1C24 | 15A | 0250 - 47 |
| 0897206 | 1C24 | 15A | 0250 - 47 |
| 0897207 | 1C24 | 15A | 0250 - 47 |
| 0897208 | 1C24 | 15A | 0250 - 47 |
| 0897209 | 1C24 | 15A | 0250 - 47 |
| 0897210 | 1C24 | 15A | 0250 - 47 |
| 0897211 | 1C24 | 15A | 0250 - 47 |
| 0897212 | 1C24 | 15A | 0250 - 47 |
| 0897213 | 1C24 | 15A | 0250 - 47 |
| 0897214 | 1C24 | 15A | 0250 - 47 |
| 0897215 | 1C24 | 15A | 0250 - 47 |
| 0897216 | 1C24 | 15A | 0250 - 47 |

## NUMERICAL INDEX - CONTINUED

| PART NO. | GRID | KEY | PAGE |
|---|---|---|---|
| 0897217 | 1C24 | 15A | 0250 - 47 |
| 0897218 | 1C24 | 15A | 0250 - 47 |
| 0897219 | 1C24 | 15A | 0250 - 47 |
| 0897220 | 1C24 | 15A | 0250 - 47 |
| 0897221 | 1C24 | 15A | 0250 - 47 |
| 0897222 | 1C24 | 15A | 0250 - 47 |
| 0897223 | 1C24 | 15A | 0250 - 47 |
| 0897224 | 1C24 | 15A | 0250 - 47 |
| 0897225 | 1C24 | 15A | 0250 - 47 |
| 0897226 | 1C24 | 15A | 0250 - 47 |
| 0897227 | 1C24 | 15A | 0250 - 47 |
| 0897228 | 1C24 | 15A | 0250 - 47 |
| 0897229 | 1C24 | 15A | 0250 - 47 |
| 0897230 | 1C24 | 15A | 0250 - 47 |
| 0897231 | 1C24 | 15A | 0250 - 47 |
| 0897232 | 1C24 | 15A | 0250 - 47 |
| 0897233 | 1C24 | 15A | 0250 - 47 |
| 0897234 | 1C24 | 15A | 0250 - 47 |
| 0897235 | 1C24 | 15A | 0250 - 47 |
| 0897236 | 1C24 | 15A | 0250 - 47 |
| 0897237 | 1C24 | 15A | 0250 - 47 |
| 0897238 | 1C24 | 15A | 0250 - 47 |
| 0897239 | 1C24 | 15A | 0250 - 47 |
| 0897240 | 1C24 | 15A | 0250 - 47 |
| 0897241 | 1C24 | 16 | 0250 - 47 |
| 0897242 | 1C24 | 18 | 0250 - 47 |
| 0897243 | 1C24 | 21 | 0250 - 47 |
| 0898701 | 2B11 | 23 | 1063 - 3 |
| 0898702 | 2B11 | 24 | 1063 - 3 |
| 0898703 | 2B11 | 25 | 1063 - 3 |
| 0898704 | 2B11 | 26 | 1063 - 3 |
| 0898705 | 2B11 | 28 | 1063 - 3 |
| 0898706 | 2B11 | 29 | 1063 - 3 |
| 0898707 | 2B11 | 30 | 1063 - 3 |
| 0898708 | 2B11 | 31 | 1063 - 3 |
| 0898709 | 2B11 | 33 | 1063 - 3 |
| 0898710 | 2B11 | 34 | 1063 - 3 |
| 0898711 | 2B11 | 36 | 1063 - 3 |
| 0898712 | 2B11 | 37 | 1063 - 3 |
| 0898713 | 2B11 | 38 | 1063 - 3 |
| 0898714 | 2B11 | 40 | 1063 - 3 |
| 0898715 | 2B11 | 41 | 1063 - 3 |
| 0898716 | 2B11 | 42 | 1063 - 3 |
| 0898717 | 2B11 | 43 | 1063 - 3 |
| 0898718 | 2B11 | 49 | 1063 - 3 |
| 0898719 | 2B11 | 2 | 1063 - 3 |
| 0898719 | 2B11 | 16 | 1063 - 3 |
| 0898720 | 2B11 | 10 | 1063 - 3 |
| 0898721 | 2B11 | 50 | 1063 - 3 |
| 0898722 | 2B11 | 14 | 1063 - 3 |
| 0898722 | 2B13 | 62 | 1063 - 5 |
| 0898723 | 2B11 | 15 | 1063 - 3 |
| 0898723 | 2B13 | 64 | 1063 - 5 |
| 0898724 | 2B11 | 17 | 1063 - 3 |
| 0898725 | 2B13 | 71 | 1063 - 5 |
| 0898726 | 2B13 | 63 | 1063 - 5 |
| 0898727 | 2B13 | 52 | 1063 - 5 |
| 0898728 | 2B13 | 55 | 1063 - 5 |
| 0898729 | 2B13 | 55B | 1063 - 5 |
| 0898729 | 2B13 | 56C | 1063 - 5 |
| 0898730 | 2B13 | 56 | 1063 - 5 |
| 0898731 | 2B13 | 56B | 1063 - 5 |
| 0898732 | 2B13 | 57 | 1063 - 5 |
| 0898733 | 2B13 | 57B | 1063 - 5 |
| 0898733 | 2B13 | 58B | 1063 - 5 |
| 0898734 | 2B13 | 58 | 1063 - 5 |
| 0898801 | 1D12 | 5 | 0260 - 9 |
| 0898802 | 1D12 | 8 | 0260 - 9 |
| 0898802 | 1D12 | 13 | 0260 - 9 |
| 0898803 | 1D12 | 9 | 0260 - 9 |
| 0898804 | 1D12 | 10 | 0260 - 9 |
| 0898805 | 1D12 | 11 | 0260 - 9 |
| 0898806 | 1D12 | 12 | 0260 - 9 |
| 0898807 | 1D12 | 17 | 0260 - 9 |
| 0898808 | 1D12 | 18 | 0260 - 9 |
| 0898809 | 1D12 | 22 | 0260 - 9 |
| 0898810 | 1D12 | 23 | 0260 - 9 |
| 0898811 | 1D12 | 26 | 0260 - 9 |
| 0898812 | 1D12 | 26 | 0260 - 9 |
| 0898813 | 1D12 | 26 | 0260 - 9 |
| 0898814 | 1D12 | 26 | 0260 - 9 |
| 0898815 | 1D12 | 26 | 0260 - 9 |
| 0898816 | 1D12 | 26 | 0260 - 9 |
| 0898817 | 1D12 | 26 | 0260 - 9 |
| 0898818 | 1D12 | 26 | 0260 - 9 |
| 0898819 | 1D12 | 27 | 0260 - 9 |
| 0898820 | 1D12 | 30 | 0260 - 9 |
| 0898821 | 1D14 | 31 | 0260 - 11 |
| 0898822 | 1D14 | 41 | 0260 - 11 |
| 0898823 | 1D14 | 42 | 0260 - 11 |
| 0898824 | 1D14 | 43 | 0260 - 11 |
| 0898825 | 1D14 | 44 | 0260 - 11 |
| 0898826 | 1D14 | 44A | 0260 - 11 |
| 0898827 | 1D14 | 44B | 0260 - 11 |
| 0898828 | 1D14 | 46 | 0260 - 11 |
| 0898829 | 1D14 | 46 | 0260 - 11 |
| 0898830 | 1D14 | 46 | 0260 - 11 |
| 0898831 | 1D14 | 46 | 0260 - 11 |
| 0898832 | 1D14 | 46 | 0260 - 11 |
| 0898833 | 1D14 | 46 | 0260 - 11 |
| 0898834 | 1D14 | 47 | 0260 - 11 |
| 0898835 | 1D14 | 61 | 0260 - 11 |
| 0898836 | 1D14 | 62 | 0260 - 11 |
| 0898837 | 1D14 | 73 | 0260 - 11 |
| 0898838 | 1D14 | 74 | 0260 - 11 |
| 0898839 | 1D14 | 75 | 0260 - 11 |
| 0898840 | 1D14 | 77 | 0260 - 11 |
| 0898841 | 1D14 | 78 | 0260 - 11 |
| 0898842 | 1D14 | 85 | 0260 - 11 |
| 0898843 | 1D14 | 89 | 0260 - 11 |
| 0898844 | 1D14 | 90 | 0260 - 11 |
| 0898845 | 1D14 | 91 | 0260 - 11 |
| 0898846 | 1D14 | 93 | 0260 - 11 |
| 0898847 | 1D14 | 94 | 0260 - 11 |
| 0898848 | 1D14 | 96 | 0260 - 11 |
| 0898849 | 1D14 | 92 | 0260 - 11 |
| 0898850 | 1D12 | 3 | 0260 - 9 |
| 0898851 | 1D12 | 6 | 0260 - 9 |
| 0898852 | 1D12 | 7 | 0260 - 9 |
| 0898853 | 1D12 | 14 | 0260 - 9 |
| 0898854 | 1D12 | 15 | 0260 - 9 |
| 0898855 | 1D12 | 16 | 0260 - 9 |
| 0898856 | 1D12 | 19 | 0260 - 9 |
| 0898857 | 1D12 | 20 | 0260 - 9 |
| 0898858 | 1D12 | 21 | 0260 - 9 |
| 0898859 | 1D12 | 24 | 0260 - 9 |
| 0898860 | 1D12 | 25 | 0260 - 9 |
| 0898861 | 1D12 | 28 | 0260 - 9 |
| 0898862 | 1D12 | 29 | 0260 - 9 |
| 0898863 | 1D14 | 32 | 0260 - 11 |
| 0898864 | 1D14 | 34 | 0260 - 11 |
| 0898865 | 1D14 | 35 | 0260 - 11 |
| 0898866 | 1D14 | 36 | 0260 - 11 |
| 0898867 | 1D14 | 38 | 0260 - 11 |
| 0898868 | 1D14 | 39 | 0260 - 11 |
| 0898869 | 1D14 | 40 | 0260 - 11 |
| 0898870 | 1D14 | 45 | 0260 - 11 |
| 0898871 | 1D14 | 48 | 0260 - 11 |
| 0898878 | 1D22 | 24 | 0260 - 19 |
| 0901901 | 1D22 | 1 | 0260 - 19 |
| 0901902 | 1D22 | 1A | 0260 - 19 |
| 0901903 | 1D22 | 1B | 0260 - 19 |
| 0901904 | 1D22 | 1C | 0260 - 19 |
| 0901905 | 1D22 | 1D | 0260 - 19 |
| 0901906 | 1D22 | 1E | 0260 - 19 |
| 0901907 | 1D22 | 1F | 0260 - 19 |
| 0901908 | 1D22 | 1G | 0260 - 19 |
| 0901909 | 1D22 | 2 | 0260 - 19 |
| 0901910 | 1D22 | 2A | 0260 - 19 |
| 0901911 | 1D22 | 2B | 0260 - 19 |
| 0901912 | 1D22 | 2C | 0260 - 19 |
| 0901913 | 1D22 | 3 | 0260 - 19 |
| 0901914 | 1D22 | 3A | 0260 - 19 |
| 0901915 | 1D22 | 3B | 0260 - 19 |
| 0901916 | 1D22 | 3C | 0260 - 19 |
| 0901917 | 1D22 | 3D | 0260 - 19 |
| 0901918 | 1D22 | 3E | 0260 - 19 |
| 0901919 | 1D22 | 3F | 0260 - 19 |
| 0901920 | 1D22 | 3G | 0260 - 19 |
| 0901921 | 1D22 | 6 | 0260 - 19 |
| 0901922 | 1D22 | 10 | 0260 - 19 |
| 0901923 | 1D22 | 11 | 0260 - 19 |
| 0901924 | 1D22 | 20 | 0260 - 19 |
| 0901925 | 1D22 | 21 | 0260 - 19 |
| 0901926 | 1D22 | 22 | 0260 - 19 |
| 0901927 | 1D22 | 23 | 0260 - 19 |
| 0901928 | 1D22 | 25 | 0260 - 19 |
| 0901929 | 1D22 | 26 | 0260 - 19 |
| 0901930 | 1D22 | 27 | 0260 - 19 |
| 0901931 | 1D22 | 28 | 0260 - 19 |
| 0901932 | 1D22 | 29 | 0260 - 19 |
| 0901933 | 1D22 | 30 | 0260 - 19 |
| 0903301 | 3H22 | 9 | 3362 - 31 |
| 0903302 | 3H22 | 11 | 3362 - 31 |
| 0903303 | 3H22 | 24 | 3362 - 31 |
| 0903304 | 3H22 | 25 | 3362 - 31 |
| 0911501080 | 1G6 | 62 | 0413 - 3 |
| 0911501080 | 1G14 | 20 | 0414 - 3 |
| 0911501120 | 1H16 | 82 | 0429 - 3 |
| 0911502080 | 1H2 | 6B | 0419 - 3 |
| 0911502100 | 1G6 | 72 | 0413 - 3 |
| 0915201 | 1B13 | 1 | 0250 - 11 |
| 0915202 | 1B13 | 3 | 0250 - 11 |
| 0915203 | 1B13 | 29 | 0250 - 11 |
| 0915204 | 1B15 | 55 | 0250 - 13 |
| 0915205 | 1B15 | 55C | 0250 - 13 |
| 0915206 | 1B15 | 56 | 0250 - 13 |
| 0915207 | 1B15 | 56C | 0250 - 13 |
| 0915208 | 1B15 | 57 | 0250 - 13 |
| 0915501 | 1B23 | 1 | 0250 - 21 |
| 0915502 | 1B23 | 28A | 0250 - 21 |
| 0915503 | 1B23 | 32 | 0250 - 21 |
| 0915902 | 1D14 | 92 | 0260 - 11 |
| 0916301 | 3K24 | 1 | 3365 - 5 |
| 0916302 | 3K24 | 26 | 3365 - 5 |
| 0916303 | 3K24 | 27 | 3365 - 5 |
| 0916304 | 3K24 | 26 | 3365 - 5 |
| 0916305 | 3K24 | 27 | 3365 - 5 |
| 0916601 | 3L2 | 1 | 3365 - 7 |
| 0916601 | 3L4 | 1 | 3365 - 9 |
| 0916602 | 3L2 | 2 | 3365 - 7 |

**NUMERICAL INDEX - CONTINUED**

| PART NO. | GRID | KEY | PAGE |
|---|---|---|---|
| 0916602 | 3L4 | 2 | 3365 - 9 |
| 0916603 | 3L2 | 28 | 3365 - 7 |
| 0916604 | 3L2 | 45 | 3365 - 7 |
| 0916604 | 3L4 | 45 | 3365 - 9 |
| 0916605 | 3L2 | 32 | 3365 - 7 |
| 0916605 | 3L4 | 32 | 3365 - 9 |
| 0916607 | 3L2 | 28 | 3365 - 7 |
| 0916801 | 3L4 | 28 | 3365 - 9 |
| 0916802 | 3L4 | 28 | 3365 - 9 |
| 0917101 | 3L10 | 1 | 3365 - 15 |
| 0917102 | 3L10 | 2 | 3365 - 15 |
| 0917103 | 3L10 | 3 | 3365 - 15 |
| 0917104 | 3L10 | 6 | 3365 - 15 |
| 0917105 | 3L10 | 13 | 3365 - 15 |
| 0917106 | 3L10 | 19 | 3365 - 15 |
| 0917107 | 3L10 | 24 | 3365 - 15 |
| 0917108 | 3L10 | 25 | 3365 - 15 |
| 0917201 | 3L10 | 25 | 3365 - 15 |
| 0917701 | 1B17 | 1 | 0250 - 15 |
| 0917702 | 1B17 | 2 | 0250 - 15 |
| 0917703 | 1B17 | 17 | 0250 - 15 |
| 0917704 | 1B17 | 17A | 0250 - 15 |
| 0917705 | 1B17 | 17B | 0250 - 15 |
| 0917706 | 1B17 | 17C | 0250 - 15 |
| 0917707 | 1B17 | 17D | 0250 - 15 |
| 0917708 | 1B17 | 34 | 0250 - 15 |
| 0917709 | 1B17 | 36 | 0250 - 15 |
| 0917710 | 1B17 | 49 | 0250 - 15 |
| 0917711 | 1B17 | 50 | 0250 - 15 |
| 0917801 | 1B19 | 1 | 0250 - 17 |
| 0917802 | 1B21 | 48A | 0250 - 19 |
| 0917802 | 1C4 | 48A | 0250 - 27 |
| 0918001 | 1B25 | 10 | 0250 - 23 |
| 0918002 | 1B25 | 29 | 0250 - 23 |
| 0918101 | 1C2 | 8 | 0250 - 25 |
| 0918102 | 1C4 | 41 | 0250 - 27 |
| 0918103 | 1C4 | 61 | 0250 - 27 |
| 0918301 | 1C8 | 13A | 0250 - 31 |
| 0918801 | 1C18 | 2 | 0250 - 41 |
| 0919101 | 1C24 | 9 | 0250 - 47 |
| 0919201 | 1D2 | 2 | 0250 - 49 |
| 0919202 | 1D2 | 5 | 0250 - 49 |
| 0919203 | 1D2 | 6 | 0250 - 49 |
| 0919301 | 1D4 | 57 | 0250 - 51 |
| 0919501 | 1J17 | 5 | 0962 - 3 |
| 0919502 | 1J19 | 76 | 0962 - 5 |
| 1025093 | 3K18 | 7B | 3364 - 3 |
| 1025912 | 3L16 | 23 | 4360 - 3 |
| 1025957 | 3L16 | 20 | 4360 - 3 |
| 1026662 | 3L16 | 11 | 4360 - 3 |
| 1026679 | 3F10 | 1 | 3360 - 3 |
| 1027131 | 3F10 | 41 | 3360 - 3 |
| 1027149 | 3F14 | 1 | 3360 - 7 |
| 1027222 | 3D10 | 0 | 3344 - 7 |
| 1027617 | 3L16 | 5 | 4360 - 3 |
| 1028267 | 3F10 | 41 | 3360 - 3 |
| 1029246 | 3G22 | 54A | 3362 - 7 |
| 1030601 | 2C23 | 7 | 1674 - 19 |
| 1030682 | 2J2 | 1 | 2160 - 5 |
| 1030750 | 3C25 | 12 | 3315 - 3 |
| 1030778 | 3G24 | 96 | 3362 - 9 |
| 1030928 | 1E16 | 0 | 0262 - 5 |
| 1030928 | 1E20 | 26 | 0265 - 5 |
| 1030928 | 1E22 | 28 | 0265 - 7 |
| 1030928 | 3B12 | 0B | 3301 - 5 |
| 1030928 | 3F6 | 0B | 3348 - 11 |
| 1031045 | 3F18 | 8 | 3360 - 11 |
| 1090001331 | 1H10 | 16 | 0423 - 2 |
| 1090001331 | 1H14 | 16 | 0423 - 7 |
| 1090004691 | 1F12 | 8 | 0404 - 3 |
| 1090004692 | 1F12 | 8 | 0404 - 3 |
| 1090005670 | 1G2 | 85 | 0409 - 5 |
| 1090091131 | 1H16 | 86 | 0429 - 3 |
| 1090440711 | 1G10 | 19B | 0413 - 7 |
| 1090440711 | 1H18 | 62 | 0433 - 3 |
| 1090701001 | 1F24 | 3 | 0409 - 3 |
| 1090701010 | 1F24 | 3 | 0409 - 3 |
| 1090701011 | 1F24 | 3 | 0409 - 3 |
| 1093000130 | 1F12 | 30 | 0404 - 3 |
| 1093000180 | 1F24 | 15 | 0409 - 3 |
| 1093000550 | 1F12 | 30 | 0404 - 3 |
| 1094001160 | 1G2 | 75 | 0409 - 5 |
| 1095030700 | 1G20 | 28 | 0417 - 3 |
| 1095803350 | 1G2 | 77 | 0409 - 5 |
| 1096000121 | 1F12 | 16 | 0404 - 3 |
| 1096000121 | 1F24 | 7B | 0409 - 3 |
| 1096000160 | 1F24 | 7C | 0409 - 3 |
| 1096000520 | 1F12 | 11 | 0404 - 3 |
| 1096000580 | 1F24 | 7A | 0409 - 3 |
| 1096050681 | 1F12 | 5 | 0404 - 3 |
| 1096230570 | 1F22 | 3 | 0407 - 9 |
| 1096231830 | 1F22 | 3 | 0407 - 9 |
| 1096234620 | 1F20 | 47 | 0407 - 7 |
| 1096234650 | 1F12 | 12 | 0404 - 3 |
| 1096254380 | 1H18 | 3 | 0433 - 3 |
| 1096255450 | 1G20 | 16 | 0417 - 3 |
| 1096300820 | 1G6 | 36 | 0413 - 3 |
| 1096300840 | 1F20 | 3B | 0407 - 7 |
| 1096300850 | 1H6 | 9 | 0420 - 5 |
| 1096390320 | 1F10 | 6 | 0402 - 3 |
| 1096750371 | 1G6 | 5 | 0413 - 3 |
| 1096750371 | 1G6 | 34 | 0413 - 3 |
| 1096750630 | 1H4 | 62B | 0420 - 3 |
| 1096750770 | 1F20 | 36 | 0407 - 7 |
| 1096750810 | 1F20 | 2B | 0407 - 7 |
| 1096751600 | 1F20 | 2B | 0407 - 7 |
| 1096800250 | 1F12 | 24 | 0404 - 3 |
| 1097004440 | 1F20 | 67 | 0407 - 7 |
| 1097006952 | 1F20 | 48 | 0407 - 7 |
| 1097007590 | 1H4 | 50B | 0420 - 3 |
| 1097007600 | 1H4 | 50C | 0420 - 3 |
| 1097040660 | 1F14 | 29 | 0404 - 5 |
| 1097400780 | 1F12 | 6 | 0404 - 3 |
| 1098001700 | 1G20 | 27C | 0417 - 3 |
| 1099851850 | 1G10 | 9 | 0413 - 7 |
| 1112191291 | 1F12 | 21 | 0404 - 3 |
| 1112613820 | 1F12 | 4 | 0404 - 3 |
| 1112613830 | 1F12 | 4 | 0404 - 3 |
| 1112613840 | 1F12 | 4 | 0404 - 3 |
| 1112613850 | 1F12 | 4 | 0404 - 3 |
| 1112613860 | 1F12 | 4 | 0404 - 3 |
| 1112613870 | 1F12 | 4 | 0404 - 3 |
| 1112613880 | 1F12 | 4 | 0404 - 3 |
| 1112613890 | 1F12 | 4 | 0404 - 3 |
| 1112902541 | 1F14 | 2 | 0404 - 5 |
| 1113415850 | 1H18 | 2 | 0433 - 3 |
| 1117210130 | 1F24 | 4 | 0409 - 3 |
| 1121211460 | 1F8 | 15 | 0401 - 3 |
| 1122110332 | 1F8 | 17 | 0401 - 3 |
| 1122301291 | 1F8 | 18 | 0401 - 3 |
| 1122350271 | 1F8 | 20 | 0401 - 3 |
| 1122510320 | 1F8 | 19 | 0401 - 3 |
| 1125220162 | 1G2 | 9 | 0409 - 5 |
| 1125511650 | 1G2 | 4 | 0409 - 5 |
| 1125521110 | 1G2 | 5 | 0409 - 5 |
| 1125610990 | 1G2 | 69 | 0409 - 5 |
| 1125610991 | 1G2 | 69 | 0409 - 5 |
| 1125750360 | 1G2 | 88 | 0409 - 5 |
| 1126112490 | 1G2 | 78 | 0409 - 5 |
| 1131230160 | 1F16 | 40 | 0407 - 3 |
| 1131280180 | 1F16 | 32 | 0407 - 3 |
| 1131401160 | 1F16 | 42 | 0407 - 3 |
| 1131610120 | 1F12 | 20 | 0404 - 3 |
| 1132402321 | 1F18 | 12 | 0407 - 5 |
| 1132600470 | 1H6 | 10 | 0420 - 5 |
| 1132600980 | 1H2 | 21 | 0419 - 3 |
| 1133421320 | 1F12 | 10 | 0404 - 3 |
| 1136200230 | 1G20 | 32 | 0417 - 3 |
| 1136310740 | 1G20 | 29 | 0417 - 3 |
| 1136411910 | 1G20 | 7 | 0417 - 3 |
| 1136420510 | 1H16 | 38 | 0429 - 3 |
| 1136603370 | 1H16 | 1 | 0429 - 3 |
| 1136741192 | 1H16 | 80 | 0429 - 3 |
| 1136741600 | 1H16 | 81 | 0429 - 3 |
| 1137118042 | 1G22 | 2 | 0418 - 3 |
| 1137430160 | 1G22 | 64 | 0418 - 3 |
| 1137700700 | 1G22 | 1 | 0418 - 3 |
| 1143190342 | 1H16 | 16 | 0429 - 3 |
| 1153004210 | 1G6 | 31 | 0413 - 3 |
| 1153113160 | 1G6 | 33 | 0413 - 3 |
| 1153320170 | 1G6 | 35 | 0413 - 3 |
| 1156190820 | 1G8 | 8 | 0413 - 5 |
| 1156230160 | 1G8 | 7 | 0413 - 5 |
| 1157491440 | 1G12 | 3 | 0413 - 9 |
| 1157491450 | 1G12 | 5 | 0413 - 9 |
| 1157550020 | 1G8 | 5 | 0413 - 5 |
| 1157590010 | 1G8 | 9 | 0413 - 5 |
| 1157590020 | 1G8 | 31 | 0413 - 5 |
| 1157590030 | 1G8 | 10 | 0413 - 5 |
| 1157610060 | 1G8 | 2 | 0413 - 5 |
| 1157610061 | 1G8 | 2 | 0413 - 5 |
| 1197110450 | 1H10 | 19 | 0423 - 2 |
| 1217290430 | 1H2 | 4 | 0419 - 3 |
| 1811001411 | 1H9 | 1 | 0422 - 2 |
| 1812004710 | 1H10 | 2 | 0423 - 2 |
| 1812005303 | 1H10 | 2 | 0423 - 2 |
| 1812111290 | 1H12 | 22 | 0423 - 5 |
| 1812120160 | 1H12 | 23 | 0423 - 5 |
| 1812131010 | 1H12 | 17 | 0423 - 5 |
| 1812143670 | 1H12 | 1 | 0423 - 5 |
| 1812211020 | 1H12 | 2 | 0423 - 5 |
| 1812221301 | 1H12 | 19 | 0423 - 5 |
| 1812297670 | 1H12 | 87 | 0423 - 5 |
| 1812297680 | 1H12 | 36 | 0423 - 5 |
| 1812297690 | 1H12 | 3A | 0423 - 5 |
| 1812297700 | 1H12 | 3B | 0423 - 5 |
| 1812297710 | 1H12 | 16 | 0423 - 5 |
| 1812297720 | 1H12 | 27 | 0423 - 5 |
| 1812298320 | 1H12 | 43 | 0423 - 5 |
| 1812298330 | 1H12 | 10 | 0423 - 5 |
| 1812600170 | 1H12 | 6 | 0423 - 5 |
| 1824101990 | 1F12 | 9 | 0404 - 3 |
| 1825130451 | 1F24 | 10 | 0409 - 3 |
| 1825503250 | 1H14 | 6 | 0423 - 7 |
| 1831610330 | 1H14 | 5 | 0423 - 7 |
| 2036744 | 3F10 | 25 | 3360 - 3 |
| 2036786 | 3F10 | 28 | 3360 - 3 |
| 2036795 | 3F10 | 27 | 3360 - 3 |
| 2036807 | 3F10 | 3 | 3360 - 3 |
| 2036808 | 3F10 | 4 | 3360 - 3 |
| 2037305 | 2I13 | 6 | 2001 - 3 |

**NUMERICAL INDEX - CONTINUED**

| PART NO. | GRID | KEY | PAGE |
|---|---|---|---|
| 2037825 | 3J14 | 5 | 3363 - 15 |
| 2038764 | 2F4 | 25B | 1810 - 19 |
| 2044634 | 3L16 | 1 | 4360 - 3 |
| 2044923 | 2G12 | 33 | 1830 - 3 |
| 2045457 | 3H2 | 84 | 3362 - 11 |
| 2045457 | 3H6 | 84 | 3362 - 15 |
| 2045509 | 2E20 | 29 | 1810 - 11 |
| 2045998 | 3K4 | 12 | 3363 - 29 |
| 2045998 | 3K6 | 12 | 3363 - 31 |
| 2046381 | 3G20 | 56 | 3362 - 5 |
| 2046381 | 3G22 | 56 | 3362 - 7 |
| 2046392 | 3H2 | 89 | 3362 - 11 |
| 2046392 | 3H6 | 89 | 3362 - 15 |
| 2046394 | 3G20 | 47B | 3362 - 5 |
| 2046394 | 3G22 | 54B | 3362 - 7 |
| 2046395 | 3G20 | 42 | 3362 - 5 |
| 2046395 | 3G22 | 42 | 3362 - 7 |
| 2046396 | 3G20 | 5 | 3362 - 5 |
| 2046398 | 3G22 | 43 | 3362 - 7 |
| 2046405 | 3G20 | 52 | 3362 - 5 |
| 2046405 | 3G22 | 52 | 3362 - 7 |
| 2046410 | 3H2 | 85 | 3362 - 11 |
| 2046410 | 3H6 | 85 | 3362 - 15 |
| 2046411 | 3H2 | 86 | 3362 - 11 |
| 2046411 | 3H6 | 86 | 3362 - 15 |
| 2046412 | 3G22 | 45 | 3362 - 7 |
| 2046415 | 3G20 | 26 | 3362 - 5 |
| 2046415 | 3G22 | 26 | 3362 - 7 |
| 2046415 | 3G24 | 26 | 3362 - 9 |
| 2046415 | 3H8 | 26 | 3362 - 17 |
| 2046418 | 3H4 | 10 | 3362 - 13 |
| 2046418 | 3H8 | 12 | 3362 - 17 |
| 2046419 | 3H2 | 90 | 3362 - 11 |
| 2046419 | 3H6 | 90 | 3362 - 15 |
| 2046420 | 3G20 | 47C | 3362 - 5 |
| 2046420 | 3G22 | 54C | 3362 - 7 |
| 2046423 | 3G20 | 6 | 3362 - 5 |
| 2046423 | 3G20 | 51 | 3362 - 5 |
| 2046423 | 3G22 | 51 | 3362 - 7 |
| 2046424 | 3G22 | 44 | 3362 - 7 |
| 2046425 | 3G20 | 58 | 3362 - 5 |
| 2046425 | 3G22 | 58 | 3362 - 7 |
| 2046431 | 3H8 | 74 | 3362 - 17 |
| 2046444 | 3G24 | 6A | 3362 - 9 |
| 2046444 | 3H4 | 30A | 3362 - 13 |
| 2046447 | 3G22 | 59 | 3362 - 7 |
| 2046449 | 3G24 | 27 | 3362 - 9 |
| 2046449 | 3H8 | 27 | 3362 - 17 |
| 2046451 | 3H2 | 1 | 3362 - 11 |
| 2046452 | 3H6 | 91 | 3362 - 15 |
| 2046453 | 3G20 | 47D | 3362 - 5 |
| 2046453 | 3G22 | 54D | 3362 - 7 |
| 2046455 | 3H4 | 19 | 3362 - 13 |
| 2046455 | 3H8 | 47 | 3362 - 17 |
| 2046462 | 3H6 | 6 | 3362 - 15 |
| 2046469 | 3H6 | 7 | 3362 - 15 |
| 2046480 | 3H6 | 12 | 3362 - 15 |
| 2046481 | 3G20 | 68 | 3362 - 5 |
| 2046481 | 3H8 | 68 | 3362 - 17 |
| 2046482 | 3G20 | 57 | 3362 - 5 |
| 2046482 | 3G22 | 57 | 3362 - 7 |
| 2046484 | 3H4 | 17 | 3362 - 13 |
| 2046484 | 3H8 | 45 | 3362 - 17 |
| 2046488 | 3G24 | 1 | 3362 - 9 |
| 2046488 | 3H8 | 9 | 3362 - 17 |
| 2046489 | 3G24 | 11 | 3362 - 9 |
| 2046490 | 3G20 | 63 | 3362 - 5 |
| 2046490 | 3G22 | 63 | 3362 - 7 |
| 2046491 | 3G24 | 2 | 3362 - 9 |
| 2046491 | 3H2 | 3 | 3362 - 11 |
| 2046491 | 3H6 | 2 | 3362 - 15 |
| 2046492 | 3H10 | 10 | 3362 - 19 |
| 2046493 | 3H10 | 6 | 3362 - 19 |
| 2046494 | 3G24 | 29 | 3362 - 9 |
| 2046494 | 3H8 | 29 | 3362 - 17 |
| 2046498 | 3G24 | 6C | 3362 - 9 |
| 2046498 | 3H4 | 30C | 3362 - 13 |
| 2046499 | 3H4 | 21 | 3362 - 13 |
| 2046499 | 3H8 | 49 | 3362 - 17 |
| 2046501 | 3G20 | 53 | 3362 - 5 |
| 2046501 | 3G22 | 53 | 3362 - 7 |
| 2046502 | 3G20 | 64 | 3362 - 5 |
| 2046502 | 3G22 | 64 | 3362 - 7 |
| 2046504 | 3H4 | 14 | 3362 - 13 |
| 2046504 | 3H8 | 42 | 3362 - 17 |
| 2046510 | 3G22 | 4 | 3362 - 7 |
| 2046512 | 3G22 | 1 | 3362 - 7 |
| 2046523 | 1E14 | 17 | 0262 - 3 |
| 2046523 | 1E16 | 19 | 0262 - 5 |
| 2046526 | 1E14 | 16 | 0262 - 3 |
| 2046526 | 1E16 | 18 | 0262 - 5 |
| 2046527 | 3H6 | 8 | 3362 - 15 |
| 2046528 | 3H6 | 9 | 3362 - 15 |
| 2046592 | 3H4 | 9 | 3362 - 13 |
| 2046592 | 3H8 | 10 | 3362 - 17 |
| 2046593 | 3H4 | 23 | 3362 - 13 |
| 2046595 | 3G24 | 35 | 3362 - 9 |
| 2046600 | 3H8 | 22 | 3362 - 17 |
| 2046601 | 3G24 | 32 | 3362 - 9 |
| 2046602 | 3G20 | 46 | 3362 - 5 |
| 2046603 | 3G24 | 9 | 3362 - 9 |
| 2046604 | 3G24 | 23 | 3362 - 9 |
| 2046605 | 3G22 | 25 | 3362 - 7 |
| 2046607 | 3G20 | 36 | 3362 - 5 |
| 2046608 | 3H4 | 18 | 3362 - 13 |
| 2046608 | 3H8 | 46 | 3362 - 17 |
| 2046609 | 3G24 | 33 | 3362 - 9 |
| 2046611 | 3G24 | 38 | 3362 - 9 |
| 2046612 | 3G20 | 69 | 3362 - 5 |
| 2046613 | 3H2 | 87 | 3362 - 11 |
| 2046613 | 3H6 | 87 | 3362 - 15 |
| 2046614 | 3G20 | 24 | 3362 - 5 |
| 2046615 | 3G24 | 39 | 3362 - 9 |
| 2046618 | 3H8 | 52 | 3362 - 17 |
| 2046619 | 3G24 | 40 | 3362 - 9 |
| 2046620 | 3G20 | 61 | 3362 - 5 |
| 2046621 | 3G20 | 30 | 3362 - 5 |
| 2046622 | 3G24 | 34 | 3362 - 9 |
| 2046623 | 3G24 | 10 | 3362 - 9 |
| 2046625 | 3G20 | 71 | 3362 - 5 |
| 2046626 | 3H4 | 26 | 3362 - 13 |
| 2046626 | 3H8 | 13 | 3362 - 17 |
| 2046627 | 3H4 | 27 | 3362 - 13 |
| 2046627 | 3H8 | 14 | 3362 - 17 |
| 2046654 | 3H2 | 6A | 3362 - 11 |
| 2046654 | 3H6 | 5A | 3362 - 15 |
| 2046976 | 3H6 | 18 | 3362 - 15 |
| 2046978 | 3H6 | 20 | 3362 - 15 |
| 2046981 | 3H6 | 21 | 3362 - 15 |
| 2047092 | 1E16 | 17 | 0262 - 5 |
| 2047677 | 1D6 | 30 | 0260 - 3 |
| 2047713 | 1E14 | 1 | 0262 - 3 |
| 2047736 | 1E18 | 1 | 0265 - 3 |
| 2047978 | 2I10 | 4 | 1910 - 23 |
| 2048807 | 3G22 | 65 | 3362 - 7 |
| 2048897 | 2D4 | 13 | 1674 - 25 |
| 2049574 | 2B20 | 9 | 1322 - 7 |
| 2049977 | 2F20 | 28 | 1810 - 35 |
| 300156 | 3B18 | 27 | 3302 - 7 |
| 300157 | 3B18 | 19 | 3302 - 7 |
| 300158 | 3B18 | 18 | 3302 - 7 |
| 300159 | 3B18 | 16 | 3302 - 7 |
| 300160 | 3B18 | 17 | 3302 - 7 |
| 300167 | 3B18 | 14 | 3302 - 7 |
| 300204 | 3B22 | 10 | 3302 - 11 |
| 300481 | 3B14 | 19 | 3302 - 3 |
| 300481 | 3C2 | 19 | 3302 - 15 |
| 300482 | 3B14 | 18 | 3302 - 3 |
| 300482 | 3C2 | 18 | 3302 - 15 |
| 300524 | 3B14 | 27 | 3302 - 3 |
| 300524 | 3B16 | 27 | 3302 - 5 |
| 300524 | 3C2 | 27 | 3302 - 15 |
| 300526 | 3B16 | 16 | 3302 - 5 |
| 300527 | 3B16 | 17 | 3302 - 5 |
| 300534 | 3B14 | 16 | 3302 - 3 |
| 300534 | 3C2 | 16 | 3302 - 15 |
| 300535 | 3B14 | 17 | 3302 - 3 |
| 300535 | 3C2 | 17 | 3302 - 15 |
| 300536 | 3B14 | 14 | 3302 - 3 |
| 300536 | 3C2 | 14 | 3302 - 15 |
| 300804 | 3B16 | 14 | 3302 - 5 |
| 304564 | 3B16 | 28 | 3302 - 5 |
| 304567 | 3B16 | 19 | 3302 - 5 |
| 304568 | 3B16 | 18 | 3302 - 5 |
| 3048482 | 1E2 | 33 | 0260 - 23 |
| 3048482 | 1E4 | 33 | 0260 - 25 |
| 3050114 | 3F6 | 12 | 3348 - 11 |
| 3053093 | 3L16 | 63 | 4360 - 3 |
| 3053093 | 3L16 | 79 | 4360 - 3 |
| 3053559 | 1D6 | 38 | 0260 - 3 |
| 3055594 | 2J2 | 4 | 2160 - 5 |
| 3063826 | 3D6 | 11 | 3344 - 3 |
| 3063826 | 3D8 | 52 | 3344 - 5 |
| 3063826 | 3E2 | 12 | 3344 - 23 |
| 306452 | 3B18 | 28 | 3302 - 7 |
| 3069541 | 3F10 | 42 | 3360 - 3 |
| 306974 | 3B14 | 28 | 3302 - 3 |
| 306974 | 3C2 | 28 | 3302 - 15 |
| 3070581 | 3F12 | 57 | 3360 - 5 |
| 3072015 | 2H14 | 1B | 1910 - 3 |
| 3072015 | 2H14 | 3C | 1910 - 3 |
| 3072015 | 2H24 | 0C | 1910 - 13 |
| 3072291 | 3J4 | 12 | 3363 - 5 |
| 3074223 | 3L16 | 75 | 4360 - 3 |
| 3074559 | 2D6 | 30 | 1674 - 27 |
| 3075674 | 3F10 | 31 | 3360 - 3 |
| 3075775 | 3F14 | 35 | 3360 - 7 |
| 3075775 | 3F16 | 35 | 3360 - 9 |
| 3076246 | 2B16 | 2 | 1322 - 3 |
| 3079728 | 3K4 | 15 | 3363 - 29 |
| 3079728 | 3K6 | 15 | 3363 - 31 |
| 3080209 | 2I6 | 0B | 1910 - 19 |
| 3080912 | 3L16 | 18 | 4360 - 3 |
| 3082517 | 3L16 | 25 | 4360 - 3 |
| 3083742 | 3L16 | 2 | 4360 - 3 |
| 3084056 | 3L16 | 30 | 4360 - 3 |
| 3084173 | 3D12 | 1 | 3344 - 9 |
| 3084729 | 3L16 | 13 | 4360 - 3 |
| 3086064 | 3L16 | 8 | 4360 - 3 |
| 3087323 | 2I10 | 3 | 1910 - 23 |
| 3087440 | 2H16 | 19B | 1910 - 5 |

**NUMERICAL INDEX - CONTINUED**

| PART NO. | GRID | KEY | PAGE |
|---|---|---|---|
| 3087882 | 2C13 | 1 | 1674 - 9 |
| 3088577 | 3D8 | 48 | 3344 - 5 |
| 3088579 | 3D8 | 47 | 3344 - 5 |
| 3088580 | 3D8 | 49 | 3344 - 5 |
| 3088581 | 3D8 | 46 | 3344 - 5 |
| 3088910 | 1I4 | 3 | 0510 - 7 |
| 3089362 | 3L16 | 33 | 4360 - 3 |
| 3089486 | 2G10 | 0 | 1821 - 9 |
| 3089848 | 3D2 | 11 | 3315 - 5 |
| 3090025 | 2F18 | 0 | 1810 - 33 |
| 3091204 | 2H10 | 3 | 1830 - 25 |
| 3091337 | 2H22 | 14 | 1910 - 11 |
| 3091842 | 2E20 | 26 | 1810 - 11 |
| 3092277 | 2I8 | 15 | 1910 - 21 |
| 3093565 | 2H18 | 33B | 1910 - 7 |
| 3093877 | 3E2 | 7 | 3344 - 23 |
| 3094002 | 2D23 | 8 | 1740 - 13 |
| 3094010 | 1E18 | 2 | 0265 - 3 |
| 3094033 | 2D4 | 0 | 1674 - 25 |
| 3094354 | 3J22 | 9 | 3363 - 23 |
| 3094355 | 3J22 | 11 | 3363 - 23 |
| 3094356 | 3J22 | 16 | 3363 - 23 |
| 3094358 | 3J22 | 17 | 3363 - 23 |
| 3094466 | 3E22 | 26 | 3348 - 3 |
| 3094533 | 3J22 | 13 | 3363 - 23 |
| 3094602 | 3D6 | 6 | 3344 - 3 |
| 3094627 | 3D6 | 5 | 3344 - 3 |
| 3094627 | 3D8 | 44 | 3344 - 5 |
| 3094627 | 3E2 | 6 | 3344 - 23 |
| 3094647 | 2D15 | 8 | 1740 - 5 |
| 3094689 | 2I10 | 0 | 1910 - 23 |
| 3094690 | 2I10 | 1 | 1910 - 23 |
| 3094698 | 2D23 | 20 | 1740 - 13 |
| 3095395 | 3B10 | 1 | 3301 - 3 |
| 3095395 | 3B10 | 25 | 3301 - 3 |
| 3095396 | 3B10 | 24 | 3301 - 3 |
| 3095497 | 1D10 | 1 | 0260 - 7 |
| 3095719 | 3G24 | 31 | 3362 - 9 |
| 3095720 | 3G24 | 41 | 3362 - 9 |
| 3095721 | 3G20 | 67 | 3362 - 5 |
| 3095852 | 1E2 | 41 | 0260 - 23 |
| 3095853 | 1E2 | 40 | 0260 - 23 |
| 3095887 | 1D10 | 15 | 0260 - 7 |
| 3096008 | 3E2 | 4 | 3344 - 23 |
| 3096154 | 2E14 | 1 | 1810 - 5 |
| 3096318 | 2D15 | 0A | 1740 - 5 |
| 3096327 | 2D15 | 0B | 1740 - 5 |
| 3096428 | 2B9 | 8 | 1062 - 9 |
| 3096428 | 2E12 | 3 | 1810 - 3 |
| 3096630 | 2H20 | 39A | 1910 - 9 |
| 3096632 | 2H16 | 16 | 1910 - 5 |
| 3096634 | 2I10 | 5 | 1910 - 23 |
| 3096800 | 3E18 | 0 | 3344 - 39 |
| 3096921 | 1I4 | 11 | 0510 - 7 |
| 3096930 | 3H8 | 73 | 3362 - 17 |
| 3096935 | 3E22 | 6 | 3348 - 3 |
| 3096936 | 3E22 | 24 | 3348 - 3 |
| 3096994 | 3B10 | 4 | 3301 - 3 |
| 3096995 | 3B10 | 5 | 3301 - 3 |
| 3097101 | 2E6 | 2 | 1740 - 21 |
| 3097102 | 2E6 | 3 | 1740 - 21 |
| 3097121 | 2I15 | 7 | 2002 - 3 |
| 3097147 | 1E10 | 9 | 0260 - 31 |
| 3097148 | 1E10 | 10 | 0260 - 31 |
| 3097149 | 1E10 | 11 | 0260 - 31 |
| 3097150 | 1E10 | 12 | 0260 - 31 |
| 3097220 | 1E6 | 4 | 0260 - 27 |
| 3097221 | 1B5 | 47 | 0250 - 3 |
| 3097222 | 1B5 | 48 | 0250 - 3 |
| 3097272 | 3F18 | 7 | 3360 - 11 |
| 3097573 | 3F6 | 2 | 3348 - 11 |
| 3097766 | 1I8 | 0A | 0510 - 11 |
| 3097862 | 2G8 | 22 | 1821 - 7 |
| 3099214 | 2E4 | 21 | 1740 - 19 |
| 3099326 | 2I10 | 2A | 1910 - 23 |
| 3099606 | 3E2 | 8 | 3344 - 23 |
| 3099607 | 3E14 | 23 | 3344 - 35 |
| 3100094 | 2B22 | 1 | 1322 - 9 |
| 3100094 | 2D4 | 20 | 1674 - 25 |
| 3100991 | 2J2 | 3 | 2160 - 5 |
| 3100993 | 2J2 | 30 | 2160 - 5 |
| 3100994 | 2J2 | 31 | 2160 - 5 |
| 322555 | 3C4 | 2 | 3302 - 17 |
| 4BG1TCG | 1F6 | 1 | 0400 - 3 |
| 4S00077 | 3L10 | 8 | 3365 - 15 |
| 4S00095 | 3L10 | 7 | 3365 - 15 |
| 4S00175 | 3K22 | 11 | 3365 - 3 |
| 4S00175 | 3K24 | 11 | 3365 - 5 |
| 4S00175 | 3L2 | 11 | 3365 - 7 |
| 4S00175 | 3L4 | 11 | 3365 - 9 |
| 4S00189 | 3L8 | 7 | 3365 - 13 |
| 4S00190 | 3L8 | 8 | 3365 - 13 |
| 4S00218 | 3L18 | 76 | 4360 - 5 |
| 4S00246 | 1H6 | 2 | 0420 - 5 |
| 4S00286 | 1I22 | 14 | 0530 - 3 |
| 4000855 | 1E6 | 50 | 0260 - 27 |
| 4004589 | 1H8 | 17 | 0421 - 3 |
| 4004589 | 1J4 | 15 | 0560 - 7 |
| 4018545 | 1B5 | 16 | 0250 - 3 |
| 4022696 | 2H18 | 15 | 1910 - 7 |
| 4022697 | 2F14 | 72 | 1810 - 29 |
| 4022697 | 2H14 | 12 | 1910 - 3 |
| 4022697 | 2H24 | 12 | 1910 - 13 |
| 4022697 | 2I8 | 12 | 1910 - 21 |
| 4022700 | 2I6 | 17 | 1910 - 19 |
| 4027427 | 3L16 | 16 | 4360 - 3 |
| 4040826 | 2D13 | 29 | 1740 - 3 |
| 4043942 | 1E10 | 17 | 0260 - 31 |
| 4050373 | 2D6 | 28 | 1674 - 27 |
| 4050373 | 2D8 | 15 | 1674 - 29 |
| 4051160 | 1H8 | 6 | 0421 - 3 |
| 4051160 | 1J4 | 20 | 0560 - 7 |
| 4051262 | 3L16 | 29 | 4360 - 3 |
| 4055311 | 2C15 | 40 | 1674 - 11 |
| 4055311 | 2C19 | 10 | 1674 - 15 |
| 4055311 | 2D23 | 45 | 1740 - 13 |
| 4055312 | 1H8 | 15 | 0421 - 3 |
| 4055312 | 1H8 | 21 | 0421 - 3 |
| 4055312 | 1J6 | 11 | 0560 - 9 |
| 4055312 | 1J8 | 3 | 0560 - 11 |
| 4055312 | 2C15 | 39 | 1674 - 11 |
| 4055312 | 2C21 | 15 | 1674 - 17 |
| 4055312 | 2D6 | 31 | 1674 - 27 |
| 4055312 | 2G18 | 25 | 1830 - 9 |
| 4055312 | 2H4 | 14 | 1830 - 19 |
| 4055312 | 2H8 | 1 | 1830 - 23 |
| 4055312 | 3B12 | 20 | 3301 - 5 |
| 4055312 | 3E18 | 4 | 3344 - 39 |
| 4055312 | 3E20 | 10 | 3344 - 41 |
| 4055312 | 3F8 | 72 | 3348 - 13 |
| 4055312 | 3J2 | 19 | 3363 - 3 |
| 4055312 | 3K4 | 25 | 3363 - 29 |
| 4056017 | 3D4 | 21 | 3315 - 7 |
| 4065687 | 3L8 | 24 | 3365 - 13 |
| 4067720 | 3E2 | 9 | 3344 - 23 |
| 4067834 | 3F20 | 9 | 3360 - 13 |
| 4067901 | 3D6 | 1 | 3344 - 3 |
| 4067901 | 3D6 | 36 | 3344 - 3 |
| 4067901 | 3E2 | 2 | 3344 - 23 |
| 4067901 | 3E2 | 40 | 3344 - 23 |
| 4067901 | 3E2 | 55 | 3344 - 23 |
| 4067901 | 3L2 | 27 | 3365 - 7 |
| 4067901 | 3L4 | 27 | 3365 - 9 |
| 4067902 | 3D8 | 1 | 3344 - 5 |
| 4067902 | 3D8 | 3 | 3344 - 5 |
| 4067902 | 3D8 | 76 | 3344 - 5 |
| 4067902 | 3D10 | 3 | 3344 - 7 |
| 4067902 | 3K22 | 25 | 3365 - 3 |
| 4067902 | 3K24 | 25 | 3365 - 5 |
| 4067902 | 3L2 | 25 | 3365 - 7 |
| 4067902 | 3L4 | 25 | 3365 - 9 |
| 4067902 | 3L6 | 29 | 3365 - 11 |
| 4067902 | 3L8 | 26 | 3365 - 13 |
| 4068898 | 3F14 | 16 | 3360 - 7 |
| 4068898 | 3F16 | 16 | 3360 - 9 |
| 4069701 | 3L10 | 7 | 3365 - 15 |
| 4069801 | 3F20 | 4 | 3360 - 13 |
| 4070952 | 2D19 | 9 | 1740 - 9 |
| 4071213 | 3F20 | 10 | 3360 - 13 |
| 4071213 | 3F22 | 4 | 3360 - 15 |
| 4083438 | 2D17 | 5 | 1740 - 7 |
| 4084578 | 3D8 | 2 | 3344 - 5 |
| 4084578 | 3E22 | 20C | 3348 - 3 |
| 4084578 | 3E22 | 21C | 3348 - 3 |
| 4085560 | 3J4 | 0 | 3363 - 5 |
| 4085607 | 3F14 | 8 | 3360 - 7 |
| 4085607 | 3F16 | 8 | 3360 - 9 |
| 4087559 | 2B22 | 2 | 1322 - 9 |
| 4089012 | 2F16 | 4 | 1810 - 31 |
| 4089028 | 3D8 | 22 | 3344 - 5 |
| 4089703 | 1E12 | 12 | 0260 - 33 |
| 4090405 | 1I18 | 4 | 0520 - 5 |
| 4092111 | 2F4 | 39 | 1810 - 19 |
| 4092534 | 2J2 | 87 | 2160 - 5 |
| 4098712 | 3E22 | 11 | 3348 - 3 |
| 4098713 | 3E22 | 10 | 3348 - 3 |
| 4098716 | 3E22 | 29 | 3348 - 3 |
| 4098717 | 3E22 | 28 | 3348 - 3 |
| 4099290 | 2J2 | 34 | 2160 - 5 |
| 4099290 | 3F12 | 58 | 3360 - 5 |
| 4100967 | 3K18 | 27 | 3364 - 3 |
| 4101345 | 2J2 | 20 | 2160 - 5 |
| 4101345 | 3H14 | 16 | 3362 - 23 |
| 4102096 | 2I13 | 5 | 2001 - 3 |
| 4103527 | 1H8 | 10 | 0421 - 3 |
| 4103527 | 1J4 | 23 | 0560 - 7 |
| 4103743 | 2D19 | 3 | 1740 - 9 |
| 4107762 | 2F20 | 21 | 1810 - 35 |
| 4107837 | 3B10 | 8B | 3301 - 3 |
| 4114402 | 2J2 | 7 | 2160 - 5 |
| 4114404 | 2D13 | 18 | 1740 - 3 |
| 4114408 | 3B10 | 21 | 3301 - 3 |
| 4116290 | 3F10 | 13 | 3360 - 3 |
| 4116300 | 2I21 | 6 | 2007 - 3 |
| 4116310 | 3D2 | 3 | 3315 - 5 |
| 4121497 | 1I24 | 0B | 0560 - 3 |
| 4121859 | 1J4 | 37 | 0560 - 7 |
| 4121859 | 2C13 | 10 | 1674 - 9 |
| 4121859 | 2G12 | 54 | 1830 - 3 |
| 4121859 | 3J20 | 37 | 3363 - 21 |
| 4122883 | 1J4 | 21 | 0560 - 7 |

**NUMERICAL INDEX - CONTINUED**

| PART NO. | GRID | KEY | PAGE |
|---|---|---|---|
| 4122884 | 1J4 | 10 | 0560 - 7 |
| 4122885 | 1J4 | 22 | 0560 - 7 |
| 4122886 | 1J4 | 11 | 0560 - 7 |
| 4123177 | 2F4 | 16 | 1810 - 19 |
| 4127708 | 2D25 | 4 | 1740 - 15 |
| 4138938 | 1D18 | 5 | 0260 - 15 |
| 4138938 | 1D18 | 14 | 0260 - 15 |
| 4138938 | 3B12 | 24 | 3301 - 5 |
| 4138938 | 3F4 | 2 | 3348 - 9 |
| 4138938 | 3F4 | 10 | 3348 - 9 |
| 4138938 | 3F6 | 24 | 3348 - 11 |
| 4139583 | 2D17 | 1 | 1740 - 7 |
| 4140436 | 3I14 | 18A | 3362 - 47 |
| 4140436 | 3I14 | 20A | 3362 - 47 |
| 4142844 | 1I10 | 6 | 0510 - 13 |
| 4144011 | 3C25 | 7 | 3315 - 3 |
| 4146370 | 3F10 | 35 | 3360 - 3 |
| 4147896 | 2F8 | 59 | 1810 - 23 |
| 4148896 | 3E14 | 15 | 3344 - 35 |
| 4150302 | 3F14 | 7 | 3360 - 7 |
| 4150302 | 3F16 | 7 | 3360 - 9 |
| 4150302 | 3F16 | 50A | 3360 - 9 |
| 4153087 | 3F16 | 50C | 3360 - 9 |
| 4153095 | 3F14 | 52A | 3360 - 7 |
| 4153095 | 3F16 | 55A | 3360 - 9 |
| 4153103 | 1F18 | 16 | 0407 - 5 |
| 4153534 | 3F16 | 50B | 3360 - 9 |
| 4154651 | 2D23 | 10 | 1740 - 13 |
| 4154651 | 3D24 | 8 | 3344 - 21 |
| 4154651 | 3E14 | 11 | 3344 - 35 |
| 4154670 | 3B12 | 9 | 3301 - 5 |
| 4154670 | 3J2 | 8 | 3363 - 3 |
| 4154670 | 3J8 | 23 | 3363 - 9 |
| 4154670 | 3J10 | 26 | 3363 - 11 |
| 4154670 | 3J10 | 31 | 3363 - 11 |
| 4154670 | 3K2 | 30 | 3363 - 27 |
| 4161735 | 2D15 | 3 | 1740 - 5 |
| 4167948 | 3D16 | 3 | 3344 - 13 |
| 4167948 | 3D18 | 3 | 3344 - 15 |
| 4167948 | 3E8 | 12 | 3344 - 29 |
| 4167948 | 3E10 | 12 | 3344 - 31 |
| 4168820 | 1I24 | 4A | 0560 - 3 |
| 4169516 | 3F12 | 84 | 3360 - 5 |
| 4170546 | 3L10 | 11 | 3365 - 15 |
| 4170547 | 3L10 | 14 | 3365 - 15 |
| 4172172 | 2I15 | 2 | 2002 - 3 |
| 4172172 | 2I17 | 2 | 2002 - 5 |
| 4174541 | 3F16 | 57 | 3360 - 9 |
| 4178173 | 3F10 | 9 | 3360 - 3 |
| 4179155 | 3F14 | 2 | 3360 - 7 |
| 4179155 | 3F16 | 2 | 3360 - 9 |
| 4179156 | 3F14 | 3 | 3360 - 7 |
| 4179156 | 3F16 | 3 | 3360 - 9 |
| 4179161 | 3F14 | 12 | 3360 - 7 |
| 4179161 | 3F16 | 12 | 3360 - 9 |
| 4179162 | 3F14 | 10 | 3360 - 7 |
| 4179162 | 3F16 | 10 | 3360 - 9 |
| 4179171 | 3F14 | 20 | 3360 - 7 |
| 4179171 | 3F16 | 20 | 3360 - 9 |
| 4179176 | 3F10 | 34 | 3360 - 3 |
| 4179177 | 3F10 | 33 | 3360 - 3 |
| 4179179 | 3F10 | 29 | 3360 - 3 |
| 4179181 | 3F10 | 23 | 3360 - 3 |
| 4179432 | 2D13 | 23 | 1740 - 3 |
| 4180349 | 3F12 | 54 | 3360 - 5 |
| 4180349 | 3F14 | 9 | 3360 - 7 |
| 4180349 | 3F16 | 9 | 3360 - 9 |
| 4180555 | 1I10 | 1 | 0510 - 13 |
| 4183224 | 1E2 | 23 | 0260 - 23 |
| 4183224 | 1E2 | 45 | 0260 - 23 |
| 4183224 | 1E4 | 45 | 0260 - 25 |
| 4183224 | 1E6 | 6 | 0260 - 27 |
| 4183224 | 1E6 | 16 | 0260 - 27 |
| 4185600 | 3H18 | 1B | 3362 - 27 |
| 4185600 | 3H18 | 9B | 3362 - 27 |
| 4185600 | 3H20 | 1B | 3362 - 29 |
| 4187082 | 2F4 | 14 | 1810 - 19 |
| 4187083 | 2F4 | 14A | 1810 - 19 |
| 4187307 | 3F24 | 2 | 3360 - 17 |
| 4187307 | 3G2 | 2 | 3360 - 19 |
| 4187308 | 1E12 | 5 | 0260 - 33 |
| 4187308 | 3D8 | 27 | 3344 - 5 |
| 4187308 | 3D14 | 14 | 3344 - 11 |
| 4187308 | 3E4 | 10 | 3344 - 25 |
| 4187308 | 3E6 | 10 | 3344 - 27 |
| 4187308 | 3F24 | 11 | 3360 - 17 |
| 4187308 | 3G2 | 11 | 3360 - 19 |
| 4187308 | 3G4 | 14 | 3360 - 21 |
| 4187308 | 3G6 | 14 | 3360 - 23 |
| 4187308 | 3J12 | 8 | 3363 - 13 |
| 4187308 | 3J14 | 12 | 3363 - 15 |
| 4187308 | 3J16 | 9 | 3363 - 17 |
| 4187308 | 3J18 | 8 | 3363 - 19 |
| 4187308 | 3K16 | 6 | 3363 - 41 |
| 4187328 | 1E12 | 4 | 0260 - 33 |
| 4187328 | 3D14 | 15 | 3344 - 11 |
| 4187328 | 3E4 | 11 | 3344 - 25 |
| 4187590 | 3L16 | 12 | 4360 - 3 |
| 4188065 | 2D25 | 6 | 1740 - 15 |
| 4188066 | 2D25 | 7 | 1740 - 15 |
| 4188136 | 3J16 | 3 | 3363 - 17 |
| 4189094 | 3J16 | 4 | 3363 - 17 |
| 4189184 | 3D2 | 4 | 3315 - 5 |
| 4189858 | 1D18 | 12 | 0260 - 15 |
| 4189859 | 3D14 | 27 | 3344 - 11 |
| 4189859 | 3E4 | 21 | 3344 - 25 |
| 4189859 | 3G4 | 8 | 3360 - 21 |
| 4189859 | 3G6 | 8 | 3360 - 23 |
| 4189860 | 3F20 | 19 | 3360 - 13 |
| 4190126 | 1E12 | 31 | 0260 - 33 |
| 4190126 | 3D14 | 26 | 3344 - 11 |
| 4190126 | 3E4 | 22 | 3344 - 25 |
| 4190126 | 3E6 | 22 | 3344 - 27 |
| 4190126 | 3J16 | 1 | 3363 - 17 |
| 4190127 | 3F20 | 16 | 3360 - 13 |
| 4190127 | 3F22 | 9 | 3360 - 15 |
| 4190244 | 3E24 | 24 | 3348 - 5 |
| 4190244 | 3J8 | 4 | 3363 - 9 |
| 4190253 | 2C15 | 38 | 1674 - 11 |
| 4190253 | 2D23 | 23 | 1740 - 13 |
| 4190261 | 1E2 | 73 | 0260 - 23 |
| 4190261 | 1E4 | 73 | 0260 - 25 |
| 4190261 | 1I12 | 4 | 0515 - 3 |
| 4190261 | 2C15 | 36 | 1674 - 11 |
| 4190261 | 2C15 | 58 | 1674 - 11 |
| 4190261 | 2C21 | 22 | 1674 - 17 |
| 4190261 | 2D23 | 24 | 1740 - 13 |
| 4190261 | 3D24 | 15 | 3344 - 21 |
| 4190261 | 3E14 | 17 | 3344 - 35 |
| 4190263 | 1J6 | 4B | 0560 - 9 |
| 4190263 | 1J6 | 5 | 0560 - 9 |
| 4190264 | 1E2 | 50 | 0260 - 23 |
| 4190264 | 1J4 | 17 | 0560 - 7 |
| 4190264 | 2C21 | 27 | 1674 - 17 |
| 4190266 | 1E4 | 51 | 0260 - 25 |
| 4190266 | 1E6 | 57 | 0260 - 27 |
| 4190266 | 1E8 | 20 | 0260 - 29 |
| 4190266 | 1E10 | 34 | 0260 - 31 |
| 4190266 | 1J21 | 17 | 0963 - 3 |
| 4190266 | 2B3 | 22 | 1062 - 3 |
| 4190273 | 2C21 | 24 | 1674 - 17 |
| 4190273 | 2H6 | 4 | 1830 - 21 |
| 4190274 | 1E4 | 52 | 0260 - 25 |
| 4190274 | 1E8 | 21 | 0260 - 29 |
| 4190274 | 2C15 | 56 | 1674 - 11 |
| 4190274 | 2C21 | 25 | 1674 - 17 |
| 4190275 | 2C21 | 21 | 1674 - 17 |
| 4190276 | 1I12 | 7 | 0515 - 3 |
| 4190277 | 2C21 | 28 | 1674 - 17 |
| 4190277 | 2H6 | 3 | 1830 - 21 |
| 4190282 | 2C21 | 23 | 1674 - 17 |
| 4190282 | 2G18 | 27 | 1830 - 9 |
| 4190282 | 3K4 | 17 | 3363 - 29 |
| 4190291 | 2C15 | 63 | 1674 - 11 |
| 4190291 | 2C21 | 27 | 1674 - 17 |
| 4190291 | 3J2 | 16 | 3363 - 3 |
| 4191977 | 2D15 | 20 | 1740 - 5 |
| 4191978 | 2D15 | 21 | 1740 - 5 |
| 4192034 | 1J6 | 6 | 0560 - 9 |
| 4192034 | 2C21 | 26 | 1674 - 17 |
| 4192034 | 2G18 | 26 | 1830 - 9 |
| 4192034 | 2H8 | 5 | 1830 - 23 |
| 4192035 | 2C21 | 20 | 1674 - 17 |
| 4192035 | 3K16 | 13 | 3363 - 41 |
| 4193816 | 1D18 | 51 | 0260 - 15 |
| 4193848 | 1E2 | 50 | 0260 - 23 |
| 4193848 | 1E10 | 32 | 0260 - 31 |
| 4193848 | 2C15 | 63 | 1674 - 11 |
| 4194176 | 3F14 | 47 | 3360 - 7 |
| 4194176 | 3F16 | 47 | 3360 - 9 |
| 4195689 | 3E2 | 61 | 3344 - 23 |
| 4196097 | 1D10 | 0 | 0260 - 7 |
| 4196106 | 3B10 | 9B | 3301 - 3 |
| 4196106 | 3E22 | 20B | 3348 - 3 |
| 4196106 | 3E22 | 21B | 3348 - 3 |
| 4196258 | 3F20 | 10A | 3360 - 13 |
| 4196258 | 3F22 | 4A | 3360 - 15 |
| 4196259 | 3F20 | 4 | 3360 - 13 |
| 4196260 | 3F20 | 9A | 3360 - 13 |
| 4196558 | 3B10 | 9C | 3301 - 3 |
| 4196560 | 2I8 | 11 | 1910 - 21 |
| 4197034 | 3E22 | 1B | 3348 - 3 |
| 4197034 | 3E22 | 36B | 3348 - 3 |
| 4197034 | 3E22 | 37B | 3348 - 3 |
| 4197035 | 3E22 | 1C | 3348 - 3 |
| 4197948 | 1I10 | 8 | 0510 - 13 |
| 4198956 | 3F10 | 22 | 3360 - 3 |
| 4199247 | 3F4 | 4 | 3348 - 9 |
| 4199645 | 2D25 | 6 | 1740 - 15 |
| 4199645 | 2D25 | 7 | 1740 - 15 |
| 4200176 | 2D15 | 24 | 1740 - 5 |
| 4200227 | 3F10 | 36 | 3360 - 3 |
| 4201749 | 2D15 | 26 | 1740 - 5 |
| 4201750 | 2D15 | 23 | 1740 - 5 |
| 4202103 | 3F6 | 42 | 3348 - 11 |
| 4202112 | 3B12 | 2 | 3301 - 5 |
| 4202112 | 3F4 | 0 | 3348 - 9 |
| 4202112 | 3F6 | 20 | 3348 - 11 |
| 4202422 | 3E20 | 3 | 3344 - 41 |
| 4202531 | 1D24 | 6 | 0260 - 21 |
| 4202531 | 1E2 | 34 | 0260 - 23 |

**NUMERICAL INDEX - CONTINUED**

| PART NO. | GRID | KEY | PAGE |
|---|---|---|---|
| 4202531 | 1E4 | 24 | 0260 - 25 |
| 4202531 | 1E4 | 34 | 0260 - 25 |
| 4202531 | 1E6 | 39 | 0260 - 27 |
| 4202531 | 1E10 | 22 | 0260 - 31 |
| 4204136 | 3F4 | 17 | 3348 - 9 |
| 4204136 | 3J20 | 35 | 3363 - 21 |
| 4204558 | 2F10 | 19 | 1810 - 25 |
| 4204579 | 2F10 | 23 | 1810 - 25 |
| 4204579 | 2F14 | 3 | 1810 - 29 |
| 4204586 | 2F10 | 32 | 1810 - 25 |
| 4204882 | 3K16 | 8 | 3363 - 41 |
| 4205110 | 3E2 | 43 | 3344 - 23 |
| 4205110 | 3E2 | 57 | 3344 - 23 |
| 4205476 | 2D13 | 14 | 1740 - 3 |
| 4207236 | 2D23 | 44 | 1740 - 13 |
| 4207538 | 2F20 | 19 | 1810 - 35 |
| 4207762 | 2D19 | 15 | 1740 - 9 |
| 4207763 | 2D19 | 16 | 1740 - 9 |
| 4208631 | 3D6 | 31 | 3344 - 3 |
| 4208913 | 3E16 | 5 | 3344 - 37 |
| 4209704 | 1E10 | 6 | 0260 - 31 |
| 4210224 | 3K18 | 5A | 3364 - 3 |
| 4210234 | 1G20 | 3 | 0417 - 3 |
| 4210412 | 2F4 | 16A | 1810 - 19 |
| 4210413 | 2F4 | 16B | 1810 - 19 |
| 4211191 | 2D15 | 31 | 1740 - 5 |
| 4213017 | 1I22 | 10 | 0530 - 3 |
| 4217384 | 1E12 | 25A | 0260 - 33 |
| 4217593 | 1H24 | 32 | 0510 - 3 |
| 4218353 | 3E2 | 59 | 3344 - 23 |
| 4218354 | 3E2 | 45 | 3344 - 23 |
| 4218355 | 3E2 | 44 | 3344 - 23 |
| 4218863 | 2D23 | 3 | 1740 - 13 |
| 4219346 | 3B12 | 8 | 3301 - 5 |
| 4219918 | 3F8 | 74 | 3348 - 13 |
| 4219918 | 3K4 | 24 | 3363 - 29 |
| 4224238 | 1I18 | 0G | 0520 - 5 |
| 4224631 | 2C19 | 2 | 1674 - 15 |
| 4224631 | 3D6 | 14 | 3344 - 3 |
| 4224631 | 3E2 | 17 | 3344 - 23 |
| 4224632 | 2C19 | 12 | 1674 - 15 |
| 4224632 | 3E2 | 60 | 3344 - 23 |
| 4225466 | 3K18 | 7D | 3364 - 3 |
| 4225472 | 3K18 | 7E | 3364 - 3 |
| 4226445 | 2G14 | 9B | 1830 - 5 |
| 4226445 | 2G18 | 19A | 1830 - 9 |
| 4226445 | 2H6 | 8A | 1830 - 21 |
| 4229973 | 1H24 | 32 | 0510 - 3 |
| 4230904 | 1E12 | 43 | 0260 - 33 |
| 4230904 | 3E4 | 17 | 3344 - 25 |
| 4233076 | 2E4 | 11 | 1740 - 19 |
| 4233165 | 3F10 | 15 | 3360 - 3 |
| 4234371 | 3K20 | 47 | 3364 - 5 |
| 4234782 | 2J2 | 86 | 2160 - 5 |
| 4235654 | 1J6 | 4B | 0560 - 9 |
| 4236448 | 2G14 | 55 | 1830 - 5 |
| 4239976 | 3E16 | 4 | 3344 - 37 |
| 4240700 | 2D15 | 25 | 1740 - 5 |
| 4241426 | 1D6 | 6 | 0260 - 3 |
| 4245194 | 1I18 | 5 | 0520 - 5 |
| 4246150 | 2D19 | 13 | 1740 - 9 |
| 4246385 | 3B12 | 14 | 3301 - 5 |
| 4246672 | 3E20 | 4 | 3344 - 41 |
| 4246672 | 3G18 | 8 | 3362 - 3 |
| 4249334 | 3D14 | 13 | 3344 - 11 |
| 4249777 | 1I24 | 0A | 0560 - 3 |
| 4250260 | 3K18 | 22 | 3364 - 3 |
| 4250260 | 3K20 | 36 | 3364 - 5 |
| 4250261 | 3K18 | 23 | 3364 - 3 |
| 4252767 | 3F12 | 82 | 3360 - 5 |
| 4252877 | 3D24 | 12 | 3344 - 21 |
| 4252898 | 1I22 | 8 | 0530 - 3 |
| 4254600 | 1I10 | 5 | 0510 - 13 |
| 4254600 | 2C21 | 5 | 1674 - 17 |
| 4254603 | 2I19 | 6 | 2004 - 3 |
| 4254604 | 2C17 | 4 | 1674 - 13 |
| 4254604 | 2C19 | 6 | 1674 - 15 |
| 4255304 | 3F16 | 61 | 3360 - 9 |
| 4255304 | 3J8 | 13 | 3363 - 9 |
| 4255305 | 3J22 | 21 | 3363 - 23 |
| 4255762 | 2C4 | 10 | 1671 - 3 |
| 4255799 | 2D15 | 2 | 1740 - 5 |
| 4257034 | 2C4 | 15 | 1671 - 3 |
| 4257035 | 2C4 | 1 | 1671 - 3 |
| 4257128 | 1I24 | 12 | 0560 - 3 |
| 4257159 | 1I14 | 4 | 0515 - 5 |
| 4257159 | 1I24 | 9 | 0560 - 3 |
| 4257159 | 2B5 | 41 | 1062 - 5 |
| 4257159 | 2B7 | 41 | 1062 - 7 |
| 4257159 | 2C21 | 2 | 1674 - 17 |
| 4257159 | 2D23 | 30 | 1740 - 13 |
| 4257159 | 3K2 | 33 | 3363 - 27 |
| 4258633 | 1D6 | 11 | 0260 - 3 |
| 4259220 | 1J4 | 36 | 0560 - 7 |
| 4259340 | 2D15 | 19 | 1740 - 5 |
| 4259765 | 2D15 | 22 | 1740 - 5 |
| 4260263 | 3F8 | 65A | 3348 - 13 |
| 4260369 | 2F4 | 20 | 1810 - 19 |
| 4261938 | 3K4 | 2 | 3363 - 29 |
| 4261938 | 3K6 | 2 | 3363 - 31 |
| 4263386 | 1I22 | 6 | 0530 - 3 |
| 4264452 | 3L16 | 74 | 4360 - 3 |
| 4264805 | 2E20 | 37 | 1810 - 11 |
| 4265372 | 2J2 | 68 | 2160 - 5 |
| 4265964 | 3F14 | 29 | 3360 - 7 |
| 4265964 | 3F16 | 29 | 3360 - 9 |
| 4266328 | 3F24 | 4 | 3360 - 17 |
| 4266328 | 3G2 | 4 | 3360 - 19 |
| 4267138 | 1D6 | 9 | 0260 - 3 |
| 4269607 | 1I24 | 13 | 0560 - 3 |
| 4270268 | 2D19 | 6 | 1740 - 9 |
| 4270269 | 2D19 | 7 | 1740 - 9 |
| 4272256 | 2C19 | 13 | 1674 - 15 |
| 4272297 | 2D23 | 4 | 1740 - 13 |
| 4272435 | 2D15 | 18 | 1740 - 5 |
| 4274552 | 2J2 | 32 | 2160 - 5 |
| 4276215 | 2I8 | 27 | 1910 - 21 |
| 4278696 | 2J2 | 2 | 2160 - 5 |
| 4278696 | 2J4 | 0 | 2160 - 21 |
| 4278696 | 3F18 | 35 | 3360 - 11 |
| 4279507 | 3D4 | 3 | 3315 - 7 |
| 4279604 | 2E12 | 19 | 1810 - 3 |
| 4279835 | 2C21 | 31 | 1674 - 17 |
| 4280117 | 3D4 | 0 | 3315 - 7 |
| 4280282 | 1E6 | 38 | 0260 - 27 |
| 4280282 | 1E10 | 21 | 0260 - 31 |
| 4280359 | 2F24 | 0 | 1810 - 39 |
| 4280359 | 2G12 | 12 | 1830 - 3 |
| 4282175 | 1D10 | 17 | 0260 - 7 |
| 4282479 | 1I20 | 12 | 0520 - 7 |
| 4282490 | 1I16 | 4 | 0520 - 3 |
| 4283535 | 3J14 | 3 | 3363 - 15 |
| 4285648 | 2C17 | 5C | 1674 - 13 |
| 4285648 | 2C19 | 5C | 1674 - 15 |
| 4285648 | 2D6 | 0C | 1674 - 27 |
| 4285648 | 2D8 | 12C | 1674 - 29 |
| 4285722 | 3E6 | 24 | 3344 - 27 |
| 4285722 | 3F6 | 37 | 3348 - 11 |
| 4285723 | 3E6 | 23 | 3344 - 27 |
| 4285797 | 3B12 | 6A | 3301 - 5 |
| 4285799 | 3B12 | 5A | 3301 - 5 |
| 4285802 | 3F8 | 70A | 3348 - 13 |
| 4286128 | 1I16 | 0B | 0520 - 3 |
| 4286128 | 1I18 | 0B | 0520 - 5 |
| 4286130 | 1I16 | 12 | 0520 - 3 |
| 4286130 | 1I18 | 11 | 0520 - 5 |
| 4286265 | 3E4 | 19 | 3344 - 25 |
| 4286269 | 3E6 | 18 | 3344 - 27 |
| 4286284 | 3E6 | 31 | 3344 - 27 |
| 4286286 | 3E6 | 12 | 3344 - 27 |
| 4286286 | 3E6 | 31 | 3344 - 27 |
| 4286834 | 2E16 | 8 | 1810 - 7 |
| 4287795 | 2E12 | 15 | 1810 - 3 |
| 4287903 | 2F4 | 24 | 1810 - 19 |
| 4288155 | 1J2 | 3 | 0560 - 5 |
| 4288260 | 1I10 | 8B | 0510 - 13 |
| 4288445 | 2G12 | 34 | 1830 - 3 |
| 4289595 | 1D6 | 14 | 0260 - 3 |
| 4289599 | 1D6 | 22 | 0260 - 3 |
| 4289708 | 2D6 | 27 | 1674 - 27 |
| 4289708 | 2D8 | 1 | 1674 - 29 |
| 429135 | 2D13 | 6 | 1740 - 3 |
| 4292762 | 2D15 | 27 | 1740 - 5 |
| 4292764 | 2D13 | 9 | 1740 - 3 |
| 4292765 | 2D13 | 10 | 1740 - 3 |
| 4292932 | 2D13 | 5 | 1740 - 3 |
| 4293335 | 2E4 | 0E | 1740 - 19 |
| 4293795 | 2D15 | 30 | 1740 - 5 |
| 4293950 | 2J2 | 15 | 2160 - 5 |
| 4293950 | 3F16 | 62 | 3360 - 9 |
| 4293950 | 3J8 | 11 | 3363 - 9 |
| 4294437 | 2E20 | 24 | 1810 - 11 |
| 4294508 | 2I6 | 10 | 1910 - 19 |
| 4294999 | 1J13 | 14 | 0920 - 5 |
| 4294999 | 1J15 | 14 | 0920 - 7 |
| 4295000 | 1J13 | 5 | 0920 - 5 |
| 4295000 | 1J13 | 13 | 0920 - 5 |
| 4295480 | 2F10 | 8D | 1810 - 25 |
| 4295662 | 2F6 | 97 | 1810 - 21 |
| 4295662 | 2F8 | 27 | 1810 - 23 |
| 4295824 | 1D24 | 12A | 0260 - 21 |
| 4295828 | 2B5 | 30 | 1062 - 5 |
| 4295876 | 2F10 | 8E | 1810 - 25 |
| 4296258 | 2D13 | 1 | 1740 - 3 |
| 4296268 | 3D8 | 24 | 3344 - 5 |
| 4296276 | 3F8 | 65A | 3348 - 13 |
| 4296541 | 2D13 | 22 | 1740 - 3 |
| 4296542 | 2D13 | 21 | 1740 - 3 |
| 4296543 | 2D13 | 20 | 1740 - 3 |
| 4297136 | 1I22 | 17 | 0530 - 3 |
| 4297188 | 1J13 | 4 | 0920 - 5 |
| 4298746 | 3E14 | 12 | 3344 - 35 |
| 4299059 | 2E20 | 39 | 1810 - 11 |
| 4300351 | 3C25 | 15 | 3315 - 3 |
| 4300644 | 2B22 | 3 | 1322 - 9 |
| 4303809 | 3H4 | 11 | 3362 - 13 |
| 4303809 | 3H8 | 11 | 3362 - 17 |
| 4303809 | 3H10 | 11 | 3362 - 19 |
| 4305263 | 1J23 | 1 | 0963 - 5 |
| 4306888 | 2J2 | 69 | 2160 - 5 |
| 4307026 | 2C17 | 5E | 1674 - 13 |

## NUMERICAL INDEX - CONTINUED


| PART NO. | GRID | KEY | PAGE |
|---|---|---|---|
| 4307026 | 2C19 | 5E | 1674 - 15 |
| 4307026 | 2D6 | 0E | 1674 - 27 |
| 4307026 | 2D8 | 12E | 1674 - 29 |
| 4307027 | 2C17 | 5F | 1674 - 13 |
| 4307027 | 2C19 | 5F | 1674 - 15 |
| 4307027 | 2D6 | 0F | 1674 - 27 |
| 4307027 | 2D8 | 12F | 1674 - 29 |
| 4310055 | 2J2 | 43 | 2160 - 5 |
| 4310825 | 1J15 | 11 | 0920 - 7 |
| 4312368 | 2D15 | 32 | 1740 - 5 |
| 4313765 | 1E6 | 62A | 0260 - 27 |
| 4314064 | 3G22 | 12 | 3362 - 7 |
| 4314064 | 3H10 | 12 | 3362 - 19 |
| 4315323 | 2C21 | 0B | 1674 - 17 |
| 4315330 | 2B7 | 33 | 1062 - 7 |
| 4315337 | 1D24 | 0A | 0260 - 21 |
| 4317426 | 1D24 | 5 | 0260 - 21 |
| 4317426 | 1E4 | 23 | 0260 - 25 |
| 4320149 | 2F6 | 56 | 1810 - 21 |
| 4320150 | 2F6 | 10 | 1810 - 21 |
| 4320163 | 2F6 | 59 | 1810 - 21 |
| 4320661 | 2H8 | 7B | 1830 - 23 |
| 4320661 | 2H8 | 8B | 1830 - 23 |
| 4326095 | 2F22 | 0B | 1810 - 37 |
| 4326800 | 2C17 | 5 | 1674 - 13 |
| 4326800 | 2C19 | 5 | 1674 - 15 |
| 4326800 | 2D6 | 0 | 1674 - 27 |
| 4326800 | 2D8 | 12 | 1674 - 29 |
| 4326801 | 2C17 | 5A | 1674 - 13 |
| 4326801 | 2C19 | 5A | 1674 - 15 |
| 4326801 | 2D6 | 0A | 1674 - 27 |
| 4326801 | 2D8 | 12A | 1674 - 29 |
| 4326802 | 2C17 | 5B | 1674 - 13 |
| 4326802 | 2C19 | 5B | 1674 - 15 |
| 4326802 | 2D6 | 0B | 1674 - 27 |
| 4326802 | 2D8 | 12B | 1674 - 29 |
| 4326803 | 2C17 | 5D | 1674 - 13 |
| 4326803 | 2C19 | 5D | 1674 - 15 |
| 4326803 | 2D6 | 0D | 1674 - 27 |
| 4326803 | 2D8 | 12D | 1674 - 29 |
| 4327293 | 1D20 | 8B | 0260 - 17 |
| 4327293 | 1D20 | 9B | 0260 - 17 |
| 4327293 | 1D24 | 0B | 0260 - 21 |
| 4327293 | 1E2 | 18 | 0260 - 23 |
| 4327293 | 1E2 | 29B | 0260 - 23 |
| 4327293 | 1E2 | 61B | 0260 - 23 |
| 4327293 | 1E2 | 62B | 0260 - 23 |
| 4327293 | 1E4 | 20B | 0260 - 25 |
| 4327293 | 1E4 | 84B | 0260 - 25 |
| 4327293 | 1E6 | 3B | 0260 - 27 |
| 4327293 | 1E6 | 12B | 0260 - 27 |
| 4327293 | 1E6 | 62B | 0260 - 27 |
| 4327293 | 1E8 | 1B | 0260 - 29 |
| 4327293 | 1E8 | 9B | 0260 - 29 |
| 4327293 | 1E10 | 25B | 0260 - 31 |
| 4327293 | 1E10 | 31B | 0260 - 31 |
| 4327293 | 1E12 | 36B | 0260 - 33 |
| 4327293 | 1E12 | 45B | 0260 - 33 |
| 4327293 | 1H8 | 26 | 0421 - 3 |
| 4327293 | 2B3 | 16B | 1062 - 3 |
| 4327293 | 2B5 | 38B | 1062 - 5 |
| 4327293 | 2B5 | 39B | 1062 - 5 |
| 4327293 | 2B7 | 34B | 1062 - 7 |
| 4327293 | 2B7 | 35B | 1062 - 7 |
| 4327293 | 2D23 | 9B | 1740 - 13 |
| 4327293 | 3B12 | 10B | 3301 - 5 |
| 4327293 | 3B12 | 11B | 3301 - 5 |
| 4327293 | 3B12 | 13B | 3301 - 5 |
| 4327293 | 3B12 | 16B | 3301 - 5 |
| 4327293 | 3B12 | 17B | 3301 - 5 |
| 4327293 | 3B12 | 18B | 3301 - 5 |
| 4327293 | 3E16 | 10B | 3344 - 37 |
| 4327293 | 3E16 | 11B | 3344 - 37 |
| 4327293 | 3E20 | 7B | 3344 - 41 |
| 4327293 | 3E20 | 8B | 3344 - 41 |
| 4327293 | 3E24 | 7B | 3348 - 5 |
| 4327293 | 3E24 | 8B | 3348 - 5 |
| 4327293 | 3E24 | 23B | 3348 - 5 |
| 4327293 | 3E24 | 34B | 3348 - 5 |
| 4327293 | 3F2 | 12B | 3348 - 7 |
| 4327293 | 3F2 | 31B | 3348 - 7 |
| 4327293 | 3F2 | 44B | 3348 - 7 |
| 4327293 | 3F8 | 48B | 3348 - 13 |
| 4327293 | 3F8 | 50B | 3348 - 13 |
| 4327293 | 3F8 | 52B | 3348 - 13 |
| 4327293 | 3F8 | 54B | 3348 - 13 |
| 4327293 | 3F8 | 56B | 3348 - 13 |
| 4327293 | 3F8 | 58B | 3348 - 13 |
| 4327293 | 3F8 | 60B | 3348 - 13 |
| 4327293 | 3F8 | 62B | 3348 - 13 |
| 4327293 | 3J2 | 10 | 3363 - 3 |
| 4327293 | 3J2 | 10B | 3363 - 3 |
| 4327293 | 3J2 | 11B | 3363 - 3 |
| 4327293 | 3J2 | 12B | 3363 - 3 |
| 4327293 | 3J2 | 13B | 3363 - 3 |
| 4327293 | 3J2 | 14B | 3363 - 3 |
| 4327293 | 3J6 | 5B | 3363 - 7 |
| 4327293 | 3J6 | 6B | 3363 - 7 |
| 4327293 | 3J8 | 14B | 3363 - 9 |
| 4327293 | 3J8 | 20B | 3363 - 9 |
| 4327293 | 3J10 | 5B | 3363 - 11 |
| 4327293 | 3J10 | 27B | 3363 - 11 |
| 4327293 | 3J20 | 26B | 3363 - 21 |
| 4327293 | 3J24 | 1B | 3363 - 25 |
| 4327293 | 3J24 | 7B | 3363 - 25 |
| 4327293 | 3J24 | 11B | 3363 - 25 |
| 4327293 | 3J24 | 12B | 3363 - 25 |
| 4327293 | 3J24 | 14B | 3363 - 25 |
| 4327293 | 3K2 | 1B | 3363 - 27 |
| 4327293 | 3K2 | 31B | 3363 - 27 |
| 4327293 | 3K10 | 10B | 3363 - 35 |
| 4327293 | 3K14 | 8B | 3363 - 39 |
| 4327293 | 3L13 | 12 | 4060 - 3 |
| 4327294 | 1D18 | 0B | 0260 - 15 |
| 4327294 | 1D18 | 1B | 0260 - 15 |
| 4327294 | 1D24 | 12B | 0260 - 21 |
| 4327294 | 1E12 | 6B | 0260 - 33 |
| 4327294 | 1E12 | 7B | 0260 - 33 |
| 4327294 | 1E12 | 25B | 0260 - 33 |
| 4327294 | 1J4 | 16 | 0560 - 7 |
| 4327294 | 2H8 | 7B | 1830 - 23 |
| 4327294 | 2H8 | 8B | 1830 - 23 |
| 4327294 | 3B12 | 3B | 3301 - 5 |
| 4327294 | 3B12 | 4B | 3301 - 5 |
| 4327294 | 3B12 | 5B | 3301 - 5 |
| 4327294 | 3B12 | 6B | 3301 - 5 |
| 4327294 | 3F4 | 1B | 3348 - 9 |
| 4327294 | 3F4 | 8B | 3348 - 9 |
| 4327294 | 3F4 | 11B | 3348 - 9 |
| 4327294 | 3F8 | 65B | 3348 - 13 |
| 4327294 | 3F8 | 66B | 3348 - 13 |
| 4327294 | 3F8 | 68B | 3348 - 13 |
| 4327294 | 3F8 | 70B | 3348 - 13 |
| 4327294 | 3F24 | 10B | 3360 - 17 |
| 4327294 | 3F24 | 15B | 3360 - 17 |
| 4327294 | 3G2 | 10B | 3360 - 19 |
| 4327294 | 3G2 | 15B | 3360 - 19 |
| 4327294 | 3G4 | 16B | 3360 - 21 |
| 4327294 | 3G8 | 0B | 3360 - 25 |
| 4327294 | 3G8 | 5B | 3360 - 25 |
| 4327294 | 3G8 | 10B | 3360 - 25 |
| 4327294 | 3G10 | 0B | 3360 - 27 |
| 4327294 | 3G10 | 5B | 3360 - 27 |
| 4327294 | 3G10 | 10B | 3360 - 27 |
| 4327294 | 3G12 | 11B | 3360 - 29 |
| 4327294 | 3J12 | 3B | 3363 - 13 |
| 4327294 | 3J12 | 5B | 3363 - 13 |
| 4327294 | 3J14 | 15B | 3363 - 15 |
| 4327294 | 3J14 | 16B | 3363 - 15 |
| 4327294 | 3J18 | 4B | 3363 - 19 |
| 4327294 | 3J18 | 5B | 3363 - 19 |
| 4327294 | 3J18 | 7B | 3363 - 19 |
| 4327294 | 3K8 | 1B | 3363 - 33 |
| 4327294 | 3K16 | 11B | 3363 - 41 |
| 4327294 | 3K16 | 12B | 3363 - 41 |
| 4330054 | 3F10 | 10 | 3360 - 3 |
| 4330785 | 2E24 | 2 | 1810 - 15 |
| 4332658 | 3L16 | 76 | 4360 - 3 |
| 4332701 | 1J6 | 2A | 0560 - 9 |
| 4333170 | 3F10 | 12 | 3360 - 3 |
| 4333185 | 2F22 | 0 | 1810 - 37 |
| 4333461 | 2G20 | 3 | 1830 - 11 |
| 4334894 | 2J2 | 22 | 2160 - 5 |
| 4334899 | 2J2 | 19 | 2160 - 5 |
| 4336165 | 3G20 | 16A | 3362 - 5 |
| 4336165 | 3G22 | 16A | 3362 - 7 |
| 4336166 | 1E16 | 16A | 0262 - 5 |
| 4336166 | 3G20 | 20A | 3362 - 5 |
| 4336166 | 3G22 | 20A | 3362 - 7 |
| 4336166 | 3G24 | 20A | 3362 - 9 |
| 4336167 | 3G20 | 18A | 3362 - 5 |
| 4336167 | 3G24 | 18A | 3362 - 9 |
| 4336570 | 2C17 | 5 | 1674 - 13 |
| 4336570 | 2C19 | 5 | 1674 - 15 |
| 4336570 | 2D6 | 0 | 1674 - 27 |
| 4336570 | 2D8 | 12 | 1674 - 29 |
| 4336923 | 3L16 | 28 | 4360 - 3 |
| 4336925 | 3L16 | 15 | 4360 - 3 |
| 4336929 | 3L16 | 14 | 4360 - 3 |
| 4337035 | 3F10 | 21 | 3360 - 3 |
| 4337419 | 3F10 | 6 | 3360 - 3 |
| 4337483 | 3F10 | 8 | 3360 - 3 |
| 4337812 | 3F10 | 44 | 3360 - 3 |
| 4337928 | 3F2 | 15 | 3348 - 7 |
| 4338053 | 3F10 | 43 | 3360 - 3 |
| 4338060 | 3F12 | 47 | 3360 - 5 |
| 4338061 | 3F12 | 51 | 3360 - 5 |
| 4338256 | 2D19 | 10 | 1740 - 9 |
| 4338907 | 3F10 | 10 | 3360 - 3 |
| 4338974 | 2F22 | 0C | 1810 - 37 |
| 4340881 | 3B12 | 10A | 3301 - 5 |
| 4341132 | 1E12 | 42 | 0260 - 33 |
| 4341706 | 2I13 | 2 | 2001 - 3 |
| 4341788 | 2H14 | 10 | 1910 - 3 |
| 4341788 | 2H24 | 10 | 1910 - 13 |
| 4341856 | 2D19 | 12 | 1740 - 9 |
| 4341877 | 3K6 | 17 | 3363 - 31 |
| 4342171 | 3F6 | 21 | 3348 - 11 |
| 4342692 | 3J6 | 9 | 3363 - 7 |
| 4342840 | 3F12 | 59 | 3360 - 5 |
| 4342841 | 3F14 | 15 | 3360 - 7 |

**NUMERICAL INDEX - CONTINUED**

| PART NO. | GRID | KEY | PAGE |
|---|---|---|---|
| 4342841 | 3F16 | 15 | 3360 - 9 |
| 4342843 | 3F14 | 14 | 3360 - 7 |
| 4342843 | 3F16 | 14 | 3360 - 9 |
| 4342846 | 3F14 | 41 | 3360 - 7 |
| 4343074 | 3F12 | 73 | 3360 - 5 |
| 4343268 | 1H24 | 2 | 0510 - 3 |
| 4343365 | 3L16 | 77 | 4360 - 3 |
| 4344025 | 1E10 | 5 | 0260 - 31 |
| 4344125 | 2C19 | 0 | 1674 - 15 |
| 4344303 | 1I22 | 18 | 0530 - 3 |
| 4344638 | 2G12 | 4 | 1830 - 3 |
| 4345297 | 3D24 | 3 | 3344 - 21 |
| 4345297 | 3E14 | 2 | 3344 - 35 |
| 4345741 | 2D19 | 17 | 1740 - 9 |
| 4346521 | 3F14 | 28 | 3360 - 7 |
| 4346521 | 3F16 | 28 | 3360 - 9 |
| 4346522 | 3F14 | 27 | 3360 - 7 |
| 4346522 | 3F16 | 27 | 3360 - 9 |
| 4346770 | 2G18 | 11 | 1830 - 9 |
| 4347107 | 3F14 | 24 | 3360 - 7 |
| 4347107 | 3F16 | 24 | 3360 - 9 |
| 4347396 | 2G12 | 6 | 1830 - 3 |
| 4347447 | 2D15 | 28 | 1740 - 5 |
| 4348182 | 3F10 | 7 | 3360 - 3 |
| 4348414 | 3J14 | 1 | 3363 - 15 |
| 4348589 | 2E2 | 2 | 1740 - 17 |
| 4348665 | 3F12 | 74 | 3360 - 5 |
| 4350187 | 2G14 | 9B | 1830 - 5 |
| 4350187 | 2G18 | 19A | 1830 - 9 |
| 4350187 | 2H6 | 8A | 1830 - 21 |
| 4350206 | 2G14 | 5A | 1830 - 5 |
| 4350206 | 2G14 | 19A | 1830 - 5 |
| 4350206 | 2H6 | 7A | 1830 - 21 |
| 4350207 | 2G18 | 22 | 1830 - 9 |
| 4350249 | 2H2 | 9 | 1830 - 17 |
| 4350623 | 3K18 | 7C | 3364 - 3 |
| 4350928 | 3F14 | 49 | 3360 - 7 |
| 4350928 | 3F16 | 49 | 3360 - 9 |
| 4351011 | 2G2 | 2 | 1810 - 41 |
| 4351057 | 2C4 | 7 | 1671 - 3 |
| 4351175 | 3K4 | 13 | 3363 - 29 |
| 4351175 | 3K6 | 13 | 3363 - 31 |
| 4351255 | 2E18 | 4 | 1810 - 9 |
| 4351774 | 3K4 | 14 | 3363 - 29 |
| 4351774 | 3K6 | 14 | 3363 - 31 |
| 4351912 | 1E8 | 1A | 0260 - 29 |
| 4352398 | 3D10 | 1 | 3344 - 7 |
| 4352398 | 3D16 | 1 | 3344 - 13 |
| 4352398 | 3D18 | 1 | 3344 - 15 |
| 4352398 | 3D20 | 1 | 3344 - 17 |
| 4352398 | 3D22 | 1 | 3344 - 19 |
| 4352398 | 3E8 | 2 | 3344 - 29 |
| 4352398 | 3E10 | 2 | 3344 - 31 |
| 4352398 | 3K22 | 1B | 3365 - 3 |
| 4352398 | 3K22 | 2B | 3365 - 3 |
| 4352398 | 3K24 | 1B | 3365 - 5 |
| 4352398 | 3K24 | 2B | 3365 - 5 |
| 4352398 | 3L2 | 1B | 3365 - 7 |
| 4352398 | 3L4 | 1B | 3365 - 9 |
| 4352398 | 3L6 | 1B | 3365 - 11 |
| 4352398 | 3L6 | 2B | 3365 - 11 |
| 4352398 | 3L8 | 1B | 3365 - 13 |
| 4352398 | 3L8 | 2B | 3365 - 13 |
| 4352947 | 2D8 | 3 | 1674 - 29 |
| 4353560 | 1I24 | 18 | 0560 - 3 |
| 4355083 | 3F12 | 50 | 3360 - 5 |
| 4355085 | 3F12 | 46 | 3360 - 5 |
| 4355875 | 3E8 | 1 | 3344 - 29 |
| 4355875 | 3E10 | 1 | 3344 - 31 |
| 4355875 | 3L2 | 2B | 3365 - 7 |
| 4355875 | 3L4 | 2B | 3365 - 9 |
| 4356695 | 2F8 | 15 | 1810 - 23 |
| 4357297 | 1I4 | 13 | 0510 - 7 |
| 4357593 | 2B18 | 11 | 1322 - 5 |
| 4357862 | 2H4 | 10 | 1830 - 19 |
| 4359331 | 2C4 | 8 | 1671 - 3 |
| 4359384 | 2C13 | 16 | 1674 - 9 |
| 4360509 | 1I14 | 0 | 0515 - 5 |
| 4360981 | 3D24 | 2 | 3344 - 21 |
| 4360981 | 3E14 | 3 | 3344 - 35 |
| 4361302 | 2F4 | 17 | 1810 - 19 |
| 4361601 | 2F20 | 15 | 1810 - 35 |
| 4361638 | 1I24 | 4 | 0560 - 3 |
| 4361800 | 2C13 | 2 | 1674 - 9 |
| 4361800 | 2F18 | 2 | 1810 - 33 |
| 4361802 | 2E20 | 4 | 1810 - 11 |
| 4361802 | 2E20 | 8 | 1810 - 11 |
| 4361802 | 2E20 | 15 | 1810 - 11 |
| 4361802 | 2E20 | 19 | 1810 - 11 |
| 4362025 | 3D22 | 2 | 3344 - 19 |
| 4362135 | 2F8 | 6 | 1810 - 23 |
| 4362178 | 2D6 | 17 | 1674 - 27 |
| 4362700 | 2F4 | 25A | 1810 - 19 |
| 4363754 | 3D4 | 1 | 3315 - 7 |
| 4363931 | 2B22 | 4 | 1322 - 9 |
| 4364009 | 3I24 | 9 | 3362 - 57 |
| 4364504 | 2F4 | 18 | 1810 - 19 |
| 4365826 | 1J23 | 2 | 0963 - 5 |
| 4365826 | 2B3 | 13 | 1062 - 3 |
| 4365826 | 3F12 | 64A | 3360 - 5 |
| 4366592 | 2D6 | 18 | 1674 - 27 |
| 4366623 | 2G12 | 3 | 1830 - 3 |
| 4366623 | 2G12 | 4 | 1830 - 3 |
| 4366745 | 3B12 | 16A | 3301 - 5 |
| 4367375 | 2C13 | 15 | 1674 - 9 |
| 4367481 | 2F4 | 44 | 1810 - 19 |
| 4368973 | 2I13 | 1 | 2001 - 3 |
| 4369148 | 2J2 | 12 | 2160 - 5 |
| 4369262 | 3F20 | 20 | 3360 - 13 |
| 4369308 | 2H8 | 7A | 1830 - 23 |
| 4369448 | 3J18 | 7A | 3363 - 19 |
| 4369472 | 2F22 | 0A | 1810 - 37 |
| 4369547 | 2F4 | 21 | 1810 - 19 |
| 4369549 | 2F4 | 23 | 1810 - 19 |
| 4369569 | 2F4 | 45 | 1810 - 19 |
| 4369615 | 2F14 | 2 | 1810 - 29 |
| 4369616 | 2F14 | 4 | 1810 - 29 |
| 4369619 | 2F14 | 71 | 1810 - 29 |
| 4369627 | 2F6 | 71 | 1810 - 21 |
| 4369645 | 2F8 | 3 | 1810 - 23 |
| 4369653 | 2F8 | 54 | 1810 - 23 |
| 4369661 | 2F8 | 13 | 1810 - 23 |
| 4369674 | 2F14 | 11 | 1810 - 29 |
| 4369675 | 2F6 | 55 | 1810 - 21 |
| 4369817 | 2C5 | 1 | 1674 - 1 |
| 4369932 | 2D8 | 4 | 1674 - 29 |
| 4370152 | 1J15 | 5A | 0920 - 7 |
| 4371242 | 1H24 | 14 | 0510 - 3 |
| 4371258 | 1H24 | 18 | 0510 - 3 |
| 4371825 | 3K18 | 11D | 3364 - 3 |
| 4372088 | 2F6 | 21 | 1810 - 21 |
| 4372088 | 2F12 | 85 | 1810 - 27 |
| 4372091 | 2F8 | 7 | 1810 - 23 |
| 4372093 | 2F8 | 56 | 1810 - 23 |
| 4372200 | 2G8 | 8 | 1821 - 7 |
| 4372210 | 2F10 | 28 | 1810 - 25 |
| 4372212 | 2F8 | 21 | 1810 - 23 |
| 4372212 | 2F12 | 61 | 1810 - 27 |
| 4372214 | 2F10 | 22 | 1810 - 25 |
| 4372219 | 2F6 | 20 | 1810 - 21 |
| 4372219 | 2F6 | 60 | 1810 - 21 |
| 4372219 | 2F10 | 11 | 1810 - 25 |
| 4372220 | 2F14 | 63 | 1810 - 29 |
| 4372221 | 2F14 | 50 | 1810 - 29 |
| 4372224 | 2F6 | 16 | 1810 - 21 |
| 4372225 | 2F10 | 7 | 1810 - 25 |
| 4372261 | 2F8 | 15 | 1810 - 23 |
| 4372619 | 1I24 | 18A | 0560 - 3 |
| 4372620 | 1I24 | 18B | 0560 - 3 |
| 4374265 | 1I24 | 7 | 0560 - 3 |
| 4374958 | 2G20 | 5 | 1830 - 11 |
| 4376846 | 3J22 | 31 | 3363 - 23 |
| 4377817 | 2F10 | 44 | 1810 - 25 |
| 4377817 | 2F12 | 69 | 1810 - 27 |
| 4379989 | 2I8 | 3F | 1910 - 21 |
| 4380534 | 2G8 | 13 | 1821 - 7 |
| 4381572 | 2C15 | 65 | 1674 - 11 |
| 4381573 | 1J15 | 12 | 0920 - 7 |
| 4381859 | 3E12 | 1 | 3344 - 33 |
| 4381859 | 3L10 | 1B | 3365 - 15 |
| 4381859 | 3L10 | 2B | 3365 - 15 |
| 4382207 | 1H24 | 18 | 0510 - 3 |
| 4382432 | 2G8 | 9 | 1821 - 7 |
| 4382816 | 2G14 | 17 | 1830 - 5 |
| 4382832 | 2G16 | 77 | 1830 - 7 |
| 4382860 | 2G16 | 76 | 1830 - 7 |
| 4382882 | 2G14 | 56 | 1830 - 5 |
| 4382882 | 2G16 | 84 | 1830 - 7 |
| 4382883 | 2G14 | 54 | 1830 - 5 |
| 4382885 | 2F8 | 23 | 1810 - 23 |
| 4384188 | 1I10 | 7 | 0510 - 13 |
| 4384239 | 2G8 | 3 | 1821 - 7 |
| 4384758 | 2C15 | 68 | 1674 - 11 |
| 4385202 | 3G8 | 5A | 3360 - 25 |
| 4385325 | 3F4 | 13 | 3348 - 9 |
| 4386450 | 2F14 | 9 | 1810 - 29 |
| 4386452 | 2F14 | 7 | 1810 - 29 |
| 4386712 | 2B22 | 5 | 1322 - 9 |
| 4387837 | 2F4 | 27 | 1810 - 19 |
| 4389011 | 3K8 | 1A | 3363 - 33 |
| 4389104 | 1D18 | 0A | 0260 - 15 |
| 4391755 | 2G14 | 50 | 1830 - 5 |
| 4392796 | 2G4 | 0B | 1821 - 3 |
| 4392798 | 2G4 | 0D | 1821 - 3 |
| 4392799 | 2G4 | 0E | 1821 - 3 |
| 4392800 | 2G4 | 6 | 1821 - 3 |
| 4392802 | 2G4 | 8 | 1821 - 3 |
| 4392805 | 2G4 | 11 | 1821 - 3 |
| 4396083 | 3D4 | 2 | 3315 - 7 |
| 4396451 | 1I22 | 16 | 0530 - 3 |
| 4396809 | 1I10 | 8A | 0510 - 13 |
| 4400079 | 2F6 | 7 | 1810 - 21 |
| 4400087 | 2F8 | 61 | 1810 - 23 |
| 4400442 | 3F16 | 50 | 3360 - 9 |
| 4401378 | 3K2 | 28 | 3363 - 27 |
| 4402460 | 3D6 | 34 | 3344 - 3 |
| 4402460 | 3E2 | 42 | 3344 - 23 |
| 4402476 | 2F4 | 28 | 1810 - 19 |
| 4402481 | 3L16 | 4 | 4360 - 3 |
| 4402599 | 3K2 | 34 | 3363 - 27 |
| 4402637 | 3L16 | 7 | 4360 - 3 |

**NUMERICAL INDEX - CONTINUED**

| PART NO. | GRID | KEY | PAGE |
|---|---|---|---|
| 4403082 | 3L16 | 27 | 4360 - 3 |
| 4403327 | 2F10 | 8C | 1810 - 25 |
| 4403371 | 3L16 | 24 | 4360 - 3 |
| 4404506 | 3L16 | 26 | 4360 - 3 |
| 4405128 | 2G10 | 1 | 1821 - 9 |
| 4405194 | 2G20 | 7 | 1830 - 11 |
| 4405814 | 2G20 | 6 | 1830 - 11 |
| 4405815 | 2G20 | 9 | 1830 - 11 |
| 4407253 | 3I20 | 0 | 3362 - 53 |
| 4407253 | 3K14 | 0 | 3363 - 39 |
| 4408661 | 3K18 | 7A | 3364 - 3 |
| 4409122 | 3D8 | 74 | 3344 - 5 |
| 4409178 | 3D8 | 75 | 3344 - 5 |
| 4409394 | 2H24 | 0B | 1910 - 13 |
| 4409394 | 2H24 | 0G | 1910 - 13 |
| 4409394 | 2I4 | 0 | 1910 - 17 |
| 4409395 | 2H24 | 0B | 1910 - 13 |
| 4409395 | 2I4 | 7 | 1910 - 17 |
| 4409396 | 2H14 | 3H | 1910 - 3 |
| 4409396 | 2H24 | 0G | 1910 - 13 |
| 4409396 | 2I2 | 14 | 1910 - 15 |
| 4409396 | 2I4 | 14 | 1910 - 17 |
| 4409446 | 2H14 | 3B | 1910 - 3 |
| 4409446 | 2H14 | 3H | 1910 - 3 |
| 4409446 | 2I2 | 0 | 1910 - 15 |
| 4409447 | 2H14 | 3B | 1910 - 3 |
| 4409447 | 2I2 | 7 | 1910 - 15 |
| 4409999 | 2E24 | 1 | 1810 - 15 |
| 4411001 | 3E24 | 37 | 3348 - 5 |
| 4411058 | 1J11 | 6 | 0920 - 3 |
| 4411535 | 3L16 | 6 | 4360 - 3 |
| 4411793 | 1I2 | 2 | 0510 - 5 |
| 4411821 | 2F14 | 3 | 1810 - 29 |
| 4411911 | 1F18 | 10 | 0407 - 5 |
| 4412573 | 2H14 | 3F | 1910 - 3 |
| 4413801 | 2G20 | 13 | 1830 - 11 |
| 4413969 | 1J11 | 10 | 0920 - 3 |
| 4413974 | 2C15 | 47 | 1674 - 11 |
| 4414207 | 2C15 | 43 | 1674 - 11 |
| 4414207 | 2D4 | 5 | 1674 - 25 |
| 4414207 | 2D6 | 23 | 1674 - 27 |
| 4414207 | 2D8 | 11 | 1674 - 29 |
| 4414207 | 3E18 | 1 | 3344 - 39 |
| 4415024 | 2E20 | 22 | 1810 - 11 |
| 4416605 | 2J2 | 17 | 2160 - 5 |
| 4417026 | 2I8 | 3D | 1910 - 21 |
| 4417500 | 1J19 | 88 | 0962 - 5 |
| 4418142 | 2G14 | 27 | 1830 - 5 |
| 4418143 | 2G14 | 26 | 1830 - 5 |
| 4418144 | 2G14 | 25 | 1830 - 5 |
| 4418147 | 2G16 | 81 | 1830 - 7 |
| 4418149 | 2G16 | 82 | 1830 - 7 |
| 4418301 | 2C21 | 3 | 1674 - 17 |
| 4419601 | 1I16 | 0G | 0520 - 3 |
| 4420392 | 3J20 | 20 | 3363 - 21 |
| 4420423 | 3K8 | 15 | 3363 - 33 |
| 4420531 | 2F8 | 56 | 1810 - 23 |
| 4420775 | 2C4 | 19 | 1671 - 3 |
| 4420875 | 2E20 | 0 | 1810 - 11 |
| 4420876 | 2E20 | 3 | 1810 - 11 |
| 4420877 | 2E20 | 7 | 1810 - 11 |
| 4420878 | 2E20 | 11 | 1810 - 11 |
| 4420879 | 2E20 | 14 | 1810 - 11 |
| 4420880 | 2E20 | 18 | 1810 - 11 |
| 4421067 | 1G22 | 69A | 0418 - 3 |
| 4422973 | 1D18 | 1A | 0260 - 15 |
| 4423345 | 3F14 | 48 | 3360 - 7 |
| 4423345 | 3F16 | 48 | 3360 - 9 |
| 4423418 | 2C21 | 0A | 1674 - 17 |
| 4423699 | 2E24 | 11 | 1810 - 15 |
| 4423995 | 1I2 | 1 | 0510 - 5 |
| 4424157 | 2H16 | 10 | 1910 - 5 |
| 4424157 | 2H18 | 10 | 1910 - 7 |
| 4424425 | 2D21 | 0 | 1740 - 11 |
| 4424425 | 3D6 | 24 | 3344 - 3 |
| 4424425 | 3E2 | 32 | 3344 - 23 |
| 4425139 | 1I10 | 4 | 0510 - 13 |
| 4425214 | 1J13 | 3 | 0920 - 5 |
| 4425215 | 1J13 | 2 | 0920 - 5 |
| 4425216 | 1J15 | 7 | 0920 - 7 |
| 4425217 | 1J15 | 10 | 0920 - 7 |
| 4425218 | 1J13 | 10 | 0920 - 5 |
| 4425444 | 2C4 | 22 | 1671 - 3 |
| 4425575 | 2H14 | 3E | 1910 - 3 |
| 4425576 | 2H14 | 1D | 1910 - 3 |
| 4425980 | 2E2 | 1 | 1740 - 17 |
| 4426044 | 1I4 | 9 | 0510 - 7 |
| 4426045 | 1I4 | 8 | 0510 - 7 |
| 4426128 | 2D21 | 3 | 1740 - 11 |
| 4426128 | 3D6 | 25 | 3344 - 3 |
| 4426128 | 3E2 | 33 | 3344 - 23 |
| 4426155 | 2G12 | 22 | 1830 - 3 |
| 4426156 | 2H4 | 8 | 1830 - 19 |
| 4426157 | 2G12 | 30 | 1830 - 3 |
| 4426158 | 2G12 | 38 | 1830 - 3 |
| 4426159 | 2H2 | 3 | 1830 - 17 |
| 4426160 | 2H2 | 0 | 1830 - 17 |
| 4426247 | 2I6 | 15 | 1910 - 19 |
| 4426354 | 2C15 | 66 | 1674 - 11 |
| 4426354 | 2E22 | 4 | 1810 - 13 |
| 4426362 | 1J15 | 1A | 0920 - 7 |
| 4426365 | 1J15 | 4 | 0920 - 7 |
| 4426366 | 1J15 | 5 | 0920 - 7 |
| 4426367 | 1J15 | 6 | 0920 - 7 |
| 4426368 | 1J15 | 8 | 0920 - 7 |
| 4426369 | 1J15 | 9 | 0920 - 7 |
| 4426370 | 1J15 | 13 | 0920 - 7 |
| 4427493 | 1I22 | 3 | 0530 - 3 |
| 4427782 | 3E24 | 32 | 3348 - 5 |
| 4427997 | 2H8 | 8A | 1830 - 23 |
| 4428213 | 2C15 | 45 | 1674 - 11 |
| 4428910 | 2C13 | 7D | 1674 - 9 |
| 4428911 | 2C13 | 7E | 1674 - 9 |
| 4428919 | 2D25 | 3 | 1740 - 15 |
| 4429017 | 3D24 | 5 | 3344 - 21 |
| 4429044 | 2I6 | 8 | 1910 - 19 |
| 4429045 | 2I6 | 7 | 1910 - 19 |
| 4430382 | 2D10 | 1 | 1674 - 31 |
| 4430601 | 1I18 | 0 | 0520 - 5 |
| 4430912 | 1F18 | 9 | 0407 - 5 |
| 4431079 | 2G12 | 46 | 1830 - 3 |
| 4431079 | 2G14 | 0 | 1830 - 5 |
| 4431079 | 2G16 | 0 | 1830 - 7 |
| 4431080 | 2G12 | 48 | 1830 - 3 |
| 4431081 | 2G20 | 0 | 1830 - 11 |
| 4431081 | 2G22 | 0 | 1830 - 13 |
| 4431082 | 2G20 | 2 | 1830 - 11 |
| 4431227 | 2G12 | 26 | 1830 - 3 |
| 4431859 | 2F4 | 49 | 1810 - 19 |
| 4432965 | 2H4 | 11 | 1830 - 19 |
| 4433064 | 2H2 | 8 | 1830 - 17 |
| 4433327 | 3F14 | 38 | 3360 - 7 |
| 4433327 | 3F16 | 38 | 3360 - 9 |
| 4433619 | 1J6 | 4A | 0560 - 9 |
| 4433793 | 2H4 | 0 | 1830 - 19 |
| 4433794 | 2H4 | 7 | 1830 - 19 |
| 4434017 | 3K18 | 11 | 3364 - 3 |
| 4434951 | 3B10 | 16C | 3301 - 3 |
| 4434951 | 3B10 | 17C | 3301 - 3 |
| 4434951 | 3D8 | 72 | 3344 - 5 |
| 4434953 | 3D6 | 33 | 3344 - 3 |
| 4434953 | 3D8 | 71 | 3344 - 5 |
| 4434953 | 3E2 | 58 | 3344 - 23 |
| 4435024 | 3F14 | 6 | 3360 - 7 |
| 4435024 | 3F16 | 6 | 3360 - 9 |
| 4435025 | 3F14 | 5 | 3360 - 7 |
| 4435025 | 3F16 | 5 | 3360 - 9 |
| 4435123 | 1B5 | 1 | 0250 - 3 |
| 4435123 | 3B10 | 28 | 3301 - 3 |
| 4435123 | 3D8 | 54 | 3344 - 5 |
| 4435124 | 3B10 | 29 | 3301 - 3 |
| 4435124 | 3D8 | 53 | 3344 - 5 |
| 4435126 | 3D6 | 9 | 3344 - 3 |
| 4435126 | 3D8 | 51 | 3344 - 5 |
| 4435126 | 3E2 | 10 | 3344 - 23 |
| 4435129 | 2D15 | 9 | 1740 - 5 |
| 4435129 | 3D6 | 8 | 3344 - 3 |
| 4435239 | 3B10 | 9D | 3301 - 3 |
| 4435239 | 3B10 | 16B | 3301 - 3 |
| 4435239 | 3B10 | 17B | 3301 - 3 |
| 4435240 | 3D6 | 7 | 3344 - 3 |
| 4435584 | 3E2 | 11 | 3344 - 23 |
| 4436254 | 3J8 | 3 | 3363 - 9 |
| 4436264 | 3E16 | 10A | 3344 - 37 |
| 4436271 | 1J23 | 2 | 0963 - 5 |
| 4436271 | 2B3 | 13 | 1062 - 3 |
| 4436271 | 3F12 | 64 | 3360 - 5 |
| 4436442 | 2G12 | 17 | 1830 - 3 |
| 4436535 | 1E8 | 14 | 0260 - 29 |
| 4436535 | 3J20 | 33 | 3363 - 21 |
| 4436535 | 3J22 | 33 | 3363 - 23 |
| 4436535 | 3K10 | 12 | 3363 - 35 |
| 4436536 | 3F14 | 52 | 3360 - 7 |
| 4436536 | 3F16 | 55 | 3360 - 9 |
| 4436646 | 2H8 | 7A | 1830 - 23 |
| 4436646 | 2H8 | 8A | 1830 - 23 |
| 4436696 | 3K6 | 5 | 3363 - 31 |
| 4436697 | 3K6 | 6 | 3363 - 31 |
| 4436736 | 2C13 | 7G | 1674 - 9 |
| 4436736 | 2C13 | 7I | 1674 - 9 |
| 4436800 | 3F16 | 63 | 3360 - 9 |
| 4437088 | 3K6 | 9 | 3363 - 31 |
| 4437104 | 3D24 | 6 | 3344 - 21 |
| 4437250 | 1F18 | 14A | 0407 - 5 |
| 4437397 | 3J8 | 24 | 3363 - 9 |
| 4437513 | 2C9 | 1 | 1674 - 5 |
| 4437513 | 2C11 | 1 | 1674 - 7 |
| 4437652 | 3E24 | 23A | 3348 - 5 |
| 4437738 | 3E16 | 11A | 3344 - 37 |
| 4437833 | 3K18 | 11A | 3364 - 3 |
| 4437836 | 3K18 | 11E | 3364 - 3 |
| 4437837 | 3K18 | 11C | 3364 - 3 |
| 4437838 | 3K18 | 11B | 3364 - 3 |
| 4438015 | 2C13 | 7F | 1674 - 9 |
| 4438059 | 2J2 | 61 | 2160 - 5 |
| 4438258 | 3K6 | 7 | 3363 - 31 |
| 4438258 | 3K6 | 8 | 3363 - 31 |
| 4438258 | 3K6 | 9 | 3363 - 31 |
| 4438260 | 3K6 | 8 | 3363 - 31 |
| 4438324 | 2I6 | 0G | 1910 - 19 |
| 4439003 | 2G18 | 12 | 1830 - 9 |

**NUMERICAL INDEX - CONTINUED**

| PART NO. | GRID | KEY | PAGE |
|---|---|---|---|
| 4439228 | 2I19 | 1 | 2004 - 3 |
| 4439229 | 2I19 | 2 | 2004 - 3 |
| 4439897 | 2C13 | 18 | 1674 - 9 |
| 4439953 | 3B12 | 13A | 3301 - 5 |
| 4441059 | 2G12 | 43 | 1830 - 3 |
| 4441061 | 2G12 | 44 | 1830 - 3 |
| 4441117 | 2E20 | 30 | 1810 - 11 |
| 4441130 | 2G12 | 50 | 1830 - 3 |
| 4441131 | 2G12 | 51 | 1830 - 3 |
| 4441139 | 2G12 | 41 | 1830 - 3 |
| 4441190 | 1J8 | 1 | 0560 - 11 |
| 4441725 | 1J6 | 2B | 0560 - 9 |
| 4442272 | 3J24 | 11A | 3363 - 25 |
| 4442322 | 3J6 | 6A | 3363 - 7 |
| 4442331 | 3J10 | 30 | 3363 - 11 |
| 4443487 | 1I8 | 4 | 0510 - 11 |
| 4443773 | 3K18 | 15 | 3364 - 3 |
| 4443880 | 3D6 | 35 | 3344 - 3 |
| 4443880 | 3E2 | 41 | 3344 - 23 |
| 4443880 | 3E2 | 56 | 3344 - 23 |
| 4443882 | 3D10 | 5 | 3344 - 7 |
| 4444284 | 2D15 | 12 | 1740 - 5 |
| 4444284 | 3E2 | 21 | 3344 - 23 |
| 4444285 | 2D15 | 13 | 1740 - 5 |
| 4444285 | 3E2 | 22 | 3344 - 23 |
| 4444286 | 2D15 | 15 | 1740 - 5 |
| 4444286 | 3D6 | 18 | 3344 - 3 |
| 4444286 | 3D8 | 57 | 3344 - 5 |
| 4444286 | 3E2 | 24 | 3344 - 23 |
| 4444286 | 3E22 | 16 | 3348 - 3 |
| 4444287 | 2D15 | 16 | 1740 - 5 |
| 4444287 | 3D6 | 19 | 3344 - 3 |
| 4444287 | 3D8 | 58 | 3344 - 5 |
| 4444287 | 3E2 | 25 | 3344 - 23 |
| 4444287 | 3E22 | 17 | 3348 - 3 |
| 4444288 | 3B10 | 42 | 3301 - 3 |
| 4444288 | 3E22 | 32 | 3348 - 3 |
| 4444289 | 3B10 | 43 | 3301 - 3 |
| 4444289 | 3E22 | 33 | 3348 - 3 |
| 4444290 | 3B10 | 40 | 3301 - 3 |
| 4444290 | 3D8 | 59 | 3344 - 5 |
| 4444291 | 3B10 | 41 | 3301 - 3 |
| 4444291 | 3D8 | 60 | 3344 - 5 |
| 4444381 | 2J2 | 29 | 2160 - 5 |
| 4444634 | 2F14 | 78 | 1810 - 29 |
| 4444664 | 2F8 | 10 | 1810 - 23 |
| 4444755 | 3E2 | 30 | 3344 - 23 |
| 4444839 | 1B5 | 5 | 0250 - 3 |
| 4444840 | 1B5 | 6 | 0250 - 3 |
| 4445220 | 2F24 | 22 | 1810 - 39 |
| 4445352 | 3L16 | 35 | 4360 - 3 |
| 4445714 | 3L13 | 11 | 4060 - 3 |
| 4445916 | 2H2 | 19 | 1830 - 17 |
| 4445917 | 2E22 | 0 | 1810 - 13 |
| 4445932 | 2E22 | 0A | 1810 - 13 |
| 4446406 | 1F18 | 14B | 0407 - 5 |
| 4446406 | 1F18 | 15B | 0407 - 5 |
| 4446657 | 2G20 | 14 | 1830 - 11 |
| 4446688 | 2C4 | 29 | 1671 - 3 |
| 4447016 | 3D8 | 73 | 3344 - 5 |
| 4447072 | 2H4 | 11 | 1830 - 19 |
| 4447264 | 3F14 | 39 | 3360 - 7 |
| 4447335 | 1F24 | 13 | 0409 - 3 |
| 4447335 | 1F24 | 41 | 0409 - 3 |
| 4447335 | 1G6 | 87 | 0413 - 3 |
| 4447335 | 1H6 | 88 | 0420 - 5 |
| 4447338 | 1G6 | 62 | 0413 - 3 |
| 4447338 | 1G14 | 20 | 0414 - 3 |
| 4447338 | 1G16 | 62 | 0416 - 3 |
| 4447338 | 1H2 | 6B | 0419 - 3 |
| 4447493 | 1I20 | 4 | 0520 - 7 |
| 4447589 | 2B5 | 12 | 1062 - 5 |
| 4447722 | 2G18 | 19 | 1830 - 9 |
| 4447765 | 2D6 | 3 | 1674 - 27 |
| 4447868 | 2D6 | 4 | 1674 - 27 |
| 4447869 | 1I20 | 3 | 0520 - 7 |
| 4447870 | 2D6 | 8 | 1674 - 27 |
| 4447890 | 3D6 | 20 | 3344 - 3 |
| 4448315 | 2F8 | 72 | 1810 - 23 |
| 4448318 | 2F12 | 18 | 1810 - 27 |
| 4448398 | 3K22 | 50 | 3365 - 3 |
| 4448398 | 3K24 | 50 | 3365 - 5 |
| 4448398 | 3L2 | 50 | 3365 - 7 |
| 4448398 | 3L4 | 50 | 3365 - 9 |
| 4448402 | 3K18 | 15 | 3364 - 3 |
| 4448658 | 2I10 | 2B | 1910 - 23 |
| 4448755 | 3J18 | 5A | 3363 - 19 |
| 4448872 | 3J24 | 7A | 3363 - 25 |
| 4448990 | 2E20 | 35 | 1810 - 11 |
| 4449019 | 2C15 | 64 | 1674 - 11 |
| 4449068 | 2H2 | 5 | 1830 - 17 |
| 4449250 | 2C21 | 17 | 1674 - 17 |
| 4449272 | 3J2 | 10A | 3363 - 3 |
| 4449348 | 2H2 | 17 | 1830 - 17 |
| 4449361 | 1I24 | 5 | 0560 - 3 |
| 4449362 | 1I24 | 6 | 0560 - 3 |
| 4449509 | 2I15 | 5 | 2002 - 3 |
| 4449509 | 2I17 | 7 | 2002 - 5 |
| 4449757 | 2I19 | 1 | 2004 - 3 |
| 4449758 | 2I19 | 2 | 2004 - 3 |
| 4450008 | 2H10 | 0 | 1830 - 25 |
| 4450011 | 3D8 | 62 | 3344 - 5 |
| 4450012 | 3D6 | 21 | 3344 - 3 |
| 4450012 | 3D8 | 61 | 3344 - 5 |
| 4450013 | 3E2 | 29 | 3344 - 23 |
| 4450206 | 2G14 | 9A | 1830 - 5 |
| 4450427 | 3J24 | 12A | 3363 - 25 |
| 4450428 | 3J24 | 12A | 3363 - 25 |
| 4450435 | 3K4 | 8 | 3363 - 29 |
| 4450436 | 3K4 | 10 | 3363 - 29 |
| 4450437 | 3K4 | 7 | 3363 - 29 |
| 4450439 | 3K4 | 6 | 3363 - 29 |
| 4450494 | 2C21 | 34 | 1674 - 17 |
| 4451036 | 2J2 | 88 | 2160 - 5 |
| 4451039 | 3F12 | 85 | 3360 - 5 |
| 4451498 | 3F14 | 22 | 3360 - 7 |
| 4451498 | 3F16 | 22 | 3360 - 9 |
| 4451668 | 3D16 | 2 | 3344 - 13 |
| 4451668 | 3D18 | 2 | 3344 - 15 |
| 4451668 | 3E8 | 11 | 3344 - 29 |
| 4451668 | 3E10 | 11 | 3344 - 31 |
| 4451681 | 2D6 | 16 | 1674 - 27 |
| 4451784 | 3I10 | 24 | 3362 - 43 |
| 4451785 | 3I10 | 25 | 3362 - 43 |
| 4451785 | 3I12 | 25 | 3362 - 45 |
| 4451786 | 3I12 | 26 | 3362 - 45 |
| 4451787 | 3I10 | 37 | 3362 - 43 |
| 4451788 | 3I10 | 38 | 3362 - 43 |
| 4451789 | 3I10 | 39 | 3362 - 43 |
| 4451789 | 3I12 | 39 | 3362 - 45 |
| 4451790 | 3I12 | 40 | 3362 - 45 |
| 4451797 | 3I12 | 41 | 3362 - 45 |
| 4451995 | 3J8 | 24 | 3363 - 9 |
| 4452158 | 2C21 | 31 | 1674 - 17 |
| 4452159 | 2C4 | 20 | 1671 - 3 |
| 4452160 | 2C13 | 20 | 1674 - 9 |
| 4452161 | 1J6 | 13 | 0560 - 9 |
| 4452162 | 1J6 | 14 | 0560 - 9 |
| 4452163 | 1J6 | 15 | 0560 - 9 |
| 4452164 | 1J6 | 16 | 0560 - 9 |
| 4452165 | 1H6 | 4 | 0420 - 5 |
| 4452165 | 1H6 | 9 | 0420 - 5 |
| 4452165 | 1J6 | 17 | 0560 - 9 |
| 4452187 | 2G12 | 52 | 1830 - 3 |
| 4452188 | 2G12 | 53 | 1830 - 3 |
| 4452290 | 3J20 | 10 | 3363 - 21 |
| 4452341 | 3J20 | 12 | 3363 - 21 |
| 4452342 | 3J20 | 14 | 3363 - 21 |
| 4452432 | 3E18 | 3 | 3344 - 39 |
| 4452613 | 2E20 | 27 | 1810 - 11 |
| 4452647 | 3I14 | 18 | 3362 - 47 |
| 4452648 | 3I14 | 20 | 3362 - 47 |
| 4452732 | 1E8 | 9A | 0260 - 29 |
| 4452737 | 3F24 | 7 | 3360 - 17 |
| 4452737 | 3G2 | 7 | 3360 - 19 |
| 4452737 | 3K14 | 8A | 3363 - 39 |
| 4453023 | 3F8 | 60A | 3348 - 13 |
| 4453198 | 3H6 | 11 | 3362 - 15 |
| 4453604 | 1H24 | 5 | 0510 - 3 |
| 4453637 | 1I6 | 1 | 0510 - 9 |
| 4453639 | 1I6 | 0 | 0510 - 9 |
| 4453654 | 2I8 | 3E | 1910 - 21 |
| 4453662 | 2F6 | 26 | 1810 - 21 |
| 4453663 | 2F6 | 31 | 1810 - 21 |
| 4453665 | 2F6 | 93 | 1810 - 21 |
| 4453666 | 2F6 | 95 | 1810 - 21 |
| 4453667 | 2F6 | 22 | 1810 - 21 |
| 4453670 | 2F8 | 20 | 1810 - 23 |
| 4453671 | 2F8 | 22 | 1810 - 23 |
| 4453672 | 2F6 | 27 | 1810 - 21 |
| 4453675 | 2F8 | 57 | 1810 - 23 |
| 4453686 | 2F4 | 33 | 1810 - 19 |
| 4453687 | 2F4 | 32 | 1810 - 19 |
| 4453690 | 2F4 | 31 | 1810 - 19 |
| 4453760 | 2H24 | 0E | 1910 - 13 |
| 4453765 | 2H24 | 0F | 1910 - 13 |
| 4453819 | 3I14 | 11 | 3362 - 47 |
| 4453820 | 3I14 | 12 | 3362 - 47 |
| 4453874 | 2G8 | 7 | 1821 - 7 |
| 4453908 | 1I18 | 0A | 0520 - 5 |
| 4453909 | 1I16 | 0C | 0520 - 3 |
| 4453909 | 1I18 | 0C | 0520 - 5 |
| 4453910 | 1I16 | 0D | 0520 - 3 |
| 4453910 | 1I18 | 0D | 0520 - 5 |
| 4453911 | 1I16 | 0E | 0520 - 3 |
| 4453911 | 1I18 | 0E | 0520 - 5 |
| 4453912 | 1I16 | 0H | 0520 - 3 |
| 4453912 | 1I18 | 0H | 0520 - 5 |
| 4454052 | 1H24 | 6 | 0510 - 3 |
| 4454057 | 1H24 | 20 | 0510 - 3 |
| 4454090 | 1H24 | 3 | 0510 - 3 |
| 4454091 | 1H24 | 4 | 0510 - 3 |
| 4454094 | 1H24 | 7 | 0510 - 3 |
| 4454095 | 1H24 | 8 | 0510 - 3 |
| 4454097 | 1H24 | 10 | 0510 - 3 |
| 4454099 | 1H24 | 12 | 0510 - 3 |
| 4454100 | 1H24 | 13 | 0510 - 3 |
| 4454103 | 1H24 | 17 | 0510 - 3 |
| 4454105 | 1H24 | 22 | 0510 - 3 |
| 4454109 | 1H24 | 26 | 0510 - 3 |
| 4454110 | 1H24 | 27 | 0510 - 3 |

## NUMERICAL INDEX - CONTINUED

| PART NO. | GRID | KEY | PAGE |
|---|---|---|---|
| 4454285 | 2I15 | 12 | 2002 - 3 |
| 4454418 | 3K18 | 5B | 3364 - 3 |
| 4454462 | 1J6 | 10 | 0560 - 9 |
| 4454560 | 3D8 | 67 | 3344 - 5 |
| 4454561 | 3D8 | 66 | 3344 - 5 |
| 4454840 | 3I18 | 0 | 3362 - 51 |
| 4454840 | 3K10 | 0 | 3363 - 35 |
| 4455119 | 3F20 | 1 | 3360 - 13 |
| 4455188 | 3K4 | 9 | 3363 - 29 |
| 4455196 | 3K6 | 10 | 3363 - 31 |
| 4455515 | 1J6 | 2B | 0560 - 9 |
| 4455541 | 1H8 | 0 | 0421 - 3 |
| 4455541 | 1J4 | 32 | 0560 - 7 |
| 4455719 | 3F14 | 59 | 3360 - 7 |
| 4455733 | 3F16 | 90 | 3360 - 9 |
| 4455818 | 2D13 | 65 | 1740 - 3 |
| 4455876 | 1J4 | 35 | 0560 - 7 |
| 4455975 | 2F8 | 4 | 1810 - 23 |
| 4455976 | 2F8 | 16 | 1810 - 23 |
| 4455977 | 2F8 | 17 | 1810 - 23 |
| 4455978 | 2F8 | 19 | 1810 - 23 |
| 4455979 | 2F8 | 2 | 1810 - 23 |
| 4455980 | 2F8 | 14 | 1810 - 23 |
| 4455981 | 2F8 | 12 | 1810 - 23 |
| 4455982 | 2F8 | 8 | 1810 - 23 |
| 4455983 | 2F8 | 9 | 1810 - 23 |
| 4456172 | 2F8 | 26 | 1810 - 23 |
| 4456175 | 2F6 | 25 | 1810 - 21 |
| 4456181 | 2F6 | 11 | 1810 - 21 |
| 4456182 | 2F6 | 13 | 1810 - 21 |
| 4456183 | 2F6 | 14 | 1810 - 21 |
| 4456184 | 2F6 | 15 | 1810 - 21 |
| 4456185 | 2F6 | 17 | 1810 - 21 |
| 4456218 | 2F10 | 2 | 1810 - 25 |
| 4456219 | 2F10 | 3 | 1810 - 25 |
| 4456220 | 2F10 | 4 | 1810 - 25 |
| 4456221 | 2F10 | 5 | 1810 - 25 |
| 4456222 | 2F10 | 3A | 1810 - 25 |
| 4456224 | 2F10 | 9 | 1810 - 25 |
| 4456225 | 2F10 | 12A | 1810 - 25 |
| 4456226 | 2F10 | 12 | 1810 - 25 |
| 4456227 | 2F10 | 8A | 1810 - 25 |
| 4456228 | 2F10 | 20 | 1810 - 25 |
| 4456229 | 2F10 | 21 | 1810 - 25 |
| 4456230 | 2F10 | 26 | 1810 - 25 |
| 4456231 | 2F10 | 27 | 1810 - 25 |
| 4456232 | 2F10 | 29 | 1810 - 25 |
| 4456233 | 2F10 | 30 | 1810 - 25 |
| 4456234 | 2F10 | 31 | 1810 - 25 |
| 4456234 | 2I21 | 26 | 2007 - 3 |
| 4456235 | 2F10 | 33 | 1810 - 25 |
| 4456236 | 2F10 | 34 | 1810 - 25 |
| 4456237 | 2F10 | 35 | 1810 - 25 |
| 4456238 | 2F4 | 37 | 1810 - 19 |
| 4456238 | 2F10 | 36 | 1810 - 25 |
| 4456239 | 2F10 | 37 | 1810 - 25 |
| 4456240 | 2F10 | 38 | 1810 - 25 |
| 4456241 | 2F10 | 39 | 1810 - 25 |
| 4456242 | 2F10 | 40 | 1810 - 25 |
| 4456244 | 2F16 | 8 | 1810 - 31 |
| 4456245 | 2F16 | 1 | 1810 - 31 |
| 4456246 | 2F16 | 2 | 1810 - 31 |
| 4456247 | 2F16 | 3 | 1810 - 31 |
| 4456248 | 2F16 | 6 | 1810 - 31 |
| 4456427 | 2F4 | 1 | 1810 - 19 |
| 4456428 | 2F4 | 15 | 1810 - 19 |
| 4456428 | 2F4 | 26 | 1810 - 19 |
| 4456428 | 2F4 | 29 | 1810 - 19 |
| 4456429 | 2F4 | 30 | 1810 - 19 |
| 4456433 | 2F4 | 34 | 1810 - 19 |
| 4456434 | 2F4 | 35 | 1810 - 19 |
| 4456435 | 2F4 | 41 | 1810 - 19 |
| 4456436 | 2F4 | 42 | 1810 - 19 |
| 4456450 | 2F4 | 43 | 1810 - 19 |
| 4456458 | 2F4 | 40 | 1810 - 19 |
| 4456596 | 2H18 | 33A | 1910 - 7 |
| 4456654 | 2F6 | 47 | 1810 - 21 |
| 4456723 | 2H4 | 0B | 1830 - 19 |
| 4456725 | 2H4 | 0A | 1830 - 19 |
| 4456735 | 2C13 | 7H | 1674 - 9 |
| 4456778 | 2C13 | 7A | 1674 - 9 |
| 4456778 | 2C23 | 7A | 1674 - 19 |
| 4456952 | 2F14 | 20 | 1810 - 29 |
| 4457448 | 1I6 | 2 | 0510 - 9 |
| 4457960 | 1J6 | 0A | 0560 - 9 |
| 4457965 | 1J6 | 0B | 0560 - 9 |
| 4458000 | 1I8 | 0D | 0510 - 11 |
| 4458089 | 2I6 | 0D | 1910 - 19 |
| 4458090 | 2I6 | 0E | 1910 - 19 |
| 4458091 | 2I6 | 0F | 1910 - 19 |
| 4458157 | 1I8 | 6 | 0510 - 11 |
| 4458227 | 2H4 | 0C | 1830 - 19 |
| 4458228 | 2H4 | 0D | 1830 - 19 |
| 4458229 | 2H4 | 0E | 1830 - 19 |
| 4458230 | 2H4 | 0F | 1830 - 19 |
| 4458231 | 2H4 | 0G | 1830 - 19 |
| 4458232 | 2H4 | 0H | 1830 - 19 |
| 4458233 | 2H4 | 0I | 1830 - 19 |
| 4458234 | 2H4 | 0J | 1830 - 19 |
| 4458235 | 2H4 | 7A | 1830 - 19 |
| 4458236 | 2H4 | 7B | 1830 - 19 |
| 4458237 | 2H4 | 7C | 1830 - 19 |
| 4458515 | 2I21 | 27 | 2007 - 3 |
| 4459194 | 1J23 | 4 | 0963 - 5 |
| 4459194 | 2B3 | 3 | 1062 - 3 |
| 4459212 | 1H24 | 21 | 0510 - 3 |
| 4459249 | 2F14 | 83 | 1810 - 29 |
| 4459250 | 1I16 | 0A | 0520 - 3 |
| 4459332 | 2B5 | 19 | 1062 - 5 |
| 4459333 | 3K2 | 24 | 3363 - 27 |
| 4459334 | 3K8 | 11 | 3363 - 33 |
| 4459435 | 2E20 | 41 | 1810 - 11 |
| 4459461 | 2H6 | 8 | 1830 - 21 |
| 4459497 | 2B7 | 24 | 1062 - 7 |
| 4459498 | 2B5 | 8 | 1062 - 5 |
| 4459499 | 3K2 | 25 | 3363 - 27 |
| 4460037 | 2C13 | 7H | 1674 - 9 |
| 4460145 | 2B22 | 6 | 1322 - 9 |
| 4460370 | 2D15 | 14 | 1740 - 5 |
| 4460370 | 3E2 | 23 | 3344 - 23 |
| 4460405 | 2F14 | 1 | 1810 - 29 |
| 4461097 | 2B3 | 16A | 1062 - 3 |
| 4461337 | 2I2 | 8 | 1910 - 15 |
| 4461337 | 2I4 | 8 | 1910 - 17 |
| 4461338 | 2I2 | 9 | 1910 - 15 |
| 4461338 | 2I4 | 9 | 1910 - 17 |
| 4461339 | 2I2 | 10 | 1910 - 15 |
| 4461339 | 2I4 | 10 | 1910 - 17 |
| 4461340 | 2I2 | 11 | 1910 - 15 |
| 4461340 | 2I4 | 11 | 1910 - 17 |
| 4461341 | 2I2 | 12 | 1910 - 15 |
| 4461341 | 2I4 | 12 | 1910 - 17 |
| 4461342 | 2I2 | 13 | 1910 - 15 |
| 4461342 | 2I4 | 13 | 1910 - 17 |
| 4461343 | 2I2 | 1 | 1910 - 15 |
| 4461343 | 2I4 | 1 | 1910 - 17 |
| 4461344 | 2I2 | 2 | 1910 - 15 |
| 4461344 | 2I4 | 2 | 1910 - 17 |
| 4461345 | 2I2 | 3 | 1910 - 15 |
| 4461345 | 2I4 | 3 | 1910 - 17 |
| 4461346 | 2I2 | 4 | 1910 - 15 |
| 4461346 | 2I4 | 4 | 1910 - 17 |
| 4461347 | 2I2 | 5 | 1910 - 15 |
| 4461347 | 2I4 | 5 | 1910 - 17 |
| 4461348 | 2I2 | 6 | 1910 - 15 |
| 4461348 | 2I4 | 6 | 1910 - 17 |
| 4461644 | 3L16 | 19 | 4360 - 3 |
| 4462366 | 1J11 | 3 | 0920 - 3 |
| 4462381 | 2C13 | 4 | 1674 - 9 |
| 4462624 | 3D6 | 22 | 3344 - 3 |
| 4462624 | 3E2 | 26 | 3344 - 23 |
| 4462737 | 3I2 | 0 | 3362 - 35 |
| 4462862 | 1H24 | 29 | 0510 - 3 |
| 4462949 | 2B9 | 9 | 1062 - 9 |
| 4462949 | 2B11 | 0 | 1063 - 3 |
| 4463199 | 1E2 | 57 | 0260 - 23 |
| 4463199 | 1E4 | 57 | 0260 - 25 |
| 4463199 | 3H24 | 0 | 3362 - 33 |
| 4463391 | 2F12 | 28 | 1810 - 27 |
| 4463392 | 2F12 | 29 | 1810 - 27 |
| 4463393 | 2F12 | 30 | 1810 - 27 |
| 4463394 | 2F12 | 31 | 1810 - 27 |
| 4463702 | 2G6 | 4 | 1821 - 5 |
| 4463703 | 2G6 | 5 | 1821 - 5 |
| 4463992 | 2J2 | 18 | 2160 - 5 |
| 4463993 | 2J2 | 21 | 2160 - 5 |
| 4463994 | 2J2 | 23 | 2160 - 5 |
| 4464075 | 2C13 | 31 | 1674 - 9 |
| 4464292 | 3H22 | 0 | 3362 - 31 |
| 4464292 | 3K2 | 4 | 3363 - 27 |
| 4464656 | 1A24 | 0G | 0110 - 3 |
| 4464656 | 1A24 | 1G | 0110 - 3 |
| 4465009 | 2B3 | 8 | 1062 - 3 |
| 4465009 | 3I22 | 0 | 3362 - 55 |
| 4465121 | 1J11 | 0 | 0920 - 3 |
| 4465156 | 2E16 | 0 | 1810 - 7 |
| 4465175 | 2C17 | 7 | 1674 - 13 |
| 4465176 | 2C17 | 8 | 1674 - 13 |
| 4465183 | 2B9 | 0 | 1062 - 9 |
| 4465183 | 3G18 | 0 | 3362 - 3 |
| 4465183 | 3H16 | 70 | 3362 - 25 |
| 4465377 | 3K6 | 20 | 3363 - 31 |
| 4465665 | 3D4 | 16 | 3315 - 7 |
| 4465713 | 1J23 | 0 | 0963 - 5 |
| 4465992 | 1E14 | 10 | 0262 - 3 |
| 4465993 | 1E14 | 6 | 0262 - 3 |
| 4465994 | 1E14 | 12 | 0262 - 3 |
| 4465995 | 2G14 | 7 | 1830 - 5 |
| 4466100 | 1I4 | 7 | 0510 - 7 |
| 4466215 | 1E14 | 4 | 0262 - 3 |
| 4466439 | 2H6 | 7 | 1830 - 21 |
| 4466497 | 2C13 | 7J | 1674 - 9 |
| 4466499 | 1E18 | 4 | 0265 - 3 |
| 4466500 | 1E18 | 5 | 0265 - 3 |
| 4466509 | 3K4 | 5 | 3363 - 29 |
| 4466511 | 3G18 | 10 | 3362 - 3 |
| 4466512 | 2B5 | 32 | 1062 - 5 |
| 4466516 | 1E18 | 6 | 0265 - 3 |
| 4466518 | 2B5 | 31 | 1062 - 5 |
| 4466540 | 3J12 | 5A | 3363 - 13 |
| 4466542 | 3D4 | 20 | 3315 - 7 |

**NUMERICAL INDEX - CONTINUED**

| PART NO. | GRID | KEY | PAGE |
|---|---|---|---|
| 4466585 | 3E14 | 6 | 3344 - 35 |
| 4466587 | 3E14 | 5 | 3344 - 35 |
| 4466884 | 1D24 | 13 | 0260 - 21 |
| 4466884 | 2B3 | 11 | 1062 - 3 |
| 4467200 | 3I4 | 0 | 3362 - 37 |
| 4467200 | 3K8 | 4 | 3363 - 33 |
| 4467272 | 3J18 | 4A | 3363 - 19 |
| 4467355 | 1H24 | 1 | 0510 - 3 |
| 4467356 | 1H24 | 19 | 0510 - 3 |
| 4467367 | 1D6 | 23 | 0260 - 3 |
| 4467381 | 3L8 | 50 | 3365 - 13 |
| 4467405 | 3H12 | 51 | 3362 - 21 |
| 4467405 | 3L13 | 3 | 4060 - 3 |
| 4467629 | 3G12 | 11A | 3360 - 29 |
| 4467676 | 3D16 | 3 | 3344 - 13 |
| 4467676 | 3D18 | 3 | 3344 - 15 |
| 4467676 | 3E8 | 12 | 3344 - 29 |
| 4467676 | 3E10 | 12 | 3344 - 31 |
| 4467973 | 1J8 | 0 | 0560 - 11 |
| 4468336 | 3I6 | 0 | 3362 - 39 |
| 4468336 | 3I8 | 0 | 3362 - 41 |
| 4468336 | 3I10 | 0 | 3362 - 43 |
| 4468336 | 3I12 | 0 | 3362 - 45 |
| 4468336 | 3I14 | 0 | 3362 - 47 |
| 4468336 | 3J20 | 0 | 3363 - 21 |
| 4468438 | 1E2 | 70 | 0260 - 23 |
| 4468438 | 1E4 | 70 | 0260 - 25 |
| 4468555 | 2D4 | 11 | 1674 - 25 |
| 4468704 | 3J20 | 15 | 3363 - 21 |
| 4468706 | 3J20 | 18 | 3363 - 21 |
| 4468943 | 2F8 | 65 | 1810 - 23 |
| 4469040 | 2G16 | 64 | 1830 - 7 |
| 4469047 | 2G14 | 48 | 1830 - 5 |
| 4469047 | 2G16 | 75 | 1830 - 7 |
| 4469048 | 2G16 | 76 | 1830 - 7 |
| 4469049 | 2G22 | 1 | 1830 - 13 |
| 4469051 | 2G22 | 2 | 1830 - 13 |
| 4469056 | 2G14 | 5 | 1830 - 5 |
| 4469057 | 2G14 | 6 | 1830 - 5 |
| 4469058 | 2G14 | 10 | 1830 - 5 |
| 4469059 | 2G14 | 17 | 1830 - 5 |
| 4469060 | 2G14 | 28 | 1830 - 5 |
| 4469061 | 2G14 | 29 | 1830 - 5 |
| 4469062 | 2G14 | 30 | 1830 - 5 |
| 4469063 | 2G14 | 44 | 1830 - 5 |
| 4469063 | 2G16 | 65 | 1830 - 7 |
| 4469095 | 3E2 | 27 | 3344 - 23 |
| 4469097 | 3E2 | 28 | 3344 - 23 |
| 4469600 | 3E2 | 39 | 3344 - 23 |
| 4470134 | 3E24 | 0 | 3348 - 5 |
| 4470134 | 3I16 | 0 | 3362 - 49 |
| 4470675 | 2H22 | 11B | 1910 - 11 |
| 4470743 | 3E2 | 21 | 3344 - 23 |
| 4470744 | 3E2 | 22 | 3344 - 23 |
| 4470863 | 1F18 | 15A | 0407 - 5 |
| 4471093 | 2B3 | 1 | 1062 - 3 |
| 4471462 | 3D20 | 0 | 3344 - 17 |
| 4471462 | 3L6 | 0 | 3365 - 11 |
| 4471463 | 3D22 | 0 | 3344 - 19 |
| 4471463 | 3L8 | 0 | 3365 - 13 |
| 4471936 | 1H24 | 15 | 0510 - 3 |
| 4471939 | 1H24 | 23 | 0510 - 3 |
| 4471940 | 1H24 | 24 | 0510 - 3 |
| 4471941 | 1H24 | 25 | 0510 - 3 |
| 4471942 | 1H24 | 31 | 0510 - 3 |
| 4472152 | 1H24 | 11 | 0510 - 3 |
| 4472210 | 3D24 | 0 | 3344 - 21 |
| 4472210 | 3E14 | 0 | 3344 - 35 |
| 4472211 | 3D24 | 1 | 3344 - 21 |
| 4472211 | 3E14 | 1 | 3344 - 35 |
| 4472392 | 2D17 | 6 | 1740 - 7 |
| 4472419 | 3D24 | 13 | 3344 - 21 |
| 4472673 | 3K18 | 16 | 3364 - 3 |
| 4472731 | 1E2 | 61A | 0260 - 23 |
| 4472733 | 1E6 | 31 | 0260 - 27 |
| 4472817 | 1E6 | 31 | 0260 - 27 |
| 4472873 | 2D4 | 12 | 1674 - 25 |
| 4473347 | 1I16 | 0 | 0520 - 3 |
| 4473366 | 1E2 | 62A | 0260 - 23 |
| 4473732 | 2B18 | 4 | 1322 - 5 |
| 4473740 | 1B5 | 20 | 0250 - 3 |
| 4473870 | 1F18 | 16 | 0407 - 5 |
| 4474042 | 3G10 | 10A | 3360 - 27 |
| 4474123 | 3H6 | 22 | 3362 - 15 |
| 4474184 | 1E14 | 5 | 0262 - 3 |
| 4474184 | 1E16 | 3 | 0262 - 5 |
| 4474185 | 1E14 | 2 | 0262 - 3 |
| 4474191 | 3L16 | 9 | 4360 - 3 |
| 4474339 | 1D10 | 3 | 0260 - 7 |
| 4474476 | 2F14 | 43 | 1810 - 29 |
| 4474477 | 2F14 | 40 | 1810 - 29 |
| 4474478 | 2F14 | 32 | 1810 - 29 |
| 4474479 | 2F14 | 5 | 1810 - 29 |
| 4474480 | 2F14 | 8 | 1810 - 29 |
| 4474482 | 2F14 | 47 | 1810 - 29 |
| 4474493 | 2F14 | 14 | 1810 - 29 |
| 4474494 | 2F14 | 10 | 1810 - 29 |
| 4474498 | 2F14 | 6 | 1810 - 29 |
| 4474499 | 2F14 | 75 | 1810 - 29 |
| 4474513 | 2F14 | 77 | 1810 - 29 |
| 4474514 | 2F14 | 76 | 1810 - 29 |
| 4474517 | 2F14 | 81 | 1810 - 29 |
| 4474518 | 2F14 | 80 | 1810 - 29 |
| 4474667 | 3F8 | 58A | 3348 - 13 |
| 4474747 | 2C23 | 0 | 1674 - 19 |
| 4474780 | 3G4 | 9 | 3360 - 21 |
| 4474780 | 3G6 | 9 | 3360 - 23 |
| 4474796 | 3E14 | 16 | 3344 - 35 |
| 4474797 | 3E14 | 18 | 3344 - 35 |
| 4474852 | 3E2 | 46 | 3344 - 23 |
| 4475229 | 2G16 | 83 | 1830 - 7 |
| 4475230 | 2G22 | 3 | 1830 - 13 |
| 4475232 | 2G18 | 22 | 1830 - 9 |
| 4475235 | 2H6 | 7B | 1830 - 21 |
| 4475236 | 2G22 | 4 | 1830 - 13 |
| 4475237 | 2G22 | 5 | 1830 - 13 |
| 4475242 | 2G22 | 6 | 1830 - 13 |
| 4475243 | 2G22 | 7 | 1830 - 13 |
| 4475244 | 2G22 | 8 | 1830 - 13 |
| 4475245 | 2G22 | 9 | 1830 - 13 |
| 4475246 | 2G22 | 10 | 1830 - 13 |
| 4475247 | 2G16 | 60 | 1830 - 7 |
| 4475248 | 2G16 | 61 | 1830 - 7 |
| 4475249 | 2G16 | 62 | 1830 - 7 |
| 4475250 | 2G16 | 63 | 1830 - 7 |
| 4475257 | 2G16 | 69 | 1830 - 7 |
| 4475258 | 2G16 | 70 | 1830 - 7 |
| 4475259 | 2G16 | 72 | 1830 - 7 |
| 4475260 | 2G16 | 74 | 1830 - 7 |
| 4475261 | 2G16 | 78 | 1830 - 7 |
| 4475262 | 2G16 | 79 | 1830 - 7 |
| 4475263 | 2G16 | 80 | 1830 - 7 |
| 4475264 | 2G14 | 1 | 1830 - 5 |
| 4475265 | 2G14 | 2 | 1830 - 5 |
| 4475283 | 2G14 | 3 | 1830 - 5 |
| 4475284 | 2G14 | 4 | 1830 - 5 |
| 4475285 | 2G14 | 8 | 1830 - 5 |
| 4475286 | 2G14 | 9 | 1830 - 5 |
| 4475287 | 2G14 | 11 | 1830 - 5 |
| 4475288 | 2G14 | 12 | 1830 - 5 |
| 4475289 | 2G14 | 13 | 1830 - 5 |
| 4475290 | 2G14 | 14 | 1830 - 5 |
| 4475291 | 2G14 | 15 | 1830 - 5 |
| 4475345 | 2G14 | 16 | 1830 - 5 |
| 4475346 | 2G14 | 17A | 1830 - 5 |
| 4475347 | 2G14 | 18 | 1830 - 5 |
| 4475348 | 2G14 | 19 | 1830 - 5 |
| 4475349 | 2G14 | 20 | 1830 - 5 |
| 4475350 | 2G14 | 21 | 1830 - 5 |
| 4475351 | 2G14 | 22 | 1830 - 5 |
| 4475352 | 2G14 | 23 | 1830 - 5 |
| 4475353 | 2G14 | 24 | 1830 - 5 |
| 4475364 | 2G14 | 31 | 1830 - 5 |
| 4475365 | 2G14 | 32 | 1830 - 5 |
| 4475366 | 2G14 | 33 | 1830 - 5 |
| 4475367 | 2G14 | 34 | 1830 - 5 |
| 4475368 | 2G14 | 35 | 1830 - 5 |
| 4475369 | 2G14 | 36 | 1830 - 5 |
| 4475370 | 2G14 | 37 | 1830 - 5 |
| 4475371 | 2G14 | 38 | 1830 - 5 |
| 4475372 | 2G14 | 39 | 1830 - 5 |
| 4475399 | 2G14 | 40 | 1830 - 5 |
| 4475400 | 2G14 | 41 | 1830 - 5 |
| 4475401 | 2G14 | 42 | 1830 - 5 |
| 4475402 | 2G14 | 43 | 1830 - 5 |
| 4475403 | 2G14 | 45 | 1830 - 5 |
| 4475404 | 2G14 | 46 | 1830 - 5 |
| 4475405 | 2G14 | 47 | 1830 - 5 |
| 4475406 | 2G14 | 49 | 1830 - 5 |
| 4475430 | 2G14 | 51 | 1830 - 5 |
| 4475431 | 2G14 | 52 | 1830 - 5 |
| 4475432 | 2G14 | 53 | 1830 - 5 |
| 4475433 | 2G14 | 57 | 1830 - 5 |
| 4475434 | 2G14 | 58 | 1830 - 5 |
| 4475435 | 2G14 | 59 | 1830 - 5 |
| 4475645 | 2B5 | 5 | 1062 - 5 |
| 4475646 | 3K2 | 20 | 3363 - 27 |
| 4475647 | 2B7 | 21 | 1062 - 7 |
| 4475800 | 1B5 | 35 | 0250 - 3 |
| 4475800 | 1D14 | 97 | 0260 - 11 |
| 4476062 | 3E2 | 29 | 3344 - 23 |
| 4476331 | 3C25 | 0 | 3315 - 3 |
| 4476331 | 3H14 | 40 | 3362 - 23 |
| 4477038 | 3K12 | 3 | 3363 - 37 |
| 4477216 | 2F14 | 44 | 1810 - 29 |
| 4477217 | 2F14 | 41 | 1810 - 29 |
| 4477218 | 2F14 | 37 | 1810 - 29 |
| 4477219 | 2F14 | 36 | 1810 - 29 |
| 4477373 | 2C13 | 0 | 1674 - 9 |
| 4477414 | 3H6 | 19 | 3362 - 15 |
| 4477415 | 3G20 | 7 | 3362 - 5 |
| 4477416 | 3G24 | 70 | 3362 - 9 |
| 4477457 | 2F6 | 18 | 1810 - 21 |
| 4478278 | 3J24 | 4 | 3363 - 25 |
| 4478552 | 3H18 | 22 | 3362 - 27 |
| 4478776 | 3E14 | 4 | 3344 - 35 |
| 4478931 | 3F24 | 3 | 3360 - 17 |
| 4478931 | 3G2 | 3 | 3360 - 19 |
| 4479026 | 1J11 | 9 | 0920 - 3 |
| 4479026 | 1J13 | 0 | 0920 - 5 |
| 4479055 | 1J13 | 7 | 0920 - 5 |

**NUMERICAL INDEX - CONTINUED**

| PART NO. | GRID | KEY | PAGE |
|---|---|---|---|
| 4479056 | 1J13 | 6 | 0920 - 5 |
| 4479182 | 1B5 | 40 | 0250 - 3 |
| 4479182 | 1B7 | 0 | 0250 - 5 |
| 4479182 | 1B11 | 0 | 0250 - 9 |
| 4479182 | 1B13 | 0 | 0250 - 11 |
| 4479182 | 1B17 | 0 | 0250 - 15 |
| 4479182 | 1B19 | 0 | 0250 - 17 |
| 4479182 | 1B23 | 0 | 0250 - 21 |
| 4479264 | 1B5 | 43 | 0250 - 3 |
| 4479264 | 1B25 | 0 | 0250 - 23 |
| 4479264 | 1C2 | 0 | 0250 - 25 |
| 4479264 | 1C6 | 0 | 0250 - 29 |
| 4479264 | 1C8 | 0 | 0250 - 31 |
| 4479264 | 1C10 | 0 | 0250 - 33 |
| 4479264 | 1C12 | 0 | 0250 - 35 |
| 4479264 | 1C14 | 0 | 0250 - 37 |
| 4479264 | 1C16 | 0 | 0250 - 39 |
| 4479264 | 1C18 | 0 | 0250 - 41 |
| 4479264 | 1C20 | 0 | 0250 - 43 |
| 4479264 | 1C22 | 0 | 0250 - 45 |
| 4479264 | 1C24 | 0 | 0250 - 47 |
| 4479264 | 1D2 | 0 | 0250 - 49 |
| 4479264 | 1D4 | 0 | 0250 - 51 |
| 4479300 | 3C25 | 3 | 3315 - 3 |
| 4479397 | 1J13 | 1 | 0920 - 5 |
| 4479397 | 1J15 | 0 | 0920 - 7 |
| 4479546 | 1E6 | 15 | 0260 - 27 |
| 4479646 | 1I22 | 0 | 0530 - 3 |
| 4479815 | 3L16 | 71 | 4360 - 3 |
| 4479838 | 1E2 | 18 | 0260 - 23 |
| 4479838 | 1E4 | 20A | 0260 - 25 |
| 4479998 | 3F24 | 10A | 3360 - 17 |
| 4479998 | 3G2 | 10A | 3360 - 19 |
| 4480022 | 1E22 | 22 | 0265 - 7 |
| 4480088 | 1E6 | 13 | 0260 - 27 |
| 4480118 | 3E10 | 0 | 3344 - 31 |
| 4480118 | 3L4 | 0 | 3365 - 9 |
| 4480119 | 3E8 | 0 | 3344 - 29 |
| 4480119 | 3L2 | 0 | 3365 - 7 |
| 4480120 | 3E12 | 0 | 3344 - 33 |
| 4480120 | 3L10 | 0 | 3365 - 15 |
| 4480168 | 3J20 | 26A | 3363 - 21 |
| 4480218 | 3E14 | 24 | 3344 - 35 |
| 4480238 | 3J8 | 12 | 3363 - 9 |
| 4480439 | 1E12 | 45A | 0260 - 33 |
| 4481615 | 1B5 | 46 | 0250 - 3 |
| 4481627 | 1E4 | 84A | 0260 - 25 |
| 4481823 | 3K18 | 5 | 3364 - 3 |
| 4482452 | 2C17 | 22 | 1674 - 13 |
| 4482453 | 2C17 | 23 | 1674 - 13 |
| 4482512 | 1A24 | 0B | 0110 - 3 |
| 4482512 | 1A24 | 1B | 0110 - 3 |
| 4482581 | 3B12 | 13A | 3301 - 5 |
| 4482883 | 2G16 | 73 | 1830 - 7 |
| 4483194 | 3L6 | 50 | 3365 - 11 |
| 4483208 | 2D4 | 11A | 1674 - 25 |
| 4483208 | 2D4 | 12A | 1674 - 25 |
| 4483411 | 1J21 | 8 | 0963 - 3 |
| 4483411 | 1J23 | 8 | 0963 - 5 |
| 4483412 | 1J21 | 9 | 0963 - 3 |
| 4483412 | 1J23 | 9 | 0963 - 5 |
| 4483414 | 1J21 | 7 | 0963 - 3 |
| 4483517 | 3E22 | 41 | 3348 - 3 |
| 4483914 | 3L6 | 50 | 3365 - 11 |
| 4483924 | 2I15 | 6 | 2002 - 3 |
| 4483924 | 2I17 | 5 | 2002 - 5 |
| 4483928 | 2B5 | 38A | 1062 - 5 |
| 4483948 | 3F20 | 7 | 3360 - 13 |
| 4483993 | 2E12 | 20 | 1810 - 3 |
| 4483993 | 3H16 | 70 | 3362 - 25 |
| 4484114 | 3H18 | 8 | 3362 - 27 |
| 4484114 | 3H18 | 16 | 3362 - 27 |
| 4484114 | 3H20 | 12 | 3362 - 29 |
| 4484116 | 3H18 | 1D | 3362 - 27 |
| 4484116 | 3H18 | 9D | 3362 - 27 |
| 4484116 | 3H20 | 1D | 3362 - 29 |
| 4484118 | 3H18 | 1C | 3362 - 27 |
| 4484118 | 3H18 | 9C | 3362 - 27 |
| 4484118 | 3H20 | 1C | 3362 - 29 |
| 4484279 | 1E16 | 9 | 0262 - 5 |
| 4484280 | 1E16 | 2 | 0262 - 5 |
| 4484431 | 1E16 | 11 | 0262 - 5 |
| 4484449 | 2H22 | 5 | 1910 - 11 |
| 4484485 | 2G18 | 22 | 1830 - 9 |
| 4484583 | 3J8 | 20A | 3363 - 9 |
| 4484584 | 3J10 | 27A | 3363 - 11 |
| 4484587 | 2B7 | 36 | 1062 - 7 |
| 4484599 | 3K14 | 6 | 3363 - 39 |
| 4484602 | 3F24 | 15A | 3360 - 17 |
| 4484602 | 3G2 | 15A | 3360 - 19 |
| 4484606 | 3G18 | 11 | 3362 - 3 |
| 4484607 | 3G18 | 12 | 3362 - 3 |
| 4484650 | 1E16 | 4 | 0262 - 5 |
| 4484769 | 3C25 | 9 | 3315 - 3 |
| 4484770 | 3C25 | 10 | 3315 - 3 |
| 4484975 | 3F2 | 27 | 3348 - 7 |
| 4484976 | 3F2 | 19 | 3348 - 7 |
| 4485027 | 3E22 | 20D | 3348 - 3 |
| 4485027 | 3E22 | 21D | 3348 - 3 |
| 4485068 | 3J14 | 0 | 3363 - 15 |
| 4485116 | 2I17 | 8 | 2002 - 5 |
| 4485206 | 1I2 | 4 | 0510 - 5 |
| 4485977 | 1B5 | 21 | 0250 - 3 |
| 4486055 | 1I2 | 9 | 0510 - 5 |
| 4486055 | 1I20 | 13 | 0520 - 7 |
| 4486055 | 2H2 | 12 | 1830 - 17 |
| 4486055 | 2H16 | 5 | 1910 - 5 |
| 4486055 | 2H16 | 8 | 1910 - 5 |
| 4486055 | 2H18 | 2 | 1910 - 7 |
| 4486055 | 2H18 | 8 | 1910 - 7 |
| 4486055 | 2H18 | 19 | 1910 - 7 |
| 4486055 | 2H22 | 1 | 1910 - 11 |
| 4486055 | 2H22 | 2 | 1910 - 11 |
| 4486055 | 2H22 | 9 | 1910 - 11 |
| 4486055 | 2H22 | 12 | 1910 - 11 |
| 4486055 | 2H24 | 8 | 1910 - 13 |
| 4486055 | 2I8 | 26 | 1910 - 21 |
| 4486055 | 2I10 | 7 | 1910 - 23 |
| 4486055 | 3F6 | 6 | 3348 - 11 |
| 4486055 | 3L13 | 6 | 4060 - 3 |
| 4486187 | 2F2 | 1B | 1810 - 17 |
| 4486187 | 2F6 | 1 | 1810 - 21 |
| 4486189 | 2G4 | 0 | 1821 - 3 |
| 4486190 | 2G4 | 0A | 1821 - 3 |
| 4486191 | 2G4 | 0C | 1821 - 3 |
| 4486192 | 2G4 | 20 | 1821 - 3 |
| 4486216 | 1E16 | 6 | 0262 - 5 |
| 4486405 | 1E22 | 0 | 0265 - 7 |
| 4486405 | 3F6 | 0A | 3348 - 11 |
| 4486447 | 1E20 | 0 | 0265 - 5 |
| 4486447 | 3B12 | 0A | 3301 - 5 |
| 4487100 | 3G8 | 0A | 3360 - 25 |
| 4487132 | 2B22 | 8 | 1322 - 9 |
| 4487133 | 2B22 | 9 | 1322 - 9 |
| 4487172 | 1D20 | 13 | 0260 - 17 |
| 4487172 | 3F8 | 50A | 3348 - 13 |
| 4487172 | 3J24 | 18 | 3363 - 25 |
| 4487197 | 1D6 | 17 | 0260 - 3 |
| 4487213 | 3F4 | 11A | 3348 - 9 |
| 4487536 | 3H18 | 23 | 3362 - 27 |
| 4487704 | 2G16 | 85 | 1830 - 7 |
| 4488217 | 3J4 | 6 | 3363 - 5 |
| 4488220 | 3J4 | 7 | 3363 - 5 |
| 4488227 | 3B12 | 18A | 3301 - 5 |
| 4488333 | 3J6 | 5A | 3363 - 7 |
| 4488334 | 2B5 | 37 | 1062 - 5 |
| 4488360 | 3K10 | 9 | 3363 - 35 |
| 4488365 | 3G10 | 0A | 3360 - 27 |
| 4488366 | 3G10 | 5A | 3360 - 27 |
| 4488774 | 2B7 | 34A | 1062 - 7 |
| 4488775 | 2B7 | 35A | 1062 - 7 |
| 4488863 | 3F6 | 8 | 3348 - 11 |
| 4488921 | 3J2 | 12A | 3363 - 3 |
| 4488926 | 3F4 | 8A | 3348 - 9 |
| 4488928 | 3D18 | 0 | 3344 - 15 |
| 4488928 | 3K24 | 0 | 3365 - 5 |
| 4488929 | 3D16 | 0 | 3344 - 13 |
| 4488929 | 3K22 | 0 | 3365 - 3 |
| 4489054 | 3F8 | 48A | 3348 - 13 |
| 4489114 | 3F8 | 68A | 3348 - 13 |
| 4489223 | 2B22 | 10 | 1322 - 9 |
| 4489341 | 2B3 | 26 | 1062 - 3 |
| 4489342 | 2B3 | 25 | 1062 - 3 |
| 4489342 | 3K8 | 3 | 3363 - 33 |
| 4489344 | 1E8 | 6 | 0260 - 29 |
| 4489347 | 2B3 | 27 | 1062 - 3 |
| 4489598 | 1I12 | 0 | 0515 - 3 |
| 4489599 | 3F8 | 52A | 3348 - 13 |
| 4489604 | 3F8 | 54A | 3348 - 13 |
| 4489607 | 3F8 | 62A | 3348 - 13 |
| 4489612 | 3J2 | 11A | 3363 - 3 |
| 4489626 | 3B12 | 11A | 3301 - 5 |
| 4489631 | 1E12 | 36A | 0260 - 33 |
| 4489678 | 3H18 | 6 | 3362 - 27 |
| 4489678 | 3H18 | 14 | 3362 - 27 |
| 4489678 | 3H20 | 10 | 3362 - 29 |
| 4489826 | 1I8 | 3 | 0510 - 11 |
| 4489827 | 1I8 | 0C | 0510 - 11 |
| 4489828 | 1I8 | 0B | 0510 - 11 |
| 449490 | 1J11 | 14 | 0920 - 3 |
| 449490 | 3D4 | 6 | 3315 - 7 |
| 449558 | 3K18 | 28 | 3364 - 3 |
| 4503469 | 1I20 | 10 | 0520 - 7 |
| 4504199 | 1I2 | 6 | 0510 - 5 |
| 4504367 | 1H8 | 8 | 0421 - 3 |
| 4504367 | 1J4 | 7 | 0560 - 7 |
| 4504491 | 1I2 | 7 | 0510 - 5 |
| 4506320 | 3H2 | 4 | 3362 - 11 |
| 4506320 | 3H4 | 4 | 3362 - 13 |
| 4506320 | 3H6 | 4 | 3362 - 15 |
| 4506320 | 3H8 | 4 | 3362 - 17 |
| 4506320 | 3H10 | 4 | 3362 - 19 |
| 4506405 | 3H4 | 22 | 3362 - 13 |
| 4506407 | 3L18 | 89 | 4360 - 5 |
| 4506408 | 3G20 | 16B | 3362 - 5 |
| 4506408 | 3G20 | 47E | 3362 - 5 |
| 4506408 | 3G22 | 16B | 3362 - 7 |
| 4506408 | 3G22 | 54E | 3362 - 7 |
| 4506408 | 3H4 | 1 | 3362 - 13 |
| 4506408 | 3H6 | 17 | 3362 - 15 |
| 4506408 | 3H22 | 15 | 3362 - 31 |

**NUMERICAL INDEX - CONTINUED**

| PART NO. | GRID | KEY | PAGE |
|---|---|---|---|
| 4506408 | 3I18 | 12 | 3362 - 51 |
| 4506409 | 3H8 | 57 | 3362 - 17 |
| 4506412 | 1E8 | 13 | 0260 - 29 |
| 4506412 | 3G20 | 28 | 3362 - 5 |
| 4506412 | 3G22 | 28 | 3362 - 7 |
| 4506412 | 3G24 | 28 | 3362 - 9 |
| 4506412 | 3H8 | 28 | 3362 - 17 |
| 4506415 | 3F24 | 9 | 3360 - 17 |
| 4506415 | 3G2 | 9 | 3360 - 19 |
| 4506416 | 1E18 | 10 | 0265 - 3 |
| 4506416 | 3G24 | 8 | 3362 - 9 |
| 4506416 | 3K8 | 3 | 3363 - 33 |
| 4506418 | 1D18 | 4 | 0260 - 15 |
| 4506418 | 1E10 | 30 | 0260 - 31 |
| 4506418 | 1E12 | 27 | 0260 - 33 |
| 4506418 | 1E12 | 29 | 0260 - 33 |
| 4506418 | 1E14 | 14 | 0262 - 3 |
| 4506418 | 1J23 | 0 | 0963 - 5 |
| 4506418 | 1J23 | 5 | 0963 - 5 |
| 4506418 | 2B3 | 0 | 1062 - 3 |
| 4506418 | 2B3 | 4 | 1062 - 3 |
| 4506418 | 2B5 | 3 | 1062 - 5 |
| 4506418 | 2B5 | 15 | 1062 - 5 |
| 4506418 | 2B5 | 16 | 1062 - 5 |
| 4506418 | 3F4 | 4 | 3348 - 9 |
| 4506418 | 3F4 | 5 | 3348 - 9 |
| 4506418 | 3F4 | 6 | 3348 - 9 |
| 4506418 | 3F4 | 12 | 3348 - 9 |
| 4506418 | 3F16 | 57A | 3360 - 9 |
| 4506418 | 3F24 | 14 | 3360 - 17 |
| 4506418 | 3G2 | 14 | 3360 - 19 |
| 4506418 | 3H12 | 31 | 3362 - 21 |
| 4506418 | 3J8 | 2 | 3363 - 9 |
| 4506418 | 3K2 | 0 | 3363 - 27 |
| 4506418 | 3K8 | 2 | 3363 - 33 |
| 4506418 | 3K8 | 14 | 3363 - 33 |
| 4506418 | 3K20 | 46 | 3364 - 5 |
| 4506418 | 3L13 | 7 | 4060 - 3 |
| 4506420 | 3G22 | 5 | 3362 - 7 |
| 4506420 | 3G24 | 6D | 3362 - 9 |
| 4506420 | 3H4 | 16 | 3362 - 13 |
| 4506420 | 3H4 | 30D | 3362 - 13 |
| 4506420 | 3H8 | 44 | 3362 - 17 |
| 4506420 | 3H10 | 13 | 3362 - 19 |
| 4506420 | 3H14 | 24 | 3362 - 23 |
| 4506420 | 3H22 | 32 | 3362 - 31 |
| 4506424 | 1E12 | 42 | 0260 - 33 |
| 4506424 | 1E12 | 43 | 0260 - 33 |
| 4506424 | 1E16 | 12 | 0262 - 5 |
| 4506424 | 1E22 | 25 | 0265 - 7 |
| 4506424 | 3D8 | 28 | 3344 - 5 |
| 4506424 | 3D14 | 18 | 3344 - 11 |
| 4506424 | 3E4 | 15 | 3344 - 25 |
| 4506424 | 3E4 | 16 | 3344 - 25 |
| 4506424 | 3E4 | 17 | 3344 - 25 |
| 4506424 | 3E6 | 15 | 3344 - 27 |
| 4506424 | 3F20 | 25 | 3360 - 13 |
| 4506424 | 3F24 | 0 | 3360 - 17 |
| 4506424 | 3F24 | 4 | 3360 - 17 |
| 4506424 | 3F24 | 12 | 3360 - 17 |
| 4506424 | 3G2 | 0 | 3360 - 19 |
| 4506424 | 3G2 | 4 | 3360 - 19 |
| 4506424 | 3G2 | 12 | 3360 - 19 |
| 4506424 | 3G4 | 15 | 3360 - 21 |
| 4506424 | 3G6 | 15 | 3360 - 23 |
| 4506424 | 3G20 | 60 | 3362 - 5 |
| 4506424 | 3G22 | 60 | 3362 - 7 |
| 4506424 | 3H12 | 32 | 3362 - 21 |
| 4506424 | 3I4 | 17 | 3362 - 37 |
| 4506424 | 3J14 | 9 | 3363 - 15 |
| 4506424 | 3J14 | 13 | 3363 - 15 |
| 4506424 | 3J14 | 14 | 3363 - 15 |
| 4506428 | 3G20 | 72 | 3362 - 5 |
| 4506428 | 3G24 | 6B | 3362 - 9 |
| 4506428 | 3H4 | 30B | 3362 - 13 |
| 4506428 | 3L18 | 45 | 4360 - 5 |
| 4506429 | 3J12 | 6 | 3363 - 13 |
| 4506429 | 3J12 | 7 | 3363 - 13 |
| 4506429 | 3K18 | 24 | 3364 - 3 |
| 4506430 | 3K22 | 30 | 3365 - 3 |
| 4506430 | 3K24 | 30 | 3365 - 5 |
| 4506430 | 3L4 | 30 | 3365 - 9 |
| 4506430 | 3L6 | 32 | 3365 - 11 |
| 4506430 | 3L8 | 30 | 3365 - 13 |
| 4506430 | 3L10 | 28 | 3365 - 15 |
| 4506459 | 3J4 | 3 | 3363 - 5 |
| 4506459 | 3K16 | 0 | 3363 - 41 |
| 4507397 | 1I16 | 8 | 0520 - 3 |
| 4507397 | 1I18 | 9 | 0520 - 5 |
| 4507397 | 1I20 | 9 | 0520 - 7 |
| 4507397 | 3J14 | 2 | 3363 - 15 |
| 4507650 | 1H8 | 11 | 0421 - 3 |
| 4507650 | 1J4 | 24 | 0560 - 7 |
| 4508805 | 1E12 | 15 | 0260 - 33 |
| 4509180 | 1D20 | 7 | 0260 - 17 |
| 4509180 | 1D20 | 12 | 0260 - 17 |
| 4509180 | 1D20 | 14 | 0260 - 17 |
| 4509180 | 1D20 | 18 | 0260 - 17 |
| 4509180 | 1D24 | 3 | 0260 - 21 |
| 4509180 | 1E2 | 32 | 0260 - 23 |
| 4509180 | 1E2 | 66 | 0260 - 23 |
| 4509180 | 1E4 | 32 | 0260 - 25 |
| 4509180 | 1E6 | 34 | 0260 - 27 |
| 4509180 | 1E6 | 37 | 0260 - 27 |
| 4509180 | 1E8 | 6 | 0260 - 29 |
| 4509180 | 1E10 | 6 | 0260 - 31 |
| 4509180 | 1E10 | 38 | 0260 - 31 |
| 4509180 | 1E12 | 46 | 0260 - 33 |
| 4509180 | 1E20 | 28 | 0265 - 5 |
| 4509180 | 1E22 | 30 | 0265 - 7 |
| 4509180 | 1J21 | 3 | 0963 - 3 |
| 4509180 | 1J21 | 4 | 0963 - 3 |
| 4509180 | 1J23 | 8 | 0963 - 5 |
| 4509180 | 1J23 | 9 | 0963 - 5 |
| 4509180 | 2B3 | 19 | 1062 - 3 |
| 4509180 | 2B3 | 20A | 1062 - 3 |
| 4509180 | 2B5 | 0 | 1062 - 5 |
| 4509180 | 2B5 | 9 | 1062 - 5 |
| 4509180 | 2B5 | 17 | 1062 - 5 |
| 4509180 | 2B5 | 19 | 1062 - 5 |
| 4509180 | 2B7 | 1 | 1062 - 7 |
| 4509180 | 2B7 | 2 | 1062 - 7 |
| 4509180 | 2B7 | 25 | 1062 - 7 |
| 4509180 | 2B7 | 26 | 1062 - 7 |
| 4509180 | 2G14 | 5A | 1830 - 5 |
| 4509180 | 2G14 | 19A | 1830 - 5 |
| 4509180 | 2H6 | 7A | 1830 - 21 |
| 4509180 | 2J2 | 87A | 2160 - 5 |
| 4509180 | 3B12 | 2 | 3301 - 5 |
| 4509180 | 3B12 | 14 | 3301 - 5 |
| 4509180 | 3B12 | 15 | 3301 - 5 |
| 4509180 | 3E16 | 3 | 3344 - 37 |
| 4509180 | 3E16 | 5 | 3344 - 37 |
| 4509180 | 3E16 | 8 | 3344 - 37 |
| 4509180 | 3E20 | 3 | 3344 - 41 |
| 4509180 | 3E24 | 5 | 3348 - 5 |
| 4509180 | 3E24 | 6 | 3348 - 5 |
| 4509180 | 3E24 | 9 | 3348 - 5 |
| 4509180 | 3E24 | 24 | 3348 - 5 |
| 4509180 | 3E24 | 30 | 3348 - 5 |
| 4509180 | 3E24 | 46 | 3348 - 5 |
| 4509180 | 3F2 | 46 | 3348 - 7 |
| 4509180 | 3F4 | 0 | 3348 - 9 |
| 4509180 | 3F6 | 20 | 3348 - 11 |
| 4509180 | 3F6 | 21 | 3348 - 11 |
| 4509180 | 3F6 | 30 | 3348 - 11 |
| 4509180 | 3F6 | 31 | 3348 - 11 |
| 4509180 | 3F6 | 32 | 3348 - 11 |
| 4509180 | 3F12 | 80A | 3360 - 5 |
| 4509180 | 3F20 | 24 | 3360 - 13 |
| 4509180 | 3F24 | 6 | 3360 - 17 |
| 4509180 | 3G2 | 6 | 3360 - 19 |
| 4509180 | 3G20 | 18B | 3362 - 5 |
| 4509180 | 3G24 | 18B | 3362 - 9 |
| 4509180 | 3H2 | 6B | 3362 - 11 |
| 4509180 | 3H4 | 20 | 3362 - 13 |
| 4509180 | 3H6 | 5B | 3362 - 15 |
| 4509180 | 3H6 | 10 | 3362 - 15 |
| 4509180 | 3H8 | 48 | 3362 - 17 |
| 4509180 | 3H10 | 5 | 3362 - 19 |
| 4509180 | 3H22 | 17 | 3362 - 31 |
| 4509180 | 3H24 | 4 | 3362 - 33 |
| 4509180 | 3I4 | 16 | 3362 - 37 |
| 4509180 | 3I10 | 24A | 3362 - 43 |
| 4509180 | 3I10 | 25A | 3362 - 43 |
| 4509180 | 3I10 | 37A | 3362 - 43 |
| 4509180 | 3I10 | 38A | 3362 - 43 |
| 4509180 | 3I10 | 39A | 3362 - 43 |
| 4509180 | 3I12 | 25A | 3362 - 45 |
| 4509180 | 3I12 | 26A | 3362 - 45 |
| 4509180 | 3I12 | 39A | 3362 - 45 |
| 4509180 | 3I12 | 41A | 3362 - 45 |
| 4509180 | 3I16 | 13 | 3362 - 49 |
| 4509180 | 3I18 | 13 | 3362 - 51 |
| 4509180 | 3J6 | 0A | 3363 - 7 |
| 4509180 | 3J6 | 1A | 3363 - 7 |
| 4509180 | 3J6 | 3A | 3363 - 7 |
| 4509180 | 3J10 | 6 | 3363 - 11 |
| 4509180 | 3J20 | 20 | 3363 - 21 |
| 4509180 | 3J22 | 21 | 3363 - 23 |
| 4509180 | 3J24 | 19 | 3363 - 25 |
| 4509180 | 3K2 | 2 | 3363 - 27 |
| 4509180 | 3K2 | 27 | 3363 - 27 |
| 4509180 | 3K4 | 2 | 3363 - 29 |
| 4509180 | 3K4 | 3 | 3363 - 29 |
| 4509180 | 3K6 | 2 | 3363 - 31 |
| 4509180 | 3K6 | 3 | 3363 - 31 |
| 4509180 | 3K10 | 5 | 3363 - 35 |
| 4509180 | 3K10 | 6 | 3363 - 35 |
| 4509180 | 3K20 | 31 | 3364 - 5 |
| 4509180 | 3K20 | 34 | 3364 - 5 |
| 4509180 | 3K20 | 36 | 3364 - 5 |
| 4509180 | 3K20 | 38 | 3364 - 5 |
| 4509180 | 3K20 | 39 | 3364 - 5 |
| 4509180 | 3K20 | 43 | 3364 - 5 |
| 4509180 | 3K20 | 47 | 3364 - 5 |
| 4509180 | 3L13 | 9 | 4060 - 3 |
| 4509180 | 3L13 | 10 | 4060 - 3 |
| 4509181 | 1J19 | 85 | 0962 - 5 |
| 4509181 | 3H4 | 15 | 3362 - 13 |
| 4509181 | 3H8 | 43 | 3362 - 17 |

**NUMERICAL INDEX - CONTINUED**

| PART NO. | GRID | KEY | PAGE |
|---|---|---|---|
| 4509182 | 1E14 | 8 | 0262 - 3 |
| 4509182 | 1E16 | 7 | 0262 - 5 |
| 4509182 | 1E20 | 23 | 0265 - 5 |
| 4509182 | 1E22 | 23 | 0265 - 7 |
| 4509404 | 2D15 | 29 | 1740 - 5 |
| 4510167 | 3G4 | 1 | 3360 - 21 |
| 4510167 | 3G6 | 1 | 3360 - 23 |
| 4510167 | 3G8 | 6 | 3360 - 25 |
| 4510167 | 3G8 | 11 | 3360 - 25 |
| 4510167 | 3G10 | 6 | 3360 - 27 |
| 4510167 | 3G10 | 11 | 3360 - 27 |
| 4510167 | 3G12 | 2 | 3360 - 29 |
| 4510167 | 3G16 | 3 | 3360 - 33 |
| 4510167 | 3J18 | 2 | 3363 - 19 |
| 4510173 | 3G4 | 2 | 3360 - 21 |
| 4510173 | 3G6 | 2 | 3360 - 23 |
| 4510173 | 3G8 | 7 | 3360 - 25 |
| 4510173 | 3G8 | 12 | 3360 - 25 |
| 4510173 | 3G10 | 7 | 3360 - 27 |
| 4510173 | 3G10 | 12 | 3360 - 27 |
| 4510173 | 3G12 | 1 | 3360 - 29 |
| 4510173 | 3G16 | 1 | 3360 - 33 |
| 4510173 | 3J18 | 0 | 3363 - 19 |
| 4512716 | 1I16 | 7 | 0520 - 3 |
| 4512716 | 1I18 | 10 | 0520 - 5 |
| 4514699 | 2G12 | 5 | 1830 - 3 |
| 4514699 | 2H8 | 0 | 1830 - 23 |
| 4514700 | 1J6 | 3 | 0560 - 9 |
| 4515041 | 3F12 | 72 | 3360 - 5 |
| 4600079 | 2C17 | 24 | 1674 - 13 |
| 4600090 | 2G4 | 9 | 1821 - 3 |
| 4600153 | 2B5 | 39A | 1062 - 5 |
| 4600154 | 3J6 | 6A | 3363 - 7 |
| 4600161 | 1H8 | 19 | 0421 - 3 |
| 4600275 | 2I21 | 20 | 2007 - 3 |
| 4600302 | 3E22 | 20E | 3348 - 3 |
| 4600302 | 3E22 | 21E | 3348 - 3 |
| 4600531 | 1B5 | 32 | 0250 - 3 |
| 4600570 | 2H22 | 0B | 1910 - 11 |
| 4600571 | 2H22 | 0C | 1910 - 11 |
| 4600572 | 2H22 | 0D | 1910 - 11 |
| 4600574 | 2H18 | 24C | 1910 - 7 |
| 4600575 | 2H18 | 24B | 1910 - 7 |
| 4600576 | 2H18 | 24D | 1910 - 7 |
| 4600577 | 2H20 | 39B | 1910 - 9 |
| 4600578 | 2H18 | 27B | 1910 - 7 |
| 4600578 | 2H22 | 0E | 1910 - 11 |
| 4600579 | 2H18 | 27C | 1910 - 7 |
| 4600579 | 2H22 | 0F | 1910 - 11 |
| 4600581 | 2H18 | 27D | 1910 - 7 |
| 4600582 | 2H18 | 21B | 1910 - 7 |
| 4600583 | 2H18 | 24E | 1910 - 7 |
| 4600723 | 2D23 | 9A | 1740 - 13 |
| 4600780 | 2H14 | 3G | 1910 - 3 |
| 4600946 | 2H18 | 27E | 1910 - 7 |
| 4601000 | 1A24 | 0E | 0110 - 3 |
| 4601000 | 1A24 | 1E | 0110 - 3 |
| 4601568 | 3K4 | 13 | 3363 - 29 |
| 4601568 | 3K6 | 13 | 3363 - 31 |
| 4601639 | 3E14 | 8 | 3344 - 35 |
| 4601757 | 2C4 | 34 | 1671 - 3 |
| 4601878 | 1I24 | 20 | 0560 - 3 |
| 4602039 | 3J6 | 7 | 3363 - 7 |
| 4602161 | 1H8 | 7 | 0421 - 3 |
| 4602370 | 1E6 | 47 | 0260 - 27 |
| 4602563 | 2F10 | 43 | 1810 - 25 |
| 4602565 | 2F8 | 53 | 1810 - 23 |
| 4602566 | 2F8 | 65 | 1810 - 23 |
| 4602567 | 2F6 | 6 | 1810 - 21 |
| 4602568 | 2F12 | 1 | 1810 - 27 |
| 4602569 | 2F6 | 9 | 1810 - 21 |
| 4602570 | 2F12 | 8 | 1810 - 27 |
| 4602576 | 2F12 | 16 | 1810 - 27 |
| 4602577 | 2F6 | 19 | 1810 - 21 |
| 4602633 | 2D23 | 41 | 1740 - 13 |
| 4602634 | 1E2 | 75 | 0260 - 23 |
| 4602634 | 1E4 | 75 | 0260 - 25 |
| 4602634 | 3K10 | 14 | 3363 - 35 |
| 4602951 | 1B5 | 33 | 0250 - 3 |
| 4603008 | 2F6 | 28 | 1810 - 21 |
| 4603011 | 2F4 | 46 | 1810 - 19 |
| 4603012 | 2F4 | 47 | 1810 - 19 |
| 4603013 | 2F4 | 48 | 1810 - 19 |
| 4603066 | 1J13 | 9 | 0920 - 5 |
| 4603067 | 1J13 | 8 | 0920 - 5 |
| 4603159 | 1E12 | 37 | 0260 - 33 |
| 4603188 | 3B10 | 45 | 3301 - 3 |
| 4603387 | 2I15 | 10 | 2002 - 3 |
| 4603525 | 3B12 | 3A | 3301 - 5 |
| 4603695 | 2D8 | 5 | 1674 - 29 |
| 4603875 | 2B22 | 7 | 1322 - 9 |
| 4603875 | 2D8 | 10 | 1674 - 29 |
| 4604473 | 2C13 | 7K | 1674 - 9 |
| 4605353 | 1J4 | 34 | 0560 - 7 |
| 4605447 | 1I16 | 6 | 0520 - 3 |
| 4605447 | 1I18 | 8 | 0520 - 5 |
| 4605449 | 1E8 | 13 | 0260 - 29 |
| 4605450 | 3J14 | 15A | 3363 - 15 |
| 4605451 | 3J14 | 16A | 3363 - 15 |
| 4605465 | 1D20 | 19 | 0260 - 17 |
| 4605834 | 2I21 | 21 | 2007 - 3 |
| 4606526 | 1E2 | 29A | 0260 - 23 |
| 4606526 | 1E10 | 25A | 0260 - 31 |
| 4606527 | 3F8 | 56A | 3348 - 13 |
| 4606528 | 3F8 | 66A | 3348 - 13 |
| 4606597 | 3E20 | 8A | 3344 - 41 |
| 4606702 | 1E10 | 31A | 0260 - 31 |
| 4606742 | 3E20 | 20 | 3344 - 41 |
| 4606769 | 3L2 | 29 | 3365 - 7 |
| 4606770 | 3L4 | 29 | 3365 - 9 |
| 4607053 | 2F10 | 45 | 1810 - 25 |
| 4607310 | 2G4 | 22 | 1821 - 3 |
| 4607311 | 2G4 | 7 | 1821 - 3 |
| 4607314 | 2G4 | 12 | 1821 - 3 |
| 4607408 | 2F6 | 41 | 1810 - 21 |
| 4607409 | 2F6 | 45 | 1810 - 21 |
| 4607410 | 2F12 | 95 | 1810 - 27 |
| 4607410 | 2I21 | 25 | 2007 - 3 |
| 4607411 | 2F12 | 97 | 1810 - 27 |
| 4607412 | 2F12 | 94 | 1810 - 27 |
| 4607627 | 2G4 | 10 | 1821 - 3 |
| 4607629 | 2G4 | 15 | 1821 - 3 |
| 4607637 | 2G4 | 14 | 1821 - 3 |
| 4607638 | 2G4 | 13 | 1821 - 3 |
| 4607644 | 2I21 | 4 | 2007 - 3 |
| 4607645 | 2I21 | 5 | 2007 - 3 |
| 4607646 | 2I21 | 7 | 2007 - 3 |
| 4607748 | 2I21 | 8 | 2007 - 3 |
| 4607751 | 2I21 | 9 | 2007 - 3 |
| 4607755 | 2I21 | 10 | 2007 - 3 |
| 4607757 | 2I21 | 11 | 2007 - 3 |
| 4607775 | 2I21 | 14 | 2007 - 3 |
| 4607776 | 2I21 | 15 | 2007 - 3 |
| 4607778 | 2I21 | 19 | 2007 - 3 |
| 4607779 | 2I21 | 22 | 2007 - 3 |
| 4608305 | 1J17 | 0 | 0962 - 3 |
| 4608305 | 1J21 | 2 | 0963 - 3 |
| 4608327 | 1J15 | 1 | 0920 - 7 |
| 4608329 | 1J15 | 2 | 0920 - 7 |
| 4608330 | 1J15 | 3 | 0920 - 7 |
| 4609014 | 2I24 | 0 | 2160 - 3 |
| 4609015 | 2I24 | 1 | 2160 - 3 |
| 4609016 | 1I4 | 2 | 0510 - 7 |
| 4609477 | 2F14 | 77 | 1810 - 29 |
| 4609478 | 2F14 | 77 | 1810 - 29 |
| 4609479 | 2F14 | 77 | 1810 - 29 |
| 4609480 | 2F14 | 77 | 1810 - 29 |
| 4609601 | 3B12 | 4A | 3301 - 5 |
| 4609608 | 3B12 | 17A | 3301 - 5 |
| 4609638 | 2E12 | 27 | 1810 - 3 |
| 4609979 | 2C17 | 7A | 1674 - 13 |
| 4609979 | 2C17 | 8A | 1674 - 13 |
| 4610054 | 2C17 | 7C | 1674 - 13 |
| 4610055 | 2C17 | 8C | 1674 - 13 |
| 4610056 | 2C17 | 7B | 1674 - 13 |
| 4610056 | 2C17 | 8B | 1674 - 13 |
| 4610057 | 2C17 | 7E | 1674 - 13 |
| 4610057 | 2C17 | 8E | 1674 - 13 |
| 4610058 | 2C17 | 7D | 1674 - 13 |
| 4610058 | 2C17 | 8D | 1674 - 13 |
| 4610059 | 2C17 | 22A | 1674 - 13 |
| 4610060 | 2C17 | 23A | 1674 - 13 |
| 4610061 | 2C17 | 22B | 1674 - 13 |
| 4610061 | 2C17 | 23B | 1674 - 13 |
| 4610062 | 2C17 | 22C | 1674 - 13 |
| 4610062 | 2C17 | 23C | 1674 - 13 |
| 4610122 | 2F10 | 1 | 1810 - 25 |
| 4610123 | 2F8 | 60 | 1810 - 23 |
| 4610124 | 2F8 | 51 | 1810 - 23 |
| 4610125 | 2F8 | 58 | 1810 - 23 |
| 4610142 | 2F8 | 52 | 1810 - 23 |
| 4610143 | 2F6 | 23 | 1810 - 21 |
| 4610144 | 2F10 | 41 | 1810 - 25 |
| 4610145 | 2I21 | 29 | 2007 - 3 |
| 4610146 | 2I21 | 1 | 2007 - 3 |
| 4610147 | 2I21 | 2 | 2007 - 3 |
| 4610148 | 2I21 | 3 | 2007 - 3 |
| 4610459 | 1E12 | 39 | 0260 - 33 |
| 4610490 | 1E12 | 6A | 0260 - 33 |
| 4610491 | 1E12 | 7A | 0260 - 33 |
| 4610532 | 1E6 | 3A | 0260 - 27 |
| 4611353 | 1I22 | 17 | 0530 - 3 |
| 4611507 | 3K10 | 8 | 3363 - 35 |
| 4611508 | 3K10 | 10A | 3363 - 35 |
| 4611509 | 3J2 | 13A | 3363 - 3 |
| 4611510 | 3J2 | 14A | 3363 - 3 |
| 4611511 | 3J24 | 11A | 3363 - 25 |
| 4611512 | 3K2 | 1A | 3363 - 27 |
| 4611513 | 1D20 | 8A | 0260 - 17 |
| 4611516 | 3G6 | 13 | 3360 - 23 |
| 4611526 | 2C13 | 7B | 1674 - 9 |
| 4611527 | 2C13 | 7C | 1674 - 9 |
| 4611602 | 2B3 | 6 | 1062 - 3 |
| 4611603 | 3J24 | 14A | 3363 - 25 |
| 4611605 | 1D20 | 9A | 0260 - 17 |
| 4611606 | 3K2 | 31A | 3363 - 27 |
| 4611607 | 1J21 | 6 | 0963 - 3 |
| 4611609 | 2B5 | 29 | 1062 - 5 |
| 4611610 | 3L13 | 12 | 4060 - 3 |
| 4611611 | 3E24 | 7A | 3348 - 5 |
| 4611612 | 3E24 | 8A | 3348 - 5 |

## NUMERICAL INDEX - CONTINUED

| PART NO. | GRID | KEY | PAGE |
|---|---|---|---|
| 4611614 | 3F2 | 12A | 3348 - 7 |
| 4611616 | 3F2 | 31A | 3348 - 7 |
| 4611617 | 3F4 | 1A | 3348 - 9 |
| 4611825 | 3J24 | 1A | 3363 - 25 |
| 4611826 | 3J8 | 14A | 3363 - 9 |
| 4611827 | 3E24 | 34A | 3348 - 5 |
| 4611829 | 3F2 | 44A | 3348 - 7 |
| 4611873 | 3G8 | 10A | 3360 - 25 |
| 4612002 | 1D16 | 0 | 0260 - 13 |
| 4612211 | 3K16 | 11A | 3363 - 41 |
| 4612212 | 3K16 | 12A | 3363 - 41 |
| 4612328 | 2G18 | 12 | 1830 - 9 |
| 4612589 | 2H24 | 2B | 1910 - 13 |
| 4612610 | 3E20 | 7A | 3344 - 41 |
| 4612973 | 3G4 | 16A | 3360 - 21 |
| 4613307 | 2J2 | 27 | 2160 - 5 |
| 4613396 | 1E6 | 60 | 0260 - 27 |
| 4613397 | 1E6 | 61 | 0260 - 27 |
| 4614353 | 2D17 | 9 | 1740 - 7 |
| 4614354 | 2D17 | 10 | 1740 - 7 |
| 4614460 | 1D14 | 51 | 0260 - 11 |
| 4614460 | 1D22 | 40 | 0260 - 19 |
| 4614698 | 3G22 | 6 | 3362 - 7 |
| 4614750 | 1E4 | 42 | 0260 - 25 |
| 4614751 | 1E4 | 43 | 0260 - 25 |
| 4614911 | 1I14 | 0 | 0515 - 5 |
| 4615440 | 3E24 | 39 | 3348 - 5 |
| 4615471 | 3J12 | 3A | 3363 - 13 |
| 4615475 | 3J10 | 5A | 3363 - 11 |
| 4615987 | 1E6 | 12A | 0260 - 27 |
| 4615996 | 1H24 | 16 | 0510 - 3 |
| 4616885 | 1E20 | 40 | 0265 - 5 |
| 4616885 | 1E22 | 50 | 0265 - 7 |
| 4617012 | 2C13 | 16 | 1674 - 9 |
| 4617327 | 2G20 | 2 | 1830 - 11 |
| 4618229 | 3L10 | 50 | 3365 - 15 |
| 4618721 | 2G20 | 2 | 1830 - 11 |
| 4618767 | 1I4 | 12 | 0510 - 7 |
| 4620431 | 2F8 | 5 | 1810 - 23 |
| 4623165 | 2F8 | 11 | 1810 - 23 |
| 4623166 | 2F8 | 28 | 1810 - 23 |
| 4631475 | 3L16 | 19 | 4360 - 3 |
| 4631864 | 2G4 | 52 | 1821 - 3 |
| 4633400 | 2F10 | 12 | 1810 - 25 |
| 4633401 | 2F10 | 8 | 1810 - 25 |
| 4633401 | 2F10 | 12 | 1810 - 25 |
| 4638278 | 2C15 | 69 | 1674 - 11 |
| 4638688 | 2F10 | 3B | 1810 - 25 |
| 4639479 | 2F8 | 0 | 1810 - 23 |
| 4639480 | 2F8 | 1 | 1810 - 23 |
| 4640468 | 2I13 | 0 | 2001 - 3 |
| 487041 | 3E22 | 46 | 3348 - 3 |
| 5005506 | 2D19 | 0 | 1740 - 9 |
| 5005575 | 2D13 | 0 | 1740 - 3 |
| 5007342 | 2F24 | 15 | 1810 - 39 |
| 5008272 | 3D6 | 30 | 3344 - 3 |
| 5008507 | 3E2 | 49 | 3344 - 23 |
| 5008512 | 3E2 | 64 | 3344 - 23 |
| 5008613 | 2D15 | 0 | 1740 - 5 |
| 5008666 | 2D23 | 0 | 1740 - 13 |
| 5008705 | 2I6 | 0A | 1910 - 19 |
| 5009061 | 3K18 | 0 | 3364 - 3 |
| 5009211 | 2D17 | 0 | 1740 - 7 |
| 5090002221 | 1G10 | 19B | 0413 - 7 |
| 5090002360 | 1G2 | 7 | 0409 - 5 |
| 5090300381 | 1G2 | 40 | 0409 - 5 |
| 5093000650 | 1F24 | 16 | 0409 - 3 |
| 5095000120 | 1G2 | 76 | 0409 - 5 |
| 5095000120 | 1G2 | 86 | 0409 - 5 |
| 5095030240 | 1F8 | 13 | 0401 - 3 |
| 5095800980 | 1F16 | 5 | 0407 - 3 |
| 5096000130 | 1F24 | 7E | 0409 - 3 |
| 5096050050 | 1F12 | 15A | 0404 - 3 |
| 5096050180 | 1F12 | 15B | 0404 - 3 |
| 5096230020 | 1F22 | 9 | 0407 - 9 |
| 5096230350 | 1F12 | 3 | 0404 - 3 |
| 5096230600 | 1G2 | 59 | 0409 - 5 |
| 5096600330 | 1F12 | 27 | 0404 - 3 |
| 5097040331 | 1F14 | 18 | 0404 - 5 |
| 5097040460 | 1G24 | 1 | 0418 - 5 |
| 5098000500 | 1G20 | 27B | 0417 - 3 |
| 5098000510 | 1G20 | 27A | 0417 - 3 |
| 5098430030 | 1F16 | 41 | 0407 - 3 |
| 5111730160 | 1F10 | 7 | 0402 - 3 |
| 5112190140 | 1F12 | 23 | 0404 - 3 |
| 5112240040 | 1F12 | 22 | 0404 - 3 |
| 5112570011 | 1F12 | 19 | 0404 - 3 |
| 5112820110 | 1H2 | 16 | 0419 - 3 |
| 5112880020 | 1H2 | 1 | 0419 - 3 |
| 5112890030 | 1H2 | 8 | 0419 - 3 |
| 5113210090 | 1H18 | 57 | 0433 - 3 |
| 5117110280 | 1F24 | 5B | 0409 - 3 |
| 5123340030 | 1F8 | 8 | 0401 - 3 |
| 5123360030 | 1F8 | 7 | 0401 - 3 |
| 5123780020 | 1F8 | 10 | 0401 - 3 |
| 5123790010 | 1F20 | 66 | 0407 - 7 |
| 5125350011 | 1G2 | 42 | 0409 - 5 |
| 5125630010 | 1G2 | 71B | 0409 - 5 |
| 5125650060 | 1G2 | 65 | 0409 - 5 |
| 5125710032 | 1G2 | 89 | 0409 - 5 |
| 5125710033 | 1G2 | 89 | 0409 - 5 |
| 5126280120 | 1G2 | 58 | 0409 - 5 |
| 5131650040 | 1F16 | 2 | 0407 - 3 |
| 5136340020 | 1G20 | 11 | 0417 - 3 |
| 5136390010 | 1G20 | 26 | 0417 - 3 |
| 5136420072 | 1G20 | 25 | 0417 - 3 |
| 5137210341 | 1G22 | 69A | 0418 - 3 |
| 5153150030 | 1G6 | 66 | 0413 - 3 |
| 5153320060 | 1G6 | 37 | 0413 - 3 |
| 5153390600 | 1G6 | 38 | 0413 - 3 |
| 5153430050 | 1G6 | 44 | 0413 - 3 |
| 5154112231 | 1G6 | 6 | 0413 - 3 |
| 5154190040 | 1G6 | 8 | 0413 - 3 |
| 5154190051 | 1G6 | 7 | 0413 - 3 |
| 5154190131 | 1G6 | 2 | 0413 - 3 |
| 5156390020 | 1G10 | 10 | 0413 - 7 |
| 5157510120 | 1G8 | 15 | 0413 - 5 |
| 5157540010 | 1G8 | 28 | 0413 - 5 |
| 5157590270 | 1G8 | 11 | 0413 - 5 |
| 5197110312 | 1H10 | 19 | 0423 - 2 |
| 5197320022 | 1F24 | 11 | 0409 - 3 |
| 5197550010 | 1H6 | 40 | 0420 - 5 |
| 5513390030 | 1G6 | 42 | 0413 - 3 |
| 5878120080 | 1F16 | 19 | 0407 - 3 |
| 5878138421 | 1H20 | 2 | 0452 - 3 |
| 5878141000 | 1F12 | 2 | 0404 - 3 |
| 5878141010 | 1F12 | 2 | 0404 - 3 |
| 5878141020 | 1F12 | 2 | 0404 - 3 |
| 5878141030 | 1F12 | 2 | 0404 - 3 |
| 5878142811 | 1H20 | 1 | 0452 - 3 |
| 5878143200 | 1G20 | 4 | 0417 - 3 |
| 5878144640 | 1F12 | 2 | 0404 - 3 |
| 5878146610 | 1F12 | 2 | 0404 - 3 |
| 5878146620 | 1F12 | 2 | 0404 - 3 |
| 5878146630 | 1F12 | 2 | 0404 - 3 |
| 600118 | 3B18 | 20 | 3302 - 7 |
| 600119 | 3B18 | 20 | 3302 - 7 |
| 600120 | 3B18 | 20 | 3302 - 7 |
| 600121 | 3B18 | 20 | 3302 - 7 |
| 600122 | 3B16 | 20 | 3302 - 5 |
| 600122 | 3B18 | 20 | 3302 - 7 |
| 600318 | 3B14 | 20 | 3302 - 3 |
| 600318 | 3C2 | 20 | 3302 - 15 |
| 600319 | 3B14 | 20 | 3302 - 3 |
| 600319 | 3C2 | 20 | 3302 - 15 |
| 600320 | 3B14 | 20 | 3302 - 3 |
| 600320 | 3C2 | 20 | 3302 - 15 |
| 600321 | 3B14 | 20 | 3302 - 3 |
| 600321 | 3C2 | 20 | 3302 - 15 |
| 600417 | 3B16 | 20 | 3302 - 5 |
| 600418 | 3B16 | 20 | 3302 - 5 |
| 600419 | 3B16 | 20 | 3302 - 5 |
| 600420 | 3B16 | 20 | 3302 - 5 |
| 6008X | 2J2 | 8 | 2160 - 5 |
| 6014819 | 2D13 | 45 | 1740 - 3 |
| 6017693 | 2D13 | 46 | 1740 - 3 |
| 6020550 | 2G2 | 0 | 1810 - 41 |
| 6020615 | 2F24 | 14 | 1810 - 39 |
| 6020622 | 2E4 | 0A | 1740 - 19 |
| 6020696 | 2I8 | 0 | 1910 - 21 |
| 6020879 | 3D8 | 70 | 3344 - 5 |
| 6021017 | 2I8 | 3A | 1910 - 21 |
| 6021346 | 1I24 | 0 | 0560 - 3 |
| 6021398 | 2F24 | 38 | 1810 - 39 |
| 6021611 | 3E22 | 1A | 3348 - 3 |
| 6021709 | 2H24 | 0A | 1910 - 13 |
| 6021710 | 2H14 | 3A | 1910 - 3 |
| 6021720 | 2H14 | 1A | 1910 - 3 |
| 6021735 | 2E6 | 0 | 1740 - 21 |
| 6021929 | 2D13 | 45 | 1740 - 3 |
| 6021931 | 2D13 | 46 | 1740 - 3 |
| 6022069 | 3B10 | 0 | 3301 - 3 |
| 6023458 | 2G10 | 3 | 1821 - 9 |
| 605995 | 3C4 | 1 | 3302 - 17 |
| 605996 | 3C4 | 1 | 3302 - 17 |
| 7030793 | 2D13 | 63 | 1740 - 3 |
| 7035639 | 1I16 | 3 | 0520 - 3 |
| 7036594 | 2E18 | 0 | 1810 - 9 |
| 7036595 | 2E18 | 2 | 1810 - 9 |
| 7037600 | 2G18 | 0 | 1830 - 9 |
| 7040103 | 2H18 | 17 | 1910 - 7 |
| 7041523 | 2H22 | 11A | 1910 - 11 |
| 7041537 | 2E4 | 0B | 1740 - 19 |
| 7041810 | 2F20 | 9 | 1810 - 35 |
| 7041811 | 2F20 | 8 | 1810 - 35 |
| 7041821 | 2F20 | 6 | 1810 - 35 |
| 7041827 | 2F20 | 4 | 1810 - 35 |
| 7041828 | 2F20 | 3 | 1810 - 35 |
| 7041842 | 2F20 | 0 | 1810 - 35 |
| 7041843 | 2F20 | 1 | 1810 - 35 |
| 7041850 | 3E22 | 21A | 3348 - 3 |
| 7041851 | 3E22 | 20A | 3348 - 3 |
| 7042157 | 3D8 | 80 | 3344 - 5 |
| 7042208 | 3D6 | 40 | 3344 - 3 |
| 7042494 | 2I8 | 3 | 1910 - 21 |
| 7042494 | 2I8 | 3A | 1910 - 21 |
| 7042657 | 2G8 | 10 | 1821 - 7 |
| 7042996 | 3E2 | 49 | 3344 - 23 |
| 7042996 | 3E2 | 50 | 3344 - 23 |
| 7043013 | 3E2 | 64 | 3344 - 23 |
| 7043013 | 3E2 | 65 | 3344 - 23 |

**NUMERICAL INDEX - CONTINUED**

| PART NO. | GRID | KEY | PAGE |
|---|---|---|---|
| 7043021 | 3D2 | 0 | 3315 - 5 |
| 7043286 | 2I8 | 19 | 1910 - 21 |
| 7043287 | 2I8 | 20 | 1910 - 21 |
| 7043457 | 2H18 | 0 | 1910 - 7 |
| 7043458 | 2H18 | 4 | 1910 - 7 |
| 7043460 | 2H16 | 3 | 1910 - 5 |
| 7043461 | 2H22 | 0A | 1910 - 11 |
| 7043516 | 1I22 | 2 | 0530 - 3 |
| 7043733 | 3B10 | 16A | 3301 - 3 |
| 7043734 | 3B10 | 16 | 3301 - 3 |
| 7043735 | 3B10 | 17A | 3301 - 3 |
| 7043736 | 3B10 | 17 | 3301 - 3 |
| 7043737 | 3B10 | 9A | 3301 - 3 |
| 7043956 | 3F20 | 6 | 3360 - 13 |
| 7043957 | 3F22 | 0 | 3360 - 15 |
| 7044075 | 2H24 | 2A | 1910 - 13 |
| 7044094 | 2H24 | 0 | 1910 - 13 |
| 7044094 | 2H24 | 0A | 1910 - 13 |
| 7044095 | 2H14 | 1 | 1910 - 3 |
| 7044095 | 2H14 | 1A | 1910 - 3 |
| 7044096 | 2H14 | 3 | 1910 - 3 |
| 7044096 | 2H14 | 3A | 1910 - 3 |
| 7044104 | 3E22 | 1 | 3348 - 3 |
| 7044104 | 3E22 | 1A | 3348 - 3 |
| 7044111 | 2E4 | 8 | 1740 - 19 |
| 7044269 | 2C17 | 29 | 1674 - 13 |
| 7044270 | 2C17 | 30 | 1674 - 13 |
| 7044539 | 2F24 | 40 | 1810 - 39 |
| 7045022 | 1I18 | 2 | 0520 - 5 |
| 7045099 | 2H22 | 0 | 1910 - 11 |
| 7045099 | 2H22 | 0A | 1910 - 11 |
| 7047820 | 2F20 | 2 | 1810 - 35 |
| 8053499 | 3K18 | 27 | 3364 - 3 |
| 8053517 | 2D13 | 19 | 1740 - 3 |
| 8053518 | 2D13 | 27 | 1740 - 3 |
| 8056744 | 2D13 | 15 | 1740 - 3 |
| 8058352 | 2J2 | 24 | 2160 - 5 |
| 8059452 | 3F10 | 19 | 3360 - 3 |
| 8060437 | 1I22 | 7 | 0530 - 3 |
| 8062021 | 3J4 | 11 | 3363 - 5 |
| 8064356 | 3F20 | 0 | 3360 - 13 |
| 8074315 | 3D12 | 0 | 3344 - 9 |
| 8076541 | 3D10 | 0 | 3344 - 7 |
| 8076541 | 3D10 | 10 | 3344 - 7 |
| 8076619 | 2F24 | 9 | 1810 - 39 |
| 8077221 | 3I24 | 1 | 3362 - 57 |
| 8077342 | 3F20 | 13 | 3360 - 13 |
| 8080641 | 3J16 | 0 | 3363 - 17 |
| 8081659 | 3J20 | 4 | 3363 - 21 |
| 8081708 | 2F20 | 12 | 1810 - 35 |
| 8081981 | 3D4 | 1 | 3315 - 7 |
| 8082202 | 2G20 | 2 | 1830 - 11 |
| 8082329 | 2C13 | 24 | 1674 - 9 |
| 8082431 | 3F6 | 36 | 3348 - 11 |
| 8082606 | 2G18 | 14 | 1830 - 9 |
| 8082618 | 1I20 | 1 | 0520 - 7 |
| 8082661 | 3G4 | 5 | 3360 - 21 |
| 8082661 | 3G6 | 5 | 3360 - 23 |
| 8082826 | 2G24 | 0 | 1830 - 15 |
| 8082827 | 2G24 | 1 | 1830 - 15 |
| 8083371 | 2E12 | 12 | 1810 - 3 |
| 8084557 | 2H18 | 33 | 1910 - 7 |
| 8086114 | 3L8 | 27 | 3365 - 13 |
| 8086130 | 3E22 | 21 | 3348 - 3 |
| 8086130 | 3E22 | 21A | 3348 - 3 |
| 8086254 | 3G18 | 1 | 3362 - 3 |
| 8086257 | 3D2 | 6 | 3315 - 5 |
| 8086354 | 2F24 | 33 | 1810 - 39 |
| 8086522 | 3I24 | 0 | 3362 - 57 |
| 8086600 | 3G16 | 0 | 3360 - 33 |
| 8086601 | 3G4 | 0 | 3360 - 21 |
| 8086601 | 3G6 | 0 | 3360 - 23 |
| 8086655 | 2H22 | 11 | 1910 - 11 |
| 8086655 | 2H22 | 11A | 1910 - 11 |
| 8086950 | 2F20 | 11 | 1810 - 35 |
| 8086966 | 2F20 | 10 | 1810 - 35 |
| 8086988 | 2F20 | 7 | 1810 - 35 |
| 8087015 | 2F20 | 5 | 1810 - 35 |
| 8087077 | 3E22 | 20 | 3348 - 3 |
| 8087225 | 2D21 | 5 | 1740 - 11 |
| 8087268 | 3D4 | 10 | 3315 - 7 |
| 8087367 | 3D6 | 4 | 3344 - 3 |
| 8087367 | 3E2 | 5 | 3344 - 23 |
| 8087461 | 3D14 | 7 | 3344 - 11 |
| 8087462 | 3D14 | 8 | 3344 - 11 |
| 8087481 | 3F20 | 12 | 3360 - 13 |
| 8087481 | 3F22 | 6 | 3360 - 15 |
| 8087867 | 3D14 | 5 | 3344 - 11 |
| 8087868 | 3D14 | 6 | 3344 - 11 |
| 8087869 | 3D14 | 9 | 3344 - 11 |
| 8087870 | 3D14 | 10 | 3344 - 11 |
| 8088673 | 2F24 | 42 | 1810 - 39 |
| 8088757 | 2E16 | 7 | 1810 - 7 |
| 8089055 | 1D18 | 9 | 0260 - 15 |
| 8089056 | 1D18 | 8 | 0260 - 15 |
| 8089205 | 3E6 | 4 | 3344 - 27 |
| 8089206 | 3E6 | 5 | 3344 - 27 |
| 8089207 | 3E4 | 2 | 3344 - 25 |
| 8089208 | 3E4 | 3 | 3344 - 25 |
| 8089212 | 3E4 | 0 | 3344 - 25 |
| 8089213 | 3E4 | 1 | 3344 - 25 |
| 8089214 | 3E4 | 6 | 3344 - 25 |
| 8089215 | 3E4 | 7 | 3344 - 25 |
| 8089323 | 2B9 | 2 | 1062 - 9 |
| 8089323 | 2E12 | 2 | 1810 - 3 |
| 8089471 | 2E14 | 0 | 1810 - 5 |
| 8089522 | 1B5 | 24 | 0250 - 3 |
| 8089920 | 3L13 | 0 | 4060 - 3 |
| 8090175 | 2H20 | 36 | 1910 - 9 |
| 8090176 | 2H18 | 24A | 1910 - 7 |
| 8090177 | 2H16 | 13 | 1910 - 5 |
| 8090179 | 2H16 | 19A | 1910 - 5 |
| 8090180 | 2H16 | 0 | 1910 - 5 |
| 8090181 | 2H22 | 8 | 1910 - 11 |
| 8090228 | 2E12 | 18 | 1810 - 3 |
| 8090381 | 1I2 | 0 | 0510 - 5 |
| 8090454 | 3E22 | 8 | 3348 - 3 |
| 8090549 | 2E4 | 4 | 1740 - 19 |
| 8090550 | 2E4 | 3 | 1740 - 19 |
| 8090629 | 2I15 | 11 | 2002 - 3 |
| 8090790 | 3B10 | 8 | 3301 - 3 |
| 8090790 | 3B10 | 8A | 3301 - 3 |
| 8090791 | 3B10 | 8A | 3301 - 3 |
| 8090791 | 3B10 | 9 | 3301 - 3 |
| 8090791 | 3B10 | 9A | 3301 - 3 |
| 8090815 | 2H18 | 27A | 1910 - 7 |
| 8090938 | 1I20 | 0 | 0520 - 7 |
| 8090940 | 3E22 | 36A | 3348 - 3 |
| 8091012 | 3E22 | 37A | 3348 - 3 |
| 8091483 | 1H8 | 1 | 0421 - 3 |
| 8091488 | 3B12 | 22A | 3301 - 5 |
| 8091528 | 2C17 | 25 | 1674 - 13 |
| 8092071 | 2H16 | 12 | 1910 - 5 |
| 8092222 | 1E12 | 2 | 0260 - 33 |
| 8092349 | 3F6 | 13 | 3348 - 11 |
| 8092350 | 3F6 | 14 | 3348 - 11 |
| 8092493 | 2H18 | 21A | 1910 - 7 |
| 8092568 | 2H18 | 27 | 1910 - 7 |
| 8092659 | 1J4 | 3 | 0560 - 7 |
| 8092662 | 1J4 | 8 | 0560 - 7 |
| 8092775 | 2I10 | 2 | 1910 - 23 |
| 8093517 | 1I16 | 10 | 0520 - 3 |
| 8093518 | 1I18 | 3 | 0520 - 5 |
| 8093717 | 2H18 | 21 | 1910 - 7 |
| 8093717 | 2H18 | 21A | 1910 - 7 |
| 8093719 | 2H20 | 39 | 1910 - 9 |
| 8093719 | 2H20 | 39A | 1910 - 9 |
| 8093757 | 2H18 | 24 | 1910 - 7 |
| 8093757 | 2H18 | 24A | 1910 - 7 |
| 8094328 | 2H24 | 2 | 1910 - 13 |
| 8094328 | 2H24 | 2A | 1910 - 13 |
| 8099268 | 1H8 | 30 | 0421 - 3 |
| 8099405 | 2G6 | 2 | 1821 - 5 |
| 8941075751 | 1F8 | 21 | 0401 - 3 |
| 8941075970 | 1F8 | 11 | 0401 - 3 |
| 8941145790 | 1G2 | 71A | 0409 - 5 |
| 8941310603 | 1F20 | 26 | 0407 - 7 |
| 8941329480 | 1H6 | 8 | 0420 - 5 |
| 8941339373 | 1G2 | 43 | 0409 - 5 |
| 8941376820 | 1F14 | 67 | 0404 - 5 |
| 8941480790 | 1F12 | 13 | 0404 - 3 |
| 8941569390 | 1F24 | 14 | 0409 - 3 |
| 8941569400 | 1F24 | 14 | 0409 - 3 |
| 8941635940 | 1F16 | 34 | 0407 - 3 |
| 8941635950 | 1F16 | 8 | 0407 - 3 |
| 8941635970 | 1F16 | 35 | 0407 - 3 |
| 8941695020 | 1G6 | 45 | 0413 - 3 |
| 8941695030 | 1G6 | 39 | 0413 - 3 |
| 8941711850 | 1G8 | 19 | 0413 - 5 |
| 8942059861 | 1H2 | 6 | 0419 - 3 |
| 8942172270 | 1H2 | 6A | 0419 - 3 |
| 8942580140 | 1H14 | 46 | 0423 - 7 |
| 8943109170 | 1H2 | 19 | 0419 - 3 |
| 8943185540 | 1G4 | 15 | 0410 - 3 |
| 8943185550 | 1G4 | 15 | 0410 - 3 |
| 8943203080 | 1G6 | 41 | 0413 - 3 |
| 8943398951 | 1F8 | 1 | 0401 - 3 |
| 8943444620 | 1F12 | 7 | 0404 - 3 |
| 8943445910 | 1F16 | 43 | 0407 - 3 |
| 8943660210 | 1G4 | 1 | 0410 - 3 |
| 8943673681 | 1F14 | 6 | 0404 - 5 |
| 8943675301 | 1F14 | 3 | 0404 - 5 |
| 8943690220 | 1G16 | 34A | 0416 - 3 |
| 8943690230 | 1G16 | 2 | 0416 - 3 |
| 8943706610 | 1G20 | 3 | 0417 - 3 |
| 8943706630 | 1G16 | 34B | 0416 - 3 |
| 8943706700 | 1F18 | 20 | 0407 - 5 |
| 8943706710 | 1H18 | 56 | 0433 - 3 |
| 8943706750 | 1G10 | 21 | 0413 - 7 |
| 8943706760 | 1G14 | 60 | 0414 - 3 |
| 8943795431 | 2C4 | 10 | 1671 - 3 |
| 8943931320 | 1F8 | 6 | 0401 - 3 |
| 8943996890 | 1F10 | 5 | 0402 - 3 |
| 8943997230 | 1F10 | 4 | 0402 - 3 |
| 8944046100 | 1G4 | 2 | 0410 - 3 |
| 8944094120 | 1G2 | 1 | 0409 - 5 |
| 8944233140 | 1H14 | 46 | 0423 - 7 |
| 8944299951 | 1F14 | 3 | 0404 - 5 |
| 8944496450 | 1H2 | 7 | 0419 - 3 |
| 8944509752 | 1H18 | 1 | 0433 - 3 |
| 8944575170 | 1G12 | 30 | 0413 - 9 |

**NUMERICAL INDEX - CONTINUED**

| PART NO. | GRID | KEY | PAGE |
|---|---|---|---|
| 8944762820 | 1G16 | 12 | 0416 - 3 |
| 8970110310 | 1F8 | 16 | 0401 - 3 |
| 8970145731 | 1G2 | 1 | 0409 - 5 |
| 8970200372 | 1H2 | 5 | 0419 - 3 |
| 8970200372 | 1H2 | 7 | 0419 - 3 |
| 8970209320 | 1F22 | 8 | 0407 - 9 |
| 8970209330 | 1H6 | 3 | 0420 - 5 |
| 8970209340 | 1H6 | 7 | 0420 - 5 |
| 8970209371 | 1G6 | 63 | 0413 - 3 |
| 8970233390 | 1F12 | 26 | 0404 - 3 |
| 8970265900 | 1F20 | 47 | 0407 - 7 |
| 8970314671 | 1G6 | 16 | 0413 - 3 |
| 8970314681 | 1G6 | 17 | 0413 - 3 |
| 8970314691 | 1G6 | 18 | 0413 - 3 |
| 8970314701 | 1G6 | 19 | 0413 - 3 |
| 8970320250 | 1H2 | 8 | 0419 - 3 |
| 8970324991 | 1H14 | 19 | 0423 - 7 |
| 8970376860 | 1F24 | 5A | 0409 - 3 |
| 8970428010 | 1H18 | 48 | 0433 - 3 |
| 8970614011 | 1G16 | 50 | 0416 - 3 |
| 8970653840 | 1F16 | 1 | 0407 - 3 |
| 8970713580 | 1F8 | 9 | 0401 - 3 |
| 8970716610 | 1F8 | 2 | 0401 - 3 |
| 8970728231 | 1H18 | 75 | 0433 - 3 |
| 8971012810 | 1G2 | 41 | 0409 - 5 |
| 8971177760 | 1G12 | 1 | 0413 - 9 |
| 8971177770 | 1G12 | 41 | 0413 - 9 |
| 8971186980 | 1H18 | 65 | 0433 - 3 |
| 8971201670 | 1G2 | 72 | 0409 - 5 |
| 8971219100 | 1G8 | 1 | 0413 - 5 |
| 8971239542 | 1F12 | 1 | 0404 - 3 |
| 8971256011 | 1H14 | 89 | 0423 - 7 |
| 8971281500 | 1H2 | 9 | 0419 - 3 |
| 8971298300 | 1H18 | 54 | 0433 - 3 |
| 8971315880 | 1F24 | 17 | 0409 - 3 |
| 8971348410 | 1G6 | 32 | 0413 - 3 |
| 8971360130 | 1G12 | 27 | 0413 - 9 |
| 8971379101 | 1F8 | 4 | 0401 - 3 |
| 8971379102 | 1F8 | 4 | 0401 - 3 |
| 8971720400 | 1F8 | 12 | 0401 - 3 |
| 8971725491 | 1H6 | 2 | 0420 - 5 |
| 8971731310 | 1G18 | 1 | 0416 - 5 |
| 8971731460 | 1G18 | 4 | 0416 - 5 |
| 8971731470 | 1G18 | 3 | 0416 - 5 |
| 8971764140 | 1F22 | 1 | 0407 - 9 |
| 8971781340 | 1H12 | 86 | 0423 - 5 |
| 8971798541 | 1H6 | 1 | 0420 - 5 |
| 8971805560 | 1H9 | 4 | 0422 - 2 |
| 8972134730 | 1H4 | 7 | 0420 - 3 |
| 8972134740 | 1H4 | 9 | 0420 - 3 |
| 8972186470 | 1H4 | 1 | 0420 - 3 |
| 8972221090 | 1F24 | 1 | 0409 - 3 |
| 8972221170 | 1F24 | 2 | 0409 - 3 |
| 8972221171 | 1F24 | 2 | 0409 - 3 |
| 8972221201 | 1F20 | 63 | 0407 - 7 |
| 8972221210 | 1G16 | 33 | 0416 - 3 |
| 8972221220 | 1F20 | 37 | 0407 - 7 |
| 8972221250 | 1F18 | 13 | 0407 - 5 |
| 8972221710 | 1G6 | 80 | 0413 - 3 |
| 8972222450 | 1G2 | 53 | 0409 - 5 |
| 8972234300 | 1H2 | 14 | 0419 - 3 |
| 8972237600 | 1F10 | 1 | 0402 - 3 |
| 8972242040 | 1G24 | 2 | 0418 - 5 |
| 8972242050 | 1F14 | 94 | 0404 - 5 |
| 8972254470 | 1H6 | 5 | 0420 - 5 |
| 8972321350 | 1F22 | 2 | 0407 - 9 |
| 8972322470 | 1G20 | 20 | 0417 - 3 |
| 8972322480 | 1G20 | 19 | 0417 - 3 |
| 8972322490 | 1G20 | 32 | 0417 - 3 |
| 8972322500 | 1G20 | 18 | 0417 - 3 |
| 8972333010 | 1H18 | 49 | 0433 - 3 |
| 8972333022 | 1H2 | 22 | 0419 - 3 |
| 8972333080 | 1G18 | 5 | 0416 - 5 |
| 8972333090 | 1G18 | 2 | 0416 - 5 |
| 8972357881 | 1G14 | 7 | 0414 - 3 |
| 8972357891 | 1G22 | 66 | 0418 - 3 |
| 8972488530 | 1G14 | 1 | 0414 - 3 |
| 8972498951 | 1G20 | 31 | 0417 - 3 |
| 8972519090 | 1G10 | 2 | 0413 - 7 |
| 8972520600 | 1G6 | 16 | 0413 - 3 |
| 8972520610 | 1G6 | 17 | 0413 - 3 |
| 8972520620 | 1G6 | 18 | 0413 - 3 |
| 8972520630 | 1G6 | 19 | 0413 - 3 |
| 8972523211 | 1F20 | 1 | 0407 - 7 |
| 8972530281 | 1G20 | 1 | 0417 - 3 |
| 8972533510 | 1F14 | 5 | 0404 - 5 |
| 8972543692 | 1F20 | 42 | 0407 - 7 |
| 8972572570 | 1G6 | 4 | 0413 - 3 |
| 8972612310 | 1G14 | 38 | 0414 - 3 |
| 8972891170 | 1H4 | 4 | 0420 - 3 |
| 8972891180 | 1H4 | 56 | 0420 - 3 |
| 8972891250 | 1H4 | 38 | 0420 - 3 |
| 8972891310 | 1H4 | 36 | 0420 - 3 |
| 8972891320 | 1H4 | 34 | 0420 - 3 |
| 8972891330 | 1H4 | 35 | 0420 - 3 |
| 8972891340 | 1H4 | 42 | 0420 - 3 |
| 8972891350 | 1H4 | 89 | 0420 - 3 |
| 8972891360 | 1H4 | 39 | 0420 - 3 |
| 8972894430 | 1G16 | 1 | 0416 - 3 |
| 8973105620 | 1F22 | 7 | 0407 - 9 |
| 8973105690 | 1H16 | 36 | 0429 - 3 |
| 8973238371 | 1G6 | 1 | 0413 - 3 |
| 8973243860 | 1F18 | 11 | 0407 - 5 |
| 8973243870 | 1G22 | 49 | 0418 - 3 |
| 8973262510 | 1F10 | 7 | 0402 - 3 |
| 8973299400 | 1G6 | 15 | 0413 - 3 |
| 8973524030 | 1F22 | 5 | 0407 - 9 |
| 8973558532 | 1F8 | 3 | 0401 - 3 |
| 8973572640 | 1G8 | 1 | 0413 - 5 |
| 8973585740 | 1F8 | 14 | 0401 - 3 |
| 8973585750 | 1F8 | 14 | 0401 - 3 |
| 8973780610 | 1G4 | 17 | 0410 - 3 |
| 9019106120 | 1G12 | 42 | 0413 - 9 |
| 9030908200 | 1G20 | 34 | 0417 - 3 |
| 9034906100 | 1H16 | 11 | 0429 - 3 |
| 9041108220 | 1G16 | 61 | 0416 - 3 |
| 9041108250 | 1F24 | 9 | 0409 - 3 |
| 9080107200 | 1G2 | 12 | 0409 - 5 |
| 9081140300 | 1F16 | 3 | 0407 - 3 |
| 9081510180 | 1F12 | 17 | 0404 - 3 |
| 9081612200 | 1F8 | 5 | 0401 - 3 |
| 9091115080 | 1G2 | 83 | 0409 - 5 |
| 9091505140 | 1H10 | 18 | 0423 - 2 |
| 9091506100 | 1G10 | 9 | 0413 - 7 |
| 9091508140 | 1H10 | 18 | 0423 - 2 |
| 9091508140 | 1H18 | 18 | 0433 - 3 |
| 9091605100 | 1G6 | 79 | 0413 - 3 |
| 9091605140 | 1H10 | 17 | 0423 - 2 |
| 9091606080 | 1H16 | 16 | 0429 - 3 |
| 9091607100 | 1G6 | 75 | 0413 - 3 |
| 9091645100 | 1G10 | 8 | 0413 - 7 |
| 9091645140 | 1H14 | 17 | 0423 - 7 |
| 9091647120 | 1H16 | 77 | 0429 - 3 |
| 9091800190 | 1G2 | 56 | 0409 - 5 |
| 9091801520 | 1G20 | 9 | 0417 - 3 |
| 9095652250 | 1H2 | 10 | 0419 - 3 |
| 9095714080 | 1G6 | 3 | 0413 - 3 |
| 9095714100 | 1F20 | 3A | 0407 - 7 |
| 9095714100 | 1F20 | 87 | 0407 - 7 |
| 9095714200 | 1H2 | 20 | 0419 - 3 |
| 9095716200 | 1H2 | 11 | 0419 - 3 |
| 9095720080 | 1F14 | 4 | 0404 - 5 |
| 9095720080 | 1G10 | 20 | 0413 - 7 |
| 9095720100 | 1F20 | 64 | 0407 - 7 |
| 9095720140 | 1F12 | 29 | 0404 - 3 |
| 9095720140 | 1G6 | 65 | 0413 - 3 |
| 9095720140 | 1G8 | 9 | 0413 - 5 |
| 9095720140 | 1H6 | 6 | 0420 - 5 |
| 9096600340 | 1F24 | 6 | 0409 - 3 |
| 9096620120 | 1F22 | 4 | 0407 - 9 |
| 9098440220 | 1F20 | 65 | 0407 - 7 |
| 9098518503 | 1G2 | 45 | 0409 - 5 |
| 9099062051 | 1F20 | 2A | 0407 - 7 |
| 9099063251 | 1H6 | 69 | 0420 - 5 |
| 9099155121 | 1F14 | 29 | 0404 - 5 |
| 9099211880 | 1F20 | 28 | 0407 - 7 |
| 9099521430 | 1G20 | 30 | 0417 - 3 |
| 9111291280 | 1F24 | 7D | 0409 - 3 |
| 9111296010 | 1F24 | 8 | 0409 - 3 |
| 9111750120 | 1F10 | 2 | 0402 - 3 |
| 9111790300 | 1F10 | 6 | 0402 - 3 |
| 9111791050 | 1F10 | 3 | 0402 - 3 |
| 9112290581 | 1H18 | 42 | 0433 - 3 |
| 9113491341 | 1H18 | 51 | 0433 - 3 |
| 9116810150 | 1G2 | 10 | 0409 - 5 |
| 9116910480 | 1F12 | 25A | 0404 - 3 |
| 9116930350 | 1F12 | 25B | 0404 - 3 |
| 9117778050 | 1F24 | 12 | 0409 - 3 |
| 9122716080 | 1F8 | 16 | 0401 - 3 |
| 9125310300 | 1G2 | 41 | 0409 - 5 |
| 9126160420 | 1G2 | 81 | 0409 - 5 |
| 9126260050 | 1G2 | 55 | 0409 - 5 |
| 9126281050 | 1G2 | 84 | 0409 - 5 |
| 9134109 | 3G20 | 16 | 3362 - 5 |
| 9134109 | 3G20 | 16A | 3362 - 5 |
| 9134109 | 3G22 | 16 | 3362 - 7 |
| 9134109 | 3G22 | 16A | 3362 - 7 |
| 9134110 | 1E16 | 16 | 0262 - 5 |
| 9134110 | 3F12 | 67 | 3360 - 5 |
| 9134110 | 3F14 | 58 | 3360 - 7 |
| 9134110 | 3G20 | 20 | 3362 - 5 |
| 9134110 | 3G22 | 20 | 3362 - 7 |
| 9134110 | 3G24 | 20 | 3362 - 9 |
| 9134111 | 3F12 | 80 | 3360 - 5 |
| 9134111 | 3G20 | 18 | 3362 - 5 |
| 9134111 | 3G24 | 18 | 3362 - 9 |
| 9134112 | 1D6 | 35 | 0260 - 3 |
| 9152468 | 3J18 | 7 | 3363 - 19 |
| 9153390510 | 1G6 | 54 | 0413 - 3 |
| 9160517 | 3G8 | 5 | 3360 - 25 |
| 9160517 | 3G10 | 5 | 3360 - 27 |
| 9169646 | 2D25 | 0 | 1740 - 15 |
| 9184556 | 3K18 | 7 | 3364 - 3 |
| 9188357 | 1J6 | 4 | 0560 - 9 |
| 9193283 | 1J6 | 2 | 0560 - 9 |
| 9196963 | 3L16 | 70 | 4360 - 3 |
| 9197392 | 3J18 | 5 | 3363 - 19 |
| 9197465 | 3J24 | 7 | 3363 - 25 |
| 9198935 | 3F12 | 69 | 3360 - 5 |
| 9198935 | 3F16 | 0 | 3360 - 9 |
| 9198936 | 3F12 | 70 | 3360 - 5 |

## NUMERICAL INDEX - CONTINUED

| PART NO. | GRID | KEY | PAGE |
|---|---|---|---|
| 9198936 | 3F14 | 0 | 3360 - 7 |
| 9200478 | 3G20 | 47 | 3362 - 5 |
| 9200481 | 3G22 | 54 | 3362 - 7 |
| 9200483 | 3G24 | 6 | 3362 - 9 |
| 9200483 | 3H4 | 30 | 3362 - 13 |
| 9200491 | 3H4 | 29 | 3362 - 13 |
| 9200491 | 3H8 | 18 | 3362 - 17 |
| 9200492 | 3G24 | 4 | 3362 - 9 |
| 9200492 | 3H8 | 19 | 3362 - 17 |
| 9200495 | 3G24 | 5 | 3362 - 9 |
| 9201381 | 3H4 | 25 | 3362 - 13 |
| 9201529 | 3H2 | 6 | 3362 - 11 |
| 9201529 | 3H6 | 5 | 3362 - 15 |
| 9203824 | 1J6 | 0 | 0560 - 9 |
| 9204069 | 3E4 | 8 | 3344 - 25 |
| 9204536 | 3J2 | 10 | 3363 - 3 |
| 9206005 | 2B3 | 16 | 1062 - 3 |
| 9207252 | 1I14 | 0A | 0515 - 5 |
| 9208714 | 1E10 | 3 | 0260 - 31 |
| 9208714 | 1E18 | 0 | 0265 - 3 |
| 9208795 | 1E10 | 3A | 0260 - 31 |
| 9208795 | 1E14 | 0 | 0262 - 3 |
| 9208795 | 1E18 | 8 | 0265 - 3 |
| 9208960 | 2H8 | 7 | 1830 - 23 |
| 9208961 | 2H8 | 8 | 1830 - 23 |
| 9209017 | 2E4 | 0 | 1740 - 19 |
| 9209265 | 1D24 | 12 | 0260 - 21 |
| 9209434 | 1D6 | 40 | 0260 - 3 |
| 9209435 | 1D6 | 2 | 0260 - 3 |
| 9209494 | 3J18 | 4 | 3363 - 19 |
| 9212059 | 1F18 | 14 | 0407 - 5 |
| 9212060 | 1F18 | 15 | 0407 - 5 |
| 9212472 | 2D2 | 1 | 1674 - 23 |
| 9212472 | 3D20 | 0 | 3344 - 17 |
| 9212472 | 3D20 | 5 | 3344 - 17 |
| 9212473 | 3D22 | 0 | 3344 - 19 |
| 9212473 | 3D22 | 5 | 3344 - 19 |
| 9216111 | 3F24 | 10 | 3360 - 17 |
| 9216111 | 3G2 | 10 | 3360 - 19 |
| 9217221 | 2I24 | 4 | 2160 - 3 |
| 9217735 | 3E10 | 15 | 3344 - 31 |
| 9217736 | 3E8 | 15 | 3344 - 29 |
| 9217737 | 3E12 | 10 | 3344 - 33 |
| 9218033 | 2J2 | 2 | 2160 - 5 |
| 9218033 | 2J4 | 0 | 2160 - 21 |
| 9218033 | 3F18 | 35 | 3360 - 11 |
| 9218234 | 3H18 | 26 | 3362 - 27 |
| 9218269 | 3F16 | 50 | 3360 - 9 |
| 9218273 | 3H20 | 16 | 3362 - 29 |
| 9218273 | 3J2 | 0 | 3363 - 3 |
| 9218852 | 1E4 | 84 | 0260 - 25 |
| 9218915 | 3G24 | 3 | 3362 - 9 |
| 9218915 | 3H8 | 16 | 3362 - 17 |
| 9219214 | 1D24 | 0 | 0260 - 21 |
| 9219217 | 3B12 | 13 | 3301 - 5 |
| 9220919 | 1E16 | 0 | 0262 - 5 |
| 9220919 | 1E20 | 26 | 0265 - 5 |
| 9220919 | 1E22 | 28 | 0265 - 7 |
| 9220919 | 3B12 | 0B | 3301 - 5 |
| 9220919 | 3F6 | 0B | 3348 - 11 |
| 9221114 | 3H20 | 13 | 3362 - 29 |
| 9221928 | 3F24 | 15 | 3360 - 17 |
| 9221928 | 3G2 | 15 | 3360 - 19 |
| 9221986 | 3J8 | 20 | 3363 - 9 |
| 9221987 | 3J10 | 27 | 3363 - 11 |
| 9222054 | 3G8 | 0 | 3360 - 25 |
| 9222054 | 3G10 | 0 | 3360 - 27 |
| 9222146 | 3F4 | 11 | 3348 - 9 |
| 9223051 | 3H18 | 27 | 3362 - 27 |
| 9223056 | 3H18 | 30 | 3362 - 27 |
| 9223172 | 1E6 | 62 | 0260 - 27 |
| 9223182 | 2B7 | 34 | 1062 - 7 |
| 9223183 | 2B7 | 35 | 1062 - 7 |
| 9223211 | 1E4 | 20 | 0260 - 25 |
| 9223255 | 1E8 | 1 | 0260 - 29 |
| 9223273 | 1E8 | 9 | 0260 - 29 |
| 9223323 | 3D18 | 10 | 3344 - 15 |
| 9223324 | 3D16 | 10 | 3344 - 13 |
| 9223465 | 3F8 | 50 | 3348 - 13 |
| 9223467 | 3F8 | 48 | 3348 - 13 |
| 9223588 | 2I6 | 0 | 1910 - 19 |
| 9223588 | 2I6 | 0A | 1910 - 19 |
| 9223911 | 3F8 | 52 | 3348 - 13 |
| 9223916 | 3F8 | 54 | 3348 - 13 |
| 9223919 | 3F8 | 62 | 3348 - 13 |
| 9223921 | 3J2 | 11 | 3363 - 3 |
| 9223929 | 3B12 | 11 | 3301 - 5 |
| 9223933 | 1E12 | 36 | 0260 - 33 |
| 9223937 | 3B12 | 22 | 3301 - 5 |
| 9223958 | 1D18 | 0 | 0260 - 15 |
| 9223961 | 1D18 | 1 | 0260 - 15 |
| 9224009 | 3B12 | 10 | 3301 - 5 |
| 9224010 | 3B12 | 16 | 3301 - 5 |
| 9224448 | 3B12 | 6 | 3301 - 5 |
| 9224470 | 3B12 | 3 | 3301 - 5 |
| 9224574 | 3F8 | 70 | 3348 - 13 |
| 9224611 | 2D23 | 9 | 1740 - 13 |
| 9224867 | 3F6 | 0 | 3348 - 11 |
| 9225025 | 3B12 | 0 | 3301 - 5 |
| 9225505 | 3F18 | 40 | 3360 - 11 |
| 9225807 | 3E16 | 10 | 3344 - 37 |
| 9225808 | 3E16 | 11 | 3344 - 37 |
| 9226074 | 3K14 | 8 | 3363 - 39 |
| 9226533 | 3H4 | 28 | 3362 - 13 |
| 9227377 | 3J20 | 26 | 3363 - 21 |
| 9227679 | 3F8 | 60 | 3348 - 13 |
| 9227683 | 3F8 | 65 | 3348 - 13 |
| 9227754 | 3J14 | 15 | 3363 - 15 |
| 9227755 | 3J14 | 16 | 3363 - 15 |
| 9228577 | 3E20 | 8 | 3344 - 41 |
| 9228658 | 1E10 | 31 | 0260 - 31 |
| 9228659 | 1E10 | 25 | 0260 - 31 |
| 9228660 | 3F8 | 56 | 3348 - 13 |
| 9228661 | 3F8 | 66 | 3348 - 13 |
| 9228663 | 3F8 | 58 | 3348 - 13 |
| 9228664 | 1E12 | 25 | 0260 - 33 |
| 9229428 | 3H8 | 50 | 3362 - 17 |
| 9229429 | 3H8 | 41 | 3362 - 17 |
| 9230193 | 3G20 | 0 | 3362 - 5 |
| 9230193 | 3G22 | 0 | 3362 - 7 |
| 9230193 | 3G24 | 0 | 3362 - 9 |
| 9230193 | 3H2 | 0 | 3362 - 11 |
| 9230193 | 3H6 | 0 | 3362 - 15 |
| 9230193 | 3H8 | 0 | 3362 - 17 |
| 9230193 | 3H10 | 0 | 3362 - 19 |
| 9230378 | 2C7 | 1 | 1674 - 3 |
| 9230959 | 2H16 | 19 | 1910 - 5 |
| 9230959 | 2H16 | 19A | 1910 - 5 |
| 9231236 | 3B12 | 5 | 3301 - 5 |
| 9231237 | 3B12 | 4 | 3301 - 5 |
| 9231238 | 3B12 | 17 | 3301 - 5 |
| 9231239 | 3B12 | 18 | 3301 - 5 |
| 9231773 | 1E6 | 3 | 0260 - 27 |
| 9231788 | 1E12 | 6 | 0260 - 33 |
| 9231789 | 1E12 | 7 | 0260 - 33 |
| 9231914 | 1E12 | 45 | 0260 - 33 |
| 9232894 | 3J12 | 5 | 3363 - 13 |
| 9232896 | 3K8 | 1 | 3363 - 33 |
| 9232897 | 3K10 | 10 | 3363 - 35 |
| 9232900 | 3J2 | 12 | 3363 - 3 |
| 9232901 | 3J2 | 13 | 3363 - 3 |
| 9232902 | 3J2 | 14 | 3363 - 3 |
| 9232905 | 3J24 | 1 | 3363 - 25 |
| 9232907 | 3J24 | 11 | 3363 - 25 |
| 9232909 | 3J24 | 14 | 3363 - 25 |
| 9232910 | 3K2 | 1 | 3363 - 27 |
| 9232911 | 1D20 | 8 | 0260 - 17 |
| 9232912 | 1D20 | 9 | 0260 - 17 |
| 9232913 | 3K2 | 31 | 3363 - 27 |
| 9232914 | 2B5 | 38 | 1062 - 5 |
| 9232915 | 2B5 | 39 | 1062 - 5 |
| 9232916 | 3J6 | 5 | 3363 - 7 |
| 9232919 | 3J6 | 6 | 3363 - 7 |
| 9232920 | 3L13 | 12 | 4060 - 3 |
| 9232921 | 3F2 | 12 | 3348 - 7 |
| 9232922 | 3E24 | 23 | 3348 - 5 |
| 9232923 | 3F2 | 31 | 3348 - 7 |
| 9232924 | 3F4 | 1 | 3348 - 9 |
| 9232925 | 3F4 | 8 | 3348 - 9 |
| 9232931 | 3G8 | 10 | 3360 - 25 |
| 9232931 | 3G10 | 10 | 3360 - 27 |
| 9233238 | 3J8 | 14 | 3363 - 9 |
| 9233239 | 3E24 | 7 | 3348 - 5 |
| 9233240 | 3E24 | 8 | 3348 - 5 |
| 9233241 | 3E24 | 34 | 3348 - 5 |
| 9233242 | 3F2 | 44 | 3348 - 7 |
| 9233820 | 3G4 | 16 | 3360 - 21 |
| 9234054 | 3E20 | 7 | 3344 - 41 |
| 9235877 | 3J12 | 3 | 3363 - 13 |
| 9235879 | 3J24 | 12 | 3363 - 25 |
| 9235883 | 3J10 | 5 | 3363 - 11 |
| 9235929 | 3K16 | 12 | 3363 - 41 |
| 9235930 | 3K16 | 11 | 3363 - 41 |
| 9235988 | 3G20 | 0 | 3362 - 5 |
| 9235988 | 3G22 | 0 | 3362 - 7 |
| 9235988 | 3G24 | 0 | 3362 - 9 |
| 9235988 | 3H2 | 0 | 3362 - 11 |
| 9235988 | 3H4 | 0 | 3362 - 13 |
| 9235988 | 3H6 | 0 | 3362 - 15 |
| 9235988 | 3H8 | 0 | 3362 - 17 |
| 9235988 | 3H10 | 0 | 3362 - 19 |
| 9236298 | 1E6 | 12 | 0260 - 27 |
| 9236929 | 2I24 | 4 | 2160 - 3 |
| 9239568 | 2D2 | 1 | 1674 - 23 |
| 9248228 | 2F2 | 1 | 1810 - 17 |
| 94-0632 | 1J4 | 14 | 0560 - 7 |
| 94-2012 | 3L16 | 36 | 4360 - 3 |
| 94-2013 | 1D6 | 5 | 0260 - 3 |
| 94-2013 | 1I24 | 8 | 0560 - 3 |
| 94-2014 | 1D6 | 6 | 0260 - 3 |
| 94-2817 | 2F22 | 3 | 1810 - 37 |
| 957366 | 1D20 | 10 | 0260 - 17 |
| 957366 | 1D20 | 16 | 0260 - 17 |
| 957366 | 1E2 | 22 | 0260 - 23 |
| 957366 | 1E4 | 22 | 0260 - 25 |
| 957366 | 1E8 | 3 | 0260 - 29 |
| 957366 | 1E10 | 5 | 0260 - 31 |
| 957366 | 1E10 | 28 | 0260 - 31 |
| 957366 | 1E12 | 44 | 0260 - 33 |
| 957366 | 1E16 | 16B | 0262 - 5 |
| 957366 | 1E20 | 30 | 0265 - 5 |

**NUMERICAL INDEX - CONTINUED**


| PART NO. | GRID | KEY | PAGE |
|---|---|---|---|
| 957366 | 1E22 | 32 | 0265 - 7 |
| 957366 | 2B3 | 17 | 1062 - 3 |
| 957366 | 2B5 | 10 | 1062 - 5 |
| 957366 | 2B5 | 27 | 1062 - 5 |
| 957366 | 2G18 | 22 | 1830 - 9 |
| 957366 | 2J2 | 16 | 2160 - 5 |
| 957366 | 3B12 | 8 | 3301 - 5 |
| 957366 | 3B12 | 9 | 3301 - 5 |
| 957366 | 3E20 | 0 | 3344 - 41 |
| 957366 | 3E20 | 1 | 3344 - 41 |
| 957366 | 3E20 | 5 | 3344 - 41 |
| 957366 | 3E24 | 22 | 3348 - 5 |
| 957366 | 3E24 | 33 | 3348 - 5 |
| 957366 | 3E24 | 35 | 3348 - 5 |
| 957366 | 3E24 | 40 | 3348 - 5 |
| 957366 | 3F2 | 11 | 3348 - 7 |
| 957366 | 3F2 | 18 | 3348 - 7 |
| 957366 | 3F2 | 28 | 3348 - 7 |
| 957366 | 3F2 | 43 | 3348 - 7 |
| 957366 | 3F6 | 26 | 3348 - 11 |
| 957366 | 3F6 | 27 | 3348 - 11 |
| 957366 | 3F10 | 16 | 3360 - 3 |
| 957366 | 3F12 | 67A | 3360 - 5 |
| 957366 | 3F14 | 58A | 3360 - 7 |
| 957366 | 3F16 | 61A | 3360 - 9 |
| 957366 | 3F16 | 62A | 3360 - 9 |
| 957366 | 3G18 | 5 | 3362 - 3 |
| 957366 | 3G18 | 6 | 3362 - 3 |
| 957366 | 3G20 | 20B | 3362 - 5 |
| 957366 | 3G22 | 20B | 3362 - 7 |
| 957366 | 3G24 | 20B | 3362 - 9 |
| 957366 | 3H16 | 26 | 3362 - 25 |
| 957366 | 3H22 | 16 | 3362 - 31 |
| 957366 | 3H24 | 12 | 3362 - 33 |
| 957366 | 3I4 | 15 | 3362 - 37 |
| 957366 | 3I12 | 40A | 3362 - 45 |
| 957366 | 3I16 | 11 | 3362 - 49 |
| 957366 | 3J2 | 3A | 3363 - 3 |
| 957366 | 3J2 | 4A | 3363 - 3 |
| 957366 | 3J2 | 6A | 3363 - 3 |
| 957366 | 3J2 | 7A | 3363 - 3 |
| 957366 | 3J2 | 8A | 3363 - 3 |
| 957366 | 3J6 | 2A | 3363 - 7 |
| 957366 | 3J8 | 9 | 3363 - 9 |
| 957366 | 3J8 | 11 | 3363 - 9 |
| 957366 | 3J8 | 13 | 3363 - 9 |
| 957366 | 3J8 | 15 | 3363 - 9 |
| 957366 | 3J8 | 19 | 3363 - 9 |
| 957366 | 3J8 | 23 | 3363 - 9 |
| 957366 | 3J10 | 26 | 3363 - 11 |
| 957366 | 3J10 | 28 | 3363 - 11 |
| 957366 | 3J10 | 31 | 3363 - 11 |
| 957366 | 3J10 | 33 | 3363 - 11 |
| 957366 | 3J20 | 29 | 3363 - 21 |
| 957366 | 3J22 | 31 | 3363 - 23 |
| 957366 | 3J22 | 32 | 3363 - 23 |
| 957366 | 3J24 | 0 | 3363 - 25 |
| 957366 | 3J24 | 3 | 3363 - 25 |
| 957366 | 3J24 | 6 | 3363 - 25 |
| 957366 | 3J24 | 10 | 3363 - 25 |
| 957366 | 3K2 | 30 | 3363 - 27 |
| 957366 | 3K4 | 0 | 3363 - 29 |
| 957366 | 3K6 | 0 | 3363 - 31 |
| 957366 | 3K8 | 16 | 3363 - 33 |
| 957366 | 3K12 | 0 | 3363 - 37 |
| 957366 | 3K14 | 3 | 3363 - 39 |
| 957366 | 3K18 | 25 | 3364 - 3 |
| 957366 | 3K20 | 30 | 3364 - 5 |
| 957366 | 3K20 | 37 | 3364 - 5 |
| 957366 | 3K20 | 44 | 3364 - 5 |
| 957366 | 3K20 | 45 | 3364 - 5 |
| 957366 | 3L18 | 48 | 4360 - 5 |
| 958740 | 2J2 | 8 | 2160 - 5 |
| 962002 | 2J2 | 9 | 2160 - 5 |
| 962453 | 3F22 | 2 | 3360 - 15 |
| 965452 | 2F10 | 50 | 1810 - 25 |
| 966993 | 3F22 | 1 | 3360 - 15 |
| 966993 | 3J4 | 8 | 3363 - 5 |
| 9701925 | 2D19 | 14 | 1740 - 9 |
| 971489 | 3G8 | 1 | 3360 - 25 |
| 971489 | 3G10 | 1 | 3360 - 27 |
| 971489 | 3G12 | 5 | 3360 - 29 |
| 971489 | 3J4 | 9 | 3363 - 5 |
| 971489 | 3J12 | 2 | 3363 - 13 |
| 971489 | 3J16 | 8 | 3363 - 17 |
| 971489 | 3K16 | 5 | 3363 - 41 |
| 9724756 | 3F10 | 32 | 3360 - 3 |
| 9726346 | 3E22 | 45 | 3348 - 3 |
| 9727634 | 3F6 | 43 | 3348 - 11 |
| 9735305 | 3J22 | 23 | 3363 - 23 |
| 9735306 | 3J22 | 24 | 3363 - 23 |
| 9738322 | 3D6 | 32 | 3344 - 3 |
| 9738322 | 3E2 | 48 | 3344 - 23 |
| 9738322 | 3E2 | 63 | 3344 - 23 |
| 9738682 | 2F20 | 24 | 1810 - 35 |
| 9738975 | 3F8 | 44 | 3348 - 13 |
| 9738975 | 3J4 | 13 | 3363 - 5 |
| 9742779 | 2J2 | 63 | 2160 - 5 |
| 9743977 | 2J2 | 62 | 2160 - 5 |
| 9745798 | 2I8 | 28 | 1910 - 21 |
| 9745899 | 2H8 | 2 | 1830 - 23 |
| 9746365 | 2C4 | 31 | 1671 - 3 |
| 9746541 | 2I8 | 3B | 1910 - 21 |
| 9751797 | 2H18 | 13 | 1910 - 7 |
| 9754651 | 2H16 | 19C | 1910 - 5 |
| 9756005 | 2D6 | 2 | 1674 - 27 |
| 9756079 | 1I14 | 0B | 0515 - 5 |
| 9757192 | 2F24 | 29 | 1810 - 39 |
| 9757701 | 3E2 | 47 | 3344 - 23 |
| 9757954 | 2H16 | 7 | 1910 - 5 |
| 9757954 | 2H18 | 7 | 1910 - 7 |
| 9758879 | 3E2 | 62 | 3344 - 23 |
| 9759327 | 2C15 | 52 | 1674 - 11 |
| 9759462 | 3K8 | 7 | 3363 - 33 |
| 9759797 | 3J20 | 39 | 3363 - 21 |
| 9760237 | 3E22 | 36 | 3348 - 3 |
| 9760237 | 3E22 | 36A | 3348 - 3 |
| 9760238 | 3E22 | 37 | 3348 - 3 |
| 9760238 | 3E22 | 37A | 3348 - 3 |
| 9760438 | 3B10 | 16D | 3301 - 3 |
| 9760438 | 3B10 | 17D | 3301 - 3 |
| 9760443 | 1I8 | 0 | 0510 - 11 |
| 9760447 | 1H8 | 13 | 0421 - 3 |
| 9760487 | 1E4 | 80 | 0260 - 25 |
| 9760910 | 1J21 | 11 | 0963 - 3 |
| 9760911 | 3K4 | 22 | 3363 - 29 |
| 9760957 | 1E8 | 17 | 0260 - 29 |
| 9761179 | 3H20 | 15 | 3362 - 29 |
| 9761438 | 2E12 | 25 | 1810 - 3 |
| 9813512050 | 1G8 | 16 | 0413 - 5 |
| 9813513020 | 1G8 | 17 | 0413 - 5 |
| 9813514030 | 1G8 | 29 | 0413 - 5 |
| 9813514100 | 1G8 | 30 | 0413 - 5 |
| 9813517020 | 1G8 | 4 | 0413 - 5 |
| 9813550250 | 1G8 | 13 | 0413 - 5 |
| 9813550350 | 1G8 | 18 | 0413 - 5 |
| 984054 | 2J2 | 6 | 2160 - 5 |
| 984614 | 3K22 | 28 | 3365 - 3 |
| 984614 | 3K24 | 28 | 3365 - 5 |
| 984614 | 3L2 | 40 | 3365 - 7 |
| 984614 | 3L4 | 40 | 3365 - 9 |
| 984614 | 3L6 | 34 | 3365 - 11 |
| 984614 | 3L10 | 26 | 3365 - 15 |
| 985099 | 3G20 | 9 | 3362 - 5 |
| 985099 | 3G22 | 9 | 3362 - 7 |
| 985099 | 3H10 | 9 | 3362 - 19 |
| 986910 | 3G8 | 2 | 3360 - 25 |
| 986910 | 3G10 | 2 | 3360 - 27 |
| 986910 | 3G12 | 4 | 3360 - 29 |
| 986910 | 3J12 | 0 | 3363 - 13 |
| 986910 | 3J16 | 6 | 3363 - 17 |
| 991342 | 3L16 | 72 | 4360 - 3 |
| 991718 | 3F20 | 8 | 3360 - 13 |
| 991725 | 2J2 | 10 | 2160 - 5 |
| 991725 | 2J2 | 44 | 2160 - 5 |
| 992526 | 3I14 | 20B | 3362 - 47 |
| 9991104140 | 1H10 | 23 | 0423 - 2 |
| 9991105140 | 1H10 | 23 | 0423 - 2 |
| 9992023140 | 1F12 | 28 | 0404 - 3 |
| 9992055170 | 1F12 | 15A | 0404 - 3 |