RUTHZIL TRATOR COMERCIAL DE PEÇAS LTDA 11 97083-6812 ROLANDO CITRANGULC

Product Catalog\BACKHOE LOADER 1CX, 208\1CX 00751600-00752999,00806000-00807552 9802/6220\A ATTACHMENTS\A01 SHOVELS\A1-1-1 SHOVEL G.P. 0.32 CU.M, 1580MM

9802/6220 A1-1-1 SHOVEL G.P. 0.32 CU.M, 1580MM

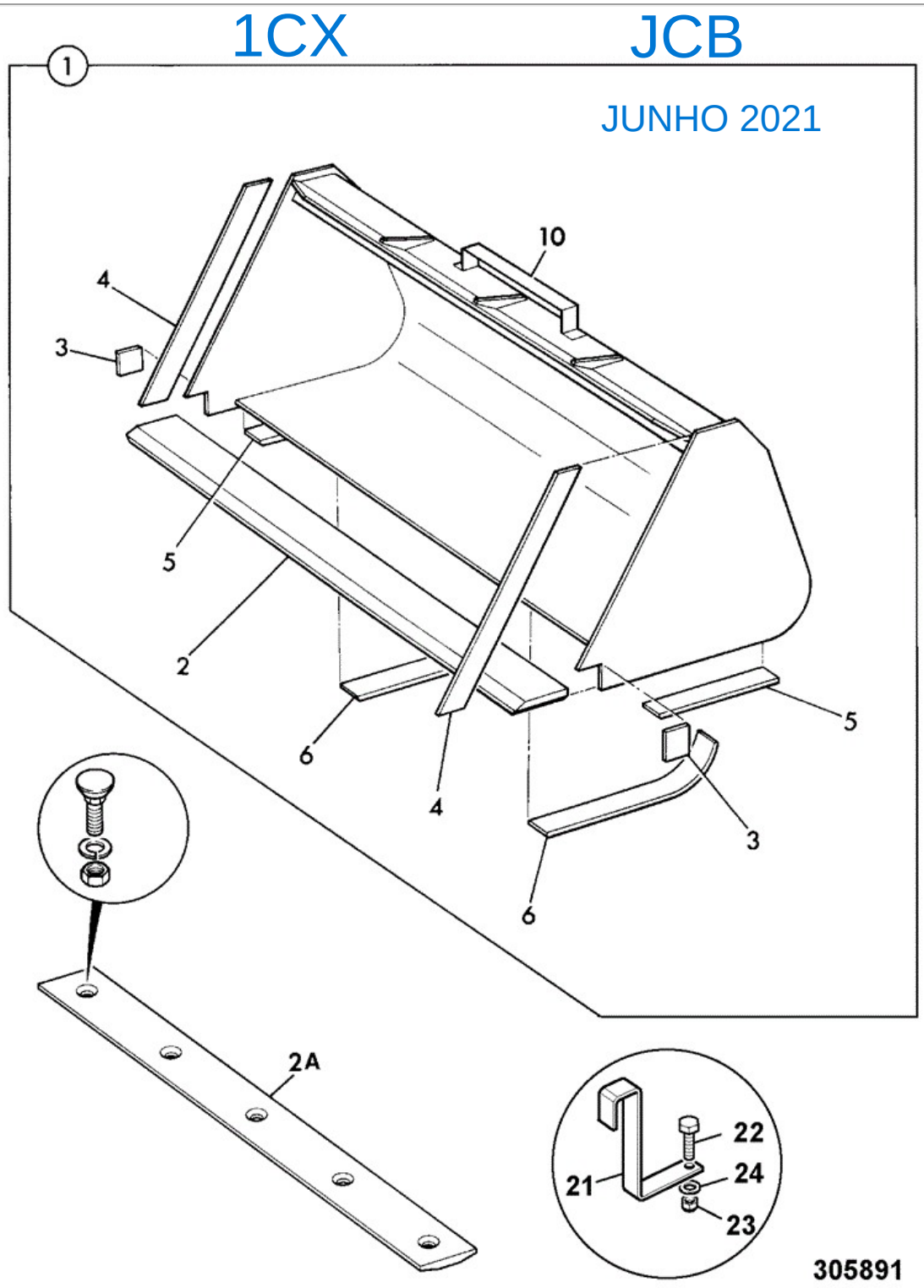

Item	Part No	Change No	Description	Usage Code	QTY
1	331/12909		Shovel G.P.,0.32 CU M Plain undrilled toeplate	A	1
			Shovel 0.32cu.mx1580mm predrilled -toeplate		

1	528/52600		Pre-drilled for bolt-on toeplate only	B	1
1	331/19265		Shovel G.P. 1580 wide predrilled for teeth Pre-drilled for teeth only	C	1
2	:512/00278		Toeplate 1560mm wide No holes (Weld-On) Weld-in plain undrilled	A	1
2	:512/00377		Toeplate 1560mm wide 5 holes (Weld-On) Weld-in drilled for bolt-on toeplate only	B	1
2	:331/19265		Shovel G.P. 1580 wide predrilled for teeth Weld in drilled for bolt-on teeth only	C	1
2A	****		'See Remark' See page A3-12-2 for bolt on toeplate details	B	1
2A	****		'See Remark' See page A1-7-1 for bolt-on teeth details	C	1
3	:512/00104		Sidecutter		2
4	:512/00217		Sidecutter		2
5	:512/00215		Strip wear, short		3
6	:512/00275		Strip wear		2
10	290/00490		Plate level indicator		1
11	1420/0007Z		Washer (M8)		4
12	1315/0307Z		Setscrew M8 X 25		4
13	1370/0203Z		Nut Nut M8		4

Note 1: Not suitable for bolt-on toeplate or bolt on teeth systems

Applicability Date Ranges:
From: , To:

Product Catalog\BACKHOE LOADER 1CX, 208\1CX 00751600-00752999,00806000-00807552 9802/6220\A ATTACHMENTS\A01 SHOVELS\A1-2-1 SHOVEL G.P. 0.29 CU.M, 1430MM

9802/6220 A1-2-1 SHOVEL G.P. 0.29 CU.M, 1430MM

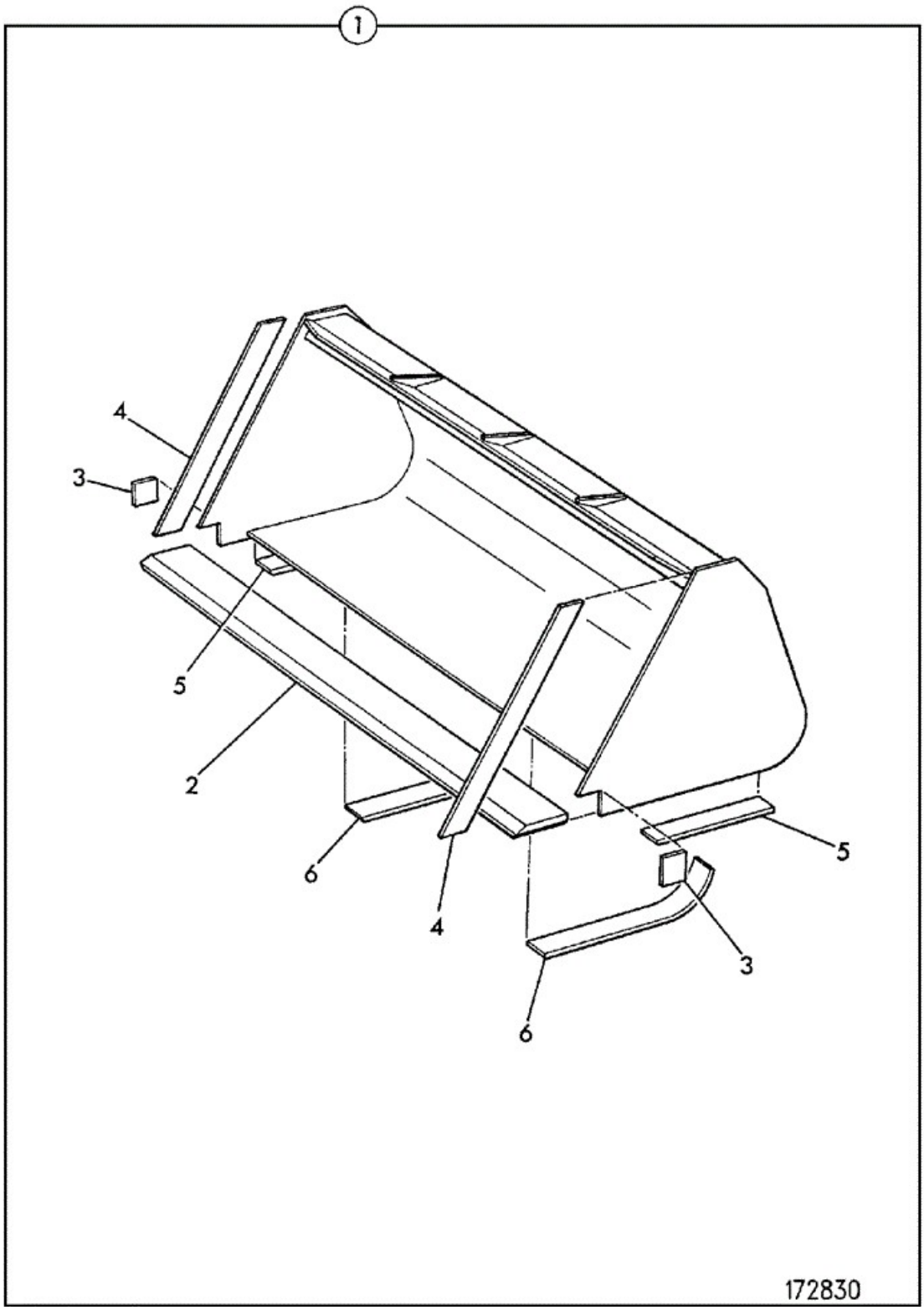

Item	Part No	Change No	Description	Usage Code	QTY

1	331/12904		Shovel G.P. 0.29 CU.M Was 512/03600		1
2	:512/00218		Toeplate (Weld-In)		1
3	:512/00104		Sidecutter		2
4	:512/00217		Sidecutter		2
5	:512/00215		Strip wear, short		3
6	:512/00216		Strip wear, long		2

Applicability Date Ranges:
From: , To:

Product Catalog\BACKHOE LOADER 1CX, 208\1CX 00751600-00752999,00806000-00807552 9802/6220\A ATTACHMENTS\A01 SHOVELS\A1-3-1 SHOVEL G.P. 0.32 CU.M, 1580MM FOR BOLT ON TEETH

9802/6220 A1-3-1 SHOVEL G.P. 0.32 CU.M, 1580MM FOR BOLT ON TEETH

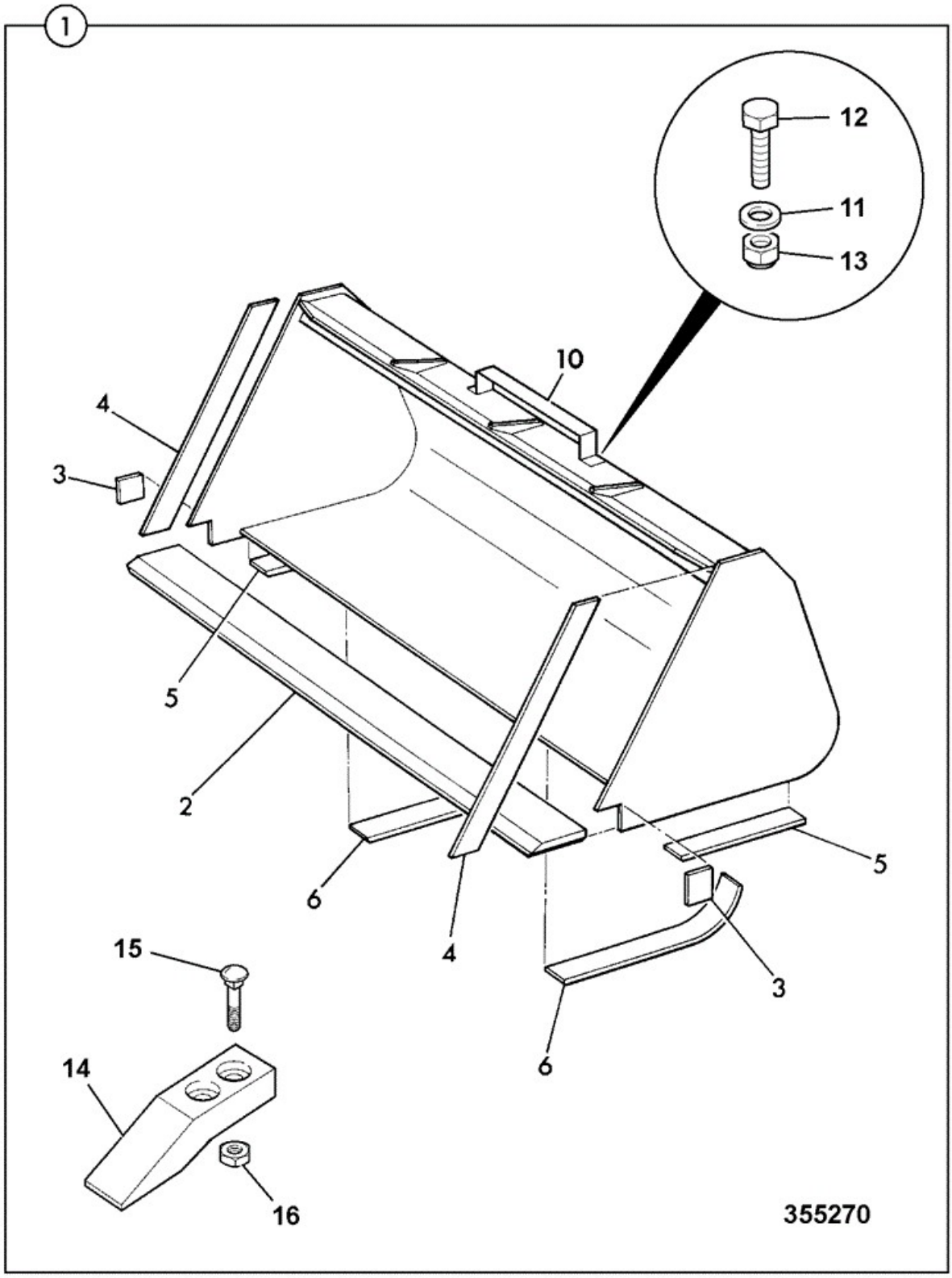

	Part				

Item	No	Change No	Description	Usage Code	QTY
1	331/19268		Shovel		1
2	:331/19262		Toeplate 1560mm wide 12 holes (Weld-In)		1
3	:512/00104		Sidecutter		2
4	:512/00217		Sidecutter		2
5	:512/00215		Strip wear, short		3
6	:512/00275		Strip wear		2
10	290/00490		Plate level indicator		1
11	1420/0007Z		Washer (M8) For level guage		4
12	1315/0307Z		Setscrew M8 X 25 For level guage		4
13	1370/0203Z		Nut Nut M8		4
14	522/00102		Tooth		6
15	826/01112		Ploughbolt 35mm		12
16	1340/0401Z		Nut (1/2" UNF)		12

Applicability Date Ranges:
From: , To:

Product Catalog\BACKHOE LOADER 1CX, 208\1CX 00751600-00752999,00806000-00807552 9802/6220\A ATTACHMENTS\A01 SHOVELS\A1-4-1 SHOVEL LIGHT DUTY, 1430MM 0.40 CU.M.

9802/6220 A1-4-1 SHOVEL LIGHT DUTY, 1430MM 0.40 CU.M.

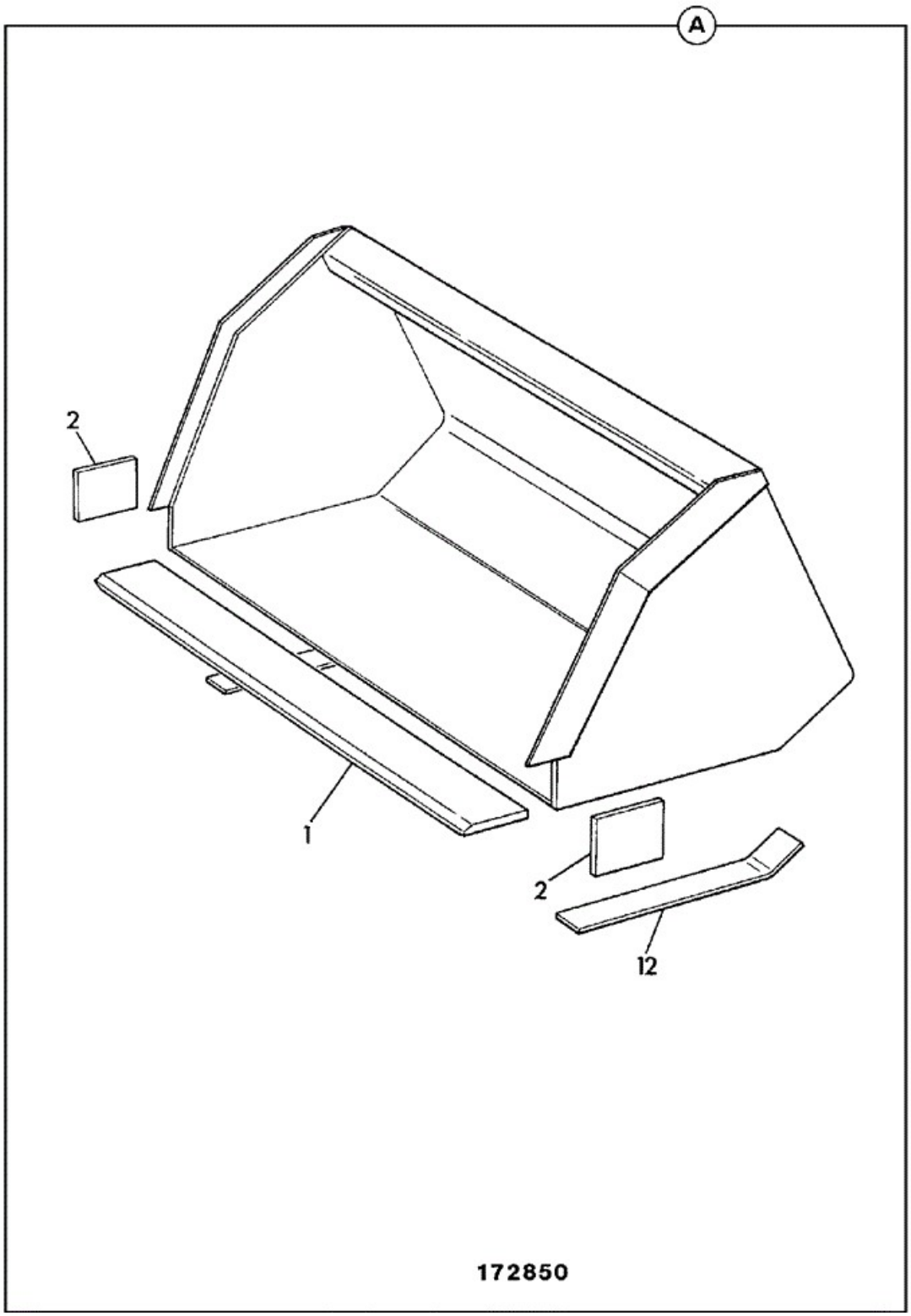

Item	Part No	Change No	Description	Usage Code	QTY

A	242/20507		Shovel light duty, 1430MM 0.40 CU.M.		1
1	:512/00318		Toeplate 1390mm wide No holes (Weld-On)		1
2	:512/00162		Sidecutter		2
12	:331/17841		Strip wear		2

Applicability Date Ranges:
From: , To:

Product Catalog\BACKHOE LOADER 1CX, 208\1CX 00751600-00752999,00806000-00807552 9802/6220\A ATTACHMENTS\A01 SHOVELS\A1-5-1 SHOVEL LIGHT DUTY, 1580MM 0.57 CU.M.

9802/6220 A1-5-1 SHOVEL LIGHT DUTY, 1580MM 0.57 CU.M.

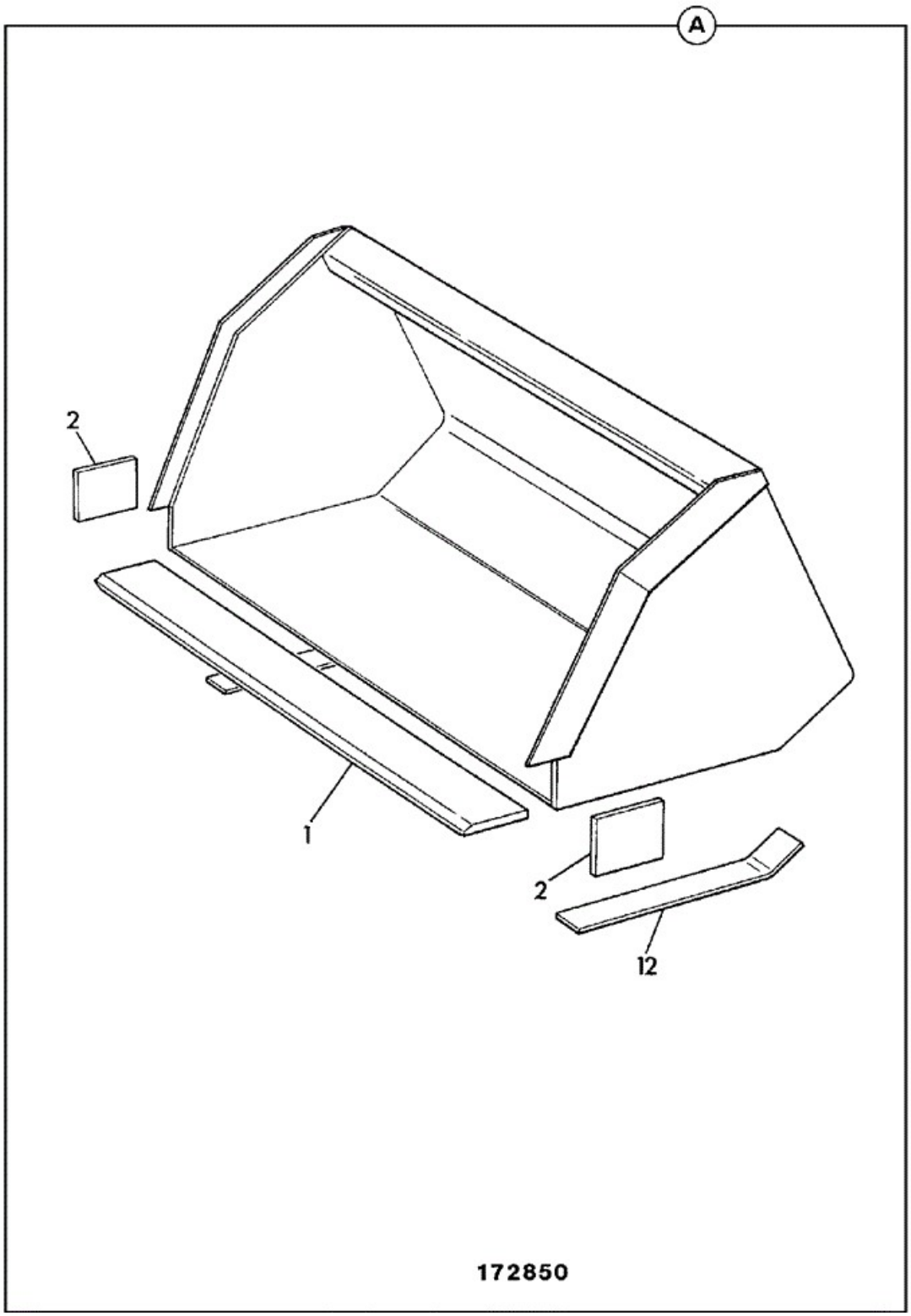

Item	Part No	Change No	Description	Usage Code	QTY

A	242/20508		Shovel light duty 1580MM 0.57 CU.M.		1
1	:512/00313		Toeplate 1540mm wide No holes (Weld-On)		1
2	:512/00162		Sidecutter		2
12	:331/18120		Strip wear		1

Applicability Date Ranges:
From: , To:

Product Catalog\BACKHOE LOADER 1CX, 208\1CX 00751600-00752999,00806000-00807552 9802/6220\A ATTACHMENTS\A01 SHOVELS\A1-6-1 SHOVEL LIGHT DUTY, 1730MM 0.48 CU.M.

9802/6220 A1-6-1 SHOVEL LIGHT DUTY, 1730MM 0.48 CU.M.

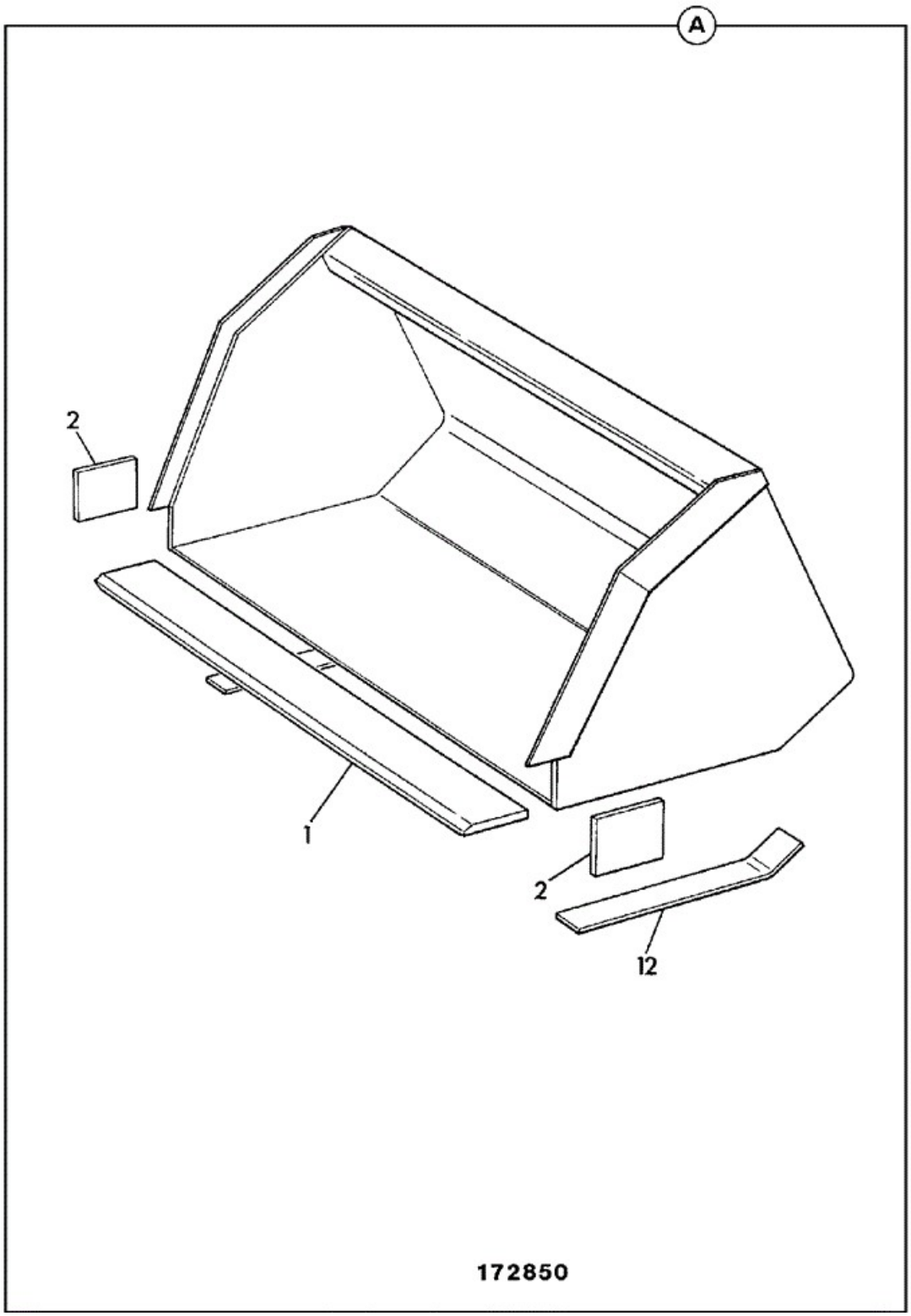

Item	Part No	Change No	Description	Usage Code	QTY

A	242/20509		Shovel light duty 1730MM 0.48 CU.M.		1
1	:331/18085		Toeplate 1730mm wide No holes (Weld-On)		1
2	:512/00162		Sidecutter		2
12	:331/17841		Strip wear		2

Applicability Date Ranges:
From: , To:

Product Catalog\BACKHOE LOADER 1CX, 208\1CX 00751600-00752999,00806000-00807552 9802/6220\A ATTACHMENTS\A01 SHOVELS\A1-7-1 TOOTH OPTIONS

9802/6220 A1-7-1 TOOTH OPTIONS

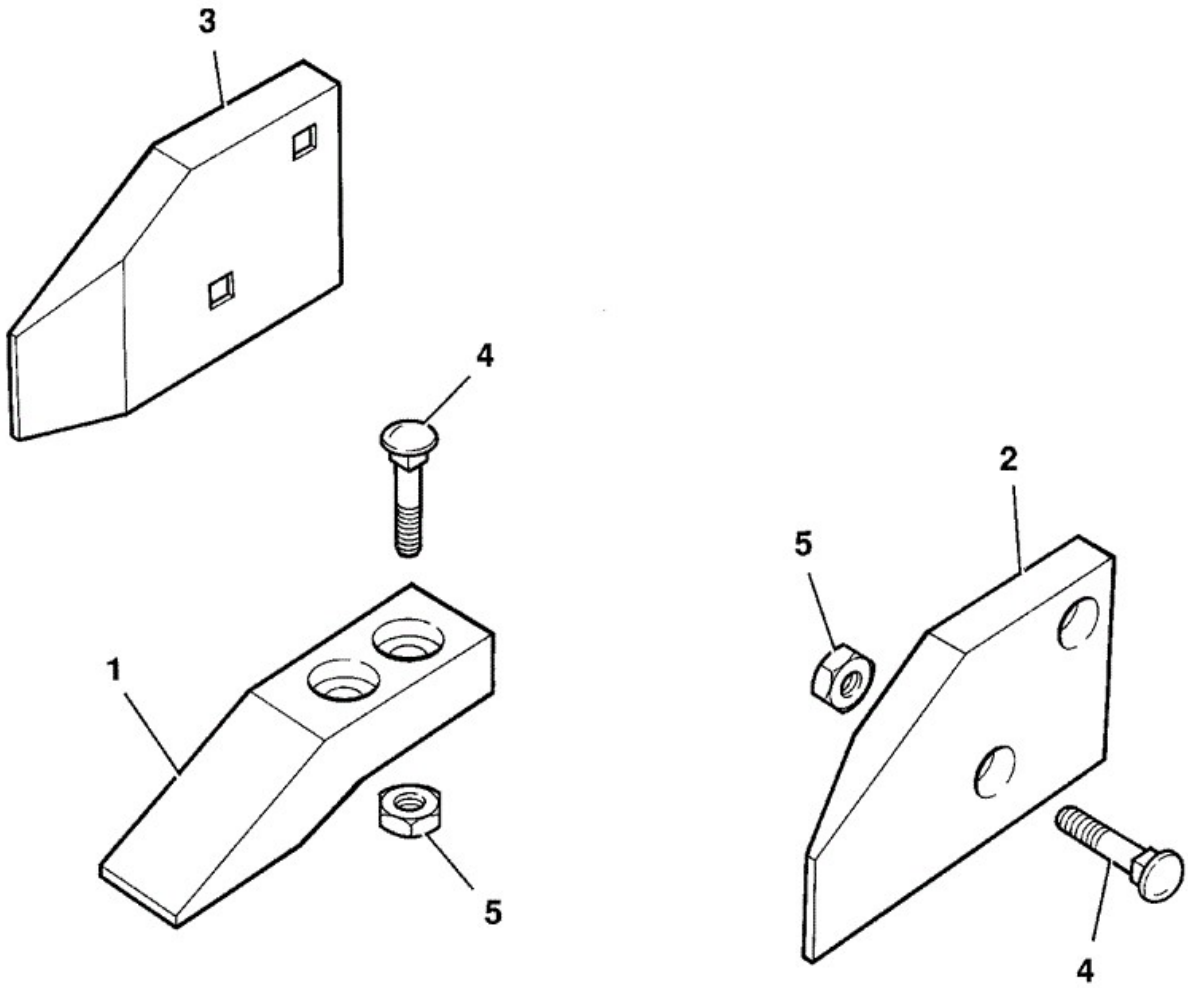

211080

Item	Part No	Change No	Description	Usage Code	QTY

1	522/00102		Tooth		4
2	512/00293		Sidecutter left		1
3	512/00294		Sidecutter right		1
4	826/01111		Ploughbolt 45mm		12
5	1340/0401Z		Nut (1/2" UNF)		12

Applicability Date Ranges:
From: , To:

Product Catalog\BACKHOE LOADER 1CX, 208\1CX 00751600-00752999,00806000-00807552 9802/6220\A ATTACHMENTS\A02 BUCKETS\A2-1-1 BUCKET, 230MM (9")

9802/6220 A2-1-1 BUCKET, 230MM (9")

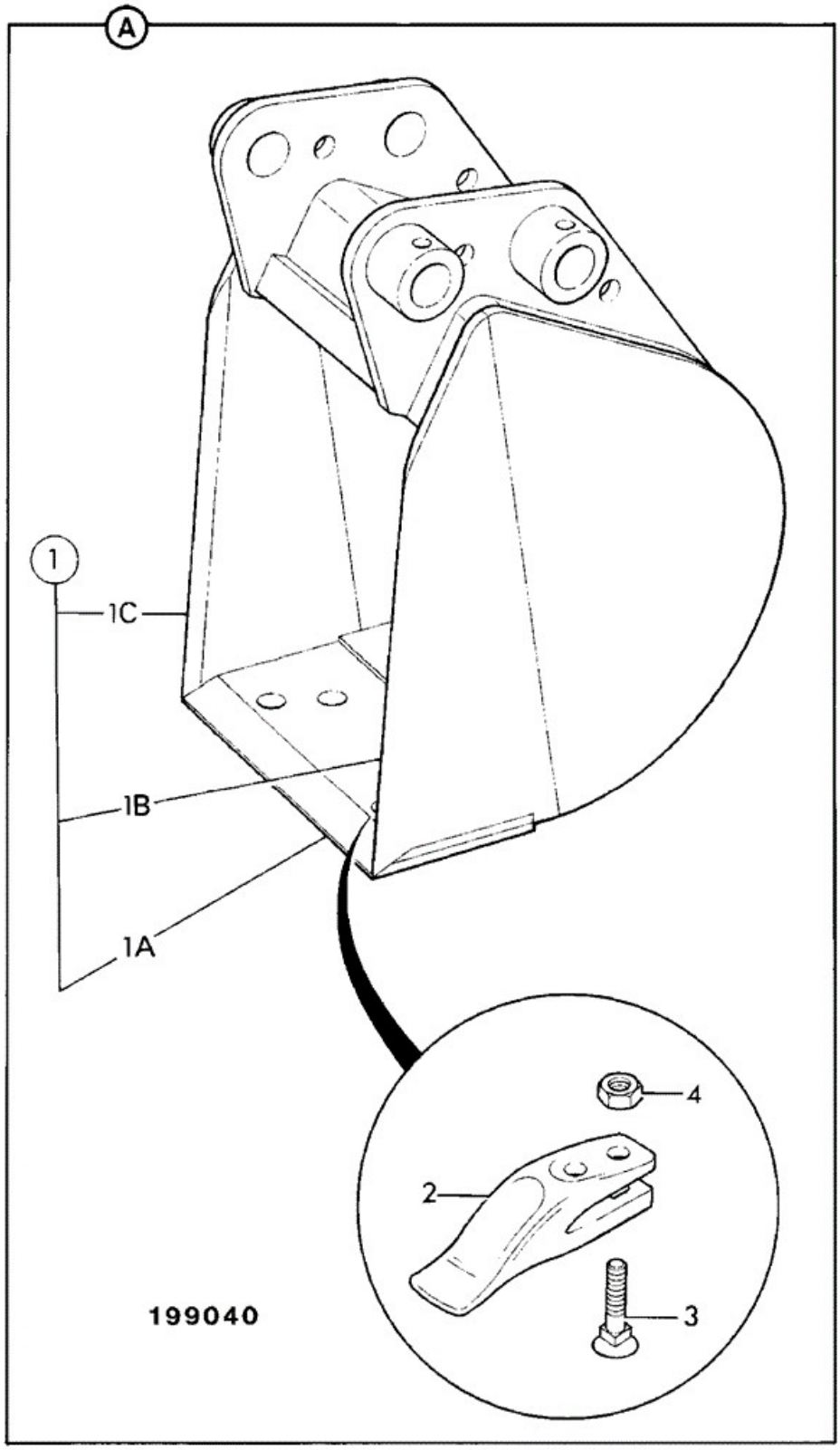

Item	Part No	Change No	Description	Usage Code	QTY

A	528/51400		Bucket assembly,230mm (9")		1
1	****		None serviced part		1
1A	::290/00233		Toeplate 227mm wide 4 holes (Weld-On)		1
1B	::290/00165		Sidecutter left side		1
1C	::290/00166		Sidecutter right side		1
2	:531/03205		Tooth		2
3	:826/00303		Bolt Plough 3/4" UNF x 70mm		4
4	:1340/0701		Nut		4

Applicability Date Ranges:
From: , To:

Product Catalog\BACKHOE LOADER 1CX, 208\1CX 00751600-00752999,00806000-00807552 9802/6220\A ATTACHMENTS\A02 BUCKETS\A2-2-1 BUCKET STANDARD

9802/6220 A2-2-1 BUCKET STANDARD

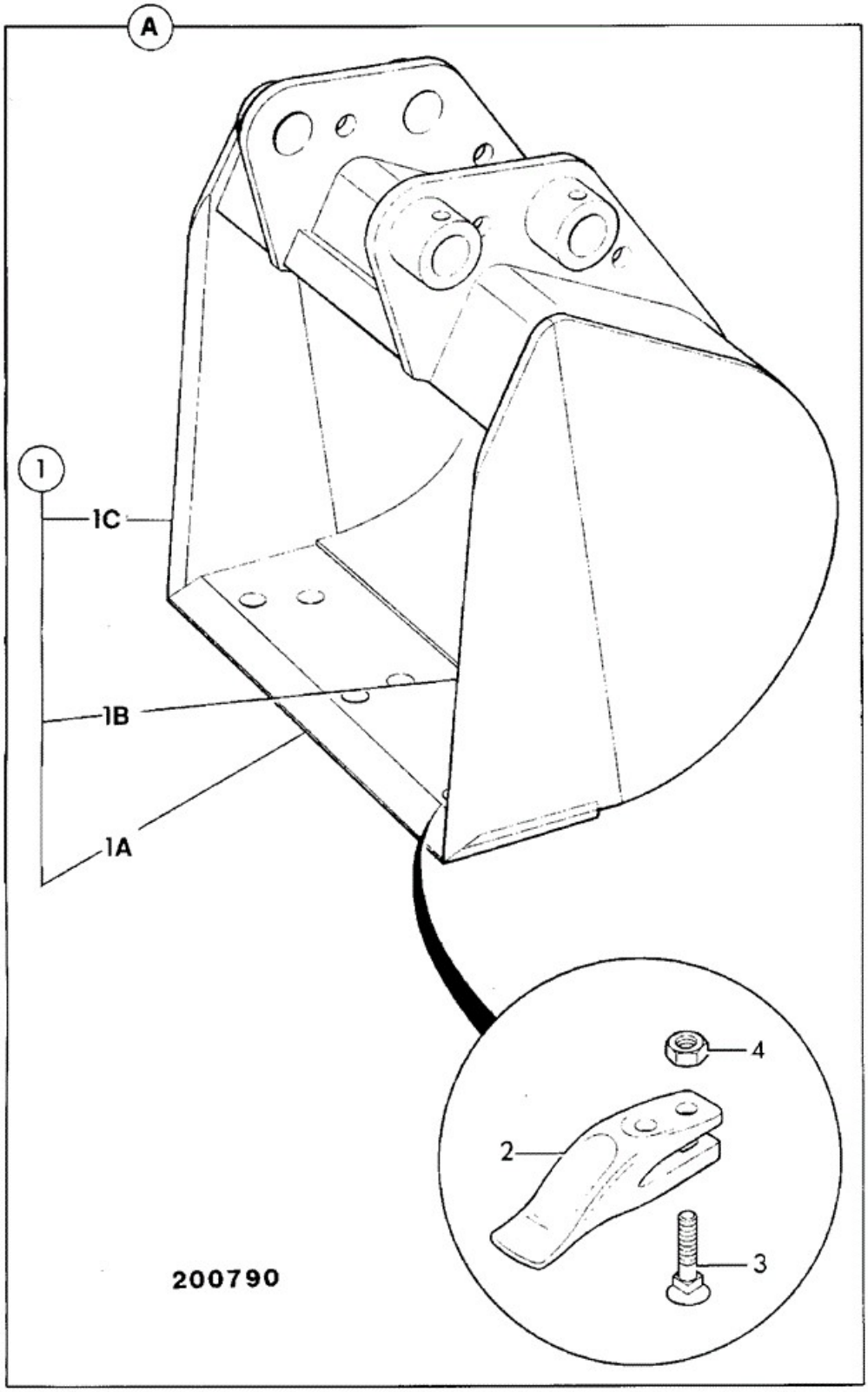

Item	Part No	Change No	Description	Usage Code	QTY

A	528/51500		Bucket assembly,305mm(12")		1
A	528/51600		Bucket assembly,460mm(18")		1
A	528/51700		Bucket assembly,610mm(24")		1
1	****		None serviced part		1
1A	::290/00314		Toeplate 301mm wide 6 holes (Weld-On)		1
1A	::290/00169		Toeplate 457mm wide 6 holes (Weld-On)		1
1A	::290/00319		Toeplate 607mm wide 8 holes (Weld-On)		1
1B	::290/00165		Sidecutter left side		1
1C	::290/00166		Sidecutter right side		1
2	:531/03205		Tooth		0
3	:826/00303		Bolt Plough 3/4" UNF x 70mm		0
4	:1340/0701		Nut		0

Applicability Date Ranges:
From: , To:

Product Catalog\BACKHOE LOADER 1CX, 208\1CX 00751600-00752999,00806000-00807552 9802/6220\A ATTACHMENTS\A02 BUCKETS\A2-3-1 BUCKET GRADING

9802/6220 A2-3-1 BUCKET GRADING

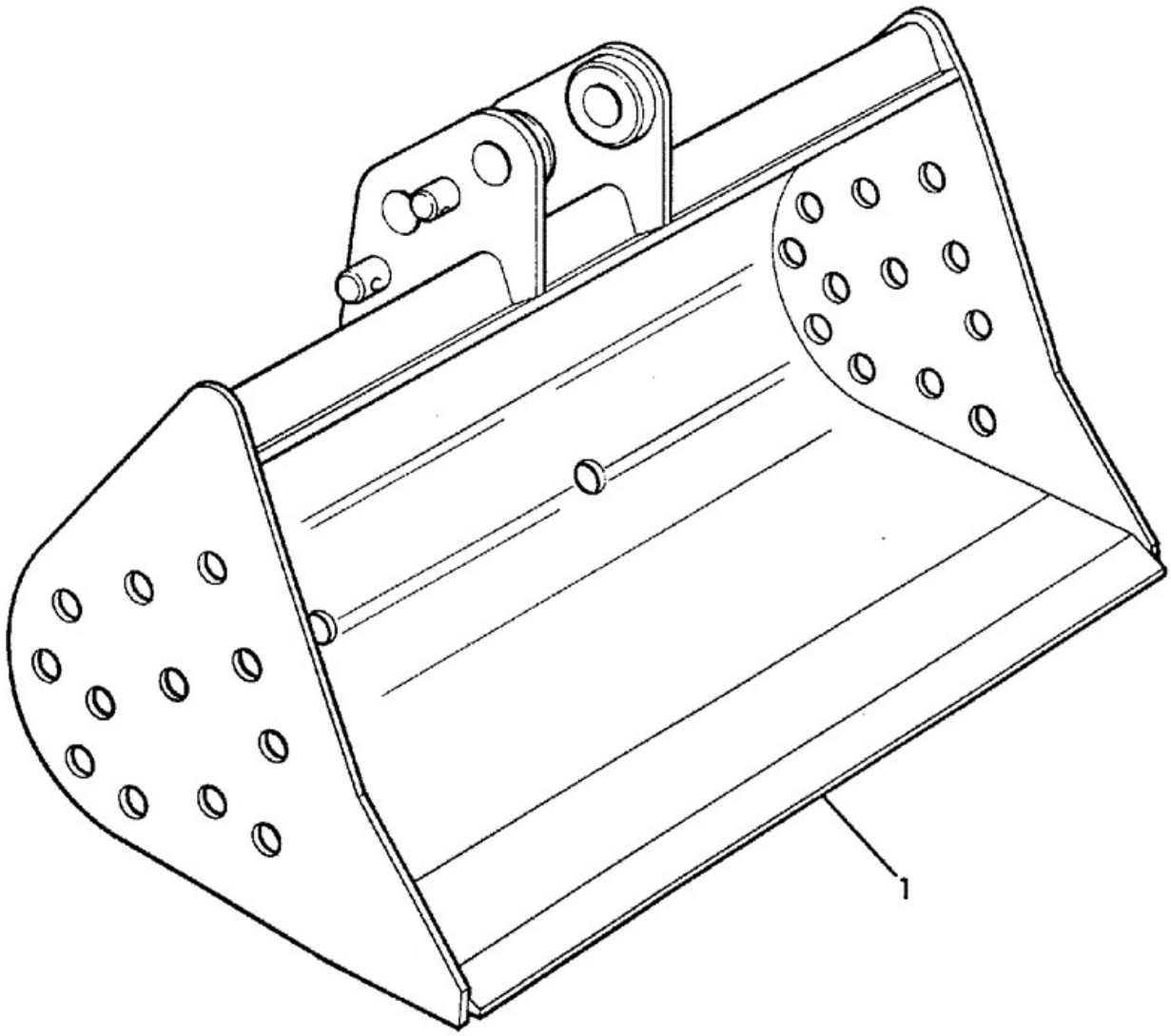

168860

Item	Part No	Change No	Description	Usage Code	QTY

1	980/65600		Bucket grading, 1000mm		1

Applicability Date Ranges:
From: , To:

Product Catalog\BACKHOE LOADER 1CX, 208\1CX 00751600-00752999,00806000-00807552 9802/6220\A ATTACHMENTS\A02 BUCKETS\A2-4-1 BUCKET, 150MM (6")

9802/6220 A2-4-1 BUCKET, 150MM (6")

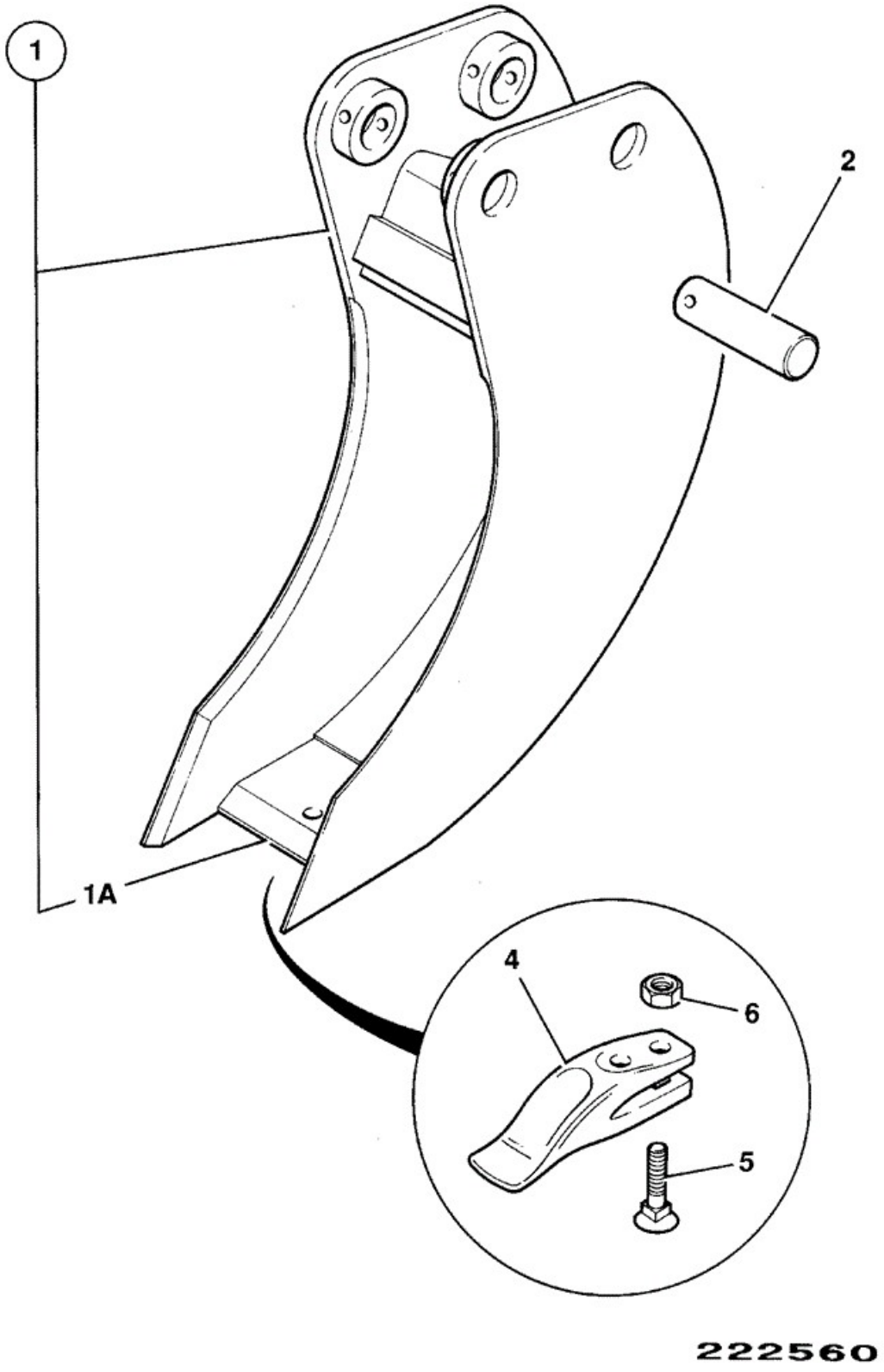

Item	Part No	Change No	Description	Usage Code	QTY

1	528/52400		Bucket assembly 150mm (6")		1
1A	:290/00817		Plate toe		1
2	811/50399		Pin pivot		1
4	522/00102		Tooth		1
5	826/01112		Ploughbolt 35mm		2
6	1340/0401Z		Nut (1/2" UNF)		2

Applicability Date Ranges:
From: , To:

Product Catalog\BACKHOE LOADER 1CX, 208\1CX 00751600-00752999,00806000-00807552 9802/6220\A ATTACHMENTS\A02 BUCKETS\A2-5-1 BUCKET WITH SIDECUTTERS

9802/6220 A2-5-1 BUCKET WITH SIDECUTTERS

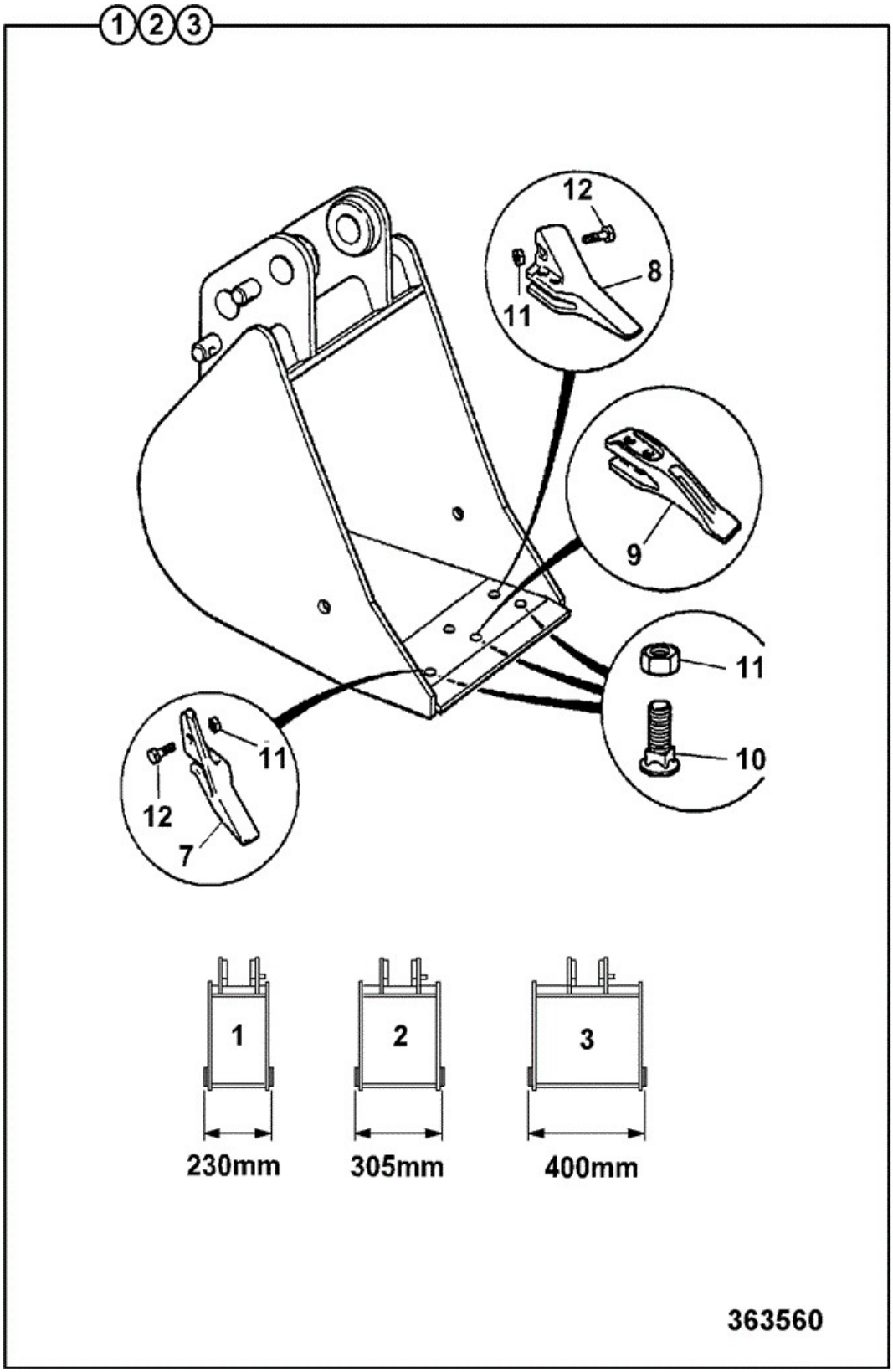

Item	Part No	Change No	Description	Usage Code	QTY

1	522/03600		Bucket 230mm		1
2	522/03800		Bucket 300 mm		1
3	522/04000		Bucket 400 mm		1
7	531/03208		Sidecutter double flange right hand		1
8	531/03209		Sidecutter double flange left hand		1
9	531/03205		Tooth		0
10	826/00303		Bolt Plough 3/4" UNF x 70mm		0
11	1340/0701		Nut		0
12	1305/0714		Bolt		2

Applicability Date Ranges:
From: , To:

9802/6220 B1-1-1 CHASSIS

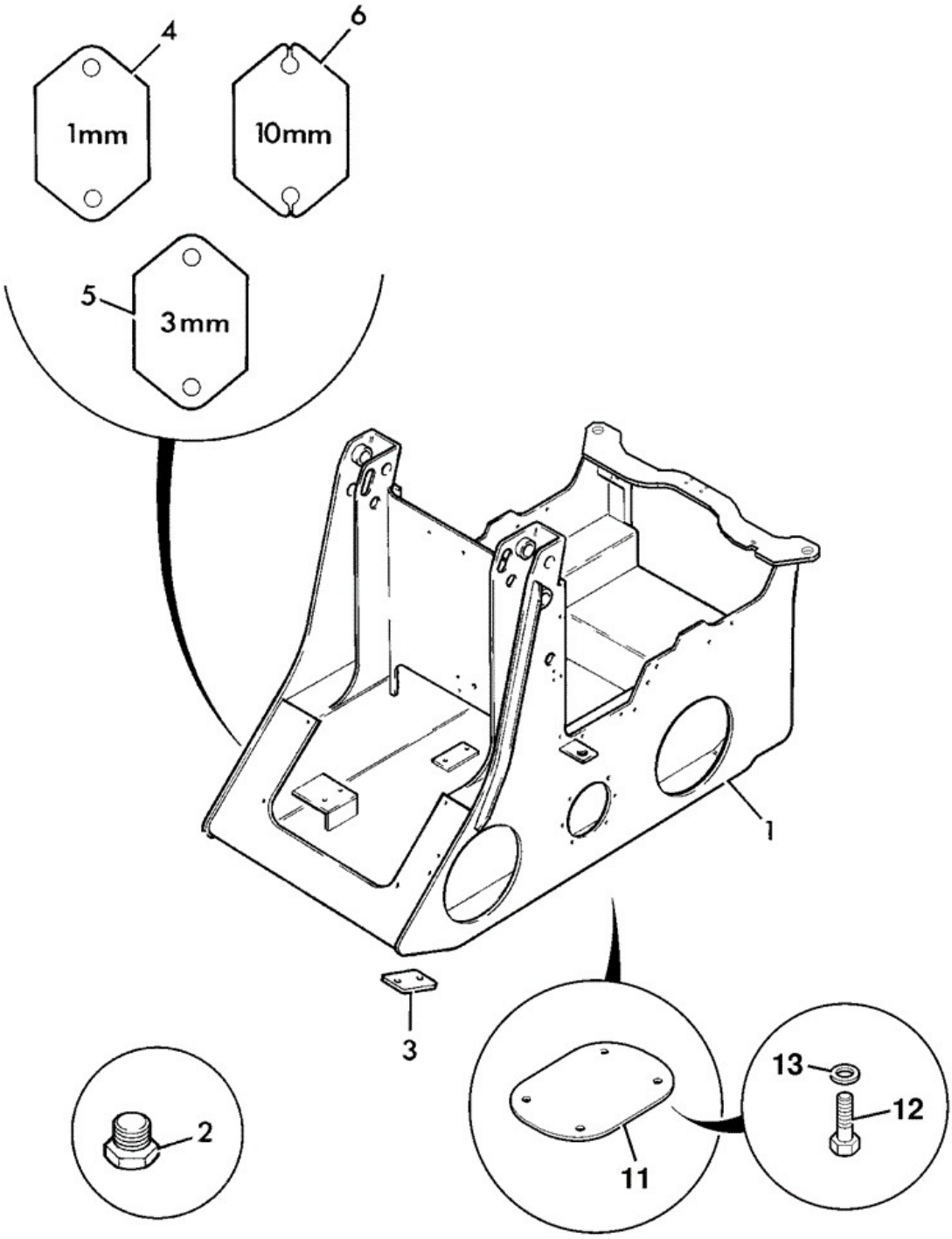

Item	Part No	Change No	Description	Usage Code	QTY
1	290/02500	<M0751817	Chassis		1
1	290/02600	>M0751818	Chassis		1

1	290/02700	>M0752463	Chassis		1
1	290/02800	>M0752692	Chassis		1
1	332/W5948	>M1299882	Chassis		1
2	816/00351	Superseded	Plug		4
2	G8/0	<M0808234	Plug 1/2"BSP		4
2	1745/0003	>M0808235	Plug Blanking		4
2A	:2401/0506		O Ring for use with 1745/0003		1
3	290/01109		Plate access		2
4	290/00403	Superseded	Pad adjustable stop pad 1mm THK. A/R - 2 off (MAX) with 13mm fixing holes		1
4	290/01276		Pad adjustable 1mm thick A/R-2 off(Max)with 24mm fixing holes		1
5	290/00402	Superseded	Pad adjustable stop pad 3mm. THK. A/R - 2 off (MAX)with 13mm fixing holes		1
5	290/01275		Pad adjustable 3mm thick A/R-2off (Max) with 24mm fixing holes		1
6	290/00397		Pad adjustable stop pad 10mm. THK.		1
7	826/01799		Nut rivet Fitted in chassis for items 4,5 & 6		2
8	1315/0509Z		Setscrew M12 x 35mm		2
9	1425/0009Z		Washer Spring M12		2
10	1420/0009Z		Washer (M12)		2
11	290/72159		Cover access		1
12	1315/0305Z		Setscrew M8 x 20		4
13	1420/0007Z		Washer (M8)		4
23	926/04800		Strip Edging approx 250mm on rear plate		0
99	290/00684		Bracket bulkhead angle fits to top edge of chassis under cab front waist rail		1

Applicability Date Ranges:
From: , To:

9802/6220 B1-2-1 FRAME, REAR

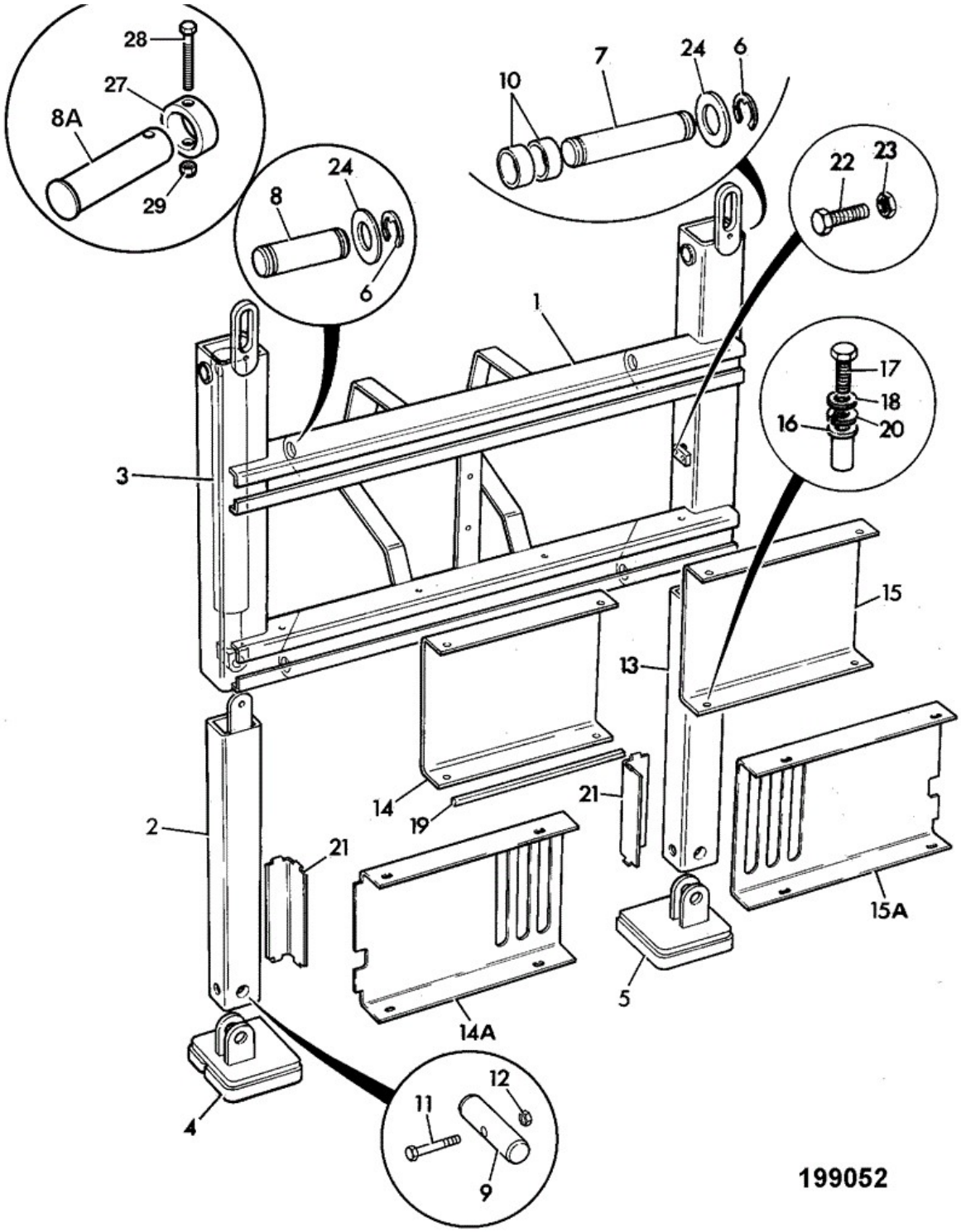

Item	Part No	Change No	Description	Usage Code	QTY
1	290/44900		Frame rear std.	A	1
1	290/52700		Frame rear hand held atts. opt.		1

1A	331/19699		Stabiliser L.H. Outer leg to fit 290/44900 only	A	1
1B	:331/19707		Stabiliser R.H. outer leg to fit 290/44900 only	A	1
2	290/30600	Superseded	Leg stabiliser inner, left side		1
2	332/W4044		Leg stabiliser, inner		1
3	553/60006	Superseded	Ram stabiliser		2
3	553/60129	<31/01/08	Ram stabiliser		2
3	332/R9609	>01/02/08	Ram stabiliser		2
4	290/40400		Foot stabiliser,left side		1
5	290/40500		Foot stabiliser right side		1
6	821/00403	<M752541	Clip "E"		8
6	2203/0041	<M806638	Circlip		12
6	2203/0041	>M806639	Circlip		4
7	811/70070	<M752541	Pin pivot		2
7	811/70119		Pin pivot From July 98		2
8	811/70073	<M752541	Pin pivot		4
8	811/70118	<M806638	Pin pivot		4
8A	913/10082		Pin pivot see items 27,28 & 29 for locking collar		4
9	811/50353		Pin pivot		2
10	141/01309		Spacer 19.5 mm wide Only required with ram assy 553/60129		4
11	1315/3418Z		Bolt (M10 x 80)		2
12	1370/0303Z		Nut lock M10		2
13	290/30700	Superseded	Leg stabiliser inner, right side		1
13	332/W4044		Leg stabiliser, inner		1
14	290/00243	Superseded	Cover left side		1
14A	290/01049	Superseded	Cover left side hot climate builds		1
14A	333/L1190		Cover hose guard, LH		1
15	290/00244	Superseded	Cover right side		1
15A	290/01050	Superseded	Cover right side hot climate builds		1
15A	333/L1197		Cover hose guard, RH		1
16	826/01254		Nut Rivet		8
17	1315/0303Z		Setscrew M8 x 16		8
18	1420/0007Z		Washer (M8)		8
19	926/01100		Strip sealing Only required with ram assy 553/60129		0
20	1425/0007Z		Washer Washer		8

21	290/00223		Plate adjuster		2
22	1315/0508Z		Setscrew M12 X 30		16
23	1370/0402Z		Nut Thin (M12)		12
24	1420/0015Z	<M752541	Washer (M30) Not required with new pivot pins		8
27	331/17048	>M806639	Collar locking		4
28	1315/0312Z	>M806639	Setscrew M8 x 50 mm		4
29	1370/0203Z	>M806639	Nut Nut M8		4

Note 1: Note revised stabiliser ram hose connections when using this ram on earlier machines

Applicability Date Ranges:
From: , To:

Product Catalog\BACKHOE LOADER 1CX, 208\1CX 00751600-00752999,00806000-00807552 9802/6220\B BODYWORK, CAB, LOADER END\B01 BODYWORK/FRAME\B1-3-1 TANK, DIESEL FUEL & FITTINGS

9802/6220 B1-3-1 TANK, DIESEL FUEL & FITTINGS

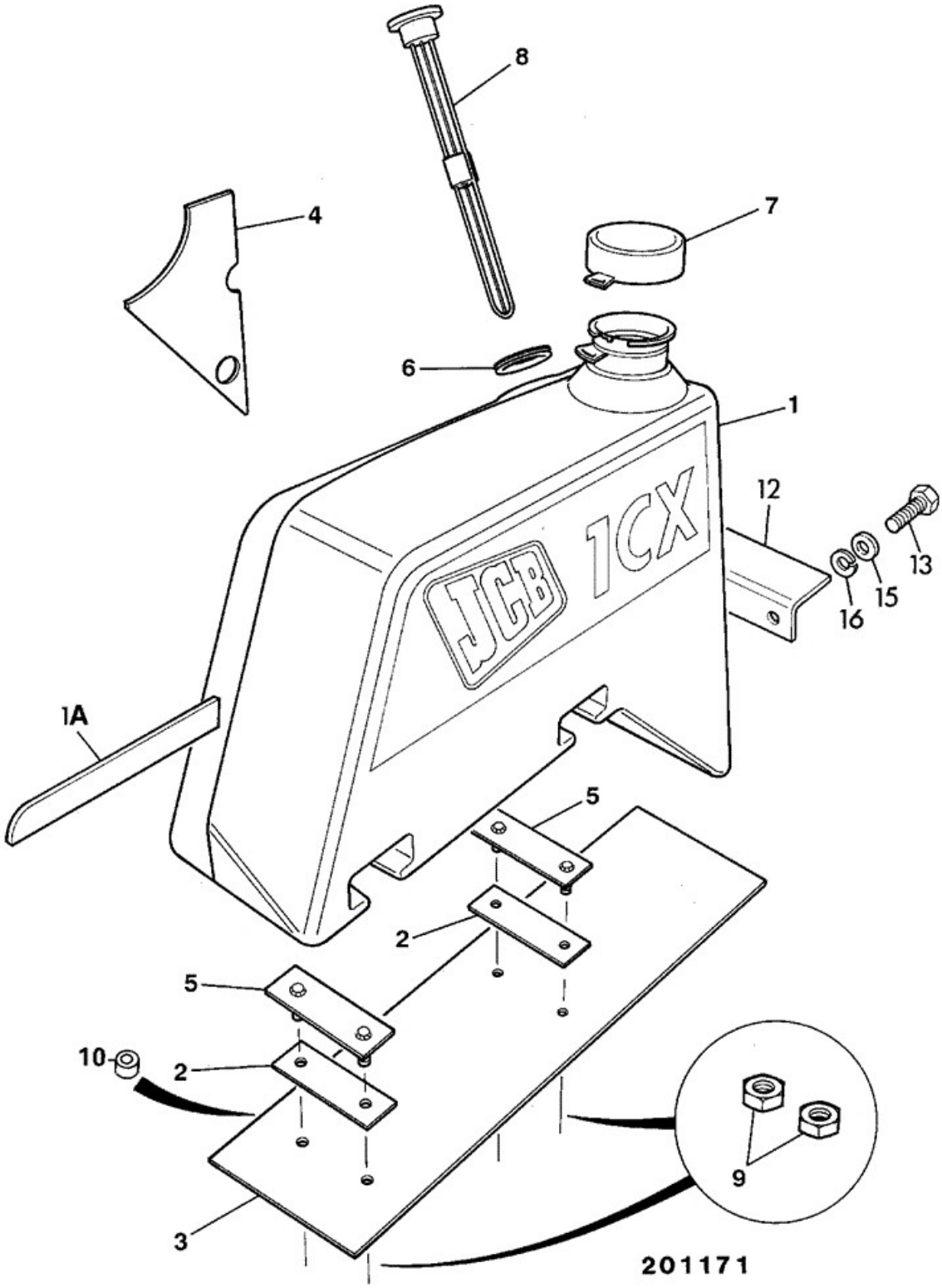

Item	Part No	Change No	Description	Usage Code	QTY

1	290/00783	<M752378	Tank fuel, 1CX	A	1
1	290/01265	<M752764	Tank fuel,1CX black cab Black cab	A	1
1	290/01291	<M807025	Tank fuel	B & C	1
1	331/24168	<S/N808800	Tank black fuel tank assy inc cap & sender includes cap & sender	B & C	1
1	290/72155	Superseded	Tank Diesel	B & C	1
1	332/W1190	<M1743448	Tank fuel ABI	B & C	1
1	332/W8761		Tank fuel ABI		1
1A	290/00602		Strip rubber If fitted		1
2	290/00505		Gasket clamp		4
3	290/00446		Gasket base		1
4	290/00454		Gasket side		1
5	290/25400		Plate clamp		2
6	828/00361	<M807025	Grommet		1
6	813/10179		Gasket for fuel gauge		1
7	122/62400	<M752764	Cap filler,diesel fuel None locking	A	1
7	162/03414	<M Sept-01	Cap Fuel Filler Locking	B	1
7	331/11403		Cap filler, vented diesel Lockable (EXCLUDES Keys)	C	1
7A	701/45501		Key Door/Ignition same as ignition switch	C	1
8	231/81402	<M807025	Gauge fuel		1
8	331/18336		Gauge fuel		1
9	1370/0203Z		Nut Nut M8		4
10	290/00508		Spacer		4
11	1420/0007Z		Washer (M8)		1
20	122/98439		Strainer Diesel Filler		1

Applicability Date Ranges:
From: , To:

Product Catalog\BACKHOE LOADER 1CX, 208\1CX 00751600-00752999,00806000-00807552 9802/6220\B BODYWORK, CAB, LOADER END\B01 BODYWORK/FRAME\B1-4-1 TANK, HYDRAULIC

9802/6220 B1-4-1 TANK, HYDRAULIC

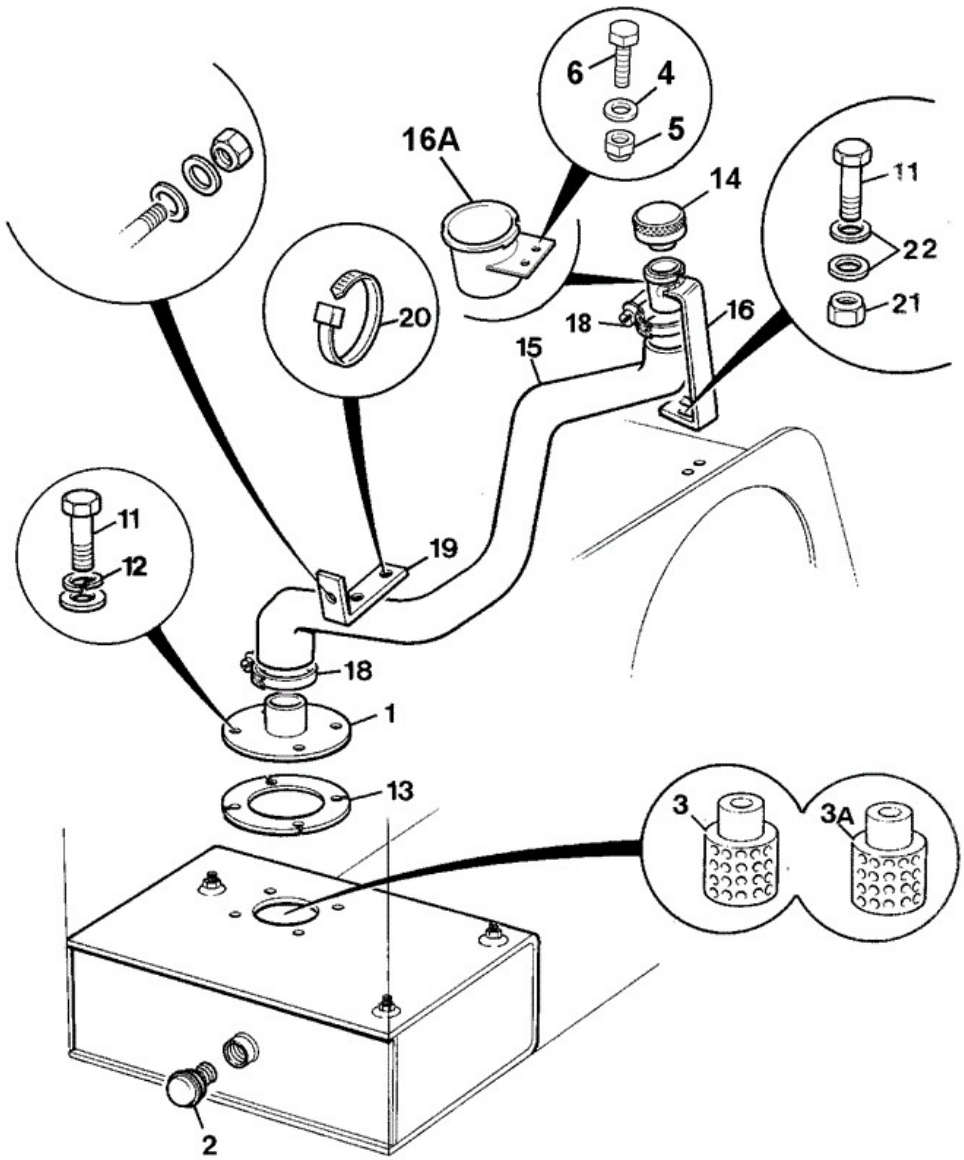

Item	Part No	Change No	Description	Usage Code	QTY
1	290/26400	<M807590	Plate filler 4 bolt fixing		1
			Plate filler		

1	335/02654	Superseded	6 bolt fixing		1
1	335/06126		Plate cover 8 Bolt fixing		1
2	265/01289		Gauge Sight		1
3	32/904100		Strainer Suction 1" BSP Thread, 46AF Hexagon		1
3A	****		'See Remark' Item 3A not reuired on standard flow machines		1
4	1420/0006Z	>M752544	Washer (M6) Used on item 16 after M		2
5	1370/0103Z	>M752544	Nut Self Lock M6		2
6	1315/0203Z	>M752544	Setscrew		2
11	1315/0307Z	<M807590	Setscrew M8 X 25		4
11	1315/0307Z		Setscrew M8 X 25		6
12	1425/0007Z	<M807590	Washer Washer		4
12	1425/0007Z		Washer Washer		6
13	813/00411	<M807590	Gasket 4 bolt fixing		1
13	813/10174	Superseded	Gasket 6 bolt fixing		1
13	813/00360		Gasket 8 Hole 8 bolt fixing		1
14	290/00396		Cap hydraulic filler		1
15	834/00526		Hose filler		1
15	834/00641		Hose hydraulic filler		1
16	290/26500	<M752543	Tube filler		1
16	290/70300		Tube filler See 16A on illustration		1
17	290/00532		Bracket		1
18	2201/0012		Clip Jubilee, 46/70mm		2
19	290/00567		Bracket		1
19	290/01068		Bracket		1
20	826/01464		Nut rivet (M8)		4
20	121/77603		Tie Cable 300mm		1
21	1370/0203Z		Nut Nut M8		2
22	1420/0007Z		Washer (M8)		8
25	2201/0009		Clip Jubilee		2
26	816/00197	<M808234	Plug		1
26	816/90022		Cap blanking 5/8"BSP steel		1
27	834/00858		Sleeve blanking Hi-Flo circuit blank		1
28	2201/0010		Clip jubilee		1

Note 1: Used on optional hand held attachments equipment

Applicability Date Ranges:
From: , To:

Product Catalog\BACKHOE LOADER 1CX, 208\1CX 00751600-00752999,00806000-00807552 9802/6220\B BODYWORK, CAB, LOADER END\B01 BODYWORK/FRAME\B1-5-1 GRILLE, FRONT

9802/6220 B1-5-1 GRILLE, FRONT

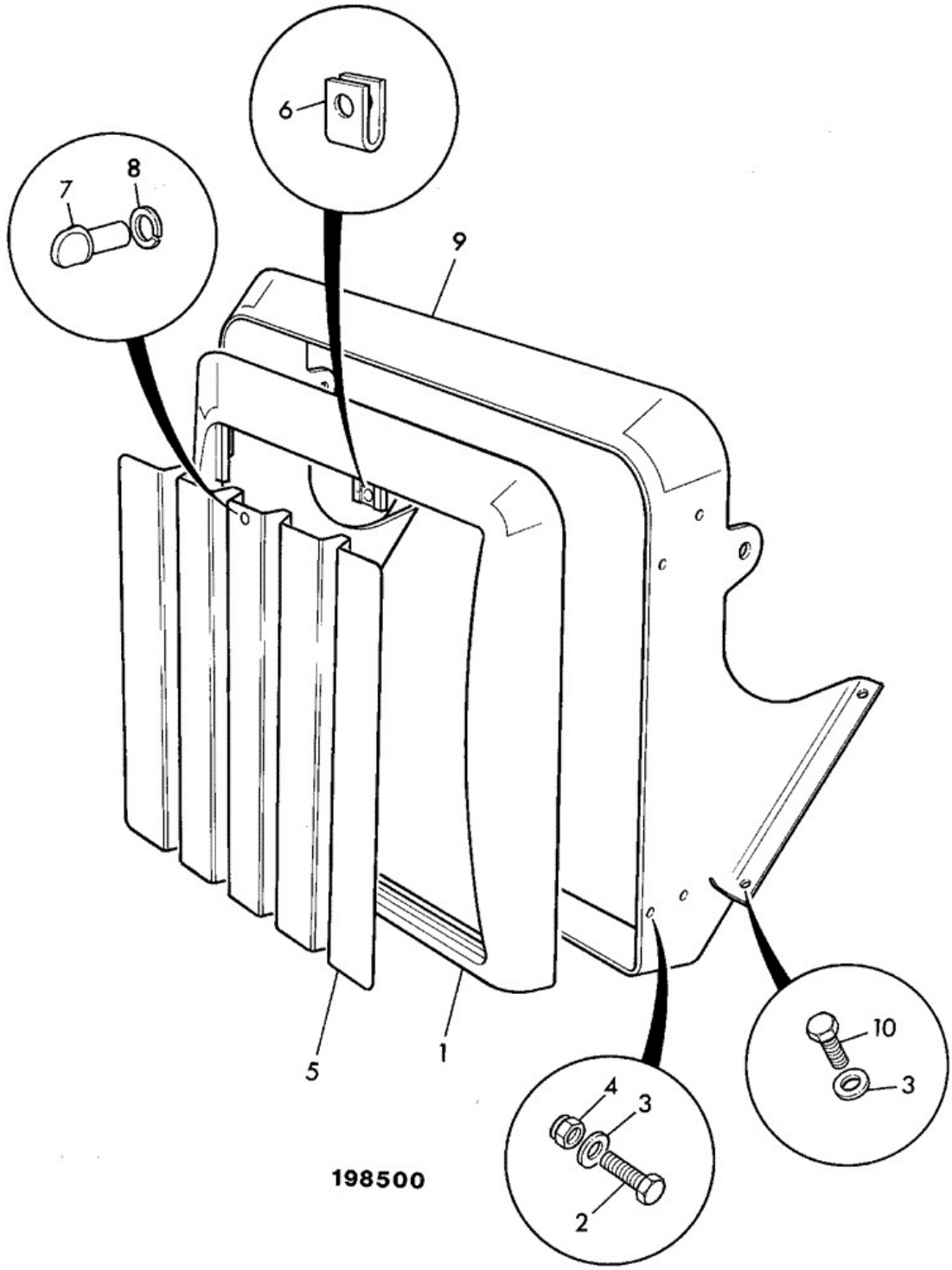

Item	Part No	Change No	Description	Usage Code	QTY
1	290/00759P	<M1051499	Casting nose		1
1	589/10388	>M1051500	Casting nose		1

2	1315/0409D		Setscrew M10 x 35mm		4
3	1420/0008D		Washer (M10)		8
4	1370/0303D		Nut Self Lock M10		4
5	290/61200	Superseded	Grille		1
5	290/01274	<M1051499	Grille Strengthened		1
5	335/09846	>M1051500	Grille		1
6	826/01431		Clip 'U'		1
7	1315/0407D		Setscrew M10 x 25		1
7A	828/10267	>M1051500	Grommet Blanking plug		1
8	823/00480		Retainer		1
9	290/37000	Superseded	Housing radiator		1
9	290/61300	<M1051499	Housing radiator		1
9	335/09768	>M1051500	Housing assembly,radiator		1
10	1315/0405D		Setscrew M10 x 20		4

Applicability Date Ranges:
From: , To:

Product Catalog\BACKHOE LOADER 1CX, 208\1CX 00751600-00752999,00806000-00807552 9802/6220\B BODYWORK, CAB, LOADER END\B01 BODYWORK/FRAME\B1-6-1 FENDERS REAR CAB

9802/6220 B1-6-1 FENDERS REAR CAB

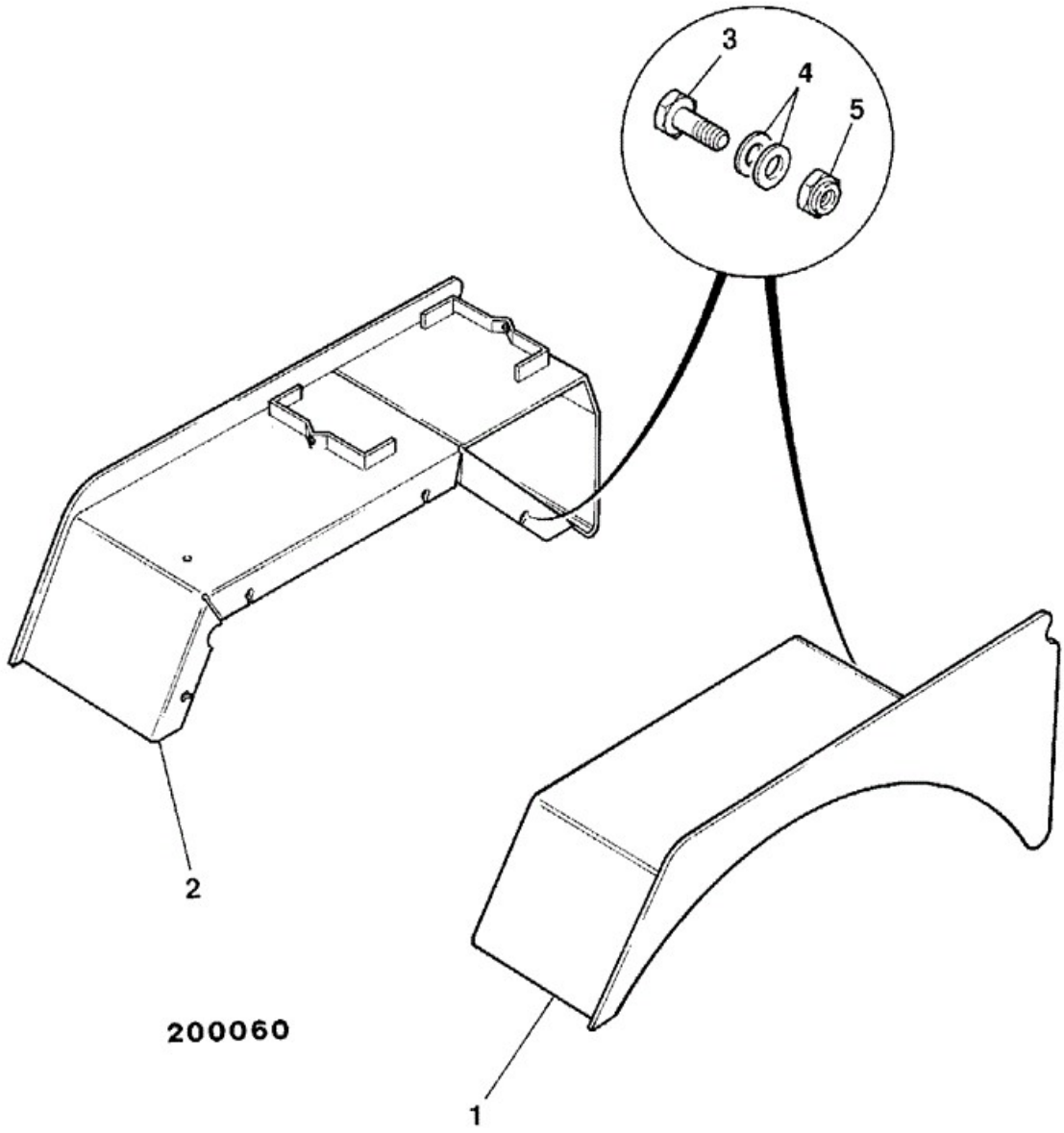

Item	Part No	Change No	Description	Usage Code	QTY

1	290/33600	<M1743448	Fender rear, left side		1
1	333/T2973		Fender rear, left side black		1
2	290/32100	<M0752286	Fender rear, right side		1
2	290/70100	<M1299881	Fender rear, right side		1
2	332/W6433	<M1743448	Fender rear right side		1
2	333/T3168		Fender rear. right side cab builds, black		1
3	1315/0508Z	<M1051499	Setscrew M12 X 30		8
3	1315/0508D	>M1051500	Setscrew M12 x 30 mm		8
4	1420/0009Z	<M1051499	Washer (M12)		16
4	1420/0009D	>M1051500	Washer (M12)		16
5	1370/0403Z	<M1051499	Nut Lock, M12		8
5	1370/0403D	>M1051500	Nut Lock M12		8
6	926/04800		Strip Edging		0

Applicability Date Ranges:
From: , To:

Product Catalog\BACKHOE LOADER 1CX, 208\1CX 00751600-00752999,00806000-00807552 9802/6220\B BODYWORK, CAB, LOADER END\B01 BODYWORK/FRAME\B1-6-2 FENDERS REAR CANOPY

9802/6220 B1-6-2 FENDERS REAR CANOPY

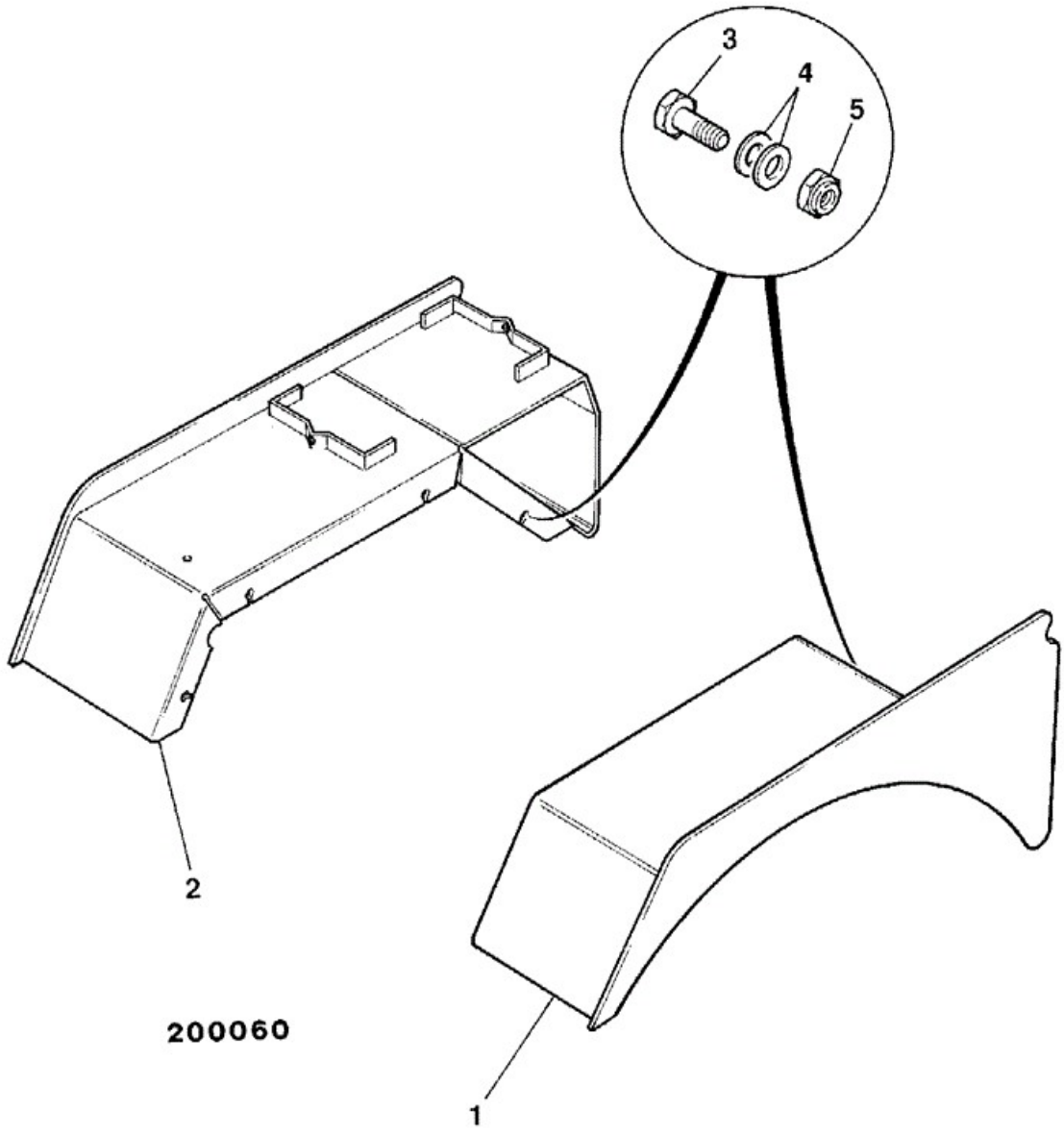

Item	Part No	Change No	Description	Usage Code	QTY

1	290/33600	<M1743448	Fender rear, left side		1
1	333/T2973		Fender rear, left side black		1
2	290/33700	<M0752286	Fender rear, right side Standard machine build		1
2	290/32100	<M0752286	Fender rear, right side Hi-Flow machine build		1
2	290/70200	<M1743448	Fender rear, right side Standard machine build		1
2	333/T3171		Fender rear, right side canopy builds, black		1
2	290/70100	<M1299881	Fender rear, right side Hi-Flow machine build		1
2	332/W6433	<M1743448	Fender rear right side Hi-Flow machine build		1
2	333/T3168		Fender rear. right side cab builds, black		1
3	1315/0508Z	<M1051499	Setscrew M12 X 30		8
3	1315/0508D	>M1051500	Setscrew M12 x 30 mm		8
4	1420/0009Z	<M1051499	Washer (M12)		16
4	1420/0009D	>M1051500	Washer (M12)		16
5	1370/0403Z	<M1051499	Nut Lock, M12		8
5	1370/0403D	>M1051500	Nut Lock M12		8
6	926/04800		Strip Edging		0

Applicability Date Ranges:
From: , To:

Product Catalog\BACKHOE LOADER 1CX, 208\1CX 00751600-00752999,00806000-00807552 9802/6220\B BODYWORK, CAB, LOADER END\B01 BODYWORK/FRAME\B1-7-1 COVERS HYDRAULIC MOTOR

9802/6220 B1-7-1 COVERS HYDRAULIC MOTOR

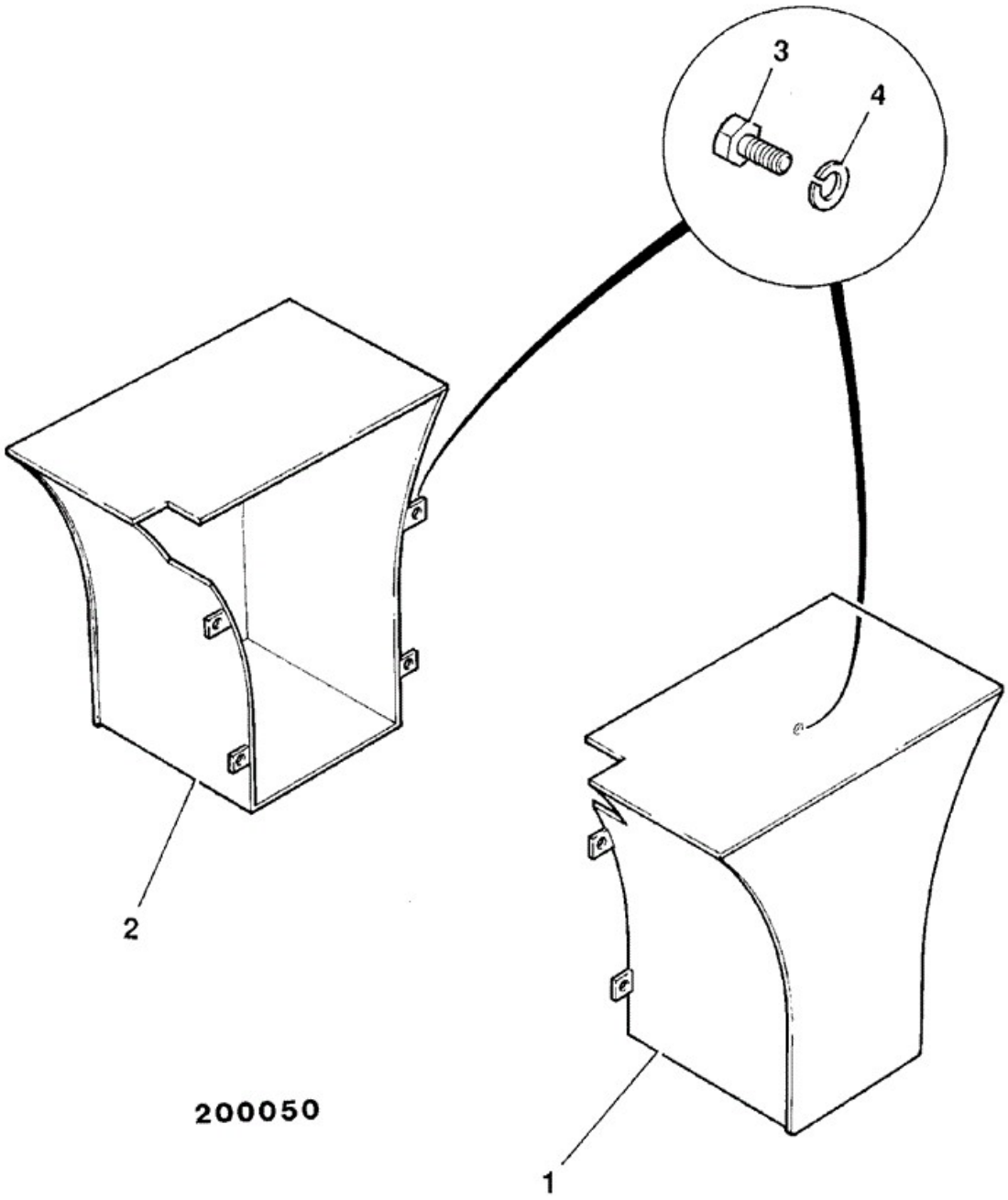

Item	Part No	Change No	Description	Usage Code	QTY

1	290/22000	<M752286	Cover motor, left side		1
1	290/68100	<M752691	Cover Motor L.H.		1
1	290/71400	>M752692	Cover motor, left		1
2	290/34100	<M752286	Cover motor, right side Canopy builds		1
2	290/32300	<M752691	Cover motor, right side Cab builds		1
2	290/01219	<M752691	Cover motor,right side drilled for toolbox Canopy build, drilled for toolbox.		1
2	290/68200	<M752691	Cover Motor R.H. Canopy build.		1
2	290/71500	>M752692	Cover motor, right Canopy builds		1
2	290/71600	>M752692	Cover motor, right Cab builds		1
2	290/01319	>M752692	Cover motor, right Drilled for toolbox		1
3	1315/0405Z	<M1051499	Setscrew M10 x 20 mm		8
3	1315/0405D	>M1051500	Setscrew M10 x 20		8
4	1425/0008Z	<M1051499	Spring Washer		8
4	1425/0008D	>M1051500	Washer Spring M10		8
5	246/01454		Pad anti-slip		1

Applicability Date Ranges:
From: , To: M1299633

Product Catalog\BACKHOE LOADER 1CX, 208\1CX 00751600-00752999,00806000-00807552 9802/6220\B BODYWORK, CAB, LOADER END\B01 BODYWORK/FRAME\B1-7-2 COVERS HYDRAULIC MOTOR

9802/6220 B1-7-2 COVERS HYDRAULIC MOTOR

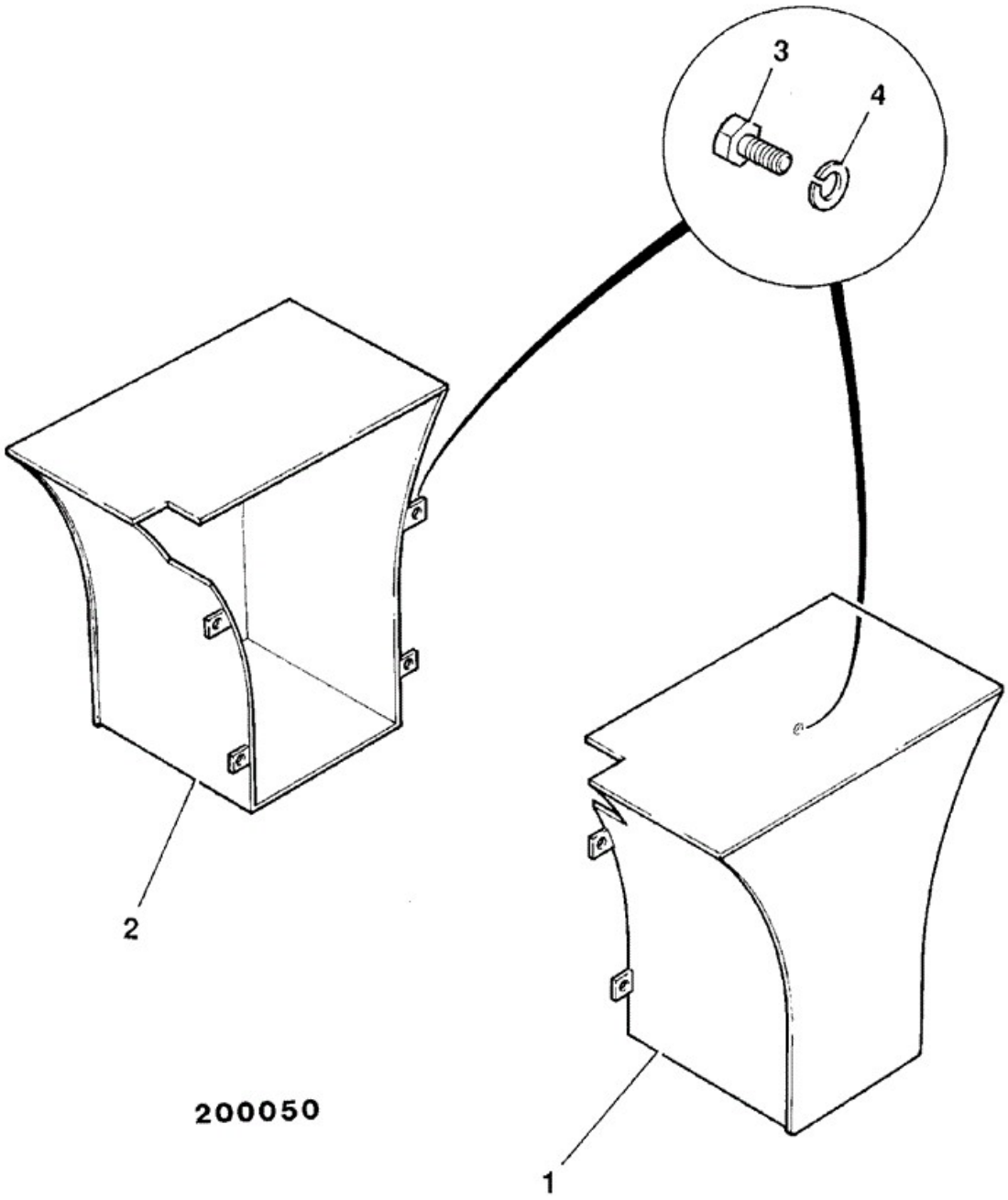

Item	Part No	Change No	Description	Usage Code	QTY

1	332/V3077		Cover motor left		1
2	290/71600		Cover motor, right Cab builds		1
2	290/01319		Cover motor, right Drilled for toolbox		1
3	1315/0405D		Setscrew M10 x 20		8
4	1425/0008D		Washer Spring M10		8

Applicability Date Ranges:
From: M1299634 , To: M1299881

Product Catalog\BACKHOE LOADER 1CX, 208\1CX 00751600-00752999,00806000-00807552 9802/6220\B BODYWORK, CAB, LOADER END\B01 BODYWORK/FRAME\B1-7-3 COVERS HYDRAULIC MOTOR

9802/6220 B1-7-3 COVERS HYDRAULIC MOTOR

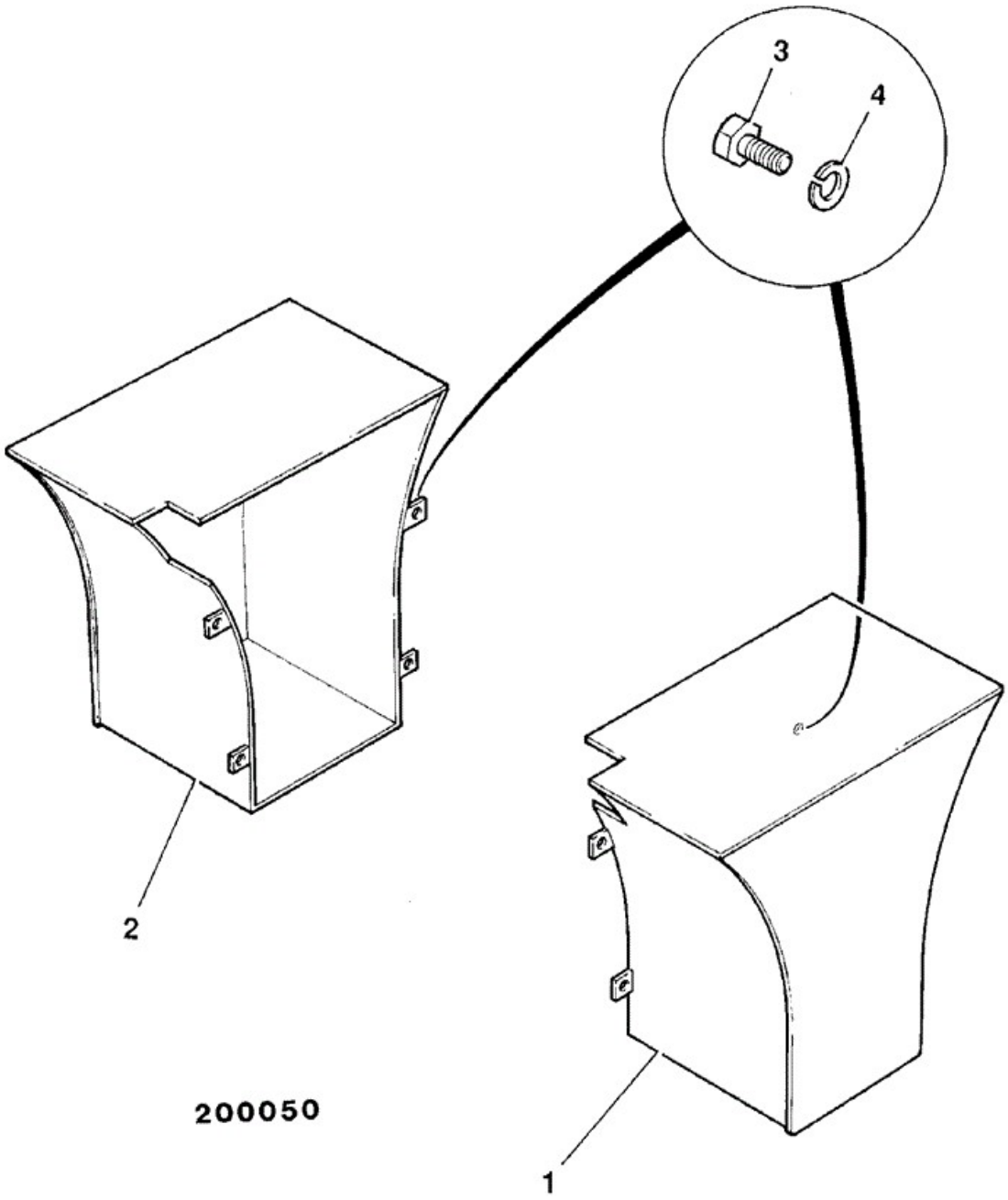

Item	Part No	Change No	Description	Usage Code	QTY

1	332/W6052	<M1743448	Cover motor, LH		1
1	333/T3147		Cover motor, LH black		1
2	332/W6470	<M1743448	Cover motor, RH Canopy builds, STD		1
2	333/T3170		Cover motor, RH canopy builds, black		1
2	332/W6385	<M1743448	Cover motor, RH Cab builds & HF Canopy		1
2	333/T3169		Cover motor, RH cab builds, black		1
3	1315/0405D		Setscrew M10 x 20		8
4	1425/0008D		Washer Spring M10		8

Applicability Date Ranges:
From: M1299882 , To:

Product Catalog\BACKHOE LOADER 1CX, 208\1CX 00751600-00752999,00806000-00807552 9802/6220\B BODYWORK, CAB, LOADER END\B01 BODYWORK/FRAME\B1-8-1 BONNET & SIDEPANELS

9802/6220 B1-8-1 BONNET & SIDEPANELS

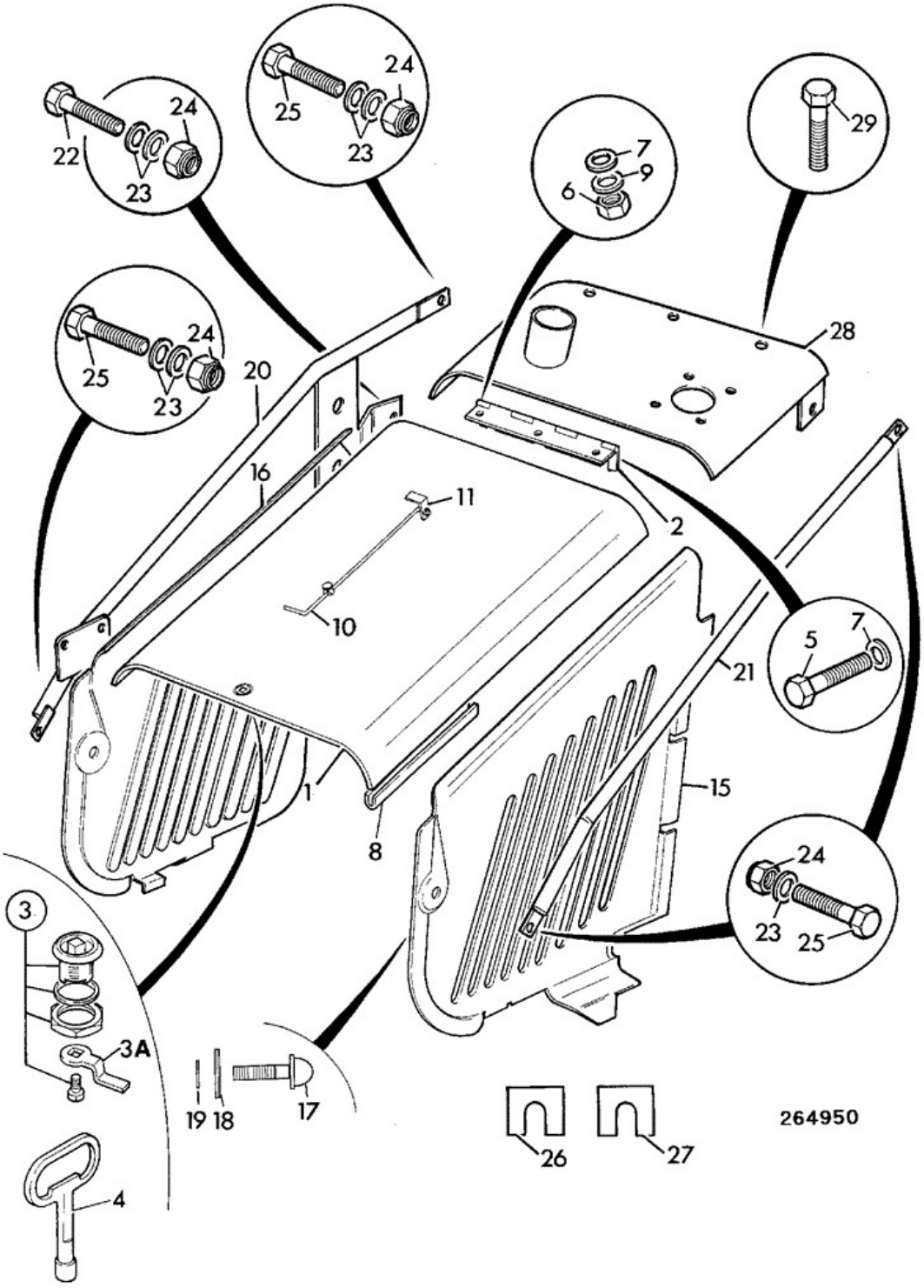

Item	Part No	Change No	Description	Usage Code	QTY
1	290/59400		Bonnet		1
2	141/00339		Hinge		1

3	140/00757		Latch		1
3A	140/00825		Pawl		1
4	140/00758		Key		1
5	1315/0307Z		Setscrew M8 X 25		3
6	1370/0201Z		Nut Standard M8		3
7	1420/0007Z		Washer (M8)		6
8	926/04800		Strip Edging 2 x 215mm		0
9	1425/0007Z		Washer Washer		3
10	141/00950		Stay bonnet		1
11	823/00515		Washer starlock, internal		2
15	290/01147		Panel left side		1
16	290/01148		Panel right side		1
17	826/00649		Screw thumb		2
18	1412/0004Z		Washer (7/16" Large)		2
19	823/00480		Retainer		2
20	290/01126		Strut right side		1
21	290/01127		Strut left side		1
22	1315/0411Z		Bolt M10 x 45		1
23	1420/0008Z		Washer (M10)		10
24	1370/0303Z		Nut lock M10		5
25	1315/0408Z		Setscrew M10 x 30		4
26	290/01129		Spacer 5 mm		2
27	290/01130		Spacer 3 mm		2
28	290/59200		Cover engine, fixed		1

Applicability Date Ranges:
From: , To: M752691

Product Catalog\BACKHOE LOADER 1CX, 208\1CX 00751600-00752999,00806000-00807552 9802/6220\B BODYWORK, CAB, LOADER END\B01 BODYWORK/FRAME\B1-8-2 BONNET & SIDEPANELS

9802/6220 B1-8-2 BONNET & SIDEPANELS

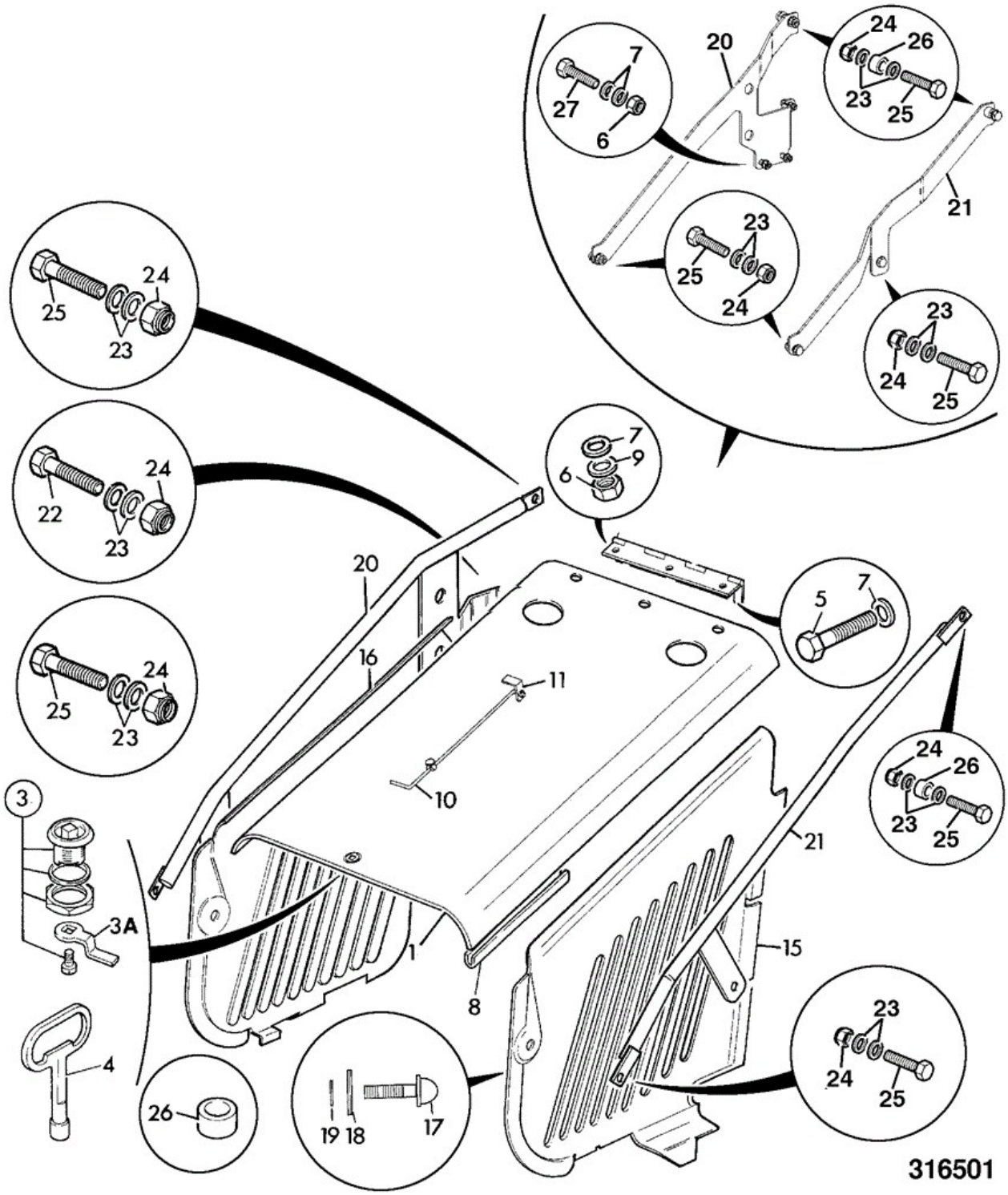

Item	Part No	Change No	Description	Usage Code	QTY
1	290/70900	<M806303	Bonnet		1
1	331/14852	<M1051499	Bonnet		1

1	335/09800	<M1743216	Bonnet		1
1	333/S0563	>M1743217	Bonnet		1
2	141/00339		Hinge		1
3	140/00757		Latch		1
3A	140/00825		Pawl		1
4	140/00758		Key		1
5	1315/3309D	<M1051499	Bolt (M8 x 35)		3
5	1315/0307D	>M1051500	Setscrew M8 x 25 mm		3
6	1370/0203D		Nut Lock M8		3
7	1420/0007D		Washer (M8)		6
8	926/04800		Strip Edging 2 x 215mm		0
9	1425/0007D		Washer Spring M8		6
10	141/00950		Stay bonnet		1
11	823/00515		Washer starlock, internal		4
15	290/01147	<M1051499	Panel left side		1
15	346/00265	>M1051500	Panel left side		1
16	290/01148	<M1051499	Panel right side		1
16	346/00266	>M1051500	Panel right side		1
17	826/00649		Screw thumb		2
18	1412/0004Z	<M1051499	Washer (7/16" Large)		2
18	1420/0008D	>M1051500	Washer (M10)		2
19	823/00480		Retainer		2
20	290/01126	<M1051499	Strut right side Round bar design		1
20	335/09766	Superseded	Strut right side Round bar design		1
20	335/11621	<M1298307	Strut right side Round bar design		1
20	331/64428		Strut engine bay right hand Flat plate design		1
21	290/01127	<M1051499	Strut left side Round bar design		1
21	335/09767	<M1298307	Strut left side Round bar design		1
21	331/64429		Strut engine bay left hand Flat plate design Tier 2 engine application		1
21	332/S3555		Strut engine bay left hand Tier 3 engine application		1
22	1315/3414Z		Bolt M10x60		1
23	1420/0008Z	<M1051499	Washer (M10)		10

23	1420/0008D	>M1051500	Washer (M10)		10
24	1370/0303Z	<M1051499	Nut lock M10		5
24	1370/0303D	>M1051500	Nut Self Lock M10		5
25	1315/0408Z	<M1051499	Setscrew M10 x 30		4
25	1315/0408D	>M1051500	Setscrew M10 x 30		4
25	1315/0411D		Setscrew M10X45		2
26	531/96302		Spacer		2
27	1315/0308D		Setscrew M8 x 30 mm		3

Applicability Date Ranges:
From: M752692 , To:

9802/6220 B1-9-1 MUDGUARDS, FRONT

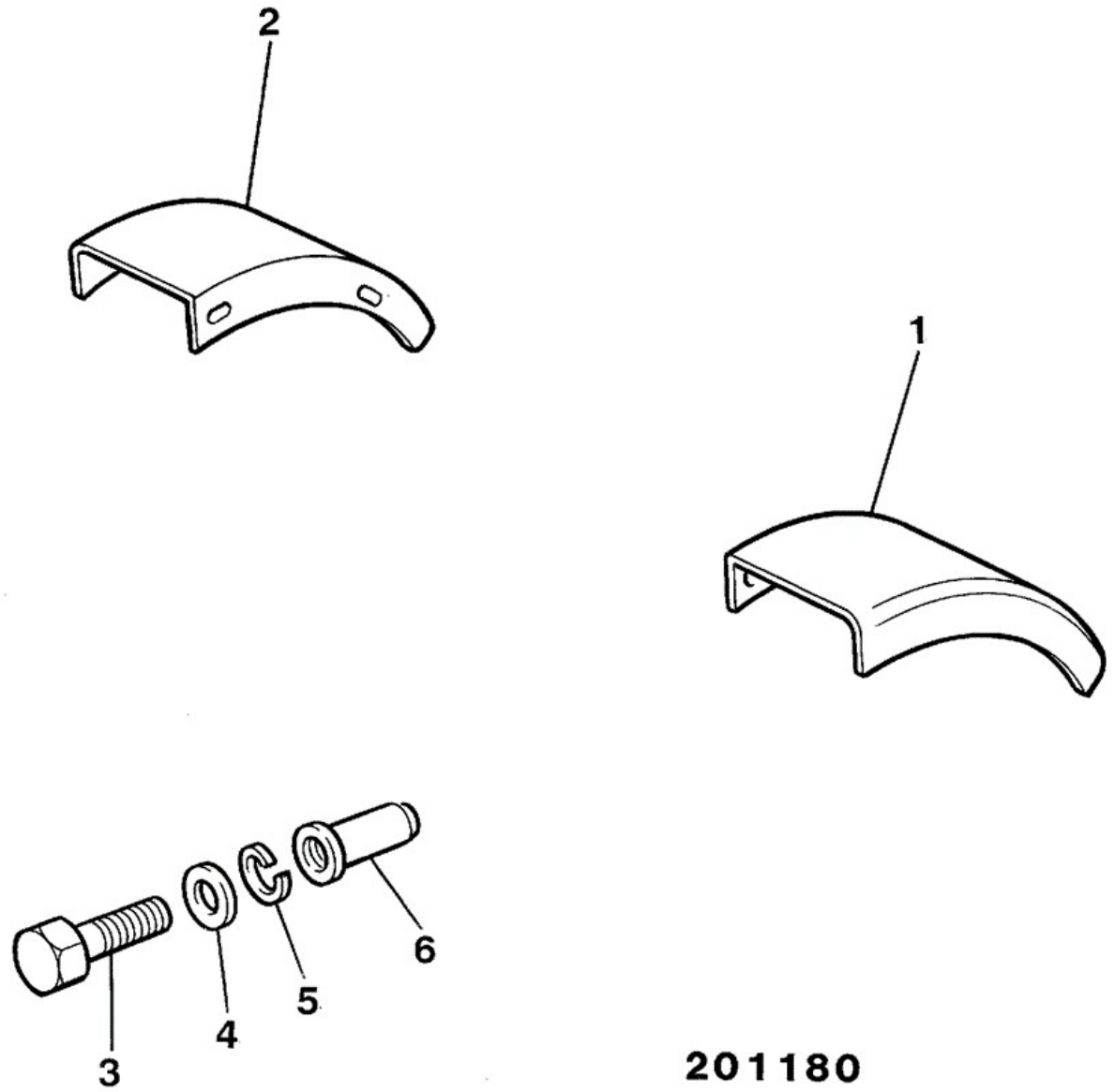

Item	Part No	Change No	Description	Usage Code	QTY
1	290/00321		Fender front, left side		1
2	290/00320		Fender front, right side		1

3	1315/0307Z		Setscrew M8 X 25		4
4	1420/0007Z		Washer (M8)		4
5	1425/0007Z		Washer Washer		4
6	826/01106		Nut Rivet,M8		4

Applicability Date Ranges:
From: , To:

Product Catalog\BACKHOE LOADER 1CX, 208\1CX 00751600-00752999,00806000-00807552 9802/6220\B BODYWORK, CAB, LOADER END\B01 BODYWORK/FRAME\B1-10-1 STREET PADS

9802/6220 B1-10-1 STREET PADS

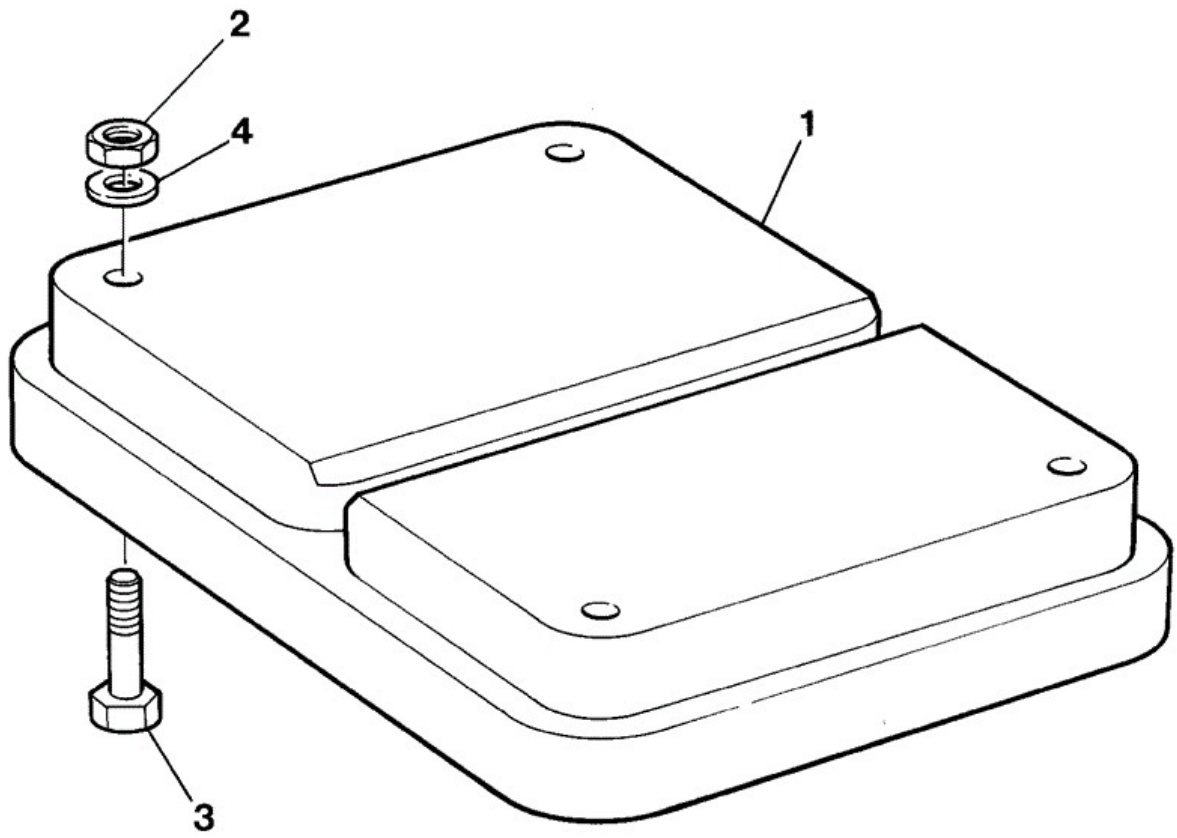

214220

Item	Part No	Change No	Description	Usage Code	QTY
1	290/35600		Pad		2
2	1370/0203Z		Nut Nut M8		8

3	1391/3309		Capscrew M8		8
4	1420/0007Z		Washer (M8)		8

Applicability Date Ranges:
From: , To:

Product Catalog\BACKHOE LOADER 1CX, 208\1CX 00751600-00752999,00806000-00807552 9802/6220\B BODYWORK, CAB, LOADER END\B01 BODYWORK/FRAME\B1-10-3 STREET PADS LARGE

9802/6220 B1-10-3 STREET PADS LARGE

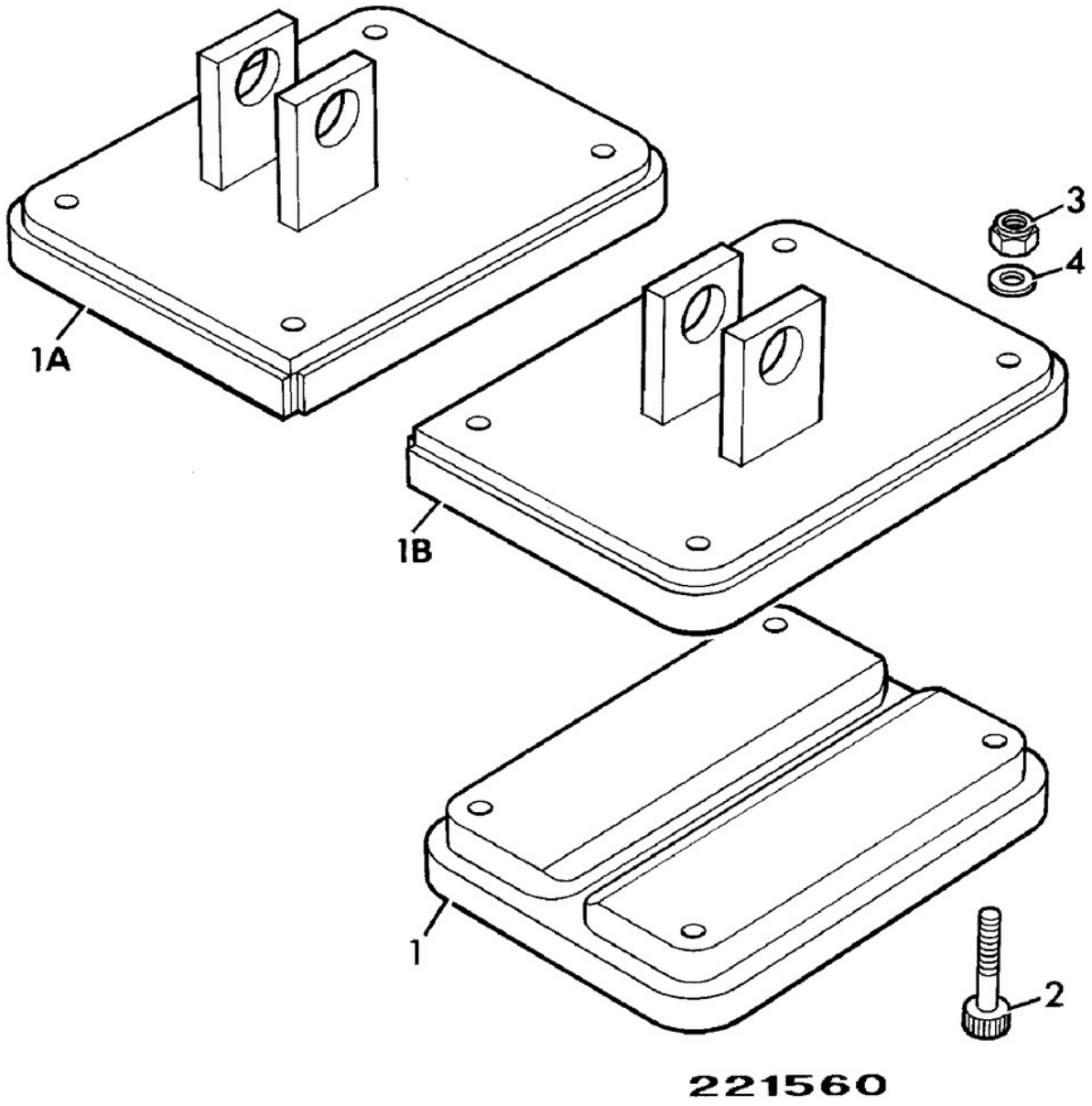

Item	Part No	Change No	Description	Usage Code	QTY
1	290/39100		Pad Large street pad		2
1A	290/39300		Foot stabiliser,left side		1
1B	290/39400		Foot stabiliser right side		1
2	1391/3409		Capscrew		8
3	1370/0303Z		Nut lock M10		8
4	1420/0008Z		Washer (M10)		8

Applicability Date Ranges:
From: , To:

Product Catalog\BACKHOE LOADER 1CX, 208\1CX 00751600-00752999,00806000-00807552 9802/6220\B BODYWORK, CAB, LOADER END\B01 BODYWORK/FRAME\B1-11-2 SOUNDPROOFING

9802/6220 B1-11-2 SOUNDPROOFING

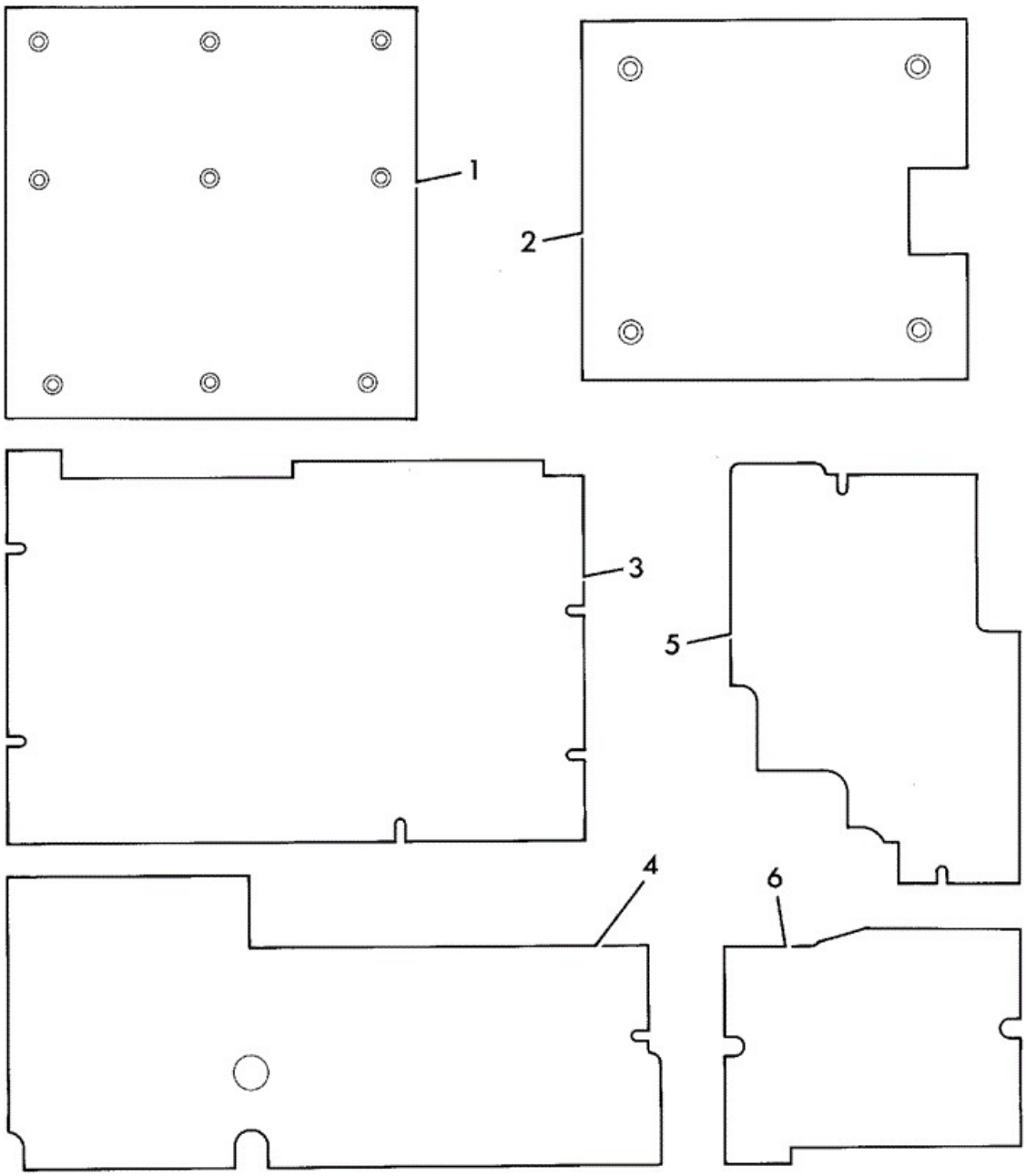

303970

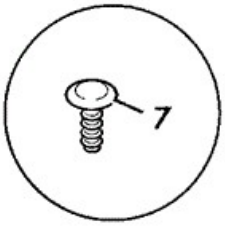

Item	Part No	Change No	Description	Usage Code	QTY

1	290/01159		Panel Soundproofing bulkhead		1
2	290/01160		Panel Soundproofing Bonnet		1
3	290/00859		Panel soundproofing front floor, left		1
4	290/00861		Panel soundproofing rear floor, left		1
5	290/00862		Panel soundproofing rear floor, right		1
6	290/00903		Panel soundproofing rear access plate		1
7	826/01308		Button Fastener		13

Applicability Date Ranges:
From: , To: M752691

Product Catalog\BACKHOE LOADER 1CX, 208\1CX 00751600-00752999,00806000-00807552 9802/6220\B BODYWORK, CAB, LOADER END\B01 BODYWORK/FRAME\B1-11-3 SOUNDPROOFING

9802/6220 B1-11-3 SOUNDPROOFING

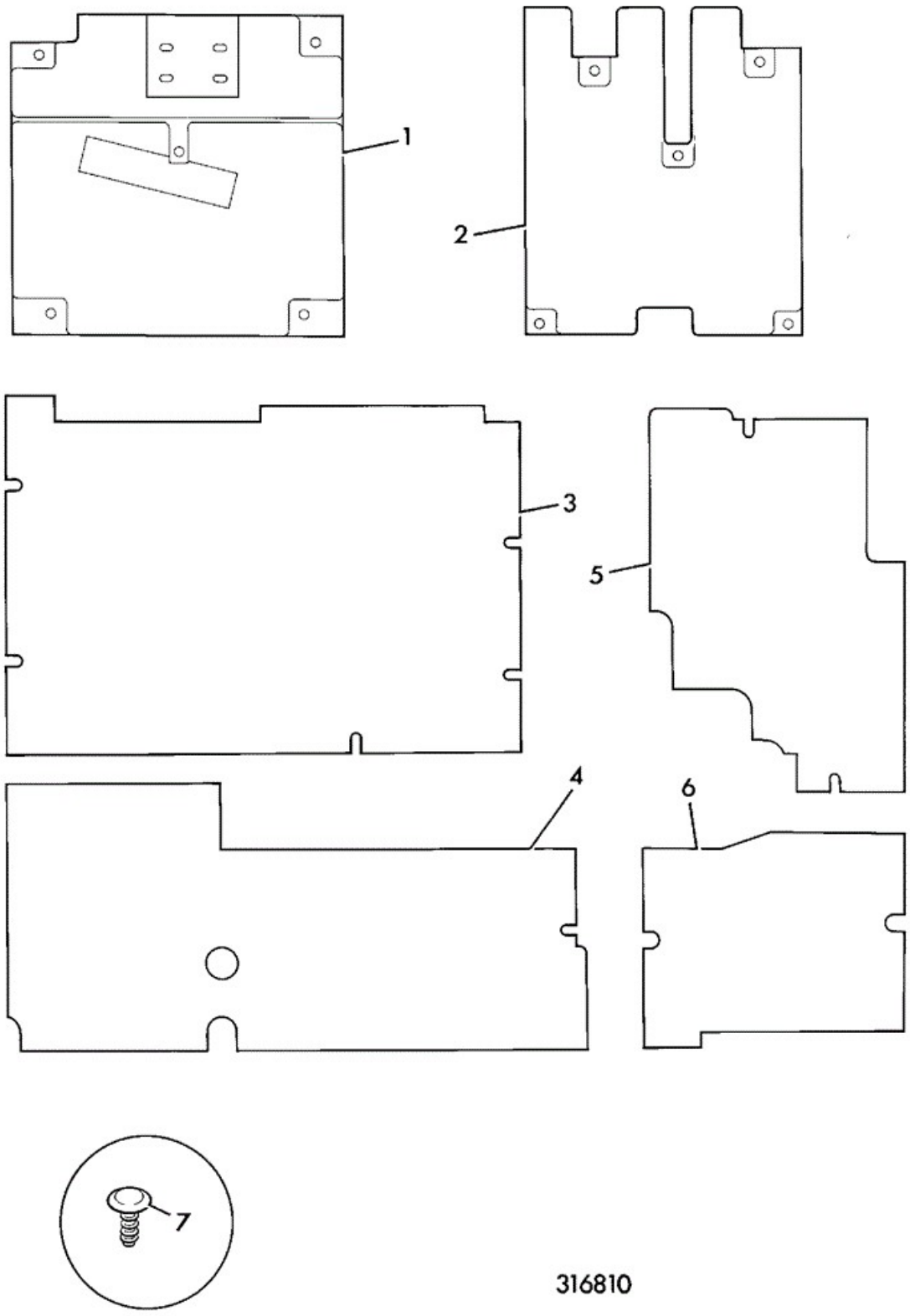

Item	Part No	Change No	Description	Usage Code	QTY

1	290/01327	<M806303	Panel soundproofing bulkhead		1
1	290/01331		Panel soundproofing bulkhead		1
2	290/01324	<M806303	Panel soundproofing bonnet		1
2	290/01332		Panel soundproofing bonnet		1
3	290/00859		Panel soundproofing front floor, left		1
4	290/00861		Panel soundproofing rear floor, left		1
5	290/00862		Panel soundproofing rear floor, right		1
6	290/00903		Panel soundproofing rear access plate		1
7	826/01624		Fastener button		5
8	826/01308	<M806303	Button Fastener		5
8	826/01623		Retainer insulation		5

Applicability Date Ranges:
From: M752692 , To:

9802/6220 B1-12-1 SOUNDPROOFING HOT CLIMATE BUILDS

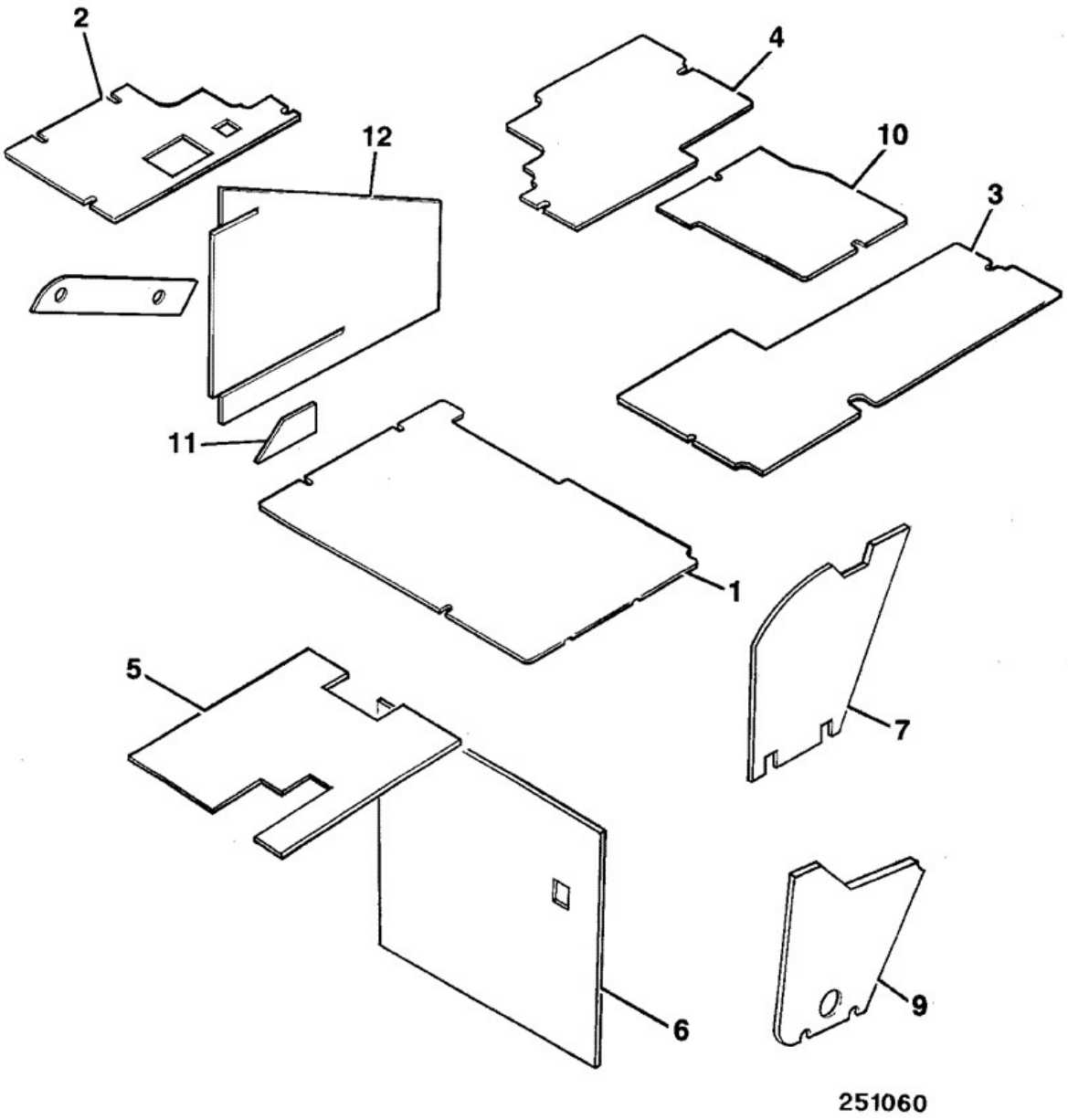

Item	Part No	Change No	Description	Usage Code	QTY
1	290/01040		Panel soundproofing front floor, left		1
2	290/01041		Panel soundproofing front floor, right		1

3	290/01042		Panel soundproofing rear floor, left		1
4	290/01043		Panel soundproofing rear floor, right		1
5	290/00863		Panel soundproofing bonnet		1
6	290/00864		Panel soundproofing chassis bulkhead		1
7	290/01047		Panel soundproofing		1
9	290/01046		Panel soundproofing heater cover		1
10	290/01044		Panel soundproofing rear access panel		1
11	290/01052		Pad Velcro self adhesive		1
12	290/01048		Panel soundproofing instrument cover Canopy builds		1

Note 1: All the panels on this page are of the reflective type.

Applicability Date Ranges:
From: , To:

Product Catalog\BACKHOE LOADER 1CX, 208\1CX 00751600-00752999,00806000-00807552 9802/6220\B BODYWORK, CAB, LOADER END\B01 BODYWORK/FRAME\B1-13-1 MOUNTINGS FRONT LIGHTS

9802/6220 B1-13-1 MOUNTINGS FRONT LIGHTS

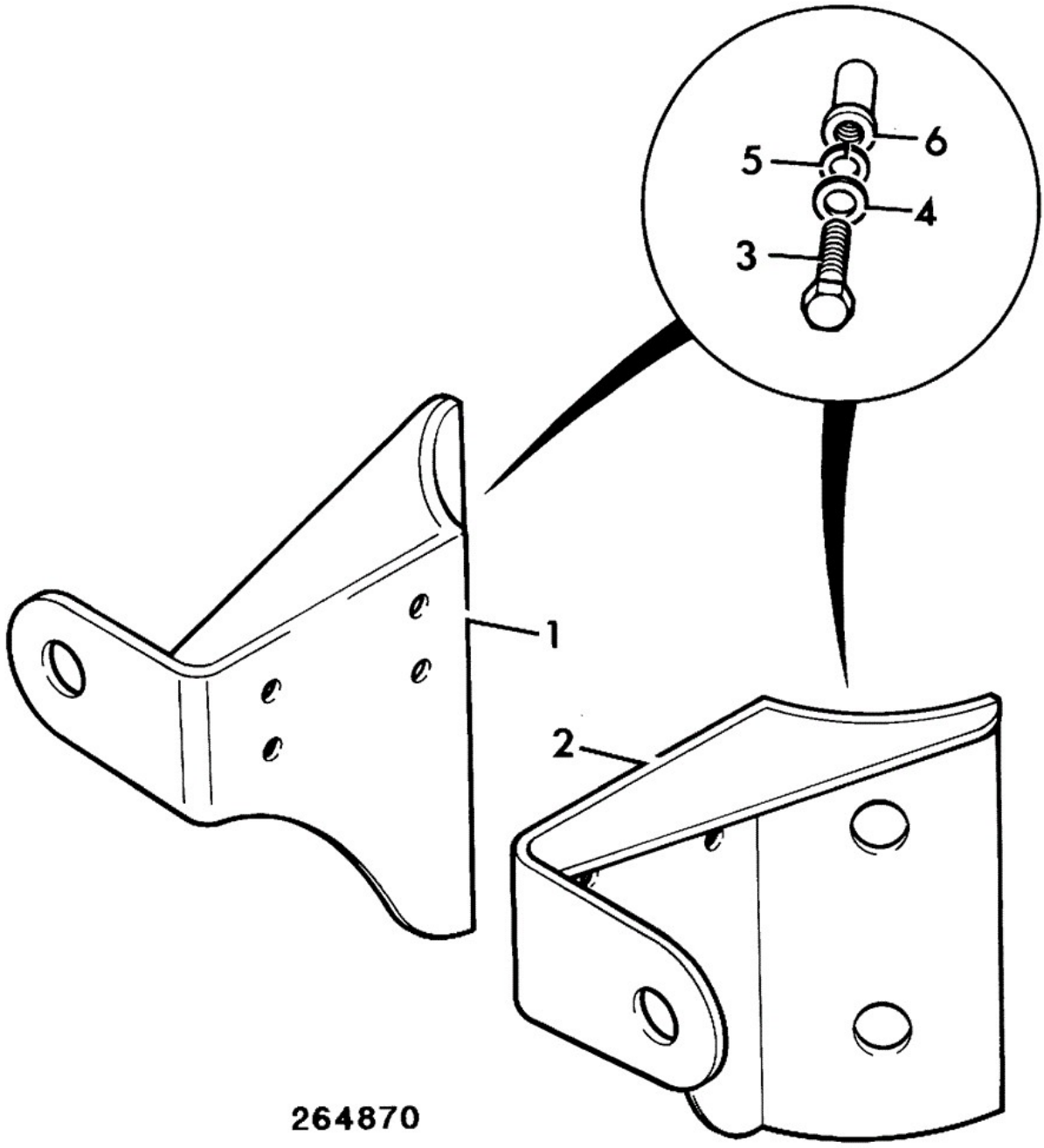

Item	Part No	Change No	Description	Usage Code	QTY
1	290/01154	<M752369	Bracket light, front right		1
1	290/01259	>M752370	Bracket front light R.H. Black cab		1
1	290/01326	>M752676	Bracket front light, R.H.		1
2	290/01151	<M752369	Bracket light, front left		1

2	290/01258	>M752370	Bracket front light L.H. Black cab		1
2	290/01325	>M752676	Bracket front light, L.H.		1
3	1315/0405Z		Setscrew M10 x 20 mm		4
4	1420/0008Z		Washer (M10)		4
5	1425/0008Z		Spring Washer		4
6	826/01306		Nut rivet		4

Applicability Date Ranges:
From: , To:

Product Catalog\BACKHOE LOADER 1CX, 208\1CX 00751600-00752999,00806000-00807552 9802/6220\B BODYWORK, CAB, LOADER END\B01 BODYWORK/FRAME\B1-14-1 TOOLBOX

9802/6220 B1-14-1 TOOLBOX

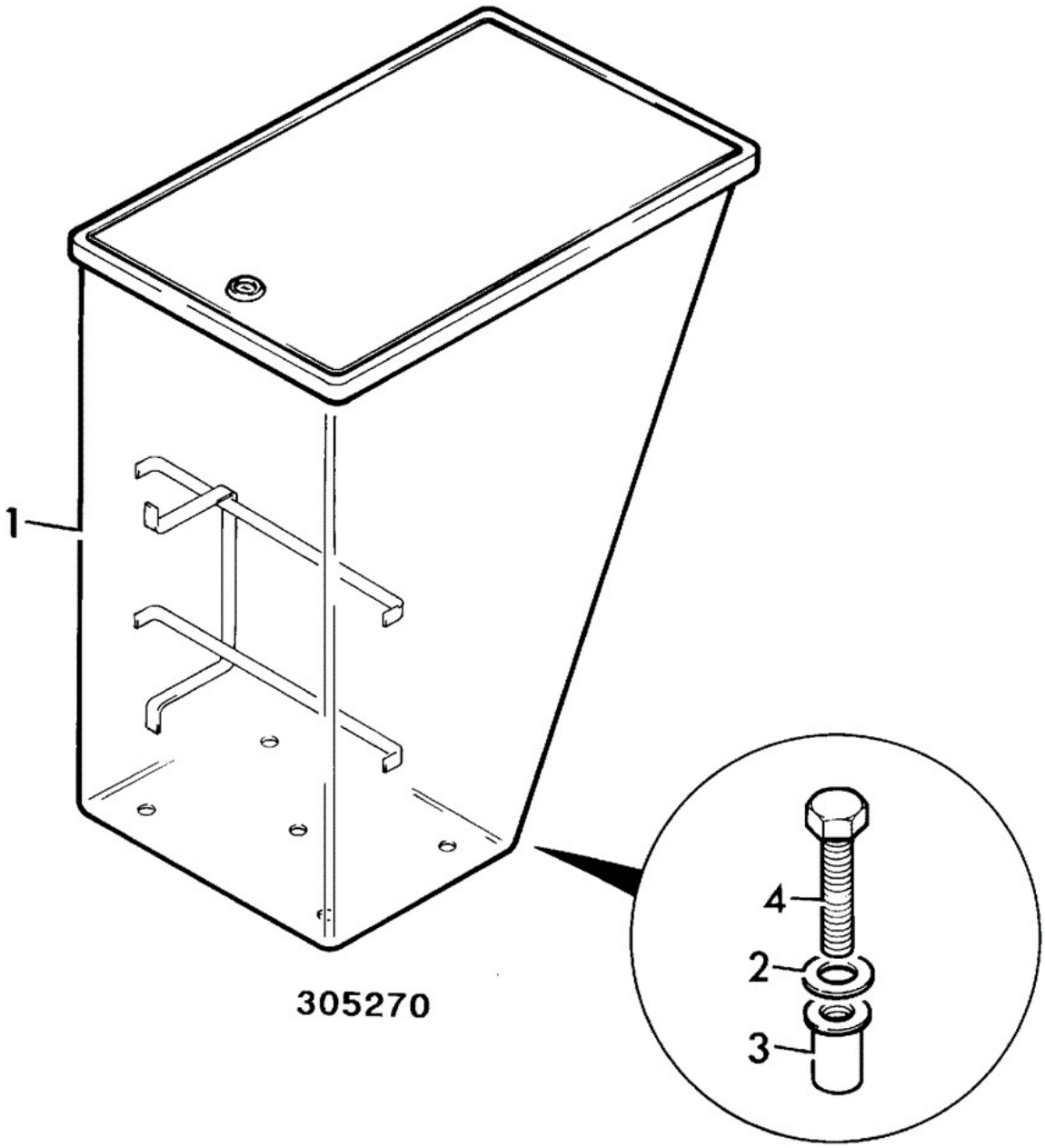

Item	Part No	Change No	Description	Usage Code	QTY
1	290/01218		Box Toolbox 1CX		1
2	1420/0008Z		Washer (M10)		4
3	826/01104		Nut Rivet		4
4	1315/0408Z		Setscrew M10 x 30		4
5	****		'See Remark'		1

Note 1: Motorcover available predrilled to take the toolbox, page B1-7-1 item 2:3

Applicability Date Ranges:
From: , To:

Product Catalog\BACKHOE LOADER 1CX, 208\1CX 00751600-00752999,00806000-00807552 9802/6220\B BODYWORK, CAB, LOADER END\B01 BODYWORK/FRAME\B1-15-1 COUNTERWEIGHT LOADER

9802/6220 B1-15-1 COUNTERWEIGHT LOADER

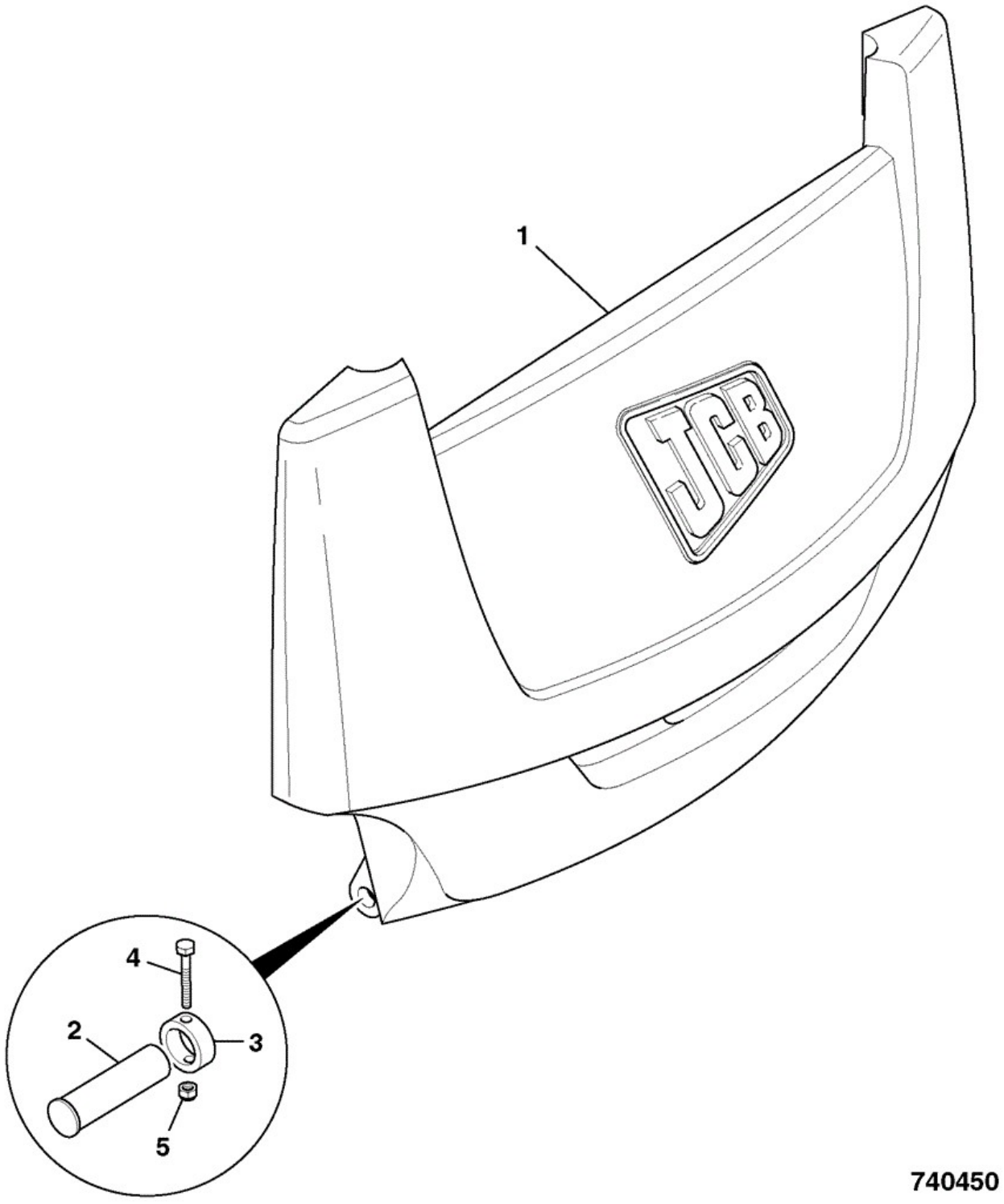

Item	Part No	Change No	Description	Usage Code	QTY
1	589/10277		Counterweight loader		1
2	913/10082		Pin pivot		4

3	331/17048		Collar locking		4
4	1315/0312Z		Setscrew M8 x 50 mm		4
5	1370/0203Z		Nut Nut M8		4

Applicability Date Ranges:
From: , To:

Product Catalog\BACKHOE LOADER 1CX, 208\1CX 00751600-00752999,00806000-00807552 9802/6220\B BODYWORK, CAB, LOADER END\B02 CAB\B2-2-1 CANOPY ASSEMBLY

9802/6220 B2-2-1 CANOPY ASSEMBLY

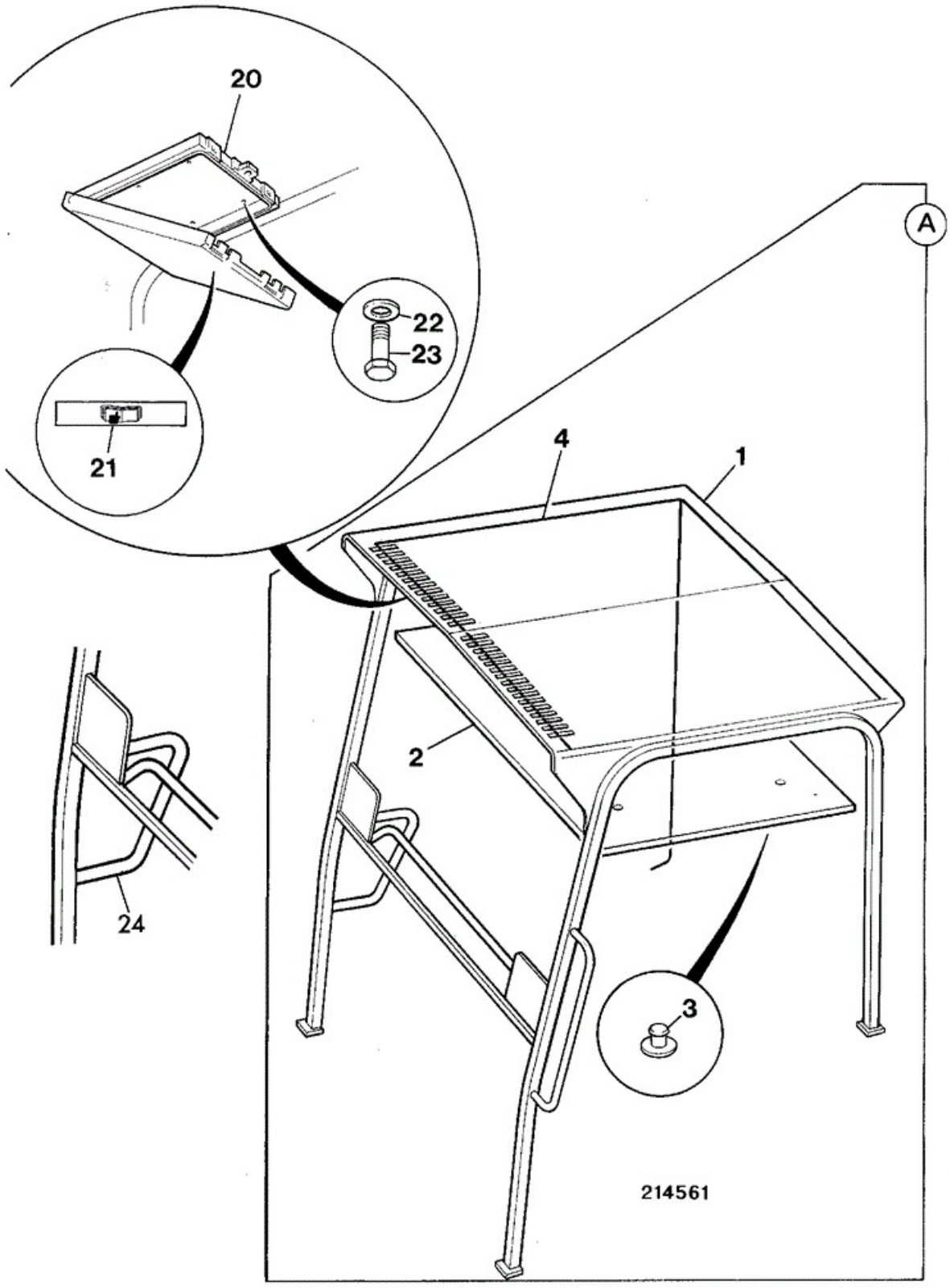

Item	Part No	Change No	Description	Usage Code	QTY

A	290/33500		Canopy assembly		1
1	:290/03600		Canopy		1
2	:290/00267	<M807859	Liner roof		1
2	331/25670		Liner roof		1
3	:826/01308		Button Fastener		2
3	826/01308		Button Fastener for use with 331/25670		4
4	:719/75800		Harness cab roof		1
5	:2410/0205		Grommet Hole Diameter 12.7mm		1
6	:2410/1113		Grommet 31.8		2
7	:828/00246		Grommet		4
8	2410/0211		Grommet 25.4 x 19 x 6.5		2
19	2410/0313		Grommet 31.8 panel hole x 5 thkness		1
20	157/51701		Holder handbook		1
21	817/01577		Label Read Handbook		1
22	1420/0006Z	<M1051499	Washer (M6)		4
22	1420/0006D	>M1051500	Washer (M6)		4
23	1315/0203Z	<M1051499	Setscrew		4
23	1315/0203D	>M1051500	Setscrew M6 x 16mm		4
24	290/00770		Rail hand Bolt on		1
24	290/01264		Rail Grab black cab Black cab		1
30	926/00600		Grommet Flexiform 1050mm approx.		0

Note 1: All canopies and associated parts will be Black from April 1998.

Applicability Date Ranges:
From: , To: M1299633

Product Catalog\BACKHOE LOADER 1CX, 208\1CX 00751600-00752999,00806000-00807552 9802/6220\B BODYWORK, CAB, LOADER END\B02 CAB\B2-2-2 CANOPY ASSEMBLY WITH WINDSCREEN

9802/6220 B2-2-2 CANOPY ASSEMBLY WITH WINDSCREEN

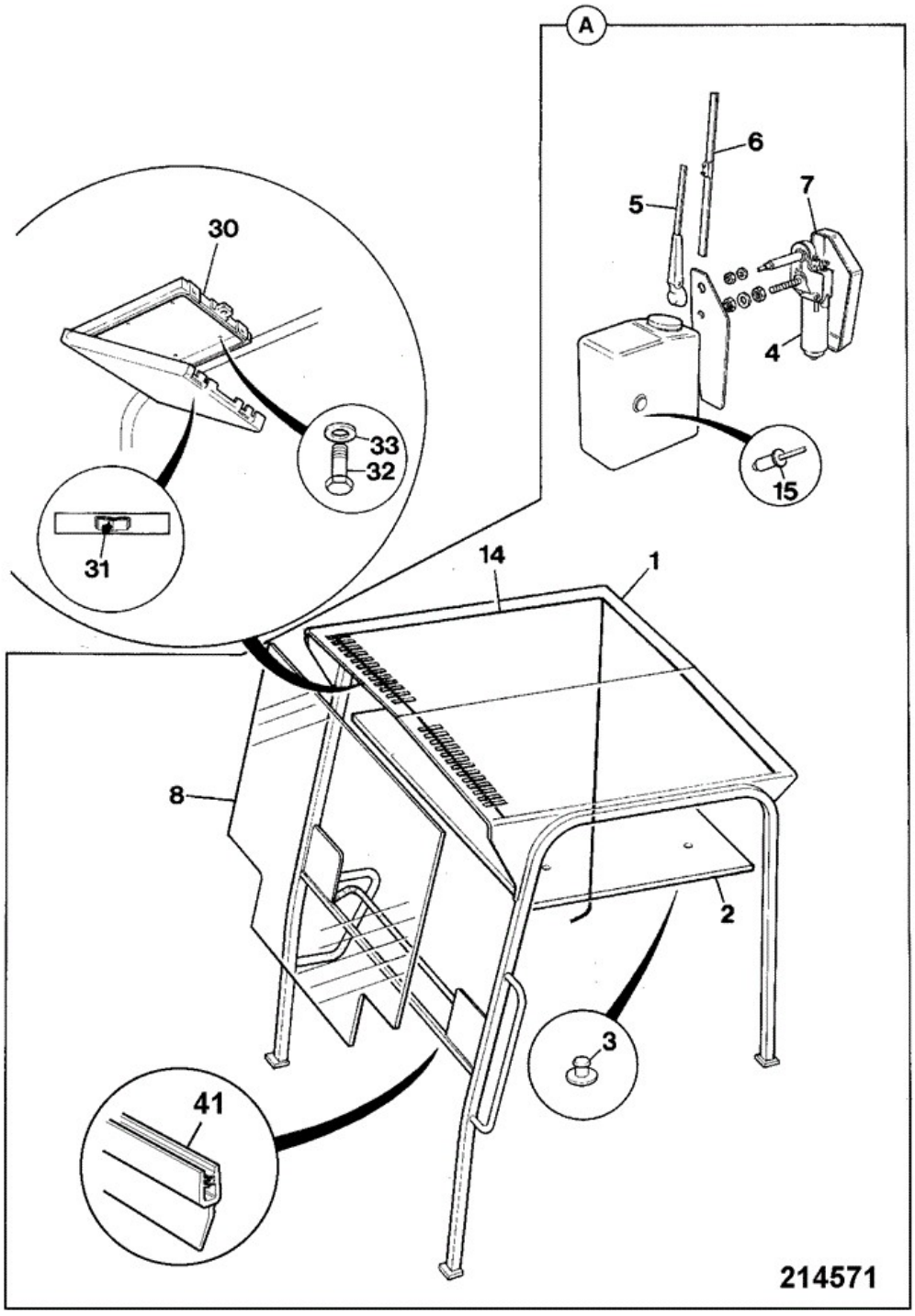

Item	Part No	Change No	Description	Usage Code	QTY
A	290/33400		Canopy assembly with front screen		1
A	290/54100		Canopy assembly,with screen tinted		1

1	:290/03600		Canopy		1
2	:290/00267	<M807859	Liner roof		1
2	331/25670		Liner roof		1
3	:826/01308		Button Fastener		2
3	826/01308		Button Fastener for use with 331/25670		4
4	:714/09400		Motor wiper		1
5	:714/22300		Arm wiper		1
6	:714/07700		Blade wiper 600mm long		1
7	:714/09500		Cover		1
8	:827/50122		Windscreen		1
14	:719/75800		Harness cab roof		1
15	:2410/0205		Grommet Hole Diameter 12.7mm		1
16	:2410/1113		Grommet 31.8		2
17	:828/00246		Grommet		4
18	2410/0211		Grommet 25.4 x 19 x 6.5		2
19	2410/0313		Grommet 31.8 panel hole x 5 thkness		1
30	157/51701		Holder handbook		1
31	817/01577		Label Read Handbook		1
32	1315/0203Z	<M1051499	Setscrew		4
32	1315/0203D	>M1051500	Setscrew M6 x 16mm		4
33	1420/0006Z	<M1051499	Washer (M6)		4
33	1420/0006D	>M1051500	Washer (M6)		4
40	926/00600		Grommet Flexiform 1050mm approx.		0
41	926/16500		Seal between chassis & canopy front bottom rail		0

Note 1: All canopies and associated parts will be Black from April 1998.

Applicability Date Ranges:
From: , To: M1299633

9802/6220 B2-2-3 CAB, GLAZED

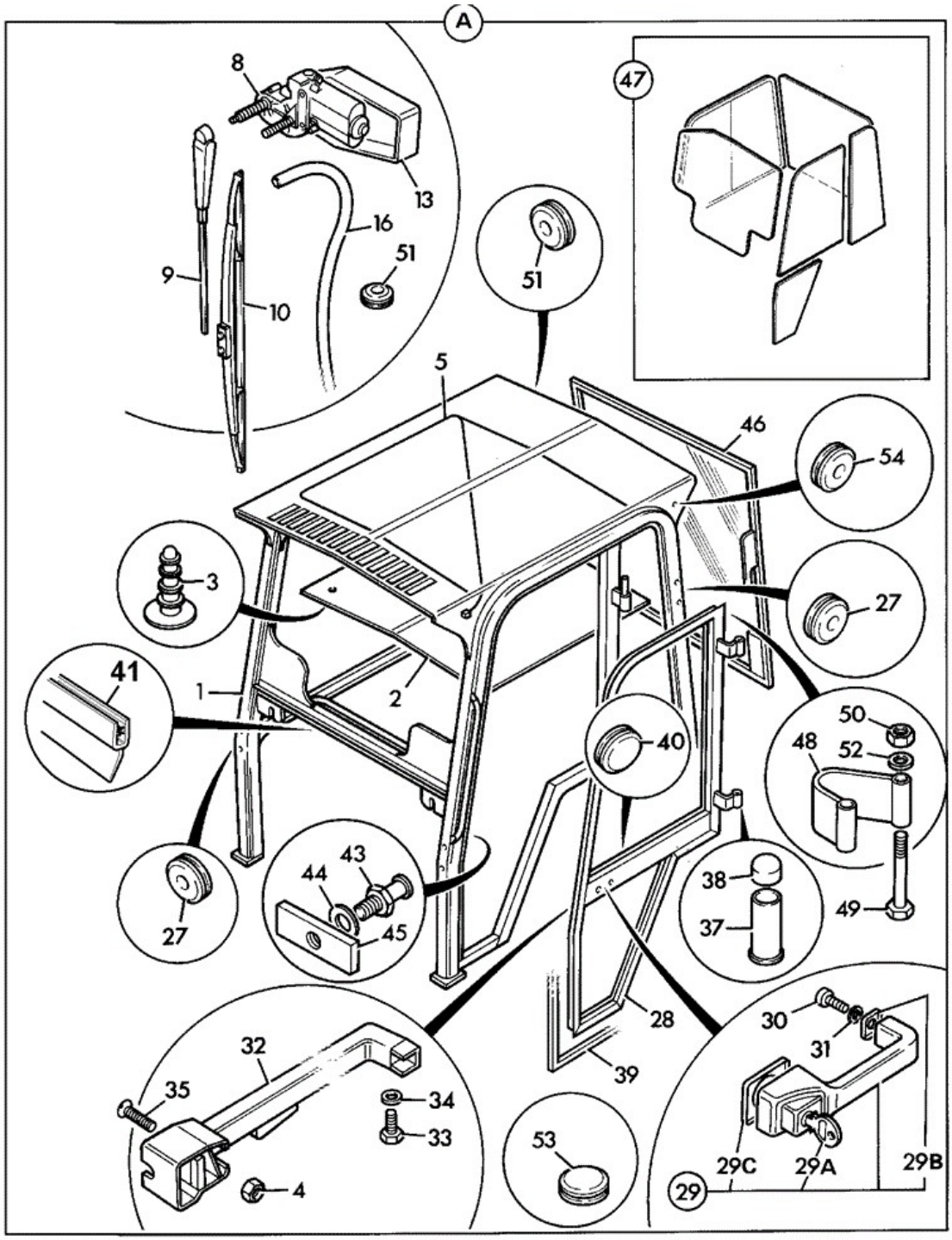

214581

Item	Part No	Change No	Description	Usage Code	QTY
A	290/31500		Cab assembly clear glass		1
A	290/54000		Cab assembly tinted glass		1

1	:290/03800		Frame cab		1
1A	:926/17000		Seal Self Adhesive 13mm Diameter To seal sliding window to cab frame		0
2	:290/00704	<M807859	Liner roof		1
2	:331/25671		Liner roof		1
3	:140/00719		Buffer		2
3	:826/01308		Button Fastener for use with 331/25671		8
4	:1370/0103Z		Nut Self Lock M6		2
5	:719/75800		Harness cab roof		1
6	:714/07700		Blade wiper 600mm long		1
7	:714/09500		Cover		1
8	714/09400		Motor wiper		1
9	714/22300		Arm wiper		1
10	714/07700		Blade wiper 600mm long		1
13	714/09500		Cover		1
14	:719/75800		Harness cab roof		1
15	:2410/0205		Grommet Hole Diameter 12.7mm		1
16	647/02025		Tube 5 metres long 647/02025 is a 5 metre length		0
17	:828/00246		Grommet		4
18	:2410/0211		Grommet 25.4 x 19 x 6.5		2
27	:2410/1105		Grommet Blind, 6.35 x 3.5 mm		8
28	:290/30800		Door		1
28	290/67500		Door Black cab Black cab		1
29	:266/35400	<DEC 02	Handle push button	A	1
29	:331/34734	>JAN 03	Handle locking	B	1
29	::701/45501		Key Door/Ignition Ignition and Door	B	2
29A	:263/05501		Key Key marked WA5	A	1
29A	:994/00236		Key Key marked WA9	A	1
30	:826/00792		Screw		2
31	:1425/0006Z		Washer Spring (M6)		3
32	:123/02450		Lock Door Left Hand Requires mounting hole centres of 558mm		1
32	290/50300		Lock door, left hand Requires mounting hole centres of 445mm		1
33	:1315/0201Z		Setscrew M6 x 12mm		1

34	:1420/0006Z		Washer (M6)		1
35	:826/01077		Screw		3
37	:120/92808		Bush Hinge		2
38	:122/22001		Cap Hinge		2
39	:926/07800		Seal Rubber, Window/Door		0
40	:2410/1008		Grommet		1
41	926/16500		Seal between cab front rail & chassis		0
43	:120/77505	Superseded	Bolt closing		1
43	:826/10374		Bolt closing		1
44	:1420/0009Z		Washer (M12)		1
45	:826/00622	Superseded	Nut		1
45	:15/106700		Nut lock M12		2
46	****		'See Remark' Rear window, see index B2		1
47	****		'See Remark' Cab glazing, see index B2		1
48	:290/00701		Strap door		1
49	:1315/3316Z		Bolt (M8 x 70)		2
50	:1370/0203Z		Nut Nut M8		2
51	:2410/0205		Grommet Hole Diameter 12.7mm		1
52	:1420/0007Z		Washer (M8)		2
53	:2410/1113		Grommet 31.8		2
54	:2410/1312		Grommet		4
57	2410/0313		Grommet 31.8 panel hole x 5 thkness		1
60	290/00769	Superseded	Rail hand Bolt on		1
60	274/00989		Rail hand		1
61	140/00618		Guard		1
70	926/00600		Grommet Flexiform 1050mm approx.		0

Note 1: All cab assemblies and asociated parts will be Black from April 1998.

Note 2: This item and items 9,10,13 and 16 are not supplied with item 0A

Applicability Date Ranges:
From: , To: M1299633

9802/6220 B2-2-4 CAB GLAZING CLEAR

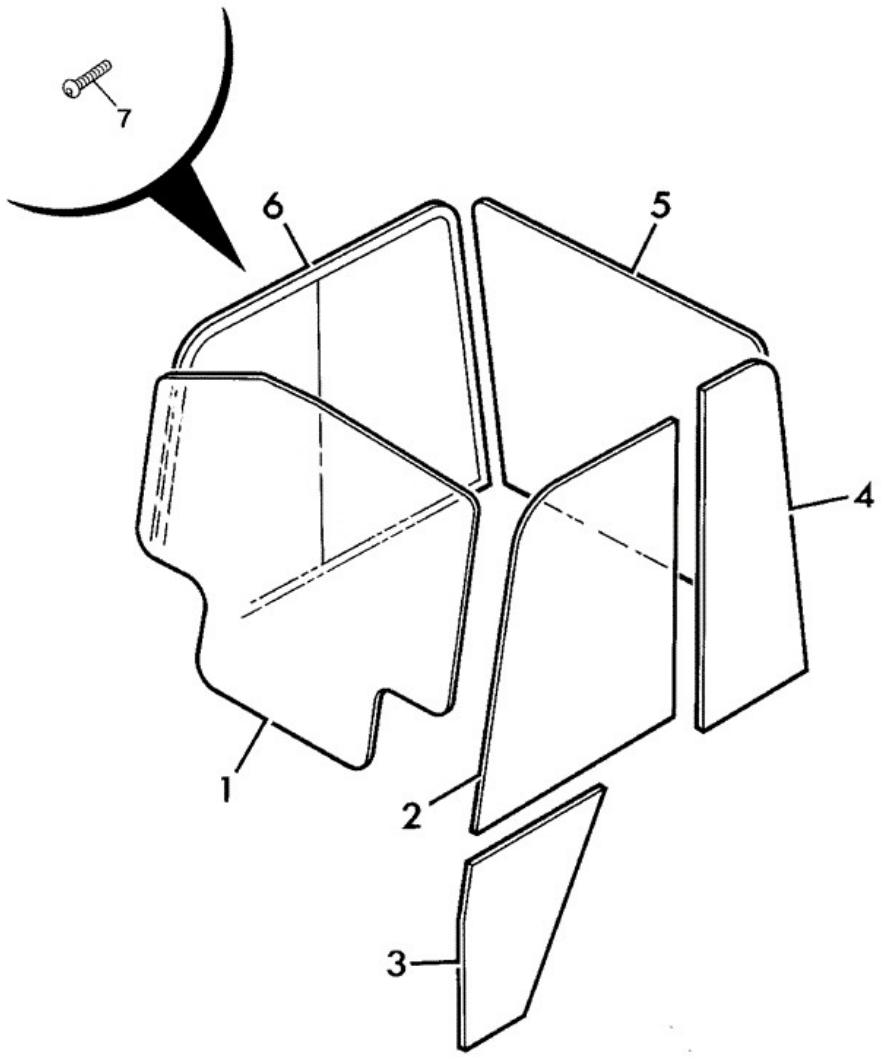

214591

Item	Part No	Change No	Description	Usage Code	QTY
1	827/50122		Windscreen		1
2	827/20335		Glass door, top		1

3	827/20336		Glass door, bottom		1
4	827/20333		Glass rear, left side		1
5	827/20337		Glass rear opening window		1
6	290/33900		Window sliding		1
6A	290/33901		Glass sliding, front		1
6B	290/33902		Glass sliding, rear		1
6C	927/16303		Catch assembly (inc screws) window handle/catch		1
7	826/01360		Screw tamper proof		4

Applicability Date Ranges:
From: , To: M1299633

Product Catalog\BACKHOE LOADER 1CX, 208\1CX 00751600-00752999,00806000-00807552 9802/6220\B BODYWORK, CAB, LOADER END\B02 CAB\B2-2-5 CAB GLAZING TINTED

9802/6220 B2-2-5 CAB GLAZING TINTED

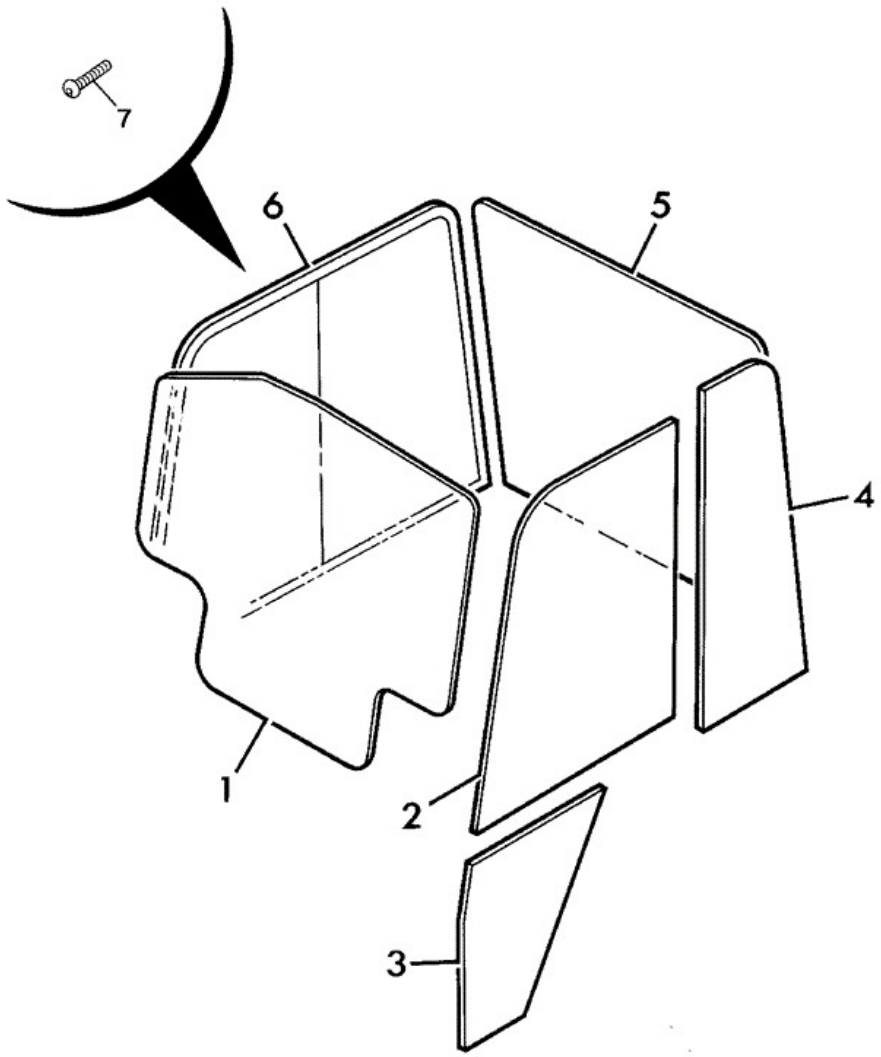

214591

Item	Part No	Change No	Description	Usage Code	QTY
1	827/30418		Windscreen tinted 847mm tall		1
1	827/80116		Windscreen standard 847mm tall cab must be removed to fit this screen		1

2	827/30416		Glass door, top		1
3	827/30415		Glass door, bottom		1
4	827/30417		Glass rear, left side		1
5	827/30414		Glass rear window		1
6	290/51700		Window sliding		1
6A	:290/51701		Glass assembly, front tinted		1
6B	:290/51702		Glass assembly, rear tinted		1
7	::927/16303		Catch assembly (inc screws) Part of item 6A		1

Applicability Date Ranges:
From: , To: M1299633

Product Catalog\BACKHOE LOADER 1CX, 208\1CX 00751600-00752999,00806000-00807552 9802/6220\B BODYWORK, CAB, LOADER END\B02 CAB\B2-2-6 CANOPY ASSEMBLY LOW CANOPY WITH WINDSCREEN

9802/6220 B2-2-6 CANOPY ASSEMBLY LOW CANOPY WITH WINDSCREEN

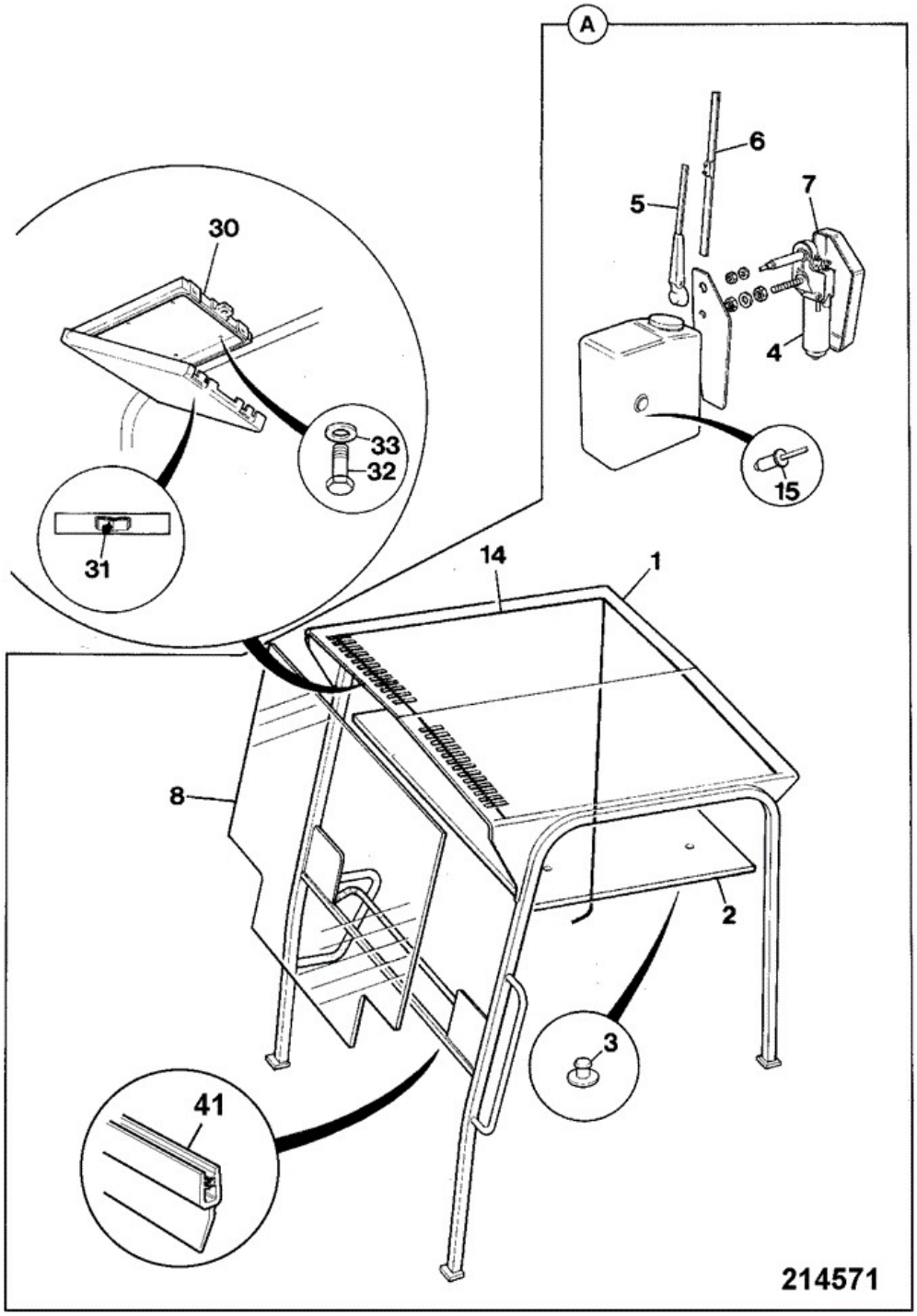

Item	Part No	Change No	Description	Usage Code	QTY
A	290/64700		Canopy assembly Low canopy		1
			Canopy low canopy 1cx green windscreen		

A	290/64900		Green tinted windscreen.		1
A	290/65000		Canopy low canopy 1CX green screen Hi flow Green widscreen - Hiflow.		1
1	:290/17700		Canopy low canopy		1
2	:290/01206	<M807859	Liner roof low canopy		1
2	331/25669		Liner roof		1
3	:826/01308		Button Fastener		2
3	826/01308		Button Fastener for use with 331/25669		12
4	:290/01217		Motor Windscreen wiper low canopy		1
5	:714/07000		Arm wiper		1
6	:714/14900		Blade wiper 500mm		1
7	:714/09500		Cover		1
8	:827/30493		Windscreen glass Production number		1
8A	:827/30494		Windscreen low canopy green		1
14	:721/00669	<M752675	Harness cab roof		1
14	:721/00807	>M752676	Harness cab roof		1
15	:2410/0205		Grommet Hole Diameter 12.7mm		1
16	:2410/1113		Grommet 31.8		2
17	:828/00246		Grommet		4
18	2410/0211		Grommet 25.4 x 19 x 6.5		2
19	2410/0313		Grommet 31.8 panel hole x 5 thkness		1
20	716/05705		Fuse 10 amp		1
30	157/51701		Holder handbook		1
31	817/01577		Label Read Handbook		1
32	1315/0203Z	<M1051499	Setscrew		4
32	1315/0203D	>M1051500	Setscrew M6 x 16mm		4
33	1420/0006Z	<M1051499	Washer (M6)		4
33	1420/0006D	>M1051500	Washer (M6)		4
40	926/00600		Grommet Flexiform 1050mm long		0
41	926/16500		Seal between chassis & canopy botton front rail		0

Note 1: All canopies and associated components will be Black after April 1998.

Applicability Date Ranges:
From: , To: M1299633

Product Catalog\BACKHOE LOADER 1CX, 208\1CX 00751600-00752999,00806000-00807552 9802/6220\B BODYWORK, CAB, LOADER END\B02 CAB\B2-2-7 CANOPY ASSEMBLY LOW CANOPY

9802/6220 B2-2-7 CANOPY ASSEMBLY LOW CANOPY

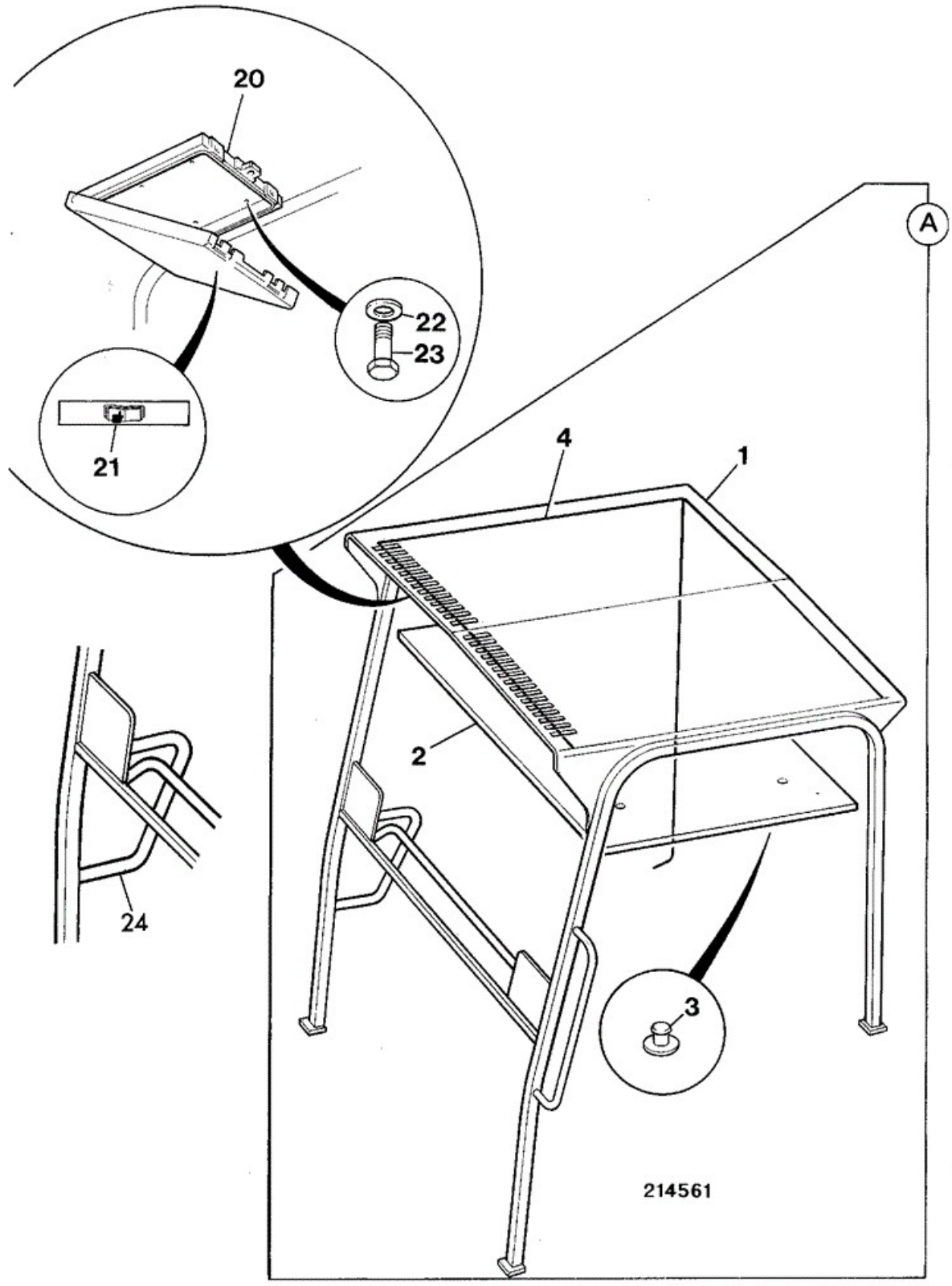

Item	Part No	Change No	Description	Usage Code	QTY

A	290/64600		Canopy low,		1
1	290/17700		Canopy low canopy		1
2	290/01206	<M807859	Liner roof low canopy		1
2	331/25669		Liner roof		1
3	826/01308		Button Fastener		2
3	826/01308		Button Fastener for use with 331/25669		12
4	721/00341		Harness cab roof		1
4	721/00669	>M752379	Harness cab roof		1
4	721/00807	>M752676	Harness cab roof		1
5	2410/0205		Grommet Hole Diameter 12.7mm		1
6	2410/1113		Grommet 31.8		2
7	828/00246		Grommet		4
8	2410/0211		Grommet 25.4 x 19 x 6.5		2
9	2410/0313		Grommet 31.8 panel hole x 5 thkness		1
20	157/51701		Holder handbook		1
21	817/01577		Label Read Handbook		1
22	1420/0006Z	<M1051499	Washer (M6)		4
22	1420/0006D	>M1051500	Washer (M6)		4
23	1315/0203Z	<M1051499	Setscrew		4
23	1315/0203D	>M1051500	Setscrew M6 x 16mm		4
30	926/00600		Grommet Flexiform 1050mm long		0

Note 1: All canopies and associated parts will be Black from April 1998.

Applicability Date Ranges:
From: , To:

Product Catalog\BACKHOE LOADER 1CX, 208\1CX 00751600-00752999,00806000-00807552 9802/6220\B BODYWORK, CAB, LOADER END\B02 CAB\B2-2-8 CANOPY LOW SCREEN GUARD

9802/6220 B2-2-8 CANOPY LOW SCREEN GUARD

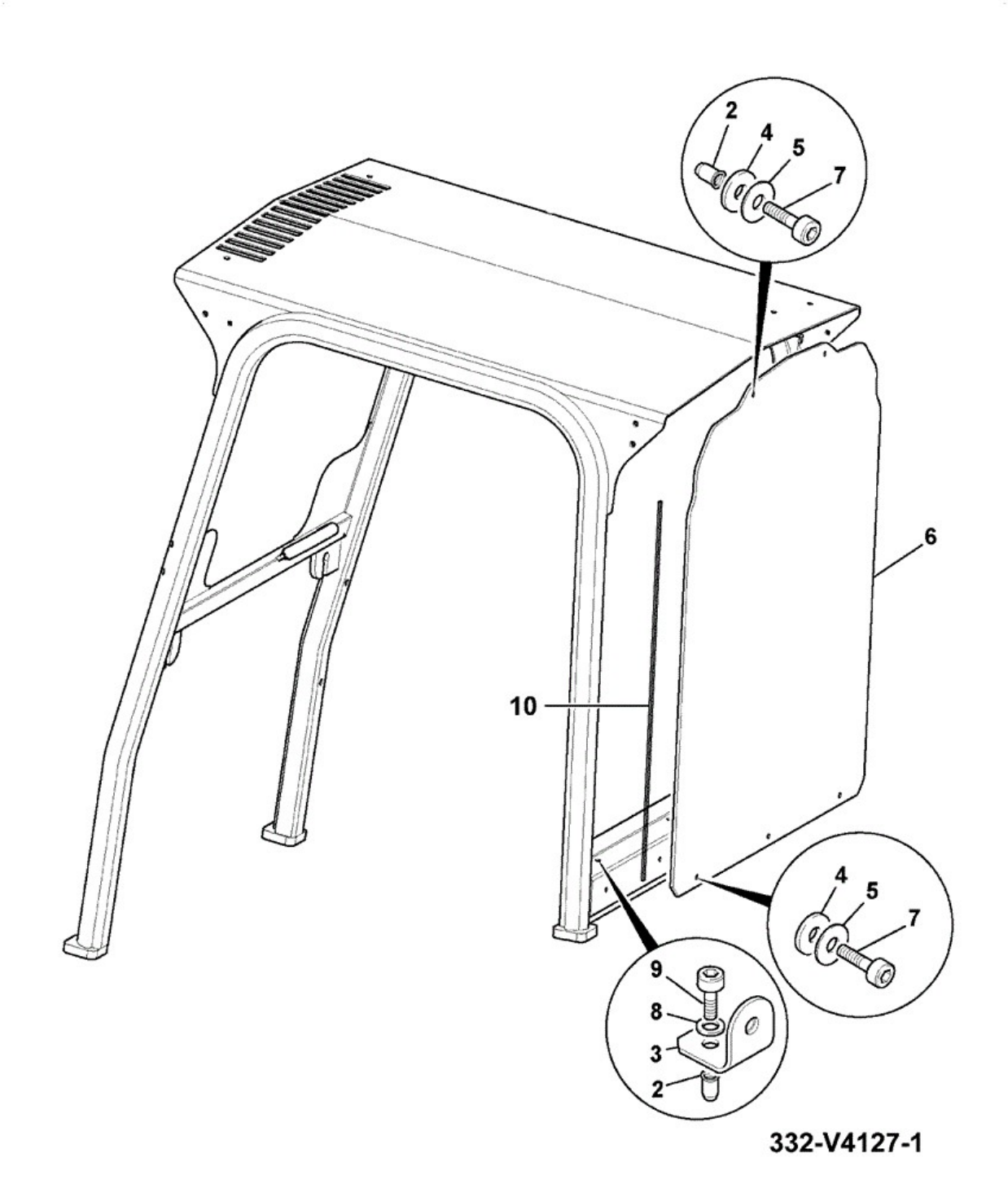

Item	Part No	Change No	Description	Usage Code	QTY
2	:826/01261		Nut Rivet		5
3	:332/V3965		Bracket WA		3

4	:332/V1322		Washer rubber 5/16		10
5	:823/00582		Washer		5
6	:332/V3830		Guard screen, low canopy 978mm tall		1
7	:1391/3308		Capscrew M8X30		5
8	:1420/0007D		Washer (M8)		3
9	:1391/3305		Capscrew M8 x 20		3
10	:926/02300		Strip Rubber, Sealing 985mm long QTY:a/r		0

Applicability Date Ranges:
From: , To:

Product Catalog\BACKHOE LOADER 1CX, 208\1CX 00751600-00752999,00806000-00807552 9802/6220\B BODYWORK, CAB, LOADER END\B02 CAB\B2-2-9 CANOPY STANDARD SCREEN GUARD

9802/6220 B2-2-9 CANOPY STANDARD SCREEN GUARD

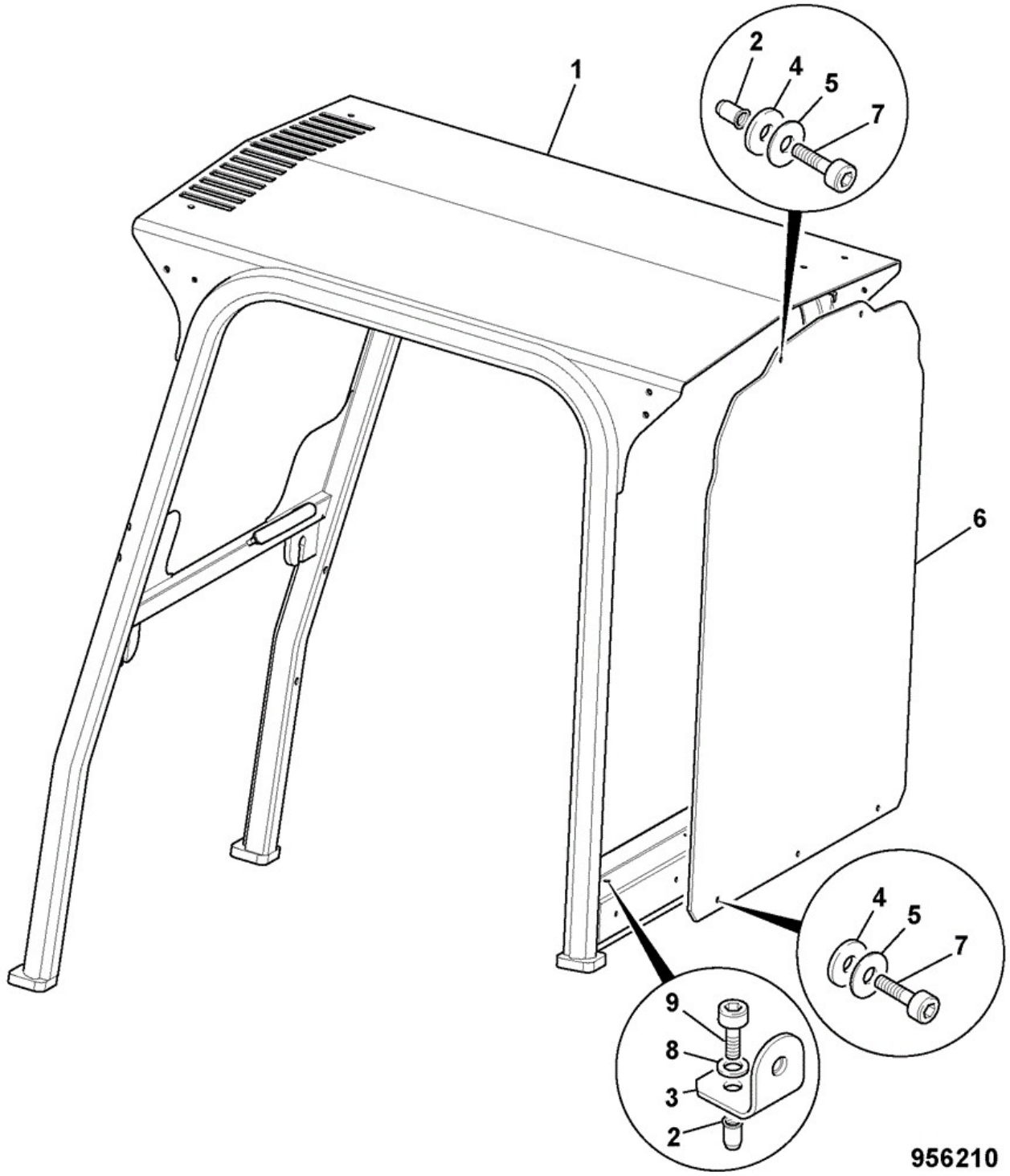

Item	Part No	Change No	Description	Usage Code	QTY
A	332/V4098		Guard SCREEN KIT HIGH CANOPY		1
2	:826/01261		Nut Rivet		5

3	:332/V3965		Bracket WA		3
4	:332/V1322		Washer rubber 5/16		10
5	:823/00582		Washer		5
6	:332/V3954		Guard screen STD canopy 1134mm tall		1
7	:1391/3308		Capscrew M8X30		5
8	:1420/0007D		Washer (M8)		3
9	:1391/3305		Capscrew M8 x 20		3
10	926/02300		Strip Rubber, Sealing 985mm long QTY:a/r		0

Applicability Date Ranges:
From: , To:

Product Catalog\BACKHOE LOADER 1CX, 208\1CX 00751600-00752999,00806000-00807552 9802/6220\B BODYWORK, CAB, LOADER END\B02 CAB\B2-2-10 DIRECT GLAZING REPLACEMENT MATERIAL

9802/6220 B2-2-10 DIRECT GLAZING REPLACEMENT MATERIAL

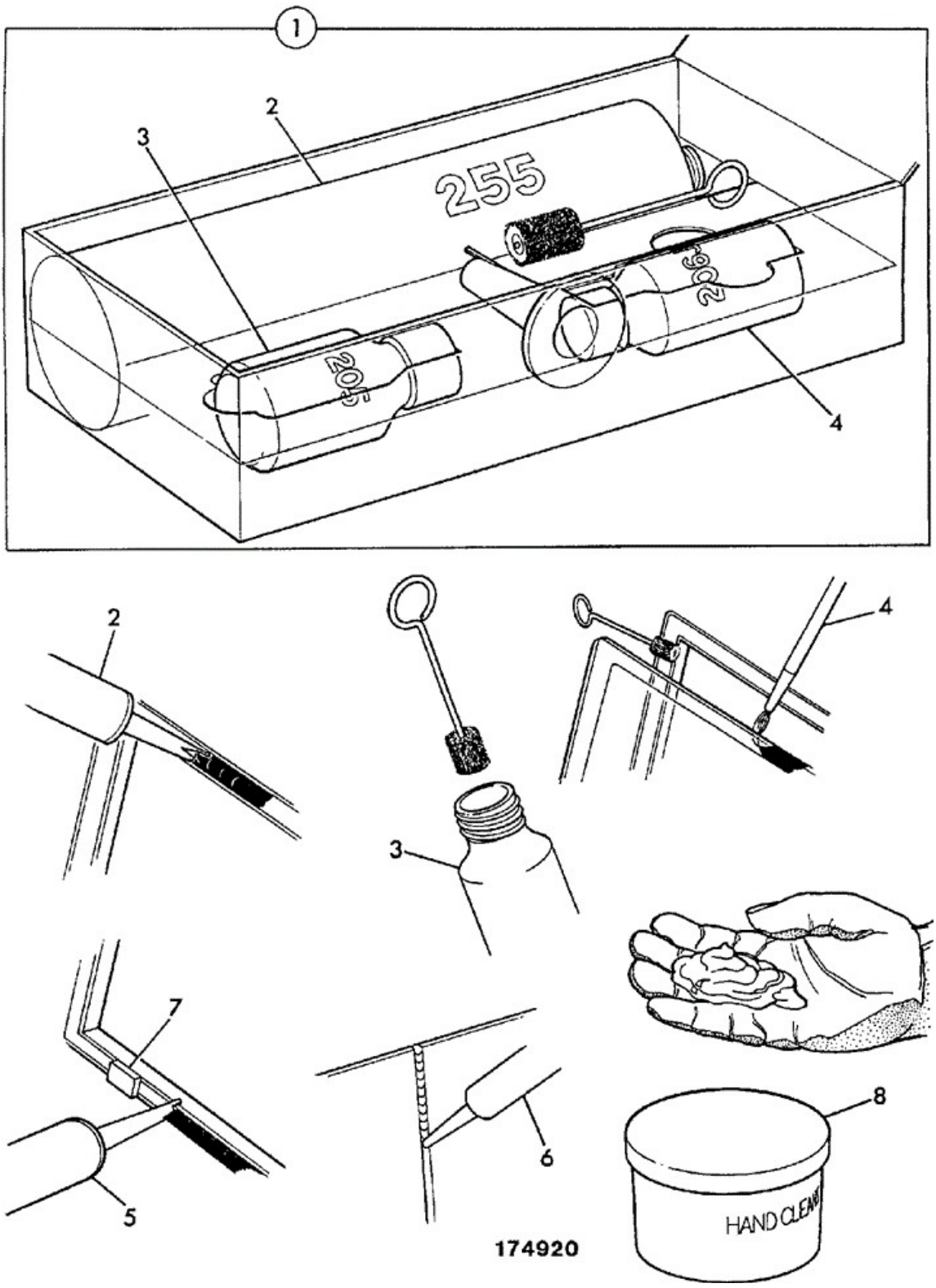

Item	Part No	Change No	Description	Usage Code	QTY

1	993/55700		Adhesive kit-JCB ultrafast glazing		1
2	:4103/2109		Adhesive JCB ultrafast 310ml cartridge See Note 1		0
3	:4104/1206		Cleaner active wiper 205 30ml		0
3	:4104/1203		Cleaner primer SIKA 205 250ml		0
4	:4201/4906		Paint black primer 206J 30ml Black ceramic ink band around glass border.		0
4	:4201/4911		Paint black primer 206J 200gm		0
5	4102/2309		Sealant black acrylic 221 310ml cartridge		0
6	4102/0933		Sealant Clear Silicone		0
7	926/15500		Spacer Block		0
8	4104/1310		Cleaner hand, polyurethane 454gm/1lb		0

Applicability Date Ranges:
From: , To:

Product Catalog\BACKHOE LOADER 1CX, 208\1CX 00751600-00752999,00806000-00807552 9802/6220\B BODYWORK, CAB, LOADER END\B02 CAB\B2-2-11 CANOPY ASSEMBLY

9802/6220 B2-2-11 CANOPY ASSEMBLY

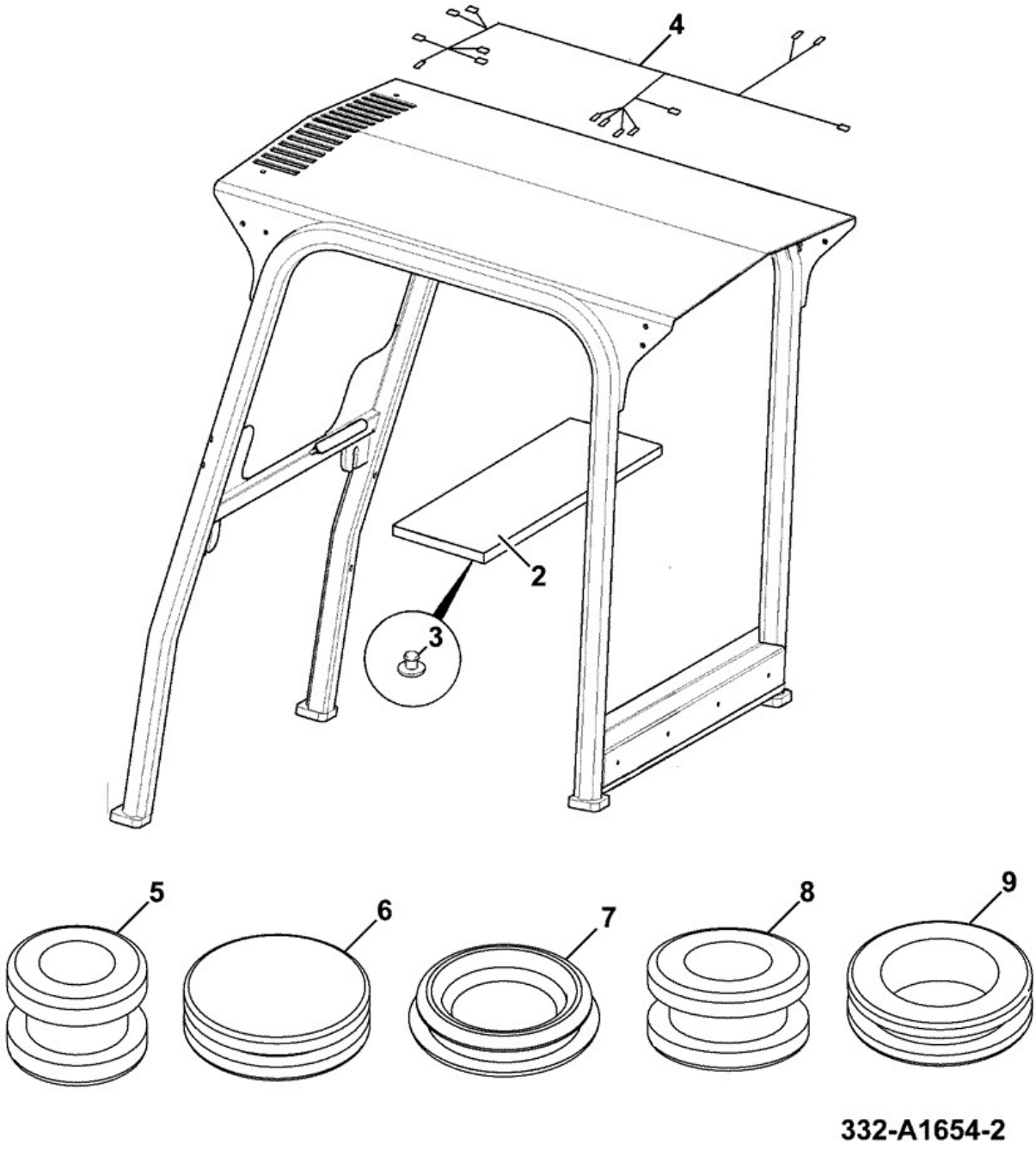

Item	Part No	Change No	Description	Usage Code	QTY
2	331/25670		Liner roof		1
3	826/01308		Button Fastener FOR ITEM 2		4

4	721/00807		Harness cab roof		1
5	2410/0205		Grommet Hole Diameter 12.7mm		1
6	2410/1113		Grommet 31.8		2
7	828/10289		Grommet blind,hole dia 32mm panel thkness 2-3mm		4
8	2410/0211		Grommet 25.4 x 19 x 6.5 INNER BOX SEC SEAL		2
9	2410/0313		Grommet 31.8 panel hole x 5 thkness		1

Applicability Date Ranges:
From: M1299634 , To:

Product Catalog\BACKHOE LOADER 1CX, 208\1CX 00751600-00752999,00806000-00807552 9802/6220\B BODYWORK, CAB, LOADER END\B02 CAB\B2-2-12 CANOPY ASSEMBLY WITH WINDSREEN

9802/6220 B2-2-12 CANOPY ASSEMBLY WITH WINDSREEN

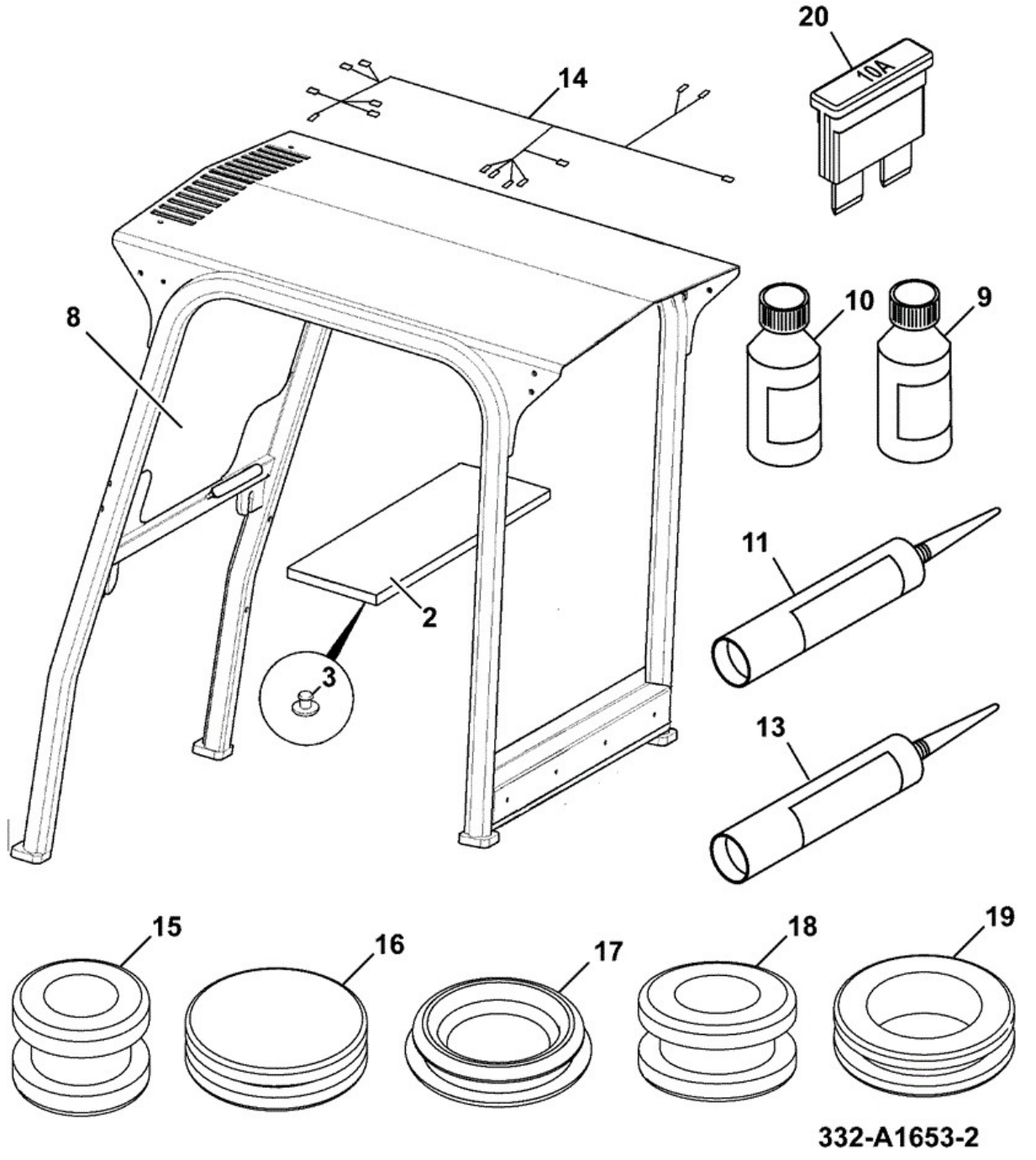

Item	Part No	Change No	Description	Usage Code	QTY
A	332/A1653		Canopy and screen ABI		1
2	:331/25670		Liner roof		1

3	:826/01308		Button Fastener FOR ITEM 2		4
8	:827/80116		Windscreen standard 847mm tall factory fit cab must be removed to fit this screen		1
8	827/30418		Windscreen tinted 847mm tall service replacement		1
9	:4104/1203		Cleaner primer SIKA 205 250ml		0
10	:4201/4906		Paint black primer 206J 30ml		0
11	:4103/2109		Adhesive JCB ultrafast 310ml cartridge		0
13	:4102/2309		Sealant black acrylic 221 310ml cartridge A/R		0
14	:721/00807		Harness cab roof		1
15	:2410/0205		Grommet Hole Diameter 12.7mm		1
16	:2410/1113		Grommet 31.8		2
17	:828/10289		Grommet blind,hole dia 32mm panel thkness 2-3mm		4
18	:2410/0211		Grommet 25.4 x 19 x 6.5 INNER BOX SEC SEAL		2
19	:2410/0313		Grommet 31.8 panel hole x 5 thkness		1
20	:716/05705		Fuse 10 amp		1

Applicability Date Ranges:
From: M1299634 , To:

Product Catalog\BACKHOE LOADER 1CX, 208\1CX 00751600-00752999,00806000-00807552 9802/6220\B BODYWORK, CAB, LOADER END\B02 CAB\B2-2-13 CAB GLAZED

9802/6220 B2-2-13 CAB GLAZED

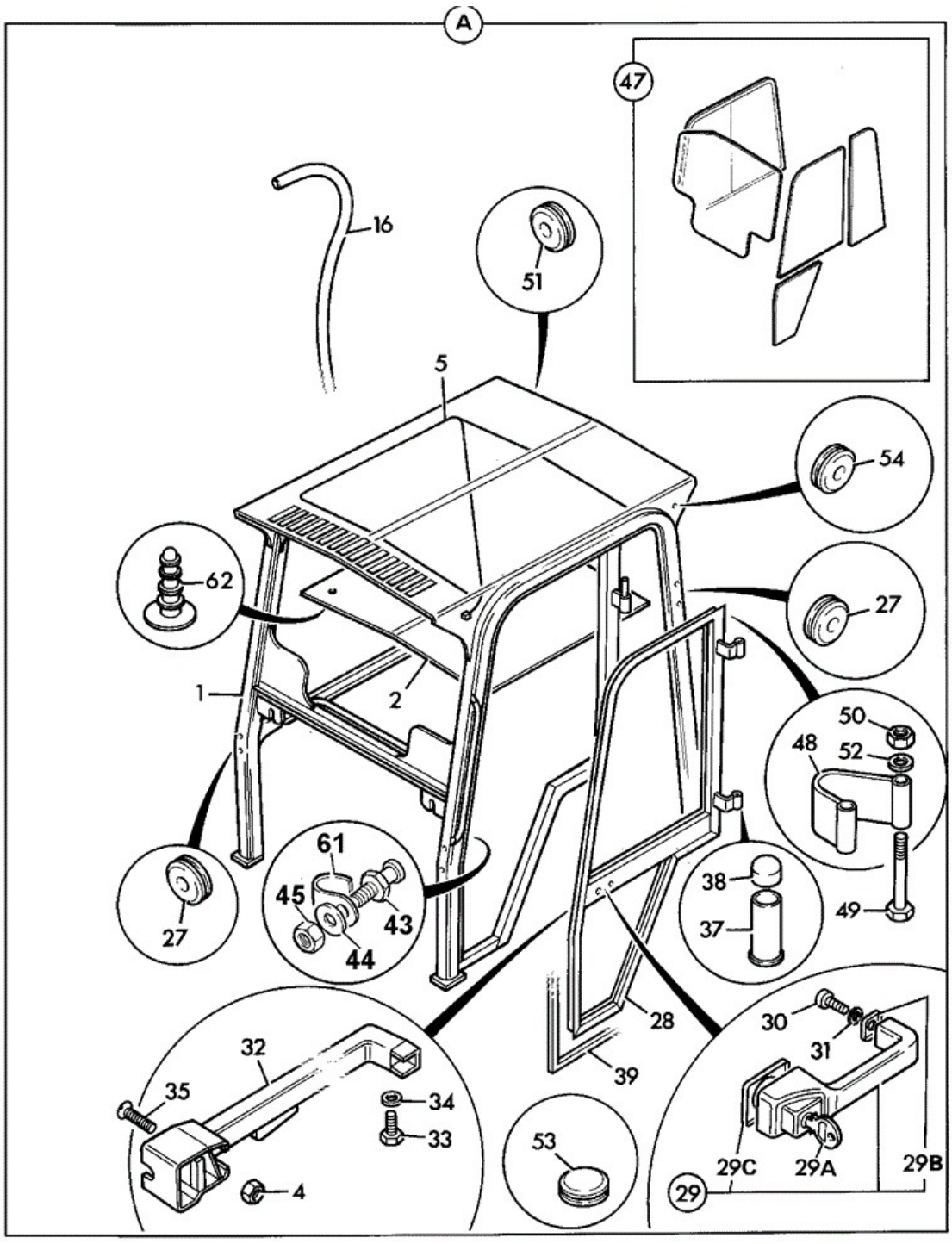

214582

Item	Part No	Change No	Description	Usage Code	QTY
A	****		Cab part glazed		1
1	:332/A1693		Cab frame		1

2	:331/25671		Liner roof		1
3	:290/00810		Buffer		2
4	:1370/0103Z		Nut Self Lock M6		2
5	:721/00807		Harness cab roof		1
16	:647/02000		Tube PVC, 4x6.4mm Roll screen washers		0
19	:4104/1203		Cleaner primer SIKA 205 250ml		0
20	:4201/4906		Paint black primer 206J 30ml		0
21	:4103/2109		Adhesive JCB ultrafast 310ml cartridge		0
23	:4102/2309		Sealant black acrylic 221 310ml cartridge		0
26	:4103/0800		Adhesive EVO-STIK-528 001 Stock		0
27	:2410/1105		Grommet Blind, 6.35 x 3.5 mm		12
28	:290/67500		Door Black cab		1
29	:331/34734		Handle locking		1
29A	701/45501		Key Door/Ignition not supplied with handle		1
29B	::263/05503		Gasket		1
29C	::263/05502		Gasket key end		1
30	:826/00792		Screw		2
31	:1425/0006Z		Washer Spring (M6)		3
32	:290/50300		Lock door, left hand		1
33	:1315/0201Z		Setscrew M6 x 12mm		1
34	:1420/0006Z		Washer (M6)		1
35	:826/01077		Screw		3
37	:120/92808		Bush Hinge		2
38	:122/22001		Cap Hinge		2
39	:926/07800		Seal Rubber, Window/Door		0
43	:826/10374		Bolt closing		1
44	:1420/0009Z		Washer (M12)		1
45	:15/106700		Nut lock M12		2
47	****		'See Remark' Glazing see index B2		1
48	:290/00701		Strap door		1
49	:1315/3316Z		Bolt (M8 x 70)		2
50	:1370/0203Z		Nut Nut M8		2
51	:2410/0305		Grommet 12.7 panel hole x 9. 5x 5 thkness		1
52	:1420/0007Z		Washer (M8)		2
53	:2410/1113		Grommet 31.8		2
54	:828/10289		Grommet blind,hole dia 32mm panel thkness 2-3mm		4
55	:2410/0211		Grommet 25.4 x 19 x 6.5		2

57	:2410/0313		Grommet 31.8 panel hole x 5 thkness		1
61	:140/00618		Guard		1
62	:826/01308		Button Fastener		8
99	290/00684		Bracket bulkhead angle fits under cab front waist rail		1

Applicability Date Ranges:
From: M1299634 , To:

9802/6220 B2-2-14 CAB GLAZING TINTED

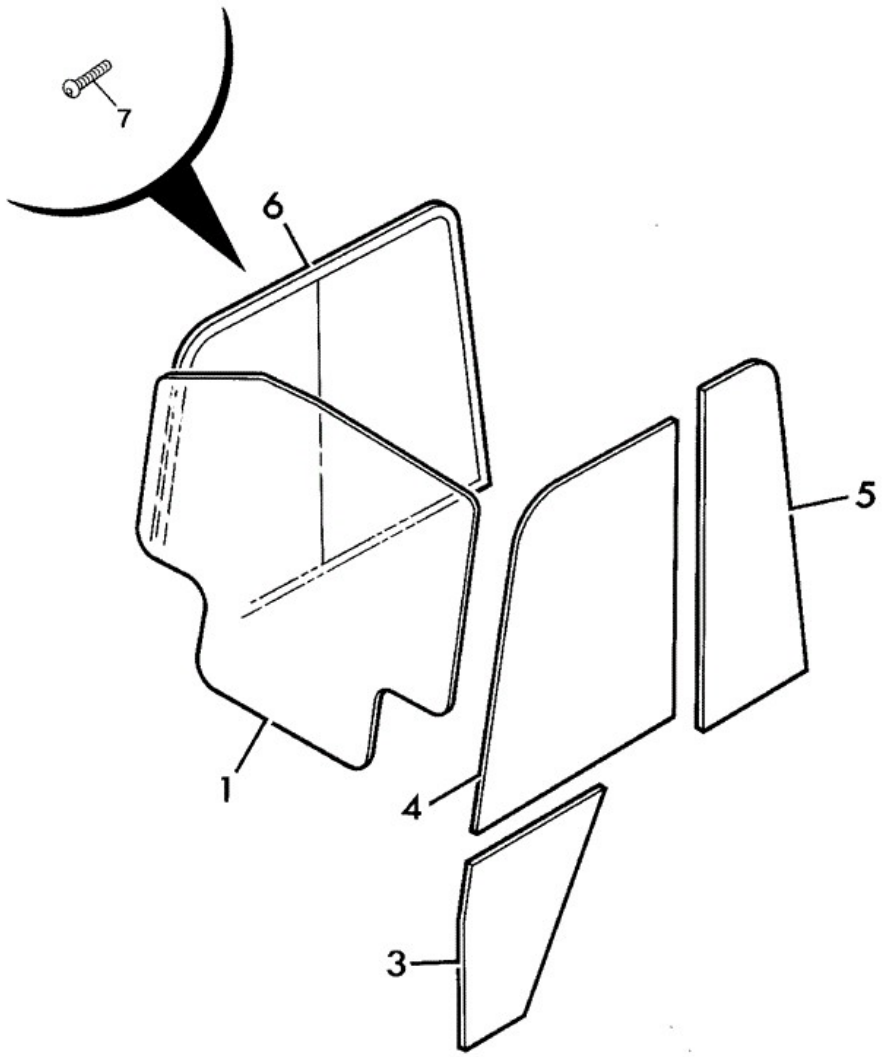

214592

Item	Part No	Change No	Description	Usage Code	QTY
1	:827/80116		Windscreen standard 847mm tall factory fit cab must be removed to fit this screen		1
			Windscreen tinted 847mm tall		

1	827/30418		service replacement		1
3	:827/30415		Glass door, bottom		1
4	:827/30416		Glass door, top		1
5	:827/30417		Glass rear, left side		1
6	:332/A1284		Window Sliding green glass		1
7	::927/16303		Catch assembly (inc screws)		1

Applicability Date Ranges:
From: M1299634 , To:

Product Catalog\BACKHOE LOADER 1CX, 208\1CX 00751600-00752999,00806000-00807552 9802/6220\B BODYWORK, CAB, LOADER END\B02 CAB\B2-2-15 CANOPY ASSEMBLY LOW CANOPY

9802/6220 B2-2-15 CANOPY ASSEMBLY LOW CANOPY

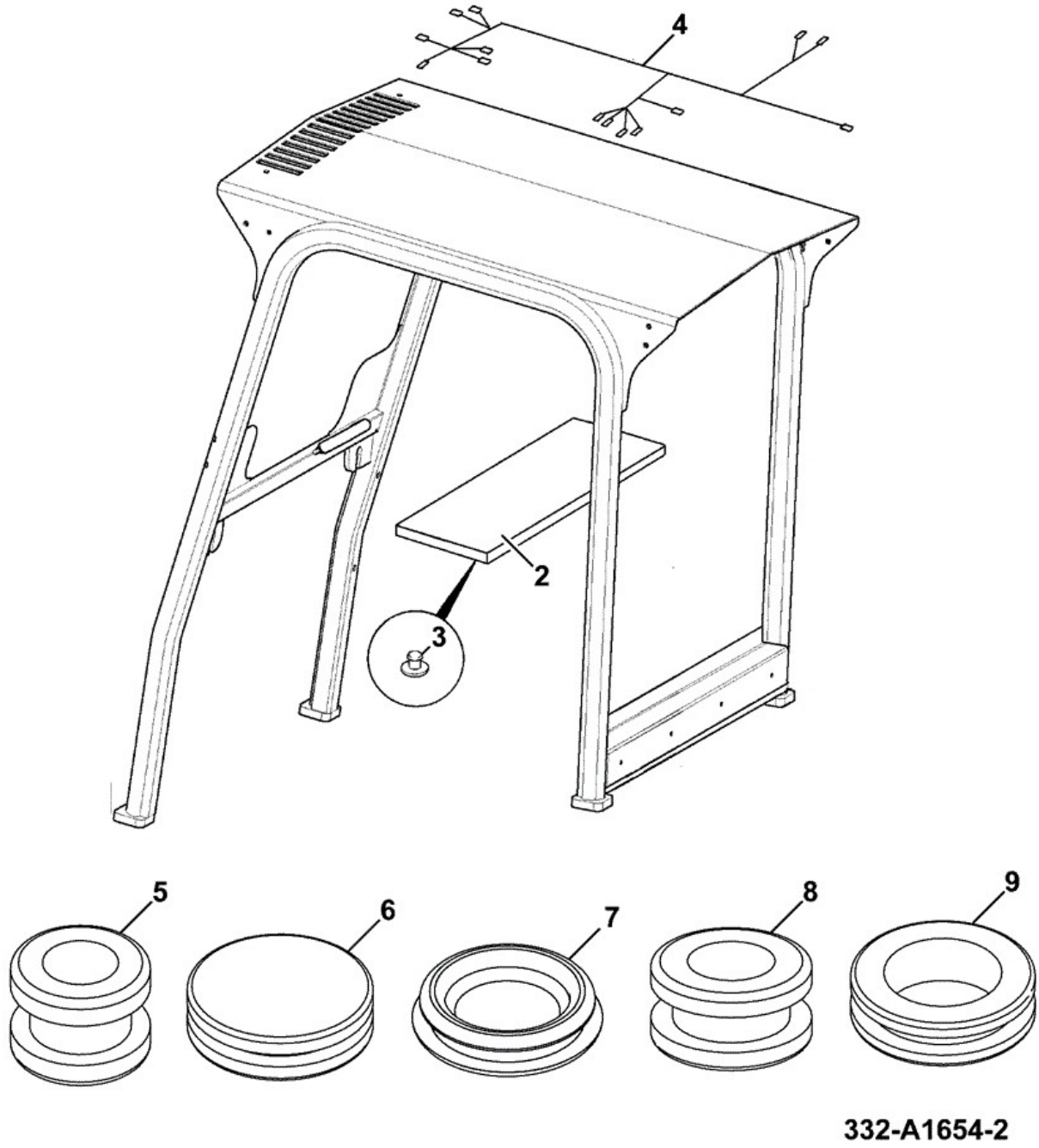

Item	Part No	Change No	Description	Usage Code	QTY
A	332/A1666		Canopy low cab ABI 332/A1666		1
2	:331/25669		Liner roof		1

3	:826/01308		Button Fastener FOR ITEM 2		12
4	:721/00807		Harness cab roof		1
5	:2410/0205		Grommet Hole Diameter 12.7mm		1
6	:2410/1113		Grommet 31.8		2
7	:828/10289		Grommet blind,hole dia 32mm panel thkness 2-3mm		4
8	:2410/0211		Grommet 25.4 x 19 x 6.5 INNER BOX SEC SEAL		2
9	:2410/0313		Grommet 31.8 panel hole x 5 thkness		1

Applicability Date Ranges:
From: M1299634 , To:

Product Catalog\BACKHOE LOADER 1CX, 208\1CX 00751600-00752999,00806000-00807552 9802/6220\B BODYWORK, CAB, LOADER END\B02 CAB\B2-2-16 CANOPY ASSEMBLY LOW CANOPY, WITH WINDSCREEN

9802/6220 B2-2-16 CANOPY ASSEMBLY LOW CANOPY, WITH WINDSCREEN

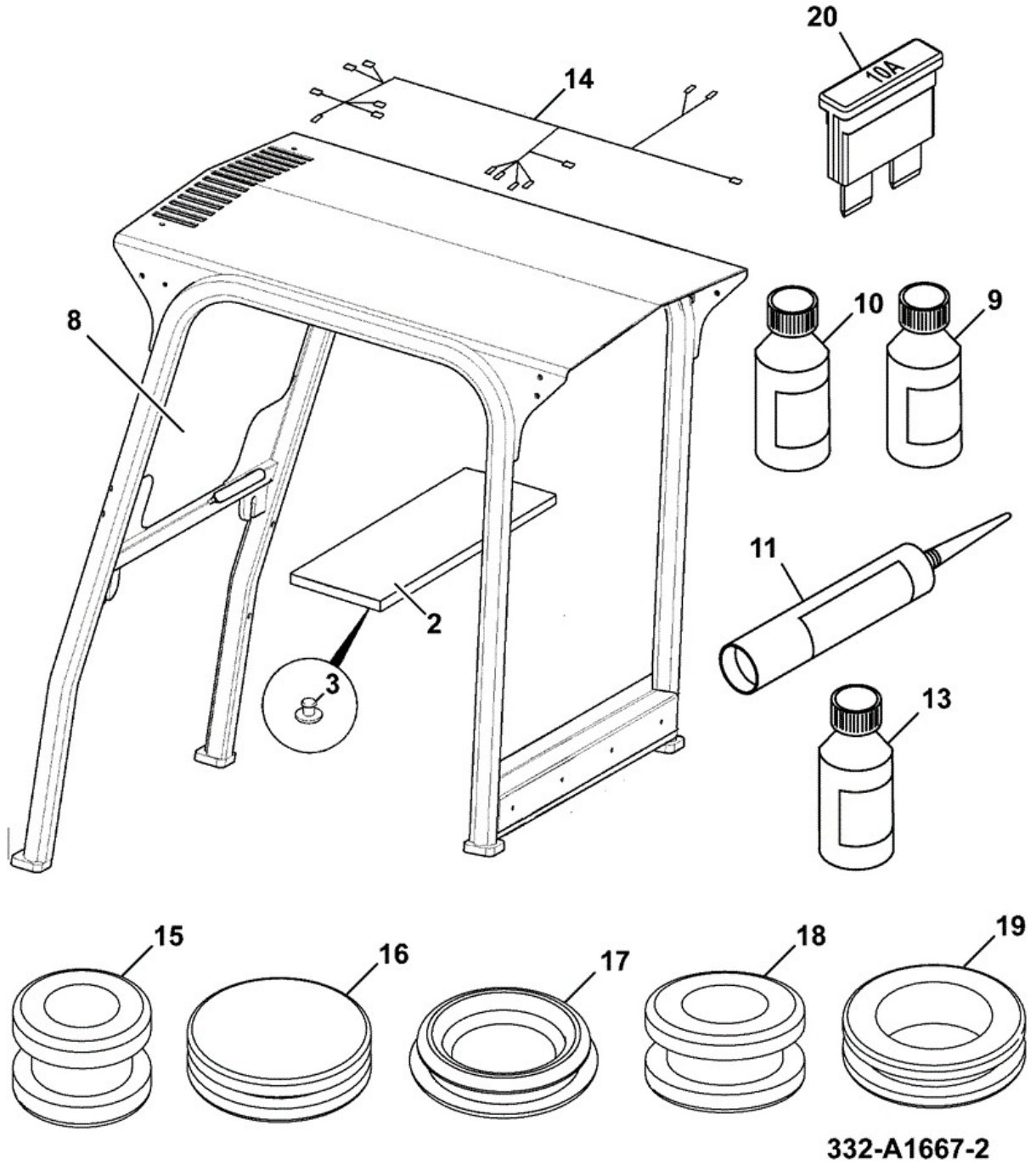

Item	Part No	Change No	Description	Usage Code	QTY
A	332/A1667		Canopy low, with windscreen ABI		1
2	:331/25669		Liner roof		1

3	:826/01308		Button Fastener FOR ITEM 2		12
8	:827/80115		Glass windscreen low cab, 685mm tall		1
9	:4104/1203		Cleaner primer SIKA 205 250ml		1
11	:4103/2109		Adhesive JCB ultrafast 310ml cartridge		1
13	:4102/2309		Sealant black acrylic 221 310ml cartridge A/R		1
14	:721/00807		Harness cab roof		1
15	:2410/0205		Grommet Hole Diameter 12.7mm		1
16	:2410/1113		Grommet 31.8		2
17	:828/10289		Grommet blind,hole dia 32mm panel thkness 2-3mm		4
18	:2410/0211		Grommet 25.4 x 19 x 6.5 INNER BOX SEC SEAL		2
19	:2410/0313		Grommet 31.8 panel hole x 5 thkness		1
20	:716/05705		Fuse 10 amp		1

Applicability Date Ranges:
From: M1299634 , To:

9802/6220 B2-3-1 CAB MOUNTINGS

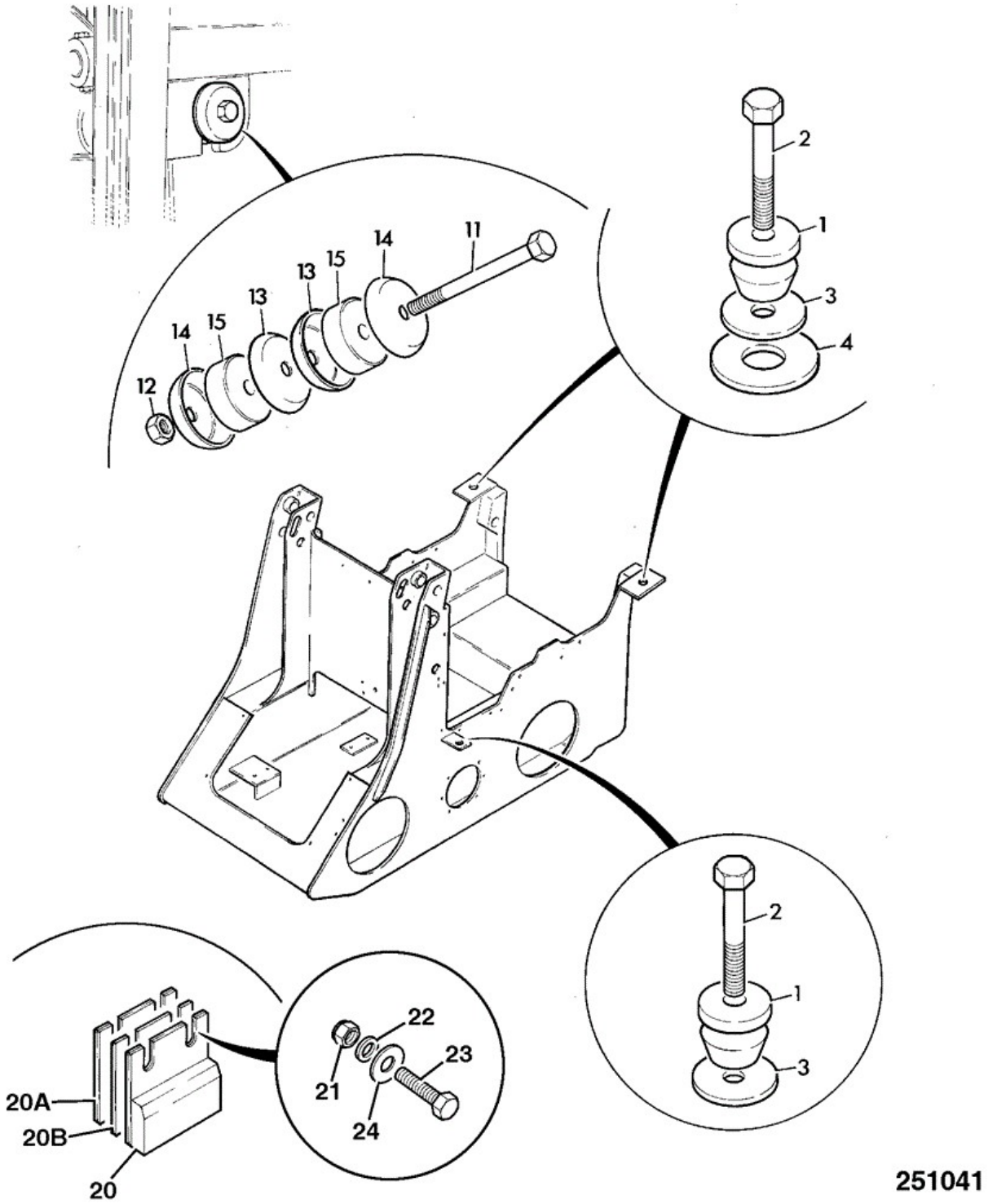

Item	Part No	Change No	Description	Usage Code	QTY
1	290/00276	<TBA	Mounting resilient Use 120/16903		4
1	120/16903	>TBA	Mounting cab rubber		4

2	1315/3720Z		Bolt M16x100		4
3	120/16902		Plate Rebound		4
4	290/00977		Disc mounting		2
7	4101/0202		Sealant Locking		0
11	1315/3519Z		Bolt M12x90mm		2
12	1370/0403Z		Nut Lock, M12		2
13	263/24401		Washer cupped (hole 21 mm)		4
14	263/24402		Washer cupped (hole 13mm)		4
15	263/24403		Mounting rubber		4
20	290/00417		Block support		2
20A	290/00574		Shim 2mm		0
20B	290/00575		Shim 1mm		0
21	1370/0203Z	<M1051499	Nut Nut M8		4
21	1370/0203D	>M1051500	Nut Lock M8		4
22	1420/0007Z	<M1051499	Washer (M8)		4
22	1420/0007D	>M1051500	Washer (M8)		4
23	1315/0308Z	<M1051499	Setscrew M8 x 30		4
23	1315/0308D	>M1051500	Setscrew M8 x 30 mm		4
24	1412/0005Z	<M1051499	Washer Plain 1/2"		4
24	1412/0005D	>M1051500	Washer (1/2" Large)		4

Applicability Date Ranges:
From: , To:

Product Catalog\BACKHOE LOADER 1CX, 208\1CX 00751600-00752999,00806000-00807552 9802/6220\B BODYWORK, CAB, LOADER END\B02 CAB\B2-4-1 MATS & FITTINGS

9802/6220 B2-4-1 MATS & FITTINGS

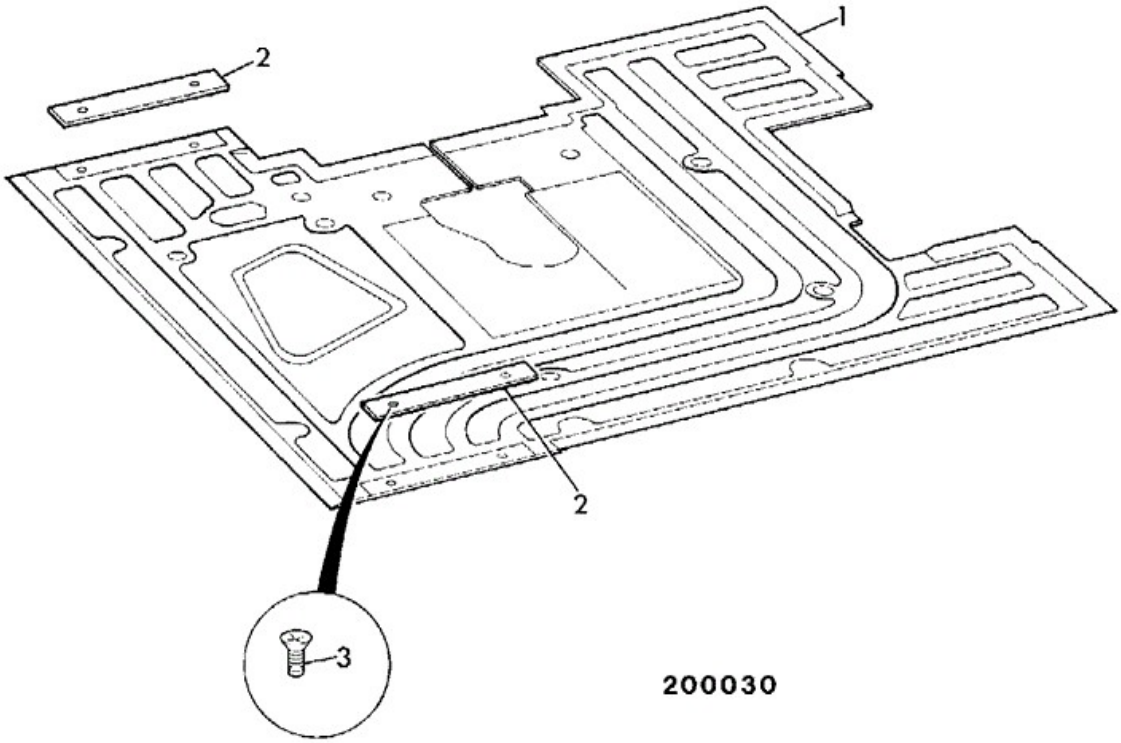

Item	Part No	Change No	Description	Usage Code	QTY

1	290/01121		Floormat		1
2	290/00363		Strip retaining		2
3	826/01196		Screw taptite		4

Applicability Date Ranges:
From: , To:

Product Catalog\BACKHOE LOADER 1CX, 208\1CX 00751600-00752999,00806000-00807552 9802/6220\B BODYWORK, CAB, LOADER END\B02 CAB\B2-5-1 MIRROR, CAB MOUNTED EXTERIOR

9802/6220 B2-5-1 MIRROR, CAB MOUNTED EXTERIOR

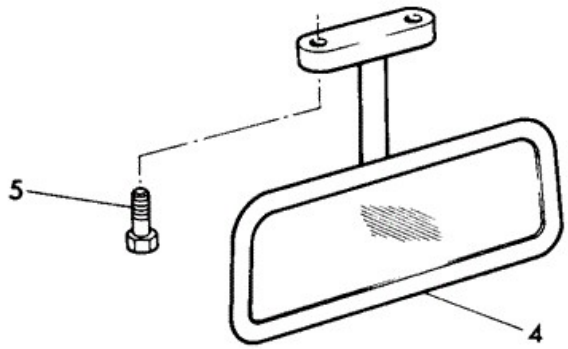

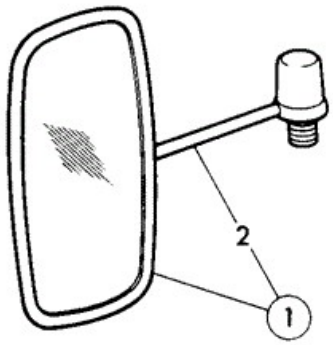

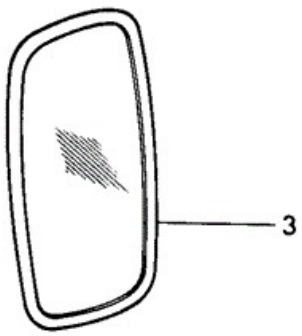

108900

Item	Part No	Change No	Description	Usage Code	QTY

1	121/59400		Mirror , External		2
2	:121/59401		Bracket		1
3	990/67600		Mirror unbreakable exterior Service option		2
4	331/21174	>MAR-01	Mirror Interior if required.		1
5	826/00896	>MAR-01	Screw M5X0.8X20mm long if required.		2
6	826/01333	>MAR-01	Nut rivet,M5 open ended if required		2

Applicability Date Ranges:
From: , To:

Product Catalog\BACKHOE LOADER 1CX, 208\1CX 00751600-00752999,00806000-00807552 9802/6220\B BODYWORK, CAB, LOADER END\B02 CAB\B2-6-1 FLOORPLATES SEAT MOUNTINGS MILSCO SEATS

9802/6220 B2-6-1 FLOORPLATES SEAT MOUNTINGS MILSCO SEATS

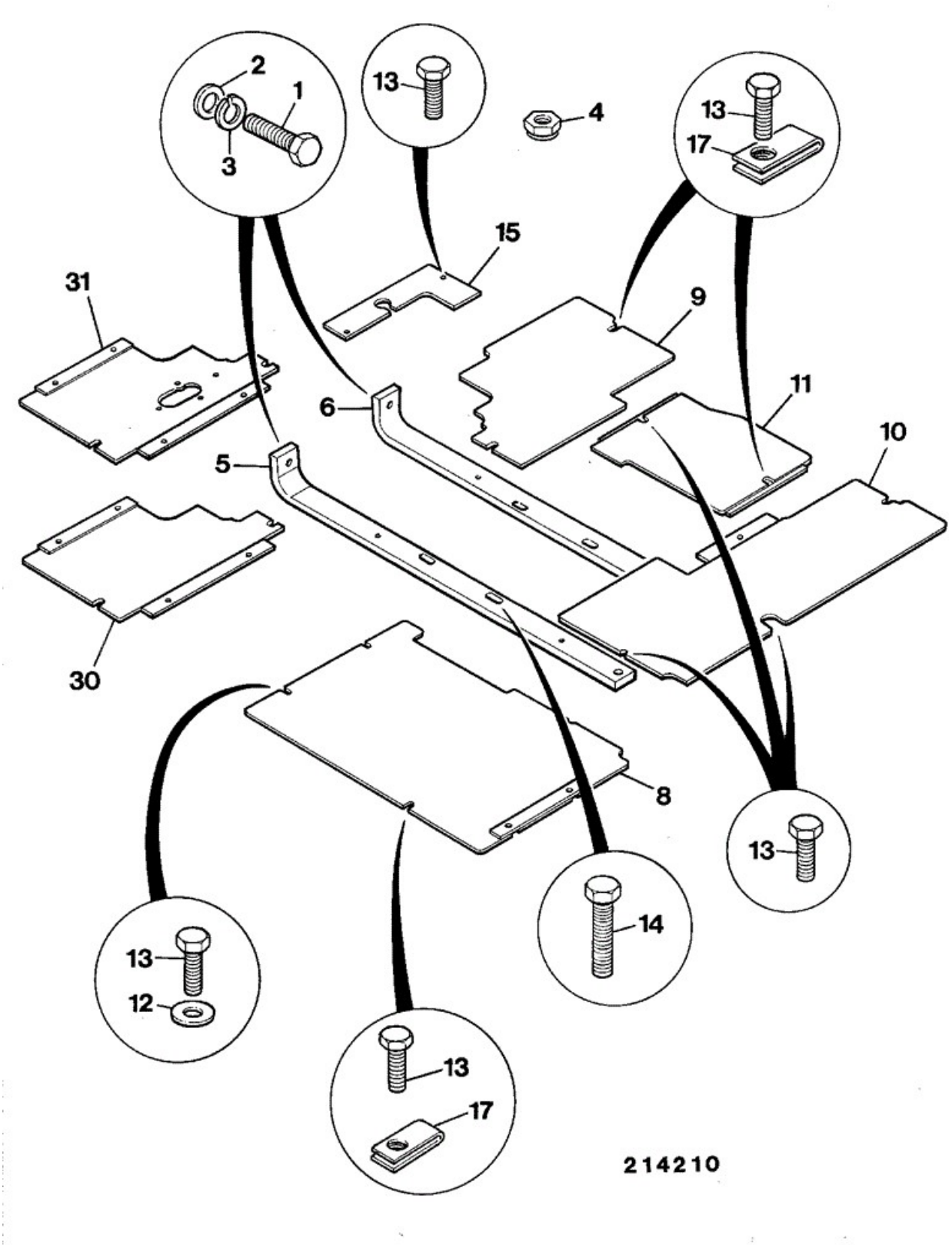

Item	Part No	Change No	Description	Usage Code	QTY

1	1315/0509Z		Setscrew M12 x 35mm Was 4 off		5
2	1420/0009Z		Washer (M12) Was 9 off		10
3	1425/0009Z		Washer Spring M12		7
4	1370/0403Z		Nut Lock, M12 Was 1 off		2
5	290/16300	Superseded	Mounting seat		1
5	40/910549		Mounting seat rail front		1
6	290/00294	Superseded	Mounting seat		1
6	290/51000	Superseded	Mounting seat		1
6	40/910550		Mounting seat mount rear		1
8	290/00354	Superseded	Plate floor front left side		1
8	331/31290		Floorplate Front LH		1
9	290/17100	Superseded	Plate floor,rear right side		1
9	331/31300		Plate floor RH rear		1
10	290/20400	Superseded	Plate floor, rear left side		1
10	331/31295		Plate floor,left side		1
11	290/00355	Superseded	Plate rear access		1
11	331/31298		Plate floor,rear access		1
12	1412/0001Z		Washer 1/4" Large		11
13	1315/0203Z		Setscrew		11
14	1315/0511Z		Bolt M12 x 45mm		4
15	290/00493		Plate cover		1
17	826/01465		Retainer "U" nut		8
30	290/16200		Plate front, right side		1
31	290/29500		Plate front, right side no throttle mount		1

Applicability Date Ranges:
From: , To:

Product Catalog\BACKHOE LOADER 1CX, 208\1CX 00751600-00752999,00806000-00807552 9802/6220\B BODYWORK, CAB, LOADER END\B02 CAB\B2-7-1 WINDOW FRAME REAR OPENING

9802/6220 B2-7-1 WINDOW FRAME REAR OPENING

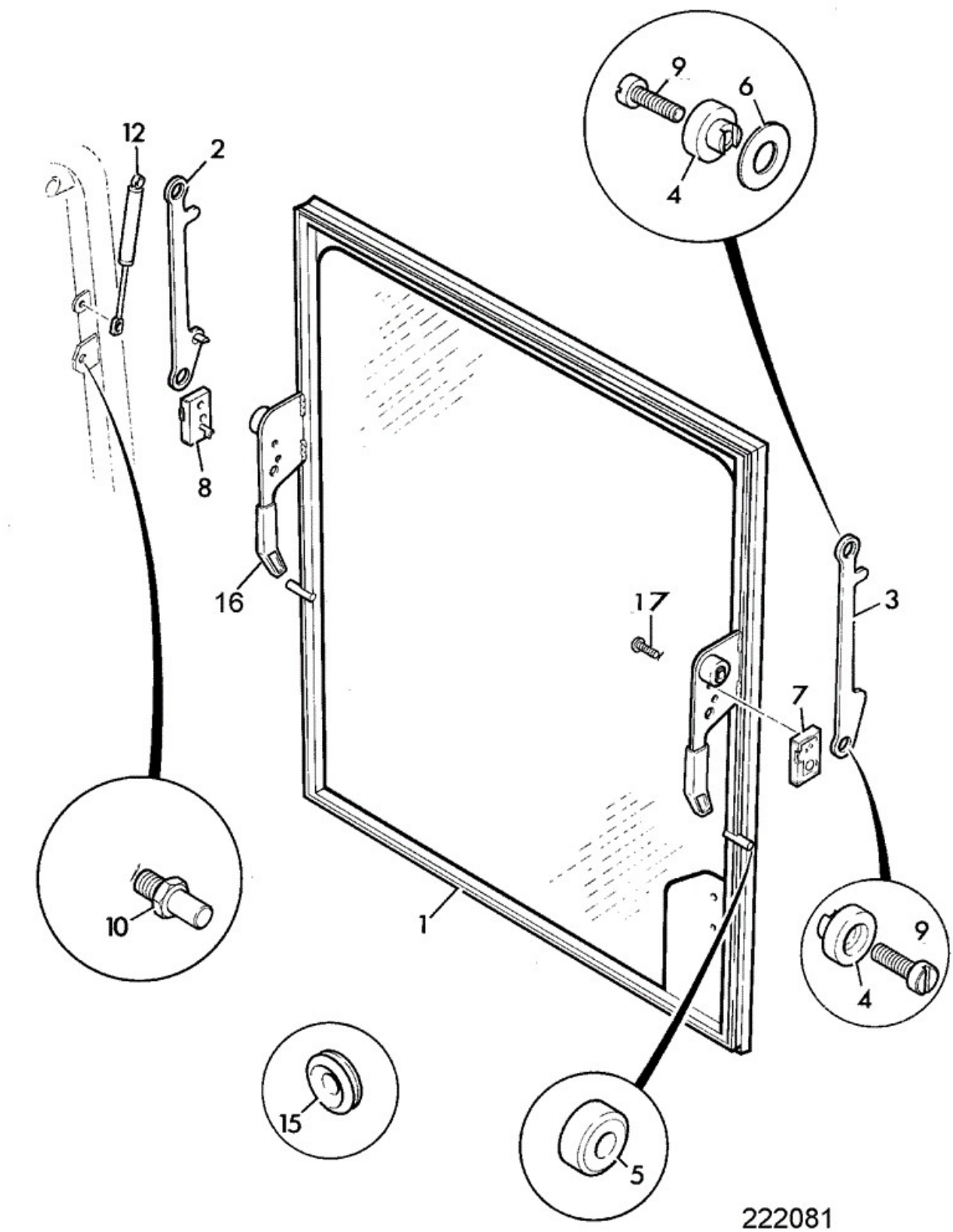

Item	Part No	Change No	Description	Usage Code	QTY

1	290/29600		Frame WA window rear		1
1	290/67600		Frame WA window rear Black cab		1
1A	290/01330		Handle red		2
2	290/29700		Link right side		1
2	290/67700		Link W.A. R.H. Black cab		1
3	290/29800		Link left side		1
3	290/67800		Link W.A. L.H. Black cab		1
4	290/00806		Clamp		4
5	290/00809		Roller		2
6	823/00538		Washer		4
7	290/00812		Lock left side,		1
7A	331/28808		Cover		1
8	290/00813		Lock right side		1
8A	331/28808		Cover		1
9	826/01515		Screw M8 slot head		2
10	290/00807		Latch bolt		2
11	926/17000		Seal Self Adhesive 13mm Diameter		0
12	290/00808		Strut gas		2
13	926/12603		Strip 1290mm long		1
14	926/17200		Seal Lip seal, self adhes ive		1
15	2410/1006		Grommet		1
16	290/01330		Handle red		2
17	826/10481		Screw Socket M8 x 40mm		4

Applicability Date Ranges:
From: , To: M1299633

Product Catalog\BACKHOE LOADER 1CX, 208\1CX 00751600-00752999,00806000-00807552 9802/6220\B BODYWORK, CAB, LOADER END\B02 CAB\B2-7-2 WINDOW FRAME REAR OPENING

9802/6220 B2-7-2 WINDOW FRAME REAR OPENING

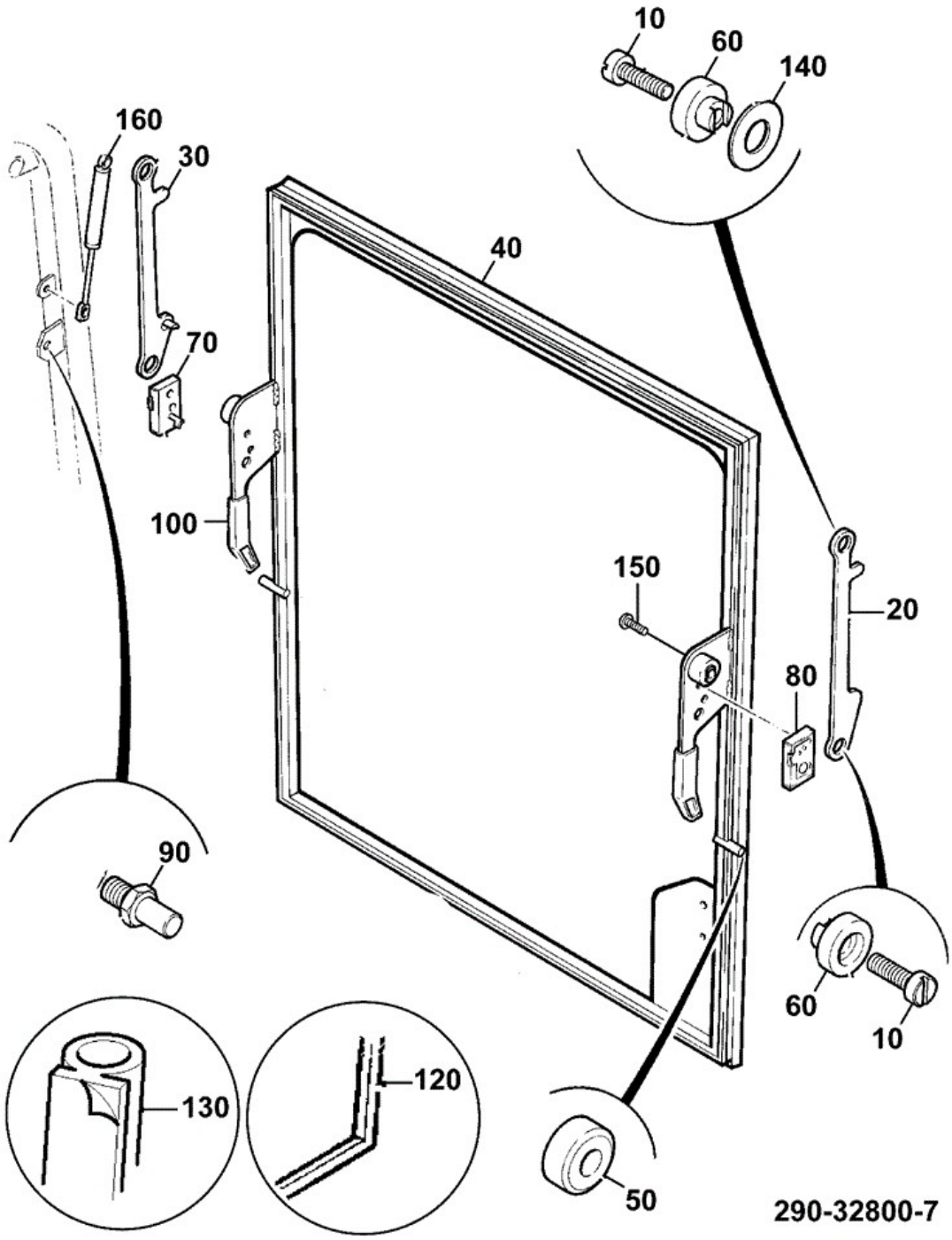

Item	Part No	Change No	Description	Usage Code	QTY
10	826/01515		Screw M8 slot head		2
20	290/67800		Link W.A. L.H.		1

30	290/67700		Link W.A. R.H.		1
40	290/67600		Frame WA window rear		1
50	290/00809		Roller		2
60	290/00806		Clamp		4
70	290/00813		Lock right side		1
80	290/00812		Lock left side,		1
90	290/00807		Latch bolt		2
100	290/01330		Handle red		2
120	926/17200		Seal Lip seal, self adhes ive		1
130	926/17000		Seal Self Adhesive 13mm Diameter		1
140	823/00538		Washer		2
150	826/10481		Screw Socket M8 x 40mm		4
160	290/00808		Strut gas		2

Applicability Date Ranges:
From: M1299634 , To:

Product Catalog\BACKHOE LOADER 1CX, 208\1CX 00751600-00752999,00806000-00807552 9802/6220\B BODYWORK, CAB, LOADER END\B02 CAB\B2-7-10 WINDOW REAR OPENING GREEN GLASS

9802/6220 B2-7-10 WINDOW REAR OPENING GREEN GLASS

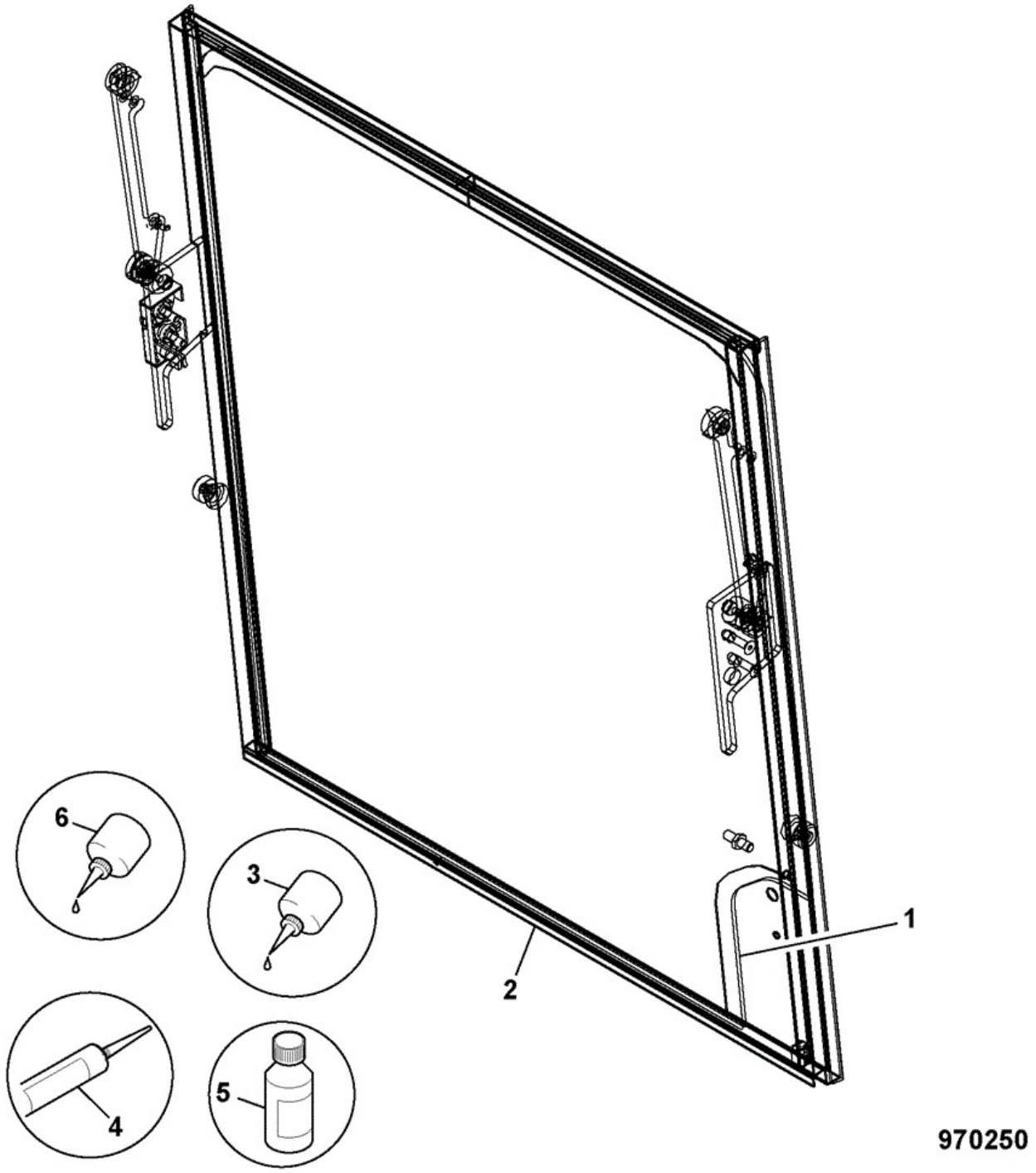

Item	Part No	Change No	Description	Usage Code	QTY
A	332/V5274		Frame rear window assembly, green glass		1
1	:827/30414		Glass rear window		1

2	:290/32800		Window Rear GA		1
3	:4104/2100		Activator sika		1
4	:4103/2104		Adhesive JCB Ultrafast 195 litre drum A/R		1
5	:4104/2303		Sealant mastic primer SIKA 209 -250ml A/R		1
6	:4104/2625		Adhesive remover 1 litre A/R		1

Applicability Date Ranges:
From: M1299634 , To:

Product Catalog\BACKHOE LOADER 1CX, 208\1CX 00751600-00752999,00806000-00807552 9802/6220\B BODYWORK, CAB, LOADER END\B02 CAB\B2-7-20 WINDOW REAR OPENING IMPACT PROTECTION

9802/6220 B2-7-20 WINDOW REAR OPENING IMPACT PROTECTION

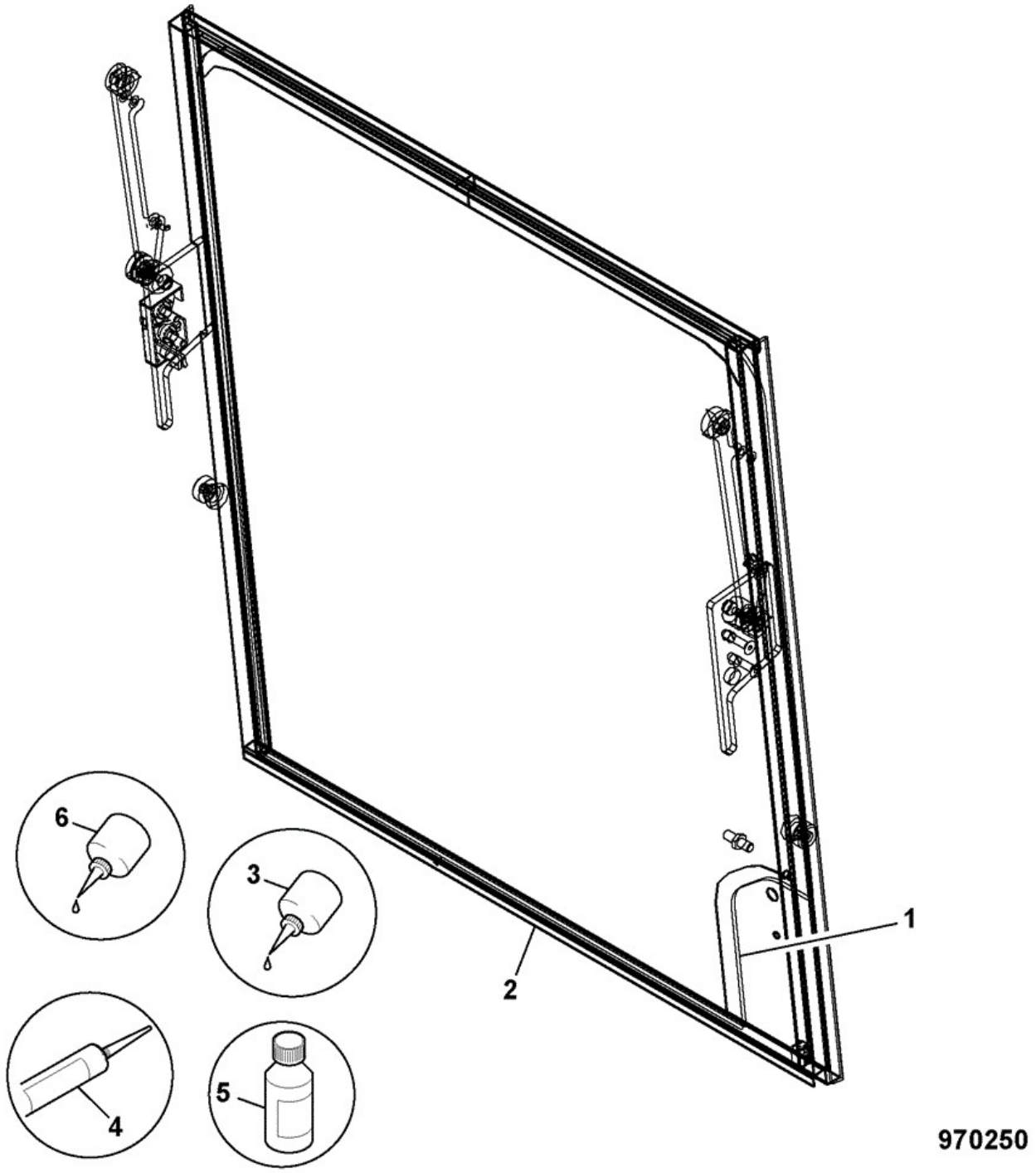

Item	Part No	Change No	Description	Usage Code	QTY
A	332/V5351		Window rear assembly Impact Glass		1
1	:290/32800		Window Rear GA		1

2	:332/V5347		Glass Impact Rear Window		1
3	:4104/2100		Activator sika		1
4	:4103/2104		Adhesive JCB Ultrafast 195 litre drum A/R		1
5	:4104/2303		Sealant mastic primer SIKA 209 -250ml A/R		1
6	:4104/2625		Adhesive remover 1 litre A/R		1

Applicability Date Ranges:
From: M1299634 , To:

9802/6220 B2-8-1 DOOR STAY

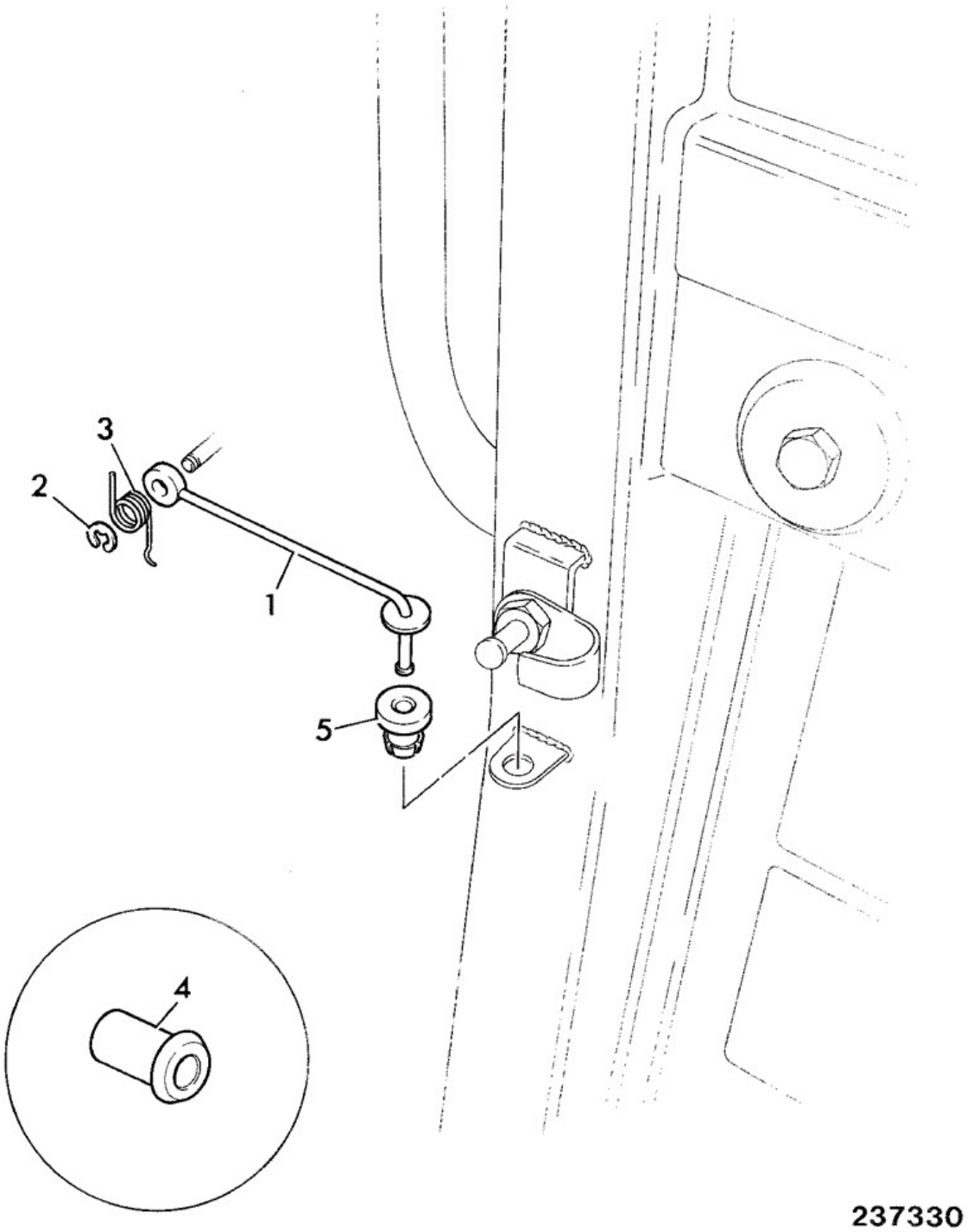

Item	Part No	Change No	Description	Usage Code	QTY
1	290/00702		Bar door stay		1
1	290/01260		Stay door Black cab		1

2	826/00614		Circlip		1
3	814/00385		Spring		1
4	835/00050		Sleeve		1
5	290/00703		Bush		1

Applicability Date Ranges:
From: , To:

9802/6220 B2-9-1 SEATS MILSCO

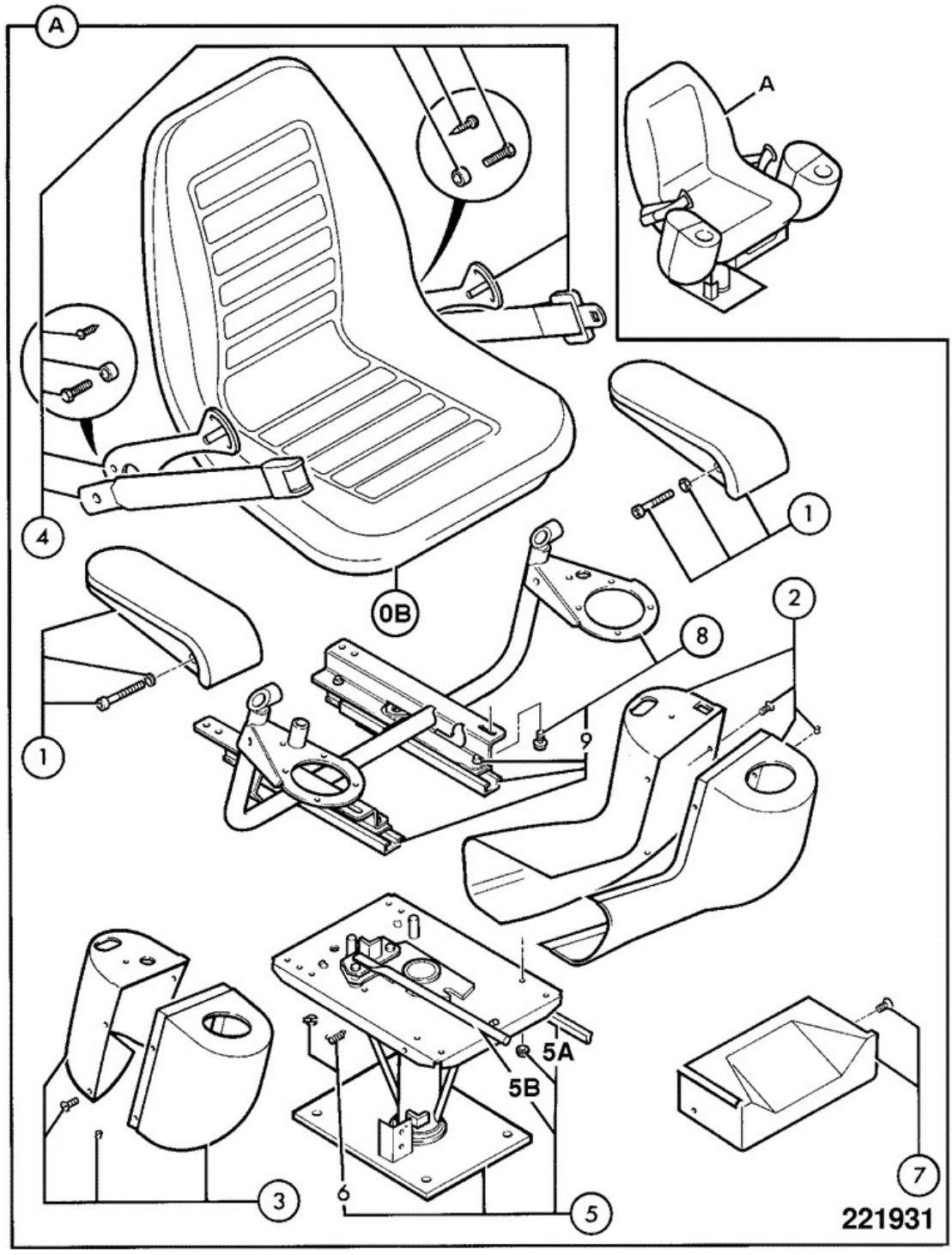

Item	Part No	Change No	Description	Usage Code	QTY
A	40/902700	<M752378	Seat assembly black vinyl Standard machine builds only	A	1
			Seat assembly black vinyl		

A	40/905900	<M807146	Standard machine builds only	A	1
A	40/910282	<M807146	Seat assembly black vinyl Standard machine builds only	A	1
A	40/910702	>M807147	Seat assembly black vinyl Standard machine builds only	A	1
A	40/902800	<M752378	Seat assembly black cloth Standard machine builds only	A	1
A	40/906000	<M807146	Seat assembly black cloth Standard machine builds only	A	1
A	40/910283	<M807146	Seat assembly black cloth Standard machine builds only	A	1
A	40/910703	>M807147	Seat assembly black cloth See note 1.Standard machine builds only	A	1
A	40/905800	<M752378	Seat assembly grey vinyl Low canopy machine builds only	B	1
A	40/906100	<M807146	Seat assembly black vinyl, manual controls Low canopy machine builds only	B	1
A	40/910284	<M807146	Seat assembly black vinyl Low canopy machine builds only	B	1
A	40/910704	>M807147	Seat assembly black vinyl See note 1.Low canopy machine builds only	B	1
A	40/906700	<M807146	Seat assembly,black vinyl c/w seat switch Hi-Flow machine builds only	A	1
A	40/910285	<M807146	Seat assembly,black vinyl c/w seat switch Hi-Flow machine builds only	A	1
A	40/910705	>M807147	Seat assembly,black vinyl c/w seat switch See note 1.Hi-Flow machine builds only	A	1
B	:40/910205		Seat static black vinyl		1
B	:40/910206		Seat static black cloth		1
1	:40/902701		Kit armrest		2
2	:40/902706		Kit shroud, left side		1
3	:40/902707		Kit shroud, right side		1
4	:40/902709		Kit seat belt assy static		1
5	:40/902705		Kit seat pedestal to suit standard seat	A	1
5	40/910566		Kit seat pedestal to suit low roof cab	B	1
5A	:40/902712		Kit latch Lateral adjustment		1
5B	:40/910369		Handle to release seat turntable		1
6	::40/902710		Kit extension spring		1
7	:40/902708		Kit shroud, front		1

8	:40/902711		Kit support assembly		1
9	::40/902704		Kit seat adjuster left & right sides		1

Note 1: For floorplates/seat mountings to suit Milsco seats See Index B2

Note 2: For use with new style horn push button

Applicability Date Ranges:
From: , To: Nov 2006

Product Catalog\BACKHOE LOADER 1CX, 208\1CX 00751600-00752999,00806000-00807552 9802/6220\B BODYWORK, CAB, LOADER END\B02 CAB\B2-9-2 SEATS ISRINGHAUSEN VINYL AND CLOTH

9802/6220 B2-9-2 SEATS ISRINGHAUSEN VINYL AND CLOTH

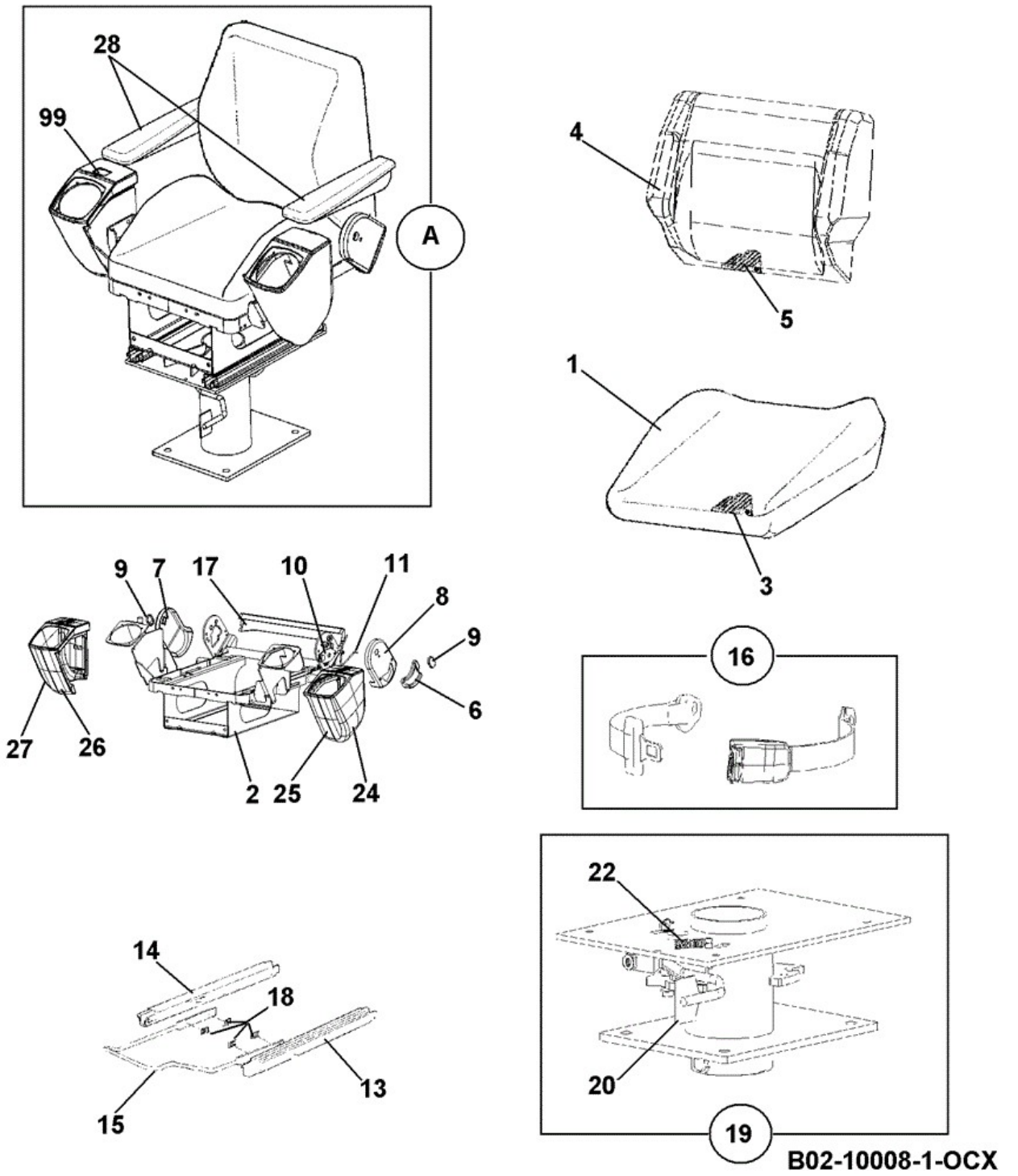

Item	Part No	Change No	Description	Usage Code	QTY
A	40/911126	>M1743238	Seat assembly,vinyl-high Std canopy machine builds only	A	1
			Seat assembly,fabric-high		

A	40/911127	>M1743238	Std cab machine builds only	B	1
A	40/911128	>M1743152	Seat assembly,vinyl-low Low canopy machine builds only	C	1
1	:40/910510		Cushion seat assy vinyl low back	A	1
1	:40/910505		Cushion seat assy fabric low back	B,C	1
2	:332/D1130		Cushion frame complete	A,B	1
2	:332/D1107		Cushion frame complete	C	1
3	::40/910511		Cover seat base vinyl low back	A	1
3	:40/910507		Cover seat base fabric low back	B,C	1
4	:332/D1132		Cushion seat assembly	A	1
4	:332/D1110		Cushion seat assembly	B,C	1
5	::332/D1134		Cover seat cushion	A	1
5	:332/D1111		Cover seat cushion	B,C	1
6	:40/910406		Handle grip, squab recline		1
7	:40/903109		Cover slave right hand sideplate		1
8	:40/903110		Cover upper left hand sideplate		1
9	:40/903108		Cap side plate		2
10	:40/910446		Handle squab		1
11	:40/910447		Spring squab handle		1
12	:40/910448		Circlip height adjuster		1
13	:40/910409		Slide left hand		1
14	:40/910410		Slide seat, right hand		1
15	:332/D1112		Handle slide		1
16	:332/D1113		Belt seat static 2 point		1
17	:40/903112		Plate cushion frame back		1
18	:40/903125		Clip slide rail		4
19	:332/D1116		Turntable assembly complete		1
20	:332/D1114		Handle swivel complete		1
22	:814/10156		Spring		1
24	:332/D1117		Pod moulding LH inner		1
25	:332/D1118		Pod moulding LH outer		1
25A	:40/911146		Pod LH Assembly only available		1
26	:332/D1119		Pod moulding RH inner		1
27	:332/D1120		Pod moulding RH outer		1
28	:40/905206		Kit-arm rest		1
99	:332/D7100		Bracket horn switch mtg		1
99	:332/D7101		Screw		4

Note 1: LH pod assy,only fitted to m/c's with float facility replacing items 24 and 25

Applicability Date Ranges:
From: Nov 2006 , To: M1743238

Product Catalog\BACKHOE LOADER 1CX, 208\1CX 00751600-00752999,00806000-00807552 9802/6220\B BODYWORK, CAB, LOADER END\B02 CAB\B2-9-3 SEAT SUSPENSION LOW BACK

9802/6220 B2-9-3 SEAT SUSPENSION LOW BACK

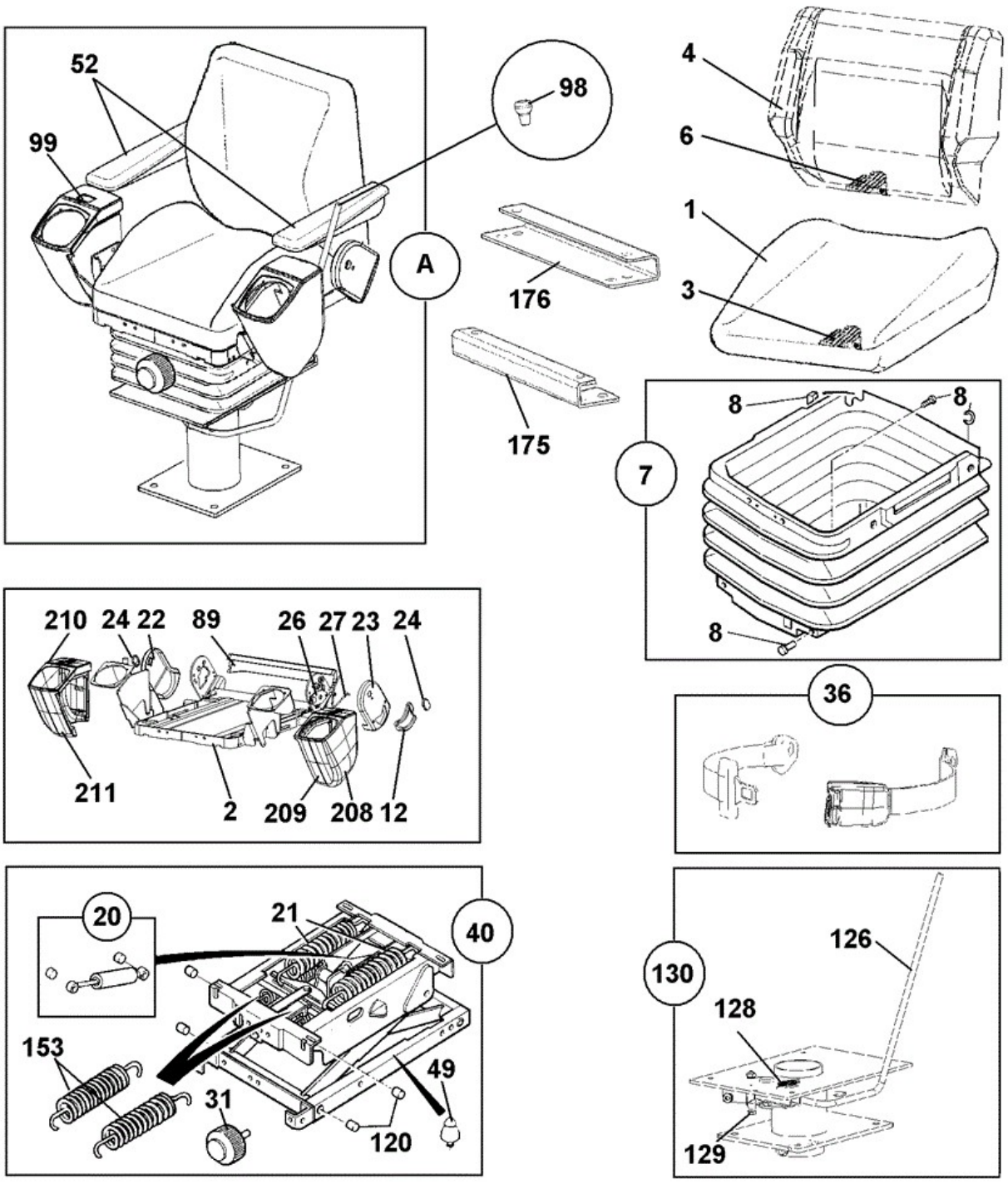

332-W3451-1

Item	Part No	Change No	Description	Usage Code	QTY
A	332/W3451		Seat Suspension Vinyl Low		1
1	:40/910510		Cushion seat assy vinyl low back		1

2	:332/F6746		Frame cushion		1
3	::40/910511		Cover seat base vinyl low back		1
4	:332/D1132		Cushion seat assembly		1
6	::332/D1134		Cover seat cushion		1
7	:40/905204		Kit-bellows		1
8	::40/903116		Kit bellow fixings		1
12	::40/910524		Handle Squab adjuster		1
20	::332/F5923		Damper shock absorber		1
21	::332/F6759		Spring spring		2
22	::40/903109		Cover slave right hand sideplate		1
23	::40/903110		Cover upper left hand sideplate		1
24	::40/903108		Cap side plate		2
26	::40/910446		Handle squab		1
27	::40/910447		Spring squab handle		1
31	::40/910818		Knob assy,suspension adj.		1
36	:332/D1113		Belt seat static 2 point		1
40	:332/F5924		Unit Suspension unit asse		1
49	::332/F6771		Stop rubber buffer		2
52	:40/910416		Kit-armrest pair		1
89	::40/903112		Plate cushion frame back		1
98	331/49049		Knob Red		1
99	:332/D7100		Bracket horn switch mtg		1
99	:332/D7101		Screw		1
120	::40/910716		Kit bush + bolt 5000lb suspension		1
126	:332/F9546		Kit Swivel Handle Kit (Inc Handle assy & Bearing)		1
128	::814/10156		Spring		1
129	::40/910413		Kit-nut & bolt pedestal swivel		1
130	:332/F6772		Pedestal complete		1
153	::40/910140		Spring		2
175	:332/F5926		Plate U profile front		1
176	:332/F5928		Plate U profile rear		1
208	:332/D1117		Pod moulding LH inner		1
209	:332/D1118		Pod moulding LH outer		1
210	:332/D1120		Pod moulding RH outer		1
211	:332/D1119		Pod moulding RH inner		1

Applicability Date Ranges:
From: M1299634 , To: M1743152

Product Catalog\BACKHOE LOADER 1CX, 208\1CX 00751600-00752999,00806000-00807552 9802/6220\B BODYWORK, CAB, LOADER END\B02 CAB\B2-10-1 CONSOLE, SIDE CANOPY

9802/6220 B2-10-1 CONSOLE, SIDE CANOPY

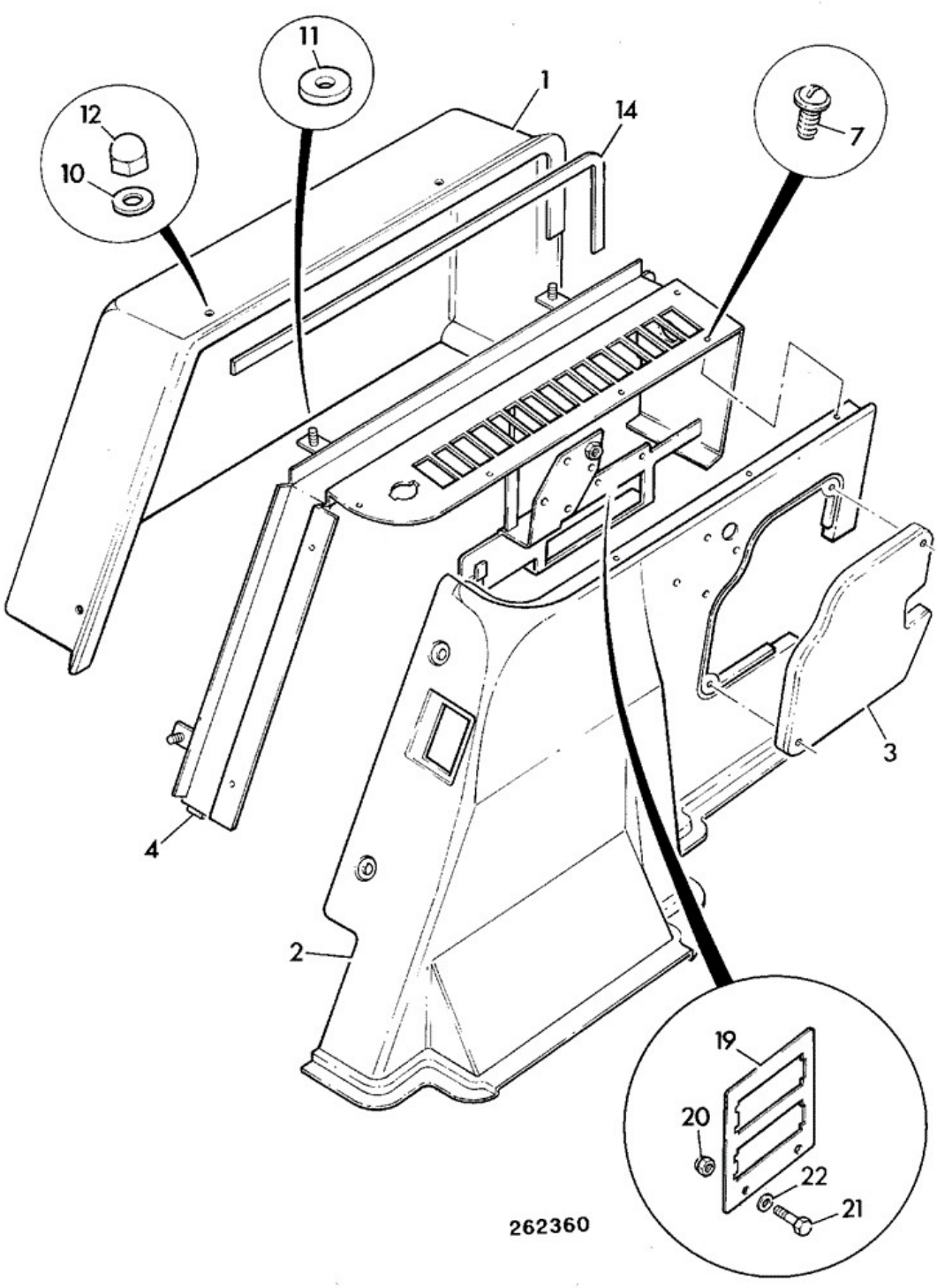

Item	Part No	Change No	Description	Usage Code	QTY
1	290/00784	<M752378	Cover outer, right side		1
1	290/01253	<M752764	Cover Battery ,canopy Black canopy		1

1	290/01289	<M807708	Cover battery		1
1	331/24169		Cover battery new logo		1
2	290/01144	Superseded	Cover instrument		1
2	290/01143	<June 1997	Cover instrument		1
2	290/01203		Cover instrument		1
3	290/00742		Cover fuse		1
4	290/58900	Superseded	Bracket instrument support		1
4	290/62500	Superseded	Bracket Instrument		1
4	290/68400	Superseded	Bracket Instrument, Canopy Black cab		1
4	290/71800		Bracket instrument		1
7	826/00861		Screw		9
8	1315/0209D		Setscrew M6 x 35mm		2
9	1370/0103Z		Nut Self Lock M6		1
10	1420/0007Z		Washer (M8)		3
11	823/00527		Washer sponge no longer fitted		3
12	826/01089		Nut Dome Head Cap		3
13	1420/0005Z		Washer (M5)		2
14	813/00421		Gasket		1
19	290/01145		Plate fuse holder		1
19	290/01269		Plate fuseholder mount black cab Black cab		1
20	1370/0003Z		Nut Nut M5		2
21	1360/0202Z		Screw 2 B.A. x 1/2"		2
22	1414/0011Z		Washer (2BA)		2

Applicability Date Ranges:
From: , To:

Product Catalog\BACKHOE LOADER 1CX, 208\1CX 00751600-00752999,00806000-00807552 9802/6220\B BODYWORK, CAB, LOADER END\B02 CAB\B2-10-2 CONSOLE, SIDE CAB

9802/6220 B2-10-2 CONSOLE, SIDE CAB

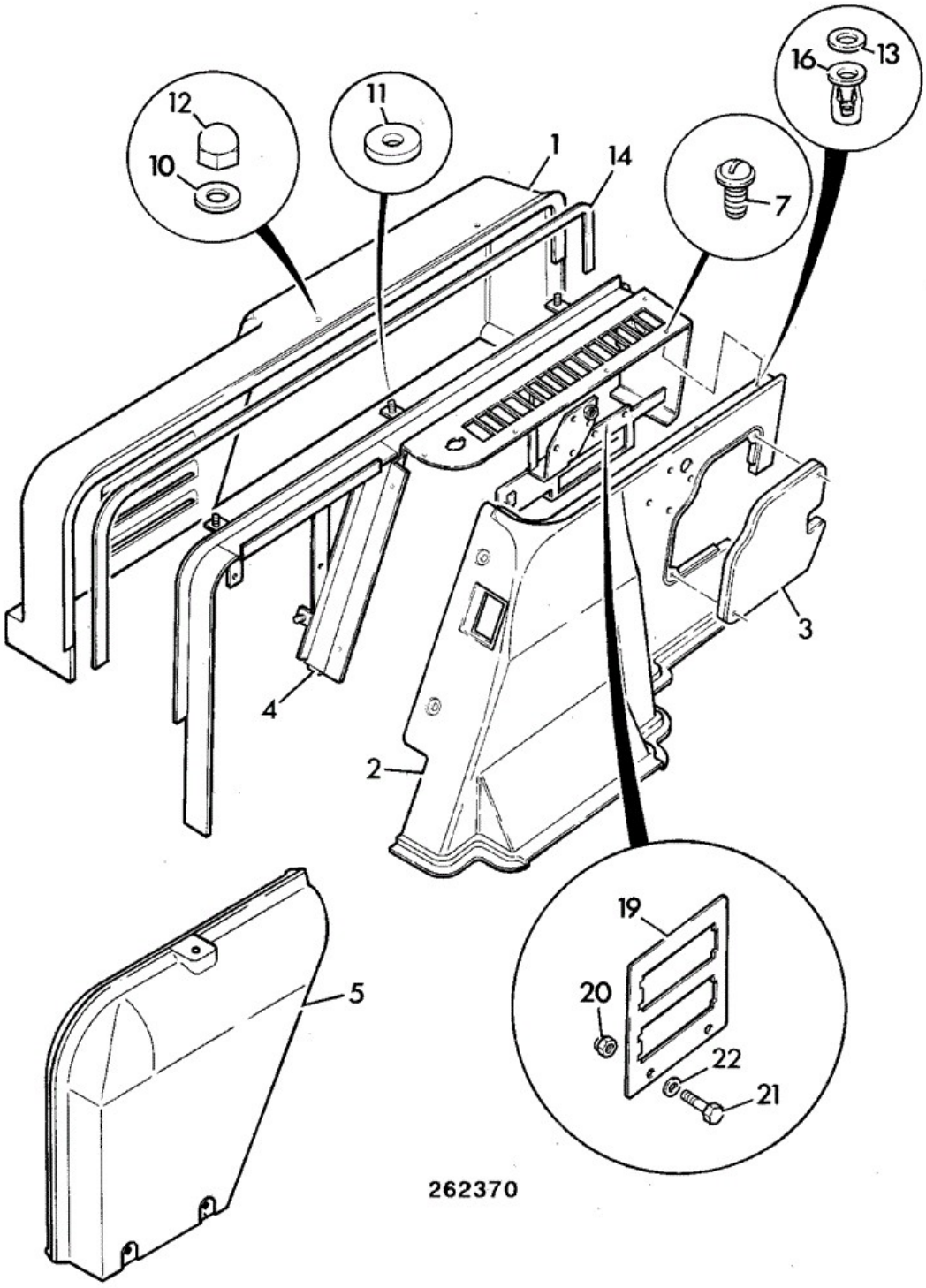

Item	Part No	Change No	Description	Usage Code	QTY
1	290/00785	<M752378	Cover right side 1CX		1
1	290/01254	<M752764	Cover Battery, cab Black cab Black cab		1

1	290/01290	<M807710	Cover battery		1
1	331/24170		Cover battery new logo		1
2	290/01143	<June 1997	Cover instrument		1
2	290/01203		Cover instrument		1
3	290/00742		Cover fuse		1
4	290/58800	Superseded	Bracket instrument support		1
4	290/62400		Bracket Instrument		1
7	826/00861		Screw		9
8	1315/0208Z		Setscrew M6 x 30mm		1
9	1370/0103Z		Nut Self Lock M6		1
10	1420/0006Z		Washer (M6)		1
11	823/00527		Washer sponge no longer fitted		3
12	826/01089		Nut Dome Head Cap		3
13	1420/0005Z		Washer (M5)		2
16	826/00842		Nut M5 Jacknut		7
19	290/01145		Plate fuse holder		1
19	290/01269		Plate fuseholder mount black cab Black cab		1
20	1370/0003Z		Nut Nut M5		2
21	1360/0202Z		Screw 2 B.A. x 1/2"		2
22	1414/0011Z		Washer (2BA)		2

Applicability Date Ranges:
From: , To:

Product Catalog\BACKHOE LOADER 1CX, 208\1CX 00751600-00752999,00806000-00807552 9802/6220\B BODYWORK, CAB, LOADER END\B02 CAB\B2-11-1 GUARD, WINDSCREEN

9802/6220 B2-11-1 GUARD, WINDSCREEN

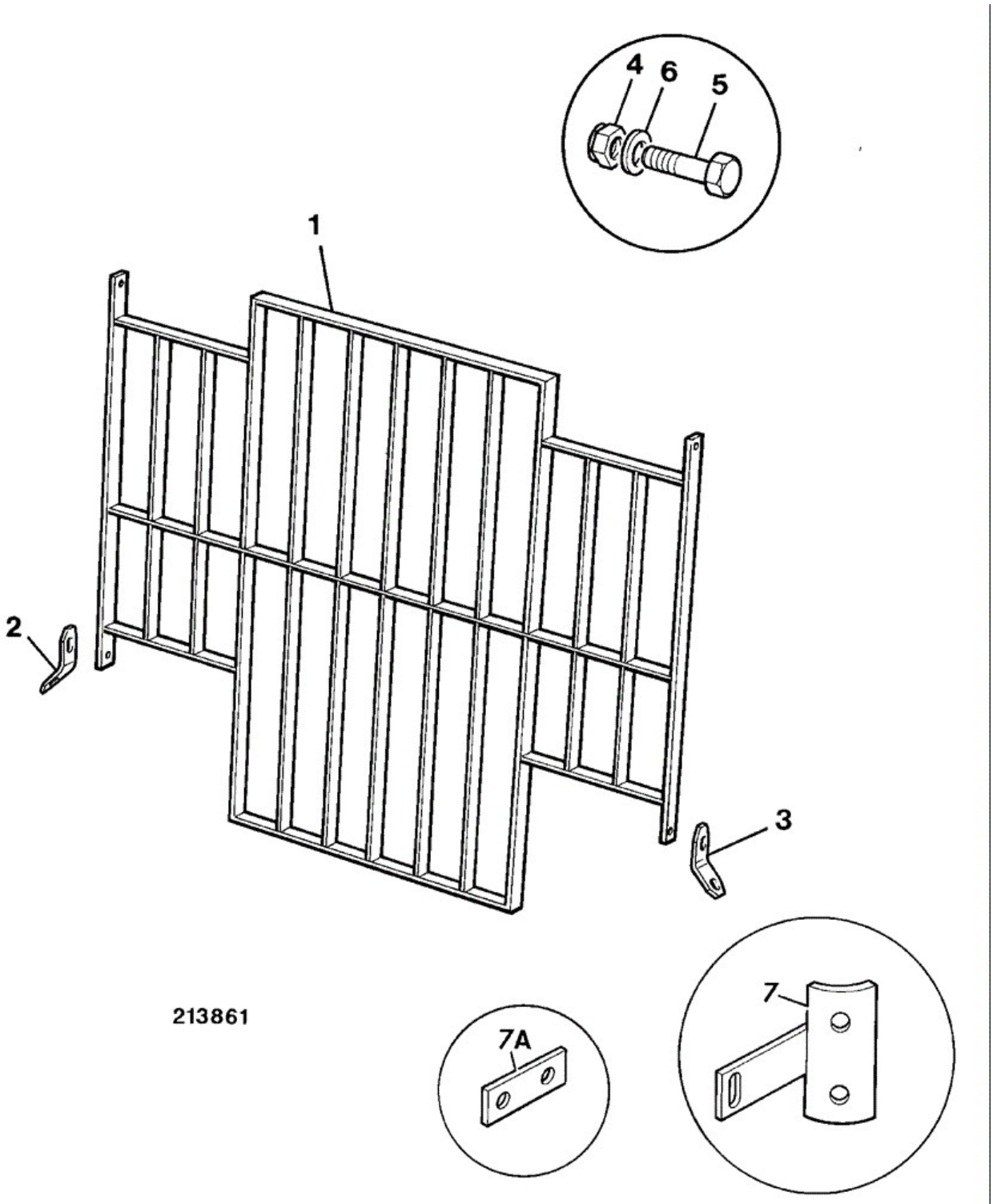

Item	Part No	Change No	Description	Usage Code	QTY
1	290/34600		Guard screen		1
2	290/00735	<M752369	Bracket mounting, left side		1

3	290/00736	<M752369	Bracket mounting,right side		1
4	1370/0303Z		Nut lock M10		4
5	1315/0408Z		Setscrew M10 x 30		4
6	1420/0008Z		Washer (M10)		4
7	290/01285	>M752370	Bracket mounting Use if roadlights not fitted		2
7A	290/01286	>M752370	Bracket mounting Use if roadlights fitted		2

Applicability Date Ranges:
From: , To:

Product Catalog\BACKHOE LOADER 1CX, 208\1CX 00751600-00752999,00806000-00807552 9802/6220\B BODYWORK, CAB, LOADER END\B02 CAB\B2-12-1 COVERS VANDAL RESISTANT

9802/6220 B2-12-1 COVERS VANDAL RESISTANT

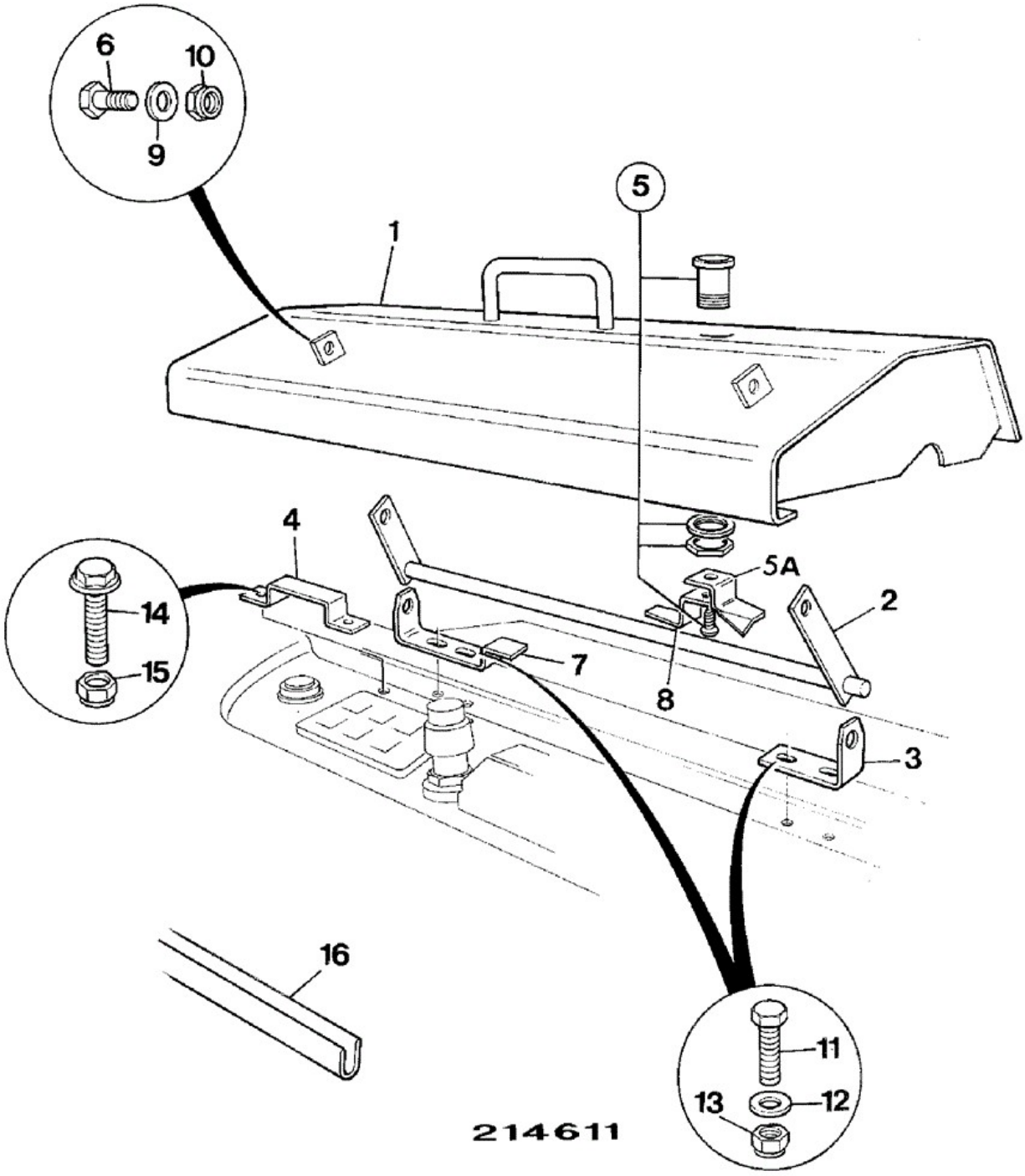

Item	Part No	Change No	Description	Usage Code	QTY
1	290/25700		Cover switch console		1
1	290/67900		Cover Vandal proof Black cab Black cab		1

2	290/25800		Pivot		1
3	290/00518		Bracket pivot		1
4	290/00519		Bracket locking		1
4	290/01261		Bracket locking Black cab		1
5	140/00757		Latch		1
5A	140/00825		Pawl		1
6	1315/0305D		Setscrew M8 x 20mm		2
7	290/00522		Bracket pivot locking		1
9	1420/0007D		Washer (M8)		2
10	1370/0203D		Nut Lock M8		2
11	826/00902		Capscrew Button Head M6 x 20		4
12	1420/0006D		Washer (M6)		8
13	1370/0103D		Nut (M6)		4
14	826/01406		Screw M5 x 20		2
15	1370/0003Z		Nut Nut M5		2
16	926/04800		Strip Edging 650mm approx.		0

Applicability Date Ranges:
From: , To:

Product Catalog\BACKHOE LOADER 1CX, 208\1CX 00751600-00752999,00806000-00807552 9802/6220\B BODYWORK, CAB, LOADER END\B02 CAB\B2-13-1 CONSOLE EXCAVATOR CONTROLS

9802/6220 B2-13-1 CONSOLE EXCAVATOR CONTROLS

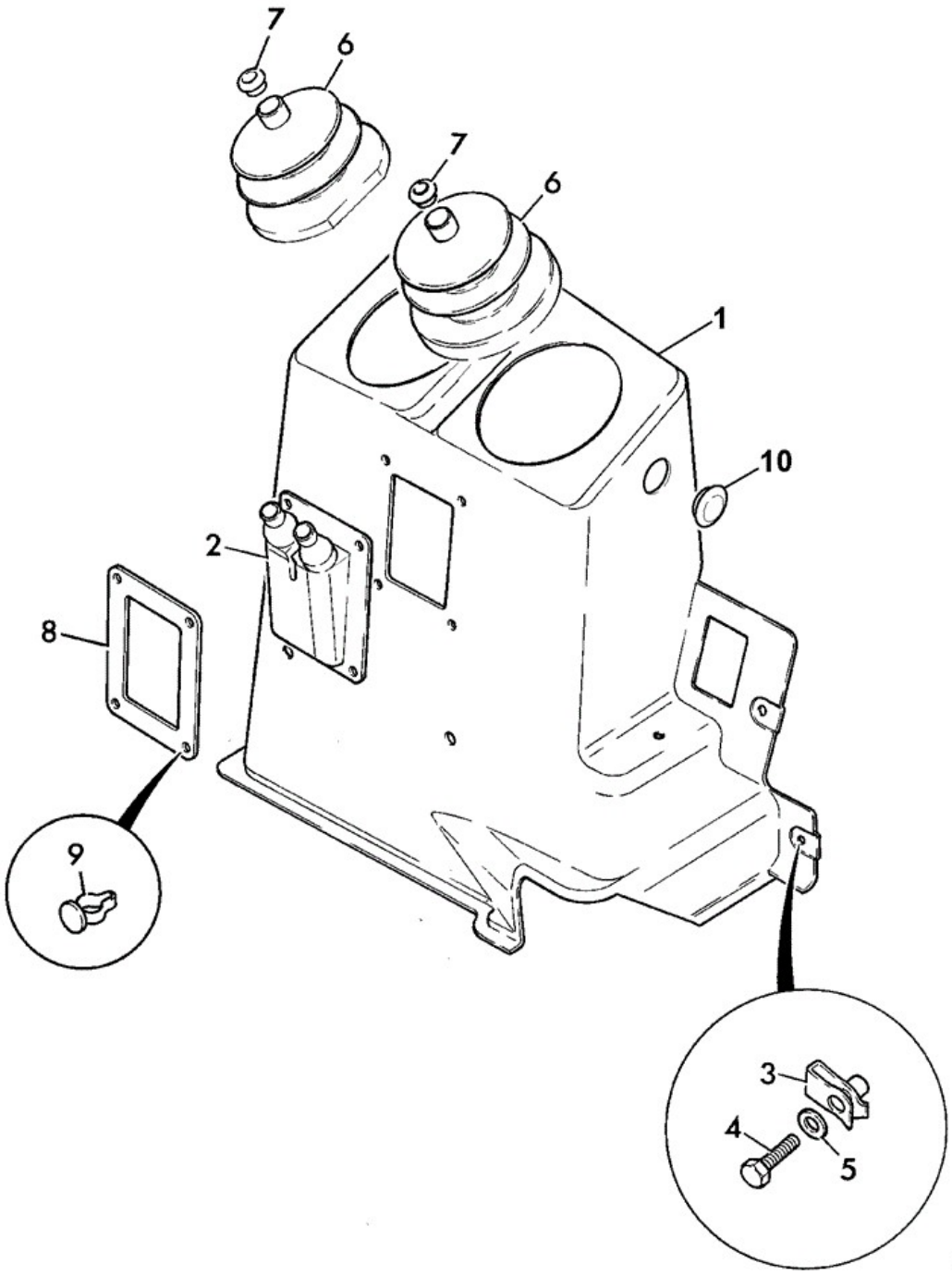

Item	Part No	Change No	Description	Usage Code	QTY
1	290/00887	<M752072	Cover excavtor controls		1
1	290/01208	>M752073	Console excavator controls		1

1	290/00893	<M752072	Cover excavater controls aux.		1
1	290/01209	<M1299641	Console excavator controls aux		1
1	332/W4915	>M1299642	Console excavator controls aux.		1
2	290/00966		Gaiter stabiliser		1
3	826/01465		Retainer "U" nut		4
4	1315/0205Z		Setscrew M6 x 20mm		4
5	1420/0006Z		Washer (M6)		4
6	142/00533		Gaiter		2
7	290/00975		Insert		2
8	290/01055		Plate retaining		1
9	826/00628		Button		4
10	828/10267		Grommet Blanking plug		1

Applicability Date Ranges:
From: , To: M1299633

Product Catalog\BACKHOE LOADER 1CX, 208\1CX 00751600-00752999,00806000-00807552 9802/6220\B BODYWORK, CAB, LOADER END\B02 CAB\B2-13-2 CONSOLE EXCAVATOR CONTROLS

9802/6220 B2-13-2 CONSOLE EXCAVATOR CONTROLS

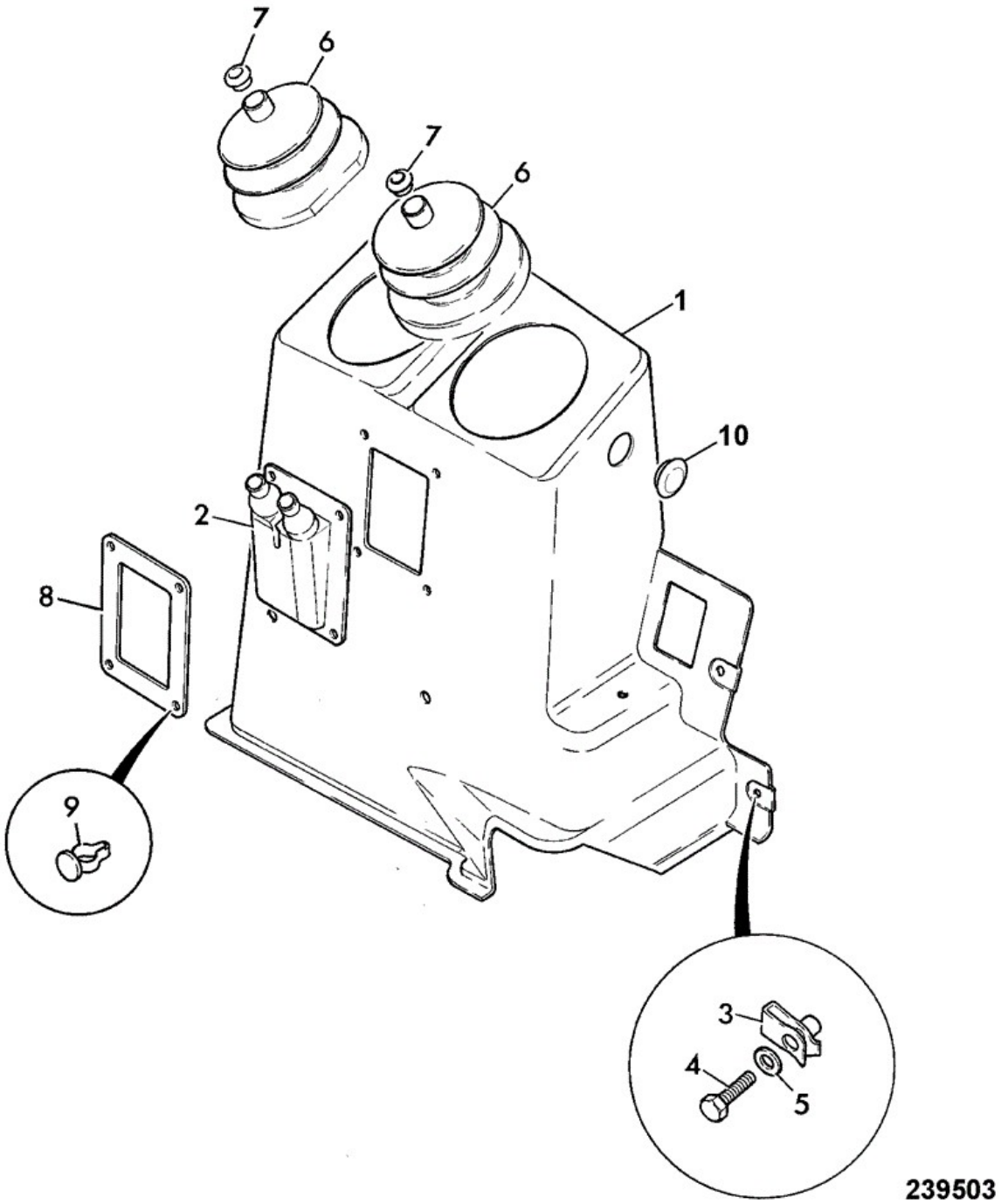

Item	Part No	Change No	Description	Usage Code	QTY
1	332/P8511		Cover EXCAVA/CONTROLS MOULDING		1
2	290/00966		Gaiter stabiliser		1

3	826/01465		Retainer "U" nut		4
4	1315/0205Z		Setscrew M6 x 20mm		4
5	1420/0006Z		Washer (M6)		4
6	142/00533		Gaiter		2
7	290/00975		Insert		2
8	290/01055		Plate retaining		1
9	826/00628		Button		4
10	828/10267		Grommet Blanking plug		1

Applicability Date Ranges:
From: M1299634 , To:

9802/6220 B2-13-21 CAB SEALS, REAR CONSOLE

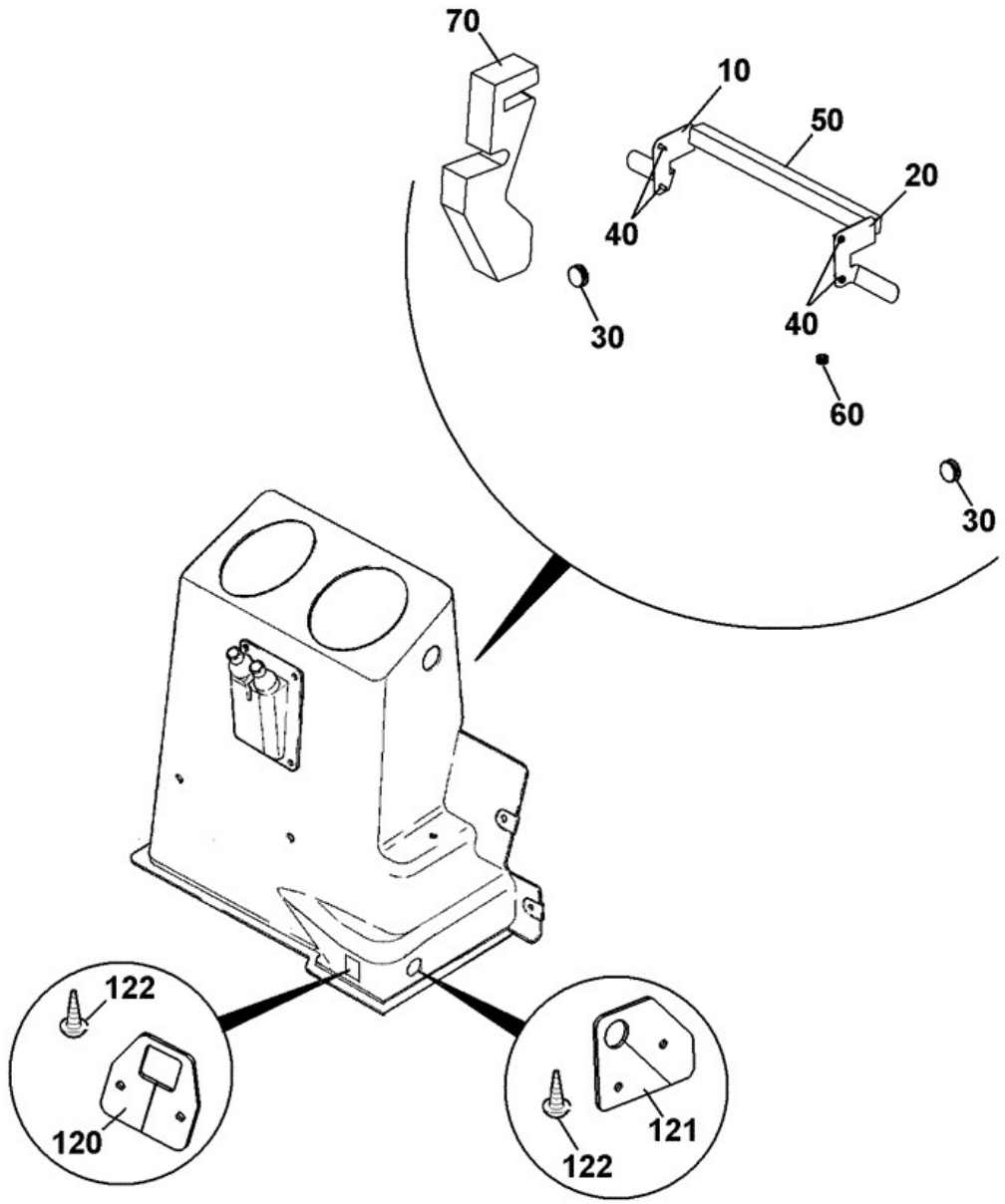

333-T3773-1

Item	Part No	Change No	Description	Usage Code	QTY
10	333/T2248		Plate cover RHS		1
20	333/T2229		Plate cover LHS		1

30	2410/1308		Grommet Blind		2
40	826/01789		Screw		4
50	333/T3774		Seal rear moulding		1
60	2410/0003		Grommet		1
70	333/T4318		Seal foam rear panel		1
120	333/T3129		Cover front		1
121	333/T3131		Cover side		1
122	826/01789		Screw		4

Applicability Date Ranges:
From: M1743352 , To:

9802/6220 B2-14-1 BRACKETS REAR LIGHT

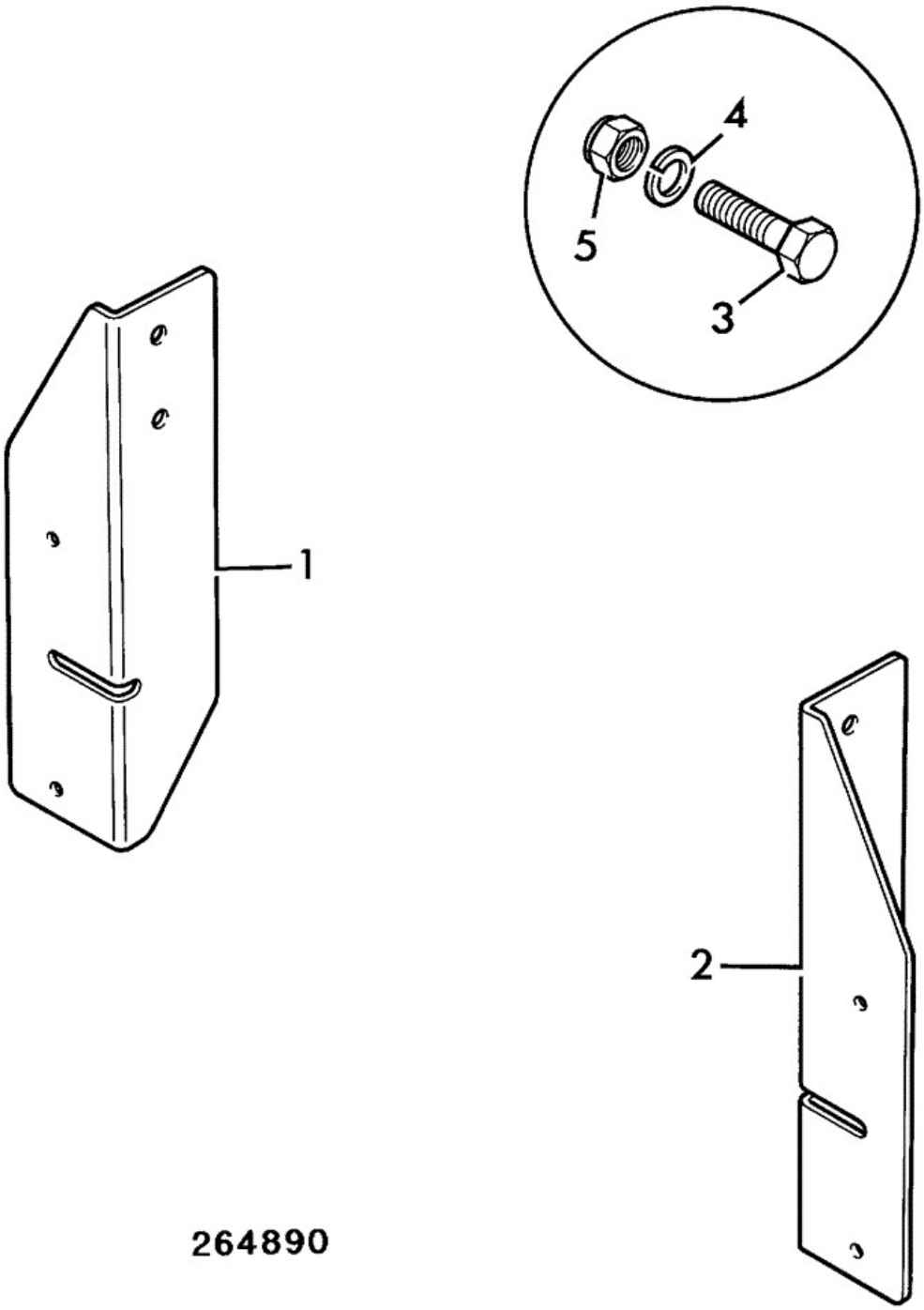

Item	Part No	Change No	Description	Usage Code	QTY
1	290/01152	<M752369	Bracket rear, left		1
1	290/01256	>M752370	Bracket rear light L.H. Black cab		1

1A	290/34400		Bracket rear light, right		1
2	290/01155	<M752369	Bracket rear, right		1
2	290/01257	>M752370	Bracket rear light R.H. Black cab		1
3	1315/0407Z		Setscrew M10 x 25 mm		4
4	1425/0008Z		Spring Washer		4
5	1370/0301Z		Nut Plain, M10		4

Applicability Date Ranges:
From: , To:

Product Catalog\BACKHOE LOADER 1CX, 208\1CX 00751600-00752999,00806000-00807552 9802/6220\B BODYWORK, CAB, LOADER END\B02 CAB\B2-15-1 CONSOLE HEATER

9802/6220 B2-15-1 CONSOLE HEATER

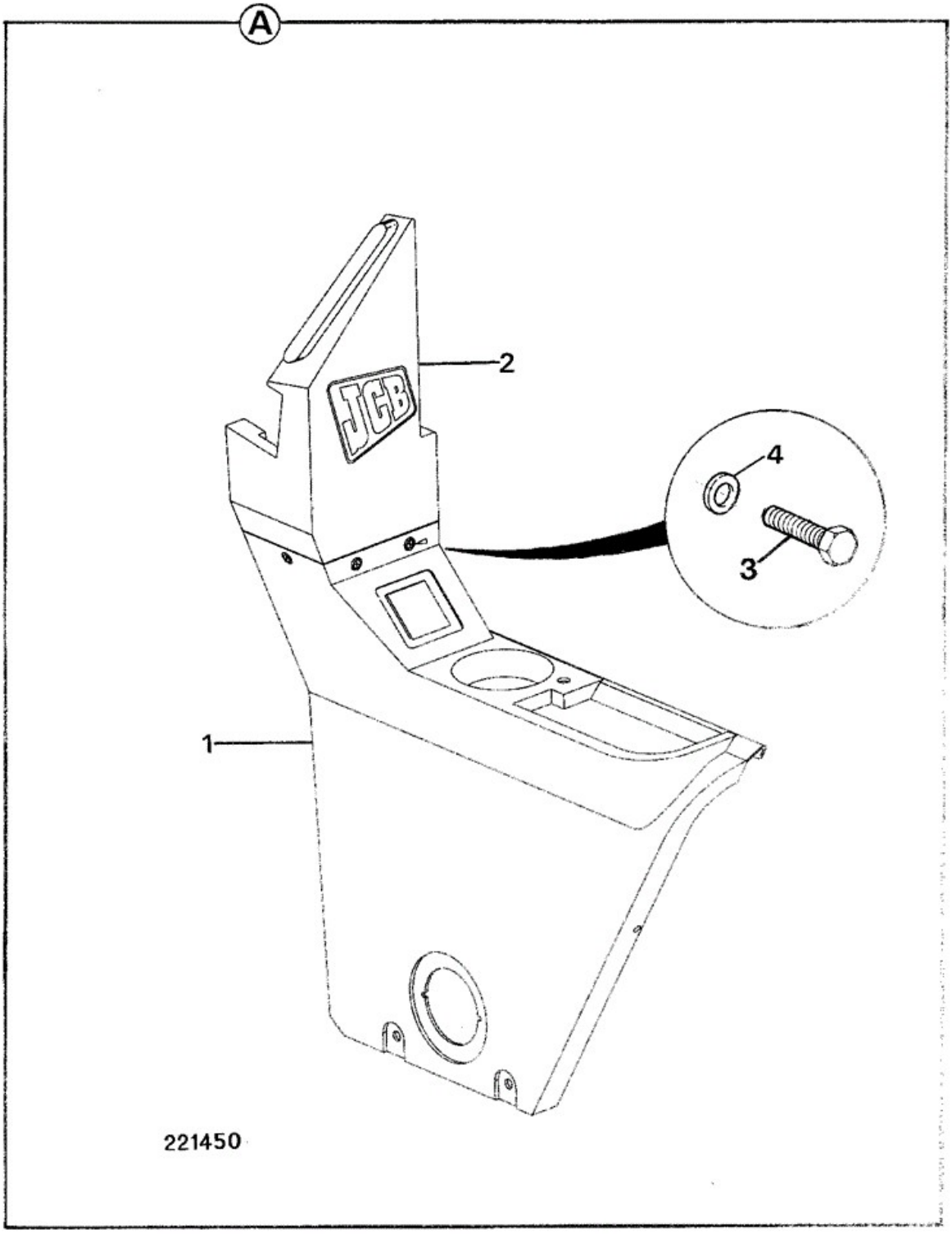

Item	Part No	Change No	Description	Usage Code	QTY

A	290/35400		Console heater		1
1	:290/00747		Console bottom		1
2	:290/00746		Vent top		1
3	:826/00861		Screw		3
4	:1420/0005Z		Washer (M5)		3

Applicability Date Ranges:
From: , To:

Product Catalog\BACKHOE LOADER 1CX, 208\1CX 00751600-00752999,00806000-00807552 9802/6220\B BODYWORK, CAB, LOADER END\B02 CAB\B2-16-1 VISOR, SUN

9802/6220 B2-16-1 VISOR, SUN

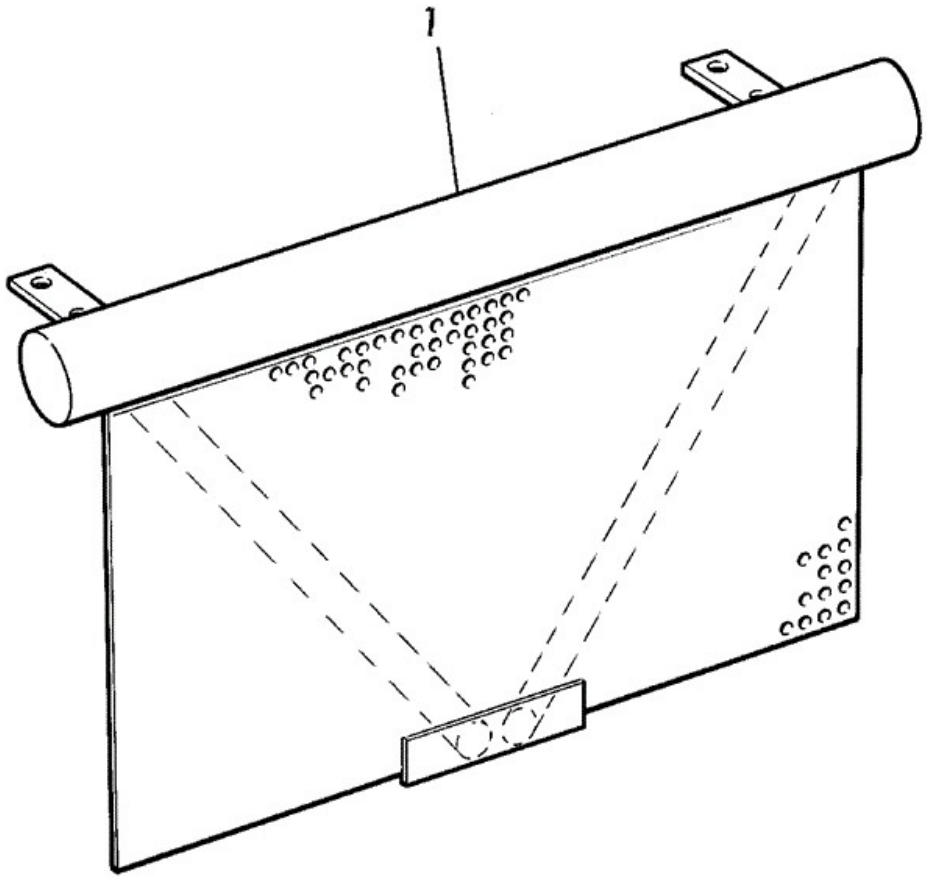

212740

Item	Part No	Change No	Description	Usage Code	QTY

1	246/48900		Blind roller		1
2	1315/0208Z		Setscrew M6 x 30mm Use with item 7		1
3	1315/0205Z		Setscrew M6 x 20mm Use with item 6		1
4	1425/0006Z		Washer Spring (M6) Use with 2 & 3		2
5	1420/0006Z		Washer (M6) Use with 2 & 3		1
6	290/00757		Spacer left side		1
7	290/00758		Spacer right side		1

Applicability Date Ranges:
From: , To:

Product Catalog\BACKHOE LOADER 1CX, 208\1CX 00751600-00752999,00806000-00807552 9802/6220\B BODYWORK, CAB, LOADER END\B02 CAB\B2-18-1 CARRIER WARNING TRIANGLE

9802/6220 B2-18-1 CARRIER WARNING TRIANGLE

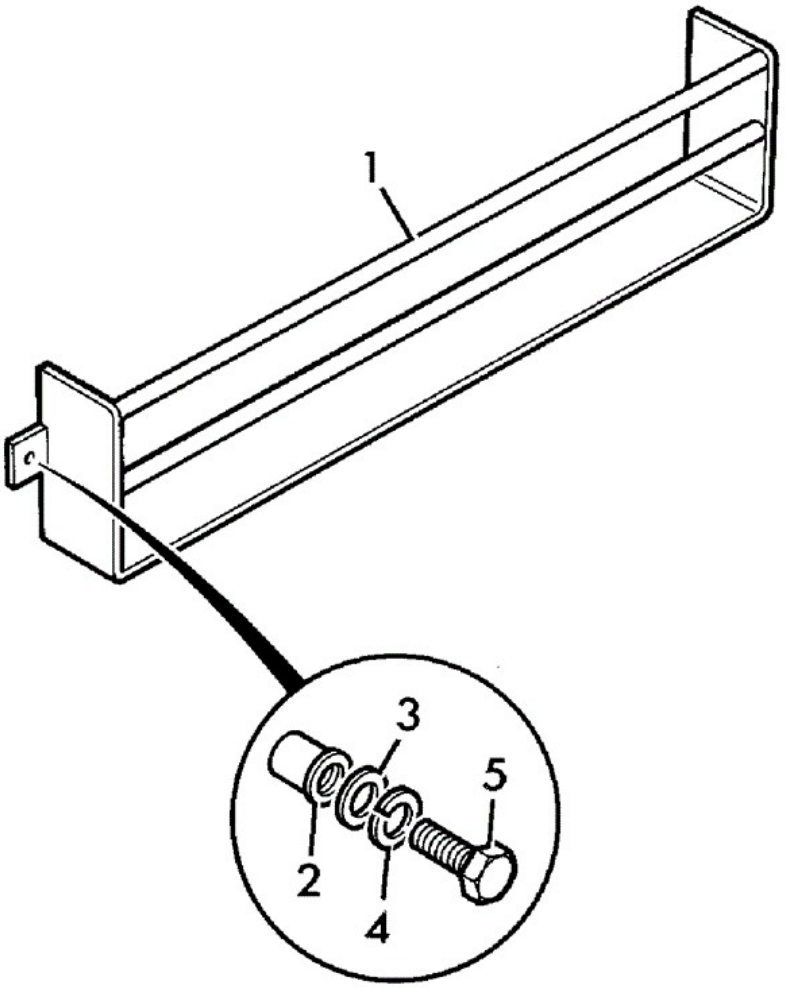

222160

Item	Part No	Change No	Description	Usage Code	QTY
1	290/37100		Carrier warning triangle		1
1	290/68000		Carrier Warning triangle Black cab Black cab		1
2	826/01176		Nut M8 rivet		2
3	1420/0007Z		Washer (M8)		2

4	1425/0007Z		Washer Washer		2
5	1315/0305Z		Setscrew M8 x 20		2

Applicability Date Ranges:
From: , To:

Product Catalog\BACKHOE LOADER 1CX, 208\1CX 00751600-00752999,00806000-00807552 9802/6220\B BODYWORK, CAB, LOADER END\B02 CAB\B2-19-1 CARRIER FIRST AID BOX

9802/6220 B2-19-1 CARRIER FIRST AID BOX

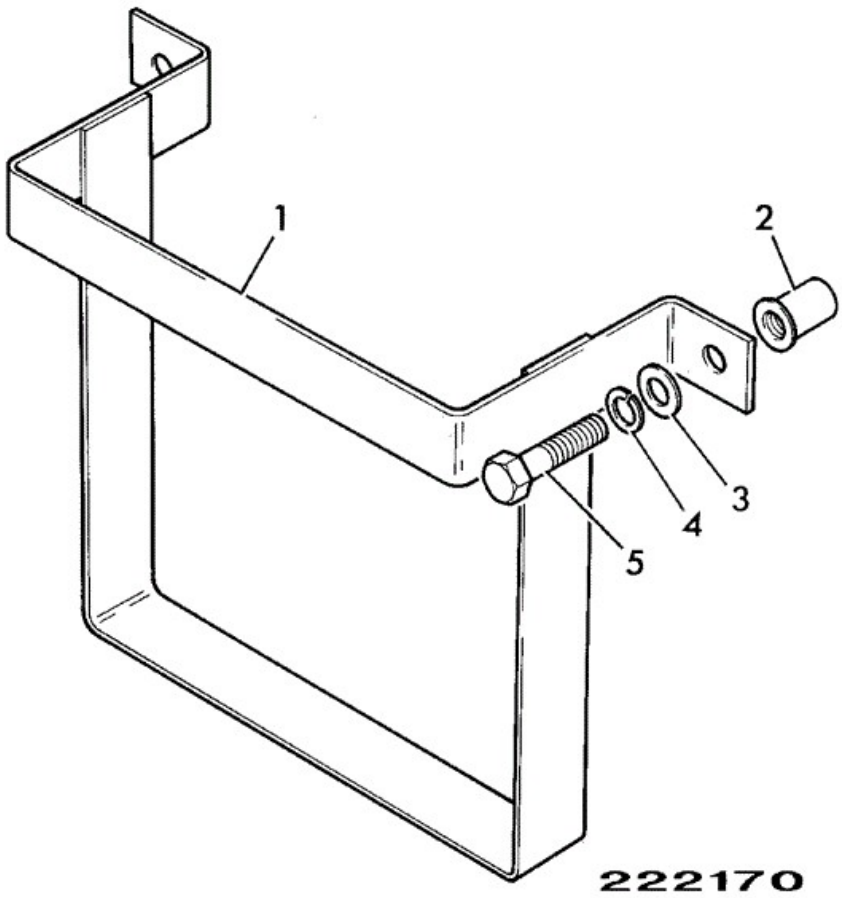

Item	Part No	Change No	Description	Usage Code	QTY

1	290/38100		Carrier first aid box		1
1	290/68500		Carrier First aid box Black cab Black cab		1
2	826/01176		Nut M8 rivet		2
3	1420/0007Z		Washer (M8)		2
4	1425/0007Z		Washer Washer		2
5	1315/0305Z		Setscrew M8 x 20		2

Applicability Date Ranges:
From: , To:

Product Catalog\BACKHOE LOADER 1CX, 208\1CX 00751600-00752999,00806000-00807552 9802/6220\B BODYWORK, CAB, LOADER END\B02 CAB\B2-20-1 COVERS THERMAL SERVO JOYSTICK

9802/6220 B2-20-1 COVERS THERMAL SERVO JOYSTICK

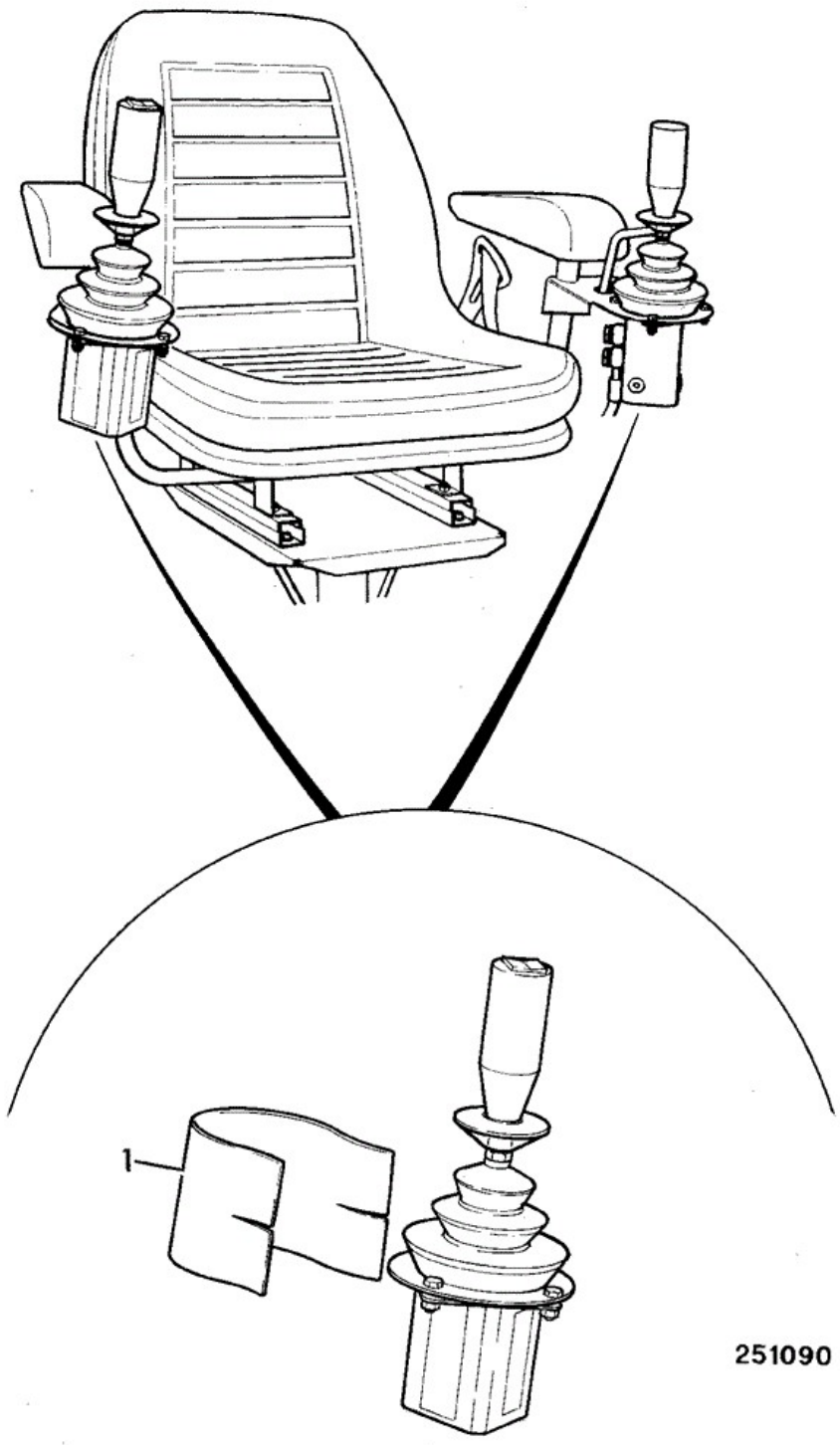

Item	Part No	Change No	Description	Usage Code	QTY
1	290/01045		Cover thermal, joystick		2

Applicability Date Ranges:
From: , To:

Product Catalog\BACKHOE LOADER 1CX, 208\1CX 00751600-00752999,00806000-00807552 9802/6220\B BODYWORK, CAB, LOADER END\B03 LOADER, FRONT END\B3-1-1 ARMS, LOADER

9802/6220 B3-1-1 ARMS, LOADER

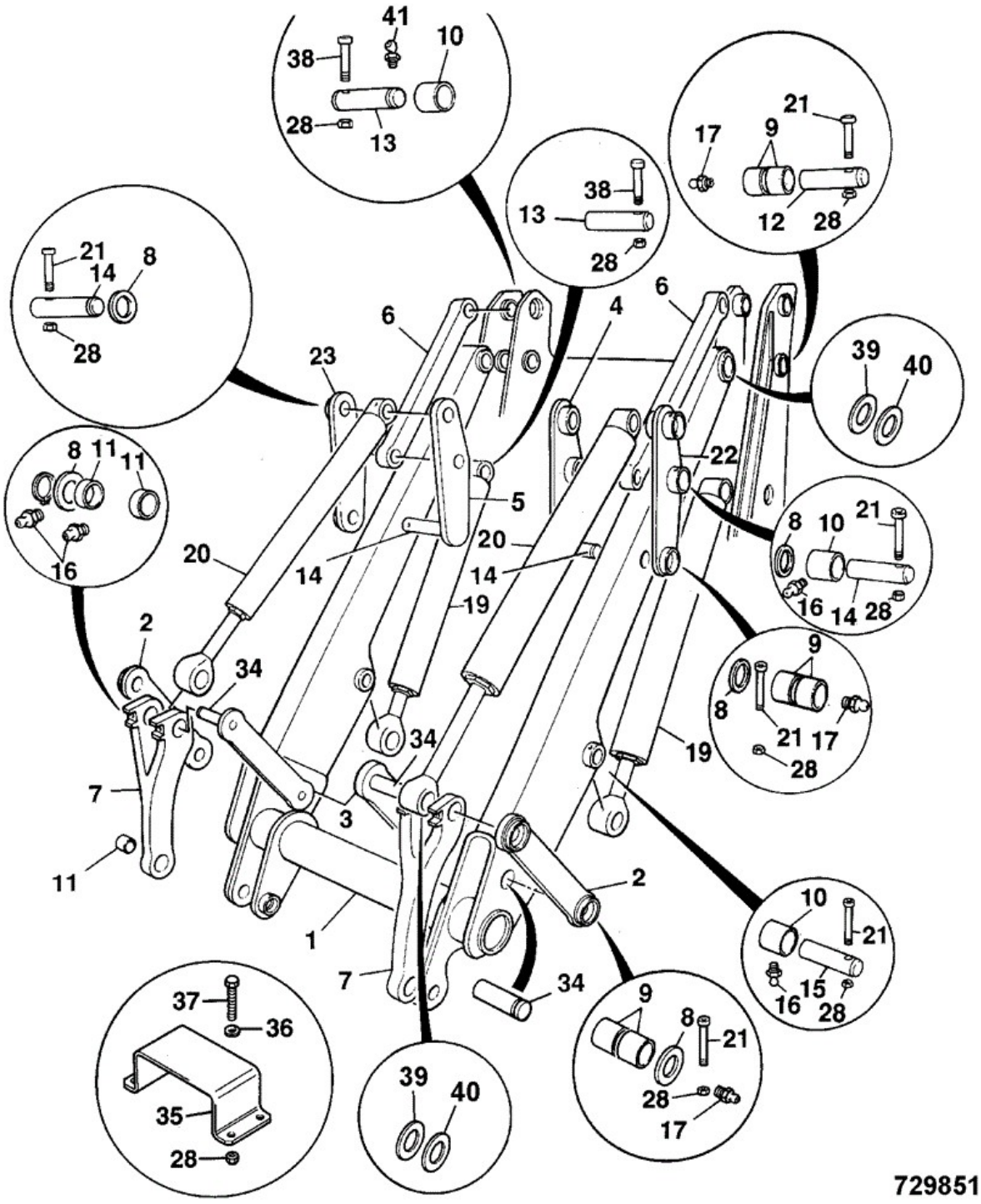

Item	Part No	Change No	Description	Usage Code	QTY
1	290/04400		Arm Loader		1
2	290/36300		Lever tipping		2

3	290/00137		Lever tipping		1
4	290/36400		Link Left side		1
5	290/36600		Link Right side		1
6	290/00139		Link level		2
7	290/00101	Superseded	Link tipping		2
7	331/38092		Link tipping		2
8	823/00385		Washer (33.25mm x 50mm x 2.5mm)		0
9	809/00108		Bush 40mm long		12
10	809/00104		Bush grooved, 40mm long		4
11	809/00109		Bush grooved, 25mm long		6
12	811/50338	<31/08/2008	Pin pivot		2
12	332/U8197	>01/09/2008	Pin pivot		2
13	811/50489		Pin pivot		4
14	811/50390		Pin pivot		6
15	811/50344		Pin pivot, 30mm x 121mm		2
16	1450/0001		Nipple Grease, Straight 1/8 BSP		10
17	1450/0002		Nipple Grease, Straight 1/4		6
19	553/60005		Ram loader lift,60 x 30		2
20	553/60004		Ram shovel, 60 x 30		2
21	826/01468	<31/08/2008	Bolt M8 x 62mm long		14
21	1315/3315D	>01/09/2008	Bolt (M8 x 65)		12
21	1315/3416D	>01/09/2008	Bolt M10 x 70mm long		2
22	290/36500		Link Left side		1
23	290/36700		Link Right side		1
26	826/01467		Bolt		4
28	1370/0203Z	<31/08/2008	Nut Nut M8		26
28	1370/0203D	>01/09/2008	Nut Lock M8		16
28	1370/0303D	>01/09/2008	Nut Self Lock M10 Loader Arm/Chassis only		2
32	2410/1303		Grommet Blind, 9.5 x 5 mm		4
34	811/50389		Pin pivot		4
35	290/00490		Plate level indicator		1
36	1420/0007Z		Washer (M8)		4
37	1315/0307Z		Setscrew M8 X 25		4
38	1315/3317Z	<31/08/2008	Bolt M8 x75 mm		4
38	1315/3317D	>01/09/2008	Bolt M8 x 75mm long		4
39	140/00826		Shim 0.5mm 0.5mm thick		0
40	140/00828		Shim 1.5mm 1.5mm thick		0

Applicability Date Ranges:
From: , To:

Product Catalog\BACKHOE LOADER 1CX, 208\1CX 00751600-00752999,00806000-00807552 9802/6220\B BODYWORK, CAB, LOADER END\B03 LOADER, FRONT END\B3-2-1 SAFETY STRUT LOADER ARMS

9802/6220 B3-2-1 SAFETY STRUT LOADER ARMS

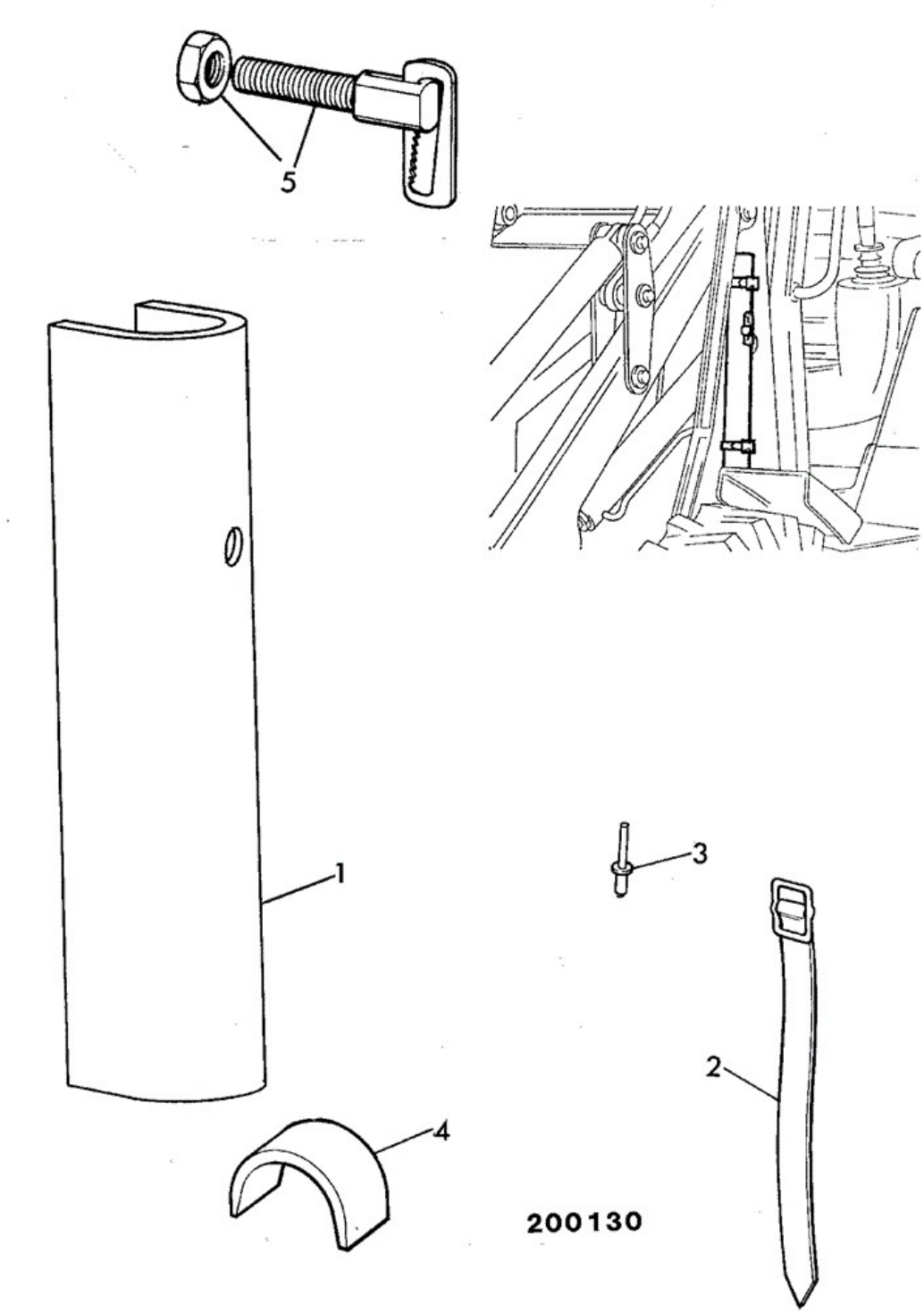

Item	Part No	Change No	Description	Usage Code	QTY
1	290/00991		Strut safety		1
2	140/00857		Strap		1

3	826/01345		Rivet Pop		1
4	290/00503		Rubber safety strut		2
5	123/02973		Fastener anti-luce		1

Applicability Date Ranges:
From: , To:

Product Catalog\BACKHOE LOADER 1CX, 208\1CX 00751600-00752999,00806000-00807552 9802/6220\B BODYWORK, CAB, LOADER END\B03 LOADER, FRONT END\B3-3-1 TRAVEL LINK,LOADER ITALY

9802/6220 B3-3-1 TRAVEL LINK,LOADER ITALY

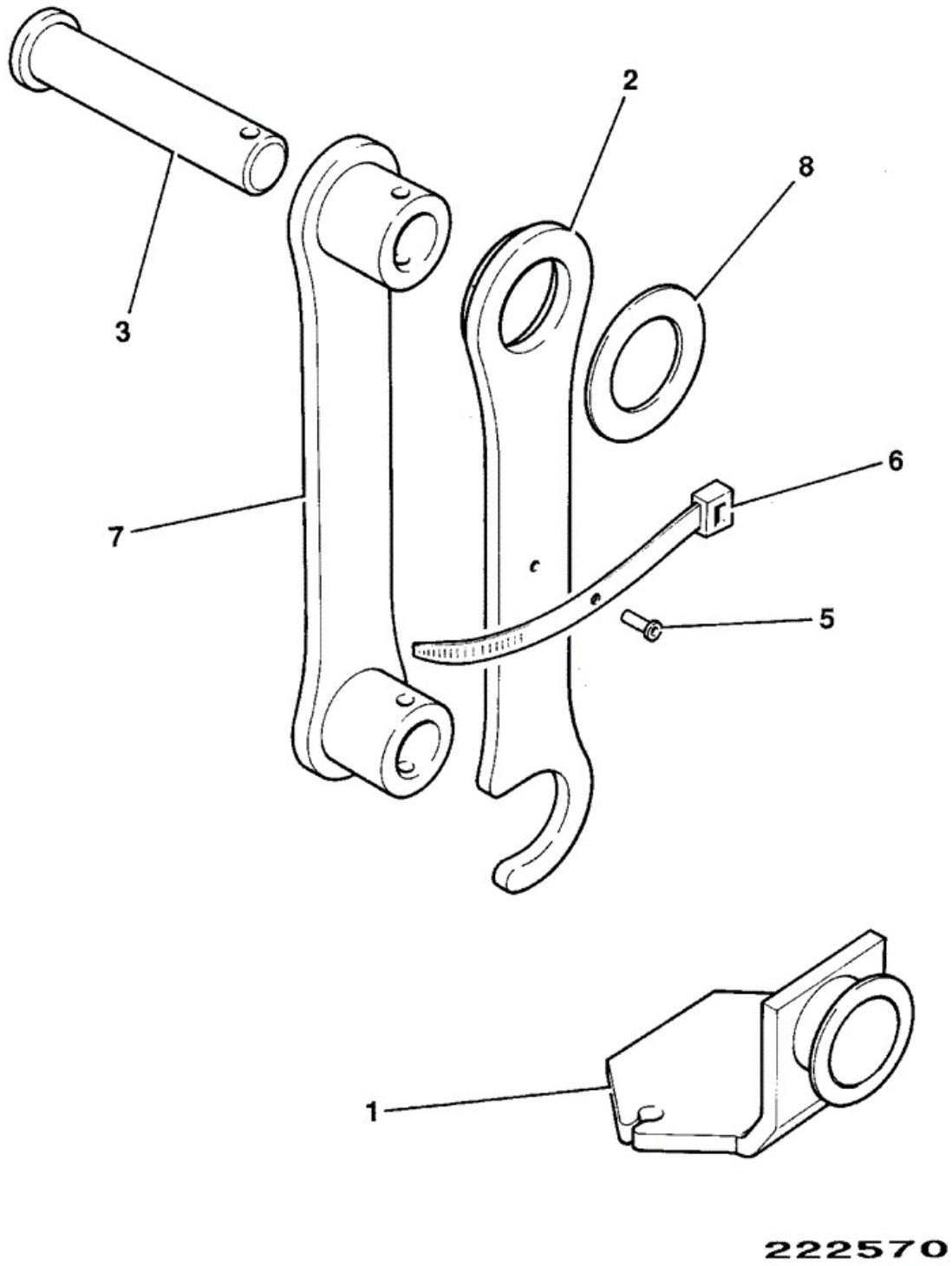

Item	Part No	Change No	Description	Usage Code	QTY

1	290/42600		Bracket location		1
2	290/42700		Link travel		1
3	811/50403		Pin pivot		2
5	826/01070		Rivet		1
6	140/00857		Strap		1
7	290/42500		Link outer		1
8	823/00237		Shim 0.95mm Thick		1

Applicability Date Ranges:
From: , To:

Product Catalog\BACKHOE LOADER 1CX, 208\1CX 00751600-00752999,00806000-00807552 9802/6220\B BODYWORK, CAB, LOADER END\B03 LOADER, FRONT END\B3-4-1 LEVEL INDICATOR LOADER ARM MOUNTED (OPTIONAL)

9802/6220 B3-4-1 LEVEL INDICATOR LOADER ARM MOUNTED (OPTIONAL)

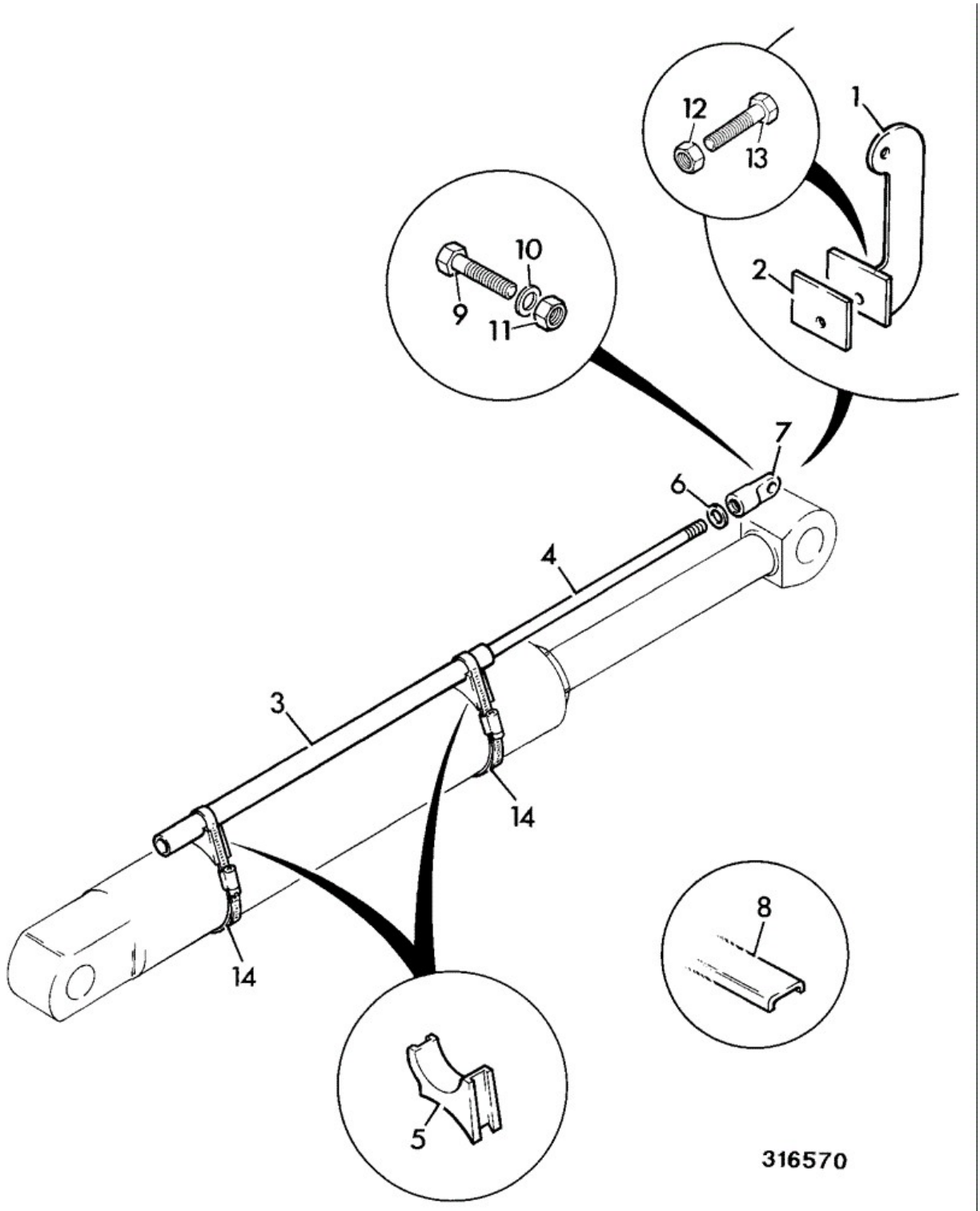

Item	Part No	Change No	Description	Usage Code	QTY
1	290/65100		Bracket level indicator		1

2	290/01211		Plate indicator		1
3	290/01212		Tube level indicator		1
4	141/01297		Bar striker		1
5	120/75402		Bracket saddle		2
6	1370/0602Z		Nut THIN NUT (M16)		1
7	274/00611		Clevis		1
8	821/00185		Insert Clamp		1
9	1315/3419Z		Bolt M10x90mm		1
10	1420/0008Z		Washer (M10)		4
11	1370/0303Z		Nut lock M10		2
12	1370/0301Z		Nut Plain, M10		1
13	1315/0412Z		Bolt M10 x 1.5 x 50		1
14	2201/0015		Clip Worm Drive 78-102mm		2

Applicability Date Ranges:
From: , To:

Product Catalog\BACKHOE LOADER 1CX, 208\1CX 00751600-00752999,00806000-00807552 9802/6220\B BODYWORK, CAB, LOADER END\B04 BACKHOE\B4-1-1 PIVOT PINS EXCAVATOR END

9802/6220 B4-1-1 PIVOT PINS EXCAVATOR END

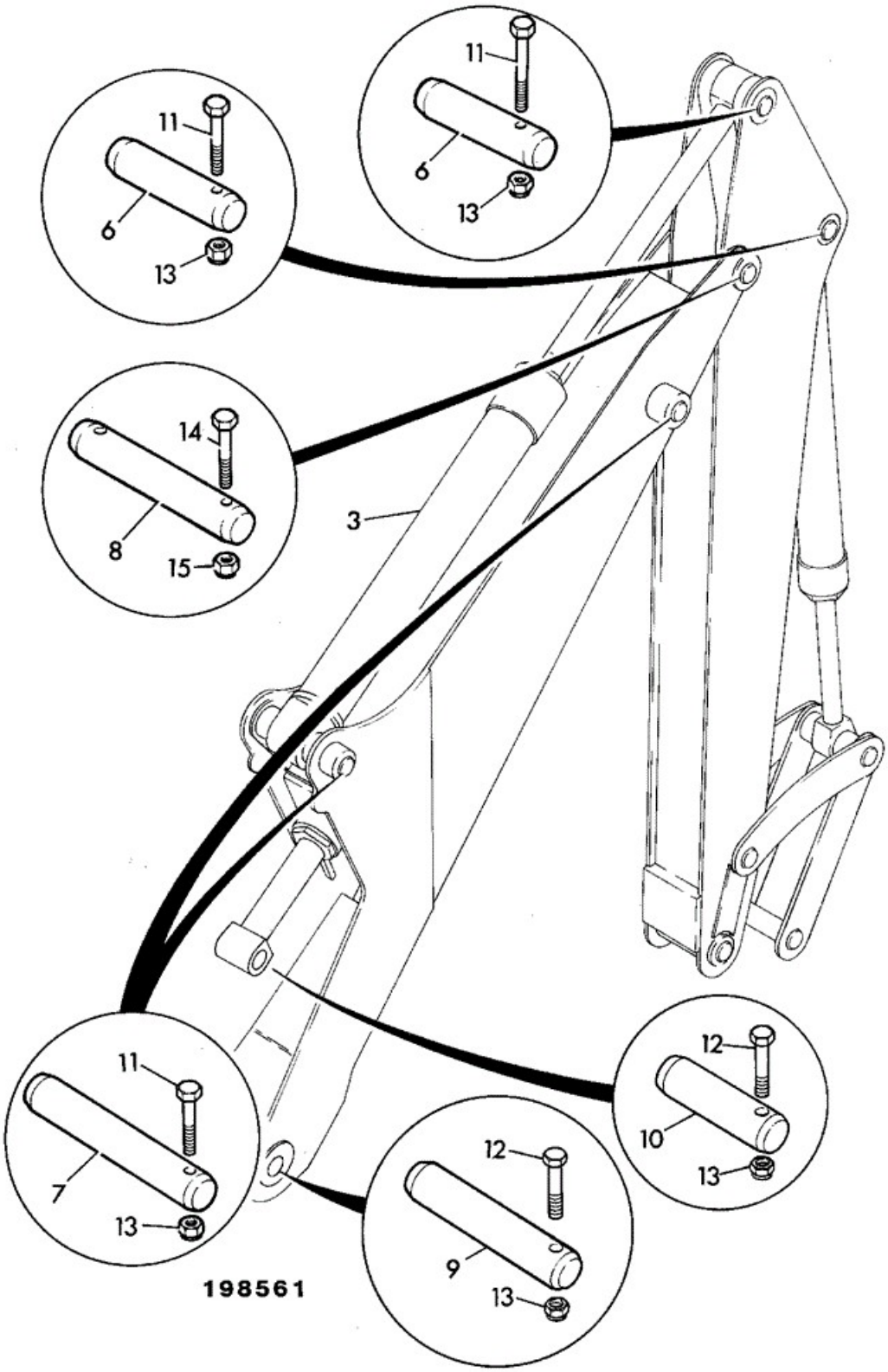

Item	Part No	Change No	Description	Usage Code	QTY

2	****		'See Remark' Boom Ram, See E4		1
3	****		'See Remark' Dipper Ram see E4		1
6	811/50336		Pin pivot		2
7	811/50335		Pin pivot		2
8	811/20059		Pin pivot		1
9	811/50341		Pin pivot		1
10	811/50376		Pivot pin		1
11	1315/3416Z		Bolt M10 x 70		4
12	1315/3417Z		Bolt (M10 x 75)		2
13	1370/0303Z		Nut lock M10		6
14	1315/3518Z		Bolt M12 x 80mm		2
15	1370/0403Z		Nut Lock, M12		2
17	1370/0203Z		Nut Nut M8		1

Applicability Date Ranges:
From: , To:

Product Catalog\BACKHOE LOADER 1CX, 208\1CX 00751600-00752999,00806000-00807552 9802/6220\B BODYWORK, CAB, LOADER END\B04 BACKHOE\B4-2-1 KINGPOST & CARRIAGE

9802/6220 B4-2-1 KINGPOST & CARRIAGE

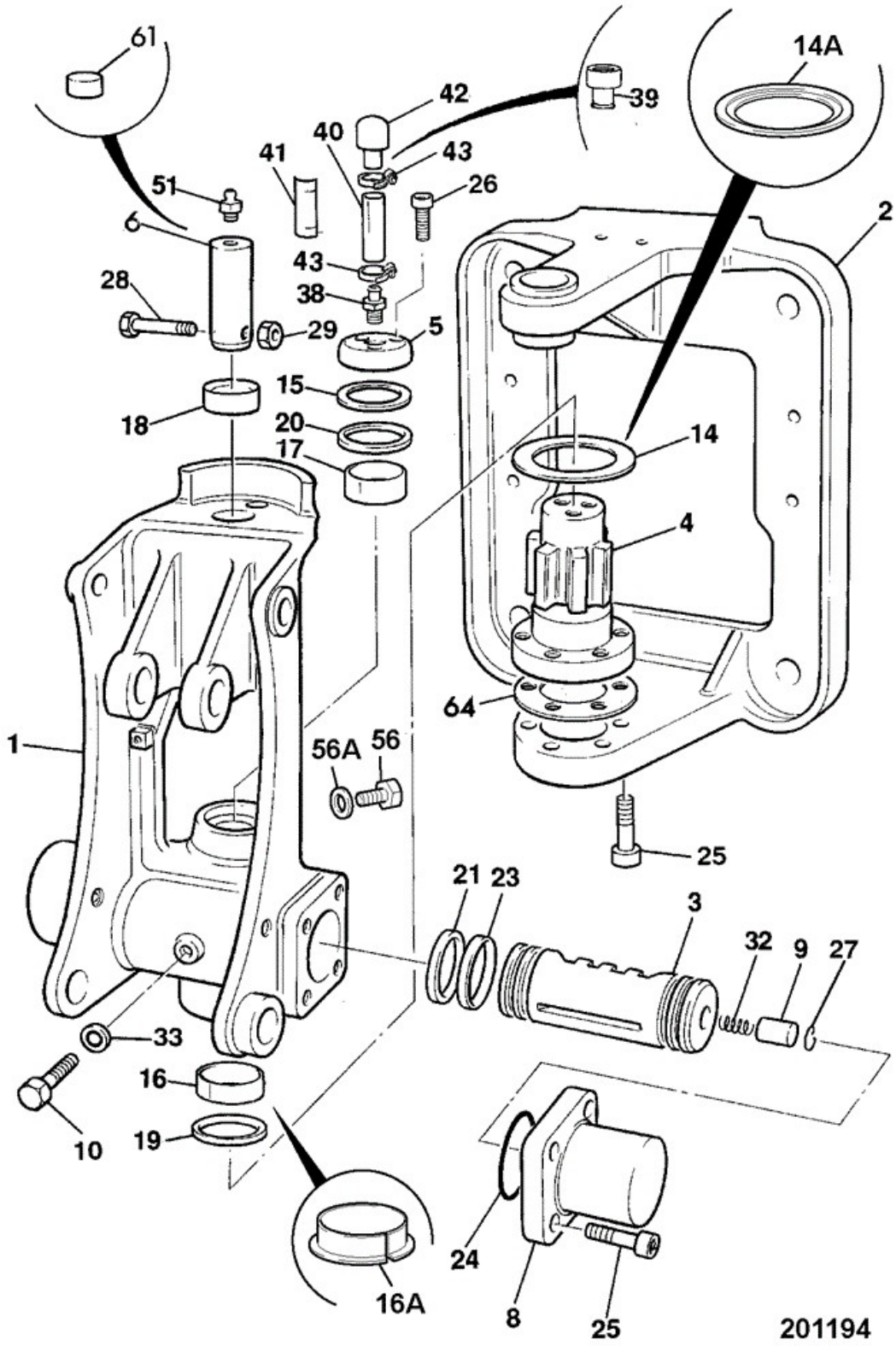

Item	Part No	Change No	Description	Usage Code	QTY

1	290/00639	Superseded	Kingpost		1
1	M.S.S.		Multi Supersession		1
1	:290/01250		Kingpost		1
1	:290/01236		Pin anti-rotation		1
2	290/00324		Carriage		1
3	290/00740		Rack slew		1
4	290/00265	Superseded	Gear pinion, drive		1
4	290/01273		Gear Flanged drive pinion Item 64 not required with this part		1
5	290/00385		Cap thrust		1
6	811/50350		Pin pivot		1
8	290/32400		Cylinder slew		2
9	290/00382		Piston damping		2
10	290/00383	<M752178	Pin anti-rotation		1
10	290/01236		Pin anti-rotation		1
14	290/00456	<M806476	Washer thrust		1
14A	823/10235		Washer thrust		1
15	290/00457		Washer Thrust		1
16	808/00343	<M806476	Bush		1
16A	831/10194		Bush flanged		1
17	808/00344		Bush		1
18	808/00351		Bush		1
19	904/14700		Seal		1
20	904/14800		Seal		1
21	2411/1135		Seal piston		2
23	2411/7918		Ring Wear		2
24	828/00350		O Ring		2
25	1391/3712		Screw cap		14
26	1391/3530	Superseded	Capscrew		3
26	1391/3508		Capscrew M12 x 30		3
27	826/01458		Ring wire locking		2
28	1315/3719Z		Bolt M16 x 90mm		1
29	1370/0602Z		Nut THIN NUT (M16)		1
32	814/00312		Spring		2
37	828/00349		O Ring		1
38	290/00973		Adapter		1
39	290/00972		Adapter		1
40	647/01000		Hose Clear P.V.C 110mm		0

41	290/00473		Indicator Not fitted after Oct 95		1
42	32/911900		Breather		1
43	821/00448		Clip		3
51	1450/0002		Nipple Grease, Straight 1/4		1
56	816/80005		Plug 3/8"BSP		3
56A	1406/0008		Seal Washer		3
59	826/00349		Stud		1
61	835/00130		Cap		1
64	290/00886	<M752547	Spacer Replaces earlier plastic design.		1
69	816/80025		Plug		1

Note 1: For machine M807216 see page B4-2-2

Note 2: 290/00456 is a plain thrust washer, 823/10235 has a machined recess.

Note 3: Not required with 290/01273

Applicability Date Ranges:
From: , To: M807225

Product Catalog\BACKHOE LOADER 1CX, 208\1CX 00751600-00752999,00806000-00807552 9802/6220\B BODYWORK, CAB, LOADER END\B04 BACKHOE\B4-2-2 KINGPOST & CARRIAGE

9802/6220 B4-2-2 KINGPOST & CARRIAGE

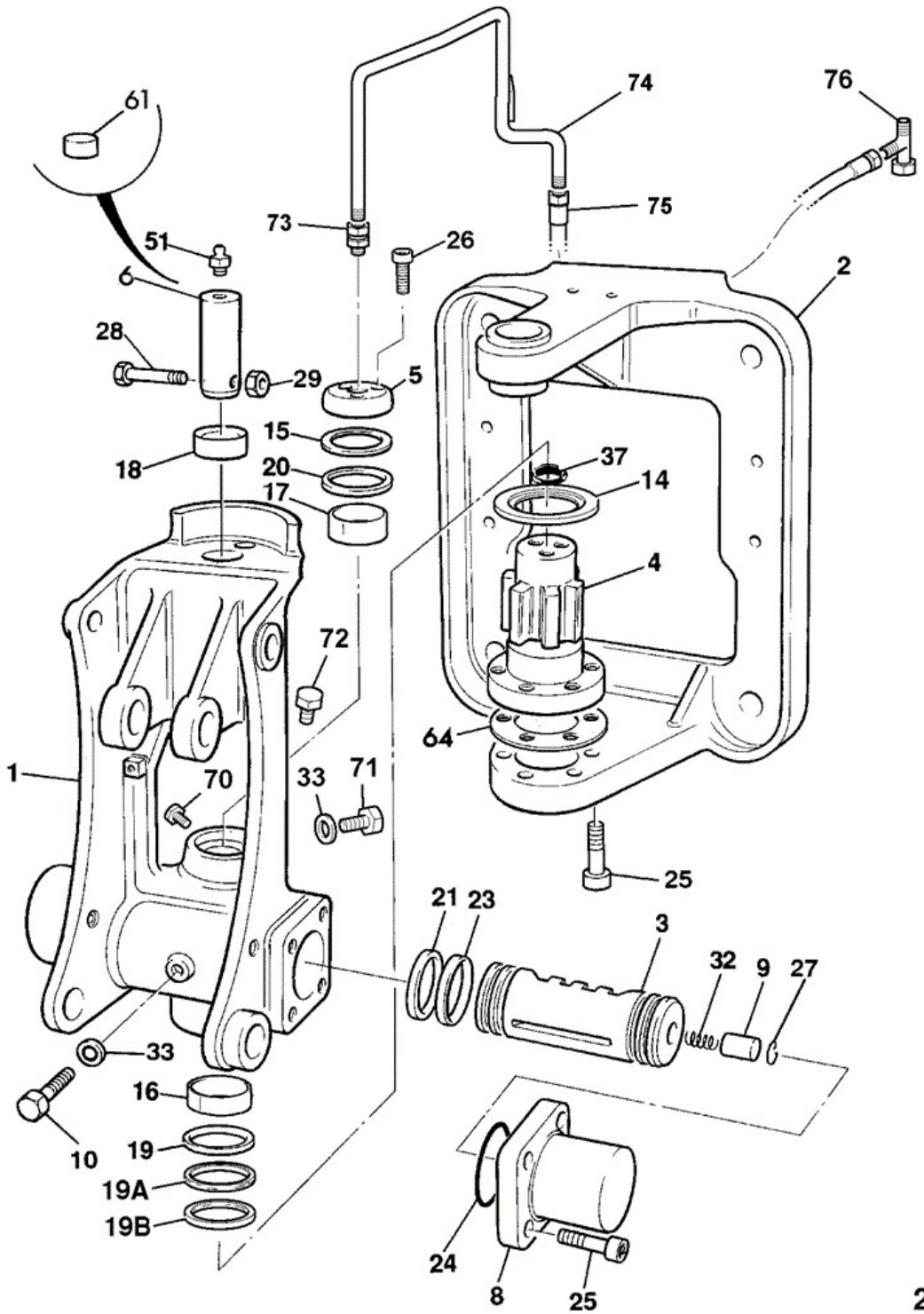

Item	Part No	Change No	Description	Usage Code	QTY
1	331/20083	<M808299	Kingpost		1
1	290/72154		Kingpost		1

2	290/00324		Carriage		1
3	331/20081		Rack slew		1
4	331/20076	Superseded	Gear flanged drive pinion		1
4	332/R7569		Gear flanged drive pinion		1
5	290/00385	<M808234	Cap thrust		1
5	290/72079		Cap thrust		1
6	811/50350		Pin pivot		1
8	290/32400	<M808234	Cylinder slew		2
8	290/72078	<06/12/07	Cylinder slew fabricated type		2
8	332/R5971	>07/12/07	Cylinder slew Cast type		2
9	290/00382		Piston damping		2
10	290/01236		Pin anti-rotation		1
14	290/00456	<M808493	Washer thrust		1
14	823/10235	>M808494	Washer thrust		1
15	290/00457		Washer Thrust		1
16	831/10233		Bush lower		1
17	831/10232		Bush upper		1
18	808/00351	<M808299	Bush		1
18	831/10287		Bush flanged		1
19	904/14700	<M808493	Seal		1
19A	904/20255	>M808494	Seal		1
19B	904/20254	>M808494	Seal		1
20	904/14800		Seal		1
21	2411/1135		Seal piston		2
23	2411/7918		Ring Wear		2
24	828/00350		O Ring		2
25	1391/3712		Screw cap		14
25A	823/10400	>M808235	Washer Nordlock M16 for item 25 to 6		6
26	1391/3508		Capscrew M12 x 30		3
27	826/01458		Ring wire locking		2
28	1315/3719Z	<06/12/07	Bolt M16 x 90mm		1
28	1315/3719D	>07/12/07	Bolt M16x90		1
29	1370/0602Z	<06/12/07	Nut THIN NUT (M16)		1
29	1370/0602D	>07/12/07	Nut thin M16		1
32	814/00312		Spring		2
33	1406/0015		Washer Bonded 3/8"		3
37	828/00349		O Ring		1
51	1450/0002		Nipple Grease, Straight 1/4		1

61	835/00130		Cap		1
64	****		'See Remark' not used on this assembly		1
69	816/80025	Superseded	Plug		1
69	816/90014		Plug 1/4"BSP		1
70	826/10571		Screw retaining		2
71	816/13234		Plug magnetic		1
72	816/13240		Plug with dipstick		1
73	816/20044	<M808234	Adaptor		1
73	816/90009		Adaptor 1/4BSP F x 9/16 SAE M		1
74	335/01744	<M808234	Pipe return		1
74	335/03765	>M808235	Pipe return		1
75	611/46500	<M807590	Hose high pressure 1170mm		1
75	611/47600		Hose		1
76	816/50018		Adapter Tee		1

Note 1: Also fitted to machine M807216 includes items 16 & 17

Note 2: includes items 16 & 17

Applicability Date Ranges:
From: M807226 , To:

Product Catalog\BACKHOE LOADER 1CX, 208\1CX 00751600-00752999,00806000-00807552 9802/6220\B BODYWORK, CAB, LOADER END\B04 BACKHOE\B4-3-1 BOOM

9802/6220 B4-3-1 BOOM

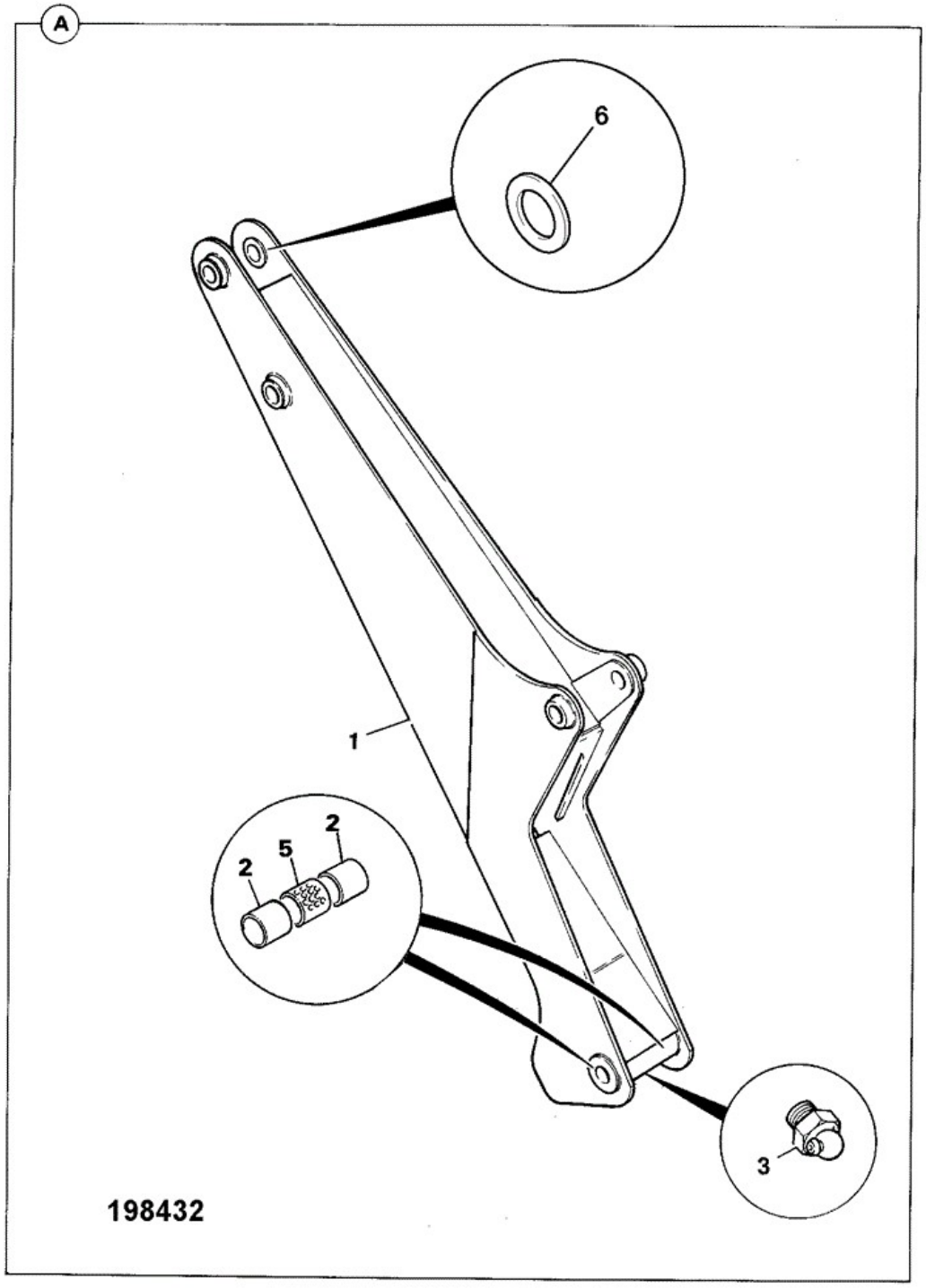

Item	Part No	Change No	Description	Usage Code	QTY
A	****		None serviced part		1
1	290/13100		Boom WA		1

2	:232/03907		Bush		2
3	:1450/0001		Nipple Grease, Straight 1/8 BSP		1
4	2410/1303		Grommet Blind, 9.5 x 5 mm		1
5	290/00773		Bush perforated		1
6	141/00818		Spacer 0.5mm 0.5mm thick, between boom and dipper		0
6	141/00819		Spacer 1.5mm 1.5mm thick, between boom and dipper		0

Applicability Date Ranges:
From: , To:

Product Catalog\BACKHOE LOADER 1CX, 208\1CX 00751600-00752999,00806000-00807552 9802/6220\B BODYWORK, CAB, LOADER END\B04 BACKHOE\B4-4-1 DIPPER 7' 3"

9802/6220 B4-4-1 DIPPER 7' 3"

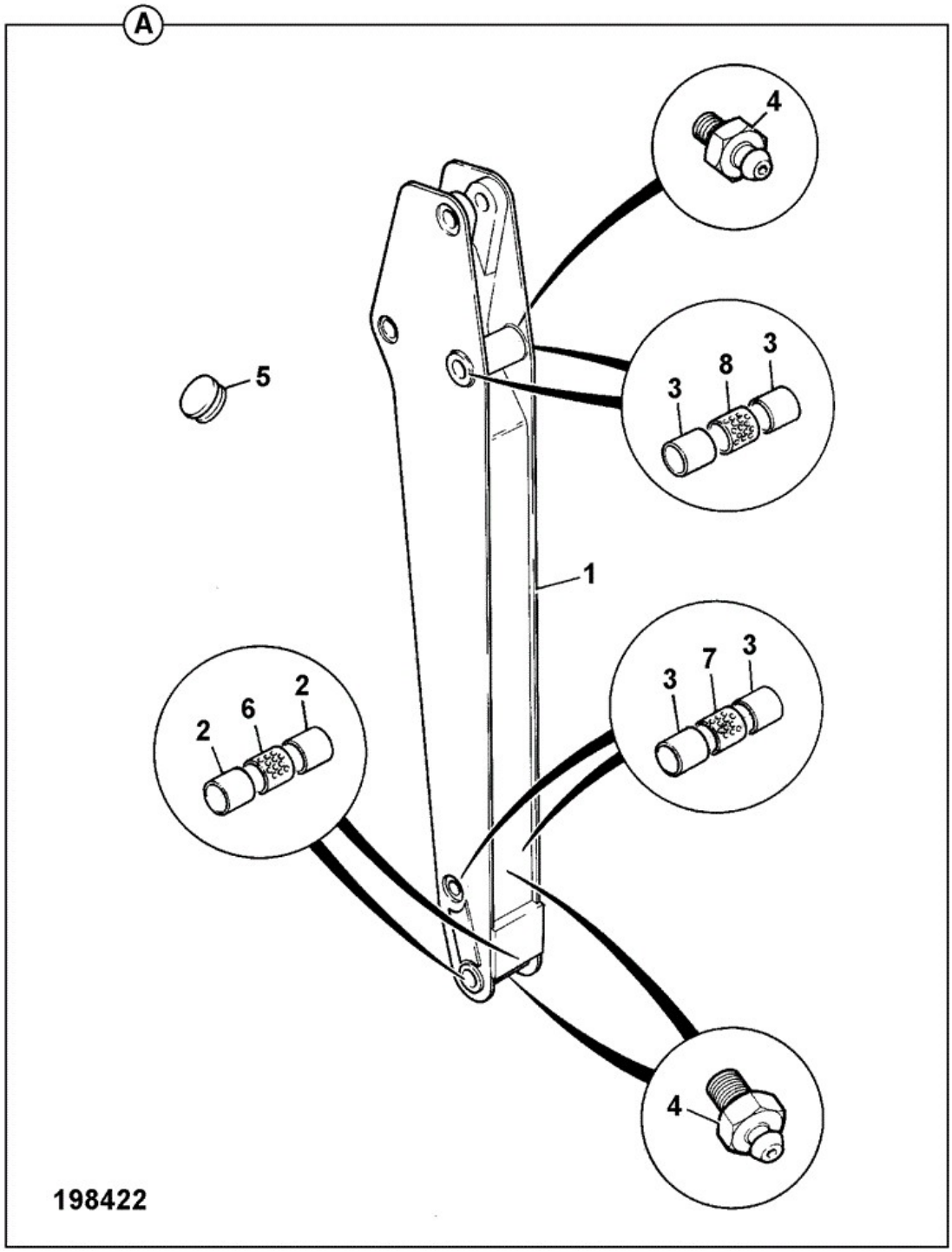

Item	Part No	Change No	Description	Usage Code	QTY
A	290/16900		Dipper assembly		1
1	****		'See Remark' Dipper		1

2	:232/03906		Bush		2
3	:232/03907		Bush		4
4	:1450/0001		Nipple Grease, Straight 1/8 BSP		3
5	:2410/1303		Grommet Blind, 9.5 x 5 mm		1
6	:290/00751		Spacer 44mm long		1
7	:290/00752		Spacer 36mm long		1
8	:290/00753		Spacer 51mm long		1

Applicability Date Ranges:
From: , To:

Product Catalog\BACKHOE LOADER 1CX, 208\1CX 00751600-00752999,00806000-00807552 9802/6220\B BODYWORK, CAB, LOADER END\B04 BACKHOE\B4-4-2 DIPPER 8' 4"

9802/6220 B4-4-2 DIPPER 8' 4"

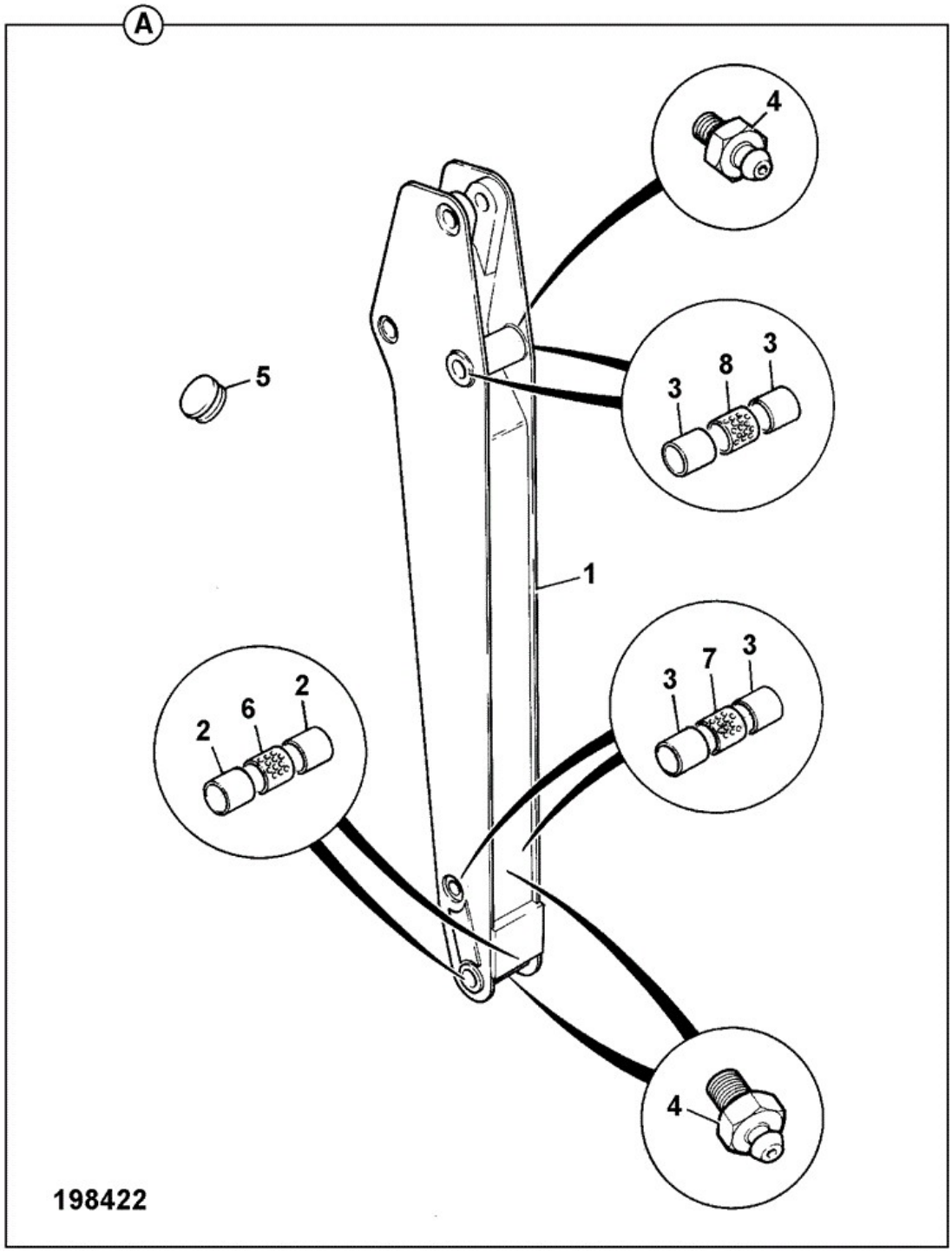

Item	Part No	Change No	Description	Usage Code	QTY
A	290/17000		Dipper 8'4" dig depth		1
1	:290/15600		Dipper W.A. long		1

2	:232/03906		Bush		2
3	:232/03907		Bush		4
4	:1450/0001		Nipple Grease, Straight 1/8 BSP		3
5	:2410/1303		Grommet Blind, 9.5 x 5 mm		8
6	:290/00751		Spacer 44mm long		1
7	:290/00752		Spacer 36mm long		1
8	:290/00753		Spacer 51mm long		1

Applicability Date Ranges:
From: , To:

Product Catalog\BACKHOE LOADER 1CX, 208\1CX 00751600-00752999,00806000-00807552 9802/6220\B BODYWORK, CAB, LOADER END\B04 BACKHOE\B4-4-3 DIPPER 8' 4" NARROW

9802/6220 B4-4-3 DIPPER 8' 4" NARROW

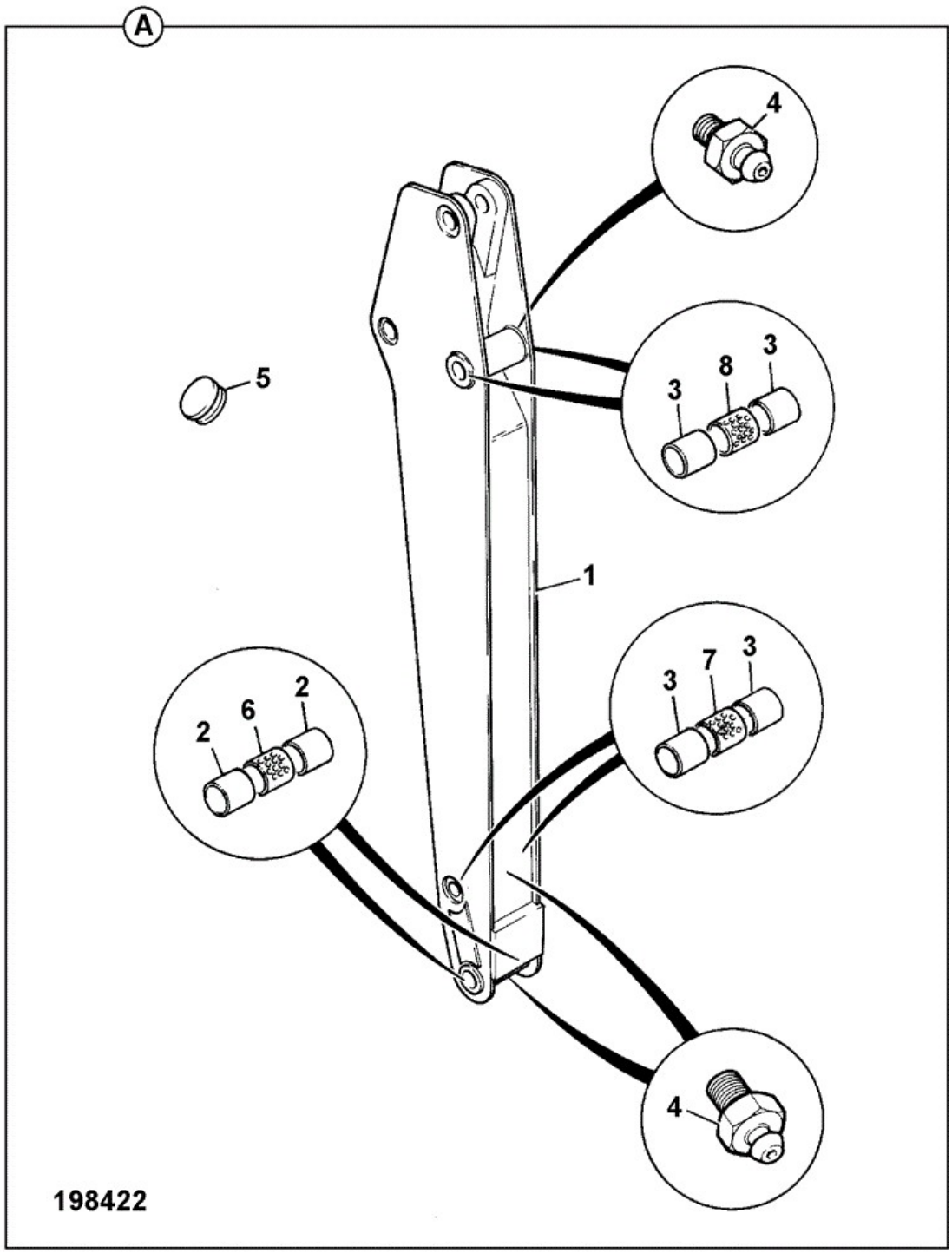

Item	Part No	Change No	Description	Usage Code	QTY
1	290/41100		Dipper narrow 90mm at nose end		1
2	809/00143		Bush		2

3	232/03907		Bush		4
4	1450/0001		Nipple Grease, Straight 1/8 BSP		3
5	2410/1303		Grommet Blind, 9.5 x 5 mm		4
6	290/00831		Spacer		1
8	290/00753		Spacer 51mm long		1

Applicability Date Ranges:
From: , To:

Product Catalog\BACKHOE LOADER 1CX, 208\1CX 00751600-00752999,00806000-00807552 9802/6220\B BODYWORK, CAB, LOADER END\B04 BACKHOE\B4-5-1 TIPPING LINK/LEVERS

9802/6220 B4-5-1 TIPPING LINK/LEVERS

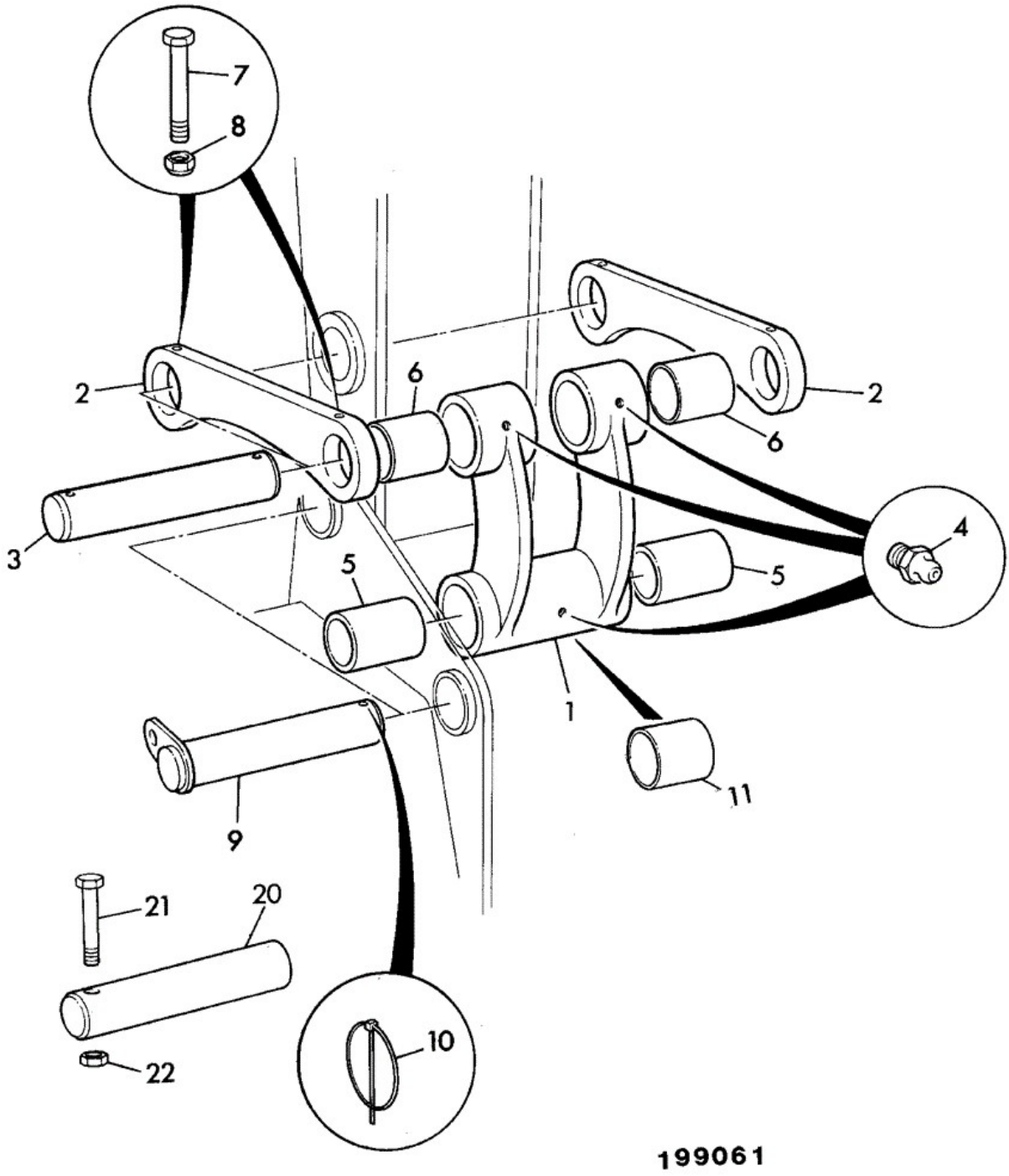

Item	Part No	Change No	Description	Usage Code	QTY
1	290/00971		Link tipping, standard 135mm wide at nose end		1
2	290/00228		Lever tipping		1
3	811/20058		Pin pivot		2

4	1450/0002		Nipple Grease, Straight 1/4		3
5	232/03906		Bush		1
6	809/00110		Bearing liner		2
7	1315/3319Z		Bolt M8 x 90 mm		4
8	1370/0203Z		Nut Nut M8		4
9	232/01100		Pin pivot		2
10	826/00600		Pin linch		2
11	290/00751		Spacer 44mm long		1
20	811/50335		Pin pivot Use on 1CX 9" buckets.		2
21	1315/3418Z		Bolt (M10 x 80)		2
22	1370/0303Z		Nut lock M10		2

Applicability Date Ranges:
From: , To:

Product Catalog\BACKHOE LOADER 1CX, 208\1CX 00751600-00752999,00806000-00807552 9802/6220\B BODYWORK, CAB, LOADER END\B04 BACKHOE\B4-5-2 TIPPING LINK/LEVERS FOR NARROW DIPPER

9802/6220 B4-5-2 TIPPING LINK/LEVERS FOR NARROW DIPPER

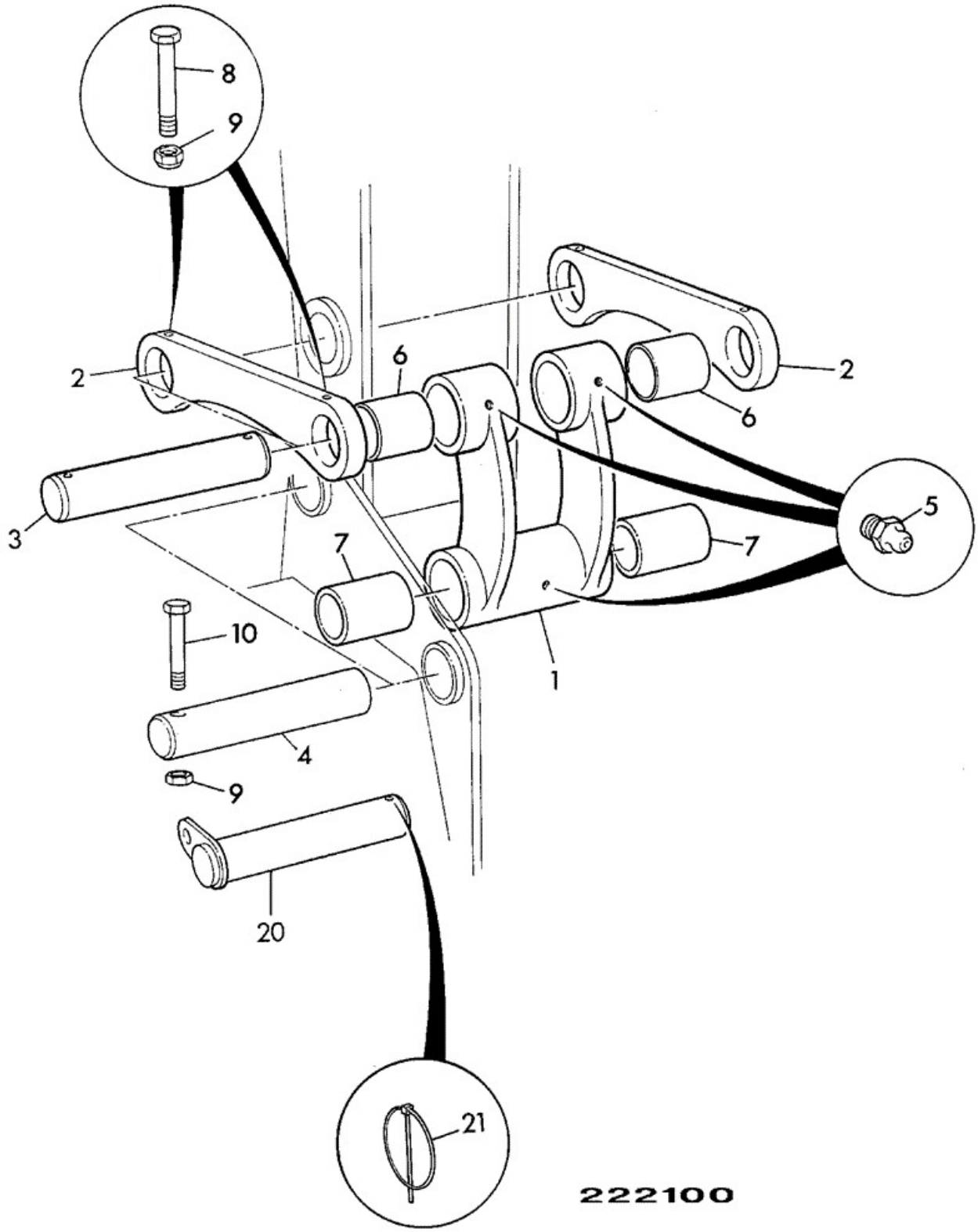

Item	Part No	Change No	Description	Usage Code	QTY

1	290/40800		Link tipping, narrow 90mm wide at nose end		1
2	290/00228		Lever tipping		2
3	811/20063		Pin pivot		2
4	811/50399		Pin pivot		2
5	1450/0002		Nipple Grease, Straight 1/4		3
6	809/00144		Bush		2
7	809/00143		Bush		2
8	1315/3318Z		Bolt M8 x 80 mm Long		4
9	1370/0203Z		Nut Nut M8		6
10	1315/3316Z		Bolt (M8 x 70)		2
20	232/01100		Pin pivot To enable use of 305, 410 & 610mm buckets		2
21	826/00600		Pin linch Use with item 20		2

Applicability Date Ranges:
From: , To:

9802/6220 B4-6-1 LOCK, BOOM

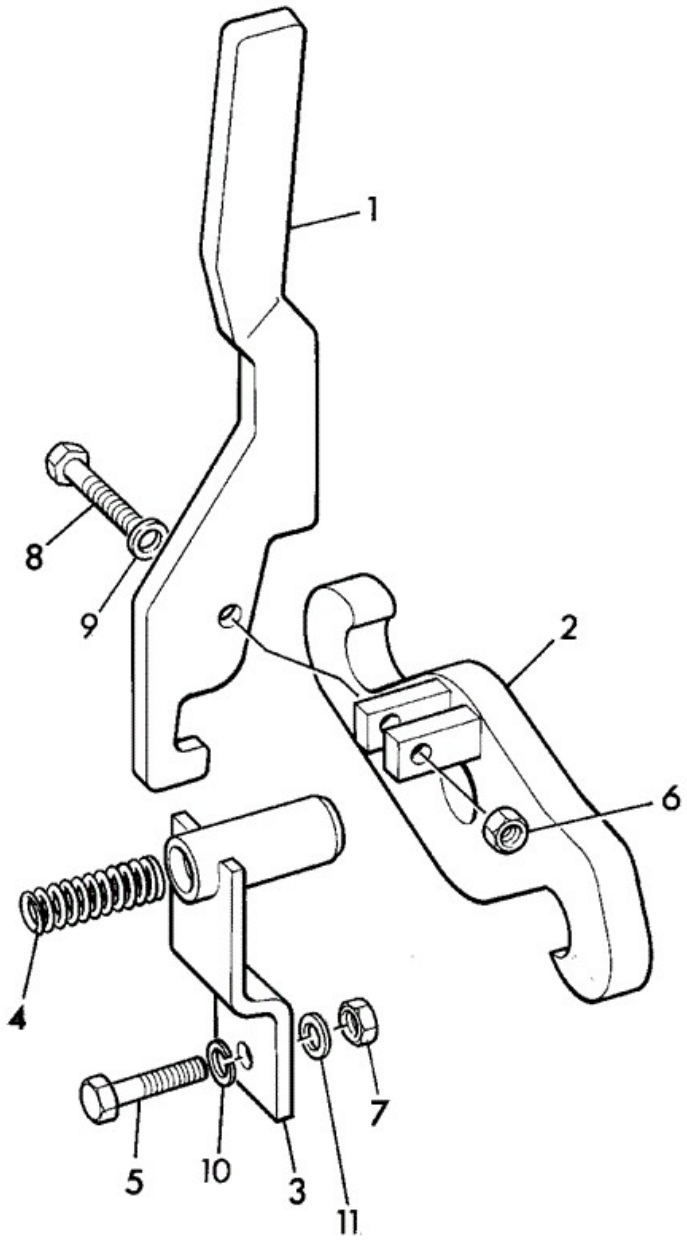

Item	Part No	Change No	Description	Usage Code	QTY

1	290/00524		Handle		1
1A	246/00495		Handle grip Fitted to Italian and German Machines.		1
2	290/00711	<M1743312	Lock boom		1
2	333/S0924	>M1743313	Lock boom		1
3	290/24300		Pin pivot		1
4	814/00378		Spring		1
5	1315/0508Z		Setscrew M12 X 30		1
6	1370/0103Z		Nut Self Lock M6		1
7	****		'See Remark' Nut, not required		1
8	1315/0209Z		Bolt M6 x 35		1
9	1420/0006Z		Washer (M6)		2
10	1425/0009Z		Washer Spring M12		1
11	1420/0009Z		Washer (M12)		1

Applicability Date Ranges:
From: , To:

Product Catalog\BACKHOE LOADER 1CX, 208\1CX 00751600-00752999,00806000-00807552 9802/6220\B BODYWORK, CAB, LOADER END\B04 BACKHOE\B4-7-1 SAFETY STRUT DIPPER ARM - UK

9802/6220 B4-7-1 SAFETY STRUT DIPPER ARM - UK

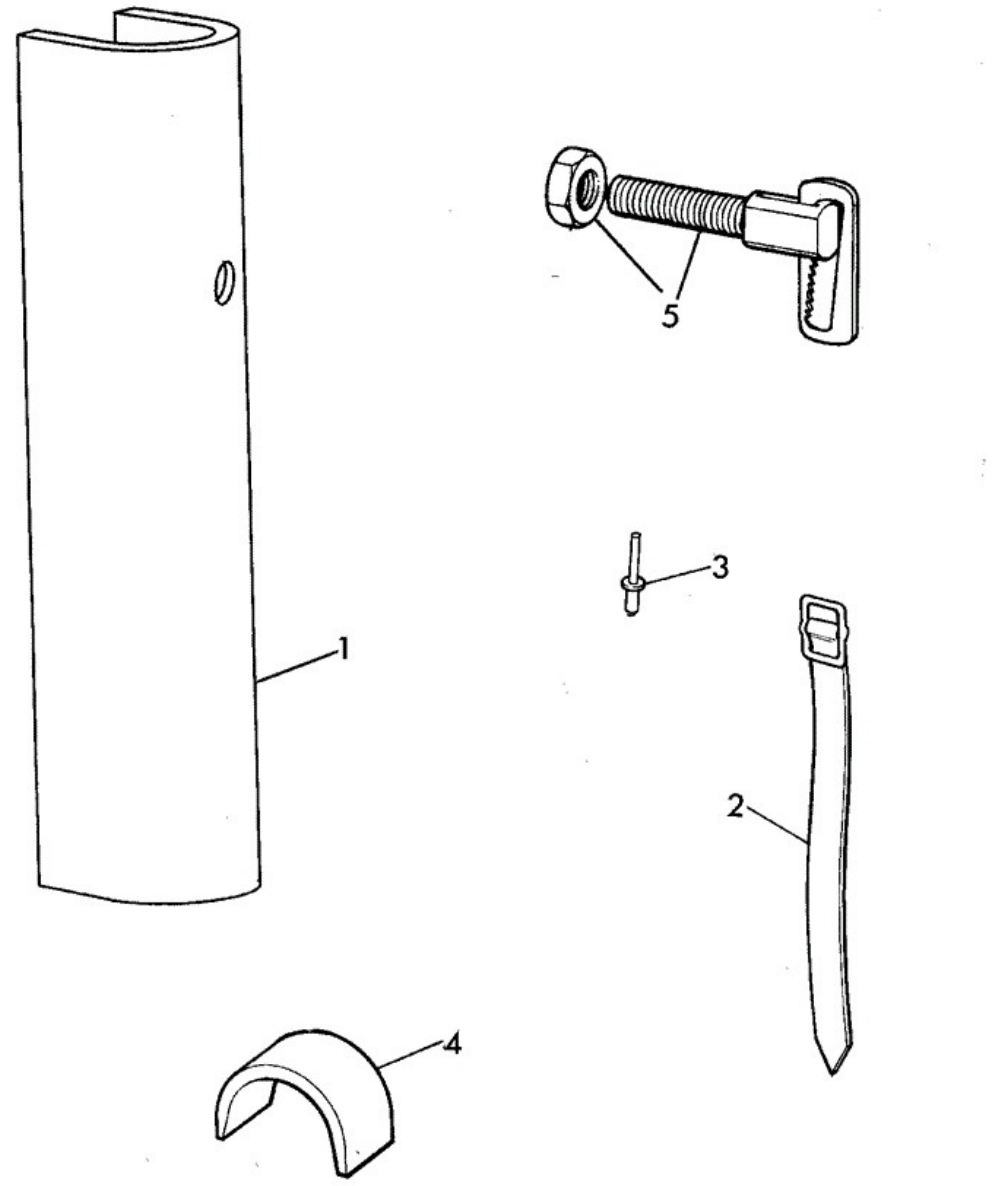

200131

Item	Part No	Change No	Description	Usage Code	QTY
1	290/01277		Strut safety, travel (dipper ram)		1
2	140/00857		Strap		1

3	826/01070		Rivet		1
4	122/82502		Stop		2
5	123/02973		Fastener anti-luce		1
6	290/00666		Bracket		2
7	1315/0305Z		Setscrew M8 x 20		3
8	1420/0007Z		Washer (M8)		5
9	1425/0007Z		Washer Washer		1
10	4101/0600		Sealant A/R		1
11	290/00745		Spacer		1

Applicability Date Ranges:
From: , To:

Product Catalog\BACKHOE LOADER 1CX, 208\1CX 00751600-00752999,00806000-00807552 9802/6220\B BODYWORK, CAB, LOADER END\B04 BACKHOE\B4-8-1 TRAVEL SAFETY STRUT CROWD RAM

9802/6220 B4-8-1 TRAVEL SAFETY STRUT CROWD RAM

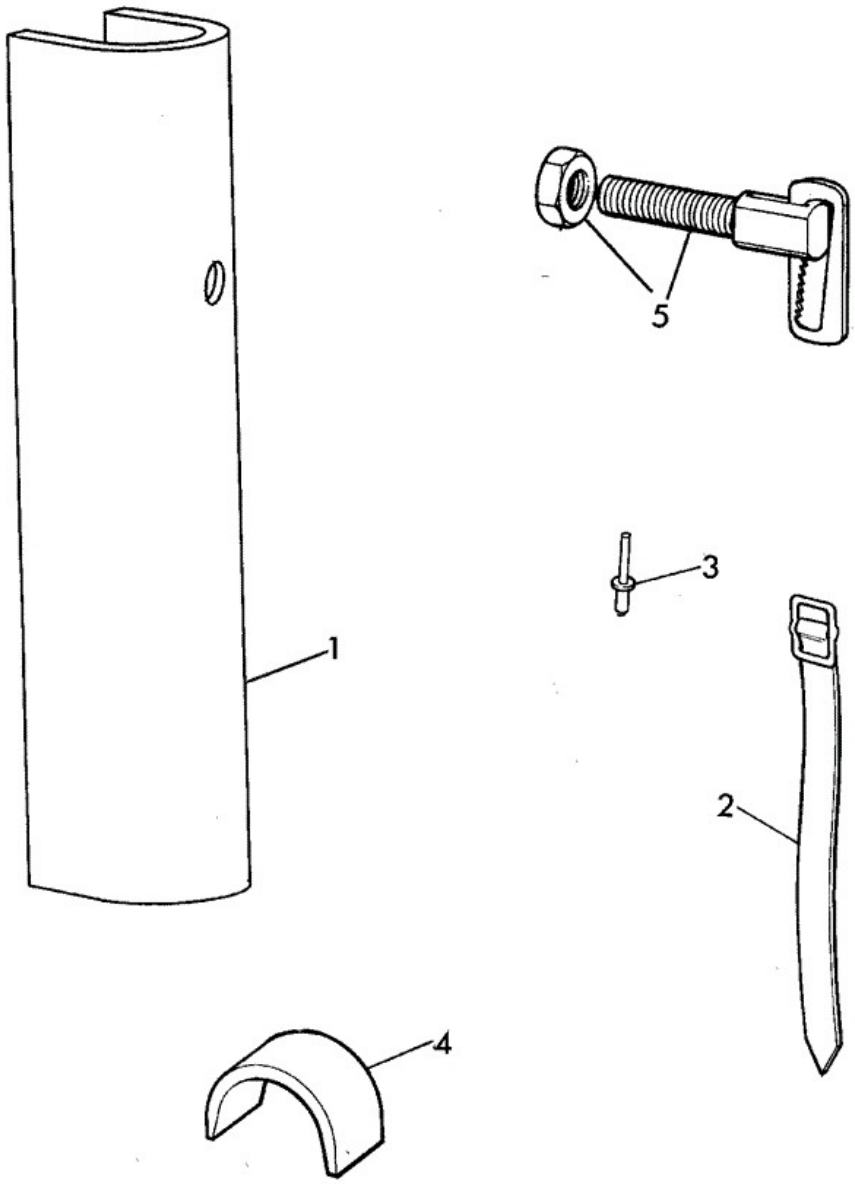

200131

Item	Part No	Change No	Description	Usage Code	QTY
1	290/00665		Strut Safety, Crowd ram		1
2	140/00857		Strap		1

3	826/01070		Rivet		1
4	122/82502		Stop		2
5	123/02973		Fastener anti-luce		1
6	1315/0305Z		Setscrew M8 x 20		3
7	1420/0007Z		Washer (M8)		5
8	1425/0007Z		Washer Washer		1
9	290/00666		Bracket		2
10	290/00745		Spacer		1

Applicability Date Ranges:
From: , To:

Product Catalog\BACKHOE LOADER 1CX, 208\1CX 00751600-00752999,00806000-00807552 9802/6220\B BODYWORK, CAB, LOADER END\B05 REFURBISHMENTS\B5-1-1 LABELS

9802/6220 B5-1-1 LABELS

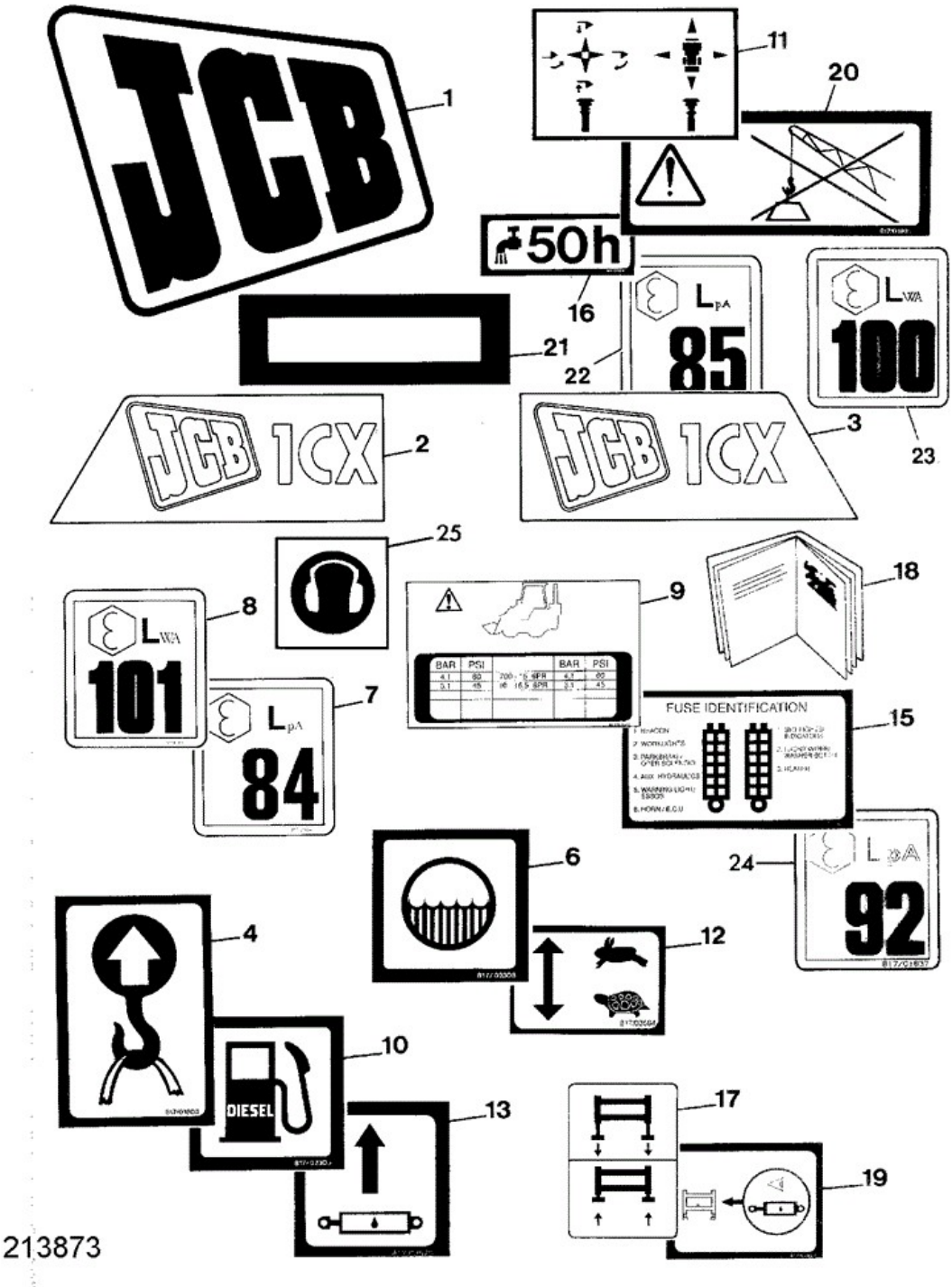

Item	Part No	Change No	Description	Usage Code	QTY
1	817/04261		Decal JCB insignia (black) 204mm x 250mm		3
2	817/03576		Decal 1CX,left side		1

3	817/03560		Label 1CX		1
4	817/01803		Label Sling Point		4
6	817/02308		Label Coolant Filler		1
7	817/01837		Decal sound pressure		1
8	817/01913		Label external noise 101 LwA		1
9	817/03561		Label tyre pressure		1
10	817/02305		Label Diesel		1
11	817/03567		Label transmission loader control		1
12	****		'See Remark' Not required		1
13	817/03570		Label hydraulic oil		1
15	817/04519	<M752072	Label fuse		1
15	817/04784	>M752073	Decal fuse/relay		1
16	817/01306	Superseded	Label Fuel Filter		1
16	817/00380		Label Drain Every 50 Hours		1
17	817/02547		Label stabilisers		1
18	817/01577		Label Read Handbook		1
19	817/03624		Label hydraulic level		1
20	817/01931		Label warning		1
21	817/02160		Label Chassis Stamping		1
22	817/02611		Label sound pressure 85 LpA		1
23	817/02953		Label LWA (100)		1
24	817/01837		Decal sound pressure		1
25	817/03908		Label ear protection		1

Applicability Date Ranges:
From: , To: M752378

9802/6220 B5-1-2 LABELS, U.K.

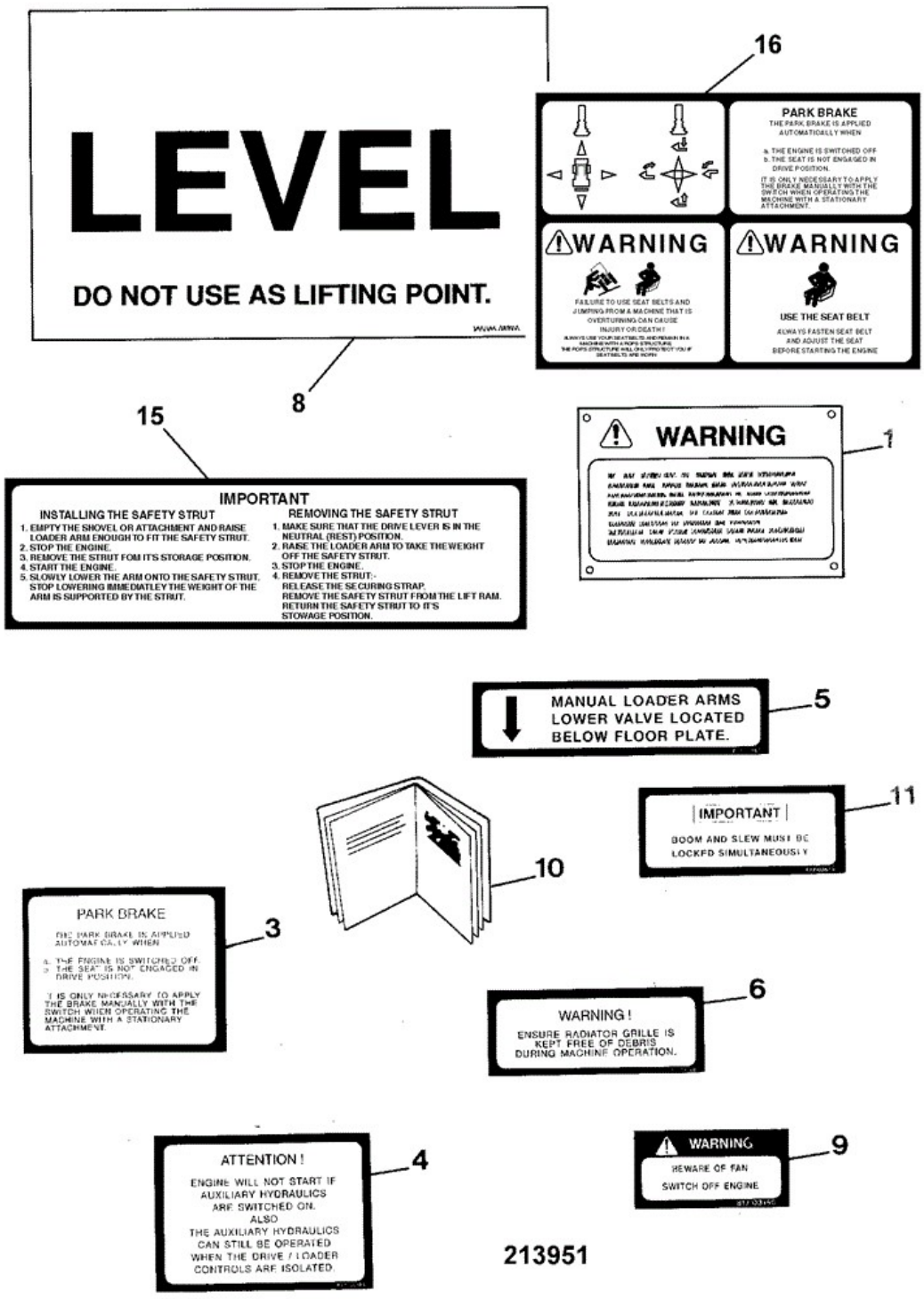

Item	Part No	Change No	Description	Usage Code	QTY
1	817/01639		Plate Warning		1
3	817/03562		Label parkbrake Fitted up to Sept. 99		1

4	817/03563		Label aux.neutral start		1
4	817/04319		Label sequence warning		1
5	817/03569		Label valve, loader arms emergency lower		1
6	817/03568		Label grille blockage		1
8	817/03565		Label "LEVEL"		1
9	817/03150		Label WARNING 'beware of fan'		1
10	817/01577		Label Read Handbook		1
11	817/03619		Label slew lock warning		1
15	817/03775		Label safety strut English		1
16	817/16570		Label bulkhead Fitted from Sept. 99		1

Applicability Date Ranges:
From: , To:

Product Catalog\BACKHOE LOADER 1CX, 208\1CX 00751600-00752999,00806000-00807552 9802/6220\B BODYWORK, CAB, LOADER END\B05 REFURBISHMENTS\B5-1-3 DECALS, EXCAVATOR JCB X PATTERN

9802/6220 B5-1-3 DECALS, EXCAVATOR JCB X PATTERN

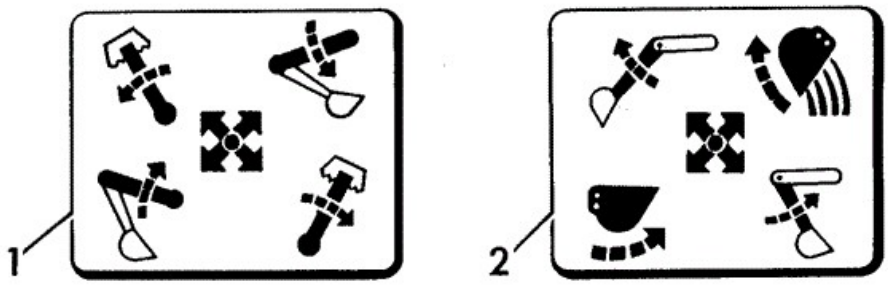

131160

Item	Part No	Change No	Description	Usage Code	QTY

1	817/02541	<M1299803	Decal backhoe, LH		1
1	332/W6820	>M1299804	Decal backhoe, LH		1
2	817/02542	<M1299803	Decal backhoe, RH		1
2	332/W6819	>M1299804	Decal backhoe, RH		1

Applicability Date Ranges:
From: , To:

Product Catalog\BACKHOE LOADER 1CX, 208\1CX 00751600-00752999,00806000-00807552 9802/6220\B BODYWORK, CAB, LOADER END\B05 REFURBISHMENTS\B5-1-4 DECALS, EXCAVATOR JCB + PATTERN

9802/6220 B5-1-4 DECALS, EXCAVATOR JCB + PATTERN

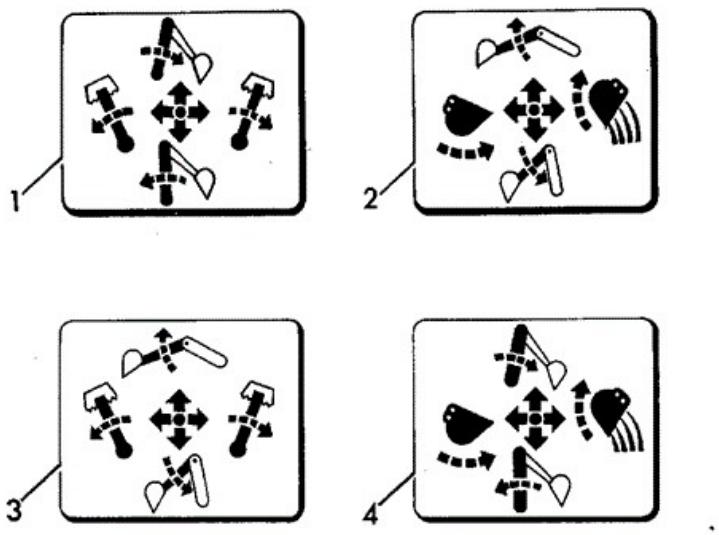

131171

Item	Part No	Change No	Description	Usage Code	QTY

1	817/02670	<M1299803	Decal JCB + pattern, L.H		1
1	332/W6818	>M1299804	Decal JCB + pattern, LH		1
2	817/02669	<M1299803	Decal JCB + pattern, R.H		1
2	332/W6817	>M1299804	Decal JCB + pattern, RH		1
3	817/02699	<M1299803	Decal ISO + pattern, LH		1
3	332/W6816	>M1299804	Decal ISO + pattern, LH		1
4	817/02700	<M1299803	Decal ISO + pattern, RH		1
4	332/W6815	>M1299804	Decal ISO + pattern, RH		1

Applicability Date Ranges:
From: , To:

Product Catalog\BACKHOE LOADER 1CX, 208\1CX 00751600-00752999,00806000-00807552 9802/6220\B BODYWORK, CAB, LOADER END\B05 REFURBISHMENTS\B5-1-5 LABELS, ITALIAN

9802/6220 B5-1-5 LABELS, ITALIAN

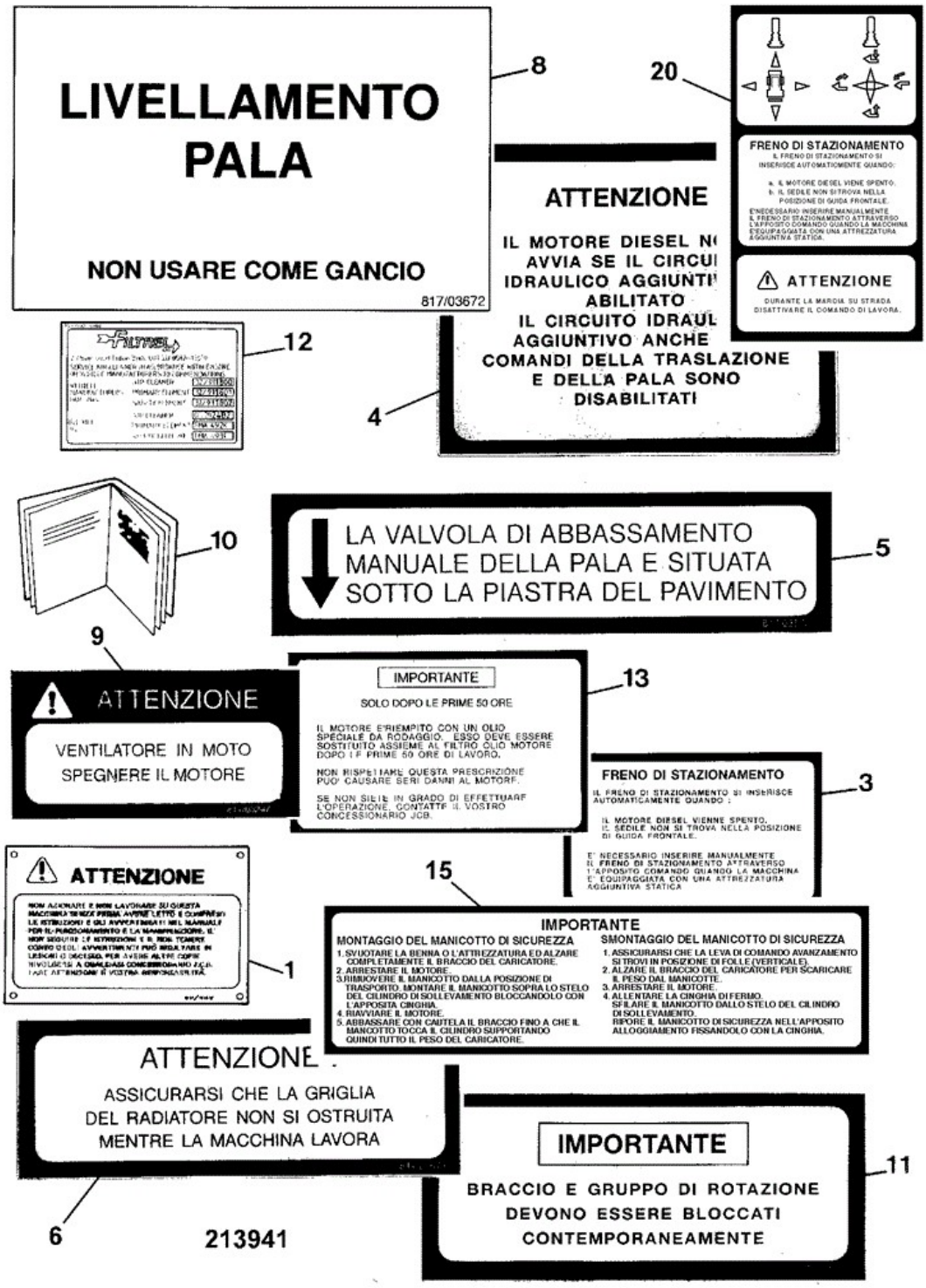

Item	Part No	Change No	Description	Usage Code	QTY
1	817/02145		Label WARNING Italian Read operating book		1
3	817/03673		Label parkbrake		1

4	817/03675		Label warning, Italian aux. hydraulics		1
4	817/04323		Label sequence warning Italian		1
5	817/03670		Label valve, loader arm manual lower,Italian		1
6	817/03671		Label grille warning Italian		1
8	817/03672		Label level, Italian		1
9	817/03247		Label warning, fan Italian		1
11	817/03677		Label boom & slew lock Italian		1
12	817/03636		Label air cleaner Italy		1
14	817/03548		Label loader control lock Italian		1
15	817/03776		Label safety strut Italian		1
20	817/16572		Label bulkhead, Italian		1

Applicability Date Ranges:
From: , To:

9802/6220 B5-1-6 LABELS, FRENCH

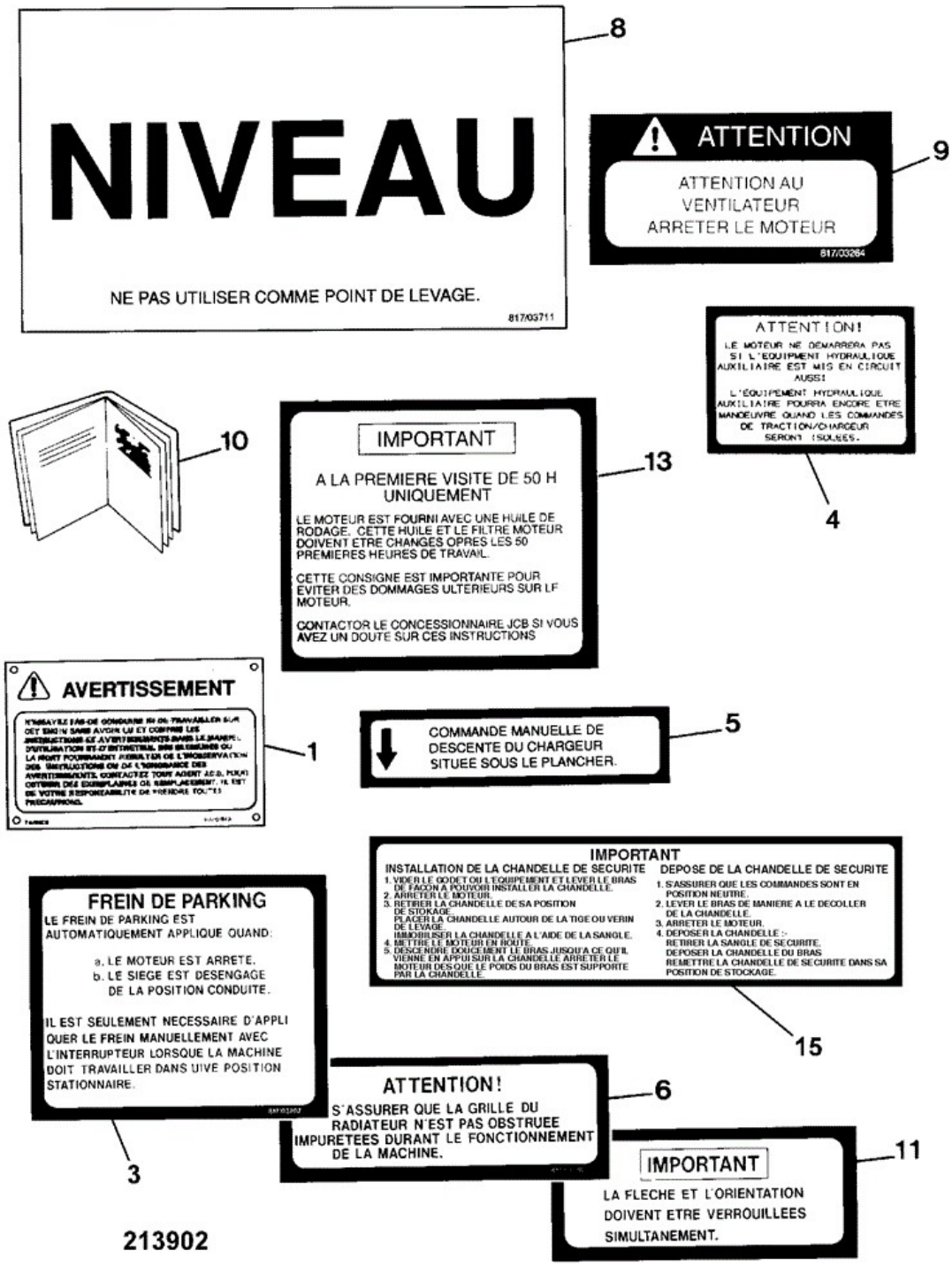

Item	Part No	Change No	Description	Usage Code	QTY
1	817/01643		Label Warning, French, Read operating book		1
3	817/03707		Label parkbrake, French		1

4	817/03708	Superseded	Label aux.neutral start French		1
4	817/04642		Label		1
4	817/04322		Label sequence warning French		1
5	817/03709		Label valve, French emergency lower		1
6	817/03710		Label grille blockage French		1
8	817/03711		Label "level", French		1
9	817/03264		Label warning, fan French		1
11	817/03712		Label slew lock warning French		1
15	817/03778		Label safety strut French		1

Applicability Date Ranges:
From: , To:

9802/6220 B5-1-9 LABELS, SPAIN

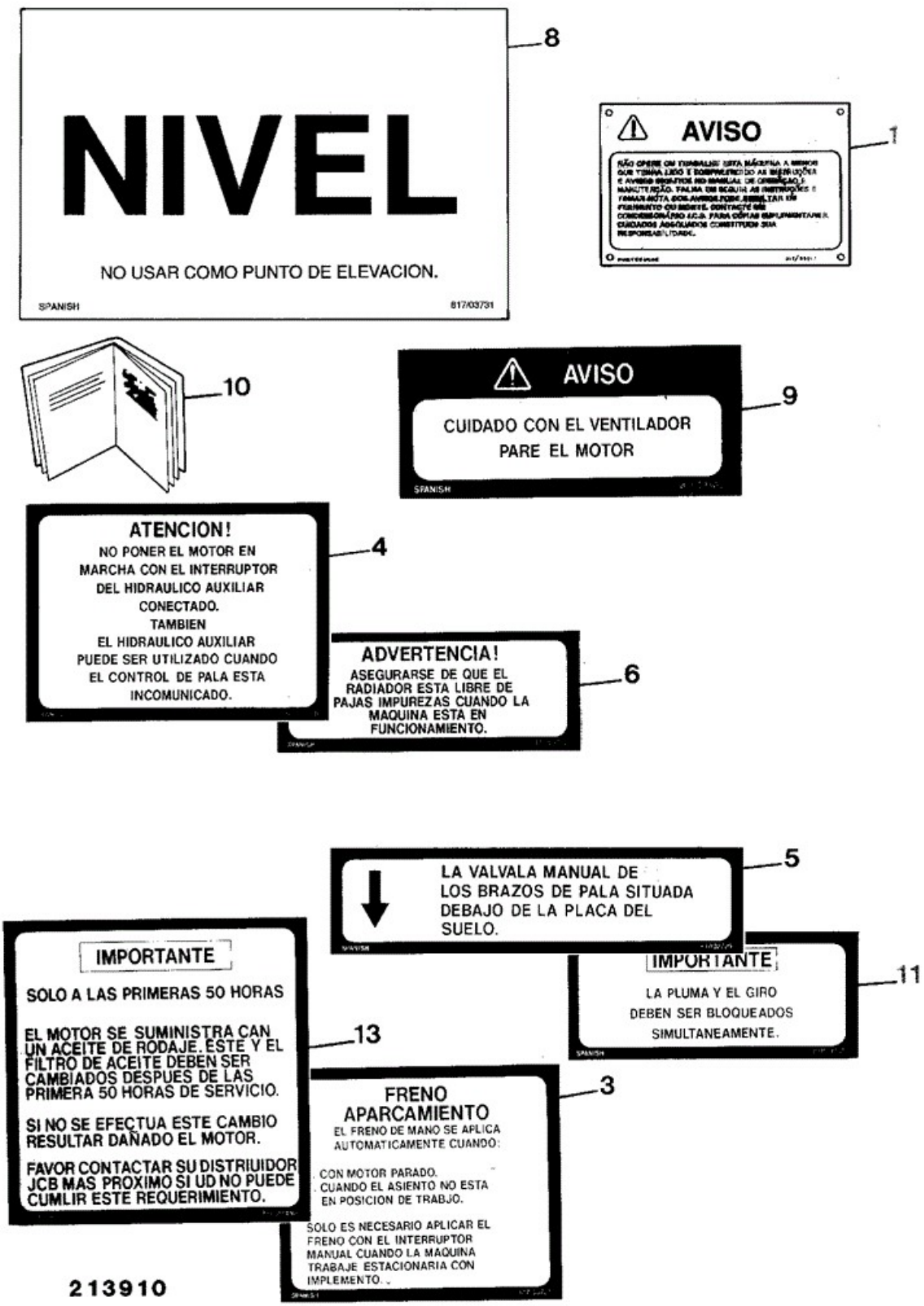

Item	Part No	Change No	Description	Usage Code	QTY

1	817/01648		Label WARNING Spanish Read operating book		1
3	817/03727		Label parkbrake		1
4	817/03728		Label aux. hydraulics Spain		1
4	817/04321		Label sequence warning Spanish		1
5	817/03729		Label manual lower valve Spain		1
6	817/03730		Label grille blockage Spain		1
8	817/03731		Label "LEVEL" Spain		1
9	817/03500		Label warning, fan Spanish		1
11	817/03732		Label slew lock warning Spain		1
15	817/03780		Label safety strut Spain		1
16	817/16571		Label bulkhead Spain		1

Applicability Date Ranges:
From: , To:

Product Catalog\BACKHOE LOADER 1CX, 208\1CX 00751600-00752999,00806000-00807552 9802/6220\B BODYWORK, CAB, LOADER END\B05 REFURBISHMENTS\B5-1-10 LABELS, BENELUX

9802/6220 B5-1-10 LABELS, BENELUX

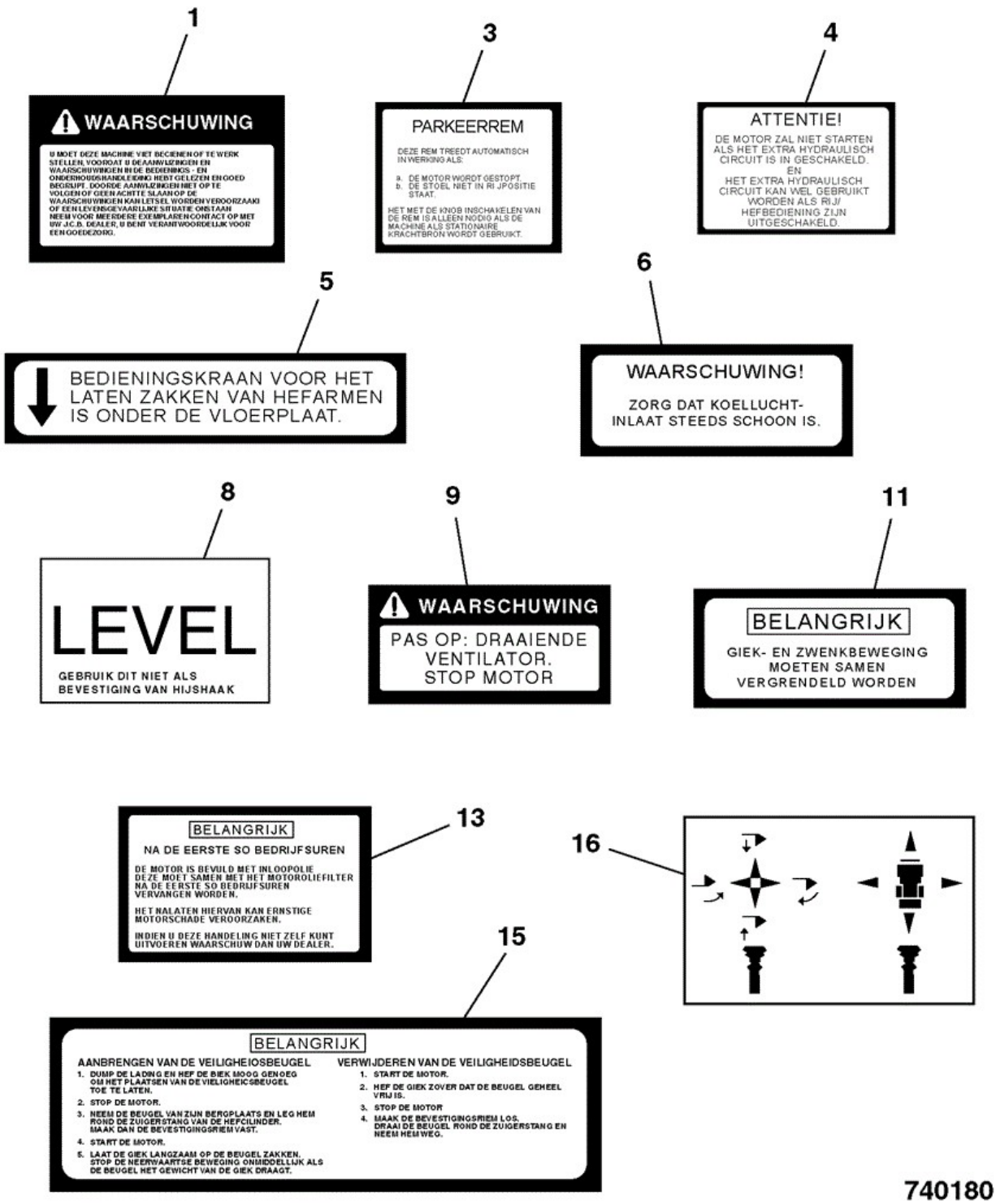

Item	Part No	Change No	Description	Usage Code	QTY
1	817/01641		Label WARNING Dutch Read operating book		1
3	817/03792		Label parkbrake Benulux (Dutch)		1

4	817/03793		Label aux.neutral start Benelux (Dutch)		1
4	817/04326		Label sequence warning Dutch		1
5	817/03794		Label valve,manual lower Benelux (Dutch)		1
6	817/03795		Label grille blockage Benelux (Dutch)		1
8	817/03796		Label "LEVEL" Benelux (Dutch)		1
9	817/03297		Label warning, fan Benelux (Dutch)		1
11	817/03797		Label slew lock warning Benelux (Dutch)		1
13	817/03293		Label engine oil run in Dutch		1
15	817/03783		Label safety strut Benelux (Dutch)		1
16	817/03567		Label transmission loader control		1

Applicability Date Ranges:
From: , To:

9802/6220 B5-1-18 LABELS 'STREETMASTER'

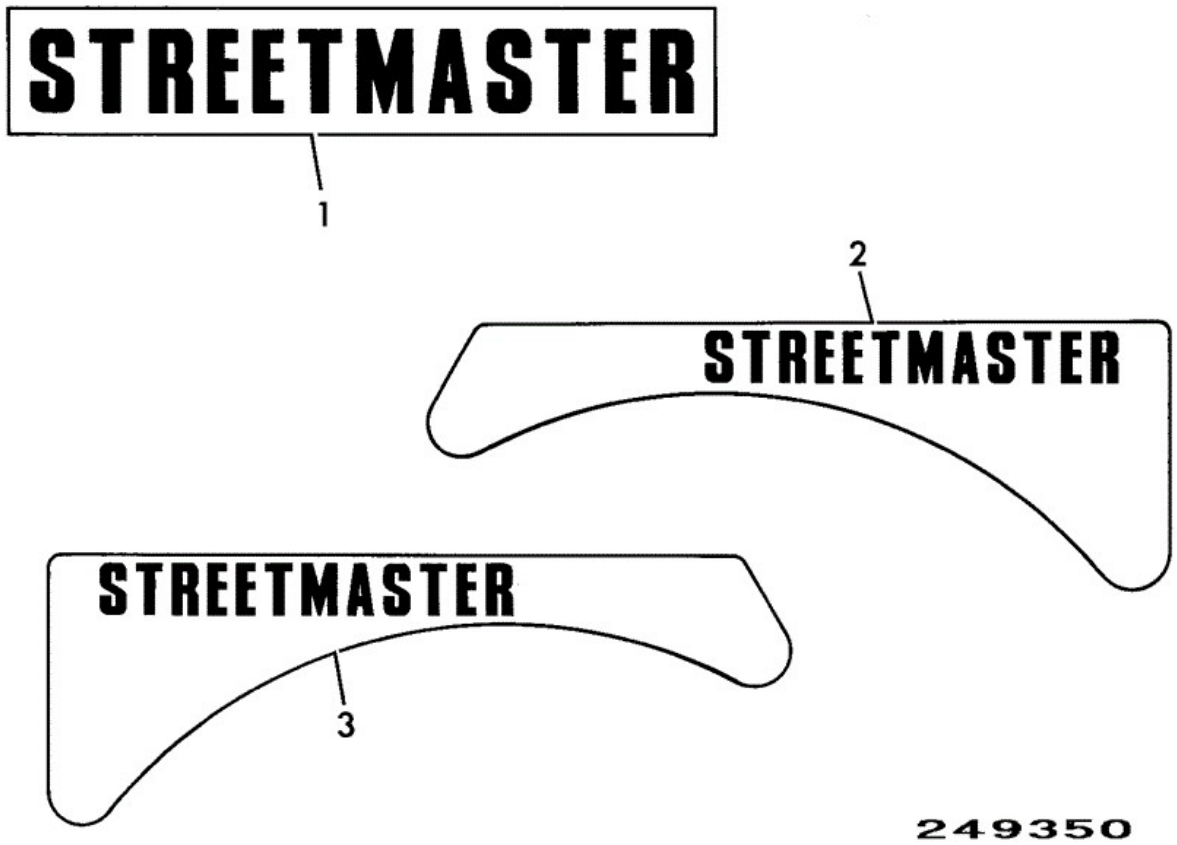

Item	Part No	Change No	Description	Usage Code	QTY
1	817/04213	< Sep 98	Label "STREETMASTER" boom No longer required		3
2	817/04214		Label "STREETMASTER",L.H.		1

2	817/05063	< Sep 98	Decal black cab Black cab		1
2	817/05238		Decal STREETMASTER Same decal on both sides		1
3	817/04215		Label "STREETMASTER", R.H.		1
3	817/05064	< Sep 98	Decal RH black cab Black cab		1
3	817/05238		Decal STREETMASTER		1

Applicability Date Ranges:
From: , To:

Product Catalog\BACKHOE LOADER 1CX, 208\1CX 00751600-00752999,00806000-00807552 9802/6220\B BODYWORK, CAB, LOADER END\B05 REFURBISHMENTS\B5-1-20 LABELS SOUND PRESSURE

9802/6220 B5-1-20 LABELS SOUND PRESSURE

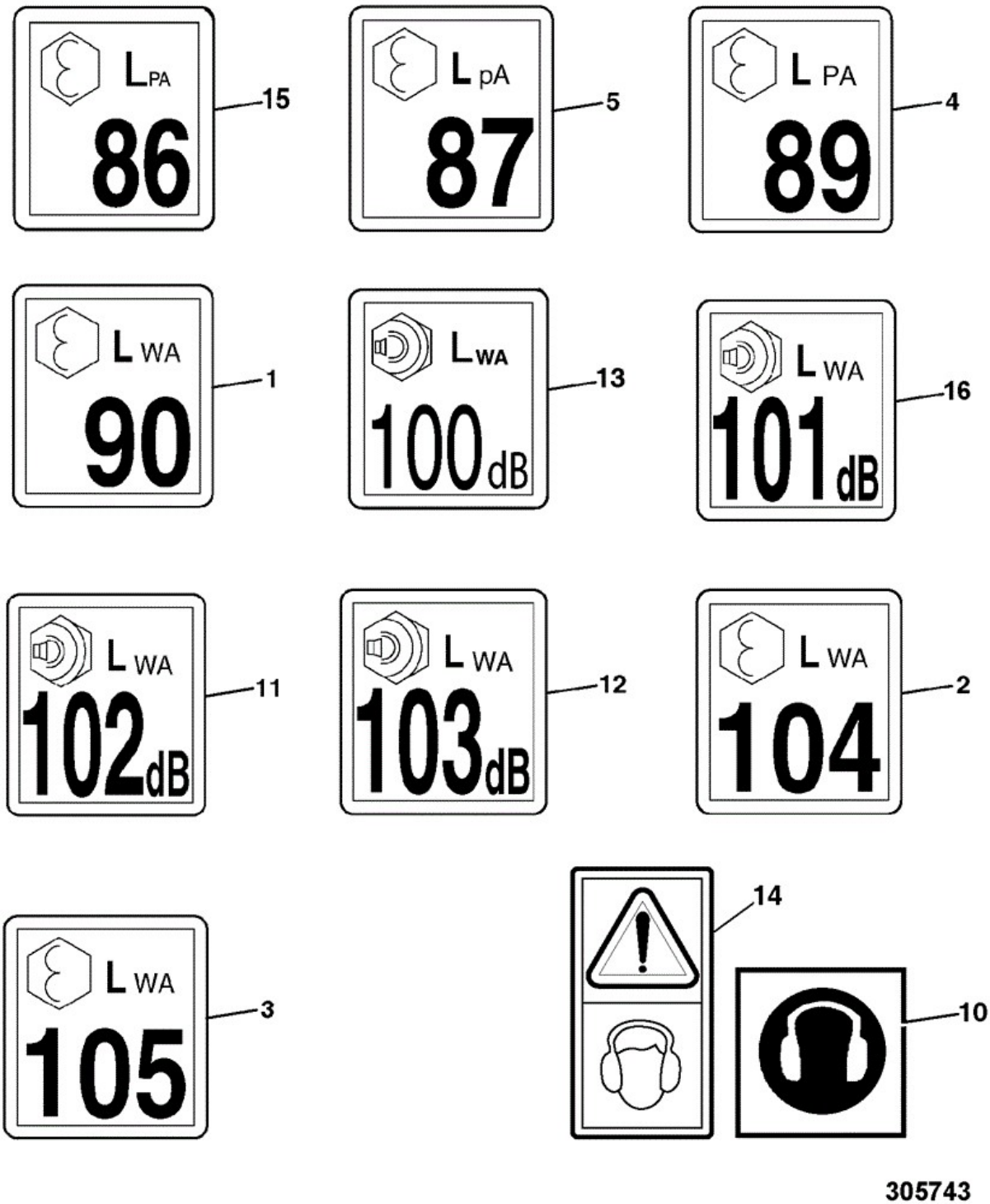

Item	Part No	Change No	Description	Usage Code	QTY
1	817/01672		Label external noise 90 LwA		1
2	817/01656		Label external noise 104LwA		1

3	817/01657		Label sound power level external 105 LWA		1
4	817/01671		Label sound level 89LpA		1
5	817/01669		Label noise, (87LpA)		1
10	817/03908		Label ear protection		1
11	817/17527		Label sound pressure level internal 102 dB LWA		1
12	817/17528		Label sound pressure level internal 103LWA		1
13	817/17525		Label 100 Decibel		1
14	817/70021		Label ISO-15C		1
15	817/01668		Label sound pressure 86LpA		1
16	817/17526		Label Sound 101DB LWA		1

Applicability Date Ranges:
From: , To:

Product Catalog\BACKHOE LOADER 1CX, 208\1CX 00751600-00752999,00806000-00807552 9802/6220\B BODYWORK, CAB, LOADER END\B05 REFURBISHMENTS\B5-1-21 LABELS

9802/6220 B5-1-21 LABELS

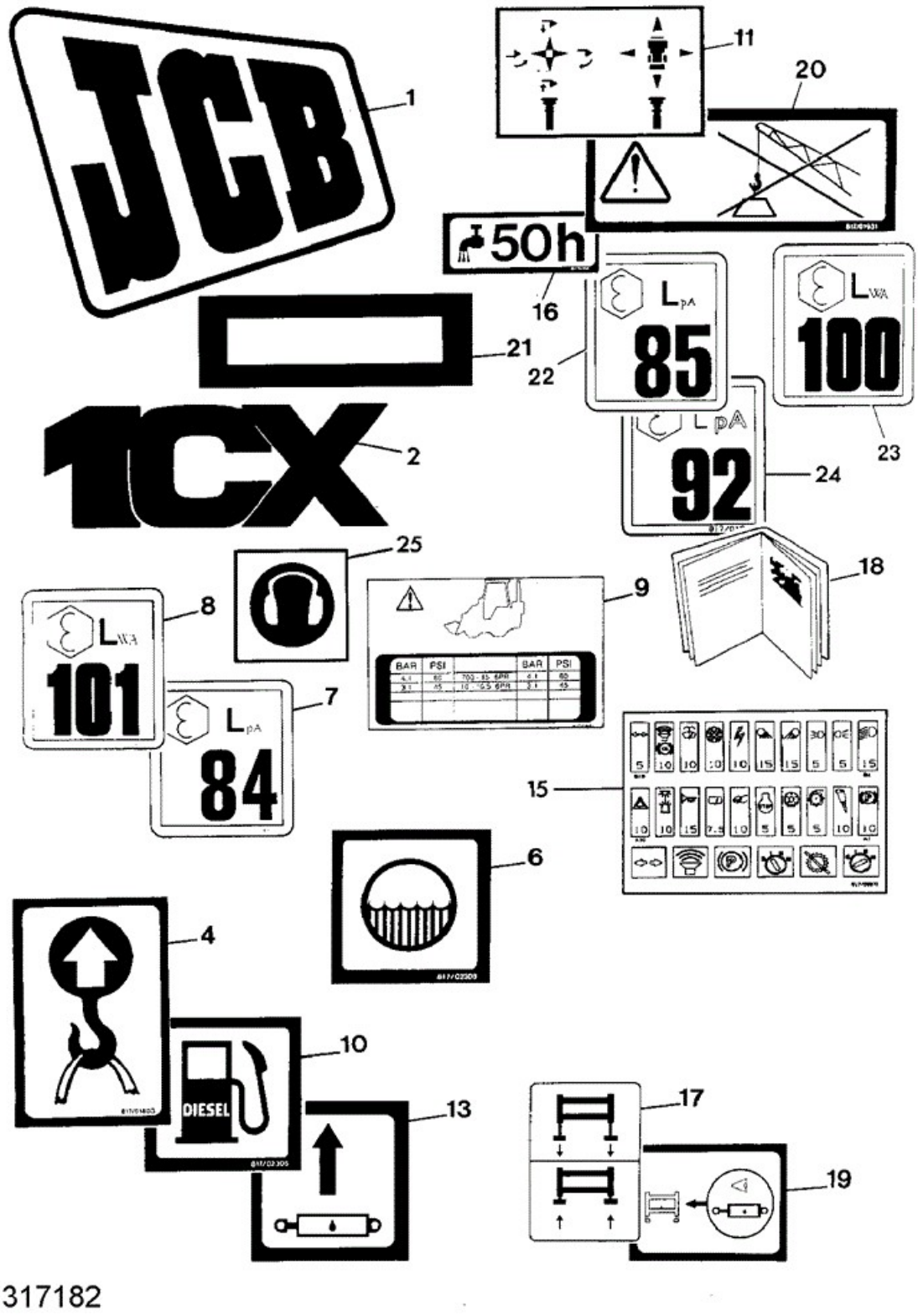

Item	Part No	Change No	Description	Usage Code	QTY

1	817/04261	<M JUL-01	Decal JCB insignia (black) 204mm x 250mm		3
1	817/17461		Decal JCB, black 250mm wide		3
2	817/05235		Decal 1CX		1
4	817/01803		Label Sling Point		4
6	817/02308		Label Coolant Filler		1
7	817/01837		Decal sound pressure		1
8	817/01913		Label external noise 101 LwA		1
9	817/03561		Label tyre pressure Fitted up to Sept. 99		1
10	817/02305		Label Diesel		1
11	817/03567		Label transmission loader control		1
13	817/03570		Label hydraulic oil		1
15	817/05072	<S/N808661	Decal fuse/relay 1CX		1
15	817/18471		Decal fuse relay		1
16	817/00380		Label Drain Every 50 Hours		1
17	817/02547		Label stabilisers		1
18	817/01577		Label Read Handbook		1
19	817/03624		Label hydraulic level		1
20	817/01931		Label warning		1
21	817/02160		Label Chassis Stamping		1
22	817/02611		Label sound pressure 85 LpA		1
23	817/02953		Label LWA (100)		1
24	817/01837		Decal sound pressure		1
25	817/03908		Label ear protection		1

Applicability Date Ranges:
From: M752379 , To:

Product Catalog\BACKHOE LOADER 1CX, 208\1CX 00751600-00752999,00806000-00807552 9802/6220\B BODYWORK, CAB, LOADER END\B05 REFURBISHMENTS\B5-1-23 LABELS BLACK AND SILVER

9802/6220 B5-1-23 LABELS BLACK AND SILVER

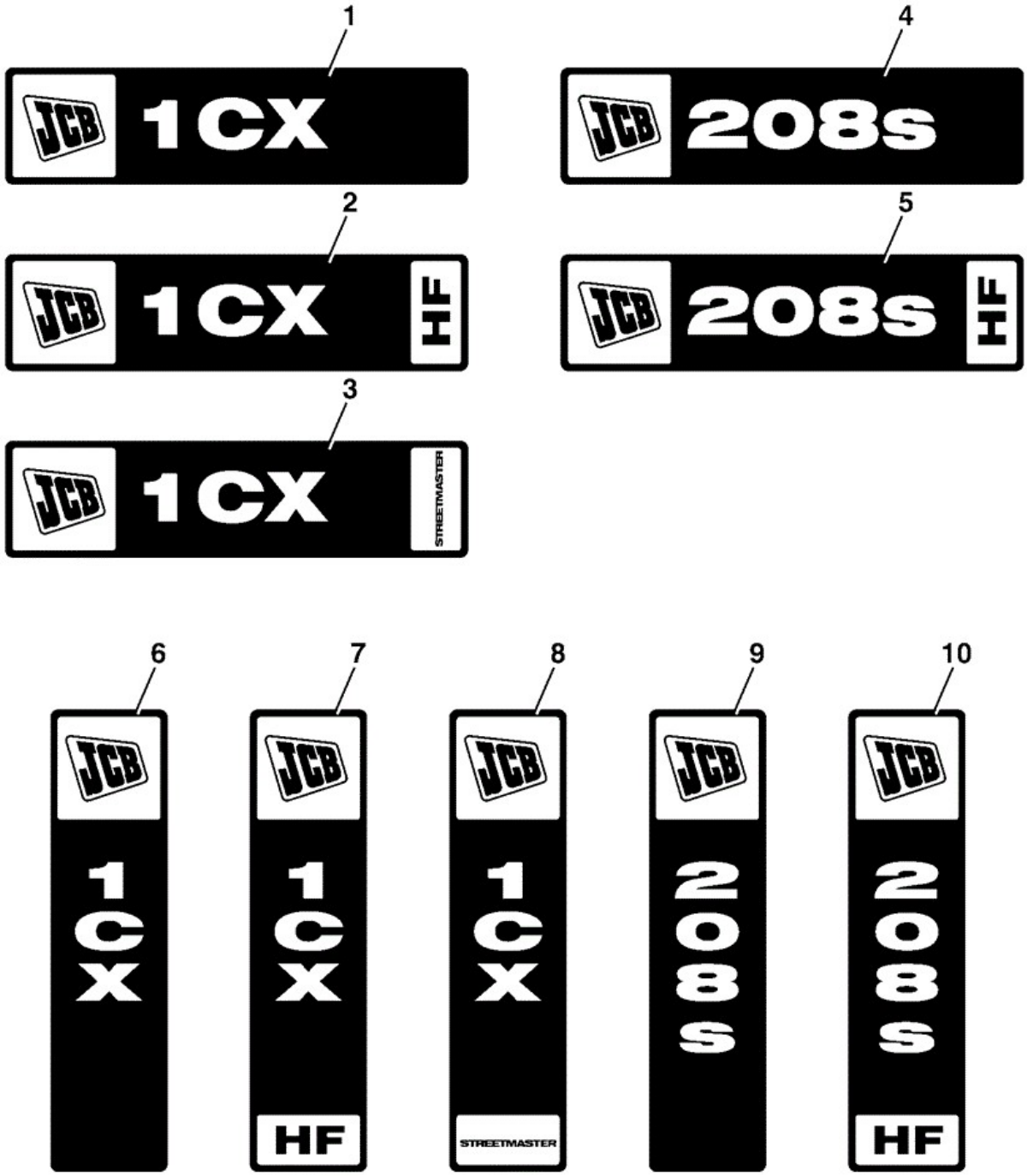

728880

Item	Part No	Change No	Description	Usage Code	QTY
1	817/18198		Decal 1CX horizontal format		2
2	817/18199		Decal 1CX HF horizontal format		2

3	817/18200		Decal 1CX Streetmaster horizontal format		2
4	817/18201		Decal 208S horizontal format		2
5	817/18202		Decal 208S HF horizontal format		2
6	817/18203		Decal 1CX vertical format		4
7	817/18204		Decal 1CX HF vertical format		4
8	817/18205		Decal ICX StreetmasteR vertical format		4
9	817/18206		Decal 208S vertical format		4
10	817/18207		Decal 208S HF vertical format		7

Applicability Date Ranges:
From: , To: M1299982

9802/6220 B5-1-24 LABELS BLACK AND WHITE

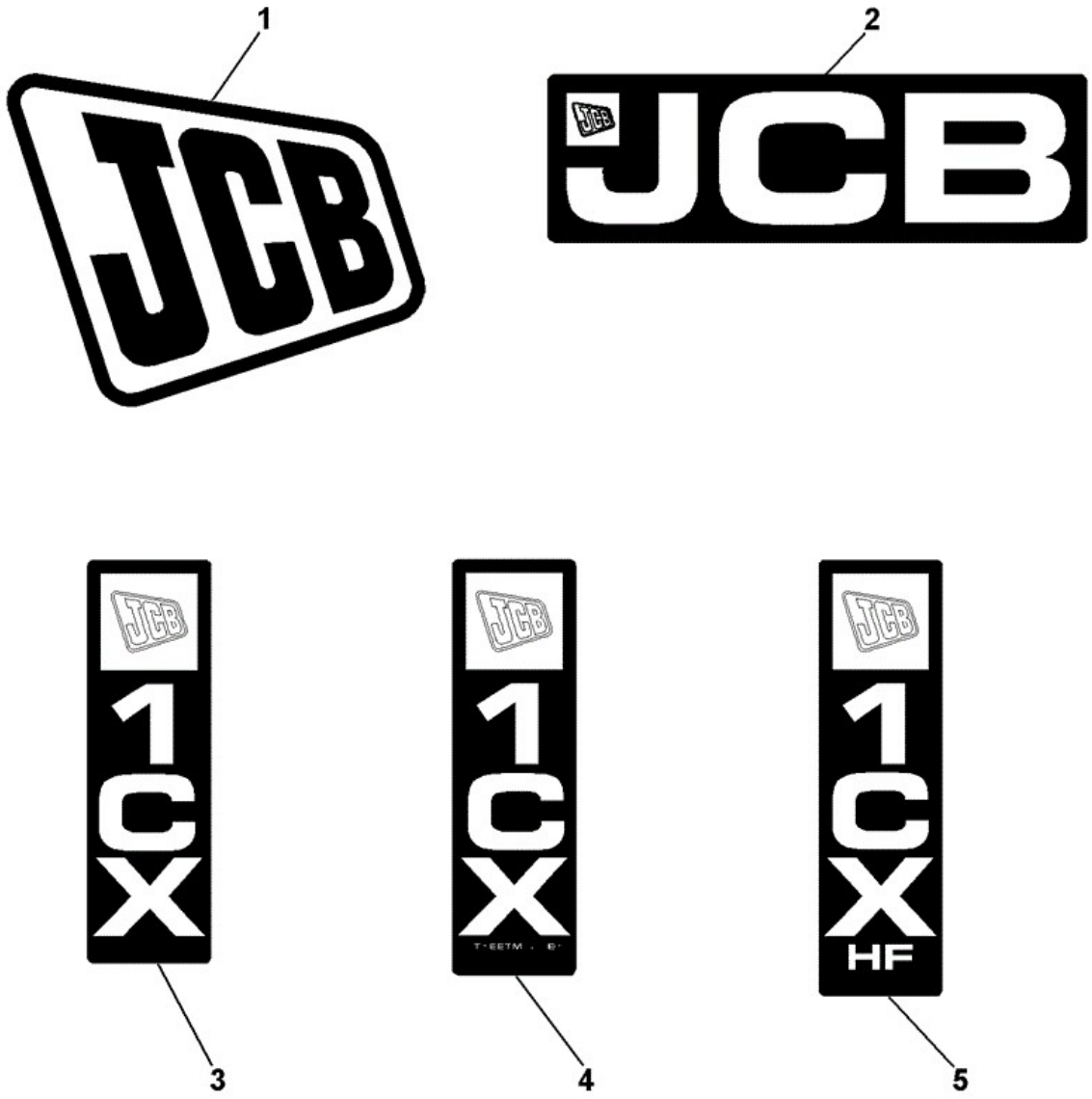

290-99919-21

Item	Part No	Change No	Description	Usage Code	QTY
1	817/17461		Decal JCB, black 250mm wide		1
2	332/G4609		Decal JCB 350 x 109 Rear Plate.		2

3	333/R4353		Decal 1CX		2
4	333/R5226		Decal 1CX Streetmaster		2
5	333/R5224		Decal 1CX High Flow		2

Applicability Date Ranges:
From: M1299983 , To: M1743448

Product Catalog\BACKHOE LOADER 1CX, 208\1CX 00751600-00752999,00806000-00807552 9802/6220\B BODYWORK, CAB, LOADER END\B05 REFURBISHMENTS\B5-1-25 LABELS BLACK AND WHITE

9802/6220 B5-1-25 LABELS BLACK AND WHITE

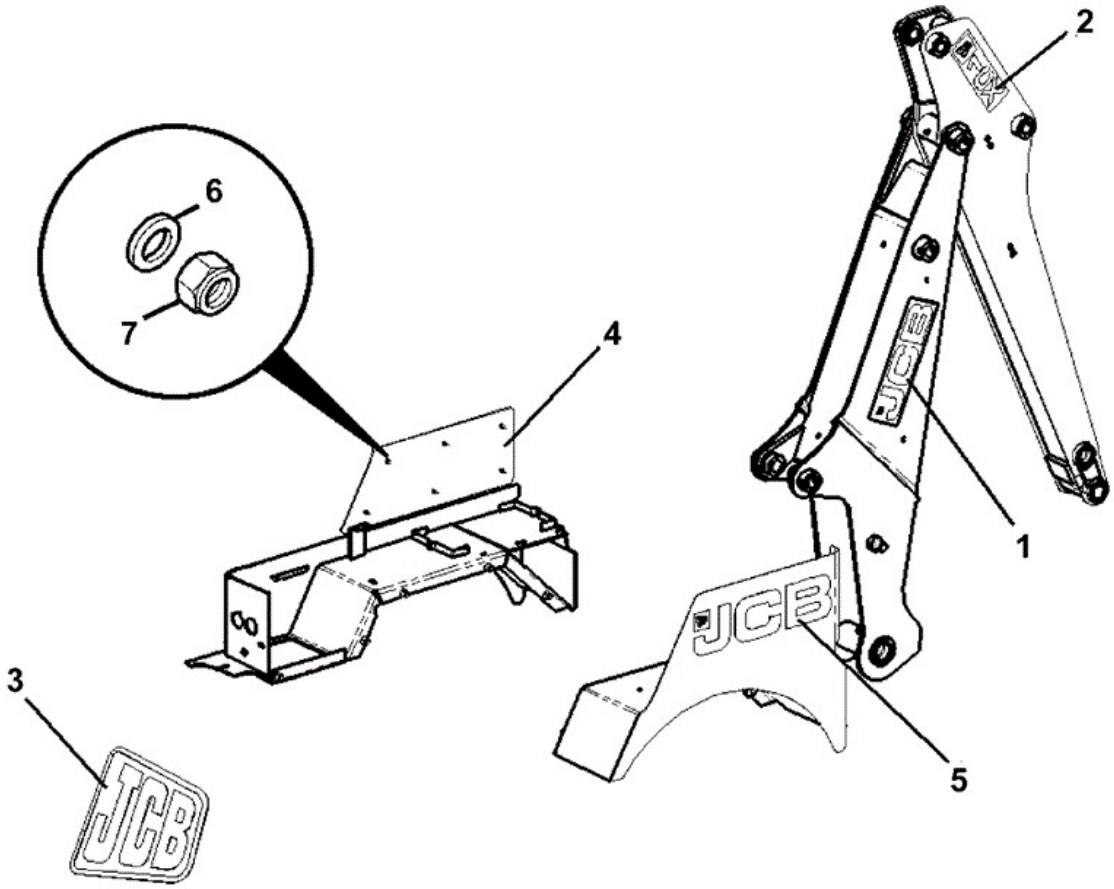

333-R5216-2

Item	Part No	Change No	Description	Usage Code	QTY
1	332/G4609		Decal JCB 350 x 109 Rear Plate.		2
2	333/R4353		Decal 1CX		2

2	333/R5226		Decal 1CX Streetmaster		2
2	333/R5224		Decal 1CX High Flow		2
3	817/17461		Decal JCB, black 250mm wide		1
4	333/T0562		Plate decal mounting		1
5	332/K3900		Decal JCB 481mm x 128mm		2
6	1420/0006D		Washer (M6)		6
7	1370/0103D		Nut (M6)		6

Applicability Date Ranges:
From: M1743449 , To:

Product Catalog\BACKHOE LOADER 1CX, 208\1CX 00751600-00752999,00806000-00807552 9802/6220\B BODYWORK, CAB, LOADER END\B05 REFURBISHMENTS\B5-3-1 TOOL KIT

9802/6220 B5-3-1 TOOL KIT

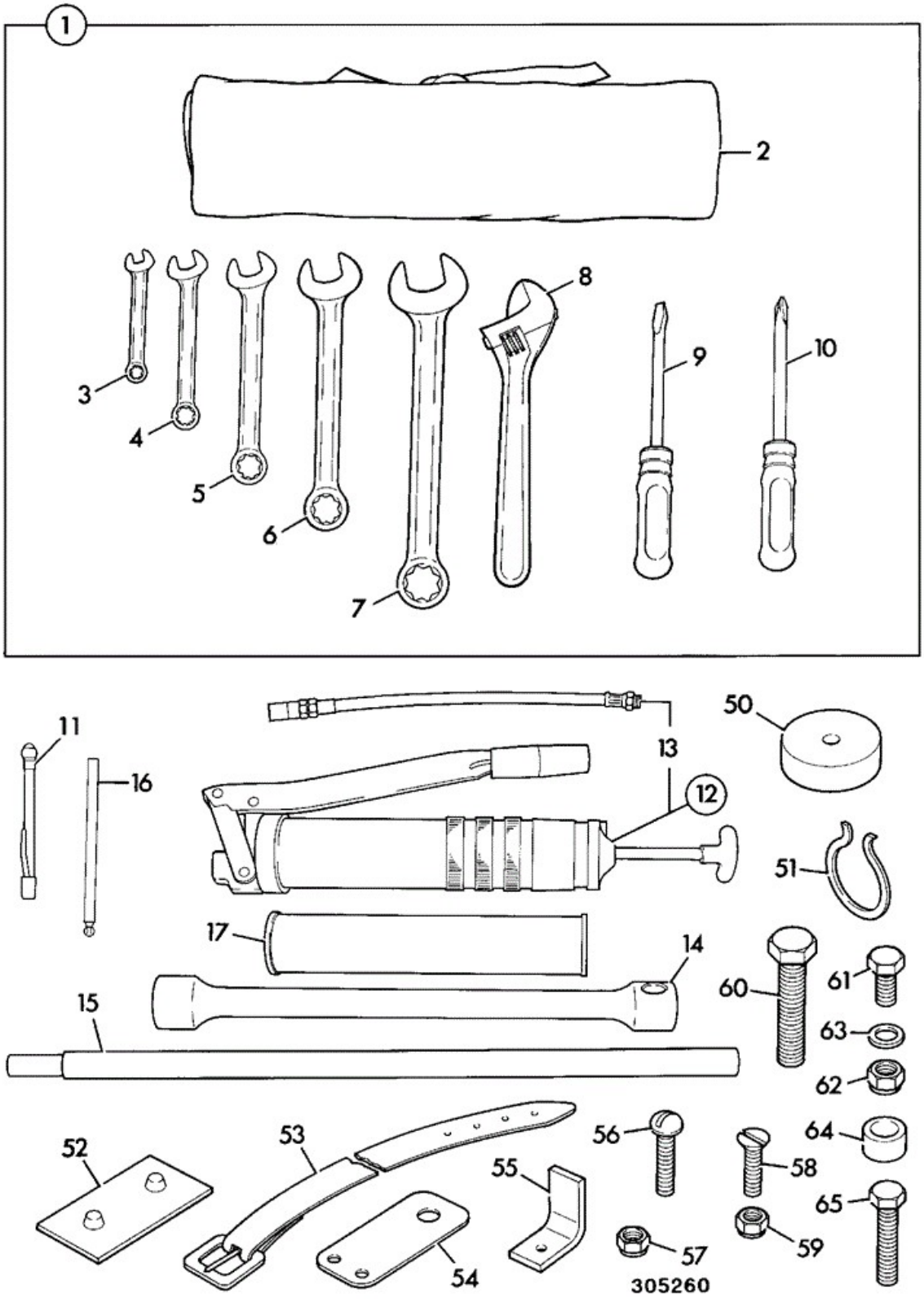

Item	Part No	Change No	Description	Usage Code	QTY

1	915/10300		Kit-tool metric		1
2	:270/48800		Bag tool		1
3	:825/99842		Spanner 10mm combination		1
4	:825/99843		Spanner 11mm combination		1
5	:825/99844		Spanner 13mm combination		1
6	:825/99845		Spanner 17mm combination		1
7	:825/99846		Spanner 19mm combination		1
8	:825/99821		Spanner adjustable 10in.		1
9	:825/99808		Screwdriver		1
10	:825/99839		Tool posidriver		1
11	915/03600		Gauge tyre pressure		1
12	915/07300		Gun grease		1
13	:915/07301		Connector flexible		1
14	825/99929	<M751599	Tool wrench wheel nut 22.36-22.06mm A/F		1
14	825/99928	>M751600	Tool wrench wheel nut 28.83-28.57mm A/F		1
15	915/10100		Bar Telescopic Tommy		1
15	915/11300		Bar tommy Not telescopic		1
16	825/00512		Key allen,ball ended		1
17	4003/1327		Grease cartridge, 400g		1
18	120/38401		Strap Rubber To secure tool kit		2
19	825/99948		Spanner 8mm combination		1
50	264/11404		Spacer		4
51	821/00223		Clip Retention		4
52	821/00414		Fastener		1
53	140/00857		Strap		1
54	290/01166		Bracket grease gun mounting		2
55	290/00536		Bracket locating		1
56	826/00872		Screw M5 x 16		2
57	1370/0003Z		Nut Nut M5		1
58	826/00316		Screw		4
59	1358/0203Z		Nut self lock		4
60	1315/0410Z		Setscrew Screw		2
61	1315/0201Z		Setscrew M6 x 12mm		2
62	1370/0103Z		Nut Self Lock M6		2
63	1420/0006Z		Washer (M6)		2
64	531/96302		Spacer		2
65	1315/0207Z		Screw M6x25		1

Applicability Date Ranges:
From: , To:

Product Catalog\BACKHOE LOADER 1CX, 208\1CX 00751600-00752999,00806000-00807552 9802/6220\B BODYWORK, CAB, LOADER END\B05 REFURBISHMENTS\B5-5-1 FIRE EXTINGUISHER 2.5KG

9802/6220 B5-5-1 FIRE EXTINGUISHER 2.5KG

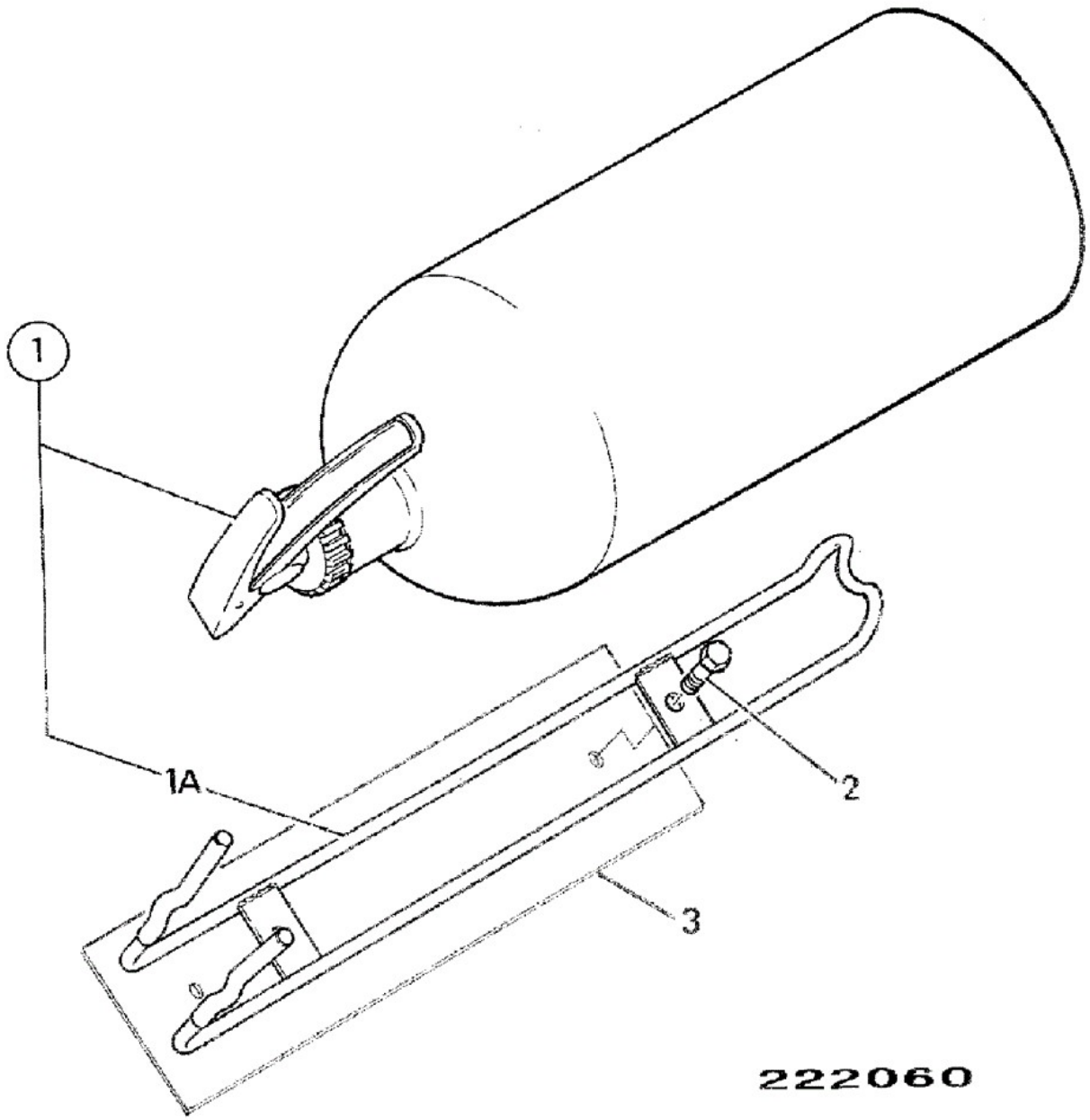

Item	Part No	Change No	Description	Usage Code	QTY
1	159/69381		Extinguisher fire c/w cradle		1
2	1315/0205Z		Setscrew M6 x 20mm		2
3	290/00778		Plate		1
4	1370/0103Z		Nut Self Lock M6		2
5	1420/0006Z		Washer (M6)		2

Applicability Date Ranges:
From: , To:

Product Catalog\BACKHOE LOADER 1CX, 208\1CX 00751600-00752999,00806000-00807552 9802/6220\B BODYWORK, CAB, LOADER END\B05 REFURBISHMENTS\B5-18-1 DECALS COMMON PARTS ANSI DECAL EN 474

9802/6220 B5-18-1 DECALS COMMON PARTS ANSI DECAL EN 474

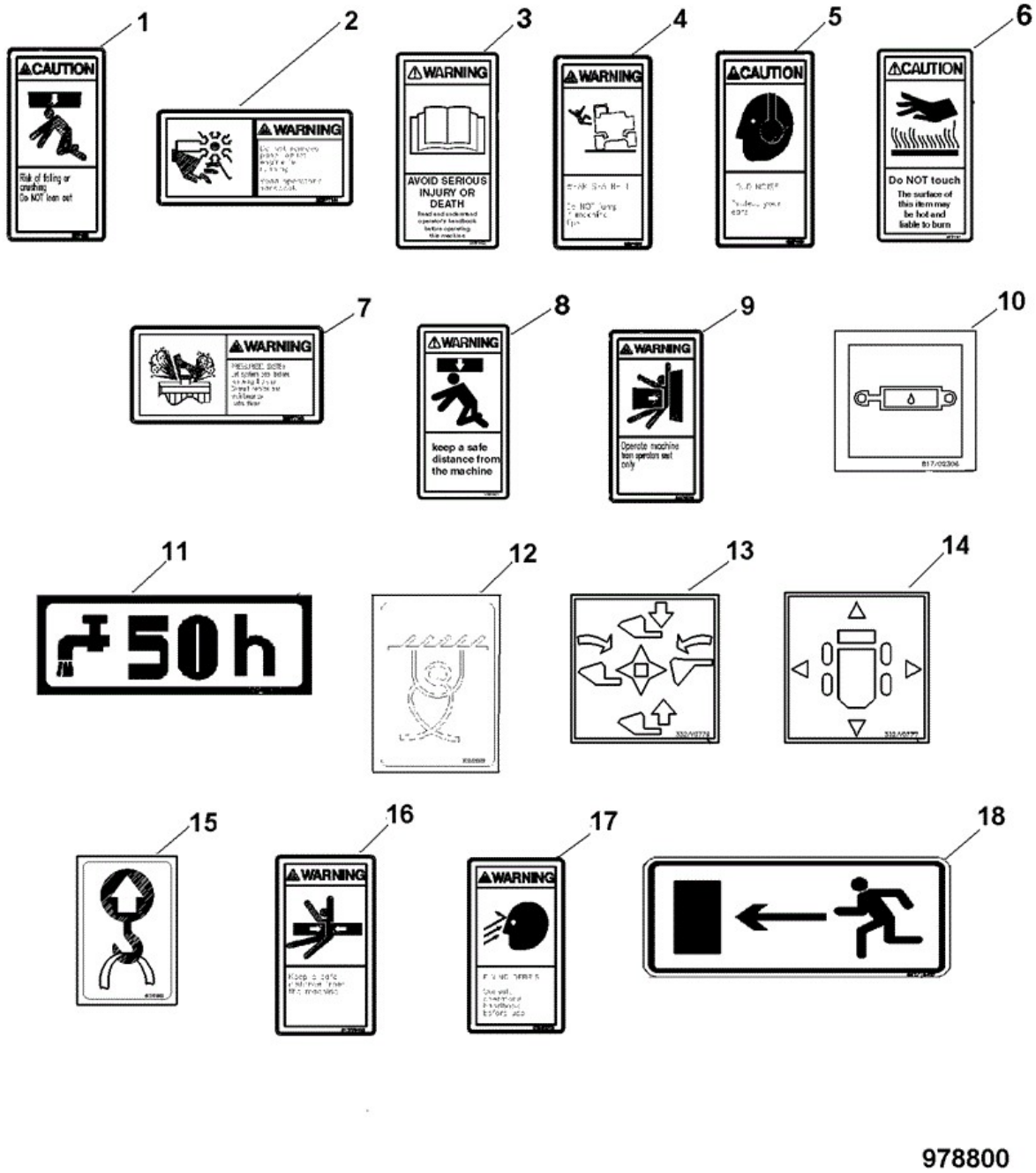

978800

Item	Part No	Change No	Description	Usage Code	QTY
1	332/P4635		Label ANSI-07E		1
2	332/P7144		Decal warning Do not remove panel whilst engine is running		1

3	817/70058		Decal warning,read manual before operating m/c		1
4	332/P4630		Label ANSI-10B		1
5	332/P4666		Label ANSI-15C		1
6	332/P7147		Decal warning do not touch, surface may be hot		1
7	332/P7143		Decal warning pressurized system		1
8	332/S9999		Decal boom support		1
9	817/70062		Decal warning,crush hazard operate from seat		1
10	817/02306		Label Hydraulic Fluid		1
11	332/P4109		Label Filter checking		1
12	332/S5833		Label Tie Down Point		4
13	332/V0779		Label loader end		1
14	332/V0777		Label direction		1
15	817/01803		Label Sling Point		4
16	817/70113		Decal Warning Crush Hazard		2
17	332/V3782		Label ANSI-15E		1
18	817/19457		Decal Emergency Exit		1

Applicability Date Ranges:
From: , To:

Product Catalog\BACKHOE LOADER 1CX, 208\1CX 00751600-00752999,00806000-00807552 9802/6220\B BODYWORK, CAB, LOADER END\B05 REFURBISHMENTS\B5-18-11 DECALS COMMON PARTS ISO DECAL EN 474

9802/6220 B5-18-11 DECALS COMMON PARTS ISO DECAL EN 474

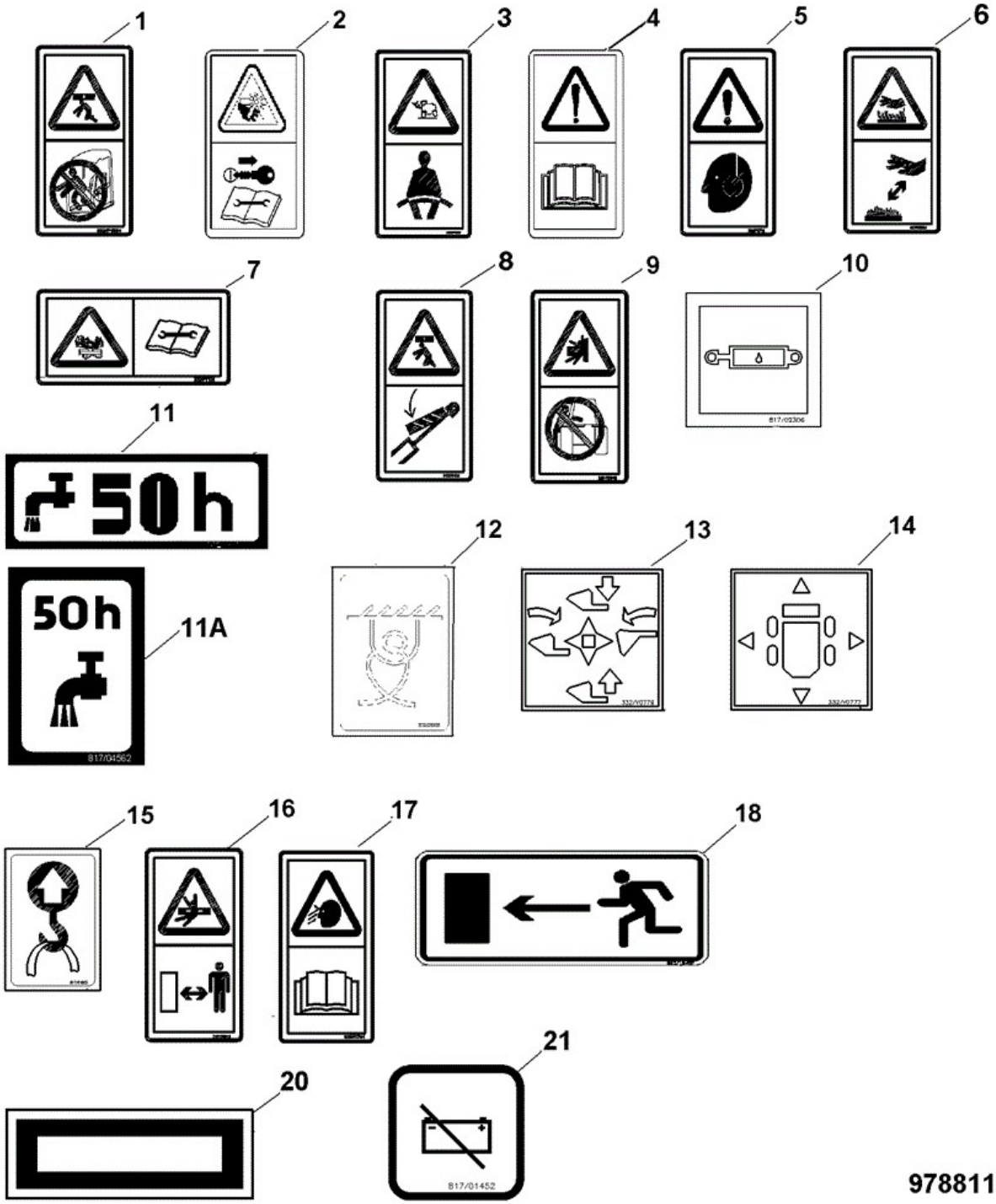

Item	Part No	Change No	Description	Usage Code	QTY
1	332/P4634		Decal safety		1
2	332/P7132		Decal warning severing of hands and fingers, rotating parts		1

3	332/P4627		Decal safety		1
4	817/70014		Label ISO-01A (Read The Manual)		1
5	332/P4712		Label ISO-15C (ear protection)		1
6	817/70004		Decal Warning, hot surfaces keep clear		1
7	332/P7131		Decal Warning Pressure Hazard		1
8	817/70104		Decal Warning,Safety Strut		1
9	817/70018		Decal Warning,Operate From Operators Seat Only		2
10	817/02306	<M1299803	Label Hydraulic Fluid		1
10	332/P4074	>M1299804	Hydraulic Oil Label		1
11	332/P4109		Label Filter checking		1
11A	817/04562		Label 50 Hour Drain		1
12	332/S5833		Label Tie Down Point		4
13	332/V0779		Label loader end		1
14	332/V0777		Label direction		1
15	817/01803		Label Sling Point		4
16	817/70112		Decal Warning Crush Hazard		2
17	332/V3761		Label ISO 15E		1
18	817/19457		Decal Emergency Exit		1
20	817/02160		Label Chassis Stamping		1
21	817/01452		Label Battery Isolator		1

Applicability Date Ranges:
From: , To:

Product Catalog\BACKHOE LOADER 1CX, 208\1CX 00751600-00752999,00806000-00807552 9802/6220\C ELECTRICS-MACHINE CAB & ENGINE\C01 ELECTRICS, MAIN MACHINE\C1-1-1 HARNESSES

9802/6220 C1-1-1 HARNESSES

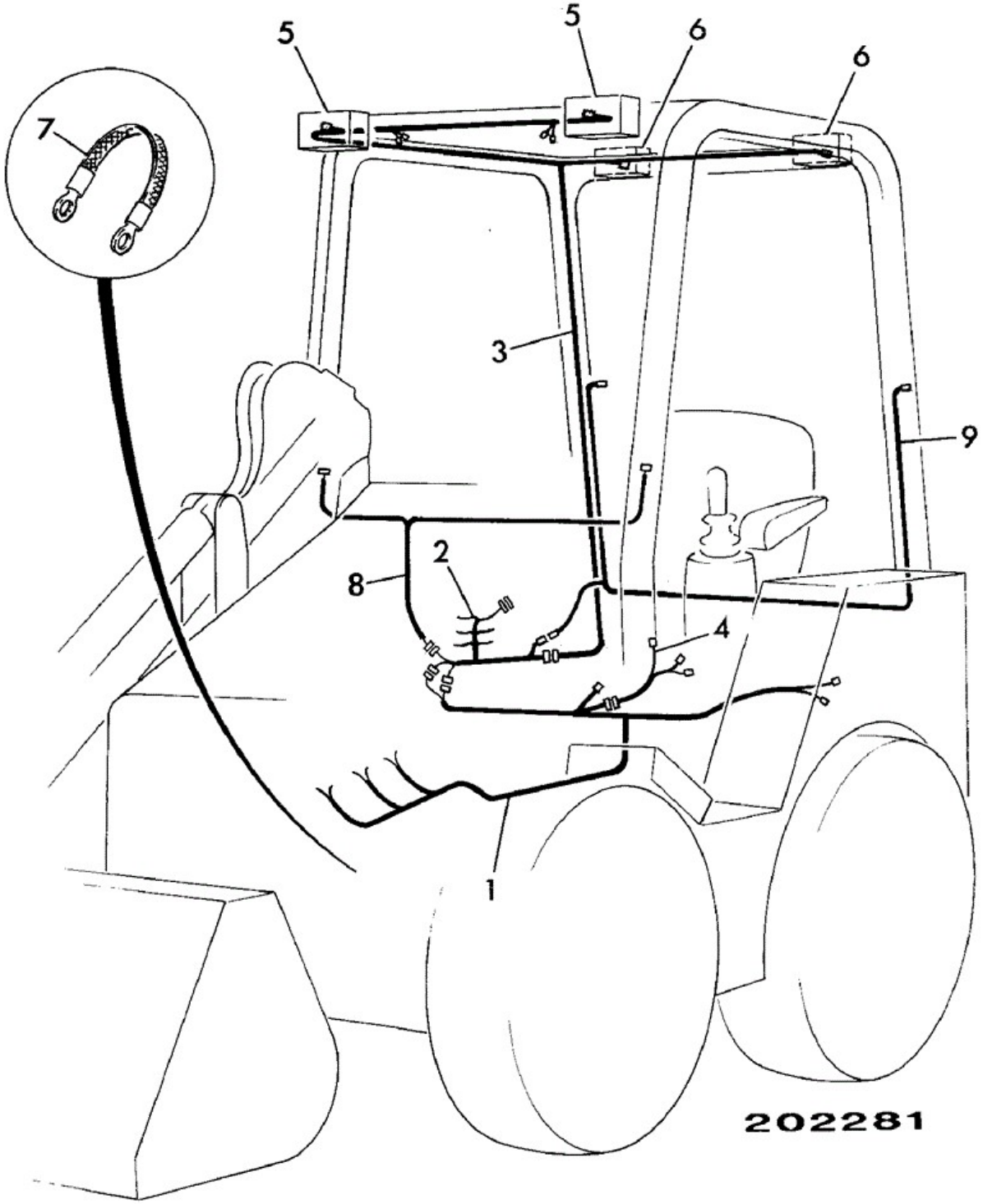

Item	Part No	Change No	Description	Usage Code	QTY
1	721/00312	<M752072	Harness mainframe		1

1	721/00537	<M752378	Harness mainframe		1
1	721/00668	<M807552	Harness mainframe		1
1	721/10599	<M808661	Harness mainframe		1
1	721/11096	<June 2005	Harness mainframe		1
1	721/11970	<Sept 2007	Harness Mainframe		1
1	332/R9175		Harness MAINFRAME 1CX		1
2	721/00313	<See note	Harness panel Use with 9 pin indicator switch only		1
2	721/00404	<M752072	Harness panel Use with 5 pin indicator switch only		1
2	721/00539	<M752378	Harness panel		1
2	721/00666	<M752675	Harness panel non-roadlights		1
2	721/00803	Superseded	Harness panel non-roadlights		1
2	721/10299	<M807716	Harness panel non-roadlights		1
2	721/10861	<M808661	Harness panel non-roadlights		1
2	721/11097		Harness panel non-roadlights		1
2	721/00667	<M752675	Harness panel, roadlights		1
2	721/00805	Superseded	Harness panel, roadlights		1
2	721/10300	<M806956	Harness panel, roadlights		1
2	721/10538	<M807705	Harness panel, roadlights		1
2	721/10862	<M808661	Harness panel, roadlights		1
2	721/11098		Harness panel, roadlights		1
2A	718/51300		Plug circuit link Interlock circuit completion plug.		1
3	719/75800	<M752378	Harness cab roof Excludes rear roadlight harness		1
3	721/00341	<M752378	Harness cab roof Includes rear roadlight harness		1
3	721/00669	<M752675	Harness cab roof		1
3	721/00807		Harness cab roof		1
4	721/00363		Harness seat extension		1
4	721/00673	>M752379	Harness seat 1CX		1
4	721/11510	>M TBA	Harness seat		1
5	****		'See Remark' Front working lights		2
6	****		'See Remark' Rear working lights		2
7	707/01000		Lead engine earth Earth, engine to chassis		1
7	718/07500	>M752379	Strap Earth Uses 1315/0407Z, 1370/0303Z, 1417/0012Z x2		1

8	721/00352	<M752675	Harness front light		1
8	721/00802	>M752676	Harness front light		1
9	719/76600	<See Note	Harness rear lights		1
10	290/00967		Bracket Not illustrated, used to support harness		1
10A	121/77603		Tie Cable 300mm Used with item 10		2
12	721/00148	<M752073	Harness link, Aux. 2 Fitted to NON ROADLIGHT builds.		1
13	721/10763	>M808272	Harness 2-way link 40mm long Deutsch-AMP/Jnrtimer used on brake solenoid		2
20	274/01043		Shield harness protection T=1mm To protect harnesses when tied to chassis		15

Note 1: From M752379 option panel harness's were introduced i.e. non-roadlights or with roadlights

Note 2: Introduction of optional panel harness with roadlight connections

Note 3: Use with item 9 716/76600

Note 4: Item 9 not required with this harness

Note 5: Only required with item 3 719/75800

Applicability Date Ranges:
From: , To: M1299633

Product Catalog\BACKHOE LOADER 1CX, 208\1CX 00751600-00752999,00806000-00807552 9802/6220\C ELECTRICS-MACHINE CAB & ENGINE\C01 ELECTRICS, MAIN MACHINE\C1-1-2 HARNESSES

9802/6220 C1-1-2 HARNESSES

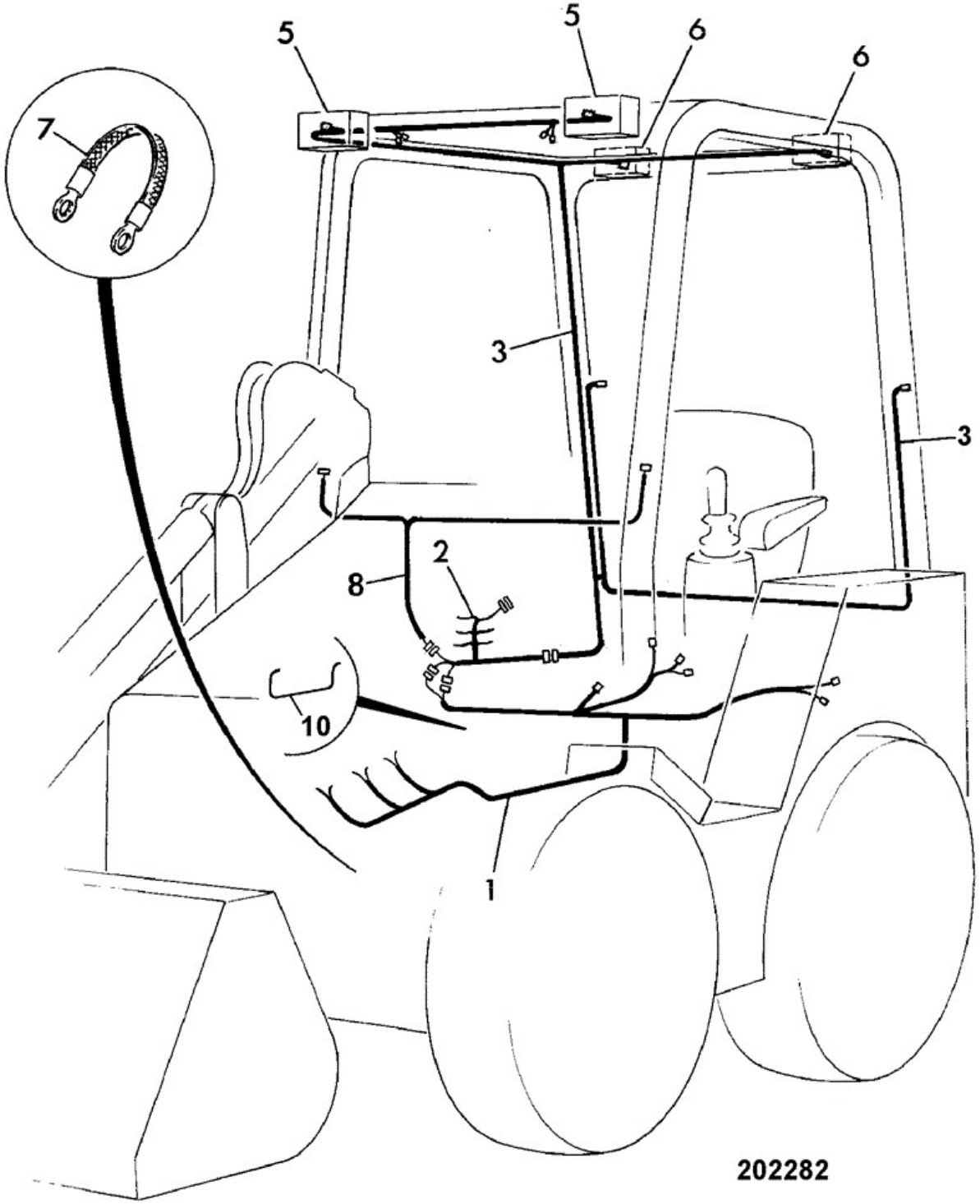

Item	Part No	Change No	Description	Usage Code	QTY
1	332/U9073	<M1299812	Harness mainframe 1CX with KAT immobiliser		1

1	332/W2052	>M1299813	Harness mainframe		1
2	332/U9064		Harness panel, none roadlight with KAT immobiliser		1
2	332/U9074		Harness panel, with roadlights with KAT immobiliser		1
2A	718/51300		Plug circuit link		1
2A	332/E0988	>M1299703	Plug blanking, Deutsch DT 2 way to blank off hyd filter connectors		1
3	721/00807		Harness cab roof		1
5	****		'See Remark' Front working lights		2
6	****		'See Remark' Rear working lights		2
7	707/01000		Lead engine earth Earth,		1
8	721/00802		Harness front light		1
10	290/00967		Bracket		1
10A	121/77603		Tie Cable 300mm		2
13	721/10763		Harness 2-way link 40mm long Deutsch-AMP/Jnrtimer		2
20	274/01043		Shield harness protection T=1mm		15

Applicability Date Ranges:
From: M1299634 , To:

Product Catalog\BACKHOE LOADER 1CX, 208\1CX 00751600-00752999,00806000-00807552 9802/6220\C ELECTRICS-MACHINE CAB & ENGINE\C01 ELECTRICS, MAIN MACHINE\C1-1-3 HARNESS SEAT INCL.PRESSURE SWITCH MILSCO SEATS

9802/6220 C1-1-3 HARNESS SEAT INCL.PRESSURE SWITCH MILSCO SEATS

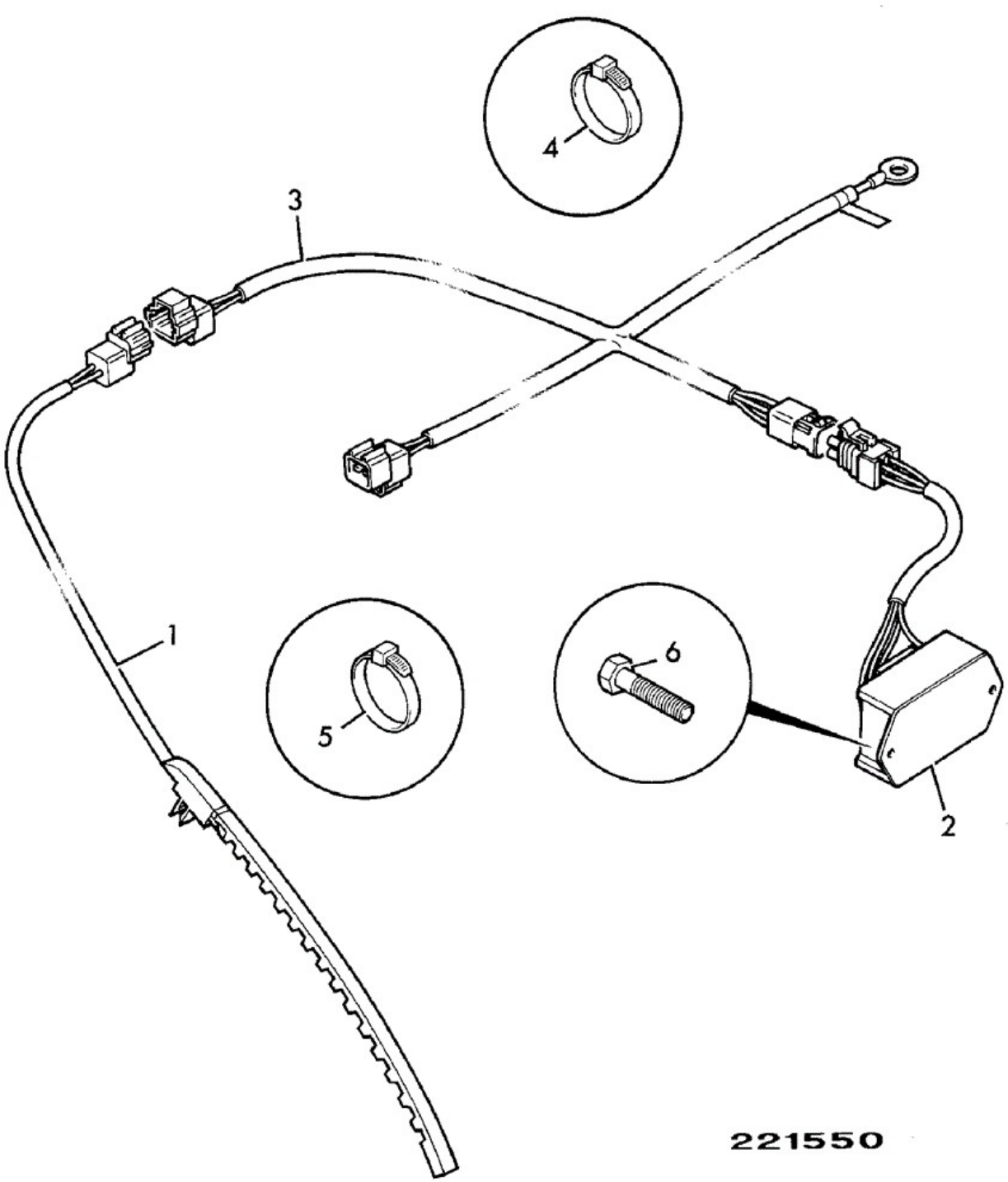

Item	Part No	Change No	Description	Usage Code	QTY
1	701/49600	<M752378	Switch seat pressure		1
1	701/72800	>M752379	Switch seat pressure		1

2	716/18400		Switch delay		1
3	719/87500		Harness seat interlock		1
3A	718/51300		Plug circuit link Interlock circuit completion plug.		1
4	826/01347		Tie Cable 160mm		5
5	204/07006		Tie Cable		5
6	1315/0105Z		Setscrew M5 x 20		2
7	718/51000		Harness rear wiper		1
8	718/56097		Harness seat switch extension extension harness 2w pin sumi.x 2w PosLok		1

Note 1: Use item 3A when item 1 not fitted.

Applicability Date Ranges:
From: , To: Nov 2006

Product Catalog\BACKHOE LOADER 1CX, 208\1CX 00751600-00752999,00806000-00807552 9802/6220\C ELECTRICS-MACHINE CAB & ENGINE\C01 ELECTRICS, MAIN MACHINE\C1-1-4 HARNESS FLOAT INSTALLATION

9802/6220 C1-1-4 HARNESS FLOAT INSTALLATION

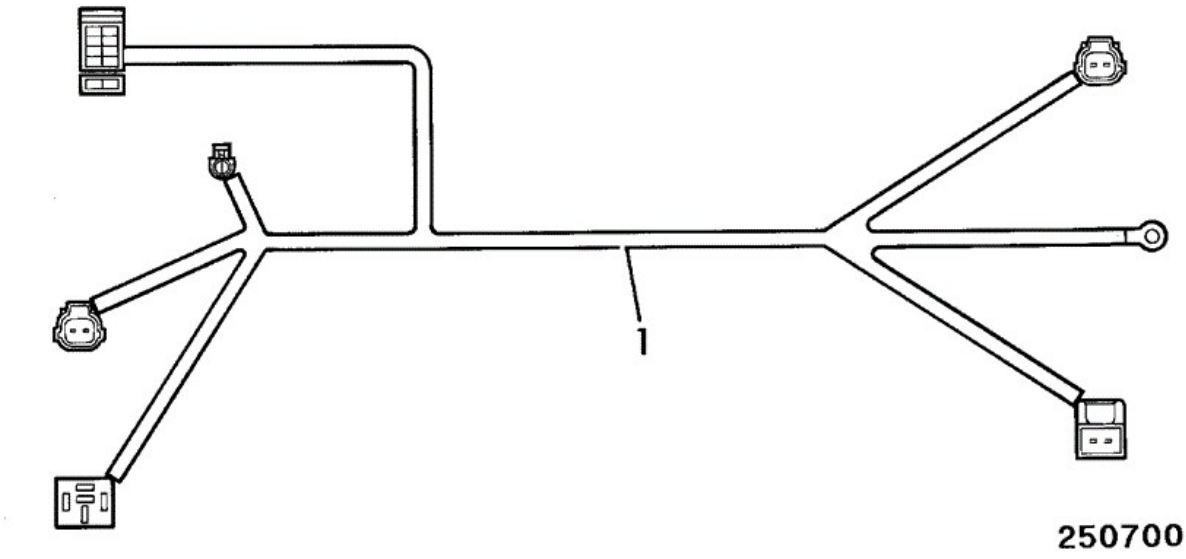

Item	Part No	Change No	Description	Usage Code	QTY
1	719/80500	<M808661	Harness float installation		1
1	721/11093		Harness float		1

Applicability Date Ranges:
From: , To:

Product Catalog\BACKHOE LOADER 1CX, 208\1CX 00751600-00752999,00806000-00807552 9802/6220\C ELECTRICS-MACHINE CAB & ENGINE\C01 ELECTRICS, MAIN MACHINE\C1-1-5 HARNESS HAND HELD ATTACHMENT

9802/6220 C1-1-5 HARNESS HAND HELD ATTACHMENT

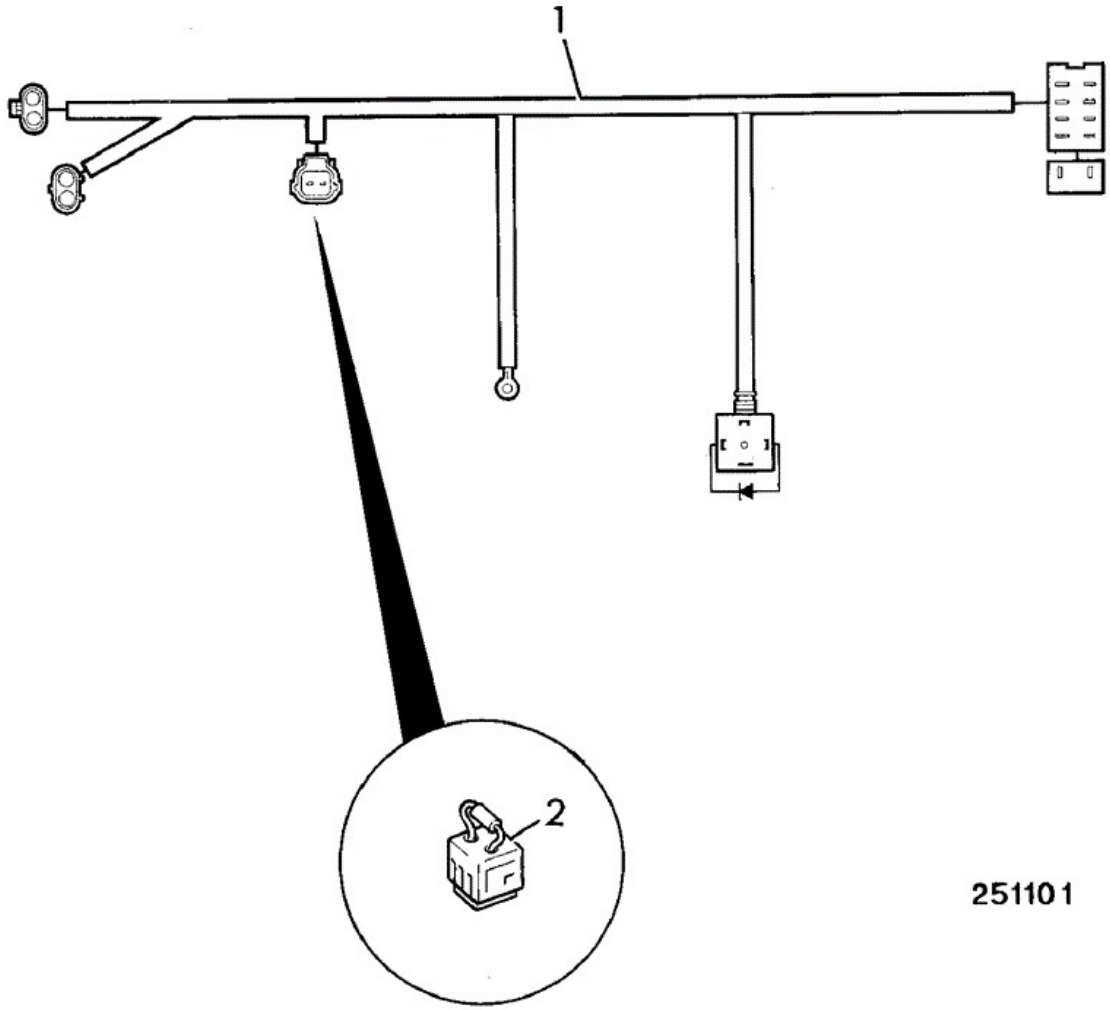

Item	Part No	Change No	Description	Usage Code	QTY
1	719/74400		Harness		1
1	721/00347	>M751722	Harness		1
2	716/10700		Plug single diode 2 way		1

Applicability Date Ranges:
From: , To:

Product Catalog\BACKHOE LOADER 1CX, 208\1CX 00751600-00752999,00806000-00807552 9802/6220\C ELECTRICS-MACHINE CAB & ENGINE\C01 ELECTRICS, MAIN MACHINE\C1-1-7 HARNESS SEAT, GERMANY

9802/6220 C1-1-7 HARNESS SEAT, GERMANY

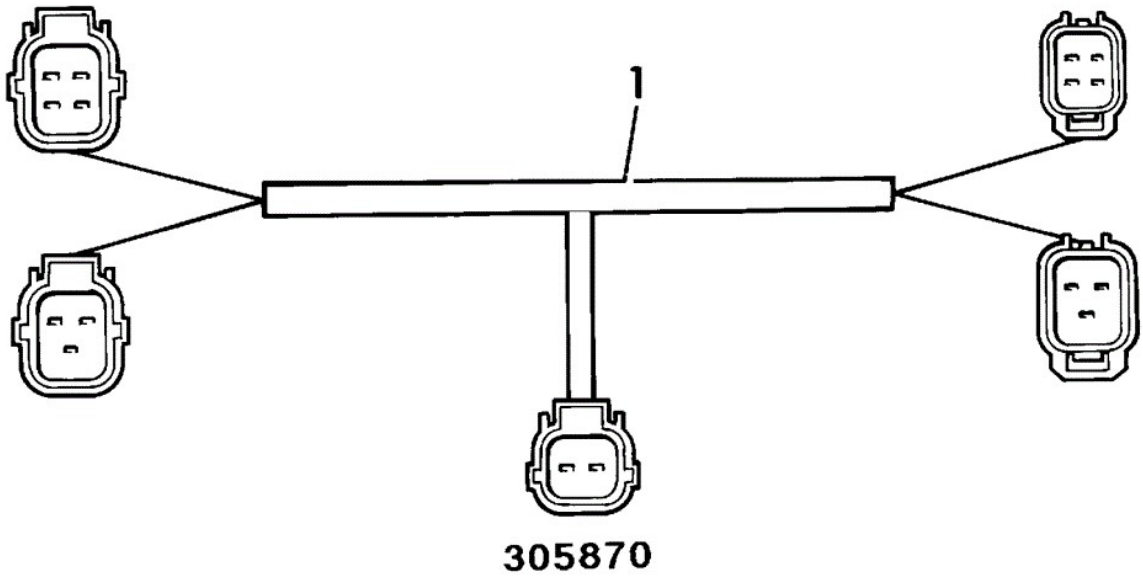

Item	Part No	Change No	Description	Usage Code	QTY
1	721/00674		Harness seat, TUV		1

Applicability Date Ranges:
From: , To:

Product Catalog\BACKHOE LOADER 1CX, 208\1CX 00751600-00752999,00806000-00807552 9802/6220\C ELECTRICS-MACHINE CAB & ENGINE\C01 ELECTRICS, MAIN MACHINE\C1-1-8 HARNESS AUXILIARY

9802/6220 C1-1-8 HARNESS AUXILIARY

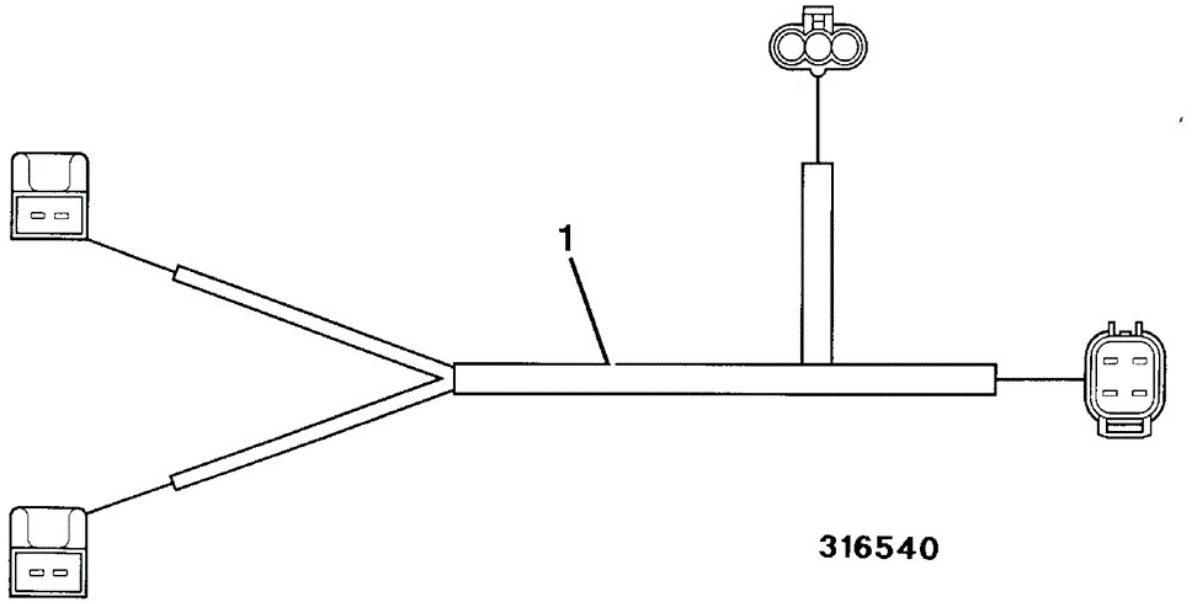

Item	Part No	Change No	Description	Usage Code	QTY
1	721/00670	<S/N808661	Harness auxiliary		1
1	721/11094		Harness auxiliary		1

Applicability Date Ranges:
From: , To:

Product Catalog\BACKHOE LOADER 1CX, 208\1CX 00751600-00752999,00806000-00807552 9802/6220\C ELECTRICS-MACHINE CAB & ENGINE\C01 ELECTRICS, MAIN MACHINE\C1-1-9 HARNESS HEATER

9802/6220 C1-1-9 HARNESS HEATER

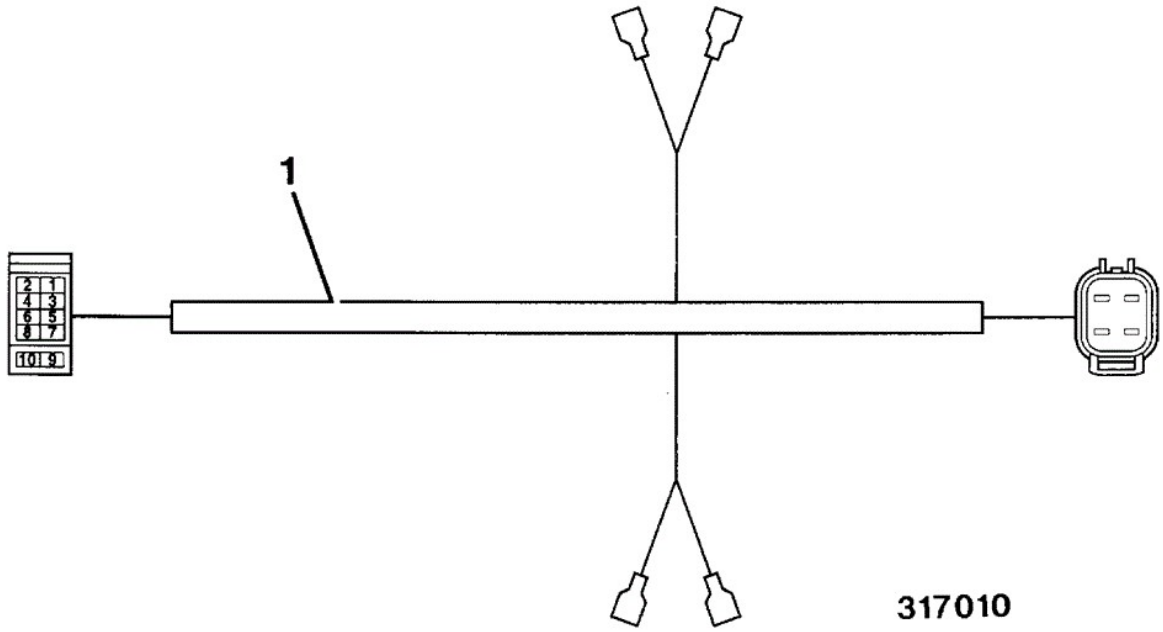

Item	Part No	Change No	Description	Usage Code	QTY
1	721/00671	<M752675	Harness heater		1
1	721/00808	<M807705	Harness heater		1
1	721/10432		Harness heater		1

Applicability Date Ranges:
From: , To:

Product Catalog\BACKHOE LOADER 1CX, 208\1CX 00751600-00752999,00806000-00807552 9802/6220\C ELECTRICS-MACHINE CAB & ENGINE\C01 ELECTRICS, MAIN MACHINE\C1-2-1 LIGHT, HEAD RIGHT HAND DIP

9802/6220 C1-2-1 LIGHT, HEAD RIGHT HAND DIP

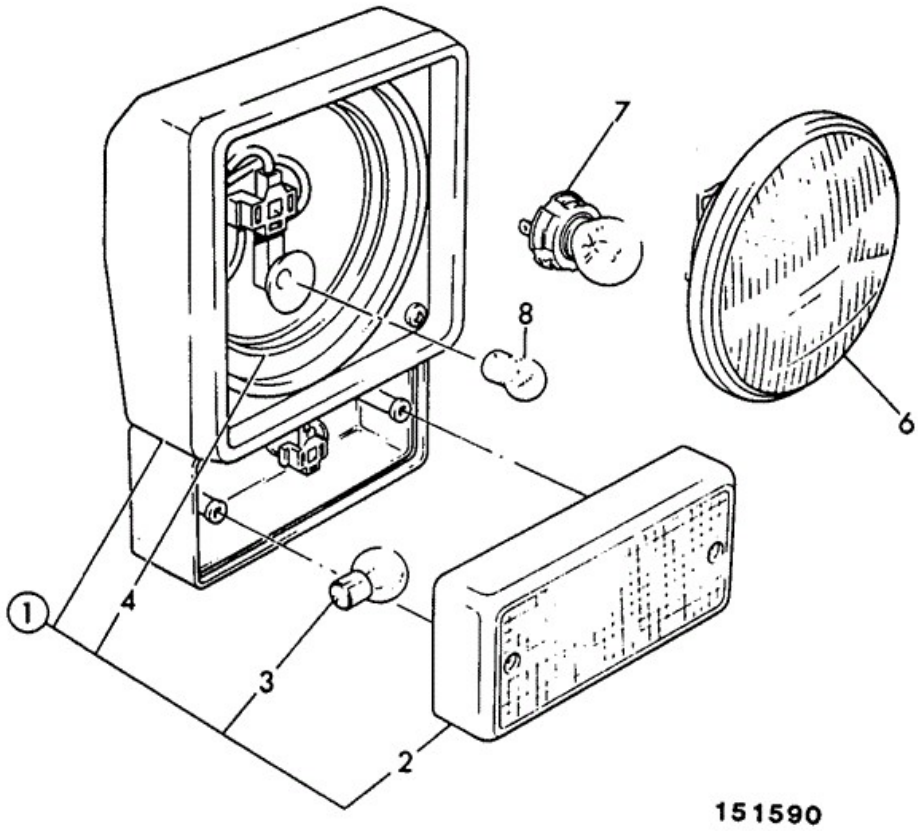

Item	Part No	Change No	Description	Usage Code	QTY

1	700/34000		Light R.H. dip, 12 volt clear		2
2	:700/16001		Lens		1
3	:720/10005		Bulb 12v 21w		1
4	:700/16002		Seal		1
6	:700/17600		Light unit right hand dip		1
7	720/10060		Bulb Halogen 60/55W 12V clear		2
8	720/10014		Bulb 12v 4W		2

Applicability Date Ranges:
From: , To: M752675

Product Catalog\BACKHOE LOADER 1CX, 208\1CX 00751600-00752999,00806000-00807552 9802/6220\C ELECTRICS-MACHINE CAB & ENGINE\C01 ELECTRICS, MAIN MACHINE\C1-2-2 LIGHT, HEAD LEFT HAND DIP CLEAR

9802/6220 C1-2-2 LIGHT, HEAD LEFT HAND DIP CLEAR

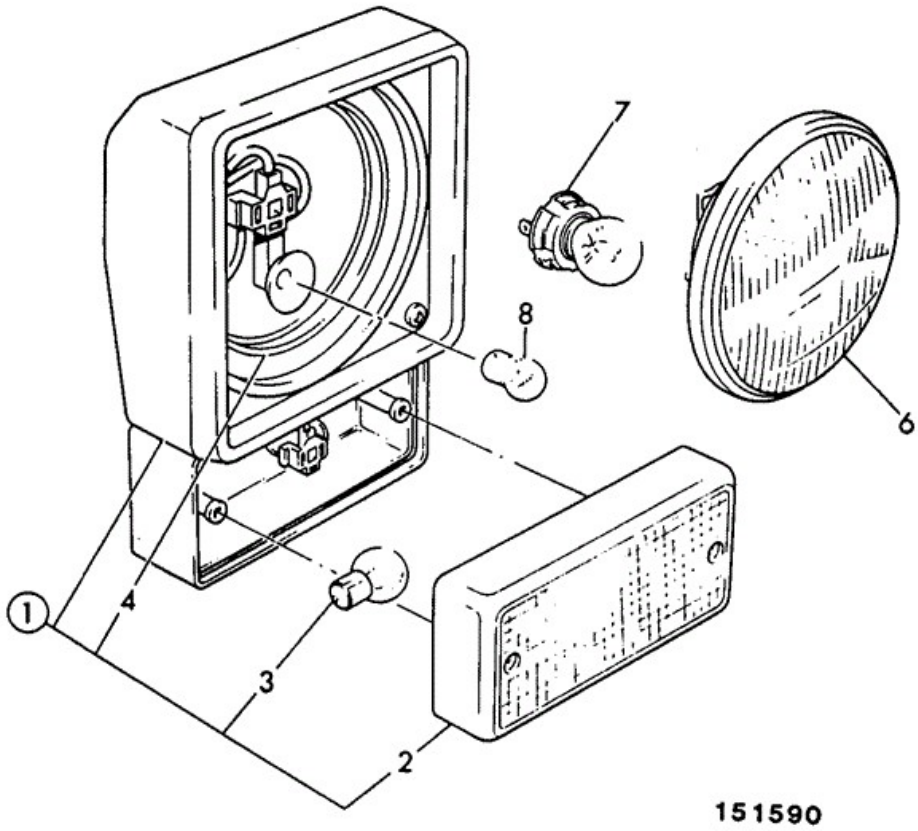

Item	Part No	Change No	Description	Usage Code	QTY

1	700/34100		Light L.H. dip, 12 volt clear		2
2	:700/16001		Lens		1
3	:720/10005		Bulb 12v 21w		1
4	:700/16002		Seal		1
6	:700/17500		Light unit left hand dip		1
7	720/10060		Bulb Halogen 60/55W 12V clear		2
8	720/10014		Bulb 12v 4W		2

Applicability Date Ranges:
From: , To: M752675

Product Catalog\BACKHOE LOADER 1CX, 208\1CX 00751600-00752999,00806000-00807552 9802/6220\C ELECTRICS-MACHINE CAB & ENGINE\C01 ELECTRICS, MAIN MACHINE\C1-2-3 LIGHT, HEAD RIGHT HAND DIP

9802/6220 C1-2-3 LIGHT, HEAD RIGHT HAND DIP

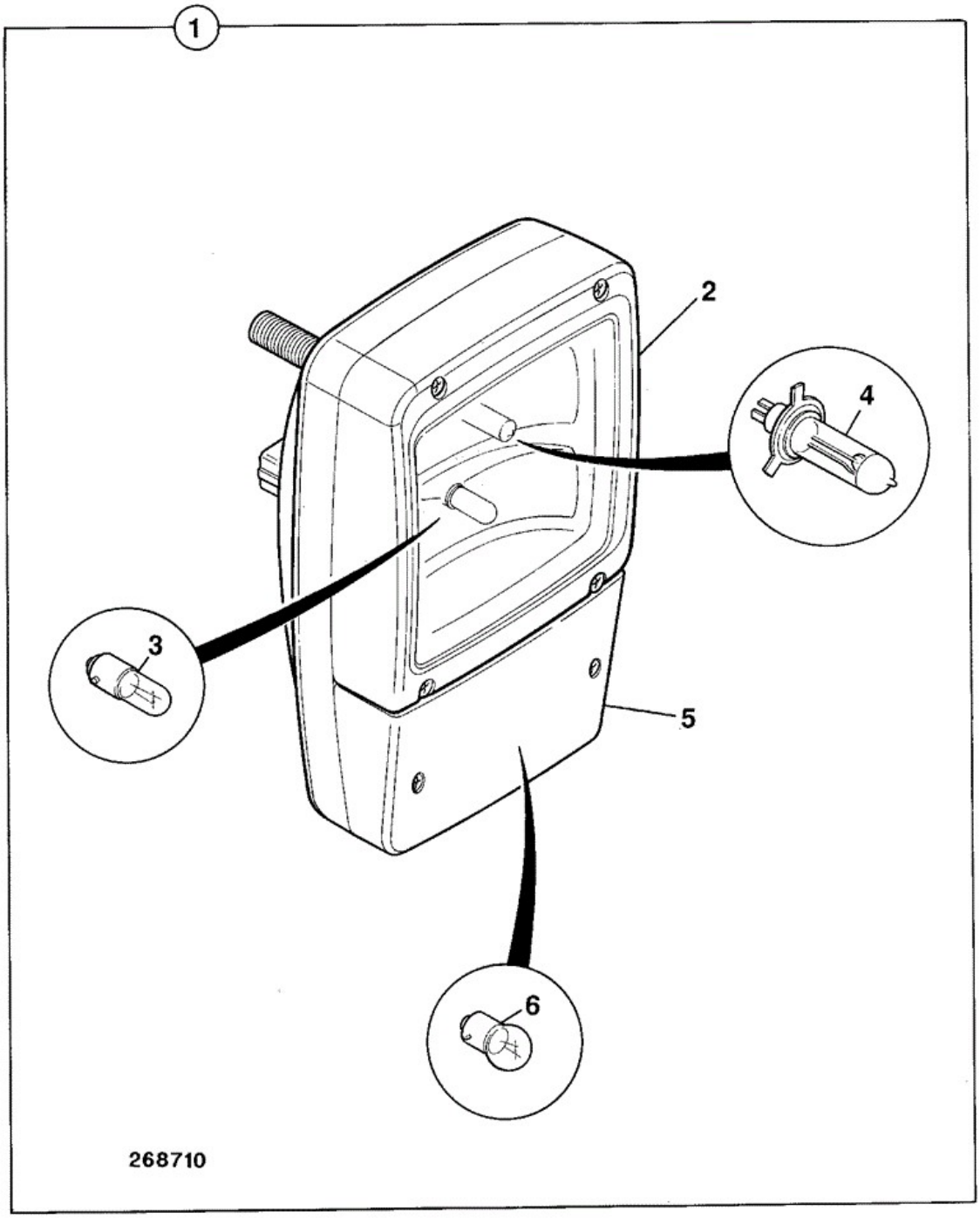

Item	Part No	Change No	Description	Usage Code	QTY
1	700/38500		Light head assembly right hand dip		2
2	:700/38501		Lens assembly, headlamp		1

3	:720/10043		Bulb side lamp 12v 4w		1
4	:720/10061		Bulb 12v 55w H3 Main		1
4	:720/10068		Bulb 12v 55w H7 Dip		1
5	:700/38401		Lens indicator		1
6	:720/10002		Bulb 12v 21w		1

Applicability Date Ranges:
From: M752676 , To:

Product Catalog\BACKHOE LOADER 1CX, 208\1CX 00751600-00752999,00806000-00807552 9802/6220\C ELECTRICS-MACHINE CAB & ENGINE\C01 ELECTRICS, MAIN MACHINE\C1-2-4 LIGHT, HEAD LEFT HAND DIP CLEAR

9802/6220 C1-2-4 LIGHT, HEAD LEFT HAND DIP CLEAR

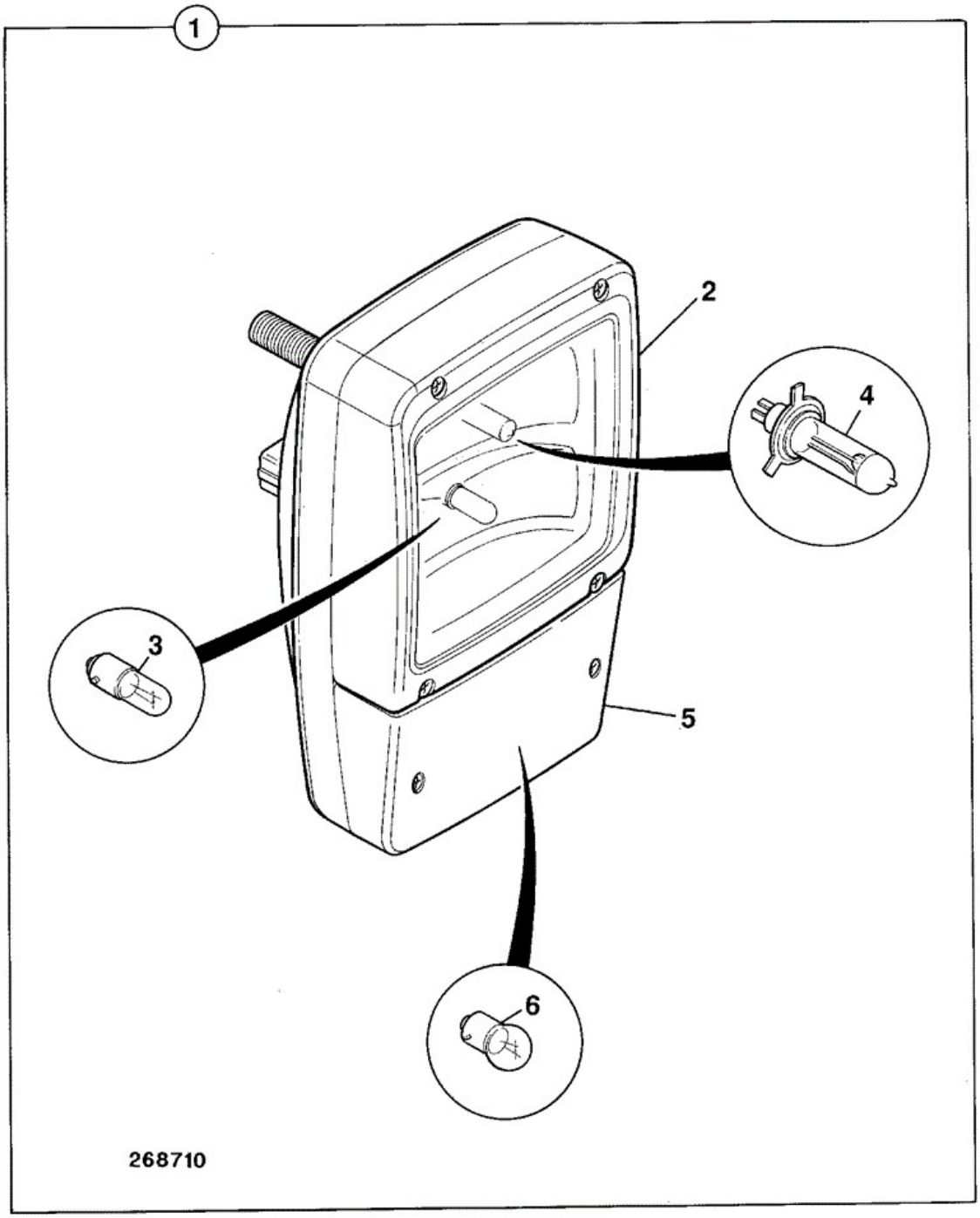

Item	Part No	Change No	Description	Usage Code	QTY
1	700/38400		Light head assembly left hand dip		2
2	:700/38402		Lens assembly, headlamp LH dip		1

3	:720/10043		Bulb side lamp 12v 4w		1
4	:720/10061		Bulb 12v 55w H3 Main		1
4	:720/10068		Bulb 12v 55w H7 Dip		1
5	:700/38401		Lens indicator		1
6	:720/10002		Bulb 12v 21w		1

Applicability Date Ranges:
From: M752676 , To:

Product Catalog\BACKHOE LOADER 1CX, 208\1CX 00751600-00752999,00806000-00807552 9802/6220\C ELECTRICS-MACHINE CAB & ENGINE\C01 ELECTRICS, MAIN MACHINE\C1-3-1 BATTERY & FITTINGS

9802/6220 C1-3-1 BATTERY & FITTINGS

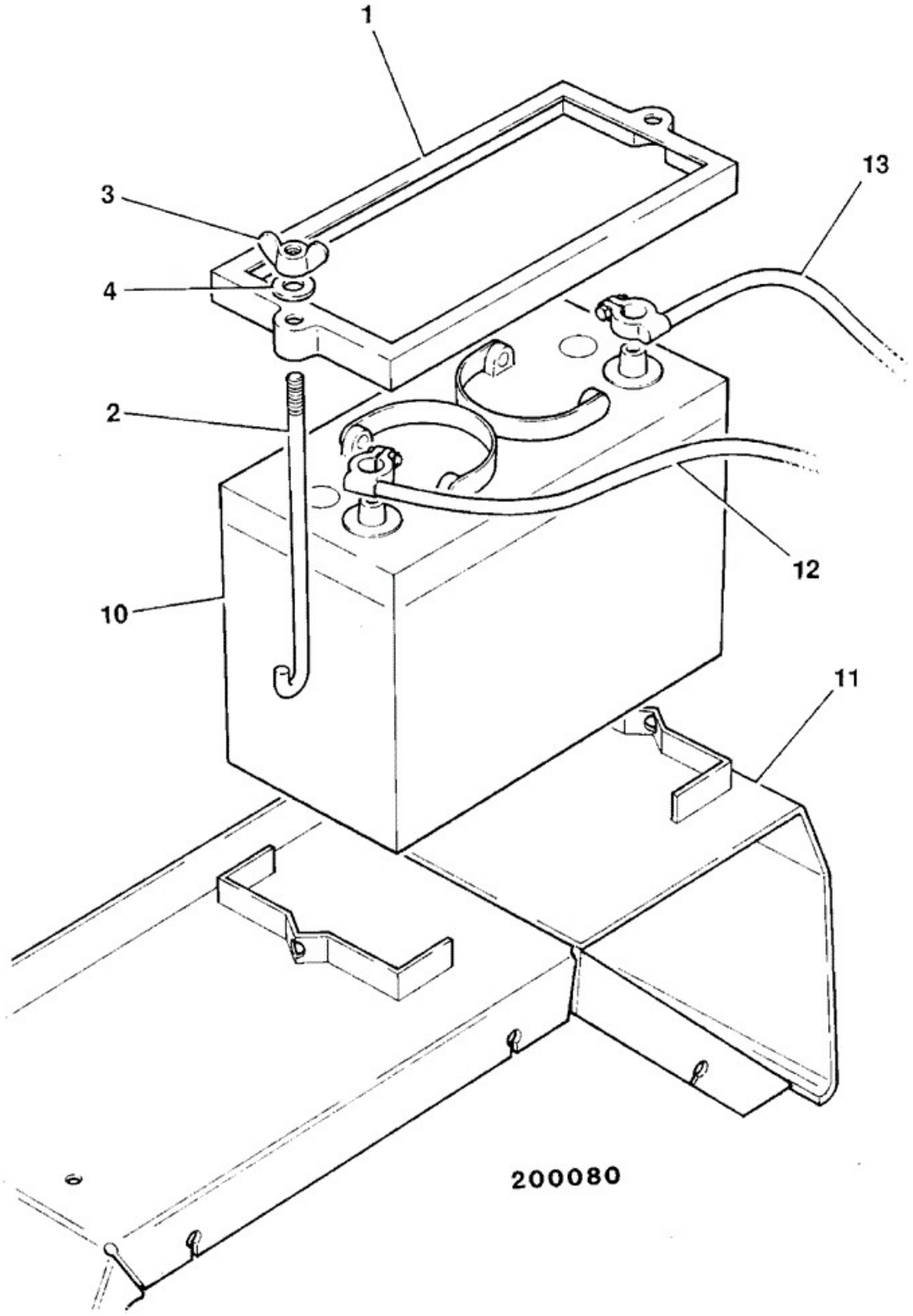

Item	Part No	Change No	Description	Usage Code	QTY

1	106/81400		Clamp		1
2	826/01379		Bolt J M6 x 220mm Use with standard battery 729/10643		2
2	290/00768		Bolt swing		2
3	826/01115		Nut Wing M6		2
4	1420/0006Z		Washer (M6)		2
10	729/10643		Battery wet charge,type 643 Standard duty		1
10	729/10655		Battery wet charge 130Ah Optional		1
11	****		'See Remark' Fender		1
12	718/04500		Lead negative		1
13	718/04400	<M752378	Lead positive		1
13	718/08400	>M752379	Lead battery, positive		1

Applicability Date Ranges:
From: , To: M752631

Product Catalog\BACKHOE LOADER 1CX, 208\1CX 00751600-00752999,00806000-00807552 9802/6220\C ELECTRICS-MACHINE CAB & ENGINE\C01 ELECTRICS, MAIN MACHINE\C1-3-2 BATTERY & FITTINGS

9802/6220 C1-3-2 BATTERY & FITTINGS

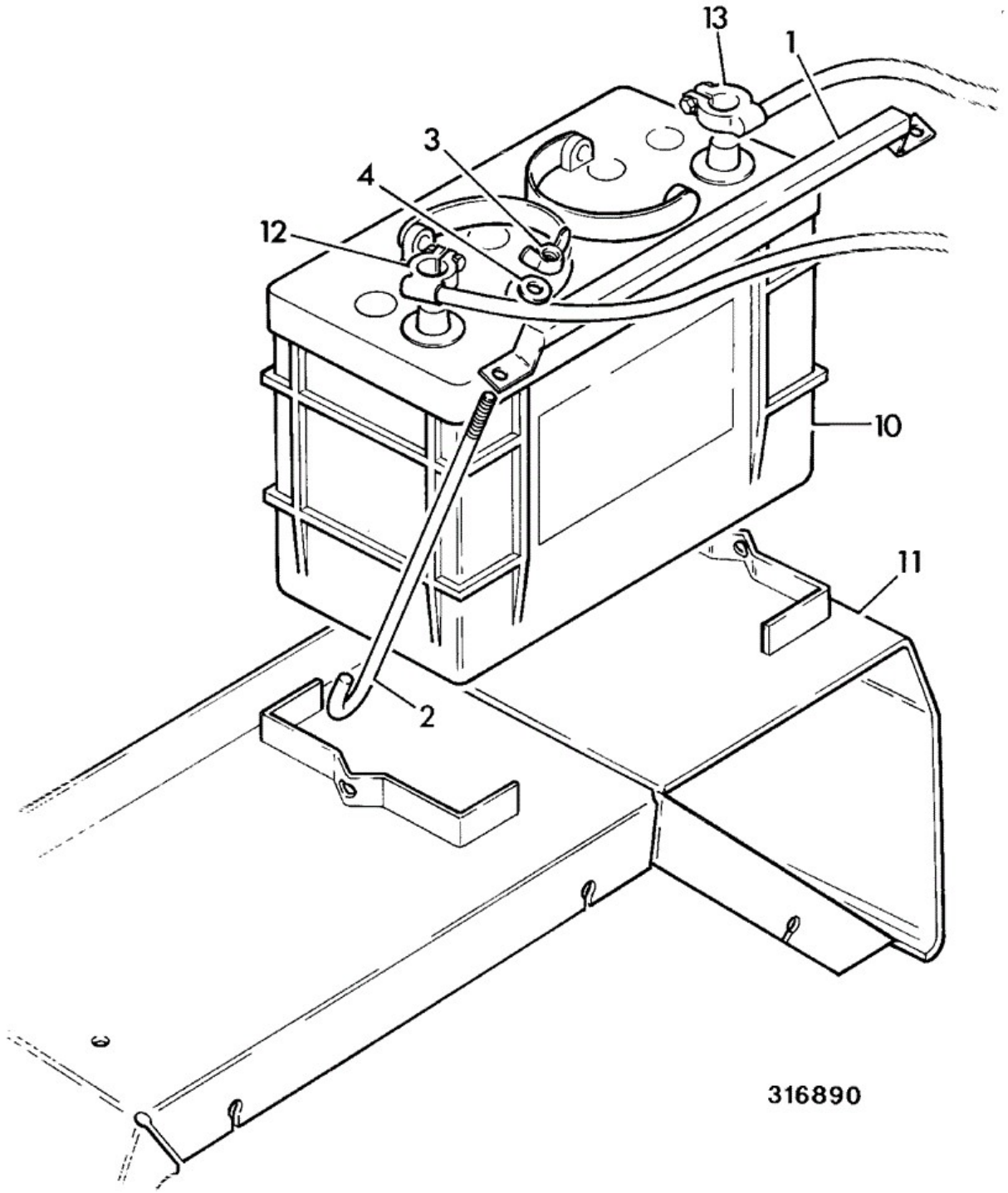

Item	Part No	Change No	Description	Usage Code	QTY
1	290/01288		Clamp Battery		1
2	826/01798		Bolt M6 x 200mm		2

			Use with standard battery		
2	826/01763		Bolt Swing M6 x 255mm		2
3	826/01115		Nut Wing M6		2
4	1420/0006Z		Washer (M6)		2
10	729/10643		Battery wet charge,type 643 Standard duty		1
10	729/10655		Battery wet charge 130Ah Optional		1
11	****		'See Remark' Fender		1
12	718/04500		Lead negative		1
13	718/08400	<3/3/2008	Lead battery, positive		1
13	718/20059	>4/3/2008	Lead battery, red to m8 ring terminal		1

Applicability Date Ranges:
From: M0752632 , To: M1743173

Product Catalog\BACKHOE LOADER 1CX, 208\1CX 00751600-00752999,00806000-00807552 9802/6220\C ELECTRICS-MACHINE CAB & ENGINE\C01 ELECTRICS, MAIN MACHINE\C1-3-3 BATTERY & FITTINGS

9802/6220 C1-3-3 BATTERY & FITTINGS

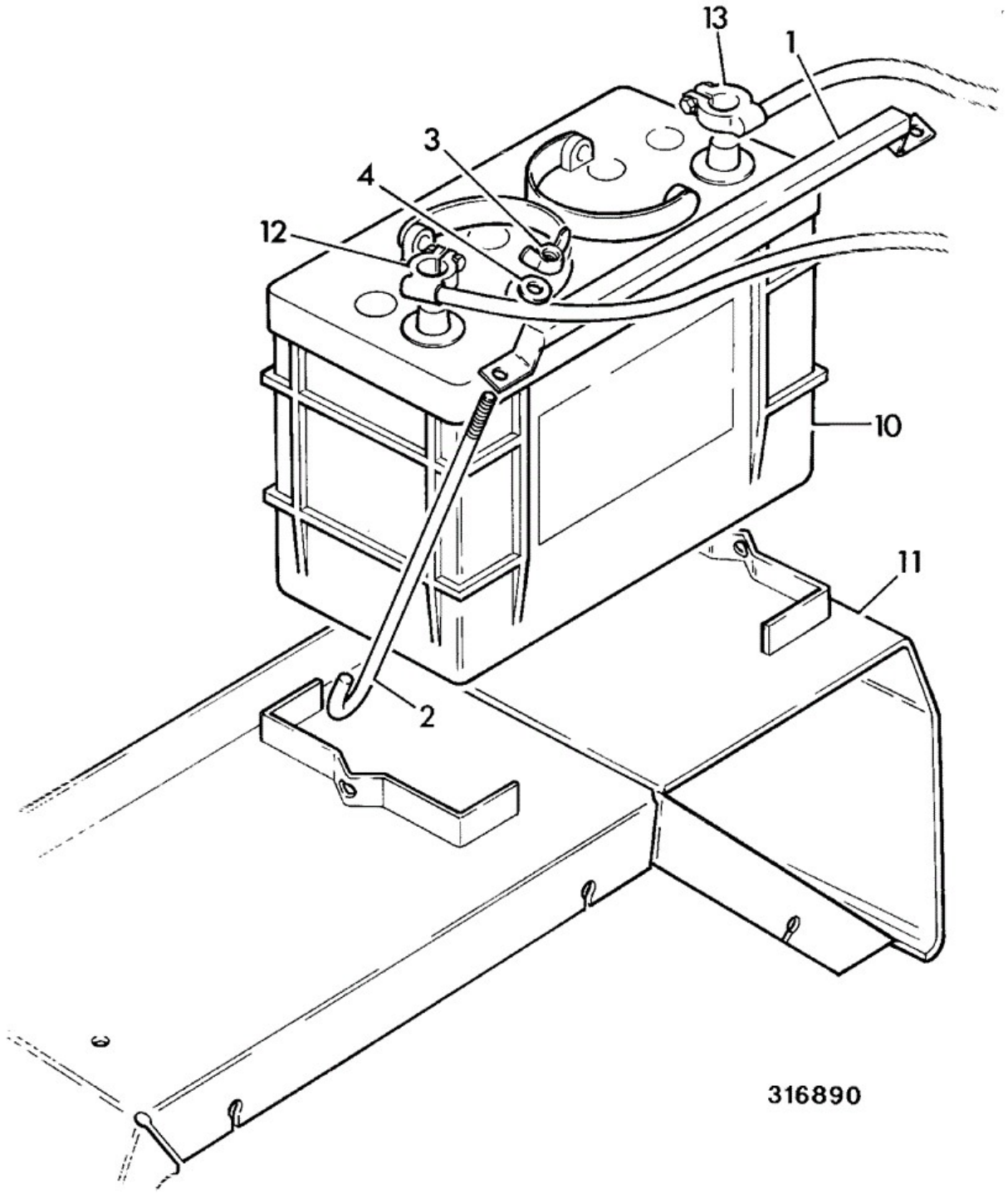

Item	Part No	Change No	Description	Usage Code	QTY
1	826/01798		Bolt M6 x 200mm standard		1

2	290/01288		Clamp Battery heavy duty		1
2	826/01763		Bolt Swing M6 x 255mm		2
3	826/01115		Nut Wing M6		2
4	1420/0006Z		Washer (M6)		2
10	729/10663		Battery 663 standard		1
10	332/L2528		Battery wet charge 850 CCA heavy duty		1
11	****		'See Remark' Fender		1
12	718/04500		Lead negative		1
13	718/20059		Lead battery, red to m8 ring terminal		1

Applicability Date Ranges:
From: M1743174 , To:

Product Catalog\BACKHOE LOADER 1CX, 208\1CX 00751600-00752999,00806000-00807552 9802/6220\C ELECTRICS-MACHINE CAB & ENGINE\C01 ELECTRICS, MAIN MACHINE\C1-4-1 ISOLATOR BATTERY OPTION CAB & CANOPY

9802/6220 C1-4-1 ISOLATOR BATTERY OPTION CAB & CANOPY

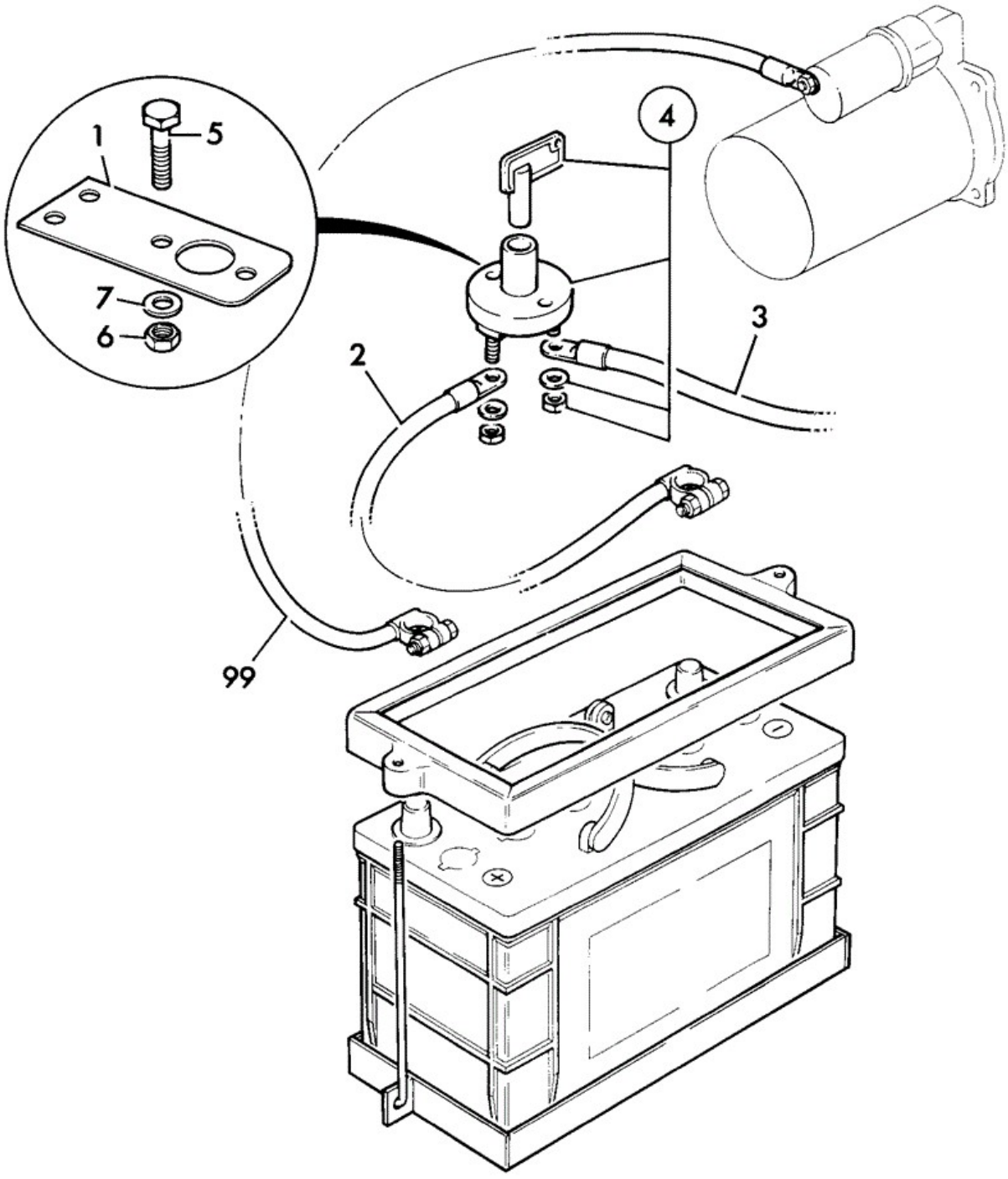

305220

Item	Part No	Change No	Description	Usage Code	QTY
1	290/01262	<M TBA	Bracket battery isolator		1

1	290/01282		Bracket battery isolator		1
2	706/42700		Lead battery negative		1
3	718/56037		Lead battery isolator extension		1
4	701/20800	Superseded	Switch isolator		1
4	708/10052		Switch Isolator		1
4	331/45004		Key isolator switch		1
5	1315/0205D		Setscrew M6 x 20		2
6	1370/0103D		Nut (M6)		2
7	1420/0006D		Washer (M6)		2
99	****		'See Remark' Existing positive lead		1

Applicability Date Ranges:
From: , To: M1299633

9802/6220 C1-4-2 ISOLATOR BATTERY OPTION CAB BUILD

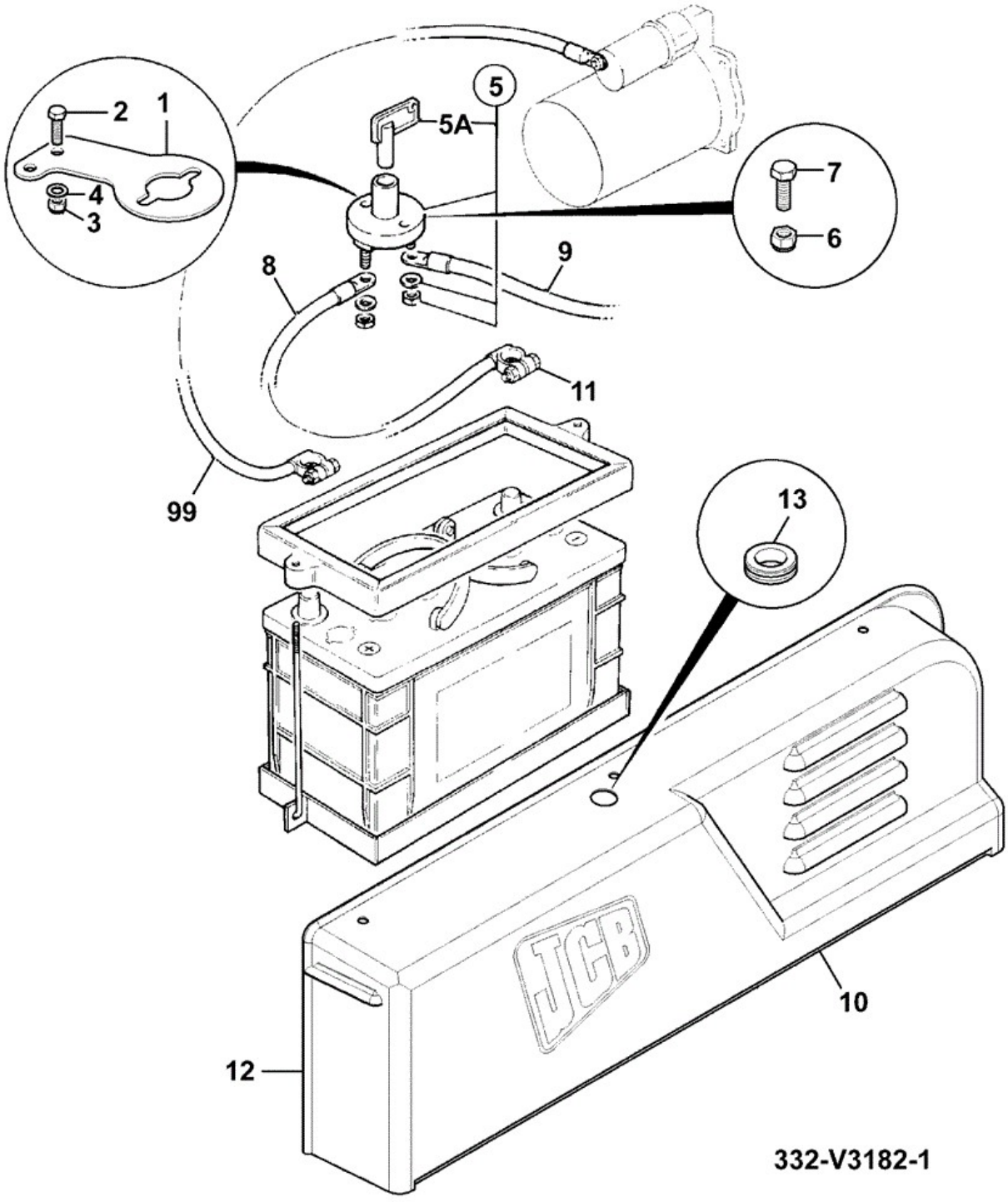

Item	Part No	Change No	Description	Usage Code	QTY
1	:332/U8725		Bracket battery isolator		1
2	:1315/0205D		Setscrew M6 x 20		2

3	:1370/0103D		Nut (M6)		2
4	:1420/0006D		Washer (M6)		2
5	:701/47400		Switch Isolator		1
5A	::701/47401		Key isolator switch (to 701/47400)		1
6	:1315/0305D		Setscrew M8 x 20mm		2
7	:1370/0203D		Nut Lock M8		2
8	:706/42700		Lead battery negative		1
9	:718/56037		Lead battery isolator extension		1
10	:332/V1302		Cover BATTERY ISOLATOR CAB BUILD		1
11	****		'See Remark' Remove existing NEG battery lead		1
12	****		'See Remark' Remove existing cover		1
13	:2410/0113		Grommet 15.9mm dia Existing positive lead		1
99	****		'See Remark' Standard battery lead		1

Applicability Date Ranges:
From: M1299634 , To:

Product Catalog\BACKHOE LOADER 1CX, 208\1CX 00751600-00752999,00806000-00807552 9802/6220\C ELECTRICS-MACHINE CAB & ENGINE\C01 ELECTRICS, MAIN MACHINE\C1-5-1 LIGHT, WORKING (SEE C1-5-2)

9802/6220 C1-5-1 LIGHT, WORKING (SEE C1-5-2)

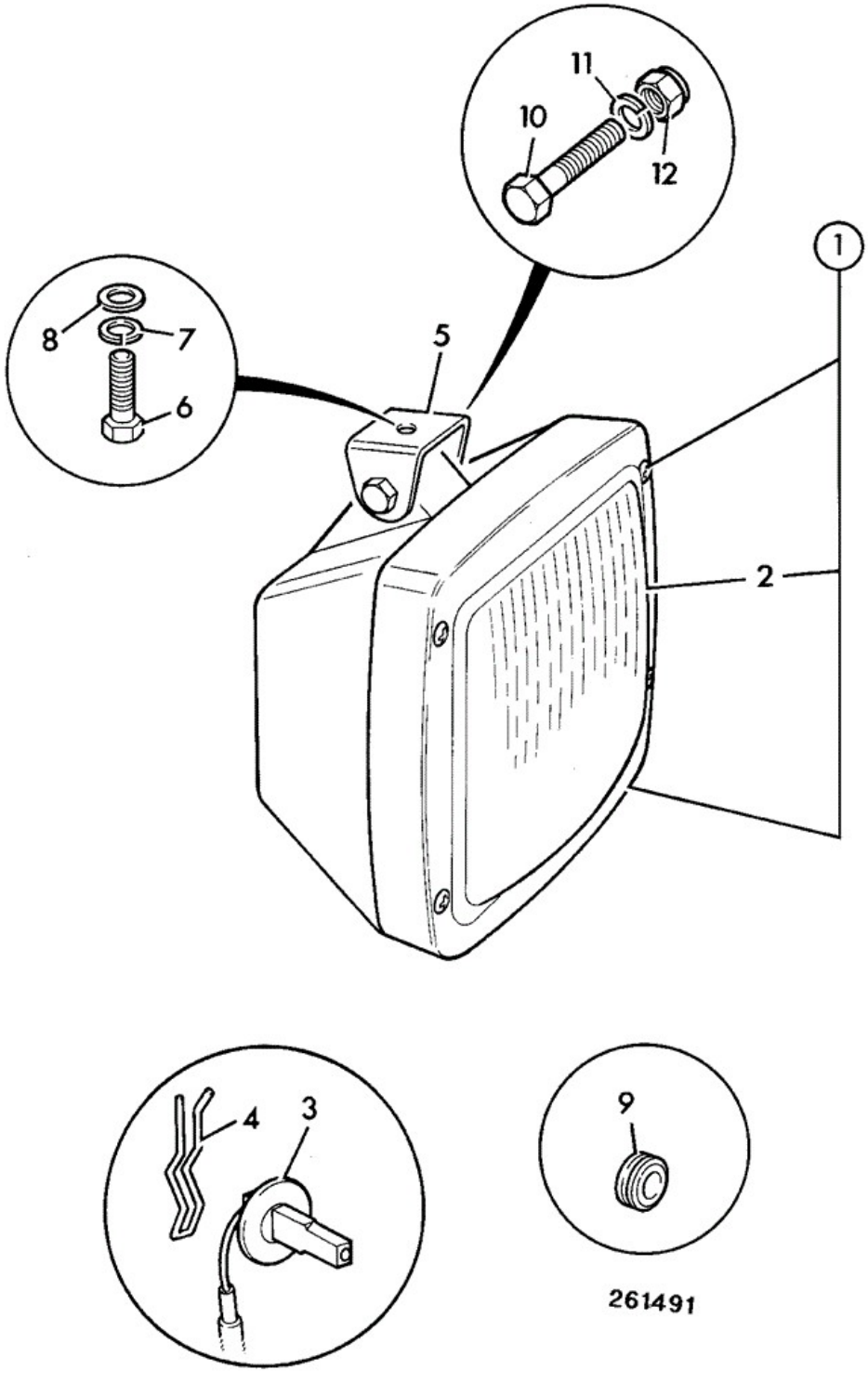

Item	Part No	Change No	Description	Usage Code	QTY
1	700/23000		Light working		4
1A	:720/10061		Bulb 12v 55w H3		1

Applicability Date Ranges:
From: , To: M TBA

Product Catalog\BACKHOE LOADER 1CX, 208\1CX 00751600-00752999,00806000-00807552 9802/6220\C ELECTRICS-MACHINE CAB & ENGINE\C01 ELECTRICS, MAIN MACHINE\C1-5-2 LIGHT, WORKING

9802/6220 C1-5-2 LIGHT, WORKING

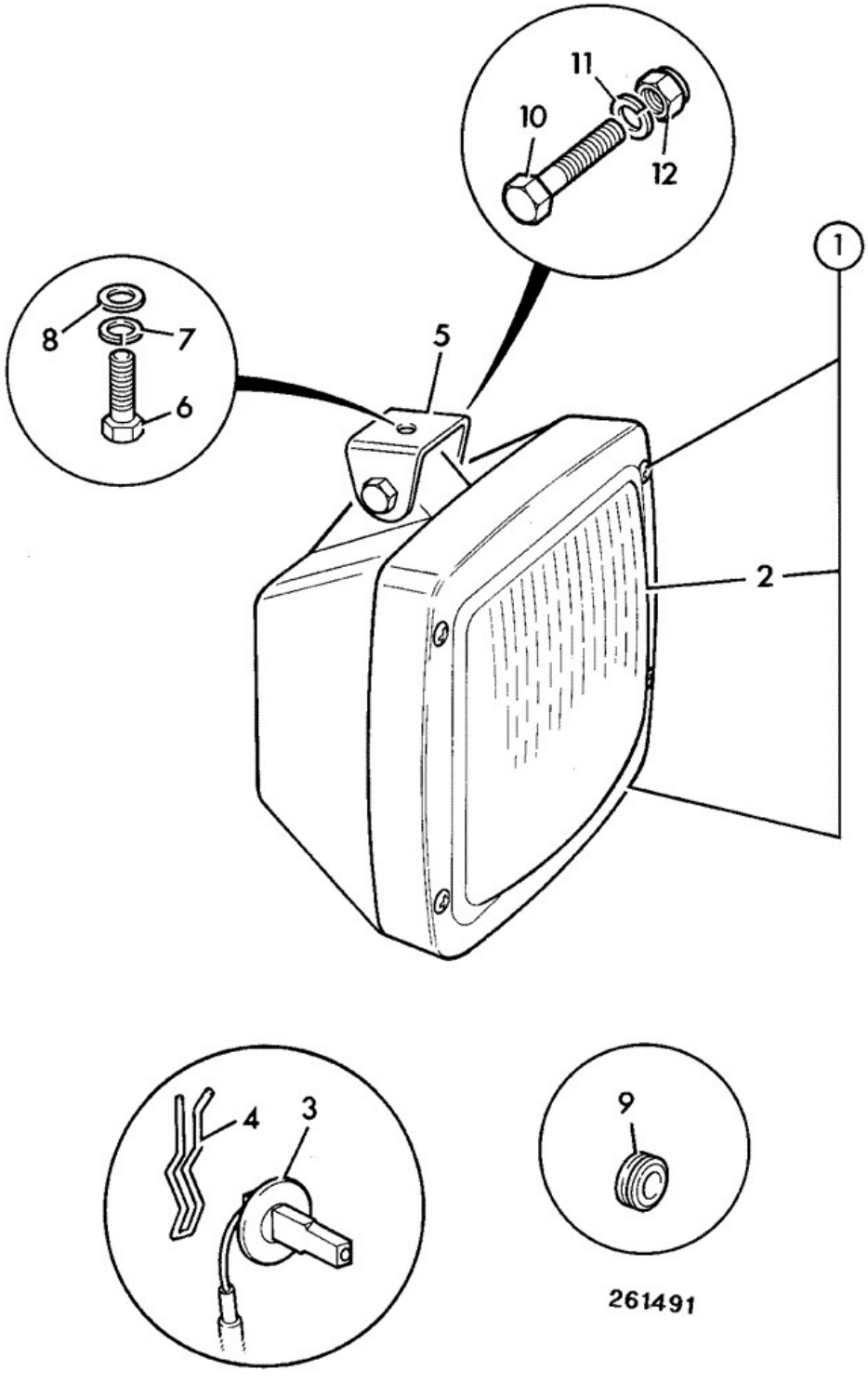

Item	Part No	Change No	Description	Usage Code	QTY
1	700/23000		Light working		4
1	700/32500	>M TBA	Light working 24 volt		4

1	700/38800	>M752676	Light Working		4
2	****		None serviced part		1
3	:720/10061		Bulb 12v 55w H3		1
4	:700/10103		Spring		1
5	123/06305		Mounting Worklamp		4
6	1315/0307Z		Setscrew M8 X 25		4
7	1420/0007Z		Washer (M8)		4
8	1370/0203Z		Nut Nut M8		4
9	123/07770		Grommet (1 hole)		2

Applicability Date Ranges:
From: , To:

Product Catalog\BACKHOE LOADER 1CX, 208\1CX 00751600-00752999,00806000-00807552 9802/6220\C ELECTRICS-MACHINE CAB & ENGINE\C01 ELECTRICS, MAIN MACHINE\C1-6-1 LIGHT, REAR PAGE SUPERCEDED, SEE C1-6-2

9802/6220 C1-6-1 LIGHT, REAR PAGE SUPERCEDED, SEE C1-6-2

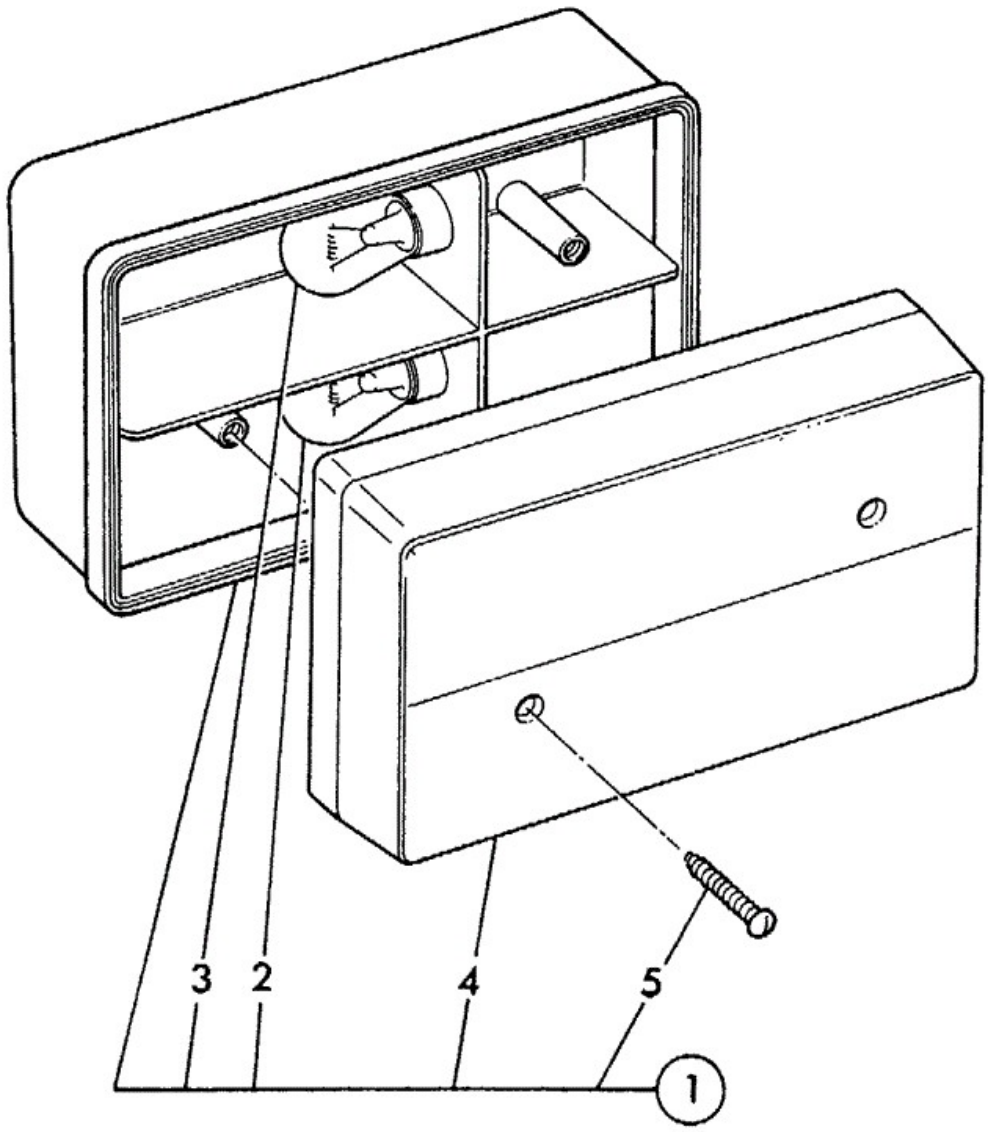

172970

Item	Part No	Change No	Description	Usage Code	QTY

1	700/35600		Light rear		2
2	:720/10038		Bulb 12v 21/5w		1
3	:720/10005		Bulb 12v 21w		1
4	:700/11700		Lens		1
5	:1430/0203		Screw self tapping		2
6	821/00368		Clip retaining Not illustrated		2

Applicability Date Ranges:
From: , To:

Product Catalog\BACKHOE LOADER 1CX, 208\1CX 00751600-00752999,00806000-00807552 9802/6220\C ELECTRICS-MACHINE CAB & ENGINE\C01 ELECTRICS, MAIN MACHINE\C1-6-2 LIGHT, REAR

9802/6220 C1-6-2 LIGHT, REAR

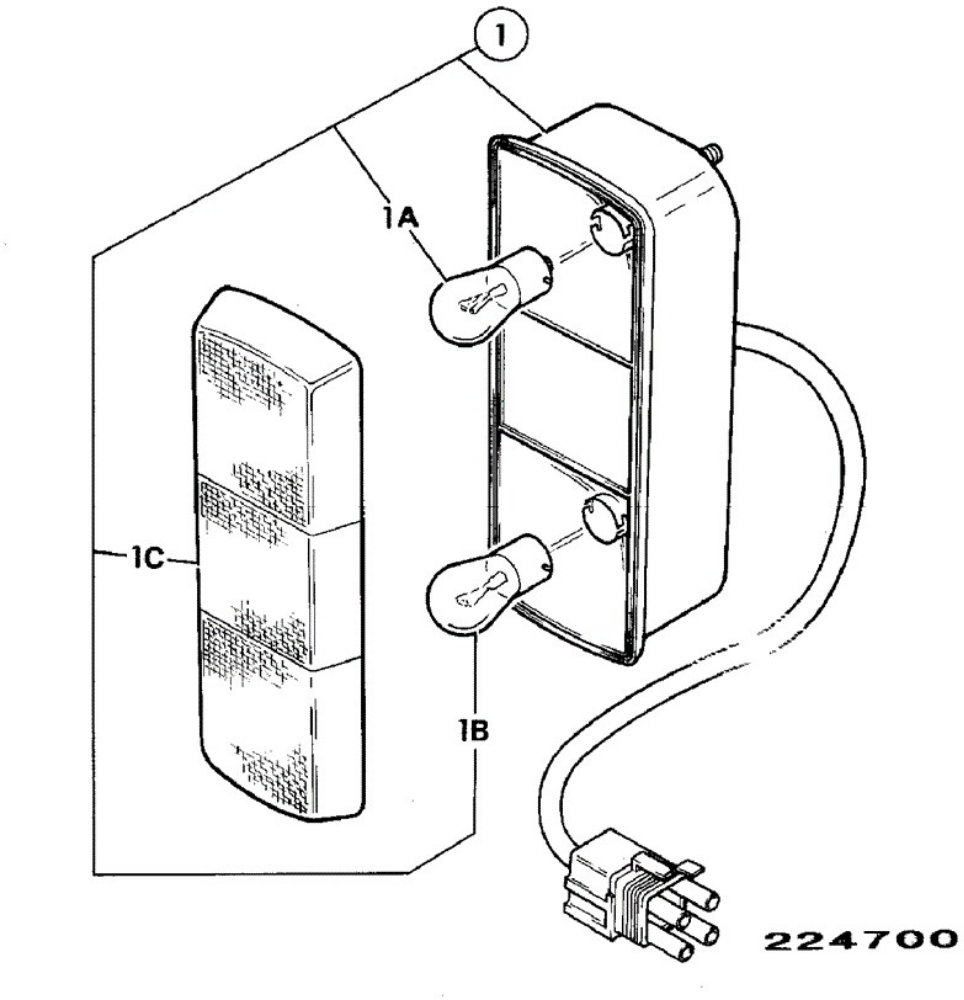

Item	Part No	Change No	Description	Usage Code	QTY
1	700/35600		Light rear		2
1A	:720/10005		Bulb 12v 21w		1
1B	:720/10038		Bulb 12v 21/5w		1
1C	:700/37001		Lens		1

Applicability Date Ranges:
From: , To:

9802/6220 C1-7-1 LIGHT, BEACON HAZARD WARNING AMBER

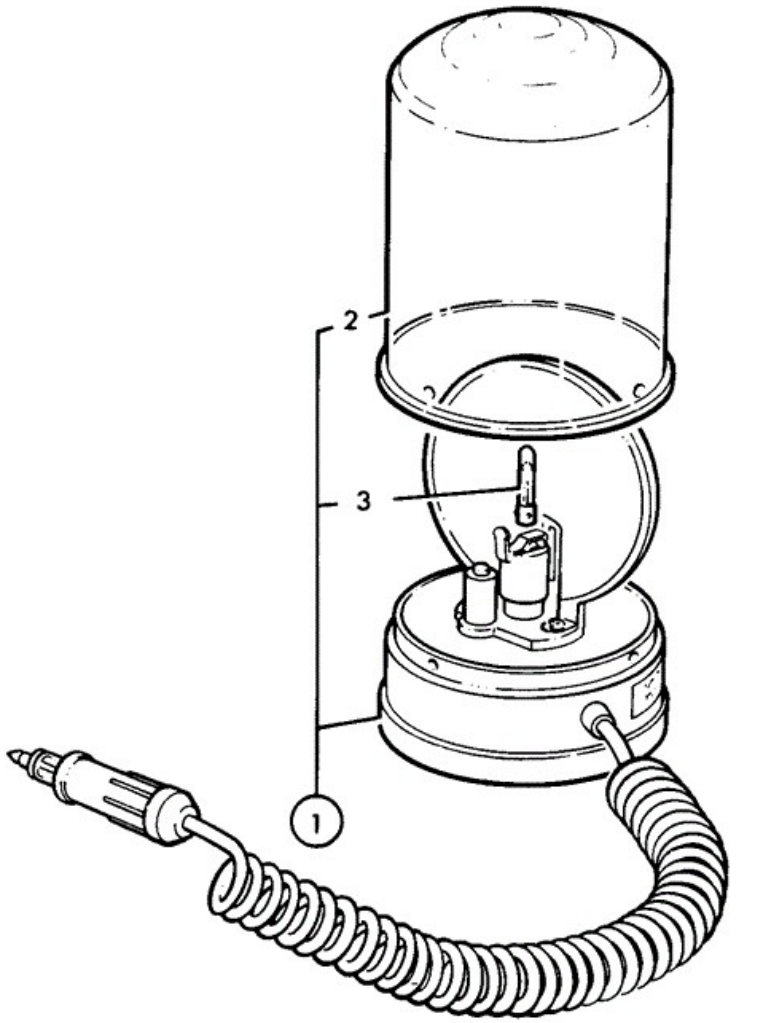

Item	Part No	Change No	Description	Usage Code	QTY

1	700/35000		Beacon 12 volt		1
2	:700/26701		Lens amber, 121mm dia		1
3	:700/09101		Bulb Halogen 12V 55W		1

Applicability Date Ranges:
From: , To:

Product Catalog\BACKHOE LOADER 1CX, 208\1CX 00751600-00752999,00806000-00807552 9802/6220\C ELECTRICS-MACHINE CAB & ENGINE\C01 ELECTRICS, MAIN MACHINE\C1-7-2 LIGHT BEACON HAZARD WARNING, STROBE

9802/6220 C1-7-2 LIGHT BEACON HAZARD WARNING, STROBE

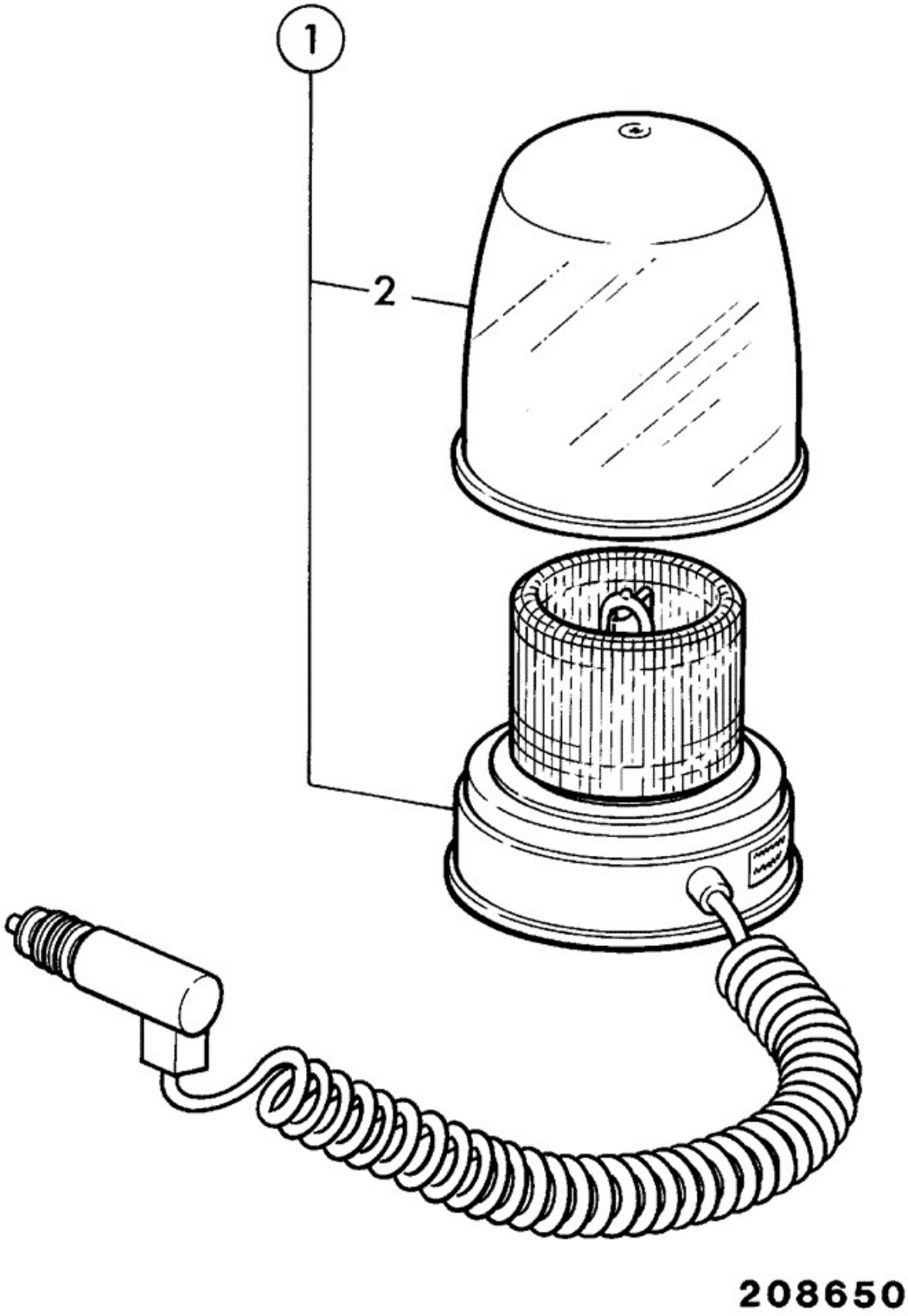

Item	Part No	Change No	Description	Usage Code	QTY

1	700/36900		Beacon warning-strobe amber		1
2	:700/33501		Lens Amber		1

Applicability Date Ranges:
From: M1299634 , To:

Product Catalog\BACKHOE LOADER 1CX, 208\1CX 00751600-00752999,00806000-00807552 9802/6220\C ELECTRICS-MACHINE CAB & ENGINE\C01 ELECTRICS, MAIN MACHINE\C1-7-10 SWITCHES BEACON LIGHT OPTIONAL

9802/6220 C1-7-10 SWITCHES BEACON LIGHT OPTIONAL

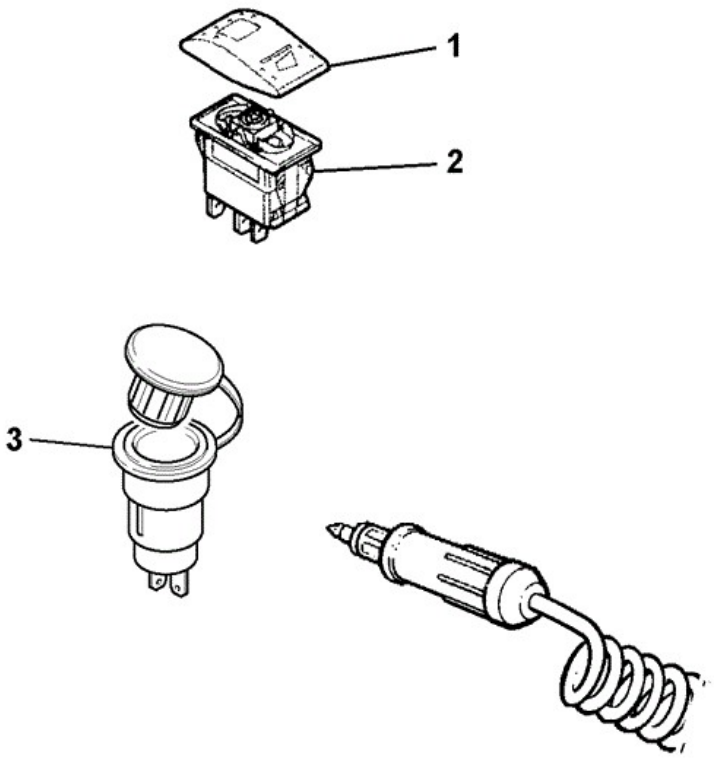

956690

Item	Part No	Change No	Description	Usage Code	QTY
1	701/58704	<M1299794	Actuator beacon switch decal		1
1	701/58825	<M1743276	Actuator Beacon Switch Lights		1

1	701/E8825	>M1743277	Actuator Beacon Lamp		1
2	701/60000	<M1743276	Switch 12V		1
2	701/E0001	>M1743277	Panel , 12Volts, 2 Position		1
3	715/04300		Socket Beacon		1

Applicability Date Ranges:
From: M1299634 , To:

Product Catalog\BACKHOE LOADER 1CX, 208\1CX 00751600-00752999,00806000-00807552 9802/6220\C ELECTRICS-MACHINE CAB & ENGINE\C01 ELECTRICS, MAIN MACHINE\C1-8-1 HORN, SINGLE TONE

9802/6220 C1-8-1 HORN, SINGLE TONE

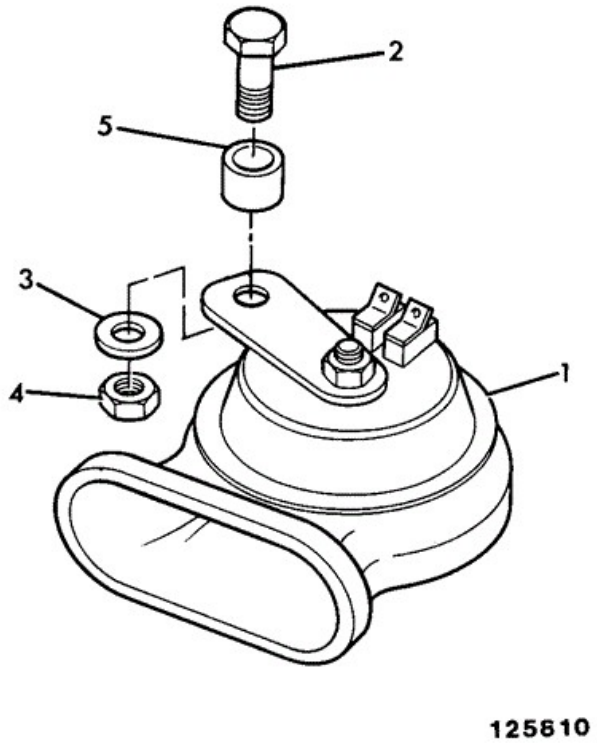

Item	Part No	Change No	Description	Usage Code	QTY

1	704/03400	<M TBA	Horn 12 volt		1
1	704/26800	<M752369	Horn 12 volt		1
1	704/37300		Disc , Horn, 12V		1
2	1315/3311Z		Bolt (M8 X 45)		1
3	1420/0007Z		Washer (M8)		1
4	1370/0203Z		Nut Nut M8		1
5	830/00285		Spacer		1
6	718/56098	>MTBA	Harness salvage, horn 2w Packard/2w PosLok Salvage harness		1

Applicability Date Ranges:
From: , To:

Product Catalog\BACKHOE LOADER 1CX, 208\1CX 00751600-00752999,00806000-00807552 9802/6220\C ELECTRICS-MACHINE CAB & ENGINE\C01 ELECTRICS, MAIN MACHINE\C1-9-1 ALARM, REVERSE

9802/6220 C1-9-1 ALARM, REVERSE

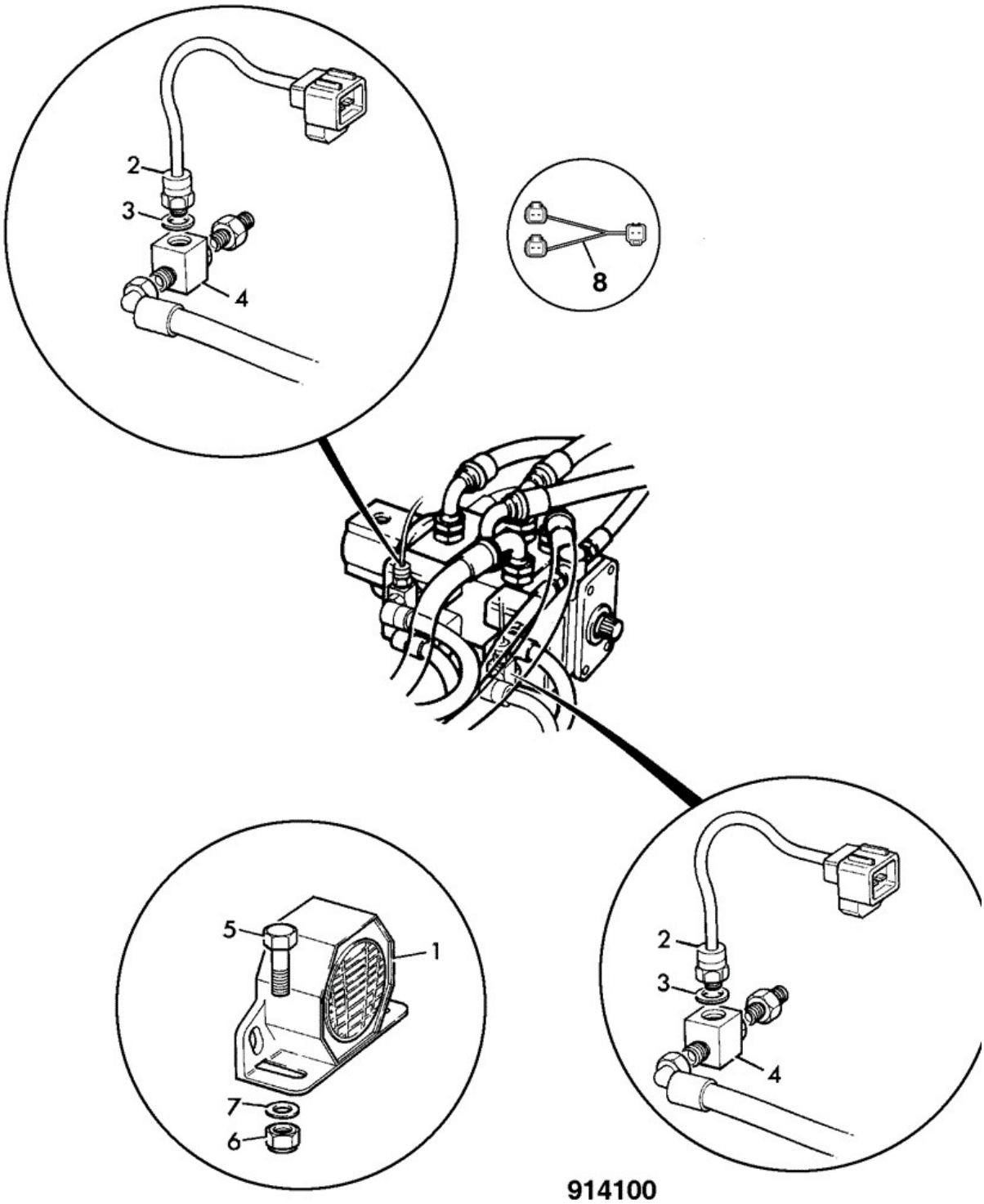

Item	Part No	Change No	Description	Usage Code	QTY
1	717/07200		Alarm Reverse 97dB		1
2	701/51300	<M806689	Switch pressure, 7 bar with snubber		2

2	701/80189	<M808234	Switch pressure, 7 bar		2
2	701/80352	<S/N808661	Switch pressure, 7 bar		2
2	701/80380		Switch Pressure Deutsch connector		2
3	1406/0011	<M808234	Washer Bonded (1/4") not required with 701/80352		6
4	816/50084	<M808234	Adapter Tee		2
4	816/90061		Adapter tee 3/8inchx 3/8inchBSP x 9/16inch-18UNF M/F/F		2
5	1315/0205Z		Setscrew M6 x 20mm		2
6	1370/0103Z		Nut Self Lock M6		2
7	1420/0006Z		Washer (M6)		4
8	718/56077	<M808661	Harness Sumitomo splitter 2 way		1
8	721/11092		Harness Deutsch,splitter 2 way		1

Applicability Date Ranges:
From: , To:

Product Catalog\BACKHOE LOADER 1CX, 208\1CX 00751600-00752999,00806000-00807552 9802/6220\C ELECTRICS-MACHINE CAB & ENGINE\C01 ELECTRICS, MAIN MACHINE\C1-10-1 LIGHT, NUMBER PLATE

9802/6220 C1-10-1 LIGHT, NUMBER PLATE

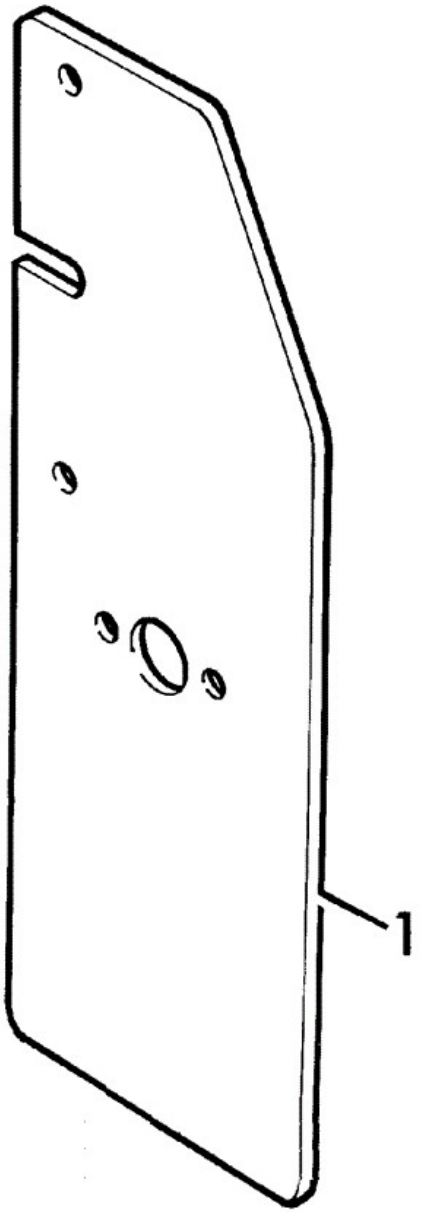

264880

Item	Part No	Change No	Description	Usage Code	QTY
1	290/01153		Bracket number plate		1
1	290/01255	>MTBA	Bracket rear number plate		1

2	700/21000		Lamp number plate		1
3	:720/10047		Bulb Festoon 12V 5W		1

Applicability Date Ranges:
From: , To:

Product Catalog\BACKHOE LOADER 1CX, 208\1CX 00751600-00752999,00806000-00807552 9802/6220\C ELECTRICS-MACHINE CAB & ENGINE\C01 ELECTRICS, MAIN MACHINE\C1-11-1 ELECTRICS STABILISER DOWN WARNING ROW & USA

9802/6220 C1-11-1 ELECTRICS STABILISER DOWN WARNING ROW & USA

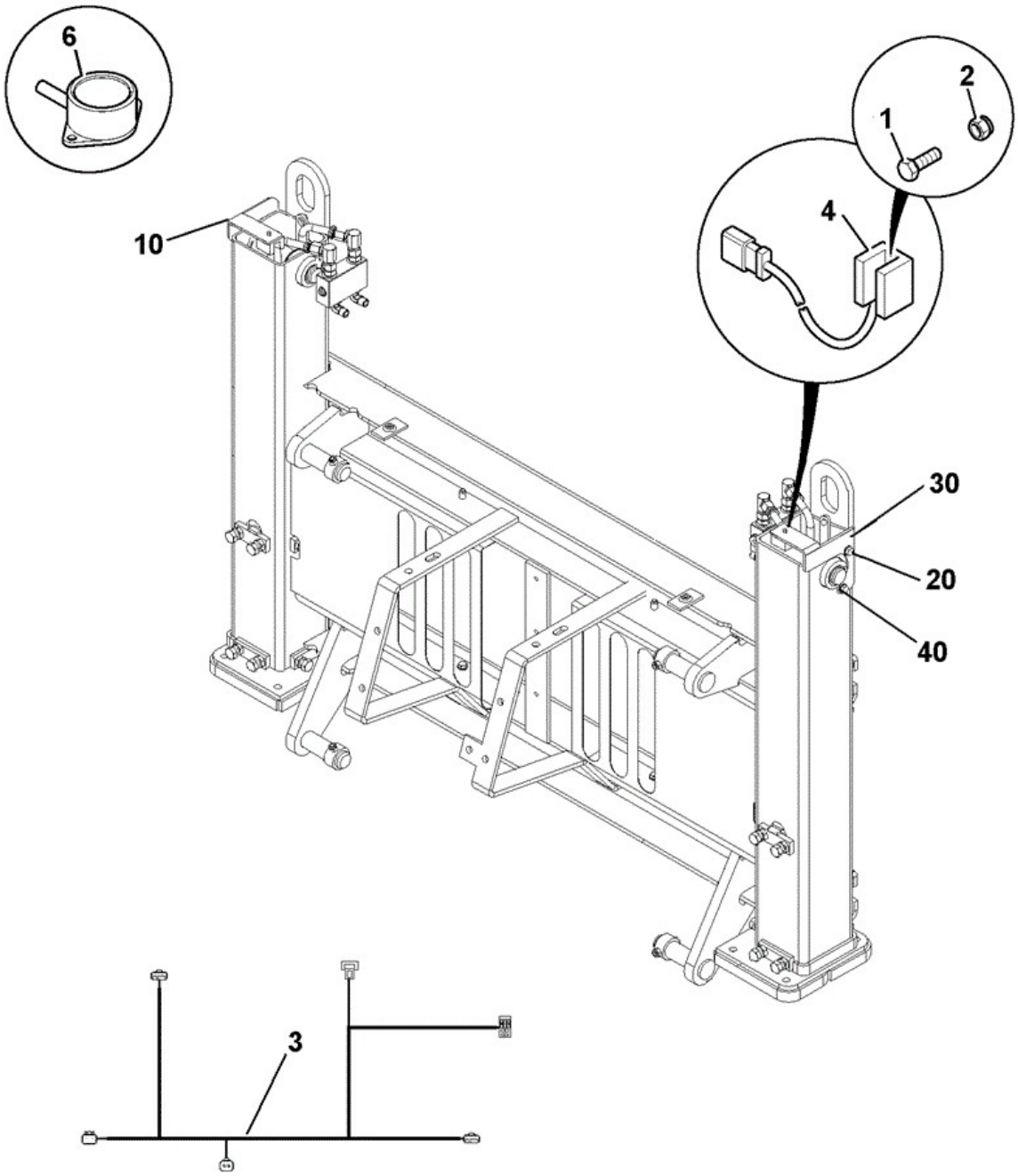

C01-10007-2-OCX

Item	Part No	Change No	Description	Usage Code	QTY
1	1315/9403Z		Setscrew M4 x 16mm ITEM 4		2

2	1370/9403Z		Nut Lock ITEM 4		2
3	332/V4218		Harness 1CX stab down warning		1
4	701/80486		Switch Sensor vane		2
6	717/20264		Alarm Buzzer, Panel IP67		1
10	332/W4185		Bracket sensor mounting RH		1
20	1315/0305D		Setscrew M8 x 20mm		4
30	332/W4056		Bracket sensor mounting LH		1
40	1420/0007D		Washer (M8)		4

Applicability Date Ranges:
From: M1299634 , To:

Product Catalog\BACKHOE LOADER 1CX, 208\.1CX 00807553-00808999,01050000-01051999,01298000-01299999 9802/6220\C ELECTRICS-MACHINE CAB & ENGINE\C02 ELECTRICS, ENGINE\C2-1-2 ELECTRICAL EQUIPMENT

9802/6220 C2-1-2 ELECTRICAL EQUIPMENT

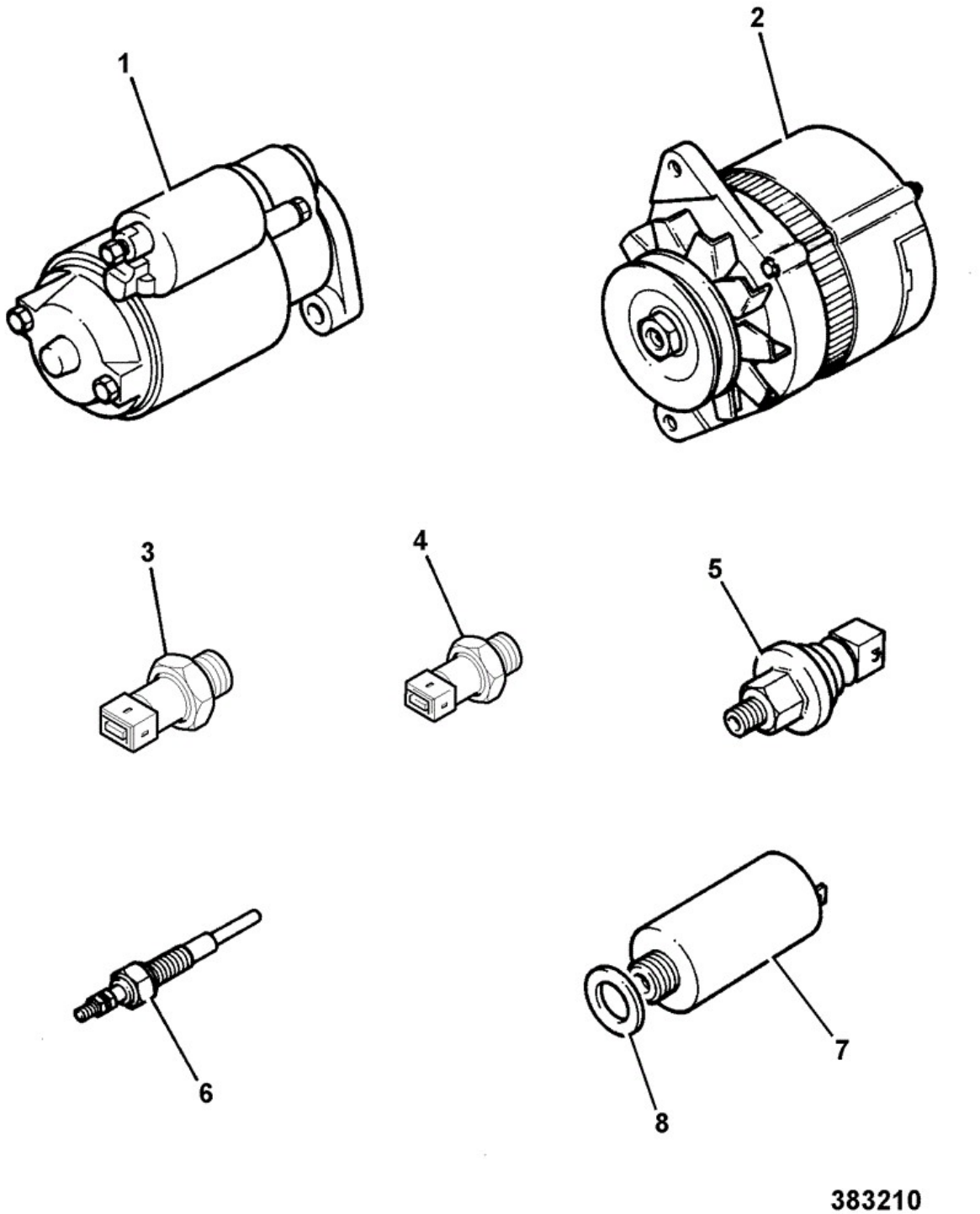

Item	Part No	Change No	Description	Usage Code	QTY
1	714/35600		Motor starter, 12v	P/Ex	1
2	714/12500		Alternator 55Amp	P/Ex	1

3	701/80307		Switch engine oil pressure		1
4	701/80308		Switch water temp sender		1
5	701/36500		Switch Vacuum Sensor		1
6	717/11700		Thermostart		1
7	716/30121		Solenoid ESOS		1
8	02/630301		Washer		1

Applicability Date Ranges:
From: , To: EU506220J

Product Catalog\BACKHOE LOADER 1CX, 208\.1CX 00807553-00808999,01050000-01051999,01298000-01299999 9802/6220\C ELECTRICS-MACHINE CAB & ENGINE\C02 ELECTRICS, ENGINE\C2-1-3 ELECTRICAL EQUIPMENT

9802/6220 C2-1-3 ELECTRICAL EQUIPMENT

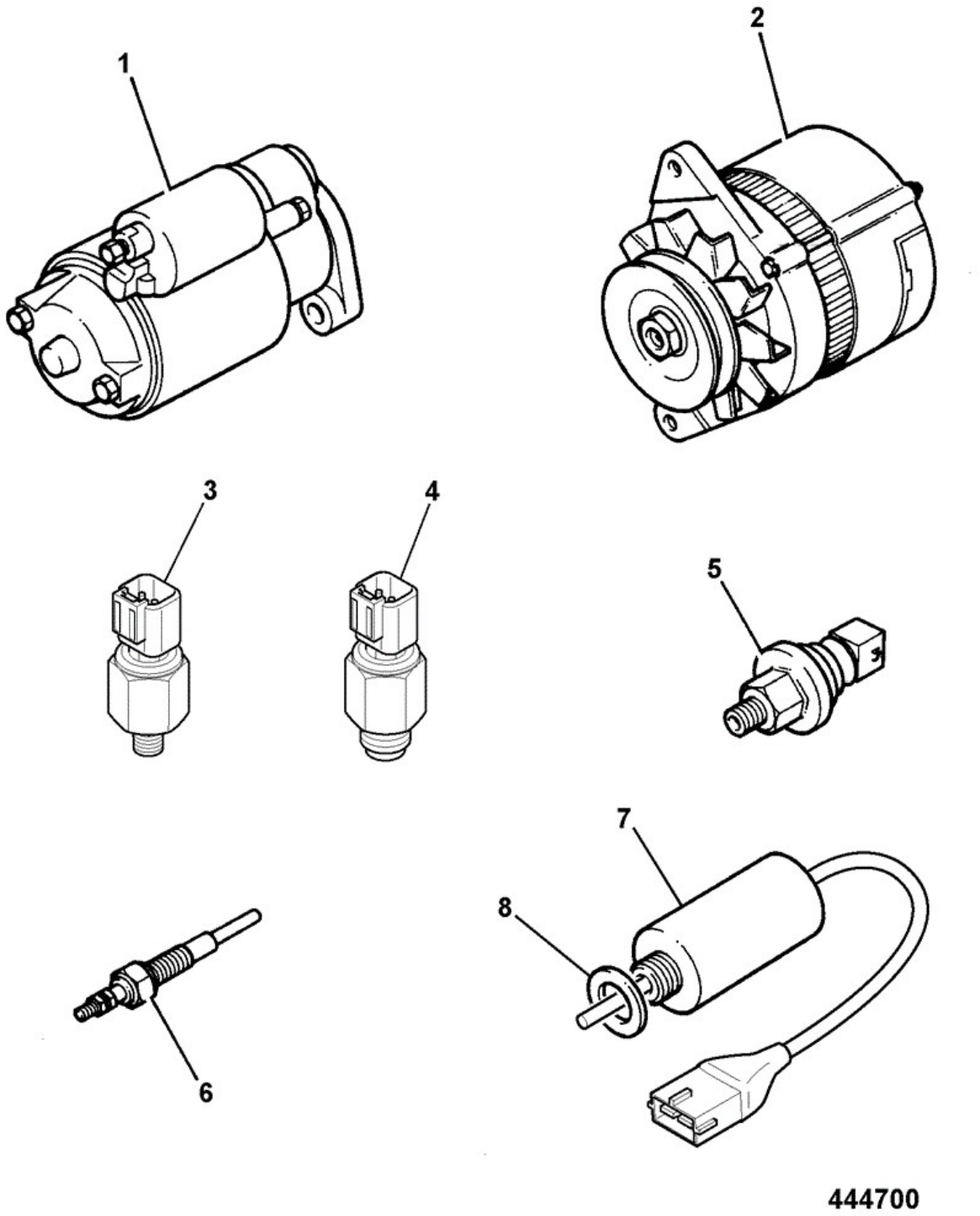

Item	Part No	Change No	Description	Usage Code	QTY
1	714/35600		Motor starter, 12v	P/Ex	1
2	714/12500		Alternator 55Amp	P/Ex	1

3	701/80433		Switch engine oil pressure		1
4	701/80434		Sensor water temperature with probe		1
5	701/36500		Switch Vacuum Sensor		1
6	717/11700		Thermostart		1
7	716/30201		Solenoid engine stop		1
8	02/630301		Washer		1
9	02/630363		Connector		1

Applicability Date Ranges:
From: EU506221J , To:

Product Catalog\BACKHOE LOADER 1CX, 208\.1CX 00807553-00808999,01050000-01051999,01298000-01299999 9802/6220\C ELECTRICS-MACHINE CAB & ENGINE\C02 ELECTRICS, ENGINE\C2-3-1 ALTERNATOR 55AMP

9802/6220 C2-3-1 ALTERNATOR 55AMP

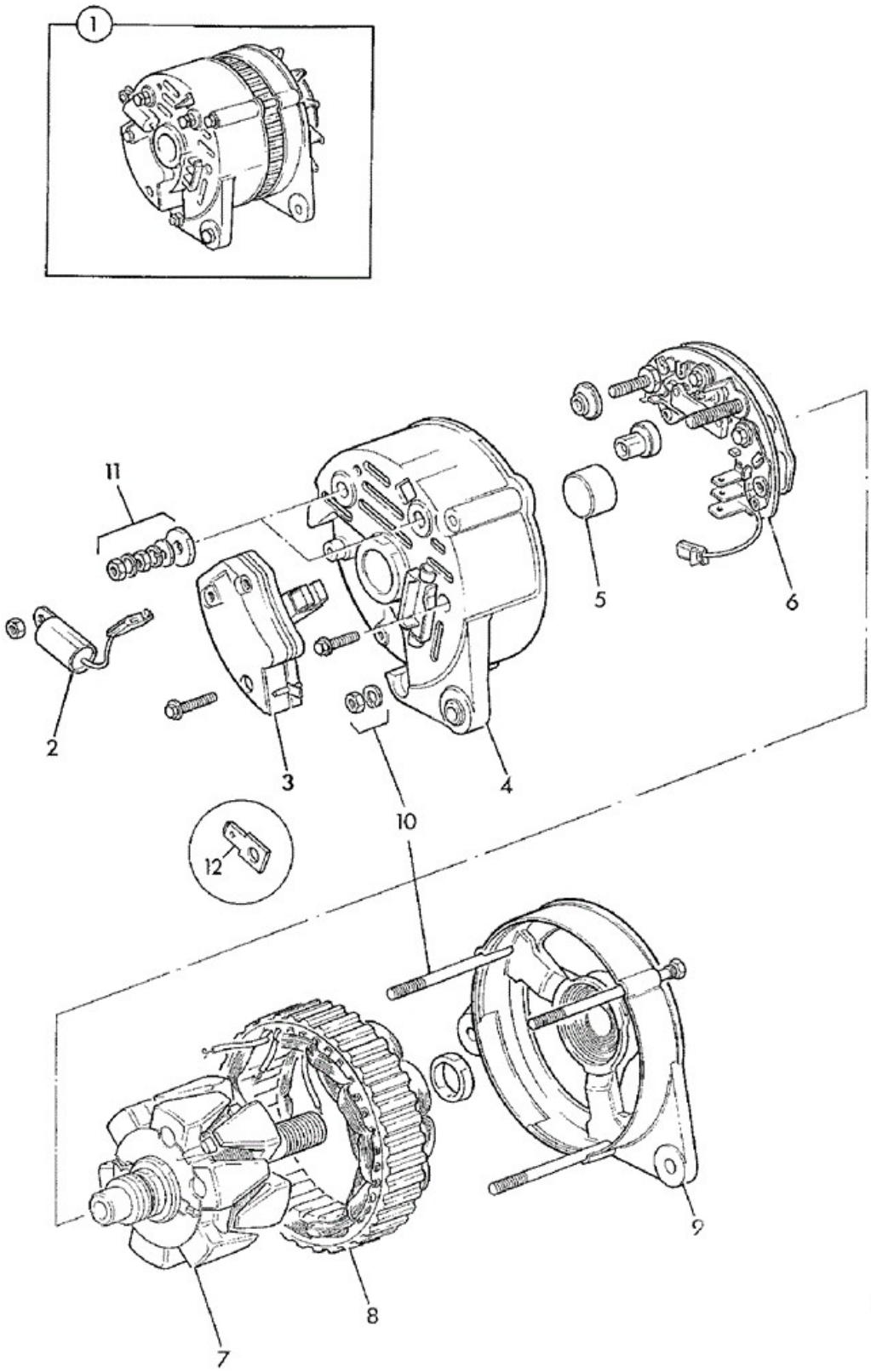

Item	Part No	Change No	Description	Usage Code	QTY

1	714/12500		Alternator 55Amp Lucas ref.24157	P/Ex	1
2	:714/10801		Capacitor Suppression		1
3	:714/10802		Regulator & Brush box assembly		1
4	:714/10803		Bracket Slip ring end		1
5	:714/10804		Bearing slip ring end		1
6	:714/10805		Rectifier		1
7	:714/12501		Rotor		1
8	:714/12502		Stator		1
9	:714/10808		Bracket Drive end		1
10	:714/10809		Kit-through bolt		1
11	:714/10811		Kit-terminal		1

Applicability Date Ranges:
From: , To: EU924821M

9802/6220 C2-3-2 ALTERNATOR

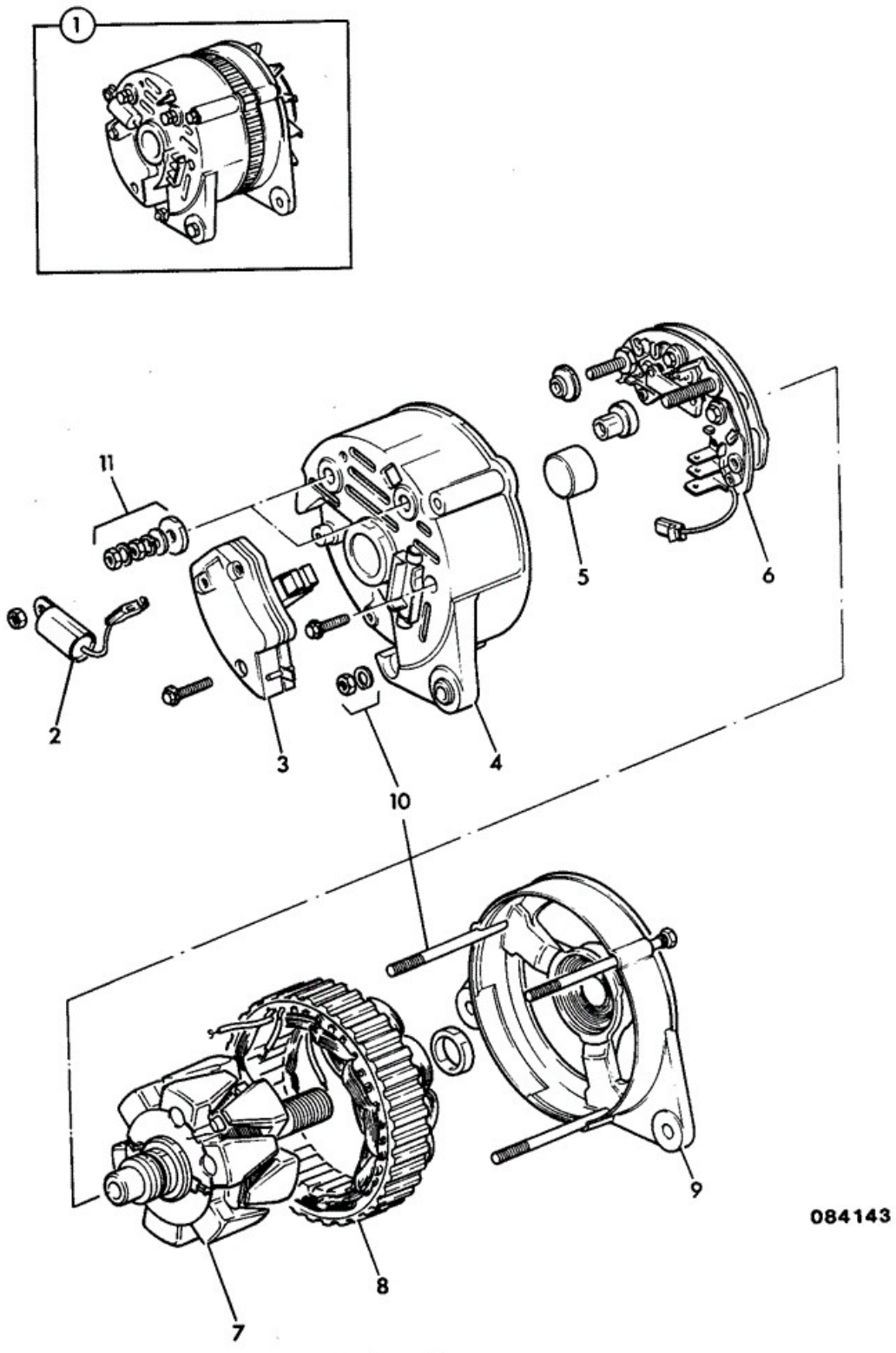

Item	Part No	Change No	Description	Usage Code	QTY

1	714/40004		Alternator 55AMP		1
2	:714/10801		Capacitor Suppression		1
3	714/10802		Regulator & Brush box assembly		1
4	:714/10803		Bracket Slip ring end		1
5	:714/10804		Bearing slip ring end		1
6	:714/10805		Rectifier		1
7	****		T.B.A		1
8	:714/10807		Stator		1
9	:714/10808		Bracket Drive end		1
10	:714/10809		Kit-through bolt		1
11	714/10811		Kit-terminal		1
12	:714/10810		Kit-sundry parts		1

Applicability Date Ranges:
From: , To:

Product Catalog\BACKHOE LOADER 1CX, 208\.1CX 00807553-00808999,01050000-01051999,01298000-01299999 9802/6220\C ELECTRICS-MACHINE CAB & ENGINE\C02 ELECTRICS, ENGINE\C2-3-3 ALTERNATOR 65AMP

9802/6220 C2-3-3 ALTERNATOR 65AMP

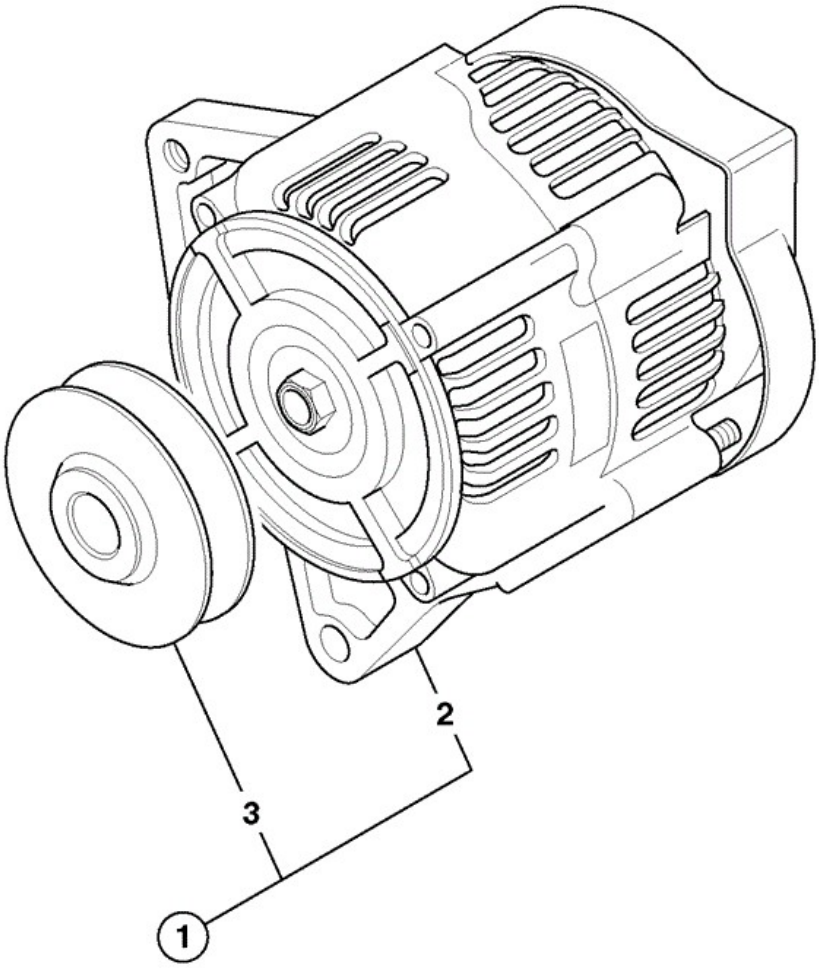

874520

Item	Part No	Change No	Description	Usage Code	QTY
1	714/40394		Alternator 65Amp		1
2	****		None serviced part		1
3	02/202438		Pulley alternator D=73mm single groove		1

Applicability Date Ranges:
From: EU924822M , To:

Product Catalog\BACKHOE LOADER 1CX, 208\.1CX 00807553-00808999,01050000-01051999,01298000-01299999 9802/6220\C ELECTRICS-MACHINE CAB & ENGINE\C02 ELECTRICS, ENGINE\C2-4-1 ALTERNATOR MOUNTINGS

9802/6220 C2-4-1 ALTERNATOR MOUNTINGS

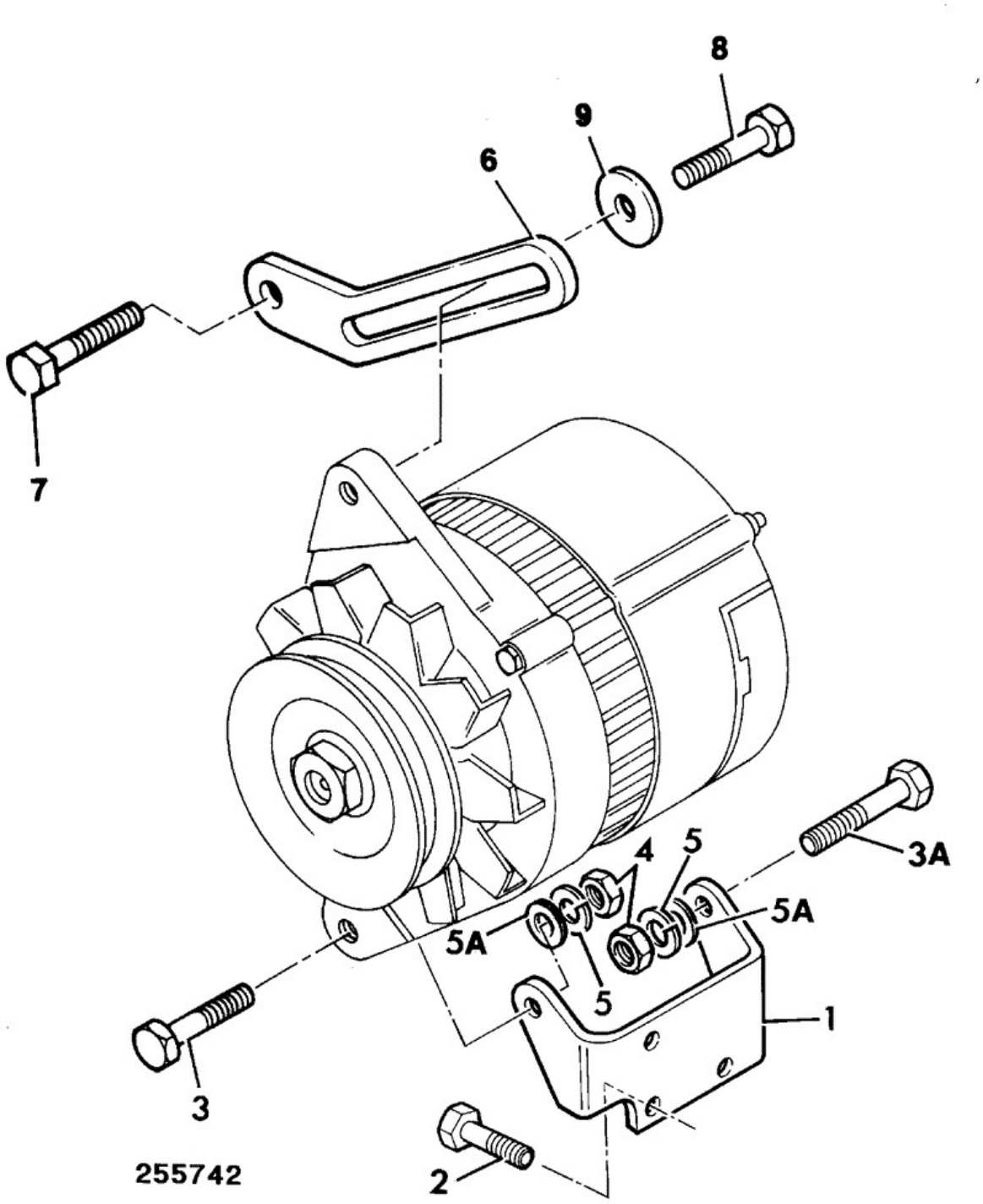

Item	Part No	Change No	Description	Usage Code	QTY
1	02/634106		Bracket alternator mounting		1
2	02/634011		Screw		3

3	826/10734		Bolt		1
3A	826/10733		Bolt		1
4	02/630078		Nut		2
5	02/630344		Washer		2
6	02/634091		Lever alternator adjusting		1
7	02/630342		Screw		1
8	02/634107		Screw		1
9	02/630851		Washer		1

Applicability Date Ranges:
From: , To: EU924821M

Product Catalog\BACKHOE LOADER 1CX, 208\.1CX 00807553-00808999,01050000-01051999,01298000-01299999 9802/6220\C ELECTRICS-MACHINE CAB & ENGINE\C02 ELECTRICS, ENGINE\C2-4-2 ALTERNATOR MOUNTINGS

9802/6220 C2-4-2 ALTERNATOR MOUNTINGS

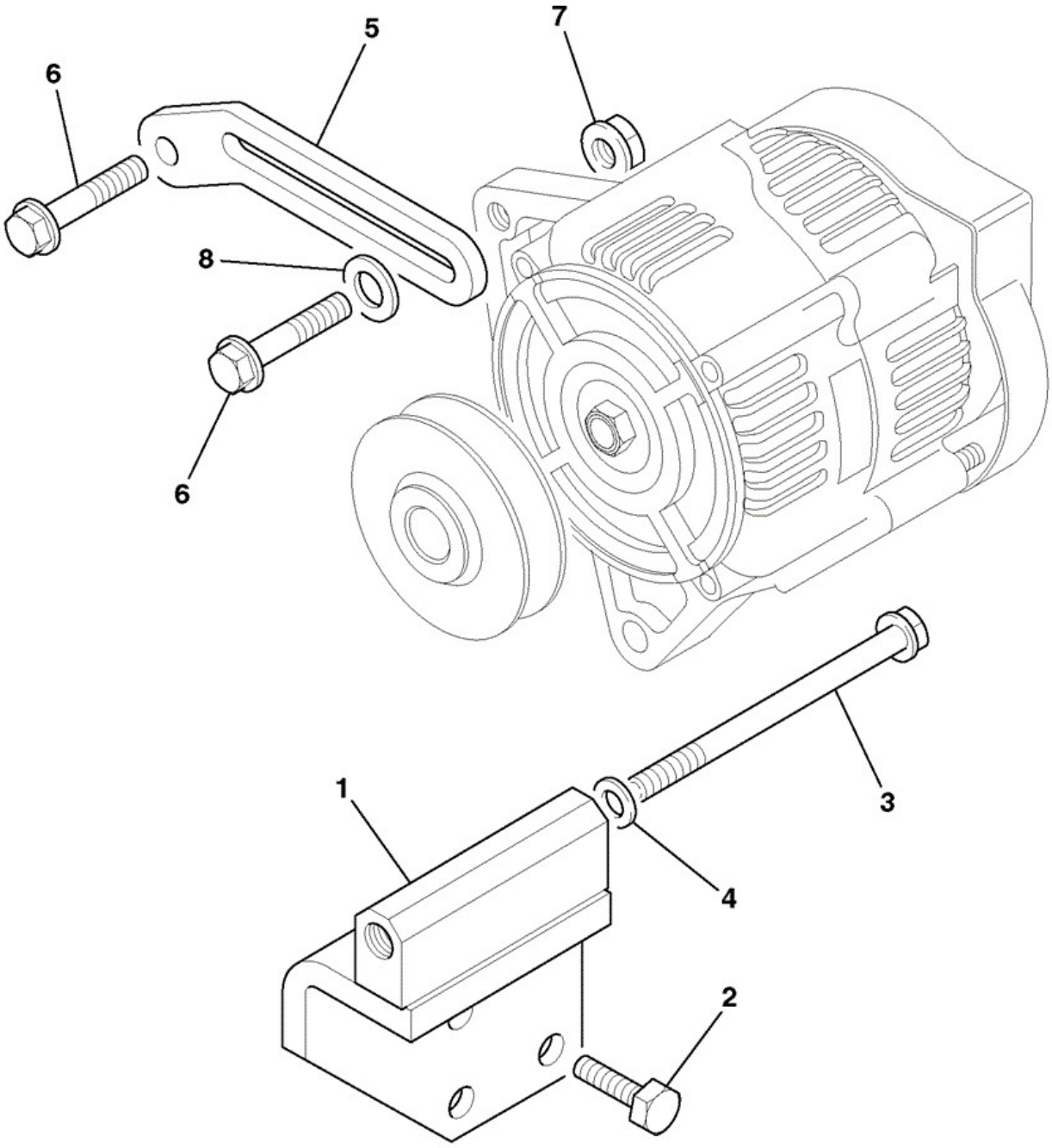

783960

Item	Part No	Change No	Description	Usage Code	QTY
1	02/634269		Bracket alternator support		1
2	826/10725		Screw		3

3	02/291228		Screw		1
4	02/634224		Washer		1
5	02/634091		Lever alternator adjusting		1
6	826/10766		Screw		2
7	02/630078		Nut		1
8	02/630851		Washer		1

Applicability Date Ranges:
From: EU924822M , To:

Product Catalog\BACKHOE LOADER 1CX, 208\.1CX 00807553-00808999,01050000-01051999,01298000-01299999 9802/6220\C ELECTRICS-MACHINE CAB & ENGINE\C02 ELECTRICS, ENGINE\C2-5-3 MOTOR, STARTER

9802/6220 C2-5-3 MOTOR, STARTER

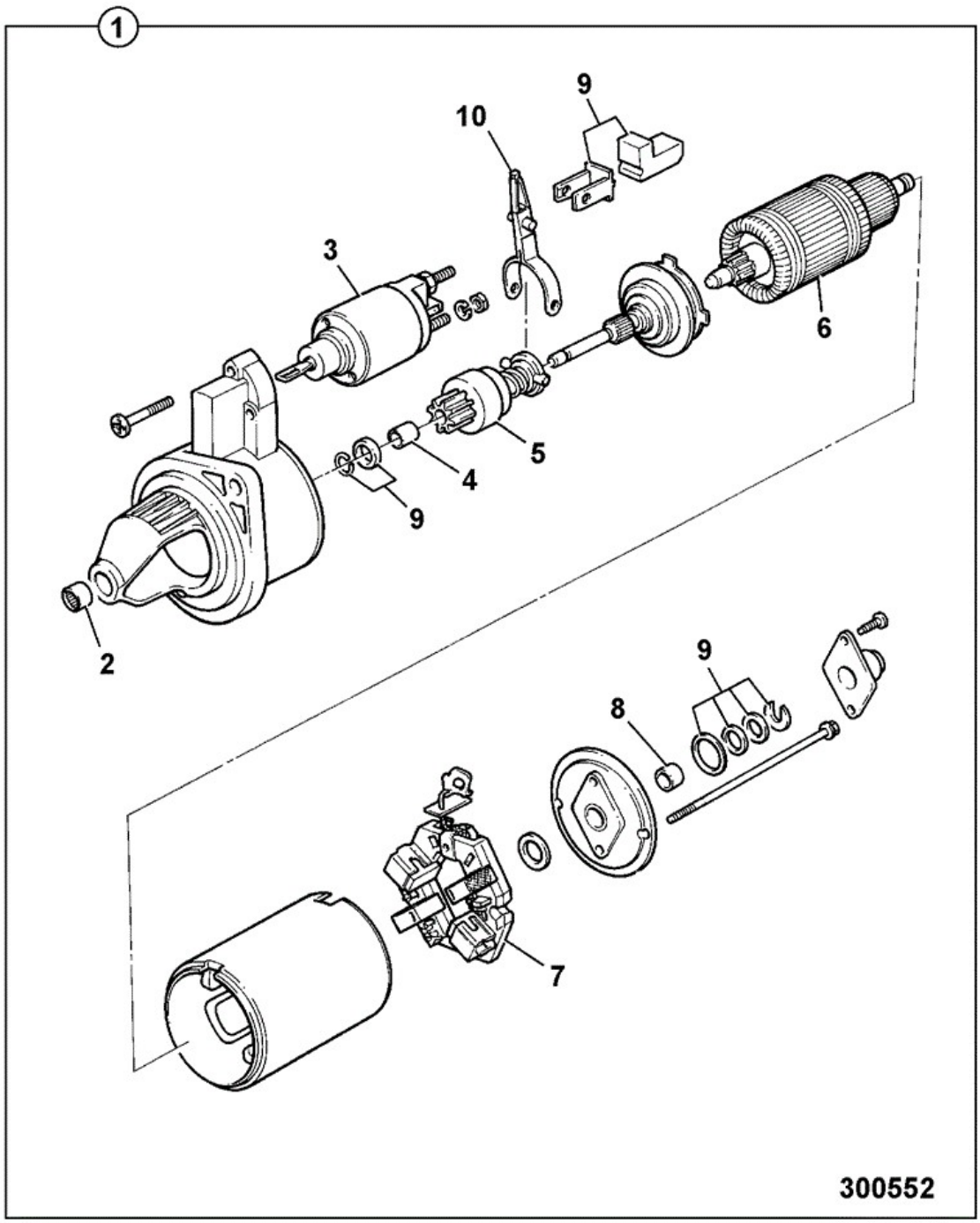

Item	Part No	Change No	Description	Usage Code	QTY
1	714/35600		Motor starter, 12v	P/Ex	1
2	:714/35601		Bush		1

3	:714/35602		Solenoid		1
4	:714/35603		Bush		1
5	:714/35604		Kit-drive end		1
6	:714/35605		Armature		1
7	:714/35606		Holder brush		1
8	:714/35607		Bush		1
9	:714/35608		Kit seals		1
10	:714/35609		Lever solenoid operating		1

Applicability Date Ranges:
From: , To:

Product Catalog\BACKHOE LOADER 1CX, 208\.1CX 00807553-00808999,01050000-01051999,01298000-01299999 9802/6220\C ELECTRICS-MACHINE CAB & ENGINE\C02 ELECTRICS, ENGINE\C2-5-4 MOTOR, STARTER

9802/6220 C2-5-4 MOTOR, STARTER

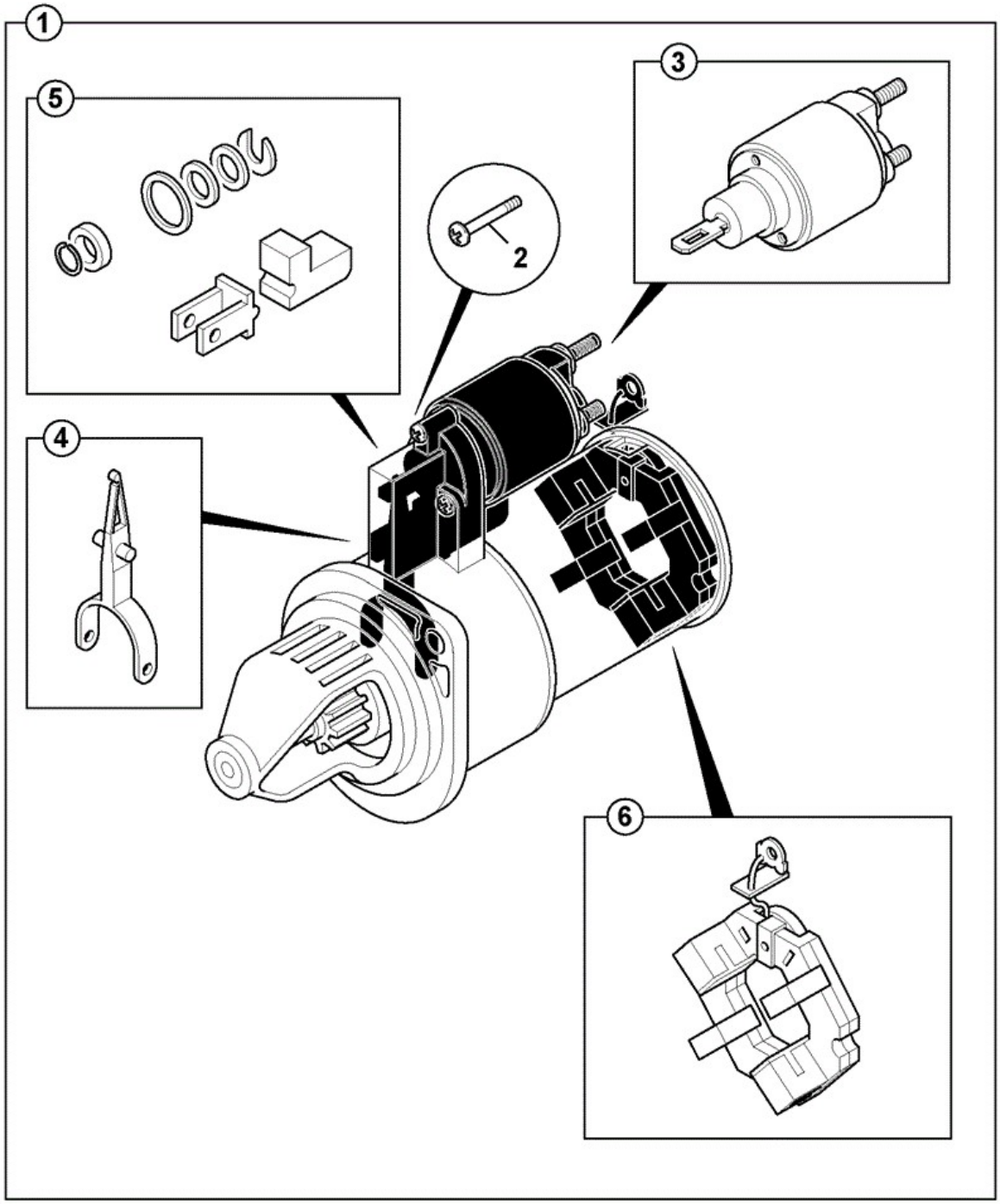

737901

Item	Part No	Change No	Description	Usage Code	QTY
1	714/35600		Motor starter, 12v		1
2	****		T.B.A		1

3	714/35602		Solenoid		1
4	714/35609		Lever solenoid operating		1
5	714/35608		Kit seals		1
6	714/35606		Holder brush		1

Applicability Date Ranges:
From: , To:

Product Catalog\BACKHOE LOADER 1CX, 208\.1CX 00807553-00808999,01050000-01051999,01298000-01299999 9802/6220\C ELECTRICS-MACHINE CAB & ENGINE\C02 ELECTRICS, ENGINE\C2-12-1 ELECTRICAL EQUIPMENT TIER 3 404D-22 FROM S/N TBA 02/2008

9802/6220 C2-12-1 ELECTRICAL EQUIPMENT TIER 3 404D-22 FROM S/N TBA 02/2008

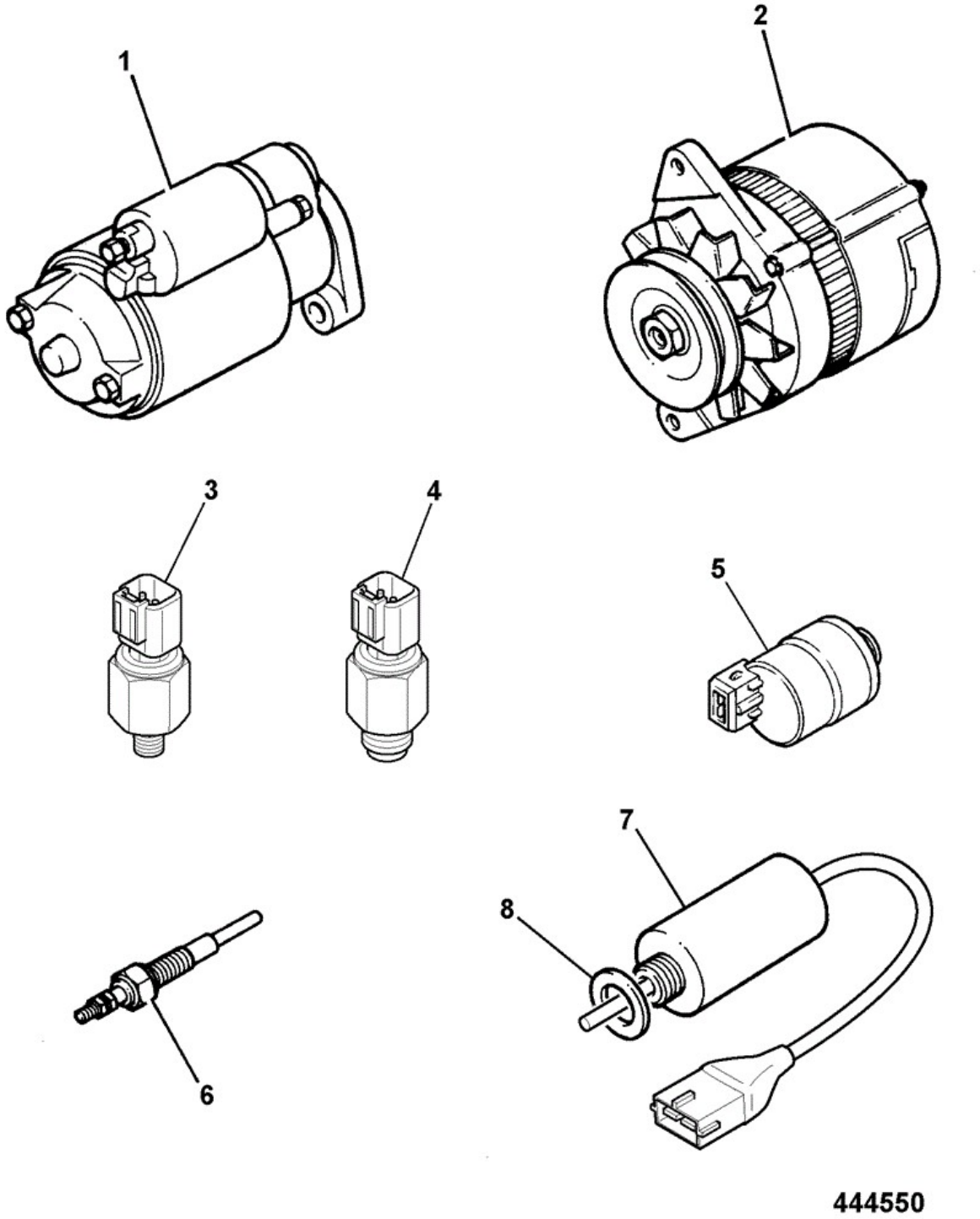

Item	Part No	Change No	Description	Usage Code	QTY
1	714/35600		Motor starter, 12v		1

2	714/40394		Alternator 65Amp		1
3	701/80614		Switch oil pressure		1
4	701/80434		Sensor water temperature with probe		1
5	****		T.B.A		1
6	717/11700		Thermostart		1
7	716/30297		Solenoid engine stop		1
8	02/630301		Washer		1

Applicability Date Ranges:
From: , To:

Product Catalog\BACKHOE LOADER 1CX, 208\.1CX 00807553-00808999,01050000-01051999,01298000-01299999 9802/6220\C ELECTRICS-MACHINE CAB & ENGINE\C02 ELECTRICS, ENGINE\C2-15-1 ALTERNATOR MOUNTINGS TIER 3 404D-22 FROM S/N TBA 02/2008

9802/6220 C2-15-1 ALTERNATOR MOUNTINGS TIER 3 404D-22 FROM S/N TBA 02/2008

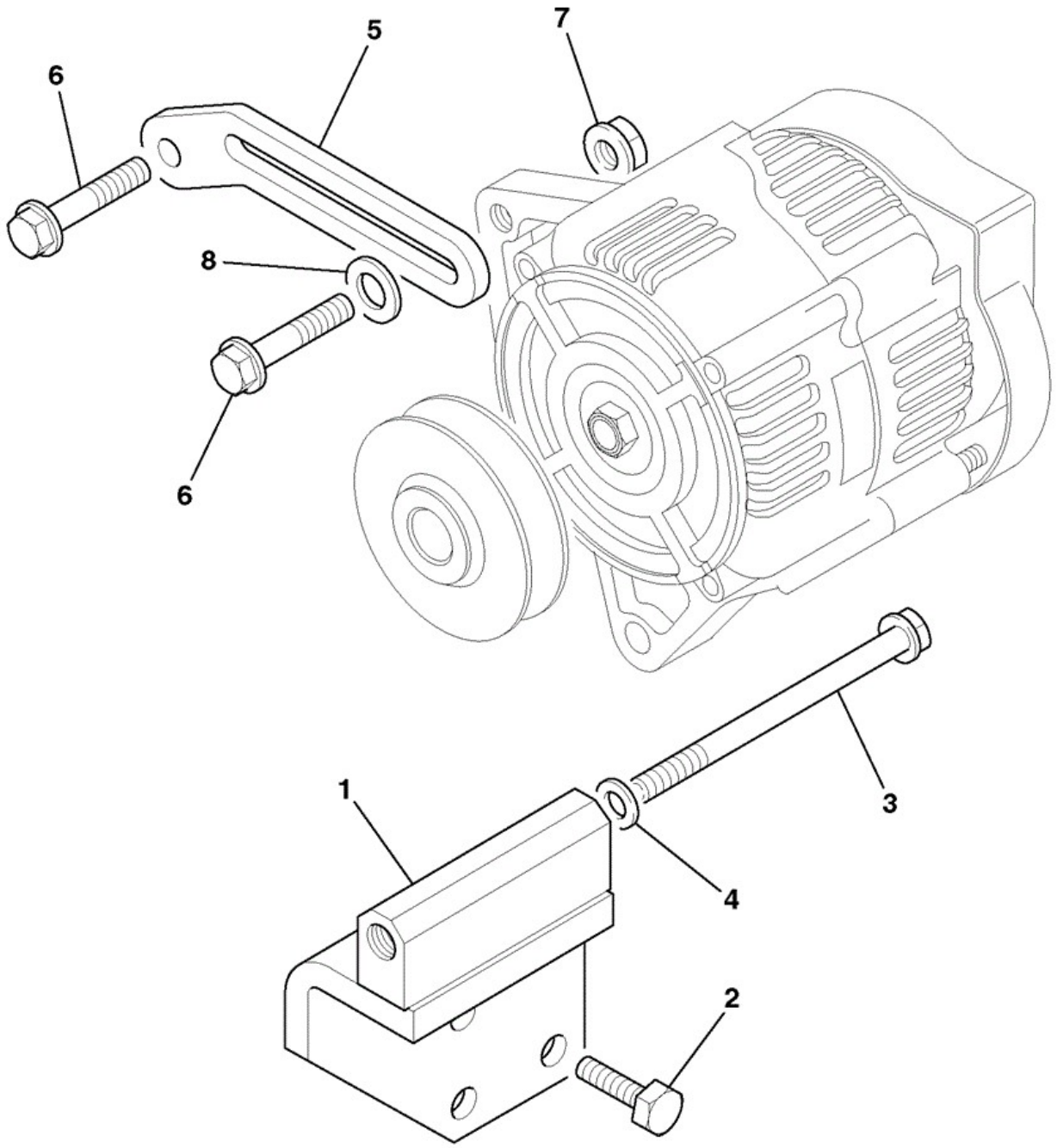

783960

Item	Part No	Change No	Description	Usage Code	QTY
1	02/634269		Bracket alternator support		1

2	826/10725		Screw		3
3	02/291228		Screw		1
3	02/630078		Nut		1
4	02/634224		Washer		1
5	02/634091		Lever alternator adjusting		1
6	826/10766		Screw		2
6	02/634224		Washer Pivot Point		1
7	02/630078		Nut		1
8	02/630851		Washer		1

Applicability Date Ranges:
From: , To:

Product Catalog\BACKHOE LOADER 1CX, 208\.1CX 00807553-00808999,01050000-01051999,01298000-01299999 9802/6220\D CONTROLS-MACHINE ENGINE & STEERING\D01 CONTROLS, MACHINE\D1-1-1 CONTROLS, EXCAVATOR

9802/6220 D1-1-1 CONTROLS, EXCAVATOR

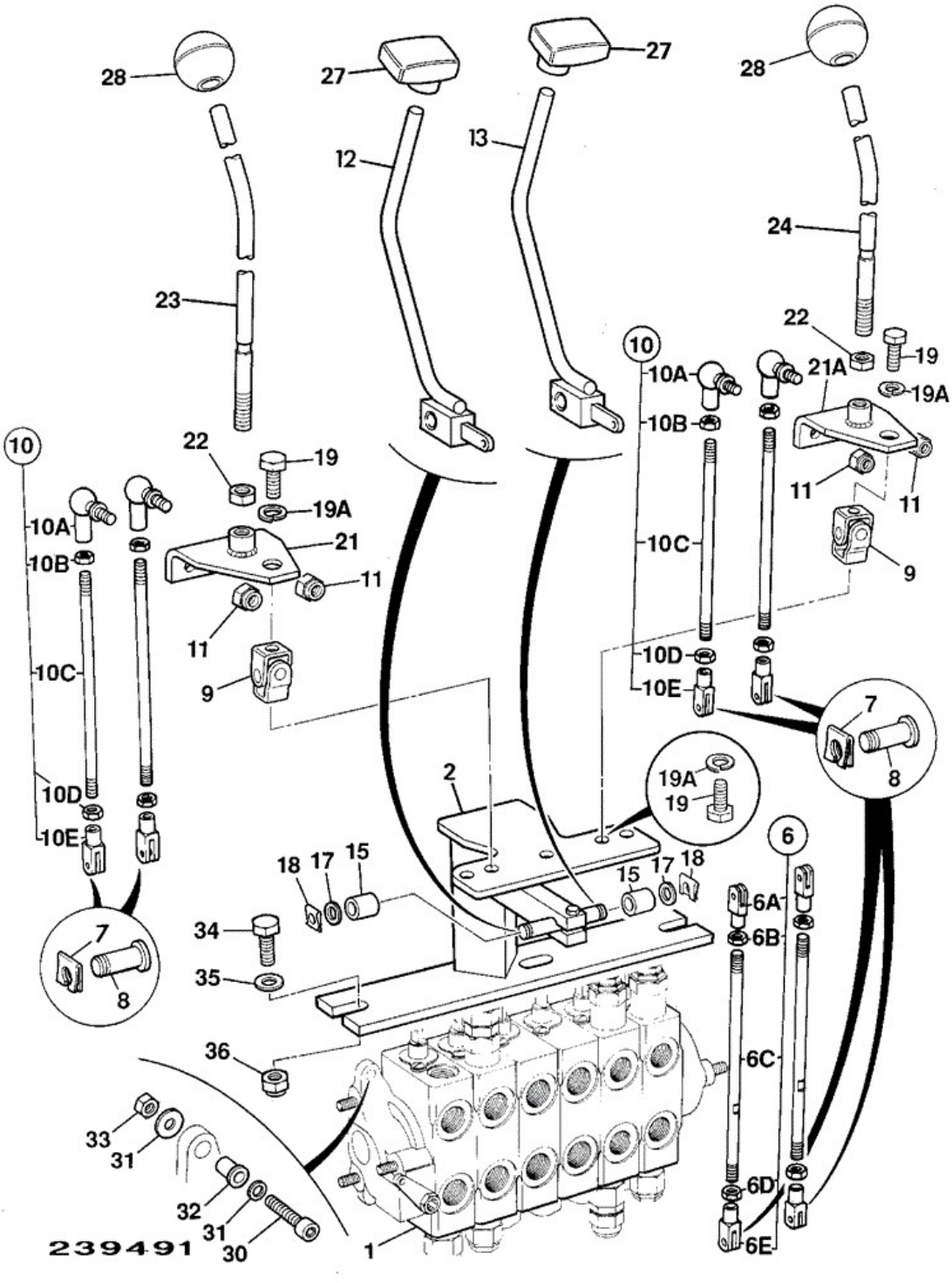

Item	Part No	Change No	Description	Usage Code	QTY
1	****		'See Remark' Valve block		1
2	290/44700	<M1299633	Bracket		1

2	332/V4527	>M1299634	Bracket Mounting		1
6	913/02700		Rod Control Assembly		2
7	913/00703		Fastener safety		8
8	913/00702		Pin Clevis		2
9	331/34525		Joint universal control linkage		2
10	913/03600		Rod Control Assembly		4
10A	:913/02902		Joint ball		1
10B	:1370/0103Z		Nut Self Lock M6		1
10C	:N.S.P.		None serviced part		1
10D	:826/01108		Lock Nut M8 LH		1
10E	:913/02903		Clevis fork (6mm hole)		1
11	1370/0203D		Nut Lock M8		4
12	290/44600		Lever stabiliser control		1
13	290/44600		Lever stabiliser control		1
14	191/00281		Knob , Control		2
14	25/929314	>M1050386	Knob		2
15	831/00125		Bearing		2
17	1420/0008D		Washer (M10)		2
18	913/00026		Clip retaining		2
19	1305/0404D		Setscrew 1/2 UNF X 3/4		5
19A	1417/0014D		Washer lock 1/2"		2
21	290/47600	<M1299633	Plate pivot		1
	332/P8109	>M1299634	Lever Pivot Plate		1
21A	290/47600	<M1299633	Plate pivot		1
	332/P8109	>M1299634	Lever Pivot Plate		1
22	1370/0402D		Nut M12		2
23	290/00442		Lever excavator control		1
24	290/00442		Lever excavator control		1
27	122/38501		Knob		2
28	122/38502		Knob Controls yellow		2

Applicability Date Ranges:
From: , To:

Product Catalog\BACKHOE LOADER 1CX, 208\.1CX 00807553-00808999,01050000-01051999,01298000-01299999 9802/6220\D CONTROLS-MACHINE ENGINE & STEERING\D01 CONTROLS, MACHINE\D1-2-1 CONTROL, HYDRACLAMP

9802/6220 D1-2-1 CONTROL, HYDRACLAMP

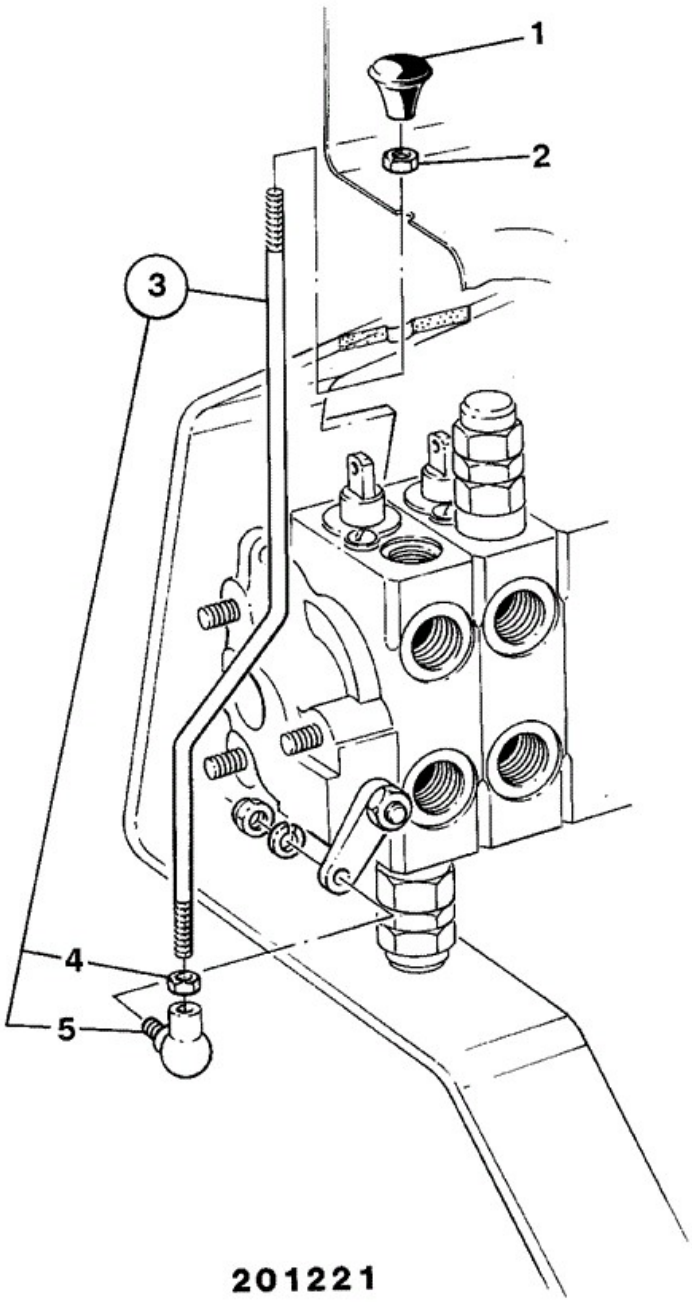

Item	Part No	Change No	Description	Usage Code	QTY

1	141/00519		Knob		1
2	1370/0102Z		Nut		1
3	913/04000		Rod control		1
4	:1370/0102Z		Nut Nut		1
5	913/03702		Joint ball		1

Applicability Date Ranges:
From: , To:

9802/6220 D1-3-1 CONTROL, FOOT EXCAVATOR AUXILIARY

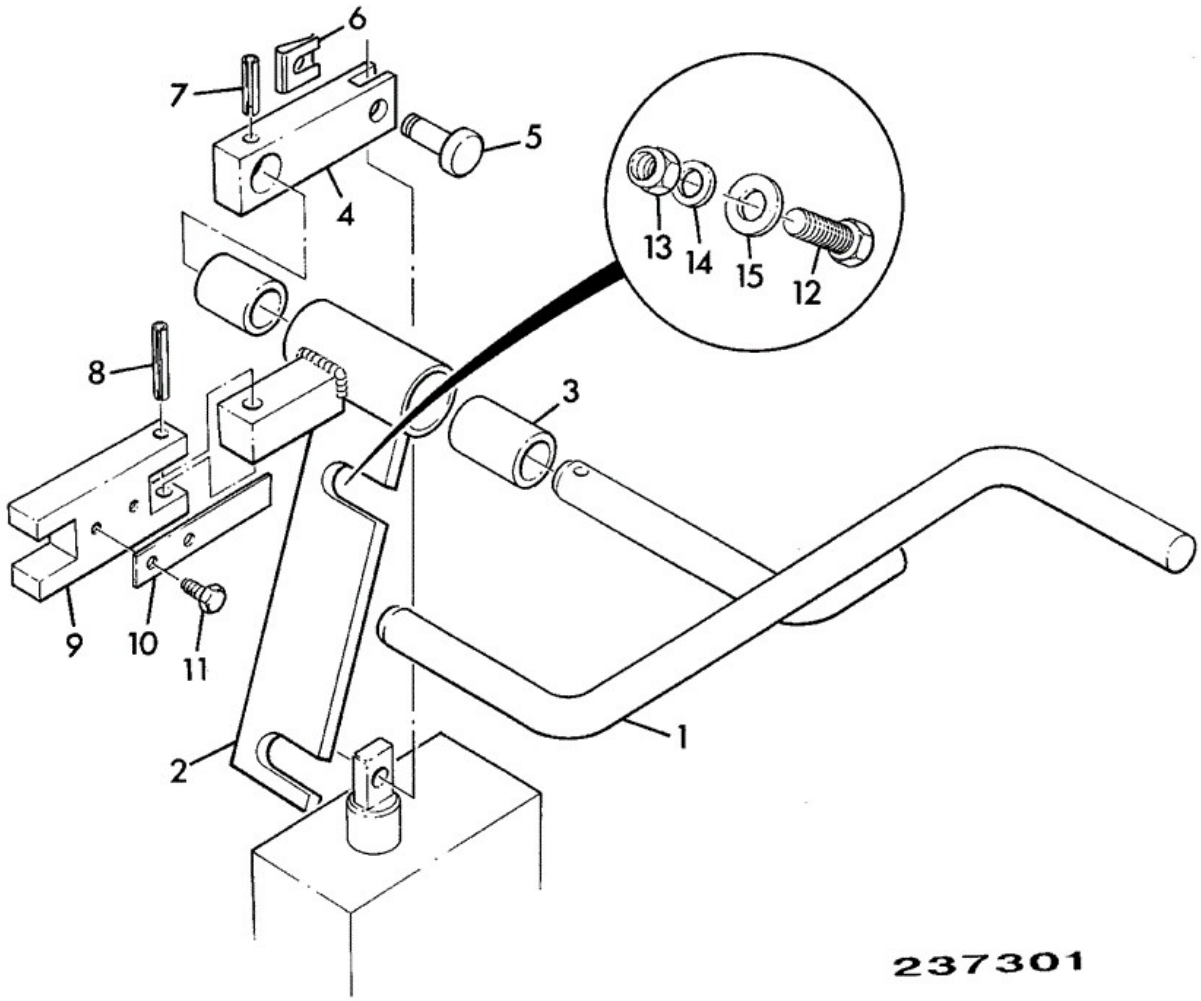

Item	Part No	Change No	Description	Usage Code	QTY
1	290/17800	<M TBA	Pedal control		1
1	290/63900		Pedal control		1

1	290/64000		Pedal control hand held attachment		1
2	290/44800	<M TBA	Pivot		1
2	290/63800		Pivot		1
2A	290/53300	<M TBA	Pivot		1
2A	290/64200		Pivot		1
3	831/00096		Bearing		2
4	290/00336		Lever		1
5	913/00702		Pin Clevis		1
6	913/00703		Fastener safety		1
7	2102/0613		Pin tension		1
8	2102/0815		Pin roll		1
9	290/00340		Plate locking		1
9	290/01202		Plate locking hand held attachment		1
10	123/02882		Plate spring strip		1
11	1315/0101Z		Screw		2
12	1315/0408D		Setscrew M10 x 30		1
13	1370/0303Z		Nut lock M10		1
14	1425/0005Z		Washer Spring (M5)		2
15	1420/0008Z		Washer (M10)		1
17	1315/0410Z		Setscrew Screw		1

Applicability Date Ranges:
From: , To:

Product Catalog\BACKHOE LOADER 1CX, 208\.1CX 00807553-00808999,01050000-01051999,01298000-01299999 9802/6220\D CONTROLS-MACHINE ENGINE & STEERING\D01 CONTROLS, MACHINE\D1-4-1 LEVER LOCK EXCAVATOR VALVE

9802/6220 D1-4-1 LEVER LOCK EXCAVATOR VALVE

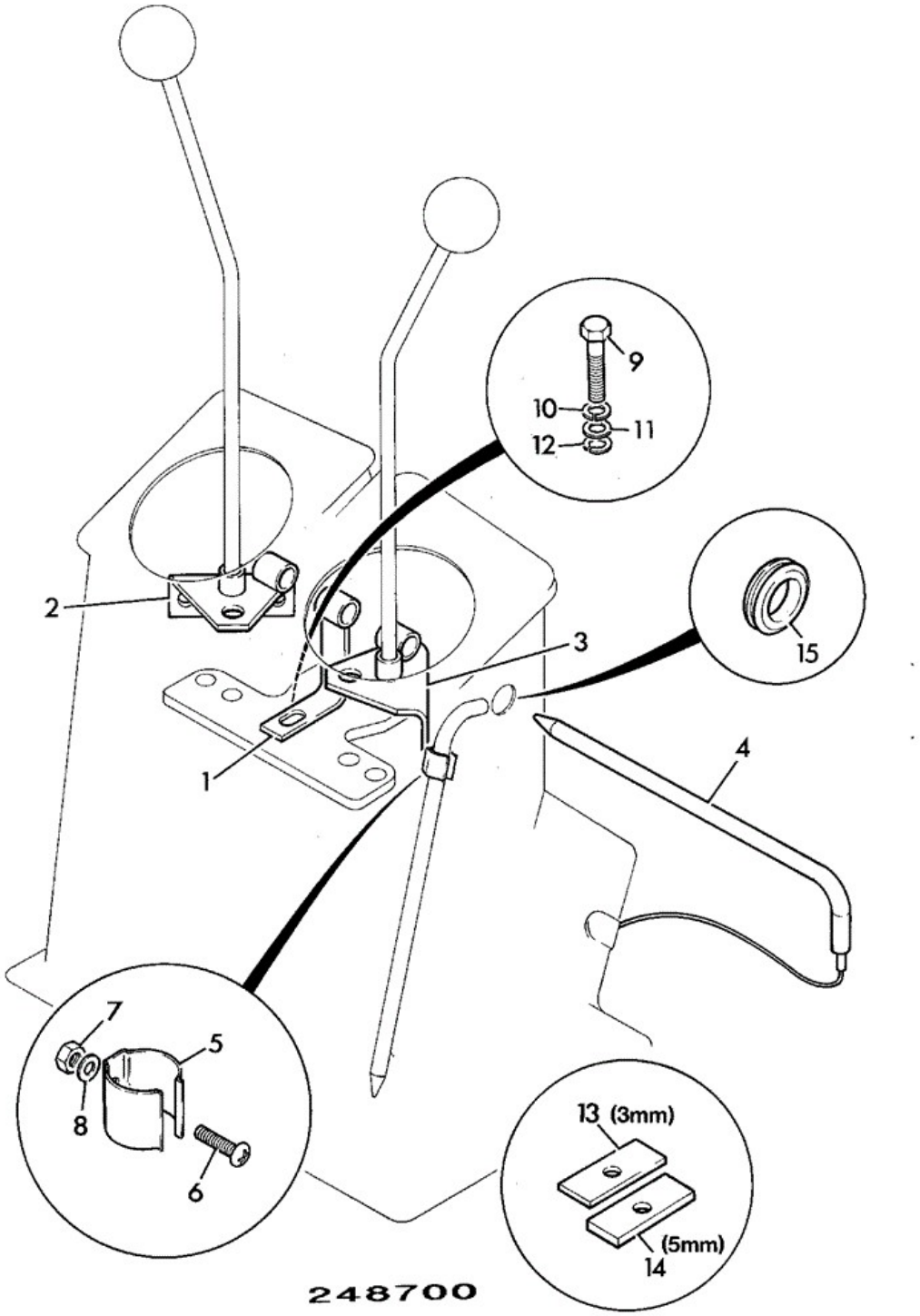

Item	Part No	Change No	Description	Usage Code	QTY
1	290/50600		Bracket lever lock		1
2	290/50800		Plate pivot, L.H.		1

3	290/50900		Plate pivot, R.H.		1
4	123/02781		Bar lever lock		1
5	821/00362		Clip		1
6	826/00892		Screw Special 3/8UNF X 3/4		1
7	1370/0003Z		Nut Nut M5		1
8	1420/0005Z		Washer (M5)		1
9	1315/0408Z		Setscrew M10 x 30		1
10	1370/0303Z		Nut lock M10		1
11	1425/0008Z		Spring Washer		1
12	1425/0008Z		Spring Washer		1
13	290/01060		Plate packing, 3mm		1
14	290/01061		Plate packing, 5mm		1
15	2410/0111		Grommet		1

Applicability Date Ranges:
From: , To: M1299633

Product Catalog\BACKHOE LOADER 1CX, 208\.1CX 00807553-00808999,01050000-01051999,01298000-01299999 9802/6220\D CONTROLS-MACHINE ENGINE & STEERING\D01 CONTROLS, MACHINE\D1-4-2 LEVER LOCK EXCAVATOR DIAG/ISO CONTROLS

9802/6220 D1-4-2 LEVER LOCK EXCAVATOR DIAG/ISO CONTROLS

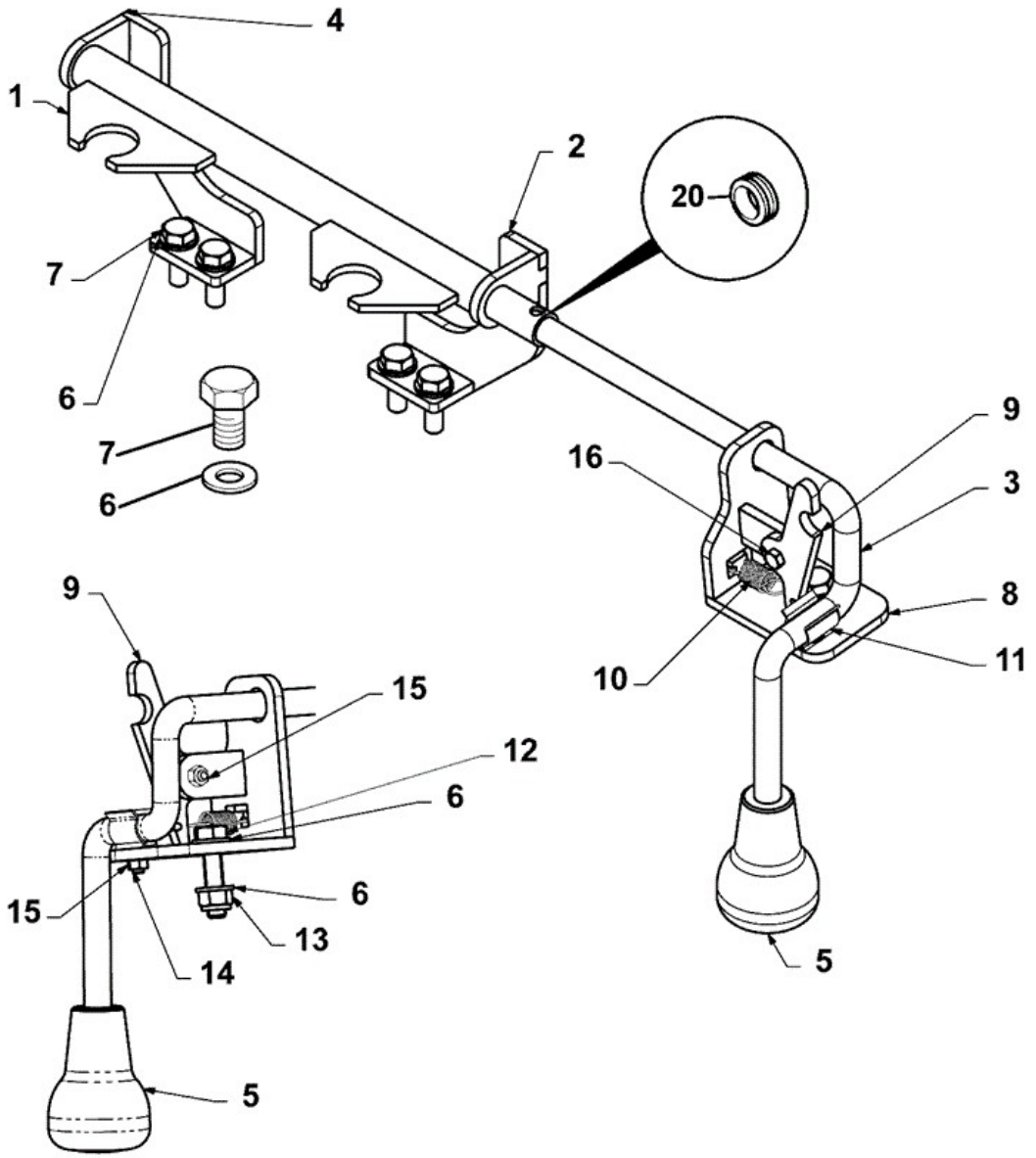

332-P8421-4

Item	Part No	Change No	Description	Usage Code	QTY
1	332/V4663		Bar lock bar diagonal		1
2	332/V4638		Bracket Lever lock Left hand		1

3	332/P8422		Lever Bar		1
4	332/P8173		Bracket Lever lock Right hand		1
5	331/49049		Knob Red		1
6	1420/0007D		Washer (M8)		6
7	1315/0307D		Setscrew M8 x 25 mm		4
8	332/P8488		Latch		1
9	332/V9137		Plate Latch		1
10	814/00301		Spring		1
11	821/00362		Clip		1
12	1315/0309D		Setscrew M8 x 35 mm		1
13	1370/0203D		Nut Lock M8		1
14	826/01488		Screw Button Head M5 x 12		1
15	1370/0001Z		Nut (M5)		2
16	1315/0103D		Setscrew M5 x 16mm		1
20	2410/0112	>M1743352	Grommet Std, 28.6 mm x 3.5 mm		1

Applicability Date Ranges:
From: M1299634 , To:

Product Catalog\BACKHOE LOADER 1CX, 208\.1CX 00807553-00808999,01050000-01051999,01298000-01299999 9802/6220\D CONTROLS-MACHINE ENGINE & STEERING\D01 CONTROLS, MACHINE\D1-4-10 LEVER LOCK EXCAVATOR PLUS CONTROLS

9802/6220 D1-4-10 LEVER LOCK EXCAVATOR PLUS CONTROLS

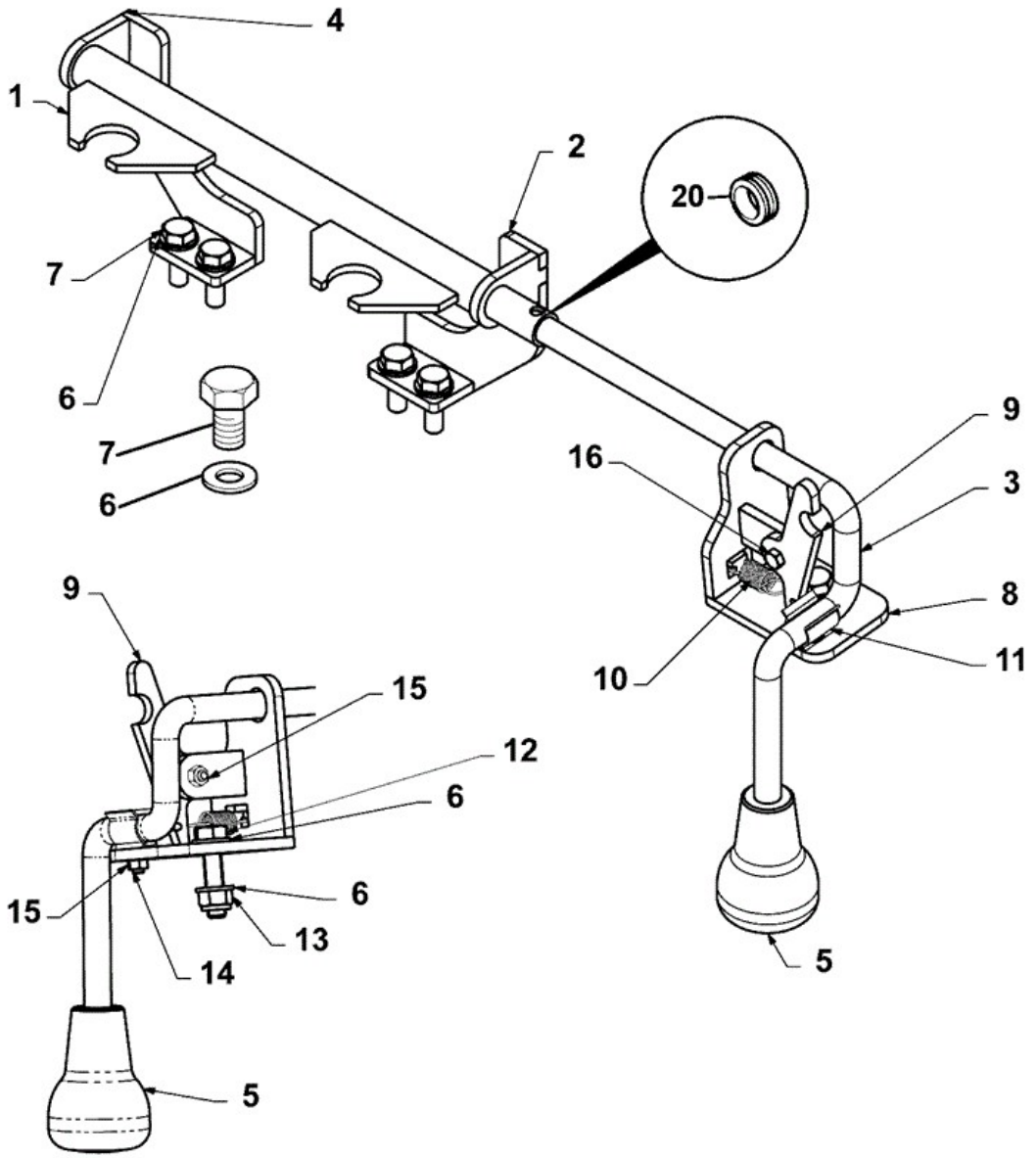

332-P8421-4

Item	Part No	Change No	Description	Usage Code	QTY
1	332/V5295		Lever lock bar plus pattern		1
2	332/V4638		Bracket Lever lock Left hand		1

3	332/P8422		Lever Bar		1
4	332/P8173		Bracket Lever lock Right hand		1
5	331/49049		Knob Red		1
6	1420/0007D		Washer (M8)		6
7	1315/0307D		Setscrew M8 x 25 mm		4
8	332/P8488		Latch		1
9	332/V9137		Plate Latch		1
10	814/00301		Spring		1
11	821/00362		Clip		1
12	1315/0309D		Setscrew M8 x 35 mm		1
13	1370/0203D		Nut Lock M8		1
14	826/01488		Screw Button Head M5 x 12		1
15	1370/0001D		Nut (M5)		2
16	1315/0103D		Setscrew M5 x 16mm		1
20	2410/0112	>M1743352	Grommet Std, 28.6 mm x 3.5 mm		1

Applicability Date Ranges:
From: M1299634 , To:

Product Catalog\BACKHOE LOADER 1CX, 208\.1CX 00807553-00808999,01050000-01051999,01298000-01299999 9802/6220\D CONTROLS-MACHINE ENGINE & STEERING\D01 CONTROLS, MACHINE\D1-5-1 CONTROL SPEED RESTRICTOR

9802/6220 D1-5-1 CONTROL SPEED RESTRICTOR

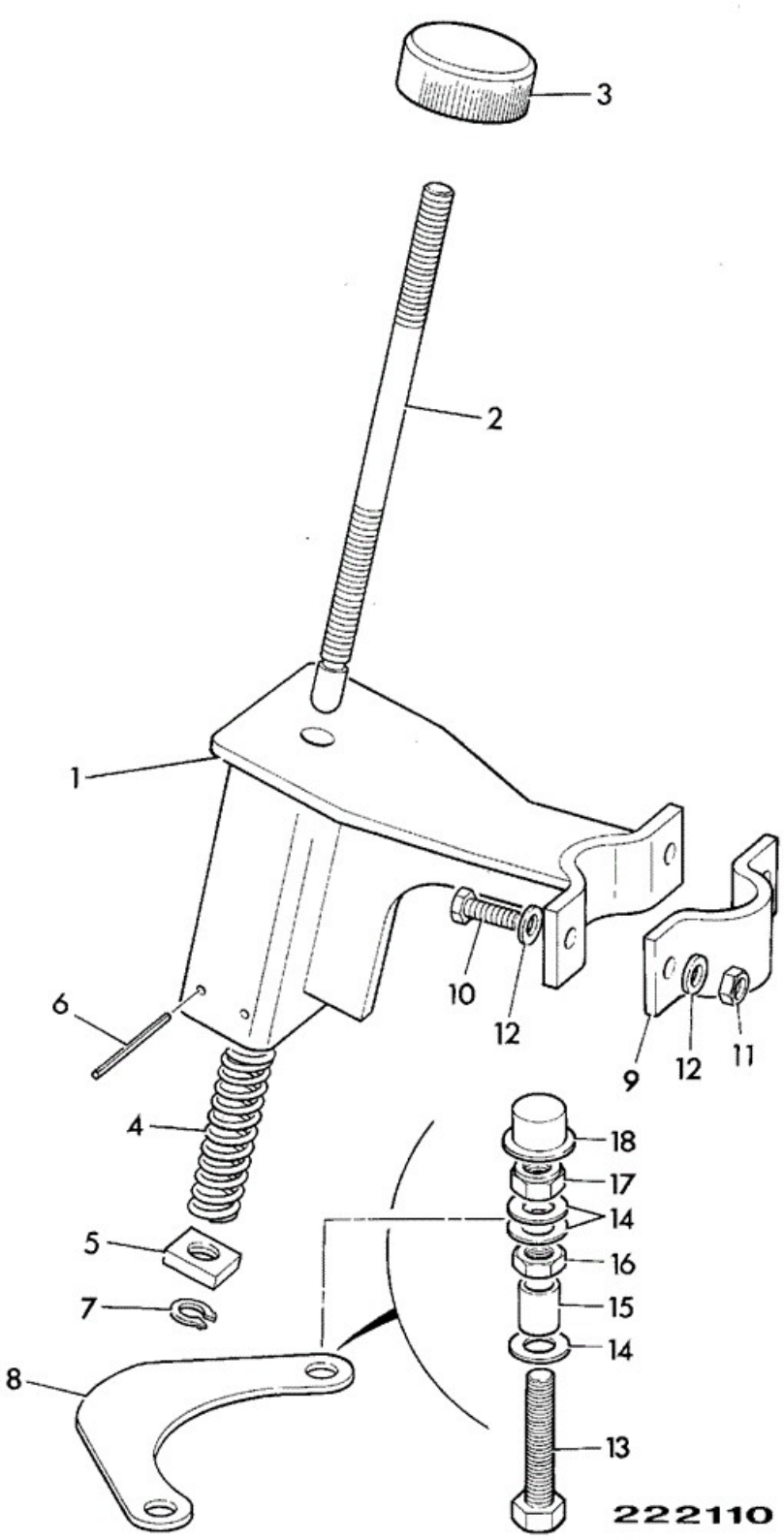

Item	Part No	Change No	Description	Usage Code	QTY

1	290/43100	<M807146	Clamp		1
1	246/88700		Bracket speed control		1
2	246/00744	<M807146	Stud		1
2	913/10097		Stud adjuster		1
3	246/00777		Knob		1
4	814/00374		Spring compression		1
5	246/00742		Nut nylon		1
6	2102/0209		Pin tension		2
7	2203/0009		Circlip		1
8	246/00743	<M807146	Plate stop		1
8	246/01203		Plate		1
9	246/00788	<M807146	Clamp		1
9	246/88600		Clamp		1
10	1315/0105Z		Setscrew M5 x 20		2
11	1370/0003Z		Nut Nut M5		2
12	1420/0005Z		Washer (M5)		2
13	1315/0210Z		Bolt M6 x 40mm long		2
14	1411/0001Z		Washer (1/4" Medium)		6
15	290/00668	<M807146	Spacer not required after this build number		2
16	1370/0102Z		Nut		2
17	1370/0103Z		Nut Self Lock M6		2
18	835/00074		Cap Nut,M6		2

Applicability Date Ranges:
From: , To: M1743136

Product Catalog\BACKHOE LOADER 1CX, 208\.1CX 00807553-00808999,01050000-01051999,01298000-01299999 9802/6220\D CONTROLS-MACHINE ENGINE & STEERING\D01 CONTROLS, MACHINE\D1-5-2 CONTROL SPEED RESTRICTOR

9802/6220 D1-5-2 CONTROL SPEED RESTRICTOR

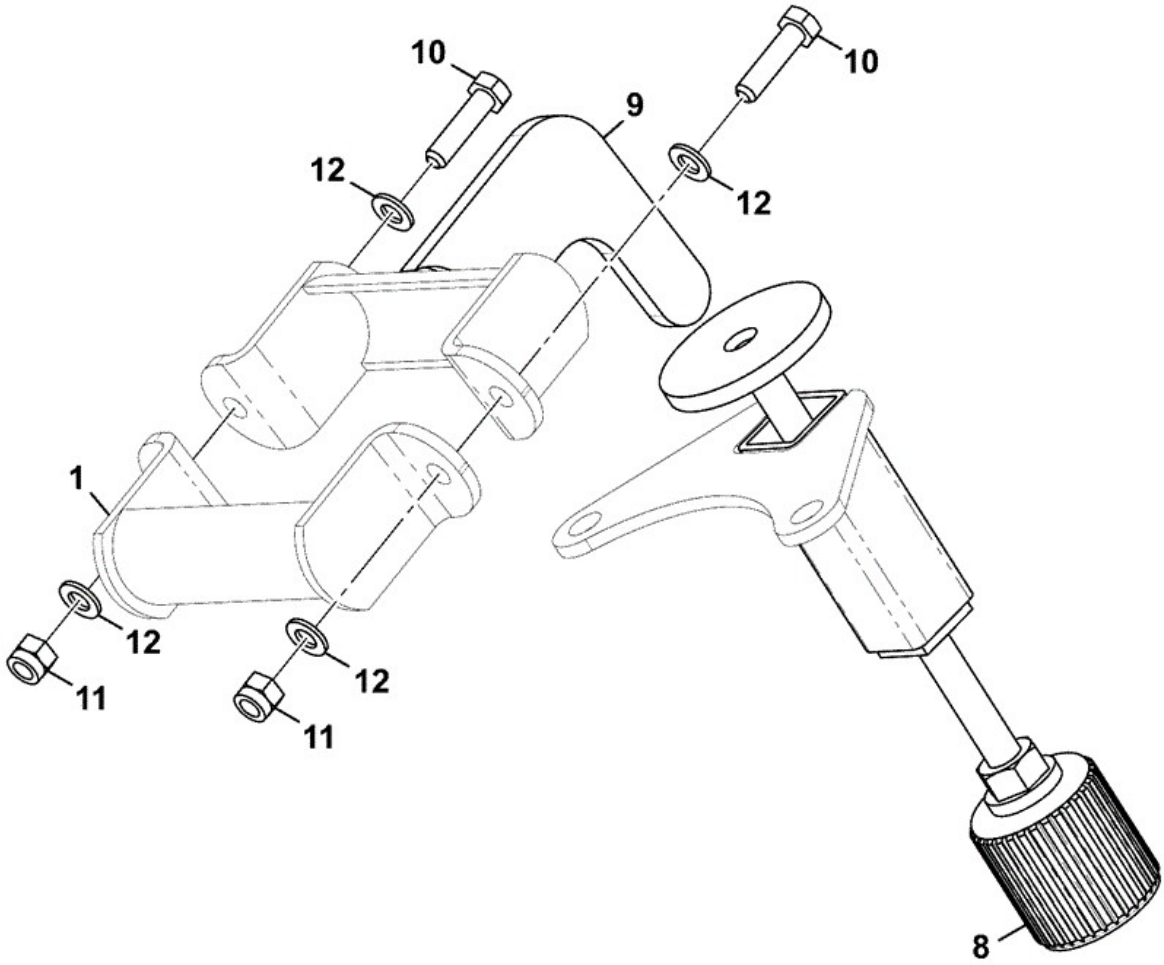

290-43000-4

Item	Part No	Change No	Description	Usage Code	QTY
1	246/88600		Clamp		1
8	****		Speed control assembly		1

9	333/S0862		Clamp plunger		1
10	1315/0105D		Setscrew M5 x 20 mm		2
11	1370/0003D		Nut Lock M5		2
12	1420/0005D		Washer (M5)		4

Applicability Date Ranges:
From: M1743137 , To:

9802/6220 D1-6-1 LEVER LOCK LOADER VALVE

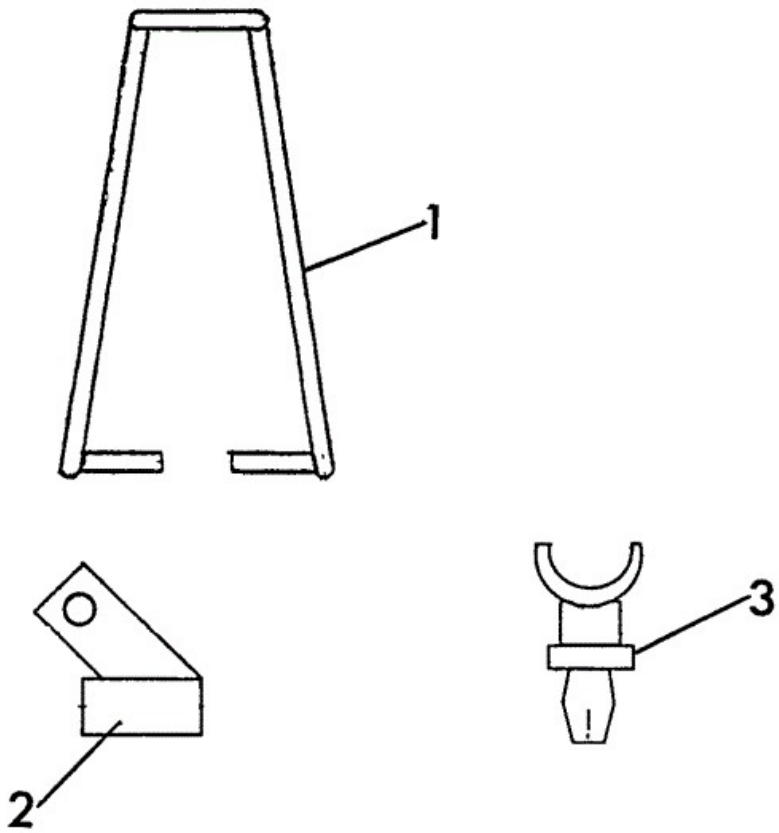

Item	Part No	Change No	Description	Usage Code	QTY

1	290/00599	<M807146	Lock loader control		1
1	290/72068		Lock loader lever lock		1
2	246/35500		Tube pivot		2

Applicability Date Ranges:
From: , To:

9802/6220 D1-6-1 LEVER LOCK LOADER VALVE

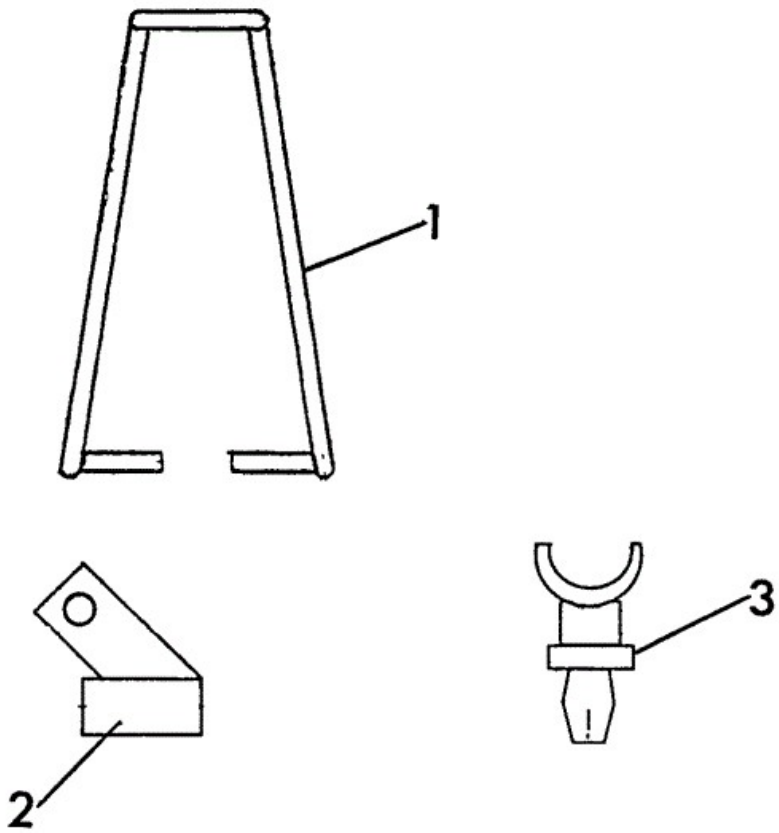

Item	Part No	Change No	Description	Usage Code	QTY

1	290/00599	<M807146	Lock loader control		1
1	290/72068		Lock loader lever lock		1
2	246/35500		Tube pivot		2

Applicability Date Ranges:
From: , To:

9802/6220 E1-1-1 CIRCUIT, NEUTRAL

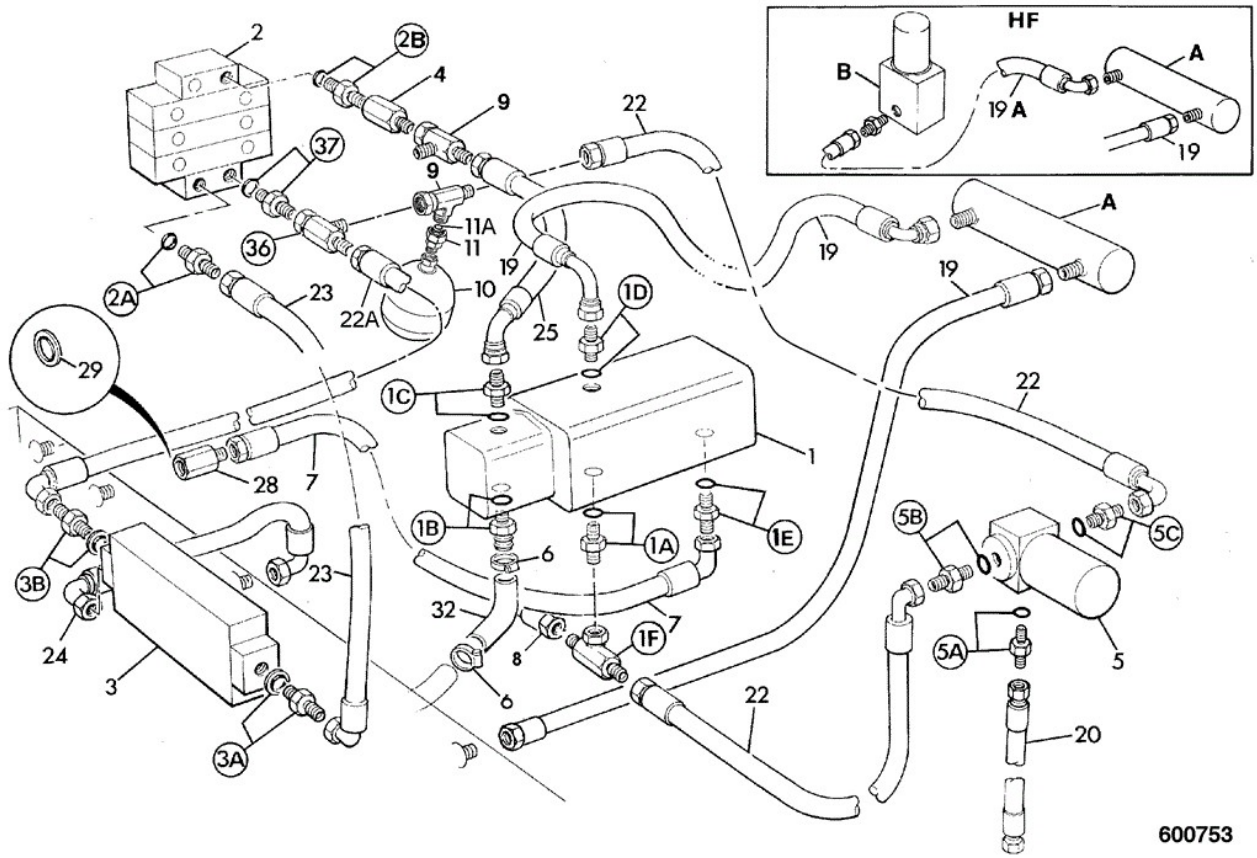

Item	Part No	Change No	Description	Usage Code	QTY
A	30/203800	<M806864	Cooler hydraulic oil		1
A	30/925372	>M806865	Cooler Hydraulic Oil	P/Ex	1
A	30/925399		Cooler hydraulic oil	P/Ex	1
A	30/203100	<M808234	Cooler oil High flow machines, elbow one end	P/Ex	1
A	30/925636		Cooler oil High Flow machines only, elbow one end		1
A	1620/2059		Adaptor 3/4BSP/1-1/16SAE M/M for use with 30/925636, O ring 2401/0508		2
B	****		'See Remark' High flow valve		1
1	****		'See Remark' Hydrastatic pump		1
1A	816/17065		Adapter 3/4in. x 3/4in.		1
1B	816/60232		Adaptor hose O ring 2401/0510		1

1C	816/17126	<M808234	Adapter O ring 2401/0508		1
1C	816/90055		Adapter 3/4M X 1 1/16 SAE		1
1D	1620/0010	<M808234	Adapter Includes 'O'Ring O ring 2401/0508		1
1D	1620/2059		Adaptor 3/4BSP/1-1/16SAE M/M		1
1E	1620/0010	<M808234	Adapter Includes 'O'Ring O ring 2401/0508		1
1E	1620/2059		Adaptor 3/4BSP/1-1/16SAE M/M		1
1F	816/50080	<M808234	Adapter tee		1
1F	816/90134		Adapter tee 1/4 X 1/4 X 3/4SAE		1
1H	816/90003		Adapter tee, M/M/F fastens to item 1F		1
2	****		'See Remark' Loader valve		1
2A	816/15061	<M808234	Adapter		1
2A	1620/2056		Adaptor		1
3	****		'See Remark' Excavator valve		1
3A	816/17057	<M808234	Adapter		1
3A	816/90007		Adaptor M/M 5/8" x 3/4"		1
3B	816/17065	<M808234	Adapter 3/4in. x 3/4in.		1
3B	816/90137		Adapter G3/4 X 3/4 SAE		1
4	****		'See Remark' Check valve		1
5	32/909000		Filter Flushing Element L=151mm		1
5A	816/17061	<M808234	Adapter		1
5A	1620/2068		Adaptor 1/2BSP x 1-1/16SAE		1
5B	1620/0010	<M808234	Adapter Includes 'O'Ring		1
5B	1620/2059		Adaptor 3/4BSP/1-1/16SAE M/M		1
5C	1620/0010	<M808234	Adapter Includes 'O'Ring		1
5C	1620/2059		Adaptor 3/4BSP/1-1/16SAE M/M		1
6	2201/0008		Clip Jubilee 1 only at pump end with hose 834/00857		2
6	2201/0010	>M752781	Clip jubilee Tank end of hose 834/00857		1
7	635/33600		Hose low pressure		1
8	611/22200		Hose		1
9	816/90039		Adaptor tee, F/M/M Only used when item 10 is fitted		1
10	32/925391		Accumulator		1

			Fitted only with auxiliary circuits		
11	816/90027		Adaptor 1/2BSPx3/4SAE Only used when item 10 is fitted		1
11A	:2401/0506		O Ring		1
19	635/30700		Hose 1420 mm long		2
19A	635/30700		Hose 1420 mm long		1
20	613/07300		Hose 1/2"BSP x 480mm		1
22	635/32700		Hose		2
22A	635/32500		Hose 3/4"BSP 1090mm long From adapter 3B on Excavator valve		1
23	614/25200		Hose		1
24	611/44900		Hose		1
25	615/20800		Hose 890mm		1
28	25/975400	<M808234	Valve check, 2 bar		1
28	25/221216		Valve check O ring 2401/0508		1
29	1406/0021	<M808234	Washer Bonded		1
29	2401/0508		O Ring		1
32	834/00687	<M752780	Hose suction For hydraulic tank with 30mm outlet		1
32	834/00857	>M752781	Hose suction For hydraulic tank with 50mm outlet		1
36	816/00344	<M808234	Adapter Tee		1
36	816/90043		Adaptor tee M/M/F		1
37	816/17091	<M808234	Adapter		1
37	1620/2058		Adaptor 3/4BSP x 7/8SAE M/M		1
38	816/00011		Adapter		1

Note 1: use for first 50 hours only, or after major hydraulic service then use 32/909200

Applicability Date Ranges:
From: , To: M1050133

Product Catalog\BACKHOE LOADER 1CX, 208\.1CX 00807553-00808999,01050000-01051999,01298000-01299999 9802/6220\E HYDRAULICS & AIR INCLUDING STEERING\E01 HOSE & PIPEWORK\E1-1-2 CIRCUIT, NEUTRAL

9802/6220 E1-1-2 CIRCUIT, NEUTRAL

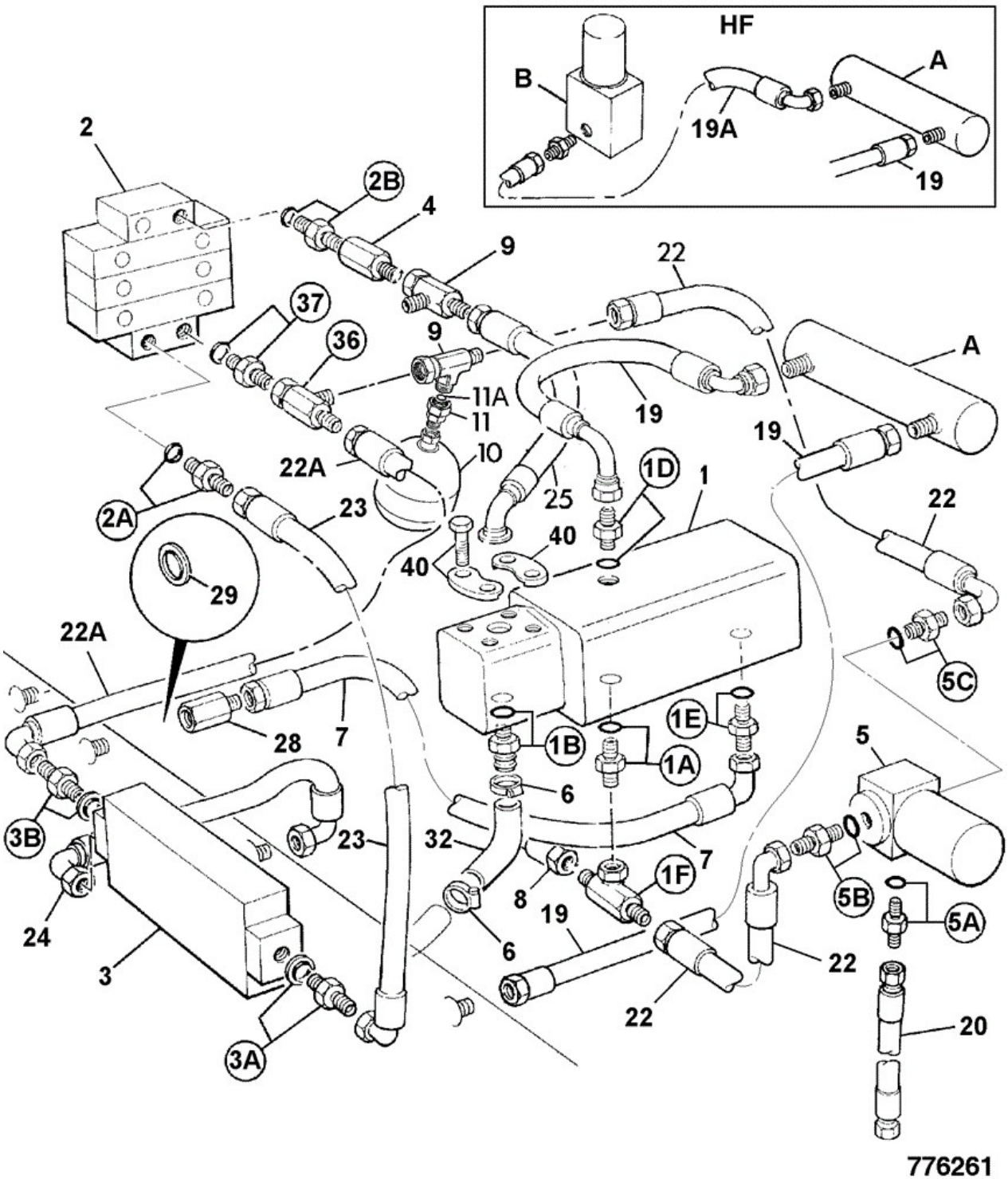

Item	Part No	Change No	Description	Usage Code	QTY
A	30/925399		Cooler hydraulic oil	P/Ex	1
A	30/925636		Cooler oil High Flow machines only, elbow one end		1

A	1620/2059		Adaptor 3/4BSP/1-1/16SAE M/M for use with 30/925636, O ring 2401/0508		2
B	****		'See Remark' High flow valve		1
1	****		'See Remark' Hydrastatic pump		1
1A	816/17065		Adapter 3/4in. x 3/4in.		1
1B	816/60232		Adaptor hose O ring 2401/0510		1
1D	1620/2059		Adaptor 3/4BSP/1-1/16SAE M/M		1
1E	1620/2059		Adaptor 3/4BSP/1-1/16SAE M/M		1
1F	816/90134		Adapter tee 1/4 X 1/4 X 3/4SAE		1
1H	816/90003		Adapter tee, M/M/F fastens to item 1F		1
2	****		'See Remark' Loader valve		1
2A	1620/2056		Adaptor		1
3	****		'See Remark' Excavator valve		1
3A	816/90007		Adaptor M/M 5/8" x 3/4"		1
3B	816/90137		Adapter G3/4 X 3/4 SAE		1
4	****		'See Remark' Check valve		1
5	32/909000		Filter Flushing Element L=151mm		1
5	32/909200		Element Return 16micron L=240mm		1
5A	1620/2068		Adaptor 1/2BSP x 1-1/16SAE		1
5B	1620/2059		Adaptor 3/4BSP/1-1/16SAE M/M		1
5C	1620/2059		Adaptor 3/4BSP/1-1/16SAE M/M		1
6	2201/0010		Clip jubilee Tank end of hose 834/00857		1
7	635/33600		Hose low pressure		1
8	611/22200		Hose		1
9	816/90039		Adaptor tee, F/M/M Only used when item 10 is fitted		1
10	32/925391		Accumulator Fitted only with auxiliary circuits		1
11	816/90027		Adaptor 1/2BSPx3/4SAE Only used when item 10 is fitted		1
11A	:2401/0506		O Ring		1
19	635/30700		Hose 1420 mm long		2
19A	635/30700		Hose 1420 mm long		1
20	613/07300		Hose 1/2"BSP x 480mm		1

22	635/32700		Hose		2
22A	635/32500		Hose 3/4"BSP 1090mm long From adapter 3B on Excavator valve		1
23	614/25200		Hose		1
24	611/44900		Hose		1
25	616/80145		Hose high pressure		1
28	25/221216		Valve check O ring 2401/0508		1
29	2401/0508		O Ring		1
32	834/00857		Hose suction For hydraulic tank with 50mm outlet		1
36	816/90043		Adaptor tee M/M/F		1
37	1620/2058		Adaptor 3/4BSP x 7/8SAE M/M		1
38	816/00011		Adapter		1
40	331/40348		Kit split flange 3/4" SAE		1

Applicability Date Ranges:
From: M1050134 , To:

Product Catalog\BACKHOE LOADER 1CX, 208\.1CX 00807553-00808999,01050000-01051999,01298000-01299999 9802/6220\E HYDRAULICS & AIR INCLUDING STEERING\E01 HOSE & PIPEWORK\E1-2-2 CIRCUIT, DRIVE

9802/6220 E1-2-2 CIRCUIT, DRIVE

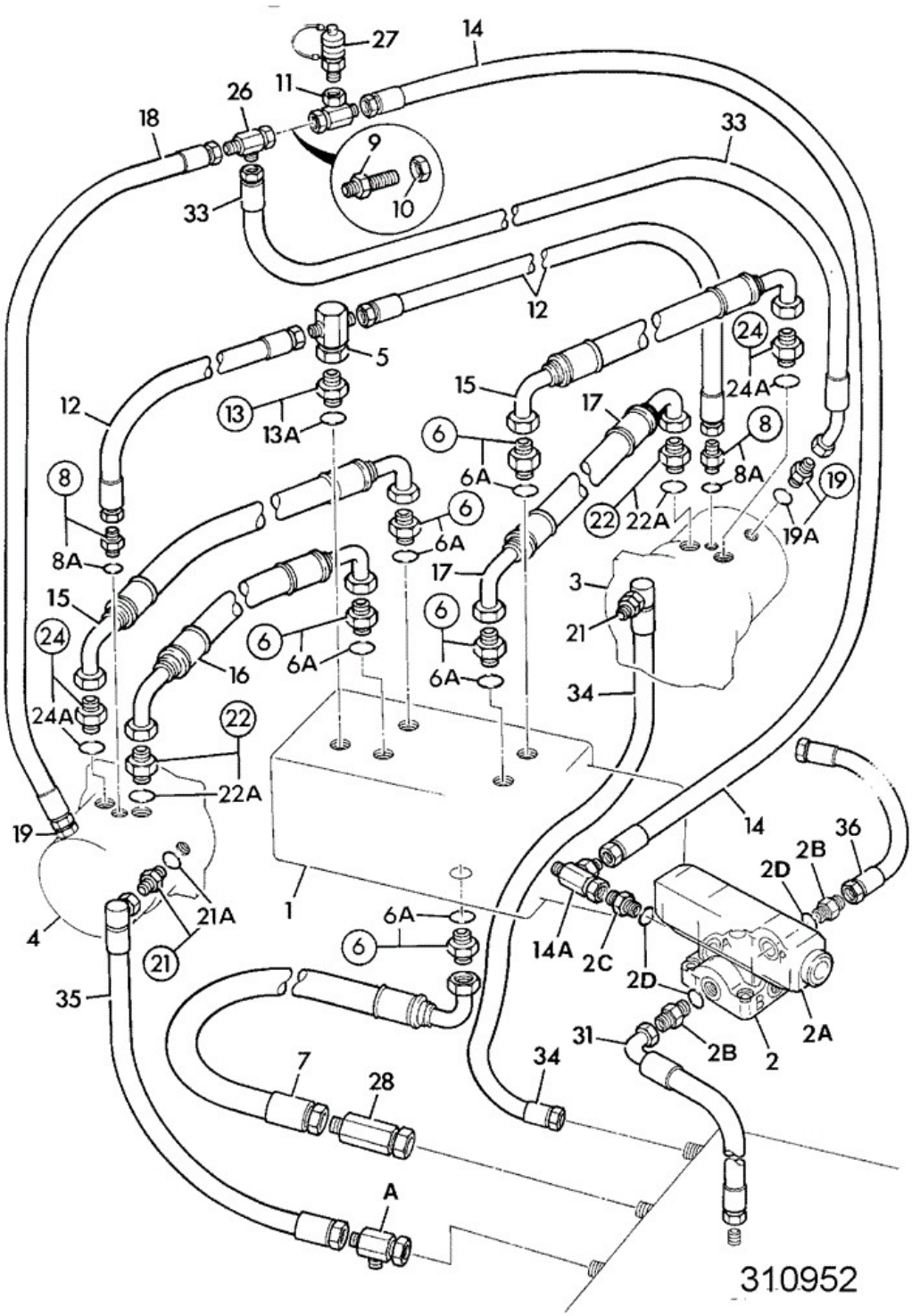

Item	Part No	Change No	Description	Usage Code	QTY
A	816/50018		Adapter Tee		1
1	****		'See Remark' Hyd. pump		1

2	25/107300	<M808271	Valve sub-plate side entry		1
2	25/221224		Valve sub-plate side entry		1
2A	25/107100		Valve solenoid		1
2A	:477/00824		Coil 2 off per valve		1
2B	1606/0003	<M808271	Adapter		3
2B	1620/2051		Adaptor 1/4"BSP x 9/16"SAE		3
2C	1604/0003	<M808271	Adapter Male/Male		1
2C	1620/2052		Adaptor 3/8BSP X 9/16		1
2D	1406/0015	<M808271	Washer Bonded 3/8"		4
2D	:2401/0505		O Ring		4
2E	1315/0108Z		Setscrew Zinc to fasten item 2		4
2F	721/10763		Harness 2-way link 40mm long Deutsch-AMP/Jnrtimer		2
3	20/916300	<M807172	Motor hydraulic Fitted to LH side of machine		1
3	20/925273	>M807713	Motor drive integral sprocket Fitted to LH side of machine		1
4	20/917700	<M807172	Motor drive Fitted to RH side of machine		1
4	20/925274	>M807173	Motor drive integral sprocket Fitted to RH side of machine		1
5	816/50022	<M808234	Adapter tee		1
5	816/90136		Adapter tee 3/8M X 3/8M X 1 1/16 replaces items 5 & 13		1
6	1620/0010	<M808234	Adapter Includes 'O'Ring		4
6	816/90055		Adapter 3/4M X 1 1/16 SAE		4
6A	:2401/0508		O Ring		1
7	635/33600		Hose low pressure		1
8	1620/0003	<M808234	Adapter		3
8	1620/2052		Adaptor 3/8BSP X 9/16		3
9	1605/0014	<M808234	Adapter		1
9	816/90135		Adapter 4 way replaces 9, 11 & 26		1
10	1356/0002Z		Nut Backnut(1/4" BSP)		1
11	816/50085	<M808234	Adapter tee, F/F/M see item 9		1
12	612/00300		Hose 3/8" BSP 725 mm		2
13	816/17126	<M808234	Adapter see item 5		1
14	611/45800		Hose 1/4"BSP x 350mm		1

14A	816/90013		Adaptor Tee 1/4F-1/4M-1/4M BSP		1
15	629/28800		Hose High Pressure		1
16	629/28700		Hose High Pressure		1
17	629/28900		Hose High Pressure		1
18	611/26700		Hose 1/4"BSP x 870mm		1
19	1620/0002	<M808234	Adapter		3
19	1620/2051		Adaptor 1/4"BSP x 9/16"SAE		3
19A	:2401/0505		O Ring		1
21	1620/0004	<M808234	Adapter 3/4		2
21	816/90288		Adapter 3/4 SAE X 3/8 BSP		2
22	816/17128		Adapter (extended)		1
22	816/17134	<M808234	Adapter std. length		1
22	816/90056		Adapter 7/8 BSP X 1 1/16 SAE		1
24	816/17128		Adapter (extended)		1
24	816/17134	<M808234	Adapter std. length		1
24	816/90056		Adapter 7/8 BSP X 1 1/16 SAE		1
26	816/50031	<M808234	Adapter Tee see item 9		1
27	816/55045	<M808234	Adapter test point		1
27	45/908000		Adaptor Pressure Test Point 9/16-18UNF Male		1
28	25/975400	<M808234	Valve check, 2 bar O ring 2401/0508		1
28	25/221216		Valve check O ring 2401/0508		1
29	1406/0021		Washer Bonded		1
31	612/25600		Hose		1
33	611/45000		Hose		1
34	612/33700		Hose		1
35	612/24800		Hose		1
36	611/22200		Hose		1

Applicability Date Ranges:
From: , To: M1298996

9802/6220 E1-2-3 CIRCUIT, DRIVE

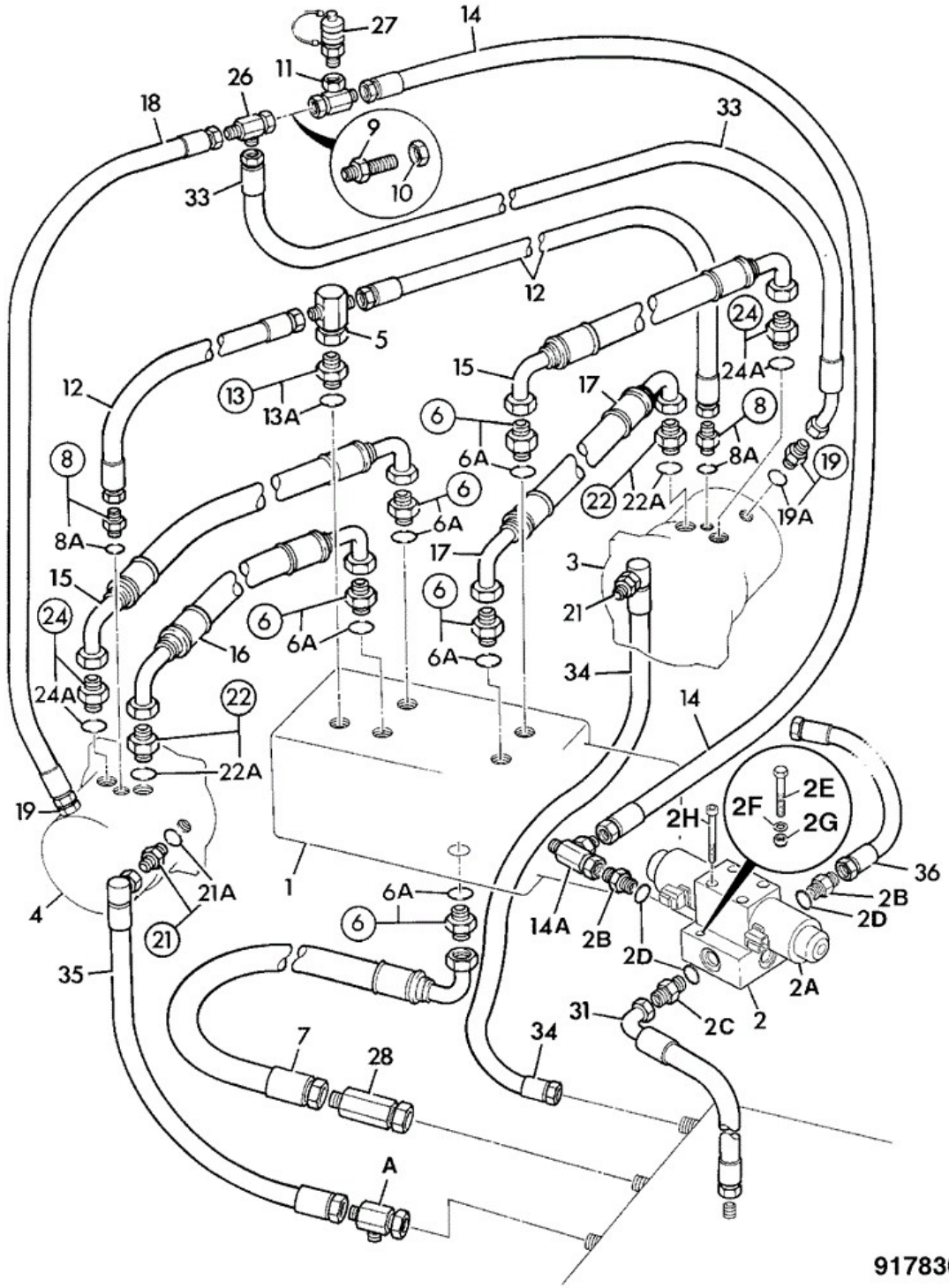

Item	Part No	Change No	Description	Usage Code	QTY
A	816/50018		Adapter Tee		1
1	****		'See Remark' Hyd. pump		1

2	332/R5718		Valve assembly		1
2A	****		None serviced part		1
2B	1620/2051		Adaptor 1/4"BSP x 9/16"SAE		3
2C	1620/2052		Adaptor 3/8BSP X 9/16		1
2D	:2401/0505		O Ring		4
2E	1315/3213D		Bolt M6 x 55 to fasten item 2		2
2F	1420/0006D		Washer (M6)		4
2G	1370/0103D		Nut (M6)		2
2H	1391/3111D		Screw cap M5x45mm Solenoid valve to sub plate		4
3	20/925273		Motor drive integral sprocket Fitted to LH side of machine		1
4	20/925274		Motor drive integral sprocket Fitted to RH side of machine		1
5	816/90136		Adapter tee 3/8M X 3/8M X 1 1/16 replaces items 5 & 13		1
6	816/90055		Adapter 3/4M X 1 1/16 SAE		4
6A	:2401/0508		O Ring		1
7	635/33600		Hose low pressure		1
8	1620/2052		Adaptor 3/8BSP X 9/16		3
9	816/90135		Adapter 4 way replaces 9, 11 & 26		1
10	1356/0002Z		Nut Backnut(1/4" BSP)		1
11	816/50085	<M808234	Adapter tee, F/F/M see item 9		1
12	612/00300		Hose 3/8" BSP 725 mm		2
13	816/17126	<M808234	Adapter see item 5		1
14	611/45800		Hose 1/4"BSP x 350mm		1
14A	816/90013		Adaptor Tee 1/4F-1/4M-1/4M BSP		1
15	629/28800		Hose High Pressure		1
16	629/28700		Hose High Pressure		1
17	629/28900		Hose High Pressure		1
18	611/26700		Hose 1/4"BSP x 870mm		1
19	1620/2051		Adaptor 1/4"BSP x 9/16"SAE		3
19A	:2401/0505		O Ring		1
21	816/90288		Adapter 3/4 SAE X 3/8 BSP		2
22	816/17128		Adapter (extended)		1
22	816/90056		Adapter 7/8 BSP X 1 1/16 SAE		1
24	816/17128		Adapter (extended)		1

24	816/90056		Adapter 7/8 BSP X 1 1/16 SAE		1
26	816/50031	<M808234	Adapter Tee see item 9		1
27	816/55045	<M808234	Adapter test point		1
27	45/908000		Adaptor Pressure Test Point 9/16-18UNF Male		1
28	25/221216		Valve check O ring 2401/0508		1
29	1406/0021		Washer Bonded		1
31	612/25600		Hose		1
33	611/45000		Hose		1
34	612/33700		Hose		1
35	612/24800		Hose		1
36	611/22200		Hose		1

Applicability Date Ranges:
From: M1298997 , To: M1299881

Product Catalog\BACKHOE LOADER 1CX, 208\.1CX 00807553-00808999,01050000-01051999,01298000-01299999 9802/6220\E HYDRAULICS & AIR INCLUDING STEERING\E01 HOSE & PIPEWORK\E1-2-4 CIRCUIT, DRIVE

9802/6220 E1-2-4 CIRCUIT, DRIVE

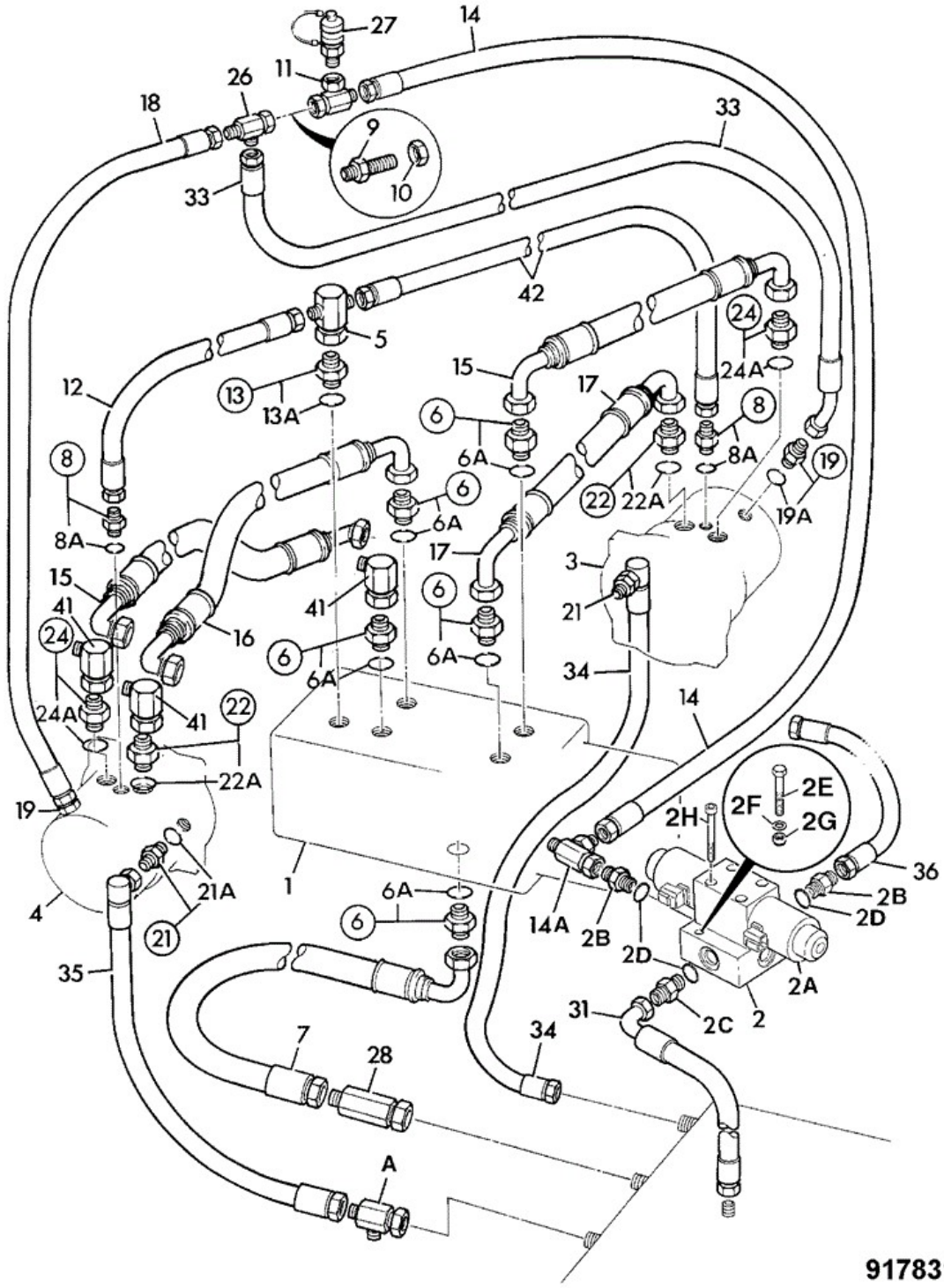

Item	Part No	Change No	Description	Usage Code	QTY
A	816/50018		Adapter Tee		1
1	****		'See Remark' Hyd. pump		1

2	332/R5718		Valve assembly		1
2A	****		None serviced part		1
2B	1620/2051		Adaptor 1/4"BSP x 9/16"SAE		3
2C	1620/2052		Adaptor 3/8BSP X 9/16		1
2D	:2401/0505		O Ring		4
2E	1315/3213D		Bolt M6 x 55 to fasten item 2		2
2F	1420/0006D		Washer (M6)		4
2G	1370/0103D		Nut (M6)		2
2H	1391/3111D		Screw cap M5x45mm Solenoid valve to sub plate		4
3	332/W3484		Motor drive integral sprocket Fitted to LH side of machine		1
4	332/W3484		Motor drive integral sprocket Fitted to RH side of machine		1
5	816/90136		Adapter tee 3/8M X 3/8M X 1 1/16 replaces items 5 & 13		1
6	816/90055		Adapter 3/4M X 1 1/16 SAE		4
6A	:2401/0508		O Ring		1
7	635/33600		Hose low pressure		1
8	1620/2052		Adaptor 3/8BSP X 9/16		3
9	816/90135		Adapter 4 way replaces 9, 11 & 26		1
10	1356/0002Z		Nut Backnut(1/4" BSP)		1
11	816/50085	<M808234	Adapter tee, F/F/M see item 9		1
12	612/35500		Hose 3/8"BSP x 740mm		2
13	816/17126	<M808234	Adapter see item 5		1
14	611/45800		Hose 1/4"BSP x 350mm		1
14A	816/90013		Adaptor Tee 1/4F-1/4M-1/4M BSP		1
15	332/V6430		Hose UHP, 3/4BSP X 565mm		1
16	332/V6403		Hose UHP, 3/4BSP X 590mm		1
17	332/V2608		Hose UHP, 3/4BSP X 780mm		1
18	332/V2670		Hose HP, 1/4BSP X 1035mm		1
19	816/90618		Adaptor elbow 1/4		2
19A	:2401/0505		O Ring		1
21	816/90288		Adapter 3/4 SAE X 3/8 BSP		2
22	816/90056		Adapter 7/8 BSP X 1 1/16 SAE		1
24	816/17128		Adapter (extended)		1
24	816/90056		Adapter 7/8 BSP X 1 1/16 SAE		1

26	816/50031	<M808234	Adapter Tee see item 9		1
27	816/55045	<M808234	Adapter test point		1
27	45/908000		Adaptor Pressure Test Point 9/16-18UNF Male		1
28	25/221216		Valve check O ring 2401/0508		1
29	1406/0021		Washer Bonded		1
31	612/25600		Hose		1
33	332/V2440		Hose HP, 1/4BSP X 715mm		1
34	612/33700		Hose		1
35	332/V2517		Hose HP, 3/8BSP X 1050mm		1
36	611/22200		Hose		1
41	816/90163		Adaptor Elbow M/F		3
42	332/V2646		Hose UHP, 3/4BSP X 700mm		1

Applicability Date Ranges:
From: M1299882 , To:

Product Catalog\BACKHOE LOADER 1CX, 208\.1CX 00807553-00808999,01050000-01051999,01298000-01299999 9802/6220\E HYDRAULICS & AIR INCLUDING STEERING\E01 HOSE & PIPEWORK\E1-3-1 TEST POINT CHARGE CIRCUIT

9802/6220 E1-3-1 TEST POINT CHARGE CIRCUIT

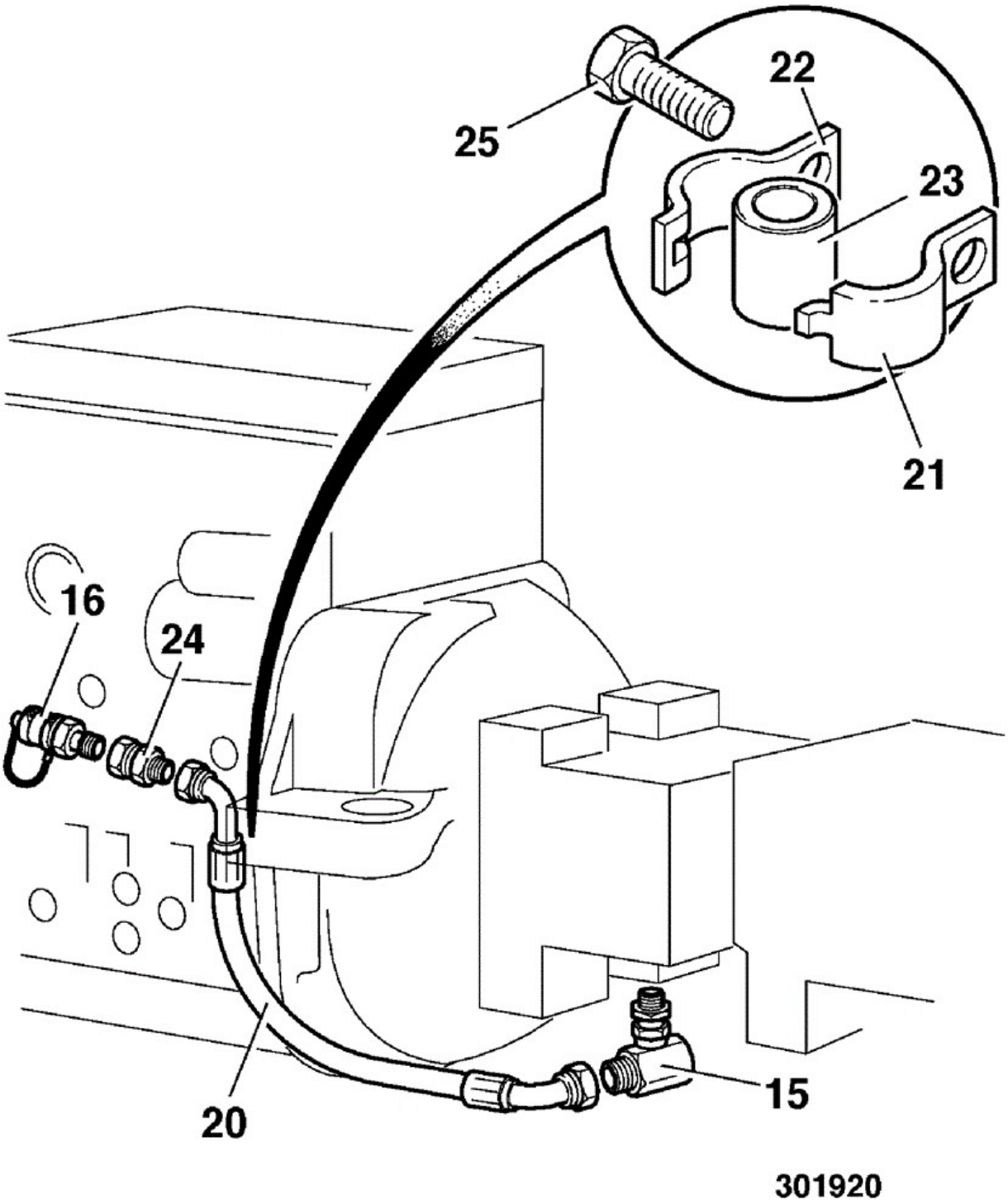

Item	Part No	Change No	Description	Usage Code	QTY
15	816/50031		Adapter Tee		1
16	45/905000	<M808036	Adapter Pressure Test 1/4BSP Male		1

16	45/908000		Adaptor Pressure Test Point 9/16-18UNF Male		1
20	611/23900		Hose 1/4"BSP x 420mm		1
21	821/00181		Clamp Base		1
22	821/00180		Clamp Top		1
23	821/00182		Insert clamp		1
24	1612/0002	<M808036	Adapter		1
24	816/13367		Adapter		1
25	1315/0414Z		Setscrew		1

Applicability Date Ranges:
From: , To:

Product Catalog\BACKHOE LOADER 1CX, 208\.1CX 00807553-00808999,01050000-01051999,01298000-01299999 9802/6220\E HYDRAULICS & AIR INCLUDING STEERING\E01 HOSE & PIPEWORK\E1-4-3 CIRCUIT CONTROL VALVES TRANSMISSION & LOADER

9802/6220 E1-4-3 CIRCUIT CONTROL VALVES TRANSMISSION & LOADER

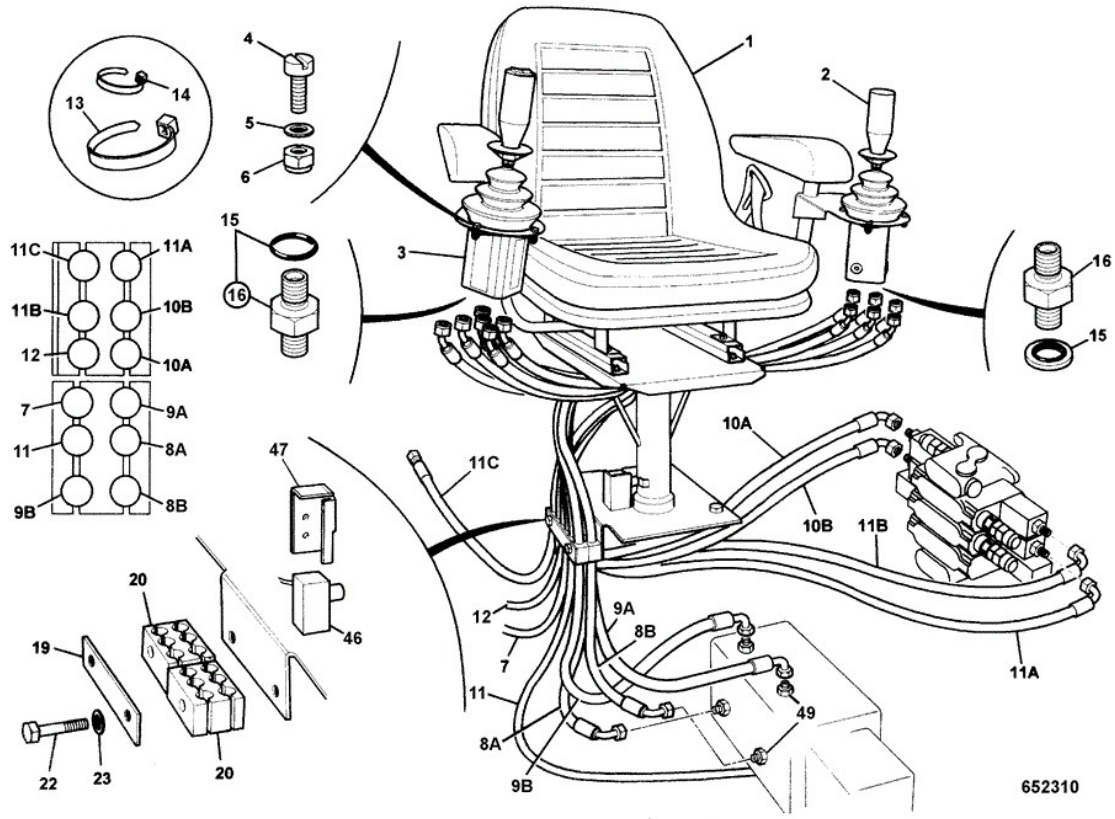

Item	Part No	Change No	Description	Usage Code	QTY
2	25/220589		Valve joystick control Transmission Rexroth		1
2	25/222137		Valve joystick control Tranmission USA build. Soft drive		1
3	25/220626		Valve joystick control Loader, Rexroth without aux. switch		1
3	25/220588		Valve joystick control Loader Rexroth with aux. switch		1
4	1315/0203Z		Setscrew		8
5	1420/0006Z		Washer (M6)		8
6	1370/0103Z		Nut Self Lock M6		8
7	632/80000		Hose low pressure		1
8	629/24800		Hose		2
9	629/24300		Hose		2

10	629/94000		Hose		2
11	629/94100		Hose		4
11	629/95063		Hose		1
12	629/93900		Hose , 1/4 BSP, 1370mm		1
13	121/77603		Tie Cable 300mm		4
14	204/07006		Tie Cable		4
15	:2401/0505		O Ring		12
16	1620/0002	<M808234	Adapter		12
16	1620/2051		Adaptor 1/4"BSP x 9/16"SAE		12
18	701/80268	<Nov 2003	Switch horn sealed		1
18	701/80365	>Dec 2003	Switch push button-horn		1
19	290/01175		Plate clamp		1
20	821/00387		Clamp		2
21	1420/0007Z		Washer (M8)		2
22	826/01086		Screw		2
23	1358/0403Z		Nut (4BA)		2
24	1414/0009Z		Washer (4BA)		4
25	721/00673		Harness seat 1CX		1
46	701/45200		Switch micro		1
47	290/00510		Guard switch		1
48	926/04800		Strip Edging approx 200mm		0
49	1620/0003	<M808234	Adapter		4
49	1620/2059		Adaptor 3/4BSP/1-1/16SAE M/M		4

Note 1: Use 4-off this hose if machine if fitted with Milsco seat

Note 2: Fit this hose to port P1 replacing 1-off 629/94100 if machine if fiited with ISRI seat.

Applicability Date Ranges:
From: , To:

Product Catalog\BACKHOE LOADER 1CX, 208\.1CX 00807553-00808999,01050000-01051999,01298000-01299999 9802/6220\E HYDRAULICS & AIR INCLUDING STEERING\E01 HOSE & PIPEWORK\E1-5-1 CIRCUIT LOADER END EMERGENCY LOWER-SEE ALSO E1-5-2

9802/6220 E1-5-1 CIRCUIT LOADER END EMERGENCY LOWER-SEE ALSO E1-5-2

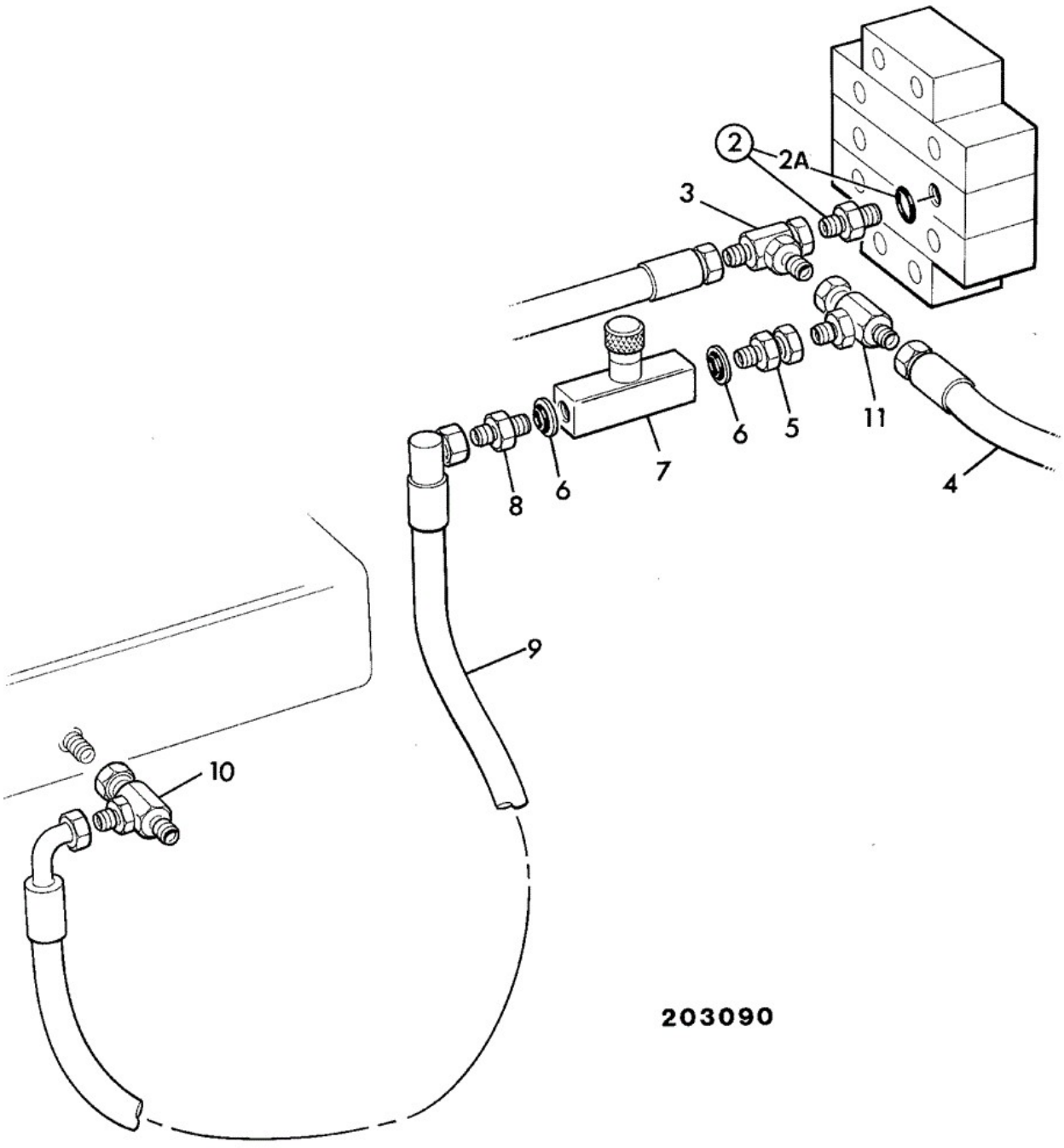

Item	Part No	Change No	Description	Usage Code	QTY
1	****		'See Remark' Loader valve		1
2	1620/0004		Adapter 3/4		2

2A	:2401/0506		O Ring		1
3	816/50033	<M807590	Adapter Tee		2
3	816/50091		Adapter 4 way adapter		1
4	612/06300	<M807590	Hose 3/8BSP x 1375mm		1
4	612/02100		Hose 3/8"BSP x 1500mm		1
5	1612/0002		Adapter		1
6	1406/0011		Washer Bonded (1/4")		2
7	25/972500		Valve needle		1
8	1604/0002		Adapter		2
9	****		'See Remark' HOSE		1
10	816/50018	<M807590	Adapter Tee		1
10	816/50031		Adapter Tee		1
11	816/50018	<M807590	Adapter Tee		1

Applicability Date Ranges:
From: , To:

Product Catalog\BACKHOE LOADER 1CX, 208\.1CX 00807553-00808999,01050000-01051999,01298000-01299999 9802/6220\E HYDRAULICS & AIR INCLUDING STEERING\E01 HOSE & PIPEWORK\E1-5-2 CIRCUIT LOADER END EMERGENCY LOWER-SEE ALSO E1-5-1

9802/6220 E1-5-2 CIRCUIT LOADER END EMERGENCY LOWER-SEE ALSO E1-5-1

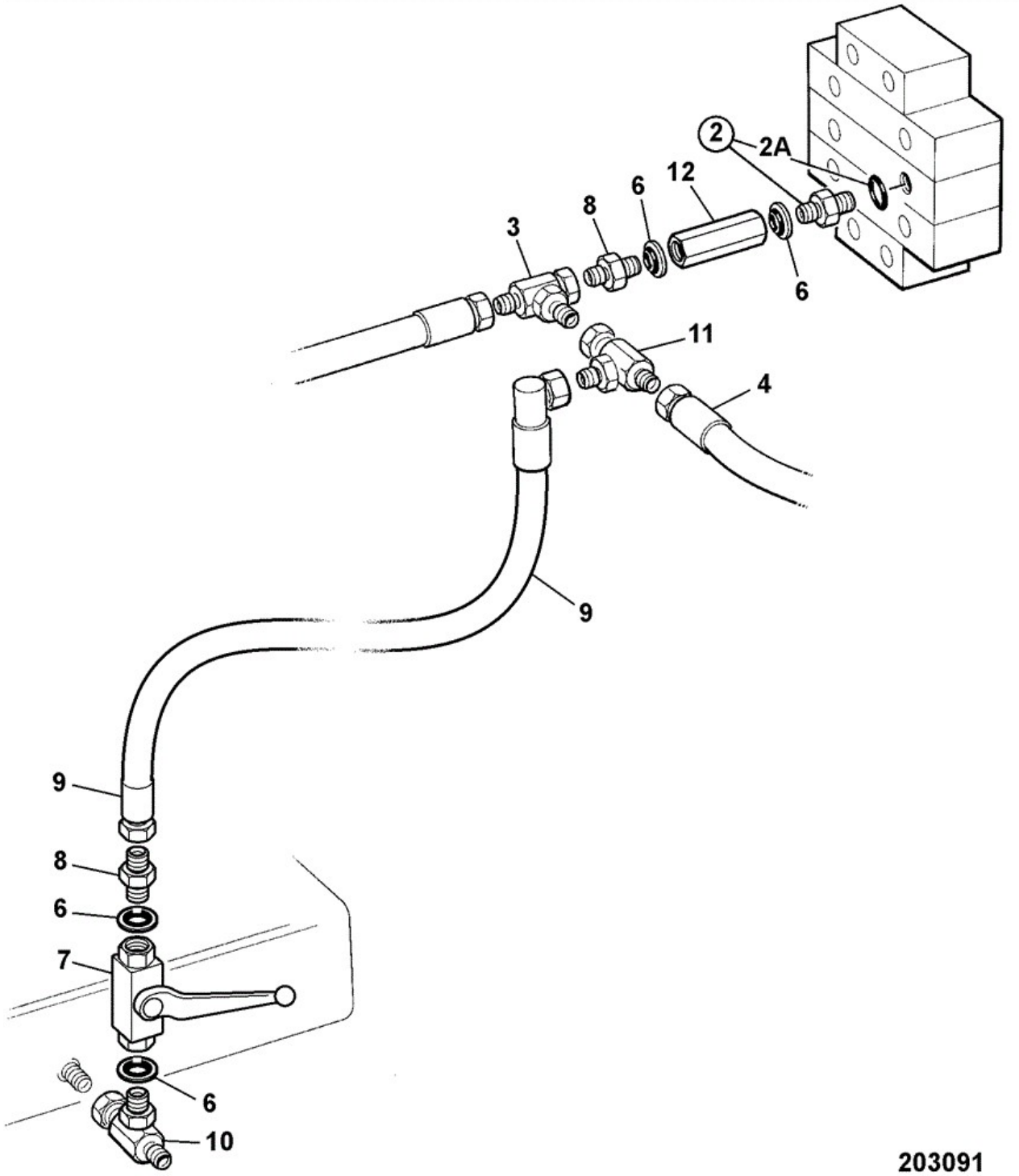

Item	Part No	Change No	Description	Usage Code	QTY
			'See Remark'		

1	****		Loader valve		1
2	1620/0004	<M808234	Adapter 3/4		2
2	1620/2053		Adaptor 3/8BSPx3/4SAE		2
2A	:2401/0506		O Ring		1
3	816/50033	<M807590	Adapter Tee		2
3	816/50091	<M808234	Adapter 4 way adapter		1
3	816/90084		Adapter 4 way F/M/M/M 4 way adapter		1
4	612/06300	<M807590	Hose 3/8BSP x 1375mm		1
4	612/02100		Hose 3/8"BSP x 1500mm		1
5	1612/0002	<M808234	Adapter between items 7 & 10		1
5	1620/2051		Adaptor 1/4"BSP x 9/16"SAE		1
6	1406/0011	<M808234	Washer Bonded (1/4")		2
7	25/201400	<M808234	Valve ball		1
7	45/920057		Valve ball		1
8	1604/0002	<M808234	Adapter hose to ball valve		2
8	816/90009		Adaptor 1/4BSP F x 9/16 SAE M		2
9	611/25600	<M807590	Hose 1/4"BSP x 350mm		1
9	611/21000		Hose 1/4"BSP x 470mm		1
10	816/50018	<M807590	Adapter Tee		1
10	816/50031	<M808234	Adapter Tee		1
10	816/90013		Adaptor Tee 1/4F-1/4M-1/4M BSP		1
11	816/50018	<M807590	Adapter Tee		1
12	25/991500	<MJan 2002	Valve check		1

Applicability Date Ranges:
From: , To:

Product Catalog\BACKHOE LOADER 1CX, 208\.1CX 00807553-00808999,01050000-01051999,01298000-01299999 9802/6220\E HYDRAULICS & AIR INCLUDING STEERING\E01 HOSE & PIPEWORK\E1-6-1 CIRCUIT LOADER LIFT RAM

9802/6220 E1-6-1 CIRCUIT LOADER LIFT RAM

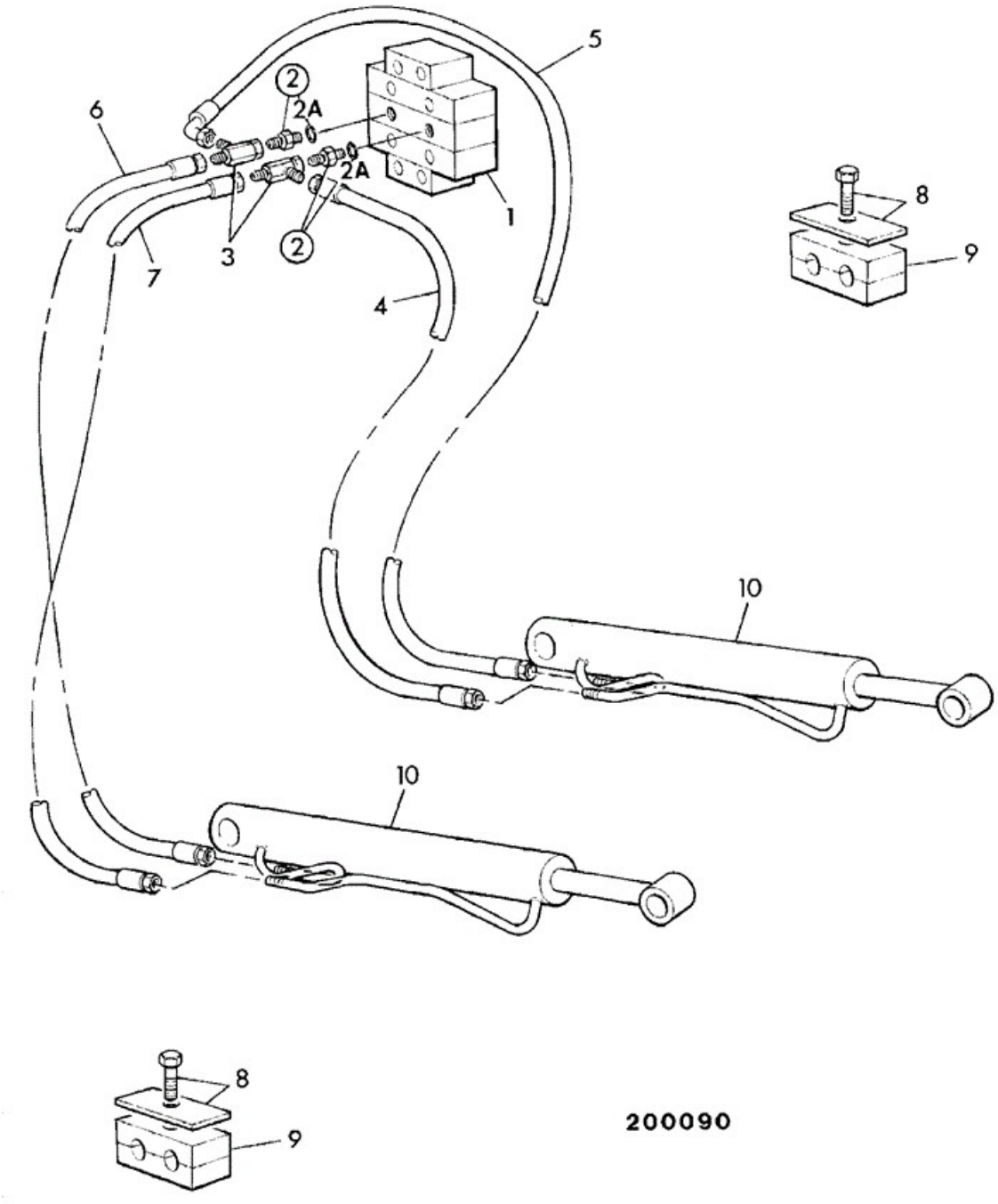

Item	Part No	Change No	Description	Usage Code	QTY

1	****		'See Remark' Loader valve		1
2	1620/0004		Adapter 3/4		2
2A	:2401/0506		O Ring		1
3	816/50033		Adapter Tee		2
4	612/06300	<M807590	Hose 3/8BSP x 1375mm		1
4	612/02100		Hose 3/8"BSP x 1500mm		1
5	612/30100	<M751604	Hose		1
5	635/53900	>M751605	Hose		1
6	612/06200		Hose 3/8"BSP x 1775mm		1
7	612/06200		Hose 3/8"BSP x 1775mm		1
8	821/00169		Plate Cover		2
8A	1315/3309Z		Bolt M8 x 35mm		2
9	821/00347		Clamp Twin		2
10	****		'See Remark' Lift rams, see E4		2

Applicability Date Ranges:
From: , To:

Product Catalog\BACKHOE LOADER 1CX, 208\.1CX 00807553-00808999,01050000-01051999,01298000-01299999 9802/6220\E HYDRAULICS & AIR INCLUDING STEERING\E01 HOSE & PIPEWORK\E1-7-1 CIRCUIT, LOADER AUXILIARY

9802/6220 E1-7-1 CIRCUIT, LOADER AUXILIARY

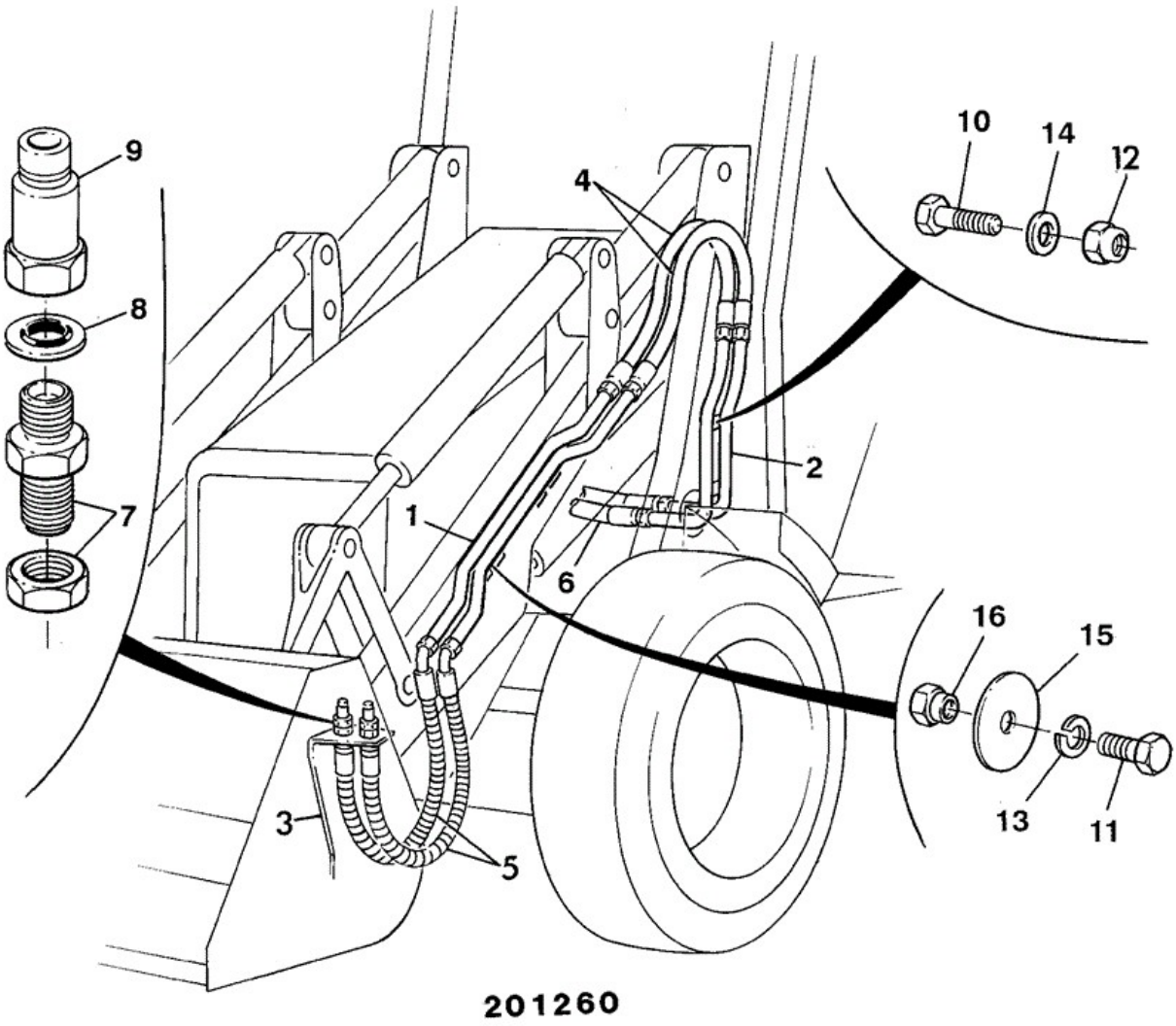

Item	Part No	Change No	Description	Usage Code	QTY
1	290/00461	<M808234	Pipe assembly,loader arm		1
1	335/03758	>M808235	Pipe assembly losder arm		1

2	290/01128	<M808234	Pipe assembly, chassis		1
2	335/03759	>M808235	Pipe assembly, chassis		1
3	290/42200	<M752018	Bracket		1
3	290/62900	>M752019	Bracket loader aux. pipes		1
4	614/03400		Hose 5/8" BSP 670 mm		2
5	614/25600		Hose		2
6	614/45600		Hose		2
7	816/10144		Adapter bulkhead		2
8	1406/0021		Washer Bonded		2
9	45/910300		Coupling 3/4" BSP male quick release		2
9	45/910300	>M751663	Coupling 3/4" BSP male quick release locate inboard		1
10	1315/0307Z		Setscrew M8 X 25		2
11	1315/3308Z	<M752018	Bolt		2
11	1370/0303Z	>M752019	Nut lock M10		1
12	1370/0203Z		Nut Nut M8		2
13	1425/0007Z		Washer Washer		2
14	1420/0007Z		Washer (M8)		2
15	1412/0002Z		Washer (5/16")		2
16	826/01254		Nut Rivet		2
17	1417/0018Z		Washer External Teeth Lock Used with item 7		2
19	45/911300	<M751662	Coupling female 3/4" BSP female		1
19	45/908400	>M751663	Coupling 3/4 BSP female quick release		1
20	1315/0409Z		Setscrew M10 x 35		2
21	1420/0008Z		Washer (M10)		2
32	274/00439		Bracket mounting		1

Applicability Date Ranges:
From: , To:

9802/6220 E1-8-1 CIRCUIT SHOVEL RAM

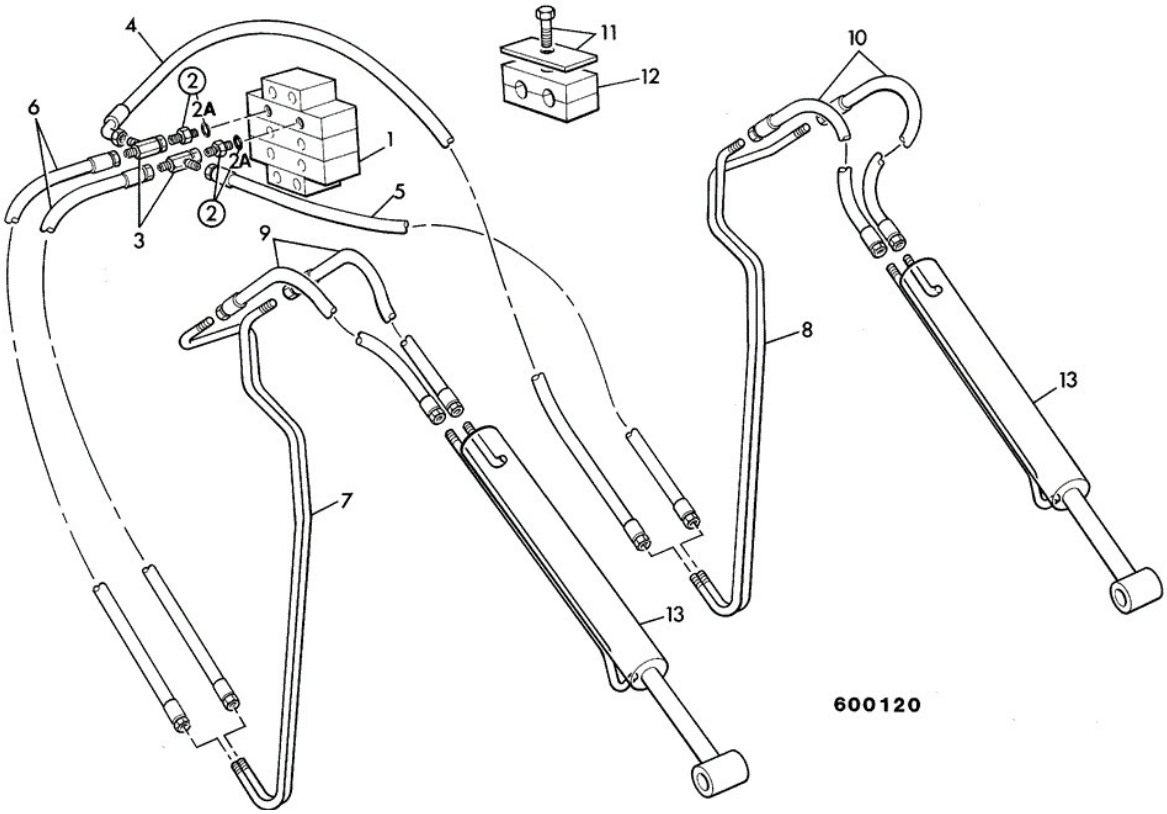

Item	Part No	Change No	Description	Usage Code	QTY
1	****		'See Remark' Loader valve		1
2	1620/0004		Adapter 3/4		2
2A	:2401/0506		O Ring		1
3	816/50033		Adapter Tee		2
4	612/45200		Hose		1
5	612/30000		Hose 3/8" BSP 735 mm		1
6	612/29900		Hose		2
7	290/00416	<M808234	Pipe right side		1
7	335/03753	Superseded	Pipe right side		1
7	335/04679		Pipe right side		1
8	290/00415	<M808234	Pipe left side		1
8	335/03752	Superseded	Pipe left side		1
8	335/04678		Pipe left side		1
9	612/06100		Hose 3/8"BSP x 540 long		2
10	612/06100		Hose 3/8"BSP x 540 long		2

11	821/00169		Plate Cover		1
11A	1315/3314Z		Bolt (M8 x 60)		1
12	821/00347		Clamp Twin		2
13	****		'See Remark' Shovel rams, see E4		2
14	611/25600		Hose 1/4"BSP x 350mm		1

Applicability Date Ranges:
From: , To:

Product Catalog\BACKHOE LOADER 1CX, 208\.1CX 00807553-00808999,01050000-01051999,01298000-01299999 9802/6220\E HYDRAULICS & AIR INCLUDING STEERING\E01 HOSE & PIPEWORK\E1-9-1 CIRCUIT BOOM, JCB + PATTERN

9802/6220 E1-9-1 CIRCUIT BOOM, JCB + PATTERN

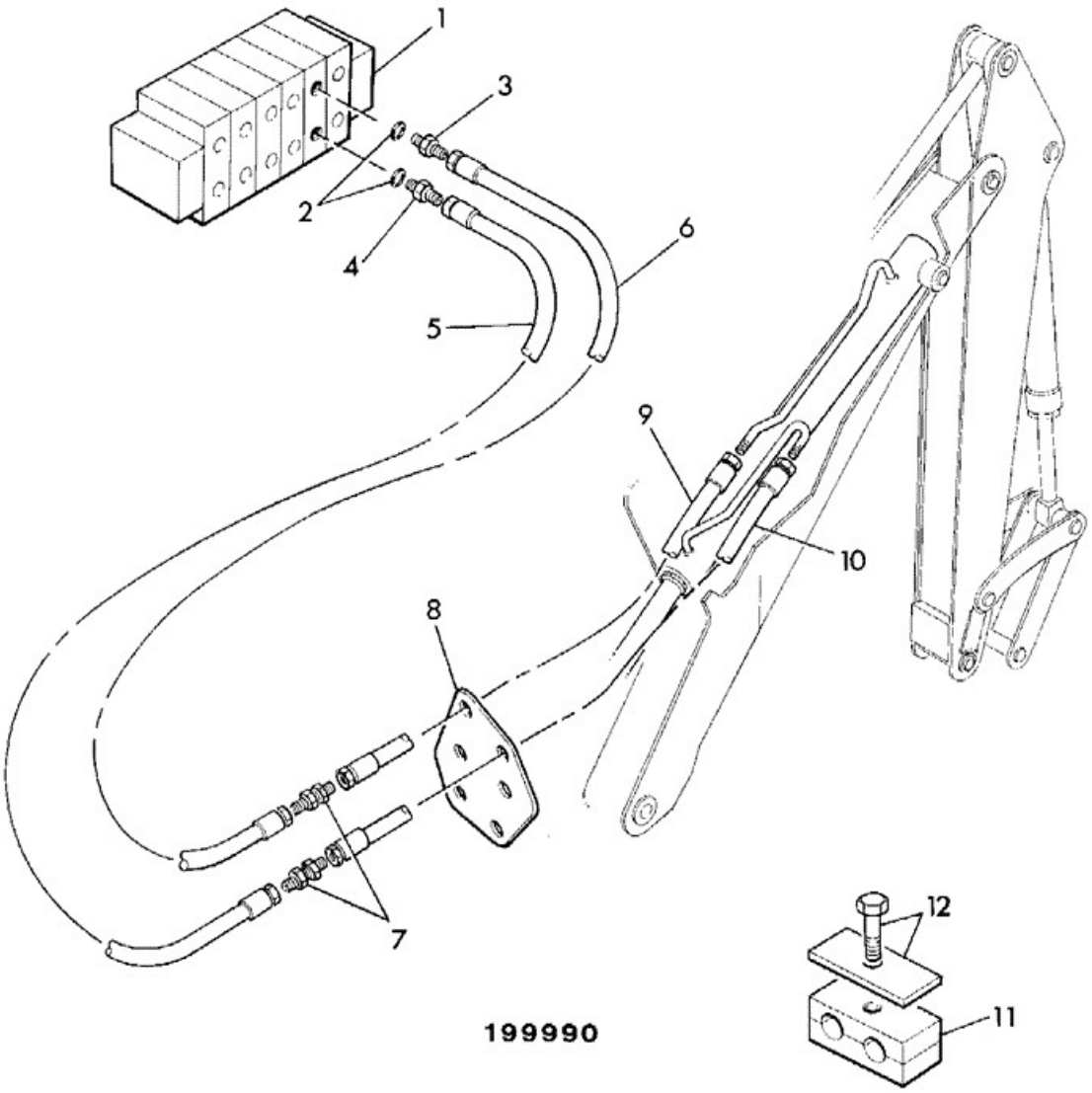

Item	Part No	Change No	Description	Usage Code	QTY

1	****		'See Remark' Excavator valve		1
3	816/17093	<M808234	Adapter restricted		1
3	1620/2053		Adaptor 3/8BSPx3/4SAE		1
3A	:2401/0506		O Ring		1
4	1620/0004	<M808234	Adapter 3/4		1
4	816/90072		Adapter restricted 2.5 mm		1
4A	:2401/0506		O Ring		1
5	612/30600		Hose 3/8"BSP x 1210mm		1
6	612/31200		Hose		1
7	816/10023	<M808234	Adapter bulkhead		2
7	816/90057		Adaptor bulkhead M/M		2
8	290/00329		Plate hose mounting		1
9	612/30800		Hose		1
10	612/30800		Hose		1
11	821/00234		Clamp 16mm/16mm holes 26mm high		2
12	821/00335		Clamp Plate		2
12	1315/0308Z		Setscrew M8 x 30		2
14	1417/0016Z		Washer Locking for item 7		2

Applicability Date Ranges:
From: , To:

Product Catalog\BACKHOE LOADER 1CX, 208\.1CX 00807553-00808999,01050000-01051999,01298000-01299999 9802/6220\E HYDRAULICS & AIR INCLUDING STEERING\E01 HOSE & PIPEWORK\E1-9-2 CIRCUIT, BOOM ISO

9802/6220 E1-9-2 CIRCUIT, BOOM ISO

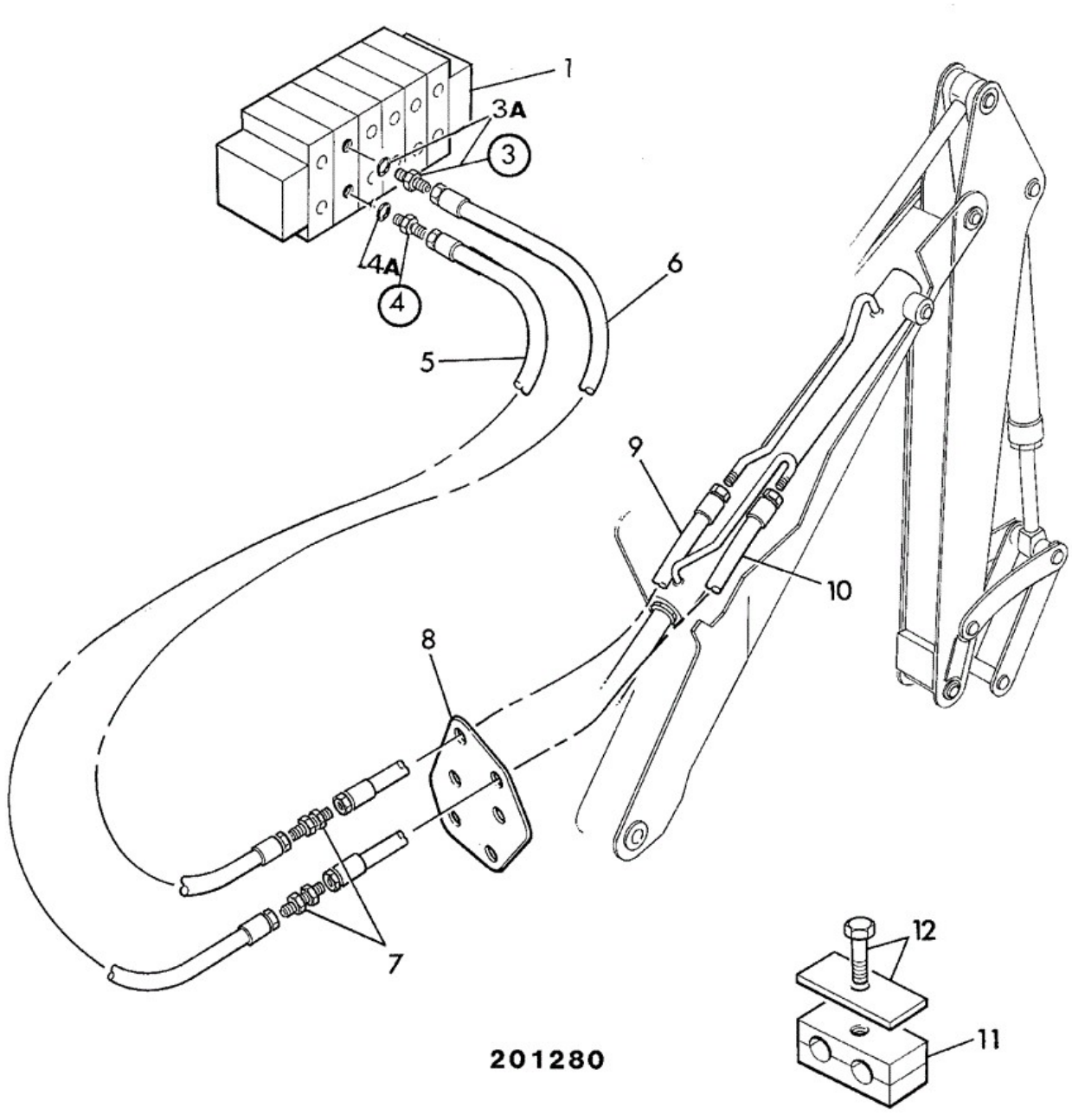

Item	Part No	Change No	Description	Usage Code	QTY
1	****		'See Remark' Excavator valve		1
3	816/17072	<M808234	Adapter		1

3	1620/2067		Adaptor		1
3A	:2401/0506		O Ring		1
4	816/17093	<M808234	Adapter restricted		1
4	816/90072		Adapter restricted 2.5 mm		1
4A	:2401/0506		O Ring		1
5	612/30600		Hose 3/8"BSP x 1210mm		1
6	612/30600		Hose 3/8"BSP x 1210mm		1
7	816/10023	<M808234	Adapter bulkhead		2
7	816/90057		Adaptor bulkhead M/M		2
8	290/00329		Plate hose mounting		1
9	612/30800		Hose		1
10	612/30800		Hose		1
11	821/00234		Clamp 16mm/16mm holes 26mm high		2
12	821/00335		Clamp Plate		2
12	1315/0308Z		Setscrew M8 x 30		2
14	1417/0016Z		Washer Locking for item 7		2

Applicability Date Ranges:
From: , To:

Product Catalog\BACKHOE LOADER 1CX, 208\.1CX 00807553-00808999,01050000-01051999,01298000-01299999 9802/6220\E HYDRAULICS & AIR INCLUDING STEERING\E01 HOSE & PIPEWORK\E1-9-3 CIRCUIT BOOM, JCB X PATTERN

9802/6220 E1-9-3 CIRCUIT BOOM, JCB X PATTERN

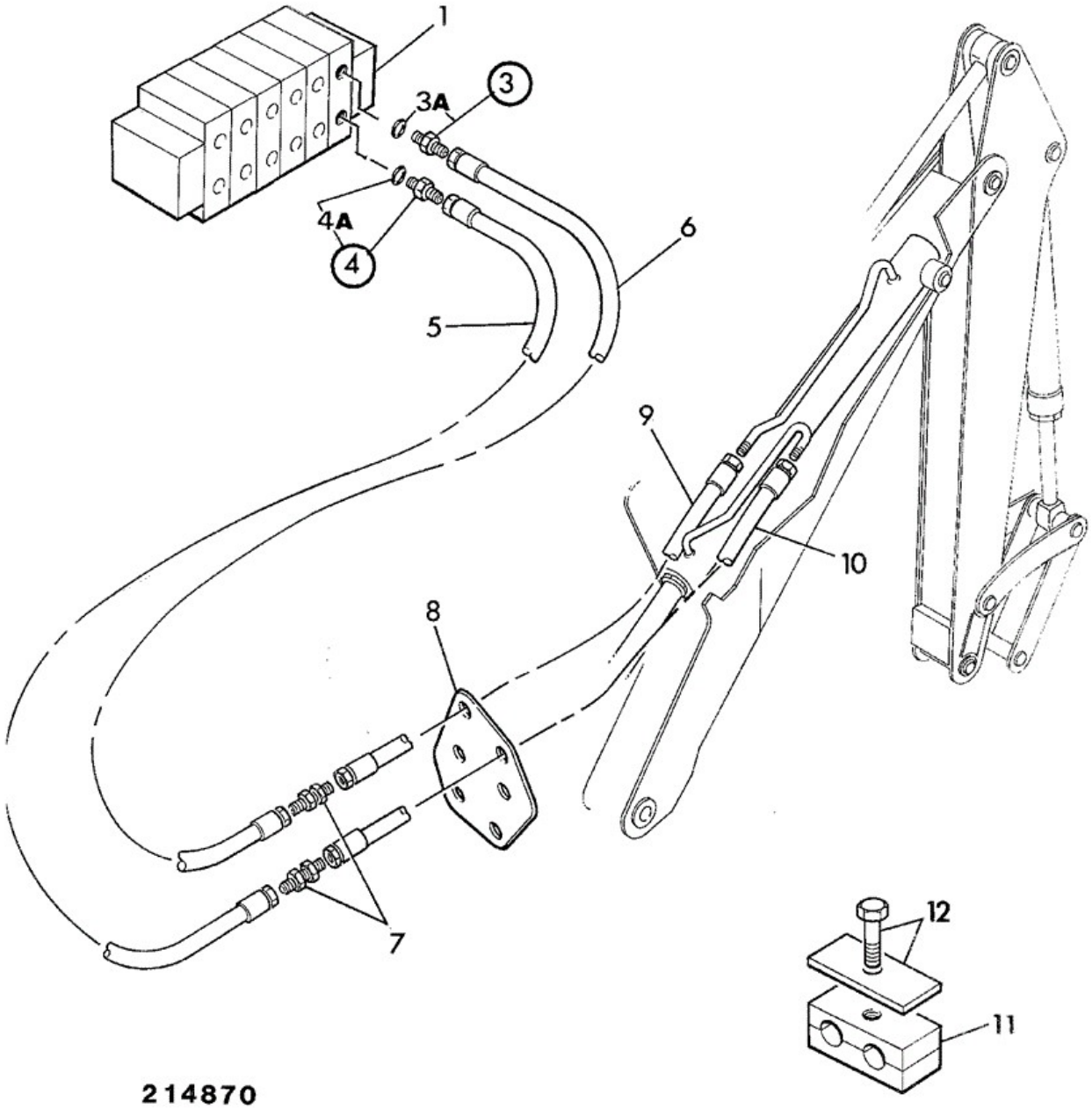

Item	Part No	Change No	Description	Usage Code	QTY
1	****		'See Remark' Excavator valve		1

3	816/17093	<M808234	Adapter restricted		1
3	1620/2053		Adaptor 3/8BSPx3/4SAE		1
3A	:2401/0506		O Ring		1
4	1620/0004	<M808234	Adapter 3/4		1
4	816/90072		Adapter restricted 2.5 mm		1
4A	:2401/0506		O Ring		1
5	612/30600		Hose 3/8"BSP x 1210mm		1
6	612/31200		Hose		1
7	816/10023	<M808234	Adapter bulkhead		2
7	816/90057		Adaptor bulkhead M/M		2
8	290/00329		Plate hose mounting		1
9	612/30800		Hose		1
10	612/30800		Hose		1
11	821/00234		Clamp 16mm/16mm holes 26mm high		2
12	821/00335		Clamp Plate		2
12	1315/0308Z		Setscrew M8 x 30		2
14	1417/0016Z		Washer Locking for item 7		2

Applicability Date Ranges:
From: , To:

Product Catalog\BACKHOE LOADER 1CX, 208\.1CX 00807553-00808999,01050000-01051999,01298000-01299999 9802/6220\E HYDRAULICS & AIR INCLUDING STEERING\E01 HOSE & PIPEWORK\E1-10-1 CIRCUIT DIPPER,JCB + PATTERN

9802/6220 E1-10-1 CIRCUIT DIPPER,JCB + PATTERN

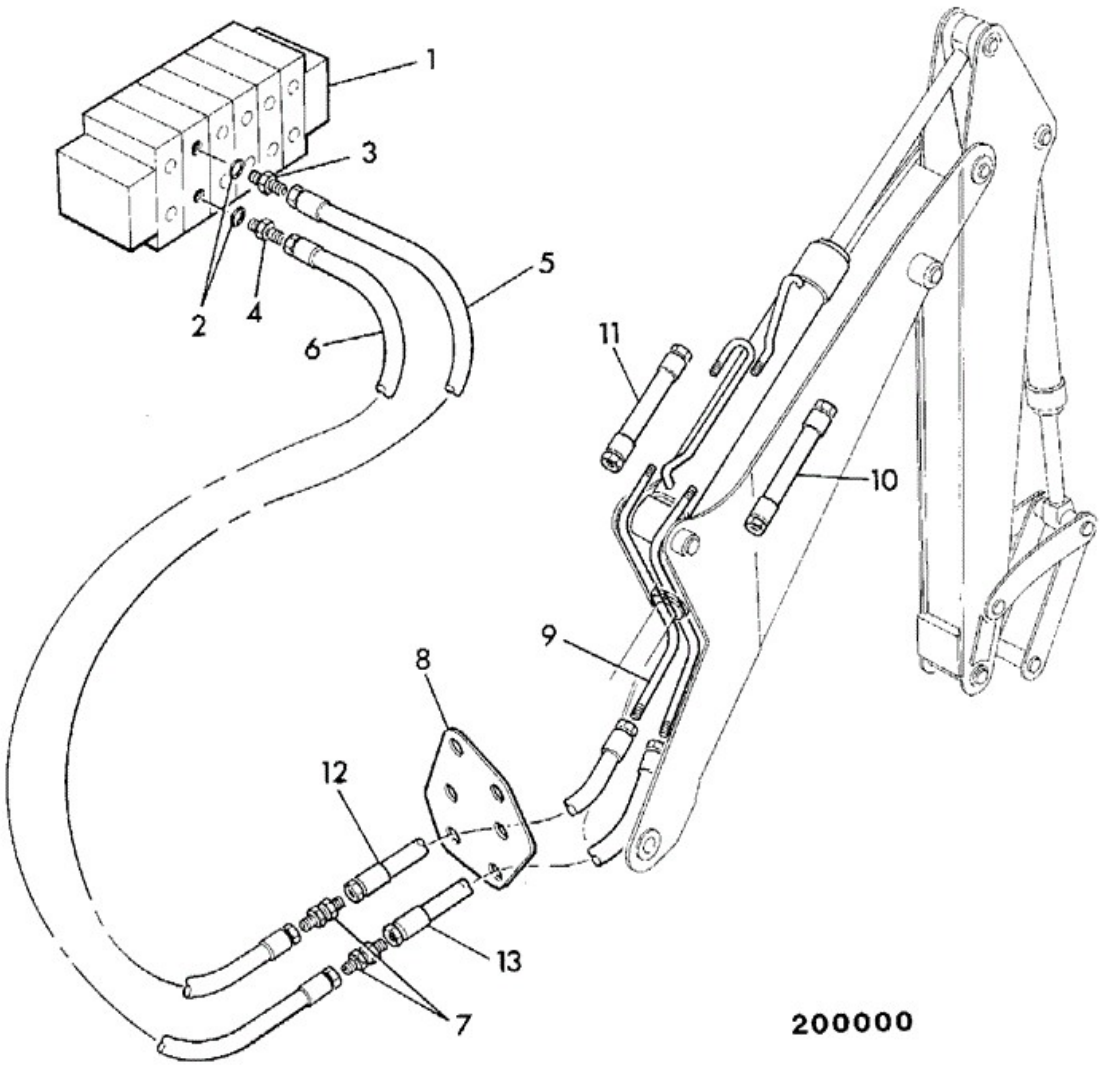

Item	Part No	Change No	Description	Usage Code	QTY

1	****		'See Remark' Excavator valve		1
3	816/17119	<M808234	Adapter restricted		1
3	816/90073		Adapter restricted 2.0 mm		1
3A	:2401/0506		O Ring		1
4	1620/0004	<M808234	Adapter 3/4		1
4	1620/2053		Adaptor 3/8BSPx3/4SAE		1
4A	:2401/0506		O Ring		1
5	612/31600		Hose , 3/8 BSP, 1195mm		1
6	612/31500		Hose		1
7	816/10023	<M808234	Adapter bulkhead		2
7	816/90057		Adaptor bulkhead M/M		2
8	290/00329		Plate hose mounting		1
9	290/00487	<M808234	Pipe assembly		1
9	335/03760	Superseded	Pipe assembly		1
9	335/04680		Pipe assembly		1
10	612/80143		Hose		1
11	612/80143		Hose		1
12	612/30900		Hose 600mm long		1
12	612/24600		Hose 3/8 BSP 470 mm 470mm long		1
12	612/25000		Hose 520 lg, with sleeve		1
13	612/30900		Hose 600mm long		1
13	612/24600		Hose 3/8 BSP 470 mm 470mm long		1
13	612/25000		Hose 520 lg, with sleeve		1
14	1417/0016Z		Washer Locking		2

Applicability Date Ranges:
From: , To:

Product Catalog\BACKHOE LOADER 1CX, 208\.1CX 00807553-00808999,01050000-01051999,01298000-01299999 9802/6220\E HYDRAULICS & AIR INCLUDING STEERING\E01 HOSE & PIPEWORK\E1-10-2 CIRCUIT DIPPER, ISO

9802/6220 E1-10-2 CIRCUIT DIPPER, ISO

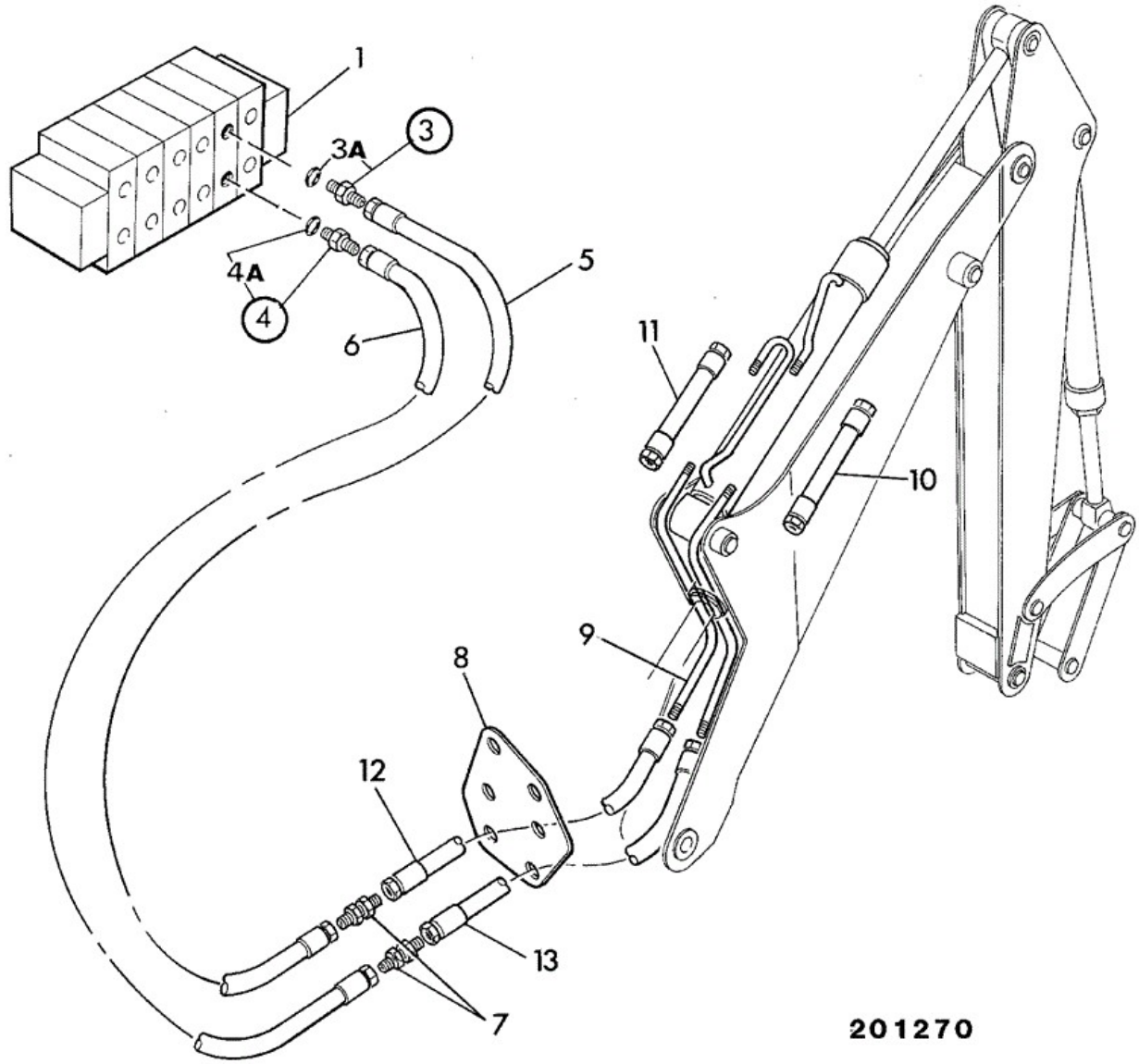

Item	Part No	Change No	Description	Usage Code	QTY
1	****		'See Remark' Excavator valve		1
3	816/17118	<M808234	Adapter restricted		1

3	816/90016		Adapter restrictor		1
3A	:2401/0506		O Ring		1
4	816/17072	<M808234	Adapter		1
4	1620/2067		Adaptor		1
4A	:2401/0506		O Ring		1
5	612/31600		Hose , 3/8 BSP, 1195mm		1
6	612/30600		Hose 3/8"BSP x 1210mm		1
7	816/10023	<M808234	Adapter bulkhead		2
7	816/90057		Adaptor bulkhead M/M		1
8	290/00329		Plate hose mounting		1
9	290/00487	<M808234	Pipe assembly		1
9	335/03760	Superseded	Pipe assembly		1
9	335/04680		Pipe assembly		1
10	612/80143		Hose		1
11	612/80143		Hose		1
12	612/30900		Hose 600mm long		1
12	612/24600		Hose 3/8 BSP 470 mm 470mm long		1
12	612/25000		Hose 520 lg, with sleeve		1
13	612/30900		Hose 600mm long		1
13	612/24600		Hose 3/8 BSP 470 mm 470 mm long		1
13	612/25000		Hose 520 lg, with sleeve		1
14	1417/0016Z		Washer Locking		2

Applicability Date Ranges:
From: , To:

Product Catalog\BACKHOE LOADER 1CX, 208\.1CX 00807553-00808999,01050000-01051999,01298000-01299999 9802/6220\E HYDRAULICS & AIR INCLUDING STEERING\E01 HOSE & PIPEWORK\E1-10-3 CIRCUIT DIPPER JCB X PATTERN

9802/6220 E1-10-3 CIRCUIT DIPPER JCB X PATTERN

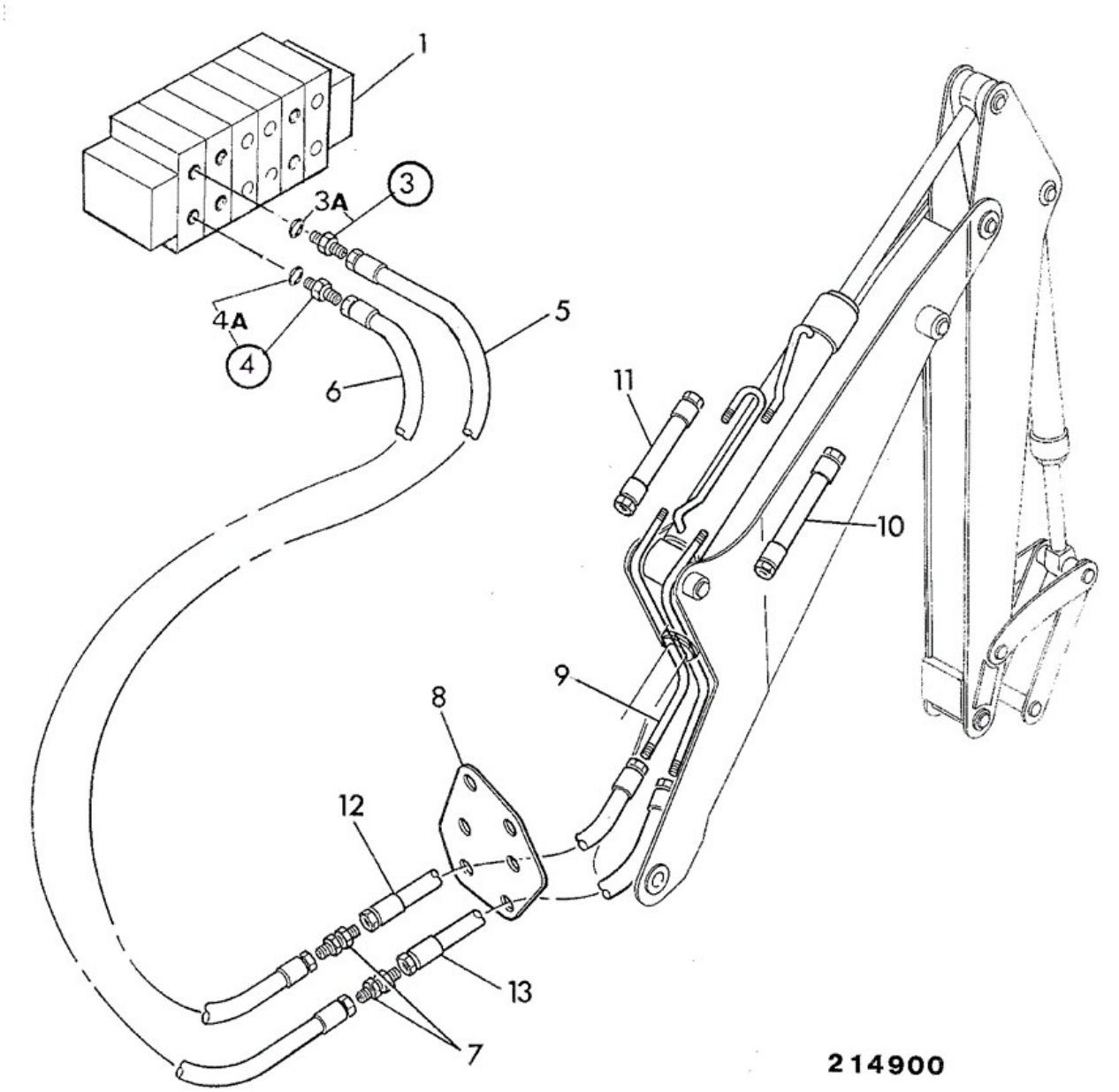

Item	Part No	Change No	Description	Usage Code	QTY
1	****		'See Remark' Excavator valve		1

3	816/17119	<M808234	Adapter restricted		1
3	816/90073		Adapter restricted 2.0 mm		1
3A	:2401/0506		O Ring		1
4	816/17056	<M808234	Adapter extended		1
4	1620/2053		Adaptor 3/8BSPx3/4SAE		1
4A	:2401/0506		O Ring		1
5	612/31600		Hose , 3/8 BSP, 1195mm		1
6	612/31500		Hose		1
7	816/10023	<M808234	Adapter bulkhead		2
7	816/90057		Adaptor bulkhead M/M		2
8	290/00329		Plate hose mounting		1
9	290/00487	<M808234	Pipe assembly		1
9	335/03760	Superseded	Pipe assembly		1
9	335/04680		Pipe assembly		1
10	612/80143		Hose		1
11	612/80143		Hose		1
12	612/30900		Hose 600mm long		1
12	612/24600		Hose 3/8 BSP 470 mm 470mm long		1
12	612/25000		Hose 520 lg, with sleeve		1
13	612/30900		Hose 600mm long		1
13	612/24600		Hose 3/8 BSP 470 mm 470mm long		1
13	612/25000		Hose 520 lg, with sleeve		1
14	1417/0016Z		Washer Locking		2

Applicability Date Ranges:
From: , To:

Product Catalog\BACKHOE LOADER 1CX, 208\.1CX 00807553-00808999,01050000-01051999,01298000-01299999 9802/6220\E HYDRAULICS & AIR INCLUDING STEERING\E01 HOSE & PIPEWORK\E1-11-1 CIRCUIT BUCKET JCB X PATTERN

9802/6220 E1-11-1 CIRCUIT BUCKET JCB X PATTERN

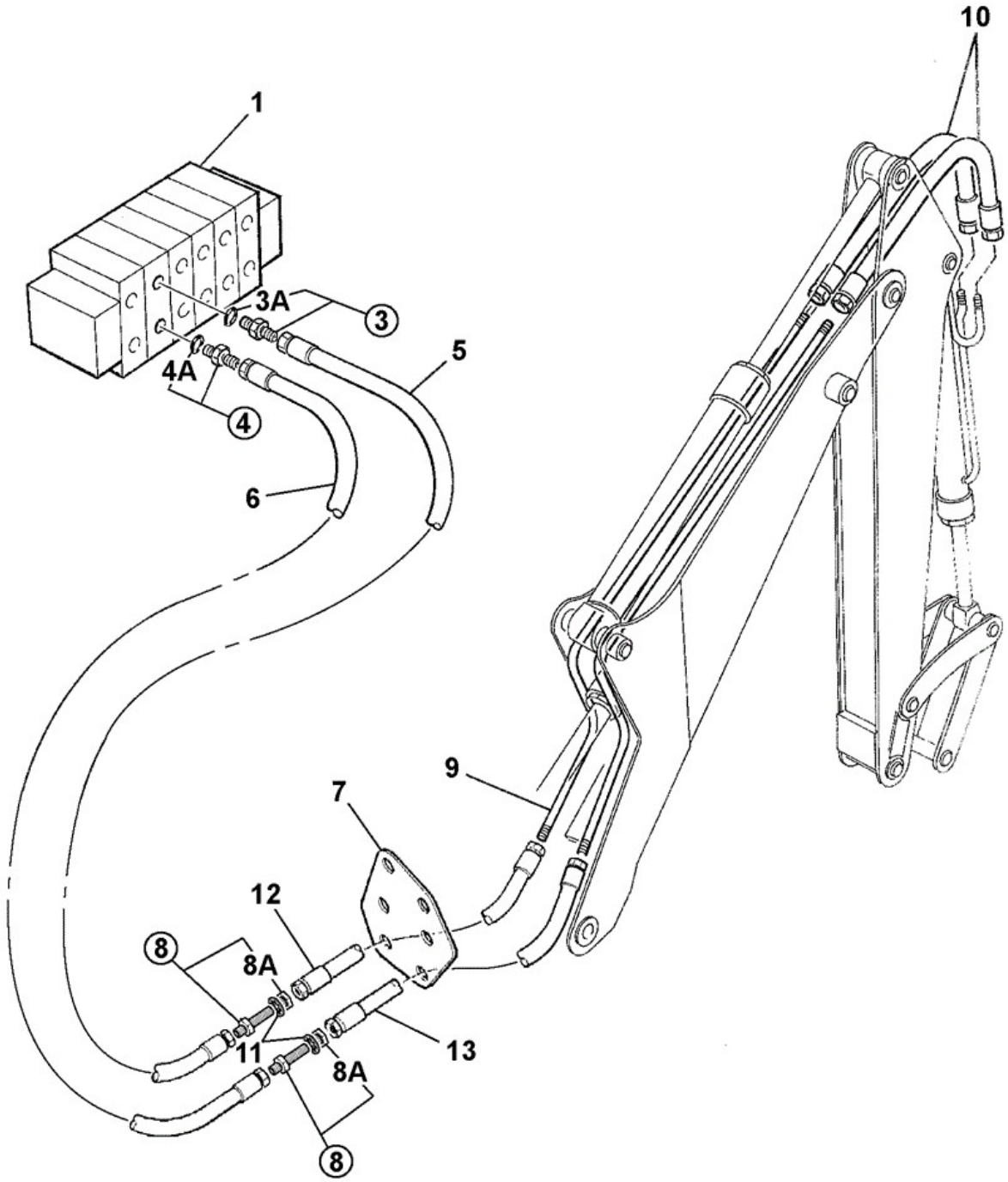

199981

Item	Part No	Change No	Description	Usage Code	QTY
1	****		'See Remark' Excavator valve		1
3	1620/0004	<M808234	Adapter 3/4		1

3	1620/2053		Adaptor 3/8BSPx3/4SAE		1
3A	:2401/0506		O Ring		1
4	1620/0004	<M808234	Adapter 3/4		1
4	1620/2053		Adaptor 3/8BSPx3/4SAE		1
4A	:2401/0506		O Ring		1
5	612/31200		Hose		1
6	612/31400		Hose		1
7	290/00329		Plate hose mounting		1
8	816/10023	<M808234	Adapter bulkhead		2
8	816/90057		Adaptor bulkhead M/M		2
8A	:1356/0203Z		Nut backing		1
9	290/00487	<M808234	Pipe assembly		1
9	335/03760	Superseded	Pipe assembly		1
9	335/04680		Pipe assembly		1
10	612/06500		Hose		2
10A	647/02703		Tube black pvc 2400mm protection sleeve approx 800mm long		2
11	1417/0016Z		Washer Locking		2

Applicability Date Ranges:
From: , To:

Product Catalog\BACKHOE LOADER 1CX, 208\.1CX 00807553-00808999,01050000-01051999,01298000-01299999 9802/6220\E HYDRAULICS & AIR INCLUDING STEERING\E01 HOSE & PIPEWORK\E1-11-2 CIRCUIT BUCKET JCB + & ISO + PATTERN

9802/6220 E1-11-2 CIRCUIT BUCKET JCB + & ISO + PATTERN

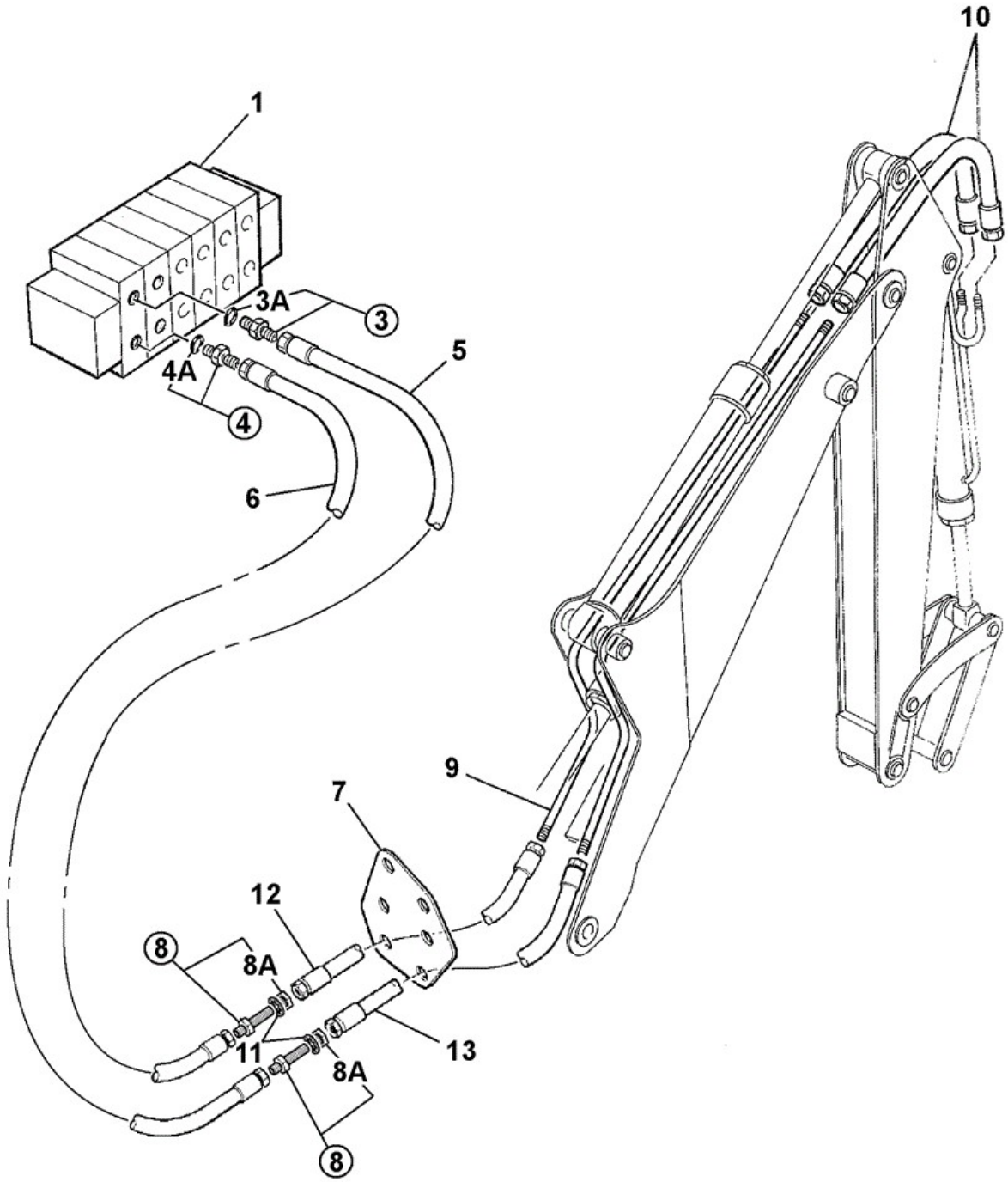

214891

Item	Part No	Change No	Description	Usage Code	QTY
1	****		'See Remark' Excavator valve		1
3	1620/0004	<M808234	Adapter 3/4		1

3	1620/2053		Adaptor 3/8BSPx3/4SAE		1
3A	:2401/0506		O Ring		1
4	1620/0004	<M808234	Adapter 3/4		1
4	1620/2053		Adaptor 3/8BSPx3/4SAE		1
4A	:2401/0506		O Ring		1
5	612/31200		Hose		1
6	612/31400		Hose		1
7	290/00329		Plate hose mounting		1
8	816/10023	<M808234	Adapter bulkhead		2
8	816/90057		Adaptor bulkhead M/M		2
8A	:1356/0203Z		Nut backing		1
9	290/00487	<M808234	Pipe assembly		1
9	335/03760	Superseded	Pipe assembly		1
9	335/04680		Pipe assembly		1
10	612/06500		Hose		2
10A	647/02703		Tube black pvc 2400mm protection sleeve approx 800mm long		2
11	1417/0016Z		Washer Locking		2
12	612/30900		Hose		1
13	612/30900		Hose		1

Applicability Date Ranges:
From: , To:

Product Catalog\BACKHOE LOADER 1CX, 208\.1CX 00807553-00808999,01050000-01051999,01298000-01299999 9802/6220\E HYDRAULICS & AIR INCLUDING STEERING\E01 HOSE & PIPEWORK\E1-12-1 CIRCUIT, STABILISER

9802/6220 E1-12-1 CIRCUIT, STABILISER

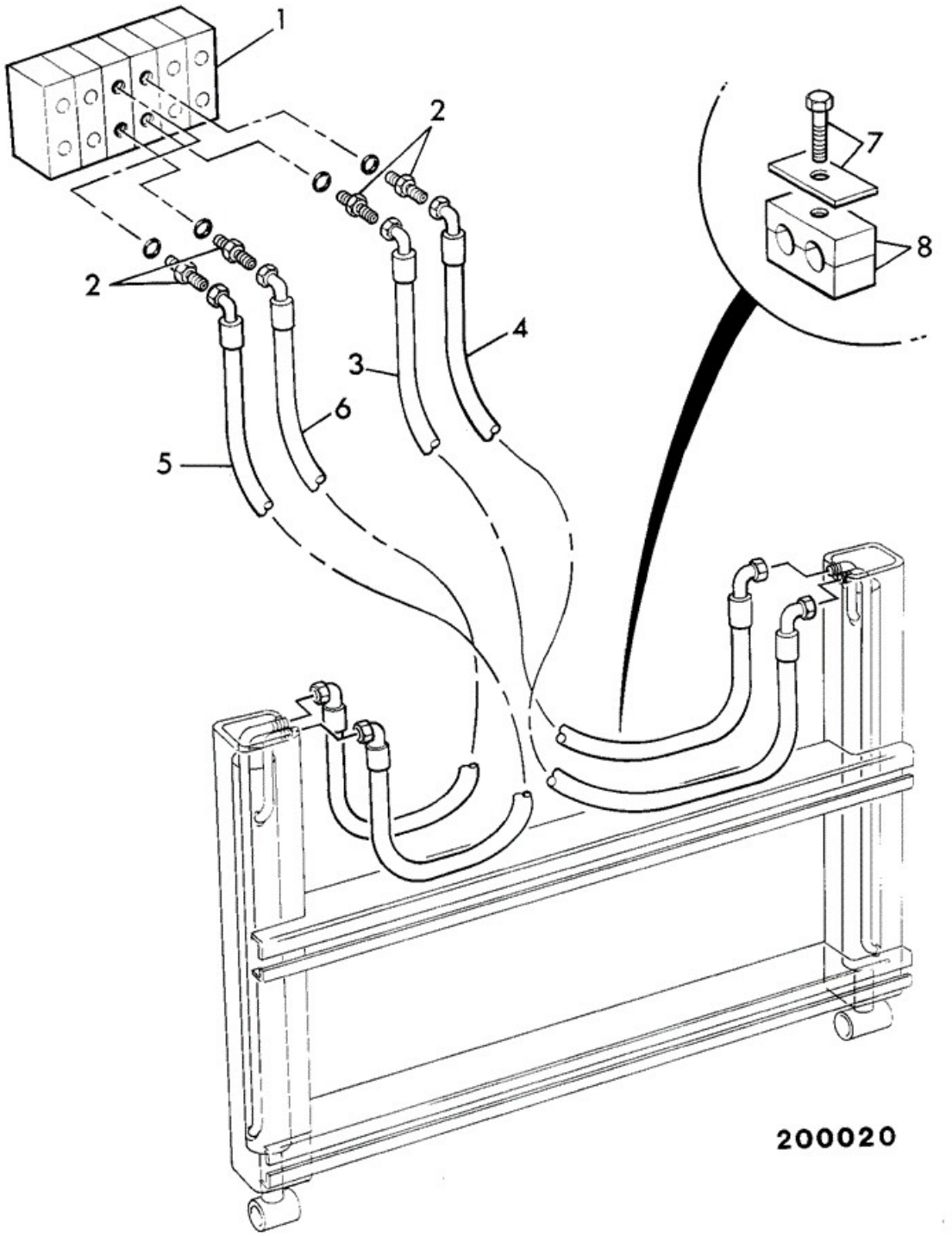

Item	Part No	Change No	Description	Usage Code	QTY

1	****		'See Remark' Excavator valve		1
2	816/17058	<M808234	Adapter 3/4in. x 1/4in.		4
2	1620/2063		Adaptor 1/4BSP x 3/4SAE		4
2A	:2401/0506		O Ring		1
3	611/46100		Hose Fitted to DUMP end of stabiliser ram		1
4	611/46100		Hose Fitted to ROD end of stabiliser ram		1
5	611/46000		Hose Fitted to DUMP end of stabiliser ram		1
6	611/46000		Hose Fitted to ROD end of stabiliser ram		1
7	821/00169		Plate Cover		2
7A	1315/3309Z		Bolt M8 x 35mm		2
8	821/00234		Clamp 16mm/16mm holes 26mm high		2

Applicability Date Ranges:
From: , To: 31/01/08

Product Catalog\BACKHOE LOADER 1CX, 208\.1CX 00807553-00808999,01050000-01051999,01298000-01299999 9802/6220\E HYDRAULICS & AIR INCLUDING STEERING\E01 HOSE & PIPEWORK\E1-12-2 CIRCUIT, STABILISER

9802/6220 E1-12-2 CIRCUIT, STABILISER

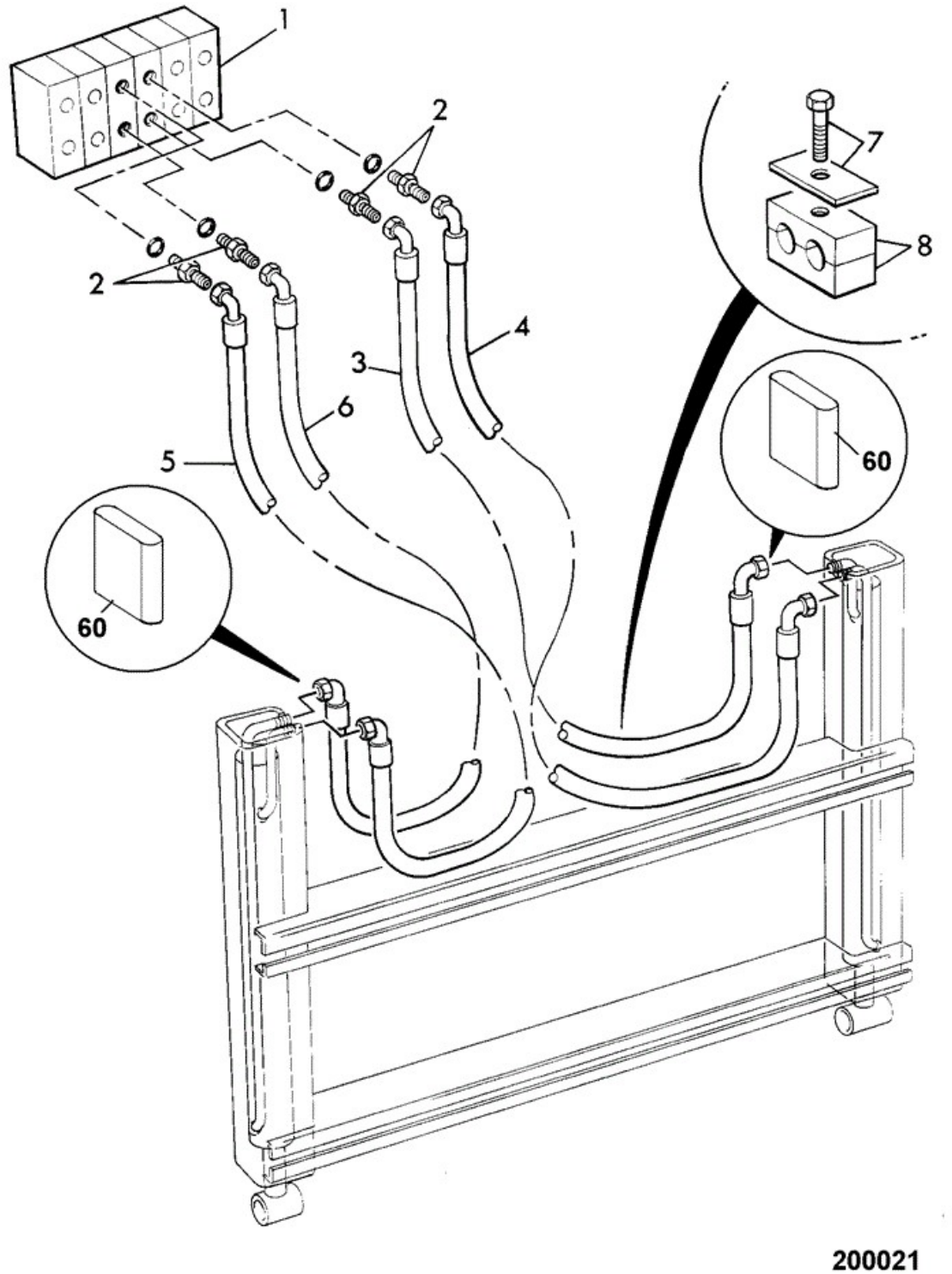

Item	Part No	Change No	Description	Usage Code	QTY

1	****		'See Remark' Excavator valve		1
2	816/17058	<M808234	Adapter 3/4in. x 1/4in.		4
2	1620/2063		Adaptor 1/4BSP x 3/4SAE		4
2A	:2401/0506		O Ring		1
3	611/46100		Hose Fitted to ROD end of stabiliser ram		1
4	611/46100		Hose Fitted to DUMP end of stabiliser ram		1
5	611/46000		Hose Fitted to ROD end of stabiliser ram		1
6	611/46000		Hose Fitted to DUMP end of stabiliser ram		1
7	821/00335		Clamp Plate		2
7A	1315/3309Z		Bolt M8 x 35mm		2
8	821/00234	<M1743496	Clamp 16mm/16mm holes 26mm high		2
8	333/T5209		Clamp 13.5/13.3 holes 26mm high		2
60	:647/02701		Sleeve PVC 500mm cut to length		2

Applicability Date Ranges:
From: 01/02/08 , To:

Product Catalog\BACKHOE LOADER 1CX, 208\.1CX 00807553-00808999,01050000-01051999,01298000-01299999 9802/6220\E HYDRAULICS & AIR INCLUDING STEERING\E01 HOSE & PIPEWORK\E1-12-10 CIRCUIT STABILISER C/W LOCKOUT VALVE OPTION

9802/6220 E1-12-10 CIRCUIT STABILISER C/W LOCKOUT VALVE OPTION

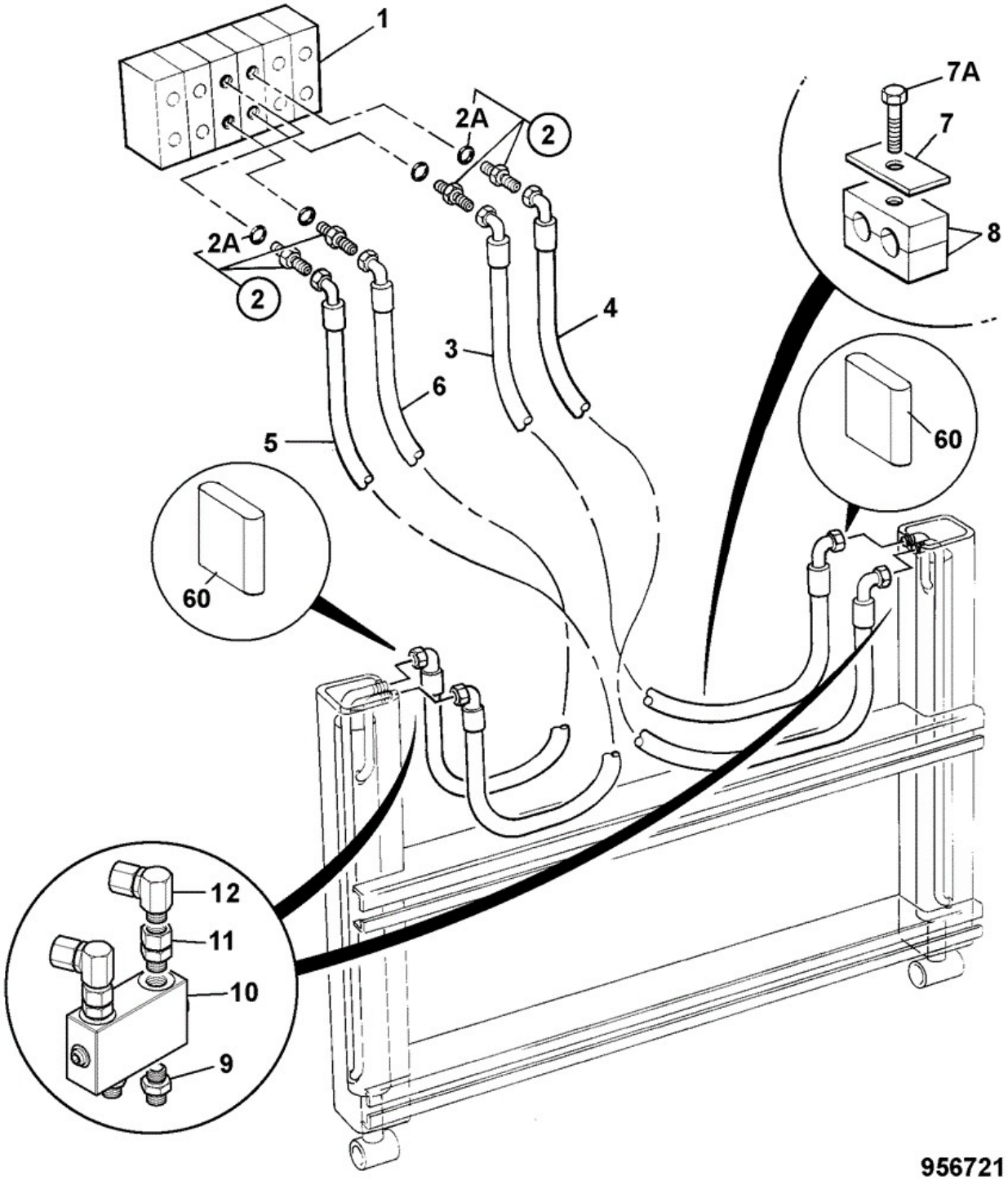

Item	Part No	Change No	Description	Usage Code	QTY
			'See Remark'		

1	****		Excavator valve		1
2	816/17058	<M808234	Adapter 3/4in. x 1/4in.		4
2	1620/2063		Adaptor 1/4BSP x 3/4SAE		4
2A	:2401/0506		O Ring		1
3	332/W2911		Hose HP,1/4 BSP x 1115mm Fitted to ROD end of stabiliser ram		1
4	611/80044		Hose HP, 1/4BSP x 1120mm Fitted to DUMP end of stabiliser ram		1
5	611/80044		Hose HP, 1/4BSP x 1120mm Fitted to ROD end of stabiliser ram		1
6	332/W2911		Hose HP,1/4 BSP x 1115mm Fitted to DUMP end of stabiliser ram		1
7	821/00169		Plate Cover		2
7A	1315/3309Z		Bolt M8 x 35mm		2
8	821/00234		Clamp 16mm/16mm holes 26mm high		2
9	816/90618		Adaptor elbow 1/4		4
10	25/206700		Valve stabiliser check		2
11	816/90009		Adaptor 1/4BSP F x 9/16 SAE M		4
12	816/90004		Adaptor Elbow M/F		4
60	647/02701		Sleeve PVC 500mm cut to length		2

Applicability Date Ranges:
From: M1299610 , To:

Product Catalog\BACKHOE LOADER 1CX, 208\.1CX 00807553-00808999,01050000-01051999,01298000-01299999 9802/6220\E HYDRAULICS & AIR INCLUDING STEERING\E01 HOSE & PIPEWORK\E1-13-1 CIRCUIT, HYDRACLAMP

9802/6220 E1-13-1 CIRCUIT, HYDRACLAMP

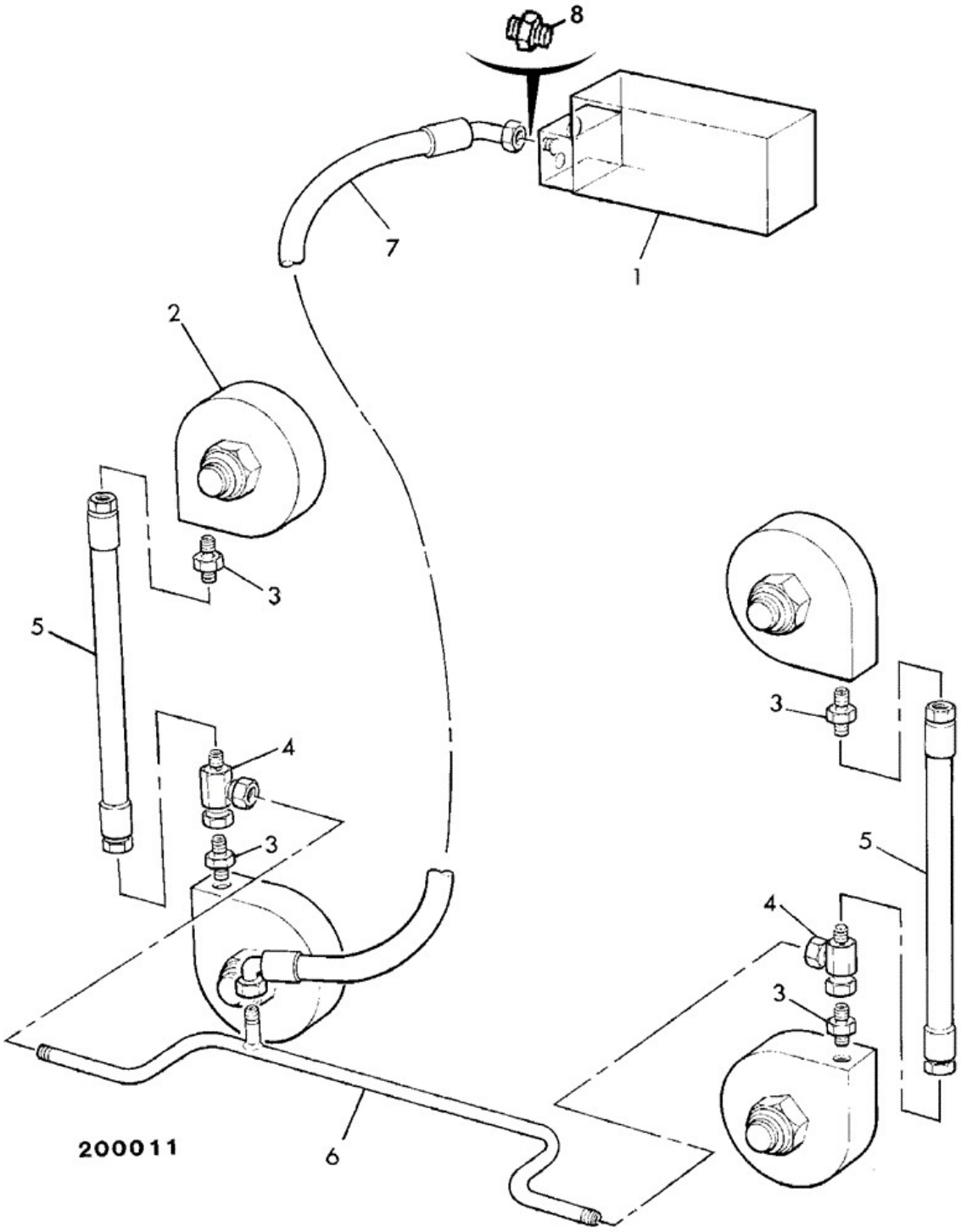

Item	Part No	Change No	Description	Usage Code	QTY
1	****		'See Remark' Excavator valve		1
			'See Remark'		

2	****		Hydraclamps, see E4		1
3	1604/0002	<M808234	Adapter		4
3	1620/2051		Adaptor 1/4"BSP x 9/16"SAE		4
4	816/50085	<M808234	Adapter tee, F/F/M		2
4	816/90060		Adapter tee, 1/4inchBSP M/F/F		2
5	611/03200		Hose		2
6	290/00455	<M808234	Pipe		1
6	335/03757	Superseded	Pipe		1
6	332/W0784	<M1299833	Pipe clamp feed		1
6	332/V8311	>M1299834	Pipe clamp feed		1
7	611/46700		Hose		1
8	816/17065		Adapter 3/4in. x 3/4in.		1
8A	:2401/0507		O Ring		1

Applicability Date Ranges:
From: , To:

Product Catalog\BACKHOE LOADER 1CX, 208\.1CX 00807553-00808999,01050000-01051999,01298000-01299999 9802/6220\E HYDRAULICS & AIR INCLUDING STEERING\E01 HOSE & PIPEWORK\E1-14-1 CIRCUIT SLEW, JCB + & ISO +

9802/6220 E1-14-1 CIRCUIT SLEW, JCB + & ISO +

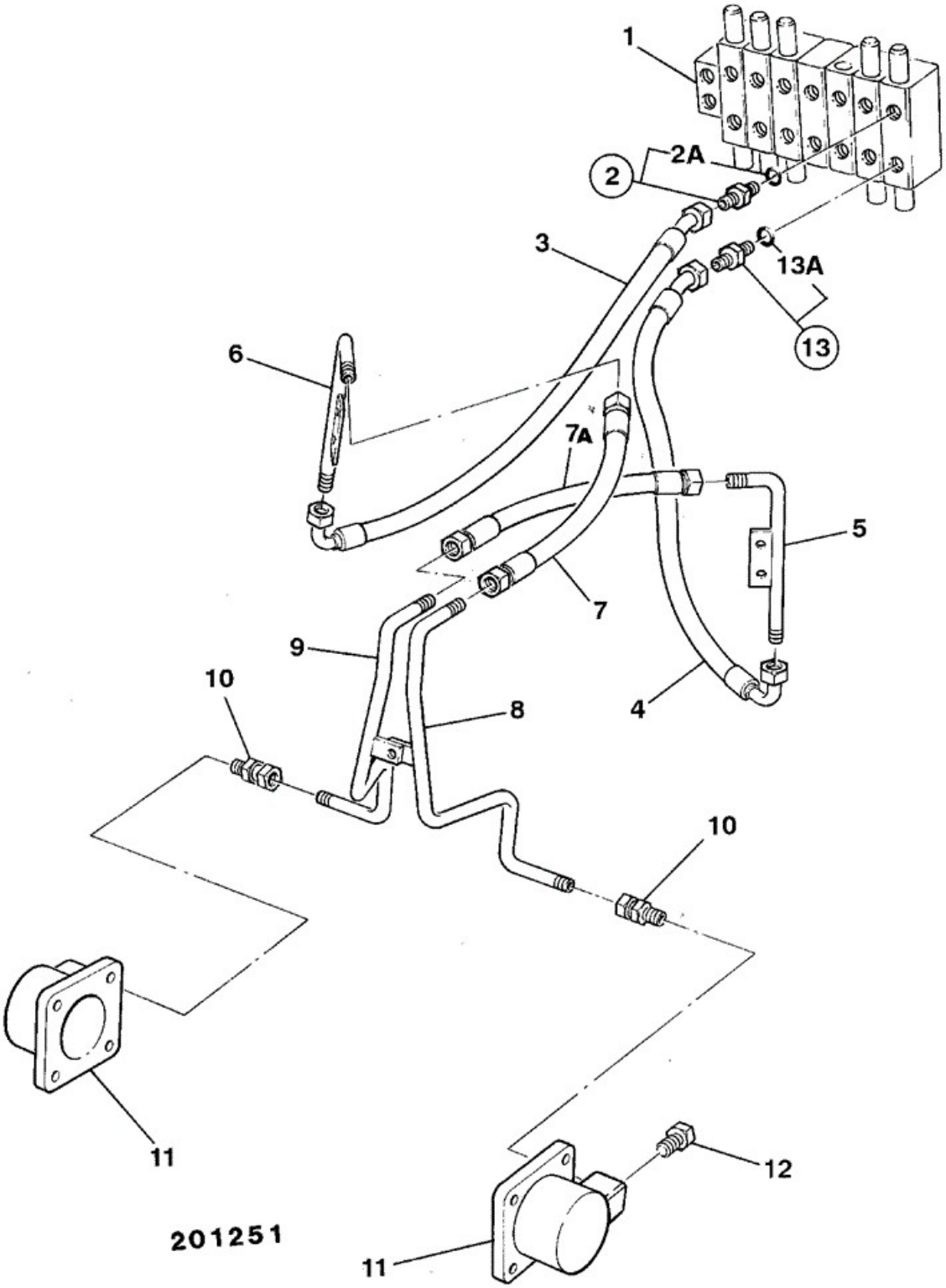

Item	Part No	Change No	Description	Usage Code	QTY

1	****		'See Remark' Excavator valve.		1
2	816/17120	<M808234	Adapter		1
2	816/90074		Adapter restricted 1.4 mm		1
2A	:2401/0506		O Ring		1
3	611/46600		Hose 1/4"BSP x 1055mm		1
4	611/46700		Hose		1
5	290/00449	<M808234	Pipe assembly,right side		1
5	335/03755		Pipe assembly right side		1
6	290/00448	<M808234	Pipe assembly, left side		1
6	335/03754		Pipe assembly left side		1
7	611/03200		Hose		1
7A	611/03500		Hose		1
8	290/00451	<Feb 2002	Pipe assembly,right side		1
8	653/10080	<M808234	Pipe assembly, right side		1
8	335/03798		Pipe assembly right side		1
9	290/00450	<Feb 2002	Pipe assembly,left side		1
9	653/10079	<M808234	Pipe assembly, left side		1
9	335/03797		Pipe assembly left side		1
10	1612/0002	<M808234	Adapter		2
10	816/90009		Adaptor 1/4BSP F x 9/16 SAE M		2
11	290/32400	<M808234	Cylinder slew		2
11	290/72078		Cylinder slew fabricated type		2
12	G8/10		Plug 1/4"BSP		2
13	816/17092	<M808234	Adapter		1
13	816/90074		Adapter restricted 1.4 mm		1
13A	:2401/0506		O Ring		1
14	1406/0011	<M808234	Washer Bonded (1/4")		2

Applicability Date Ranges:
From: , To: M1299046

Product Catalog\BACKHOE LOADER 1CX, 208\.1CX 00807553-00808999,01050000-01051999,01298000-01299999 9802/6220\E HYDRAULICS & AIR INCLUDING STEERING\E01 HOSE & PIPEWORK\E1-14-2 CIRCUIT SLEW, JCB X PATTERN

9802/6220 E1-14-2 CIRCUIT SLEW, JCB X PATTERN

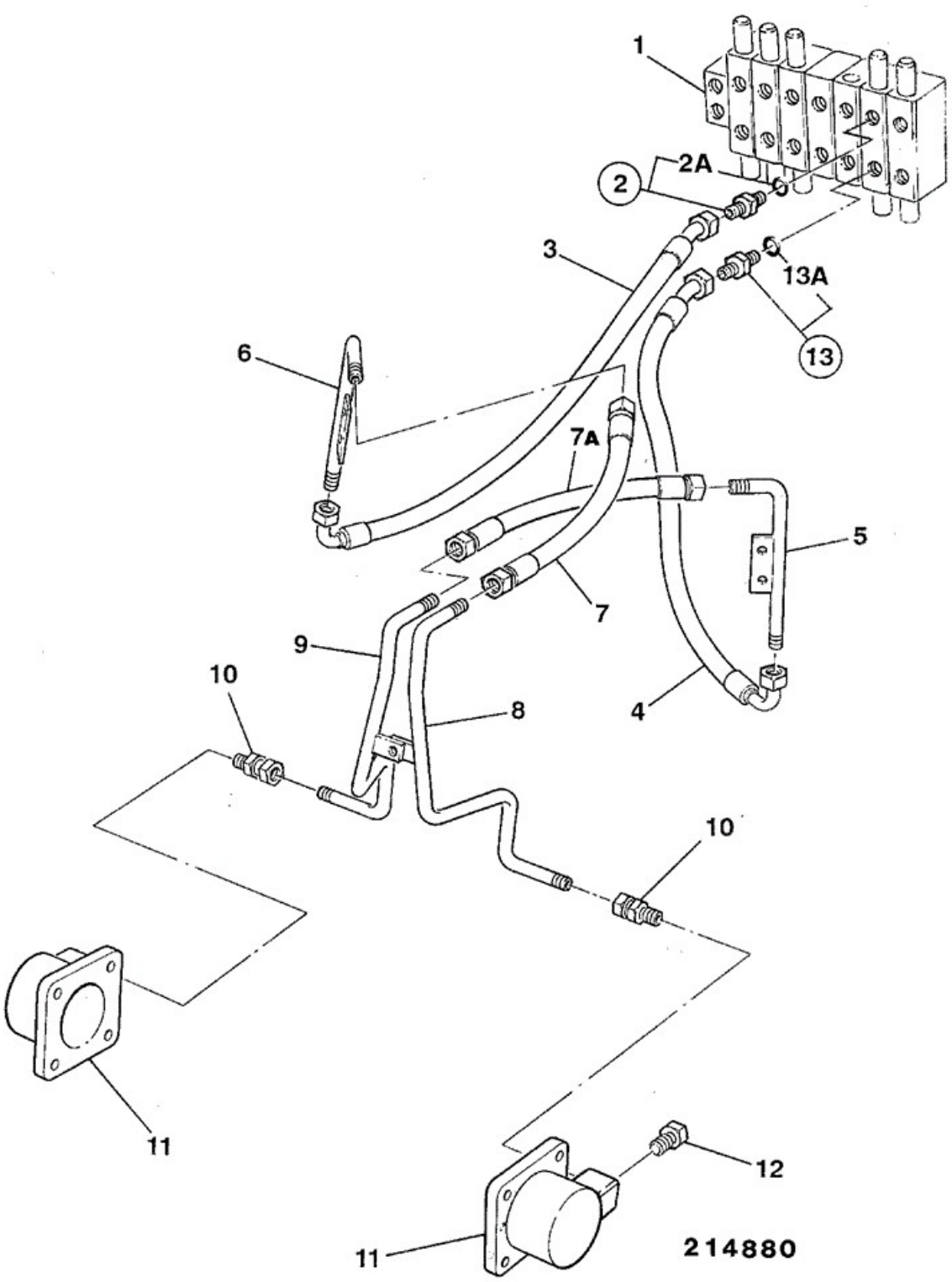

Item	Part No	Change No	Description	Usage Code	QTY

1	****		'See Remark' Excavator valve.		1
2	816/17120	<M808234	Adapter		1
2	816/90074		Adapter restricted 1.4 mm		1
2A	:2401/0506		O Ring		1
3	611/46600		Hose 1/4"BSP x 1055mm		1
4	611/46700		Hose		1
5	290/00449	<M808234	Pipe assembly,right side		1
5	335/03755	>M808235	Pipe assembly right side		1
6	290/00448	<M808234	Pipe assembly, left side		1
6	335/03754	>M808235	Pipe assembly left side		1
7	611/03200		Hose		1
7A	611/03500		Hose		1
8	290/00451	<Feb 2002	Pipe assembly,right side		1
8	653/10080	<M808234	Pipe assembly, right side		1
8	335/03798	>M808235	Pipe assembly right side		1
9	290/00450	<Feb 2002	Pipe assembly,left side		1
9	653/10079	<M808234	Pipe assembly, left side		1
9	335/03797	>M808235	Pipe assembly left side		1
10	1612/0002	<M808234	Adapter		2
10	816/90009		Adaptor 1/4BSP F x 9/16 SAE M		2
11	290/32400	<M808234	Cylinder slew		2
11	290/72078		Cylinder slew fabricated type		2
12	G8/10		Plug 1/4"BSP		2
13	816/17092	<M808234	Adapter		1
13	816/90074		Adapter restricted 1.4 mm		1
13A	:2401/0506		O Ring		1
14	1406/0011	<M808234	Washer Bonded (1/4")		2

Applicability Date Ranges:
From: , To: M1299046

Product Catalog\BACKHOE LOADER 1CX, 208\.1CX 00807553-00808999,01050000-01051999,01298000-01299999 9802/6220\E HYDRAULICS & AIR INCLUDING STEERING\E01 HOSE & PIPEWORK\E1-14-3 CIRCUIT SLEW, JCB + & ISO +

9802/6220 E1-14-3 CIRCUIT SLEW, JCB + & ISO +

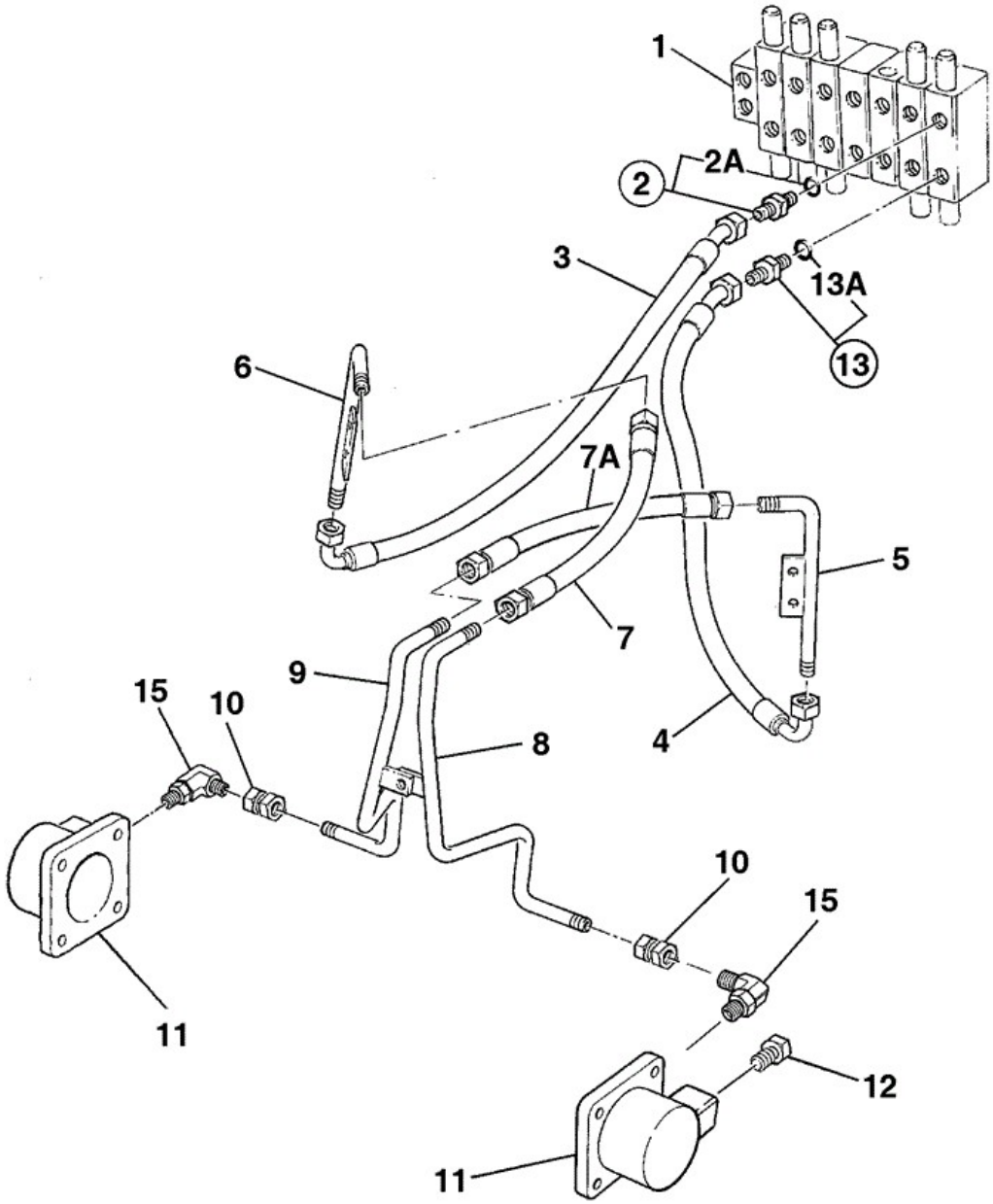

917940

Item	Part No	Change No	Description	Usage Code	QTY
1	****		'See Remark' Excavator valve.		1
2	816/90074		Adapter restricted 1.4 mm		1

2A	:2401/0506		O Ring		1
3	611/46600		Hose 1/4"BSP x 1055mm		1
4	611/46700		Hose		1
5	335/03755		Pipe assembly right side		1
6	335/03754		Pipe assembly left side		1
7	611/03200		Hose		1
7A	611/03500		Hose		1
8	335/03798		Pipe assembly right side		1
9	335/03797		Pipe assembly left side		1
10	816/90199	<M1299770	Adapter F/F		2
10	332/R7883	>M1299771	Adapter 1/4" female		2
11	332/R5971		Cylinder slew Cast type		2
12	G8/10		Plug 1/4"BSP		2
13	816/90074		Adapter restricted 1.4 mm		1
13A	:2401/0506		O Ring		1
15	816/90618		Adaptor elbow 1/4		2

Applicability Date Ranges:
From: M1299047 , To:

9802/6220 E1-14-4 CIRCUIT SLEW, JCB X PATTERN

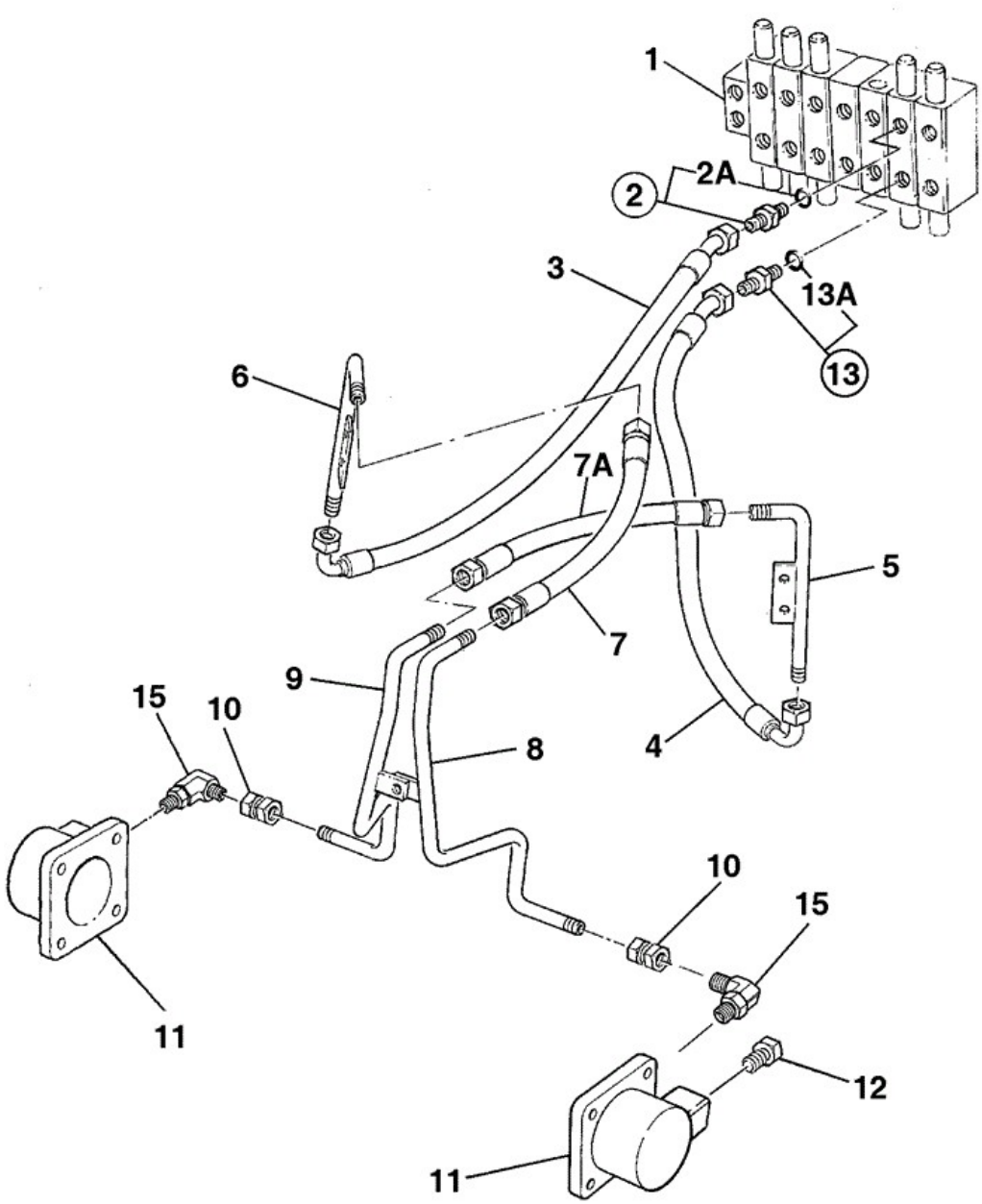

917930

Item	Part No	Change No	Description	Usage Code	QTY
1	****		'See Remark' Excavator valve.		1
2	816/90074		Adapter restricted 1.4 mm		1

2A	:2401/0506		O Ring		1
3	611/46600		Hose 1/4"BSP x 1055mm		1
4	611/46700		Hose		1
5	335/03755		Pipe assembly right side		1
6	335/03754		Pipe assembly left side		1
7	611/03200		Hose		1
7A	611/03500		Hose		1
8	335/03798		Pipe assembly right side		1
9	335/03797		Pipe assembly left side		1
10	816/90199	<M1299770	Adapter F/F		2
10	332/R7883	>M1299771	Adapter 1/4" female		2
11	332/R5971		Cylinder slew Cast type		2
12	G8/10		Plug 1/4"BSP		2
13	816/90074		Adapter restricted 1.4 mm		1
13A	:2401/0506		O Ring		1
15	816/90618		Adaptor elbow 1/4		2

Applicability Date Ranges:
From: M1299047 , To:

Product Catalog\BACKHOE LOADER 1CX, 208\.1CX 00807553-00808999,01050000-01051999,01298000-01299999 9802/6220\E HYDRAULICS & AIR INCLUDING STEERING\E01 HOSE & PIPEWORK\E1-15-3 CIRCUIT, EXCAVATOR AUXILIARY

9802/6220 E1-15-3 CIRCUIT, EXCAVATOR AUXILIARY

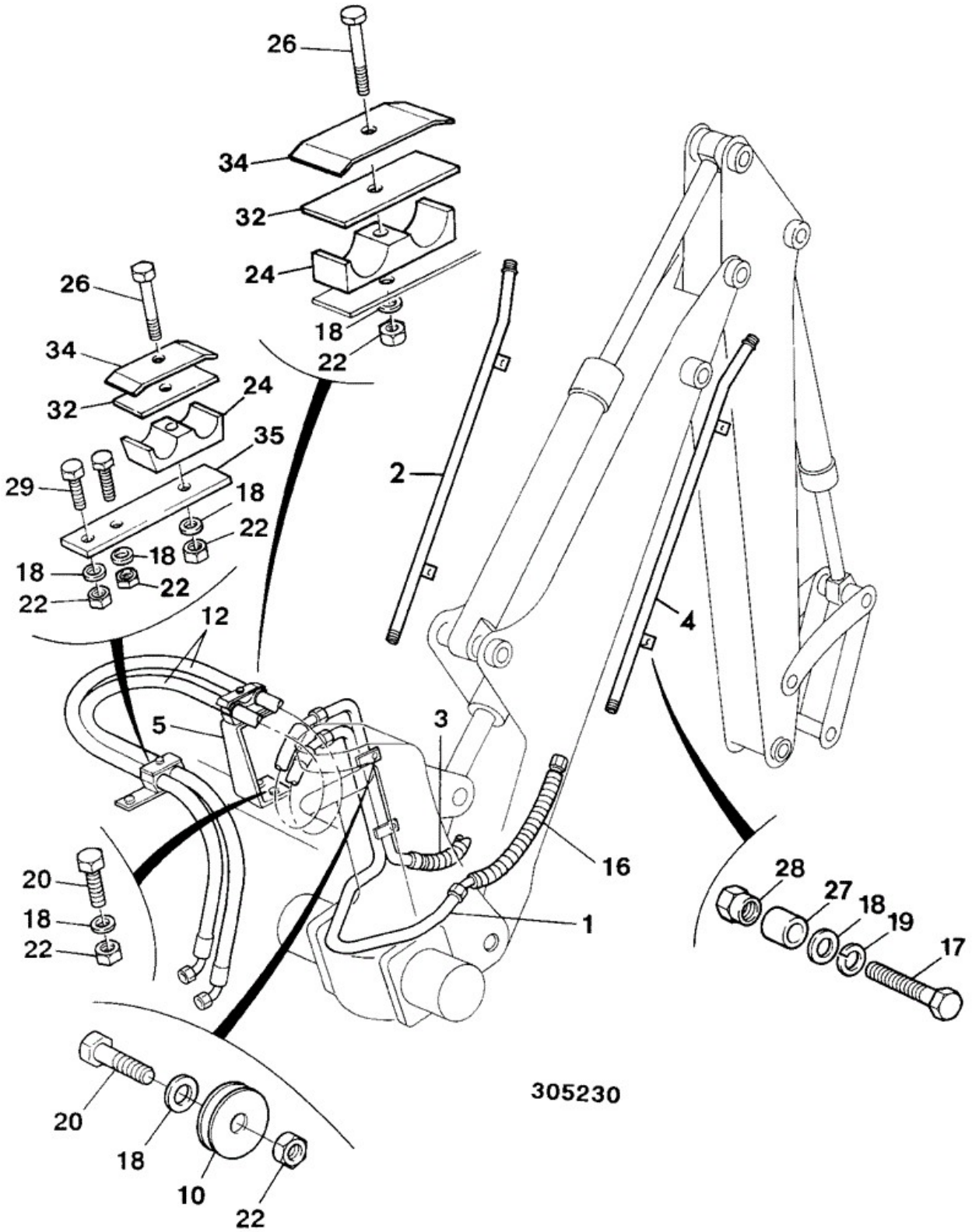

Item	Part No	Change No	Description	Usage Code	QTY

1	290/18300	<M808234	Pipe		1
1	335/03763	>M808235	Pipe		1
2	290/01230	<M808234	Pipe auxiliary R.H.		1
2	335/03762	>M808235	Pipe auxiliary R.H.		1
3	614/03300		Hose		1
4	290/01229	<M808234	Pipe auxiliary L.H.		1
4	335/03761	>M808235	Pipe auxiliary L.H.		1
5	****		'See Remark' see item 33		1
9	45/910300	<M808234	Coupling 3/4" BSP male quick release		1
9	45/920048	>M8082335	Coupling HQ12-M-12 SAE, Male Quick Release		1
10	210/33605		Spacer		3
11	1406/0021	<M808234	Washer Bonded		2
12	****		'See Remark' see items 30 & 31		1
16	614/25300		Hose		1
18	1420/0007Z		Washer (M8)		16
19	1425/0007Z		Washer Washer		4
20	1315/3311Z		Bolt (M8 X 45)		9
21	1315/0307Z		Setscrew M8 X 25		2
21A	1315/0308Z		Setscrew M8 x 30		2
22	1370/0203Z		Nut Nut M8		7
23	1315/3314Z		Bolt (M8 x 60)		5
24	821/00117		Clamp top, 25.4mm hole M6 x 33mm crs		1
26	1315/0210Z		Bolt M6 x 40mm long		4
27	290/00460		Spacer 18mm Lg.		4
28	826/01106		Nut Rivet,M8		8
29	1315/3309Z		Bolt M8 x 35mm		1
30	614/45800		Hose		1
31	614/45900		Hose		1
32	290/00582		Pad clamp		2
33	290/00580	<M1299633	Bracket mounting		1
33	332/V7735	>M1299634	Bracket mounting		1
34	290/00581		Plate clamp		2
35	290/00583		Plate mounting		1
38	45/908400	<M808234	Coupling 3/4 BSP female quick release		1
38	45/920047	>M808235	Coupling 1-1/16" 12 UNF, Female Quick Release		1
39	816/17068	<M808234	Adapter extended hose to valve block extended		1
39	816/90054	>M808235	Adapter extended 5/8 bsp x 3/4 UNF		1

40	816/17057	<M808234	Adapter hose to valve block		1
40	816/90007	>M808235	Adaptor M/M 5/8" x 3/4"		1

Applicability Date Ranges:
From: , To:

Product Catalog\BACKHOE LOADER 1CX, 208\.1CX 00807553-00808999,01050000-01051999,01298000-01299999 9802/6220\E HYDRAULICS & AIR INCLUDING STEERING\E01 HOSE & PIPEWORK\E1-17-1 KIT GRADING

9802/6220 E1-17-1 KIT GRADING

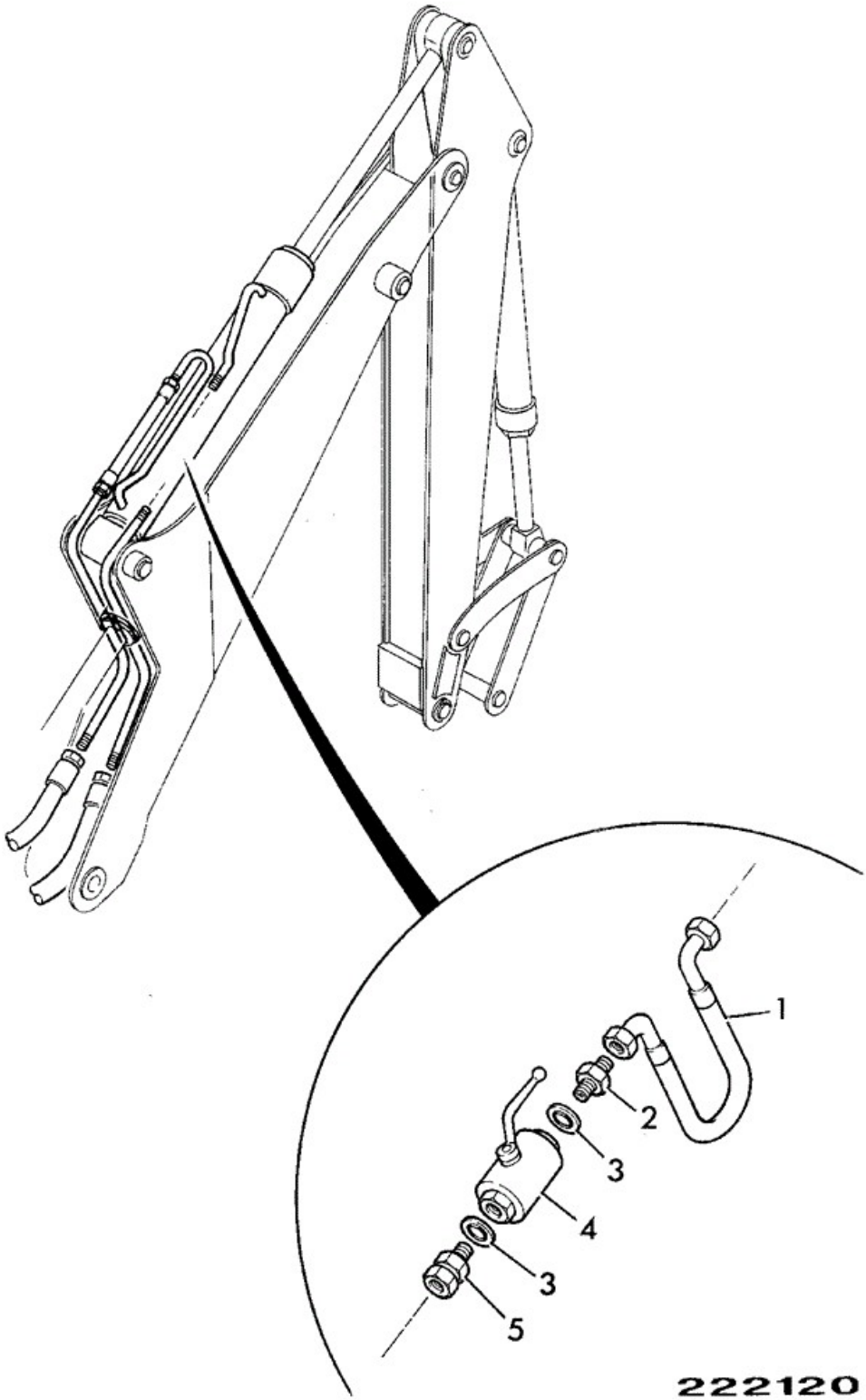

Item	Part No	Change No	Description	Usage Code	QTY

1	612/45600		Hose		1
2	1604/0003		Adapter Male/Male		1
3	1406/0015		Washer Bonded 3/8"		2
4	25/985000		Valve ball		1
5	1612/0003		Adapter Male/Female		1

Applicability Date Ranges:
From: , To:

Product Catalog\BACKHOE LOADER 1CX, 208\.1CX 00807553-00808999,01050000-01051999,01298000-01299999 9802/6220\E HYDRAULICS & AIR INCLUDING STEERING\E01 HOSE & PIPEWORK\E1-18-2 CIRCUIT HAND HELD ATTACHMENT (REAR FRAME MOUNTED)

9802/6220 E1-18-2 CIRCUIT HAND HELD ATTACHMENT (REAR FRAME MOUNTED)

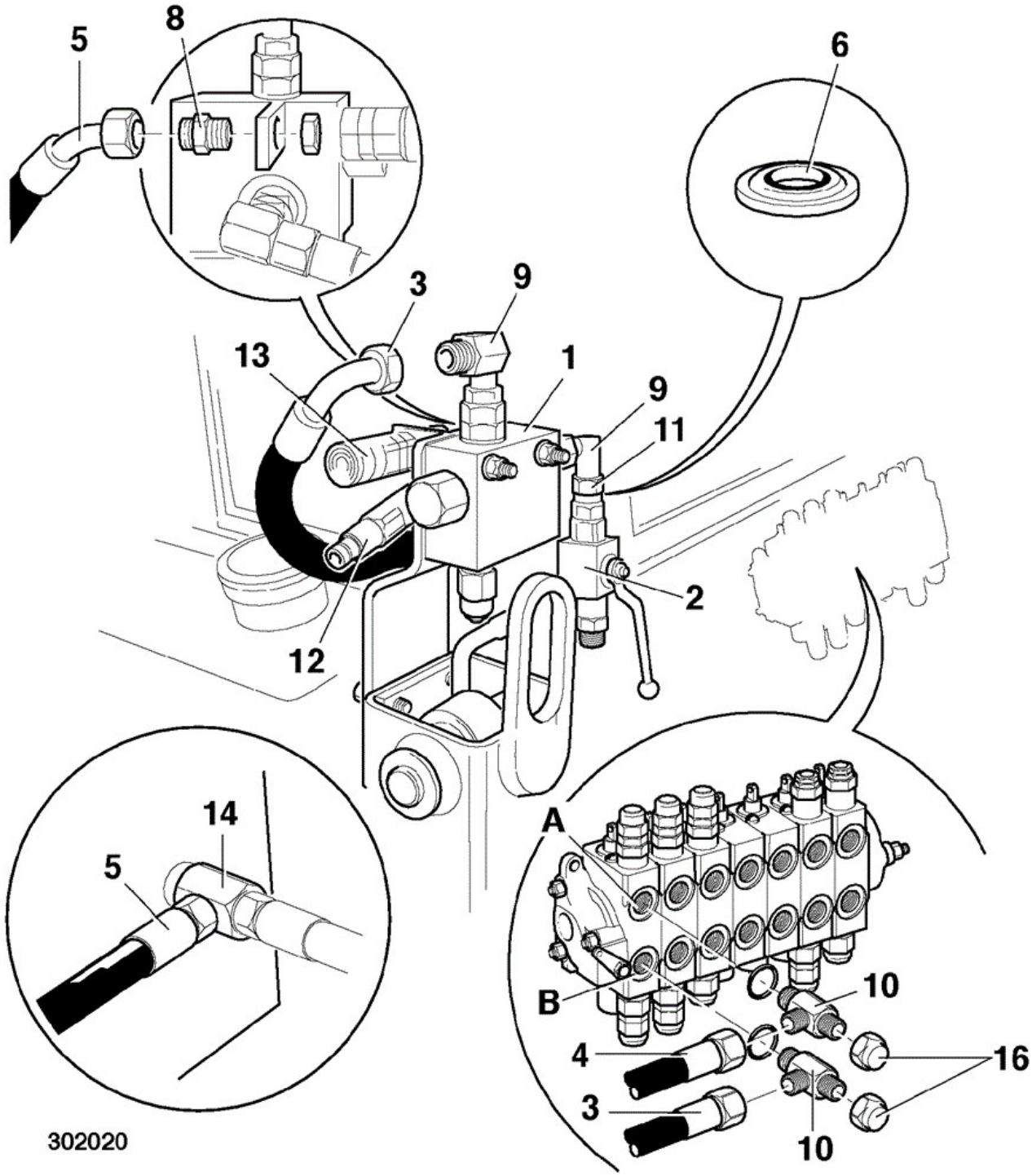

Item	Part No	Change No	Description	Usage Code	QTY
1	25/204100		Valve Flow Regulator 1/2" BSP		1

2	25/204200		Valve 2 way ball 1/2"BSP		1
3	613/20700		Hose		1
4	613/07400		Hose 1/2"BSP x 830mm		1
5	612/31900		Hose 3/8"BSP x 1570mm		1
6	1406/0018		Washer Bonded (1/2" BSP)		5
7	1604/0004		Adaptor Male		3
8	816/10029		Connector bulkhead		1
9	816/40016		Adapter ,90 Deg.		1
10	816/55075		Adapter positional tee		1
11	1612/0004		Adapter male/female		1
12	45/910500		Coupling 1/2" BSP male quick release		1
13	45/910400		Coupling 1/2" BSP female quick release		1
14	816/50033		Adapter Tee		1
15	816/50070		Adapter Tee F/M/M		1
16	816/00197		Plug		2

Applicability Date Ranges:
From: , To: M808234

Product Catalog\BACKHOE LOADER 1CX, 208\.1CX 00807553-00808999,01050000-01051999,01298000-01299999 9802/6220\E HYDRAULICS & AIR INCLUDING STEERING\E01 HOSE & PIPEWORK\E1-18-3 CIRCUIT HAND HELD ATTACHMENT REAR FRAME MOUNTED

9802/6220 E1-18-3 CIRCUIT HAND HELD ATTACHMENT REAR FRAME MOUNTED

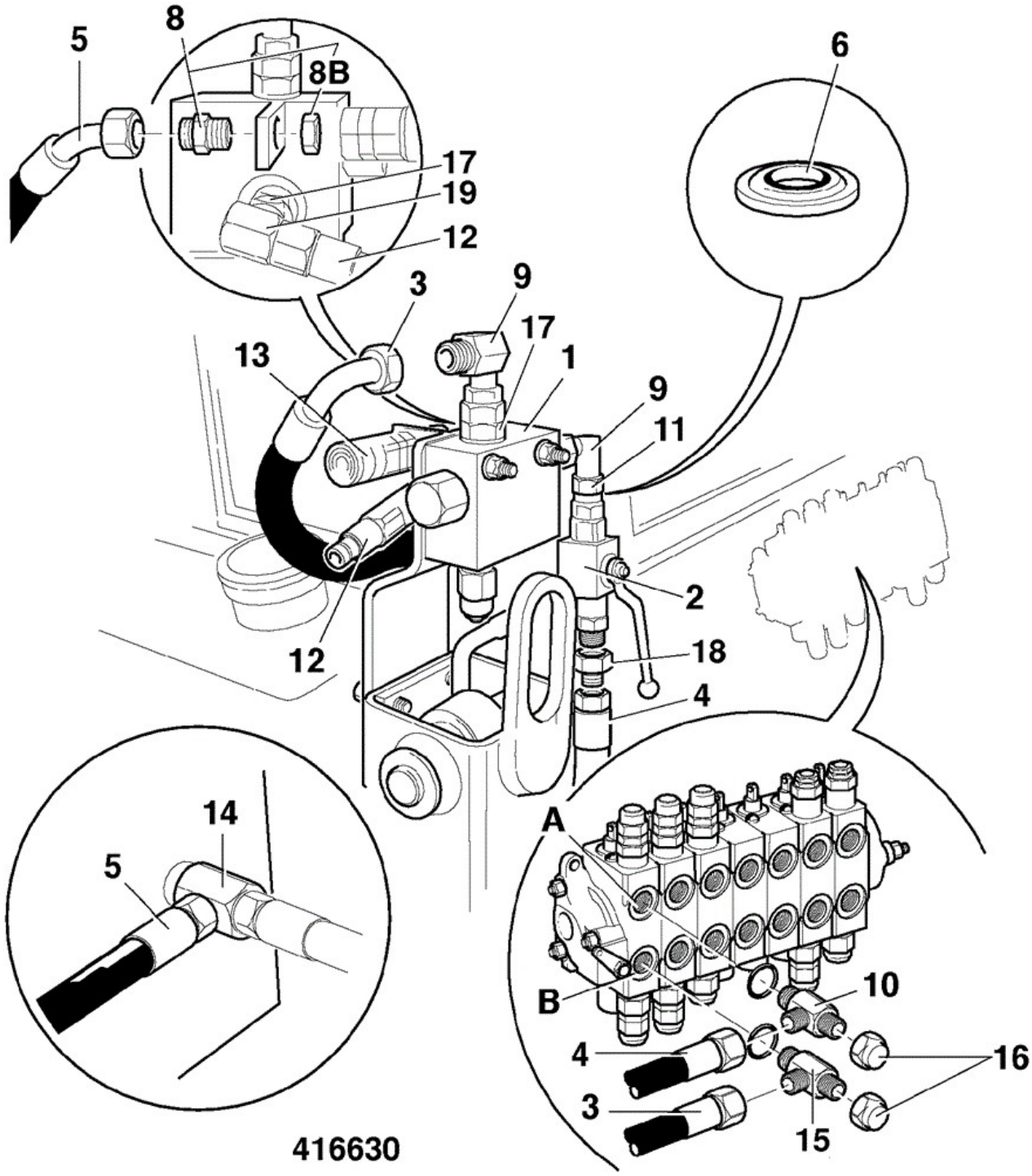

Item	Part No	Change No	Description	Usage Code	QTY
1	25/221219		Valve flow regulator sae		1

2	25/976300		Valve ball		1
3	613/20700		Hose		1
4	613/07400		Hose 1/2"BSP x 830mm		1
5	612/31900		Hose 3/8"BSP x 1570mm		1
8	816/90070		Adapter bulkhead		1
8A	:2401/0506		O Ring		1
8B	:1356/0003Z		Nut		1
9	816/90078		Adaptor 90 deg elbow M/F		1
10	816/90086		Adapter tee male,male,male sae-8 X G1/2 X G5/8		1
10A	:2401/0506		O Ring		1
11	816/90087		Adapter sae-10 male X G1/2-F swivel		1
11A	:2401/0507		O Ring		1
12	45/920050		Coupling Quick Release,Male 3/4"UNF used with item 19		1
13	45/920049		Coupling Female 3/4"UNF		1
14	816/90040		Adaptor Tee		1
15	816/90082		Adapter tee, F/M/M		1
16	816/90022		Cap blanking 5/8"BSP steel		2
17	1620/2054		Adaptor 1/2BSP x 3/4 SAE		3
17A	:2401/0506		O Ring		1
18	1620/2055		Adaptor 39.5mm Long. M/M 1/2"BSP x 7/8"SAE		1
18A	:2401/0507		O Ring		1
19	816/90059		Adapter 90 degree elbow G1/2-F x 3/4 SAE-M used with item 12		1

Applicability Date Ranges:
From: , To:

9802/6220 E1-18-4 CIRCUIT HAND HELD TOOL

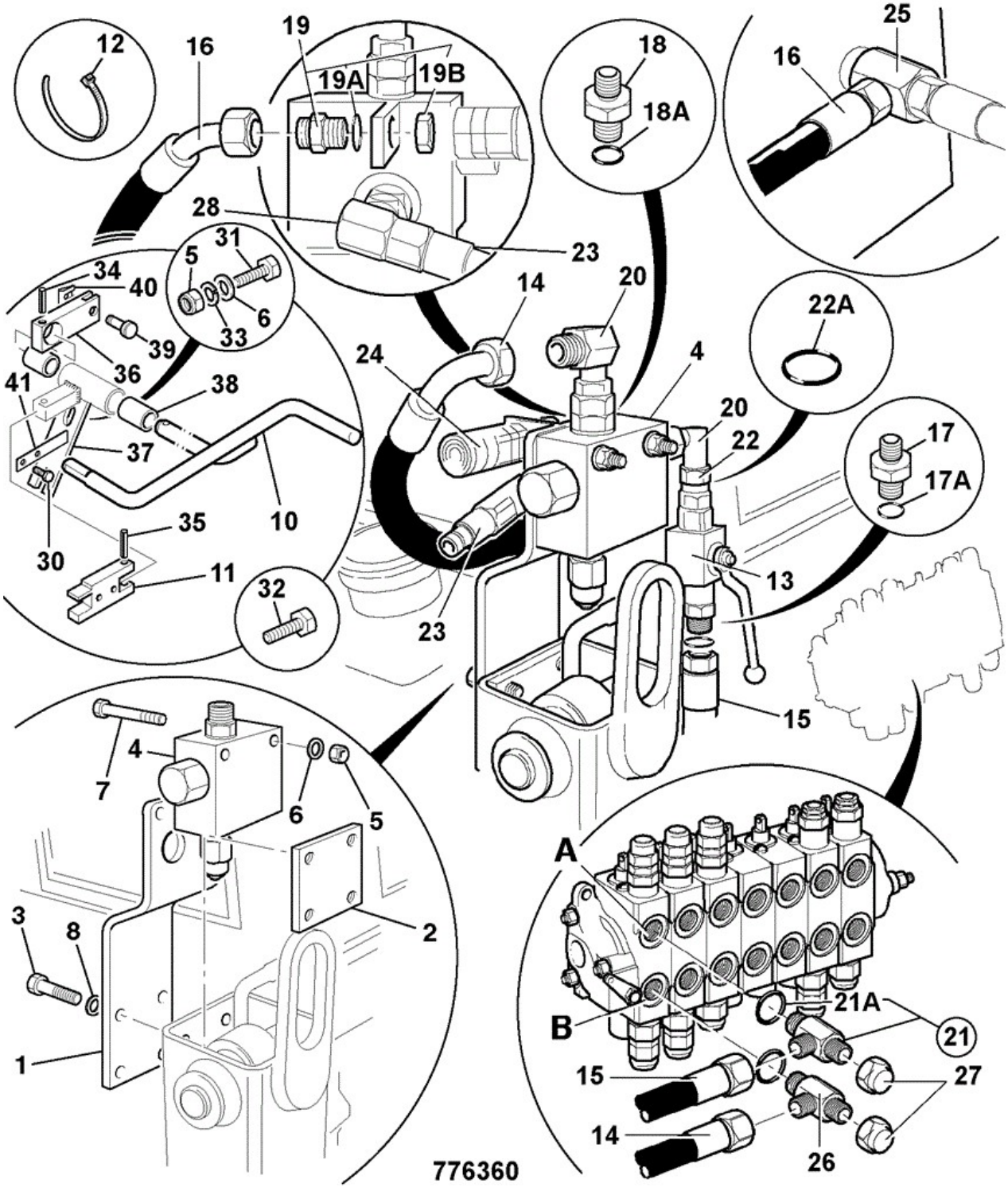

Item	Part No	Change No	Description	Usage Code	QTY
1	:290/65500		Bracket		1
2	290/01067		Plate clamp		1

3	1315/0508Z		Setscrew M12 X 30		4
4	25/221219		Valve flow regulator sae		1
5	1370/0303Z		Nut lock M10		3
6	1420/0008Z		Washer (M10)		4
7	1315/3417Z		Bolt (M10 x 75)		2
8	1420/0009Z		Washer (M12)		4
10	290/64000		Pedal control hand held attachment		1
11	290/01202		Plate locking hand held attachment		1
12	:121/77603A		Tie Cable		1
13	25/976300		Valve ball		1
14	613/20700		Hose		1
15	613/07400		Hose 1/2"BSP x 830mm		1
16	612/31900		Hose 3/8"BSP x 1570mm		1
17	1620/2055		Adaptor 39.5mm Long. M/M 1/2"BSP x 7/8"SAE		1
17A	:2401/0507		O Ring		1
18	1620/2054		Adaptor 1/2BSP x 3/4 SAE		3
18A	:2401/0506		O Ring		1
19	816/90070		Adapter bulkhead		1
19A	:2401/0506		O Ring		1
19B	:1356/0003Z		Nut		1
20	816/90078		Adaptor 90 deg elbow M/F		2
21	816/90086		Adapter tee male,male,male sae-8 X G1/2 X G5/8		1
21A	:2401/0506		O Ring		1
22	816/90087		Adapter sae-10 male X G1/2-F swivel		1
22A	:2401/0507		O Ring		1
23	45/920050		Coupling Quick Release,Male 3/4"UNF		1
24	45/920049		Coupling Female 3/4"UNF		1
25	816/90040		Adaptor Tee		1
26	816/90082		Adapter tee, F/M/M		1
27	816/90022		Cap blanking 5/8"BSP steel		2
28	816/90059		Adapter 90 degree elbow G1/2-F x 3/4 SAE-M Use with item 23		1
30	1315/0101Z		Screw		2
31	1315/0408Z		Setscrew M10 x 30		1
32	1315/0410Z		Setscrew Screw		1
33	1425/0005Z		Washer Spring (M5)		2
34	2102/0613		Pin tension		1
35	2102/0815		Pin roll		1
36	290/00336		Lever		1

37	290/63800		Pivot		1
38	831/00096		Bearing		2
39	913/00702		Pin Clevis		1
40	913/00703		Fastener safety		1
41	123/02882		Plate spring strip		1

Applicability Date Ranges:
From: , To:

9802/6220 E1-19-1 DIPPER AUXILIARY PIPEWORK (OPTIONAL)

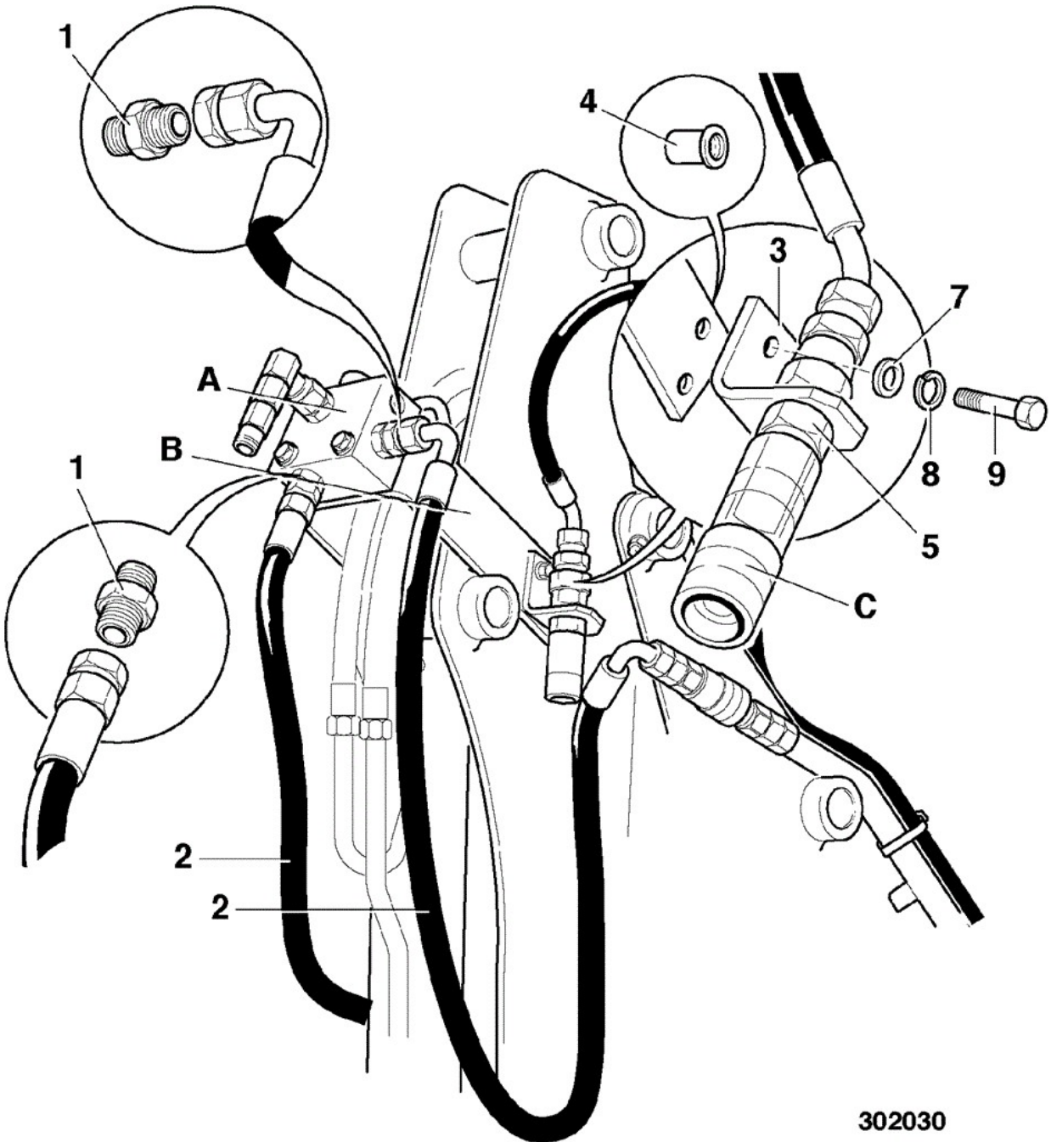

Item	Part No	Change No	Description	Usage Code	QTY
A	****		'See Remark' Diverter Valve		1
B	****		'See Remark' Diverter valve mounting bracket.		1
C	****		'See Remark' Quick Release Coupling - female		1

1	816/20076	<M808234	Adapter 5/8"m 3/4"FIXFEM		2
1	816/90058		Adapter		2
2	614/80073		Hose		2
3	290/00337		Bracket mounting		2
4	826/01254		Nut Rivet		4
5	816/10144	<M808234	Adapter bulkhead		2
5	816/90088		Adapter bulkhead		2
6	1417/0018Z		Washer External Teeth Lock		2
7	1411/0002Z		Washer (5/16" Medium)		4
8	1425/0007Z		Washer Washer		4
9	1315/0307Z		Setscrew M8 X 25		4
10	1406/0021		Washer Bonded		2

Applicability Date Ranges:
From: , To:

Product Catalog\BACKHOE LOADER 1CX, 208\.1CX 00807553-00808999,01050000-01051999,01298000-01299999 9802/6220\E HYDRAULICS & AIR INCLUDING STEERING\E01 HOSE & PIPEWORK\E1-20-1 AUXILIARY PIPEWORK INSTALLATION (DIPPER)

9802/6220 E1-20-1 AUXILIARY PIPEWORK INSTALLATION (DIPPER)

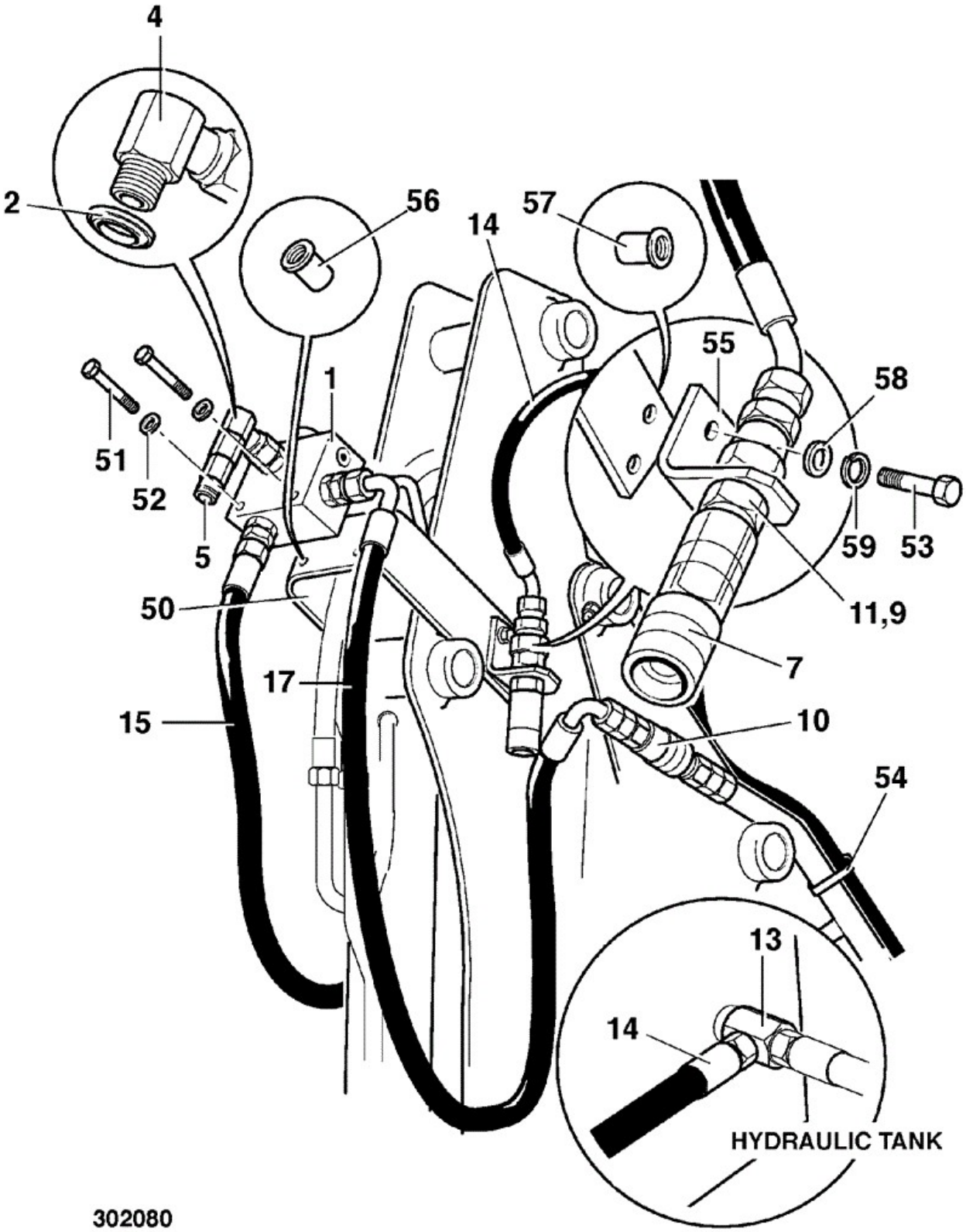

Item	Part	Change No	Description	Usage Code	QTY

	No				
1	25/204100		Valve Flow Regulator 1/2" BSP		1
2	1406/0018		Washer Bonded (1/2" BSP)		5
3	1604/0004		Adaptor Male		3
4	816/40016		Adapter ,90 Deg.		1
5	45/910500		Coupling 1/2" BSP male quick release		1
7	45/908400		Coupling 3/4 BSP female quick release		1
8	45/910300		Coupling 3/4" BSP male quick release		1
9	1406/0021		Washer Bonded		2
10	1606/0009		Adapter Reducing, M/M		2
11	816/10029		Connector bulkhead		1
12	45/910400		Coupling 1/2" BSP female quick release		1
13	816/50033		Adapter Tee		1
14	632/31200		Hose 3/8 LP 5360mm long		1
15	613/07500		Hose 850mm long		1
17	613/23700		Hose		1
50	290/65700		Bracket Valve Mounting		1
51	1315/3416Z		Bolt M10 x 70		2
52	1420/0008Z		Washer (M10)		2
53	1315/3310Z		Bolt (M8 x 40)		4
54	121/77603		Tie Cable 300mm		12
55	290/01199		Bracket		1
56	826/01104		Nut Rivet		2
57	826/01254		Nut Rivet		4
58	1411/0002Z		Washer (5/16" Medium)		4
59	1425/0007Z		Washer Washer		4

Applicability Date Ranges:
From: , To: M808234

Product Catalog\BACKHOE LOADER 1CX, 208\.1CX 00807553-00808999,01050000-01051999,01298000-01299999 9802/6220\E HYDRAULICS & AIR INCLUDING STEERING\E01 HOSE & PIPEWORK\E1-20-2 AUXILIARY PIPEWORK INSTALLATION (DIPPER)

9802/6220 E1-20-2 AUXILIARY PIPEWORK INSTALLATION (DIPPER)

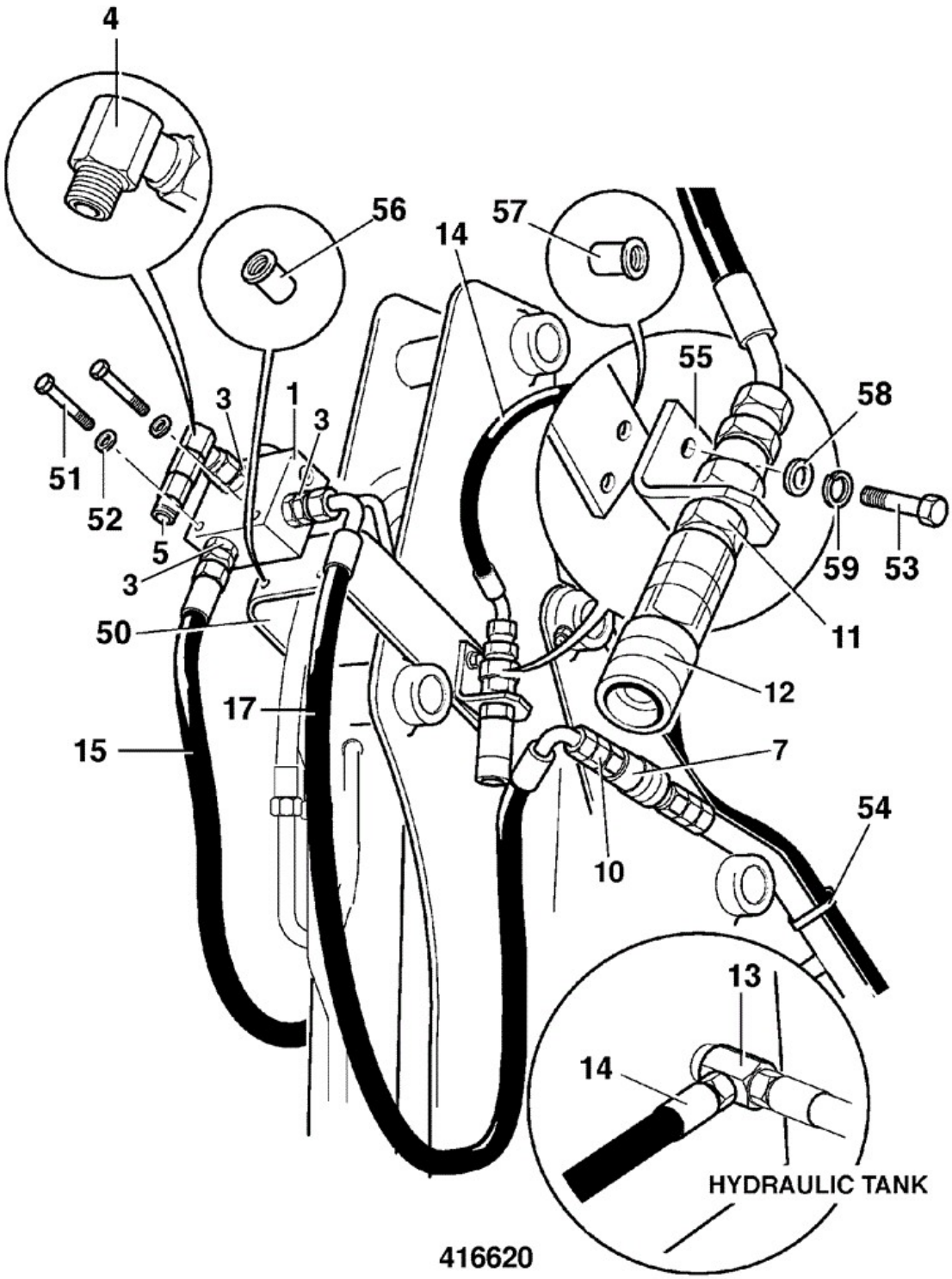

Item	Part No	Change No	Description	Usage Code	QTY
1	25/221219		Valve flow regulator sae		1
3	1620/2054		Adaptor 1/2BSP x 3/4 SAE		3

3A	:2401/0506		O Ring		1
4	816/90059		Adapter 90 degree elbow G1/2-F x 3/4 SAE-M		1
4A	:2401/0506		O Ring		1
5	45/920050		Coupling Quick Release,Male 3/4"UNF		1
7	45/920047		Coupling 1-1/16" 12 UNF, Female Quick Release		1
8	45/920048		Coupling HQ12-M-12 SAE, Male Quick Release		1
10	1620/2068		Adaptor 1/2BSP x 1-1/16SAE		2
10A	:2401/0508		O Ring		1
11	816/90070		Adapter bulkhead		1
11A	:2401/0506		O Ring		1
11B	:1356/0003Z		Nut		1
12	45/920049		Coupling Female 3/4"UNF		1
13	816/90040		Adaptor Tee		1
14	632/31200		Hose 3/8 LP 5360mm long		1
15	613/07500		Hose 850mm long		1
17	613/23700		Hose		1
50	290/65700		Bracket Valve Mounting		1
51	1315/3416Z		Bolt M10 x 70		2
52	1420/0008Z		Washer (M10)		2
53	1315/3310Z		Bolt (M8 x 40)		4
54	121/77603		Tie Cable 300mm		12
55	290/01199		Bracket		1
56	826/01104		Nut Rivet		2
57	826/01254		Nut Rivet		4
58	1411/0002Z		Washer (5/16" Medium)		4
59	1425/0007Z		Washer Washer		4

Applicability Date Ranges:
From: , To:

Product Catalog\BACKHOE LOADER 1CX, 208\.1CX 00807553-00808999,01050000-01051999,01298000-01299999 9802/6220\E HYDRAULICS & AIR INCLUDING STEERING\E01 HOSE & PIPEWORK\E1-21-1 LOXAM AUXILIARY SALES SPECIAL

9802/6220 E1-21-1 LOXAM AUXILIARY SALES SPECIAL

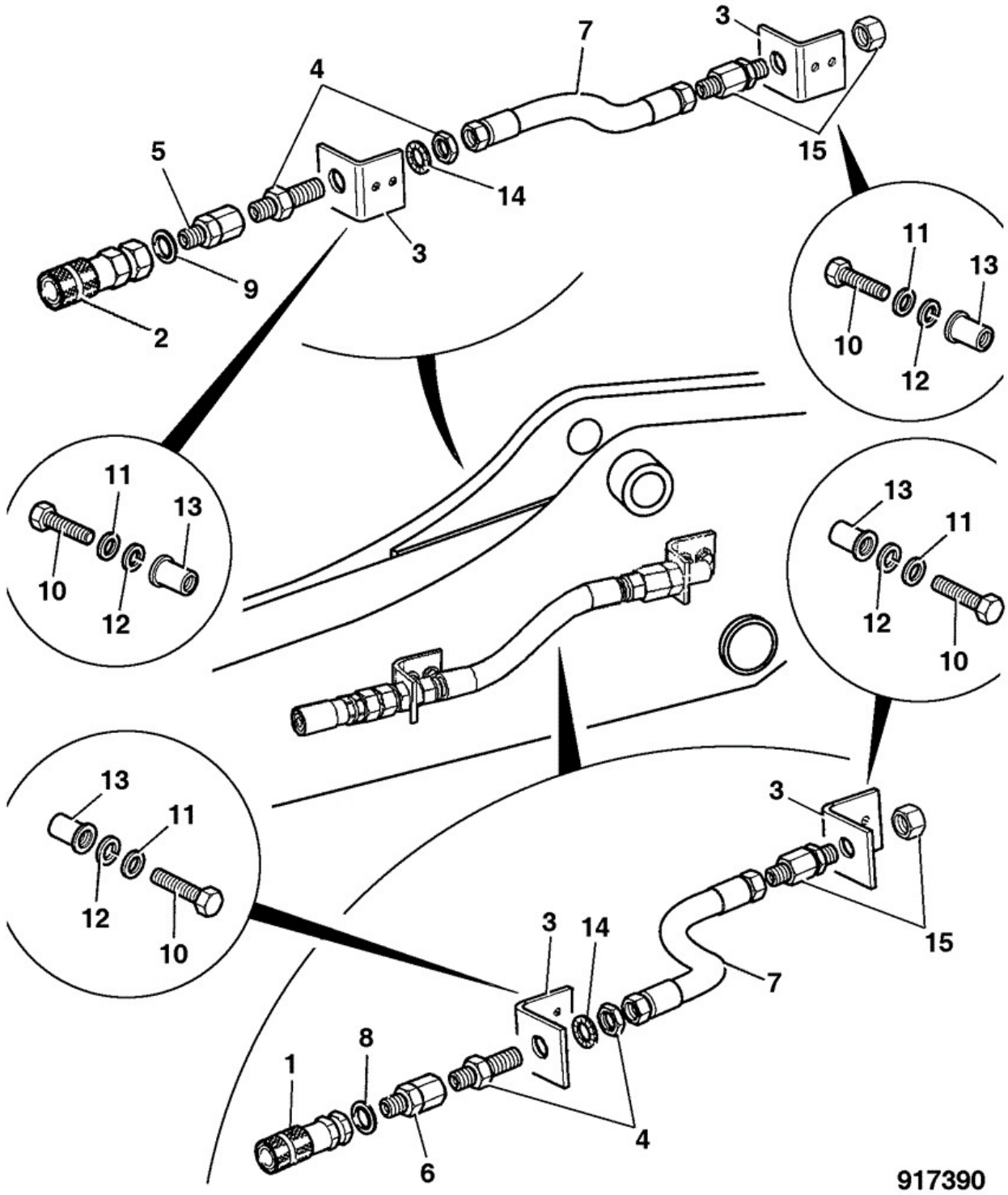

Item	Part No	Change No	Description	Usage Code	QTY
1	332/R9344		Coupling QR female 1/2"BSP		1
2	332/R9329		Coupling QR female 3/4"BSP		1

3	290/00337		Bracket mounting		2
4	816/90339		Adaptor Bulkhead		2
5	816/90175		Adapter		1
6	1612/2057		Adapter		1
7	332/R7901		Hose 5/8 BSP		2
8	1406/0021		Washer Bonded		1
9	1406/0018		Washer Bonded (1/2" BSP)		1
10	1315/0307D		Setscrew M8 x 25 mm		4
11	1411/0002D		Washer 5/16in medium		4
12	1425/0007D		Washer Spring M8		4
13	826/01254		Nut Rivet		4
14	1417/0018D		Washer teeth lock		2
15	816/90058		Adapter		2

Applicability Date Ranges:
From: , To:

Product Catalog\BACKHOE LOADER 1CX, 208\.1CX 00807553-00808999,01050000-01051999,01298000-01299999 9802/6220\E HYDRAULICS & AIR INCLUDING STEERING\E01 HOSE & PIPEWORK\E1-23-1 CIRCUIT HYDRAULIC FLOAT

9802/6220 E1-23-1 CIRCUIT HYDRAULIC FLOAT

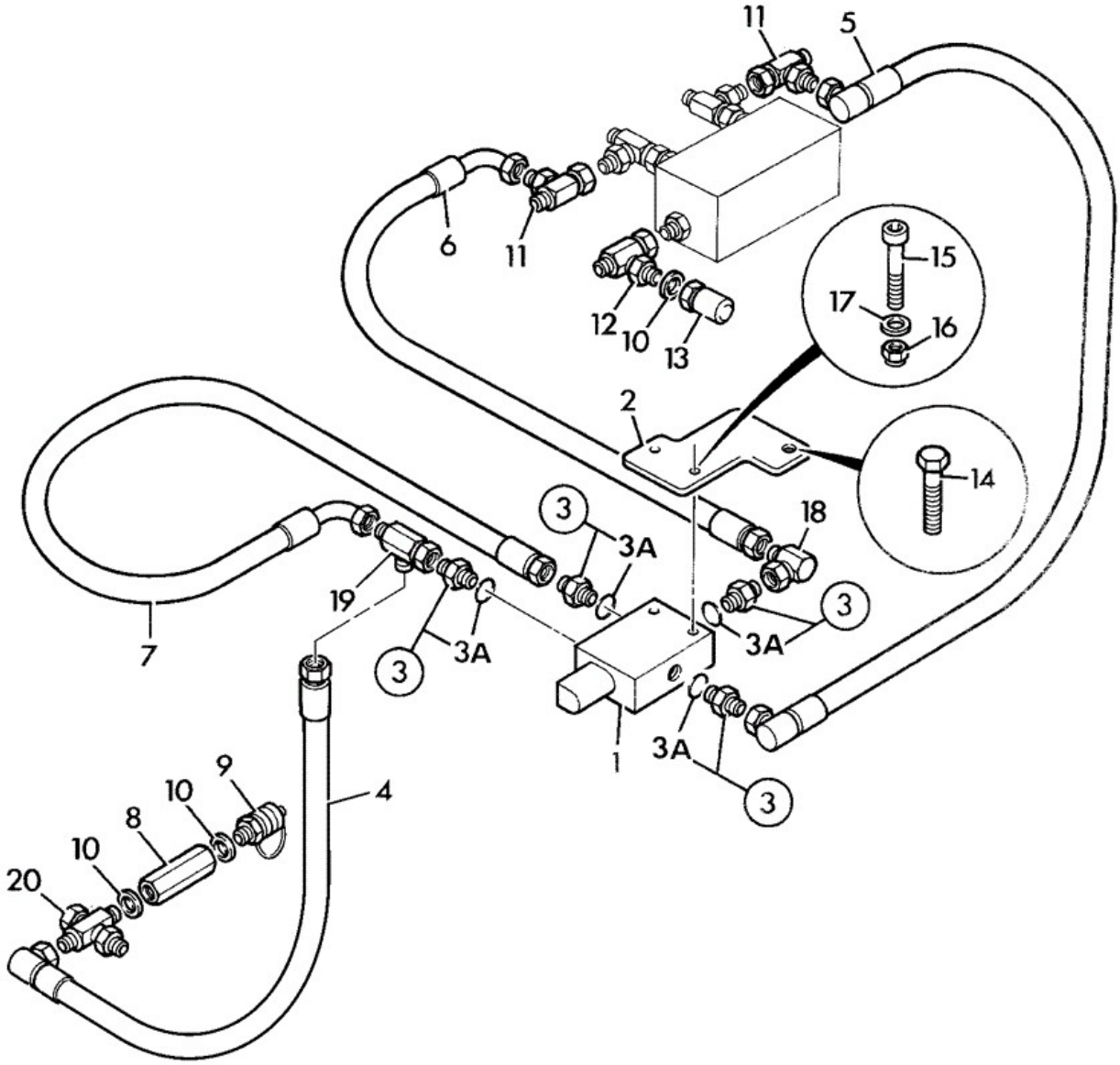

237811

Item	Part No	Change No	Description	Usage Code	QTY
1	25/103500	<S/N808661	Valve solenoid operated		1
1	928/60150		Valve float 12V		1

2	290/00974		Plate mounting		1
3	1620/0003	<M808234	Adapter		4
3	1620/2052		Adaptor 3/8BSP X 9/16		4
3A	:2401/0505		O Ring		1
4	611/24500		Hose 1/4"BSP x 650mm		1
5	612/41700		Hose		1
6	612/25400	<M808239	Hose 3/8BSPx360 used when external loader check valve fitted		1
6	612/28200		Hose 3/8"BSP x 300mm used when internal loader check valve fitted		1
7	612/24600		Hose 3/8 BSP 470 mm		1
8	816/00143	<M808234	Adapter not used after this serial number		1
9	45/905000	<M808234	Adapter Pressure Test 1/4BSP Male not used after this serial number		1
10	1406/0011	<M808234	Washer Bonded (1/4") not used after this serial number		3
11	816/50033	<M808234	Adapter Tee		2
11	816/90040		Adaptor Tee		2
12	816/50089	<M808234	Adapter tee		1
13	701/44700	<M806715	Switch brake pressure		1
13	701/80188	<M808234	Switch pressure, 4 bar		1
13	701/80351	<M808661	Switch pressure, 4 bar		1
13	701/80379	<M1743245	Switch pressure		1
13	332/P9666		Switch pressure		1
14	1315/3512Z		Bolt M12 x 50mm		1
15	1315/0211Z		Setscrew (M6 x 45)		2
16	1370/0103Z		Nut Self Lock M6		2
17	1420/0006Z		Washer (M6)		2
18	816/40006	<M808234	Adapter 90 Deg		1
18	816/90076		Adaptor 90 deg elbow, M/F		1
19	816/50018	<M808234	Adapter Tee		1
19	816/90079		Adaptor tee, F/M/M (3/8inchBSP x 3/8inchBSP x 1/4inchBSP F/M/M)		1
20	816/50065	<M808234	Adapter 4-way F/M/M/M		1
20	816/90081		Adapter 4-way , F/M/M/M		1

Applicability Date Ranges:
From: , To:

9802/6220 E1-24-1 HOSE CLAMPS REARFRAME

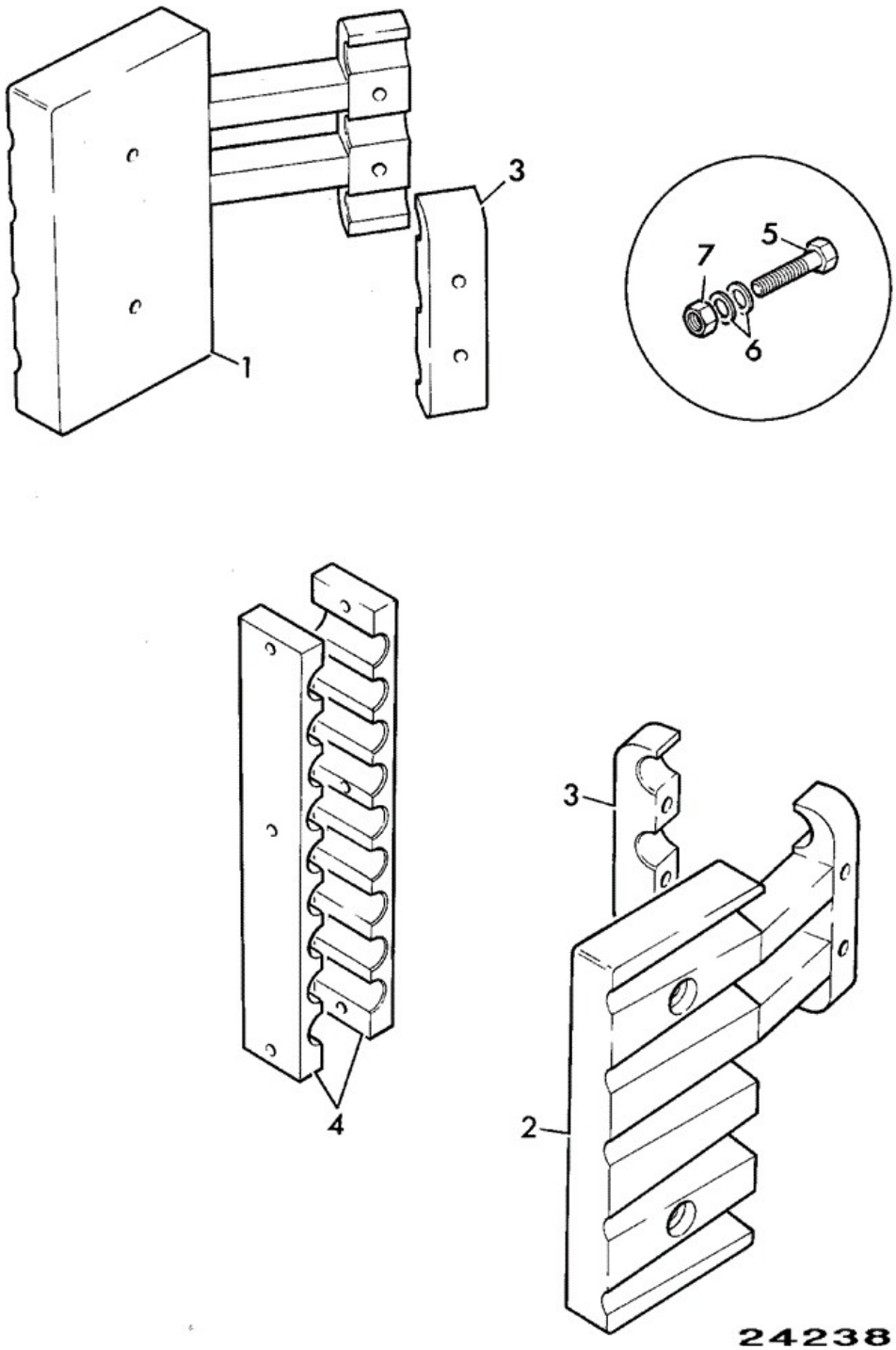

Item	Part No	Change No	Description	Usage Code	QTY
1	290/00364		Clamp hose, left		1
2	290/00365	<M807225	Clamp hose, right Excluding M807216		1

2	331/20075		Clamp hose, right Including M807216		1
3	290/00366		Clamp hose		2
4	290/00443		Clamp hose, 9 positions		2
4A	290/00503	>M1743497	Rubber safety strut use as spacer in bottom 3 holes		1
5	1315/3314Z		Bolt (M8 x 60)		4
6	1420/0007Z		Washer (M8)		4
7	1370/0203Z		Nut Nut M8		4
8	1315/3313Z		Bolt M8 x 55		4
9	1420/0007Z		Washer (M8)		4
10	1370/0203Z		Nut Nut M8		4

Applicability Date Ranges:
From: , To:

Product Catalog\BACKHOE LOADER 1CX, 208\.1CX 00807553-00808999,01050000-01051999,01298000-01299999 9802/6220\E HYDRAULICS & AIR INCLUDING STEERING\E02 PUMP/MOTOR & PUMP DRIVE\E2-1-4 MOTOR, DRIVE INTEGRAL SPROCKET

9802/6220 E2-1-4 MOTOR, DRIVE INTEGRAL SPROCKET

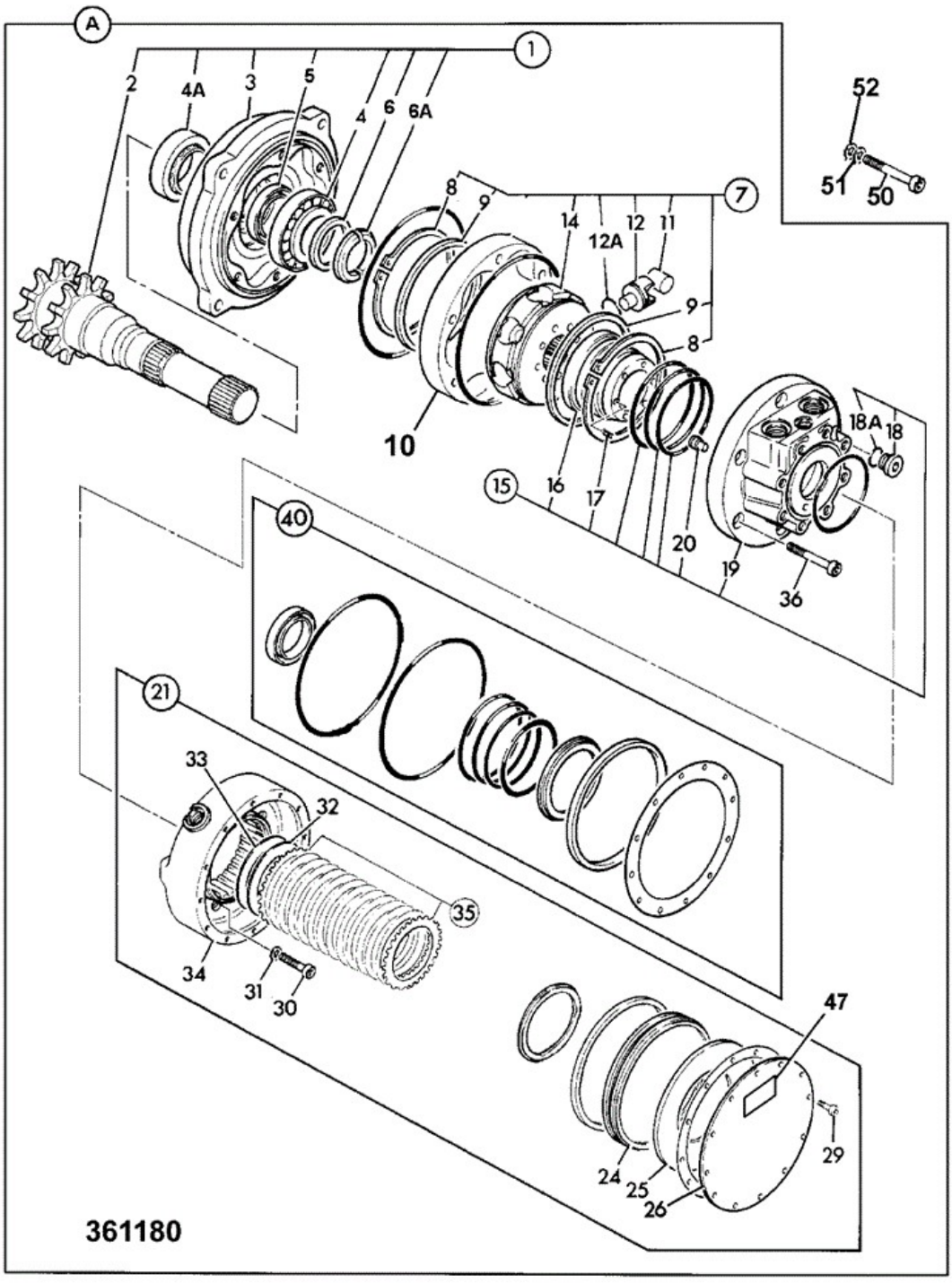

Item	Part No	Change No	Description	Usage Code	QTY
A	20/925273		Motor drive integral sprocket Left side of machine		1

A	20/925274		Motor drive integral sprocket right side of machine.		1
1	:20/950496		Case front sub assembly MCR3		1
2	::20/950497		Shaft integral sprocket MCR3		1
3	::20/914403		Case front		1
4	::20/905904		Bearing		1
4A	::20/914406		Bearing		1
5	****		'See Remark' Seal kit		1
6	::20/950566		Kit abutment washer		1
6A	::20/914405		Ring split		1
7	:20/905905		Cam assembly		1
8	::20/950499		Circlip 120 dia		2
9	::20/950500		Ring retaining MCR3		2
10	:20/905911		Cam - Must be ordered as seperate part.		1
11	::20/905907		Roller		8
12	::20/905908		Piston		8
12A	::20/905948		Ring piston Qty shown per piston-use with item 12		1
12A	::332/F0237	Superseded	O Ring piston seal Qty shown per piston-use with item 12		1
12A	::332/G9474		O Ring piston seal Qty shown per piston-use with item 12		1
14	::20/950498		Block cylinder MCR3		1
15	:20/950501		Case rear, sub assembly MCR3		1
16	::20/950502		Ring distributor MCR3		1
17	::20/905916		Spring		6
18	::20/905917		Plug assembly		1
19	::20/905913		Case rear		1
20	::20/905915		Pin stop		1
21	:20/950508		Brake sub assembly MCR3		1
24	::20/950510		Piston brake MCR3		1
25	::20/905943		Spring disc		1
26	::20/925172		Cover brake end		1
27	::20/905923		Label all motors		1
29	::20/905941		Screw		12
30	::20/905942		Screw		8
31	::20/906415		Washer		8
32	::20/905935		Shim		0
33	::20/905936		Shim		0

34	::20/950509		Housing brake MCR3		1
35	::20/950564		Kit-brake includes 1 off item 32 & 1 off item 33		1
36	:20/905922		Screw		6
40	:20/950511		Kit-seal		1
50	826/01820		Screw hardened 4 Per drive motor		8
51	1422/0010		Washer M14, hardened 8 per drive motor		8
52	****		'See Remark' Not required with 1422/0010		0
99	828/00311		O Ring Motor face to chassis. Not supplied with 00A		1

Applicability Date Ranges:
From: , To: M1299881

Product Catalog\BACKHOE LOADER 1CX, 208\.1CX 00807553-00808999,01050000-01051999,01298000-01299999 9802/6220\E HYDRAULICS & AIR INCLUDING STEERING\E02 PUMP/MOTOR & PUMP DRIVE\E2-1-4 MOTOR, DRIVE INTEGRAL SPROCKET

9802/6220 E2-1-4 MOTOR, DRIVE INTEGRAL SPROCKET

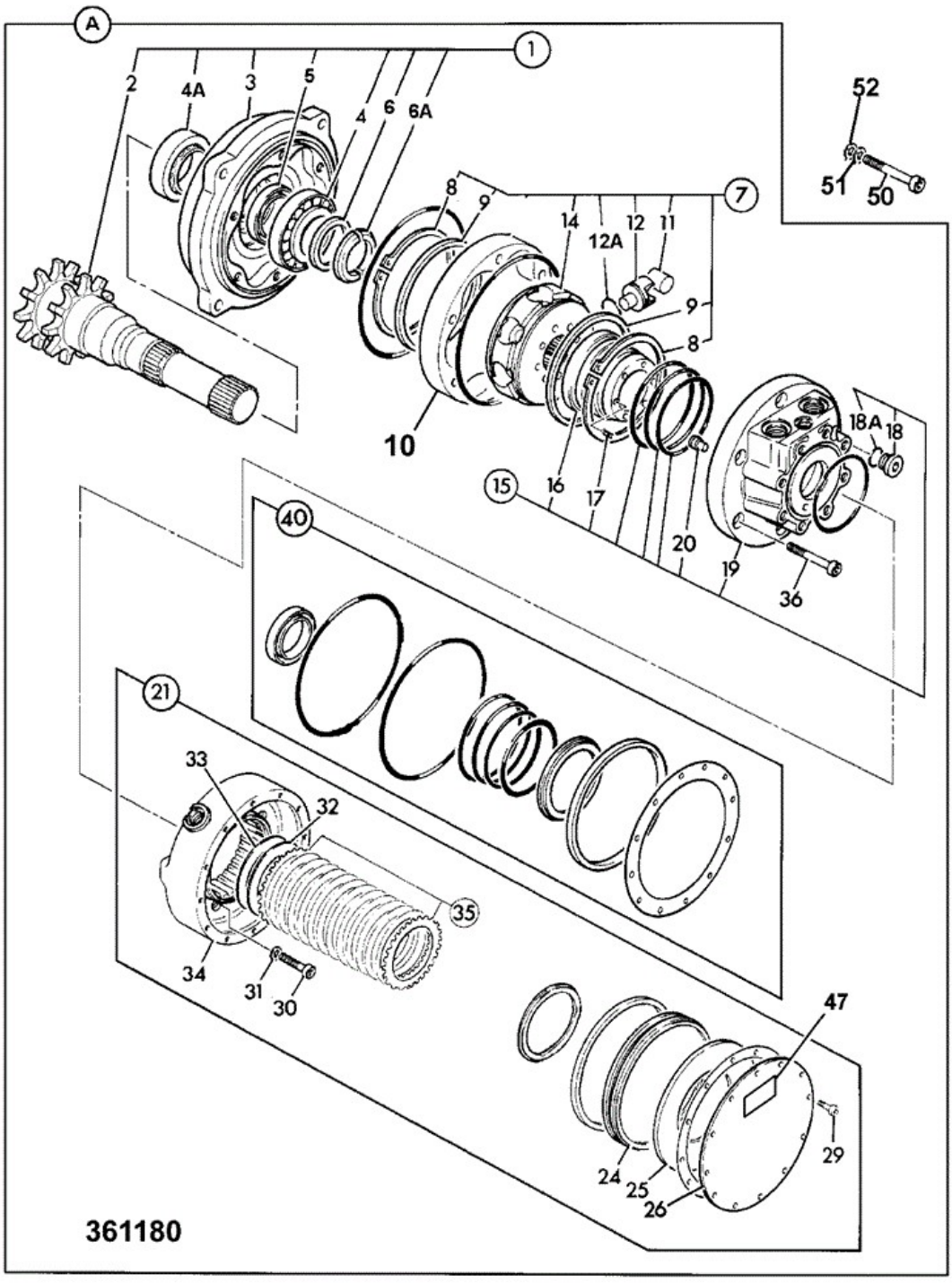

Item	Part No	Change No	Description	Usage Code	QTY
A	20/925273		Motor drive integral sprocket Left side of machine		1

A	20/925274		Motor drive integral sprocket right side of machine.		1
1	:20/950496		Case front sub assembly MCR3		1
2	::20/950497		Shaft integral sprocket MCR3		1
3	::20/914403		Case front		1
4	::20/905904		Bearing		1
4A	::20/914406		Bearing		1
5	****		'See Remark' Seal kit		1
6	::20/950566		Kit abutment washer		1
6A	::20/914405		Ring split		1
7	:20/905905		Cam assembly		1
8	::20/950499		Circlip 120 dia		2
9	::20/950500		Ring retaining MCR3		2
10	:20/905911		Cam - Must be ordered as seperate part.		1
11	::20/905907		Roller		8
12	::20/905908		Piston		8
12A	::20/905948		Ring piston Qty shown per piston-use with item 12		1
12A	::332/F0237	Superseded	O Ring piston seal Qty shown per piston-use with item 12		1
12A	::332/G9474		O Ring piston seal Qty shown per piston-use with item 12		1
14	::20/950498		Block cylinder MCR3		1
15	:20/950501		Case rear, sub assembly MCR3		1
16	::20/950502		Ring distributor MCR3		1
17	::20/905916		Spring		6
18	::20/905917		Plug assembly		1
19	::20/905913		Case rear		1
20	::20/905915		Pin stop		1
21	:20/950508		Brake sub assembly MCR3		1
24	::20/950510		Piston brake MCR3		1
25	::20/905943		Spring disc		1
26	::20/925172		Cover brake end		1
27	::20/905923		Label all motors		1
29	::20/905941		Screw		12
30	::20/905942		Screw		8
31	::20/906415		Washer		8
32	::20/905935		Shim		0
33	::20/905936		Shim		0

34	::20/950509		Housing brake MCR3		1
35	::20/950564		Kit-brake includes 1 off item 32 & 1 off item 33		1
36	:20/905922		Screw		6
40	:20/950511		Kit-seal		1
50	826/01820		Screw hardened 4 Per drive motor		8
51	1422/0010		Washer M14, hardened 8 per drive motor		8
52	****		'See Remark' Not required with 1422/0010		0
99	828/00311		O Ring Motor face to chassis. Not supplied with 00A		1

Applicability Date Ranges:
From: , To: M1299881

Product Catalog\BACKHOE LOADER 1CX, 208\.1CX 00807553-00808999,01050000-01051999,01298000-01299999 9802/6220\E HYDRAULICS & AIR INCLUDING STEERING\E02 PUMP/MOTOR & PUMP DRIVE\E2-1-5 MOTOR, DRIVE INTEGRAL SPROCKET

9802/6220 E2-1-5 MOTOR, DRIVE INTEGRAL SPROCKET

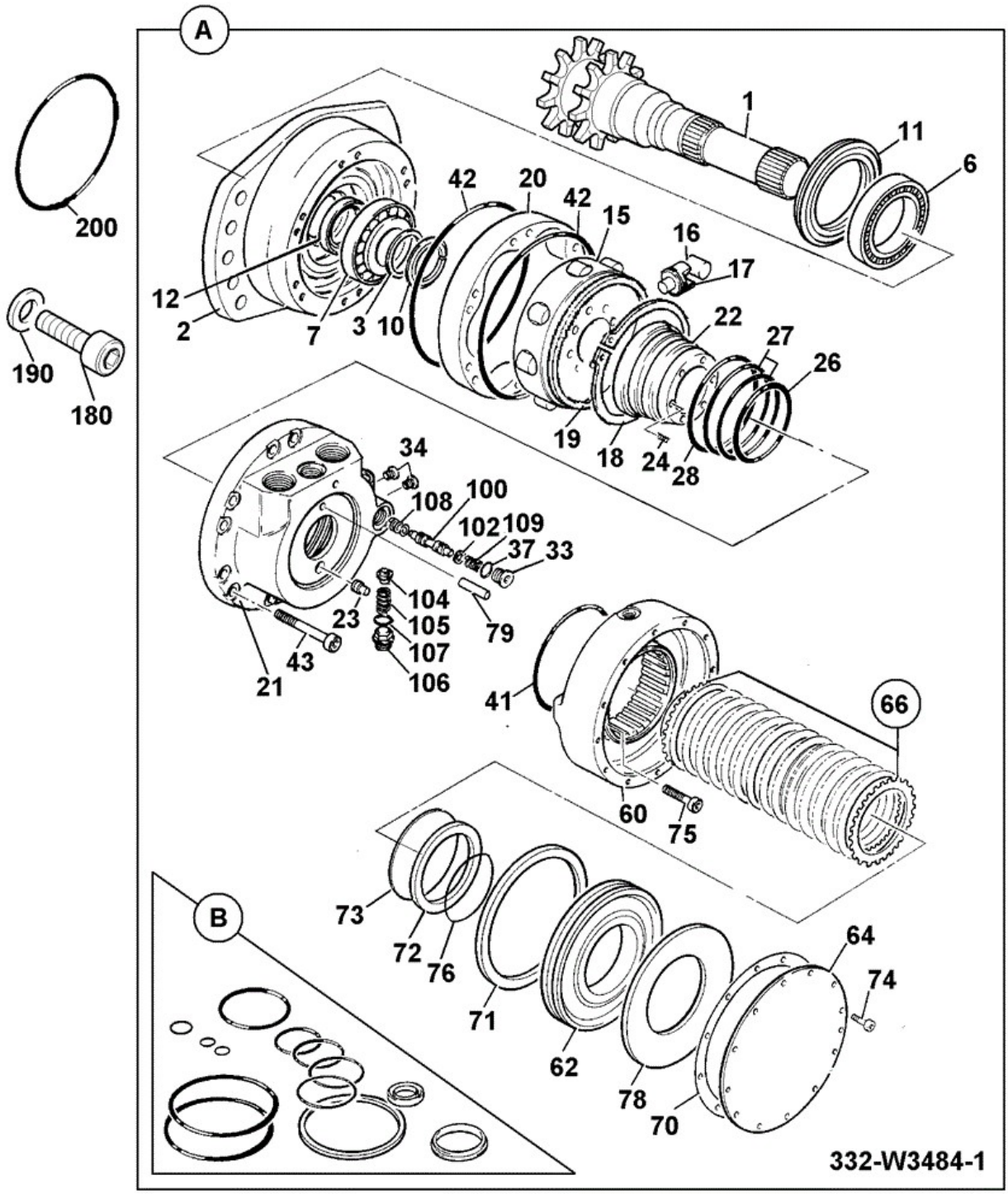

Item	Part No	Change No	Description	Usage Code	QTY
A	332/W3484		Motor drive integral sprocket		1
B	:333/C3592		Kit seal		1

1	:333/C3594		Shaft integral sprocket MC		1
2	:333/C3595		Case front		1
3	:20/914404		Washer abutment		1
6	:333/C3596		Bearing bearing		1
7	:20/951916		Bearing		1
10	:20/914405		Ring split		1
11	:333/C3597		Seal face		1
12	:20/906429		Seal shaft		1
15	:20/905905		Cam assembly contains items 16, 17, 18, 19		1
16	::20/905907		Roller		8
17	::20/905908		Piston		8
17A	::20/905948		Ring piston		8
17B	::332/G9474		O Ring piston seal		8
18	::20/950499		Circlip 120 dia		2
19	::20/950500		Ring retaining MCR3		2
20	:20/905911		Cam - Must be ordered as seperate part.		1
21	:333/C3598		Case rear		1
22	:333/C3599		Distributor		1
23	:20/951923		Pin stop		1
24	:20/905916		Spring		9
25	:20/951924		Plug 3/4-16 not illustrated fits to item 21		2
26	:20/950776		Seal rod		1
27	:333/C3600		Seal piston		2
28	:20/950505		Seal rod D=84		1
33	:20/951728		Plug F/spool G3/8		1
34	:20/951731		Plug shear M8		1
37	:20/914229		O Ring		1
41	:20/950506		Ring seal 88.62 X 1.68		1
42	:20/950507		Ring seal 171.5 X 1.68		2
43	:20/905922		Screw		6
60	:333/C3601		Housing brake		1
62	:20/950510		Piston brake MCR3		1
64	:20/925172		Cover brake end		1
66	:333/C3602		Kit brake pack		1
70	:20/952323		Gasket		1
71	:20/950336		Seal		1
72	:333/C3604		Seal ring, brake		1

73	:333/C3605		Circlip internal		1
74	:332/C2834		Screw skt.hd.M6		12
75	:20/952324		Screw M10 x 35		5
76	:333/C3606		O Ring seal		1
78	:20/916302		Spring disc		1
79	:333/C3607		Dowel 10 x 25		3
100	:25/220411		Spool flushing		1
102	:823/10233		Washer		1
104	:333/C3608		Poppet flushing		1
105	:814/10102		Spring flushing relief valve		1
106	:32/925173		Plug		1
107	:20/950335		O Ring		1
108	:814/10103		Spring flushing side A		1
109	:814/10104		Spring flushing side B		1
180	1391/3509D		Capscrew M12x35mm holds motor to chassis		6
190	1420/0009D		Washer (M12) for item 180		6
200	332/W7640		O Ring between motor and chassis		1

Applicability Date Ranges:
From: M1299882 , To:

Product Catalog\BACKHOE LOADER 1CX, 208\.1CX 00807553-00808999,01050000-01051999,01298000-01299999 9802/6220\E HYDRAULICS & AIR INCLUDING STEERING\E02 PUMP/MOTOR & PUMP DRIVE\E2-4-1 PUMP, MAIN HYDRAULIC

9802/6220 E2-4-1 PUMP, MAIN HYDRAULIC

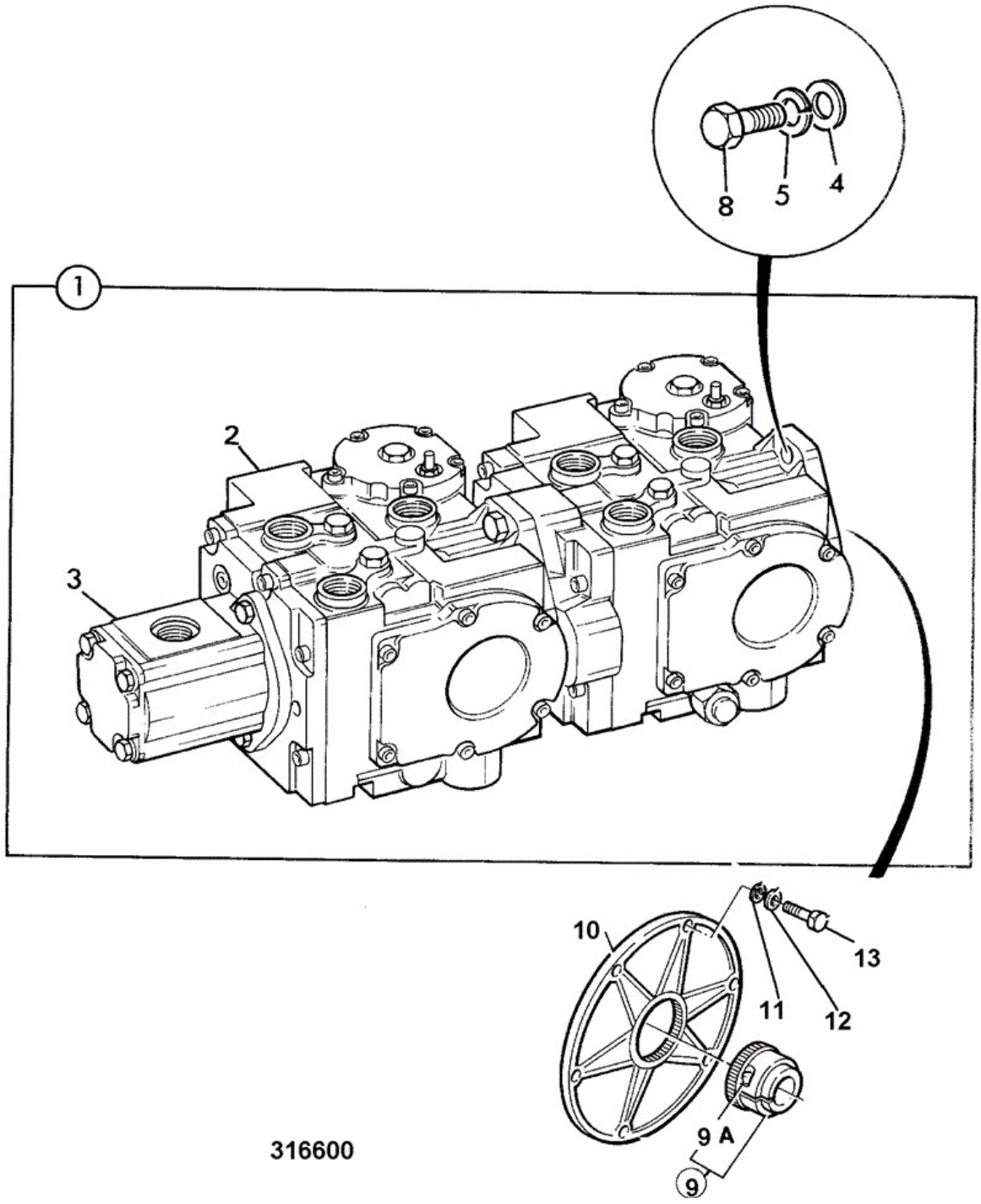

Item	Part No	Change No	Description	Usage Code	QTY
1	20/209000	Superseded	Pump standard,hydrostatic single pump		1
1	20/925250	<M1050133	Pump standard single pump Assembly NLA Use individual parts only		1

1	20/925513	>M1050134	Pump hydraulic Refer to page E2-4-2 for component details		1
1	20/208900		Pump hydrostatic,Hi-flo double pump Assembly NLA Use individual parts only		1
2	:20/209100		Pump hydrostatic	P/Ex	1
3	:20/205500	Superseded	Pump single std flow		1
3	:20/950285		Pump single, std. flow		1
3	:20/208800	<M1299798	Pump tandem, high flow		1
3	:332/W7212	>M1299799	Pump tandem high flow		1
4	1420/0009Z		Washer (M12)		2
5	1425/0009Z		Washer Spring M12		2
8	1315/0509Z		Setscrew M12 x 35mm		2
9	45/906800		Clamp hub coupling		1
10	45/913700		Coupling outer		1
11	1420/0008Z		Washer (M10)		8
12	1425/0008Z		Spring Washer		8
13	1305/1608Z		Setscrew (5/16 UNC x 1-1/4")		8
14	701/72700	<M808234	Switch temperature		1
14	701/80358	<M808661	Switch oil temp 9/16"UNF AMP connector		1
14	701/80325		Switch temperature		1
15	1406/0012	<M808234	Washer bonded use with 701/72700		1
15	:2401/0505		O Ring		1
16	816/13367		Adapter for item 14		1

Note 1: SAE Split Flange port

Applicability Date Ranges:
From: , To: M1050133

Product Catalog\BACKHOE LOADER 1CX, 208\.1CX 00807553-00808999,01050000-01051999,01298000-01299999 9802/6220\E HYDRAULICS & AIR INCLUDING STEERING\E02 PUMP/MOTOR & PUMP DRIVE\E2-4-2 PUMP, MAIN HYDRAULIC

9802/6220 E2-4-2 PUMP, MAIN HYDRAULIC

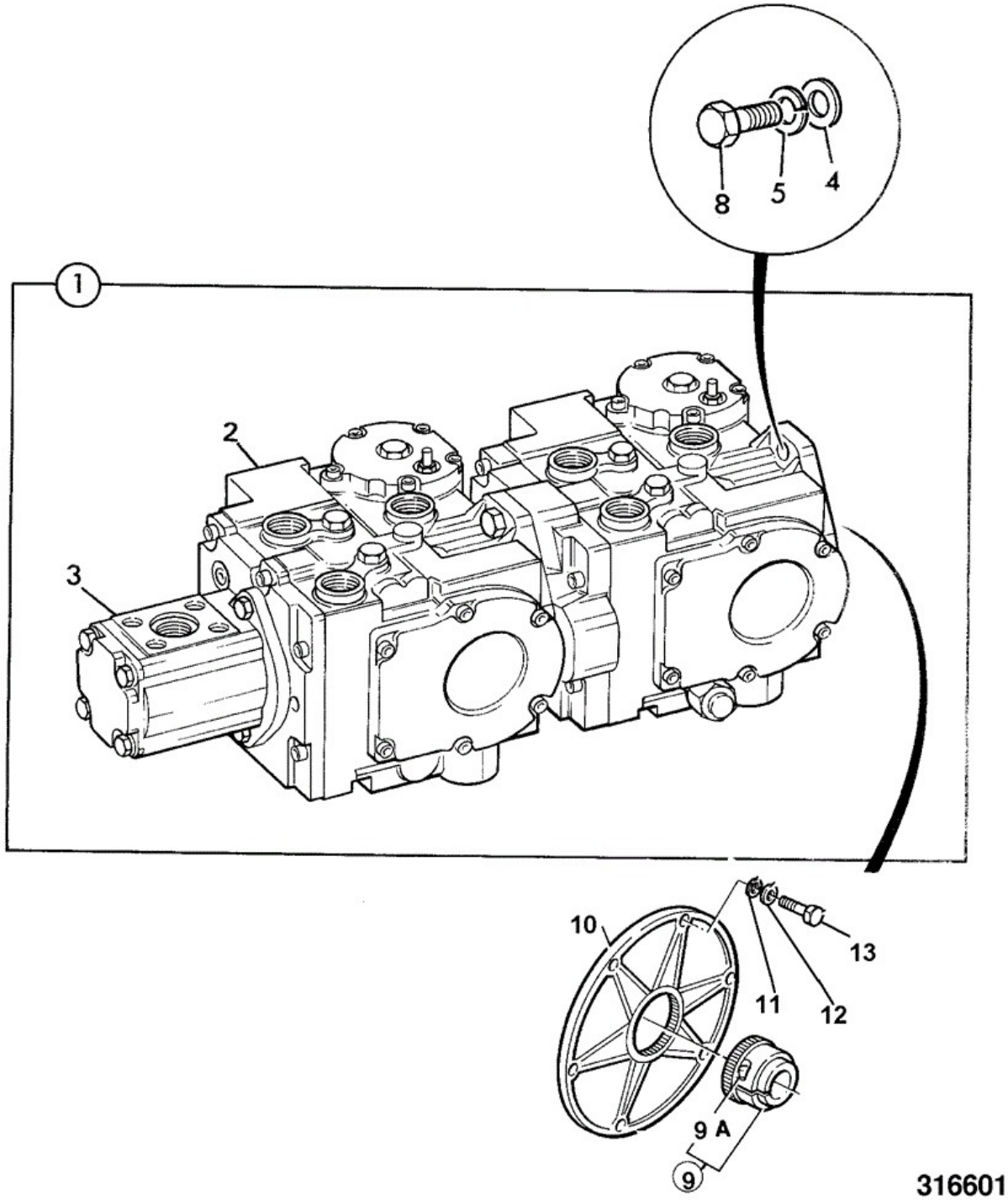

Item	Part No	Change No	Description	Usage Code	QTY
1	20/925513		Pump hydraulic Assembly NLA Use individual parts only		1
2	:20/209100		Pump hydrostatic	P/Ex	1

2A	332/U0193		Screw cap 3/8"UNF X 7/8" long		4
3	:20/951572		Pump gear		1
4	1420/0009D		Washer (M12)		2
5	1425/0009D		Washer M12 spring		2
8	1315/0509D		Screw M12x35mm		2
9	45/906800		Clamp hub coupling		1
10	45/913700		Coupling outer		1
11	1420/0008D		Washer (M10)		8
12	1425/0008D		Washer Spring M10		8
13	1305/1608Z		Setscrew (5/16 UNC x 1-1/4")		8
14	701/80325		Switch temperature		1
15	2401/0505		O Ring		1
16	816/90049		Adapter 1/4 BSP X 9/16 SAE for item 14		1

Applicability Date Ranges:
From: M1050134 , To:

9802/6220 E2-5-1 PUMP HYDROSTATIC COMPONENTS

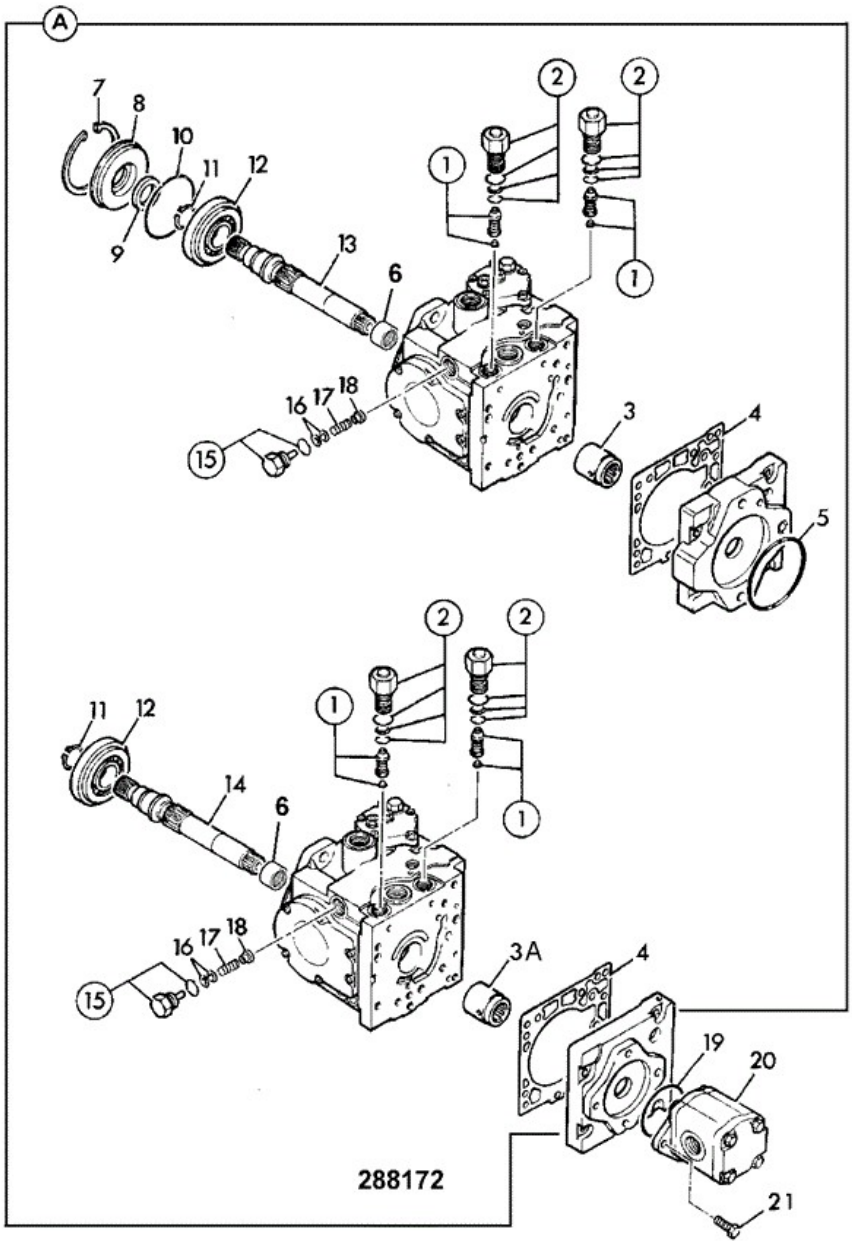

Item	Part No	Change No	Description	Usage Code	QTY
A	20/209100		Pump hydrostatic	P/Ex	1
1	:20/207634		Valve SCR 345 bar/5000 PSI		4

1	:20/950283		Valve SCR, 415 bar		4
2	:20/207631		Plug SCR valve assembly		4
3	:20/207660		Coupling 13 tooth auxiliary		2
3A	:20/950284		Coupling		1
4	:20/207642		Gasket charge pump		2
4	:20/207501		Kit seal Pump Seal kit		1
5	:20/207664		O Ring		1
6	:20/207605		Bearing needle		2
7	:20/207609		Ring internal retaining		1
8	:20/207654		Carrier shaft seal		1
9	:20/207653		Seal lip 28mm dia		1
9	20/950070		Seal 33mm dia		1
10	:20/207606		O Ring		1
11	:20/207604		Ring retaining		2
12	:20/207603		Bearing roller		2
13	:20/207652		Shaft		1
14	:20/207602		Shaft		1
15	:20/207662		Plug assembly charge relief engine side of pump only		1
16	:20/950064		Kit-shim		2
17	:20/205634		Spring		1
18	:20/205635		Poppet charge relief		1
19	:20/950363		O Ring		1
20	****		'See Remark' Gear pump, Std. or Hi-flow, refer to index		2
21	:1315/0509D		Screw M12x35mm		2

Applicability Date Ranges:
From: , To:

9802/6220 E2-6-1 PUMP, GEAR

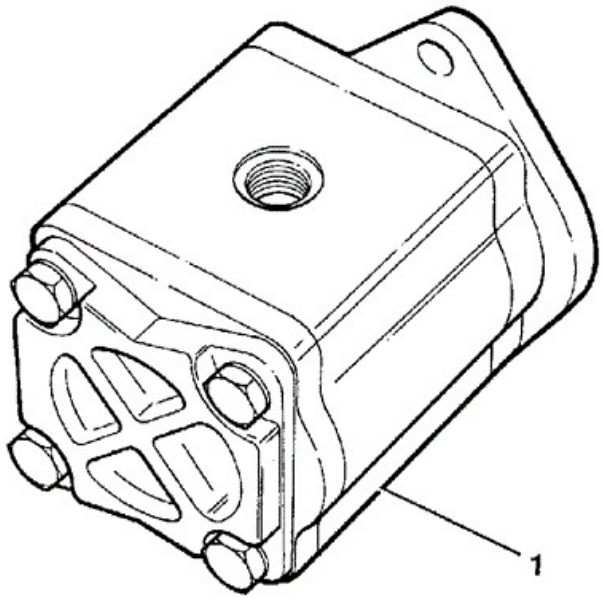

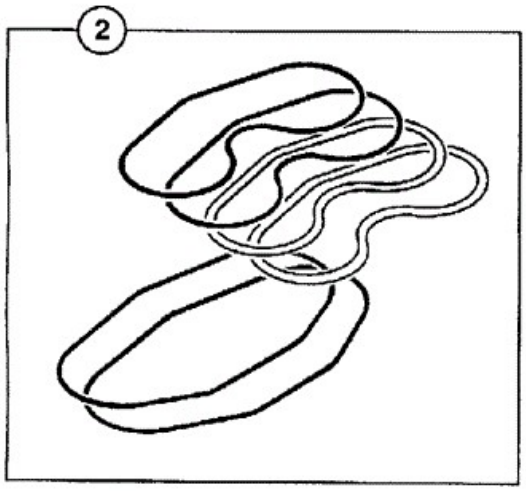

173090

Item	Part No	Change No	Description	Usage Code	QTY

1	20/205500	<M806769	Pump single std flow	A	1
1	20/950285	<M1050133	Pump single, std. flow SAE "O" Ring ports	B	1
1	20/951572		Pump gear SAE split flange port	C	1
2	:20/205501		Kit-seal	A	1
2	:20/950316		Kit-seal	B & C	1
21	:20/207661		Screw Torx socket head		12

Note 1: Identified as 550/1/33032 on data plate

Applicability Date Ranges:
From: , To:

Product Catalog\BACKHOE LOADER 1CX, 208\.1CX 00807553-00808999,01050000-01051999,01298000-01299999 9802/6220\E HYDRAULICS & AIR INCLUDING STEERING\E03 VALVES & HYDRAULIC FILTERS\E3-1-1 VALVE, CONTROL EXCAVATOR, 7 SPOOL

9802/6220 E3-1-1 VALVE, CONTROL EXCAVATOR, 7 SPOOL

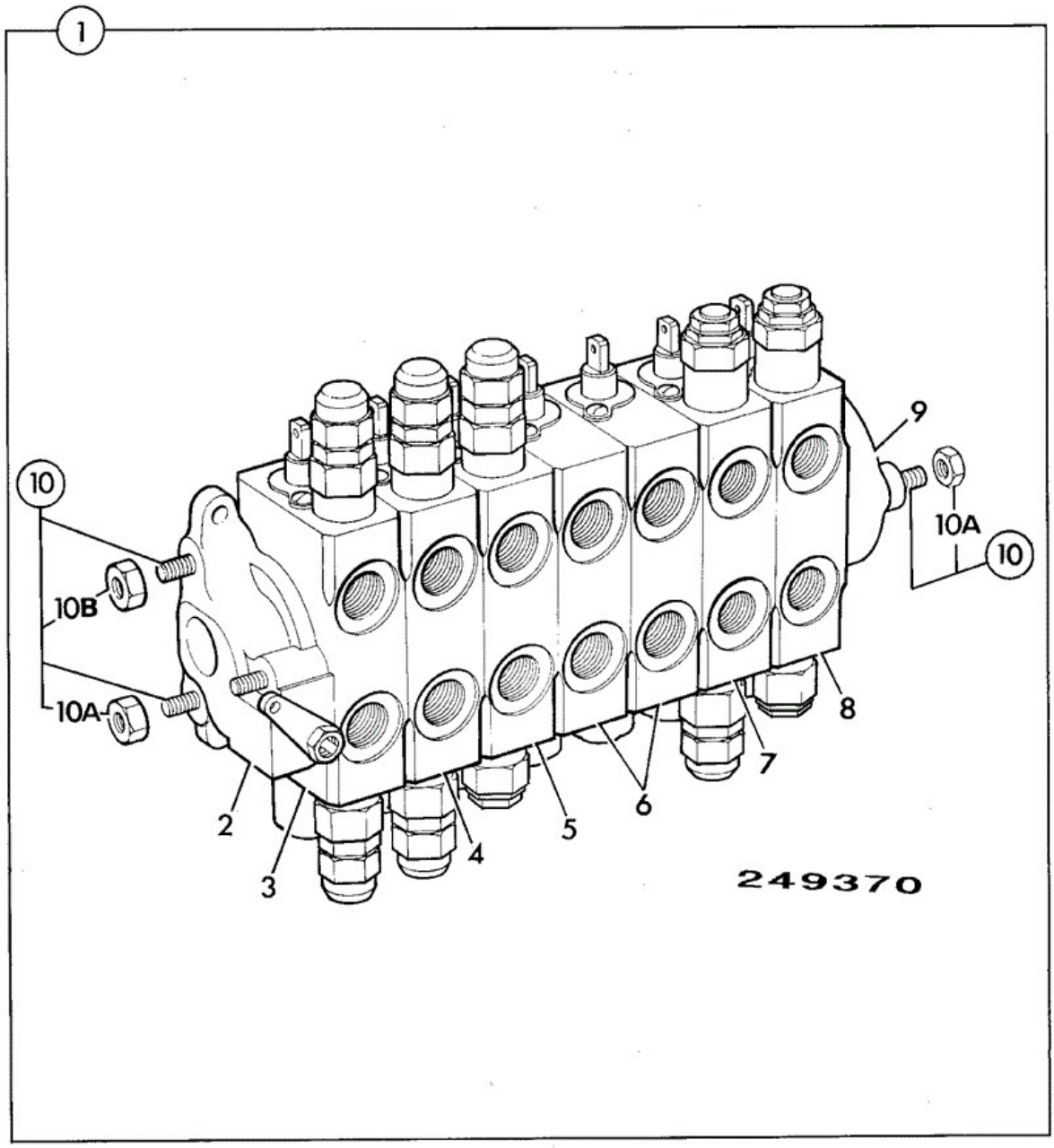

Item	Part No	Change No	Description	Usage Code	QTY
1	25/617400		Valve excavator		1
2	:25/617402		Cover outlet & clamp		1

3	:25/611202		Valve section Auxilliary		1
4	:25/611202		Valve section Bucket		1
5	:25/617401		Valve section Boom (ISO), dipper (JCB)		1
6	:25/221557		Valve section, stabiliser Stabilisers		2
7	:25/617401		Valve section Boom (JCB), dipper (ISO)		1
8	:25/611204		Valve section Slew		1
9	:25/611205		Cover inlet		1
10	:25/607212		Kit-tie rod 7-spool		1
10A	::1340/0201Z		Nut		2
10B	::25/606817		Nut		4

Applicability Date Ranges:
From: , To:

9802/6220 E3-2-1 VALVE, CONTROL EXCAVATOR, 6 SPOOL

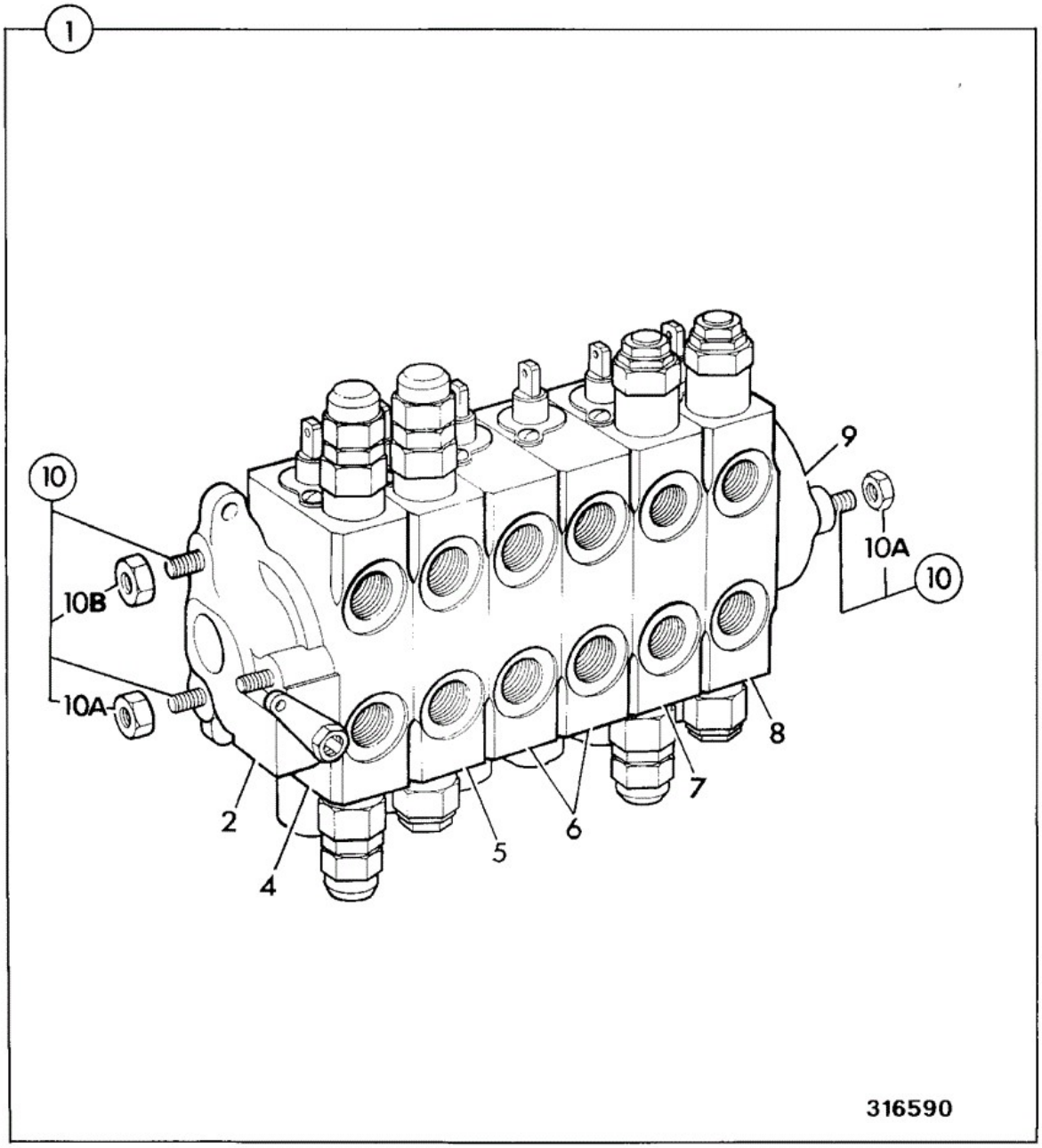

Item	Part No	Change No	Description	Usage Code	QTY
1	25/620600		Valve excavator, 6 spool		1
2	:25/617402		Cover outlet & clamp		1
4	:25/611202		Valve section Bucket		1

5	:25/617401		Valve section Boom (ISO), dipper (JCB)		1
6	:25/221557		Valve section, stabiliser Stabilisers		2
7	:25/617401		Valve section Boom (JCB), dipper (ISO)		1
8	:25/611204		Valve section Slew		1
9	:25/611205		Cover inlet		1
10	:25/607213		Kit-tie rod 6-spool		1
10A	::1340/0201Z		Nut		2
10B	::25/606817		Nut		4

Applicability Date Ranges:
From: , To:

Product Catalog\BACKHOE LOADER 1CX, 208\.1CX 00807553-00808999,01050000-01051999,01298000-01299999 9802/6220\E HYDRAULICS & AIR INCLUDING STEERING\E03 VALVES & HYDRAULIC FILTERS\E3-4-2 VALVE, CONTROL LOADER, 3 SPOOL (BLACK CAB)

9802/6220 E3-4-2 VALVE, CONTROL LOADER, 3 SPOOL (BLACK CAB)

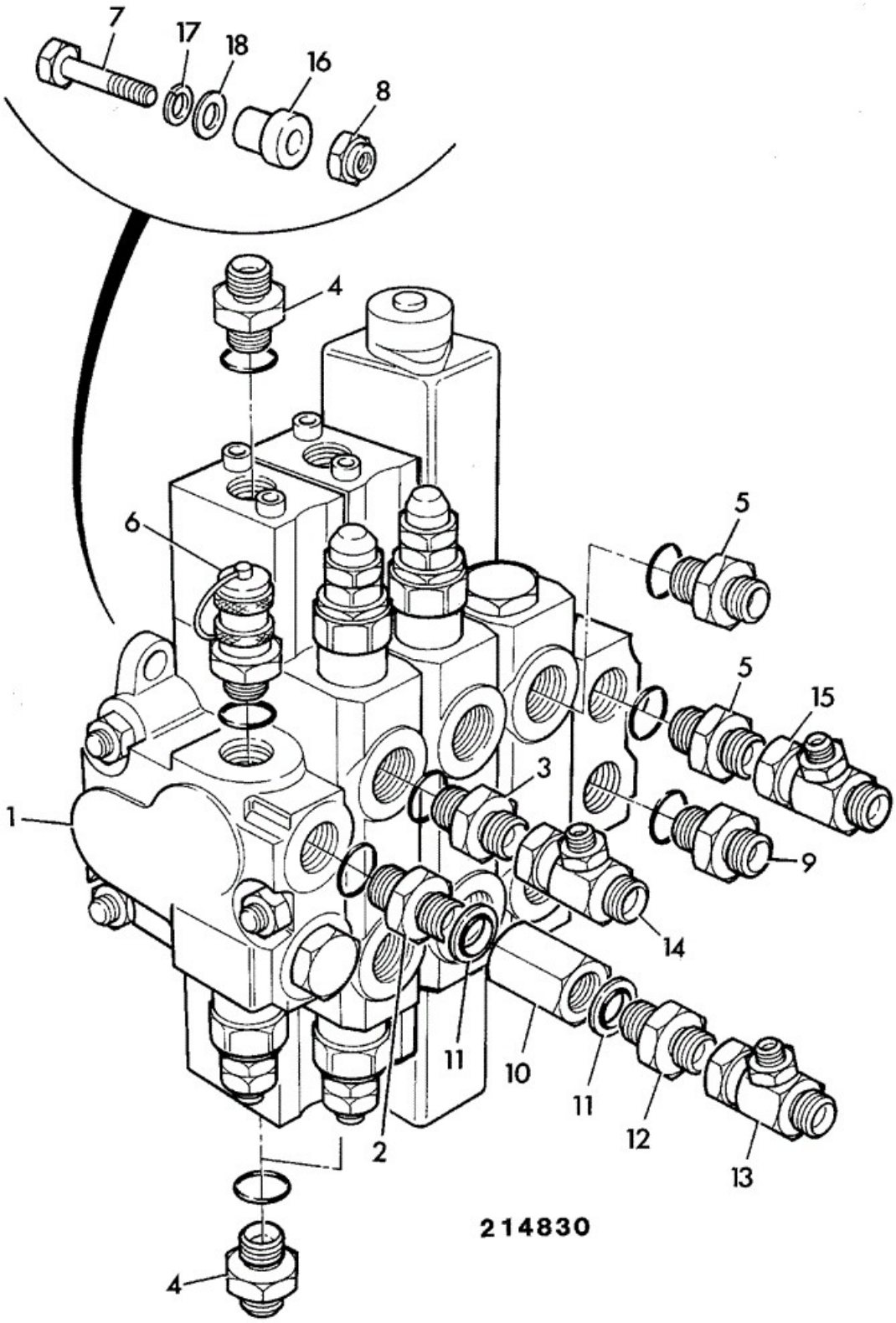

	Part				

Item	No	Change No	Description	Usage Code	QTY
1	25/621700		Valve 3 spool		1
2	816/17061		Adapter		2
3	1620/0004		Adapter 3/4		4
3A	:2401/0506		O Ring		1
4	1620/0002		Adapter		1
4A	:2401/0505		O Ring		1
5	816/17057		Adapter		1
5A	:2401/0506		O Ring		1
6	816/60230		Plug test point		1
6A	:2401/0505		O Ring		1
7	1315/0411Z		Bolt M10 x 45		3
8	1370/0303Z		Nut lock M10		3
9	1620/0007		Adapter		1
9A	:2401/0507		O Ring		1
10	25/975500		Valve check, 5 bar		1
11	1406/0021		Washer Bonded		2
12	1604/0006		Adaptor 3/4" Bsp mm		1
13	816/50043		Adapter tee		1
14	816/50033		Adapter Tee		4
15	816/00344		Adapter Tee		1
16	141/00936		Mounting Resilient		3
17	1420/0012Z		Washer M20		3
18	823/00326		Washer M10 X 30mm		6
19	25/991500		Valve check Lift circuit		1

Applicability Date Ranges:
From: , To: JAN 2002

Product Catalog\BACKHOE LOADER 1CX, 208\.1CX 00807553-00808999,01050000-01051999,01298000-01299999 9802/6220\E HYDRAULICS & AIR INCLUDING STEERING\E03 VALVES & HYDRAULIC FILTERS\E3-4-3 VALVE, CONTROL LOADER, 3 SPOOL

9802/6220 E3-4-3 VALVE, CONTROL LOADER, 3 SPOOL

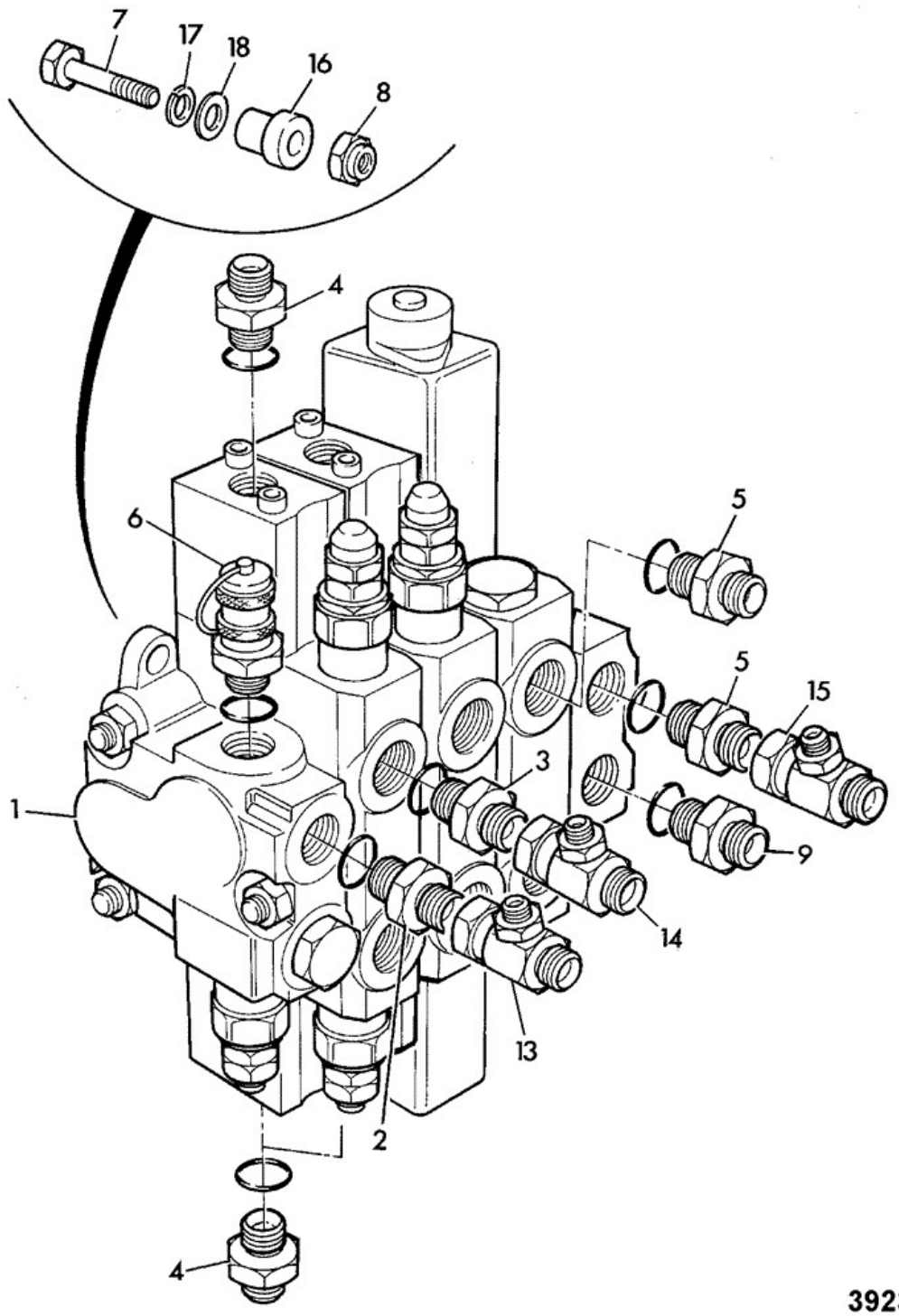

Item	Part No	Change No	Description	Usage Code	QTY
1	25/221033		Valve loader, 3 spool integral restrictor		1
2	816/17061		Adapter		2

3	1620/0004		Adapter 3/4		4
3A	:2401/0506		O Ring		1
4	1620/0002		Adapter		1
4A	:2401/0505		O Ring		1
5	816/17057		Adapter		1
5A	:2401/0506		O Ring		1
6	816/60230		Plug test point		1
6A	:2401/0505		O Ring		1
7	1315/0411Z		Bolt M10 x 45		3
8	1370/0303Z		Nut lock M10		3
9	1620/0007		Adapter		1
9A	:2401/0507		O Ring		1
13	816/50043		Adapter tee		1
14	816/50033		Adapter Tee		4
15	816/00344		Adapter Tee		1
16	141/00936		Mounting Resilient		3
17	1420/0012Z		Washer M20		3
18	823/00326		Washer M10 X 30mm		6

Applicability Date Ranges:
From: , To: S/N808661

Product Catalog\BACKHOE LOADER 1CX, 208\.1CX 00807553-00808999,01050000-01051999,01298000-01299999 9802/6220\E HYDRAULICS & AIR INCLUDING STEERING\E03 VALVES & HYDRAULIC FILTERS\E3-4-4 VALVE, CONTROL LOADER, 3 SPOOL 12 VOLT

9802/6220 E3-4-4 VALVE, CONTROL LOADER, 3 SPOOL 12 VOLT

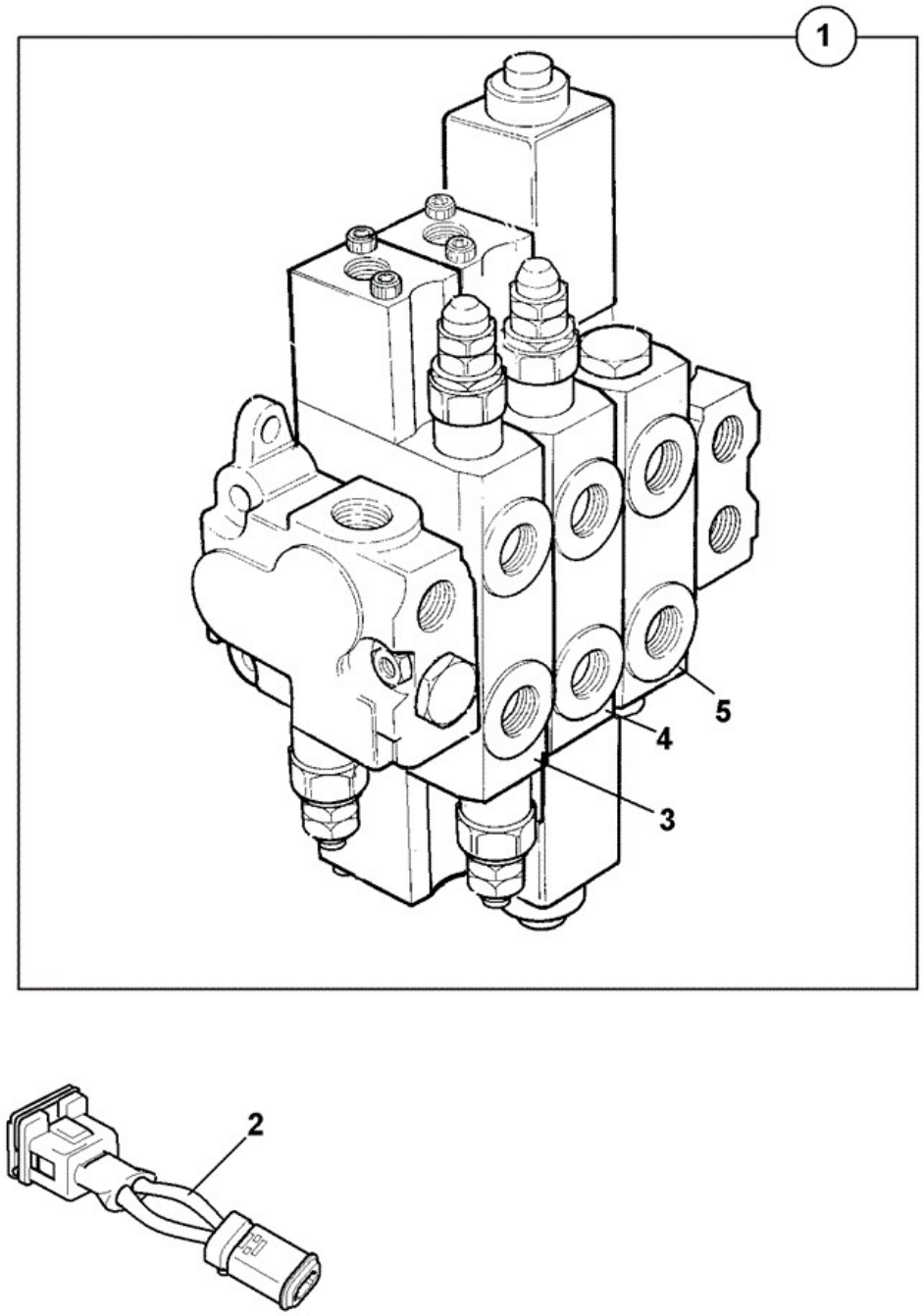

Item	Part No	Change No	Description	Usage Code	QTY
1	25/221345	Superseded	Valve loader with restrictor	A	1
			Valve loader 3 spool		

1	332/W3572		see page E3-12-9 for breakdown		1
2	721/10763		Harness 2-way link 40mm long Deutsch-AMP/Jnrtimer	A	2
3	:25/611403		Valve section		1
4	:331/40477		Valve section		1
5	:331/40479		Valve section auxiliary		1

Note 1: Also supply 721/10763 2off when replacing 25/221033

Applicability Date Ranges:
From: S/N808662 , To:

Product Catalog\BACKHOE LOADER 1CX, 208\.1CX 00807553-00808999,01050000-01051999,01298000-01299999 9802/6220\E HYDRAULICS & AIR INCLUDING STEERING\E03 VALVES & HYDRAULIC FILTERS\E3-4-5 VALVE, CONTROL 3 SPOOL + RESTRICTOR

9802/6220 E3-4-5 VALVE, CONTROL 3 SPOOL + RESTRICTOR

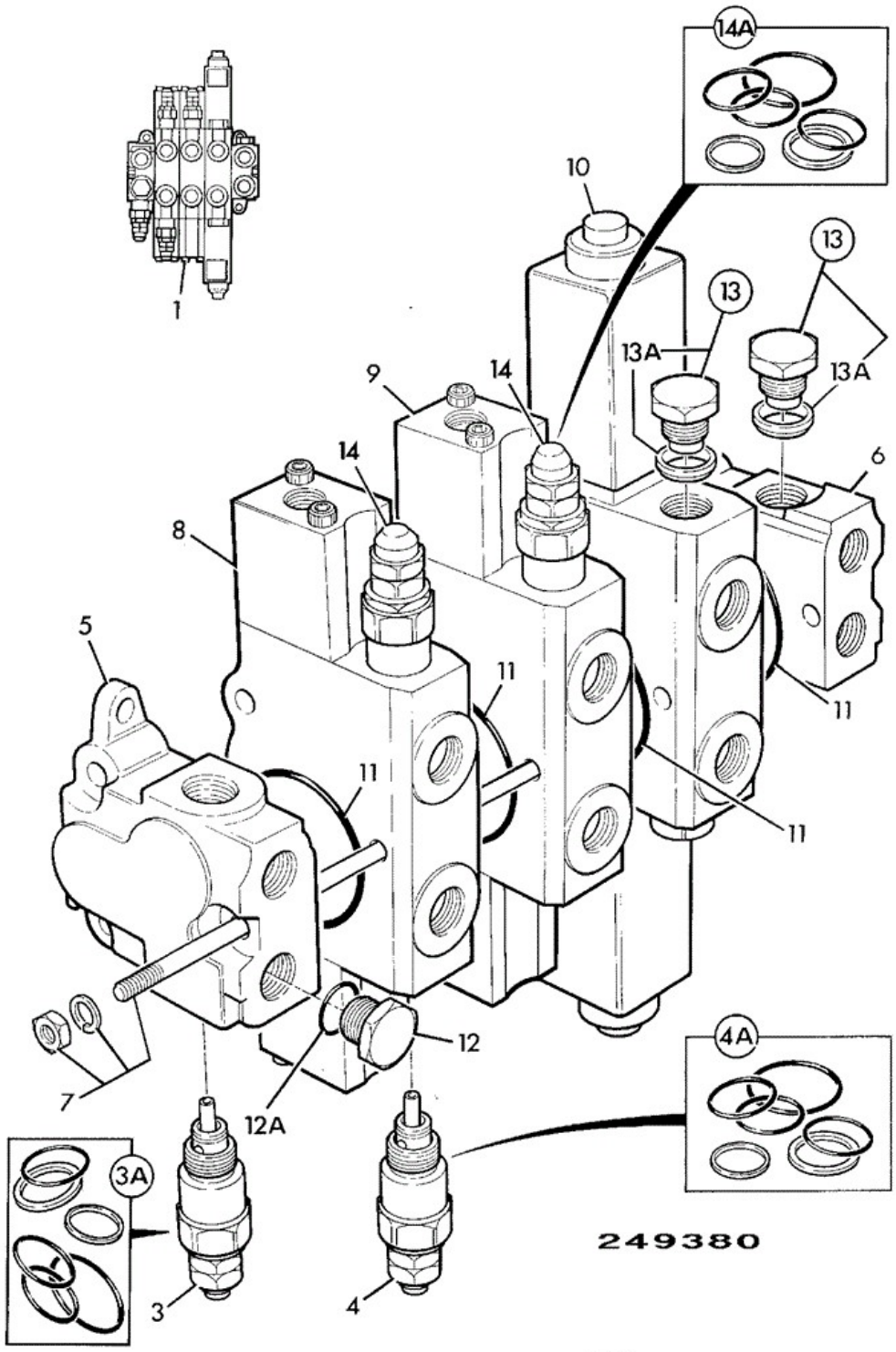

Item	Part No	Change No	Description	Usage Code	QTY
1	25/221345	>M808662	Valve loader with restrictor		1
			Valve loader 3 spool		

1	332/W3572		see page E3-12-9 for breakdown		1
3	:25/607232		Valve relief Main Relief Valve		1
3A	::25/606849		Kit-seal		1
4	:25/618001		Valve aux. relief Shovel ram, Dump End		1
4A	::25/606849		Kit-seal		1
5	:25/611401		Valve inlet section		1
6	:25/606904		Valve outlet section		1
7	:25/607702		Kit-tie rod		1
8	:25/221097		Valve section auxiliary		1
9	:331/45862		Valve Boom Section		1
10	:331/40479		Valve section auxiliary		1
11	:25/606812		Kit O-Rings X 5 valve sections interface		4
12	:25/606822		Plug assembly		1
12A	::25/606116		O Ring		1
13	:25/607234		Plug kit		2
13A	::25/607235		Seal		1
14	25/611407		Valve relief		2
14A	::25/606849		Kit-seal		1

Applicability Date Ranges:
From: M808662 , To:

9802/6220 E3-5-1 VALVE, CONTROL LOADER, 2 SPOOL

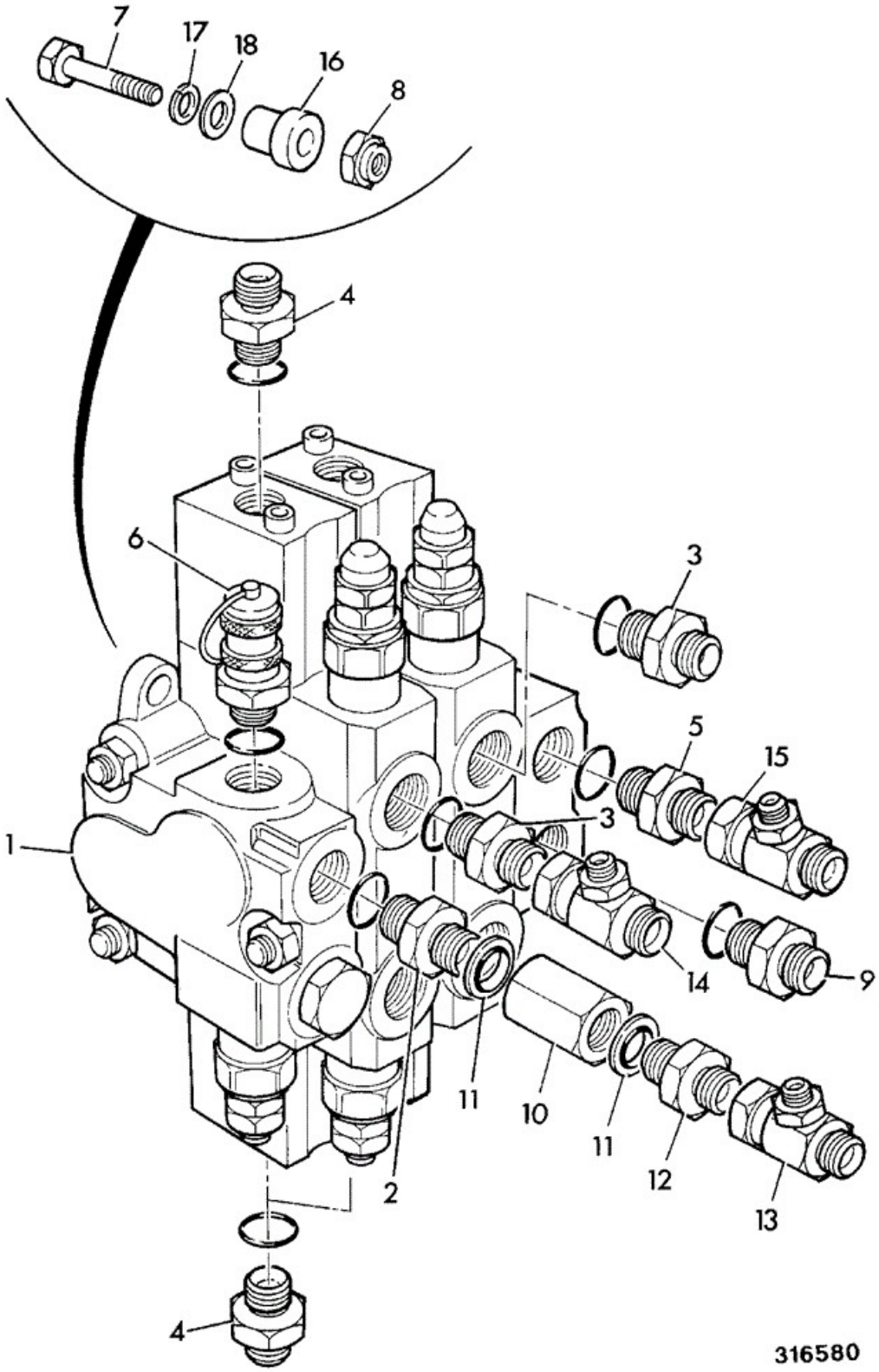

	Part				

Item	No	Change No	Description	Usage Code	QTY
1	25/620500		Valve loader, 2 spool		1
2	816/17091		Adapter		2
3	1620/0004		Adapter 3/4		4
3A	:2401/0506		O Ring		1
4	1620/0002		Adapter		1
4A	:2401/0505		O Ring		1
5	816/17057		Adapter		1
5A	:2401/0506		O Ring		1
6	816/60230		Plug test point		1
6A	:2401/0505		O Ring		1
7	1315/0411Z		Bolt M10 x 45		3
8	1370/0303Z		Nut lock M10		3
9	1620/0007		Adapter		1
9A	:2401/0507		O Ring		1
10	25/975500		Valve check, 5 bar		1
11	1406/0021		Washer Bonded		2
12	1604/0006		Adaptor 3/4" Bsp mm		1
13	816/50043		Adapter tee		1
14	816/50033		Adapter Tee		4
15	816/00344		Adapter Tee		1
16	141/00936		Mounting Resilient		3
17	1420/0012Z		Washer M20		3
18	823/00326		Washer M10 X 30mm		6
19	25/991500		Valve check Lift circuit		1

Applicability Date Ranges:
From: , To: JAN 2002

Product Catalog\BACKHOE LOADER 1CX, 208\.1CX 00807553-00808999,01050000-01051999,01298000-01299999 9802/6220\E HYDRAULICS & AIR INCLUDING STEERING\E03 VALVES & HYDRAULIC FILTERS\E3-5-2 VALVE, CONTROL LOADER, 2 SPOOL

9802/6220 E3-5-2 VALVE, CONTROL LOADER, 2 SPOOL

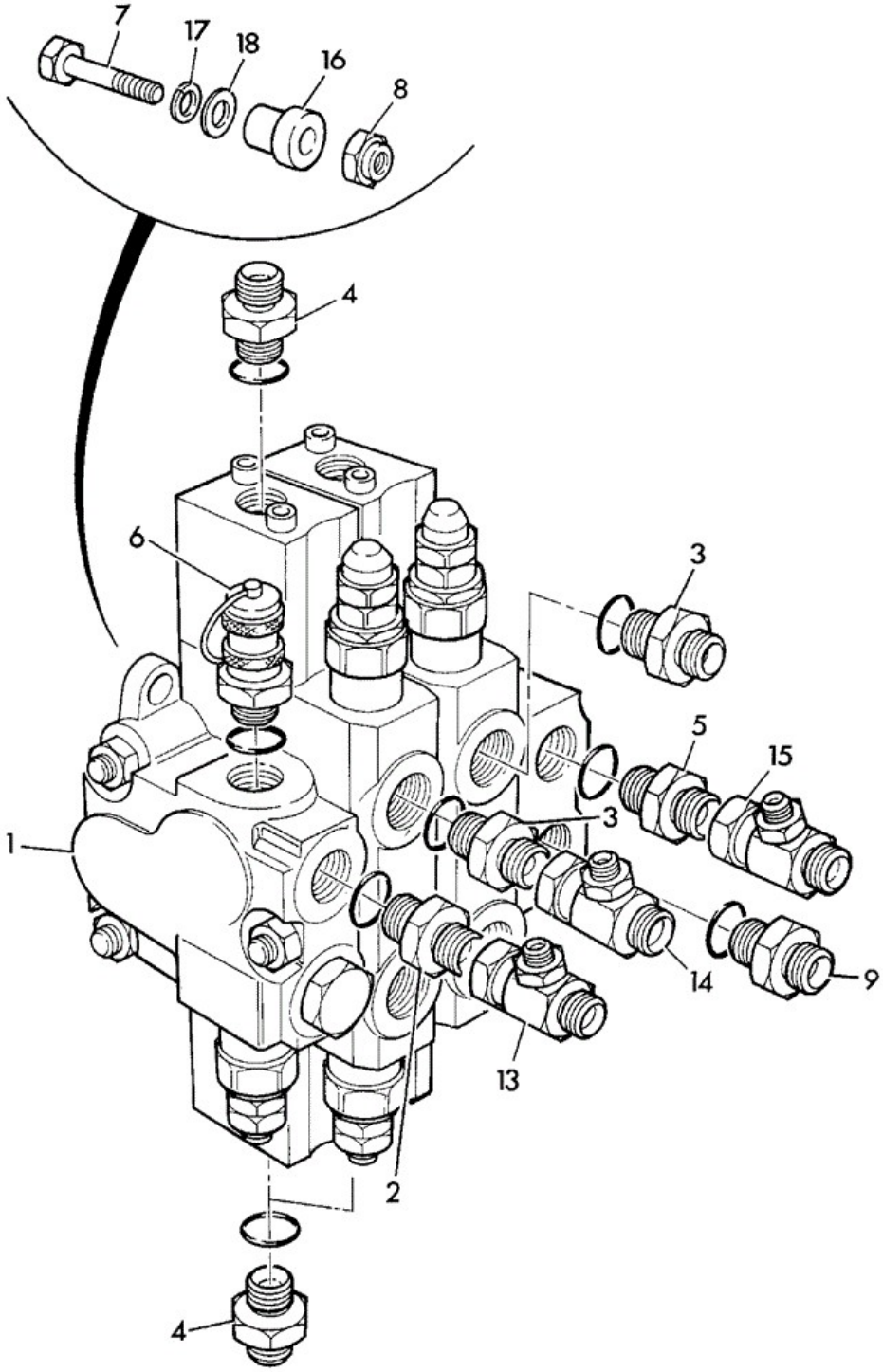

Item	Part No	Change No	Description	Usage Code	QTY
1	25/221039	Superseded	Valve loader, 2 spool integral restrictor		1
1	332/W3571		Valve loader, 2 spool		1

2	816/17091	<M808234	Adapter		1
2	1620/2058		Adaptor 3/4BSP x 7/8SAE M/M		2
3	1620/0004	<M808234	Adapter 3/4		4
3	1620/2053		Adaptor 3/8BSPx3/4SAE		4
3A	:2401/0506		O Ring		1
4	1620/0002	<M808234	Adapter		1
4	1620/2051		Adaptor 1/4"BSP x 9/16"SAE		1
4A	:2401/0505		O Ring		1
5	816/17061	<M808234	Adapter		1
5	1620/2058		Adaptor 3/4BSP x 7/8SAE M/M		1
5A	:2401/0506		O Ring		1
6	816/60230	<M808234	Plug test point		1
6	45/908000		Adaptor Pressure Test Point 9/16-18UNF Male		1
6A	:2401/0505		O Ring		1
7	1315/0411Z		Bolt M10 x 45		3
8	1370/0303Z		Nut lock M10		3
9	1620/0007	<M808234	Adapter		1
9	1620/2056		Adaptor		1
9A	:2401/0507		O Ring		1
13	816/50043		Adapter tee		1
14	816/50033	<M808234	Adapter Tee		4
14	816/90040		Adaptor Tee		3
15	816/00344	<M808234	Adapter Tee		1
15	816/90043		Adaptor tee M/M/F		1
16	141/00936		Mounting Resilient		3
17	1420/0012Z		Washer M20		3
18	823/00326		Washer M10 X 30mm		6

Applicability Date Ranges:
From: Jan 2002 , To:

Product Catalog\BACKHOE LOADER 1CX, 208\.1CX 00807553-00808999,01050000-01051999,01298000-01299999 9802/6220\E HYDRAULICS & AIR INCLUDING STEERING\E03 VALVES & HYDRAULIC FILTERS\E3-6-1 VALVE, SECTION BUCKET & AUXILIARY

9802/6220 E3-6-1 VALVE, SECTION BUCKET & AUXILIARY

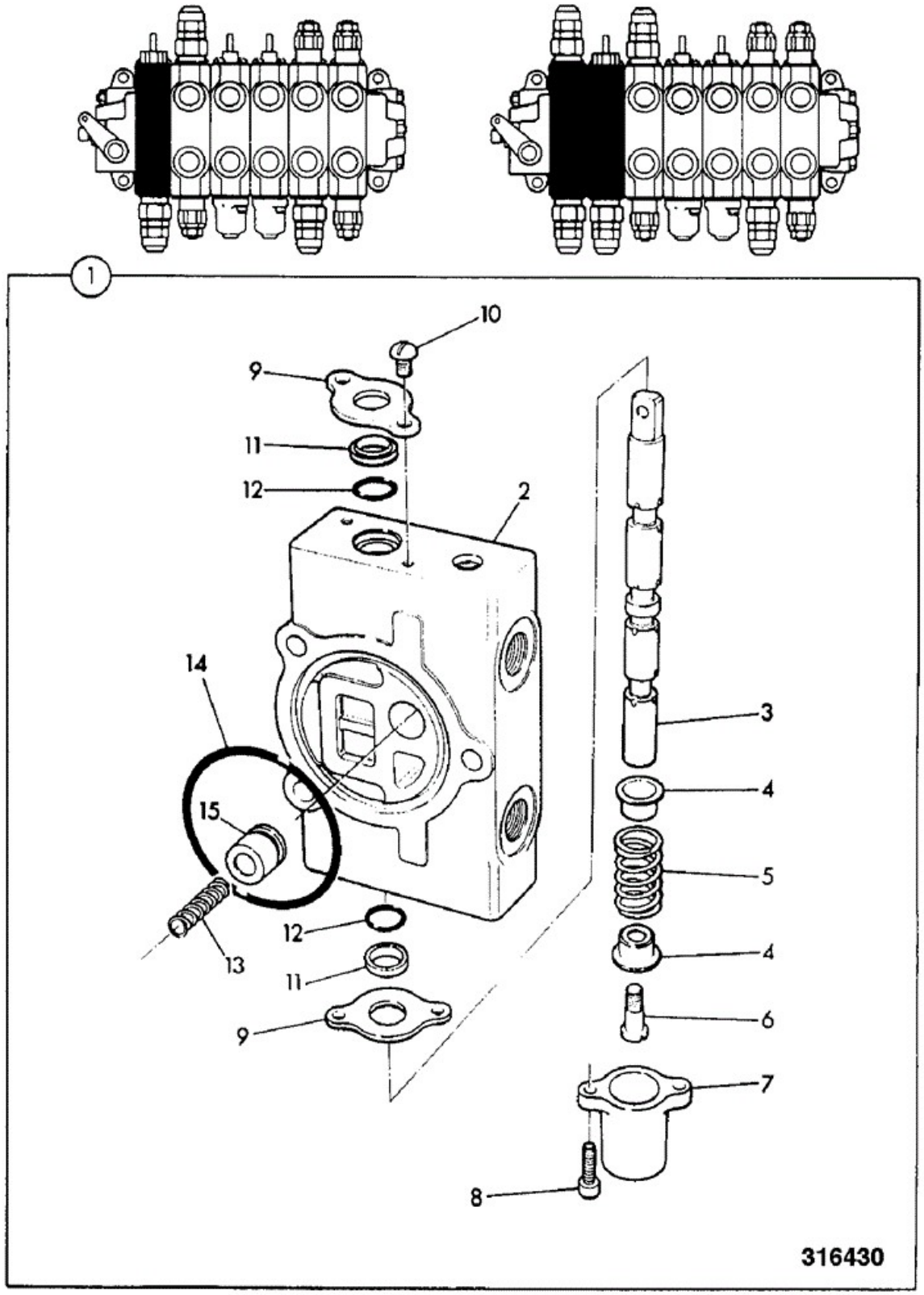

	Part				

Item	No	Change No	Description	Usage Code	QTY
1	25/611202		Valve section Bucket (Auxilliary also,7 spool)		0
2	****		None serviced part Spool and body are matched pairs.		1
3	****		None serviced part		1
4	:25/606834		Seat spring		2
5	:25/617405		Spring		1
6	:25/606828		Spool end		1
7	:25/606846		Cap spool		1
8	:25/606827		Screw		2
9	:25/606826		Plate seal		2
10	:25/606503		Screw		2
11	:25/606835		Seal wiper		2
12	:25/606836		O Ring		2
13	:25/606844		Spring		1
14	:25/606812		Kit O-Rings X 5 valve sections interface		1
15	:25/606843		Poppet		1

Applicability Date Ranges:
From: , To:

9802/6220 E3-6-2 VALVE, SECTION DIPPER & BOOM

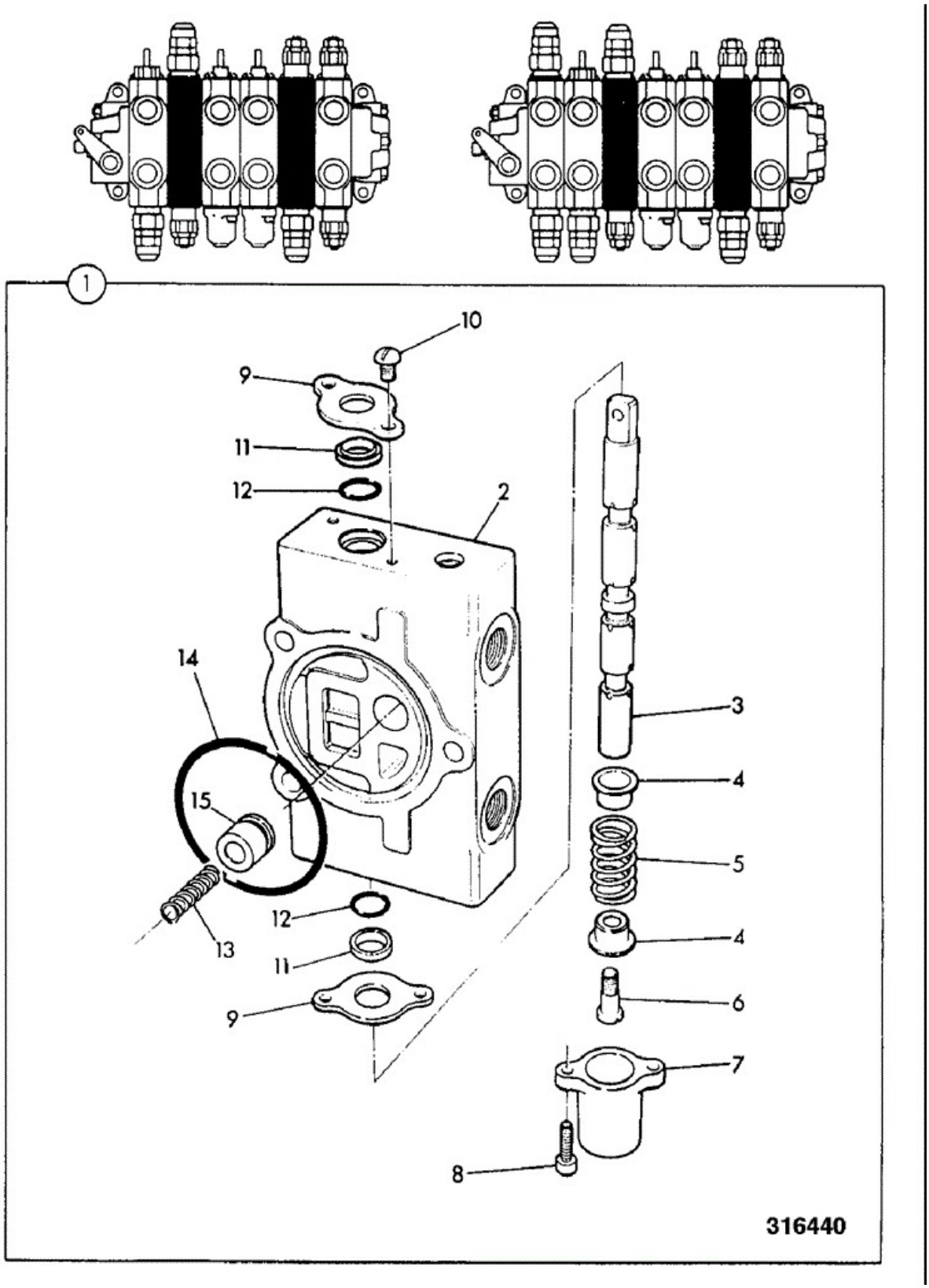

Item	Part No	Change No	Description	Usage Code	QTY

1	25/617401		Valve section Dipper, boom		0
2	****		None serviced part Spool and body are matched pairs.		1
3	****		None serviced part		1
4	:25/606834		Seat spring		2
5	:25/617405		Spring		1
6	:25/606828		Spool end		1
7	:25/606846		Cap spool		1
8	:25/606827		Screw		2
9	:25/606826		Plate seal		2
10	:25/606503		Screw		2
11	:25/606835		Seal wiper		2
12	:25/606836		O Ring		2
13	:25/606844		Spring		1
14	:25/606812		Kit O-Rings X 5 valve sections interface		1
15	:25/606843		Poppet		1

Applicability Date Ranges:
From: , To:

Product Catalog\BACKHOE LOADER 1CX, 208\.1CX 00807553-00808999,01050000-01051999,01298000-01299999 9802/6220\E HYDRAULICS & AIR INCLUDING STEERING\E03 VALVES & HYDRAULIC FILTERS\E3-7-1 VALVE, SECTION STABILISER

9802/6220 E3-7-1 VALVE, SECTION STABILISER

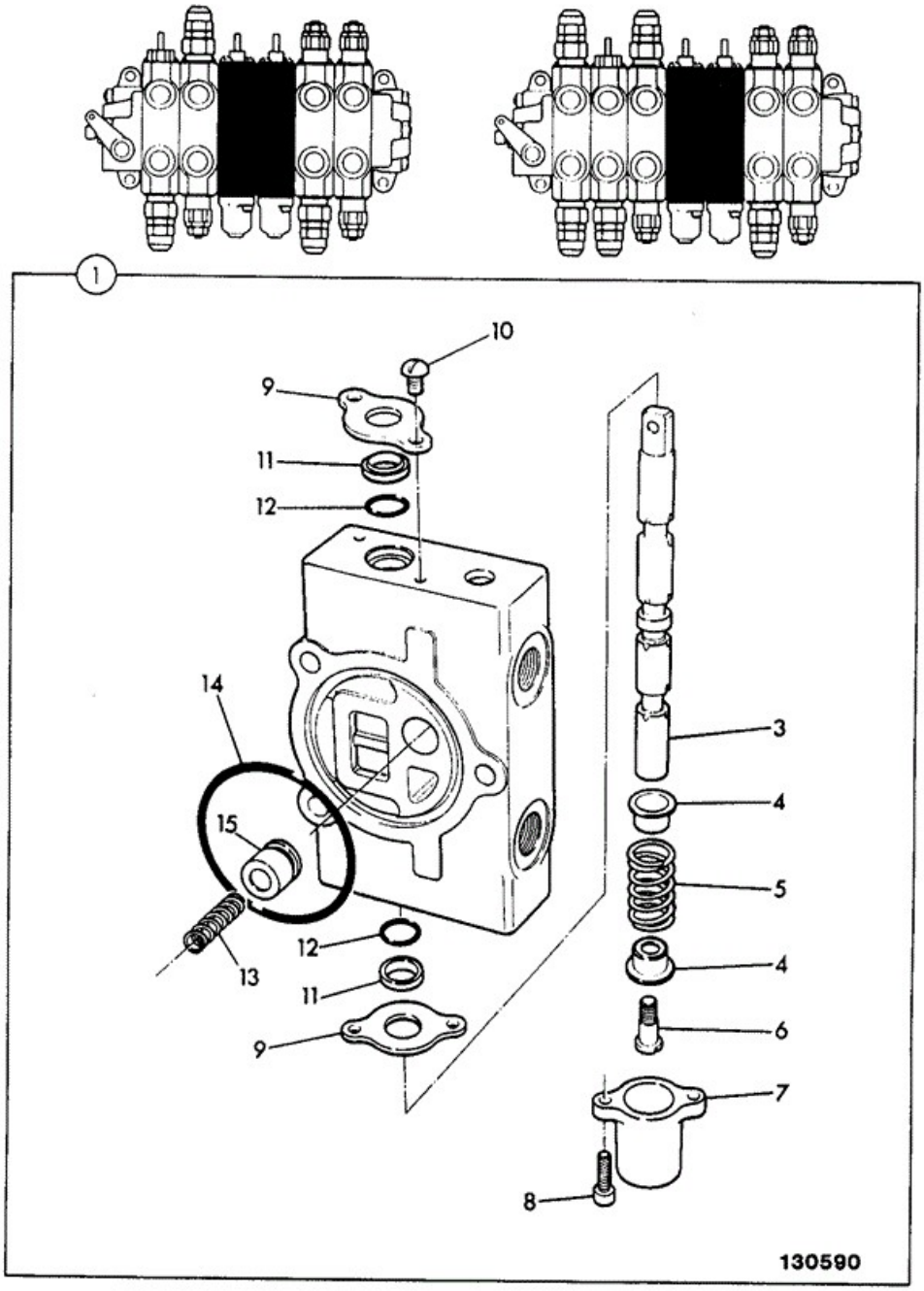

Item	Part No	Change No	Description	Usage Code	QTY

1	25/611203		Valve section Stabilizer, Left and right hand		0
2	****		None serviced part Spool and body are matched pairs.		1
3	****		None serviced part		1
4	:25/606834		Seat spring		2
5	:25/606833		Spring		1
6	:25/606828		Spool end		1
7	:25/606846		Cap spool		1
8	:25/606827		Screw		2
9	:25/606826		Plate seal		2
10	:25/606503		Screw		2
11	:25/606835		Seal wiper		2
12	:25/606836		O Ring		2
13	:25/606844		Spring		1
14	:25/606812		Kit O-Rings X 5 valve sections interface		1
15	:25/606843		Poppet		1

Applicability Date Ranges:
From: , To:

Product Catalog\BACKHOE LOADER 1CX, 208\.1CX 00807553-00808999,01050000-01051999,01298000-01299999 9802/6220\E HYDRAULICS & AIR INCLUDING STEERING\E03 VALVES & HYDRAULIC FILTERS\E3-8-1 VALVE, SECTION SLEW

9802/6220 E3-8-1 VALVE, SECTION SLEW

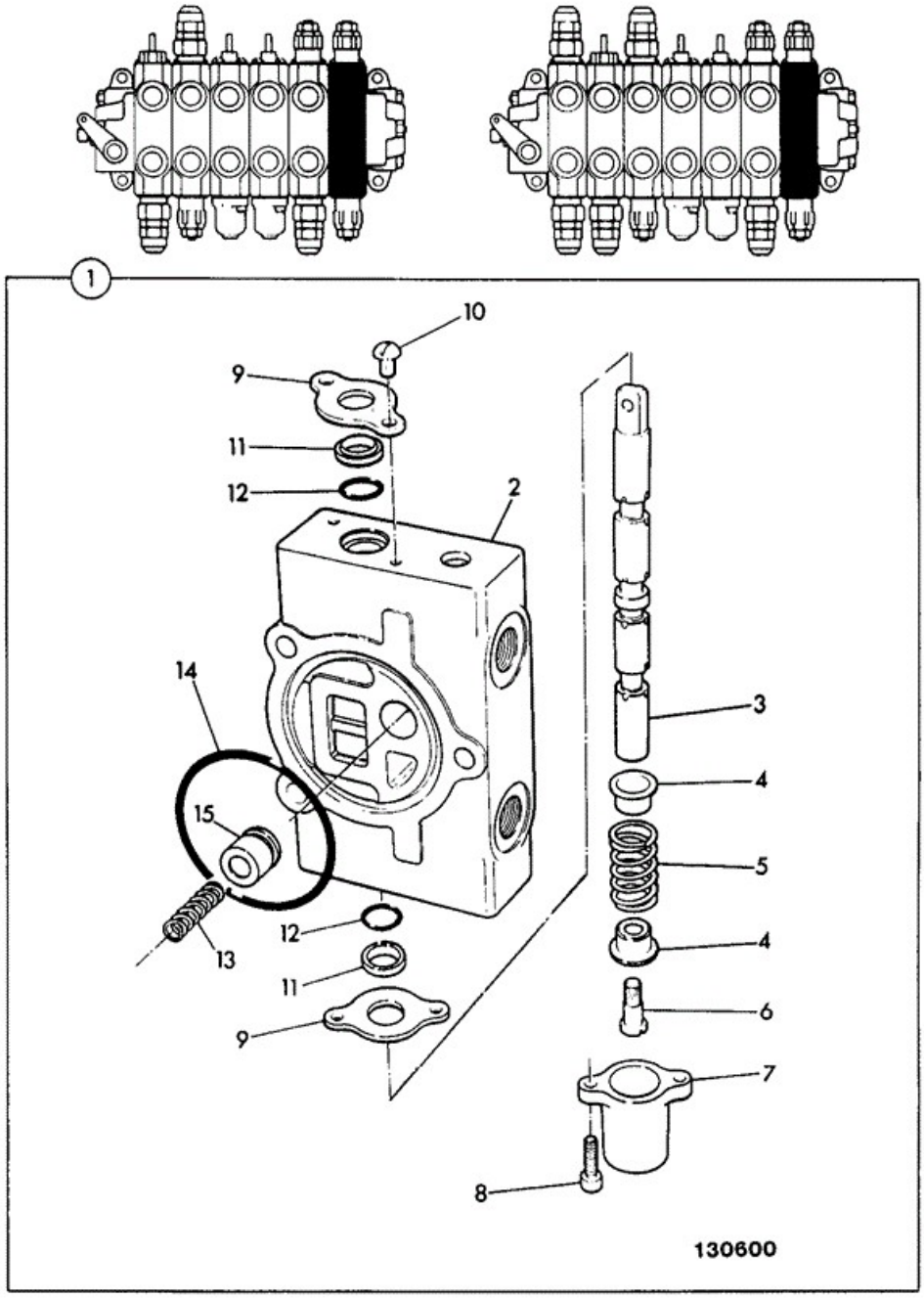

Item	Part No	Change No	Description	Usage Code	QTY

1	25/611204		Valve section Slew		1
2	****		None serviced part Spool and body are matched pairs.		1
3	****		None serviced part		1
4	:25/606834		Seat spring		2
5	:25/617405		Spring		1
6	:25/606828		Spool end		1
7	:25/606846		Cap spool		1
8	:25/606827		Screw		2
9	:25/606826		Plate seal		2
10	:25/606503		Screw		2
11	:25/606835		Seal wiper		2
12	:25/606836		O Ring		2
13	:25/606844		Spring		1
14	:25/606812		Kit O-Rings X 5 valve sections interface		1
15	:25/606843		Poppet		1

Applicability Date Ranges:
From: , To:

Product Catalog\BACKHOE LOADER 1CX, 208\.1CX 00807553-00808999,01050000-01051999,01298000-01299999 9802/6220\E HYDRAULICS & AIR INCLUDING STEERING\E03 VALVES & HYDRAULIC FILTERS\E3-9-1 COVER INLET & OUTLET EXCAVATOR VALVE

9802/6220 E3-9-1 COVER INLET & OUTLET EXCAVATOR VALVE

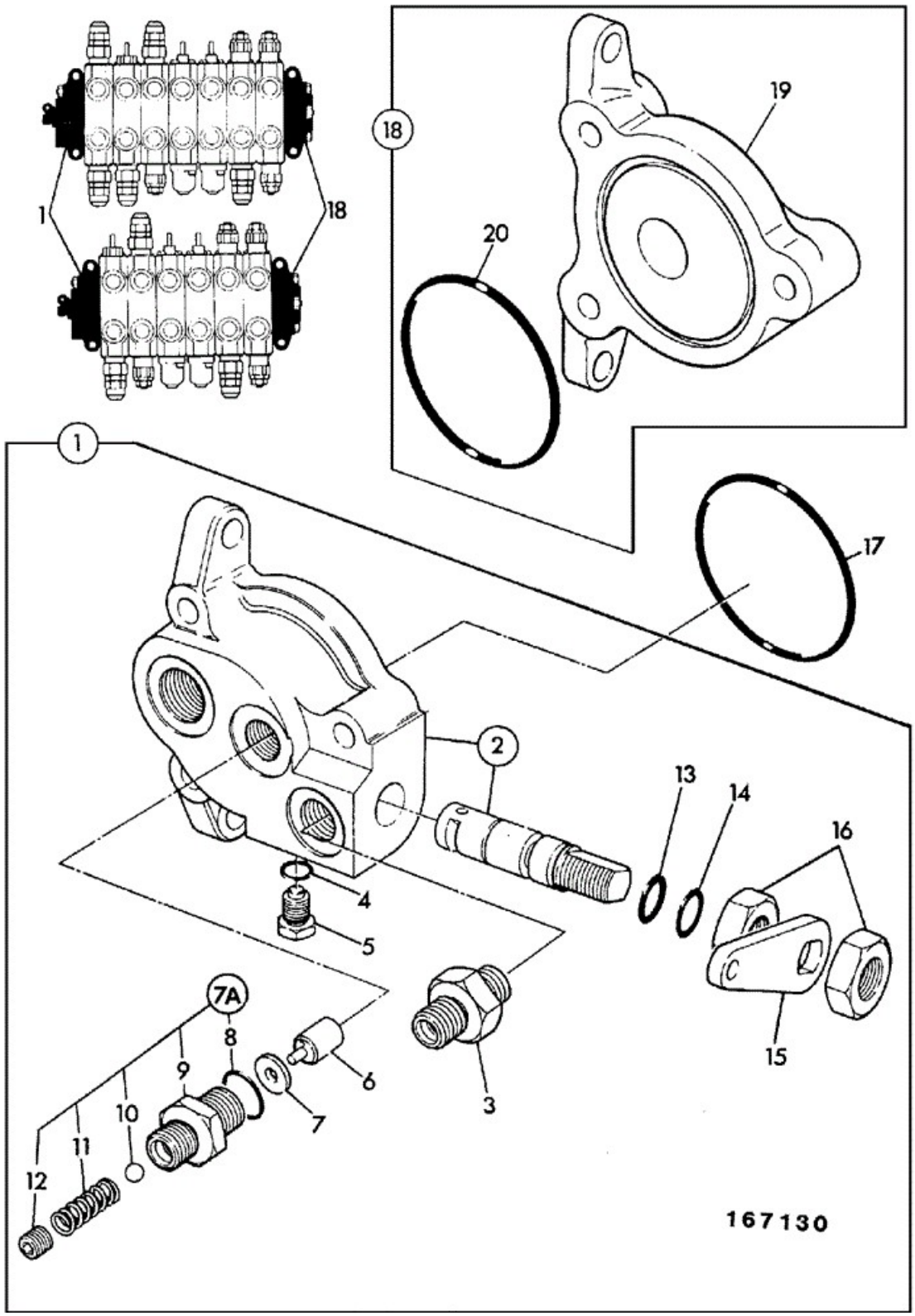

	Part				

Item	No	Change No	Description	Usage Code	QTY
1	25/611201		Cover outlet & clamp		1
2	****		None serviced part Body and spool are a matched pair.		1
3	:25/610702		Adapter		1
4	:25/617403		O Ring		1
5	:25/607217		Plug		1
6	****		None serviced part Piston and body are a matched pair.		1
7	****		'See Remark' Not required on this assembly.		1
7A	:25/607236		Valve check, assembly		1
8	::25/607219		O Ring		1
9	::25/607220		Body adaptor NSP		1
10	::25/617404		Ball		1
11	::25/607222		Spring		1
12	::25/607223		Retainer spring		1
13	:25/607224		O Ring		1
14	:25/607225		O Ring		1
15	:25/607226		Lever		1
16	:25/607227		Nut		2
17	:25/606812		Kit O-Rings X 5 valve sections interface		1
18	25/611205		Cover inlet		1
19	****		None serviced part		1
20	:25/606812		Kit O-Rings X 5 valve sections interface		1

Applicability Date Ranges:
From: , To:

9802/6220 E3-10-1 VALVE, RELIEF EXCAVATOR

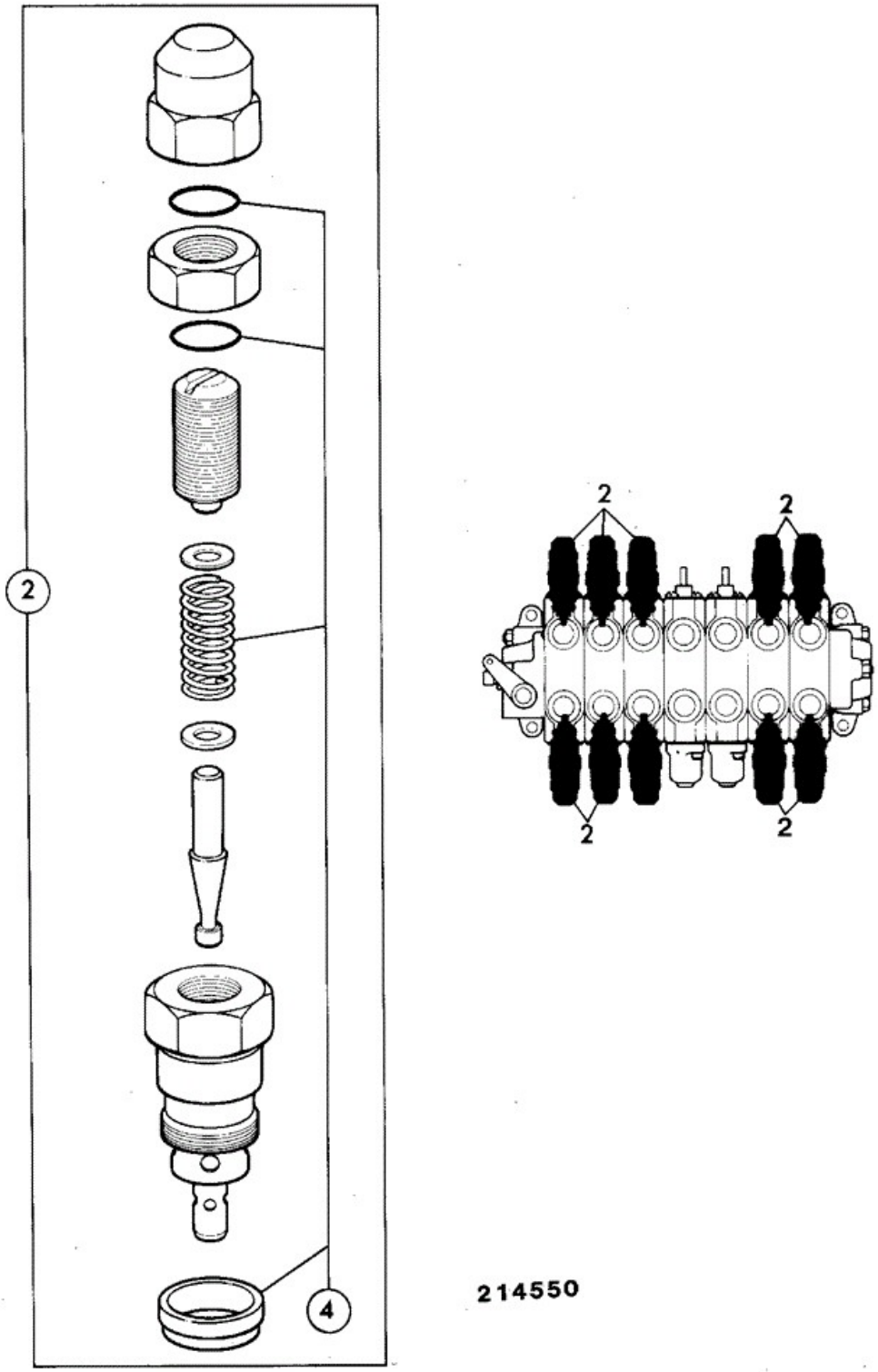

Item	Part No	Change No	Description	Usage Code	QTY

2	25/607228		Valve relief,auxiliary 3500psi QTY:A/R		0
4	:25/606819		Kit-seal relief valve		1
5	332/G0313		Valve ARV 3500psi@0.5Gal/min Ports 2A and 5A QTY:A/R		0
6	:25/606849		Kit-seal		1

Applicability Date Ranges:
From: , To:

9802/6220 E3-11-1 VALVE, RELIEF LOADER

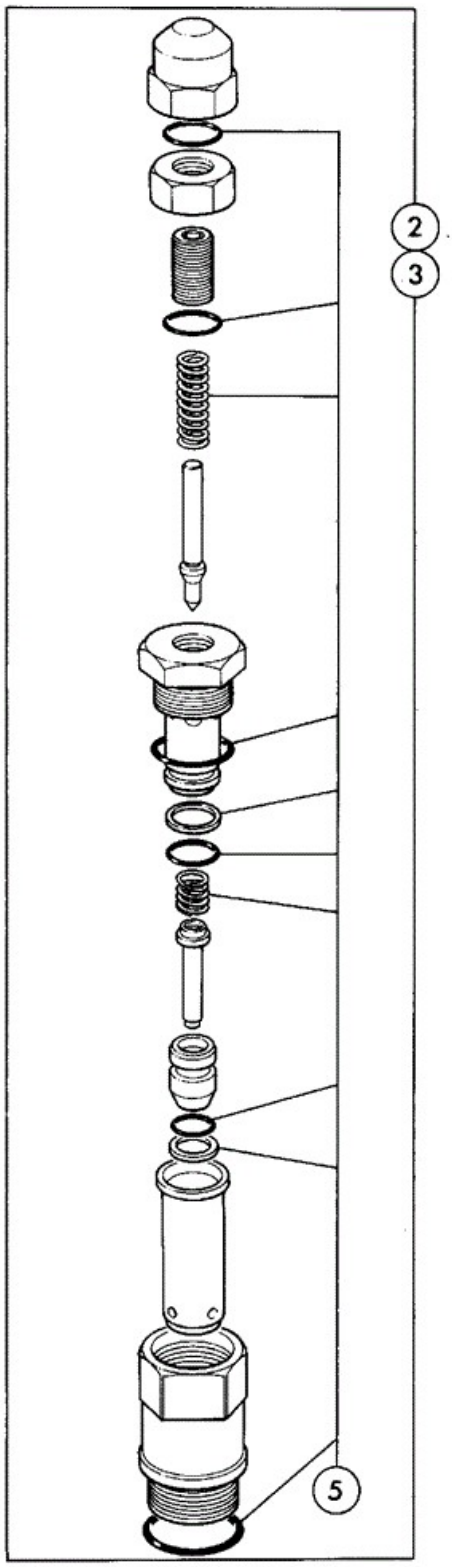

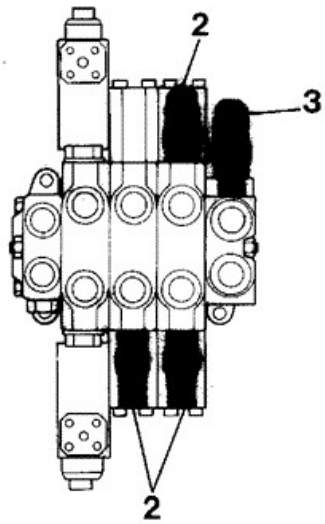

214630

Item	Part No	Change No	Description	Usage Code	QTY

2	25/607231		Valve Relief 3500 psi		1
2	25/618001		Valve aux. relief Shovel ram Dump End		1
3	25/607232		Valve relief Main relief valve		1
5	:25/606849		Kit-seal		1

Applicability Date Ranges:
From: , To:

Product Catalog\BACKHOE LOADER 1CX, 208\.1CX 00807553-00808999,01050000-01051999,01298000-01299999 9802/6220\E HYDRAULICS & AIR INCLUDING STEERING\E03 VALVES & HYDRAULIC FILTERS\E3-12-3 VALVE, COMPONENTS 3 SPOOL VALVE

9802/6220 E3-12-3 VALVE, COMPONENTS 3 SPOOL VALVE

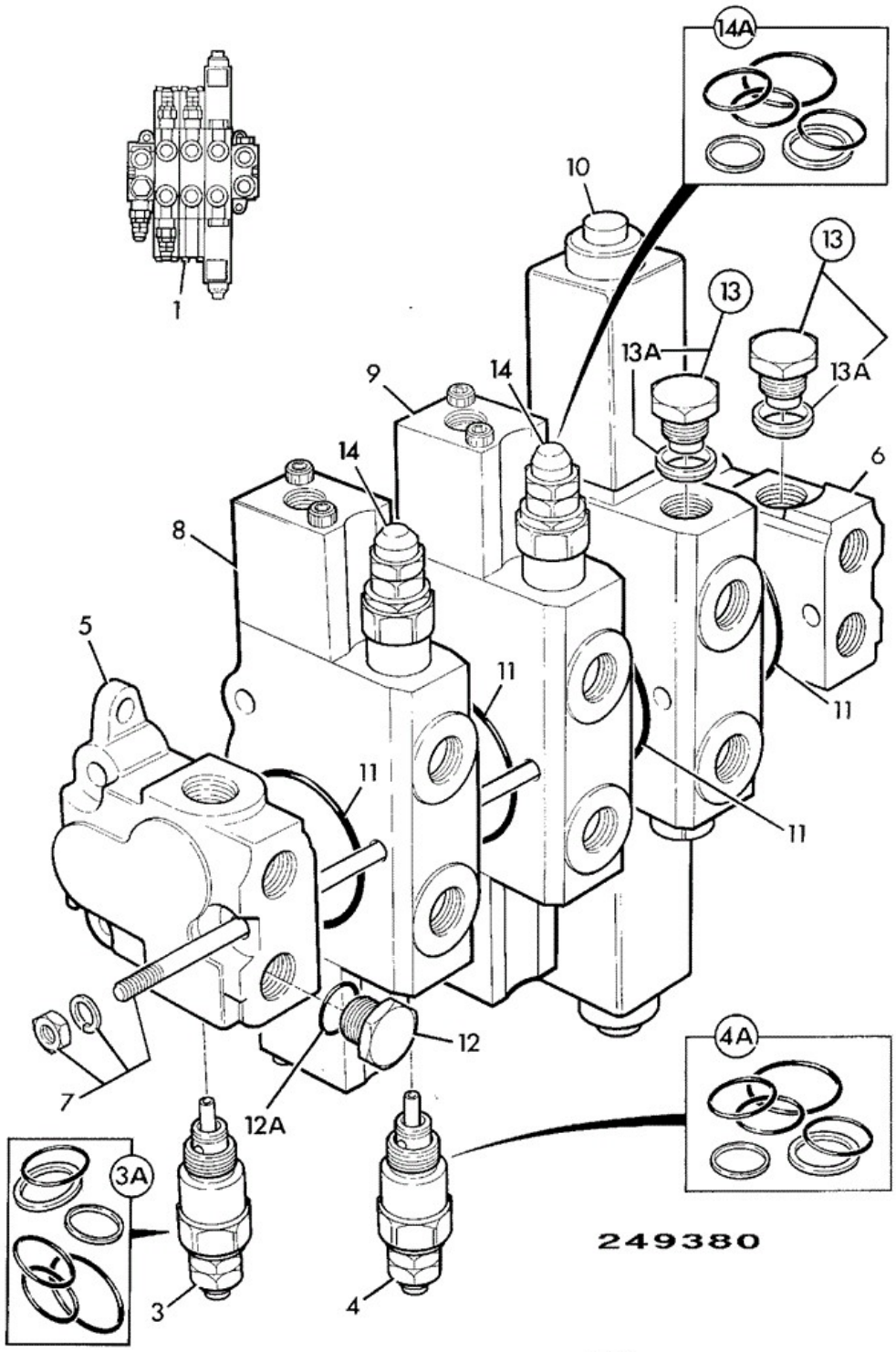

Item	Part No	Change No	Description	Usage Code	QTY
1	25/621700		Valve 3 spool		1
			Valve relief		

3	:25/607232		Main Relief Valve		1
3A	::25/606849		Kit-seal		1
4	:25/618001		Valve aux. relief Shovel ram, Dump End		1
4A	::25/606849		Kit-seal		1
5	:25/611401		Valve inlet section		1
6	:25/606904		Valve outlet section		1
7	:25/607702		Kit-tie rod		1
8	:25/611403		Valve section		1
9	:25/611402		Valve section		1
10	:25/621701		Valve aux. section AMP connectors		1
11	:25/606812		Kit O-Rings X 5 valve sections interface		0
12	:25/606822		Plug assembly		1
12A	::25/606116		O Ring		1
13	:25/607234		Plug kit		2
13A	::25/607235		Seal		1
14	25/611407		Valve relief		2
14A	::25/606849		Kit-seal		1

Applicability Date Ranges:
From: , To: JAN 2002

Product Catalog\BACKHOE LOADER 1CX, 208\.1CX 00807553-00808999,01050000-01051999,01298000-01299999 9802/6220\E HYDRAULICS & AIR INCLUDING STEERING\E03 VALVES & HYDRAULIC FILTERS\E3-12-4 VALVE, COMPONENTS 2 SPOOL VALVE

9802/6220 E3-12-4 VALVE, COMPONENTS 2 SPOOL VALVE

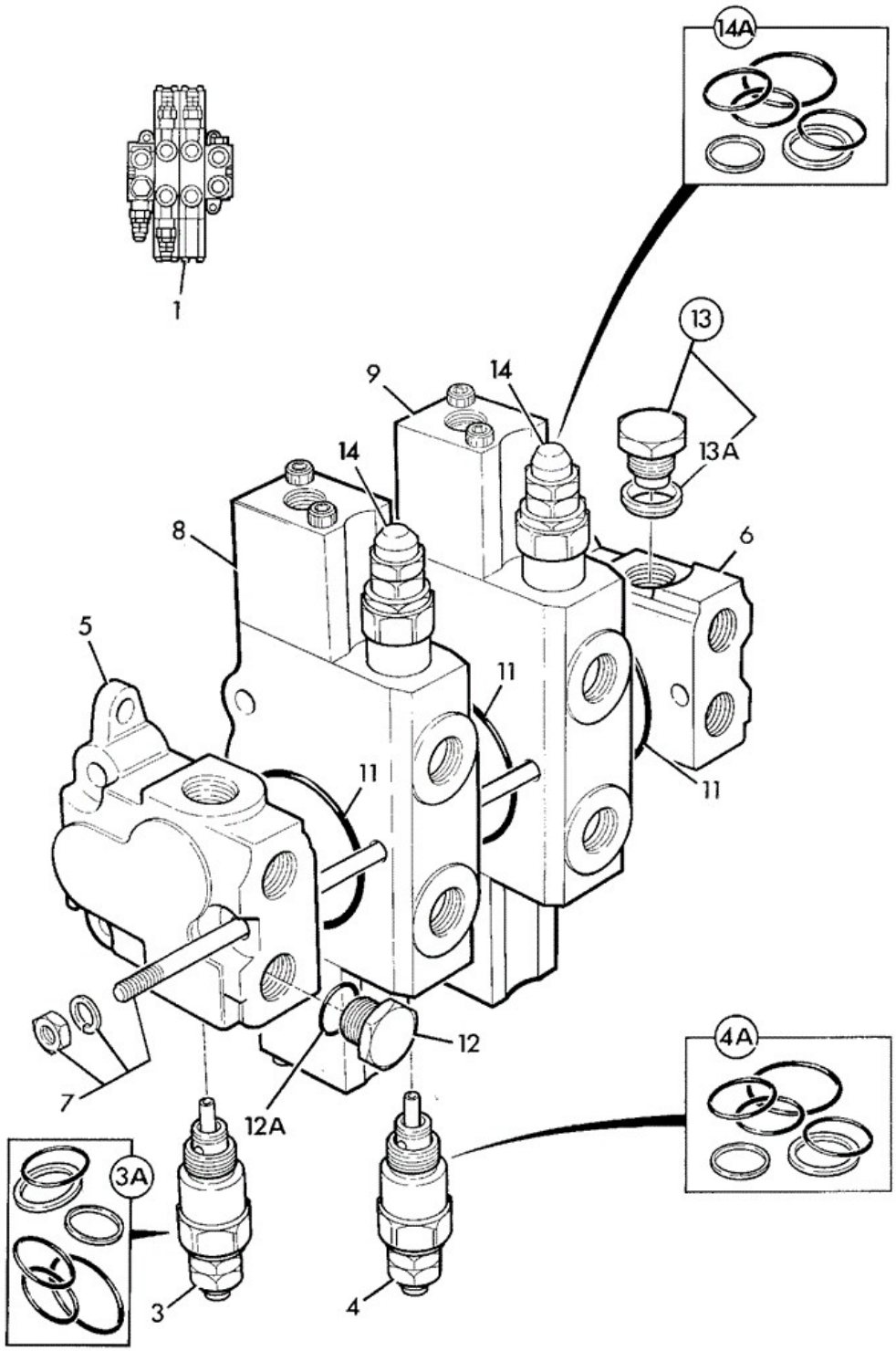

Item	Part No	Change No	Description	Usage Code	QTY
1	25/620500		Valve loader, 2 spool		1
			Valve relief		

3	:25/607232		Main Relief Valve		1
3A	::25/606849		Kit-seal		1
4	:25/618001		Valve aux. relief Shovel ram, Dump End		1
4A	::25/606849		Kit-seal		1
5	:25/611401		Valve inlet section		1
6	:25/606904		Valve outlet section		1
7	:25/607605		Kit-tie rod		1
8	:25/611403		Valve section		1
9	:25/611402		Valve section		1
11	:25/606812		Kit O-Rings X 5 valve sections interface		3
12	:25/606822		Plug assembly		1
12A	::25/606116		O Ring		1
13	:25/607234		Plug kit		1
13A	::25/607235		Seal		1
14	25/611407		Valve relief		2
14A	::25/606849		Kit-seal		1

Applicability Date Ranges:
From: , To: JAN 2002

Product Catalog\BACKHOE LOADER 1CX, 208\.1CX 00807553-00808999,01050000-01051999,01298000-01299999 9802/6220\E HYDRAULICS & AIR INCLUDING STEERING\E03 VALVES & HYDRAULIC FILTERS\E3-12-5 VALVE, COMPONENTS 2 SPOOL VALVE INTEGRAL RESTRICTOR

9802/6220 E3-12-5 VALVE, COMPONENTS 2 SPOOL VALVE INTEGRAL RESTRICTOR

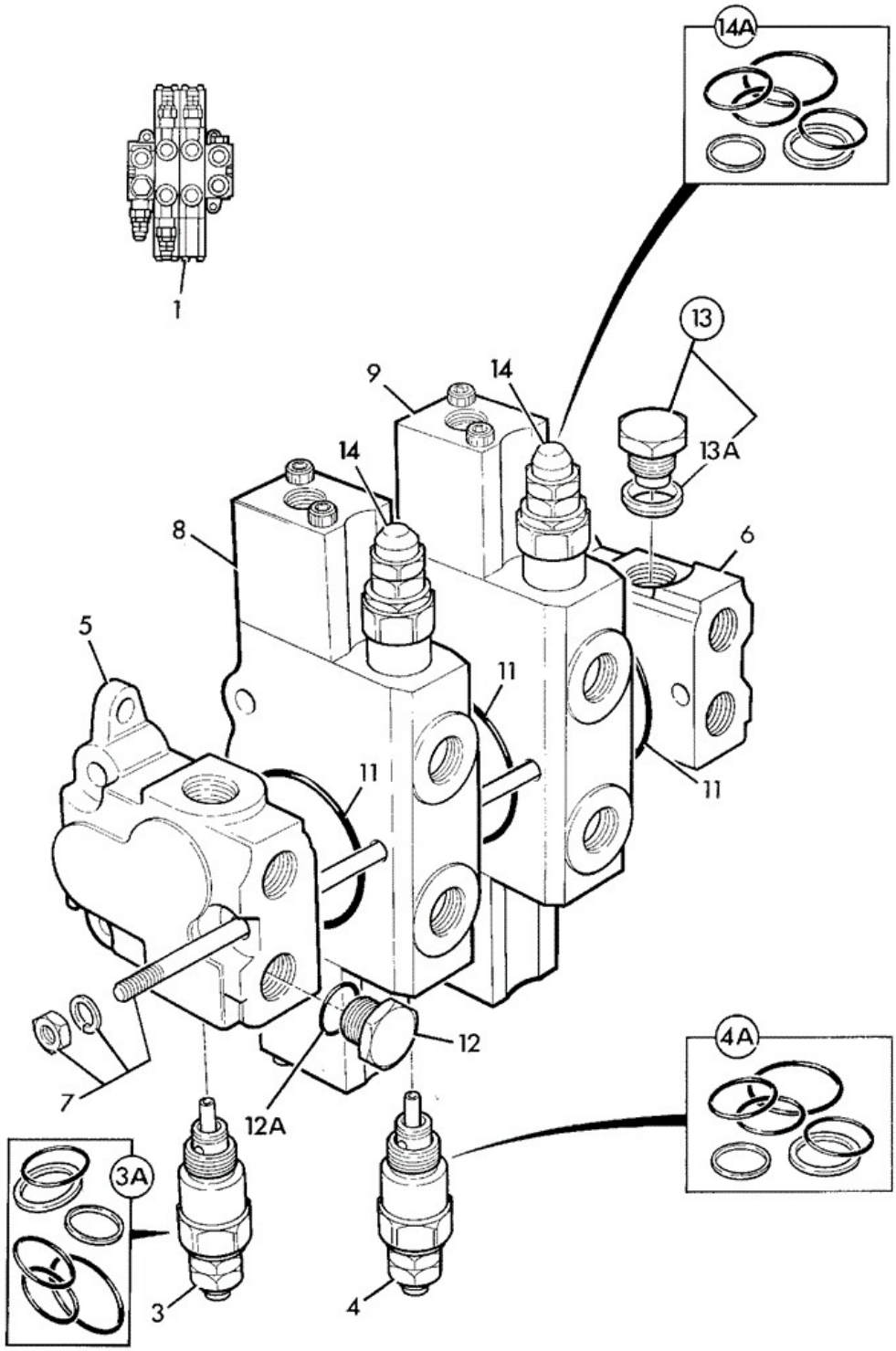

Item	Part No	Change No	Description	Usage Code	QTY
1	25/221039	Superseded	Valve loader, 2 spool integral restrictor		1

1	332/W3571		Valve loader, 2 spool see E3-12-8 for breakdown		1
3	:25/607232		Valve relief Main Relief Valve		1
3A	::25/606849		Kit-seal		1
4	:25/618001		Valve aux. relief Shovel ram, Dump End		1
4A	::25/606849		Kit-seal		1
5	:25/611401		Valve inlet section		1
6	:25/606904		Valve outlet section		1
7	:25/607605		Kit-tie rod		1
8	:25/221097		Valve section auxiliary bucket section		1
9	:25/221096		Valve section boom section		1
11	:25/606812		Kit O-Rings X 5 valve sections interface		3
12	:25/606822		Plug assembly		1
12A	::25/606116		O Ring		1
13	:25/607234		Plug kit		1
13A	::25/607235		Seal		1
14	25/611407		Valve relief		2
14A	::25/606849		Kit-seal		1

Applicability Date Ranges:
From: Jan 2002 , To:

9802/6220 E3-12-6 VALVE, COMPONENTS 3 SPOOL VALVE INTEGRAL RESTRICTOR

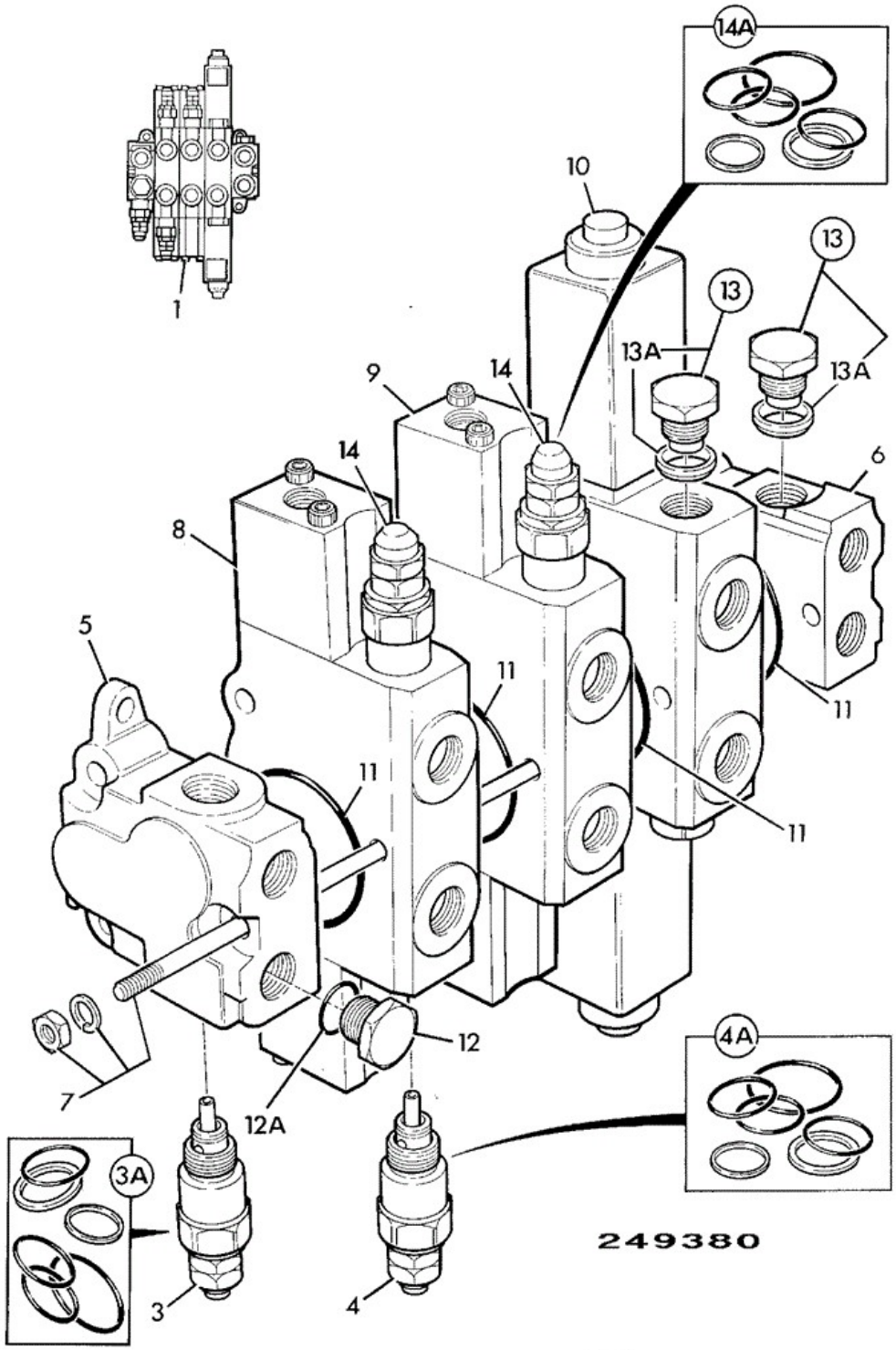

Item	Part No	Change No	Description	Usage Code	QTY
1	25/221033		Valve loader, 3 spool integral restrictor		1

3	:25/607232		Valve relief Main Relief Valve		1
3A	::25/606849		Kit-seal		1
4	:25/618001		Valve aux. relief Shovel ram, Dump End		1
4A	::25/606849		Kit-seal		1
5	:25/611401		Valve inlet section		1
6	:25/606904		Valve outlet section		1
7	:25/607702		Kit-tie rod		1
8	:25/221097		Valve section auxiliary bucket section		1
9	:25/221096		Valve section boom section		1
10	:25/621701		Valve aux. section AMP connectors aux section		1
11	:25/606812		Kit O-Rings X 5 valve sections interface		4
12	:25/606822		Plug assembly		1
12A	::25/606116		O Ring		1
13	:25/607234		Plug kit		2
13A	::25/607235		Seal		1
14	25/611407		Valve relief		2
14A	::25/606849		Kit-seal		1

Applicability Date Ranges:
From: , To: S/N808661

Product Catalog\BACKHOE LOADER 1CX, 208\.1CX 00807553-00808999,01050000-01051999,01298000-01299999 9802/6220\E HYDRAULICS & AIR INCLUDING STEERING\E03 VALVES & HYDRAULIC FILTERS\E3-12-7 VALVE, COMPONENTS 3 SPOOL VALVE INTEGRAL RESTRICTOR 12 VOLT

9802/6220 E3-12-7 VALVE, COMPONENTS 3 SPOOL VALVE INTEGRAL RESTRICTOR 12 VOLT

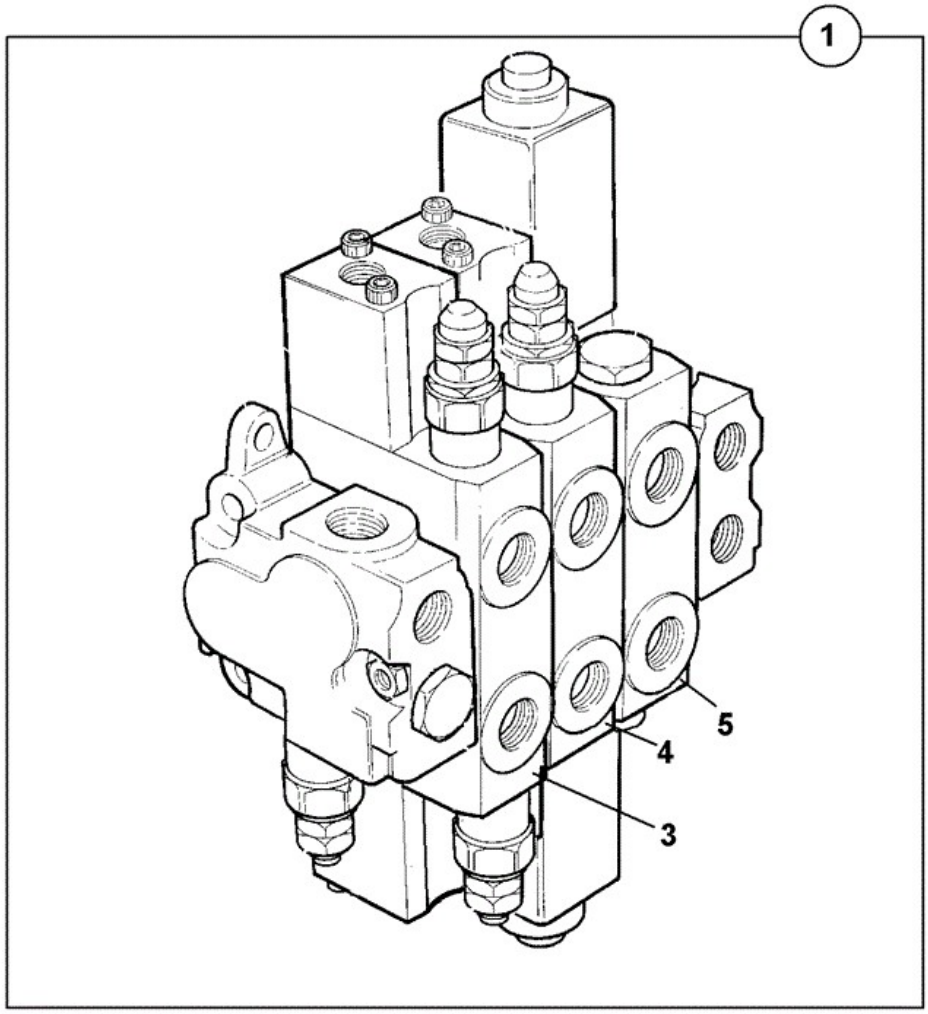

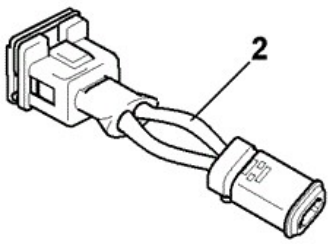

721-10763-1

Item	Part No	Change No	Description	Usage Code	QTY
1	25/221345		Valve loader with restrictor	A	1

1	332/W3572		Valve loader 3 spool see page E3-12-9 for breakdown		1
2	721/10763		Harness 2-way link 40mm long Deutsch-AMP/Jnrtimer	A	2
3	:25/611403		Valve section		1
4	:331/40477		Valve section		1
5	:331/40479		Valve section auxiliary		1

Note 1: Also supply 721/10763 2off when replacing 25/221033

Applicability Date Ranges:
From: S/N808662 , To:

Product Catalog\BACKHOE LOADER 1CX, 208\.1CX 00807553-00808999,01050000-01051999,01298000-01299999 9802/6220\E HYDRAULICS & AIR INCLUDING STEERING\E03 VALVES & HYDRAULIC FILTERS\E3-12-8 VALVE, COMPONENTS 2 SPOOL VALVE

9802/6220 E3-12-8 VALVE, COMPONENTS 2 SPOOL VALVE

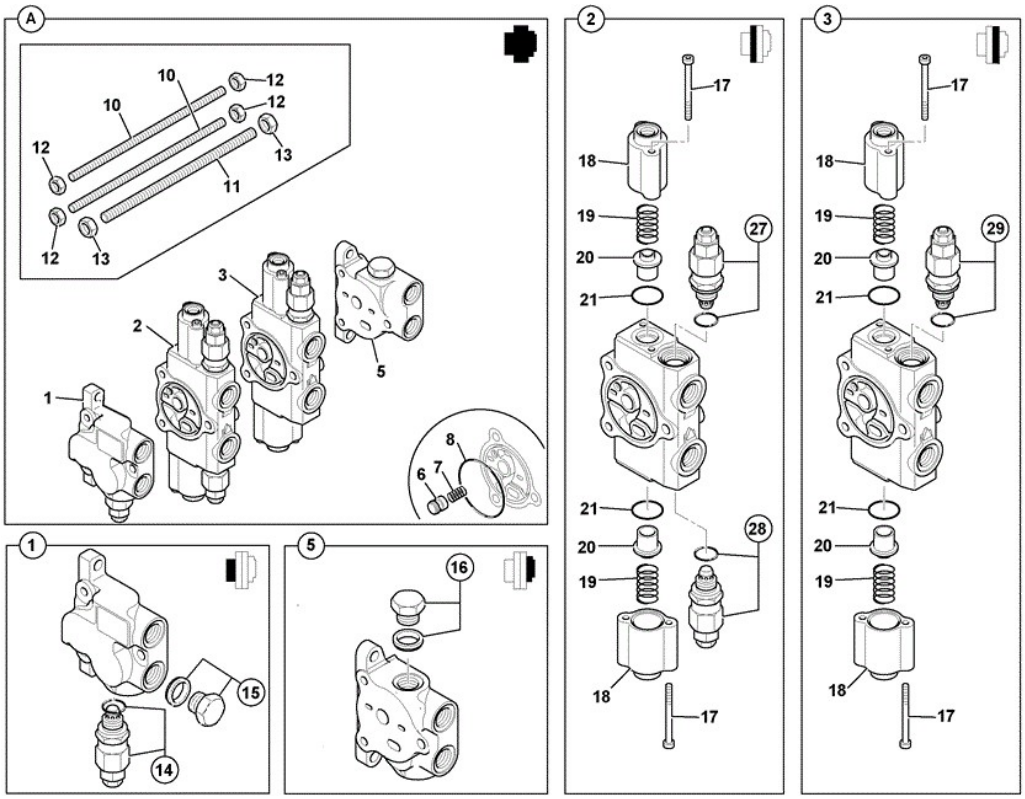

332-W3571-1

Item	Part No	Change No	Description	Usage Code	QTY
A	332/W3571		Valve loader, 2 spool		1
1	:25/611401		Valve inlet section		1
2	:25/221097		Valve section auxiliary		1
3	:331/45862		Valve Boom Section		1
5	:25/606904		Valve outlet section		1
6	:25/606843		Poppet		3
7	:25/606844		Spring		3
8	:25/606812		Kit O-Rings X 5 valve sections interface		3
10	:25/607606		Rod tie		2
11	:25/607607		Rod tie		1
12	:25/606817		Nut		4
13	:25/606815		Nut		2
14	:25/611406		Valve Relief 2680 psi not supplied with item 1		1
15	::25/606822		Plug assembly		1
16	::25/607234		Plug kit		1

17	::25/608607		Capscrew		8
18	::25/608608		Cap detent		4
19	::25/611408		Spring		4
20	::25/608609		Seat spring		4
21	::25/608606		O Ring		4
27	:332/G2759		Valve relief 233bar @ 2L/M not supplied with item 2		1
28	:25/618001		Valve aux. relief not supplied with item 2		1
29	:332/G2758		Valve relief 233bar @ 2L/M not supplied with item 3		1

Applicability Date Ranges:
From: , To:

9802/6220 E3-12-9 VALVE, COMPONENTS 3 SPOOL VALVE

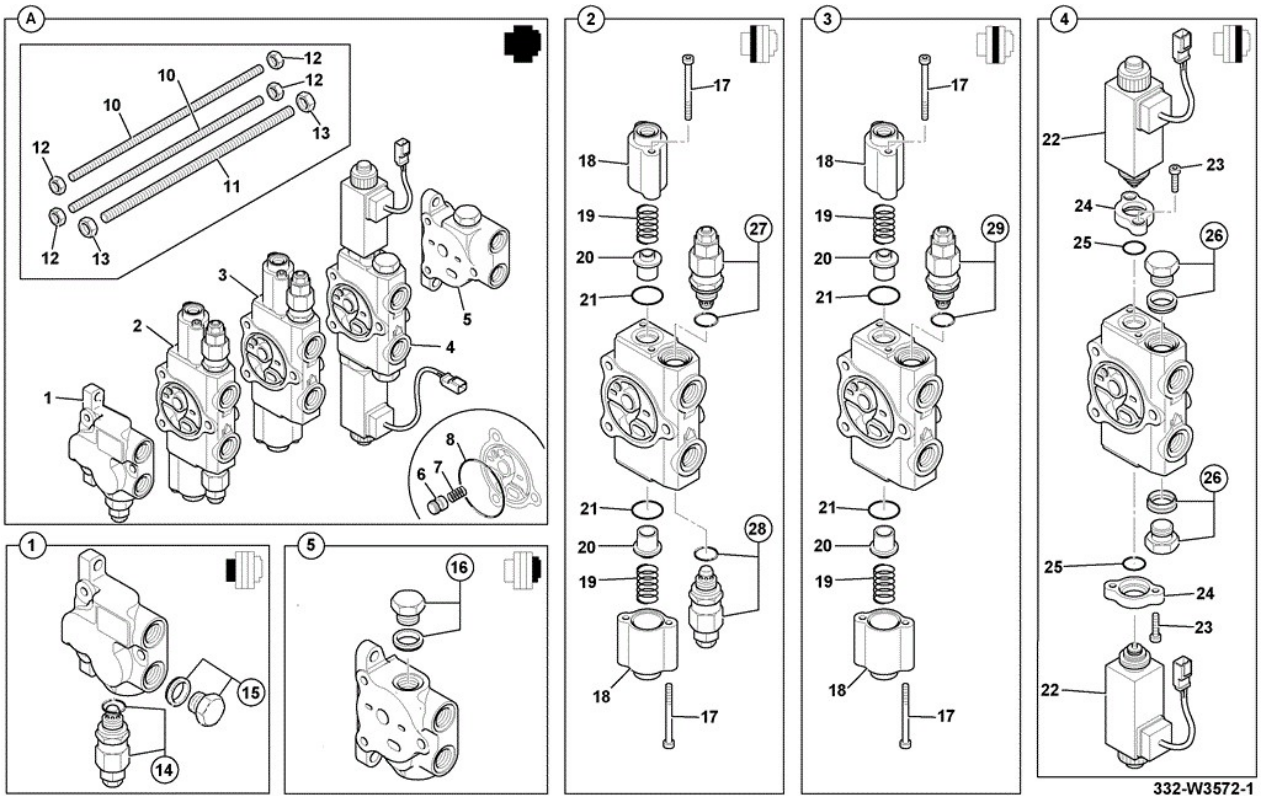

Item	Part No	Change No	Description	Usage Code	QTY
A	332/W3572		Valve loader 3 spool		1
1	:25/611401		Valve inlet section		1
2	:25/221097		Valve section auxiliary		1
3	:331/45862		Valve Boom Section		1
4	:331/40479		Valve section auxiliary		1
5	:25/606904		Valve outlet section		1
6	:25/606843		Poppet		3
7	:25/606844		Spring		3
8	:25/606812		Kit O-Rings X 5 valve sections interface		4
10	:25/607704		Rod tie		2
11	:25/607703		Rod tie		1
12	:25/606817		Nut		4
13	:25/606815		Nut		2
14	:25/611406		Valve Relief 2680 psi not supplied with item 1		1
15	::25/606822		Plug assembly		1

16	::25/607234		Plug kit		1
17	::25/608607		Capscrew		8
18	::25/608608		Cap detent		4
19	::25/611408		Spring		4
20	::25/608609		Seat spring		4
21	::25/608606		O Ring		4
22	::25/222193		Solenoid Deutsch Connectors		2
23	::332/C8797		Screw cap c'sk head		4
24	::332/C8798		Adapter solenoid		2
25	::25/611412		Seal		2
26	::25/607234		Plug kit		2
27	:332/G2759		Valve relief 233bar @ 2L/M not supplied with item 2		1
28	:25/618001		Valve aux. relief not supplied with item 2		1
29	:332/G2758		Valve relief 233bar @ 2L/M not supplied with item 3		1

Applicability Date Ranges:
From: , To:

9802/6220 E3-13-1 VALVE, SECTION SOLENOIDS

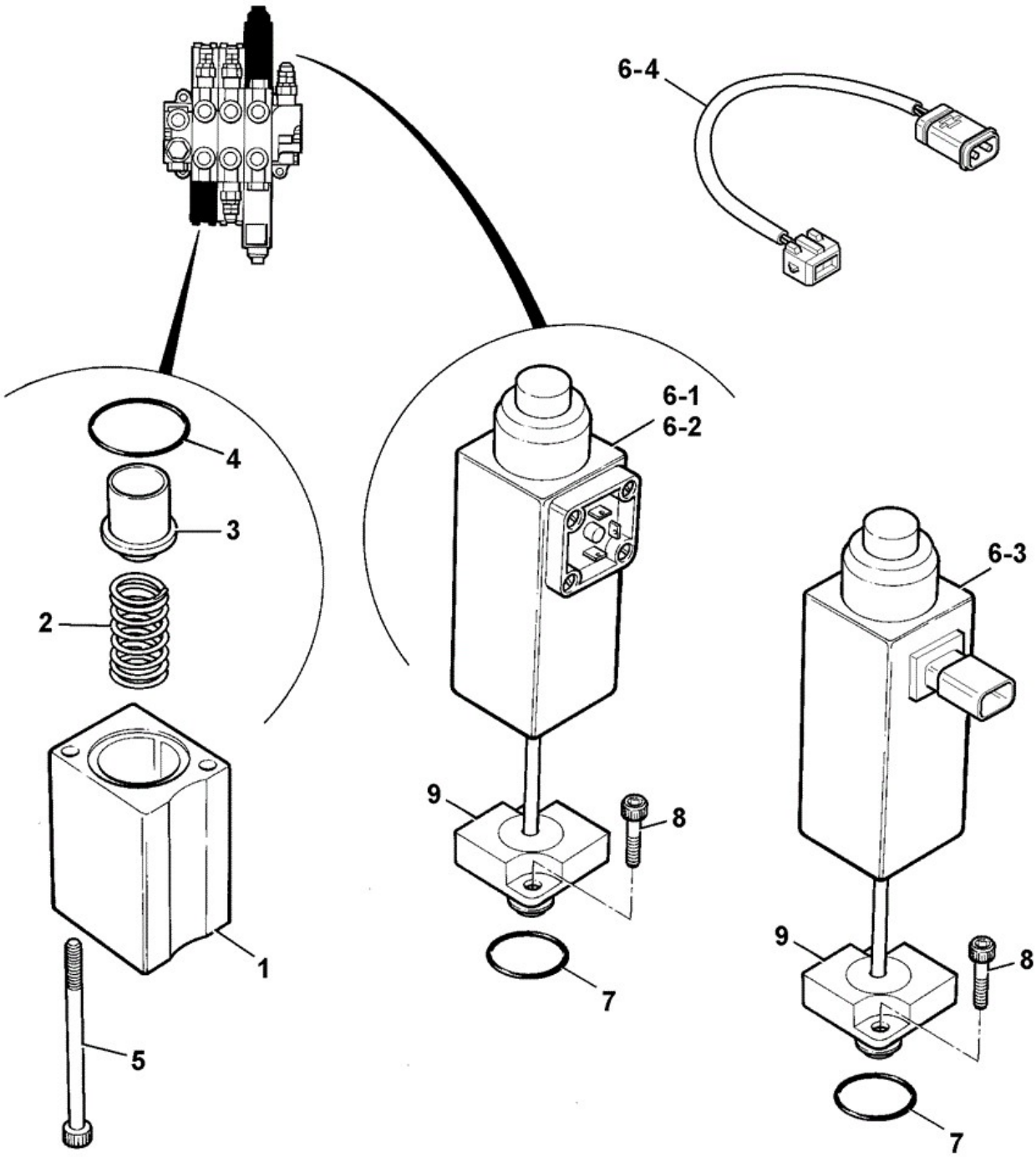

739720

Item	Part No	Change No	Description	Usage Code	QTY
1	25/608608		Cap detent		4
2	25/611408		Spring		4

3	25/608609		Seat spring		4
4	25/608606		O Ring		4
5	25/608607		Capscrew		8
6	25/611409	<M752369	Solenoid No serviceable items within this unit.		2
6	25/621702	<M Jan 02	Solenoid AMP connectors Fitted to 25/621700		2
6	25/222193	>M808662	Solenoid Deutsch Connectors Deutsch connection		1
6	721/10763		Harness 2-way link 40mm long Deutsch-AMP/Jnrtimer Harness, Link AMP to Deutsch		2
7	25/611412		Seal		2
8	25/611411		Capscrew		4
9	25/611410		Spacer		2

Applicability Date Ranges:
From: , To:

Product Catalog\BACKHOE LOADER 1CX, 208\.1CX 00807553-00808999,01050000-01051999,01298000-01299999 9802/6220\E HYDRAULICS & AIR INCLUDING STEERING\E03 VALVES & HYDRAULIC FILTERS\E3-15-1 FILTER, HYDRAULIC

9802/6220 E3-15-1 FILTER, HYDRAULIC

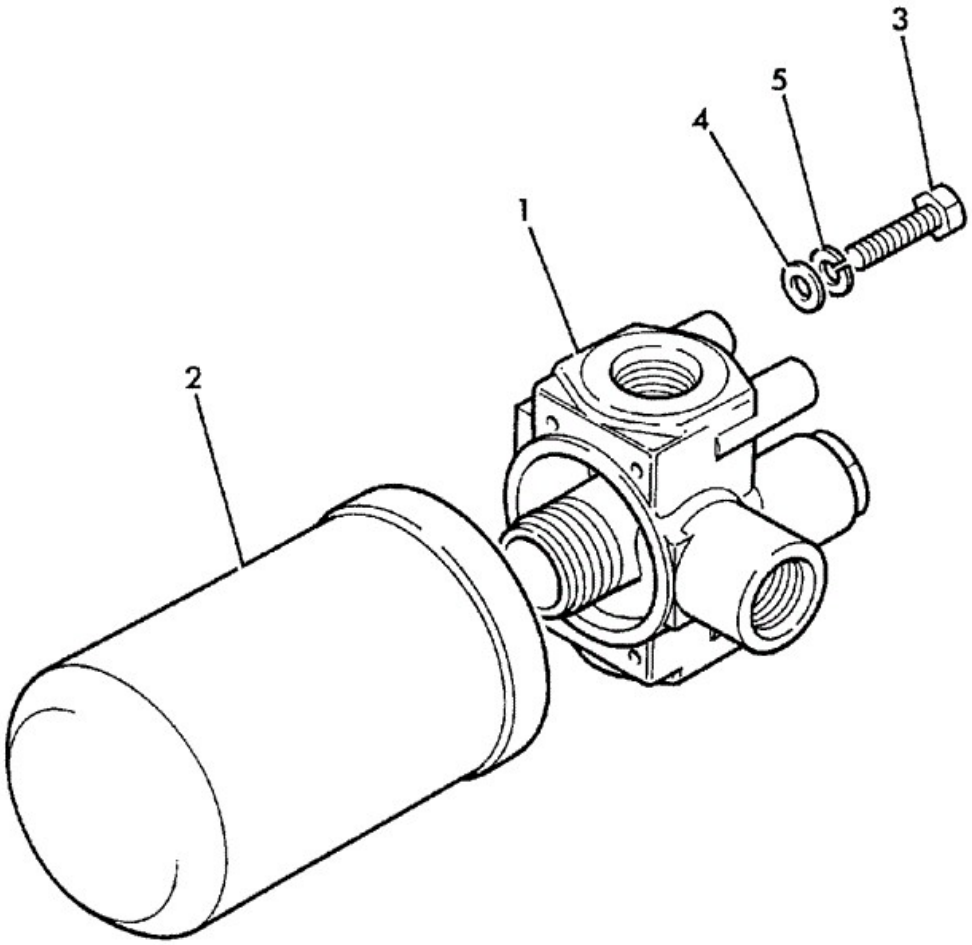

173060

Item	Part No	Change No	Description	Usage Code	QTY

1	32/908800		Head filter		1
2	32/909000		Filter Flushing Element L=151mm For first 50 hours only		1
2	32/909200		Element Return 16micron L=240mm		1
3	1315/0405Z		Setscrew M10 x 20 mm		2
4	1420/0008Z		Washer (M10)		2
5	1425/0008Z		Spring Washer		2

Applicability Date Ranges:
From: , To:

Product Catalog\BACKHOE LOADER 1CX, 208\.1CX 00807553-00808999,01050000-01051999,01298000-01299999 9802/6220\E HYDRAULICS & AIR INCLUDING STEERING\E03 VALVES & HYDRAULIC FILTERS\E3-16-2 VALVE, CONTROL TRANSMISSION LEFT HAND

9802/6220 E3-16-2 VALVE, CONTROL TRANSMISSION LEFT HAND

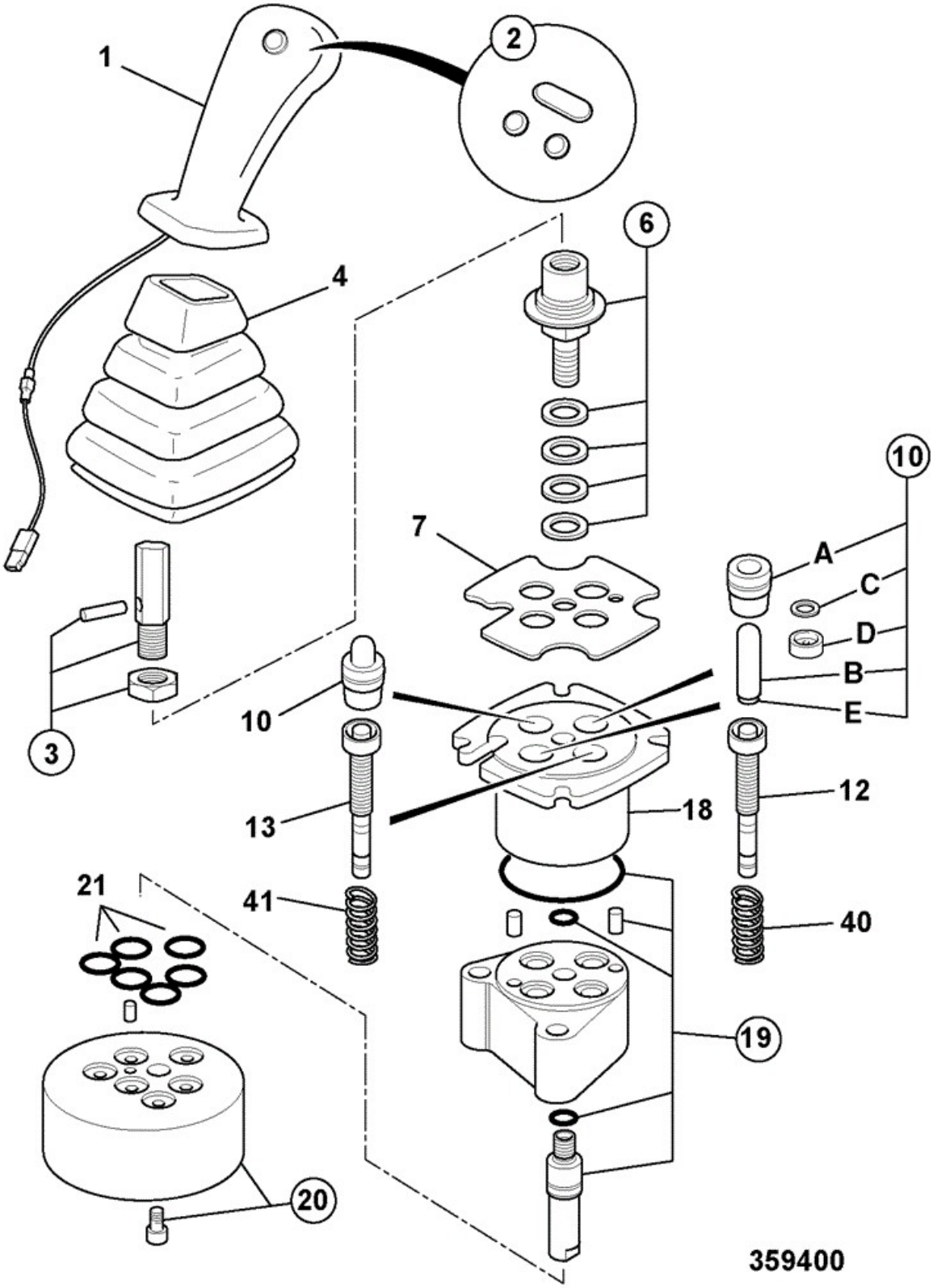

	Part				

Item	No	Change No	Description	Usage Code	QTY
A	25/220589		Valve joystick control Transmission Rexroth		1
1	25/220681		Handle type ST		1
2	25/220682		Kit push button covers		1
3	25/220684		Kit lever		1
4	25/220683		Boot rubber		1
6	25/220685		Kit cardan		1
7	25/220686		Plate retaining		1
10	25/220687		Kit plunger with NBR seals kit is 2 plunger sets		2
12	N.S.P.		None serviced part		1
13	N.S.P.		None serviced part		1
18	25/220691		Body upper		1
19	25/220690		Kit seal		1
20	25/220692		Kit flange		1
21	25/220693		Kit flange seals		1
40	N.S.P.		None serviced part		1
41	N.S.P.		None serviced part		1

Applicability Date Ranges:
From: , To:

9802/6220 E3-17-2 VALVE, CONTROL LOADER NO AUX SWITCH RIGHT HAND

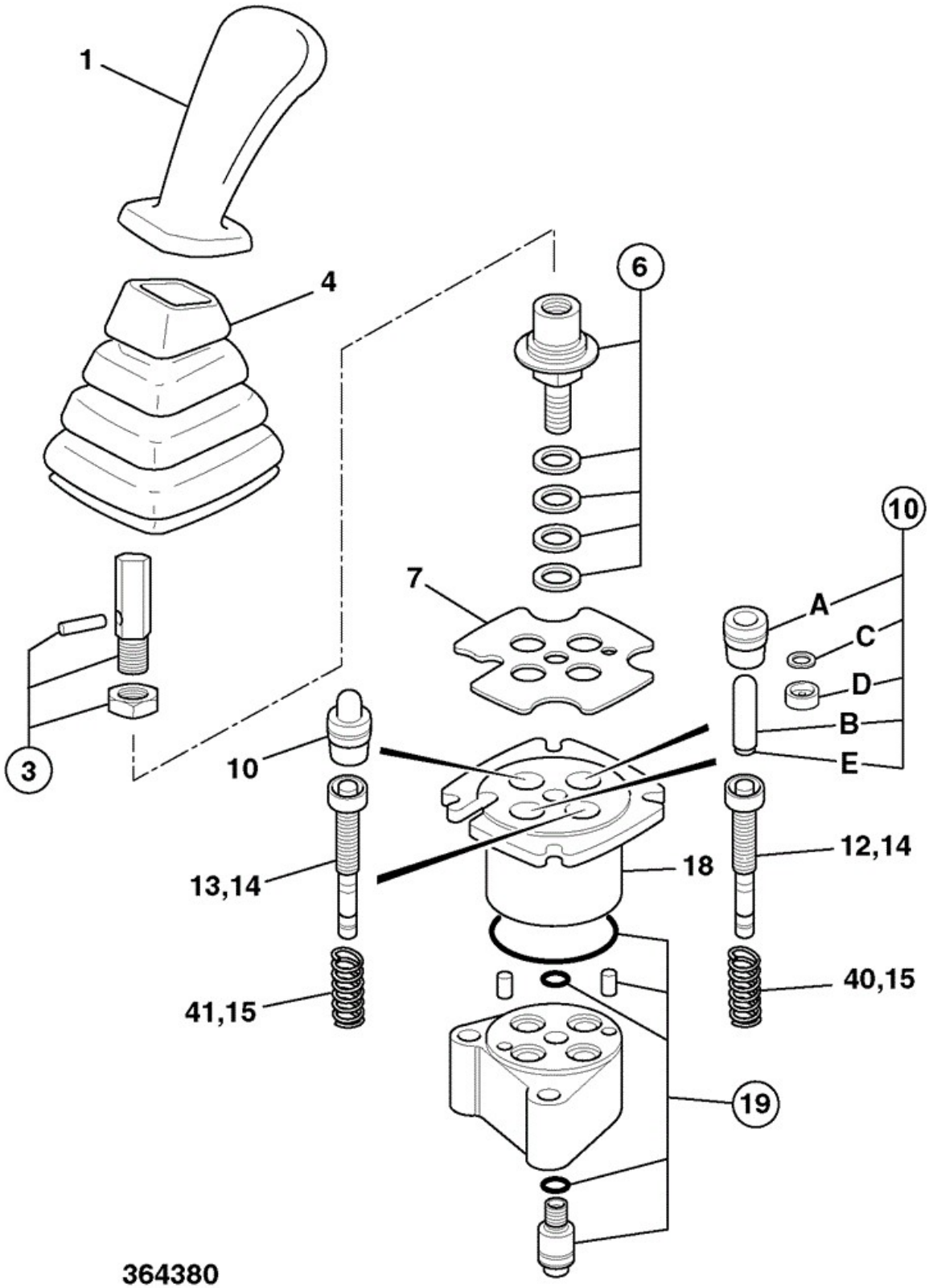

Item	Part No	Change No	Description	Usage Code	QTY
A	25/220626		Valve joystick control Loader, Rexroth		1
1	:25/208010		Handle type TT		1
3	:25/220684		Kit lever		1
4	:25/220683		Boot rubber		1
6	:25/220685		Kit cardan		1
7	:25/220686		Plate retaining		1
10	:25/220687		Kit plunger with NBR seals kit is 1 pair of plungers		2
13	:N.S.P.		None serviced part		1
18	:25/220691		Body upper		1
19	:25/220697		Kit seal		1
41	:N.S.P.		None serviced part		1

Applicability Date Ranges:
From: , To:

9802/6220 E3-17-3 VALVE, CONTROL LOADER,+ AUX SWITCH RIGHT HAND

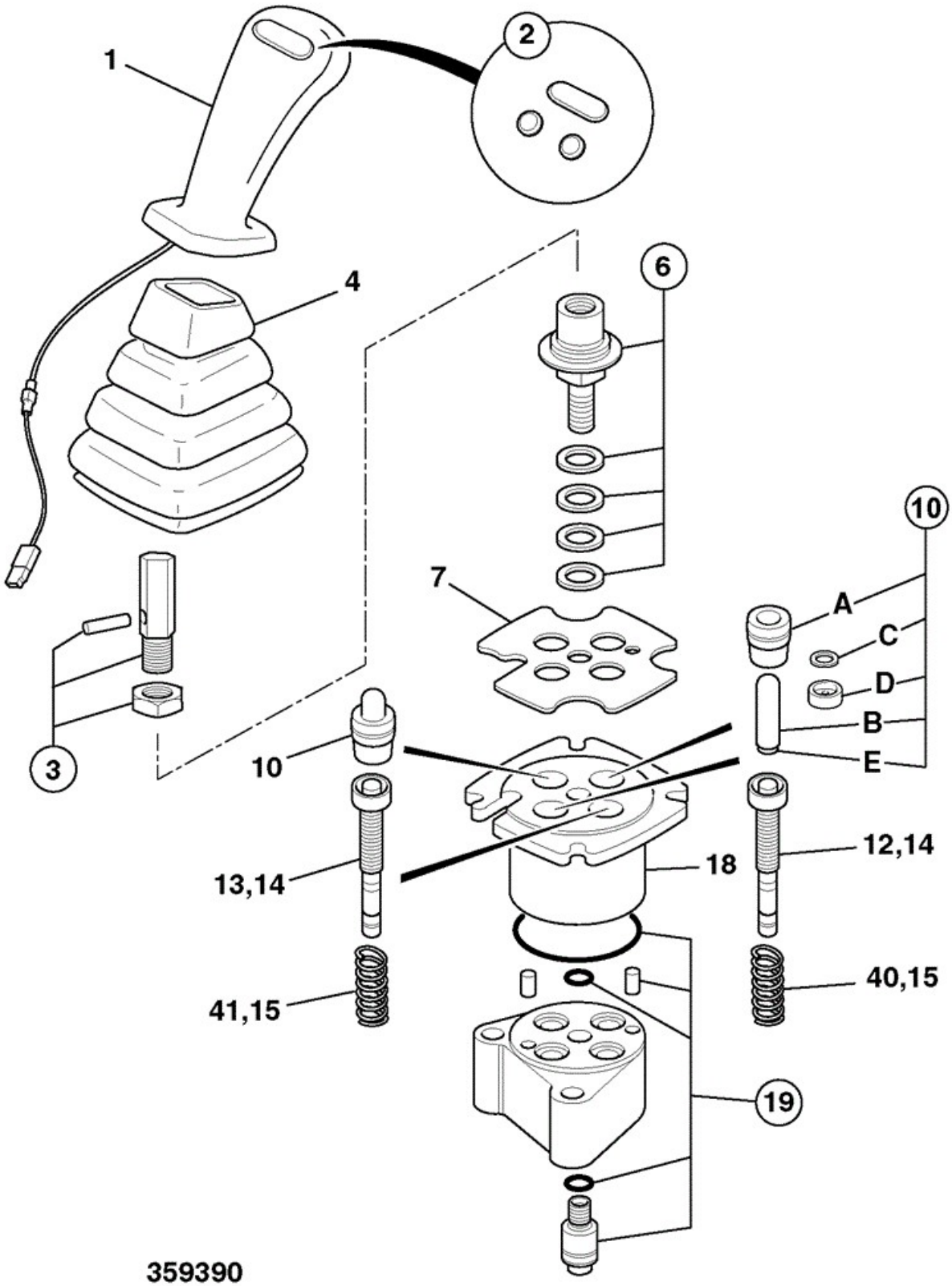

Item	Part No	Change No	Description	Usage Code	QTY
A	25/220588		Valve joystick control Loader Rexroth		1
1	25/220698		Handle type VT		1
2	25/220682		Kit push button covers		1
3	25/220684		Kit lever		1
4	25/220683		Boot rubber		1
6	25/220685		Kit cardan		1
7	25/220686		Plate retaining		1
10	25/220687		Kit plunger with NBR seals set of 2		2
13	N.S.P.		None serviced part		1
18	25/220691		Body upper		1
19	25/220697		Kit seal		1
41	N.S.P.		None serviced part		1

Applicability Date Ranges:
From: , To:

Product Catalog\BACKHOE LOADER 1CX, 208\.1CX 00807553-00808999,01050000-01051999,01298000-01299999 9802/6220\E HYDRAULICS & AIR INCLUDING STEERING\E03 VALVES & HYDRAULIC FILTERS\E3-18-1 VALVE HIGH FLOW

9802/6220 E3-18-1 VALVE HIGH FLOW

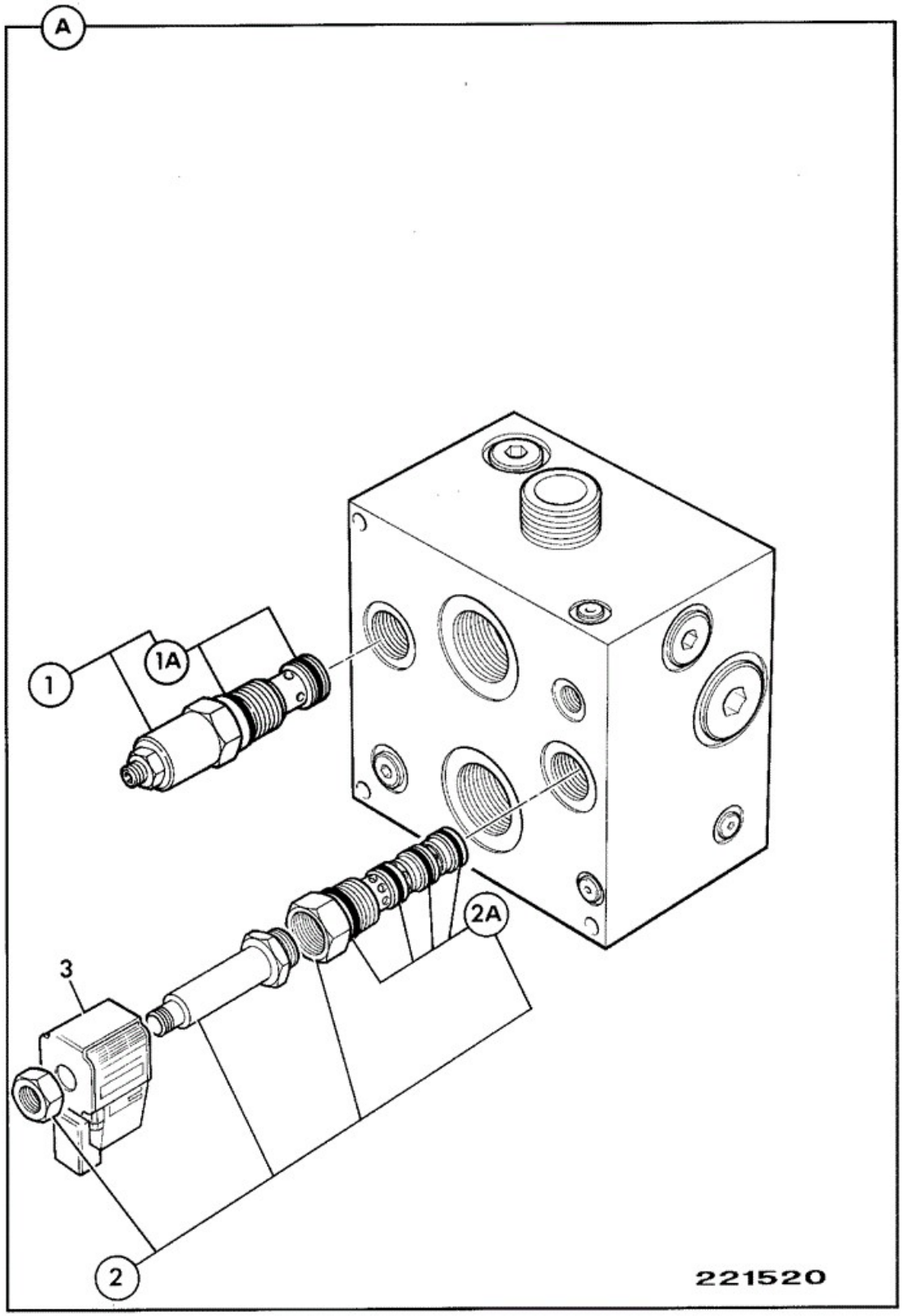

Item	Part No	Change No	Description	Usage Code	QTY

A	25/982500		Valve Hi-flow		1
1	:25/982501		Valve relief		1
1A	::25/982508		Kit-seal relief valve		1
2	:25/982502		Valve soleniod		1
2A	::25/982509		Kit-seal solenoid valve		1
3	:25/982503		Coil 12 v		1
10	718/51600		Connector polarity changer		1

Applicability Date Ranges:
From: , To:

Product Catalog\BACKHOE LOADER 1CX, 208\.1CX 00807553-00808999,01050000-01051999,01298000-01299999 9802/6220\E HYDRAULICS & AIR INCLUDING STEERING\E03 VALVES & HYDRAULIC FILTERS\E3-19-1 VALVE, CONTROL DUAL CONTROLS

9802/6220 E3-19-1 VALVE, CONTROL DUAL CONTROLS

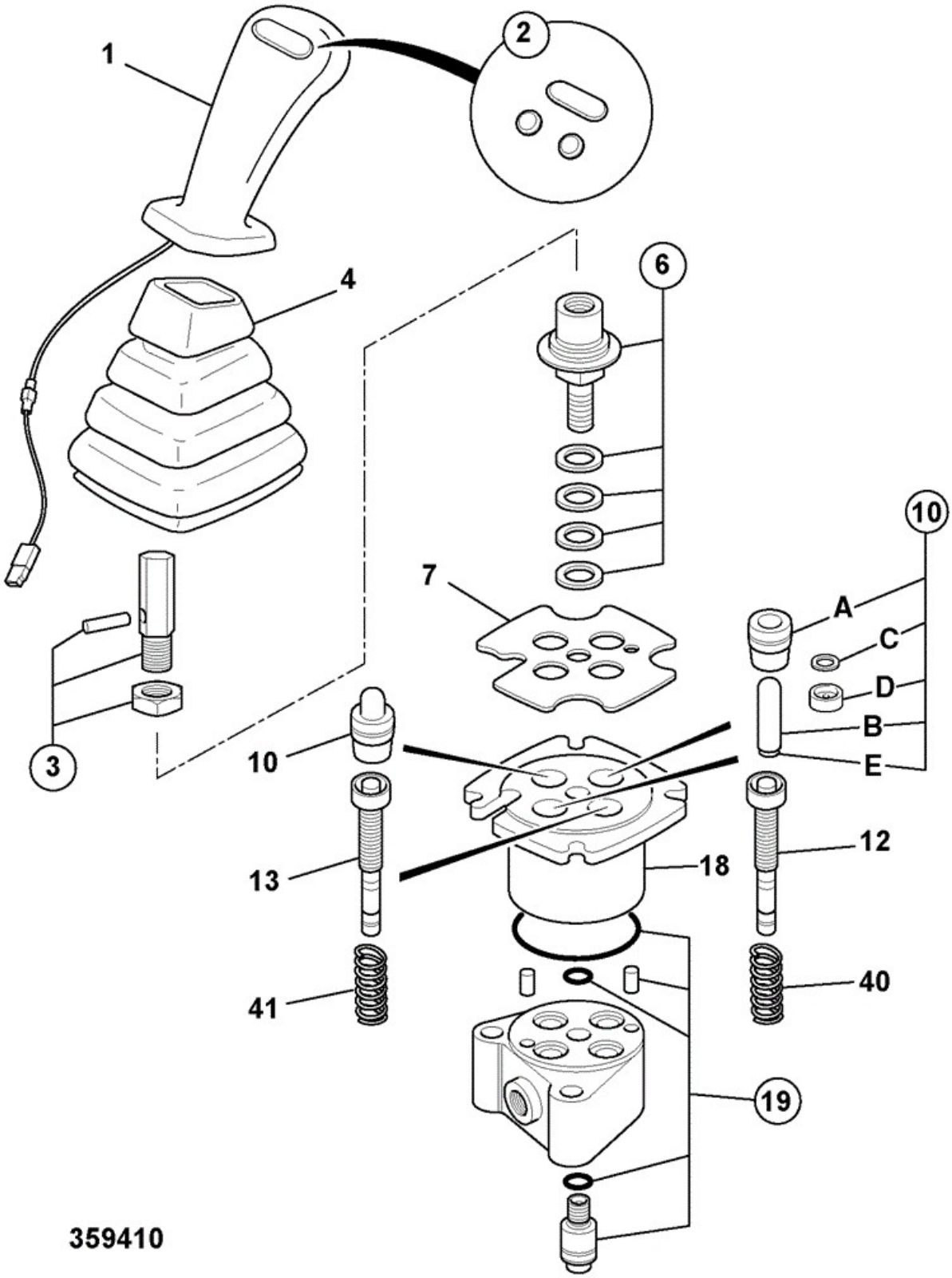

	Part				

Item	No	Change No	Description	Usage Code	QTY
A	25/220590		Lever dual control joystick-Rexroth 2 top buttons, 1 u/side button		1
1	25/220696		Handle type VU		1
2	25/220682		Kit push button covers		1
3	25/220684		Kit lever		1
4	25/220683		Boot rubber		1
6	25/220685		Kit cardan		1
7	25/220686		Plate retaining		1
10	25/220687		Kit plunger with NBR seals		1
12	N.S.P.		None serviced part		1
13	N.S.P.		None serviced part		1
18	25/220691		Body upper		1
19	25/220697		Kit seal		1
40	N.S.P.		None serviced part		1
41	N.S.P.		None serviced part		1

Applicability Date Ranges:
From: , To:

Product Catalog\BACKHOE LOADER 1CX, 208\.1CX 00807553-00808999,01050000-01051999,01298000-01299999 9802/6220\E HYDRAULICS & AIR INCLUDING STEERING\E04 RAMS\E4-1-1 RAM, LIFT

9802/6220 E4-1-1 RAM, LIFT

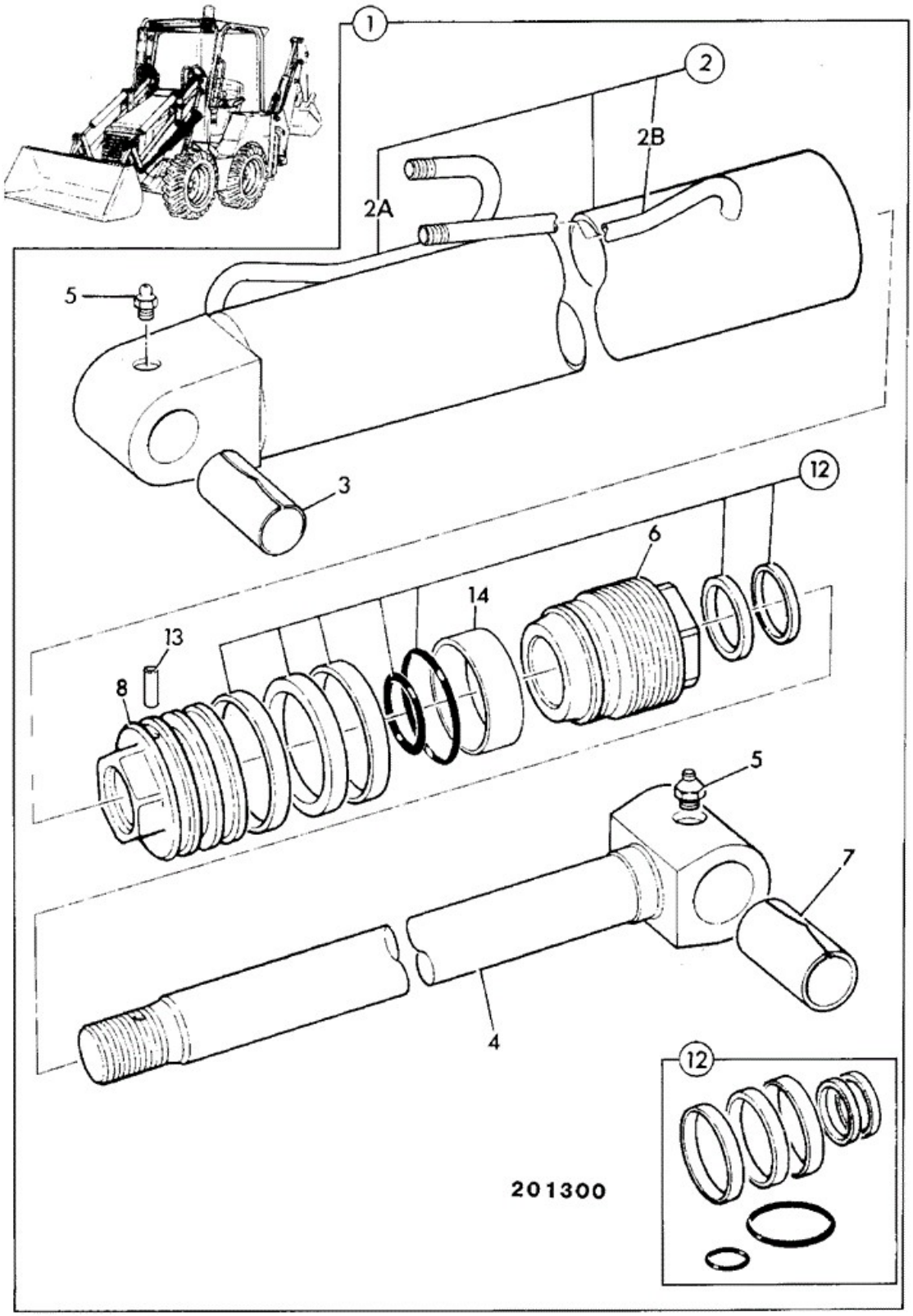

Item	Part No	Change No	Description	Usage Code	QTY

1	553/60005	Superseded	Ram loader lift,60 x 30		1
1	553/60131		Ram loader lift		1
2	:553/70005	Superseded	Cylinder lift ram, 60 x 30		1
2	:553/70131		Cylinder		1
3	:809/00104		Bush grooved, 40mm long		1
4	:590/40066		Rod piston, 30mm		1
5	:1450/0001		Nipple Grease, Straight 1/8 BSP		2
6	:594/14080		Cap end, assembly		1
7	:809/00104		Bush grooved, 40mm long		1
8	:595/10032		Piston head		1
12	:991/00098		Kit-seal 30mm rod x 60mm cyl		1
13	:826/01182		Dowel		1

Applicability Date Ranges:
From: , To: M1743132

Product Catalog\BACKHOE LOADER 1CX, 208\.1CX 00807553-00808999,01050000-01051999,01298000-01299999 9802/6220\E HYDRAULICS & AIR INCLUDING STEERING\E04 RAMS\E4-1-2 RAM LIFT

9802/6220 E4-1-2 RAM LIFT

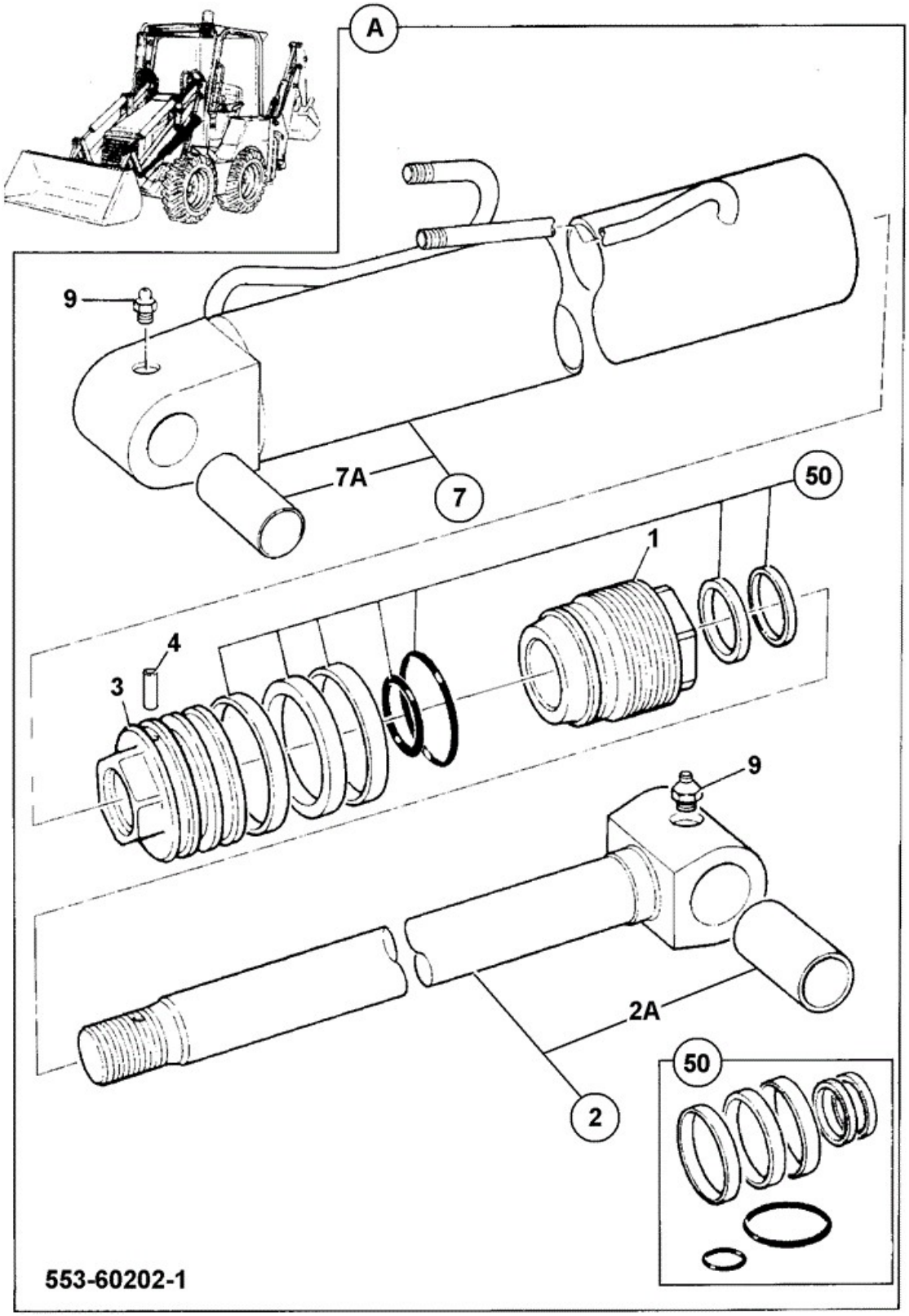

Item	Part No	Change No	Description	Usage Code	QTY

A	553/60202		Ram loader lift 60 X 30		1
1	:332/G4335		Kit service end cap		1
2	:590/40066		Rod piston, 30mm		1
2A	::809/00104		Bush grooved, 40mm long		1
3	:595/10032		Piston head		1
4	:826/01182		Dowel		1
7	:553/70202		Cylinder 60mm bore		1
7A	::809/00104		Bush grooved, 40mm long		1
9	:1450/0001		Nipple Grease, Straight 1/8 BSP		2
50	:991/20024		Kit Seals		0

Applicability Date Ranges:
From: M1743133 , To:

Product Catalog\BACKHOE LOADER 1CX, 208\.1CX 00807553-00808999,01050000-01051999,01298000-01299999 9802/6220\E HYDRAULICS & AIR INCLUDING STEERING\E04 RAMS\E4-2-2 RAM SHOVEL

9802/6220 E4-2-2 RAM SHOVEL

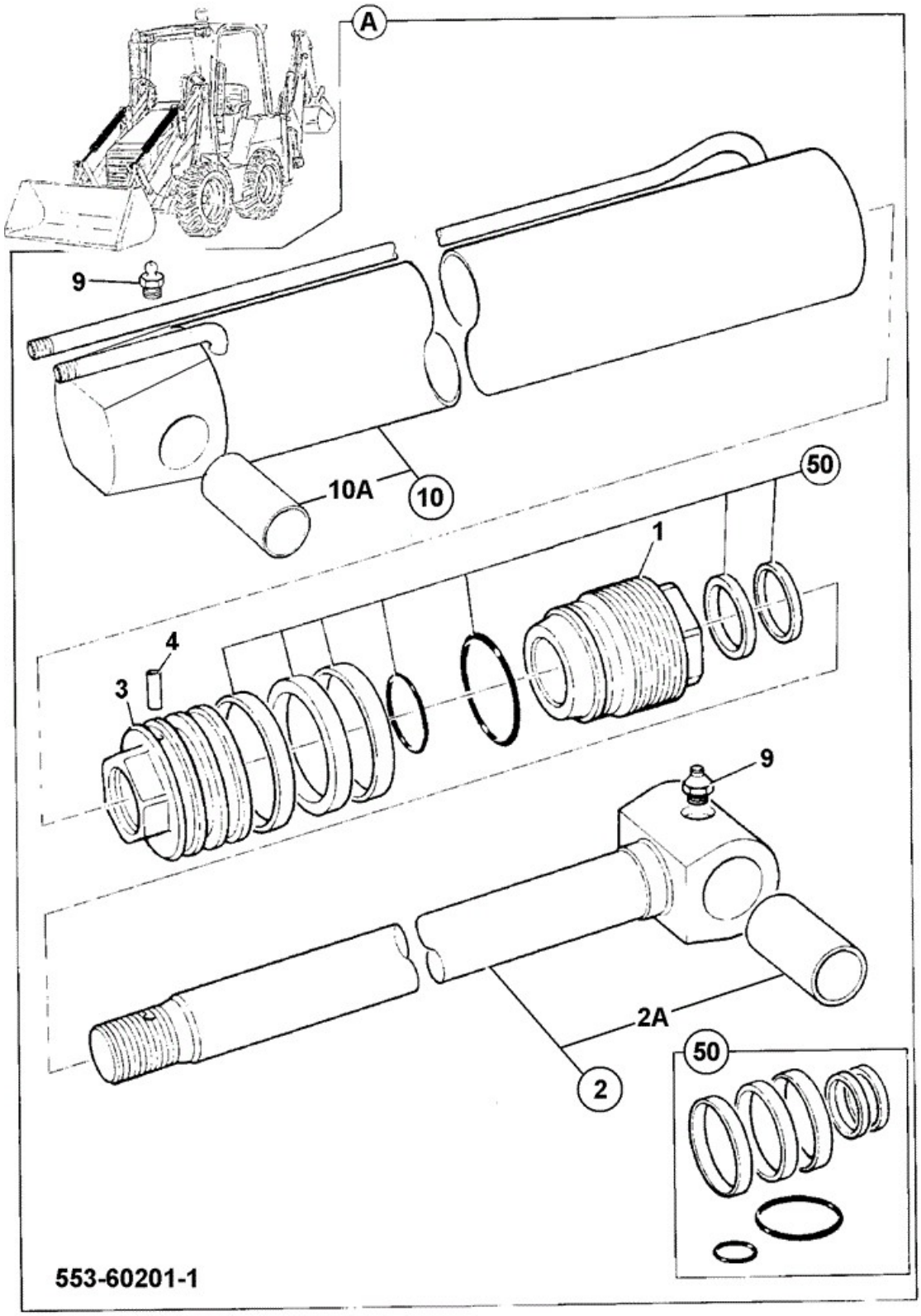

Item	Part No	Change No	Description	Usage Code	QTY

A	553/60201		Ram shovel 60 X 30		1
1	:332/G4335		Kit service end cap		1
2	:590/40066		Rod piston, 30mm		1
2A	::809/00104		Bush grooved, 40mm long		1
3	:595/10032		Piston head		1
4	:826/01182		Dowel		1
9	:1450/0001		Nipple Grease, Straight 1/8 BSP		2
10	:553/70201		Cylinder 60mm bore		1
10A	::809/00104		Bush grooved, 40mm long		1
50	:991/20024		Kit Seals		0

Applicability Date Ranges:
From: M1743133 , To:

Product Catalog\BACKHOE LOADER 1CX, 208\.1CX 00807553-00808999,01050000-01051999,01298000-01299999 9802/6220\E HYDRAULICS & AIR INCLUDING STEERING\E04 RAMS\E4-3-1 SEAL KIT SALES SPECIAL BRAZILIAN HIGH TEMPERATURE END CAP ASSY

9802/6220 E4-3-1 SEAL KIT SALES SPECIAL BRAZILIAN HIGH TEMPERATURE END CAP ASSY



Item	Part No	Change No	Description	Usage Code	QTY
1	332/D2938		Kit seal-high temp sales special		1

Note 1: Only to be used on 1CX Brazilian high temp end cap machine

Applicability Date Ranges:
From: , To:

Product Catalog\BACKHOE LOADER 1CX, 208\.1CX 00807553-00808999,01050000-01051999,01298000-01299999 9802/6220\E HYDRAULICS & AIR INCLUDING STEERING\E04 RAMS\E4-5-1 RAM, BOOM

9802/6220 E4-5-1 RAM, BOOM

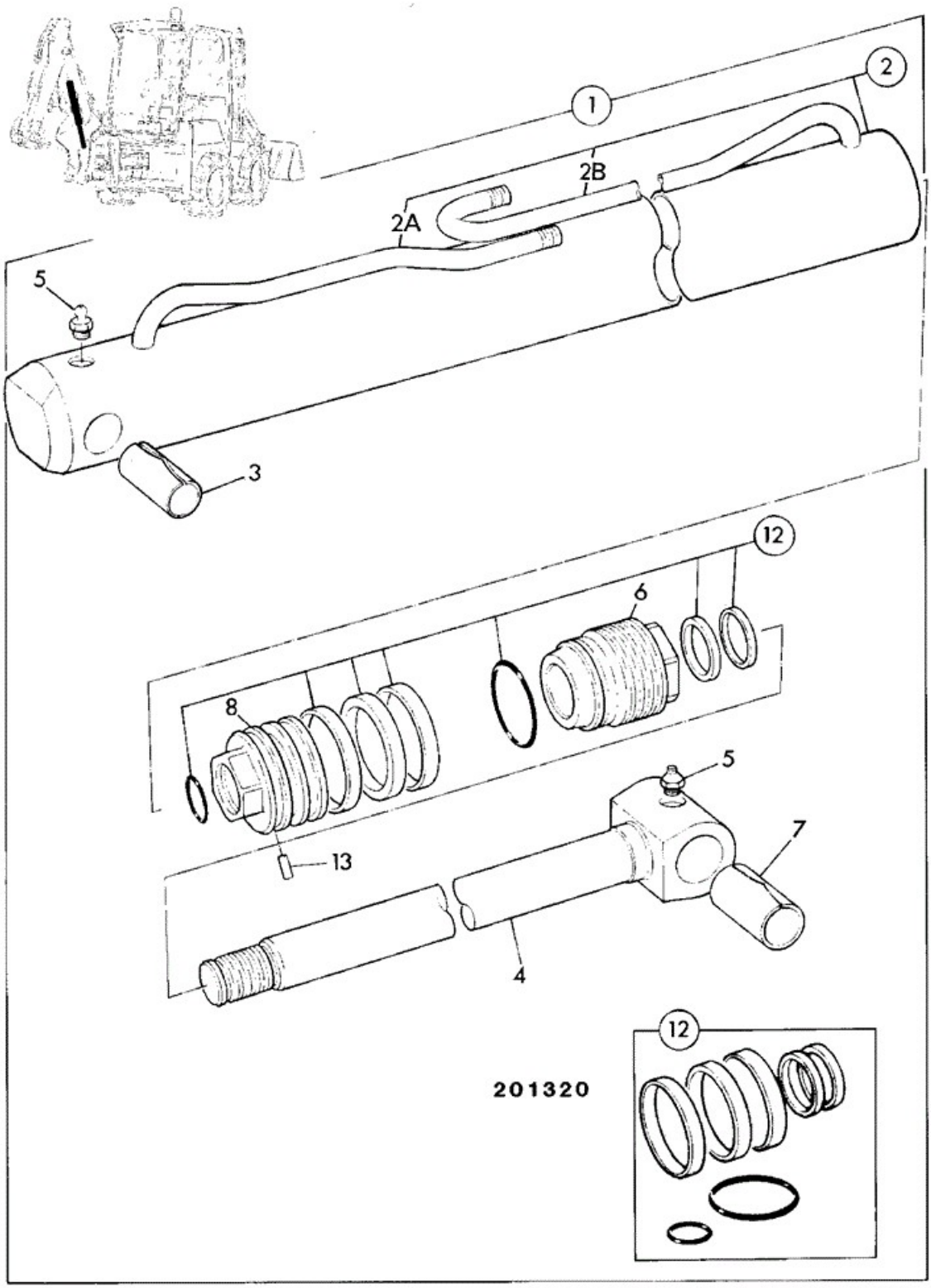

Item	Part No	Change No	Description	Usage Code	QTY

1	556/60025	Superseded	Ram boom, 70 x 40	P/Ex	1
1	556/60276	Superseded	Ram boom		1
1	556/60427		Ram assembly boom 70 X 40 see E4-5-2 for breakdown		1
2	:556/70025	Superseded	Cylinder boom ram, 70 x 40		1
2	:556/70276		Cylinder boom ram		1
3	:809/00107		Bush bearing 35-45-71		1
4	:590/40065		Rod piston, 40mm		1
5	:1450/0001		Nipple Grease, Straight 1/8 BSP		2
6	:594/00017		Cap end		1
7	:809/00106		Bush		1
8	:595/10027		Head piston		1
12	:991/00100		Kit-seal 70x40		1
13	:826/01182		Dowel		1

Applicability Date Ranges:
From: , To: M1299794

Product Catalog\BACKHOE LOADER 1CX, 208\.1CX 00807553-00808999,01050000-01051999,01298000-01299999 9802/6220\E HYDRAULICS & AIR INCLUDING STEERING\E04 RAMS\E4-5-1 RAM, BOOM

9802/6220 E4-5-1 RAM, BOOM

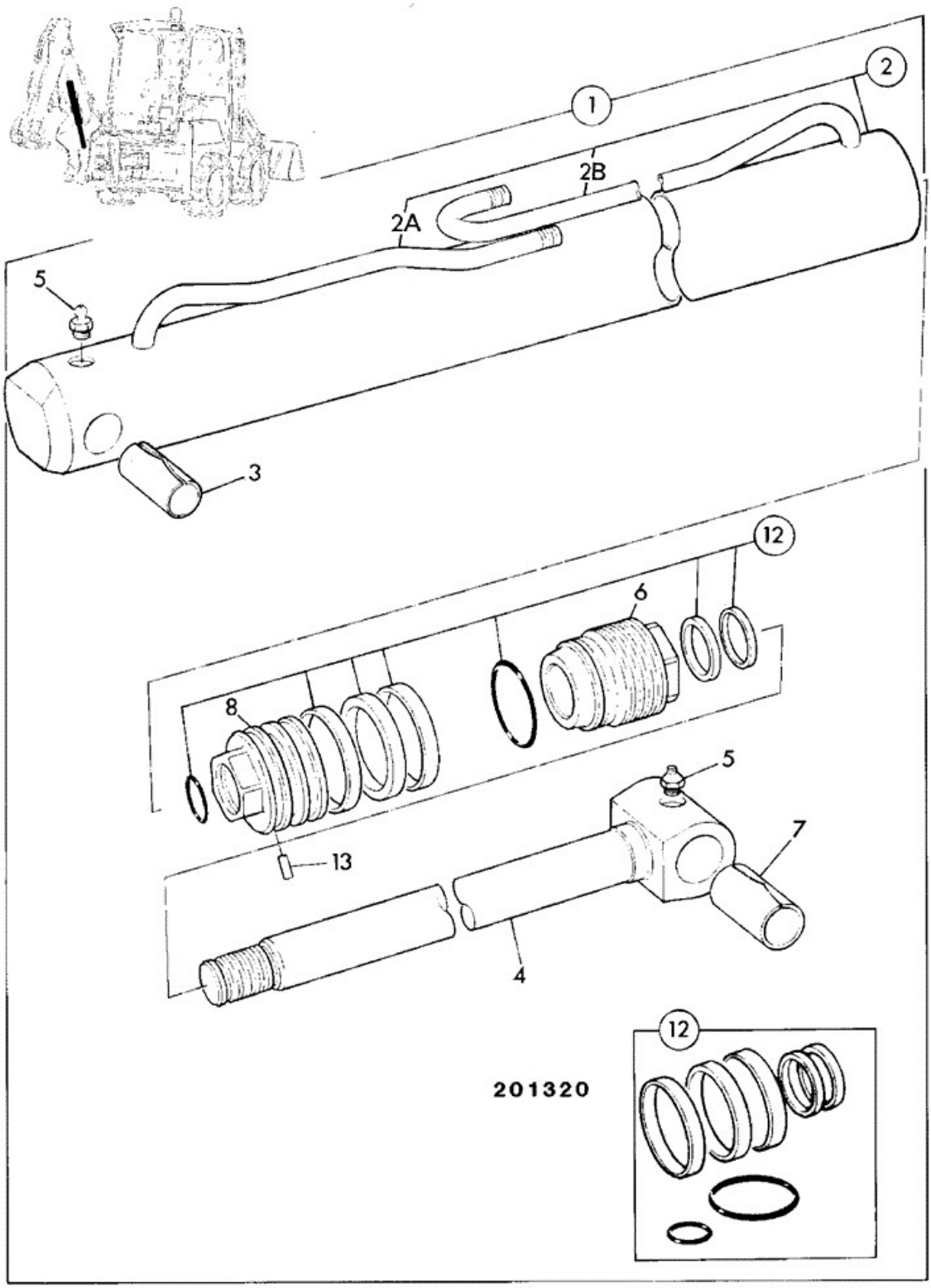

Item	Part No	Change No	Description	Usage Code	QTY

1	556/60025	Superseded	Ram boom, 70 x 40	P/Ex	1
1	556/60276	Superseded	Ram boom		1
1	556/60427		Ram assembly boom 70 X 40 see E4-5-2 for breakdown		1
2	:556/70025	Superseded	Cylinder boom ram, 70 x 40		1
2	:556/70276		Cylinder boom ram		1
3	:809/00107		Bush bearing 35-45-71		1
4	:590/40065		Rod piston, 40mm		1
5	:1450/0001		Nipple Grease, Straight 1/8 BSP		2
6	:594/00017		Cap end		1
7	:809/00106		Bush		1
8	:595/10027		Head piston		1
12	:991/00100		Kit-seal 70x40		1
13	:826/01182		Dowel		1

Applicability Date Ranges:
From: , To: M1299794

Product Catalog\BACKHOE LOADER 1CX, 208\.1CX 00807553-00808999,01050000-01051999,01298000-01299999 9802/6220\E HYDRAULICS & AIR INCLUDING STEERING\E04 RAMS\E4-5-2 RAM, BOOM

9802/6220 E4-5-2 RAM, BOOM

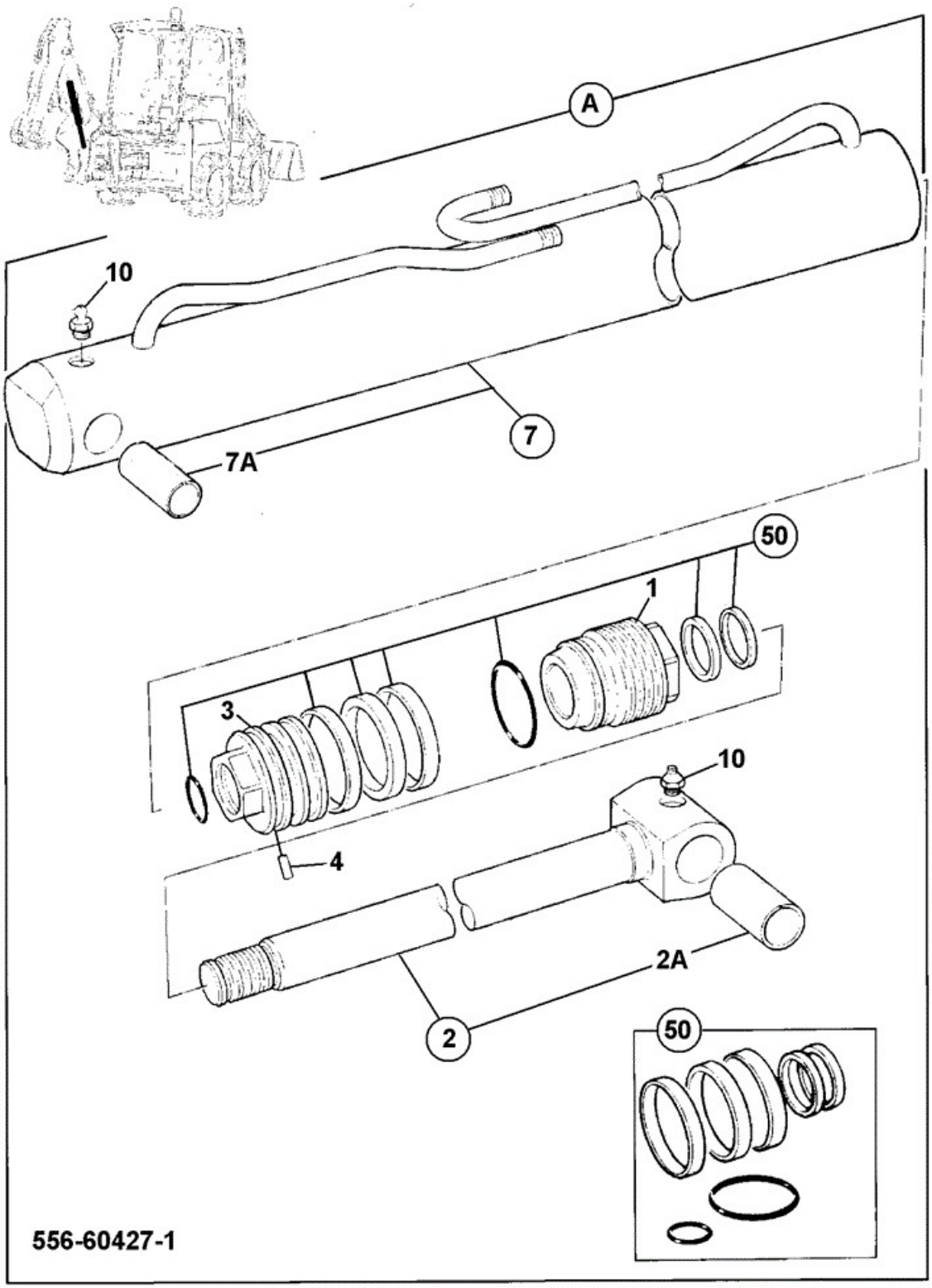

Item	Part No	Change No	Description	Usage Code	QTY

A	556/60427		Ram assembly boom 70 X 40		1
1	:332/D4842		Kit - end cap assembly		1
2	:590/40065		Rod piston, 40mm		1
2A	::809/00106		Bush		1
3	:595/10027		Head piston		1
4	:826/01182		Dowel		1
7	:556/70427		Cylinder assembly		1
7A	::809/00107		Bush bearing 35-45-71		1
10	:1450/0001		Nipple Grease, Straight 1/8 BSP		2
50	:332/D4850		Kit seal 70X40		1

Applicability Date Ranges:
From: M1299795 , To:

Product Catalog\BACKHOE LOADER 1CX, 208\.1CX 00807553-00808999,01050000-01051999,01298000-01299999 9802/6220\E HYDRAULICS & AIR INCLUDING STEERING\E04 RAMS\E4-6-1 RAM, DIPPER

9802/6220 E4-6-1 RAM, DIPPER

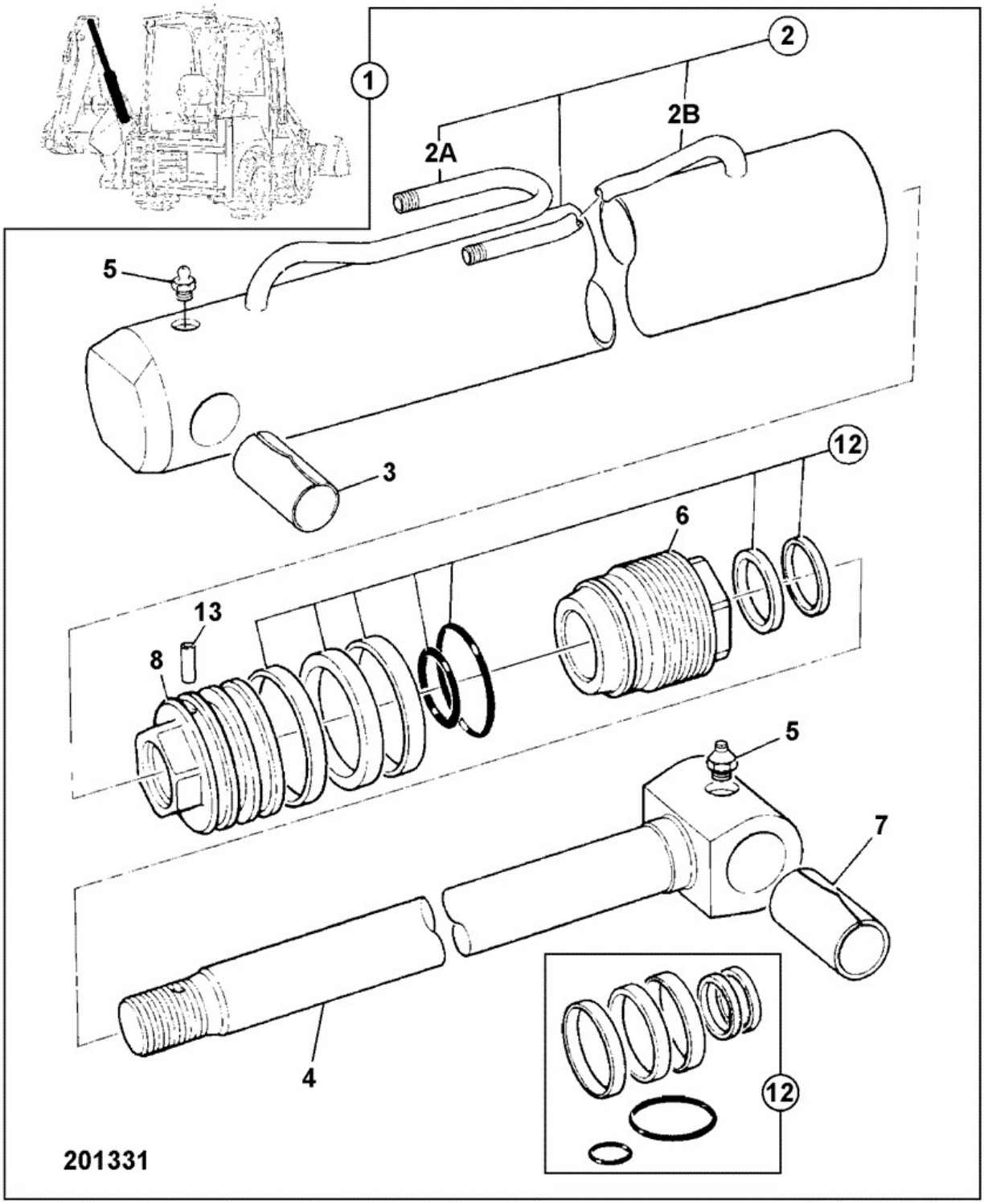

Item	Part No	Change No	Description	Usage Code	QTY
1	556/60027	Superseded	Ram dipper, 70 x 40	P/Ex	1
1	556/60278	Superseded	Ram dipper		1

1	556/60439		Ram assembly dipper 70 X 40 see E4-6-2 for breakdown		1
2	:556/70027	Superseded	Cylinder dipper ram, 70 x 40		1
2	:556/70278		Cylinder		1
3	:809/00107		Bush bearing 35-45-71		1
4	:590/40062		Rod piston, 40mm		1
5	:1450/0001		Nipple Grease, Straight 1/8 BSP		2
6	:594/00017		Cap end		1
7	:809/00107		Bush bearing 35-45-71		1
8	:595/10027		Head piston		1
12	:991/00100		Kit-seal 70x40		1
13	:826/01182		Dowel		1

Applicability Date Ranges:
From: , To: M1299784

Product Catalog\BACKHOE LOADER 1CX, 208\.1CX 00807553-00808999,01050000-01051999,01298000-01299999 9802/6220\E HYDRAULICS & AIR INCLUDING STEERING\E04 RAMS\E4-6-2 RAM, DIPPER

9802/6220 E4-6-2 RAM, DIPPER

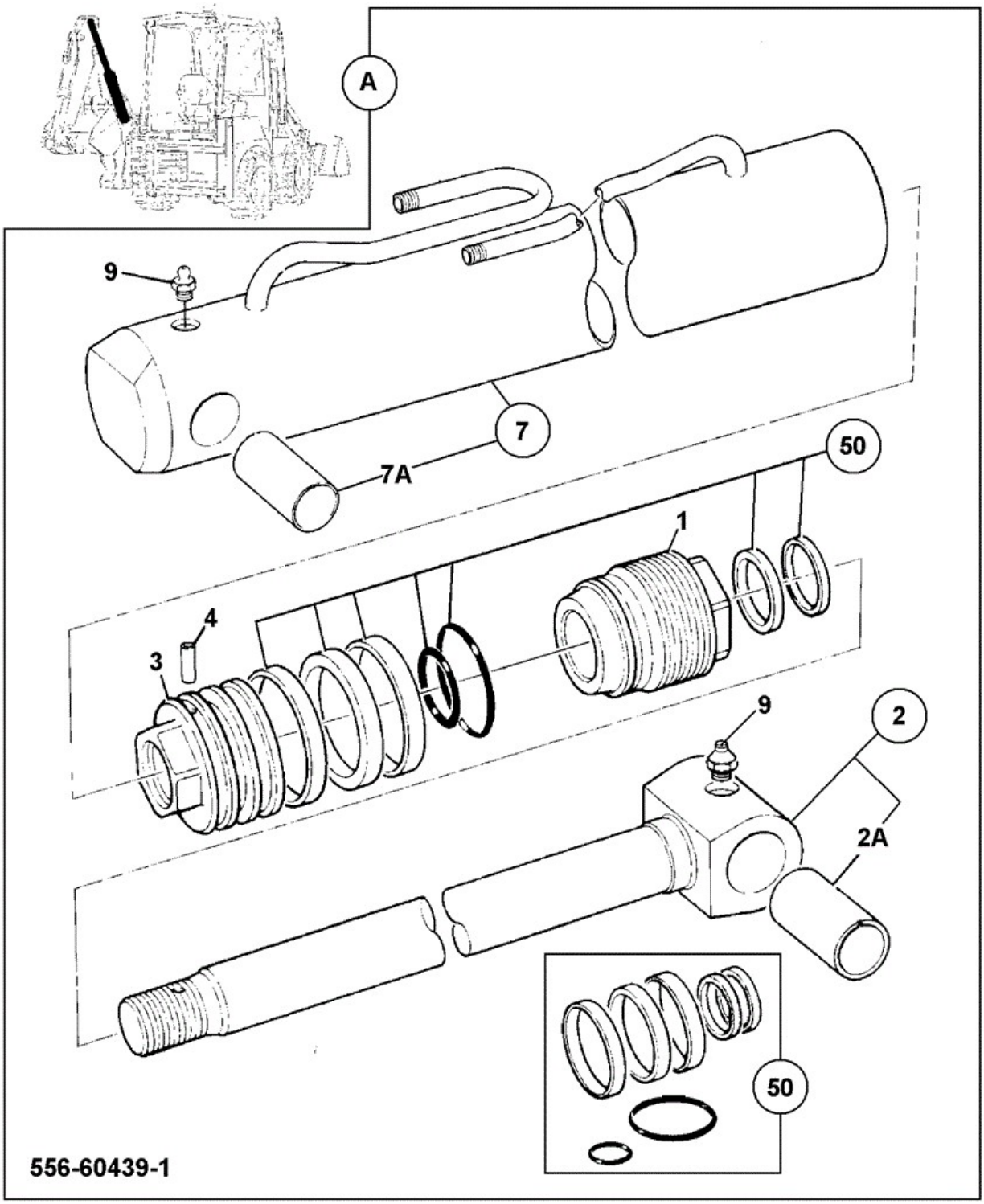

Item	Part No	Change No	Description	Usage Code	QTY
A	556/60439		Ram assembly dipper 70 X 40		1
1	:332/D4842		Kit - end cap assembly		1

2	:590/40062		Rod piston, 40mm		1
2A	::809/00107		Bush bearing 35-45-71		1
3	:595/10027		Head piston		1
4	:826/01182		Dowel		1
7	:556/70439		Cylinder assembly		1
7A	::809/00107		Bush bearing 35-45-71		1
9	::1450/0001		Nipple Grease, Straight 1/8 BSP		1
50	332/D4850		Kit seal 70X40		1

Applicability Date Ranges:
From: M1299785 , To:

Product Catalog\BACKHOE LOADER 1CX, 208\.1CX 00807553-00808999,01050000-01051999,01298000-01299999 9802/6220\E HYDRAULICS & AIR INCLUDING STEERING\E04 RAMS\E4-7-1 RAM, BUCKET 7'3"

9802/6220 E4-7-1 RAM, BUCKET 7'3"



Item	Part No	Change No	Description	Usage Code	QTY

1	556/60026		Ram bucket, 70 x 40 692mm closed centres	P/Ex	1
2	:556/70026		Cylinder bucket ram, 70 x 40		1
3	:809/00107		Bush bearing 35-45-71		1
4	:590/40064		Rod piston, 40mm		1
5	:1450/0001		Nipple Grease, Straight 1/8 BSP		2
6	:594/00017		Cap end		1
7	:809/00105		Bush		1
8	:595/10027		Head piston		1
12	:991/00100		Kit-seal 70x40		1
13	:826/01182		Dowel		1

Applicability Date Ranges:
From: , To:

Product Catalog\BACKHOE LOADER 1CX, 208\.1CX 00807553-00808999,01050000-01051999,01298000-01299999 9802/6220\E HYDRAULICS & AIR INCLUDING STEERING\E04 RAMS\E4-7-2 RAM, BUCKET 8'4"

9802/6220 E4-7-2 RAM, BUCKET 8'4"

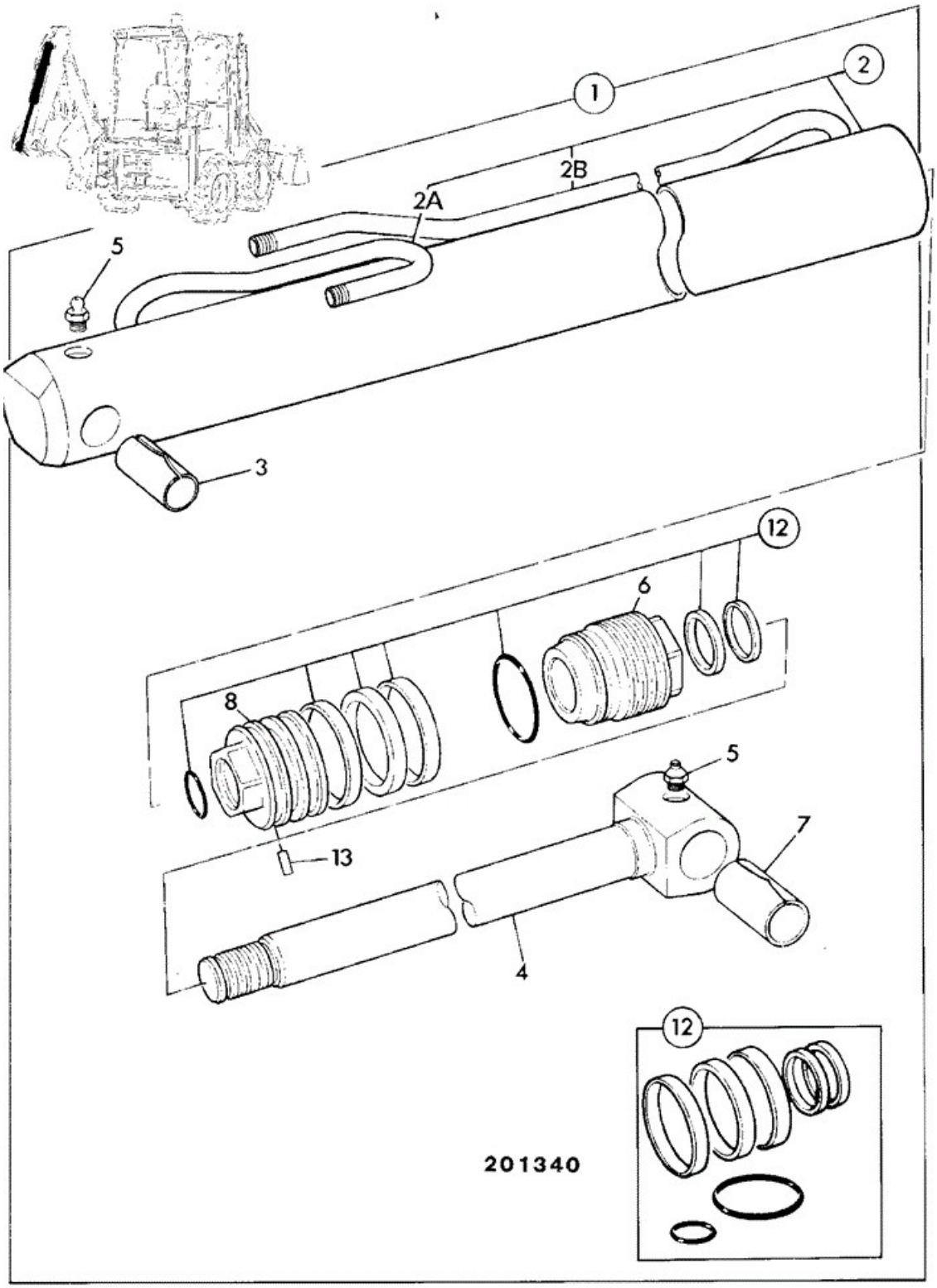

Item	Part No	Change No	Description	Usage Code	QTY

1	556/60049	Superseded	Ram complete bucket 837mm closed centres	P/Ex	1
1	556/60277	Superseded	Ram complete 837mm closed centres		1
1	556/60432		Ram assembly bucket 70 X 40 see E4-7-3 for breakdown		1
2	:556/70049	Superseded	Cylinder		1
2	:556/70277		Cylinder		1
3	:809/00107		Bush bearing 35-45-71		1
4	:590/40092		Rod piston		1
5	:1450/0001		Nipple Grease, Straight 1/8 BSP		2
6	:594/00017		Cap end		1
7	:809/00105		Bush		1
8	:595/10027		Head piston		1
12	:991/00100		Kit-seal 70x40		1
13	:826/01182		Dowel		1

Applicability Date Ranges:
From: , To: M1299780

Product Catalog\BACKHOE LOADER 1CX, 208\.1CX 00807553-00808999,01050000-01051999,01298000-01299999 9802/6220\E HYDRAULICS & AIR INCLUDING STEERING\E04 RAMS\E4-7-3 RAM, BUCKET 8'4"

9802/6220 E4-7-3 RAM, BUCKET 8'4"

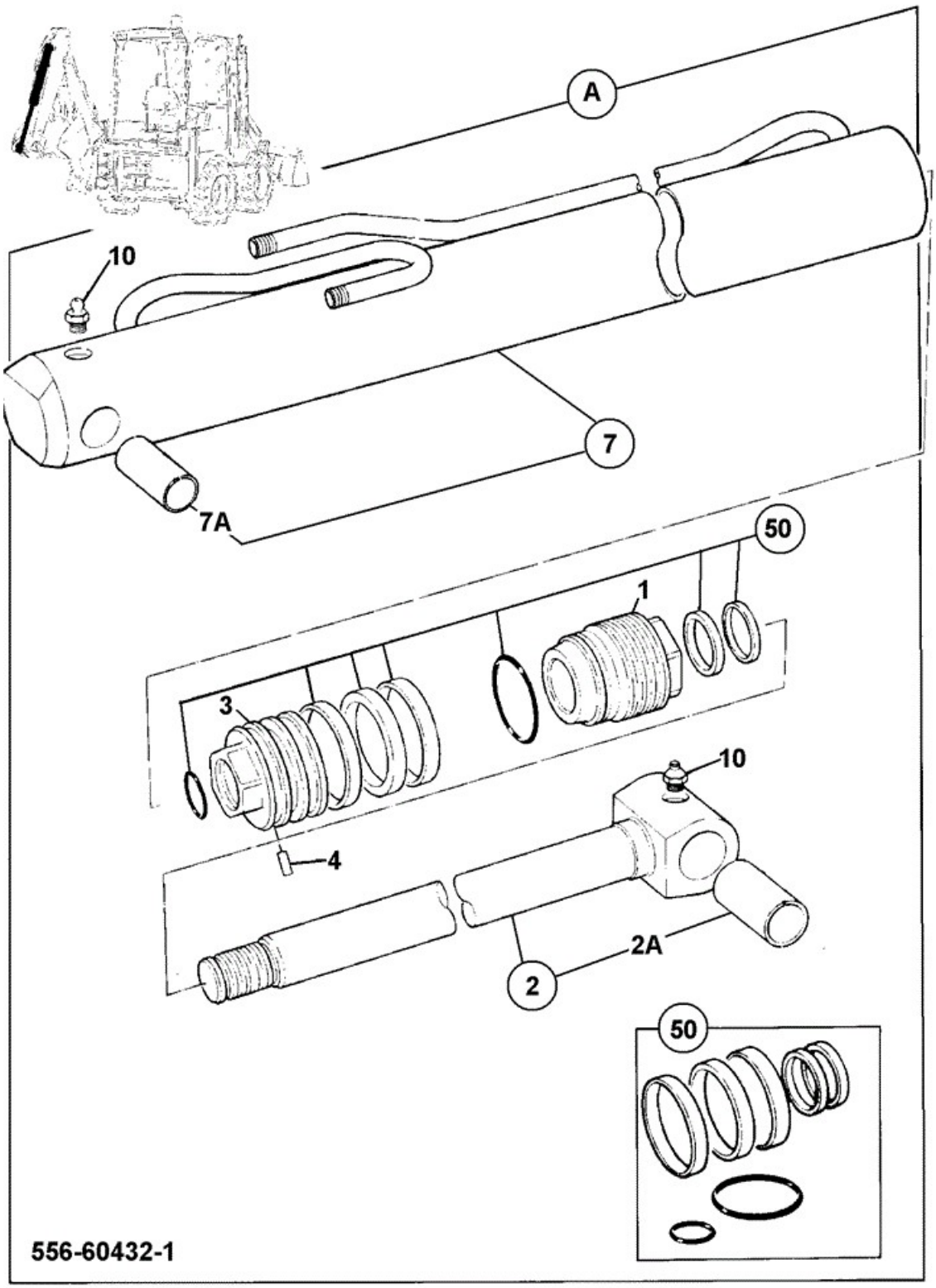

Item	Part No	Change No	Description	Usage Code	QTY

A	556/60432		Ram assembly bucket 70 X 40		1
1	:332/D4842		Kit - end cap assembly		1
2	:590/40092		Rod piston		1
2A	::809/00105		Bush		1
3	:595/10027		Head piston		1
4	:826/01182		Dowel		1
7	:556/70432		Cylinder assembly		1
7A	::809/00107		Bush bearing 35-45-71		1
10	:1450/0001		Nipple Grease, Straight 1/8 BSP		2
50	:332/D4850		Kit seal 70X40		1

Applicability Date Ranges:
From: M1299781 , To:

Product Catalog\BACKHOE LOADER 1CX, 208\.1CX 00807553-00808999,01050000-01051999,01298000-01299999 9802/6220\E HYDRAULICS & AIR INCLUDING STEERING\E04 RAMS\E4-8-1 RAM, STABILISER

9802/6220 E4-8-1 RAM, STABILISER

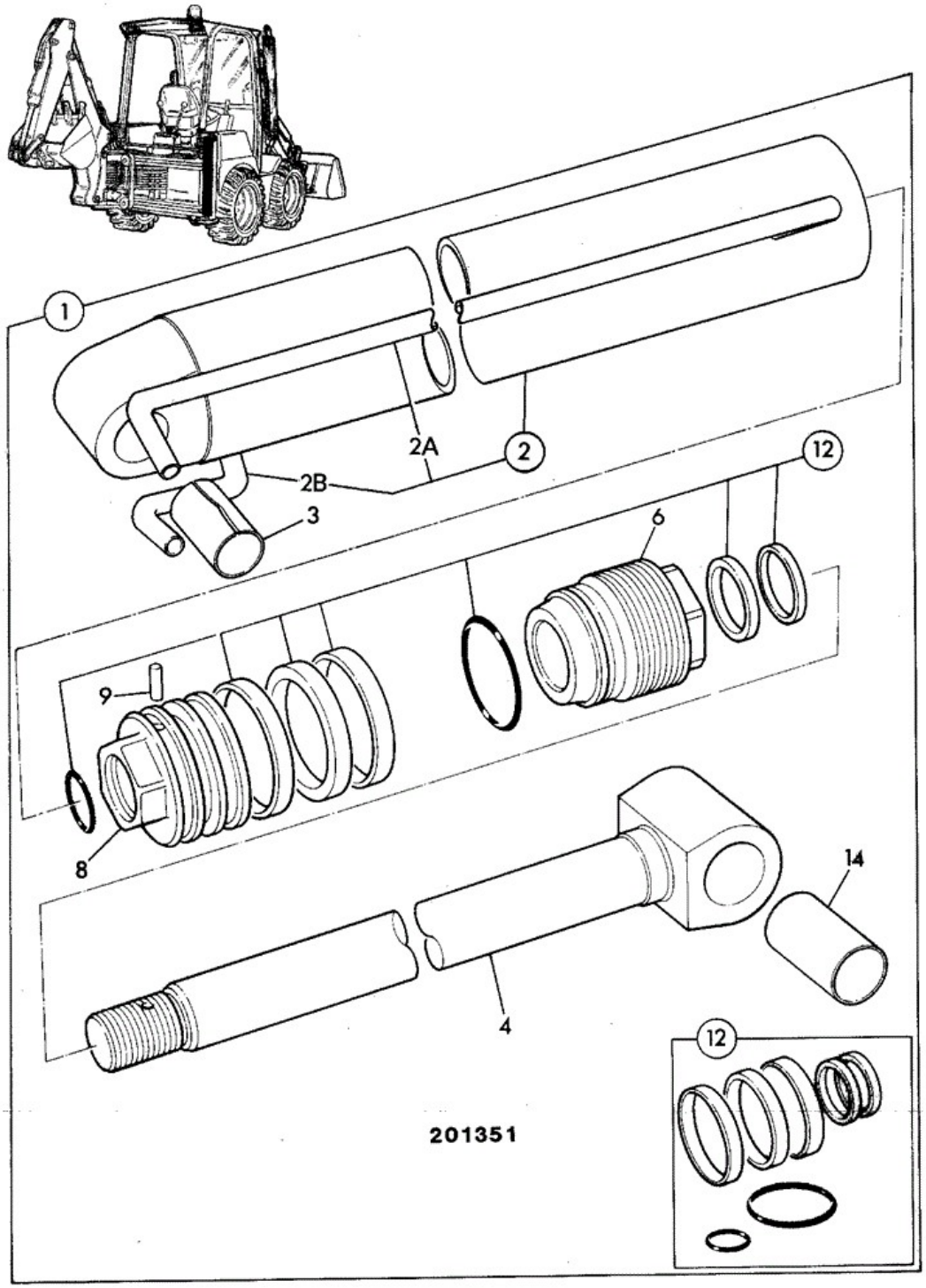

Item	Part No	Change No	Description	Usage Code	QTY
1	553/60006	Superseded	Ram stabiliser		2
1	553/60129		Ram stabiliser		2

2	:553/70006	Superseded	Cylinder		1
2	:553/70129		Cylinder		1
2A	::653/10036	Superseded	Pipe		1
2A	::653/10085		Pipe		1
2B	::653/00500	Superseded	Pipe		1
2B	::653/10084		Pipe		1
3	****		'See Remark' no bushes fitted to dump end pivot		1
4	:590/40068		Rod piston, 40mm		1
5	:1450/0001		Nipple Grease, Straight 1/8 BSP		2
6	:594/00015		Cap end		1
8	:595/10032		Piston head		1
12	:991/00098		Kit-seal 30mm rod x 60mm cyl		1
13	:826/01182		Dowel		1
14	:290/00763		Bush 38 X 30 X 40L		1

Note 1: This is a steel collar and NOT a bush and may not be fitted to all rams.

Applicability Date Ranges:
From: , To: 31/01/08

Product Catalog\BACKHOE LOADER 1CX, 208\.1CX 00807553-00808999,01050000-01051999,01298000-01299999 9802/6220\E HYDRAULICS & AIR INCLUDING STEERING\E04 RAMS\E4-8-2 RAM, STABILISER

9802/6220 E4-8-2 RAM, STABILISER

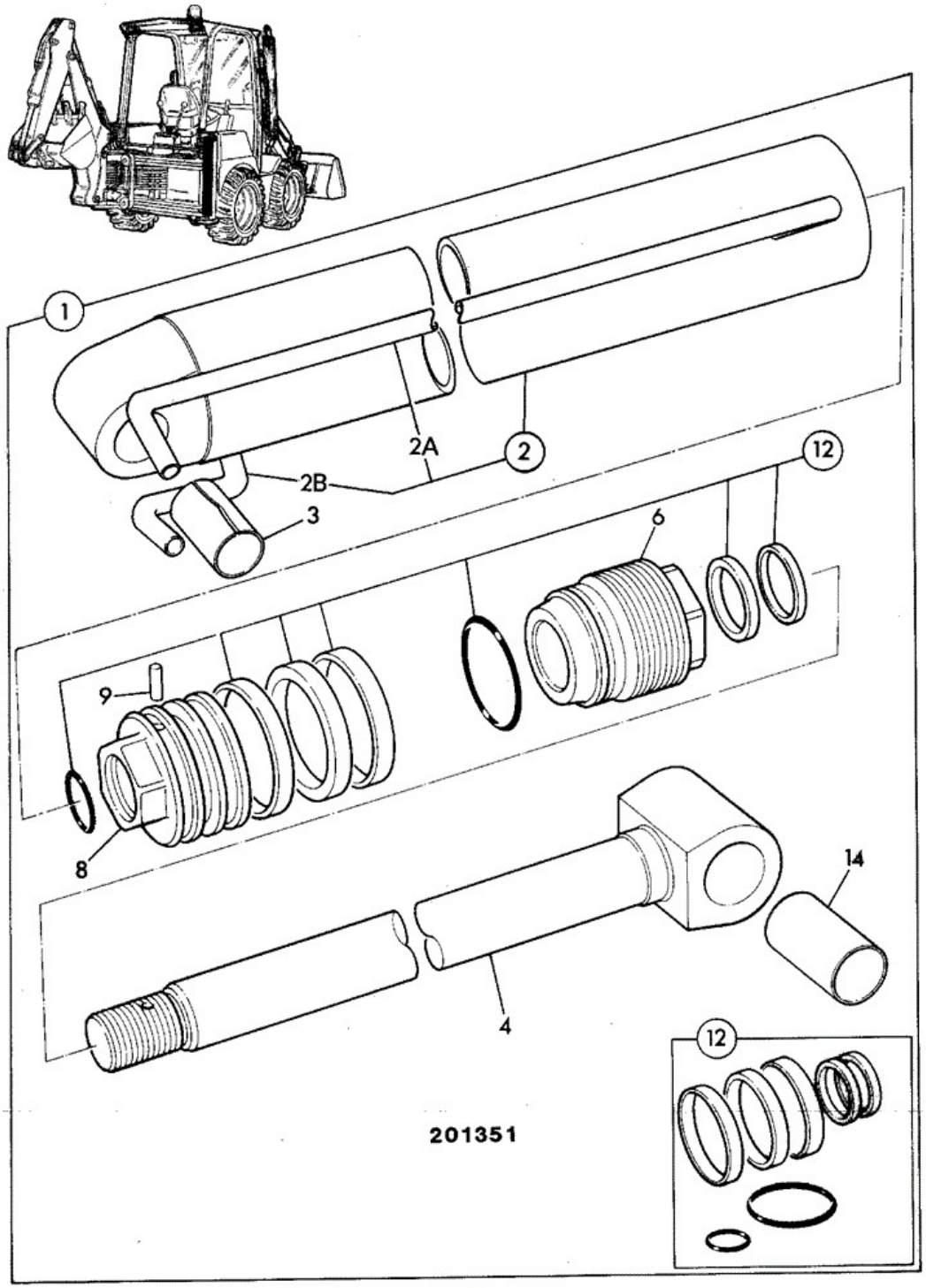

Item	Part No	Change No	Description	Usage Code	QTY
1	332/R9609		Ram stabiliser		2
2	****		None serviced part Cylinder - Use item 1		1

2A	****		None serviced part feed pipe		1
2B	****		None serviced part Feed pipe		1
3	****		'See Remark' No bushes are fitted to the dump end pivot		1
4	****		None serviced part Piston rod - use item 1		1
5	:1450/0001		Nipple Grease, Straight 1/8 BSP		2
6	:594/00132		Cap end		1
6	:808/00395		Bearing 30-34-30 Not illustrated, not supplied with 594/00132		1
8	:595/10148		Piston head		1
12	991/10141		Kit-seal service		1
13	:903/21387		Dowel Pin 6 x 20mm Piston Head		1
14	****		'See Remark' No bushes are fitted to the eye end pivot		1

Note 1: Note revised stabiliser ram hose connections when using this ram on earlier machines

Applicability Date Ranges:
From: 01/02/08 , To:

Product Catalog\BACKHOE LOADER 1CX, 208\.1CX 00807553-00808999,01050000-01051999,01298000-01299999 9802/6220\E HYDRAULICS & AIR INCLUDING STEERING\E04 RAMS\E4-8-10 RAM STABILISER RIGHT HAND SIDE USE WITH LOCKOUT VALVE EU

9802/6220 E4-8-10 RAM STABILISER RIGHT HAND SIDE USE WITH LOCKOUT VALVE EU

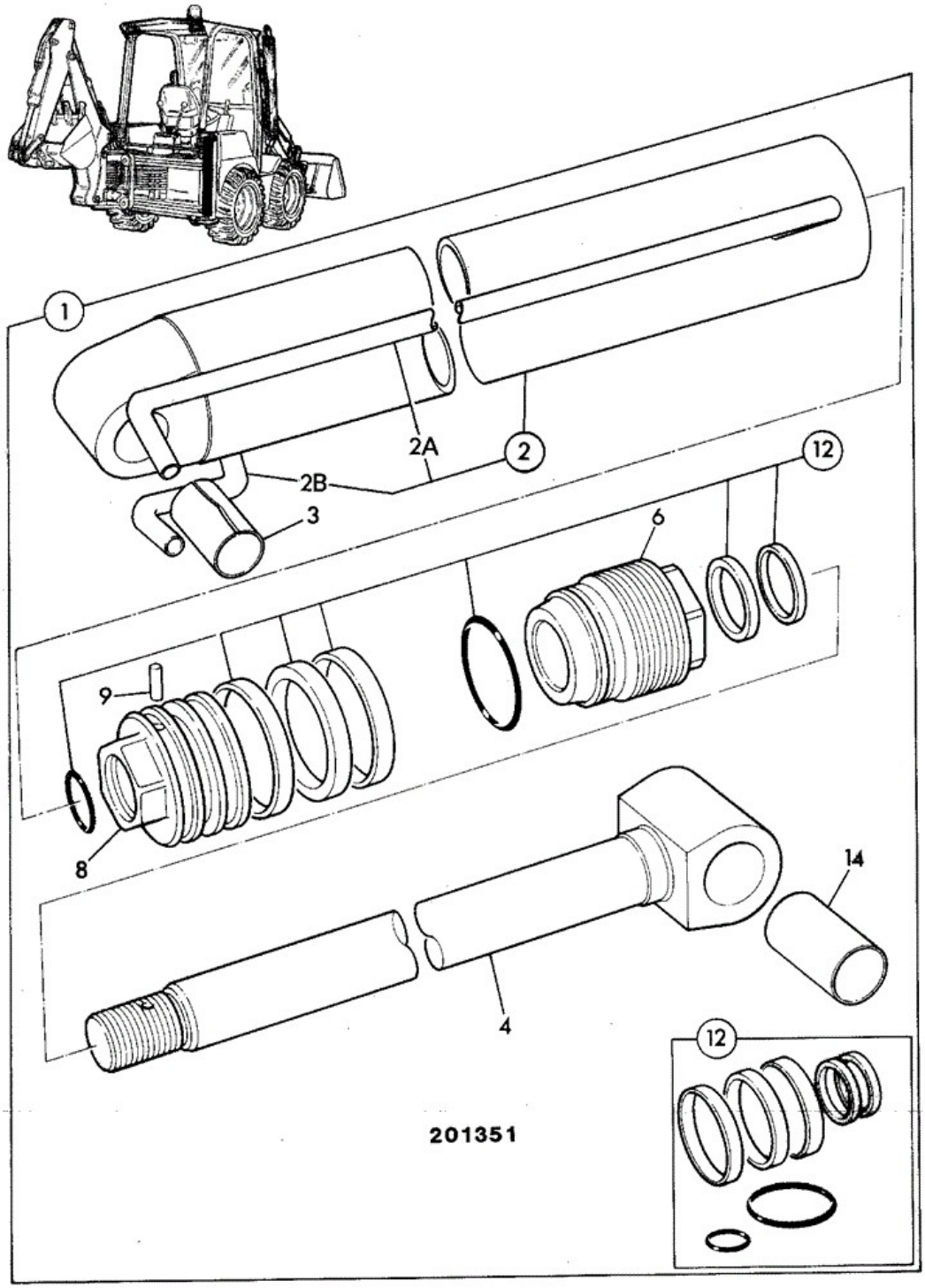

Item	Part No	Change No	Description	Usage Code	QTY
1	332/V3174		Ram stabiliser RH		1

2	****		None serviced part Cylinder - Use item 1		1
2A	****		None serviced part feed pipe		1
2B	****		None serviced part Feed pipe		1
3	****		'See Remark' No bushes are fitted to the dump end pivot		1
4	****		None serviced part Piston rod - use item 1		1
5	:1450/0001		Nipple Grease, Straight 1/8 BSP		2
6	:594/00132		Cap end		1
6	:808/00395		Bearing 30-34-30 Not illustrated, not supplied with 594/00132		1
8	:595/10148		Piston head		1
12	991/10141		Kit-seal service		1
13	:903/21387		Dowel Pin 6 x 20mm Piston Head		1
14	****		'See Remark' No bushes are fitted to the eye end pivot		1

Note 1: Note revised stabiliser ram hose connections when using this ram on earlier machines

Applicability Date Ranges:
From: M1299634 , To:

Product Catalog\BACKHOE LOADER 1CX, 208\.1CX 00807553-00808999,01050000-01051999,01298000-01299999 9802/6220\E HYDRAULICS & AIR INCLUDING STEERING\E04 RAMS\E4-8-20 RAM STABILISER LEFT HAND SIDE USE WITH LOCKOUT VALVE EU

9802/6220 E4-8-20 RAM STABILISER LEFT HAND SIDE USE WITH LOCKOUT VALVE EU

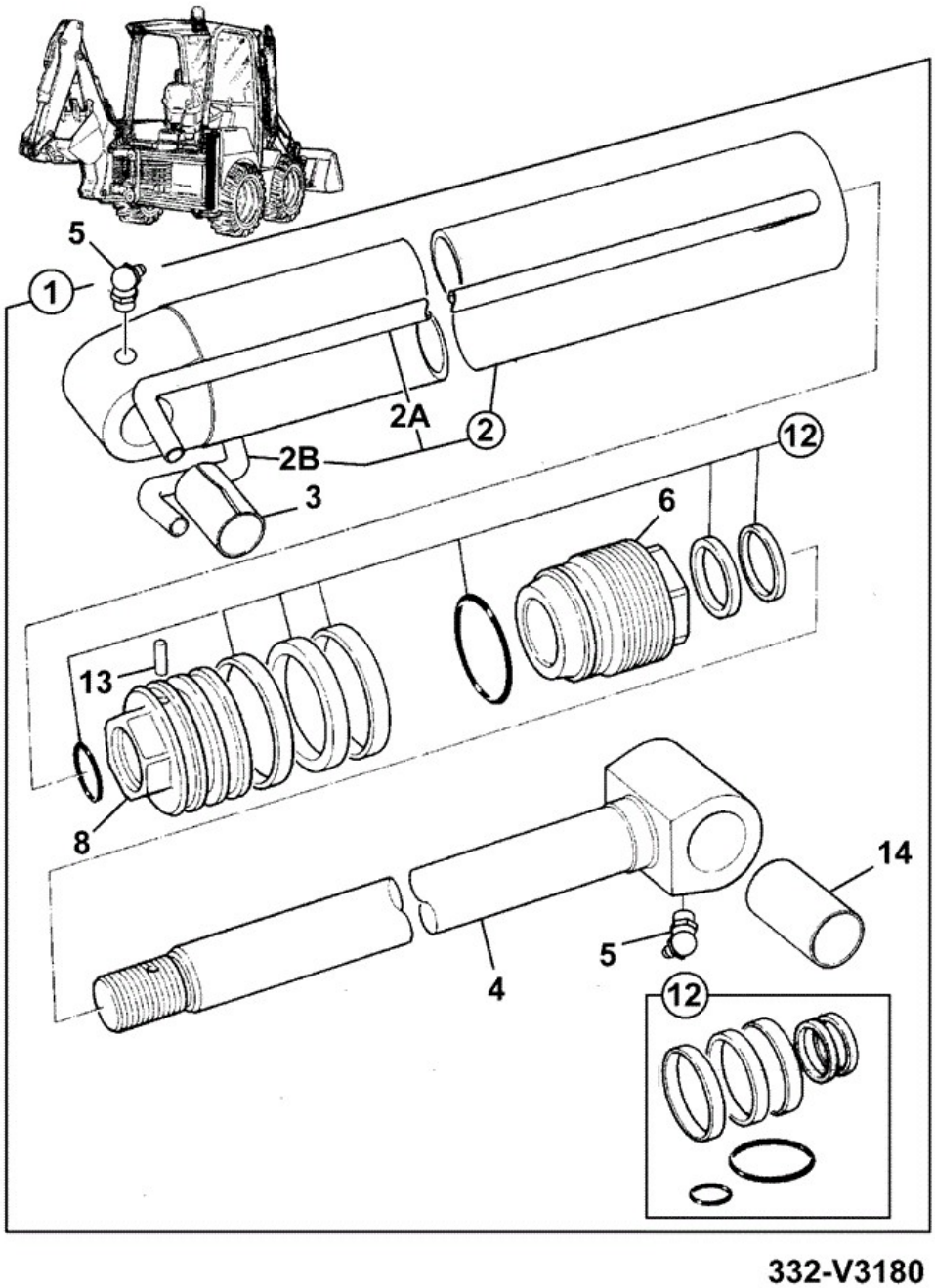

332-V3180

Item	Part No	Change No	Description	Usage Code	QTY
1	332/V3180		Ram stabiliser LH		1

2	****		None serviced part Cylinder - Use item 1		1
2A	****		None serviced part feed pipe		1
2B	****		None serviced part Feed pipe		1
3	****		'See Remark' No bushes are fitted to the dump end pivot		1
4	****		None serviced part Piston rod - use item 1		1
5	:1450/0001		Nipple Grease, Straight 1/8 BSP		2
6	:594/00132		Cap end		1
6	:808/00395		Bearing 30-34-30 Not illustrated, not supplied with 594/00132		1
8	:595/10148		Piston head		1
12	991/10141		Kit-seal service		1
13	:903/21387		Dowel Pin 6 x 20mm Piston Head		1
14	****		'See Remark' No bushes are fitted to the eye end pivot		1

Note 1: Note revised stabiliser ram hose connections when using this ram on earlier machines

Applicability Date Ranges:
From: M1299634 , To:

Product Catalog\BACKHOE LOADER 1CX, 208\.1CX 00807553-00808999,01050000-01051999,01298000-01299999 9802/6220\E HYDRAULICS & AIR INCLUDING STEERING\E04 RAMS\E4-9-3 KERB GRAB RAM

9802/6220 E4-9-3 KERB GRAB RAM

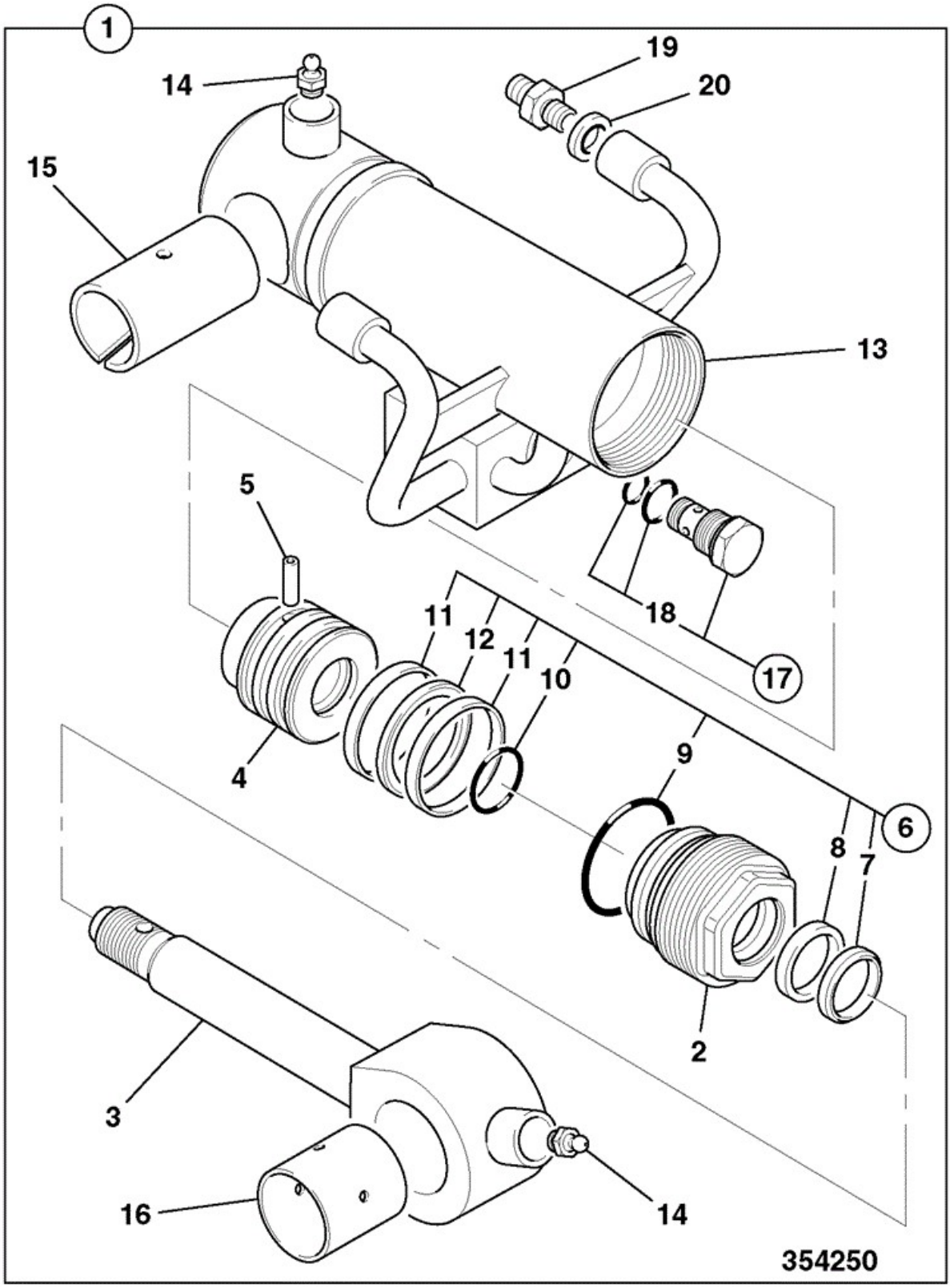

Item	Part No	Change No	Description	Usage Code	QTY

1	551/60137		Ram 50mm cyl x 25mm rod		1
2	:593/00013		Cap end		1
3	:590/40528		Rod piston 25mm x 161.5mm long		1
4	:595/10028		Head piston		1
5	:826/01182		Dowel		1
6	:991/00097		Kit-seal		1
7	::2411/8601		Seal wiper		1
8	::2411/0501		Seal rod		1
9	::2302/0100		O Ring		1
10	::2302/0006		O Ring		1
11	::2411/7915		Ring wear		2
12	::2411/1127		Seal		1
13	:551/70136		Cylinder excavator quickhitch		1
14	:1450/0001		Nipple Grease, Straight 1/8 BSP		2
15	:1206/0015		Bush spring		1
16	:831/10003		Bearing 35 x x39 x 40		1
17	:25/220562		Valve cartridge check		1
18	::998/10408		Kit-seal check valve		1
19	:816/10168		Adapter filter		2
20	:1406/0011		Washer Bonded (1/4")		2

Applicability Date Ranges:
From: , To:

Product Catalog\BACKHOE LOADER 1CX, 208\.1CX 00807553-00808999,01050000-01051999,01298000-01299999 9802/6220\E HYDRAULICS & AIR INCLUDING STEERING\E04 RAMS\E4-10-1 HYDRACLAMP SIDESHIFT

9802/6220 E4-10-1 HYDRACLAMP SIDESHIFT

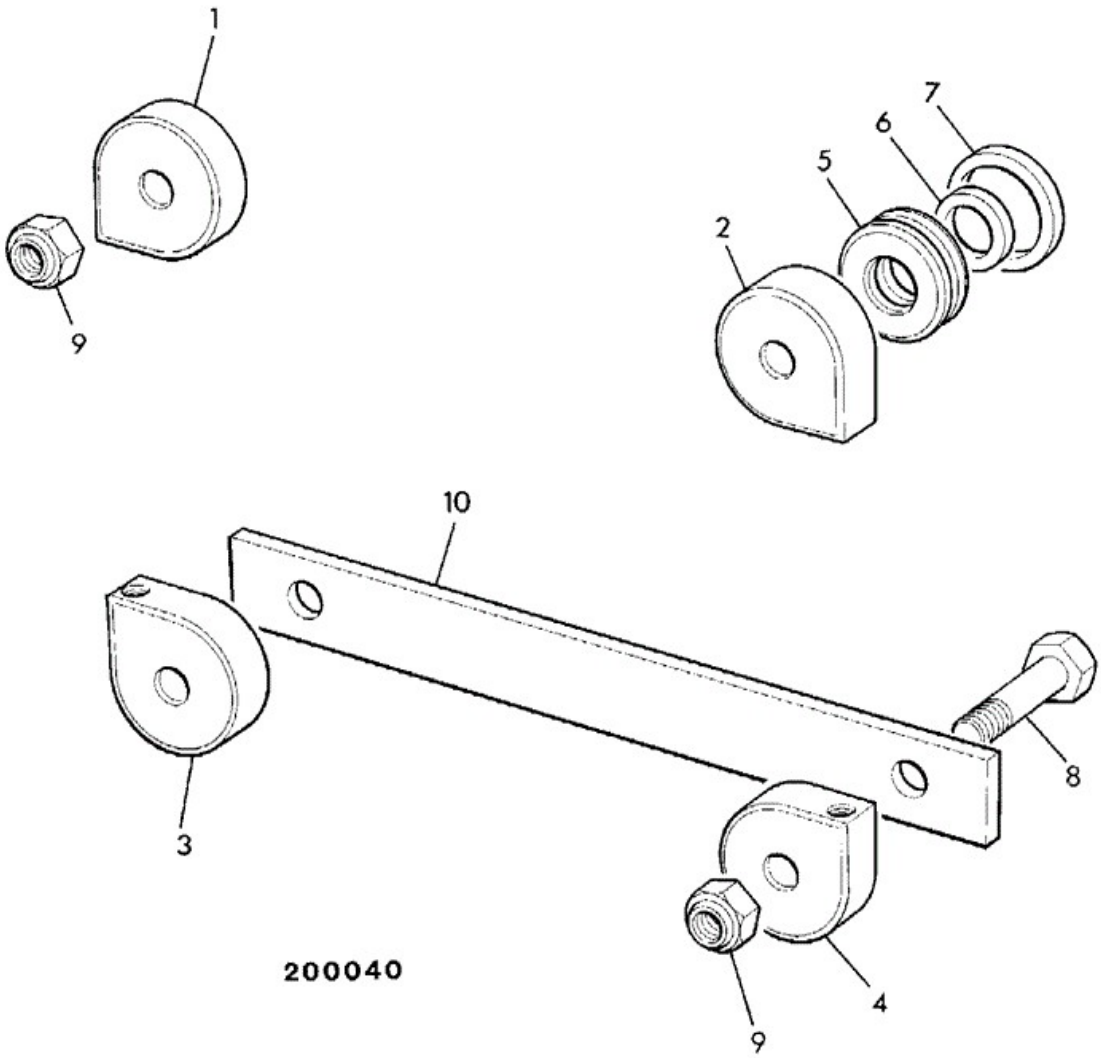

Item	Part No	Change No	Description	Usage Code	QTY

1	290/01161	<M808234	Cylinder hydraclamp		1
1	290/72082	Superseded	Cylinder hydraclamp upper left		1
1	331/59248		Cylinder hydraclamp upper left		1
2	290/01108	<M808234	Cylinder hydraclamp		1
2	290/72081	Superseded	Cylinder hydraclamp lower L / upper R		1
2	331/59246		Cylinder hydraclamp lower L/upper R		1
3	290/01108	<M808234	Cylinder hydraclamp		1
3	290/72081	Superseded	Cylinder hydraclamp lower L / upper R		1
3	331/59246		Cylinder hydraclamp lower L/upper R		1
4	290/01107	<M808234	Cylinder hydraclamp		1
4	290/72080	Superseded	Cylinder hydraclamp lower right		1
4	331/59245		Cylinder hydraclamp lower right		1
5	290/00361		Piston NLA see TI 1/024		4
6	2411/0503		Seal square section		4
7	2411/1135		Seal piston		4
8	1315/4020Z	<M751505	Bolt		3
8	1315/4021Z	>M751506	Bolt M24x110		3
8A	826/01686		Bolt 105mm long		1
9	1370/0903Z		Nut Lock M24		4
10	290/00548		Bar clamping		2

Applicability Date Ranges:
From: , To: M1299418

Product Catalog\BACKHOE LOADER 1CX, 208\.1CX 00807553-00808999,01050000-01051999,01298000-01299999 9802/6220\E HYDRAULICS & AIR INCLUDING STEERING\E04 RAMS\E4-10-10 HYDRACLAMP SIDESHIFT

9802/6220 E4-10-10 HYDRACLAMP SIDESHIFT

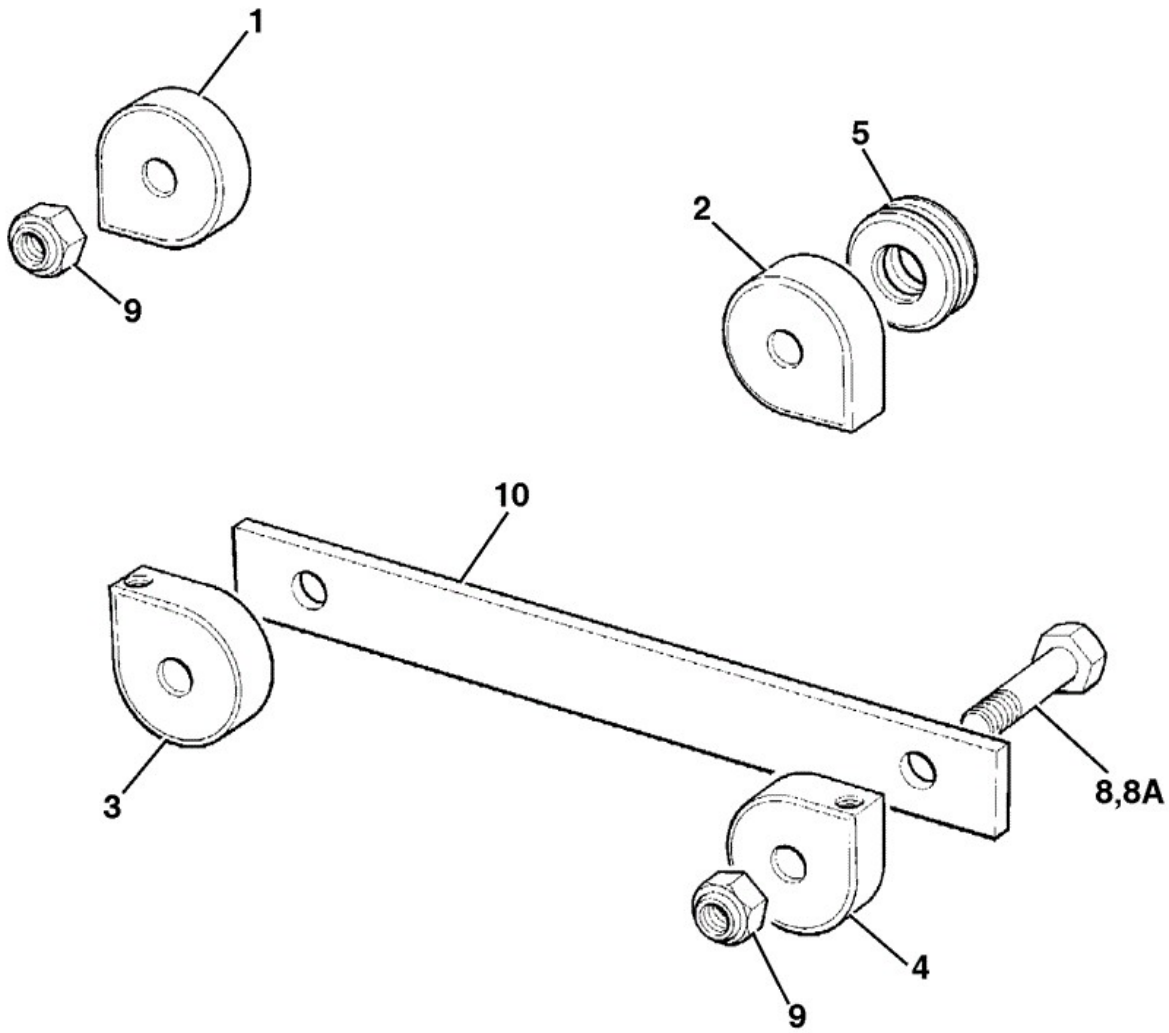

921600

Item	Part No	Change No	Description	Usage Code	QTY
1	332/T0336		Cylinder hydraclamp		1
2	332/T3941		Cylinder hydraclamp		1

3	332/T3941		Cylinder hydraclamp		1
4	332/T0336		Cylinder hydraclamp		1
5	332/T1633		Seal assembly		4
8	1315/4022D		Bolt M24 x120mm long		3
8A	1315/4021D		Bolt M24 x110mm long		1
9	1370/0903D		Nut Lock M24		4
10	290/00548		Bar clamping		2

Applicability Date Ranges:
From: M1299419 , To:

Product Catalog\BACKHOE LOADER 1CX, 208\.1CX 00807553-00808999,01050000-01051999,01298000-01299999 9802/6220\E HYDRAULICS & AIR INCLUDING STEERING\E04 RAMS\E4-16-1 RAM, SIDETIP SHOVEL

9802/6220 E4-16-1 RAM, SIDETIP SHOVEL

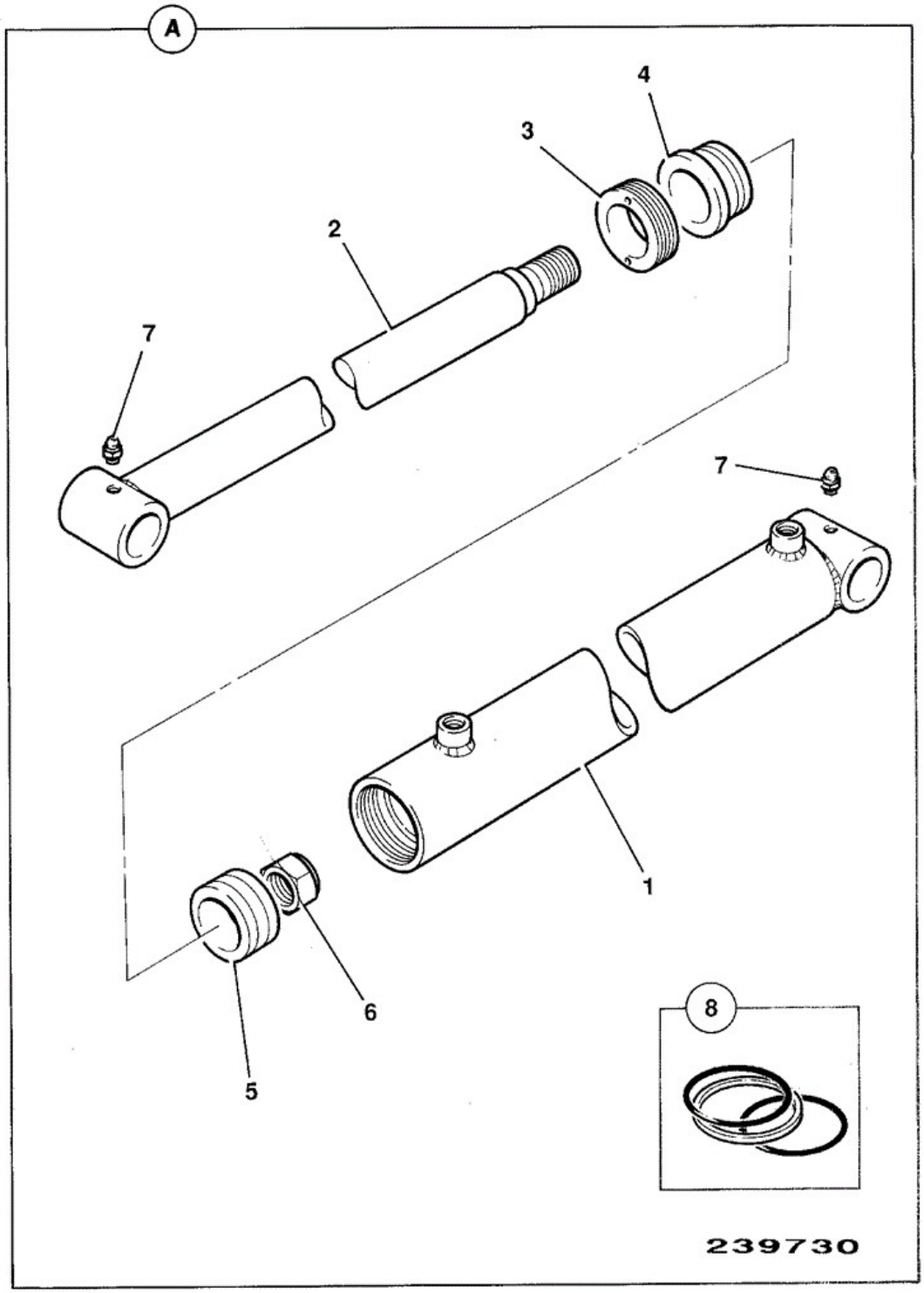

Item	Part No	Change No	Description	Usage Code	QTY
A	997/00900		Ram assembly		1
1	:997/00901		Cylinder		1

2	:997/00902		Rod piston		1
3	:997/00903		Cap End		1
4	:997/00904		Bearing gland		1
5	:997/00905		Head piston		1
6	:997/00906		Nut		1
7	:997/00907		Nipple grease		2
8	:997/00908		Kit seal		1

Applicability Date Ranges:
From: , To:

Product Catalog\BACKHOE LOADER 1CX, 208\.1CX 00807553-00808999,01050000-01051999,01298000-01299999 9802/6220\E HYDRAULICS & AIR INCLUDING STEERING\E04 RAMS\E4-17-1 RAM HIGH TIP

9802/6220 E4-17-1 RAM HIGH TIP

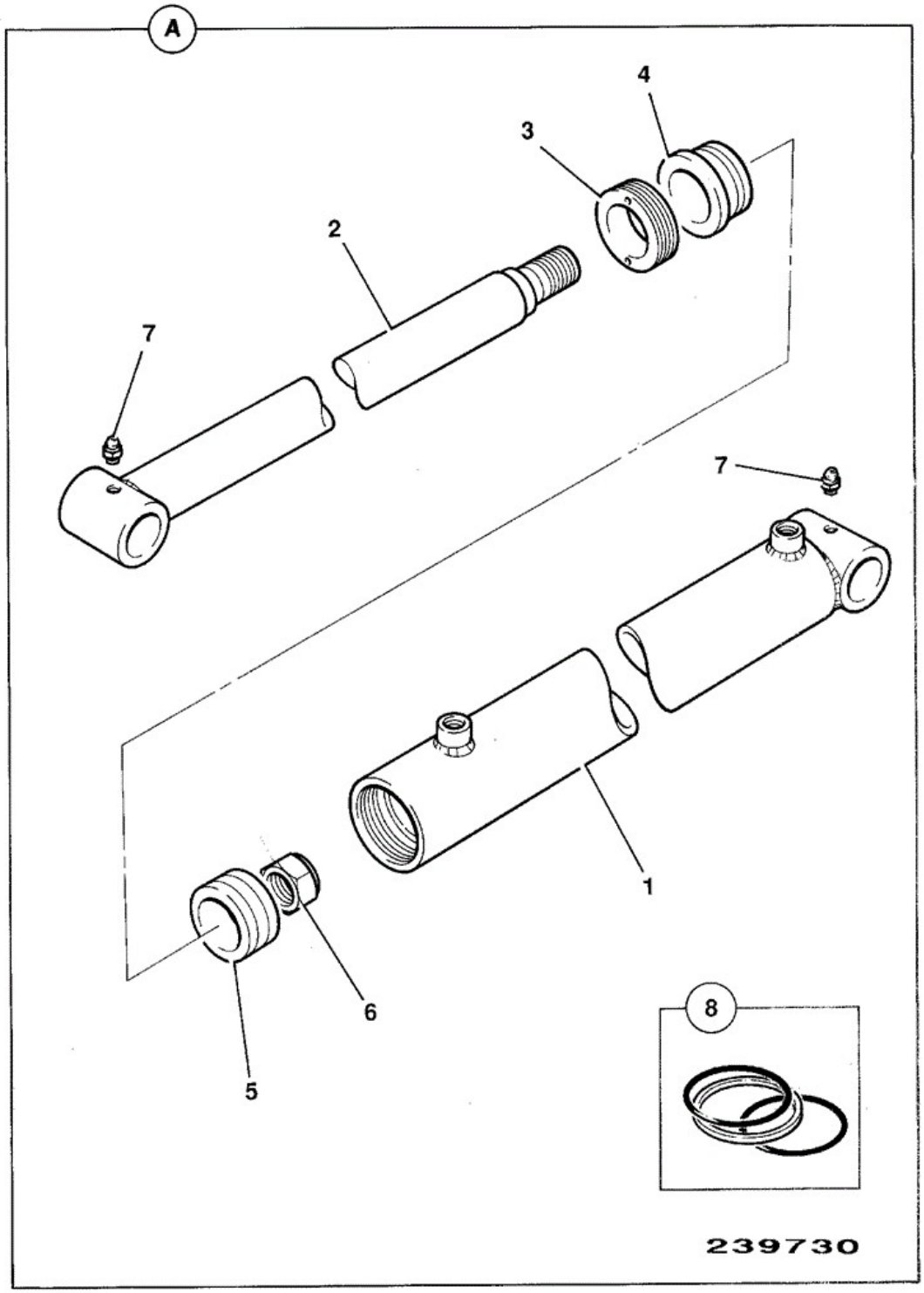

Item	Part No	Change No	Description	Usage Code	QTY
A	997/07700		Ram complete		1
1	:997/07701		Cylinder		1

2	:997/07702		Rod		1
3	:997/07703		Cap		1
4	:997/07704		Housing gland		1
5	:997/07705		Piston		1
6	:997/00906		Nut		1
7	:997/00907		Nipple grease		2
8	:903/10301		Kit seal		1

Applicability Date Ranges:
From: , To:

Product Catalog\BACKHOE LOADER 1CX, 208\.1CX 00807553-00808999,01050000-01051999,01298000-01299999 9802/6220\E HYDRAULICS & AIR INCLUDING STEERING\E04 RAMS\E4-18-2 RAM, CLAMSHOVEL

9802/6220 E4-18-2 RAM, CLAMSHOVEL

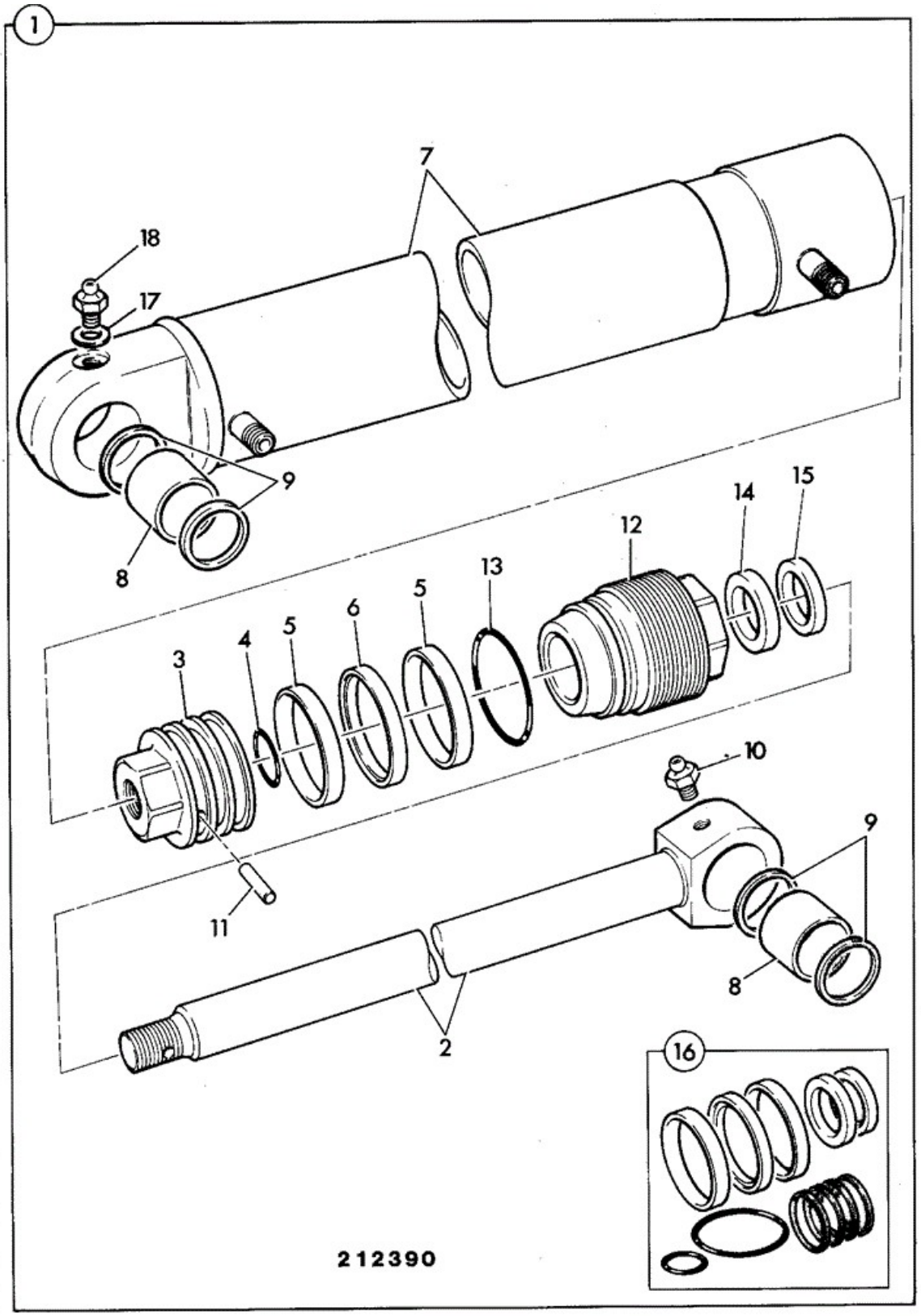

Item	Part No	Change No	Description	Usage Code	QTY

1	551/60021	Superseded	Ram assembly		2
1	551/60150		Ram assembly		2
2	:590/32000		Rod piston, 25mm dia		1
3	:595/10028		Head piston		1
4	:2302/0006		O Ring		1
5	:2411/7915		Ring wear		2
6	:2411/1127		Seal		1
7	:551/70021	Superseded	Cylinder		1
7	:551/70150		Cylinder		1
8	:808/00246		Bush 27mm long 35mm OD x 25mm ID		2
9	:904/09300		Seal oil		4
10	:1450/0001		Nipple Grease, Straight 1/8 BSP		1
11	:826/01182		Dowel		1
12	:593/00013		Cap end		1
13	:2302/0100		O Ring		1
14	:2411/0501		Seal rod		1
15	:2411/8601		Seal wiper		1
16	:991/00097		Kit-seal		1
17	:1403/0001		Washer Aluminium		1
18	:816/60056		Nipple Grease		1

Applicability Date Ranges:
From: , To:

Product Catalog\BACKHOE LOADER 1CX, 208\.1CX 00807553-00808999,01050000-01051999,01298000-01299999 9802/6220\F AXLES, WHEELS & TRANSMISSION\F01 AXLES, FRONT\F1-1-1 AXLE ASSEMBLY FRONT

9802/6220 F1-1-1 AXLE ASSEMBLY FRONT

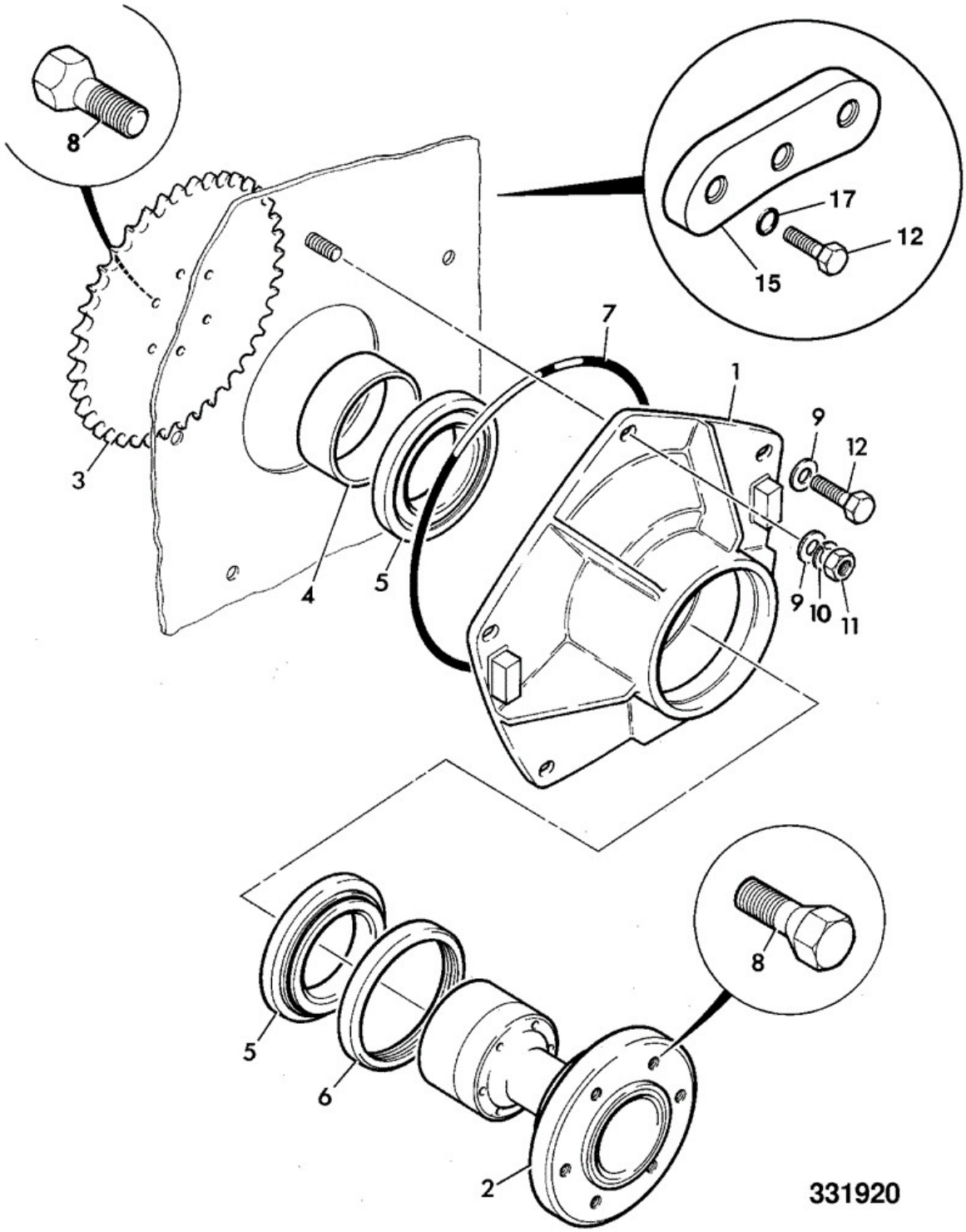

Item	Part No	Change No	Description	Usage Code	QTY
1	246/01031	Superseded	Housing 246/01231P Casting		1
1	M.S.S.		Multi Supersession		1

1	331/30567	Superseded	Housing		1
1	331/41809	>01/06/04	Hub Front		1
1	828/10131		O Ring 7mm dia section		1
2	246/01032		Axle Stub front machining		1
3	246/01037		Sprocket		1
4	246/01038		Spacer		1
5	907/52200		Bearing Taper		2
6	904/50025		Seal 161 x 126.25 x 20.3		1
7	828/00388	<M808382	O Ring use with 246/01031		1
7	828/10131		O Ring 7mm dia section use with 331/30567		1
8	826/00533	<M806056	Bolt wheel		12
8	826/01831		Bolt wheel		12
9	1420/0011D		Washer (M16)		5
10	1425/0011Z	<M806487	Washer spring M16		1
11	1370/0601Z	<M806487	Nut M16		4
12	1321/0710D		Setscrew M16X40		5
13	4101/0202		Sealant Locking		0
14	4102/0900		Sealant		1
21	1315/3518D		Bolt M12x80 to adjust chain tension		1
22	1370/0402D		Nut M12 for use with item 21		2
23	1411/0005D		Washer for use with item 21		2

Applicability Date Ranges:
From: , To:

Product Catalog\BACKHOE LOADER 1CX, 208\.1CX 00807553-00808999,01050000-01051999,01298000-01299999 9802/6220\F AXLES, WHEELS & TRANSMISSION\F02 AXLES, REAR\F2-1-1 AXLE ASSEMBLY REAR

9802/6220 F2-1-1 AXLE ASSEMBLY REAR

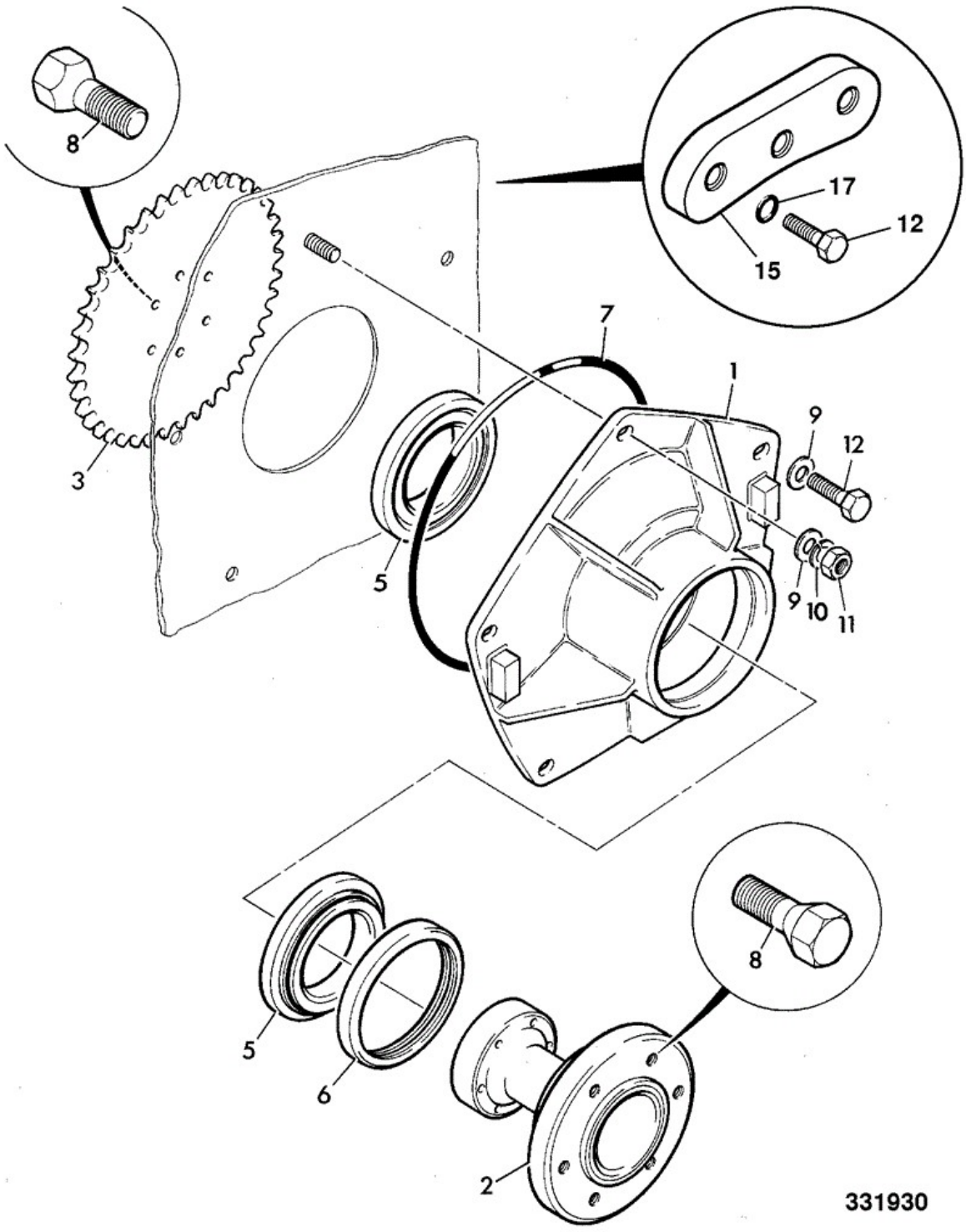

Item	Part No	Change No	Description	Usage Code	QTY
1	246/01031	Superseded	Housing		1
1	M.S.S.		Multi Supersession		1

1	828/10131		O Ring 7mm dia section		1
1	331/30567	Superseded	Housing		1
1	331/41809	>01/06/04	Hub Front		1
2	246/01033		Axle stub rear machining		1
3	246/01037		Sprocket		1
5	907/52200		Bearing Taper		2
6	904/50025		Seal 161 x 126.25 x 20.3		1
7	828/00388	<M808382	O Ring use with 246/01031		1
7	828/10131		O Ring 7mm dia section use with 331/30567		1
8	826/00533	<M806056	Bolt wheel		12
8	826/01831		Bolt wheel		12
9	1420/0011D		Washer (M16)		5
10	1425/0011Z	<M806487	Washer spring M16		1
11	1370/0601Z	<M806487	Nut M16		1
12	1321/0710D		Setscrew M16X40		5
13	4101/0200		Fluid Locking		0
14	4102/0900		Sealant		0
15	335/01013	<M806975	Plate not used after this this build no.		1
17	828/00376	<M806975	O Ring 5mm dia section not used after this build no		3
21	1315/3518D		Bolt M12x80 to adjust chain tension		1
22	1370/0402D		Nut M12 for use with item 21		2
23	1411/0005D		Washer for use with item 21		2

Applicability Date Ranges:
From: , To:

Product Catalog\BACKHOE LOADER 1CX, 208\1CX 00751600-00752999,00806000-00807552 9802/6220\F AXLES, WHEELS & TRANSMISSION\F03 WHEELS, TYRES & PROPSHAFTS\F3-1-1 WHEELS & TYRES 6 STUD 7.00 X 15

9802/6220 F3-1-1 WHEELS & TYRES 6 STUD 7.00 X 15

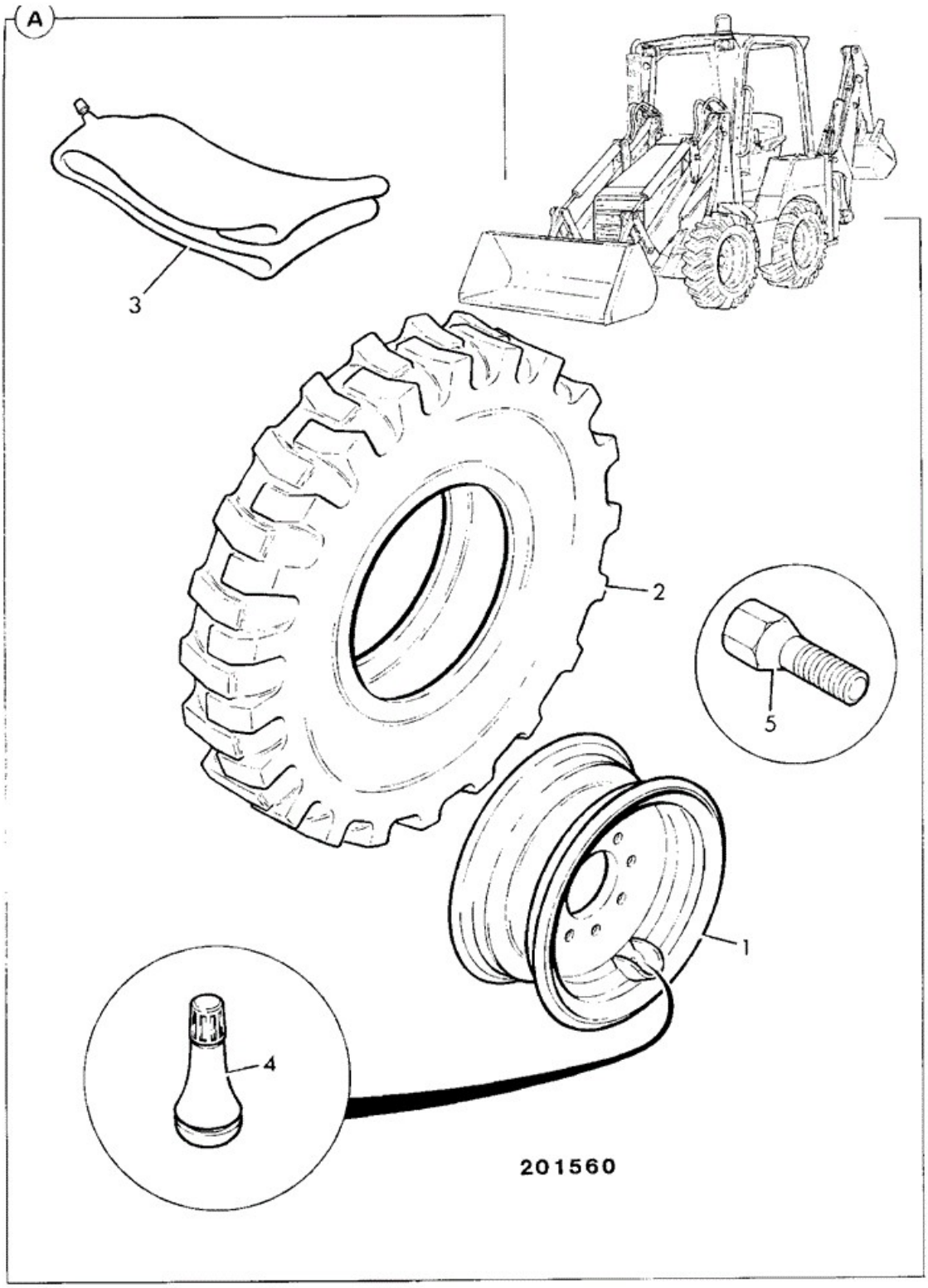

Item	Part No	Change No	Description	Usage Code	QTY

A	246/75200	<M806056	Wheel assembly 7.00 x 15	A	4
A	245/23900	>M806057	Wheel assembly, 700x15 6 ply, Solideal	B	4
1	:41/926100		Wheel centre	A	1
1	:41/932500		Wheel centre, 6J x 15H2 Mefro Must use shorter bolts	B	1
2	:42/912900		Tyre 7 x 15, tubed	A	1
2	:42/922500		Tyre 700 x 15, 6ply Solideal		1
3	:832/00053		Tube	A B	1
5	826/00533		Bolt wheel Not included with wheel assembly. 53mm long	A	6
5	826/01831		Bolt wheel 46mm long	B	6

Note 1: Bolts 826/00533 CANNOT be used with items with usage code B

Note 2: Bolts 826/01831 must be used with usage code B and MAY be used with usage code A

Applicability Date Ranges:
From: , To:

Product Catalog\BACKHOE LOADER 1CX, 208\1CX 00751600-00752999,00806000-00807552 9802/6220\F AXLES, WHEELS & TRANSMISSION\F03 WHEELS, TYRES & PROPSHAFTS\F3-2-1 WHEELS & TYRES 6 STUD 10 X 16.5 HD2000

9802/6220 F3-2-1 WHEELS & TYRES 6 STUD 10 X 16.5 HD2000

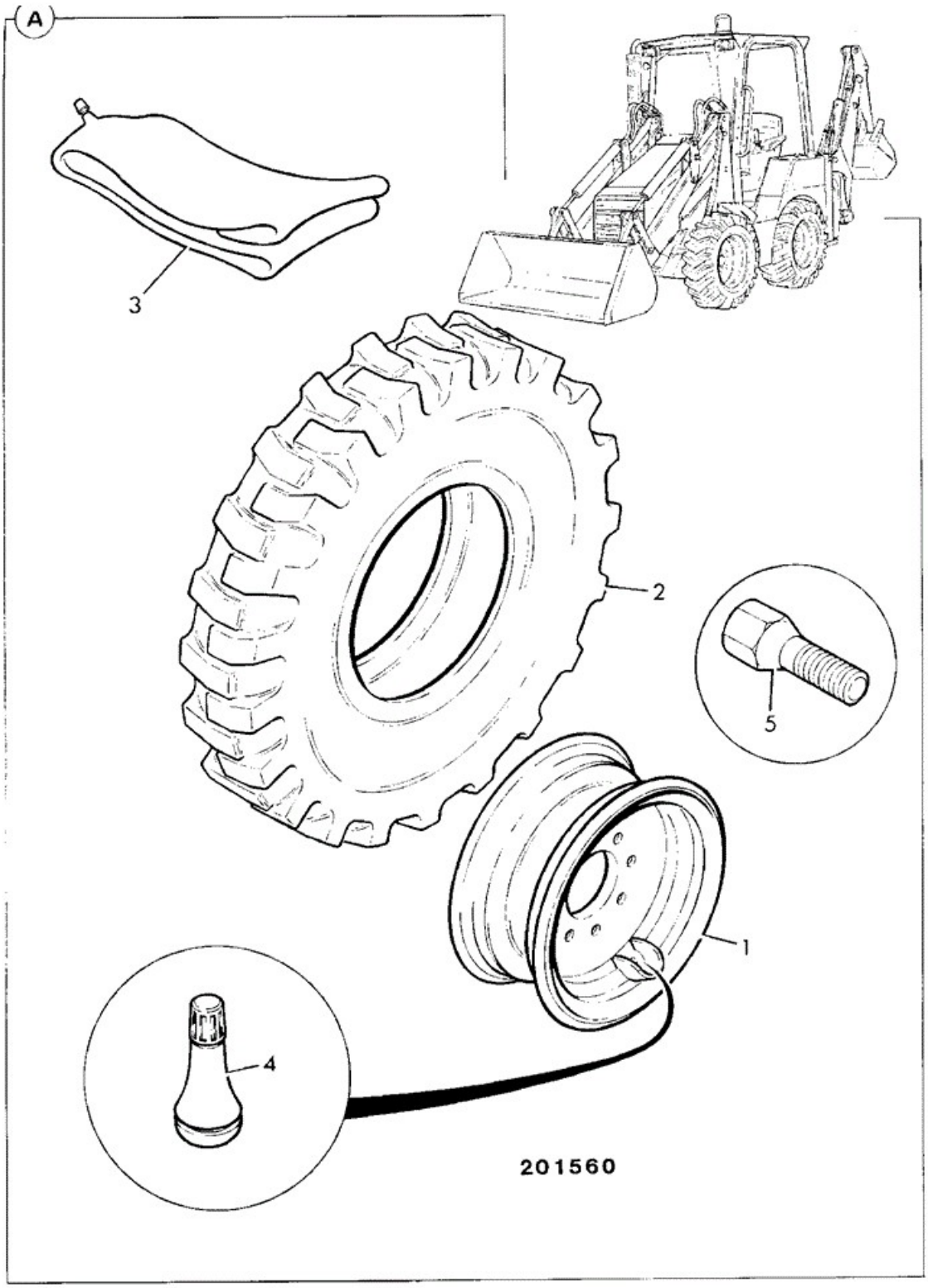

Item	Part No	Change No	Description	Usage Code	QTY

A	246/73600		Wheel assembly 10 x 16.5	A	4
A	246/74600		Wheel assembly 10 x 16.5 HD2000	B	4
A	246/74500		Wheel assembly, 10x16.5 Dico	C	4
1	:41/925800		Wheel centre	A,B,C	1
2	:42/913000		Tyre 10 x 16.5, tubeless Dico	A,C	1
2	:42/409300		Tyre 10 x 16.5, tubless G/year	A	1
2	:42/915500		Tyre 10 x 16.5 x 8 PR tubeless HD 2000	B	1
4	:151/05201		Valve Tyre		1
5	826/00533		Bolt wheel Not included with tyre assembly		6

Applicability Date Ranges:
From: , To: M806057

Product Catalog\BACKHOE LOADER 1CX, 208\1CX 00751600-00752999,00806000-00807552 9802/6220\F AXLES, WHEELS & TRANSMISSION\F03 WHEELS, TYRES & PROPSHAFTS\F3-2-2 WHEELS & TYRES 6 STUD 10 X 16.5

9802/6220 F3-2-2 WHEELS & TYRES 6 STUD 10 X 16.5

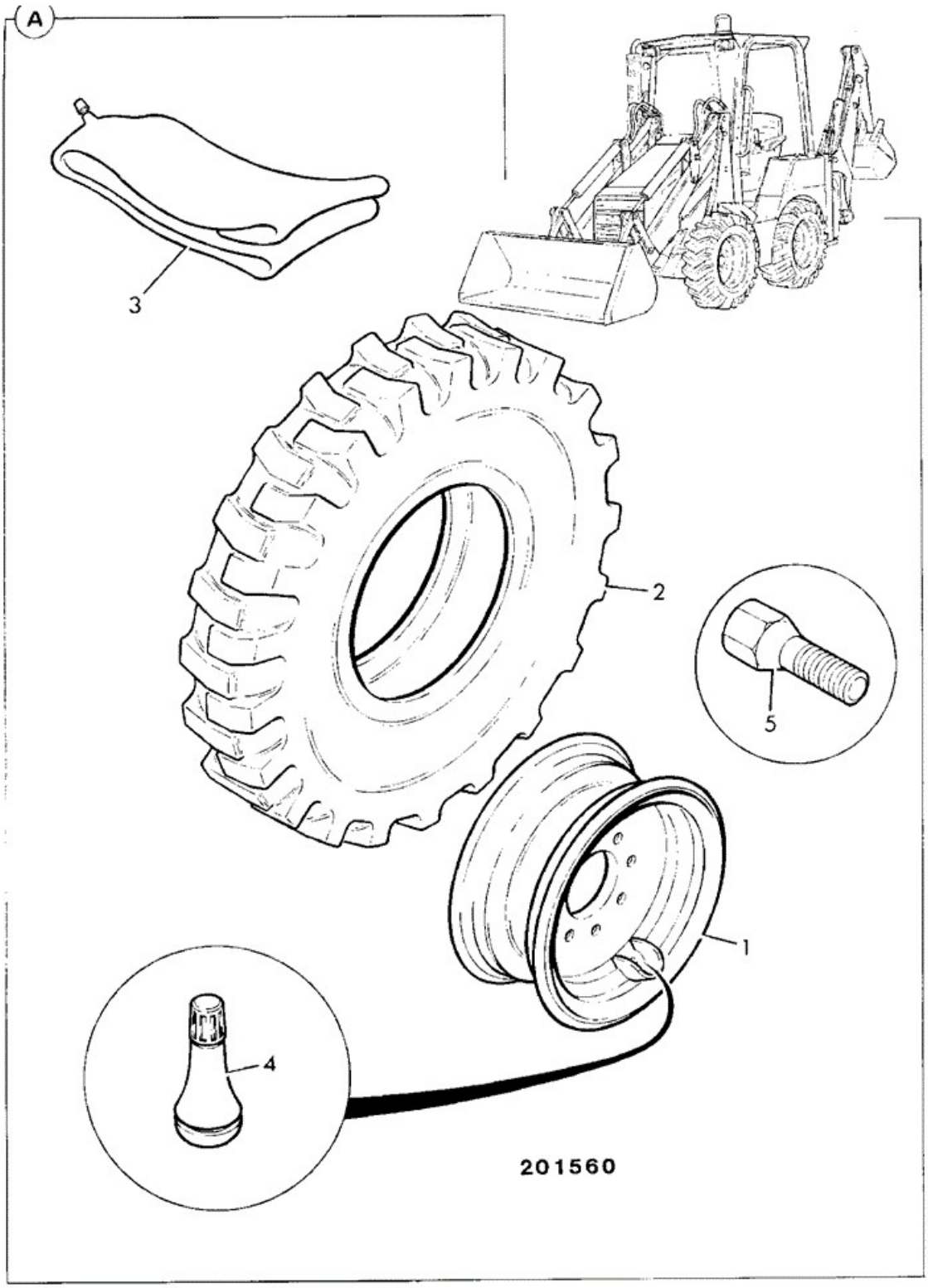

Item	Part No	Change No	Description	Usage Code	QTY

A	245/23300		Wheel assembly, 10x16.5 6 ply, Solideal	A	4
A	245/23500		Wheel assembly, 10x16.5 8 ply, Solideal	B	4
1	:41/932300		Wheel centre, 16.5 x 8.25 Mefro	A B	1
2	:42/922200		Tyre 10 x 16.5, 6 ply Solideal	A	1
2	:42/922300		Tyre 10 x 16.5, 8 ply Sitemaster	B	1
4	:123/05041		Valve tyre flexible (Tubeless)	AB	1
5	826/01831		Bolt wheel	A B	6

Applicability Date Ranges:
From: M806057 , To:

Product Catalog\BACKHOE LOADER 1CX, 208\1CX 00751600-00752999,00806000-00807552 9802/6220\F AXLES, WHEELS & TRANSMISSION\F03 WHEELS, TYRES & PROPSHAFTS\F3-2-3 WHEELS & TYRES 6 STUD 10 X 16.5

9802/6220 F3-2-3 WHEELS & TYRES 6 STUD 10 X 16.5

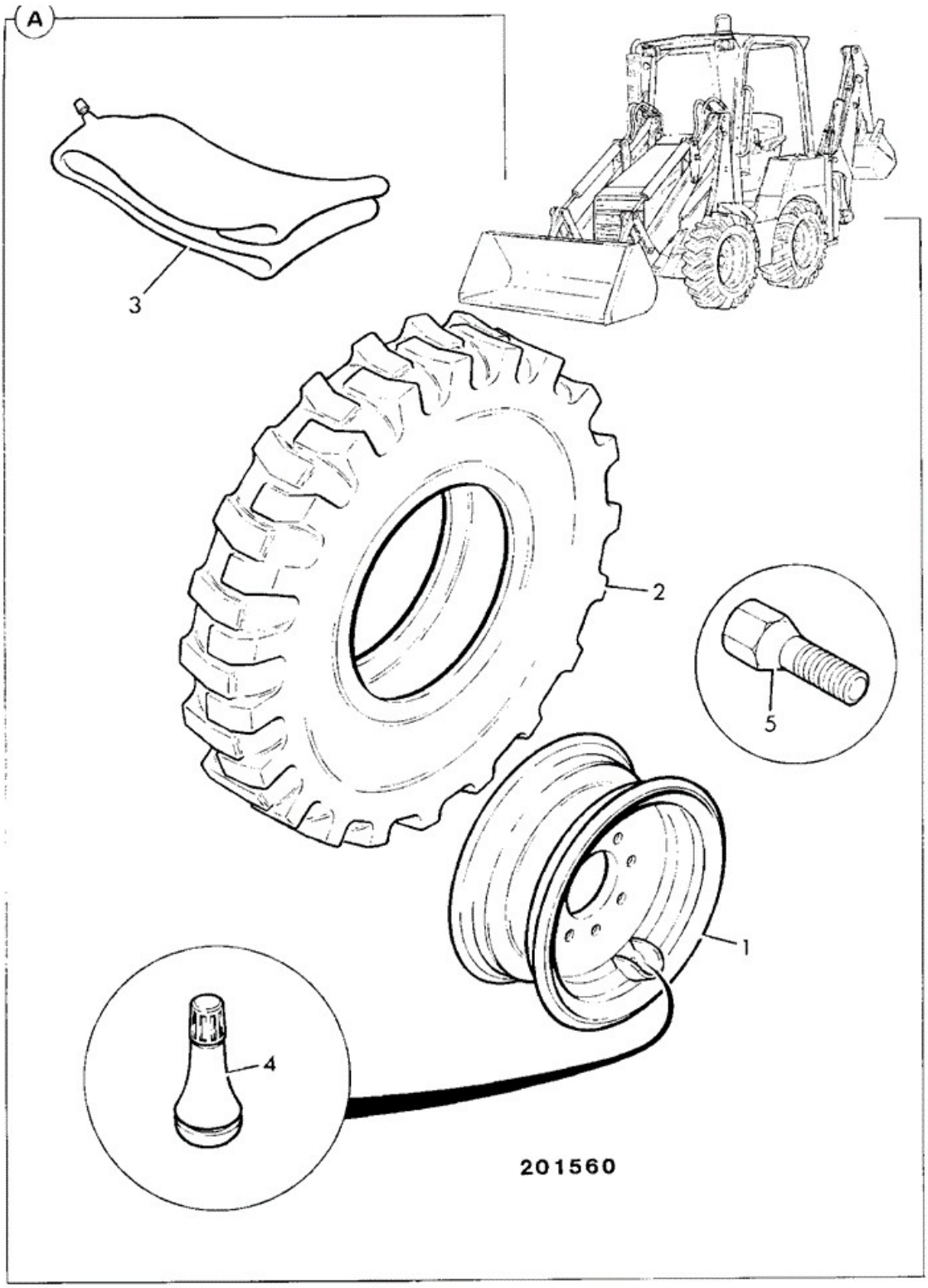

Item	Part No	Change No	Description	Usage Code	QTY

A	246/74200	<M806056	Wheel assembly 10 x 16.5 May be replaced by 245/23300 only in sets	A	1
A	245/23300	>M806057	Wheel assembly, 10x16.5 6 ply, Solideal	B	1
A	245/23500	>M806057	Wheel assembly, 10x16.5 8 ply, Solideal	C	1
1	:41/925800		Wheel centre	A	1
1	:41/932300		Wheel centre, 16.5 x 8.25 Mefro Must use short wheel bolts, see Notes	BC	1
2	:42/913000		Tyre 10 x 16.5, tubeless Dico	A	1
2	:42/922200		Tyre 10 x 16.5, 6 ply Solideal	B	1
2	:42/922300		Tyre 10 x 16.5, 8 ply Sitemaster	C	1
4	:123/05041		Valve tyre flexible (Tubeless)	ABC	1
5	826/00533		Bolt wheel 53mm long	A	6
5	826/01831		Bolt wheel 46 mm long	BC	6

Note 1: Bolts 826/00533 cannot be used with usage codes B or C

Note 2: Bolts 826/01831 MUST be used with usage codesB C and may be used with A

Applicability Date Ranges:
From: , To:

9802/6220 F3-3-1 WHEEL & TYRES SEGMENTED 6 STUD 240MM WIDE

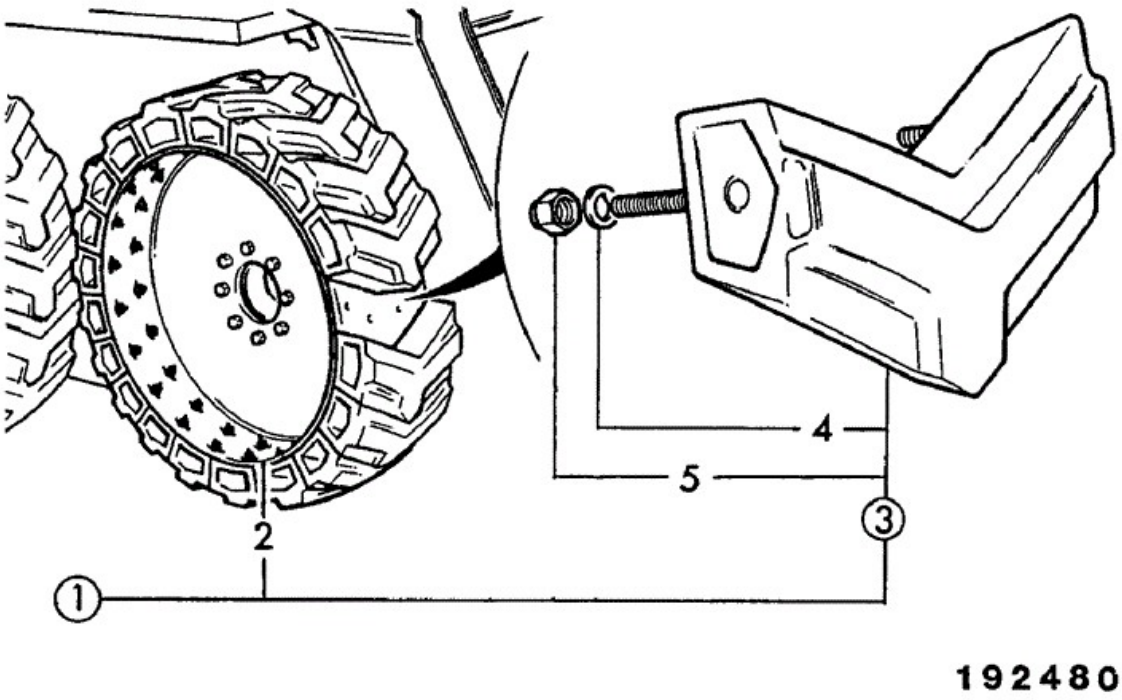

	Part				

Item	No	Change No	Description	Usage Code	QTY
1	246/73900		Wheel assembly,segmented 240mm wide L.H.		2
1	246/73800		Wheel assembly,segmented 240mm wide, R.H.		2
2	:41/926500		Rim left hand		1
2	:41/926400		Rim right hand		1
3	:42/913700		Kit tyre segment		20

Applicability Date Ranges:
From: , To:

9802/6220 F3-3-2 WHEEL & TYRES SEGMENTED 6 STUD 210MM WIDE

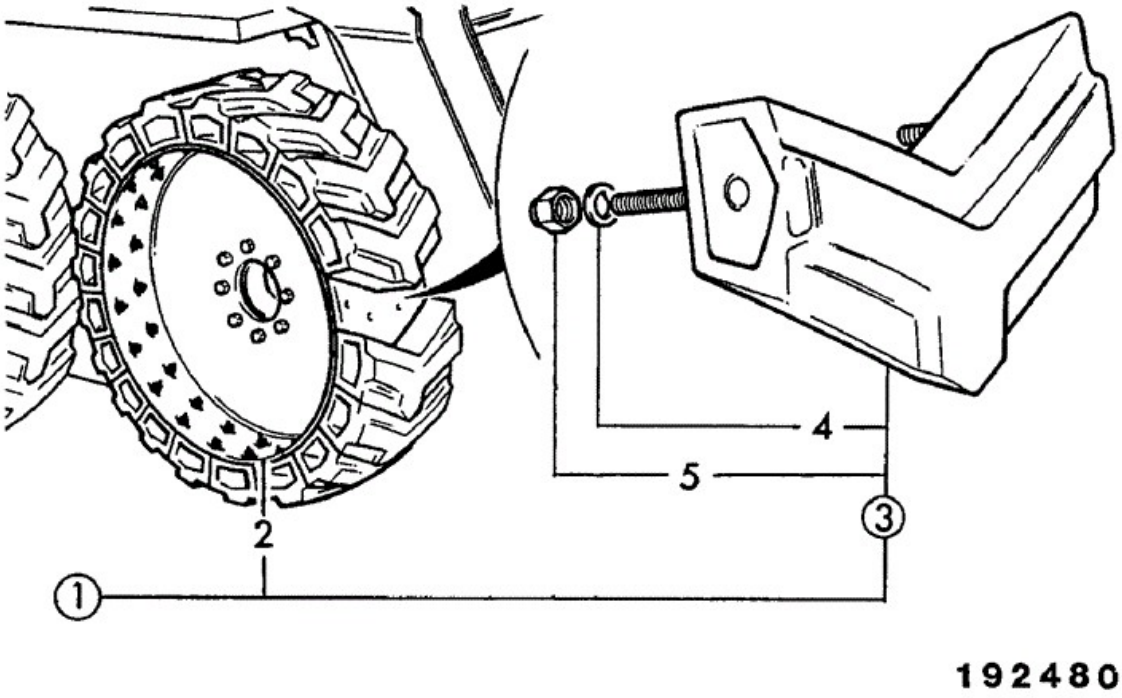

	Part				

Item	No	Change No	Description	Usage Code	QTY
1	246/75100		Wheel assembly,segmented 210mm wide L.H.		2
1	246/75000		Wheel assembly, segmented 210mm wide, R.H.		2
2	:41/926300		Rim left side		1
2	:41/926200		Rim right side		1
3	:42/916100		Kit tyre segment		18

Applicability Date Ranges:
From: , To:

9802/6220 F3-4-1 WHEELS & TYRES 6 STUD 7.00 X 15 PREMIUM WIDE TRACK

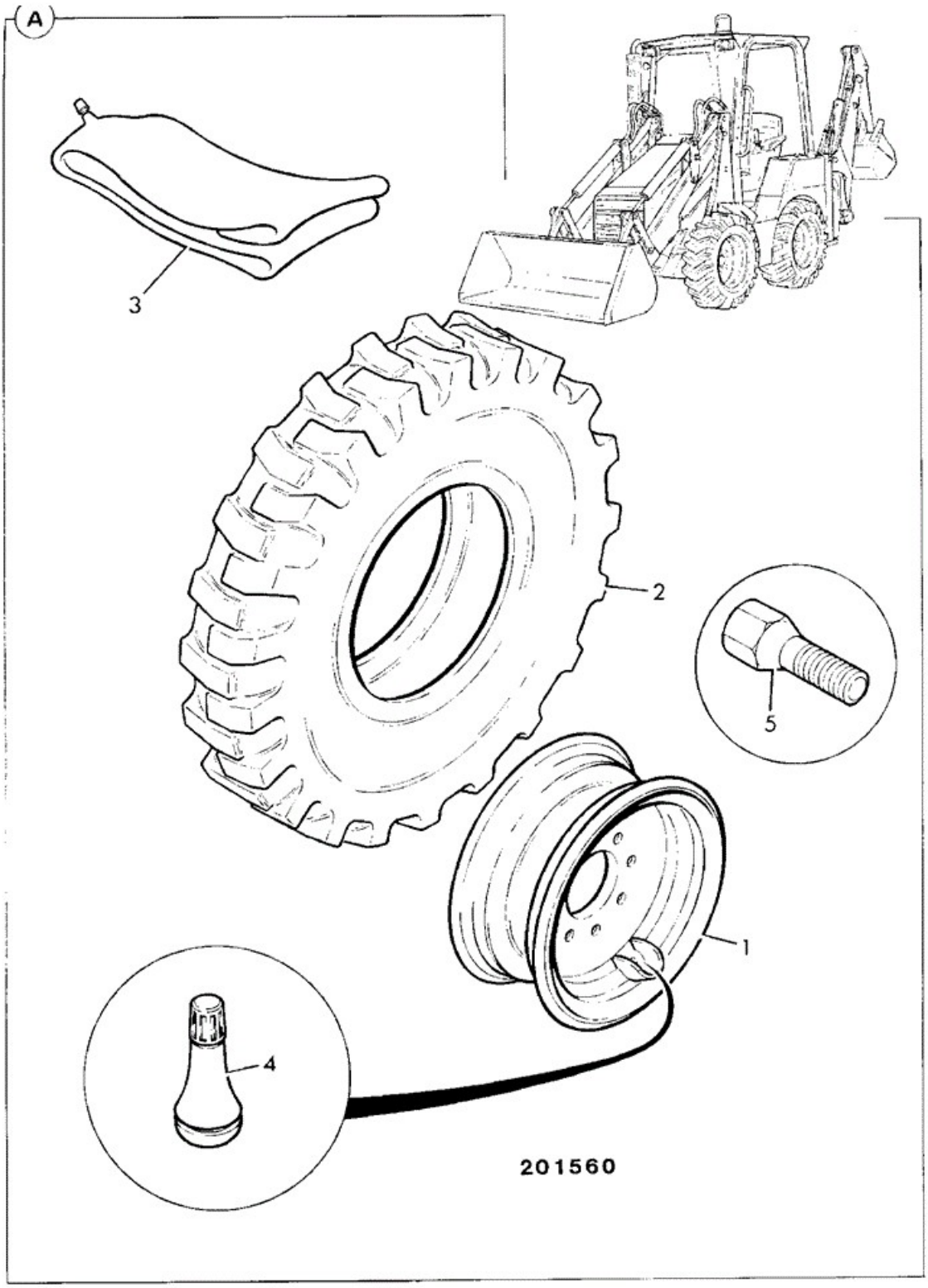

	Part				

Item	No	Change No	Description	Usage Code	QTY
A	290/09400		Wheel assembly, 7 x 15 premium wide track		4
1	:41/928500		Wheel centre		1
2	:42/915900		Tyre 29-8 x 15,tubeless wide track, IND.		1
4	:151/05201		Valve Tyre		1
5	826/00533		Bolt wheel Not included with wheel assembly		6

Applicability Date Ranges:
From: , To: M806056

Product Catalog\BACKHOE LOADER 1CX, 208\1CX 00751600-00752999,00806000-00807552 9802/6220\F AXLES, WHEELS & TRANSMISSION\F03 WHEELS, TYRES & PROPSHAFTS\F3-4-2 WHEELS & TYRES 6 STUD 7.00 X 15 PREMIUM WIDE TRACK

9802/6220 F3-4-2 WHEELS & TYRES 6 STUD 7.00 X 15 PREMIUM WIDE TRACK

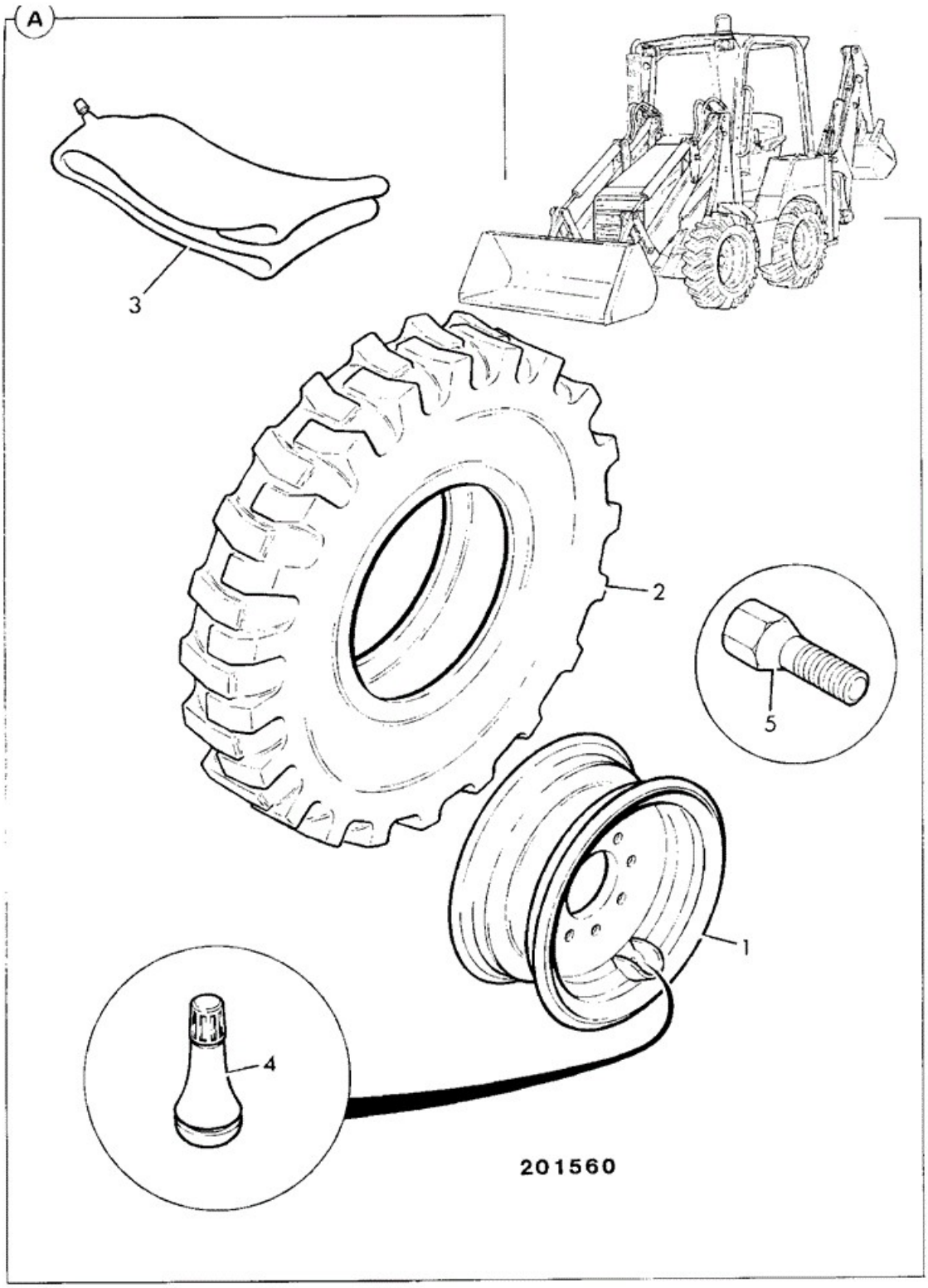

	Part				

Item	No	Change No	Description	Usage Code	QTY
A	245/24000		Wheel assembly, 700x15 14 ply, Solideal		1
1	:41/932400		Wheel 5.5 - 15 split rim Mefro		1
2	:42/922600		Tyre 700x15, 14ply, tubed Solideal		1
3	:832/00053		Tube		1
5	826/01831		Bolt wheel Short wheel bolts		6

Applicability Date Ranges:
From: M806057 , To:

9802/6220 F3-4-4 WHEELS & TYRES SOLID 6 STUD, 700 X 15 - 5.50

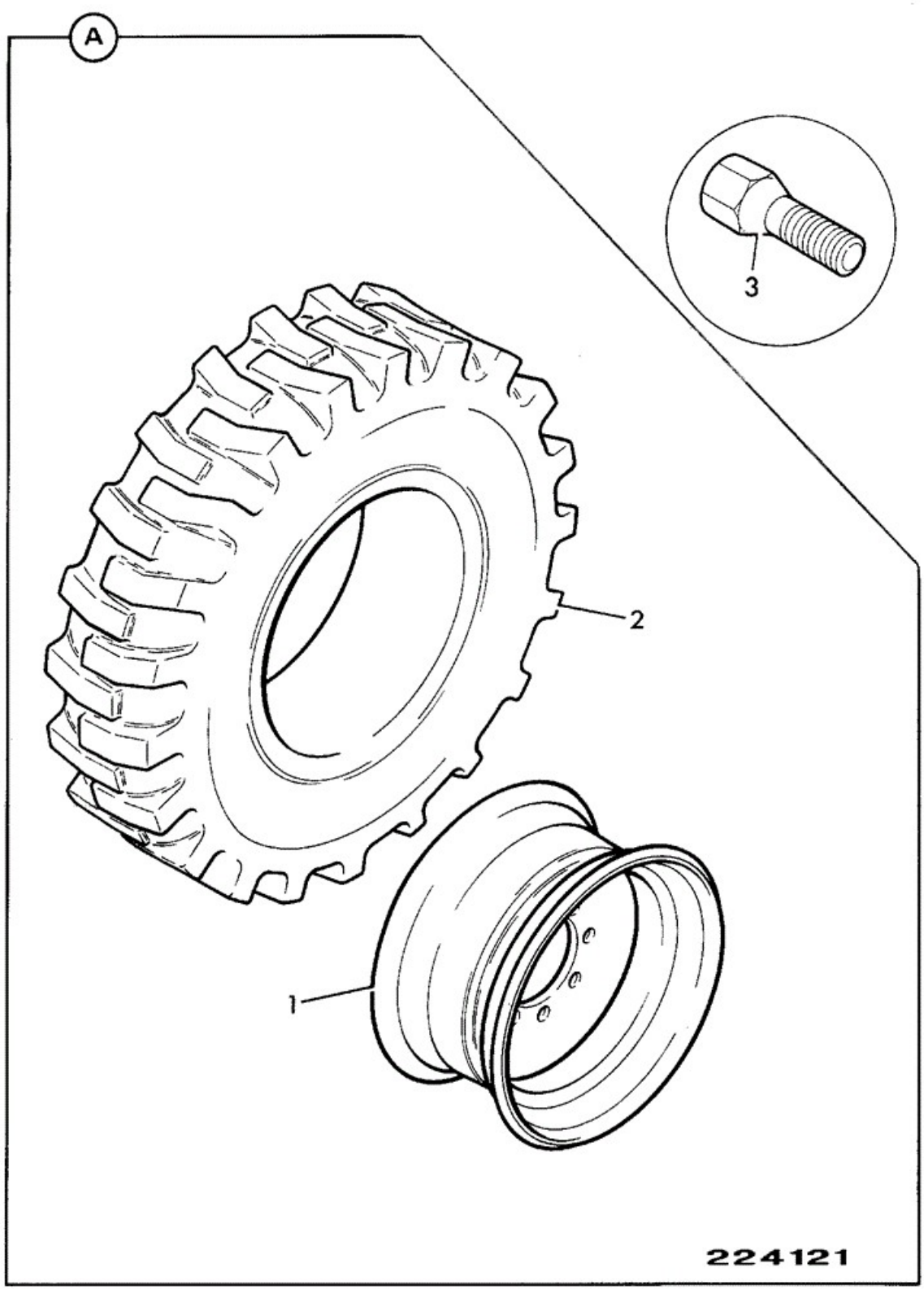

Item	Part No	Change No	Description	Usage Code	QTY

A	245/23700		Kit wheel and tyre solid		4
1	:41/932400		Wheel 5.5 - 15 split rim Mefro		1
2	:42/916000		Tyre 700x15 - 5.50 solid		1
3	826/01831		Bolt wheel 6/wheel		6

Applicability Date Ranges:
From: , To:

Product Catalog\BACKHOE LOADER 1CX, 208\1CX 00751600-00752999,00806000-00807552 9802/6220\F AXLES, WHEELS & TRANSMISSION\F03 WHEELS, TYRES & PROPSHAFTS\F3-5-1 GRASSLAND TYRE 13.5 X 15

9802/6220 F3-5-1 GRASSLAND TYRE 13.5 X 15

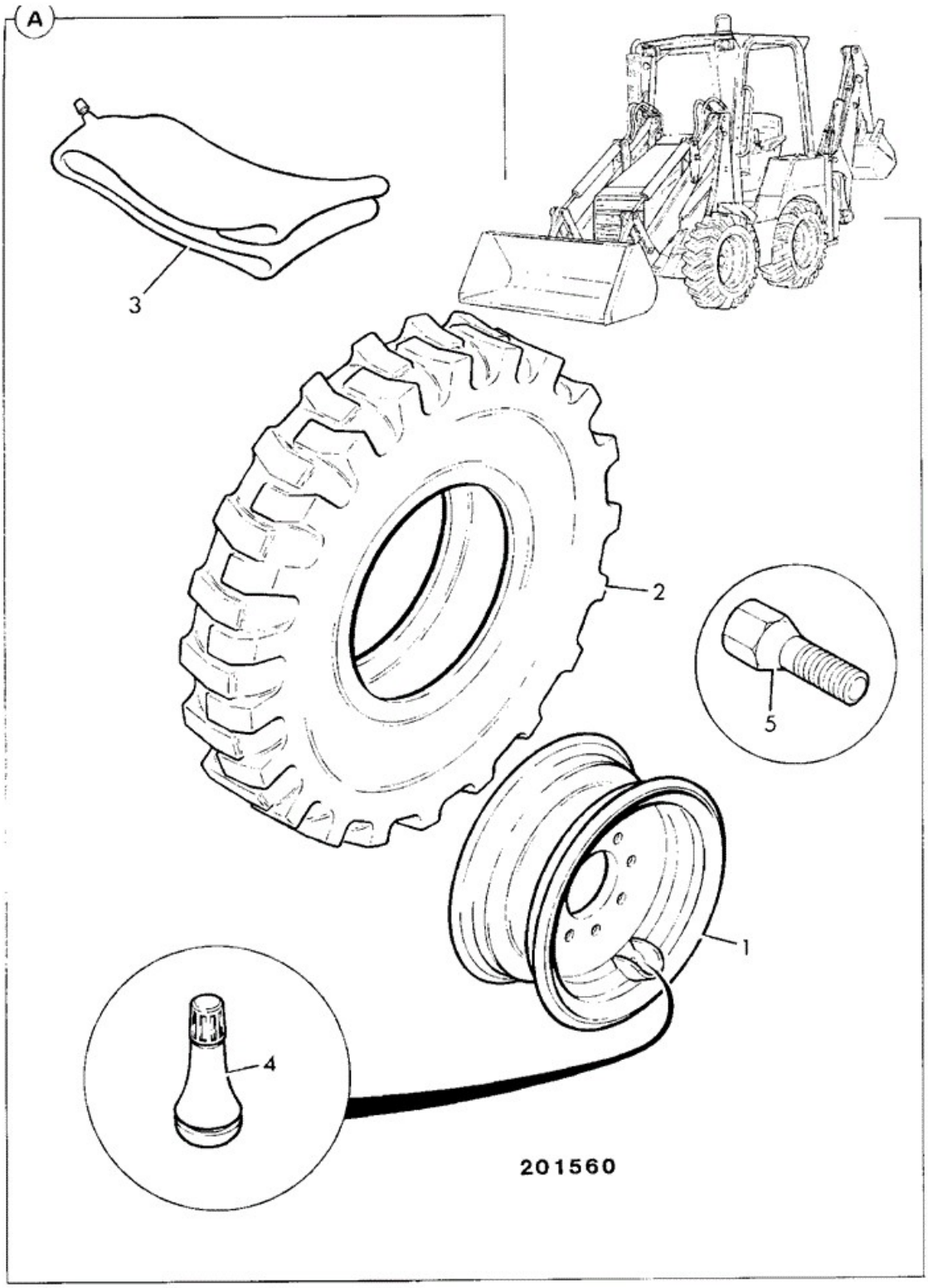

Item	Part No	Change No	Description	Usage Code	QTY

A	290/09500		Wheel assembly, grassland		4
1	41/929700		Rim grassland tyre 10 X 15		1
2	42/413600		Tyre Grassland 13.5 x 15		1
3	123/05041		Valve tyre flexible (Tubeless)		1

Applicability Date Ranges:
From: , To:

9802/6220 L1-1-1 ENGINE, COMPLETE KR BUILD

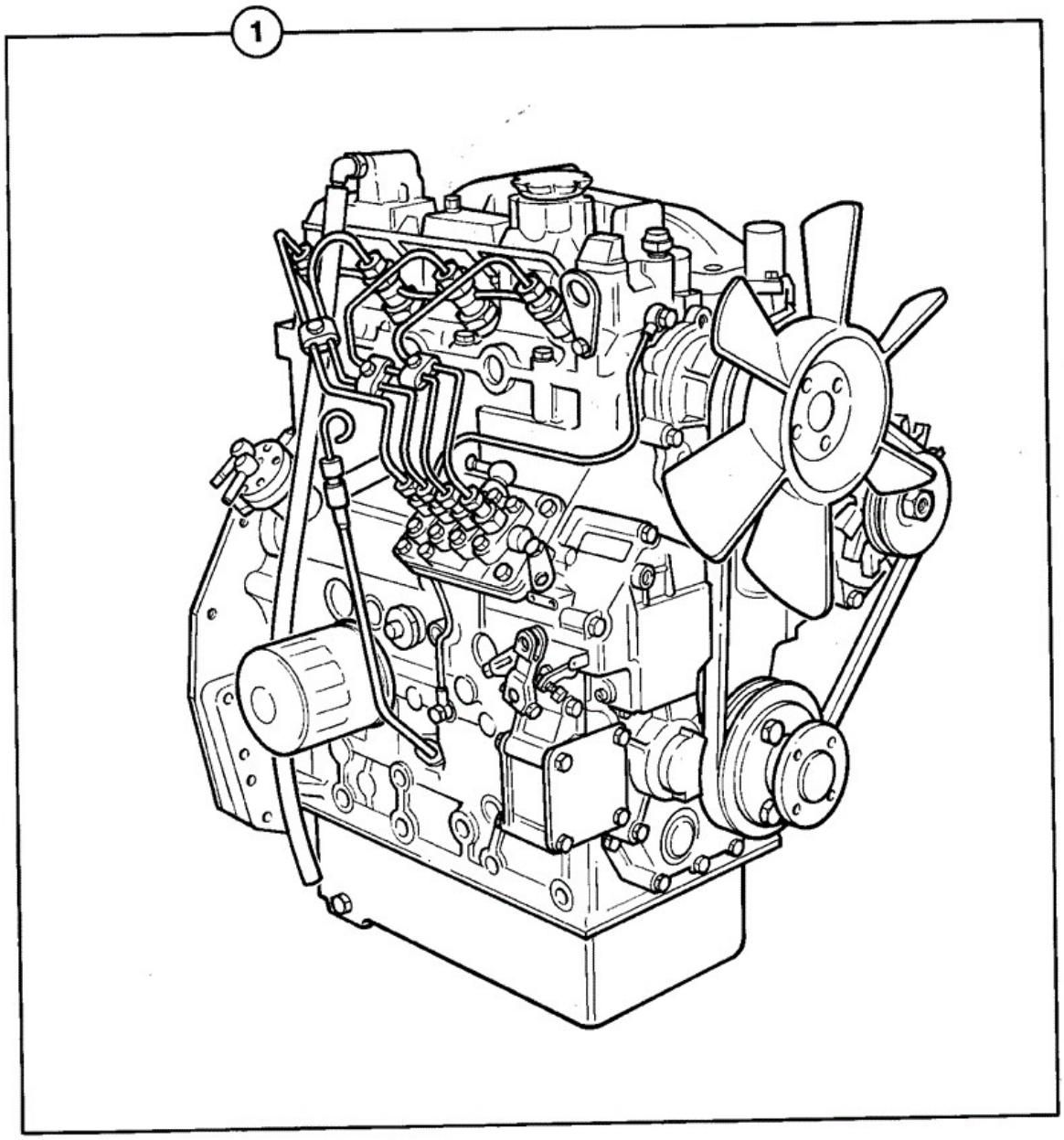

Item	Part No	Change No	Description	Usage Code	QTY
1	01/131000	Superseded	Engine complete, 104.22 naturally aspirated		1
1	01/138200		Engine complete 104.22 nat/asp, 2800rpm	P/Ex	1

Applicability Date Ranges:
From: , To:

Product Catalog\BACKHOE LOADER 1CX, 208\1CX 00751600-00752999,00806000-00807552 9802/6220\L ENGINES 104.22, KR BUILD TO M807552\L01 ENGINE BLOCK & SUB-ASSEMBLIES\L1-1-2 ENGINE, COMPLETE KR BUILD

9802/6220 L1-1-2 ENGINE, COMPLETE KR BUILD

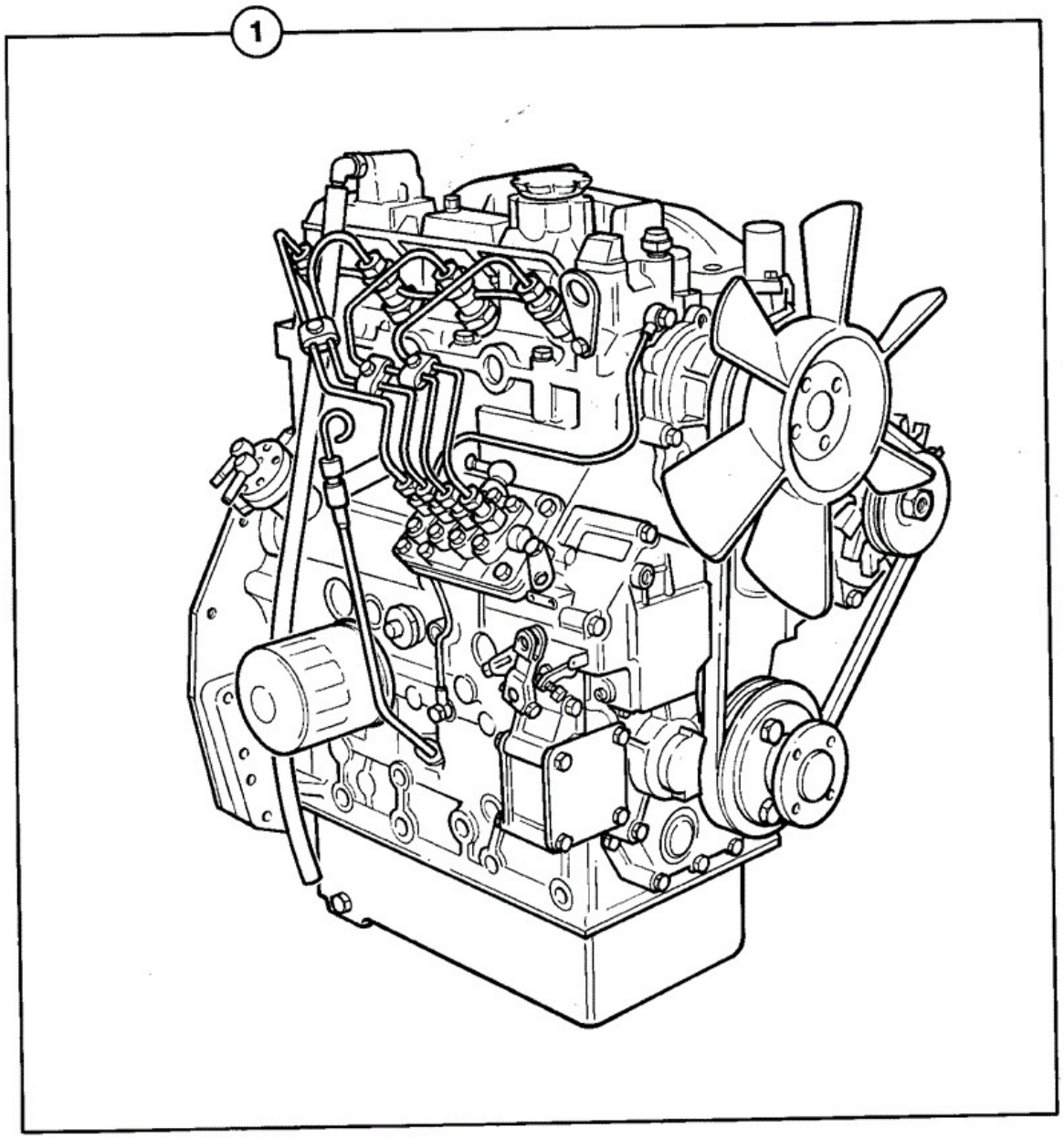

Item	Part No	Change No	Description	Usage Code	QTY
1	01/138200		Engine complete 104.22 nat/asp, 2800rpm	P/Ex	1

Applicability Date Ranges:
From: , To:

Product Catalog\BACKHOE LOADER 1CX, 208\1CX 00751600-00752999,00806000-00807552 9802/6220\L ENGINES 104.22, KR BUILD TO M807552\L01 ENGINE BLOCK & SUB-ASSEMBLIES\L1-2-1 ENGINE, SHORT KR BUILD

9802/6220 L1-2-1 ENGINE, SHORT KR BUILD

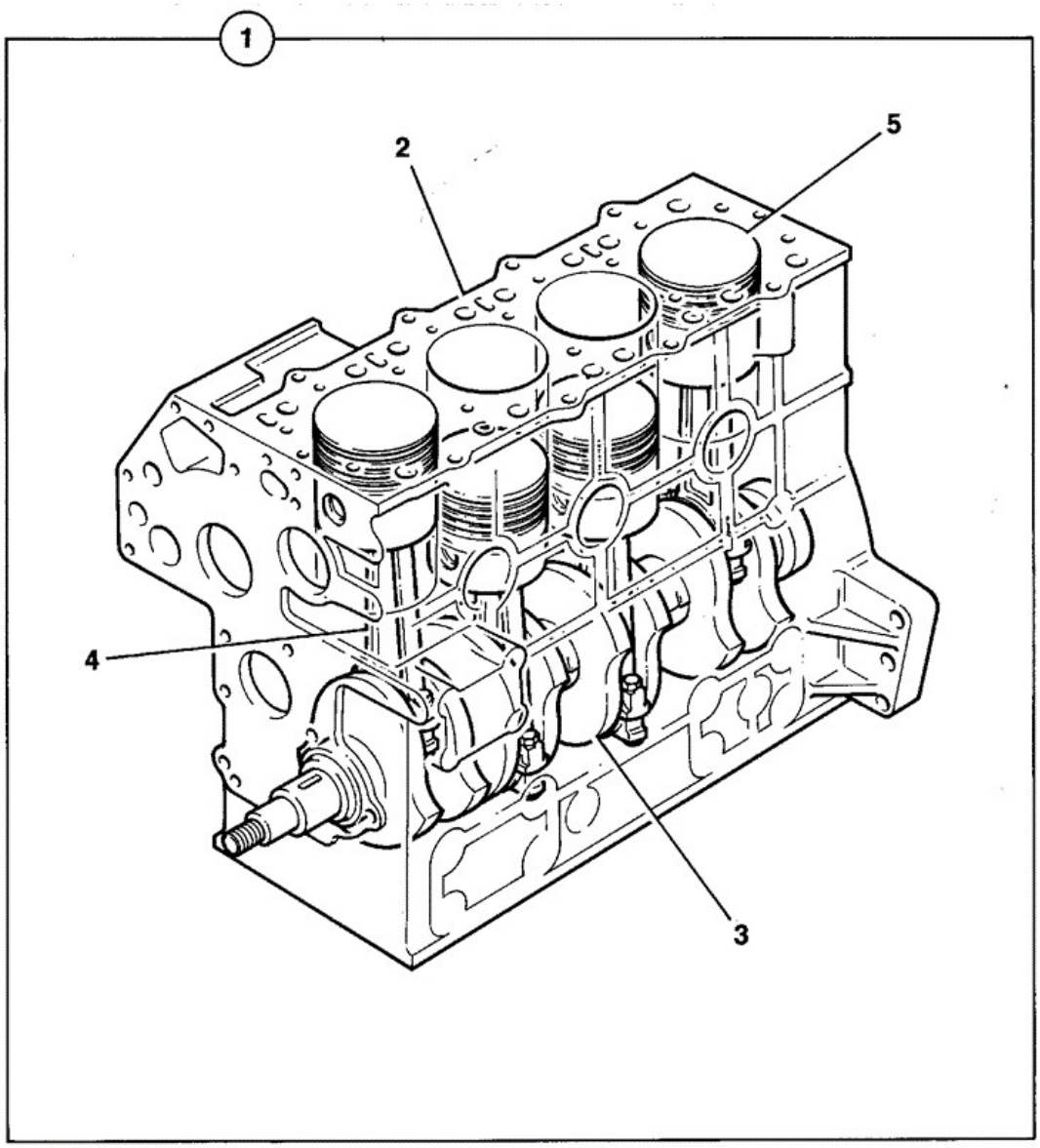

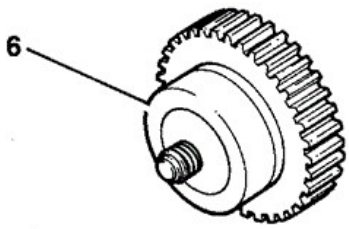

255720

Item	Part No	Change No	Description	Usage Code	QTY
1	02/634100		Engine short		1

Applicability Date Ranges:
From: , To: EU965455J

Product Catalog\BACKHOE LOADER 1CX, 208\1CX 00751600-00752999,00806000-00807552 9802/6220\L ENGINES 104.22, KR BUILD TO M807552\L01 ENGINE BLOCK & SUB-ASSEMBLIES\L1-3-1 BLOCK ASSEMBLY KR BUILD

9802/6220 L1-3-1 BLOCK ASSEMBLY KR BUILD

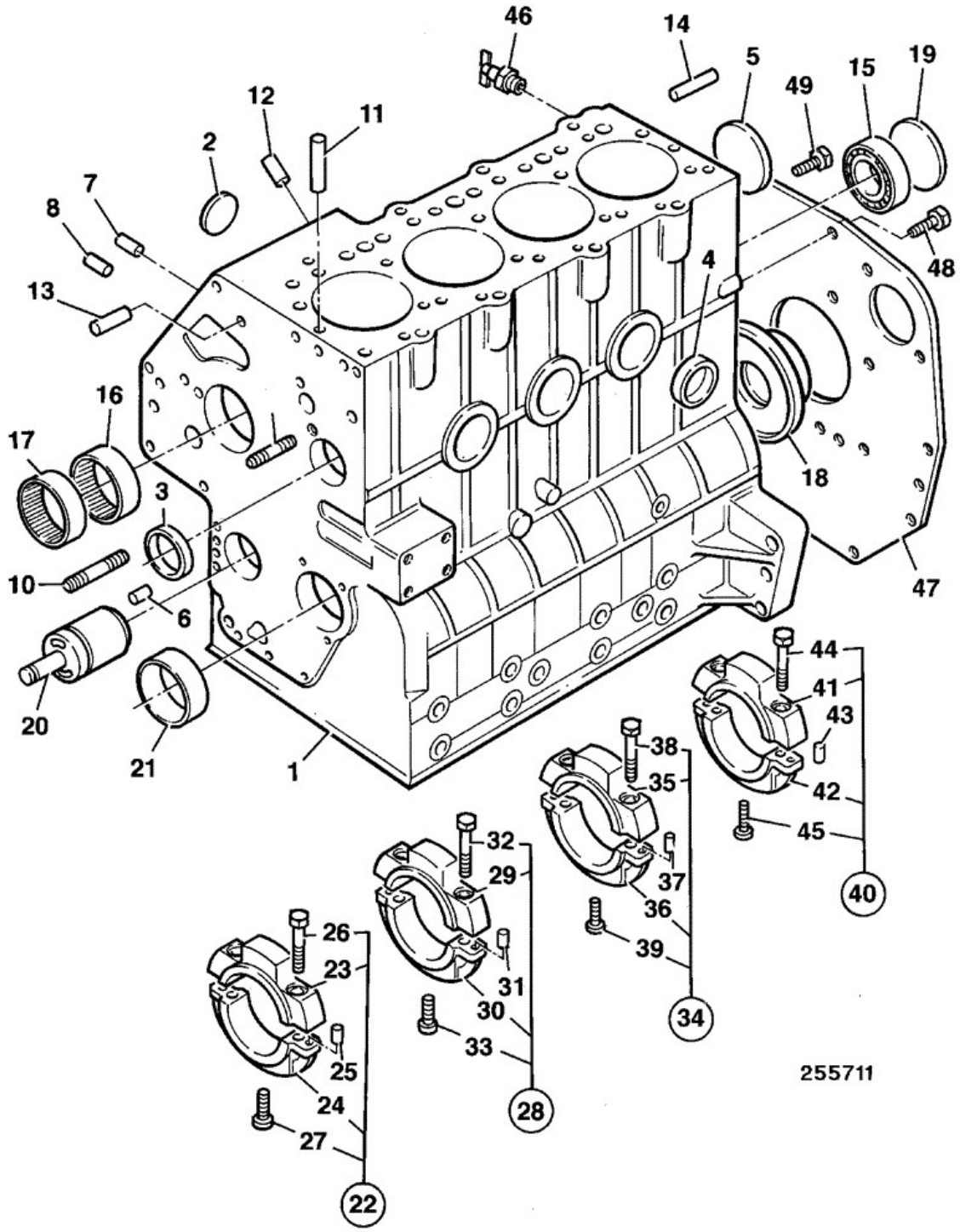

Item	Part No	Change No	Description	Usage Code	QTY
1	02/634000		Block cylinder assembly		1
2	:02/630002		Plug D=25		2

3	:02/630004		Plug D=40mm		1
4	:02/630004		Plug D=40mm		3
5	:02/630004		Plug D=40mm		1
6	:02/630007		Plug 8.4mm		3
7	:02/630702		Plug 10.4mm		4
8	:02/630006		Plug 6.5mm		4
9	02/630021		Stud		1
10	02/630022		Stud		1
11	02/630019		Pin		2
12	02/630024		Dowel		2
13	02/630017		Dowel		2
14	02/630018		Dowel		2
15	02/630013		Bearing		1
16	02/634002		Bearing needle		1
17	02/634001		Bearing needle		1
18	02/634013		Seal rear oil		1
19	02/630014		Plug core D=45mm		1
20	02/630703		Hub		1
21	02/630704		Bush		1
21	02/630705		Bush oversize - 0.25mm		0
21	02/630706		Bush oversize - 0.50mm		0
22	02/634004		Cap bearing assembly		1
23	****		None serviced part		1
24	****		None serviced part		1
25	:02/630024		Dowel		2
26	:02/634005		Screw		2
27	02/634006		Screw		1
28	02/634007		Cap bearing assembly		1
29	****		None serviced part		1
30	****		None serviced part		1
31	:02/630024		Dowel		2
32	:02/634005		Screw		2
33	02/634006		Screw		1
34	02/634008		Cap bearing assembly		1
35	****		None serviced part		1
36	****		None serviced part		1
37	:02/630024		Dowel		2
38	:02/634005		Screw		2
39	02/634006		Screw		1

40	02/634009		Cap bearing assembly		1
41	****		None serviced part		1
42	****		None serviced part		1
43	:02/630024		Dowel		2
44	:02/634005		Screw		2
45	02/630714		Screw		2
46	02/630031		Tap drain		1
47	02/634010		Plate		1
48	02/634011		Screw		10
49	02/634012		Screw		2

Applicability Date Ranges:
From: , To:

Product Catalog\BACKHOE LOADER 1CX, 208\1CX 00751600-00752999,00806000-00807552 9802/6220\L ENGINES 104.22, KR BUILD TO M807552\L01 ENGINE BLOCK & SUB-ASSEMBLIES\L1-4-1 CRANKSHAFT, BEARINGS PISTONS & CON-RODS KR BUILD

9802/6220 L1-4-1 CRANKSHAFT, BEARINGS PISTONS & CON-RODS KR BUILD

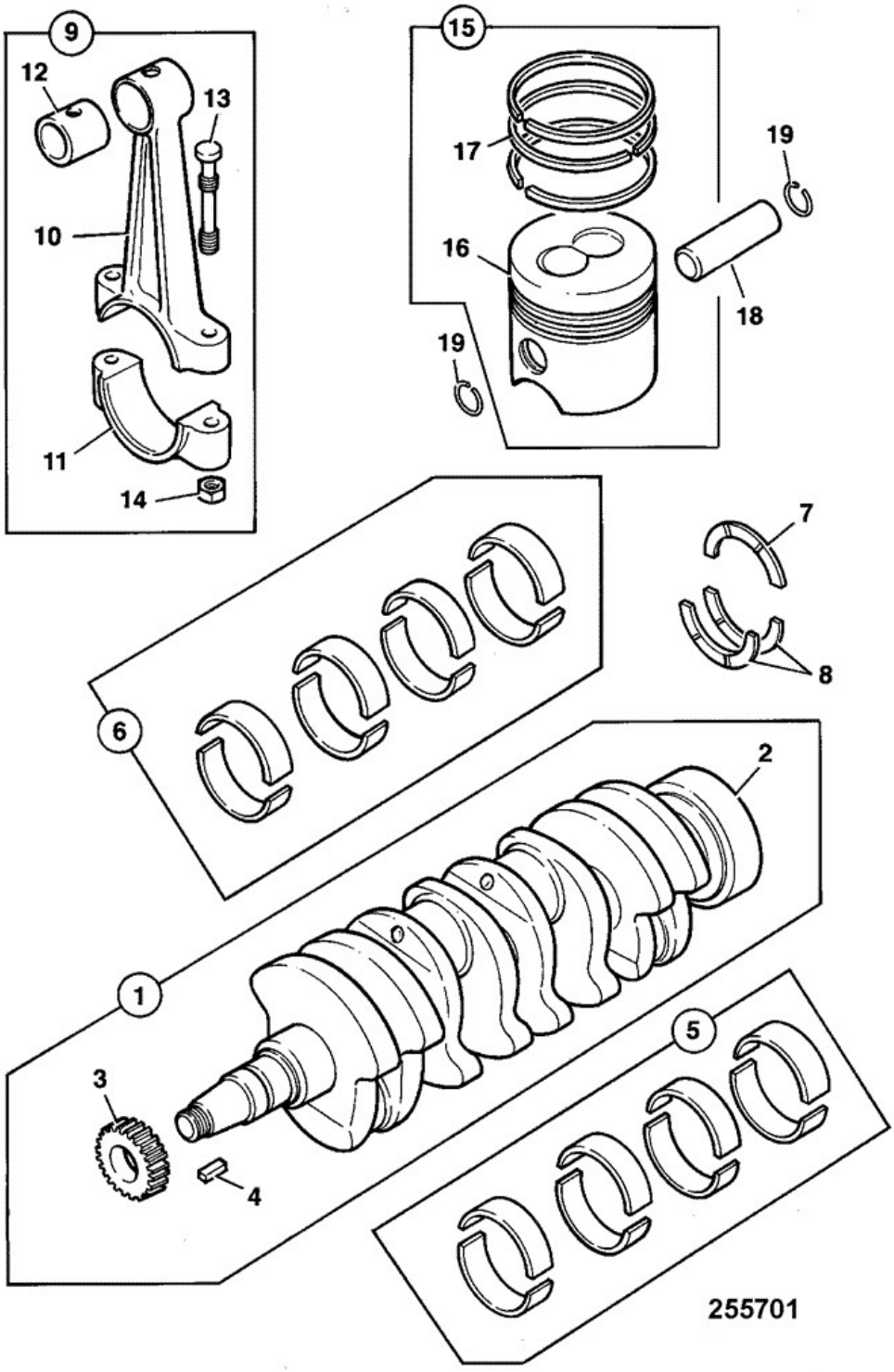

Item	Part No	Change No	Description	Usage Code	QTY
1	02/634020		Crankshaft assembly		1

2	****		None serviced part		1
3	:02/630716		Gear		1
4	:02/630042		Key		1
5	02/634019		Kit-bearing main standard		1
5	02/634018		Kit-bearing main undersize - 0.25mm		1
5	02/634017		Kit-bearing main undersize - 0.50mm		1
6	02/634016		Kit-bearing big end standard		1
6	02/634015		Kit-bearing big end undersize - 0.25mm		1
6	02/634014		Kit-bearing big end undersize - 0.50mm		1
7	02/634021		Washer thrust		1
8	02/630723		Washer thrust		2
9	02/634022		Conrod assembly		4
10	****		None serviced part		1
11	****		None serviced part		1
12	:02/630725		Bush small end		1
13	:02/630726		Screw		2
14	:02/630727		Nut		2
15	02/634101		Piston assembly standard		4
15	02/634102		Piston assembly oversize - 0.5mm		0
15	02/634103		Piston assembly oversize - 1.0mm		0
16	****		None serviced part		1
17	:02/630733		Kit-piston ring		1
17	02/630734		Kit-piston ring oversize - 0.50mm		0
17	02/631262		Kit-piston ring oversize - 1.0mm		0
18	02/630731		Pin gudgeon		1
19	02/630732		Circlip		2

Applicability Date Ranges:
From: , To: U965456J

Product Catalog\BACKHOE LOADER 1CX, 208\1CX 00751600-00752999,00806000-00807552 9802/6220\L ENGINES 104.22, KR BUILD TO M807552\L01 ENGINE BLOCK & SUB-ASSEMBLIES\L1-4-10 CRANKSHAFT, BEARINGS PISTONS & CON-RODS

9802/6220 L1-4-10 CRANKSHAFT, BEARINGS PISTONS & CON-RODS

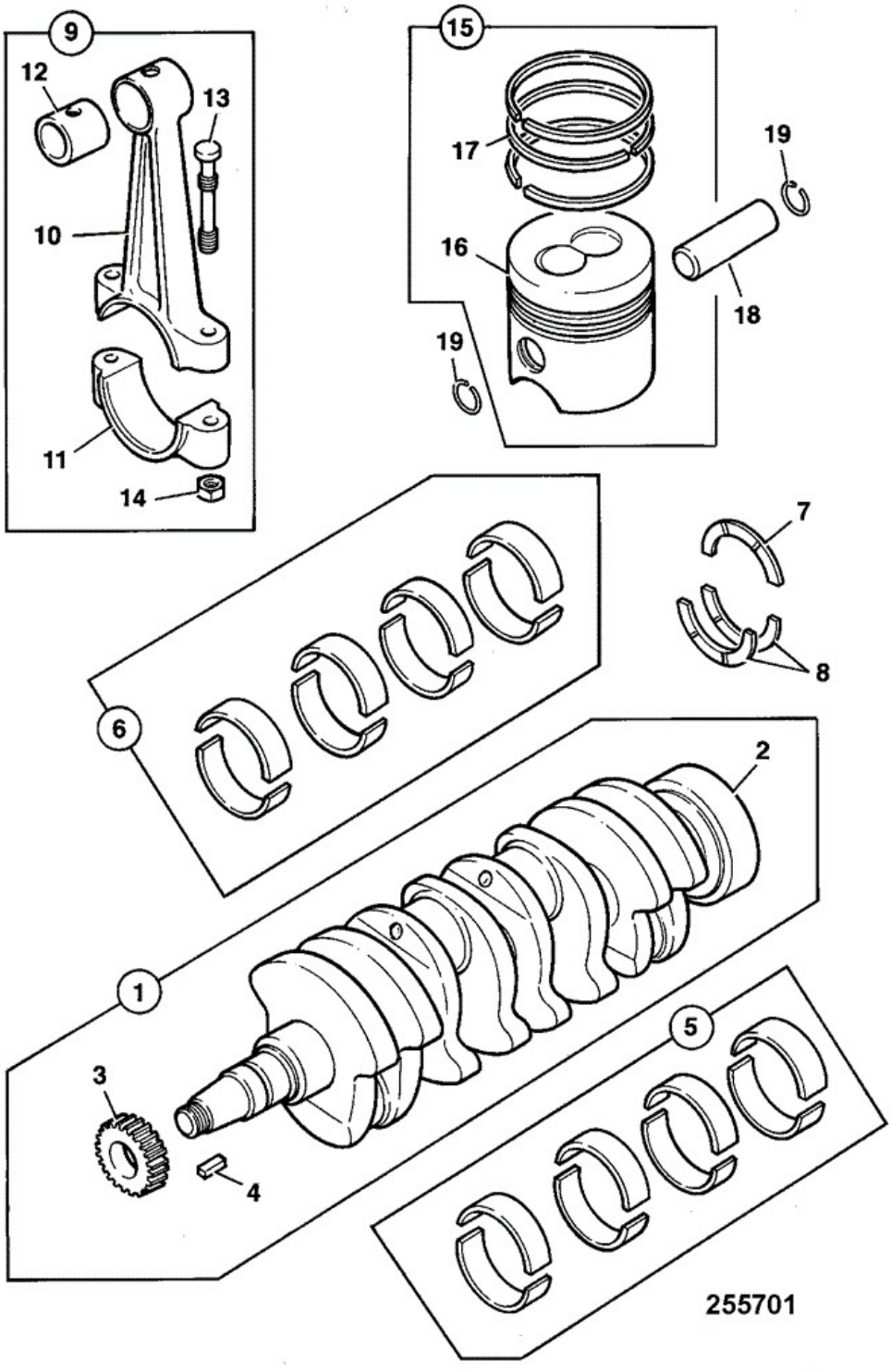

Item	Part No	Change No	Description	Usage Code	QTY
1	02/634020		Crankshaft assembly		1
2	****		None serviced part		1

3	:02/630716		Gear		1
4	:02/630042		Key		1
5	02/634019		Kit-bearing main standard		1
5	02/634018		Kit-bearing main undersize - 0.25mm		1
5	02/634017		Kit-bearing main undersize - 0.50mm		1
6	02/634016		Kit-bearing big end standard		1
6	02/634015		Kit-bearing big end undersize - 0.25mm		1
6	02/634014		Kit-bearing big end undersize - 0.50mm		1
7	02/634021		Washer thrust		1
8	02/630723		Washer thrust		2
9	02/634022		Conrod assembly		4
10	****		None serviced part		1
11	****		None serviced part		1
12	:02/630725		Bush small end		1
13	:02/630726		Screw		2
14	:02/630727		Nut		2
15	02/634135		Piston assembly		4
16	****		None serviced part		1
17	:02/634136		Kit-piston ring		1
18	02/630731		Pin gudgeon		1
19	02/630732		Circlip		2

Applicability Date Ranges:
From: U965457J , To:

Product Catalog\BACKHOE LOADER 1CX, 208\1CX 00751600-00752999,00806000-00807552 9802/6220\L ENGINES 104.22, KR BUILD TO M807552\L01 ENGINE BLOCK & SUB-ASSEMBLIES\L1-5-1 FANS, PULLEYS & FAN BELT KR BUILD

9802/6220 L1-5-1 FANS, PULLEYS & FAN BELT KR BUILD

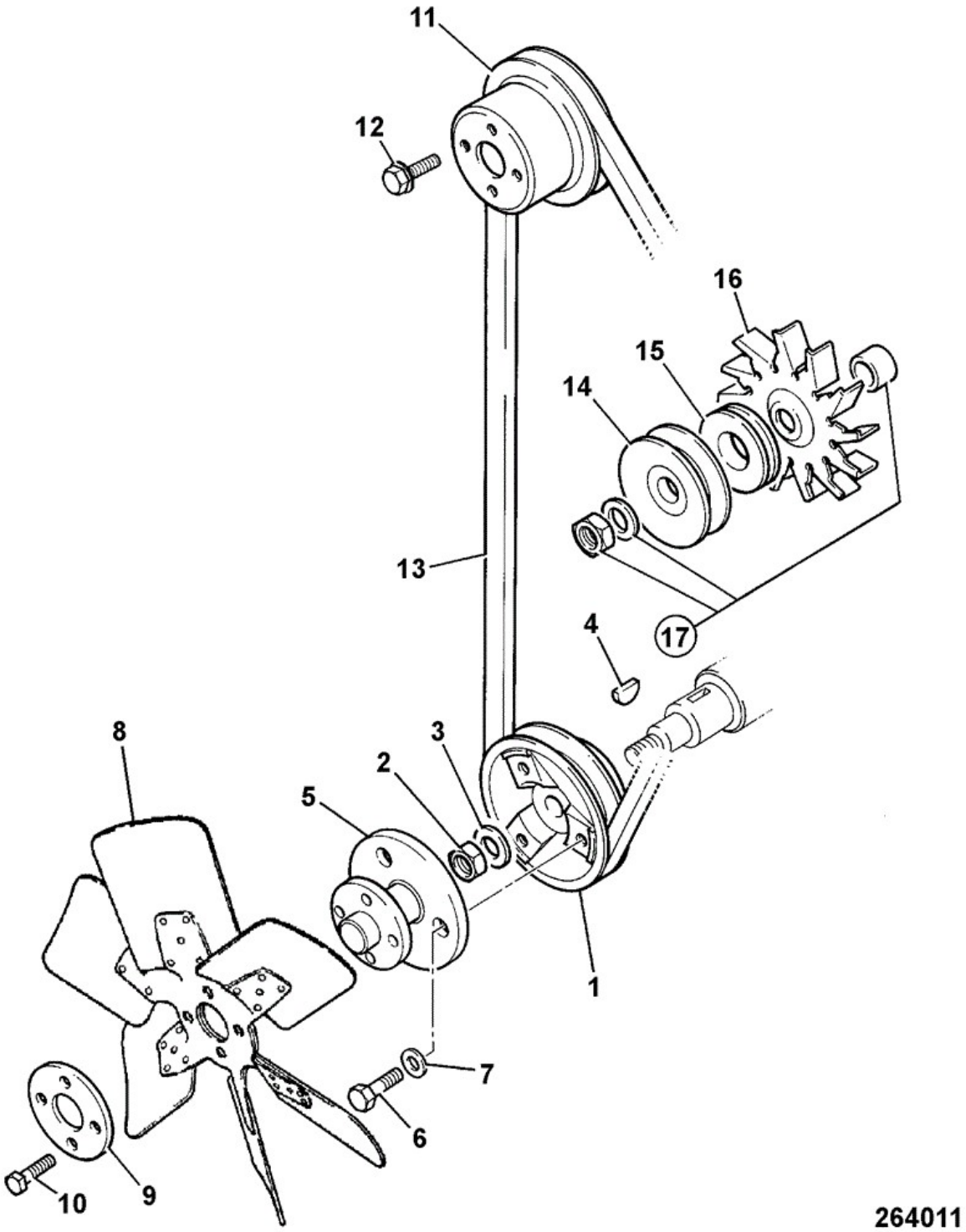

Item	Part No	Change No	Description	Usage Code	QTY
1	02/634088		Pulley crankshaft		1
2	02/630778		Nut		1

3	02/630779		Washer		1
4	02/630068		Key		1
5	290/01141		Spacer fan		1
6	1315/0505Z		Bolt M12x20		3
7	1425/0009Z		Washer Spring M12		3
8	246/01068		Fan cooling 16" pusher		1
9	02/634075		Plate		1
10	1315/0205Z		Setscrew M6 x 20mm		4
10A	1425/0006Z		Washer Spring (M6)		4
11	02/630835		Pulley water pump		1
12	02/634076		Screw		4
13	02/634154		Belt fan L=1010mm		1
14	02/102012		Pulley single D=83mm		1
15	02/201382		Spacer alternator pulley		1
16	714/10812		Fan alternator		1
17	714/20405		Kit-sundry parts		1

Applicability Date Ranges:
From: , To:

9802/6220 L1-6-1 TIMING CASE CAMSHAFT & GEARS KR BUILD

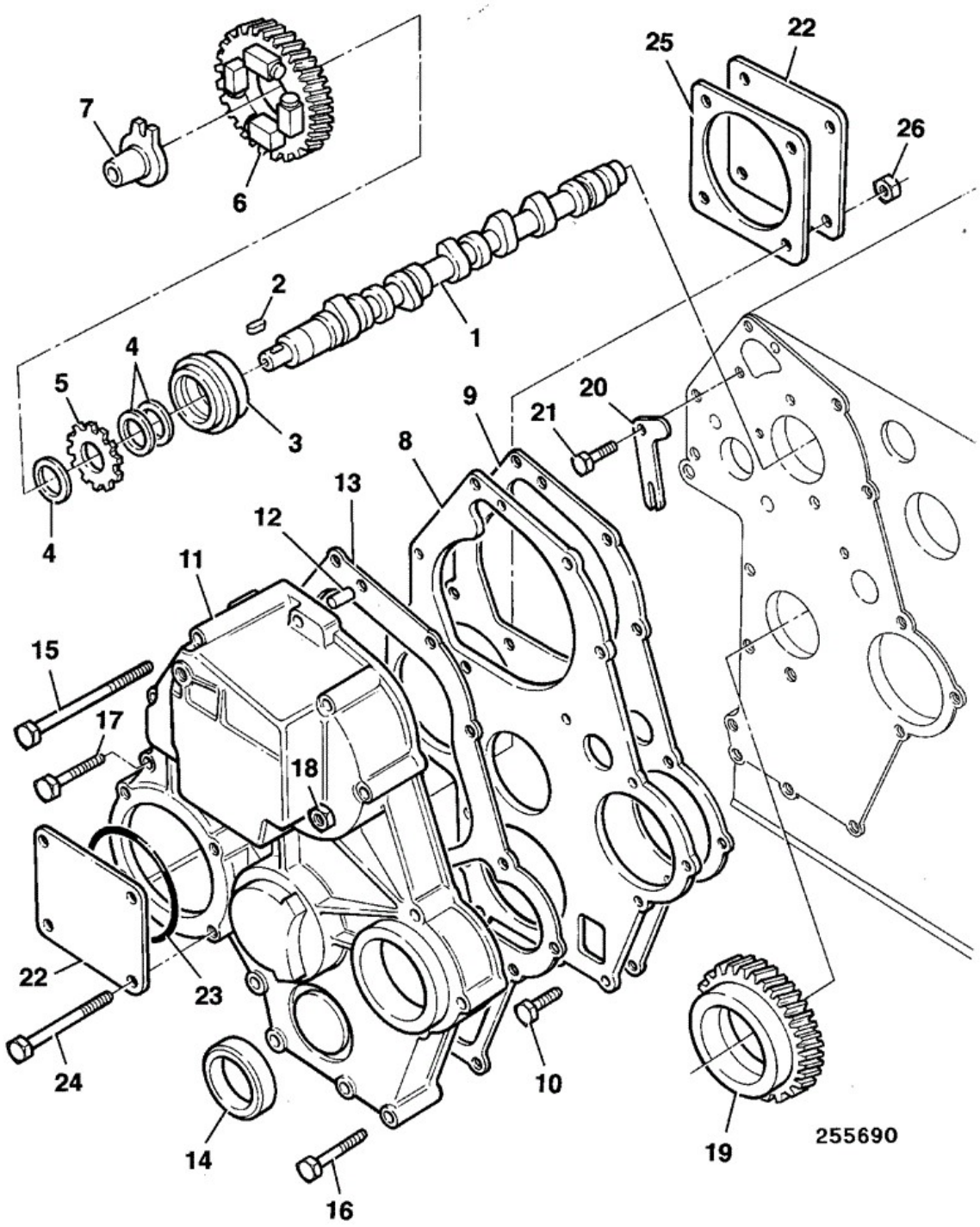

Item	Part No	Change No	Description	Usage Code	QTY
1	02/634033		Camshaft		1
2	02/630068		Key		1

3	02/634032		Bearing		1
4	02/630082		Spacer		1
5	02/630083		Gear		1
6	02/630768		Gear		1
7	02/630085		Tappet		1
8	02/630767		Plate		1
9	02/630766		Gasket		1
10	02/630172		Bolt		2
11	02/634031		Casing timing		1
12	02/630089		Pin		1
13	02/630764		Gasket		1
14	02/630763		Seal front oil		1
15	02/630762		Screw		6
16	02/630093		Screw		2
17	02/630095		Screw		5
18	02/630096		Nut		1
19	****		'See Remark' SEE OIL PUMP, L5-2-1		1
20	02/634087		Plate		1
21	02/630102		Screw		2
22	02/630097		Plate		2
23	02/630079		O Ring		1
24	02/630099		Screw		4
25	02/630098		Gasket		1
26	02/630078		Nut		4

Applicability Date Ranges:
From: , To:

Product Catalog\BACKHOE LOADER 1CX, 208\1CX 00751600-00752999,00806000-00807552 9802/6220\L ENGINES 104.22, KR BUILD TO M807552\L01 ENGINE BLOCK & SUB-ASSEMBLIES\L1-6-2 TIMING LEVERS ARMS & SPRINGS KR BUILD

9802/6220 L1-6-2 TIMING LEVERS ARMS & SPRINGS KR BUILD

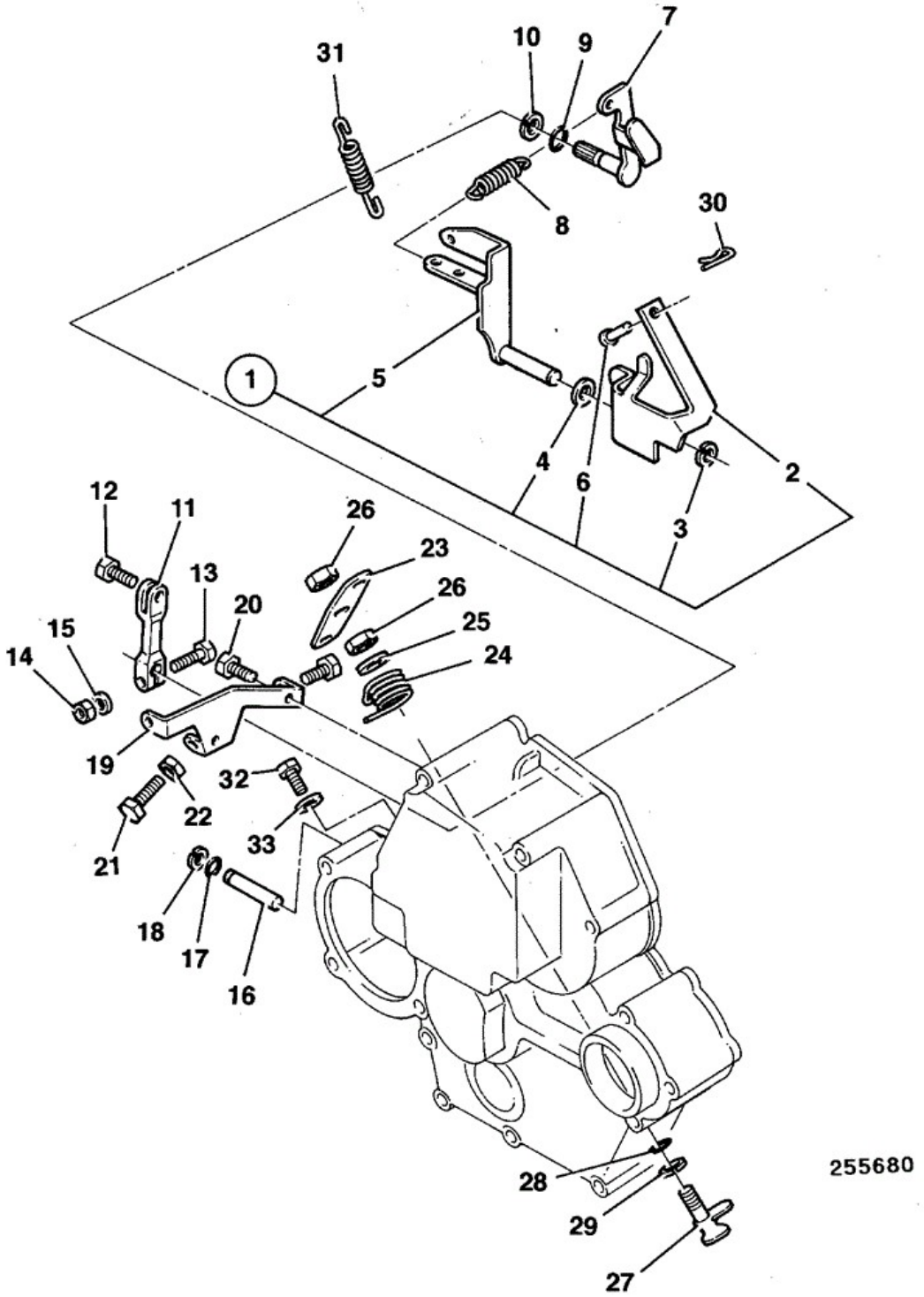

Item	Part No	Change No	Description	Usage Code	QTY
1	02/634050		Lever		1
2	****		None serviced part		1

3	02/630107		Circlip		1
4	:02/630108		Washer		1
5	:02/630781		Lever		1
7	02/630113		Arm		1
8	02/634090		Spring		1
9	02/630114		O Ring		1
10	02/630107		Circlip		1
11	02/634052		Lever		1
12	02/630784		Screw		1
13	02/630123		Screw		1
14	02/630096		Nut		1
15	02/630126		Washer		1
16	02/630785		Shaft		1
17	02/630119		O Ring		1
18	02/630120		Circlip		1
19	02/630121		Stay		1
20	02/630122		Screw		2
21	02/630131		Screw		2
22	02/630096		Nut		2
23	02/630124		Lever		1
24	02/630125		Spring		1
25	02/630126		Washer		1
26	02/634053		Nut		2
27	02/630128		Arm		1
28	02/630129		O Ring		1
29	02/630130		Circlip		1
30	02/630111		Pin		1
31	02/630112		Spring		1

Applicability Date Ranges:
From: , To:

9802/6220 L1-7-1 FLYWHEEL & HOUSING KR BUILD

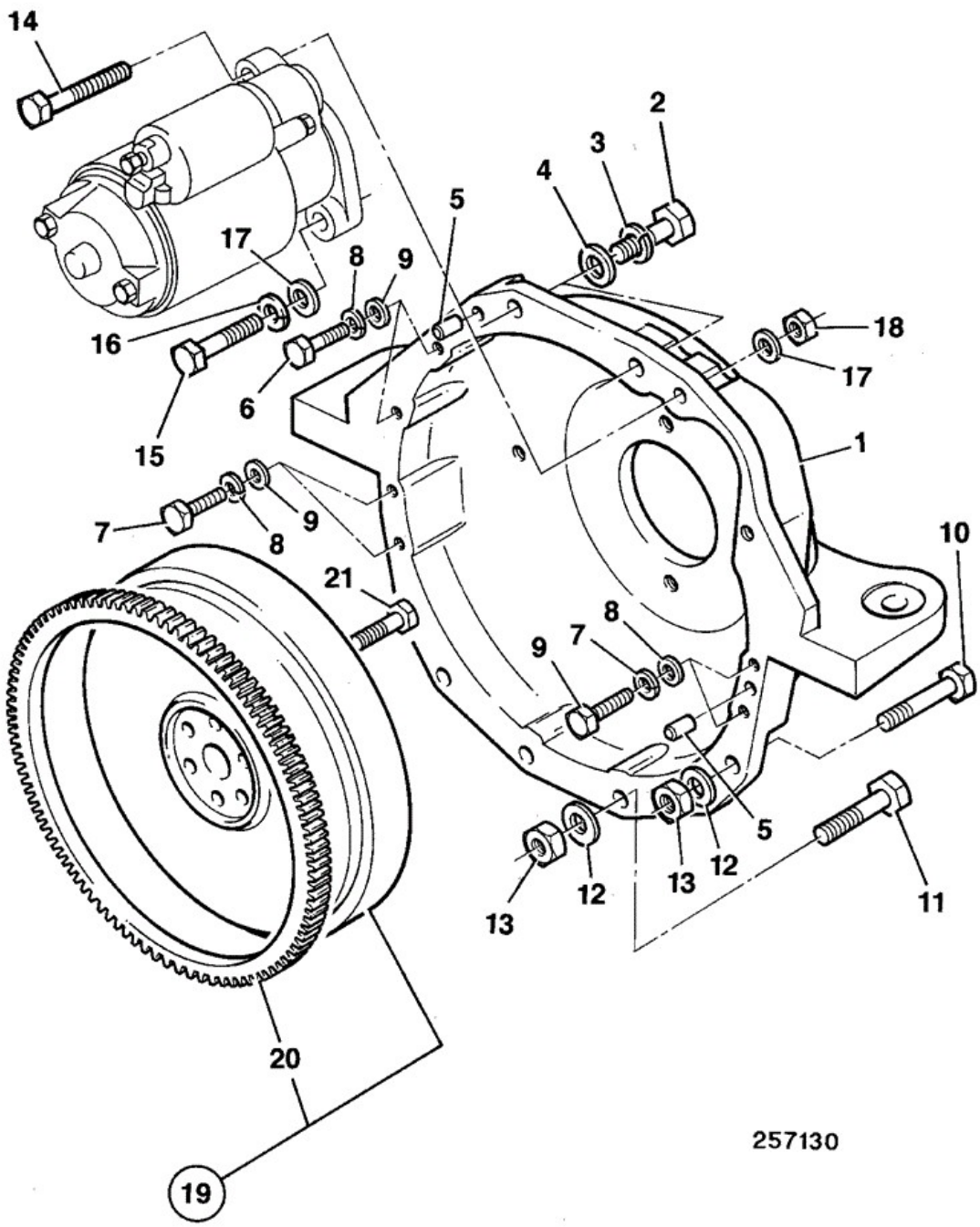

Item	Part No	Change No	Description	Usage Code	QTY
1	246/01075		Housing flywheel		1
2	1315/0508Z		Setscrew M12 X 30		2

3	1425/0009Z		Washer Spring M12		2
4	1420/0009Z		Washer (M12)		2
5	02/630018		Dowel		2
6	1315/0407Z		Setscrew M10 x 25 mm		2
7	1315/3412Z		Bolt M10x50		4
8	1425/0008Z		Spring Washer		6
9	1420/0008Z		Washer (M10)		6
10	1315/3414Z		Bolt M10x60		2
11	1315/0408Z		Setscrew M10 x 30		4
12	1420/0008Z		Washer (M10)		6
13	1370/0303Z		Nut lock M10		6
14	1315/3411Z		Bolt M10 x 45mm		1
15	1315/0409Z		Setscrew M10 x 35		1
16	1425/0008Z		Spring Washer		1
17	1420/0008Z		Washer (M10)		2
18	1370/0303Z		Nut lock M10		1
19	02/634048		Flywheel assembly		1
20	:02/634049		Gear flywheel ring		1
21	02/630775		Bolt		6

Applicability Date Ranges:
From: , To:

9802/6220 L1-8-1 ENGINE MOUNTINGS KR BUILD

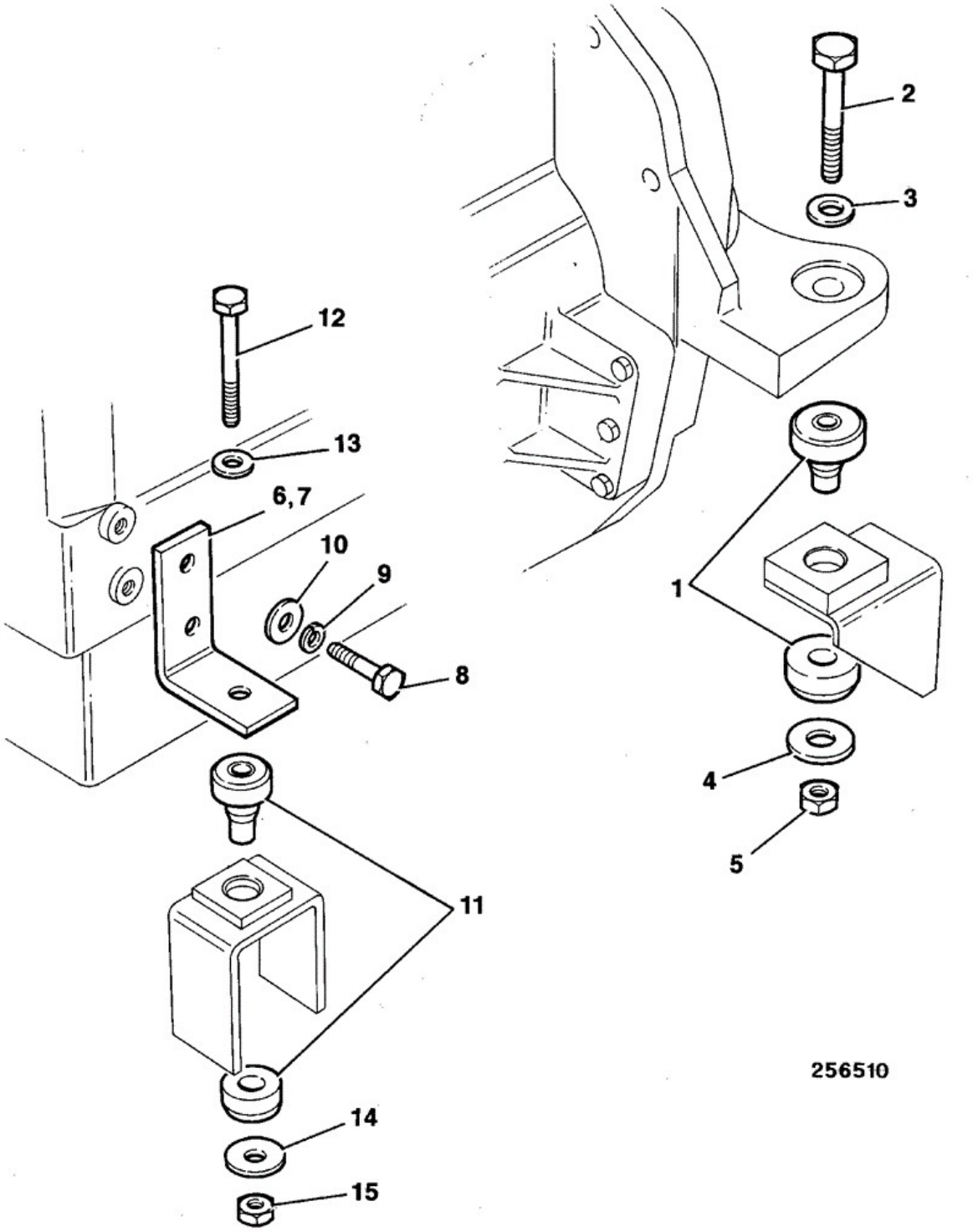

Item	Part No	Change No	Description	Usage Code	QTY
1	246/01106		Mounting metalastik		2
2	1315/3721Z		Bolt M16 x 110		2

3	1420/0011Z		Washer (M16)		2
4	120/16902		Plate Rebound		2
5	1370/0603Z		Nut lock M16		2
6	290/01112		Bracket engine mountings left hand		1
7	290/01113		Bracket engine mounting right hand		1
8	826/01288		Bolt M14 x 30		4
9	1425/0010Z		Washer		4
10	1420/0010Z		Washer Plain		4
11	246/01107		Mounting metalastik		2
12	1315/3518Z		Bolt M12 x 80mm		2
13	1420/0009Z		Washer (M12)		2
14	111/15709	Superseded	Washer		2
14	123/02453		Washer Rebound (13.5mm x 65mm x 5mm)		2
15	1370/0403Z		Nut Lock, M12		2

Applicability Date Ranges:
From: , To:

Product Catalog\BACKHOE LOADER 1CX, 208\1CX 00751600-00752999,00806000-00807552 9802/6220\L ENGINES 104.22, KR BUILD TO M807552\L02 CYLINDER HEAD & SUB-ASSEMBLIES\L2-1-1 CYLINDER HEAD KR BUILD

9802/6220 L2-1-1 CYLINDER HEAD KR BUILD

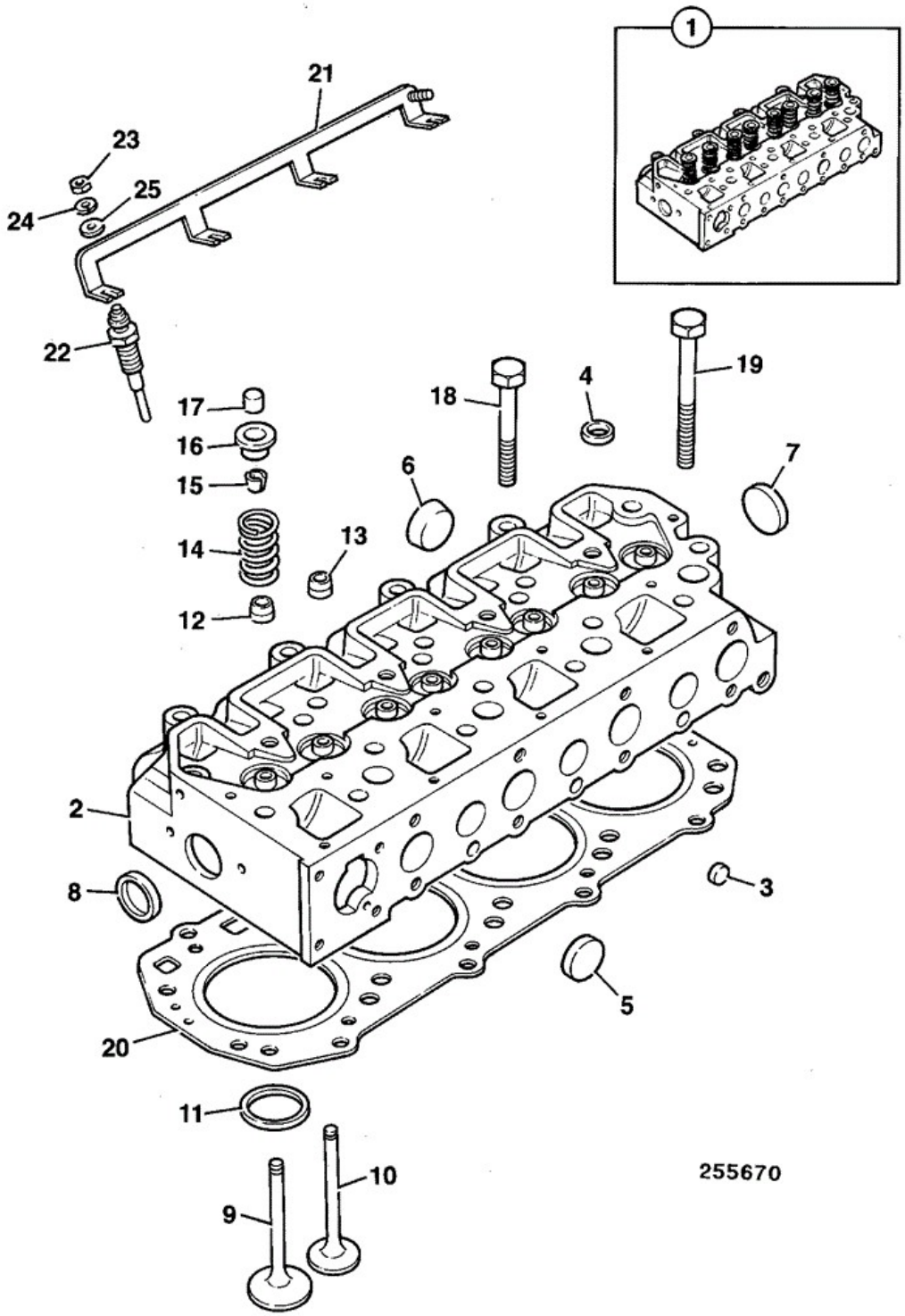

Item	Part No	Change No	Description	Usage Code	QTY
1	02/634030		Head cylinder		1
2	****		None serviced part		1

3	:02/630744		Plug D=10mm		3
4	:02/630148		Plug D=18mm		7
5	:02/630002		Plug D=25		3
6	:02/630002		Plug D=25		3
7	:02/630149		Plug D=30mm		1
8	:02/630149		Plug D=30mm		1
9	:02/634029		Valve inlet		4
10	:02/634028		Valve exhaust		4
11	:02/634027		Insert		4
12	:02/630142		Seal inlet valve		4
13	:02/630147		Seal exhaust valve		4
14	:02/630143		Spring valve		8
15	:02/630145		Collet		8
16	:02/630144		Cap		8
17	02/630151		Cap		8
18	02/630742		Screw		4
19	02/630741		Screw		14
20	02/634026		Gasket cylinder head		4
21	02/634085		Rail heater connector		1
22	717/11700		Thermostart		4

Applicability Date Ranges:
From: , To:

Product Catalog\BACKHOE LOADER 1CX, 208\1CX 00751600-00752999,00806000-00807552 9802/6220\L ENGINES 104.22, KR BUILD TO M807552\L02 CYLINDER HEAD & SUB-ASSEMBLIES\L2-2-1 ROCKER ASSEMBLY PUSH RODS & TAPPETS KR BUILD

9802/6220 L2-2-1 ROCKER ASSEMBLY PUSH RODS & TAPPETS KR BUILD

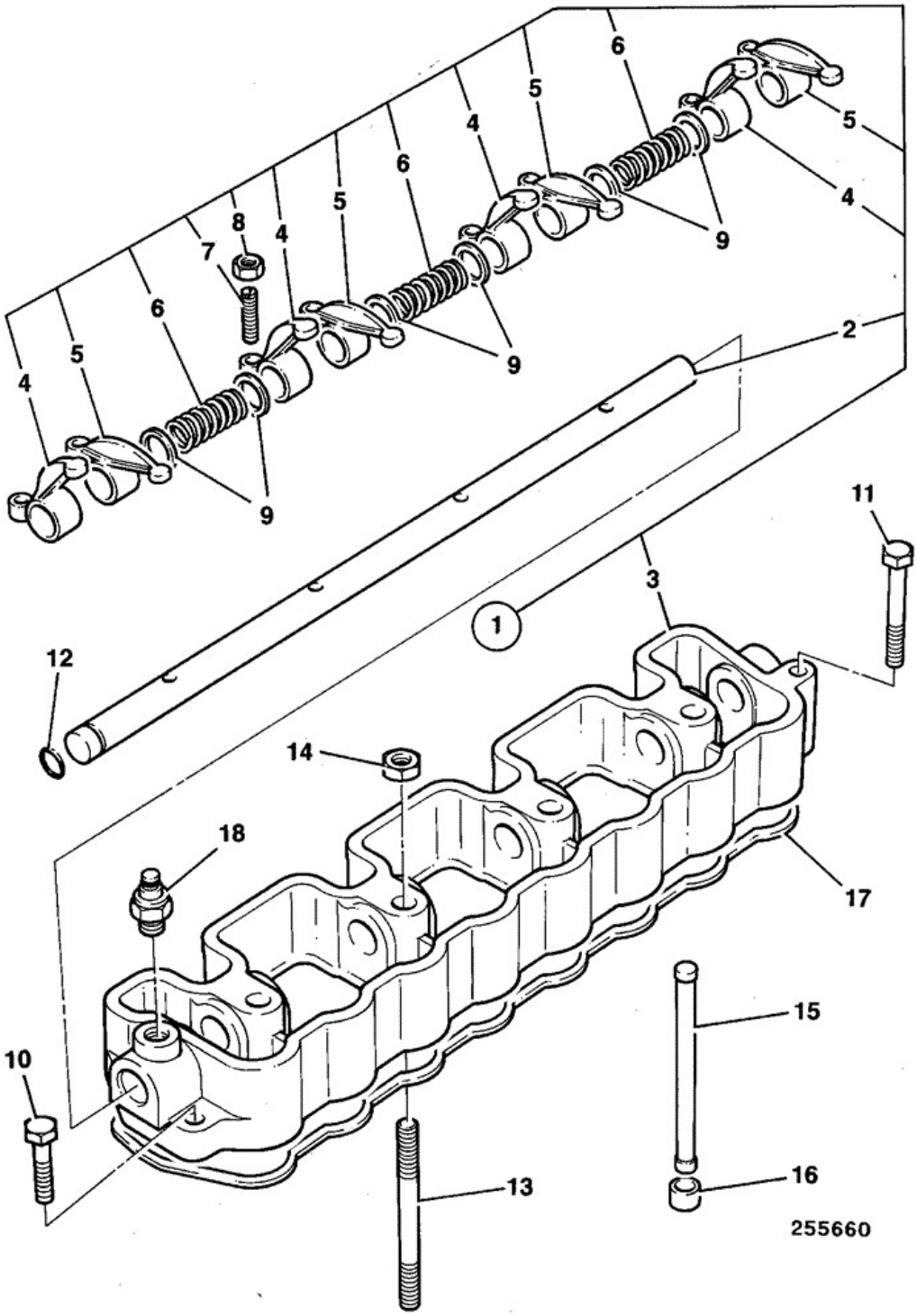

Item	Part No	Change No	Description	Usage Code	QTY
1	02/634040		Shaft rocker assembly		1

2	:02/634039		Shaft rocker		1
3	:02/634038		Box rocker		1
4	:02/634037		Lever rocker right hand		4
5	:02/634036		Lever rocker left hand		1
6	:02/634035		Spring		3
7	:02/630167		Screw adjusting		8
8	:02/630168		Nut		8
9	02/634024		Washer		6
10	02/630753		Screw		1
11	02/630347		Screw		1
12	02/630202		O Ring		1
13	02/634023		Stud		4
14	02/630307		Nut		4
15	02/634034		Rod push		8
16	02/630171		Tappet		8
17	02/634025		Seal rocker box		1
18	02/630156		Switch oil pressure		1

Applicability Date Ranges:
From: , To:

Product Catalog\BACKHOE LOADER 1CX, 208\1CX 00751600-00752999,00806000-00807552 9802/6220\L ENGINES 104.22, KR BUILD TO M807552\L02 CYLINDER HEAD & SUB-ASSEMBLIES\L2-3-1 ROCKER COVER KR BUILD

9802/6220 L2-3-1 ROCKER COVER KR BUILD

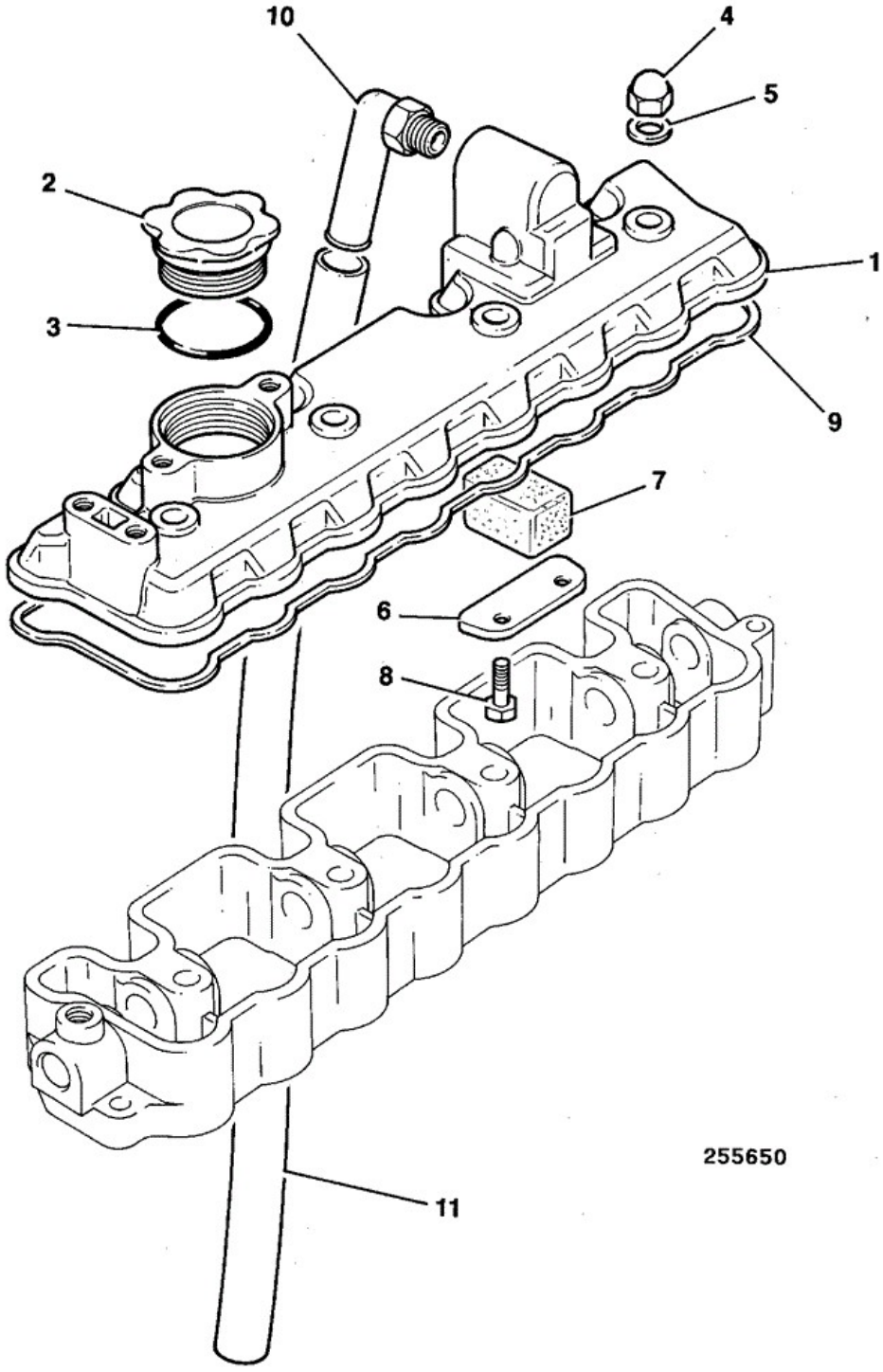

Item	Part No	Change No	Description	Usage Code	QTY
1	02/634070		Cover rocker		1
2	02/630179		Cap oil filler		1

3	02/630178		Seal		1
4	02/634069		Nut Dome		4
5	02/634068		Washer fibre sealing		4
6	02/630174		Plate		1
7	02/630794		Breather gauze		1
8	02/630172		Bolt		2
9	02/634067		Seal rocker cover		1
10	02/630792		Pipe breather		1
11	02/630793		Hose oil breather		1

Applicability Date Ranges:
From: , To:

9802/6220 L2-4-1 LIFTING PLATES ENGINE KR BUILD

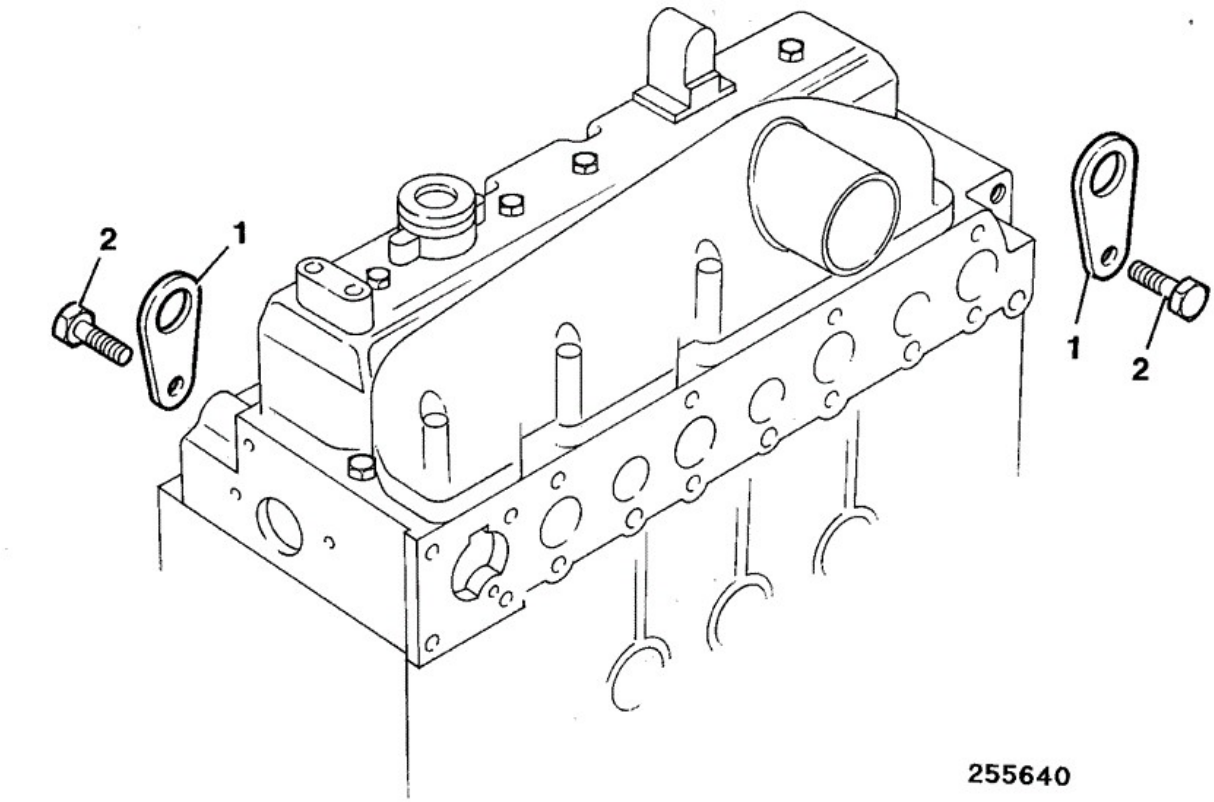

Item	Part No	Change No	Description	Usage Code	QTY
1	02/634086		Plate engine lifting		2
2	02/630187		Screw		2

Applicability Date Ranges:
From: , To:

9802/6220 L3-1-1 MANIFOLD, INDUCTION KR BUILD

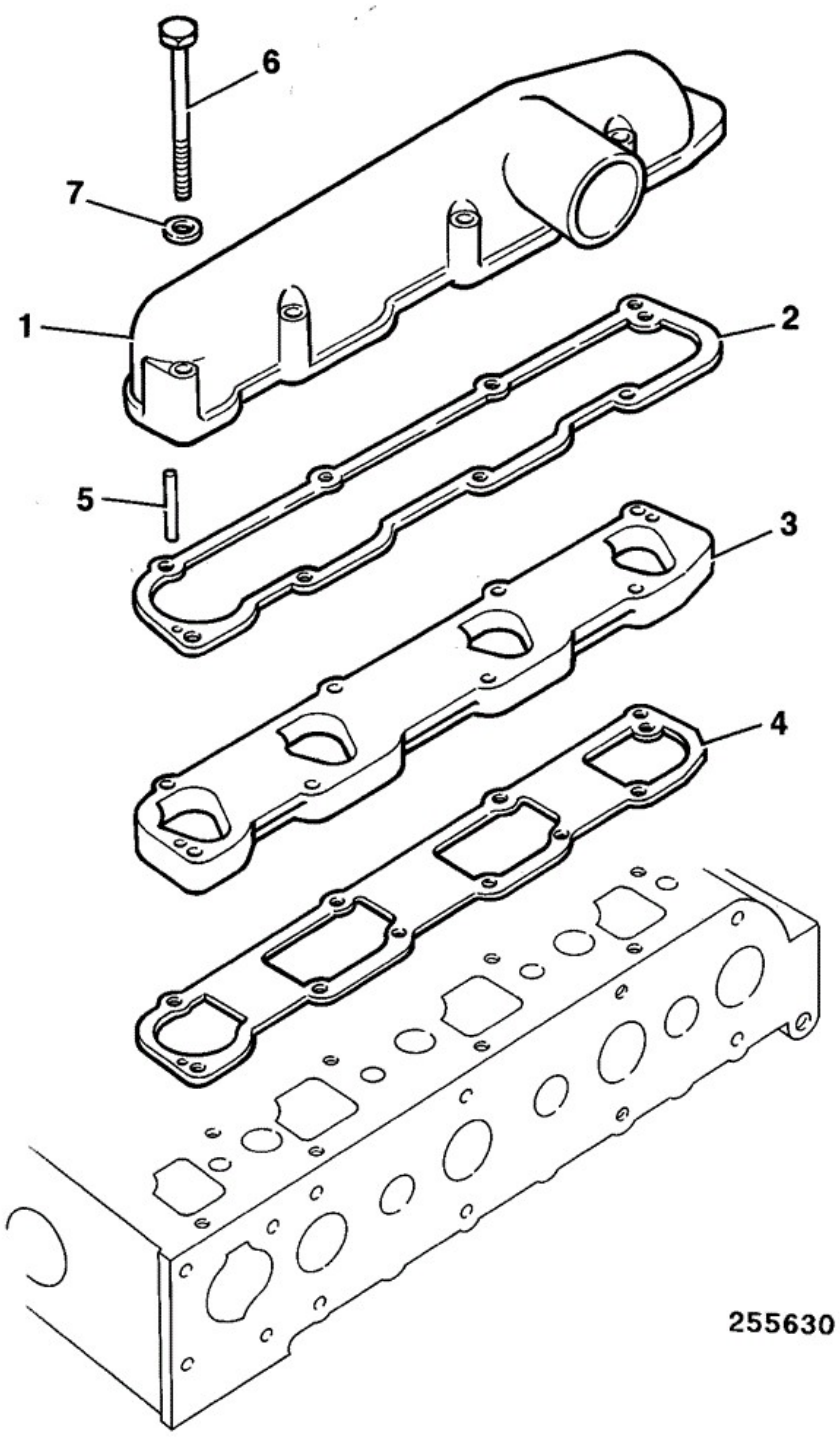

Item	Part No	Change No	Description	Usage Code	QTY
1	02/634071		Manifold induction		1
2	02/634072		Gasket induction manifold		1

3	02/634073		Spacer		1
4	02/634074		Gasket		1
5	02/630089		Pin		2
6	02/630095		Screw		8
7	02/630787		Washer		2

Applicability Date Ranges:
From: , To:

Product Catalog\BACKHOE LOADER 1CX, 208\1CX 00751600-00752999,00806000-00807552 9802/6220\L ENGINES 104.22, KR BUILD TO M807552\L03 INDUCTION & EXHAUST SYSTEMS\L3-2-1 MANIFOLD, EXHAUST KR BUILD

9802/6220 L3-2-1 MANIFOLD, EXHAUST KR BUILD

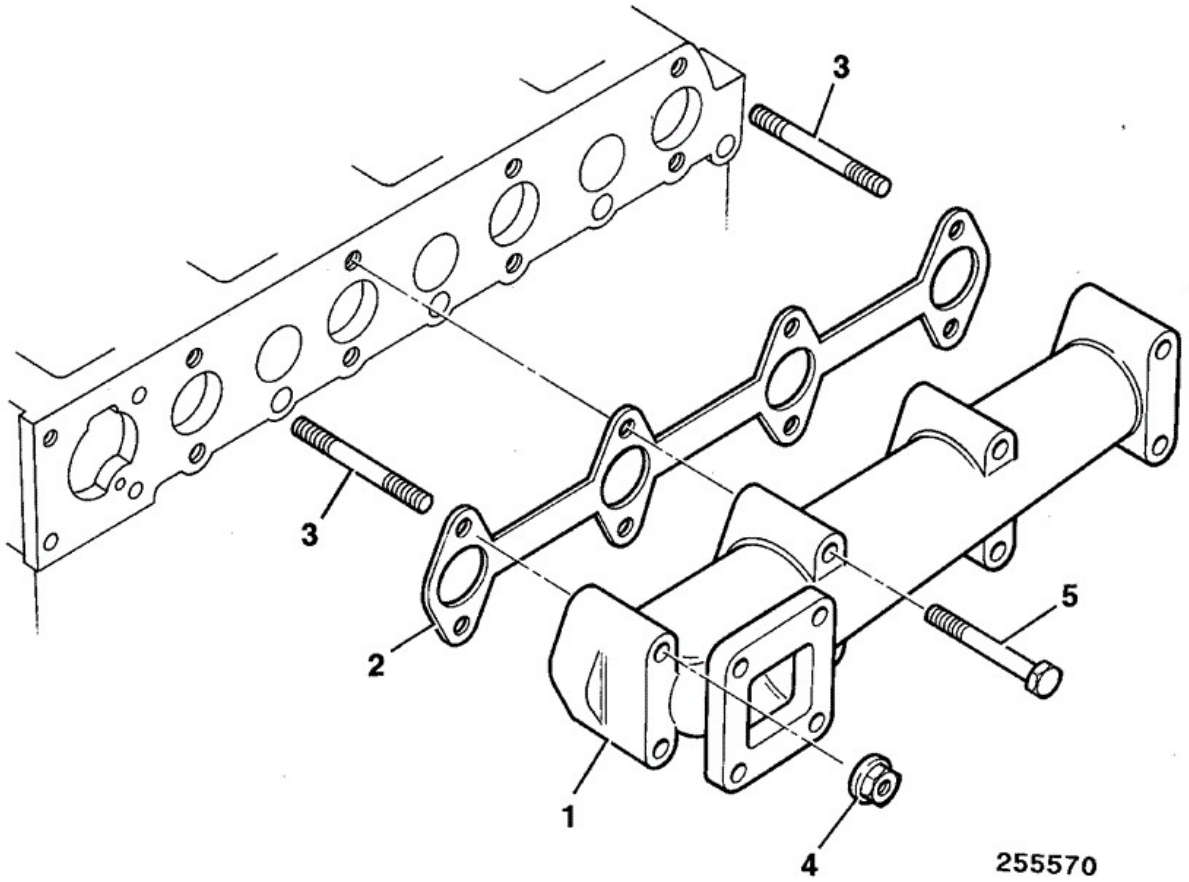

Item	Part No	Change No	Description	Usage Code	QTY
1	02/634081		Manifold exhaust		1
2	02/634082		Gasket exhaust manifold		1

3	02/634083		Stud		2
4	02/630078		Nut		2
5	02/634084		Screw		6

Applicability Date Ranges:
From: , To:

Product Catalog\BACKHOE LOADER 1CX, 208\1CX 00751600-00752999,00806000-00807552 9802/6220\L ENGINES 104.22, KR BUILD TO M807552\L03 INDUCTION & EXHAUST SYSTEMS\L3-3-1 FILTER, AIR

9802/6220 L3-3-1 FILTER, AIR

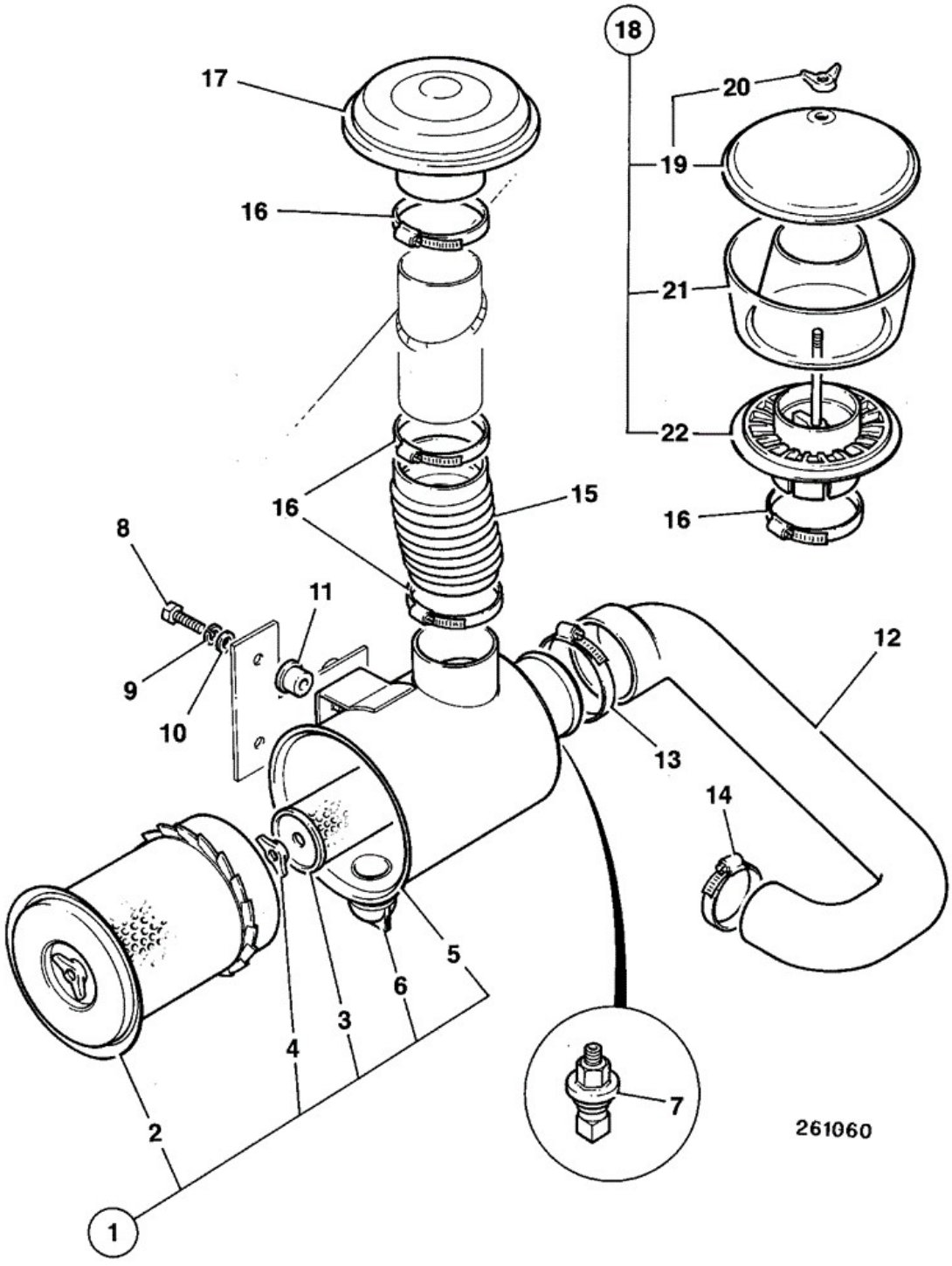

Item	Part No	Change No	Description	Usage Code	QTY
1	32/916400		Filter air		1
2	:32/905001		Element air primary		1

3	:32/905002		Element air safety		1
4	:32/905303		Nut wing		1
5	:32/911101		Seal moisture		1
6	:32/905304		Valve safety		1
7	701/36500		Switch Vacuum Sensor		1
8	1315/0308Z		Setscrew M8 x 30		2
9	1425/0007Z		Washer Washer		2
10	823/00326		Washer M10 X 30mm		2
11	141/00936		Mounting Resilient		2
12	834/00625		Hose air induction		1
13	2201/0014		Clip Worm Drive		1
14	2201/0011		Clip Worm Drive 40/64mm		1
15	647/04104		Duct air 100mm Length required		0
16	2201/0012		Clip Jubilee, 46/70mm		2
17	32/916300		Cap rain		1
18	32/910300		Filter pre-cleaner OPTIONAL EQUIPMENT		1
19	:32/910301		Cover & wing nut		1
20	::32/910302		Nut wing		1
21	:32/910303		Bowl		1
22	:32/910304		Tube deflector		1

Applicability Date Ranges:
From: , To: M752691

Product Catalog\BACKHOE LOADER 1CX, 208\1CX 00751600-00752999,00806000-00807552 9802/6220\L ENGINES 104.22, KR BUILD TO M807552\L03 INDUCTION & EXHAUST SYSTEMS\L3-3-2 FILTER, AIR

9802/6220 L3-3-2 FILTER, AIR

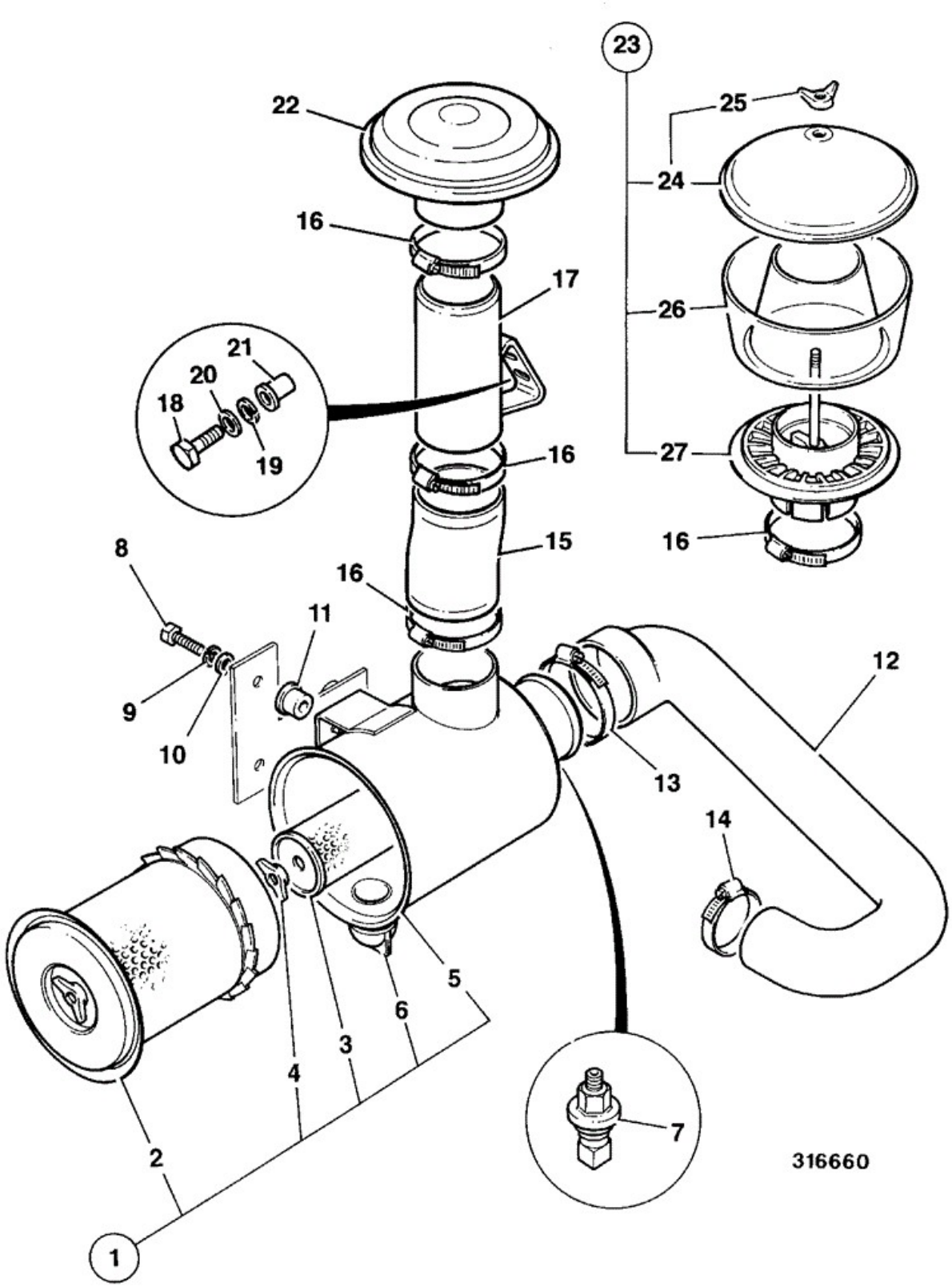

Item	Part No	Change No	Description	Usage Code	QTY

1	32/916400		Filter air		1
2	:32/905001		Element air primary		1
3	:32/905002		Element air safety		1
4	:32/905303		Nut wing		1
5	:32/911101		Seal moisture		1
6	:32/905304		Valve safety		1
7	701/36500		Switch Vacuum Sensor		1
8	1315/0308Z		Setscrew M8 x 30		2
9	1425/0007Z		Washer Washer		2
10	823/00326		Washer M10 X 30mm		2
11	141/00936		Mounting Resilient		2
12	834/00625		Hose air induction		1
13	2201/0014		Clip Worm Drive		1
14	2201/0012		Clip Jubilee, 46/70mm		1
15	290/01304		Hose air induction		1
16	2201/0013		Clip Jubilee		2
17	290/71100		Tube air induction		1
18	1315/0308Z		Setscrew M8 x 30		2
19	1425/0007Z		Washer Washer		2
20	1420/0007Z		Washer (M8)		2
21	826/01102		Nut M8		2
22	32/916300		Cap rain		1
23	32/910300		Filter pre-cleaner OPTIONAL EQUIPMENT		1
24	:32/910301		Cover & wing nut		1
25	::32/910302		Nut wing		1
26	:32/910303		Bowl		1
27	:32/910304		Tube deflector		1

Applicability Date Ranges:
From: M752692 , To:

Product Catalog\BACKHOE LOADER 1CX, 208\1CX 00751600-00752999,00806000-00807552 9802/6220\L ENGINES 104.22, KR BUILD TO M807552\L03 INDUCTION & EXHAUST SYSTEMS\L3-4-1 EXHAUST SYSTEM

9802/6220 L3-4-1 EXHAUST SYSTEM

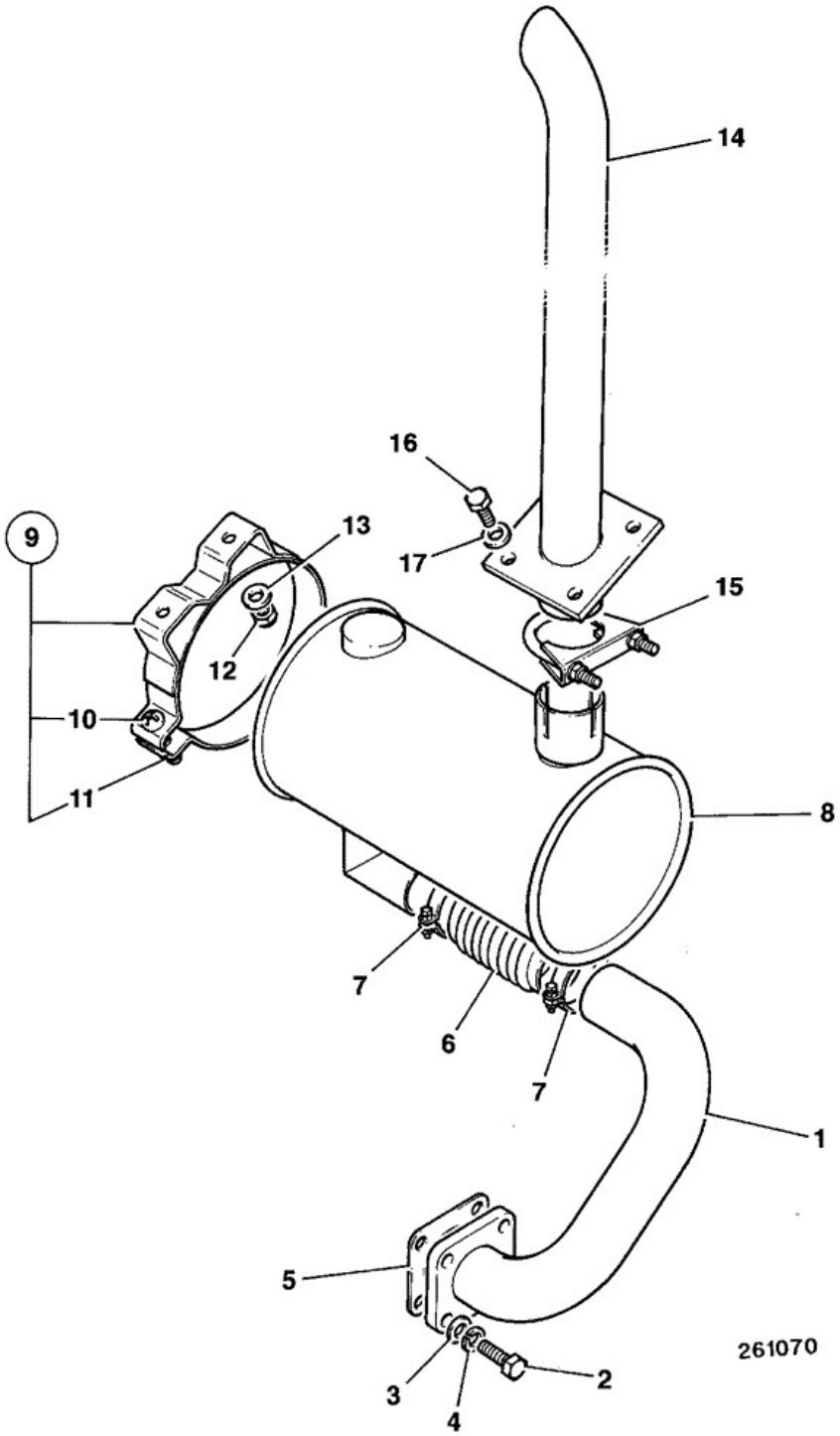

Item	Part No	Change No	Description	Usage Code	QTY
1	290/01114		Pipe exhaust		1
2	1315/0307Z		Setscrew M8 X 25		4

3	1425/0007Z		Washer Washer		4
4	1420/0007Z		Washer (M8)		4
5	02/630338		Gasket		1
6	246/01194		Tube exhaust expansion		1
7	821/00476		Clamp sealing		2
8	290/01115		Silencer exhaust		1
9	246/01208		Band mounting		1
12	1370/0203Z		Nut Nut M8		2
13	1420/0007Z		Washer (M8)		2
14	290/01116		Pipe exhaust extension		1
15	261/00202		Clamp 'U'		1
15A	:1420/0007Z		Washer (M8)		2
15B	:1425/0007Z		Washer Washer		2
15C	:1340/0103Z		Nut 5/16" UNF self lock nut		2
16	1315/0305Z		Setscrew M8 x 20		4
17	1420/0007Z		Washer (M8)		4

Applicability Date Ranges:
From: , To: M752691

Product Catalog\BACKHOE LOADER 1CX, 208\1CX 00751600-00752999,00806000-00807552 9802/6220\L ENGINES 104.22, KR BUILD TO M807552\L03 INDUCTION & EXHAUST SYSTEMS\L3-4-2 EXHAUST SYSTEM

9802/6220 L3-4-2 EXHAUST SYSTEM

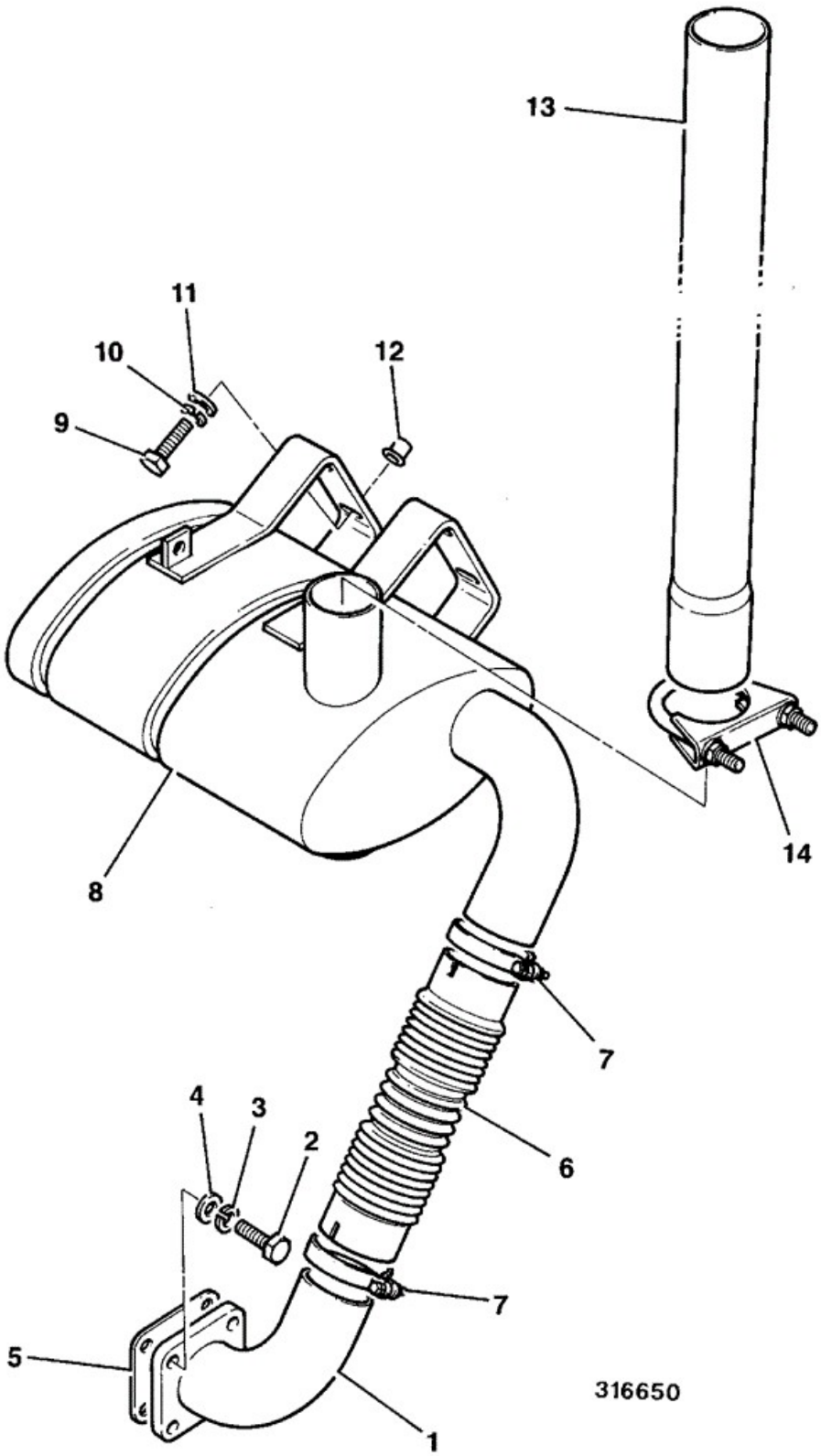

Item	Part No	Change No	Description	Usage Code	QTY

1	290/01303		Pipe exhaust		1
2	1315/0308Z		Setscrew M8 x 30		4
3	1425/0007D		Washer Spring M8		4
4	1420/0007D		Washer (M8)		4
5	02/630338		Gasket		1
6	290/01307		Tube exhaust expansion		1
7	821/00476		Clamp sealing		2
8	290/70700	<M806303	Silencer exhaust		1
8A	331/14760	>M806304	Silencer exhaust		1
9	1315/0308Z		Setscrew M8 x 30		4
10	1425/0007D		Washer Spring M8		4
11	1420/0007D		Washer (M8)		4
12	826/01102		Nut M8		4
13	290/01301	Superseded	Pipe exhaust extension		1
13	331/43399		Pipe exhaust extension STANDARD		1
13	290/01302	Superseded	Pipe exhaust extension low		1
13	331/43400		Pipe exhaust exstension low		1
14	261/00202		Clamp 'U'		1
14A	:1340/0103Z		Nut 5/16" UNF self lock nut		2
15	331/14917	>M806304	Bracket exhaust mounting		1
16	1315/0303D	>M806304	Setscrew M8 x 16mm		4

Applicability Date Ranges:
From: M752692 , To:

9802/6220 L4-1-1 PUMP, WATER KR BUILD

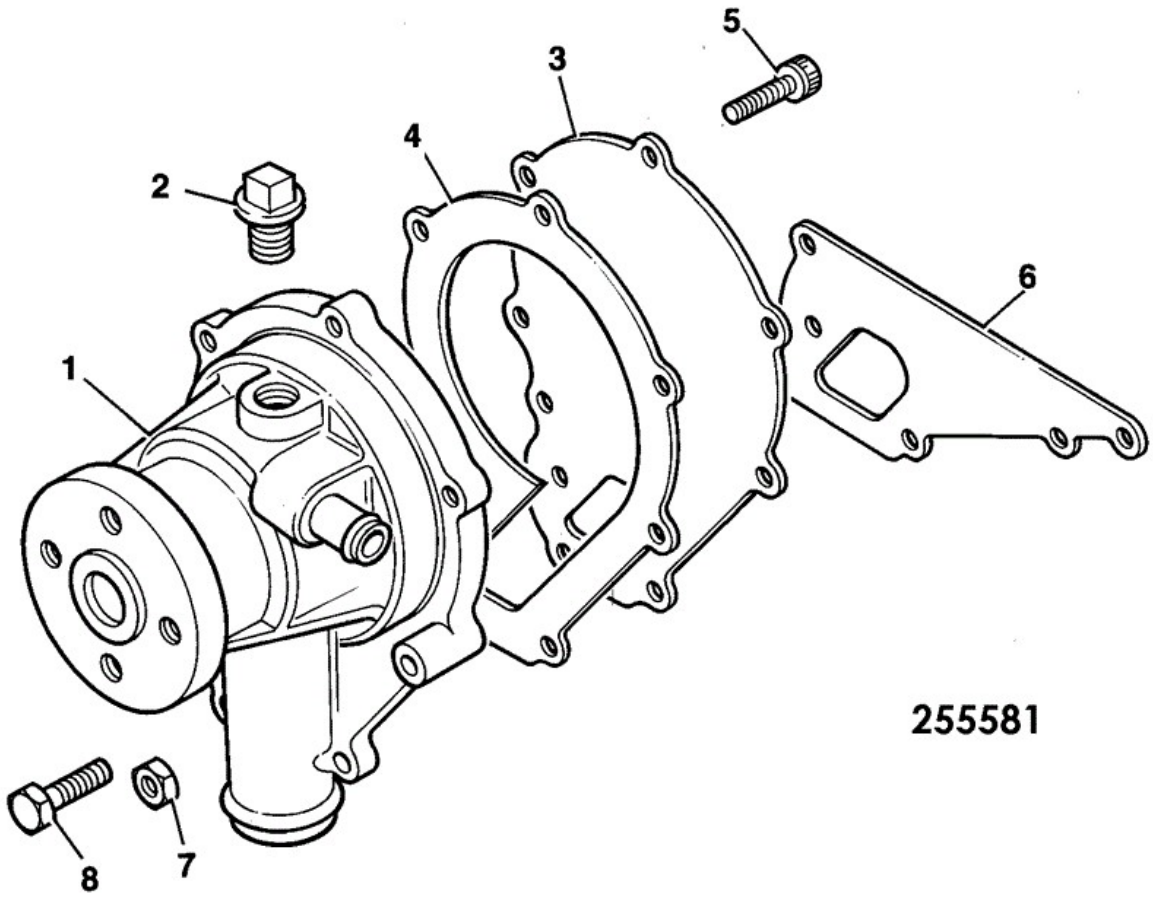

Item	Part No	Change No	Description	Usage Code	QTY
1	02/634080		Pump water		1
2	:02/630189		Plug D=30mm		1

3	:02/630839		Plate		1
4	:02/634078		Gasket w/pump		1
5	:02/630836		Screw		5
6	02/634079		Gasket w/pump to cyl/block		1
7	02/630096		Nut		3
8	02/630188		Screw		4

Applicability Date Ranges:
From: , To:

9802/6220 L4-2-1 THERMOSTAT, HOUSING INLET & OUTLET KR BUILD

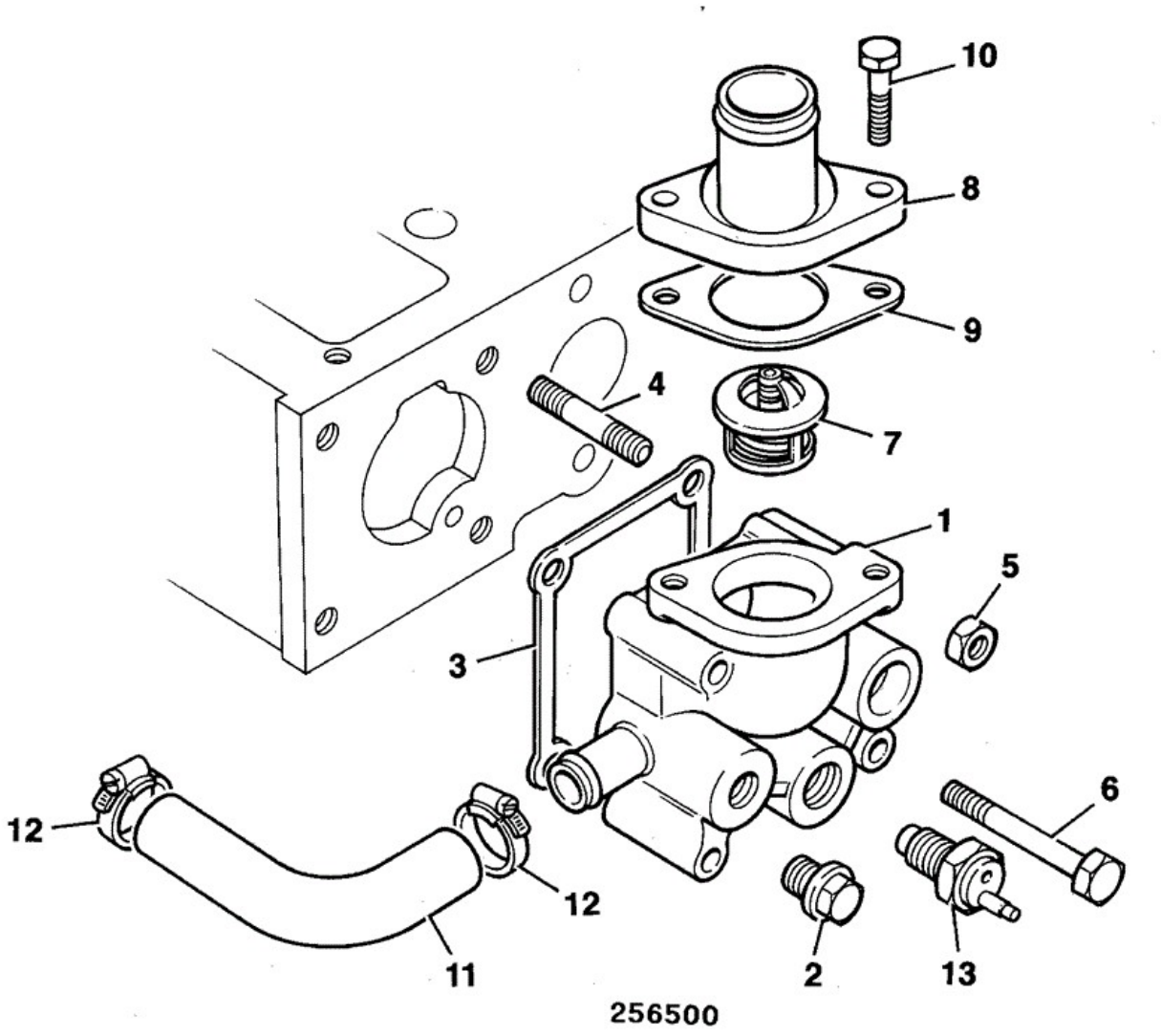

Item	Part No	Change No	Description	Usage Code	QTY
1	02/634110		Housing thermostat		1
2	02/630189		Plug D=30mm		1

3	02/634077		Gasket thermostat housing		1
4	02/630847		Stud		2
5	02/630096		Nut		2
6	02/630762		Screw		2
7	02/632114		Thermostat		1
8	02/634111		Connector water outlet		1
9	02/630843		Gasket		1
10	02/630809		Screw		2
11	02/630845		Hose by-pass		1
12	02/630846		Clip		2
13	02/632137		Sender temperature		1

Applicability Date Ranges:
From: , To:

9802/6220 L4-3-1 RADIATOR FITTINGS & MOUNTINGS KR BUILD

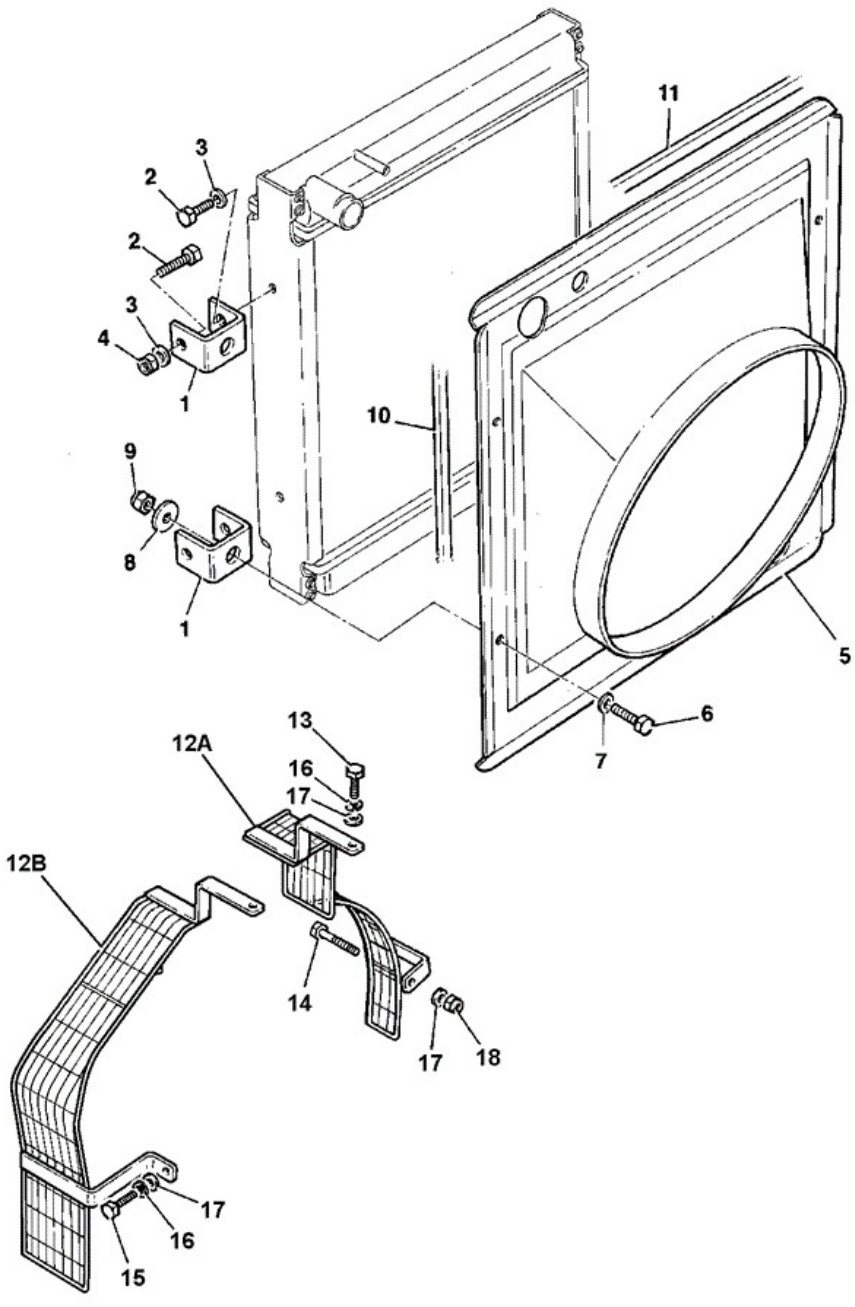

Item	Part No	Change No	Description	Usage Code	QTY
1	290/01133		Bracket radiator mounting		4
2	1315/0407Z		Setscrew M10 x 25 mm		8

3	1420/0008Z		Washer (M10)		8
4	1370/0303Z		Nut lock M10		4
5	290/01132		Cowling fan		1
6	1315/0403Z		Setscrew M10x16		4
7	1420/0008Z		Washer (M10)		4
8	****		'See Remark' Washer large		4
9	1370/0303Z		Nut lock M10		4
10	926/09500		Strip Edging 2 off 215mm		0
11	926/20701		Strip foam sealing		2
12	290/61500	Superseded	Guard fan		1
12	N.L.A		No longer available		1
12A	:290/01195		Guard fan right hand		1
12B	:290/01196		Guard fan left hand		1
13	1315/0305Z		Setscrew M8 x 20		2
14	1315/3316Z		Bolt (M8 x 70)		1
15	1315/0308Z		Setscrew M8 x 30		1
16	1425/0007Z		Washer Washer		3
17	1420/0007Z		Washer (M8)		4
18	1370/0203Z		Nut Nut M8		1

Applicability Date Ranges:
From: , To:

9802/6220 L4-4-1 RADIATOR & HOSES

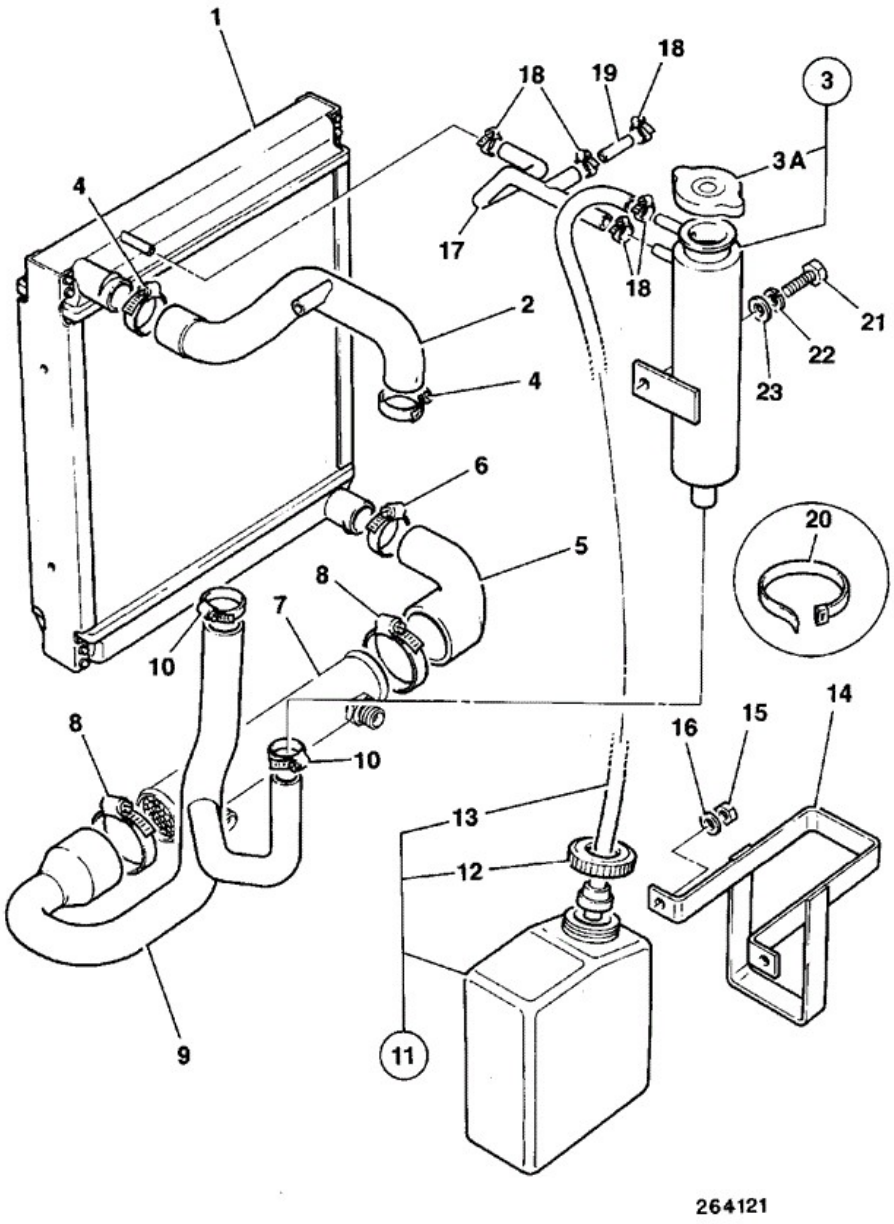

Item	Part No	Change No	Description	Usage Code	QTY
1	30/917000		Radiator assembly		1
2	834/00697	Superseded	Hose top		1

2	834/10455		Hose top		1
3	294/26900		Bottle coolant filler assembly		1
3A	:121/60601		Cap coolant filler double seal, 7psi		1
4	2201/0008		Clip Jubilee		2
5	834/00704		Hose bottom		1
6	2201/0009		Clip Jubilee		1
7	****		'See Remark' Transmission oil cooler, See Section E		1
8	2201/0013		Clip Jubilee		2
9	834/00698		Hose cooler		1
10	2201/0008		Clip Jubilee		2
11	121/59800		Bottle expansion, assembly		1
12	:123/03532		Cap expansion bottle		1
13	:121/59803		Hose overflow assembly		1
14	260/26100		Bracket expansion bottle		1
15	1370/0103Z		Nut Self Lock M6		2
16	1420/0006Z		Washer (M6)		2
17	834/00722	<M807795	Hose expansion		1
18	2201/0002	<M807795	Clip jubilee		5
18	2201/0002		Clip jubilee		3
19	290/00845	<M807795	Tube bundy		1
20	121/77603		Tie Cable 300mm		2
21	1315/0407Z		Setscrew M10 x 25 mm		1
22	1425/0008Z		Spring Washer		1
23	1420/0008Z		Washer (M10)		1

Applicability Date Ranges:
From: , To:

9802/6220 L5-1-1 SUMP, OIL KR BUILD

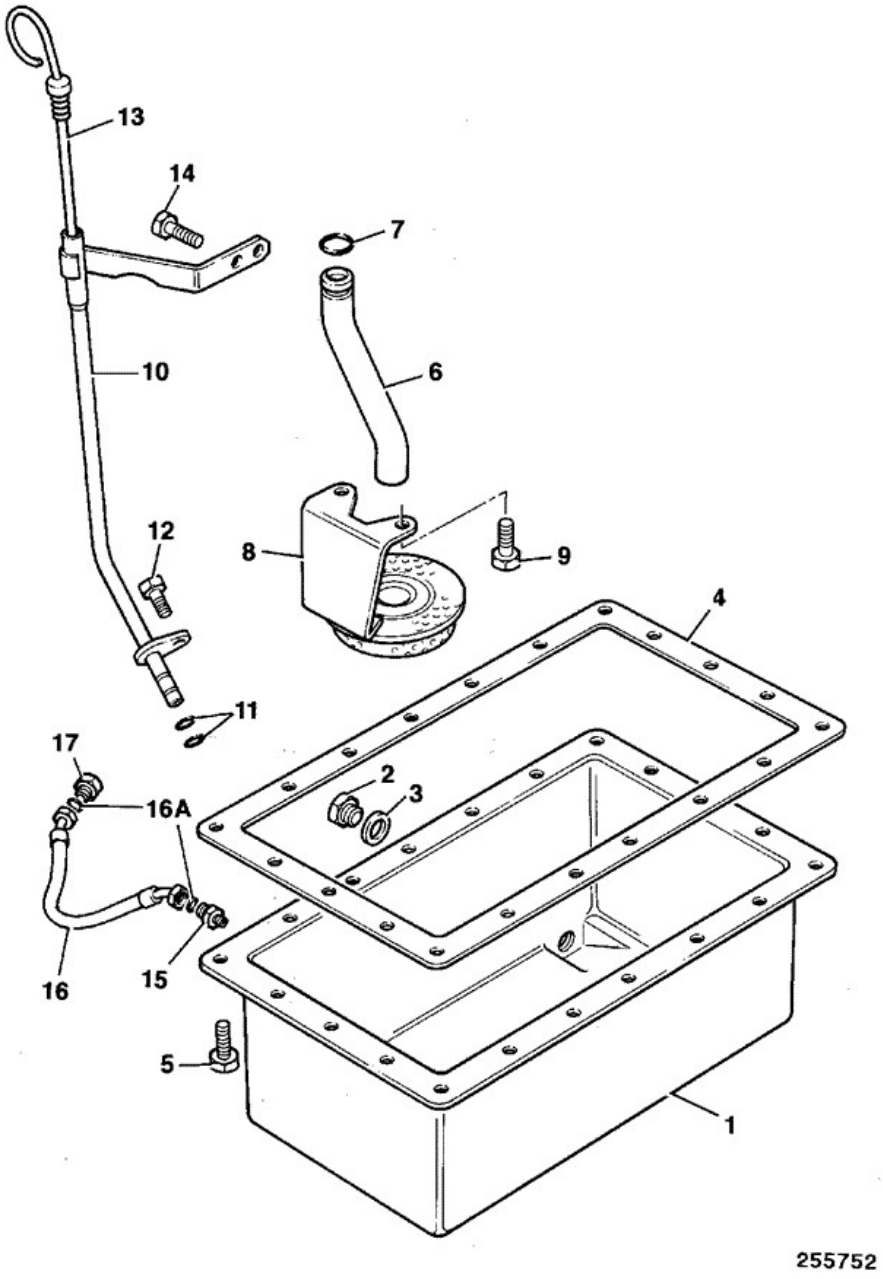

Item	Part No	Change No	Description	Usage Code	QTY
1	02/634060		Sump oil		1
2	02/630199		Plug oil drain		2

3	02/630198		Washer		2
4	02/634063		Gasket oil sump		1
5	02/630197		Screw		30
6	02/634061		Pipe oil suction		1
7	02/630202		O Ring		1
8	02/634062		Strainer oil		1
9	02/630102		Screw		2
10	02/634064		Tube dipstick		1
11	02/630206		O Ring		2
12	02/630172		Bolt		1
13	02/634065		Dipstick		1
14	02/632145		Screw		1
15	816/15183		Adapter		1
16	613/33100		Hose 1/2in, 600 long		1
16A	:2301/0010		O Ring 1/2"BSP		2
17	G8/0		Plug 1/2"BSP		1

Applicability Date Ranges:
From: , To:

9802/6220 L5-2-1 PUMP, OIL KR BUILD

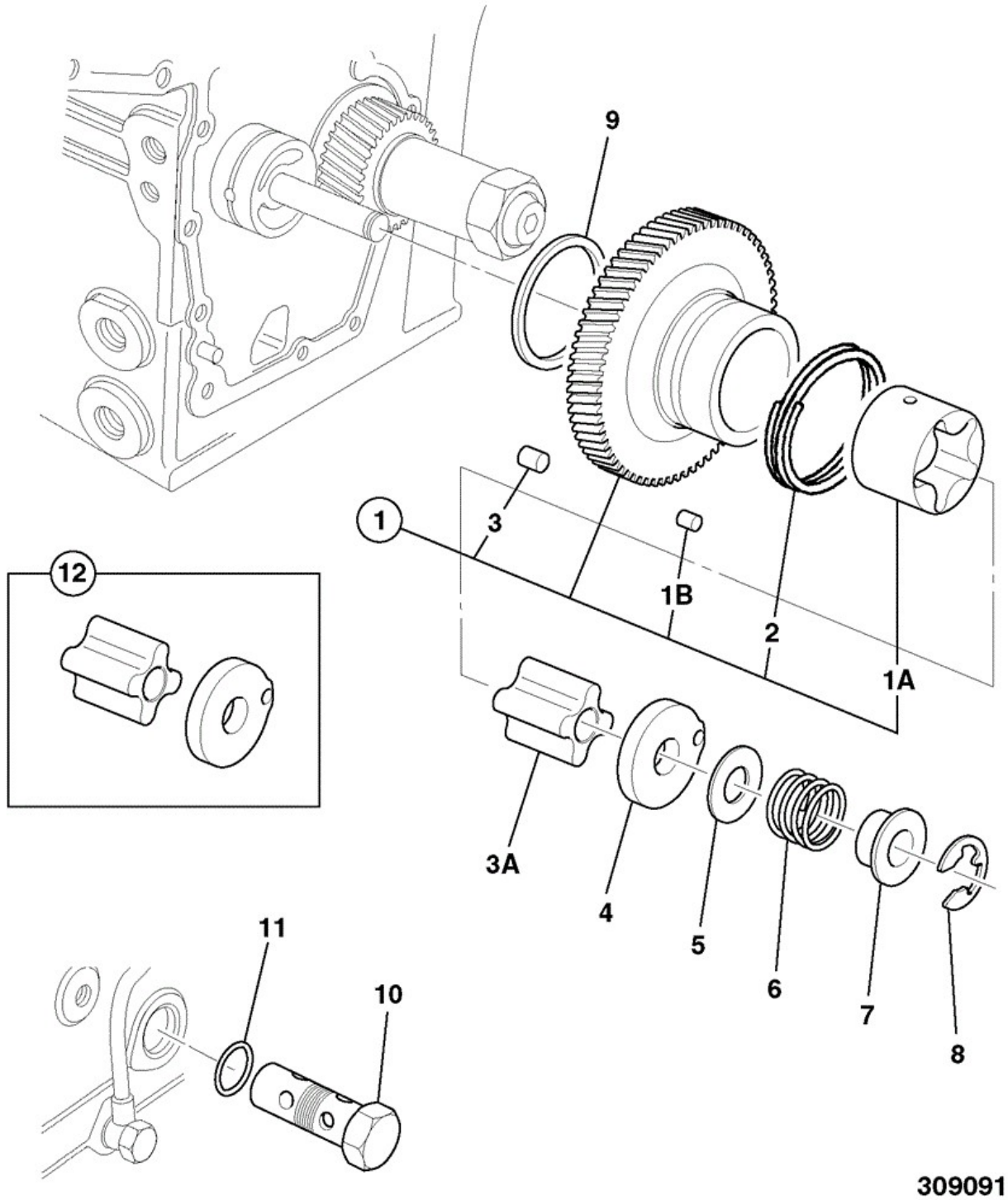

Item	Part No	Change No	Description	Usage Code	QTY
1	02/630800		Pump oil idler gear		1
1A	:02/634165		Rotor		1

1B	:02/630208		Dowel		3
2	:02/630207		Spring		1
3	:02/630212		Bush		3
3A	02/630789		Rotor		1
4	02/630214		Cover		1
5	02/630215		Shim oversize - 0.10mm		0
5	02/630216		Shim oversize - 0.15mm		0
5	02/630217		Shim oversize - 0.20mm		0
5	02/630218		Shim oversize - 0.50mm		0
6	02/630219		Spring		1
7	02/630220		Collar		1
8	02/630221		Circlip		1
9	02/630222		Washer thrust		1
10	02/634047		Valve oil relief		1
11	02/630224		O Ring		1
12	02/630788		Kit-repair oil pump		1

Applicability Date Ranges:
From: , To:

Product Catalog\BACKHOE LOADER 1CX, 208\1CX 00751600-00752999,00806000-00807552 9802/6220\L ENGINES 104.22, KR BUILD TO M807552\L05 SYSTEM, LUBRICATION\L5-4-1 FILTER, OIL KR BUILD

9802/6220 L5-4-1 FILTER, OIL KR BUILD

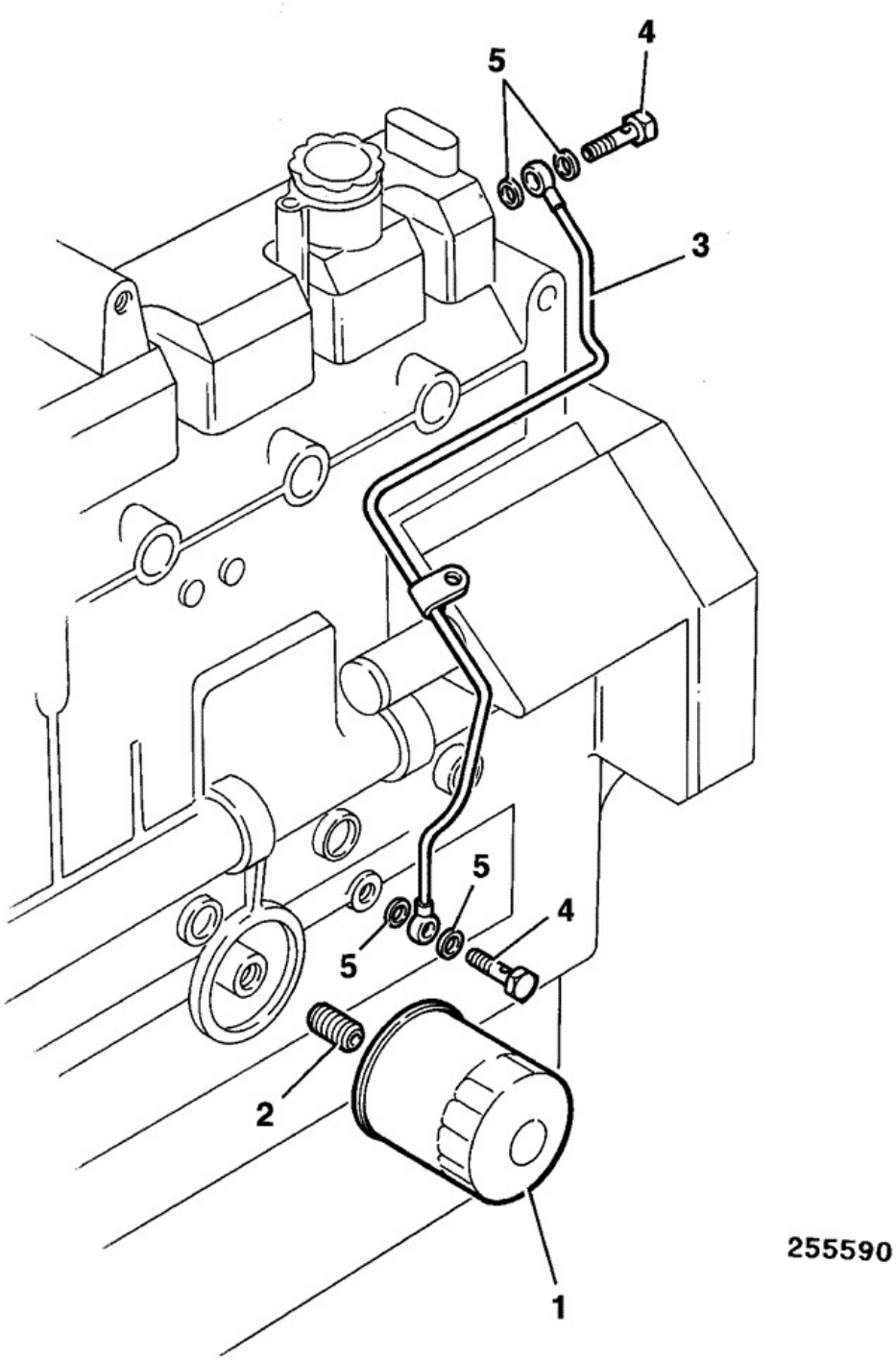

Item	Part No	Change No	Description	Usage Code	QTY
1	02/630935		Element engine oil filter		1
2	02/630226		Connector		1

3	02/634066		Pipe oil feed		1
4	02/630228		Bolt banjo		2
5	02/630175		Washer		4

Applicability Date Ranges:
From: , To:

Product Catalog\BACKHOE LOADER 1CX, 208\1CX 00751600-00752999,00806000-00807552 9802/6220\L ENGINES 104.22, KR BUILD TO M807552\L06 SYSTEM, FUEL\L6-1-1 PUMP, FUEL INJECTION & SHUT-OFF SOLENOID KR BUILD

9802/6220 L6-1-1 PUMP, FUEL INJECTION & SHUT-OFF SOLENOID KR BUILD

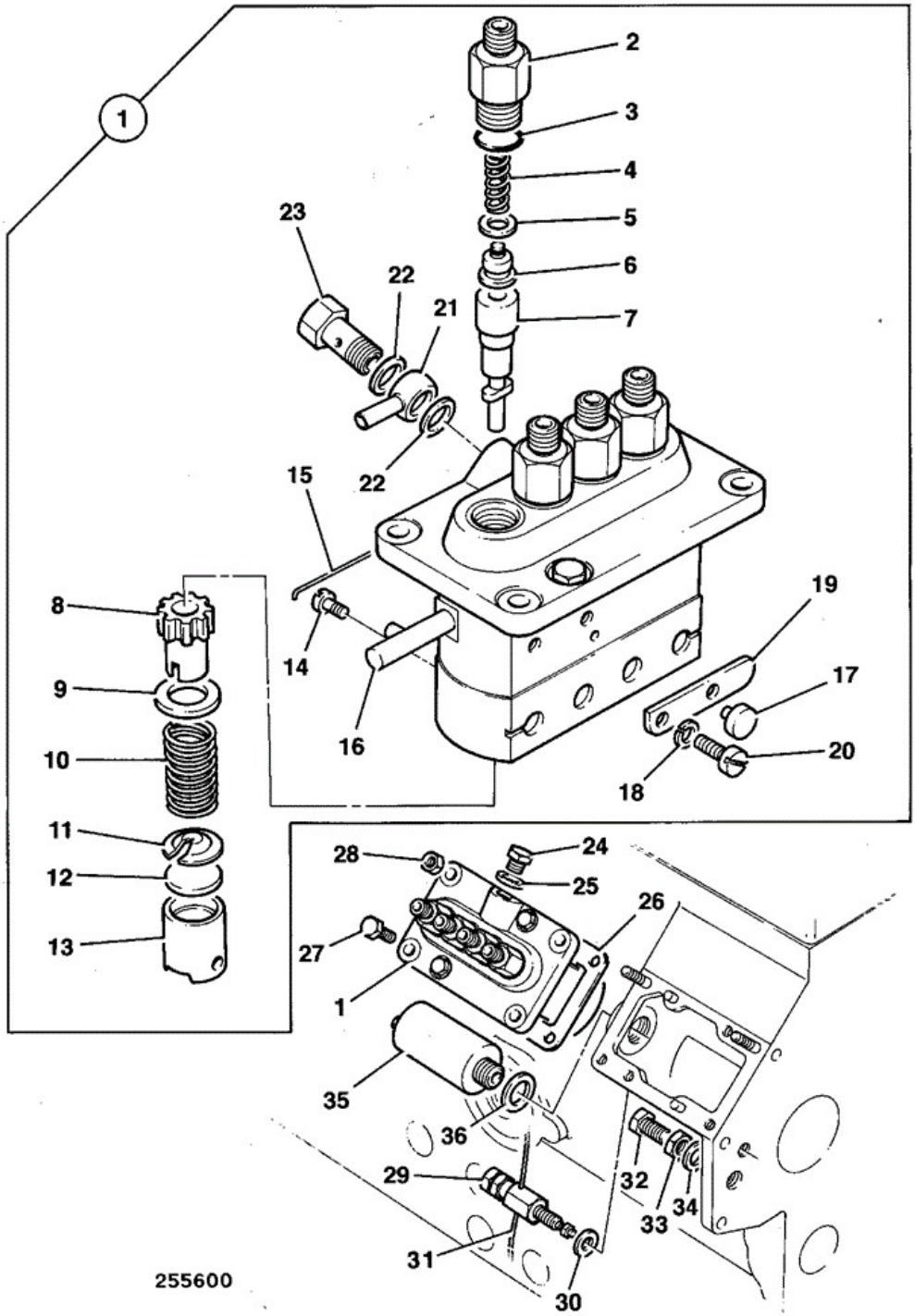

Item	Part No	Change No	Description	Usage Code	QTY
1	17/900300		Pump fuel injection	P/Ex	1
2	:17/900301		Holder valve		4

3	:02/631002		O Ring		4
4	:02/631003		Spring		4
5	:02/631004		Gasket		4
6	:02/631005		Valve		4
7	:02/631006		Plunger assembly		4
8	:02/631007		Sleeve		4
9	:02/631008		Washer		4
10	:02/631009		Spring		4
11	:02/631010		Washer		4
12	:02/631011		Shim		4
13	:02/631012		Tappet		4
14	:02/631021		Pin		4
15	:17/900302		Wire		2
16	:17/900303		Rack		1
17	:02/631016		Pin		3
18	:02/631015		Washer		3
19	:17/900304		Plate cover		1
20	:02/631014		Screw		3
21	:02/631019		Connector banjo bolt		1
22	:02/631020		Washer seal		2
23	:17/900305		Bolt banjo		1
24	02/630265		Screw		1
25	02/630808		Washer		1
26	02/634054		Shim 0.2mm beaded		0
26	02/634055		Shim 0.3mm beaded		0
26	02/634056		Shim 0.4mm beaded		0
26	02/634057		Shim 0.5mm beaded		0
26	02/634058		Shim 0.5mm flat		0
27	02/634046		Screw		3
28	02/630078		Nut		3
29	02/630829		Screw		1
30	02/630308		Washer		1
31	02/630309		Wire		1
32	02/630310		Screw		1
33	02/630307		Nut		1
34	02/630308		Washer		1
35	02/630300		Solenoid fuel shut-off		1
36	02/630301		Washer		1

Applicability Date Ranges:
From: , To:

9802/6220 L6-2-1 INJECTORS, FUEL & INJECTION PIPES KR BUILD

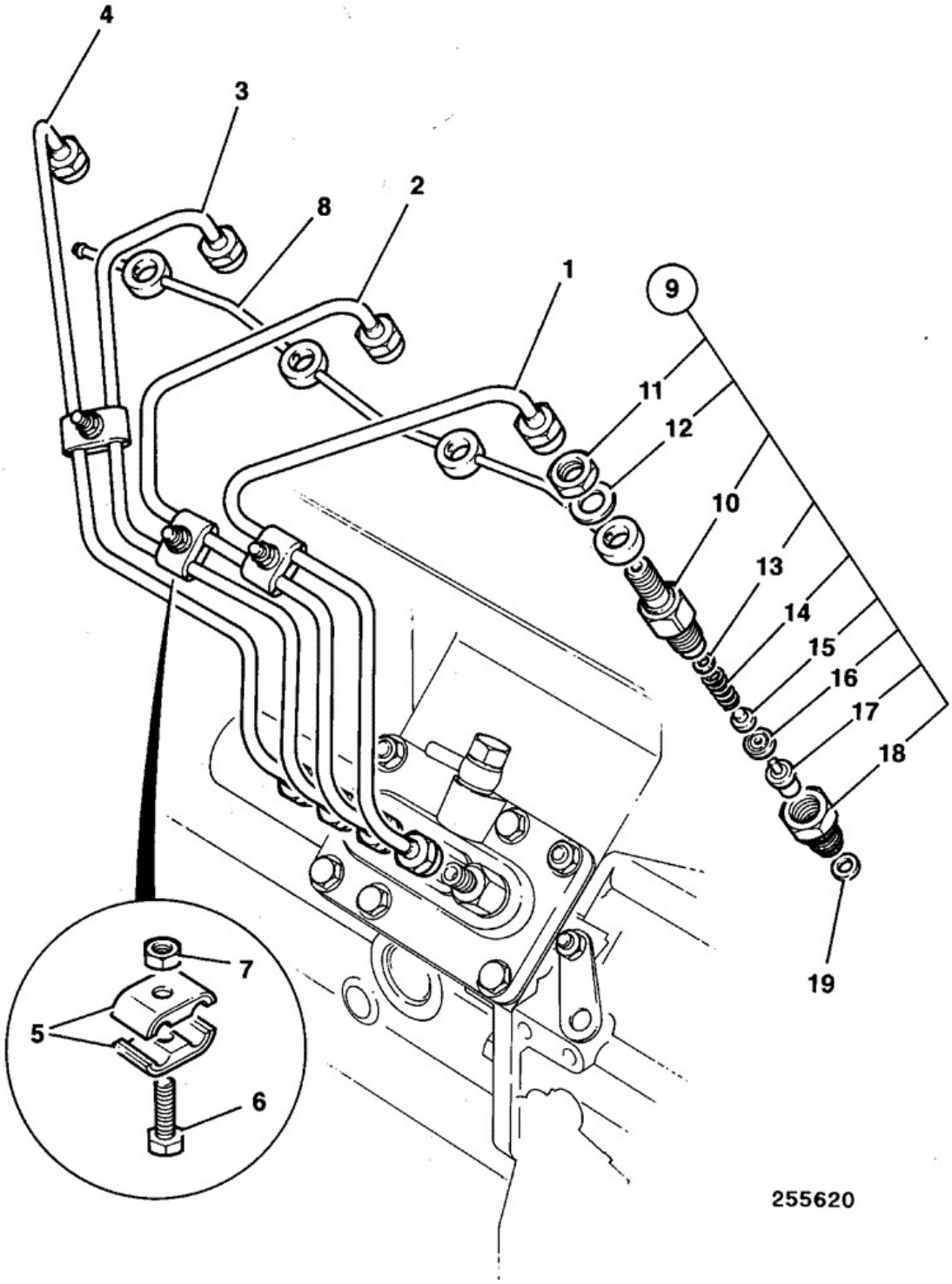

Item	Part No	Change No	Description	Usage Code	QTY
1	02/634041		Pipe injector No.1		1
2	02/634042		Pipe injector No,2		1

3	02/634043		Pipe injector No.3		1
4	02/634044		Pipe injector No.4		1
5	02/630314		Clamp		6
6	02/630315		Screw		3
7	02/630096		Nut		3
8	02/634045		Pipe fuel leak-off		1
9	02/630820		Injector assembly	P/Ex	4
10	****		None serviced part		1
11	:02/630822		Nut		1
12	:02/630823		Washer seal		1
13	:02/630824		Shim		1
14	:02/630825		Spring		1
15	:02/630826		Pin		1
16	:02/630827		Spacer		1
17	:02/630821		Nozzle		1
18	:02/630828		Nut		1
19	02/630804		Washer copper		4

Applicability Date Ranges:
From: , To:

Product Catalog\BACKHOE LOADER 1CX, 208\1CX 00751600-00752999,00806000-00807552 9802/6220\L ENGINES 104.22, KR BUILD TO M807552\L06 SYSTEM, FUEL\L6-3-1 FUEL SYSTEM KR BUILD

9802/6220 L6-3-1 FUEL SYSTEM KR BUILD

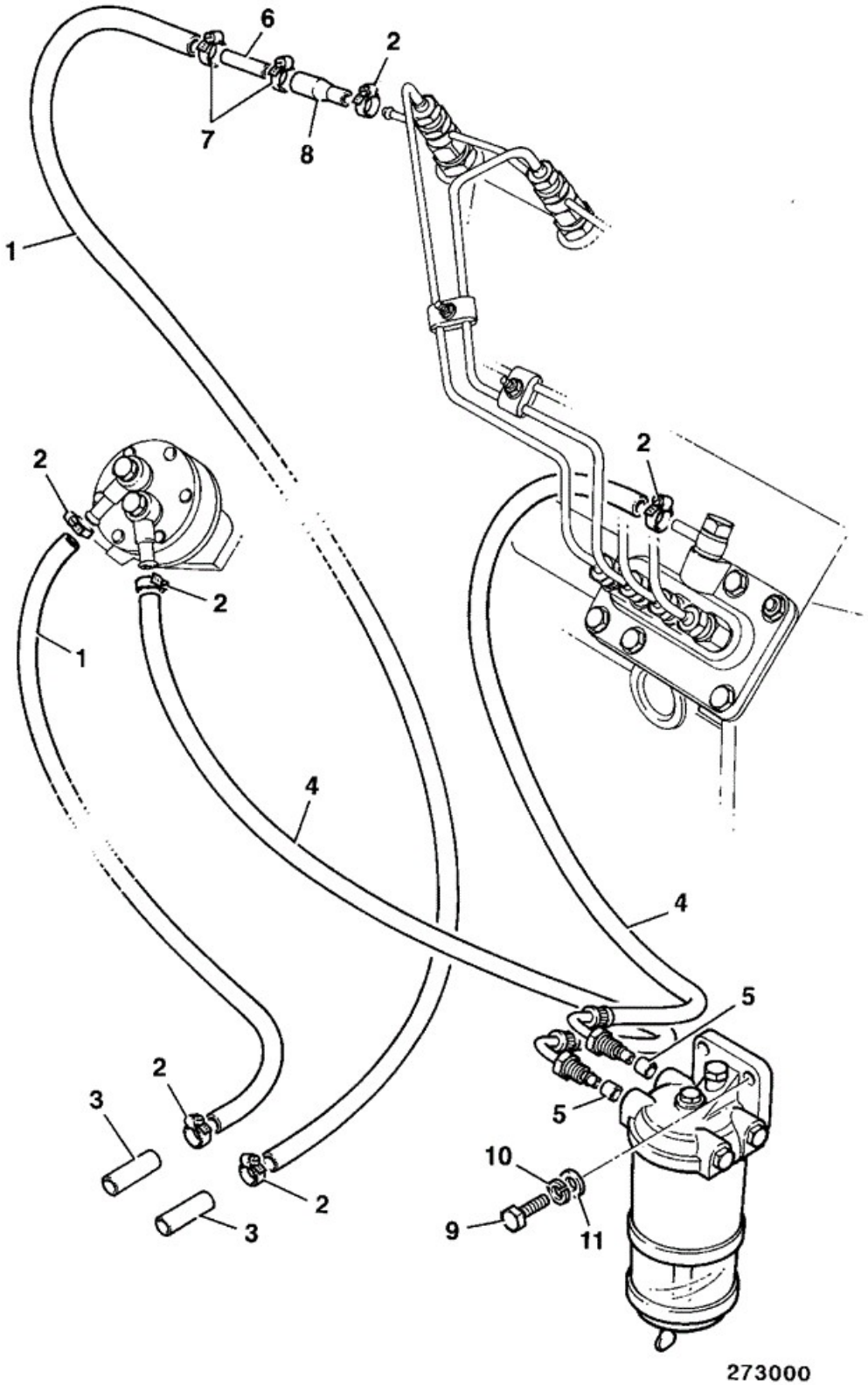

Item	Part No	Change No	Description	Usage Code	QTY

1	648/03502		Hose 2 metres		0
2	2201/0005		Clip Worm Drive 14/27mm		6
3	648/01942		Hose 6.85m length		0
4	649/43400		Hose diesel fuel L=455mm		2
5	816/60170		Olive		2
6	290/00845		Tube bundy		1
7	821/00493		Clip crimp		2
8	816/60212		Sleeve rubber connector		1
9	1315/0308Z		Setscrew M8 x 30		2
10	1425/0007Z		Washer Washer		2
11	1420/0007Z		Washer (M8)		2

Applicability Date Ranges:
From: , To: EU928282F

Product Catalog\BACKHOE LOADER 1CX, 208\1CX 00751600-00752999,00806000-00807552 9802/6220\L ENGINES 104.22, KR BUILD TO M807552\L06 SYSTEM, FUEL\L6-3-2 FUEL SYSTEM KR BUILD

9802/6220 L6-3-2 FUEL SYSTEM KR BUILD

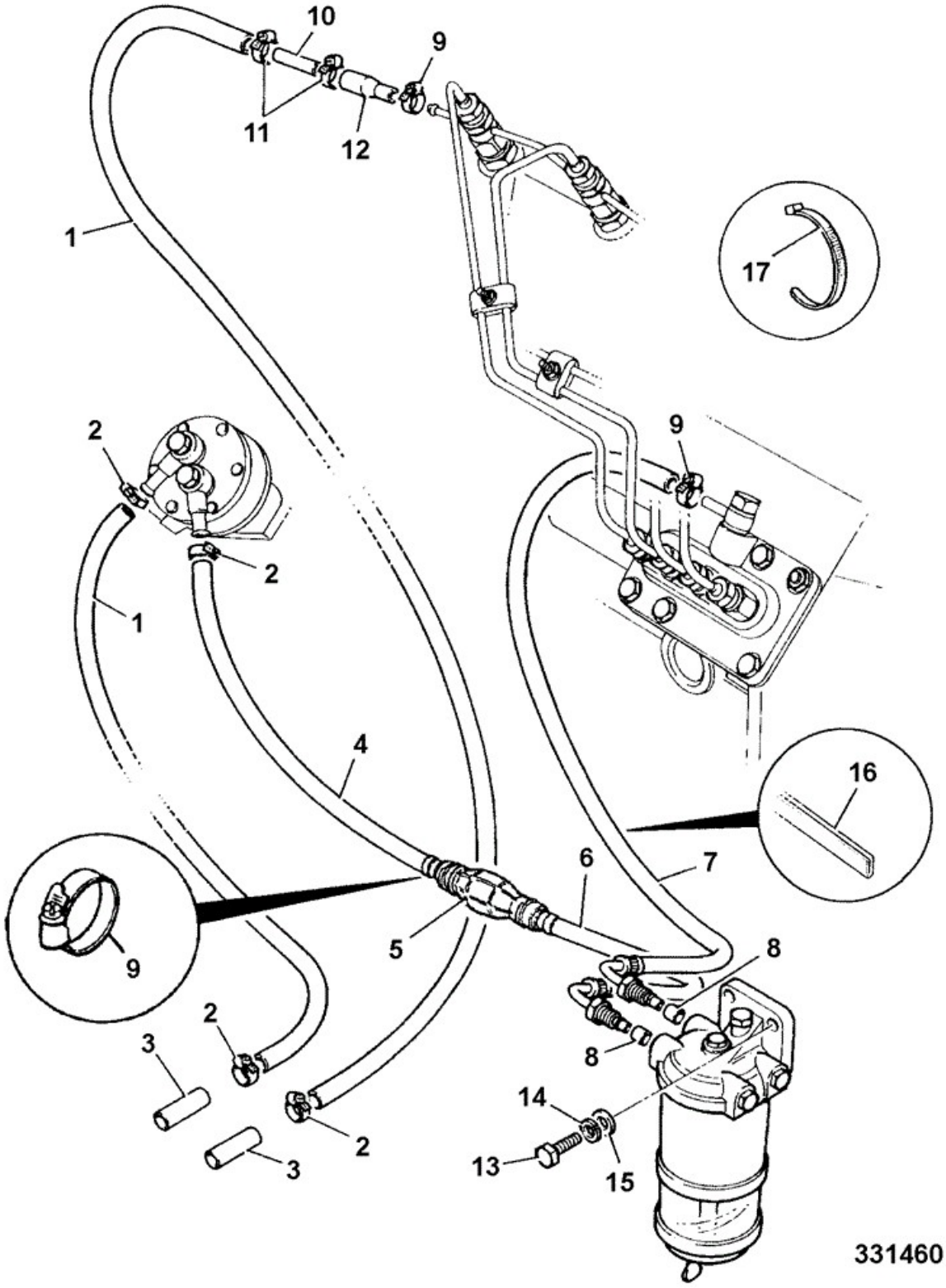

Item	Part No	Change No	Description	Usage Code	QTY

1	648/03502		Hose 2 metres 2 X 680mm Lengths required		0
2	2201/0005		Clip Worm Drive 14/27mm		6
3	648/01942		Hose 6.85m length 2 X 75mm Lengths required		0
4	648/03502		Hose 2 metres 1 X 500mm Length required		0
5	246/00646		Pump hand primer		1
6	649/51123		Hose diesel fuel Filter to Hand Primer		1
7	649/51130		Hose Diesel Fuel Filter to Inj/Pump		1
8	816/60170		Olive		2
9	2201/0002		Clip jubilee		2
10	290/00845		Tube bundy		1
11	821/00493		Clip crimp		2
12	816/60212		Sleeve rubber connector		2
13	1315/0308Z		Setscrew M8 x 30		2
14	1425/0007Z		Washer Washer		2
15	1420/0007Z		Washer (M8)		2
16	926/09500		Strip Edging		0
17	121/77603		Tie Cable 300mm		8

Applicability Date Ranges:
From: EU928283F , To:

9802/6220 L6-4-1 FILTER, FUEL

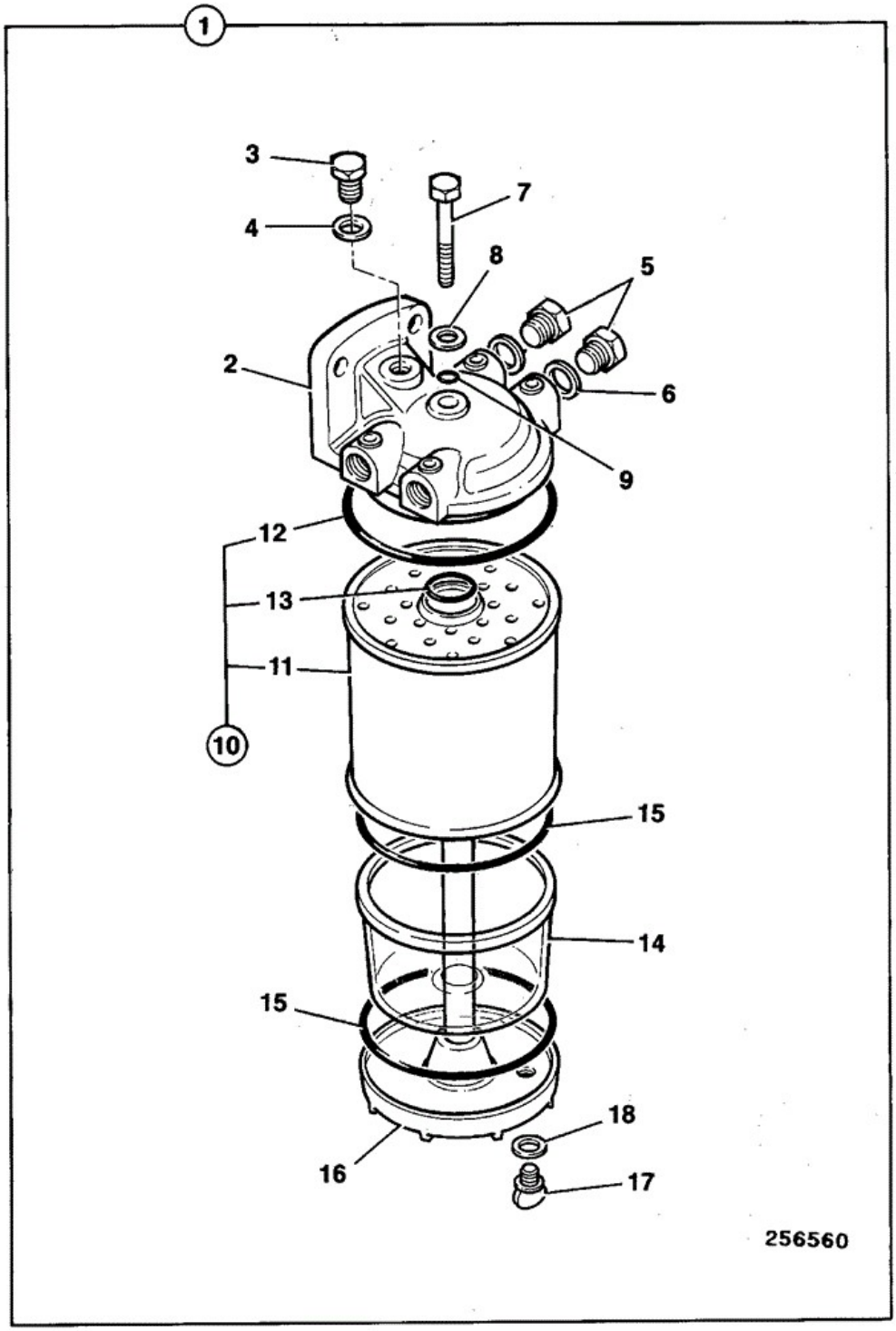

Item	Part No	Change No	Description	Usage Code	QTY
1	32/400100		Filter Fuel Assembly Diesel		1
2	:32/400101		Head fuel filter		1

3	:200/44613		Plug vent		1
4	:200/44614		Washer		1
5	:200/44611		Plug		2
6	:200/44612		Washer		2
7	:200/44607		Bolt centre		1
8	:32/400508		Washer		1
9	:2401/0006		O Ring		1
10	:32/401102		Kit-element fuel filter, short		1
11	****		None serviced part		1
12	:200/44606		Seal		1
13	:828/00085		O Ring		1
14	:200/44604		Bowl glass		1
15	:828/00086		Seal		2
16	:32/400102		Base Filter		1
17	:32/400505		Plug drain		1
18	:200/44610		Washer		1

Applicability Date Ranges:
From: , To:

Product Catalog\BACKHOE LOADER 1CX, 208\1CX 00751600-00752999,00806000-00807552 9802/6220\L ENGINES 104.22, KR BUILD TO M807552\L06 SYSTEM, FUEL\L6-5-1 PUMP, FUEL LIFT

9802/6220 L6-5-1 PUMP, FUEL LIFT

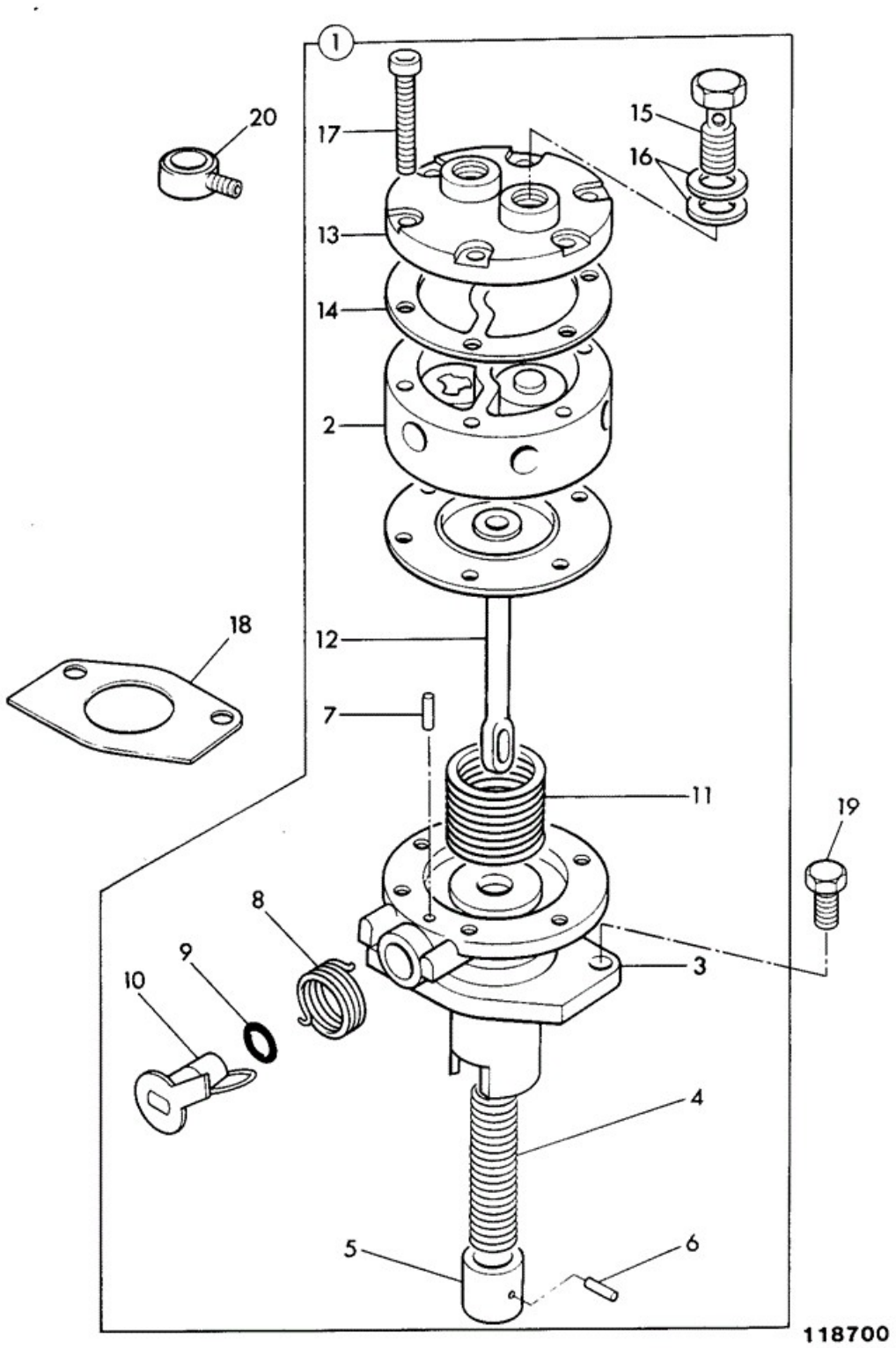

Item	Part No	Change No	Description	Usage Code	QTY

1	02/630320		Pump fuel lift		1
2	:N.S.P.		None serviced part Body upper		1
3	:02/630321		Body lower		1
4	:02/630322		Spring		1
5	:02/630323		Plunger		1
6	:02/630324		Pin		1
7	:02/630325		Pin		1
8	:02/630326		Spring		1
9	:02/630327		O Ring		1
10	:02/630328		Lever		1
11	:02/630329		Spring		1
12	:02/630330		Diaphragm		1
13	:02/630331		Cap		1
14	:02/630332		Gasket		1
15	:02/630333		Bolt		2
16	:02/630334		Washer		4
17	:02/630335		Capscrew		6
18	02/634094		Gasket		1
19	02/634093		Screw M6x14		1
19	02/634092		Screw M6x16		1
20	02/630337		Banjo		2

Applicability Date Ranges:
From: , To:

Product Catalog\BACKHOE LOADER 1CX, 208\1CX 00751600-00752999,00806000-00807552 9802/6220\L ENGINES 104.22, KR BUILD TO M807552\L06 SYSTEM, FUEL\L6-5-2 PUMP, FUEL LIFT

9802/6220 L6-5-2 PUMP, FUEL LIFT

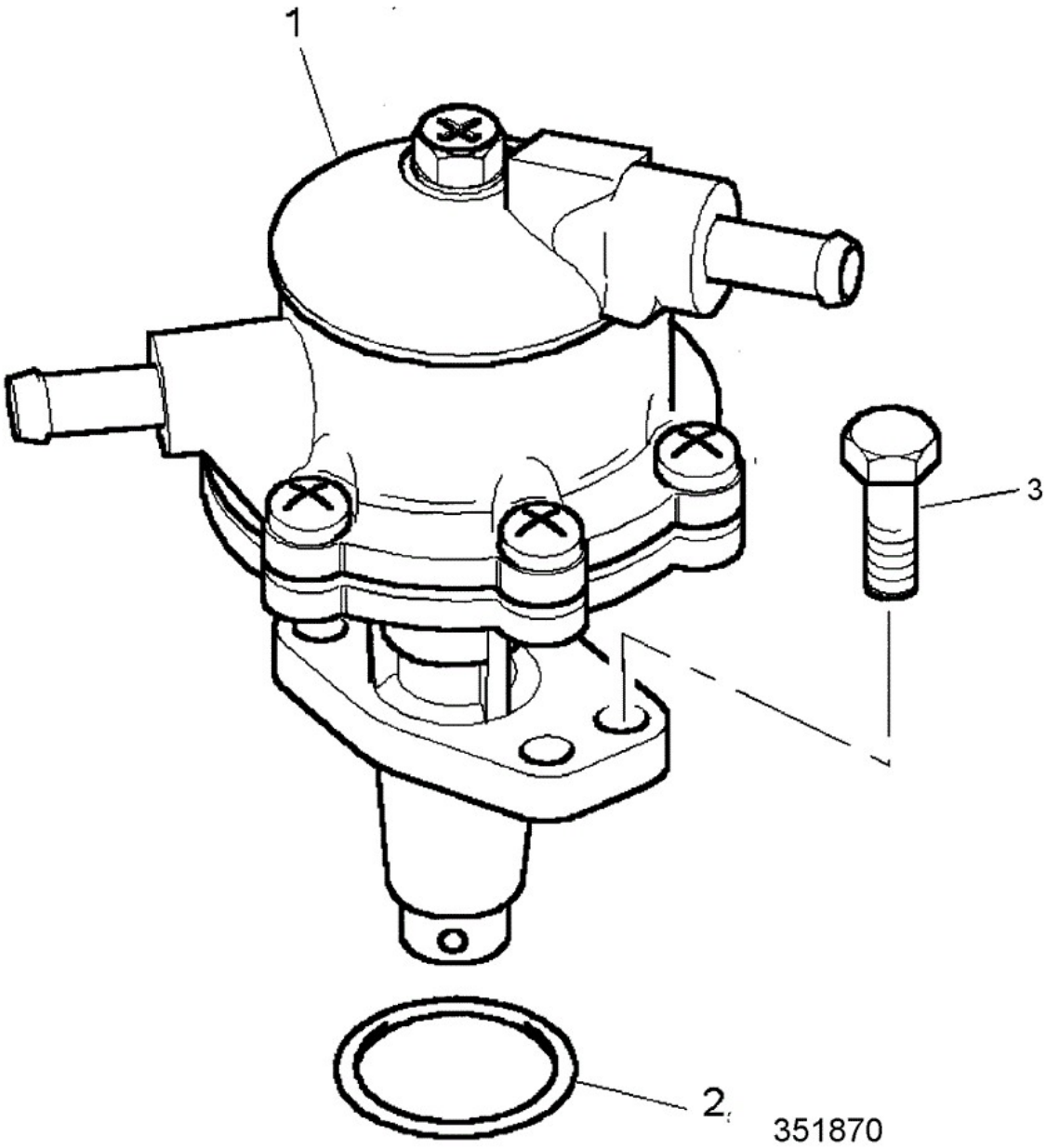

Item	Part No	Change No	Description	Usage Code	QTY
1	17/912400		Pump fuel lift		1
2	02/630269		O Ring		1
3	02/634092		Screw M6x16		2

Applicability Date Ranges:
From: EU928283F , To:

Product Catalog\BACKHOE LOADER 1CX, 208\1CX 00751600-00752999,00806000-00807552 9802/6220\L ENGINES 104.22, KR BUILD TO M807552\L08 GASKET SETS\L8-1-1 GASKET SETS KR BUILD

9802/6220 L8-1-1 GASKET SETS KR BUILD

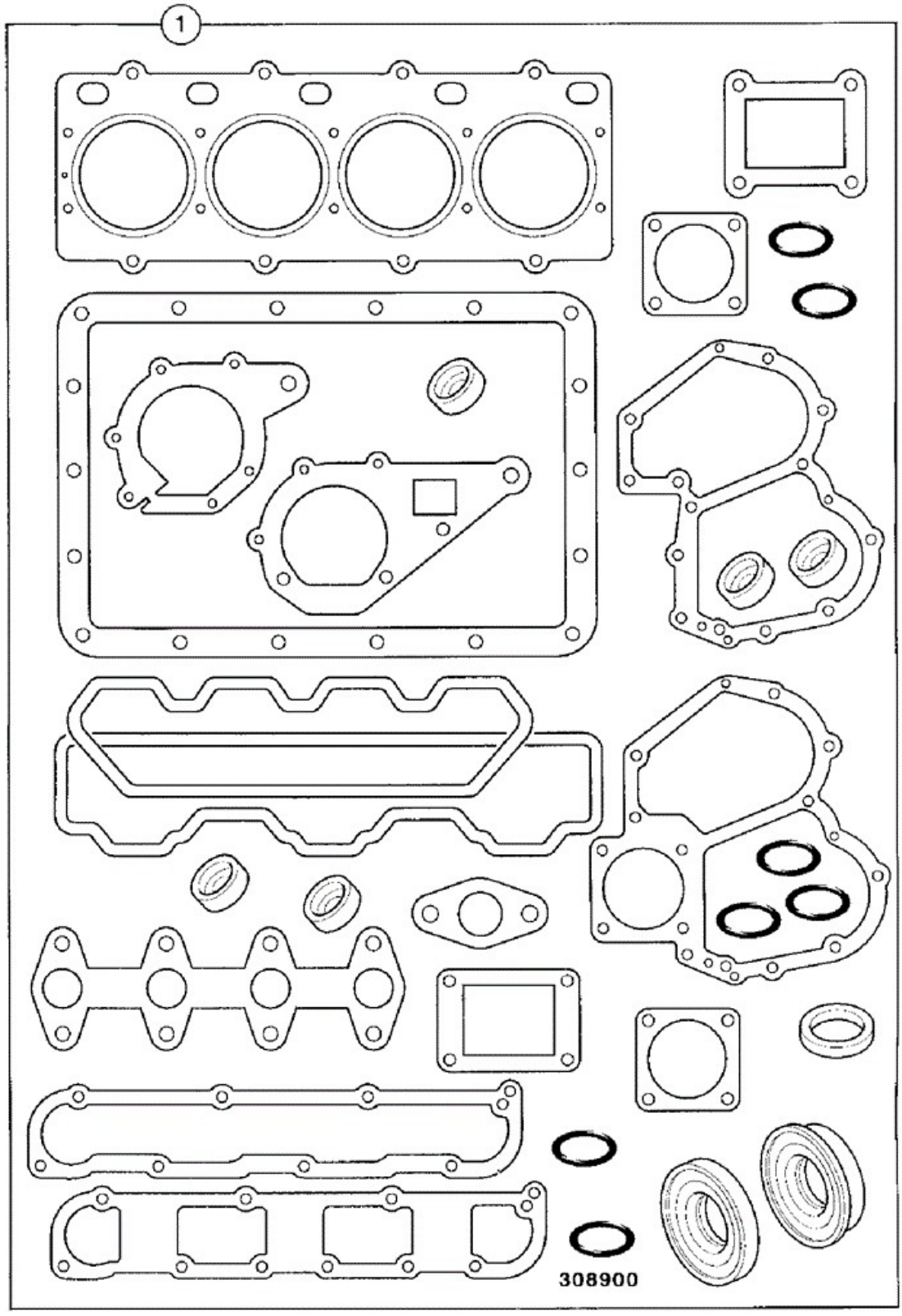

Item	Part No	Change No	Description	Usage Code	QTY

1	02/634097		Kit-gasket		1

Applicability Date Ranges:
From: , To:

Product Catalog\BACKHOE LOADER 1CX, 208\1CX 00751600-00752999,00806000-00807552 9802/6220\M ENGINES 404C.22, HP BUILD FROM M807553\M03 INDUCTION & EXHAUST SYSTEM\M3-4-2 EXHAUST LOW HEIGHT SHIELDED (OPTIONAL)

9802/6220 M3-4-2 EXHAUST LOW HEIGHT SHIELDED (OPTIONAL)

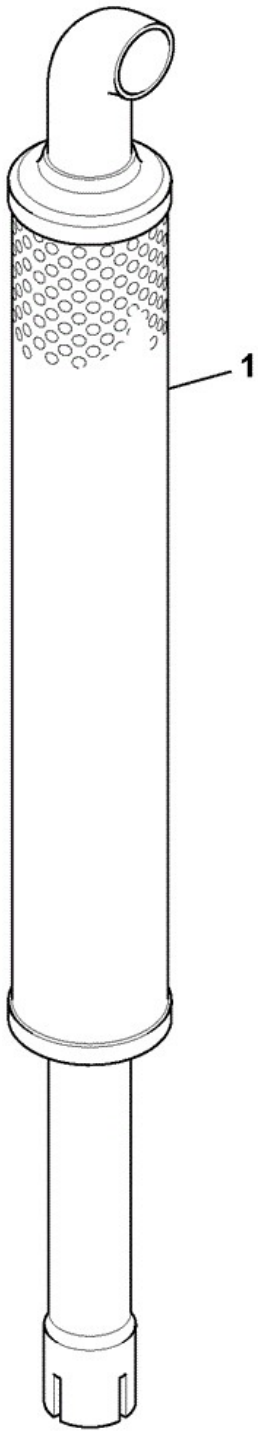

930710

Item	Part No	Change No	Description	Usage Code	QTY
1	332/R8653		Pipe exhaust low height shielded		1

Applicability Date Ranges:
From: , To:

9802/6220 M4-3-4 RADIATOR FITTINGS & MOUNTINGS STANDARD

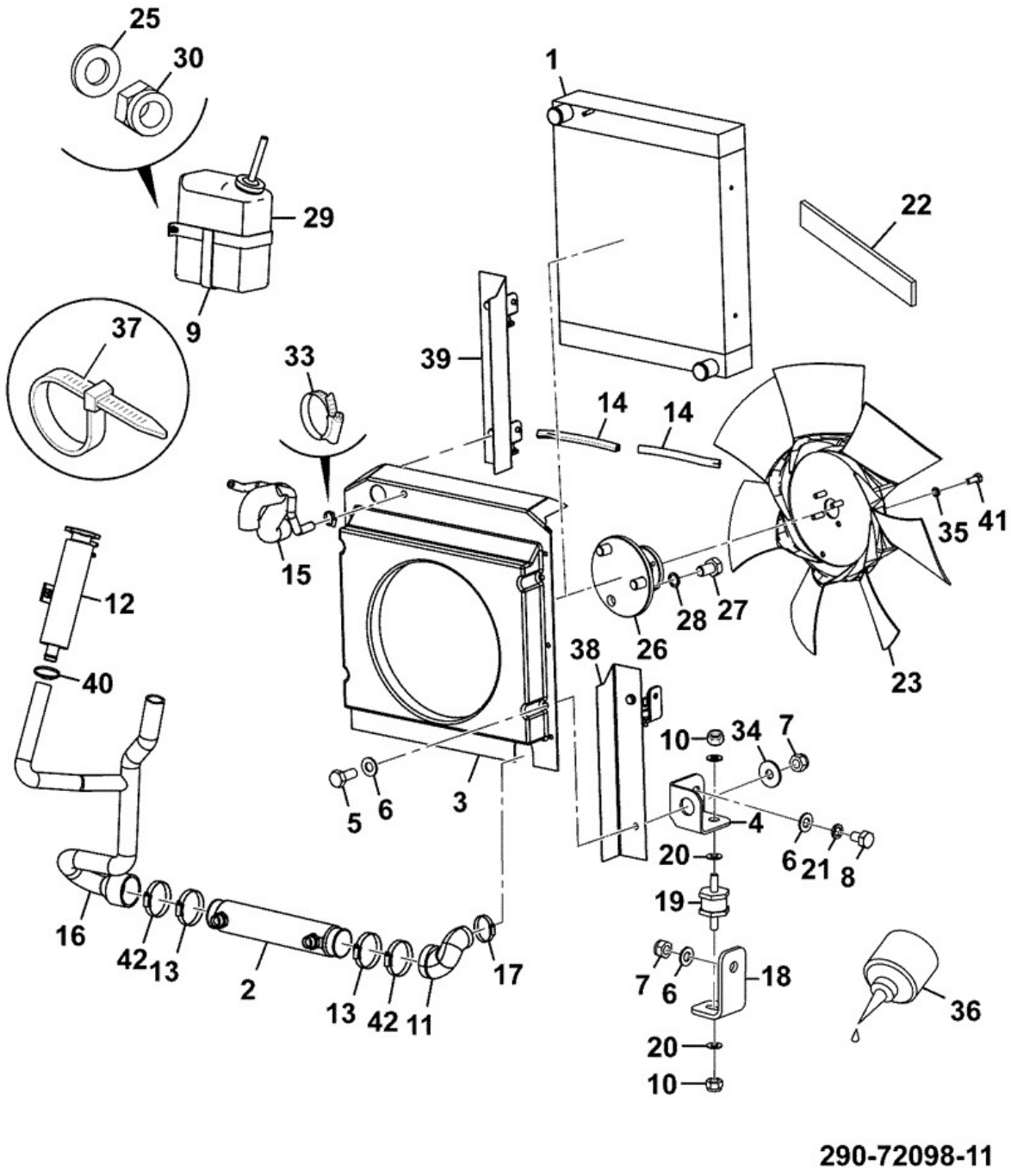

Item	Part No	Change No	Description	Usage Code	QTY
1	30/927088		Radiator assembly		1
2	30/925399		Cooler hydraulic oil		1

3	346/00310		Cowling fan		1
4	335/05762		Bracket radiator mounting		4
5	1315/0407D		Setscrew M10 x 25		4
6	1420/0008D		Washer (M10)		12
7	1370/0303D		Nut Self Lock M10		8
8	1315/0403D		Setscrew M10 x16mm		4
9	260/26100		Bracket expansion bottle		1
10	1370/0203D		Nut Lock M8		8
11	332/W3827		Hose bottom radiator, Std		1
12	333/W2347		Filler Bottle Assembly		1
13	2201/0013		Clip Jubilee		2
14	926/09502		Strip edging L=220mm		2
15	333/W3336		Hose Top		1
16	332/V8561		Hose Cooler to Engine		1
17	332/G4601		Clip Worm Drive 35 to 50 Dia		4
18	331/36135		Bracket radiator mounting		4
19	331/31026		Mounting Anti Vibration		4
20	1420/0007D		Washer (M8)		8
21	1425/0008D		Washer Spring M10		4
22	926/20701		Strip foam sealing		2
23	30/925942		Fan 14" Pusher		1
25	1420/0006D		Washer (M6)		2
26	829/31303		Spacer fan		1
27	1315/0505D		Screw M12 x 20mm long		3
28	1425/0009D		Washer M12 spring		3
29	121/59800		Bottle expansion, assembly		1
30	1370/0103D		Nut (M6)		2
33	2201/0001		Clip Worm Drive 8/16mm		2
34	823/00326		Washer M10 X 30mm		4
35	823/10399		Washer Nordlock M6		4
36	4101/0200		Fluid Locking		1
37	121/77603		Tie Cable 300mm		2
38	331/52777		Plate blanking		1
39	331/52778		Plate blanking		1
40	333/R7966		Clip Worm Drive WF 25/40mm		1
41	1316/0203D		Screw		4
42	332/F6560		Clip wormdrive 60 to 80 Dia		2

Applicability Date Ranges:

From: , To:

9802/6220 N1-1-1 ENGINE, COMPLETE

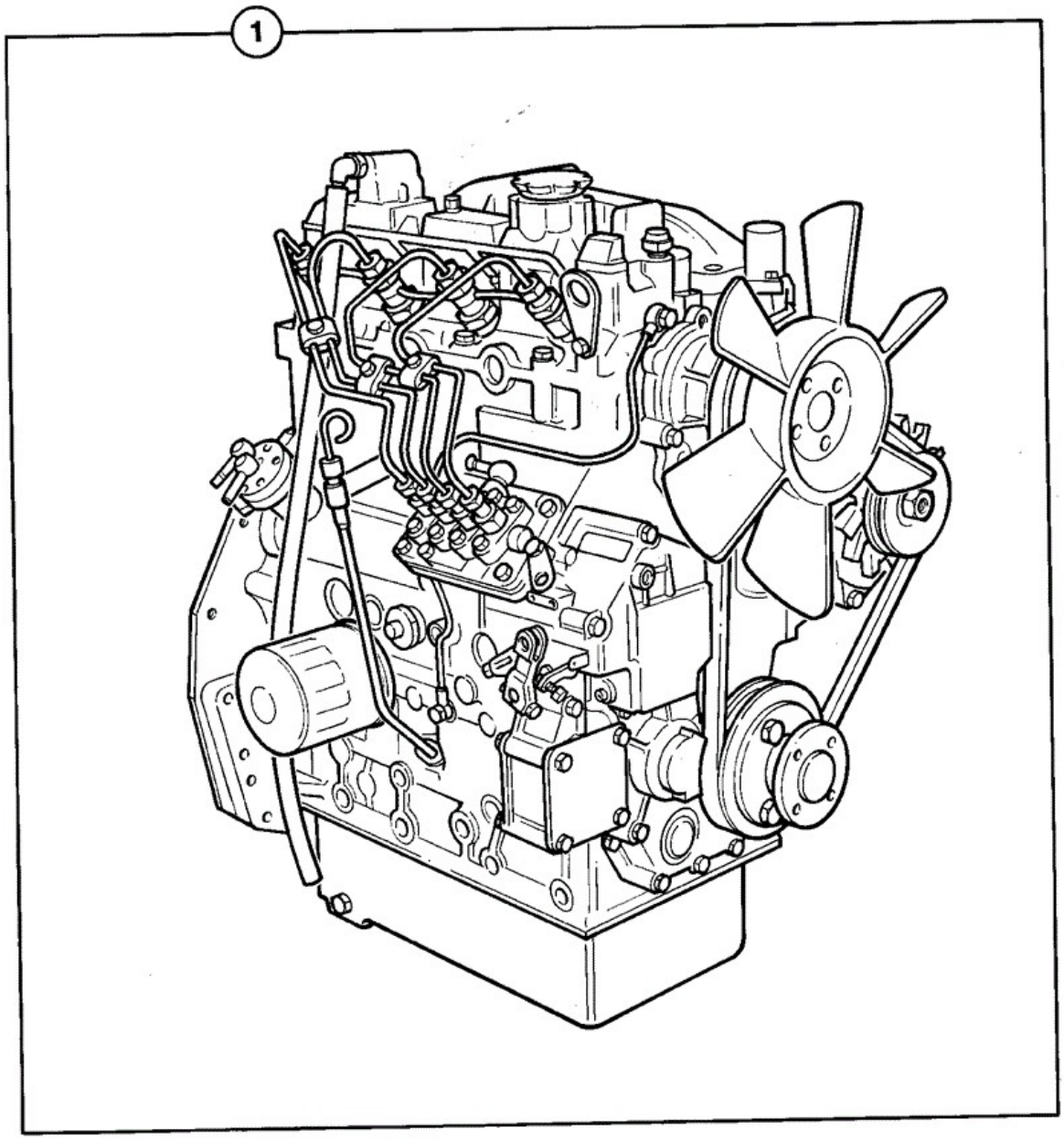

Item	Part No	Change No	Description	Usage Code	QTY
1	332/R7146		Engine assembly, 404D-22 37.3kw nat asp		1

Applicability Date Ranges:
From: , To:

9802/6220 N1-3-1 BLOCK ASSEMBLY

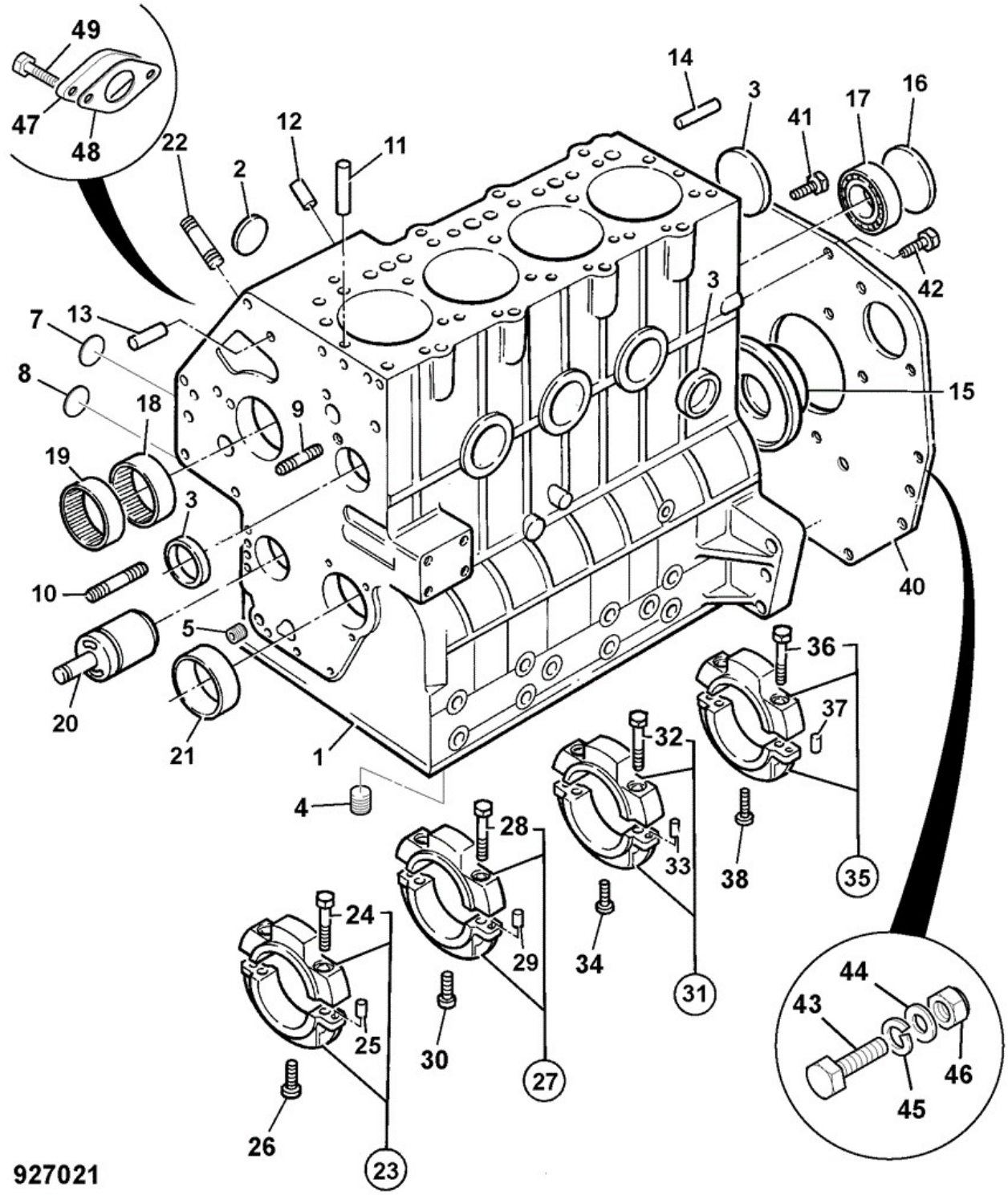

Item	Part No	Change No	Description	Usage Code	QTY
1	****		None serviced part		1
2	02/634206		Plug core D=25mm		2

3	02/634207		Plug core D=40mm		5
4	02/634202		Plug D=6.5mm		3
5	02/630702		Plug 10.4mm		2
7	02/630456		Plug D=40mm		4
8	02/630007		Plug 8.4mm		3
9	826/10720		Stud		1
10	02/630022		Stud		1
11	02/630019		Pin		2
12	02/630024		Dowel		2
13	02/630017		Dowel		2
14	02/630018		Dowel		2
15	02/634013		Seal rear oil		1
16	02/630014		Plug core D=45mm		1
17	02/630013		Bearing		1
18	02/634002		Bearing needle		1
19	02/634001		Bearing needle		1
20	02/634768		Shaft .		1
20	332/G1855		Shaft kit oil pump idler Contains idler gear plus oil pump assembly kit including the shaft.		1
21	02/634203		Bush		1
21	02/634709		Bush -0.25mm undersize		1
21	02/634710		Bush -0.5mm undersize		1
22	826/10719		Stud		3
23	02/634004		Cap bearing assembly		1
26	826/10744		Screw		1
25	:02/630024		Dowel		2
24	:02/634005		Screw		2
27	02/634007		Cap bearing assembly		1
30	826/10744		Screw		1
29	:02/630024		Dowel		2
28	:02/634005		Screw		2
31	02/634008		Cap bearing assembly		1
34	826/10744		Screw		1
33	:02/630024		Dowel		2
32	:02/634005		Screw		2
35	02/634009		Cap bearing assembly		1
38	826/10745		Screw		2
37	:02/630024		Dowel		2
36	:02/634005		Screw		2

40	02/634010		Plate		1
41	826/10731		Screw		2
42	02/634112		Screw		10
43	02/634674		Bolt		2
44	02/634059		Nut		2
45	02/630108		Washer		2
46	02/630134		Washer spring		2
47	02/634650		Plate Blanking		1
48	02/634094		Gasket		1
49	02/630102		Screw		2

Applicability Date Ranges:
From: , To:

Product Catalog\BACKHOE LOADER 1CX, 208\1CX 00751600-00752999,00806000-00807552 9802/6220\N ENGINES 404D-22, TIER 3 \N01 ENGINE BLOCK & SUB-ASSEMBLIES\N1-5-1 FAN, PULLEY & BELT

9802/6220 N1-5-1 FAN, PULLEY & BELT

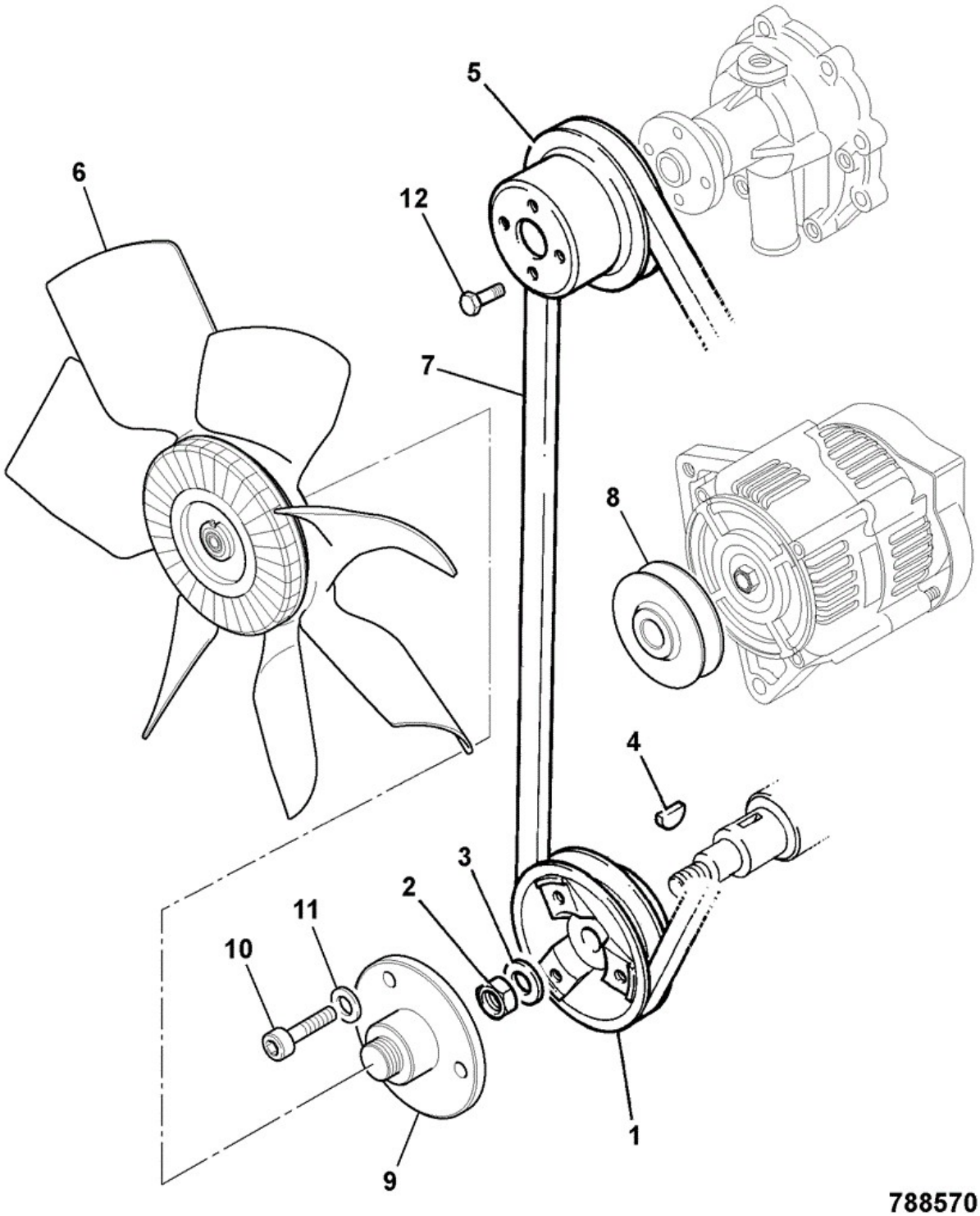

Item	Part No	Change No	Description	Usage Code	QTY
1	02/634731		Pulley Crankshaft		1
2	02/630778		Nut		1

3	****		'See Remark' Not fitted or required		1
4	02/630068		Key		1
5	02/630835		Pulley water pump		1
6	30/925942		Fan 14" Pusher		1
7	02/634154		Belt fan L=1010mm		1
8	02/202438		Pulley alternator D=73mm single groove		1
9	02/634075		Plate		1
10	02/634076		Screw		4
11	****		'See Remark' Not fitted or required		1

Applicability Date Ranges:
From: , To:

9802/6220 N1-6-1 TIMING CASE CAMSHAFT & GEARS

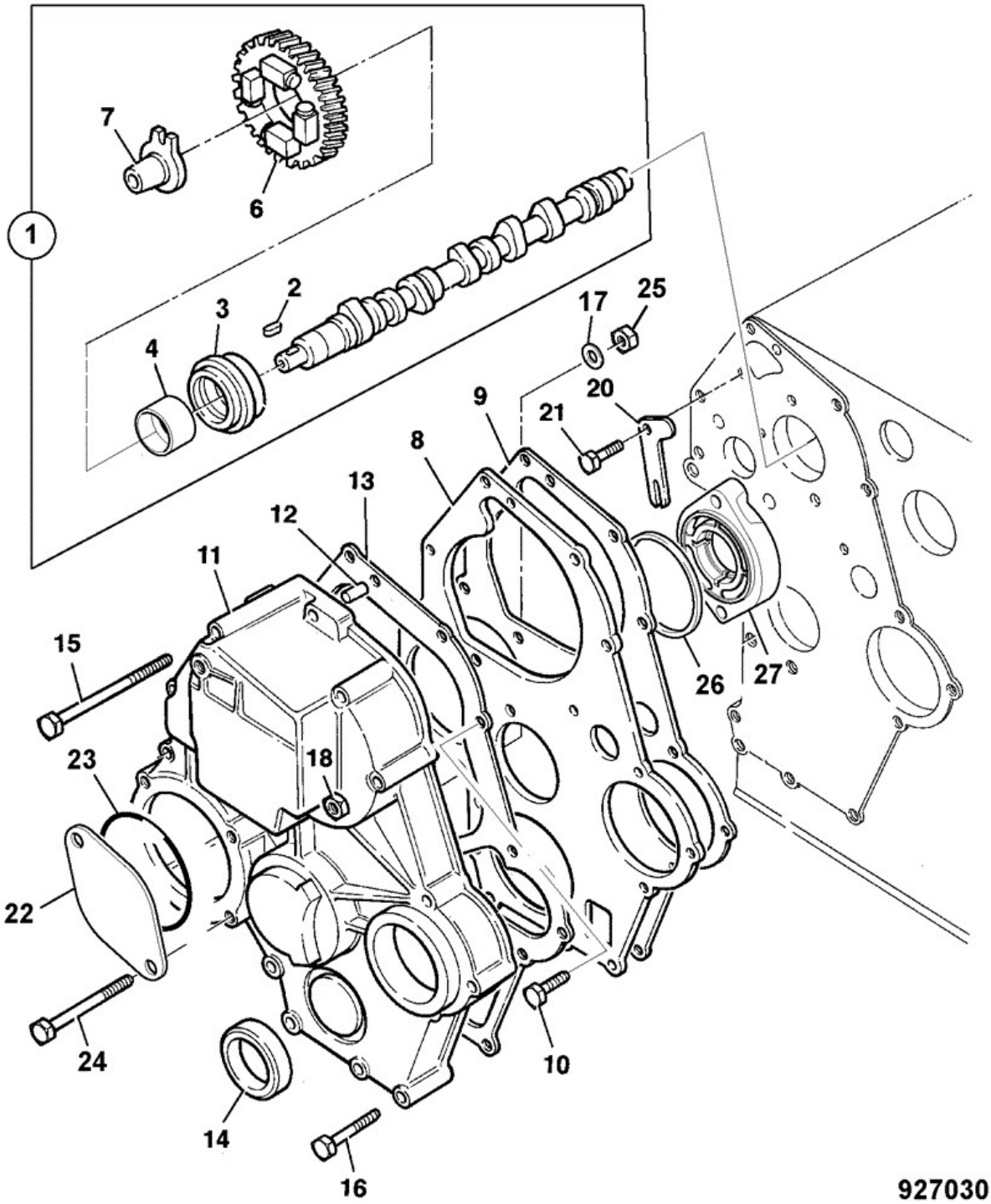

Item	Part No	Change No	Description	Usage Code	QTY
1	02/634733		Camshaft Assembly		1
2	:02/630068		Key		1

3	:02/634032		Bearing		1
4	:02/634210		Spacer		1
6	:02/634732		Gear Camshaft		1
7	:02/634740		Tappet .		1
8	02/634765		Plate .		1
9	02/634162		Gasket t/case to block		1
10	02/630102		Screw		1
11	02/634764		Cover .		1
12	02/630089		Pin		1
13	02/634769		Gasket Timing Case		1
14	02/630763		Seal front oil		1
15	826/10729		Screw		4
16	826/10777		Screw		7
17	02/630134		Washer spring		2
18	02/630096		Nut		1
20	02/634087		Plate		1
21	02/630102		Screw		1
22	02/634766		Cover .		2
23	02/634722		Seal O-Ring		2
24	02/634713		Bolt .		2
25	02/634719		Nut .		2
26	02/634722		Seal O-Ring		1
27	02/634725		Housing Bearing		1
40	02/634779		Cap Oil Filler Timing Case Not Shown		1
41	02/634721		Seal O-Ring		1

Applicability Date Ranges:
From: , To:

Product Catalog\BACKHOE LOADER 1CX, 208\1CX 00751600-00752999,00806000-00807552 9802/6220\N ENGINES 404D-22, TIER 3 \N01 ENGINE BLOCK & SUB-ASSEMBLIES\N1-4-1 CRANKSHAFT, BEARINGS PISTONS & CON-RODS

9802/6220 N1-4-1 CRANKSHAFT, BEARINGS PISTONS & CON-RODS

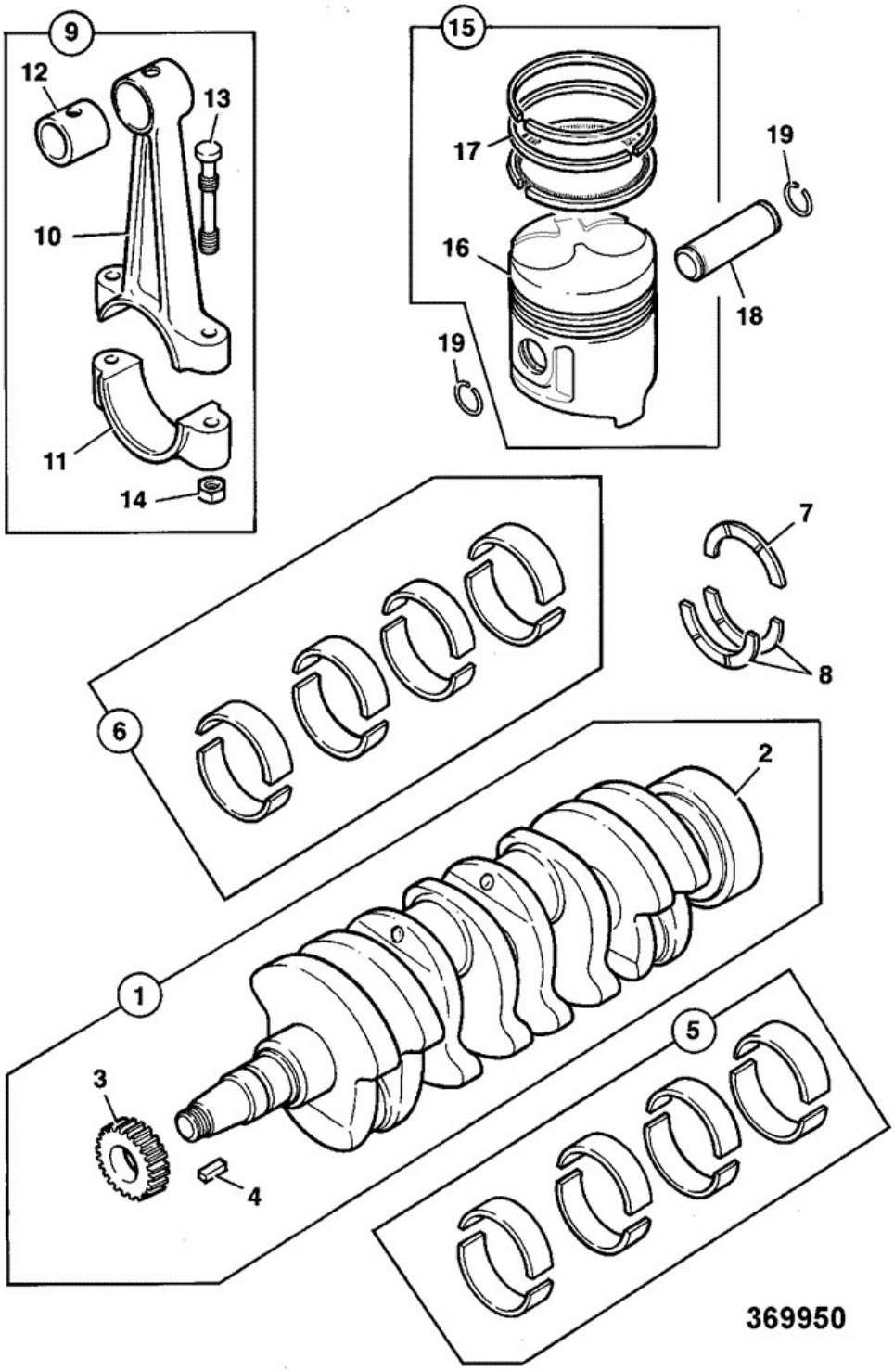

Item	Part No	Change No	Description	Usage Code	QTY
1	02/634729		Crankshaft Assembly		1
2	****		None serviced part		1

3	:02/634730		Gear .		1
4	:02/630042		Key		1
5	02/634781		Kit Main Bearing Std.		1
5	02/634782		Kit Main Bearing -0.25mm		1
6	02/634783		Kit Big End Bearing		1
7	02/634021		Washer thrust		1
8	02/630723		Washer thrust		2
9	02/634022		Conrod assembly		4
10	****		None serviced part		1
11	****		None serviced part		1
12	:02/630725		Bush small end		1
13	:02/630726		Screw		2
14	:02/630727		Nut		2
15	02/634135		Piston assembly		4
16	****		None serviced part		1
17	:02/634136		Kit-piston ring		1
18	02/630731		Pin gudgeon		1
19	02/630732		Circlip		2

Applicability Date Ranges:
From: , To:

9802/6220 N1-6-1 TIMING CASE CAMSHAFT & GEARS

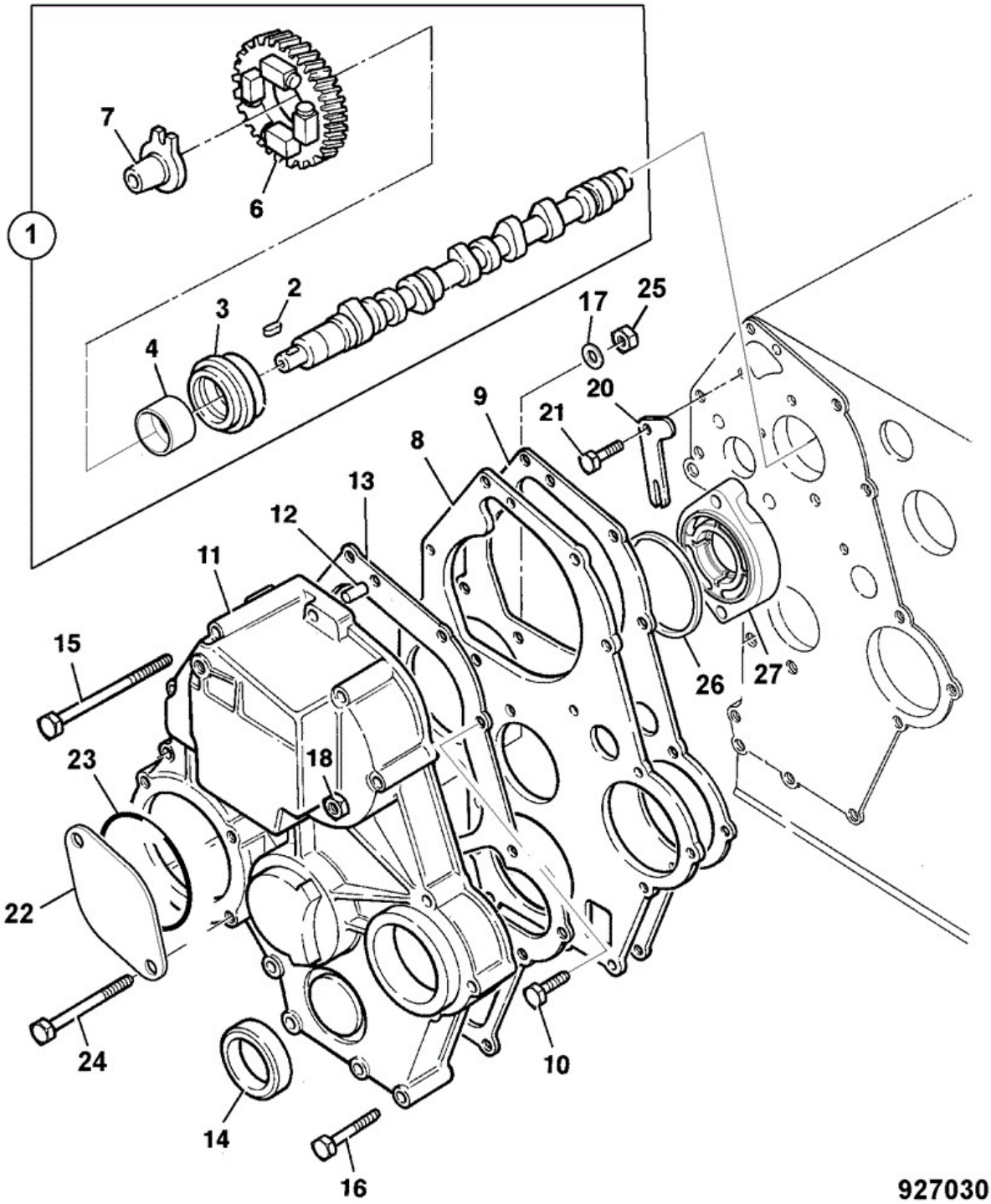

Item	Part No	Change No	Description	Usage Code	QTY
1	02/634733		Camshaft Assembly		1
2	:02/630068		Key		1

3	:02/634032		Bearing		1
4	:02/634210		Spacer		1
6	:02/634732		Gear Camshaft		1
7	:02/634740		Tappet .		1
8	02/634765		Plate .		1
9	02/634162		Gasket t/case to block		1
10	02/630102		Screw		1
11	02/634764		Cover .		1
12	02/630089		Pin		1
13	02/634769		Gasket Timing Case		1
14	02/630763		Seal front oil		1
15	826/10729		Screw		4
16	826/10777		Screw		7
17	02/630134		Washer spring		2
18	02/630096		Nut		1
20	02/634087		Plate		1
21	02/630102		Screw		1
22	02/634766		Cover .		2
23	02/634722		Seal O-Ring		2
24	02/634713		Bolt .		2
25	02/634719		Nut .		2
26	02/634722		Seal O-Ring		1
27	02/634725		Housing Bearing		1
40	02/634779		Cap Oil Filler Timing Case Not Shown		1
41	02/634721		Seal O-Ring		1

Applicability Date Ranges:
From: , To:

9802/6220 N1-6-2 TIMING LEVERS ARMS & SPRINGS

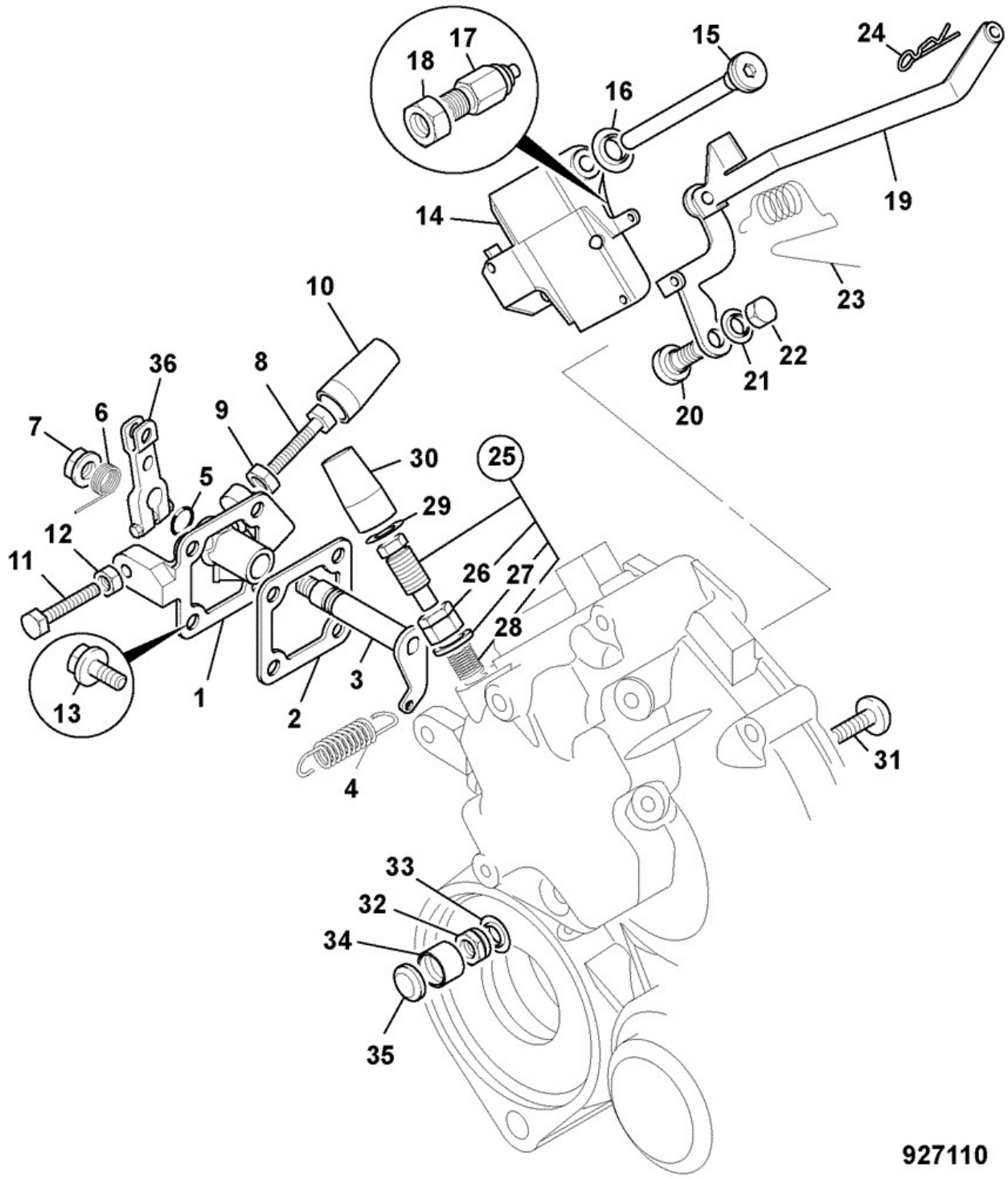

Item	Part No	Change No	Description	Usage Code	QTY
1	02/634743		Bracket .		1
2	02/634770		Gasket .		1

3	02/634739		Lever Arm		1
4	02/634773		Spring .		1
5	02/630114		O Ring		1
6	02/634771		Spring .		1
7	02/630078		Nut		1
8	826/10742		Screw		1
9	826/10743		Nut		1
10	02/634166		Cap anti-tamper		1
11	826/10742		Screw		1
12	1370/0101Z		Nut (M6)		1
13	02/630071		Screw		4
14	02/634736		Bracket Lever Arm		1
15	02/634738		Shaft .		1
16	02/630808		Washer		1
17	02/634746		Sensor Speed		1
18	02/634717		Nut .		1
19	02/634741		Lever Arm		1
20	02/634737		Pivot Pin Bolt		1
21	02/630266		Washer		1
22	02/634720		Nut .		1
23	02/634774		Spring .		1
24	02/630111		Pin		1
25	02/634747		Screw Assembly		1
26	:826/10738		Nut		1
27	:02/630308		Washer		1
28	:02/634775		Spring .		1
29	02/634776		Ring .		1
30	02/634159		Cap anti-tamper		1
31	02/634749		Bolt .		1
32	02/634716		Nut .		1
33	02/630266		Washer		1
34	02/634760		Cap Anti Tamper		1
35	02/634723		Cap .		1
36	02/634742		Lever .		1

Applicability Date Ranges:
From: , To:

9802/6220 N1-7-1 FLYWHEEL HOUSING

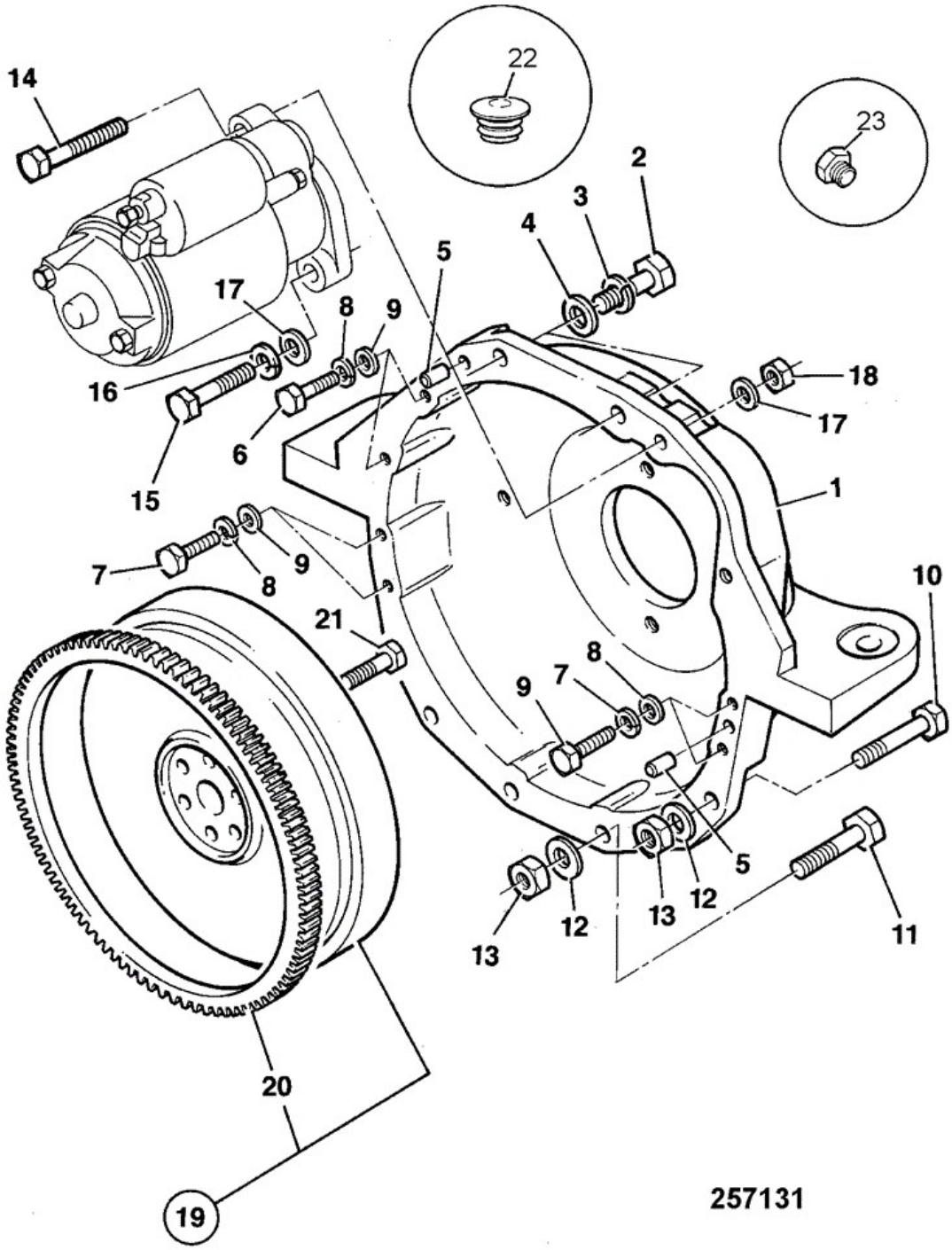

Item	Part No	Change No	Description	Usage Code	QTY
1	242/00082		Housing flywheel		1
2	1315/0509Z		Setscrew M12 x 35mm		2

3	1425/0009Z		Washer Spring M12		2
4	1420/0009Z		Washer (M12)		2
5	02/630018		Dowel		1
6	1315/0407Z		Setscrew M10 x 25 mm		2
7	1315/3412Z		Bolt M10x50		4
8	1425/0008Z		Spring Washer		6
9	1420/0008Z		Washer (M10)		6
10	1315/3415Z		Bolt (M10 x 65)		2
11	1315/0408Z		Setscrew M10 x 30		4
12	1420/0008Z		Washer (M10)		6
13	1370/0303Z		Nut lock M10		6
14	826/10732		Screw		1
15	826/10732		Screw		1
16	02/630108		Washer		1
17	02/630134		Washer spring		2
18	02/634059		Nut		2
19	02/634048		Flywheel assembly		1
20	:02/634049		Gear flywheel ring		1
21	02/630775		Bolt		6
22	835/00174		Plug Plastic,Black		2
23	835/00158		Plug		5

Applicability Date Ranges:
From: , To:

Product Catalog\BACKHOE LOADER 1CX, 208\1CX 00751600-00752999,00806000-00807552 9802/6220\N ENGINES 404D-22, TIER 3 \N01 ENGINE BLOCK & SUB-ASSEMBLIES\N1-8-1 ENGINE MOUNTINGS

9802/6220 N1-8-1 ENGINE MOUNTINGS

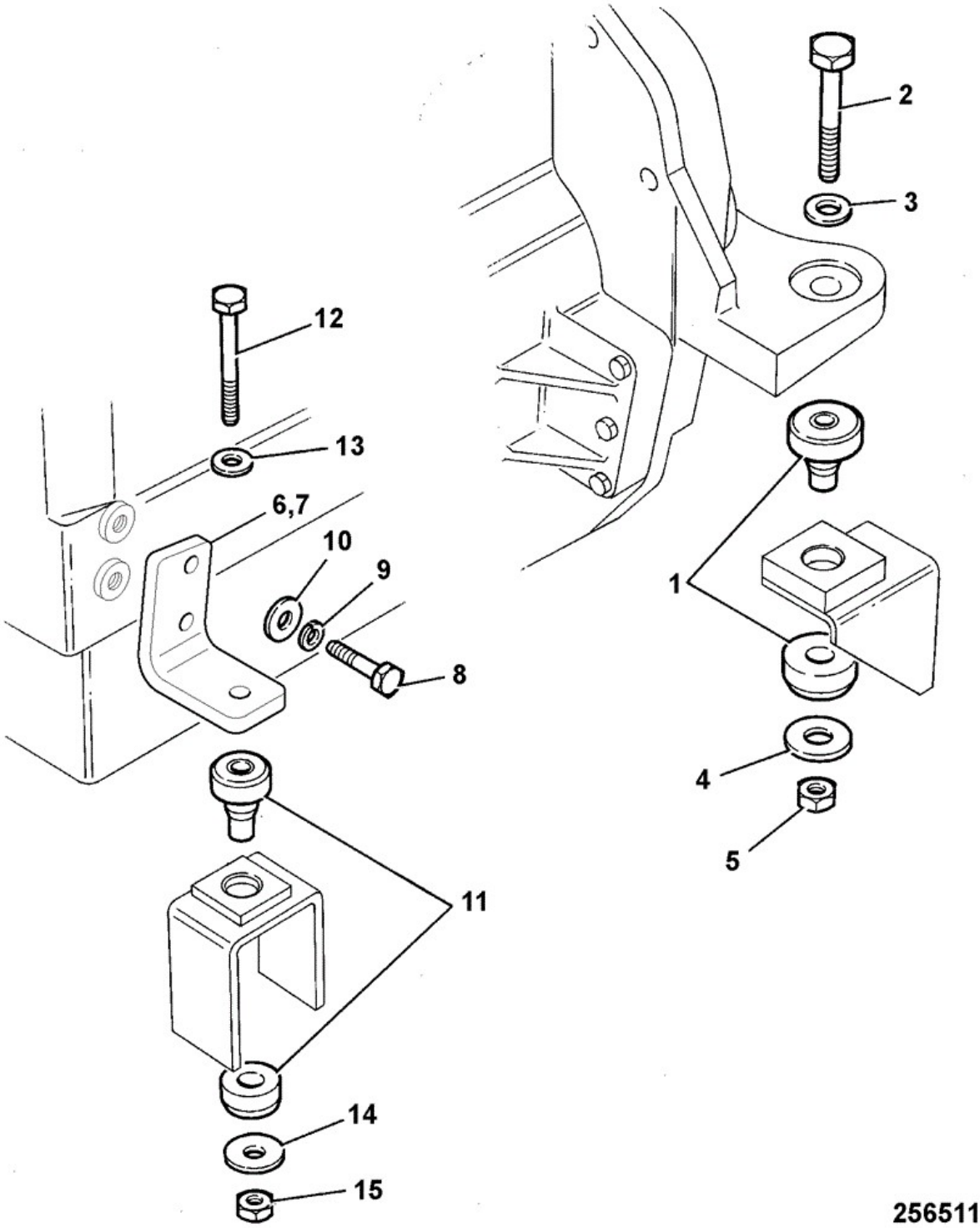

Item	Part No	Change No	Description	Usage Code	QTY
1	331/20297		Mounting engine		1
2	1315/3721D		Bolt M16 x 110		2

3	1420/0011D		Washer (M16)		2
4	120/16902		Plate Rebound		2
5	1370/0603D		Nut -Lock Nut, M16		2
6	332/S0923		Bracket engine mounting lefy hand		1
7	332/S0706		Bracket engine mounting right hand		1
8	826/01288		Bolt M14 x 30		4
9	1425/0010D		Washer spring M14		4
10	1420/0010D		Washer M14		4
11	246/01107		Mounting metalastik		2
12	1315/3519D		Bolt M12 x 90 mm		2
13	1420/0009D		Washer (M12)		2
14	123/02453		Washer Rebound (13.5mm x 65mm x 5mm)		2
15	1370/0403D		Nut Lock M12		2

Applicability Date Ranges:
From: , To:

9802/6220 N2-1-1 CYLINDER HEAD

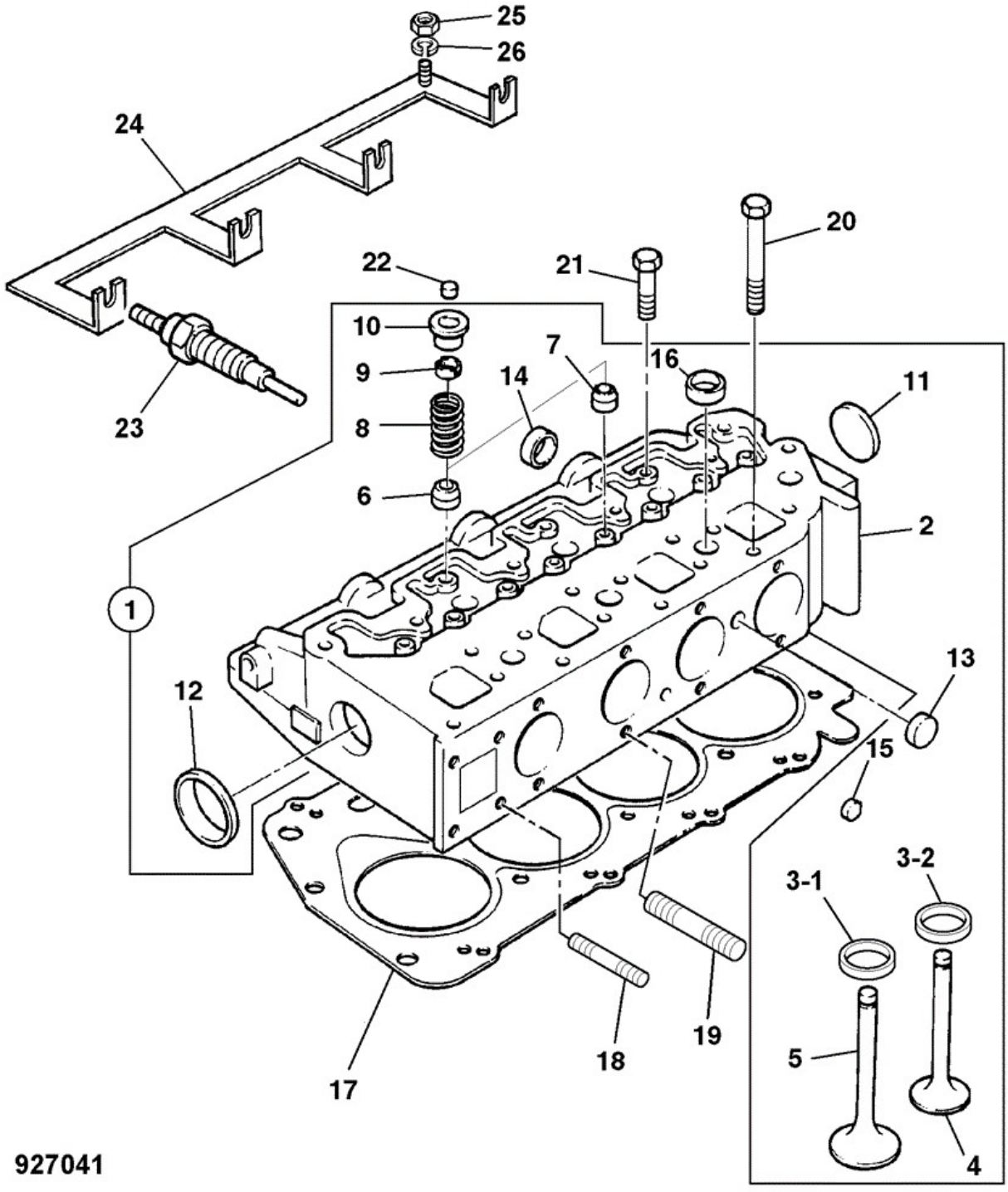

Item	Part No	Change No	Description	Usage Code	QTY
1	02/634726		Cylinder Head Assembly		1
2	****		None serviced part		1

3	:02/634693		Seat valve insert		4
3	:02/631335		Seat valve insert		4
4	:02/634735		Valve Exhaust		4
5	:02/634734		Valve Intake		4
6	:02/630147		Seal exhaust valve		4
7	:02/630142		Seal inlet valve		4
8	:02/630143		Spring valve		8
9	:02/630145		Collet		16
10	:02/630144		Cap		8
11	:02/630149		Plug D=30mm		3
12	:02/630149		Plug D=30mm		3
13	:02/634206		Plug core D=25mm		3
14	:02/634206		Plug core D=25mm		3
15	:02/631320		Plug D=10mm		3
16	:02/630933		Plug D=18mm		7
17	02/634727		Gasket Cylinder Head 1.2mm		0
17	02/634728		Gasket Cylinder Head 1.3mm		1
18	02/634715		Stud .		2
19	02/634083		Stud		2
20	02/630741		Screw		14
21	02/630856		Screw		4
22	02/634804		Cap Valve Spring		8
23	717/11700		Thermostart		4
24	02/634085		Rail heater connector		1
25	02/630758		Nut		1
26	02/630759		Washer		1

Applicability Date Ranges:
From: , To:

9802/6220 N2-2-1 ROCKER ASSEMBLY PUSH RODS & TAPPETS

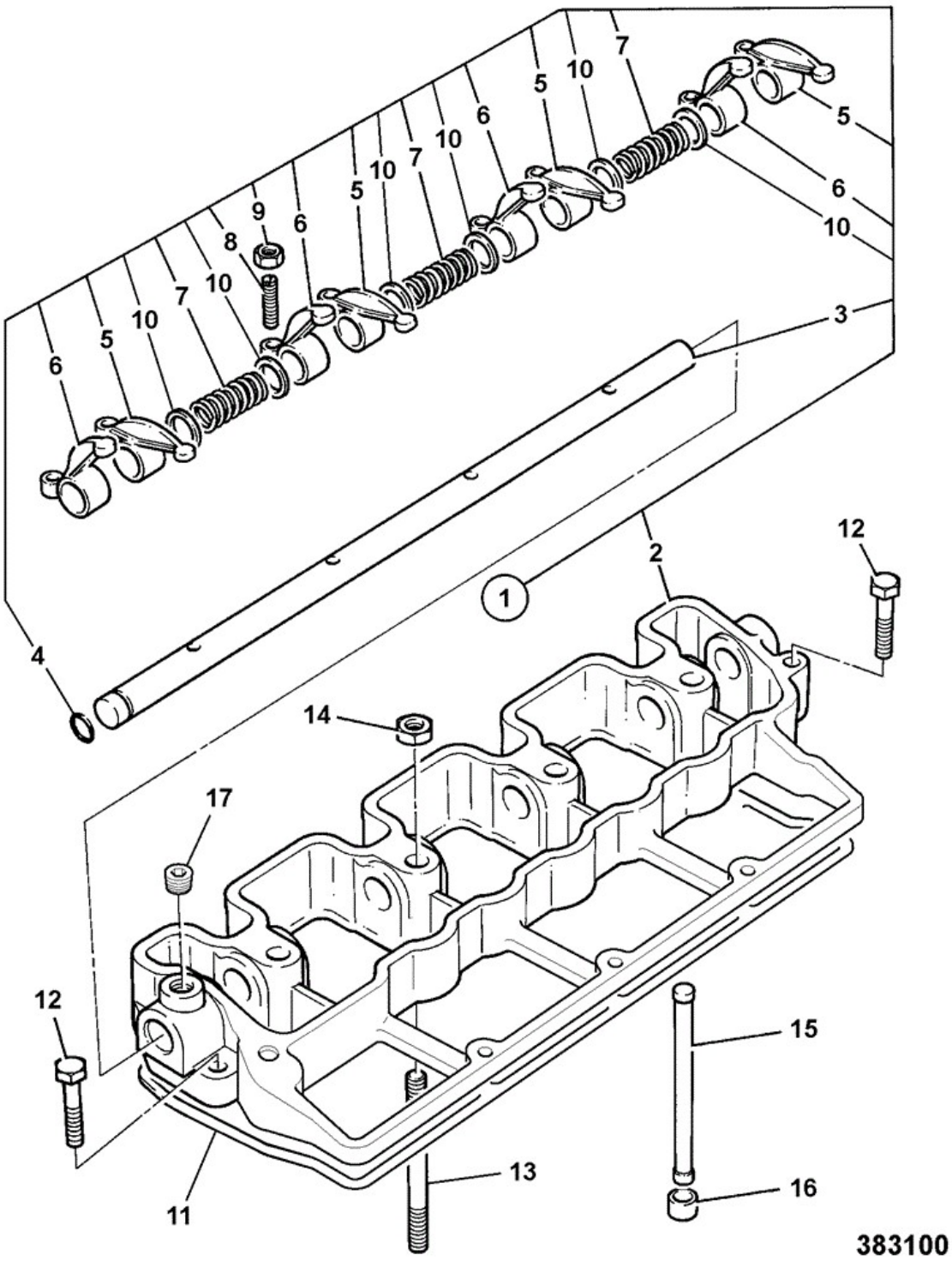

Item	Part No	Change No	Description	Usage Code	QTY
1	02/634663		Shaft rocker assembly		1
2	****		None serviced part		1

3	:02/634039		Shaft rocker		1
4	:02/630202		O Ring		1
5	:02/634037		Lever rocker right hand		4
6	:02/634036		Lever rocker left hand		4
7	:02/634035		Spring		3
8	:02/630167		Screw adjusting		8
9	:02/630168		Nut		8
10	:02/634024		Washer		6
11	02/634129		Gasket rocker bracket		1
12	826/10723		Screw		2
13	02/634023		Stud		4
14	02/634116		Nut		4
15	02/634034		Rod push		8
16	02/630171		Tappet		8

Applicability Date Ranges:
From: , To:

9802/6220 N2-3-1 ROCKER COVER

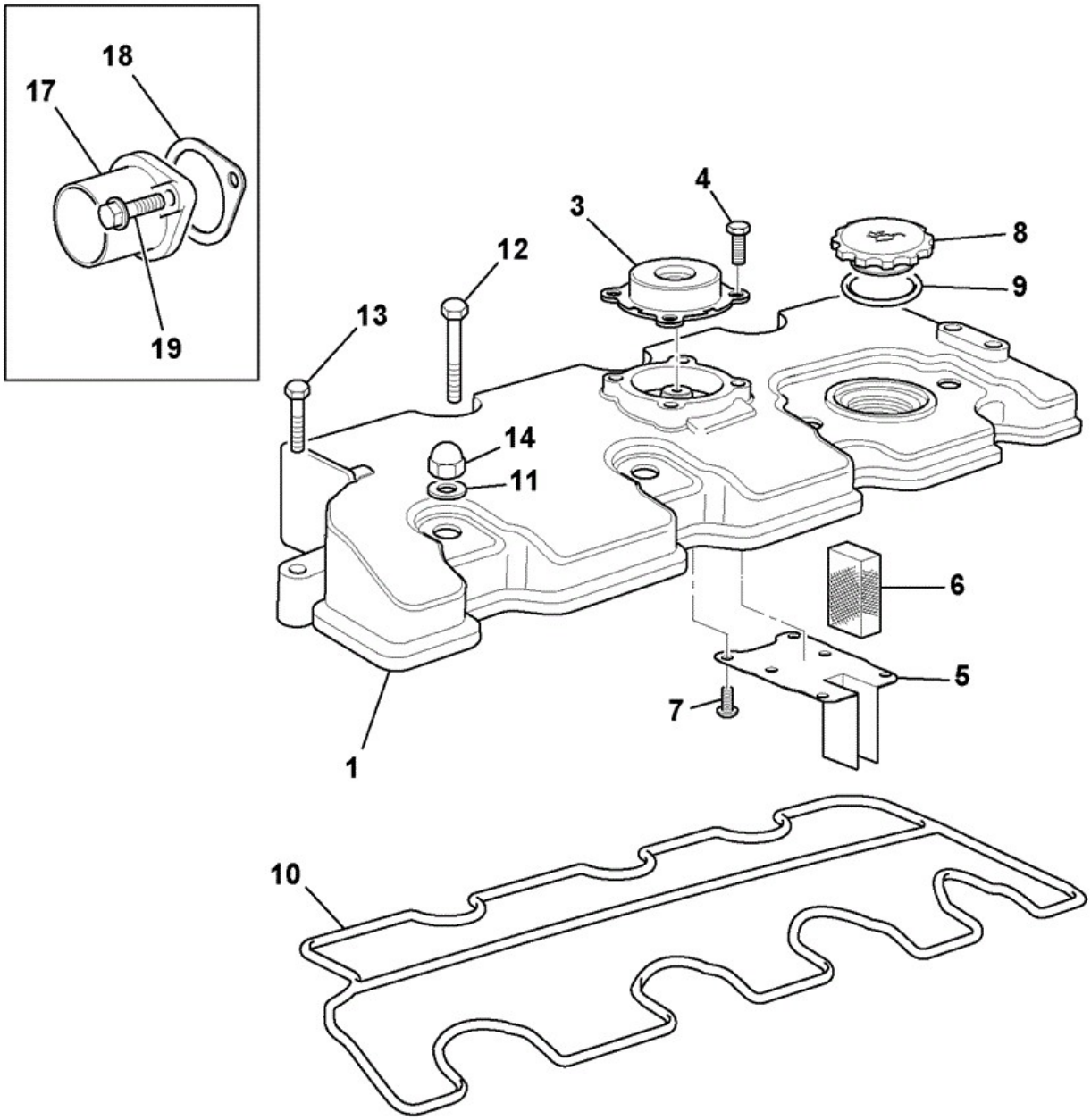

929700

Item	Part No	Change No	Description	Usage Code	QTY
1	02/634785		Cover Rocker		1
3	02/634138		Valve oil breather		1

4	826/10727		Bolt		4
5	02/634147		Plate		1
6	02/630173		Breather gauze		1
7	826/10728		Screw		6
8	02/630455		Cap engine oil filler		1
9	02/630178		Seal		1
10	02/634150		Gasket rocker cover		1
11	02/634068		Washer fibre sealing		1
12	826/10729		Screw		3
13	826/10777		Screw		2
14	02/634069		Nut Dome		4
17	02/631323		Pipe air induction		1
18	02/634149		Gasket		1
19	02/634076		Screw		1

Applicability Date Ranges:
From: , To:

9802/6220 N2-4-1 LIFTING PLATES

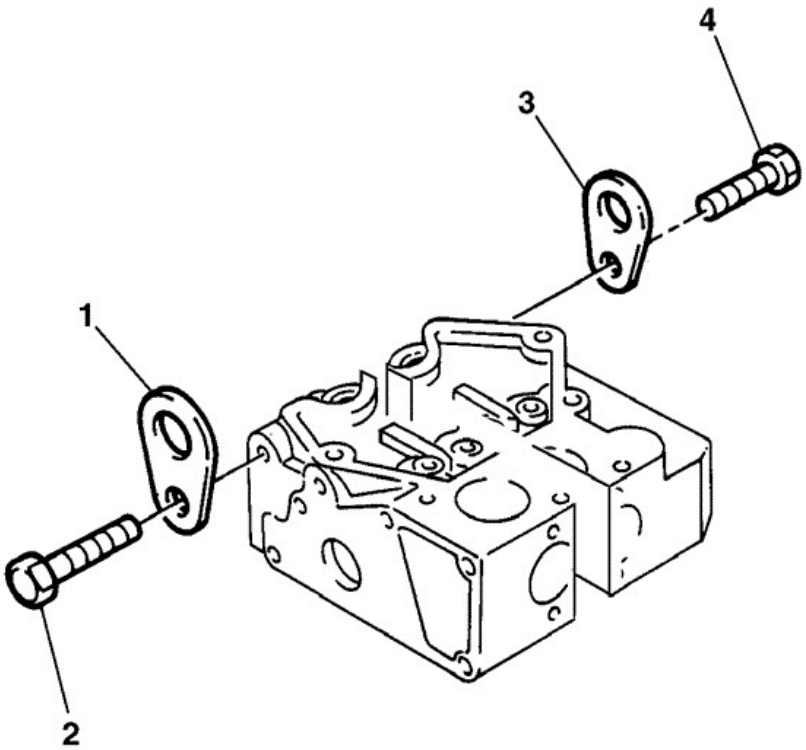

370000

Item	Part No	Change No	Description	Usage Code	QTY
1	02/634786		Plate Lifting Point Front		1
2	02/634112		Screw		1

3	02/634787		Plate Lifting Point Rear		1
4	02/634112		Screw		1

Applicability Date Ranges:
From: , To:

9802/6220 N3-1-1 MANIFOLD, INDUCTION

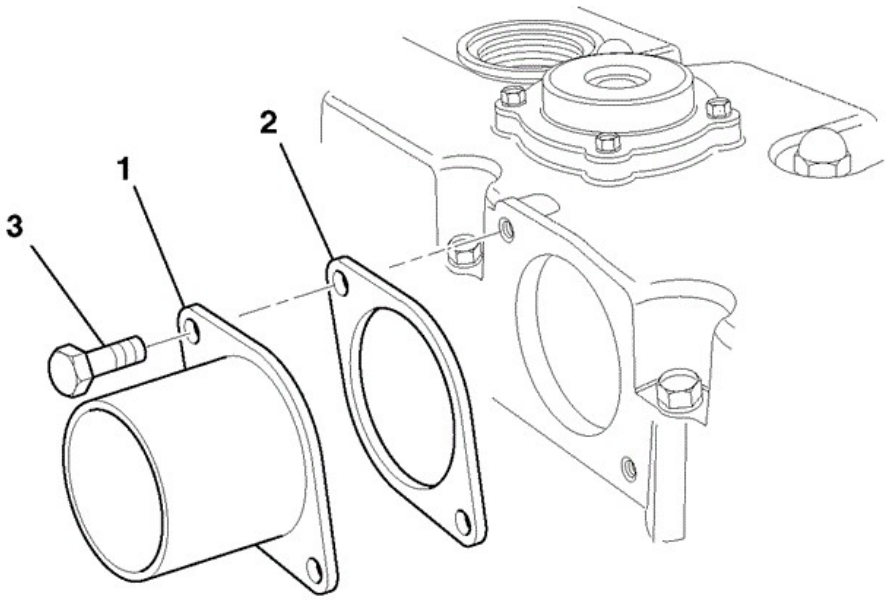

383201

Item	Part No	Change No	Description	Usage Code	QTY
1	02/634148		Pipe air induction		1
2	02/634149		Gasket		1
3	02/634076		Screw		2

Applicability Date Ranges:
From: , To:

9802/6220 N3-2-1 MANIFOLD, EXHAUST

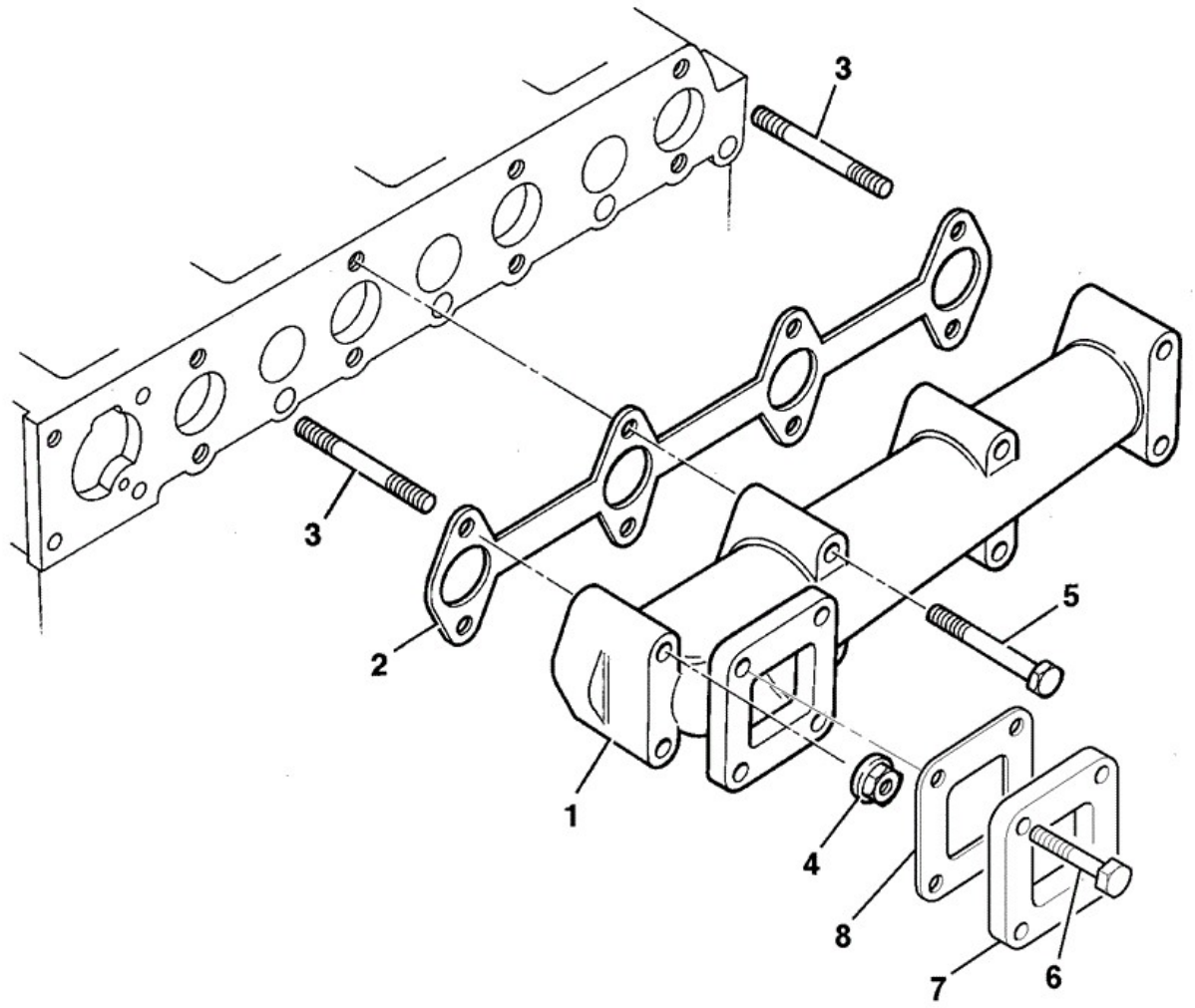

927050

Item	Part No	Change No	Description	Usage Code	QTY
1	02/634081		Manifold exhaust		1
2	02/634082		Gasket exhaust manifold		1

3	02/634083		Stud		2
4	02/630078		Nut		4
5	02/634084		Screw		6
6	826/10766		Screw		4
7	02/630357		Flange exhaust		1
8	02/630338		Gasket		1

Applicability Date Ranges:
From: , To:

9802/6220 N3-3-1 AIR FILTER Wing Nut Fixing, Steel Body

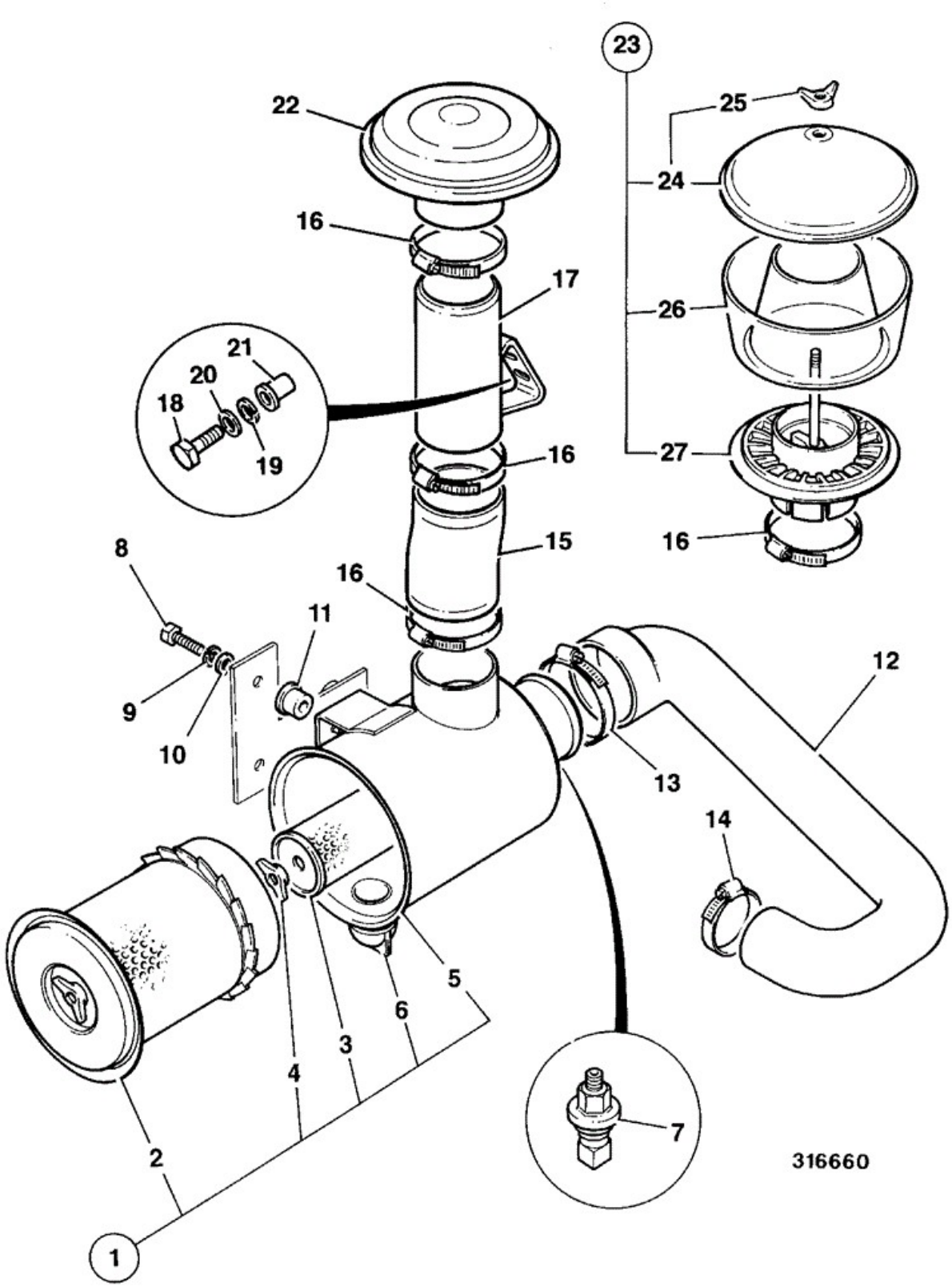

Item	Part No	Change No	Description	Usage Code	QTY

1	32/916400		Filter air		1
2	:32/905001		Element air primary		1
3	:32/905002		Element air safety		1
4	:32/905303		Nut wing		1
5	:32/911101		Seal moisture		1
6	:32/905304		Valve safety		1
7	701/36500		Switch Vacuum Sensor		1
8	1315/0308Z		Setscrew M8 x 30		2
9	1425/0007Z		Washer Washer		2
10	823/00326		Washer M10 X 30mm		2
11	141/00936		Mounting Resilient		2
12	834/00625		Hose air induction		1
13	2201/0014		Clip Worm Drive		1
14	2201/0012		Clip Jubilee, 46/70mm		1
15	290/01304		Hose air induction		1
16	2201/0013		Clip Jubilee		2
17	290/71100		Tube air induction		1
18	1315/0308Z		Setscrew M8 x 30		2
19	1425/0007Z		Washer Washer		2
20	1420/0007Z		Washer (M8)		2
21	826/01102		Nut M8		2
22	32/916300		Cap rain		1
23	32/910300		Filter pre-cleaner OPTIONAL EQUIPMENT		1
24	:32/910301		Cover & wing nut		1
25	::32/910302		Nut wing		1
26	:32/910303		Bowl		1
27	:32/910304		Tube deflector		1

Applicability Date Ranges:
From: , To: 02.05.2012

9802/6220 N3-3-4 AIR FILTER COMPONENTS Clip Fixing, Plastic Body

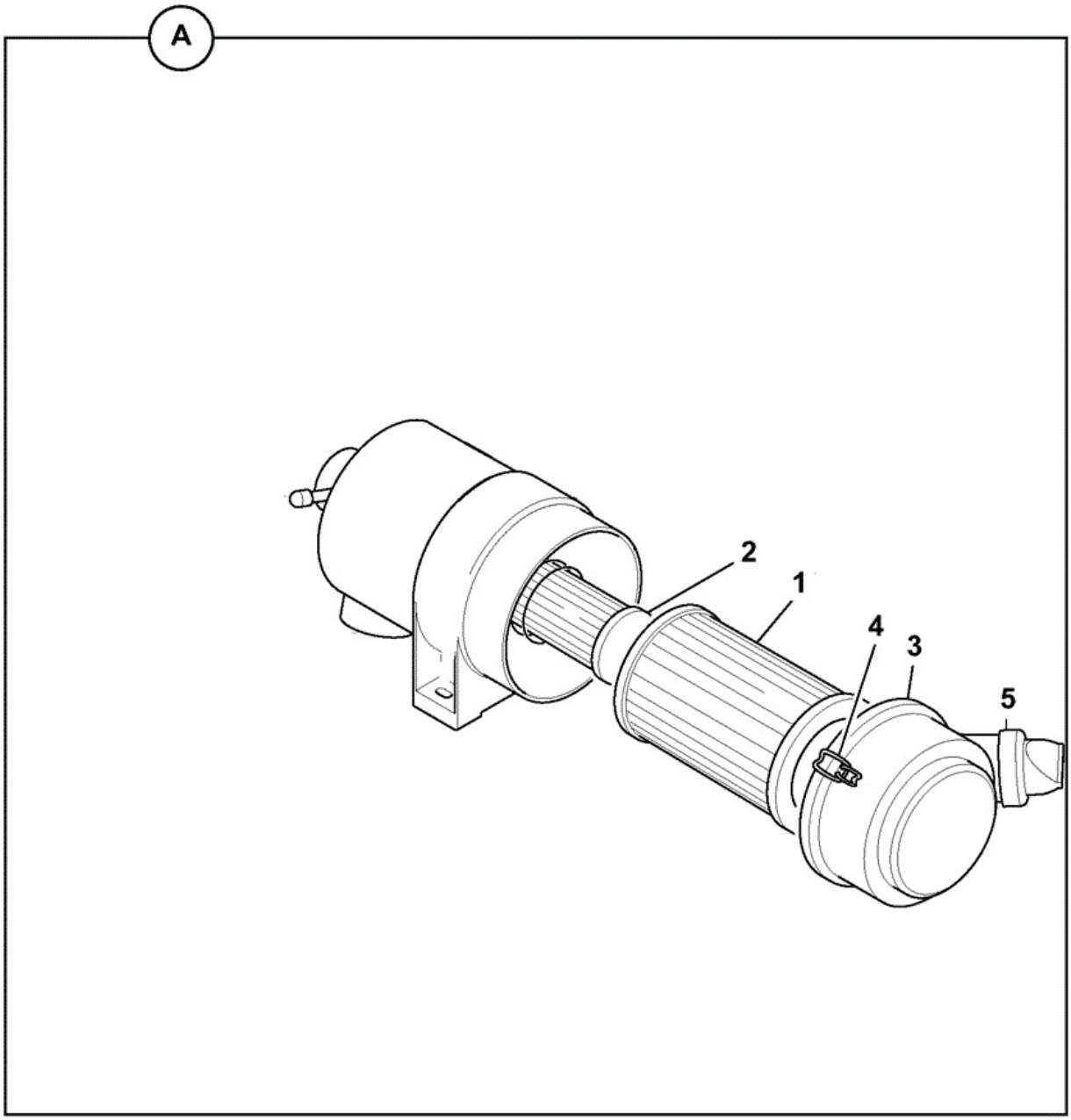

332-R6314-3

Item	Part No	Change No	Description	Usage Code	QTY
A	332/R6314		Filter air assembly		1
1	:32/925348		Element main air filter		1
2	:32/925349		Element safety air filter		1

3	:32/925361		Cover assembly		1
4	:32/926066		Clip		1
5	:32/915704		Valve Dust Valve		1

Applicability Date Ranges:
From: 03.05.2012 , To:

Product Catalog\BACKHOE LOADER 1CX, 208\1CX 00751600-00752999,00806000-00807552 9802/6220\N ENGINES 404D-22, TIER 3 \N03 INDUCTION & EXHAUST SYSTEMS\N3-4-1 EXHAUST SYSTEM

9802/6220 N3-4-1 EXHAUST SYSTEM

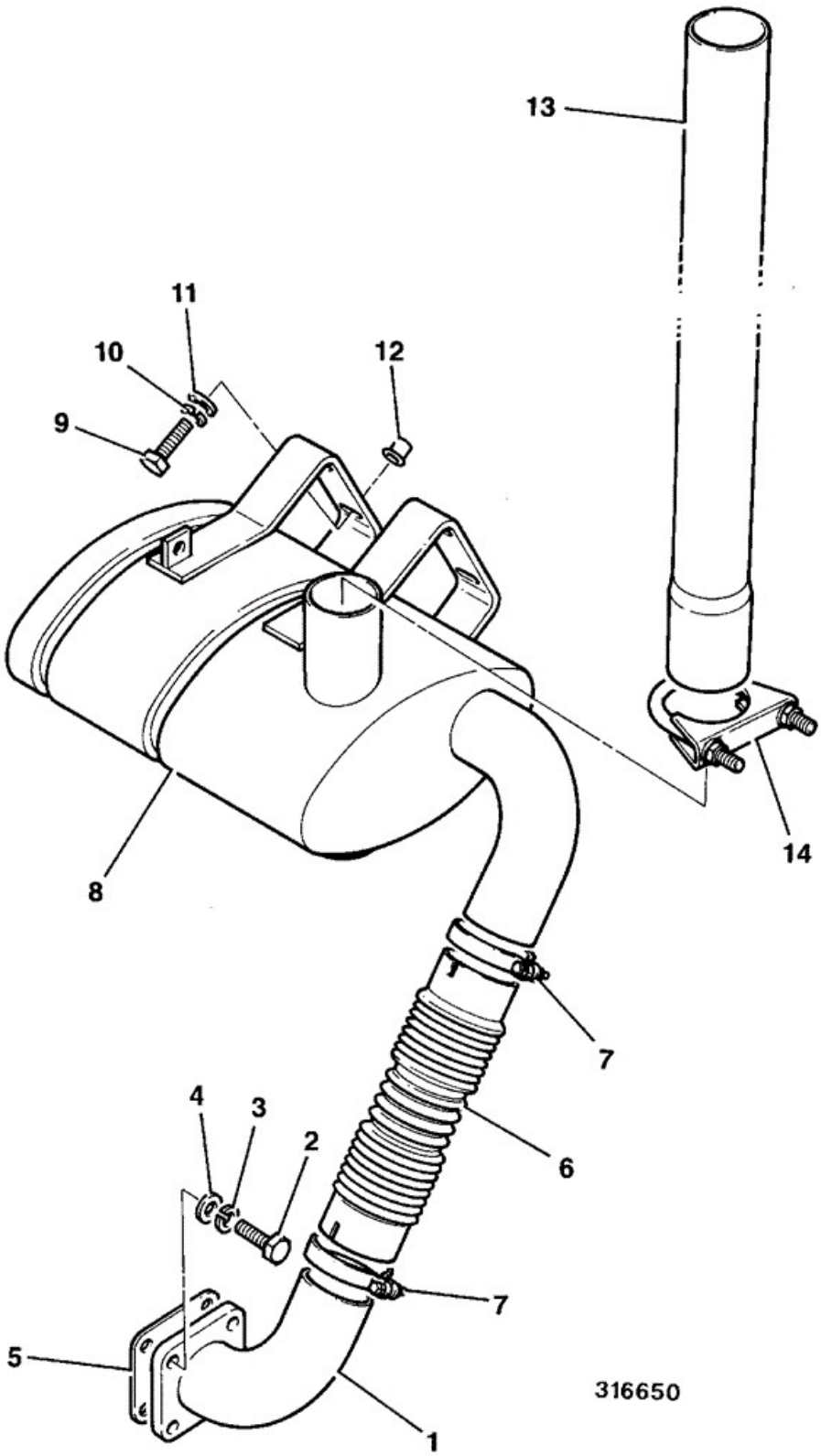

Item	Part No	Change No	Description	Usage Code	QTY

1	290/01303		Pipe exhaust		1
2	1315/0308D		Setscrew M8 x 30 mm		4
3	1425/0007D		Washer Spring M8		4
4	1420/0007D		Washer (M8)		4
5	02/630338		Gasket		1
6	290/01307	<M1743265	Tube exhaust expansion		1
6	332/T4480	>M1743266	Bellows flexible exhaust		1
7	821/00522		Clamp band 44 to 47mm was 821/00476		2
8	331/61325		Silencer exhaust		1
9	1315/0308D		Setscrew M8 x 30 mm		4
10	1425/0007D		Washer Spring M8		4
11	1420/0007D		Washer (M8)		4
12	826/01102		Nut M8		4
13	331/43399		Pipe exhaust extension STANDARD		1
13	331/43400		Pipe exhaust exstension low		1
14	261/00202		Clamp 'U'		1
14A	:1340/0103Z		Nut 5/16" UNF self lock nut		2
15	331/14917		Bracket exhaust mounting		1
16	1315/0303D		Setscrew M8 x 16mm		4

Applicability Date Ranges:
From: , To:

9802/6220 N4-1-1 PUMP, WATER

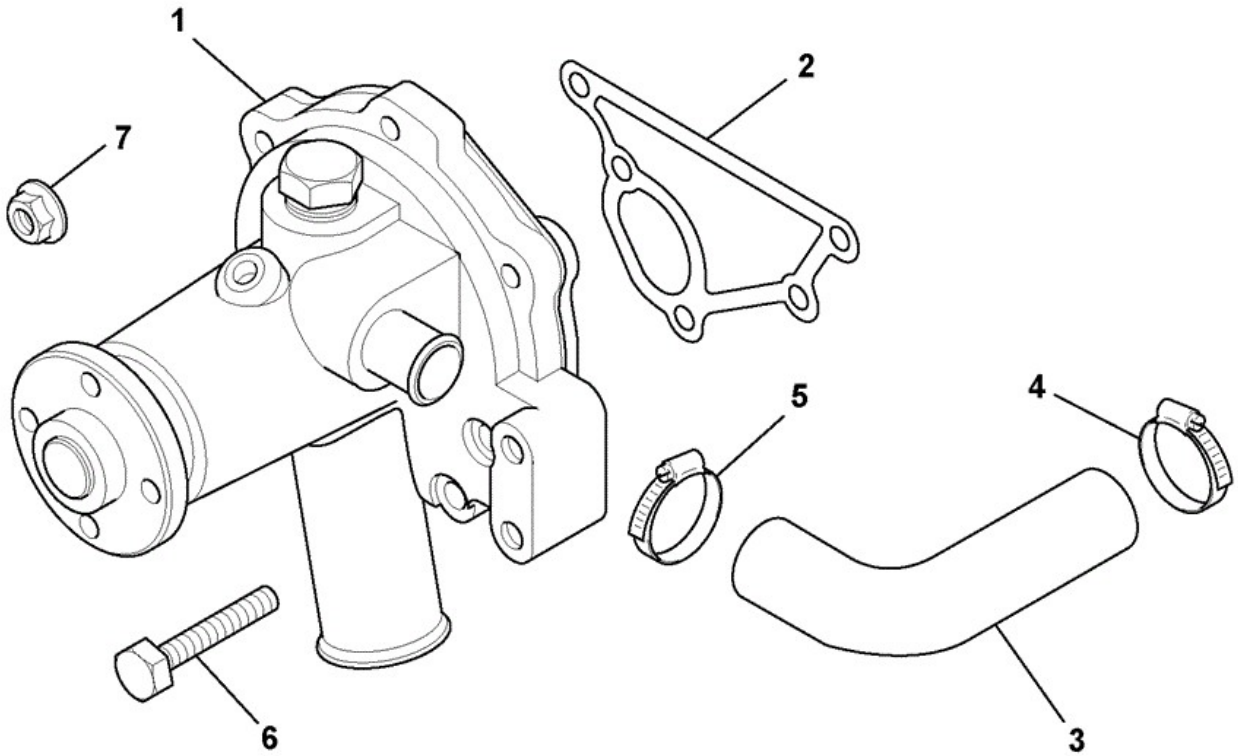

927060

Item	Part No	Change No	Description	Usage Code	QTY
1	02/630880		Pump water assembly		1
2	02/631336		Gasket		1

3	02/630879		Hose by-pass		1
4	02/634724		Clamp Hose		1
5	02/634724		Clamp Hose		1
6	826/10723		Screw		4
7	02/630096		Nut		1

Applicability Date Ranges:
From: , To:

9802/6220 N4-2-1 THERMOSTAT HOUSING

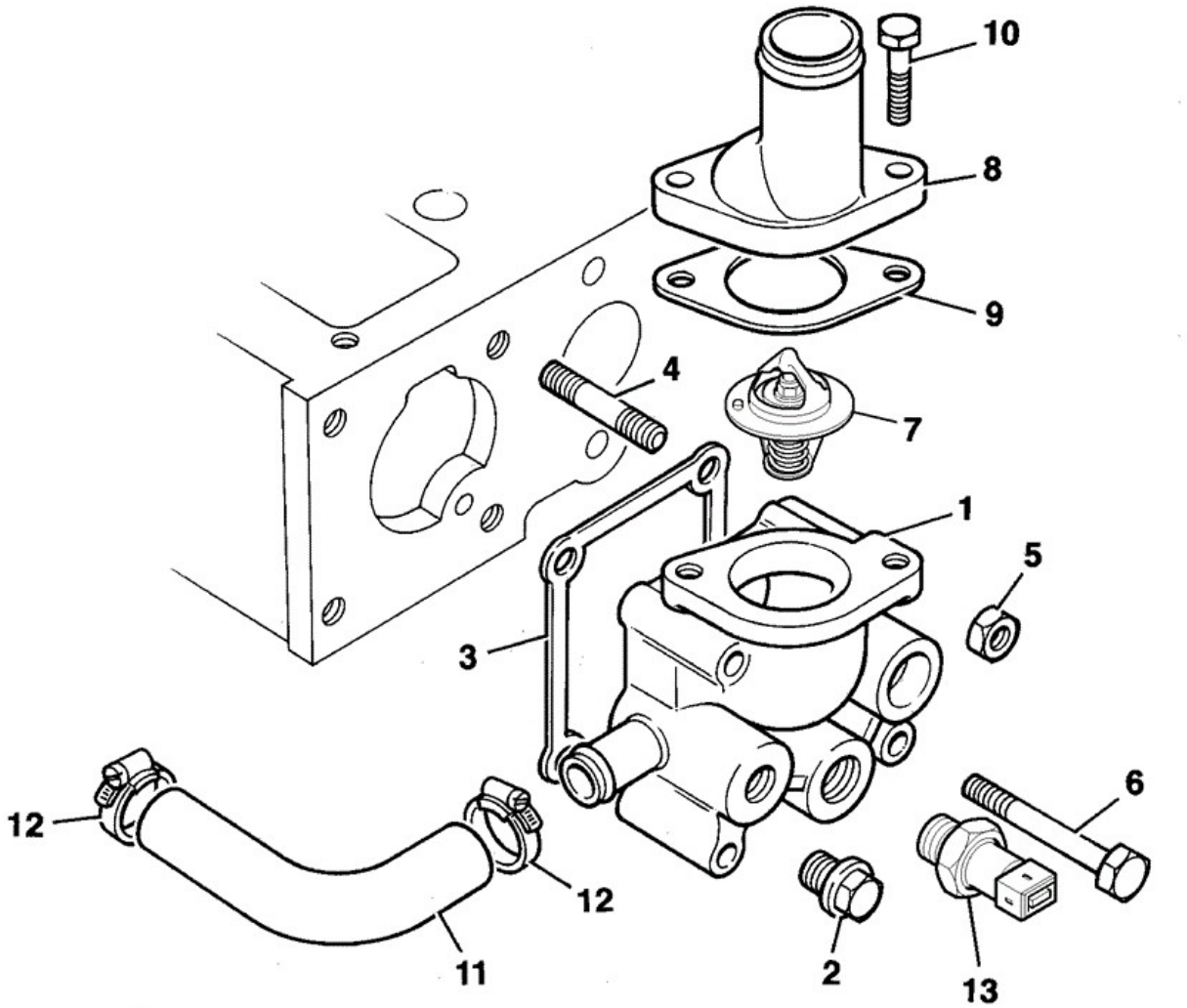

Item	Part No	Change No	Description	Usage Code	QTY
1	02/630878		Housing thermostat		1
2	02/630189		Plug D=30mm Square Head		1

3	02/634077		Gasket thermostat housing		1
4	02/634715		Stud .		2
5	02/630096		Nut		2
6	02/634714		Bolt .		2
7	02/634247		Thermostat		1
8	02/631337		Connector water		1
9	02/630843		Gasket		1
10	826/10766		Screw		2
11	02/630879		Hose by-pass		1
12	02/634724		Clamp Hose		2
13	701/80434		Sensor water temperature with probe		1
14	02/634683		Plug D=60MM Not Shown Square Head		1

Applicability Date Ranges:
From: , To:

9802/6220 N4-3-1 RADIATOR FITTINGS & MOUNTINGS TEMPERATE TIER 3

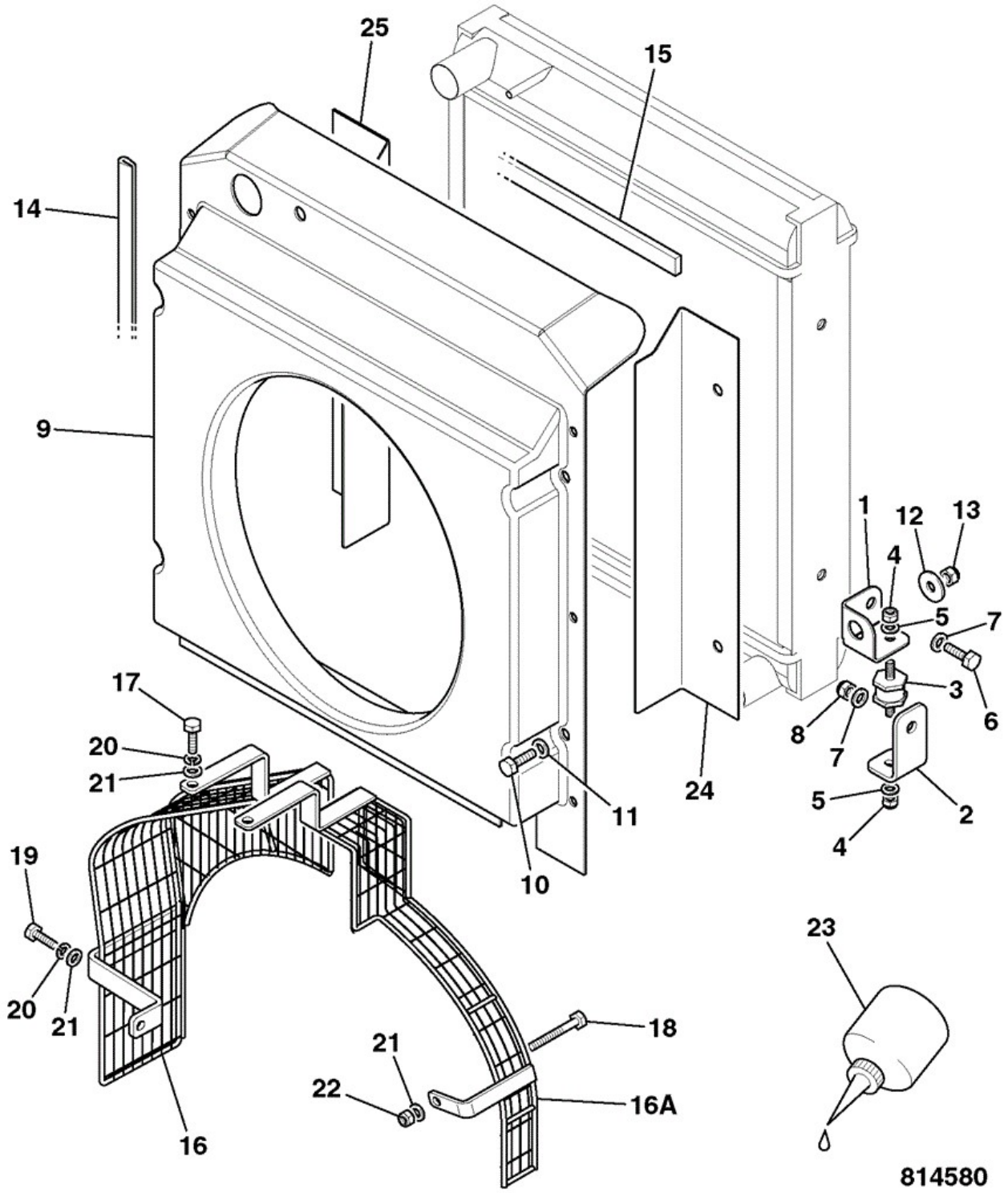

Item	Part No	Change No	Description	Usage Code	QTY
1	335/05762		Bracket radiator mounting		4
2	331/36135		Bracket radiator mounting		4

3	331/31026		Mounting Anti Vibration		4
4	1370/0203D		Nut Lock M8		8
5	1420/0007D		Washer (M8)		8
6	1315/0407D		Setscrew M10 x 25		8
7	1420/0008D		Washer (M10)		8
8	1370/0303D		Nut Self Lock M10		4
9	346/00310		Cowling fan		1
10	1315/0403D		Setscrew M10 x16mm		4
11	1420/0008D		Washer (M10)		4
12	823/00326		Washer M10 X 30mm		4
13	1370/0303D		Nut Self Lock M10		4
14	926/09502		Strip edging L=220mm		2
15	926/20701		Strip foam sealing		2
16	335/11499		Guard fan R/H bottom		1
17	1315/0305D		Setscrew M8 x 20mm		2
18	1315/3316D		Bolt M8 x 70mm		1
19	1315/0308D		Setscrew M8 x 30 mm		1
20	1425/0007D		Washer Spring M8		3
21	1420/0007D		Washer (M8)		4
22	1370/0203D		Nut Lock M8		1
23	4101/0200		Fluid Locking		0
24	331/52777		Plate blanking		1
25	331/52778		Plate blanking		1
26	1370/0101D		Nut Plain M6		1
27	1420/0006D		Washer (M6)		1

Applicability Date Ranges:
From: , To:

9802/6220 N4-4-1 RADIATOR & HOSES TEMPERATE TIER 3

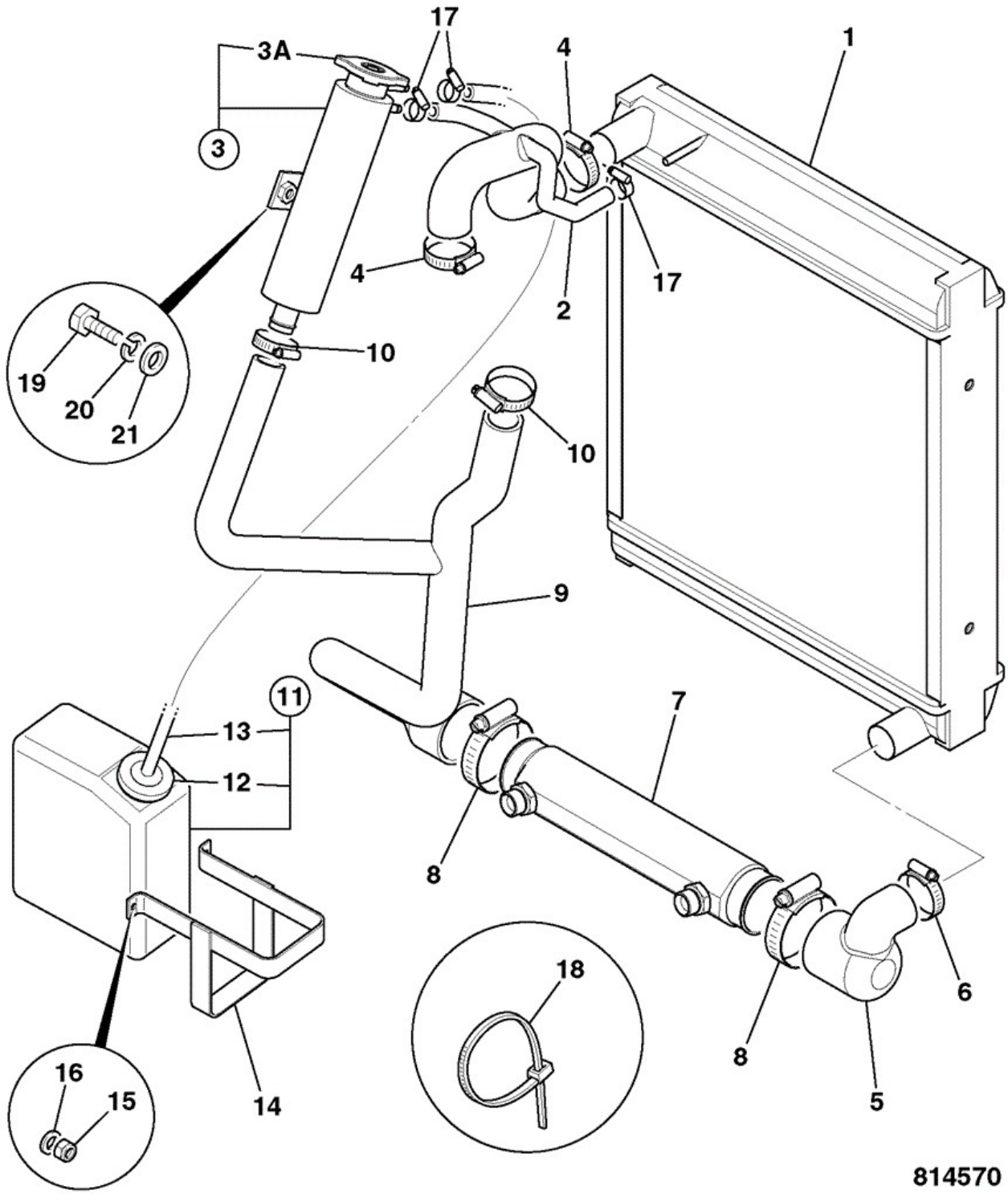

Item	Part No	Change No	Description	Usage Code	QTY
1	30/917000		Radiator assembly		1
2	834/11170		Hose top radiator		1

3	294/26800		Bottle Filler Bottle		1
3A	:331/26347		Cap coolant filler double seal, 13psi		1
4	2201/0008		Clip Jubilee		2
5	834/11168	Superseded	Hose bottom radiator		1
5	332/V8556	Superseded	Hose Bottom - STD		1
5	332/W1285	Superseded	Hose bottom radiator. STD		1
5	332/W3827		Hose bottom radiator, Std		1
6	2201/0009		Clip Jubilee		1
7	****		'See Remark' Transmission oil cooler, See Section E		1
8	2201/0013		Clip Jubilee		2
9	834/11204	Superseded	Hose cooler		1
9	332/V8561		Hose Cooler to Engine		1
10	2201/0008		Clip Jubilee		2
11	121/59800		Bottle expansion, assembly		1
12	:123/03532		Cap expansion bottle		1
13	:121/59803		Hose overflow assembly		1
14	260/26100		Bracket expansion bottle		1
15	1370/0103D		Nut (M6)		2
16	1420/0006D		Washer (M6)		2
17	2201/0001		Clip Worm Drive 8/16mm		3
18	121/77603		Tie Cable 300mm		2
19	1315/0407D		Setscrew M10 x 25		1
20	1425/0008D		Washer Spring M10		1
21	1420/0008D		Washer (M10)		1

Applicability Date Ranges:
From: , To:

9802/6220 N4-5-1 FAN GUARDS

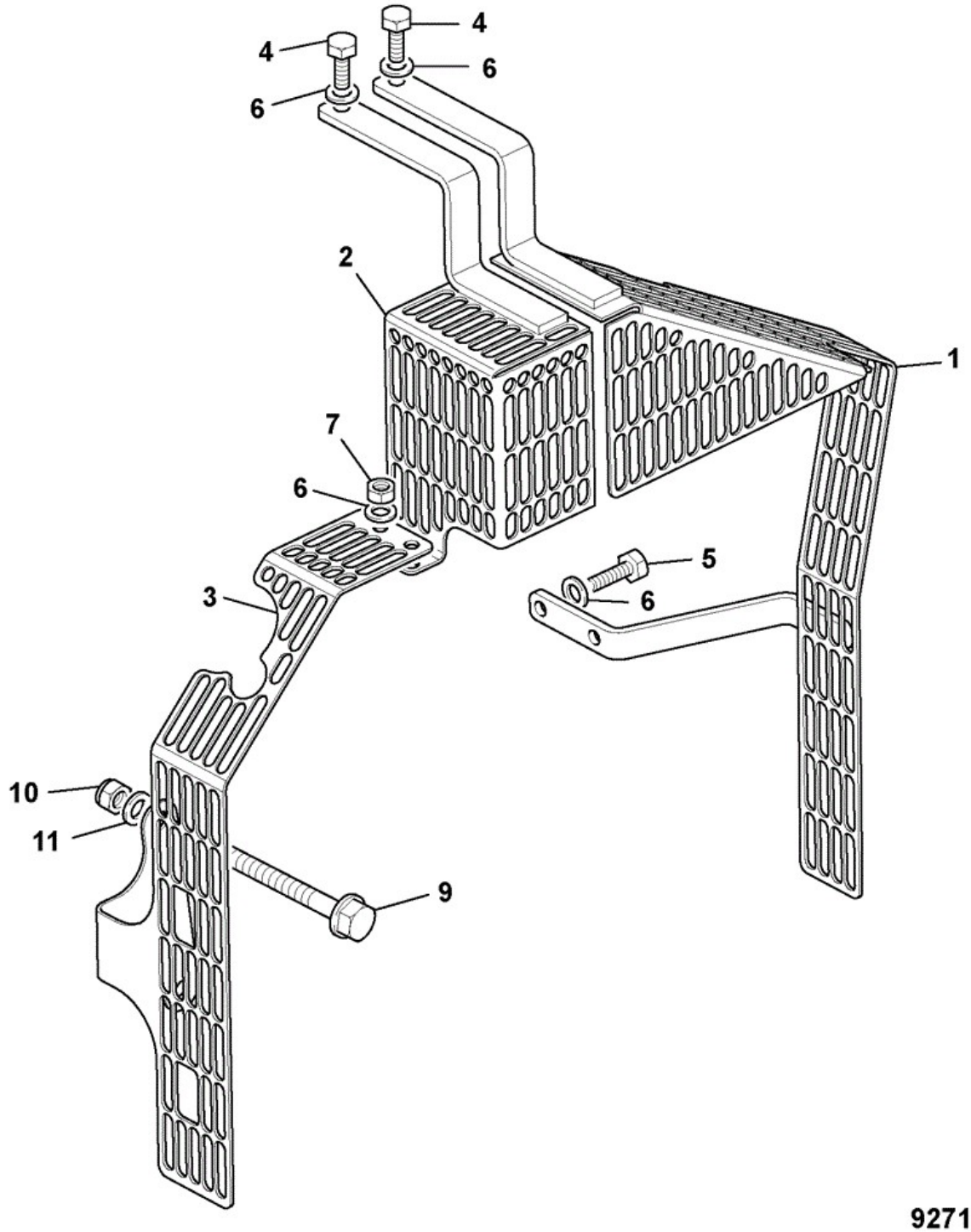

Item	Part No	Change No	Description	Usage Code	QTY
1	335/11497		Guard fan L/H		1
2	335/11498		Guard fan R/H top		1

3	332/S4735		Guard fan bottom right hand		1
4	1315/0303D		Setscrew M8 x 16mm		2
5	1315/0308D		Setscrew M8 x 30 mm		1
6	1420/0007D		Washer (M8)		4
7	1370/0101D		Nut Plain M6		2
9	1315/3419D		Bolt M10 x 90mm		2
10	1370/0303D		Nut Self Lock M10		2
11	1420/0008D		Washer (M10)		4

Applicability Date Ranges:
From: , To:

9802/6220 N5-1-1 SUMP, OIL

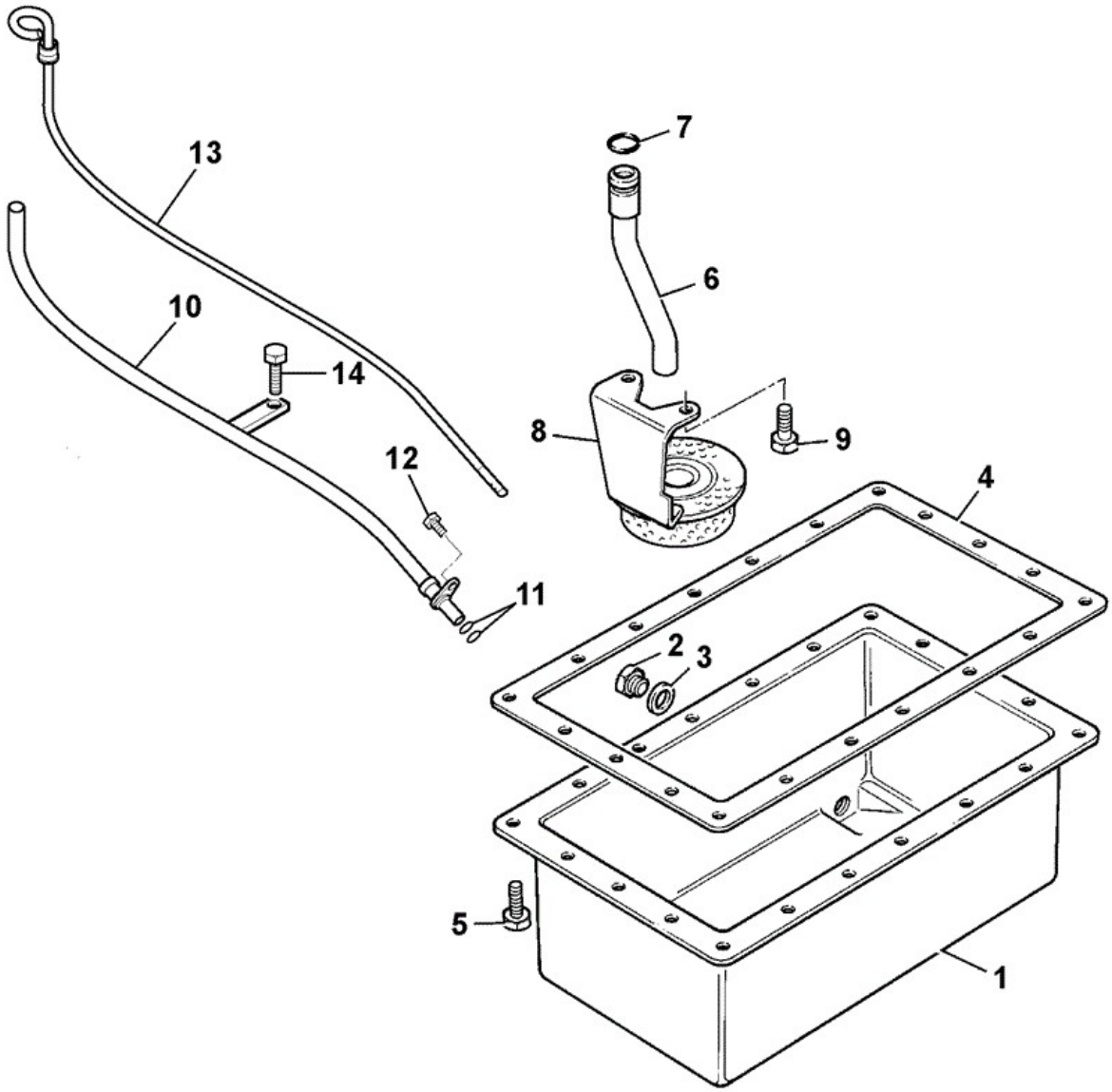

927070

Item	Part No	Change No	Description	Usage Code	QTY
1	02/634212		Sump oil		1
2	826/10726		Screw oil drain		2

3	02/630301		Washer		2
4	02/634063		Gasket oil sump		1
5	02/630197		Screw		30
6	02/634801		Pipe Suction		1
7	02/630202		O Ring		1
8	02/634062		Strainer oil		1
9	02/630102		Screw		2
10	02/634139		Tube dipstick		1
11	02/630206		O Ring		2
12	02/630197		Screw		1
13	02/634140		Dipstick oil level		1
14	826/10764		Screw		1

Applicability Date Ranges:
From: , To:

9802/6220 N5-2-1 OIL PUMP & PRV

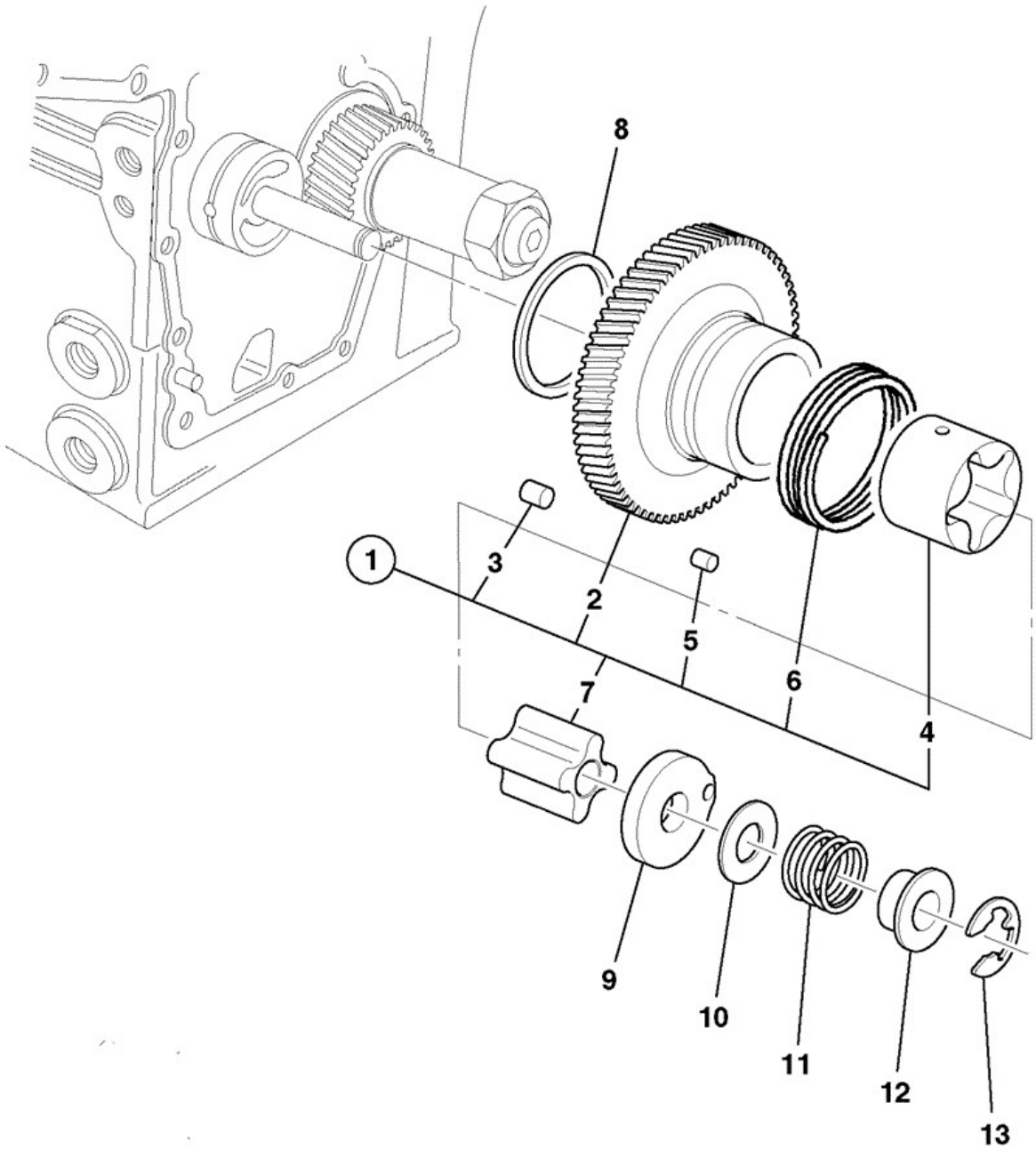

Item	Part No	Change No	Description	Usage Code	QTY
1	02/634763		Pump Assembly		1
2	****		None serviced part		1

3	:02/630208		Dowel		3
4	****		None serviced part		1
5	:02/630212		Bush		3
6	:02/634772		Spring .		1
7	****		None serviced part		1
8	02/634778		Washer Thrust		1
9	02/634761		Cover .		1
10	02/630215		Shim oversize - 0.10mm		1
10	02/630216		Shim oversize - 0.15mm		1
10	02/630217		Shim oversize - 0.20mm		1
10	02/630218		Shim oversize - 0.50mm		1
11	02/630219		Spring		1
12	02/630220		Collar		1
13	02/630221		Circlip		1

Applicability Date Ranges:
From: , To:

9802/6220 N5-4-1 OIL FILTER, PIPEWORK

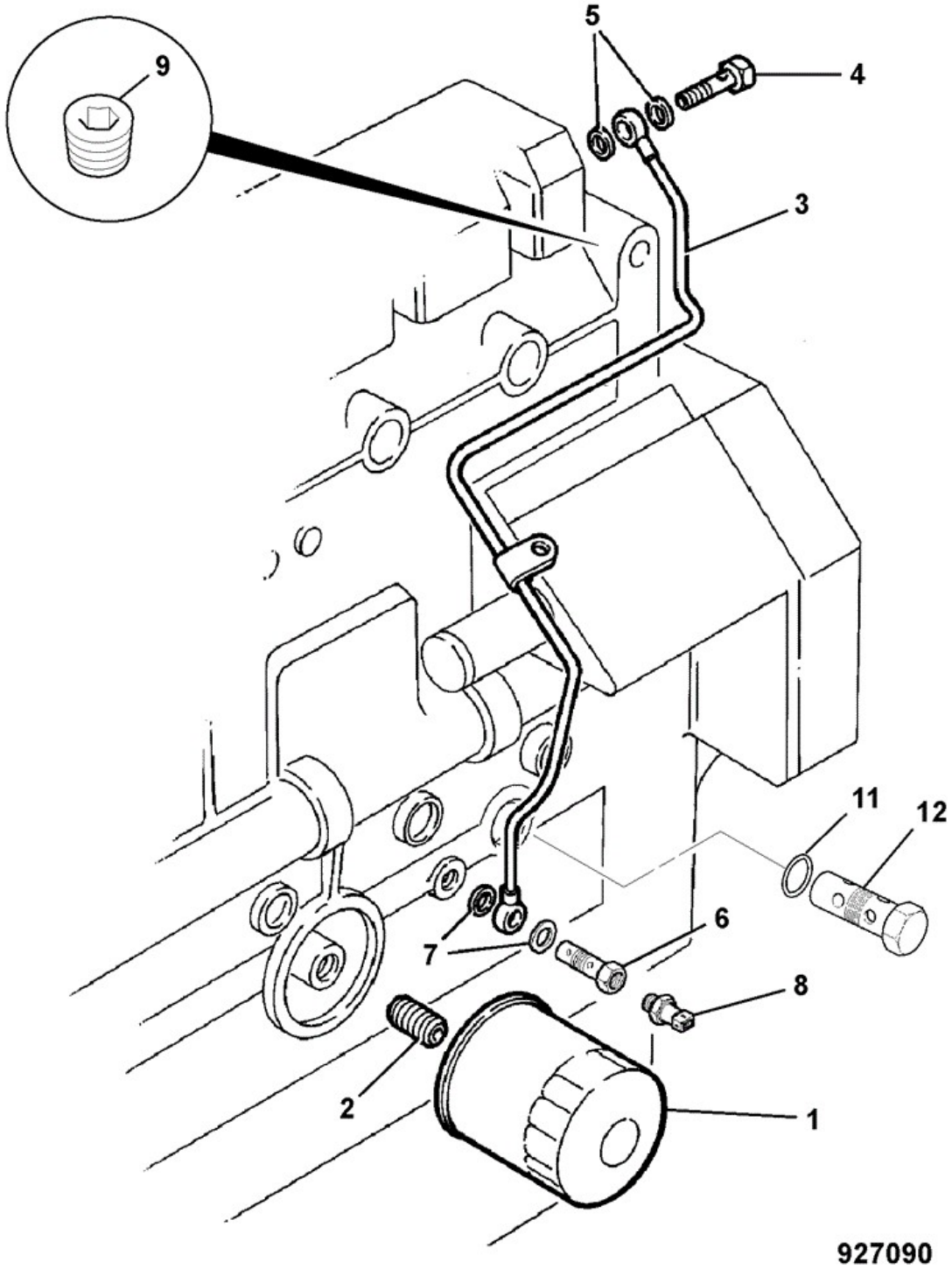

Item	Part No	Change No	Description	Usage Code	QTY
1	02/630935		Element engine oil filter		1
2	02/630226		Connector		1

3	02/634066		Pipe oil feed		1
4	02/630228		Bolt banjo		1
5	02/630359		Washer		2
6	02/631341		Bolt banjo		1
7	02/630359		Washer		2
8	701/80614		Switch oil pressure		1
9	02/630392		Plug D=10mm		1
10	02/634047		Valve oil relief		1
11	828/10241		O Ring		1

Applicability Date Ranges:
From: , To:

9802/6220 N6-1-1 PUMP, FUEL INJECTION

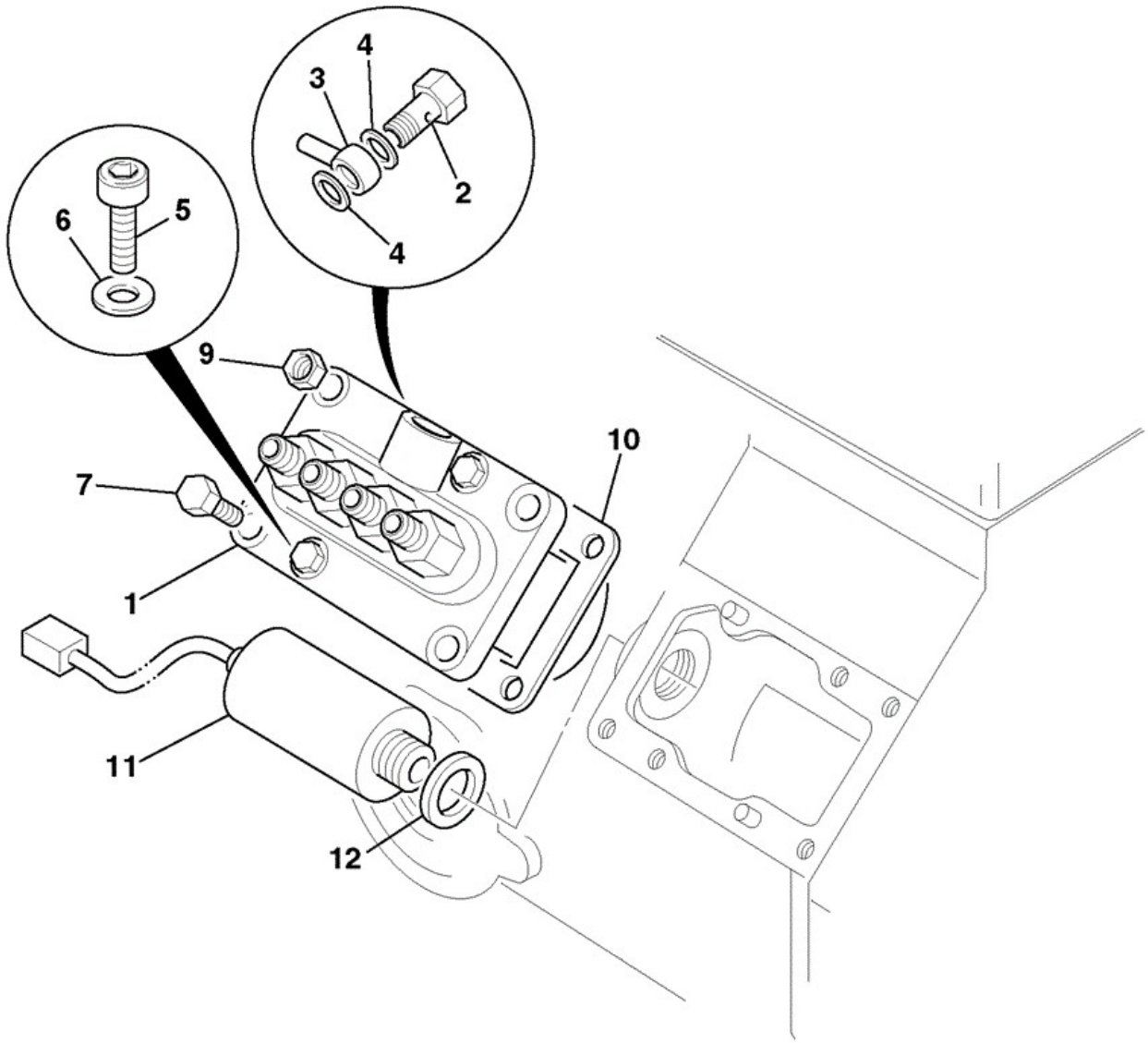

Item	Part No	Change No	Description	Usage Code	QTY
1	02/634745		Pump Fuel Injection		1
2	02/630806		Bolt banjo		1

3	02/634173		Pipe fuel leak-off		1
4	02/630808		Washer		2
5	02/634267		Screw		1
6	02/630344		Washer		1
7	02/634046		Screw		2
9	02/630078		Nut		3
10	02/634054		Shim 0.2mm beaded		1
10	02/634664		Shim +0.25mm		1
10	02/634055		Shim 0.3mm beaded		1
10	02/634665		Shim +0.35mm		1
10	02/634056		Shim 0.4mm beaded		1
10	02/634057		Shim 0.5mm beaded		1
10	02/634058		Shim 0.5mm flat		1
11	716/30297		Solenoid engine stop		1
12	02/630301		Washer		1
13	02/634742		Lever .		1

Applicability Date Ranges:
From: , To:

9802/6220 N6-2-1 INJECTOR & FUEL PIPE

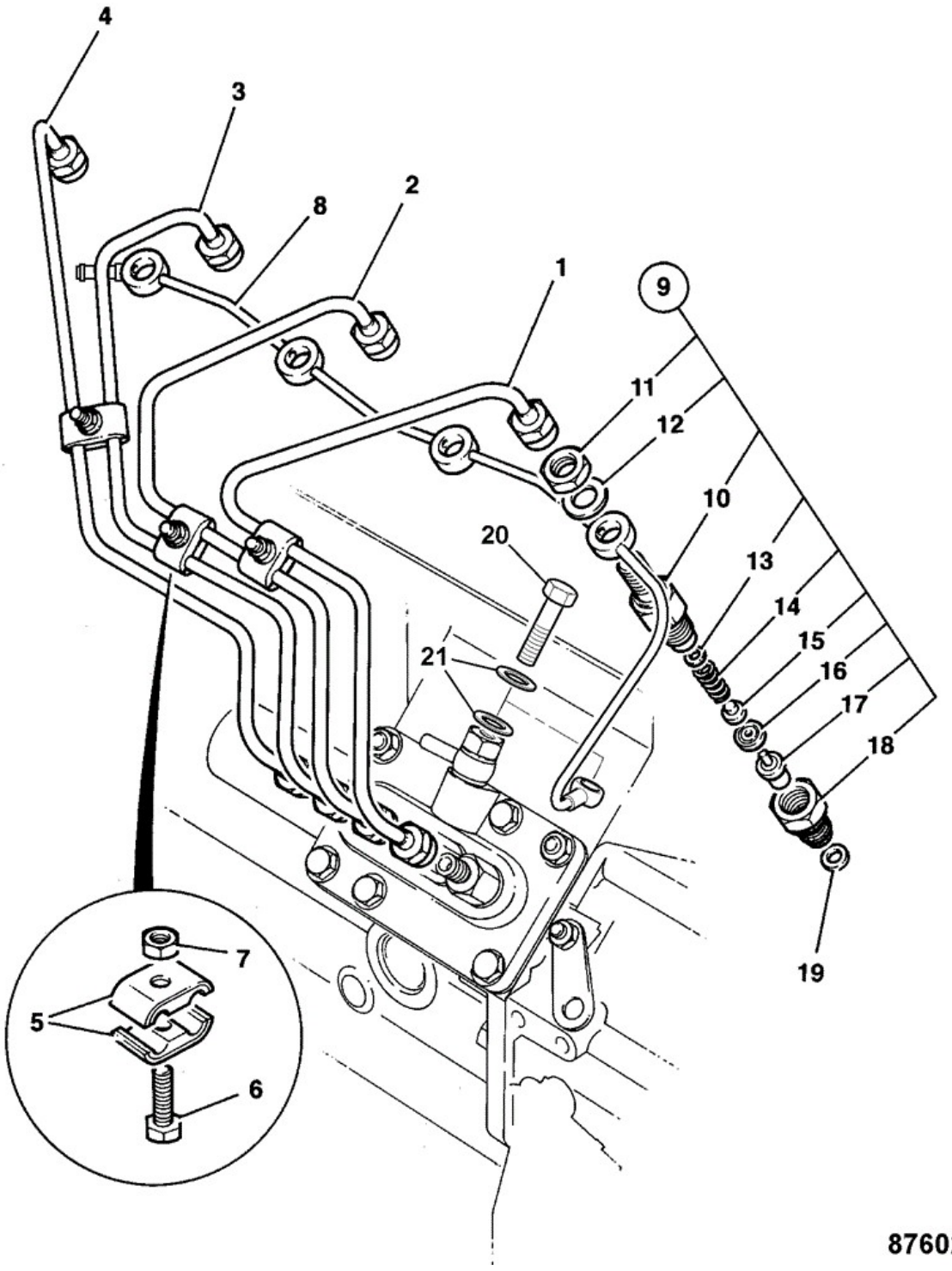

Item	Part No	Change No	Description	Usage Code	QTY
1	02/634141		Pipe fuel injector No.1		1
2	02/634142		Pipe fuel injector No.2		1

3	02/634143		Pipe fuel injector No.3		1
4	02/634144		Pipe fuel injector No.4		1
5	02/630314		Clamp		6
6	826/10724		Screw		3
7	02/630096		Nut		3
8	02/634173		Pipe fuel leak-off		1
9	02/630820		Injector assembly	P/Ex	4
10	****		None serviced part		1
11	:02/630822		Nut		1
12	:02/630823		Washer seal		1
13	:02/630824		Shim		1
14	:02/630825		Spring		1
15	:02/630826		Pin		1
16	:02/630827		Spacer		1
17	:02/630821		Nozzle		1
18	:02/630828		Nut		1
19	02/630804		Washer copper		4
20	02/630806		Bolt banjo		1
21	02/630808		Washer		2

Applicability Date Ranges:
From: , To:

9802/6220 N6-3-1 FUEL SYSTEM

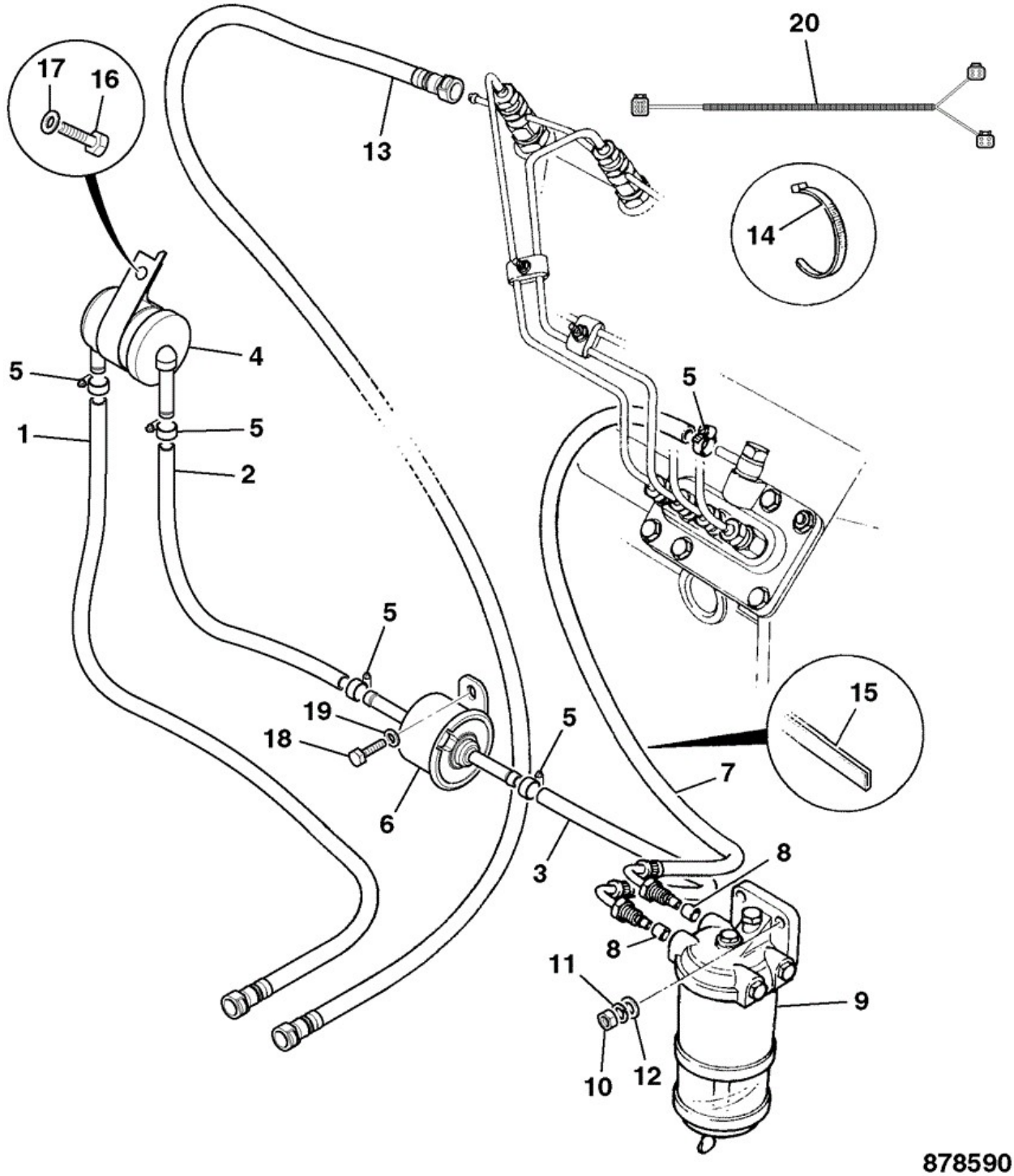

Item	Part No	Change No	Description	Usage Code	QTY
1	649/51483		Hose Diesel Fuel		1
2	649/52161		Hose Diesel Fuel		1

3	649/51130		Hose Diesel Fuel		1
4	32/922300		Filter fuel pre-filter		1
4	02/634654		Bracket fuel pre-filter		1
5	2201/0001		Clip Worm Drive 8/16mm		5
6	02/634780		Pump Fuel Lift		1
6	02/630078		Nut		1
7	649/51130		Hose Diesel Fuel		1
8	816/60170		Olive		2
9	32/400100		Filter Fuel Assembly Diesel See section M6-4-1		1
10	1370/0203D		Nut Lock M8		2
11	1425/0007Z		Washer Washer		2
12	1420/0007Z		Washer (M8)		2
13	649/51484		Hose Diesel Fuel		1
14	121/77603		Tie Cable 300mm		8
15	926/09500		Strip Edging 2 x 80mm length required		0
16	826/10725		Screw		1
17	02/634224		Washer		1
18	1315/0205D		Setscrew M6 x 20		2
19	1420/0006D		Washer (M6)		2
20	721/12373		Harness electric fuel pump		1

Applicability Date Ranges:
From: , To:

Product Catalog\BACKHOE LOADER 1CX, 208\1CX 00751600-00752999,00806000-00807552 9802/6220\N ENGINES 404D-22, TIER 3 \N06 FUEL SYSTEM\N6-4-1 FUEL FILTER

9802/6220 N6-4-1 FUEL FILTER

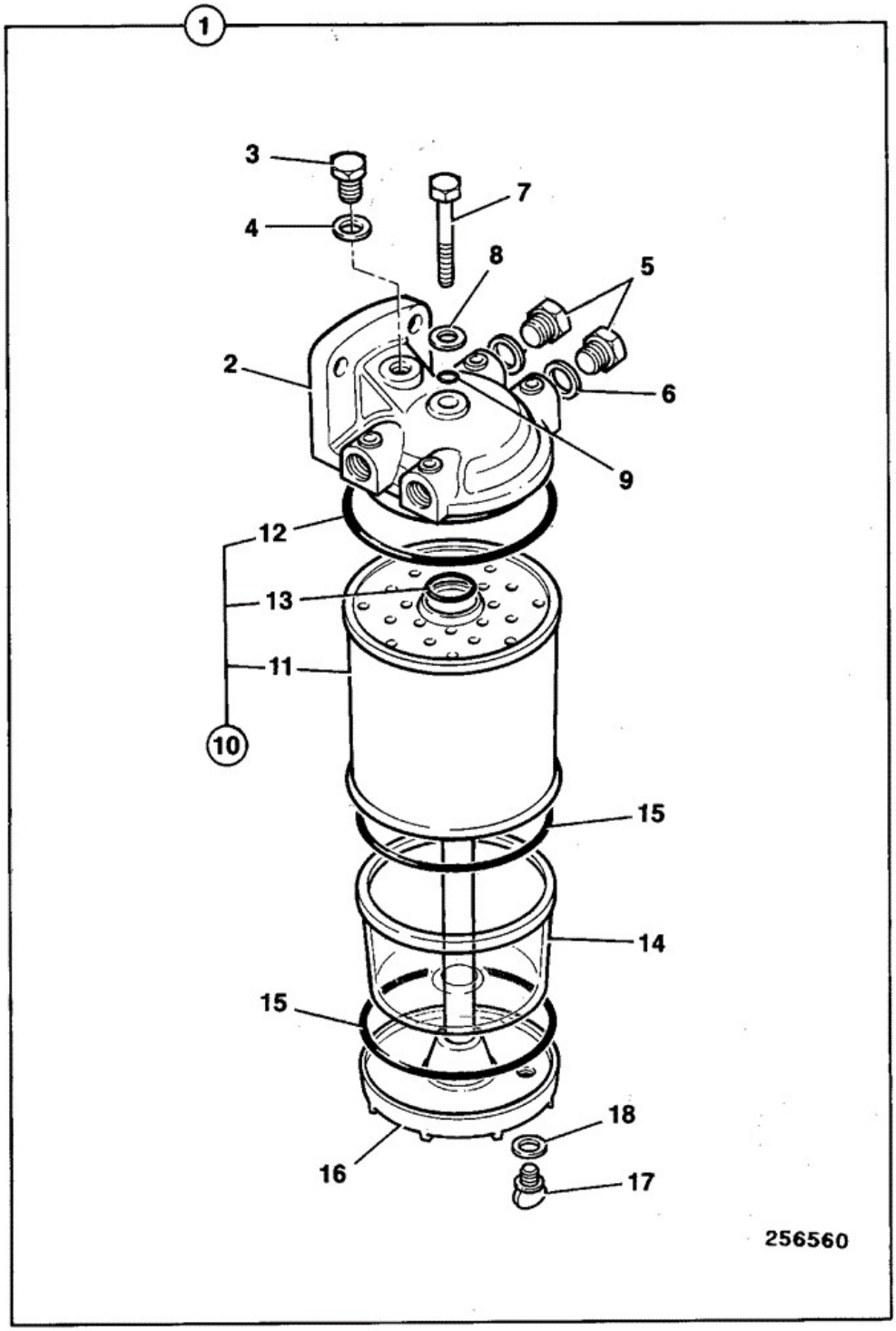

Item	Part No	Change No	Description	Usage Code	QTY
1	32/400100		Filter Fuel Assembly Diesel		1
2	:32/400101		Head fuel filter		1

3	:200/44613		Plug vent		1
4	:200/44614		Washer		1
5	:200/44611		Plug		2
6	:200/44612		Washer		2
7	:200/44607		Bolt centre		1
8	:32/400508		Washer		1
9	:2401/0006		O Ring		1
10	:32/401102		Kit-element fuel filter, short		1
11	****		None serviced part		1
12	:200/44606		Seal		1
13	:828/00085		O Ring		1
14	:200/44604		Bowl glass		1
15	:828/00086		Seal		2
16	:32/400102		Base Filter		1
17	:32/400505		Plug drain		1
18	:200/44610		Washer		1

Applicability Date Ranges:
From: , To:

Product Catalog\BACKHOE LOADER 1CX, 208\1CX 00751600-00752999,00806000-00807552 9802/6220\P ENGINE GN BUILD\P01 ENGINE BLOCK & SUB ASSEMBLIES\P1-1-1 ENGINE COMPLETE

9802/6220 P1-1-1 ENGINE COMPLETE

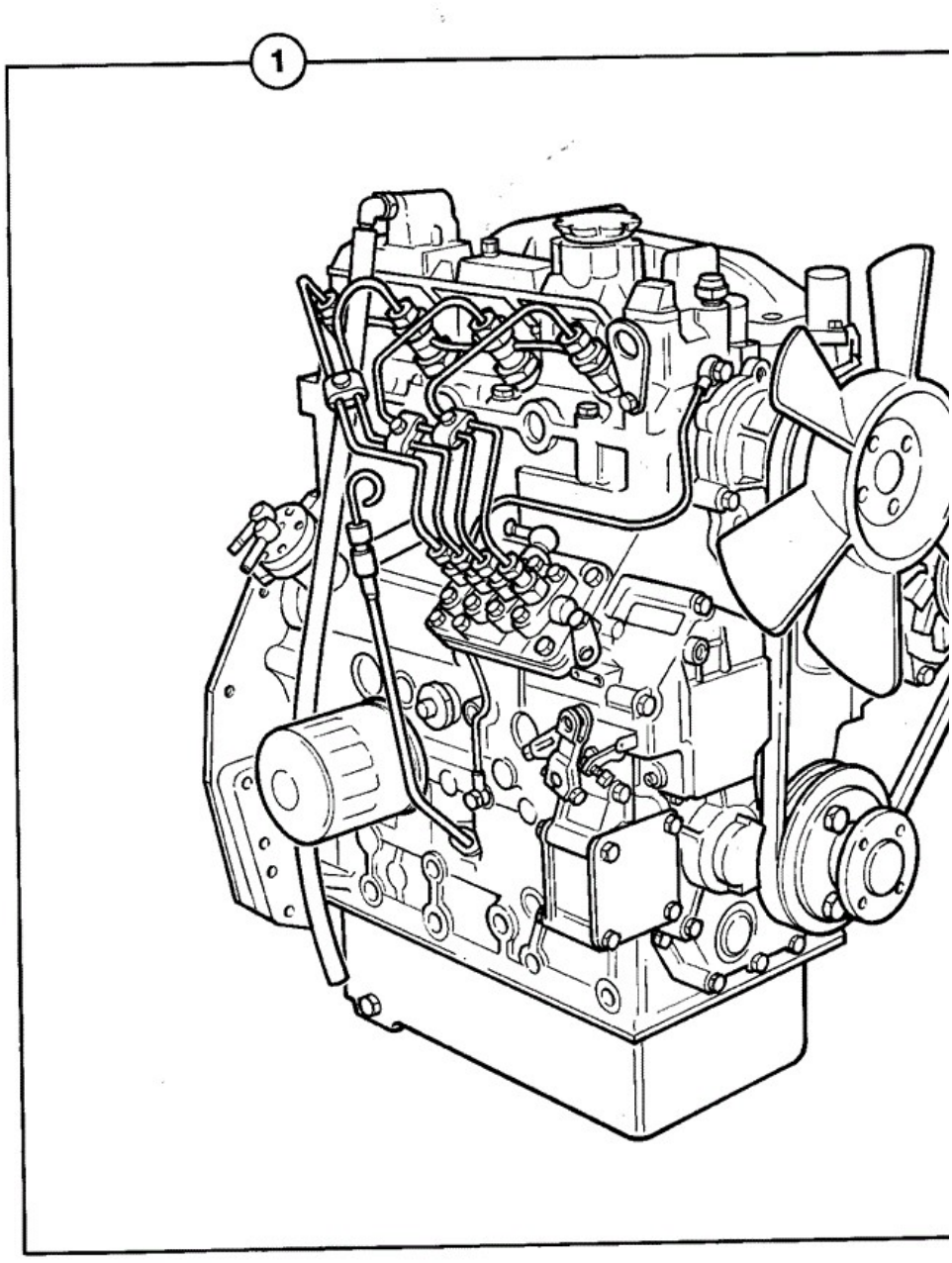

Item	Part No	Change No	Description
1	02/634913		Engine Long
1	332/F1909		Engine hybrid For engine parts catalogue enter part number in the search box.

Note 1: This engine does NOT come with a Flywheel, Starter Motor, Alternator, Exhaust manifold and gasket.See

Applicability Date Ranges:
From: , To:

Product Catalog\BACKHOE LOADER 1CX, 208\1CX 00751600-00752999,00806000-00807552 9802/6220\P ENGINE GN BUILD\P01 ENGINE BLOCK & SUB ASSEMBLIES\P1-1-2 AUXILIARY EQUIPEMENT

9802/6220 P1-1-2 AUXILIARY EQUIPEMENT

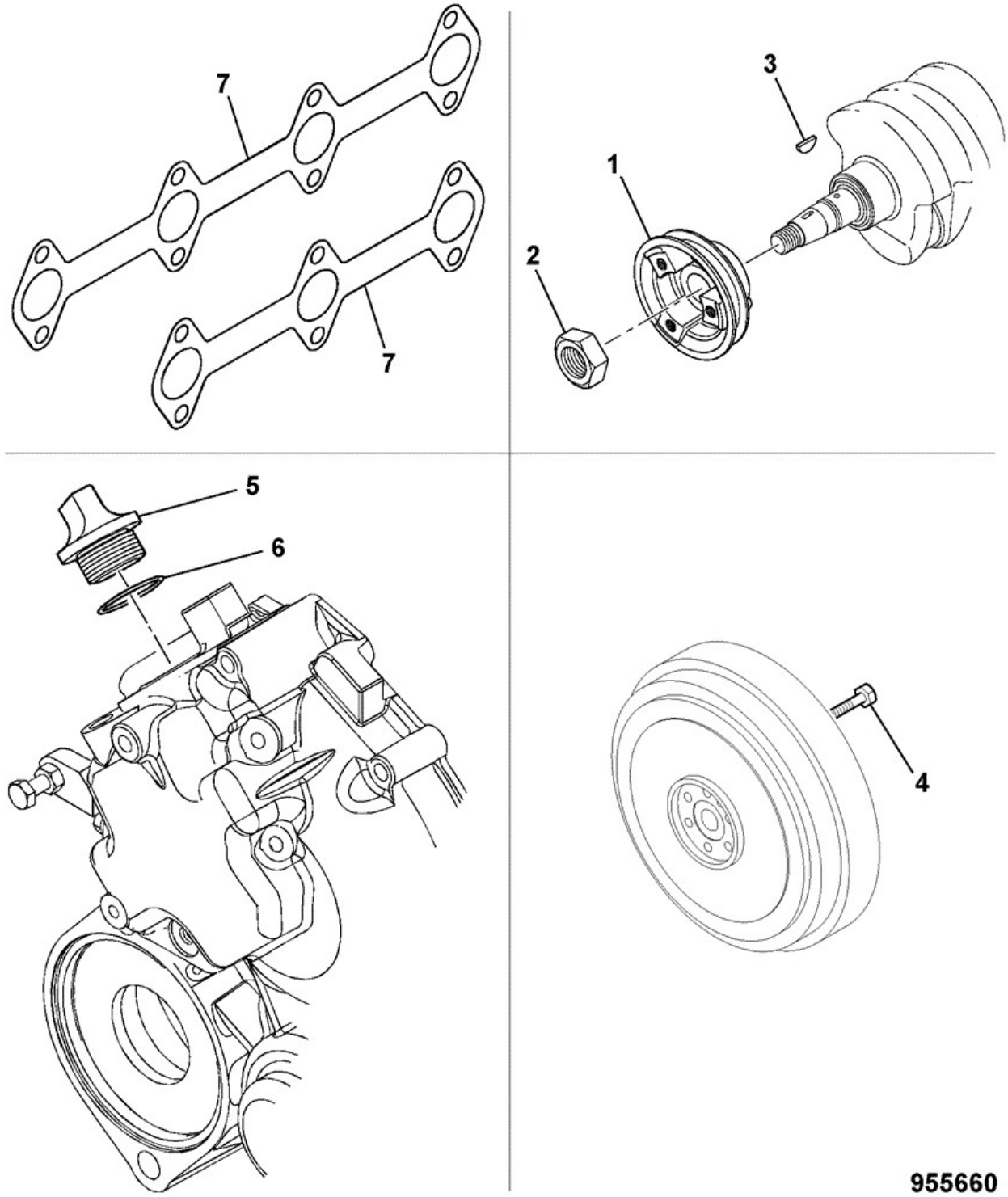

Item	Part No	Change No	Description	Usage Code	QTY
1	02/634865		Pulley Crankshaft		1
2	02/630778		Nut		1

3	02/630068		Key		1
4	02/630775		Bolt		6
5	02/634953		Cap .		1
6	02/634721		Seal O-Ring		1
7	02/634082		Gasket exhaust manifold		1

Applicability Date Ranges:
From: , To:

Product Catalog\BACKHOE LOADER 1CX, 208\1CX 00751600-00752999,00806000-00807552 9802/6220\P ENGINE GN BUILD\P01 ENGINE BLOCK & SUB ASSEMBLIES\P1-3-1 BLOCK ASSEMBLY

9802/6220 P1-3-1 BLOCK ASSEMBLY

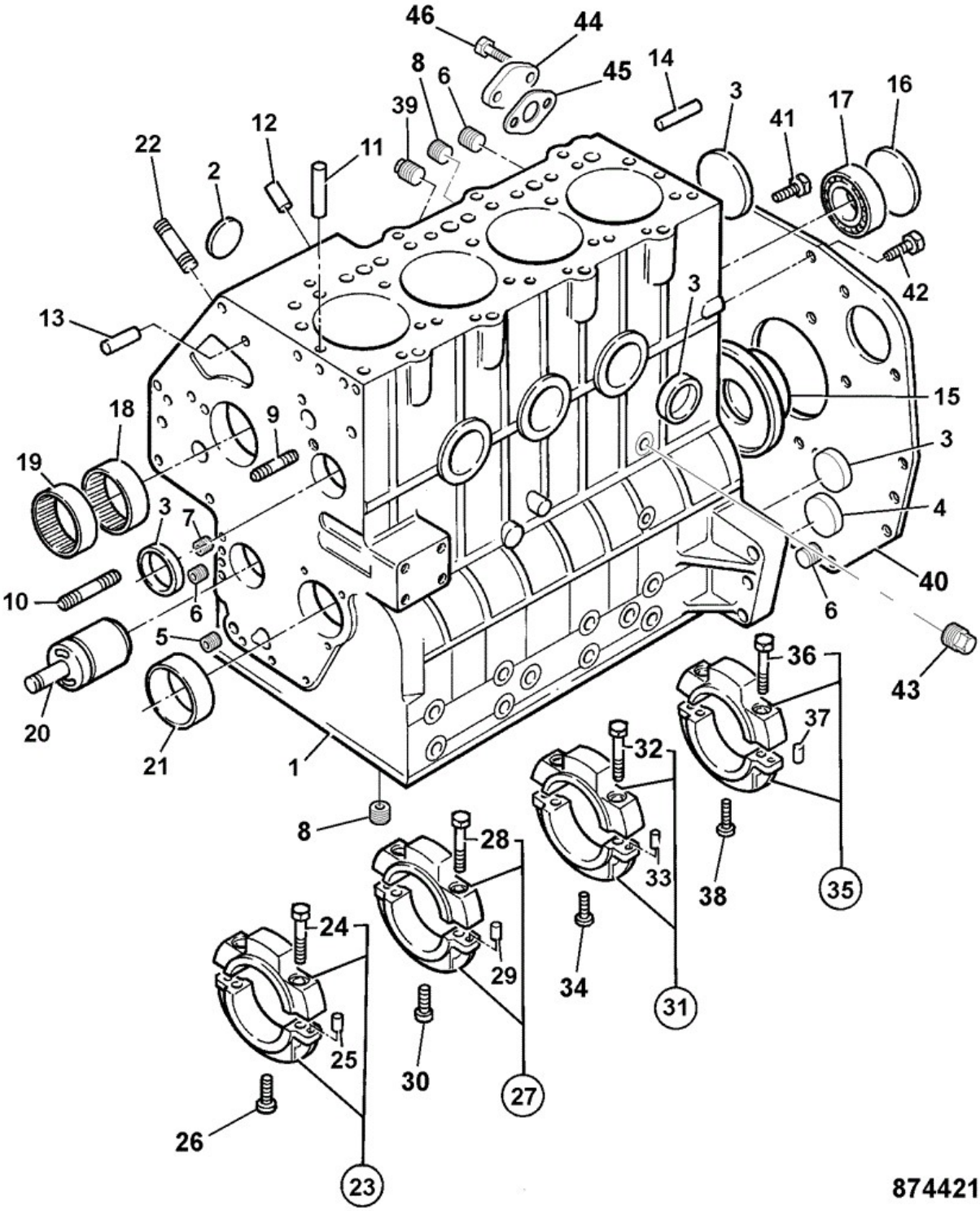

Item	Part No	Change No	Description	Usage Code	QTY
1	****		None serviced part		1
2	02/634206		Plug core D=25mm		2

3	02/634207		Plug core D=40mm		5
4	****		Not applicable not available		1
5	02/630702		Plug 10.4mm		2
5	****		Not applicable not available		1
6	02/630456		Plug D=40mm		4
7	02/630007		Plug 8.4mm		3
8	02/634202		Plug D=6.5mm		3
9	826/10720		Stud		1
10	02/630022		Stud		1
11	02/630019		Pin		2
12	02/630024		Dowel		2
13	02/630017		Dowel		2
14	02/630018		Dowel		2
15	02/634013		Seal rear oil		1
15.1	02/630877		Sleeve wear		1
16	02/630014		Plug core D=45mm		1
17	02/630013		Bearing		1
18	02/634002		Bearing needle		1
19	02/634001		Bearing needle		1
20	02/634768		Shaft .		1
20	332/G1855		Shaft kit oil pump idler Contains idler gear plus oil pump assembly kit including the shaft.		1
21	02/634203		Bush		1
21.1	02/634709		Bush -0.25mm undersize QTY:A/R		0
21.2	02/634710		Bush -0.5mm undersize QTY:A/R		0
22	826/10719		Stud		3
23	02/634004		Cap bearing assembly		1
26	826/10744		Screw		1
25	:02/630024		Dowel		2
24	:02/634005		Screw		2
27	02/634007		Cap bearing assembly		1
30	826/10744		Screw		1
29	:02/630024		Dowel		2
28	:02/634005		Screw		2
31	02/634008		Cap bearing assembly		1
34	826/10744		Screw		1
33	:02/630024		Dowel		2
32	:02/634005		Screw		2

35	02/634009		Cap bearing assembly		1
38	826/10745		Screw		2
37	:02/630024		Dowel		2
36	:02/634005		Screw		2
39	****		Not applicable not available		1
40	02/634010		Plate		1
41	826/10731		Screw		2
42	02/634112		Screw		10
43	****		Not applicable not available		1
44	02/634948		Cover .		1
44.1	02/630929		Plug D=15mm		1
45	02/203010		Gasket		1
46	02/630102		Screw		2

Applicability Date Ranges:
From: , To:

Product Catalog\BACKHOE LOADER 1CX, 208\1CX 00751600-00752999,00806000-00807552 9802/6220\P ENGINE GN BUILD\P01 ENGINE BLOCK & SUB ASSEMBLIES\P1-4-1 CRANKSHAFT ASSEMBLY PISTONS & CON-RODS

9802/6220 P1-4-1 CRANKSHAFT ASSEMBLY PISTONS & CON-RODS

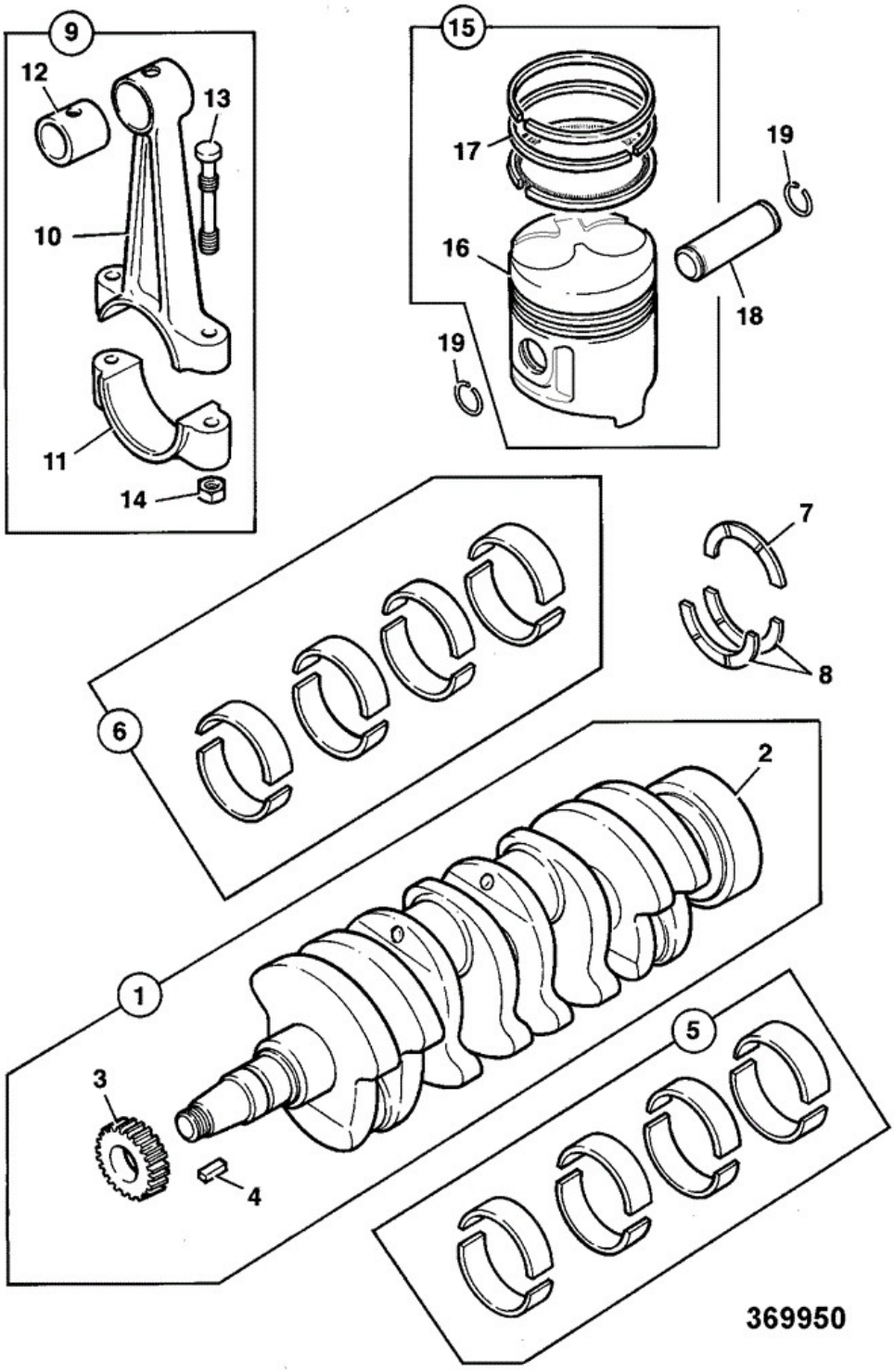

Item	Part No	Change No	Description	Usage Code	QTY
1	02/634729		Crankshaft Assembly		1
2	****		None serviced part		1

3	02/634956		Gear Crankshaft		1
4	02/630042		Key		1
5	02/634781		Kit Main Bearing Std.		1
6	02/634783		Kit Big End Bearing		1
7	02/634021		Washer thrust		1
8	02/630723		Washer thrust		2
9	02/634022		Conrod assembly		4
10	****		None serviced part		1
11	****		None serviced part		1
12	02/630725		Bush small end		1
13	02/630726		Screw		2
14	02/630727		Nut		2
15	02/634135		Piston assembly		4
16	****		None serviced part		1
17	02/634136		Kit-piston ring		1
18	02/630731		Pin gudgeon		4
19	02/630732		Circlip		8

Applicability Date Ranges:
From: , To:

Product Catalog\BACKHOE LOADER 1CX, 208\1CX 00751600-00752999,00806000-00807552 9802/6220\P ENGINE GN BUILD\P01 ENGINE BLOCK & SUB ASSEMBLIES\P1-6-1 CAMSHAFT TIMING CASE

9802/6220 P1-6-1 CAMSHAFT TIMING CASE

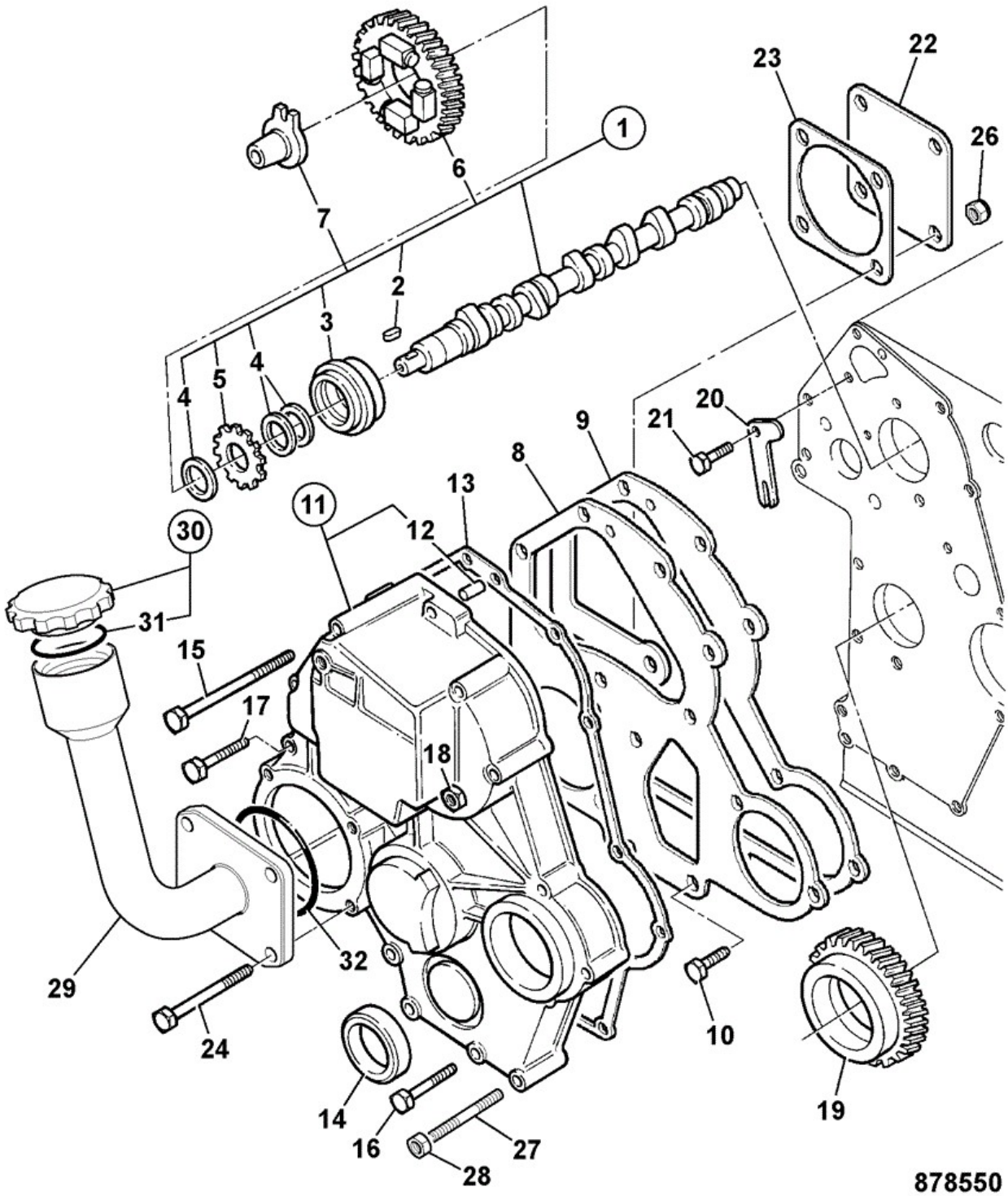

Item	Part No	Change No	Description	Usage Code	QTY
1	02/634733		Camshaft Assembly		1
2	02/630068		Key		1

3	02/634032		Bearing		1
4	02/634210		Spacer		1
5	****		Not applicable not available		1
6	02/634732		Gear Camshaft		1
7	02/634740		Tappet .		1
8	02/634947		Plate .		1
9	02/634162		Gasket t/case to block		1
10	02/630102		Screw		2
11	02/634946		Cover Timing		1
12	02/630089		Pin		1
13	02/630459		Gasket case cover		1
14	02/630763		Seal front oil		1
15	826/10729		Screw		4
16	****		Not applicable not available		1
17	****		Not applicable not available		1
18	02/630096		Nut		2
19	****		Not applicable not available		1
20	02/634087		Plate		1
21	02/630102		Screw		2
22	02/630998		Plate cover		2
23	02/630098		Gasket		1
24	826/10735		Bolt		4
26	02/630078		Nut		4
27	****		Not applicable not available		1
28	826/10777		Screw		7
29	****		Not applicable not available		1
30	****		Not applicable not available		1
31	****		Not applicable not available		1
32	02/630079		O Ring		1

Applicability Date Ranges:
From: , To:

Product Catalog\BACKHOE LOADER 1CX, 208\1CX 00751600-00752999,00806000-00807552 9802/6220\P ENGINE GN BUILD\P01 ENGINE BLOCK & SUB ASSEMBLIES\P1-6-2 THROTTLE CONTROL

9802/6220 P1-6-2 THROTTLE CONTROL

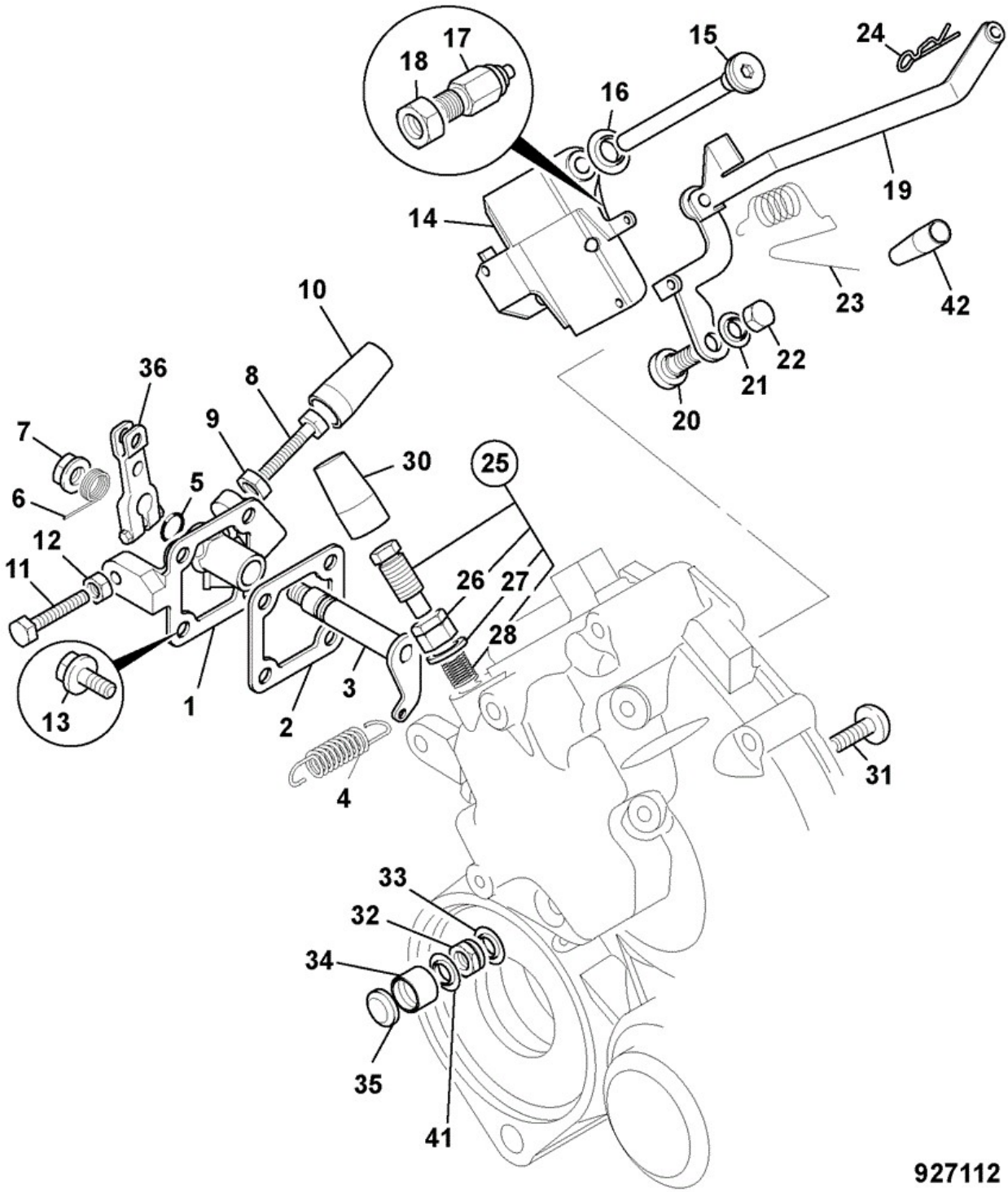

Item	Part No	Change No	Description	Usage Code	QTY
1	02/634933		Bracket .		1
2	02/634770		Gasket .		1

3	02/634930		Lever Arm		1
4	02/634773		Spring .		1
5	02/630114		O Ring		1
6	02/634771		Spring .		1
7	02/630078		Nut		1
8	826/10742		Screw		1
9	826/10743		Nut		1
10	02/634166		Cap anti-tamper		1
11	826/10742		Screw		1
12	1370/0101Z		Nut (M6)		1
13	02/630541		Screw		1
14	02/634874		Lever Control		1
15	02/634738		Shaft .		1
16	02/634837		Seal O-Ring		1
17	02/634935		Sensor Speed		1
18	02/634717		Nut .		1
19	02/634932		Control Lever		1
20	02/634737		Pivot Pin Bolt		1
21	02/630266		Washer		1
22	02/634720		Nut .		1
23	02/634774		Spring .		1
24	02/630111		Pin		1
25	02/634939		Screw .		1
26	:826/10738		Nut		1
27	:02/630308		Washer		1
28	:02/634951		Spring		1
30	02/634159		Cap anti-tamper		1
30A	02/634776		Ring .		1
31	02/634749		Bolt .		1
32	02/634842		Nut .		1
33	02/630266		Washer		1
34	02/634942		Cap Anti Tamper		1
35	02/634723		Cap .		1
36	02/634742		Lever .		1
41	02/634776		Ring .		1
42	02/634961		Plug .		1

Applicability Date Ranges:
From: , To:

Product Catalog\BACKHOE LOADER 1CX, 208\1CX 00751600-00752999,00806000-00807552 9802/6220\P ENGINE GN BUILD\P02 CYLINDER HEAD & SUB ASSEMBLIES\P2-1-1 CYLINDER HEAD ASSEMBLY

9802/6220 P2-1-1 CYLINDER HEAD ASSEMBLY

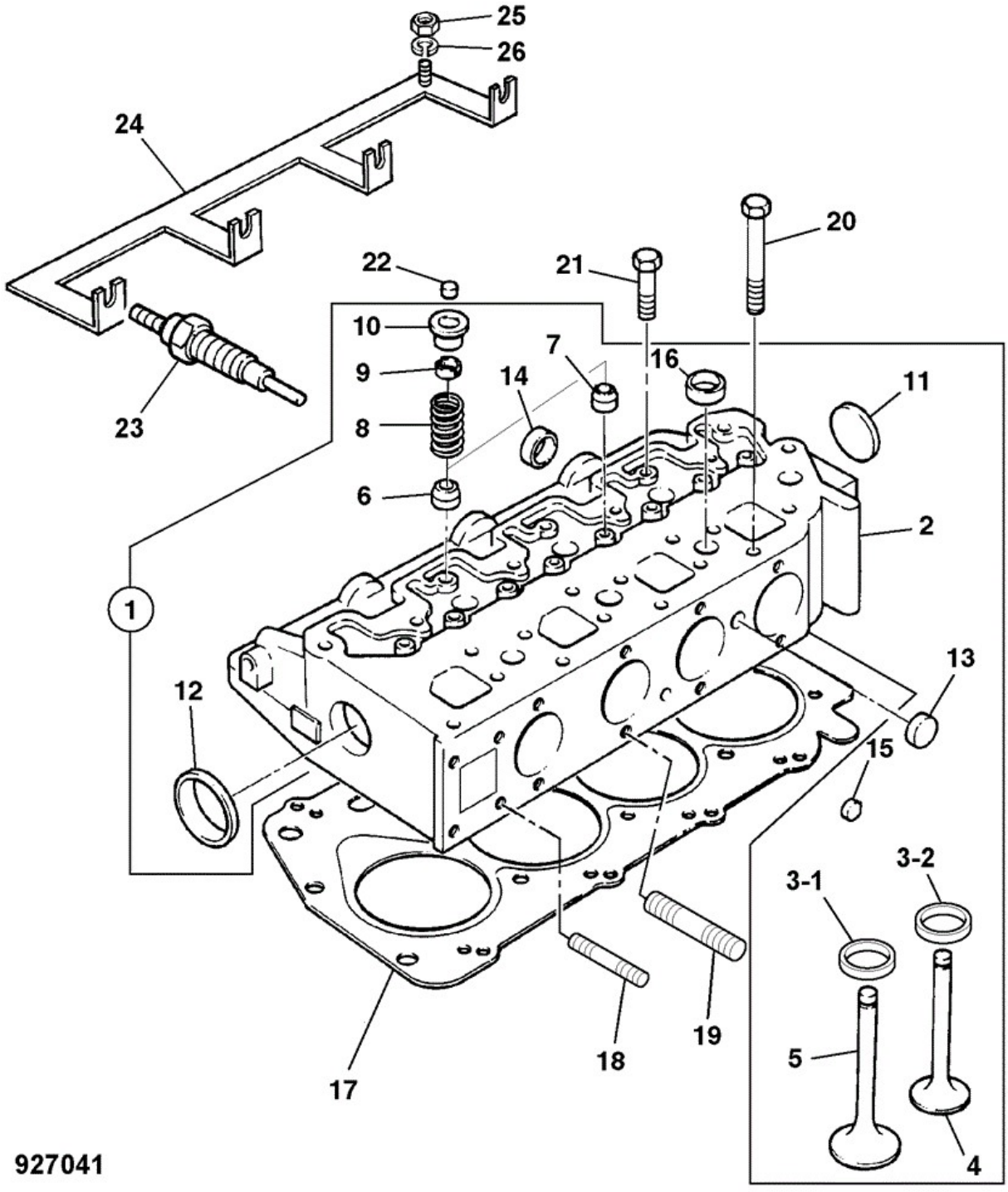

Item	Part No	Change No	Description	Usage Code	QTY
1	02/634866		Cylinder Head Assy.		1
2	****		None serviced part		1

3.1	02/634955		Valve Seat		1
3.2	02/634954		Valve Seat		1
4	02/634735		Valve Exhaust		4
5	02/634734		Valve Intake		4
6	02/630142		Seal inlet valve		4
7	02/630147		Seal exhaust valve		4
8	02/630143		Spring valve		8
9	02/630145		Collet		4
10	02/630144		Cap		4
11	02/630149		Plug D=30mm		1
12	02/630149		Plug D=30mm		1
13	02/634206		Plug core D=25mm		3
14	02/634206		Plug core D=25mm		3
15	02/631320		Plug D=10mm		3
16	02/630933		Plug D=18mm		7
17	02/634927		Gasket head 1.3mm		1
17	02/634926		Gasket head 1.2mm		1
17	02/634925		Gasket head 1.1mm		1
18	02/634715		Stud .		2
19	02/634083		Stud		2
20	02/630741		Screw		14
21	02/630856		Screw		4
22	02/634804		Cap Valve Spring		8
23	717/11700		Thermostart		4
24	02/634085		Rail heater connector		1
25	02/630758		Nut		1
26	02/630759		Washer		1

Applicability Date Ranges:
From: , To:

Product Catalog\BACKHOE LOADER 1CX, 208\1CX 00751600-00752999,00806000-00807552 9802/6220\P ENGINE GN BUILD\P02 CYLINDER HEAD & SUB ASSEMBLIES\P2-2-1 ROCKER ASSEMBLY

9802/6220 P2-2-1 ROCKER ASSEMBLY

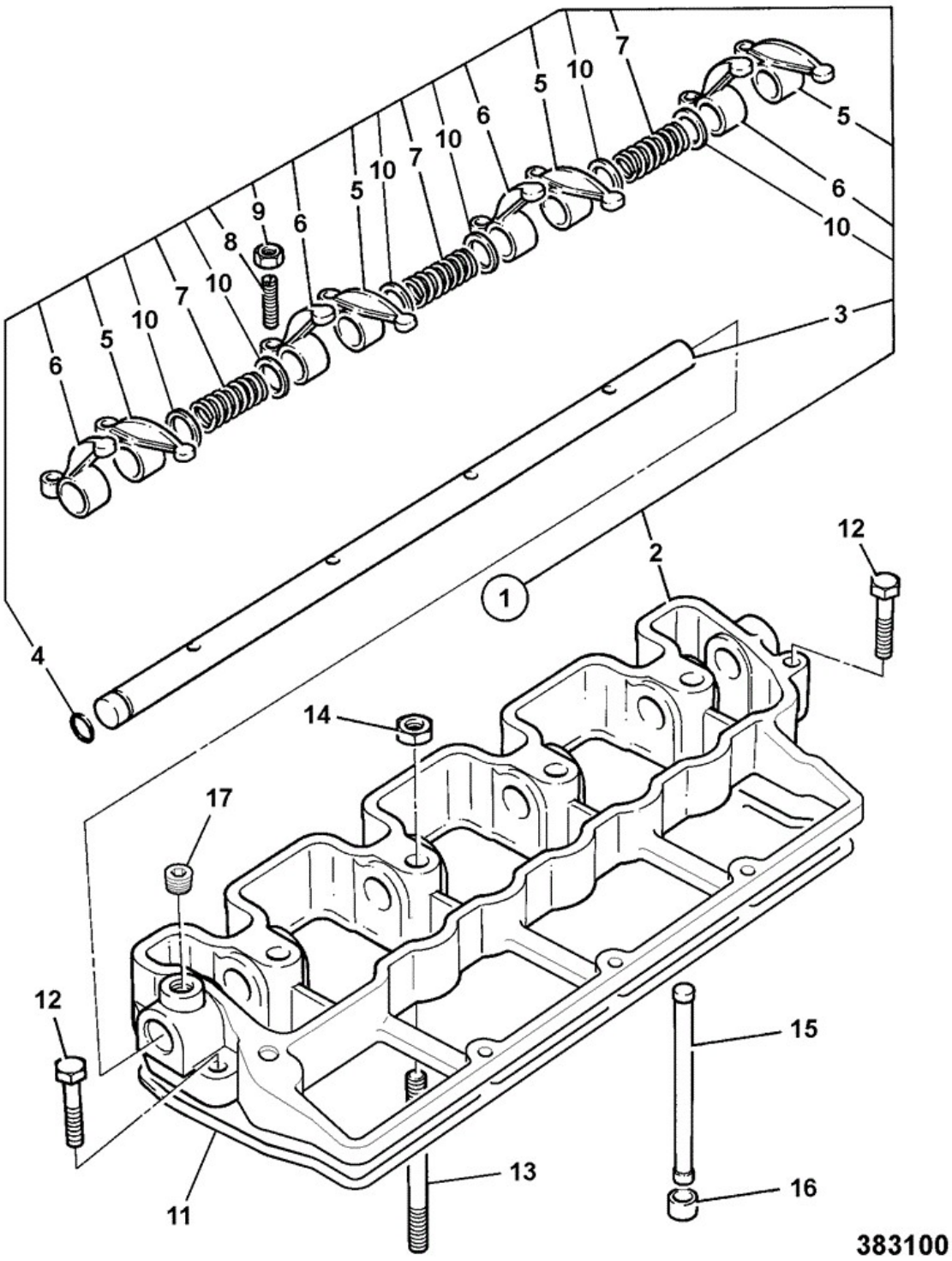

Item	Part No	Change No	Description	Usage Code	QTY
1	02/634663		Shaft rocker assembly		1
2	****		None serviced part		1

3	02/634039		Shaft rocker		1
4	02/630202		O Ring		1
5	02/634037		Lever rocker right hand		4
6	02/634036		Lever rocker left hand		4
7	02/634035		Spring		3
8	02/630167		Screw adjusting		8
9	02/630168		Nut		8
10	02/634024		Washer		6
11	02/634129		Gasket rocker bracket		1
12	826/10723		Screw		2
13	02/634023		Stud		4
14	02/634116		Nut		4
15	02/634034		Rod push		8
16	02/630171		Tappet		8
17	02/630392		Plug D=10mm		1

Applicability Date Ranges:
From: , To:

Product Catalog\BACKHOE LOADER 1CX, 208\1CX 00751600-00752999,00806000-00807552 9802/6220\P ENGINE GN BUILD\P02 CYLINDER HEAD & SUB ASSEMBLIES\P2-3-1 ROCKER COVER ASSEMBLY

9802/6220 P2-3-1 ROCKER COVER ASSEMBLY

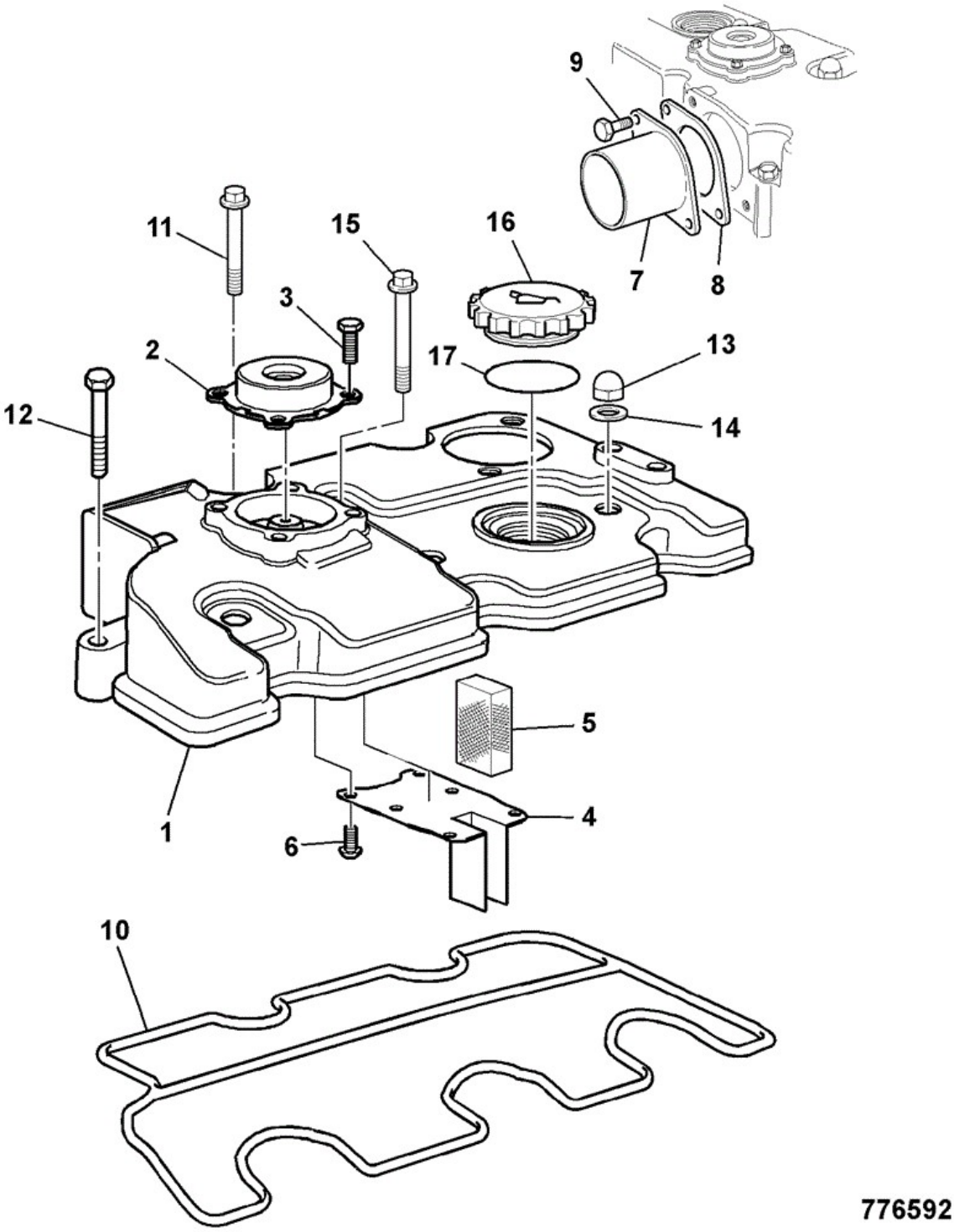

Item	Part No	Change No	Description	Usage Code	QTY
1	02/634137		Cover rocker/induction		1
2	02/634138		Valve oil breather		1

3	826/10727		Bolt		4
4	02/634867		Plate .		1
5	02/630173		Breather gauze		1
6	826/10728		Screw		6
7	02/631323		Pipe air induction		1
8	02/634149		Gasket		1
9	02/634076		Screw		2
10	02/634150		Gasket rocker cover		1
11	826/10729		Screw		3
12	826/10777		Screw		2
13	02/634069		Nut Dome		4
14	02/634068		Washer fibre sealing		4
15	****		Not applicable not available		1
16	02/630455		Cap engine oil filler		1
17	02/630178		Seal		1

Applicability Date Ranges:
From: , To:

Product Catalog\BACKHOE LOADER 1CX, 208\1CX 00751600-00752999,00806000-00807552 9802/6220\P ENGINE GN BUILD\P02 CYLINDER HEAD & SUB ASSEMBLIES\P2-4-1 LIFTING PLATES

9802/6220 P2-4-1 LIFTING PLATES

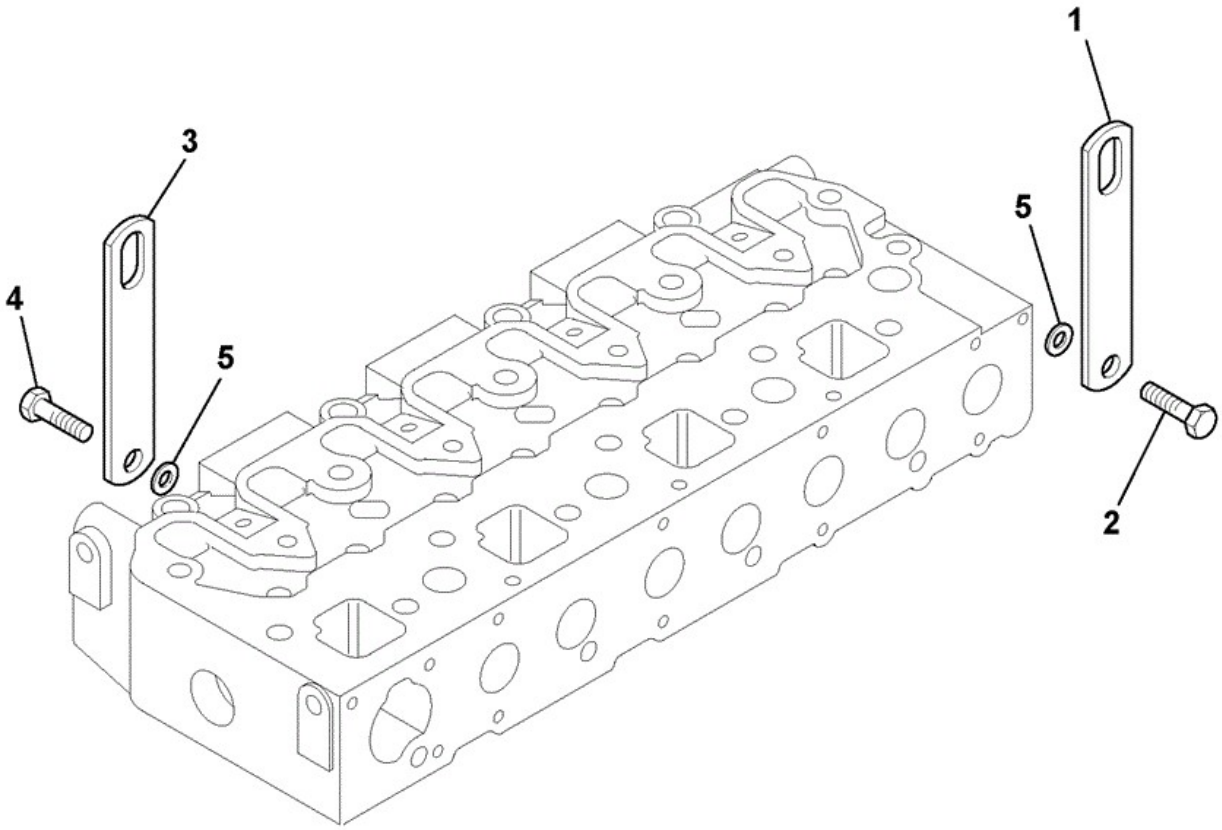

737570

Item	Part No	Change No	Description	Usage Code	QTY
1	02/634243		Plate engine lifting		1
2	826/10725		Screw		1

3	02/634243		Plate engine lifting		1
4	826/10725		Screw		1
5	02/634224		Washer		2

Applicability Date Ranges:
From: , To:

Product Catalog\BACKHOE LOADER 1CX, 208\1CX 00751600-00752999,00806000-00807552 9802/6220\P ENGINE GN BUILD\P04 COOLING SYSTEM\P4-1-1 WATER PUMP

9802/6220 P4-1-1 WATER PUMP

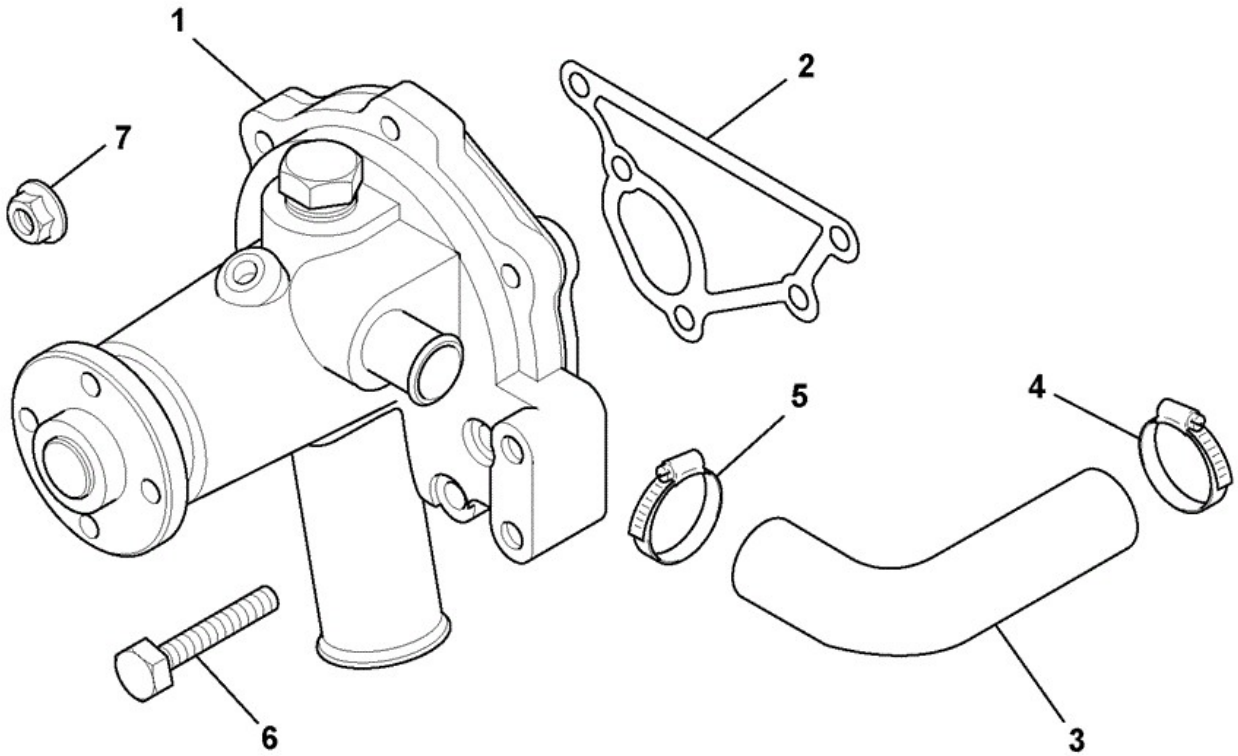

927060

Item	Part No	Change No	Description	Usage Code	QTY
1	02/630880		Pump water assembly		1
2	02/631336		Gasket		1

3	02/630879		Hose by-pass		1
4	02/630846		Clip		1
5	02/630846		Clip		1
6	826/10723		Screw		4
7	02/630096		Nut		1

Applicability Date Ranges:
From: , To:

Product Catalog\BACKHOE LOADER 1CX, 208\1CX 00751600-00752999,00806000-00807552 9802/6220\P ENGINE GN BUILD\P04 COOLING SYSTEM\P4-2-1 THERMOSTAT & HOUSING

9802/6220 P4-2-1 THERMOSTAT & HOUSING

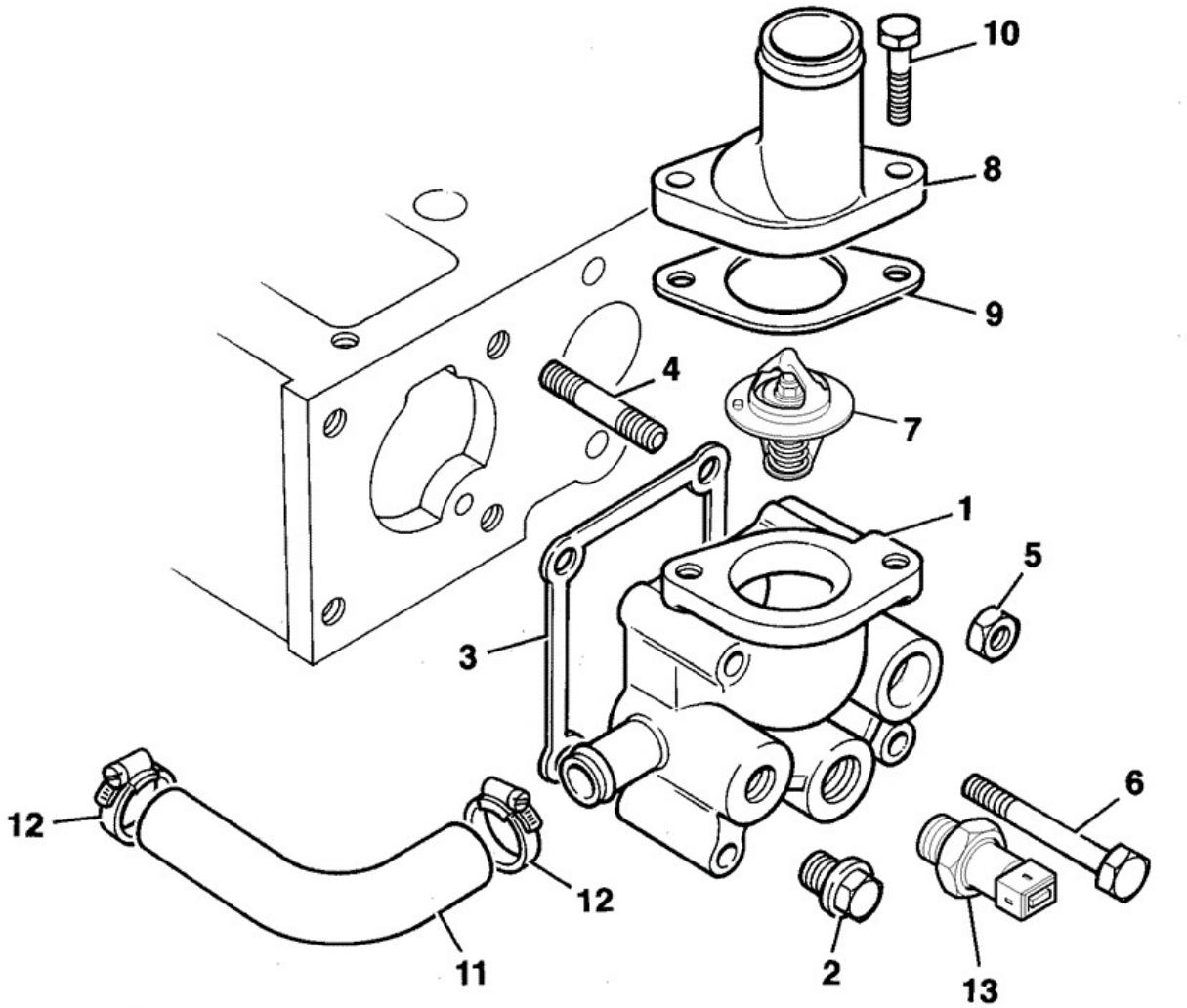

Item	Part No	Change No	Description	Usage Code	QTY
1	02/630878		Housing thermostat		1
2	02/630189		Plug D=30mm		1

3	02/634077		Gasket thermostat housing		1
4	02/634715		Stud .		2
5	02/630096		Nut		2
6	02/634714		Bolt .		2
7	02/634247		Thermostat		1
8	02/631337		Connector water		1
9	02/630843		Gasket		1
10	826/10766		Screw		2
11	02/630879		Hose by-pass		1
12	02/630846		Clip		2
13	701/80434		Sensor water temperature with probe		1
14	02/634683		Plug D=60MM		2

Applicability Date Ranges:
From: , To: