NISSAN FORKLIFT

MARÇO 2013

RUTHZIL TRATOR COMERCIAL DE PEÇAS LTDA 11 97083-6812 ROLANDO CITRANGULO

PARTS CATALOG

MODEL 1F2UP

Platinum II Series IC Pneumatic Tire
Engine Powered/LPG, Gasoline, Dual Fuel, Diesel
4,000-7,000 lb. Capacities



PARTS

NISSAN FORKLIFT CORPORATION
240 North Prospect Street
Marengo, IL 60152
Phone: 815-568-0061
Fax: 815-568-0179
www.nissanforklift.com

PART NUMBER: CF690-UBOOK
PRINTING: MARCH 2013

NISSAN FORKLIFT

PARTS CATALOG

MODEL 1F2UP SERIES

MARCH 2013 ISSUE

FIRST EDITION	: MARCH	2007
SECOND EDITION	: JUNE	2007
THIRD EDITION	: JULY	2008
FOURTH EDITION	: SEPTEMBER	2009
FIFTH EDITION	: JULY	2011
SIXTH EDITION	: MARCH	2013

© NISSAN FORKLIFT CORPORATION

All Rigths Reserved. No part of this publication may be reproduced in any form without the prior written permission of the publisher.

GENERAL INDEX

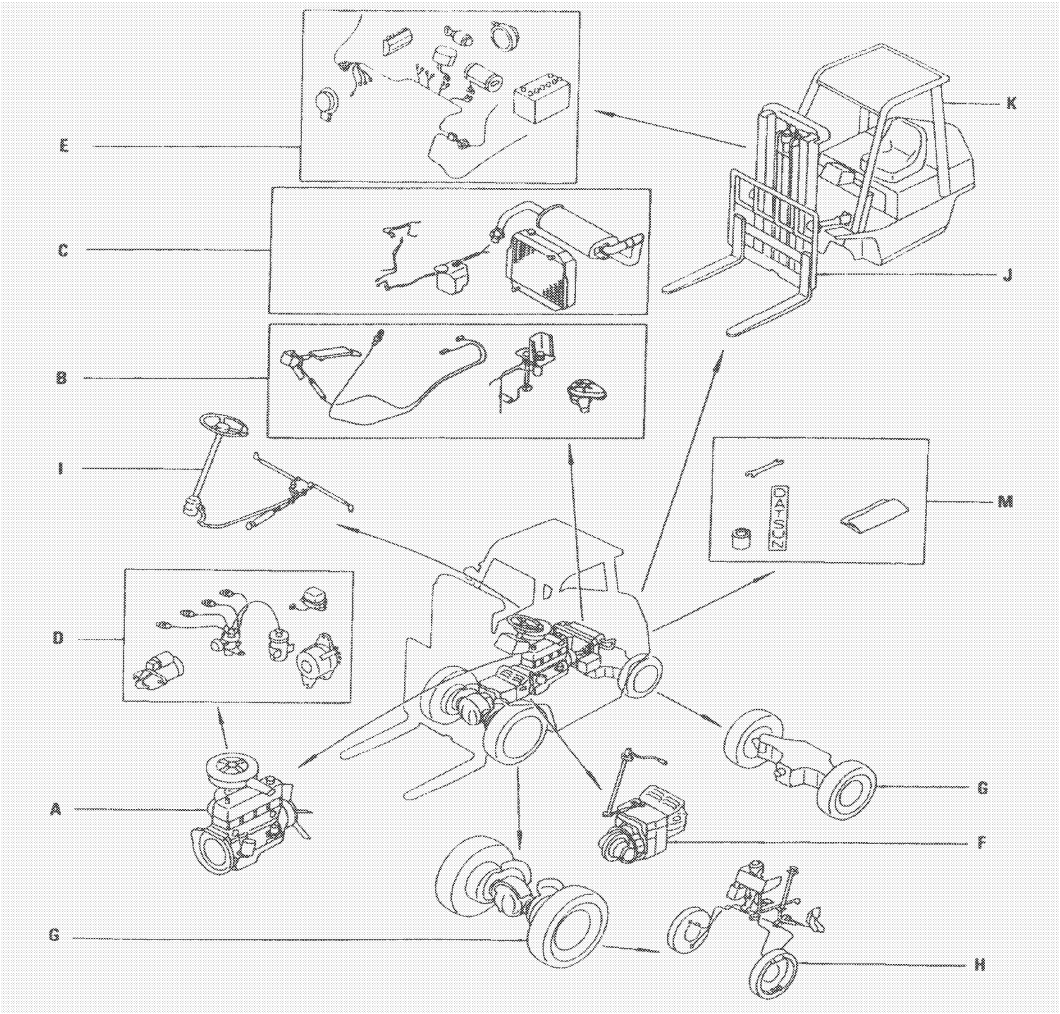

	INTRODUCTION
A	ENGINE MECHANICAL
B	FUEL & ENGINE CONTROL
C	EXHAUST & COOLING
D	ENGINE ELECTRICAL
E	BODY ELECTRICAL
F	POWER TRAIN
G	AXLE & SUSPENSION
H	BRAKE
I	STEERING
J	BODY(FRONT, ROOF & FLOOR)
K	BODY(SIDE, REAR & SEAT)
M	MISCELLANEOUS
	ALPHA. PART NAME INDEX
	PART NO. INDEX

*ILLSTRATIONS SHOWN IN GENERAL INDEX AND GROUP INDEX ARE GENARALIZED DESCRIPTIONS FOR ALL MODELS AND ARE NOT PRECISE IN ALL DETAILS.

CONTENTS

INTRODUCTION **Page**

GROUP SYMBOLS AND ABBREVIATIONS E1
CAR NUMBER AND ENGINE NUMBER E5
TABLE OF CHASSIS NUMBERS E6
SECTION INDEX 1

TEXT **Section No.**

ENGINE MECHANICAL ..... 100-150&296
FUEL & ENGINE CONTROL 160-199
EXHAUST & COOLING 200-216
ENGINE ELECTRICAL 220-233
BODY ELECTRICAL 240-267
POWER TRAIN 310-380
AXLE & SUSPENSION 402-434
BRAKE 440-465
STEERING 480-497
BODY (FRONT, ROOF & FLOOR) 500-740
BODY (SIDE, REAR & SEAT) 871
MISCELLANEOUS 991-993

PART NUMBER INDEX 1-26

WARRANTY COVERAGE AT A GLANCE

To Nissan Forklift Valued Customers

Your Nissan Forklift may be covered by one or more of the following warranty coverages, depending on your location. Included in your delivery package with this Operator's Manual should be a separate Warranty Statement, which will explain your coverage.

Basic Coverage*	**12 months / 2,000 hours**
Powertrain	**24 months / 4,000 hours**
Emission Control Warranty LSI	**36 months or 2,500 hours (General Parts)**
Emission Control Warranty LSI	**36 months or 4,000 hours (Powertrain Parts)**
Long-Term Emission Control Warranty LSI	**60 months or 3,500 hours (General Parts)**
Long-Term Emission Control Warranty LSI	**60 months or 4,000 hours (Powertrain Parts)**
Emission Related Warranty CI	**60 months or 3,000 hours (General Parts)**

LSI = Large Spark Ignited Engines above 25 HP (gas, LPG, LNG)
CI = Compression Ignited Engines (all Diesel)

The above warranty coverage applies to both U.S. EPA and CARB Emission Regulation standards only. These warranty time periods are for units shipped in the United States and its territories.

For exclusion and limitations, see separate Warranty Statement included with start-up manuals.

*Warranty coverage for tires, battery, optional equipment, and hang on attachments are provided by the local component manufacturer's representatives, directly.

For warranty coverage and statements outside of the U.S., please contact your local authorized NISSAN Forklift dealer.

Jan-04

INTRODUCTION

GROUP SYMBOLS AND ABBREVIATIONS

DEFINITION OF GROUP SYMBOLS IN APPLIED MODEL COLUMN:

20	LIFTING CAPACITY OF 4,000lbs OR 2,000kg
25	LIFTING CAPACITY OF 5,000lbs OR 2,500kg
28	LIFTING CAPACITY OF 5,500lbs OR 2,800kg
30	LIFTING CAPACITY OF 6,000lbs OR 3,000kg
35	LIFTING CAPACITY OF 7,000lbs OR 3,500kg
K21	K21 GASOLINE ENGINE
K25	K25 GASOLINE ENGINE
QD32	QD32 DIESEL ENGINE
ATM	AUTOMATIC TRANSMISSION
PNEU	PNEUMATIC TYPE
2W	2 STAGE WIDE VIEW MAST
2F	2 STAGE FULL FREE MAST
3F	3 STAGE FULL FREE MAST
3V	3 STAGE FULL FREE MAST (OPTIVIEW MAST)
270~700	LIFTING HEIGHT 270cm ~ 700cm
OP	OPTIONAL EQUIPMENT
GAS	GASOLINE ENGINE
LPG	LP-GAS ENGINE
DUAL	DUAL ENGINE
FC	FINGER TIP CONTROL

DEFINITION OF GROUP SYSTEMS IN SPECIFICATION COLUMN

VLVX3	3 SPOOL VALVE
VLVX4	4 SPOOL VALVE
S.S	SIDE SHIFT

DEFINITION OF GROUP SYMBOLS IN "S" COLUMN:

*	NON-AVAILABLE ITEM OR OLD ITEM SUPERSEDED BY A NEW ONE.
#	DISREGARD THIS SYMBOL, IN INTERPRETING THIS PARTS CATALOG.

MODEL IDENTIFICATION

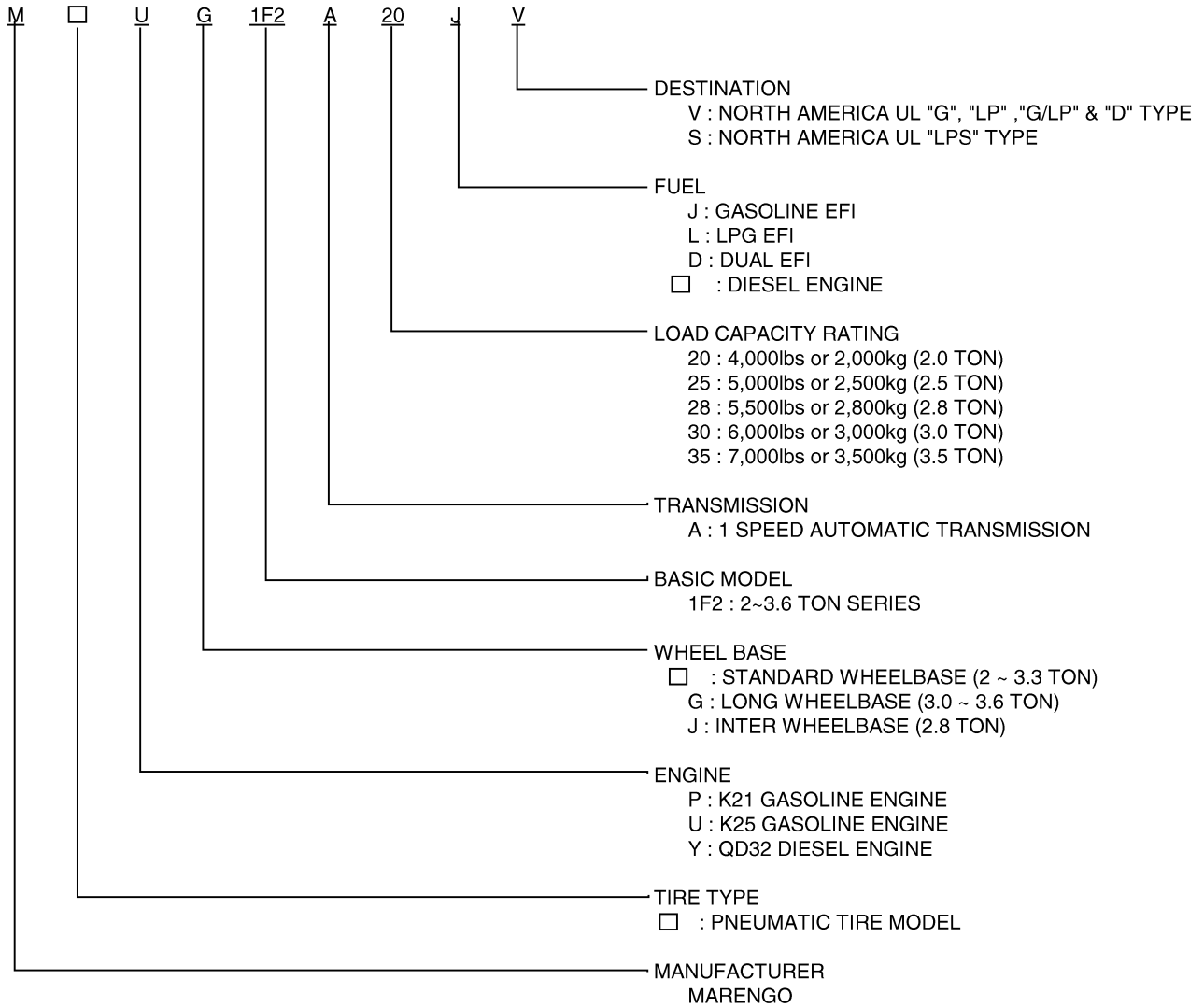

CLASSIFICATION OF MODEL

APP NO.	MODEL NISSAN	LOCAL	STYLE	ENGINE	FUEL	WHEEL BASE	TRANSMISSION	CAPACITY RATING	UL TYPE	DESTINATION
01	MP1F2A20JV	PF40	PNEU	K21	GASOLINE	STD	ATM	20	G	NORTH AMERICA
02	MP1F2A20LV	PF40LP	PNEU	K21	LPG	STD	ATM	20	LP	NORTH AMERICA
03	MP1F2A20DV	PF40DF	PNEU	K21	DUAL	STD	ATM	20	G/LP	NORTH AMERICA
04	MP1F2A20LS	PF40LPS	PNEU	K21	LPG	STD	ATM	20	LPS	NORTH AMERICA
05	MY1F2A20V	PFD40	PNEU	QD32	DIESEL	STD	ATM	20	D	NORTH AMERICA
06	MU1F2A20JV	PFU40	PNEU	K25	GASOLINE	STD	ATM	20	G	NORTH AMERICA
07	MU1F2A20LV	PFU40LP	PNEU	K25	LPG	STD	ATM	20	LP	NORTH AMERICA
08	MU1F2A20DV	PFU40DF	PNEU	K25	DUAL	STD	ATM	20	G/LP	NORTH AMERICA
09	MU1F2A20LS	PFU40LPS	PNEU	K25	LPG	STD	ATM	20	LPS	NORTH AMERICA
10	MP1F2A25JV	PF50	PNEU	K21	GASOLINE	STD	ATM	25	G	NORTH AMERICA
11	MP1F2A25LV	PF50LP	PNEU	K21	LPG	STD	ATM	25	LP	NORTH AMERICA
12	MP1F2A25DV	PF50DF	PNEU	K21	DUAL	STD	ATM	25	G/LP	NORTH AMERICA
13	MP1F2A25LS	PF50LPS	PNEU	K21	LPG	STD	ATM	25	LPS	NORTH AMERICA
14	MY1F2A25V	PFD50	PNEU	QD32	DIESEL	STD	ATM	25	D	NORTH AMERICA
15	MU1F2A25JV	PFU50	PNEU	K25	GASOLINE	STD	ATM	25	G	NORTH AMERICA
16	MU1F2A25LV	PFU50LP	PNEU	K25	LPG	STD	ATM	25	LP	NORTH AMERICA
17	MU1F2A25DV	PFU50DF	PNEU	K25	DUAL	STD	ATM	25	G/LP	NORTH AMERICA
18	MU1F2A25LS	PFU50LPS	PNEU	K25	LPG	STD	ATM	25	LPS	NORTH AMERICA
19	MUJ1F2A28JV	PF55	PNEU	K25	GASOLINE	INTER	ATM	28	G	NORTH AMERICA
20	MUJ1F2A28LV	PF55LP	PNEU	K25	LPG	INTER	ATM	28	LP	NORTH AMERICA
21	MUJ1F2A28DV	PF55DF	PNEU	K25	DUAL	INTER	ATM	28	G/LP	NORTH AMERICA
22	MUG1F2A30JV	PF60	PNEU	K25	GASOLINE	LONG	ATM	30	G	NORTH AMERICA
23	MUG1F2A30LV	PF60LP	PNEU	K25	LPG	LONG	ATM	30	LP	NORTH AMERICA
24	MUG1F2A30DV	PF60DF	PNEU	K25	DUAL	LONG	ATM	30	G/LP	NORTH AMERICA
25	MYG1F2A30V	PFD60	PNEU	QD32	DIESEL	LONG	ATM	30	D	NORTH AMERICA
26	MUG1F2A35JV	PF70	PNEU	K25	GASOLINE	LONG	ATM	35	G	NORTH AMERICA
27	MUG1F2A35LV	PF70LP	PNEU	K25	LPG	LONG	ATM	35	LP	NORTH AMERICA
28	MUG1F2A35DV	PF70DF	PNEU	K25	DUAL	LONG	ATM	35	G/LP	NORTH AMERICA
29	MYG1F2A35V	PFD70	PNEU	QD32	DIESEL	LONG	ATM	35	D	NORTH AMERICA

CLASSIFICATION OF MODEL

APP NO.	MODEL NISSAN	LOCAL	STYLE	ENGINE	FUEL	WHEEL BASE	TRANSMISSION	CAPACITY RATING	UL TYPE	DESTINATION
01	PJ01A15V	JP30	PNEU	H20-II	GASOLINE	STD	ATM	15	G	NORTH AMERICA
02	PJ01A15PV	JP30LP	PNEU	H20-II	LPG	STD	ATM	15	LP	NORTH AMERICA
03	PJ01A18V	JP35	PNEU	H20-II	GASOLINE	STD	ATM	18	G	NORTH AMERICA
04	PJ01A18PV	JP35LP	PNEU	H20-II	LPG	STD	ATM	18	LP	NORTH AMERICA
05	PJ01A15S	JP30GS	PNEU	H20-II	GASOLINE	STD	ATM	15	GS	NORTH AMERICA
06	PJ01A15PS	JP30LPS	PNEU	H20-II	LPG	STD	ATM	15	LPS	NORTH AMERICA
07	PJ01A18S	JP35GS	PNEU	H20-II	GASOLINE	STD	ATM	18	GS	NORTH AMERICA
08	PJ01A18PS	JP35LPS	PNEU	H20-II	LPG	STD	ATM	18	LPS	NORTH AMERICA

3-103
SEC. 993 CAUTION PLATE & LABEL

PLACA Y ETIQUETA DE PRECAUCIÓN
PLAQUE ET VIGNETTE D'AVERTISSEMENT
HINWEISSCHILD UND -ETIKETT

NO.	S	KEY NO.	LEV	PART NO.	PART NAME	SPECIFICATION	QTY	APPLIED DATE	ICA N	ICA F	FORMER PART NO.
	1	01	1	97835-10H00	LABEL-NAME, MAST		02	0897-			
	2	01	1	97836-10K00	PLATE-MAST CAUTION		02	0897-			
	3	01	1	97837-10H00	PLATE-COUTION FORK		01	0897-			
	4	01	1	97839-11H01	LABEL-CAUTION LIFT & DRAW		01	0897-			
	5	01	1	97833-L2000	PLATE-CAUTION HYDRAULIC	F/PLATE-GERMAN	01	0897-			
		02	1	97833-L3000		F/PLATE-FRENCH	01	0897-			
		03	1	97833-26H00		F/PLATE-SPANISH	01	0897-			
	6	01	1	97830-S6000	PLATE-OPERATION LIFT & TILT		01	0897-			

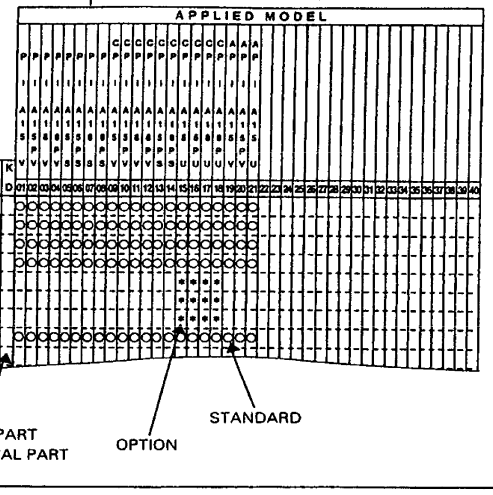

* : KD PART
□ : LOCAL PART

OPTION

STANDARD

ICA

The purpose of this column is to indicate whether the new part number can replace the fromer part number and vice versa. The "N" column represents the new part number. The "F" column represents the former or old part number.

ICA N	ICA F	Part catalog column
2	2	The new part number can replace the former and vice versa.
2	0	The new part number can replace the former one, but the former can not replace the new one.
0	2	The former part number can replace the new one but the new can not replace the former one.
0	0	No interchangeability is possible between the new and former part numbers.
5	0	Conditional interchangeability.

CAR NUMBER AND ENGINE NUMBER

To choose the right parts, always refer to the Car Nes.,
or engine Nos., which are located in the engine room (see below).

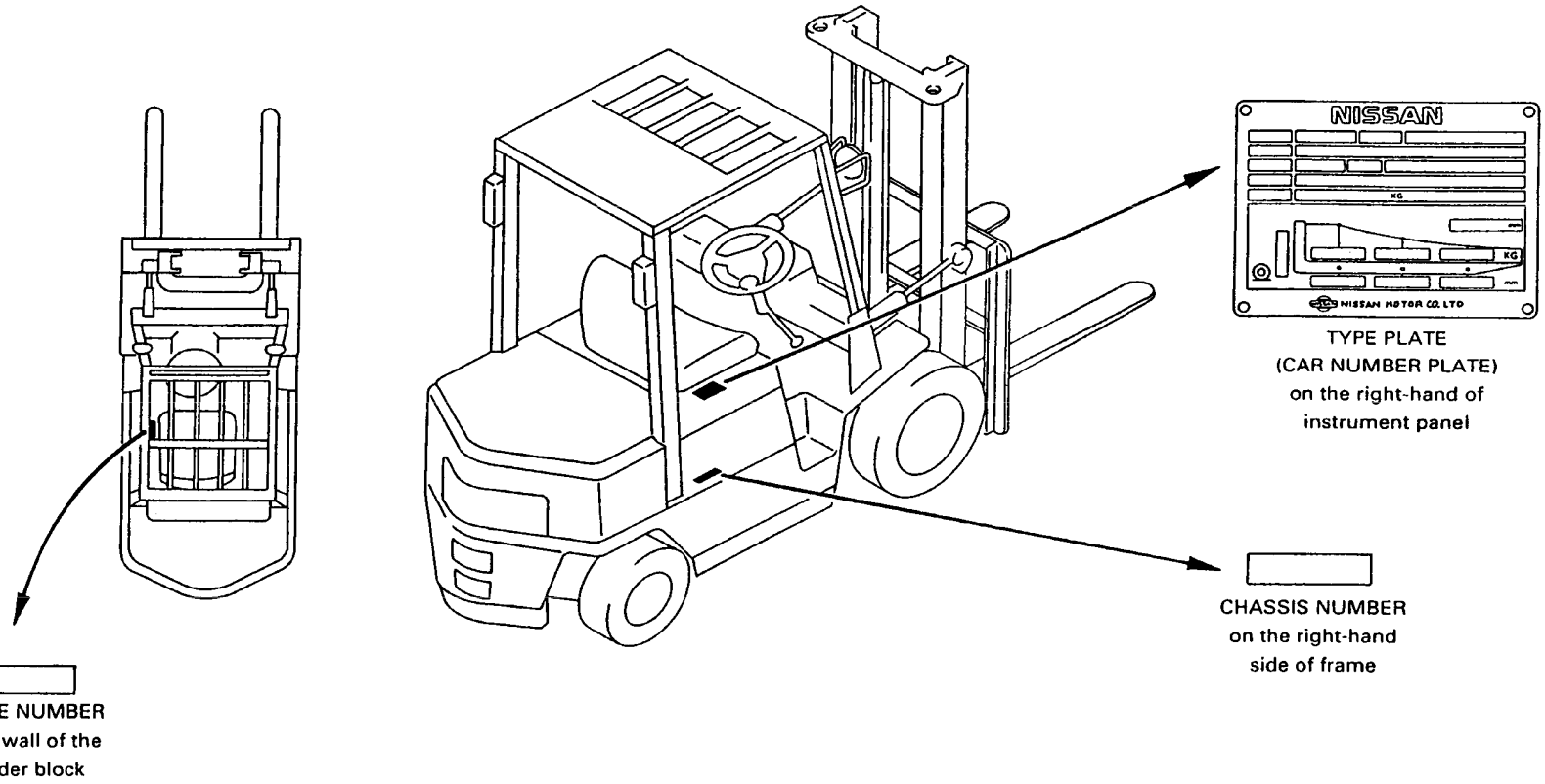

TABLE OF CHASSIS NUMBERS

This table shows the chassis number of the first vehicle in each monthly production. The table was compiled to facilitate finding out when a customer's vehicle was produced so as to find the correct part in the catalog. The production months shown here may be slightly different from the month the vehicle was actually produced. This is because production variables sometimes cause actual serial numbers to vary from the previously-decided serial numbers.

TABLA DE LOS NUMEROS DE CHASIS

Esta tabla le muestra el número de chasis del primer vehículo producido cada mes. Esta tabla ha sido compilada para facilitar el conocimiento de cuando fué producido el vehículo de cliente, y facilitar la búsqueda de las piezas correctas en el catálogo. Los meses de producción mostrados aquí pueden diferir ligeramente con el mes en eque el vehículo fué actualmente producido. Esto es debido a que la producción varía algunas veces y causa que los números de serie difieran de los decididos previamente.

TABLEAU DES NUMEROS DE CHASSIS

Ce tableau indique le numero de châssis du premier véhicule de la produciton mensuelle. Ce tableau a été compilé pour savoir plus rapidement quand la voiture d'un client a été produite de manière à retrouver dans le catalogue de pièces de rechange, la pièce qui convient. Les mois de production qui sont indiqués ici peuvent sensiblement varier du mois de production du véhicule actuellement produit. Ceci est dû au fait que la production dans une certaine mesure et provoque une variation dans les numéros de série actuels en comparaison des numéros de série qui sont décidés au départ.

TABELLE DER FAHRGESTELLNUMMERN

Diese Tabelle zeigt die Fahrgestellnummern der monatlich als erstes hergestellten Fahrzeuge. Diese Tabelle wurde zu dem Zweck zusammengestellt, schnell zu wissen, wann ein bestimmtes Fahrzeug Ihres Kunden hergestellt wurde, um passende Ersatzteile im Katalog aufzufinden. Die hier angegebenen Produktionsmonate können von den tatsächlichen leicht abweichen, da die veränderlichen Produktionsfaktoren verursachen daß die wirklichen Seriennummern von den vorbestimmten abweichen.

TABLE OF CHASSIS NUMBERS

MONTH / YEAR CHASSIS TYPE	PLANT	01-'07	02-'07	03-'07	04-'07	05-'07	06-'07	07-'07	08-'07	09-'07	10-'07	11-'07	12-'07
P1F2	MARENGO	9H0001	9H0002	9H0088	9H0188	9H0292	9H0404	9H0517	9H0581	9H0715	9H0882	9H1007	9H1131
U1F2	MARENGO	9J0001	9J0003	9J0018	9J0026	9J0038	9J0048	9J0054	9J0062	9J0064	9J0072	9J0079	9J0086
Y1F2	MARENGO	9K0001	9K0003	9K0006	9K0017	9K0028	9K0036	9K0044	9K0050	9K0053	9K0064	9K0067	9K0072
UJ1F2	MARENGO	9V0001	9V0002	9V0004		9V0006	9V0010	9V0015	9V0016	9V0018	9V0020		
UG1F2	MARENGO	9L0001	9L0003	9L0085	9L0133	9L0190	9L0268	9L0336	9L0381	9L0409	9L0489	9L0521	9L0574
YG1F2	MARENGO	9M0001	9M0002		9M0003	9M0085	9M0092	9M0103	9M0112	9M0130	9M0157	9M0172	9M0184

MONTH / YEAR CHASSIS TYPE	PLANT	01-'08	02-'08	03-'08	04-'08	05-'08	06-'08	07-'08	08-'08	09-'08	10-'08	11-'08	12-'08
P1F2	MARENGO	9H1237	9H1377	9H1468	9H1549	9H1644	9H1782	9H1806	9H1855	9H1973	9H2122	9H2221	9H2276
U1F2	MARENGO	9J0094	9J0104	9J0111	9J0119	9J0130	9J0141	9J0149	9J0163	9J0175	9J0189	9J0204	9J0209
Y1F2	MARENGO	9K0076	9K0086	9K0093	9K0115	9K0117	9K0124	9K0126	9K0151	9K0175	9K0183	9K0189	9K0193
UJ1F2	MARENGO			9V0022		9V0027	9V0029	9V0031	9V0032	9V0034	9V0038	9V0039	
UG1F2	MARENGO	9L0631	9L0690	9L0743	9L0784	9L0844	9L0898	9L0942	9L0975	9L1016	9L1070	9L1113	9L1140
YG1F2	MARENGO	9M0198	9M0209	9M0226	9M0247	9M0257	9M0272	9M0287	9M0323	9M0333	9M0347	9M0358	9M0364

MONTH / YEAR CHASSIS TYPE	PLANT	01-'09	02-'09	03-'09	04-'09	05-'09	06-'09	07-'09	08-'09	09-'09	10-'09	11-'09	12-'09
P1F2	MARENGO	9H2337	9H2437	9H2520	9H2559	9H2596	9H2625	9H2659	9H2708	9H2737	9H2769	9H2845	9H2874
U1F2	MARENGO		9J0215		9J0216	9J0221	9J0230	9J0235	9J0236	9J0242	9J0243	9J0245	9J0246
Y1F2	MARENGO	9K0207	9K0222	9K0248	9K0253	9K0264	9K0267	9K0282	9K0290	9K0293	9K0304	PK0305	9K0308
UJ1F2	MARENGO	9V0040					9V0042	9V0043	9V0044			9V0045	
UG1F2	MARENGO	9L1184	9L1238	9L1244	9L1250	9L1280	9L1300	9L1321	9L1342	9L1364	9L1385	9L1397	9L1410
YG1F2	MARENGO	9M0368	9M0396	9M0398	9M0402	9M0409	9M0416	9M0419	9M0422	9M0425	9M0430		9M0433

TABLE OF CHASSIS NUMBERS

MONTH / YEAR CHASSIS TYPE	PLANT	01-'10	02-'10	03-'10	04-'10	05-'10	06-'10	07-'10	08-'10	09-'10	10-'10	11-'10	12-'10
P1F2	MARENGO	9H2891	9H2923	9H2961	9H3012	9H3050	9H3131	9H3219	9H3255	9H3279	9H3305	9H3376	9H3444
U1F2	MARENGO	9J0248	9J0249	9J0252	9J0256	9J0260	9J0261	9J0265	9J0269	9J0280	9J0305	9J0334	9J0348
Y1F2	MARENGO	9K0310	9K0317	9K0322	9K0325	9K0333	9K0340	9K0344	9K0346	9K0350	9K0353	9K0357	9K0364
UJ1F2	MARENGO	9V0046		9V0047	9V0049		9V0050				9V0051		
UG1F2	MARENGO	9L1422	9L1441	9L1454	9L1466	9L1486	9L1509	9L1529	9L1548	9L1568	9L1584	9L1613	9L1640
YG1F2	MARENGO	9M0438	9M0443	9M0448	9M0457	9M0461	9M0463	9M0471	9M0476	9M0485	9M0493	9M0497	9M0509

MONTH / YEAR CHASSIS TYPE	PLANT	01-'11	02-'11	03-'11	04-'11	05-'11	06-'11	07-'11	08-'11	09-'11	10-'11	11-'11	12-'11
P1F2	MARENGO	9H3506	9H3638	9H3780	9H3882	9H3929	9H4003	9H4084	9H4148	9H4237	9H4332	9H4416	9H4506
U1F2	MARENGO	9J0352	9J0362	9J0365	9J0375	9J0388	9J0409	9J0425	9J0432	9J0456	9J0466	9J0476	9J0494
Y1F2	MARENGO	9K0365	9K0369	9K0374	9K0377	9K0389	9K0394	9K0404	9K0405	9K0407	9K0412	9K0425	9K0435
UJ1F2	MARENGO				9V0052		9V0055		9V0063				
UG1F2	MARENGO	9L1681	9L1703	9L1731	9L1765	9L1807	9L1853	9L1915	9L1972	9L2026	9L2078	9L2117	9L2150
YG1F2	MARENGO	9M0522	9M0536	9M0538	PM0540	9M0551	9M0563	9M0571	9M0578	9M0590	9M0600	9M0612	9M0622

MONTH / YEAR CHASSIS TYPE	PLANT	01-'12	02-'12	03-'12	04-'12	05-'12	06-'12	07-'12	08-'12	09-'12	10-'12	11-'12	12-'12
P1F2	MARENGO	9H4562	9H4639	9H4764	9H4876	9H4979	9H5109	9H5225	9H5314	9H5484	9H5505	9H5583	9H5707
U1F2	MARENGO	9J0499	9J0530	9J0534	9J0569	9J0591	9J0631	9J0663	9J0676	9J0704	9J0730	9J0754	9J0777
Y1F2	MARENGO	9K0443	9K0447	9K0457	9K0463	9K0470	9K0480	9K0491	9K0498	9K0504	9K0515	9K0520	9K0530
UJ1F2	MARENGO		9V0068		9V0074	9V0081						9V0092	
UG1F2	MARENGO	9L2178	9L2216	9L2278	9L2339	9L2384	9L2444	9L2484	9L2531	9L2607	9L2615	9L2655	9L2693
YG1F2	MARENGO	9M0626	9M0639	9M0648	9M0657	9M0670	9M0681	9M0705	9M0719	9M0729	9M0744	9M0755	9M0761

TABLE OF CHASSIS NUMBERS

MONTH / YEAR CHASSIS TYPE	PLANT	01-'13	02-'13	03-'13	04-'13	05-'13	06-'13	07-'13	08-'13	09-'13	10-'13	11-'13	12-'13
P1F2	MARENGO	9H5808	9H5939										
U1F2	MARENGO	9J0787	9J0803										
Y1F2	MARENGO	9K0533	9K0539										
UJ1F2	MARENGO	9V0094											
UG1F2	MARENGO	9L2735	9L2774										
YG1F2	MARENGO	9M0767	9M0776										

MONTH / YEAR CHASSIS TYPE	PLANT	01-'14	02-'14	03-'14	04-'14	05-'14	06-'14	07-'14	08-'14	09-'14	10-'14	11-'14	12-'14
P1F2	MARENGO												
U1F2	MARENGO												
Y1F2	MARENGO												
UJ1F2	MARENGO												
UG1F2	MARENGO												
YG1F2	MARENGO												

MONTH / YEAR CHASSIS TYPE	PLANT	01-'15	02-'15	03-'15	04-'15	05-'15	06-'15	07-'15	08-'15	09-'15	10-'15	11-'15	12-'15
P1F2	MARENGO												
U1F2	MARENGO												
Y1F2	MARENGO												
UJ1F2	MARENGO												
UG1F2	MARENGO												
YG1F2	MARENGO												

SECTION INDEX

(A) ENGINE MECHANICAL

Sec.No.	Sec. Name
100	ENGINE ASSEMBLY
102A	ENGINE GASKET KIT (K21 & K25)
102B	ENGINE GASKET KIT (QD32)
110A	CYLINDER BLOCK & OIL PAN (K21 & K25)
110B	CYLINDER BLOCK & OIL PAN (QD32)
111A	CYLINDER HEAD & ROCKER COVER (K21 & K25)
111B	CYLINDER HEAD & ROCKER COVER (QD32)
112	ENGINE & MOUNTING
117B	FAN, COMPRESSOR & POWER STEERING BELT (QD32)
118A	CRANK CASE VENTILATION (K21 & K25)
118B	CRANK CASE VENTILATION (QD32)
120A	PISTON,CRANKSHAFT & FLYWHEEL (K21 & K25)
120B	PISTON,CRANKSHAFT & FLYWHEEL (QD32)
130A	CAMSHAFT & VALVE MECHANISM (K21 & K25)
130B	CAMSHAFT & VALVE MECHANISM (QD32)
135A	FRONT COVER & FITTING (K21 & K25)
135B	FRONT COVER & FITTING (QD32 UPTO SEPT. 2008)
135C	FRONT COVER & FITTING (QD32 FROM SEPT. 2008)
140A	MANIFOLD (K21 & K25)
140B	MANIFOLD (QD32)
150A	LUBRICATING SYSTEM (K21 & K25)
150B	LUBRICATING SYSTEM (QD32)
296	CONTROLLER (VCM)

(B) FUEL & ENGINE CONTROL

Sec.No.	Sec. Name
160A	CARBURETOR
164A	FUEL STRAINER & FUEL HOSE (K21 & K25)
164B	FUEL STRAINER & FUEL HOSE (QD32)
165	AIR CLEANER
173A	FUEL PIPING (K21 & K25)
173B	FUEL PIPING (QD32)
180	ACCELERATOR LINKAGE
185B	FUEL SUPPLY SYSTEM (QD32)
186B	FUEL INJECTION PUMP (QD32)
195A	VAPORIZER (K21 & K25)
196	LPG FILTER & PIPING
199A	LPG BOMBE
199B	LPG BOMBE -FIXED
199C	LPG BOMBE (SWING DOWN)

(C) EXHAUST & COOLING

Sec.No.	Sec. Name
200A	EXHAUST TUBE & MUFFLER
200B	EXHAUST TUBE & MUFFLER (QD32)
200C	EXHAUST TUBE & MUFFLER (QD32-OVERHEAD) (UPTO NOV. 2008)
200D	EXHAUST TUBE & MUFFLER (QD32-OVERHEAD) (FROM NOV. 2008)
210A	WATER PUMP, COOLING FAN & THERMOSTAT (K21 & K25)
210B	WATER PUMP, COOLING FAN & THERMOSTAT (QD32)
213B	OIL COOLER (QD32)
214	RADIATOR, SHROUD & FITTING
216A	TORQUE CONVERTER OIL COOLER & PIPING (UPTO AUG. 2011)
216B	TORQUE CONVERTER OIL COOLER & PIPING (FROM AUG. 2011)

(D) ENGINE ELECTRICAL

Sec.No.	Sec. Name
220A	IGNITION SYSTEM
220B	IGNITION SYSTEM (QD32)
221A	DISTRIBUTOR (K21 & K25)
223A	VACUUM PIPING (K21 & K25)
226A	ENGINE CONTROL MODULE (K21 & K25)
230A	ALTERNATOR FITTING (K21 & K25)
230B	ALTERNATOR FITTING (QD32)
231A	ALTERNATOR (K21 & K25)
231B	ALTERNATOR (QD32)
233A	STARTER MOTOR (K21 & K25)
233B	STARTER MOTOR (QD32)

(E) BODY ELECTRICAL

Sec.No.	Sec. Name
240	WIRING ENGINE ROOM & INSTRUMENT
241A1	WIRING (BODY) (K21 & K25) PART 1
241A2	WIRING (BODY) (K21 & K25) PART 2
241B1	WIRING (BODY) (QD32) PART 1
241B2	WIRING (BODY) (QD32) PART 2
244	BATTERY & BATTERY MOUNTING
248	INSTRUMENT METER & GAUGE
251	SWITCH
253	ELECTRICAL UNIT
260	HEAD LAMP
261	FRONT COMBINATION LAMP
265	REAR COMBINATION LAMP
267	LAMPS (OTHERS)

(F) POWER TRAIN

Sec.No.	Sec. Name
310A	TRANSMISSION ASSEMBLY & FITTING
310B	TRANSMISSION ASSEMBLY & FITTING (ATM-FROM MAY 2008)
311A	TORQUE CONVERTER CASE & HOUSING (ATM-UPTO MAY 2008)
311B	TORQUE CONVERTER CASE & HOUSING (ATM-FROM MAY 2008)
313A	OIL PUMP PARTS (ATM-UPTO MAY 2008)
313B	OIL PUMP PARTS (ATM-FROM MAY 2008)
314A	GOVERNOR & GEAR PARTS (ATM-UPTO MAY 2008)
314B	GOVERNOR & GEAR PARTS (ATM-FROM MAY 2008)
315A	CLUTCH & BRAKE BAND (ATM-UPTO MAY 2008)
315B	CLUTCH & BRAKE BAND (ATM-FROM MAY 2008)
317A	CONTROL VALVE (ATM-UPTO MAY 2008)
317B	CONTROL VALVE (ATM-FROM MAY 2008)
370	PROPELLER SHAFT (ATM)
380A	FINAL DRIVE ASSEMBLY (ATM-20+25 JAN. 2007 & UP, 30+35 JAN. 2007 THRU MAY 2008)
380B	FINAL DRIVE ASSEMBLY (ATM-30+35 FROM MAY 2008)

(G) AXLE & SUSPENSION

Sec.No.	Sec. Name
402	DRIVE AXLE
403	STEERING AXLE
433	ROAD WHEEL & TIRE (DRIVE AXLE)
434	ROAD WHEEL & TIRE (STEERING AXLE)

(H) BRAKE

Sec.No.	Sec. Name
440	FRONT BRAKE
443	PARKING BRAKE CONTROL
460	BRAKE MASTER CYLINDER
462	BRAKE PIPING & CONTROL
465	BRAKE & CLUTCH PEDAL

(I) STEERING

Sec.No.	Sec. Name
480	STEERING GEAR
484	STEERING WHEEL
485	STEERING LINKAGE
488	STEERING COLUMN
497	POWER STEERING PIPING

SECTION INDEX

(J) BODY(FRONT, ROOF & FLOOR)

Sec.No.	Sec. Name
500A	FRAME
500B	FRAME -FRONT COVERS
500C	FRAME -DEBRIS OPTION
580A	LIFT CYLINDER (2W)
580B	LIFT CYLINDER (2F UPTO SEPT. 2009)
580D	LIFT CYLINDER (3F UPTO SEPT. 2010)
580E	LIFT CYLINDER (3V UPTO SEPT. 2010)
580F	LIFT CYLINDER (2F FROM SEPT. 2009)
580G	LIFT CYLINDER (3F 2 & 2.5 TON FROM SEPT. 2010)
580H	LIFT CYLINDER (3F 2.8, 3 & 3.5 TON FROM SEPT. 2010)
580J	LIFT CYLINDER (3V FROM SEPT. 2010)
585A	CHAIN WHEEL SUPPORT & CHAIN (2W-INNER CHAIN 3.5TON)
585B	CHAIN WHEEL SUPPORT & CHAIN (2F)
585D	CHAIN WHEEL SUPPORT & CHAIN (3F)
585E	CHAIN WHEEL SUPPORT & CHAIN (3V)
585F	CHAIN WHEEL SUPPORT & CHAIN (2W-OUTER CHAIN 2.0, 2.5 & 3.0TON-UPTO MAY 2008)
585G	CHAIN WHEEL SUPPORT & CHAIN (NML 2W-INNER CHAIN 2.0, 2.5 & 3TON-FROM MAY 2008)
586	TILT CYLINDER
591A	MAST (2W-INNER CHAIN 3.5TON)
591B	MAST (2F)
591D	MAST (3F)
591E	MAST (3V)
591F	MAST (2W-OUTER CHAIN 2.0, 2.5 & 3.0TON-UPTO MAY 2008)
591G	MAST (NML 2W-INNER CHAIN 2.0, 2.5 & 3.0TON-FROM MAY 2008)
594	BACK REST & FORK
595A	CARRIAGE (2W)
595B	CARRIAGE (2F)
595C	CARRIAGE (3F)
595D	CARRIAGE (3V)
597A	SIDESHIFTER (BOLZONI)
597B	SIDESHIFTER (BOLZONI INTEGRAL)
655	TOP PANEL,HINGE & FITTING
680	INSTRUMENT PANEL, PAD & CLUSTER LID
691A	HYDRAULIC OIL PUMP & FITTING (TANK FITTING PART)
691B	HYDRAULIC OIL PUMP & FITTING (PUMP FITTING PART)
692	HYDRAULIC OIL PUMP ASSEMBLY
693A	HYDRAULIC CONTROL VALVE
693B	HYDRAULIC CONTROL VALVE (FC OPTION)
694B	HYDRAULIC CONTROL VALVE FITTING (3 SPOOL VALVE)
694C	HYDRAULIC CONTROL VALVE FITTING (4 SPOOL VALVE)
694D	HYDRAULIC CONTROL VALVE FITTING (KIT PARTS)
694E	HYDRAULIC CONTROL VALVE FITTING (FC OPTION-3 SPOOL VALVE)
694F	HYDRAULIC CONTROL VALVE FITTING (FC OPTION-4 SPOOL VALVE)
695A	HYDRAULIC CONTROL LEVER (FITTING PARTS)
695C	HYDRAULIC CONTROL LEVER (3 SPOOL-3 LEVER)
695D	HYDRAULIC CONTROL LEVER (4 SPOOL-4 LEVER)
695G	HYDRAULIC CONTROL LEVER (3 SPOOL-2 LEVER)
695H	HYDRAULIC CONTROL LEVER (4 SPOOL-3 LEVER)
695I	HYDRAULIC CONTROL LEVER (FC OPTION FITTING PARTS)
695J	HYDRAULIC CONTROL LEVER (FC OPTION)
695K	HYDRAULIC CONTROL LEVER (FC OPTION WIRING)
697A	HYDRAULIC OIL PIPING (FROM TANK TO PUMP)
697B	HYDRAULIC OIL PIPING (FROM TANK TO VALVE)
697C	HYDRAULIC OIL PIPING (FROM VALVE TO CYLINDER)
697D	HYDRAULIC OIL PIPING (FROM TANK TO STRG)
697E	HYDRAULIC OIL PIPING (SINGLE ACCUMULATOR)
698A	HYDRAULIC OIL PIPING MAST (2W)
698B	HYDRAULIC OIL PIPING MAST (2F)
698D	HYDRAULIC OIL PIPING MAST (3F)
698E	HYDRAULIC OIL PIPING MAST (3V)
699A	HYDRAULIC OIL PIPING (ATTACHMENT) (2W-OUTER CHAIN 2.0, 2.5 & 3.0TON-UPTO MAY 2008)
699B	HYDRAULIC OIL PIPING (ATTACHMENT) (2W-OUTER CHAIN, 3 SPOOL 2.0, 2.5 & 3.0TON-UPTO MAY 2008)
699C	HYDRAULIC OIL PIPING (ATTACHMENT) (2W-OUTER CHAIN, 4 SPOOL 2.0, 2.5 & 3.0TON-UPTO MAY 2008)
699D	HYDRAULIC OIL PIPING (ATTACHMENT) (2F & LIFTEC 2W)
699E	HYDRAULIC OIL PIPING (ATTACHMENT) (2F, 3 SPOOL)
699F	HYDRAULIC OIL PIPING (ATTACHMENT) (2F, 4 SPOOL)
699G	HYDRAULIC OIL PIPING (ATTACHMENT) (3F)
699H	HYDRAULIC OIL PIPING (ATTACHMENT) (3F, 3 SPOOL)
699I	HYDRAULIC OIL PIPING (ATTACHMENT) (3F, 4 SPOOL)
699J	HYDRAULIC OIL PIPING (ATTACHMENT) (3V)
699K	HYDRAULIC OIL PIPING (ATTACHMENT) (3V, 3 SPOOL)
699L	HYDRAULIC OIL PIPING (ATTACHMENT) (3V, 4 SPOOL)
699Q	HYDRAULIC OIL PIPING (ATTACHMENT) (2W-INNER CHAIN 3.5TON)
699R	HYDRAULIC OIL PIPING (ATTACHMENT) (2W-INNER CHAIN, 3 SPOOL 3.5TON)
699S	HYDRAULIC OIL PIPING (ATTACHMENT) (2W-INNER CHAIN, 4 SPOOL 3.5TON)
699T	HYDRAULIC OIL PIPING (ATTACHMENT) (NML 2W-INNER CHAIN 2.0, 2.5 & 3.0TON-FROM MAY 2008)
699U	HYDRAULIC OIL PIPING (ATTACHMENT) (NML 2W-INNER CHAIN, 3 SPL 2.0, 2.5 & 3.0TON-FROM MAY 2008)
699V	HYDRAULIC OIL PIPING (ATTACHMENT) (NML 2W-INNER CHAIN, 4 SPL 2.0, 2.5 & 3.0TON-FROM MAY 2008)
737	OVER HEAD GUARD
740	FLOOR PANEL

(K) BODY(SIDE, REAR & SEAT)

Sec.No.	Sec. Name
871A	SEAT (FC OPTION - ALL OTHERS REFER TO PAGE FOR APPLIED DATE)
871B	SEAT -ELR (FROM JULY 2010)

(M) MISCELLANEOUS

Sec.No.	Sec. Name
991	CAUTION PLATE & LABEL CAR
992	CAUTION PLATE & LABEL ELECTRICAL
993	CAUTION PLATE & LABEL MAST

GROUP INDEX

ENGINE MECHANICAL

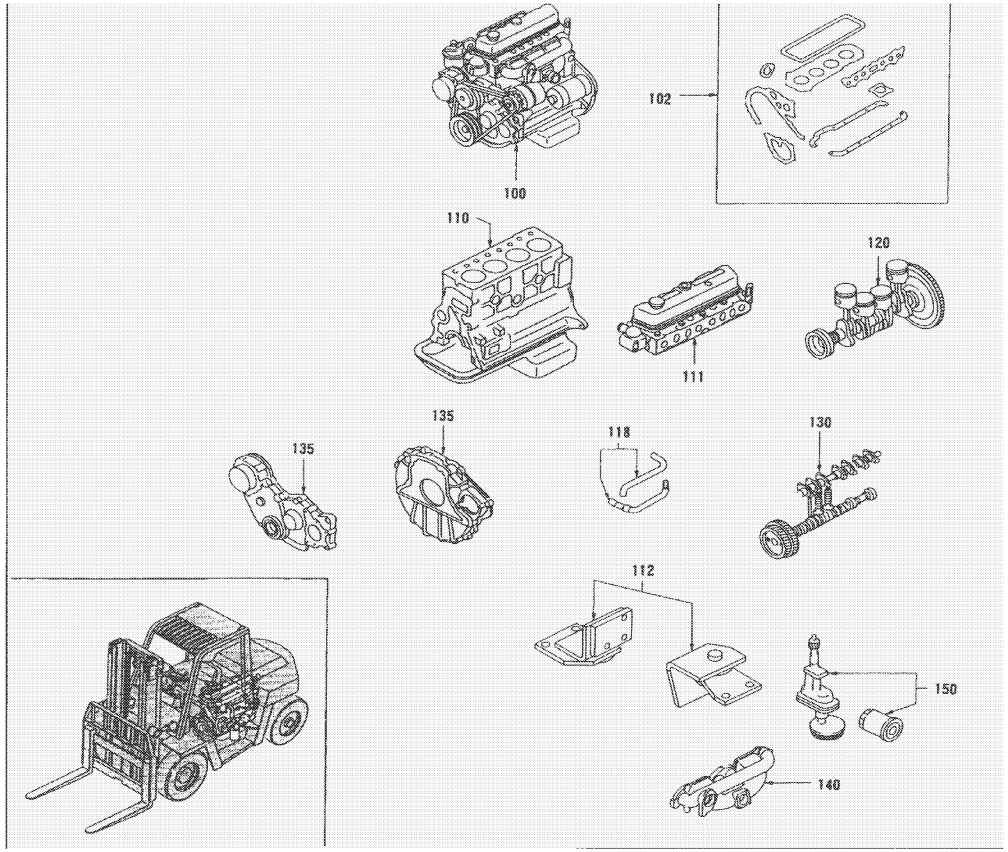

SEC.NO	SECTION NAME
100	ENGINE ASSEMBLY
102A	ENGINE GASKET KIT (K21 & K25)
102B	ENGINE GASKET KIT (QD32)
110A	CYLINDER BLOCK & OIL PAN (K21 & K25)
110B	CYLINDER BLOCK & OIL PAN (QD32)
111A	CYLINDER HEAD & ROCKER COVER (K21 & K25)
111B	CYLINDER HEAD & ROCKER COVER (QD32)
112	ENGINE & MOUNTING
117B	FAN, COMPRESSOR & POWER STEERING BELT (QD32)
118A	CRANK CASE VENTILATION (K21 & K25)
118B	CRANK CASE VENTILATION (QD32)
120A	PISTON,CRANKSHAFT & FLYWHEEL (K21 & K25)
120B	PISTON,CRANKSHAFT & FLYWHEEL (QD32)
130A	CAMSHAFT & VALVE MECHANISM (K21 & K25)
130B	CAMSHAFT & VALVE MECHANISM (QD32)
135A	FRONT COVER & FITTING (K21 & K25)
135B	FRONT COVER & FITTING (QD32 UPTO SEPT. 2008)
135C	FRONT COVER & FITTING (QD32 FROM SEPT. 2008)
140A	MANIFOLD (K21 & K25)
140B	MANIFOLD (QD32)
150A	LUBRICATING SYSTEM (K21 & K25)
150B	LUBRICATING SYSTEM (QD32)
296	CONTROLLER (VCM)

A

*ILLSTRATIONS SHOWN IN GENERAL INDEX AND GROUP INDEX ARE GENARALIZED DESCRIPTIONS FOR ALL MODELS AND ARE NOT PRECISE IN ALL DETAILS.

SEC. 100

ENGINE ASSEMBLY

CONJUNTO DEL MOTOR

MOTOR KOMPLETT

ENSEMBLE MOTEUR

(K21+K25)

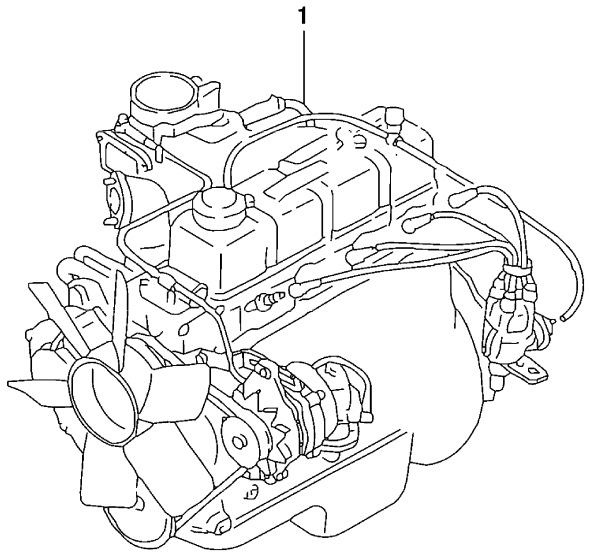

(QD32)

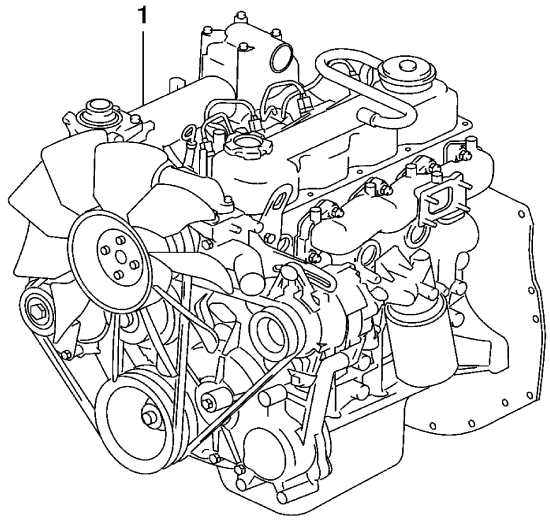

L2P100_A

SEC. 100

ENGINE ASSEMBLY

CONJUNTO DEL MOTOR

MOTOR KOMPLETT

ENSEMBLE MOTEUR

NC	S	KEY NO.	LEV	PART NO.	PART NAME	SPECIFICATION	QTY	APPLIED DATE	TCANF	FORMER PART NO.	KD	APPLIED MODEL 01 02 03 04 05 06 07 08 09 10 11 12 13 14 15 16 17 18 19 20 21 22 23 24 25 26 27 28 29
	1	01	1	**10001-GS01A**	ENGINE ASSY W/FLYWHEEL		01	0107-1007				○ ○
		02	1	**10001-GS81A**		VERIFY ENGINE PART NO. FROM	01	1007-0000				○ ○
						SERIAL NUMBER ATTRIBUTES						
		03	1	**10001-4K41A**		VERIFY ENGINE PART NO. FROM	01	0000-				○ ○
						SERIAL NUMBER ATTRIBUTES						
		04	1	**10001-GS01A**		NFTA VERIFY ENGINE PART NO. FROM	01	1007-0000				✱ ✱
						SERIAL NUMBER ATTRIBUTES						
		05	1	**10001-4K61A**		NFTA VERIFY ENGINE PART NO. FROM	01	0000-				✱ ✱
						SERIAL NUMBER ATTRIBUTES						
		06	1	**10001-GS07A**			01	0107-1007				○ ○
		07	1	**10001-GS87A**		VERIFY ENGINE PART NO. FROM	01	1007-0000				○ ○
						SERIAL NUMBER ATTRIBUTES						
		08	1	**10001-4K47A**		VERIFY ENGINE PART NO. FROM	01	0000-				○ ○
						SERIAL NUMBER ATTRIBUTES						
		09	1	**10001-GS07A**		NFTA VERIFY ENGINE PART NO. FROM	01	1007-0000				✱ ✱
						SERIAL NUMBER ATTRIBUTES						
		10	1	**10001-4K67A**		NFTA VERIFY ENGINE PART NO. FROM	01	0000-				✱ ✱
						SERIAL NUMBER ATTRIBUTES						
		11	1	**10001-GS04A**			01	0107-1007				○ ○
		12	1	**10001-GS84A**		VERIFY ENGINE PART NO. FROM	01	1007-0000				○ ○
						SERIAL NUMBER ATTRIBUTES						
		13	1	**10001-4K44A**		VERIFY ENGINE PART NO. FROM	01	0000-				○ ○
						SERIAL NUMBER ATTRIBUTES						
		14	1	**10001-GS04A**		NFTA VERIFY ENGINE PART NO. FROM	01	1007-0000				✱ ✱
						SERIAL NUMBER ATTRIBUTES						
		15	1	**10001-4K64A**		NFTA VERIFY ENGINE PART NO. FROM	01	0000-				✱ ✱
						SERIAL NUMBER ATTRIBUTES						
		16	1	**10001-GS04B**			01	0107-1007				○ ○
		17	1	**10001-GS84B**		VERIFY ENGINE PART NO. FROM	01	1007-0000				○ ○
						SERIAL NUMBER ATTRIBUTES						
		18	1	**10001-4K44B**		VERIFY ENGINE PART NO. FROM	01	0000-				○ ○
						SERIAL NUMBER ATTRIBUTES						
		19	1	**10001-GS04B**		NFTA VERIFY ENGINE PART NO. FROM	01	1007-0000				✱ ✱
						SERIAL NUMBER ATTRIBUTES						
		20	1	**10001-4K64B**		NFTA VERIFY ENGINE PART NO. FROM	01	0000-				✱ ✱
						SERIAL NUMBER ATTRIBUTES						
		21	1	**10001-GS11A**			01	0107-1007				○ ○ ○ ○ ○ ○

SEC. 100

ENGINE ASSEMBLY

CONJUNTO DEL MOTOR

MOTOR KOMPLETT

ENSEMBLE MOTEUR

NC	S	KEY NO.	LEV	PART NO.	PART NAME	SPECIFICATION	QTY	APPLIED DATE	TCANF	FORMER PART NO.	KD	APPLIED MODEL 01 02 03 04 05 06 07 08 09 10 11 12 13 14 15 16 17 18 19 20 21 22 23 24 25 26 27 28 29
		1 22	1	**10001-GS91A**	ENGINE ASSY W/FLYWHEEL	VERIFY ENGINE PART NO. FROM	01	1007-0000				O O O O O
						SERIAL NUMBER ATTRIBUTES						
		23	1	**10001-4K51A**		VERIFY ENGINE PART NO. FROM	01	0000-				O O O O O
						SERIAL NUMBER ATTRIBUTES						
		24	1	**10001-GS11A**		NFTA VERIFY ENGINE PART NO. FROM	01	1007-0000				* * * * *
						SERIAL NUMBER ATTRIBUTES						
		25	1	**10001-4K71A**		NFTA VERIFY ENGINE PART NO. FROM	01	0000-				* * * * *
						SERIAL NUMBER ATTRIBUTES						
		26	1	**10001-GS17A**			01	0107-1007				O O O O O
		27	1	**10001-GS97A**		VERIFY ENGINE PART NO. FROM	01	1007-0000				O O O O O
						SERIAL NUMBER ATTRIBUTES						
		28	1	**10001-4K57A**		VERIFY ENGINE PART NO. FROM	01	0000-				O O O O O
						SERIAL NUMBER ATTRIBUTES						
		29	1	**10001-GS17A**		NFTA VERIFY ENGINE PART NO. FROM	01	1007-0000				* * * * *
						SERIAL NUMBER ATTRIBUTES						
		30	1	**10001-4K77A**		NFTA VERIFY ENGINE PART NO. FROM	01	0000-				* * * * *
						SERIAL NUMBER ATTRIBUTES						
		31	1	**10001-GS14A**			01	0107-1007				O O O O O
		32	1	**10001-GS94A**		VERIFY ENGINE PART NO. FROM	01	1007-0000				O O O O O
						SERIAL NUMBER ATTRIBUTES						
		33	1	**10001-4K54A**		VERIFY ENGINE PART NO. FROM	01	0000-				O O O O O
						SERIAL NUMBER ATTRIBUTES						
		34	1	**10001-GS14A**		NFTA VERIFY ENGINE PART NO. FROM	01	1007-0000				* * * * *
						SERIAL NUMBER ATTRIBUTES						
		35	1	**10001-4K74A**		NFTA VERIFY ENGINE PART NO. FROM	01	0000-				* * * * *
						SERIAL NUMBER ATTRIBUTES						
		36	1	**10001-GS14B**			01	0107-1007				O O
		37	1	**10001-GS94B**		VERIFY ENGINE PART NO. FROM	01	1007-0000				O O
						SERIAL NUMBER ATTRIBUTES						
		38	1	**10001-4K54B**		VERIFY ENGINE PART NO. FROM	01	0000-				O O
						SERIAL NUMBER ATTRIBUTES						
		39	1	**10001-GS14B**		NFTA VERIFY ENGINE PART NO. FROM	01	1007-0000				* *
						SERIAL NUMBER ATTRIBUTES						
		40	1	**10001-4K74B**		NFTA VERIFY ENGINE PART NO. FROM	01	0000-				* *
						SERIAL NUMBER ATTRIBUTES						
		41	1	**10100-NA01E**			01	0107-1208				O O O O
C		42	1	**10100-NA10A**			01	1208-0313				O O O O

SEC. 100

ENGINE ASSEMBLY

CONJUNTO DEL MOTOR

MOTOR KOMPLETT

ENSEMBLE MOTEUR

NC	S	KEY NO.	LEV	PART NO.	PART NAME	SPECIFICATION	QTY	APPLIED DATE	ICANF	FORMER PART NO.	KD	APPLIED MODEL 01 02 03 04 05 06 07 08 09 10 11 12 13 14 15 16 17 18 19 20 21 22 23 24 25 26 27 28 29
N		**1** 43	1	**10100-NA12D**	ENGINE ASSY W/FLYWHEEL		01	0313-				O O O O O

MIPP IIII AA220JVV — MIPP IIII AA220DVV — MIPP IIII AA220LVS — MIPP IIII AA220JVV — MIUU IIII AA220DVV — MIUU IIII AA220LVV — MIUU IIII AA220LVS — MIUY IIII AA220JVV — MIPP IIII AA225DVV — MIPP IIII AA225LVV — MIPP IIII AA225JVV — MIUU IIII AA225DVS — MIUU IIII AA225LVV — MIUU IIII AA225JVV — MIUU IIII AA225DVV — MIUU IIII AA225LVS — MIUU JJII AA228JVV — MIUU JJII AA228DVV — MIUU GGII AA230LVV — MIUU GGII AA230JVV — MIUU GGII AA230DVV — MIUY GGII AA230LVV — MIUU GGII AA235JVV — MIUU GGII AA235DVV — MIUU GGII AA235LVV — MIUG GGII AA235JVV

SEC. 102A

ENGINE GASKET KIT (K21 & K25)

JUEGO DE EMPAQUETADURAS DEL MOTOR

MOTORDICHTUNGSSATZ

JEU DE JOINTS DE MOTEUR

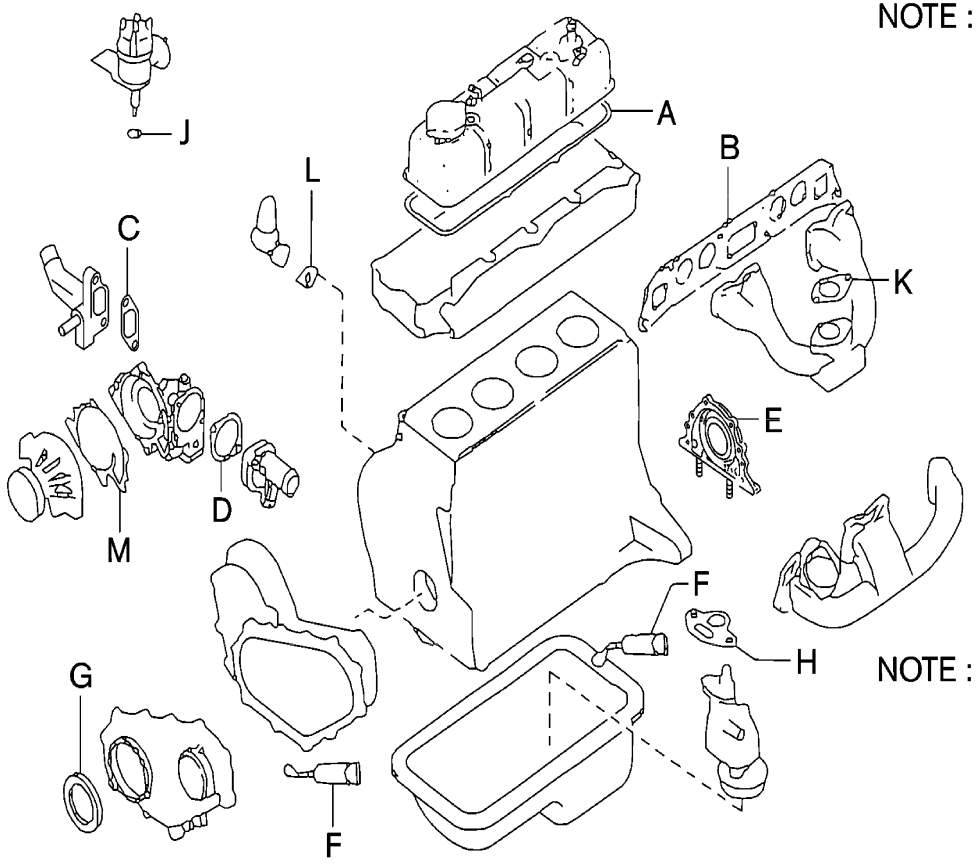

NOTE : KEY NO.1 GASKET KIT-ENGINE REPAIR
NOTE : KEY NO.2 GASKET KIT-VALVE REGRIND INCLUDES A, B, C, D

A	GASKET-ROCKER COVER	01
B	GASKET-MANIFOLD	01
C	GASKET-WATER INLET	01
D	GASKET-WATER OUTLET	01
E	SEAL-OIL,CRANKSHAFT REAR	01
F	GASKET-LIQUID	02
G	SEAL-OIL FRONT COVER	01
H	GASKET-OIL PUMP	01
J	SEAL-O RING , O/P SPINDLE	01
K	INSULATOR-GOVERNOR	01
L	GASKET-FUEL PUMP	01
M	GASKET-WATER PUMP	01

NOTE : THIS KIT DOES NOT INCLUDE GASKET-CYLINDER HEAD, PLEASE ORDER GASKET-CYLINDER HEAD SEPARATELY, IF REQUIRED (SEE SEC.111)

L2P102AA

SEC. 102A

ENGINE GASKET KIT (K21 & K25)

JUEGO DE EMPAQUETADURAS DEL MOTOR

MOTORDICHTUNGSSATZ

JEU DE JOINTS DE MOTEUR

NC	S	KEY NO.	LEV	PART NO.	PART NAME	SPECIFICATION	QTY	APPLIED DATE	ICANF	FORMER PART NO.	KD	APPLIED MODEL 01 02 03 04 05 06 07 08 09 10 11 12 13 14 15 16 17 18 19 20 21 22 23 24 25 26 27 28 29
		1 01	1	**10101-FY52K**	GASKET KIT-ENGINE REGRIND		01	0107-0810				○ ○
		02	1	**10101-FY54J**			01	0810-				○ ○
		2 01	1	**11042-FY52J**	GASKET KIT-VALVE REGRIND		01	0107-				○ ○

SEC. 102B

ENGINE GASKET KIT (QD32)

JUEGO DE EMPAQUETADURAS DEL MOTOR

MOTORDICHTUNGSSATZ

JEU DE JOINTS DE MOTEUR

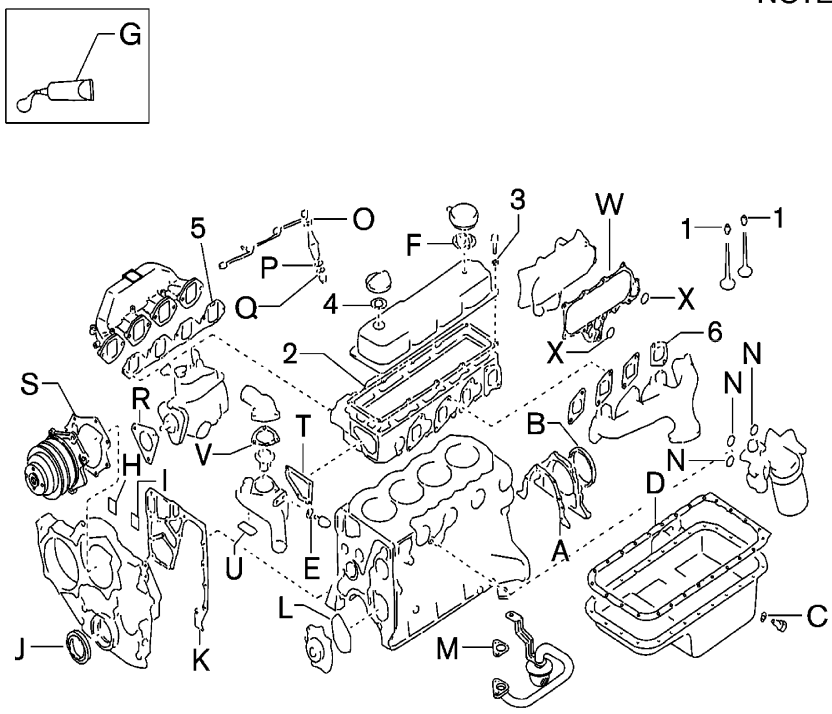

NOTE; KEY NO.1GASKET KIT ENGINE REPAIR QTY

A	GASKET-RETAINER	1
B	SEAL-OIL,CRANKSHAFT REAR	1
C	WASHER'-DRAIN PLUG	1
D	GASKET-OIL PAN	1
E	GASKET	5
F	GASKET-CONTROL VALVE	1
G	GASKET-LIQUID	1
H	GASKET	1
I	GASKET	1
J	SEAL-OIL,CRANKSHAFT FRONT	1
K	GASKET-PLATE	1
L	GASKET-OIL PUMP	1
M	GASKET-OIL STRAINER	1
N	SEAL-O RING	3
O	GASKET-NOZZLE	4
P	GASKET-NOZZLE	4
Q	GASKET	4
R	GASKET-INJECTION PUMP	1
S	GASKET-WATER PUMP	1
T	GASKET-THERMOSTAT HOUSING	1
U	SEAL-O RING	1
V	GASKET-WATER OUTLET	1
W	RING-RUBBER	1
X	SEAL-O RING	2
1	SEAL-OIL VALVE	8
2	GASKET-ROCKER COVER	1
3	WASHER	10
4	PACKING-OIL FILLER CAP	1
5	GASKET-MANIFOLD	1
6	GASKET-EXHAUST MANIFOLD,A	4

NOTE; THIS KIT DOES NOT INCLUDE GASKET-CYLINDER HEAD. PLEASE ORDER GASKET-CYLINDER HEAD SEPARATELY,IF REQUIRED(SEE SEC.111)

NOTE; KEY NO.2 GASKET-VALVE REGRIND INCLUDES 1~6

L2P102BA

SEC. 102B

ENGINE GASKET KIT (QD32)

JUEGO DE EMPAQUETADURAS DEL MOTOR

MOTORDICHTUNGSSATZ

JEU DE JOINTS DE MOTEUR

NC	S	KEY NO.	LEV	PART NO.	PART NAME	SPECIFICATION	QTY	APPLIED DATE	ICANF	FORMER PART NO.	KD	APPLIED MODEL 01 02 03 04 05 06 07 08 09 10 11 12 13 14 15 16 17 18 19 20 21 22 23 24 25 26 27 28 29
		1 01	1	**10101-40K1K**	GASKET KIT-ENGINE REPAIR		01	0107-0208				○ ○ ○ ○
		02	1	**10101-40K2K**			01	0208-				○ ○ ○ ○
		2 01	1	**11042-40K0J**	GASKET KIT-VALVE REGRIND		01	0107-				○ ○ ○ ○

SEC. 110A

CYLINDER BLOCK & OIL PAN (K21 & K25)

BLOQUE DE CILINDROS Y COLECTOR DE ACEITE

ZYLINDERBLOCK & ÖLWANNE

BLOC-CYLINDRES ET CARTER INFERIEUR

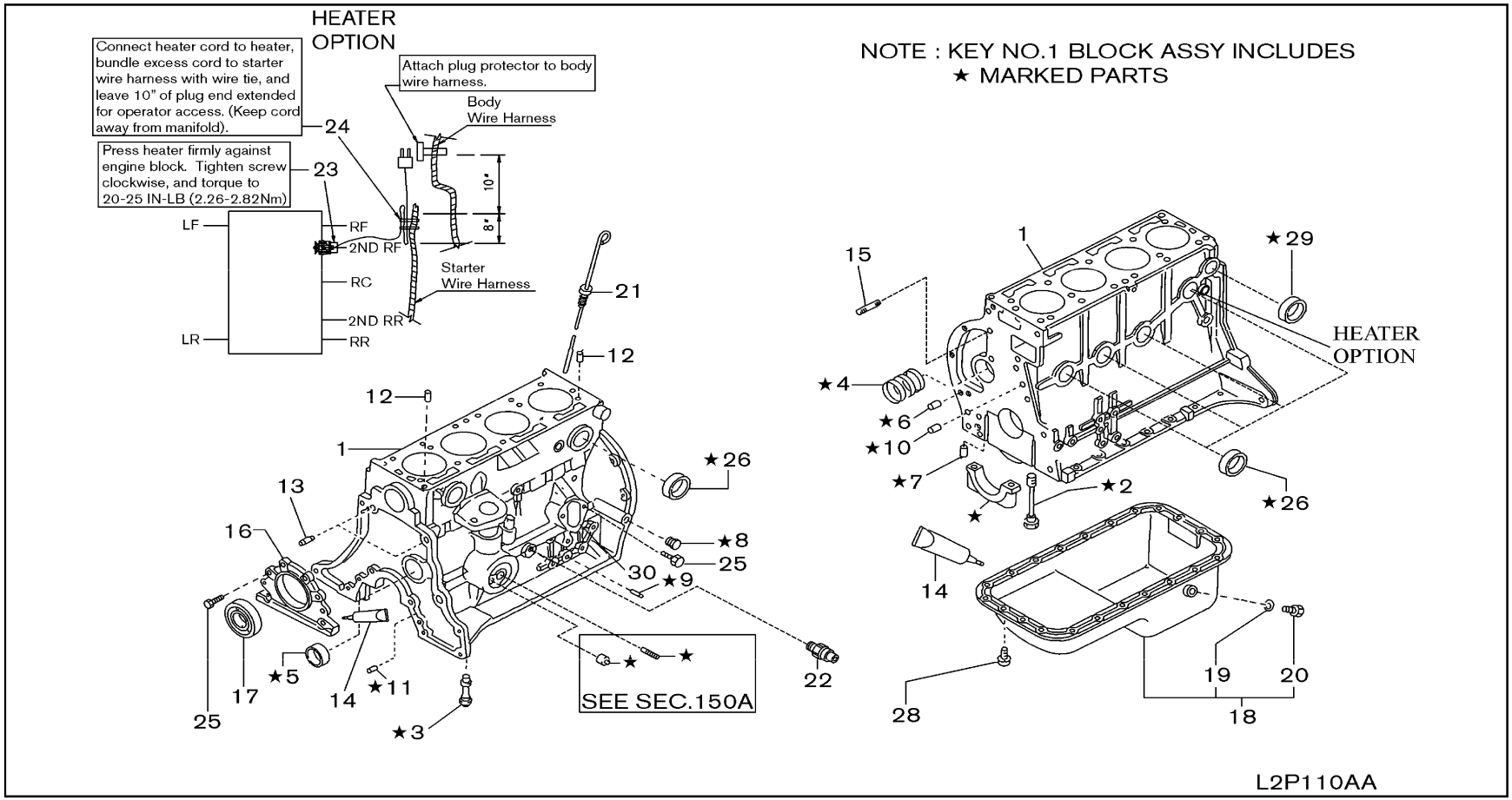

SEC. 110A

CYLINDER BLOCK & OIL PAN (K21 & K25)

BLOQUE DE CILINDROS Y COLECTOR DE ACEITE

ZYLINDERBLOCK & ÖLWANNE

BLOC-CYLINDRES ET CARTER INFERIEUR

NC	S	KEY NO.	LEV	PART NO.	PART NAME	SPECIFICATION	QTY	APPLIED DATE	ICANF	FORMER PART NO.	KD	APPLIED MODEL 01 02 03 04 05 06 07 08 09 10 11 12 13 14 15 16 17 18 19 20 21 22 23 24 25 26 27 28 29
		1	01	1	**11000-FU400**	BLOCK ASSY-CYLINDER		01	0107-			○ ○
			02	1	**11000-FY500**			01	0107-			○ ○
		2	01	2	**12293-P0500**	BOLT-MAIN BEARING CAP		10	0107-			○ ○
		3	01	2	**NA-**	BUSH-OIL PUMP DRIVE	NOT FOR SALE	01	0107-			○ ○
		4	01	2	**13002-71200**	BUSH SET		01	0107-			○ ○
		5	01	2	**11019-32201**	PLUG-WELCH		01	0107-			○ ○
		6	01	2	**11024-K0100**	PLUG-TAPER		02	0107-			○ ○
		7	01	2	**11024-78200**	PLUG-BLIND		01	0107-			○ ○
		8	01	2	**11024-85G0A**	PLUG-WELCH		02	0107-			○ ○
		9	01	2	**11023-78200**	PLUG		01	0107-			○ ○
		10	01	2	**11046-73402**	DOWEL		04	0107-			○ ○
		11	01	1	**11024-85G1A**	PLUG-TAPER		01	0107-			○ ○
		12	01	1	**11053-73400**	DOWEL-PIN		02	0107-			○ ○
		13	01	1	**30412-P5100**	DOWEL-PIN	L=25	02	0107-			○ ○
		14	01	1	**KP710-00150**	GASKET-LIQUID		AR	0107-			○ ○
		15	01	1	**11392-50K00**	STUD		02	0107-			○ ○
		16	01	1	**12297-FU400**	RETAINER ASSY-OIL SEAL, REAR		01	0107-			○ ○
		17	01	1	**12279-FF200**	SEAL-OIL, CRANKSHAFT REAR		01	0107-			○ ○
		18	01	1	**11110-FU400**	PAN ASSY-OIL		01	0107-			○ ○
		19	01	2	**11026-01M02**	WASHER-DRAIN PLUG		01	0107-			○ ○
		20	01	2	**11128-01M00**	PLUG-DRAIN		01	0107-			○ ○
		21	01	1	**11140-FT860**	GAUGE-OIL LEVEL		01	0107-			○ ○
		22	01	1	**25240-FJ10A**	SW-OIL PRESSURE		01	0107-			○ ○
		23	01	1	**11001-GY000**	HEATER-CYL BLOCK	F/BLOCK HEATER	01	0107-			* *
		24	01	1	**24216-S5802**	WIRE TIE	F/BLOCK HEATER	02	0107-			* *
		25	01	1	**08120-8201E**	SCREW-HHM M8-1.25X20 W/LKW		06	0107-			○ ○
		26	01	1	**00933-1351A**	PLUG		07	0107-			○ ○
		28	01	1	**08120-61228**	SCREW-HHM M6-1.0X12 W/LKW		12	0107-			○ ○
		29	01	1	**00933-1301A**	PLUG		01	0107-			○ ○
		30	01	1	**16420-E0100**	SPACER-FUEL PUMP		01	0107-			○ ○
			02	1	**17099-85G00**	GASKET-FUEL PUMP		01	0107-0710			○ ○
			03	1	**17099-85G0A**			01	0710-			○ ○

SEC. 110B

CYLINDER BLOCK & OIL PAN (QD32)

BLOQUE DE CILINDROS Y COLECTOR DE ACEITE

ZYLINDERBLOCK & ÖLWANNE

BLOC-CYLINDRES ET CARTER INFERIEUR

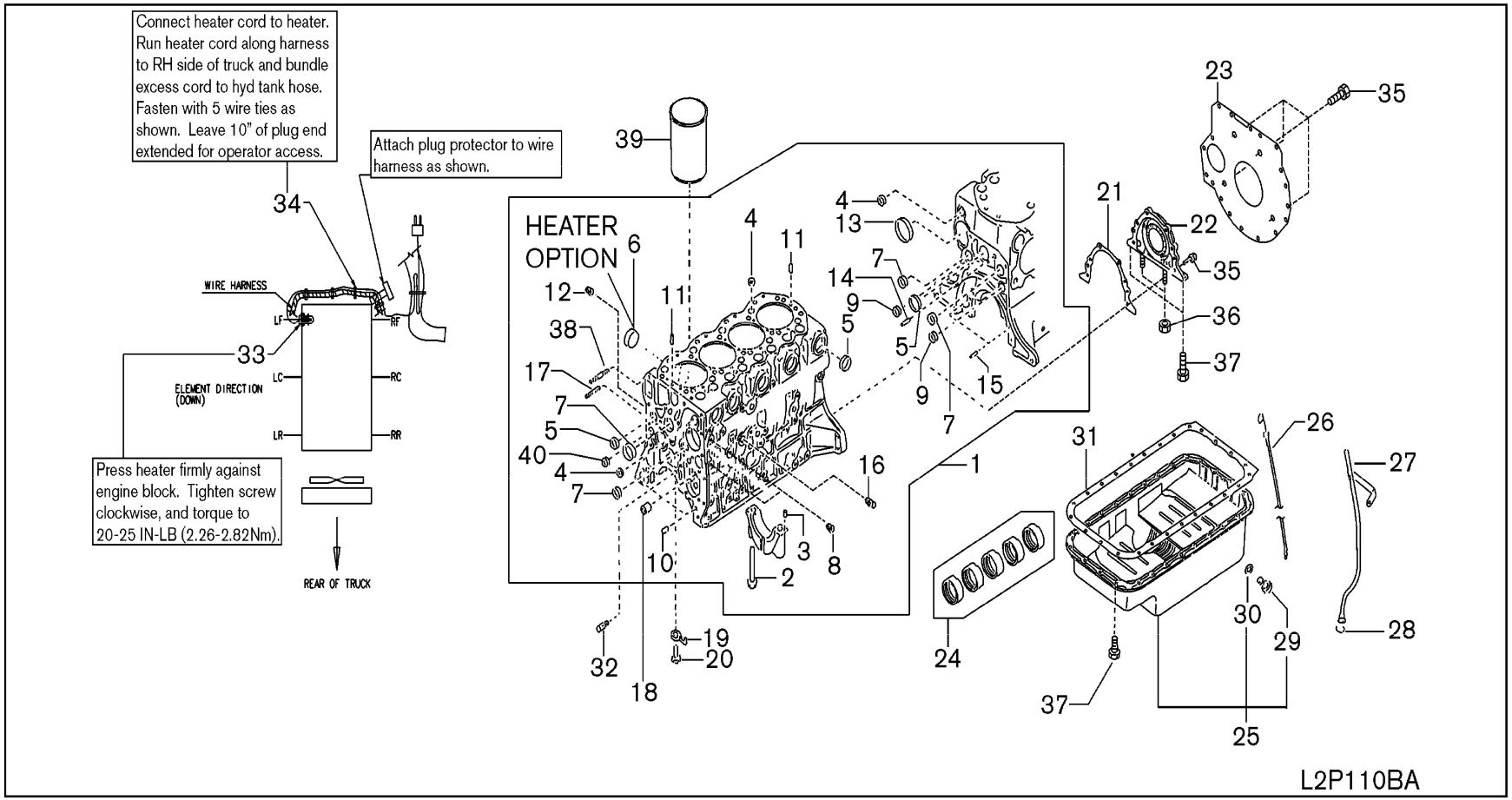

SEC. 110B

CYLINDER BLOCK & OIL PAN (QD32)

BLOQUE DE CILINDROS Y COLECTOR DE ACEITE

ZYLINDERBLOCK & ÖLWANNE

BLOC-CYLINDRES ET CARTER INFERIEUR

NC	S	KEY NO.	LEV	PART NO.	PART NAME	SPECIFICATION	QTY	APPLIED DATE	ICANF	FORMER PART NO.	KD	APPLIED MODEL 01	02	03	04	05	06	07	08	09	10	11	12	13	14	15	16	17	18	19	20	21	22	23	24	25	26	27	28	29
		1	01	1	**11009-NA00A**	BLOCK ASSY-CYLINDER		01	0107-											○								○							○			○
		2	01	2	**12293-0W800**	BOLT-MAIN BEARING CAP		10	0107-											○								○							○			○
		3	01	2	**01522-05104**	PIN-HOLLOW		01	0107-											○								○							○			○
		4	01	2	**01648-00224**	PLUG-WELCH		08	0107-											○								○							○			○
		5	01	2	**01648-00084**	PLUG-WELCH		09	0107-											○								○							○			○
		6	01	2	**01648-00154**	PLUG-WELCH		01	0107-											○								○							○			○
		7	01	2	**01648-00024**	PLUG-WELCH		04	0107-											○								○							○			○
		8	01	2	**01642-03004**	PLUG-THREAD		02	0107-											○								○							○			○
		9	01	2	**01648-00224**	PLUG-WELCH		02	0107-											○								○							○			○
		10	01	2	**30412-P5100**	DOWEL-BLOCK		02	0107-											○								○							○			○
		11	01	2	**11013-T9000**	DOWEL-BLOCK TO HEAD		02	0107-											○								○							○			○
		12	01	2	**01642-03004**	PLUG-TAPER		01	0107-											○								○							○			○
		13	01	2	**11019-90002**	PLUG		01	0107-0908											○								○							○			○
			02	2	**11019-9000A**			01	0908-											○								○							○			○
		14	01	2	**30412-P5100**	DOWEL-BLOCK		02	0107-											○								○							○			○
		15	01	2	**12313-10600**	DOWEL-BLOCK TO TRANSMISSION		02	0107-											○								○							○			○
		16	01	2	**11021-J200A**	PLUG-THREAD		01	0107-											○								○							○			○
		17	01	2	**15213-43G01**	STUD-OIL FILTER		01	0107-											○								○							○			○
		18	01	2	**15075-43G00**	BUSH-OIL PUMP DRIVE SPINDLE		01	0107-											○								○							○			○
		19	01	1	**12124-1W401**	JET ASSY-OIL		04	0107-											○								○							○			○
		20	01	1	**12125-VC700**	BOLT-OIL JET		04	0107-											○								○							○			○
		21	01	1	**12298-34N00**	GASKET-RETAINER		01	0107-											○								○							○			○
		22	01	1	**12279-43G05**	SEAL-OIL, CRANKSHAFT REAR		01	0107-											○								○							○			○
		23	01	1	**30411-NA00A**	PLATE-ENGINE, REAR		01	0107-											○								○							○			○
		24	01	1	**13002-43G05**	BUSH SET	STD	01	0107-											○								○							○			○
			02	1	**13003-43G06**		US=0.25	01	0107-											○								○							○			○
			03	1	**13003-43G07**		US=0.50	01	0107-											○								○							○			○
			04	1	**13003-43G08**		US=0.75	01	0107-											○								○							○			○
		25	01	1	**11110-6T301**	PAN ASSY-OIL		01	0107-											○								○							○			○
		26	01	1	**11140-59N00**	GAUGE-OIL LEVEL		01	0107-											○								○							○			○
		27	01	1	**11150-54T00**	GUIDE-OIL LEVEL GAUGE		01	0107-											○								○							○			○
		28	01	1	**15056-02N00**	SEAL-O RING		01	0107-											○								○							○			○
		29	01	2	**11128-69200**	PLUG-DRAIN		01	0107-											○								○							○			○
		30	01	2	**11026-61000**	WASHER-DRAIN PLUG		01	0107-											○								○							○			○
		31	01	1	**11121-63G03**	GASKET-OIL PAN		01	0107-											○								○							○			○
		32	01	1	**13081-40K00**	JET-OIL, TIMING CHAIN		01	0107-											○								○							○			○
		33	01	1	**11001-FV00A**	HEATER-CYL BLOCK	F/BLOCK HEATER	01	0107-											*								*							*			*

SEC. 110B

CYLINDER BLOCK & OIL PAN (QD32)

BLOQUE DE CILINDROS Y COLECTOR DE ACEITE

ZYLINDERBLOCK & ÖLWANNE

BLOC-CYLINDRES ET CARTER INFERIEUR

NC	S	KEY NO.	LEV	PART NO.	PART NAME	SPECIFICATION	QTY	APPLIED DATE	TCANF	FORMER PART NO.	KD
		34 01	1	**24216-S5802**	CLIP	F/BLOCK HEATER	05	0107-			
		35 01	1	**08120-8251E**	SCREW-HHM M8-1.25X25 W/LKW		10	0107-			
		36 01	1	**08912-80610**	NUT		02	0107-			
		37 01	1	**08120-61228**	SCREW-HHM M6-1.0X12 W/LKW		02	0107-			
		38 01	2	**08227-08010**	STUD		02	0107-			
		39 01	1	**NA-**	SLEEVE	CONTACT FACTORY	01	0107-			
		40 01	2	**11024-54T00**	PLUG		01	0107-			

APPLIED MODEL

01	02	03	04	05	06	07	08	09	10	11	12	13	14	15	16	17	18	19	20	21	22	23	24	25	26	27	28	29
MI PA 20 JV	MI PA 20 DV	MI PA 20 LV	MI PA 20 SV	MI PU 20 LJ VV	MI UU 20 DV	MI UU 20 LV	MI UU 20 SV	MI UY 20 LV	MI PP 20 JV	MI PP 20 DV	MI PP 20 LV	MI PU 20 LJ VS	MI UU 20 DV	MI UU 20 LV	MI UU 20 SV	MI UY 20 LV	MI UU 20 JV	MI UU 20 DV	MI UU 20 LV	MI UU 20 SV	MI UY 20 LV	MI UU 20 JV	MI UU 20 DV	MI UY 20 LV	MI UU 20 JV	MI UU 20 DV	MI UU 20 LV	MI UY 20 LV
								*									*							*				*
								O									O							O				O
								O									O							O				O
								O									O							O				O
								O									O							O				O
								O									O							O				O
								O									O							O				O

NOTE

SEC. 111A

CYLINDER HEAD & ROCKER COVER (K21 & K25)

CULATA Y CUBIERTA DEL BALANCIN

ZYLINDERKOPF & VENTILDECKEL

CULASSE ET CACHE-CULBUTEURS

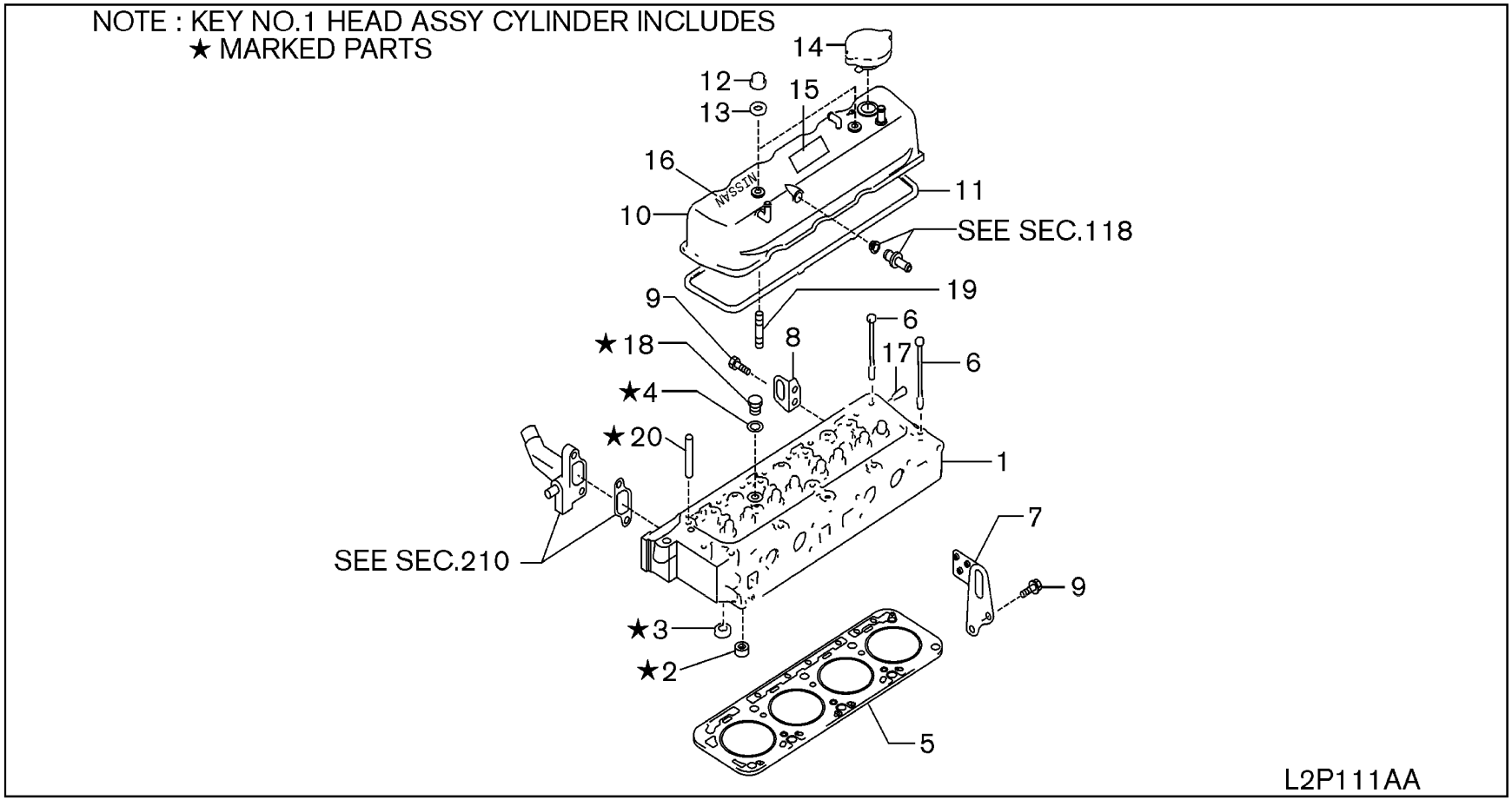

SEC. 111A

CYLINDER HEAD & ROCKER COVER (K21 & K25)

CULATA Y CUBIERTA DEL BALANCIN

ZYLINDERKOPF & VENTILDECKEL

CULASSE ET CACHE-CULBUTEURS

NC	S	KEY NO.	LEV	PART NO.	PART NAME	SPECIFICATION	QTY	APPLIED DATE	TCANF	FORMER PART NO.	KD	APPLIED MODEL 01 02 03 04 05 06 07 08 09 10 11 12 13 14 15 16 17 18 19 20 21 22 23 24 25 26 27 28 29
		1 01	1	**11040-FY501**	HEAD ASSY-CYLINDER		01	0107-				○○○○○○○○○ ○○○○○○○○○ ○○○○○○○ ○○○
		2 01	2	**11098-FY500**	SEAT-VALVE,INTAKE		04	0107-				○○○○○○○○○ ○○○○○○○○○ ○○○○○○○ ○○○
		3 01	2	**11099-FY500**	SEAT-VALVE,EXHAUST		04	0107-				○○○○○○○○○ ○○○○○○○○○ ○○○○○○○ ○○○
		4 01	2	**11026-53J00**	GASKET		02	0107-				○○○○○○○○○ ○○○○○○○○○ ○○○○○○○ ○○○
		5 01	1	**11044-FU400**	GASKET-CYLINDER HEAD		01	0107-				○○ ○○ ○○ ○○ ○○ ○○
		02	1	**11044-FU460**			01	0107-				○○ ○○ ○○ ○○ ○○ ○○
		6 01	1	**11056-FY500**	BOLT-CYLINDER HEAD		10	0107-0310				○○○○○○○○○ ○○○○○○○○○ ○○○○○○○ ○○○
		02	1	**11056-FY50A**			10	0310-				○○○○○○○○○ ○○○○○○○○○ ○○○○○○○ ○○○
		7 01	1	**10005-GS00A**	SLINGER-ENGINE, FRONT		01	0107-				○○○○○○○○○ ○○○○○○○○○ ○○○○○○○ ○○○
		8 01	1	**10006-FU410**	SLINGER-ENGINE, REAR		01	0107-				○○○○○○○○○ ○○○○○○○○○ ○○○○○○○ ○○○
		9 01	1	**01121-05351**	BOLT-SLINGER		04	0107-				○○○○○○○○○ ○○○○○○○○○ ○○○○○○○ ○○○
		10 01	1	**NA-**	COVER ASSY-VALVE ROCKER	CONTACT FACTORY	01	0107-				○○○○○○○○○ ○○○○○○○○○ ○○○○○○○ ○○○
		11 01	1	**13270-FY50A**	GASKET-ROCKER COVER		01	0107-				○○○○○○○○○ ○○○○○○○○○ ○○○○○○○ ○○○
		12 01	1	**13274-B1101**	NUT		02	0107-				○○○○○○○○○ ○○○○○○○○○ ○○○○○○○ ○○○
		13 01	1	**13268-88V62**	WASHER-NUT CAP		02	0107-				○○○○○○○○○ ○○○○○○○○○ ○○○○○○○ ○○○
		14 01	1	**15255-1P110**	CAP ASSY-OIL FILLER		01	0107-1010				○○○○○○○○○ ○○○○○○○○○ ○○○○○○○ ○○○
		02	1	**15255-1GZ0A**			01	1010-				○○○○○○○○○ ○○○○○○○○○ ○○○○○○○ ○○○
		15 01	1	**NA-**	LABEL-EMISSION	CONTACT FACTORY	01	0107-				○○○○○○○○○ ○○○○○○○○○ ○○○○○○○ ○○○
		16 01	1	**97835-FJ300**	LABEL-NISSAN		01	0107-				○○○○○○○○○ ○○○○○○○○○ ○○○○○○○ ○○○
		17 01	1	**12205-40F00**	PLUG-CRANKSHAFT OIL HOLE		01	0107-1007				○○○○○○○○○ ○○○○○○○○○ ○○○○○○○ ○○○
		02	1	**NA-**			01	1007-				○○○○○○○○○ ○○○○○○○○○ ○○○○○○○ ○○○
		03	1	**12205-40F00**		NFTA	01	1007-				********* ********* ******* ***
		18 01	1	**08931-71800**	PLUG		02	0107-				○○○○○○○○○ ○○○○○○○○○ ○○○○○○○ ○○○
		19 01	1	**08223-88010**	STUD		02	0107-				○○○○○○○○○ ○○○○○○○○○ ○○○○○○○ ○○○
		20 01	2	**NA-**	GUIDE-INLET VALVE		08	1007-				○○○○○○○○○ ○○○○○○○○○ ○○○○○○○ ○○○

SEC. 111B

CYLINDER HEAD & ROCKER COVER (QD32)

CULATA Y CUBIERTA DEL BALANCIN

ZYLINDERKOPF & VENTILDECKEL

CULASSE ET CACHE-CULBUTEURS

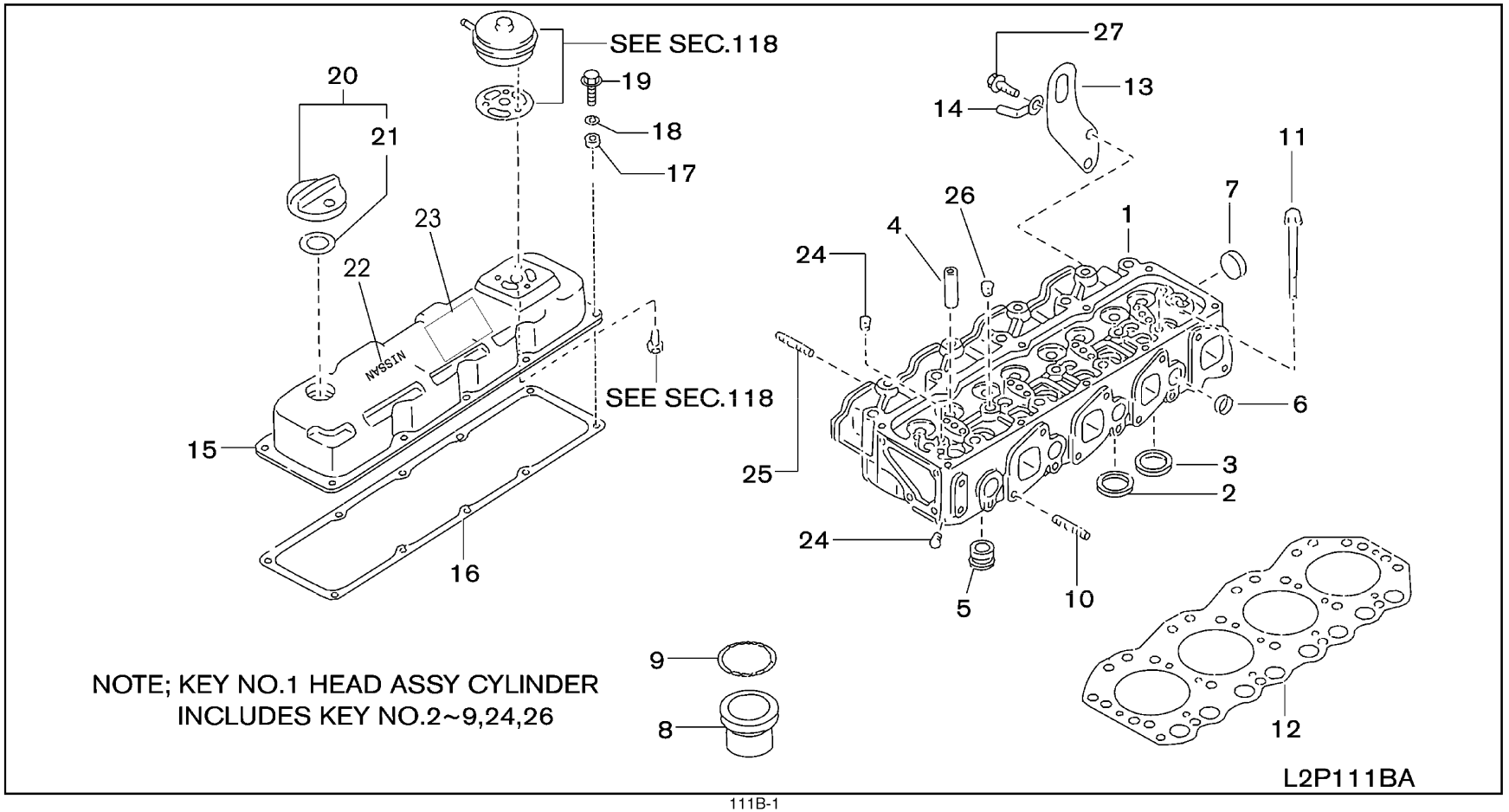

SEC. 111B

CYLINDER HEAD & ROCKER COVER (QD32)

CULATA Y CUBIERTA DEL BALANCIN

ZYLINDERKOPF & VENTILDECKEL

CULASSE ET CACHE-CULBUTEURS

NC	S	KEY NO.	LEV	PART NO.	PART NAME	SPECIFICATION	QTY	APPLIED DATE	ICANF	FORMER PART NO.	KD
		1 01	1	**11039-VH002**	HEAD ASSY-CYLINDER		01	0107-			
		2 01	2	**11098-2S600**	SEAT-VALVE, INTAKE		04	0107-			
		3 01	2	**11099-1W400**	SEAT-VALVE, EXHAUST	STD	04	0107-			
		02	2	**11099-1W410**		OS=0.2	04	0107-			
		03	2	**11099-1W411**		OS=0.4	04	0107-			
		4 01	2	**13212-54T01**	GUIDE-VALVE, INTAKE		08	0107-			
		5 01	2	**11076-VH001**	CHAMBER ASSY-COMBUSTION		04	0107-			
		6 01	2	**01648-00024**	PLUG-WELCH		07	0107-			
		7 01	2	**01648-00044**	PLUG-WELCH		02	0107-			
		8 01	2	**16650-43G01**	PROTECTOR-NOZZLE		04	0107-			
		9 01	2	**16625-43G02**	GASKET		04	0107-			
		10 01	1	**14064-31N00**	STUD-MANIFOLD		08	0107-			
		11 01	1	**11056-09D61**	BOLT-CYLINDER HEAD		18	0107-			
		12 01	1	**11044-1W400**	GASKET-CYLINDER HEAD	GRADE STAMP 1	01	0107-			
		02	1	**11044-1W401**		GRADE STAMP 2	01	0107-			
		03	1	**11044-1W402**		GRADE STAMP 3	01	0107-			
		13 01	1	**10006-43G00**	SLINGER-ENGINE		01	0107-			
		14 01	1	**24211-89944**	CLIP		01	0107-			
		15 01	1	**NA-**	COVER ASSY-VALVE ROCKER	CONTACT FACTORY	01	0107-			
		16 01	1	**13270-43G03**	GASKET-ROCKER COVER		01	0107-			
		17 01	1	**13268-D0104**	TRAY-ROCKER COVER WASHER		10	0107-0507			
		02	1	**13268-D010C**			10	0507-			
		18 01	1	**13268-29N00**	WASHER		10	0107-0507			
		02	1	**13268-29N0A**			10	0507-			
		19 01	1	**13224-0W800**	BOLT-ROCKER COVER		10	0107-			
		20 01	1	**15255-D5502**	CAP ASSY-OIL FILLER		01	0107-			
		21 01	2	**15270-D0103**	PACKING-OIL FILLER CAP		01	0107-			
		22 01	1	**97835-FJ300**	LABEL-NISSAN		01	0107-			
		23 01	1	**NA-**	LABEL-EMISSION	CONTACT FACTORY	01	0107-			
		24 01	1	**00933-20650**	PLUG-TAPER		02	0107-			
		25 01	1	**08223-82210**	STUD		02	0107-			
		26 01	1	**00931-20800**	PLUG		03	0107-			
		27 01	1	**081B0-8201A**	BOLT		02	0107-			

APPLIED MODEL

	MIPU	MIPU	MIPU	MIUU	MIUU	MIUU	MIUY	MIPU	MIPU	MIPU	MIUU	MIUU	MIUU	MIUY	MIUJ	MIUJ	MIUG	MIUG	MIUG	MIUY	MIUG	MIUG	MIUG	MIUY
	AI2 0JV	AI2 0DV	AI2 0LV	AI2 0SV	AI2 0JV	AI2 0DV	AI2 0LV	AI2 0SV	AI2 0JV	AI2 0DV	AI2 0LV	AI2 0SV	AI2 0JV	AI2 0DV	AI2 0LV	AI2 0SV	AI2 0JV	AI2 0DV	AI2 0LV	AI2 0SV	AI3 0JV	AI3 0DV	AI3 0LV	AI3 0JV	AI3 0DV	AI3 0LV
01																								
02																								
03																								
04																								
05																								
06																								
07																								
08																								
09	O	O	O	O	O	O	O	O	O	O	O	O	O	O	O	O	O	O	O	O	O	O	O	O
10	O	O	O	O	O	O	O	O	O	O	O	O	O	O	O	O	O	O	O	O	O	O	O	O
11	O	O	O	O	O	O	O	O	O	O	O	O	O	O	O	O	O	O	O	O	O	O	O	O
12	O	O	O	O	O	O	O	O	O	O	O	O	O	O	O	O	O	O	O	O	O	O	O	O
13	O	O	O	O	O	O	O	O	O	O	O	O	O	O	O	O	O	O	O	O	O	O	O	O
14	O	O	O	O	O	O	O	O	O	O	O	O	O	O	O	O	O	O	O	O	O	O	O	O
15	O	O	O	O	O	O	O	O	O	O	O	O	O	O	O	O	O	O	O	O	O	O	O	O
16	O	O	O	O	O	O	O	O	O	O	O	O	O	O	O	O	O	O	O	O	O	O	O	O
17	O	O	O	O	O	O	O	O	O	O	O	O	O	O	O	O	O	O	O	O	O	O	O	O
18	O	O	O	O	O	O	O	O	O	O	O	O	O	O	O	O	O	O	O	O	O	O	O	O
19	O	O	O	O	O	O	O	O	O	O	O	O	O	O	O	O	O	O	O	O	O	O	O	O
20	O	O	O	O	O	O	O	O	O	O	O	O	O	O	O	O	O	O	O	O	O	O	O	O
21	O	O	O	O	O	O	O	O	O	O	O	O	O	O	O	O	O	O	O	O	O	O	O	O
22	O	O	O	O	O	O	O	O	O	O	O	O	O	O	O	O	O	O	O	O	O	O	O	O
23	O	O	O	O	O	O	O	O	O	O	O	O	O	O	O	O	O	O	O	O	O	O	O	O
24	O	O	O	O	O	O	O	O	O	O	O	O	O	O	O	O	O	O	O	O	O	O	O	O
25	O	O	O	O	O	O	O	O	O	O	O	O	O	O	O	O	O	O	O	O	O	O	O	O
26																								
27	O	O	O	O	O	O	O	O	O	O	O	O	O	O	O	O	O	O	O	O	O	O	O	O
28																								
29	O	O	O	O	O	O	O	O	O	O	O	O	O	O	O	O	O	O	O	O	O	O	O	O

SEC. 112

ENGINE & MOUNTING

MONTAJE DEL MOTOR

MOTOR AUFHÄNGUNG

SUSPENSION MOTER

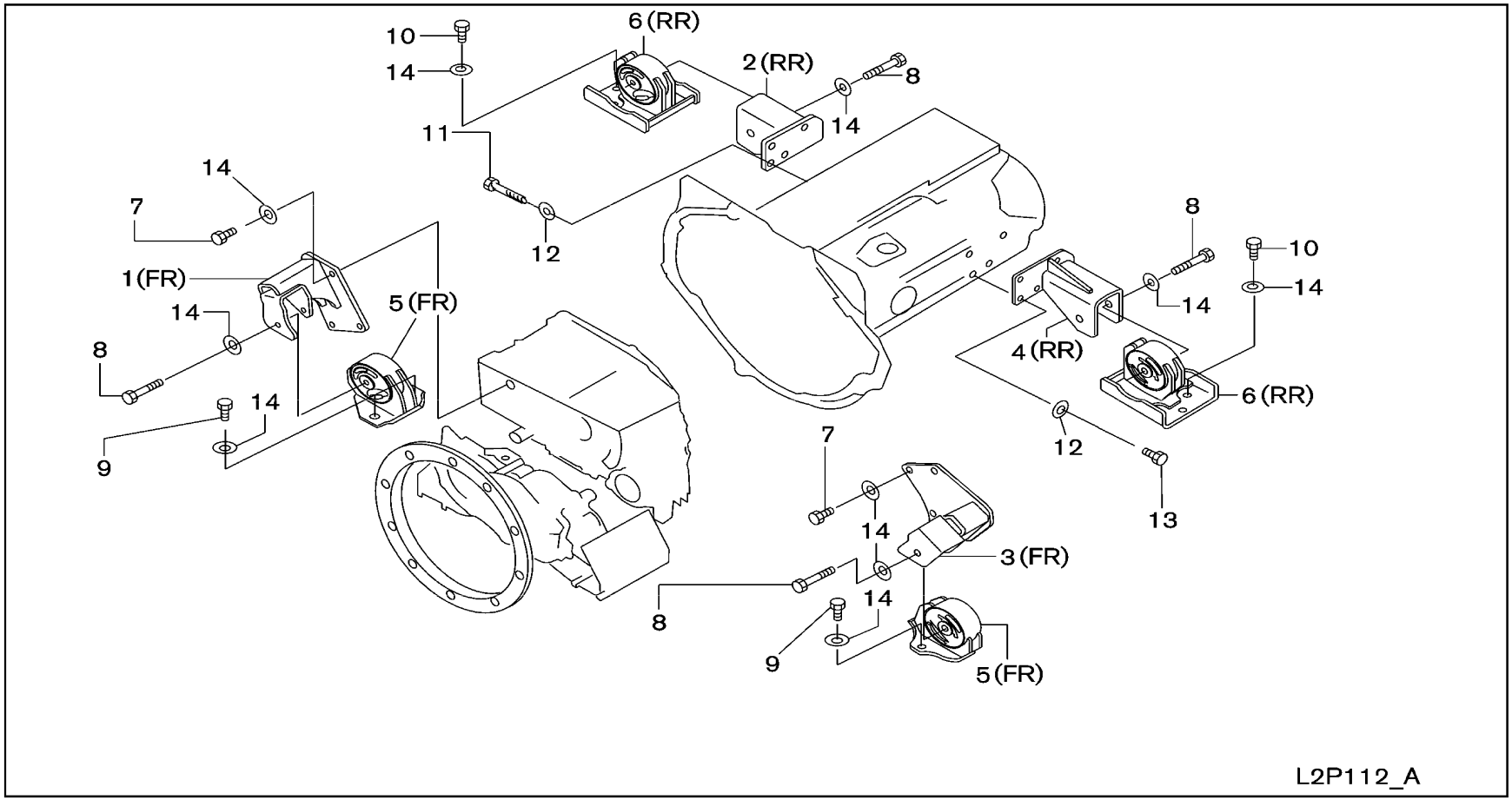

SEC. 112

ENGINE & MOUNTING

MONTAJE DEL MOTOR

MOTOR AUFHÄNGUNG

SUSPENSION MOTER

NC	S	KEY NO.	LEV	PART NO.	PART NAME	SPECIFICATION	QTY	APPLIED DATE	ICANF	FORMER PART NO.	KD
		1	01	1	**11252-FK000**	BRACKET-ENGINE MOUNTING,FRONT RH		01	0107-			
		2	01	1	**11232-FK100**	BRACKET-ENGINE MOUNTING,RH		01	0107-			
			02	1	**11232-GG30A**			01	0107-1107			
			03	1	**11232-GG30B**			01	1107-			
		3	01	1	**11253-FK000**	BRACKET-ENGINE MOUNTING,LH		01	0107-			
		4	01	1	**11233-FK100**	BRACKET-ENGINE MOUNTING,LH		01	0107-			
			02	1	**11233-GG30A**			01	0107-1107			
			03	1	**11233-GG30B**			01	1107-			
		5	01	1	**11270-FK00A**	INSULATOR ASSY-ENGINE MOUNTING,CENTER		02	0107-0508			
			02	1	**11270-GG00A**			02	0508-			
			03	1	**11270-FK00A**			02	0508-			
		6	01	1	**11270-FK30A**	INSULATOR ASSY-ENGINE MOUNTING,CENTER		02	0107-			
			02	1	**11270-GG30A**			02	0107-			
		7	01	1	**08181-2301A**	SCREW-HHM M12-1.75X30 9T HEAVY		06	0107-			
		8	01	1	**08044-2851A**	SCREW-HHM M12-1.25X85 9T		04	0107-			
		9	01	1	**08184-2251A**	SCREW-HHM M12-1.25X25 9T		04	0107-			
		10	01	1	**08184-2351A**	SCREW-HHM M12-1.25X35 9T		06	0107-			
		11	01	1	**08171-0201A**	SCREW-HHM M10-1.5X20 9T		04	0107-			
			02	1	**08171-0351A**	SCREW-HHM M10-1.5X35 9T		04	0107-			
		12	01	1	**08915-1401A**	WASHER-LOCK SPLIT M10		08	0107-			
		13	01	1	**08171-0201A**	SCREW-HHM M10-1.5X20 9T		04	0107-			
		14	01	1	**08915-1421A**	WASHER-LOCK SPLIT M12		20	0107-			

APPLIED MODEL

01	02	03	04	05	06	07	08	09	10	11	12	13	14	15	16	17	18	19	20	21	22	23	24	25	26	27	28	29
MIPV	MIPV	MIPV	MIPS	MIUV	MIUV	MIUV	MIUS	MIYV	MIPV	MIPV	MIPV	MIUS	MIUV	MIUV	MIUV	MIUS	MIUV	MIUV	MIUV	MIUV	MIUV	MIUV	MIUV	MIYV	MIUV	MIUV	MIUV	MIYV
																	MJUV	MJUV	MJUV	MGUV	MGUV	MGUV	MGUV	MGUV	MGUV	MGUV	MGUV	MGUV
A20JV	A20DV	A20LV	A20LS	A20JV	A20DV	A20LV	A20LS	A20LV	A25JV	A25DV	A25LV	A25LS	A25JV	A25DV	A25LV	A25LS	A25LV	A28JV	A28DV	A28LV	A30JV	A30DV	A30LV	A30LV	A35JV	A35DV	A35LV	A35LV

SEC. 117B

FAN, COMPRESSOR & POWER STEERING BELT (QD32)

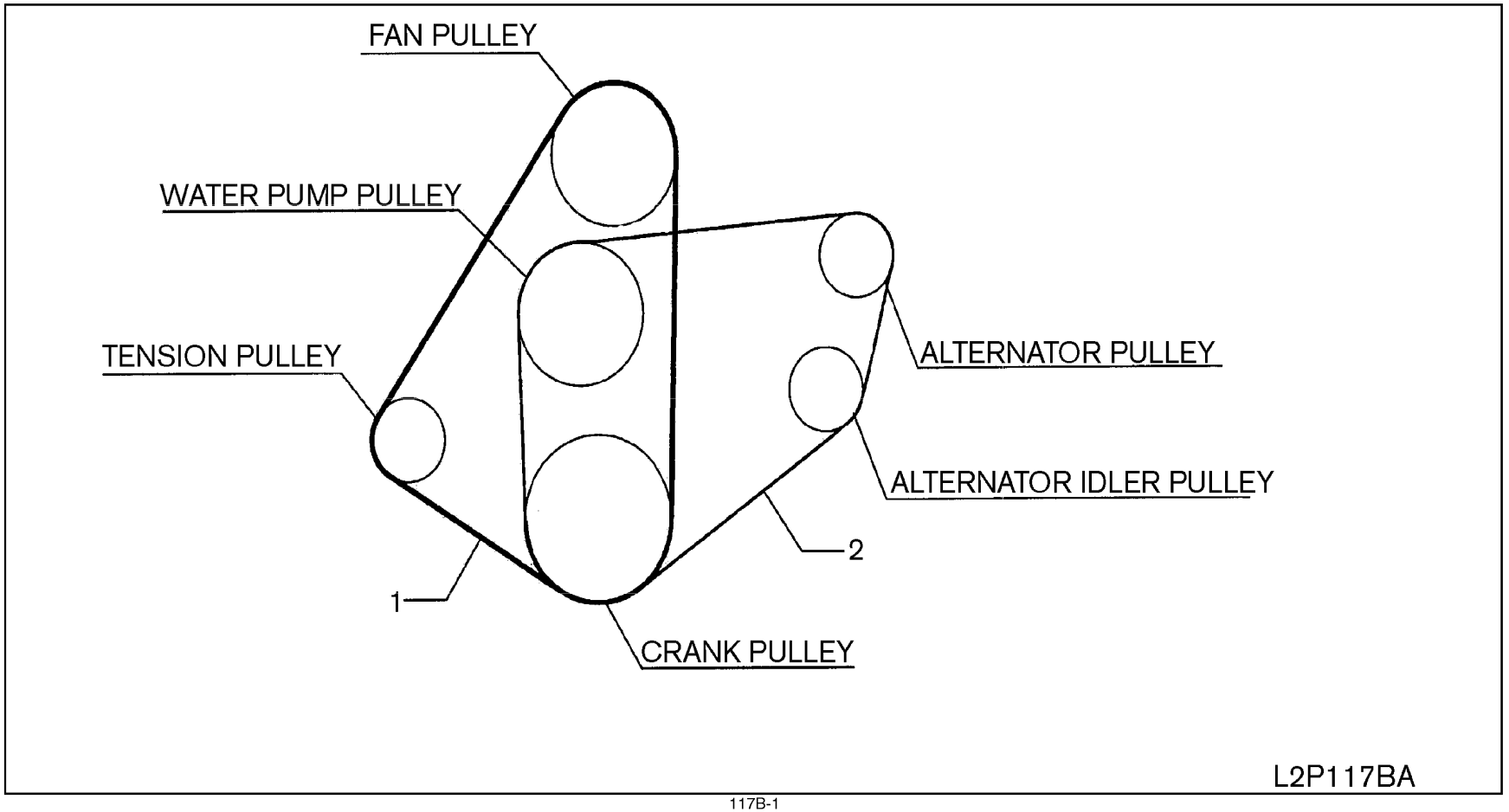

SEC. 117B

FAN, COMPRESSOR & POWER STEERING BELT (QD32)

NC	S	KEY NO.	LEV	PART NO.	PART NAME	SPECIFICATION	QTY	APPLIED DATE	ICANF	FORMER PART NO.	KD	APPLIED MODEL 01 02 03 04 05 06 07 08 09 10 11 12 13 14 15 16 17 18 19 20 21 22 23 24 25 26 27 28 29
		1 01	1	**11720-NA002**	BELT-FAN		01	0107-				○ ○ ○ ○
		2 01	1	**11720-NA00A**	BELT-ALTERNATOR & WATER PUMP		01	0107-				○ ○ ○ ○

SEC. 118A

CRANK CASE VENTILATION (K21 & K25)

VENTILACION DEL CARTER DEL MOTOR

KURBELGEHÄUSEENTLÜFTUNG

VENTILATION DE CARTER MOTEUR

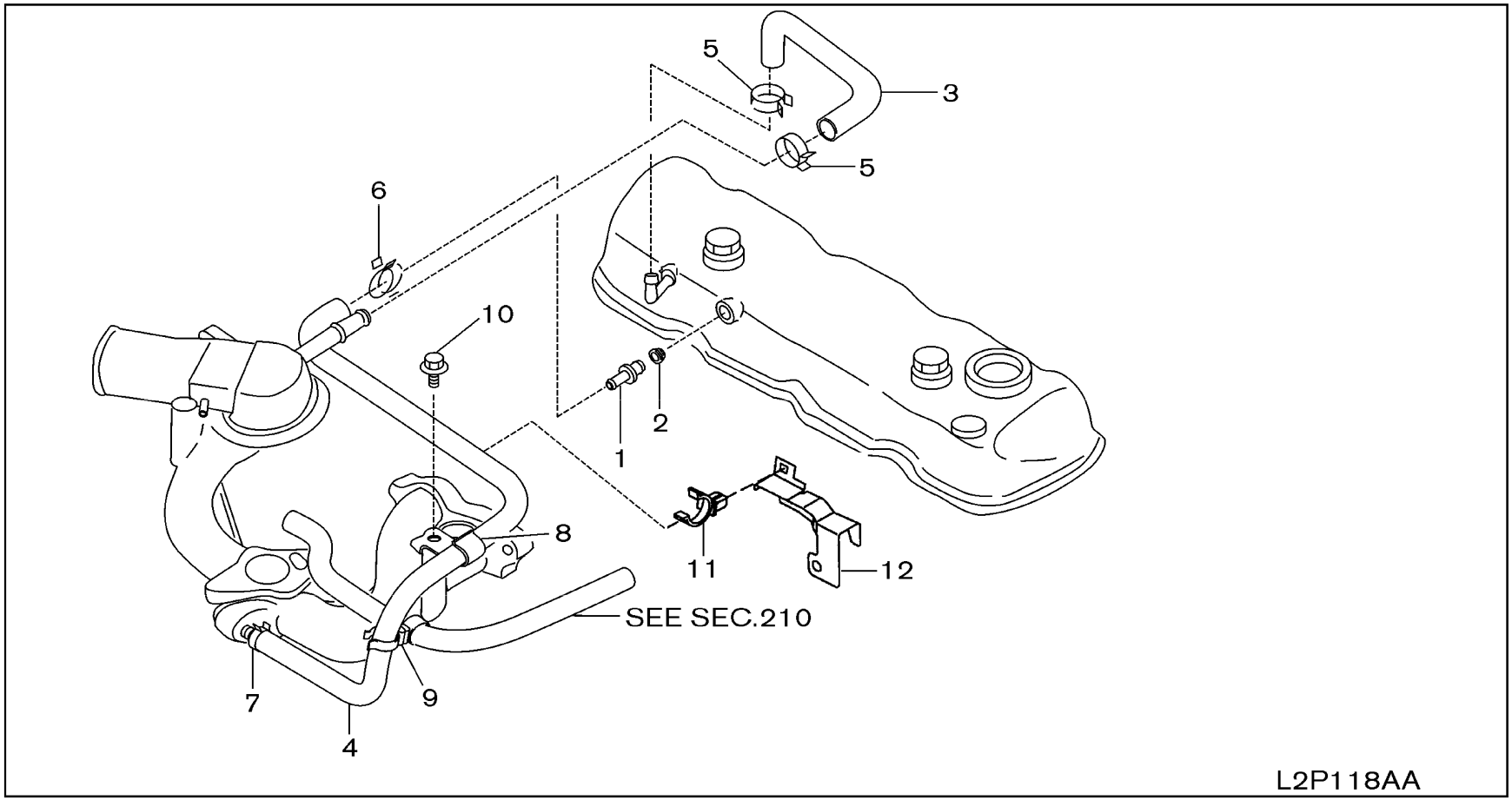

SEC. 118A

CRANK CASE VENTILATION (K21 & K25)

VENTILACION DEL CARTER DEL MOTOR

KURBELGEHÄUSEENTLÜFTUNG

VENTILATION DE CARTER MOTEUR

NC	S	KEY NO.	LEV	PART NO.	PART NAME	SPECIFICATION	QTY	APPLIED DATE	ICANF	FORMER PART NO.	KD	APPLIED MODEL 01 02 03 04 05 06 07 08 09 10 11 12 13 14 15 16 17 18 19 20 21 22 23 24 25 26 27 28 29
		1 01	1	**11810-75T00**	VALVE ASSY-CONTROL BLOWBY		01	0107-				○○○○○○○○○ ○○○○○○○○○○ ○○○○○○○○○ ○○○
		2 01	1	**11812-41B00**	INSULATOR-PCV VALVE		01	0107-				○○○○○○○○○ ○○○○○○○○○○ ○○○○○○○○○ ○○○
		3 01	1	**11828-FU400**	HOSE-BLOWBY GAS		01	0107-				○○○○○○○○○ ○○○○○○○○○○ ○○○○○○○○○ ○○○
		4 01	1	**11823-GS00A**	HOSE-BLOWBY GAS		01	0107-				○○○○○○○○○ ○○○○○○○○○○ ○○○○○○○○○ ○○○
		5 01	1	**16439-V500B**	CLAMP-HOSE		02	0107-				○○○○○○○○○ ○○○○○○○○○○ ○○○○○○○○○ ○○○
		6 01	1	**16439-42L0B**	CLAMP-HOSE		01	0107-				○○○○○○○○○ ○○○○○○○○○○ ○○○○○○○○○ ○○○
		7 01	1	**16439-17B0A**	CLAMP-HOSE		01	0107-0710				○○○○○○○○○ ○○○○○○○○○○ ○○○○○○○○○ ○○○
		02	1	**16439-7S01C**			01	0710-				○○○○○○○○○ ○○○○○○○○○○ ○○○○○○○○○ ○○○
		8 01	1	**24220-FU400**	CLIP		01	0107-				○○○○○○○○○ ○○○○○○○○○○ ○○○○○○○○○ ○○○
		9 01	1	**24220-55Y00**	CLIP		01	0107-				○○○○○○○○○ ○○○○○○○○○○ ○○○○○○○○○ ○○○
		10 01	1	**08120-61228**	SCREW-HHM M6-1.0X12 W/LKW		01	0107-				○○○○○○○○○ ○○○○○○○○○○ ○○○○○○○○○ ○○○
		11 01	1	**17571-5V002**	CLIP		01	0107-				○○○○○○○○○ ○○○○○○○○○○ ○○○○○○○○○ ○○○
		12 01	1	**11836-GQ70A**	BRACKET-BLOWBY PIPE		01	0107-				○○○○○○○○○ ○○○○○○○○○○ ○○○○○○○○○ ○○○

SEC. 118B

CRANK CASE VENTILATION (QD32)

VENTILACION DEL CARTER DEL MOTOR

KURBELGEHÄUSEENTLÜFTUNG

VENTILATION DE CARTER MOTEUR

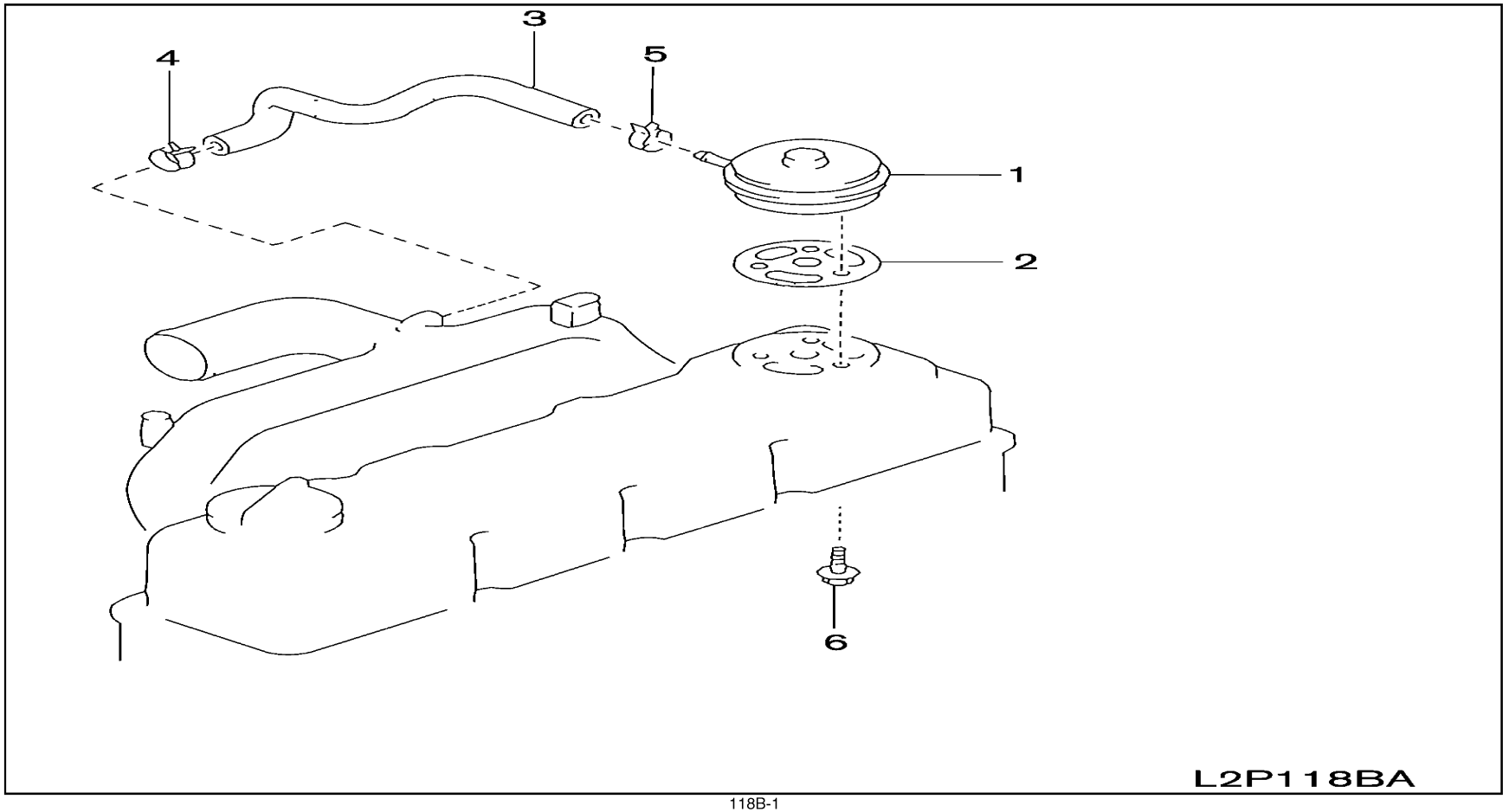

SEC. 118B

CRANK CASE VENTILATION (QD32)

VENTILACION DEL CARTER DEL MOTOR

KURBELGEHÄUSEENTLÜFTUNG

VENTILATION DE CARTER MOTEUR

NC	S	KEY NO.	LEV	PART NO.	PART NAME	SPECIFICATION	QTY	APPLIED DATE	ICANF	FORMER PART NO.	KD	APPLIED MODEL 01	02	03	04	05	06	07	08	09	10	11	12	13	14	15	16	17	18	19	20	21	22	23	24	25	26	27	28	29
		1	01	1	**11810-43G00**	VALVE ASSY-CONTROL BLOWBY		01	0107-											O								O										O
		2	01	1	**11033-43G03**	GASKET-CONTROL VALVE		01	0107-											O								O										O
		3	01	1	**11826-40K00**	HOSE-BLOWBY, A		01	0107-											O								O										O
		4	01	1	**01558-00124**	CLIP		01	0107-											O								O										O
		5	01	1	**22316-T820D**	CLIP		01	0107-											O								O										O
		6	01	1	**08120-62028**	SCREW-HHM M6-1.0X20 W/LKW		01	0107-											O								O										O

SEC. 120A

PISTON,CRANKSHAFT & FLYWHEEL (K21 & K25)

PISTON,CIGÜEÑAL Y VOLANTE MOTOR

KOLBEN,KURBELWELLE & SCHWUNGRAD

PISTON,VILEBREQUIN ET VOLANT

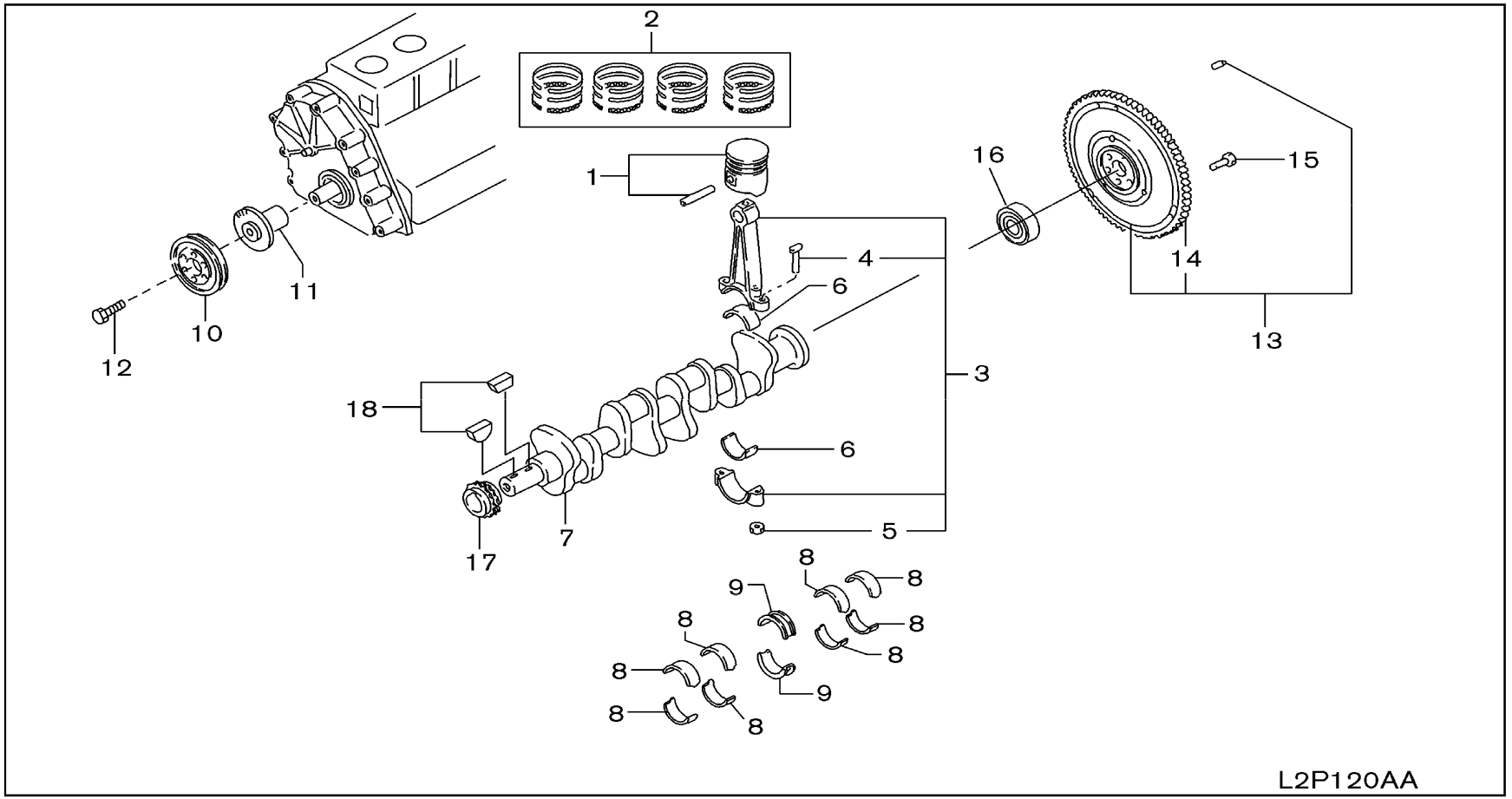

SEC. 120A

PISTON,CRANKSHAFT & FLYWHEEL (K21 & K25)

PISTON,CIGÜEÑAL Y VOLANTE MOTOR

KOLBEN,KURBELWELLE & SCHWUNGRAD

PISTON,VILEBREQUIN ET VOLANT

NC	S	KEY NO.	LEV	PART NO.	PART NAME	SPECIFICATION	QTY	APPLIED DATE	ICANF	FORMER PART NO.	KD	APPLIED MODEL 01 02 03 04 05 06 07 08 09 10 11 12 13 14 15 16 17 18 19 20 21 22 23 24 25 26 27 28 29
		1	01	1	**12010-GS00A**	PISTON,W/PIN	GRADE 1	04	0107-			o o o o o o o o o o o o o o o o o o o o o o o o o o o o o
			02	1	**12010-GS00B**		GRADE 2	04	0107-			o o o o o o o o o o o o o o o o o o o o o o o o o o o o o
			03	1	**12010-GS00C**		GRADE 3	04	0107-			o o o o o o o o o o o o o o o o o o o o o o o o o o o o o
			04	1	**12010-GS00D**		GRADE 4	04	0107-			o o o o o o o o o o o o o o o o o o o o o o o o o o o o o
			05	1	**12010-GS00E**		GRADE 5	04	0107-			o o o o o o o o o o o o o o o o o o o o o o o o o o o o o
			06	1	**12010-GS07A**		OS=0.5	04	0107-			o o o o o o o o o o o o o o o o o o o o o o o o o o o o o
			07	1	**12010-GS07B**		OS=1.0	04	0107-			o o o o o o o o o o o o o o o o o o o o o o o o o o o o o
			08	1	**12010-GS10A**		GRADE 1	04	0107-			o o o o o o o o o o o o o o o o o o o o o o o o o o o o o
			09	1	**12010-GS10B**		GRADE 2	04	0107-			o o o o o o o o o o o o o o o o o o o o o o o o o o o o o
			10	1	**12010-GS10C**		GRADE 3	04	0107-			o o o o o o o o o o o o o o o o o o o o o o o o o o o o o
			11	1	**12010-GS10D**		GRADE 4	04	0107-			o o o o o o o o o o o o o o o o o o o o o o o o o o o o o
			12	1	**12010-GS10E**		GRADE 5	04	0107-			o o o o o o o o o o o o o o o o o o o o o o o o o o o o o
			13	1	**12010-GS17A**		OS=0.5	04	0107-			o o o o o o o o o o o o o o o o o o o o o o o o o o o o o
			14	1	**12010-GS17B**		OS=1.0	04	0107-			o o o o o o o o o o o o o o o o o o o o o o o o o o o o o
C		**2**	01	1	**12033-AE003**	RING SET-PISTON	STD	01	0107-			o o o o o o o o o o o o o o o o o o o o o o o o o o o o o
C			02	1	**12036-GS00A**		OS=0.5	01	0107-			o o o o o o o o o o o o o o o o o o o o o o o o o o o o o
C			03	1	**12038-GS00B**		OS=1.0	01	0107-			o o o o o o o o o o o o o o o o o o o o o o o o o o o o o
		3	01	1	**12100-FU400**	ROD COMPL-CONNECTING		04	0107-0208			o o o o o o o o o o o o o o o o o o o o o o o o o o o o o
			02	1	**12100-FU40A**			04	0208-			o o o o o o o o o o o o o o o o o o o o o o o o o o o o o
			03	1	**12100-FY500**			04	0107-0208			o o o o o o o o o o o o o o o o o o o o o o o o o o o o o
			04	1	**12100-FY50A**			04	0208-			o o o o o o o o o o o o o o o o o o o o o o o o o o o o o
		4	01	2	**12109-D0210**	BOLT-CONNECTING ROD		08	0107-0208			o o o o o o o o o o o o o o o o o o o o o o o o o o o o o
			02	2	**12109-GQ70A**			08	0208-			o o o o o o o o o o o o o o o o o o o o o o o o o o o o o
		5	01	2	**12112-H1000**	NUT-CONNECTING ROD		08	0107-			o o o o o o o o o o o o o o o o o o o o o o o o o o o o o
		6	01	1	**12111-FY500**	BEARING SET-CONN ROD	STD	08	0107-			o o o o o o o o o o o o o o o o o o o o o o o o o o o o o
			02	1	**12117-FY500**		US=0.08	08	0107-			o o o o o o o o o o o o o o o o o o o o o o o o o o o o o
			03	1	**12118-FY500**		US=0.12	08	0107-			o o o o o o o o o o o o o o o o o o o o o o o o o o o o o
			04	1	**12119-FY500**		US=0.25	08	0107-			o o o o o o o o o o o o o o o o o o o o o o o o o o o o o
		7	01	1	**12201-FU400**	CRANKSHAFT ASSY		01	0107-			o o o o o o o o o o o o o o o o o o o o o o o o o o o o o
			02	1	**12201-FY500**			01	0107-			o o o o o o o o o o o o o o o o o o o o o o o o o o o o o
		8	01	1	**12231-FY500**	BEARING-MAIN, INNER	STD	08	0107-			o o o o o o o o o o o o o o o o o o o o o o o o o o o o o
			02	1	**12232-FY500**		US=0.02	08	0107-			o o o o o o o o o o o o o o o o o o o o o o o o o o o o o
			03	1	**12233-FY500**		US=0.25	08	0107-			o o o o o o o o o o o o o o o o o o o o o o o o o o o o o
			04	1	**12234-FY500**		US=0.50	08	0107-			o o o o o o o o o o o o o o o o o o o o o o o o o o o o o
			05	1	**12235-FY500**		US=0.75	08	0107-			o o o o o o o o o o o o o o o o o o o o o o o o o o o o o
			06	1	**12236-FY500**		US=1.00	08	0107-			o o o o o o o o o o o o o o o o o o o o o o o o o o o o o
		9	01	1	**12247-50K00**	BEARING-MAIN, CENTER	STD	02	0107-			o o o o o o o o o o o o o o o o o o o o o o o o o o o o o

SEC. 120A

PISTON,CRANKSHAFT & FLYWHEEL (K21 & K25)

PISTON,CIGÜEÑAL Y VOLANTE MOTOR

KOLBEN,KURBELWELLE & SCHWUNGRAD

PISTON,VILEBREQUIN ET VOLANT

NC	S	KEY NO.	LEV	PART NO.	PART NAME	SPECIFICATION	QTY	APPLIED DATE	ICANF	FORMER PART NO.	KD	APPLIED MODEL 01 02 03 04 05 06 07 08 09 10 11 12 13 14 15 16 17 18 19 20 21 22 23 24 25 26 27 28 29
		9	02	1	**12248-50K00**	BEARING-MAIN, CENTER	US=0.02	02	0107-			○○○○○○○○○ ○○○○○○○○○○ ○○○○○○○○ ○○○
			03	1	**12249-50K00**		US=0.25	02	0107-			○○○○○○○○○ ○○○○○○○○○○ ○○○○○○○○ ○○○
			04	1	**12250-50K00**		US=0.50	02	0107-			○○○○○○○○○ ○○○○○○○○○○ ○○○○○○○○ ○○○
			05	1	**12251-50K00**		US=0.75	02	0107-			○○○○○○○○○ ○○○○○○○○○○ ○○○○○○○○ ○○○
			06	1	**12252-50K00**		US=1.00	02	0107-			○○○○○○○○○ ○○○○○○○○○○ ○○○○○○○○ ○○○
		10	01	1	**12303-FU400**	PULLEY-CRANKSHAFT		01	0107-			○○○○○○○○○ ○○○○○○○○○○ ○○○○○○○○ ○○○
		11	01	1	**12307-GX10A**	BUSH		01	0107-			○○○○○○○○○ ○○○○○○○○○○ ○○○○○○○○ ○○○
		12	01	1	**12309-FU400**	BOLT-FIX, PULLEY CRANK		01	0107-			○○○○○○○○○ ○○○○○○○○○○ ○○○○○○○○ ○○○
		13	01	1	**12310-FU400**	FLYWHEEL ASSY		01	0107-			○○○○○○○○○ ○○○○○○○○○○ ○○○○○○○○ ○○○
		14	01	2	**12312-50K00**	GEAR-RING		01	0107-			○○○○○○○○○ ○○○○○○○○○○ ○○○○○○○○ ○○○
		15	01	1	**12315-FU410**	BOLT-FLYWHEEL		06	0107-			○○○○○○○○○ ○○○○○○○○○○ ○○○○○○○○ ○○○
		16	01	1	**32203-FU400**	BEARING-BALL		01	0107-			○○○○○○○○○ ○○○○○○○○○○ ○○○○○○○○ ○○○
		17	01	1	**13021-FY500**	SPROCKET-CRANKSHAFT		01	0107-0510			○○○○○○○○○ ○○○○○○○○○○ ○○○○○○○○ ○○○
			02	1	**13021-FY50A**			01	0510-			○○○○○○○○○ ○○○○○○○○○○ ○○○○○○○○ ○○○
		18	01	1	**00926-51600**	KEY		02	0107-			○○○○○○○○○ ○○○○○○○○○○ ○○○○○○○○ ○○○

APPLIED MODEL: MPI UPI UPI UPI UUI UUI UUI UYI YPI PPI PPI PUI UUI UUI UYI YUI UUI UUI UGI GGI GGI G

NOTE

SEC. 120B

PISTON,CRANKSHAFT & FLYWHEEL (QD32)

PISTON,CIGÜEÑAL Y VOLANTE MOTOR

KOLBEN,KURBELWELLE & SCHWUNGRAD

PISTON,VILEBREQUIN ET VOLANT

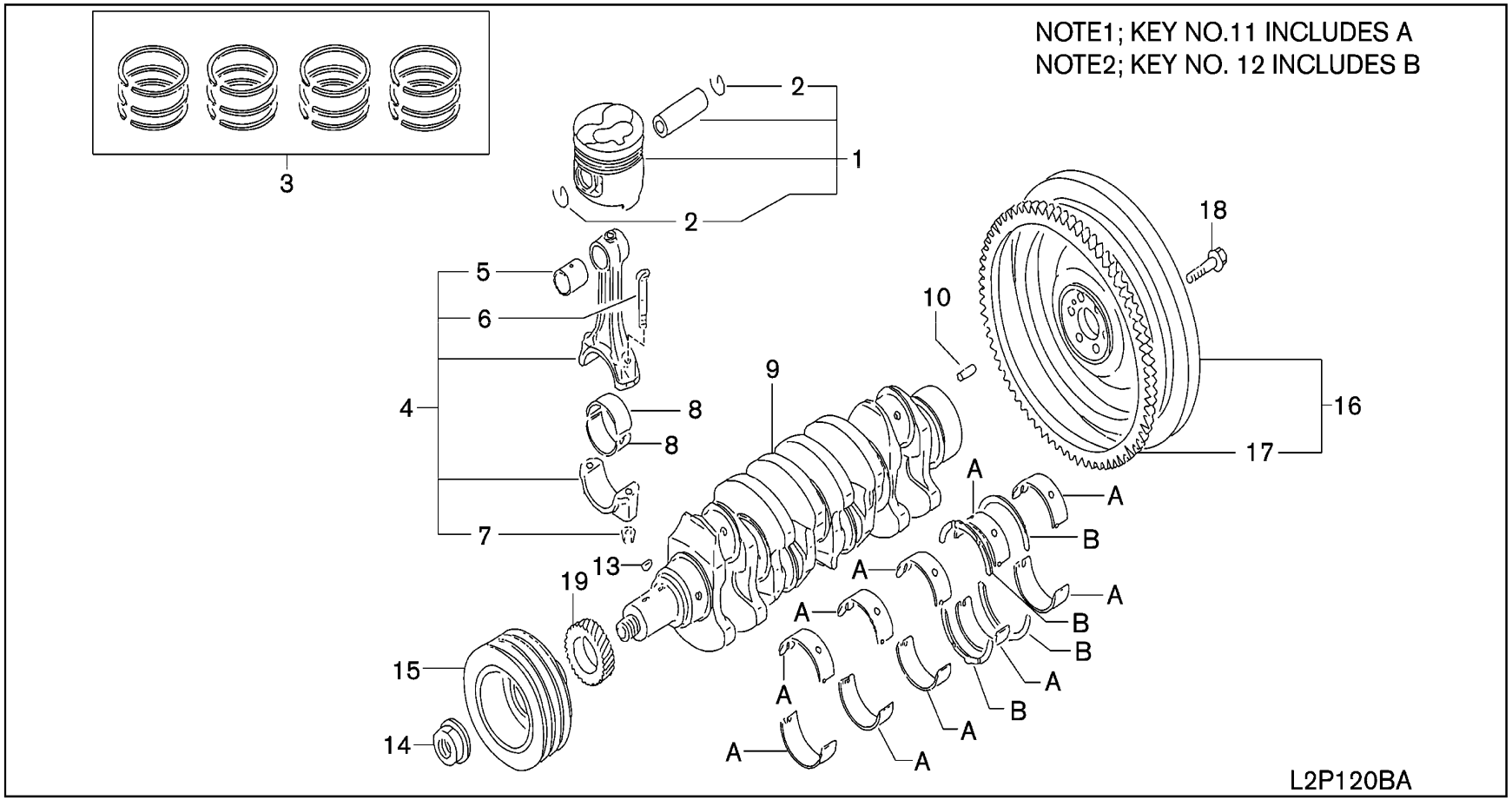

SEC. 120B

PISTON,CRANKSHAFT & FLYWHEEL (QD32)

PISTON,CIGÜEÑAL Y VOLANTE MOTOR

KOLBEN,KURBELWELLE & SCHWUNGRAD

PISTON,VILEBREQUIN ET VOLANT

NC	S	KEY NO.	LEV	PART NO.	PART NAME	SPECIFICATION	QTY	APPLIED DATE	ICANF	FORMER PART NO.	KD	APPLIED MODEL 01 02 03 04 05 06 07 08 09 10 11 12 13 14 15 16 17 18 19 20 21 22 23 24 25 26 27 28 29
		1	01	1	**12010-2S606**	PISTON, W/PIN	GRADE 1	04	0107-			O O O O O
			02	1	**12010-2S616**		GRADE 2	04	0107-			O O O O O
			03	1	**12010-2S620**		OS=0.25	04	0107-			O O O O O
		2	01	2	**12032-2S600**	RING-SNAP		08	0107-			O O O O O
		3	01	1	**12033-2S612**	RING SET-PISTON	STD	01	0107-			O O O O O
			02	1	**12035-2S61A**		OS-0.25	01	0107-			O O O O O
		4	01	1	**12100-1W402**	ROD COMPL-CONNECTING		04	0107-0308			O O O O O
			02	1	**12100-1W40A**			04	0308-			O O O O O
		5	01	2	**12030-2W200**	BUSH-PISTON PIN		04	0107-0308			O O O O O
			02	2	**12030-2W20A**			04	0308-			O O O O O
		6	01	2	**12109-43G00**	BOLT-CONNECTING ROD		08	0107-			O O O O O
		7	01	2	**12112-43G00**	NUT-CONNECTING ROD		08	0107-			O O O O O
		8	01	1	**12111-2W20A**	BEARING-CONNECTING ROD	STD	08	0107-			O O O O O
			02	1	**12117-2W20A**		US=0.25	08	0107-			O O O O O
			03	1	**12118-2W20A**		US=0.50	08	0107-			O O O O O
			04	1	**12119-2W20A**		US=0.75	08	0107-			O O O O O
			05	1	**12120-2W20A**		US=1.00	08	0107-			O O O O O
		9	01	1	**12200-2S60B**	CRANKSHAFT ASSY		01	0107-			O O O O O
		10	01	1	**01522-10224**	PIN-CRANKSHAFT		01	0107-			O O O O O
		11	01	1	**12207-MA70A**	BEARING SET-CRANKSHAFT	STD	01	0107-			O O O O O
			02	1	**12209-MA70A**		US=0.25	01	0107-			O O O O O
			03	1	**12210-MA70A**		US=0.50	01	0107-			O O O O O
			04	1	**12211-MA70A**		US=0.75	01	0107-			O O O O O
			05	1	**12212-MA70A**		US=1.00	01	0107-			O O O O O
		12	01	1	**12280-37525**	WASHER SET-THRUST	STD=A T=2.325	02	0107-			O O O O O
			02	1	**12280-37526**		STD=B T=2.350	02	0107-			O O O O O
			03	1	**12280-37527**		STD=C T=2.375	02	0107-			O O O O O
			04	1	**12280-37528**		OS=0.20 T=2.525	02	0107-			O O O O O
			05	1	**12280-37529**		OS=0.40 T=2.725	02	0107-			O O O O O
		13	01	1	**12205-76200**	KEY		02	0107-			O O O O O
		14	01	1	**12309-61503**	NUT-PULLEY, CRANKSHAFT		01	0107-			O O O O O
		15	01	1	**12304-6K200**	PULLEY-CRANKSHAFT		01	0107-			O O O O O
		16	01	1	**12310-NA00C**	FLYWHEEL ASSY		01	0107-			O O O O O
		17	01	2	**12312-43G01**	GEAR-RING		01	0107-0609			O O O O O
			02	2	**12312-43G0A**			01	0609-			O O O O O
		18	01	1	**12316-L2001**	BOLT-FLYWHEEL		06	0107-			O O O O O
		19	01	1	**13021-43G01**	SPROCKET-CRANKSHAFT		01	0107-			O O O O O

SEC. 130A

CAMSHAFT & VALVE MECHANISM (K21 & K25)

ARBOL DE LEVAS Y MECANISMO DE VALVULAS

NOCKENWELLE & VENTILMECHANISMUS

ARBRE A CAMES ET DISTRIBUTION

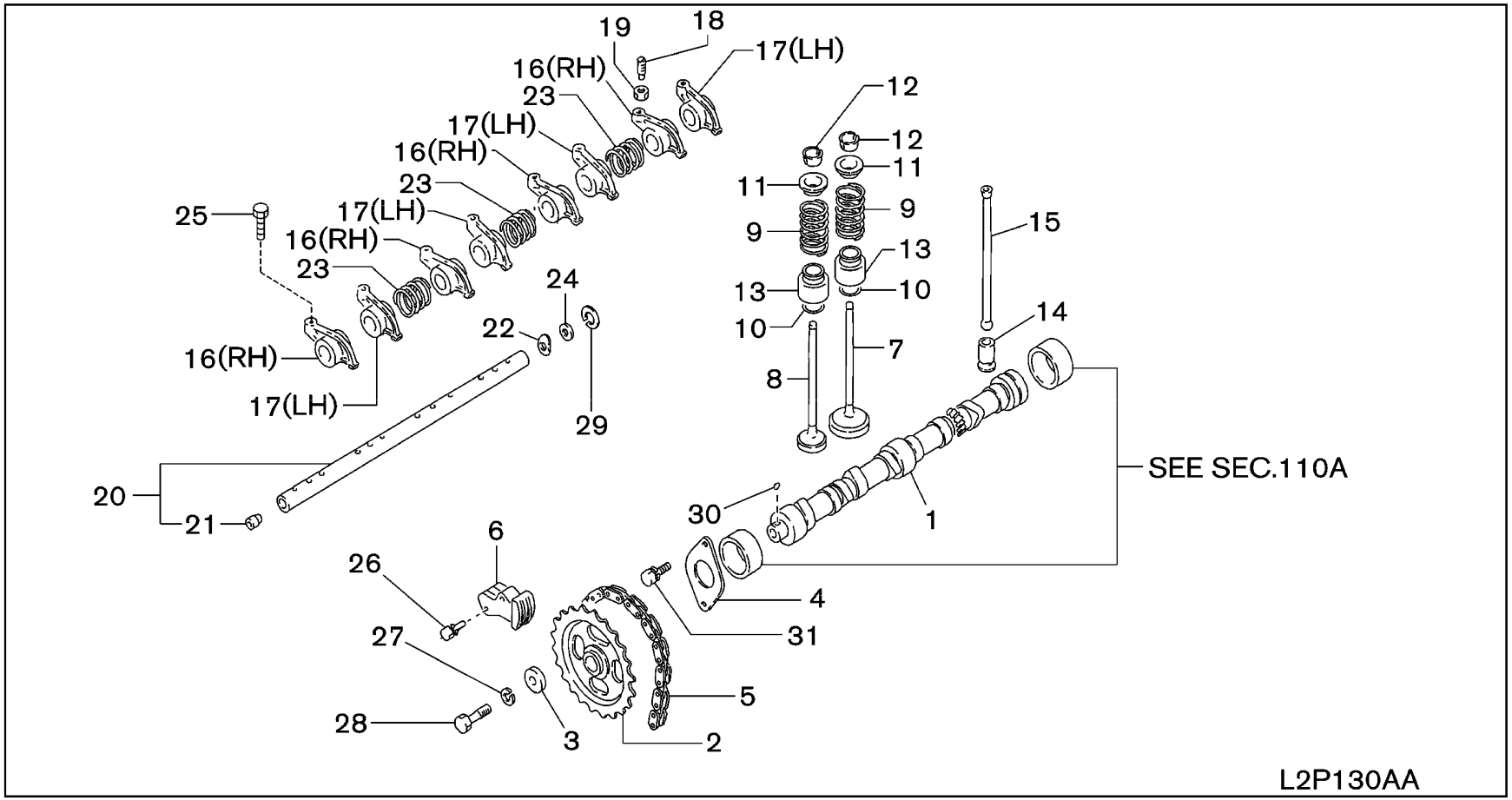

SEC. 130A

CAMSHAFT & VALVE MECHANISM (K21 & K25)

ARBOL DE LEVAS Y MECANISMO DE VALVULAS

NOCKENWELLE & VENTILMECHANISMUS

ARBRE A CAMES ET DISTRIBUTION

NC	S	KEY NO.	LEV	PART NO.	PART NAME	SPECIFICATION	QTY	APPLIED DATE	ICANF	FORMER PART NO.	KD	APPLIED MODEL 01 02 03 04 05 06 07 08 09 10 11 12 13 14 15 16 17 18 19 20 21 22 23 24 25 26 27 28 29
		1 01	1	13001-GS00A	CAMSHAFT ASSY		01	0107-				o o o o o o o o o o o o o o o o o o o o o o o o o o o o o
		2 01	1	13024-FY500	SPROCKET-CAMSHAFT		01	0107-0510				o o o o o o o o o o o o o o o o o o o o o o o o o o o o o
		02	1	13024-FY50A			01	0510-				o o o o o o o o o o o o o o o o o o o o o o o o o o o o o
		3 01	1	13013-78200	WASHER-CAM SPROCKET		01	0107-				o o o o o o o o o o o o o o o o o o o o o o o o o o o o o
		4 01	1	13010-78201	PLATE-LOCATING,CAMSHAFT		01	0107-				o o o o o o o o o o o o o o o o o o o o o o o o o o o o o
		5 01	1	13028-FU400	CHAIN-TIMING CAMSHAFT		01	0107-				o o o o o o o o o o o o o o o o o o o o o o o o o o o o o
		6 01	1	13070-50K00	TENSION ASSY-CHAIN		01	0107-				o o o o o o o o o o o o o o o o o o o o o o o o o o o o o
		7 01	1	13201-FY500	VALVE-INTAKE		04	0107-				o o o o o o o o o o o o o o o o o o o o o o o o o o o o o
		8 01	1	13202-FU400	VALVE-EXHAUST		04	0107-				o o o o o o o o o o o o o o o o o o o o o o o o o o o o o
		9 01	1	13203-FY50A	SPRING-VALVE		08	0107-				o o o o o o o o o o o o o o o o o o o o o o o o o o o o o
		10 01	1	13205-40F00	SEAT-VALVE SPRING,OUTER		08	0107-				o o o o o o o o o o o o o o o o o o o o o o o o o o o o o
		11 01	1	13209-V7200	RETAINER-VALVE STEM		08	0107-				o o o o o o o o o o o o o o o o o o o o o o o o o o o o o
		12 01	1	13210-16A00	COLLET-VALVE		16	0107-				o o o o o o o o o o o o o o o o o o o o o o o o o o o o o
		13 01	1	13207-53F00	SEAL-OIL VALVE STEM		08	0107-0307				o o o o o o o o o o o o o o o o o o o o o o o o o o o o o
		02	1	13207-D0111			08	0307-				o o o o o o o o o o o o o o o o o o o o o o o o o o o o o
		14 01	1	13231-H1001	LIFTER-VALVE		08	0107-				o o o o o o o o o o o o o o o o o o o o o o o o o o o o o
		15 01	1	13238-FY500	ROD-PUSH		08	0107-1007				o o o o o o o o o o o o o o o o o o o o o o o o o o o o o
		02	1	13238-FU40A			08	1007-				o o o o o o o o o o o o o o o o o o o o o o o o o o o o o
		03	1	13238-FY500		NFTA	08	1007-				* *
		16 01	1	13258-FY500	ARM-VALVE ROCKER RH		04	0107-				o o o o o o o o o o o o o o o o o o o o o o o o o o o o o
		17 01	1	13258-FY510	ARM-VALVE ROCKER LH		04	0107-				o o o o o o o o o o o o o o o o o o o o o o o o o o o o o
		18 01	1	13234-78200	SCREW-ADJUST,VALVE ROCKER		08	0107-				o o o o o o o o o o o o o o o o o o o o o o o o o o o o o
		19 01	1	13235-78200	NUT-ADJUST SCREW		08	0107-				o o o o o o o o o o o o o o o o o o o o o o o o o o o o o
		20 01	1	13252-FY500	SHAFT ASSY-VALVE ROCKER		01	0107-				o o o o o o o o o o o o o o o o o o o o o o o o o o o o o
		21 01	2	13254-02N00	PLUG-ROCKER SHAFT		02	0107-				o o o o o o o o o o o o o o o o o o o o o o o o o o o o o
		22 01	1	13255-58000	SPRING-OUTSIDE, VALVE ROCKER		02	0107-				o o o o o o o o o o o o o o o o o o o o o o o o o o o o o
		23 01	1	13256-W0400	SPRING-VALVE ROCKER		03	0107-				o o o o o o o o o o o o o o o o o o o o o o o o o o o o o
		24 01	1	13289-58000	WASHER-ROCKER SHAFT		02	0107-				o o o o o o o o o o o o o o o o o o o o o o o o o o o o o
		25 01	1	081A0-8251A	BOLT-FLANGE		04	0107-				o o o o o o o o o o o o o o o o o o o o o o o o o o o o o
		26 01	1	08120-63528	SCREW-HHM M6-1.0X35 W/LKW		02	0107-				o o o o o o o o o o o o o o o o o o o o o o o o o o o o o
		27 01	1	08915-1401A	WASHER-LOCK SPLIT M10		01	0107-				o o o o o o o o o o o o o o o o o o o o o o o o o o o o o
		28 01	1	08171-0401A	SCREW-HHM M10-1.5X40 9T		01	0107-				o o o o o o o o o o o o o o o o o o o o o o o o o o o o o
		29 01	1	00922-12010	RING-SNAP		02	0107-				o o o o o o o o o o o o o o o o o o o o o o o o o o o o o
		30 01	1	00926-41600	KEY		01	0107-				o o o o o o o o o o o o o o o o o o o o o o o o o o o o o
		31 01	1	08120-61628	SCREW-HHM M6-1.0X16 W/LKW		02	0107-				o o o o o o o o o o o o o o o o o o o o o o o o o o o o o

SEC. 130B

CAMSHAFT & VALVE MECHANISM (QD32)

ARBOL DE LEVAS Y MECANISMO DE VALVULAS

NOCKENWELLE & VENTILMECHANISMUS

ARBRE A CAMES ET DISTRIBUTION

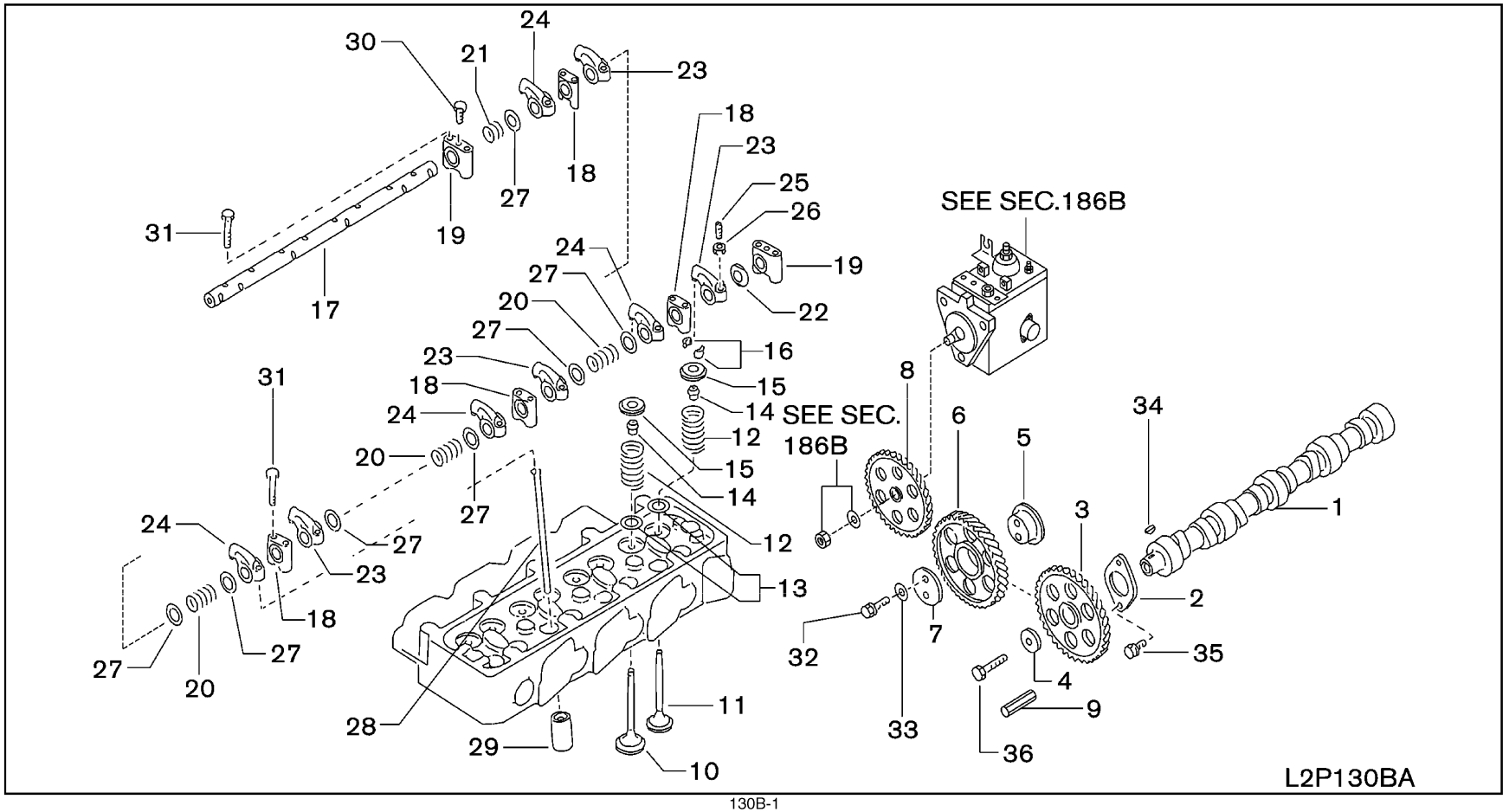

SEC. 130B

CAMSHAFT & VALVE MECHANISM (QD32)

ARBOL DE LEVAS Y MECANISMO DE VALVULAS

NOCKENWELLE & VENTILMECHANISMUS

ARBRE A CAMES ET DISTRIBUTION

NC	S	KEY NO.	LEV	PART NO.	PART NAME	SPECIFICATION	QTY	APPLIED DATE	ICANF	FORMER PART NO.	KD
		1	01	1	**13001-54T03**	CAMSHAFT ASSY		01	0107-		
		2	01	1	**13010-06J00**	PLATE-LOCATING, CAMSHAFT		01	0107-		
		3	01	1	**13024-0T600**	SPROCKET-CAMSHAFT		01	0107-		
		4	01	1	**13030-37500**	WASHER-PLAIN		01	0107-		
		5	01	1	**13016-54T0A**	SHAFT-IDLER GEAR		01	0107-		
		6	01	1	**13012-54T00**	GEAR-IDLER		01	0107-		
		7	01	1	**13011-43G00**	PLATE-IDLER GEAR		01	0107-		
		8	01	1	**16735-NA00A**	GEAR-DRIVE INJECTION PUMP		01	0107-		
		9	01	1	**13081-40K00**	JET-OIL		01	0107-		
		10	01	1	**13201-1W400**	VALVE-INTAKE		04	0107-		
		11	01	1	**13202-1W400**	VALVE-EXHAUST		04	0107-		
		12	01	1	**13203-54T01**	SPRING-VALVE, OUTER		08	0107-		
		13	01	1	**13206-31N00**	SEAT-VALVE SPRING, INNER		08	0107-		
		14	01	1	**13207-V1700**	SEAL-OIL, VALVE		08	0107-0610		
			02	1	**13207-V170A**			08	0610-		
		15	01	1	**13209-43G01**	RETAINER-VALVE SPRING		08	0107-		
		16	01	1	**13208-Z5500**	COLLET-VALVE SPRING		16	0107-		
		17	01	1	**13252-43G02**	SHAFT-ROCKER		01	0107-		
		18	01	1	**13222-43G00**	BRACKET-ROCKER SHAFT		04	0107-		
		19	01	1	**13223-43G01**	BRACKET-ROCKER SHAFT		02	0107-		
		20	01	1	**13256-43G01**	SPRING-ROCKER		03	0107-		
		21	01	1	**13256-43G02**	SPRING-ROCKER		01	0107-		
		22	01	1	**13255-43G00**	RETAINER-ROCKER SHAFT		01	0107-		
		23	01	1	**13257-63G01**	ROCKER-VALVE		04	0107-		
		24	01	1	**13258-63G01**	ROCKER-VALVE		04	0107-		
		25	01	1	**13234-43G01**	SCREW-ADJUST, VALVE ROCKER		08	0107-		
		26	01	1	**01225-00112**	NUT-LOCK, ROCKER PIVOT SCREW		08	0107-		
		27	01	1	**13297-43G00**	WASHER-PIVOT		08	0107-		
		28	01	1	**13238-43G00**	ROD-PUSH		08	0107-		
		29	01	1	**13231-54T02**	LIFTER-VALVE		08	0107-		
		30	01	1	**081A0-6161A**	BOLT-FLANGE		02	0107-		
		31	01	1	**08120-8601F**	SCREW-HHM M8-1.25X60 W/LK & PW		12	0107-		
		32	01	1	**08170-8501A**	BOLT-HEX		02	0107-		
		33	01	1	**08915-1381A**	WASHER-LOCK SPLIT M8		02	0107-		
		34	01	1	**00926-41600**	KEY		01	0107-		
		35	01	1	**08120-61628**	SCREW-HHM M6-1.0X16 W/LKW		02	0107-		
		36	01	1	**08051-0501A**	BOLT-HEX		01	0107-		

APPLIED MODEL

01	02	03	04	05	06	07	08	09	10	11	12	13	14	15	16	17	18	19	20	21	22	23	24	25	26	27	28	29
MI PA 20 JV	MI PA 20 DV	MI PA 20 LV	MI PA 20 SV	MI PU 20 LV	MI PU 20 JV	MI PU 20 DV	MI PU 20 LS	MI PY 20 LV	MI PP 25 JV	MI PP 25 DV	MI PP 25 LV	MI PP 25 SV	MI PU 25 JV	MI PU 25 DV	MI PU 25 LV	MI PU 25 LS	MI PY 25 LV	MI UU 28 JV	MI UU 28 DV	MI UU 28 LV	MI UG 30 JV	MI UG 30 DV	MI UG 30 LV	MI UG 30 LV	MI UY 30 JV	MI UU 35 DV	MI UU 35 LV	MI UY 35 LV	MI UG 35 LV
O	O	O	O	O	O	O	O	O	O	O	O	O	O	O	O	O	O	O	O	O	O	O	O	O	O	O	O	O

SEC. 135A

FRONT COVER & FITTING (K21 & K25)

CUBIERTA DELANTERA Y PARTES DE FIJACION

VORDERABDECKUNG & BESCHLAGTEILE

COUVERCLE AVANT ET PIECES DE FIXATION

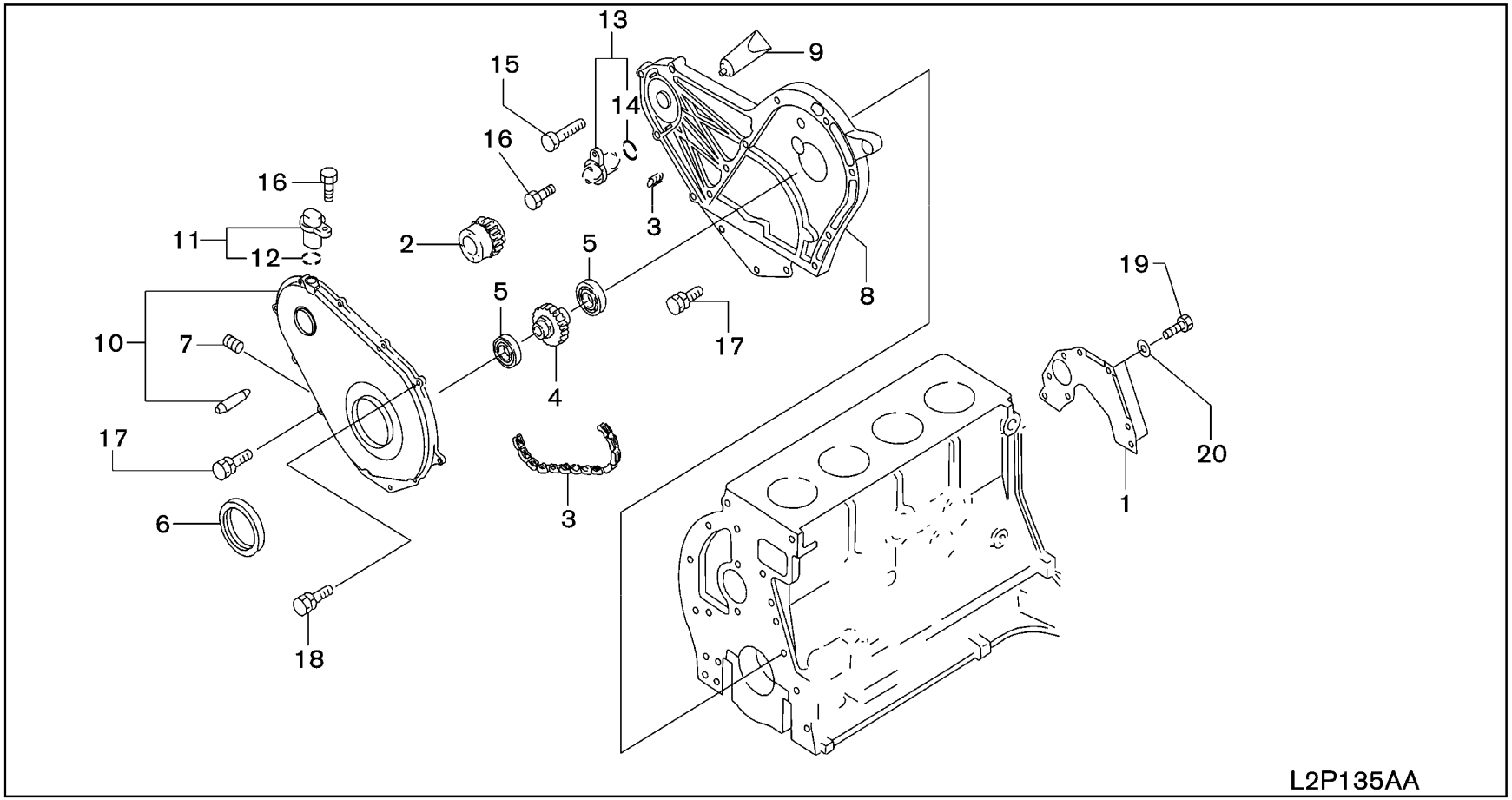

SEC. 135A

FRONT COVER & FITTING (K21 & K25)

CUBIERTA DELANTERA Y PARTES DE FIJACION

VORDERABDECKUNG & BESCHLAGTEILE

COUVERCLE AVANT ET PIECES DE FIXATION

NC	S	KEY NO.	LEV	PART NO.	PART NAME	SPECIFICATION	QTY	APPLIED DATE	ICANF	FORMER PART NO.	KD	APPLIED MODEL 01 02 03 04 05 06 07 08 09 10 11 12 13 14 15 16 17 18 19 20 21 22 23 24 25 26 27 28 29
		1 01	1	**30411-FU400**	PLATE-ENGINE, REAR		01	0107-				o o o o o o o o o o o o o o o o o o o o o o o o o o o o o
		2 01	1	**12351-FU400**	SPROCKET-PTO, DRIVE		01	0107-				o o o o o o o o o o o o o o o o o o o o o o o o o o o o o
		3 01	1	**12352-FU400**	CHAIN-PTO		01	0107-				o o o o o o o o o o o o o o o o o o o o o o o o o o o o o
		4 01	1	**12353-FU400**	SPROCKET-PTO DRIVEN		01	0107-				o o o o o o o o o o o o o o o o o o o o o o o o o o o o o
		5 01	1	**12354-50K00**	BEARING-SPROCKET PTO, DRIVEN		02	0107-				o o o o o o o o o o o o o o o o o o o o o o o o o o o o o
		6 01	1	**13510-FF200**	SEAL-OIL, FRONT COVER		01	0107-				o o o o o o o o o o o o o o o o o o o o o o o o o o o o o
		7 01	1	**11046-73402**	PIN-DOWEL		01	0107-				o o o o o o o o o o o o o o o o o o o o o o o o o o o o o
		8 01	1	**13034-FU400**	HOUSING-TIMING CHAIN		01	0107-				o o o o o o o o o o o o o o o o o o o o o o o o o o o o o
		9 01	1	**KP710-00150**	GASKET-LIQUID		AR	0107-				o o o o o o o o o o o o o o o o o o o o o o o o o o o o o
		10 01	1	**13501-FU400**	COVER-FRONT		01	0107-				o o o o o o o o o o o o o o o o o o o o o o o o o o o o o
C		**11** 01	1	**23731-6J90B**	SENSOR ASSY-CRANK		01	0107-1211				o o o o o o o o o o o o o o o o o o o o o o o o o o o o o
N		02	1	**23731-6J90C**			01	1211-				o o o o o o o o o o o o o o o o o o o o o o o o o o o o o
		12 01	2	**22131-4M505**	SEAL-O RING		02	0107-				o o o o o o o o o o o o o o o o o o o o o o o o o o o o o
		13 01	1	**23731-6N20A**	SENSOR ASSY-CAMSHAFT		01	0107-0807				o o o o o o o o o o o o o o o o o o o o o o o o o o o o o
		02	1	**23731-6N20C**			01	0807-0311				o o o o o o o o o o o o o o o o o o o o o o o o o o o o o
		03	1	**23731-6N21A**			01	0311-				o o o o o o o o o o o o o o o o o o o o o o o o o o o o o
		14 01	2	**22131-4M505**	SEAL-O RING		02	0107-				o o o o o o o o o o o o o o o o o o o o o o o o o o o o o
		15 01	2	**08120-8451E**	SCREW-HHM M8-1.25X45 W/LKW		06	0107-				o o o o o o o o o o o o o o o o o o o o o o o o o o o o o
		16 01	2	**08120-62033**	SCREW-HHM M6-1.0X20 W/LK & PW		02	0107-				o o o o o o o o o o o o o o o o o o o o o o o o o o o o o
		17 01	2	**08120-8251E**	SCREW-HHM M8-1.25X25 W/LKW		13	0107-				o o o o o o o o o o o o o o o o o o o o o o o o o o o o o
		18 01	2	**08120-62533**	BOLT-HEX		01	0107-				o o o o o o o o o o o o o o o o o o o o o o o o o o o o o
		19 01	2	**08171-0252A**	BOLT-HEX		04	0107-				o o o o o o o o o o o o o o o o o o o o o o o o o o o o o
		20 01	2	**08915-2401A**	WASHER-LOCK SPLIT M10 HEAVY		04	0107-				o o o o o o o o o o o o o o o o o o o o o o o o o o o o o

SEC. 135B

FRONT COVER & FITTING (QD32 UPTO SEPT. 2008)

CUBIERTA DELANTERA Y PARTES DE FIJACION

VORDERABDECKUNG & BESCHLAGTEILE

COUVERCLE AVANT ET PIECES DE FIXATION

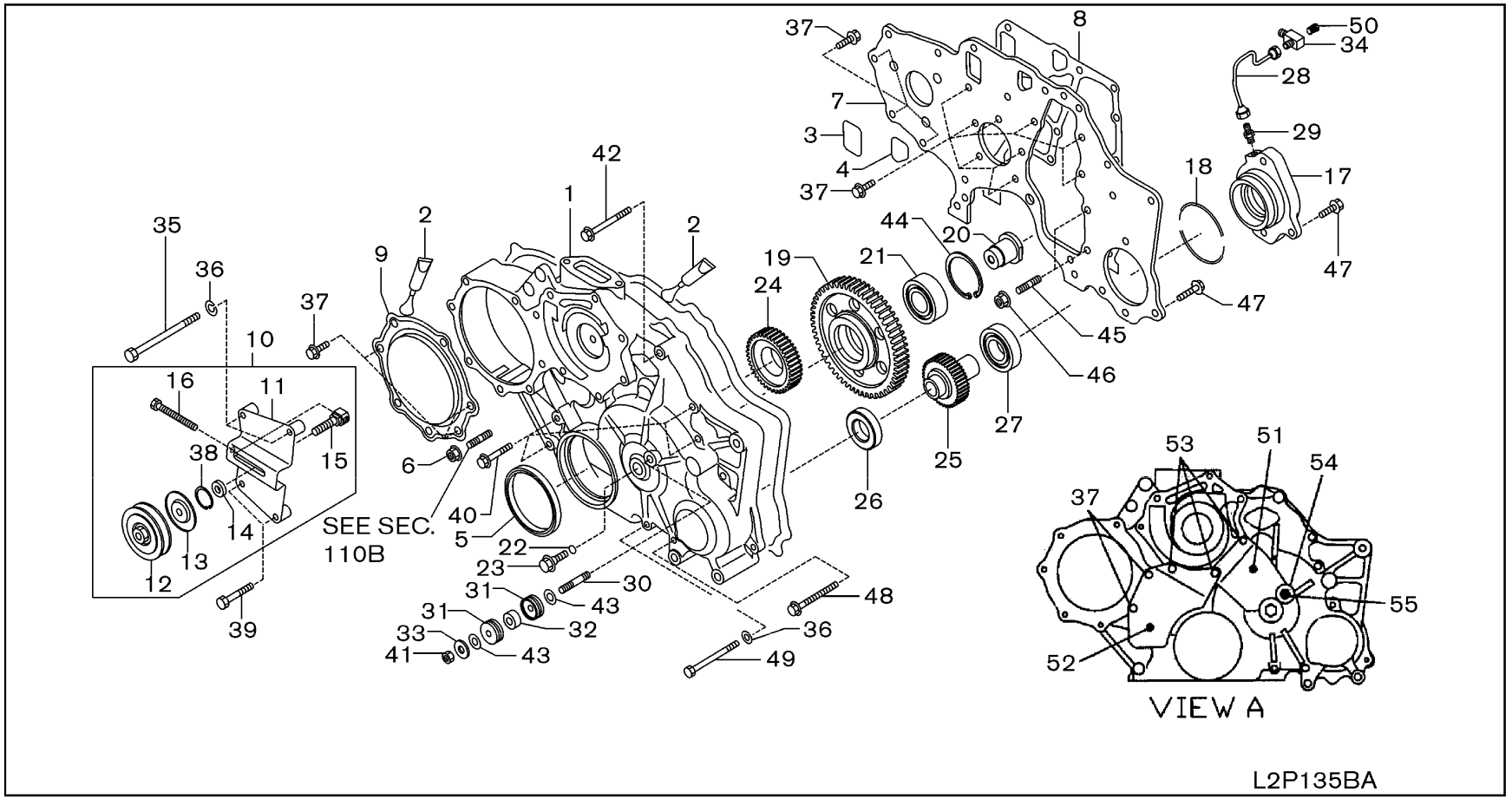

SEC. 135B

FRONT COVER & FITTING (QD32 UPTO SEPT. 2008)

CUBIERTA DELANTERA Y PARTES DE FIJACION

VORDERABDECKUNG & BESCHLAGTEILE

COUVERCLE AVANT ET PIECES DE FIXATION

NC	S	KEY NO.	LEV	PART NO.	PART NAME	SPECIFICATION	QTY	APPLIED DATE	ICANF	FORMER PART NO.	KD	APPLIED MODEL 01	02	03	04	05	06	07	08	09	10	11	12	13	14	15	16	17	18	19	20	21	22	23	24	25	26	27	28	29
		1	01	1	**13034-41K01**	CASE-FRONT COVER		01	0107-0908										O	O								O								O			O
		2	01	1	**KP710-00150**	GASKET-LIQUID		AR	0107-0908										O	O								O								O			O
		3	01	1	**14465-43G20**	GASKET		01	0107-0908										O	O								O								O			O
		4	01	1	**14465-43G21**	GASKET		01	0107-0908										O	O								O								O			O
		5	01	1	**13510-40K01**	SEAL-OIL, CRANKSHAFT FRONT		01	0107-0908										O	O								O								O			O
		6	01	1	**16132-43G00**	NUT		01	0107-0908										O	O								O								O			O
		7	01	1	**13031-41K00**	PLATE-FRONT		01	0107-0908										O	O								O								O			O
		8	01	1	**13037-54T01**	GASKET-PLATE		01	0107-0908										O	O								O								O			O
		9	01	1	**13560-54T00**	COVER-FRONT		01	0107-0908										O	O								O								O			O
		10	01	1	**11925-NA000**	PULLEY ASSY-IDLER, COMPRESSOR		01	0107-0908										O	O								O								O			O
		11	01	2	**11926-NA000**	BRACKET-IDLER PULLEY		01	0107-0908										O	O								O								O			O
		12	01	2	**23150-43G01**	PULLEY ASSY		01	0107-0908										O	O								O								O			O
		13	01	2	**11915-J5502**	COVER-DUST, IDLER PULLEY		01	0107-0908										O	O								O								O			O
		14	01	2	**33023-90000**	SPACER-IDLER PULLEY		01	0107-0908										O	O								O								O			O
		15	01	2	**69763-10G01**	SHAFT-IDLER PULLEY		01	0107-0908										O	O								O								O			O
		16	01	2	**01111-16144**	BOLT-ADJUST		01	0107-0908										O	O								O								O			O
		17	01	1	**69190-41K01**	BRACKET-OIL PUMP		01	0107-0908										O	O								O								O			O
		18	01	1	**69170-L1400**	SEAL-O RING		01	0107-0908										O	O								O								O			O
		19	01	1	**13014-41K0A**	GEAR-IDLER		01	0107-0908										O	O								O								O			O
		20	01	1	**13016-41K00**	SHAFT-IDLER GEAR		01	0107-0908										O	O								O								O			O
		21	01	1	**33379-40K00**	BEARING-IDLER GEAR		01	0107-0908										O	O								O								O			O
		22	01	1	**01001-20024**	SEAL-O RING		01	0107-0908										O	O								O								O			O
		23	01	1	**01125-00104**	BOLT		01	0107-0908										O	O								O								O			O
		24	01	1	**13021-40K0A**	GEAR-CRANKSHAFT		01	0107-0908										O	O								O								O			O
		25	01	1	**33320-40K0A**	GEAR-OUTPUT		01	0107-0908										O	O								O								O			O
		26	01	1	**01011-00074**	BEARING-BALL		01	0107-0908										O	O								O								O			O
		27	01	1	**33378-40K00**	BEARING-OUTPUT SHAFT		01	0107-0908										O	O								O								O			O
		28	01	1	**15192-41K01**	TUBE ASSY-OIL		01	0107-0908										O	O								O								O			O
		29	01	1	**01612-11134**	ELBOW		01	0107-0908										O	O								O								O			O
		30	01	1	**14065-41K00**	STUD		01	0107-0908										O	O								O								O			O
		31	01	1	**11914-41K00**	BUSH		02	0107-0908										O	O								O								O			O
		32	01	1	**01931-00394**	SPACER		01	0107-0908										O	O								O								O			O
		33	01	1	**21113-90003**	WASHER		01	0107-0908										O	O								O								O			O
		34	01	1	**15191-41K01**	CONNECTOR-OIL		01	0107-0908										O	O								O								O			O
		35	01	1	**08120-8901A**	BOLT-HEX		02	0107-0908										O	O								O								O			O
		36	01	1	**08915-1381A**	WASHER-LOCK SPLIT M8		03	0107-0908										O	O								O								O			O
		37	01	1	**08120-8161E**	SCREW-HHM M8-1.25X16 W/LKW		17	0107-0908										O	O								O								O			O

SEC. 135B

FRONT COVER & FITTING (QD32 UPTO SEPT. 2008)

CUBIERTA DELANTERA Y PARTES DE FIJACION

VORDERABDECKUNG & BESCHLAGTEILE

COUVERCLE AVANT ET PIECES DE FIXATION

NC	S	KEY NO.	LEV	PART NO.	PART NAME	SPECIFICATION	QTY	APPLIED DATE	ICANF	FORMER PART NO.	KD	APPLIED MODEL 01 02 03 04 05 06 07 08 09 10 11 12 13 14 15 16 17 18 19 20 21 22 23 24 25 26 27 28 29
		38 01	1	**00922-24700**	RING-SNAP		01	0107-0908				o o o o o o o o o o o o o o o o o o o o o o o o o o o
		39 01	1	**08120-8401E**	BOLT-HEX		02	0107-0908				o o o o o o o o o o o o o o o o o o o o o o o o o o o
		40 01	1	**08120-8451E**	SCREW-HHM M8-1.25X45 W/LKW		04	0107-0908				o o o o o o o o o o o o o o o o o o o o o o o o o o o
		41 01	1	**08911-2401A**	NUT-HEX M10-1.25 6T		01	0107-0908				o o o o o o o o o o o o o o o o o o o o o o o o o o o
		42 01	1	**08120-8651E**	SCREW-HHM M8-1.25X65 W/LKW		01	0107-0908				o o o o o o o o o o o o o o o o o o o o o o o o o o o
		43 01	1	**08915-4401A**	WASHER-FLAT M10		02	0107-0908				o o o o o o o o o o o o o o o o o o o o o o o o o o o
		44 01	1	**00922-26200**	RING-SNAP		01	0107-0908				o o o o o o o o o o o o o o o o o o o o o o o o o o o
		45 01	1	**08223-81810**	STUD		02	0107-0908				o o o o o o o o o o o o o o o o o o o o o o o o o o o
		46 01	1	**08911-1081G**	NUT-HEX W/CON SPW M8-1.25		02	0107-0908				o o o o o o o o o o o o o o o o o o o o o o o o o o o
		47 01	1	**08120-8301E**	SCREW-HHM M8-1.25X30 W/LKW		02	0107-0908				o o o o o o o o o o o o o o o o o o o o o o o o o o o
		48 01	1	**08120-8701E**	BOLT-HEX		01	0107-0908				o o o o o o o o o o o o o o o o o o o o o o o o o o o
		49 01	1	**08120-8851A**	SCREW-HHM M8-1.25X85		01	0107-0908				o o o o o o o o o o o o o o o o o o o o o o o o o o o
		50 01	1	**11021-J200A**	PLUG-WELCH		01	0107-0908				o o o o o o o o o o o o o o o o o o o o o o o o o o o
		51 01	1	**13036-NA00A**	COVER-CASE TIMING GEAR		01	0107-0908				o o o o o o o o o o o o o o o o o o o o o o o o o o o
		52 01	1	**13036-NA00B**	COVER-CASE TIMING GEAR		01	0107-0908				o o o o o o o o o o o o o o o o o o o o o o o o o o o
		53 01	1	**08120-8251E**	SCREW-HHM M8-1.25X25 W/LKW		03	0107-0908				o o o o o o o o o o o o o o o o o o o o o o o o o o o
		54 01	1	**08915-44000**	WASHER		01	0107-0908				o o o o o o o o o o o o o o o o o o o o o o o o o o o
		55 01	1	**08911-2401A**	NUT-HEX M10-1.25 6T		01	0107-0908				o o o o o o o o o o o o o o o o o o o o o o o o o o o

NOTE

SEC. 135C

FRONT COVER & FITTING (QD32 FROM SEPT. 2008)

CUBIERTA DELANTERA Y PARTES DE FIJACION

VORDERABDECKUNG & BESCHLAGTEILE

COUVERCLE AVANT ET PIECES DE FIXATION

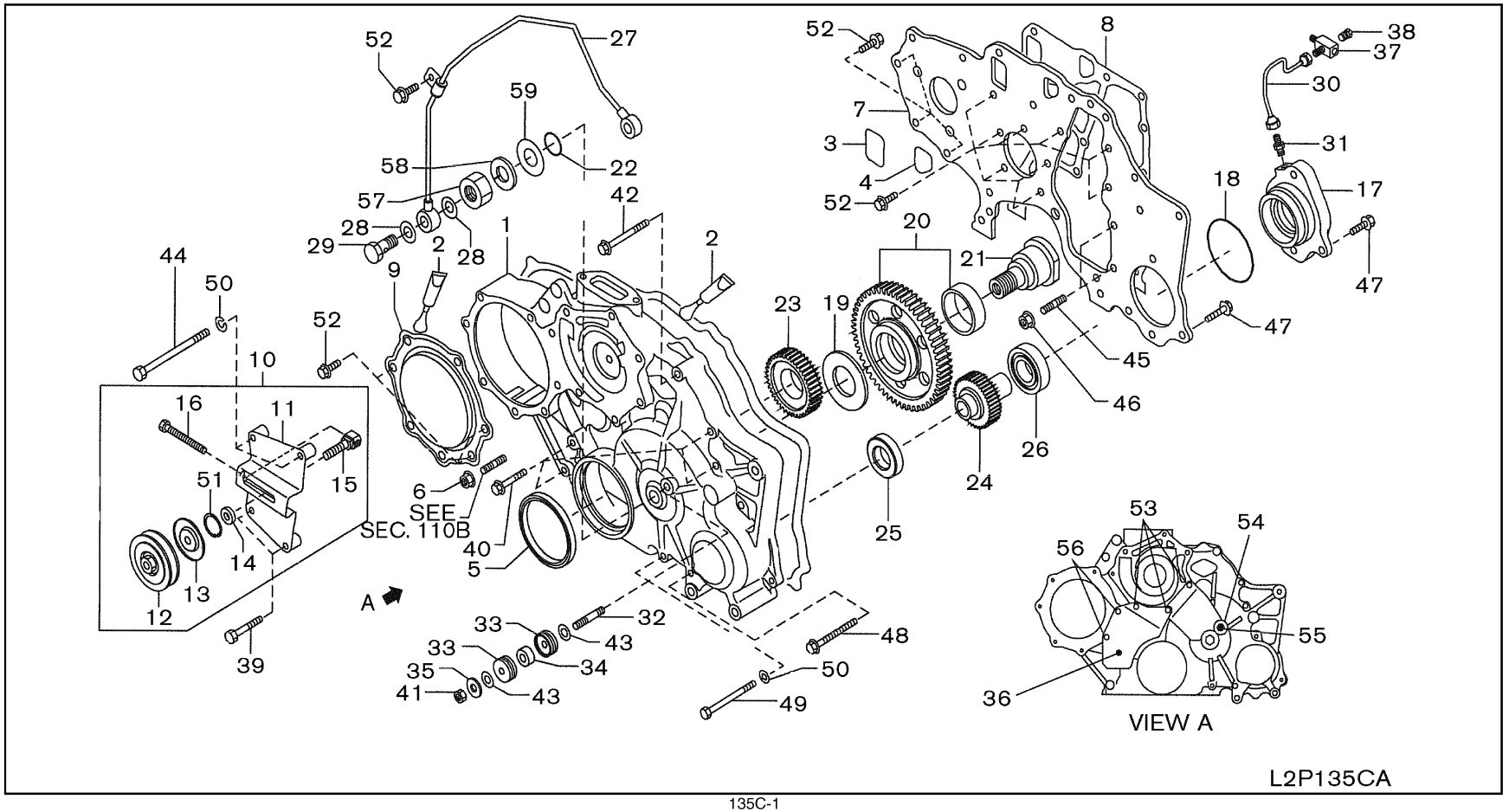

SEC. 135C

FRONT COVER & FITTING (QD32 FROM SEPT. 2008)

CUBIERTA DELANTERA Y PARTES DE FIJACION

VORDERABDECKUNG & BESCHLAGTEILE

COUVERCLE AVANT ET PIECES DE FIXATION

NC	S	KEY NO.	LEV	PART NO.	PART NAME	SPECIFICATION	QTY	APPLIED DATE	ICANF	FORMER PART NO.	KD	APPLIED MODEL 01	02	03	04	05	06	07	08	09	10	11	12	13	14	15	16	17	18	19	20	21	22	23	24	25	26	27	28	29
		1	01	1	**13034-NA01A**	CASE-FRONT COVER		01	0908-											O								O							O			O
		2	01	1	**KP710-00150**	GASKET-LIQUID		AR	0908-											O								O							O			O
		3	01	1	**14465-43G20**	GASKET		01	0908-											O								O							O			O
		4	01	1	**14465-43G21**	GASKET		01	0908-											O								O							O			O
		5	01	1	**13510-40K01**	SEAL-OIL, CRANKSHAFT FRONT		01	0908-											O								O							O			O
		6	01	1	**16132-43G00**	NUT		01	0908-											O								O							O			O
		7	01	1	**13031-41K00**	PLATE-FRONT		01	0908-											O								O							O			O
		8	01	1	**13037-54T01**	GASKET-PLATE		01	0908-											O								O							O			O
		9	01	1	**13560-54T00**	COVER-FRONT		01	0908-											O								O							O			O
		10	01	1	**11925-NA00B**	PULLEY ASSY-IDLER, COMPRESSOR		01	0908-											O								O							O			O
		11	01	2	**11926-NA000**	BRACKET-IDLER PULLEY		01	0908-											O								O							O			O
		12	01	2	**23150-43G0C**	PULLEY ASSY		01	0908-											O								O							O			O
		13	01	2	**11915-J5502**	COVER-DUST, IDLER PULLEY		01	0908-1008											O								O							O			O
			02	2	**11915-J550B**			01	1008-											O								O							O			O
		14	01	2	**33023-90000**	SPACER-IDLER PULLEY		01	0908-											O								O							O			O
		15	01	2	**69763-10G0A**	SHAFT-IDLER PULLEY		01	0908-											O								O							O			O
		16	01	2	**01111-16144**	BOLT-ADJUST		01	0908-											O								O							O			O
		17	01	1	**69190-41K01**	BRACKET-OIL PUMP		01	0908-											O								O							O			O
		18	01	1	**69170-L1400**	SEAL-O RING		01	0908-											O								O							O			O
		19	01	1	**13011-NA00B**	PLATE		01	0908-											O								O							O			O
		20	01	1	**13012-NA00B**	GEAR-IDLER		01	0908-											O								O							O			O
		21	01	1	**13016-NA00C**	SHAFT-IDLER GEAR		01	0908-											O								O							O			O
		22	01	1	**38952-90000**	SEAL-O RING		01	0908-											O								O							O			O
		23	01	1	**13021-40K0A**	GEAR-CRANKSHAFT		01	0908-											O								O							O			O
		24	01	1	**33320-40K0A**	GEAR-OUTPUT		01	0908-											O								O							O			O
		25	01	1	**01011-00074**	BEARING-BALL		01	0908-											O								O							O			O
		26	01	1	**33378-40K00**	BEARING-OUTPUT SHAFT		01	0908-											O								O							O			O
		27	01	1	**15108-NA00B**	TUBE ASSY-OIL		01	0908-											O								O							O			O
		28	01	1	**01351-21084**	GASKET-FRONT COVER		04	0908-											O								O							O			O
		29	01	1	**15188-NA00A**	BOLT-EYE		02	0908-											O								O							O			O
		30	01	1	**15192-41K01**	TUBE ASSY-OIL		01	0908-											O								O							O			O
		31	01	1	**01612-11134**	CONNECTOR		01	0908-											O								O							O			O
		32	01	1	**14065-41K00**	STUD		01	0908-											O								O							O			O
		33	01	1	**11914-41K00**	BEARING BALL		02	0908-											O								O							O			O
		34	01	1	**01931-00394**	SPACER		01	0908-											O								O							O			O
		35	01	1	**21113-90003**	WASHER		01	0908-											O								O							O			O
		36	01	1	**13036-NA00C**	COVER-FLANGE		01	0908-											O								O							O			O

SEC. 135C

FRONT COVER & FITTING (QD32 FROM SEPT. 2008)

CUBIERTA DELANTERA Y PARTES DE FIJACION

VORDERABDECKUNG & BESCHLAGTEILE

COUVERCLE AVANT ET PIECES DE FIXATION

NC	S	KEY NO.	LEV	PART NO.	PART NAME	SPECIFICATION	QTY	APPLIED DATE	ICANF	FORMER PART NO.	KD	APPLIED MODEL 01 02 03 04 05 06 07 08 09 10 11 12 13 14 15 16 17 18 19 20 21 22 23 24 25 26 27 28 29
		37 01	1	**15191-NA00B**	CONNECTOR		01	0908-				o o o o
		38 01	1	**11021-J200A**	PLUG-WELCH		01	0908-				o o o o
		39 01	1	**08120-8401E**	BOLT-HEX		02	0908-				o o o o
		40 01	1	**08120-8451E**	SCREW-HHM M8-1.25X45 W/LKW		04	0908-				o o o o
		41 01	1	**08911-2401A**	NUT-HEX M10-1.25 6T		01	0908-				o o o o
		42 01	1	**08120-8651E**	SCREW-HHM M8-1.25X65 W/LKW		01	0908-				o o o o
		43 01	1	**08915-4401A**	WASHER-FLAT M10		02	0908-				o o o o
		44 01	1	**08120-8901A**	BOLT-HEX		02	0908-				o o o o
		45 01	1	**08223-81810**	STUD		02	0908-				o o o o
		46 01	1	**08911-1081G**	NUT-HEX W/CON SPW M8-1.25		02	0908-				o o o o
		47 01	1	**08120-8301E**	SCREW-HHM M8-1.25X30 W/LKW		02	0908-				o o o o
		48 01	1	**08120-8701E**	BOLT-HEX		01	0908-				o o o o
		49 01	1	**08120-8851A**	SCREW-HHM M8-1.25X85		01	0908-				o o o o
		50 01	1	**08915-1381A**	WASHER-LOCK SPLIT M8		03	0908-				o o o o
		51 01	1	**00922-24700**	RING-SNAP		01	0908-				o o o o
		52 01	1	**08120-8161E**	SCREW-HHM M8-1.25X16 W/LKW		16	0908-				o o o o
		53 01	1	**08120-8251E**	SCREW-HHM M8-1.25X25 W/LKW		03	0908-				o o o o
		54 01	1	**08915-44000**	WASHER		01	0908-				o o o o
		55 01	1	**08911-2401A**	NUT-HEX M10-1.25 6T		01	0908-				o o o o
		56 01	1	**08120-8201E**	SCREW-HHM M8-1.25X20 W/LKW		02	0908-				o o o o
		57 01	1	**08911-3501A**	NUT-HEX JAM M20-1.5		01	0908-				o o o o
		58 01	1	**08915-1501A**	WASHER-LOCK SPLIT M20		01	0908-				o o o o
		59 01	1	**08915-4501A**	WASHER-FLAT M20		01	0908-				o o o o

NOTE

SEC. 140A

MANIFOLD (K21 & K25)

MULTIPLE

KRÜMMER

COLLECTEUR

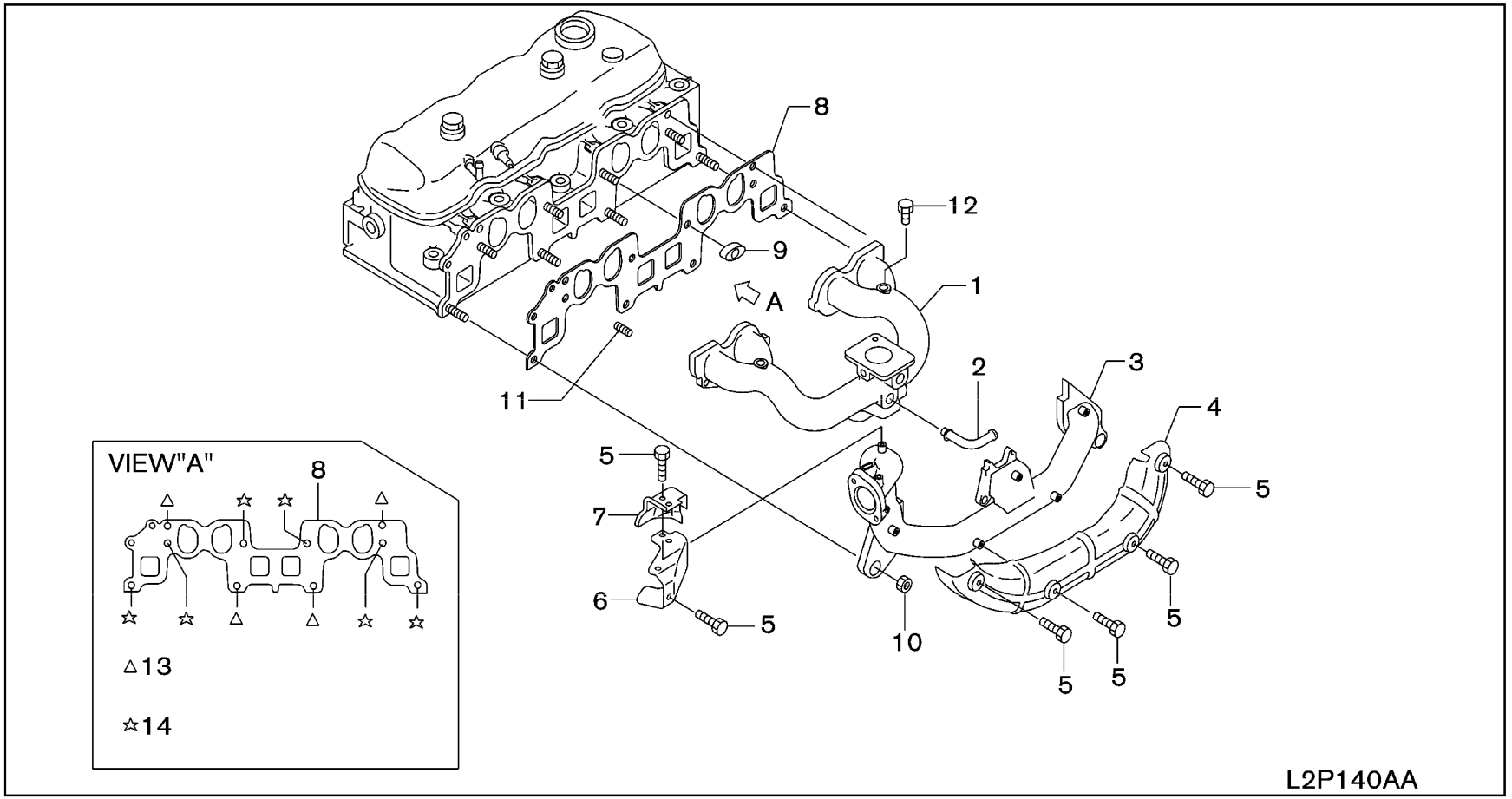

SEC. 140A

MANIFOLD (K21 & K25)

MULTIPLE

KRÜMMER

COLLECTEUR

NC	S	KEY NO.	LEV	PART NO.	PART NAME	SPECIFICATION	QTY	APPLIED DATE	ICANF	FORMER PART NO.	KD
		1 01	1	**14003-GS01A**	MANIFOLD ASSY-INTAKE		01	0107-			
		02	1	**14003-GS04A**			01	0107-			
		2 01	1	**11831-FU460**	CONNECTOR-BLOWBY		01	0107-			
		3 01	1	**14004-GS00A**	MANIFOLD-EXHAUST		01	0107-			
		4 01	1	**16590-GS00A**	COVER-EXHAUST MANIFOLD		01	0107-			
		5 01	1	**14069-82F00**	BOLT		07	0107-1107			
		02	1	**14069-82F0A**			07	1107-			
		6 01	1	**16590-GS00B**	COVER-EXH MANIFOLD		01	0107-			
		7 01	1	**16590-GS00C**	COVER-EXH MANIFOLD		01	0107-			
		8 01	1	**14035-FY500**	GASKET-MANIFOLD		01	0107-			
		9 01	1	**14037-42L01**	YOKE-FIX, MANIFOLD		06	0107-			
		10 01	1	**14094-31U00**	NUT-LOCK		04	0107-			
		11 01	1	**08223-83210**	STUD		02	0107-			
		12 01	1	**08931-3041A**	PLUG		01	0107-			
		13 01	1	**08267-03510**	STUD		04	0107-			
		14 01	1	**08124-0351A**	SCREW-HHM M10-1.25X35 7T		06	0107-			

APPLIED MODEL

01	02	03	04	05	06	07	08	09	10	11	12	13	14	15	16	17	18	19	20	21	22	23	24	25	26	27	28	29
MIPAJV	MIPAJV	MIPALV	MIPASV	MIUAJV	MIUAJV	MIUADV	MIUALV	MIUASV	MIYAJV	MIPAJV	MIPALV	MIPASV	MIUAJV	MIUAJV	MIUADV	MIUALV	MIUASV	MIUAJV	MIUAJV	MIUADV	MIUALV	MIUASV	MIYAJV	MIUAJV	MIUADV	MIUALV	MIUASV	MIYAJV
																		JIAJV	JIAJV	JIADV	JIALV	JIASV	GIAJV	GIAJV	GIADV	GIALV	GIASV	GIAJV
A20JV	A20JV	A20LV	A20SV	A20JV	A20DV	A20LV	A20SV	A20LV	A25JV	A25JV	A25LV	A25SV	A25JV	A25DV	A25LV	A25SV	A25LV	A28JV	A28JV	A28LV	A30JV	A30DV	A30LV	A30JV	A35DV	A35LV	A35SV	A35LV

SEC. 140B

MANIFOLD (QD32)

MULTIPLE

KRÜMMER

COLLECTEUR

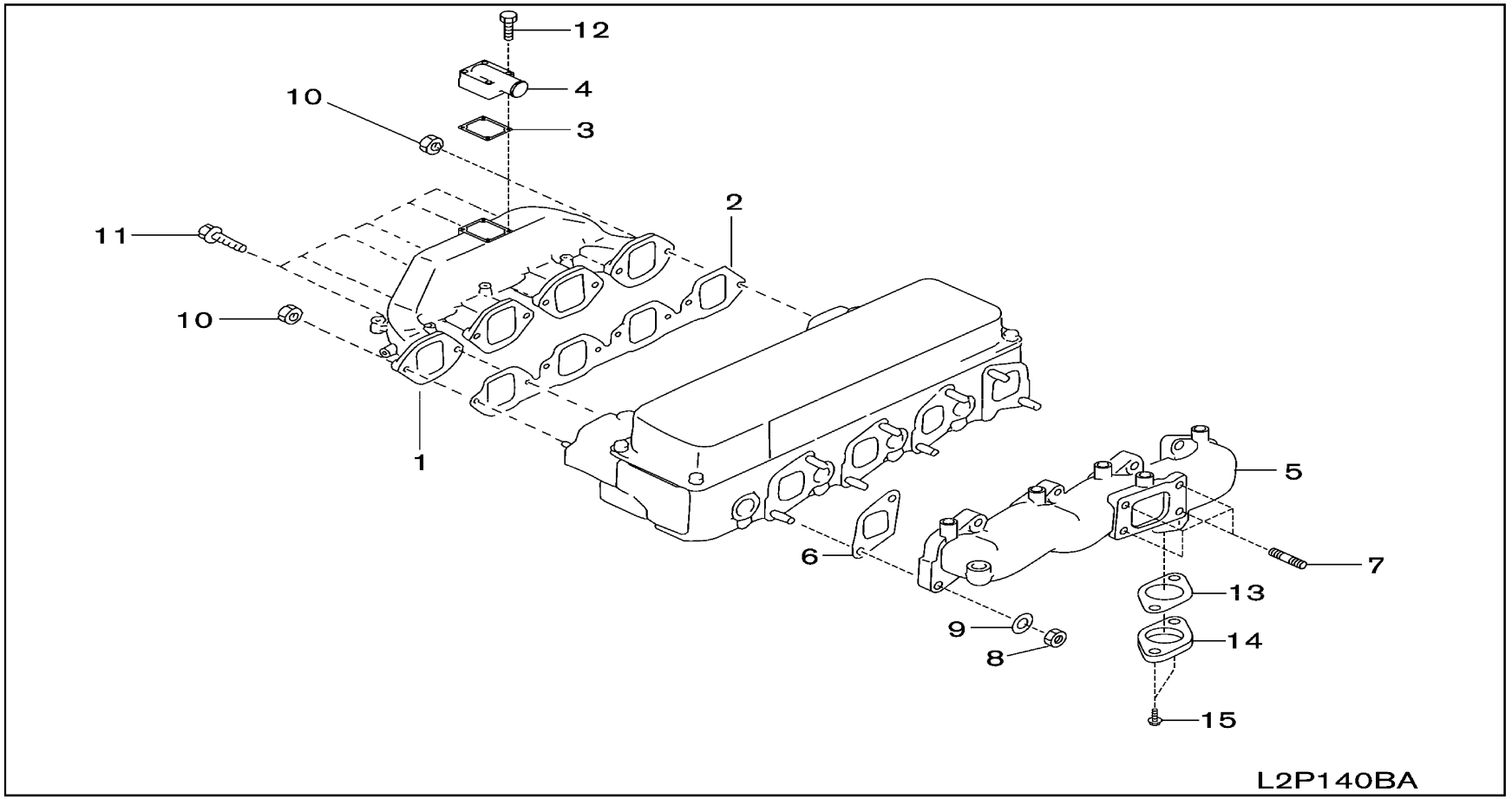

SEC. 140B

MANIFOLD (QD32)

MULTIPLE

KRÜMMER

COLLECTEUR

NC	S	KEY NO.	LEV	PART NO.	PART NAME	SPECIFICATION	QTY	APPLIED DATE	ICANF	FORMER PART NO.	KD
		1 01	1	**14003-41K01**	MANIFOLD ASSY-INTAKE		01	0107-			
		2 01	1	**14035-31N00**	GASKET-MANIFOLD		01	0107-			
		3 01	1	**14064-54T00**	GASKET-HEATER HOUSING		01	0107-			
		4 01	1	**16587-GG30A**	HOUSING-AIR INLET		01	0107-			
		5 01	1	**14004-0W800**	MANIFOLD-EXHAUST		01	0107-			
		6 01	1	**14036-43G00**	GASKET-EXHAUST MANIFOLD, A		04	0107-			
		7 01	1	**14414-31N00**	STUD-TURBO HOUSING		04	0107-			
		8 01	1	**20602-41G0A**	NUT		08	0107-			
		9 01	1	**14037-VJ500**	YOKE-MANIFOLD		08	0107-			
		10 01	1	**08911-1081G**	NUT-HEX W/CON SPW M8-1.25		02	0107-			
		11 01	1	**08120-8251E**	SCREW-HHM M8-1.25X25 W/LKW		06	0107-			
		12 01	1	**08120-8801E**	SCREW-HHM M8-1.25X80 W/LKW		04	0107-			
		13 01	1	**14719-45N01**	GASKET-EGR TUBE		01	0107-			
		14 01	1	**14711-58G02**	EGR TUBE COVER		01	0107-			
		15 01	1	**08120-8201E**	SCREW-HHM M8-1.25X20 W/LKW		02	0107-			

APPLIED MODEL

	MIPIAJ20JVV	MIPIAJ20LVS	MIPIAJ20LSV	MIPIAJ20JVV	MIUIAJ20DVV	MIUIAJ20LVV	MIUIAJ20LSV	MIUIAJ20JVV	MIYIAJ20LVS	MIPIAJ25JVV	MIPIAJ25DVV	MIPIAJ25LSV	MIPIAJ25JVV	MIUIAJ25DVV	MIUIAJ25LSV	MIUIAJ25JVV	MIUIAJ25DVV	MIUIAJ25LVV	MIYIAJ25LSV	MIUIAJ28JVV	MIUIAJ28DVV	MIUIAJ28LVV	MIGIAJ30JVV	MIGIAJ30DVV	MIGIAJ30LVV	MIYIAJ30LVV	MIUIAJ35JVV	MIUIAJ35DVV	MIUIAJ35LVV	MIGIAJ35LVV	MIGIAJ35LVV	MIYIAJ35LVV
	01	02	03	04	05	06	07	08	09	10	11	12	13	14	15	16	17	18	19	20	21	22	23	24	25	26	27	28	29			
	O	O	O	O	O	O	O	O	O	O	O	O	O	O	O	O	O	O	O	O	O	O	O	O	O	O	O	O	O			
	O	O	O	O	O	O	O	O	O	O	O	O	O	O	O	O	O	O	O	O	O	O	O	O	O	O	O	O	O			
	O	O	O	O	O	O	O	O	O	O	O	O	O	O	O	O	O	O	O	O	O	O	O	O	O	O	O	O	O			
	O	O	O	O	O	O	O	O	O	O	O	O	O	O	O	O	O	O	O	O	O	O	O	O	O	O	O	O	O			
	O	O	O	O	O	O	O	O	O	O	O	O	O	O	O	O	O	O	O	O	O	O	O	O	O	O	O	O	O			
	O	O	O	O	O	O	O	O	O	O	O	O	O	O	O	O	O	O	O	O	O	O	O	O	O	O	O	O	O			
	O	O	O	O	O	O	O	O	O	O	O	O	O	O	O	O	O	O	O	O	O	O	O	O	O	O	O	O	O			
	O	O	O	O	O	O	O	O	O	O	O	O	O	O	O	O	O	O	O	O	O	O	O	O	O	O	O	O	O			
	O	O	O	O	O	O	O	O	O	O	O	O	O	O	O	O	O	O	O	O	O	O	O	O	O	O	O	O	O			
	O	O	O	O	O	O	O	O	O	O	O	O	O	O	O	O	O	O	O	O	O	O	O	O	O	O	O	O	O			
	O	O	O	O	O	O	O	O	O	O	O	O	O	O	O	O	O	O	O	O	O	O	O	O	O	O	O	O	O			
	O	O	O	O	O	O	O	O	O	O	O	O	O	O	O	O	O	O	O	O	O	O	O	O	O	O	O	O	O			
	O	O	O	O	O	O	O	O	O	O	O	O	O	O	O	O	O	O	O	O	O	O	O	O	O	O	O	O	O			

SEC. 150A

LUBRICATING SYSTEM (K21 & K25)

SISTEMA DE LUBRICACION

ABSCHMIERSYSTEM

CIRCUIT DE GRAISSAGE

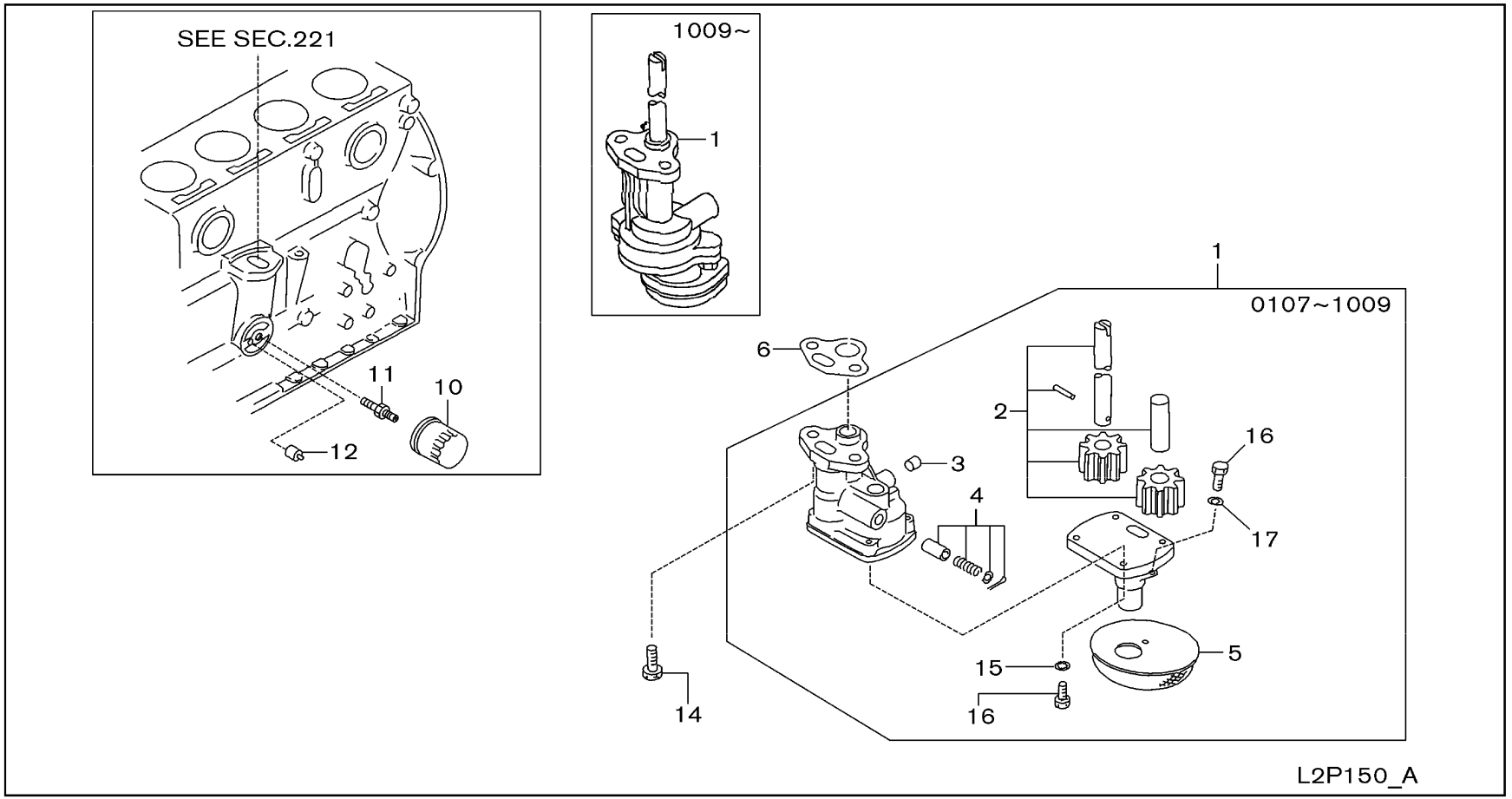

SEC. 150A

LUBRICATING SYSTEM (K21 & K25)

SISTEMA DE LUBRICACION

ABSCHMIERSYSTEM

CIRCUIT DE GRAISSAGE

NC	S	KEY NO.	LEV	PART NO.	PART NAME	SPECIFICATION	QTY	APPLIED DATE	ICANF	FORMER PART NO.	KD
		1	01	1	**15010-66202**	PUMP ASSY-OIL		01	0107-1009		
			02	1	**15010-GQ70A**			01	1009-		
		2	01	1	**15020-78205**	SHAFT ASSY-OIL PUMP		02	0107-1009		
		3	01	1	**11065-30000**	PLUG-OIL FILTER		01	0107-1009		
		4	01	1	**15132-66600**	VALVE ASSY-OIL REGULATOR		01	0107-1009		
		5	01	1	**15050-66201**	STRAINER ASSY-OIL		01	0107-1009		
		6	01	1	**15066-78200**	GASKET-OIL PUMP TO CYLINDER BLOCK		01	0107-		
		10	01	1	**15208-01B02**	FILTER ASSY-OIL		01	0107-0907		
			02	1	**15208-01B0B**			01	0907-		
		11	01	1	**15213-21002**	STUD-OIL FILTER		01	0107-		
		12	01	1	**15241-16A01**	VALVE ASSY-RELIEF		01	0107-		
		14	01	1	**08120-8201E**	SCREW-HHM M8-1.25X20 W/LKW		02	0107-		
		15	01	2	**08916-13500**	WASHER		04	0107-1009		
		16	01	2	**08120-61410**	SCREW-HHM M6-1.0X14		05	0107-1009		
		17	01	2	**08915-13600**	WASHER-SPRING		01	0107-1009		

APPLIED MODEL

01	02	03	04	05	06	07	08	09	10	11	12	13	14	15	16	17	18	19	20	21	22	23	24	25	26	27	28	29
MIPU	MIPU	MIPU	MIPU	MIUU	MIUU	MIUU	MIUY	MIPY	MIPP	MIPP	MIPP	MIUU	MIUU	MIUU	MIUU	MIUY	MIUU	MIJJ	MIJJ	MIJJ	MIGG	MIGG	MIGG	MIYG	MIUU	MIGG	MIGG	MIYG
A20JV	A20DV	A20LV	A20SV	A20JV	A20DV	A20LV	A20SV	A20JV	A20DV	A20LV	A20SV	A20JV	A20DV	A20LV	A20SV	A20LV	A20JV	A20DV	A20LV	A20JV	A20DV	A20LV	A20JV	A20LV	A35JV	A35DV	A35LV	A35LV

SEC. 150B

LUBRICATING SYSTEM (QD32)

SISTEMA DE LUBRICACION

ABSCHMIERSYSTEM

CIRCUIT DE GRAISSAGE

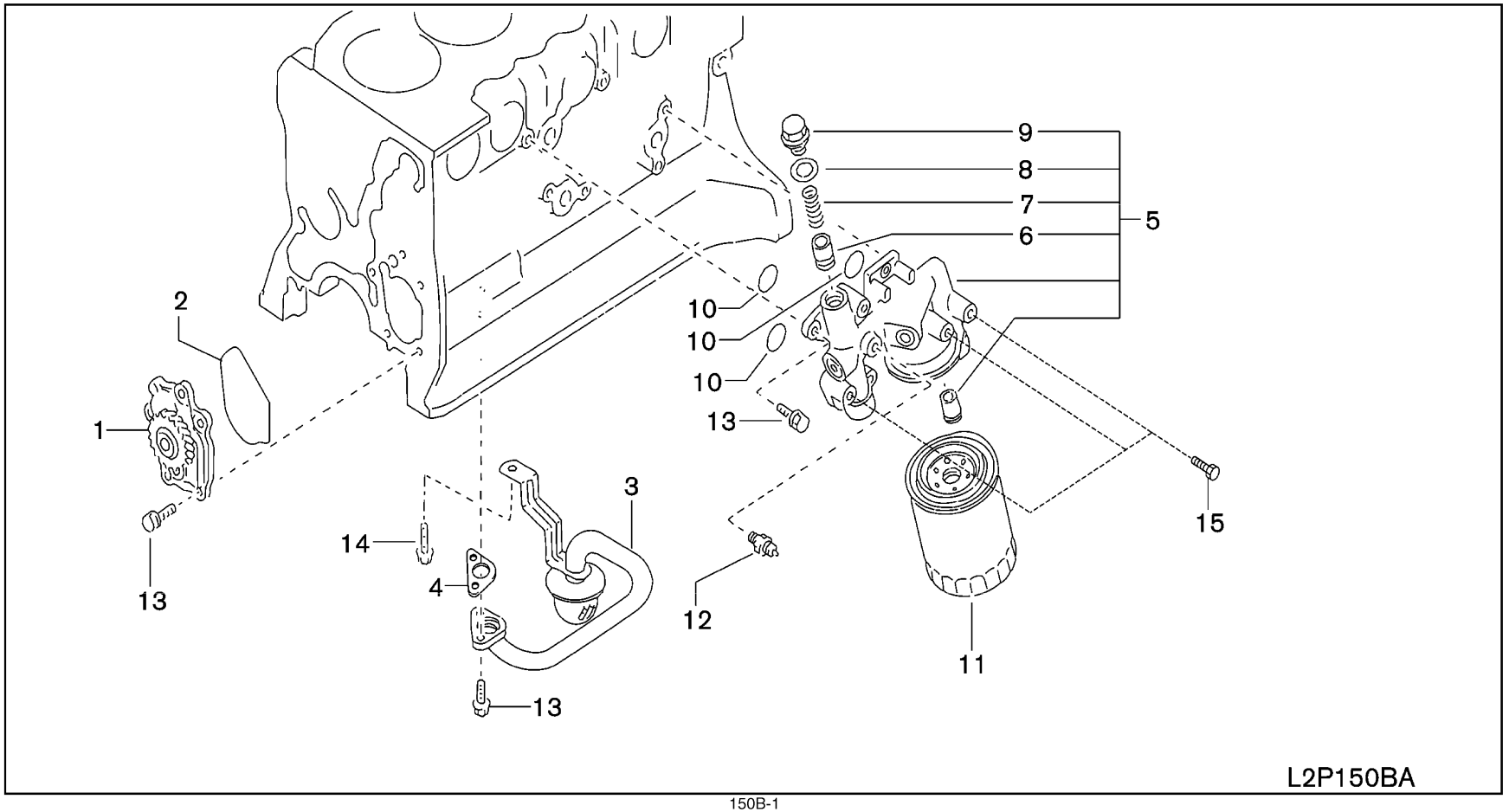

SEC. 150B

LUBRICATING SYSTEM (QD32)

SISTEMA DE LUBRICACION

ABSCHMIERSYSTEM

CIRCUIT DE GRAISSAGE

NC	S	KEY NO.	LEV	PART NO.	PART NAME	SPECIFICATION	QTY	APPLIED DATE	ICANF	FORMER PART NO.	KD	APPLIED MODEL 01 02 03 04 05 06 07 08 09 10 11 12 13 14 15 16 17 18 19 20 21 22 23 24 25 26 27 28 29
		1 01	1	**15010-1W402**	PUMP ASSY-OIL		01	0107-				O O O O
		2 01	1	**15025-43G01**	GASKET-OIL PUMP		01	0107-				O O O O
		3 01	1	**15050-59N00**	STRAINER ASSY-OIL		01	0107-				O O O O
		4 01	1	**15053-80G00**	GASKET-OIL STRAINER		01	0107-				O O O O
		5 01	1	**15238-VR80B**	BRACKET-OIL FILTER		01	0107-				O O O O
		6 01	2	**15132-43G01**	VALVE ASSY-OIL REGULATOR		01	0107-				O O O O
		7 01	2	**15133-06J01**	SPRING-OIL REGULATOR		01	0107-				O O O O
		8 01	2	**05412-1800P**	WASHER-SEAL		01	0107-				O O O O
		9 01	2	**15134-MA70A**	PLUG		01	0107-				O O O O
		10 01	1	**21334-02N00**	SEAL-O RING		03	0107-				O O O O
		11 01	1	**15208-43G00**	FILTER ASSY-OIL		01	0107-0507				O O O O
		02	1	**15208-43G0A**			01	0507-				O O O O
		12 01	1	**25240-Z550A**	SWITCH ASSY-OIL PRESS		01	0107-				O O O O
		13 01	1	**08120-8201E**	SCREW-HHM M8-1.25X20 W/LKW		11	0107-				O O O O
		14 01	1	**08120-8161E**	SCREW-HHM M8-1.25X16 W/LKW		01	0107-				O O O O
		15 01	1	**08120-8451E**	SCREW-HHM M8-1.25X45 W/LKW		03	0107-				O O O O

SEC. 296

CONTROLLER (VCM)

CONTROLADOR

KONTROLLINSTRUMENT

ORGANE DE COMMANDE

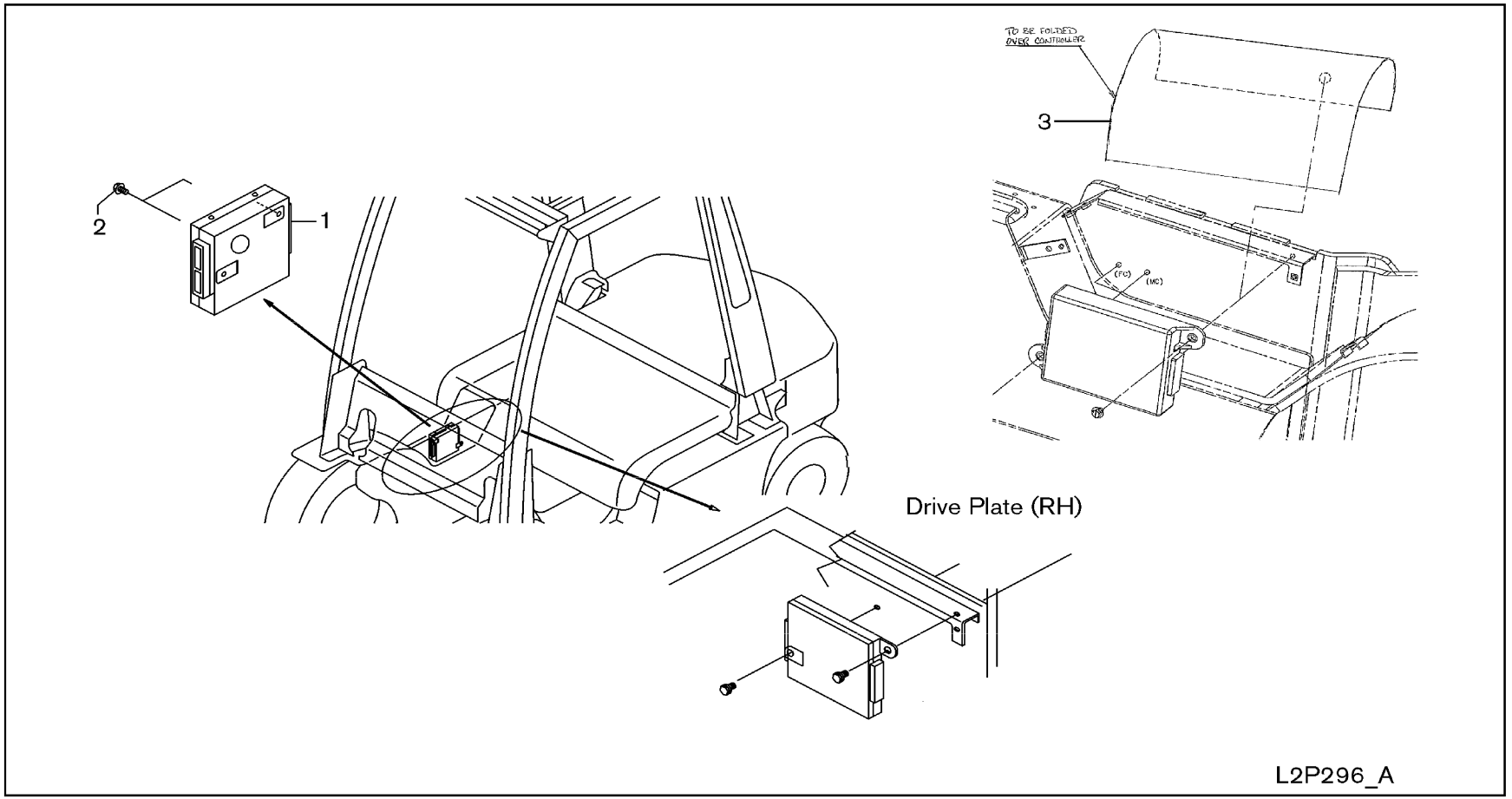

SEC. 296

CONTROLLER (VCM)

CONTROLADOR

KONTROLLINSTRUMENT

ORGANE DE COMMANDE

NC	S	KEY NO.	LEV	PART NO.	PART NAME	SPECIFICATION	QTY	APPLIED DATE	TCANF	FORMER PART NO.	KD	APPLIED MODEL 01 02 03 04 05 06 07 08 09 10 11 12 13 14 15 16 17 18 19 20 21 22 23 24 25 26 27 28 29
		1 01	1	**29310-GG10A**	CONTROLLER ASSY-VCM		01	0107-0807				○○○○○○○○○○○○○○○○○○○○○○○○○○○○○
		02	1	**29310-GG10B**			01	0807-0208				○○○○○○○○○○○○○○○○○○○○○○○○○○○○○
		03	1	**29310-GG10D**			01	0208-0708				○○○○○○○○○○○○○○○○○○○○○○○○○○○○○
		04	1	**29310-GG10E**			01	0708-1008				○○○○○○○○○○○○○○○○○○○○○○○○○○○○○
		05	1	**29310-GG10F**			01	1008-0310				○○○○○○○○○○○○○○○○○○○○○○○○○○○○○
		06	1	**29310-GG10G**			01	0310-1210				○○○○○○○○○○○○○○○○○○○○○○○○○○○○○
C		07	1	**29310-GG20A**			01	1210-0113				○○○○○○○○○○○○○○○○○○○○○○○○○○○○○
N		08	1	**29310-GG20B**			01	0113-				○○○○○○○○○○○○○○○○○○○○○○○○○○○○○
		09	1	**29310-GG13A**		F/TILT LEVELING SYSTEM	01	0107-0707				*********************************
		10	1	**29310-GG13B**		F/TILT LEVELING SYSTEM	01	0707-0308				*********************************
		11	1	**29310-GG13D**		F/TILT LEVELING SYSTEM	01	0308-0708				*********************************
		12	1	**29310-GG13E**		F/TILT LEVELING SYSTEM	01	0708-1108				*********************************
		13	1	**29310-GG13F**		F/TILT LEVELING SYSTEM	01	1108-0310				*********************************
		14	1	**29310-GG13G**		F/TILT LEVELING SYSTEM	01	0310-0311				*********************************
C		15	1	**29310-GG23A**		F/TILT LEVELING SYSTEM	01	0311-0213				*********************************
N		16	1	**29310-GG23B**		F/TILT LEVELING SYSTEM	01	0213-				*********************************
		17	1	**29310-GG15A**		F/FC	01	0507-0109				*** *** *** *** *** * *** * *** *

NOTE

GROUP INDEX

FUEL & ENGINE CONTROL

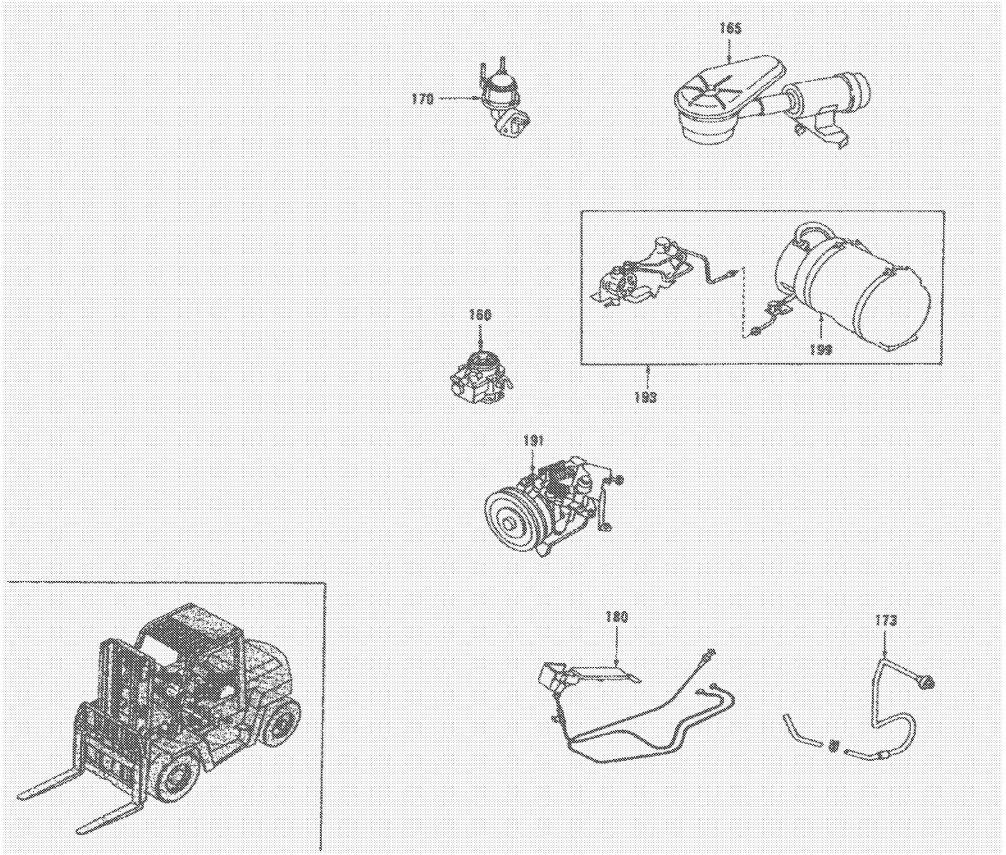

SEC.NO	SECTION NAME
160A	CARBURETOR
164A	FUEL STRAINER & FUEL HOSE (K21 & K25)
164B	FUEL STRAINER & FUEL HOSE (QD32)
165	AIR CLEANER
173A	FUEL PIPING (K21 & K25)
173B	FUEL PIPING (QD32)
180	ACCELERATOR LINKAGE
185B	FUEL SUPPLY SYSTEM (QD32)
186B	FUEL INJECTION PUMP (QD32)
195A	VAPORIZER (K21 & K25)
196	LPG FILTER & PIPING
199A	LPG BOMBE
199B	LPG BOMBE -FIXED
199C	LPG BOMBE (SWING DOWN)

B

*ILLSTRATIONS SHOWN IN GENERAL INDEX AND GROUP INDEX ARE GENARALIZED DESCRIPTIONS FOR ALL MODELS AND ARE NOT PRECISE IN ALL DETAILS.

SEC. 160A

CARBURETOR (K21 & K25)

CARBURADOR

VERGASER

CARBURATEUR

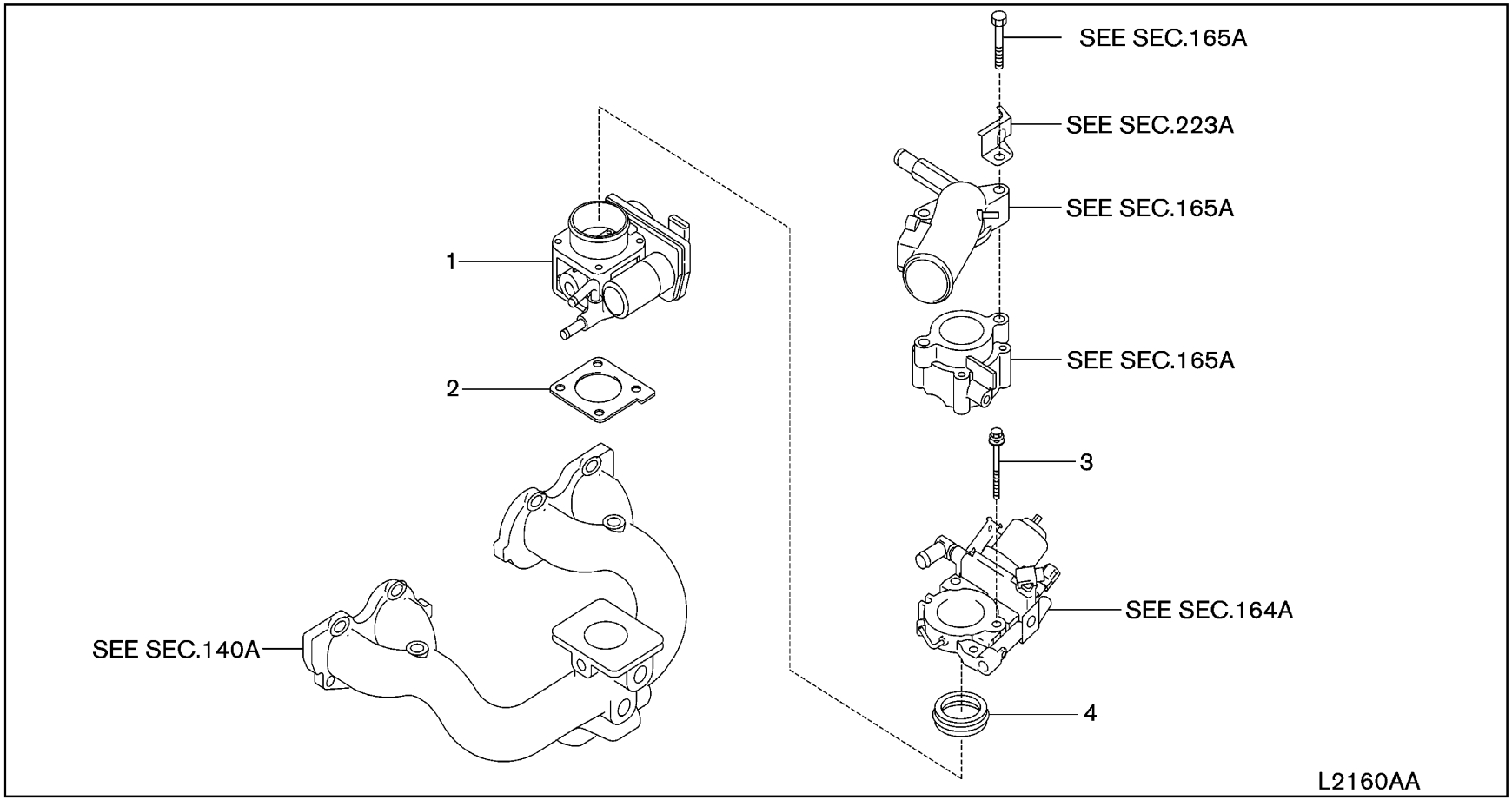

SEC. 160A

CARBURETOR (K21 & K25)

CARBURADOR

VERGASER

CARBURATEUR

NC	S	KEY NO.	LEV	PART NO.	PART NAME	SPECIFICATION	QTY	APPLIED DATE	ICANF	FORMER PART NO.	KD
		1 01	1	**16119-GS00A**	CHAMBER ASSY-THROTTLE		01	0107-			
		2 01	1	**16175-GS00A**	GASKET-THROTTLE CHAMBER		01	0107-			
		3 01	1	**16185-GS00A**	BOLT		04	0107-			
		4 01	1	**16175-GS00B**	GASKET-THROTTLE CHAMBER		01	0107-			

APPLIED MODEL

01	02	03	04	05	06	07	08	09	10	11	12	13	14	15	16	17	18	19	20	21	22	23	24	25	26	27	28	29
MIPA2000JV	MIPA2000VV	MIPA2000LV	MIPA2000SV	MIUA2200JV	MIUA2200DV	MIUA2200LV	MIUA2200SV	MIYA2205JV	MIPA2205DV	MIPA2205LV	MIPA2205SV	MIUA2205JV	MIUA2205DV	MIUA2205LV	MIUA2205SV	MIYA2205JV	MIUA2205DV	MIUA2208JV	MIUA2208DV	MIUA2208LV	MIGA2300JV	MIGA2300DV	MIGA2300LV	MIYA2305JV	MIUA2305DV	MIUA2305LV	MIGA2305JV	MIGA2305DV	MIGA2305LV
○	○	○	○	○	○	○	○	○	○	○	○	○	○	○	○	○	○	○	○	○	○	○	○	○	○	○	○	○
○	○	○	○	○	○	○	○	○	○	○	○	○	○	○	○	○	○	○	○	○	○	○	○	○	○	○	○	○
○	○	○	○	○	○	○	○	○	○	○	○	○	○	○	○	○	○	○	○	○	○	○	○	○	○	○	○	○
○	○	○	○	○	○	○	○	○	○	○	○	○	○	○	○	○	○	○	○	○	○	○	○	○	○	○	○	○

SEC. 164A

FUEL STRAINER & FUEL HOSE (K21 & K25)

COLADOR DE COMBUSTIBLE Y MANGERA DE COMBUSTIBLE

KRAFTSTOFFSIEB & KRAFTSTOFFSCHLAUCH

CREPINE A CARBURANT ET DURITE D'ALIMENTATION

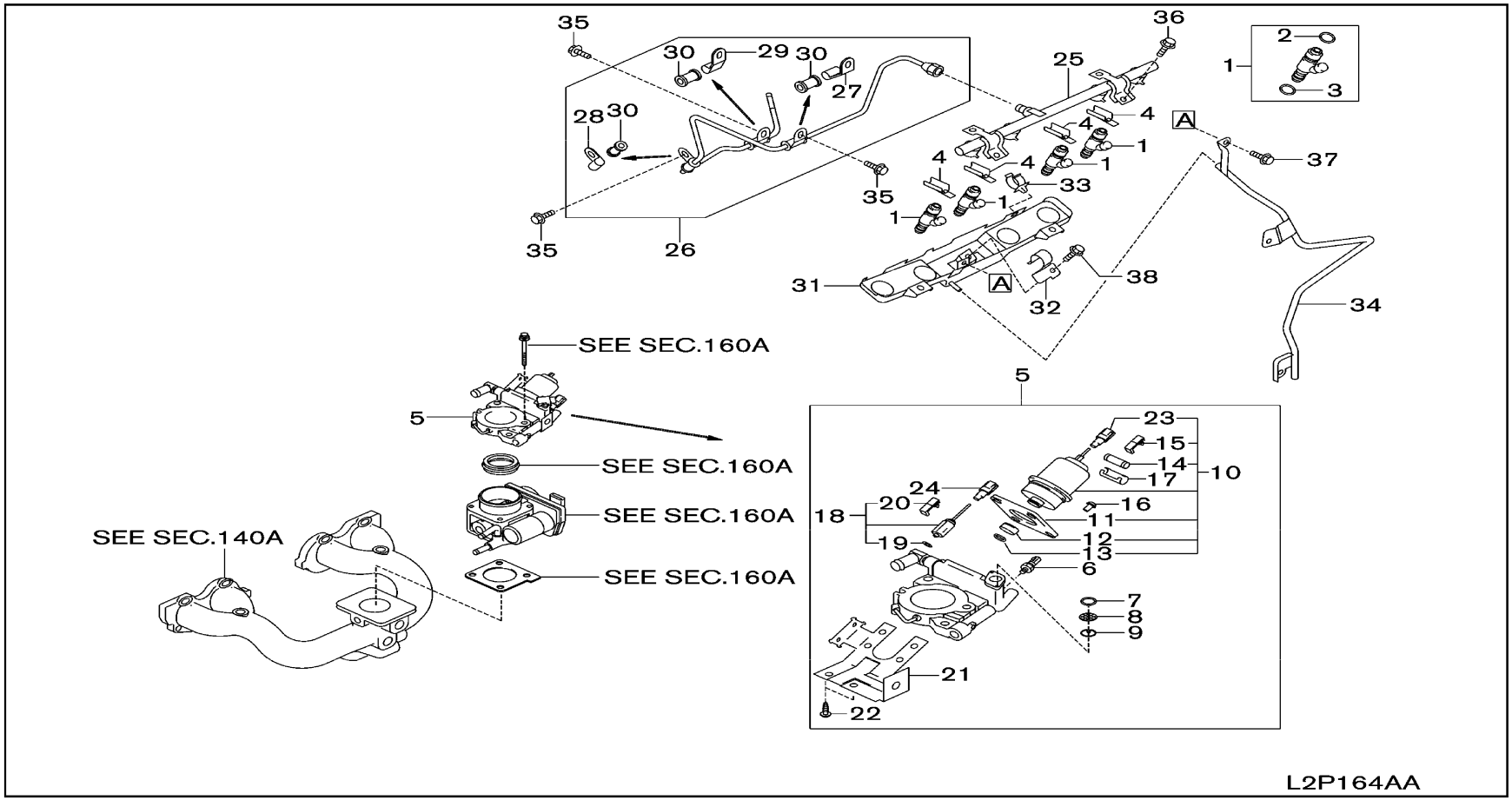

SEC. 164A

FUEL STRAINER & FUEL HOSE (K21 & K25)

COLADOR DE COMBUSTIBLE Y MANGERA DE COMBUSTIBLE

KRAFTSTOFFSIEB & KRAFTSTOFFSCHLAUCH

CREPINE A CARBURANT ET DURITE D'ALIMENTATION

NC	S	KEY NO.	LEV	PART NO.	PART NAME	SPECIFICATION	QTY	APPLIED DATE	ICANF	FORMER PART NO.	KD	APPLIED MODEL 01 02 03 04 05 06 07 08 09 10 11 12 13 14 15 16 17 18 19 20 21 22 23 24 25 26 27 28 29
		1	01	1	**16600-GU61A**	INJECTOR ASSY-FUEL		04	0107-			○○ ○○ ○○ ○○ ○○ ○○ ○○ ○○ ○○ ○○ ○○ ○○ ○○ ○○
		2	01	2	**16618-5L300**	SEAL-O RING		04	0107-			○○ ○○ ○○ ○○ ○○ ○○ ○○ ○○ ○○ ○○ ○○ ○○ ○○ ○○
		3	01	2	**16618-FU460**	SEAL-O RING		04	0107-			○○ ○○ ○○ ○○ ○○ ○○ ○○ ○○ ○○ ○○ ○○ ○○ ○○ ○○
		4	01	1	**17571-5L30A**	CLIP		04	0107-			○○ ○○ ○○ ○○ ○○ ○○ ○○ ○○ ○○ ○○ ○○ ○○ ○○ ○○
		5	01	1	**16610-GS07A**	HOLDER ASSY-INJECTOR, LPG		01	0107-1207			○○○ ○○○ ○○
			02	1	**16610-GS07B**			01	1207-0510			○○○ ○○○ ○○
			03	1	**16610-GS07E**			01	0510-			○○○ ○○○ ○○
			04	1	**16610-GS17A**			01	0107-1207			○○○ ○○○ ○○ ○○
			05	1	**16610-GS17B**			01	1207-0510			○○○ ○○○ ○○ ○○
			06	1	**16610-GS17E**			01	0510-			○○○ ○○○ ○○ ○○
		6	01	2	**16638-GX11A**	SENSOR ASSY-PRESSURE CHG		01	0107-			○○○ ○○○ ○○○ ○○○ ○○ ○○ ○○
		7	01	2	**16618-GX11A**	SEAL-O RING		01	0107-			○○○ ○○○ ○○○ ○○○ ○○ ○○ ○○
		8	01	2	**16098-GS07A**	FILTER		01	0107-			○○○ ○○○ ○○○ ○○○ ○○ ○○ ○○
		9	01	2	**16156-GS07A**	CLIP		01	0107-			○○○ ○○○ ○○○ ○○○ ○○ ○○ ○○
		10	01	2	**16600-GS07A**	INJECTOR ASSY-FUEL		01	0107-1209			○○○ ○○○ ○○
			02	2	**16600-GS07B**			01	1209-			○○○ ○○○ ○○
			03	2	**16600-GS17A**			01	0107-1009			○○○ ○○○ ○○ ○○
			04	2	**16600-GS17B**			01	1009-			○○○ ○○○ ○○ ○○
		11	01	3	**16290-GS07A**	PLATE-HOLDER, LPG		01	0107-			○○○ ○○○ ○○○ ○○○ ○○ ○○ ○○
		12	01	3	**16349-VS002**	SEAL-O RING		01	0107-			○○○ ○○○ ○○○ ○○○ ○○ ○○ ○○
		13	01	3	**16349-VS001**	SEAL-O RING		01	0107-			○○○ ○○○ ○○○ ○○○ ○○ ○○ ○○
		14	01	3	**24319-C9905**	FUSE		01	0107-			○○○ ○○○ ○○○ ○○○ ○○ ○○ ○○
		15	01	3	**24346-VS000**	CLIP-CONNECTOR		01	0107-			○○○ ○○○ ○○○ ○○○ ○○ ○○ ○○
		16	01	2	**16065-FU460**	SCREW		04	0107-			○○○ ○○○ ○○○ ○○○ ○○ ○○ ○○
		17	01	2	**16277-FU461**	CLAMP		01	0107-			○○○ ○○○ ○○○ ○○○ ○○ ○○ ○○
		18	01	2	**16197-FU46A**	SOLENOID ASSY		01	0107-			○○○ ○○○ ○○○ ○○○ ○○ ○○ ○○
		19	01	3	**16094-B8500**	PACKING-SOLENOID		01	0107-			○○○ ○○○ ○○○ ○○○ ○○ ○○ ○○
		20	01	3	**24346-VS000**	CLIP-CONNECTOR		01	0107-			○○○ ○○○ ○○○ ○○○ ○○ ○○ ○○
		21	01	2	**16263-GS07A**	BRACKET-CONNECTOR		01	0107-			○○○ ○○○ ○○○ ○○○ ○○ ○○ ○○
		22	01	2	**16065-0H600**	SCREW		04	0107-			○○○ ○○○ ○○○ ○○○ ○○ ○○ ○○
		23	01	2	**24341-10Y03**	HOUSING-CONNECTOR, MALE		01	0107-			○○○ ○○○ ○○○ ○○○ ○○ ○○ ○○
		24	01	2	**24341-10Y01**	HOUSING-CONNECTOR, MALE		01	0107-			○○○ ○○○ ○○○ ○○○ ○○ ○○ ○○
		25	01	1	**17520-FU461**	TUBE ASSY-FUEL		01	0107-			○○ ○○ ○○ ○○ ○○ ○○ ○○ ○○ ○○ ○○ ○○ ○○ ○○ ○○
		26	01	1	**17522-GS01A**	TUBE ASSY-FUEL		01	0107-1210			○○ ○○ ○○ ○○ ○○ ○○ ○○ ○○ ○○ ○○ ○○ ○○ ○○ ○○
			02	1	**17522-GS01B**			01	1210-			○○ ○○ ○○ ○○ ○○ ○○ ○○ ○○ ○○ ○○ ○○ ○○ ○○ ○○
		27	01	2	**17111-GS01A**	CLAMP		01	0107-			○○ ○○ ○○ ○○ ○○ ○○ ○○ ○○ ○○ ○○ ○○ ○○ ○○ ○○
		28	01	2	**17111-50K60**	CLAMP-TUBE		01	0107-			○○ ○○ ○○ ○○ ○○ ○○ ○○ ○○ ○○ ○○ ○○ ○○ ○○ ○○

SEC. 164A

FUEL STRAINER & FUEL HOSE (K21 & K25)

COLADOR DE COMBUSTIBLE Y MANGERA DE COMBUSTIBLE

KRAFTSTOFFSIEB & KRAFTSTOFFSCHLAUCH

CREPINE A CARBURANT ET DURITE D'ALIMENTATION

NC	S	KEY NO.	LEV	PART NO.	PART NAME	SPECIFICATION	QTY	APPLIED DATE	ICANF	FORMER PART NO.	KD	APPLIED MODEL 01	02	03	04	05	06	07	08	09	10	11	12	13	14	15	16	17	18	19	20	21	22	23	24	25	26	27	28	29
		29 01	2	**17111-50K00**	CLAMP-TUBE		01	0107-				○	○			○	○				○	○			○	○				○	○		○	○			○	○		
		30 01	2	**17108-K7005**	INSULATOR-FUEL TUBE		03	0107-				○	○			○	○				○	○			○	○				○	○		○	○			○	○		
		31 01	1	**14330-GS01B**	PLATE-FUEL, RECEIVER		01	0107-				○	○			○	○				○	○			○	○				○	○		○	○			○	○		
		32 01	1	**24220-GS01B**	CLIP		01	0107-				○	○			○	○				○	○			○	○				○	○		○	○			○	○		
		33 01	1	**17571-5V002**	CLIP		01	0107-				○	○			○	○				○	○			○	○				○	○		○	○			○	○		
		34 01	1	**16318-GS01A**	TUBE-DRAIN		01	0107-				○	○			○	○				○	○			○	○				○	○		○	○			○	○		
		35 01	1	**08120-8161F**	SCREW-HHM M8-1.25X16 W/LK & PW		03	0107-				○	○			○	○				○	○			○	○				○	○		○	○			○	○		
		36 01	1	**08120-8161E**	SCREW-HHM M8-1.25X16 W/LKW		02	0107-				○	○			○	○				○	○			○	○				○	○		○	○			○	○		
		37 01	1	**08120-61233**	SCREW-HHM M6-1.0X12 W/LK		03	0107-				○	○			○	○				○	○			○	○				○	○		○	○			○	○		
		38 01	1	**08120-61228**	SCREW-HHM M6-1.0X12 W/LK2		01	0107-				○	○			○	○				○	○			○	○				○	○		○	○			○	○		

NOTE

SEC. 164B

FUEL STRAINER & FUEL HOSE (QD32)

COLADOR DE COMBUSTIBLE Y MANGERA DE COMBUSTIBLE

KRAFTSTOFFSIEB & KRAFTSTOFFSCHLAUCH

CREPINE A CARBURANT ET DURITE D'ALIMENTATION

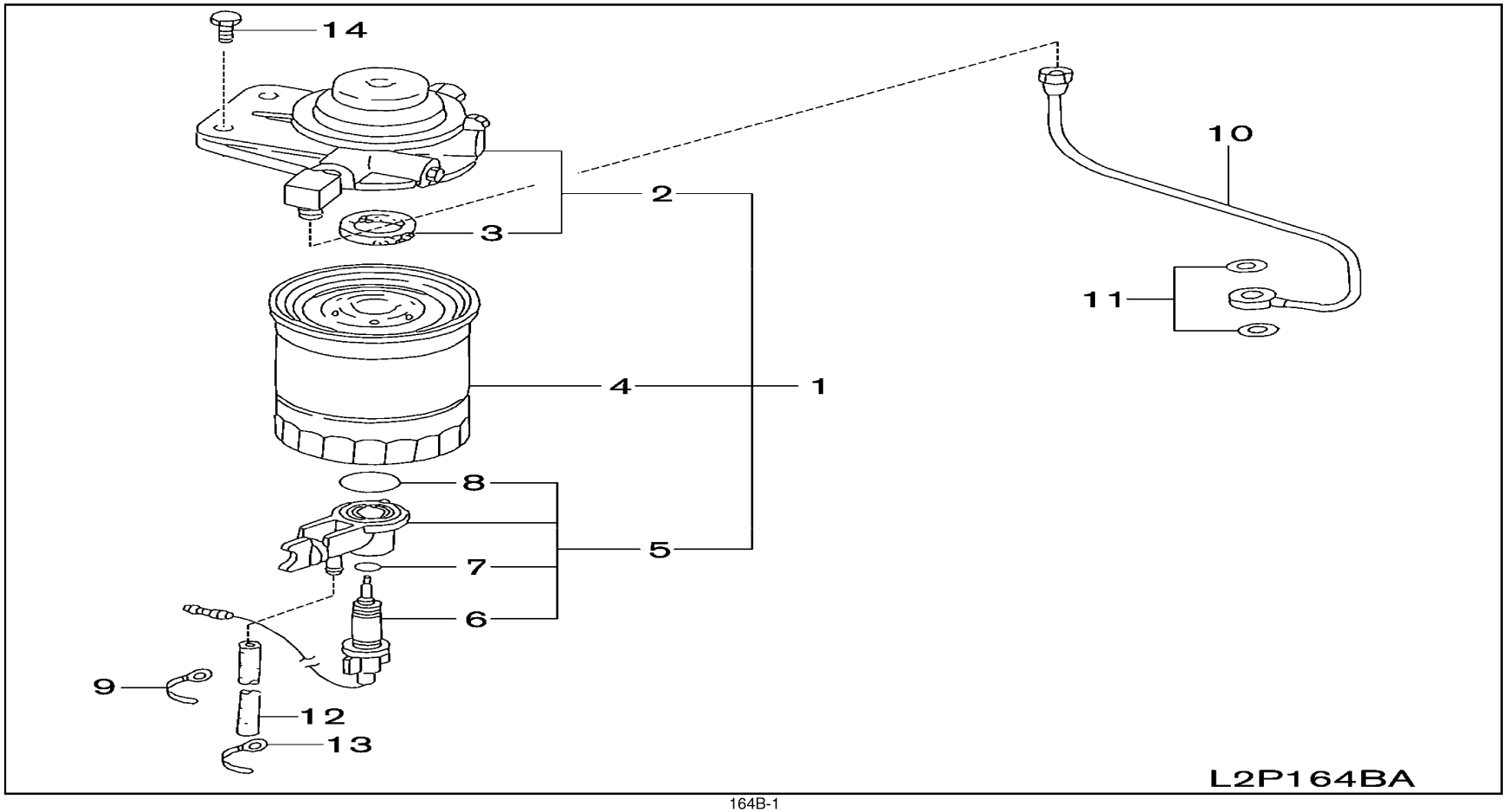

SEC. 164B

FUEL STRAINER & FUEL HOSE (QD32)

COLADOR DE COMBUSTIBLE Y MANGERA DE COMBUSTIBLE

KRAFTSTOFFSIEB & KRAFTSTOFFSCHLAUCH

CREPINE A CARBURANT ET DURITE D'ALIMENTATION

NC	S	KEY NO.	LEV	PART NO.	PART NAME	SPECIFICATION	QTY	APPLIED DATE	ICANF	FORMER PART NO.	KD	APPLIED MODEL 01 02 03 04 05 06 07 08 09 10 11 12 13 14 15 16 17 18 19 20 21 22 23 24 25 26 27 28 29
		1 01	1	**16400-41K00**	STRAINER ASSY-FUEL		01	0107-				O O O O
		2 01	2	**16401-41K00**	COVER-UPPER		01	0107-				O O O O
		3 01	3	**16407-W4900**	PACKING		01	0107-				O O O O
		4 01	2	**16405-T9005**	CARTRIDGE ASSY		01	0107-0108				O O O O
		02	2	**SLIFT-16405-02**			01	0108-				O O O O
		5 01	2	**16413-10H00**	SENSOR ASSY-W/DRAIN COCK		01	0107-				O O O O
		6 01	3	**16412-10H00**	SENSOR ASSY		01	0107-				O O O O
		7 01	3	**16407-T9001**	SEAL-O RING		01	0107-				O O O O
		8 01	3	**16406-T9001**	SEAL-O RING		01	0107-				O O O O
		9 01	1	**24211-89944**	CLIP		01	0107-				O O O O
		10 01	1	**17521-41K00**	TUBE ASSY-FUEL		01	0107-				O O O O
		11 01	1	**16794-10G00**	PACKING		02	0107-				O O O O
		12 01	1	**02173-01520**	TUBE-VINYL	S/#A7335-U0110 L=15	01	0107-				O O O O
		13 01	1	**24211-89944**	CLIP		01	0107-				O O O O
		14 01	1	**08120-8251E**	SCREW-HHM M8-1.25X25 W/LKW		02	0107-				O O O O

SEC. 165

AIR CLEANER

FILTRO DE AIRE

LUFTFILTER

FILTRE A AIR

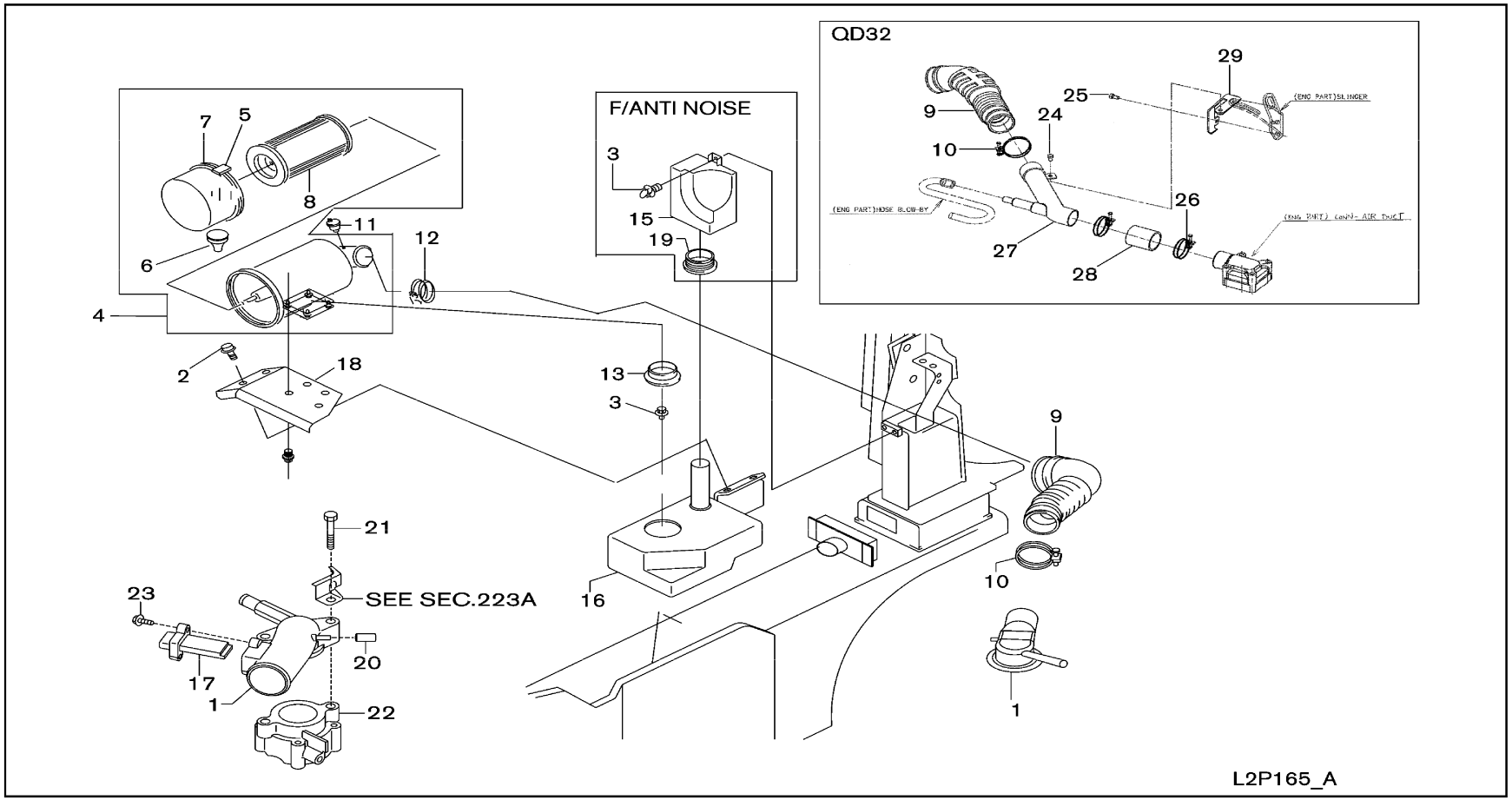

SEC. 165

AIR CLEANER

FILTRO DE AIRE

LUFTFILTER

FILTRE A AIR

NC	S	KEY NO.	LEV	PART NO.	PART NAME	SPECIFICATION	QTY	APPLIED DATE	TCANF	FORMER PART NO.	KD
		1	01	1	**16267-GS00A**	HORN ASSY-AIR		01	0107-		
		2	01	1	**08120-8161F**	SCREW-HHM M8-1.25X16 W/LK & PW		04	0107-		
		3	01	1	**08124-0201F**	SCREW-HHM M10-1.25X20 W/LK & PW		01	0107-		
			02	1	**08124-0201F**		F/ANTI NOISE	02	0107-		
		4	01	1	**16501-FJ17A**	CYCLONE-AIR CLEANER		01	0107-		
			02	1	**16501-GG30A**			01	0107-		
			03	1	**16501-FK370**		F/PRECLEANER	01	0107-0208		
			04	1	**16501-GG30A**		F/PRECLEANER	01	0208-		
		5	01	2	**16563-FJ100**	LATCH		04	0107-		
		6	01	2	**16514-FJ100**	VACUATOR VALVE		01	0107-		
		7	01	2	**16526-FJ170**	COVER		01	0107-		
			02	2	**16526-FK370**			01	0107-		
		8	01	2	**16546-FJ170**	ELEMENT ASSY-AIR CLEANER	USE ONLY "UL" OEM FILTER	01	0107-1009		
			02	2	**16546-GE20A**		USE ONLY "UL" OEM FILTER	01	1009-		
			03	2	**16546-FK370**		USE ONLY "UL" OEM FILTER	01	0107-		
		9	01	1	**16575-FK102**	DUCT ASSY-AIR		01	0107-		
			02	1	**16575-GG30A**			01	0107-		
		10	01	1	**08723-16000**	CLAMP-HOSE		01	0107-0607		
			02	1	**01555-00971**			01	0607-		
			03	1	**01555-00521**			01	0107-0208		
			04	1	**01555-00981**			01	0208-		
		11	01	1	**16588-FK311**	SERVICE INDICATOR ASSY		01	0107-		
		12	01	1	**08723-17500**	CLAMP-HOSE		01	0107-0607		
			02	1	**01555-01001**			01	0607-		
		13	01	1	**16542-FK302**	SEAL-AIR DUCT		01	0107-		
		15	01	1	**16586-FK301**	RESONATOR ASSY	F/ANTI NOISE	01	0107-		
			02	1	**16586-GG30A**		F/ANTI NOISE	01	0107-		
		16	01	1	**16586-FK302**	RESONATOR ASSY		01	0107-0307		
			02	1	**16586-GG00A**			01	0307-		
			03	1	**16586-FK300**		F/ANTI NOISE	01	0107-		
		17	01	1	**22680-7S000**	MASS AIR FLOW		01	0107-		
		18	01	1	**16589-FK300**	BRACKET-AIR CLEANER		01	0107-		
		19	01	1	**16542-FK300**	SEAL-AIR DUCT	F/ANTI NOISE	01	0107-		
		20	01	1	**16599-N3600**	CAP-CONNECTOR		01	0107-		
		21	01	1	**16185-GS10B**	BOLT		02	0107-		
		22	01	1	**16270-GS01A**	SPACER-AIR HORN		01	0107-		
		23	01	1	**08340-4082A**	SCREW		02	0107-		

APPLIED MODEL

	MIPVI	MIPVI	MIPVI	MIPSI	MIUVI	MIUVI	MIUVI	MIUSI	MIYPI	MIPVI	MIPVI	MIPVI	MIUVI	MIUVI	MIUVI	MIUSI	MIYUI	MIUVI	MIUVI	MIUVI	MIUVI	MIUSI	MIYUI	MIUVI	MIUVI	MIUVI	MIUSI	MIYUI	MIUVI	MIUVI	MIUVI	MIUSI	MIYUI	MIUVI	MIUVI	MIUVI	MIUSI	MIYUI	MIUVI	MIUVI	MIUVI	MIUSI	MIYGI	MIUVI	MIUVI	MIUVI	MIUSI	MIYGI	MIUVI	MIUVI	MIUVI	MIUSI	MIYGI
	AA20JVI	AA20DVI	AA20LVI	AA20SVI	AA20JVI	AA20DVI	AA20LVI	AA20SVI	AA20JVI	AA20DVI	AA20LVI	AA20SVI	AA20JVI	AA20DVI	AA20LVI	AA20SVI	AA20JVI	AA20DVI	AA20LVI	AA20SVI	AA20JVI	AA20DVI	AA20LVI	AA20SVI	AA20JVI	AA20DVI	AA20LVI	AA20SVI	AA20JVI	AA20DVI	AA20LVI	AA20SVI	AA20JVI	AA20DVI	AA20LVI	AA20SVI	AA20JVI	AA20DVI	AA20LVI	AA20SVI	AA20JVI	AA20DVI	AA20LVI	AA20SVI	AA20JVI	AA20DVI	AA20LVI	AA20SVI	AA20JVI	AA20DVI	AA20LVI	AA20SVI
	01	02	03	04	05	06	07	08	09	10	11	12	13	14	15	16	17	18	19	20	21	22	23	24	25	26	27	28	29																							
	○	○	○	○	○	○	○	○	○	○	○	○	○	○	○	○	○	○	○	○	○	○	○	○	○	○	○	○																							
	○	○	○	○	○	○	○	○	○	○	○	○	○	○	○	○	○	○	○	○	○	○	○	○	○	○	○	○																							
	○	○	○	○	○	○	○	○	○	○	○	○	○	○	○	○	○	○	○	○	○	○	○	○	○	○	○	○																							
	*	*	*	*	*	*	*	*	*	*	*	*	*	*	*	*	*	*	*	*	*	*	*	*	*	*	*	*																							
	○	○	○	○	○	○	○	○	○	○	○	○	○	○	○	○	○	○	○	○	○	○	○	○	○	○	○	○																							
									○								○							○				○																							
									*								*							*				*																							
									*								*							*				*																							
	○	○	○	○	○	○	○	○	○	○	○	○	○	○	○	○	○	○	○	○	○	○	○	○	○	○	○																							
	○	○	○	○	○	○	○	○	○	○	○	○	○	○	○	○	○	○	○	○	○	○	○	○	○	○	○	○																							
	○	○	○	○	○	○	○	○	○	○	○	○	○	○	○	○	○	○	○	○	○	○	○	○	○	○	○	○																							
									○								○							○				○																							
	○	○	○	○	○	○	○	○	○	○	○	○	○	○	○	○	○	○	○	○	○	○	○	○	○	○	○	○																							
	○	○	○	○	○	○	○	○	○	○	○	○	○	○	○	○	○	○	○	○	○	○	○	○	○	○	○	○																							
									○								○							○				○																							
									○								○							○				○																							
	○	○	○	○	○	○	○	○	○	○	○	○	○	○	○	○	○	○	○	○	○	○	○	○	○	○	○	○																							
	○	○	○	○	○	○	○	○	○	○	○	○	○	○	○	○	○	○	○	○	○	○	○	○	○	○	○	○																							
	○	○	○	○	○	○	○	○	○	○	○	○	○	○	○	○	○	○	○	○	○	○	○	○	○	○	○	○																							
									○								○							○				○																							
									○								○							○				○																							
	○	○	○	○	○	○	○	○	○	○	○	○	○	○	○	○	○	○	○	○	○	○	○	○	○	○	○	○																							
	○	○	○	○	○	○	○	○	○	○	○	○	○	○	○	○	○	○	○	○	○	○	○	○	○	○	○	○																							
	○	○	○	○	○	○	○	○	○	○	○	○	○	○	○	○	○	○	○	○	○	○	○	○	○	○	○	○																							
	○	○	○	○	○	○	○	○	○	○	○	○	○	○	○	○	○	○	○	○	○	○	○	○	○	○	○	○																							
	○	○	○	○	○	○	○	○	○	○	○	○	○	○	○	○	○	○	○	○	○	○	○	○	○	○	○	○																							
	○	○	○	○	○	○	○	○	○	○	○	○	○	○	○	○	○	○	○	○	○	○	○	○	○	○	○	○																							
	○	○	○	○	○	○	○	○	○	○	○	○	○	○	○	○	○	○	○	○	○	○	○	○	○	○	○	○																							
	○	○	○	○	○	○	○	○	○	○	○	○	○	○	○	○	○	○	○	○	○	○	○	○	○	○	○	○																							
	○	○	○	○	○	○	○	○	○	○	○	○	○	○	○	○	○	○	○	○	○	○	○	○	○	○	○	○																							
	○	○	○	○	○	○	○	○	○	○	○	○	○	○	○	○	○	○	○	○	○	○	○	○	○	○	○	○																							
	○	○	○	○	○	○	○	○	○	○	○	○	○	○	○	○	○	○	○	○	○	○	○	○	○	○	○	○																							
	○	○	○	○	○	○	○	○	○	○	○	○	○	○	○	○	○	○	○	○	○	○	○	○	○	○	○	○																							
	○	○	○	○	○	○	○	○	○	○	○	○	○	○	○	○	○	○	○	○	○	○	○	○	○	○	○	○																							
	○	○	○	○	○	○	○	○	○	○	○	○	○	○	○	○	○	○	○	○	○	○	○	○	○	○	○	○																							
	○	○	○	○	○	○	○	○	○	○	○	○	○	○	○	○	○	○	○	○	○	○	○	○	○	○	○	○																							

SEC. 165

AIR CLEANER

FILTRO DE AIRE

LUFTFILTER

FILTRE A AIR

NC	S	KEY NO.	LEV	PART NO.	PART NAME	SPECIFICATION	QTY	APPLIED DATE	ICANF	FORMER PART NO.	KD	APPLIED MODEL 01 02 03 04 05 06 07 08 09 10 11 12 13 14 15 16 17 18 19 20 21 22 23 24 25 26 27 28 29
		24 01	1	**08120-8161F**	SCREW-HHM M8-1.25x16 W/LK & PW		01	0107-				O O O
		25 01	1	**08120-8121E**	SCREW-HHM M8-1.25X12 W/LKW		01	0107-				O O O
		26 01	1	**08723-15600**	CLAMP-HOSE		02	0107-0607				O O O
		02	1	**01555-00961**			02	0607-				O O O
		27 01	1	**16575-GG30B**	DUCT ASSY-AIR		01	0107-				O O O
		28 01	1	**16575-GG30C**	DUCT ASSY-AIR		01	0107-				O O O
		29 01	1	**16538-GG30A**	BRACKET ASSY-AIR CLNR DUT		01	0107-				O O O

NOTE

SEC. 173A

FUEL PIPING (K21 & K25)

TUBERIA DE COMBUSTIBLE

KRAFTSTOFFLEITUING

CONDUITES D'ALIMENTATION

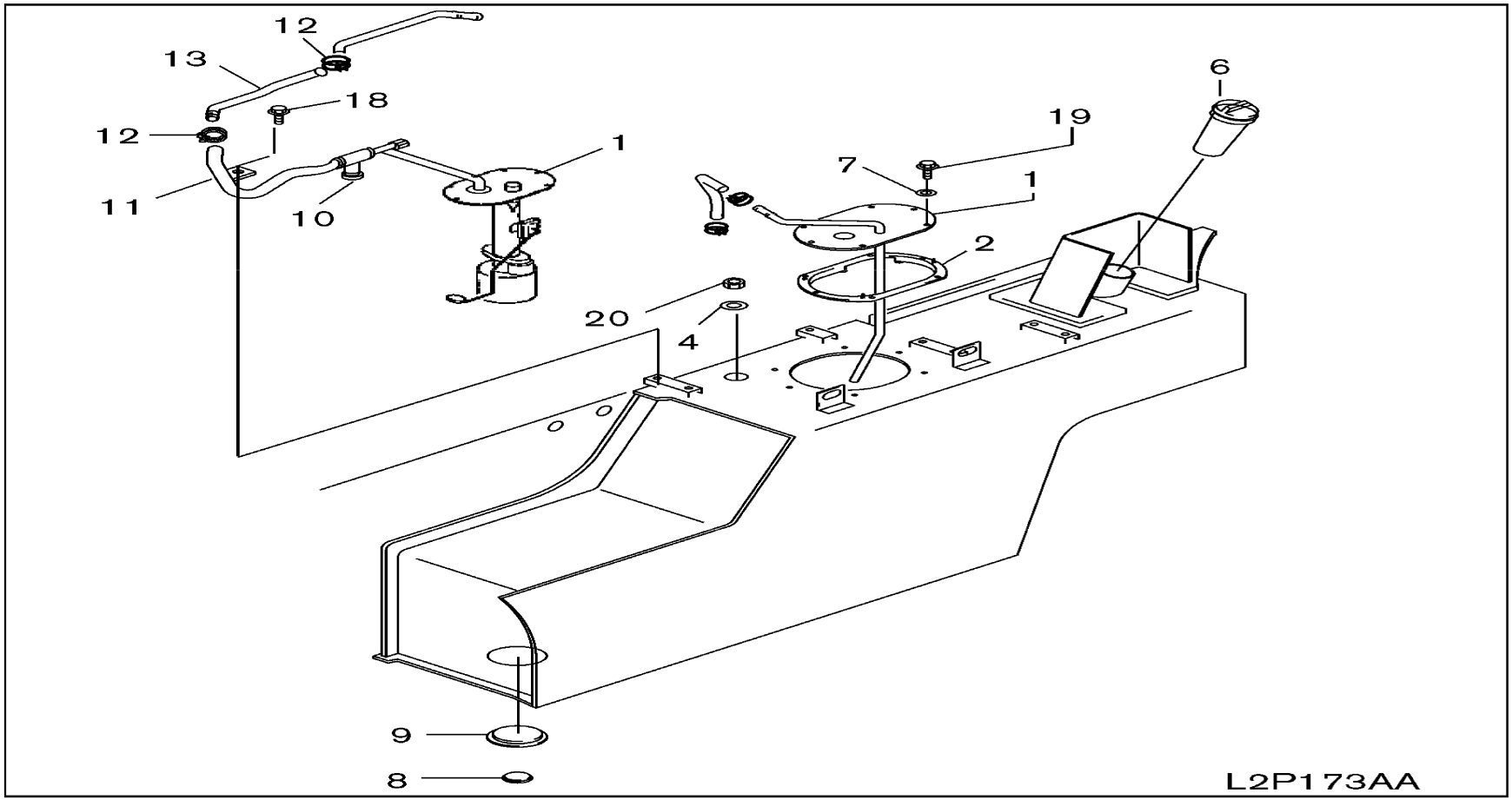

SEC. 173A

FUEL PIPING (K21 & K25)

TUBERIA DE COMBUSTIBLE

KRAFTSTOFFLEITUING

CONDUITES D'ALIMENTATION

NC	S	KEY NO.	LEV	PART NO.	PART NAME	SPECIFICATION	QTY	APPLIED DATE	ICANF	FORMER PART NO.	KD	APPLIED MODEL 01	02	03	04	05	06	07	08	09	10	11	12	13	14	15	16	17	18	19	20	21	22	23	24	25	26	27	28	29
		1	01	1	17040-FB100	MODULE-FUEL, INTAKE		01	0107-0409				O	O			O	O			O	O			O	O					O	O			O	O			
			02	1	17040-FW40A			01	0409-				O	O			O	O			O	O			O	O					O	O			O	O			
		2	01	1	17342-FK10A	PACKING-FUEL GAUGE		01	0107-				O	O			O	O			O	O			O	O					O	O			O	O			
		4	01	1	11026-FK100	WASHER-SEAL		01	0107-				O	O			O	O			O	O			O	O					O	O			O	O			
		6	01	1	17251-FV00A	CAP ASSY-FILLER		01	0107-				O	O			O	O			O	O			O	O					O	O			O	O			
		7	01	1	17224-L1100	WASHER-SEAL		06	0107-				O	O			O	O			O	O			O	O					O	O			O	O			
		8	01	1	01641-00071	PLUG-DRAIN		01	0107-				O	O			O	O			O	O			O	O					O	O			O	O			
		9	01	1	01352-00291	PACKING-DRAIN		01	0107-				O	O			O	O			O	O			O	O					O	O			O	O			
		10	01	1	17510-FB000	VALVE ASSY-FUEL		01	0107-				O	O			O	O			O	O			O	O					O	O			O	O			
		11	01	1	17503-FB401	TUBE-FUEL FEED		01	0107-				O	O			O	O			O	O			O	O					O	O			O	O			
		12	01	1	17326-6G000	CLAMP		04	0107-				O	O			O	O			O	O			O	O					O	O			O	O			
		13	01	1	17525-FV40A	HOSE-FUEL	USE ONLY "UL" OEM HOSE	01	0107-				O	O			O	O			O	O			O	O					O	O			O	O			
		18	01	1	08110-8201G	SCREW-HHM M8-1.25X20 W/SPRW		01	0107-				O	O			O	O			O	O			O	O					O	O			O	O			
		19	01	1	08360-62010	SCREW-HH CR M6-1.0X20		06	0107-				O	O			O	O			O	O			O	O					O	O			O	O			
		20	01	1	08931-4421A	PLUG-HH STR THD M12-1.25		01	0107-				O	O			O	O			O	O			O	O					O	O			O	O			

SEC. 173B

FUEL PIPING (QD32)

TUBERIA DE COMBUSTIBLE

KRAFTSTOFFLEITUING

CONDUITES D'ALIMENTATION

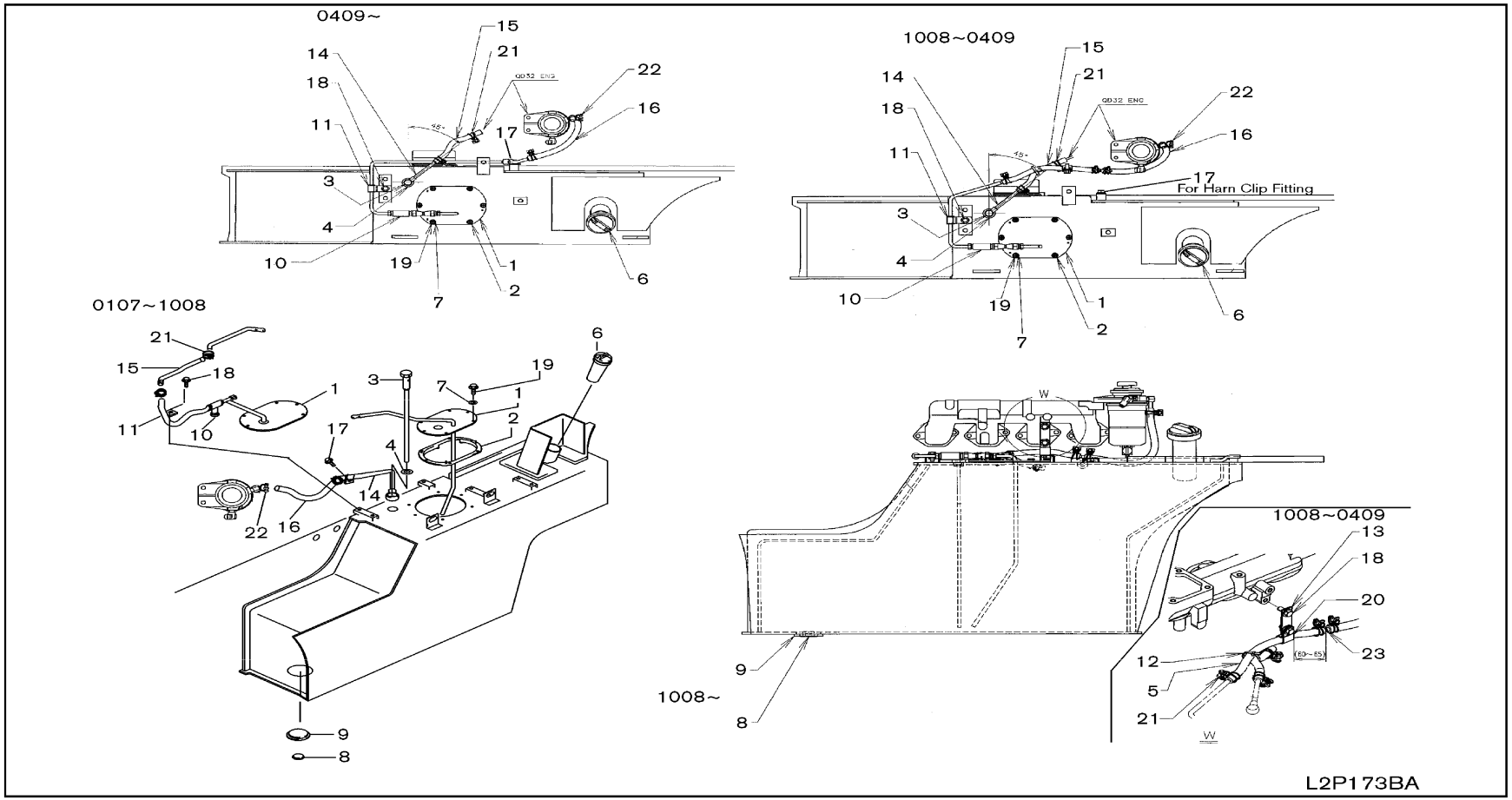

SEC. 173B

FUEL PIPING (QD32)

TUBERIA DE COMBUSTIBLE

KRAFTSTOFFLEITUING

CONDUITES D'ALIMENTATION

NC	S	KEY NO.	LEV	PART NO.	PART NAME	SPECIFICATION	QTY	APPLIED DATE	ICANF	FORMER PART NO.	KD	APPLIED MODEL 01 02 03 04 05 06 07 08 09 10 11 12 13 14 15 16 17 18 19 20 21 22 23 24 25 26 27 28 29
		1	01	1	**25060-FB001**	SENDER UNIT-FUEL GAUGE		01	0107-			O O O O
		2	01	1	**17342-FK10A**	PACKING-FUEL GAUGE		01	0107-			O O O O
		3	01	1	**17503-FK100**	TUBE-FUEL FEED		01	0107-			O O O O
		4	01	1	**11026-FK100**	WASHER-SEAL		02	0107-			O O O O
		5	01	1	**17525-FV60A**	HOSE-FULE		01	1008-0409			O O O O
		6	01	1	**17251-FV00A**	CAP ASSY-FILLER		01	0107-			O O O O
		7	01	1	**17224-L1100**	WASHER-SEAL		06	0107-			O O O O
		8	01	1	**01641-00071**	PLUG-DRAIN		01	0107-			O O O O
		9	01	1	**01352-00291**	PACKING-DRAIN		01	0107-			O O O O
		10	01	1	**17510-FB000**	VALVE ASSY-FUEL		01	0107-1010			O O O O
			02	1	**17510-GG10A**			01	1010-			O O O O
		11	01	1	**17507-GG31B**	TUBE ASSY-FUEL		01	0107-0409			O O O O
			02	1	**17507-FV60A**			01	0409-			O O O O
		12	01	1	**24216-W1000**	CLIP-TIE WRAP		01	1008-0409			O O O O
		13	01	1	**17520-FV60A**	BRACKET ASSY-FUEL HOSE		01	1008-0409			O O O O
		14	01	1	**17507-GG30A**	TUBE ASSY-FUEL		01	0107-1008			O O O O
			02	1	**17507-GL21A**			01	1008-			O O O O
		15	01	1	**17525-00H05**	HOSE-FUEL		01	0107-			O O O O
		16	01	1	**17525-GG30A**	HOSE-FUEL		01	0107-			O O O O
		17	01	1	**08124-0161F**	SCREW-HHM M10-1.25X16 W/LK & PW		01	0107-			O O O O
		18	01	1	**08110-8201G**	SCREW-HHM M8-1.25X20 W/SPRW		01	0107-1008			O O O O
			02	1	**08110-8201G**			03	1008-0409			O O O O
			03	1	**08110-8201G**			01	0409-			O O O O
		19	01	1	**08360-62010**	SCREW-HH CR M6-1.0X20		06	0107-			O O O O
		20	01	1	**36456-11H00**	CLIP-CA		01	1008-0409			O O O O
		21	01	1	**08723-11400**	CLAMP-HOSE		02	0107-0307			O O O O
			02	1	**01555-00791**			02	0307-1008			O O O O
			03	1	**01555-00791**			04	1008-0409			O O O O
			04	1	**01555-00791**			02	0409-			O O O O
		22	01	1	**08723-11600**	CLAMP-HOSE		02	0107-0607			O O O O
			02	1	**01555-00801**			02	0607-			O O O O
		23	01	1	**17523-GG36C**	TUBE-FUEL		01	1008-0409			O O O O

SEC. 180

ACCELERATOR LINKAGE

VARILLAJE DEL ACELERADOR

VERGASERGESTÄNGE

TRINGLERIE D'ACCÉLÉRATEUR

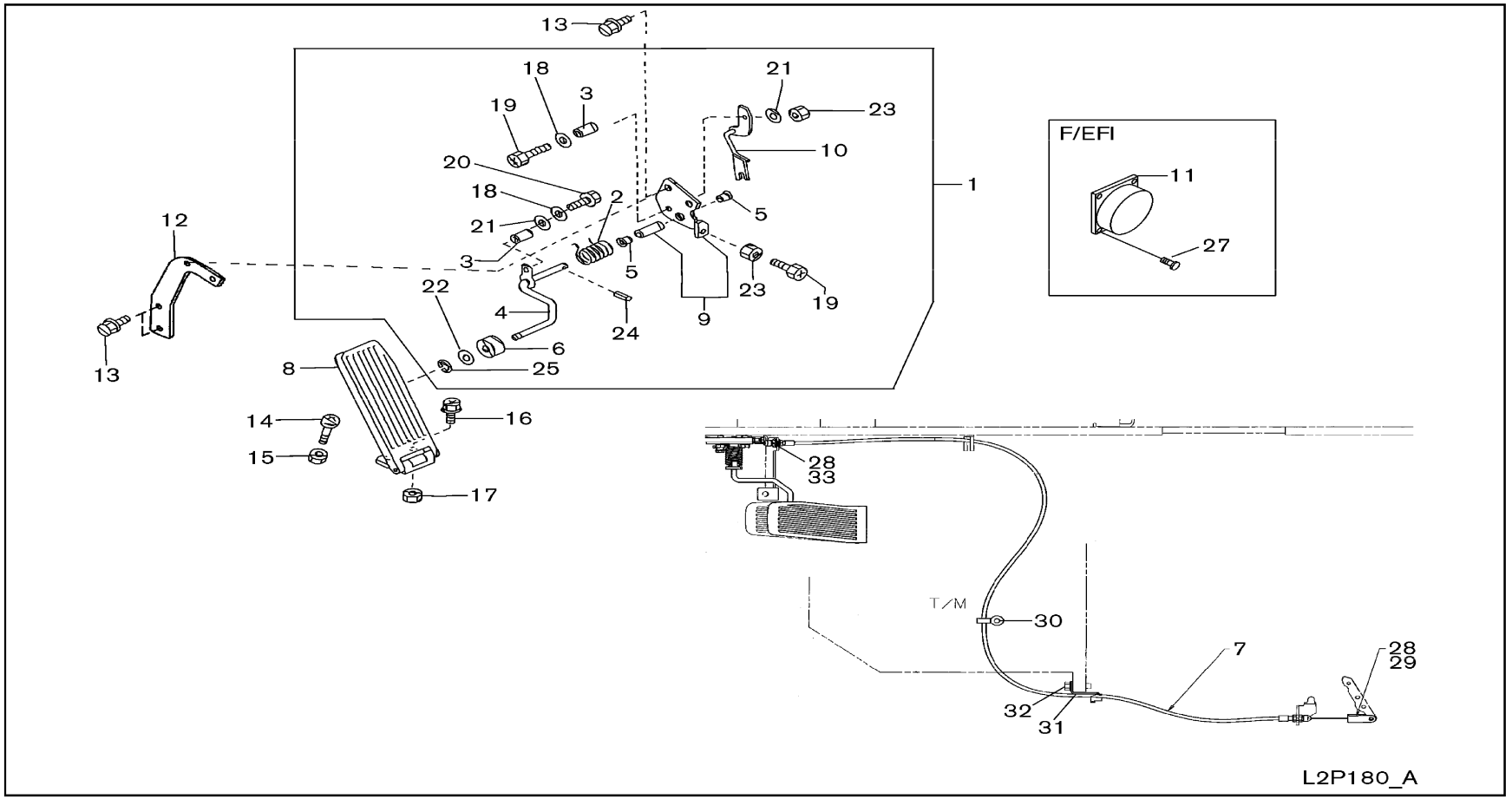

SEC. 180

ACCELERATOR LINKAGE

VARILLAJE DEL ACELERADOR

VERGASERGESTÄNGE

TRINGLERIE D'ACCÉLÉRATEUR

NC	S	KEY NO.	LEV	PART NO.	PART NAME	SPECIFICATION	QTY	APPLIED DATE	ICANF	FORMER PART NO.	KD
		1	01	2	**18005-FK000**	LEVER COMPL-ACCEL PEDAL		01	0107-		
			02	1	**18005-FJ410**			01	0107-		
		2	01	3	**18215-FK001**	SPRING-RETURN		01	0107-		
			02	2	**18215-FK102**			01	0107-		
		3	01	3	**18167-FK100**	PIN-TORSION SHAFT LEVER		02	0107-		
			02	3	**18167-FK100**			02	0107-		
		4	01	3	**18130-FK000**	ROD ASSY-ACCELERATOR,A		01	0107-		
			02	2	**18130-FK101**			01	0107-		
		5	01	3	**18124-FK200**	BUSH-BELL CRANK		02	0107-		
			02	2	**18124-FK200**			02	0107-		
		6	01	3	**18017-FK200**	PAD-ACCELERATOR PEDAL		01	0107-		
			02	2	**18017-FK200**			01	0107-		
		7	01	1	**18201-GG10A**	WIRE ASSY-ACCELERATOR		01	0107-0707		
			02	1	**18201-GG10C**			01	0707-0508		
			03	1	**18201-GG11A**			01	0508-		
		8	01	1	**18012-FK10A**	PEDAL ASSY-ACCELERATOR		01	0107-		
		9	01	3	**18010-FK000**	LEVER ASSY-ACCEL PEDAL		01	0107-		
			02	2	**18010-FK200**			01	0107-		
		10	01	3	**18130-FK010**	ROD ASSY-ACCELERATOR,A		01	0107-		
			02	2	**18020-FK200**	BRACKET ASSY-ACCEL PEDAL		01	0107-		
		11	01	3	**18919-AM810**	ACCEL-WORK UNIT		01	0107-		
		12	01	1	**18020-FK103**	BRACKET ASSY-ACCEL PEDAL		01	0107-		
		13	01	1	**08120-8201E**	SCREW-HHM M8-1.25X20 W/LKW		04	0107-		
		14	01	1	**08310-8601A**	SCREW-PHM M8-1.25X60		01	0107-0307		
			02	1	**08310-8601A**			01	0307-		
C			03	1	**08310-8701A**	SCREW-PHM M8-1.25X70		01	0307-		
		15	01	1	**08911-1081A**	NUT-HEX M8-1.25 4T		01	0107-		
		16	01	1	**08110-61610**	SCREW-HHM M6-1.0X16		02	0107-		
		17	01	1	**08911-10610**	NUT-HEX M8-1.0 4T		02	0107-		
		18	01	3	**08915-43610**	WASHER-FLAT M6		02	0107-		
			02	2	**08915-43610**			01	0107-		
		19	01	3	**08360-6302A**	SCREW-HH-CR M6-1.0X30		03	0107-		
			02	2	**08360-6302A**			02	0107-		
		20	01	3	**08360-6202A**	SCREW W/INTEGRAL WASHER		01	0107-		
			02	2	**08360-62025**	SCREW-HH CR M6-1.0x20 W/LK & PW		01	0107-		
		21	01	3	**08915-13610**	WASHER SPR		02	0107-		
			02	2	**08915-13610**			01	0107-		

APPLIED MODEL

01	02	03	04	05	06	07	08	09	10	11	12	13	14	15	16	17	18	19	20	21	22	23	24	25	26	27	28	29
MIPV	MIPV	MIPV	MIPS	MIUV	MIUV	MIUV	MIUS	MIYV	MIPV	MIPV	MIPV	MIUV	MIUV	MIUV	MIUS	MIYV	MIUV	MIUV	MIUV	MIUV	MIGV	MIGV	MIYV	MIGV	MIGV	MIGV	MIGV	MIGV
																	JJDV	JJDV	JJDV	JJDV	JJDV	JJDV	JJDV	JJDV	JJDV	JJDV	JJDV	JJDV
AA20JV	AA20DV	AA20LV	AA20LV	AA20JV	AA20DV	AA20LV	AA20LS	AA20LV	AA25JV	AA25DV	AA25LV	AA25LV	AA25JV	AA25DV	AA25LV	AA25LS	AA28LV	AA28DV	AA28LV	AA30JV	AA30DV	AA30LV	AA30LV	AA35JV	AA35DV	AA35LV	AA35LV	AA35LV
○	○	○	○	○	○	○	○	○	○	○	○	○	○	○	○	○	○	○	○	○	○	○	○		○	○	○	
								○									○							○				○

SEC. 180

ACCELERATOR LINKAGE

VARILLAJE DEL ACELERADOR

VERGASERGESTÄNGE

TRINGLERIE D'ACCÉLÉRATEUR

NC	S	KEY NO.	LEV	PART NO.	PART NAME	SPECIFICATION	QTY	APPLIED DATE	ICANF	FORMER PART NO.	KD	APPLIED MODEL 01	02	03	04	05	06	07	08	09	10	11	12	13	14	15	16	17	18	19	20	21	22	23	24	25	26	27	28	29
												MI PVJ	MI PVJ	MI PVS	MI PVS	MI UVL	MI UVL	MI UVL	MI UVL	MI YVL	MI PVL	MI PVL	MI PVL	MI UVL	MI UVL	MI UVL	MI UVL	MI YVL	MI UJV	MI UJV	MI UJV	MI GVL	MI GVL	MI GVL	MI GVL	MI YVL	MI GVL	MI GVL	MI GVL	MI GVL
												AA 20 JV	AA 20 DV	AA 20 LV	AA 20 LV	AA 20 JV	AA 20 DV	AA 20 LV	AA 20 LV	AA 20 LV	AA 20 JV	AA 20 DV	AA 20 LV	AA 20 LV	AA 20 JV	AA 20 DV	AA 20 LV	AA 20 LV	AA 22 JV	AA 22 DV	AA 22 LV	AA 23 JV	AA 23 DV	AA 23 LV	AA 23 LV	AA 23 JV	AA 23 DV	AA 23 LV	AA 23 LV
		22	01	3	**08915-4381A**	WASHER-FLAT M8		01	0107-			○	○	○	○	○	○	○	○		○	○	○	○	○	○	○		○	○	○	○	○		○	○	○	
			02	2	**08915-4381A**			01	0107-											○									○							○			○
		23	01	3	**08911-10610**	NUT-HEX M6-1.0 4T		03	0107-			○	○	○	○	○	○	○	○		○	○	○	○	○	○	○		○	○	○	○	○		○	○	○	
			02	2	**08911-10610**			02	0107-											○									○							○			○
		24	01	3	**00830-32000**	PIN		01	0107-			○	○	○	○	○	○	○	○		○	○	○	○	○	○	○		○	○	○	○	○		○	○	○	
			02	2	**00830-32000**			01	0107-											○									○							○			○
		25	01	3	**00922-50610**	RING-SNAP		01	0107-			○	○	○	○	○	○	○	○		○	○	○	○	○	○	○		○	○	○	○	○		○	○	○	
			02	2	**00922-50610**			01	0107-											○									○							○			○
		27	01	3	**08310-41225**	SCREW-PAN M4-0.7X12 W/SPW & PW		02	0107-			○	○	○	○	○	○	○	○		○	○	○	○	○	○	○		○	○	○	○	○		○	○	○	
		28	01	1	**00923-1061A**	PIN-SNAP		02	0107-											○									○							○			○
		29	01	1	**00840-6181A**	PIN-CLEVIS		01	0107-0508											○									○							○			○
			02	1	**00843-6201A**			01	0508-											○									○							○			○
		30	01	1	**24210-89944**	CLIP		01	0107-0508											○									○							○			○
			02	1	**24210-3J100**			01	0508-											○									○							○			○
		31	01	1	**18167-GG10A**	CLIP-ACCEL WIRE		01	0107-0607											○									○							○			○
			02	1	**18167-GG00B**			01	0607-											○									○							○			○
		32	01	1	**081B4-0305M**	SCREW-HH FLG M10-1.25X30 9T		01	0107-											○									○							○			○
		33	01	1	**08915-43610**	WASHER-FLAT M6		01	0107-											○									○							○			○

NOTE

SEC. 185B

FUEL SUPPLY SYSTEM (QD32)

SISTEMA DE ALIMENTACION DE COMBUSTIBLE

KRAFTSTOFFÖRDERANLAGE

CIRCUIT D'ALIMENTATION

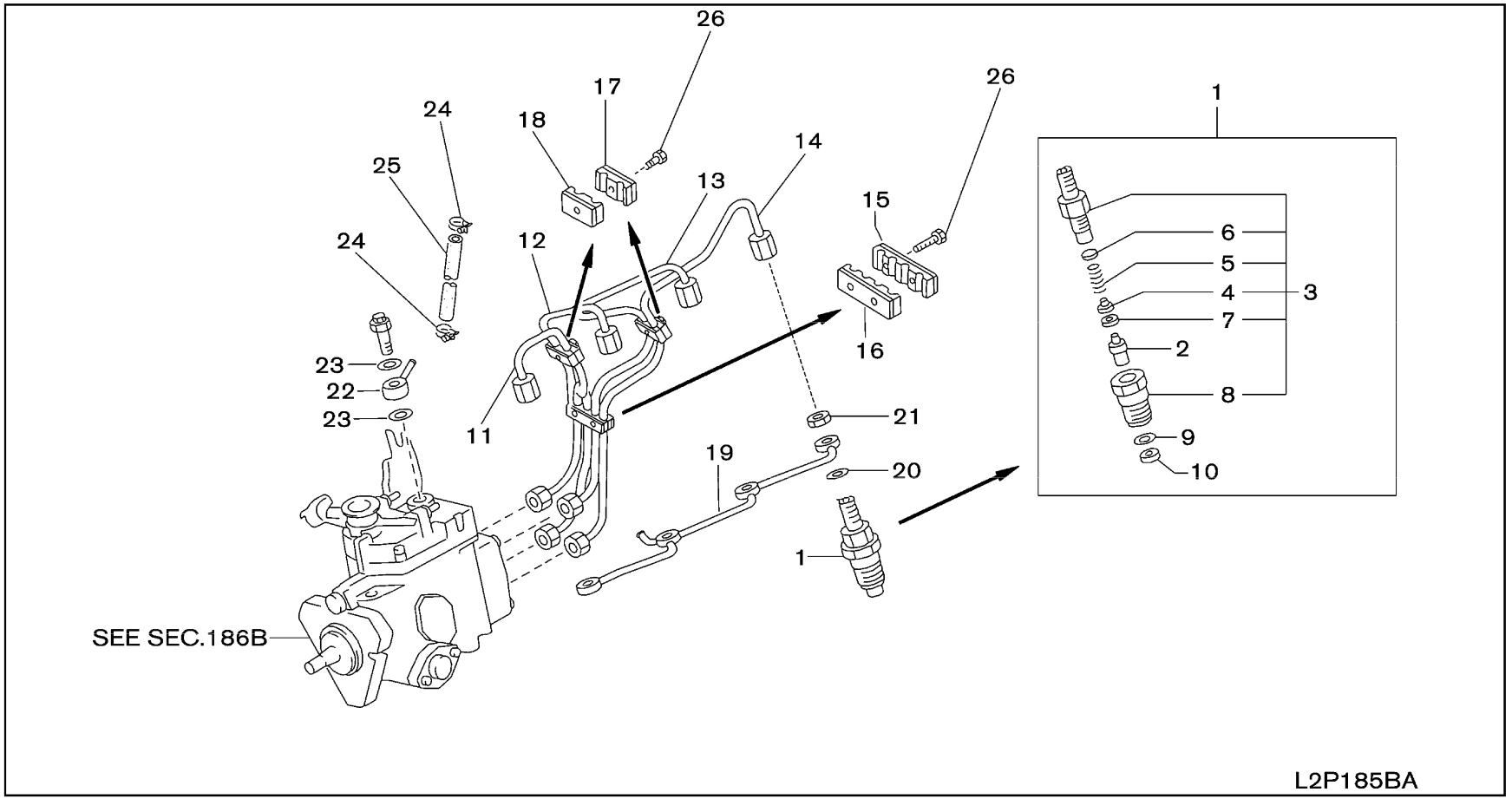

SEC. 185B

FUEL SUPPLY SYSTEM (QD32)

SISTEMA DE ALIMENTACION DE COMBUSTIBLE

KRAFTSTOFFÖRDERANLAGE

CIRCUIT D'ALIMENTATION

NC	S	KEY NO.	LEV	PART NO.	PART NAME	SPECIFICATION	QTY	APPLIED DATE	ICANF	FORMER PART NO.	KD	APPLIED MODEL 01 02 03 04 05 06 07 08 09 10 11 12 13 14 15 16 17 18 19 20 21 22 23 24 25 26 27 28 29
		1	01	1	**16600-63G21**	NOZZLE ASSY & HOLDER		04	0107-			o o o o
		2	01	2	**16620-90009**	NOZZLE ASSY		04	0107-			o o o o
		3	01	2	**16610-43G01**	HOLDER ASSY-NOZZLE		04	0107-			o o o o
		4	01	3	**16612-43G00**	ROD-PUSH		04	0107-			o o o o
		5	01	3	**16615-43G00**	SPRING-NOZZLE		04	0107-			o o o o
		6	01	3	**16613-43G00**	WASHER-ADJUSTING	T=0.1	AR	0107-			o o o o
			02	3	**16613-43G01**		T=0.2	AR	0107-			o o o o
			03	3	**16613-43G02**		T=0.3	AR	0107-			o o o o
			04	3	**16613-43G03**		T=0.4	AR	0107-			o o o o
			05	3	**16613-43G04**		T=0.5	AR	0107-			o o o o
			06	3	**16613-43G05**		T=0.52	AR	0107-			o o o o
			07	3	**16613-43G06**		T=0.54	AR	0107-			o o o o
			08	3	**16613-43G07**		T=0.56	AR	0107-			o o o o
			09	3	**16613-43G08**		T=0.58	AR	0107-			o o o o
			10	3	**16613-43G09**		T=0.8	AR	0107-			o o o o
		7	01	3	**16616-43G00**	PIECE-DISTANCE		04	0107-			o o o o
		8	01	3	**16629-43G01**	NUT-NOZZLE		04	0107-			o o o o
		9	01	2	**16625-43G00**	GASKET-NOZZLE		04	0107-			o o o o
		10	01	2	**16626-43G00**	GASKET-NOZZLE		04	0107-			o o o o
		11	01	1	**16680-40K00**	TUBE ASSY-INJECTION, NO 1		01	0107-			o o o o
		12	01	1	**16681-40K00**	TUBE ASSY-INJECTION, NO 2		01	0107-			o o o o
		13	01	1	**16682-40K00**	TUBE ASSY-INJECTION, NO 3		01	0107-			o o o o
		14	01	1	**16683-40K00**	TUBE ASSY-INJECTION, NO 4		01	0107-			o o o o
		15	01	1	**16696-43G0B**	SUPPORT-INJECTION TUBE		01	0107-			o o o o
		16	01	1	**16697-21N0A**	SUPPORT-INJECTION TUBE		01	0107-			o o o o
		17	01	1	**16698-43G0B**	SUPPORT-INJECTION TUBE		02	0107-			o o o o
		18	01	1	**16699-43G0A**	SUPPORT-INJECTION TUBE		02	0107-			o o o o
		19	01	1	**16670-43G00**	TUBE-FUEL SPILL		01	0107-0707			o o o o
			02	1	**16670-43G0A**			01	0707-			o o o o
		20	01	1	**16627-43G00**	GASKET		04	0107-			o o o o
		21	01	1	**16666-43G00**	NUT-SPILL		04	0107-0508			o o o o
			02	1	**16666-43G0A**			04	0508-			o o o o
		22	01	1	**16678-43G01**	TUBE-FUEL SPILL		01	0107-0608			o o o o
			02	1	**16678-43G0A**			01	0608-			o o o o
		23	01	1	**16794-10G00**	GASKET		02	0107-			o o o o
		24	01	2	**01558-00111**	CLIP		02	0107-0608			o o o o
			02	2	**01558-00401**			02	0608-			o o o o

SEC. 185B

FUEL SUPPLY SYSTEM (QD32)

SISTEMA DE ALIMENTACION DE COMBUSTIBLE

KRAFTSTOFFÖRDERANLAGE

CIRCUIT D'ALIMENTATION

NC	S	KEY NO.	LEV	PART NO.	PART NAME	SPECIFICATION	QTY	APPLIED DATE	ICANF	FORMER PART NO.	KD	APPLIED MODEL 01 02 03 04 05 06 07 08 09 10 11 12 13 14 15 16 17 18 19 20 21 22 23 24 25 26 27 28 29
		25 01	1	**16445-2S000**	HOSE-FULE		01	0107-0608				○ ○ ○ ○
		02	1	**16445-2S00A**			01	0608-				○ ○ ○ ○
		26 01	1	**08120-62528**	SCREW-HHM M6-1.0X25 W/LKW		04	0107-				○ ○ ○ ○

185B-3

NOTE

SEC. 186B

FUEL INJECTION PUMP (QD32)

BOMBA DE INYECCION

KRAFTSTOFFEINSPRITZPUMPE

POMPE D'INJECTION

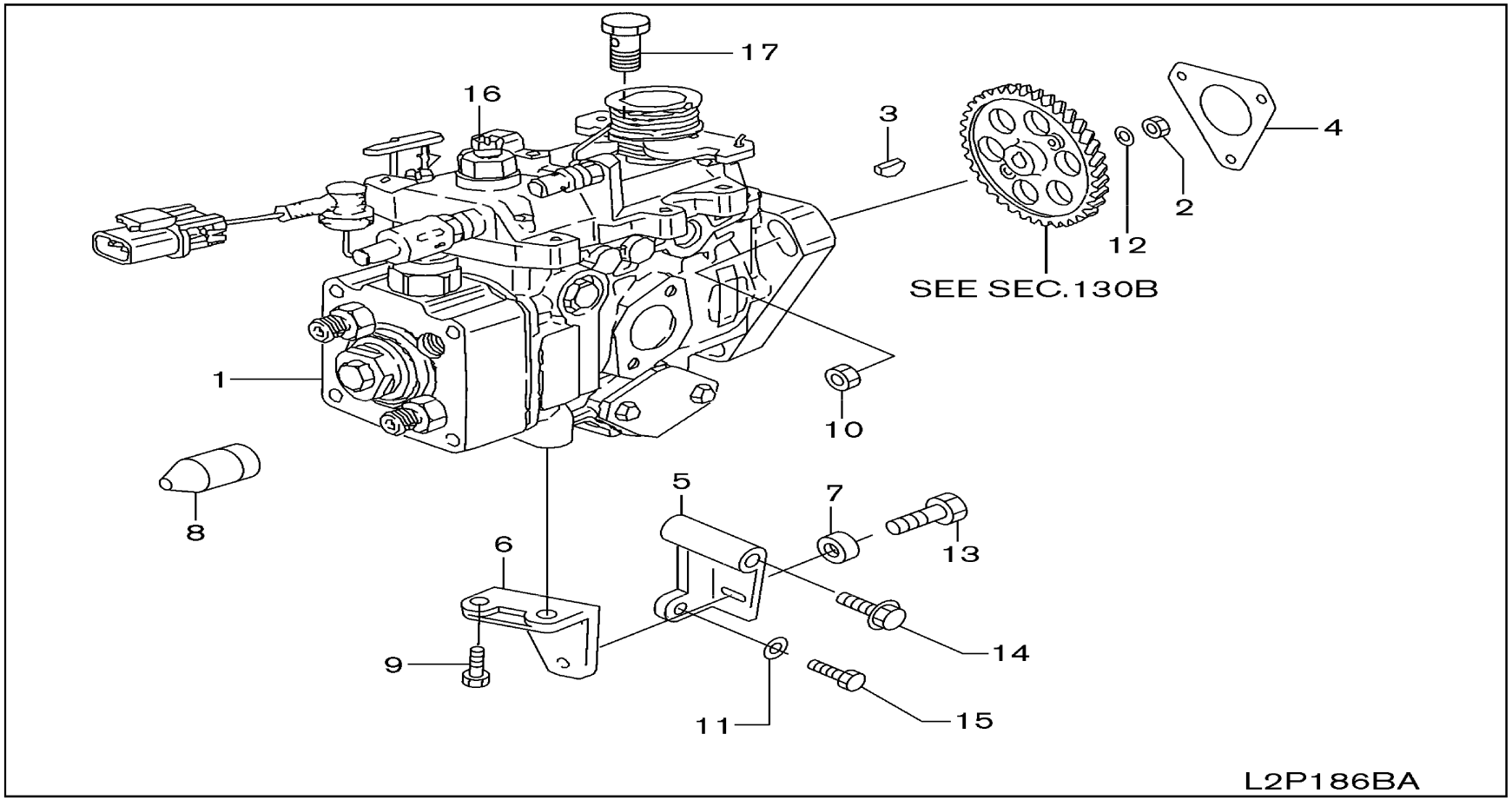

SEC. 186B

FUEL INJECTION PUMP (QD32)

BOMBA DE INYECCION

KRAFTSTOFFEINSPRITZPUMPE

POMPE D'INJECTION

NC	S	KEY NO.	LEV	PART NO.	PART NAME	SPECIFICATION	QTY	APPLIED DATE	ICANF	FORMER PART NO.	KD	APPLIED MODEL 01	02	03	04	05	06	07	08	09	10	11	12	13	14	15	16	17	18	19	20	21	22	23	24	25	26	27	28	29
		1	01	1	**16700-NA01B**	PUMP ASSY-INJECTION		01	0107-1208											O								O								O
			02	1	**16700-NA01D**			01	1208-											O								O								O
		2	01	1	**01211-01054**	NUT		01	0107-											O								O								O
		3	01	1	**16742-37501**	KEY-WOODRUFF		01	0107-											O								O								O
		4	01	1	**16701-R8100**	GASKET-INJECTION PUMP		01	0107-											O								O								O
		5	01	1	**16811-54T00**	BRACKET-INJECTION		01	0107-											O								O								O
		6	01	1	**16814-43G01**	BRACKET-INJECTION		01	0107-											O								O								O
		7	01	1	**16420-43G00**	SPACER		01	0107-											O								O								O
		8	01	1	**19270-35V10**	LEVER-STOP		01	0107-											O								O								O
		9	01	1	**08121-0201E**	SCREW-HHM M10-1.5X20 W/PW		02	0107-											O								O								O
		10	01	1	**08918-2081A**	NUT-HEX FLG M8-1.28 6T		01	0107-											O								O								O
		11	01	1	**08915-1401A**	WASHER-LOCK SPLIT M10		01	0107-											O								O								O
		12	01	1	**08915-1421A**	WASHER-LOCK SPLIT M12		01	0107-											O								O								O
		13	01	1	**08121-0301E**	SCREW-HHM M10-1.5X30 W/LKW		01	0107-											O								O								O
		14	01	1	**08121-0701E**	BOLT-HEX		01	0107-											O								O								O
		15	01	1	**08121-0901A**	BOLT-HEX		01	0107-											O								O								O
		16	01	1	**16790-38G00**	OVERFLOW VALVE		01	0107-											O								O								O
		17	01	2	**NA-**	CONNECTOR-TUBE, INJECTION PUMP	INCLUDED WITH ITEM NO. 1	01	0107-1208											O								O								O
			02	1	**16787-NA00A**			01	1208-											O								O								O

SEC. 195A

VAPORIZER (K21 & K25)

VAPORIZADOR

VERDAMPFER

VAPORISATEUR

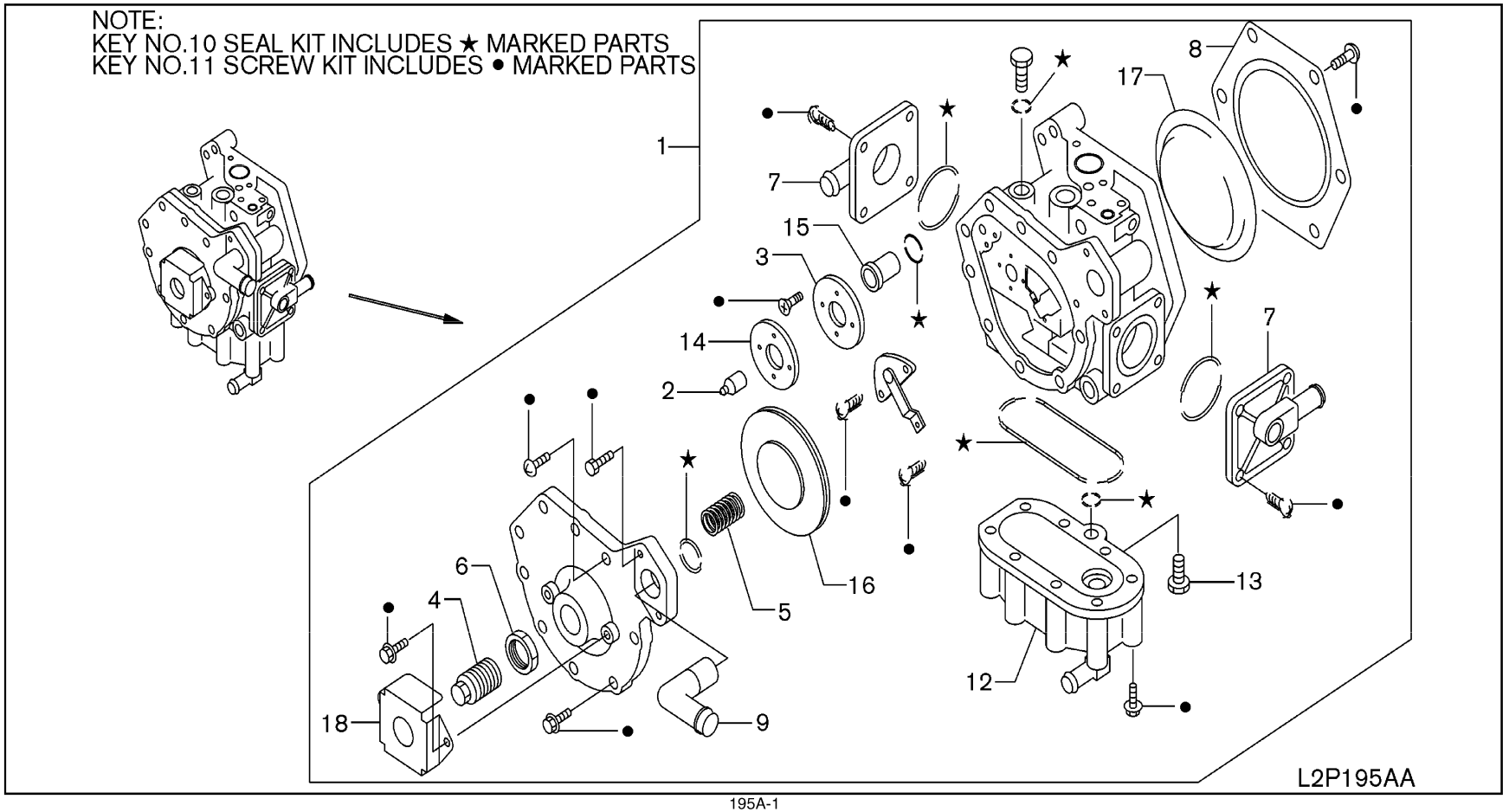

SEC. 195A

VAPORIZER (K21 & K25)

VAPORIZADOR

VERDAMPFER

VAPORISATEUR

NC	S	KEY NO.	LEV	PART NO.	PART NAME	SPECIFICATION	QTY	APPLIED DATE	TCANF	FORMER PART NO.	KD	APPLIED MODEL 01 02 03 04 05 06 07 08 09 10 11 12 13 14 15 16 17 18 19 20 21 22 23 24 25 26 27 28 29
C		**1** 01	1	**16310-GS00A**	VAPORIZER ASSY		01	0107-0212				○ ○
C		02	1	**16310-GS00B**			01	0212-0213				○ ○
N		03	1	**16310-GS00C**			01	0213-				○ ○
		2 01	2	**16388-FU460**	ROD-BALANCE		01	0107-				○ ○
		3 01	2	**16237-FU460**	PLATE-BALANCE		01	0107-				○ ○
		4 01	2	**16379-FU460**	SCREW-ADJUST		01	0107-				○ ○
		5 01	2	**17052-FU460**	SPRING-DIAPHRAGM		01	0107-				○ ○
		6 01	2	**16214-16811**	NUT		01	0107-				○ ○
		7 01	2	**16389-FU460**	COVER-THERMO		02	0107-				○ ○
		8 01	2	**16375-FU460**	COVER-REGULATOR		01	0107-				○ ○
		9 01	2	**16356-FU460**	PIPE-FUEL		01	0107-				○ ○
C		**10** 01	2	**16328-GS00A**	SEAL KIT-O RING		01	0107-0212				○ ○
C		02	2	**16328-GS00B**			01	0212-				○ ○
		11 01	2	**16065-GU60A**	SCREW KIT		01	0107-				○ ○
		12 01	2	**17959-GY360**	COVER ASSY-VAPORIZER		01	0107-				○ ○
		13 01	2	**17958-16811**	PLUG		01	0107-				○ ○
		14 01	2	**17053-FU460**	DIAPHRAGM ASSY		01	0107-				○ ○
C		**15** 01	2	**17962-FU460**	VALVE COMPL-1ST		01	0107-0213				○ ○
N		02	2	**17962-FU46A**			01	0213-				○ ○
C		**16** 01	2	**17960-GU60A**	DIAPHRAGM ASSY		01	0107-0212				○ ○
C		02	2	**17960-GT00A**			01	0212-				○ ○
		17 01	2	**17054-FU460**	DIAPHRAGM		01	0107-				○ ○
		18 01	2	**NA-**	COVER	NOT SOLD SEPARATELY	01	0107-				○ ○
C		**99** 01	1	**16188-GS00A**	VALVE KIT	NOT SHOWN-INCLUDES ITEM NO. 14, 15, 16 & 17	01	0107-0212				○ ○
C		02	1	**16188-GT00A**		NOT SHOWN-INCLUDES ITEM NO. 14, 15, 16 & 17	01	0212-0213				○ ○
N		03	1	**16188-GT00B**		NOT SHOWN-INCLUDES ITEM NO. 14, 15, 16 & 17	01	0213-				○ ○

SEC. 196

LPG FILTER & PIPING

TUBERIA Y FILTRO DE LPG

FLÜSSIGGASSFILTER & LEITUNG

FILTRE DE LPG ET CANALISATION

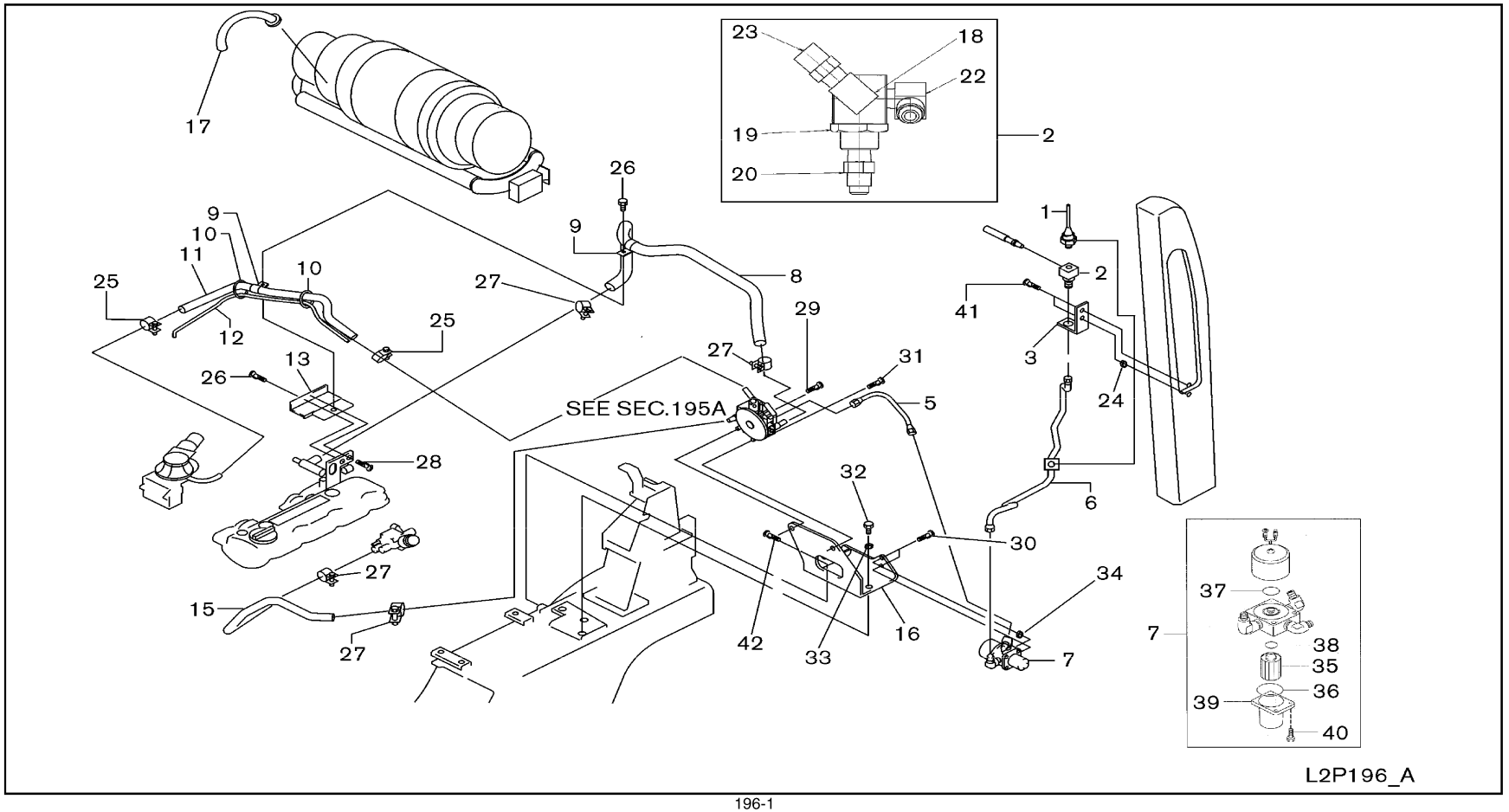

SEC. 196

LPG FILTER & PIPING

TUBERIA Y FILTRO DE LPG

FLÜSSIGGASSFILTER & LEITUNG

FILTRE DE LPG ET CANALISATION

NC	S	KEY NO.	LEV	PART NO.	PART NAME	SPECIFICATION	QTY	APPLIED DATE	ICANF	FORMER PART NO.	KD
		1	01	1	**17908-FC00D**	SWITCH ASSY		01	0107-		
		2	01	1	**17906-FV40A**	BULKHEAD ASSY		01	0107-		
		3	01	1	**17924-FC400**	BRACKET-SOLENOID VALVE		01	0107-		
		5	01	1	**17504-FJ211**	TUBE ASSY-LPG		01	0107-		
		6	01	1	**17504-FK111**	TUBE ASSY-LPG		01	0107-		
		7	01	1	**17904-FC300**	VALVE ASSY-SOLENOID		01	0107-		
		8	01	1	**14055-GG10A**	HOSE-WATER		01	0107-		
		9	01	1	**69676-FK300**	CLIP		02	0107-		
		10	01	1	**01552-00411**	BAND-HOSE		03	0107-		
		11	01	1	**17527-FJ201**	HOSE-FUEL OUTLET		01	0107-		
		12	01	1	**22318-GS04A**	HOSE-VACUUM CONTROL		01	0107-		
		13	01	1	**17520-GH00A**	BRACKET-FUEL HOSE		01	0107-		
		15	01	1	**14056-FK100**	HOSE-WATER		01	0107-		
		16	01	1	**16306-FC301**	BRACKET-VAPO		01	0107-0310		
			02	1	**16306-FV00A**			01	0310-		
		17	01	1	**17920-FC303**	HOSE ASSY-FILLER	USE ONLY UL OEM HOSE	01	0107-		
			02	1	**17920-FB601**		USE ONLY UL OEM HOSE	01	0107-		
			03	1	**17920-FC086**		F/SWING DOWN USE ONLY UL OEM HOSE	01	0107-		
		18	01	2	**17907-90H18**	VALVE ASSY-OUTLET		01	0107-		
		19	01	2	**16132-FC200**	NUT		01	0107-		
		20	01	2	**17906-FC201**	CONN-LPG		01	0107-		
		22	01	2	**17907-90H20**	VALVE ASSY-OUTLET		01	0107-		
		23	01	2	**17908-90H70**	VALVE ASSY-SAFETY		01	0107-		
		24	01	1	**64892-W5000**	COVER-HOLE		02	0107-		
		25	01	1	**16439-9V702**	CLIP-HOSE		02	0107-0408		
			02	1	**16439-9V80A**			02	0408-		
		26	01	1	**08110-8201G**	SCREW-HHM M8-1.25X20 W/SPRW		02	0107-		
		27	01	1	**08723-12300**	CLAMP-HOSE		04	0107-0607		
			02	1	**01555-00861**			04	0607-		
		28	01	1	**08110-8201A**	SCREW-HHM M8-1.25X20		01	0107-		
		29	01	1	**08110-8001G**	SCREW-HHM M8-1.5X80 W/SPRW		01	0107-		
		30	01	1	**08110-8161G**	SCREW-HHM M8-1.25X16 W/SPRW		02	0107-		
		31	01	1	**08110-8451G**	SCREW-HHM M8-1.25X45 W/SPRW		01	0107-		
		32	01	1	**08124-0161F**	SCREW-HHM M10-1.25X16 W/LK & PW		01	0107-		
		33	01	1	**08916-34010**	WASHER-LOCK M10		01	0107-		
		34	01	1	**08916-3381A**	WASHER-LOCK M8		01	0107-		
		35	01	2	**16919-W1602**	FILTER		01	0107-		

APPLIED MODEL

01	02	03	04	05	06	07	08	09	10	11	12	13	14	15	16	17	18	19	20	21	22	23	24	25	26	27	28	29
MIPV	MIPV	MIPV	MIPV	MIUV	MIUV	MIUV	MIUV	MIYV	MIPV	MIPV	MIPV	MIUV	MIUV	MIUV	MIUV	MIYV	MIUV	MIJV	MIJV	MIGV	MIGV	MIGV	MIGV	MIYV	MIUV	MIGV	MIGV	MIYV
A20JV	A20DV	A20LV	A20LV	A20JV	A20DV	A20LV	A20LV	A20LV	A25JV	A25DV	A25LV	A25LV	A25JV	A25DV	A25LV	A25LV	A25SV	A28JV	A28DV	A28LV	A30JV	A30DV	A30LV	A30LV	A35JV	A35DV	A35LV	A35LV
○○○	○○○	○○○	○○○	○○○	○○○	○○○	○○○		○○○	○○○	○○○	○○○	○○○	○○○	○○○	○○○		○○	○○	○○	○○	○○	○○			○○	○○	
○○○	○○○	○○○	○○○	○○○	○○○	○○○	○○○		○○○	○○○	○○○	○○○	○○○	○○○	○○○	○○○		○○	○○	○○	○○	○○	○○			○○	○○	
○○○	○○○	○○○	○○○	○○○	○○○	○○○	○○○		○○○	○○○	○○○	○○○	○○○	○○○	○○○	○○○		○○	○○	○○	○○	○○	○○			○○	○○	
○○○	○○○	○○○	○○○	○○○	○○○	○○○	○○○		○○○	○○○	○○○	○○○	○○○	○○○	○○○	○○○		○○	○○	○○	○○	○○	○○			○○	○○	
○○○	○○○	○○○	○○○	○○○	○○○	○○○	○○○		○○○	○○○	○○○	○○○	○○○	○○○	○○○	○○○		○○	○○	○○	○○	○○	○○			○○	○○	
○○○	○○○	○○○	○○○	○○○	○○○	○○○	○○○		○○○	○○○	○○○	○○○	○○○	○○○	○○○	○○○		○○	○○	○○	○○	○○	○○			○○	○○	
○○○	○○○	○○○	○○○	○○○	○○○	○○○	○○○		○○○	○○○	○○○	○○○	○○○	○○○	○○○	○○○		○○	○○	○○	○○	○○	○○			○○	○○	
○○○	○○○	○○○	○○○	○○○	○○○	○○○	○○○		○○○	○○○	○○○	○○○	○○○	○○○	○○○	○○○		○○	○○	○○	○○	○○	○○			○○	○○	
○○○	○○○	○○○	○○○	○○○	○○○	○○○	○○○		○○○	○○○	○○○	○○○	○○○	○○○	○○○	○○○		○○	○○	○○	○○	○○	○○			○○	○○	
○○○	○○○	○○○	○○○	○○○	○○○	○○○	○○○		○○○	○○○	○○○	○○○	○○○	○○○	○○○	○○○		○○	○○	○○	○○	○○	○○			○○	○○	
○○○	○○○	○○○	○○○	○○○	○○○	○○○	○○○		○○○	○○○	○○○	○○○	○○○	○○○	○○○	○○○		○○	○○	○○	○○	○○	○○			○○	○○	
○○○	○○○	○○○	○○○	○○○	○○○	○○○	○○○		○○○	○○○	○○○	○○○	○○○	○○○	○○○	○○○		○○	○○	○○	○○	○○	○○			○○	○○	
○○○	○○○	○○○	○○○	○○○	○○○	○○○	○○○		○○○	○○○	○○○	○○○	○○○	○○○	○○○	○○○		○○	○○	○○	○○	○○	○○			○○	○○	
○○○	○○○	○○○	○○○	○○○	○○○	○○○	○○○		○○○	○○○	○○○	○○○	○○○	○○○	○○○	○○○		○○	○○	○○	○○	○○	○○			○○	○○	
○○○	○○○	○○○	○○○	○○○	○○○	○○○	○○○		○○○	○○○	○○○	○○○	○○○	○○○	○○○	○○○		○○	○○	○○	○○	○○	○○			○○	○○	
○○○	○○○	○○○	○○○	○○○	○○○	○○○	○○○		○○○	○○○	○○○	○○○	○○○	○○○	○○○	○○○		○○	○○	○○	○○	○○	○○			○○	○○	
○○○	○○○	○○○	○○○	○○○	○○○	○○○	○○○		○○○	○○○	○○○	○○○	○○○	○○○	○○○	○○○		○○	○○	○○	○○	○○	○○			○○	○○	
○○○	○○○	○○○	○○○	○○○	○○○	○○○	○○○		○○○	○○○	○○○	○○○	○○○	○○○	○○○	○○○		○○	○○	○○	○○	○○	○○			○○	○○	
○○○	○○○	○○○	○○○	○○○	○○○	○○○	○○○		○○○	○○○	○○○	○○○	○○○	○○○	○○○	○○○		○○	○○	○○	○○	○○	○○			○○	○○	
○○○	○○○	○○○	○○○	○○○	○○○	○○○	○○○		○○○	○○○	○○○	○○○	○○○	○○○	○○○	○○○		○○	○○	○○	○○	○○	○○			○○	○○	
○○○	○○○	○○○	○○○	○○○	○○○	○○○	○○○		○○○	○○○	○○○	○○○	○○○	○○○	○○○	○○○		○○	○○	○○	○○	○○	○○			○○	○○	
○○○	○○○	○○○	○○○	○○○	○○○	○○○	○○○		○○○	○○○	○○○	○○○	○○○	○○○	○○○	○○○		○○	○○	○○	○○	○○	○○			○○	○○	
○○○	○○○	○○○	○○○	○○○	○○○	○○○	○○○		○○○	○○○	○○○	○○○	○○○	○○○	○○○	○○○		○○	○○	○○	○○	○○	○○			○○	○○	
○○○	○○○	○○○	○○○	○○○	○○○	○○○	○○○		○○○	○○○	○○○	○○○	○○○	○○○	○○○	○○○		○○	○○	○○	○○	○○	○○			○○	○○	
○○○	○○○	○○○	○○○	○○○	○○○	○○○	○○○		○○○	○○○	○○○	○○○	○○○	○○○	○○○	○○○		○○	○○	○○	○○	○○	○○			○○	○○	
○○○	○○○	○○○	○○○	○○○	○○○	○○○	○○○		○○○	○○○	○○○	○○○	○○○	○○○	○○○	○○○		○○	○○	○○	○○	○○	○○			○○	○○	
○○○	○○○	○○○	○○○	○○○	○○○	○○○	○○○		○○○	○○○	○○○	○○○	○○○	○○○	○○○	○○○		○○	○○	○○	○○	○○	○○			○○	○○	
○				○				○○					○				○○				○			○○				○
○○○	○○○	○○○	○○○	○○○	○○○	○○○	○○○		○○○	○○○	○○○	○○○	○○○	○○○	○○○	○○○		○○	○○	○○	○○	○○	○○			○○	○○	
○○○	○○○	○○○	○○○	○○○	○○○	○○○	○○○		○○○	○○○	○○○	○○○	○○○	○○○	○○○	○○○		○○	○○	○○	○○	○○	○○			○○	○○	
○○○	○○○	○○○	○○○	○○○	○○○	○○○	○○○		○○○	○○○	○○○	○○○	○○○	○○○	○○○	○○○		○○	○○	○○	○○	○○	○○			○○	○○	
○○○	○○○	○○○	○○○	○○○	○○○	○○○	○○○		○○○	○○○	○○○	○○○	○○○	○○○	○○○	○○○		○○	○○	○○	○○	○○	○○			○○	○○	
○○○	○○○	○○○	○○○	○○○	○○○	○○○	○○○		○○○	○○○	○○○	○○○	○○○	○○○	○○○	○○○		○○	○○	○○	○○	○○	○○			○○	○○	
○○○	○○○	○○○	○○○	○○○	○○○	○○○	○○○		○○○	○○○	○○○	○○○	○○○	○○○	○○○	○○○		○○	○○	○○	○○	○○	○○			○○	○○	

SEC. 196

LPG FILTER & PIPING

TUBERIA Y FILTRO DE LPG

FLÜSSIGGASSFILTER & LEITUNG

FILTRE DE LPG ET CANALISATION

NC	S	KEY NO.	LEV	PART NO.	PART NAME	SPECIFICATION	QTY	APPLIED DATE	ICANF	FORMER PART NO.	KD	APPLIED MODEL 01 02 03 04 05 06 07 08 09 10 11 12 13 14 15 16 17 18 19 20 21 22 23 24 25 26 27 28 29
		36 01	2	**17937-Y4400**	SEAL-O RING		01	0107-				○ ○
		37 01	2	**17937-Y4410**	SEAL-O RING		01	0107-				○ ○
		38 01	2	**16349-18V00**	SEAL-O RING		01	0107-				○ ○
		39 01	2	**16125-Y4400**	COVER-FILTER		01	0107-				○ ○
		40 01	2	**16163-Y4403**	BOLT		04	0107-				○ ○
		41 01	1	**08110-8161G**	SCREW-HHM M8-1.25X16 W/SPRW		02	0107-0408				○ ○
		02	1	**08110-8201G**	SCREW-HHM M8-1.25X20 W/SPRW		02	0408-				○ ○
		42 01	1	**08124-0161F**	SCREW-HHM M10-1.25X16 W/LK & PW		01	0107-0310				○ ○
		02	1	**08120-8121F**	SCREW-HHM M8-1.25X12 W/LK & PW		01	0310-				○ ○

NOTE

SEC. 199A

LPG BOMBE

BOTELLA DE LPG

FLÜSSIGGASBEHÄLTER

BOUTEILLE DE LPG

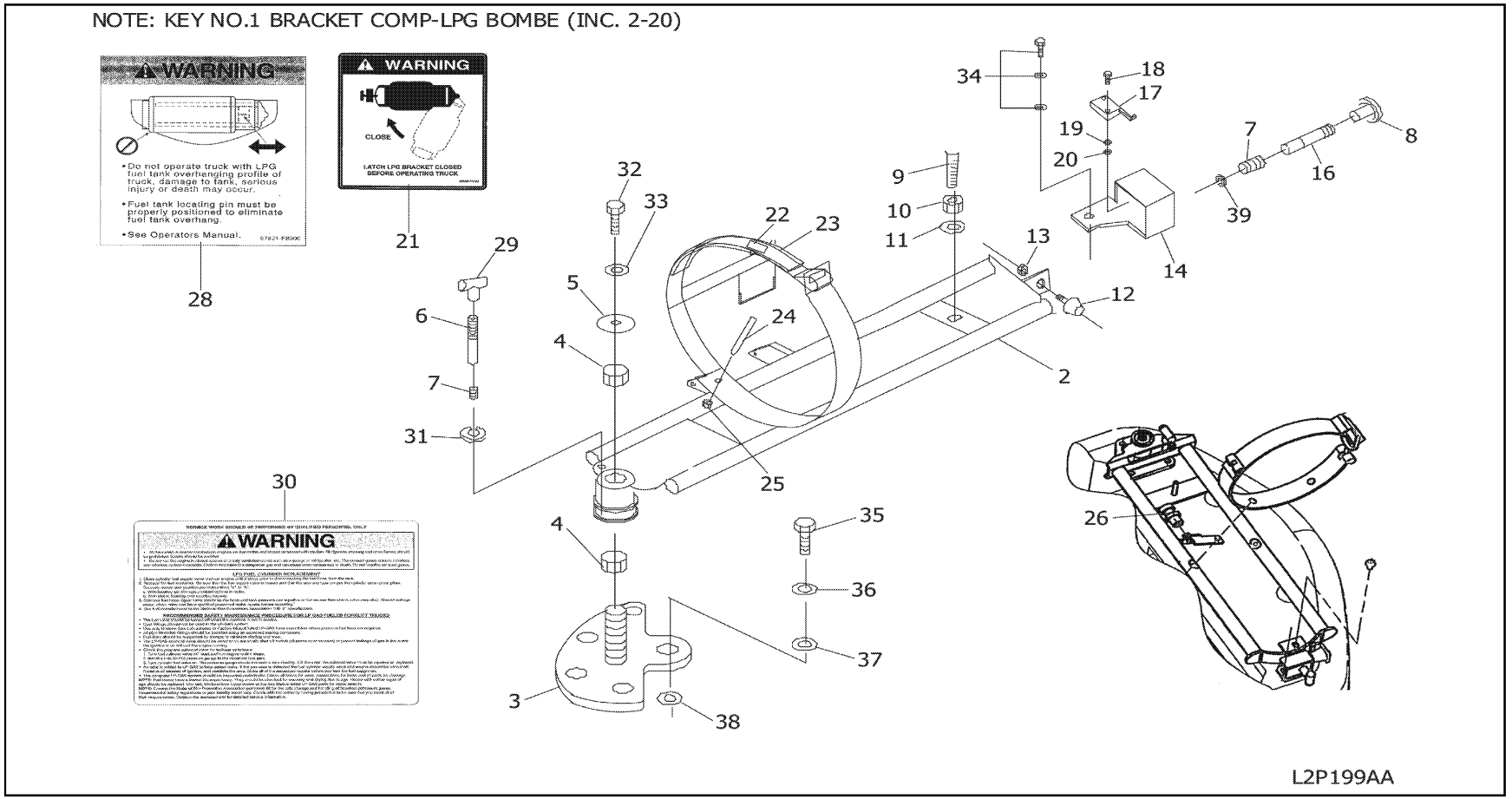

199A-1

SEC. 199A

LPG BOMBE

BOTELLA DE LPG

FLÜSSIGGASBEHÄLTER

BOUTEILLE DE LPG

NC	S	KEY NO.	LEV	PART NO.	PART NAME	SPECIFICATION	QTY	APPLIED DATE	ICANF	FORMER PART NO.	KD	APPLIED MODEL 01 02 03 04 05 06 07 08 09 10 11 12 13 14 15 16 17 18 19 20 21 22 23 24 25 26 27 28 29
		1 01	1	**17915-FB300**	BRACKET COMP-SWING KIT		01	0107-				○○○ ○○○ ○○○ ○○○ ○○
		2 01	2	**17925-FB300**	BRACKET COMP-LPG BOMBE		01	0107-				○○○ ○○○ ○○○ ○○○ ○○
		02	3	**17926-FB300**	BRACKET WELDMENT		01	0107-				○○○ ○○○ ○○○ ○○○ ○○
		3 01	2	**17934-6G400**	BRACKET-LPG BOMBE		01	0107-				○○○ ○○○ ○○○ ○○○ ○○
		4 01	3	**17937-6G100**	BUSH		02	0107-				○○○ ○○○ ○○○ ○○○ ○○
		5 01	1	**17938-6G100**	COVER-SEAL		01	0107-				○○○ ○○○ ○○○ ○○○ ○○
		6 01	4	**17939-FB086**	PIN		01	0107-				○○○ ○○○ ○○○ ○○○ ○○
		7 01	3	**17940-6G100**	SPRING-HANDLE		02	0107-				○○○ ○○○ ○○○ ○○○ ○○
		8 01	3	**17941-FB085**	HANDLE		01	0107-				○○○ ○○○ ○○○ ○○○ ○○
		9 01	4	**17942-FB087**	PIN-LOCATOR		01	0107-				○○○ ○○○ ○○○ ○○○ ○○
		10 01	4	**08911-FB801**	NUT		01	0107-				○○○ ○○○ ○○○ ○○○ ○○
		11 01	4	**7000-012**	WASHER		01	0107-				○○○ ○○○ ○○○ ○○○ ○○
		12 01	3	**17943-6G100**	BUMPER		01	0107-				○○○ ○○○ ○○○ ○○○ ○○
		13 01	3	**17946-6G100**	NUT		01	0107-				○○○ ○○○ ○○○ ○○○ ○○
		14 01	3	**17951-6G100**	LATCH WELDMENT		01	0107-				○○○ ○○○ ○○○ ○○○ ○○
		16 01	4	**17939-FB085**	PIN		01	0107-				○○○ ○○○ ○○○ ○○○ ○○
		17 01	3	**25500-F9701**	SWITCH-MICRO		01	0107-				○○○ ○○○ ○○○ ○○○ ○○
		18 01	3	**01135-6G000**	SCREW		02	0107-				○○○ ○○○ ○○○ ○○○ ○○
		19 01	3	**01321-6G000**	WASHER		02	0107-				○○○ ○○○ ○○○ ○○○ ○○
		20 01	3	**01211-6G000**	NUT		02	0107-				○○○ ○○○ ○○○ ○○○ ○○
		21 01	1	**99350-FC100**	LABEL-WARNING LATCH		01	0107-				○○○ ○○○ ○○○ ○○○ ○○
		02	1	**99350-FC210**		F/FRENCH	01	0107-				✻✻✻ ✻✻✻ ✻✻✻ ✻✻✻ ✻✻
		03	1	**99350-FC215**		F/SPANISH	01	0107-				✻✻✻ ✻✻✻ ✻✻✻ ✻✻✻ ✻✻
		22 01	1	**97841-90H76**	LABEL-CAUTION FUEL		01	0107-				○○○ ○○○ ○○○ ○○○ ○○
		23 01	2	**17932-6G100**	STRAP		01	0107-				○○○ ○○○ ○○○ ○○○ ○○
		24 01	1	**17598-6G100**	SCREW		02	0107-				○○○ ○○○ ○○○ ○○○ ○○
		25 01	1	**17599-6G100**	NUT		02	0107-				○○○ ○○○ ○○○ ○○○ ○○
C		26 01	1	**17925-FW50A**	BRACKET KIT-LPG HOSE		01	0107-				○ ○ ○ ○ ○
		28 01	1	**97821-FB300**	LABEL-WARNING ADJ LPG		01	0107-				○○○ ○○○ ○○○ ○○○ ○○
		29 01	3	**17941-FB086**	HANDLE		01	0107-				○○○ ○○○ ○○○ ○○○ ○○
		30 01	1	**97841-FC40A**	LABEL-CAUTION FUEL		01	0107-				○○○ ○○○ ○○○ ○○○ ○○
		31 01	3	**00922-51010**	RING-SNAP		01	0107-				○○○ ○○○ ○○○ ○○○ ○○
		32 01	1	**08114-0201A**	SCREW-HHM M10-1.25X20 W/SPRW		01	0107-				○○○ ○○○ ○○○ ○○○ ○○
		33 01	1	**08915-1401A**	WASHER-LOCK SPLIT M10		01	0107-				○○○ ○○○ ○○○ ○○○ ○○
		34 01	1	**08121-0251F**	SCREW-HHM M10-1.25X25 W/LK & PW		02	0107-				○○○ ○○○ ○○○ ○○○ ○○
		35 01	1	**08191-2401A**	SCREW-HHM M12-1.75X40		03	0107-				○○○ ○○○ ○○○ ○○○ ○○
		36 01	1	**08915-1421A**	WASHER-LOCK SPLIT M12		03	0107-				○○○ ○○○ ○○○ ○○○ ○○

SEC. 199A

LPG BOMBE

BOTELLA DE LPG

FLÜSSIGGASBEHÄLTER

BOUTEILLE DE LPG

NC	S	KEY NO.	LEV	PART NO.	PART NAME	SPECIFICATION	QTY	APPLIED DATE	ICANF	FORMER PART NO.	KD
		37 01	1	**08915-4421A**	WASHER-FLAT M12		03	0107-			
		38 01	1	**9877-044**	WASHER FLAT		AR	0107-0407			
		02	1	**17946-FW10A**	SHIM		AR	0407-			
		39 01	3	**00092-25101**	RING-SNAP		01	0107-0108			
		02	3	**00922-51010**			01	0108-			

APPLIED MODEL

01	02	03	04	05	06	07	08	09	10	11	12	13	14	15	16	17	18	19	20	21	22	23	24	25	26	27	28	29
MIPA200JVV	MIPA200DVV	MIPA200LVS	MIPA200LVV	MIUA200JVV	MIUA200DVV	MIUA200LVV	MIUA200LVS	MIUA200LVV	MIYA205JVV	MIPA255DVV	MIPA255LVV	MIPA255LVS	MIUA255JVV	MIUA255DVV	MIUA255LVV	MIUA255LVS	MIUA255LVV	MIYA258JVV	MIUA288DVV	MIUA288LVV	MIUA300JVV	MIUA300DVV	MIUA300LVV	MIUA300LVV	MIUA355JVV	MIUA355DVV	MIUA355LVV	MIUA355LVV
IIII

NOTE

SEC. 199B

LPG BOMBE -FIXED

BOTELLA DE LPG

FLÜSSIGGASBEHÄLTER

BOUTEILLE DE LPG

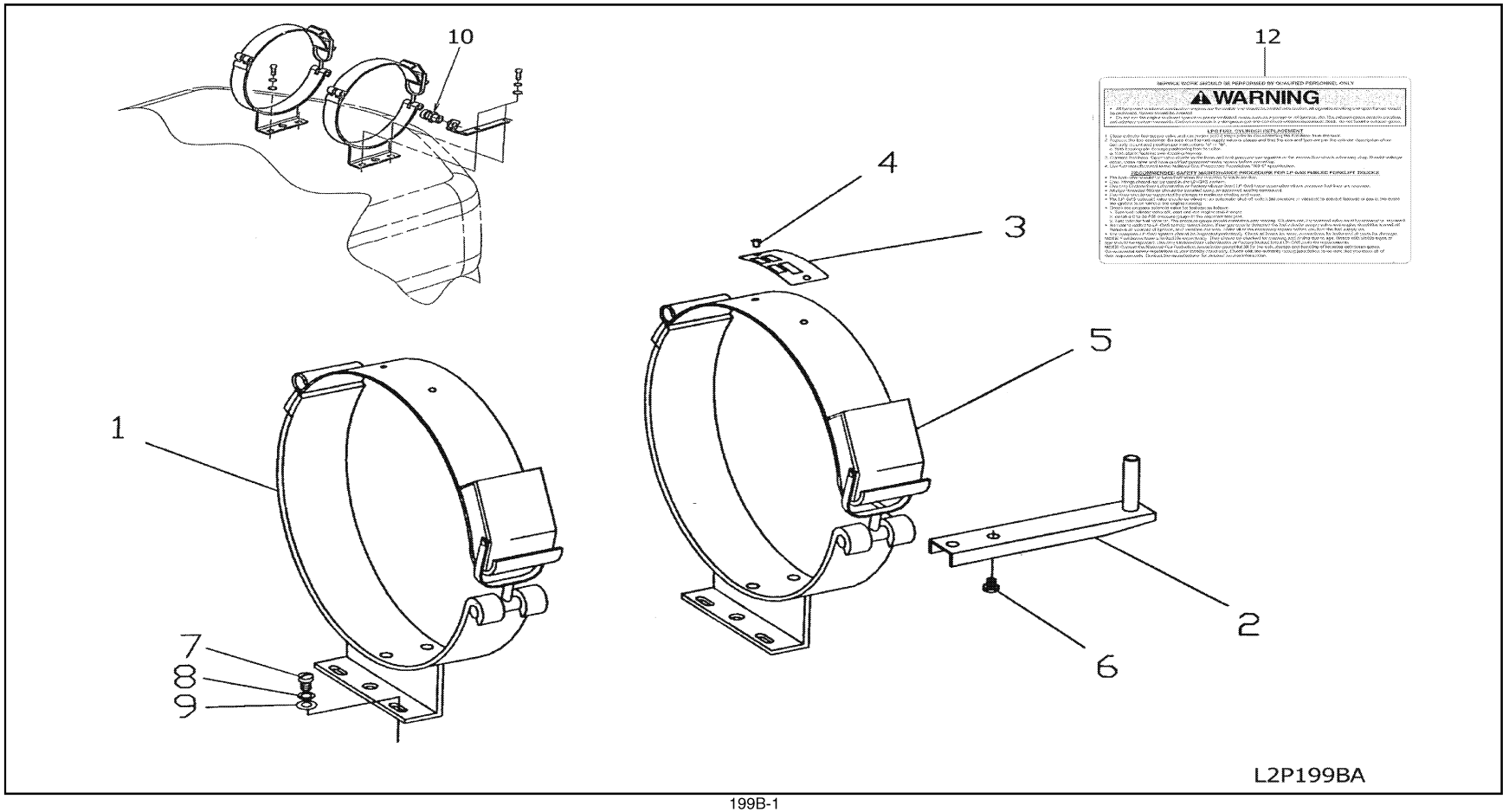

SEC. 199B

LPG BOMBE -FIXED

BOTELLA DE LPG

FLÜSSIGGASBEHÄLTER

BOUTEILLE DE LPG

NC	S	KEY NO.	LEV	PART NO.	PART NAME	SPECIFICATION	QTY	APPLIED DATE	ICANF	FORMER PART NO.	KD	APPLIED MODEL 01 02 03 04 05 06 07 08 09 10 11 12 13 14 15 16 17 18 19 20 21 22 23 24 25 26 27 28 29
		0 01	1	**17925-6G600**	BRACKET ASSY-LPG TANK		01	0107-				O O O O
		1 01	2	**17926-90H75**	BRACKET		02	0107-				O O O O
		2 01	2	**NSS-**	PIN ASSY-LOCATOR	NOT SERVICEABLE	01	0107-				O O O O
		3 01	2	**97841-90H76**	PLATE-FUEL SPEC		01	0107-				O O O O
		4 01	2	**17930-90H00**	RIVET		02	0107-				O O O O
		5 01	2	**NSS-**	TOGGLE ASSY	NOT SERVICEABLE	02	0107-				O O O O
		6 01	2	**NSS-**	SCREW	NOT SERVICEABLE	02	0107-				O O O O
		7 01	1	**16185-FB000**	SCREW		04	0107-0807				O O O O
C		02	1	**16185-FB000**			04	0807-1212				O O
N		03	1	**16185-FB085**			04	1212-				O O
		04	1	**16185-FB085**			04	0807-				O O
		8 01	1	**16152-90H05**	WASHER-LOCK		04	0107-				O O O O
		9 01	1	**16152-90H00**	WASHER-FLAT		04	0107-				O O O O
C		**10** 01	1	**17925-FW50A**	BRACKET KIT-LPG HOSE		01	0107-				O O
		12 01	1	**97841-FC40A**	LABEL-CAUTION FUEL		01	0107-				O O O O

SEC. 199C

LPG BOMBE (SWING DOWN)

BOTELLA DE LPG

FLÜSSIGGASBEHÄLTER

BOUTEILLE DE LPG

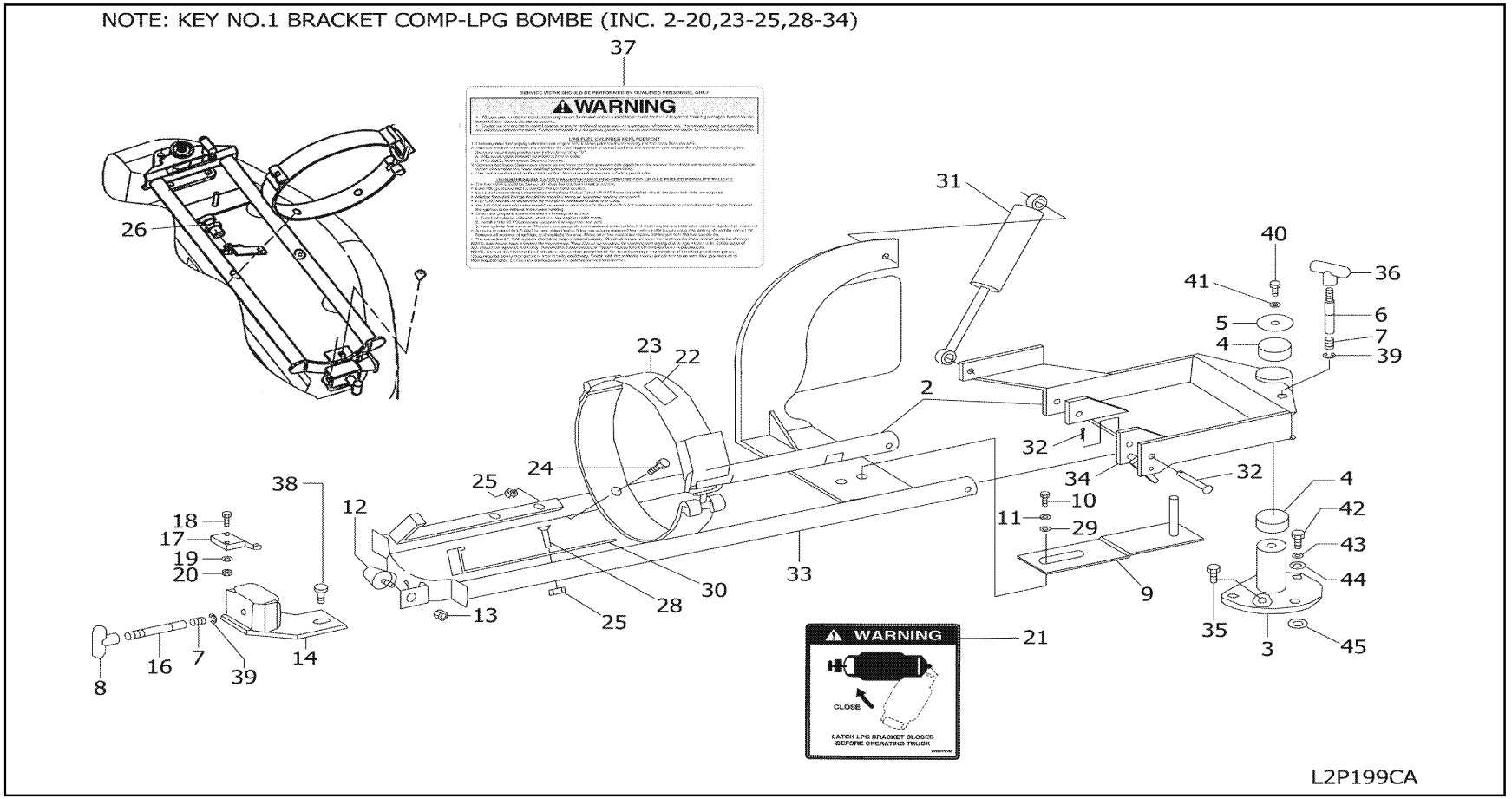

SEC. 199C

LPG BOMBE (SWING DOWN)

BOTELLA DE LPG

FLÜSSIGGASBEHÄLTER

BOUTEILLE DE LPG

NC	S	KEY NO.	LEV	PART NO.	PART NAME	SPECIFICATION	QTY	APPLIED DATE	TCANF	FORMER PART NO.	KD	APPLIED MODEL 01 02 03 04 05 06 07 08 09 10 11 12 13 14 15 16 17 18 19 20 21 22 23 24 25 26 27 28 29
		1	01	1	**17915-FB485**	BRACKET COMPLETE-SWING KIT		01	0107-			* *
		2	01	2	**17925-FB485**	BRACKET COMP-LPG BOMBE		01	0107-			* *
		3	01	2	**17934-FB485**	BRACKET-LPG BOMBE		01	0107-			* *
		4	01	3	**17937-6G100**	BUSH		02	0107-			* *
		5	01	1	**17938-6G100**	COVER-SEAL		01	0107-			* *
		6	01	4	**17939-FB086**	PIN		01	0107-			* *
		7	01	3	**17940-6G100**	SPRING-HANDLE		02	0107-			* *
		8	01	3	**17941-FB085**	HANDLE		02	0107-			* *
		9	01	3	**17942-FB085**	PIN-LOCATOR		01	0107-			* *
		10	01	3	**16185-FB085**	SCREW		02	0107-			* *
		11	01	3	**16152-90H00**	WASHER-FLAT		02	0107-			* *
		12	01	3	**17943-6G100**	BUMPER		01	0107-			* *
		13	01	3	**17946-6G100**	NUT		01	0107-			* *
		14	01	3	**17951-6G100**	LATCH WELDMENT		01	0107-			* *
		16	01	4	**17939-FB085**	PIN		01	0107-			* *
		17	01	3	**25500-F9701**	SWITCH-MICRO		01	0107-			* *
		18	01	3	**01135-6G000**	SCREW		02	0107-			* *
		19	01	3	**01321-6G000**	WASHER		02	0107-			* *
		20	01	3	**01211-6G000**	NUT		02	0107-			* *
		21	01	1	**99350-FC100**	LABEL-WARNING LATCH		01	0107-			* *
			02	1	**99350-FC210**		F/FRENCH	01	0107-			* *
			03	1	**99350-FC215**		F/SPANISH	01	0107-			* *
		22	01	1	**97841-90H76**	LABEL-CAUTION FUEL		01	0107-			* *
		23	01	2	**17932-6G100**	STRAP		01	0107-			* *
		24	01	1	**17598-6G100**	SCREW		02	0107-			* *
		25	01	2	**17599-6G100**	NUT-NYLOCK		04	0107-			* *
			02	1	**17599-6G100**			02	0107-			* *
C		**26**	01	1	**17925-FW50A**	BRACKET KIT-LPG HOSE		01	0107-			* *
		28	01	3	**17598-FB085**	SCREW		04	0107-			* *
		29	01	3	**16152-90H05**	WASHER-SPRING		02	0107-			* *
		30	01	3	**17935-FB085**	SUPPORT-CNG BOMBE		02	0107-			* *
		31	01	3	**17980-FB085**	STAY-GAS KIT		01	0107-			* *
		32	01	3	**17981-FB085**	PIN-PIVOT		02	0107-			* *
		33	01	3	**17926-FB485**	CRADLE-SWING TILT		01	0107-			* *
		34	01	3	**17926-FB090**	FRAME-SWING TILT		01	0107-			* *
		35	01	1	**17598-FB086**	SCREW		01	0107-			* *
		36	01	1	**17941-FB086**	HANDLE		01	0107-			* *

SEC. 199C

LPG BOMBE (SWING DOWN)

BOTELLA DE LPG

FLÜSSIGGASBEHÄLTER

BOUTEILLE DE LPG

NC	S	KEY NO.	LEV	PART NO.	PART NAME	SPECIFICATION	QTY	APPLIED DATE	TCANF	FORMER PART NO.	KD	APPLIED MODEL 01 02 03 04 05 06 07 08 09 10 11 12 13 14 15 16 17 18 19 20 21 22 23 24 25 26 27 28 29
		37 01	1	**97841-FC40A**	LABEL-CAUTION FUEL		01	0107-				* *
		38 01	1	**08121-0251F**	SCREW-HHM M10-1.5X25 W/LK & PW		02	0107-				* *
		39 01	3	**00092-25101**	RING-SNAP		02	0107-0108				* *
		02	3	**00922-51010**			02	0108-				* *
		40 01	1	**08114-0201A**	SCREW-HHM M10-1.25X20 W/SPRW		01	0107-				* *
		41 01	1	**08915-1401A**	WASHER-LOCK SPLIT M10		01	0107-				* *
		42 01	1	**08191-2401A**	SCREW-HHM M12-1.75X40		02	0107-				* *
		43 01	1	**08915-1421A**	WASHER-LOCK SPLIT M12		02	0107-				* *
		44 01	1	**08915-4421A**	WASHER-FLAT M12		02	0107-				* *
		45 01	1	**9877-044**	WASHER-PLAIN		AR	0107-0407				* *
		02	1	**17946-FW10A**	SHIM		AR	0407-				* *

GROUP INDEX

EXHAUST & COOLING

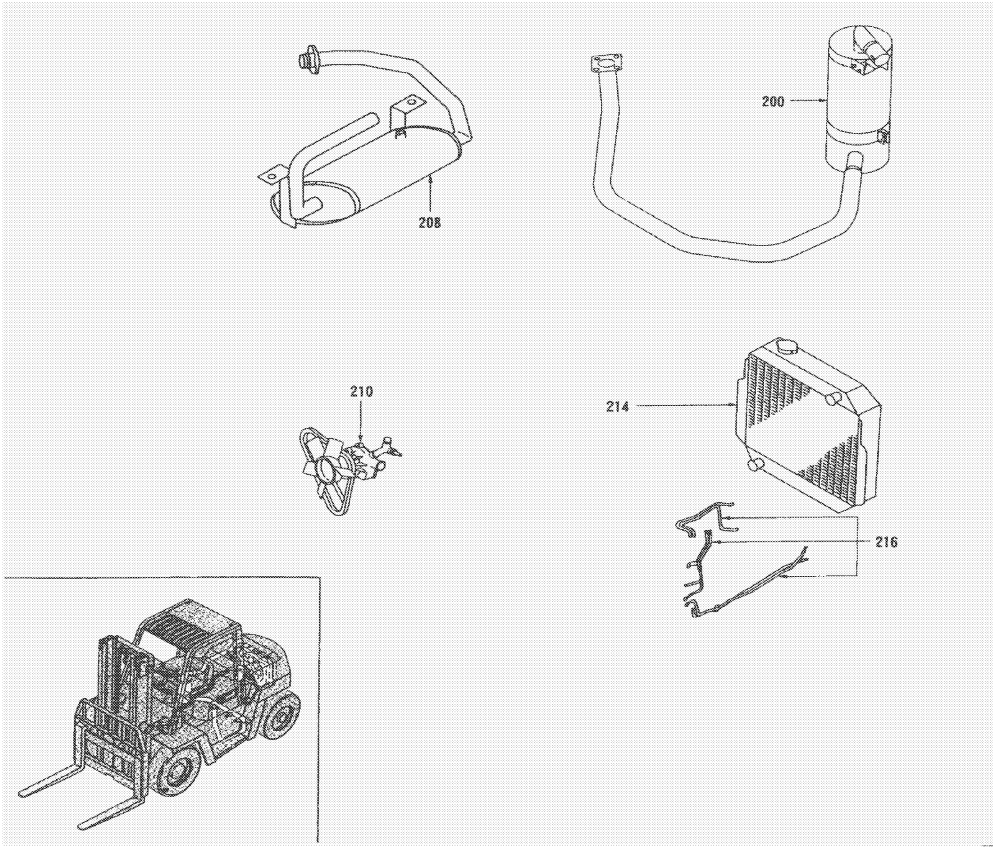

SEC.NO	SECTION NAME
200A	EXHAUST TUBE & MUFFLER
200B	EXHAUST TUBE & MUFFLER (QD32)
200C	EXHAUST TUBE & MUFFLER (QD32-OVERHEAD) (UPTO NOV. 2008)
200D	EXHAUST TUBE & MUFFLER (QD32-OVERHEAD) (FROM NOV. 2008)
210A	WATER PUMP, COOLING FAN & THERMOSTAT (K21 & K25)
210B	WATER PUMP, COOLING FAN & THERMOSTAT (QD32)
213B	OIL COOLER (QD32)
214	RADIATOR, SHROUD & FITTING
216A	TORQUE CONVERTER OIL COOLER & PIPING (UPTO AUG. 2011)
216B	TORQUE CONVERTER OIL COOLER & PIPING (FROM AUG. 2011)

C

*ILLSTRATIONS SHOWN IN GENERAL INDEX AND GROUP INDEX ARE GENARALIZED DESCRIPTIONS FOR ALL MODELS AND ARE NOT PRECISE IN ALL DETAILS.

SEC. 200A

EXHAUST TUBE & MUFFLER (K21 & K25)

TUBO DE ESCAPE Y SILENCIADOR

AUSPUFFLEITUNG & SCHALLDÄMPFER

TUYAU D'ECHAPPEMENT ET SILENCIEUX

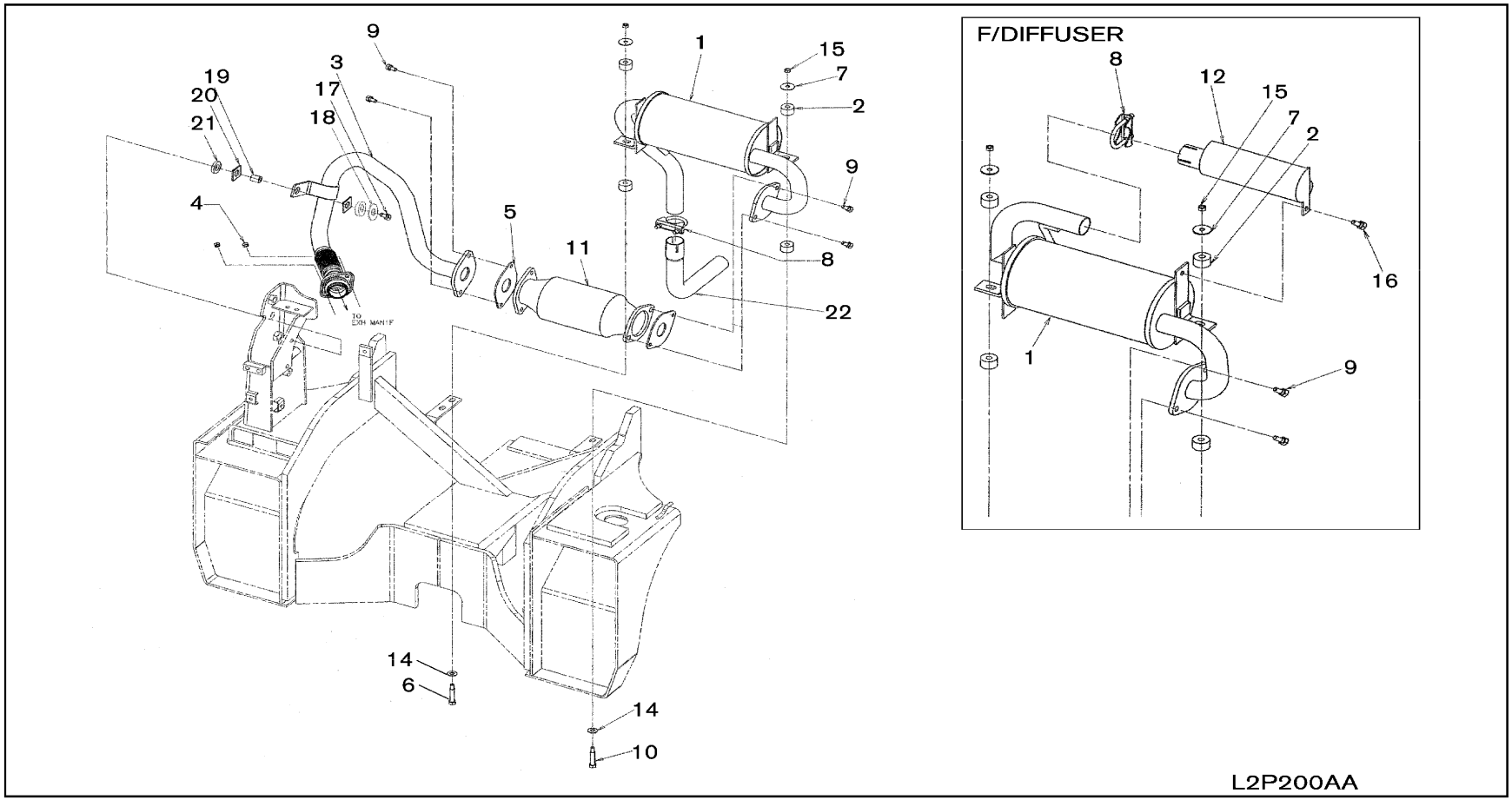

SEC. 200A

EXHAUST TUBE & MUFFLER (K21 & K25)

TUBO DE ESCAPE Y SILENCIADOR

AUSPUFFLEITUNG & SCHALLDÄMPFER

TUYAU D'ECHAPPEMENT ET SILENCIEUX

NC	S	KEY NO.	LEV	PART NO.	PART NAME	SPECIFICATION	QTY	APPLIED DATE	ICANF	FORMER PART NO.	KD	APPLIED MODEL 01 02 03 04 05 06 07 08 09 10 11 12 13 14 15 16 17 18 19 20 21 22 23 24 25 26 27 28 29
		1 01	1	**20100-FK170**	MUFFLER ASSY		01	0107-				○○○ ○○○ ○○○ ○○○
		02	1	**20100-FK180**			01	0107-				○ ○ ○ ○
		03	1	**20100-FK370**			01	0107-				○○○ ○○○
		04	1	**20100-GG00A**		F/DIFFUSER	01	0107-				✱✱✱✱✱✱✱✱ ✱✱✱✱✱✱✱✱ ✱✱✱✱✱✱ ✱✱✱
		2 01	1	**20638-FK10A**	RUBBER-MUFFLER MOUNTING		04	0107-				○○○○○○○○ ○○○○○○○○ ○○○○○○ ○○○
		3 01	1	**20010-GG00A**	TUBE-EXHAUST REAR		01	0107-0609				○○○ ○○○ ○○○ ○○○ ○○○○○○ ○○○
		02	1	**20010-GG02A**			01	0609-				○○○ ○○○ ○○○ ○○○ ○○○○○○ ○○○
		03	1	**20010-GG01A**			01	0107-1110				○ ○ ○ ○
		04	1	**20010-GG02A**			01	1110-				○ ○ ○ ○
		4 01	1	**20602-01M00**	NUT-EXHAUST TUBE		02	0107-0707				○○○○○○○○ ○○○○○○○○ ○○○○○○ ○○○
		02	1	**20602-01M0A**			02	0707-				○○○○○○○○ ○○○○○○○○ ○○○○○○ ○○○
		5 01	1	**20692-65J00**	GASKET-EXH END		02	0107-				○○○○○○○○ ○○○○○○○○ ○○○○○○ ○○○
		6 01	1	**20138-B5000**	BOLT		01	0107-				○○○○○○○○ ○○○○○○○○ ○○○○○○ ○○○
		7 01	1	**20135-B5000**	WASHER-FLAT		02	0107-				○○○○○○○○ ○○○○○○○○ ○○○○○○ ○○○
		8 01	1	**20629-40K10**	CLAMP-U,EXHAUST TUBE		01	0107-				○○○○○○○○ ○○○○○○○○ ○○○○○○ ○○○
		9 01	1	**01115-00201**	BOLT		04	0107-				○○○○○○○○ ○○○○○○○○ ○○○○○○ ○○○
		10 01	1	**20606-00H00**	BOLT		01	0107-				○○○○○○○○ ○○○○○○○○ ○○○○○○ ○○○
		11 01	1	**20800-VC225**	CONVERTER ASSY-CATALYST		01	0107-0708				○○○○○○○○ ○○○○○○○○ ○○○○○○ ○○○
		02	1	**20800-VD90A**			01	0708-				○○○○○○○○ ○○○○○○○○ ○○○○○○ ○○○
C		**12** 01	1	**20051-GG00A**	TUBE-EXHAUST, TAIL	F/DIFFUSER	01	0107-				✱✱✱✱✱✱✱✱ ✱✱✱✱✱✱✱✱ ✱✱✱✱✱✱ ✱✱✱
		14 01	1	**08915-4401A**	WASHER-PLAIN		02	0107-				○○○○○○○○ ○○○○○○○○ ○○○○○○ ○○○
		15 01	1	**08911-1081G**	NUT-HEX W/CON SPW M8-1.25		02	0107-				○○○○○○○○ ○○○○○○○○ ○○○○○○ ○○○
		16 01	1	**08120-8251F**	SCREW-HHM M8-1.25X25 W/LK & PW	F/DIFFUSER	01	0107-				✱✱✱✱✱✱✱✱ ✱✱✱✱✱✱✱✱ ✱✱✱✱✱✱ ✱✱✱
		17 01	1	**08124-0401E**	SCREW-HHM M10-1.25X40 W/LKW		01	0107-				○○○○○○○○ ○○○○○○○○ ○○○○○○ ○○○
		18 01	1	**20135-GG00A**	WASHER-PLAIN		01	0107-				○○○○○○○○ ○○○○○○○○ ○○○○○○ ○○○
		19 01	1	**20153-GG00A**	COLLAR-EXH		01	0107-				○○○○○○○○ ○○○○○○○○ ○○○○○○ ○○○
		20 01	1	**20465-GG00A**	INSUL-HEAT		02	0107-				○○○○○○○○ ○○○○○○○○ ○○○○○○ ○○○
		21 01	1	**20651-GG00A**	MTG-EXH, RUB		02	0107-				○○○○○○○○ ○○○○○○○○ ○○○○○○ ○○○
		22 01	1	**20056-FK161**	TUBE-EXHAUST,TAIL		01	0107-				○○○○○○○○
		02	1	**20056-FK160**			01	0107-				○○○○○○○○ ○○○○○○ ○○○

SEC. 200B

EXHAUST TUBE & MUFFLER (QD32)

TUBO DE ESCAPE Y SILENCIADOR

AUSPUFFLEITUNG & SCHALLDÄMPFER

TUYAU D'ECHAPPEMENT ET SILENCIEUX

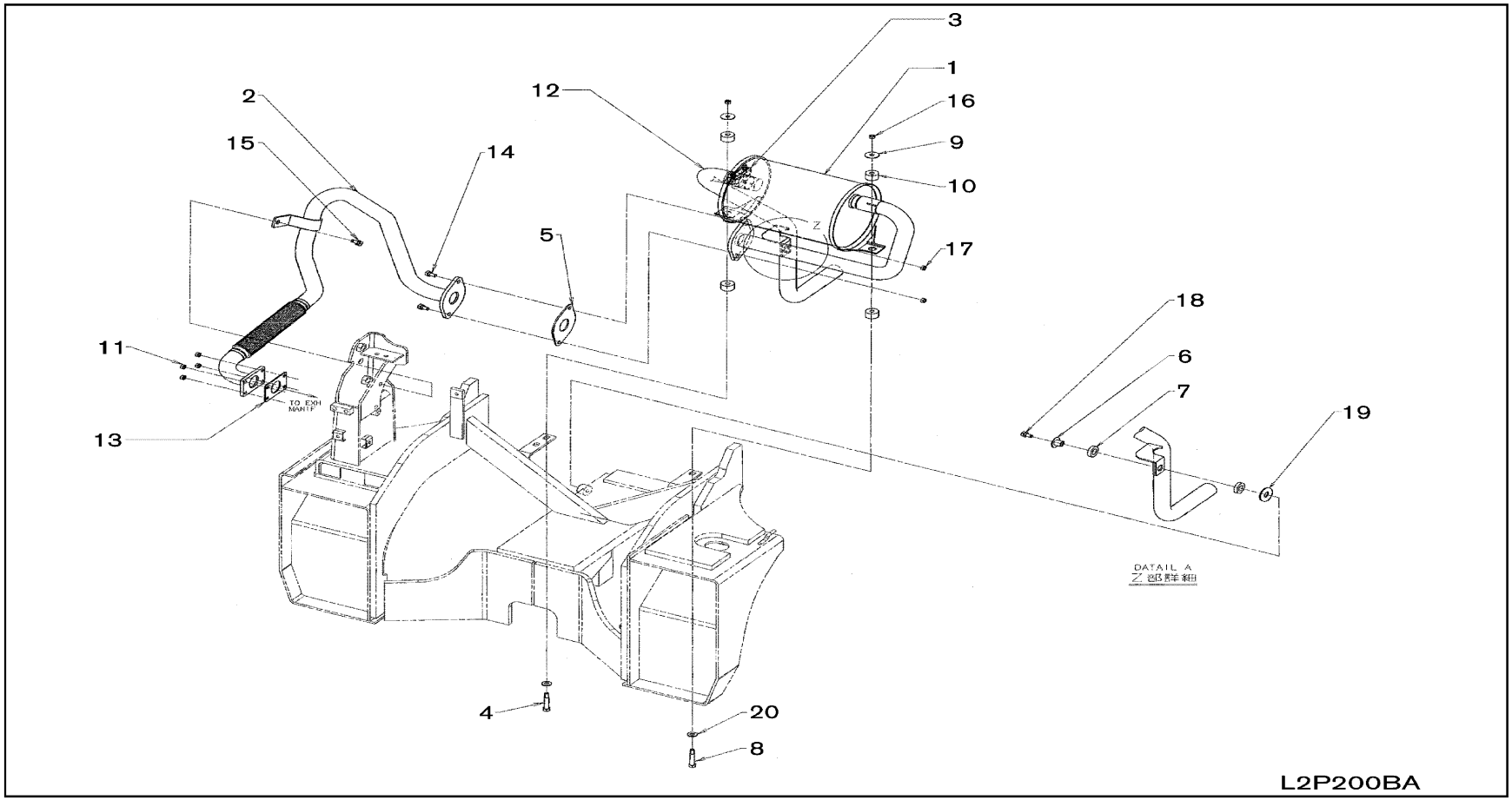

200B-1

SEC. 200B

EXHAUST TUBE & MUFFLER (QD32)

TUBO DE ESCAPE Y SILENCIADOR

AUSPUFFLEITUNG & SCHALLDÄMPFER

TUYAU D'ECHAPPEMENT ET SILENCIEUX

NC	S	KEY NO.	LEV	PART NO.	PART NAME	SPECIFICATION	QTY	APPLIED DATE	ICANF	FORMER PART NO.	KD	APPLIED MODEL 01 02 03 04 05 06 07 08 09 10 11 12 13 14 15 16 17 18 19 20 21 22 23 24 25 26 27 28 29
		1	01	1	**20100-FK102**	MUFFLER ASSY		01	0107-0109		

SEC. 200C

EXHAUST TUBE & MUFFLER (QD32-OVERHEAD) (UPTO NOV. 2008)

TUBO DE ESCAPE Y SILENCIADOR

AUSPUFFLEITUNG & SCHALLDÄMPFER

TUYAU D'ECHAPPEMENT ET SILENCIEUX

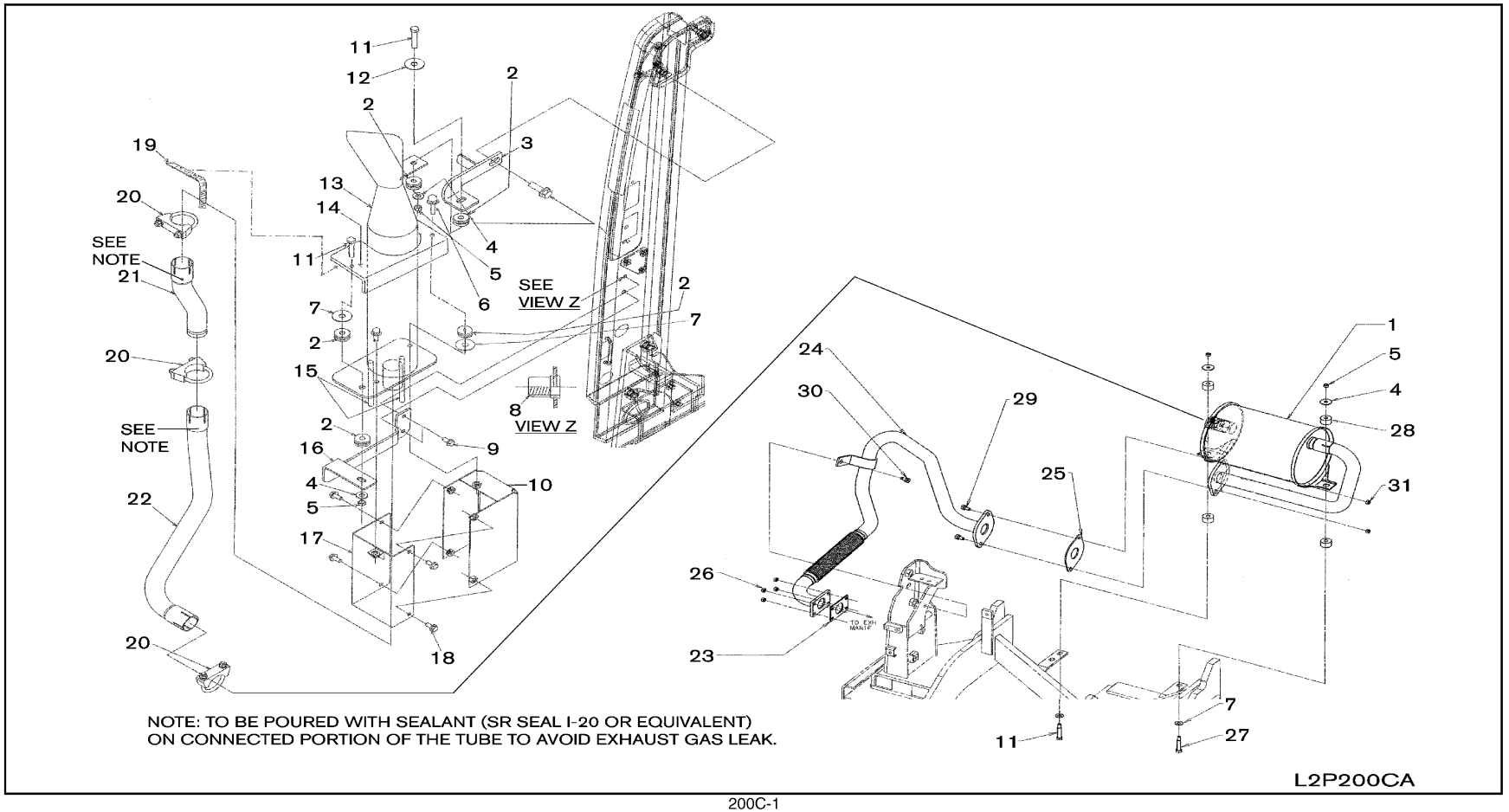

SEC. 200C

EXHAUST TUBE & MUFFLER (QD32-OVERHEAD) (UPTO NOV. 2008)

TUBO DE ESCAPE Y SILENCIADOR

AUSPUFFLEITUNG & SCHALLDÄMPFER

TUYAU D'ECHAPPEMENT ET SILENCIEUX

NC	S	KEY NO.	LEV	PART NO.	PART NAME	SPECIFICATION	QTY	APPLIED DATE	ICANF	FORMER PART NO.	KD	APPLIED MODEL 01 02 03 04 05 06 07 08 09 10 11 12 13 14 15 16 17 18 19 20 21 22 23 24 25 26 27 28 29
		1	01	1	**20100-FK102**	MUFFLER ASSY		01	0107-1108			* * * *
		2	01	1	**20638-61500**	RUBBER-MUFFLER MOUNTING		05	0107-1108			* * * *
		3	01	1	**20721-GG10A**	BRACKET-EXHAUST MOUNTING		01	0107-1108			* * * *
		4	01	1	**20135-B5000**	WASHER-LOCK		04	0107-1108			* * * *
		5	01	1	**08911-1081G**	NUT-HEX W/CON SPW M8-1.25		04	0107-1108			* * * *
		6	01	1	**08120-8351E**	SCREW-HHM M8-1.25X35 W/LKW		01	0107-1108			* * * *
		7	01	1	**08915-4401A**	WASHER-FLAT M10		04	0107-1108			* * * *
		8	01	1	**50526-51K01**	NUT-T		02	0107-0608			* * * *
		9	01	1	**08120-8301E**	SCREW-HHM M8-1.25X30 W/LKW		02	0107-1108			* * * *
		10	01	1	**20557-FK500**	INSUL RR TUBE		01	0107-1108			* * * *
		11	01	1	**20138-B5000**	BOLT-HEX		03	0107-1108			* * * *
		12	01	1	**01311-00192**	WASHER-FLAT M10		01	0107-1108			* * * *
		13	01	1	**20040-FK50A**	TUBE ASSY-EXHAUST RR		01	0107-1108			* * * *
		14	01	1	**20557-FK501**	INSUL RR TUBE		01	0107-1108			* * * *
		15	01	1	**21515-16H00**	HOSE-WATER		02	0107-1108			* * * *
		16	01	1	**20711-FK501**	BRACKET-EXHAUST MOUNTING		01	0107-1108			* * * *
		17	01	1	**20558-FK500**	INSUL RR TUBE		01	0107-1108			* * * *
		18	01	1	**08360-81898**	SCREW-NES D2158		05	0107-1108			* * * *
		19	01	1	**65380-43H60**	SEAL-TOP PANEL		01	0107-1108			* * * *
		20	01	1	**20629-40K10**	CLAMP-U EXHAUST TUBE		03	0107-1108			* * * *
		21	01	1	**20046-FK500**	TUBE-EXHAUST RR B		01	0107-1108			* * * *
		22	01	1	**20041-FK500**	TUBE-EXHAUST RR A		01	0107-1108			* * * *
		23	01	1	**14415-31N03**	GASKET-TURBO, IN		01	0107-0208			* * * *
			02	1	**14415-31N0A**			01	0208-1108			* * * *
		24	01	1	**20010-GG30A**	TUBE ASSY-EXHAUST FR		01	0107-1108			* * * *
		25	01	1	**20692-65J00**	GASKET-EXHAUST		01	0107-1108			* * * *
		26	01	1	**20602-01M00**	NUT-HEX FLG M8-1.25		04	0107-0707			* * * *
			02	1	**20602-01M0A**			04	0707-1108			* * * *
		27	01	1	**20606-00H00**	BOLT-SHOULDER HH M8-1.25		01	0107-1108			* * * *
		28	01	1	**20638-FK10A**	RUBBER-MUFFLER MOUNTING		04	0107-1108			* * * *
		29	01	1	**31009-FJ100**	SCREW-HH FLG M10-1.25X28		02	0107-1108			* * * *
		30	01	1	**08124-0201E**	SCREW-HHM M10-1.25X20 W/PW		01	0107-1108			* * * *
		31	01	1	**08911-2401A**	NUT-HEX M10-1.25 6T		02	0107-1108			* * * *

SEC. 200D

EXHAUST TUBE & MUFFLER (QD32-OVERHEAD) (FROM NOV. 2008)

TUBO DE ESCAPE Y SILENCIADOR

AUSPUFFLEITUNG & SCHALLDÄMPFER

TUYAU D'ECHAPPEMENT ET SILENCIEUX

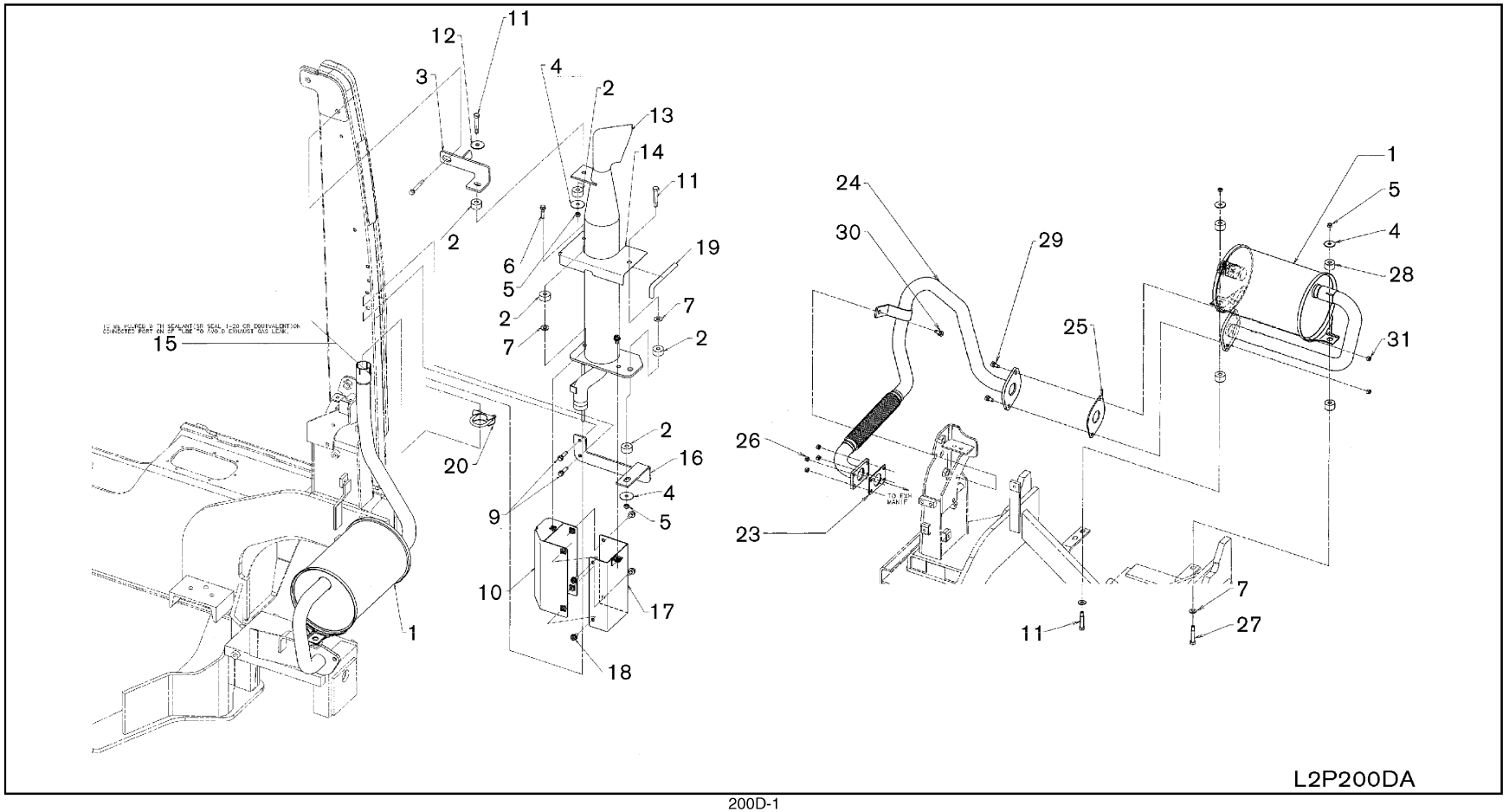

SEC. 200D

EXHAUST TUBE & MUFFLER (QD32-OVERHEAD) (FROM NOV. 2008)

TUBO DE ESCAPE Y SILENCIADOR

AUSPUFFLEITUNG & SCHALLDÄMPFER

TUYAU D'ECHAPPEMENT ET SILENCIEUX

NC	S	KEY NO.	LEV	PART NO.	PART NAME	SPECIFICATION	QTY	APPLIED DATE	ICANF	FORMER PART NO.	KD	APPLIED MODEL 01 02 03 04 05 06 07 08 09 10 11 12 13 14 15 16 17 18 19 20 21 22 23 24 25 26 27 28 29
		1	01	1	**20100-GG16A**	MUFFLER ASSY		01	1108-			* * * * *
		2	01	1	**20638-61500**	RUBBER-MUFFLER MOUNTING		05	1108-			* * * * *
		3	01	1	**20721-GG10A**	BRACKET-EXHAUST MOUNTING		01	1108-			* * * * *
		4	01	1	**20135-B5000**	WASHER-LOCK		04	1108-			* * * * *
		5	01	1	**08911-1081G**	NUT-HEX W/CON SPW M8-1.25		04	1108-			* * * * *
		6	01	1	**08120-8351E**	SCREW-HHM M8-1.25X35 W/LKW		01	1108-			* * * * *
		7	01	1	**08915-4401A**	WASHER-FLAT M10		04	1108-			* * * * *
		9	01	1	**08120-8301E**	SCREW-HHM M8-1.25X30 W/LKW		02	1108-			* * * * *
		10	01	1	**20557-FK500**	INSUL RR TUBE		01	1108-			* * * * *
		11	01	1	**20138-B5000**	BOLT-HEX		03	1108-			* * * * *
		12	01	1	**01311-00192**	WASHER-FLAT M10		01	1108-			* * * * *
		13	01	1	**20040-GG11A**	TUBE ASSY-EXHAUST RR		01	1108-			* * * * *
		14	01	1	**20557-FK501**	INSUL RR TUBE		01	1108-			* * * * *
		15	01	1	**20585-GL10A**	SEALANT-EXHAUST PIPE		01	1108-			* * * * *
		16	01	1	**20711-GG10A**	BRACKET-EXHAUST MOUNTING		01	1108-			* * * * *
C		**17**	01	1	**20558-FK500**	INSUL RR TUBE		01	1108-0112			* * * * *
C			02	1	**20558-GE20A**			01	0112-			* * * * *
		18	01	1	**08360-81898**	SCREW-NES D2158		05	1108-			* * * * *
C		**19**	01	1	**65380-43H60**	SEAL-TOP PANEL		01	1108-0409			* * * * *
N			02	1	**65380-35H00**			01	0409-			* * * * *
		20	01	1	**20629-40K10**	CLAMP-U EXHAUST TUBE		01	1108-			* * * * *
		23	01	1	**14415-31N0A**	GASKET-TURBO, IN		01	1108-			* * * * *
		24	01	1	**20010-GG30A**	TUBE ASSY-EXHAUST FR		01	1108-			* * * * *
		25	01	1	**20692-65J00**	GASKET-EXHAUST		01	1108-			* * * * *
		26	01	1	**20602-01M0A**	NUT-HEX FLG M8-1.25		04	1108-			* * * * *
		27	01	1	**20606-00H00**	BOLT-SHOULDER HH M8-1.25		01	1108-			* * * * *
		28	01	1	**20638-FK10A**	RUBBER-MUFFLER MOUNTING		04	1108-			* * * * *
		29	01	1	**31009-FJ100**	SCREW-HH FLG M10-1.25X28		02	1108-			* * * * *
		30	01	1	**08124-0201E**	SCREW-HHM M10-1.25X20 W/PW		01	1108-			* * * * *
		31	01	1	**08911-2401A**	NUT-HEX M10-1.25 6T		02	1108-			* * * * *

SEC. 210A

WATER PUMP, COOLING FAN & THERMOSTAT (K21 & K25)

BOMBA DE AGUA,VENTILADOR DE REFRIGERACION Y TERMOSTATO

WASSERPUMPE,KÜHLVENTILATOR & THERMOSTAT

POMPE A EAU,VENTILATEUR DE REFROIDISSEMENT ET THERMOSTAT

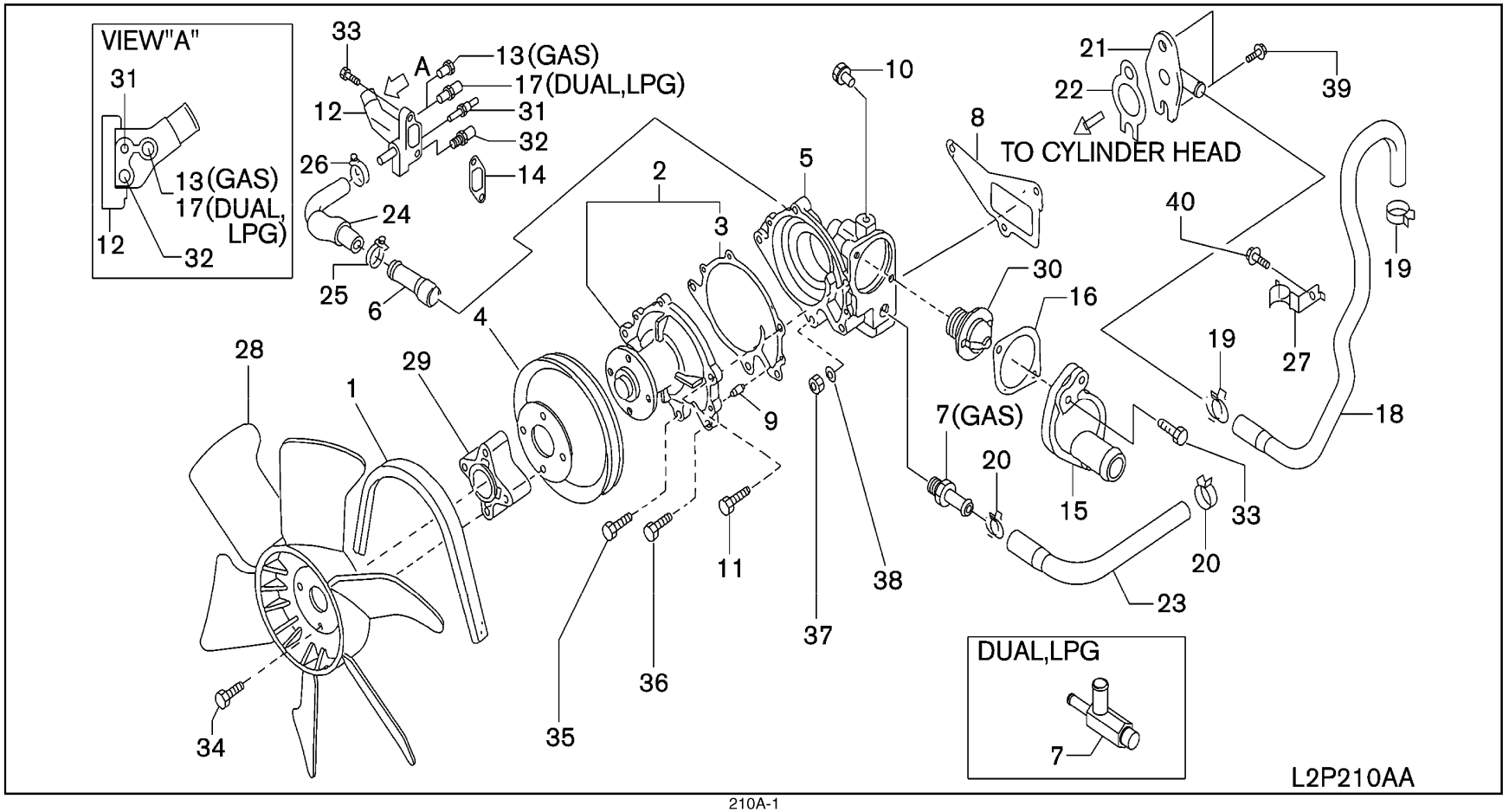

SEC. 210A

WATER PUMP, COOLING FAN & THERMOSTAT (K21 & K25)

BOMBA DE AGUA,VENTILADOR DE REFRIGERACION Y TERMOSTATO

WASSERPUMPE,KÜHLVENTILATOR & THERMOSTAT

POMPE A EAU,VENTILATEUR DE REFROIDISSEMENT ET THERMOSTAT

NC	S	KEY NO.	LEV	PART NO.	PART NAME	SPECIFICATION	QTY	APPLIED DATE	ICANF	FORMER PART NO.	KD	APPLIED MODEL 01 02 03 04 05 06 07 08 09 10 11 12 13 14 15 16 17 18 19 20 21 22 23 24 25 26 27 28 29
		1	01	1	**02117-20021**	BELT-FAN		01	0107-			o o o o o o o o o o o o o o o o o o o o o o o o o o o
			02	1	**02117-22023**			01	0107-			o o o o o o o o o o o o o o o o o o o o o o o o o o o
		2	01	1	**21010-FU425**	PUMP ASSY-WATER		01	0107-			o o o o o o o o o o o o o o o o o o o o o o o o o o o
		3	01	1	**21014-07N00**	GASKET-WATER PUMP		01	0107-			o o o o o o o o o o o o o o o o o o o o o o o o o o o
		4	01	1	**21051-GY360**	PULLEY-FAN & WATER PUMP		01	0107-			o o o o o o o o o o o o o o o o o o o o o o o o o o o
		5	01	1	**11061-FU400**	HOUSING-THERMOSTAT		01	0107-			o o o o o o o o o o o o o o o o o o o o o o o o o o o
		6	01	1	**14075-40F04**	CONNECTOR-WATER		01	0107-			o o o o o o o o o o o o o o o o o o o o o o o o o o o
		7	01	1	**14049-76001**	CONNECTOR-WATER		01	0107-			o o o o o o o o o o o o o o o o o o o o o o o o o o o
			02	1	**14075-FU460**			01	0107-			o o o o o o o o o o o o o o o o o o o o o o o o o o o
		8	01	1	**11072-50K01**	GASKET-THERMOSTAT HOUSING		01	0107-			o o o o o o o o o o o o o o o o o o o o o o o o o o o
		9	01	1	**11046-73402**	DOWEL-WATER PUMP		02	0107-			o o o o o o o o o o o o o o o o o o o o o o o o o o o
		10	01	1	**14053-42L00**	TUBE-WATER INLET		01	0107-0507			o o o o o o o o o o o o o o o o o o o o o o o o o o o
			02	1	**14053-42L0A**			01	0507-			o o o o o o o o o o o o o o o o o o o o o o o o o o o
		11	01	1	**21079-K9760**	BOLT-FIX, HOUSING THERMOSTAT		01	0107-			o o o o o o o o o o o o o o o o o o o o o o o o o o o
		12	01	1	**11060-FU400**	OUTLET-WATER		01	0107-			o o o o o o o o o o o o o o o o o o o o o o o o o o o
		13	01	1	**11024-25N0A**	CONNECTOR-WATER		01	0107-			o o o o o o o o o o o o o o o o o o o o o o o o o o o
		14	01	1	**11062-FY500**	GASKET-WATER OUTLET		01	0107-			o o o o o o o o o o o o o o o o o o o o o o o o o o o
		15	01	1	**11060-W7001**	OUTLET-WATER		01	0107-			o o o o o o o o o o o o o o o o o o o o o o o o o o o
		16	01	1	**11062-07N00**	GASKET-INLET		01	0107-			o o o o o o o o o o o o o o o o o o o o o o o o o o o
		17	01	1	**01691-00052**	CONNECTOR-WATER HOSE		01	0107-0608			o o o o o o o o o o o o o o o o o o o o o o o o o o o
			02	1	**01691-0005A**			01	0608-			o o o o o o o o o o o o o o o o o o o o o o o o o o o
		18	01	1	**14056-GS00A**	HOSE-WATER		01	0107-			o o o o o o o o o o o o o o o o o o o o o o o o o o o
		19	01	1	**16439-56S0A**	CLAMP-HOSE		02	0107-			o o o o o o o o o o o o o o o o o o o o o o o o o o o
		20	01	1	**16439-42L0A**	CLAMP-HOSE		02	0107-			o o o o o o o o o o o o o o o o o o o o o o o o o o o
		21	01	1	**14053-FU400**	PIPE ASSY-HEATER, FEED		01	0107-			o o o o o o o o o o o o o o o o o o o o o o o o o o o
		22	01	1	**13050-FU400**	GASKET-WATER INLET		01	0107-			o o o o o o o o o o o o o o o o o o o o o o o o o o o
		23	01	1	**14056-GS00B**	HOSE-WATER		01	0107-			o o o o o o o o o o o o o o o o o o o o o o o o o o o
			02	1	**14056-GS00C**			01	0107-			o o o o o o o o o o o o o o o o o o o o o o o o o o o
		24	01	1	**14080-50K00**	HOSE-WATER, BYPASS		01	0107-			o o o o o o o o o o o o o o o o o o o o o o o o o o o
		25	01	1	**01555-00261**	CLAMP-HOSE		01	0107-			o o o o o o o o o o o o o o o o o o o o o o o o o o o
		26	01	1	**16439-26E0A**	CLAMP-HOSE		01	0107-			o o o o o o o o o o o o o o o o o o o o o o o o o o o
		27	01	1	**14165-GS00A**	BRACKET-HOSE		01	0107-			o o o o o o o o o o o o o o o o o o o o o o o o o o o
		28	01	1	**21060-FU40A**	FAN-COOLING		01	0107-			o o o o o o o o o o o o o o o o o o o o o o o o o o o
		29	01	1	**21064-FU30A**	SPACER-FAN		01	0107-			o o o o o o o o o o o o o o o o o o o o o o o o o o o
		30	01	1	**21200-VJ200**	THERMOSTAT ASSY		01	0107-			o o o o o o o o o o o o o o o o o o o o o o o o o o o
		31	01	1	**25080-89903**	GAUGE-TEMPERATURE		01	0107-			o o o o o o o o o o o o o o o o o o o o o o o o o o o
		32	01	1	**22630-44B20**	SENSOR ASSY-TEMPERATURE GAUGE		01	0107-			o o o o o o o o o o o o o o o o o o o o o o o o o o o

SEC. 210A

WATER PUMP, COOLING FAN & THERMOSTAT (K21 & K25)

BOMBA DE AGUA,VENTILADOR DE REFRIGERACION Y TERMOSTATO

WASSERPUMPE,KÜHLVENTILATOR & THERMOSTAT

POMPE A EAU,VENTILATEUR DE REFROIDISSEMENT ET THERMOSTAT

NC	S	KEY NO.	LEV	PART NO.	PART NAME	SPECIFICATION	QTY	APPLIED DATE	ICANF	FORMER PART NO.	KD	APPLIED MODEL 01	02	03	04	05	06	07	08	09	10	11	12	13	14	15	16	17	18	19	20	21	22	23	24	25	26	27	28	29
		33	01	1	**08120-8301E**	SCREW-HHM M8-1.25X30 W/LKW		04	0107-				O	O	O	O	O	O	O	O		O	O	O	O	O	O	O	O		O	O	O	O	O	O		O	O	O
		34	01	1	**08120-65028**	SCREW-HHM M6-1.0X50 W/LKW		04	0107-				O	O	O	O	O	O	O	O		O	O	O	O	O	O	O	O		O	O	O	O	O	O		O	O	O
		35	01	1	**08120-62028**	SCREW-HHM M6-1.0X20 W/LKW		03	0107-				O	O	O	O	O	O	O	O		O	O	O	O	O	O	O	O		O	O	O	O	O	O		O	O	O
		36	01	1	**08120-8201E**	SCREW-HHM M8-1.25X20 W/LKW		02	0107-				O	O	O	O	O	O	O	O		O	O	O	O	O	O	O	O		O	O	O	O	O	O		O	O	O
		37	01	1	**08911-1081A**	NUT-HEX M8-1.25		02	0107-				O	O	O	O	O	O	O	O		O	O	O	O	O	O	O	O		O	O	O	O	O	O		O	O	O
		38	01	1	**08915-3381A**	WASHER-LOCK WAVE M8		02	0107-				O	O	O	O	O	O	O	O		O	O	O	O	O	O	O	O		O	O	O	O	O	O		O	O	O
		39	01	1	**081A0-8201A**	BOLT-FLANGE		02	0107-				O	O	O	O	O	O	O	O		O	O	O	O	O	O	O	O		O	O	O	O	O	O		O	O	O
		40	01	1	**08120-61228**	SCREW-HHM M6-1.0X12 W/LKW		01	0107-				O	O	O	O	O	O	O	O		O	O	O	O	O	O	O	O		O	O	O	O	O	O		O	O	O

NOTE

SEC. 210B

WATER PUMP, COOLING FAN & THERMOSTAT (QD32)

BOMBA DE AGUA,VENTILADOR DE REFRIGERACION Y TERMOSTATO

WASSERPUMPE,KÜHLVENTILATOR & THERMOSTAT

POMPE A EAU,VENTILATEUR DE REFROIDISSEMENT ET THERMOSTAT

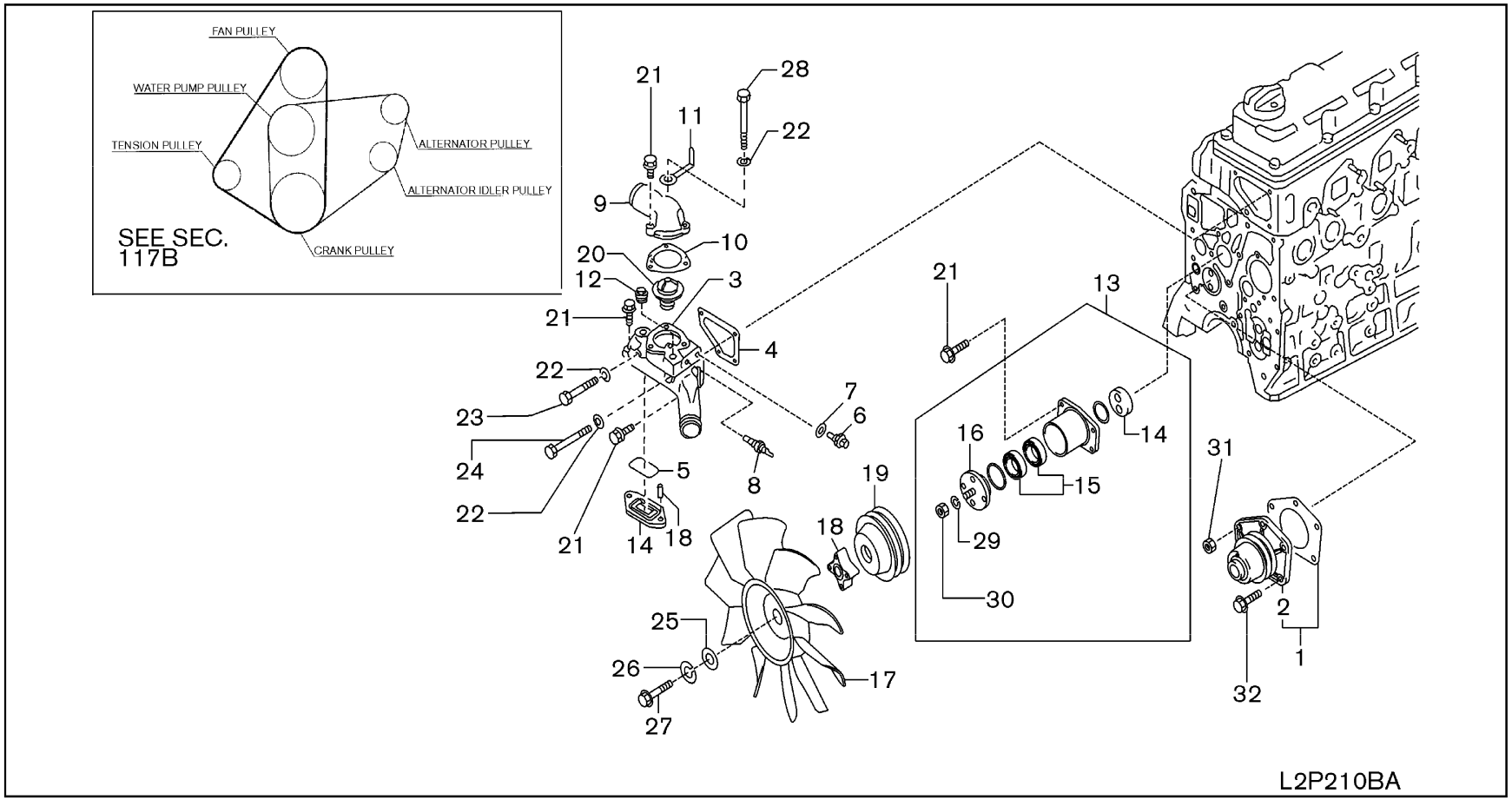

SEC. 210B

WATER PUMP, COOLING FAN & THERMOSTAT (QD32)

BOMBA DE AGUA,VENTILADOR DE REFRIGERACION Y TERMOSTATO

WASSERPUMPE,KÜHLVENTILATOR & THERMOSTAT

POMPE A EAU,VENTILATEUR DE REFROIDISSEMENT ET THERMOSTAT

NC	S	KEY NO.		LEV	PART NO.	PART NAME	SPECIFICATION	QTY	APPLIED DATE	ICANF	FORMER PART NO.	KD	APPLIED MODEL 01	02	03	04	05	06	07	08	09	10	11	12	13	14	15	16	17	18	19	20	21	22	23	24	25	26	27	28	29
		1	01	1	**21010-NA00J**	PUMP ASSY-WATER		01	0107-											O								O							O			O
		2	01	2	**21014-34N01**	GASKET-WATER PUMP		01	0107-											O								O							O			O
		3	01	1	**11061-NA003**	HOUSING-THERMOSTAT		01	0107-1108											O								O							O			O
			02	1	**11061-NA00A**			01	1108-											O								O							O			O
		4	01	1	**11072-34N02**	GASKET-THERMOSTAT HOUSING		01	0107-											O								O							O			O
		5	01	1	**14465-43G02**	SEAL-O RING		01	0107-											O								O							O			O
		6	01	1	**22630-10G00**	ENGINE COOLANT TEMPERATURE SENSOR		01	0107-											O								O							O			O
		7	01	1	**16794-10G00**	GASKET-TEMPERATURE SENSOR		01	0107-											O								O							O			O
		8	01	1	**25080-89903**	GAUGE-TEMPERATURE, ENGINE UNIT		01	0107-											O								O							O			O
		9	01	1	**11060-43G00**	OUTLET-WATER		01	0107-											O								O							O			O
		10	01	1	**11062-34N01**	GASKET-WATER OUTLET		01	0107-											O								O							O			O
		11	01	1	**24211-89944**	CLAMP		01	0107-											O								O							O			O
		12	01	1	**11021-J200A**	PLUG		02	0107-											O								O							O			O
		13	01	1	**21046-NA000**	BRACKET ASSY-FAN DRIVE PULLEY		01	0107-											O								O							O			O
		14	01	2	**21048-NA000**	BEARING-FAN DRIVE		01	0107-											O								O							O			O
		15	01	2	**21035-51H00**	BEARING-FAN DRIVE		02	0107-											O								O							O			O
		16	01	2	**21054-NA000**	HUB-FAN		01	0107-											O								O							O			O
		17	01	1	**21060-FU40A**	FAN-COOLING		01	0107-											O								O							O			O
		18	01	1	**21052-90105**	SPACER-FAN		01	0107-											O								O							O			O
		19	01	1	**21051-NA00A**	PULLEY-FAN & WATER PUMP		01	0107-											O								O							O			O
		20	01	1	**21200-05D02**	THERMOSTAT ASSY	82C	01	0107-											O								O							O			O
		21	01	1	**08120-8251E**	SCREW-HHM M8-1.25X25		09	0107-											O								O							O			O
		22	01	1	**08915-1381A**	WASHER-LOCK SPLIT M8		03	0107-											O								O							O			O
		23	01	1	**08120-8751A**	BOLT-HEX		01	0107-											O								O							O			O
		24	01	1	**08120-8901A**	BOLT-HEX		01	0107-											O								O							O			O
		25	01	1	**08915-43610**	WASHER-FLAT M6		04	0107-											O								O							O			O
		26	01	1	**08915-33610**	WASHER-LOCK WAVE M6		04	0107-											O								O							O			O
		27	01	1	**08170-64510**	BOLT		04	0107-											O								O							O			O
		28	01	1	**08120-8031A**	BOLT-HEX		01	0107-											O								O							O			O
		29	01	1	**08915-1441A**	WASHER-LOCK SPLIT M14		01	0107-											O								O							O			O
		30	01	1	**08911-2441A**	NUT-HEX M14-1.5 6T		01	0107-											O								O							O			O
		31	01	1	**08918-3401A**	NUT-FLG HEX M10 9N		02	0107-											O								O							O			O
		32	01	1	**08120-8201E**	SCREW-HHM M8-1.25X20 W/LKW		05	0107-											O								O							O			O

SEC. 213B

OIL COOLER (QD32)

REFRIGERADOR DE ACEITE

ÖLKÜHLER

RADIATEUR D'HUILE

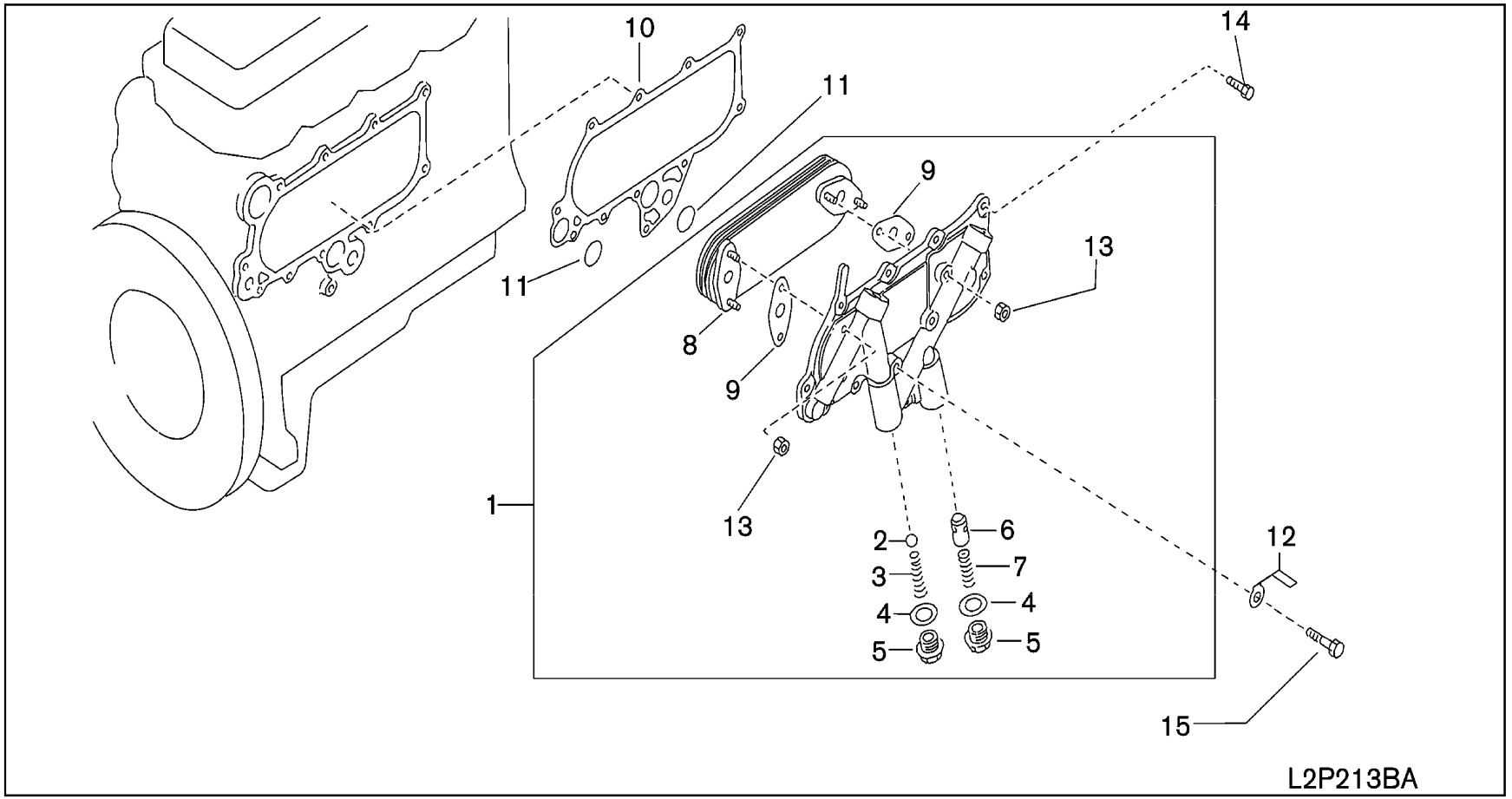

SEC. 213B

OIL COOLER (QD32)

REFRIGERADOR DE ACEITE

ÖLKÜHLER

RADIATEUR D'HUILE

NC	S	KEY NO.	LEV	PART NO.	PART NAME	SPECIFICATION	QTY	APPLIED DATE	ICANF	FORMER PART NO.	KD
		1 01	1	**21305-54T02**	COOLER ASSY-OIL		01	0107-0309			
		02	1	**21305-54T04**			01	0309-0409			
		03	1	**21305-54T0A**			01	0409-			
		2 01	2	**15300-76200**	VALVE ASSY-RELIEF, OIL COOLER		01	0107-			
		3 01	2	**15133-54T00**	SPRING-VALVE, OIL COOLER		01	0107-			
		4 01	2	**15304-61501**	PACKING-OIL COOLER PLUG		02	0107-			
		5 01	2	**15303-61503**	PLUG-OIL COOLER		02	0107-			
		6 01	2	**15280-90001**	VALVE ASSY-RELIEF OIL COOLER		01	0107-			
		7 01	2	**15243-31N00**	SPRING-VALVE, OIL COOLER		01	0107-			
		8 01	2	**21355-54T00**	ELEMENT-OIL COOLER		01	0107-			
		9 01	2	**21334-05D04**	PACKING		02	0107-			
		10 01	1	**21304-34N00**	RING-RUBBER		01	0107-			
		11 01	1	**21334-02N00**	SEAL-O RING		02	0107-			
		12 01	1	**24211-89944**	CLIP-HOSE		01	0107-			
		13 01	2	**08911-1081G**	NUT-HEX W/CON SPW M8-1.25		04	0107-			
		14 01	1	**08120-8251E**	SCREW-HHM M8-1.25X25 W/LKW		10	0107-			
		15 01	1	**08120-8451E**	SCREW-HHM M8-1.25X45 W/LKW		01	0107-			

APPLIED MODEL

	MIPIAA20JVI	MIPVAA20DVI	MIPVAA20LVI	MIPSAA20SVI	MIUIAA20JVI	MIUVAA20DVI	MIUVAA20LVI	MIUSAA20LVI	MIYIAA20JVI	MIYPAA25JVI	MIYPAA25DVI	MIYPAA25LVI	MIYSAA25SVI	MIUIAA25JVI	MIUVAA25DVI	MIUVAA25LVI	MIUSAA25SVI	MIUUAA25JVI	MIUUAA25DVI	MIUUAA25LVI	MIUYAA25SVI	MIUJAA25JVI	MIUJAA25DVI	MIUJAA25LVI	MIUGAA25SVI	MIGIAA30JVI	MIGIAA30DVI	MIGIAA30LVI	MIGGAA30JVI	MIGGAA30DVI	MIGGAA30LVI	MIGYAA30LVI	MIGIAA35JVI	MIGIAA35DVI	MIGIAA35LVI	MIGGAA35JVI	MIGGAA35DVI	MIGGAA35LVI
	01	02	03	04	05	06	07	08	09	10	11	12	13	14	15	16	17	18	19	20	21	22	23	24	25	26	27	28	29								
1	O	O	O	O	O	O	O	O	O	O	O	O	O	O	O	O	O	O	O	O	O	O	O	O	O	O	O	O	O								
2	O	O	O	O	O	O	O	O	O	O	O	O	O	O	O	O	O	O	O	O	O	O	O	O	O	O	O	O	O								
3	O	O	O	O	O	O	O	O	O	O	O	O	O	O	O	O	O	O	O	O	O	O	O	O	O	O	O	O	O								
4	O	O	O	O	O	O	O	O	O	O	O	O	O	O	O	O	O	O	O	O	O	O	O	O	O	O	O	O	O								
5	O	O	O	O	O	O	O	O	O	O	O	O	O	O	O	O	O	O	O	O	O	O	O	O	O	O	O	O	O								
6	O	O	O	O	O	O	O	O	O	O	O	O	O	O	O	O	O	O	O	O	O	O	O	O	O	O	O	O	O								
7	O	O	O	O	O	O	O	O	O	O	O	O	O	O	O	O	O	O	O	O	O	O	O	O	O	O	O	O	O								
8	O	O	O	O	O	O	O	O	O	O	O	O	O	O	O	O	O	O	O	O	O	O	O	O	O	O	O	O	O								
9	O	O	O	O	O	O	O	O	O	O	O	O	O	O	O	O	O	O	O	O	O	O	O	O	O	O	O	O	O								
10	O	O	O	O	O	O	O	O	O	O	O	O	O	O	O	O	O	O	O	O	O	O	O	O	O	O	O	O	O								
11	O	O	O	O	O	O	O	O	O	O	O	O	O	O	O	O	O	O	O	O	O	O	O	O	O	O	O	O	O								
12	O	O	O	O	O	O	O	O	O	O	O	O	O	O	O	O	O	O	O	O	O	O	O	O	O	O	O	O	O								
13	O	O	O	O	O	O	O	O	O	O	O	O	O	O	O	O	O	O	O	O	O	O	O	O	O	O	O	O	O								
14	O	O	O	O	O	O	O	O	O	O	O	O	O	O	O	O	O	O	O	O	O	O	O	O	O	O	O	O	O								
15	O	O	O	O	O	O	O	O	O	O	O	O	O	O	O	O	O	O	O	O	O	O	O	O	O	O	O	O	O								

SEC. 214

RADIATOR, SHROUD & FITTING

RADIADOR,BOVEDA Y PARTES DE FIJACION

KÜHLER,UMMANTELUNG & BESCHLAGTEILE

RADIATEUR,ENVELOPPE ET PIECES DE FIXATION

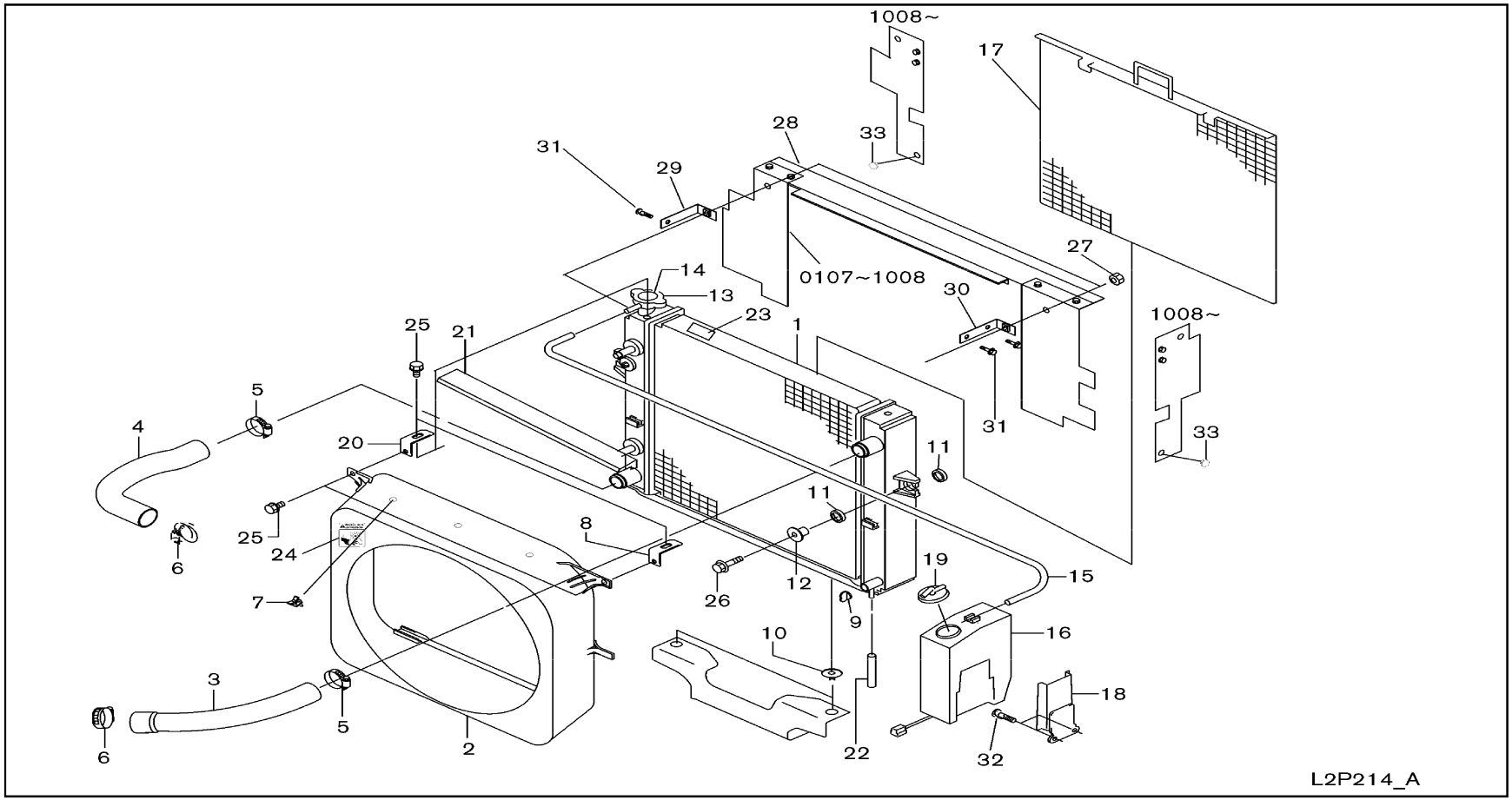

SEC. 214

RADIATOR, SHROUD & FITTING

RADIADOR,BOVEDA Y PARTES DE FIJACION

KÜHLER,UMMANTELUNG & BESCHLAGTEILE

RADIATEUR,ENVELOPPE ET PIECES DE FIXATION

NC	S	KEY NO.	LEV	PART NO.	PART NAME	SPECIFICATION	QTY	APPLIED DATE	ICANF	FORMER PART NO.	KD	APPLIED MODEL 01 02 03 04 05 06 07 08 09 10 11 12 13 14 15 16 17 18 19 20 21 22 23 24 25 26 27 28 29
C		**1** 01	1	**21450-FK30A**	RADIATOR ASSY		01	0107-0811				○○○○○○○○○○○○○○○○○○○○○○○○○○○○○
N		02	1	**21450-FC30A**			01	0811-				○○○○○○○○○○○○○○○○○○○○○○○○○○○○○
C		03	1	**21450-FK31A**		F/COTTON CORE	01	0107-0811				✱✱✱✱✱✱✱✱✱✱✱✱✱✱✱✱✱✱✱✱✱✱✱✱✱✱✱✱✱✱✱
N		04	1	**21450-FC31A**		F/COTTON CORE	01	0811-				✱✱✱✱✱✱✱✱✱✱✱✱✱✱✱✱✱✱✱✱✱✱✱✱✱✱✱✱✱✱✱
C		05	2	**21460-FK30A**	RADIATOR ASSY-WITH OIL COOLER		01	0107-0811				○○○○○○○○○○○○○○○○○○○○○○○○○○○○○
N		06	2	**21460-FC30A**			01	0811-				○○○○○○○○○○○○○○○○○○○○○○○○○○○○○
C		07	2	**21460-FK31A**		F/COTTON CORE	01	0107-0811				✱✱✱✱✱✱✱✱✱✱✱✱✱✱✱✱✱✱✱✱✱✱✱✱✱✱✱✱✱✱✱
N		08	2	**21460-FC31A**		F/COTTON CORE	01	0811-				✱✱✱✱✱✱✱✱✱✱✱✱✱✱✱✱✱✱✱✱✱✱✱✱✱✱✱✱✱✱✱
		2 01	1	**21475-FK10A**	SHROUD ASSY-RAD		01	0107-				○○○○○○○○○ ○○○○○○○○○○ ○○○○○○ ○○○
		02	1	**21475-GG40A**			01	0107-				○ ○ ○ ○ ○ ○ ○
		3 01	1	**21501-FK101**	HOSE-RADIATOR,UPPER		01	0107-				○○○○○○○○○ ○○○○○○○○○○ ○○○○○○ ○○○
		02	1	**21501-GG30A**			01	0107-				○ ○ ○ ○ ○ ○ ○
		4 01	1	**21503-FK100**	HOSE-RADIATOR,LOWER		01	0107-				○○○○○○○○○ ○○○○○○○○○○ ○○○○○○ ○○○
		02	1	**21503-GG30A**			01	0107-				○ ○ ○ ○ ○ ○ ○
		5 01	1	**21643-FK30A**	CLAMP-HOSE		02	0107-				○○○○○○○○○○○○○○○○○○○○○○○○○○○○○
		6 01	1	**21643-FK30A**	CLAMP-HOSE		02	0107-				○○○○○○○○○ ○○○○○○○○○○ ○○○○○○ ○○○
		02	1	**21514-V5200**			02	0107-1110				○ ○ ○ ○ ○ ○ ○
		03	1	**01555-00951**			02	1110-				○ ○ ○ ○ ○ ○ ○
		7 01	1	**16439-FK300**	CLAMP-HOSE		02	0107-				○○○○○○○○○ ○○○○○○○○○○ ○○○○○○ ○○○
		02	1	**16439-FK300**			03	0107-				○ ○ ○ ○ ○ ○ ○
		8 01	1	**21476-FK300**	BRACKET-SHROUD, LH		01	0107-				○○○○○○○○○○○○○○○○○○○○○○○○○○○○○
		9 01	3	**21440-FK300**	COCK ASSY-DRAIN		01	0107-				○○○○○○○○○○○○○○○○○○○○○○○○○○○○○
		10 01	1	**21538-FK301**	INSULATOR		02	0107-				○○○○○○○○○○○○○○○○○○○○○○○○○○○○○
		11 01	1	**21525-FK300**	MOUNTING-RADIATOR		04	0107-				○○○○○○○○○○○○○○○○○○○○○○○○○○○○○
		12 01	1	**21548-FK300**	SPACER		02	0107-				○○○○○○○○○○○○○○○○○○○○○○○○○○○○○
		13 01	3	**21430-FK300**	CAP ASSY-RADIATOR		01	0107-				○○○○○○○○○○○○○○○○○○○○○○○○○○○○○
		14 01	1	**21435-89960**	LABEL-CAUTION RADIATOR		01	0107-				○○○○○○○○○○○○○○○○○○○○○○○○○○○○○
		02	1	**21435-89910**		F/FRENCH	01	0107-				✱✱✱✱✱✱✱✱✱✱✱✱✱✱✱✱✱✱✱✱✱✱✱✱✱✱✱✱✱✱✱
		03	1	**21435-14H20**		F/SPANISH	01	0107-				✱✱✱✱✱✱✱✱✱✱✱✱✱✱✱✱✱✱✱✱✱✱✱✱✱✱✱✱✱✱✱
		15 01	1	**21741-FK200**	HOSE-RESERVOIR TANK		01	0107-				○○○○○○○○○○○○○○○○○○○○○○○○○○○○○
		16 01	1	**21710-FK310**	TANK COMPLETE-RESERVOIR RADIATOR		01	0107-0307				○○○○○○○○○○○○○○○○○○○○○○○○○○○○○
		02	1	**21710-FK31A**			01	0307-0210				○○○○○○○○○○○○○○○○○○○○○○○○○○○○○
		03	1	**21710-FK310**			01	0210-				○○○○○○○○○○○○○○○○○○○○○○○○○○○○○
		04	2	**21711-FK310**	TANK ASSY-RESERVOIR RADIATOR		01	0107-0307				○○○○○○○○○○○○○○○○○○○○○○○○○○○○○
		05	2	**21711-FK31A**			01	0307-0210				○○○○○○○○○○○○○○○○○○○○○○○○○○○○○
		06	2	**21711-FK310**			01	0210-				○○○○○○○○○○○○○○○○○○○○○○○○○○○○○
		07	2	**21730-FW40A**	SENSOR ASSY-LEVEL		01	0508-0210				○○○○○○○○○○○○○○○○○○○○○○○○○○○○○

SEC. 214

RADIATOR, SHROUD & FITTING

RADIADOR,BOVEDA Y PARTES DE FIJACION

KÜHLER,UMMANTELUNG & BESCHLAGTEILE

RADIATEUR,ENVELOPPE ET PIECES DE FIXATION

NC	S	KEY NO.	LEV	PART NO.	PART NAME	SPECIFICATION	QTY	APPLIED DATE	ICANF	FORMER PART NO.	KD
		16	08	2	**21730-GG10A**	SENSOR ASSY-LEVEL		01	0210-			
		17	01	1	**21473-FK302**	NET-RADIATOR	W/SCREEN	01	0107-			
		18	01	1	**21745-FJ10A**	BRACKET-RESERVOIR TANK		01	0107-0408			
			02	1	**21746-FV00A**			01	0408-			
		19	01	2	**21712-FK31A**	CAP ASSY-RESERVOIR TANK		01	0107-			
			02	3	**21723-FK300**	CAP		01	0107-			
			03	3	**21742-FK31A**	HOSE-RAD RESVR TANK		01	0107-			
			04	3	**31357-FK30A**	SEAL-CAP		01	0107-			
		20	01	1	**21477-FK300**	BRACKET-SHROUD, RH		01	0107-			
		21	01	1	**21496-GG30A**	SEAL-RAD, UPR		01	0107-			
		22	01	2	**21444-FK300**	HOSE-DRAIN		01	0107-			
		23	01	1	**21435-89946**	LABEL-CAUTION ,LLC		01	0107-			
			02	1	**21435-24H80**		F/SPANISH	01	0107-			
		24	01	1	**97825-FK300**	LABEL-COOLING FAN		01	0107-			
		25	01	1	**08110-8161G**	SCREW-HHM M8-1.25X16 W/SPRW		04	0107-			
		26	01	1	**08146-8302G**	SCREW-HHM M8-1.25X30 W/SPRW		02	0107-			
		27	01	1	**08911-1081G**	NUT-HEX W/CON SPW M8-1.25	F/FC	02	0507-			
		28	01	1	**21560-FV60A**	BAFFLE ASSY-RAD	F/FC	01	0507-1008			
			02	1	**21560-FV60B**		F/FC	01	1008-			
		29	01	1	**21562-FC000**	STAY-PLATE BAFFLE, RH	F/FC	01	0507-			
		30	01	1	**21563-FC000**	STAY-PLATE BAFFLE, LH	F/FC	01	0507-			
		31	01	1	**08110-8161G**	SCREW-HHM M8-1.25X16 W/SPRW	F/FC	03	0507-			
		32	01	1	**08110-8161G**	SCREW-HHM M8-1.25X16 W/SPRW		02	0107-0408			
			02	1	**08110-8121G**	SCREW-HHM M8-1.25X12 W/SPRW		02	0408-			
		33	01	1	**46584-S0100**	RUBBER-PEDAL STOP	F/FC	02	1008-			

APPLIED MODEL

01	02	03	04	05	06	07	08	09	10	11	12	13	14	15	16	17	18	19	20	21	22	23	24	25	26	27	28	29
MIPA200JVV	MIPA200DVV	MIPA200LVS	MIPA200SVV	MIPA200JVV	MIPA200DVV	MIPA200LVV	MIPA200LVS	MIPA205 JVV	MIPA205DVV	MIPA205LVV	MIPA205SVV	MIPA205JVV	MIPA205DVV	MIPA205LVV	MIPA205LVS	MIPA205LVV	MIPA258 JVV	MIPA258DVV	MIPA258LVV	MIPA258JVV	MIPA300DVV	MIPA300JVV	MIPA300DVV	MIPA300LVV	MIPA305 JVV	MIPA305DVV	MIPA305LVV	MIPA305LVV
○	○	○	○	○	○	○	○	○	○	○	○	○	○	○	○	○	○	○	○	○	○	○	○	○	○	○	○	○
*	*	*	*	*	*	*	*	*	*	*	*	*	*	*	*	*	*	*	*	*	*	*	*	*	*	*	*	*
○	○	○	○	○	○	○	○	○	○	○	○	○	○	○	○	○	○	○	○	○	○	○	○	○	○	○	○	○
○	○	○	○	○	○	○	○	○	○	○	○	○	○	○	○	○	○	○	○	○	○	○	○	○	○	○	○	○
○	○	○	○	○	○	○	○	○	○	○	○	○	○	○	○	○	○	○	○	○	○	○	○	○	○	○	○	○
○	○	○	○	○	○	○	○	○	○	○	○	○	○	○	○	○	○	○	○	○	○	○	○	○	○	○	○	○
○	○	○	○	○	○	○	○	○	○	○	○	○	○	○	○	○	○	○	○	○	○	○	○	○	○	○	○	○
○	○	○	○	○	○	○	○	○	○	○	○	○	○	○	○	○	○	○	○	○	○	○	○	○	○	○	○	○
								○								○								○				○
○	○	○	○	○	○	○	○	○	○	○	○	○	○	○	○	○	○	○	○	○	○	○	○	○	○	○	○	○
○	○	○	○	○	○	○	○	○	○	○	○	○	○	○	○	○	○	○	○	○	○	○	○	○	○	○	○	○
*	*	*	*	*	*	*	*	*	*	*	*	*	*	*	*	*	*	*	*	*	*	*	*	*	*	*	*	*
○	○	○	○	○	○	○	○	○	○	○	○	○	○	○	○	○	○	○	○	○	○	○	○	○	○	○	○	○
○	○	○	○	○	○	○	○	○	○	○	○	○	○	○	○	○	○	○	○	○	○	○	○	○	○	○	○	○
○	○	○	○	○	○	○	○	○	○	○	○	○	○	○	○	○	○	○	○	○	○	○	○	○	○	○	○	○
								*								*												
								*								*												
								*								*												
								*								*												
								*								*												
								*								*												
○	○	○	○	○	○	○	○	○	○	○	○	○	○	○	○	○	○	○	○	○	○	○	○	○	○	○	○	○
○	○	○	○	○	○	○	○	○	○	○	○	○	○	○	○	○	○	○	○	○	○	○	○	○	○	○	○	○
								*								*												

NOTE

SEC. 216A

TORQUE CONVERTER OIL COOLER & PIPING (UPTO AUG. 2011)

ENFRIADOR DE ACEITE Y TUBERIA DEL CONVERTIDOR DE PAR

DREHMOMENTWANDLEROLKÜHLER & ROHRLEITUNGEN

REFROIDISSEUR D'HUILE DU CONVERTISSEUR DE COUPLE ET TUYAUTER

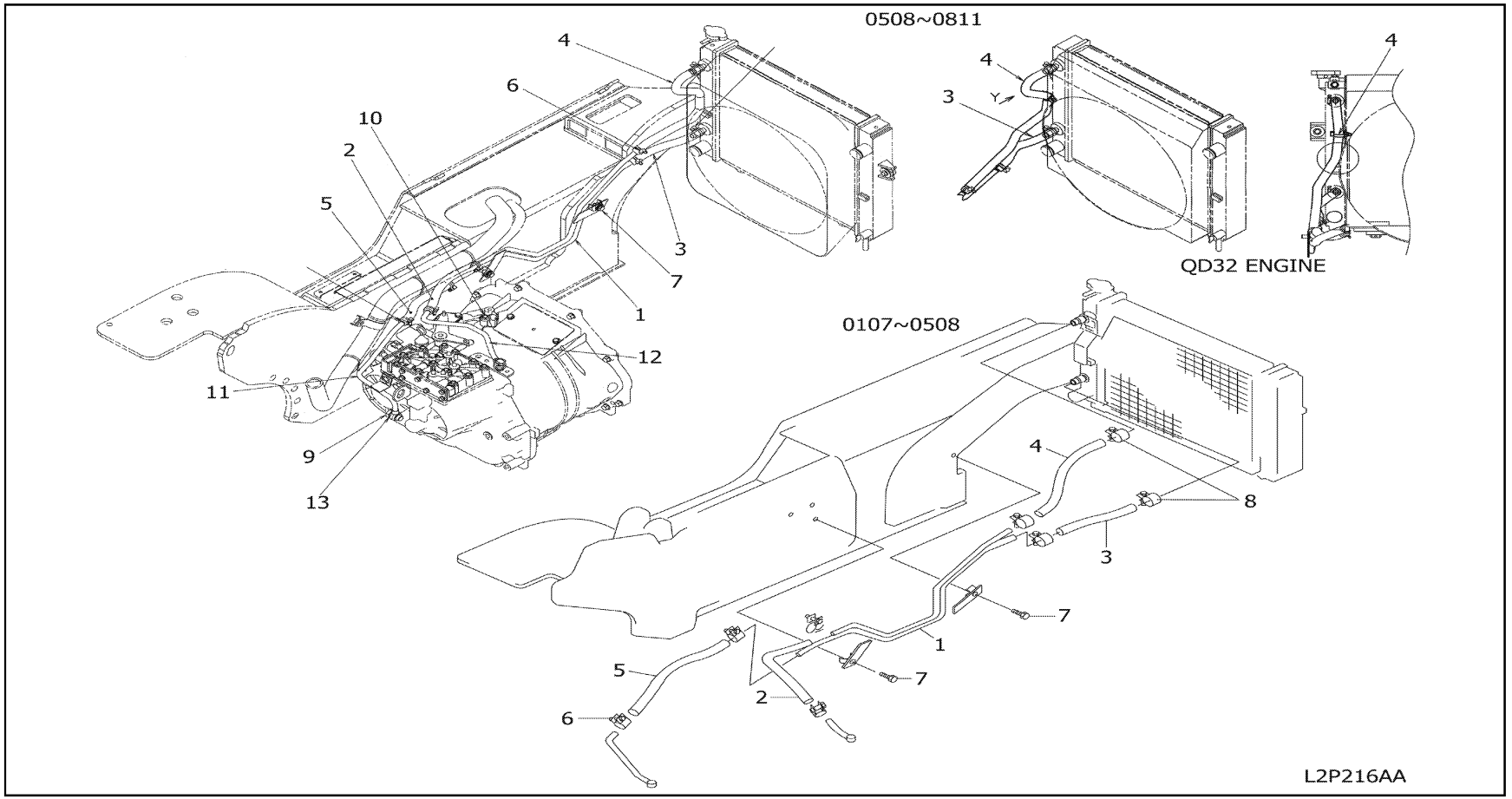

SEC. 216A

TORQUE CONVERTER OIL COOLER & PIPING (UPTO AUG. 2011)

ENFRIADOR DE ACEITE Y TUBERIA DEL CONVERTIDOR DE PAR

DREHMOMENTWANDLEROLKÜHLER & ROHRLEITUNGEN

REFROIDISSEUR D'HUILE DU CONVERTISSEUR DE COUPLE ET TUYAUTER

NC	S	KEY NO.	LEV	PART NO.	PART NAME	SPECIFICATION	QTY	APPLIED DATE	ICANF	FORMER PART NO.	KD	APPLIED MODEL 01 02 03 04 05 06 07 08 09 10 11 12 13 14 15 16 17 18 19 20 21 22 23 24 25 26 27 28 29
C		**1** 01	1	**21621-FK101**	TUBE COMPLETE-OIL COOLER		01	0107-0811				o o o o o o o o o o o o o o o o o o o o o o o o o o o
C		02	1	**21621-GG00A**			01	0107-0811				o o o o
		2 01	1	**21631-FK10A**	HOSE-AUTO TRANS		01	0107-0508				o o o o o o o o o o o o o o o o o o o o o o o o o o o
C		02	1	**21631-GG00B**			01	0508-0811				o o o o o o o o o o o o o o o o o o o o o o o o o o o
		03	1	**21631-FK102**		F/VLVX4	01	0107-0508				* *
C		04	1	**21631-GG00C**		F/VLVX4	01	0508-0811				* *
C		**3** 01	1	**21632-FK102**	HOSE-AUTO TRANS		01	0107-0811				o o o o o o o o o o o o o o o o o o o o o o o o o o o
C		02	1	**21632-GG00A**			01	0107-0811				o o o o
C		**4** 01	1	**21631-FK103**	HOSE-AUTO TRANS		01	0107-0811				o o o o o o o o o o o o o o o o o o o o o o o o o o o
C		02	1	**21631-GG00A**			01	0107-0811				o o o o
C		03	1	**24225-89960**	CLIP		01	0107-0811				o o o o
		5 01	1	**21632-FK10A**	HOSE-AUTO TRANS		01	0107-0508				o o o o o o o o o o o o o o o o o o o o o o o o o o o
C		02	1	**21631-GG00B**			01	0508-0811				o o o o o o o o o o o o o o o o o o o o o o o o o o o
		03	1	**21632-FK101**		F/VLVX4	01	0107-0508				* *
C		04	1	**21631-GG00C**		F/VLVX4	01	0508-0811				* *
		05	2	**69690-L1100**	PROTECTOR	F/VLVX4	01	0107-0508				* *
		6 01	1	**08723-12000**	CLAMP-HOSE		06	0107-0607				o o o o o o o o o o o o o o o o o o o o o o o o o o o
C		02	1	**01555-00841**			06	0607-0811				o o o o o o o o o o o o o o o o o o o o o o o o o o o
C		**7** 01	1	**08124-0201F**	SCREW-HHM M10-1.25X20 W/LK & PW		02	0107-0811				o o o o o o o o o o o o o o o o o o o o o o o o o o o
		8 01	1	**08723-12300**	CLAMP-HOSE		02	0107-0607				o o o o o o o o o o o o o o o o o o o o o o o o o o o
C		02	1	**01555-00861**			02	0607-0811				o o o o o o o o o o o o o o o o o o o o o o o o o o o
C		**9** 01	1	**01619-00011**	BOLT-EYE		02	0508-0811				o o o o o o o o o o o o o o o o o o o o o o o o o o o
C		**10** 01	1	**081A0-8161A**	SCREW-HH FLANGE M8-1.25X16		01	0508-0811				o o o o o o o o o o o o o o o o o o o o o o o o o o o
C		**11** 01	1	**21623-GE00A**	TUBE-OIL COOLER		01	0508-0811				o o o o o o o o o o o o o o o o o o o o o o o o o o o
C		**12** 01	1	**21623-GE00B**	TUBE-OIL COOLER		01	0508-0811				o o o o o o o o o o o o o o o o o o o o o o o o o o o
C		**13** 01	1	**49726-Y0100**	GASKET		04	0508-0811				o o o o o o o o o o o o o o o o o o o o o o o o o o o

SEC. 216B

TORQUE CONVERTER OIL COOLER & PIPING (FROM AUG. 2011)

ENFRIADOR DE ACEITE Y TUBERIA DEL CONVERTIDOR DE PAR

DREHMOMENTWANDLEROLKÜHLER & ROHRLEITUNGEN

REFROIDISSEUR D'HUILE DU CONVERTISSEUR DE COUPLE ET TUYAUTER

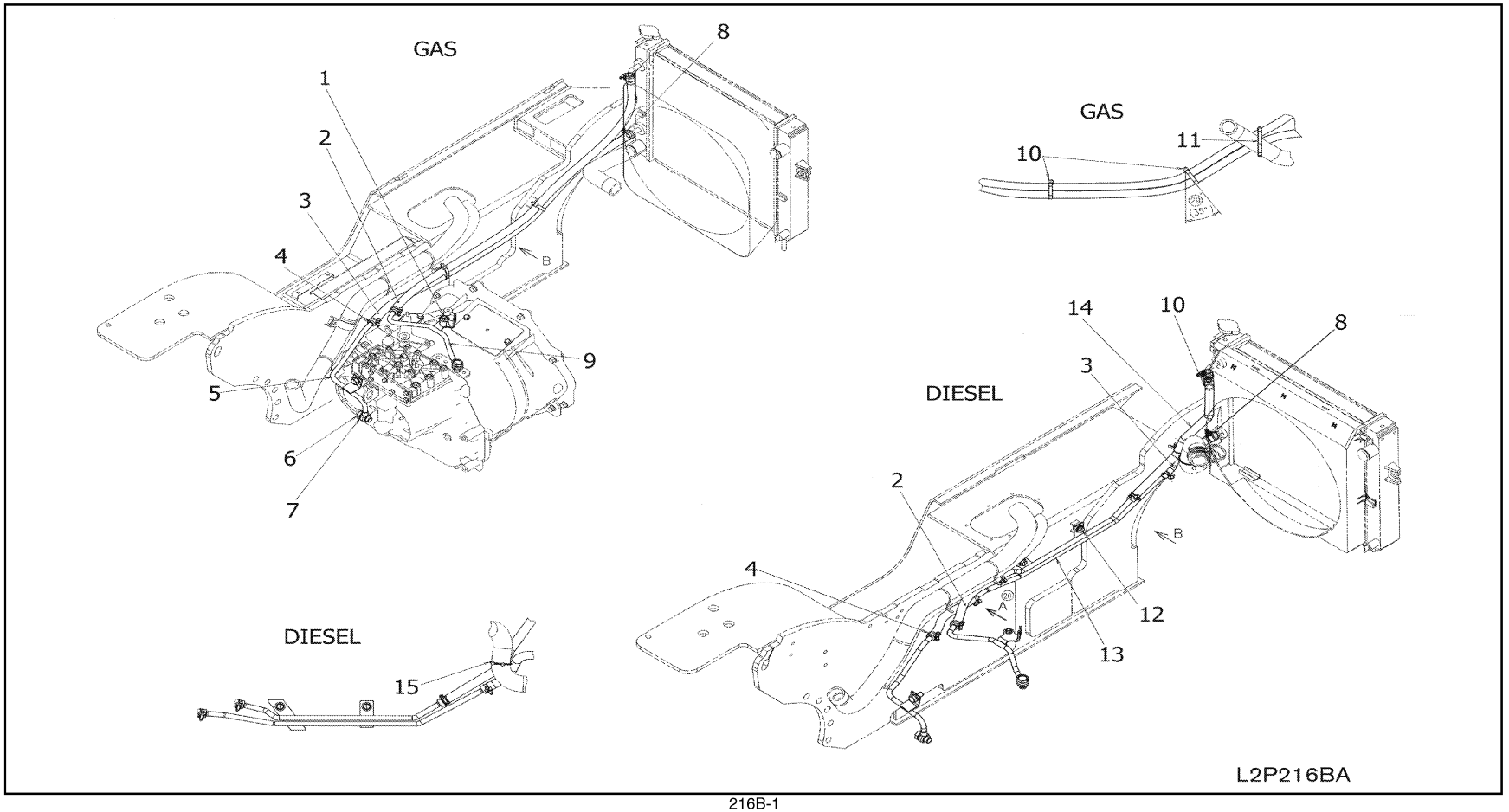

SEC. 216B

TORQUE CONVERTER OIL COOLER & PIPING (FROM AUG. 2011)

ENFRIADOR DE ACEITE Y TUBERIA DEL CONVERTIDOR DE PAR

DREHMOMENTWANDLEROLKÜHLER & ROHRLEITUNGEN

REFROIDISSEUR D'HUILE DU CONVERTISSEUR DE COUPLE ET TUYAUTER

NC	S	KEY NO.	LEV	PART NO.	PART NAME	SPECIFICATION	QTY	APPLIED DATE	TCANF	FORMER PART NO.	KD	APPLIED MODEL 01	02	03	04	05	06	07	08	09	10	11	12	13	14	15	16	17	18	19	20	21	22	23	24	25	26	27	28	29
												MI PJ AA 20 JV	MI PV AA 20 DV	MI PV AA 20 LV	MI PS AA 20 SV	MI PV AA 20 JV	MI UV AA 20 DV	MI UV AA 20 LV	MI US AA 20 LV	MI YV AA 20 JV	MI PV AA 20 DV	MI PV AA 20 LV	MI PS AA 20 SV	MI UV AA 20 JV	MI UV AA 20 DV	MI UV AA 20 LV	MI US AA 20 LV	MI YV AA 20 DV	MI UV AA 20 LV	MI UJ AA 22 JV	MI UJ AA 22 DV	MI UG AA 22 LV	MI UG AA 30 JV	MI UG AA 30 DV	MI UG AA 30 LV	MI UG AA 30 LV	MI YV AA 30 DV	MI UV AA 35 JV	MI UV AA 35 DV	MI UV AA 35 LV	MI UV AA 35 LV	MI YV AA 35 DV
N		1	01	1	081A0-8161A	SCREW-HH FLANGE M8-1.25X16		01	0811-				○	○	○	○	○	○	○	○	○	○	○	○	○	○	○	○	○	○	○	○	○	○	○	○	○	○	○	○	○
N		2	01	1	21631-GG01B	HOSE-AUTO TRANS		01	0811-				○	○	○	○	○	○	○	○		○	○	○	○	○	○	○	○		○	○	○	○	○	○		○	○	○	
N			02	1	21631-GG00B	HOSE-AUTO TRANS UPR		01	0811-											○								○							○			○			○
N			03	1	21631-GG00C		F/VLVX4	01	0811-											✱								✱							✱			✱			✱
N		3	01	1	21632-GG01B	HOSE-AUTO TRANS		01	0811-				○	○	○	○	○	○	○	○		○	○	○	○	○	○	○	○		○	○	○	○	○	○		○	○	○	
N			02	1	21632-GG01C		F/VLVX4	01	0811-				✱	✱	✱	✱	✱	✱	✱	✱		✱	✱	✱	✱	✱	✱	✱	✱		✱	✱	✱	✱	✱	✱		✱	✱	✱	
N			03	1	21632-GG01A	HOSE-AUTO TRANS LWR		01	0811-											○								○							○			○			○
N			04	1	21632-GG00A		F/VLVX4	01	0811-											✱								✱							✱			✱			✱
N		4	01	1	01555-00841	CLAMP-HOSE		02	0811-				○	○	○	○	○	○	○	○		○	○	○	○	○	○	○	○		○	○	○	○	○	○		○	○	○	
N			02	1	01555-00841			06	0811-											○								○							○			○			○
N		5	01	1	21623-GE00A	TUBE-OIL COOLER		01	0811-				○	○	○	○	○	○	○	○	○	○	○	○	○	○	○	○	○	○	○	○	○	○	○	○	○	○	○	○	○
N		6	01	1	01619-00011	BOLT-EYE		02	0811-				○	○	○	○	○	○	○	○	○	○	○	○	○	○	○	○	○	○	○	○	○	○	○	○	○	○	○	○	○
N		7	01	1	49726-Y0100	GASKET		04	0811-				○	○	○	○	○	○	○	○	○	○	○	○	○	○	○	○	○	○	○	○	○	○	○	○	○	○	○	○	○
N		8	01	1	01555-00861	CLAMP-HOSE		02	0811-				○	○	○	○	○	○	○	○	○	○	○	○	○	○	○	○	○	○	○	○	○	○	○	○	○	○	○	○	○
N		9	01	1	21623-GE00B	TUBE-OIL COOLER		01	0811-				○	○	○	○	○	○	○	○	○	○	○	○	○	○	○	○	○	○	○	○	○	○	○	○	○	○	○	○	○
N		10	01	1	24222-89933	BAND-CLIP		02	0811-				○	○	○	○	○	○	○	○		○	○	○	○	○	○	○	○		○	○	○	○	○	○		○	○	○	
N			02	1	24222-89933			01	0811-											○								○							○			○			○
N		11	01	1	01552-00431	BAND-HOSE 300L		01	0811-				○	○	○	○	○	○	○	○		○	○	○	○	○	○	○	○		○	○	○	○	○	○		○	○	○	
N		12	01	1	08124-0201F	SCREW-HHM M10-1.25X20 W/LK & PW		02	0811-											○								○							○			○			○
N		13	01	1	21621-GG00A	TUBE ASSY-OIL COOLER		01	0811-											○								○							○			○			○
N		14	01	1	21631-GG01A	HOSE-AUTO TRANS UPR		01	0811-											○								○							○			○			○
N			02	1	21631-GG01C		F/VLVX4	01	0811-											✱								✱							✱			✱			✱
N		15	01	1	01552-00291	CLP-CABLE		01	0811-											○								○							○			○			○

NOTE

GROUP INDEX

ENGINE ELECTRICAL

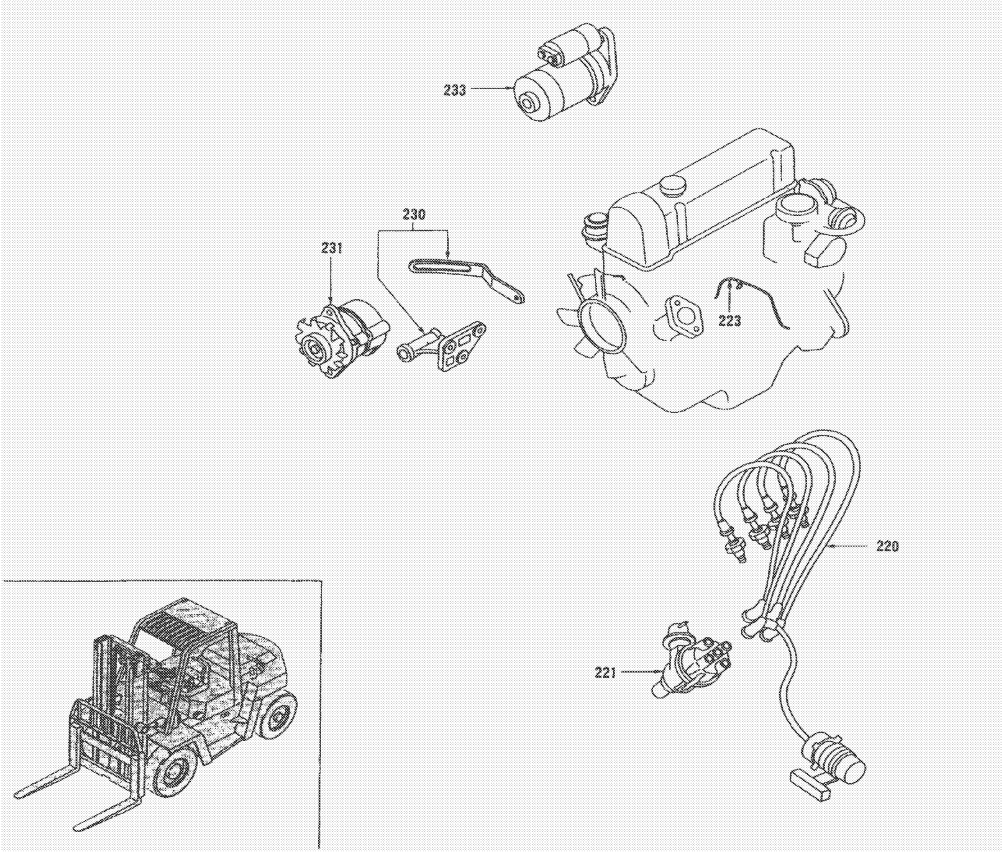

SEC.NO	SECTION NAME
220A	IGNITION SYSTEM
220B	IGNITION SYSTEM (QD32)
221A	DISTRIBUTOR (K21 & K25)
223A	VACUUM PIPING (K21 & K25)
226A	ENGINE CONTROL MODULE (K21 & K25)
230A	ALTERNATOR FITTING (K21 & K25)
230B	ALTERNATOR FITTING (QD32)
231A	ALTERNATOR (K21 & K25)
231B	ALTERNATOR (QD32)
233A	STARTER MOTOR (K21 & K25)
233B	STARTER MOTOR (QD32)

D

*ILLSTRATIONS SHOWN IN GENERAL INDEX AND GROUP INDEX ARE GENARALIZED DESCRIPTIONS FOR ALL MODELS AND ARE NOT PRECISE IN ALL DETAILS.

SEC. 220A

IGNITION SYSTEM (K21 & K25)

SISTEMA DE ENCENDIDO

ZÜNDANLAGE

SYSTEME D'ALLUMAGE

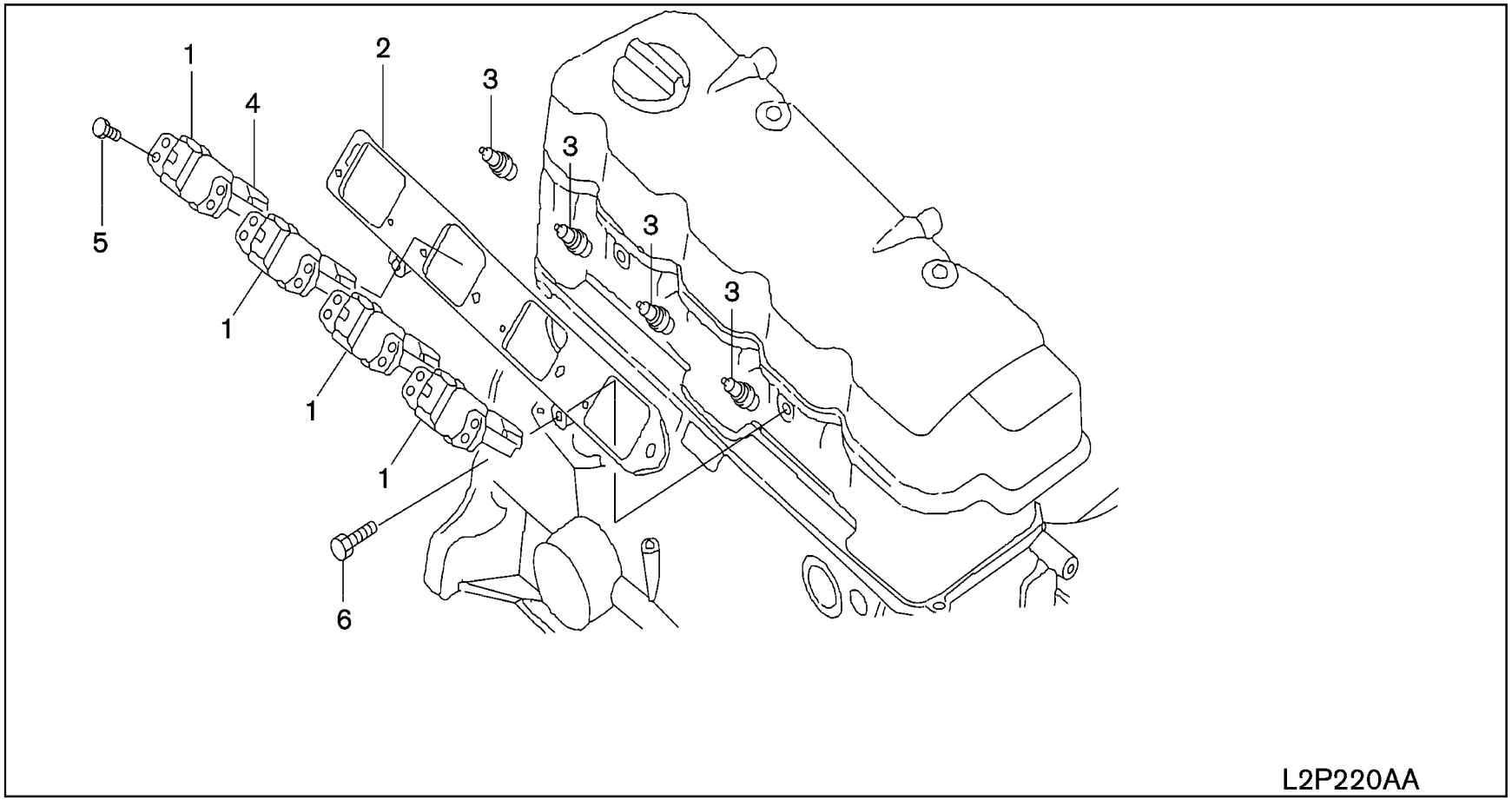

SEC. 220A

IGNITION SYSTEM (K21 & K25)

SISTEMA DE ENCENDIDO

ZÜNDANLAGE

SYSTEME D'ALLUMAGE

NC	S	KEY NO.	LEV	PART NO.	PART NAME	SPECIFICATION	QTY	APPLIED DATE	ICANF	FORMER PART NO.	KD	APPLIED MODEL 01 02 03 04 05 06 07 08 09 10 11 12 13 14 15 16 17 18 19 20 21 22 23 24 25 26 27 28 29
		1 01	1	**22448-AR215**	COIL ASSY-IGNITION		04	0107-				o o o o o o o o o o o o o o o o o o o o o o o o o o o o o
		2 01	1	**22435-FU400**	BRACKET-IGNITION COIL		01	0107-				o o o o o o o o o o o o o o o o o o o o o o o o o o o o o
		3 01	1	**22401-FU412**	PLUG-SPARK		04	0107-0908				o o o o o o o o o o o o o o o o o o o o o o o o o o o o o
		02	1	**22401-FU42A**			04	0908-				o o o o o o o o o o o o o o o o o o o o o o o o o o o o o
		4 01	1	**22465-8J115**	PROTECTOR-IGNITION COIL		04	0107-				o o o o o o o o o o o o o o o o o o o o o o o o o o o o o
		5 01	1	**08120-62028**	SCREW-HHM M6-1.0X20 W/LKW		04	0107-				o o o o o o o o o o o o o o o o o o o o o o o o o o o o o
		6 01	1	**08120-8501E**	SCREW-HHM M8-1.25X50 W/LKW		02	0107-				o o o o o o o o o o o o o o o o o o o o o o o o o o o o o

SEC. 220B

IGNITION SYSTEM (QD32)

SISTEMA DE ENCENDIDO

ZÜNDANLAGE

SYSTEME D'ALLUMAGE

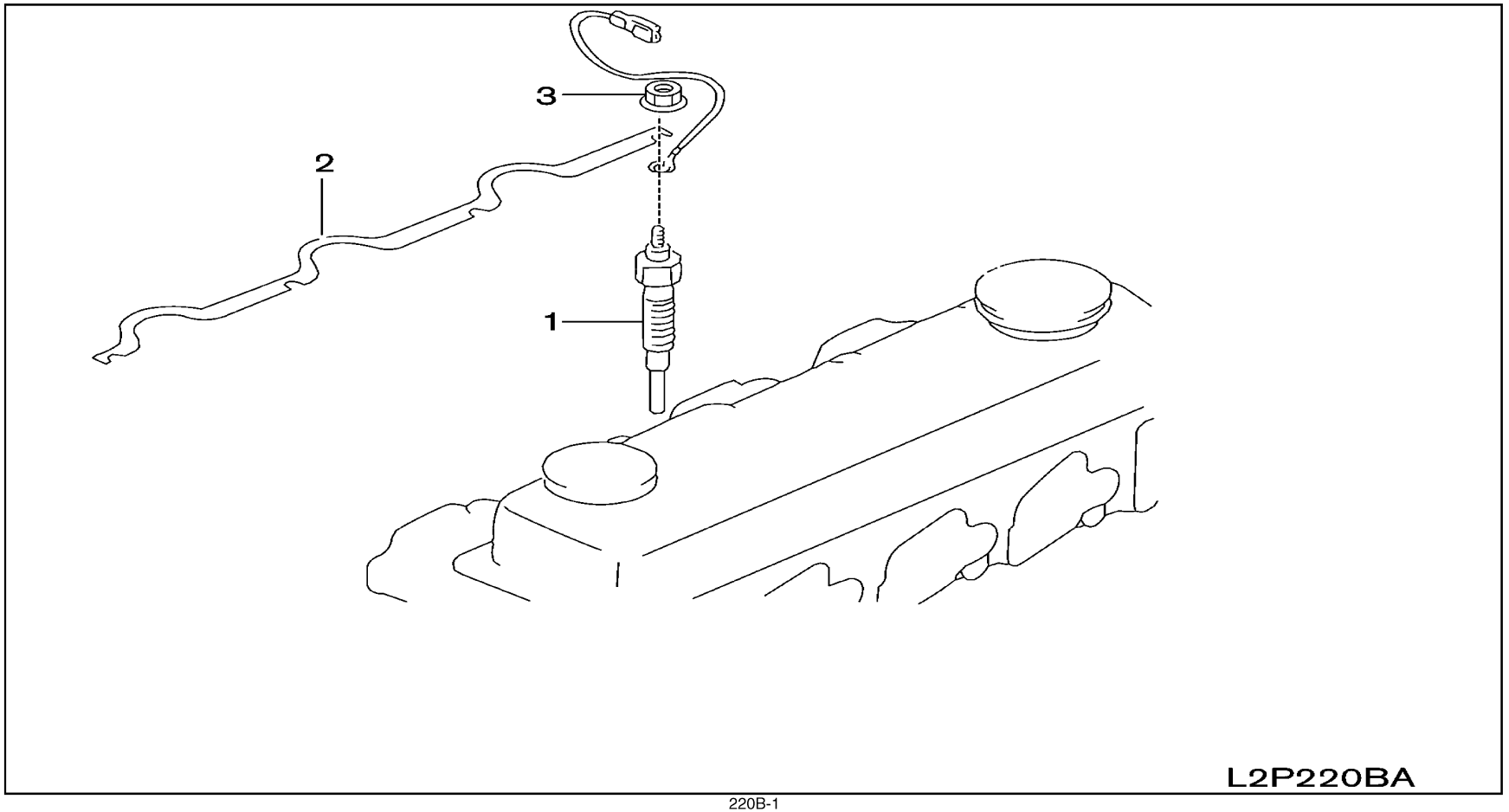

SEC. 220B

IGNITION SYSTEM (QD32)

SISTEMA DE ENCENDIDO

ZÜNDANLAGE

SYSTEME D'ALLUMAGE

NC	S	KEY NO.	LEV	PART NO.	PART NAME	SPECIFICATION	QTY	APPLIED DATE	ICANF	FORMER PART NO.	KD	APPLIED MODEL 01 02 03 04 05 06 07 08 09 10 11 12 13 14 15 16 17 18 19 20 21 22 23 24 25 26 27 28 29
		1 01	1	**11065-63G00**	PLUG-GLOW		04	0107-				○ ○ ○ ○ ○
		2 01	1	**11086-43G01**	CABLE ASSY		01	0107-				○ ○ ○ ○ ○
		3 01	1	**01221-02004**	NUT		04	0107-				○ ○ ○ ○ ○

SEC. 221A

DISTRIBUTOR (K21 & K25)

DISTRIBUIDOR

ZÜNDVERTEILER

ALLUMEUR

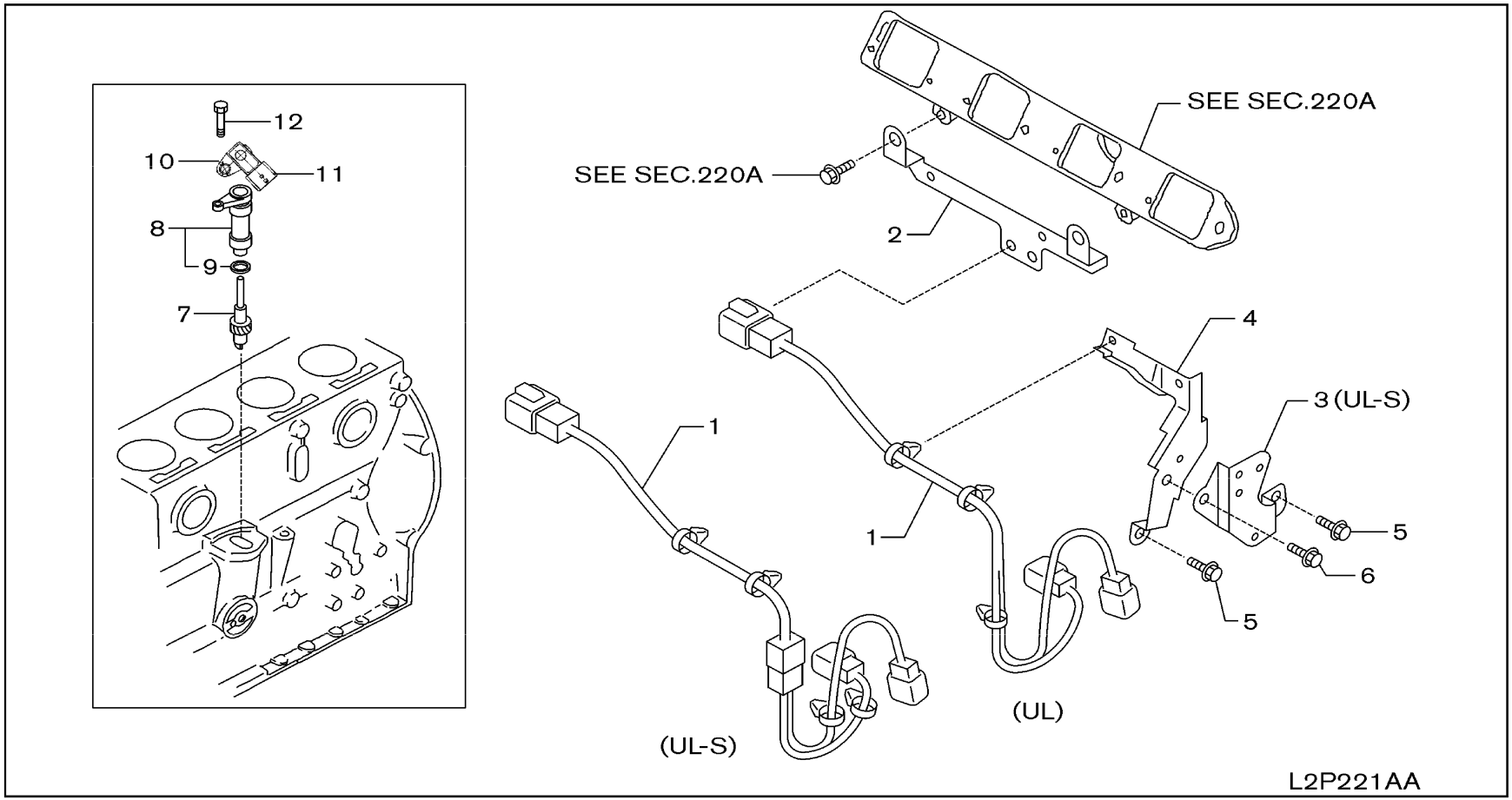

SEC. 221A

DISTRIBUTOR (K21 & K25)

DISTRIBUIDOR

ZÜNDVERTEILER

ALLUMEUR

NC	S	KEY NO.	LEV	PART NO.	PART NAME	SPECIFICATION	QTY	APPLIED DATE	ICANF	FORMER PART NO.	KD	APPLIED MODEL 01 02 03 04 05 06 07 08 09 10 11 12 13 14 15 16 17 18 19 20 21 22 23 24 25 26 27 28 29
		1 01	1	**24075-GY360**	HARNESS ASSY-SUB		01	0107-				○ ○
C		02	1	**24075-GS00A**			01	0107-1211				○ ○ ○ ○ ○ ○ ○ ○ ○
N		03	1	**24075-GY360**			01	1211-				○ ○ ○ ○ ○ ○ ○ ○ ○
		2 01	1	**24136-FU460**	BRACKET-SUB HARNESS		01	0107-				○ ○
C		**3** 01	1	**24136-GS00A**	BRACKET-SUB HARNESS		01	0107-1211				○ ○ ○ ○ ○ ○ ○ ○ ○
		4 01	1	**24136-GY360**	BRACKET-SUB HARNESS		01	0107-				○ ○
		5 01	1	**08120-8161E**	SCREW-HHM M8-1.25X16 W/LKW		01	0107-				○ ○
C		02	1	**08120-8161E**			02	0107-1211				○ ○ ○ ○ ○ ○ ○ ○ ○
N		03	1	**08120-8161E**			01	1211-				○ ○ ○ ○ ○ ○ ○ ○ ○
		6 01	1	**08120-8301E**	SCREW-HHM M8-1.25X30 W/LKW		01	0107-				○ ○
		7 01	1	**15040-FU46A**	SPINDLE ASSY-OIL PUMP DRIVE		01	0107-				○ ○
		8 01	1	**22177-GX11A**	SUPPORT ASSY-SPINDLE	USE WITH ENGINE PART NO. 10001-GSXXX	01	0107-0000				○ ○
		02	1	**22177-4K40A**		USE WITH ENGINE PART NO. 10001-4KXXX	01	0000-				○ ○
		9 01	1	**22131-55K10**	SEAL-O RING		01	0107-				○ ○
		10 01	1	**16563-4K40A**	CASE	USE WITH ENGINE PART NO. 10001-4KXXX	01	0000-				○ ○
		11 01	1	**22365-EY00A**	SENSOR-PRESSURE	USE WITH ENGINE PART NO. 10001-4KXXX	01	0000-				○ ○
		12 01	1	**08120-8351E**	SCREW	USE WITH ENGINE PART NO. 10001-GSXXX	01	0107-0000				○ ○
		02	1	**08146-6162G**		USE WITH ENGINE PART NO. 10001-4KXXX	01	0000-				○ ○

SEC. 223A

VACUUM PIPING (K21 & K25)

TUBERIA DE VACIO

UNTERDRUCKLEITUNG

CANALISATION A DEPRESSION

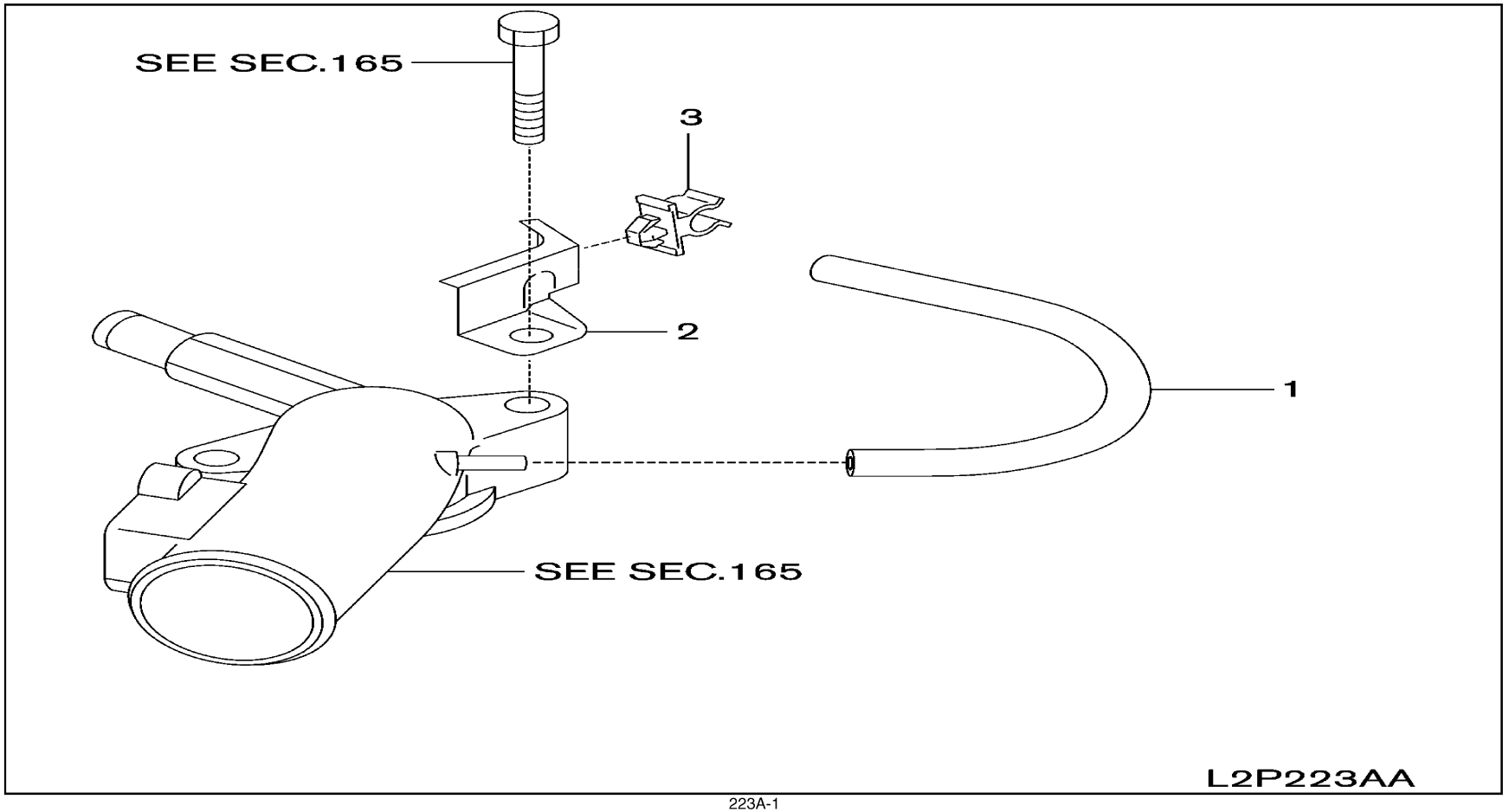

SEC. 223A

VACUUM PIPING (K21 & K25)

TUBERIA DE VACIO

UNTERDRUCKLEITUNG

CANALISATION A DEPRESSION

NC	S	KEY NO.	LEV	PART NO.	PART NAME	SPECIFICATION	QTY	APPLIED DATE	ICANF	FORMER PART NO.	KD	APPLIED MODEL 01 02 03 04 05 06 07 08 09 10 11 12 13 14 15 16 17 18 19 20 21 22 23 24 25 26 27 28 29
		1	01	1	**22318-GS04A**	HOSE-VACUUM CONTROL		01	0107-			○ ○
		2	01	1	**22317-GS04A**	BRACKET-HOSE CLAMP		01	0107-			○ ○
		3	01	1	**24220-VJ264**	CLIP		01	0107-			○ ○

APPLIED MODEL

01	02	03	04	05	06	07	08	09	10	11	12	13	14	15	16	17	18	19	20	21	22	23	24	25	26	27	28	29
MIPA20JV	MIPA20DV	MIPA20LV	MIPA20SV	MIUA20JV	MIUA20DV	MIUA20LV	MIUA20SV	MIYA205L	MIPA205V	MIPA205D	MIPA205L	MIPA205S	MIUA205J	MIUA205D	MIUA205L	MIUA205S	MIUY205L	MIUJA285J	MIUJA285D	MIUGA285L	MIUGA305J	MIUGA305D	MIUGA305L	MIUYA305	MIUGA355J	MIUGA355D	MIUGA355L	MIUYA355

SEC. 226A

ENGINE CONTROL MODULE (K21 & K25)

UNIDAD DE CONTROL EGI

EGI-STEUERGERÄT

UNITÉ DE COMMANDE EGI

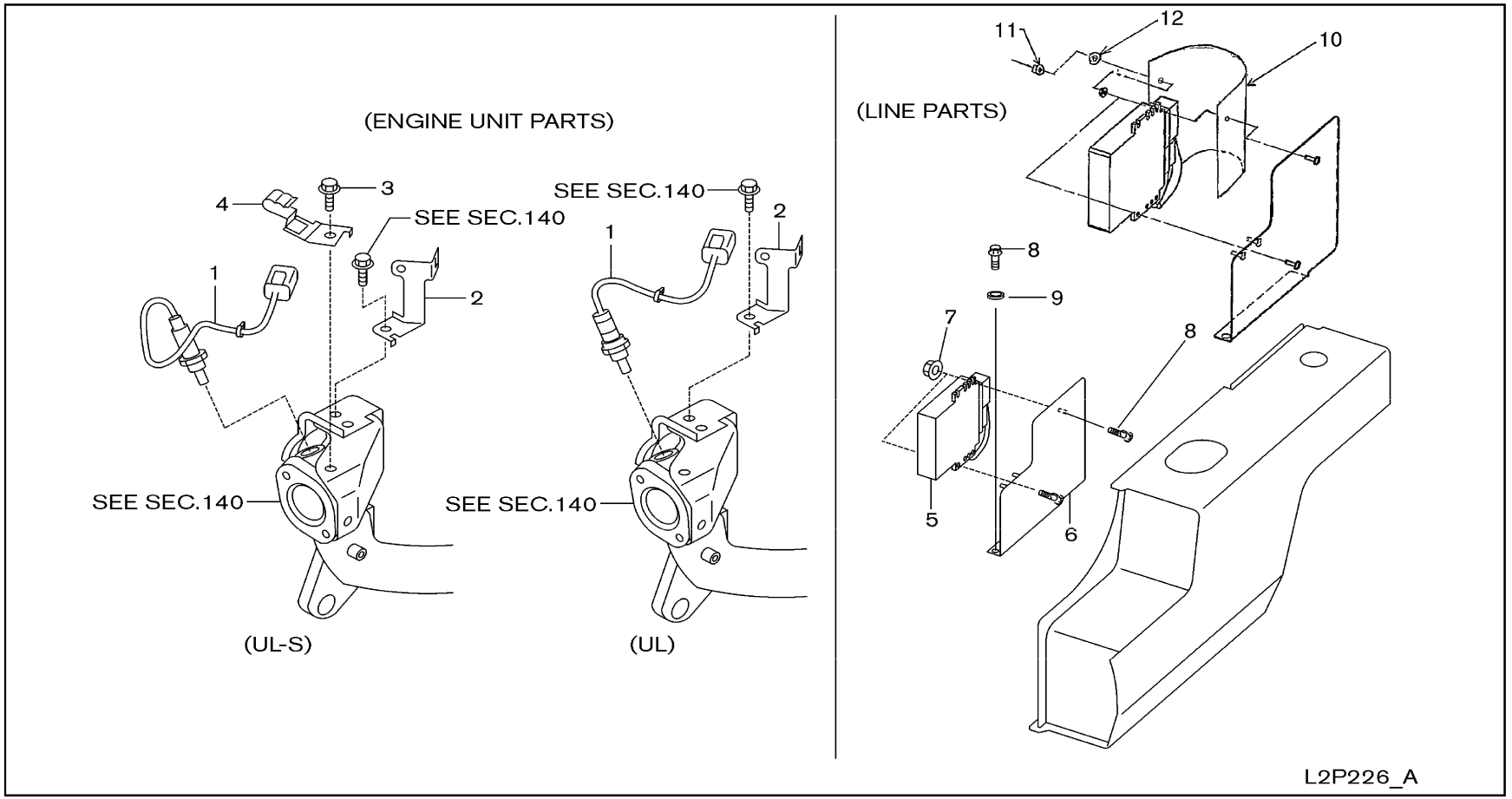

SEC. 226A

ENGINE CONTROL MODULE (K21 & K25)

UNIDAD DE CONTROL EGI

EGI-STEUERGERÄT

UNITÉ DE COMMANDE EGI

NC	S	KEY NO.	LEV	PART NO.	PART NAME	SPECIFICATION	QTY	APPLIED DATE	ICANF	FORMER PART NO.	KD	APPLIED MODEL 01 02 03 04 05 06 07 08 09 10 11 12 13 14 15 16 17 18 19 20 21 22 23 24 25 26 27 28 29
		1	01	1	**22690-GS00A**	HEATED OXYGEN SENSOR		01	0107-			○ ○
C			02	1	**22690-GU60A**			01	0107-1211			○ ○ ○ ○ ○ ○ ○ ○ ○ ○ ○ ○ ○
N			03	1	**22690-GS00A**			01	1211-			○ ○ ○ ○ ○ ○ ○ ○ ○ ○ ○ ○ ○
		2	01	1	**24210-GS00A**	CLAMP		01	0107-			○ ○
		3	01	1	**14069-82F00**	BOLT		01	0107-1107			○ ○ ○ ○ ○ ○ ○ ○ ○ ○ ○ ○ ○
C			02	1	**14069-82F0A**			01	1107-1211			○ ○ ○ ○ ○ ○ ○ ○ ○ ○ ○ ○ ○
C		**4**	01	1	**24210-GS00B**	CLAMP		01	0107-1211			○ ○ ○ ○ ○ ○ ○ ○ ○ ○ ○ ○ ○
		5	01	1	**23710-GS00A**	MODULE ASSY-ENGINE CONTROL		01	0107-0508			○ ○ ○ ○ ○ ○ ○ ○ ○ ○ ○ ○ ○
			02	1	**23710-GS03A**		USE WITH ENGINE PART NO. 10001-GSXXX	01	0508-0708			○ ○ ○ ○ ○ ○ ○ ○ ○ ○
			03	1	**23710-GS06A**		USE WITH ENGINE PART NO. 10001-GSXXX	01	0708-0000			○ ○ ○ ○ ○ ○ ○ ○ ○ ○
			04	1	**23710-4K40A**		USE WITH ENGINE PART NO. 10001-4KXXX	01	0000-			○ ○ ○ ○ ○ ○ ○ ○ ○ ○
			05	1	**23710-GS10A**			01	0107-0508			○ ○
			06	1	**23710-GS13A**		USE WITH ENGINE PART NO. 10001-GSXXX	01	0508-0708			○ ○
			07	1	**23710-GS16A**		USE WITH ENGINE PART NO. 10001-GSXXX	01	0708-0000			○ ○
			08	1	**23710-4K50A**		USE WITH ENGINE PART NO. 10001-4KXXX	01	0000-			○ ○
		6	01	1	**23712-GG10A**	BRACKET		01	0107-			○ ○
		7	01	1	**08911-10637**	NUT-HEX W/CON SPRW M6-1.0		02	0107-			○ ○
		8	01	1	**08110-8201G**	SCREW-HHM M8-1.25X20 W/SPRW		03	0107-			○ ○
		9	01	1	**08915-4381A**	WASHER-FLAT M8		01	0107-0407			○ ○
		10	01	1	**23712-FV801**	COVER-RUB ECM	F/ANTI RUST	01	0607-			* *
		11	01	1	**08911-10637**	NUT-HEX W/CON SPRW M6-1.0	F/ANTI RUST	01	0607-			* *
		12	01	1	**08915-4381A**	WASHER-FLAT M8	F/ANTI RUST	01	0607-			* *

SEC. 230A

ALTERNATOR FITTING (K21 & K25)

PARTES DE FIJACION DEL ALTERNADOR

LICHTMASCHINEN-BESCHLAGTEILE

PIECES DE FIXATION D'ALTERNATEUR

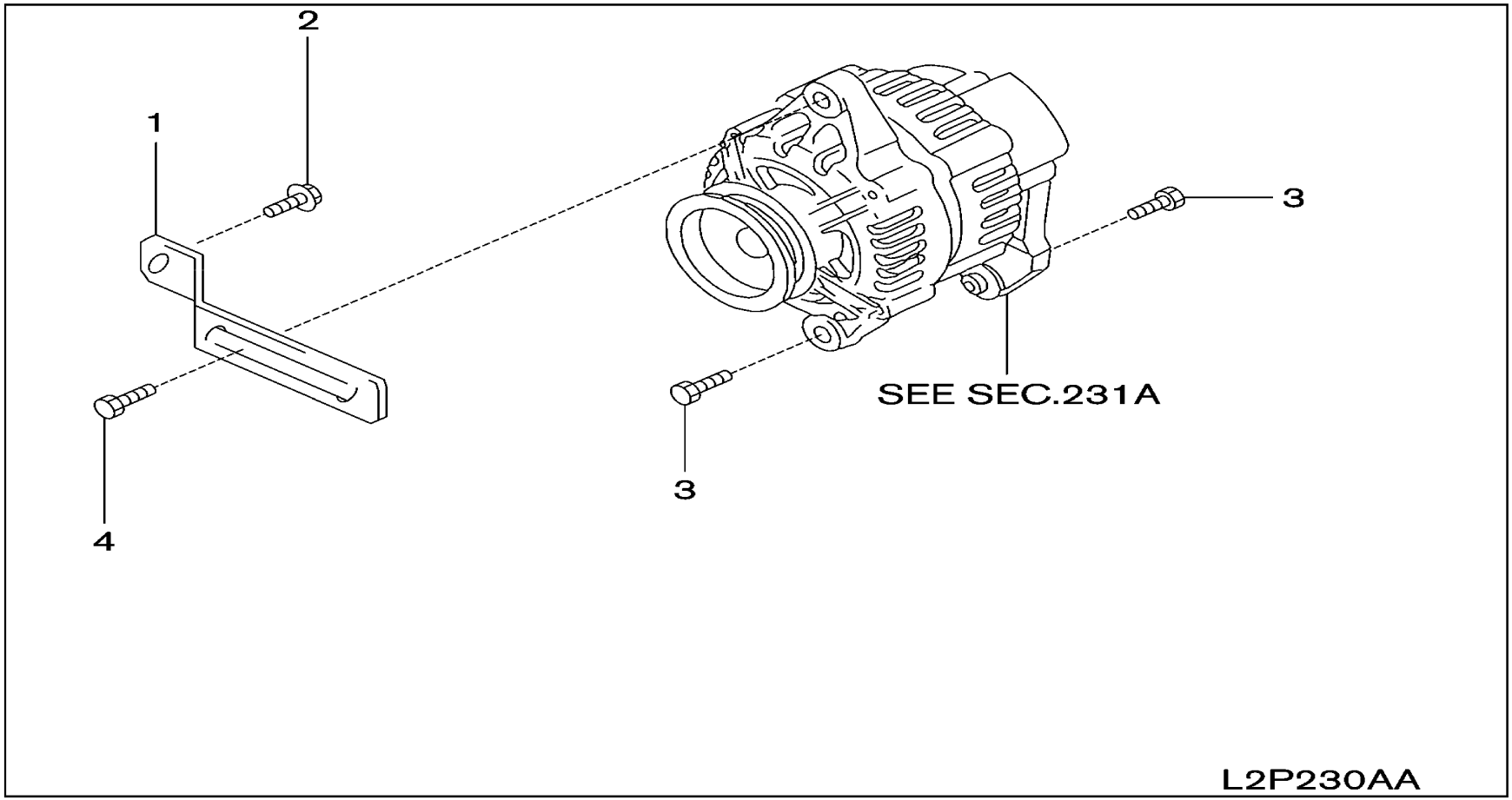

SEC. 230A

ALTERNATOR FITTING (K21 & K25)

PARTES DE FIJACION DEL ALTERNADOR

LICHTMASCHINEN-BESCHLAGTEILE

PIECES DE FIXATION D'ALTERNATEUR

NC	S	KEY NO.	LEV	PART NO.	PART NAME	SPECIFICATION	QTY	APPLIED DATE	ICANF	FORMER PART NO.	KD	APPLIED MODEL 01 02 03 04 05 06 07 08 09 10 11 12 13 14 15 16 17 18 19 20 21 22 23 24 25 26 27 28 29
C		**1** 01	1	**11715-FU400**	BAR-ADJUSTING, ATLERNATOR		01	0107-0511				o o o o o o o o o o o o o o o o o o o o o o o o o o o
N		02	1	**11715-FU40A**			01	0511-				o o o o o o o o o o o o o o o o o o o o o o o o o o o
		2 01	1	**08124-0201F**	SCREW-HHM M10-1.25X20 W/LK & PW		01	0107-				o o o o o o o o o o o o o o o o o o o o o o o o o o o
		3 01	1	**08120-8301F**	SCREW-HHM M8-1.25X30 W/LK & PW		02	0107-				o o o o o o o o o o o o o o o o o o o o o o o o o o o
		4 01	1	**08120-8201F**	SCREW-HHM M8-1.25X20 W/LK & PW		01	0107-				o o o o o o o o o o o o o o o o o o o o o o o o o o o

APPLIED MODEL

01	02	03	04	05	06	07	08	09	10	11	12	13	14	15	16	17	18	19	20	21	22	23	24	25	26	27	28	29
MIPA20JV	MIPA20DV	MIPA20LV	MIPA20SV	MIUA20JV	MIUA20DV	MIUA20LV	MIUA20SV	MIUA20LV	MIYA20JV	MIPA25DV	MIPA25LV	MIPA25LV	MIUA25JV	MIUA25DV	MIUA25LV	MIUA25SV	MIYA25LV	MIUJA28JV	MIUJA28DV	MIUGA28LV	MIUGA30JV	MIUGA30DV	MIUGA30LV	MIYA30LV	MIUJA35DV	MIUGA35LV	MIUGA35LV	MIYG35LV

SEC. 230B

ALTERNATOR FITTING (QD32)

PARTES DE FIJACION DEL ALTERNADOR

LICHTMASCHINEN-BESCHLAGTEILE

PIECES DE FIXATION D'ALTERNATEUR

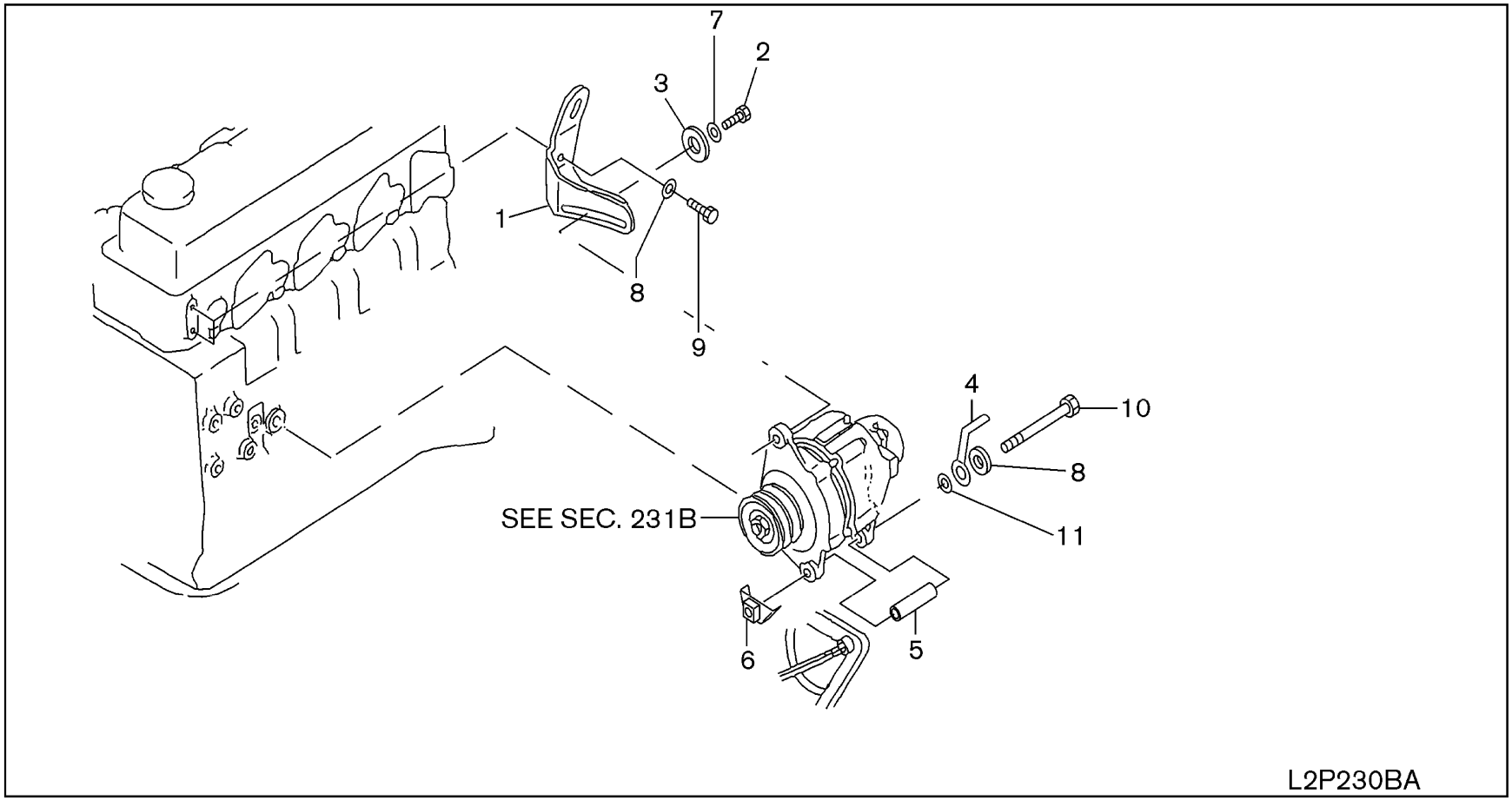

SEC. 230B

ALTERNATOR FITTING (QD32)

PARTES DE FIJACION DEL ALTERNADOR

LICHTMASCHINEN-BESCHLAGTEILE

PIECES DE FIXATION D'ALTERNATEUR

NC	S	KEY NO.	LEV	PART NO.	PART NAME	SPECIFICATION	QTY	APPLIED DATE	ICANF	FORMER PART NO.	KD	APPLIED MODEL 01	02	03	04	05	06	07	08	09	10	11	12	13	14	15	16	17	18	19	20	21	22	23	24	25	26	27	28	29
		1	01	1	**11715-NA00A**	BAR-ADJUSTING, ALTERNATOR		01	0107-											O								O										O
		2	01	1	**11716-6T000**	BOLT-SETTING		01	0107-0407											O								O										O
			02	1	**11716-6T00A**			01	0407-											O								O										O
		3	01	1	**33296-43G00**	WASHER-LOCK		01	0107-											O								O										O
		4	01	1	**24210-S090A**	CLAMP-HOSE		01	0107-											O								O										O
		5	01	1	**11713-40K00**	SPACER-ALTERNATOR		01	0107-											O								O										O
		6	01	1	**11719-37N00**	NUT-STOPPER		01	0107-1208											O								O										O
			02	1	**11719-37N0A**			01	1208-											O								O										O
		7	01	1	**08915-1381A**	WASHER-LOCK SPLIT M8		01	0107-											O								O										O
		8	01	1	**08915-1401A**	WASHER-LOCK SPLIT M10		02	0107-											O								O										O
		9	01	1	**08171-0201A**	SCREW-HHM M10-1.5X20 9T		02	0107-											O								O										O
		10	01	1	**08124-0051A**	BOLT-HEX		01	0107-											O								O										O
		11	01	1	**08915-4401A**	WASHER-FLAT M10		01	0107-											O								O										O

SEC. 231A

ALTERNATOR (K21 & K25)

ALTERNADOR

LICHTMASCHINE

ALTERNATEUR

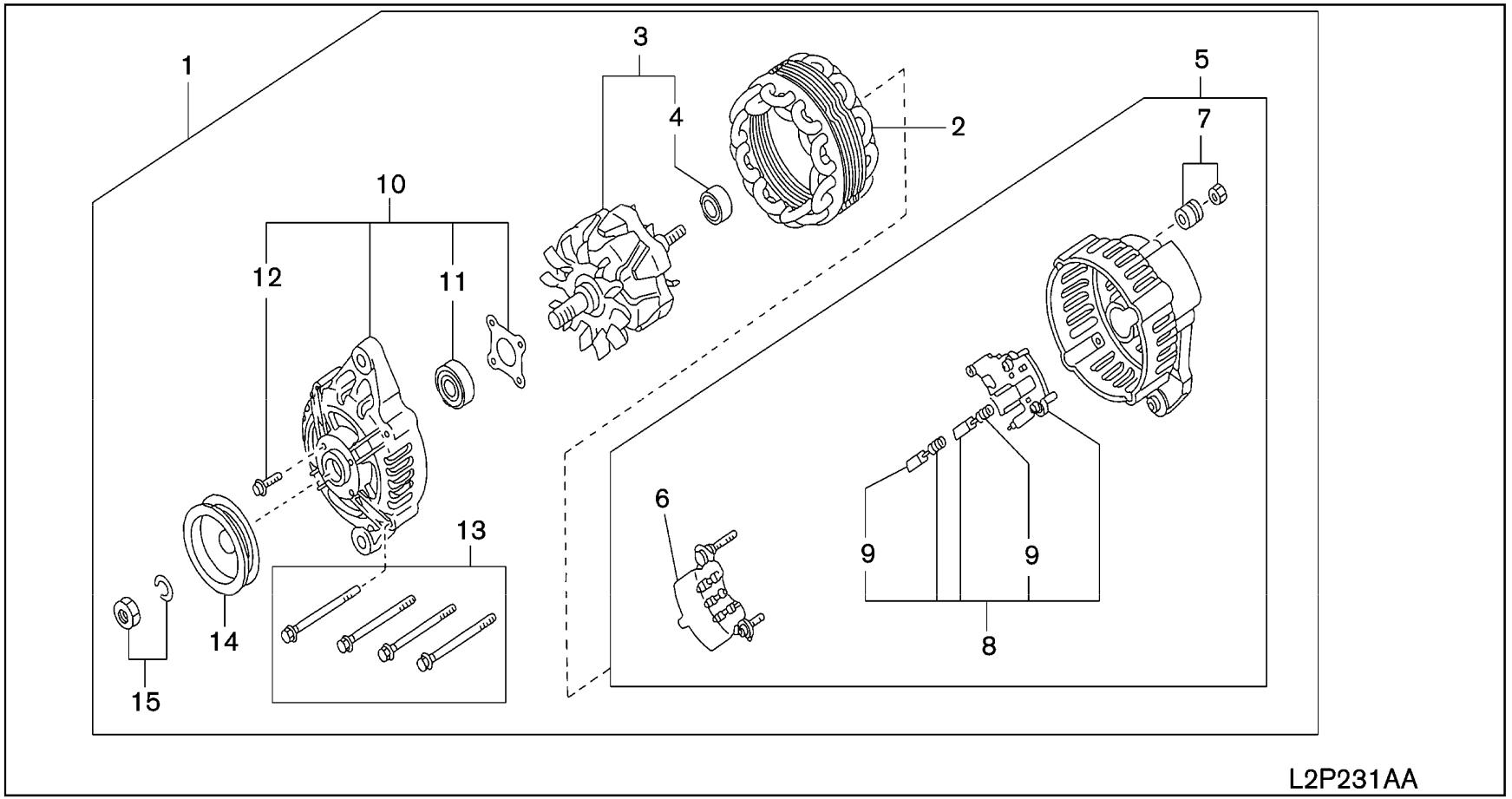

SEC. 231A

ALTERNATOR (K21 & K25)

ALTERNADOR

LICHTMASCHINE

ALTERNATEUR

NC	S	KEY NO.	LEV	PART NO.	PART NAME	SPECIFICATION	QTY	APPLIED DATE	ICANF	FORMER PART NO.	KD	APPLIED MODEL 01 02 03 04 05 06 07 08 09 10 11 12 13 14 15 16 17 18 19 20 21 22 23 24 25 26 27 28 29
		1	01	1	**23100-FU410**	ALTERNATOR ASSY		01	0107-			○ ○
			02	1	**23100-GY360**			01	0107-			○ ○ ○ ○ ○ ○ ○ ○ ○ ○ ○ ○ ○
		2	01	2	**23102-50K15**	STATOR ASSY		01	0107-			○ ○
			02	2	**23102-GY360**			01	0107-			○ ○ ○ ○ ○ ○ ○ ○ ○ ○ ○ ○ ○
		3	01	2	**23108-50K15**	ROTOR		01	0107-			○ ○
			02	2	**23108-GY360**			01	0107-			○ ○ ○ ○ ○ ○ ○ ○ ○ ○ ○ ○ ○
		4	01	3	**23120-30R10**	BEARING-BALL		01	0107-			○ ○
		5	01	2	**23127-FF110**	COVER ASSY-REAR		01	0107-			○ ○
			02	2	**23127-GY360**			01	0107-			○ ○ ○ ○ ○ ○ ○ ○ ○ ○ ○ ○ ○
		6	01	3	**23124-FF110**	RECTIFIER ASSY		01	0107-			○ ○
			02	3	**23124-GY360**			01	0107-			○ ○ ○ ○ ○ ○ ○ ○ ○ ○ ○ ○ ○
		7	01	3	**23156-0B000**	NUT-SET		01	0107-			○ ○
		8	01	3	**23215-3S416**	REGULATOR ASSY-IC		01	0107-			○ ○
			02	3	**23215-GY360**			01	0107-			○ ○ ○ ○ ○ ○ ○ ○ ○ ○ ○ ○ ○
		9	01	4	**23142-0B000**	BRUSH SET		02	0107-			○ ○
		10	01	2	**23118-47N10**	BRACKET ASSY-FRONT		01	0107-			○ ○
			02	2	**23118-GY360**			01	0107-			○ ○ ○ ○ ○ ○ ○ ○ ○ ○ ○ ○ ○
		11	01	3	**23120-22J20**	BEARING-BALL		01	0107-			○ ○
		12	01	3	**23115-47N10**	SCREW SET		01	0107-			○ ○
			02	3	**23115-20P10**			01	0107-			○ ○ ○ ○ ○ ○ ○ ○ ○ ○ ○ ○ ○
		13	01	2	**23131-20P10**	BOLT-THROUGH		01	0107-			○ ○
		14	01	2	**23150-FU410**	PULLEY ASSY		01	0107-			○ ○
			02	2	**23150-GY360**			01	0107-			○ ○ ○ ○ ○ ○ ○ ○ ○ ○ ○ ○ ○
		15	01	2	**23153-70T12**	NUT ASSY-PULLEY		01	0107-			○ ○

SEC. 231B

ALTERNATOR (QD32)

ALTERNADOR

LICHTMASCHINE

ALTERNATEUR

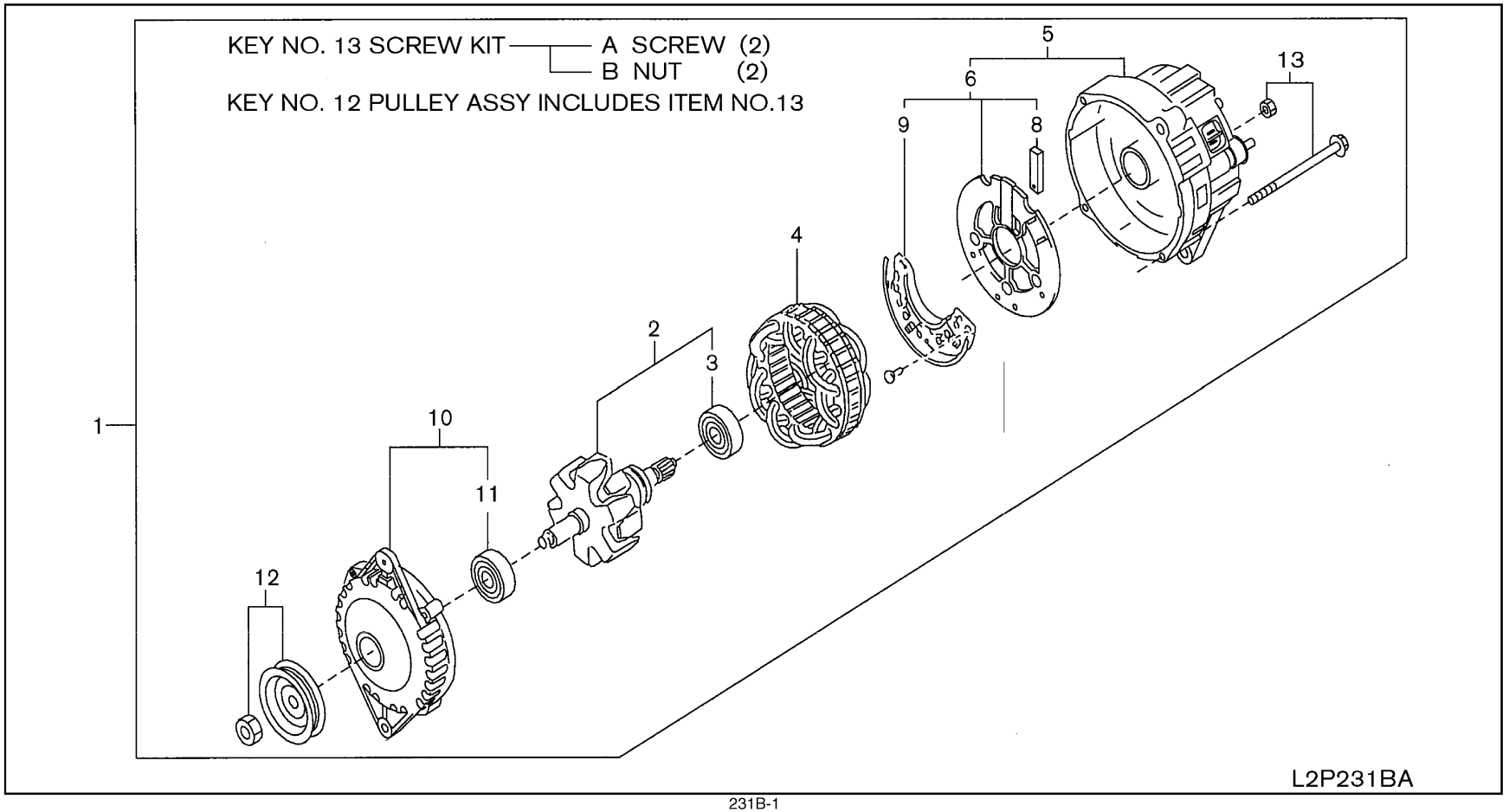

SEC. 231B

ALTERNATOR (QD32)

ALTERNADOR

LICHTMASCHINE

ALTERNATEUR

NC	S	KEY NO.	LEV	PART NO.	PART NAME	SPECIFICATION	QTY	APPLIED DATE	ICANF	FORMER PART NO.	KD
		1 01	1	**23100-NA00B**	ALTERNATOR ASSY		01	0107-			
		2 01	2	**23108-0S30A**	ROTOR ASSY		01	0107-			
		3 01	3	**23120-0M000**	BEARING-BALL		01	0107-			
		4 01	3	**23102-0S300**	STATOR ASSY		01	0107-			
		5 01	2	**23127-NA00A**	COVER ASSY-REAR		01	0107-			
		6 01	4	**23124-NA00B**	RECTIFIER ASSY		01	0107-			
		8 01	4	**23142-31U00**	BRUSH SET		01	0107-			
		9 01	3	**23230-7T402**	DIODE ASSY		01	0107-			
		10 01	2	**23118-7T40A**	COVER ASSY-FRONT		01	0107-			
		11 01	2	**23120-0M00A**	BEARING-BALL		01	0107-			
		12 01	2	**23150-65N0A**	PULLEY ASSY		01	0107-			
		13 01	2	**23200-CN10A**	SCREW SET		01	0107-			

APPLIED MODEL

	MIPV	MIPV	MIPS	MIUV	MIUV	MIUV	MIUS	MIUL	MIYV	MIPV	MIPV	MIPV	MIUV	MIUV	MIUV	MIUV	MIYV	MJUV	MJUV	MGUV	MGUV	MGUV	MGYV	MGUV	MGUV	MGUV	MGYV
	A20JV	A20DV	A20LS	A20JV	A20DV	A20LV	A20DS	A20LV	A20LS	A25JV	A25DV	A25LV	A25JS	A25DV	A25LV	A25LS	A25LV	A28JV	A28DV	A28LV	A30JV	A30DV	A30LV	A30LV	A35JV	A35DV	A35LV	A35LV
01																											
02																											
03																											
04																											
05																											
06																											
07																											
08																											
09	O	O	O	O	O	O	O	O	O	O	O	O	O	O	O	O	O	O	O	O	O	O	O	O	O	O	O
10																											
11																											
12																											
13																											
14																											
15																											
16																											
17																											
18	O	O	O	O	O	O	O	O	O	O	O	O	O	O	O	O	O	O	O	O	O	O	O	O	O	O	O
19																											
20																											
21																											
22																											
23																											
24																											
25	O	O	O	O	O	O	O	O	O	O	O	O	O	O	O	O	O	O	O	O	O	O	O	O	O	O	O
26																											
27																											
28																											
29	O	O	O	O	O	O	O	O	O	O	O	O	O	O	O	O	O	O	O	O	O	O	O	O	O	O	O

SEC. 233A

STARTER MOTOR (K21 & K25)

MOTOR DE ARRANQUE

ANLASSER

DEMARREUR

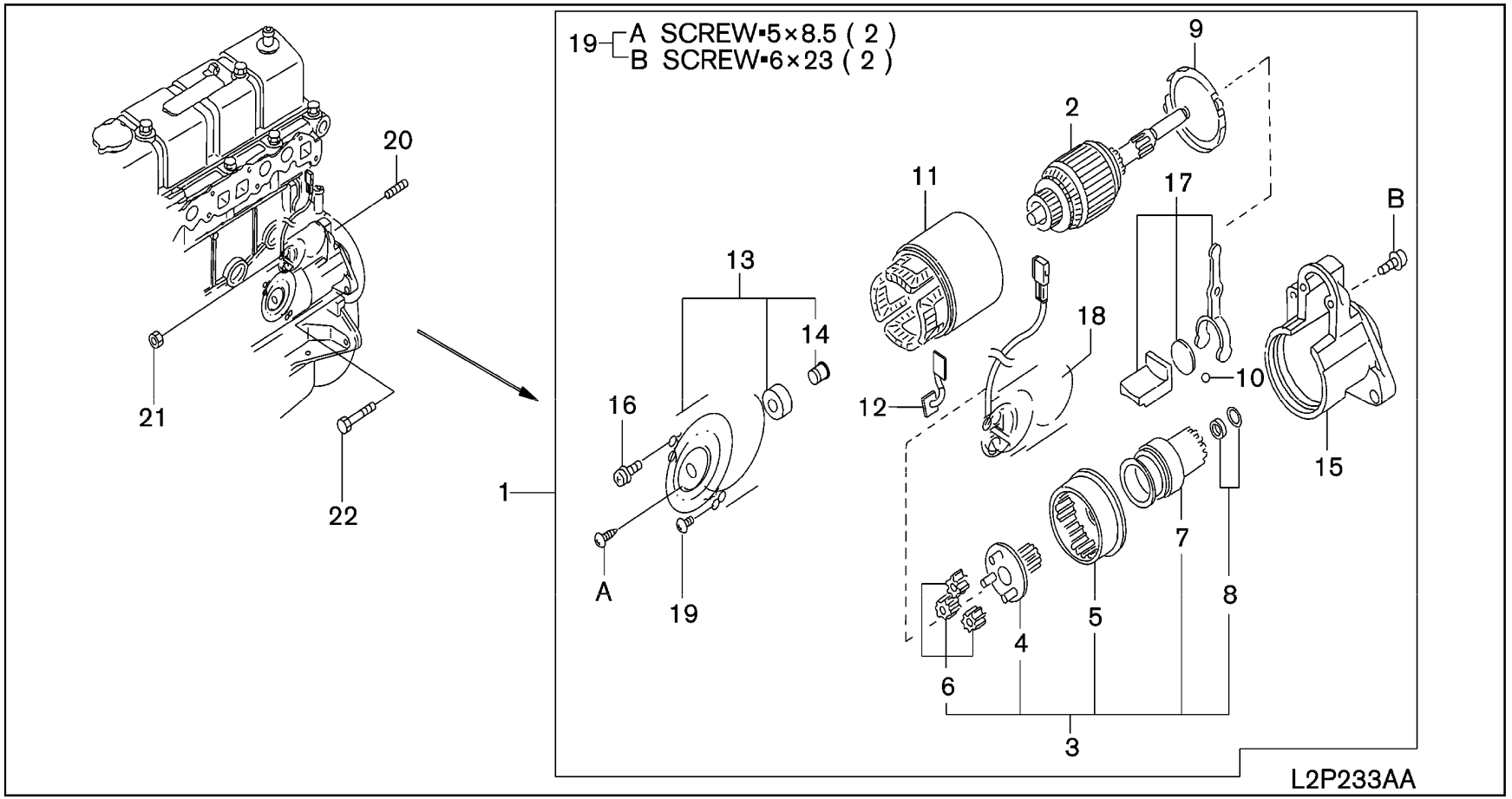

SEC. 233A

STARTER MOTOR (K21 & K25)

MOTOR DE ARRANQUE

ANLASSER

DEMARREUR

NC	S	KEY NO.	LEV	PART NO.	PART NAME	SPECIFICATION	QTY	APPLIED DATE	ICANF	FORMER PART NO.	KD	APPLIED MODEL 01 02 03 04 05 06 07 08 09 10 11 12 13 14 15 16 17 18 19 20 21 22 23 24 25 26 27 28 29
		1	01	1	**23300-GS20A**	MOTOR ASSY-STARTER		01	0107-0309			○○○○○○○○○ ○○○○○○○○○○ ○○○○○○○ ○○○
			02	1	**23300-GS20B**			01	0309-			○○○○○○○○○ ○○○○○○○○○○ ○○○○○○○ ○○○
		2	01	2	**23310-0M210**	ARMATURE ASSY		01	0107-			○○○○○○○○○ ○○○○○○○○○○ ○○○○○○○ ○○○
		3	01	2	**23312-0W010**	PINION ASSY		01	0107-			○○○○○○○○○ ○○○○○○○○○○ ○○○○○○○ ○○○
		4	01	3	**23312-1S710**	PINION ASSY		01	0107-			○○○○○○○○○ ○○○○○○○○○○ ○○○○○○○ ○○○
		5	01	3	**23360-0M210**	GEAR & SHAFT SET		01	0107-			○○○○○○○○○ ○○○○○○○○○○ ○○○○○○○ ○○○
		6	01	3	**23361-42L70**	GEAR		03	0107-			○○○○○○○○○ ○○○○○○○○○○ ○○○○○○○ ○○○
		7	01	3	**23354-W9810**	CLUTCH ASSY		01	0107-			○○○○○○○○○ ○○○○○○○○○○ ○○○○○○○ ○○○
		8	01	3	**23465-W9810**	STOPPER SET-PINION		01	0107-			○○○○○○○○○ ○○○○○○○○○○ ○○○○○○○ ○○○
		9	01	2	**23385-50Y12**	PACKING		01	0107-			○○○○○○○○○ ○○○○○○○○○○ ○○○○○○○ ○○○
		10	01	2	**23325-42L70**	BEARING		01	0107-			○○○○○○○○○ ○○○○○○○○○○ ○○○○○○○ ○○○
		11	01	2	**23302-6J010**	YOKE		01	0107-			○○○○○○○○○ ○○○○○○○○○○ ○○○○○○○ ○○○
		12	01	2	**23381-FU410**	BRUSH SET		01	0107-			○○○○○○○○○ ○○○○○○○○○○ ○○○○○○○ ○○○
		13	01	2	**23337-0W011**	COVER ASSY-REAR		01	0107-			○○○○○○○○○ ○○○○○○○○○○ ○○○○○○○ ○○○
		14	01	3	**23338-01N10**	METAL-REAR COVER		01	0107-			○○○○○○○○○ ○○○○○○○○○○ ○○○○○○○ ○○○
		15	01	2	**23318-FU410**	BRUSH SET		01	0107-			○○○○○○○○○ ○○○○○○○○○○ ○○○○○○○ ○○○
		16	01	2	**23340-0M210**	BOLT-THROUGH		01	0107-			○○○○○○○○○ ○○○○○○○○○○ ○○○○○○○ ○○○
		17	01	2	**23322-50Y12**	LEVER SET-SHIFT		01	0107-			○○○○○○○○○ ○○○○○○○○○○ ○○○○○○○ ○○○
		18	01	2	**23343-GS20A**	SWITCH ASSY-MAGNETIC		01	0107-			○○○○○○○○○ ○○○○○○○○○○ ○○○○○○○ ○○○
		19	01	2	**23480-M0110**	SCREW SET		01	0107-			○○○○○○○○○ ○○○○○○○○○○ ○○○○○○○ ○○○
		20	01	1	**08261-02510**	STUD-FINE M10-1.25		01	0107-			○○○○○○○○○ ○○○○○○○○○○ ○○○○○○○ ○○○
		21	01	1	**08911-1401G**	NUT-HEX		01	0107-			○○○○○○○○○ ○○○○○○○○○○ ○○○○○○○ ○○○
		22	01	1	**08124-0251F**	SCREW-HHM M10-1.25X25 W/LK & PW		01	0107-			○○○○○○○○○ ○○○○○○○○○○ ○○○○○○○ ○○○

SEC. 233B

STARTER MOTOR (QD32)

MOTOR DE ARRANQUE

ANLASSER

DEMARREUR

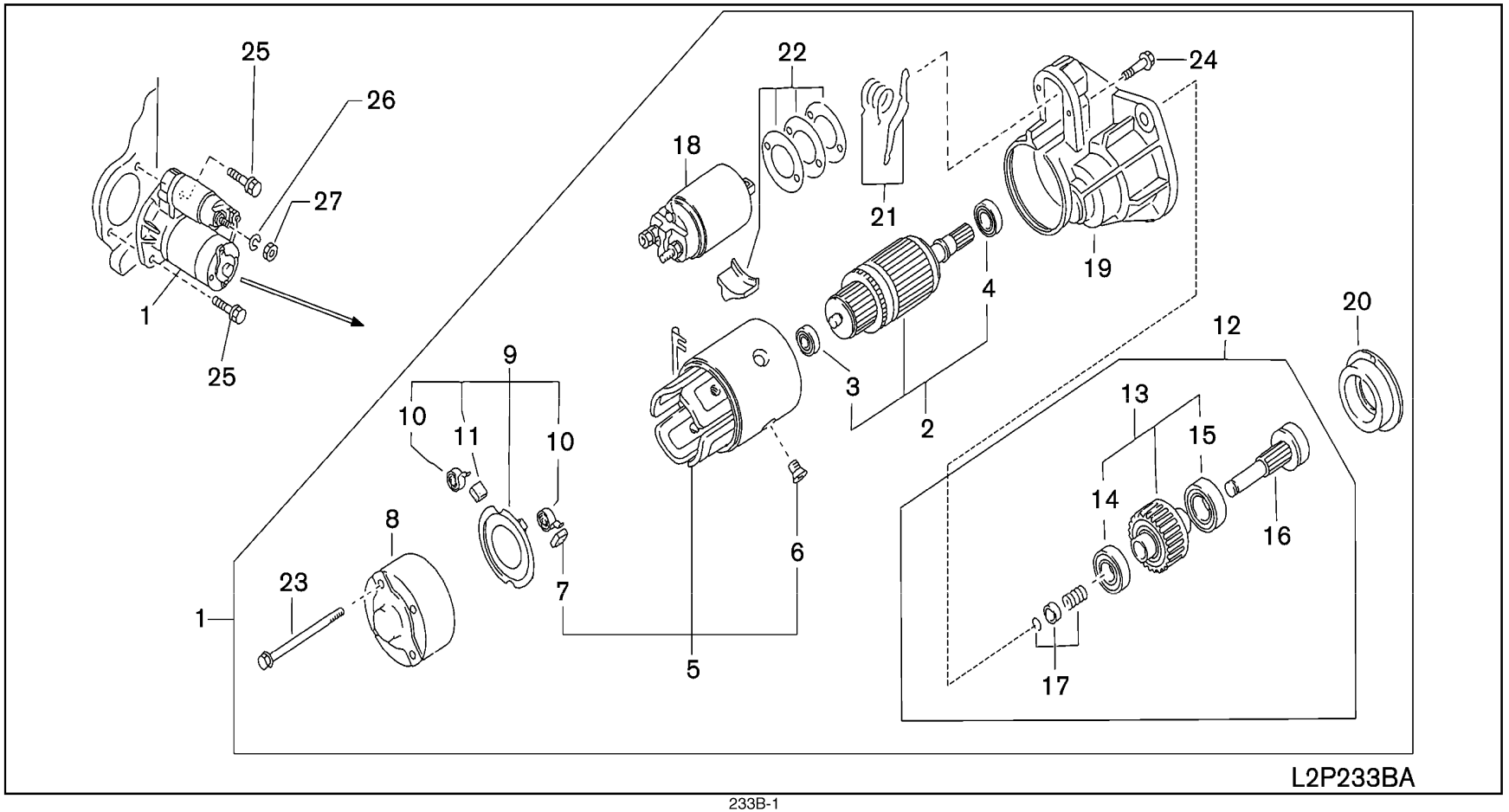

SEC. 233B

STARTER MOTOR (QD32)

MOTOR DE ARRANQUE

ANLASSER

DEMARREUR

NC	S	KEY NO.	LEV	PART NO.	PART NAME	SPECIFICATION	QTY	APPLIED DATE	ICANF	FORMER PART NO.	KD	APPLIED MODEL 01 02 03 04 05 06 07 08 09 10 11 12 13 14 15 16 17 18 19 20 21 22 23 24 25 26 27 28 29
		1 01	1	**23300-1W400**	MOTOR ASSY-STARTER		01	0107-				O O O O
		2 01	2	**23310-0Y000**	ARMATURE ASSY-STARTER		01	0107-				O O O O
		3 01	3	**23319-M4900**	BEARING-GEAR CASE		01	0107-				O O O O
		4 01	3	**23338-M4900**	BEARING-REAR COVER		01	0107-				O O O O
		5 01	2	**23306-1W400**	COIL ASSY-FIELD		01	0107-				O O O O
		6 01	3	**23305-09500**	SCREW-POLE CORE SET		04	0107-				O O O O
		7 01	3	**23379-1W400**	BRUSH-MINUS		02	0107-				O O O O
		8 01	2	**23337-0Y000**	COVER ASSY-REAR		01	0107-				O O O O
		9 01	2	**23378-1W400**	HOLDER ASSY-BRUSH		01	0107-				O O O O
		10 01	3	**23333-W2500**	SPRING-BRUSH		04	0107-				O O O O
		11 01	3	**23379-1W400**	BRUSH-PLUS		02	0107-				O O O O
		12 01	2	**23312-6T000**	PINION ASSY		01	0107-				O O O O
		13 01	3	**23354-6T000**	CLUTCH ASSY		01	0107-				O O O O
		14 01	4	**23358-07G00**	BEARING		01	0107-				O O O O
		15 01	4	**23363-07G00**	BEARING		01	0107-				O O O O
		16 01	3	**23357-6T000**	SHAFT-PINION		01	0107-				O O O O
		17 01	3	**23465-M4900**	STOPPER SET-PINION		01	0107-				O O O O
		18 01	2	**23343-6T000**	SWITCH ASSY-MAGNETIC		01	0107-				O O O O
		19 01	2	**23318-6T000**	CASE ASSY-GEAR		01	0107-				O O O O
		20 01	3	**23341-43G00**	RETAINER-BEARING		01	0107-				O O O O
		21 01	2	**23322-6T000**	LEVER SET-SHIFT		01	0107-				O O O O
		22 01	2	**23470-6T000**	COVER SET-DUST		01	0107-				O O O O
		23 01	2	**23340-0Y000**	BOLT-THROUGH		02	0107-				O O O O
		24 01	2	**23344-57J05**	SCREW		02	0107-				O O O O
		25 01	1	**08124-0251E**	SCREW-HHM M10-1.25X25 W/PW		02	0107-				O O O O
		26 01	1	**08915-1381A**	WASHER-LOCK SPLIT M8		01	0107-				O O O O
		27 01	1	**08911-3081A**	NUT-HEX M8-1.25 4T		01	0107-				O O O O

NOTE

GROUP INDEX

BODY ELECTRICAL

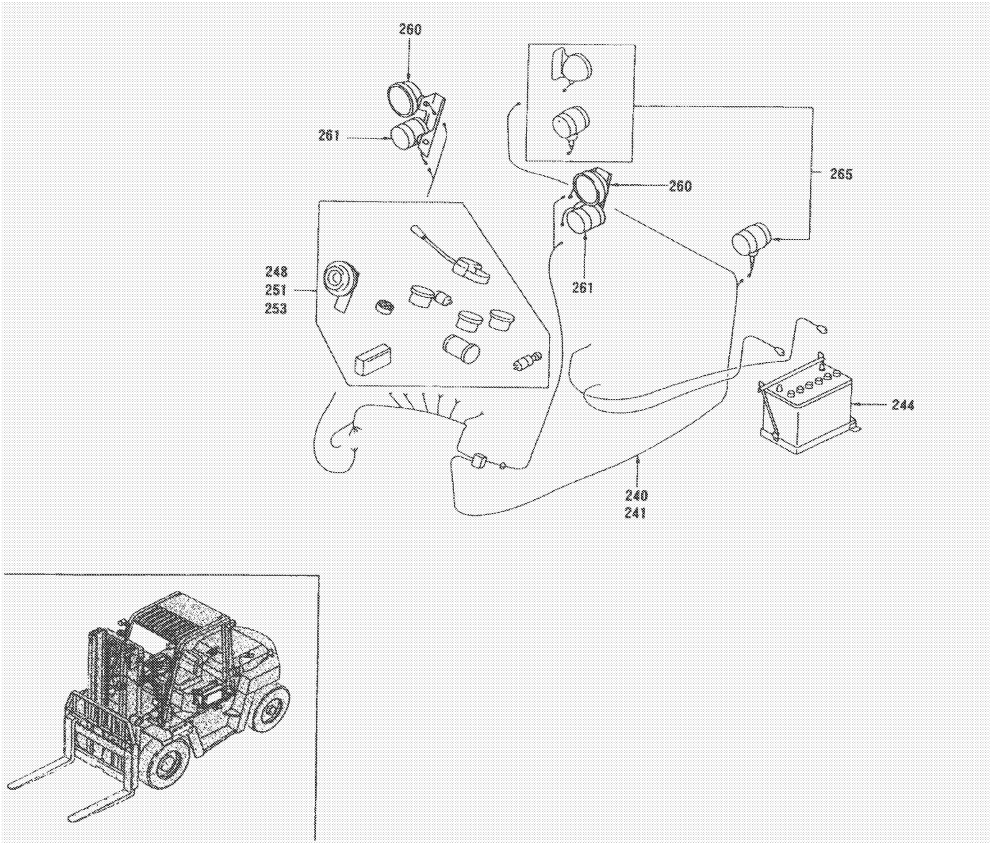

SEC.NO	SECTION NAME
240	WIRING ENGINE ROOM & INSTRUMENT
241A1	WIRING (BODY) (K21 & K25) PART 1
241A2	WIRING (BODY) (K21 & K25) PART 2
241B1	WIRING (BODY) (QD32) PART 1
241B2	WIRING (BODY) (QD32) PART 2
244	BATTERY & BATTERY MOUNTING
248	INSTRUMENT METER & GAUGE
251	SWITCH
253	ELECTRICAL UNIT
260	HEAD LAMP
261	FRONT COMBINATION LAMP
265	REAR COMBINATION LAMP
267	LAMPS (OTHERS)

E

*ILLSTRATIONS SHOWN IN GENERAL INDEX AND GROUP INDEX ARE GENARALIZED DESCRIPTIONS FOR ALL MODELS AND ARE NOT PRECISE IN ALL DETAILS.

SEC. 240

WIRING ENGINE ROOM & INSTRUMENT

CABLEADO COMPARTIMIENTO DEL MOTOR E INSTRUMENTOS

KABELBAUM MOTORRAUM & INSTRUMENT

CABLAGE COMPARTIMENT MOTEUR & TABLEAU DE BORD

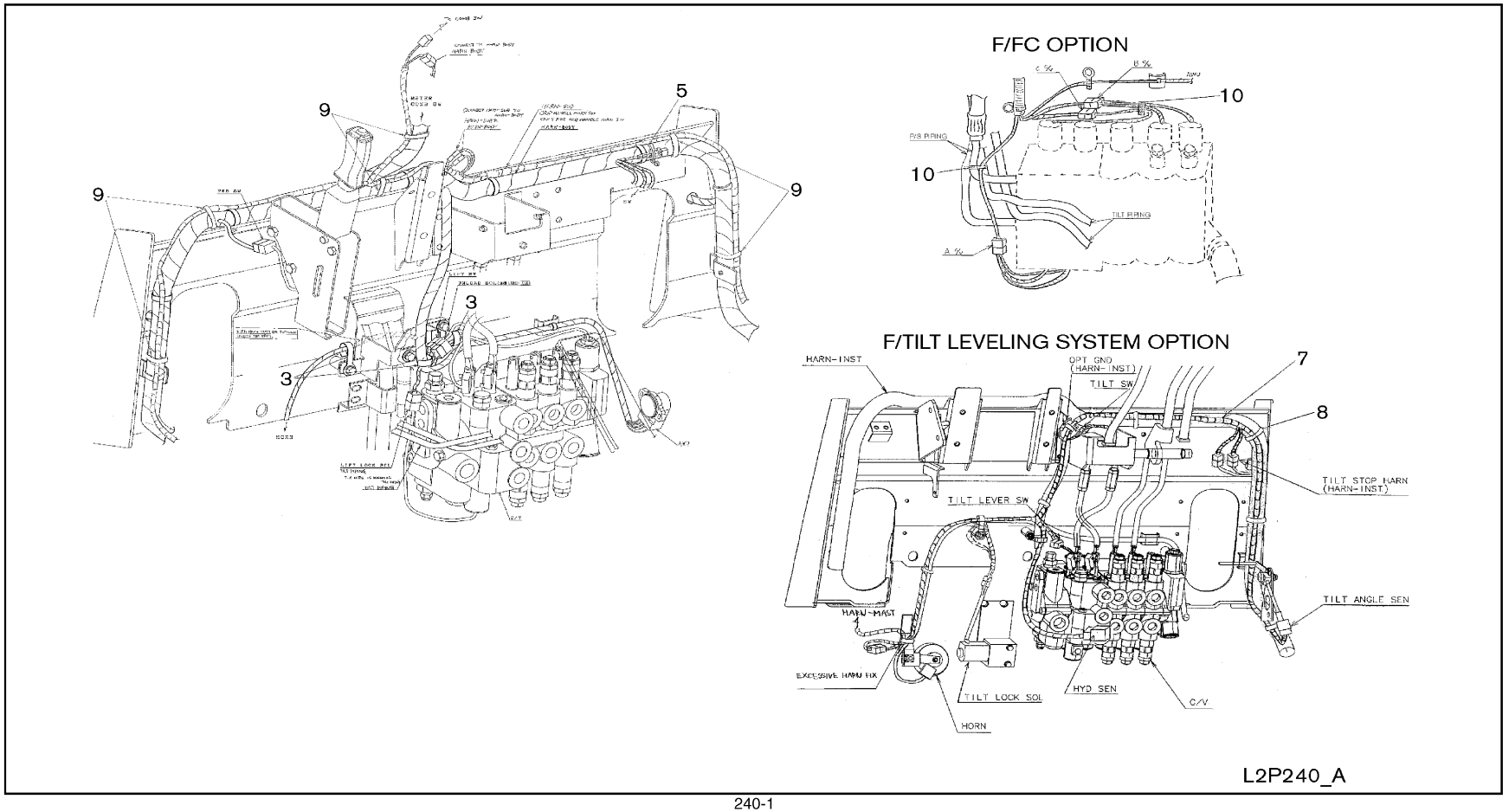

SEC. 240

WIRING ENGINE ROOM & INSTRUMENT

CABLEADO COMPARTIMIENTO DEL MOTOR E INSTRUMENTOS

KABELBAUM MOTORRAUM & INSTRUMENT

CABLAGE COMPARTIMENT MOTEUR & TABLEAU DE BORD

NC	S	KEY NO.	LEV	PART NO.	PART NAME	SPECIFICATION	QTY	APPLIED DATE	TCANF	FORMER PART NO.	KD	APPLIED MODEL 01	02	03	04	05	06	07	08	09	10	11	12	13	14	15	16	17	18	19	20	21	22	23	24	25	26	27	28	29
		3 01	1	24210-89944	CLIP-WIRING HARNESS		03	0107-				O	O	O	O	O	O	O	O	O	O	O	O	O	O	O	O	O	O	O	O	O	O	O	O	O	O	O	O
		5 01	1	01552-00411	CLIP		01	0107-				O	O	O	O	O	O	O	O	O	O	O	O	O	O	O	O	O	O	O	O	O	O	O	O	O	O	O	O
		7 01	1	24018-FJ401	HARNESS-INST SUB	F/TILT LEVELING SYSTEM	01	0107-				*	*	*	*	*	*	*	*	*	*	*	*	*	*	*	*	*	*	*	*	*	*	*	*	*	*	*	*
		02	1	24018-GG10A		F/FC TILT LEVELING SYSTEM	01	0507-				*	*	*		*	*	*		*	*	*	*		*	*	*		*										
		8 01	1	24216-S5802	CLIP	F/TILT LEVELING SYSTEM	08	0107-				*	*	*	*	*	*	*	*	*	*	*	*	*	*	*	*	*	*	*	*	*	*	*	*	*	*	*	*
		9 01	1	01552-00411	CLIP	F/SWIVEL SEAT	06	0107-				*	*	*	*	*	*	*	*	*	*	*	*	*	*	*	*	*	*	*	*	*	*	*	*	*	*	*	*
		10 01	1	01552-00411	CLIP	F/FC	02	0507-				*	*	*		*	*	*		*	*	*	*		*	*	*		*										

SEC. 241A1

WIRING (BODY) (K21 & K25) PART 1

CABLEADO CARROCERIA

KABELBAUM KAROSSERIE

CABLAGE CARROSSERIE

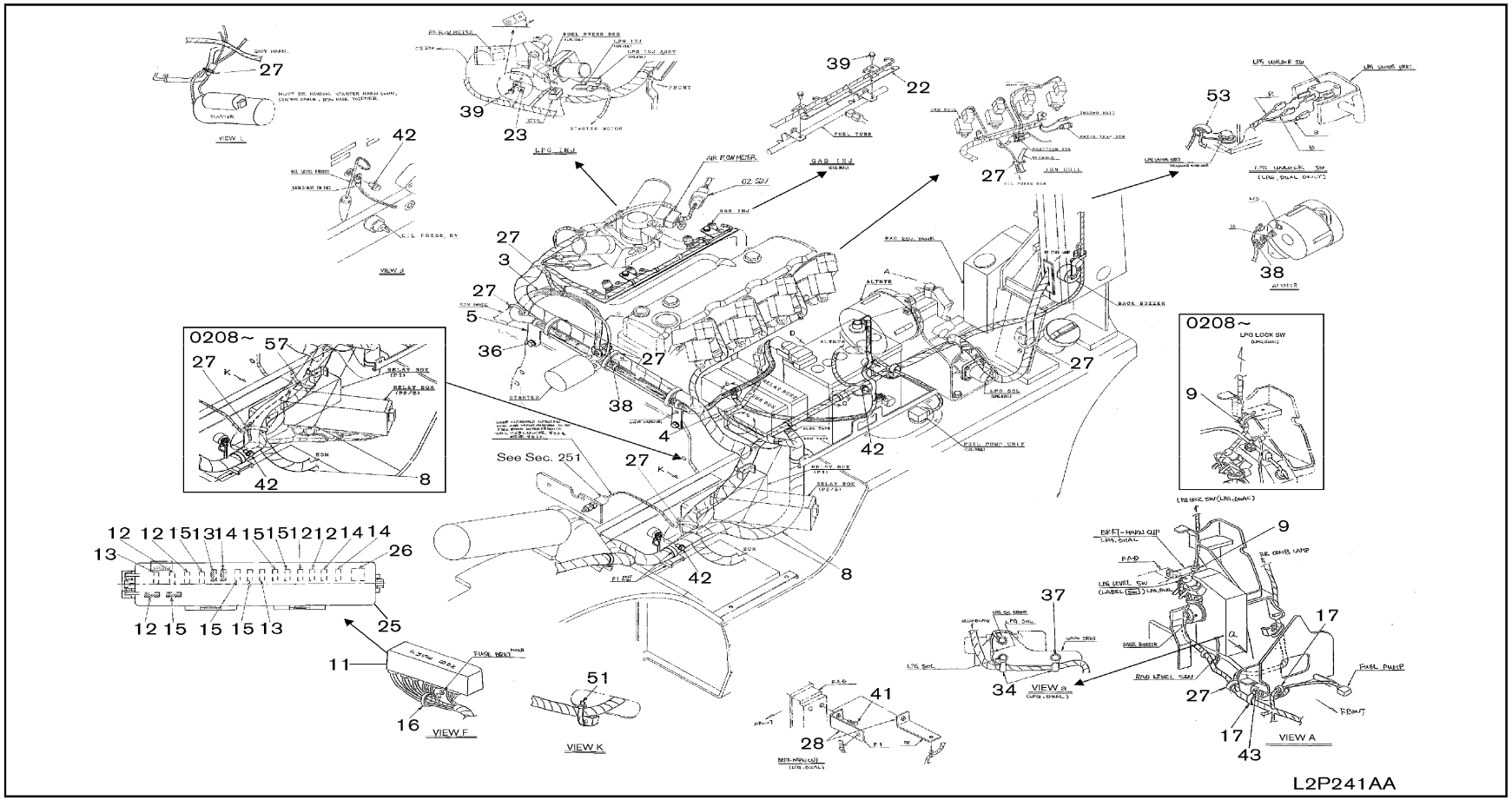

241A1-1

SEC. 241A1

WIRING (BODY) (K21 & K25) PART 1

CABLEADO CARROCERIA

KABELBAUM KAROSSERIE

CABLAGE CARROSSERIE

NC	S	KEY NO.	LEV	PART NO.	PART NAME	SPECIFICATION	QTY	APPLIED DATE	ICANF	FORMER PART NO.	KD	APPLIED MODEL 01 02 03 04 05 06 07 08 09 10 11 12 13 14 15 16 17 18 19 20 21 22 23 24 25 26 27 28 29
		3	01	1	**24110-FJ360**	CABLE ASSY-BATTERY TO STARTER MOTOR		01	0107-			○ ○
			02	1	**24116-FK405**			01	0107-			○ ○ ○ ○ ○ ○ ○ ○ ○ ○
		4	01	1	**24080-FK111**	CABLE ASSY-BATTERY TO ENGINE		01	0107-			○ ○
		5	01	1	**24238-FK100**	BRACKET-CLIP		01	0107-			○ ○
		8	01	1	**24014-GG10A**	HARNESS-CHASSIS		01	0107-1207			○ ○ ○ ○ ○ ○ ○ ○ ○ ○
			02	1	**24014-GG14A**			01	1207-0508			○ ○ ○ ○ ○ ○ ○ ○ ○ ○
			03	1	**24014-GG11A**		USE WITH ENGINE PART NO. 10001-GSXXX	01	0508-0000			○ ○ ○ ○ ○ ○ ○ ○ ○ ○
			04	1	**24014-GG12A**		USE WITH ENGINE PART NO. 10001-4KXXX	01	0000-			○ ○ ○ ○ ○ ○ ○ ○ ○ ○
			05	1	**24014-GG10B-T**		F/ANTI RUST	01	0107-1207			✱ ✱ ✱ ✱ ✱ ✱ ✱ ✱ ✱ ✱
			06	1	**24014-GG14B-T**		F/ANTI RUST	01	1207-0508			✱ ✱ ✱ ✱ ✱ ✱ ✱ ✱ ✱ ✱
			07	1	**24014-GG11B-T**		F/ANTI RUST USE WITH ENGINE PART NO. 10001-GSXXX	01	0508-0000			✱ ✱ ✱ ✱ ✱ ✱ ✱ ✱ ✱ ✱
			08	1	**24014-GG12B-T**		F/ANTI RUST USE WITH ENGINE PART NO. 10001-4KXXX	01	0000-			✱ ✱ ✱ ✱ ✱ ✱ ✱ ✱ ✱ ✱
			09	1	**24014-GG10C**		F/FC	01	0507-1107			✱ ✱ ✱ ✱ ✱ ✱ ✱
			10	1	**24014-GG14C**		F/FC	01	1107-0508			✱ ✱ ✱ ✱ ✱ ✱ ✱
			11	1	**24014-GG11C**		F/FC USE WITH ENGINE PART NO. 10001-GSXXX	01	0508-0000			✱ ✱ ✱ ✱ ✱ ✱ ✱
			12	1	**24014-GG12C**		F/FC USE WITH ENGINE PART NO. 10001-4KXXX	01	0000-			✱ ✱ ✱ ✱ ✱ ✱ ✱
			13	1	**24014-GG10D-T**		F/FC ANTI RUST	01	0507-1107			✱ ✱ ✱ ✱ ✱ ✱ ✱
			14	1	**24014-GG14D-T**		F/FC ANTI RUST	01	1107-0508			✱ ✱ ✱ ✱ ✱ ✱ ✱
			15	1	**24014-GG11D-T**		F/FC ANTI RUST USE WITH ENGINE PART NO. 10001-GSXXX	01	0508-0000			✱ ✱ ✱ ✱ ✱ ✱ ✱
			16	1	**24014-GG12D-T**		F/FC ANTI RUST USE WITH ENGINE PART NO. 10001-4KXXX	01	0000-			✱ ✱ ✱ ✱ ✱ ✱ ✱
			17	1	**24014-GG20A**			01	0107-0508			○ ○ ○ ○ ○ ○ ○ ○ ○ ○ ○ ○ ○ ○
			18	1	**24014-GG21A**		USE WITH ENGINE PART NO. 10001-GSXXX	01	0508-0000			○ ○ ○ ○ ○ ○ ○ ○ ○ ○ ○ ○ ○ ○
			19	1	**24014-GG22A**		USE WITH ENGINE PART NO. 10001-4KXXX	01	0000-			○ ○ ○ ○ ○ ○ ○ ○ ○ ○ ○ ○ ○ ○
			20	1	**24014-GG20B-T**		F/ANTI RUST	01	0107-0508			✱ ✱ ✱ ✱ ✱ ✱ ✱ ✱ ✱ ✱ ✱ ✱ ✱ ✱
			21	1	**24014-GG21B-T**		F/ANTI RUST USE WITH ENGINE PART NO. 10001-GSXXX	01	0508-0000			✱ ✱ ✱ ✱ ✱ ✱ ✱ ✱ ✱ ✱ ✱ ✱ ✱ ✱
			22	1	**24014-GG22B-T**		F/ANTI RUST USE WITH ENGINE PART NO. 10001-4KXXX	01	0000-			✱ ✱ ✱ ✱ ✱ ✱ ✱ ✱ ✱ ✱ ✱ ✱ ✱ ✱
			23	1	**24014-GG20C**		F/FC	01	0507-0508			✱ ✱ ✱ ✱ ✱ ✱ ✱ ✱ ✱ ✱
			24	1	**24014-GG21C**		F/FC USE WITH ENGINE PART NO. 10001-GSXXX	01	0508-0000			✱ ✱ ✱ ✱ ✱ ✱ ✱ ✱ ✱ ✱

SEC. 241A1

WIRING (BODY) (K21 & K25) PART 1

CABLEADO CARROCERIA

KABELBAUM KAROSSERIE

CABLAGE CARROSSERIE

NC	S	KEY NO.	LEV	PART NO.	PART NAME	SPECIFICATION	QTY	APPLIED DATE	ICANF	FORMER PART NO.	KD	APPLIED MODEL 01 02 03 04 05 06 07 08 09 10 11 12 13 14 15 16 17 18 19 20 21 22 23 24 25 26 27 28 29
		8 25	1	**24014-GG22C**	HARNESS-CHASSIS	F/FC USE WITH ENGINE PART	01	0000-				* * * * *
						NO. 10001-4KXXX						
		26	1	**24014-GG20D-T**		F/FC ANTI RUST	01	0507-0508				* * * * *
		27	1	**24014-GG21D-T**		F/FC ANTI RUST USE WITH ENGINE PART	01	0508-0000				* * * * *
						NO. 10001-GSXXX						
		28	1	**24014-GG22D-T**		F/FC ANTI RUST USE WITH ENGINE PART	01	0000-				* * * * *
						NO. 10001-4KXXX						
		29	1	**24014-GG00A**			01	0107-0508				o o o o o o o o o o o o o o o
		30	1	**24014-GG01A**		USE WITH ENGINE PART NO. 10001-GSXXX	01	0508-0000				o o o o o o o o o o o o o o o
		31	1	**24014-GG02A**		USE WITH ENGINE PART NO. 10001-4KXXX	01	0000-				o o o o o o o o o o o o o o o
		32	1	**24014-GG00B-T**		F/ANTI RUST	01	0107-0508				* * * * * * * * * * * * * * *
		33	1	**24014-GG01B-T**		F/ANTI RUST USE WITH ENGINE PART	01	0508-0000				* * * * * * * * * * * * * * *
						NO. 10001-GSXXX						
		34	1	**24014-GG02B-T**		F/ANTI RUST USE WITH ENGINE PART	01	0000-				* * * * * * * * * * * * * * *
						NO. 10001-4KXXX						
		35	1	**24014-GG00C**		F/FC	01	0507-0508				* * * * * * * * *
		36	1	**24014-GG01C**		F/FC USE WITH ENGINE PART	01	0508-0000				* * * * * * * * *
						NO. 10001-GSXXX						
		37	1	**24014-GG02C**		F/FC USE WITH ENGINE PART	01	0000-				* * * * * * * * *
						NO. 10001-4KXXX						
		38	1	**24014-GG00D-T**		F/FC ANTI RUST	01	0507-0508				* * * * * * * * *
		39	1	**24014-GG01D-T**		F/FC ANTI RUST USE WITH ENGINE PART	01	0508-0000				* * * * * * * * *
						NO. 10001-GSXXX						
		40	1	**24014-GG02D-T**		F/FC ANTI RUST USE WITH ENGINE PART	01	0000-				* * * * * * * * *
						NO. 10001-4KXXX						
		41	1	**24014-GG04A**			01	0107-0508				o o o o o o o o o
		42	1	**24014-GG05A**		USE WITH ENGINE PART NO. 10001-GSXXX	01	0508-0000				o o o o o o o o o
		43	1	**24014-GG06A**		USE WITH ENGINE PART NO. 10001-4KXXX	01	0000-				o o o o o o o o o
		44	1	**24014-GG04B-T**		F/ANTI RUST	01	0107-0508				* * * * * * * * *
		45	1	**24014-GG05B-T**		F/ANTI RUST USE WITH ENGINE PART	01	0508-0000				* * * * * * * * *
						NO. 10001-GSXXX						
		46	1	**24014-GG06B-T**		F/ANTI RUST USE WITH ENGINE PART	01	0000-				* * * * * * * * *
						NO. 10001-4KXXX						
		47	2	**24022-FJ000**	WIRE ASSY-FUSIBLE LINK		01	0107-				o o o o o o o o o o o o o o o o o o o o o o o o o o o
		48	2	**28351-89902**	CONDENSOR		01	0107-				o o o o o o o o o o o o o o o o o o o o o o o o o o o
		49	2	**24335-89900**	DIODE		01	0107-				o o o o o o o o o o o o o o o o o o o o o o o o o o o
		50	2	**24335-89900**		F/FC	03	0507-				* *

SEC. 241A1

WIRING (BODY) (K21 & K25) PART 1

CABLEADO CARROCERIA

KABELBAUM KAROSSERIE

CABLAGE CARROSSERIE

NC	S	KEY NO.	LEV	PART NO.	PART NAME	SPECIFICATION	QTY	APPLIED DATE	ICANF	FORMER PART NO.	KD	APPLIED MODEL 01 02 03 04 05 06 07 08 09 10 11 12 13 14 15 16 17 18 19 20 21 22 23 24 25 26 27 28 29
		8	51	2	**24335-89900**	DIODE		02	0107-			
		9	01	1	**24225-79900**	CLIP		01	0107-0208			
			02	1	**01552-00411**	BAND-HOSE		01	0208-			
		11	01	1	**24310-FL101**	BLOCK ASSY-FUSE		01	0107-			
		12	01	2	**24319-FK110**	FUSE-10A		05	0107-			
		13	01	2	**24319-FK120**	FUSE-20A		03	0107-			
		14	01	2	**24319-FK130**	FUSE-30A		03	0107-			
		15	01	2	**24319-FK115**	FUSE-15A		06	0107-			
		16	01	1	**24225-79960**	CLIP		01	0107-			
		17	01	1	**24210-S0900**	CLIP		02	0107-			
		22	01	1	**24238-FK210**	BRACKET-HARNESS CLIP		01	0107-			
		23	01	1	**24238-FK205**	BRACKET-HARNESS CLIP		01	0107-			
		25	01	2	**24324-FL101**	COVER ASSY-FUSE BLOCK		01	0107-			
			02	3	**24313-FL101**	LABEL-FUSE BLOCK		01	0107-			
		26	01	2	**24321-FK100**	PULLER-FUSE		01	0107-			
		27	01	1	**01552-00411**	CLIP		08	0107-			
		28	01	1	**24238-FC400**	BRACKET-HARN CLIP		01	0107-0208			
		34	01	1	**24210-89944**	CLIP		02	0107-			
		36	01	1	**08124-0161F**	SCREW-HHM M10-1.25X16 W/LK & PW		02	0107-			
		37	01	1	**08110-8161G**	SCREW-HHM M8-1.25X16 W/SPRW		01	0107-			
		38	01	1	**08911-1081G**	NUT-HEX W/CON SPW M8-1.25		02	0107-			
		39	01	1	**08360-61225**	SCREW-HH CR M6-1.0X12 W/LK & PW		01	0107-			
			02	1	**08360-61225**			03	0107-			
		41	01	1	**08110-8121G**	SCREW-HHM M8-1.25X12 W/SPRW		01	0107-0208			
		42	01	1	**08120-8121F**	SCREW-HHM M8-1.25X12 W/LK & PW		03	0107-			
		43	01	1	**08124-0161F**	SCREW-HHM M10-1.25X16 W/LK & PW		01	0107-			
		51	01	1	**01552-00421**	BAND-HOSE		01	0107-			
		53	01	1	**24210-S0900**	CLIP		01	0107-			
		57	01	1	**01552-00431**	BAND-HOSE		01	0508-			
		98	01	1	**99240-FS002**	COMPOUND-ELECT INSUL	NOT SHOWN F/ANTI RUST USE ON HARNESS CONNECTORS	AR	0607-			
		99	01	1	**24038-FB800**	TAPE-INSUL	NOT SHOWN F/ANTI RUST USE ON HARNESS CONNECTORS	AR	0607-			

SEC. 241A2

WIRING (BODY) (K21 & K25) PART 2

CABLEADO CARROCERIA

KABELBAUM KAROSSERIE

CABLAGE CARROSSERIE

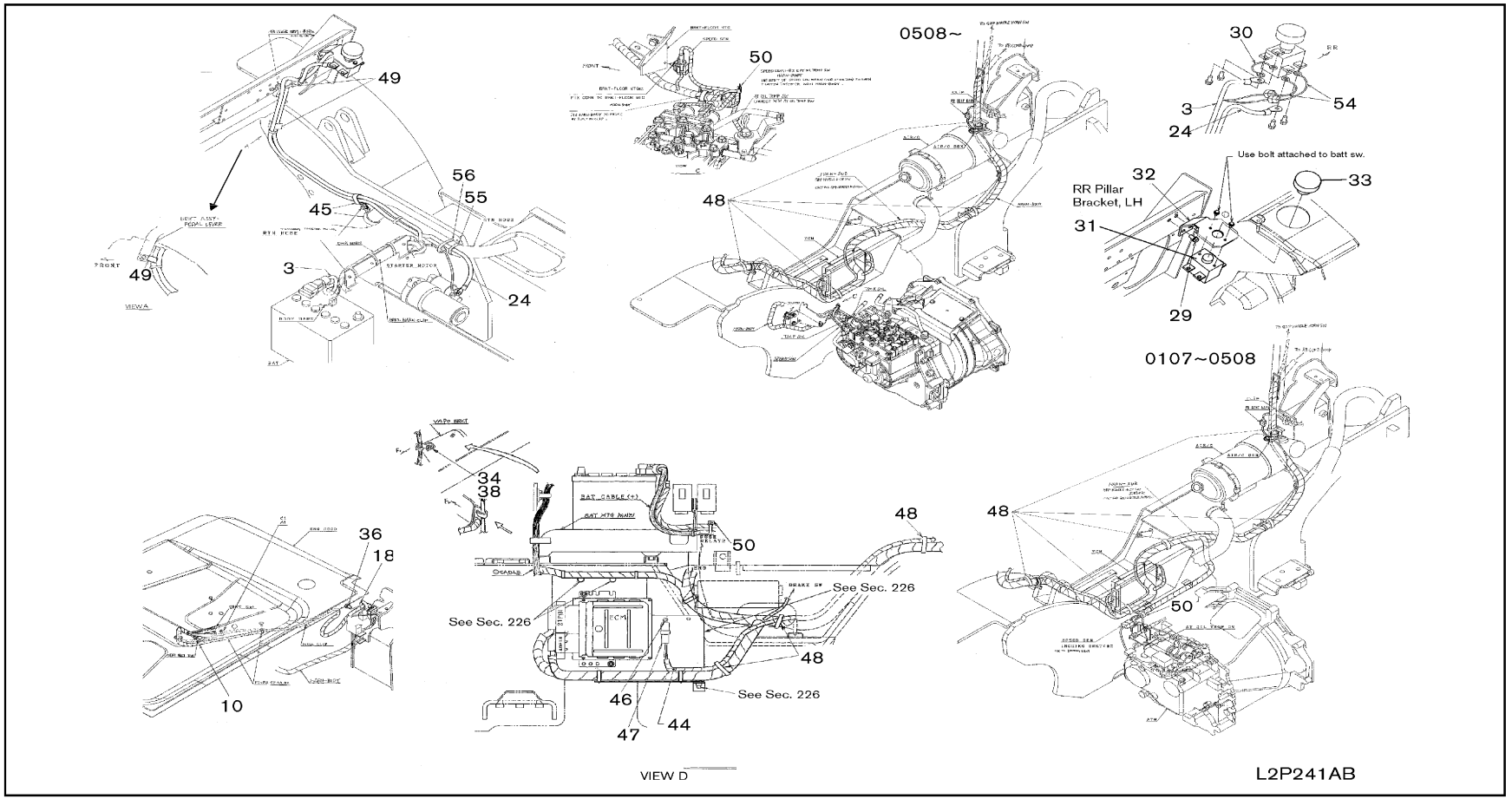

SEC. 241A2

WIRING (BODY) (K21 & K25) PART 2

CABLEADO CARROCERIA

KABELBAUM KAROSSERIE

CABLAGE CARROSSERIE

NC	S	KEY NO.	LEV	PART NO.	PART NAME	SPECIFICATION	QTY	APPLIED DATE	ICANF	FORMER PART NO.	KD
		3	01	1	**24110-FJ360**	CABLE ASSY-BATTERY TO STARTER MOTOR		01	0107-		
			02	1	**24116-FK405**			01	0107-		
		10	01	1	**24034-FL100**	HARNESS-SEAT SWITCH		01	0107-		
		18	01	1	**24210-S0900**	CLIP		01	0107-		
		24	01	1	**24117-FK402**	CABLE-BAT SW TO STARTER MOTOR		01	0107-		
		29	01	1	**08120-8161F**	SCREW-HHM M8-1.25X16 W/LK & PW		02	0107-		
		30	01	1	**24028-FJ100**	HARNESS-SUB		01	0107-		
		31	01	1	**25250-FK100**	SWITCH ASSY-BATTERY		01	0107-		
		32	01	1	**25255-FJ100**	BRACKET-BATTERY SWITCH		01	0107-		
		33	01	2	**25258-9G100**	KNOB-BATTERY SWITCH		01	0107-		
		34	01	1	**24210-89944**	CLIP		01	0107-		
		36	01	1	**08124-0161F**	SCREW-HHM M10-1.25X16 W/LK & PW		01	0107-		
		38	01	1	**08911-1081G**	NUT-HEX W/CON SPW M8-1.25		01	0107-		
		44	01	1	**24028-GG10A**	HARNESS-SUB	F/SWIVEL SEAT	01	0107-		
			02	1	**24028-GG800-T**		F/SWIVEL SEAT ANTI RUST	01	0607-		
		45	01	1	**21647-40K00**	CLP-TUBE OIL CLR		02	0107-		
		46	01	1	**08911-10637**	NUT-HEX W/CON SPRW M6-1.0	F/SWIVEL SEAT	01	0107-		
		47	01	1	**25230-79981**	RELAY-1M	F/SWIVEL SEAT	01	0107-		
			02	1	**25235-N8500**	BRACKET-RELAY	F/SWIVEL SEAT	01	0107-0807		
			03	1	**25235-N853A**		F/SWIVEL SEAT	01	0807-		
		48	01	1	**01552-00411**	BAND-HOSE	F/SWIVEL SEAT	08	0107-		
		49	01	1	**21642-L3000**	CLIP-HOSE		02	0107-		
		50	01	1	**01552-00411**	BAND-HOSE		02	0107-		
		54	01	1	**24022-FJ102**	WIRE ASSY-FUSIBLE LINK		02	0107-		
		55	01	1	**01552-00411**	BAND-HOSE		04	0107-		
		56	01	1	**01552-00431**	BAND-HOSE		01	0107-		

APPLIED MODEL

01	02	03	04	05	06	07	08	09	10	11	12	13	14	15	16	17	18	19	20	21	22	23	24	25	26	27	28	29
MIPA20JVL	MIPA20DVL	MIPA20LVS	MIPA20JVS	MIUA20DVL	MIUA20JVL	MIUA20DVL	MIUA20LVS	MIYA20JVL	MIPA20DVL	MIPA20LVL	MIPA20JVS	MIUA20DVL	MIUA20JVL	MIUA20DVL	MIUA20LVS	MIYA20JVL	MIUA20DVL	MIUA20LVL	MIUA20JVS	MIUA20DVL	MIUA20JVL	MIUA20DVL	MIUA20LVS	MIYA20JVL	MIUA20DVL	MIUA20LVL	MIUA20JVS	MIYA20JVL
																		JIGA20DVL	JIGA20JVL	JIGA20DVL	JIGA20LVS	JIGA20JVL	JIGA20DVL	JIGA20LVS	JIGA20JVL	JIGA20DVL	JIGA20LVL	JIGA20JVS
AA220JVL	AA220DVL	AA220LVS	AA220JVL	AA220DVL	AA220JVL	AA220DVL	AA220LVS	AA220JVL	AA255JVL	AA255DVL	AA255LVS	AA255JVL	AA255DVL	AA255JVL	AA255LVS	AA255JVL	AA255DVL	AA288JVL	AA288DVL	AA288LVS	AA300JVL	AA300DVL	AA300LVL	AA300JVS	AA355JVL	AA355DVL	AA355LVL	AA300JVS
○	○	○		○	○	○			○	○	○		○	○	○			○	○	○	○	○	○		○	○	○	
			○				○					○				○												
○	○	○	○	○	○	○	○		○	○	○	○	○	○	○	○		○	○	○	○	○	○		○	○	○	
○	○	○	○	○	○	○	○		○	○	○	○	○	○	○	○		○	○	○	○	○	○		○	○	○	
			○				○					○				○												
			○				○					○				○												
			○				○					○				○												
			○				○					○				○												
			○				○					○				○												
	○	○	○		○	○	○			○	○	○		○	○	○			○	○		○	○			○	○	
○	○	○	○	○	○	○	○		○	○	○	○	○	○	○	○		○	○	○	○	○	○		○	○	○	
○	○	○	○	○	○	○	○		○	○	○	○	○	○	○	○		○	○	○	○	○	○		○	○	○	
*	*	*	*	*	*	*	*		*	*	*	*	*	*	*	*		*	*	*	*	*	*		*	*	*	
*	*	*	*	*	*	*	*		*	*	*	*	*	*	*	*		*	*	*	*	*	*		*	*	*	
			○				○					○				○												
*	*	*	*	*	*	*	*		*	*	*	*	*	*	*	*		*	*	*	*	*	*		*	*	*	
*	*	*	*	*	*	*	*		*	*	*	*	*	*	*	*		*	*	*	*	*	*		*	*	*	
*	*	*	*	*	*	*	*		*	*	*	*	*	*	*	*		*	*	*	*	*	*		*	*	*	
*	*	*	*	*	*	*	*		*	*	*	*	*	*	*	*		*	*	*	*	*	*		*	*	*	
			○				○					○				○												
○	○	○	○	○	○	○	○		○	○	○	○	○	○	○	○		○	○	○	○	○	○		○	○	○	
			○				○					○				○												
			○				○					○				○												
			○				○					○				○												

SEC. 241B1

WIRING (BODY) (QD32) PART 1

CABLEADO CARROCERIA

KABELBAUM KAROSSERIE

CABLAGE CARROSSERIE

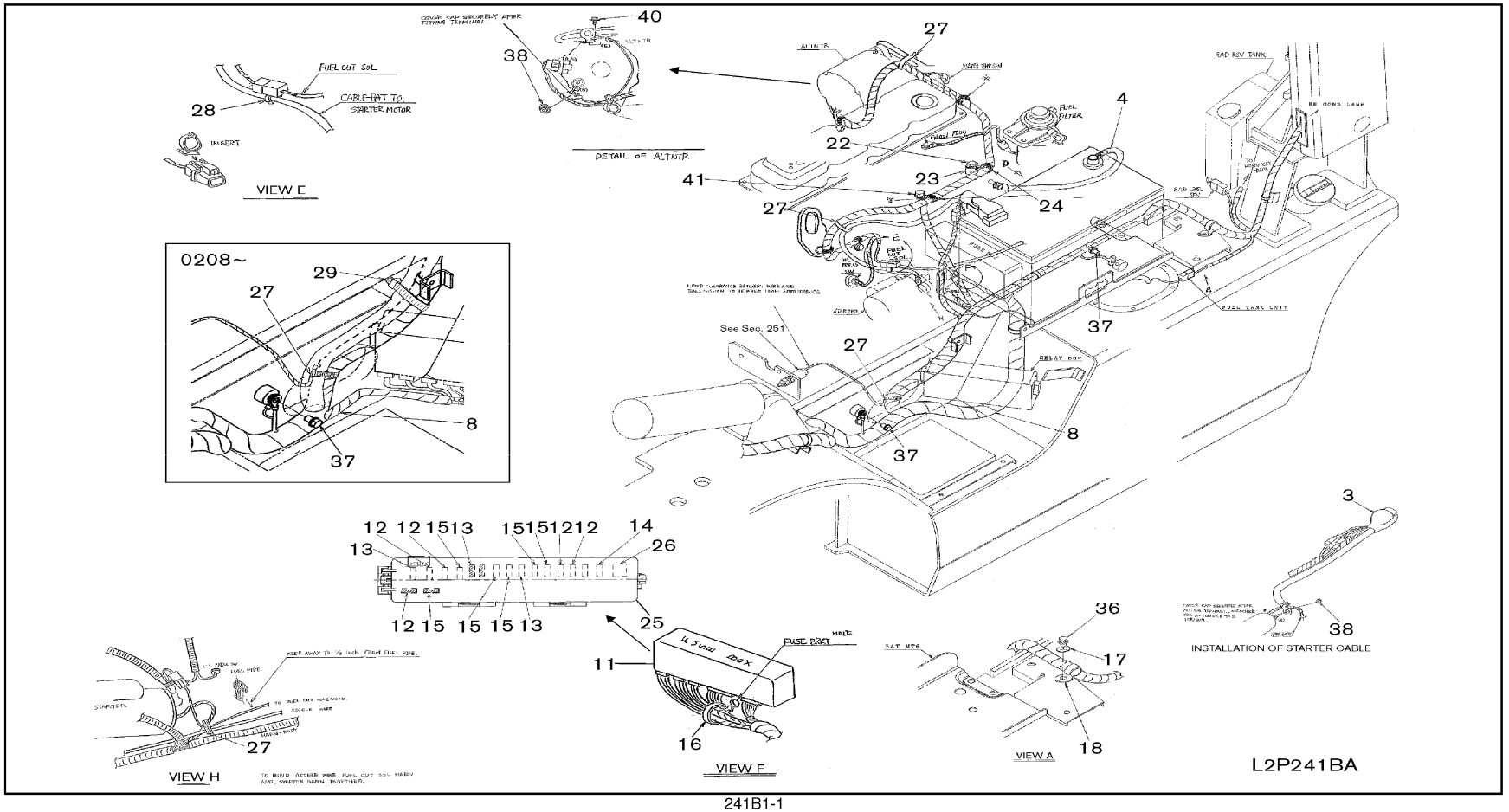

241B1-1

SEC. 241B1

WIRING (BODY) (QD32) PART 1

CABLEADO CARROCERIA

KABELBAUM KAROSSERIE

CABLAGE CARROSSERIE

NC	S	KEY NO.	LEV	PART NO.	PART NAME	SPECIFICATION	QTY	APPLIED DATE	ICANF	FORMER PART NO.	KD
C		**3**	01	1	**24110-GG30A**	CABLE ASSY-BATTERY TO STARTER MOTOR		01	0107-0213			
N			02	1	**24110-GG31A**			01	0213-			
		4	01	1	**24080-GG30A**	CABLE ASSY-BATTERY TO ENGINE		01	0107-			
		8	01	1	**24014-GG30A**	HARNESS-CHASSIS		01	0107-0508			
			02	1	**24014-GG31A**			01	0508-			
			03	1	**24014-GG30B-T**		F/ANTI RUST	01	0107-0508			
			04	1	**24014-GG31B-T**		F/ANTI RUST	01	0508-			
			05	1	**24014-GG30C**		F/FC	01	0507-0508			
			06	1	**24014-GG31C**		F/FC	01	0508-			
			07	1	**24014-GG30D-T**		F/FC ANTI RUST	01	0507-0508			
			08	1	**24014-GG31D-T**		F/FC ANTI RUST	01	0508-			
			09	2	**24022-FJ000**	WIRE ASSY-FUSIBLE LINK		01	0107-			
			10	2	**24022-FJ400**			01	0107-			
			11	2	**24335-89900**	DIODE		02	0107-			
			12	2	**24335-89900**		F/FC	04	0507-			
		10	01	1	**24034-FL100**	HARNESS-SEAT SWITCH		01	0107-			
		11	01	1	**24310-FL200**	BLOCK ASSY-FUSE		01	0107-			
		12	01	2	**24319-FK110**	FUSE-10A		05	0107-			
		13	01	2	**24319-FK120**	FUSE-20A		03	0107-			
		14	01	2	**24319-FK130**	FUSE-30A		01	0107-			
		15	01	2	**24319-FK115**	FUSE-15A		05	0107-			
		16	01	1	**24225-79960**	CLIP		01	0107-			
		17	01	1	**08915-4401A**	WASHER-FLAT M10		01	0107-0108			
		18	01	1	**24210-S0900**	CLIP		01	0107-			
		22	01	1	**08110-8301G**	SCREW-HHM M8-1.25X30 W/SPRW		01	0107-			
		23	01	1	**69394-L4000**	SPACER		01	0107-			
		24	01	1	**24210-89944**	CLIP		02	0107-			
		25	01	2	**24324-FL200**	COVER ASSY-FUSE BLOCK		01	0107-			
			02	3	**24313-FL200**	LABEL-FUSE BLOCK		01	0107-			
		26	01	2	**24321-FK100**	PULLER-FUSE		01	0107-			
		27	01	1	**01552-00411**	CLIP		04	0107-			
		28	01	1	**24346-79981**	CLIP-CONN		01	0107-			
		29	01	1	**01552-00431**	BAND-HOSE		01	0508-			
		36	01	1	**08124-0161F**	SCREW-HHM M10-1.25X16 W/LK & PW		01	0107-			
		37	01	1	**08120-8121F**	SCREW-HHM M8-1.25X12 W/LK & PW		02	0107-			
		38	01	1	**08911-1081G**	NUT-HEX W/CON SPW M8-1.25		02	0107-			
		40	01	1	**08360-51014**	SCREW-HHM M5-0.8X10 W/LKW		01	0107-			

APPLIED MODEL

	MIPVJ	MIPVD	MIPVL	MIPVS	MIUVJ	MIUVD	MIUVL	MIUVS	MIUYL	MIYVJ	MIYVD	MIYVL	MIYVS	MIUVJ	MIUVD	MIUVL	MIUVS	MIUYL	MIUYJ	MIUGJ	MIUGD	MIUGL	MIUGS	MIUYJ	MIUYD	MIUYL	MIUYS	MIUGJ	MIUGD	MIUGL	MIUGS	MIYGJ	MIYGD	MIYGL	MIYGS
	AA20JV	AA20DV	AA20LV	AA20SV	AA20JV	AA20DV	AA20LV	AA20SV	AA20LV	AA25JV	AA25DV	AA25LV	AA25SV	AA25JV	AA25DV	AA25LV	AA25SV	AA25LV	AA25JV	AA28JV	AA28DV	AA28LV	AA28SV	AA30JV	AA30DV	AA30LV	AA30SV	AA35JV	AA35DV	AA35LV	AA35SV	AA30JV	AA30DV	AA30LV	AA30SV
01																																			
02																																			
03																																			
04																																			
05																																			
06																																			
07																																			
08																																			
09																																			
10																																			
11																																			
12																																			
13																																			
14																																			
15																																			
16																																			
17																																			
18																																			
19																																			
20																																			
21																																			
22																																			
23																																			
24																																			
25																																			
26																																			
27																																			
28																																			
29																																			

	01	02	03	04	05	06	07	08	09	10	11	12	13	14	15	16	17	18	19	20	21	22	23	24	25	26	27	28	29
	○	○	○	○	○	○	○	○	○	○	○	○	○	○	○	○	○	○	○	○	○	○	○	○	○	○	○	○	○
	○	○	○	○	○	○	○	○	○	○	○	○	○	○	○	○	○	○	○	○	○	○	○	○	○	○	○	○	○
	○	○	○	○	○	○	○	○	○	○	○	○	○	○	○	○	○	○	○	○	○	○	○	○	○	○	○	○	○
	○	○	○	○	○	○	○	○	○	○	○	○	○	○	○	○	○	○	○	○	○	○	○	○	○	○	○	○	○
	○	○	○	○	○	○	○	○	○	○	○	○	○	○	○	○	○	○	○	○	○	○	○	○	○	○	○	○	○
	○	○	○	○	○	○	○	○	✱	○	○	○	○	○	○	○	○	✱	○	○	○	○	○	✱	○	○	○	○	✱
	○	○	○	○	○	○	○	○	✱	○	○	○	○	○	○	○	○	✱	○	○	○	○	○	✱	○	○	○	○	✱
	○	○	○	○	○	○	○	○	✱	○	○	○	○	○	○	○	○	✱	○	○	○	○	○	○	○	○	○	○	○
	○	○	○	○	○	○	○	○	✱	○	○	○	○	○	○	○	○	✱	○	○	○	○	○	○	○	○	○	○	○
	○	○	○	○	○	○	○	○	✱	○	○	○	○	○	○	○	○	✱	○	○	○	○	○	○	○	○	○	○	○
	○	○	○	○	○	○	○	○	✱	○	○	○	○	○	○	○	○	✱	○	○	○	○	○	○	○	○	○	○	○
	○	○	○	○	○	○	○	○	✱	○	○	○	○	○	○	○	○	✱	○	○	○	○	○	○	○	○	○	○	○
	○	○	○	○	○	○	○	○	○	○	○	○	○	○	○	○	○	○	○	○	○	○	○	○	○	○	○	○	○
	○	○	○	○	○	○	○	○	○	○	○	○	○	○	○	○	○	○	○	○	○	○	○	○	○	○	○	○	○
	○	○	○	○	○	○	○	○	○	○	○	○	○	○	○	○	○	○	○	○	○	○	○	○	○	○	○	○	○
	○	○	○	○	○	○	○	○	○	○	○	○	○	○	○	○	○	○	○	○	○	○	○	○	○	○	○	○	○
	○	○	○	○	○	○	○	○	○	○	○	○	○	○	○	○	○	○	○	○	○	○	○	○	○	○	○	○	○
	○	○	○	○	○	○	○	○	○	○	○	○	○	○	○	○	○	○	○	○	○	○	○	○	○	○	○	○	○
	○	○	○	○	○	○	○	○	○	○	○	○	○	○	○	○	○	○	○	○	○	○	○	○	○	○	○	○	○
	○	○	○	○	○	○	○	○	○	○	○	○	○	○	○	○	○	○	○	○	○	○	○	○	○	○	○	○	○
	○	○	○	○	○	○	○	○	○	○	○	○	○	○	○	○	○	○	○	○	○	○	○	○	○	○	○	○	○
	○	○	○	○	○	○	○	○	○	○	○	○	○	○	○	○	○	○	○	○	○	○	○	○	○	○	○	○	○
	○	○	○	○	○	○	○	○	○	○	○	○	○	○	○	○	○	○	○	○	○	○	○	○	○	○	○	○	○
	○	○	○	○	○	○	○	○	○	○	○	○	○	○	○	○	○	○	○	○	○	○	○	○	○	○	○	○	○
	○	○	○	○	○	○	○	○	○	○	○	○	○	○	○	○	○	○	○	○	○	○	○	○	○	○	○	○	○
	○	○	○	○	○	○	○	○	○	○	○	○	○	○	○	○	○	○	○	○	○	○	○	○	○	○	○	○	○
	○	○	○	○	○	○	○	○	○	○	○	○	○	○	○	○	○	○	○	○	○	○	○	○	○	○	○	○	○
	○	○	○	○	○	○	○	○	○	○	○	○	○	○	○	○	○	○	○	○	○	○	○	○	○	○	○	○	○
	○	○	○	○	○	○	○	○	○	○	○	○	○	○	○	○	○	○	○	○	○	○	○	○	○	○	○	○	○

SEC. 241B1

WIRING (BODY) (QD32) PART 1

CABLEADO CARROCERIA

KABELBAUM KAROSSERIE

CABLAGE CARROSSERIE

NC	S	KEY NO.	LEV	PART NO.	PART NAME	SPECIFICATION	QTY	APPLIED DATE	TCANF	FORMER PART NO.	KD
		41 01	1	**08110-8121G**	SCREW-HHM M8-1.25X12 W/SPRW		01	0107-			
		44 01	1	**24028-GG10A**	HARNESS-SUB	F/SWIVEL SEAT	01	0107-			
		02	1	**24028-GG800-T**		F/SWIVEL SEAT ANTI RUST	01	0107-			
		46 01	1	**08911-10637**	NUT-HEX W/CON SPRW M6-1.0	F/SWIVEL SEAT	01	0107-			
		47 01	1	**25230-79981**	RELAY-1M	F/SWIVEL SEAT	01	0107-			
		02	1	**25235-N8500**	BRACKET-RELAY	F/SWIVEL SEAT	01	0107-0807			
		03	1	**25235-N853A**	BRACKET, A RELAY	F/SWIVEL SEAT	01	0807-			
		48 01	1	**01552-00411**	BAND-HOSE	F/SWIVEL SEAT	08	0107-			
		49 01	1	**01552-00411**	BAND-HOSE		01	0107-			
		98 01	1	**99240-FS002**	COMPOUND-ELECT INSUL	NOT SHOWN F/ANTI RUST USE ON	AR	0607-			
						HARNESS CONNECTORS					
		99 01	1	**24038-FB800**	TAPE-INSUL	NOT SHOWN F/ANTI RUST USE ON	AR	0607-			
						HARNESS CONNECTORS					

APPLIED MODEL

	MIPU	MIPU	MIPU	MIUU	MIUU	MIUU	MIUY	MIPU	MIPU	MIPU	MIUU	MIUU	MIUU	MIUY	MIUJ	MIUJ	MIGG	MIUU	MIUU	MIUY	MIGG	MIGG	MIGG	MIUY	MIGG
	A20JV	A20DV	A20LS	A20JV	A20DV	A20LS	A20LS	A25JV	A25DV	A25LS	A25JV	A25DV	A25LS	A25LS	A28JV	A28DV	A28LJ	A30JV	A30DV	A30LV	A35JV	A35DV	A35LV	A35LV	A35LV
01																									
02																									
03																									
04																									
05																									
06																									
07																									
08	*	*	*	*	*	*	*	*	*	*	*	*	*	*	*	*	*	*	*	*	*	*	*	*	*
09	O																								
10																									
11																									
12																									
13																									
14																									
15																									
16																									
17																									
18	O	*	*	*	*	*	*	*	*	*	*	*	*	*	*	*	*	*	*	*	*	*	*	*	*
19																									
20																									
21																									
22																									
23																									
24																									
25	O	*	*	*	*	*	*	*	*	*	*	*	*	*	*	*	*	*	*	*	*	*	*	*	*
26																									
27																									
28																									
29	O	*	*	*	*	*	*	*	*	*	*	*	*	*	*	*	*	*	*	*	*	*	*	*	*

NOTE

SEC. 241B2

WIRING (BODY) (QD32) PART 2

CABLEADO CARROCERIA

KABELBAUM KAROSSERIE

CABLAGE CARROSSERIE

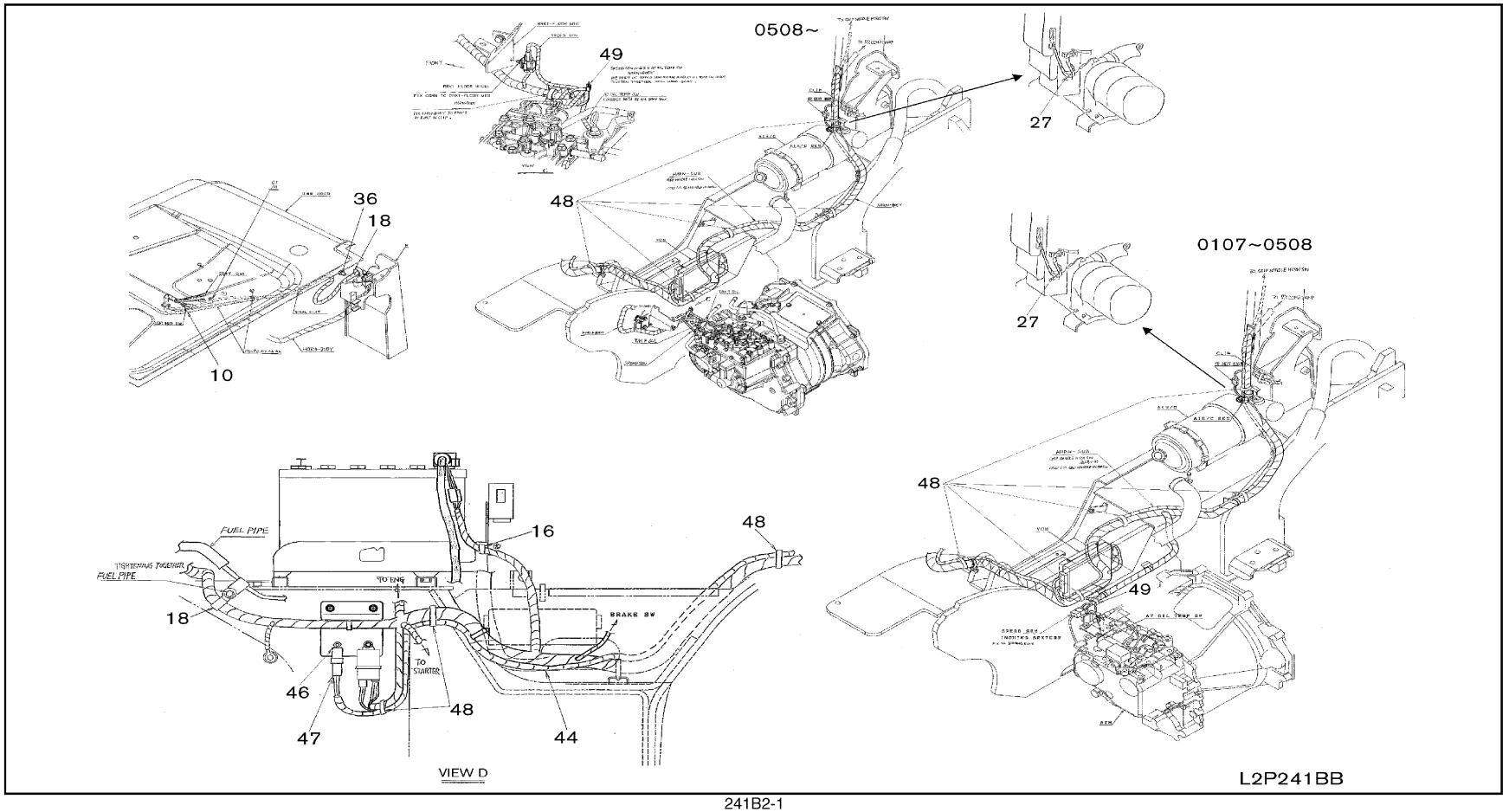

241B2-1

SEC. 241B2

WIRING (BODY) (QD32) PART 2

CABLEADO CARROCERIA

KABELBAUM KAROSSERIE

CABLAGE CARROSSERIE

NC	S	KEY NO.	LEV	PART NO.	PART NAME	SPECIFICATION	QTY	APPLIED DATE	ICANF	FORMER PART NO.	KD
		10 01	1	**24034-FL100**	HARNESS-SEAT SWITCH		01	0107-			
		16 01	1	**24225-79960**	CLIP		01	0107-			
		18 01	1	**24210-S0900**	CLIP		02	0107-			
		27 01	1	**01552-00411**	CLIP		01	0107-			
		36 01	1	**08124-0161F**	SCREW-HHM M10-1.25X16 W/LK & PW		01	0107-			
		44 01	1	**24028-GG10A**	HARNESS-SUB	F/SWIVEL SEAT	01	0107-			
		02	1	**24028-GG800-T**		F/SWIVEL SEAT ANTI RUST	01	0107-			
		46 01	1	**08911-10637**	NUT-HEX W/CON SPRW M6-1.0	F/SWIVEL SEAT	01	0107-			
		47 01	1	**25230-79981**	RELAY-1M	F/SWIVEL SEAT	01	0107-			
		02	1	**25235-N8500**	BRACKET-RELAY	F/SWIVEL SEAT	01	0107-0807			
		03	1	**25235-N853A**	BRACKET, A RELAY	F/SWIVEL SEAT	01	0807-			
		48 01	1	**01552-00411**	BAND-HOSE	F/SWIVEL SEAT	08	0107-			
		49 01	1	**01552-00411**	BAND-HOSE		01	0107-			

APPLIED MODEL

	MIPVI	MIPVI	MIPSI	MIUVI	MIUVI	MIUVI	MIYSI	MIPVI	MIPVI	MIPVI	MIUVI	MIUVI	MIUVI	MIYVI	MIUJI	MIUJI	MIUGI	MIUGI	MIUGI	MIYGI	MIUGI	MIUGI	MIUGI	MIYGI
	A20JV	A20DV	A20LS	A20JV	A20DV	A20LV	A20LS	A25JV	A25DV	A25LV	A25JV	A25DV	A25LS	A25LV	A28JV	A28DV	A30JV	A30DV	A30LV	A30LV	A35JV	A35DV	A35LV	A35LV
01																								
02																								
03																								
04																								
05																								
06																								
07																								
08																								
09	O	O	O	O	O	O	O	*	*	*	*	*	*	*										
10																								
11																								
12																								
13																								
14																								
15																								
16																								
17																								
18	O	O	O	O	O	O	O	*	*	*	*	*	*	*										
19																								
20																								
21																								
22																								
23																								
24																								
25	O	O	O	O	O	O	O	*	*	*	*	*	*	*										
26																								
27																								
28																								
29	O	O	O	O	O	O	O	*	*	*	*	*	*	*										

SEC. 244

BATTERY & BATTERY MOUNTING

BATERIA Y MONTAJE DE LA BATERIA

BATTERIE & BETTERIEAUFHÄNGUNG

BATTERIE ET FIXATION DE BATTERIE

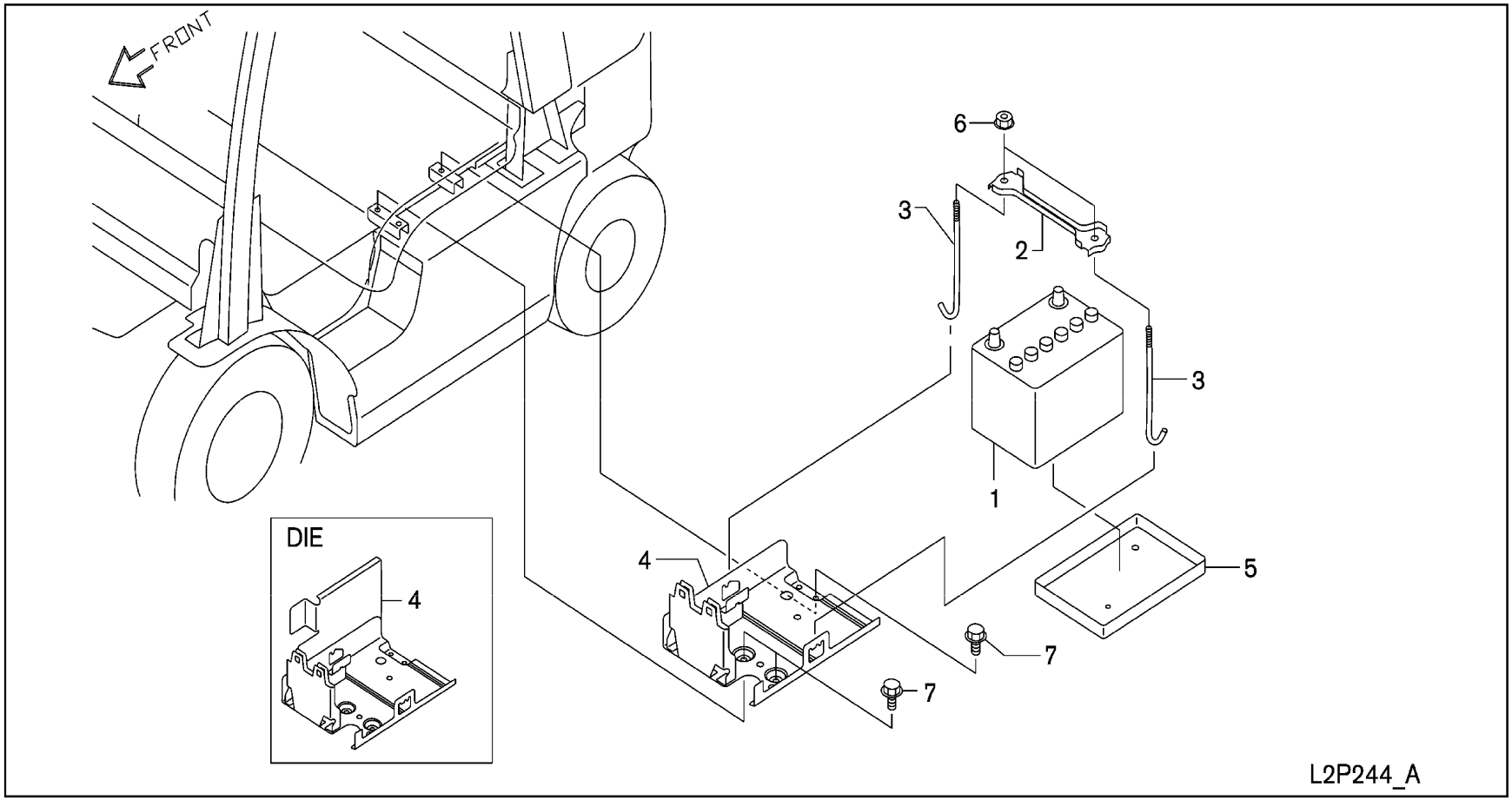

SEC. 244

BATTERY & BATTERY MOUNTING

BATERIA Y MONTAJE DE LA BATERIA

BATTERIE & BETTERIEAUFHÄNGUNG

BATTERIE ET FIXATION DE BATTERIE

NC	S	KEY NO.	LEV	PART NO.	PART NAME	SPECIFICATION	QTY	APPLIED DATE	ICANF	FORMER PART NO.	KD	APPLIED MODEL 01 02 03 04 05 06 07 08 09 10 11 12 13 14 15 16 17 18 19 20 21 22 23 24 25 26 27 28 29
		1 01	1	**24410-FB00A**	BATTERY		01	0107-				○○○○○○○○○ ○○○○○○○○○○○○○○○○ ○○○○○○○ ○○○
		02	1	**24410-FB40A**			01	0107-				○ ○ ○ ○ ○ ○ ○
		2 01	1	**24420-M6600**	BAR-BATTERY FIX		01	0107-				○○○○○○○○○○○○○○○○○○○○○○○○○○○○○
		3 01	1	**24425-89906**	ROD-BATTERY FIX		02	0107-				○○○○○○○○○○○○○○○○○○○○○○○○○○○○○
		4 01	1	**24445-FJ301**	PANEL-BATTERY MOUNTING		01	0107-				○○○○○○○○○ ○○○○○○○○○○○○○○○○ ○○○○○○○ ○○○
		02	1	**24445-GG10A**			01	0107-				○ ○ ○ ○ ○ ○ ○
		5 01	1	**24428-FB100**	TRAY-BATTERY		01	0107-				○○○○○○○○○ ○○○○○○○○○○○○○○○○ ○○○○○○○ ○○○
		02	1	**24428-FB110**			01	0107-				○ ○ ○ ○ ○ ○ ○
		6 01	1	**08911-10637**	NUT-HEX W/CON SPRW M6-1.0		02	0107-				○○○○○○○○○○○○○○○○○○○○○○○○○○○○○
		7 01	1	**08124-0201E**	SCREW-HHM M10-1.25X20 W/PW		03	0107-				○○○○○○○○○○○○○○○○○○○○○○○○○○○○○
		99 01	1	**99207-FS000**	CORROSION PROT SPRAY	NOT SHOWN F/ANTI RUST USE ON TERMINALS	AR	0607-				*********************************

SEC. 248

INSTRUMENT METER & GAUGE

INSTRUMENTOS DE MEDIDA INDICADOR

MESS- & ANZEIGEVORRICHTUNG

COMPTEUR ET JAUGE DE TABLEAU DE BORD

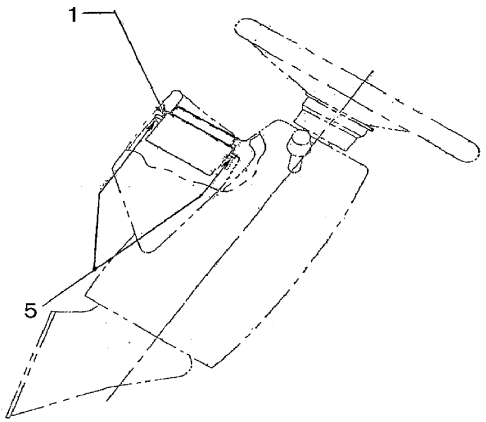

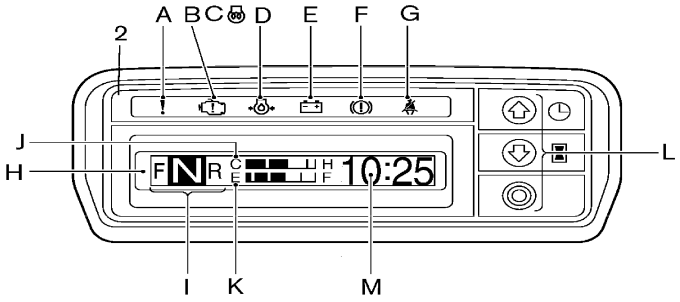

A) Multipurpose warning lamp
B) Engine check lamp (gasoline engine forklifts only)
C) Glow pilot lamp (diesel engine forklifts only)
D) Oil pressure warning lamp
E) Charge warning lamp
F) Parking brake warning lamp
G) Seal belt warning lamp
H) Liquid crystal display (LCD)
I) Selector lever position (left side of LCD)
J) Water temperature gauge (top center of LCD)
K) Fuel gauge (bottom center of LCD)
L) Operation buttons
M) Time (right side of LCD)

F/ANTI RUST

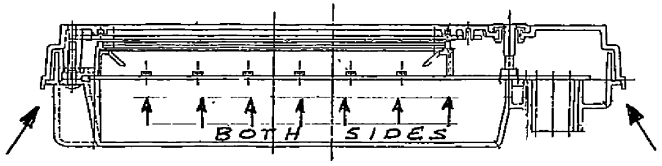

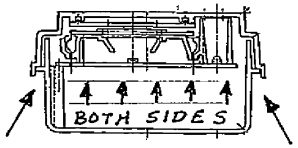

NOTE: USE SILICONE RTV SEALER ITEM #6 AND COMPLETELY SEAL METER COVER AT LOCATION SHOWN BY ARROWS.

L2P248_A

SEC. 248

INSTRUMENT METER & GAUGE

INSTRUMENTOS DE MEDIDA INDICADOR

MESS- & ANZEIGEVORRICHTUNG

COMPTEUR ET JAUGE DE TABLEAU DE BORD

NC	S	KEY NO.	LEV	PART NO.	PART NAME	SPECIFICATION	QTY	APPLIED DATE	ICANF	FORMER PART NO.	KD
		1 01	1	**24810-GG10A**	METER ASSY-COMBINATION		01	0107-0308			
		02	1	**24810-GG11A**			01	0308-1008			
		03	1	**24810-GG12A**			01	1008-			
		04	1	**24810-GG800**		F/ANTI RUST	01	0307-0308			
		05	1	**24810-GG80A**		F/ANTI RUST	01	0308-1008			
		06	1	**24810-GG82A**		F/ANTI RUST	01	1008-			
		07	1	**24810-GG20A**			01	0107-0308			
		08	1	**24810-GG21A**			01	0308-1208			
		09	1	**24810-GG22A**			01	1208-			
		10	1	**24810-GG810**		F/ANTI RUST	01	0307-0308			
		11	1	**24810-GG81A**		F/ANTI RUST	01	0308-1208			
		12	1	**24810-GG83A**		F/ANTI RUST	01	1208-			
		2 01	2	**24813-GG10A**	COVER-COMBINATION METER		01	0107-			
		02	2	**24814-GG10A**	CIRCUIT ASSY-PRINTED BOARD		01	0107-0308			
		03	2	**24814-GG11A**			01	0308-1008			
		04	2	**24814-GG12A**			01	1008-0109			
		05	2	**24814-GG12D**			01	0109-			
		06	2	**24813-GG20A**	COVER-COMBINATION METER		01	0107-			
		07	2	**24814-GG20A**	CIRCUIT ASSY-PRINTED BOARD		01	0107-0308			
		08	2	**24814-GG21A**			01	0308-1208			
		09	2	**24814-GG22A**			01	1208-0109			
		10	2	**24814-GG22D**			01	0109-			
		5 01	1	**08513-41012**	SCREW		04	0107-			
		6 01	1	**24038-FB801**	SEALER-SILICONE RTV	F/ANTI RUST	AR	0307-			

APPLIED MODEL

01	02	03	04	05	06	07	08	09	10	11	12	13	14	15	16	17	18	19	20	21	22	23	24	25	26	27	28	29
MIPV	MIPV	MIPV	MIPS	MIUV	MIUV	MIUV	MIUS	MIYV	MIPV	MIPV	MIPV	MIUV	MIUV	MIUV	MIUV	MIUS	MIYV	MIUJV	MIUJV	MIUJV	MIGV	MIGV	MIGV	MIYV	MIUV	MIGV	MIGV	MIGV
AA20JV	AA20DV	AA20LV	AA20LS	AA20JV	AA20DV	AA20LV	AA20LS	AA20LV	AA20JV	AA20DV	AA20LV	AA20JV	AA20DV	AA20LV	AA20LV	AA20LS	AA20LV	AA28JV	AA28DV	AA28LV	AA30JV	AA30DV	AA30LV	AA30LV	AA35JV	AA35DV	AA35LV	AA35LV
○	○	○	○	○	○	○	○	○	○	○	○	○	○	○	○	○	○	○	○	○	○	○	○	○	○	○	○	○
○	○	○	○	○	○	○	○	○	○	○	○	○	○	○	○	○	○	○	○	○	○	○	○	○	○	○	○	○
○	○	○	○	○	○	○	○	○	○	○	○	○	○	○	○	○	○	○	○	○	○	○	○	○	○	○	○	○
*	*	*	*	*	*	*	*	*	*	*	*	*	*	*	*	*	*	*	*	*	*	*	*	○	*	*	*	○
*	*	*	*	*	*	*	*	*	*	*	*	*	*	*	*	*	*	*	*	*	*	*	*	○	*	*	*	○
*	*	*	*	*	*	*	*	*	*	*	*	*	*	*	*	*	*	*	*	*	*	*	*	○	*	*	*	○
								○									○							○				○
								○									○							○				○
								○									○							○				○
								*									*							*				*
								*									*							*				*
								*									*							*				*
○	○	○	○	○	○	○	○	○	○	○	○	○	○	○	○	○	○	○	○	○	○	○	○	○	○	○	○	○
○	○	○	○	○	○	○	○	○	○	○	○	○	○	○	○	○	○	○	○	○	○	○	○	○	○	○	○	○
○	○	○	○	○	○	○	○	○	○	○	○	○	○	○	○	○	○	○	○	○	○	○	○	○	○	○	○	○
○	○	○	○	○	○	○	○	○	○	○	○	○	○	○	○	○	○	○	○	○	○	○	○	○	○	○	○	○
○	○	○	○	○	○	○	○	○	○	○	○	○	○	○	○	○	○	○	○	○	○	○	○	○	○	○	○	○
○	○	○	○	○	○	○	○	○	○	○	○	○	○	○	○	○	○	○	○	○	○	○	○	○	○	○	○	○
○	○	○	○	○	○	○	○	○	○	○	○	○	○	○	○	○	○	○	○	○	○	○	○	○	○	○	○	○
*	*	*	*	*	*	*	*	*	*	*	*	*	*	*	*	*	*	*	*	*	*	*	*	*	*	*	*	*

SEC. 251

SWITCH

INTERRUPTOR

SCHALTER

COMMANDE

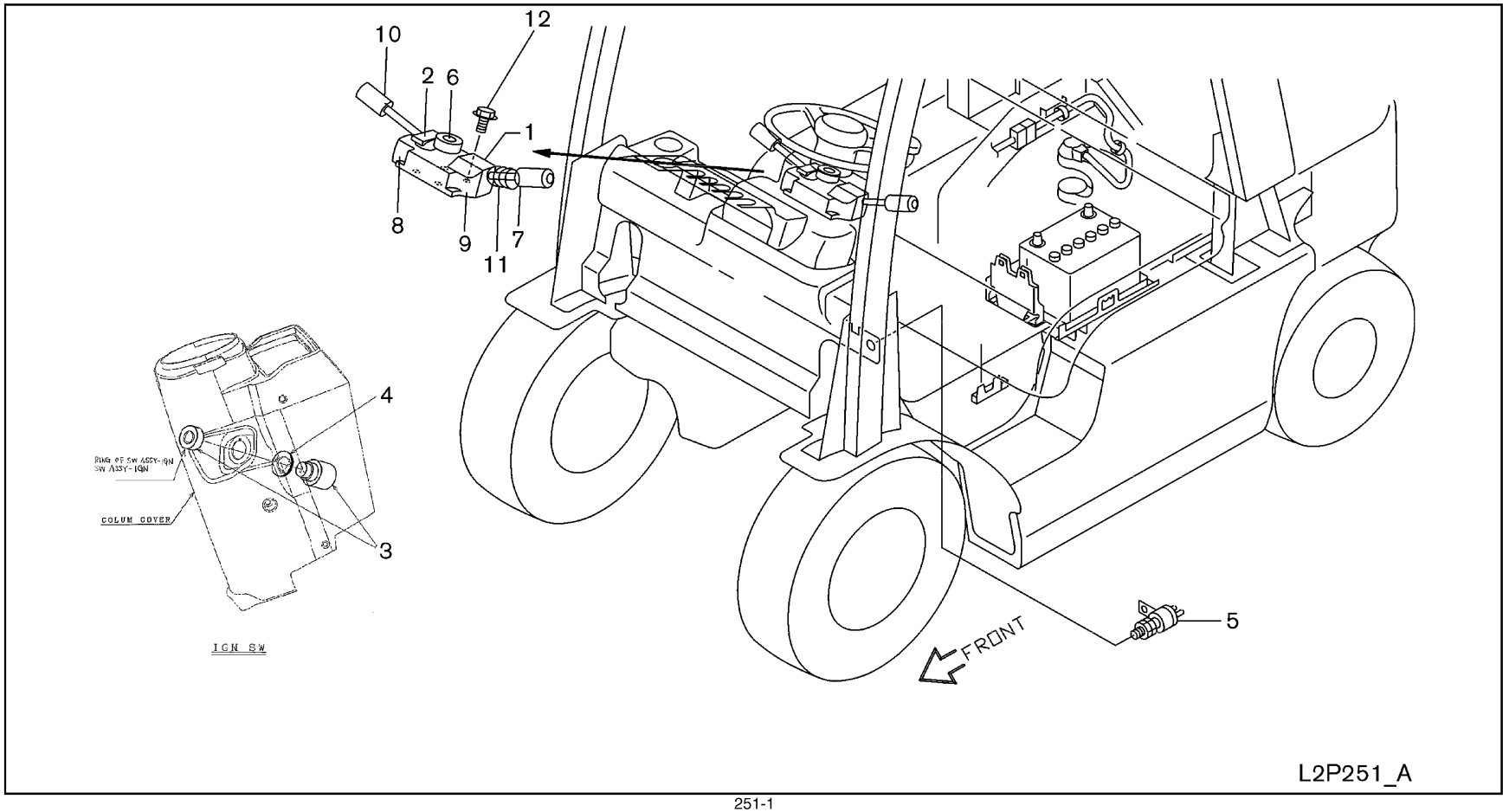

SEC. 251

SWITCH

INTERRUPTOR

SCHALTER

COMMANDE

NC	S	KEY NO.	LEV	PART NO.	PART NAME	SPECIFICATION	QTY	APPLIED DATE	ICANF	FORMER PART NO.	KD
		1 01	1	**25560-FK20A**	SWITCH COMPLETE-TURN SIGNAL		01	0107-			
		02	1	**25560-GG11A**		F/FC	01	0507-			
		2 01	2	**25543-FK000**	BRACKET-TURN		01	0107-			
		3 01	1	**25150-GG10B**	SWITCH ASSY-IGNITION		01	0107-			
		4 01	1	**25152-FK100**	SPACER-IGN SWITCH		01	0107-			
		5 01	1	**25320-GB000**	SWITCH ASSY-STOP LAMP		01	0107-			
		6 01	2	**25569-FK000**	HORN CONTACT		01	0107-			
		7 01	2	**25563-GA10A**	LEVER ASSY-FNR		01	0107-			
		02	2	**25563-GA10A**		F/FC	01	0107-0609			
		03	2	**25562-GA10A**		F/FC	01	0609-			
		8 01	2	**25541-FK000**	SWITCH UNIT-TURN SIGNAL		01	0107-			
		02	2	**25541-GA10A**		F/FC	01	0507-			
		9 01	2	**25542-FK000**	SWITCH UNIT-FNR SIGNAL		01	0107-			
		10 01	2	**25562-FK000**	LEVER ASSY-TURN		01	0107-			
		11 01	2	**25568-FK000**	BOOTS		02	0107-			
		12 01	1	**08310-61614**	SCREW-PHM M6-1.0X16 W/SPRW		04	0107-			

APPLIED MODEL

	MIPVJ	MIPVJ	MIPVS	MIPVS	MUUVL	MUUVL	MUUVL	MUUVL	MYPVL	MPPVJ	MPPVL	MPPVS	MUUVJ	MUUVL	MUUVS	MUUVL	MYUVJ	MUUVJ	MUUVL	MUUVS	MUUVL	MGGVJ	MGGVL	MGGVS	MGGVL	MYUVJ	MUUVL	MUUVS	MUUVL	MGGVJ	MGGVL	MGGVS
	A220JV	A220LV	A220SV	A220JV	A220LV	A220JV	A220LV	A220SV	A220LV	A255JV	A255LV	A255SV	A255JV	A255LV	A255SV	A255LV	A258JV	A288JV	A288LV	A288SV	A288LV	A300JV	A300LV	A300SV	A300LV	A305JV	A355JV	A355LV	A355SV	A355JV	A355LV	A355SV
01	○	○	○	○	○	○	○	○	○	○	○	○	○	○	○	○	○	○	○	○	○	○	○	○	○	○	○	○	○	○	○	○
02	✱	✱	✱		✱	✱	✱		✱	✱	✱		✱	✱		✱	✱																
03	○	○	○	○	○	○	○	○	○	○	○	○	○	○	○	○	○	○	○	○	○	○	○	○	○	○	○	○	○	○	○	○
04	○	○	○	○	○	○	○	○	○	○	○	○	○	○	○	○	○	○	○	○	○	○	○	○	○	○	○	○	○	○	○	○
05	○	○	○	○	○	○	○	○	○	○	○	○	○	○	○	○	○	○	○	○	○	○	○	○	○	○	○	○	○	○	○	○
06	○	○	○	○	○	○	○	○	○	○	○	○	○	○	○	○	○	○	○	○	○	○	○	○	○	○	○	○	○	○	○	○
07	○	○	○	○	○	○	○	○	○	○	○	○	○	○	○	○	○	○	○	○	○	○	○	○	○	○	○	○	○	○	○	○
08	✱	✱	✱		✱	✱	✱		✱	✱	✱		✱	✱		✱	✱																
09	✱	✱	✱		✱	✱	✱		✱	✱	✱		✱	✱		✱	✱																
10	○	○	○	○	○	○	○	○	○	○	○	○	○	○	○	○	○	○	○	○	○	○	○	○	○	○	○	○	○	○	○	○
11	○	○	○	○	○	○	○	○	○	○	○	○	○	○	○	○	○	○	○	○	○	○	○	○	○	○	○	○	○	○	○	○
12	○	○	○	○	○	○	○	○	○	○	○	○	○	○	○	○	○	○	○	○	○	○	○	○	○	○	○	○	○	○	○	○
13	✱	✱	✱		✱	✱	✱		✱	✱	✱		✱	✱		✱	✱																
14	✱	✱	✱		✱	✱	✱		✱	✱	✱		✱	✱		✱	✱																
15	○	○	○	○	○	○	○	○	○	○	○	○	○	○	○	○	○	○	○	○	○	○	○	○	○	○	○	○	○	○	○	○
16	○	○	○	○	○	○	○	○	○	○	○	○	○	○	○	○	○	○	○	○	○	○	○	○	○	○	○	○	○	○	○	○
17	○	○	○	○	○	○	○	○	○	○	○	○	○	○	○	○	○	○	○	○	○	○	○	○	○	○	○	○	○	○	○	○
18	✱	✱	✱		✱	✱	✱		✱	✱	✱		✱	✱		✱	✱																
19	○	○	○	○	○	○	○	○	○	○	○	○	○	○	○	○	○	○	○	○	○	○	○	○	○	○	○	○	○	○	○	○
20	○	○	○	○	○	○	○	○	○	○	○	○	○	○	○	○	○	○	○	○	○	○	○	○	○	○	○	○	○	○	○	○
21	○	○	○	○	○	○	○	○	○	○	○	○	○	○	○	○	○	○	○	○	○	○	○	○	○	○	○	○	○	○	○	○
22	○	○	○	○	○	○	○	○	○	○	○	○	○	○	○	○	○	○	○	○	○	○	○	○	○	○	○	○	○	○	○	○
23	○	○	○	○	○	○	○	○	○	○	○	○	○	○	○	○	○	○	○	○	○	○	○	○	○	○	○	○	○	○	○	○
24	○	○	○	○	○	○	○	○	○	○	○	○	○	○	○	○	○	○	○	○	○	○	○	○	○	○	○	○	○	○	○	○
25	○	○	○	○	○	○	○	○	○	○	○	○	○	○	○	○	○	○	○	○	○	○	○	○	○	○	○	○	○	○	○	○
26	○	○	○	○	○	○	○	○	○	○	○	○	○	○	○	○	○	○	○	○	○	○	○	○	○	○	○	○	○	○	○	○
27	○	○	○	○	○	○	○	○	○	○	○	○	○	○	○	○	○	○	○	○	○	○	○	○	○	○	○	○	○	○	○	○
28	○	○	○	○	○	○	○	○	○	○	○	○	○	○	○	○	○	○	○	○	○	○	○	○	○	○	○	○	○	○	○	○
29	○	○	○	○	○	○	○	○	○	○	○	○	○	○	○	○	○	○	○	○	○	○	○	○	○	○	○	○	○	○	○	○

SEC. 253

ELECTRICAL UNIT

UNIDAD ELECTRICA

ELEKTRISCHE BAUTEILE

ELEMENT ELECTRIQUE

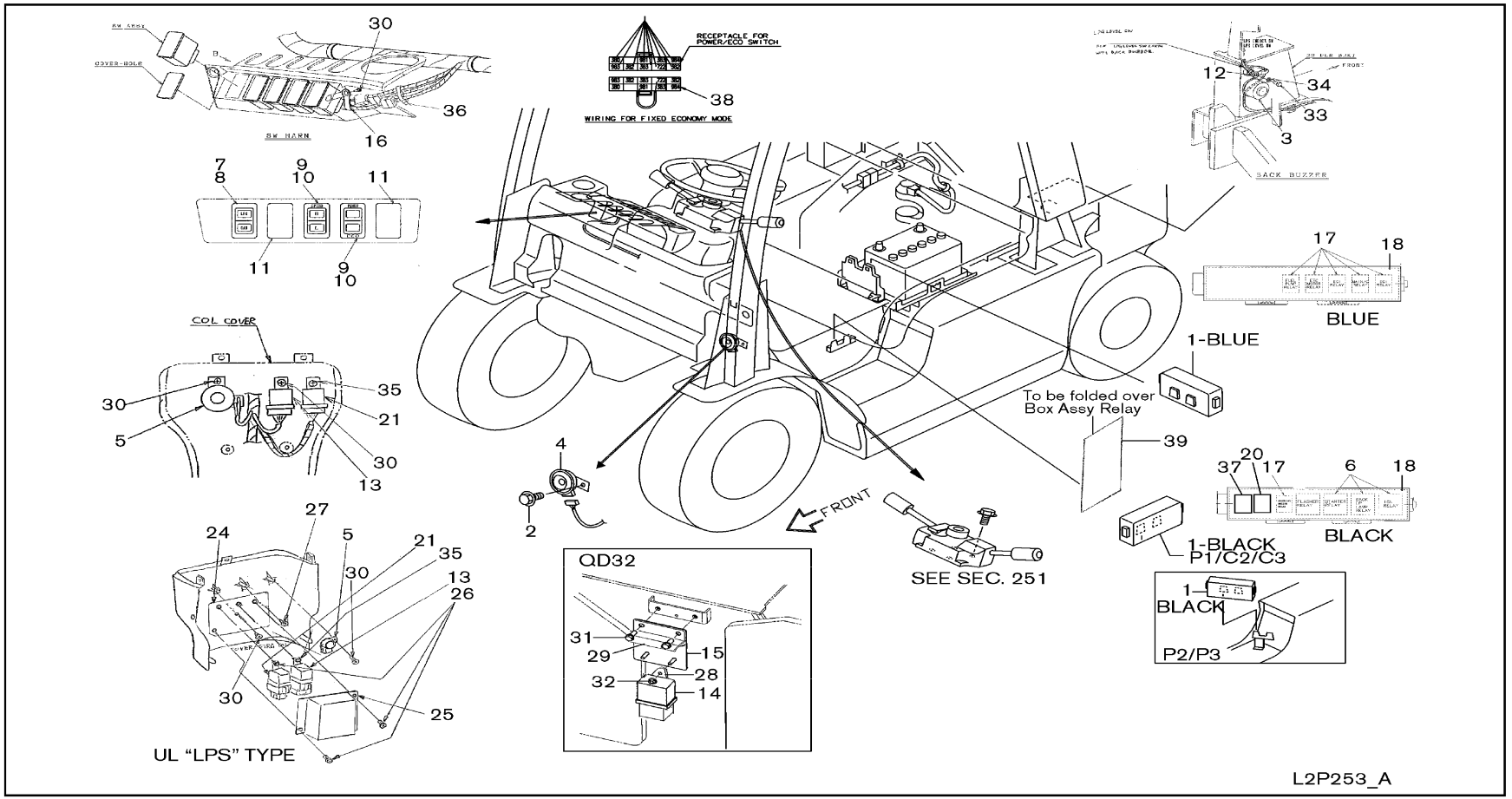

SEC. 253

ELECTRICAL UNIT

UNIDAD ELECTRICA

ELEKTRISCHE BAUTEILE

ELEMENT ELECTRIQUE

NC	S	KEY NO.	LEV	PART NO.	PART NAME	SPECIFICATION	QTY	APPLIED DATE	TCANF	FORMER PART NO.	KD	APPLIED MODEL 01 02 03 04 05 06 07 08 09 10 11 12 13 14 15 16 17 18 19 20 21 22 23 24 25 26 27 28 29
		1	01	1	**24380-FK26A**	BOX ASSY-RELAY	BLUE	01	0107-0408			o o o o o o o o o o o o o o o o o o o o o o o o o o o o o
			02	1	**24380-GE00C**		BLUE	01	0408-			o o o o o o o o o o o o o o o o o o o o o o o o o o o o
			03	1	**24380-FK111**		BLACK	01	0107-			o o o o o o o o o o o o o o o o o o o o o o o o o o o o o
			04	1	**24380-FK111**		F/RR COMBI LAMP BLACK	01	0107-			* *
		2	01	1	**01125-00931**	BOLT		01	0107-0509			o o o o o o o o o o o o o o o o o o o o o o o o o o o o o
			02	1	**08120-8161F**	SCREW-HHM M8-1.25X16 W/LK & PW		01	0509-			o o o o o o o o o o o o o o o o o o o o o o o o o o o o o
		3	01	1	**25650-50K00**	HORN ASSY-BACK		01	0107-			o o o o o o o o o o o o o o o o o o o o o o o o o o o o o
		4	01	1	**25620-FK105**	HORN ASSY-LOW		01	0107-0110			o o o o o o o o o o o o o o o o o o o o o o o o o o o o o
			02	1	**25620-GH10A**			01	0110-			o o o o o o o o o o o o o o o o o o o o o o o o o o o o o
		5	01	1	**25640-GH10A**	BUZZER ASSY-CONTINUANCE		01	0107-			o o o o o o o o o o o o o o o o o o o o o o o o o o o o o
		6	01	2	**25230-FK110**	RELAY-1M		03	0107-			o o o o o o o o o o o o o o o o o o o o o o o o o o o o o
		7	01	1	**69425-FK010**	COVER-HOLE		01	0107-			o o o o o o o o o o o o o o o o o o o o o o o o o o o o o
		8	01	1	**25565-FK101**	SWITCH ASSY	F/LP/GAS SELECT	01	0107-0709			o o o o o o o o o o o o o o o o o o o o o o o o o o o o o
			02	1	**25565-GL00C**		F/LP/GAS SELECT	01	0709-			o o o o o o o o o o o o o o o o o o o o o o o o o o o o o
		9	01	1	**25565-FK11A**	SWITCH ASSY	F/SOFT POWER ACCEL	01	0107-1109			* *
			02	1	**25565-GL00A**		F/SOFT POWER ACCEL	01	1109-			* *
			03	1	**24027-FW80B**	SWITCH ASSY-KEY POWER & ECO	F/KEY POWER/ECO	01	1107-			* *
			04	1	**25565-FK120**	SWITCH ASSY	F/SPEED SELECT SWITCH	01	0107-0810			* *
			05	1	**25565-GL00B**		F/SPEED SELECT SWITCH	01	0810-			* *
			06	1	**24027-FW80A**	SWITCH ASSY-KEY SPEED HIGH & LOW	F/KEY HIGH/LOW SPEED	01	1107-			* *
		10	01	1	**69425-FK010**	COVER-HOLE		02	0107-			o o o o o o o o o o o o o o o o o o o o o o o o o o o o o
		11	01	1	**69425-FK010**	COVER-HOLE		02	0107-			o o o o o o o o o o o o o o o o o o o o o o o o o o o o o
		12	01	1	**24210-89944**	CLIP		01	0107-			o o o o o o o o o o o o o o o o o o o o o o o o o o o o o
		13	01	1	**25230-79981**	RELAY-1M		01	0107-			o o o o o o o o o o o o o o o o o o o o o o o o o o o o o
			02	1	**25235-N8500**	BRACKET, A-RELAY		01	0107-0807			o o o o o o o o o o o o o o o o o o o o o o o o o o o o o
			03	1	**25235-N853A**			01	0807-			o o o o o o o o o o o o o o o o o o o o o o o o o o o o o
		14	01	1	**25230-18A01**	RELAY ASSY-GLOW		01	0107-			o o o o
		15	01	1	**25232-FK100**	BRACKET ASSY-ELECTRIC UNIT		01	0107-			o o o o
		16	01	1	**24210-89932**	CLIP		01	0107-			o o o o o o o o o o o o o o o o o o o o o o o o o o o o o
		17	01	2	**25230-FK12A**	RELAY-1M1B	F/BLACK	01	0107-0608			o o o o o o o o o o o o o o o o o o o o o o o o o o o o o
			02	2	**25230-GE00A**		F/BLACK	01	0608-			o o o o o o o o o o o o o o o o o o o o o o o o o o o o o
			03	2	**25230-FK12A**		F/BLUE	05	0107-0408			o o o o o o o o o o o o o o o o o o o o o o o o o o o o o
			04	2	**25230-GE00A**		F/BLUE	05	0408-			o o o o o o o o o o o o o o o o o o o o o o o o o o o o o
		18	01	2	**24390-FK111**	COVER-RELAY BOX	F/BLACK	01	0107-			o o o o o o o o o o o o o o o o o o o o o o o o o o o o o
			02	2	**24390-FK111**		F/RR COMBI LAMP BLACK	01	0107-			* *
			03	2	**24390-FK266**		F/BLUE	01	0107-			o o o o o o o o o o o o o o o o o o o o o o o o o o o o o
		20	01	1	**25230-FK12A**	RELAY-1M1B		01	0107-0408			o o o o o o o o o o o o o o o o o o o o o o o o o o o o o

SEC. 253

ELECTRICAL UNIT

UNIDAD ELECTRICA

ELEKTRISCHE BAUTEILE

ELEMENT ELECTRIQUE

NC	S	KEY NO.	LEV	PART NO.	PART NAME	SPECIFICATION	QTY	APPLIED DATE	TCANF	FORMER PART NO.	KD	APPLIED MODEL 01 02 03 04 05 06 07 08 09 10 11 12 13 14 15 16 17 18 19 20 21 22 23 24 25 26 27 28 29
		20	02	1	**25230-GE00A**	RELAY-1M1B		01	0408-			o o o o o o o o o o o o o o o o o o o o o o o o o
		21	01	1	**25230-79982**	RELAY-1M	F/FR COMBI LAMP	01	0107-			* *
			02	1	**25235-N8500**	BRACKET, A-RELAY	F/FR COMBI LAMP	01	0107-0807			* *
			03	1	**25235-N853A**		F/FR COMBI LAMP	01	0807-			* *
		24	01	1	**25238-FV00A**	COVER ASSY-RELAY		01	0107-0207			o o o o o o o o o o o o o o o o o o o o o o o o o
			02	1	**25238-FV00B**			01	0207-			o o o o o o o o o o o o o o o o o o o o o o o o o
		25	01	1	**25239-FV00A**	COVER-RELAY		01	0107-0207			o o o o o o o o o o o o o o o o o o o o o o o o o
			02	1	**25239-FV00B**			01	0207-			o o o o o o o o o o o o o o o o o o o o o o o o o
		26	01	1	**08360-61225**	SCREW-CR M6-1.0X12 W/LK & PW		03	0107-			o o o o o o o o o o o o o o o o o o o o o o o o o
		27	01	1	**08540-51210**	SCREW-TAP TR HD		02	0107-			o o o o o o o o o o o o o o o o o o o o o o o o o
		28	01	1	**25238-51K00**	BRACKET-RELAY		01	0107-			o o o o o o o o o o o o o o o o o o o o o o o o o
		29	01	1	**25239-GG30A**	COVER-RELAY		01	0107-			o o o o o o o o o o o o o o o o o o o o o o o o o
		30	01	1	**08540-51210**	SCREW-TAP TR HD		03	0107-			o o o o o o o o o o o o o o o o o o o o o o o o o
		31	01	1	**08120-8161F**	SCREW-HHM M8-1.25X20 W/LK & PW		02	0107-			o o o o o o o o o o o o o o o o o o o o o o o o o
		32	01	1	**08911-10637**	NUT-HEX W/CON SPRW M6-1.0		01	0107-			o o o o o o o o o o o o o o o o o o o o o o o o o
		33	01	1	**08110-8121A**	SCREW-HHM M8-1.25X12 W/SPRW		01	0107-0508			o o o o o o o o o o o o o o o o o o o o o o o o o
			02	1	**08110-8121A**			01	0508-			o o o o o o o o o o o o o o o o o o o o o o o o o
			03	1	**08110-8161A**	SCREW-HHM M8-1.25X16		01	0508-			o o o o o o o o o o o o o o o o o o o o o o o o o
		34	01	1	**08915-1381A**	WASHER-LOCK SPLIT M8		01	0107-			o o o o o o o o o o o o o o o o o o o o o o o o o
		35	01	1	**08540-51210**	SCREW-TAP TR HD	F/FR COMBI LAMP	01	0107-			* *
			02	1	**08360-61225**	SCREW-HH CR M6-1.0X12 W/LK & PW	F/FR COMBI LAMP	01	0107-			* *
		36	01	1	**01552-00411**	BAND-HOSE	F/OPTIONAL SWITCH ASSEMBLIES	01	0107-			* *
		37	01	1	**25230-FK12A**	RELAY-1M1B	F/HEATER CABIN	01	0107-0408			* *
			02	1	**25230-GE00A**		F/HEATER CABIN	01	0408-			* *
		38	01	1	**24027-FW80C**	HARN-FIXED ECONOMY MODE	F/FIXED ECONOMY MODE	01	1107-			* *
		39	01	1	**25432-FB800**	COVER-RUB, RELAY	F/ANTI RUST	01	0607-			* *

NOTE

SEC. 260

HEAD LAMP

FARO

SCHEINWERFER

PHARE

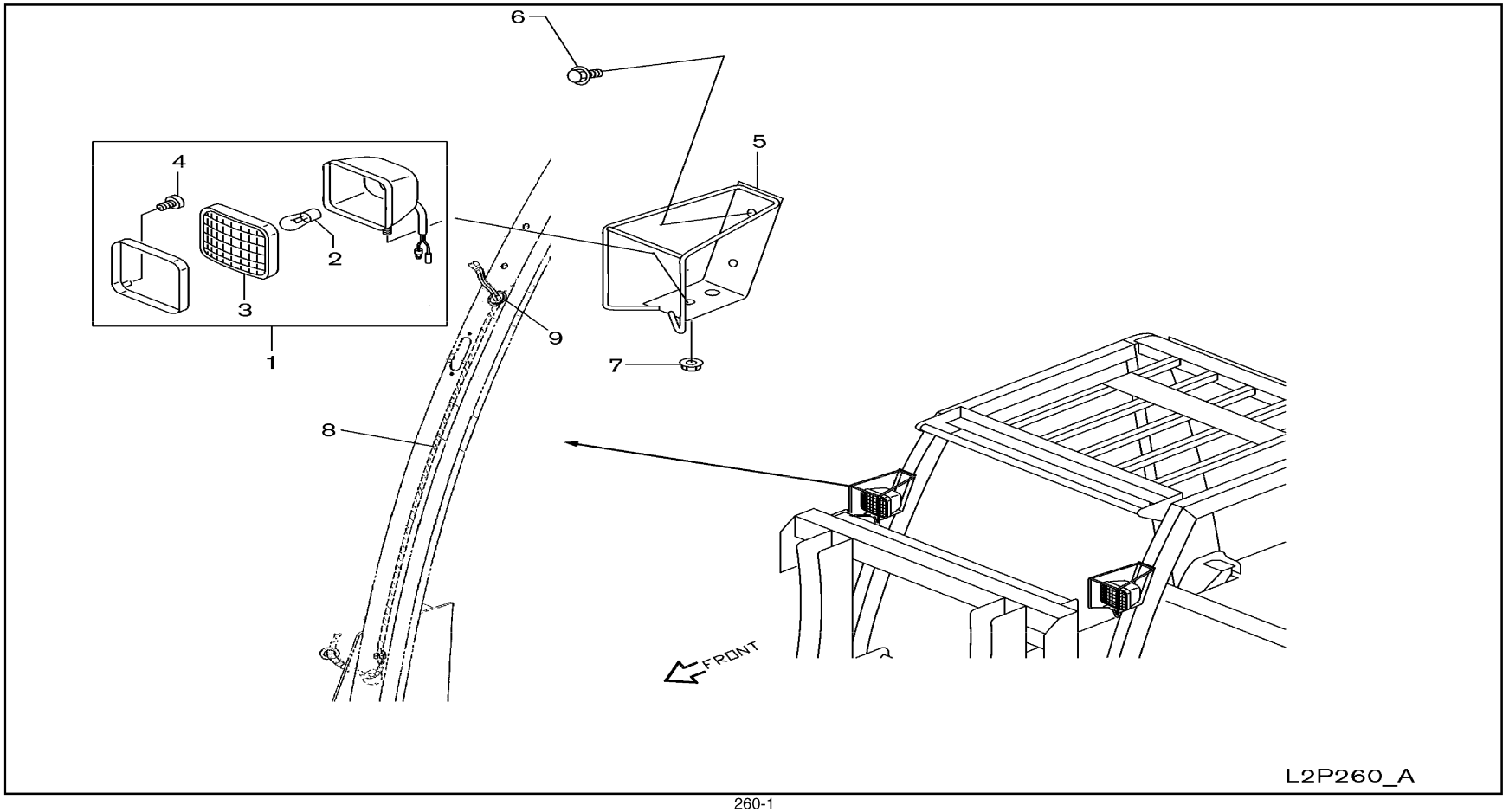

SEC. 260

HEAD LAMP

FARO

SCHEINWERFER

PHARE

NC	S	KEY NO.	LEV	PART NO.	PART NAME	SPECIFICATION	QTY	APPLIED DATE	ICANF	FORMER PART NO.	KD	APPLIED MODEL 01	02	03	04	05	06	07	08	09	10	11	12	13	14	15	16	17	18	19	20	21	22	23	24	25	26	27	28	29
		1 01	1	**26010-FE300**	LAMP ASSY-HEAD		02	0107-				O	O	O	O	O	O	O	O	O	O	O	O	O	O	O	O	O	O	O	O	O	O	O	O	O	O	O
		2 01	2	**26293-51K00**	BULB		02	0107-				O	O	O	O	O	O	O	O	O	O	O	O	O	O	O	O	O	O	O	O	O	O	O	O	O	O	O
		02	2	**26293-FJ10A**		F/HALOGEN	02	0107-				*	*	*	*	*	*	*	*	*	*	*	*	*	*	*	*	*	*	*	*	*	*	*	*	*	*	*
		3 01	2	**26011-61K00**	LENS-HEAD LAMP		02	0107-				O	O	O	O	O	O	O	O	O	O	O	O	O	O	O	O	O	O	O	O	O	O	O	O	O	O	O
		4 01	2	**26022-51K10**	SCREW		04	0107-				O	O	O	O	O	O	O	O	O	O	O	O	O	O	O	O	O	O	O	O	O	O	O	O	O	O	O
		5 01	1	**26311-FB00A**	PROTECTOR ASSY-HEAD LAMP		02	0107-0608				O	O	O	O	O	O	O	O	O	O	O	O	O	O	O	O	O	O	O	O	O	O	O	O	O	O	O
		02	1	**26311-FV00A**			02	0608-				O	O	O	O	O	O	O	O	O	O	O	O	O	O	O	O	O	O	O	O	O	O	O	O	O	O	O
		6 01	1	**08110-8201D**	SCREW-HHM M8-1.25X20 W/SPRW		04	0107-				O	O	O	O	O	O	O	O	O	O	O	O	O	O	O	O	O	O	O	O	O	O	O	O	O	O	O
		7 01	1	**08911-1081G**	NUT-HEX W/CON SPW M8-1.25		02	0107-				O	O	O	O	O	O	O	O	O	O	O	O	O	O	O	O	O	O	O	O	O	O	O	O	O	O	O
		8 01	1	**24012-FJ000**	GUARD-HARNESS		02	0107-0510				O	O	O	O	O	O	O	O	O	O	O	O	O	O	O	O	O	O	O	O	O	O	O	O	O	O	O
		02	1	**24012-FE305**			02	0510-				O	O	O	O	O	O	O	O	O	O	O	O	O	O	O	O	O	O	O	O	O	O	O	O	O	O	O
		03	1	**24012-FJ005**		F/COMBI LAMP	02	0107-0610				*	*	*	*	*	*	*	*	*	*	*	*	*	*	*	*	*	*	*	*	*	*	*	*	*	*	*
		04	1	**24012-FE300**		F/COMBI LAMP	02	0610-1210				*	*	*	*	*	*	*	*	*	*	*	*	*	*	*	*	*	*	*	*	*	*	*	*	*	*	*
		05	1	**24012-FJ005**		F/COMBI LAMP	02	1210-				*	*	*	*	*	*	*	*	*	*	*	*	*	*	*	*	*	*	*	*	*	*	*	*	*	*	*
		9 01	1	**01651-00033**	GROMMET		02	0107-				O	O	O	O	O	O	O	O	O	O	O	O	O	O	O	O	O	O	O	O	O	O	O	O	O	O	O

SEC. 261

FRONT COMBINATION LAMP

LUCES DE COMBINACION DELANTERAS

VORDERE KOMBINATIONSLEUCHTE

ECLAIRAGE AVANT COMBINE

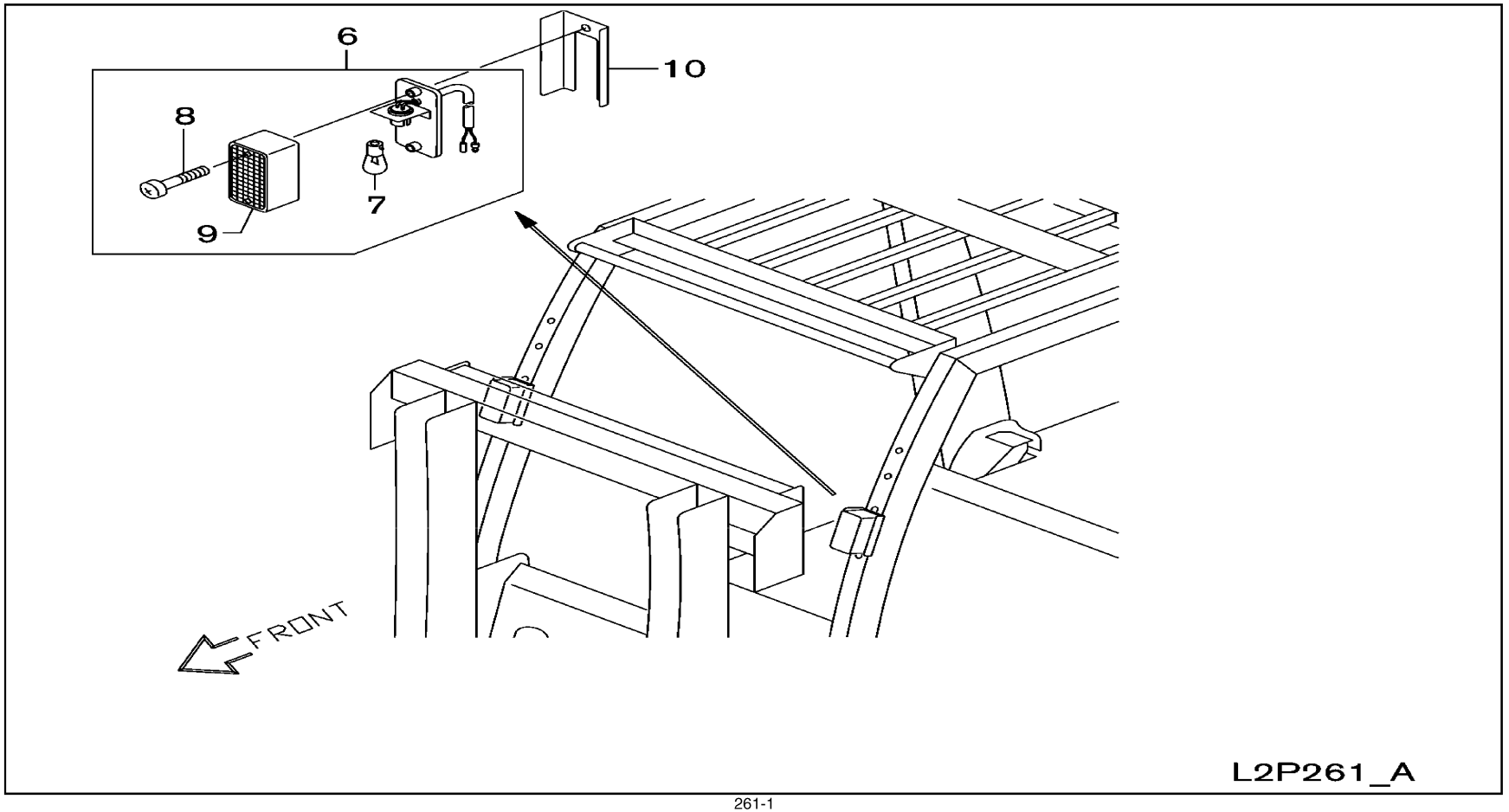

SEC. 261

FRONT COMBINATION LAMP

LUCES DE COMBINACION DELANTERAS

VORDERE KOMBINATIONSLEUCHTE

ECLAIRAGE AVANT COMBINE

NC	S	KEY NO.	LEV	PART NO.	PART NAME	SPECIFICATION	QTY	APPLIED DATE	TCANF	FORMER PART NO.	KD
		6 01	1	**74892-V6000**	COVER-ADHESIVE		02	0107-			
		02	1	**26130-FE300**	LAMP ASSY-TURN SIGNAL,FRONT	F/FR COMBI LAMP	02	0107-			
		7 01	2	**26717-89900**	BULB	F/FR COMBI LAMP	02	0107-			
		8 01	2	**26391-FE300**	SCREW	F/FR COMBI LAMP	04	0107-			
		9 01	2	**26131-FE300**	LENS	F/FR COMBI LAMP	02	0107-			
		10 01	1	**26122-FE300**	SHADE	F/FR COMBI LAMP	02	0107-			

APPLIED MODEL

01	02	03	04	05	06	07	08	09	10	11	12	13	14	15	16	17	18	19	20	21	22	23	24	25	26	27	28	29
MIPA2000JV	MIPA2000DV	MIPA2000LV	MIPA2000SV	MIUA2000JV	MIUA2000DV	MIUA2000LV	MIUA2000SV	MIYA2000LS	MIPA2055JV	MIPA2055DV	MIPA2055LV	MIPA2055SV	MIUA2055JV	MIUA2055DV	MIUA2055LV	MIUA2055SV	MIYA2055LS	MIUA2058JV	MIUA2058DV	MIUA2058LV	MIGA3000JV	MIGA3000DV	MIGA3000LV	MIYA3005JV	MIUA3055DV	MIUA3055LV	MIGA3055LV	MIYA3055LV
○	○	○	○	○	○	○	○	○	○	○	○	○	○	○	○	○	○	○	○	○	○	○	○	○	○	○	○	○
*	*	*	*	*	*	*	*	*	*	*	*	*	*	*	*	*	*	*	*	*	*	*	*	*	*	*	*	*
*	*	*	*	*	*	*	*	*	*	*	*	*	*	*	*	*	*	*	*	*	*	*	*	*	*	*	*	*
*	*	*	*	*	*	*	*	*	*	*	*	*	*	*	*	*	*	*	*	*	*	*	*	*	*	*	*	*
*	*	*	*	*	*	*	*	*	*	*	*	*	*	*	*	*	*	*	*	*	*	*	*	*	*	*	*	*
*	*	*	*	*	*	*	*	*	*	*	*	*	*	*	*	*	*	*	*	*	*	*	*	*	*	*	*	*

SEC. 265

REAR COMBINATION LAMP

LUCES DE COMBINACION TRASERAS

HINTERE KOMBINATIONSLEUCHTE

ECLAIRAGE ARRIERE COMBINE

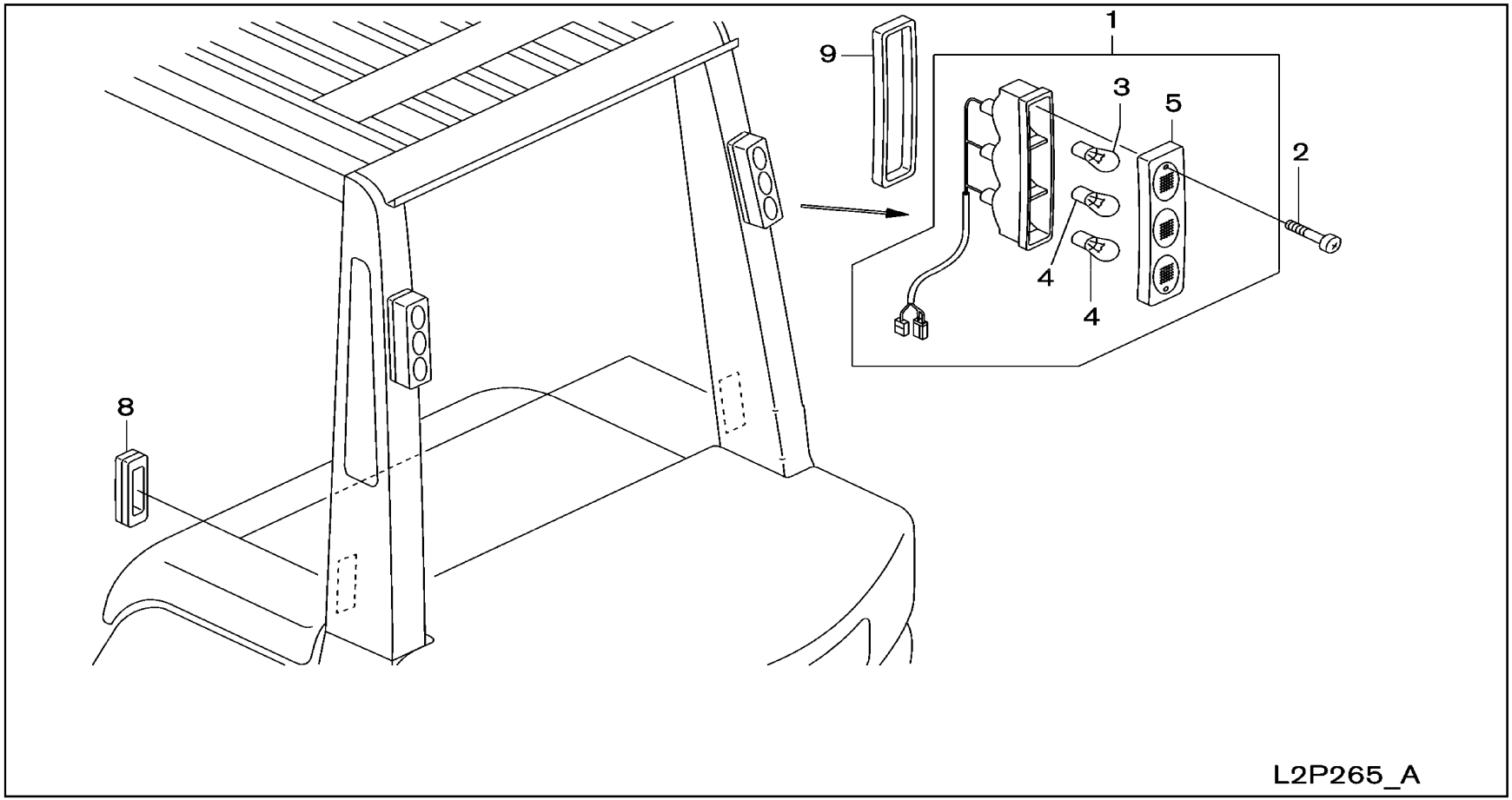

SEC. 265

REAR COMBINATION LAMP

LUCES DE COMBINACION TRASERAS

HINTERE KOMBINATIONSLEUCHTE

ECLAIRAGE ARRIERE COMBINE

NC	S	KEY NO.	LEV	PART NO.	PART NAME	SPECIFICATION	QTY	APPLIED DATE	ICANF	FORMER PART NO.	KD
		1 01	1	**26334-FA000**	PLATE		02	0107-0208			
		02	1	**26334-GE00A**			02	0208-			
		03	1	**26550-FK100**	LAMP ASSY-REAR COMBINATION	F/RR COMBI LAMP	02	0107-			
		2 01	1	**26574-FK100**	SCREW		04	0107-			
		3 01	2	**26717-FK100**	BULB	F/RR COMBI LAMP	02	0107-			
		4 01	2	**26717-FK110**	BULB	F/RR COMBI LAMP	04	0107-			
		5 01	2	**26521-FK10A**	LENS	F/RR COMBI LAMP	02	0107-			
		8 01	1	**24261-51K00**	GROMMET		02	0107-			
		9 01	1	**26553-FK100**	PACKING-LAMP	F/RR COMBI LAMP	02	0107-			

APPLIED MODEL

01	02	03	04	05	06	07	08	09	10	11	12	13	14	15	16	17	18	19	20	21	22	23	24	25	26	27	28	29
MIPA20JV	MIPA20DV	MIPA20LV	MIPA20LS	MIUA20JV	MIUA20DV	MIUA20LV	MIUA20LS	MIYA20LV	MIPA25JV	MIPA25DV	MIPA25LV	MIPA25LS	MIUA25JV	MIUA25DV	MIUA25LV	MIUA25LS	MIYA25LV	MIUJA28JV	MIUJA28DV	MIUGA28LV	MIUGA30JV	MIUGA30DV	MIUGA30LV	MIYA30L	MIUGA35JV	MIUGA35DV	MIUGA35LV	MIYG35V
O	O	O	O	O	O	O	O	O	O	O	O	O	O	O	O	O	O	O	O	O	O	O	O	O	O	O	O	O
O	O	O	O	O	O	O	O	O	O	O	O	O	O	O	O	O	O	O	O	O	O	O	O	O	O	O	O	O
*	*	*	*	*	*	*	*	*	*	*	*	*	*	*	*	*	*	*	*	*	*	*	*	*	*	*	*	*
O	O	O	O	O	O	O	O	O	O	O	O	O	O	O	O	O	O	O	O	O	O	O	O	O	O	O	O	O
*	*	*	*	*	*	*	*	*	*	*	*	*	*	*	*	*	*	*	*	*	*	*	*	*	*	*	*	*
*	*	*	*	*	*	*	*	*	*	*	*	*	*	*	*	*	*	*	*	*	*	*	*	*	*	*	*	*
*	*	*	*	*	*	*	*	*	*	*	*	*	*	*	*	*	*	*	*	*	*	*	*	*	*	*	*	*
O	O	O	O	O	O	O	O	O	O	O	O	O	O	O	O	O	O	O	O	O	O	O	O	O	O	O	O	O
*	*	*	*	*	*	*	*	*	*	*	*	*	*	*	*	*	*	*	*	*	*	*	*	*	*	*	*	*

SEC. 267

LAMPS (OTHERS)

LUCES

ANDERE LEUCHTEN

LAMPES

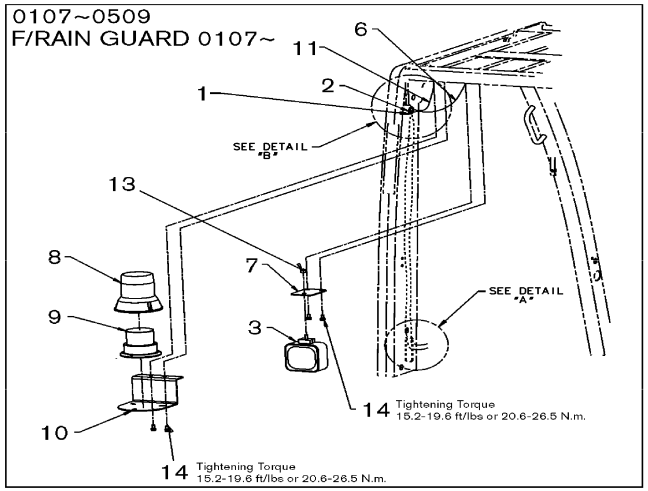

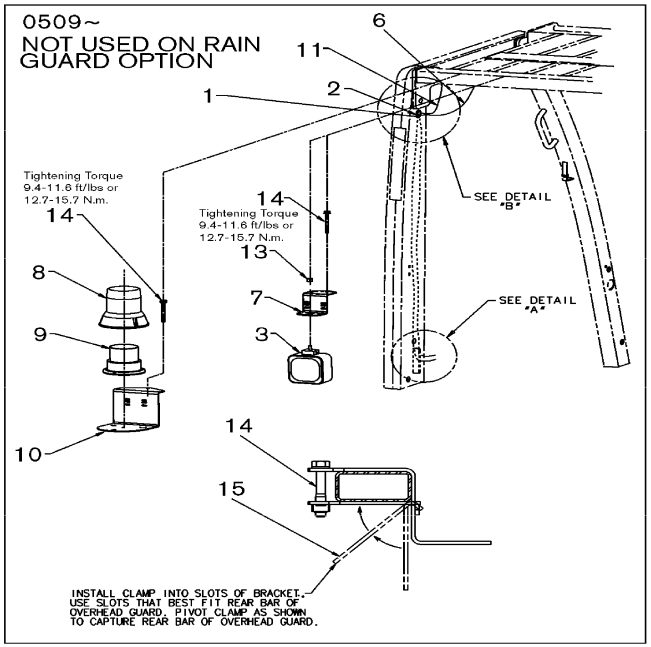

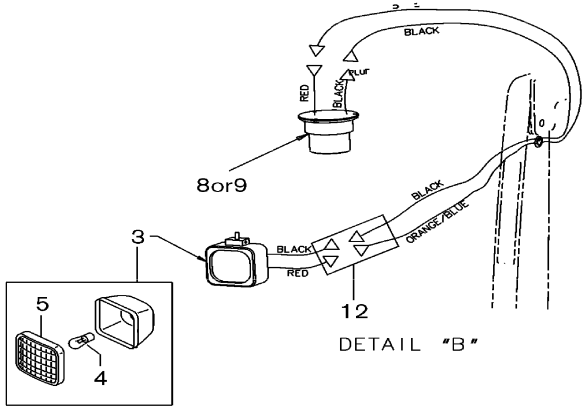

DETAIL "B"

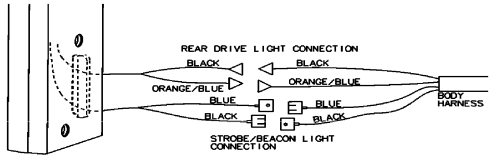

DETAIL "A"

L2P267_A

SEC. 267

LAMPS (OTHERS)

LUCES

ANDERE LEUCHTEN

LAMPES

NC	S	KEY NO.	LEV	PART NO.	PART NAME	SPECIFICATION	QTY	APPLIED DATE	TCANF	FORMER PART NO.	KD	APPLIED MODEL 01 02 03 04 05 06 07 08 09 10 11 12 13 14 15 16 17 18 19 20 21 22 23 24 25 26 27 28 29
		1 01	1	**64890-U7400**	COVER-HOLE		02	0107-				○○○○○○○○○○○○○○○○○○○○○○○○○○○○○
		2 01	1	**01651-00033**	GROMMET		02	0107-				*********************************
		3 01	1	**26010-FE300**	LAMP ASSY-HEAD		01	0107-				*********************************
		4 01	2	**26293-51K00**	BULB		01	0107-				*********************************
		02	2	**26293-FJ10A**		F/HALOGEN	01	0107-				*********************************
		5 01	2	**26011-61K00**	LENS		01	0107-				*********************************
		6 01	1	**24012-FB085**	HARNESS-RR DRIVE LIGHT		01	0107-				*********************************
		7 01	1	**26633-FB085**	BRACKET-RR DRIVE LIGHT		01	0107-0509				*********************************
		02	1	**26633-FB085**		F/RAIN GUARD	01	0509-				*********************************
		03	1	**26633-GA90B**			01	0509-				*********************************
		8 01	1	**26580-FB085**	LIGHT-ROT BEACON	AMBER 12VDC	01	0107-				*********************************
		02	1	**26580-FB086**		BLUE 12VDC	01	0107-				*********************************
		03	1	**26580-FB087**		RED 12VDC	01	0107-				*********************************
		04	1	**R5812-BH**	BULB		01	0107-				*********************************
		9 01	1	**26580-FB090**	LIGHT-STROBE	AMBER 12-80VDC	01	0107-				*********************************
		02	1	**26580-FB091**		BLUE 12-80VDC	01	0107-				*********************************
		03	1	**26580-FB092**		RED 12-80VDC	01	0107-				*********************************
		04	1	**R6410-FT**	BULB		01	0107-				*********************************
		10 01	1	**26633-FB091**	BRACKET-WARNING LIGHT		01	0107-0509				*********************************
		02	1	**26633-FB091**		F/RAIN GUARD	01	0509-				*********************************
		03	1	**26633-GA90D**			01	0509-				*********************************
		11 01	1	**24012-FB090**	HARNESS-WARNING LIGHT		01	0107-				*********************************
		12 01	1	**24841-97H50**	LOOM-WIRE	.5 FT	AR	0107-				*********************************
		13 01	1	**08911-1081G**	NUT-HEX W/CON SPRW M8-1.25		01	0107-				*********************************
		14 01	1	**08120-8251F**	SCREW-HHM M8-1.25X25 W/LK & PW		02	0107-0509				*********************************
		02	1	**08120-8251F**		F/RAIN GUARD	02	0509-				*********************************
		03	1	**08120-8751E**	SCREW-HHM M8-1.25X75 W/LKW		02	0509-				*********************************
		04	1	**08915-4381A**	WASHER-FLAT M8		02	0509-				*********************************
C		**15** 01	1	**26634-GA90B**	BRACKET ASSY-WARN LIGHT LWR	NOT USED WITH RAIN GUARD OPTION	01	0509-				*********************************

NOTE

GROUP INDEX

POWER TRAIN

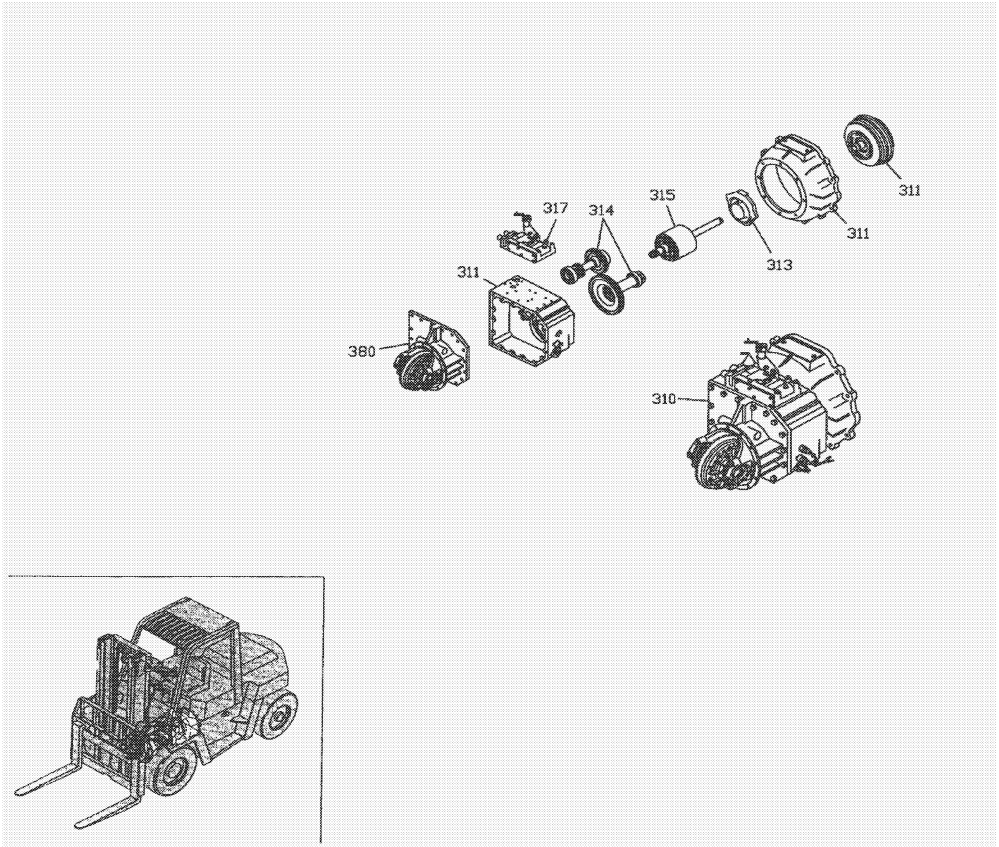

SEC.NO	SECTION NAME
310A	TRANSMISSION ASSEMBLY & FITTING
310B	TRANSMISSION ASSEMBLY & FITTING (ATM-FROM MAY 2008)
311A	TORQUE CONVERTER CASE & HOUSING (ATM-UPTO MAY 2008)
311B	TORQUE CONVERTER CASE & HOUSING (ATM-FROM MAY 2008)
313A	OIL PUMP PARTS (ATM-UPTO MAY 2008)
313B	OIL PUMP PARTS (ATM-FROM MAY 2008)
314A	GOVERNOR & GEAR PARTS (ATM-UPTO MAY 2008)
314B	GOVERNOR & GEAR PARTS (ATM-FROM MAY 2008)
315A	CLUTCH & BRAKE BAND (ATM-UPTO MAY 2008)
315B	CLUTCH & BRAKE BAND (ATM-FROM MAY 2008)
317A	CONTROL VALVE (ATM-UPTO MAY 2008)
317B	CONTROL VALVE (ATM-FROM MAY 2008)
370	PROPELLER SHAFT (ATM)
380A	FINAL DRIVE ASSEMBLY (ATM-20+25 JAN. 2007 & UP, 30+35 JAN. 2007 THRU MAY 2008)
380B	FINAL DRIVE ASSEMBLY (ATM-30+35 FROM MAY 2008)

F

*ILLSTRATIONS SHOWN IN GENERAL INDEX AND GROUP INDEX ARE GENARALIZED DESCRIPTIONS FOR ALL MODELS AND ARE NOT PRECISE IN ALL DETAILS.

SEC. 310A

TRANSMISSION ASSEMBLY & FITTING (ATM-UPTO MAY 2008)

CONJUNTO DE LA TRANSMISION Y PARTES DE FIJACION

GETRIEBE KOMPLETT & BESCHLAGTEILE

ENSEMBLE BOITE DE VITESSES ET PIECES DE FIXATION

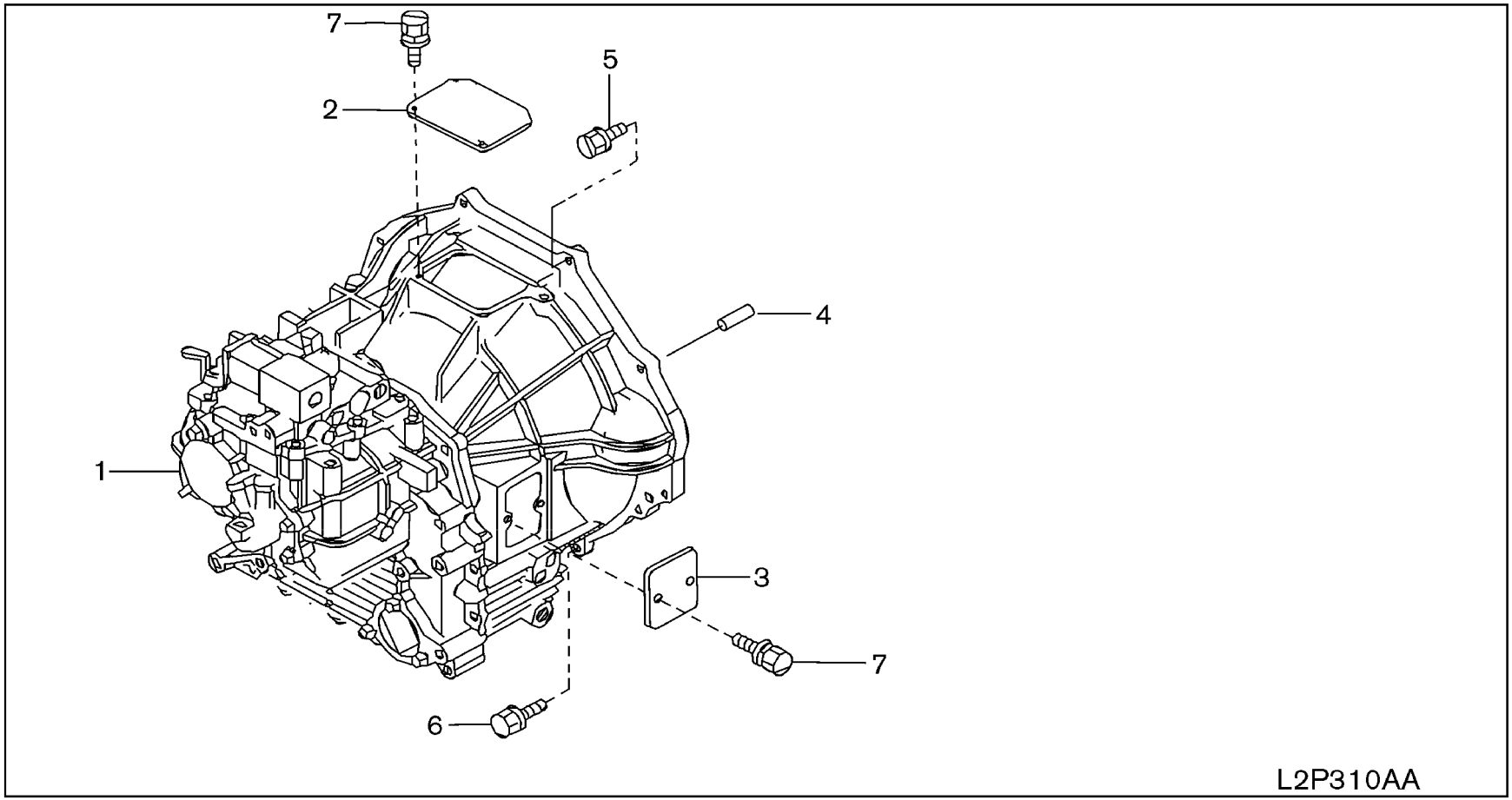

SEC. 310A

TRANSMISSION ASSEMBLY & FITTING (ATM-UPTO MAY 2008)

CONJUNTO DE LA TRANSMISION Y PARTES DE FIJACION

GETRIEBE KOMPLETT & BESCHLAGTEILE

ENSEMBLE BOITE DE VITESSES ET PIECES DE FIXATION

NC	S	KEY NO.	LEV	PART NO.	PART NAME	SPECIFICATION	QTY	APPLIED DATE	ICANF	FORMER PART NO.	KD	APPLIED MODEL 01 02 03 04 05 06 07 08 09 10 11 12 13 14 15 16 17 18 19 20 21 22 23 24 25 26 27 28 29
		1 01	1	**31020-FJ200**	TRANSMISSION ASSY-W/TORQ CONV		01	0107-0508				○○○○○○○○○○○○○○○○○○○○○○○○○○○○○
		02	2	**31011-FJ100**	TRANSMISSION ASSY-AUTO		01	0107-0508				○○○○○○○○○○○○○○○○○○○○○○○○○○○○○
		2 01	1	**30420-FJ100**	COVER		01	0107-0508				○○○○○○○○○○○○○○○○○○○○○○○○○○○○○
		3 01	1	**30422-FJ100**	COVER-CLUTCH HOUSING		02	0107-0508				○○○○○○○○○○○○○○○○○○○○○○○○○○○○○
		4 01	1	**12313-FJ110**	PIN-DOWEL		02	0107-0508				○○○○○○○○○○○○○○○○○○○○○○○○○○○○○
		5 01	1	**31009-FJ100**	BOLT		08	0107-0508				○○○○○○○○○ ○○○○○○○○○○○○ ○○○○○○ ○○○ ○
		02	1	**31009-FJ100**			07	0107-0508				○ ○ ○
		6 01	1	**31009-FJ120**	BOLT		02	0107-0508				○○○○○○○○○○○○○○○○○○○○○○○○○○○○○
		7 01	1	**08120-8201F**	SCREW-HHM M8-1.25X20 W/LK & PW		06	0107-0508				○○○○○○○○○○○○○○○○○○○○○○○○○○○○○

SEC. 310B

TRANSMISSION ASSEMBLY & FITTING (ATM-FROM MAY 2008)

CONJUNTO DE LA TRANSMISION Y PARTES DE FIJACION

GETRIEBE KOMPLETT & BESCHLAGTEILE

ENSEMBLE BOITE DE VITESSES ET PIECES DE FIXATION

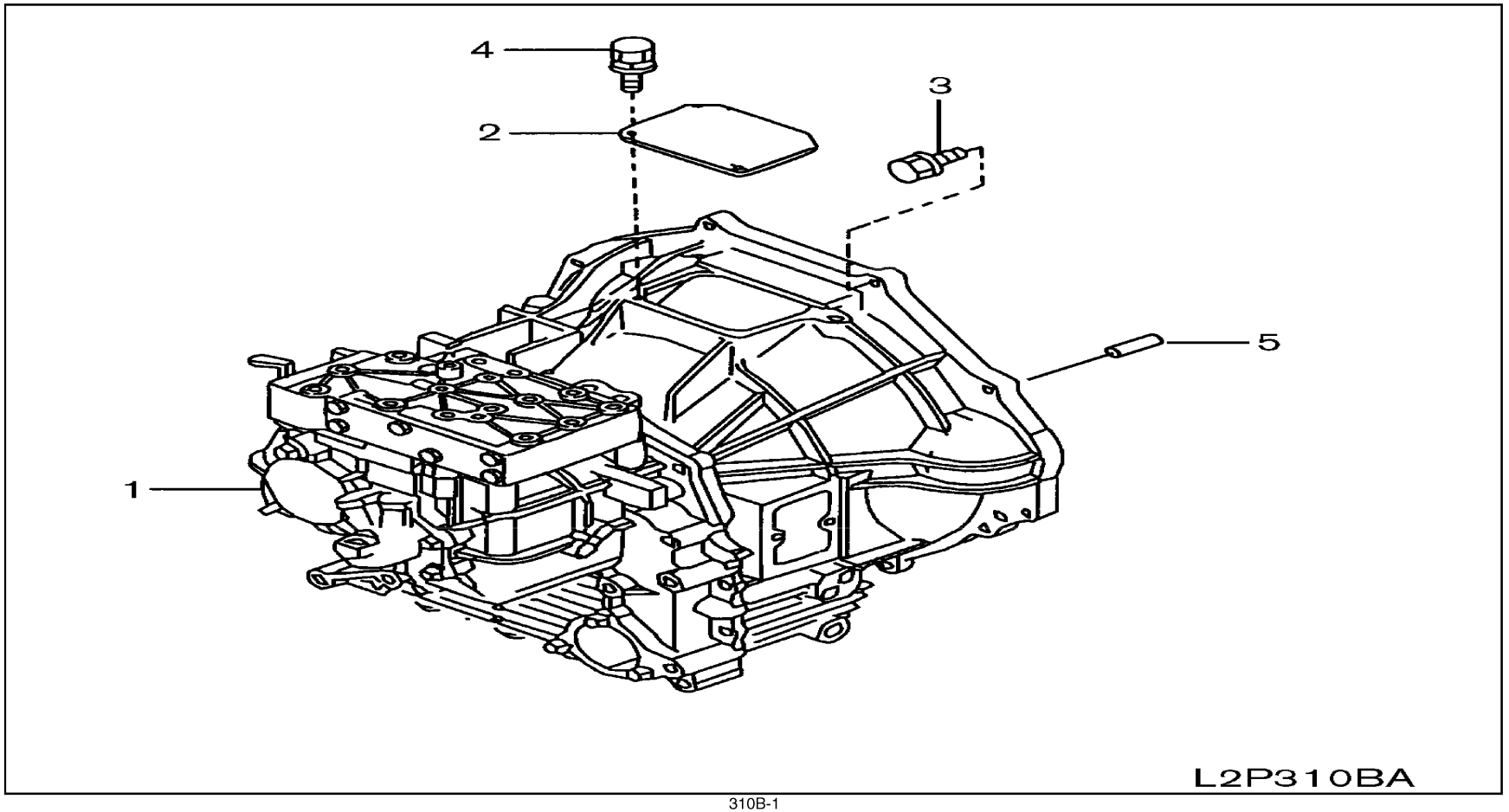

SEC. 310B

TRANSMISSION ASSEMBLY & FITTING (ATM-FROM MAY 2008)

CONJUNTO DE LA TRANSMISION Y PARTES DE FIJACION

GETRIEBE KOMPLETT & BESCHLAGTEILE

ENSEMBLE BOITE DE VITESSES ET PIECES DE FIXATION

NC	S	KEY NO.	LEV	PART NO.	PART NAME	SPECIFICATION	QTY	APPLIED DATE	ICANF	FORMER PART NO.	KD	APPLIED MODEL 01 02 03 04 05 06 07 08 09 10 11 12 13 14 15 16 17 18 19 20 21 22 23 24 25 26 27 28 29
		1 01	1	**31020-GG00A**	TRANSMISSION ASSY-W/TORQUE CONVERTER		01	0508-				○○○○○○○○○○○○○○○○○○○○○○○○○○○○○
		02	2	**31011-GE00A**	TRANSMISSION ASSY-AUTO		01	0508-				○○○○○○○○○○○○○○○○○○○○○○○○○○○○○
		2 01	1	**30411-GE00B**	COVER		01	0508-				○○○○○○○○○○○○○○○○○○○○○○○○○○○○○
		3 01	1	**31009-FJ100**	BOLT		10	0508-				○○○○○○○○○○○○○○○○○○○○○○○○○○○○○
		4 01	1	**08120-8201F**	SCREW-HHM M8-1.25X20 W/LK & PW		02	0508-				○○○○○○○○○○○○○○○○○○○○○○○○○○○○○
		5 01	4	**12313-FJ110**	DOWEL-PIN		02	0508-1008				○○○○○○○○○○○○○○○○○○○○○○○○○○○○○
		02	4	**12313-GE00A**			02	1008-				○○○○○○○○○○○○○○○○○○○○○○○○○○○○○

SEC. 311A

TORQUE CONVERTER CASE & HOUSING (ATM-UPTO MAY 2008)

CAJA DEL CONVERTIDOR DE PAR Y CAJA

DREHMOMENTWANDLERGEHÄUSE & GEHÄUSETEILE

CARTER DE CONVERTISSEUR DE COUPLE ET BOITIER

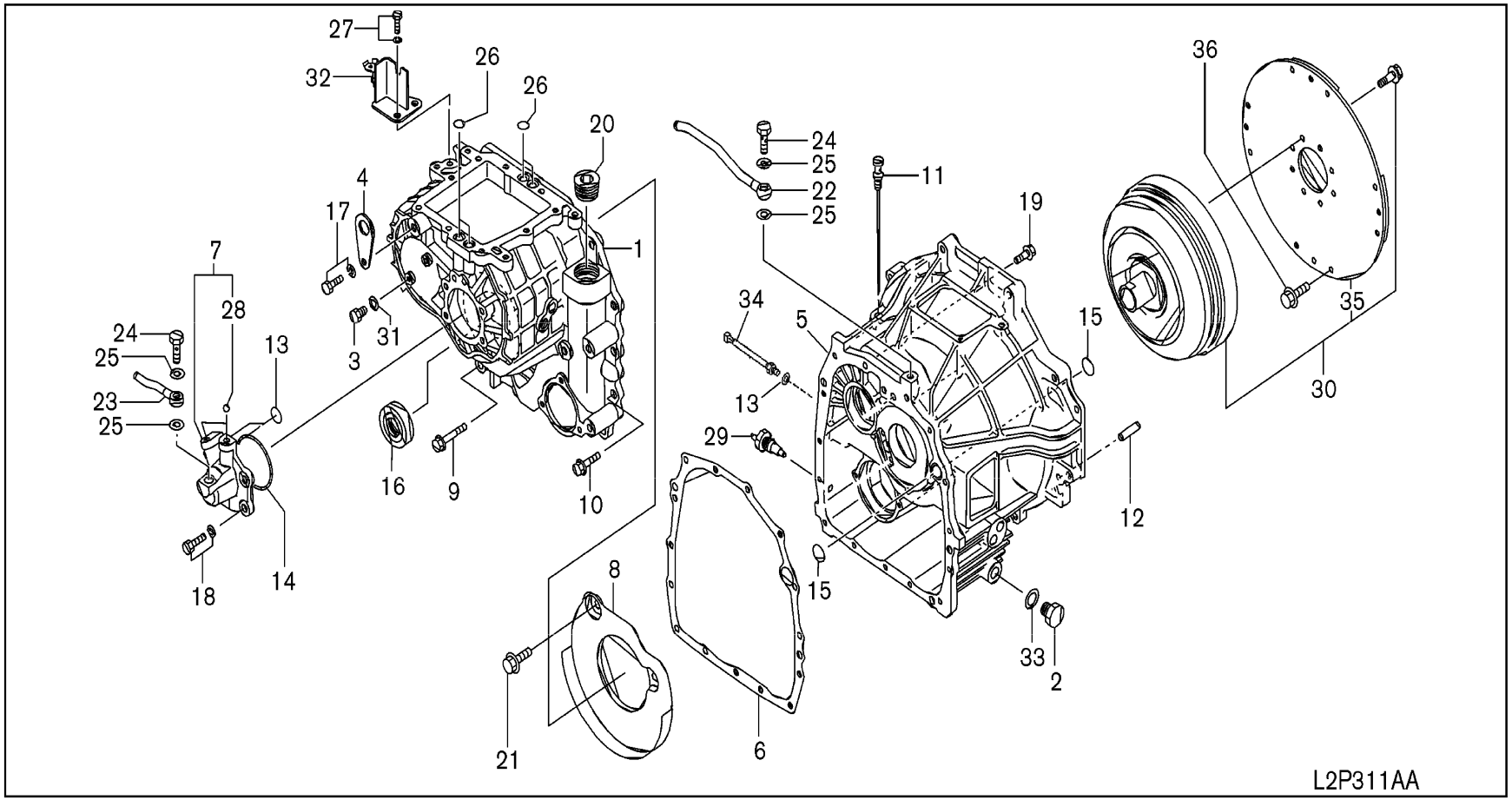

SEC. 311A

TORQUE CONVERTER CASE & HOUSING (ATM-UPTO MAY 2008)

CAJA DEL CONVERTIDOR DE PAR Y CAJA

DREHMOMENTWANDLERGEHÄUSE & GEHÄUSETEILE

CARTER DE CONVERTISSEUR DE COUPLE ET BOITIER

NC	S	KEY NO.	LEV	PART NO.	PART NAME	SPECIFICATION	QTY	APPLIED DATE	TCANF	FORMER PART NO.	KD	APPLIED MODEL 01 02 03 04 05 06 07 08 09 10 11 12 13 14 15 16 17 18 19 20 21 22 23 24 25 26 27 28 29
		1 01	3	**31312-FJ100**	CASE ASSY-TRANSMISSION		01	0107-0508				o o o o o o o o o o o o o o o o o o o o o o o o o o o o o
		2 01	3	**31319-FJ100**	PLUG		01	0107-0508				o o o o o o o o o o o o o o o o o o o o o o o o o o o o o
		3 01	3	**31319-FJ111**	PLUG		02	0107-0508				o o o o o o o o o o o o o o o o o o o o o o o o o o o o o
		4 01	3	**31315-FJ100**	PLATE		01	0107-0508				o o o o o o o o o o o o o o o o o o o o o o o o o o o o o
		5 01	3	**31301-FJ101**	HOUSING-CONVERTER		01	0107-0508				o o o o o o o o o o o o o o o o o o o o o o o o o o o o o
		6 01	3	**31309-FJ100**	GASKET		01	0107-0508				o o o o o o o o o o o o o o o o o o o o o o o o o o o o o
		7 01	3	**31485-FJ100**	CASE ASSY-SERVO		01	0107-0508				o o o o o o o o o o o o o o o o o o o o o o o o o o o o o
		8 01	3	**31327-FJ100**	PLATE-BAFFLE		01	0107-0508				o o o o o o o o o o o o o o o o o o o o o o o o o o o o o
		9 01	3	**31377-FJ100**	BOLT		03	0107-0508				o o o o o o o o o o o o o o o o o o o o o o o o o o o o o
		10 01	3	**31377-FJ110**	BOLT		09	0107-0508				o o o o o o o o o o o o o o o o o o o o o o o o o o o o o
		11 01	3	**31086-FJ100**	GAUGE-OIL LEVEL		01	0107-0508				o o o o o o o o o o o o o o o o o o o o o o o o o o o o o
		12 01	3	**12313-FJ110**	PIN		02	0107-0508				o o o o o o o o o o o o o o o o o o o o o o o o o o o o o
		13 01	3	**31343-FJ130**	O RING		03	0107-0508				o o o o o o o o o o o o o o o o o o o o o o o o o o o o o
		14 01	3	**31343-FJ140**	O RING		01	0107-0508				o o o o o o o o o o o o o o o o o o o o o o o o o o o o o
		15 01	3	**31343-FJ160**	O RING		02	0107-0508				o o o o o o o o o o o o o o o o o o o o o o o o o o o o o
		16 01	3	**31375-FJ10A**	SEAL-OIL		01	0107-0508				o o o o o o o o o o o o o o o o o o o o o o o o o o o o o
		17 01	3	**31377-FJ200**	BOLT		01	0107-0508				o o o o o o o o o o o o o o o o o o o o o o o o o o o o o
		18 01	3	**31377-FJ211**	BOLT		04	0107-0508				o o o o o o o o o o o o o o o o o o o o o o o o o o o o o
		19 01	3	**31377-FJ160**	BOLT		03	0107-0508				o o o o o o o o o o o o o o o o o o o o o o o o o o o o o
		20 01	3	**31319-FJ120**	PLUG		01	0107-0508				o o o o o o o o o o o o o o o o o o o o o o o o o o o o o
		21 01	3	**31377-FJ121**	BOLT		02	0107-0508				o o o o o o o o o o o o o o o o o o o o o o o o o o o o o
		22 01	3	**21621-FJ100**	TUBE		01	0107-0508				o o o o o o o o o o o o o o o o o o o o o o o o o o o o o
		23 01	3	**21621-FJ110**	TUBE		01	0107-0508				o o o o o o o o o o o o o o o o o o o o o o o o o o o o o
		24 01	3	**21628-FJ110**	CONNECTOR		02	0107-0508				o o o o o o o o o o o o o o o o o o o o o o o o o o o o o
		25 01	3	**31326-FJ110**	GASKET-OUTPUT COVER		04	0107-0508				o o o o o o o o o o o o o o o o o o o o o o o o o o o o o
		26 01	3	**31343-FJ120**	O RING		04	0107-0508				o o o o o o o o o o o o o o o o o o o o o o o o o o o o o
		27 01	3	**31377-FJ211**	BOLT		02	0107-0508				o o o o o o o o o o o o o o o o o o o o o o o o o o o o o
		28 01	4	**31357-FJ110**	BALL-STEEL		02	0107-0508				o o o o o o o o o o o o o o o o o o o o o o o o o o o o o
		29 01	1	**25080-FK100**	SWITCH ASSY-THERMO		01	0107-0508				o o o o o o o o o o o o o o o o o o o o o o o o o o o o o
		30 01	2	**31100-FJ200**	CONVERTER ASSY-TORQUE		01	0107-0508				o o o o o o o o o o o o o o o o o o o o o o o o o o o o o
		31 01	3	**31326-FJ100**	FLANGE-STRAINER		02	0107-0508				o o o o o o o o o o o o o o o o o o o o o o o o o o o o o
		32 01	3	**30769-FJ110**	BRACKET-RETURN SPRING CLUTCH		01	0107-0508				o o o o o o o o o o o o o o o o o o o o o o o o o o o o o
		33 01	3	**31326-FJ120**	GASKET		01	0107-0508				o o o o o o o o o o o o o o o o o o o o o o o o o o o o o
		34 01	3	**25911-FK100**	SENSOR ASSY-SPEED		01	0107-0508				o o o o o o o o o o o o o o o o o o o o o o o o o o o o o
		35 01	4	**12334-FJ100**	PLATE-DRIVE		01	0107-0508				o o o o o o o o o o o o o o o o o o o o o o o o o o o o o
		36 01	1	**08120-8121E**	SCREW-HHM M8-1.25X12 W/LKW		08	0107-0508				o o o o o o o o o o o o o o o o o o o o o o o o o o o o o

SEC. 311B

TORQUE CONVERTER CASE & HOUSING (ATM-FROM MAY 2008)

CAJA DEL CONVERTIDOR DE PAR Y CAJA

DREHMOMENTWANDLERGEHÄUSE & GEHÄUSETEILE

CARTER DE CONVERTISSEUR DE COUPLE ET BOITIER

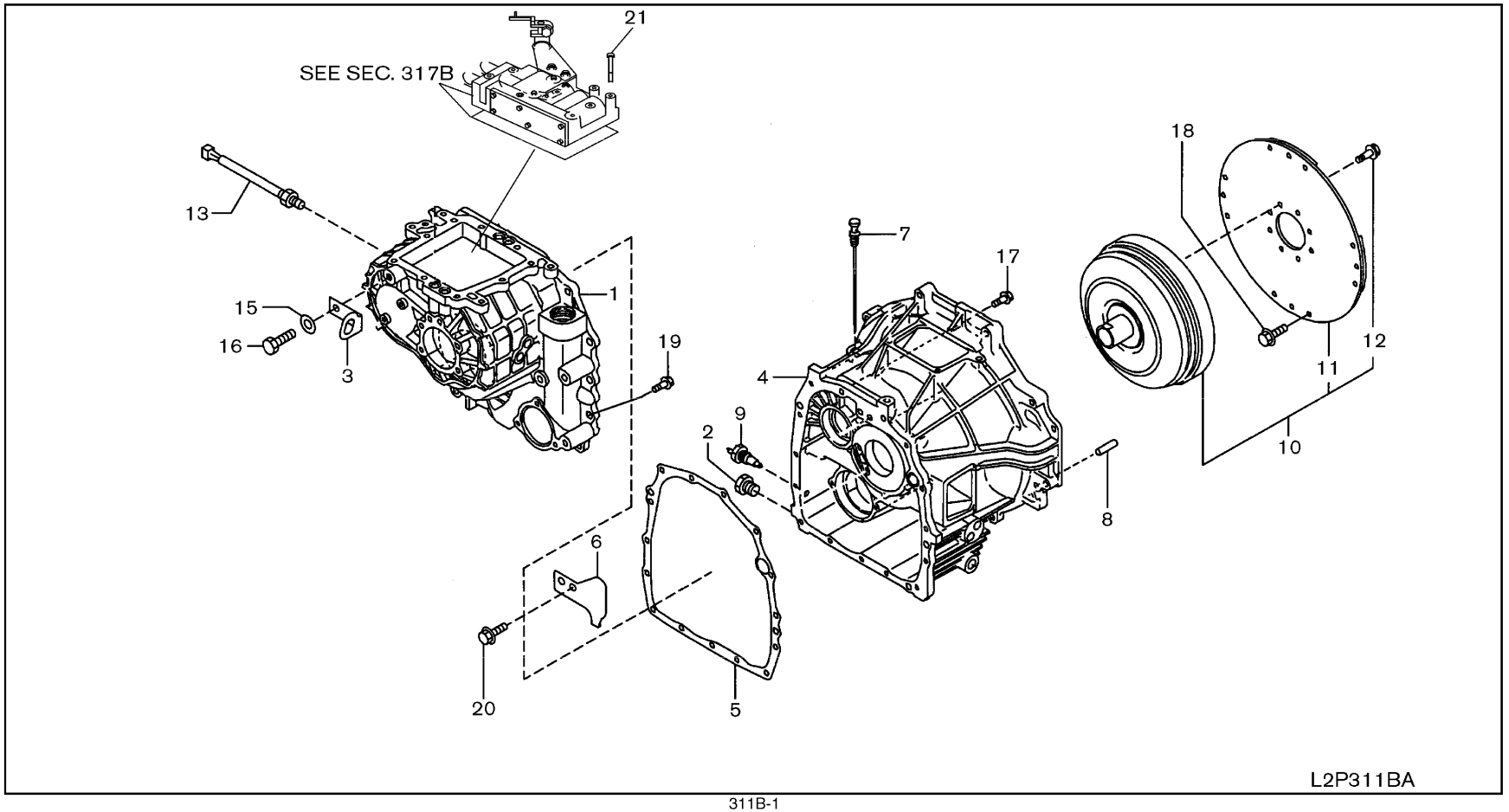

SEC. 311B

TORQUE CONVERTER CASE & HOUSING (ATM-FROM MAY 2008)

CAJA DEL CONVERTIDOR DE PAR Y CAJA

DREHMOMENTWANDLERGEHÄUSE & GEHÄUSETEILE

CARTER DE CONVERTISSEUR DE COUPLE ET BOITIER

NC	S	KEY NO.	LEV	PART NO.	PART NAME	SPECIFICATION	QTY	APPLIED DATE	ICANF	FORMER PART NO.	KD	APPLIED MODEL 01 02 03 04 05 06 07 08 09 10 11 12 13 14 15 16 17 18 19 20 21 22 23 24 25 26 27 28 29
		1 01	3	**31310-GE00A**	CASE ASSY-TRANSMISSION		01	0508-				o o o o o o o o o o o o o o o o o o o o o o o o o o o o o
		2 01	3	**32103-14600**	PLUG-MAGNET		01	0508-				o o o o o o o o o o o o o o o o o o o o o o o o o o o o o
		3 01	2	**31315-GE00A**	SLINGER		01	0508-				o o o o o o o o o o o o o o o o o o o o o o o o o o o o o
		4 01	3	**31300-GE00A**	HOUSING-CONVERTER		01	0508-				o o o o o o o o o o o o o o o o o o o o o o o o o o o o o
		5 01	3	**32134-GE00A**	PACKING-TRANSMISSION CASE		01	0508-				o o o o o o o o o o o o o o o o o o o o o o o o o o o o o
		6 01	3	**31395-GE00A**	BAFFLE-BREATHER		01	0508-				o o o o o o o o o o o o o o o o o o o o o o o o o o o o o
		7 01	3	**31086-GE00A**	GAUGE-OIL LEVEL		01	0508-0209				o o o o o o o o o o o o o o o o o o o o o o o o o o o o o
		02	3	**31086-GE00B**			01	0209-				o o o o o o o o o o o o o o o o o o o o o o o o o o o o o
		8 01	4	**30413-61700**	DOWEL-PIN		02	0508-				o o o o o o o o o o o o o o o o o o o o o o o o o o o o o
		9 01	3	**25080-FK100**	SENSOR-TEMPERATURE		01	0508-				o o o o o o o o o o o o o o o o o o o o o o o o o o o o o
C		10 01	2	**31100-GE00B**	CONVERTER ASSY-TORQUE		01	0508-0812				o o o o o o o o o o o o o o o o o o o o o o o o o o o o o
N		02	2	**31100-GE01B**			01	0812-				o o o o o o o o o o o o o o o o o o o o o o o o o o o o o
		11 01	3	**12334-GE00A**	PLATE-DRIVE		01	0508-				o o o o o o o o o o o o o o o o o o o o o o o o o o o o o
		12 01	3	**31377-FJ220**	BOLT		08	0508-				o o o o o o o o o o o o o o o o o o o o o o o o o o o o o
		13 01	3	**25911-FK100**	SENSOR ASSY-SPEED		01	0508-				o o o o o o o o o o o o o o o o o o o o o o o o o o o o o
		15 01	3	**08915-1421A**	WASHER-LOCK SPLIT M12		02	0508-				o o o o o o o o o o o o o o o o o o o o o o o o o o o o o
		16 01	3	**08191-2251A**	BOLT-HEX HEAVY 7T M12		02	0508-				o o o o o o o o o o o o o o o o o o o o o o o o o o o o o
		17 01	3	**081A1-0701A**	BOLT-HEX FLANGE 7T M10		08	0508-				o o o o o o o o o o o o o o o o o o o o o o o o o o o o o
		18 01	1	**08120-8121E**	SCREW-HHM M8-1.25X12 W/LKW		08	0508-				o o o o o o o o o o o o o o o o o o o o o o o o o o o o o
		19 01	3	**081A1-0401A**	SCREW-HH FLANGE 7T M10-1.5X40		12	0508-				o o o o o o o o o o o o o o o o o o o o o o o o o o o o o
		20 01	3	**31377-GE00A**	BOLT-HEX W/WASH SEALED		02	0508-				o o o o o o o o o o o o o o o o o o o o o o o o o o o o o
		21 01	3	**081A0-8601A**	BOLT-HEX W/WLW & PW 7T M8		12	0508-				o o o o o o o o o o o o o o o o o o o o o o o o o o o o o

SEC. 313A

OIL PUMP PARTS (ATM-UPTO MAY 2008)

PARTES DE LA BOMBA DE ACEITE

ÖLPUMPENTEILE

PIECES DE POMPE A HUILE

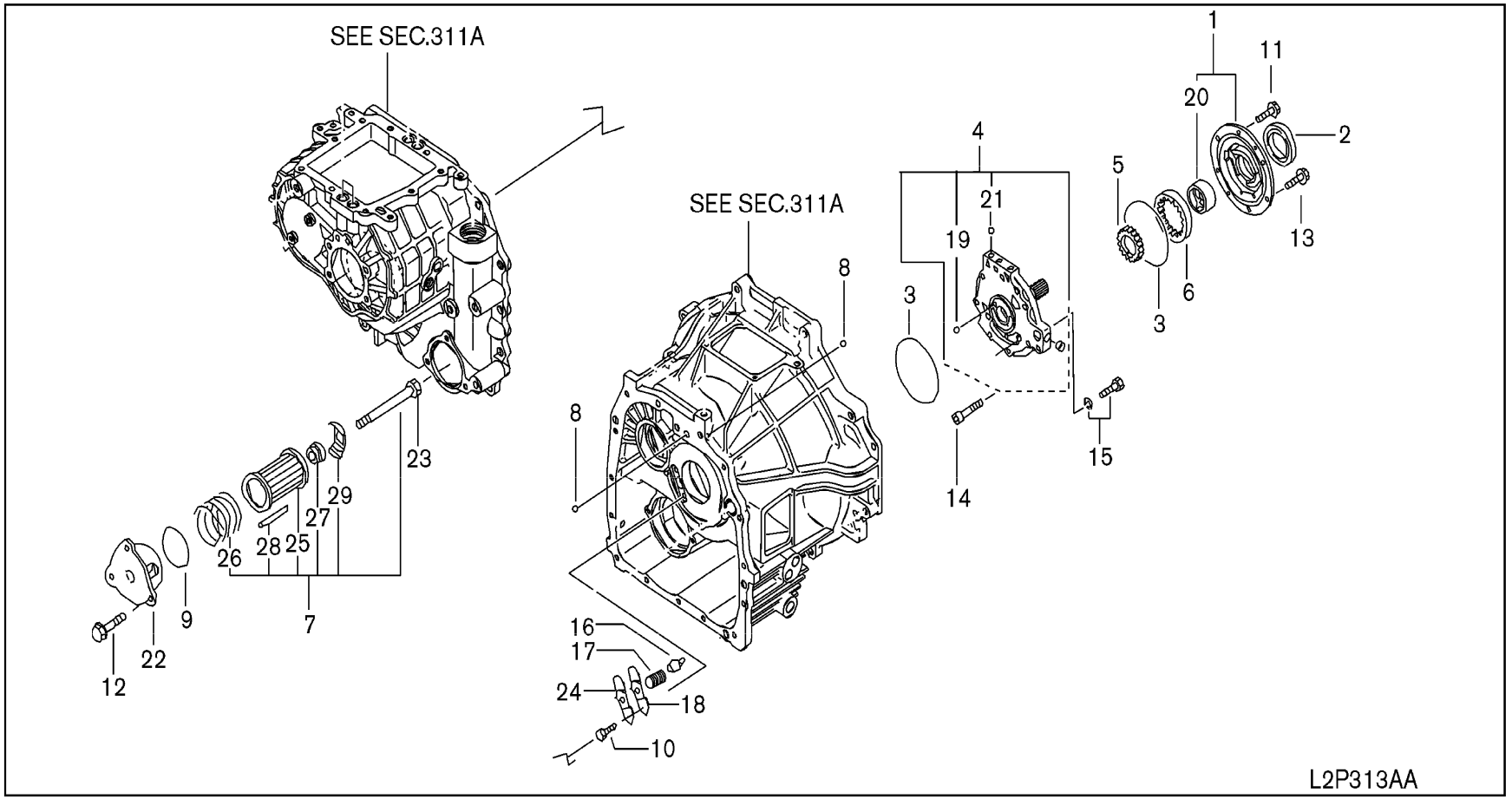

SEC. 313A

OIL PUMP PARTS (ATM-UPTO MAY 2008)

PARTES DE LA BOMBA DE ACEITE

ÖLPUMPENTEILE

PIECES DE POMPE A HUILE

NC	S	KEY NO.	LEV	PART NO.	PART NAME	SPECIFICATION	QTY	APPLIED DATE	TCANF	FORMER PART NO.	KD	APPLIED MODEL 01 02 03 04 05 06 07 08 09 10 11 12 13 14 15 16 17 18 19 20 21 22 23 24 25 26 27 28 29
		1	01	3 **31341-FJ100**	HOUSING ASSY-OIL PUMP		01	0107-0508				o o o o o o o o o o o o o o o o o o o o o o o o o o o
		2	01	3 **31344-FJ10A**	SEAL-OIL PUMP HOUSING		01	0107-0508				o o o o o o o o o o o o o o o o o o o o o o o o o o o
		3	01	3 **31343-FJ10A**	O RING		02	0107-0508				o o o o o o o o o o o o o o o o o o o o o o o o o o o
		4	01	3 **31350-FJ10A**	COVER ASSY-OIL		01	0107-0508				o o o o o o o o o o o o o o o o o o o o o o o o o o o
		5	01	3 **31346-FJ10A**	GEAR-INNER,OIL PUMP		01	0107-0508				o o o o o o o o o o o o o o o o o o o o o o o o o o o
		6	01	3 **31347-FJ10A**	GEAR-OUTER,OIL PUMP		01	0107-0508				o o o o o o o o o o o o o o o o o o o o o o o o o o o
		7	01	3 **31728-FJ10B**	STRAINER ASSY-OIL, KIT	INCLUDES ITEM NO. 22	01	0107-0508				o o o o o o o o o o o o o o o o o o o o o o o o o o o
		8	01	3 **31343-FJ110**	O RING		05	0107-0508				o o o o o o o o o o o o o o o o o o o o o o o o o o o
		9	01	3 **31343-FJ150**	O RING		01	0107-0508				o o o o o o o o o o o o o o o o o o o o o o o o o o o
		10	01	3 **31377-FJ131**	BOLT		02	0107-0508				o o o o o o o o o o o o o o o o o o o o o o o o o o o
		11	01	3 **31377-FJ140**	BOLT		01	0107-0508				o o o o o o o o o o o o o o o o o o o o o o o o o o o
		12	01	3 **31377-FJ150**	BOLT		03	0107-0508				o o o o o o o o o o o o o o o o o o o o o o o o o o o
		13	01	3 **31377-FJ170**	BOLT		05	0107-0508				o o o o o o o o o o o o o o o o o o o o o o o o o o o
		14	01	3 **31377-FJ180**	BOLT		01	0107-0508				o o o o o o o o o o o o o o o o o o o o o o o o o o o
		15	01	3 **31377-FJ190**	BOLT		01	0107-0508				o o o o o o o o o o o o o o o o o o o o o o o o o o o
		16	01	3 **31335-FJ100**	VALVE		01	0107-0508				o o o o o o o o o o o o o o o o o o o o o o o o o o o
		17	01	3 **31336-FJ100**	SPRING-CONVERTER RELIEF		01	0107-0508				o o o o o o o o o o o o o o o o o o o o o o o o o o o
		18	01	3 **31337-FJ10A**	PLATE-RETAINER		01	0107-0508				o o o o o o o o o o o o o o o o o o o o o o o o o o o
		19	01	4 **31357-FJ120**	BALL-STEEL		03	0107-0508				o o o o o o o o o o o o o o o o o o o o o o o o o o o
		20	01	4 **31343-FJ170**	BUSH		01	0107-0508				o o o o o o o o o o o o o o o o o o o o o o o o o o o
		21	01	4 **31357-FJ110**	BALL-STEEL		02	0107-0508				o o o o o o o o o o o o o o o o o o o o o o o o o o o
		22	01	4 **NA-**	COVER-STRAINER	INCLUDED IN ITEM NO. 7	01	0107-0508				o o o o o o o o o o o o o o o o o o o o o o o o o o o
		23	01	3 **31365-FJ100**	NUT		01	0107-0508				o o o o o o o o o o o o o o o o o o o o o o o o o o o
		24	01	3 **31337-FJ110**	COVER-RELIEF		01	0107-0508				o o o o o o o o o o o o o o o o o o o o o o o o o o o
		25	01	4 **NF91224-07101**	FILTER ELEMENT		01	0107-0508				o o o o o o o o o o o o o o o o o o o o o o o o o o o
		26	01	4 **NF52725-03601**	SPRING		01	0107-0508				o o o o o o o o o o o o o o o o o o o o o o o o o o o
		27	01	4 **NF62626-08101**	GASKET		01	0107-0508				o o o o o o o o o o o o o o o o o o o o o o o o o o o
		28	01	4 **NF91224-07201**	MAGNET-STRAINER		01	0107-0508				o o o o o o o o o o o o o o o o o o o o o o o o o o o
		29	01	4 **NF91224-07301**	SUPPORT-SPRING		01	0107-0508				o o o o o o o o o o o o o o o o o o o o o o o o o o o

SEC. 313B

OIL PUMP PARTS (ATM-FROM MAY 2008)

PARTES DE LA BOMBA DE ACEITE

ÖLPUMPENTEILE

PIECES DE POMPE A HUILE

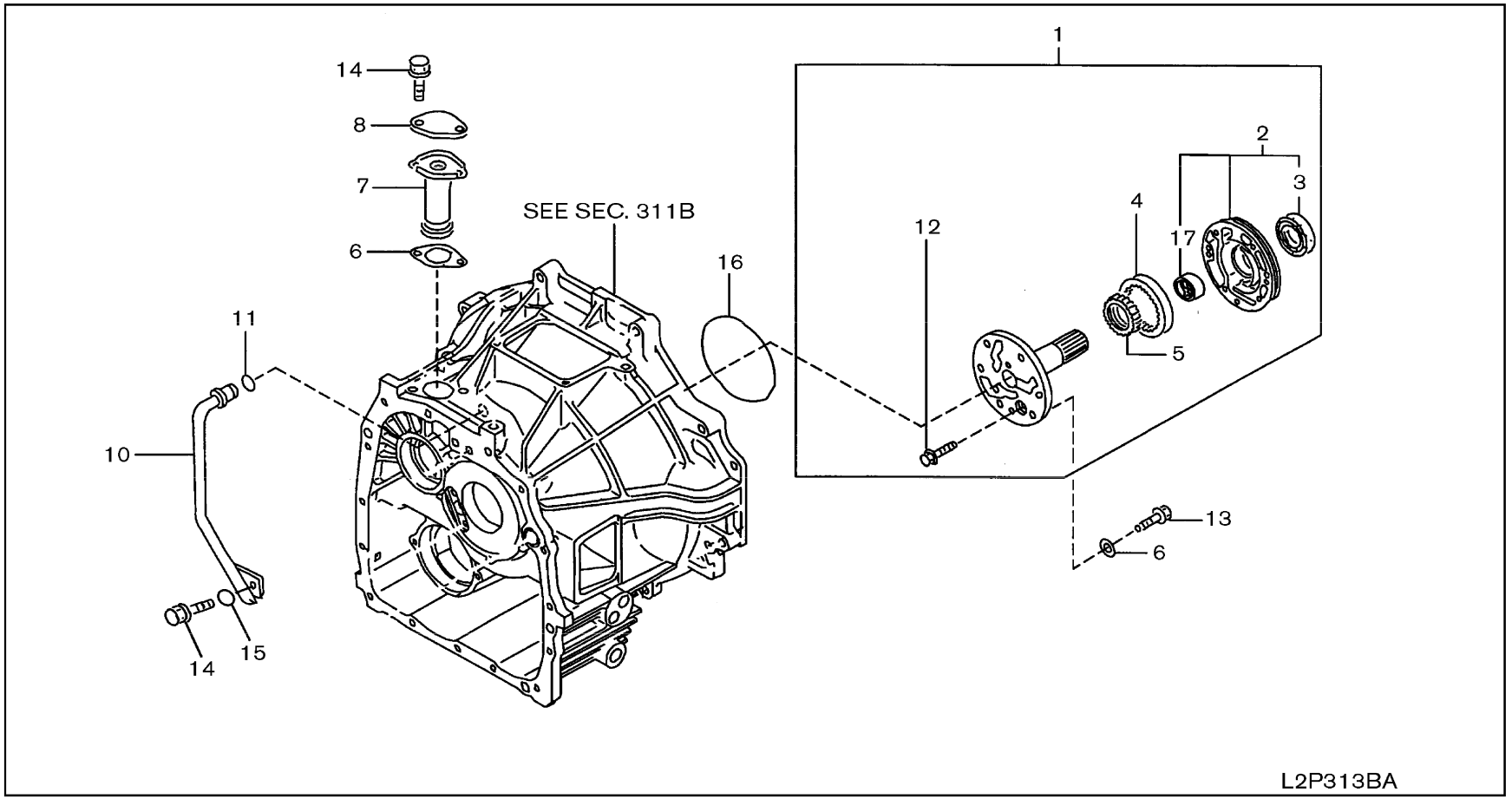

SEC. 313B

OIL PUMP PARTS (ATM-FROM MAY 2008)

PARTES DE LA BOMBA DE ACEITE

ÖLPUMPENTEILE

PIECES DE POMPE A HUILE

NC	S	KEY NO.	LEV	PART NO.	PART NAME	SPECIFICATION	QTY	APPLIED DATE	ICANF	FORMER PART NO.	KD	APPLIED MODEL 01 02 03 04 05 06 07 08 09 10 11 12 13 14 15 16 17 18 19 20 21 22 23 24 25 26 27 28 29
		1	01	3	**31340-GE00A**	PUMP ASSY-OIL		01	0508-			o o o o o o o o o o o o o o o o o o o o o o o o o o o o o
		2	01	4	**31341-FC000**	HOUSING ASSY-OIL PUMP		01	0508-			o o o o o o o o o o o o o o o o o o o o o o o o o o o o o
		3	01	5	**31344-L1210**	SEAL-OIL, PUMP HOUSING		01	0508-			o o o o o o o o o o o o o o o o o o o o o o o o o o o o o
		4	01	4	**31347-L1000**	GEAR-OUTER, OIL PUMP	T=16.00-15.99	01	0508-			o o o o o o o o o o o o o o o o o o o o o o o o o o o o o
			02	4	**31347-L1001**		T=15.99-15.98	01	0508-			o o o o o o o o o o o o o o o o o o o o o o o o o o o o o
			03	4	**31347-L1002**		T=115.99-15.97	01	0508-			o o o o o o o o o o o o o o o o o o o o o o o o o o o o o
		5	01	4	**31346-L1210**	GEAR-INNER, OIL PUMP	T=16.00-15.99	01	0508-			o o o o o o o o o o o o o o o o o o o o o o o o o o o o o
			02	4	**31346-L1211**		T=15.99-15.98	01	0508-			o o o o o o o o o o o o o o o o o o o o o o o o o o o o o
			03	4	**31346-L1212**		T=15.99-15.97	01	0508-			o o o o o o o o o o o o o o o o o o o o o o o o o o o o o
		6	01	3	**05413-0800P**	GASKET		06	0508-1008			o o o o o o o o o o o o o o o o o o o o o o o o o o o o o
			02	3	**31734-L1000**	SEAL-WASHER		06	1008-			o o o o o o o o o o o o o o o o o o o o o o o o o o o o o
		7	01	3	**31728-40K00**	STRAINER ASSY-OIL		01	0508-			o o o o o o o o o o o o o o o o o o o o o o o o o o o o o
		8	01	3	**31743-11H00**	PLATE-RETAINER		01	0508-			o o o o o o o o o o o o o o o o o o o o o o o o o o o o o
		9	01	3	**31729-40K00**	GASKET-OIL STRAINER		01	0508-			o o o o o o o o o o o o o o o o o o o o o o o o o o o o o
		10	01	3	**31850-GE00A**	PIPE ASSY-OIL		01	0508-			o o o o o o o o o o o o o o o o o o o o o o o o o o o o o
		11	01	3	**31859-FC000**	SEAL-O RING		01	0508-			o o o o o o o o o o o o o o o o o o o o o o o o o o o o o
		12	01	4	**08110-61610**	SCREW-HHM M6-1.0X16		01	0508-			o o o o o o o o o o o o o o o o o o o o o o o o o o o o o
		13	01	3	**081A0-8451A**	BOLT-HEX FLANGE 7T M8		06	0508-			o o o o o o o o o o o o o o o o o o o o o o o o o o o o o
		14	01	3	**08120-8201E**	SCREW-HHM M8-1.25X20 W/LKW		03	0508-			o o o o o o o o o o o o o o o o o o o o o o o o o o o o o
		15	01	3	**08915-4381A**	WASHER-FLAT M8		01	0508-			o o o o o o o o o o o o o o o o o o o o o o o o o o o o o
		16	01	3	**31343-FC000**	O RING		01	0508-			o o o o o o o o o o o o o o o o o o o o o o o o o o o o o
		17	01	5	**31343-X0100**	BUSHING		01	0508-			o o o o o o o o o o o o o o o o o o o o o o o o o o o o o

SEC. 314A

GOVERNOR & GEAR PARTS (ATM-UPTO MAY 2008)

REGULADOR Y PARTES DE ENGRANAJES

REGLER & ZAHNRADTEILE

PIECES DE REGULATEUR ET D'ENGRENAGE

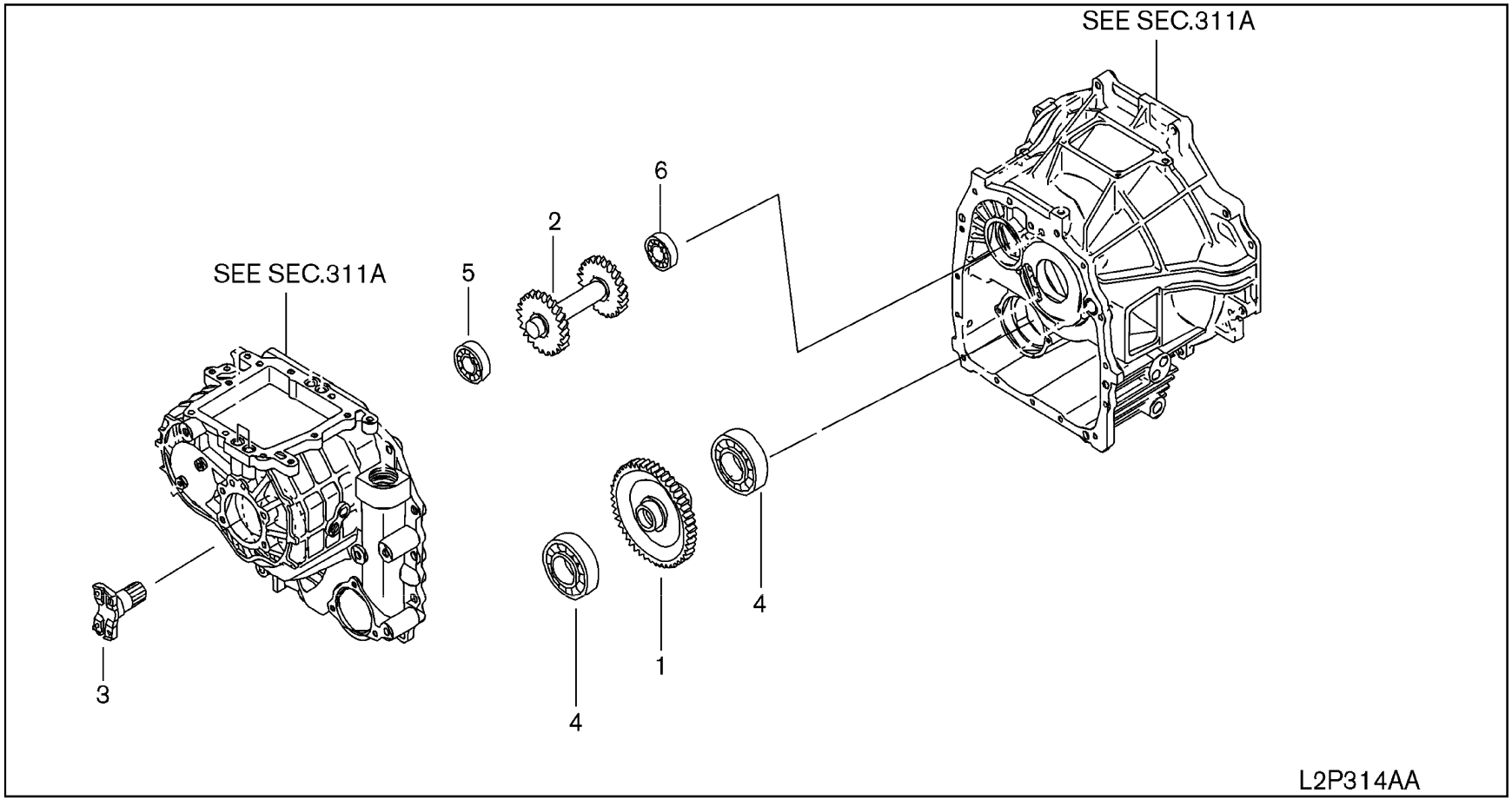

SEC. 314A

GOVERNOR & GEAR PARTS (ATM-UPTO MAY 2008)

REGULADOR Y PARTES DE ENGRANAJES

REGLER & ZAHNRADTEILE

PIECES DE REGULATEUR ET D'ENGRENAGE

NC	S	KEY NO.	LEV	PART NO.	PART NAME	SPECIFICATION	QTY	APPLIED DATE	ICANF	FORMER PART NO.	KD	APPLIED MODEL 01 02 03 04 05 06 07 08 09 10 11 12 13 14 15 16 17 18 19 20 21 22 23 24 25 26 27 28 29
		1 01	3	**31489-FJ100**	GEAR ASSY		01	0107-0508				○○○○○○○○○○○○○○○○○○○○○○○○○○○○○
		2 01	3	**31493-FJ101**	GEAR-IDLER		01	0107-0508				○○○○○○○○○○○○○○○○○○○○○○○○○○○○○
		3 01	3	**32141-FJ10A**	FLANGE ASSY-OUTPUT		01	0107-0508				○○○○○○○○○○○○○○○○○○○○○○○○○○○○○
		4 01	3	**37510-FJ100**	BEARING-BALL		02	0107-0508				○○○○○○○○○○○○○○○○○○○○○○○○○○○○○
		5 01	3	**37516-FJ100**	BEARING-ROLLER		01	0107-0508				○○○○○○○○○○○○○○○○○○○○○○○○○○○○○
		6 01	3	**37510-FJ110**	BEARING-BALL		01	0107-0508				○○○○○○○○○○○○○○○○○○○○○○○○○○○○○

SEC. 314B

GOVERNOR & GEAR PARTS (ATM-FROM MAY 2008)

REGULADOR Y PARTES DE ENGRANAJES

REGLER & ZAHNRADTEILE

PIECES DE REGULATEUR ET D'ENGRENAGE

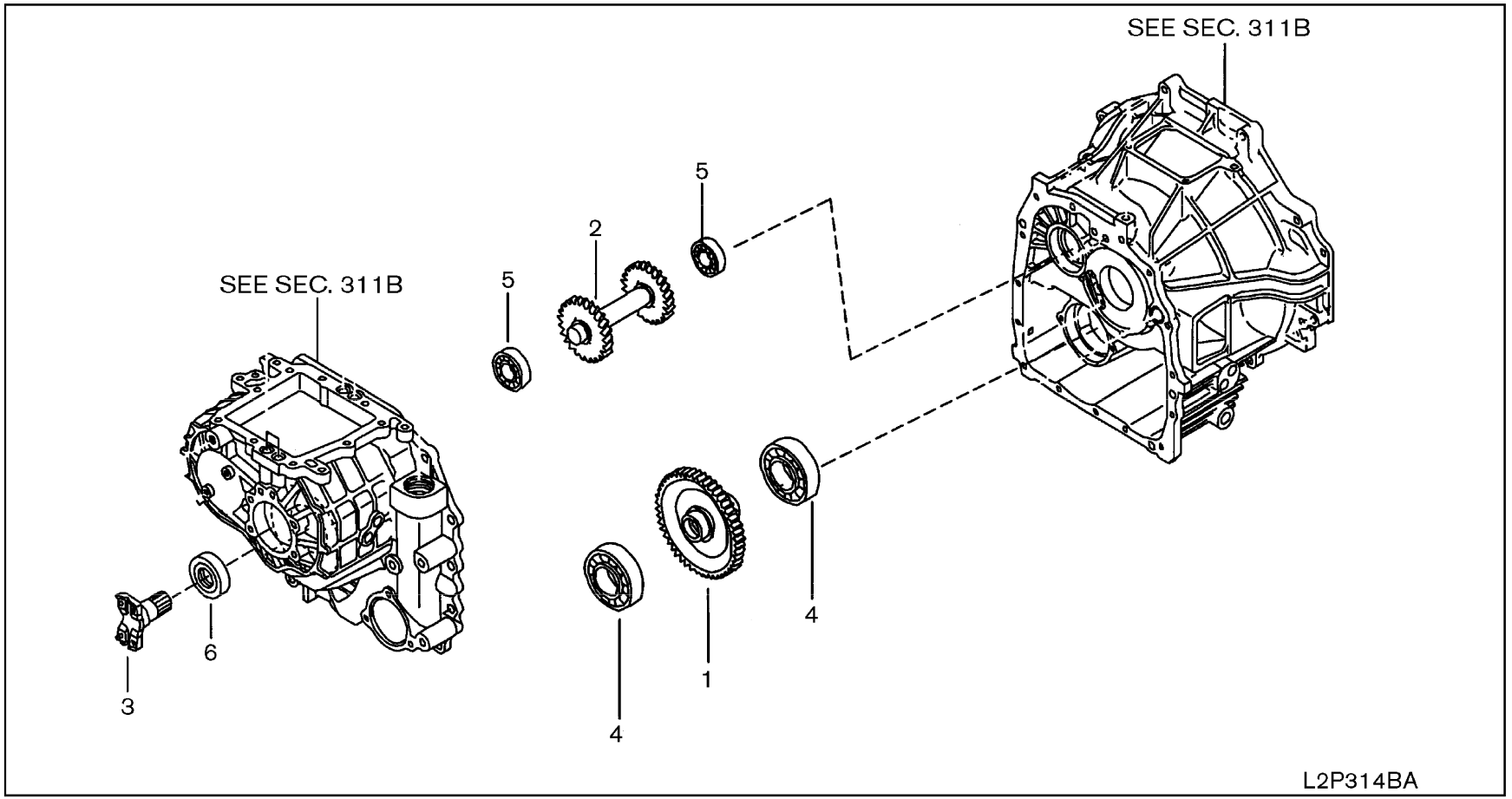

SEC. 314B

GOVERNOR & GEAR PARTS (ATM-FROM MAY 2008)

REGULADOR Y PARTES DE ENGRANAJES

REGLER & ZAHNRADTEILE

PIECES DE REGULATEUR ET D'ENGRENAGE

NC	S	KEY NO.	LEV	PART NO.	PART NAME	SPECIFICATION	QTY	APPLIED DATE	ICANF	FORMER PART NO.	KD	APPLIED MODEL 01 02 03 04 05 06 07 08 09 10 11 12 13 14 15 16 17 18 19 20 21 22 23 24 25 26 27 28 29
		1 01	3	**32220-GE00A**	GEAR-REDUCTION		01	0508-				○○○○○○○○○○○○○○○○○○○○○○○○○○○○○
		2 01	3	**32281-GE00A**	SHAFT-IDLER		01	0508-				○○○○○○○○○○○○○○○○○○○○○○○○○○○○○
		3 01	3	**33221-GE00A**	FLANGE-COMPANION		01	0508-				○○○○○○○○○○○○○○○○○○○○○○○○○○○○○
		4 01	3	**32203-50K00**	BEARING-BALL		02	0508-				○○○○○○○○○○○○○○○○○○○○○○○○○○○○○
		5 01	3	**33125-33G00**	BEARING-BALL		02	0508-				○○○○○○○○○○○○○○○○○○○○○○○○○○○○○
		6 01	3	**33140-7S110**	SEAL-OIL		01	0508-				○○○○○○○○○○○○○○○○○○○○○○○○○○○○○

SEC. 315A

CLUTCH & BRAKE BAND (ATM-UPTO MAY 2008)

EMBRAGUE Y CINTA DE FRENO

KUPPLUNG & BREMSBAND

EMBRAYAGE ET BANDE DE FREIN

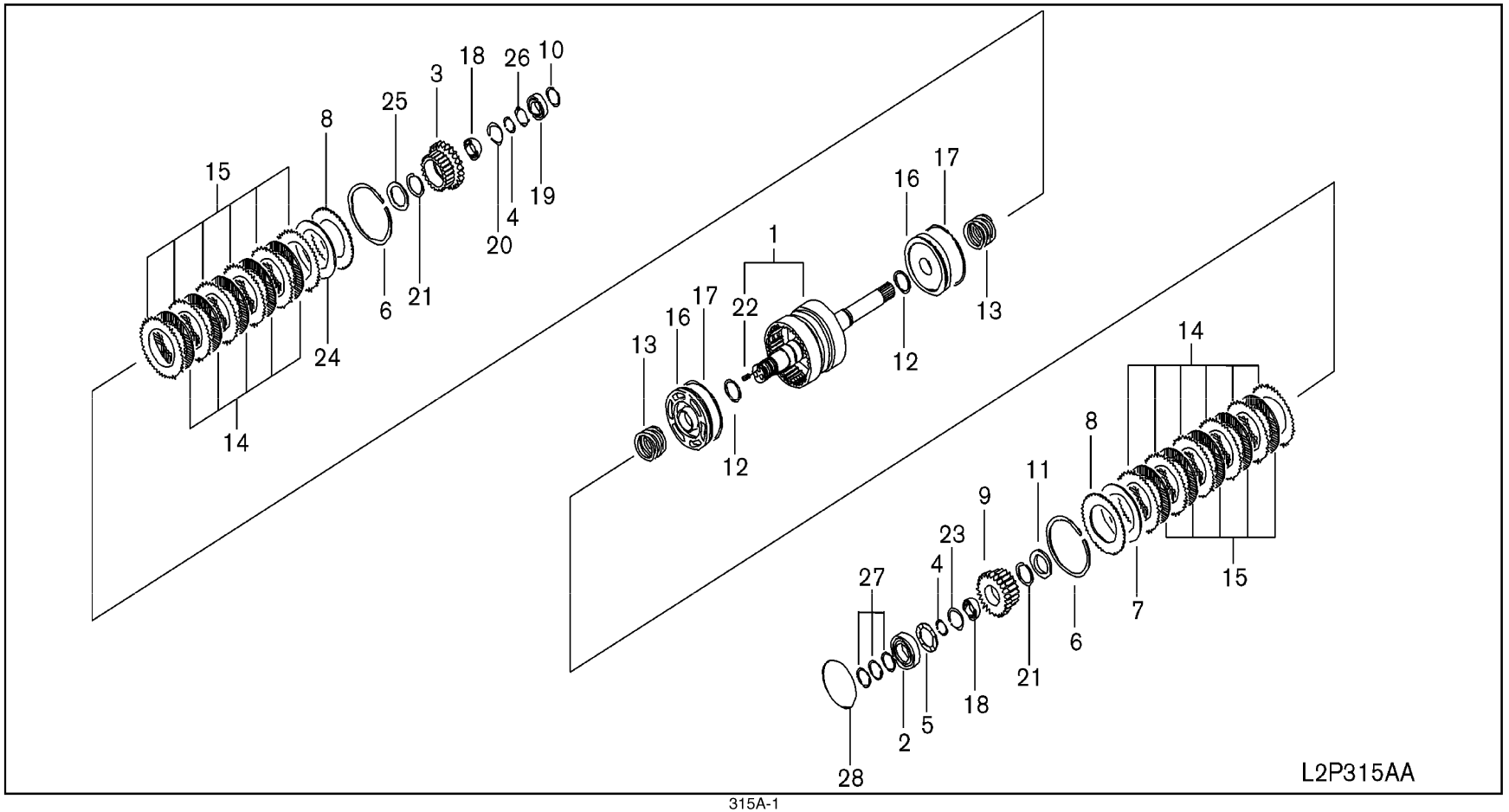

SEC. 315A

CLUTCH & BRAKE BAND (ATM-UPTO MAY 2008)

EMBRAGUE Y CINTA DE FRENO

KUPPLUNG & BREMSBAND

EMBRAYAGE ET BANDE DE FREIN

NC	S	KEY NO.	LEV	PART NO.	PART NAME	SPECIFICATION	QTY	APPLIED DATE	TCANF	FORMER PART NO.	KD	APPLIED MODEL 01 02 03 04 05 06 07 08 09 10 11 12 13 14 15 16 17 18 19 20 21 22 23 24 25 26 27 28 29
		1 01	3	**31511-FJ101**	DRUM-CLUTCH WITH SHAFT		01	0107-0508				o o o o o o o o o o o o o o o o o o o o o o o o o o o o o
		2 01	3	**37510-FJ110**	BEARING-BALL		01	0107-0508				o o o o o o o o o o o o o o o o o o o o o o o o o o o o o
		3 01	3	**31451-FJ101**	GEAR-REVERSE		01	0107-0508				o o o o o o o o o o o o o o o o o o o o o o o o o o o o o
		4 01	3	**32357-FJ100**	WASHER-THRUST		02	0107-0508				o o o o o o o o o o o o o o o o o o o o o o o o o o o o o
		5 01	3	**32357-FJ110**	SPACER-REDUCTION GEAR		01	0107-0508				o o o o o o o o o o o o o o o o o o o o o o o o o o o o o
		6 01	3	**31568-FJ100**	RING-SNAP		02	0107-0508				o o o o o o o o o o o o o o o o o o o o o o o o o o o o o
		7 01	3	**31534-FJ10A**	PLATE-CONICAL		01	0107-0508				o o o o o o o o o o o o o o o o o o o o o o o o o o o o o
		8 01	3	**31537-FJ100**	PLATE-RETAINING		02	0107-0508				o o o o o o o o o o o o o o o o o o o o o o o o o o o o o
		9 01	3	**31421-FJ101**	GEAR-FORWARD		01	0107-0508				o o o o o o o o o o o o o o o o o o o o o o o o o o o o o
		10 01	3	**31487-FJ100**	RING-SEAL		01	0107-0508				o o o o o o o o o o o o o o o o o o o o o o o o o o o o o
		11 01	3	**31552-FJ100**	RETAINER-SPRING		01	0107-0508				o o o o o o o o o o o o o o o o o o o o o o o o o o o o o
		12 01	3	**31526-FJ100**	O RING		02	0107-0508				o o o o o o o o o o o o o o o o o o o o o o o o o o o o o
		13 01	3	**31521-FJ100**	SPRING-PISTON CLUTCH		02	0107-0508				o o o o o o o o o o o o o o o o o o o o o o o o o o o o o
		14 01	3	**31532-FJ100**	PLATE ASSY-DRIVE		10	0107-0508				o o o o o o o o o o o o o o o o o o o o o o o o o o o o o
		15 01	3	**31536-FJ100**	PLATE-DRIVEN		12	0107-0508				o o o o o o o o o o o o o o o o o o o o o o o o o o o o o
		16 01	3	**31515-FJ10A**	PISTON-CLUTCH		02	0107-0508				o o o o o o o o o o o o o o o o o o o o o o o o o o o o o
		17 01	3	**31516-FJ10A**	RING-SEAL PISTON		02	0107-0508				o o o o o o o o o o o o o o o o o o o o o o o o o o o o o
		18 01	3	**31429-FJ100**	BEARING-NEEDLE		02	0107-0508				o o o o o o o o o o o o o o o o o o o o o o o o o o o o o
		19 01	3	**37510-FJ110**	BEARING-BALL		01	0107-0508				o o o o o o o o o o o o o o o o o o o o o o o o o o o o o
		20 01	3	**31315-FJ110**	RETAINER-BEARING		01	0107-0508				o o o o o o o o o o o o o o o o o o o o o o o o o o o o o
		21 01	3	**31538-FJ100**	RING-SNAP		02	0107-0508				o o o o o o o o o o o o o o o o o o o o o o o o o o o o o
		22 01	4	**31756-FJ110**	PLUG		02	0107-0508				o o o o o o o o o o o o o o o o o o o o o o o o o o o o o
		23 01	3	**31315-FJ110**	RETAINER-BEARING		01	0107-0508				o o o o o o o o o o o o o o o o o o o o o o o o o o o o o
		24 01	3	**31534-FJ10A**	PLATE-CONICAL		01	0107-0508				o o o o o o o o o o o o o o o o o o o o o o o o o o o o o
		25 01	3	**31552-FJ100**	RETAINER-SPRING		01	0107-0508				o o o o o o o o o o o o o o o o o o o o o o o o o o o o o
		26 01	3	**32357-FJ110**	SPACER-REDUCTION GEAR		01	0107-0508				o o o o o o o o o o o o o o o o o o o o o o o o o o o o o
		27 01	3	**31487-FJ100**	RING-SEAL		03	0107-0508				o o o o o o o o o o o o o o o o o o o o o o o o o o o o o
		28 01	3	**32237-FJ100**	SHIM-ADJ, MAIN SFT BRG	T=0.1	AR	0107-0508				o o o o o o o o o o o o o o o o o o o o o o o o o o o o o
		02	3	**32237-FJ110**		T=0.2	AR	0107-0508				o o o o o o o o o o o o o o o o o o o o o o o o o o o o o
		03	3	**32237-FJ120**		T=0.3	AR	0107-0508				o o o o o o o o o o o o o o o o o o o o o o o o o o o o o
		04	3	**32237-FJ130**		T=0.4	AR	0107-0508				o o o o o o o o o o o o o o o o o o o o o o o o o o o o o
		05	3	**32237-FJ140**		T=0.5	AR	0107-0508				o o o o o o o o o o o o o o o o o o o o o o o o o o o o o
		06	3	**32237-FJ150**		T=0.6	AR	0107-0508				o o o o o o o o o o o o o o o o o o o o o o o o o o o o o

SEC. 315B

CLUTCH & BRAKE BAND (ATM-FROM MAY 2008)

EMBRAGUE Y CINTA DE FRENO

KUPPLUNG & BREMSBAND

EMBRAYAGE ET BANDE DE FREIN

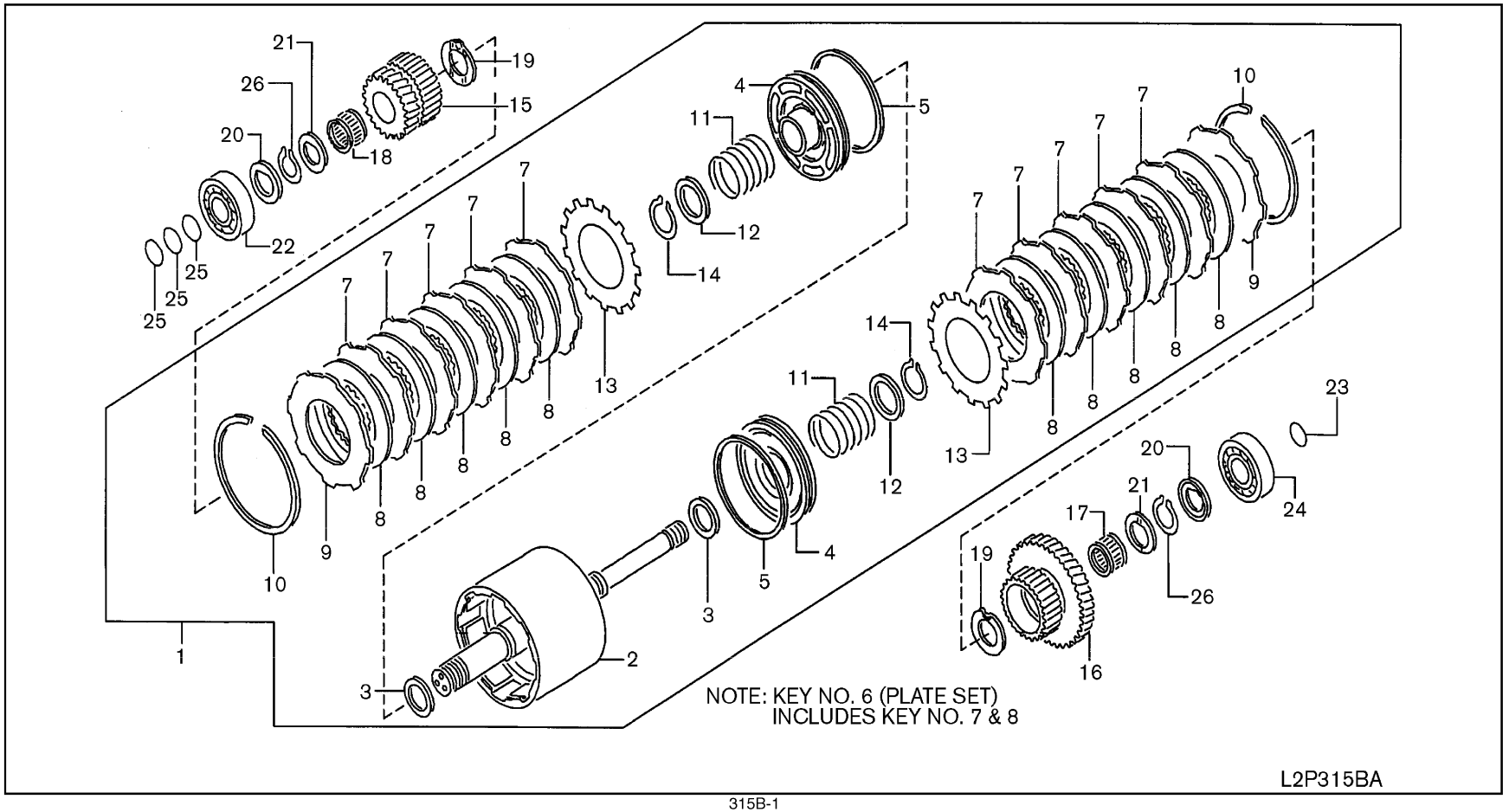

SEC. 315B

CLUTCH & BRAKE BAND (ATM-FROM MAY 2008)

EMBRAGUE Y CINTA DE FRENO

KUPPLUNG & BREMSBAND

EMBRAYAGE ET BANDE DE FREIN

NC	S	KEY NO.	LEV	PART NO.	PART NAME	SPECIFICATION	QTY	APPLIED DATE	ICANF	FORMER PART NO.	KD	APPLIED MODEL 01 02 03 04 05 06 07 08 09 10 11 12 13 14 15 16 17 18 19 20 21 22 23 24 25 26 27 28 29
		1	01	3	**31502-GE00A**	CLUTCH ASSY-DRUM W/GEAR		01	0508-			○○○○○○○○○○○○○○○○○○○○○○○○○○○○○
		2	01	4	**31511-GE00A**	DRUM-CLUTCH W/SHAFT		01	0508-			○○○○○○○○○○○○○○○○○○○○○○○○○○○○○
		3	01	4	**31526-41K00**	SEAL-O RING		02	0508-			○○○○○○○○○○○○○○○○○○○○○○○○○○○○○
		4	01	4	**31515-41K00**	PISTON-CLUTCH		02	0508-			○○○○○○○○○○○○○○○○○○○○○○○○○○○○○
		5	01	4	**31516-41K00**	SEAL-RING PISTON		02	0508-			○○○○○○○○○○○○○○○○○○○○○○○○○○○○○
		6	01	4	**31530-41K00**	PLATE SET-CLUTCH		12	0508-			○○○○○○○○○○○○○○○○○○○○○○○○○○○○○
		7	01	5	**31536-41K00**	PLATE-DRIVEN		12	0508-			○○○○○○○○○○○○○○○○○○○○○○○○○○○○○
		8	01	5	**31532-41K00**	PLATE-DRIVE		12	0508-			○○○○○○○○○○○○○○○○○○○○○○○○○○○○○
		9	01	4	**31537-41K00**	PLATE-RETAINING	T=3.4	02	0508-			○○○○○○○○○○○○○○○○○○○○○○○○○○○○○
			02	4	**31537-41K01**		T=3.6	02	0508-			○○○○○○○○○○○○○○○○○○○○○○○○○○○○○
			03	4	**31537-41K02**		T=3.8	02	0508-			○○○○○○○○○○○○○○○○○○○○○○○○○○○○○
			04	4	**31537-41K03**		T=4.0	02	0508-			○○○○○○○○○○○○○○○○○○○○○○○○○○○○○
			05	4	**31537-41K04**		T=4.2	02	0508-			○○○○○○○○○○○○○○○○○○○○○○○○○○○○○
			06	4	**31537-41K05**		T=4.4	02	0508-			○○○○○○○○○○○○○○○○○○○○○○○○○○○○○
		10	01	4	**31568-41K00**	RING-SNAP, CLUTCH DRUM		02	0508-			○○○○○○○○○○○○○○○○○○○○○○○○○○○○○
		11	01	4	**31521-41K00**	SPRING-PISTON CLUTCH		02	0508-			○○○○○○○○○○○○○○○○○○○○○○○○○○○○○
		12	01	4	**31552-41K00**	RETAINER-SPRING		02	0508-			○○○○○○○○○○○○○○○○○○○○○○○○○○○○○
		13	01	4	**31534-41K00**	PLATE-CONICAL		02	0508-			○○○○○○○○○○○○○○○○○○○○○○○○○○○○○
		14	01	4	**31538-41K00**	RING-SNAP		02	0508-			○○○○○○○○○○○○○○○○○○○○○○○○○○○○○
		15	01	3	**31421-GE00A**	GEAR-FORWARD		01	0508-			○○○○○○○○○○○○○○○○○○○○○○○○○○○○○
		16	01	3	**31441-GE00A**	GEAR-REVERSE		01	0508-			○○○○○○○○○○○○○○○○○○○○○○○○○○○○○
		17	01	3	**31429-40K10**	BEARING-NEEDLE		01	0508-			○○○○○○○○○○○○○○○○○○○○○○○○○○○○○
		18	01	3	**31429-40K10**	BEARING-NEEDLE		01	0508-			○○○○○○○○○○○○○○○○○○○○○○○○○○○○○
		19	01	3	**31427-40K00**	WASHER-THRUST		02	0508-			○○○○○○○○○○○○○○○○○○○○○○○○○○○○○
		20	01	3	**32357-L1005**	WASHER-THRUST		01	0508-			○○○○○○○○○○○○○○○○○○○○○○○○○○○○○
		21	01	3	**32357-L1005**	WASHER-THRUST		01	0508-			○○○○○○○○○○○○○○○○○○○○○○○○○○○○○
		22	01	3	**32275-GE00A**	BEARING-BALL		01	0508-			○○○○○○○○○○○○○○○○○○○○○○○○○○○○○
		23	01	3	**31487-GE00A**	RING-SEAL		01	0508-			○○○○○○○○○○○○○○○○○○○○○○○○○○○○○
		24	01	3	**32275-GE00A**	BEARING-BALL		01	0508-			○○○○○○○○○○○○○○○○○○○○○○○○○○○○○
		25	01	3	**31487-00H00**	RING-SEAL, SERVO		03	0508-			○○○○○○○○○○○○○○○○○○○○○○○○○○○○○
		26	01	3	**32204-GE00A**	RING-SNAP		02	0508-			○○○○○○○○○○○○○○○○○○○○○○○○○○○○○

SEC. 317A

CONTROL VALVE (ATM-UPTO MAY 2008)

VALVULAS DE MANDO

STEUERVENTIL

SOUPAPE DE COMMANDE

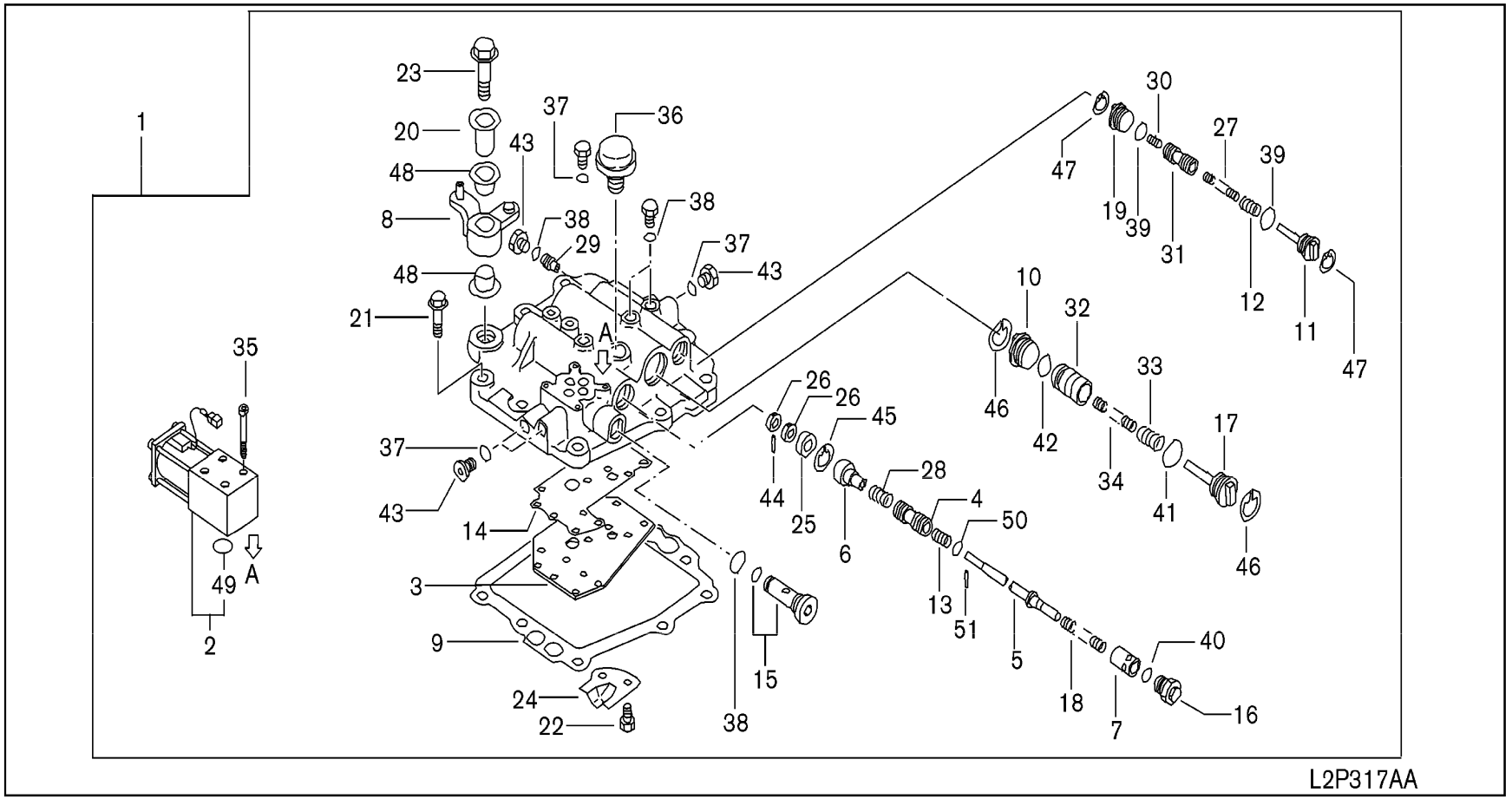

SEC. 317A

CONTROL VALVE (ATM-UPTO MAY 2008)

VALVULAS DE MANDO

STEUERVENTIL

SOUPAPE DE COMMANDE

NC	S	KEY NO.	LEV	PART NO.	PART NAME	SPECIFICATION	QTY	APPLIED DATE	ICANF	FORMER PART NO.	KD	APPLIED MODEL 01 02 03 04 05 06 07 08 09 10 11 12 13 14 15 16 17 18 19 20 21 22 23 24 25 26 27 28 29
		1 01	2	**31705-FJ20A**	VALVE ASSY-CONTROL		01	0107-0508				O O O O O O O O O O O O O O O O O O O O O O O O O O O
		2 01	3	**NF91A28-30022**	VALVE ASSY-SOLENOID		01	0107-0508				O O O O O O O O O O O O O O O O O O O O O O O O O O O
		3 01	3	**31719-FJ100**	COVER-VALVE BODY,B		01	0107-0508				O O O O O O O O O O O O O O O O O O O O O O O O O O O
		4 01	3	**31761-FJ10A**	VALVE-INCHING		01	0107-0508				O O O O O O O O O O O O O O O O O O O O O O O O O O O
		5 01	3	**31764-FJ10A**	ROD-INCHING		01	0107-0508				O O O O O O O O O O O O O O O O O O O O O O O O O O O
		6 01	3	**31777-FJ100**	SLEEVE-INCHING		01	0107-0508				O O O O O O O O O O O O O O O O O O O O O O O O O O O
		7 01	3	**31737-FJ100**	STOPPER-PISTON		01	0107-0508				O O O O O O O O O O O O O O O O O O O O O O O O O O O
		8 01	3	**31961-FJ10A**	LEVER-INCHING		01	0107-0508				O O O O O O O O O O O O O O O O O O O O O O O O O O O
		9 01	3	**31716-FJ100**	GASKET-BODY VALVE		01	0107-0508				O O O O O O O O O O O O O O O O O O O O O O O O O O O
		10 01	3	**31757-FJ100**	PLUG		01	0107-0508				O O O O O O O O O O O O O O O O O O O O O O O O O O O
		11 01	3	**31743-FJ100**	SEAT-SPR, PRESSURE REGULATOR		01	0107-0508				O O O O O O O O O O O O O O O O O O O O O O O O O O O
		12 01	3	**31742-FJ100**	SPRING-VALVE		01	0107-0508				O O O O O O O O O O O O O O O O O O O O O O O O O O O
		13 01	3	**31762-FJ10A**	SPRING-INCHING VALVE		01	0107-0508				O O O O O O O O O O O O O O O O O O O O O O O O O O O
		14 01	3	**31717-FJ100**	GASKET		01	0107-0508				O O O O O O O O O O O O O O O O O O O O O O O O O O O
		15 01	3	**31756-FJ100**	STRAINER-SOLENOID VALVE		01	0107-0508				O O O O O O O O O O O O O O O O O O O O O O O O O O O
		16 01	3	**31768-FJ100**	PLUG-INCHING		01	0107-0508				O O O O O O O O O O O O O O O O O O O O O O O O O O O
		17 01	3	**31743-FJ110**	SEAT-SPRING,ACCUM		01	0107-0508				O O O O O O O O O O O O O O O O O O O O O O O O O O O
		18 01	3	**31763-FJ10A**	SPRING-INCHING		01	0107-0508				O O O O O O O O O O O O O O O O O O O O O O O O O O O
		19 01	3	**31744-FJ100**	PLUG-PRESS REG		01	0107-0508				O O O O O O O O O O O O O O O O O O O O O O O O O O O
		20 01	3	**31962-FJ10A**	RETAINER-INCHING LEVER		01	0107-0508				O O O O O O O O O O O O O O O O O O O O O O O O O O O
		21 01	3	**31723-FJ100**	BOLT		09	0107-0508				O O O O O O O O O O O O O O O O O O O O O O O O O O O
		22 01	3	**31723-FJ110**	BOLT		14	0107-0508				O O O O O O O O O O O O O O O O O O O O O O O O O O O
		23 01	3	**31723-FJ120**	BOLT		01	0107-0508				O O O O O O O O O O O O O O O O O O O O O O O O O O O
		24 01	3	**31722-FJ100**	COVER-BREATHER		01	0107-0508				O O O O O O O O O O O O O O O O O O O O O O O O O O O
		25 01	3	**31709-FJ101**	SEAL-OIL		01	0107-0508				O O O O O O O O O O O O O O O O O O O O O O O O O O O
		26 01	3	**31968-FJ110**	PLATE-INCHING ROD		02	0107-0508				O O O O O O O O O O O O O O O O O O O O O O O O O O O
		27 01	3	**31742-FJ110**	SPRING-VALVE		01	0107-0508				O O O O O O O O O O O O O O O O O O O O O O O O O O O
		28 01	3	**31763-FJ110**	SPRING-INCHING VALVE		01	0107-0508				O O O O O O O O O O O O O O O O O O O O O O O O O O O
		29 01	3	**31744-FJ121**	SCREW		01	0107-0508				O O O O O O O O O O O O O O O O O O O O O O O O O O O
		30 01	3	**31755-FJ100**	PLUG-VALVE RELIEF		01	0107-0508				O O O O O O O O O O O O O O O O O O O O O O O O O O O
		31 01	3	**31754-FJ100**	VALVE-RELIEF		01	0107-0508				O O O O O O O O O O O O O O O O O O O O O O O O O O O
		32 01	3	**31751-FJ100**	PISTON-MODULATOR		01	0107-0508				O O O O O O O O O O O O O O O O O O O O O O O O O O O
		33 01	3	**31752-FJ100**	SPRING-MODULATOR		01	0107-0508				O O O O O O O O O O O O O O O O O O O O O O O O O O O
		34 01	3	**31752-FJ110**	SPRING-MODULATOR "B"		01	0107-0508				O O O O O O O O O O O O O O O O O O O O O O O O O O O
		35 01	3	**31723-FJ130**	BOLT		04	0107-0508				O O O O O O O O O O O O O O O O O O O O O O O O O O O
		36 01	3	**43095-FJ110**	BREATHER-AIR		01	0107-0508				O O O O O O O O O O O O O O O O O O O O O O O O O O O
		37 01	3	**31769-FJ100**	O RING		08	0107-0508				O O O O O O O O O O O O O O O O O O O O O O O O O O O

SEC. 317A

CONTROL VALVE (ATM-UPTO MAY 2008)

VALVULAS DE MANDO

STEUERVENTIL

SOUPAPE DE COMMANDE

NC	S	KEY NO.	LEV	PART NO.	PART NAME	SPECIFICATION	QTY	APPLIED DATE	ICANF	FORMER PART NO.	KD	APPLIED MODEL 01 02 03 04 05 06 07 08 09 10 11 12 13 14 15 16 17 18 19 20 21 22 23 24 25 26 27 28 29
		38 01	3	**31343-FJ130**	O RING		01	0107-0508				○○○○○○○○○○○○○○○○○○○○○○○○○○○○○
		39 01	3	**31343-FJ120**	O RING		02	0107-0508				○○○○○○○○○○○○○○○○○○○○○○○○○○○○○
		40 01	3	**31769-FJ130**	O RING		01	0107-0508				○○○○○○○○○○○○○○○○○○○○○○○○○○○○○
		41 01	3	**31769-FJ140**	O RING		01	0107-0508				○○○○○○○○○○○○○○○○○○○○○○○○○○○○○
		42 01	3	**31769-FJ150**	O RING		01	0107-0508				○○○○○○○○○○○○○○○○○○○○○○○○○○○○○
		43 01	3	**31768-FJ120**	PLUG		08	0107-0508				○○○○○○○○○○○○○○○○○○○○○○○○○○○○○
		44 01	3	**31734-FJ100**	PIN-SPRING		01	0107-0508				○○○○○○○○○○○○○○○○○○○○○○○○○○○○○
		45 01	3	**31767-FJ100**	RING-SNAP		01	0107-0508				○○○○○○○○○○○○○○○○○○○○○○○○○○○○○
		46 01	3	**31767-FJ110**	RING-SNAP		02	0107-0508				○○○○○○○○○○○○○○○○○○○○○○○○○○○○○
		47 01	3	**31767-FJ120**	RING-SNAP		02	0107-0508				○○○○○○○○○○○○○○○○○○○○○○○○○○○○○
		48 01	3	**31968-FJ100**	BUSH-INCHING LEVER		02	0107-0508				○○○○○○○○○○○○○○○○○○○○○○○○○○○○○
		49 01	4	**31769-FJ200**	O RING		02	0107-0508				○○○○○○○○○○○○○○○○○○○○○○○○○○○○○
		50 01	3	**31737-FJ10A**	STOPPER		01	0107-0508				○○○○○○○○○○○○○○○○○○○○○○○○○○○○○
		51 01	3	**31734-FJ10A**	PIN		01	0107-0508				○○○○○○○○○○○○○○○○○○○○○○○○○○○○○

NOTE

SEC. 317B

CONTROL VALVE (ATM-FROM MAY 2008)

VALVULAS DE MANDO

STEUERVENTIL

SOUPAPE DE COMMANDE

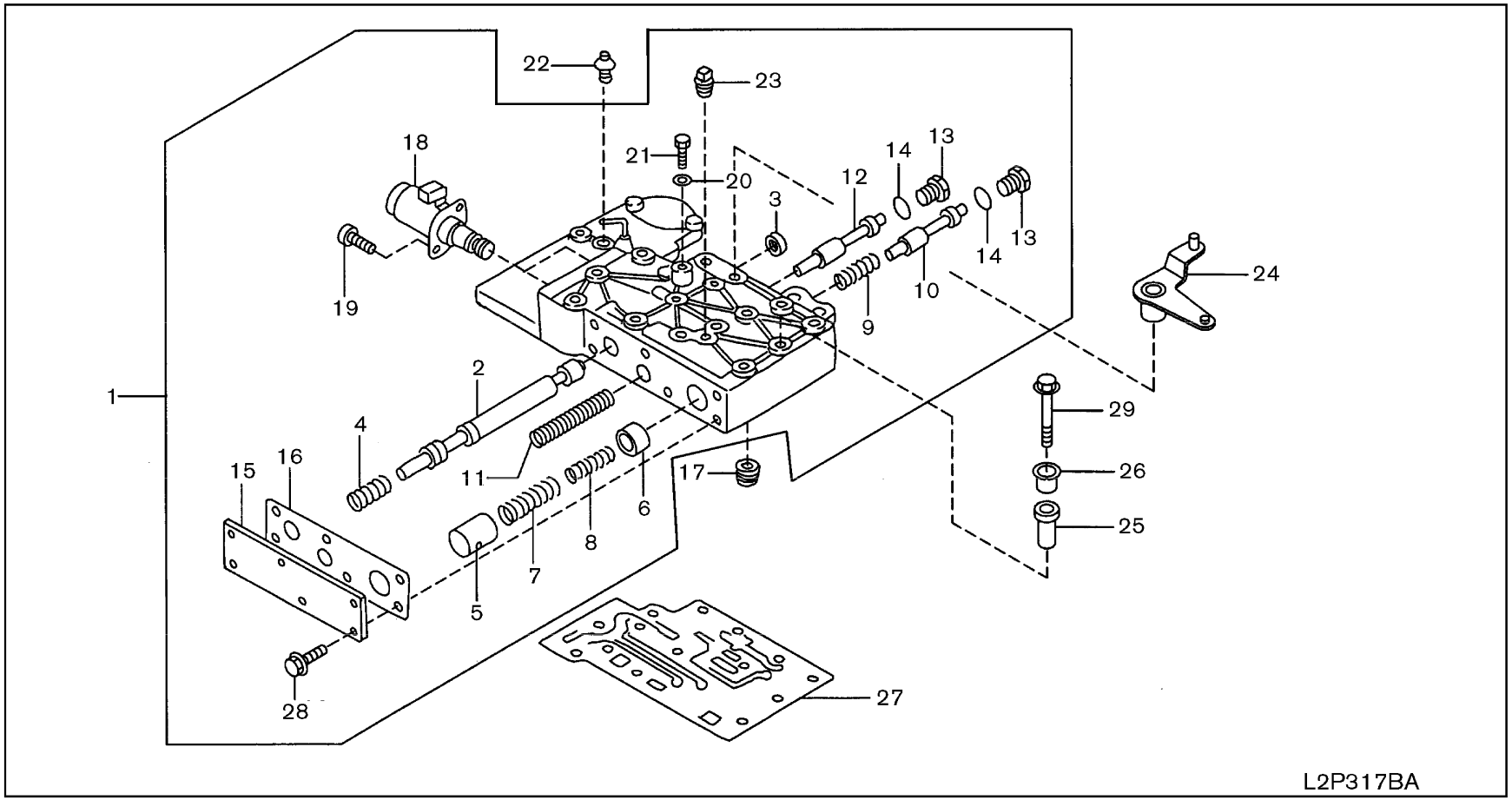

SEC. 317B

CONTROL VALVE (ATM-FROM MAY 2008)

VALVULAS DE MANDO

STEUERVENTIL

SOUPAPE DE COMMANDE

NC	S	KEY NO.	LEV	PART NO.	PART NAME	SPECIFICATION	QTY	APPLIED DATE	ICANF	FORMER PART NO.	KD
		1 01	2	**31705-GG00A**	VALVE ASSY-CONTROL		01	0508-			
		2 01	3	**31761-GE00A**	VALVE-INCHING		01	0508-			
		3 01	3	**32858-FC000**	SEAL-OIL		01	0508-			
		4 01	3	**31762-FC000**	SPRING-INCHING VALVE		01	0508-			
		5 01	3	**31737-FC000**	STOPPER-VALVE		01	0508-			
		6 01	3	**31675-FC000**	PISTON-ACCUMULATOR		01	0508-			
		7 01	3	**31755-FC000**	BALL-STEEL		01	0508-			
		8 01	3	**31755-FC001**	BALL-STEEL		01	0508-			
		9 01	3	**31842-FC001**	SPRING-RELIEF VALVE		01	0508-			
		10 01	3	**31841-FC000**	VALVE ASSY-SELECT		01	0508-			
		11 01	3	**31742-FC000**	SPRING-VALVE		01	0508-			
		12 01	3	**31741-FC000**	VALVE-PRESSURE REGULATOR		01	0508-			
		13 01	3	**31744-FC010**	PLUG		02	0508-			
		14 01	3	**31769-FC010**	SEAL-O RING		02	0508-			
		15 01	3	**31721-FC000**	PLATE-SIDE		01	0508-			
		16 01	3	**31724-FC000**	GASKET		01	0508-			
		17 01	2	**31307-FC000**	PLUG		01	0508-			
		18 01	3	**31765-FC000**	VALVE ASSY-SOLENOID		02	0508-			
		19 01	3	**31723-FC000**	BOLT		04	0508-			
		20 01	3	**31734-L1000**	PIN-SPRING		01	0508-			
		21 01	3	**31733-FC000**	BOLT-STOPPER		01	0508-			
		22 01	2	**40535-41400**	PLUG		01	0508-			
		23 01	3	**31319-40K00**	PLUG-TAPER		04	0508-			
		24 01	3	**31960-GE00A**	LEVER-INCHING		01	0508-			
		25 01	3	**32888-GE00A**	LEVER		01	0508-			
		26 01	3	**31968-GE00A**	BUSH		01	0508-			
		27 01	3	**31715-GE00A**	PACKING-CONTROL VALVE		01	0508-			
		28 01	3	**08120-8201E**	SCREW-HHM M8-1.25X20 W/LKW		06	0508-			
		29 01	3	**081A1-0601A**	BOLT-HEX FLANGE 7T M10		01	0508-			

APPLIED MODEL

01	02	03	04	05	06	07	08	09	10	11	12	13	14	15	16	17	18	19	20	21	22	23	24	25	26	27	28	29
MI PU AA 200 JV	MI PV AA 200 DV	MI PV AA 200 LV	MI PV AA 200 SV	MI UU AA 200 JV	MI UU AA 200 DV	MI UU AA 200 LV	MI UY AA 200 SV	MI YP AA 200 LI	MI PP AA 255 JV	MI PP AA 255 DV	MI PP AA 255 LV	MI PU AA 255 SV	MI UU AA 255 JV	MI UU AA 255 DV	MI UU AA 255 LV	MI UY AA 255 SV	MI UU AA 288 JV	MI UU AA 288 DV	MI UU AA 288 LV	MI UU AA 300 JV	MI UU AA 300 DV	MI UY AA 300 LV	MI UU AA 335 JV	MI UU AA 335 DV	MI UU AA 335 LV	MI UY AA 335 SV	MI YG AA 335 LV
○	○	○	○	○	○	○	○	○	○	○	○	○	○	○	○	○	○	○	○	○	○	○	○	○	○	○	○	○

SEC. 370

PROPELLER SHAFT (ATM)

EJE CARDAN

GELENKWELLE

ARBRE DE TRANSMISSION

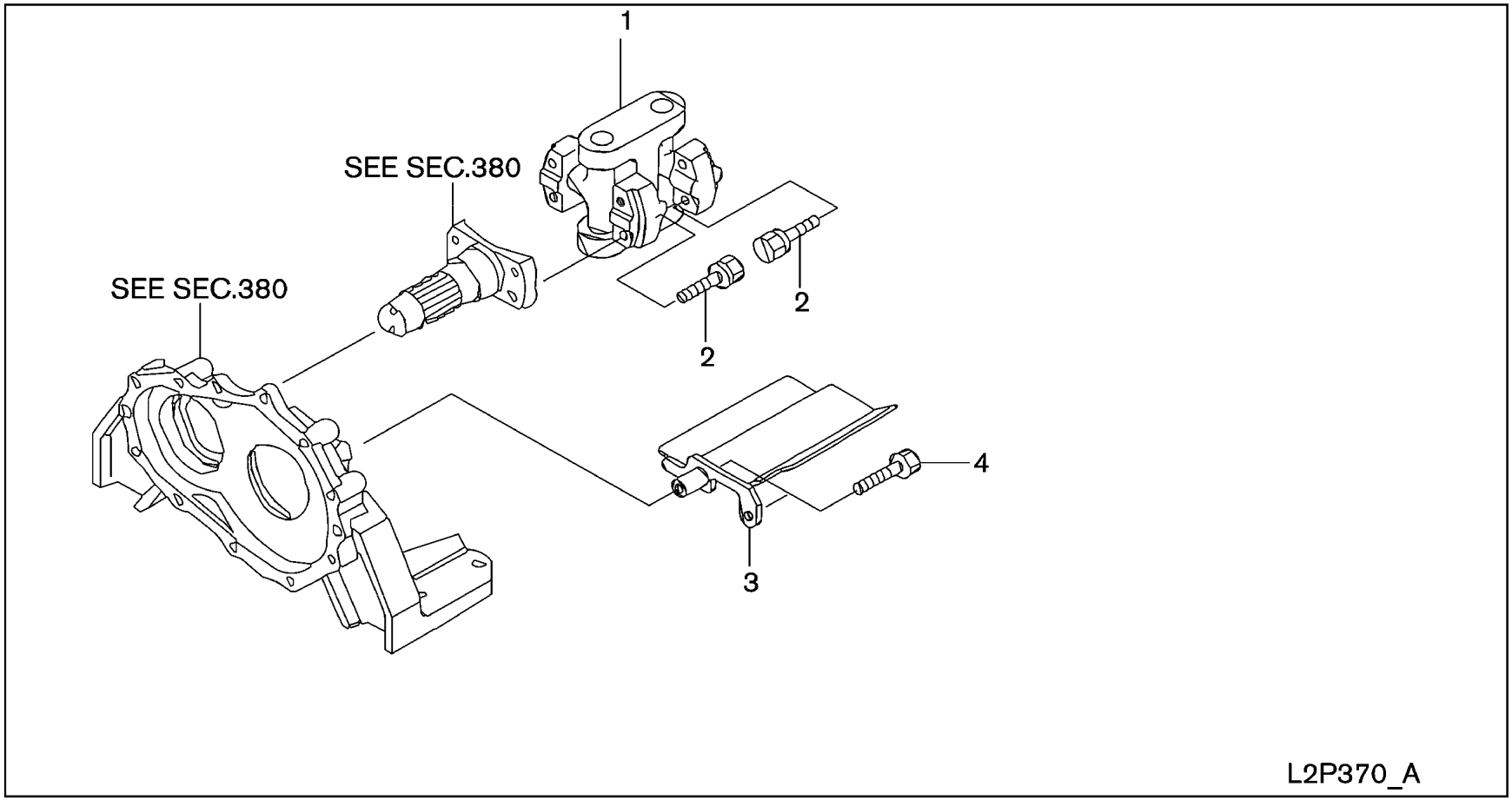

SEC. 370

PROPELLER SHAFT (ATM)

EJE CARDAN

GELENKWELLE

ARBRE DE TRANSMISSION

NC	S	KEY NO.	LEV	PART NO.	PART NAME	SPECIFICATION	QTY	APPLIED DATE	TCANF	FORMER PART NO.	KD
		1 01	1	**37000-FJ100**	JOINT ASSY		01	0107-			
		2 01	1	**37120-FJ101**	BOLT		08	0107-0508			
		02	1	**37120-GE00A**			08	0508-			
		3 01	1	**37532-FK001**	COVER-PROP SHAFT		01	0107-1207			
		02	1	**37532-FK001**			01	1207-			
		03	1	**37532-FJ101**			01	1207-			
		4 01	1	**08124-0501F**	SCREW-HHM M10-1.25X45 W/LK & PW		02	0107-			

APPLIED MODEL

01	02	03	04	05	06	07	08	09	10	11	12	13	14	15	16	17	18	19	20	21	22	23	24	25	26	27	28	29
MIPAA220JVV	MIPAA220DVV	MIPAA220LVS	MIPAA220SVV	MIUAA220JVV	MIUAA220DVV	MIUAA220LVS	MIUAA220SVV	MIYAA220LVV	MIPAA255JVV	MIPAA255DVV	MIPAA255LVV	MIPAA255JVS	MIUAA255DVV	MIUAA255LVV	MIUAA255LVS	MIYAA255LVV	MIPAA258JVV	MIPAA258DVV	MIPAA258LVV	MIUAA330JVV	MIUAA330DVV	MIUAA330LVV	MIUAA330LVS	MIYAA330JVV	MIYAA330DVV	MIYAA330LVV	MIGJA355JVV	MIGGA355LVV
○	○	○	○	○	○	○	○	○	○	○	○	○	○	○	○	○	○	○	○	○	○	○	○	○	○	○	○	○
○	○	○	○	○	○	○	○	○	○	○	○	○	○	○	○	○	○	○	○	○	○	○	○	○	○	○	○	○
○	○	○	○	○	○	○	○	○	○	○	○	○	○	○	○	○	○	○	○	○	○	○	○	○	○	○	○	○
○	○	○	○	○	○	○	○	○	○	○	○	○	○	○	○	○	○	○	○	○	○	○	○	○	○	○	○	○
○	○	○	○	○	○	○	○	○	○	○	○	○	○	○	○	○	○											
																		○	○	○	○	○	○	○	○	○	○	○
○	○	○	○	○	○	○	○	○	○	○	○	○	○	○	○	○	○	○	○	○	○	○	○	○	○	○	○	○

SEC. 380A

FINAL DRIVE ASSEMBLY (ATM-20+25 JAN. 2007 & UP, 30+35 JAN. 2007 THRU MAY 2008)

CONJUNTO DE TRANSMISSION FINAL

ACHSANTRIEB KOMPLETT

ENSEMBLE ENTRAINEMENT AUX ROUES

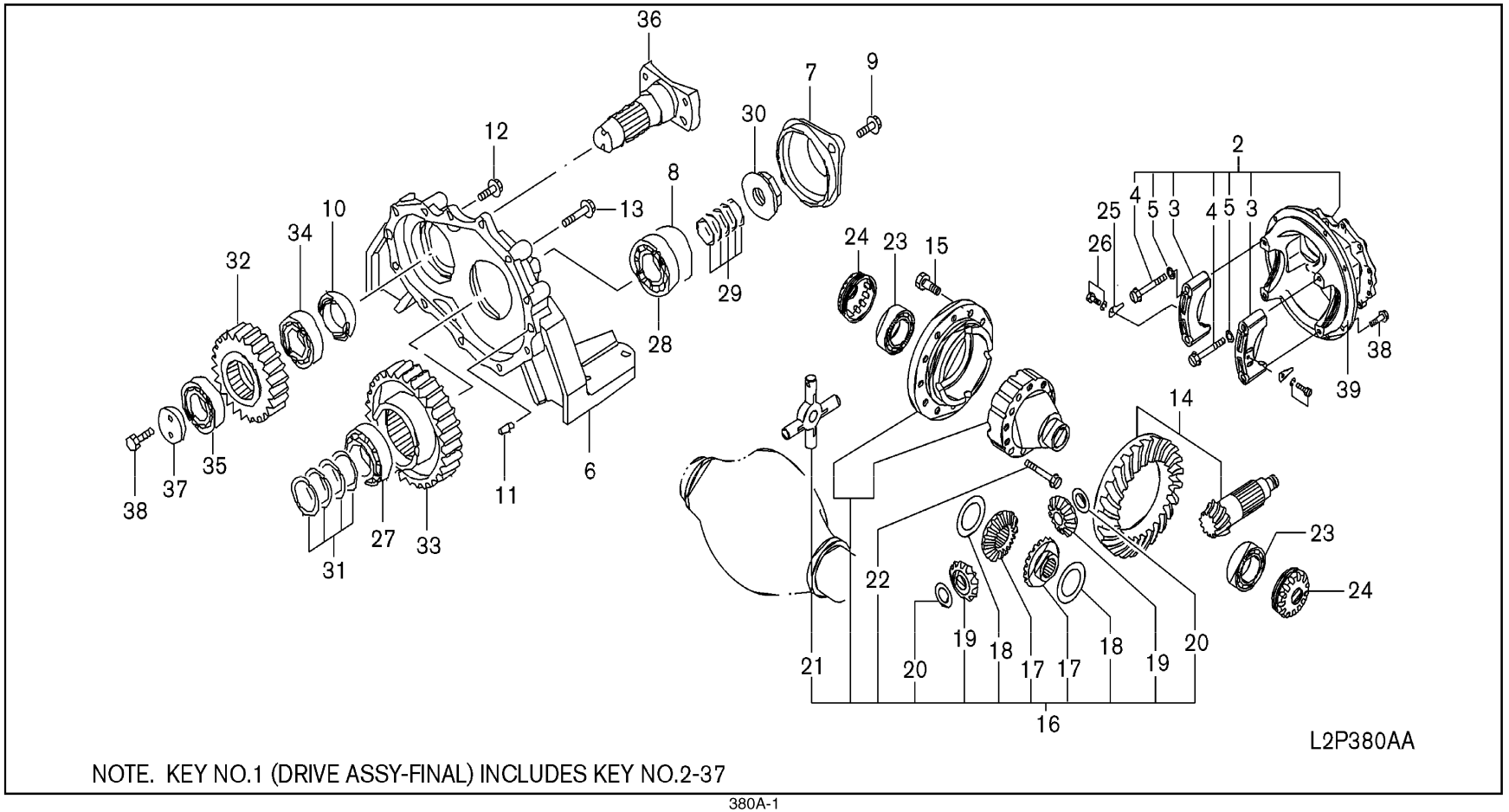

NOTE. KEY NO.1 (DRIVE ASSY-FINAL) INCLUDES KEY NO.2-37

SEC. 380A

FINAL DRIVE ASSEMBLY (ATM-20+25 JAN. 2007 & UP, 30+35 JAN. 2007 THRU MAY 2008)

CONJUNTO DE TRANSMISSION FINAL

ACHSANTRIEB KOMPLETT

ENSEMBLE ENTRAINEMENT AUX ROUES

NC	S	KEY NO.	LEV	PART NO.	PART NAME	SPECIFICATION	QTY	APPLIED DATE	ICANF	FORMER PART NO.	KD	APPLIED MODEL 01 02 03 04 05 06 07 08 09 10 11 12 13 14 15 16 17 18 19 20 21 22 23 24 25 26 27 28 29
		1	01	1	**38300-FK100**	FINAL DRIVE ASSY		01 0107-				○○○○○○○○ ○○○○○○○○○
			02	1	**38300-FK000**			01 0107-				○ ○
			03	1	**38300-FK310**			01 0107-0508				○○○○○○ ○○○
			04	1	**38300-FK300**			01 0107-0508				○ ○
		2	01	2	**38310-FK000**	CARRIER ASSY-GEAR		01 0107-				○○○○○○○○○○○○○○○○○
			02	2	**38310-FK300**			01 0107-0508				○○○○○○○○○○○○○
		3	01	3	**38312-FK000**	CAP-MAST PIN		02 0107-				○○○○○○○○○○○○○○○○○
			02	3	**38312-FK300**			02 0107-0508				○○○○○○○○○○○○○
		4	01	3	**38315-FK000**	BOLT		04 0107-0508				○○○○○○○○○○○○○○○○○○○○○○○○○
			02	3	**38315-FK000**			04 0508-				○○○○○○○○○○○○○○○○○
		5	01	3	**38353-FK000**	WASHER-THRUST A		04 0107-0508				○○○○○○○○○○○○○○○○○○○○○○○○○
			02	3	**38353-FK000**			04 0508-				○○○○○○○○○○○○○○○○○
		6	01	2	**38351-FK000**	COVER-GEAR CARRIER		01 0107-0508				○○○○○○○○○○○○○○○○○○○○○○○○○
			02	2	**38351-FK000**			01 0508-				○○○○○○○○○○○○○○○○○
		7	01	2	**38181-FJ100**	CAP		01 0107-0508				○○○○○○○○○○○○○○○○○○○○○○○○○
			02	2	**38181-FJ100**			01 0508-				○○○○○○○○○○○○○○○○○
		8	01	2	**32884-FJ100**	O RING		01 0107-0508				○○○○○○○○○○○○○○○○○○○○○○○○○
			02	2	**32884-FJ100**			01 0508-				○○○○○○○○○○○○○○○○○
		9	01	2	**38171-FJ10A**	BOLT		02 0107-0508				○○○○○○○○○○○○○○○○○○○○○○○○○
			02	2	**38171-FJ10A**			02 0508-				○○○○○○○○○○○○○○○○○
		10	01	2	**38189-FJ100**	PACKING-CARRIER COVER		01 0107-0508				○○○○○○○○○○○○○○○○○○○○○○○○○
			02	2	**38189-FJ100**			01 0508-				○○○○○○○○○○○○○○○○○
		11	01	2	**12313-FJ110**	DOWEL-GEAR BOX MOUNTING		02 0107-0508				○○○○○○○○○○○○○○○○○○○○○○○○○
			02	2	**12313-FJ110**			02 0508-				○○○○○○○○○○○○○○○○○
		12	01	2	**38171-FJ11A**	BOLT-DIFF GEAR CASE		04 0107-0508				○○○○○○○○○○○○○○○○○○○○○○○○○
			02	2	**38171-FJ11A**			04 0508-				○○○○○○○○○○○○○○○○○
		13	01	2	**38171-FK00A**	BOLT		09 0107-0508				○○○○○○○○○○○○○○○○○○○○○○○○○
			02	2	**38171-FK00A**			09 0508-				○○○○○○○○○○○○○○○○○
		14	01	2	**38100-FK000**	GEAR SET-FINAL DRIVE		01 0107-				○○○○○○○○○○○○○○○○○
			02	2	**38100-FK300**			01 0107-0508				○○○○○○○○○○○○○
		15	01	2	**38102-FK000**	BOLT-DRIVE GEAR		12 0107-0508				○○○○○○○○○○○○○○○○○○○○○○○○○
			02	2	**38102-FK000**			12 0508-				○○○○○○○○○○○○○○○○○
		16	01	2	**38420-FK000**	DIFFERENTIAL ASSY & GEAR KIT		01 0107-				○○○○○○○○○○○○○○○○○
			02	2	**38420-FK300**			01 0107-0508				○○○○○○○○○○○○○
		17	01	3	**38423-FK000**	GEAR-SIDE DIFF BEVEL		02 0107-				○○○○○○○○○○○○○○○○○
			02	3	**38423-FK300**			02 0107-0508				○○○○○○○○○○○○○
		18	01	3	**38424-FK000**	WASHER-THRUST, SIDE GEAR		02 0107-				○○○○○○○○○○○○○○○○○

SEC. 380A

FINAL DRIVE ASSEMBLY (ATM-20+25 JAN. 2007 & UP, 30+35 JAN. 2007 THRU MAY 2008)

CONJUNTO DE TRANSMISSION FINAL

ACHSANTRIEB KOMPLETT

ENSEMBLE ENTRAINEMENT AUX ROUES

NC	S	KEY NO.	LEV	PART NO.	PART NAME	SPECIFICATION	QTY	APPLIED DATE	ICANF	FORMER PART NO.	KD
		18	02	3	**38424-FK300**	WASHER-THRUST, SIDE GEAR		02	0107-0508			
		19	01	3	**38425-FK000**	PINION-MATE		02	0107-			
			02	3	**38425-FK300**			04	0107-0508			
		20	01	3	**38426-FK000**	WASHER-DRIVE PINION		02	0107-			
			02	3	**38426-FK300**			04	0107-0508			
		21	01	3	**38427-FK000**	SHAFT-PINION MATE		01	0107-			
			02	3	**38427-FK300**			01	0107-0508			
		22	01	3	**38428-FK000**	PIN-LOCK, PINION MATE SHAFT		01	0107-			
			02	3	**38434-FK300**	BOLT-COUPLE DIFF CASE		12	0107-0508			
		23	01	2	**38440-FK000**	BEARING-DIFFERENTIAL SIDE		02	0107-			
			02	2	**38440-FK300**			02	0107-0508			
		24	01	2	**38316-FK000**	NUT-SIDE BEARING		02	0107-			
			02	2	**38316-FK300**			02	0107-0508			
		25	01	2	**38319-FK000**	FINGER-LOCK		02	0107-0508			
			02	2	**38319-FK000**			02	0508-			
		26	01	2	**38315-FK010**	BOLT		02	0107-0508			
			02	2	**38315-FK010**			02	0508-			
		27	01	2	**38140-FJ100**	BEARING-DRIVE PINION		01	0107-0508			
			02	2	**38140-FJ100**			01	0508-			
		28	01	2	**38120-FK000**	BEARING-DRIVE PINION		01	0107-0508			
			02	2	**38120-FK000**			01	0508-			
		29	01	3	**38127-FJ100**	SHIM-ADJUSTING,BEARING	T=0.1	01	0107-0508			
			02	3	**38127-FJ100**		T=0.1	01	0508-			
			03	3	**38127-FJ110**		T=0.2	01	0107-0508			
			04	3	**38127-FJ110**		T=0.2	01	0508-			
			05	3	**38127-FJ120**		T=0.5	01	0107-0508			
			06	3	**38127-FJ120**		T=0.5	01	0508-			
			07	3	**38127-FJ130**		T=1.0	01	0107-0508			
			08	3	**38127-FJ130**		T=1.0	01	0508-			
			09	3	**38127-FJ140**		T=0.05	01	0107-0508			
			10	3	**38127-FJ140**		T=0.05	01	0508-			
		30	01	2	**38216-FJ100**	NUT		01	0107-0508			
			02	2	**38216-FJ100**			01	0508-			
		31	01	2	**38154-FK000**	SHIM-ADJUSTING,DIFFERENTIAL GEAR		01	0107-0508			
			02	2	**38154-FK000**			01	0508-			
			03	2	**38154-FK010**			01	0107-0508			
			04	2	**38154-FK010**			01	0508-			

APPLIED MODEL

01	02	03	04	05	06	07	08	09	10	11	12	13	14	15	16	17	18	19	20	21	22	23	24	25	26	27	28	29
MIPU	MIPU	MIPU	MIPU	MIUV	MIUV	MIUV	MIUS	MIYV	MIPV	MIPV	MIPV	MIPV	MIUS	MIUV	MIUV	MIUV	MIYS	MIUV	MIUV	MIUV	MIUV	MIUV	MIUV	MIYV	MIUV	MIUV	MIUV	MIYV
																		MJJ	MJJ	MJJ	MGJ	MGJ	MGJ	MGJ	MGJ	MGJ	MGJ	MGJ
AI220JV	AI220JV	AI220JV	AI220JV	AI220JV	AI220JV	AI220JV	AI220JV	AI220JV	AI255JV	AI255JV	AI255JV	AI255JV	AI255JV	AI255JV	AI255JV	AI255JV	AI255JV	AI288JV	AI288JV	AI288JV	AI300JV	AI300JV	AI300JV	AI300JV	AI355JV	AI355JV	AI355JV	AI355JV

SEC. 380A

FINAL DRIVE ASSEMBLY (ATM-20+25 JAN. 2007 & UP, 30+35 JAN. 2007 THRU MAY 2008)

CONJUNTO DE TRANSMISSION FINAL

ACHSANTRIEB KOMPLETT

ENSEMBLE ENTRAINEMENT AUX ROUES

NC	S	KEY NO.	LEV	PART NO.	PART NAME	SPECIFICATION	QTY	APPLIED DATE	ICANF	FORMER PART NO.	KD	APPLIED MODEL 01 02 03 04 05 06 07 08 09 10 11 12 13 14 15 16 17 18 19 20 21 22 23 24 25 26 27 28 29
		31 05	2	**38154-FK020**	SHIM-ADJUSTING,DIFFERENTIAL GEAR		01	0107-0508				○ ○
		06	2	**38154-FK020**			01	0508-				○ ○ ○ ○ ○ ○ ○ ○ ○ ○ ○ ○ ○ ○ ○ ○ ○
		32 01	2	**33124-FK000**	GEAR-DRIVE		01	0107-				○ ○
		02	2	**33124-FK010**			01	0107-				○ ○ ○ ○ ○ ○ ○ ○ ○ ○ ○ ○ ○ ○ ○ ○
		03	2	**33124-FK010**			01	0107-0508				○ ○
		04	2	**33124-FK020**			01	0107-0508				○ ○ ○ ○ ○ ○ ○ ○ ○
		33 01	2	**33320-FK000**	GEAR-DRIVE		01	0107-				○ ○
		02	2	**33320-FK010**			01	0107-				○ ○ ○ ○ ○ ○ ○ ○ ○ ○ ○ ○ ○ ○ ○ ○
		03	2	**33320-FK010**			01	0107-0508				○ ○
		04	2	**33320-FK020**			01	0107-0508				○ ○ ○ ○ ○ ○ ○ ○ ○
		34 01	2	**37510-FJ120**	BEARING-BALL		01	0107-0508				○ ○
		02	2	**37510-FJ120**			01	0508-				○ ○ ○ ○ ○ ○ ○ ○ ○ ○ ○ ○ ○ ○ ○ ○ ○
		35 01	2	**37510-FJ130**	BEARING-BALL		01	0107-0508				○ ○
		02	2	**37510-FJ130**			01	0508-				○ ○ ○ ○ ○ ○ ○ ○ ○ ○ ○ ○ ○ ○ ○ ○ ○
		36 01	2	**38211-FK000**	ADAPTER-SERRATION		01	0107-0508				○ ○
		02	2	**38211-FK000**			01	0508-				○ ○ ○ ○ ○ ○ ○ ○ ○ ○ ○ ○ ○ ○ ○ ○ ○
		37 01	2	**32136-FJ100**	WASHER-DRIVE SHAFT		01	0107-0508				○ ○
		02	2	**32136-FJ100**			01	0508-				○ ○ ○ ○ ○ ○ ○ ○ ○ ○ ○ ○ ○ ○ ○ ○ ○
		38 01	2	**32137-FJ100**	BOLT-ROAD WHEEL		15	0107-0508				○ ○
		02	2	**32137-FJ100**			15	0508-				○ ○ ○ ○ ○ ○ ○ ○ ○ ○ ○ ○ ○ ○ ○ ○ ○
		39 01	1	**38320-FJ100**	PACKING-AXLE HOUSING		01	0107-0508				○ ○
		02	1	**38320-FJ100**			01	0508-				○ ○ ○ ○ ○ ○ ○ ○ ○ ○ ○ ○ ○ ○ ○ ○ ○

SEC. 380B

FINAL DRIVE ASSEMBLY (ATM-30+35 FROM MAY 2008)

CONJUNTO DE TRANSMISSION FINAL

ACHSANTRIEB KOMPLETT

ENSEMBLE ENTRAINEMENT AUX ROUES

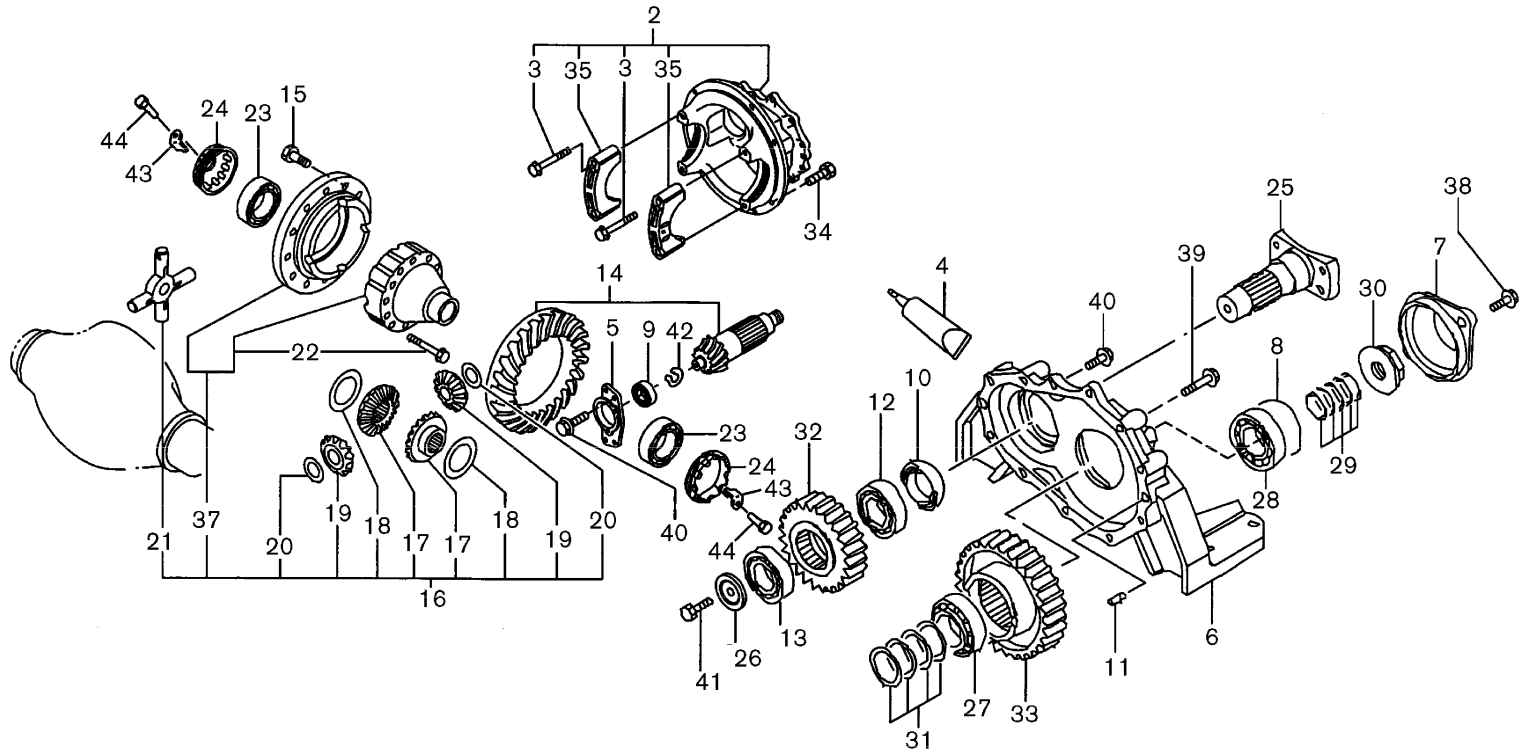

NOTE: KEY NO. 1 (FINAL DRIVE ASSY) INCLUDES KEY NO. 2,3,5~34 & 35~44
NOTE: KEY NO. 36 (DIFF ASSY-W/HTP GEAR SET) INCLUDES KEY NO. 14~16

L2P380BA

SEC. 380B

FINAL DRIVE ASSEMBLY (ATM-30+35 FROM MAY 2008)

CONJUNTO DE TRANSMISSION FINAL

ACHSANTRIEB KOMPLETT

ENSEMBLE ENTRAINEMENT AUX ROUES

NC	S	KEY NO.	LEV	PART NO.	PART NAME	SPECIFICATION	QTY	APPLIED DATE	ICANF	FORMER PART NO.	KD	APPLIED MODEL 01 02 03 04 05 06 07 08 09 10 11 12 13 14 15 16 17 18 19 20 21 22 23 24 25 26 27 28 29
		1	01	1	**38300-GG31A**	FINAL DRIVE ASSY		01	0508-			○ ○
			02	1	**38300-GG30A**			01	0508-			○ ○ ○ ○ ○ ○ ○ ○ ○ ○
		2	01	2	**38310-GG30A**	CARRIER ASSY-GEAR		01	0508-			○ ○ ○ ○ ○ ○ ○ ○ ○ ○
		3	01	3	**38314-Z5002**	BOLT		04	0508-			○ ○ ○ ○ ○ ○ ○ ○ ○ ○
		4	01	1	**C8320-00330**	SEALANT		01	0508-			○ ○ ○ ○ ○ ○ ○ ○ ○ ○
		5	01	2	**38331-GG30A**	SUPPORT-PILOT BEARING		01	0508-1208			○ ○ ○ ○ ○ ○ ○ ○ ○ ○
			02	2	**38331-GG31A**			01	1208-			○ ○ ○ ○ ○ ○ ○ ○ ○ ○
		6	01	2	**38351-GG30A**	COVER-GEAR CARRIER		01	0508-			○ ○ ○ ○ ○ ○ ○ ○ ○ ○
		7	01	2	**38181-GG30A**	CAP		01	0508-1208			○ ○ ○ ○ ○ ○ ○ ○ ○ ○
			02	2	**38181-GG31A**			01	1208-			○ ○ ○ ○ ○ ○ ○ ○ ○ ○
		8	01	2	**32884-GG30A**	O RING		01	0508-			○ ○ ○ ○ ○ ○ ○ ○ ○ ○
		9	01	2	**38352-NA000**	BEARING-ROLLER		01	0508-			○ ○ ○ ○ ○ ○ ○ ○ ○ ○
		10	01	2	**38189-GE00A**	SEAL-OIL DRIVE SHAFT		01	0508-			○ ○ ○ ○ ○ ○ ○ ○ ○ ○
		11	01	2	**30413-61700**	DOWEL-GEAR BOX MOUNTING		02	0508-			○ ○ ○ ○ ○ ○ ○ ○ ○ ○
		12	01	2	**37510-GE00A**	BEARING-BALL		01	0508-			○ ○ ○ ○ ○ ○ ○ ○ ○ ○
		13	01	2	**37510-GE00B**	BEARING-BALL		01	0508-			○ ○ ○ ○ ○ ○ ○ ○ ○ ○
		14	01	3	**38100-GG30A**	GEAR SET-FINAL DRIVE		01	0508-			○ ○ ○ ○ ○ ○ ○ ○ ○ ○
		15	01	3	**38102-Z5005**	BOLT-DRIVE GEAR		12	0508-			○ ○ ○ ○ ○ ○ ○ ○ ○ ○
		16	01	3	**38411-GG30A**	CASE COMPL-DIFF		01	0508-			○ ○ ○ ○ ○ ○ ○ ○ ○ ○
		17	01	4	**38423-Z5005**	GEAR-SIDE DIFF BEVEL		02	0508-			○ ○ ○ ○ ○ ○ ○ ○ ○ ○
		18	01	4	**38424-Z5009**	WASHER-THRUST, SIDE GEAR		02	0508-			○ ○ ○ ○ ○ ○ ○ ○ ○ ○
			02	4	**38424-Z5010**			02	0508-			○ ○ ○ ○ ○ ○ ○ ○ ○ ○
			03	4	**38424-Z5011**			02	0508-			○ ○ ○ ○ ○ ○ ○ ○ ○ ○
			04	4	**38424-Z5012**			02	0508-			○ ○ ○ ○ ○ ○ ○ ○ ○ ○
			05	4	**38424-Z5013**			02	0508-			○ ○ ○ ○ ○ ○ ○ ○ ○ ○
		19	01	4	**38425-Z5005**	PINION-MATE		04	0508-			○ ○ ○ ○ ○ ○ ○ ○ ○ ○
		20	01	4	**38426-Z5000**	WASHER-THRUST, PINION MATE		04	0508-			○ ○ ○ ○ ○ ○ ○ ○ ○ ○
		21	01	4	**38427-Z5003**	SHAFT-PINION MATE		01	0508-			○ ○ ○ ○ ○ ○ ○ ○ ○ ○
		22	01	5	**38434-Z5000**	WASHER-THRUST, PINION MATE		12	0508-			○ ○ ○ ○ ○ ○ ○ ○ ○ ○
		23	01	2	**01014-00534**	BEARING-DIFF SIDE		02	0508-			○ ○ ○ ○ ○ ○ ○ ○ ○ ○
		24	01	2	**38443-Z5007**	SCREW-ADJUST		02	0508-			○ ○ ○ ○ ○ ○ ○ ○ ○ ○
		25	01	2	**38211-GG30A**	ADAPTER-SERRATION		01	0508-			○ ○ ○ ○ ○ ○ ○ ○ ○ ○
		26	01	2	**32136-GE00A**	WASHER-DRIVE SHAFT		01	0508-			○ ○ ○ ○ ○ ○ ○ ○ ○ ○
		27	01	2	**38140-GG30A**	BEARING-DRIVE PINION		01	0508-			○ ○ ○ ○ ○ ○ ○ ○ ○ ○
		28	01	2	**38140-GG30B**	BEARING-DRIVE PINION		01	0508-			○ ○ ○ ○ ○ ○ ○ ○ ○ ○
		29	01	2	**38127-GG30A**	SHIM-ADJUSTING, BEARING	T=0.05	01	0508-			○ ○ ○ ○ ○ ○ ○ ○ ○ ○
			02	2	**38127-GG31A**		T=0.1	01	0508-			○ ○ ○ ○ ○ ○ ○ ○ ○ ○

SEC. 380B

FINAL DRIVE ASSEMBLY (ATM-30+35 FROM MAY 2008)

CONJUNTO DE TRANSMISSION FINAL

ACHSANTRIEB KOMPLETT

ENSEMBLE ENTRAINEMENT AUX ROUES

NC	S	KEY NO.	LEV	PART NO.	PART NAME	SPECIFICATION	QTY	APPLIED DATE	ICANF	FORMER PART NO.	KD
	29	03	2	**38127-GG32A**	SHIM-ADJUSTING, BEARING	T=0.2	01	0508-			
		04	2	**38127-GG33A**		T=0.5	01	0508-			
		05	2	**38127-GG34A**		T=1.0	01	0508-			
		06	2	**38127-GG35A**		T=0.02	01	0508-			
		07	2	**38127-GG36A**		T=0.03	01	0508-			
		08	2	**38127-GG37A**		T=0.97	01	0508-			
		09	2	**38127-GG38A**		T=0.98	01	0508-			
	30	01	2	**38216-GG30A**	NUT-FLANGE, DRIVE PINION		01	0508-			
	31	01	2	**38151-GG30A**	WASHER-ADJUST, DRIVE PINION	T=1.94	01	0508-			
		02	2	**38151-GG31A**		T=1.97	01	0508-			
		03	2	**38151-GG32A**		T=2.00	01	0508-			
		04	2	**38151-GG33A**		T=2.03	01	0508-			
		05	2	**38151-GG34A**		T=2.06	01	0508-			
		06	2	**38151-GG35A**		T=2.09	01	0508-			
		07	2	**38151-GG36A**		T=2.12	01	0508-			
		08	2	**38151-GG37A**		T=2.15	01	0508-			
		09	2	**38151-GG38A**		T=2.18	01	0508-			
		10	2	**38151-GG39A**		T=2.21	01	0508-			
		11	2	**38151-GG30B**		T=2.24	01	0508-			
		12	2	**38151-GG31B**		T=2.27	01	0508-			
		13	2	**38151-GG32B**		T=2.30	01	0508-			
		14	2	**38151-GG33B**		T=2.33	01	0508-			
		15	2	**38151-GG34B**		T=2.36	01	0508-			
		16	2	**38151-GG35B**		T=2.39	01	0508-			
		17	2	**38151-GG36B**		T=2.42	01	0508-			
		18	2	**38151-GG37B**		T=2.45	01	0508-			
		19	2	**38151-GG38B**		T=2.48	01	0508-			
		20	2	**38151-GG39B**		T=2.51	01	0508-			
		21	2	**38151-GG30C**		T=2.54	01	0508-			
		22	2	**38151-GG31C**		T=2.57	01	0508-			
		23	2	**38151-GG32C**		T=2.60	01	0508-			
		24	2	**38151-GG33C**		T=2.63	01	0508-			
		25	2	**38151-GG34C**		T=2.66	01	0508-			
	32	01	2	**33124-GG02B**	GEAR-DRIVE, TRANSFER		01	0508-			
		02	2	**33124-GG02C**			01	0508-			
	33	01	2	**33320-GG33A**	GEAR-DRIVE, TRANSFER		01	0508-			
		02	2	**33320-GG33B**			01	0508-			

APPLIED MODEL

01	02	03	04	05	06	07	08	09	10	11	12	13	14	15	16	17	18	19	20	21	22	23	24	25	26	27	28	29
MI PV	MI PV	MI PV	MI PS	MI UV	MI UV	MI UV	MI UV	MI YS	MI PV	MI PV	MI PV	MI PV	MI UV	MI UV	MI UV	MI UV	MI YS	MI UV	MI UV	MI UV	MI UV	MI UV	MI YV	MI UV	MI UV	MI UV	MI UV	MI YV
																		MI JV	MI JV	MI JV	MI GV	MI GV	MI GV	MI GV	MI GV	MI GV	MI GV	MI GV
A20 0JV	A20 0DV	A20 0LV	A20 0LS	A20 0JV	A20 0DV	A20 0LV	A20 0LS	A20 0LV	A20 5JV	A20 5DV	A20 5LV	A20 5LV	A20 5JV	A20 5DV	A20 5LV	A20 5LS	A20 5LV	A20 8JV	A20 8DV	A20 8LV	A30 0JV	A30 0DV	A30 0LV	A30 0LV	A30 5JV	A30 5DV	A30 5LV	A30 5LV

SEC. 380B

FINAL DRIVE ASSEMBLY (ATM-30+35 FROM MAY 2008)

CONJUNTO DE TRANSMISSION FINAL

ACHSANTRIEB KOMPLETT

ENSEMBLE ENTRAINEMENT AUX ROUES

NC	S	KEY NO.	LEV	PART NO.	PART NAME	SPECIFICATION	QTY	APPLIED DATE	ICANF	FORMER PART NO.	KD	APPLIED MODEL 01 02 03 04 05 06 07 08 09 10 11 12 13 14 15 16 17 18 19 20 21 22 23 24 25 26 27 28 29
		34 01	1	**38231-FJ100**	BOLT		14	0508-				○ ○ ○ ○ ○ ○ ○ ○ ○ ○ ○
		35 01	3	**38312-GG30A**	CAP-BRG, DIFF		02	0508-				○ ○ ○ ○ ○ ○ ○ ○ ○ ○ ○
		36 01	2	**38405-GG30A**	DIFF ASSY-2/HTP GEAR SET		01	0508-				○ ○ ○ ○ ○ ○ ○ ○ ○ ○ ○
		37 01	4	**38420-Z500E**	CASE ASSY-DIFF		01	0508-0611				○ ○ ○ ○ ○ ○ ○ ○ ○ ○ ○
		02	4	**38420-Z5010**			01	0611-				○ ○ ○ ○ ○ ○ ○ ○ ○ ○ ○
		38 01	2	**08124-0201E**	SCREW-HHM M10-1.25X20 W/PW		02	0508-				○ ○ ○ ○ ○ ○ ○ ○ ○ ○ ○
		39 01	2	**08124-0551E**	BOLT-HEX W/WLW 7T M10		10	0508-				○ ○ ○ ○ ○ ○ ○ ○ ○ ○ ○
		40 01	2	**08124-0301E**	SCREW-HHM M10-1.25X30 W/PW		07	0508-				○ ○ ○ ○ ○ ○ ○ ○ ○ ○ ○
		41 01	2	**081B4-2301A**	BOLT-HEX FLANGE 9T M12		01	0508-				○ ○ ○ ○ ○ ○ ○ ○ ○ ○ ○
		42 01	2	**00922-13010**	RING-SNAP		01	0508-				○ ○ ○ ○ ○ ○ ○ ○ ○ ○ ○
		43 01	2	**38319-Z5000**	FINGER-LOCK		02	0508-				○ ○ ○ ○ ○ ○ ○ ○ ○ ○ ○
		44 01	2	**08110-8161B**	SCREW-HHM M8-1.25X16 W/SPRW		04	0508-				○ ○ ○ ○ ○ ○ ○ ○ ○ ○ ○

NOTE

GROUP INDEX

AXLE & SUSPENSION

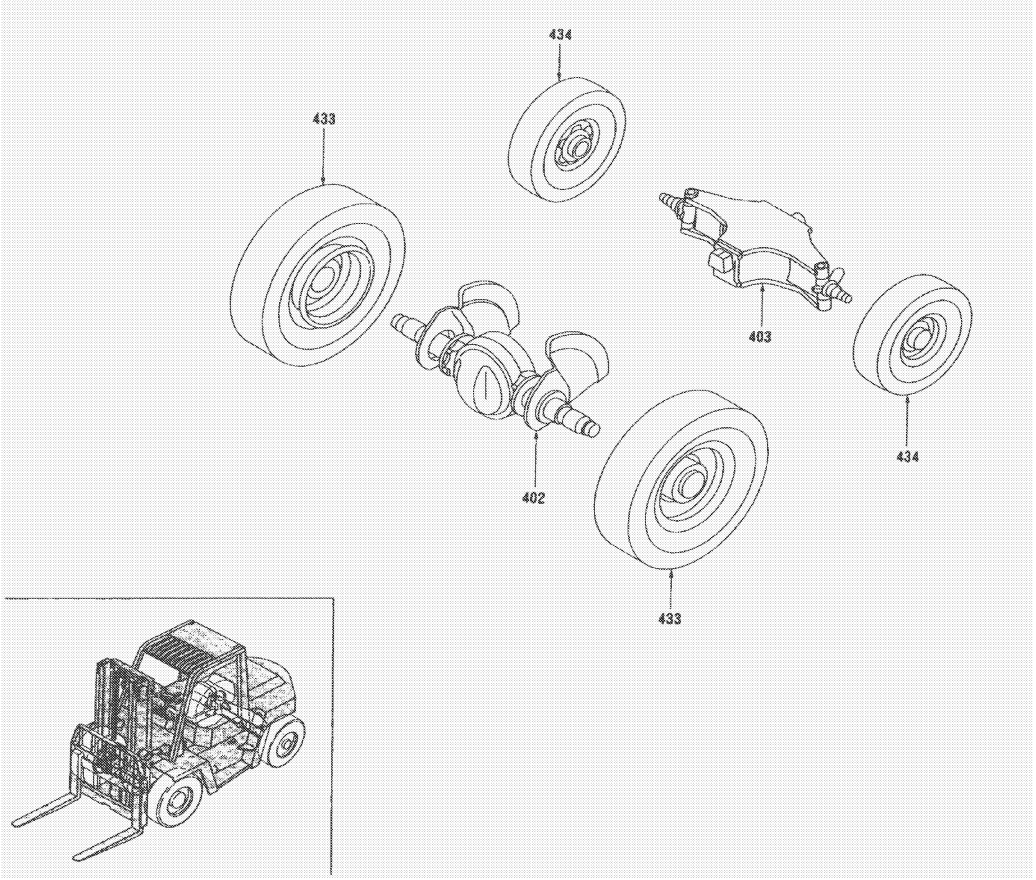

SEC.NO	SECTION NAME
402	DRIVE AXLE
403	STEERING AXLE
433	ROAD WHEEL & TIRE (DRIVE AXLE)
434	ROAD WHEEL & TIRE (STEERING AXLE)

G

*ILLSTRATIONS SHOWN IN GENERAL INDEX AND GROUP INDEX ARE GENARALIZED DESCRIPTIONS FOR ALL MODELS AND ARE NOT PRECISE IN ALL DETAILS.

SEC. 402

DRIVE AXLE

EJE DE TRANSMISION

ANTRIEBSWELLE

ESSIEU MOTEUR

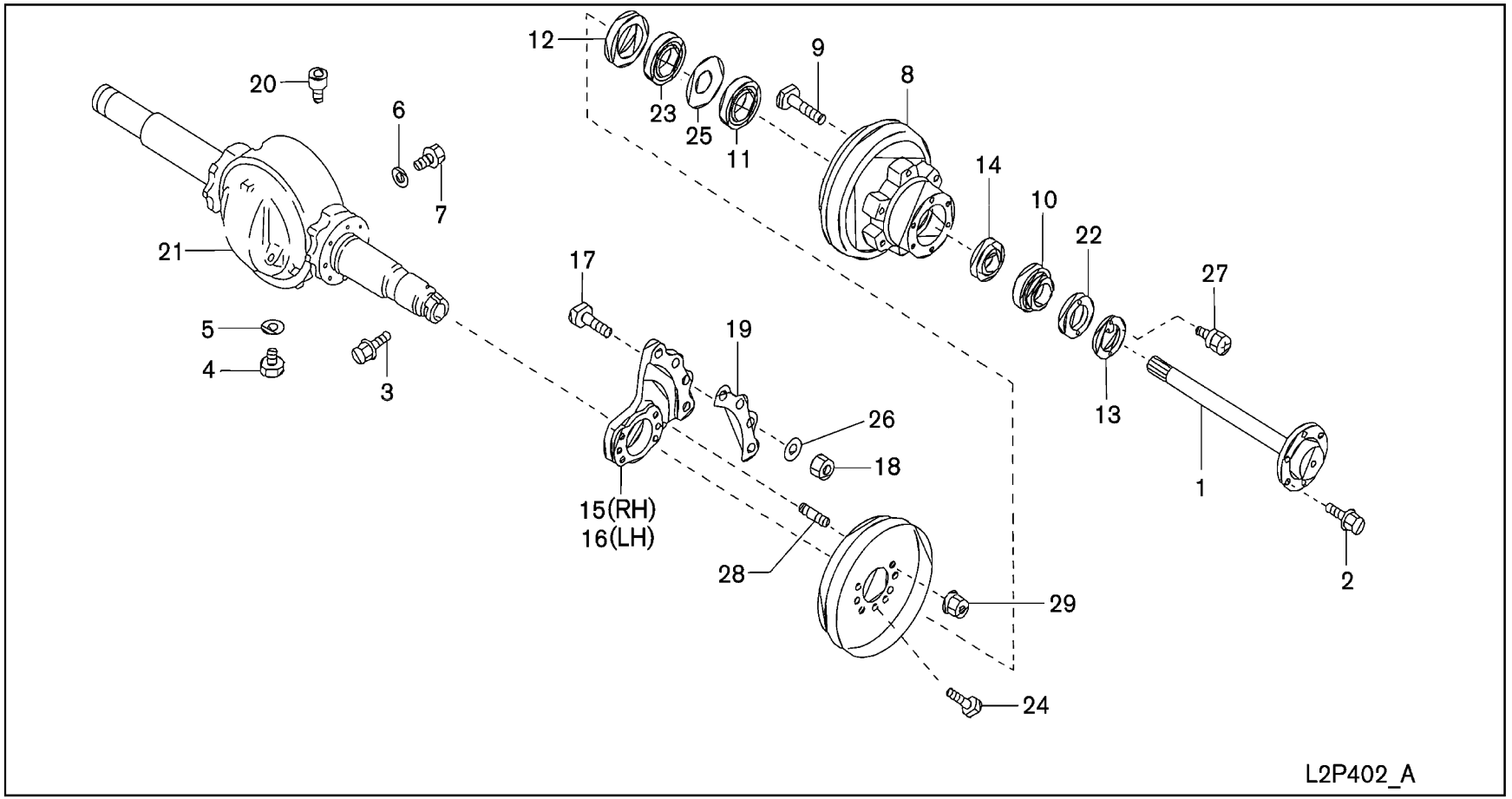

SEC. 402

DRIVE AXLE

EJE DE TRANSMISION

ANTRIEBSWELLE

ESSIEU MOTEUR

NC	S	KEY NO.	LEV	PART NO.	PART NAME	SPECIFICATION	QTY	APPLIED DATE	ICANF	FORMER PART NO.	KD	APPLIED MODEL 01 02 03 04 05 06 07 08 09 10 11 12 13 14 15 16 17 18 19 20 21 22 23 24 25 26 27 28 29
												MIPUUUUUYPPPPUUUUUYUUUUUUYUUUUY JJGGGGGGGG IIIIIIIIIIIIIIIIIIIIIIIIIIIIIII AA2200JDVV AA2200LLSV AA2200JDVV AA2200DLVV AA2200LSVV AA2205JDVV AA2205LLSV AA2205JDVV AA2205DLVV AA2205LSVV AA2205JDVV AA2205DLVV AA2205LSVV AA2288JDVV AA2230JDVV AA2230DLVV AA2330JDVV AA2330DLVV AA2330JDVV AA2335DLVV AA2335JDVV AA2335LSVV AA2335JDVV AA2335LSVV
C		1	01	1	38164-FK000	SHAFT-DRIVE AXLE		02	0107-1112			○○○○○○○○○○○○○○○○○○○○○
N			02	1	38164-FK000-P			02	1112-			○○○○○○○○○○○○○○○○○○○○○
			03	1	38164-FK300			02	0107-0508			○○○○○○○○○○○○○○○○○○○○○
C			04	1	38164-GG30A			02	0508-1112			○○○○○○○○○○○○○○○○○○○○○
N			05	1	38164-GG30A-P			02	1112-			○○○○○○○○○○○○○○○○○○○○○
		2	01	1	38167-FJ101	BOLT		16	0107-			○○○○○○○○○○○○○○○○○○○○○
		3	01	1	38231-FJ100	BOLT		14	0107-			○○○○○○○○○○○○○○○○○○○○○
		4	01	1	43027-FJ100	BOLT-MOUNTING,DRIVE AXLE		01	0107-0508			○○○○○○○○○○○○○○○○○○○○○
			02	1	43027-FJ100			01	0508-			○○○○○○○○○○○○○○○○○○○○○
			03	1	00931-21200	PLUG		01	0508-			○○○○○○○○○○○○○○○○○○○○○
		5	01	1	43060-FJ100	SEAL-0IL		01	0107-0508			○○○○○○○○○○○○○○○○○○○○○
			02	1	43060-FJ100			01	0508-			○○○○○○○○○○○○○○○○○○○○○
		6	01	1	43058-FJ100	SEAL-DUST		01	0107-0508			○○○○○○○○○○○○○○○○○○○○○
			02	1	43058-FJ100			01	0508-			○○○○○○○○○○○○○○○○○○○○○
		7	01	1	43059-FJ10A	BOLT		01	0107-0508			○○○○○○○○○○○○○○○○○○○○○
			02	1	43059-FJ10A			01	0508-			○○○○○○○○○○○○○○○○○○○○○
			03	1	00931-21200	PLUG		01	0508-			○○○○○○○○○○○○○○○○○○○○○
		8	01	2	43204-FK010	HUB-DRIVE AXLE		02	0107-			○○○○○○○○○○○○○○○○○○○○○
			02	2	43204-FK30A			02	0107-			○○○○○○○○○○○○○○○○○○○○○
		9	01	2	43222-FK001	BOLT-HUB		12	0107-			○○○○○○○○○○○○○○○○○○○○○
			02	2	43222-FK30A			12	0107-			○○○○○○○○○○○○○○○○○○○○○
			03	2	43222-FK310		F/DOUBLE TIRE	12	0107-			*********************
		10	01	2	43215-FK000	BEARING ASSY-OUTER		02	0107-			○○○○○○○○○○○○○○○○○○○○○
			02	2	43210-FK300			02	0107-			○○○○○○○○○○○○○○○○○○○○○
		11	01	2	43210-FK000	BEARING ASSY-INNER		02	0107-			○○○○○○○○○○○○○○○○○○○○○
		12	01	2	43090-FK000	SEAL-DUST		02	0107-			○○○○○○○○○○○○○○○○○○○○○
		13	01	1	43234-FK00A	WASHER-LOCK		02	0107-			○○○○○○○○○○○○○○○○○○○○○
		14	01	1	43254-FK000	SEAL-0IL		02	0107-			○○○○○○○○○○○○○○○○○○○○○
		15	01	1	43080-FK001	BRACKET-DRIVE AXLE MTG RH		01	0107-			○○○○○○○○○○○○○○○○○○○○○
			02	1	43080-FK301			01	0107-			○○○○○○○○○○○○○○○○○○○○○
		16	01	1	43081-FK001	BRACKET-DRIVE AXLE MTG LH		01	0107-			○○○○○○○○○○○○○○○○○○○○○
			02	1	43081-FK301			01	0107-			○○○○○○○○○○○○○○○○○○○○○
		17	01	1	43084-FK000	BOLT-MOUNTING,DRIVE AXLE		08	0107-			○○○○○○○○○○○○○○○○○○○○○
			02	1	43084-FK000			10	0107-			○○○○○○○○○○○○○○○○○○○○○
		18	01	1	43087-FJ100	NUT-LOCK		08	0107-			○○○○○○○○○○○○○○○○○○○○○
			02	1	43087-FJ100			10	0107-			○○○○○○○○○○○○○○○○○○○○○
		19	01	1	43070-FK000	SPACER		01	0107-			○○○○○○○○○○○○○○○○○○○○○

SEC. 402

DRIVE AXLE

EJE DE TRANSMISION

ANTRIEBSWELLE

ESSIEU MOTEUR

NC	S	KEY NO.	LEV	PART NO.	PART NAME	SPECIFICATION	QTY	APPLIED DATE	ICANF	FORMER PART NO.	KD	APPLIED MODEL 01 02 03 04 05 06 07 08 09 10 11 12 13 14 15 16 17 18 19 20 21 22 23 24 25 26 27 28 29
		20 01	1	**43095-FJ100**	BREATHER-AIR		01	0107-0508				○ ○
		02	1	**43095-FJ100**			01	0508-				○ ○ ○ ○ ○ ○ ○ ○ ○ ○ ○ ○ ○ ○ ○ ○ ○ ○
		03	1	**38322-55100**			01	0508-				○ ○ ○ ○ ○ ○ ○ ○ ○ ○ ○ ○
		21 01	1	**43026-FK000**	HOUSING-DRIVE AXLE		01	0107-				○ ○ ○ ○ ○ ○ ○ ○ ○ ○ ○ ○ ○ ○ ○ ○ ○ ○
		02	1	**43026-FK301**			01	0107-0508				○ ○ ○ ○ ○ ○ ○ ○ ○ ○ ○ ○
		03	1	**43010-GG30A**	DRIVE AXLE HOUSING & TUBE ASSY		01	0508-				○ ○ ○ ○ ○ ○ ○ ○ ○ ○ ○ ○
		22 01	1	**43231-FK001**	CARRIER-PINION GEAR		02	0107-				○ ○
		23 01	1	**43270-FK000**	SPACER		02	0107-				○ ○
		24 01	1	**44005-FK000**	BOLT-FIX, RR BRAKE		14	0107-0407				○ ○ ○ ○ ○ ○ ○ ○ ○ ○ ○ ○ ○ ○ ○ ○ ○ ○
		02	1	**44005-FK000**			16	0407-				○ ○ ○ ○ ○ ○ ○ ○ ○ ○ ○ ○ ○ ○ ○ ○ ○ ○
		03	1	**44005-FK000**			10	0107-0407				○ ○ ○ ○ ○ ○ ○ ○ ○ ○ ○ ○
		04	1	**44005-FK000**			12	0407-				○ ○ ○ ○ ○ ○ ○ ○ ○ ○ ○ ○
		05	1	**44005-FK300**		BOTTOM HOLES	04	0107-				○ ○ ○ ○ ○ ○ ○ ○ ○ ○ ○ ○
		25 01	1	**43271-FK000**	RING O		02	0107-				○ ○
		26 01	1	**08915-2481A**	WASHER-LOCK SPLIT M18 HEAVY		08	0107-				○ ○ ○ ○ ○ ○ ○ ○ ○ ○ ○ ○ ○ ○ ○ ○ ○ ○
		02	1	**08915-2481A**			10	0107-				○ ○ ○ ○ ○ ○ ○ ○ ○ ○ ○ ○
		27 01	1	**08360-6122A**	SCREW-HH CR M6-1.0X12		04	0107-				○ ○
		28 01	1	**08291-45010**	STUD-FINE 9T M14-1.5X50	REPLACED WITH ITEM NO. 24	02	0107-0407				○ ○
		29 01	1	**08918-3441A**	NUT-HEX FLANGE M14-1.5 9N	REPLACED WITH ITEM NO. 24	02	0107-0407				○ ○

NOTE

SEC. 403

STEERING AXLE

EJE DE DIRECCION

LENKACHSE

ARBRE DE DIRECTION

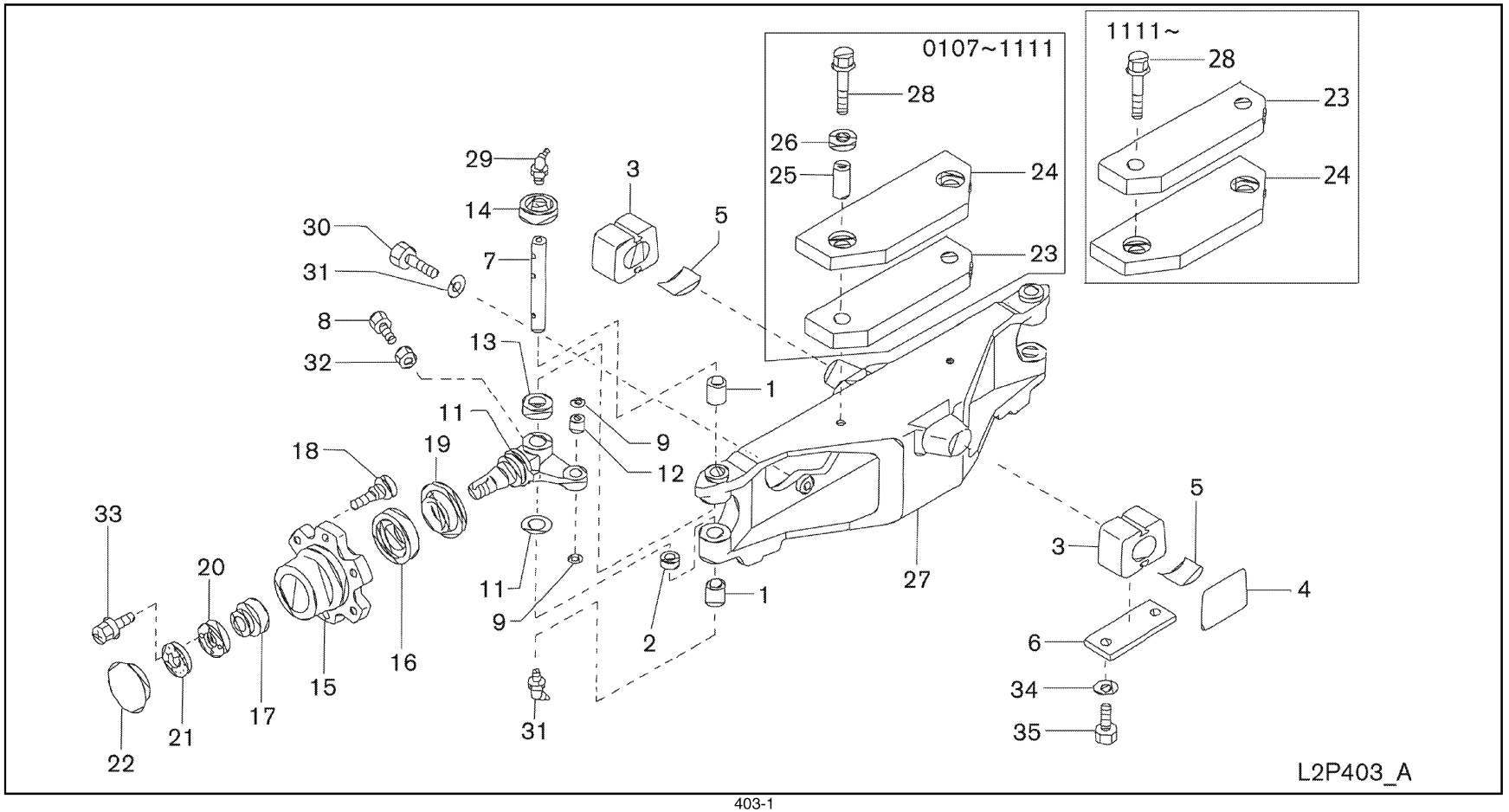

SEC. 403

STEERING AXLE

EJE DE DIRECCION

LENKACHSE

ARBRE DE DIRECTION

NC	S	KEY NO.	LEV	PART NO.	PART NAME	SPECIFICATION	QTY	APPLIED DATE	TCANF	FORMER PART NO.	KD	APPLIED MODEL 01 02 03 04 05 06 07 08 09 10 11 12 13 14 15 16 17 18 19 20 21 22 23 24 25 26 27 28 29
		1 01	1	**40016-FK000**	BEARING-NEEDLE		04	0107-				○○○○○○○○○○○○○○○○○○○○○○○○○○○○○
		2 01	1	**40024-L1100**	SEAL-GREASE		04	0107-				○○○○○○○○○○○○○○○○○○○○○○○○○○○○○
		3 01	1	**40005-FK000**	BUSH-MOUNTING STEERING AXLE		02	0107-				○○○○○○○○○○○○○○○○○○○○○○○○○○○○○
		4 01	1	**40571-FJ100**	SHIM-MOUNTING	T=1.0	01	0107-				○○○○○○○○○○○○○○○○○○○○○○○○○○○○○
		02	1	**40572-FJ100**		T=2.3	01	0107-				○○○○○○○○○○○○○○○○○○○○○○○○○○○○○
		03	1	**40573-FJ100**		T=0.6	01	0107-				○○○○○○○○○○○○○○○○○○○○○○○○○○○○○
		5 01	1	**40006-47600**	SHIM-AXLE CENTER	T=1.2	01	0107-				○○○○○○○○○○○○○○○○○○○○○○○○○○○○○
		02	1	**40008-47600**		T=1.6	01	0107-				○○○○○○○○○○○○○○○○○○○○○○○○○○○○○
		6 01	1	**40047-FK000**	CAP		02	0107-				○○○○○○○○○○○○○○○○○○○○○○○○○○○○○
		7 01	1	**40022-FK000**	PIN-KING		02	0107-				○○○○○○○○○○○○○○○○○○○○○○○○○○○○○
		8 01	1	**40023-FJ100**	BOLT		02	0107-				○○○○○○○○○○○○○○○○○○○○○○○○○○○○○
		9 01	1	**48522-FJ101**	SEAL-CLEVIS PIN		04	0107-				○○○○○○○○○○○○○○○○○○○○○○○○○○○○○
		10 01	1	**40033-FK000**	SHIM-SPINDLE	T=0.2	AR	0107-				○○○○○○○○○○○○○○○○○○○○○○○○○○○○○
		02	1	**40034-FK000**		T=0.6	AR	0107-				○○○○○○○○○○○○○○○○○○○○○○○○○○○○○
		11 01	1	**40014-FK000**	SPINDLE-KNUCKLE		02	0107-				○○○○○○○○○○○○○○○○○○○○○○○○○○○○○
		12 01	1	**49534-FK000**	BUSH-PIN		02	0107-				○○○○○○○○○○○○○○○○○○○○○○○○○○○○○
		13 01	1	**40030-L1100**	BEARING-THRUST		02	0107-				○○○○○○○○○○○○○○○○○○○○○○○○○○○○○
		14 01	1	**40041-FJ100**	CAP-KING PIN		02	0107-				○○○○○○○○○○○○○○○○○○○○○○○○○○○○○
		15 01	2	**40204-FK001**	HUB-STEERING WHEEL		02	0107-				○○○○○○○○○○○○○○○○○○○○○○○○○
		02	2	**40204-FK400**			02	0107-				○○○○
		16 01	2	**43215-47601**	BEARING ASSY-INNER		02	0107-				○○○○○○○○○○○○○○○○○○○○○○○○○○○○○
		17 01	2	**40215-0T100**	BEARING ASSY-OUTER		02	0107-				○○○○○○○○○○○○○○○○○○○○○○○○○○○○○
		18 01	2	**40222-FJ100**	BOLT-HUB		12	0107-				○○○○○○○○○○○○○○○○○○○○○○○○○
		02	2	**40222-FK401**			12	0107-				○○○○
		19 01	1	**40227-FK000**	SEAL-GREASE		02	0107-				○○○○○○○○○○○○○○○○○○○○○○○○○○○○○
		20 01	1	**40262-FJ100**	NUT-LOCK		02	0107-				○○○○○○○○○○○○○○○○○○○○○○○○○○○○○
		21 01	1	**40264-FJ100**	WASHER-LOCK		02	0107-				○○○○○○○○○○○○○○○○○○○○○○○○○○○○○
C		**22** 01	1	**40292-FJ100**	CAP-HUB		02	0107-1112				○○○○○○○○○○○○○○○○○○○○○○○○○○○○○
N		02	1	**40292-FJ100-P**			02	1112-				○○○○○○○○○○○○○○○○○○○○○○○○○○○○○
		23 01	1	**40079-FK001**	RUBBER-MOUNTING		01	0107-0407				○○○○○○○○○○○○○○○○○
C		02	1	**40079-FK00A**			01	0407-1111				○○○○○○○○○○○○○○○○○
N		03	1	**40079-GG00A**			01	1111-				○○○○○○○○○○○○○○○○○
		04	1	**40079-FK101**			01	0107-0407				○○○○○○○○○○○○○○○○○○○○○○○○○○○○○
C		05	1	**40079-FK10A**			01	0407-1111				○○○○○○○○○○○○○○○○○○○○○○○○○○○○○
N		06	1	**40079-GG30A**			01	1111-				○○○○○○○○○○○○○○○○○○○○○○○○○○○○○
C		**24** 01	1	**40070-FJ100**	PLATE-GUARD AXLE CENTER		01	0107-1111				○○○○○○○○○○○○○○○○○○○○○○○○○○○○○
N		02	1	**40070-GB00B**			01	1111-				○○○○○○○○○○○○○○○○○○○○○○○○○○○○○

SEC. 403

STEERING AXLE

EJE DE DIRECCION

LENKACHSE

ARBRE DE DIRECTION

NC	S	KEY NO.	LEV	PART NO.	PART NAME	SPECIFICATION	QTY	APPLIED DATE	ICANF	FORMER PART NO.	KD	APPLIED MODEL 01 02 03 04 05 06 07 08 09 10 11 12 13 14 15 16 17 18 19 20 21 22 23 24 25 26 27 28 29
C		**25** 01	1	**40018-FK100**	COLLAR		02	0107-1111				o o o o o o o o o o o o o o o o o
C		02	1	**40018-FJ100**			02	0107-1111				o o o o o o o o o o o o o o o o o
C		**26** 01	1	**40037-FJ101**	WASHER		02	0107-1111				o o o o o o o o o o o o o o o o o o o o o o o o o o o o o
		27 01	1	**40002-FK001**	AXLE CENTER COMPL-STEERING		01	0107-				o o o o o o o o o o o o o o o o o o o o o o o o o o o o o
C		**28** 01	1	**01121-06121**	BOLT		02	0107-1111				o o o o o o o o o o o o o o o o o o o o o o o o o o o o o
N		02	1	**08124-4451A**	SCREW-HHM M14-1.5X45		02	1111-				o o o o o o o o o o o o o o o o o o o o o o o o o o o o o
		29 01	1	**00932-2011A**	FITTING-GREASE 67.5 DEG		04	0107-				o o o o o o o o o o o o o o o o o o o o o o o o o o o o o
		30 01	1	**08044-6451A**	SCREW-HHM M16-1.5X45 9T		04	0107-0708				o o o o o o o o o o o o o o o o o o o o o o o o o o o o o
		02	1	**08034-6451A**			04	0708-				o o o o o o o o o o o o o o o o o o o o o o o o o o o o o
		31 01	1	**08915-2461A**	WASHER-LOCK SPLIT M16 HEAVY		04	0107-				o o o o o o o o o o o o o o o o o o o o o o o o o o o o o
		32 01	1	**08911-1401A**	NUT-HEX M10-1.25 4T		02	0107-				o o o o o o o o o o o o o o o o o o o o o o o o o o o o o
		33 01	1	**08360-6122A**	SCREW-HH CR M6-1.0X12		04	0107-				o o o o o o o o o o o o o o o o o o o o o o o o o o o o o
		34 01	1	**08915-1421A**	WASHER-LOCK SPLIT M12		04	0107-				o o o o o o o o o o o o o o o o o o o o o o o o o o o o o
		35 01	1	**08124-2351A**	SCREW-HHM M12-1.25X35 7T		04	0107-				o o o o o o o o o o o o o o o o o o o o o o o o o o o o o

NOTE

SEC. 433

ROAD WHEEL & TIRE (DRIVE AXLE)

NEUMATICOS Y RUEDAS

RAD & REIFEN

ROUES ET PNEUS

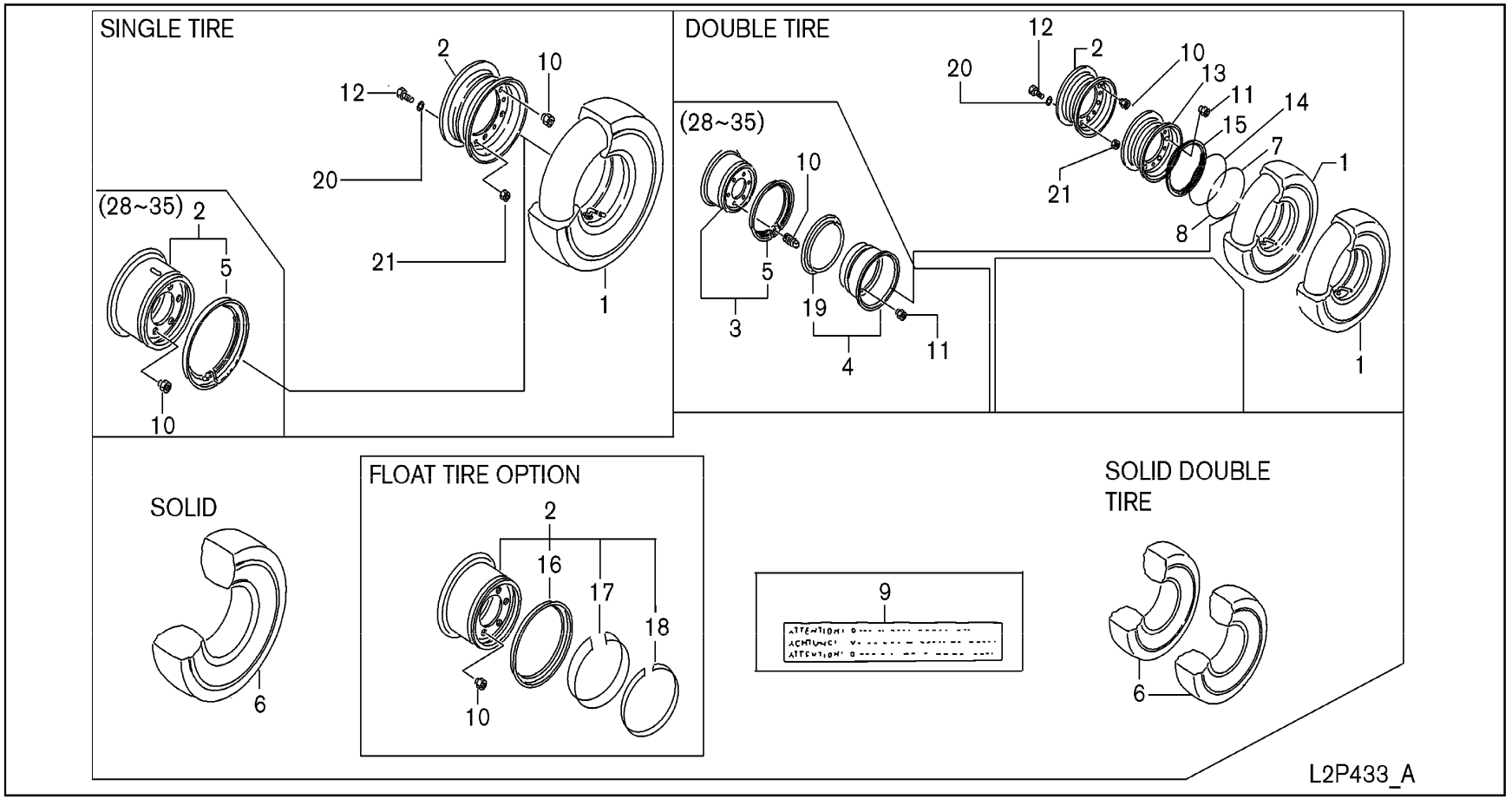

SEC. 433

ROAD WHEEL & TIRE (DRIVE AXLE)

NEUMATICOS Y RUEDAS

RAD & REIFEN

ROUES ET PNEUS

NC	S	KEY NO.	LEV	PART NO.	PART NAME	SPECIFICATION	QTY	APPLIED DATE	TCANF	FORMER PART NO.	KD	APPLIED MODEL 01 02 03 04 05 06 07 08 09 10 11 12 13 14 15 16 17 18 19 20 21 22 23 24 25 26 27 28 29
		1	01	2	**43310-50K00**	TIRE & TUBE SET		02	0107-			○ ○ ○ ○ ○ ○ ○ ○ ○ ○ ○ ○ ○ ○ ○ ○ ○ ○
			02	2	**43310-50K00**		F/DOUBLE TIRE	04	0107-			✻ ✻ ✻ ✻ ✻ ✻ ✻ ✻ ✻ ✻ ✻ ✻ ✻ ✻ ✻ ✻ ✻ ✻
			03	2	**43310-L1300**			02	0107-			○ ○ ○ ○ ○ ○ ○
			04	2	**43310-61K00**		F/DOUBLE TIRE	04	0107-			✻ ✻ ✻ ✻ ✻ ✻ ✻
			05	2	**43310-FB700**			02	0107-			○ ○ ○ ○
			06	2	**43310-L1300**		F/DOUBLE TIRE	04	0107-			✻ ✻ ✻ ✻
		2	01	2	**43300-L1104**	RIM SET-DISC WHEEL		02	0107-			○ ○ ○ ○ ○ ○ ○ ○ ○ ○ ○ ○ ○ ○ ○ ○ ○ ○
			02	2	**43300-FB400**	WHEEL ASSY-DISC INNER	F/DOUBLE TIRE	02	0107-			✻ ✻ ✻ ✻ ✻ ✻ ✻ ✻ ✻ ✻ ✻ ✻ ✻ ✻ ✻ ✻ ✻ ✻
			03	2	**43300-FB500**	RIM SET-DISC WHEEL		02	0107-			○ ○ ○ ○ ○ ○ ○
			04	2	**43300-FB700**			02	0107-			○ ○ ○ ○
			05	2	**43300-FB585**	WHEEL ASSY-DISC	F/FLOAT TIRE	02	0107-			✻ ✻ ✻ ✻ ✻ ✻ ✻ ✻ ✻ ✻ ✻ ✻ ✻ ✻ ✻ ✻ ✻ ✻
			06	2	**43300-FB685**		F/FLOAT TIRE	02	0107-			✻ ✻ ✻ ✻ ✻ ✻ ✻
			07	2	**43300-FB785**		F/FLOAT TIRE	02	0107-			✻ ✻ ✻ ✻
		3	01	2	**43300-FB600**	WHEEL ASSY-DISC INNER	F/DOUBLE TIRE	02	0107-			✻ ✻ ✻ ✻ ✻ ✻ ✻ ✻
			02	2	**43300-FB706**		F/DOUBLE TIRE	02	0107-			✻ ✻ ✻ ✻
		4	01	2	**43301-FB600**	WHEEL ASSY-DISC OUTER	F/DOUBLE TIRE	02	0107-			✻ ✻ ✻ ✻ ✻ ✻ ✻
			02	2	**43301-FB706**		F/DOUBLE TIRE	02	0107-			✻ ✻ ✻ ✻
		5	01	3	**43306-L1300**	RING		02	0107-			○ ○ ○ ○ ○ ○ ○ ○ ○ ○ ○
			02	3	**43306-L1311**		F/DOUBLE TIRE	02	0107-			✻ ✻ ✻ ✻ ✻ ✻ ✻
			03	3	**43306-L1300**		F/DOUBLE TIRE	02	0107-			✻ ✻ ✻ ✻
		6	01	2	**43312-L1102**	TIRE-CUSHION PNEUMATIC TYPE	F/SOLID	02	0107-			✻ ✻ ✻ ✻ ✻ ✻ ✻ ✻ ✻ ✻ ✻ ✻ ✻ ✻ ✻ ✻ ✻ ✻
			02	2	**43312-L1102**		F/SOLID DOUBLE TIRE	04	0107-			✻ ✻ ✻ ✻ ✻ ✻ ✻ ✻ ✻ ✻ ✻ ✻ ✻ ✻ ✻ ✻ ✻ ✻
			03	2	**43312-L1301**		F/SOLID	02	0107-			✻ ✻ ✻ ✻ ✻ ✻ ✻ ✻
			04	2	**43312-L1311**		F/SOLID DOUBLE TIRE	04	0107-			✻ ✻ ✻ ✻ ✻ ✻ ✻
			05	2	**43312-FB710**		F/SOLID	02	0107-			✻ ✻ ✻ ✻
			06	2	**43312-L1301**		F/SOLID DOUBLE TIRE	04	0107-			✻ ✻ ✻ ✻
			07	2	**43310-FB585**	TIRE-FLOAT	F/FLOAT TIRE 27X10-12	02	0107-			✻ ✻ ✻ ✻ ✻ ✻ ✻ ✻ ✻ ✻ ✻ ✻ ✻ ✻ ✻ ✻ ✻ ✻
			08	2	**43310-FB685**		F/FLOAT TIRE 28X12.5-15	02	0107-			✻ ✻ ✻ ✻ ✻ ✻ ✻ ✻ ✻ ✻ ✻ ✻ ✻
		7	01	3	**43305-FB401**	RING-DISC WHEEL, LOCK	F/DOUBLE TIRE	02	0107-			✻ ✻ ✻ ✻ ✻ ✻ ✻ ✻ ✻ ✻ ✻ ✻ ✻ ✻ ✻ ✻ ✻ ✻
		8	01	3	**43305-FB400**	RING-DISC WHEEL, LOCK	F/DOUBLE TIRE	02	0107-			✻ ✻ ✻ ✻ ✻ ✻ ✻ ✻ ✻ ✻ ✻ ✻ ✻ ✻ ✻ ✻ ✻ ✻
		9	01	1	**97862-4G200**	LABEL-CAUTION DIVIDED RIM		02	0107-			○ ○ ○ ○ ○ ○ ○ ○ ○ ○ ○ ○ ○ ○ ○ ○ ○ ○
		10	01	1	**40225-L0700**	NUT-ROAD WHEEL		12	0107-			○ ○ ○ ○ ○ ○ ○ ○ ○ ○ ○ ○ ○ ○ ○ ○ ○ ○
			02	1	**40225-90001**			12	0107-0508			○ ○ ○ ○ ○ ○ ○ ○ ○ ○ ○
			03	1	**40224-07D0C**			12	0508-			○ ○ ○ ○ ○ ○ ○ ○ ○ ○ ○
			04	1	**43224-14H00**		F/ANTI RUST	12	0107-			✻ ✻ ✻ ✻ ✻ ✻ ✻ ✻ ✻ ✻ ✻ ✻ ✻ ✻ ✻ ✻ ✻ ✻
			05	1	**43224-24H00**		F/ANTI RUST	12	0107-			✻ ✻ ✻ ✻ ✻ ✻ ✻ ✻ ✻ ✻ ✻
			06	1	**43224-C0400**	NUT-ROAD WHEEL INNER	F/DOUBLE TIRE	12	0107-			✻ ✻ ✻ ✻ ✻ ✻ ✻ ✻ ✻ ✻ ✻ ✻ ✻ ✻ ✻ ✻ ✻ ✻

SEC. 433

ROAD WHEEL & TIRE (DRIVE AXLE)

NEUMATICOS Y RUEDAS

RAD & REIFEN

ROUES ET PNEUS

NC	S	KEY NO.	LEV	PART NO.	PART NAME	SPECIFICATION	QTY	APPLIED DATE	ICANF	FORMER PART NO.	KD	APPLIED MODEL 01 02 03 04 05 06 07 08 09 10 11 12 13 14 15 16 17 18 19 20 21 22 23 24 25 26 27 28 29
		11 01	1	**43241-FK000**	NUT-ROAD WHEEL OUTER	F/DOUBLE TIRE	12	0107-				* * * * * * * * * * * * * * * * *
		02	1	**43241-90001**		F/DOUBLE TIRE	12	0107-0408				* * * * * * * * * * * *
		03	1	**43241-00Z0A**		F/DOUBLE TIRE	12	0408-				* * * * * * * * * * * *
		12 01	2	**43330-50H00**	BOLT-FIX, DIVIDED TYPE RIM		12	0107-				o o o o o o o o o o o o o o o o o
		13 01	2	**43301-FB400**	WHEEL ASSY-DISC OUTER	F/DOUBLE TIRE	02	0107-				* * * * * * * * * * * * * * * * *
		14 01	3	**43306-FB400**	RING-DISC WHEEL, SIDE	F/DOUBLE TIRE	02	0107-				* * * * * * * * * * * * * * * * *
		15 01	3	**43307-FB400**	BAND-BEAD SEAT	F/DOUBLE TIRE	02	0107-				* * * * * * * * * * * * * * * * *
		16 01	3	**43305-FB585**	ADVANCE BAND	F/FLOAT TIRE	02	0107-				* * * * * * * * * * * * * * * * *
		02	3	**43305-FB685**		F/FLOAT TIRE	02	0107-				* * * * * * * * * * * *
		17 01	3	**43304-FB585**	SIDERING	F/FLOAT TIRE	02	0107-				* * * * * * * * * * * * * * * * *
		02	3	**43304-FB685**		F/FLOAT TIRE	02	0107-				* * * * * * * * * * * *
		18 01	3	**43303-FB585**	LOCKRING	F/FLOAT TIRE	02	0107-				* * * * * * * * * * * * * * * * *
		02	3	**43303-FB685**		F/FLOAT TIRE	02	0107-				* * * * * * * * * * * *
		19 01	3	**43306-L1311**	RING	F/DOUBLE TIRE	02	0107-				* * * * * * * *
		02	3	**43306-L1300**		F/DOUBLE TIRE	02	0107-				* * * *
		20 01	2	**08915-2461A**	WASHER-LOCK SPLIT M16 HEAVY		12	0107-				o o o o o o o o o o o o o o o o o o o o o o o o o o o o o
		02	2	**08915-2461A**		F/DOUBLE TIRE	12	0107-				* *
		21 01	2	**08911-2461A**	NUT-HEX M16-1.5 6T		12	0107-				o o o o o o o o o o o o o o o o o o o o o o o o o o o o o
		02	2	**08911-2461A**		F/DOUBLE TIRE	12	0107-				* *

NOTE

SEC. 434

ROAD WHEEL & TIRE (STEERING AXLE)

NEUMATICOS Y RUEDAS

RAD & REIFEN

ROUES ET PNEUS

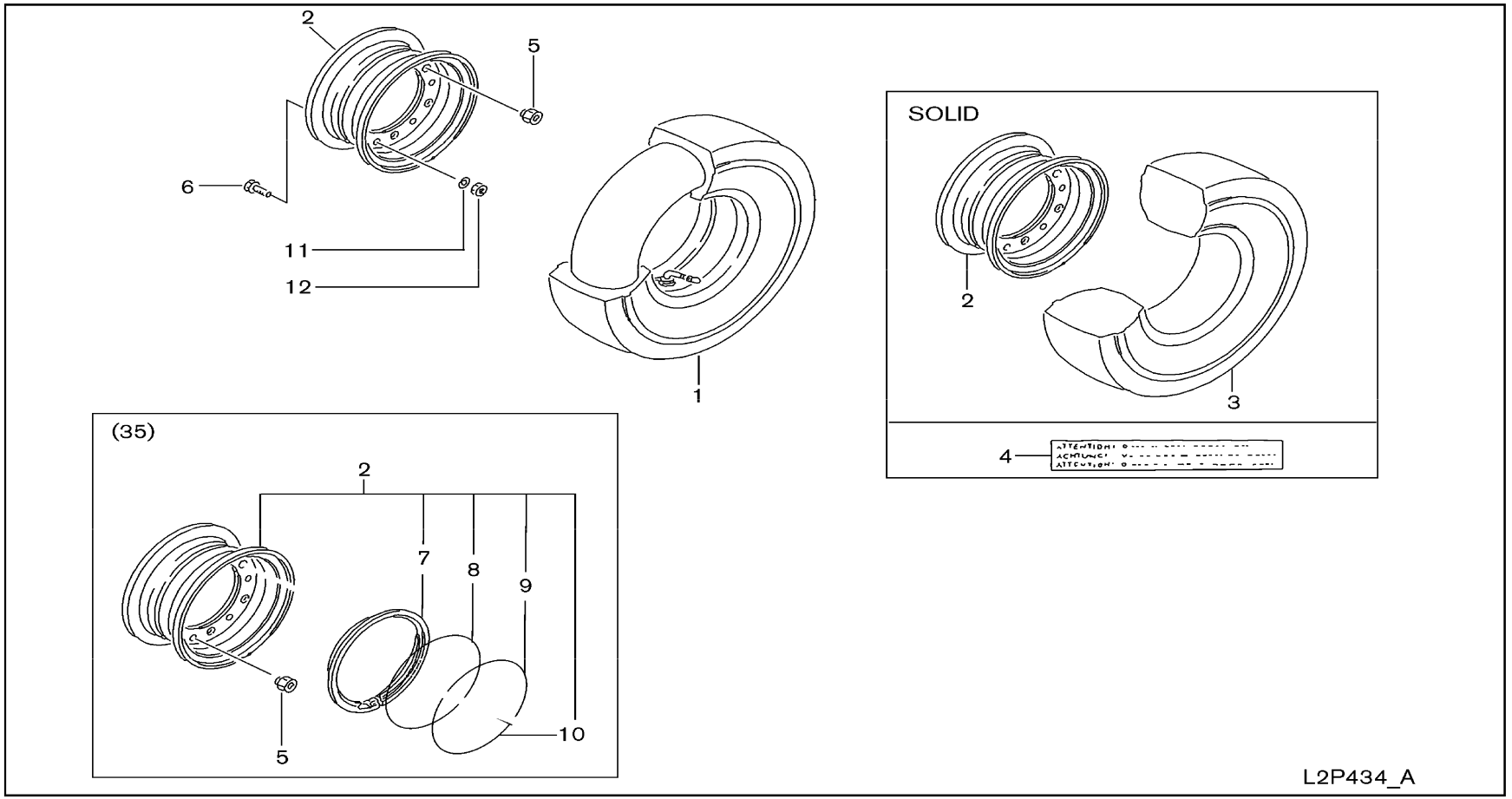

SEC. 434

ROAD WHEEL & TIRE (STEERING AXLE)

NEUMATICOS Y RUEDAS

RAD & REIFEN

ROUES ET PNEUS

NC	S	KEY NO.	LEV	PART NO.	PART NAME	SPECIFICATION	QTY	APPLIED DATE	ICANF	FORMER PART NO.	KD	APPLIED MODEL 01 02 03 04 05 06 07 08 09 10 11 12 13 14 15 16 17 18 19 20 21 22 23 24 25 26 27 28 29
		1 01	2	**40310-L1100**	TIRE & TUBE SET		02	0107-				○○○○○○○○○○○○○○○○○
		02	2	**40310-L1300**			02	0107-				○○○○○○○
		03	2	**40310-FB700**			02	0107-				○○○○
		2 01	2	**40300-L1109**	RIM SET-DISC WHEEL		02	0107-				○○○○○○○○○○○○○○○○○
		02	2	**40300-L1309**			02	0107-				○○○○○○○
		03	2	**40300-FB700**	DISC-WHEEL		02	0107-				○○○○
		3 01	2	**40312-L1102**	TIRE-CUSHION PNEUMATIC TYPE	F/SOLID	02	0107-				✱✱✱✱✱✱✱✱✱✱✱✱✱✱✱✱✱
		02	2	**40312-L1302**		F/SOLID	02	0107-				✱✱✱✱✱✱✱✱✱✱✱✱✱
		4 01	1	**97862-4G200**	LABEL-CAUTION RIM		02	0107-				○○○○○○○○○○○○○○○○○○○○○○○○○
		5 01	1	**40224-FJ100**	NUT-ROAD WHEEL		12	0107-0108				○○○○○○○○○○○○○○○○○○○○○○○○○
		02	1	**40224-0T005**			12	0108-0508				○○○○○○○○○○○○○○○○○
		03	1	**40224-07D0B**			12	0508-				○○○○○○○○○○○○○○○○○
		04	1	**40224-FJ100**			12	0108-				○○○○○○○○
		05	1	**40224-FJ110**		F/ANTI RUST	12	0107-0108				✱✱✱✱✱✱✱✱✱✱✱✱✱✱✱✱✱✱✱✱✱✱✱✱✱✱✱
		06	1	**43224-04H00**		F/ANTI RUST	12	0108-				✱✱✱✱✱✱✱✱✱✱✱✱✱✱✱✱✱✱✱✱✱✱✱✱✱✱✱
		07	1	**43224-T5400**			12	0107-0607				○○○○
		08	1	**43224-T540A**			12	0607-				○○○○
		09	1	**40224-FB700**		F/ANTI RUST	12	0107-				✱✱✱✱
		6 01	2	**43330-51K00**	BOLT		12	0107-				○○○○○○○○○○○○○○○○○
		02	2	**43330-52K00**			12	0107-				○○○○○○○
		7 01	3	**43307-FB700**	BAND-BEAD SEAT		02	0107-				○○○○
		8 01	3	**43306-FB700**	RING-DISC WHEE,SIDE		02	0107-				○○○○
		9 01	3	**43305-FB701**	RING-DISC WHEEL,LOCK		02	0107-				○○○○
		10 01	3	**43305-FB700**	RING-DISC WHEEL,LOCK		02	0107-				○○○○
		11 01	2	**08915-2421A**	WASHER-LOCK SPLIT M12 HEAVY		12	0107-				○○○○○○○○○○○○○○○○○○○○○○○○○
		12 01	2	**08911-2421A**	NUT-HEX M12-1.25 6T		12	0107-				○○○○○○○○○○○○○○○○○○○○○○○○○

NOTE

GROUP INDEX

BRAKE

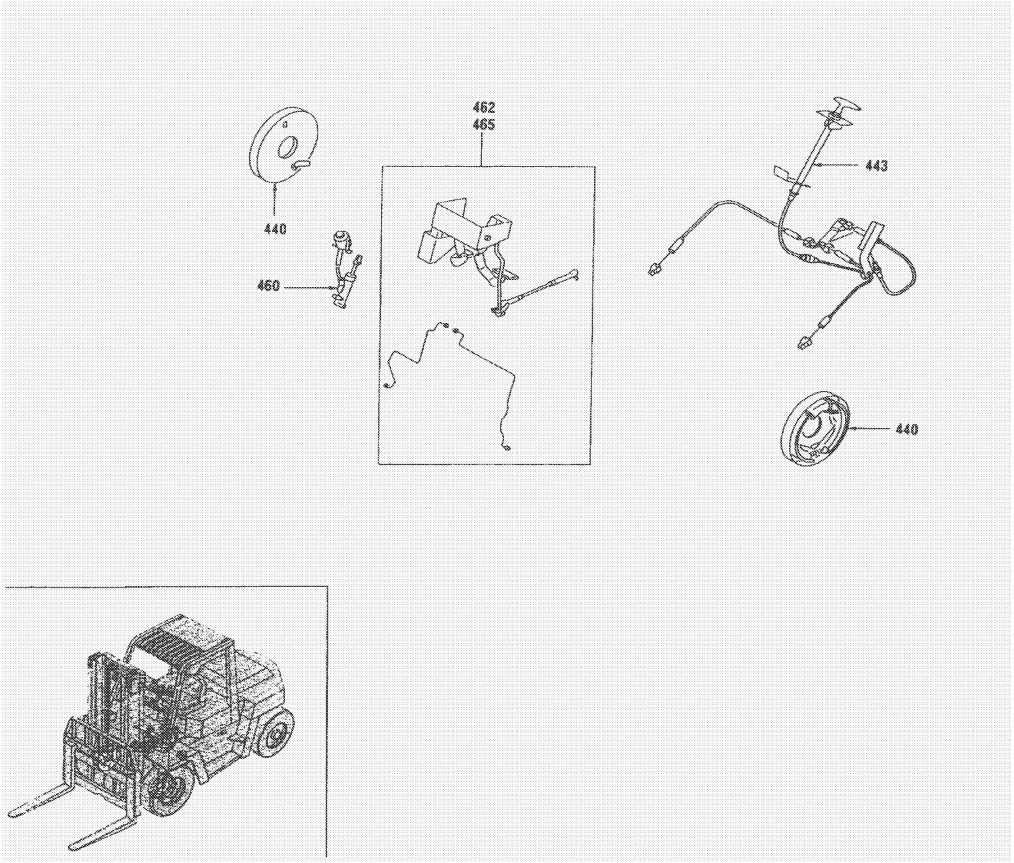

SEC.NO	SECTION NAME
440	FRONT BRAKE
443	PARKING BRAKE CONTROL
460	BRAKE MASTER CYLINDER
462	BRAKE PIPING & CONTROL
465	BRAKE & CLUTCH PEDAL

H

*ILLSTRATIONS SHOWN IN GENERAL INDEX AND GROUP INDEX ARE GENARALIZED DESCRIPTIONS FOR ALL MODELS AND ARE NOT PRECISE IN ALL DETAILS.

SEC. 440

FRONT BRAKE

FRENO DELANTERO

VORDERRADBREMSE

FREIN AVANT

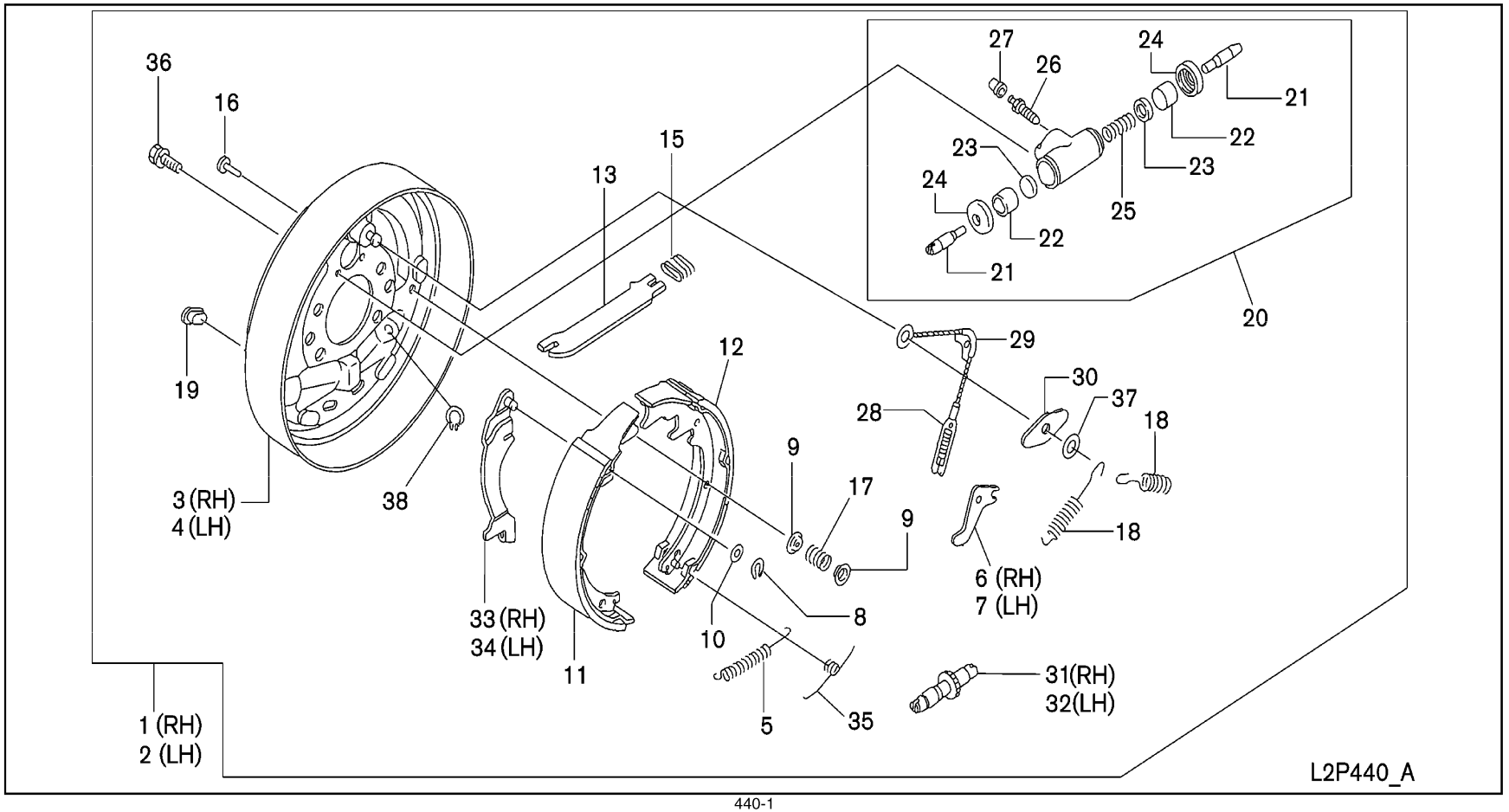

SEC. 440

FRONT BRAKE

FRENO DELANTERO

VORDERRADBREMSE

FREIN AVANT

NC	S	KEY NO.	LEV	PART NO.	PART NAME	SPECIFICATION	QTY	APPLIED DATE	ICANF	FORMER PART NO.	KD	APPLIED MODEL 01 02 03 04 05 06 07 08 09 10 11 12 13 14 15 16 17 18 19 20 21 22 23 24 25 26 27 28 29
		1	01	1	**44000-FK010**	BRAKE ASSY-DRIVE AXLE W/CABLE RH		01	0107-			○○○○○○○○○○○○○○○○○○○○
			02	2	**44000-FK000**	BRAKE ASSY-DRIVE AXLE RH		01	0107-			○○○○○○○○○○○○○○○○○○○○
			03	1	**44000-FK31A**	BRAKE ASSY-DRIVE AXLE W/CABLE RH		01	0107-			○○○○○○○○○○○
			04	2	**44000-FK30A**	BRAKE ASSY-DRIVE AXLE RH		01	0107-			○○○○○○○○○○○
		2	01	1	**44010-FK010**	BRAKE ASSY-DRIVE AXLE W/CABLE LH		01	0107-			○○○○○○○○○○○○○○○○○○○○
			02	2	**44010-FK000**	BRAKE ASSY-DRIVE AXLE LH		01	0107-			○○○○○○○○○○○○○○○○○○○○
			03	1	**44010-FK31A**	BRAKE ASSY-DRIVE AXLE W/CABLE LH		01	0107-			○○○○○○○○○○○
			04	2	**44010-FK30A**	BRAKE ASSY-DRIVE AXLE LH		01	0107-			○○○○○○○○○○○
		3	01	3	**44020-FK000**	PLATE ASSY-BACKING RH		01	0107-			○○○○○○○○○○○○○○○○○○○○○○○○○
		4	01	3	**44030-FK000**	PLATE ASSY-BACKING LH		01	0107-			○○○○○○○○○○○○○○○○○○○○○○○○○
		5	01	3	**44147-22H00**	SPRING-ADJUSTER		02	0107-			○○○○○○○○○○○○○○○○○○○○○○○○○
		6	01	3	**44095-53H02**	LEVER-RH		01	0107-			○○○○○○○○○○○○○○○○○○○○○○○○○
		7	01	3	**44096-53H02**	LEVER-LH		01	0107-			○○○○○○○○○○○○○○○○○○○○○○○○○
		8	01	3	**44042-L0100**	RETAINER-PIN PARKING LEVER		02	0107-			○○○○○○○○○○○○○○○○○○○○○○○○○
		9	01	3	**44043-50H05**	CUP-SHOE HOLD DOWN		08	0107-			○○○○○○○○○○○○○○○○○○○○○○○○○
		10	01	3	**44085-53H01**	WASHER-WEB		02	0107-			○○○○○○○○○○○○○○○○○○○○○○○○○
		11	01	3	**44060-FK000**	SHOE & LINING ASSY-NO.1		02	0107-			○○○○○○○○○○○○○○○○○○○○
			02	3	**44060-FK30A**			02	0107-			○○○○○○○○○○○
		12	01	3	**44070-FK000**	SHOE & LINING ASSY-NO.2 RH		01	0107-			○○○○○○○○○○○○○○○○○○○○
			02	3	**44070-FK30A**			01	0107-			○○○○○○○○○○○
			03	3	**44070-FK010**	SHOE & LINING ASSY-NO.2 LH		01	0107-			○○○○○○○○○○○○○○○○○○○○
			04	3	**44070-FK31A**			01	0107-			○○○○○○○○○○○
		13	01	3	**44038-22H00**	STRUT-PARKING BRAKE LEVER RH		01	0107-			○○○○○○○○○○○○○○○○○○○○○○○○○
			02	3	**44038-22H10**	STRUT-PARKING BRAKE LEVER LH		01	0107-			○○○○○○○○○○○○○○○○○○○○○○○○○
		15	01	3	**44039-22H00**	SPRING-STRUT		02	0107-			○○○○○○○○○○○○○○○○○○○○○○○○○
		16	01	3	**44081-53H01**	PIN-SHOE HOLD DOWN		04	0107-			○○○○○○○○○○○○○○○○○○○○○○○○○
		17	01	3	**44083-FK000**	SPRING-SHOE HOLD DOWN		04	0107-			○○○○○○○○○○○○○○○○○○○○○○○○○
		18	01	3	**44090-22H00**	SPRING-RETURN ANCHOR RR		02	0107-			○○○○○○○○○○○○○○○○○○○○○○○○○
			02	3	**44090-22H10**	SPRING-RETURN ANCHOR FR		02	0107-			○○○○○○○○○○○○○○○○○○○○○○○○○
		19	01	3	**44098-L1400**	PLUG-ADJUSTING HOLE		02	0107-			○○○○○○○○○○○○○○○○○○○○○○○○○
		20	01	3	**44100-FK000**	CYLINDER ASSY-WHEEL		02	0107-			○○○○○○○○○○○○○○○○○○○○○○○○○
		21	01	4	**44045-22H00**	ROD-PUSH WHEEL CYLINDER		04	0107-			○○○○○○○○○○○○○○○○○○○○○○○○○
		22	01	4	**44108-22H00**	PISTON-WHEEL CYLINDER		04	0107-			○○○○○○○○○○○○○○○○○○○○○○○○○
		23	01	4	**44112-22H00**	CUP-WHEEL CYLINDER		04	0107-			○○○○○○○○○○○○○○○○○○○○○○○○○
		24	01	4	**44124-FK000**	BOOT-WHEEL CYLINDER		04	0107-0210			○○○○○○○○○○○○○○○○○○○○○○○○○
			02	4	**44124-22H00**			04	0210-			○○○○○○○○○○○○○○○○○○○○○○○○○
		25	01	4	**44125-22H00**	SPRING-WHEEL CYLINDER		02	0107-			○○○○○○○○○○○○○○○○○○○○○○○○○

SEC. 440

FRONT BRAKE

FRENO DELANTERO

VORDERRADBREMSE

FREIN AVANT

NC	S	KEY NO.	LEV	PART NO.	PART NAME	SPECIFICATION	QTY	APPLIED DATE	ICANF	FORMER PART NO.	KD
		26 01	4	**44128-L1500**	SCREW-BLEEDER		02	0107-0210			
		02	4	**44128-8J100**			02	0210-			
		27 01	4	**44129-L0700**	CAP-BLEEDER		02	0107-0210			
		02	4	**44129-80Z0A**			02	0210-			
		28 01	3	**44215-22H00**	CABLE ASSY-ADJUSTER		02	0107-			
		29 01	3	**44025-22H00**	GUIDE-CABLE		02	0107-			
		30 01	3	**44065-22H00**	PLATE-SHOE GUIDE		02	0107-			
		31 01	3	**44200-FK000**	ADJUSTER ASSY-RH		01	0107-			
		32 01	3	**44201-FK000**	ADJUSTER ASSY-LH		01	0107-			
		33 01	3	**44209-FK000**	LEVER ASSY-PARKING RH		01	0107-			
		34 01	3	**44210-FK000**	LEVER ASSY-PARKING LH		01	0107-			
		35 01	3	**44214-22H00**	SPRING-ADJUST RH		01	0107-			
		02	3	**44214-22H01**	SPRING-ADJUST LH		01	0107-			
		36 01	3	**44132-FK000**	SCREW		04	0107-			
		37 01	3	**44044-22H00**	WASHER		02	0107-			
		38 01	2	**00922-50810**	RING-SNAP		02	0107-			

APPLIED MODEL

01	02	03	04	05	06	07	08	09	10	11	12	13	14	15	16	17	18	19	20	21	22	23	24	25	26	27	28	29
MIPA2000JVV	MIPA2000DVV	MIPA2000LVS	MIPA2000LVS	MIPA2000JVV	MIUA2000DVV	MIUA2000LVV	MIUA2000LSV	MIUA2005LSV	MIYA2005JVV	MIPA2005DVV	MIPA2005LVV	MIPA2005LSV	MIUA2005JVV	MIUA2005DVV	MIUA2005LVV	MIUA2005LSV	MIYA2005LSV	MIUA2058JVV	MIUA2058DVV	MIUA2058LVV	MIGA2030JVV	MIGA2030DVV	MIGA2030LVV	MIGA2035JVV	MIGA2035DVV	MIGA2035LVV	MIGA2035LVV	MIGA2035LVV
O	O	O	O	O	O	O	O	O	O	O	O	O	O	O	O	O	O	O	O	O	O	O	O	O	O	O	O	O
O	O	O	O	O	O	O	O	O	O	O	O	O	O	O	O	O	O	O	O	O	O	O	O	O	O	O	O	O
O	O	O	O	O	O	O	O	O	O	O	O	O	O	O	O	O	O	O	O	O	O	O	O	O	O	O	O	O
O	O	O	O	O	O	O	O	O	O	O	O	O	O	O	O	O	O	O	O	O	O	O	O	O	O	O	O	O
O	O	O	O	O	O	O	O	O	O	O	O	O	O	O	O	O	O	O	O	O	O	O	O	O	O	O	O	O
O	O	O	O	O	O	O	O	O	O	O	O	O	O	O	O	O	O	O	O	O	O	O	O	O	O	O	O	O
O	O	O	O	O	O	O	O	O	O	O	O	O	O	O	O	O	O	O	O	O	O	O	O	O	O	O	O	O
O	O	O	O	O	O	O	O	O	O	O	O	O	O	O	O	O	O	O	O	O	O	O	O	O	O	O	O	O
O	O	O	O	O	O	O	O	O	O	O	O	O	O	O	O	O	O	O	O	O	O	O	O	O	O	O	O	O
O	O	O	O	O	O	O	O	O	O	O	O	O	O	O	O	O	O	O	O	O	O	O	O	O	O	O	O	O
O	O	O	O	O	O	O	O	O	O	O	O	O	O	O	O	O	O	O	O	O	O	O	O	O	O	O	O	O
O	O	O	O	O	O	O	O	O	O	O	O	O	O	O	O	O	O	O	O	O	O	O	O	O	O	O	O	O
O	O	O	O	O	O	O	O	O	O	O	O	O	O	O	O	O	O	O	O	O	O	O	O	O	O	O	O	O
O	O	O	O	O	O	O	O	O	O	O	O	O	O	O	O	O	O	O	O	O	O	O	O	O	O	O	O	O

NOTE

SEC. 443

PARKING BRAKE CONTROL

CONTROL DEL FRENO DE ESTACIONAMIENTO

PARKBREMSBETÄTIGUNG

COMMANDE DE FREIN DE STATIONNEMENT

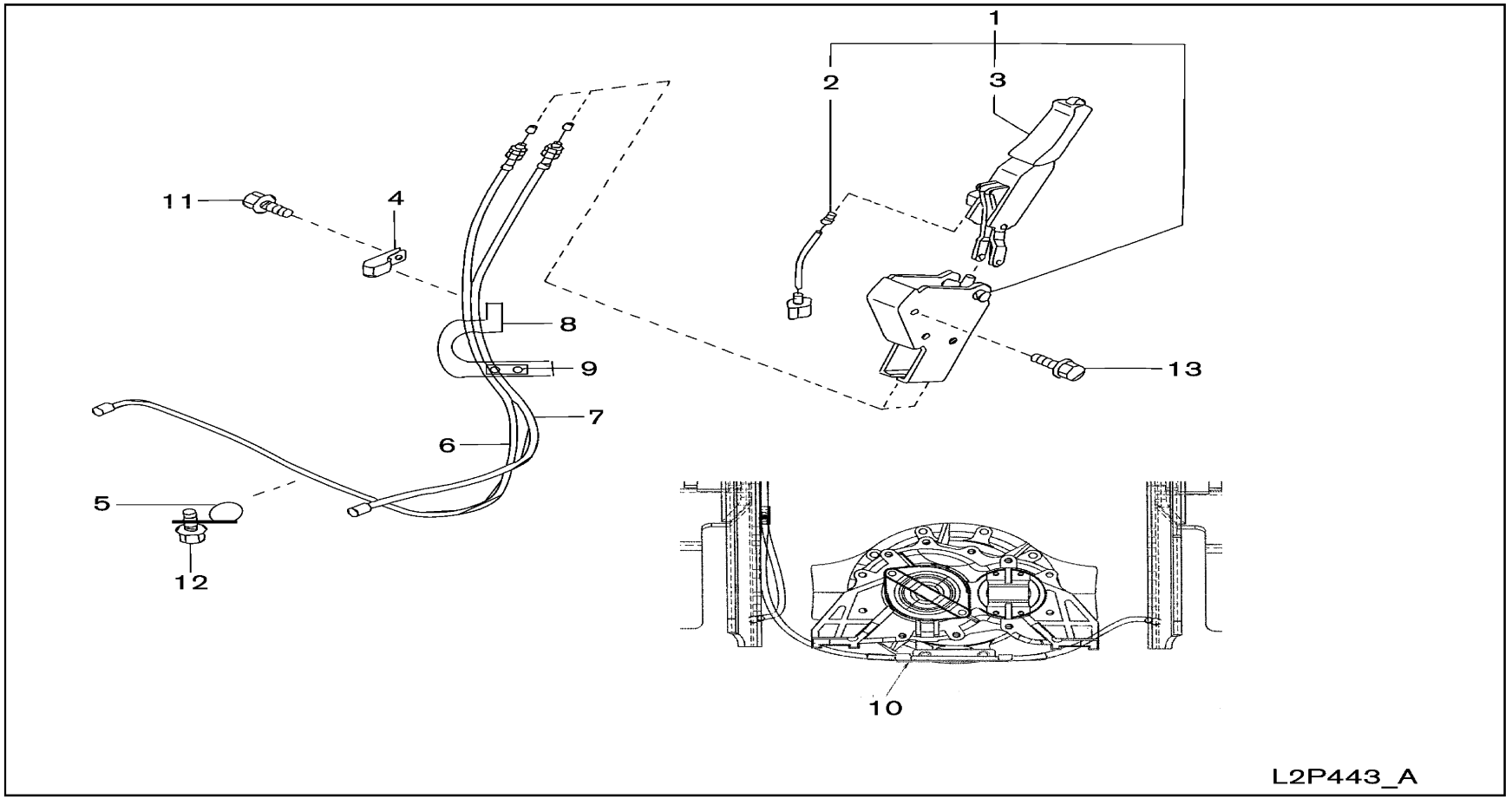

SEC. 443

PARKING BRAKE CONTROL

CONTROL DEL FRENO DE ESTACIONAMIENTO

PARKBREMSBETÄTIGUNG

COMMANDE DE FREIN DE STATIONNEMENT

NC	S	KEY NO.	LEV	PART NO.	PART NAME	SPECIFICATION	QTY	APPLIED DATE	ICANF	FORMER PART NO.	KD
		1	01	1	**36010-FK101**	DEVICE ASSY-PARKING BRAKE		01	0107-		
		2	01	2	**36014-FK101**	SWITCH ASSY-PARKING BRAKE WARNING		01	0107-		
			02	2	**08310-31025**	BOLT		01	0107-		
		3	01	2	**36019-FK101**	LEVER ASSY		01	0107-		
		4	01	1	**36455-41K01**	CLIP-CABLE		01	0107-0508		
			02	1	**36456-GB400**			01	0508-		
		5	01	1	**36456-11H00**	CLIP-CABLE		02	0107-		
		6	01	2	**36530-FK001**	CABLE ASSY-PARKING BRAKE,RH		01	0107-		
			02	2	**36530-FK30A**			01	0107-		
		7	01	2	**36531-FK001**	CABLE ASSY-PARKING BRAKE,LH		01	0107-		
			02	2	**36531-FK30A**			01	0107-		
		8	01	1	**46289-89978**	CLIP-BRAKE HOSE		01	0107-0508		
		9	01	1	**46283-89954**	INSULATOR-BRAKE TUBE		01	0107-0508		
		10	01	1	**36410-FK100**	BRACKET ASSY-CABLE		01	0107-1207		
			02	1	**36410-FK100**			01	1207-		
			03	1	**36410-GG00A**			01	1207-		
		11	01	1	**081A0-8121A**	SCREW-HH FLANGE 7T M8-1.25X12		02	0107-		
		12	01	1	**081A0-8161A**	SCREW-HH FLANGE 7T M8-1.25X16		02	0107-		
		13	01	1	**08124-0601F**	SCREW-HHM M10-1.25X60 W/LK & PW		02	0107-		

APPLIED MODEL

01	02	03	04	05	06	07	08	09	10	11	12	13	14	15	16	17	18	19	20	21	22	23	24	25	26	27	28	29
MIPA2000JVV	MIPA2000DVV	MIPA2000LVS	MIPA2000LVV	MIPA2000JVV	MIUA2000DVV	MIUA2000LVV	MIUA2000LVS	MIUA2000LVV	MIYA2055JVV	MIPA2055DVV	MIPA2055LVV	MIPA2055LVS	MIUA2055JVV	MIUA2055DVV	MIUA2055LVV	MIUA2055LVS	MIUA2055LVV	MIUA2088JVV	MIUA2088DVV	MIUA2088LVV	MIUA2300JVV	MIUA2300DVV	MIUA2300LVV	MIYA2305JVV	MIUA2355DVV	MIUA2355LVV	MIUA2355LVV	MIYA2355LVV
○	○	○	○	○	○	○	○	○	○	○	○	○	○	○	○	○	○	○	○	○	○	○	○	○	○	○	○	○
○	○	○	○	○	○	○	○	○	○	○	○	○	○	○	○	○	○	○	○	○	○	○	○	○	○	○	○	○
○	○	○	○	○	○	○	○	○	○	○	○	○	○	○	○	○	○	○	○	○	○	○	○	○	○	○	○	○
○	○	○	○	○	○	○	○	○	○	○	○	○	○	○	○	○	○	○	○	○	○	○	○	○	○	○	○	○
○	○	○	○	○	○	○	○	○	○	○	○	○	○	○	○	○	○	○	○	○	○	○	○	○	○	○	○	○
○	○	○	○	○	○	○	○	○	○	○	○	○	○	○	○	○	○	○	○	○	○	○	○	○	○	○	○	○
○	○	○	○	○	○	○	○	○	○	○	○	○	○	○	○	○	○	○	○	○	○	○	○	○	○	○	○	○
○	○	○	○	○	○	○	○	○	○	○	○	○	○	○	○	○	○	○	○	○	○	○	○	○	○	○	○	○
																		○	○	○	○	○	○	○	○	○	○	○
○	○	○	○	○	○	○	○	○	○	○	○	○	○	○	○	○	○	○	○	○	○	○	○	○	○	○	○	○
																		○	○	○	○	○	○	○	○	○	○	○
○	○	○	○	○	○	○	○	○	○	○	○	○	○	○	○	○	○	○	○	○	○	○	○	○	○	○	○	○
○	○	○	○	○	○	○	○	○	○	○	○	○	○	○	○	○	○	○	○	○	○	○	○	○	○	○	○	○
○	○	○	○	○	○	○	○	○	○	○	○	○	○	○	○	○	○	○	○	○	○	○	○	○	○	○	○	○
○	○	○	○	○	○	○	○	○	○	○	○	○	○	○	○	○	○	○	○	○	○	○	○	○	○	○	○	○
○	○	○	○	○	○	○	○	○	○	○	○	○	○	○	○	○	○	○	○	○	○	○	○	○	○	○	○	○
○	○	○	○	○	○	○	○	○	○	○	○	○	○	○	○	○	○	○	○	○	○	○	○	○	○	○	○	○

SEC. 460

BRAKE MASTER CYLINDER

CILINDRO MAESTRO DEL FRENO

BREMSHAUPTZYLINDER

MAITRE-CYLINDRE DE FREIN

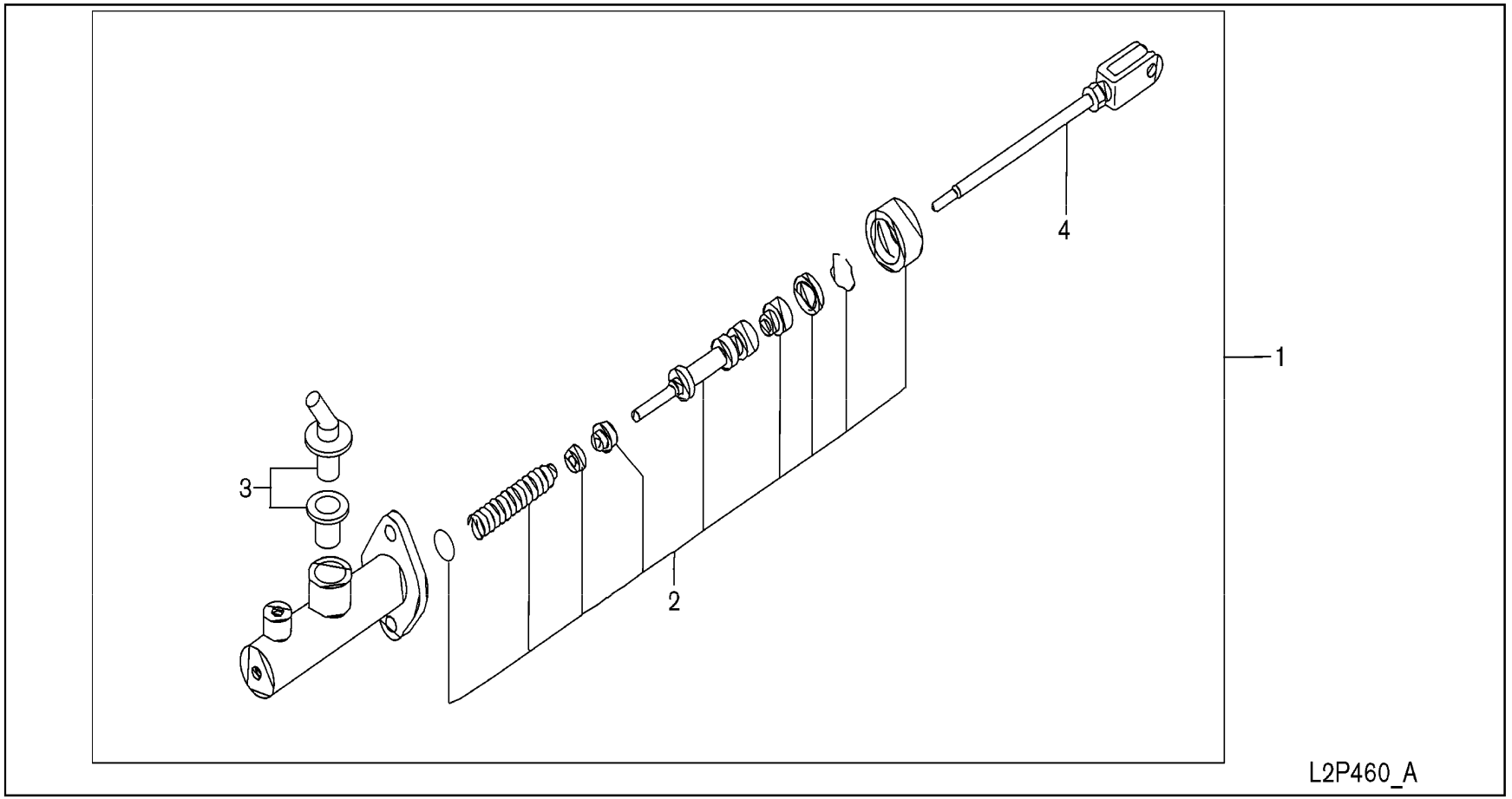

SEC. 460

BRAKE MASTER CYLINDER

CILINDRO MAESTRO DEL FRENO

BREMSHAUPTZYLINDER

MAITRE-CYLINDRE DE FREIN

NC	S	KEY NO.	LEV	PART NO.	PART NAME	SPECIFICATION	QTY	APPLIED DATE	ICANF	FORMER PART NO.	KD	APPLIED MODEL 01 02 03 04 05 06 07 08 09 10 11 12 13 14 15 16 17 18 19 20 21 22 23 24 25 26 27 28 29
		1 01	1	**46010-FJ100**	CYLINDER ASSY-BRAKE MASTER		01	0107-				○○○○○○○○○○○○○○○○○○○○○○○○○○○○○
		2 01	2	**46011-FJ11J**	PISTON KIT-BRAKE MASTER CYLINDER		01	0107-				○○○○○○○○○○○○○○○○○○○○○○○○○○○○○
		3 01	2	**30672-FJ11J**	UNION KIT-FILLER		01	0107-				○○○○○○○○○○○○○○○○○○○○○○○○○○○○○
		4 01	2	**46080-FJ100**	ROD ASSY -PUSH		01	0107-				○○○○○○○○○○○○○○○○○○○○○○○○○○○○○

SEC. 462

BRAKE PIPING & CONTROL

TUBERIA DEL FRENO Y VALVULA DE CONTROL

BREMSROHRLEITUNG & STEUERVENTIL

CANALISATION DE FREIN ET SOUPAPE DE COMMANDE

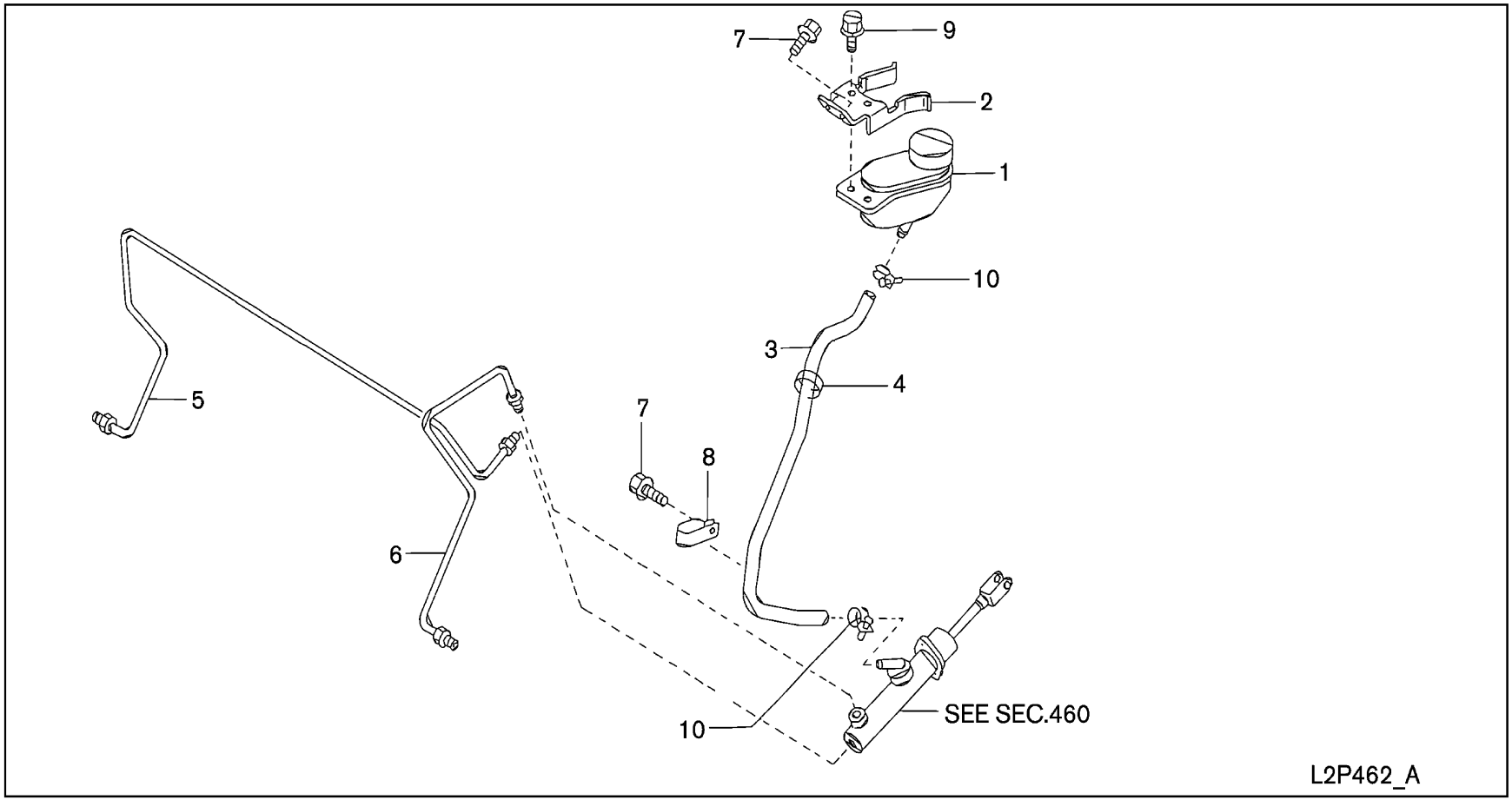

SEC. 462

BRAKE PIPING & CONTROL

TUBERIA DEL FRENO Y VALVULA DE CONTROL

BREMSROHRLEITUNG & STEUERVENTIL

CANALISATION DE FREIN ET SOUPAPE DE COMMANDE

NC	S	KEY NO.	LEV	PART NO.	PART NAME	SPECIFICATION	QTY	APPLIED DATE	TCANF	FORMER PART NO.	KD	APPLIED MODEL 01 02 03 04 05 06 07 08 09 10 11 12 13 14 15 16 17 18 19 20 21 22 23 24 25 26 27 28 29
		1	01	1	**46091-FK100**	RESERVOIR-BRAKE FLUID		01	0107-			o o o o o o o o o o o o o o o o o o o o o o o o o o o o o
			02	2	**46093-GB00A**	CAP ASSY-OIL RESERVOIR		01	0609-			o o o o o o o o o o o o o o o o o o o o o o o o o o o o o
		2	01	1	**46092-FK101**	BRACKET ASSY-RESERVOIR		01	0107-			o o o o o o o o o o o o o o o o o o o o o o o o o o o o o
		3	01	1	**46113-FK101**	HOSE-RESERVOIR, BRAKE FLUID		01	0107-			o o o o o o o o o o o o o o o o o o o o o o o o o o o o o
			02	1	**69690-FK100**	PROTECTOR-SPIRAL TUBE		01	0107-0508			o o o o o o o o o o o o o o o o o o o o o o o o o o o o o
			03	1	**69690-L1106**			01	0508-			o o o o o o o o o o o o o o o o o o o o o o o o o o o o o
		4	01	1	**01552-00411**	CLIP		01	0107-			o o o o o o o o o o o o o o o o o o o o o o o o o o o o o
		5	01	1	**46290-FK100**	TUBE ASSY-BRAKE RH		01	0107-			o o o o o o o o o o o o o o o o o o o o o o o o o o o o o
			02	1	**46290-FK110**		F/TILT LEVELING SYSTEM	01	0107-			* *
			03	1	**46290-GG00A**		F/FC	01	1207-			* *
		6	01	1	**46310-FK100**	TUBE ASSY-BRAKE LH		01	0107-			o o o o o o o o o o o o o o o o o o o o o o o o o o o o o
		7	01	1	**08110-8161G**	SCREW-HHM M8-1.25X16 W/SPRW		03	0107-			o o o o o o o o o o o o o o o o o o o o o o o o o o o o o
		8	01	1	**46289-89978**	CLAMP		01	0107-1208			o o o o o o o o o o o o o o o o o o o o o o o o o o o o o
			02	1	**46289-GE00A**			01	1208-			o o o o o o o o o o o o o o o o o o o o o o o o o o o o o
		9	01	1	**08120-61628**	SCREW-HHM M6-1.0X16 W/LKW		02	0107-			o o o o o o o o o o o o o o o o o o o o o o o o o o o o o
		10	01	1	**08723-11600**	CLAMP-HOSE		02	0107-0607			o o o o o o o o o o o o o o o o o o o o o o o o o o o o o
			02	1	**01555-00801**			02	0607-			o o o o o o o o o o o o o o o o o o o o o o o o o o o o o

SEC. 465

BRAKE & CLUTCH PEDAL

PEDALES DE FRENO Y DE EMBRAGUE

BREMS- & KUPPLUNGSPEDAL

PEDALES DE FREIN ET D'EMBRAYAGE

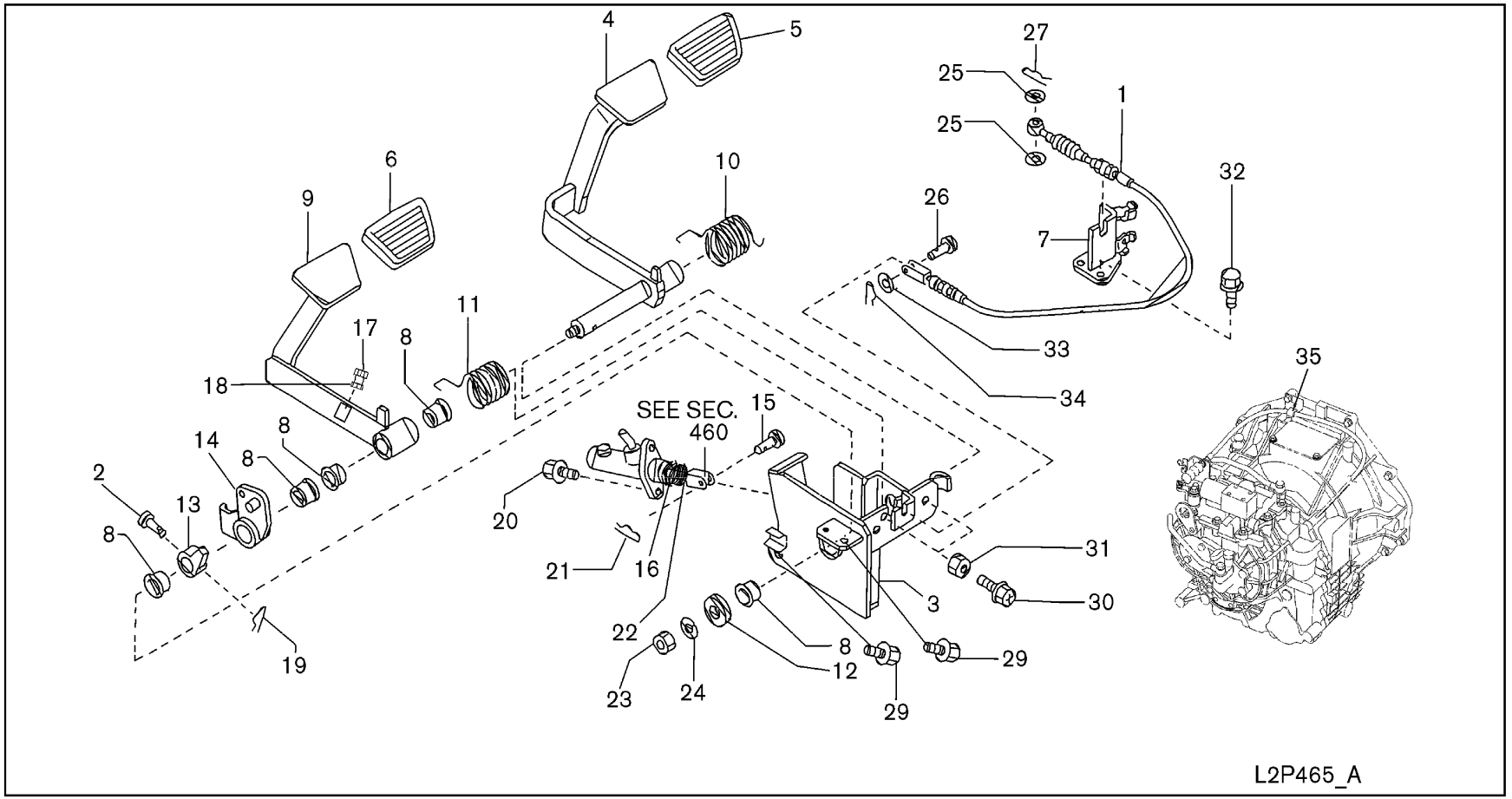

SEC. 465

BRAKE & CLUTCH PEDAL

PEDALES DE FRENO Y DE EMBRAGUE

BREMS- & KUPPLUNGSPEDAL

PEDALES DE FREIN ET D'EMBRAYAGE

NC	S	KEY NO.	LEV	PART NO.	PART NAME	SPECIFICATION	QTY	APPLIED DATE	TCANF	FORMER PART NO.	KD	APPLIED MODEL 01 02 03 04 05 06 07 08 09 10 11 12 13 14 15 16 17 18 19 20 21 22 23 24 25 26 27 28 29
		1	01	1	**30770-FJ110**	CABLE ASSY-INCHING		01	0107-0508			o o o o o o o o o o o o o o o o o o o o o o o o o o o o o
			02	1	**30770-GE00A**			01	0508-			o o o o o o o o o o o o o o o o o o o o o o o o o o o o o
		2	01	3	**46123-FK105**	PIN-CLEVIS		01	0107-0508			o o o o o o o o o o o o o o o o o o o o o o o o o o o o o
			02	3	**46123-FK100**			01	0508-			o o o o o o o o o o o o o o o o o o o o o o o o o o o o o
		3	01	3	**46510-FK100**	BRACKET ASSY-PEDAL		01	0107-0508			o o o o o o o o o o o o o o o o o o o o o o o o o o o o o
			02	3	**46510-GG00A**			01	0508-			o o o o o o o o o o o o o o o o o o o o o o o o o o o o o
		4	01	3	**46523-FK300**	PEDAL ASSY-BRAKE		01	0107-0508			o o o o o o o o o o o o o o o o o o o o o o o o o o o o o
			02	3	**46523-GE10A**			01	0508-			o o o o o o o o o o o o o o o o o o o o o o o o o o o o o
		5	01	3	**46531-FK100**	COVER-PEDAL PAD		01	0107-			o o o o o o o o o o o o o o o o o o o o o o o o o o o o o
		6	01	3	**46531-FK100**	COVER-PEDAL PAD		01	0107-			o o o o o o o o o o o o o o o o o o o o o o o o o o o o o
		7	01	2	**30769-FJ110**	BRACKET		01	0107-0508			o o o o o o o o o o o o o o o o o o o o o o o o o o o o o
			02	2	**NA-**		SEE SEC. 317B ITEM NO. 24	01	0508-			o o o o o o o o o o o o o o o o o o o o o o o o o o o o o
		8	01	3	**46536-FK100**	BUSH-PEDAL		06	0107-0508			o o o o o o o o o o o o o o o o o o o o o o o o o o o o o
			02	3	**46536-FK100**			04	0508-			o o o o o o o o o o o o o o o o o o o o o o o o o o o o o
		9	01	3	**46543-FK300**	PEDAL ASSY-INCHING		01	0107-			o o o o o o o o o o o o o o o o o o o o o o o o o o o o o
		10	01	3	**46585-FK300**	SPRING-RETURN,PEDAL		01	0107-0508			o o o o o o o o o o o o o o o o o o o o o o o o o o o o o
			02	3	**46585-GE00A**			01	0508-			o o o o o o o o o o o o o o o o o o o o o o o o o o o o o
		11	01	3	**46585-FK201**	SPRING-RETURN,PEDAL		01	0107-			o o o o o o o o o o o o o o o o o o o o o o o o o o o o o
		12	01	3	**46366-FK100**	SPACER		01	0107-			o o o o o o o o o o o o o o o o o o o o o o o o o o o o o
		13	01	3	**46521-FK101**	LEVER ASSY-BRAKE PEDAL		01	0107-0508			o o o o o o o o o o o o o o o o o o o o o o o o o o o o o
			02	3	**NA-**		PART OF ITEM NO. 14	01	0508-			o o o o o o o o o o o o o o o o o o o o o o o o o o o o o
		14	01	3	**46522-FK101**	LEVER ASSY-MASTER CYL		01	0107-0508			o o o o o o o o o o o o o o o o o o o o o o o o o o o o o
			02	3	**46522-GG00A**			01	0508-			o o o o o o o o o o o o o o o o o o o o o o o o o o o o o
		15	01	1	**46123-J0100**	PIN-CLEVIS		01	0107-			o o o o o o o o o o o o o o o o o o o o o o o o o o o o o
		16	01	2	**46571-FK100**	SPRING-ASST		01	0107-0508			o o o o o o o o o o o o o o o o o o o o o o o o o o o o o
		17	01	3	**40038-48200**	SCREW		01	0107-			o o o o o o o o o o o o o o o o o o o o o o o o o o o o o
		18	01	2	**08911-1401A**	NUT-HEX M10-1.25		01	0107-			o o o o o o o o o o o o o o o o o o o o o o o o o o o o o
		19	01	2	**00923-1101A**	PIN-SNAP		01	0107-			o o o o o o o o o o o o o o o o o o o o o o o o o o o o o
		20	01	2	**08124-0301E**	SCREW-HHM M10-1.25X30 W/PW		02	0107-			o o o o o o o o o o o o o o o o o o o o o o o o o o o o o
		21	01	2	**01532-00022**	RING-SNAP		01	0107-			o o o o o o o o o o o o o o o o o o o o o o o o o o o o o
		22	01	2	**08915-4381A**	WASHER-FLAT M8		01	0107-0508			o o o o o o o o o o o o o o o o o o o o o o o o o o o o o
		23	01	2	**08911-1421A**	NUT-HEX M12-1.25		01	0107-0508			o o o o o o o o o o o o o o o o o o o o o o o o o o o o o
			02	2	**08918-3421A**	NUT-HEX FLG M12-1.25 9N		01	0508-			o o o o o o o o o o o o o o o o o o o o o o o o o o o o o
		24	01	2	**08915-1421A**	WASHER-LOCK SPLIT M12		01	0107-0508			o o o o o o o o o o o o o o o o o o o o o o o o o o o o o
		25	01	1	**08915-43610**	WASHER-FLAT M6		02	0107-			o o o o o o o o o o o o o o o o o o o o o o o o o o o o o
		26	01	1	**00840-8221A**	PIN-CLEVIS		01	0107-			o o o o o o o o o o o o o o o o o o o o o o o o o o o o o
		27	01	1	**00923-1061A**	PIN-SNAP		01	0107-0508			o o o o o o o o o o o o o o o o o o o o o o o o o o o o o

SEC. 465

BRAKE & CLUTCH PEDAL

PEDALES DE FRENO Y DE EMBRAGUE

BREMS- & KUPPLUNGSPEDAL

PEDALES DE FREIN ET D'EMBRAYAGE

NC	S	KEY NO.	LEV	PART NO.	PART NAME	SPECIFICATION	QTY	APPLIED DATE	ICANF	FORMER PART NO.	KD	APPLIED MODEL 01 02 03 04 05 06 07 08 09 10 11 12 13 14 15 16 17 18 19 20 21 22 23 24 25 26 27 28 29
		27 02	1	**01532-00015**	PIN-SNAP		01	0508-				o o o o o o o o o o o o o o o o o o o o o o o o o o o o o
		29 01	1	**08124-0201E**	SCREW-HHM M10-1.25X20 W/PW		02	0107-				o o o o o o o o o o o o o o o o o o o o o o o o o o o o o
		30 01	2	**08360-8351A**	SCREW-HH CR M8-1.25X35		02	0107-				o o o o o o o o o o o o o o o o o o o o o o o o o o o o o
		31 01	2	**08911-1081A**	NUT-HEX M8-1.25		02	0107-				o o o o o o o o o o o o o o o o o o o o o o o o o o o o o
		32 01	2	**31377-FJ211**	BOLT-FLANGE		02	0107-0508				o o o o o o o o o o o o o o o o o o o o o o o o o o o o o
		33 01	1	**08915-4381A**	WASHER-FLAT M8		01	0107-				o o o o o o o o o o o o o o o o o o o o o o o o o o o o o
		34 01	1	**01532-00022**	RING-SNAP		01	0107-0508				o o o o o o o o o o o o o o o o o o o o o o o o o o o o o
		02	1	**00923-1081A**	PIN-SNAP M8 SHAFT		01	0508-				o o o o o o o o o o o o o o o o o o o o o o o o o o o o o
		35 01	1	**24220-FJ10A**	CLIP		01	0107-0508				o o o o o o o o o o o o o o o o o o o o o o o o o o o o o

GROUP INDEX

STEERING

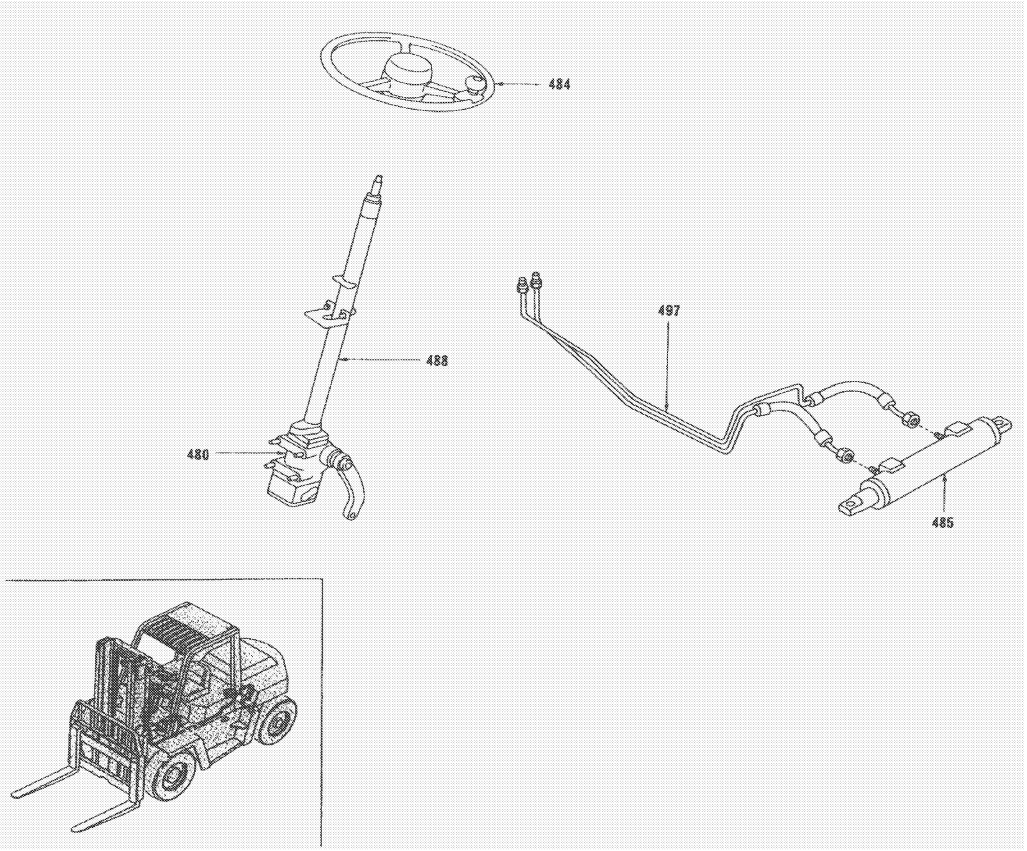

SEC.NO	SECTION NAME
480	STEERING GEAR
484	STEERING WHEEL
485	STEERING LINKAGE
488	STEERING COLUMN
497	POWER STEERING PIPING

*ILLSTRATIONS SHOWN IN GENERAL INDEX AND GROUP INDEX ARE GENARALIZED DESCRIPTIONS FOR ALL MODELS AND ARE NOT PRECISE IN ALL DETAILS.

I

SEC. 480

STEERING GEAR

MECANISMO DE LA DIRECCION

LENKGETRIEBE

BOITIER DE DIRECTION

NOTE 1) KEY NO. 22 SEAL KIT-VALVE INCLUDES KEY NO.3,6,7,8,9,14
NOTE 2) KEY NO. 2 BEARING KIT INCLUDES KEY NO.5&19
NOTE 3) KEY NO. 31 SCREW KIT INCLUDES KEY NO.4

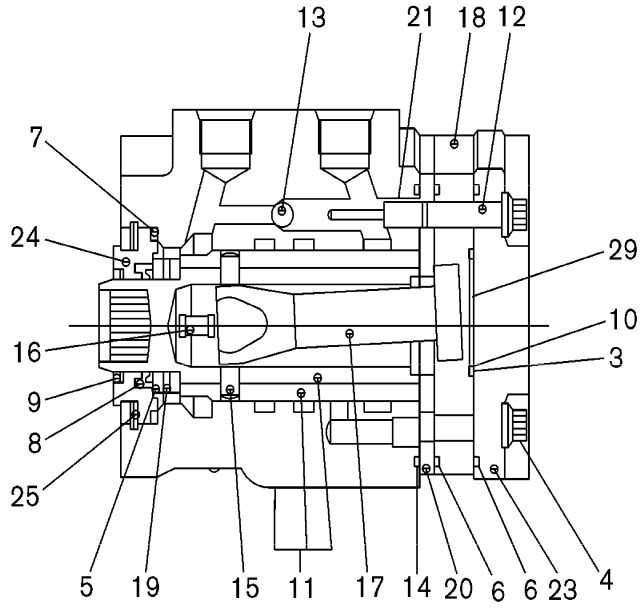

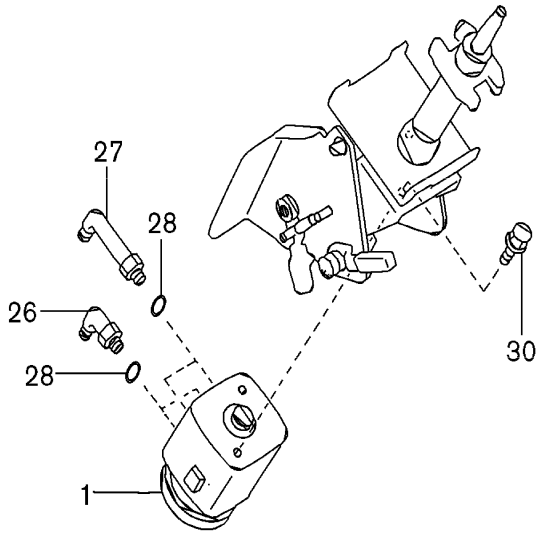

L2P480_A

SEC. 480

STEERING GEAR

MECANISMO DE LA DIRECCION

LENKGETRIEBE

BOITIER DE DIRECTION

NC	S	KEY NO.	LEV	PART NO.	PART NAME	SPECIFICATION	QTY	APPLIED DATE	TCANF	FORMER PART NO.	KD	APPLIED MODEL 01 02 03 04 05 06 07 08 09 10 11 12 13 14 15 16 17 18 19 20 21 22 23 24 25 26 27 28 29
		1 01	1	**49410-FJ500**	VALVE ASSY-POWER STEERING		01	0107-				○○○○○○○○○○○○○○○○○○○
		02	1	**49410-FK000**			01	0107-				○○○○○○○○○○○○○
		2 01	2	**49441-51K00**	BEARING KIT-THRUST NEEDLE		01	0107-				○○○○○○○○○○○○○○○○○○○○○○○○○○○
		3 01	2	**NSS-**	RING-O		01	0107-				○○○○○○○○○○○○○○○○○○○○○○○○○○○
		4 01	2	**NSS-**	SCREW		06	0107-				○○○○○○○○○○○○○○○○○○○○○○○○○○○
		5 01	2	**NSS-**	BEARING-RACE		02	0107-				○○○○○○○○○○○○○○○○○○○○○○○○○○○
		6 01	2	**NSS-**	RING-O		02	0107-				○○○○○○○○○○○○○○○○○○○○○○○○○○○
		7 01	2	**NSS-**	RING O		01	0107-				○○○○○○○○○○○○○○○○○○○○○○○○○○○
		8 01	2	**NSS-**	SEAL		01	0107-				○○○○○○○○○○○○○○○○○○○○○○○○○○○
		9 01	2	**NSS-**	SEAL-DUST		01	0107-				○○○○○○○○○○○○○○○○○○○○○○○○○○○
		10 01	2	**NSS-**	PLUG		01	0107-				○○○○○○○○○○○○○○○○○○○○○○○○○○○
		11 01	2	**NSS-**	CONTROL PARTS ASSY		01	0107-				○○○○○○○○○○○○○○○○○○○○○○○○○○○
		12 01	2	**NSS-**	RETAINER SCREW ASSY		01	0107-				○○○○○○○○○○○○○○○○○○○○○○○○○○○
		13 01	2	**NSS-**	BALL-CHECK		01	0107-				○○○○○○○○○○○○○○○○○○○○○○○○○○○
		14 01	2	**NSS-**	RING-O		01	0107-				○○○○○○○○○○○○○○○○○○○○○○○○○○○
		15 01	2	**NSS-**	PIN		01	0107-				○○○○○○○○○○○○○○○○○○○○○○○○○○○
		16 01	2	**NSS-**	SPRING		04	0107-				○○○○○○○○○○○○○○○○○○○○○○○○○○○
		17 01	2	**NSS-**	DRIVE		01	0107-				○○○○○○○○○○○○○○○○○○○○○○○○○○○
		18 01	2	**NSS-**	GEROTOR		01	0107-				○○○○○○○○○○○○○○○○○○○○○○○○○○○
		19 01	2	**NSS-**	BEARING-NEEDLE		01	0107-				○○○○○○○○○○○○○○○○○○○○○○○○○○○
		20 01	2	**NSS-**	PLATE-SPACER		01	0107-				○○○○○○○○○○○○○○○○○○○○○○○○○○○
		21 01	2	**NSS-**	SCREW		01	0107-				○○○○○○○○○○○○○○○○○○○○○○○○○○○
		22 01	2	**49440-FJ100**	SEAL KIT-POWER STEERING VALVE		01	0107-				○○○○○○○○○○○○○○○○○○○○○○○○○○○
		23 01	2	**NSS-**	CAP-END		01	0107-				○○○○○○○○○○○○○○○○○○○○○○○○○○○
		24 01	2	**NSS-**	SEAL-GLAND BUSHING		01	0107-				○○○○○○○○○○○○○○○○○○○○○○○○○○○
		25 01	2	**NSS-**	RING-RETAINING		01	0107-				○○○○○○○○○○○○○○○○○○○○○○○○○○○
		26 01	1	**69350-FJ10B**	CONN ASSY		02	0107-				○○○○○○○○○○○○○○○○○○○○○○○○○○○
		27 01	1	**69350-FJ10A**	CONN ASSY		02	0107-				○○○○○○○○○○○○○○○○○○○○○○○○○○○
		28 01	2	**69371-L1100**	SEAL-O RING		04	0107-				○○○○○○○○○○○○○○○○○○○○○○○○○○○
		29 01	2	**NSS-**	SPACER		01	0107-				○○○○○○○○○○○○○○○○○○○○○○○○○○○
		30 01	1	**08124-0201E**	SCREW-HHM M10-1.25X20 W/PW		02	0107-				○○○○○○○○○○○○○○○○○○○○○○○○○○○
		31 01	1	**49448-GE00B**	SCREW KIT		01	0107-				○○○○○○○○○○○○○○○○○○○
		02	1	**49448-GG30A**			01	0107-				○○○○○○○○○○○○○

SEC. 484

STEERING WHEEL

VOLANTE DE DIRECCION

LENKRAD

VOLANT DE DIRECTION

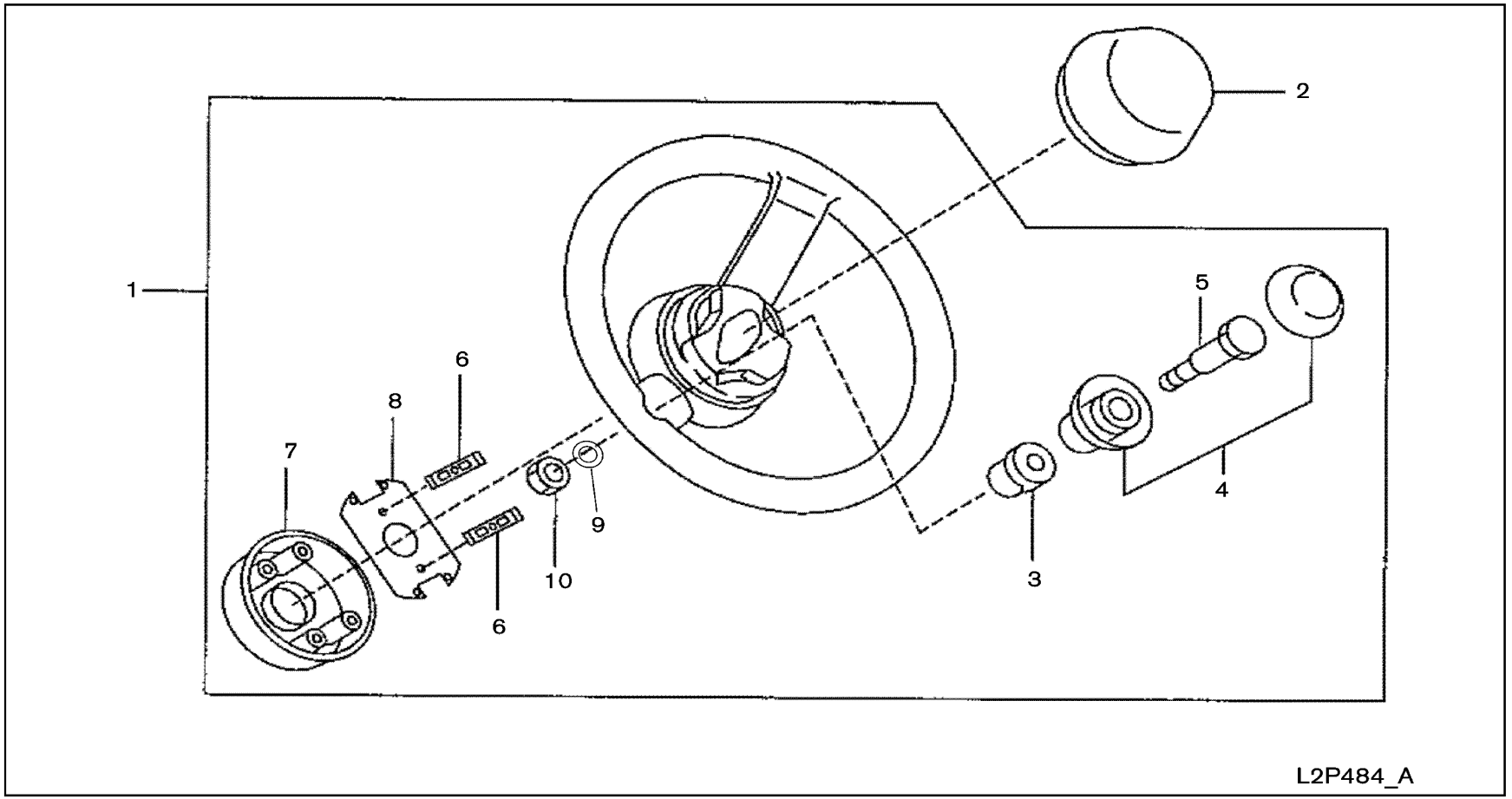

SEC. 484

STEERING WHEEL

VOLANTE DE DIRECCION

LENKRAD

VOLANT DE DIRECTION

NC	S	KEY NO.	LEV	PART NO.	PART NAME	SPECIFICATION	QTY	APPLIED DATE	ICANF	FORMER PART NO.	KD	APPLIED MODEL 01 02 03 04 05 06 07 08 09 10 11 12 13 14 15 16 17 18 19 20 21 22 23 24 25 26 27 28 29
		1 01	1	**48401-FJ20A**	WHEEL-STEERING		01	0107-				○ ○
		02	1	**48401-FJ10A**		W/KNOB	01	0107-				✱ ✱
		2 01	1	**48422-FJ10A**	BUTTON-HORN		01	0107-				○ ○
		3 01	2	**48414-FJ10A**	BUSH-KNOB	W/KNOB	01	0107-				✱ ✱
		4 01	2	**48415-FJ10A**	KNOB	W/KNOB	01	0107-				✱ ✱
		5 01	2	**48417-FJ100**	SHAFT-KNOB	W/KNOB	01	0107-				✱ ✱
		6 01	2	**48425-FJ100**	SPRING-HORN BUTTON		02	0107-				○ ○
		7 01	2	**48451-FJ100**	RING COMPL-SLIP		01	0107-				○ ○
		8 01	2	**48442-FJ100**	SEAT-SPRING		01	0107-				○ ○
		9 01	2	**08915-1381A**	WASHER-LOCK SPLIT M8	W/KNOB	01	0107-				✱ ✱
		10 01	2	**08911-1081A**	NUT-HEX M8-1.25	W/KNOB	01	0107-				✱ ✱

SEC. 485

STEERING LINKAGE

ESLABONAMIENTO DE LA DIRECCION

LENKGESTÄNGE

TIMONERIE DE DIRECTION

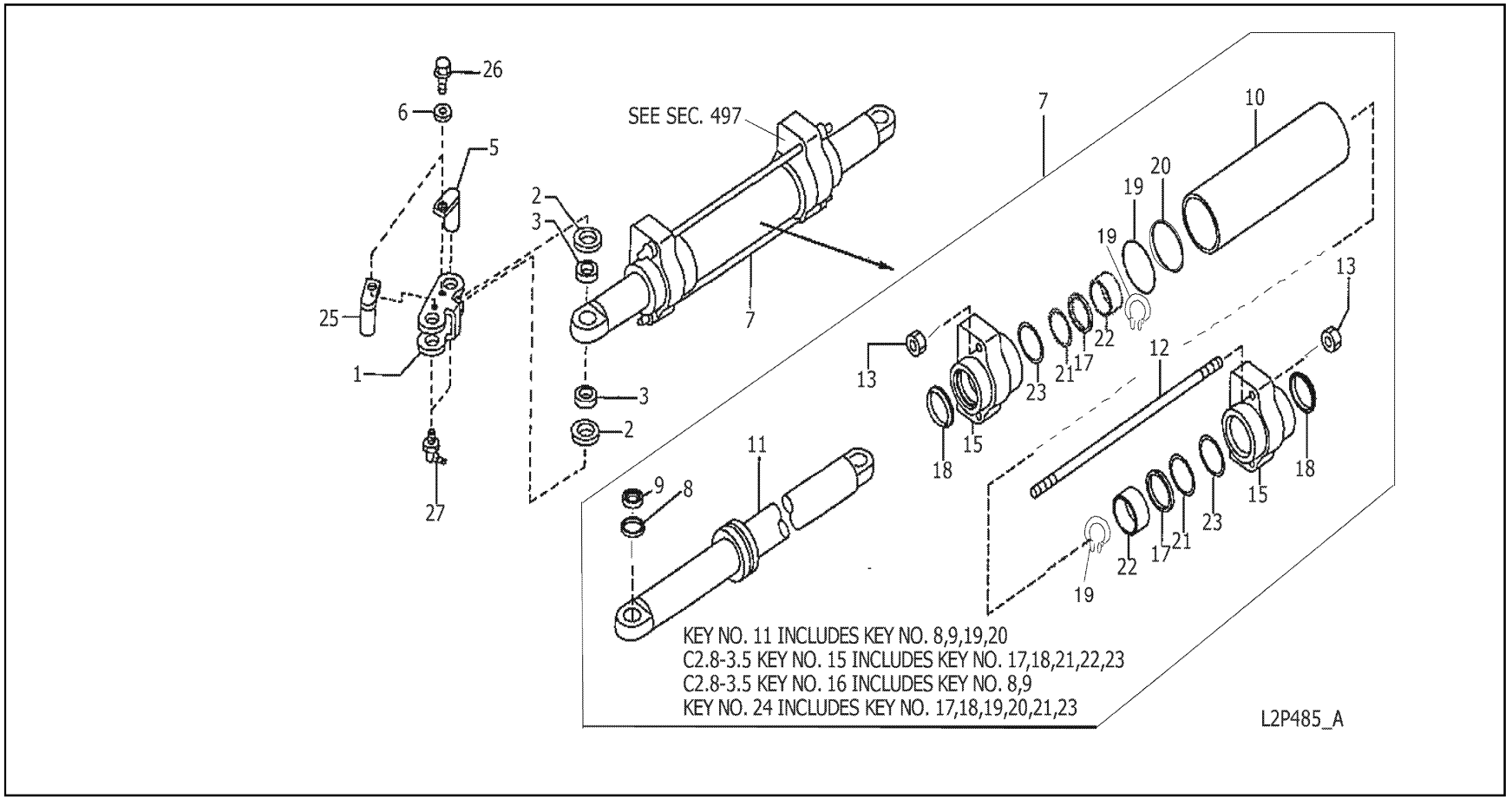

SEC. 485

STEERING LINKAGE

ESLABONAMIENTO DE LA DIRECCION

LENKGESTÄNGE

TIMONERIE DE DIRECTION

NC	S	KEY NO.	LEV	PART NO.	PART NAME	SPECIFICATION	QTY	APPLIED DATE	ICANF	FORMER PART NO.	KD	APPLIED MODEL 01 02 03 04 05 06 07 08 09 10 11 12 13 14 15 16 17 18 19 20 21 22 23 24 25 26 27 28 29
		1 01	1	**48511-FK001**	BAR-TIE ROD RH		01	0107-				○○○○○○○○○○○○○○○○○○○○○○○○○○○○○
		02	1	**48512-FK001**	BAR-TIE ROD LH		01	0107-				○○○○○○○○○○○○○○○○○○○○○○○○○○○○○
		2 01	1	**48525-FK000**	SEAL-GREASE		04	0107-				○○○○○○○○○○○○○○○○○○○○○○○○○○○○○
		3 01	1	**48594-FK000**	SPACER-INNER		04	0107-				○○○○○○○○○○○○○○○○○○○○○○○○○○○○○
		5 01	1	**48513-FK00A**	PIN-CLEVIS,TIE ROD INNER		02	0107-				○○○○○○○○○○○○○○○○○○○○○○○○○○○○○
		6 01	1	**48593-FJ100**	SPACER-OUTER		04	0107-				○○○○○○○○○○○○○○○○○○○○○○○○○○○○○
		7 01	1	**49509-FB30A**	CYLINDER COMPLETE-POWER STEERING		01	0107-				○○○○○○○○○○○○○○○○○
		02	1	**49509-FK01A**		F/ANTI RUST	01	0107-1207				*********************
		03	1	**49509-FK01B**		F/ANTI RUST	01	1207-0508				*********************
		04	1	**49509-FB31A**		F/ANTI RUST	01	0508-				*********************
C		05	1	**49509-FB50A**			01	0107-0811				○○○○○○○○○○○○○
N		06	1	**49509-GG30A**			01	0811-				○○○○○○○○○○○○○
		07	1	**49509-FK21A**		F/ANTI RUST	01	0107-0508				**********
C		08	1	**49509-FB51A**		F/ANTI RUST	01	0508-0811				**********
N		09	1	**49509-GG31A**		F/ANTI RUST	01	0811-				**********
		8 01	2	**NSS-**	BUSH-STRG LINKAGE		02	0107-				○○○○○○○○○○○○○○○○○○○○○○○○○○○○○
		9 01	2	**NSS-**	RING-SNAP, C		02	0107-				○○○○○○○○○○○○○○○○○○○○○○○○○○○○○
		10 01	2	**49512-FB30A**	TUBE		01	0107-				○○○○○○○○○○○○○○○○○
		02	2	**49512-FK00A**		F/ANTI RUST	01	0107-0508				*********************
		03	2	**49512-FB30A**		F/ANTI RUST	01	0508-				*********************
C		04	2	**49512-FB50A**			01	0107-0811				○○○○○○○○○○○○○
		05	2	**49512-FK20A**		F/ANTI RUST	01	0107-0508				**********
C		06	2	**49512-FB50A**		F/ANTI RUST	01	0508-0811				**********
N		07	2	**NSS-**			01	0811-				○○○○○○○○○○○○○
		11 01	2	**49514-FB30A**	ROD ASSY-PISTON		01	0107-				○○○○○○○○○○○○○○○○○
		02	2	**49514-FK01A**		F/ANTI RUST	01	0107-0508				*********************
		03	2	**49514-FB31A**		F/ANTI RUST	01	0508-				*********************
C		04	2	**49514-FB50A**			01	0107-0811				○○○○○○○○○○○○○
N		05	2	**49514-GG30A**			01	0811-				○○○○○○○○○○○○○
		06	2	**49514-FK21A**		F/ANTI RUST	01	0107-0508				**********
C		07	2	**49514-FB51A**		F/ANTI RUST	01	0508-0811				**********
N		08	2	**49514-GG31A**		F/ANTI RUST	01	0811-				**********
C		**12** 01	2	**49537-FB30A**	TIE ROD		02	0107-				○○○○○○○○○○○○○○○○○
		02	2	**49537-FJ100**		F/ANTI RUST	02	0107-0508				*********************
C		03	2	**49537-FB30A**		F/ANTI RUST	02	0508-				*********************
N		04	2	**49537-FB30A**			02	0107-0811				○○○○○○○○○○○○○
N		05	2	**49537-FB30A**		F/ANTI RUST	02	0508-0811				**********

SEC. 485

STEERING LINKAGE

ESLABONAMIENTO DE LA DIRECCION

LENKGESTÄNGE

TIMONERIE DE DIRECTION

NC	S	KEY NO.	LEV	PART NO.	PART NAME	SPECIFICATION	QTY	APPLIED DATE	ICANF	FORMER PART NO.	KD	APPLIED MODEL 01 02 03 04 05 06 07 08 09 10 11 12 13 14 15 16 17 18 19 20 21 22 23 24 25 26 27 28 29
N		**12** 06	2	**49596-GG30A**	TIE ROD	INCLUDES ITEM NO. 13	02	0811-				○○○○○○○○○○○○○
C		**13** 01	2	**49525-FB20A**	NUT		04	0107-				○○○○○○○○○○○○○○○○○○○○
		02	2	**08911-1081A**		F/ANTI RUST	04	0107-0508				**********************
C		03	2	**49525-FB20A**		F/ANTI RUST	04	0508-				**********************
N		04	2	**49525-FB20A**			04	0107-0811				○○○○○○○○○○○○○
N		05	2	**49525-FB20A**		F/ANTI RUST	04	0508-0811				**********
N		06	2	**NSS-**		INCLUDED WITH ITEM NO. 13	04	0811-				○○○○○○○○○○○○○
	15	01	2	**49520-FB30A**	END CAP		02	0107-				○○○○○○○○○○○○○○○○○○○○
		02	2	**49520-FK00A**		F/ANTI RUST	02	0107-1207				**********
		03	2	**49520-FK00B**		F/ANTI RUST	02	1207-0508				**********
		04	2	**49520-FB30A**		F/ANTI RUST	02	0508-				**********
C		05	2	**49520-FB50A**			02	0107-0811				○○○○○○○○○○○○○
		06	2	**49520-FK20A**		F/ANTI RUST	02	0107-0508				**********
C		07	2	**49520-FB50A**		F/ANTI RUST	02	0508-0811				**********
N		08	2	**49598-GG30A**	END CAP ASSY		02	0811-				○○○○○○○○○○○○○
N		**16** 01	2	**49597-GG30A**	BEARING KIT		02	0811-				○○○○○○○○○○○○○
		17 01	2	**NSS-**	O RING		02	0107-				○○○○○○○○○○○○○○○○○○○○
		02	2	**NSS-**		F/ANTI RUST	02	0107-				**********
		03	2	**NSS-**			02	0107-				○○○○○○○○○○○○○
		04	2	**NSS-**		F/ANTI RUST	02	0107-				**********
		18 01	2	**NSS-**	WIPER		02	0107-				○○○○○○○○○○○○○○○○○○○○
		02	2	**NSS-**			02	0107-				○○○○○○○○○○○○○
		03	2	**NSS-**		F/ANTI RUST	02	0107-				**********
		19 01	2	**NSS-**	PISTON SEAL CAP		01	0107-				○○○○○○○○○○○○○○○○○○○○
		02	2	**NSS-**			01	0107-				○○○○○○○○○○○○○
		03	2	**NSS-**	RING-SNAP	F/ANTI RUST	02	0107-1207				**********
		04	2	**NSS-**		F/ANTI RUST	02	0107-				**********
		20 01	2	**NSS-**	O RING		01	0107-				○○○○○○○○○○○○○○○○○○○○
		02	2	**NSS-**	RING-SEAL ASSY	F/ANTI RUST	01	0107-				**********
		03	2	**NSS-**	O RING		01	0107-				○○○○○○○○○○○○○
		04	2	**NSS-**	RING-SEAL ASSY	F/ANTI RUST	01	0107-				**********
		21 01	2	**NSS-**	RING-BACKUP		02	0107-				○○○○○○○○○○○○○○○○○○○○
		02	2	**NSS-**	O RING	F/ANTI RUST	02	0107-				**********
		03	2	**NSS-**	RING-BACKUP		02	0107-				○○○○○○○○○○○○○
		04	2	**NSS-**	O RING	F/ANTI RUST	02	0107-				**********
C		**22** 01	2	**49521-FB30A**	BUSHING		02	0107-				○○○○○○○○○○○○○○○○○○○○
		02	2	**49521-FK000**		F/ANTI RUST	02	0107-1207				**********

SEC. 485

STEERING LINKAGE

ESLABONAMIENTO DE LA DIRECCION

LENKGESTÄNGE

TIMONERIE DE DIRECTION

NC	S	KEY NO.	LEV	PART NO.	PART NAME	SPECIFICATION	QTY	APPLIED DATE	ICANF	FORMER PART NO.	KD
	22	03	2	**49521-FK00A**	BUSHING	F/ANTI RUST	02	1207-0508			
		04	2	**49521-FK000**		F/ANTI RUST	02	0107-0508			
C		05	2	**49521-FB30A**		F/ANTI RUST	02	0508-			
N		06	2	**49521-FB30A**			02	0107-0811			
N		07	2	**49521-FB30A**		F/ANTI RUST	02	0508-0811			
N		08	2	**NSS-**			02	0811-			
	23	01	2	**NSS-**	ROD SEAL		02	0107-			
		02	2	**NSS-**	U RING	F/ANTI RUST	02	0107-			
		03	2	**NSS-**	RING-BACKUP	F/ANTI RUST	02	0107-1207			
		04	2	**NSS-**		F/ANTI RUST	02	0107-			
	24	01	1	**49599-FB30A**	SEAL KIT-PS CYLINDER		02	0107-			
		02	1	**49599-FK00A**		F/ANTI RUST	02	0107-1207			
		03	1	**49599-FK00B**		F/ANTI RUST	02	1207-0508			
		04	1	**49599-FB30A**		F/ANTI RUST	02	0508-			
C		05	1	**49599-FB50A**			02	0107-0811			
		06	1	**49599-FK20A**		F/ANTI RUST	02	0107-0508			
C		07	1	**49599-FB50A**		F/ANTI RUST	02	0508-0811			
N		08	1	**49599-GG30A**			02	0811-			
	25	01	1	**48513-FJ10B**	PIN-CLEVIS,TIE ROD OUTER		02	0107-			
	26	01	1	**08120-61233**	SCREW-HHM M6-1.0X12 W/LK		04	0107-			
	27	01	1	**08932-3021A**	FTG-GRS 90 DEG MT6-0.75		04	0107-			

APPLIED MODEL

01	02	03	04	05	06	07	08	09	10	11	12	13	14	15	16	17	18	19	20	21	22	23	24	25	26	27	28	29
MIPA220JVV	MIPA220DVV	MIPA220LVS	MIPA220LVV	MIUA220JVV	MIUA220DVV	MIUA220LVV	MIUA220LVS	MIUA220LVV	MIYA220JVV	MIPA220DVV	MIPA220LVV	MIPA220LVS	MIUA220JVV	MIUA220DVV	MIUA220LVV	MIUA220LVS	MIUA220LVV	MIUJA220JVV	MIUJA220DVV	MIUGA223LVV	MIUGA280JVV	MIUGA280DVV	MIUGA300LVV	MIUGA300JVV	MIYGA305DVV	MIUGA355LVV	MIUGA355DVV	MIUGA335LVV
*	*	*	*	*	*	*	*	*	*	*	*	*	*	*	*	*	*											
																		*	*	*	*	*	*	*	*	*	*	*
*	*	*	*	*	*	*	*	*	*	*	*	*	*	*	*	*	*											
																		o	o	o	o	o	o	o	o	o	o	o
																		*	*	*	*	*	*	*	*	*	*	*
																		o	o	o	o	o	o	o	o	o	o	o
o	o	o	o	o	o	o	o	o	o	o	o	o	o	o	o	o	o	o	o	o	o	o	o	o	o	o	o	o
*	*	*	*	*	*	*	*	*	*	*	*	*	*	*	*	*	*	*	*	*	*	*	*	*	*	*	*	*
*	*	*	*	*	*	*	*	*	*	*	*	*	*	*	*	*	*											
																		*	*	*	*	*	*	*	*	*	*	*
o	o	o	o	o	o	o	o	o	o	o	o	o	o	o	o	o	o											
*	*	*	*	*	*	*	*	*	*	*	*	*	*	*	*	*	*											
*	*	*	*	*	*	*	*	*	*	*	*	*	*	*	*	*	*											
*	*	*	*	*	*	*	*	*	*	*	*	*	*	*	*	*	*											
																		o	o	o	o	o	o	o	o	o	o	o
																		*	*	*	*	*	*	*	*	*	*	*
																		*	*	*	*	*	*	*	*	*	*	*
																		o	o	o	o	o	o	o	o	o	o	o
o	o	o	o	o	o	o	o	o	o	o	o	o	o	o	o	o	o	o	o	o	o	o	o	o	o	o	o	o
o	o	o	o	o	o	o	o	o	o	o	o	o	o	o	o	o	o	o	o	o	o	o	o	o	o	o	o	o
o	o	o	o	o	o	o	o	o	o	o	o	o	o	o	o	o	o	o	o	o	o	o	o	o	o	o	o	o

SEC. 488

STEERING COLUMN

COLUMNA DE DIRECCION

LENKSÄULE

COLONNE DE DIRECTION

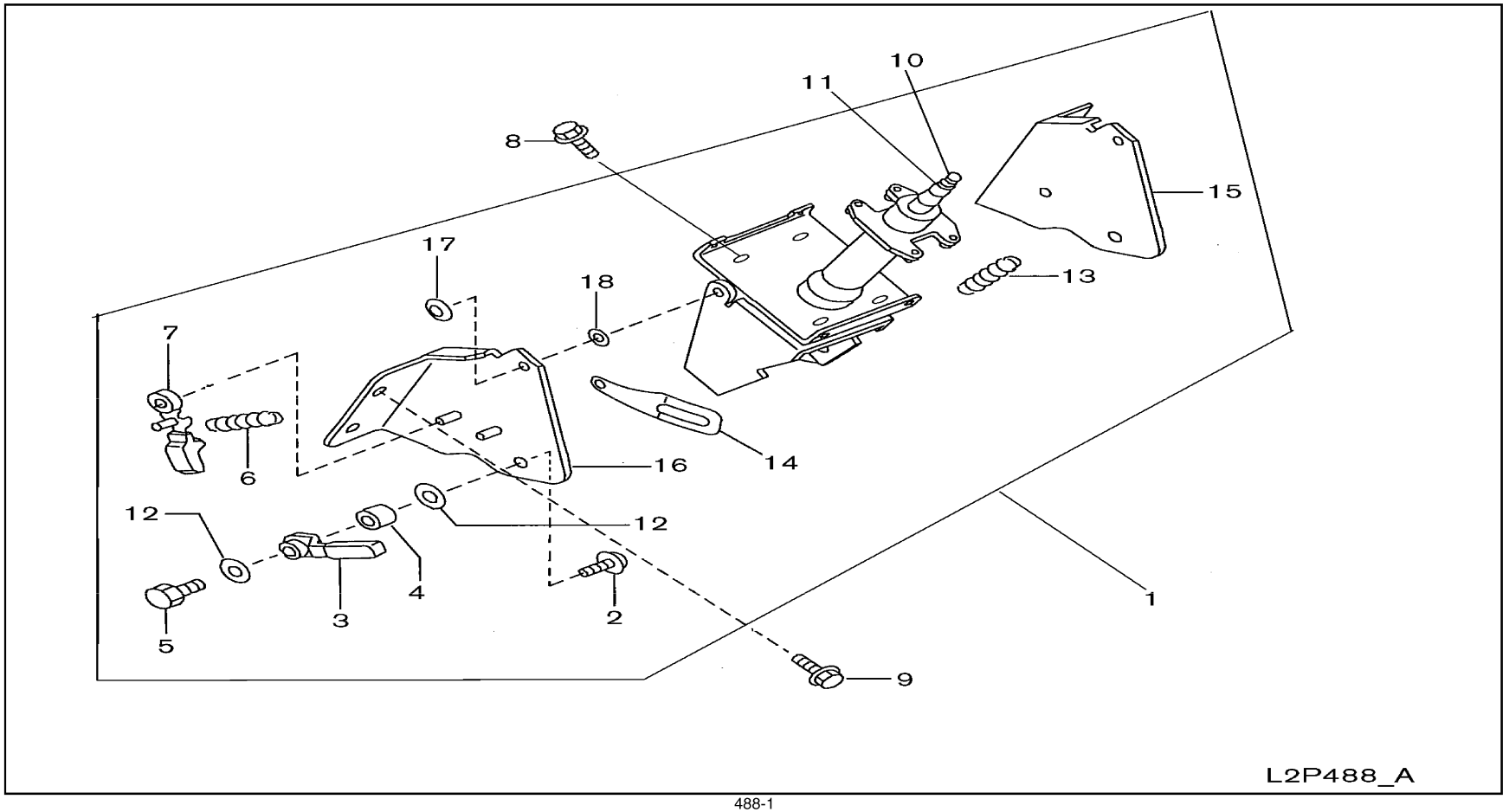

SEC. 488

STEERING COLUMN

COLUMNA DE DIRECCION

LENKSÄULE

COLONNE DE DIRECTION

NC	S	KEY NO.	LEV	PART NO.	PART NAME	SPECIFICATION	QTY	APPLIED DATE	ICANF	FORMER PART NO.	KD	APPLIED MODEL 01 02 03 04 05 06 07 08 09 10 11 12 13 14 15 16 17 18 19 20 21 22 23 24 25 26 27 28 29
		1 01	1	**48805-FJ101**	COLUMN ASSY-STEERING		01	0107-				○○○○○○○○○○○○○○○○○○○○○○○○○○○○○
		2 01	2	**48966-11H00**	BOLT-CLAMP,STRG ADJUSTING		01	0107-				○○○○○○○○○○○○○○○○○○○○○○○○○○○○○
		3 01	2	**48970-FJ100**	LEVER-ADJUSTING,STRG		01	0107-				○○○○○○○○○○○○○○○○○○○○○○○○○○○○○
		4 01	2	**48976-FJ100**	NUT-STRG ADJUSTING		01	0107-				○○○○○○○○○○○○○○○○○○○○○○○○○○○○○
		5 01	2	**48979-FJ100**	BOLT-ADJUSTING LEVER		01	0107-				○○○○○○○○○○○○○○○○○○○○○○○○○○○○○
		6 01	2	**48944-FJ100**	SPRING		01	0107-				○○○○○○○○○○○○○○○○○○○○○○○○○○○○○
		7 01	2	**65342-FJ100**	LATCH KNOB		01	0107-				○○○○○○○○○○○○○○○○○○○○○○○○○○○○○
		8 01	1	**08124-0201E**	SCREW-HHM M10-1.25X20 W/PW		02	0107-				○○○○○○○○○○○○○○○○○○○○○○○○○○○○○
		9 01	1	**08124-0251F**	SCREW-HHM M10-1.25X25 W/LK & PW		04	0107-				○○○○○○○○○○○○○○○○○○○○○○○○○○○○○
		10 01	1	**08911-3441A**	NUT-HEX JAM M14-1.5 4N		01	0107-				○○○○○○○○○○○○○○○○○○○○○○○○○○○○○
		11 01	1	**08915-1441A**	WASHER-LOCK SPLIT M14		01	0107-				○○○○○○○○○○○○○○○○○○○○○○○○○○○○○
		12 01	2	**08915-5381A**	WASHER-FLAT M8		02	0107-				○○○○○○○○○○○○○○○○○○○○○○○○○○○○○
		13 01	2	**48933-FJ100**	SPRING		01	0107-				○○○○○○○○○○○○○○○○○○○○○○○○○○○○○
		14 01	2	**48968-FJ100**	PLATE-TILT LOCK		01	0107-				○○○○○○○○○○○○○○○○○○○○○○○○○○○○○
		15 01	2	**48962-FJ100**	BRACKET-STRG COLUMN		01	0107-				○○○○○○○○○○○○○○○○○○○○○○○○○○○○○
		16 01	2	**48961-FJ100**	BRACKET-STRG COLUMN		01	0107-				○○○○○○○○○○○○○○○○○○○○○○○○○○○○○
		17 01	2	**01241-00781**	NUT		02	0107-				○○○○○○○○○○○○○○○○○○○○○○○○○○○○○
		18 01	2	**48974-FJ100**	WASHER-PLAIN		01	0107-				○○○○○○○○○○○○○○○○○○○○○○○○○○○○○

SEC. 497

POWER STEERING PIPING

TUBERIA DE LA DIRECCION HIDRAULICA

SERVOLENKUNGSROHRLEITUNG

CANALISATION DE DIRECTION ASSISTEE

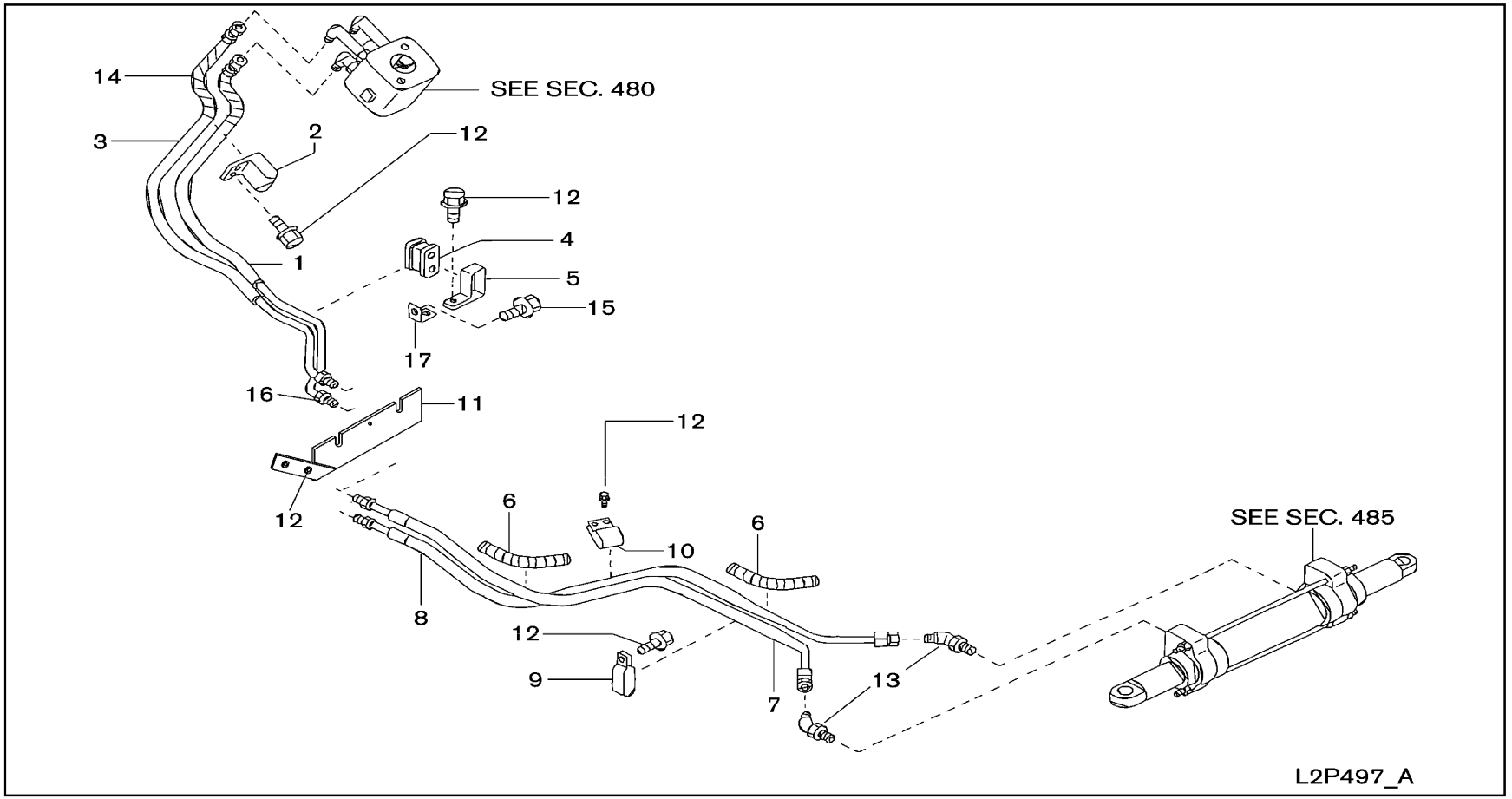

SEC. 497

POWER STEERING PIPING

TUBERIA DE LA DIRECCION HIDRAULICA

SERVOLENKUNGSROHRLEITUNG

CANALISATION DE DIRECTION ASSISTEE

NC	S	KEY NO.	LEV	PART NO.	PART NAME	SPECIFICATION	QTY	APPLIED DATE	ICANF	FORMER PART NO.	KD	APPLIED MODEL 01 02 03 04 05 06 07 08 09 10 11 12 13 14 15 16 17 18 19 20 21 22 23 24 25 26 27 28 29
		1	01	1	**49711-FK160**	TUBE ASSY-POWER STEERING RH		01	0107-			○ ○
			02	1	**49711-FK170**		F/ANTI RUST	01	0107-			✱ ✱
		2	01	1	**69674-FK101**	CLAMP		01	0107-			○ ○
		3	01	1	**49712-FK160**	TUBE ASSY-POWER STEERING LH		01	0107-			○ ○
			02	1	**49712-FK170**		F/ANTI RUST	01	0107-			✱ ✱
		4	01	1	**46283-89954**	INSULATOR-TUBE		01	0107-			○ ○
		5	01	1	**69674-FK102**	CLAMP-TUBE		01	0107-			○ ○
		6	01	1	**69690-51K00**	PROTECTOR	USE WITH ITEM NO. 7 & 8	04	0107-			○ ○
		7	01	1	**49713-FK161**	TUBE ASSY-POWER STEERING HOSE,RH		01	0107-			○ ○
			02	1	**49713-FK361**			01	0107-			○ ○ ○ ○ ○ ○ ○ ○
		8	01	1	**49714-FK161**	TUBE ASSY-POWER STEERING HOSE,LH		01	0107-			○ ○
			02	1	**49714-FK361**			01	0107-			○ ○ ○ ○ ○ ○ ○ ○
		9	01	1	**21647-40K00**	CLAMP-TUBE		01	0107-			○ ○
		10	01	1	**49791-FK100**	CLIP-HOSE		01	0107-			○ ○
		11	01	1	**69681-FK100**	BRACKET-HOSE FIX		01	0107-			○ ○
		12	01	1	**08120-8161F**	SCREW-HHM M8-1.25X16 W/LK & PW		08	0107-			○ ○
		13	01	1	**49455-FK100**	CONNECTOR ASSY		02	0107-			○ ○
		14	01	1	**69690-L1106**	PROTECTOR	USE WITH ITEM NO. 1 & 3	02	0107-			○ ○
		15	01	1	**08124-0201F**	SCREW-HHM M10-1.25X20 W/LK & PW		01	0107-			○ ○
		16	01	1	**08911-3461A**	NUT-HEX JAM M16-1.5 4N		02	0107-			○ ○
		17	01	1	**69680-FK107**	BRACKET ASSY-HOSE		01	0107-			○ ○

GROUP INDEX

BODY(FRONT, ROOF & FLOOR)

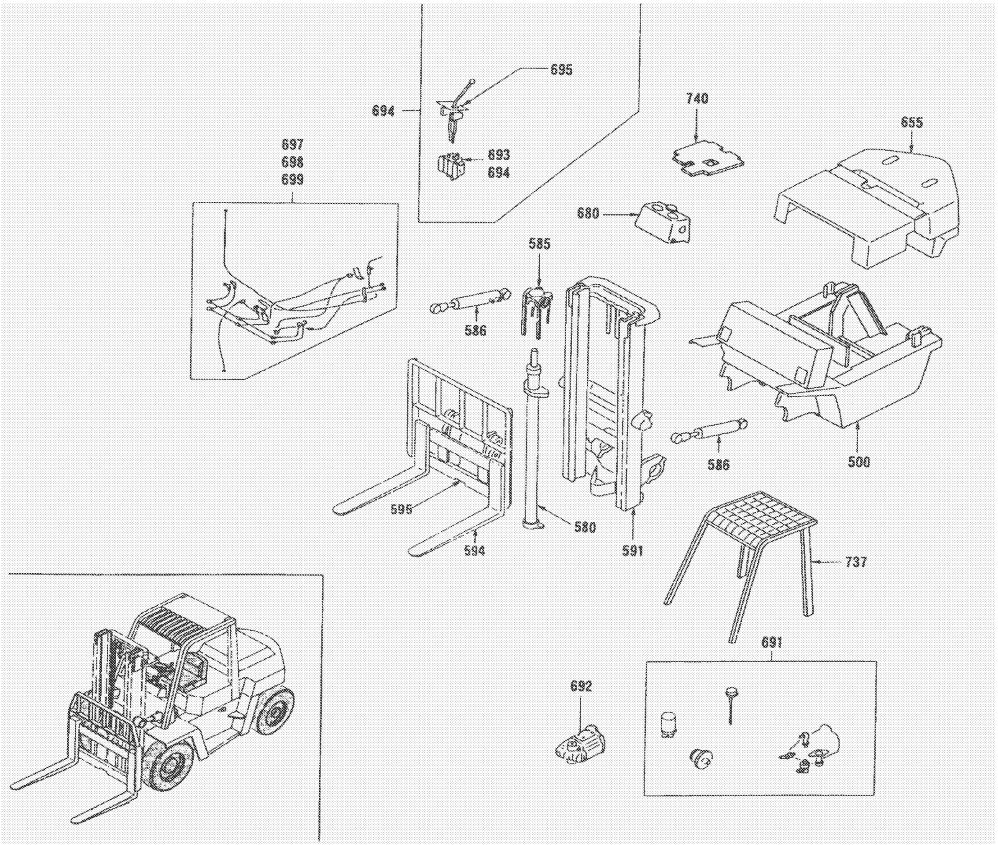

SEC.NO	SECTION NAME
500A	FRAME
500B	FRAME -FRONT COVERS
500C	FRAME -DEBRIS OPTION
580A	LIFT CYLINDER (2W)
580B	LIFT CYLINDER (2F UPTO SEPT. 2009)
580D	LIFT CYLINDER (3F UPTO SEPT. 2010)
580E	LIFT CYLINDER (3V UPTO SEPT. 2010)
580F	LIFT CYLINDER (2F FROM SEPT. 2009)
580G	LIFT CYLINDER (3F 2 & 2.5 TON FROM SEPT. 2010)
580H	LIFT CYLINDER (3F 2.8, 3 & 3.5 TON FROM SEPT. 2010)
580J	LIFT CYLINDER (3V FROM SEPT. 2010)
585A	CHAIN WHEEL SUPPORT & CHAIN (2W-INNER CHAIN 3.5TON)
585B	CHAIN WHEEL SUPPORT & CHAIN (2F)
585D	CHAIN WHEEL SUPPORT & CHAIN (3F)
585E	CHAIN WHEEL SUPPORT & CHAIN (3V)
585F	CHAIN WHEEL SUPPORT & CHAIN (2W-OUTER CHAIN 2.0, 2.5 & 3.0TON-UPTO MAY 2008)
585G	CHAIN WHEEL SUPPORT & CHAIN (NML 2W-INNER CHAIN 2.0, 2.5 & 3.0TON-FROM MAY 2008)
586	TILT CYLINDER
591A	MAST (2W-INNER CHAIN 3.5TON)
591B	MAST (2F)
591D	MAST (3F)
591E	MAST (3V)
591F	MAST (2W-OUTER CHAIN 2.0, 2.5 & 3.0TON-UPTO MAY 2008)
591G	MAST (NML 2W-INNER CHAIN 2.0, 2.5 & 3.0TON-FROM MAY 2008)
594	BACK REST & FORK
595A	CARRIAGE (2W)
595B	CARRIAGE (2F)
595C	CARRIAGE (3F)
595D	CARRIAGE (3V)
597A	SIDESHIFTER (BOLZONI)
597B	SIDESHIFTER (BOLZONI INTEGRAL)
655	TOP PANEL,HINGE & FITTING
680	INSTRUMENT PANEL, PAD & CLUSTER LID
691A	HYDRAULIC OIL PUMP & FITTING (TANK FITTING PART)
691B	HYDRAULIC OIL PUMP & FITTING (PUMP FITTING PART)
692	HYDRAULIC OIL PUMP ASSEMBLY
693A	HYDRAULIC CONTROL VALVE
693B	HYDRAULIC CONTROL VALVE (FC OPTION)
694B	HYDRAULIC CONTROL VALVE FITTING (3 SPOOL VALVE)
694C	HYDRAULIC CONTROL VALVE FITTING (4 SPOOL VALVE)
694D	HYDRAULIC CONTROL VALVE FITTING (KIT PARTS)
694E	HYDRAULIC CONTROL VALVE FITTING (FC OPTION-3 SPOOL VALVE)
694F	HYDRAULIC CONTROL VALVE FITTING (FC OPTION-4 SPOOL VALVE)
695A	HYDRAULIC CONTROL LEVER (FITTING PARTS)

*ILLSTRATIONS SHOWN IN GENERAL INDEX AND GROUP INDEX ARE GENARALIZED DESCRIPTIONS FOR ALL MODELS AND ARE NOT PRECISE IN ALL DETAILS.

J

GROUP INDEX

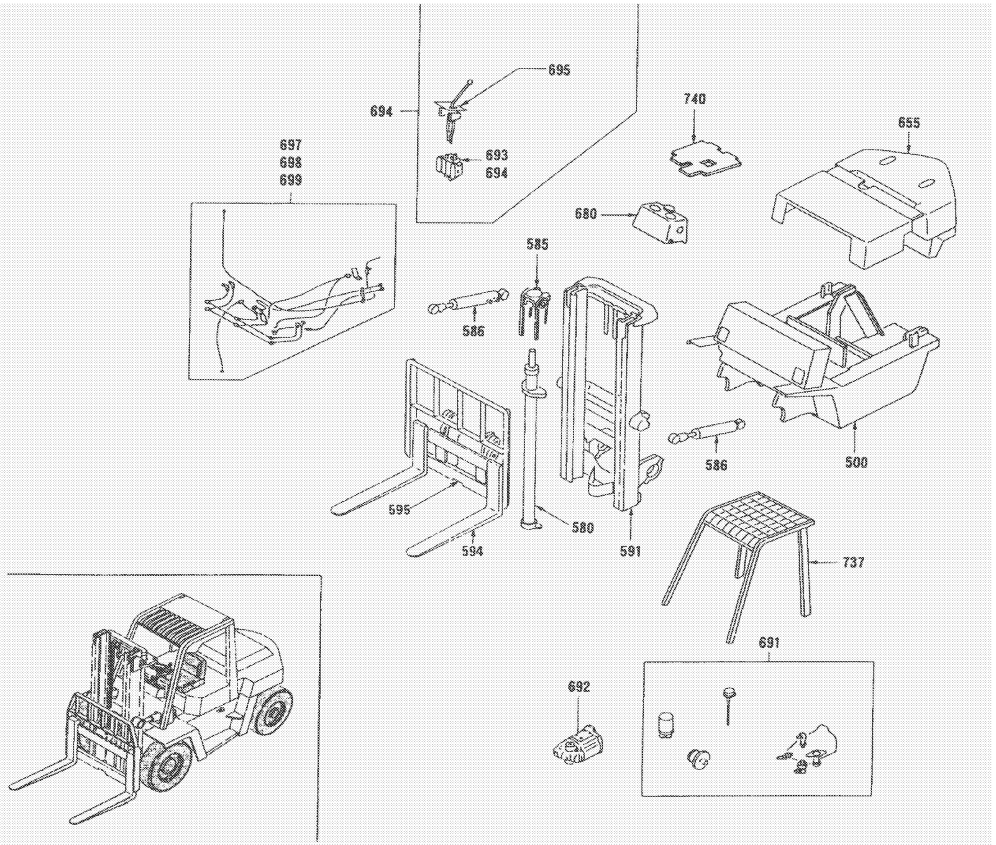

SEC.NO	SECTION NAME
695C	HYDRAULIC CONTROL LEVER (3 SPOOL-3 LEVER)
695D	HYDRAULIC CONTROL LEVER (4 SPOOL-4 LEVER)
695G	HYDRAULIC CONTROL LEVER (3 SPOOL-2 LEVER)
695H	HYDRAULIC CONTROL LEVER (4 SPOOL-3 LEVER)
695I	HYDRAULIC CONTROL LEVER (FC OPTION FITTING PARTS)
695J	HYDRAULIC CONTROL LEVER (FC OPTION)
695K	HYDRAULIC CONTROL LEVER (FC OPTION WIRING)
697A	HYDRAULIC OIL PIPING (FROM TANK TO PUMP)
697B	HYDRAULIC OIL PIPING (FROM TANK TO VALVE)
697C	HYDRAULIC OIL PIPING (FROM VALVE TO CYLINDER)
697D	HYDRAULIC OIL PIPING (FROM TANK TO STRG)
697E	HYDRAULIC OIL PIPING (SINGLE ACCUMULATOR)
698A	HYDRAULIC OIL PIPING MAST (2W)
698B	HYDRAULIC OIL PIPING MAST (2F)
698D	HYDRAULIC OIL PIPING MAST (3F)
698E	HYDRAULIC OIL PIPING MAST (3V)
699A	HYDRAULIC OIL PIPING (ATTACHMENT) (2W-OUTER CHAIN 2.0, 2.5 & 3.0TON-UPTO MAY 2008)
699B	HYDRAULIC OIL PIPING (ATTACHMENT) (2W-OUTER CHAIN, 3 SPOOL 2.0, 2.5 & 3.0TON-UPTO MAY 2008)
699C	HYDRAULIC OIL PIPING (ATTACHMENT) (2W-OUTER CHAIN, 4 SPOOL 2.0, 2.5 & 3.0TON-UPTO MAY 2008)
699D	HYDRAULIC OIL PIPING (ATTACHMENT) (2F & LIFTEC 2W)
699E	HYDRAULIC OIL PIPING (ATTACHMENT) (2F, 3 SPOOL)
699F	HYDRAULIC OIL PIPING (ATTACHMENT) (2F, 4 SPOOL)
699G	HYDRAULIC OIL PIPING (ATTACHMENT) (3F)
699H	HYDRAULIC OIL PIPING (ATTACHMENT) (3F, 3 SPOOL)
699I	HYDRAULIC OIL PIPING (ATTACHMENT) (3F, 4 SPOOL)
699J	HYDRAULIC OIL PIPING (ATTACHMENT) (3V)
699K	HYDRAULIC OIL PIPING (ATTACHMENT) (3V, 3 SPOOL)
699L	HYDRAULIC OIL PIPING (ATTACHMENT) (3V, 4 SPOOL)
699Q	HYDRAULIC OIL PIPING (ATTACHMENT) (2W-INNER CHAIN 3.5TON)
699R	HYDRAULIC OIL PIPING (ATTACHMENT) (2W-INNER CHAIN, 3 SPOOL 3.5TON)
699S	HYDRAULIC OIL PIPING (ATTACHMENT) (2W-INNER CHAIN, 4 SPOOL 3.5 TON)
699T	HYDRAULIC OIL PIPING (ATTACHMENT) (NML 2W-INNER CHAIN 2.0, 2.5 & 3.0TON-FROM MAY 2008)
699U	HYDRAULIC OIL PIPING (ATTACHMENT) (NML 2W-INNER CHAIN, 3 SPL 2.0, 2.5 & 3.0TON-FROM MAY 2008)
699V	HYDRAULIC OIL PIPING (ATTACHMENT) (NML 2W-INNER CHAIN, 4 SPL 2.0, 2.5 & 3.0TON-FROM MAY 2008)
737	OVER HEAD GUARD
740	FLOOR PANEL

*ILLSTRATIONS SHOWN IN GENERAL INDEX AND GROUP INDEX ARE GENARALIZED DESCRIPTIONS FOR ALL MODELS AND ARE NOT PRECISE IN ALL DETAILS.

SEC. 500A

FRAME -MAIN

BASTIDOR

RAHMEN

CHASSIS

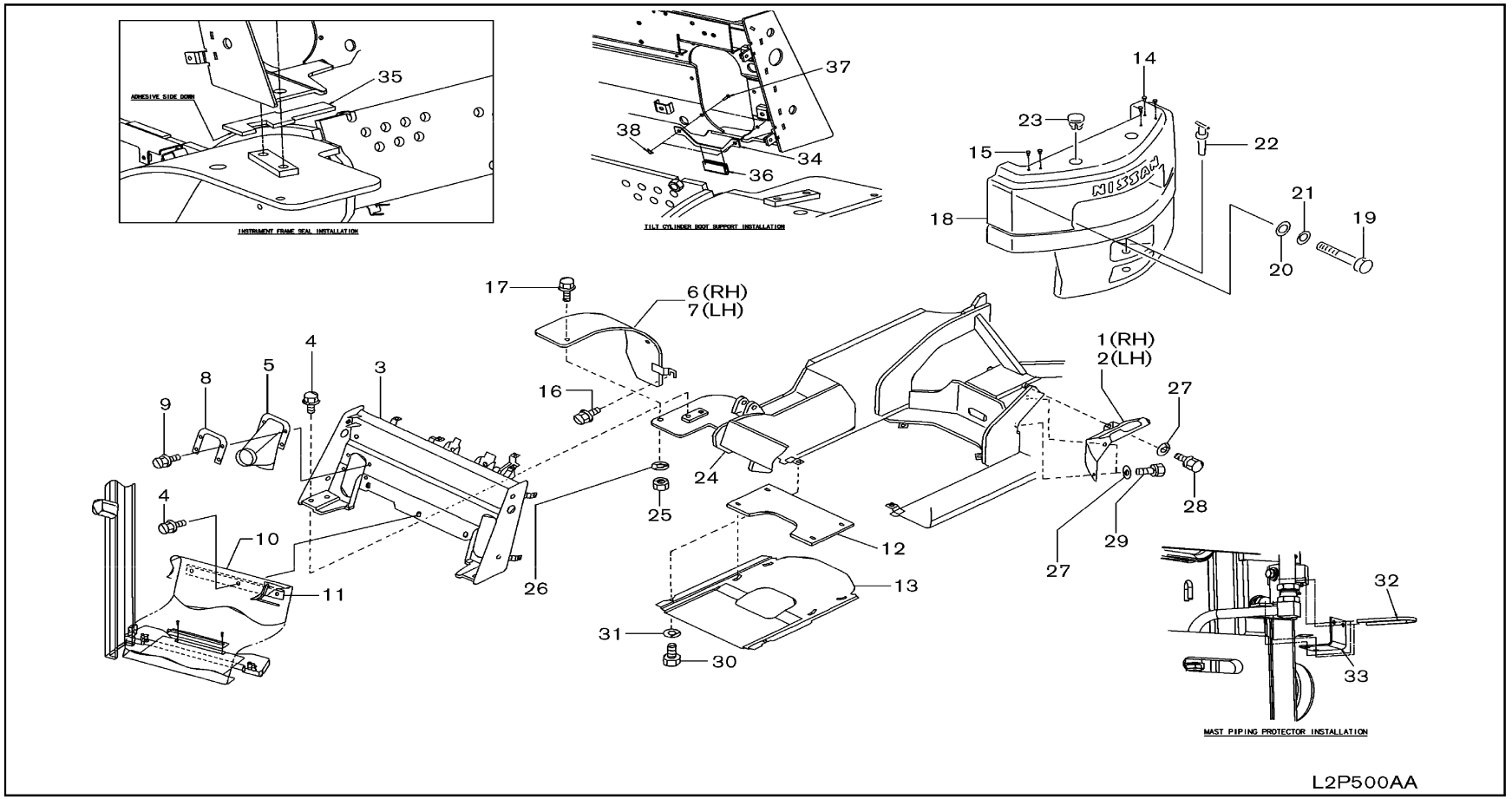

SEC. 500A

FRAME -MAIN

BASTIDOR

RAHMEN

CHASSIS

NC	S	KEY NO.	LEV	PART NO.	PART NAME	SPECIFICATION	QTY	APPLIED DATE	ICANF	FORMER PART NO.	KD	APPLIED MODEL 01 02 03 04 05 06 07 08 09 10 11 12 13 14 15 16 17 18 19 20 21 22 23 24 25 26 27 28 29
		1	01	1	**50890-FV40A**	COVER-SIDE,RH	F/SILENT (ANTI NOISE)	01	0107-			* *
			02	1	**50890-FV60A**		F/SILENT (ANTI NOISE)	01	0107-			* *
		2	01	1	**50891-FV40A**	COVER-SIDE,LH	F/SILENT (ANTI NOISE)	01	0107-			* *
			02	1	**50891-FV60A**		F/SILENT (ANTI NOISE)	01	0107-			* *
		3	01	1	**50510-FB40A**	FRAME ASSY-INSTRUMENT		01	0107-			o o o o o o o o o o o o o o o o o o o o o o o o o o o o o
			02	1	**50510-FV40A**			01	0107-0907			o o
			03	1	**50510-FV60A**			01	0907-			o o
		4	01	1	**01121-03311**	BOLT		07	0107-			o o o o o o o o o o o o o o o o o o o o o o o o o o o o o
		5	01	1	**50580-FK000**	COVER ASSY-TILT CYL RH	F/TILT CYL COVER	02	0107-			* *
		6	01	1	**51480-FK110**	FENDER ASSY-OVER,RH	F/DOUBLE TIRE	01	0107-			* *
			02	1	**51480-FK300**			01	0107-			o o o o o o o
			03	1	**51480-FK400**			01	0107-			o o o o
			04	1	**51480-FK410**		F/DOUBLE TIRE	01	0107-			* * * *
			05	1	**51480-FB485**		F/FLOAT TIRE	01	0107-			* * * * * * * * * * * * * * * * *
			06	1	**51480-FB685**		F/FLOAT TIRE	01	0107-			* * * * * * * * * * * *
		7	01	1	**51481-FK110**	FENDER ASSY-OVER LH	F/DOUBLE TIRE	01	0107-			* *
			02	1	**51481-FK300**			01	0107-			o o o o o o o
			03	1	**51481-FK400**			01	0107-			o o o o
			04	1	**51481-FK410**		F/DOUBLE TIRE	01	0107-			* * * *
			05	1	**51481-FB485**		F/FLOAT TIRE	01	0107-			* * * * * * * * * * * * * * * * *
			06	1	**51481-FB685**		F/FLOAT TIRE	01	0107-			* * * * * * * * * * * *
		8	01	1	**50594-FK000**	PLATE-COVER RH	F/TILT CYL COVER	02	0107-			* *
		9	01	1	**84952-3W700**	CLIP-TRIM	F/TILT CYL COVER	12	0107-			* *
		10	01	1	**50882-FK100**	COVER ASSY-TRANSFER	F/TILT CYL COVER ANTI RUST	01	0107-0607			* *
			02	1	**50882-FB800**		F/3F 3 SPOOL TILT CYL COVER ANTI RUST	01	0607-			* *
			03	1	**50882-FB802**		F/3F 4 SPOOL TILT CYL COVER ANTI RUST	01	0607-			* *
			04	1	**50882-FB803**		F/2W & 2F 3 SPOOL TILT CYL COVER ANTI RUST	01	0607-			* *
			05	1	**50882-FB804**		F/2W & 2F 4 SPOOL TILT CYL COVER ANTI RUST	01	0607-			* *
		11	01	1	**50886-FK100**	BRACKET-TRANSFER COVER RH	F/TILT CYL COVER ANTI RUST	01	0107-			* *
		12	01	1	**50850-FK100**	INSULATOR-ENGINE UNDER COVER	F/SILENT (ANTI NOISE)	01	0107-			* *
			02	1	**50850-GG20A**		F/SILENT (ANTI NOISE)	01	0107-			* * * * * *
		13	01	1	**50841-FK100**	COVER ASSY-ENGINE UNDER	F/SILENT (ANTI NOISE)	01	0107-			* *
			02	1	**50841-FV50A**		F/SILENT (ANTI NOISE)	01	0107-			* * * * * *
			03	1	**50841-FK300**		F/SILENT (ANTI NOISE)	01	0107-			* * * * * * *
			04	1	**50841-FV70A**		F/SILENT (ANTI NOISE)	01	0107-			* *
		14	01	1	**65531-FB010**	PLUG		03	0107-0708			o o o o o o o o o o o o o o o o o o o o o o o o o o o o o
		15	01	1	**65531-FB000**	PLUG		02	0107-0708			o o o o o o o o o o o o o o o o o o o o o o o o o o o o o

SEC. 500A

FRAME -MAIN

BASTIDOR

RAHMEN

CHASSIS

NC	S	KEY NO.	LEV	PART NO.	PART NAME	SPECIFICATION	QTY	APPLIED DATE	TCANF	FORMER PART NO.	KD
C		**16**	01	1	**08114-0201D**	SCREW-HHM M10-1.25X20 W/SPRW	F/DOUBLE OR FLOAT TIRE	02	0107-		
N			02	1	**08114-0201D**		F/DOUBLE OR FLOAT TIRE	02	0107-		
C		**17**	01	1	**08114-0351D**	SCREW-HHM M10-1.25X35 W/SPRW	F/DOUBLE OR FLOAT TIRE	04	0107-		
N			02	1	**08114-0351D**		F/DOUBLE OR FLOAT TIRE	04	0107-		
		18	01	1	**65510-FB300**	COUNTERWEIGHT		01	0107-0708		
			02	1	**65510-FB930**			01	0708-		
			03	1	**65510-FB300**			01	0708-		
			04	1	**65510-FB400**			01	0107-0708		
			05	1	**65510-FB940**			01	0708-		
			06	1	**65510-FB400**			01	0708-		
			07	1	**65510-FB500**			01	0107-0708		
			08	1	**65510-FB950**			01	0708-		
			09	1	**65510-FB500**			01	0708-		
			10	1	**65510-FB600**			01	0107-0708		
			11	1	**65510-FB960**			01	0708-		
			12	1	**65510-FB600**			01	0708-		
			13	1	**65510-FB700**			01	0107-0708		
			14	1	**65510-FB970**			01	0708-		
			15	1	**65510-FB700**			01	0708-		
		19	01	1	**65530-L1400**	BOLT		01	0107-		
		20	01	1	**65535-L3000**	WASHER		01	0107-		
		21	01	1	**59026-L0700**	WASHER-LOCK		01	0107-		
		22	01	1	**65520-22H00**	PIN-TRACTION		01	0107-0411		
			02	1	**65520-GG00A**			01	0411-		
		23	01	1	**65527-FK100**	CAP-SLINGER		02	0107-		
		24	01	1	**74892-FB00A**	COVER-PVC FOAM		01	0107-		
C		**25**	01	1	**08911-1401A**	NUT-HEX M10-1.25 4T	F/DOUBLE OR FLOAT TIRE	04	0107-		
N			02	1	**08911-1401A**		F/DOUBLE OR FLOAT TIRE	04	0107-		
C		**26**	01	1	**08915-4401A**	WASHER-FLAT M10	F/DOUBLE OR FLOAT TIRE	04	0107-		
N			02	1	**08915-4401A**		F/DOUBLE OR FLOAT TIRE	04	0107-		
		27	01	1	**01311-00221**	WASHER-PLAIN	F/SILENT (ANTI NOISE)	06	0107-		
		28	01	1	**08110-8161G**	SCREW-HHM M8-1.25X16 W/SPRW	F/SILENT (ANTI NOISE)	02	0107-		
		29	01	1	**08110-8201G**	SCREW-HHM M8-1.25X20 W/LKW	F/SILENT (ANTI NOISE)	04	0107-		
		30	01	1	**08120-8251E**	SCREW-HHM M8-1.25X25 W/LKW	F/SILENT (ANTI NOISE)	04	0107-		
		31	01	1	**08915-5381A**	WASHER-FLAT M8	F/SILENT (ANTI NOISE)	04	0107-		
		32	01	1	**24216-W1000**	CLIP	F/3F ANTI RUST	02	0607-		
		33	01	1	**50882-FB801**	COVER-RUB, MAST PIPING	F/3F ANTI RUST	01	0607-		

APPLIED MODEL

01	02	03	04	05	06	07	08	09	10	11	12	13	14	15	16	17	18	19	20	21	22	23	24	25	26	27	28	29
MI PV 2000 JV	MI PV 2000 DV	MI PV 2000 LV	MI PV 2000 SV	MI PU 2000 JV	MI PU 2000 DV	MI PU 2000 LV	MI PU 2000 SV	MI PY 2000 LV	MI PP 2055 JV	MI PP 2055 DV	MI PP 2055 LV	MI PP 2055 SV	MI PU 2055 JV	MI PU 2055 DV	MI PU 2055 LV	MI PU 2055 SV	MI PY 2055 LV	MI UJ 2088 JV	MI UJ 2088 DV	MI UG 2088 LV	MI UG 2000 JV	MI UG 2000 DV	MI UG 2000 LV	MI UY 2000 LV	MI UG 2055 JV	MI UG 2055 DV	MI UG 2055 LV	MI UY 2055 LV
○	○	○	○	○	○	○	○	○																				
○				○				○																				
	○	○	○		○	○	○																					
									○	○	○	○	○	○	○	○	○											
								○					○			○												
										○	○	○		○	○													
																		○	○	○								
																		○	○									
																				○	○	○	○	○				
																				○				○				
																					○	○						
																									○	○	○	○
																									○			○
																											○	○
○	○	○	○	○	○	○	○	○	○	○	○	○	○	○	○	○	○	○	○	○	○	○	○	○	○	○	○	○
○	○	○	○	○	○	○	○	○	○	○	○	○	○	○	○	○	○	○	○	○	○	○	○	○	○	○	○	○
○	○	○	○	○	○	○	○	○	○	○	○	○	○	○	○	○	○	○	○	○	○	○	○	○	○	○	○	○
○	○	○	○	○	○	○	○	○	○	○	○	○	○	○	○	○	○	○	○	○	○	○	○	○	○	○	○	○
○	○	○	○	○	○	○	○	○	○	○	○	○	○	○	○	○	○	○	○	○	○	○	○	○	○	○	○	○
○	○	○	○	○	○	○	○	○	○	○	○	○	○	○	○	○	○	○	○	○	○	○	○	○	○	○	○	○
○	○	○	○	○	○	○	○	○	○	○	○	○	○	○	○	○	○	○	○	○	○	○	○	○	○	○	○	○
○	○	○	○	○	○	○	○	○	○	○	○	○	○	○	○	○	○	○	○	○	○	○	○	○	○	○	○	○
○	○	○	○	○	○	○	○	○	○	○	○	○	○	○	○	○	○	○	○	○	○	○	○	○	○	○	○	○
○	○	○	○	○	○	○	○	○	○	○	○	○	○	○	○	○	○	○	○	○	○	○	○	○	○	○	○	○
○	○	○	○	○	○	○	○	○	○	○	○	○	○	○	○	○	○	○	○	○	○	○	○	○	○	○	○	○
○	○	○	○	○	○	○	○	○	○	○	○	○	○	○	○	○	○	○	○	○	○	○	○	○	○	○	○	○
○	○	○	○	○	○	○	○	○	○	○	○	○	○	○	○	○	○	○	○	○	○	○	○	○	○	○	○	○
○	○	○	○	○	○	○	○	○	○	○	○	○	○	○	○	○	○	○	○	○	○	○	○	○	○	○	○	○
○	○	○	○	○	○	○	○	○	○	○	○	○	○	○	○	○	○	○	○	○	○	○	○	○	○	○	○	○
○	○	○	○	○	○	○	○	○	○	○	○	○	○	○	○	○	○	○	○	○	○	○	○	○	○	○	○	○
○	○	○	○	○	○	○	○	○	○	○	○	○	○	○	○	○	○	○	○	○	○	○	○	○	○	○	○	○
○	○	○	○	○	○	○	○	○	○	○	○	○	○	○	○	○	○	○	○	○	○	○	○	○	○	○	○	○
○	○	○	○	○	○	○	○	○	○	○	○	○	○	○	○	○	○	○	○	○	○	○	○	○	○	○	○	○
○	○	○	○	○	○	○	○	○	○	○	○	○	○	○	○	○	○	○	○	○	○	○	○	○	○	○	○	○
*	*	*	*	*	*	*	*	*	*	*	*	*	*	*	*	*	*											
																		○	○	○	○	○	○	○	○	○	○	○
*	*	*	*	*	*	*	*	*	*	*	*	*	*	*	*	*	*											
																		○	○	○	○	○	○	○	○	○	○	○
*	*	*	*	*	*	*	*	*	*	*	*	*	*	*	*	*	*	*	*	*	*	*	*	*	*	*	*	*
*	*	*	*	*	*	*	*	*	*	*	*	*	*	*	*	*	*	*	*	*	*	*	*	*	*	*	*	*
*	*	*	*	*	*	*	*	*	*	*	*	*	*	*	*	*	*	*	*	*	*	*	*	*	*	*	*	*
*	*	*	*	*	*	*	*	*	*	*	*	*	*	*	*	*	*	*	*	*	*	*	*	*	*	*	*	*
*	*	*	*	*	*	*	*	*	*	*	*	*	*	*	*	*	*	*	*	*	*	*	*	*	*	*	*	*
*	*	*	*	*	*	*	*	*	*	*	*	*	*	*	*	*	*	*	*	*	*	*	*	*	*	*	*	*
*	*	*	*	*	*	*	*	*	*	*	*	*	*	*	*	*	*	*	*	*	*	*	*	*	*	*	*	*

SEC. 500A

FRAME -MAIN

BASTIDOR

RAHMEN

CHASSIS

NC	S	KEY NO.	LEV	PART NO.	PART NAME	SPECIFICATION	QTY	APPLIED DATE	ICANF	FORMER PART NO.	KD
		34 01	1	**50594-FB800**	PLATE-INST FR TILT SEAL	F/ANTI RUST	02	0607-			
		35 01	1	**65380-FB800**	SEAL-RUB, INST RH	F/ANTI RUST	01	0607-			
		02	1	**65381-FB800**	SEAL-RUB, INST LH	F/ANTI RUST	01	0607-			
		36 01	1	**65380-FB801**	SEAL-RUB, INST TILTE	F/ANTI RUST	02	0607-			
		37 01	1	**08120-62528**	SCREW-HHM M6-1.0X25 W/LKW	F/ANTI RUST	04	0607-			
		38 01	1	**08911-10637**	NUT-HEX W/CON SPRW M6-1.0	F/ANTI RUST	04	0607-			

APPLIED MODEL

01	02	03	04	05	06	07	08	09	10	11	12	13	14	15	16	17	18	19	20	21	22	23	24	25	26	27	28	29
MIPA200JV	MIPA200VV	MIPA200LV	MIPA200SV	MIUA200JV	MIUA200DV	MIUA200LV	MIUA200SV	MIYA200LV	MIPA255JV	MIPA255DV	MIPA255LV	MIPA255SV	MIUA255JV	MIUA255DV	MIUA255LV	MIUA255SV	MIUA258LV	MIUJA258JV	MIUJA258DV	MIUGA300JV	MIUGA300DV	MIUGA300LV	MIYGA300LV	MIUGA355JV	MIUGA355DV	MIUGA355LV	MIYGA355LV	MIUGA355LI
*	*	*	*	*	*	*	*	*	*	*	*	*	*	*	*	*	*	*	*	*	*	*	*	*	*	*	*	*
*	*	*	*	*	*	*	*	*	*	*	*	*	*	*	*	*	*	*	*	*	*	*	*	*	*	*	*	*
*	*	*	*	*	*	*	*	*	*	*	*	*	*	*	*	*	*	*	*	*	*	*	*	*	*	*	*	*
*	*	*	*	*	*	*	*	*	*	*	*	*	*	*	*	*	*	*	*	*	*	*	*	*	*	*	*	*
*	*	*	*	*	*	*	*	*	*	*	*	*	*	*	*	*	*	*	*	*	*	*	*	*	*	*	*	*
*	*	*	*	*	*	*	*	*	*	*	*	*	*	*	*	*	*	*	*	*	*	*	*	*	*	*	*	*

SEC. 500B

FRAME -FRONT COVERS

BASTIDOR

RAHMEN

CHASSIS

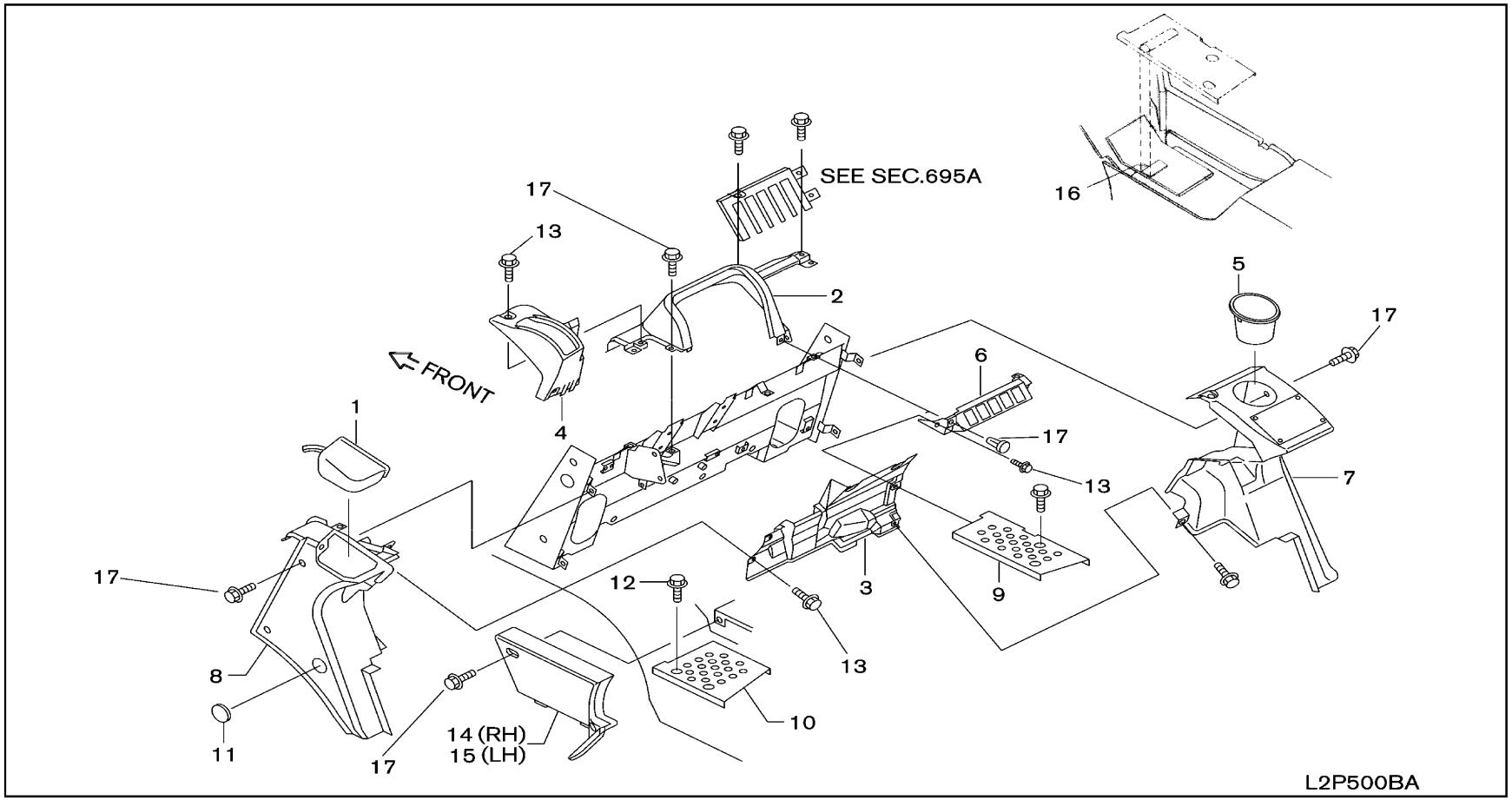

SEC. 500B

FRAME -FRONT COVERS

BASTIDOR

RAHMEN

CHASSIS

NC	S	KEY NO.	LEV	PART NO.	PART NAME	SPECIFICATION	QTY	APPLIED DATE	ICANF	FORMER PART NO.	KD
		1 01	1	**50520-FK10A**	LID-RESERVOIR		01	0107-			
		2 01	1	**50550-FK10A**	COVER ASSY-INST UPR		01	0107-			
		3 01	1	**50553-FK10A**	COVER-INST LWR		01	0107-			
		4 01	1	**50554-FK10A**	COVER-PKB		01	0107-			
		5 01	1	**50555-FK10A**	HOLDER-CUP		01	0107-			
		6 01	1	**50556-FK10A**	COVER-LEVER RR		01	0107-			
		7 01	1	**50581-FK10A**	COVER-TILT CYLINDER RH		01	0107-			
		8 01	1	**50591-FK10A**	COVER-TILT CYLINDER LH		01	0107-			
		9 01	1	**51882-FK100**	PLATE-STEP RH		01	0107-			
		10 01	1	**51883-FK100**	PLATE-STEP LH		01	0107-			
		11 01	1	**93161-6K200**	GROMMET		02	0107-			
		12 01	1	**01456-00411**	BOLT		04	0107-			
		13 01	1	**01553-06721**	CLIP		10	0107-			
		14 01	1	**50562-FK10A**	COVER-LEVER RH		01	0107-			
		15 01	1	**50563-FK10A**	COVER-LEVER LH		01	0107-			
		16 01	1	**74940-43K00**	INSULATOR-FR FLOOR		02	0107-			
		17 01	1	**08363-6162C**	SCREW-HH PP M6-1.0X16 W/PW		15	0107-			

APPLIED MODEL

01	02	03	04	05	06	07	08	09	10	11	12	13	14	15	16	17	18	19	20	21	22	23	24	25	26	27	28	29
MIPA20JV	MIPA20DV	MIPA20LV	MIPA20LS	MIPA20JV	MIUA20DV	MIUA20LV	MIUA20LS	MIUA20LL	MIYA20JV	MIPA25DV	MIPA25LV	MIPA25LV	MIUA25JV	MIUA25DV	MIUA25LV	MIUA25LL	MIYA25LS	MIUJA28JV	MIUJA28DV	MIUA28LV	MIGA30JV	MIGA30DV	MIGA30LV	MIGA30LV	MIYA30DV	MIUA30LV	MIUA35DV	MIUA35LV	MIGA35LV
○	○	○	○	○	○	○	○	○	○	○	○	○	○	○	○	○	○	○	○	○	○	○	○	○	○	○	○	○
○	○	○	○	○	○	○	○	○	○	○	○	○	○	○	○	○	○	○	○	○	○	○	○	○	○	○	○	○
○	○	○	○	○	○	○	○	○	○	○	○	○	○	○	○	○	○	○	○	○	○	○	○	○	○	○	○	○
○	○	○	○	○	○	○	○	○	○	○	○	○	○	○	○	○	○	○	○	○	○	○	○	○	○	○	○	○
○	○	○		○	○	○	○		○	○	○	○		○	○	○		○	○	○	○	○	○	○	○	○	○	○
○	○	○	○	○	○	○	○	○	○	○	○	○	○	○	○	○	○	○	○	○	○	○	○	○	○	○	○	○
○	○	○	○	○	○	○	○	○	○	○	○	○	○	○	○	○	○	○	○	○	○	○	○	○	○	○	○	○
○	○	○	○	○	○	○	○	○	○	○	○	○	○	○	○	○	○	○	○	○	○	○	○	○	○	○	○	○
○	○	○	○	○	○	○	○	○	○	○	○	○	○	○	○	○	○	○	○	○	○	○	○	○	○	○	○	○
○	○	○	○	○	○	○	○	○	○	○	○	○	○	○	○	○	○	○	○	○	○	○	○	○	○	○	○	○
○	○	○	○	○	○	○	○	○	○	○	○	○	○	○	○	○	○	○	○	○	○	○	○	○	○	○	○	○
○	○	○	○	○	○	○	○	○	○	○	○	○	○	○	○	○	○	○	○	○	○	○	○	○	○	○	○	○
○	○	○	○	○	○	○	○	○	○	○	○	○	○	○	○	○	○	○	○	○	○	○	○	○	○	○	○	○
○	○	○	○	○	○	○	○	○	○	○	○	○	○	○	○	○	○	○	○	○	○	○	○	○	○	○	○	○
○	○	○	○	○	○	○	○	○	○	○	○	○	○	○	○	○	○	○	○	○	○	○	○	○	○	○	○	○

SEC. 500C

FRAME -DEBRIS OPTION

BASTIDOR

RAHMEN

CHASSIS

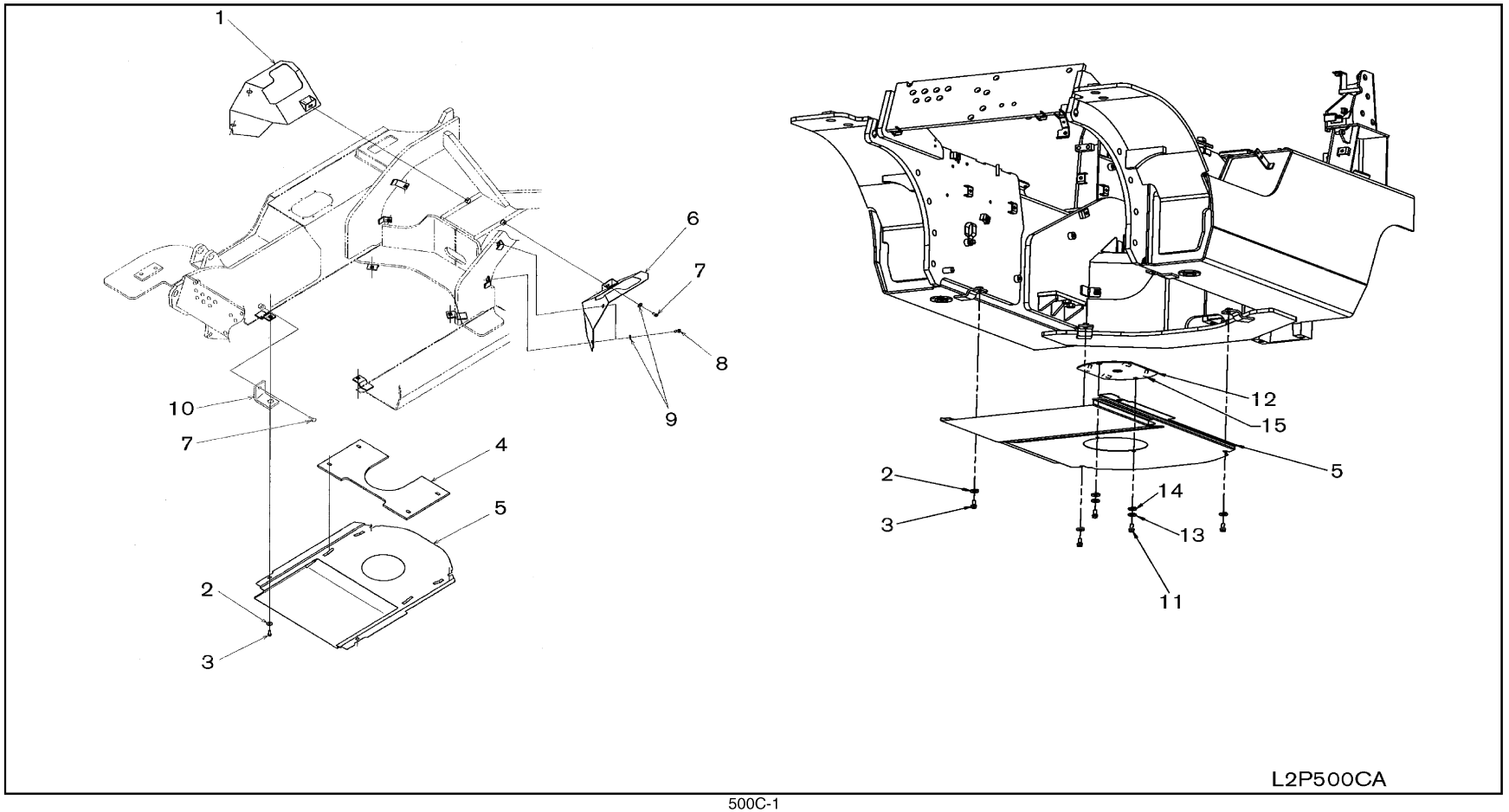

SEC. 500C

FRAME -DEBRIS OPTION

BASTIDOR

RAHMEN

CHASSIS

NC	S	KEY NO.	LEV	PART NO.	PART NAME	SPECIFICATION	QTY	APPLIED DATE	ICANF	FORMER PART NO.	KD	APPLIED MODEL 01 02 03 04 05 06 07 08 09 10 11 12 13 14 15 16 17 18 19 20 21 22 23 24 25 26 27 28 29
		1	01	1	**50890-FV40J**	COVER ASSY-FRAME RR, RH		01	0107-			********** ********** *****
			02	1	**50890-FV60J**			01	0107-			********** **********
			03	1	**50890-FV40A**		F/ANTI NOISE	01	0107-			********** ********** *****
			04	1	**50890-FV60A**		F/ANTI NOISE	01	0107-			********** **********
			05	1	**50890-FV80A**		F/RECYCLER	01	0608-			********** ********** *****
			06	1	**50890-FV80B**		F/RECYCLER	01	0608-			********** **********
		2	01	1	**08915-5381A**	WASHER-FLAT M8	F/UNDER COVER & F/ANTI NOISE	04	0107-			********** ********** ********** **********
		3	01	1	**08120-8251E**	SCREW-HHM M8-1.25X25 W/LKW	F/UNDER COVER & F/ANTI NOISE	04	0107-			********** ********** ********** **********
		4	01	1	**50850-FK100**	INSUL-ENG UNDER COVER	F/ANTI NOISE	01	0107-			********* ********** ********** **********
			02	1	**50850-GG20A**		F/ANTI NOISE	01	0107-			********** **********
		5	01	1	**50841-FV40J**	COVER ASSY-ENG UNDER	F/UNDER COVER	01	0107-			********** ********** *****
			02	1	**50841-FV60J**		F/UNDER COVER	01	0107-			********** **********
			03	1	**50841-FK100**		F/ANTI NOISE	01	0107-			********* ********** ********** **********
			04	1	**50841-FV50A**		F/ANTI NOISE	01	0107-			********** **********
			05	1	**50841-FK300**		F/ANTI NOISE	01	0107-			********** **********
			06	1	**50841-FV70A**		F/ANTI NOISE	01	0107-			********** **********
			07	1	**50841-FV84A**		F/RECYCLER	01	0608-			********* ********** ********** **********
			08	1	**50841-FB685**		F/RECYCLER	01	0608-			********** **********
			09	1	**50841-FV85A**		F/RECYCLER	01	0608-			********** **********
			10	1	**50841-FV80B**		F/RECYCLER	01	0608-			********** **********
		6	01	1	**50891-FV40J**	COVER ASSY-FRAME RR, LH		01	0107-			********** ********** *****
			02	1	**50891-FV60J**			01	0107-			********** **********
			03	1	**50891-FV40A**		F/ANTI NOISE	01	0107-			********** ********** *****
			04	1	**50891-FV60A**			01	0107-			********** **********
			05	1	**50891-FV80A**		F/RECYCLER	01	0608-			********** ********** *****
			06	1	**50891-FV80B**		F/RECYCLER	01	0608-			********** **********
		7	01	1	**08110-8161G**	SCREW-HHM M8-1.25X16 W/SPRW		02	0107-			********* ********** ********** **********
			02	1	**08110-8161G**			04	0107-			********** **********
		8	01	1	**08110-8201G**	SCREW-HHM M8-1.25X20 W/SPRW		04	0107-			********** ********** ********** **********
		9	01	1	**01311-00221**	WASHER-PLAIN		06	0107-			********** ********** ********** **********
		10	01	1	**50647-GG10A**	BRACKET ASSY-COVER		02	0107-			********** **********
		11	01	1	**11277-004**	SCREW-BHSC 1/4-20X.625	F/RECYCLER	02	0107-			********** ********** ********** **********
		12	01	1	**50814-FB801**	COVER ASSY-PANEL ACCESS	F/RECYCLER	01	0107-			********** ********** ********** **********
		13	01	1	**7000-009**	WASHER-LOCK SPLIT 1/4	F/RECYCLER	02	0107-			********** ********** ********** **********
		14	01	1	**7163-002**	WASHER-FLAT 1/4	F/RECYCLER	02	0107-			********** ********** ********** **********
		15	01	1	**74940-43K00**	INSUL-FR FLOOR	F/RECYCLER	02	0107-			********** ********** ********** **********

SEC. 580A

LIFT CYLINDER (2W)

CILINDRO DE ELEVACION

AUFTRIEBZYLINDER

CYLINDRE DE LEVAGE

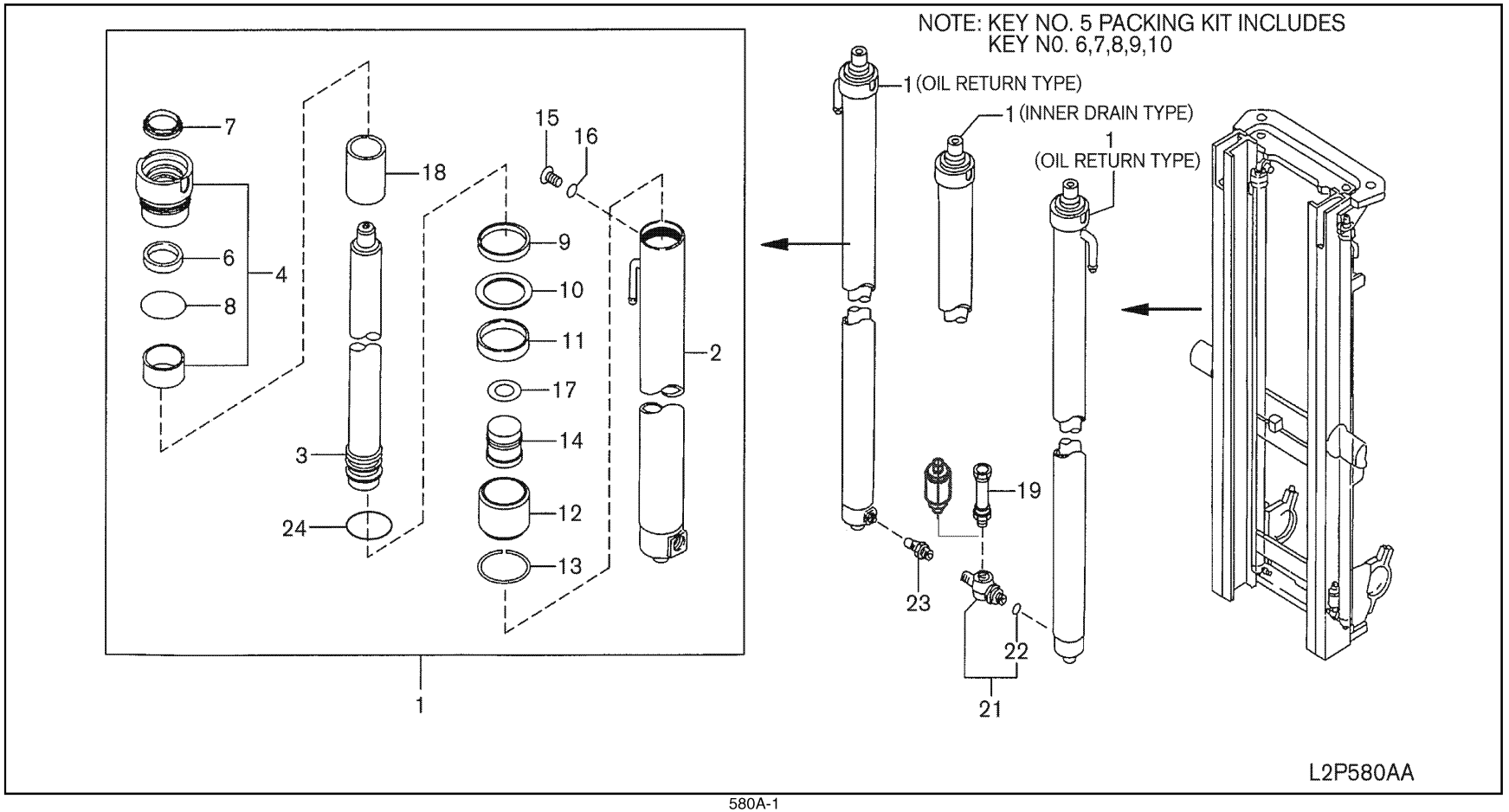

SEC. 580A

LIFT CYLINDER (2W)

CILINDRO DE ELEVACION

AUFTRIEBZYLINDER

CYLINDRE DE LEVAGE

NC	S	KEY NO.	LEV	PART NO.	PART NAME	SPECIFICATION	QTY	APPLIED DATE	ICANF	FORMER PART NO.	KD	APPLIED MODEL 01 02 03 04 05 06 07 08 09 10 11 12 13 14 15 16 17 18 19 20 21 22 23 24 25 26 27 28 29
		1 01	1	**58010-FF063**	CYLINDER ASSY-LIFT	RH & LH-270	02	0107-				* * * * * * * * * * * * * * * * * *
		02	1	**58010-FF060**		RH & LH-300	02	0107-				* * * * * * * * * * * * * * * * * *
		03	1	**58010-FF064**		RH & LH-330	02	0107-				* * * * * * * * * * * * * * * * * *
		04	1	**58010-FF065**		RH & LH-350	02	0107-				* * * * * * * * * * * * * * * * * *
		05	1	**58010-FF076**		RH-370 F/OIL RETURN	01	0107-				* * * * * * * * * * * * * * * * * *
		06	1	**58011-FF076**		LH-370 F/OIL RETURN	01	0107-				* * * * * * * * * * * * * * * * * *
		07	1	**58010-FF077**		RH-400 F/OIL RETURN	01	0107-				* * * * * * * * * * * * * * * * * *
		08	1	**58011-FF077**		LH-400 F/OIL RETURN	01	0107-				* * * * * * * * * * * * * * * * * *
		09	1	**58010-FF078**		RH-450 F/OIL RETURN	01	0107-				* * * * * * * * * * * * * * * * * *
		10	1	**58011-FF078**		LH-450 F/OIL RETURN	01	0107-				* * * * * * * * * * * * * * * * * *
		11	1	**58010-FF079**		RH-500 F/OIL RETURN	01	0107-				* * * * * * * * * * * * * * * * * *
		12	1	**58011-FF079**		LH-500 F/OIL RETURN	01	0107-				* * * * * * * * * * * * * * * * * *
		13	1	**58010-FF363**		RH & LH-270	02	0107-				* * * * * * *
		14	1	**58010-FF360**		RH & LH-300	02	0107-				* * * * * * *
		15	1	**58010-FF364**		RH & LH-330	02	0107-				* * * * * * *
		16	1	**58010-FF365**		RH & LH-350	02	0107-				* * * * * * *
		17	1	**58010-FF376**		RH-370 F/OIL RETURN	01	0107-				* * * * * * *
		18	1	**58011-FF376**		LH-370 F/OIL RETURN	01	0107-				* * * * * * *
		19	1	**58010-FF377**		RH-400 F/OIL RETURN	01	0107-				* * * * * * *
		20	1	**58011-FF377**		LH-400 F/OIL RETURN	01	0107-				* * * * * * *
		21	1	**58010-FF378**		RH-450 F/OIL RETURN	01	0107-				* * * * * * *
		22	1	**58011-FF378**		LH-450 F/OIL RETURN	01	0107-				* * * * * * *
		23	1	**58010-FF379**		RH-500 F/OIL RETURN	01	0107-				* * * * * * *
		24	1	**58011-FF379**		LH-500 F/OIL RETURN	01	0107-				* * * * * * *
		25	1	**58010-GG40A**		300	02	0107-				* * * *
		26	1	**58010-GG44A**		330	02	0107-				* * * *
		27	1	**58010-GG45B**		350 F/OIL RETURN	02	0107-				* * * *
		28	1	**58010-GG46B**		370 F/OIL RETURN	02	0107-				* * * *
		29	1	**58010-GG47B**		400 F/OIL RETURN	02	0107-				* * * *
		30	1	**58010-GG48B**		450 F/OIL RETURN	02	0107-				* * * *
		31	1	**58010-GG49B**		500 F/OIL RETURN	02	0107-				* * * *
		2 01	2	**58015-FF063**	TUBE ASSY-CYLINDER	270	02	0107-				* * * * * * * * * * * * * * * * * *
		02	2	**58015-FF060**		300	02	0107-				* * * * * * * * * * * * * * * * * *
		03	2	**58015-FF064**		330	02	0107-				* * * * * * * * * * * * * * * * * *
		04	2	**58015-FF065**		350	02	0107-				* * * * * * * * * * * * * * * * * *
		05	2	**58015-FF076**		RH-370 F/OIL RETURN	01	0107-				* * * * * * * * * * * * * * * * * *
		06	2	**58016-FF076**		LH-370 F/OIL RETURN	01	0107-				* * * * * * * * * * * * * * * * * *

SEC. 580A

LIFT CYLINDER (2W)

CILINDRO DE ELEVACION

AUFTRIEBZYLINDER

CYLINDRE DE LEVAGE

NC	S	KEY NO.	LEV	PART NO.	PART NAME	SPECIFICATION	QTY	APPLIED DATE	TCANF	FORMER PART NO.	KD	APPLIED MODEL 01 02 03 04 05 06 07 08 09 10 11 12 13 14 15 16 17 18 19 20 21 22 23 24 25 26 27 28 29
		2 07	2	**58015-FF077**		RH-400 F/OIL RETURN	01	0107-				* * * * * * * * * * * * * * * * * *
		08	2	**58016-FF077**		LH-400 F/OIL RETURN	01	0107-				* * * * * * * * * * * * * * * * * *
		09	2	**58015-FF078**		RH-450 F/OIL RETURN	01	0107-				* * * * * * * * * * * * * * * * * *
		10	2	**58016-FF078**		LH-450 F/OIL RETURN	01	0107-				* * * * * * * * * * * * * * * * * *
		11	2	**58015-FF079**		RH-500 F/OIL RETURN	01	0107-				* * * * * * * * * * * * * * * * * *
		12	2	**58016-FF079**		LH-500 F/OIL RETURN	01	0107-				* * * * * * * * * * * * * * * * * *
		13	2	**58015-FF363**		270	02	0107-				* * * * * * *
		14	2	**58015-FF360**		300	02	0107-				* * * * * * *
		15	2	**58015-FF364**		330	02	0107-				* * * * * * *
		16	2	**58015-FF365**		350	02	0107-				* * * * * * *
		17	2	**58015-FF376**		RH-370 F/OIL RETURN	01	0107-				* * * * * * *
		18	2	**58016-FF376**		LH-370 F/OIL RETURN	01	0107-				* * * * * * *
		19	2	**58015-FF377**		RH-400 F/OIL RETURN	01	0107-				* * * * * * *
		20	2	**58016-FF377**		LH-400 F/OIL RETURN	01	0107-				* * * * * * *
		21	2	**58015-FF378**		RH-450 F/OIL RETURN	01	0107-				* * * * * * *
		22	2	**58016-FF378**		LH-450 F/OIL RETURN	01	0107-				* * * * * * *
		23	2	**58015-FF379**		RH-500 F/OIL RETURN	01	0107-				* * * * * * *
		24	2	**58016-FF379**		LH-500 F/OIL RETURN	01	0107-				* * * * * * *
		25	1	**58015-GG40A**	TUBE ASSY-CYLINDER	300	02	0107-				* * * *
		26	1	**58015-GG44A**		330	02	0107-				* * * *
		27	1	**58015-GG45B**		350 F/OIL RETURN	02	0107-				* * * *
		28	1	**58015-GG46B**		370 F/OIL RETURN	02	0107-				* * * *
		29	1	**58015-GG47B**		400 F/OIL RETURN	02	0107-				* * * *
		30	1	**58015-GG48B**		450 F/OIL RETURN	02	0107-				* * * *
		31	1	**58015-GG49B**		500 F/OIL RETURN	02	0107-				* * * *
		3 01	2	**58030-FF063**	ROD ASSY-PISTON	270	02	0107-				* * * * * * * * * * * * * * * * * *
		02	2	**58030-FF060**		300	02	0107-				* * * * * * * * * * * * * * * * * *
		03	2	**58030-FF064**		330	02	0107-				* * * * * * * * * * * * * * * * * *
		04	2	**58030-FF065**		350	02	0107-				* * * * * * * * * * * * * * * * * *
		05	2	**58030-FF076**		370 F/OIL RETURN	02	0107-				* * * * * * * * * * * * * * * * * *
		06	2	**58030-FF077**		400 F/OIL RETURN	02	0107-				* * * * * * * * * * * * * * * * * *
		07	2	**58030-FF078**		450 F/OIL RETURN	02	0107-				* * * * * * * * * * * * * * * * * *
		08	2	**58030-FF079**		500 F/OIL RETURN	02	0107-				* * * * * * * * * * * * * * * * * *
		09	2	**58030-FF363**		270	02	0107-				* * * * * * *
		10	2	**58030-FF360**		300	02	0107-				* * * * * * *
		11	2	**58030-FF364**		330	02	0107-				* * * * * * *
		12	2	**58030-FF365**		350	02	0107-				* * * * * * *

SEC. 580A

LIFT CYLINDER (2W)

CILINDRO DE ELEVACION

AUFTRIEBZYLINDER

CYLINDRE DE LEVAGE

NC	S	KEY NO.	LEV	PART NO.	PART NAME	SPECIFICATION	QTY	APPLIED DATE	ICANF	FORMER PART NO.	KD	APPLIED MODEL 01 02 03 04 05 06 07 08 09 10 11 12 13 14 15 16 17 18 19 20 21 22 23 24 25 26 27 28 29
		3	13	2	**58030-FF376**	ROD ASSY-PISTON	370 F/OIL RETURN	02	0107-				* * * * * * *			

SEC. 580A

LIFT CYLINDER (2W)

CILINDRO DE ELEVACION

AUFTRIEBZYLINDER

CYLINDRE DE LEVAGE

NC	S	KEY NO.	LEV	PART NO.	PART NAME	SPECIFICATION	QTY	APPLIED DATE	ICANF	FORMER PART NO.	KD	APPLIED MODEL 01 02 03 04 05 06 07 08 09 10 11 12 13 14 15 16 17 18 19 20 21 22 23 24 25 26 27 28 29
		8	04	2	**58026-23H60**	RING-O	370+400+450+500 F/OIL RETURN	04	0107-			*******
			05	2	**58026-GG01A**		300+330	02	0107-			****
			06	2	**58026-20H62**		350+370+400+450+500 F/OIL RETURN	02	0107-			****
		9	01	2	**58035-FF060**	SEAL-U RING, PISTON ROD	270+300+330+350	02	0107-			**********
			02	2	**58035-10H60**		370+400+450+500 F/OIL RETURN	02	0107-			**********
			03	2	**58035-FF360**		270+300+330+350	02	0107-			*******
			04	2	**58035-23H60**		370+400+450+500 F/OIL RETURN	02	0107-			*******
			05	2	**58035-GG01A**	RING-U PISTON	300+330	02	0107-			****
			06	2	**58035-20H62**		350+370+400+450+500 F/OIL RETURN	02	0107-			****
		10	01	2	**58424-FF060**	RING-BACK UP	270+300+330+350	04	0107-			**********
			02	2	**58424-10H60**		370+400+450+500 F/OIL RETURN	04	0107-			**********
			03	2	**58424-FF360**		270+300+330+350	04	0107-			*******
			04	2	**58424-23H60**		370+400+450+500 F/OIL RETURN	04	0107-			*******
			05	2	**58424-GG01A**		300+330	02	0107-			****
			06	2	**58424-20H62**		350+370+400+450+500 F/OIL RETURN	02	0107-			****
		11	01	2	**58623-10H61**	BUSH		02	0107-			**********
			02	2	**58623-23H61**			02	0107-			*******
			03	2	**58623-20H62**			02	0107-			****
		12	01	2	**58234-FE060**	BEARING-CUSHION		02	0107-			**********
			02	2	**58234-FF360**			02	0107-			**********
		13	01	2	**58288-FE000**	RING-SNAP		04	0107-			**********
			02	2	**58288-FF360**		270+300+330+350	04	0107-			*******
			03	2	**58288-FF300**		370+400+450+500 F/OIL RETURN	04	0107-			*******
			04	2	**58288-FF300**			02	0107-			****
		14	01	2	**69317-FE060**	VALVE ASSY-CHECK	270+300+330+350	02	0107-			**********
			02	2	**69317-FE060**		300+330	02	0107-			****
		15	01	2	**58116-42K01**	PLUG	270+300+330+350	02	0107-			**********
			02	2	**58116-42K01**		300+330	02	0107-			****
		16	01	2	**69130-FE060**	SEAL-DUST	270+300+330+350	02	0107-			**********
			02	2	**69130-FE060**	GASKET	300+330	02	0107-			****
		17	01	2	**58239-FF360**	SPACER	270+300+330+350	02	0107-			*******
			02	2	**58239-FF360**		300+330	02	0107-			****
		18	01	2	**58039-L2605**	SPACER-ROD	350	02	0107-			**********
			02	2	**58039-10H06**		370 F/OIL RETURN	02	0107-			**********
			03	2	**58039-L2607**		400+450+500 F/OIL RETURN	02	0107-			**********
			04	2	**58039-L1405**		350	02	0107-			*******
			05	2	**58039-L1406**		370 F/OIL RETURN	02	0107-			*******

SEC. 580A

LIFT CYLINDER (2W)

CILINDRO DE ELEVACION

AUFTRIEBZYLINDER

CYLINDRE DE LEVAGE

NC	S	KEY NO.	LEV	PART NO.	PART NAME	SPECIFICATION	QTY	APPLIED DATE	ICANF	FORMER PART NO.	KD
	18	06	2	**58039-L1407**		400+450+500 F/OIL RETURN	02	0107-			
		07	2	**58039-GG40A**	SPACER-ROD	300	02	0107-			
		08	2	**58039-GG44A**		330	02	0107-			
		09	2	**58039-GG45B**		350 F/OIL RETURN	02	0107-			
		10	2	**58039-GG46B**		370 F/OIL RETURN	02	0107-			
		11	2	**58039-GG47B**		400+450+500 F/OIL RETURN	02	0107-			
	19	01	1	**69350-FJ111**	CONNECTOR ASSY		01	0107-			
C		02	1	**69350-FK311**			01	0107-			
N		03	1	**58070-20H00**	VALVE ASSY-FLOW REGULATOR		01	0107-			
	21	01	1	**58065-L2601**	CONNECTOR ASSY		01	0107-			
		02	1	**58065-24H01**			01	0107-			
	22	01	1	**69371-L1100**	SEAL-O RING		01	0107-			
		02	1	**69370-L1100**			01	0107-			
	23	01	1	**58071-FE200**	VALVE ASSY-SAFETY		01	0107-			
C		02	1	**58071-GL10A**			01	0107-			
	24	01	2	**58234-24H07**	RING-WEAR		02	0107-			
		02	2	**58234-L1400**			02	0107-			
		03	2	**58026-GG40A**	RING-O		02	0107-			

APPLIED MODEL

01	02	03	04	05	06	07	08	09	10	11	12	13	14	15	16	17	18	19	20	21	22	23	24	25	26	27	28	29
MIPA2000JVV	MIPA2000DVV	MIPA2000LVS	MIPA2000LVV	MIPA2000JVV	MUUA2000DVV	MUUA2000LVV	MUUA2000LVS	MUUA2000 VV	MYPA2055JVV	MPPA2055DVV	MPPA2055LVV	MPPA2055LVS	MUUA2055JVV	MUUA2055DVV	MUUA2055LVV	MUUA2055LVS	MYUA2055 VV	MJJA2088JVV	MJJA2088DVV	MGGA2088LVV	MGGA3300JVV	MGGA3300DVV	MGGA3300LVV	MYGA3305 VV	MUUA3355JVV	MUUA3355DVV	MUUA3355LVV	MYGA3355 VV
																		*	*	*	*	*	*	*				
																									*	*	*	*
																									*	*	*	*
																									*	*	*	*
																									*	*	*	*
																									*	*	*	*
*	*	*	*	*	*	*	*	*	*	*	*	*	*	*	*	*	*											
																		*	*	*	*	*	*	*				
																									*	*	*	*
*	*	*	*	*	*	*	*	*	*	*	*	*	*	*	*	*	*											
																		*	*	*	*	*	*	*	*	*	*	*
*	*	*	*	*	*	*	*	*	*	*	*	*	*	*	*	*	*											
																		*	*	*	*	*	*	*	*	*	*	*
*	*	*	*	*	*	*	*	*	*	*	*	*	*	*	*	*	*											
																		*	*	*	*	*	*	*	*	*	*	*
*	*	*	*	*	*	*	*	*	*	*	*	*	*	*	*	*	*											
																		*	*	*	*	*	*	*				
																									*	*	*	*

SEC. 580B

LIFT CYLINDER (2F UPTO SEPT. 2009)

CILINDRO DE ELEVACION

AUFTRIEBZYLINDER

CYLINDRE DE LEVAGE

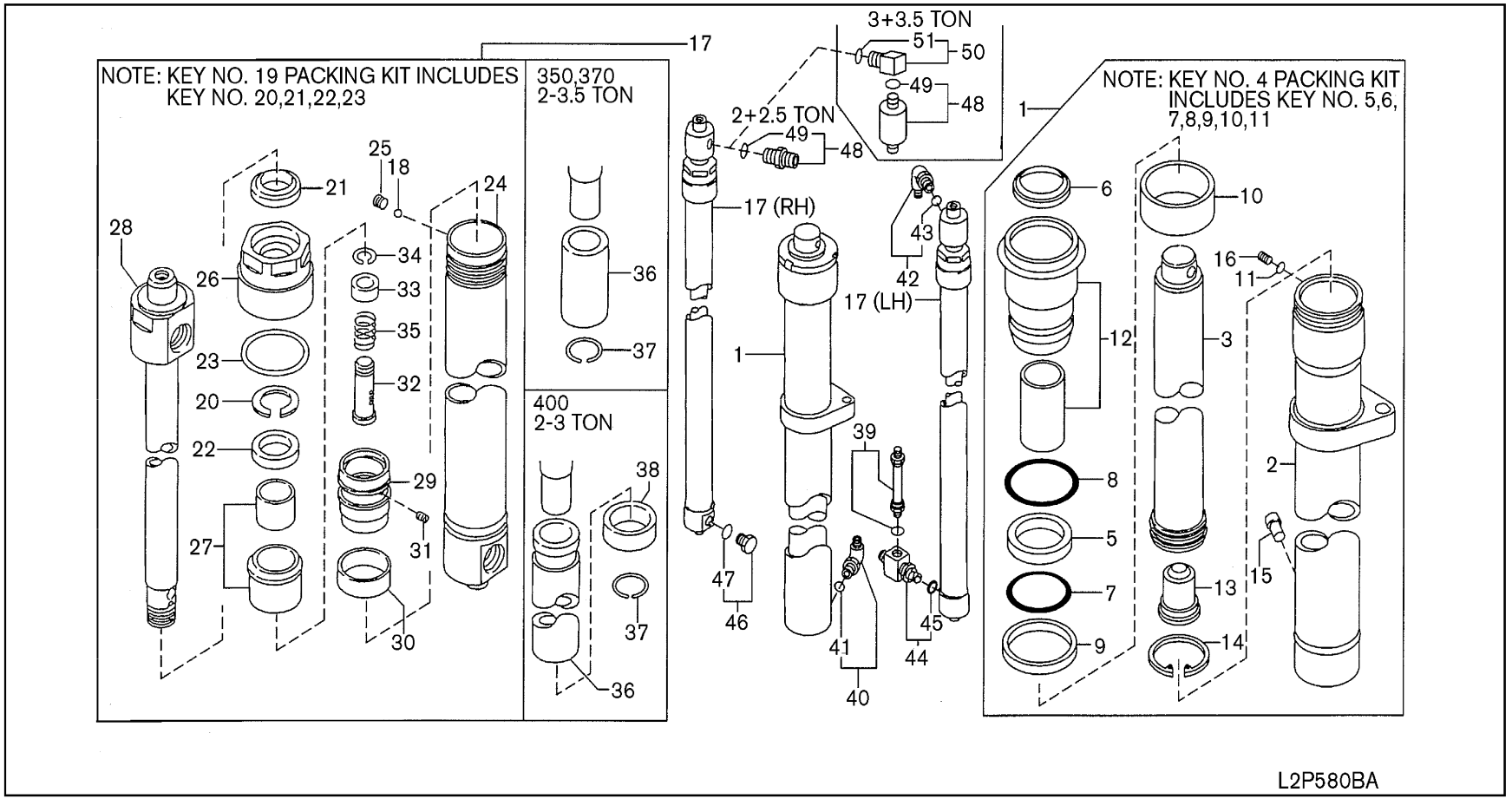

SEC. 580B

LIFT CYLINDER (2F UPTO SEPT. 2009)

CILINDRO DE ELEVACION

AUFTRIEBZYLINDER

CYLINDRE DE LEVAGE

NC	S	KEY NO.	LEV	PART NO.	PART NAME	SPECIFICATION	QTY	APPLIED DATE	ICANF	FORMER PART NO.	KD	APPLIED MODEL 01 02 03 04 05 06 07 08 09 10 11 12 13 14 15 16 17 18 19 20 21 22 23 24 25 26 27 28 29
		1 01	1	**58410-52K02**	CYLINDER ASSY-FULL FREE	300	01	0107-1208				********** ********** **********

SEC. 580B

LIFT CYLINDER (2F UPTO SEPT. 2009)

CILINDRO DE ELEVACION

AUFTRIEBZYLINDER

CYLINDRE DE LEVAGE

NC	S	KEY NO.	LEV	PART NO.	PART NAME	SPECIFICATION	QTY	APPLIED DATE	ICANF	FORMER PART NO.	KD
	2	15	2	**58415-62K04**	TUBE ASSY-LIFT FULL FREE	350	01	0107-0909			
		16	2	**58415-62K05**		370	01	0107-0909			
		17	2	**58415-62K06**		400	01	0107-0909			
		18	2	**58415-62K09**		420	01	0107-0909			
		19	2	**58415-GG42D**		300	01	0107-0909			
		20	2	**58415-GG43D**		330	01	0107-0909			
		21	2	**58415-GG44D**		350	01	0107-0909			
		22	2	**58415-GG45D**		370	01	0107-0909			
		23	2	**58415-GG46D**		400	01	0107-0909			
	3	01	2	**58430-52K02**	ROD ASSY-PISTON	300	01	0107-1208			
		02	2	**58430-52K03**		330	01	0107-1208			
		03	2	**58430-52K04**		350	01	0107-1208			
		04	2	**58430-52K05**		370	01	0107-1208			
		05	2	**58430-52K06**		400	01	0107-1208			
		06	2	**58430-52K09**		420	01	0107-1208			
		07	2	**58430-42K02**		300	01	1208-0909			
		08	2	**58430-42K03**		330	01	1208-0909			
		09	2	**58430-42K04**		350	01	1208-0909			
		10	2	**58430-42K05**		370	01	1208-0909			
		11	2	**58430-42K06**		400	01	1208-0909			
		12	2	**NA-**		420-CONTACT FACTORY	01	1208-0909			
		13	2	**58430-62K02**		300	01	0107-0909			
		14	2	**58430-62K03**		330	01	0107-0909			
		15	2	**58430-62K04**		350	01	0107-0909			
		16	2	**58430-62K05**		370	01	0107-0909			
		17	2	**58430-62K06**		400	01	0107-0909			
		18	2	**58430-62K09**		420	01	0107-0909			
		19	2	**58430-21H02**		300	01	0107-0909			
		20	2	**58430-21H03**		330	01	0107-0909			
		21	2	**58430-21H04**		350	01	0107-0909			
		22	2	**58430-21H05**		370	01	0107-0909			
		23	2	**58430-21H06**		400	01	0107-0909			
	4	01	1	**58499-52K01**	PACKING KIT-FULL FREE CYL		01	0107-1208			
		02	1	**58499-42K01**			01	1208-0909			
		03	1	**58499-62K01**			01	0107-0909			
		04	3	**58499-21H01**			01	0107-0909			
	5	01	2	**58035-42K01**	U RING		01	0107-0909			

APPLIED MODEL

01	02	03	04	05	06	07	08	09	10	11	12	13	14	15	16	17	18	19	20	21	22	23	24	25	26	27	28	29
MI PJ AA 200 JV	MI PV AA 200 DV	MI PV AA 200 LV	MI PS AA 200 SV	MI PU AA 200 JV	MI UU AA 200 DV	MI UU AA 200 LV	MI UY AA 200 SV	MI YP AA 205 JV	MI PP AA 205 DV	MI PP AA 205 LV	MI PP AA 205 SV	MI PU AA 205 JV	MI UU AA 205 DV	MI UU AA 205 LV	MI UU AA 205 SV	MI UY AA 205 JV	MI YU AA 205 DV	MI UU AA 205 LV	MI UU AA 205 SV	MI UU AA 205 JV	MI UU AA 205 DV	MI UY AA 205 LV	MI YU AA 205 JV	MI UU AA 205 DV	MI UU AA 205 LV	MI UY AA 205 SV	MI YU AA 205 JV	MI UU AA 205 DV	MI UU AA 205 LV	MI UY AA 205 SV
GJ II AA 258 JV	GJ II AA 258 DV	GJ II AA 258 LV	GJ II AA 258 SV	GG II AA 300 JV	GG II AA 300 DV	GG II AA 300 LV	GG II AA 300 SV	GG II AA 305 JV	GG II AA 305 DV	GG II AA 305 LV	GG II AA 305 SV	GG II AA 355 JV	GG II AA 355 DV	GG II AA 355 LV	GG II AA 355 SV	GG II AA 358 JV	GG II AA 358 DV	GG II AA 358 LV	GG II AA 358 SV	GG II AA 358 JV	GG II AA 358 DV	GG II AA 358 LV	GG II AA 358 JV	GG II AA 358 DV	GG II AA 358 LV	GG II AA 358 SV	GG II AA 358 JV	GG II AA 358 DV	GG II AA 358 LV	GG II AA 358 SV
*	*	*	*	*	*	*	*	*	*	*	*	*	*	*	*	*	*	*	*	*	*	*	*	*	*	*	*	*

SEC. 580B

LIFT CYLINDER (2F UPTO SEPT. 2009)

CILINDRO DE ELEVACION

AUFTRIEBZYLINDER

CYLINDRE DE LEVAGE

NC	S	KEY NO.	LEV	PART NO.	PART NAME	SPECIFICATION	QTY	APPLIED DATE	ICANF	FORMER PART NO.	KD	APPLIED MODEL 01 02 03 04 05 06 07 08 09 10 11 12 13 14 15 16 17 18 19 20 21 22 23 24 25 26 27 28 29
		5	02	2	**49522-L9000**	U RING		01	0107-0909			*******
			03	2	**58035-21H01**	RING-U		01	0107-0909			****
		6	01	2	**58422-42K01**	RING-WIPER		01	0107-0909			**********
			02	2	**58422-62K01**			01	0107-0909			*******
			03	2	**58422-21H01**			01	0107-0909			****
		7	01	2	**58026-52K01**	O RING		01	0107-1208			**********
			02	2	**58026-51H60**			01	1208-0909			**********
			03	2	**58026-62K01**			01	0107-0909			*******
			04	2	**58026-21H01**	SEAL-O RING		01	0107-0909			****
		8	01	2	**58026-52K02**	O RING		01	0107-1208			**********
			02	2	**58026-42K01**			01	1208-0909			**********
			03	2	**58026-62K02**			01	0107-0909			*******
			04	2	**58026-21H02**	SEAL-O RING		01	0107-0909			****
		9	01	2	**58035-52K02**	U RING		01	0107-1208			**********
			02	2	**58035-42K02**			01	1208-0909			**********
			03	2	**58035-62K01**			01	0107-0909			*******
			04	2	**58035-21H02**	SEAL ASSY-RING		01	0107-0909			****
		10	01	2	**58434-52K01**	RING-SLIDE		01	0107-1208			**********
			02	2	**58434-42K01**			01	1208-0909			**********
			03	2	**58434-62K01**			01	0107-0909			*******
			04	2	**58434-21H01**			01	0107-0909			****
		11	01	2	**58022-42K01**	SEAL-PISTON		01	0107-0909			********** ********** *****
		12	01	2	**58498-52K01**	KIT-BUSH & PACKING		01	0107-1208			**********
			02	2	**58498-42K01**			01	1208-0909			**********
			03	2	**58498-62K01**			01	0107-0909			*******
			04	2	**58498-21H01**	HEAD ASSY-CYLINDER		02	0107-0909			****
		13	01	2	**58050-42K01**	VALVE-CHECK A		01	0107-0909			********** ********** *****
		14	01	2	**58028-42K01**	RING-SNAP		01	0107-0909			********** ********** *****
		15	01	2	**58471-02H01**	VALVE-DOWN SAFETY		01	0107-0909			**********
			02	2	**58471-25H01**			01	0107-0909			********** *****
		16	01	2	**58116-42K01**	PLUG		01	0107-0909			********** ********** *****
		17	01	1	**58211-11H03**	CYLINDER ASSY-LIFT MAST	300	02	0107-0909			**********
			02	1	**58211-11H04**		330	02	0107-0909			**********
			03	1	**58211-11H05**		350	02	0107-0909			**********
			04	1	**58211-11H06**		370	02	0107-0909			**********
			05	1	**58211-11H07**		400	02	0107-0909			**********
			06	1	**58211-51K00**		420	02	0107-0909			**********

SEC. 580B

LIFT CYLINDER (2F UPTO SEPT. 2009)

CILINDRO DE ELEVACION

AUFTRIEBZYLINDER

CYLINDRE DE LEVAGE

NC	S	KEY NO.	LEV	PART NO.	PART NAME	SPECIFICATION	QTY	APPLIED DATE	ICANF	FORMER PART NO.	KD	APPLIED MODEL 01 02 03 04 05 06 07 08 09 10 11 12 13 14 15 16 17 18 19 20 21 22 23 24 25 26 27 28 29
		17	07	1	**58211-24H03**	CYLINDER ASSY-LIFT MAST	300	02	0107-0909			*******
			08	1	**58211-24H04**		330	02	0107-0909			*******
			09	1	**58211-24H05**		350	02	0107-0909			*******
			10	1	**58211-24H06**		370	02	0107-0909			*******
			11	1	**58211-24H07**		400	02	0107-0909			*******
			12	1	**58211-61K00**		420	02	0107-0909			*******
			13	1	**58211-GG42C**		300	02	0107-0909			****
			14	1	**58211-GG43C**		330	02	0107-0909			****
			15	1	**58211-GG44C**		350	02	0107-0909			****
			16	1	**58211-GG45C**		370	02	0107-0909			****
			17	1	**58211-GG46C**		400	02	0107-0909			****
		18	01	2	**32247-20100**	BALL-STEEL		02	0107-0909			**********************
		19	01	1	**58299-11H00**	PACKING KIT-MAST CYLINDER		02	0107-0909			**********
			02	1	**58299-24H00**			02	0107-0909			*******
			03	1	**58299-21H00**			02	0107-0909			****
		20	01	2	**58224-11H00**	RING-BACK UP		02	0107-0909			**********
			02	2	**58224-24H00**			02	0107-0909			*******
			03	2	**58224-21H00**			02	0107-0909			****
		21	01	2	**58222-11H00**	RING-WIPER		02	0107-0909			**********
			02	2	**58222-24H01**			02	0107-0909			*******
			03	2	**58222-21H01**			02	0107-0909			****
		22	01	2	**58621-L1100**	U RING		02	0107-0909			**********
			02	2	**58221-24H00**			02	0107-0909			*******
			03	2	**58221-21H00**	RING-U		02	0107-0909			****
		23	01	2	**58026-00H00**	O RING		02	0107-0909			**********
			02	2	**58026-10H00**			02	0107-0909			*******
			03	2	**58123-L1400**	SEAL-O RING		02	0107-0909			****
		24	01	2	**58215-01H03**	TUBE ASSY-CYLINDER	300	02	0107-0909			**********
			02	2	**58215-01H04**		330	02	0107-0909			**********
			03	2	**58215-01H05**		350	02	0107-0909			**********
			04	2	**58215-01H06**		370	02	0107-0909			**********
			05	2	**58215-01H07**		400	02	0107-0909			**********
			06	2	**58215-51K00**		420	02	0107-0909			**********
			07	2	**58215-24H03**		300	02	0107-0909			*******
			08	2	**58215-24H04**		330	02	0107-0909			*******
			09	2	**58215-24H05**		350	02	0107-0909			*******
			10	2	**58215-24H06**		370	02	0107-0909			*******

SEC. 580B

LIFT CYLINDER (2F UPTO SEPT. 2009)

CILINDRO DE ELEVACION

AUFTRIEBZYLINDER

CYLINDRE DE LEVAGE

NC	S	KEY NO.	LEV	PART NO.	PART NAME	SPECIFICATION	QTY	APPLIED DATE	ICANF	FORMER PART NO.	KD	APPLIED MODEL 01 02 03 04 05 06 07 08 09 10 11 12 13 14 15 16 17 18 19 20 21 22 23 24 25 26 27 28 29
		24	11	2	**58215-24H07**	TUBE ASSY-CYLINDER	400	02	0107-0909			*******
			12	2	**58215-61K00**		420	02	0107-0909			*******
			13	2	**58416-GG42C**		300	02	0107-0909			****
			14	2	**58416-GG43C**		330	02	0107-0909			****
			15	2	**58416-GG44C**		350	02	0107-0909			****
			16	2	**58416-GG45C**		370	02	0107-0909			****
			17	2	**58416-GG46C**		400	02	0107-0909			****
		25	01	2	**58218-01H00**	SCREW-SET		02	0107-0909			**********************************
		26	01	2	**58220-11H00**	HEAD-CYLINDER		02	0107-0909			*********************
			02	2	**58220-24H00**			02	0107-0909			*******
			03	2	**58220-21H00**			02	0107-0909			****
		27	01	2	**58027-00H00**	HOLDER ASSY-BUSH		02	0107-0909			*********************
			02	2	**58227-24H00**			02	0107-0909			*******
			03	2	**58227-21H00**			02	0107-0909			****
		28	01	2	**58230-11H03**	ROD ASSY-PISTON	300	02	0107-0909			*********************
			02	2	**58230-11H04**		330	02	0107-0909			*********************
			03	2	**58230-11H05**		350	02	0107-0909			*********************
			04	2	**58230-11H06**		370	02	0107-0909			*********************
			05	2	**58230-11H07**		400	02	0107-0909			*********************
			06	2	**58230-51K00**		420	02	0107-0909			*********************
			07	2	**58230-24H03**		300	02	0107-0909			*******
			08	2	**58230-24H04**		330	02	0107-0909			*******
			09	2	**58230-24H05**		350	02	0107-0909			*******
			10	2	**58230-24H06**		370	02	0107-0909			*******
			11	2	**58230-24H07**		400	02	0107-0909			*******
			12	2	**58230-61K00**		420	02	0107-0909			*******
			13	2	**58431-GG42C**		300	02	0107-0909			****
			14	2	**58431-GG43C**		330	02	0107-0909			****
			15	2	**58431-GG44C**		350	02	0107-0909			****
			16	2	**58431-GG45C**		370	02	0107-0909			****
			17	2	**58431-GG46C**		400	02	0107-0909			****
		29	01	2	**58231-11H00**	PISTON		02	0107-0909			*********************
			02	2	**58231-24H00**			02	0107-0909			*******
			03	2	**58231-21H00**			02	0107-0909			****
		30	01	2	**58234-01H00**	RING-SLIDE		02	0107-0909			*********************
			02	2	**58234-24H00**			02	0107-0909			*******
			03	2	**58234-21H00**			02	0107-0909			****

SEC. 580B

LIFT CYLINDER (2F UPTO SEPT. 2009)

CILINDRO DE ELEVACION

AUFTRIEBZYLINDER

CYLINDRE DE LEVAGE

NC	S	KEY NO.	LEV	PART NO.	PART NAME	SPECIFICATION	QTY	APPLIED DATE	ICANF	FORMER PART NO.	KD	APPLIED MODEL 01 02 03 04 05 06 07 08 09 10 11 12 13 14 15 16 17 18 19 20 21 22 23 24 25 26 27 28 29
		31	01	2	**58238-11H00**	SCREW-SET		02	0107-0909			* *
			02	2	**58238-01H00**			02	0107-0909			* *
		32	01	2	**58283-01H00**	SPOOL		02	0107-0909			* *
			02	2	**58283-24H00**			02	0107-0909			* *
			03	2	**58283-21H00**	SPOOL-CUSHION		02	0107-0909			* *
		33	01	2	**58286-01H00**	VALVE-CHECK		02	0107-0909			* *
			02	2	**58286-24H00**			02	0107-0909			* *
			03	2	**58286-21H00**			02	0107-0909			* *
		34	01	2	**58288-01H00**	RING-SNAP		02	0107-0909			* *
			02	2	**58288-24H00**			02	0107-0909			* *
			03	2	**58288-21H00**			02	0107-0909			* *
		35	01	2	**58289-01H00**	SPRING		02	0107-0909			* *
			02	2	**58289-24H00**			02	0107-0909			* *
			03	2	**58289-21H00**			02	0107-0909			* *
		36	01	2	**58239-11H05**	SPACER	350	02	0107-0909			* *
			02	2	**58239-11H06**		370	02	0107-0909			* *
			03	2	**58239-11H07**		400+420	02	0107-0909			* *
			04	2	**58239-24H05**		350	02	0107-0909			* *
			05	2	**58239-24H06**		370	02	0107-0909			* *
			06	2	**58239-24H07**		400+420	02	0107-0909			* *
			07	2	**58239-GG42C**		300	02	0107-0909			* *
			08	2	**58239-GG43C**		330	02	0107-0909			* *
			09	2	**58239-GG44C**		350	02	0107-0909			* *
			10	2	**58239-GG45C**		370	02	0107-0909			* *
			11	2	**58239-GG46C**		400	02	0107-0909			* *
		37	01	2	**58288-01H05**	RING-SNAP	350+370+400+420	02	0107-0909			* *
			02	2	**58288-24H05**		350+370+400+420	02	0107-0909			* *
			03	2	**58288-21H05**			02	0107-0909			* *
		38	01	2	**58234-01H07**	RING-WEAR	400+420	02	0107-0909			* *
			02	2	**58234-24H07**		400+420	02	0107-0909			* *
		39	01	1	**69350-FJ111**	CONNECTOR ASSY		01	0107-0909			* *
			02	1	**69350-FK311**			01	0107-0909			* *
		40	01	1	**58060-L6000**	CONNECTOR ASSY-FULL FREE		01	0107-0909			* *
			02	1	**69142-L1101**	CONNECTOR ASSY		01	0107-0909			* *
		41	01	2	**69370-L1100**	O RING		01	0107-0909			* *
			02	2	**69173-L1100**	SEAL-O RING		01	0107-0909			* *
		42	01	1	**58060-L6000**	CONNECTOR ASSY-FULL FREE		01	0107-0909			* *

SEC. 580B

LIFT CYLINDER (2F UPTO SEPT. 2009)

CILINDRO DE ELEVACION

AUFTRIEBZYLINDER

CYLINDRE DE LEVAGE

NC	S	KEY NO.	LEV	PART NO.	PART NAME	SPECIFICATION	QTY	APPLIED DATE	ICANF	FORMER PART NO.	KD	APPLIED MODEL 01 02 03 04 05 06 07 08 09 10 11 12 13 14 15 16 17 18 19 20 21 22 23 24 25 26 27 28 29
		42 02	1	**58080-L6000**	CONNECTOR ASSY		01	0107-0909				* * * *
		43 01	2	**69370-L1100**	O RING		01	0107-0909				* *
		44 01	1	**58065-L6003**	CONNECTOR ASSY		01	0107-0909				* * * * * * * * * * * * * * * * * *
		02	1	**58065-24H02**			01	0107-0909				* * * * * * * * * * * * *
		45 01	2	**69370-L1100**	O RING		01	0107-0909				* *
		46 01	1	**69384-01H00**	PLUG		01	0107-0909				* *
		47 01	2	**69370-L1100**	O RING		01	0107-0909				* *
		48 01	1	**58071-40H60**	VALVE ASSY-SAFETY		01	0107-0909				* * * * * * * * * * * * * * * * * *
		02	1	**58071-61K00**			01	0107-0909				* * * * * * * * * * * * *
		49 01	2	**69386-L1106**	SEAL-O RING		01	0107-0909				* *
		50 01	1	**58065-L6003**	CONNECTOR ASSY		01	0107-0909				* *
		51 01	2	**69370-L1100**	O RING		01	0107-0909				* *

SEC. 580D

LIFT CYLINDER (3F UPTO SEPT. 2010)

CILINDRO DE ELEVACION

AUFTRIEBZYLINDER

CYLINDRE DE LEVAGE

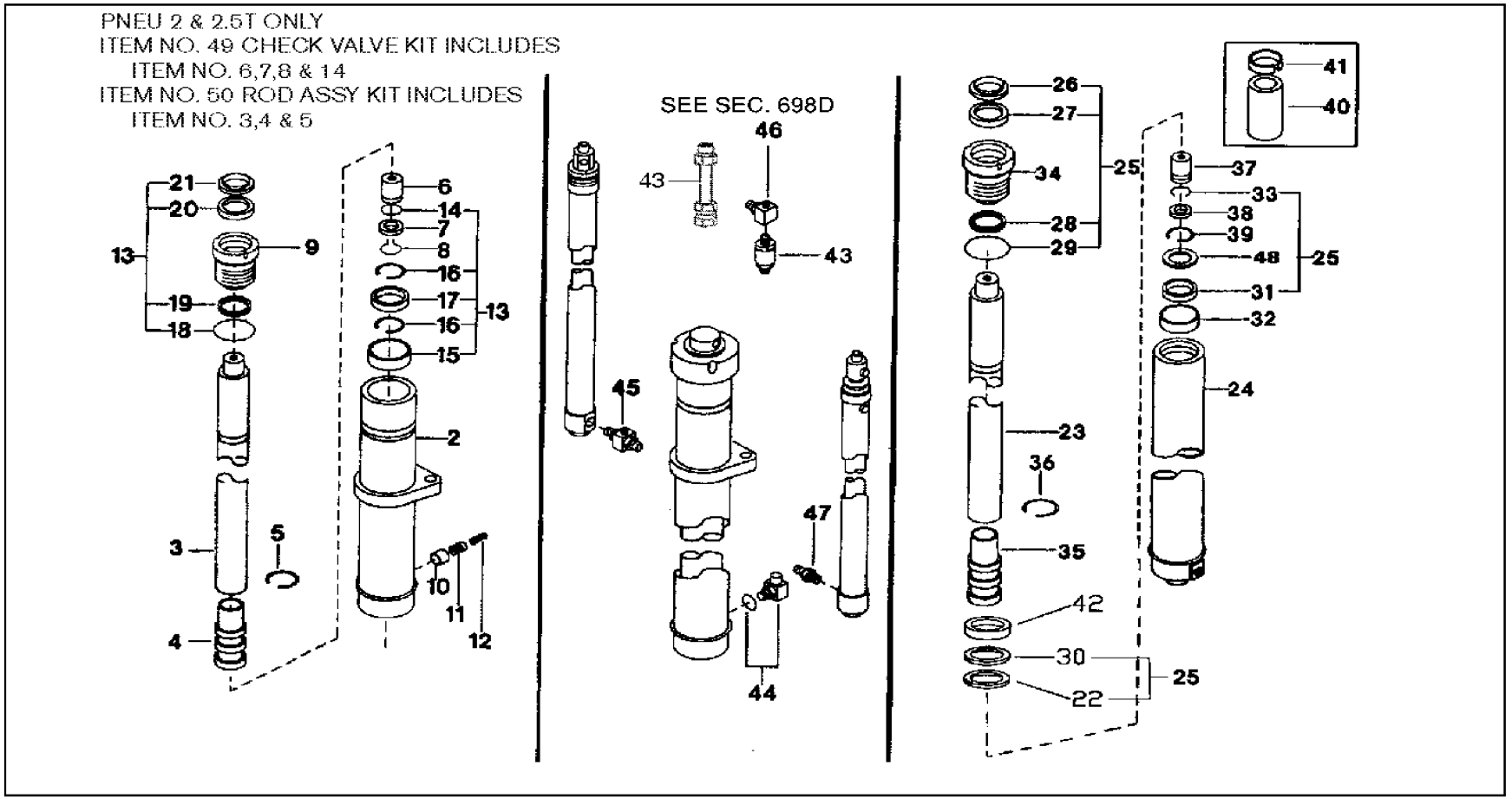

SEC. 580D

LIFT CYLINDER (3F UPTO SEPT. 2010)

CILINDRO DE ELEVACION

AUFTRIEBZYLINDER

CYLINDRE DE LEVAGE

NC	S	KEY NO.	LEV	PART NO.	PART NAME	SPECIFICATION	QTY	APPLIED DATE	TCANF	FORMER PART NO.	KD	APPLIED MODEL 01 02 03 04 05 06 07 08 09 10 11 12 13 14 15 16 17 18 19 20 21 22 23 24 25 26 27 28 29
		0 01	1	**58410-0G211**	CYLINDER ASSY-FULL FREE	385	01	0107-0207				**********
		02	1	**58410-FA31B**		385	01	0207-0910				**********
		03	1	**58410-0G212**		430	01	0107-0207				**********
		04	1	**58410-FA32B**		430	01	0207-0910				**********
		05	1	**58410-0G213**		475	01	0107-0207				**********
		06	1	**58410-FA33B**		475	01	0207-0910				**********
		07	1	**58410-0G214**		515	01	0107-0207				**********
		08	1	**58410-FA34B**		515	01	0207-0910				**********
		09	1	**58410-0G215**		550	01	0107-0207				**********
		10	1	**58410-FA35B**		550	01	0207-0910				**********
		11	1	**58410-0G216**		600	01	0107-0207				**********
		12	1	**58410-FA36B**		600	01	0207-0910				**********
		13	1	**58410-0G217**		650	01	0107-0207				**********
		14	1	**58410-FA37B**		650	01	0207-0910				**********
		15	1	**58410-0G218**		700	01	0107-0207				**********
		16	1	**58410-FA38B**		700	01	0207-0910				**********
		17	1	**58410-0G511**		385	01	0107-0910				**********
		18	1	**58410-0G512**		430	01	0107-0910				**********
		19	1	**58410-0G513**		475	01	0107-0910				**********
		20	1	**58410-0G514**		515	01	0107-0910				**********
		21	1	**58410-0G515**		550	01	0107-0910				**********
		22	1	**58410-0G516**		600	01	0107-0910				**********
		23	1	**58410-0G517**		650	01	0107-0910				**********
		24	1	**58410-0G518**		700	01	0107-0910				**********
		25	1	**58410-6G601**		355	01	0107-0910				**********
		26	1	**58410-6G602**		400	01	0107-0910				**********
		27	1	**58410-6G603**		445	01	0107-0910				**********
		28	1	**58410-6G604**		485	01	0107-0910				**********
		29	1	**58410-6G605**		520	01	0107-0910				**********
		30	1	**58410-6G606**		570	01	0107-0910				**********
		31	1	**58410-6G607**		620	01	0107-0910				**********
		32	1	**58410-6G608**		670	01	0107-0910				**********
		33	1	**58411-FA501**	CYLINDER ASSY-MAST	385	02	0107-0910				**********
		34	1	**58411-FA502**		430	02	0107-0910				**********
		35	1	**58411-FA503**		475	02	0107-0910				**********
		36	1	**58411-FA504**		515	02	0107-0910				**********
		37	1	**58411-FA505**		550	02	0107-0910				**********

SEC. 580D

LIFT CYLINDER (3F UPTO SEPT. 2010)

CILINDRO DE ELEVACION

AUFTRIEBZYLINDER

CYLINDRE DE LEVAGE

NC	S	KEY NO.	LEV	PART NO.	PART NAME	SPECIFICATION	QTY	APPLIED DATE	TCANF	FORMER PART NO.	KD	APPLIED MODEL 01 02 03 04 05 06 07 08 09 10 11 12 13 14 15 16 17 18 19 20 21 22 23 24 25 26 27 28 29
		0 38	1	**58411-FA506**	CYLINDER ASSY-MAST	600	02	0107-0910				**********
		39	1	**58411-FA507**		650	02	0107-0910				**********
		40	1	**58411-FA508**		700	02	0107-0910				**********
		41	1	**58411-FA601**		385	02	0107-0910				**********
		42	1	**58411-FA602**		430	02	0107-0910				**********
		43	1	**58411-FA603**		475	02	0107-0910				**********
		44	1	**58411-FA604**		515	02	0107-0910				**********
		45	1	**58411-FA605**		550	02	0107-0910				**********
		46	1	**58411-FA606**		600	02	0107-0910				**********
		47	1	**58411-FA607**		650	02	0107-0910				**********
		48	1	**58411-FA608**		700	02	0107-0910				**********
		49	1	**58411-6G601**		355	02	0107-0910				**********
		50	1	**58411-6G602**		400	02	0107-0910				**********
		51	1	**58411-6G603**		445	02	0107-0910				**********
		52	1	**58411-6G604**		485	02	0107-0910				**********
		53	1	**58411-6G605**		520	02	0107-0910				**********
		54	1	**58411-6G606**		570	02	0107-0910				**********
		55	1	**58411-6G607**		620	02	0107-0910				**********
		56	1	**58411-6G608**		670	02	0107-0910				**********
		2 01	2	**58415-0G211**	SHELL ASSY	385	01	0107-0207				**********
		02	2	**58415-FA31B**		385	01	0207-0910				**********
		03	2	**58415-0G212**		430	01	0107-0207				**********
		04	2	**58415-FA32B**		430	01	0207-0910				**********
		05	2	**58415-0G213**		475	01	0107-0207				**********
		06	2	**58415-FA33B**		475	01	0207-0910				**********
		07	2	**58415-0G214**		515	01	0107-0207				**********
		08	2	**58415-FA34B**		515	01	0207-0910				**********
		09	2	**58415-0G215**		550	01	0107-0207				**********
		10	2	**58415-FA35B**		550	01	0207-0910				**********
		11	2	**58415-0G216**		600	01	0107-0207				**********
		12	2	**58415-FA36B**		600	01	0207-0910				**********
		13	2	**58415-0G217**		650	01	0107-0207				**********
		14	2	**58415-FA37B**		650	01	0207-0910				**********
		15	2	**58415-0G218**		700	01	0107-0207				**********
		16	2	**58415-FA38B**		700	01	0207-0910				**********
		17	2	**58415-0G511**		385	01	0107-0910				**********
		18	2	**58415-0G512**		430	01	0107-0910				**********

SEC. 580D

LIFT CYLINDER (3F UPTO SEPT. 2010)

CILINDRO DE ELEVACION

AUFTRIEBZYLINDER

CYLINDRE DE LEVAGE

NC	S	KEY NO.	LEV	PART NO.	PART NAME	SPECIFICATION	QTY	APPLIED DATE	ICANF	FORMER PART NO.	KD	APPLIED MODEL 01 02 03 04 05 06 07 08 09 10 11 12 13 14 15 16 17 18 19 20 21 22 23 24 25 26 27 28 29
		2 19	2	**58415-0G513**	SHELL ASSY	475	01	0107-0910				*******
		20	2	**58415-0G514**		515	01	0107-0910				*******
		21	2	**58415-0G515**		550	01	0107-0910				*******
		22	2	**58415-0G516**		600	01	0107-0910				*******
		23	2	**58415-0G517**		650	01	0107-0910				*******
		24	2	**58415-0G518**		700	01	0107-0910				*******
		25	2	**58415-6G601**		355	01	0107-0910				****
		26	2	**58415-6G602**		400	01	0107-0910				****
		27	2	**58415-6G603**		445	01	0107-0910				****
		28	2	**58415-6G604**		485	01	0107-0910				****
		29	2	**58415-6G605**		520	01	0107-0910				****
		30	2	**58415-6G606**		570	01	0107-0910				****
		31	2	**58415-6G607**		620	01	0107-0910				****
		32	2	**58415-6G608**		670	01	0107-0910				****
		3 01	2	**58431-0G511**	ROD	385	01	0107-0207				*********************
		02	2	**58431-0G511**		385	01	0207-0910				*******
		03	2	**58431-0G512**		430	01	0107-0207				*********************
		04	2	**58431-0G512**		430	01	0207-0910				*******
		05	2	**58431-0G513**		475	01	0107-0207				*********************
		06	2	**58431-0G513**		475	01	0207-0910				*******
		07	2	**58431-0G514**		515	01	0107-0207				*********************
		08	2	**58431-0G514**		515	01	0207-0910				*******
		09	2	**58431-0G515**		550	01	0107-0207				*********************
		10	2	**58431-0G515**		550	01	0207-0910				*******
		11	2	**58431-0G516**		600	01	0107-0207				*********************
		12	2	**58431-0G516**		600	01	0207-0910				*******
		13	2	**58431-0G517**		650	01	0107-0207				*********************
		14	2	**58431-0G517**		650	01	0207-0910				*******
		15	2	**58431-0G518**		700	01	0107-0207				*********************
		16	2	**58431-0G518**		700	01	0207-0910				*******
		17	2	**NA-**		IN ROD ASSY KIT-REFER TO ITEM NO. 50	01	0207-0910				**********
		18	2	**58430-6G601**		355	01	0107-0910				****
		19	2	**58430-6G602**		400	01	0107-0910				****
		20	2	**58430-6G603**		445	01	0107-0910				****
		21	2	**58430-6G604**		485	01	0107-0910				****
		22	2	**58430-6G605**		520	01	0107-0910				****
		23	2	**58430-6G606**		570	01	0107-0910				****

SEC. 580D

LIFT CYLINDER (3F UPTO SEPT. 2010)

CILINDRO DE ELEVACION

AUFTRIEBZYLINDER

CYLINDRE DE LEVAGE

NC	S	KEY NO.	LEV	PART NO.	PART NAME	SPECIFICATION	QTY	APPLIED DATE	ICANF	FORMER PART NO.	KD	APPLIED MODEL 01 02 03 04 05 06 07 08 09 10 11 12 13 14 15 16 17 18 19 20 21 22 23 24 25 26 27 28 29
		3	24	2	**58430-6G607**	ROD	620	01	0107-0910																			****
			25	2	**58430-6G608**		670	01	0107-0910																			****
		4	01	2	**58433-0G211**	PISTON		01	0107-0207			**********																
			02	2	**NA-**		IN ROD ASSY KIT	01	0207-0910			**********																
			03	2	**58433-0G511**	PISTON		01	0107-0910												*******						
			04	2	**58433-6G611**			01	0107-0910																			****
		5	01	2	**58028-0G511**	PULL-IN WIRE		01	0107-0207			**********																
			02	2	**NA-**		IN ROD ASSY KIT	01	0207-0910			**********																
			03	2	**58028-0G511**			01	0207-0910												**********						
		6	01	2	**58050-31K00**	CHECK VALVE		01	0107-0207			**********																
			02	2	**58050-31K00**		IN CHECK VALVE KIT	01	0207-0910			**********																
			03	2	**58050-31K00**			01	0207-0910												**********						
		7	01	2	**58044-31K00**	WASHER		01	0107-0207			**********																
			02	2	**58044-31K00**		IN CHECK VALVE KIT	01	0207-0910			**********																
			03	2	**58044-31K00**			01	0207-0910												**********						
		8	01	2	**58028-31K01**	CIRCLIP		01	0107-0207			**********																
			02	2	**58028-31K01**		IN REPAIR KIT-FULL FREE & CHECK VALVE KIT	01	0207-0910			**********																
			03	2	**58028-31K01**			01	0207-0910												**********						
		9	01	2	**58420-0G211**	RETAINER		01	0107-0207			**********																
			02	2	**58420-FA31B**			01	0207-0910			**********																
			03	2	**58420-0G511**			01	0107-0910												*******						
			04	2	**58420-6G611**			01	0107-0910																			****
		10	01	2	**58471-0G511**	FUSE PISTON		01	0107-0207			**********																
			02	2	**58471-FA31B**			01	0207-0910			**********																
			03	2	**58471-0G511**			01	0207-0910												**********						
		11	01	2	**58489-0G211**	SPRING		01	0107-0910			**********																
			02	2	**58489-0G511**			01	0107-0910												**********						
		12	01	2	**58445-0G511**	SPRING GUIDE		01	0107-0910			**********																
		13	01	2	**58099-0G211**	SERVICE KIT-FULL FREE		01	0107-0207			**********																
			02	2	**58099-FA31B**			01	0207-0910			**********																
			03	2	**58099-0G511**			01	0107-0910												*******						
			04	2	**58499-6G611**			01	0107-0910																			****
		14	01	2	**58026-31K01**	O-RING	IN REPAIR KIT-FULL FREE	01	0107-0207			**********																
			02	2	**58026-FA601**		IN REPAIR KIT-FULL FREE & CHECK VALVE KIT	01	0207-0910			**********																
			03	2	**58026-31K01**		IN REPAIR KIT-FULL FREE	01	0207-0910												**********						
		15	01	2	**58434-0G211**	WEAR RING	IN REPAIR KIT-FULL FREE	01	0107-0207			**********																
			02	2	**58434-31K11**		IN REPAIR KIT-FULL FREE	01	0207-0910			**********																

SEC. 580D

LIFT CYLINDER (3F UPTO SEPT. 2010)

CILINDRO DE ELEVACION

AUFTRIEBZYLINDER

CYLINDRE DE LEVAGE

NC	S	KEY NO.	LEV	PART NO.	PART NAME	SPECIFICATION	QTY	APPLIED DATE	ICANF	FORMER PART NO.	KD	APPLIED MODEL 01 02 03 04 05 06 07 08 09 10 11 12 13 14 15 16 17 18 19 20 21 22 23 24 25 26 27 28 29
		15 03	2	**58434-0G511**	WEAR RING	IN REPAIR KIT-FULL FREE	01	0107-0910				*******
		04	2	**58434-6G611**		IN REPAIR KIT-FULL FREE	01	0107-0910				***
		16 01	2	**58024-0G212**	NYLON RING	IN REPAIR KIT-FULL FREE	02	0107-0207				**********
		02	2	**58024-FA01A**		IN REPAIR KIT-FULL FREE	02	0207-0910				**********
		03	2	**58024-0G511**		IN REPAIR KIT-FULL FREE	02	0107-0910				*******
		04	2	**58024-6G611**		IN REPAIR KIT-FULL FREE	02	0107-0910				****
		17 01	2	**58035-0G211**	PISTON SEAL	IN REPAIR KIT-FULL FREE	01	0107-0207				**********
		02	2	**58035-FA01A**		IN REPAIR KIT-FULL FREE	01	0207-0910				**********
		03	2	**58035-0G512**		IN REPAIR KIT-FULL FREE	01	0107-0910				*******
		04	2	**58035-6G611**		IN REPAIR KIT-FULL FREE	01	0107-0910				****
		18 01	2	**58026-0G511**	O-RING	IN REPAIR KIT-FULL FREE	01	0107-0207				**********
		02	2	**58026-FA01A**		IN REPAIR KIT-FULL FREE	01	0207-0910				**********
		03	2	**58026-0G511**		IN REPAIR KIT-FULL FREE	01	0207-0910				*******
		04	2	**58026-6G611**		IN REPAIR KIT-FULL FREE	01	0107-0910				****
		19 01	2	**58024-0G512**	BACK-UP RING	IN REPAIR KIT-FULL FREE	01	0107-0207				**********
		02	2	**58024-FA31B**		IN REPAIR KIT-FULL FREE	01	0207-0910				**********
		03	2	**58024-0G512**		IN REPAIR KIT-FULL FREE	01	0207-0910				*******
		04	2	**58026-6G612**		IN REPAIR KIT-FULL FREE	01	0107-0910				****
		20 01	2	**58035-0G511**	ROD SEAL	IN REPAIR KIT-FULL FREE	01	0107-0910				**********
		02	2	**58035-6G612**		IN REPAIR KIT-FULL FREE	01	0107-0910				****
		21 01	2	**58022-0G511**	WIPER	IN REPAIR KIT-FULL FREE	01	0107-0207				**********
		02	2	**58022-FA31B**		IN REPAIR KIT-FULL FREE	01	0207-0910				**********
		03	2	**58022-0G511**		IN REPAIR KIT-FULL FREE	01	0207-0910				*******
		04	2	**58022-6G611**		IN REPAIR KIT-FULL FREE	01	0107-0910				****
		22 01	2	**58034-FA500**	WEAR RING	IN REPAIR KIT-MAST	02	0107-0910				**********
		02	2	**58034-FA600**		IN REPAIR KIT-MAST	02	0107-0910				*******
		03	2	**58034-6G500**		IN REPAIR KIT-MAST	02	0107-0910				****
		23 01	2	**58431-FA501**	PLUNGER	385	02	0107-0910				**********
		02	2	**58431-FA502**		430	02	0107-0910				**********
		03	2	**58431-FA503**		475	02	0107-0910				**********
		04	2	**58431-FA504**		515	02	0107-0910				**********
		05	2	**58431-FA505**		550	02	0107-0910				**********
		06	2	**58431-FA506**		600	02	0107-0910				**********
		07	2	**58431-FA507**		650	02	0107-0910				**********
		08	2	**58431-FA508**		700	02	0107-0910				**********
		09	2	**58431-FA601**		385	02	0107-0910				*******
		10	2	**58431-FA602**		430	02	0107-0910				*******

SEC. 580D

LIFT CYLINDER (3F UPTO SEPT. 2010)

CILINDRO DE ELEVACION

AUFTRIEBZYLINDER

CYLINDRE DE LEVAGE

NC	S	KEY NO.	LEV	PART NO.	PART NAME	SPECIFICATION	QTY	APPLIED DATE	ICANF	FORMER PART NO.	KD	APPLIED MODEL 01 02 03 04 05 06 07 08 09 10 11 12 13 14 15 16 17 18 19 20 21 22 23 24 25 26 27 28 29
	23	11	2	**58431-FA603**	PLUNGER	475	02	0107-0910				*******
		12	2	**58431-FA604**		515	02	0107-0910				*******
		13	2	**58431-FA605**		550	02	0107-0910				*******
		14	2	**58431-FA606**		600	02	0107-0910				*******
		15	2	**58431-FA607**		650	02	0107-0910				*******
		16	2	**58431-FA608**		700	02	0107-0910				*******
		17	2	**58431-6G616**		355	02	0107-0910				****
		18	2	**58431-6G617**		400	02	0107-0910				****
		19	2	**58431-6G618**		445	02	0107-0910				****
		20	2	**58431-6G619**		485	02	0107-0910				****
		21	2	**58431-6G620**		520	02	0107-0910				****
		22	2	**58431-6G621**		570	02	0107-0910				****
		23	2	**58431-6G622**		620	02	0107-0910				****
		24	2	**58431-6G623**		670	02	0107-0910				****
	24	01	2	**58416-FA511**	SHELL ASSY	385	02	0107-0910				**********
		02	2	**58416-FA512**		430	02	0107-0910				**********
		03	2	**58416-FA513**		475	02	0107-0910				**********
		04	2	**58416-FA514**		515	02	0107-0910				**********
		05	2	**58416-FA515**		550	02	0107-0910				**********
		06	2	**58416-FA516**		600	02	0107-0910				**********
		07	2	**58416-FA517**		650	02	0107-0910				**********
		08	2	**58416-FA518**		700	02	0107-0910				**********
		09	2	**58416-FA601**		385	02	0107-0910				*******
		10	2	**58416-FA602**		430	02	0107-0910				*******
		11	2	**58416-FA603**		475	02	0107-0910				*******
		12	2	**58416-FA604**		515	02	0107-0910				*******
		13	2	**58416-FA605**		550	02	0107-0910				*******
		14	2	**58416-FA606**		600	02	0107-0910				*******
		15	2	**58416-FA607**		650	02	0107-0910				*******
		16	2	**58416-FA608**		700	02	0107-0910				*******
		17	2	**58416-6G616**		355	02	0107-0910				****
		18	2	**58416-6G617**		400	02	0107-0910				****
		19	2	**58416-6G618**		445	02	0107-0910				****
		20	2	**58416-6G619**		485	02	0107-0910				****
		21	2	**58416-6G620**		520	02	0107-0910				****
		22	2	**58416-6G621**		570	02	0107-0910				****
		23	2	**58416-6G622**		620	02	0107-0910				****

SEC. 580D

LIFT CYLINDER (3F UPTO SEPT. 2010)

CILINDRO DE ELEVACION

AUFTRIEBZYLINDER

CYLINDRE DE LEVAGE

NC	S	KEY NO.	LEV	PART NO.	PART NAME	SPECIFICATION	QTY	APPLIED DATE	ICANF	FORMER PART NO.	KD	APPLIED MODEL 01 02 03 04 05 06 07 08 09 10 11 12 13 14 15 16 17 18 19 20 21 22 23 24 25 26 27 28 29
		24	24	2	**58416-6G623**	SHELL ASSY	670	02	0107-0910			****
		25	01	2	**58099-FA500**	SERVICE KIT-MAST		02	0107-0910			**********
			02	2	**58099-FA600**			02	0107-0910			*******
			03	2	**58099-6G600**			02	0107-0910			****
		26	01	2	**58622-FA500**	WIPER	IN REPAIR KIT-MAST	02	0107-0910			**********
			02	2	**58022-FA600**		IN REPAIR KIT-MAST	02	0107-0910			*******
			03	2	**58022-0G301**		IN REPAIR KIT-MAST	02	0107-0910			****
		27	01	2	**58621-FA500**	ROD SEAL	IN REPAIR KIT-MAST	02	0107-0910			**********
			02	2	**58621-FA600**		IN REPAIR KIT-MAST	02	0107-0910			*******
			03	2	**58621-5G500**		IN REPAIR KIT-MAST	02	0107-0910			****
		28	01	2	**58026-0G001**	O-RING	IN REPAIR KIT-MAST	02	0107-0910			**********
			02	2	**58026-FA600**		IN REPAIR KIT-MAST	02	0107-0910			*******
			03	2	**58026-6G601**		IN REPAIR KIT-MAST	02	0107-0910			**O*
		29	01	2	**58024-0G001**	BACK-UP RING	IN REPAIR KIT-MAST	02	0107-0910			**********
			02	2	**58024-FA600**		IN REPAIR KIT-MAST	02	0107-0910			*******
			03	2	**58024-6G600**		IN REPAIR KIT-MAST	02	0107-0910			****
		30	01	2	**58035-0G213**	PISTON SEAL	IN REPAIR KIT-MAST	02	0107-0910			**********
			02	2	**58035-0G513**		IN REPAIR KIT-MAST	02	0107-0910			*******
			03	2	**58035-6G613**		IN REPAIR KIT-MAST	02	0107-0910			****
		31	01	2	**58028-31K11**	CIRCLIP	IN REPAIR KIT-MAST	02	0107-0910			**********
			02	2	**58028-6G611**		IN REPAIR KIT-MAST	02	0107-0910			****
		32	01	2	**58183-31K11**	SLEEVE		02	0107-0910			**********
			02	2	**58183-6G611**			02	0107-0910			****
		33	01	2	**58026-FA400**	O-RING	IN REPAIR KIT-MAST	02	0107-0910			**********
			02	2	**58026-FA601**		IN REPAIR KIT-MAST	02	0107-0910			*******
			03	2	**58026-31K01**		IN REPAIR KIT-MAST	02	0107-0910			****
		34	01	2	**58020-FA500**	RETAINER		02	0107-0910			**********
			02	2	**58020-FA600**			02	0107-0910			*******
			03	2	**58020-6G601**			02	0107-0910			****
		35	01	2	**58032-FA500**	PISTON		02	0107-0910			**********
			02	2	**58032-FA600**			02	0107-0910			*******
			03	2	**58032-6G611**			02	0107-0910			****
		36	01	2	**58028-31K00**	PULL-IN WIRE		02	0107-0910			**********
			02	2	**58028-0G301**			02	0107-0910			****
		37	01	2	**58050-FA400**	CHECK VALVE		02	0107-0910			**********
			02	2	**58050-31K00**			02	0107-0910			**********
		38	01	2	**58044-31K00**	WASHER		02	0107-0910			**********

SEC. 580D

LIFT CYLINDER (3F UPTO SEPT. 2010)

CILINDRO DE ELEVACION

AUFTRIEBZYLINDER

CYLINDRE DE LEVAGE

NC	S	KEY NO.	LEV	PART NO.	PART NAME	SPECIFICATION	QTY	APPLIED DATE	ICANF	FORMER PART NO.	KD	APPLIED MODEL 01 02 03 04 05 06 07 08 09 10 11 12 13 14 15 16 17 18 19 20 21 22 23 24 25 26 27 28 29
		39 01	2	**58028-31K01**	CIRCLIP		02	0107-0910				* *
		40 01	2	**58439-0G205**	SPACER	550	02	0107-0910				* * * * * * * * * * * * * * * * * *
		02	2	**58439-0G206**		600	02	0107-0910				* * * * * * * * * * * * * * * * * *
		03	2	**58439-0G207**		650	02	0107-0910				* * * * * * * * * * * * * * * * * *
		04	2	**58439-0G208**		700	02	0107-0910				* * * * * * * * * * * * * * * * * *
		41 01	2	**58434-0G207**	GUIDE BUSH	650 & 700	02	0107-0910				* * * * * * * * * * * * * * * * * *
		42 01	2	**58024-4G500**	BACK-UP RING	IN REPAIR KIT-MAST	02	0107-0910				* * * * * * * * * * * * * * * * * *
		02	2	**58024-0G513**		IN REPAIR KIT-MAST	02	0107-0910				* * * * * * *
		03	2	**58424-6G500**		IN REPAIR KIT-MAST	02	0107-0910				* * * *
		43 01	1	**69350-FJ111**	CONNECTOR ASSY		01	0107-0910				* * * * * * * * * * * * * * * * * *
		02	1	**69350-FK311**			01	0107-0910				* * * * * * *
		03	1	**58070-20H00**	VALVE ASSY-FLOW REGULATOR		01	0107-0910				* * * *
		44 01	1	**58465-1G000**	CONNECTOR ASSY		01	0107-0910				* *
		45 01	1	**58065-52K00**	CONNECTOR ASSY		01	0107-0910				* * * * * * * * * * * * * * * * * *
		02	1	**58065-62K00**			01	0107-0910				* * * * * * * * * * * * *
		46 01	1	**58066-62K01**	CONNECTOR ASSY		01	0107-0910				* * * *
		47 01	1	**58071-4G000**	VALVE ASSY-SAFETY		01	0107-0910				* * * * * * * * * * * * * * * * * *
		02	1	**58071-1G300**			01	0107-0910				* * * * * * * * * * * * *
		48 01	2	**58459-FA600**	STOP RING		02	0107-0910				* * * * * * *
		49 01	1	**58051-FA31B**	CHECK VALVE KIT		01	0207-0910				* * * * * * * * * * * * * * * * * *
		50 01	1	**58432-FA31B**	ROD ASSY KIT	385	01	0207-0910				* * * * * * * * * * * * * * * * * *
		02	1	**58432-FA32B**		430	01	0207-0910				* * * * * * * * * * * * * * * * * *
		03	1	**58432-FA33B**		475	01	0207-0910				* * * * * * * * * * * * * * * * * *
		04	1	**58432-FA34B**		515	01	0207-0910				* * * * * * * * * * * * * * * * * *
		05	1	**58432-FA35B**		550	01	0207-0910				* * * * * * * * * * * * * * * * * *
		06	1	**58432-FA36B**		600	01	0207-0910				* * * * * * * * * * * * * * * * * *
		07	1	**58432-FA37B**		650	01	0207-0910				* * * * * * * * * * * * * * * * * *
		08	1	**58432-FA38B**		700	01	0207-0910				* * * * * * * * * * * * * * * * * *

NOTE

SEC. 580E

LIFT CYLINDER (3V UPTO SEPT. 2010)

CILINDRO DE ELEVACION

AUFTRIEBZYLINDER

CYLINDRE DE LEVAGE

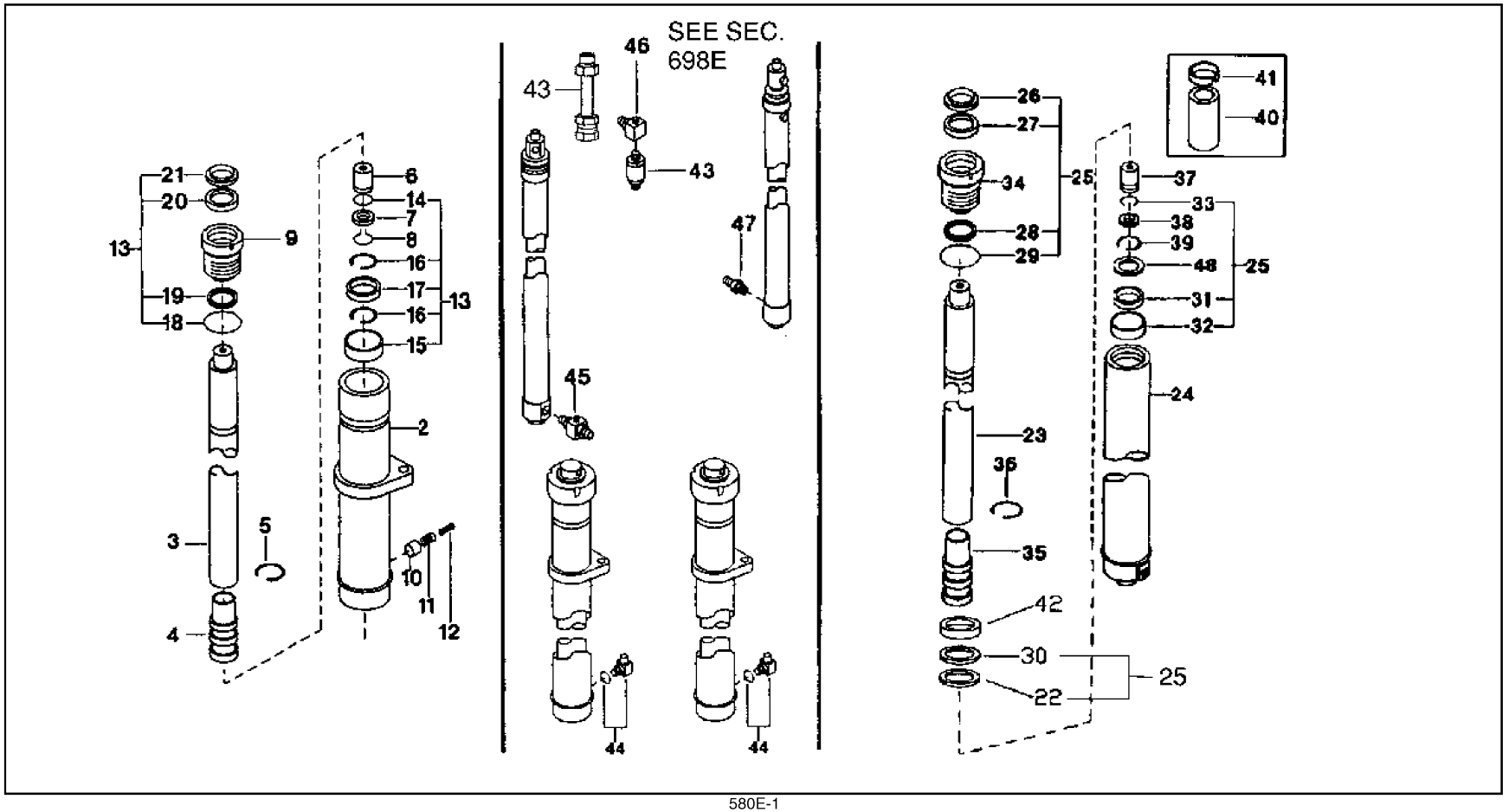

580E-1

SEC. 580E

LIFT CYLINDER (3V UPTO SEPT. 2010)

CILINDRO DE ELEVACION

AUFTRIEBZYLINDER

CYLINDRE DE LEVAGE

NC	S	KEY NO.	LEV	PART NO.	PART NAME	SPECIFICATION	QTY	APPLIED DATE	ICANF	FORMER PART NO.	KD	APPLIED MODEL 01 02 03 04 05 06 07 08 09 10 11 12 13 14 15 16 17 18 19 20 21 22 23 24 25 26 27 28 29
		0 01	1	**58414-FA560**	CYLINDER ASSY-FULL FREE LH	360	01	0107-0910				* *
		02	1	**58414-FA561**		405	01	0107-0910				* *
		03	1	**58414-FA562**		450	01	0107-0910				* *
		04	1	**58414-FA563**		490	01	0107-0910				* *
		05	1	**58414-FA564**		525	01	0107-0910				* *
		06	1	**58414-FA565**		575	01	0107-0910				* *
		07	1	**58414-FA566**		633	01	0107-0910				* *
		08	1	**58414-FA567**		688	01	0107-0910				* *
		09	1	**58414-FA661**		385	01	0107-0910				* *
		10	1	**58414-FA662**		430	01	0107-0910				* *
		11	1	**58414-FA663**		470	01	0107-0910				* *
		12	1	**58414-FA664**		505	01	0107-0910				* *
		13	1	**58414-FA665**		555	01	0107-0910				* *
		14	1	**58414-FA666**		600	01	0107-0910				* *
		15	1	**58414-FA667**		650	01	0107-0910				* *
		16	1	**58414-FA668**		700	01	0107-0910				* *
		17	1	**58414-6G611**		385	01	0107-0910				* *
		18	1	**58414-6G612**		430	01	0107-0910				* *
		19	1	**58414-6G613**		470	01	0107-0910				* *
		20	1	**58414-6G614**		505	01	0107-0910				* *
		21	1	**58414-6G615**		555	01	0107-0910				* *
		22	1	**58414-6G616**		600	01	0107-0910				* *
		23	1	**58414-6G617**		650	01	0107-0910				* *
		24	1	**58414-6G618**		700	01	0107-0910				* *
		25	1	**58413-FA560**	CYLINDER ASSY-FULL FREE RH	360	01	0107-0910				* *
		26	1	**58413-FA561**		405	01	0107-0910				* *
		27	1	**58413-FA562**		450	01	0107-0910				* *
		28	1	**58413-FA563**		490	01	0107-0910				* *
		29	1	**58413-FA564**		525	01	0107-0910				* *
		30	1	**58413-FA565**		575	01	0107-0910				* *
		31	1	**58413-FA566**		633	01	0107-0910				* *
		32	1	**58413-FA567**		688	01	0107-0910				* *
		33	1	**58413-FA661**		385	01	0107-0910				* *
		34	1	**58413-FA662**		430	01	0107-0910				* *
		35	1	**58413-FA663**		470	01	0107-0910				* *
		36	1	**58413-FA664**		505	01	0107-0910				* *
		37	1	**58413-FA665**		555	01	0107-0910				* *

SEC. 580E

LIFT CYLINDER (3V UPTO SEPT. 2010)

CILINDRO DE ELEVACION

AUFTRIEBZYLINDER

CYLINDRE DE LEVAGE

NC	S	KEY NO.	LEV	PART NO.	PART NAME	SPECIFICATION	QTY	APPLIED DATE	ICANF	FORMER PART NO.	KD	APPLIED MODEL 01 02 03 04 05 06 07 08 09 10 11 12 13 14 15 16 17 18 19 20 21 22 23 24 25 26 27 28 29
		0 38	1	**58413-FA666**	CYLINDER ASSY-FULL FREE RH	600	01	0107-0910				*******
		39	1	**58413-FA667**		650	01	0107-0910				*******
		40	1	**58413-FA668**		700	01	0107-0910				*******
		41	1	**58413-6G611**		385	01	0107-0910				****
		42	1	**58413-6G612**		430	01	0107-0910				****
		43	1	**58413-6G613**		470	01	0107-0910				****
		44	1	**58413-6G614**		505	01	0107-0910				****
		45	1	**58413-6G615**		555	01	0107-0910				****
		46	1	**58413-6G616**		600	01	0107-0910				****
		47	1	**58413-6G617**		650	01	0107-0910				****
		48	1	**58413-6G618**		700	01	0107-0910				****
		49	1	**58411-FA501**	CYLINDER ASSY-MAST	360	01	0107-0910				**********
		50	1	**58411-FA502**		405	01	0107-0910				**********
		51	1	**58411-FA503**		450	01	0107-0910				**********
		52	1	**58411-FA504**		490	01	0107-0910				**********
		53	1	**58411-FA505**		525	01	0107-0910				**********
		54	1	**58411-FA506**		575	01	0107-0910				**********
		55	1	**58411-FA507**		633	01	0107-0910				**********
		56	1	**58411-FA508**		688	01	0107-0910				**********
		57	1	**58411-FA661**		385	01	0107-0910				*******
		58	1	**58411-FA662**		430	01	0107-0910				*******
		59	1	**58411-FA663**		470	01	0107-0910				*******
		60	1	**58411-FA664**		505	01	0107-0910				*******
		61	1	**58411-FA665**		555	01	0107-0910				*******
		62	1	**58411-FA606**		600	01	0107-0910				*******
		63	1	**58411-FA667**		650	01	0107-0910				*******
		64	1	**58411-FA608**		700	01	0107-0910				*******
		65	1	**58411-6G602**		385	01	0107-0910				****
		66	1	**58411-6G603**		430	01	0107-0910				****
		67	1	**58411-6G604**		470	01	0107-0910				****
		68	1	**58411-6G605**		505	01	0107-0910				****
		69	1	**58411-6G606**		555	01	0107-0910				****
		70	1	**58411-6G617**		600	01	0107-0910				****
		71	1	**58411-6G618**		650	01	0107-0910				****
		72	1	**58411-6G619**		700	01	0107-0910				****
		2 01	2	**58416-FA560**	SHELL ASSY-LH	360	01	0107-0910				**********
		02	2	**58416-FA561**		405	01	0107-0910				**********

SEC. 580E

LIFT CYLINDER (3V UPTO SEPT. 2010)

CILINDRO DE ELEVACION

AUFTRIEBZYLINDER

CYLINDRE DE LEVAGE

NC	S	KEY NO.	LEV	PART NO.	PART NAME	SPECIFICATION	QTY	APPLIED DATE	ICANF	FORMER PART NO.	KD	APPLIED MODEL 01 02 03 04 05 06 07 08 09 10 11 12 13 14 15 16 17 18 19 20 21 22 23 24 25 26 27 28 29
		2 03	2	**58416-FA562**	SHELL ASSY-LH	450	01	0107-0910				**********
		04	2	**58416-FA563**		490	01	0107-0910				**********
		05	2	**58416-FA564**		525	01	0107-0910				**********
		06	2	**58416-FA565**		575	01	0107-0910				**********
		07	2	**58416-FA566**		633	01	0107-0910				**********
		08	2	**58416-FA567**		688	01	0107-0910				**********
		09	2	**58416-FA568**	SHELL ASSY-RH	360	01	0107-0910				**********
		10	2	**58416-FA569**		405	01	0107-0910				**********
		11	2	**58416-FA570**		450	01	0107-0910				**********
		12	2	**58416-FA571**		490	01	0107-0910				**********
		13	2	**58416-FA572**		525	01	0107-0910				**********
		14	2	**58416-FA573**		575	01	0107-0910				**********
		15	2	**58416-FA574**		633	01	0107-0910				**********
		16	2	**58416-FA575**		688	01	0107-0910				**********
		17	2	**58416-FA661**	SHELL ASSY-LH	385	01	0107-0910				*******
		18	2	**58416-FA662**		430	01	0107-0910				*******
		19	2	**58416-FA663**		470	01	0107-0910				*******
		20	2	**58416-FA664**		505	01	0107-0910				*******
		21	2	**58416-FA665**		555	01	0107-0910				*******
		22	2	**58416-FA666**		600	01	0107-0910				*******
		23	2	**58416-FA667**		650	01	0107-0910				*******
		24	2	**58416-FA668**		700	01	0107-0910				*******
		25	2	**58416-FA669**	SHELL ASSY-RH	385	01	0107-0910				*******
		26	2	**58416-FA670**		430	01	0107-0910				*******
		27	2	**58416-FA671**		470	01	0107-0910				*******
		28	2	**58416-FA672**		505	01	0107-0910				*******
		29	2	**58416-FA673**		555	01	0107-0910				*******
		30	2	**58416-FA674**		600	01	0107-0910				*******
		31	2	**58416-FA675**		650	01	0107-0910				*******
		32	2	**58416-FA676**		700	01	0107-0910				*******
		33	2	**58417-6G601**	SHELL ASSY-LH	385	01	0107-0910				****
		34	2	**58417-6G602**		430	01	0107-0910				****
		35	2	**58417-6G603**		470	01	0107-0910				****
		36	2	**58417-6G604**		505	01	0107-0910				****
		37	2	**58417-6G605**		555	01	0107-0910				****
		38	2	**58417-6G606**		600	01	0107-0910				****
		39	2	**58417-6G607**		650	01	0107-0910				****

SEC. 580E

LIFT CYLINDER (3V UPTO SEPT. 2010)

CILINDRO DE ELEVACION

AUFTRIEBZYLINDER

CYLINDRE DE LEVAGE

NC	S	KEY NO.	LEV	PART NO.	PART NAME	SPECIFICATION	QTY	APPLIED DATE	ICANF	FORMER PART NO.	KD	APPLIED MODEL 01 02 03 04 05 06 07 08 09 10 11 12 13 14 15 16 17 18 19 20 21 22 23 24 25 26 27 28 29
	2	40	2	**NA-**	SHELL ASSY-LH	700 CONTACT FACTORY	01	0107-0910				****
		41	2	**58417-6G609**	SHELL ASSY-RH	385	01	0107-0910				****
		42	2	**58417-6G610**		430	01	0107-0910				****
		43	2	**58417-6G611**		470	01	0107-0910				****
		44	2	**58417-6G612**		505	01	0107-0910				****
		45	2	**58417-6G613**		555	01	0107-0910				****
		46	2	**58417-6G614**		600	01	0107-0910				****
		47	2	**58417-6G615**		650	01	0107-0910				****
		48	2	**NA-**		700 CONTACT FACTORY	01	0107-0910				****
	3	01	2	**58431-5G500**	ROD-LH & RH	360	02	0107-0910				**********
		02	2	**58431-5G501**		405	02	0107-0910				**********
		03	2	**58431-5G502**		450	02	0107-0910				**********
		04	2	**58431-5G503**		490	02	0107-0910				**********
		05	2	**58431-5G504**		525	02	0107-0910				**********
		06	2	**58431-5G505**		575	02	0107-0910				**********
		07	2	**58431-5G506**		633	02	0107-0910				**********
		08	2	**58431-5G507**		688	02	0107-0910				**********
		09	2	**58431-5G501**		385	02	0107-0910				*******
		10	2	**58431-5G502**		430	02	0107-0910				*******
		11	2	**58431-5G503**		470	02	0107-0910				*******
		12	2	**58431-5G504**		505	02	0107-0910				*******
		13	2	**58431-5G505**		555	02	0107-0910				*******
		14	2	**58431-5G506**		600	02	0107-0910				*******
		15	2	**58431-5G507**		650	02	0107-0910				*******
		16	2	**58431-5G508**		700	02	0107-0910				*******
		17	2	**58431-6G601**		385	02	0107-0910				****
		18	2	**58431-6G602**		430	02	0107-0910				****
		19	2	**58431-6G603**		470	02	0107-0910				****
		20	2	**58431-6G604**		505	02	0107-0910				****
		21	2	**58431-6G605**		555	02	0107-0910				****
		22	2	**58431-6G606**		600	02	0107-0910				****
		23	2	**58431-6G607**		650	02	0107-0910				****
		24	2	**NA-**		700 CONTACT FACTORY	02	0107-0910				****
	4	01	2	**58032-FA561**	PISTON		02	0107-0910				**********
		02	2	**58032-FA661**			02	0107-0910				*******
		03	2	**58032-6G600**			02	0107-0910				****
	5	01	2	**58028-0G301**	PULL-IN WIRE		02	0107-0910				**********

SEC. 580E

LIFT CYLINDER (3V UPTO SEPT. 2010)

CILINDRO DE ELEVACION

AUFTRIEBZYLINDER

CYLINDRE DE LEVAGE

NC	S	KEY NO.	LEV	PART NO.	PART NAME	SPECIFICATION	QTY	APPLIED DATE	ICANF	FORMER PART NO.	KD	APPLIED MODEL 01 02 03 04 05 06 07 08 09 10 11 12 13 14 15 16 17 18 19 20 21 22 23 24 25 26 27 28 29
		5	02	2	**58028-6G500**	PULL-IN WIRE		02	0107-0910			* * * *
		6	01	2	**58050-31K00**	CHECK VALVE		02	0107-0910			* *
		7	01	2	**58044-31K00**	WASHER		02	0107-0910			* *
		8	01	2	**58028-31K01**	CIRCLIP		02	0107-0910			* *
		9	01	2	**58620-FA561**	RETAINER		02	0107-0910			* * * * * * * * * * * * * * * * * * * *
			02	2	**58620-FA661**			02	0107-0910			* * * * * * *
			03	2	**58620-6G600**			02	0107-0910			* * * *
		10	01	2	**58471-4G500**	FUSE PISTON	LH ONLY	01	0107-0910			* *
		11	01	2	**58489-4G500**	SPRING	LH ONLY	01	0107-0910			* * * * * * * * * * * * * * * * * * * *
			02	2	**58489-6G500**		LH ONLY	01	0107-0910			* *
		12	01	2	**58445-4G500**	SPRING GUIDE	LH ONLY	01	0107-0910			* *
		13	01	2	**58099-FA562**	REPAIR KIT-FULL FREE		02	0107-0910			* * * * * * * * * * * * * * * * * * * *
			02	2	**58099-FA661**			02	0107-0910			* * * * * * *
			03	2	**58499-6G600**			02	0107-0910			* * * *
		14	01	2	**58026-31K01**	O-RING	IN REPAIR KIT-FULL FREE	02	0107-0910			* *
		15	01	2	**58034-FA561**	WEAR RING	IN REPAIR KIT-FULL FREE	02	0107-0910			* * * * * * * * * * * * * * * * * * * *
			02	2	**58034-FA661**		IN REPAIR KIT-FULL FREE	02	0107-0910			* * * * * * *
			03	2	**58034-6G600**		IN REPAIR KIT-FULL FREE	02	0107-0910			* * * *
		16	01	2	**58024-FA561**	BACK-UP RING	IN REPAIR KIT-FULL FREE	04	0107-0910			* * * * * * * * * * * * * * * * * * * *
			02	2	**58024-FA661**		IN REPAIR KIT-FULL FREE	04	0107-0910			* * * * * * *
			03	2	**58424-6G600**	NYLON RING	IN REPAIR KIT-FULL FREE	04	0107-0910			* * * *
		17	01	2	**58444-FA561**	SEAL	IN REPAIR KIT-FULL FREE	02	0107-0910			* * * * * * * * * * * * * * * * * * * *
			02	2	**58444-FA661**		IN REPAIR KIT-FULL FREE	02	0107-0910			* * * * * * *
			03	2	**58444-6G600**		IN REPAIR KIT-FULL FREE	02	0107-0910			* * * *
		18	01	2	**58026-0G301**	O-RING	IN REPAIR KIT-FULL FREE	02	0107-0910			* * * * * * * * * * * * * * * * * * * *
			02	2	**49527-0G000**		IN REPAIR KIT-FULL FREE	02	0107-0910			* * * * * * *
			03	2	**58634-31K02**		IN REPAIR KIT-FULL FREE	02	0107-0910			* * * *
		19	01	2	**58024-0G301**	BACK-UP RING	IN REPAIR KIT-FULL FREE	02	0107-0910			* * * * * * * * * * * * * * * * * * * *
			02	2	**58024-FA660**		IN REPAIR KIT-FULL FREE	02	0107-0910			* * * * * * *
			03	2	**58633-0G001**		IN REPAIR KIT-FULL FREE	02	0107-0910			* * * *
		20	01	2	**58621-5G500**	ROD SEAL	IN REPAIR KIT-FULL FREE	02	0107-0910			* *
			02	2	**58621-6G600**		IN REPAIR KIT-FULL FREE	02	0107-0910			* * * *
		21	01	2	**58022-0G301**	WIPER	IN REPAIR KIT-FULL FREE	02	0107-0910			* *
			02	2	**58622-6G600**		IN REPAIR KIT-FULL FREE	02	0107-0910			* * * *
		22	01	2	**58034-FA500**	WEAR RING	IN REPAIR KIT-MAST	02	0107-0910			* * * * * * * * * * * * * * * * * * * *
			02	2	**58034-FA600**		IN REPAIR KIT-MAST	02	0107-0910			* * * * * * *
			03	2	**58034-6G500**		IN REPAIR KIT-MAST	02	0107-0910			* * * *

SEC. 580E

LIFT CYLINDER (3V UPTO SEPT. 2010)

CILINDRO DE ELEVACION

AUFTRIEBZYLINDER

CYLINDRE DE LEVAGE

NC	S	KEY NO.	LEV	PART NO.	PART NAME	SPECIFICATION	QTY	APPLIED DATE	ICANF	FORMER PART NO.	KD	APPLIED MODEL 01 02 03 04 05 06 07 08 09 10 11 12 13 14 15 16 17 18 19 20 21 22 23 24 25 26 27 28 29
	23	01	2	**58431-FA501**	PLUNGER	360	02	0107-0910				* *
		02	2	**58431-FA502**		405	02	0107-0910				* *
		03	2	**58431-FA503**		450	02	0107-0910				* *
		04	2	**58431-FA504**		490	02	0107-0910				* *
		05	2	**58431-FA505**		525	02	0107-0910				* *
		06	2	**58431-FA506**		575	02	0107-0910				* *
		07	2	**58431-FA507**		633	02	0107-0910				* *
		08	2	**58431-FA508**		688	02	0107-0910				* *
		09	2	**58431-FA661**		385	02	0107-0910				* *
		10	2	**58431-FA662**		430	02	0107-0910				* *
		11	2	**58431-FA663**		470	02	0107-0910				* *
		12	2	**58431-FA664**		505	02	0107-0910				* *
		13	2	**58431-FA665**		555	02	0107-0910				* *
		14	2	**58431-FA606**		600	02	0107-0910				* *
		15	2	**58431-FA667**		650	02	0107-0910				* *
		16	2	**58431-FA608**		700	02	0107-0910				* *
		17	2	**58431-6G617**		385	02	0107-0910				* *
		18	2	**58431-6G618**		430	02	0107-0910				* *
		19	2	**58431-6G619**		470	02	0107-0910				* *
		20	2	**58431-6G620**		505	02	0107-0910				* *
		21	2	**58431-6G621**		555	02	0107-0910				* *
		22	2	**NA-**		600 CONTACT FACTORY	02	0107-0910				* *
		23	2	**NA-**		650 CONTACT FACTORY	02	0107-0910				* *
		24	2	**NA-**		700 CONTACT FACTORY	02	0107-0910				* *
	24	01	2	**58416-FA511**	SHELL ASSY	360	02	0107-0910				* *
		02	2	**58416-FA512**		405	02	0107-0910				* *
		03	2	**58416-FA513**		450	02	0107-0910				* *
		04	2	**58416-FA514**		490	02	0107-0910				* *
		05	2	**58416-FA515**		525	02	0107-0910				* *
		06	2	**58416-FA516**		575	02	0107-0910				* *
		07	2	**58416-FA517**		633	02	0107-0910				* *
		08	2	**58416-FA518**		688	02	0107-0910				* *
		09	2	**58416-FA601**		385	02	0107-0910				* *
		10	2	**58416-FA602**		430	02	0107-0910				* *
		11	2	**58416-FA603**		470	02	0107-0910				* *
		12	2	**58416-FA604**		505	02	0107-0910				* *
		13	2	**58416-FA605**		555	02	0107-0910				* *

SEC. 580E

LIFT CYLINDER (3V UPTO SEPT. 2010)

CILINDRO DE ELEVACION

AUFTRIEBZYLINDER

CYLINDRE DE LEVAGE

NC	S	KEY NO.	LEV	PART NO.	PART NAME	SPECIFICATION	QTY	APPLIED DATE	ICANF	FORMER PART NO.	KD	APPLIED MODEL 01 02 03 04 05 06 07 08 09 10 11 12 13 14 15 16 17 18 19 20 21 22 23 24 25 26 27 28 29
		24	14	2	**58416-FA606**	SHELL ASSY	600	02	0107-0910			*******
			15	2	**58416-FA607**		650	02	0107-0910			*******
			16	2	**58416-FA608**		700	02	0107-0910			*******
			17	2	**58416-6G617**		385	02	0107-0910			****
			18	2	**58416-6G618**		430	02	0107-0910			****
			19	2	**58416-6G619**		470	02	0107-0910			****
			20	2	**58416-6G620**		505	02	0107-0910			****
			21	2	**58416-6G621**		555	02	0107-0910			****
			22	2	**NA-**		600 CONTACT FACTORY	02	0107-0910			****
			23	2	**NA-**		650 CONTACT FACTORY	02	0107-0910			****
			24	2	**NA-**		700 CONTACT FACTORY	02	0107-0910			****
		25	01	2	**58099-FA500**	REPAIR KIT-MAST		02	0107-0910			**********
			02	2	**58099-FA600**			02	0107-0910			*******
			03	2	**58099-6G600**			02	0107-0910			****
		26	01	2	**58622-FA500**	WIPER	IN REPAIR KIT-MAST	02	0107-0910			**********
			02	2	**58022-FA600**		IN REPAIR KIT-MAST	02	0107-0910			*******
			03	2	**58022-0G301**		IN REPAIR KIT-MAST	02	0107-0910			****
		27	01	2	**58621-FA500**	ROD SEAL	IN REPAIR KIT-MAST	02	0107-0910			**********
			02	2	**58621-FA600**		IN REPAIR KIT-MAST	02	0107-0910			*******
			03	2	**58621-5G500**		IN REPAIR KIT-MAST	02	0107-0910			****
		28	01	2	**58026-0G001**	O-RING	IN REPAIR KIT-MAST	02	0107-0910			**********
			02	2	**58026-FA600**		IN REPAIR KIT-MAST	02	0107-0910			*******
			03	2	**58026-6G601**		IN REPAIR KIT-MAST	02	0107-0910			****
		29	01	2	**58024-0G001**	BACK-UP RING	IN REPAIR KIT-MAST	02	0107-0910			**********
			02	2	**58024-FA600**		IN REPAIR KIT-MAST	02	0107-0910			*******
			03	2	**58024-6G600**		IN REPAIR KIT-MAST	02	0107-0910			****
		30	01	2	**58035-0G213**	PISTON SEAL	IN REPAIR KIT-MAST	02	0107-0910			**********
			02	2	**58035-0G513**		IN REPAIR KIT-MAST	02	0107-0910			*******
			03	2	**58035-6G613**		IN REPAIR KIT-MAST	02	0107-0910			****
		31	01	2	**58028-31K11**	CIRCLIP	IN REPAIR KIT-MAST	02	0107-0910			**********
			02	2	**58028-6G611**		IN REPAIR KIT-MAST	02	0107-0910			****
		32	01	2	**58183-31K11**	SLEEVE		02	0107-0910			**********
			02	2	**58183-6G611**			02	0107-0910			****
		33	01	2	**58026-FA400**	O-RING		02	0107-0910			**********
			02	2	**58026-FA601**			02	0107-0910			*******
			03	2	**58026-31K01**			02	0107-0910			****
		34	01	2	**58020-FA500**	RETAINER		02	0107-0910			**********

SEC. 580E

LIFT CYLINDER (3V UPTO SEPT. 2010)

CILINDRO DE ELEVACION

AUFTRIEBZYLINDER

CYLINDRE DE LEVAGE

NC	S	KEY NO.	LEV	PART NO.	PART NAME	SPECIFICATION	QTY	APPLIED DATE	ICANF	FORMER PART NO.	KD	APPLIED MODEL 01 02 03 04 05 06 07 08 09 10 11 12 13 14 15 16 17 18 19 20 21 22 23 24 25 26 27 28 29
		34	02	2	**58020-FA600**	RETAINER		02	0107-0910			* * * * * * *
			03	2	**58020-6G601**			02	0107-0910			* * * *
		35	01	2	**58032-FA500**	PISTON		02	0107-0910			* * * * * * * * * * * * * * * * * * *
			02	2	**58032-FA600**			02	0107-0910			* * * * * * *
			03	2	**58032-6G611**			02	0107-0910			* * * *
		36	01	2	**58028-31K00**	PULL-IN WIRE		02	0107-0910			* *
			02	2	**58028-0G301**			02	0107-0910			* * * *
		37	01	2	**58050-FA400**	CHECK VALVE		02	0107-0910			* * * * * * * * * * * * * * * * * * *
			02	2	**58050-31K00**			02	0107-0910			* * * * * * * * * * * * *
		38	01	2	**58044-31K00**	WASHER		02	0107-0910			* *
		39	01	2	**58028-31K01**	CIRCLIP	IN REPAIR KIT-MAST	02	0107-0910			* *
		40	01	2	**58439-0G205**	SPACER	525	02	0107-0910			* * * * * * * * * * * * * * * * * * *
			02	2	**58439-0G206**		575	02	0107-0910			* * * * * * * * * * * * * * * * * * *
			03	2	**58439-0G207**		633	02	0107-0910			* * * * * * * * * * * * * * * * * * *
			04	2	**58439-0G208**		688	02	0107-0910			* * * * * * * * * * * * * * * * * * *
		41	01	2	**58434-0G207**	GUIDE BUSH	633 & 688	02	0107-0910			* * * * * * * * * * * * * * * * * * *
		42	01	2	**58024-4G500**	BACK-UP RING	IN REPAIR KIT-MAST	02	0107-0910			* * * * * * * * * * * * * * * * * * *
			02	2	**58024-0G513**		IN REPAIR KIT-MAST	02	0107-0910			* * * * * * *
			03	2	**58424-6G500**		IN REPAIR KIT-MAST	02	0107-0910			* * * *
		43	01	1	**69350-FJ111**	CONNECTOR ASSY		01	0107-0910			* * * * * * * * * * * * * * * * * * *
			02	1	**69350-FK311**			01	0107-0910			* * * * * * *
			03	1	**58070-20H00**	VALVE ASSY-FLOW REGULATOR		01	0107-0910			* * * *
		44	01	1	**69944-4G500**	CONNECTOR ASSY		02	0107-0910			* * * * * * * * * * * * * * * * * * *
			02	1	**69944-6G500**			02	0107-0910			* * * * * * * * * * * *
		45	01	1	**69662-L1100**	CONNECTOR ASSY		01	0107-0910			* * * * * * * * * * * * * * * * * * *
			02	1	**69350-L1100**			01	0107-0910			* * * * * * * * * * * * *
		46	01	1	**58066-FA660**	CONNECTOR		01	0107-0910			* * * *
			02	1	**69353-L6000**	CONNECTOR ASSY-PUMP PORT		01	0107-0910			* * * *
		47	01	1	**58071-4G000**	VALVE ASSY-SAFETY		01	0107-0910			* * * * * * * * * * * * * * * * * * *
			02	1	**58071-1G300**			01	0107-0910			* * * * * * * * * * * * *
		48	01	2	**58459-FA600**	STOP RING		02	0107-0910			* * * * * * *

NOTE

SEC. 580F

LIFT CYLINDER (2F FROM SEPT. 2009)

CILINDRO DE ELEVACION

AUFTRIEBZYLINDER

CYLINDRE DE LEVAGE

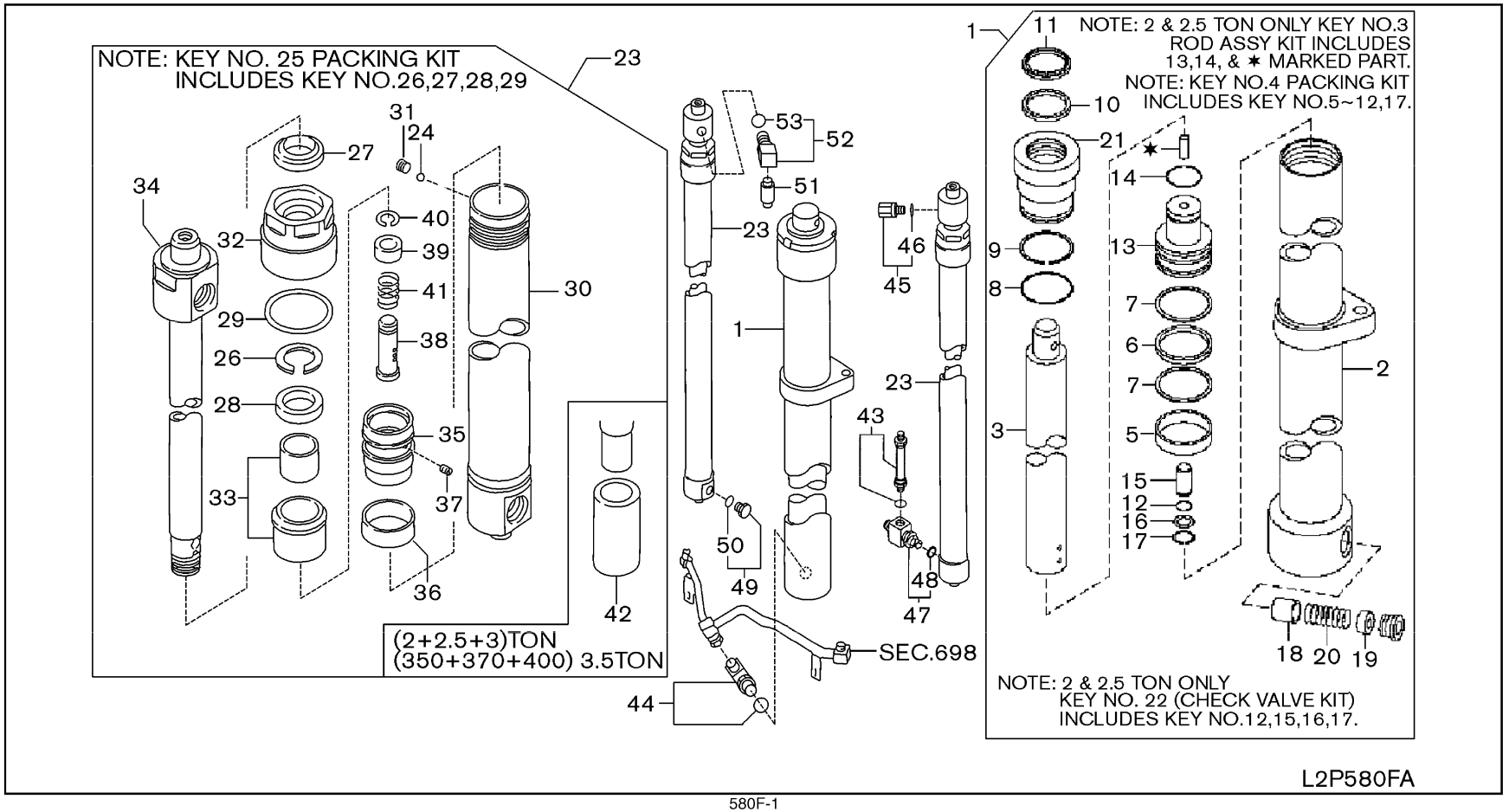

580F-1

SEC. 580F

LIFT CYLINDER (2F FROM SEPT. 2009)

CILINDRO DE ELEVACION

AUFTRIEBZYLINDER

CYLINDRE DE LEVAGE

NC	S	KEY NO.	LEV	PART NO.	PART NAME	SPECIFICATION	QTY	APPLIED DATE	ICANF	FORMER PART NO.	KD	APPLIED MODEL 01 02 03 04 05 06 07 08 09 10 11 12 13 14 15 16 17 18 19 20 21 22 23 24 25 26 27 28 29
		1 01	1	**58410-FA32B**		300	01	0909-0310				* * * * * * * * * * * * * * * * *
		02	1	**58410-FA33B**		330	01	0909-0310				* * * * * * * * * * * * * * * * *
		03	1	**58410-FA34B**		350	01	0909-0310				* * * * * * * * * * * * * * * * *
		04	1	**58410-FA35B**		370	01	0909-0310				* * * * * * * * * * * * * * * * *
		05	1	**58410-FA36B**		400	01	0909-0310				* * * * * * * * * * * * * * * * *
		06	1	**58410-FA39B**		420	01	0909-0310				* * * * * * * * * * * * * * * * *
		07	1	**58410-GE52A**		300	01	0310-				* * * * * * * * * * * * * * * * *
		08	1	**58410-GE53A**		330	01	0310-				* * * * * * * * * * * * * * * * *
		09	1	**58410-GE54A**		350	01	0310-				* * * * * * * * * * * * * * * * *
		10	1	**58410-GE55A**		370	01	0310-				* * * * * * * * * * * * * * * * *
		11	1	**58410-GE56A**		400	01	0310-				* * * * * * * * * * * * * * * * *
		12	1	**58410-GE59A**		420	01	0310-				* * * * * * * * * * * * * * * * *
		13	1	**58410-FA42A**		300	01	0909-0310				* * * * * * *
		14	1	**58410-FA43A**		330	01	0909-0310				* * * * * * *
		15	1	**58410-FA44A**		350	01	0909-0310				* * * * * * *
		16	1	**58410-FA45A**		370	01	0909-0310				* * * * * * *
		17	1	**58410-FA46A**		400	01	0909-0310				* * * * * * *
		18	1	**58410-FA49A**		420	01	0909-0310				* * * * * * *
		19	1	**58410-GG12A**		300	01	0310-				* * * * * * *
		20	1	**58410-GG13A**		330	01	0310-				* * * * * * *
		21	1	**58410-GG14A**		350	01	0310-				* * * * * * *
		22	1	**58410-GG15A**		370	01	0310-				* * * * * * *
		23	1	**58410-GG16A**		400	01	0310-				* * * * * * *
		24	1	**58410-GG19A**		420	01	0310-				* * * * * * *
		25	1	**58410-GG62A**		300	01	0909-				* * * *
		26	1	**58410-GG63A**		330	01	0909-				* * * *
		27	1	**58410-GG64A**		350	01	0909-				* * * *
		28	1	**58410-GG65A**		370	01	0909-				* * * *
		29	1	**58410-GG66A**		400	01	0909-				* * * *
		2 01	2	**58415-FA32B**		300	01	0909-0310				* * * * * * * * * * * * * * * * *
		02	2	**58415-FA33B**		330	01	0909-0310				* * * * * * * * * * * * * * * * *
		03	2	**58415-FA34B**		350	01	0909-0310				* * * * * * * * * * * * * * * * *
		04	2	**58415-FA35B**		370	01	0909-0310				* * * * * * * * * * * * * * * * *
		05	2	**58415-FA36B**		400	01	0909-0310				* * * * * * * * * * * * * * * * *
		06	2	**58415-FA39B**		420	01	0909-0310				* * * * * * * * * * * * * * * * *
		07	2	**58415-GE52A**		300	01	0310-				* * * * * * * * * * * * * * * * *
		08	2	**58415-GE53A**		330	01	0310-				* * * * * * * * * * * * * * * * *

SEC. 580F

LIFT CYLINDER (2F FROM SEPT. 2009)

CILINDRO DE ELEVACION

AUFTRIEBZYLINDER

CYLINDRE DE LEVAGE

NC	S	KEY NO.	LEV	PART NO.	PART NAME	SPECIFICATION	QTY	APPLIED DATE	ICANF	FORMER PART NO.	KD	APPLIED MODEL 01 02 03 04 05 06 07 08 09 10 11 12 13 14 15 16 17 18 19 20 21 22 23 24 25 26 27 28 29
		2 09	2	**58415-GE54A**		350	01	0310-				* * * * * * * * * * * * * * * * * *
		10	2	**58415-GE55A**		370	01	0310-				* * * * * * * * * * * * * * * * * *
		11	2	**58415-GE56A**		400	01	0310-				* * * * * * * * * * * * * * * * * *
		12	2	**58415-GE59A**		420	01	0310-				* * * * * * * * * * * * * * * * * *
		13	2	**58415-FA42A**		300	01	0909-0310				* * * * * * *
		14	2	**58415-FA43A**		330	01	0909-0310				* * * * * * *
		15	2	**58415-FA44A**		350	01	0909-0310				* * * * * * *
		16	2	**58415-FA45A**		370	01	0909-0310				* * * * * * *
		17	2	**58415-FA46A**		400	01	0909-0310				* * * * * * *
		18	2	**58415-FA49A**		420	01	0909-0310				* * * * * * *
		19	2	**58415-GG12A**		300	01	0310-				* * * * * * *
		20	2	**58415-GG13A**		330	01	0310-				* * * * * * *
		21	2	**58415-GG14A**		350	01	0310-				* * * * * * *
		22	2	**58415-GG15A**		370	01	0310-				* * * * * * *
		23	2	**58415-GG16A**		400	01	0310-				* * * * * * *
		24	2	**58415-GG19A**		420	01	0310-				* * * * * * *
		25	2	**58415-GG62A**		300	01	0909-				* * * *
		26	2	**58415-GG63A**		330	01	0909-				* * * *
		27	2	**58415-GG64A**		350	01	0909-				* * * *
		28	2	**58415-GG65A**		370	01	0909-				* * * *
		29	2	**58415-GG66A**		400	01	0909-				* * * *
		3 01	2	**58432-FA32B**	ROD ASSY KIT-PISTON	300	01	0909-0310				* * * * * * * * * * * * * * * * * *
		02	2	**58432-FA33B**		330	01	0909-0310				* * * * * * * * * * * * * * * * * *
		03	2	**58432-FA34B**		350	01	0909-0310				* * * * * * * * * * * * * * * * * *
		04	2	**58432-FA35B**		370	01	0909-0310				* * * * * * * * * * * * * * * * * *
		05	2	**58432-FA36B**		400	01	0909-0310				* * * * * * * * * * * * * * * * * *
		06	2	**58432-FA39B**		420	01	0909-0310				* * * * * * * * * * * * * * * * * *
		07	2	**58432-GE52A**		300	01	0310-				* * * * * * * * * * * * * * * * * *
		08	2	**58432-GE53A**		330	01	0310-				* * * * * * * * * * * * * * * * * *
		09	2	**58432-GE54A**		350	01	0310-				* * * * * * * * * * * * * * * * * *
		10	2	**58432-GE55A**		370	01	0310-				* * * * * * * * * * * * * * * * * *
		11	2	**58432-GE56A**		400	01	0310-				* * * * * * * * * * * * * * * * * *
		12	2	**58432-GE59A**		420	01	0310-				* * * * * * * * * * * * * * * * * *
		13	2	**58431-FA42B**	ROD ASSY-PISTON	300	01	0909-0310				* * * * * * *
		14	2	**58431-FA43B**		330	01	0909-0310				* * * * * * *
		15	2	**58431-FA44B**		350	01	0909-0310				* * * * * * *
		16	2	**58431-FA45B**		370	01	0909-0310				* * * * * * *

SEC. 580F

LIFT CYLINDER (2F FROM SEPT. 2009)

CILINDRO DE ELEVACION

AUFTRIEBZYLINDER

CYLINDRE DE LEVAGE

NC	S	KEY NO.	LEV	PART NO.	PART NAME	SPECIFICATION	QTY	APPLIED DATE	ICANF	FORMER PART NO.	KD	APPLIED MODEL 01 02 03 04 05 06 07 08 09 10 11 12 13 14 15 16 17 18 19 20 21 22 23 24 25 26 27 28 29
		3	17	2	**58431-FA46B**	ROD ASSY-PISTON	400	01	0909-0310			*******
			18	2	**58431-FA49B**		420	01	0909-0310			*******
			19	2	**58431-GG12A**		300	01	0310-			*******
			20	2	**58431-GG13A**		330	01	0310-			*******
			21	2	**58431-GG14A**		350	01	0310-			*******
			22	2	**58431-GG15A**		370	01	0310-			*******
			23	2	**58431-GG16A**		400	01	0310-			*******
			24	2	**58431-GG19A**		420	01	0310-			*******
			25	2	**58430-GG62A**		300	01	0909-			****
			26	2	**58430-GG63A**		330	01	0909-			****
			27	2	**58430-GG64A**		350	01	0909-			****
			28	2	**58430-GG65A**		370	01	0909-			****
			29	2	**58430-GG66A**		400	01	0909-			****
		4	01	2	**58099-FA31B**	PACKING KIT-FULL FREE CYL		01	0909-			**********
			02	2	**58099-FA41A**			01	0909-			*******
			03	2	**58499-6G611**			01	0909-			****
		5	01	3	**58434-31K11**	WEAR RING		01	0909-			**********
			02	3	**58434-0G511**			01	0909-			*******
			03	3	**58434-6G611**			01	0909-			****
		6	01	3	**58035-FA01A**	PISTON SEAL		01	0909-			**********
			02	3	**58035-0G512**			01	0909-			*******
			03	3	**58035-GG60A**			01	0909-			****
		7	01	3	**58024-FA01A**	NYLON RING		02	0909-			**********
			02	3	**58024-0G511**			02	0909-			*******
			03	3	**58024-6G611**			02	0909-			****
		8	01	3	**58026-FA01A**	O RING		01	0909-			**********
			02	3	**58026-0G511**			01	0909-			*******
			03	3	**58026-6G611**			01	0909-			****
		9	01	3	**58024-FA31B**	BACKUP RING		01	0909-			**********
			02	3	**58024-0G512**			01	0909-			*******
			03	3	**58024-6G612**			01	0909-			****
		10	01	3	**58035-0G511**	ROD SEAL		01	0909-			**********
			02	3	**58035-6G612**			01	0909-			****
		11	01	3	**58022-FA31B**	WIPER		01	0909-			**********
			02	3	**58022-0G511**			01	0909-			*******
			03	3	**58022-6G611**			01	0909-			****
		12	01	3	**58026-FA601**	O RING		01	0909-			**********

SEC. 580F

LIFT CYLINDER (2F FROM SEPT. 2009)

CILINDRO DE ELEVACION

AUFTRIEBZYLINDER

CYLINDRE DE LEVAGE

NC	S	KEY NO.	LEV	PART NO.	PART NAME	SPECIFICATION	QTY	APPLIED DATE	ICANF	FORMER PART NO.	KD	APPLIED MODEL 01 02 03 04 05 06 07 08 09 10 11 12 13 14 15 16 17 18 19 20 21 22 23 24 25 26 27 28 29
		13	01	3	**NA-**	PISTON	INCLUDED WITH ITEM NO. 3	01	0909-			* *
			02	2	**NA-**			01	0909-			* * * * * * *
			03	2	**58433-6G611**			01	0909-			* * * *
		14	01	3	**NA-**	WIRE RING	INCLUDED WITH ITEM NO. 3	01	0909-			* * * * * * * * * * * * * * * * * * * *
			02	2	**NA-**	RING-SNAP		01	0909-			* * * * * * *
			03	2	**58028-0G511**	PULL-IN WIRE		01	0909-			* * * *
		15	01	2	**58050-31K00**	CHECK VALVE		01	0909-			* *
		16	01	2	**58044-31K00**	WASHER		01	0909-			* *
		17	01	3	**58028-31K01**	CIRCLIP		01	0909-			* *
		18	01	2	**58471-FA31B**	FUSE PISTON		01	0909-			* *
			02	2	**58471-0G511**			01	0909-			* * * * * * *
		19	01	2	**58445-0G511**	SPRING GUIDE		01	0909-			* *
		20	01	2	**58489-0G211**	SPRING		01	0909-			* * * * * * * * * * * * * * * * * * * *
			02	2	**58489-0G511**			01	0909-			* *
		21	01	2	**58420-FA31B**	RETAINER		01	0909-			* * * * * * * * * * * * * * * * * * * *
			02	2	**58420-0G511**			01	0909-			* * * * * * *
			03	2	**58420-6G611**			01	0909-			* * * *
		22	01	2	**58051-FA31B**	CHECK VALVE KIT		01	0909-			* * * * * * * * * * * * * * * * * * * *
		23	01	1	**58211-11H03**		300	02	0909-			* * * * * * * * * * * * * * * * * * * *
			02	1	**58211-11H04**		330	02	0909-			* * * * * * * * * * * * * * * * * * * *
			03	1	**58211-11H05**		350	02	0909-			* * * * * * * * * * * * * * * * * * * *
			04	1	**58211-11H06**		370	02	0909-			* * * * * * * * * * * * * * * * * * * *
			05	1	**58211-11H07**		400	02	0909-			* * * * * * * * * * * * * * * * * * * *
			06	1	**58211-51K00**		420	02	0909-			* * * * * * * * * * * * * * * * * * * *
			07	1	**58211-24H03**		300	02	0909-			* * * * * * *
			08	1	**58211-24H04**		330	02	0909-			* * * * * * *
			09	1	**58211-24H05**		350	02	0909-			* * * * * * *
			10	1	**58211-24H06**		370	02	0909-			* * * * * * *
			11	1	**58211-24H07**		400	02	0909-			* * * * * * *
			12	1	**58211-61K00**		420	02	0909-			* * * * * * *
			13	1	**58211-GG42C**		300	02	0909-			* * * *
			14	1	**58211-GG43C**		330	02	0909-			* * * *
			15	1	**58211-GG44C**		350	02	0909-			* * * *
			16	1	**58211-GG45C**		370	02	0909-			* * * *
			17	1	**58211-GG46C**		400	02	0909-			* * * *
		24	01	2	**32247-20100**	BALL-STEEL		02	0909-			* *
		25	01	2	**58299-11H00**	PACKING KIT-MAST CYLINDER		02	0909-			* * * * * * * * * * * * * * * * * * * *

SEC. 580F

LIFT CYLINDER (2F FROM SEPT. 2009)

CILINDRO DE ELEVACION

AUFTRIEBZYLINDER

CYLINDRE DE LEVAGE

NC	S	KEY NO.	LEV	PART NO.	PART NAME	SPECIFICATION	QTY	APPLIED DATE	ICANF	FORMER PART NO.	KD	APPLIED MODEL 01 02 03 04 05 06 07 08 09 10 11 12 13 14 15 16 17 18 19 20 21 22 23 24 25 26 27 28 29
		25	02	2	**58299-24H00**			02 0909-				*******
		03	2	**58299-21H00**			02 0909-					****
		26	01	3	**58224-11H00**	RING-BACK UP		02 0909-				**********
		02	3	**58224-24H00**			02 0909-					*******
		03	3	**58224-21H00**			02 0909-					****
		27	01	3	**58222-11H00**	RING-WIPER		02 0909-				**********
		02	3	**58222-24H01**			02 0909-					*******
		03	3	**58222-21H01**			02 0909-					****
		28	01	3	**58621-L1100**	RING-U		02 0909-				**********
		02	3	**58221-24H00**			02 0909-					*******
		03	3	**58221-21H00**			02 0909-					****
		29	01	3	**58026-00H00**	SEAL-O RING		02 0909-				**********
		02	3	**58026-10H00**			02 0909-					*******
		03	3	**58123-L1400**			02 0909-					****
		30	01	2	**58215-01H03**		300	02 0909-				**********
		02	2	**58215-01H04**		330	02 0909-					**********
		03	2	**58215-01H05**		350	02 0909-					**********
		04	2	**58215-01H06**		370	02 0909-					**********
		05	2	**58215-01H07**		400	02 0909-					**********
		06	2	**58215-51K00**		420	02 0909-					**********
		07	2	**58215-24H03**		300	02 0909-					*******
		08	2	**58215-24H04**		330	02 0909-					*******
		09	2	**58215-24H05**		350	02 0909-					*******
		10	2	**58215-24H06**		370	02 0909-					*******
		11	2	**58215-24H07**		400	02 0909-					*******
		12	2	**58215-61K00**		420	02 0909-					*******
		13	2	**58416-GG42C**		300	02 0909-					****
		14	2	**58416-GG43C**		330	02 0909-					****
		15	2	**58416-GG44C**		350	02 0909-					****
		16	2	**58416-GG45C**		370	02 0909-					****
		17	2	**58416-GG46C**		400	02 0909-					****
		31	01	2	**58218-01H00**	SCREW-SET		02 0909-				**********
		32	01	2	**58220-11H00**	HEAD-CYLINDER		02 0909-				**********
		02	2	**58220-24H00**			02 0909-					*******
		03	2	**58220-21H00**			02 0909-					****
		33	01	2	**58027-00H00**	HOLDER ASSY-BUSH		02 0909-				**********
		02	2	**58227-24H00**			02 0909-					*******

SEC. 580F

LIFT CYLINDER (2F FROM SEPT. 2009)

CILINDRO DE ELEVACION

AUFTRIEBZYLINDER

CYLINDRE DE LEVAGE

NC	S	KEY NO.	LEV	PART NO.	PART NAME	SPECIFICATION	QTY	APPLIED DATE	ICANF	FORMER PART NO.	KD	APPLIED MODEL 01 02 03 04 05 06 07 08 09 10 11 12 13 14 15 16 17 18 19 20 21 22 23 24 25 26 27 28 29
		33	03	2	**58227-21H00**			02	0909-			****
		34	01	2	**58230-11H03**		300	02	0909-			**********
			02	2	**58230-11H04**		330	02	0909-			**********
			03	2	**58230-11H05**		350	02	0909-			**********
			04	2	**58230-11H06**		370	02	0909-			**********
			05	2	**58230-11H07**		400	02	0909-			**********
			06	2	**58230-51K00**		420	02	0909-			**********
			07	2	**58230-24H03**		300	02	0909-			*******
			08	2	**58230-24H04**		330	02	0909-			*******
			09	2	**58230-24H05**		350	02	0909-			*******
			10	2	**58230-24H06**		370	02	0909-			*******
			11	2	**58230-24H07**		400	02	0909-			*******
			12	2	**58230-61K00**		420	02	0909-			*******
			13	2	**58431-GG42C**		300	02	0909-			****
			14	2	**58431-GG43C**		330	02	0909-			****
			15	2	**58431-GG44C**		350	02	0909-			****
			16	2	**58431-GG45C**		370	02	0909-			****
			17	2	**58431-GG46C**		400	02	0909-			****
		35	01	2	**58231-11H00**	PISTON		02	0909-			**********
			02	2	**58231-24H00**			02	0909-			*******
			03	2	**58231-21H00**			02	0909-			****
		36	01	2	**58234-01H00**	RING-SLIDE		02	0909-			**********
			02	2	**58234-24H00**			02	0909-			*******
			03	2	**58234-21H00**			02	0909-			****
		37	01	2	**58238-11H00**	SCREW-SET		02	0909-			**********
			02	2	**58238-01H00**			02	0909-			**********
		38	01	2	**58283-01H00**	SPOOL-CUSHION		02	0909-			**********
			02	2	**58283-24H00**			02	0909-			*******
			03	2	**58283-21H00**			02	0909-			****
		39	01	2	**58286-01H00**	VALVE-CHECK		02	0909-			**********
			02	2	**58286-24H00**			02	0909-			*******
			03	2	**58286-21H00**			02	0909-			****
		40	01	2	**58288-01H00**	RING-SNAP		02	0909-			**********
			02	2	**58288-24H00**			02	0909-			*******
			03	2	**58288-21H00**			02	0909-			****
		41	01	2	**58289-01H00**	SPRING		02	0909-			**********
			02	2	**58289-24H00**			02	0909-			*******

SEC. 580F

LIFT CYLINDER (2F FROM SEPT. 2009)

CILINDRO DE ELEVACION

AUFTRIEBZYLINDER

CYLINDRE DE LEVAGE

NC	S	KEY NO.	LEV	PART NO.	PART NAME	SPECIFICATION	QTY	APPLIED DATE	ICANF	FORMER PART NO.	KD	APPLIED MODEL 01 02 03 04 05 06 07 08 09 10 11 12 13 14 15 16 17 18 19 20 21 22 23 24 25 26 27 28 29
		41 03	2	**58289-21H00**			02	0909-				* * * *
		42 01	2	**58239-11H05**	SPACER	350	02	0909-				* * * * * * * * * * * * * * * * * *
		02	2	**58239-11H06**		370	02	0909-				* * * * * * * * * * * * * * * * * *
		03	2	**58239-11H07**		400+420	02	0909-				* * * * * * * * * * * * * * * * * *
		04	2	**58239-24H05**		350	02	0909-				* * * * * * *
		05	2	**58239-24H06**		370	02	0909-				* * * * * * *
		06	2	**58239-24H07**		400+420	02	0909-				* * * * * * *
		07	2	**58239-GG42C**		300	02	0909-				* * * *
		08	2	**58239-GG43C**		330	02	0909-				* * * *
		09	2	**58239-GG44C**		350	02	0909-				* * * *
		10	2	**58239-GG45C**		370	02	0909-				* * * *
		11	2	**58239-GG46C**		400	02	0909-				* * * *
		43 01	1	**69350-GE10A**	CONNECTORY ASSY		01	0909-				* *
		44 01	1	**58465-GE00A**	CONNECTOR ASSY-FULL FREE		01	0909-				* *
		45 01	1	**58060-L6000**	CONNECTOR ASSY-FULL FREE		01	0909-				* *
		46 01	2	**69370-L1100**	SEAL-O RING		02	0909-				* *
		47 01	1	**58065-L6003**	CONNECTOR ASSY		01	0909-				* * * * * * * * * * * * * * * * * *
		02	1	**58065-24H02**			01	0909-				* * * * * * * * * * * * * * * * * *
		48 01	2	**69370-L1100**	SEAL-O RING		01	0909-				* *
		49 01	1	**69384-01H00**	PLUG ASSY		01	0909-				* *
		50 01	2	**69370-L1100**	SEAL-O RING		01	0909-				* *
		51 01	1	**58071-40H60**	VALVE ASSY-SAFETY		01	0909-				* * * * * * * * * * * * * * * * * *
		02	1	**58071-61K00**			01	0909-				* * * * * * * * * * * * * * * * * *
		52 01	1	**58065-L6003**	CONNECTOR ASSY		01	0909-				* * * * * * * * * * * * * * * * * *
		53 01	2	**69370-L1100**	SEAL-O RING		01	0909-				* * * * * * * * * * * * * * * * * *

SEC. 580G

LIFT CYLINDER (3F 2 & 2.5 TON FROM SEPT. 2010)

CILINDRO DE ELEVACION

AUFTRIEBZYLINDER

CYLINDRE DE LEVAGE

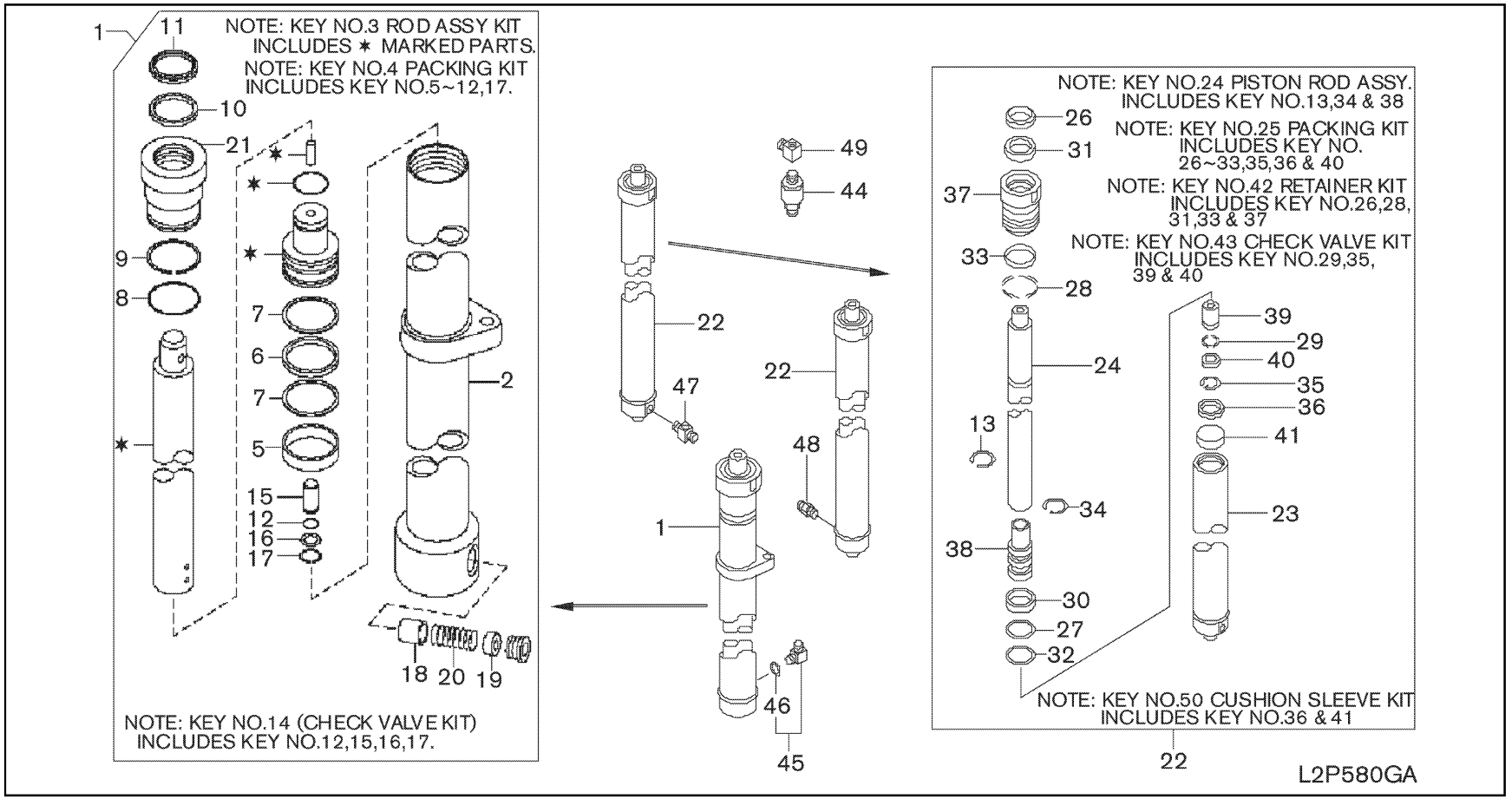

580G-1

SEC. 580G

LIFT CYLINDER (3F 2 & 2.5 TON FROM SEPT. 2010)

CILINDRO DE ELEVACION

AUFTRIEBZYLINDER

CYLINDRE DE LEVAGE

NC	S	KEY NO.	LEV	PART NO.	PART NAME	SPECIFICATION	QTY	APPLIED DATE	ICANF	FORMER PART NO.	KD	APPLIED MODEL 01 02 03 04 05 06 07 08 09 10 11 12 13 14 15 16 17 18 19 20 21 22 23 24 25 26 27 28 29
		1	01	1	**58410-FA31B**	CYLINDER ASSY-FULL FREE	F/385	01	0910-			**********
			02	1	**58410-FA32B**		F/430	01	0910-			**********
			03	1	**58410-FA33B**		F/475	01	0910-			**********
			04	1	**58410-FA34B**		F/515	01	0910-			**********
			05	1	**58410-FA35B**		F/550	01	0910-			**********
			06	1	**58410-FA36B**		F/600	01	0910-			**********
			07	1	**58410-FA37B**		F/650	01	0910-			**********
			08	1	**58410-FA38B**		F/700	01	0910-			**********
		2	01	2	**58415-FA31B**	TUBE ASSY-LIFT CYLINDER	F/385	01	0910-			**********
			02	2	**58415-FA32B**		F/430	01	0910-			**********
			03	2	**58415-FA33B**		F/475	01	0910-			**********
			04	2	**58415-FA34B**		F/515	01	0910-			**********
			05	2	**58415-FA35B**		F/550	01	0910-			**********
			06	2	**58415-FA36B**		F/600	01	0910-			**********
			07	2	**58415-FA37B**		F/650	01	0910-			**********
			08	2	**58415-FA38B**		F/700	01	0910-			**********
		3	01	2	**58432-FA31B**	ROD ASSY KIT-PISTON	F/385	01	0910-			**********
			02	2	**58432-FA32B**		F/430	01	0910-			**********
			03	2	**58432-FA33B**		F/475	01	0910-			**********
			04	2	**58432-FA34B**		F/515	01	0910-			**********
			05	2	**58432-FA35B**		F/550	01	0910-			**********
			06	2	**58432-FA36B**		F/600	01	0910-			**********
			07	2	**58432-FA37B**		F/650	01	0910-			**********
			08	2	**58432-FA38B**		F/700	01	0910-			**********
		4	01	2	**58099-FA31B**	PACKING KIT-FULL FREE CYLINDER		01	0910-			**********
		5	01	3	**58434-31K11**	RING-SLIDE		01	0910-			**********
		6	01	3	**58035-FA01A**	SEAL-U RING		01	0910-			**********
		7	01	3	**58024-FA01A**	RING-BACK-UP		02	0910-			**********
		8	01	3	**58026-FA01A**	SEAL-O RING		01	0910-			**********
		9	01	3	**58024-FA31B**	RING-BACK UP		01	0910-			**********
		10	01	3	**58035-0G511**	SEAL-U RING, PISTON ROD		01	0910-			**********
		11	01	3	**58022-FA31B**	SEAL-DUST		01	0910-			**********
		12	01	3	**58026-FA601**	SEAL, O RING		01	0910-			**********
		13	01	3	**NA-**	STOP RING		02	0910-			**********
		14	01	2	**58051-FA31B**	CHECK VALVE KIT		01	0910-			**********
		15	01	2	**58050-31K00**	VALVE-CHECK		01	0910-			**********
		16	01	2	**58044-31K00**	WASHER		01	0910-			**********

SEC. 580G

LIFT CYLINDER (3F 2 & 2.5 TON FROM SEPT. 2010)

CILINDRO DE ELEVACION

AUFTRIEBZYLINDER

CYLINDRE DE LEVAGE

NC	S	KEY NO.	LEV	PART NO.	PART NAME	SPECIFICATION	QTY	APPLIED DATE	ICANF	FORMER PART NO.	KD	APPLIED MODEL 01 02 03 04 05 06 07 08 09 10 11 12 13 14 15 16 17 18 19 20 21 22 23 24 25 26 27 28 29
		17	01	2	**58028-31K01**	CIRCLIP		01	0910-			* * * * * * * * * * * * * * * * *
		18	01	2	**58471-FA31B**	VALVE-DOWN SAFETY		01	0910-			* * * * * * * * * * * * * * * * *
		19	01	2	**58445-0G511**	GUIDE-SPRING		01	0910-			* * * * * * * * * * * * * * * * *
		20	01	2	**58489-0G211**	SPRING		01	0910-			* * * * * * * * * * * * * * * * *
		21	01	2	**58420-FA31B**	HEAD-CYLINDER		01	0910-			* * * * * * * * * * * * * * * * *
		22	01	1	**58411-FB61A**	CYLINDER ASSY-LIFT, MAST	F/385	02	0910-			* * * * * * * * * * * * * * * * *
			02	1	**58411-FB62A**		F/430	02	0910-			* * * * * * * * * * * * * * * * *
			03	1	**58411-FB63A**		F/475	02	0910-			* * * * * * * * * * * * * * * * *
			04	1	**58411-FB64A**		F/515	02	0910-			* * * * * * * * * * * * * * * * *
			05	1	**58411-FB65A**		F/550	02	0910-			* * * * * * * * * * * * * * * * *
			06	1	**58411-FB66A**		F/600	02	0910-			* * * * * * * * * * * * * * * * *
			07	1	**58411-FB67A**		F/650	02	0910-			* * * * * * * * * * * * * * * * *
			08	1	**58411-FB68A**		F/700	02	0910-			* * * * * * * * * * * * * * * * *
		23	01	2	**58416-FA511**	TUBE ASSY-MAST CYLINDER	F/385	02	0910-			* * * * * * * * * * * * * * * * *
			02	2	**58416-FA512**		F/430	02	0910-			* * * * * * * * * * * * * * * * *
			03	2	**58416-FA513**		F/475	02	0910-			* * * * * * * * * * * * * * * * *
			04	2	**58416-FA514**		F/515	02	0910-			* * * * * * * * * * * * * * * * *
			05	2	**58416-FA515**		F/550	02	0910-			* * * * * * * * * * * * * * * * *
			06	2	**58416-FA516**		F/600	02	0910-			* * * * * * * * * * * * * * * * *
			07	2	**58416-FA517**		F/650	02	0910-			* * * * * * * * * * * * * * * * *
			08	2	**58416-FA518**		F/700	02	0910-			* * * * * * * * * * * * * * * * *
		24	01	2	**58431-FA51A**	ROD ASSY-PISTON	F/385	02	0910-			* * * * * * * * * * * * * * * * *
			02	2	**58431-FA52A**		F/430	02	0910-			* * * * * * * * * * * * * * * * *
			03	2	**58431-FA53A**		F/475	02	0910-			* * * * * * * * * * * * * * * * *
			04	2	**58431-FA54A**		F/515	02	0910-			* * * * * * * * * * * * * * * * *
			05	2	**58431-FA55A**		F/550	02	0910-			* * * * * * * * * * * * * * * * *
			06	2	**58431-FA56A**		F/600	02	0910-			* * * * * * * * * * * * * * * * *
			07	2	**58431-FA57A**		F/650	02	0910-			* * * * * * * * * * * * * * * * *
			08	2	**58431-FA58A**		F/700	02	0910-			* * * * * * * * * * * * * * * * *
		25	01	2	**58099-FD41B**	PACKING KIT-MAST CYLINDER		02	0910-			* * * * * * * * * * * * * * * * *
		26	01	3	**NA-**	WIPER		02	0910-			* * * * * * * * * * * * * * * * *
		27	01	3	**NA-**	PISTON SEAL		02	0910-			* * * * * * * * * * * * * * * * *
		28	01	3	**NA-**	BACK UP RING		02	0910-			* * * * * * * * * * * * * * * * *
		29	01	3	**NA-**	O RING		02	0910-			* * * * * * * * * * * * * * * * *
		30	01	2	**NA-**	RING-BACK UP		02	0910-			* * * * * * * * * * * * * * * * *
		31	01	3	**NA-**	ROD SEAL		02	0910-			* * * * * * * * * * * * * * * * *
		32	01	3	**NA-**	WEAR RING		02	0910-			* * * * * * * * * * * * * * * * *

SEC. 580G

LIFT CYLINDER (3F 2 & 2.5 TON FROM SEPT. 2010)

CILINDRO DE ELEVACION

AUFTRIEBZYLINDER

CYLINDRE DE LEVAGE

NC	S	KEY NO.	LEV	PART NO.	PART NAME	SPECIFICATION	QTY	APPLIED DATE	ICANF	FORMER PART NO.	KD	APPLIED MODEL 01 02 03 04 05 06 07 08 09 10 11 12 13 14 15 16 17 18 19 20 21 22 23 24 25 26 27 28 29
		33 01	3	**NA-**	O RING		02	0910-				* * * * * * * * * * * * * * * * *
		34 01	3	**NA-**	PULL-IN WIRE		02	0910-				* * * * * * * * * * * * * * * * *
		35 01	3	**NA-**	CIRCLIP		02	0910-				* * * * * * * * * * * * * * * * *
		36 01	3	**NA-**	CIRCLIP		02	0910-				* * * * * * * * * * * * * * * * *
		37 01	3	**NA-**	RETAINER		02	0910-				* * * * * * * * * * * * * * * * *
		38 01	3	**NA-**	PISTON		02	0910-				* * * * * * * * * * * * * * * * *
		39 01	3	**NA-**	VALVE-CHECK		02	0910-				* * * * * * * * * * * * * * * * *
		40 01	3	**NA-**	WASHER		02	0910-				* * * * * * * * * * * * * * * * *
		41 01	3	**NA-**	SLEEVE		02	0910-				* * * * * * * * * * * * * * * * *
		42 01	2	**58019-FB60A**	RETAINER KIT		02	0910-				* * * * * * * * * * * * * * * * *
		43 01	2	**58099-FD02B**	CHECK VALVE KIT		01	0910-				* * * * * * * * * * * * * * * * *
		44 01	1	**58080-FW40A**	VALVE ASSY-FLOW REGULATOR		01	0910-				* * * * * * * * * * * * * * * * *
		45 01	1	**58465-1G000**	CONNECTOR-ELBOW		01	0910-				* * * * * * * * * * * * * * * * *
		46 01	2	**69370-1G001**	SEAL-O RING		01	0910-				* * * * * * * * * * * * * * * * *
		47 01	1	**58065-52K00**	CONNECTOR ASSY		01	0910-				* * * * * * * * * * * * * * * * *
		48 01	1	**58071-4G000**	VALVE ASSY-SAFETY		01	0910-0111				* * * * * * * * * * * * * * * * *
		02	1	**58071-FE200**			01	0111-				* * * * * * * * * * * * * * * * *
		49 01	1	**58066-52K01**	CONNECTOR ASSY		01	0910-				* * * * * * * * * * * * * * * * *
		50 01	2	**58182-FB20A**	CUSHION SLEEVE KIT		02	0910-				* * * * * * * * * * * * * * * * *

SEC. 580H

LIFT CYLINDER (3F 2.8, 3 & 3.5 TON FROM SEPT. 2010)

CILINDRO DE ELEVACION

AUFTRIEBZYLINDER

CYLINDRE DE LEVAGE

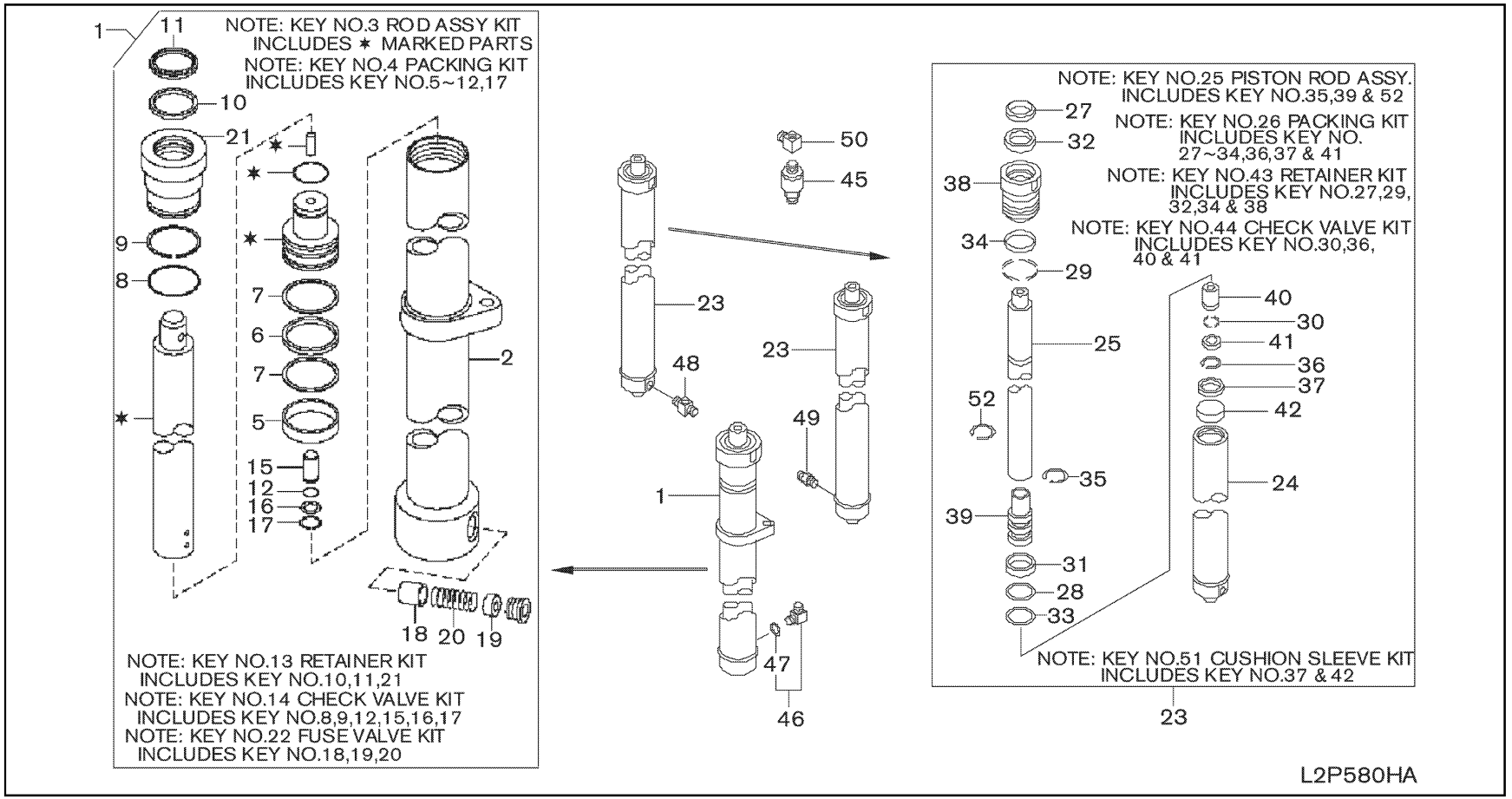

580H-1

SEC. 580H

LIFT CYLINDER (3F 2.8, 3 & 3.5 TON FROM SEPT. 2010)

CILINDRO DE ELEVACION

AUFTRIEBZYLINDER

CYLINDRE DE LEVAGE

NC	S	KEY NO.	LEV	PART NO.	PART NAME	SPECIFICATION	QTY	APPLIED DATE	ICANF	FORMER PART NO.	KD	APPLIED MODEL 01 02 03 04 05 06 07 08 09 10 11 12 13 14 15 16 17 18 19 20 21 22 23 24 25 26 27 28 29
		1	01	1	**58410-FC21A**	CYLINDER ASSY-FULL FREE	F/385	01	0910-			*******
			02	1	**58410-FC22A**		F/430	01	0910-			*******
			03	1	**58410-FC23A**		F/475	01	0910-			*******
			04	1	**58410-FC24A**		F/515	01	0910-			*******
			05	1	**58410-FC25A**		F/550	01	0910-			*******
			06	1	**58410-FC26A**		F/600	01	0910-			*******
			07	1	**58410-FC27A**		F/650	01	0910-			*******
			08	1	**58410-FC28A**		F/700	01	0910-			*******
			09	1	**58410-FC61A**		F/355	01	0910-			****
			10	1	**58410-FC62A**		F/400	01	0910-			****
			11	1	**58410-FC63A**		F/445	01	0910-			****
			12	1	**58410-FC64A**		F/485	01	0910-			****
			13	1	**58410-FC65A**		F/520	01	0910-			****
			14	1	**58410-FC66A**		F/570	01	0910-			****
			15	1	**58410-FC67A**		F/620	01	0910-			****
			16	1	**58410-FC68A**		F/670	01	0910-			****
		2	01	2	**58416-FC21B**	TUBE ASSY-LIFT CYLINDER	F/385	01	0910-			*******
			02	2	**58416-FC22B**		F/430	01	0910-			*******
			03	2	**58416-FC23B**		F/475	01	0910-			*******
			04	2	**58416-FC24B**		F/515	01	0910-			*******
			05	2	**58416-FC25B**		F/550	01	0910-			*******
			06	2	**58416-FC26B**		F/600	01	0910-			*******
			07	2	**58416-FC27B**		F/650	01	0910-			*******
			08	2	**58416-FC28B**		F/700	01	0910-			*******
			09	2	**58416-FC61B**		F/355	01	0910-			****
			10	2	**58416-FC62B**		F/400	01	0910-			****
			11	2	**58416-FC63B**		F/445	01	0910-			****
			12	2	**58416-FC64B**		F/485	01	0910-			****
			13	2	**58416-FC65B**		F/520	01	0910-			****
			14	2	**58416-FC66B**		F/570	01	0910-			****
			15	2	**58416-FC67B**		F/620	01	0910-			****
			16	2	**58416-FC68B**		F/670	01	0910-			****
		3	01	2	**58431-FC21B**	ROD ASSY KIT-PISTON	F/385	01	0910-			*******
			02	2	**58431-FC22B**		F/430	01	0910-			*******
			03	2	**58431-FC23B**		F/475	01	0910-			*******
			04	2	**58431-FC24B**		F/515	01	0910-			*******
			05	2	**58431-FC25B**		F/550	01	0910-			*******

SEC. 580H

LIFT CYLINDER (3F 2.8, 3 & 3.5 TON FROM SEPT. 2010)

CILINDRO DE ELEVACION

AUFTRIEBZYLINDER

CYLINDRE DE LEVAGE

NC	S	KEY NO.	LEV	PART NO.	PART NAME	SPECIFICATION	QTY	APPLIED DATE	ICANF	FORMER PART NO.	KD
		3	06	2	**58431-FC26B**	ROD ASSY KIT-PISTON	F/600	01	0910-		
			07	2	**58431-FC27B**		F/650	01	0910-		
			08	2	**58431-FC28B**		F/700	01	0910-		
			09	2	**58431-FC61B**		F/355	01	0910-		
			10	2	**58431-FC62B**		F/400	01	0910-		
			11	2	**58431-FC63B**		F/445	01	0910-		
			12	2	**58431-FC64B**		F/485	01	0910-		
			13	2	**58431-FC65B**		F/520	01	0910-		
			14	2	**58431-FC66B**		F/570	01	0910-		
			15	2	**58431-FC67B**		F/620	01	0910-		
			16	2	**58431-FC68B**		F/670	01	0910-		
		4	01	2	**58099-FC20B**	PACKING KIT-FULL FREE CYLINDER		01	0910-		
			02	2	**58099-FC60B**			01	0910-		
		5	01	3	**NA-**	WEAR RING		01	0910-		
		6	01	3	**NA-**	PISTON SEAL		01	0910-		
		7	01	3	**NA-**	NYLON RING		02	0910-		
		8	01	3	**NA-**	O RING		01	0910-		
		9	01	3	**NA-**	BACKUP RING		01	0910-		
		10	01	3	**NA-**	ROD SEAL		01	0910-		
		11	01	3	**NA-**	WIPER		01	0910-		
		12	01	3	**NA-**	O RING		01	0910-		
		13	01	2	**58019-FC20B**	RETAINER KIT		01	0910-		
			02	2	**58019-FC60B**			01	0910-		
		14	01	2	**58051-FA01B**	CHECK VALVE KIT		01	0910-		
		15	01	3	**NA-**	VALVE-CHECK		01	0910-		
		16	01	3	**NA-**	WASHER		01	0910-		
		17	01	3	**NA-**	CIRCLIP		01	0910-		
		18	01	3	**NA-**	FUSE PISTON		01	0910-		
		19	01	3	**NA-**	SPRING GUIDE		01	0910-		
		20	01	3	**NA-**	SPRING		01	0910-		
		21	01	3	**NA-**	RETAINER		01	0910-		
		22	01	2	**58182-FC20B**	FUSE VALVE KIT		01	0910-		
		23	01	1	**58411-FC21A**	CYLINDER ASSY-LIFT, MAST	F/385	02	0910-		
			02	1	**58411-FC22A**		F/430	02	0910-		
			03	1	**58411-FC23A**		F/475	02	0910-		
			04	1	**58411-FC24A**		F/515	02	0910-		
			05	1	**58411-FC25A**		F/550	02	0910-		

APPLIED MODEL

01	02	03	04	05	06	07	08	09	10	11	12	13	14	15	16	17	18	19	20	21	22	23	24	25	26	27	28	29
MIPV	MIPV	MIPV	MIPS	MIUV	MIUV	MIUV	MIUS	MIYL	MIPJ	MIPV	MIPV	MIPV	MIUS	MIUV	MIUV	MIUV	MIUS	MIUV	MIUJ	MIUV	MIGV	MIGV	MIGV	MIYV	MIGV	MIGV	MIGV	MIYG
AA20JV	AA20DV	AA20LV	AA20LS	AA20JV	AA20DV	AA20LV	AA20LS	AA20L	AA25JV	AA25DV	AA25LV	AA25LS	AA25JV	AA25DV	AA25LV	AA25LS	AA25L	AA28JV	AA28DV	AA28LV	AA30JV	AA30DV	AA30LV	AA30L	AA35JV	AA35DV	AA35LV	AA35
*	*	*	*	*	*	*	*	*	*	*	*	*	*	*	*	*	*	*	*	*	*	*	*	*				
																									*	*	*	*
																									*	*	*	*
																									*	*	*	*
																									*	*	*	*
																									*	*	*	*
																									*	*	*	*
																									*	*	*	*
																		*	*	*	*	*	*	*				
																									*	*	*	*
*	*	*	*	*	*	*	*	*	*	*	*	*	*	*	*	*	*	*	*	*	*	*	*	*	*	*	*

SEC. 580H

LIFT CYLINDER (3F 2.8, 3 & 3.5 TON FROM SEPT. 2010)

CILINDRO DE ELEVACION

AUFTRIEBZYLINDER

CYLINDRE DE LEVAGE

NC	S	KEY NO.	LEV	PART NO.	PART NAME	SPECIFICATION	QTY	APPLIED DATE	ICANF	FORMER PART NO.	KD	APPLIED MODEL 01 02 03 04 05 06 07 08 09 10 11 12 13 14 15 16 17 18 19 20 21 22 23 24 25 26 27 28 29
	23	06	1	**58411-FC26A**		F/600	02	0910-				*******
		07	1	**58411-FC27A**		F/650	02	0910-				*******
		08	1	**58411-FC28A**		F/700	02	0910-				*******
		09	1	**58411-FC61A**		F/355	02	0910-				****
		10	1	**58411-FC62A**		F/400	02	0910-				****
		11	1	**58411-FC63A**		F/445	02	0910-				****
		12	1	**58411-FC64A**		F/485	02	0910-				****
		13	1	**58411-FC65A**		F/520	02	0910-				****
		14	1	**58411-FC66A**		F/570	02	0910-				****
		15	1	**58411-FC67A**		F/620	02	0910-				****
		16	1	**58411-FC68A**		F/670	02	0910-				****
	24	01	2	**58416-FA601**	TUBE ASSY-MAST CYLINDER	F/385	02	0910-				*******
		02	2	**58416-FA602**		F/430	02	0910-				*******
		03	2	**58416-FA603**		F/475	02	0910-				*******
		04	2	**58416-FA604**		F/515	02	0910-				*******
		05	2	**58416-FA605**		F/550	02	0910-				*******
		06	2	**58416-FA606**		F/600	02	0910-				*******
		07	2	**58416-FA607**		F/650	02	0910-				*******
		08	2	**58416-FA608**		F/700	02	0910-				*******
		09	2	**58416-FC61A**		F/355	02	0910-				****
		10	2	**58416-FC62A**		F/400	02	0910-				****
		11	2	**58416-FC63A**		F/445	02	0910-				****
		12	2	**58416-FC64A**		F/485	02	0910-				****
		13	2	**58416-FC65A**		F/520	02	0910-				****
		14	2	**58416-FC66A**		F/570	02	0910-				****
		15	2	**58416-FC67A**		F/620	02	0910-				****
		16	2	**58416-FC68A**		F/670	02	0910-				****
	25	01	2	**58431-FC21A**	ROD ASSY-PISTON	F/385	02	0910-				*******
		02	2	**58431-FC22A**		F/430	02	0910-				*******
		03	2	**58431-FC23A**		F/475	02	0910-				*******
		04	2	**58431-FC24A**		F/515	02	0910-				*******
		05	2	**58431-FC25A**		F/550	02	0910-				*******
		06	2	**58431-FC26A**		F/600	02	0910-				*******
		07	2	**58431-FC27A**		F/650	02	0910-				*******
		08	2	**58431-FC28A**		F/700	02	0910-				*******
		09	2	**58431-FC61A**		F/355	02	0910-				****
		10	2	**58431-FC62A**		F/400	02	0910-				****

SEC. 580H

LIFT CYLINDER (3F 2.8, 3 & 3.5 TON FROM SEPT. 2010)

CILINDRO DE ELEVACION

AUFTRIEBZYLINDER

CYLINDRE DE LEVAGE

NC	S	KEY NO.	LEV	PART NO.	PART NAME	SPECIFICATION	QTY	APPLIED DATE	ICANF	FORMER PART NO.	KD	APPLIED MODEL 01 02 03 04 05 06 07 08 09 10 11 12 13 14 15 16 17 18 19 20 21 22 23 24 25 26 27 28 29
		25	11	2	**58431-FC63A**		F/445	02	0910-			* * * *
			12	2	**58431-FC64A**		F/485	02	0910-			* * * *
			13	2	**58431-FC65A**		F/520	02	0910-			* * * *
			14	2	**58431-FC66A**		F/570	02	0910-			* * * *
			15	2	**58431-FC67A**		F/620	02	0910-			* * * *
			16	2	**58431-FC68A**		F/670	02	0910-			* * * *
		26	01	2	**58099-FC20A**	PACKING KIT-MAST CYLINDER		02	0910-			* * * * * *
			02	2	**58099-FC60A**			02	0910-			* * * *
		27	01	3	**NA-**	WIPER		02	0910-			* * * * * * * * * *
		28	01	3	**NA-**	PISTON SEAL		02	0910-			* * * * * * * * * *
		29	01	3	**NA-**	BACK UP RING		02	0910-			* * * * * * * * * *
		30	01	3	**NA-**	O RING		02	0910-			* * * * * * * * * *
		31	01	2	**NA-**	RING-BACK UP		02	0910-			* * * * * * * * * *
		32	01	3	**NA-**	ROD SEAL		02	0910-			* * * * * * * * * *
		33	01	3	**NA-**	WEAR RING		02	0910-			* * * * * * * * * *
		34	01	3	**NA-**	O RING		02	0910-			* * * * * * * * * *
		35	01	3	**NA-**	PULL-IN WIRE		02	0910-			* * * * * * * * * *
		36	01	3	**NA-**	CIRCLIP		02	0910-			* * * * * * * * * *
		37	01	3	**NA-**	CIRCLIP		02	0910-			* * * * * * * * * *
		38	01	3	**NA-**	RETAINER		02	0910-			* * * * * * * * * *
		39	01	3	**NA-**	PISTON		02	0910-			* * * * * * * * * *
		40	01	3	**NA-**	VALVE-CHECK		02	0910-			* * * * * * * * * *
		41	01	3	**NA-**	WASHER		02	0910-			* * * * * * * * * *
		42	01	3	**NA-**	SLEEVE		02	0910-			* * * * * * * * * *
		43	01	2	**58019-FC20A**	RETAINER KIT		02	0910-			* * * * * * *
			02	2	**58019-FC60A**			02	0910-			* * * *
		44	01	2	**58099-FD02B**	CHECK VALVE KIT		01	0910-			* * * * * * *
			02	2	**58051-FA01B**			01	0910-			* * * *
		45	01	1	**58080-24H00**	VALVE ASSY-FLOW REGULATOR		01	0910-			* * * * * * *
			02	1	**58070-20H00**			01	0910-			* * * *
		46	01	1	**58465-1G000**	CONNECTOR-ELBOW		01	0910-			* * * * * * * * * *
		47	01	2	**69370-1G001**	SEAL-O RING		01	0910-			* * * * * * * * * *
		48	01	1	**58065-62K00**	CONNECTOR ASSY		01	0910-			* * * * * * * * * *
		49	01	1	**58071-1G300**	VALVE ASSY-SAFETY		01	0910-			* * * * * * * * * *
		50	01	1	**58066-62K01**	CONNECTOR ASSY		01	0910-			* * * * * * * * * *
		51	01	2	**58182-FB20A**	CUSHION SLEEVE KIT		02	0910-			* * * * * * *
			02	2	**58182-FC60A**			02	0910-			* * * *

SEC. 580H

LIFT CYLINDER (3F 2.8, 3 & 3.5 TON FROM SEPT. 2010)

CILINDRO DE ELEVACION

AUFTRIEBZYLINDER

CYLINDRE DE LEVAGE

NC	S	KEY NO.	LEV	PART NO.	PART NAME	SPECIFICATION	QTY	APPLIED DATE	TCANF	FORMER PART NO.	KD	APPLIED MODEL 01 02 03 04 05 06 07 08 09 10 11 12 13 14 15 16 17 18 19 20 21 22 23 24 25 26 27 28 29
		52 01	1	**58459-FA600**	STOP RING		01	0910-				✱ ✱ ✱ ✱ ✱ ✱ ✱

MIP AUIJ AUIJ AUIJ

SEC. 580J

LIFT CYLINDER (3V FROM SEPT. 2010)

CILINDRO DE ELEVACION

AUFTRIEBZYLINDER

CYLINDRE DE LEVAGE

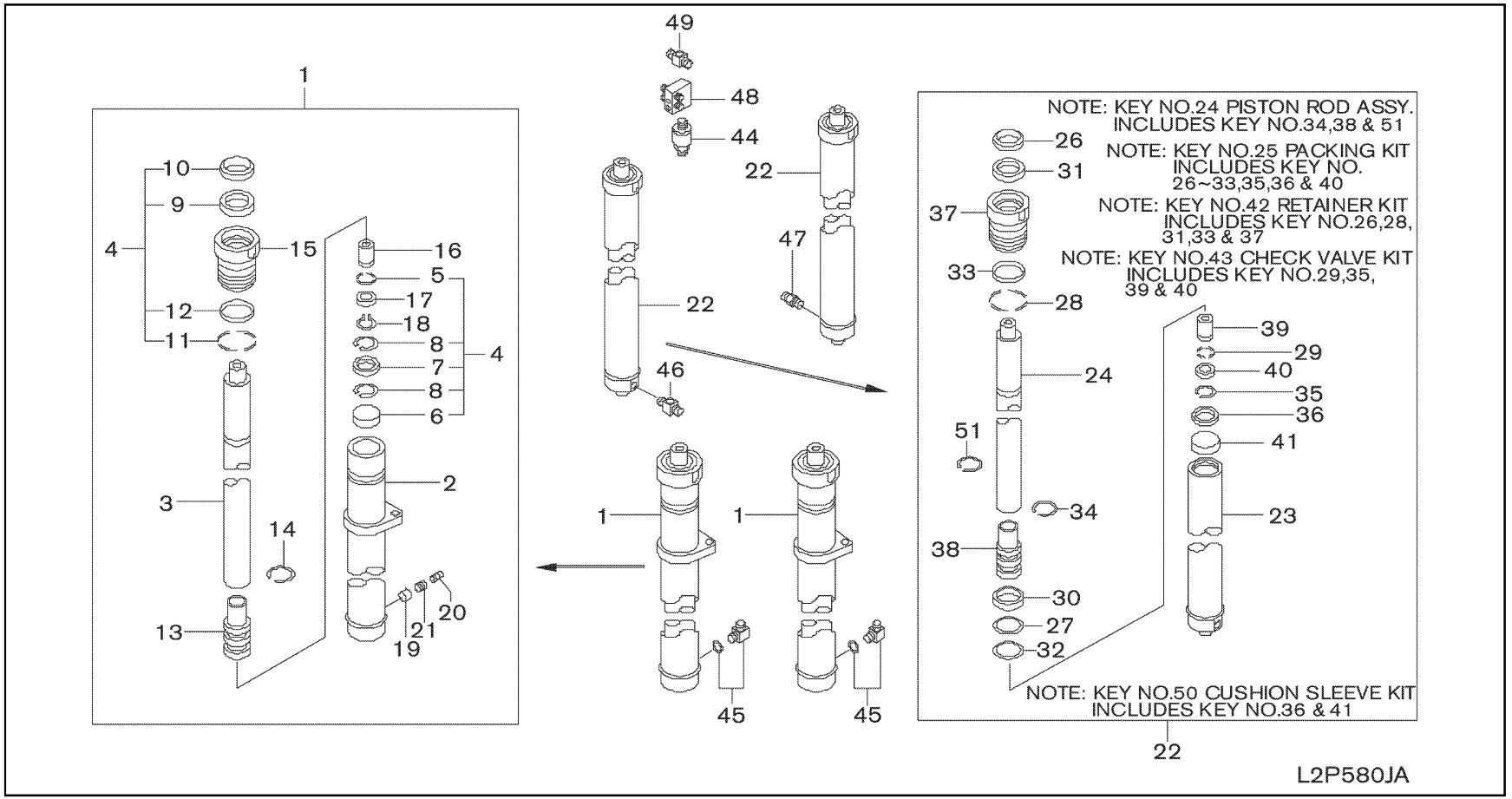

SEC. 580J

LIFT CYLINDER (3V FROM SEPT. 2010)

CILINDRO DE ELEVACION

AUFTRIEBZYLINDER

CYLINDRE DE LEVAGE

NC	S	KEY NO.	LEV	PART NO.	PART NAME	SPECIFICATION	QTY	APPLIED DATE	ICANF	FORMER PART NO.	KD	APPLIED MODEL 01 02 03 04 05 06 07 08 09 10 11 12 13 14 15 16 17 18 19 20 21 22 23 24 25 26 27 28 29
		1 01	1	**58413-FA560**	CYLINDER ASSY-FULL FREE	F/RH, F/360	01	0910-				* * * * * * * * * * * * * * * * * *
		02	1	**58413-FA561**		F/RH, F/405	01	0910-				* * * * * * * * * * * * * * * * * *
		03	1	**58413-FA562**		F/RH, F/450	01	0910-				* * * * * * * * * * * * * * * * * *
		04	1	**58413-FA563**		F/RH, F/490	01	0910-				* * * * * * * * * * * * * * * * * *
		05	1	**58413-FA564**		F/RH, F/525	01	0910-				* * * * * * * * * * * * * * * * * *
		06	1	**58413-FA565**		F/RH, F/575	01	0910-				* * * * * * * * * * * * * * * * * *
		07	1	**58413-FA566**		F/RH, F/633	01	0910-				* * * * * * * * * * * * * * * * * *
		08	1	**58413-FA567**		F/RH, F/688	01	0910-				* * * * * * * * * * * * * * * * * *
		09	1	**58414-FA560**		F/LH, F/360	01	0910-				* * * * * * * * * * * * * * * * * *
		10	1	**58414-FA561**		F/LH, F/405	01	0910-				* * * * * * * * * * * * * * * * * *
		11	1	**58414-FA562**		F/LH, F/450	01	0910-				* * * * * * * * * * * * * * * * * *
		12	1	**58414-FA563**		F/LH, F/490	01	0910-				* * * * * * * * * * * * * * * * * *
		13	1	**58414-FA564**		F/LH, F/525	01	0910-				* * * * * * * * * * * * * * * * * *
		14	1	**58414-FA565**		F/LH, F/575	01	0910-				* * * * * * * * * * * * * * * * * *
		15	1	**58414-FA566**		F/LH, F/633	01	0910-				* * * * * * * * * * * * * * * * * *
		16	1	**58414-FA567**		F/LH, F/688	01	0910-				* * * * * * * * * * * * * * * * * *
		17	1	**58413-FA661**		F/RH, F/385	01	0910-				* * * * * * * * * * * * * * * * * *
		18	1	**58413-FA662**		F/RH, F/430	01	0910-				* * * * * * * * * * * * * * * * * *
		19	1	**58413-FA663**		F/RH, F/470	01	0910-				* * * * * * *
		20	1	**58413-FA664**		F/RH, F/505	01	0910-				* * * * * * *
		21	1	**58413-FA665**		F/RH, F/555	01	0910-				* * * * * * *
		22	1	**58413-FA666**		F/RH, F/600	01	0910-				* * * * * * *
		23	1	**58413-FA667**		F/RH, F/650	01	0910-				* * * * * * *
		24	1	**58413-FA668**		F/RH, F/700	01	0910-				* * * * * * *
		25	1	**58414-FA661**		F/LH, F/385	01	0910-				* * * * * * *
		26	1	**58414-FA662**		F/LH, F/430	01	0910-				* * * * * * *
		27	1	**58414-FA663**		F/LH, F/470	01	0910-				* * * * * * *
		28	1	**58414-FA664**		F/LH, F/505	01	0910-				* * * * * * *
		29	1	**58414-FA665**		F/LH, F/555	01	0910-				* * * * * * *
		30	1	**58414-FA666**		F/LH, F/600	01	0910-				* * * * * * *
		31	1	**58414-FA667**		F/LH, F/650	01	0910-				* * * * * * *
		32	1	**58414-FA668**		F/LH, F/700	01	0910-				* * * * * * *
		33	1	**58413-6G611**		F/RH, F/385	01	0910-				* * * *
		34	1	**58413-6G612**		F/RH, F/430	01	0910-				* * * *
		35	1	**58413-6G613**		F/RH, F/470	01	0910-				* * * *
		36	1	**58413-6G614**		F/RH, F/505	01	0910-				* * * *
		37	1	**58413-6G615**		F/RH, F/555	01	0910-				* * * *

SEC. 580J

LIFT CYLINDER (3V FROM SEPT. 2010)

CILINDRO DE ELEVACION

AUFTRIEBZYLINDER

CYLINDRE DE LEVAGE

NC	S	KEY NO.	LEV	PART NO.	PART NAME	SPECIFICATION	QTY	APPLIED DATE	ICANF	FORMER PART NO.	KD	APPLIED MODEL 01 02 03 04 05 06 07 08 09 10 11 12 13 14 15 16 17 18 19 20 21 22 23 24 25 26 27 28 29
		1 38	1	**58413-6G616**		F/RH, F/600	01	0910-				****
		39	1	**58413-6G617**		F/RH, F/650	01	0910-				****
		40	1	**58413-6G618**		F/RH, F/700	01	0910-				****
		41	1	**58414-6G611**		F/LH, F/385	01	0910-				****
		42	1	**58414-6G612**		F/LH, F/430	01	0910-				****
		43	1	**58414-6G613**		F/LH, F/470	01	0910-				****
		44	1	**58414-6G614**		F/LH, F/505	01	0910-				****
		45	1	**58414-6G615**		F/LH, F/555	01	0910-				****
		46	1	**58414-6G616**		F/LH, F/600	01	0910-				****
		47	1	**58414-6G617**		F/LH, F/650	01	0910-				****
		48	1	**58414-6G618**		F/LH, F/700	01	0910-				****
		2 01	2	**58416-FA568**	TUBE ASSY-LIFT CYLINDER	F/RH, F/360	01	0910-				**********
		02	2	**58416-FA569**		F/RH, F/405	01	0910-				**********
		03	2	**58416-FA570**		F/RH, F/450	01	0910-				**********
		04	2	**58416-FA571**		F/RH, F/490	01	0910-				**********
		05	2	**58416-FA572**		F/RH, F/525	01	0910-				**********
		06	2	**58416-FA573**		F/RH, F/575	01	0910-				**********
		07	2	**58416-FA574**		F/RH, F/633	01	0910-				**********
		08	2	**58416-FA575**		F/RH, F/688	01	0910-				**********
		09	2	**58416-FA560**		F/LH, F/360	01	0910-				**********
		10	2	**58416-FA561**		F/LH, F/405	01	0910-				**********
		11	2	**58416-FA562**		F/LH, F/450	01	0910-				**********
		12	2	**58416-FA563**		F/LH, F/490	01	0910-				**********
		13	2	**58416-FA564**		F/LH, F/525	01	0910-				**********
		14	2	**58416-FA565**		F/LH, F/575	01	0910-				**********
		15	2	**58416-FA566**		F/LH, F/633	01	0910-				**********
		16	2	**58416-FA567**		F/LH, F/688	01	0910-				**********
		17	2	**58416-FA669**		F/RH, F/385	01	0910-				*******
		18	2	**58416-FA670**		F/RH, F/430	01	0910-				*******
		19	2	**58416-FA671**		F/RH, F/470	01	0910-				*******
		20	2	**58416-FA672**		F/RH, F/505	01	0910-				*******
		21	2	**58416-FA673**		F/RH, F/555	01	0910-				*******
		22	2	**58416-FA674**		F/RH, F/600	01	0910-				*******
		23	2	**58416-FA675**		F/RH, F/650	01	0910-				*******
		24	2	**58416-FA676**		F/RH, F/700	01	0910-				*******
		25	2	**58416-FA661**		F/LH, F/385	01	0910-				*******
		26	2	**58416-FA662**		F/LH, F/430	01	0910-				*******

SEC. 580J

LIFT CYLINDER (3V FROM SEPT. 2010)

CILINDRO DE ELEVACION

AUFTRIEBZYLINDER

CYLINDRE DE LEVAGE

NC	S	KEY NO.	LEV	PART NO.	PART NAME	SPECIFICATION	QTY	APPLIED DATE	ICANF	FORMER PART NO.	KD	APPLIED MODEL 01 02 03 04 05 06 07 08 09 10 11 12 13 14 15 16 17 18 19 20 21 22 23 24 25 26 27 28 29
		2	27	2	**58416-FA663**		F/LH, F/470	01	0910-			*******
			28	2	**58416-FA664**		F/LH, F/505	01	0910-			*******
			29	2	**58416-FA665**		F/LH, F/555	01	0910-			*******
			30	2	**58416-FA666**		F/LH, F/600	01	0910-			*******
			31	2	**58416-FA667**		F/LH, F/650	01	0910-			*******
			32	2	**58416-FA668**		F/LH, F/700	01	0910-			*******
			33	2	**58416-6G609**		F/RH, F/385	01	0910-			****
			34	2	**58416-6G610**		F/RH, F/430	01	0910-			****
			35	2	**58416-6G611**		F/RH, F/470	01	0910-			****
			36	2	**58416-6G612**		F/RH, F/505	01	0910-			****
			37	2	**58416-6G613**		F/RH, F/555	01	0910-			****
			38	2	**58416-6G614**		F/RH, F/600	01	0910-			****
			39	2	**58416-6G615**		F/RH, F/650	01	0910-			****
			40	2	**58416-6G616**		F/RH, F/700	01	0910-			****
			41	2	**58416-6G601**		F/LH, F/385	01	0910-			****
			42	2	**58416-6G602**		F/LH, F/430	01	0910-			****
			43	2	**58416-6G603**		F/LH, F/470	01	0910-			****
			44	2	**58416-6G604**		F/LH, F/505	01	0910-			****
			45	2	**58416-6G605**		F/LH, F/555	01	0910-			****
			46	2	**58416-6G606**		F/LH, F/600	01	0910-			****
			47	2	**58416-6G607**		F/LH, F/650	01	0910-			****
			48	2	**58416-6G608**		F/LH, F/700	01	0910-			****
		3	01	2	**58431-5G500**	ROD ASSY-PISTON	F/360	02	0910-			**********
			02	2	**58431-5G501**		F/405	02	0910-			**********
			03	2	**58431-5G502**		F/450	02	0910-			**********
			04	2	**58431-5G503**		F/490	02	0910-			**********
			05	2	**58431-5G504**		F/525	02	0910-			**********
			06	2	**58431-5G505**		F/575	02	0910-			**********
			07	2	**58431-5G506**		F/633	02	0910-			**********
			08	2	**58431-5G507**		F/688	02	0910-			*******
			09	2	**58431-5G501**		F/385	02	0910-			*******
			10	2	**58431-5G502**		F/430	02	0910-			*******
			11	2	**58431-5G503**		F/470	02	0910-			*******
			12	2	**58431-5G504**		F/505	02	0910-			*******
			13	2	**58431-5G505**		F/555	02	0910-			*******
			14	2	**58431-5G506**		F/600	02	0910-			*******
			15	2	**58431-5G507**		F/650	02	0910-			*******

SEC. 580J

LIFT CYLINDER (3V FROM SEPT. 2010)

CILINDRO DE ELEVACION

AUFTRIEBZYLINDER

CYLINDRE DE LEVAGE

NC	S	KEY NO.	LEV	PART NO.	PART NAME	SPECIFICATION	QTY	APPLIED DATE	ICANF	FORMER PART NO.	KD	APPLIED MODEL 01 02 03 04 05 06 07 08 09 10 11 12 13 14 15 16 17 18 19 20 21 22 23 24 25 26 27 28 29
		3	16	2	**58431-5G508**		F/700	02	0910-			* * * * * * *
			17	2	**58431-6G601**		F/385	02	0910-			* * * *
			18	2	**58431-6G602**		F/430	02	0910-			* * * *
			19	2	**58431-6G603**		F/470	02	0910-			* * * *
			20	2	**58431-6G604**		F/505	02	0910-			* * * *
			21	2	**58431-6G605**		F/555	02	0910-			* * * *
			22	2	**58431-6G606**		F/600	02	0910-			* * * *
			23	2	**58431-6G607**		F/650	02	0910-			* * * *
			24	2	**58431-6G608**		F/700	02	0910-			* * * *
		4	01	2	**58099-FA562**	PACKING KIT-FULL FREE CYLINDER		02	0910-			* * * * * * * * * * * * * * * * * *
			02	2	**58099-FA661**			02	0910-			* * * * * * *
			03	2	**58099-6G600**			02	0910-			* * * *
		5	01	3	**58026-31K01**	SEAL-O RING		02	0910-			* * * * * * * * * * * * * * * * * *

SEC. 580J

LIFT CYLINDER (3V FROM SEPT. 2010)

CILINDRO DE ELEVACION

AUFTRIEBZYLINDER

CYLINDRE DE LEVAGE

NC	S	KEY NO.	LEV	PART NO.	PART NAME	SPECIFICATION	QTY	APPLIED DATE	ICANF	FORMER PART NO.	KD	APPLIED MODEL 01	02	03	04	05	06	07	08	09	10	11	12	13	14	15	16	17	18	19	20	21	22	23	24	25	26	27	28	29
		15	01	2	**58620-FA561**	HEAD-CYLINDER		02 0910-				*	*	*	*	*	*	*	*	*	*	*	*	*	*	*	*	*	*											
			02	2	**58620-FA661**			02 0910-																						*	*	*	*	*	*	*					
			03	2	**58620-6G600**			02 0910-																													*	*	*	*	
		16	01	2	**58050-31K00**	VALVE-CHECK		02 0910-				*	*	*	*	*	*	*	*	*	*	*	*	*	*	*	*	*	*	*	*	*	*	*	*	*	*	*	*	*
		17	01	2	**58044-31K00**	WASHER		02 0910-				*	*	*	*	*	*	*	*	*	*	*	*	*	*	*	*	*	*	*	*	*	*	*	*	*	*	*	*	*
		18	01	2	**58028-31K01**	CIRCLIP		02 0910-				*	*	*	*	*	*	*	*	*	*	*	*	*	*	*	*	*	*	*	*	*	*	*	*	*	*	*	*	*
		19	01	2	**58471-4G500**	VALVE-DOWN SAFETY	F/LH	01 0910-				*	*	*	*	*	*	*	*	*	*	*	*	*	*	*	*	*	*	*	*	*	*	*	*	*	*	*	*	*
		20	01	2	**58445-4G500**	GUIDE-SPRING	F/LH	01 0910-				*	*	*	*	*	*	*	*	*	*	*	*	*	*	*	*	*	*	*	*	*	*	*	*	*	*	*	*	*
		21	01	2	**58489-4G500**	SPRING	F/LH	01 0910-				*	*	*	*	*	*	*	*	*	*	*	*	*	*	*	*	*	*											
			02	2	**58489-6G500**		F/LH	01 0910-																						*	*	*	*	*	*	*	*	*	*	*	*
		22	01	1	**58411-FB61A**	CYLINDER ASSY-LIFT, MAST	F/360	02 0910-				*	*	*	*	*	*	*	*	*	*	*	*	*	*	*	*	*	*											
			02	1	**58411-FB62A**		F/405	02 0910-				*	*	*	*	*	*	*	*	*	*	*	*	*	*	*	*	*	*											
			03	1	**58411-FB63A**		F/450	02 0910-				*	*	*	*	*	*	*	*	*	*	*	*	*	*	*	*	*	*											
			04	1	**58411-FB64A**		F/490	02 0910-				*	*	*	*	*	*	*	*	*	*	*	*	*	*	*	*	*	*											
			05	1	**58411-FB65A**		F/525	02 0910-				*	*	*	*	*	*	*	*	*	*	*	*	*	*	*	*	*	*											
			06	1	**58411-FB66A**		F/575	02 0910-				*	*	*	*	*	*	*	*	*	*	*	*	*	*	*	*	*	*											
			07	1	**58411-FB67A**		F/633	02 0910-				*	*	*	*	*	*	*	*	*	*	*	*	*	*	*	*	*	*											
			08	1	**58411-FB68A**		F/688	02 0910-				*	*	*	*	*	*	*	*	*	*	*	*	*	*	*	*	*	*											
			09	1	**58411-FC31A**		F/385	02 0910-																						*	*	*	*	*	*	*					
			10	1	**58411-FC32A**		F/430	02 0910-																						*	*	*	*	*	*	*					
			11	1	**58411-FC33A**		F/470	02 0910-																						*	*	*	*	*	*	*					
			12	1	**58411-FC34A**		F/505	02 0910-																						*	*	*	*	*	*	*					
			13	1	**58411-FC35A**		F/555	02 0910-																						*	*	*	*	*	*	*					
			14	1	**58411-FC26A**		F/600	02 0910-																						*	*	*	*	*	*	*					
			15	1	**58411-FC37A**		F/650	02 0910-																						*	*	*	*	*	*	*					
			16	1	**58411-FC28A**		F/700	02 0910-																						*	*	*	*	*	*	*					
			17	1	**58411-FC62A**		F/385	02 0910-																													*	*	*	*	
			18	1	**58411-FC63A**		F/430	02 0910-																													*	*	*	*	
			19	1	**58411-FC64A**		F/470	02 0910-																													*	*	*	*	
			20	1	**58411-FC65A**		F/505	02 0910-																													*	*	*	*	
			21	1	**58411-FC66A**		F/555	02 0910-																													*	*	*	*	
			22	1	**58411-FC77A**		F/600	02 0910-																													*	*	*	*	
			23	2	**58411-FC78A**		F/650	02 0910-																													*	*	*	*	
			24	1	**58411-FC79A**		F/700	02 0910-																													*	*	*	*	
		23	01	2	**58416-FA511**	TUBE ASSY-MAST CYLINDER	F/360	02 0910-				*	*	*	*	*	*	*	*	*	*	*	*	*	*	*	*	*	*											
			02	2	**58416-FA512**		F/405	02 0910-				*	*	*	*	*	*	*	*	*	*	*	*	*	*	*	*	*	*											
			03	2	**58416-FA513**		F/450	02 0910-				*	*	*	*	*	*	*	*	*	*	*	*	*	*	*	*	*	*											

SEC. 580J

LIFT CYLINDER (3V FROM SEPT. 2010)

CILINDRO DE ELEVACION

AUFTRIEBZYLINDER

CYLINDRE DE LEVAGE

NC	S	KEY NO.	LEV	PART NO.	PART NAME	SPECIFICATION	QTY	APPLIED DATE	ICANF	FORMER PART NO.	KD	APPLIED MODEL 01 02 03 04 05 06 07 08 09 10 11 12 13 14 15 16 17 18 19 20 21 22 23 24 25 26 27 28 29
	23	04	2	**58416-FA514**		F/490	02	0910-				* * * * * * * * * * * * * * * * * *
		05	2	**58416-FA515**		F/525	02	0910-				* * * * * * * * * * * * * * * * * *
		06	2	**58416-FA516**		F/575	02	0910-				* * * * * * * * * * * * * * * * * *
		07	2	**58416-FA517**		F/633	02	0910-				* * * * * * * * * * * * * * * * * *
		08	2	**58416-FA518**		F/688	02	0910-				* * * * * * * * * * * * * * * * * *
		09	2	**58416-FA601**		F/385	02	0910-				* * * * * * *
		10	2	**58416-FA602**		F/430	02	0910-				* * * * * * *
		11	2	**58416-FA603**		F/470	02	0910-				* * * * * * *
		12	2	**58416-FA604**		F/505	02	0910-				* * * * * * *
		13	2	**58416-FA605**		F/555	02	0910-				* * * * * * *
		14	2	**58416-FA606**		F/600	02	0910-				* * * * * * *
		15	2	**58416-FA607**		F/650	02	0910-				* * * * * * *
		16	2	**58416-FA608**		F/700	02	0910-				* * * * * * *
		17	2	**58416-FC62A**		F/385	02	0910-				* * * *
		18	2	**58416-FC63A**		F/430	02	0910-				* * * *
		19	2	**58416-FC64A**		F/470	02	0910-				* * * *
		20	2	**58416-FC65A**		F/505	02	0910-				* * * *
		21	2	**58416-FC66A**		F/555	02	0910-				* * * *
		22	2	**58416-FC67A**		F/600	02	0910-				* * * *
		23	2	**58416-FC68A**		F/650	02	0910-				* * * *
		24	2	**58416-FC79A**		F/700	02	0910-				* * * *
	24	01	2	**58431-FA51A**	ROD ASSY-PISTON	F/360	02	0910-				* * * * * * * * * * * * * * * * * *
		02	2	**58431-FA52A**		F/405	02	0910-				* * * * * * * * * * * * * * * * * *
		03	2	**58431-FA53A**		F/450	02	0910-				* * * * * * * * * * * * * * * * * *
		04	2	**58431-FA54A**		F/490	02	0910-				* * * * * * * * * * * * * * * * * *
		05	2	**58431-FA55A**		F/525	02	0910-				* * * * * * * * * * * * * * * * * *
		06	2	**58431-FA56A**		F/575	02	0910-				* * * * * * * * * * * * * * * * * *
		07	2	**58431-FA57A**		F/633	02	0910-				* * * * * * * * * * * * * * * * * *
		08	2	**58431-FA58A**		F/688	02	0910-				* * * * * * * * * * * * * * * * * *
		09	2	**58431-FC21A**		F/385	02	0910-				* * * * * * *
		10	2	**58431-FC22A**		F/430	02	0910-				* * * * * * *
		11	2	**58431-FC23A**		F/470	02	0910-				* * * * * * *
		12	2	**58431-FC24A**		F/505	02	0910-				* * * * * * *
		13	2	**58431-FC25A**		F/555	02	0910-				* * * * * * *
		14	2	**58431-FC26A**		F/600	02	0910-				* * * * * * *
		15	2	**58431-FC27A**		F/650	02	0910-				* * * * * * *
		16	2	**58431-FC28A**		F/700	02	0910-				* * * * * * *

SEC. 580J

LIFT CYLINDER (3V FROM SEPT. 2010)

CILINDRO DE ELEVACION

AUFTRIEBZYLINDER

CYLINDRE DE LEVAGE

NC	S	KEY NO.	LEV	PART NO.	PART NAME	SPECIFICATION	QTY	APPLIED DATE	ICANF	FORMER PART NO.	KD	APPLIED MODEL 01 02 03 04 05 06 07 08 09 10 11 12 13 14 15 16 17 18 19 20 21 22 23 24 25 26 27 28 29
		24	17	2	**58431-FC62A**		F/385	02	0910-			∗∗∗∗
			18	2	**58431-FC63A**		F/430	02	0910-			∗∗∗∗
			19	2	**58431-FC64A**		F/470	02	0910-			∗∗∗∗
			20	2	**58431-FC65A**		F/505	02	0910-			∗∗∗∗
			21	2	**58431-FC66A**		F/555	02	0910-			∗∗∗∗
			22	2	**58431-FC67A**		F/600	02	0910-			∗∗∗∗
			23	2	**58431-FC68A**		F/650	02	0910-			∗∗∗∗
			24	2	**58431-FC79A**		F/700	02	0910-			∗∗∗∗
		25	01	2	**58099-FD41B**	PACKING KIT-MAST CYLINDER		02	0910-			∗∗∗∗∗∗∗∗∗∗∗∗∗∗∗∗∗∗∗
			02	2	**58099-FC20A**			02	0910-			∗∗∗∗∗∗∗
			03	2	**58099-FC60A**			02	0910-			∗∗∗∗
		26	01	3	**NA-**	WIPER		02	0910-			∗∗∗∗∗∗∗∗∗∗∗∗∗∗∗∗∗∗∗∗∗∗∗∗∗∗∗∗∗∗∗∗∗∗
		27	01	3	**NA-**	PISTON SEAL		02	0910-			∗∗∗∗∗∗∗∗∗∗∗∗∗∗∗∗∗∗∗∗∗∗∗∗∗∗∗∗∗∗∗∗∗∗
		28	01	3	**NA-**	BACK UP RING		02	0910-			∗∗ ∗∗∗∗∗∗∗∗∗∗∗∗∗∗∗∗∗∗∗∗∗∗∗∗∗∗∗∗∗∗
		29	01	3	**NA-**	O RING		02	0910-			∗∗∗∗∗∗∗∗∗∗∗∗∗∗∗∗∗∗∗∗∗∗∗∗∗∗∗∗∗∗∗∗∗∗
		30	01	3	**NA-**	NYLON RING		02	0910-			∗∗∗∗∗∗∗∗∗∗∗∗∗∗∗∗∗∗∗∗∗∗∗∗∗∗∗∗∗∗∗∗∗∗
		31	01	3	**NA-**	ROD SEAL		02	0910-			∗∗∗∗∗∗∗∗∗∗∗∗∗∗∗∗∗∗∗∗∗∗∗∗∗∗∗∗∗∗∗∗∗∗
		32	01	3	**NA-**	WEAR RING		02	0910-			∗∗∗∗∗∗∗∗∗∗∗∗∗∗∗∗∗∗∗∗∗∗∗∗∗∗∗∗∗∗∗∗∗∗
		33	01	3	**NA-**	O RING		02	0910-			∗∗∗∗∗∗∗∗∗∗∗∗∗∗∗∗∗∗∗∗∗∗∗∗∗∗∗∗∗∗∗∗∗∗
		34	01	3	**NA-**	WIRE RING		02	0910-			∗∗∗∗∗∗∗∗∗∗∗∗∗∗∗∗∗∗∗∗∗∗∗∗∗∗∗∗∗∗∗∗∗∗
		35	01	3	**NA-**	CIRCLIP		02	0910-			∗∗∗∗∗∗∗∗∗∗∗∗∗∗∗∗∗∗∗∗∗∗∗∗∗∗∗∗∗∗∗∗∗∗
		36	01	3	**NA-**			02	0910-			∗∗∗∗∗∗∗∗∗∗∗∗∗∗∗∗∗∗∗∗∗∗∗∗∗∗∗∗∗∗∗∗∗∗
		37	01	3	**NA-**	RETAINER		02	0910-			∗∗∗∗∗∗∗∗∗∗∗∗∗∗∗∗∗∗∗∗∗∗∗∗∗∗∗∗∗∗∗∗∗∗
		38	01	3	**NA-**	PISTON		02	0910-			∗∗∗∗∗∗∗∗∗∗∗∗∗∗∗∗∗∗∗∗∗∗∗∗∗∗∗∗∗∗∗∗∗∗
		39	01	3	**NA-**	CHECK VALVE		02	0910-			∗∗∗∗∗∗∗∗∗∗∗∗∗∗∗∗∗∗∗∗∗∗∗∗∗∗∗∗∗∗∗∗∗∗
		40	01	3	**NA-**	WASHER		02	0910-			∗∗∗∗∗∗∗∗∗∗∗∗∗∗∗∗∗∗∗∗∗∗∗∗∗∗∗∗∗∗∗∗∗∗
		41	01	3	**NA-**	SLEEVE		02	0910-			∗∗∗∗∗∗∗∗∗∗∗∗∗∗∗∗∗∗∗∗∗∗∗∗∗∗∗∗∗∗∗∗∗∗
		42	01	2	**58019-FB60A**	RETAINER KIT		02	0910-			∗∗∗∗∗∗∗∗∗∗∗∗∗∗∗∗∗∗∗
			02	2	**58019-FC20A**			02	0910-			∗∗∗∗∗∗∗
			03	2	**58019-FC60A**			02	0910-			∗∗∗∗
		43	01	2	**58099-FD02B**	CHECK VALVE KIT		02	0910-			∗∗∗∗∗∗∗∗∗∗∗∗∗∗∗∗∗∗∗∗∗∗∗∗∗∗∗∗∗∗∗
			02	2	**58051-FA01B**			02	0910-			∗∗∗∗
		44	01	1	**58080-FW40A**			01	0910-			∗∗∗∗∗∗∗∗∗∗∗∗∗∗∗∗∗∗∗
			02	1	**58080-24H00**			01	0910-			∗∗∗∗∗∗∗
			03	1	**58070-20H00**			01	0910-			∗∗∗∗
		45	01	1	**69944-4G500**	NUT		02	0910-			∗∗∗∗∗∗∗∗∗∗∗∗∗∗∗∗∗∗∗
			02	1	**69944-6G500**			02	0910-			∗∗∗∗∗∗∗∗∗∗∗

SEC. 580J

LIFT CYLINDER (3V FROM SEPT. 2010)

CILINDRO DE ELEVACION

AUFTRIEBZYLINDER

CYLINDRE DE LEVAGE

NC	S	KEY NO.	LEV	PART NO.	PART NAME	SPECIFICATION	QTY	APPLIED DATE	TCANF	FORMER PART NO.	KD	APPLIED MODEL 01 02 03 04 05 06 07 08 09 10 11 12 13 14 15 16 17 18 19 20 21 22 23 24 25 26 27 28 29
		46 01	1	**69662-L1100**	CONNECTOR ASSY		01	0910-				* *
		02	1	**69350-L1100**			01	0910-				* *
		47 01	1	**58071-FE200**			01	0910-				* *
		02	1	**58071-GL10A**	VALVE ASSY-SAFETY		01	0910-				* *
		48 01	1	**58066-FA560**	CONNECTOR ASSY		01	0910-				* *
		02	1	**58066-FA660**			01	0910-				* *
		49 01	1	**69350-L1100**	CONNECTOR ASSY		01	0910-				* *
		02	1	**69353-L6000**			01	0910-				* *
		50 01	1	**58182-FB20A**	CUSHION SLEEVE KIT		02	0910-				* *
		02	1	**58182-FC60A**			02	0910-				* * * *
		51 01	3	**NA-**	STOP RING		02	0910-				* *

NOTE

SEC. 585A

CHAIN WHEEL SUPPORT & CHAIN (2W-INNER CHAIN 3.5TON)

SOPORTE DE LA RUEDA DE CADENA Y CADENA

KETTENABSTÜTZUNG & KETTE

SUPPORT DE ROUE DE CHAINE ET CHAINE

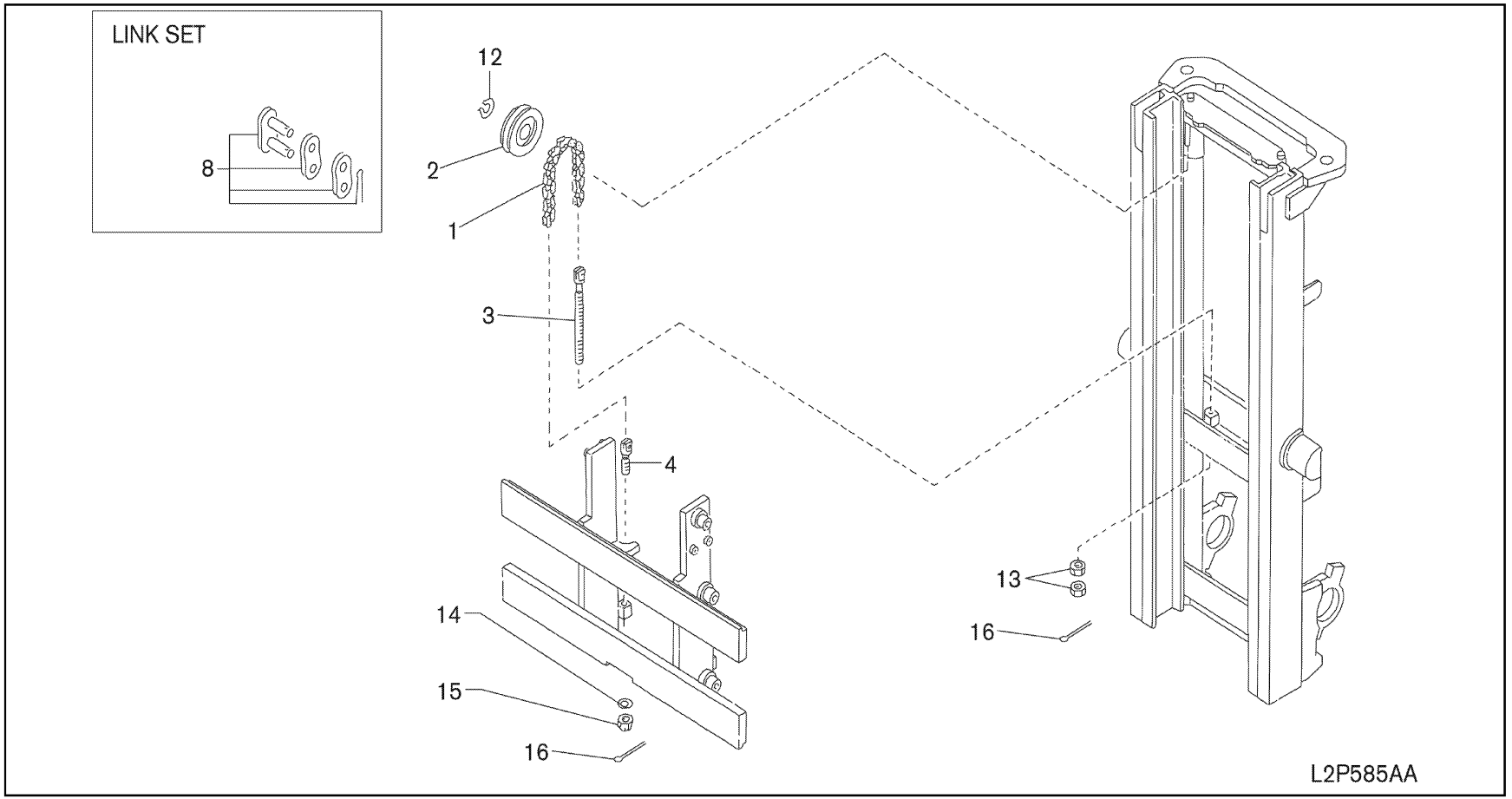

585A-1

SEC. 585A

CHAIN WHEEL SUPPORT & CHAIN (2W-INNER CHAIN 3.5TON)

SOPORTE DE LA RUEDA DE CADENA Y CADENA

KETTENABSTÜTZUNG & KETTE

SUPPORT DE ROUE DE CHAINE ET CHAINE

NC	S	KEY NO.	LEV	PART NO.	PART NAME	SPECIFICATION	QTY	APPLIED DATE	ICANF	FORMER PART NO.	KD	APPLIED MODEL 01 02 03 04 05 06 07 08 09 10 11 12 13 14 15 16 17 18 19 20 21 22 23 24 25 26 27 28 29
		1	01	1	**59420-50H01**	CHAIN-LIFT	BL834, 121 LINK-300	02	0107-																		*	*	*	*
			02	1	**59420-L6307**		BL834, 131 LINK-330	02	0107-																		*	*	*	*
			03	1	**59420-L1313**		BL834, 97 LINK-350	02	0107-																		*	*	*	*
			04	1	**59420-23H07**		BL834, 105 LINK-370	02	0107-																		*	*	*	*
			05	1	**59420-23H08**		BL834, 125 LINK-400	02	0107-																		*	*	*	*
			06	1	**59420-23H09**		BL834, 145 LINK-450	02	0107-																		*	*	*	*
			07	1	**59420-GG40A**		BL834, 165 LINK-500	02	0107-																		*	*	*	*
		2	01	1	**59440-20H00**	WHEEL-CHAIN		02	0107-																		*	*	*	*
		3	01	1	**59433-20H00**	BOLT-ADJUST CHAIN		02	0107-																		*	*	*	*
		4	01	1	**59431-20H00**	BOLT-ANCHOR CHAIN		02	0107-																		*	*	*	*
		8	01	1	**59499-FC20A**	LINK SET-LIFT CHAIN		02	0107-																		*	*	*	*
		12	01	1	**00922-14500**	RING-SNAP		02	0107-																		*	*	*	*
		13	01	1	**08911-2481A**	NUT-HEX M18-1.5 6T		04	0107-																		*	*	*	*
		14	01	1	**08915-1481A**	WASHER-LOCK SPLIT M18		02	0107-																		*	*	*	*
		15	01	1	**08911-8481A**	NUT-SLOTTED HEX M18-1.5 9N		02	0107-																		*	*	*	*
		16	01	1	**00921-4301A**	PIN-COTTER		04	0107-																		*	*	*	*

SEC. 585B

CHAIN WHEEL SUPPORT & CHAIN (2F)

SOPORTE DE LA RUEDA DE CADENA Y CADENA

KETTENABSTÜTZUNG & KETTE

SUPPORT DE ROUE DE CHAINE ET CHAINE

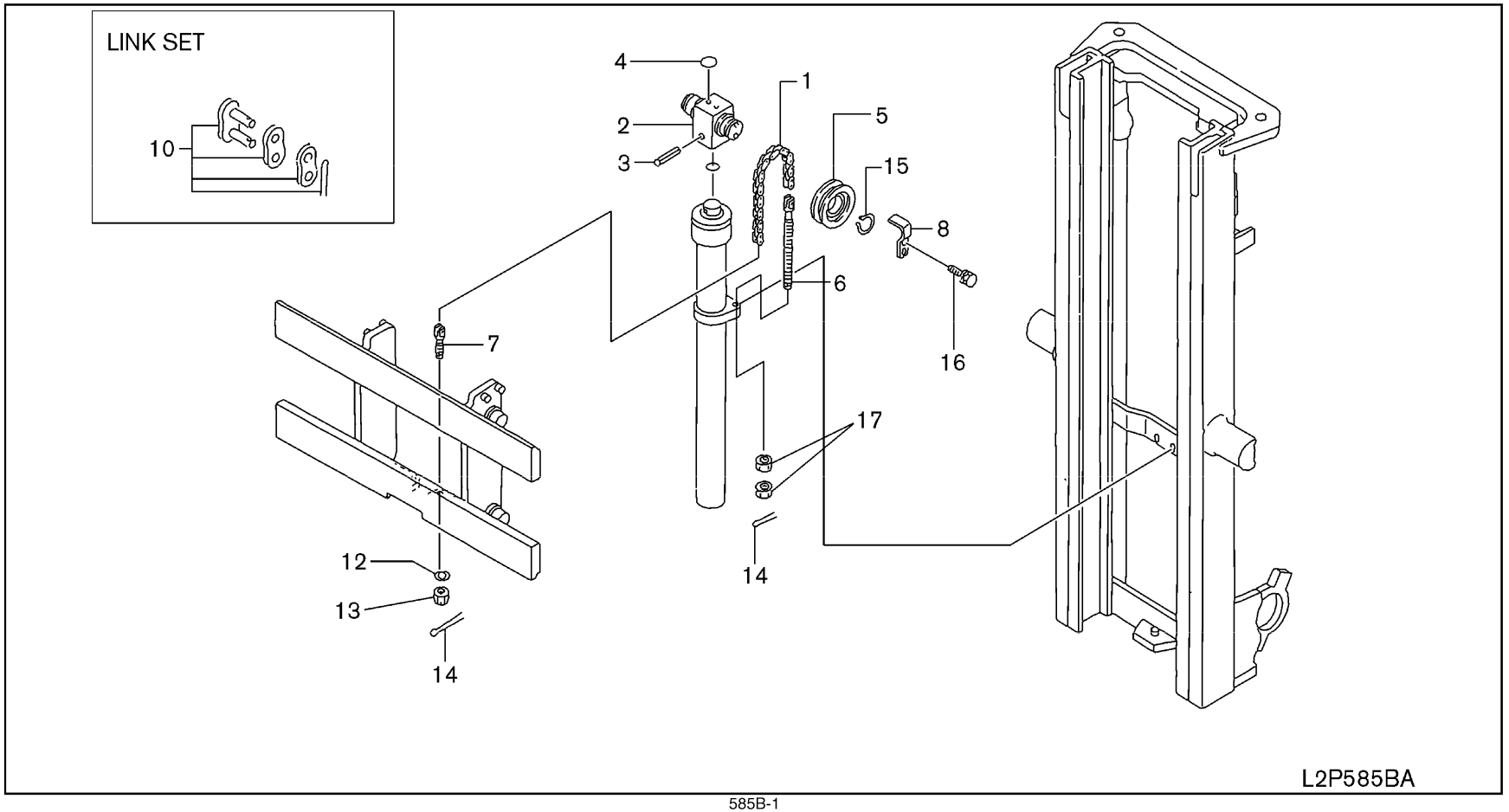

SEC. 585B

CHAIN WHEEL SUPPORT & CHAIN (2F)

SOPORTE DE LA RUEDA DE CADENA Y CADENA

KETTENABSTÜTZUNG & KETTE

SUPPORT DE ROUE DE CHAINE ET CHAINE

NC	S	KEY NO.	LEV	PART NO.	PART NAME	SPECIFICATION	QTY	APPLIED DATE	ICANF	FORMER PART NO.	KD	APPLIED MODEL 01 02 03 04 05 06 07 08 09 10 11 12 13 14 15 16 17 18 19 20 21 22 23 24 25 26 27 28 29
		1	01	1	**59420-L1219**	CHAIN-LIFT	81LINK-300	02	0107-			* * * * * * * * * * * * * * * * * * *
			02	1	**59420-L1203**		89LINK-330	02	0107-			* * * * * * * * * * * * * * * * * * *
			03	1	**59420-L1200**		97LINK-350	02	0107-			* * * * * * * * * * * * * * * * * * *
			04	1	**59420-L2904**		103LINK-370	02	0107-			* * * * * * * * * * * * * * * * * * *
			05	1	**59420-L1205**		113LINK-400	02	0107-			* * * * * * * * * * * * * * * * * * *
			06	1	**59420-L1206**		119LINK-420	02	0107-			* * * * * * * * * * * * * * * * * * *
			07	1	**59420-22H00**		61LINK-300	02	0107-			* * * * * * * * * * *
			08	1	**59420-L6205**		133LINK-330	02	0107-			* * * * * * * * * * *
			09	1	**59420-22H02**		73LINK-350	02	0107-			* * * * * * * * * * *
			10	1	**59420-22H03**		77LINK-370	02	0107-			* * * * * * * * * * *
			11	1	**59420-25H01**		85LINK-400	02	0107-			* * * * * * * * * * *
			12	1	**59420-20H03**		89LINK-420	02	0107-			* * * * * * * * * * *
		2	01	1	**58510-1G201**	BLOCK ASSY-HEAD		01	0107-			* * * * * * * * * * * * * * * * * *
			02	1	**58510-1G501**			01	0107-			* * * * * * * * * * *
		3	01	1	**01523-00032**	PIN-SPRING		01	0107-			* *
		4	01	1	**64892-W5000**	COVER		02	0107-			* *
		5	01	1	**59440-10H00**	WHEEL-CHAIN		02	0107-			* * * * * * * * * * * * * * * * * *
			02	1	**59440-20H00**			02	0107-			* * * * * * * * * * *
		6	01	1	**59433-50K00**	BOLT-ADJUST CHAIN		02	0107-			* * * * * * * * * * * * * * * * * *
			02	1	**59433-20H00**			02	0107-			* * * * * * * * * * *
		7	01	1	**59431-10H00**	BOLT-ANCHOR CHAIN		02	0107-			* * * * * * * * * * * * * * * * * *
			02	1	**59431-20H00**			02	0107-			* * * * * * * * * * *
		8	01	1	**58810-52K00**	PROTECTOR-CHAIN		02	0107-			* *
		10	01	1	**59499-FB60A**	LINK SET-LIFT CHAIN	BL634	01	0107-			* * * * * * * * * * * * * * * * * *
			02	1	**59499-FC20A**		BL834	01	0107-			* * * * * * * * * * *
		12	01	1	**08915-1461A**	WASHER-LOCK SPLIT M16		02	0107-			* * * * * * * * * * * * * * * * * *
			02	1	**08915-1481A**	WASHER-LOCK SPLIT M18		02	0107-			* * * * * * * * * * *
		13	01	1	**08911-8461A**	NUT-SLOTTED HEX M16-1.5 9N		02	0107-			* * * * * * * * * * * * * * * * * *
			02	1	**08911-8481A**	NUT-SLOTTED HEX M18-1.5 9N		02	0107-			* * * * * * * * * * *
		14	01	1	**00921-4301A**	PIN-COTTER		04	0107-			* *
		15	01	1	**00922-14500**	RING-SNAP		02	0107-			* *
		16	01	1	**08110-8201D**	SCREW-HHM M8-1.25X20 W/SPRW		04	0107-			* *
		17	01	1	**08911-2461A**	NUT-HEX M16-1.5 6T		04	0107-			* * * * * * * * * * * * * * * * * *
			02	1	**08911-2481A**	NUT-HEX M18-1.5 6T		04	0107-			* * * * * * * * * * *

SEC. 585D

CHAIN WHEEL SUPPORT & CHAIN (3F)

SOPORTE DE LA RUEDA DE CADENA Y CADENA

KETTENABSTÜTZUNG & KETTE

SUPPORT DE ROUE DE CHAINE ET CHAINE

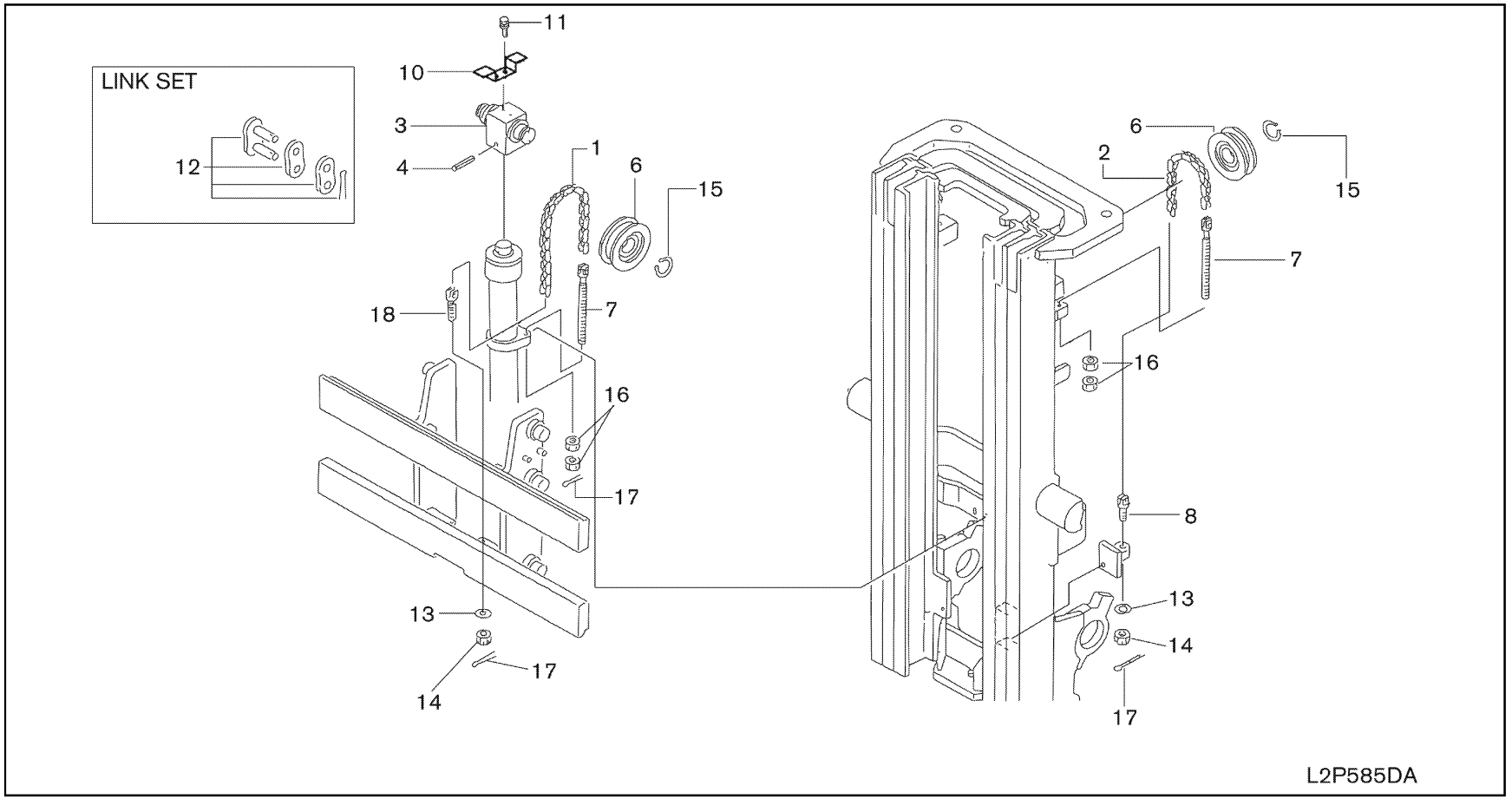

SEC. 585D

CHAIN WHEEL SUPPORT & CHAIN (3F)

SOPORTE DE LA RUEDA DE CADENA Y CADENA

KETTENABSTÜTZUNG & KETTE

SUPPORT DE ROUE DE CHAINE ET CHAINE

NC	S	KEY NO.	LEV	PART NO.	PART NAME	SPECIFICATION	QTY	APPLIED DATE	ICANF	FORMER PART NO.	KD	APPLIED MODEL 01 02 03 04 05 06 07 08 09 10 11 12 13 14 15 16 17 18 19 20 21 22 23 24 25 26 27 28 29
		1	01	1	**59420-L3002**	LIFT CHAIN-FULL FREE CYLINDER	BL634,75 LINK-385	02	0107-				* * * * * * * * * * * * * * * * * *
			02	1	**59420-L2902**		BL634,83 LINK-430	02	0107-				* * * * * * * * * * * * * * * * * *
			03	1	**59420-L1210**		BL634,91 LINK-475	02	0107-				* * * * * * * * * * * * * * * * * *
			04	1	**59420-L1211**		BL634,99 LINK-515	02	0107-				* * * * * * * * * * * * * * * * * *
			05	1	**59420-L1204**		BL634,105 LINK-550	02	0107-				* * * * * * * * * * * * * * * * * *
			06	1	**59420-L3007**		BL634,115 LINK-600	02	0107-				* * * * * * * * * * * * * * * * * *
			07	1	**59420-L1213**		BL634,123 LINK-650	02	0107-				* * * * * * * * * * * * * * * * * *
			08	1	**59420-15H00**		BL634,135 LINK-700	02	0107-				* * * * * * * * * * * * * * * * * *
			09	1	**59420-L6202**		BL834,57 LINK-385 HI-VIS	02	0107-				* * * * * * *
			10	1	**59420-L6204**		BL834,63 LINK-430 HI-VIS	02	0107-				* * * * * * *
			11	1	**59420-22H01**		BL834,69 LINK-475 HI-VIS	02	0107-				* * * * * * *
			12	1	**59420-L1310**		BL834,73 LINK-515 HI-VIS	02	0107-				* * * * * * *
			13	1	**59420-22H04**		BL834,79 LINK-550 HI-VIS	02	0107-				* * * * * * *
			14	1	**59420-L1312**		BL834,87 LINK-600 HI-VIS	02	0107-				* * * * * * *
			15	1	**59420-50H00**		BL834,93 LINK-650 HI-VIS	02	0107-				* * * * * * *
			16	1	**59420-20H00**		BL834,101 LINK-700 HI-VIS	02	0107-				* * * * * * *
			17	1	**59420-L6201**		BL834,55 LINK-385 HEAVY DUTY	02	0107-				* * * * * * *
			18	1	**59420-22H00**		BL834,61 LINK-430 HEAVY DUTY	02	0107-				* * * * * * *
			19	1	**59420-L6205**		BL834,67 LINK-475 HEAVY DUTY	02	0107-				* * * * * * *
			20	1	**59420-22H02**		BL834,73 LINK-515 HEAVY DUTY	02	0107-				* * * * * * *
			21	1	**59420-22H03**		BL834,77 LINK-550 HEAVY DUTY	02	0107-				* * * * * * *
			22	1	**59420-25H01**		BL834,85 LINK-600 HEAVY DUTY	02	0107-				* * * * * * *
			23	1	**59420-L1315**		BL834,91 LINK-650 HEAVY DUTY	02	0107-				* * * * * * *
			24	1	**59420-23H03**		BL834,99 LINK-700 HEAVY DUTY	02	0107-				* * * * * * *
			25	1	**59420-L6201**		BL834,55 LINK-355	02	0107-				* * * *
			26	1	**59420-22H00**		BL834,59 LINK-400	02	0107-				* * * *
			27	1	**59420-L6205**		BL834,67 LINK-445	02	0107-				* * * *
			28	1	**59420-22H02**		BL834,73 LINK-485	02	0107-				* * * *
			29	1	**59420-22H03**		BL834,77 LINK-520	02	0107-				* * * *
			30	1	**59420-25H01**		BL834,85 LINK-570	02	0107-				* * * *
			31	1	**59420-L1315**		BL834,91 LINK-620	02	0107-				* * * *
			32	1	**59420-23H03**		BL834,99 LINK-670	02	0107-				* * * *
		2	01	1	**59420-L2902**	LIFT CHAIN-MAST CYLINDER	BL634,83 LINK-385	02	0107-				* * * * * * * * * * * * * * * * * *
			02	1	**59420-L1210**		BL634,91 LINK-430	02	0107-				* * * * * * * * * * * * * * * * * *
			03	1	**59420-L1211**		BL634,99 LINK-475	02	0107-				* * * * * * * * * * * * * * * * * *
			04	1	**59420-L7208**		BL634,107 LINK-515	02	0107-				* * * * * * * * * * * * * * * * * *
			05	1	**59420-L1205**		BL634,113 LINK-550	02	0107-				* * * * * * * * * * * * * * * * * *

SEC. 585D

CHAIN WHEEL SUPPORT & CHAIN (3F)

SOPORTE DE LA RUEDA DE CADENA Y CADENA

KETTENABSTÜTZUNG & KETTE

SUPPORT DE ROUE DE CHAINE ET CHAINE

NC	S	KEY NO.	LEV	PART NO.	PART NAME	SPECIFICATION	QTY	APPLIED DATE	ICANF	FORMER PART NO.	KD	APPLIED MODEL 01 02 03 04 05 06 07 08 09 10 11 12 13 14 15 16 17 18 19 20 21 22 23 24 25 26 27 28 29
		2	06	1	**59420-L1213**	LIFT CHAIN-MAST CYLINDER	BL634,123 LINK-600	02	0107-				* *
			07	1	**59420-15H00**		BL634,135 LINK-650	02	0107-				* *
			08	1	**59420-10H00**		BL634,149 LINK-700	02	0107-				* *
			09	1	**59420-22H01**		BL834,69 LINK-385	02	0107-				* *
			10	1	**59420-L1310**		BL834,75 LINK-430	02	0107-				* *
			11	1	**59420-22H04**		BL834,79 LINK-475	02	0107-				* *
			12	1	**59420-25H01**		BL834,85 LINK-515	02	0107-				* *
			13	1	**59420-L1315**		BL834,91 LINK-550	02	0107-				* *
			14	1	**59420-20H00**		BL834,101 LINK-600	02	0107-				* *
			15	1	**59420-L6305**		BL834,111 LINK-650	02	0107-				* *
			16	1	**59420-50H01**		BL834,121 LINK-700	02	0107-				* *
			17	1	**59420-L6204**		BL834,63 LINK-355	02	0107-				* *
			18	1	**59420-22H01**		BL834,69 LINK-400	02	0107-				* *
			19	1	**59420-L1310**		BL834,75 LINK-445	02	0107-				* *
			20	1	**59420-22H04**		BL834,79 LINK-485	02	0107-				* *
			21	1	**59420-25H01**		BL834,85 LINK-520	02	0107-				* *
			22	1	**59420-L1315**		BL834,91 LINK-570	02	0107-				* *
			23	1	**59420-20H00**		BL834,101 LINK-620	02	0107-				* *
			24	1	**59420-L6305**		BL834,111 LINK-670	02	0107-				* *
		3	01	1	**58510-5G400**	SUPPORT ASSY-CHAIN WHEEL		01	0107-				* *
			02	1	**58510-6G400**			01	0107-				* *
		4	01	1	**01523-00032**	PIN-SPRING		01	0107-				* *
		6	01	1	**59440-10H00**	WHEEL-CHAIN		04	0107-				* *
			02	1	**59440-20H00**			04	0107-				* *
		7	01	1	**59433-50K00**	BOLT-ADJUST CHAIN		04	0107-				* *
			02	1	**59433-20H00**			04	0107-				* *
		8	01	1	**59431-10H00**	BOLT-ANCHOR CHAIN		02	0107-				* *
			02	1	**59431-20H00**			02	0107-				* *
		10	01	1	**58810-5G400**	PROTECTOR-CHAIN		01	0107-				* *
			02	1	**58810-6G400**			01	0107-				* *
		11	01	1	**08124-0251E**	SCREW-HHM M10-1.25X25 W/PW		02	0107-				* *
		12	01	1	**59499-FB60A**	LINK SET-LIFT CHAIN		01	0107-				* *
			02	1	**59499-FC20A**			01	0107-				* *
		13	01	1	**08915-1461A**	WASHER-LOCK SPLIT M16		04	0107-				* *
			02	1	**08915-1481A**	WASHER-LOCK SPLIT M18		04	0107-				* *
		14	01	1	**08911-8461A**	NUT-SLOTTED HEX M16-1.5		04	0107-				* *
			02	1	**08911-8481A**	NUT-SLOTTED HEX M18-1.5		04	0107-				* *

SEC. 585D

CHAIN WHEEL SUPPORT & CHAIN (3F)

SOPORTE DE LA RUEDA DE CADENA Y CADENA

KETTENABSTÜTZUNG & KETTE

SUPPORT DE ROUE DE CHAINE ET CHAINE

NC	S	KEY NO.	LEV	PART NO.	PART NAME	SPECIFICATION	QTY	APPLIED DATE	TCANF	FORMER PART NO.	KD	APPLIED MODEL 01 02 03 04 05 06 07 08 09 10 11 12 13 14 15 16 17 18 19 20 21 22 23 24 25 26 27 28 29
		15 01	1	**00922-14500**	RING-SNAP		04	0107-				* *
		16 01	1	**08911-2461A**	NUT-HEX M16-1.5		08	0107-				* * * * * * * * * * * * * * * * * * * *
		02	1	**08911-2481A**	NUT-HEX M18-1.5		08	0107-				* *
		17 01	1	**00921-4301A**	PIN-COTTER		06	0107-				* *
		18 01	1	**59431-10H01**	BOLT-ANCHOR CHAIN		02	0107-				* * * * * * * * * * * * * * * * * * * *
		02	1	**59431-20H00**			02	0107-				* *

SEC. 585E

CHAIN WHEEL SUPPORT & CHAIN (3V)

SOPORTE DE LA RUEDA DE CADENA Y CADENA

KETTENABSTÜTZUNG & KETTE

SUPPORT DE ROUE DE CHAINE ET CHAINE

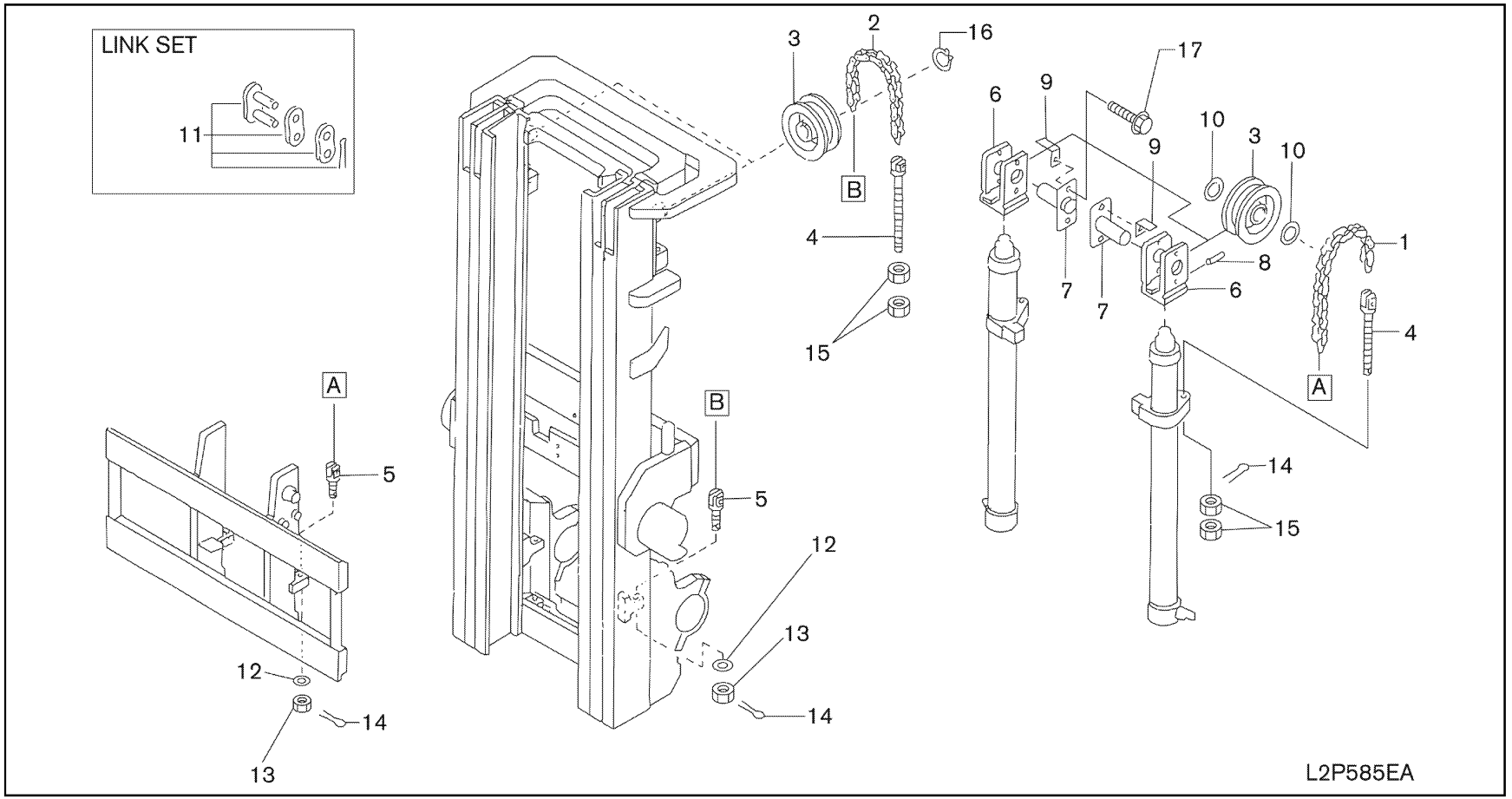

585E-1

SEC. 585E

CHAIN WHEEL SUPPORT & CHAIN (3V)

SOPORTE DE LA RUEDA DE CADENA Y CADENA

KETTENABSTÜTZUNG & KETTE

SUPPORT DE ROUE DE CHAINE ET CHAINE

NC	S	KEY NO.	LEV	PART NO.	PART NAME	SPECIFICATION	QTY	APPLIED DATE	ICANF	FORMER PART NO.	KD	APPLIED MODEL 01	02	03	04	05	06	07	08	09	10	11	12	13	14	15	16	17	18	19	20	21	22	23	24	25	26	27	28	29
		1	01	1	**59420-L7410**	LIFT CHAIN-FULL FREE CYLINDER	BL634,61 LINK-360	02	0107-			*	*	*	*	*	*	*	*	*	*	*	*	*	*	*	*	*											
			02	1	**59420-L3000**		BL634,67 LINK-405	02	0107-			*	*	*	*	*	*	*	*	*	*	*	*	*	*	*	*	*											
			03	1	**59420-L3002**		BL634,75 LINK-450 + 525	02	0107-			*	*	*	*	*	*	*	*	*	*	*	*	*	*	*	*	*											
			04	1	**59420-L1219**		BL634,81 LINK-490 + 575	02	0107-			*	*	*	*	*	*	*	*	*	*	*	*	*	*	*	*	*											
			05	1	**59420-L3004**		BL634,87 LINK-633	02	0107-			*	*	*	*	*	*	*	*	*	*	*	*	*	*	*	*	*											
			06	1	**59420-L3005**		BL634,93 LINK-688	02	0107-			*	*	*	*	*	*	*	*	*	*	*	*	*	*	*	*	*											
			07	1	**59420-L6200**		BL834,51 LINK-385	02	0107-																				*	*	*	*	*	*	*	*	*	*	*	*
			08	1	**59420-L6202**		BL834,57 LINK-430 + 505	02	0107-																				*	*	*	*	*	*	*	*	*	*	*	*
			09	1	**59420-22H00**		BL834,61 LINK-470 + 555	02	0107-0507																				*	*	*	*	*	*	*	*	*	*	*	*
			10	1	**59420-L6204**		BL834,63 LINK-470	02	0507-																				*	*	*	*	*	*	*	*	*	*	*	*
			11	1	**59420-22H00**		BL834,61 LINK-555	02	0507-																				*	*	*	*	*	*	*	*	*	*	*	*
			12	1	**59420-20H01**		BL834,65 LINK-600	02	0107-																				*	*	*	*	*	*	*	*	*	*	*	*
			13	1	**59420-25H03**		BL834,71 LINK-650	02	0107-																				*	*	*	*	*	*	*	*	*	*	*	*
			14	1	**59420-22H02**		BL834,73 LINK-700	02	0107-																				*	*	*	*	*	*	*	*	*	*	*	*
		2	01	1	**59420-L2902**	LIFT CHAIN-MAST CYLINDER	BL634,83 LINK-360	02	0107-			*	*	*	*	*	*	*	*	*	*	*	*	*	*	*	*	*											
			02	1	**59420-L1210**		BL634,91 LINK-405	02	0107-			*	*	*	*	*	*	*	*	*	*	*	*	*	*	*	*	*											
			03	1	**59420-L1211**		BL634,99 LINK-450	02	0107-			*	*	*	*	*	*	*	*	*	*	*	*	*	*	*	*	*											
			04	1	**59420-L7208**		BL634,107 LINK-490	02	0107-			*	*	*	*	*	*	*	*	*	*	*	*	*	*	*	*	*											
			05	1	**59420-L1205**		BL634,113 LINK-525	02	0107-			*	*	*	*	*	*	*	*	*	*	*	*	*	*	*	*	*											
			06	1	**59420-L1213**		BL634,123 LINK-575	02	0107-			*	*	*	*	*	*	*	*	*	*	*	*	*	*	*	*	*											
			07	1	**59420-15H00**		BL634,135 LINK-633	02	0107-			*	*	*	*	*	*	*	*	*	*	*	*	*	*	*	*	*											
			08	1	**59420-10H00**		BL634,149 LINK-688	02	0107-			*	*	*	*	*	*	*	*	*	*	*	*	*	*	*	*	*											
			09	1	**59420-22H01**		BL834,69 LINK-385	02	0107-																				*	*	*	*	*	*	*	*	*	*	*	*
			10	1	**59420-L1310**		BL834,75 LINK-430	02	0107-																				*	*	*	*	*	*	*	*	*	*	*	*
			11	1	**59420-22H04**		BL834,79 LINK-470	02	0107-																				*	*	*	*	*	*	*	*	*	*	*	*
			12	1	**59420-25H01**		BL834,85 LINK-505	02	0107-																				*	*	*	*	*	*	*	*	*	*	*	*
			13	1	**59420-L1315**		BL834,91 LINK-555	02	0107-																				*	*	*	*	*	*	*	*	*	*	*	*
			14	1	**59420-20H00**		BL834,101 LINK-600	02	0107-																				*	*	*	*	*	*	*	*	*	*	*	*
			15	1	**59420-L6305**		BL834,111 LINK-650	02	0107-																				*	*	*	*	*	*	*	*	*	*	*	*
			16	1	**59420-50H01**		BL834,121 LINK-700	02	0107-																				*	*	*	*	*	*	*	*	*	*	*	*
		3	01	1	**59440-10H00**	WHEEL-CHAIN		04	0107-			*	*	*	*	*	*	*	*	*	*	*	*	*	*	*	*	*											
			02	1	**59440-20H00**			04	0107-																				*	*	*	*	*	*	*	*	*	*	*	*
		4	01	1	**59433-50K00**	BOLT-ADJUST CHAIN		04	0107-			*	*	*	*	*	*	*	*	*	*	*	*	*	*	*	*	*											
			02	1	**59433-20H00**			04	0107-																				*	*	*	*	*	*	*	*	*	*	*	*
		5	01	1	**59431-10H00**	BOLT-ANCHOR CHAIN		04	0107-			*	*	*	*	*	*	*	*	*	*	*	*	*	*	*	*	*											
			02	1	**59431-20H00**			04	0107-																				*	*	*	*	*	*	*	*	*	*	*	*
		6	01	1	**58510-FB700**	BLOCK ASSY-HEAD		02	0107-			*	*	*	*	*	*	*	*	*	*	*	*	*	*	*	*	*											

SEC. 585E

CHAIN WHEEL SUPPORT & CHAIN (3V)

SOPORTE DE LA RUEDA DE CADENA Y CADENA

KETTENABSTÜTZUNG & KETTE

SUPPORT DE ROUE DE CHAINE ET CHAINE

NC	S	KEY NO.	LEV	PART NO.	PART NAME	SPECIFICATION	QTY	APPLIED DATE	ICANF	FORMER PART NO.	KD	APPLIED MODEL 01	02	03	04	05	06	07	08	09	10	11	12	13	14	15	16	17	18	19	20	21	22	23	24	25	26	27	28	29
		6	02	1	**58510-FB700**	BLOCK ASSY-HEAD	LH F/HYDR TO CARR VLVX3	01	0107-				*	*	*	*	*	*	*	*	*	*	*	*	*	*	*	*	*											
			03	1	**58510-FB710**		RH F/HYDR TO CARR VLVX3	01	0107-				*	*	*	*	*	*	*	*	*	*	*	*	*	*	*	*	*											
			04	1	**58510-FB710**		F/HYDR TO CARR VLVX4	02	0107-				*	*	*	*	*	*	*	*	*	*	*	*	*	*	*	*	*											
			05	1	**58510-FC700**			02	0107-																					*	*	*	*	*	*	*	*	*	*	*	*
			06	1	**58510-FC700**		LH F/HYDR TO CARR VLVX3	01	0107-																					*	*	*	*	*	*	*	*	*	*	*	*
			07	1	**58510-FC710**		RH F/HYDR TO CARR VLVX3	01	0107-																					*	*	*	*	*	*	*	*	*	*	*	*
			08	1	**58510-FC710**		F/HYDR TO CARR VLVX4	02	0107-																					*	*	*	*	*	*	*	*	*	*	*	*
		7	01	1	**58565-5G500**	SHAFT-CHAIN WHEEL		02	0107-				*	*	*	*	*	*	*	*	*	*	*	*	*	*	*	*	*											
			02	1	**58565-5G500**		LH F/HYDR TO CARR VLVX3	01	0107-				*	*	*	*	*	*	*	*	*	*	*	*	*	*	*	*	*											
			03	1	**58565-5G510**		RH F/HYDR TO CARR VLVX3	01	0107-				*	*	*	*	*	*	*	*	*	*	*	*	*	*	*	*	*											
			04	1	**58565-5G510**		F/HYDR TO CARR VLVX4	02	0107-				*	*	*	*	*	*	*	*	*	*	*	*	*	*	*	*	*											
			05	1	**58565-6G500**			02	0107-																					*	*	*	*	*	*	*	*	*	*	*	*
			06	1	**58565-6G500**		LH F/HYDR TO CARR VLVX3	01	0107-																					*	*	*	*	*	*	*	*	*	*	*	*
			07	1	**58565-6G510**		RH F/HYDR TO CARR VLVX3	01	0107-																					*	*	*	*	*	*	*	*	*	*	*	*
			08	1	**58565-6G510**		F/HYDR TO CARR VLVX4	02	0107-																					*	*	*	*	*	*	*	*	*	*	*	*
		8	01	1	**01523-00032**	PIN-SPRING		02	0107-				*	*	*	*	*	*	*	*	*	*	*	*	*	*	*	*	*	*	*	*	*	*	*	*	*	*	*
		9	01	1	**58810-5G500**	PROTECTOR-CHAIN		02	0107-				*	*	*	*	*	*	*	*	*	*	*	*	*	*	*	*	*	*	*	*	*	*	*	*	*	*	*
			02	1	**58810-5G500**		LH F/HYDR TO CARR VLVX3	01	0107-				*	*	*	*	*	*	*	*	*	*	*	*	*	*	*	*	*	*	*	*	*	*	*	*	*	*	*
			03	1	**58810-5G510**		RH F/HYDR TO CARR VLVX3	01	0107-				*	*	*	*	*	*	*	*	*	*	*	*	*	*	*	*	*	*	*	*	*	*	*	*	*	*	*
			04	1	**58810-5G510**		F/HYDR TO CARR VLVX4	02	0107-				*	*	*	*	*	*	*	*	*	*	*	*	*	*	*	*	*	*	*	*	*	*	*	*	*	*	*
		10	01	1	**58572-FB700**	SPACER		04	0107-				*	*	*	*	*	*	*	*	*	*	*	*	*	*	*	*	*											
			02	1	**58572-FB700**		F/HYDR PIPING UP TO CARR+CONTVLVX3	05	0107-				*	*	*	*	*	*	*	*	*	*	*	*	*	*	*	*	*											
			03	1	**58572-FB700**		F/HYDR PIPING UP TO CARR+CONTVLVX4	06	0107-				*	*	*	*	*	*	*	*	*	*	*	*	*	*	*	*	*											
			04	1	**58572-FC700**			04	0107-																					*	*	*	*	*	*	*	*	*	*	*	*
			05	1	**58572-FC700**		F/HYDR PIPING UP TO CARR+CONTVLVX3	05	0107-																					*	*	*	*	*	*	*	*	*	*	*	*
			06	1	**58572-FC700**		F/HYDR PIPING UP TO CARR+CONTVLVX4	06	0107-																					*	*	*	*	*	*	*	*	*	*	*	*
		11	01	1	**59499-FB60A**	LINK SET-LIFT CHAIN		01	0107-				*	*	*	*	*	*	*	*	*	*	*	*	*	*	*	*	*											
			02	1	**59499-FC20A**			01	0107-																					*	*	*	*	*	*	*	*	*	*	*	*
		12	01	1	**08915-1461A**	WASHER-LOCK SPLIT M16		04	0107-				*	*	*	*	*	*	*	*	*	*	*	*	*	*	*	*	*											
			02	1	**08915-1481A**	WASHER-LOCK SPLIT M18		04	0107-																					*	*	*	*	*	*	*	*	*	*	*	*
		13	01	1	**08911-8461A**	NUT-SLOTTED HEX M16-1.5 9N		04	0107-				*	*	*	*	*	*	*	*	*	*	*	*	*	*	*	*	*											
			02	1	**08911-8481A**	NUT-SLOTTED HEX M18-1.5 9N		04	0107-																					*	*	*	*	*	*	*	*	*	*	*	*
		14	01	1	**00921-4301A**	PIN-COTTER		06	0107-				*	*	*	*	*	*	*	*	*	*	*	*	*	*	*	*	*	*	*	*	*	*	*	*	*	*	*
		15	01	1	**08911-2461A**	NUT-HEX M16-1.5 6T		08	0107-				*	*	*	*	*	*	*	*	*	*	*	*	*	*	*	*	*											
			02	1	**08911-2481A**	NUT-HEX M18-1.5 6T		08	0107-																					*	*	*	*	*	*	*	*	*	*	*	*
		16	01	1	**00922-14500**	RING-SNAP		02	0107-				*	*	*	*	*	*	*	*	*	*	*	*	*	*	*	*	*	*	*	*	*	*	*	*	*	*	*
		17	01	1	**08110-8201D**	SCREW-HHM M8-1.25X20 W/SPRW		04	0107-				*	*	*	*	*	*	*	*	*	*	*	*	*	*	*	*	*	*	*	*	*	*	*	*	*	*	*

NOTE

SEC. 585F

CHAIN WHEEL SUPPORT & CHAIN (2W-OUTER CHAIN 2.0, 2.5 & 3.0TON-UPTO MAY 2008)

SOPORTE DE LA RUEDA DE CADENA Y CADENA

KETTENABSTÜTZUNG & KETTE

SUPPORT DE ROUE DE CHAINE ET CHAINE

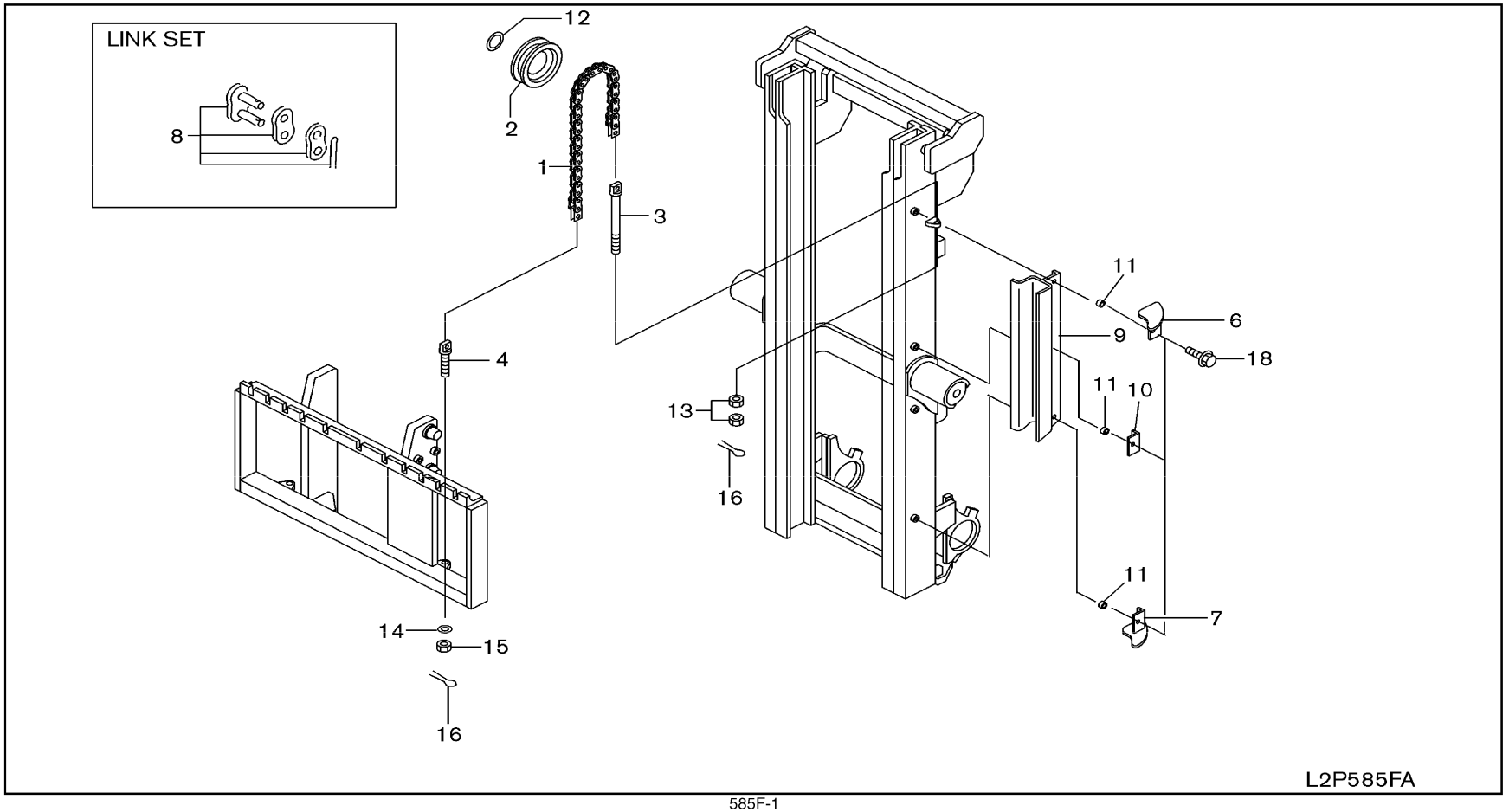

SEC. 585F

CHAIN WHEEL SUPPORT & CHAIN (2W-OUTER CHAIN 2.0, 2.5 & 3.0TON-UPTO MAY 2008)

SOPORTE DE LA RUEDA DE CADENA Y CADENA

KETTENABSTÜTZUNG & KETTE

SUPPORT DE ROUE DE CHAINE ET CHAINE

NC	S	KEY NO.	LEV	PART NO.	PART NAME	SPECIFICATION	QTY	APPLIED DATE	ICANF	FORMER PART NO.	KD	APPLIED MODEL 01 02 03 04 05 06 07 08 09 10 11 12 13 14 15 16 17 18 19 20 21 22 23 24 25 26 27 28 29
		1	01	1	**59420-L3006**	CHAIN-LIFT	BL634,101 LINK-270	02	0107-0508			**********
			02	1	**59420-L1212**		BL634,109 LINK-300	02	0107-0508			**********
			03	1	**59420-L2906**		BL634,117 LINK-330	02	0107-0508			**********
			04	1	**59420-L1213**		BL634,123 LINK-350	02	0107-0508			**********
			05	1	**59420-L1207**		BL634,129 LINK-370	02	0107-0508			**********
			06	1	**59420-L2800**		BL634,141 LINK-400	02	0107-0508			**********
			07	1	**59420-13H04**		BL634,167 LINK-450	02	0107-0508			**********
			08	1	**59420-FF000**		BL634,193 LINK-500	02	0107-0508			**********
			09	1	**59420-22H03**		BL834,77 LINK-270	02	0107-0508			******
			10	1	**59420-25H05**		BL834,83 LINK-300	02	0107-0508			******
			11	1	**59420-20H03**		BL834,89 LINK-330	02	0107-0508			******
			12	1	**59420-50H00**		BL834,93 LINK-350	02	0107-0508			******
			13	1	**59420-23H03**		BL834,99 LINK-370	02	0107-0508			******
			14	1	**59420-L6300**		BL834,107 LINK-400	02	0107-0508			******
			15	1	**59420-FF300**		BL834,127 LINK-450	02	0107-0508			******
			16	1	**59420-23H09**		BL834,145 LINK-500	02	0107-0508			******
		2	01	1	**59440-10H00**	WHEEL-CHAIN		02	0107-0508			**********
			02	1	**59440-20H00**			02	0107-0508			******
		3	01	1	**59433-50K00**	BOLT-ADJUST CHAIN		02	0107-0508			**********
			02	1	**59433-20H00**			02	0107-0508			******
		4	01	1	**59431-10H01**	BOLT-ANCHOR CHAIN		02	0107-0508			**********
			02	1	**59431-20H00**			02	0107-0508			******
		6	01	1	**59487-FJ400**	BRACKET ASSY-CHAIN GUIDE	LH	01	0107-0508			**********
			02	1	**59487-FJ410**		RH	01	0107-0508			**********
		7	01	1	**59487-FJ410**		LH	01	0107-0508			**********
			02	1	**59487-FJ400**		RH	01	0107-0508			**********
		8	01	1	**59499-FB60A**	LINK SET-LIFT CHAIN		02	0107-0508			**********
			02	1	**59499-FC20A**			02	0107-0508			******
		9	01	1	**59485-FJ403**	GUIDE-CHAIN	RH & LH-270	02	0107-0508			**********
			02	1	**59485-FJ40A**		RH & LH-300	02	0107-0508			**********
			03	1	**59485-FJ404**		RH-330	01	0107-0508			**********
			04	1	**59486-FJ404**		LH-330	01	0107-0508			**********
			05	1	**59485-FJ405**		RH-350	01	0107-0508			**********
			06	1	**59486-FJ405**		LH-350	01	0107-0508			**********
			07	1	**59485-FJ406**		RH-370	01	0107-0508			**********
			08	1	**59486-FJ406**		LH-370	01	0107-0508			**********
			09	1	**59485-FJ407**		RH-400	01	0107-0508			**********

SEC. 585F

CHAIN WHEEL SUPPORT & CHAIN (2W-OUTER CHAIN 2.0, 2.5 & 3.0TON-UPTO MAY 2008)

SOPORTE DE LA RUEDA DE CADENA Y CADENA

KETTENABSTÜTZUNG & KETTE

SUPPORT DE ROUE DE CHAINE ET CHAINE

NC	S	KEY NO.	LEV	PART NO.	PART NAME	SPECIFICATION	QTY	APPLIED DATE	ICANF	FORMER PART NO.	KD	APPLIED MODEL 01 02 03 04 05 06 07 08 09 10 11 12 13 14 15 16 17 18 19 20 21 22 23 24 25 26 27 28 29
		9 10	1	**59486-FJ407**		LH-400	01	0107-0508				* *
		11	1	**59485-FJ408**		RH & LH-450	02	0107-0508				* *
		12	1	**59485-FJ409**		RH & LH-500	02	0107-0508				* *
		13	1	**59485-FK003**		RH & LH-270	02	0107-0508				* * * *
		14	1	**59485-FK00A**		RH & LH-300	02	0107-0508				* * * *
		15	1	**59485-FK004**		RH-330	01	0107-0508				* * * *
		16	1	**59486-FK004**		LH-330	01	0107-0508				* * * *
		17	1	**59485-FK005**		RH-350	01	0107-0508				* * * *
		18	1	**59486-FK005**		LH-350	01	0107-0508				* * * *
		19	1	**59485-FK006**		RH-370	01	0107-0508				* * * *
		20	1	**59486-FK006**		LH-370	01	0107-0508				* * * *
		21	1	**59485-FK007**		RH-400	01	0107-0508				* * * *
		22	1	**59486-FK007**		LH-400	01	0107-0508				* * * *
		23	1	**59485-FK008**		RH & LH-450	02	0107-0508				* * * *
		24	1	**59485-FK009**		RH & LH-500	02	0107-0508				* * * *
	10	01	1	**59488-FJ400**	BRACKET ASSY-CHAIN GUIDE	330+350+370+400	02	0107-0508				* *
		02	1	**59488-FJ400**		450+500	04	0107-0508				* *
	11	01	1	**58572-6K000**	SPACER	270+300	04	0107-0508				* *
		02	1	**58572-6K000**		330+350+370+400	06	0107-0508				* *
		03	1	**58572-6K000**		450+500	08	0107-0508				* *
	12	01	1	**00922-14500**	RING-SNAP		02	0107-0508				* *
	13	01	1	**08911-2461A**	NUT-HEX M16-1.5 6T		04	0107-0508				* * * * * * * * * * * * * * * * * * *
		02	1	**08911-2481A**	NUT-HEX M18-1.5 6T		04	0107-0508				* * * *
	14	01	1	**08915-1461A**	WASHER-LOCK SPLIT M16		02	0107-0508				* * * * * * * * * * * * * * * * * * *
		02	1	**08915-1481A**	WASHER-LOCK SPLIT M18		02	0107-0508				* * * *
	15	01	1	**08911-8461A**	NUT-SLOTTED HEX M16-1.5 9N		02	0107-0508				* * * * * * * * * * * * * * * * * * *
		02	1	**08911-8481A**			02	0107-0508				* * * *
	16	01	1	**00921-4301A**	PIN-COTTER		04	0107-0508				* *
	18	01	1	**08120-8251E**	SCREW-HHM M8-1.25X25 W/LKW	270+300	04	0107-0508				* *
		02	1	**08120-8251E**		330+350+370+400	06	0107-0508				* *
		03	1	**08120-8251E**		450+500	08	0107-0508				* *

NOTE

SEC. 585G

CHAIN WHEEL SUPPORT & CHAIN (NML 2W-INNER CHAIN 2.0, 2.5 & 3.0TON-FROM MAY 2008)

SOPORTE DE LA RUEDA DE CADENA Y CADENA

KETTENABSTÜTZUNG & KETTE

SUPPORT DE ROUE DE CHAINE ET CHAINE

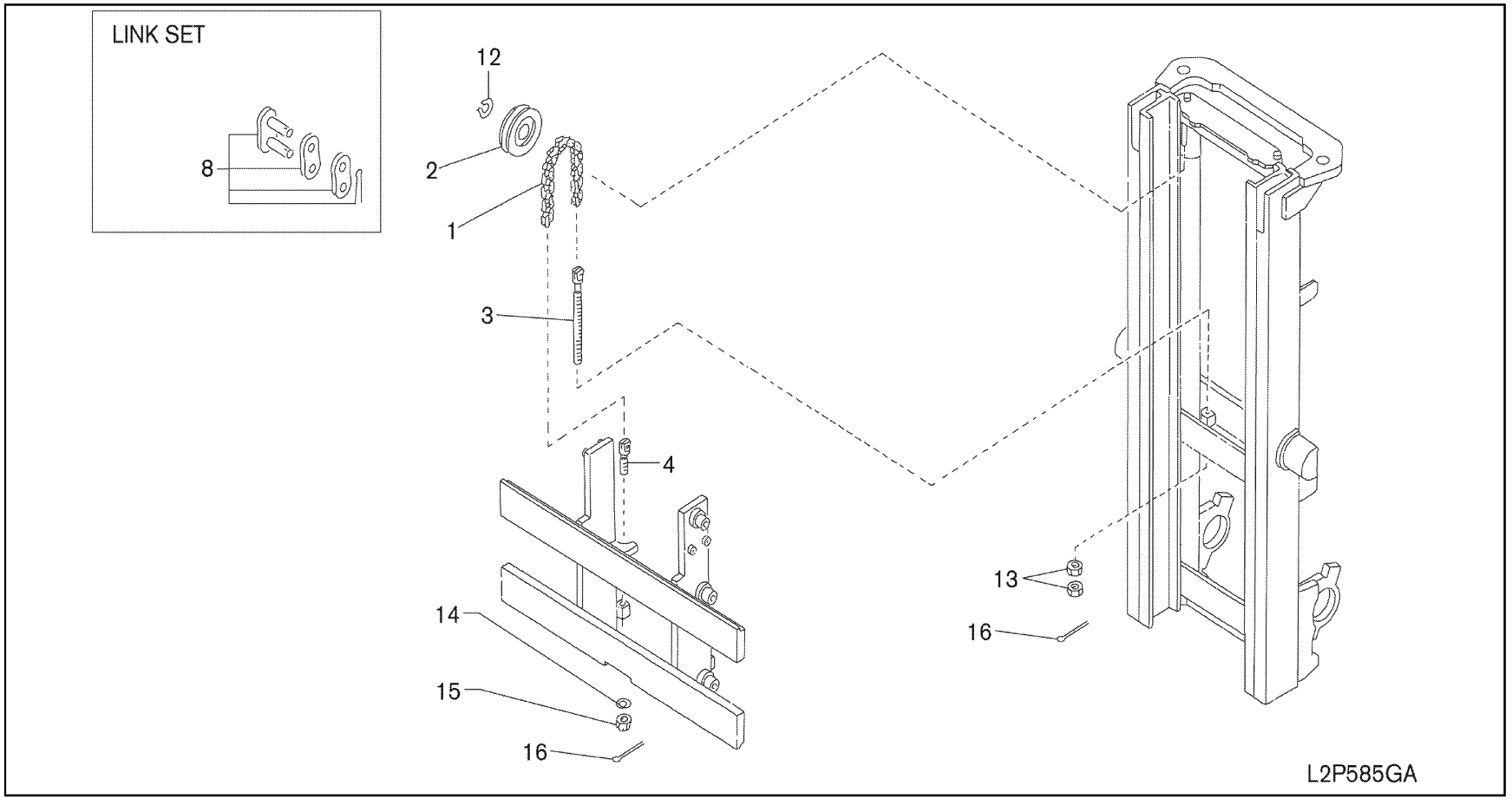

585G-1

SEC. 585G

CHAIN WHEEL SUPPORT & CHAIN (NML 2W-INNER CHAIN 2.0, 2.5 & 3.0TON-FROM MAY 2008)

SOPORTE DE LA RUEDA DE CADENA Y CADENA

KETTENABSTÜTZUNG & KETTE

SUPPORT DE ROUE DE CHAINE ET CHAINE

NC	S	KEY NO.	LEV	PART NO.	PART NAME	SPECIFICATION	QTY	APPLIED DATE	ICANF	FORMER PART NO.	KD	APPLIED MODEL 01 02 03 04 05 06 07 08 09 10 11 12 13 14 15 16 17 18 19 20 21 22 23 24 25 26 27 28 29
		1	01	1	**59420-L1207**	CHAIN-LIFT	BL634, 129 LINK-270	02	0508-			**********
			02	1	**59420-L2807**		BL634, 145 LINK-300	02	0508-			**********
			03	1	**59420-FL400**		BL634, 161 LINK-330	02	0508-			**********
			04	1	**59420-GE40A**		BL634, 175 LINK-350	02	0508-			**********
			05	1	**59420-L1207**		BL634, 129 LINK-370	02	0508-			**********
			06	1	**59420-GD40B**		BL634, 141 LINK-400	02	0508-			**********
			07	1	**59420-13H04**		BL634, 167 LINK-450	02	0508-			**********
			08	1	**59420-FF000**		BL634, 193 LINK-500	02	0508-			**********
			09	1	**59420-L1313**		BL834, 97 LINK-270	02	0508-			******
			10	1	**59420-22H07**		BL834, 109 LINK-300	02	0508-			******
			11	1	**59420-50H01**		BL834, 121 LINK-330	02	0508-			******
			12	1	**59420-L6307**		BL834, 131 LINK-350	02	0508-			******
			13	1	**59420-L1313**		BL834, 97 LINK-370	02	0508-			******
			14	1	**59420-23H07**		BL834, 105 LINK-400	02	0508-			******
			15	1	**59420-23H08**		BL834, 125 LINK-450	02	0508-			******
			16	1	**59420-23H09**		BL834, 145 LINK-500	02	0508-			******
		2	01	1	**59440-10H00**	WHEEL-CHAIN		02	0508-			**********
			02	1	**59440-20H00**			02	0508-			******
		3	01	1	**59433-50K00**	BOLT-ADJUST CHAIN		02	0508-			**********
			02	1	**59433-20H00**			02	0508-			******
		4	01	1	**59431-10H00**	BOLT-ANCHOR CHAIN		02	0508-			**********
			02	1	**59431-20H00**			02	0508-			******
		8	01	1	**59499-FB60A**	LINK SET-LIFT CHAIN		02	0508-			**********
			02	1	**59499-FC20A**			02	0508-			******
		12	01	1	**00922-14500**	RING-SNAP		02	0508-			**********
		13	01	1	**08911-2461A**	NUT-HEX M16-1.5 6T		04	0508-			**********
			02	1	**08911-2481A**	NUT-HEX M18-1.5 6T		04	0508-			******
		14	01	1	**08915-1461A**	WASHER-LOCK SPLIT M16		02	0508-			**********
			02	1	**08915-1481A**	WASHER-LOCK SPLIT M18		02	0508-			******
		15	01	1	**08911-8461A**	NUT-SLOTTED HEX M16-1.5 9N		02	0508-			**********
			02	1	**08911-8481A**	NUT-SLOTTED HEX M18-1.5 9N		02	0508-			******
		16	01	1	**00921-4301A**	PIN-COTTER		04	0508-			**********

SEC. 586

TILT CYLINDER

CILINDRO DE INCLINACION

KIPPZYLINDER

CYLINDRE D'INCLINAISON

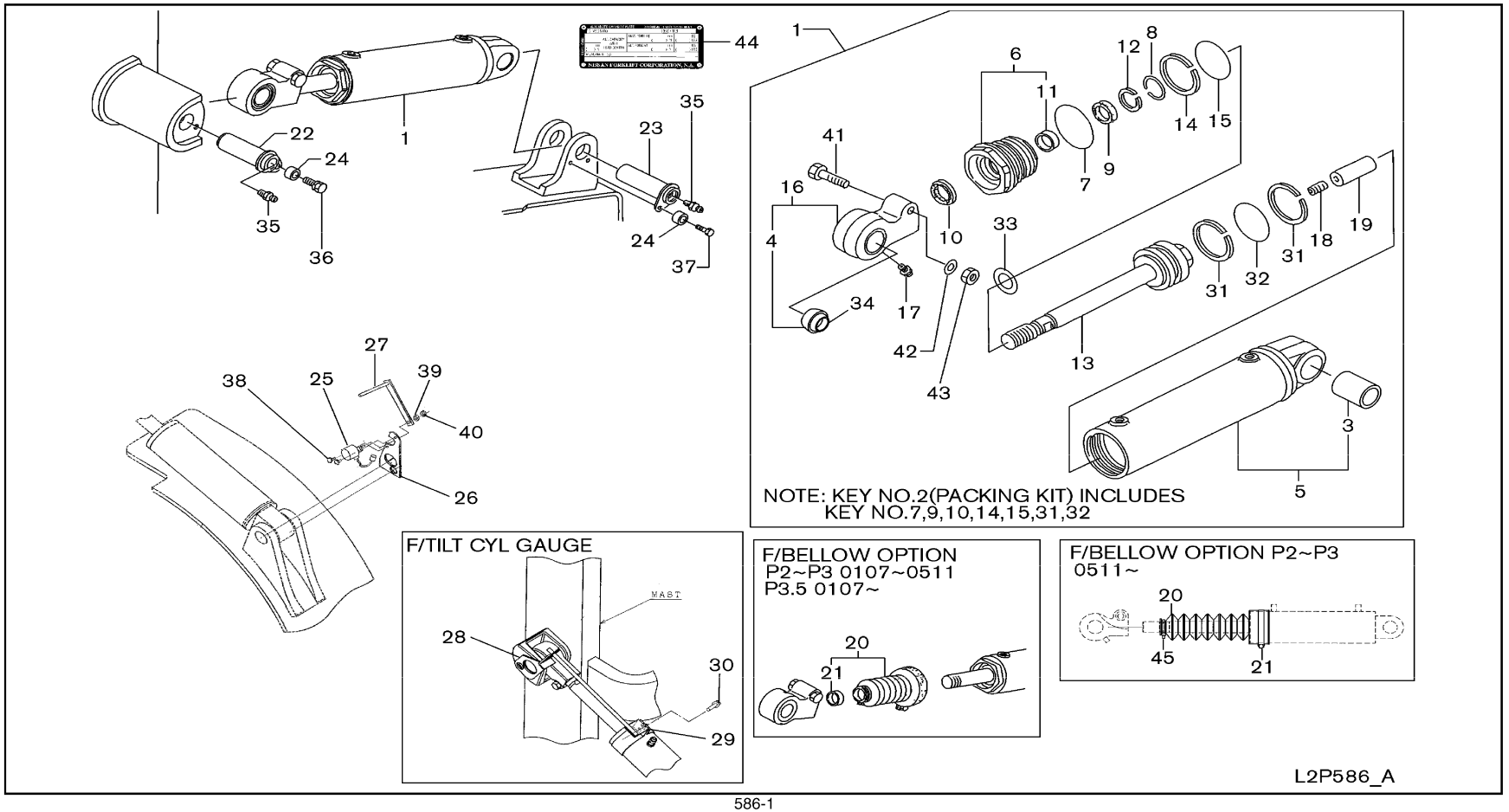

SEC. 586

TILT CYLINDER

CILINDRO DE INCLINACION

KIPPZYLINDER

CYLINDRE D'INCLINAISON

NC	S	KEY NO.	LEV	PART NO.	PART NAME	SPECIFICATION	QTY	APPLIED DATE	TCANF	FORMER PART NO.	KD
		1 01	1	**58610-FK010**	CYLINDER ASSY-TILT	ANGLE 6-12	02	0107-			
		02	1	**58610-FK085**		BOTTLERS TILT	02	0107-			
		03	1	**58610-FK012**		ANGLE 6-6	02	0107-			
		04	1	**58610-FK060**		ANGLE 6-12 F/ANTI RUST	02	0107-			
		05	1	**58610-FK086**		BOTTLERS TILT F/ANTI RUST	02	0107-			
		06	1	**58610-FK062**		ANGLE 6-6 F/ANTI RUST	02	0107-			
		07	1	**58610-FK410**		ANGLE 6-12	02	0107-0508			
		08	1	**58610-GG40A**		ANGLE 6-12	02	0508-			
		09	1	**58610-GG41A**		ANGLE 6-12 F/ANTI RUST	02	0508-			
		10	1	**58610-FK485**		BOTTLERS TILT	02	0107-			
		11	1	**58610-FK412**		ANGLE 6-6 F/2 STAGE	02	0107-0508			
		12	1	**58610-GG40B**		ANGLE 6-6 F/2 STAGE	02	0508-			
		13	1	**58610-FK420**		ANGLE 6-6 F/3 STAGE	02	0107-			
		14	1	**58610-GG41B**		ANGLE 6-6 F/ANTI RUST	02	0508-			
		2 01	2	**58699-FK010**	PACKING KIT-TILT CYLINDER		02	0107-0409			
		02	2	**58699-GG01A**			02	0409-			
		03	2	**58699-FK410**			02	0107-0508			
		04	2	**58699-GG02A**			02	0508-			
		3 01	2	**58616-FK010**	BUSH-PIVOT PIN		02	0107-			
		4 01	2	**58616-FJ110**	BUSH-PIVOT PIN		02	0107-0508			
		02	2	**58616-FJ110**			02	0508-0409			
		03	2	**58616-GG01A**			02	0409-			
		04	2	**58616-GG01A**			02	0508-			
		05	2	**58616-FB485**		F/BOTTLERS TILT	02	0107-			
		5 01	2	**58617-FK010**	TUBE KIT-CYLINDER		02	0107-			
		02	2	**58617-FK410**			02	0107-			
		6 01	2	**58619-FK010**	HEAD KIT-CYLINDER		02	0107-0409			
		02	2	**58619-GG03A**			02	0409-			
		03	2	**58619-FK410**			02	0107-0508			
		04	2	**58619-GG02A**			02	0508-			
		7 01	2	**58123-FK010**	O RING		02	0107-			
		02	2	**58122-FK410**	RING-O		02	0107-			
		8 01	2	**58626-10H00**	RING-SNAP		02	0107-			
		02	2	**58223-47600**			02	0107-			
		9 01	2	**58621-L1400**	SEAL-U RING		02	0107-			
		02	2	**58621-L1100**			02	0107-			
		10 01	2	**58622-10H00**	RING-WIPER		02	0107-			

APPLIED MODEL

01	02	03	04	05	06	07	08	09	10	11	12	13	14	15	16	17	18	19	20	21	22	23	24	25	26	27	28	29
MIPV	MIPV	MIPS	MIUV	MIUV	MIUV	MIUV	MIUS	MIUV	MIPV	MIPV	MIPV	MIUV	MIUV	MIUV	MIUV	MIUS	MIUV	MIUV	MIUV	MIUV	MIUV	MIUV	MIUV	MIUV	MIUV	MIUV	MIUV	MIUV
																	JA20JDLV	JA20JDLV	JG20JDLV	JG20JDLV	JG20JDLV	JG20JDLV	JG20JDLV	JG20JDLV	JG20JDLV	JG20JDLV	JG20JDLV	JG20JDLV
AI2000JV	AI2000JV	AI2000LV	AI2000SV	AI2000JV	AI2000DV	AI2000LV	AI2000LV	AI2055JV	AI2055DV	AI2055LV	AI2055LV	AI2055JV	AI2055DV	AI2055LV	AI2055LV	AI2055SV	AI2088JV	AI2088DV	AI2088LV	AI3000JV	AI3000DV	AI3000LV	AI3000LV	AI3055JV	AI3055DV	AI3055LV	AI3055LV	AI3055SV
o	o	o	o	o	o	o	o	o	o	o	o	o	o	o	o	o	o	o	o	o	o	o	o	o				
*	*	*	*	*	*	*	*	*	*	*	*	*	*	*	*	*	*	*	*	*	*	*	*	*				
*	*	*	*	*	*	*	*	*	*	*	*	*	*	*	*	*	*	*	*	*	*	*	*	*				
*	*	*	*	*	*	*	*	*	*	*	*	*	*	*	*	*	*	*	*	*	*	*	*	*				
*	*	*	*	*	*	*	*	*	*	*	*	*	*	*	*	*	*	*	*	*	*	*	*	*				
*	*	*	*	*	*	*	*	*	*	*	*	*	*	*	*	*	*	*	*	*	*	*	*	*				
																									o	o	o	o
																									o	o	o	o
																									*	*	*	*
																									*	*	*	*
																									*	*	*	*
																									*	*	*	*
																									*	*	*	*
																									*	*	*	*
o	o	o	o	o	o	o	o	o	o	o	o	o	o	o	o	o	o	o	o	o	o	o	o	o				
o	o	o	o	o	o	o	o	o	o	o	o	o	o	o	o	o	o	o	o	o	o	o	o	o				
																									o	o	o	o
																									o	o	o	o
o	o	o	o	o	o	o	o	o	o	o	o	o	o	o	o	o	o	o	o	o	o	o	o	o	o	o	o	o
o	o	o	o	o	o	o	o	o	o	o	o	o	o	o	o	o	o	o	o	o	o	o	o	o	o	o	o	o
																									o	o	o	o
o	o	o	o	o	o	o	o	o	o	o	o	o	o	o	o	o	o	o	o	o	o	o	o	o				
																									o	o	o	o
o	o	o	o	o	o	o	o	o	o	o	o	o	o	o	o	o	o	o	o	o	o	o	o	o				
																									o	o	o	o
o	o	o	o	o	o	o	o	o	o	o	o	o	o	o	o	o	o	o	o	o	o	o	o	o				
																									o	o	o	o
o	o	o	o	o	o	o	o	o	o	o	o	o	o	o	o	o	o	o	o	o	o	o	o	o				

SEC. 586

TILT CYLINDER

CILINDRO DE INCLINACION

KIPPZYLINDER

CYLINDRE D'INCLINAISON

NC	S	KEY NO.	LEV	PART NO.	PART NAME	SPECIFICATION	QTY	APPLIED DATE	ICANF	FORMER PART NO.	KD	APPLIED MODEL 01 02 03 04 05 06 07 08 09 10 11 12 13 14 15 16 17 18 19 20 21 22 23 24 25 26 27 28 29
		10 02	2	**58017-L1610**	RING-WIPER		02	0107-				o o o o
		11 01	2	**58623-10H00**	BUSH		02	0107-				o o o o o o o o o o o o o o o o o o o o o o o o o o
		02	2	**58623-20H00**			02	0107-				o o o o
		12 01	2	**58625-10H00**	HEADER-PACKING		02	0107-				o o o o o o o o o o o o o o o o o o o o o o o o o o
		02	2	**58625-20H00**			02	0107-				o o o o
		13 01	2	**58630-FK010**	ROD ASSY-PISTON		02	0107-				o o o o o o o o o o o o o o o o o o o o o o o o o o
		02	2	**58630-FK060**		F/ANTI RUST	02	0107-				* *
		03	2	**58630-FK410**			02	0107-0508				o o o o
		04	2	**58630-GG40A**		ANGLE 6-12	02	0508-				o o o o
		05	2	**58630-GG40A**		ANGLE 6-6 F/2 STAGE	02	0508-				* * * *
		06	2	**58630-FK410**		ANGLE 6-6 F/3 STAGE	02	0508-				* * * *
		07	2	**58630-GG41A**		F/ANTI RUST	02	0508-				* * * *
		14 01	2	**58633-FK010**	RING-BACK UP		02	0107-0110				o o o o o o o o o o o o o o o o o o o o o o o o o o
		02	2	**58633-FK410**			02	0107-0508				o o o o
		15 01	2	**58026-51H60**	RING-O		02	0107-				o o o o o o o o o o o o o o o o o o o o o o o o o o
		02	2	**58026-62K01**	O RING		02	0107-				o o o o
		16 01	2	**58641-FK010**	KIT-ROD HEAD ASSY		02	0107-0409				o o o o o o o o o o o o o o o o o o o o o o o o o o
		02	2	**58641-GG02A**			02	0409-				o o o o o o o o o o o o o o o o o o o o o o o o o o
		03	2	**58640-FB487**		F/BOTTLERS TILT	02	0107-				* *
		04	2	**58641-FK410**			02	0107-0508				o o o o
		05	2	**58641-GG03A**			02	0508-				o o o o
		06	2	**58640-FB687**		F/BOTTLERS TILT	02	0107-				* * * *
		17 01	2	**58645-20H00**	NIPPLE-GREASE		02	0107-				o o o o o o o o o o o o o o o o o o o o o o o o o o
		02	2	**00932-1011A**		F/BOTTLERS TILT	02	0107-				* *
		18 01	2	**58662-20H00**	SCREW SET		02	0107-				o o o o o o o o o o o o o o o o o o o o o o o o o o
		19 01	2	**58661-45H00**	SPACER-REAR	ANGLE 6-6	02	0107-				* *
		02	2	**58661-FK412**		ANGLE 6-6 F/2 STAGE	02	0107-				* * * *
		03	2	**58661-FB485**		F/BOTTLERS TILT	02	0107-				* *
		04	2	**58636-FC805**		F/BOTTLERS TILT	02	0107-				* * * *
		20 01	1	**58680-FK100**	BELLOWS COMPL-TILT CYL		02	0107-0511				* *
		02	1	**58681-GG00A**	BELLOWS ASSY-TILT CYL		02	0511-				* *
		03	1	**58680-FK400**	BELLOWS COMPL-TILT CYL		02	0107-				* * * *
		21 01	2	**58682-20H00**	RING-RUBBER		02	0107-0511				* *
		02	1	**14464-21U00**	CLIP-HOSE, TURBO		02	0511-				* *
		03	2	**58682-14H00**	RING-RUBBER		02	0107-				* * * *
		22 01	1	**58650-FK115**	PIN-PIVOT		02	0107-				o o o o o o o o o o o o o o o o o o o o o o o o o o
		02	1	**58650-FK105**		F/2 STAGE	02	0107-0508				o o o o

SEC. 586

TILT CYLINDER

CILINDRO DE INCLINACION

KIPPZYLINDER

CYLINDRE D'INCLINAISON

NC	S	KEY NO.	LEV	PART NO.	PART NAME	SPECIFICATION	QTY	APPLIED DATE	TCANF	FORMER PART NO.	KD
		22 03	1	**58650-FK115**	PIN-PIVOT	F/2 STAGE	02	0508-			
		04	1	**58650-FK115**		F/3 STAGE	02	0107-			
		23 01	1	**58650-FK20A**	PIN-PIVOT		02	0107-			
		24 01	1	**58185-FK100**	COLLER		04	0107-			
C		**25** 01	1	**29459-FK210**	POTENTIOMETER	F/TILT ANGLE SENSOR	01	0107-1111			
N		02	1	**29459-GG21A**		F/TILT ANGLE SENSOR	01	1111-			
		26 01	1	**58691-FK111**	BRACKET-TILT ANGLE SEN	F/TILT ANGLE SENSOR	01	0107-			
		02	1	**58691-FK311**		F/TILT ANGLE SENSOR	01	0107-			
		03	1	**58691-FJ311**		F/TILT ANGLE SENSOR	01	0107-			
		27 01	1	**58695-FK110**	ARM-TILT ANGLE SEN	F/TILT ANGLE SENSOR	01	0107-			
		28 01	1	**70091-FK10A**	BASE-TILT GAUGE	F/2 STAGE	01	0107-			
		02	1	**70091-FK100**		F/3F	01	0107-			
		03	1	**70091-FK11A**		F/3V	01	0107-			
		04	1	**70091-FK405**		F/2 STAGE	01	0107-			
		05	1	**70091-FK100**		F/3F	01	0107-			
		06	1	**70091-FK11A**		F/3V	01	0107-			
		29 01	1	**70092-FK100**	ARM-TILT GAUGE		01	0107-			
		02	1	**70092-FK405**		F/2 STAGE	01	0107-			
		03	1	**70092-FK400**		F/3 STAGE	01	0107-			
		30 01	1	**08110-8251G**	BOLT-HEX	F/TILT CYL BOOT + F/TILT GAUGE	01	0107-			
		02	1	**08110-8401F**		F/TILT CYL BOOT W/COVER	01	0107-			
		31 01	2	**58633-L1100**	RING-BACK UP		04	0107-			
		02	2	**E8249-F8220**			04	0107-			
		32 01	2	**58225-47600**	O RING		02	0107-			
		02	2	**58122-L0700**			02	0107-			
		33 01	2	**58636-FK420**	SPACER	ANGLE 6-6 F/3 STAGE	02	0107-			
		34 01	3	**00922-25510**	RING-SNAP	F/BOTTLERS TILT	02	0107-			
		35 01	1	**00932-1011A**	FTG-GRS STR		02	0107-			
		36 01	1	**08124-2251F**	SCREW-HHM M12-1.25X25 W/LK & PW		02	0107-			
		37 01	1	**08124-0251F**	SCREW-HHM M10-1.25X25 W/LK & PW		02	0107-			
		38 01	1	**08360-41026**	SCREW-HH CR M4-0.7X10 W/LK & PW	F/TILT ANGLE SENSOR	02	0107-			
		39 01	1	**08915-13610**	WASHER-LOCK SPLIT M6	F/TILT ANGLE SENSOR	01	0107-			
		40 01	1	**08911-30610**	NUT-HEX JAM M6-1.0	F/TILT ANGLE SENSOR	01	0107-			
		41 01	2	**08184-4501A**	BOLT-HEX M14 HEAVY		01	0107-			
		02	2	**08914-4601A**	SCREW-HH M14-1.5X60	F/BOTTLERS TILT	01	0107-			
		42 01	2	**08915-2441A**	WASHER-LOCK SPLIT M14 HEAVY		01	0107-			
		43 01	2	**08911-6441A**	NUT-HEX M14		01	0107-			

APPLIED MODEL

	MIPVI	MIPVI	MIPSI	MIUVI	MIUVI	MIUVI	MIUSI	MIYVI	MPPVI	MPPVI	MPPVI	MUUVI	MUUVI	MUUVI	MUUSI	MYUVI	MUUVI	MUUVI	MUUVI	MUUVI	MYUVI	MGGVI	MGGVI	MGGVI	MGGVI	MGGVI	MGGVI	MGGVI
	A20JV	A22DV	A22LV	A22SV	A30JV	A30DV	A30LV	A30SV	A35JV	A35DV	A35LV	A35JV	A35DV	A35LV	A35SV	A35LV	A38JV	A38DV	A38LV	A38JV	A38DV	A30LV	A33JV	A33DV	A33LV	A33JV	A35DV	A35LV	A35LV
01																												
02																												
03																												
04																												
05																												
06																												
07																												
08																												
09																												
10																												
11																												
12																												
13																												
14																												
15																												
16																												
17																												
18																												
19																												
20																												
21																												
22																												
23																												
24																												
25																												
26																												
27																												
28																												
29																												

SEC. 586

TILT CYLINDER

CILINDRO DE INCLINACION

KIPPZYLINDER

CYLINDRE D'INCLINAISON

NC	S	KEY NO.	LEV	PART NO.	PART NAME	SPECIFICATION	QTY	APPLIED DATE	TCANF	FORMER PART NO.	KD	APPLIED MODEL
		44 01	1	**NA-**	PLATE-CAPACITY ALTERNATE	F/BOTTLERS TILT-CONTACT FACTORY	01	0307-				* *
		45 01	1	**24216-S5802**	CLIP		02	0511-				* *

APPLIED MODEL

01	02	03	04	05	06	07	08	09	10	11	12	13	14	15	16	17	18	19	20	21	22	23	24	25	26	27	28	29
MIPA2000JV	MIPA2000LV	MIPA2000SV	MIUA2000JV	MIUA2000DV	MIUA2000LV	MIUA2000SV	MIYA2000LS	MIPA2255JV	MIPA2255DV	MIPA2255LV	MIPA2255SV	MIUA2255JV	MIUA2255DV	MIUA2255LV	MIUA2255SV	MIUA2255LV	MIUY2255LS	MIUA2588JV	MIUA2588DV	MIUA2588LV	MIUG3300JV	MIUG3300DV	MIUG3300LV	MIUG3305DV	MIUG3305JV	MIUG3355DV	MIUG3355LV	MIYG3355LV

NOTE

SEC. 591A

MAST (2W-INNER CHAIN 3.5TON)

MASTIL

HUBMAST

MAT

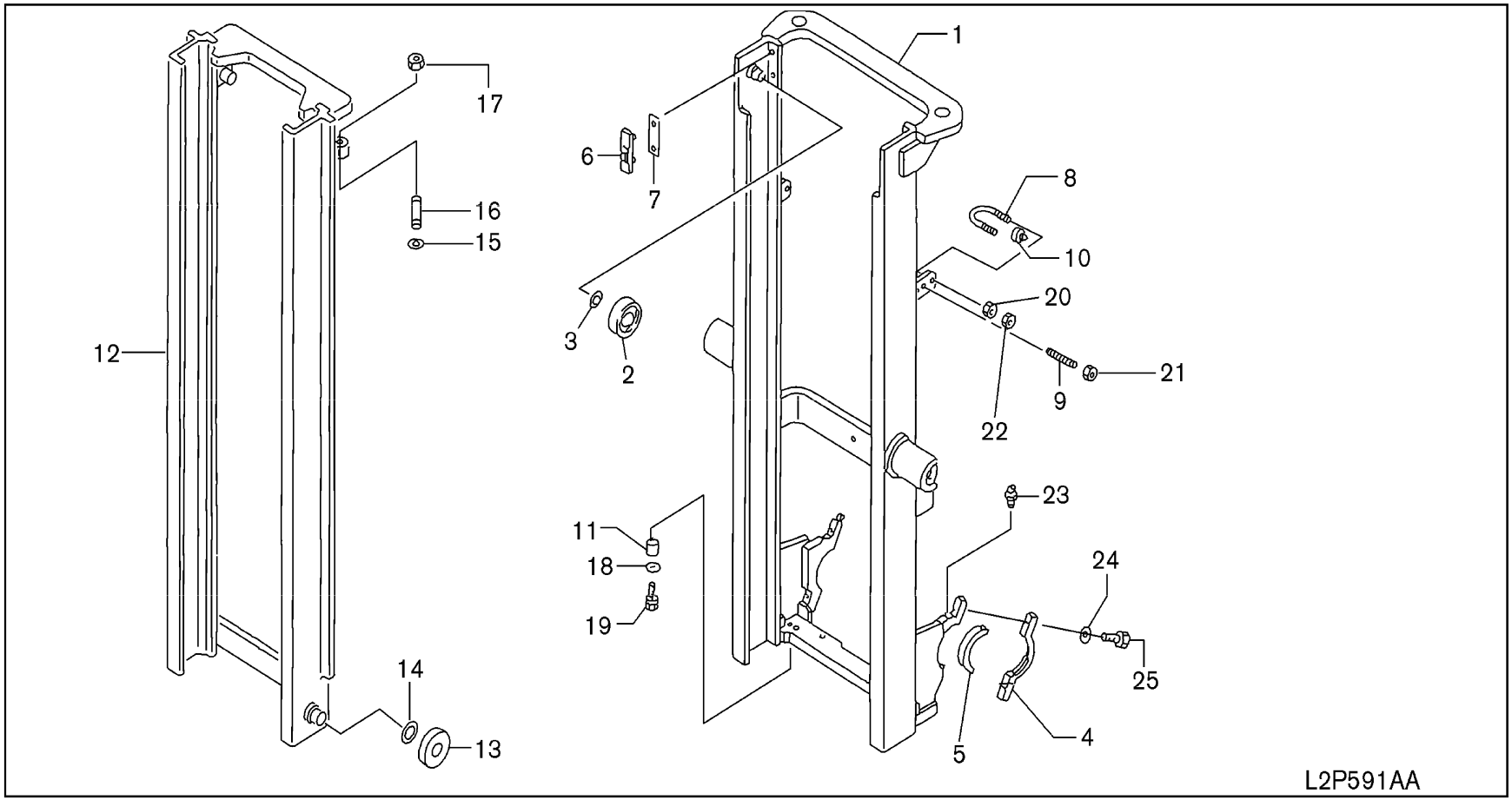

SEC. 591A

MAST (2W-INNER CHAIN 3.5TON)

MASTIL

HUBMAST

MAT

NC	S	KEY NO.	LEV	PART NO.	PART NAME	SPECIFICATION	QTY	APPLIED DATE	ICANF	FORMER PART NO.	KD
		1 01	1	**59110-GG40A**	MAST ASSY-OUTER	300	01	0107-			
		02	1	**59110-GG44A**		330	01	0107-			
		03	1	**59110-GG45A**		350	01	0107-			
		04	1	**59110-GG46A**		370	01	0107-			
		05	1	**59110-GG47A**		400	01	0107-			
		06	1	**59110-GG48A**		450	01	0107-			
		07	1	**59110-GG49A**		500	01	0107-			
		2 01	1	**59117-20H00**	ROLLER-LIFT		02	0107-			
		3 01	1	**59118-20H00**	SHIM-LIFT ROLLER	T=1.0	02	0107-			
		02	1	**59118-20H01**		T=0.5	02	0107-			
		03	1	**59118-50K00**		T=2.0	02	0107-			
		4 01	1	**59150-FJ40A**	CAP-MAST SUPPORT		02	0107-			
		5 01	1	**59151-FJ400**	BUSH-MAST SUPPORT		02	0107-			
		6 01	1	**59154-FF000**	METAL-BACK UP		02	0107-			
		7 01	1	**59155-L1100**	SHIM-BACK UP METAL		02	0107-			
		02	1	**59155-L1110**			02	0107-			
		8 01	1	**58583-20H01**	BOLT-U		02	0107-			
		9 01	1	**59537-00H00**	BOLT-ADJUST		02	0107-			
		10 01	1	**46584-S0100**	STOPPER		02	0107-			
		11 01	1	**58572-04H00**	SPACER-LIFT CYLINDER		02	0107-			
		12 01	1	**59210-GG40A**	MAST ASSY-INNER	300	01	0107-			
		02	1	**59210-GG44A**		330	01	0107-			
		03	1	**59210-GG45A**		350	01	0107-			
		04	1	**59210-GG46A**		370	01	0107-			
		05	1	**59210-GG47A**		400	01	0107-			
		06	1	**59210-GG48A**		450	01	0107-			
		07	1	**59210-GG49A**		500	01	0107-			
		13 01	1	**59117-20H10**	ROLLER-LIFT	D=123	02	0107-			
		02	1	**59117-20H11**		D=123.5	02	0107-			
		14 01	1	**59118-20H00**	SHIM-LIFT ROLLER	T=1.0	02	0107-			
		02	1	**59118-20H01**		T=0.5	02	0107-			
		03	1	**59118-50K00**		T=2.0	02	0107-			
		15 01	1	**58573-10H00**	SHIM-LIFT CYLINDER		02	0107-			
		16 01	1	**58519-GE40A**	STUD-FINE		02	0107-			
		17 01	1	**08912-8421A**	NUT		02	0107-			
		18 01	1	**08915-4401A**	WASHER-FLAT M10		02	0107-			
		19 01	1	**08124-0301E**	SCREW-HHM M10-1.25X30 W/PW		02	0107-			

APPLIED MODEL

	01	02	03	04	05	06	07	08	09	10	11	12	13	14	15	16	17	18	19	20	21	22	23	24	25	26	27	28	29
MODEL	MIPI	MIPI	MIPI	MIPU	MIUU	MIUU	MIUU	MIUY	MIPP	MIPP	MIPP	MIPU	MIUU	MIUU	MIUU	MIUY	MIUU	MIUU	MIJJ	MIJJ	MIGG	MIUU	MIUU	MIUY	MIGG	MIGG	MIGG	MIGG	MIGI
	AI20JV	AA20DV	AA20LV	AA20SV	AA20JV	AA20DV	AA20LV	AA20SV	AA20LV	AA25JV	AA25DV	AA25LV	AA25SV	AA25JV	AA25DV	AA25LV	AA25SV	AA25LV	AA28DV	AA28LV	AA28JV	AA30DV	AA30LV	AA30LV	AA35JV	AA35DV	AA35LV	AA35LV	AA35LV
✱✱✱✱																													

SEC. 591A

MAST (2W-INNER CHAIN 3.5TON)

MASTIL

HUBMAST

MAT

NC	S	KEY NO.	LEV	PART NO.	PART NAME	SPECIFICATION	QTY	APPLIED DATE	ICANF	FORMER PART NO.	KD
		20 01	1	**08918-3401A**	NUT-FLG HEX M10 9N		04	0107-			
		21 01	1	**08911-3501A**	NUT-HEX JAM M20-1.5 4N		02	0107-			
		22 01	1	**08911-1401A**	NUT-HEX M10-1.25 4T		04	0107-			
		23 01	1	**00932-1011A**	FTG-GRS STR		02	0107-			
		24 01	1	**08915-2481A**	WASHER-LOCK SPLIT M18 HEAVY		04	0107-			
		25 01	1	**08124-8601A**	SCREW-HHM M18-1.5X60 7T		04	0107-			

APPLIED MODEL

01	02	03	04	05	06	07	08	09	10	11	12	13	14	15	16	17	18	19	20	21	22	23	24	25	26	27	28	29
MIPA220JV	MIPA200DV	MIPA200LV	MIPA200SV	MIUA200JV	MIUA200DV	MIUA200LV	MIUA200SV	MIYA200LV	MIPA255JV	MIPA255DV	MIPA255LV	MIPA255SV	MIUA255JV	MIUA255DV	MIUA255LV	MIUA255SV	MIYA255LV	MIUAJA588JV	MIUAJA588DV	MIUAGA588LV	MIUAGA300JV	MIUAGA300DV	MIUAGA300LV	MIYAGA300LV	MIUAGA355JV	MIUAGA355DV	MIUAGA355LV	MIYAGA355V
																									*	*	*	*
																									*	*	*	*
																									*	*	*	*
																									*	*	*	*
																									*	*	*	*
																									*	*	*	*

NOTE

SEC. 591B

MAST (2F)

MASTIL

HUBMAST

MAT

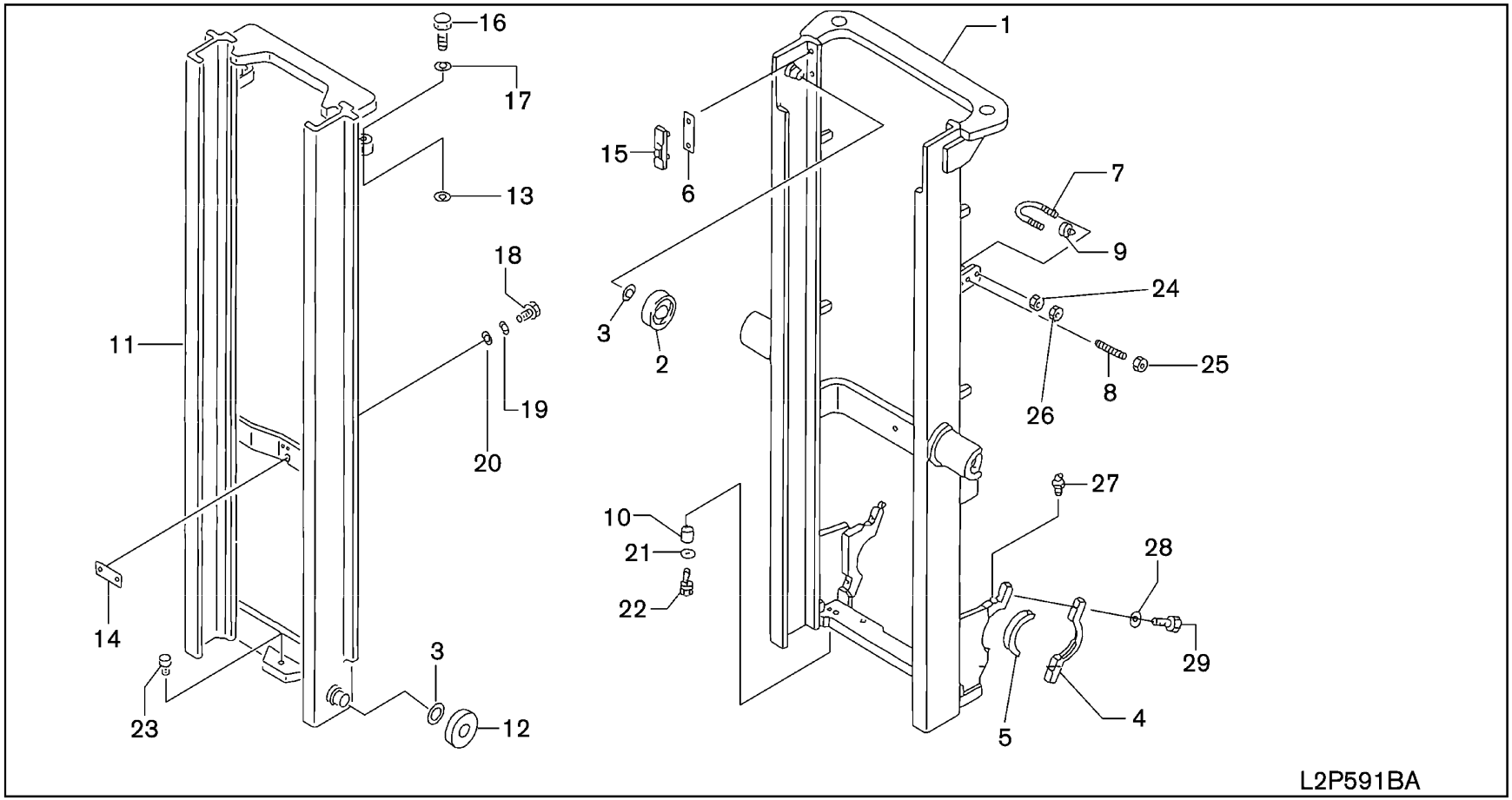

SEC. 591B

MAST (2F)

MASTIL

HUBMAST

MAT

NC	S	KEY NO.	LEV	PART NO.	PART NAME	SPECIFICATION	QTY	APPLIED DATE	ICANF	FORMER PART NO.	KD	APPLIED MODEL 01 02 03 04 05 06 07 08 09 10 11 12 13 14 15 16 17 18 19 20 21 22 23 24 25 26 27 28 29
		1	01	1	**59110-FJ50A**	MAST ASSY-OUTER	300	01	0107-			* * * * * * * * * * * * * * * * * * *
			02	1	**59110-FJ54A**		330	01	0107-			* * * * * * * * * * * * * * * * * * *
			03	1	**59110-FJ55A**		350	01	0107-			* * * * * * * * * * * * * * * * * * *
			04	1	**59110-FJ56A**		370	01	0107-			* * * * * * * * * * * * * * * * * * *
			05	1	**59110-FJ57A**		400	01	0107-			* * * * * * * * * * * * * * * * * * *
			06	1	**59110-FJ58A**		420	01	0107-			* * * * * * * * * * * * * * * * * * *
			07	1	**59110-FK10A**		300	01	0107-			* * * * * * *
			08	1	**59110-FK14A**		330	01	0107-			* * * * * * *
			09	1	**59110-FK15A**		350	01	0107-			* * * * * * *
			10	1	**59110-FK16A**		370	01	0107-			* * * * * * *
			11	1	**59110-FK17A**		400	01	0107-			* * * * * * *
			12	1	**59110-FK18A**		420	01	0107-			* * * * * * *
			13	1	**59110-GG50A**		300	01	0508-			* * * *
			14	1	**59110-GG54A**		330	01	0508-			* * * *
			15	1	**59110-GG55A**		350	01	0508-			* * * *
			16	1	**59110-GG56A**		370	01	0508-			* * * *
			17	1	**59110-GG57A**		400	01	0508-			* * * *
		2	01	1	**59117-20H00**	ROLLER-LIFT	D=115	02	0107-			* *
		3	01	1	**59118-20H00**	SHIM-LIFT ROLLER	T=1.0	02	0107-			* *
			02	1	**59118-20H01**		T=0.5	02	0107-			* *
			03	1	**59118-50K00**		T=2.0	02	0107-			* *
		4	01	1	**59150-FJ40A**	CAP-MAST SUPPORT		02	0107-			* *
		5	01	1	**59151-FJ400**	BUSH-MAST SUPPORT		02	0107-			* *
		6	01	1	**59155-L1100**	SHIM-BACK UP METAL	T=1.0	02	0107-			* *
			02	1	**59155-L1110**		T=0.5	02	0107-			* *
		7	01	1	**58583-24H00**	BOLT-U		02	0107-			* * * * * * * * * * * * * * * * * *
			02	1	**58583-10H01**			02	0107-			* * * * * * *
			03	1	**58583-FK50A**			02	0508-			* * * *
		8	01	1	**59537-00H00**	BOLT-ADJUST		02	0107-			* *
		9	01	1	**46584-S0100**	STOPPER		02	0107-			* *
		10	01	1	**58572-04H00**	SPACER-LIFT CYLINDER		02	0107-			* *
		11	01	1	**59210-GE50A**	MAST ASSY-INNER	300	01	0107-			* *
			02	1	**59210-GE54A**		330	01	0107-			* *
			03	1	**59210-GE55A**		350	01	0107-			* *
			04	1	**59210-GE56A**		370	01	0107-			* *
			05	1	**59210-GE57A**		400	01	0107-			* *
			06	1	**59210-GE58A**		420	01	0107-			* *

SEC. 591B

MAST (2F)

MASTIL

HUBMAST

MAT

NC	S	KEY NO.	LEV	PART NO.	PART NAME	SPECIFICATION	QTY	APPLIED DATE	ICANF	FORMER PART NO.	KD	APPLIED MODEL 01 02 03 04 05 06 07 08 09 10 11 12 13 14 15 16 17 18 19 20 21 22 23 24 25 26 27 28 29
		11 07	1	**59210-GE54A**	MAST ASSY-INNER	300	01	0508-				* * * *
		08	1	**59210-GE55A**		330	01	0508-				* * * *
		09	1	**59210-GE56A**		350	01	0508-				* * * *
		10	1	**59210-GE57A**		370	01	0508-				* * * *
		11	1	**59210-GG57A**		400	01	0508-				* * * *
		12 01	1	**59117-20H10**	ROLLER-LIFT	D=123	02	0107-				* *
		02	1	**59117-20H11**		D=123.5	02	0107-				* *
		13 01	1	**58573-10H00**	SHIM-LIFT CYLINDER		02	0107-				* *
		14 01	1	**58568-L7400**	SHIM-LIFT CYLINDER FULL FREE		01	0107-				* *
		15 01	1	**59154-FF000**	METAL-BACK UP		02	0107-				* *
		16 01	1	**08124-2301A**	SCREW-HHM M12-1.25X30 7T		02	0107-				* *
		17 01	1	**08915-2421A**	WASHER-LCOK SPLIT M12 HEAVY		02	0107-				* *
		18 01	1	**08124-4401A**	SCREW-HHM M14-1.5X40 7T		02	0107-				* *
		19 01	1	**08915-1441A**	WASHER-LOCK SPLIT M14		02	0107-				* *
		20 01	1	**08915-4441A**	WASHER-FLAT M14		02	0107-				* *
		21 01	1	**08915-4401A**	WASHER-FLAT M10		02	0107-				* *
		22 01	1	**08124-0301E**	SCREW-HHM M10-1.25X30 W/PW		02	0107-				* *
		23 01	1	**08114-2201A**	SCREW-HHM M12-1.25X20 4T		01	0107-				* *
		24 01	1	**08918-3401A**	NUT-FLG HEX M10 9N		04	0107-				* *
		25 01	1	**08911-3501A**	NUT-HEX JAM M20-1.5 4N		02	0107-				* *
		26 01	1	**08911-1401A**	NUT-HEX M10-1.25 4T		04	0107-				* *
		27 01	1	**00932-1011A**	FTG-GRS STR		02	0107-				* *
		28 01	1	**08915-2481A**	WASHER-LOCK SPLIT M18 HEAVY		04	0107-				* *
		29 01	1	**08124-8601A**	SCREW-HHM M18-1.5X60 7T		04	0107-				* *

NOTE

SEC. 591D

MAST (3F)

MASTIL

HUBMAST

MAT

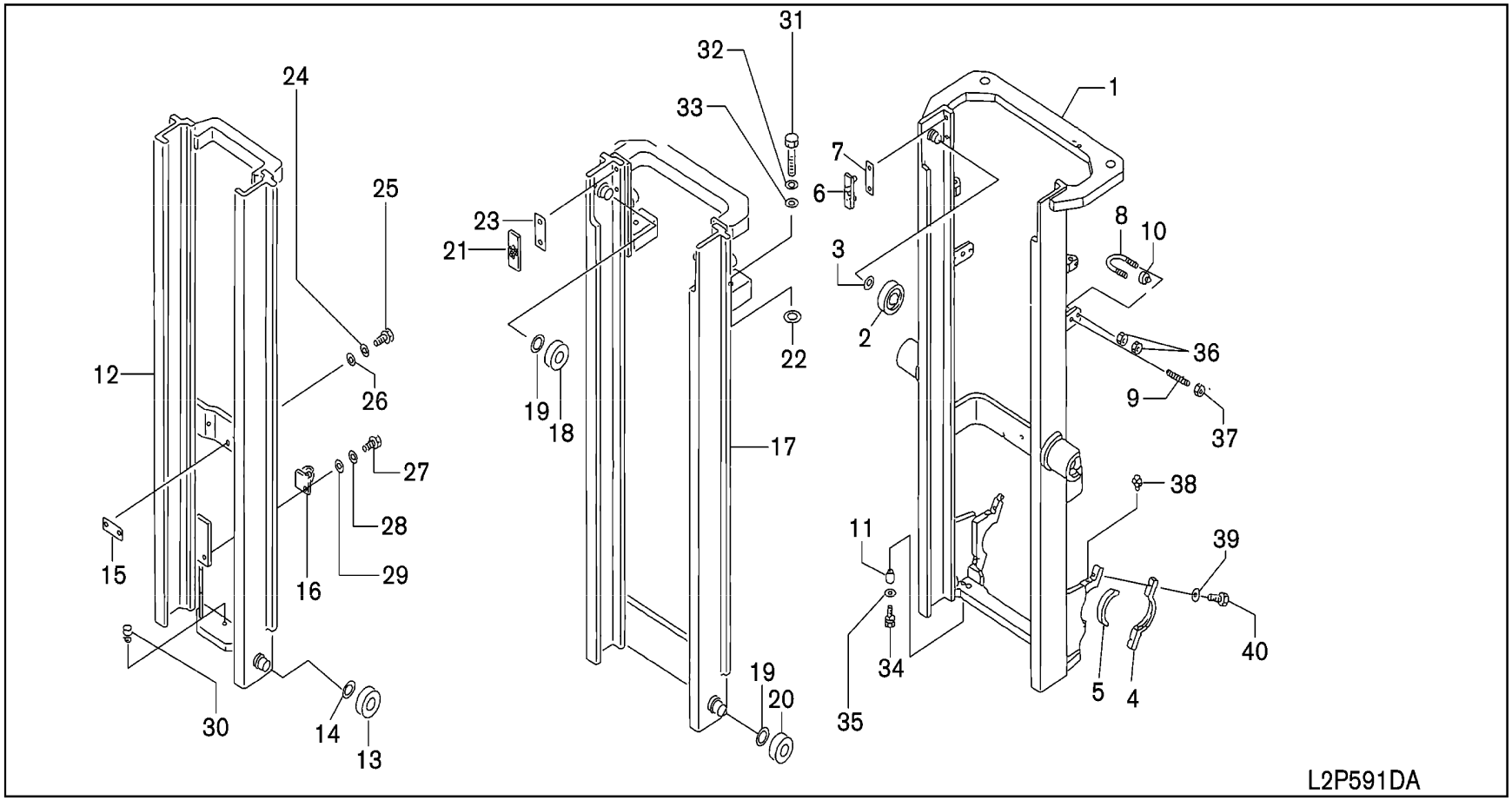

591D-1

SEC. 591D

MAST (3F)

MASTIL

HUBMAST

MAT

NC	S	KEY NO.	LEV	PART NO.	PART NAME	SPECIFICATION	QTY	APPLIED DATE	ICANF	FORMER PART NO.	KD	APPLIED MODEL 01 02 03 04 05 06 07 08 09 10 11 12 13 14 15 16 17 18 19 20 21 22 23 24 25 26 27 28 29
		1 01	1	**59110-FB600**	MAST ASSY-OUTER	385	01	0107-				* * * * * * * * * * * * * * * * * *
		02	1	**59110-FB601**		430	01	0107-				* * * * * * * * * * * * * * * * * *
		03	1	**59110-FB602**		475	01	0107-				* * * * * * * * * * * * * * * * * *
		04	1	**59110-FB603**		515	01	0107-				* * * * * * * * * * * * * * * * * *
		05	1	**59110-FB604**		550	01	0107-				* * * * * * * * * * * * * * * * * *
		06	1	**59110-FB605**		600	01	0107-				* * * * * * * * * * * * * * * * * *
		07	1	**59110-FB606**		650	01	0107-				* * * * * * * * * * * * * * * * * *
		08	1	**59110-FB607**		700	01	0107-				* * * * * * * * * * * * * * * * * *
		09	1	**59110-FC201**		385	01	0107-				* * * * * * *
		10	1	**59110-FC202**		430	01	0107-				* * * * * * *
		11	1	**59110-FC203**		475	01	0107-				* * * * * * *
		12	1	**59110-FC204**		515	01	0107-				* * * * * * *
		13	1	**59110-FC205**		550	01	0107-				* * * * * * *
		14	1	**59110-FC206**		600	01	0107-				* * * * * * *
		15	1	**59110-FC207**		650	01	0107-				* * * * * * *
		16	1	**59110-FC208**		700	01	0107-				* * * * * * *
		17	1	**59110-FC200**		355	01	0107-				* * * *
		18	1	**59110-FC201**		400	01	0107-				* * * *
		19	1	**59110-FC202**		445	01	0107-				* * * *
		20	1	**59110-FC203**		485	01	0107-				* * * *
		21	1	**59110-FC204**		520	01	0107-				* * * *
		22	1	**59110-FC205**		570	01	0107-				* * * *
		23	1	**59110-FC206**		620	01	0107-				* * * *
		24	1	**59110-FC207**		670	01	0107-				* * * *
		2 01	1	**59117-20H00**	ROLLER-LIFT	D=115	02	0107-				* *
		3 01	1	**59118-50K00**	SHIM-LIFT ROLLER	T=2.0	AR	0107-				* *
		02	1	**59118-20H00**		T=1.0	AR	0107-				* *
		03	1	**59118-20H01**		T=0.5	AR	0107-				* *
		4 01	1	**59150-FJ40A**	CAP-MAST SUPPORT		02	0107-				* *
		5 01	1	**59151-FJ400**	BUSH-MAST SUPPORT		02	0107-				* *
		6 01	1	**59154-FF000**	METAL-BACK UP		02	0107-				* *
		7 01	1	**59155-L1100**	SHIM-METAL BACK UP	T=1.0	AR	0107-				* *
		02	1	**59155-L1110**		T=0.5	AR	0107-				* *
		8 01	1	**58583-10H01**	BOLT-U		02	0107-				* * * * * * * * * * * * * * * * * *
		02	1	**58583-23H00**			02	0107-				* * * * * * *
		03	1	**58583-20H01**			02	0107-				* * * *
		9 01	1	**59537-00H00**	BOLT-ADJUST		02	0107-				* *

SEC. 591D

MAST (3F)

MASTIL

HUBMAST

MAT

NC	S	KEY NO.	LEV	PART NO.	PART NAME	SPECIFICATION	QTY	APPLIED DATE	ICANF	FORMER PART NO.	KD	APPLIED MODEL 01 02 03 04 05 06 07 08 09 10 11 12 13 14 15 16 17 18 19 20 21 22 23 24 25 26 27 28 29
		10 01	1	**46584-S0100**	STOPPER		02	0107-				* *
		11 01	1	**58572-04H00**	SPACER-LIFT CYLINDER		02	0107-				* *
		12 01	1	**59210-FB600**	MAST ASSY-INNER	385	01	0107-				* * * * * * * * * * * * * * * * * * *
		02	1	**59210-FB601**		430	01	0107-				* * * * * * * * * * * * * * * * * * *
		03	1	**59210-FB602**		475	01	0107-				* * * * * * * * * * * * * * * * * * *
		04	1	**59210-FB603**		515	01	0107-				* * * * * * * * * * * * * * * * * * *
		05	1	**59210-FB604**		555	01	0107-				* * * * * * * * * * * * * * * * * * *
		06	1	**59210-FB605**		600	01	0107-				* * * * * * * * * * * * * * * * * * *
		07	1	**59210-FB606**		650	01	0107-				* * * * * * * * * * * * * * * * * * *
		08	1	**59210-FB607**		700	01	0107-				* * * * * * * * * * * * * * * * * * *
		09	1	**59210-FB601**		385	01	0107-				* * * * * * *
		10	1	**59210-FB602**		430	01	0107-				* * * * * * *
		11	1	**59210-FB603**		475	01	0107-				* * * * * * *
		12	1	**59210-FB604**		515	01	0107-				* * * * * * *
		13	1	**59210-FB605**		555	01	0107-				* * * * * * *
		14	1	**59210-FB606**		600	01	0107-				* * * * * * *
		15	1	**59210-FB607**		650	01	0107-				* * * * * * *
		16	1	**59210-FB608**		700	01	0107-				* * * * * * *
		17	1	**59210-FB600**		355	01	0107-				* * * *
		18	1	**59210-FB601**		400	01	0107-				* * * *
		19	1	**59210-FB602**		445	01	0107-				* * * *
		20	1	**59210-FB603**		485	01	0107-				* * * *
		21	1	**59210-FB604**		520	01	0107-				* * * *
		22	1	**59210-FB605**		570	01	0107-				* * * *
		23	1	**59210-FB606**		620	01	0107-				* * * *
		24	1	**59210-FB607**		670	01	0107-				* * * *
		13 01	1	**59117-20H00**	ROLLER-LIFT	D=115	02	0107-				* *
		02	1	**59117-20H01**		D=115.5	02	0107-				* *
		03	1	**59117-20H02**		D=116	02	0107-				* *
		14 01	1	**59118-50K00**	SHIM-LIFT ROLLER	T=2.0	AR	0107-				* *
		02	1	**59118-20H00**		T=1.0	AR	0107-				* *
		03	1	**59118-20H01**		T=0.5	AR	0107-				* *
		15 01	1	**58568-L7400**	SHIM-LIFT CYLINDER FULL FREE		AR	0107-				* *
		16 01	1	**59285-FB600**	ANCHOR ASSY-CHAIN RH		01	0107-				* *
		02	1	**59285-FB601**	ANCHOR ASSY-CHAIN LH		01	0107-				* *
		17 01	1	**59360-FB600**	MAST ASSY-MIDDLE	385	01	0107-				* * * * * * * * * * * * * * * * * * *
		02	1	**59360-FB601**		430	01	0107-				* * * * * * * * * * * * * * * * * * *

SEC. 591D

MAST (3F)

MASTIL

HUBMAST

MAT

NC	S	KEY NO.	LEV	PART NO.	PART NAME	SPECIFICATION	QTY	APPLIED DATE	ICANF	FORMER PART NO.	KD	APPLIED MODEL 01 02 03 04 05 06 07 08 09 10 11 12 13 14 15 16 17 18 19 20 21 22 23 24 25 26 27 28 29
		17 03	1	**59360-FB602**	MAST ASSY-MIDDLE	475	01	0107-				* * * * * * * * * * * * * * * * * *
		04	1	**59360-FB603**		515	01	0107-				* * * * * * * * * * * * * * * * * *
		05	1	**59360-FB604**		555	01	0107-				* * * * * * * * * * * * * * * * * *
		06	1	**59360-FB605**		600	01	0107-				* * * * * * * * * * * * * * * * * *
		07	1	**59360-FB606**		650	01	0107-				* * * * * * * * * * * * * * * * * *
		08	1	**59360-FB607**		700	01	0107-				* * * * * * * * * * * * * * * * * *
		09	1	**59360-FB601**		385	01	0107-				* * * * * * *
		10	1	**59360-FB602**		430	01	0107-				* * * * * * *
		11	1	**59360-FB603**		475	01	0107-				* * * * * * *
		12	1	**59360-FB604**		515	01	0107-				* * * * * * *
		13	1	**59360-FB605**		555	01	0107-				* * * * * * *
		14	1	**59360-FB606**		600	01	0107-				* * * * * * *
		15	1	**59360-FB607**		650	01	0107-				* * * * * * *
		16	1	**59360-FB608**		700	01	0107-				* * * * * * *
		17	1	**59360-FB600**		355	01	0107-				* * * *
		18	1	**59360-FB601**		400	01	0107-				* * * *
		19	1	**59360-FB602**		445	01	0107-				* * * *
		20	1	**59360-FB603**		485	01	0107-				* * * *
		21	1	**59360-FB604**		520	01	0107-				* * * *
		22	1	**59360-FB605**		570	01	0107-				* * * *
		23	1	**59360-FB606**		620	01	0107-				* * * *
		24	1	**59360-FB607**		670	01	0107-				* * * *
		18 01	1	**59117-20H00**	ROLLER-LIFT	D=115	01	0107-				* *
		19 01	1	**59118-50K00**	SHIM-LIFT ROLLER	T=2.0	AR	0107-				* *
		02	1	**59118-20H00**		T=1.0	AR	0107-				* *
		03	1	**59118-20H01**		T=0.5	AR	0107-				* *
		20 01	1	**59117-20H10**	ROLLER-LIFT	D=123	02	0107-				* *
		02	1	**59117-20H11**		D=123.5	02	0107-				* *
		03	1	**59117-20H12**		D=124	02	0107-				* *
		21 01	1	**59154-FF000**	METAL-BACK UP		02	0107-				* *
		22 01	1	**58573-10H00**	SHIM-LIFT CYLINDER		02	0107-				* *
		23 01	1	**59155-L1100**	SHIM-METAL BACK UP	T=1.0	AR	0107-				* *
		02	1	**59155-L1110**		T=0.5	AR	0107-				* *
		24 01	1	**08915-1441A**	WASHER-LOCK SPLIT M14		02	0107-				* *
		25 01	1	**08124-4451A**	SCREW-HHM M14-1.5X45 7T		02	0107-				* *
		26 01	1	**08915-4441A**	WASHER-FLAT M14		02	0107-				* *
		27 01	1	**08124-6351A**	SCREW-HHM M16-1.5X35 7T		02	0107-				* *

SEC. 591D

MAST (3F)

MASTIL

HUBMAST

MAT

NC	S	KEY NO.	LEV	PART NO.	PART NAME	SPECIFICATION	QTY	APPLIED DATE	ICANF	FORMER PART NO.	KD	APPLIED MODEL 01 02 03 04 05 06 07 08 09 10 11 12 13 14 15 16 17 18 19 20 21 22 23 24 25 26 27 28 29
		28	01	1	**08915-1461A**	WASHER-LOCK SPLIT M16		02	0107-			* *
		29	01	1	**08915-4461A**	WASHER-FLAT M16		02	0107-			* *
		30	01	1	**08114-2201A**	SCREW-HHM M12-1.25X20 4T		01	0107-			* *
		31	01	1	**08124-2651A**	SCREW-HHM M12-1.25X65 7T		02	0107-			* *
		32	01	1	**08915-2421A**	WASHER-LOCK SPLIT M12 HEAVY		02	0107-			* *
		33	01	1	**08915-4421A**	WASHER-FLAT M12		02	0107-			* *
		34	01	1	**08124-0301E**	SCREW-HHMN M10-1.25X30 W/PW		02	0107-			* *
		35	01	1	**08915-4401A**	WASHER-FLAT M10		02	0107-			* *
		36	01	1	**08911-1401A**	NUT-HEX M10-1.25 4T		08	0107-			* *
		37	01	1	**08911-3501A**	NUT-HEX JAM M20-1.5 4N		02	0107-			* *
		38	01	1	**00932-1011A**	FTG-GRS STR		02	0107-			* *
		39	01	1	**08915-2481A**	WASHER-LOCK SPLIT M18 HEAVY		04	0107-			* *
		40	01	1	**08124-8601A**	SCREW-HHM M18-1.5X60 7T		04	0107-			* *

NOTE

SEC. 591E

MAST (3V)

MASTIL

HUBMAST

MAT

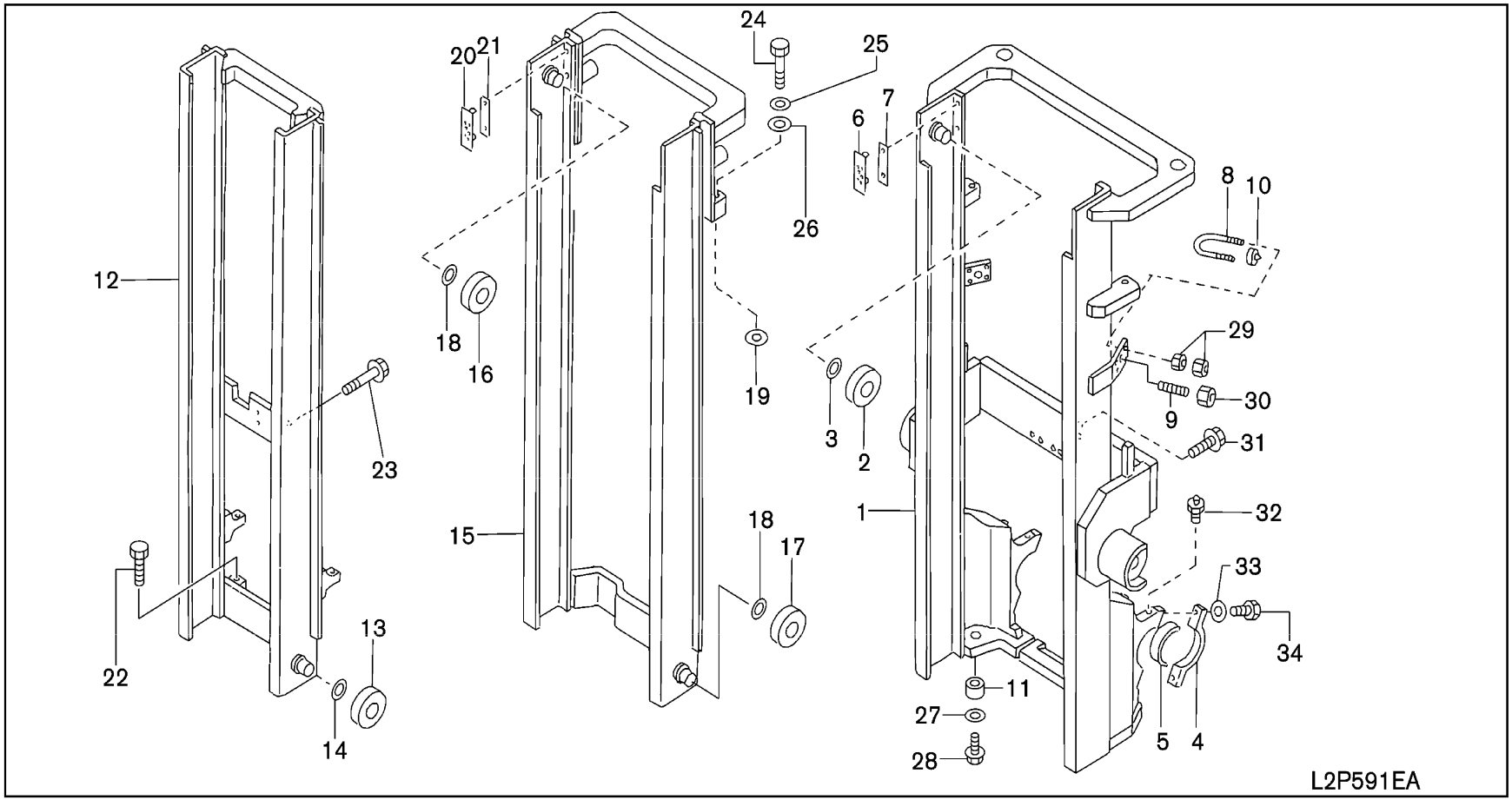

591E-1

SEC. 591E

MAST (3V)

MASTIL

HUBMAST

MAT

NC	S	KEY NO.	LEV	PART NO.	PART NAME	SPECIFICATION	QTY	APPLIED DATE	ICANF	FORMER PART NO.	KD	APPLIED MODEL 01 02 03 04 05 06 07 08 09 10 11 12 13 14 15 16 17 18 19 20 21 22 23 24 25 26 27 28 29
		1	01	1	**59110-FB700**	MAST ASSY-OUTER	360	01	0107-			**********
			02	1	**59110-FB701**		405	01	0107-			**********
			03	1	**59110-FB702**		450	01	0107-			**********
			04	1	**59110-FB703**		490	01	0107-			**********
			05	1	**59110-FB704**		525	01	0107-			**********
			06	1	**59110-FB705**		575	01	0107-			**********
			07	1	**59110-FB706**		633	01	0107-			**********
			08	1	**59110-FB707**		688	01	0107-			**********
			09	1	**59110-FC300**		385	01	0107-			**********
			10	1	**59110-FC301**		430	01	0107-			**********
			11	1	**59110-FC302**		470	01	0107-			**********
			12	1	**59110-FC303**		505	01	0107-			**********
			13	1	**59110-FC304**		555	01	0107-			**********
			14	1	**59110-FC305**		600	01	0107-			**********
			15	1	**59110-FC306**		650	01	0107-			**********
			16	1	**59110-FC307**		700	01	0107-			**********
		2	01	1	**59117-20H00**	ROLLER-LIFT	D=115	02	0107-			**********
		3	01	1	**59118-50K00**	SHIM-LIFT ROLLER	T=2.0	AR	0107-			**********
			02	1	**59118-20H00**		T=1.0	AR	0107-			**********
			03	1	**59118-20H01**		T=0.5	AR	0107-			**********
		4	01	1	**59150-FJ40A**	CAP-MAST SUPPORT		02	0107-			**********
		5	01	1	**59151-FJ400**	BUSH-MAST SUPPORT		02	0107-			**********
		6	01	1	**59154-FF000**	METAL-BACK UP		02	0107-			**********
		7	01	1	**59155-L1100**	SHIM-METAL BACK UP	T=1.0	AR	0107-			**********
			02	1	**59155-L1110**		T=0.5	AR	0107-			**********
		8	01	1	**58583-10H01**	BOLT-U		02	0107-			**********
			02	1	**58583-23H00**			02	0107-			**********
			03	1	**58583-20H01**			02	0107-			**********
		9	01	1	**59537-00H00**	BOLT-ADJUST		02	0107-			**********
		10	01	1	**48584-S0100**	STOPPER		02	0107-			**********
		11	01	1	**58572-04H00**	SPACER-LIFT CYLINDER		02	0107-			**********
		12	01	1	**59210-FB700**	MAST ASSY-INNER	360	01	0107-0508			**********
			02	1	**59210-FB70A**		360	01	0508-			**********
			03	1	**59210-FB701**		405	01	0107-0508			**********
			04	1	**59210-FB71A**		405	01	0508-			**********
			05	1	**59210-FB702**		450	01	0107-0508			**********
			06	1	**59210-FB72A**		450	01	0508-			**********

SEC. 591E

MAST (3V)

MASTIL

HUBMAST

MAT

NC	S	KEY NO.	LEV	PART NO.	PART NAME	SPECIFICATION	QTY	APPLIED DATE	ICANF	FORMER PART NO.	KD	APPLIED MODEL 01 02 03 04 05 06 07 08 09 10 11 12 13 14 15 16 17 18 19 20 21 22 23 24 25 26 27 28 29
		12 07	1	**59210-FB703**	MAST ASSY-INNER	490	01	0107-0508				* * * * * * * * * * * * * * * * * *
		08	1	**59210-FB73A**		490	01	0508-				* * * * * * * * * * * * * * * * * *
		09	1	**59210-FB704**		525	01	0107-0508				* * * * * * * * * * * * * * * * * *
		10	1	**59210-FB74A**		525	01	0508-				* * * * * * * * * * * * * * * * * *
		11	1	**59210-FB705**		575	01	0107-0508				* * * * * * * * * * * * * * * * * *
		12	1	**59210-FB75A**		575	01	0508-				* * * * * * * * * * * * * * * * * *
		13	1	**59210-FB706**		633	01	0107-0508				* * * * * * * * * * * * * * * * * *
		14	1	**59210-FB76A**		633	01	0508-				* * * * * * * * * * * * * * * * * *
		15	1	**59210-FB707**		688	01	0107-0508				* * * * * * * * * * * * * * * * * *
		16	1	**59210-FB77A**		688	01	0508-				* * * * * * * * * * * * * * * * * *
		17	1	**59210-FB701**		385	01	0107-0508				* * * * * * * * * * * * * * * * * *
		18	1	**59210-FB71A**		385	01	0508-				* * * * * * * * * * * * * * * * * *
		19	1	**59210-FB702**		430	01	0107-0508				* * * * * * * * * * * * * * * * * *
		20	1	**59210-FB72A**		430	01	0508-				* * * * * * * * * * * * * * * * * *
		21	1	**59210-FB703**		470	01	0107-0508				* * * * * * * * * * * * * * * * * *
		22	1	**59210-FB73A**		470	01	0508-				* * * * * * * * * * * * * * * * * *
		23	1	**59210-FB704**		505	01	0107-0508				* * * * * * * * * * * * * * * * * *
		24	1	**59210-FB74A**		505	01	0508-				* * * * * * * * * * * * * * * * * *
		25	1	**59210-FB705**		555	01	0107-0508				* * * * * * * * * * * * * * * * * *
		26	1	**59210-FB75A**		555	01	0508-				* * * * * * * * * * * * * * * * * *
		27	1	**59210-FB706**		600	01	0107-0508				* * * * * * * * * * * * * * * * * *
		28	1	**59210-FB76A**		600	01	0508-				* * * * * * * * * * * * * * * * * *
		29	1	**59210-FB707**		650	01	0107-0508				* * * * * * * * * * * * * * * * * *
		30	1	**59210-FB77A**		650	01	0508-				* * * * * * * * * * * * * * * * * *
		31	1	**59210-FB708**		700	01	0107-0508				* * * * * * * * * * * * * * * * * *
		32	1	**59210-FB78A**		700	01	0508-				* * * * * * * * * * * * * * * * * *
		13 01	1	**59117-20H00**	ROLLER-LIFT	D=115	02	0107-				* *
		02	1	**59117-20H01**		D=115.5	02	0107-				* *
		03	1	**59117-20H02**		D=116	02	0107-				* *
		14 01	1	**59118-50K00**	SHIM-LIFT ROLLER	T=2.0	AR	0107-				* *
		02	1	**59118-20H00**		T=1.0	AR	0107-				* *
		03	1	**59118-20H01**		T=0.5	AR	0107-				* *
		15 01	1	**59360-FB700**	MAST ASSY-MIDDLE	360	01	0107-0508				* * * * * * * * * * * * * * * * * *
		02	1	**59360-FB70A**		360	01	0508-				* * * * * * * * * * * * * * * * * *
		03	1	**59360-FB701**		405	01	0107-0508				* * * * * * * * * * * * * * * * * *
		04	1	**59360-FB71A**		405	01	0508-				* * * * * * * * * * * * * * * * * *
		05	1	**59360-FB702**		450	01	0107-0508				* * * * * * * * * * * * * * * * * *

SEC. 591E

MAST (3V)

MASTIL

HUBMAST

MAT

NC	S	KEY NO.	LEV	PART NO.	PART NAME	SPECIFICATION	QTY	APPLIED DATE	ICANF	FORMER PART NO.	KD	APPLIED MODEL 01 02 03 04 05 06 07 08 09 10 11 12 13 14 15 16 17 18 19 20 21 22 23 24 25 26 27 28 29
		15 06	1	**59360-FB72A**	MAST ASSY-MIDDLE	450	01	0508-				* * * * * * * * * * * * * * * * *
		07	1	**59360-FB703**		490	01	0107-0508				* * * * * * * * * * * * * * * * *
		08	1	**59360-FB73A**		490	01	0508-				* * * * * * * * * * * * * * * * *
		09	1	**59360-FB704**		525	01	0107-0508				* * * * * * * * * * * * * * * * *
		10	1	**59360-FB74A**		525	01	0508-				* * * * * * * * * * * * * * * * *
		11	1	**59360-FB705**		575	01	0107-0508				* * * * * * * * * * * * * * * * *
		12	1	**59360-FB75A**		575	01	0508-				* * * * * * * * * * * * * * * * *
		13	1	**59360-FB706**		633	01	0107-0508				* * * * * * * * * * * * * * * * *
		14	1	**59360-FB76A**		633	01	0508-				* * * * * * * * * * * * * * * * *
		15	1	**59360-FB707**		688	01	0107-0508				* * * * * * * * * * * * * * * * *
		16	1	**59360-FB77A**		688	01	0508-				* * * * * * * * * * * * * * * * *
		17	1	**59360-FB701**		385	01	0107-0508				* * * * * * * * * * * * * * * * *
		18	1	**59360-FB71A**		385	01	0508-				* * * * * * * * * * * * * * * * *
		19	1	**59360-FB702**		430	01	0107-0508				* * * * * * * * * * * * * * * * *
		20	1	**59360-FB72A**		430	01	0508-				* * * * * * * * * * * * * * * * *
		21	1	**59360-FB703**		470	01	0107-0508				* * * * * * * * * * * * * * * * *
		22	1	**59360-FB73A**		470	01	0508-				* * * * * * * * * * * * * * * * *
		23	1	**59360-FB704**		505	01	0107-0508				* * * * * * * * * * * * * * * * *
		24	1	**59360-FB74A**		505	01	0508-				* * * * * * * * * * * * * * * * *
		25	1	**59360-FB705**		555	01	0107-0508				* * * * * * * * * * * * * * * * *
		26	1	**59360-FB75A**		555	01	0508-				* * * * * * * * * * * * * * * * *
		27	1	**59360-FB706**		600	01	0107-0508				* * * * * * * * * * * * * * * * *
		28	1	**59360-FB76A**		600	01	0508-				* * * * * * * * * * * * * * * * *
		29	1	**59360-FB707**		650	01	0107-0508				* * * * * * * * * * * * * * * * *
		30	1	**59360-FB77A**		650	01	0508-				* * * * * * * * * * * * * * * * *
		31	1	**59360-FB708**		700	01	0107-0508				* * * * * * * * * * * * * * * * *
		32	1	**59360-FB78A**		700	01	0508-				* * * * * * * * * * * * * * * * *
		16 01	1	**59117-20H00**	ROLLER-LIFT	D=115	02	0107-				* * * * * * * * * * * * * * * * *
		17 01	1	**59117-20H10**	ROLLER-LIFT	D=123	02	0107-				* * * * * * * * * * * * * * * * *
		02	1	**59117-20H11**		D=123.5	02	0107-				* * * * * * * * * * * * * * * * *
		03	1	**59117-20H12**		D=124	02	0107-				* * * * * * * * * * * * * * * * *
		18 01	1	**59118-50K00**	SHIM-LIFT ROLLER	T=2.0	AR	0107-				* * * * * * * * * * * * * * * * *
		02	1	**59118-20H00**		T=1.0	AR	0107-				* * * * * * * * * * * * * * * * *
		03	1	**59118-20H01**		T=0.5	AR	0107-				* * * * * * * * * * * * * * * * *
		19 01	1	**58573-10H00**	SHIM-LIFT CYLINDER		AR	0107-				* * * * * * * * * * * * * * * * *
		20 01	1	**59154-FF000**	METAL-BACK UP		02	0107-				* * * * * * * * * * * * * * * * *
		21 01	1	**59155-L1100**	SHIM-METAL BACK UP	T=1.0	AR	0107-				* * * * * * * * * * * * * * * * *

SEC. 591E

MAST (3V)

MASTIL

HUBMAST

MAT

NC	S	KEY NO.	LEV	PART NO.	PART NAME	SPECIFICATION	QTY	APPLIED DATE	ICANF	FORMER PART NO.	KD	APPLIED MODEL 01 02 03 04 05 06 07 08 09 10 11 12 13 14 15 16 17 18 19 20 21 22 23 24 25 26 27 28 29
		21 02	1	**59155-L1110**	SHIM-METAL BACK UP	T=0.5	AR	0107-				* *
		22 01	1	**08114-2201A**	SCREW-HHM M12-1.25X20 4T		02	0107-				* *
		23 01	1	**08124-0351F**	SCREW-HHM M10-1.25X35 W/LK & PW		02	0107-				* *
		24 01	1	**08124-2651A**	SCREW-HHM M12-1.25X65 7T		02	0107-				* *
		25 01	1	**08915-2421A**	WASHER-LOCK SPLIT M12 HEAVY		02	0107-				* *
		26 01	1	**08915-4421A**	WASHER-FLAT M12		02	0107-				* *
		27 01	1	**08915-4401A**	WASHER-FLAT M10		02	0107-				* *
		28 01	1	**08124-0301E**	SCREW-HHM M10-1.25X30 W/PW		02	0107-				* *
		29 01	1	**08911-1401A**	NUT-HEX M10-1.25 4T		08	0107-				* *
		30 01	1	**08911-3501A**	NUT-HEX JAM M20-1.5 4N		02	0107-				* *
		31 01	1	**08120-8501F**	SCREW-HHN M8-1.25X50 W/LK & PW		02	0107-				* *
		32 01	1	**00932-1011A**	FTG-GRS STR		02	0107-				* *
		33 01	1	**08915-2481A**	WASHER-LOCK SPLIT M18 HEAVY		04	0107-				* *
		34 01	1	**08124-8601A**	SCREW-HHM M18-1.5X60 7T		04	0107-				* *

NOTE

SEC. 591F

MAST (2W-OUTER CHAIN 2.0, 2.5 & 3.0TON-UPTO MAY 2008)

MASTIL

HUBMAST

MAT

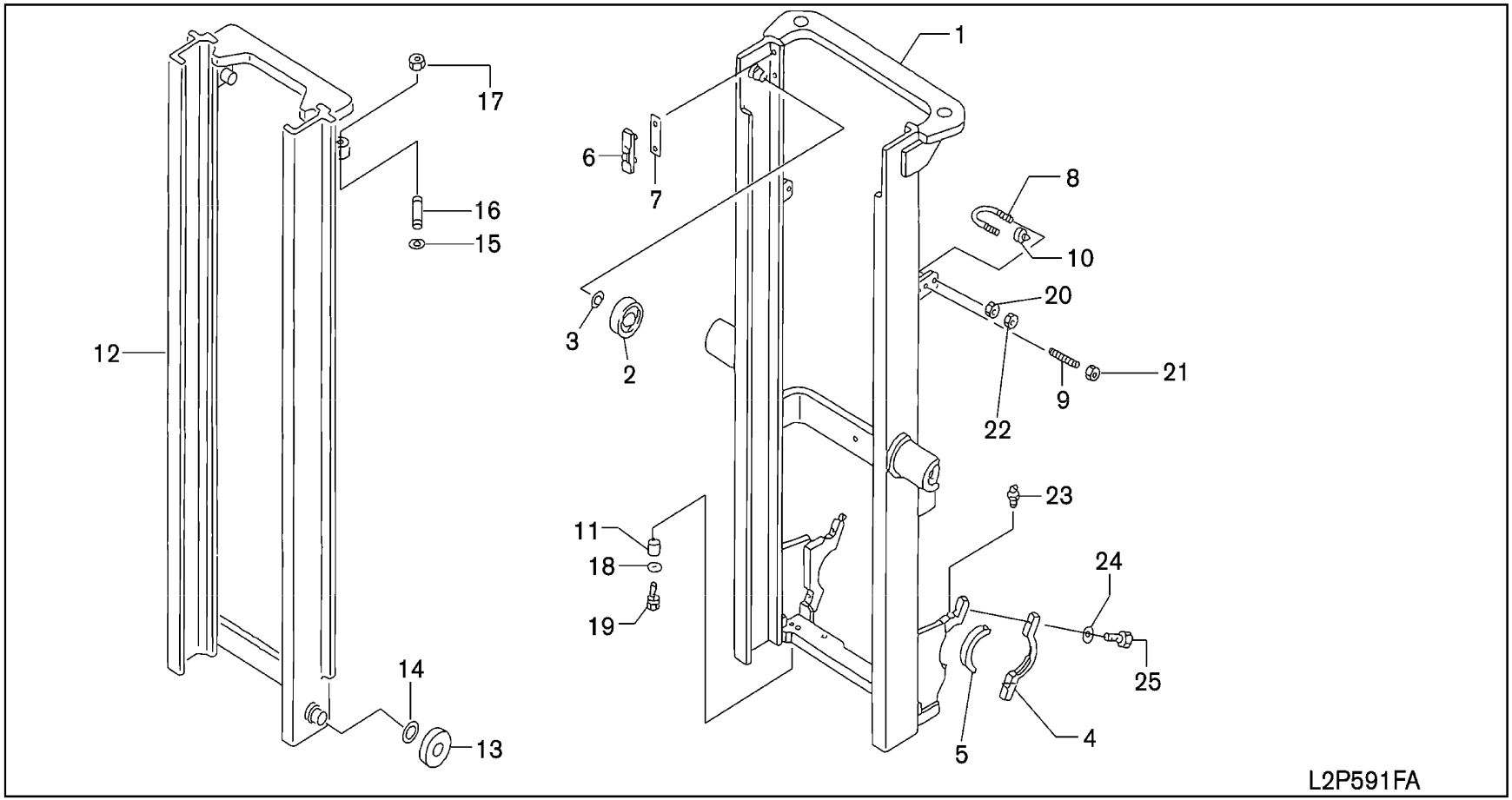

SEC. 591F

MAST (2W-OUTER CHAIN 2.0, 2.5 & 3.0TON-UPTO MAY 2008)

MASTIL

HUBMAST

MAT

NC	S	KEY NO.	LEV	PART NO.	PART NAME	SPECIFICATION	QTY	APPLIED DATE	ICANF	FORMER PART NO.	KD	APPLIED MODEL 01 02 03 04 05 06 07 08 09 10 11 12 13 14 15 16 17 18 19 20 21 22 23 24 25 26 27 28 29
		1	01	1	**59110-GE43C**	MAST ASSY-OUTER	270	01	0107-0508			**********
			02	1	**59110-GE40C**		300	01	0107-0508			**********
			03	1	**59110-GE44C**		330	01	0107-0508			**********
			04	1	**59110-GE45C**		350	01	0107-0508			**********
			05	1	**59110-GE46C**		370	01	0107-0508			**********
			06	1	**59110-GE47C**		400	01	0107-0508			**********
			07	1	**59110-GE48C**		450	01	0107-0508			**********
			08	1	**59110-GE49C**		500	01	0107-0508			**********
			09	1	**59110-GG03C**		270	01	0107-0508			******
			10	1	**59110-GG00C**		300	01	0107-0508			******
			11	1	**59110-GG04C**		330	01	0107-0508			******
			12	1	**59110-GG05C**		350	01	0107-0508			******
			13	1	**59110-GG06C**		370	01	0107-0508			******
			14	1	**59110-GG07C**		400	01	0107-0508			******
			15	1	**59110-GG08C**		450	01	0107-0508			******
			16	1	**59110-GG09C**		500	01	0107-0508			******
		2	01	1	**59117-20H00**	ROLLER-LIFT		02	0107-0508			**********
		3	01	1	**59118-20H00**	SHIM-LIFT ROLLER	T=1.0	02	0107-0508			**********
			02	1	**59118-20H01**		T=0.5	02	0107-0508			**********
			03	1	**59118-50K00**		T=2.0	02	0107-0508			**********
		4	01	1	**59150-FJ40A**	CAP-MAST SUPPORT		02	0107-0508			**********
		5	01	1	**59151-FJ400**	BUSH-MAST SUPPORT		02	0107-0508			**********
		6	01	1	**59154-FF000**	METAL-BACK UP		02	0107-0508			**********
		7	01	1	**59155-L1100**	SHIM-BACK UP METAL		02	0107-0508			**********
			02	1	**59155-L1110**			02	0107-0508			**********
		8	01	1	**58583-FF000**	BOLT-U		02	0107-0508			**********
			02	1	**58583-7K000**			02	0107-0508			******
		9	01	1	**59537-6K000**	BOLT-ADJUST		02	0107-0508			**********
		10	01	1	**46584-S0100**	STOPPER		02	0107-0508			**********
		11	01	1	**58572-04H00**	SPACER-LIFT CYLINDER		02	0107-0508			**********
		12	01	1	**59210-FJ43A**	MAST ASSY-INNER	270	01	0107-0508			**********
			02	1	**59210-FJ40A**		300	01	0107-0508			**********
			03	1	**59210-FJ44A**		330	01	0107-0508			**********
			04	1	**59210-FJ45A**		350	01	0107-0508			**********
			05	1	**59210-FJ46A**		370	01	0107-0508			**********
			06	1	**59210-FJ47A**		400	01	0107-0508			**********
			07	1	**59210-FJ48A**		450	01	0107-0508			**********

SEC. 591F

MAST (2W-OUTER CHAIN 2.0, 2.5 & 3.0TON-UPTO MAY 2008)

MASTIL

HUBMAST

MAT

NC	S	KEY NO.	LEV	PART NO.	PART NAME	SPECIFICATION	QTY	APPLIED DATE	ICANF	FORMER PART NO.	KD	APPLIED MODEL 01 02 03 04 05 06 07 08 09 10 11 12 13 14 15 16 17 18 19 20 21 22 23 24 25 26 27 28 29
		12 08	1	**59210-FJ49A**	MAST ASSY-INNER	500	01	0107-0508				* *
		09	1	**59210-GG03C**		270	01	0107-0508				* * * *
		10	1	**59210-GG00C**		300	01	0107-0508				* * * *
		11	1	**59210-GG04C**		330	01	0107-0508				* * * *
		12	1	**59210-GG05C**		350	01	0107-0508				* * * *
		13	1	**59210-GG06C**		370	01	0107-0508				* * * *
		14	1	**59210-GG07C**		400	01	0107-0508				* * * *
		15	1	**59210-GG08C**		450	01	0107-0508				* * * *
		16	1	**59210-GG09C**		500	01	0107-0508				* * * *
		13 01	1	**59117-20H10**	ROLLER-LIFT	D=123	02	0107-0508				* *
		02	1	**59117-20H11**		D=123.5	02	0107-0508				* *
		14 01	1	**59118-20H00**	SHIM-LIFT ROLLER	T=1.0	02	0107-0508				* *
		02	1	**59118-20H01**		T=0.5	02	0107-0508				* *
		03	1	**59118-50K00**		T=2.0	02	0107-0508				* *
		15 01	1	**58573-10H00**	SHIM-LIFT CYLINDER		02	0107-0508				* *
		16 01	1	**58519-FF000**	STUD-FINE		02	0107-0508				* *
		17 01	1	**08912-8421A**	NUT		02	0107-0508				* *
		18 01	1	**08915-4401A**	WASHER-FLAT M10		02	0107-0508				* *
		19 01	1	**08124-0301E**	SCREW-HHM M10-1.25X30 W/PW		02	0107-0508				* *
		20 01	1	**08918-3401A**	NUT-FLG HEX M10 9N		04	0107-0508				* *
		21 01	1	**08911-3501A**	NUT-HEX JAM M20-1.5 4N		02	0107-0508				* *
		22 01	1	**08911-1401A**	NUT-HEX M10-1.25 4T		04	0107-0508				* *
		23 01	1	**00932-1011A**	FTG-GRS STR		02	0107-0508				* *
		24 01	1	**08915-2481A**	WASHER-LOCK SPLIT M18 HEAVY		04	0107-0508				* *
		25 01	1	**08124-8601A**	SCREW-HHM M18-1.5X60 7T		04	0107-0508				* *

NOTE

SEC. 591G

MAST (NML 2W-INNER CHAIN 2.0, 2.5 & 3.0TON-FROM MAY 2008)

MASTIL

HUBMAST

MAT

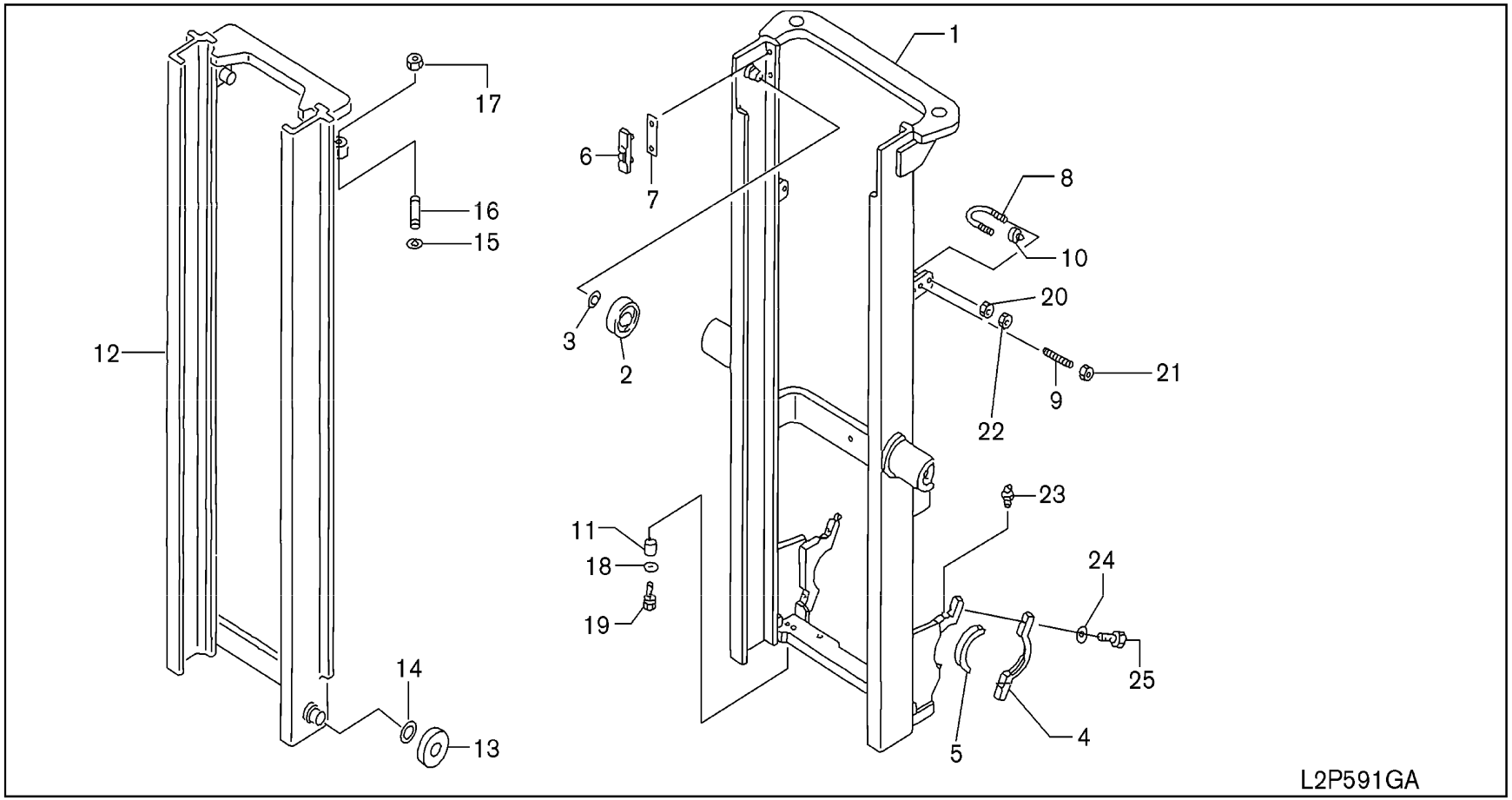

SEC. 591G

MAST (NML 2W-INNER CHAIN 2.0, 2.5 & 3.0TON-FROM MAY 2008)

MASTIL

HUBMAST

MAT

NC	S	KEY NO.	LEV	PART NO.	PART NAME	SPECIFICATION	QTY	APPLIED DATE	ICANF	FORMER PART NO.	KD	APPLIED MODEL 01 02 03 04 05 06 07 08 09 10 11 12 13 14 15 16 17 18 19 20 21 22 23 24 25 26 27 28 29
		1	01	1	**59110-GE43A**	MAST ASSY-OUTER	270	01	0508-			**********
			02	1	**59110-GE40A**		300	01	0508-			**********
			03	1	**59110-GE44A**		330	01	0508-			**********
			04	1	**59110-GE45A**		350	01	0508-			**********
			05	1	**59110-GE46A**		370	01	0508-			**********
			06	1	**59110-GE47A**		400	01	0508-			**********
			07	1	**59110-GE48A**		450	01	0508-			**********
			08	1	**59110-GE49A**		500	01	0508-			**********
			09	1	**59110-GG03A**		270	01	0508-			******
			10	1	**59110-GG00A**		300	01	0508-			******
			11	1	**59110-GG04A**		330	01	0508-			******
			12	1	**59110-GG05A**		350	01	0508-			******
			13	1	**59110-GG06A**		370	01	0508-			******
			14	1	**59110-GG07A**		400	01	0508-			******
			15	1	**59110-GG08A**		450	01	0508-			******
			16	1	**59110-GG09A**		500	01	0508-			******
		2	01	1	**59117-20H00**	ROLLER-LIFT		02	0508-			**********
		3	01	1	**59118-20H00**	SHIM-LIFT ROLLER	T=1.0	02	0508-			**********
			02	1	**59118-20H01**		T=0.5	02	0508-			**********
			03	1	**59118-50K00**		T=2.0	02	0508-			**********
		4	01	1	**59150-FJ40A**	CAP-MAST SUPPORT		02	0508-			**********
		5	01	1	**59151-FJ400**	BUSH-MAST SUPPORT		02	0508-			**********
		6	01	1	**59154-FF000**	METAL-BACK UP		02	0508-			**********
		7	01	1	**59155-L1100**	SHIM-BACK UP METAL		02	0508-			**********
			02	1	**59155-L1110**			02	0508-			**********
		8	01	1	**58583-10H01**	BOLT-U		02	0508-			**********
			02	1	**58583-FK50A**			02	0508-			******
		9	01	1	**59537-00H00**	BOLT-ADJUST		02	0508-			**********
		10	01	1	**46584-S0100**	STOPPER		02	0508-			**********
		11	01	1	**58572-04H00**	SPACER-LIFT CYLINDER		02	0508-			**********
		12	01	1	**59210-GE43A**	MAST ASSY-INNER	270	01	0508-			**********
			02	1	**59210-GE40A**		300	01	0508-			**********
			03	1	**59210-GE44A**		330	01	0508-			**********
			04	1	**59210-GE45A**		350	01	0508-			**********
			05	1	**59210-GE46A**		370	01	0508-			**********
			06	1	**59210-GE47A**		400	01	0508-			**********
			07	1	**59210-GE48A**		450	01	0508-			**********

SEC. 591G

MAST (NML 2W-INNER CHAIN 2.0, 2.5 & 3.0TON-FROM MAY 2008)

MASTIL

HUBMAST

MAT

NC	S	KEY NO.	LEV	PART NO.	PART NAME	SPECIFICATION	QTY	APPLIED DATE	ICANF	FORMER PART NO.	KD	APPLIED MODEL 01 02 03 04 05 06 07 08 09 10 11 12 13 14 15 16 17 18 19 20 21 22 23 24 25 26 27 28 29
		12 08	1	**59210-GE49A**	MAST ASSY-INNER	500	01	0508-				* *
		09	1	**59210-GG03A**		270	01	0508-				* * * *
		10	1	**59210-GG00A**		300	01	0508-				* * * *
		11	1	**59210-GG04A**		330	01	0508-				* * * *
		12	1	**59210-GG05A**		350	01	0508-				* * * *
		13	1	**59210-GG06A**		370	01	0508-				* * * *
		14	1	**59210-GG07A**		400	01	0508-				* * * *
		15	1	**59210-GG08A**		450	01	0508-				* * * *
		16	1	**59210-GG09A**		500	01	0508-				* * * *
		13 01	1	**59117-20H10**	ROLLER-LIFT	D=123	02	0508-				* *
		02	1	**59117-20H11**		D=123.5	02	0508-				* *
		14 01	1	**59118-20H00**	SHIM-LIFT ROLLER	T=1.0	02	0508-				* *
		02	1	**59118-20H01**		T=0.5	02	0508-				* *
		03	1	**59118-50K00**		T=2.0	02	0508-				* *
		15 01	1	**58573-10H00**	SHIM-LIFT CYLINDER		02	0508-				* *
		16 01	1	**58519-GE40A**	STUD-FINE		02	0508-				* *
		17 01	1	**08912-8421A**	NUT		02	0508-				* *
		18 01	1	**08915-4401A**	WASHER-FLAT M10		02	0508-				* *
		19 01	1	**08124-0301E**	SCREW-HHM M10-1.25X30 W/PW		02	0508-				* *
		20 01	1	**08918-3401A**	NUT-FLG HEX M10 9N		04	0508-				* *
		21 01	1	**08911-3501A**	NUT-HEX JAM M20-1.5 4N		02	0508-				* *
		22 01	1	**08911-1401A**	NUT-HEX M10-1.25 4T		04	0508-				* *
		23 01	1	**00932-1011A**	FTG-GRS STR		02	0508-				* *
		24 01	1	**08915-2481A**	WASHER-LOCK SPLIT M18 HEAVY		04	0508-				* *
		25 01	1	**08124-8601A**	SCREW-HHM M18-1.5X60 7T		04	0508-				* *

NOTE

SEC. 594

BACK REST & FORK

PORTADOR,RESPALDO Y HORQUILLA

AUFBAU,RÜCKSTÜTZE & GABEL

SUPPORT,APPUI ET FORCHE

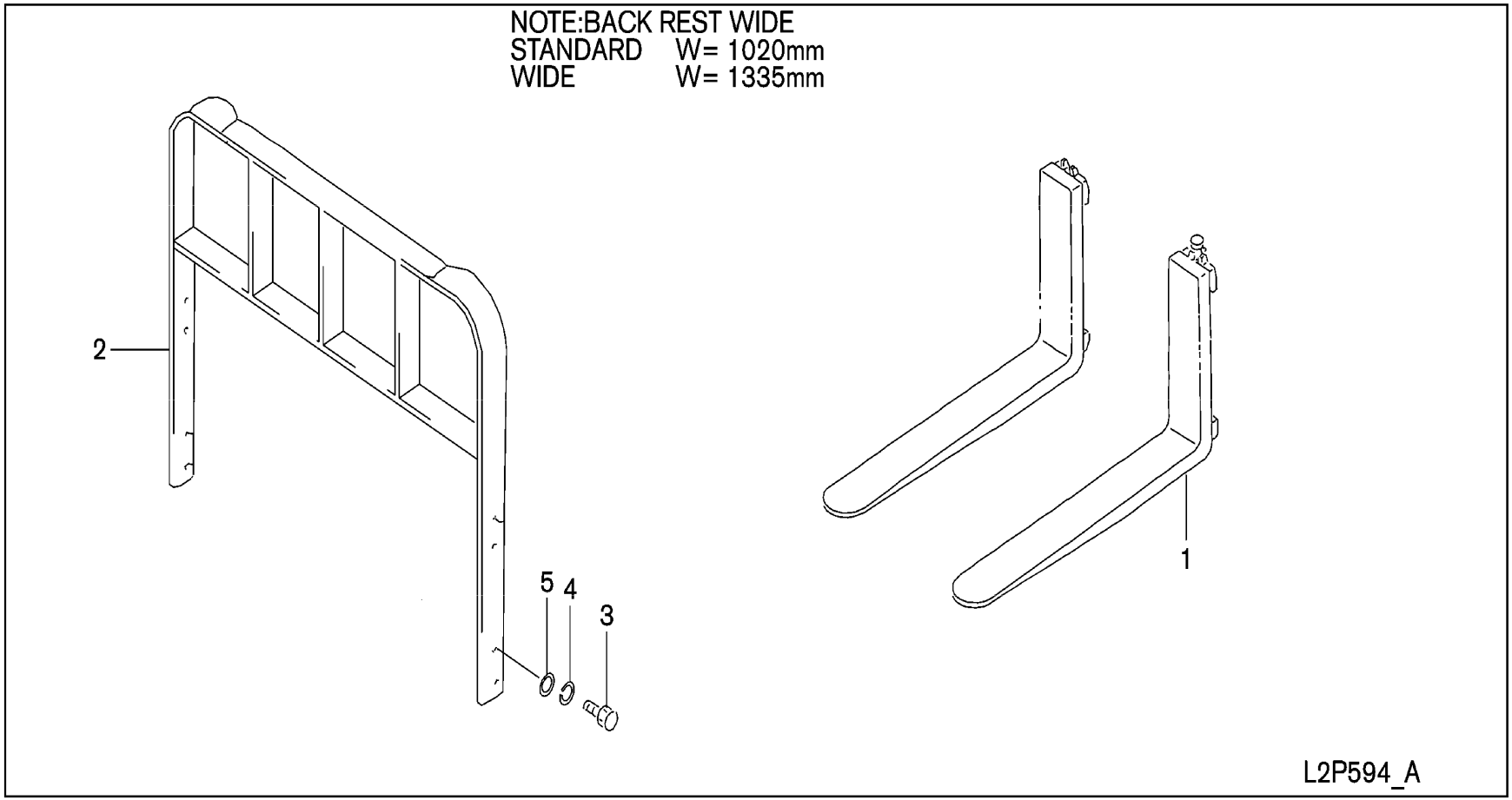

SEC. 594

BACK REST & FORK

PORTADOR,RESPALDO Y HORQUILLA

AUFBAU,RÜCKSTÜTZE & GABEL

SUPPORT,APPUI ET FORCHE

NC	S	KEY NO.	LEV	PART NO.	PART NAME	SPECIFICATION	QTY	APPLIED DATE	ICANF	FORMER PART NO.	KD	APPLIED MODEL 01 02 03 04 05 06 07 08 09 10 11 12 13 14 15 16 17 18 19 20 21 22 23 24 25 26 27 28 29
		1 01	1	**59710-8G002**	FORK & LOCK PIN ASSY	F/FORK-920MM	02	0107-				* *
		02	1	**59710-8G004**		F/FORK-1070MM	02	0107-				* *
		03	1	**59710-8G006**		F/FORK-1220MM	02	0107-				* *
		04	1	**59710-8G007**		F/FORK-1370MM	02	0107-				* * * * * * * * * * * * * * * * * *
		05	1	**59710-FB507**		F/FORK-1370MM	02	0107-				* * *
		06	1	**59710-8G009**		F/FORK-1520MM	02	0107-				* * * * * * * * * * * * * * * * * *
		07	1	**59710-FB509**		F/FORK-1520MM	02	0107-				* * *
		08	1	**59710-8G202**		F/FORK-920MM	02	0107-				* * * * * * * * *
		09	1	**59710-8G204**		F/FORK-1070MM	02	0107-				* * * * * * * * *
		10	1	**59710-8G206**		F/FORK-1220MM	02	0107-				* * * * * * * * *
		11	1	**59710-8G207**		F/FORK-1370MM	02	0107-				* * * * * * * * *
		12	1	**59710-8G209**		F/FORK-1520MM	02	0107-				* * * * * * * * *
		13	1	**59710-8G260**		F/FORK-1830MM	02	0107-				* * * * * * * * *
		14	1	**59710-FB412**		F/FULLY TAPERED & POLISHED FORK-920MM	02	0107-				* * * * * * * * * * * * * * * * * * * *
		15	1	**59710-FB414**		F/FULLY TAPERED & POLISHED FORK-1070MM	02	0107-				* * * * * * * * * * * * * * * * * * * *
		16	1	**59710-FB416**		F/FULLY TAPERED & POLISHED FORK-1220MM	02	0107-				* * * * * * * * * * * * * * * * * * * *
		17	1	**59710-FB417**		F/FULLY TAPERED & POLISHED FORK-1370MM	02	0107-				* * * * * * * * * * * * * * * * * *
		18	1	**59710-FB517**		F/FULLY TAPERED & POLISHED FORK-1370MM	02	0107-				* * *
		19	1	**59710-FB419**		F/FULLY TAPERED & POLISHED FORK-1520MM	02	0107-				* * * * * * * * * * * * * * * * * *
		20	1	**59710-FB519**		F/FULLY TAPERED & POLISHED FORK-1520MM	02	0107-				* * *
		21	1	**59710-FB612**		F/FULLY TAPERED & POLISHED FORK-920MM	02	0107-				* * * * * * * * *
		22	1	**59710-FB614**		F/FULLY TAPERED & POLISHED FORK-1070MM	02	0107-				* * * * * * * * *
		23	1	**59710-FB616**		F/FULLY TAPERED & POLISHED FORK-1220MM	02	0107-				* * * * * * * * *
		24	1	**59710-FB617**		F/FULLY TAPERED & POLISHED FORK-1370MM	02	0107-				* * * * * * * * *
		25	1	**59710-FB619**		F/FULLY TAPERED & POLISHED FORK-1520MM	02	0107-				* * * * * * * * *
		26	1	**59710-FB670**		F/FULLY TAPERED & POLISHED FORK-183	02	0107-				* * * * * * * * *
N		27	2	**59720-FW00A**	PIN ASSY		02	0107-				* * * * * * * * * * * * * * * * * * * *
N		28	2	**59720-GL40A**			02	0107-				* * * * * * * * *
		2 01	1	**59610-FB600**	BACK REST		01	0107-				o o o o o o o o o o o o o o o o o o o o
		02	1	**59610-FB605**		F/WIDE	01	0107-				* * * * * * * * * * * * * * * * * * * *
		03	1	**59610-FC600**			01	0107-				o o o o o o o o o
		04	1	**59610-FC605**		F/WIDE	01	0107-				* * * * * * * * *
		05	1	**59610-FC400**		F/2 STAGE	01	0107-0508				* * * *
		06	1	**59610-FC405**		F/2 STAGE WIDE	01	0107-0508				* * * *
		3 01	1	**08184-4351A**	SCREW-HHM M14-1.5X35		04	0107-				o o o o o o o o o o o o o o o o o o o o o o o o o o o
		02	1	**08104-6301A**	SCREW-HHM M16-1.5X30	F/2 STAGE	04	0107-0508				* * * *
		03	1	**08915-2461A**	WASHER-LOCK SPLIT M16 HEAVY	F/2 STAGE	04	0107-0508				* * * *

SEC. 594

BACK REST & FORK

PORTADOR,RESPALDO Y HORQUILLA

AUFBAU,RÜCKSTÜTZE & GABEL

SUPPORT,APPUI ET FORCHE

NC	S	KEY NO.	LEV	PART NO.	PART NAME	SPECIFICATION	QTY	APPLIED DATE	ICANF	FORMER PART NO.	KD	APPLIED MODEL 01	02	03	04	05	06	07	08	09	10	11	12	13	14	15	16	17	18	19	20	21	22	23	24	25	26	27	28	29
		4 01	1	**08915-1441A**	WASHER-LOCK M14		04	0107-				O	O	O	O	O	O	O	O	O	O	O	O	O	O	O	O	O	O	O	O	O	O	O	O	O	O	O	O	O
		5 01	1	**08915-4441A**	WASHER-FLAT M14		04	0107-				O	O	O	O	O	O	O	O	O	O	O	O	O	O	O	O	O	O	O	O	O	O	O	O	O	O	O	O	O

MIP MIP MIP MIU MIU MIU MIU MIY MIP MIP MIP MIU MIU MIU MIU MIY MIU MIU MIU MIU MIU MIY MIU MIU MIU MIY
JJ GG GG GG GG GG GG GG
I I I

NOTE

SEC. 595A

CARRIAGE (2W)

CARRO

FAHRWERK

CARROSSERIE

NOTE ; BACK REST WIDTH

STANDARD	W=920mm
WIDE	W=1335mm

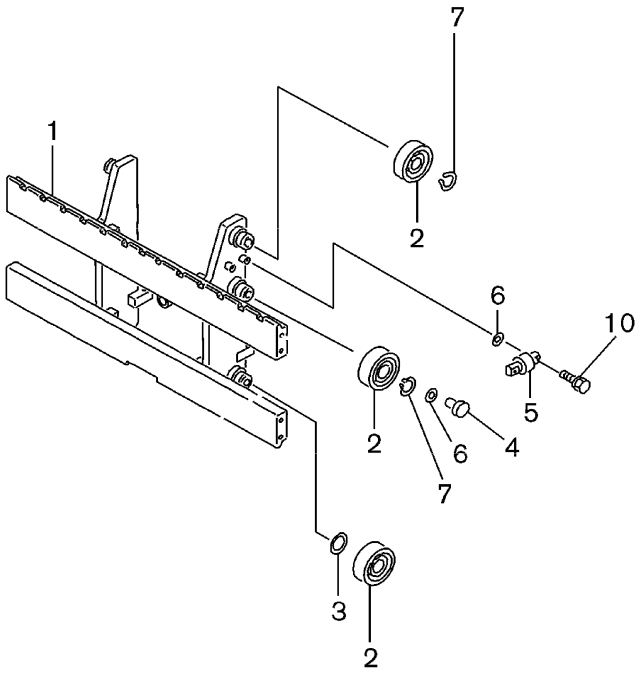

SEE SEC.594

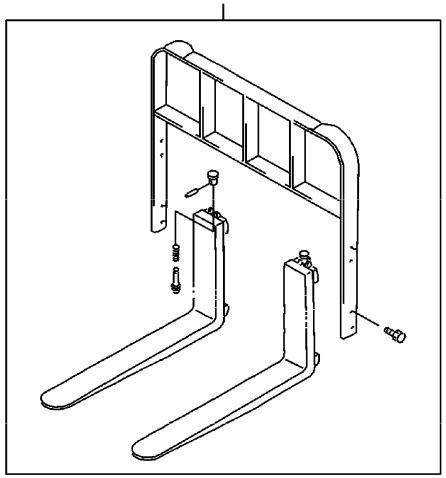

L2P595AA

SEC. 595A

CARRIAGE (2W)

CARRO

FAHRWERK

CARROSSERIE

NC	S	KEY NO.	LEV	PART NO.	PART NAME	SPECIFICATION	QTY	APPLIED DATE	ICANF	FORMER PART NO.	KD
C		**1** 01	1	**59510-GE42A**	BRACKET ASSY-CARRIAGE		01	0107-			
C		02	1	**59510-GG02A**			01	0107-			
		03	1	**59510-GG42A**			01	0107-			
		2 01	1	**59117-20H00**	ROLLER-LIFT		06	0107-			
		02	1	**59117-20H01**			04	0107-			
		3 01	1	**59118-20H00**	SHIM-LIFT ROLLER		02	0107-			
		02	1	**59118-20H01**			02	0107-			
		03	1	**59118-50K00**			02	0107-			
		4 01	1	**59119-FJ00A**	METAL-SIDE THRUST		02	0107-			
		5 01	1	**59532-FF000**	ROLLER-SIDE		02	0107-			
		6 01	1	**58582-13H00**	SHIM-SIDE ROLLER	T=1.0	06	0107-			
		02	1	**58582-13H01**		T=0.5	06	0107-			
		03	1	**58582-50K00**		T=2.0	06	0107-			
		7 01	1	**00922-14000**	RING-SNAP		04	0107-			
		10 01	1	**08120-0301E**	SCREW-HHM M10-1.25X30 W/PW		04	0107-			

APPLIED MODEL

01	02	03	04	05	06	07	08	09	10	11	12	13	14	15	16	17	18	19	20	21	22	23	24	25	26	27	28	29
MIPU2000JVV	MIPU2000DVV	MIPU2000LVS	MIUU2000JVV	MIUU2000DVV	MIUU2000LVV	MIUU2000JDV	MIUU2000DLV	MIUU2000LSV	MIYP2055JVV	MIPP2055DVV	MIPP2055LVV	MIPP2055JSV	MIUU2055DVV	MIUU2055LVV	MIUU2055JDV	MIUU2055DLV	MIUY2055LSV	MIUU2058JDV	MIUU2058DLV	MIUU2058JDV	MIUU2058DLV	MIUU3000LVV	MIUU3000JVV	MIUU3000DLV	MIUU3055JVV	MIUU3055DLV	MIUU3055LVV	MIYG3055JVV
*	*	*	*	*	*	*	*	*	*	*	*	*	*	*	*	*	*											
																		*	*	*	*	*	*	*				
																									*	*	*	*
*	*	*	*	*	*	*	*	*	*	*	*	*	*	*	*	*	*	*	*	*	*	*	*	*	*	*	*	*
*	*	*	*	*	*	*	*	*	*	*	*	*	*	*	*	*	*	*	*	*	*	*	*	*	*	*	*	*
*	*	*	*	*	*	*	*	*	*	*	*	*	*	*	*	*	*	*	*	*	*	*	*	*	*	*	*	*
*	*	*	*	*	*	*	*	*	*	*	*	*	*	*	*	*	*	*	*	*	*	*	*	*	*	*	*	*
*	*	*	*	*	*	*	*	*	*	*	*	*	*	*	*	*	*	*	*	*	*	*	*	*	*	*	*	*
*	*	*	*	*	*	*	*	*	*	*	*	*	*	*	*	*	*	*	*	*	*	*	*	*	*	*	*	*
*	*	*	*	*	*	*	*	*	*	*	*	*	*	*	*	*	*	*	*	*	*	*	*	*	*	*	*	*
*	*	*	*	*	*	*	*	*	*	*	*	*	*	*	*	*	*	*	*	*	*	*	*	*	*	*	*	*
*	*	*	*	*	*	*	*	*	*	*	*	*	*	*	*	*	*	*	*	*	*	*	*	*	*	*	*	*
*	*	*	*	*	*	*	*	*	*	*	*	*	*	*	*	*	*	*	*	*	*	*	*	*	*	*	*	*
*	*	*	*	*	*	*	*	*	*	*	*	*	*	*	*	*	*	*	*	*	*	*	*	*	*	*	*	*
*	*	*	*	*	*	*	*	*	*	*	*	*	*	*	*	*	*	*	*	*	*	*	*	*	*	*	*	*

SEC. 595B

CARRIAGE (2F)

CARRO

FAHRWERK

CARROSSERIE

NOTE: BACK REST WIDTH
STANDARD W=1020mm
WIDE W=1335mm

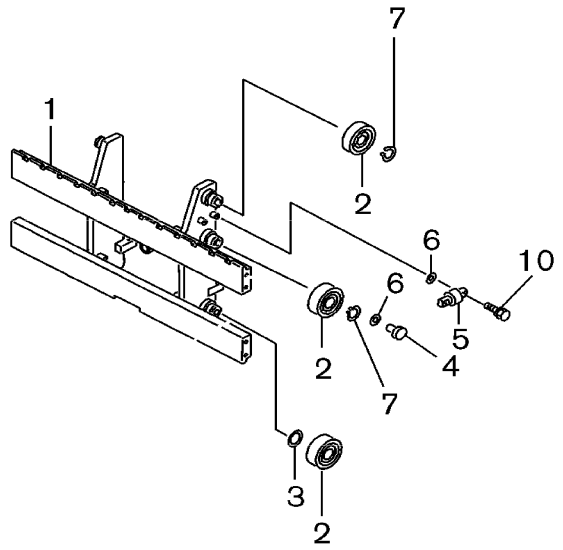

SEE SEC.594

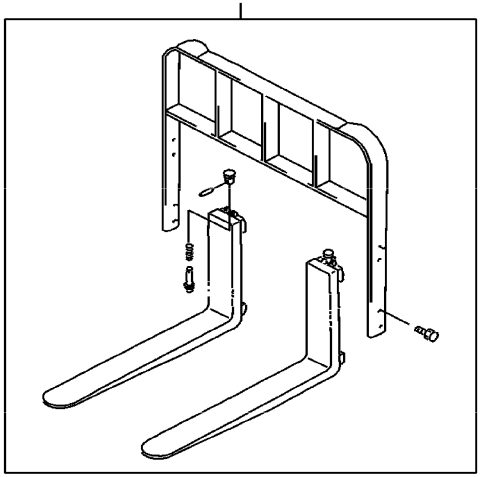

L2P595BA

SEC. 595B

CARRIAGE (2F)

CARRO

FAHRWERK

CARROSSERIE

NC	S	KEY NO.	LEV	PART NO.	PART NAME	SPECIFICATION	QTY	APPLIED DATE	ICANF	FORMER PART NO.	KD
		1 01	1	**69921-FF100**	BRACKET ASSY-CARRIAGE		01	0107-			
N		02	1	**69921-FK16A**			01	0107-			
C		03	1	**69921-FF400**			01	0107-			
		04	1	**59510-GG52A**			01	0107-			
		2 01	1	**59117-20H00**	ROLLER-LIFT	D=115	06	0107-			
		02	1	**59117-20H01**		D=115.5	04	0107-			
		3 01	1	**59118-20H00**	SHIM-LIFT ROLLER	T=1.0	02	0107-			
		02	1	**59118-20H01**		T=0.5	02	0107-			
		03	1	**59118-50K00**		T=2.0	02	0107-			
		4 01	1	**59119-FJ00A**	METAL-SIDE THRUST		02	0107-			
		5 01	1	**59532-FF000**	ROLLER-SIDE		02	0107-			
		6 01	1	**58582-13H00**	SHIM-SIDE ROLLER	T=1.0	06	0107-			
		02	1	**58582-13H01**		T=0.5	06	0107-			
		03	1	**58582-50K00**		T=2.0	06	0107-			
		7 01	1	**00922-14000**	RING-SNAP		04	0107-			
		10 01	1	**08124-0301E**	SCREW-HHM M10-1.25X30 W/PW		04	0107-			

APPLIED MODEL

01	02	03	04	05	06	07	08	09	10	11	12	13	14	15	16	17	18	19	20	21	22	23	24	25	26	27	28	29
MIPA2000JVV	MIPA2000LVV	MIPA2000LVS	MIPA2000JVV	MIUA2000DVV	MIUA2000LVV	MIUA2000LVS	MIUY2000LVV	MIPA2055JVV	MIPA2055DVV	MIPA2055LVV	MIPA2055LVS	MIUA2055JVV	MIUA2055DVV	MIUA2055LVV	MIUA2055LVS	MIUY2055LVV	MIUY2058JVV	MIUU2058JVV	MIUU2058DVV	MIUU2058LVV	MIUU2058JVV	MIUU2058DVV	MIUU2058LVV	MIUY2058LVV	MIUU2055JVV	MIUU2055DVV	MIUU2055LVV	MIUY2055LVV
*	*	*	*	*	*	*	*	*	*	*	*	*	*	*	*	*	*											
																		*	*	*								
																					*	*	*	*				
																									*	*	*	*
*	*	*	*	*	*	*	*	*	*	*	*	*	*	*	*	*	*	*	*	*	*	*	*	*	*	*	*	*
*	*	*	*	*	*	*	*	*	*	*	*	*	*	*	*	*	*	*	*	*	*	*	*	*	*	*	*	*
*	*	*	*	*	*	*	*	*	*	*	*	*	*	*	*	*	*	*	*	*	*	*	*	*	*	*	*	*
*	*	*	*	*	*	*	*	*	*	*	*	*	*	*	*	*	*	*	*	*	*	*	*	*	*	*	*	*
*	*	*	*	*	*	*	*	*	*	*	*	*	*	*	*	*	*	*	*	*	*	*	*	*	*	*	*	*
*	*	*	*	*	*	*	*	*	*	*	*	*	*	*	*	*	*	*	*	*	*	*	*	*	*	*	*	*
*	*	*	*	*	*	*	*	*	*	*	*	*	*	*	*	*	*	*	*	*	*	*	*	*	*	*	*	*
*	*	*	*	*	*	*	*	*	*	*	*	*	*	*	*	*	*	*	*	*	*	*	*	*	*	*	*	*
*	*	*	*	*	*	*	*	*	*	*	*	*	*	*	*	*	*	*	*	*	*	*	*	*	*	*	*	*
*	*	*	*	*	*	*	*	*	*	*	*	*	*	*	*	*	*	*	*	*	*	*	*	*	*	*	*	*
*	*	*	*	*	*	*	*	*	*	*	*	*	*	*	*	*	*	*	*	*	*	*	*	*	*	*	*	*
*	*	*	*	*	*	*	*	*	*	*	*	*	*	*	*	*	*	*	*	*	*	*	*	*	*	*	*	*

SEC. 595C

CARRIAGE (3F)

CARRO

FAHRWERK

CARROSSERIE

NOTE ; BACK REST WIDTH

STANDARD	W=1020mm
WIDE	W=1335mm

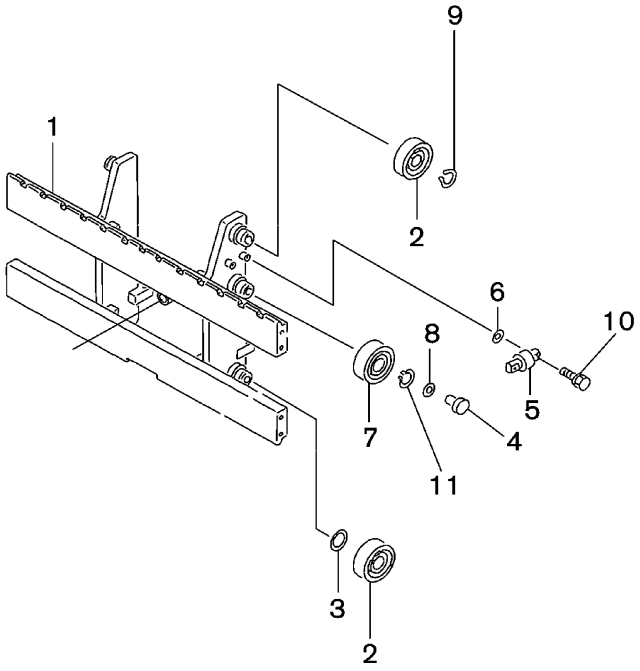

SEE SEC.594

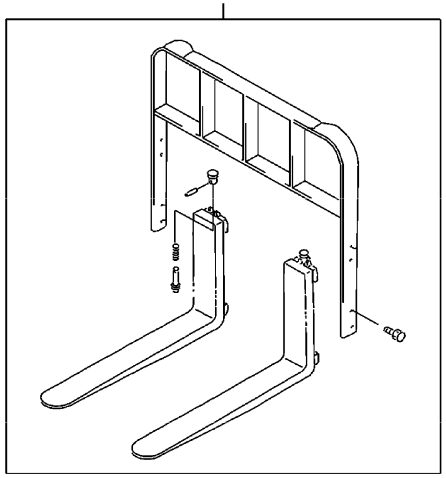

L2P595CA

SEC. 595C

CARRIAGE (3F)

CARRO

FAHRWERK

CARROSSERIE

NC	S	KEY NO.	LEV	PART NO.	PART NAME	SPECIFICATION	QTY	APPLIED DATE	ICANF	FORMER PART NO.	KD	APPLIED MODEL 01 02 03 04 05 06 07 08 09 10 11 12 13 14 15 16 17 18 19 20 21 22 23 24 25 26 27 28 29
		1	01	1	**59510-FB61A**	CARRIAGE	F/HI-VIS	01	0107-			* *
			02	1	**59510-FB60A**		F/HEAVY DUTY	01	0107-			* *
			03	1	**59510-FB65A**		F/HEAVY DUTY WIDE	01	0107-			* *
			04	1	**59510-FC26A**		F/HI-VIS	01	0107-			* *
			05	1	**59510-FC260**		F/HEAVY DUTY	01	0107-			* *
			06	1	**59510-FC265**		F/HEAVY DUTY WIDE	01	0107-			* *
			07	1	**59510-FC200**		F/HEAVY DUTY	01	0107-			* *
			08	1	**59510-FC205**		F/HEAVY DUTY WIDE	01	0107-			* *
			09	1	**59510-FC600**		F/HEAVY DUTY	01	0107-			* *
			10	1	**59510-FC605**		F/HEAVY DUTY WIDE	01	0107-			* *
		2	01	1	**59117-20H00**	ROLLER-LIFT	D=115	04	0107-			* *
			02	1	**59117-20H01**		D=115.5	04	0107-			* *
			03	1	**59117-20H02**		D=116	04	0107-			* *
		3	01	1	**59118-50K00**	SHIM-LIFT ROLLER	T=2.0	AR	0107-			* *
			02	1	**59118-20H00**		T=1.0	AR	0107-			* *
			03	1	**59118-20H01**		T=0.5	AR	0107-			* *
		4	01	1	**59119-FJ00A**	METAL-SIDE THRUST		02	0107-			* *
		5	01	1	**59532-FF000**	ROLLER-SIDE		02	0107-			* *
		6	01	1	**58582-50K00**	SHIM	T=2.0	AR	0107-			* *
			02	1	**58582-13H00**		T=1.0	AR	0107-			* *
			03	1	**58582-13H01**		T=0.5	AR	0107-			* *
		7	01	1	**59117-20H00**	ROLLER-LIFT	D=115	02	0107-			* *
		8	01	1	**58582-50K00**	SHIM	T=2.0	AR	0107-			* *
			02	1	**58582-13H00**		T=1.0	AR	0107-			* *
			03	1	**58582-13H01**		T=0.5	AR	0107-			* *
		9	01	1	**00922-14000**	RING-SNAP		02	0107-			* *
		10	01	1	**08124-0301E**	SCREW-HHM M10-1.25X30 W/PW		04	0107-			* *
		11	01	1	**00922-14000**	RING-SNAP		02	0107-			* *

SEC. 595D

CARRIAGE (3V)

CARRO

FAHRWERK

CARROSSERIE

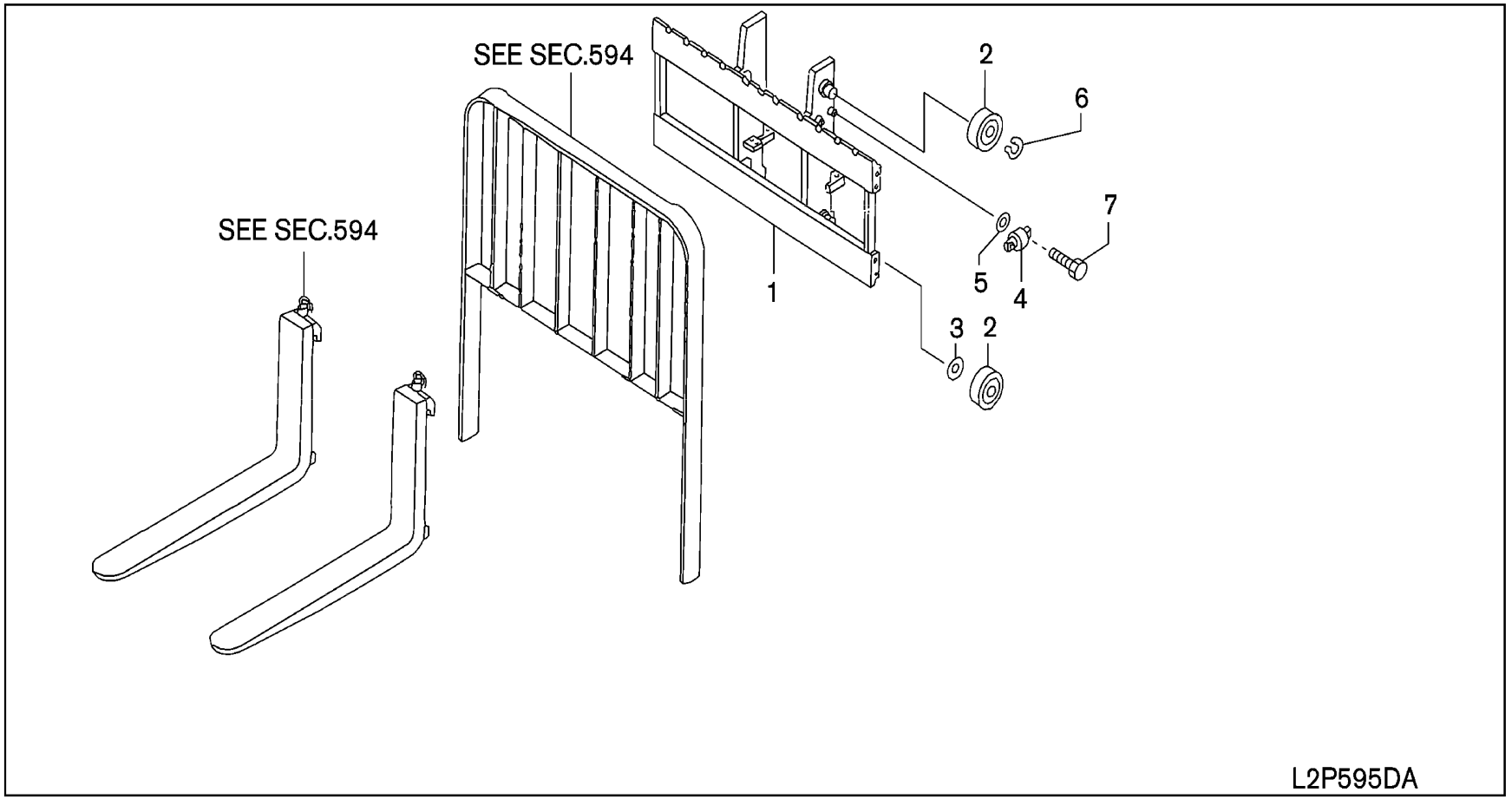

SEC. 595D

CARRIAGE (3V)

CARRO

FAHRWERK

CARROSSERIE

NC	S	KEY NO.	LEV	PART NO.	PART NAME	SPECIFICATION	QTY	APPLIED DATE	ICANF	FORMER PART NO.	KD	APPLIED MODEL 01 02 03 04 05 06 07 08 09 10 11 12 13 14 15 16 17 18 19 20 21 22 23 24 25 26 27 28 29
		1 01	1	**59510-FB71A**	CARRIAGE	F/HI-VIS	01	0107-				* * * * * * * * * * * * * * * * * *
		02	1	**59510-FB700**		F/HEAVY DUTY	01	0107-				* * * * * * * * * * * * * * * * * *
		03	1	**59510-FB705**		F/HEAVY DUTY WIDE	01	0107-				* * * * * * * * * * * * * * * * * *
		04	1	**59510-FC36A**		F/HI-VIS	01	0107-				* * *
		05	1	**59510-FC360**		F/HEAVY DUTY	01	0107-				* * *
		06	1	**59510-FC365**		F/HEAVY DUTY WIDE	01	0107-				* * *
		07	1	**59510-FC300**		F/HEAVY DUTY	01	0107-				* * * *
		08	1	**59510-FC305**		F/HEAVY DUTY WIDE	01	0107-				* * * *
		09	1	**59510-FC700**		F/HEAVY DUTY	01	0107-				* * * *
		10	1	**59510-FC705**		F//HEAVY DUTY WIDE	01	0107-				* * * *
		2 01	1	**59117-20H00**	ROLLER-LIFT	D=115	04	0107-				* *
		02	1	**59117-20H01**		D=115.5	04	0107-				* *
		03	1	**59117-20H02**		D=116	04	0107-				* *
		3 01	1	**59118-50K00**	SHIM-LIFT ROLLER	T=2.0	AR	0107-				* *
		02	1	**59118-20H00**		T=1.0	AR	0107-				* *
		03	1	**59118-20H01**		T=0.5	AR	0107-				* *
		4 01	1	**59532-FF000**	ROLLER-SIDE		02	0107-				* *
		5 01	1	**58582-50K00**	SHIM	T=2.0	AR	0107-				* *
		02	1	**58582-13H00**		T=1.0	AR	0107-				* *
		03	1	**58582-13H01**		T=0.5	AR	0107-				* *
		6 01	1	**00922-14000**	RING-SNAP		02	0107-				* *
		7 01	1	**08124-0301E**	SCREW-HHM M10-1.25X30 W/PW		04	0107-				* *

SEC. 597A

SIDESHIFTER (BOLZONI)

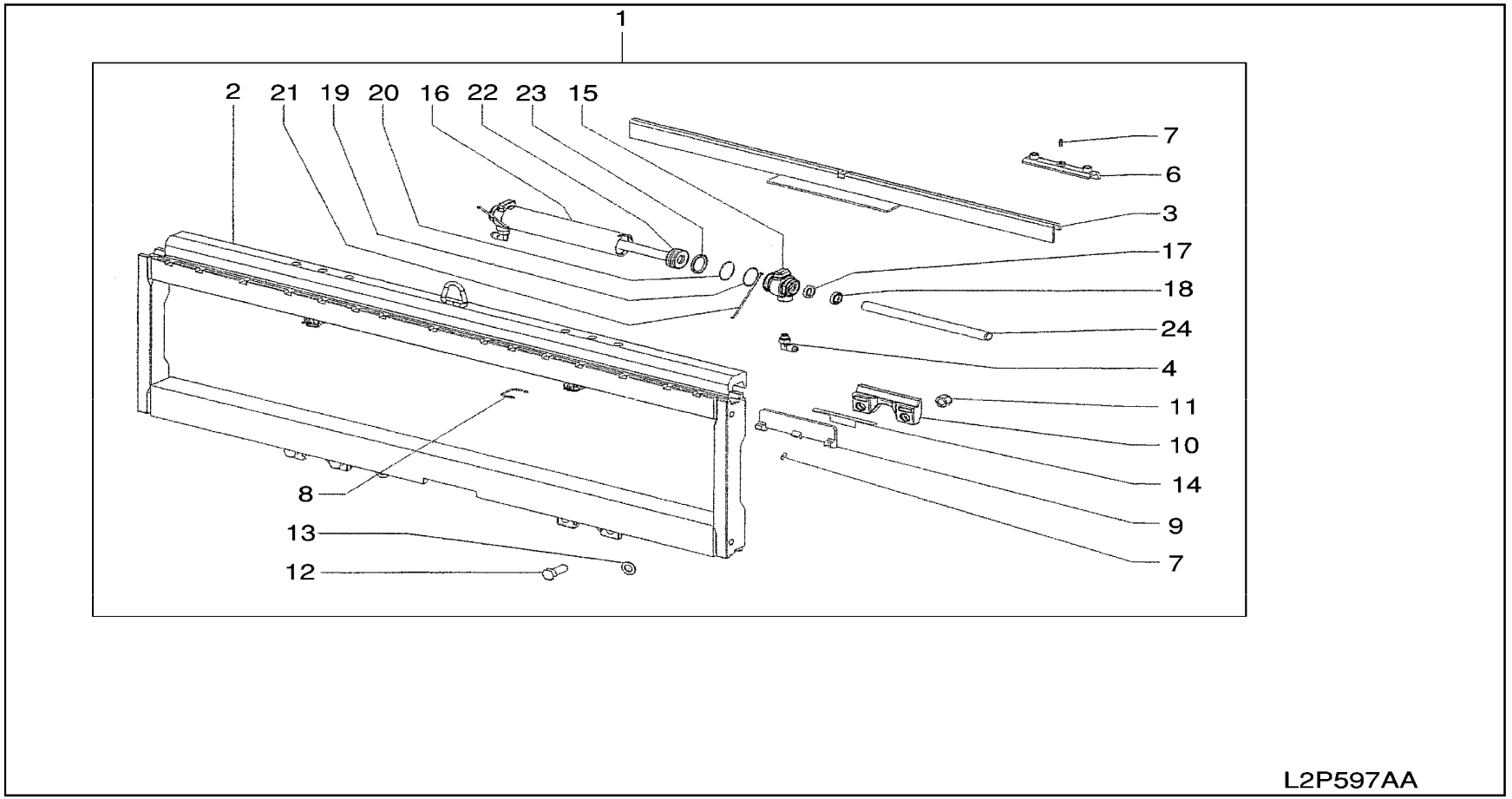

SEC. 597A

SIDESHIFTER (BOLZONI)

NC	S	KEY NO.	LEV	PART NO.	PART NAME	SPECIFICATION	QTY	APPLIED DATE	ICANF	FORMER PART NO.	KD	APPLIED MODEL 01 02 03 04 05 06 07 08 09 10 11 12 13 14 15 16 17 18 19 20 21 22 23 24 25 26 27 28 29
		1	01	1	**70810-FB40A**	SIDESHIFT ASSY		01	0107-			**********
			02	1	**70810-FB41A**		F/WIDE	01	0107-			**********
			03	1	**70810-FB60A**			01	0107-			****
			04	1	**70810-FB61A**		F/WIDE	01	0107-			****
			05	1	**70810-FB70A**		F/2 STAGE	01	0107-0508			****
			06	1	**70810-FC70A**		F/2 STAGE	01	0508-			****
			07	1	**70810-FB71A**		F/2 STAGE WIDE	01	0107-0508			****
			08	1	**70810-FC71A**		F/2 STAGE WIDE	01	0508-			****
			09	1	**70810-FC70A**		F/3 STAGE	01	0107-			****
			10	1	**70810-FC71A**		F/3 STAGE WIDE	01	0107-			****
		2	01	2	**70830-FB40A**	MOBILE FRAME		01	0107-			**********
			02	2	**70830-FB41A**		F/WIDE	01	0107-			**********
			03	2	**70830-FB60A**			01	0107-			****
			04	2	**70830-FB61A**		F/WIDE	01	0107-			****
			05	2	**70830-FB70A**		F/2 STAGE	01	0107-0508			****
			06	2	**70830-FC70A**		F/2 STAGE	01	0508-			****
			07	2	**70830-FB71A**		F/2 STAGE WIDE	01	0107-0508			****
			08	2	**70830-FC71A**		F/2 STAGE WIDE	01	0508-			****
			09	2	**70830-FC70A**		F/3 STAGE	01	0107-			****
			10	2	**70830-FC71A**		F/3 STAGE WIDE	01	0107-			****
		3	01	2	**70131-FA065**	CYLINDER SUPPORT		01	0107-			**********
			02	2	**70131-FB41A**		F/WIDE	01	0107-			**********
			03	2	**70131-FA265**			01	0107-			****
			04	2	**70131-FB61A**		F/WIDE	01	0107-			****
			05	2	**70131-FC70A**			01	0107-			****
			06	2	**70131-FB71A**		F/2 STAGE WIDE	01	0107-0508			****
			07	2	**70131-FC71A**		F/2 STAGE WIDE	01	0508-			****
			08	2	**70131-FC71A**		F/3 STAGE WIDE	01	0107-			****
		4	01	2	**69981-FA065**	FITTING		02	0107-			**********
			02	2	**69981-FA065**			02	0107-			****
		6	01	2	**70843-FA065**	UPPER PAD		02	0107-			**********
			02	2	**70843-FA265**			02	0107-			****
			03	2	**70843-FA265**			02	0107-			****
		7	01	2	**70880-FA000**	GREASER		04	0107-			**********
			02	2	**70880-FA000**			04	0107-			****
		8	01	2	**70845-FA065**	SPLIT PIN		02	0107-			**********
			02	2	**70845-FC70A**			02	0107-			****

SEC. 597A

SIDESHIFTER (BOLZONI)

NC	S	KEY NO.	LEV	PART NO.	PART NAME	SPECIFICATION	QTY	APPLIED DATE	ICANF	FORMER PART NO.	KD	APPLIED MODEL 01 02 03 04 05 06 07 08 09 10 11 12 13 14 15 16 17 18 19 20 21 22 23 24 25 26 27 28 29
		9	01	2	**70842-FA065**	LOWER PAD		02	0107-			* *
			02	2	**70842-FA265**			02	0107-			* * * *
			03	2	**70842-FC70A**			02	0107-			* * * *
		10	01	2	**70841-FA065**	LOWER HOOK		02	0107-			* *
			02	2	**70841-FA265**			02	0107-			* * * *
			03	2	**70841-FA265**			02	0107-			* * * *
		11	01	2	**70028-FA065**	SELF LOCK NUT		04	0107-			* *
			02	2	**70028-FA265**			04	0107-			* * * *
			03	2	**70028-FA265**			04	0107-			* * * *
		12	01	2	**70019-FA065**	SCREW		04	0107-			* *
			02	2	**70019-FA265**			04	0107-			* * * *
			03	2	**70019-FA265**			04	0107-			* * * *
		13	01	2	**70026-FA065**	WASHER		04	0107-			* *
			02	2	**70026-FA265**			04	0107-			* * * *
			03	2	**70026-FA265**			04	0107-			* * * *
		14	01	2	**70848-FA065**	HOOK PAD		02	0107-			* *
			02	2	**70848-FA065**			02	0107-			* * * *
		15	01	2	**69937-FA065**	CYLINDER CUP		02	0107-			* *
			02	2	**69937-FC70A**			02	0107-			* * * *
		16	01	2	**69933-FA065**	CYLINDER		01	0107-			* *
			02	2	**69933-FC70A**			01	0107-			* * * *
			03	2	**69935-FA065**	CYLINDER BODY		01	0107-			* *
			04	2	**69935-FC70A**			01	0107-			* * * *
		17	01	2	**70018-FA066**	SEAL	INCLUDED IN SEAL KIT	02	0107-			* *
			02	2	**70018-FC70B**		INCLUDED IN SEAL KIT	02	0107-			* * * *
		18	01	2	**69943-FA066**	SCRAPER	INCLUDED IN SEAL KIT	02	0107-			* *
			02	2	**69943-FC70B**		INCLUDED IN SEAL KIT	02	0107-			* * * *
		19	01	2	**69941-FA065**	PBK	INCLUDED IN SEAL KIT	02	0107-			* *
			02	2	**69941-FC70A**		INCLUDED IN SEAL KIT	02	0107-			* * * *
		20	01	2	**58283-FA065**	RING-O	INCLUDED IN SEAL KIT	02	0107-			* *
			02	2	**58283-FC70A**		INCLUDED IN SEAL KIT	02	0107-			* * * *
		21	01	2	**69943-FA065**	CYLINDER CUP LINK		02	0107-			* *
			02	2	**69943-FC70A**			02	0107-			* * * *
		22	01	2	**69938-FA065**	PISTON		01	0107-			* *
			02	2	**69938-FC70A**			01	0107-			* * * *
		23	01	2	**70018-FA065**	SEAL	INCLUDED IN SEAL KIT	01	0107-			* *
			02	2	**70018-FC70A**		INCLUDED IN SEAL KIT	01	0107-			* * * *

SEC. 597A

SIDESHIFTER (BOLZONI)

NC	S	KEY NO.	LEV	PART NO.	PART NAME	SPECIFICATION	QTY	APPLIED DATE	ICANF	FORMER PART NO.	KD
	24	01	2	**69936-FA065**	ROD		02	0107-			
		02	2	**69936-FC70A**			02	0107-			
	99	01	1	**69999-FA065**	SEAL KIT	NOT SHOWN	01	0107-			
		02	1	**69999-FC70A**		NOT SHOWN	01	0107-			

APPLIED MODEL

01	02	03	04	05	06	07	08	09	10	11	12	13	14	15	16	17	18	19	20	21	22	23	24	25	26	27	28	29
MIPA20JV	MIPA20DV	MIPA20LV	MIPA20SV	MIUA20JV	MIUA20DV	MIUA20LV	MIUA20SV	MIYA20LV	MIPA25JV	MIPA25DV	MIPA25LV	MIPA25SV	MIUA25JV	MIUA25DV	MIUA25LV	MIUA25SV	MIYA25LV	MIJJA28JV	MIJJA28DV	MIGA28LV	MIGA30JV	MIGA30DV	MIGA30LV	MIYA30LV	MIUA35JV	MIUA35DV	MIGA35LV	MIYA35LV
*	*	*	*	*	*	*	*	*	*	*	*	*	*	*	*	*	*	*	*	*	*	*	*	*				
																									*	*	*	*
*	*	*	*	*	*	*	*	*	*	*	*	*	*	*	*	*	*	*	*	*	*	*	*	*				
																									*	*	*	*

SEC. 597B

SIDESHIFTER (BOLZONI INTEGRAL)

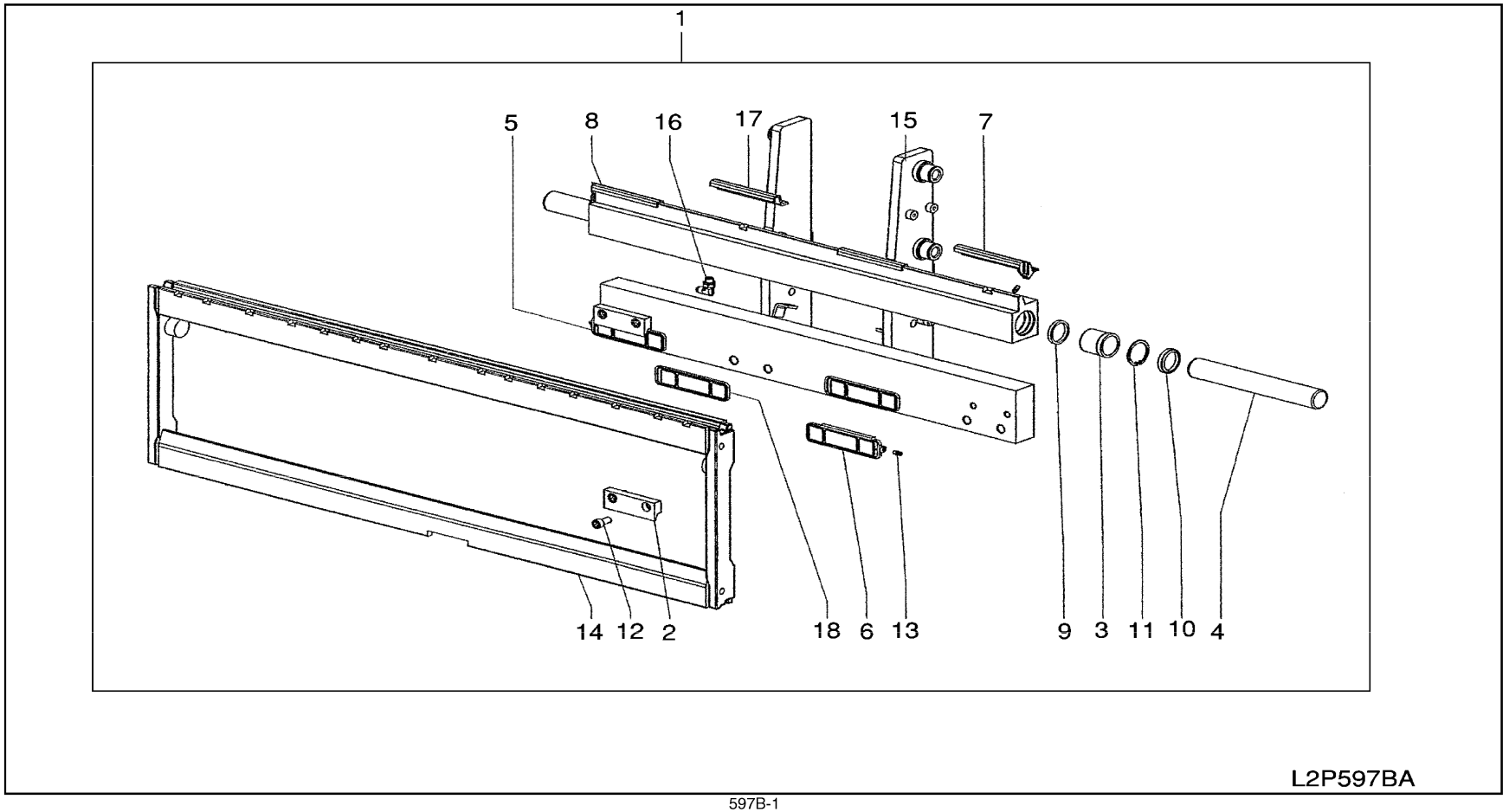

SEC. 597B

SIDESHIFTER (BOLZONI INTEGRAL)

NC	S	KEY NO.	LEV	PART NO.	PART NAME	SPECIFICATION	QTY	APPLIED DATE	TCANF	FORMER PART NO.	KD	APPLIED MODEL 01 02 03 04 05 06 07 08 09 10 11 12 13 14 15 16 17 18 19 20 21 22 23 24 25 26 27 28 29
		1	01	1	**70810-FB62A**	SIDESHIFT ASSY	F/3F	01	0107-			**********
			02	1	**70810-FB63A**		F/3F WIDE	01	0107-			**********
			03	1	**70810-FB72A**		F/3V	01	0107-			**********
			04	1	**70810-FB73A**		F/3V WIDE	01	0107-			**********
			05	1	**70810-FC26A**		F/3F	01	0107-			**********
			06	1	**70810-FC27A**		F/3F WIDE	01	0107-			**********
			07	1	**70810-FC36A**		F/3V	01	0107-			**********
			08	1	**70810-FC37A**		F/3V WIDE	01	0107-			**********
			09	1	**70810-FC20A**		F/3F	01	0107-			**********
			10	1	**70810-FC21A**		F/3F WIDE	01	0107-			**********
			11	1	**70810-FC30A**		F/3V	01	0107-			**********
			12	1	**70810-FC31A**		F/3V WIDE	01	0107-			**********
			13	1	**70810-FC60A**		F/3F	01	0107-			**********
			14	1	**70810-FC61A**		F/3F WIDE	01	0107-			**********
			15	1	**70810-FC72A**		F/3V	01	0107-			**********
			16	1	**70810-FC73A**		F/3V WIDE	01	0107-			**********
		2	01	2	**70834-FD20A**	LOWER HOOK		02	0107-			**********
			02	2	**70834-FR60A**			02	0107-			**********
		3	01	2	**69939-FD20A**	ROD BUSHING		02	0107-			**********
		4	01	2	**69936-FD20A**	ROD		02	0107-			**********
		5	01	2	**70842-FD20A**	LOWER PAD-RH		01	0107-			**********
		6	01	2	**70842-FD20B**	LOWER PAD-LH		01	0107-			**********
		7	01	2	**70843-FD20A**	UPPER PAD-LH		01	0107-			**********
		8	01	2	**70843-FD20B**	UPPER PAD-RH		01	0107-			**********
		9	01	2	**70018-FD20A**	SEAL	INCLUDED IN SEAL KIT	02	0107-			**********
		10	01	2	**69943-FD20A**	SCRAPER	INCLUDED IN SEAL KIT	02	0107-			**********
		11	01	2	**69378-FD20A**	CIRCLIP		02	0107-			**********
		12	01	2	**70019-FD20A**	SCREW		04	0107-			**********
			02	2	**70019-FR60A**			04	0107-			**********
		13	01	2	**70880-FD20A**	GREASE		04	0107-			**********
		14	01	2	**70830-FR26A**	MOBILE FRAME	F/3F & 3V	01	0107-			**********
			02	2	**70830-FC27A**		F/3F & 3V WIDE	01	0107-			**********
			03	2	**70830-FR20A**		F/3F & 3V	01	0107-			**********
			04	2	**70830-FC21A**		F/3F & 3V WIDE	01	0107-			**********
			05	2	**70830-FR60A**		F/3F & 3V	01	0107-			**********
			06	2	**70830-FC61A**		F/3F & 3V WIDE	01	0107-			**********
		15	01	2	**70820-FB62A**	FIXED FRAME	F/3F	01	0107-			**********

SEC. 597B

SIDESHIFTER (BOLZONI INTEGRAL)

NC	S	KEY NO.	LEV	PART NO.	PART NAME	SPECIFICATION	QTY	APPLIED DATE	ICANF	FORMER PART NO.	KD	APPLIED MODEL 01 02 03 04 05 06 07 08 09 10 11 12 13 14 15 16 17 18 19 20 21 22 23 24 25 26 27 28 29
		15 02	2	**70820-FB63A**	FIXED FRAME	F/3F WIDE	01	0107-				* * * * * * * * * * * * * * * * *
		03	2	**70820-FB72A**		F/3V	01	0107-				* * * * * * * * * * * * * * * * *
		04	2	**70820-FB73A**		F/3V WIDE	01	0107-				* * * * * * * * * * * * * * * * *
		05	2	**70820-FC26A**		F/3F	01	0107-				* * *
		06	2	**70820-FC27A**		F/3F WIDE	01	0107-				* * *
		07	2	**70820-FC36A**		F/3V	01	0107-				* * *
		08	2	**70820-FC37A**		F/3V WIDE	01	0107-				* * *
		09	2	**70820-FC20A**		F/3F	01	0107-				* * * *
		10	2	**70820-FC21A**		F/3F WIDE	01	0107-				* * * *
		11	2	**70820-FC30A**		F/3V	01	0107-				* * * *
		12	2	**70820-FC31A**		F/3V WIDE	01	0107-				* * * *
		13	2	**70820-FC60A**		F/3F	01	0107-				* * * *
		14	2	**70820-FC61A**		F/3F WIDE	01	0107-				* * * *
		15	2	**70820-FC72A**		F/3V	01	0107-				* * * *
		16	2	**70820-FC73A**		F/3V WIDE	01	0107-				* * * *
		16 01	2	**69981-FD20A**	CONN		02	0107-				* *
		17 01	2	**70843-FD20C**	UPPER PAD		01	0107-				* *
		02	2	**70843-FD20C**		F/WIDE	02	0107-				* *
		18 01	2	**70834-FC61A**	LOWER PAD	F/WIDE	02	0107-				* *
		99 01	2	**69999-FD20A**	SEAL KIT	NOT SHOWN	01	0107-				* *

NOTE

SEC. 655

TOP PANEL,HINGE & FITTING

PANEL SUPERIOR, BISAGRA Y ELEMENTUS DE AJUSTE

DACHPLATTE,SCHARNIER UND BEFESTIGUNGS ELEMENTE

PANNEAU SUPPER, CHARNIERE ET RACCORD

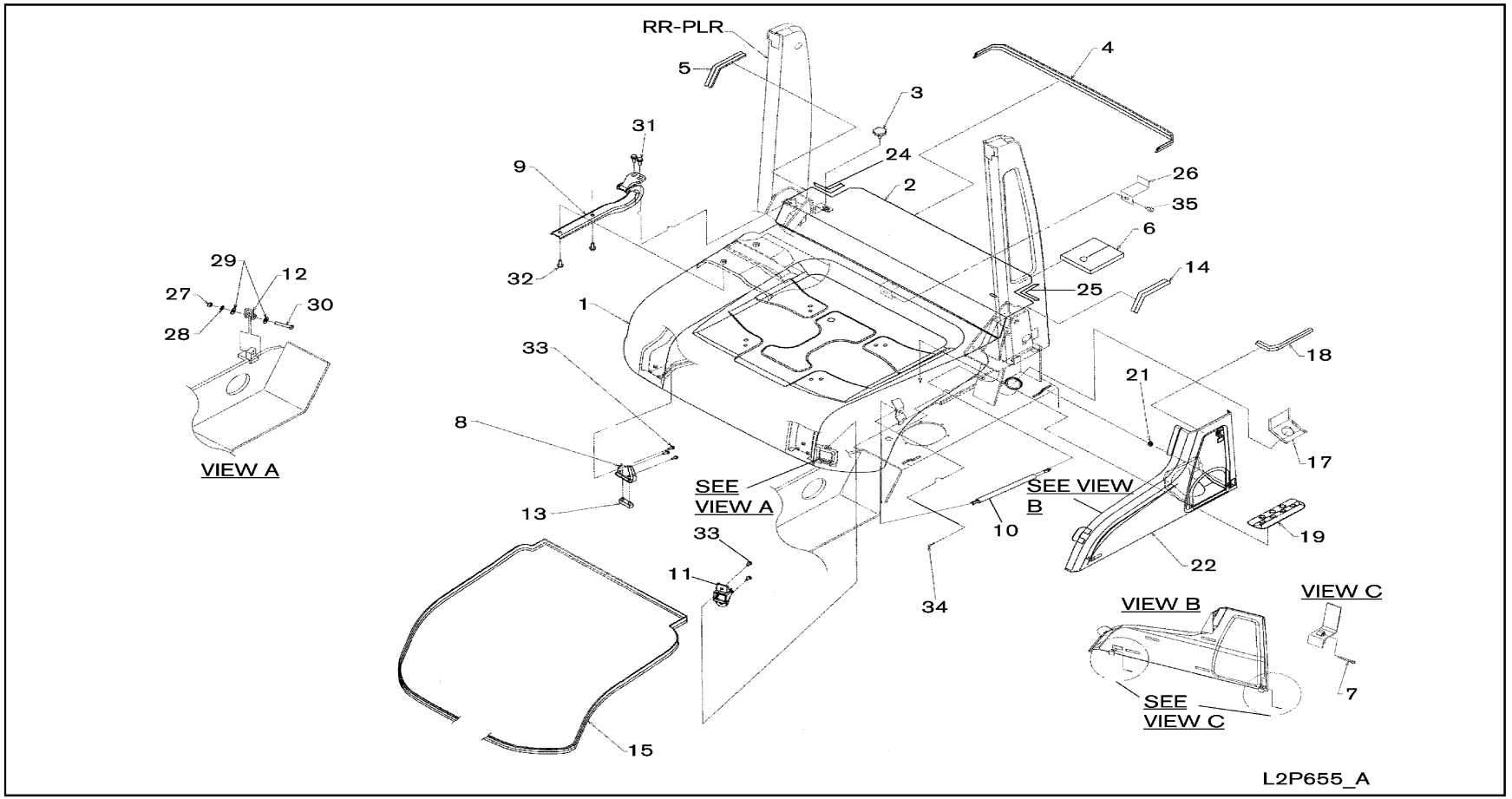

SEC. 655

TOP PANEL,HINGE & FITTING

PANEL SUPERIOR, BISAGRA Y ELEMENTUS DE AJUSTE

DACHPLATTE,SCHARNIER UND BEFESTIGUNGS ELEMENTE

PANNEAU SUPPER, CHARNIERE ET RACCORD

NC	S	KEY NO.	LEV	PART NO.	PART NAME	SPECIFICATION	QTY	APPLIED DATE	ICANF	FORMER PART NO.	KD	APPLIED MODEL 01 02 03 04 05 06 07 08 09 10 11 12 13 14 15 16 17 18 19 20 21 22 23 24 25 26 27 28 29
		1 01	1	**65201-FK10A**	HOOD ASSY		01	0107-				○ ○
		02	1	**65201-FK20A**		F/FC	01	0507-				✱ ✱ ✱ ✱ ✱ ✱ ✱ ✱ ✱ ✱ ✱ ✱
		03	1	**65360-FK100**	INSULATOR-TOP PANEL		01	0107-				○ ○
		2 01	1	**65280-FK101**	COVER ASSY-RADIATOR		01	0107-				○ ○
		02	1	**65280-FK111**		F/OHM	01	0107-				✱ ✱ ✱ ✱ ✱ ✱
		03	1	**65280-FB405**			01	0107-				○ ○
		04	1	**65366-FK100**	INSULATOR-RADIATOR COVER		01	0107-				○ ○
		3 01	1	**65285-15K00**	KNOB-RADIATOR COVER		02	0107-				○ ○
		4 01	1	**65380-FK111**	SEAL-TOP PANEL		01	0107-				○ ○
		02	1	**65380-FK112**		F/OHM	01	0107-				✱ ✱ ✱ ✱ ✱ ✱
		5 01	1	**65380-FJ302**	SEAL-TOP PANEL		01	0107-				○ ○
		6 01	1	**65564-FB400**	SEAL-COVER		01	0107-				○ ○
		7 01	1	**65399-FB10A**	PIN-COTTER, SPLIT		04	0107-0411				○ ○
		8 01	1	**65306-FK101**	SUPPORT-TOP PANEL		02	0107-				○ ○
		9 01	1	**65310-FK101**	HINGE ASSY-TOP PANEL	F/RH	01	0107-				○ ○
		02	1	**65310-FK102**		F/LH	01	0107-				○ ○
		10 01	1	**65320-FB401**	STAY ASSY-TOP		01	0107-				○ ○
		02	1	**65320-FB400**		F/FC	01	0507-				✱ ✱ ✱ ✱ ✱ ✱ ✱ ✱ ✱ ✱ ✱ ✱
		11 01	1	**65343-FK100**	LOCK ASSY-TOP PANEL SIDE LH		01	0107-				○ ○
		12 01	1	**65351-FK100**	STRIKER ASSY-TOP		01	0107-				○ ○
		13 01	1	**65371-FK10A**	BUMPER-TOP PANEL,RUBBER		02	0107-				○ ○
		14 01	1	**65380-FJ302**	SEAL-TOP PANEL		01	0107-				○ ○
		02	1	**65380-FC006**			01	0107-				○ ○
		15 01	1	**65380-FK123**	SEAL-TOP PANEL		01	0107-				○ ○
		17 01	1	**50853-GG10A**	COVER ASSY-ENGINE UNDER		01	0107-				○ ○
		18 01	1	**65381-FK115**	SEAL-RUBBER		02	0107-				○ ○
C		**19** 01	1	**65355-6K200**	PAD-HOOD		01	0107-0612				○ ○
		21 01	1	**50555-FC000**	FASTENER		04	0107-0411				○ ○
		02	1	**65371-FW80A**	BUMPER-TOP PANEL, RUBBER		04	0411-				○ ○
		22 01	1	**65260-FK101**	PANEL ASSY-TOP,SIDE	F/RH	01	0107-0711				○ ○
		02	1	**65260-GH10A**		F/RH	01	0711-				○ ○
		03	1	**65362-FK100**	INSULATOR-TOP PANEL,SIDE	F/RH	01	0107-0711				○ ○
		04	1	**65261-FK101**	PANEL ASSY-TOP,SIDE	F/LH	01	0107-0711				○ ○
		05	1	**65261-GH10A**		F/LH	01	0711-				○ ○
		06	1	**65261-FK102**		F/LH	01	0107-0711				○ ○
		07	1	**65261-GH11A**		F/LH	01	0711-				○ ○
		08	1	**65363-FK100**	INSULATOR-TOP PANEL,SIDE	F/LH	01	0107-0711				○ ○

SEC. 655

TOP PANEL,HINGE & FITTING

PANEL SUPERIOR, BISAGRA Y ELEMENTUS DE AJUSTE

DACHPLATTE,SCHARNIER UND BEFESTIGUNGS ELEMENTE

PANNEAU SUPPER, CHARNIERE ET RACCORD

NC	S	KEY NO.	LEV	PART NO.	PART NAME	SPECIFICATION	QTY	APPLIED DATE	ICANF	FORMER PART NO.	KD
		22 09	1	**65260-FB801**	PANEL ASSY-TOP,SIDE	F/VENTED RH	01	0107-			
		10	1	**65261-FB801**		F/VENTED LH	01	0107-			
		11	1	**65261-FB802**		F/VENTED LH	01	0107-			
		23 01	1	**65832-F5000**	CLIP	NOT SHOWN USE ON INSULATOR	07	0107-			
		24 01	1	**65380-FK102**	SEAL-TOP PANEL		01	0107-			
		25 01	1	**65380-FK103**	SEAL-TOP PANEL		01	0107-			
		26 01	1	**65326-FJ30A**	BRACKET-STAY		01	0107-			
		27 01	1	**08911-1401A**	NUT-HEX M10-125 4T		01	0107-			
		28 01	1	**08915-1401A**	WASHER-LOCK SPLIT M10		01	0107-			
		29 01	1	**08915-5401A**	WASHER-FLAT M10		02	0107-			
		30 01	1	**08124-0501A**	SCREW-HHM M10-1.25X50 7T		01	0107-			
		31 01	1	**08120-8251F**	SCREW-HHM M8-1.25X25 W/LK & PW		04	0107-			
		32 01	1	**08124-0201F**	SCREW-HHM M10-1.25X20 W/LK & PW		04	0107-			
		33 01	1	**08120-8161F**	SCREW-HHM M8-1.25X16 W/LK & PW		08	0107-			
		34 01	1	**00923-10810**	PIN-SNAP M8		02	0107-			
		35 01	1	**08360-61225**	SCREW-HH CR M6-1.0X12 W/LK & PW		01	0107-			
		99 01	1	**65658-FB800**	3M4799 ADHESIVE	NOT SHOWN USE WITH ITEM NO. 4 & 15	AR	0107-			

APPLIED MODEL

01	02	03	04	05	06	07	08	09	10	11	12	13	14	15	16	17	18	19	20	21	22	23	24	25	26	27	28	29
MIPA20JV	MIPA20DV	MIPA20LV	MIPA20SV	MIUA20JV	MIUA20DV	MIUA20LV	MIUA20SV	MIYA20LV	MIPA20JV	MIPA20DV	MIPA20LV	MIPA20SV	MIUA20JV	MIUA20DV	MIUA20LV	MIUA20SV	MIUA20LV	MIUA20JV	MIUA20DV	MIUA20LV	MIUA20JV	MIUA20DV	MIUA20LV	MIYA20DV	MIUA20JV	MIUA20DV	MIUA20LV	MIYA20LV
																		MIJA20JV	MIJA20DV	MIJA20LV	MIGA20JV	MIGA20DV	MIGA20LV	MIGA20DV	MIGA20JV	MIGA20DV	MIGA20LV	MIGA20LV
MIPA22JV	MIPA22DV	MIPA22LV	MIPA22SV	MIUA22JV	MIUA22DV	MIUA22LV	MIUA22SV	MIYA22LV	MIPA22JV	MIPA22DV	MIPA22LV	MIPA22SV	MIUA22JV	MIUA22DV	MIUA22LV	MIUA22SV	MIUA22LV	MIUA22JV	MIUA22DV	MIUA22LV	MIUA23JV	MIUA23DV	MIUA23LV	MIUA23DV	MIUA23JV	MIUA23DV	MIUA23LV	MIUA23LV
655-3																												
655-4																												
655-5																												
655-6																												
655-7																												
655-8																												
655-9																												
655-10																												
655-11																												
655-12																												
655-13																												
655-14																												
655-15																												
655-16																												
655-17																												
655-18																												
655-19																												
655-20																												
655-21																												
655-22																												
655-23																												
655-24																												
655-25																												
655-26																												
655-27																												
655-28																												
655-29																												
655-30																												
655-31																												
655-32																												
655-33																												
655-34																												
655-35																												
655-36																												
655-37																												
655-38																												
655-39																												
655-40																												
655-41																												
655-42																												
655-43																												
655-44																												
655-45																												
655-46																												
655-47																												
655-48																												
655-49																												
655-50																												
655-51																												
655-52																												
655-53																												
655-54																												
655-55																												
655-56																												
655-57																												
655-58																												
655-59																												
655-60																												
655-61																												
655-62																												
655-63																												
655-64																												
655-65																												
655-66																												
655-67																												
655-68																												
655-69																												
655-70																												
655-71																												
655-72																												
655-73																												
655-74																												
655-75																												
655-76																												
655-77																												
655-78																												
655-79																												
655-80																												
655-81																												
655-82																												
655-83																												
655-84																												
655-85																												
655-86																												
655-87																												
655-88																												
655-89																												
655-90																												
655-91																												
655-92																												
655-93																												
655-94																												
655-95																												
655-96																												
655-97																												
655-98																												
655-99																												
655-100																												

NOTE

SEC. 680

INSTRUMENT PANEL, PAD & CLUSTER LID

PANEL DE INSTRUMENTOS,ALMOHANDILLA Y CAJA DEL GRUPO DE INSTR

INSTRUMENTENBRETT,POLSTER & INSTRUMENTENVERKLEIDUNG

TABLEAU DE BORD,GARNISSAGE ET COUVERCLE E COMBINE

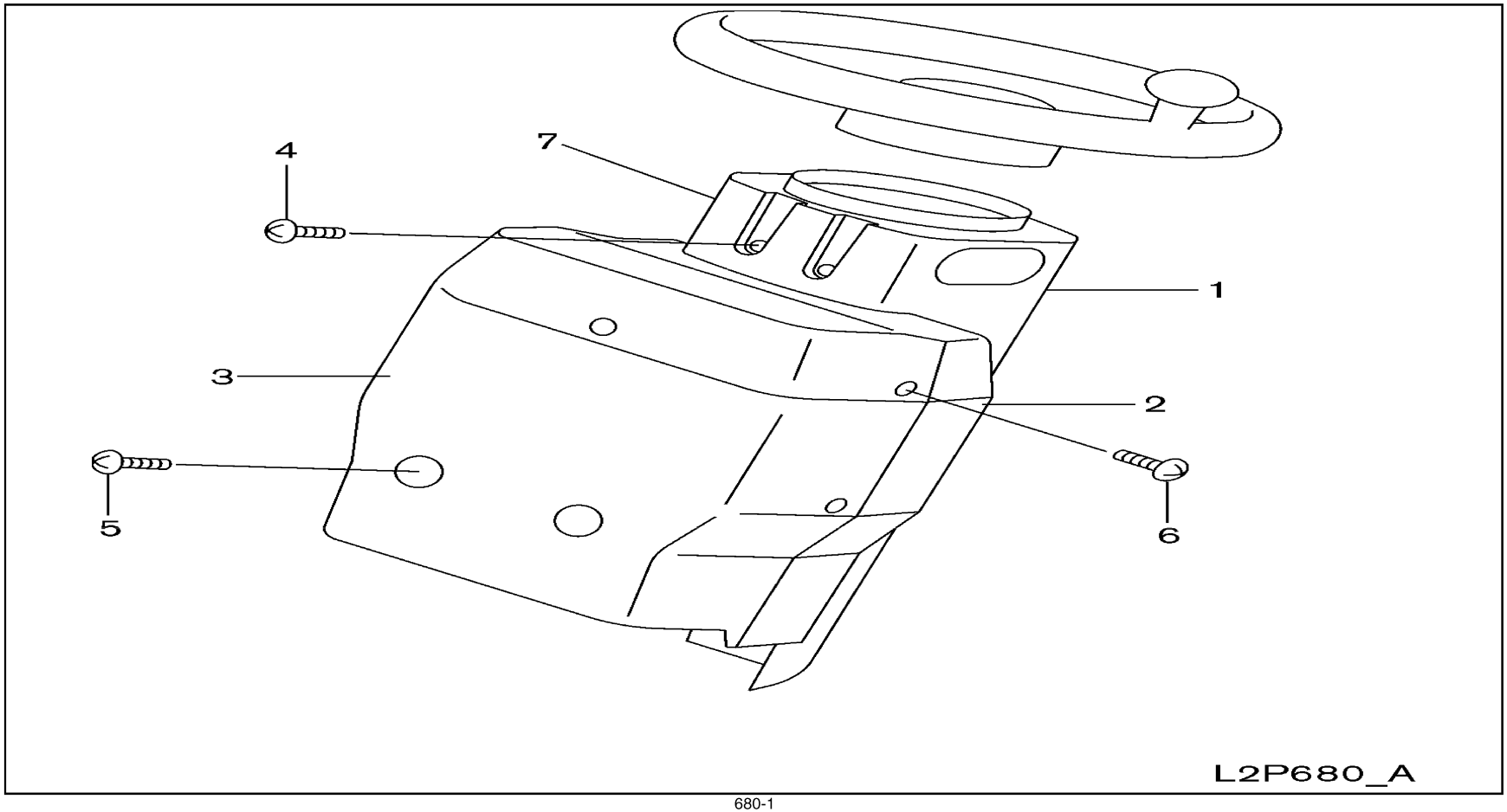

SEC. 680

INSTRUMENT PANEL, PAD & CLUSTER LID

PANEL DE INSTRUMENTOS,ALMOHANDILLA Y CAJA DEL GRUPO DE INSTR

INSTRUMENTENBRETT,POLSTER & INSTRUMENTENVERKLEIDUNG

TABLEAU DE BORD,GARNISSAGE ET COUVERCLE E COMBINE

NC	S	KEY NO.	LEV	PART NO.	PART NAME	SPECIFICATION	QTY	APPLIED DATE	ICANF	FORMER PART NO.	KD	APPLIED MODEL 01	02	03	04	05	06	07	08	09	10	11	12	13	14	15	16	17	18	19	20	21	22	23	24	25	26	27	28	29
		1 01	1	**48478-FJ10A**	COVER-STEERING COL, RR		01	0107-				O	O	O	O	O	O	O	O	O	O	O	O	O	O	O	O	O	O	O	O	O	O	O	O	O	O	O	O
		2 01	1	**48471-FJ10A**	COVER-STEERING COL, UPR		01	0107-				O	O	O	O	O	O	O	O	O	O	O	O	O	O	O	O	O	O	O	O	O	O	O	O	O	O	O	O
		3 01	1	**48473-FJ10A**	COVER-STEERING COL, FR		01	0107-				O	O	O	O	O	O	O	O	O	O	O	O	O	O	O	O	O	O	O	O	O	O	O	O	O	O	O	O
		4 01	1	**08566-6122A**	SCREW-HH TAP M6-1.55X12		04	0107-				O	O	O	O	O	O	O	O	O	O	O	O	O	O	O	O	O	O	O	O	O	O	O	O	O	O	O	O
		5 01	1	**08363-6162C**	SCREW-HH PP M6-1.0X16 W/PW		04	0107-				O	O	O	O	O	O	O	O	O	O	O	O	O	O	O	O	O	O	O	O	O	O	O	O	O	O	O	O
		6 01	1	**08330-5162A**	SCREW-OVL M5-0.8X16 W/LKW		05	0107-				O	O	O	O	O	O	O	O	O	O	O	O	O	O	O	O	O	O	O	O	O	O	O	O	O	O	O	O
		7 01	1	**48486-FJ100**	CAP-COL COVER	F/FC	01	0507-				*	*	*		*	*	*		*		*	*	*	*		*	*	*		*								

SEC. 691A

HYDRAULIC OIL PUMP & FITTING (TANK FITTING PART)

BOMBA HIDRAULICA DE ACEITE Y PARTES DE FIJACION

HYDRAULIKÖLPUMPE & BESCHLAGTEILE

POMPE A HUILE HYDRAULIQUE ET PIECES DE FIXATION

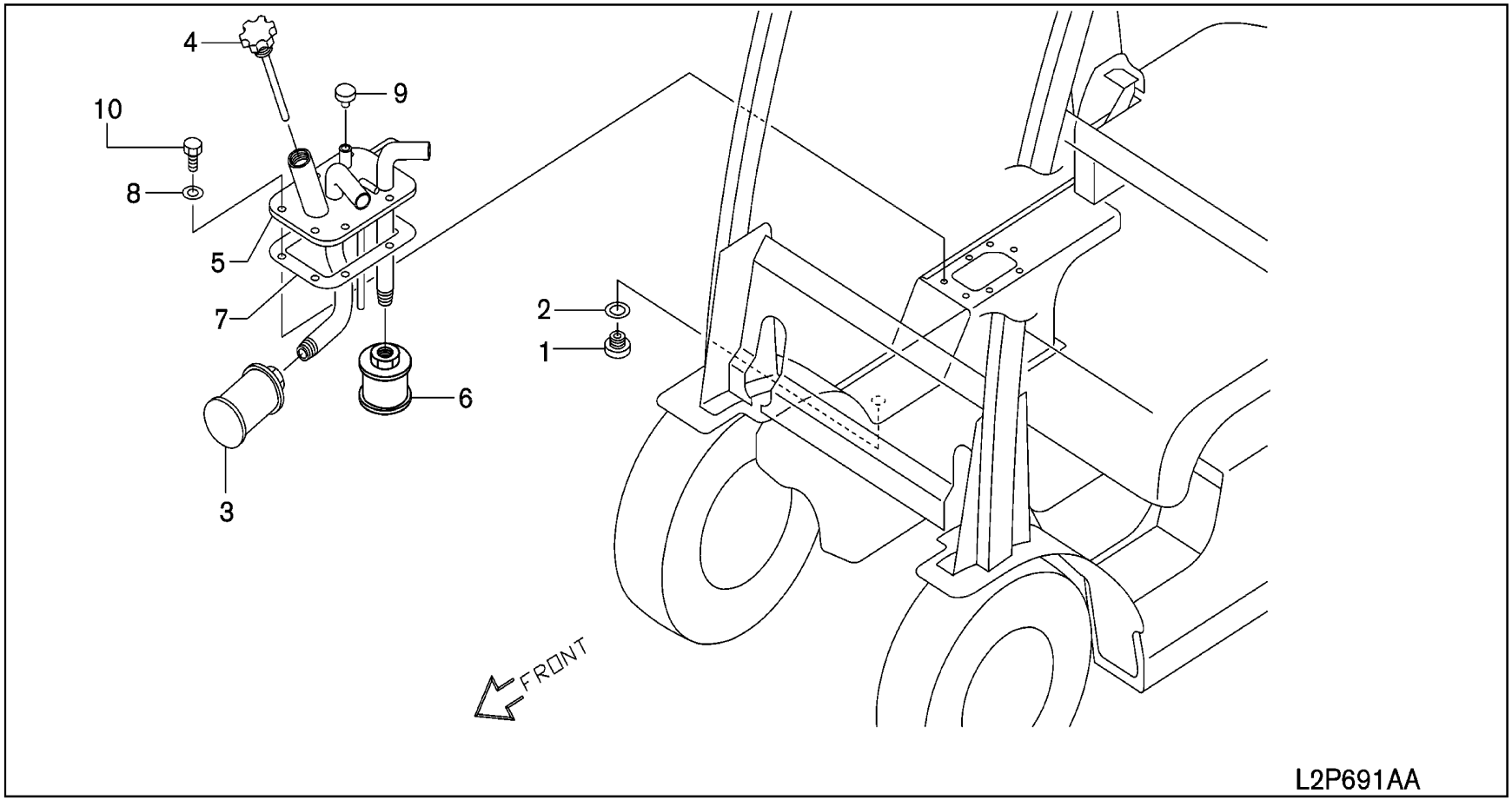

SEC. 691A

HYDRAULIC OIL PUMP & FITTING (TANK FITTING PART)

BOMBA HIDRAULICA DE ACEITE Y PARTES DE FIJACION

HYDRAULIKÖLPUMPE & BESCHLAGTEILE

POMPE A HUILE HYDRAULIQUE ET PIECES DE FIXATION

NC	S	KEY NO.	LEV	PART NO.	PART NAME	SPECIFICATION	QTY	APPLIED DATE	TCANF	FORMER PART NO.	KD
		1	01	1	**01641-00071**	PLUG		01	0107-		
		2	01	1	**01352-00291**	GASKET-NYLON		01	0107-		
		3	01	1	**69220-FK100**	FILTER ASSY-MICRON		01	0107-		
		4	01	1	**69260-FF000**	GAUGE ASSY-HYD OIL TANK		01	0107-		
		5	01	1	**69250-FK107**	PIPE ASSY-HYD TANK		01	0107-		
			02	1	**69250-FK100**		F/OIL RETURN	01	0107-		
		6	01	1	**69270-FK100**	FILTER ASSY-SUCT		01	0107-		
		7	01	1	**69271-FK100**	PACKING-FILTER		01	0107-		
		8	01	1	**17232-6K201**	PACKING-DRAIN		07	0107-		
		9	01	1	**69290-FE000**	BREATHER-HYD TANK		01	0107-		
		10	01	1	**08360-62010**	SCREW-HH CR M6-1.0X20		07	0107-		
		99	01	1	**69696-L1100**	SEAL-TAPE	NOT SHOWN USE WITH ITEM NO. 9	AR	0107-		

APPLIED MODEL

01	02	03	04	05	06	07	08	09	10	11	12	13	14	15	16	17	18	19	20	21	22	23	24	25	26	27	28	29
MI PU JI A20 JV	MI PU JI A20 DV	MI PU JI A20 LV	MI PU JI A20 SV	MI UU JI A22 JV	MI UU JI A22 DV	MI UU JI A22 LV	MI UY JI A22 SV	MI PU JI A25 JV	MI PU JI A25 DV	MI PU JI A25 LV	MI PU JI A25 SV	MI UU JI A25 JV	MI UU JI A25 DV	MI UU JI A25 LV	MI UU JI A25 SV	MI UY JI A25 LV	MI UU JI A28 JV	MI UU JI A28 DV	MI UU JI A28 LV	MI UU JI A30 JV	MI UU JI A30 DV	MI UU JI A30 LV	MI UY JI A30 LV	MI UU JI A35 JV	MI UU JI A35 DV	MI UY JI A35 LV	MI UY JI A35 VV
○	○	○	○	○	○	○	○	○	○	○	○	○	○	○	○	○	○	○	○	○	○	○	○	○	○	○	○	○
○	○	○	○	○	○	○	○	○	○	○	○	○	○	○	○	○	○	○	○	○	○	○	○	○	○	○	○	○
○	○	○	○	○	○	○	○	○	○	○	○	○	○	○	○	○	○	○	○	○	○	○	○	○	○	○	○	○
○	○	○	○	○	○	○	○	○	○	○	○	○	○	○	○	○	○	○	○	○	○	○	○	○	○	○	○	○
○	○	○	○	○	○	○	○	○	○	○	○	○	○	○	○	○	○	○	○	○	○	○	○	○	○	○	○	○
*	*	*	*	*	*	*	*	*	*	*	*	*	*	*	*	*	*	*	*	*	*	*	*	*	*	*	*	*
○	○	○	○	○	○	○	○	○	○	○	○	○	○	○	○	○	○	○	○	○	○	○	○	○	○	○	○	○
○	○	○	○	○	○	○	○	○	○	○	○	○	○	○	○	○	○	○	○	○	○	○	○	○	○	○	○	○
○	○	○	○	○	○	○	○	○	○	○	○	○	○	○	○	○	○	○	○	○	○	○	○	○	○	○	○	○
○	○	○	○	○	○	○	○	○	○	○	○	○	○	○	○	○	○	○	○	○	○	○	○	○	○	○	○	○
○	○	○	○	○	○	○	○	○	○	○	○	○	○	○	○	○	○	○	○	○	○	○	○	○	○	○	○	○
○	○	○	○	○	○	○	○	○	○	○	○	○	○	○	○	○	○	○	○	○	○	○	○	○	○	○	○	○
○	○	○	○	○	○	○	○	○	○	○	○	○	○	○	○	○	○	○	○	○	○	○	○	○	○	○	○	○

SEC. 691B

HYDRAULIC OIL PUMP & FITTING (PUMP FITTING PART)

BOMBA HIDRAULICA DE ACEITE Y PARTES DE FIJACION

HYDRAULIKÖLPUMPE & BESCHLAGTEILE

POMPE A HUILE HYDRAULIQUE ET PIECES DE FIXATION

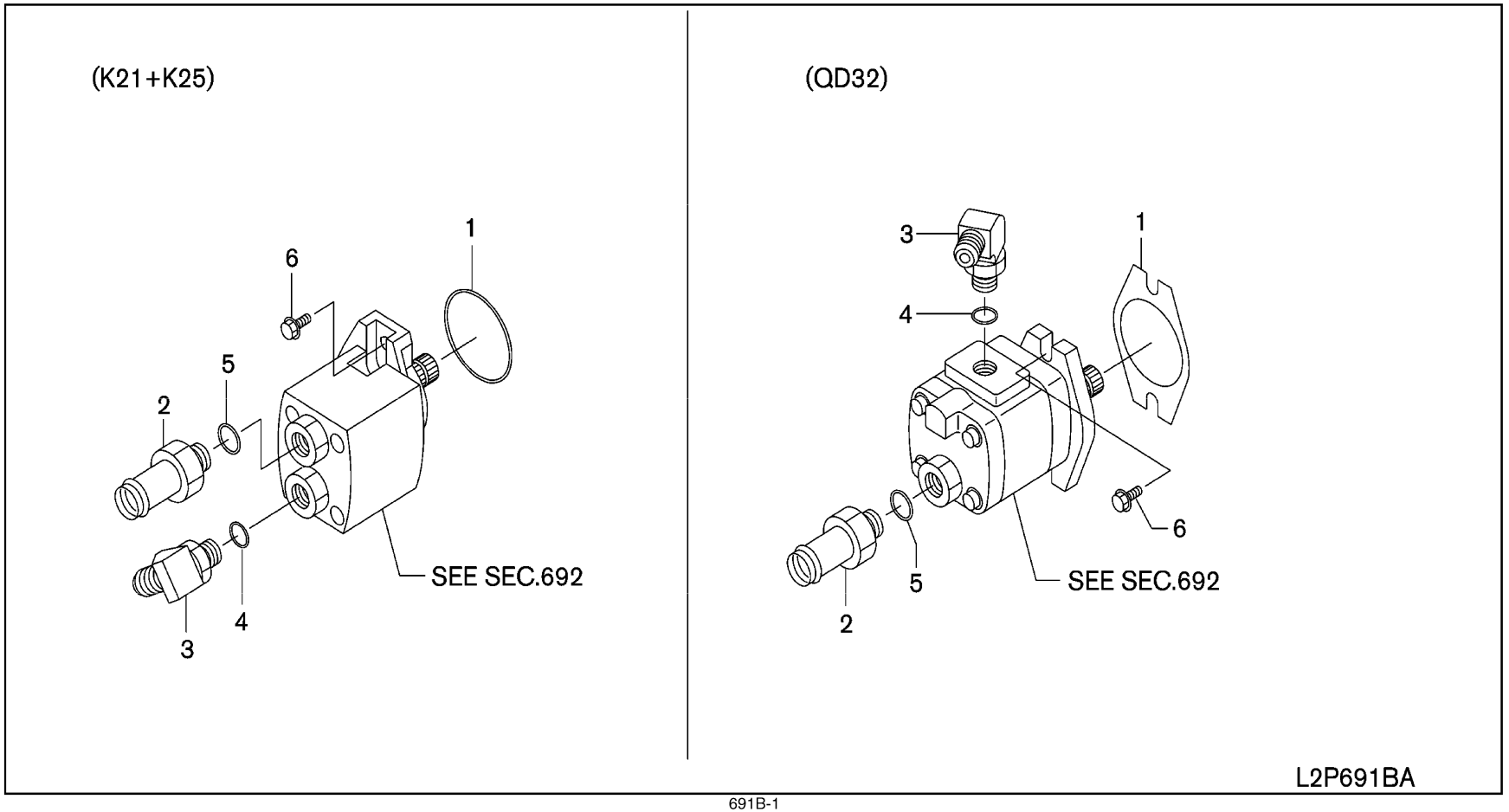

SEC. 691B

HYDRAULIC OIL PUMP & FITTING (PUMP FITTING PART)

BOMBA HIDRAULICA DE ACEITE Y PARTES DE FIJACION

HYDRAULIKÖLPUMPE & BESCHLAGTEILE

POMPE A HUILE HYDRAULIQUE ET PIECES DE FIXATION

NC	S	KEY NO.	LEV	PART NO.	PART NAME	SPECIFICATION	QTY	APPLIED DATE	ICANF	FORMER PART NO.	KD	APPLIED MODEL 01 02 03 04 05 06 07 08 09 10 11 12 13 14 15 16 17 18 19 20 21 22 23 24 25 26 27 28 29
		1 01	1	**69170-L1400**	RING-O		01	0107-				○ ○
		2 01	1	**69148-FK110**	CONN ASSY-INLET		01	0107-				○ ○
		3 01	1	**69350-FK110**	CONN ASSY		01	0107-				○ ○
		02	1	**69142-L1101**			01	0107-				○ ○ ○ ○
		4 01	2	**69173-L1100**	RING-O		01	0107-				○ ○
		5 01	1	**69370-L6000**	RING-O		01	0107-				○ ○
		6 01	1	**08121-0301F**	SCREW-HHM M10-1.5X30 W/LK & PW		02	0107-				○ ○
		02	1	**08121-0551F**	SCREW-HHM M10-1.5X55 W/LK & PW		02	0107-				○ ○ ○ ○

SEC. 692

HYDRAULIC OIL PUMP ASSEMBLY

CONJUNTO DE LA BOMBA HIDRAULICA DE ACEITE

HYDRAULIKÖLPUMPE KOMPLETT

ENSEMBLE POMPE A HUILE HYDRAULIQUE

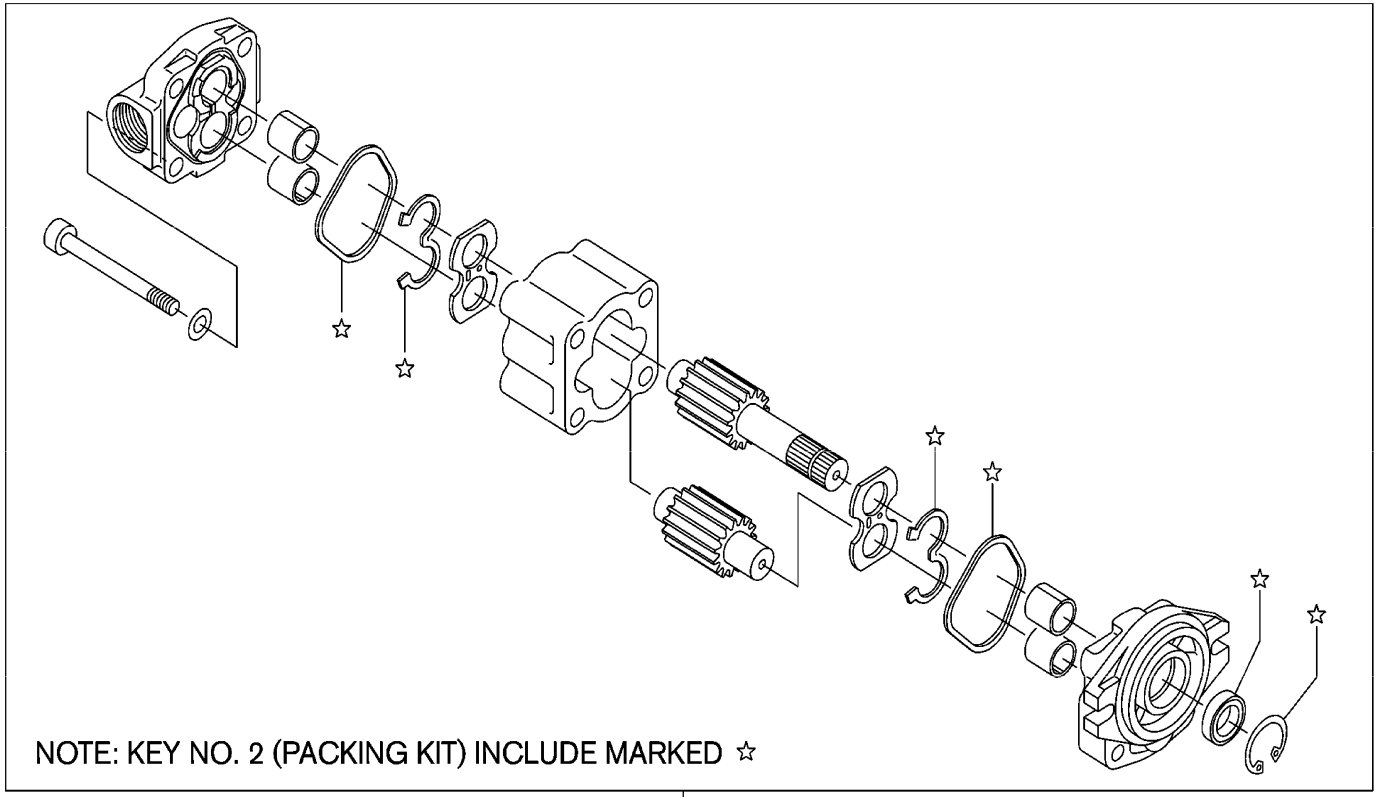

SEC. 692

HYDRAULIC OIL PUMP ASSEMBLY

CONJUNTO DE LA BOMBA HIDRAULICA DE ACEITE

HYDRAULIKÖLPUMPE KOMPLETT

ENSEMBLE POMPE A HUILE HYDRAULIQUE

NC	S	KEY NO.	LEV	PART NO.	PART NAME	SPECIFICATION	QTY	APPLIED DATE	ICANF	FORMER PART NO.	KD
		1 01	1	**69101-FK160**	PUMP ASSY-HYD OIL		01	0107-			
		02	1	**69101-FC46A**		F/LOW NOISE	01	0107-			
		03	1	**69101-FK170**			01	0107-			
		04	1	**69101-FC47A**		F/LOW NOISE	01	0107-			
		05	1	**69101-GG00A**			01	0107-			
		06	1	**69101-GG00B**		F/LOW NOISE	01	0107-			
		2 01	1	**69199-FK110**	PACKING KIT-HYD OIL PUMP		01	0107-			
C		02	1	**69199-FK110**			01	0107-			
C		03	1	**69199-51K00**		F/LOW NOISE	01	0107-			
N		04	1	**69199-FK110**		F/LOW NOISE	01	0107-			

APPLIED MODEL

	MIPJVL	MIPVVL	MIPVSL	MIPVVL	MUUJDL	MUUVVL	MUUVVL	MUUVSL	MYPJVL	MPPVVL	MPPVVL	MPPVSL	MUUJDL	MUUVVL	MUUVVL	MUUVSL	MUUJDL	MUUVVL	MUUVVL	MUUVSL	MUUJDL	MUUVVL	MUUVVL	MUUVSL	MYYJDL	MUUJDL	MUUVVL	MUUVVL	MYGJDL	MGGVVL	MGGVVL	MGGVSL	MIIJDL	MIIVVL	MIIVVL	MIIVSL	MYGJDL	MGGVVL	MGGVVL	MGGVSL
	AA20JVL	AA22DVL	AA20LVS	AA20JVL	AA20DVL	AA20LVL	AA20JVL	AA20DVS	AA20LVL	AA25JVL	AA25DVL	AA25LVS	AA25LVL	AA25JVL	AA25DVL	AA25LVS	AA25LVL	AA25JVL	AA25DVL	AA25LVS	AA25LVL	AA28JVL	AA28DVL	AA28LVS	AA30JVL	AA30DVL	AA30LVL	AA30JVL	AA30DVL	AA30LVL	AA35JVL	AA35DVL	AA35LVL	AA35JVL	AA35DVL	AA35LVL	AA35JVL	AA35DVL	AA35LVL
	01	02	03	04	05	06	07	08	09	10	11	12	13	14	15	16	17	18	19	20	21	22	23	24	25	26	27	28	29										
	○	○	○	○						○	○	○	○																										
	✱	✱	✱	✱						✱	✱	✱	✱																										
					○	○	○	○						○	○	○	○		○	○	○	○	○	○		○	○	○												
					✱	✱	✱	✱						✱	✱	✱	✱		✱	✱	✱	✱	✱	✱		✱	✱	✱												
									○									○							○				○											
									✱									✱							✱				✱											
	○	○	○	○	○	○	○	○		○	○	○	○	○	○	○	○		○	○	○	○	○	○		○	○	○											
									○									○							○				○											
	✱	✱	✱	✱	✱	✱	✱	✱	✱	✱	✱	✱	✱	✱	✱	✱	✱		✱	✱	✱	✱	✱	✱		✱	✱	✱											
									✱									✱							✱				✱											

SEC. 693A

HYDRAULIC CONTROL VALVE

VALVULA DE CONTROL HIDRAULICO

HYDRAULIKSTEUERVENTIL

SOUPAPE DE COMMANDE HYDRAULIQUE

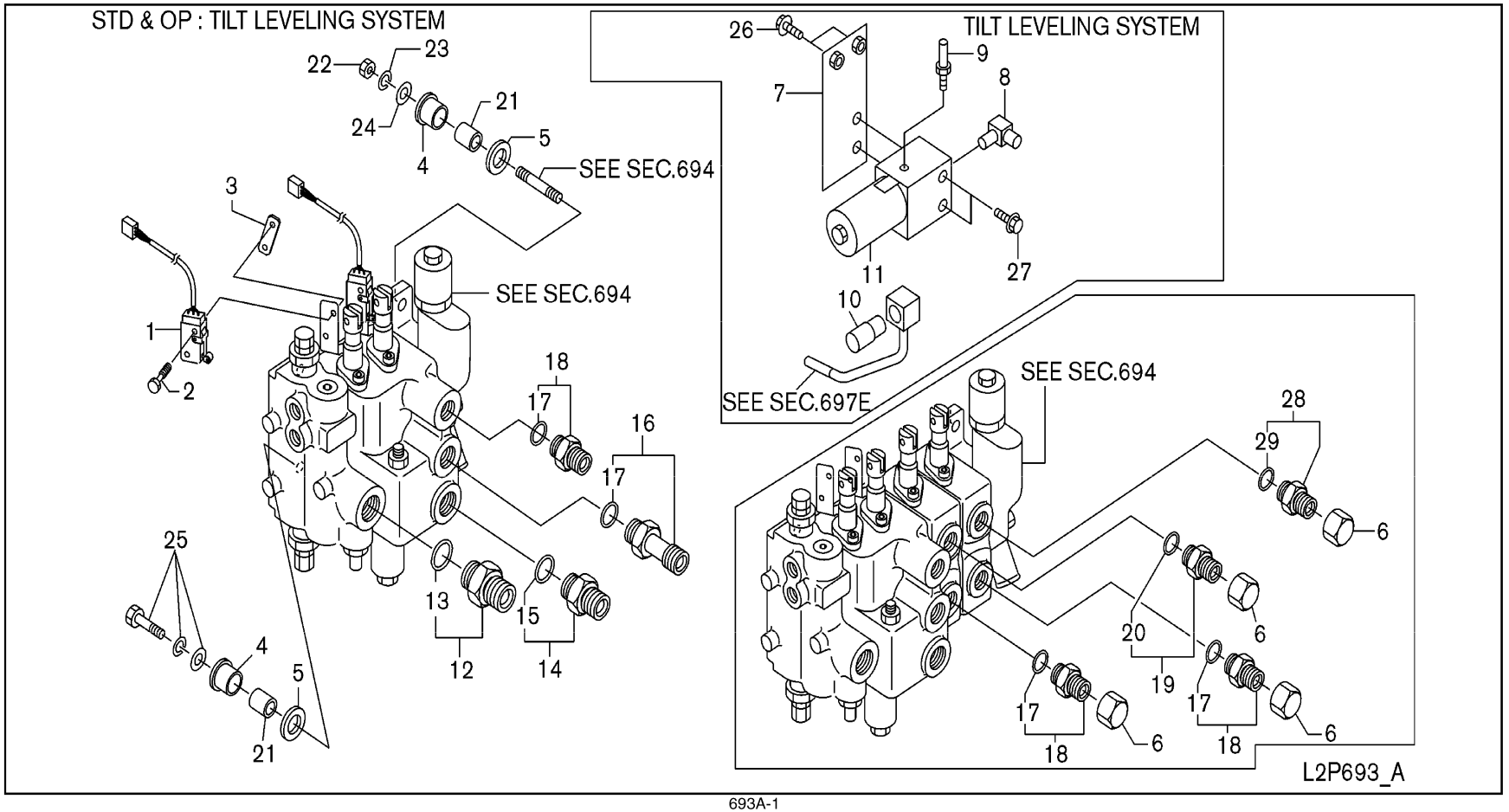

693A-1

SEC. 693A

HYDRAULIC CONTROL VALVE

VALVULA DE CONTROL HIDRAULICO

HYDRAULIKSTEUERVENTIL

SOUPAPE DE COMMANDE HYDRAULIQUE

NC	S	KEY NO.	LEV	PART NO.	PART NAME	SPECIFICATION	QTY	APPLIED DATE	ICANF	FORMER PART NO.	KD	APPLIED MODEL 01 02 03 04 05 06 07 08 09 10 11 12 13 14 15 16 17 18 19 20 21 22 23 24 25 26 27 28 29
C		**1** 01	2	**25565-FK200**	SWITCH ASSY	F/CONT VLVX3 TILT LEVELING SYSTEM	02	0107-1111				* *
N		02	2	**25565-FK200**		F/CONT VLVX3 TILT LEVELING SYSTEM	01	1111-				* *
N		03	2	**25565-FK200**		F/CONT VLVX4	01	0107-				* *
		04	2	**25565-FK200**		F/CONT VLVX4 TILT LEVELING SYSTEM	02	0107-				* *
C		**2** 01	2	**69540-FK100**	BOLT	F/CONT VLVX3 TILT LEVELING SYSTEM	04	0107-1111				* *
N		02	2	**69540-FK100**		F/TILT LEVELING SYSTEM	02	1111-				* *
N		03	2	**69540-FK100**		F/CONT VLVX4	02	0107-				* *
N		04	2	**69540-FK100**		F/CONT VLVX4 TILT LEVELING SYSTEM	04	0107-				* *
		3 01	2	**69393-FK100**	BRACKET-MICRO SWITCH	F/TILT LEVELING SYSTEM	02	0107-0508				* *
C		02	2	**69393-FK10A**		F/CONT VLVX3 TILT LEVELING SYSTEM	02	0508-1111				* *
N		03	2	**69393-FK10A**		F/CONT VLVX3 TILT LEVELING SYSTEM	01	1111-				* *
		04	2	**69393-FK100**		F/CONT VLVX4	01	0107-0308				* *
C		05	2	**69393-FK10A**		F/CONT VLVX4	01	0308-				* *
N		06	2	**69393-FK10A**		F/CONT VLVX4 TILT LEVELING SYSTEM	02	0308-				* *
		4 01	1	**69391-L4000**	INSULATOR-HYDRAULIC CONTROL VALVE		03	0107-				o o o o o o o o o o o o o o o o o o o o o o o o o o o o o
		5 01	1	**69392-FK000**	INSULATOR-HYDRAULIC CONTROL VALVE		03	0107-				o o o o o o o o o o o o o o o o o o o o o o o o o o o o o
		6 01	1	**69395-L1100**	PLUG ASSY		02	0107-				o o o o o o o o o o o o o o o o o o o o o o o o o o o o o
		02	1	**69395-L1100**		F/CONT VLVX4	04	0107-				* *
		7 01	1	**69479-FK100**	BRACKET-HYDRAULIC CONTROL VALVE	F/TILT LEVELING SYSTEM	01	0107-				* *
C		**8** 01	1	**70983-L1100**	CONN ASSY-90 ELBOW	F/TILT LEVELING SYSTEM	01	0107-0313				* *
N		02	1	**69350-15K00**	CONN ASSY-VALVE	F/TILT LEVELING SYSTEM	01	0313-				* *
C		**9** 01	1	**70257-L1100**	CONN ASSY, 3/8	F/TILT LEVELING SYSTEM	01	0107-0313				* *
N		02	1	**69350-FK010**	CONN ASSY, PF 3/8	F/TILT LEVELING SYSTEM	01	0313-				* *
		10 01	1	**25070-FK100**	SENSOR ASSY	F/TILT LEVELING SYSTEM	01	0107-				* *
C		**11** 01	1	**69313-FK110**	VALVE ASSY-SOL	F/TILT LEVELING SYSTEM	01	0107-0313				* *
N		02	1	**69313-GE00A**		F/TILT LEVELING SYSTEM	01	0313-				* *
		12 01	1	**69353-L6000**	CONNECTOR-P1 PORT		01	0107-				o o o o o o o o o o o o o o o o o o o o o o o o o o o o o
		13 01	2	**69173-L1100**	O RING		01	0107-				o o o o o o o o o o o o o o o o o o o o o o o o o o o o o
		14 01	1	**69350-FK000**	CONNECTOR-A1,PORT		01	0107-				o o o o o o o o o o o o o o o o o o o o o o o o o o o o o
		15 01	2	**69370-L1100**	O RING		01	0107-				o o o o o o o o o o o o o o o o o o o o o o o o o o o o o
		16 01	1	**69350-FK010**	CONNECTOR-A2,PORT		01	0107-				o o o o o o o o o o o o o o o o o o o o o o o o o o o o o
		17 01	2	**69371-L1100**	O RING		03	0107-				o o o o o o o o o o o o o o o o o o o o o o o o o o o o o
		02	2	**69371-L1100**		F/CONT VLVX4	04	0107-				* *
		18 01	1	**69662-L1100**	CONNECTOR-B2,A3 PORT		02	0107-				o o o o o o o o o o o o o o o o o o o o o o o o o o o o o
		02	1	**69662-L1100**	CONNECTOR-B2,A3,A4 PORT	F/CONT VLVX4	03	0107-				* *
C		**19** 01	1	**69662-L1100**	CONNECTOR-B3 PORT	F/2 STAGE MAST	01	0107-				o o o o o o o o o o o o o o o o o o o o o o o o o o o o o
		02	1	**69350-L7001**		F/3 STAGE MAST	01	0107-				* *

SEC. 693A

HYDRAULIC CONTROL VALVE

VALVULA DE CONTROL HIDRAULICO

HYDRAULIKSTEUERVENTIL

SOUPAPE DE COMMANDE HYDRAULIQUE

NC	S	KEY NO.	LEV	PART NO.	PART NAME	SPECIFICATION	QTY	APPLIED DATE	ICANF	FORMER PART NO.	KD	APPLIED MODEL 01	02	03	04	05	06	07	08	09	10	11	12	13	14	15	16	17	18	19	20	21	22	23	24	25	26	27	28	29
		20	01	2	**69371-L1100**	O RING		01	0107-			O	O	O	O	O	O	O	O	O	O	O	O	O	O	O	O	O	O	O	O	O	O	O	O	O	O	O	O	O
		21	01	1	**69394-FK000**	SPACER-CONTROL VALVE		03	0107-			O	O	O	O	O	O	O	O	O	O	O	O	O	O	O	O	O	O	O	O	O	O	O	O	O	O	O	O	O
		22	01	1	**08911-1401A**	NUT-HEX M10-1.25 4T		02	0107-			O	O	O	O	O	O	O	O	O	O	O	O	O	O	O	O	O	O	O	O	O	O	O	O	O	O	O	O	O
		23	01	1	**08915-1401A**	WASHER-LOCK SPLIT M10		02	0107-			O	O	O	O	O	O	O	O	O	O	O	O	O	O	O	O	O	O	O	O	O	O	O	O	O	O	O	O	O
		24	01	1	**08915-4401A**	WASHER-FLAT M10		02	0107-			O	O	O	O	O	O	O	O	O	O	O	O	O	O	O	O	O	O	O	O	O	O	O	O	O	O	O	O	O
		25	01	1	**08124-0301F**	SCREW-HHM M10-1.25X30 W/LK & PW		01	0107-			O	O	O	O	O	O	O	O	O	O	O	O	O	O	O	O	O	O	O	O	O	O	O	O	O	O	O	O	O
		26	01	1	**08120-8251F**	SCREW-HHM M8-1.25X25 W/LK & PW	F/TILT LEVELING SYSTEM	02	0107-			*	*	*	*	*	*	*	*	*	*	*	*	*	*	*	*	*	*	*	*	*	*	*	*	*	*	*	*	*
		27	01	1	**08110-6502G**	SCREW-HHM M6-1.0X50 W/SPRW	F/TILT LEVELING SYSTEM	02	0107-			*	*	*	*	*	*	*	*	*	*	*	*	*	*	*	*	*	*	*	*	*	*	*	*	*	*	*	*	*
		28	01	1	**69662-L1100**	CONNECTOR-B4 PORT	F/2 STAGE MAST CONT VLVX4	01	0107-			*	*	*	*	*	*	*	*	*	*	*	*	*	*	*	*	*	*	*	*	*	*	*	*	*	*	*	*	*
			02	1	**69350-L7001**		F/3 STAGE MAST CONT VLVX4	01	0107-			*	*	*	*	*	*	*	*	*	*	*	*	*	*	*	*	*	*	*	*	*	*	*	*	*	*	*	*	*
		29	01	2	**69371-L1100**	O RING	F/CONT VLVX4	01	0107-			*	*	*	*	*	*	*	*	*	*	*	*	*	*	*	*	*	*	*	*	*	*	*	*	*	*	*	*	*

NOTE

SEC. 693B

HYDRAULIC CONTROL VALVE (FC OPTION)

VALVULA DE CONTROL HIDRAULICO

HYDRAULIKSTEUERVENTIL

SOUPAPE DE COMMANDE HYDRAULIQUE

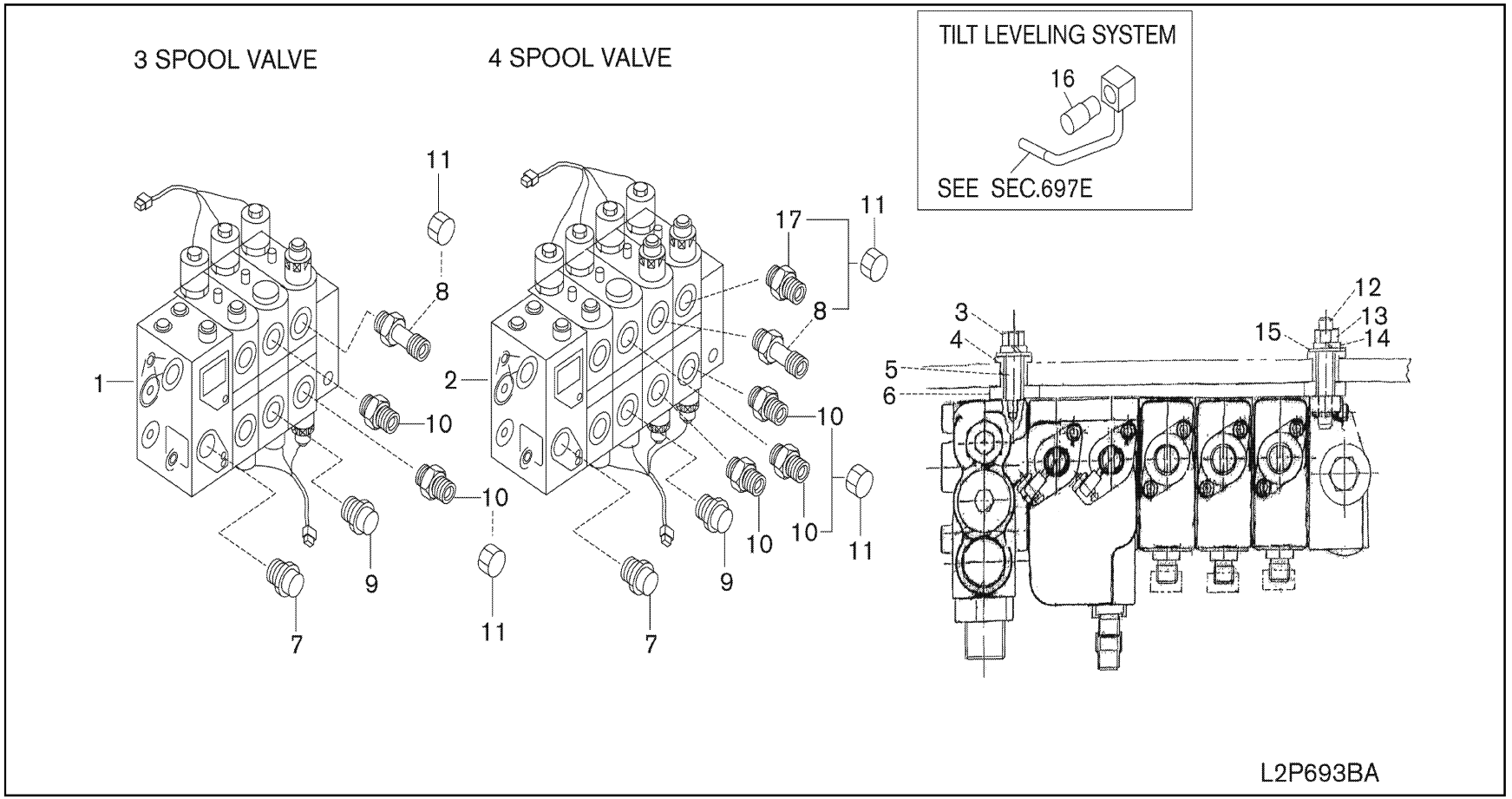

SEC. 693B

HYDRAULIC CONTROL VALVE (FC OPTION)

VALVULA DE CONTROL HIDRAULICO

HYDRAULIKSTEUERVENTIL

SOUPAPE DE COMMANDE HYDRAULIQUE

NC	S	KEY NO.	LEV	PART NO.	PART NAME	SPECIFICATION	QTY	APPLIED DATE	ICANF	FORMER PART NO.	KD	APPLIED MODEL 01 02 03 04 05 06 07 08 09 10 11 12 13 14 15 16 17 18 19 20 21 22 23 24 25 26 27 28 29
		1	01	1	**69320-GG00A**	VALVE ASSY-CONTROL	F/CONT VLVX3	01	0507-			* *
		2	01	1	**69320-GG00B**	VALVE ASSY-CONTROL	F/CONT VLVX4	01	0507-			* *
		3	01	1	**08124-0301F**	SCREW-HHM M10-1.25X30 W/LK & PW		01	0507-			* *
		4	01	1	**69391-L4000**	INSULATOR		03	0507-			* *
		5	01	1	**69394-FK000**	SPACER		03	0507-			* *
		6	01	1	**69392-FK000**	INSULATOR		03	0507-			* *
		7	01	1	**69353-L6000**	CONNECTOR		01	0507-			* *
		8	01	1	**69350-L7001**	CONNECTOR		01	0507-			* *
		9	01	1	**69350-FK010**	CONNECTOR		01	0507-			* *
		10	01	1	**69662-L1100**	CONNECTOR	F/CONT VLVX3	02	0507-			* *
C			02	1	**69662-L1100**		F/CONT VLVX4	03	0507-			* *
		11	01	1	**69395-L1100**	PLUG ASSY	F/CONT VLVX3	02	0507-			* *
			02	1	**69395-L1100**		F/CONT VLVX4	04	0507-			* *
		12	01	1	**08251-04010**	STUD		02	0507-			* *
		13	01	1	**08911-1401A**	NUT-HEX M10-1.25		02	0507-			* *
		14	01	1	**08915-1401A**	WASHER-LOCK SPLIT M10		02	0507-			* *
		15	01	1	**08915-4401A**	WASHER-FLAT M10		02	0507-			* *
		16	01	1	**25070-FK100**	SENSOR ASSY	F/TILT LEVELING SYSTEM	01	0507-			* *
N		**17**	01	1	**69662-L1100**	CONNECTOR	F/CONT VLVX4	01	0507-1012			* *
N			02	1	**69350-L7001**		F/CONT VLVX4	01	1012-			* *

SEC. 694B

HYDRAULIC CONTROL VALVE FITTING (3 SPOOL VALVE)

PARTES DE FIJACION DE LA VALVULA DE CONTROL HIDRAULICO

BESCHLAGTEILE DES HYDRAULIKSTEUERVENTILS

PIECES DE FIXATION DE SOUPAPE DE HYDRAULIQUE

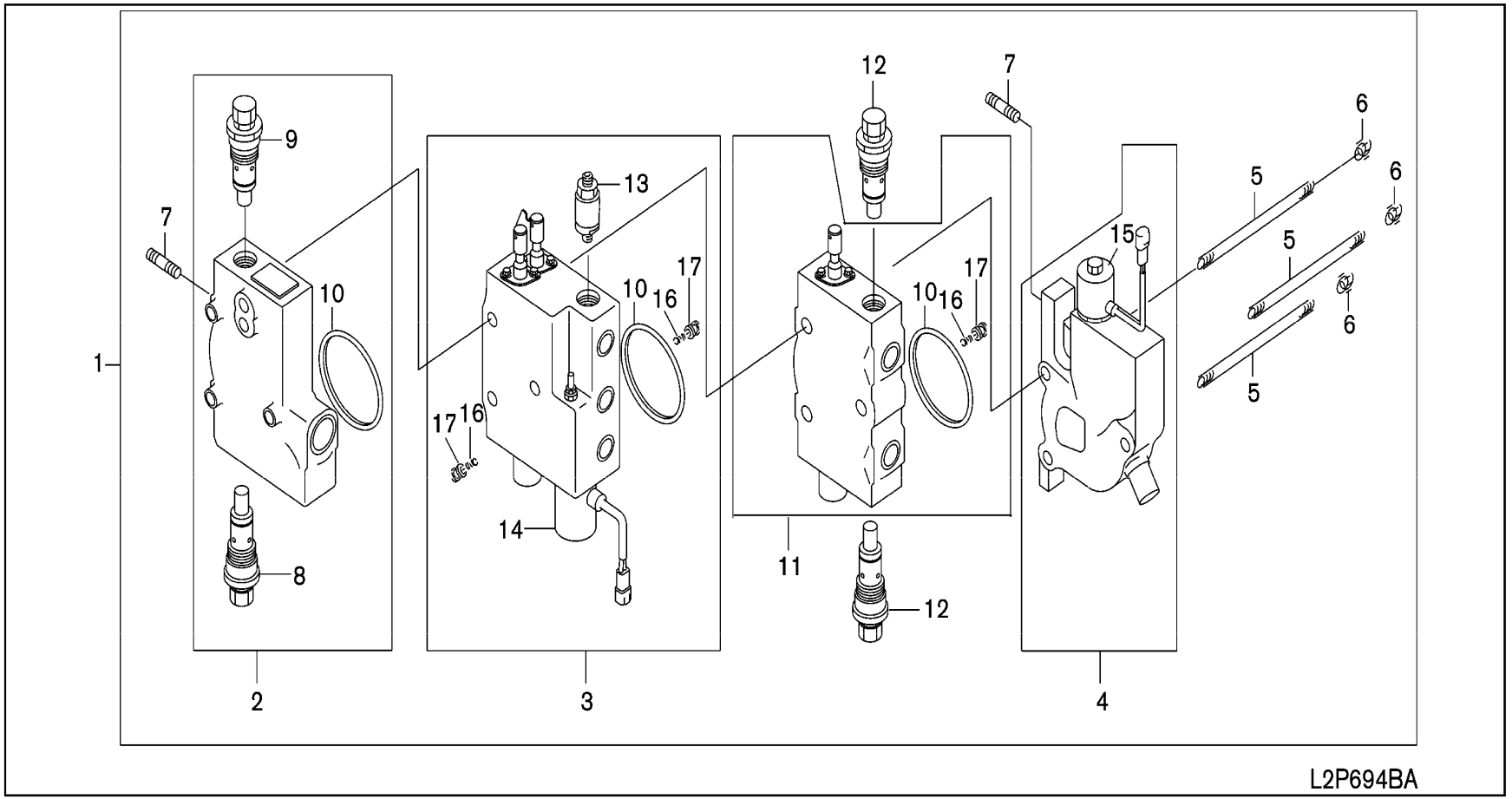

694B-1

SEC. 694B

HYDRAULIC CONTROL VALVE FITTING (3 SPOOL VALVE)

PARTES DE FIJACION DE LA VALVULA DE CONTROL HIDRAULICO

BESCHLAGTEILE DES HYDRAULIKSTEUERVENTILS

PIECES DE FIXATION DE SOUPAPE DE HYDRAULIQUE

NC	S	KEY NO.	LEV	PART NO.	PART NAME	SPECIFICATION	QTY	APPLIED DATE	ICANF	FORMER PART NO.	KD	APPLIED MODEL 01 02 03 04 05 06 07 08 09 10 11 12 13 14 15 16 17 18 19 20 21 22 23 24 25 26 27 28 29
		1 01	1	**69320-FK124**	VALVE ASSY-CONTROL		01	0107-0607				○○○○○○○○○○○○○○○○○○○
		02	1	**69320-FK14A**			01	0607-				○○○○○○○○○○○○○○○○○○○
		03	1	**69320-FK134**		F/TILT LEVELING SYSTEM	01	0107-0209				*********************
C		04	1	**69320-FK14B**		F/TILT LEVELING SYSTEM	01	0209-1111				*********************
N		05	1	**69320-GG07B**		F/TILT LEVELING SYSTEM	01	1111-				*********************
		06	1	**69320-FK324**			01	0107-0607				○○○○○○○
		07	1	**69320-FK34A**			01	0607-				○○○○○○○
		08	1	**69320-FK334**		F/TILT LEVELING SYSTEM	01	0107-1108				*******
		09	1	**69320-FK34B**		F/TILT LEVELING SYSTEM	01	1108-				*******
		10	1	**69320-FK304**			01	0107-0607				○○○○
		11	1	**69320-FK34C**			01	0607-				○○○○
		12	1	**69320-FK314**		F/TILT LEVELING SYSTEM	01	0107-0109				****
		13	1	**69320-FK34D**		F/TILT LEVELING SYSTEM	01	0109-0311				****
		14	1	**69320-GG18B**		F/TILT LEVELING SYSTEM	01	0311-				****
		2 01	2	**69322-FK10A**	HOUSING ASSY-INLET		01	0107-				○○○○○○○○○○○○○○○○○○○
		02	2	**69322-FK30A**			01	0107-				○○○○○○○○○○○○○
		03	1	**69339-FK100**	KIT-SEAL, O RING		01	0107-				○○○○○○○○○○○○○○○○○○○○○○○○○
		3 01	2	**69324-FK12A**	HOUSING ASSY-VALVE NO. 1		01	0107-0607				○○○○○○○○○○○○○○○○○○○
		02	2	**69324-FK10A**			01	0607-				○○○○○○○○○○○○○○○○○○○
		03	2	**69324-FK13A**		F/TILT LEVELING SYSTEM	01	0107-0209				*********************
C		04	2	**69324-FK10B**		F/TILT LEVELING SYSTEM	01	0209-1111				*********************
N		05	2	**69324-GG05A**		F/TILT LEVELING SYSTEM	01	1111-				*********************
		06	2	**69324-FK32A**			01	0107-0607				○○○○○○○
		07	2	**69324-FK34A**			01	0607-				○○○○○○○
		08	2	**69324-FK33A**		F/TILT LEVELING SYSTEM	01	0107-1108				*******
		09	2	**69324-FK30B**		F/TILT LEVELING SYSTEM	01	1108-				*******
		10	2	**69324-FK30A**			01	0107-0607				○○○○
		11	2	**69324-FK34C**			01	0607-				○○○○
		12	2	**69324-FK31A**		F/TILT LEVELING SYSTEM	01	0107-0109				****
		13	2	**69324-FK34D**		F/TILT LEVELING SYSTEM	01	0109-0311				****
		14	2	**69324-GG18A**		F/TILT LEVELING SYSTEM	01	0311-				****
		15	1	**69339-FK10A**	KIT-SEAL, O RING		01	0107-0607				○○○○○○○○○○○○○○○○○○○○○○○○○
		16	1	**69339-FK00A**			01	0607-				○○○○○○○○○○○○○○○○○○○○○○○○○
		17	1	**69339-FK10A**		F/TILT LEVELING SYSTEM	01	0607-0209				*********************
C		18	1	**69339-FK00A**		F/TILT LEVELING SYSTEM	01	0209-1111				*********************
N		19	1	**NA-**		F/TILT LEVELING SYSTEM	01	1111-				*********************
		20	1	**69339-FK10A**		F/TILT LEVELING SYSTEM	01	0607-1108				*******

SEC. 694B

HYDRAULIC CONTROL VALVE FITTING (3 SPOOL VALVE)

PARTES DE FIJACION DE LA VALVULA DE CONTROL HIDRAULICO

BESCHLAGTEILE DES HYDRAULIKSTEUERVENTILS

PIECES DE FIXATION DE SOUPAE DE HYDRAULIQUE

NC	S	KEY NO.	LEV	PART NO.	PART NAME	SPECIFICATION	QTY	APPLIED DATE	ICANF	FORMER PART NO.	KD	APPLIED MODEL 01 02 03 04 05 06 07 08 09 10 11 12 13 14 15 16 17 18 19 20 21 22 23 24 25 26 27 28 29
		3	21	1	**69339-FK00A**	KIT-SEAL, O RING	F/TILT LEVELING SYSTEM	01	1108-		

SEC. 694B

HYDRAULIC CONTROL VALVE FITTING (3 SPOOL VALVE)

PARTES DE FIJACION DE LA VALVULA DE CONTROL HIDRAULICO

BESCHLAGTEILE DES HYDRAULIKSTEUERVENTILS

PIECES DE FIXATION DE SOUPAPE DE HYDRAULIQUE

NC	S	KEY NO.	LEV	PART NO.	PART NAME	SPECIFICATION	QTY	APPLIED DATE	ICANF	FORMER PART NO.	KD	APPLIED MODEL 01 02 03 04 05 06 07 08 09 10 11 12 13 14 15 16 17 18 19 20 21 22 23 24 25 26 27 28 29
		14 03	3	**69313-FK12A**	VALVE ASSY-SOLENOID		01	1209-				○ ○
		04	3	**69313-FK12A**		F/TILT LEVELING SYSTEM	01	0107-1108				✱ ✱
		05	3	**69313-FK110**		F/TILT LEVELING SYSTEM	01	1108-1209				✱ ✱
C		06	3	**69313-FK12A**		F/TILT LEVELING SYSTEM	01	1209-1111				✱ ✱
N		07	3	**NA-**		F/TILT LEVELING SYSTEM	01	1111-				✱ ✱
N		08	3	**69313-FK12A**		F/TILT LEVELING SYSTEM	01	1111-				✱ ✱
		09	3	**69313-FK12A**		F/TILT LEVELING SYSTEM	01	0107-0109				✱ ✱ ✱ ✱
		10	3	**69313-FK110**		F/TILT LEVELING SYSTEM	01	0109-1209				✱ ✱ ✱ ✱
		11	3	**69313-FK12A**		F/TILT LEVELING SYSTEM	01	1209-0311				✱ ✱ ✱ ✱
		12	3	**NA-**		F/TILT LEVELING SYSTEM-CONTACY FACTORY	01	0311-				✱ ✱ ✱ ✱
		13	4	**69313-FK102**	SOLENOID		01	0107-1209				○ ○
		14	4	**69313-GG01A**			01	1209-				○ ○
		15	4	**69313-FK102**		F/TILT LEVELING SYSTEM	01	0107-1209				✱ ✱
		16	4	**69313-GG01A**		F/TILT LEVELING SYSTEM	01	1209-				✱ ✱
		17	4	**69313-GG01A**		F/TILT LEVELING SYSTEM	01	1209-0311				✱ ✱ ✱ ✱
		18	4	**NA-**		F/TILT LEVELING SYSTEM-CONTACY FACTORY	01	0311-				✱ ✱ ✱ ✱
		15 01	3	**69313-FK12B**	VALVE ASSY-SOLENOID		01	0107-				○ ○
		02	4	**69313-FK102**	SOLENOID		01	0107-1209				○ ○
		03	4	**69313-GG01A**			01	1209-				○ ○
		16 01	3	**69376-FK100**	SPRING		03	0107-				○ ○
		17 01	3	**69375-FK100**	POPPET		03	0107-				○ ○

SEC. 694C

HYDRAULIC CONTROL VALVE FITTING (4 SPOOL VALVE)

PARTES DE FIJACION DE LA VALVULA DE CONTROL HIDRAULICO

BESCHLAGTEILE DES HYDRAULIKSTEUERVENTILS

PIECES DE FIXATION DE SOUPAPE DE HYDRAULIQUE

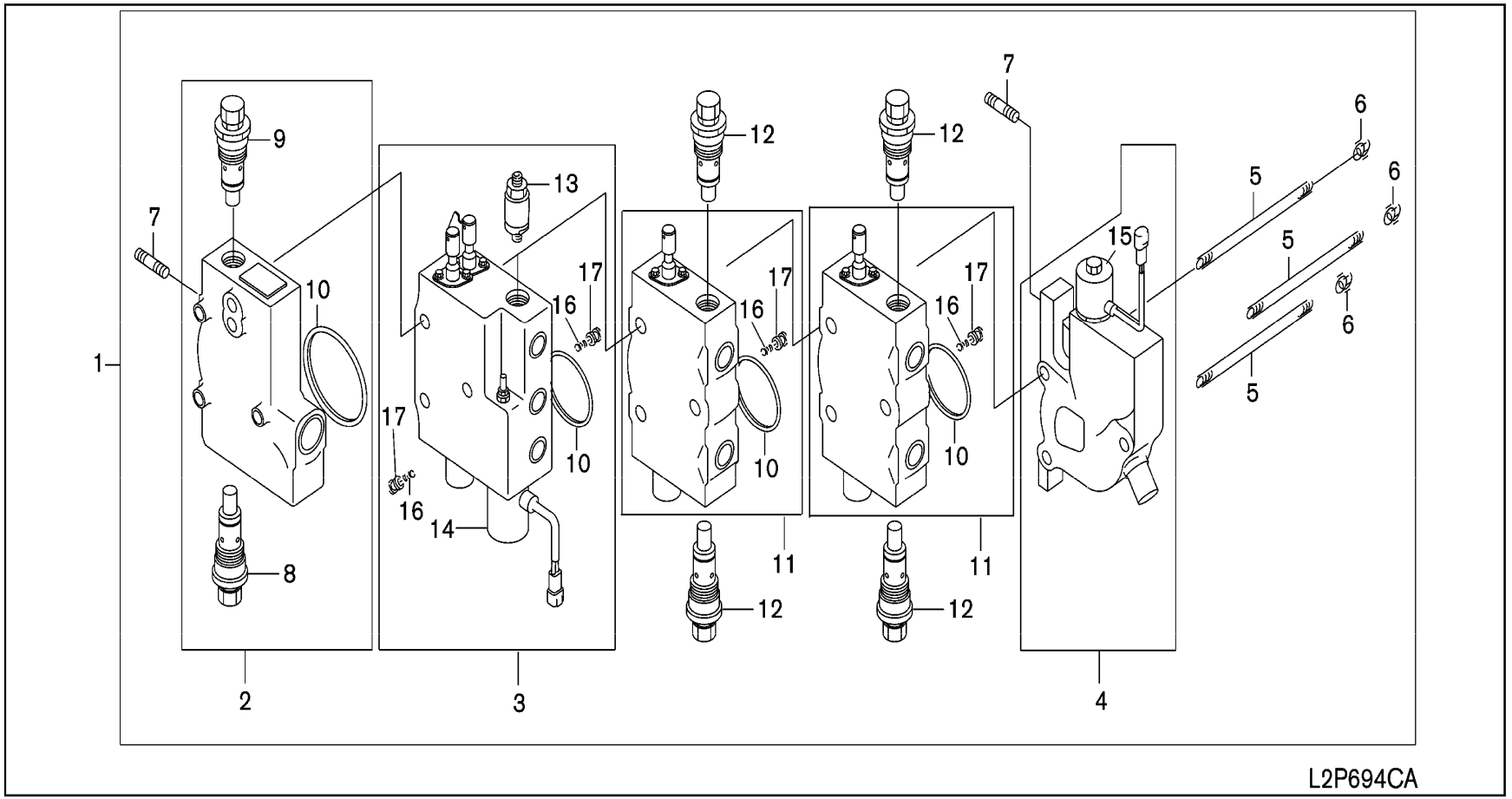

694C-1

SEC. 694C

HYDRAULIC CONTROL VALVE FITTING (4 SPOOL VALVE)

PARTES DE FIJACION DE LA VALVULA DE CONTROL HIDRAULICO

BESCHLAGTEILE DES HYDRAULIKSTEUERVENTILS

PIECES DE FIXATION DE SOUPAPE DE HYDRAULIQUE

NC	S	KEY NO.	LEV	PART NO.	PART NAME	SPECIFICATION	QTY	APPLIED DATE	ICANF	FORMER PART NO.	KD	APPLIED MODEL 01 02 03 04 05 06 07 08 09 10 11 12 13 14 15 16 17 18 19 20 21 22 23 24 25 26 27 28 29
		1 01	1	**69320-FK125**	VALVE ASSY-CONTROL		01	0107-0807				* *
		02	1	**69320-FK15A**			01	0807-				* *
		03	1	**69320-FK135**		F/TILT LEVELING SYSTEM	01	0107-0109				* *
		04	1	**69320-FK15B**		F/TILT LEVELING SYSTEM	01	0109-				* *
		05	1	**69320-FK325**			01	0107-0807				* *
		06	1	**69320-FK35A**			01	0807-				* *
		07	1	**69320-FK335**		F/TILT LEVELING SYSTEM	01	0107-1208				* *
		08	1	**69320-FK35B**		F/TILT LEVELING SYSTEM	01	1208-				* *
		09	1	**69320-FK305**			01	0107-0807				* *
		10	1	**69320-FK35C**			01	0807-				* *
		11	1	**69320-FK315**		F/TILT LEVELING SYSTEM	01	0107-1008				* *
		12	1	**69320-FK35D**		F/TILT LEVELING SYSTEM	01	1008-				* *
		2 01	2	**69322-FK10A**	HOUSING ASSY-INLET		01	0107-				* *
		02	2	**69322-FK30A**			01	0107-				* *
		03	1	**69339-FK100**	KIT-SEAL, O RING		01	0107-				* *
		3 01	2	**69324-FK12F**	HOUSING ASSY-VALVE NO. 1		01	0107-0807				* *
		02	2	**69324-FK15A**			01	0807-				* *
		03	2	**69324-FK13A**		F/TILT LEVELING SYSTEM	01	0107-0109				* *
		04	2	**69324-FK10B**		F/TILT LEVELING SYSTEM	01	0109-				* *
		05	2	**69324-FK32F**			01	0107-0807				* *
		06	2	**69324-FK35A**			01	0807-				* *
		07	2	**69324-FK33A**		F/TILT LEVELING SYSTEM	01	0107-1208				* *
		08	2	**69324-FK30B**		F/TILT LEVELING SYSTEM	01	1208-				* *
		09	2	**69324-FK30F**			01	0107-0807				* *
		10	2	**69324-FK35C**			01	0807-				* *
		11	2	**69324-FK31A**		F/TILT LEVELING SYSTEM	01	0107-1008				* *
		12	2	**69324-FK34D**		F/TILT LEVELING SYSTEM	01	1008-				* *
		13	1	**69339-FK10A**	KIT-SEAL, O RING		01	0107-0807				* *
		14	1	**69339-FK00A**			01	0807-				* *
		15	1	**69339-FK10A**		F/TILT LEVELING SYSTEM	01	0807-0109				* *
		16	1	**69339-FK00A**		F/TILT LEVELING SYSTEM	01	0109-				* *
		17	1	**69339-FK10A**		F/TILT LEVELING SYSTEM	01	0807-1208				* *
		18	1	**69339-FK00A**		F/TILT LEVELING SYSTEM	01	1208-				* *
		19	1	**69339-FK10B**			01	0107-0807				* *
		20	1	**69339-FK01A**			01	0807-				* *
		21	1	**69339-FK10B**		F/TILT LEVELING SYSTEM	01	0807-1008				* *
		22	1	**69339-FK01A**		F/TILT LEVELING SYSTEM	01	1008-				* *

SEC. 694C

HYDRAULIC CONTROL VALVE FITTING (4 SPOOL VALVE)

PARTES DE FIJACION DE LA VALVULA DE CONTROL HIDRAULICO

BESCHLAGTEILE DES HYDRAULIKSTEUERVENTILS

PIECES DE FIXATION DE SOUPADE DE HYDRAULIQUE

NC	S	KEY NO.	LEV	PART NO.	PART NAME	SPECIFICATION	QTY	APPLIED DATE	TCANF	FORMER PART NO.	KD	APPLIED MODEL 01 02 03 04 05 06 07 08 09 10 11 12 13 14 15 16 17 18 19 20 21 22 23 24 25 26 27 28 29
		4	01	2	**69326-FJ300**	HOUSING-OUTLET		01	0107-			* *
		5	01	2	**58444-FJ305**	ROD-TIE	L=188	03	0107-			* *
		6	01	2	**58448-FJ300**	NUT-TIE ROD		03	0107-			* *
		7	01	2	**58426-FJ300**	BOLT-STUD		02	0107-			* *
		8	01	2	**69328-FJ30A**	VALVE-RELIEF, MAIN		01	0107-			* *
			02	1	**NA-**	KIT-SEAL, O RING	CONTACT FACTORY	01	0107-			* *
		9	01	2	**69328-FK10A**	VALVE-RELEF		01	0107-			* *
			02	1	**NA-**	KIT-SEAL, O RING	CONTACT FACTORY	01	0107-			* *
		10	01	3	**69386-FK102**	RING-O HOUSING		04	0107-			* *
		11	01	2	**69324-FJ301**	HOUSING ASSY-VALVE NO. 2		02	0107-0807			* *
			02	2	**69324-FJ31A**			02	0807-			* *
			03	2	**69324-FJ301**		F/TILT LEVELING SYSTEM	02	0807-0109			* *
			04	2	**69324-FJ31A**		F/TILT LEVELING SYSTEM	02	0109-			* *
			05	2	**69324-FJ301**		F/TILT LEVELING SYSTEM	02	0807-1208			* *
			06	2	**69324-FJ31A**		F/TILT LEVELING SYSTEM	02	1208-			* *
			07	2	**69324-FJ301**		F/TILT LEVELING SYSTEM	02	0807-1008			* *
			08	2	**69324-FJ31A**		F/TILT LEVELING SYSTEM	02	1008-			* *
			09	1	**69339-FK110**	KIT-SEAL, O RING		02	0107-0807			* *
			10	1	**69339-FK02A**			02	0807-			* *
			11	1	**69339-FK110**		F/TILT LEVELING SYSTEM	02	0807-0109			* *
			12	1	**69339-FK02A**		F/TILT LEVELING SYSTEM	02	0109-			* *
			13	1	**69339-FK110**		F/TILT LEVELING SYSTEM	02	0807-1208			* *
			14	1	**69339-FK02A**		F/TILT LEVELING SYSTEM	02	1208-			* *
			15	1	**69339-FK110**		F/TILT LEVELING SYSTEM	02	0807-1008			* *
			16	1	**69339-FK02A**		F/TILT LEVELING SYSTEM	02	1008-			* *
		12	01	3	**69328-FJ302**	VALVE-RELIEF		04	0107-			* *
			02	1	**NA-**	KIT-SEAL, O RING	CONTACT FACTORY	04	0107-			* *
		13	01	2	**58080-FK120**	FLOW REGULATOR VALVE ASSY		01	0107-			* *
			02	2	**58080-FK320**			01	0107-			* *
		14	01	3	**69313-FK12A**	VALVE ASSY-SOLENOID		01	0107-0807			* *
			02	3	**69313-FK110**			01	0807-1209			* *
			03	3	**69313-FK12A**			01	1209-			* *
			04	4	**69313-FK102**	SOLENOID		01	0107-1209			* *
			05	4	**69313-GG01A**			01	1209-			* *
		15	01	3	**69313-FK12B**	VALVE ASSY-SOLENOID		01	0107-			* *
			02	4	**69313-FK102**	SOLENOID		01	0107-1209			* *
			03	4	**69313-GG01A**			01	1209-			* *

SEC. 694C

HYDRAULIC CONTROL VALVE FITTING (4 SPOOL VALVE)

PARTES DE FIJACION DE LA VALVULA DE CONTROL HIDRAULICO

BESCHLAGTEILE DES HYDRAULIKSTEUERVENTILS

PIECES DE FIXATION DE SOUPAPE DE HYDRAULIQUE

NC	S	KEY NO.	LEV	PART NO.	PART NAME	SPECIFICATION	QTY	APPLIED DATE	ICANF	FORMER PART NO.	KD
		16 01	3	**69376-FK100**	SPRING		04	0107-			
		17 01	3	**69375-FK100**	POPPET		04	0107-			

APPLIED MODEL

01	02	03	04	05	06	07	08	09	10	11	12	13	14	15	16	17	18	19	20	21	22	23	24	25	26	27	28	29
MIPA2000JV	MIPA2000VV	MIPA2000LV	MIPA2000SV	MIUA2000JV	MIUA2000DV	MIUA2000LV	MIUA2000SV	MIYA2000LV	MIPA2055JV	MIPA2055DV	MIPA2055LV	MIPA2055SV	MIUA2055JV	MIUA2055DV	MIUA2055LV	MIUA2055SV	MIUA2058JV	MIUA2058DV	MIUA2058LV	MIUA2058JV	MIUA2300DV	MIUA2300LV	MIUA2300DV	MIUA2300LV	MIYA2305JV	MIUA2355DV	MIUA2355LV	MIYG2355JV
✱	✱	✱	✱	✱	✱	✱	✱	✱	✱	✱	✱	✱	✱	✱	✱	✱	✱	✱	✱	✱	✱	✱	✱	✱	✱	✱	✱	✱
✱	✱	✱	✱	✱	✱	✱	✱	✱	✱	✱	✱	✱	✱	✱	✱	✱	✱	✱	✱	✱	✱	✱	✱	✱	✱	✱	✱	✱

SEC. 694D

HYDRAULIC CONTROL VALVE FITTING (KIT PARTS)

PARTES DE FIJACION DE LA VALVULA DE CONTROL HIDRAULICO

BESCHLAGTEILE DES HYDRAULIKSTEUERVENTILS

PIECES DE FIXATION DE SOUPAPE DE HYDRAULIQUE

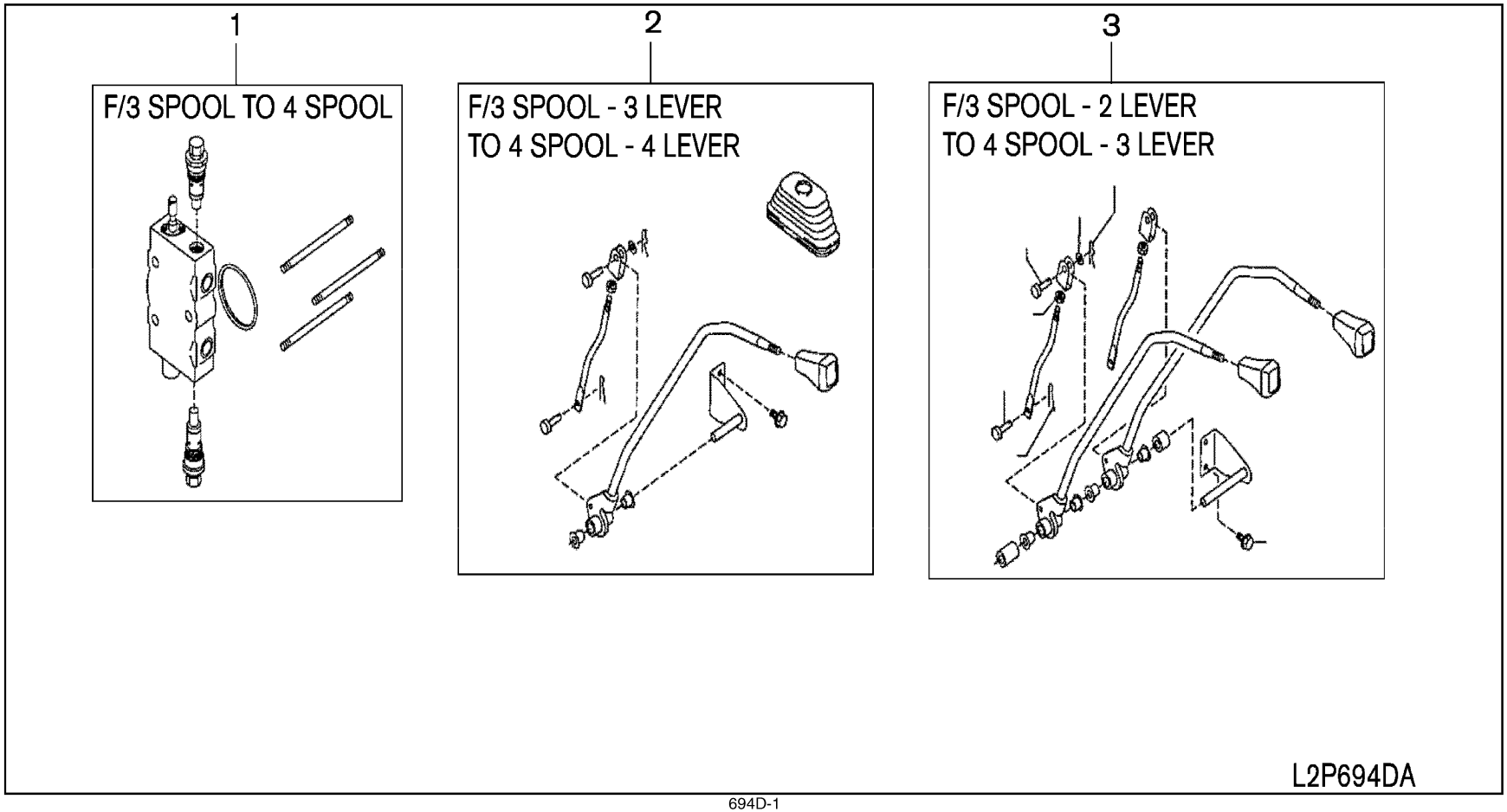

SEC. 694D

HYDRAULIC CONTROL VALVE FITTING (KIT PARTS)

PARTES DE FIJACION DE LA VALVULA DE CONTROL HIDRAULICO

BESCHLAGTEILE DES HYDRAULIKSTEUERVENTILS

PIECES DE FIXATION DE SOUPAPE DE HYDRAULIQUE

NC	S	KEY NO.	LEV	PART NO.	PART NAME	SPECIFICATION	QTY	APPLIED DATE	ICANF	FORMER PART NO.	KD	APPLIED MODEL 01 02 03 04 05 06 07 08 09 10 11 12 13 14 15 16 17 18 19 20 21 22 23 24 25 26 27 28 29
		1	01	1	**69310-FK102**	VALVE KIT-HYD CONTROL	F/3 SPOOL TO 4 SPOOL	01	0107-			* *
		2	01	1	**69403-FK102**	LEVER KIT-CONT VALVE	F/3 SPOOL - 3 LEVER TO 4 SPOOL - 4 LEVER	01	0107-			* *
		3	01	1	**69403-FK104**	LEVER KIT-CONT VALVE	F/3 SPOOL - 2 LEVER TO 4 SPOOL - 3 LEVER	01	0107-			* *

SEC. 694E

HYDRAULIC CONTROL VALVE FITTING (FC OPTION-3 SPOOL VALVE)

PARTES DE FIJACION DE LA VALVULA DE CONTROL HIDRAULICO

BESCHLAGTEILE DES HYDRAULIKSTEUERVENTILS

PIECES DE FIXATION DE SOUPAPE DE HYDRAULIQUE

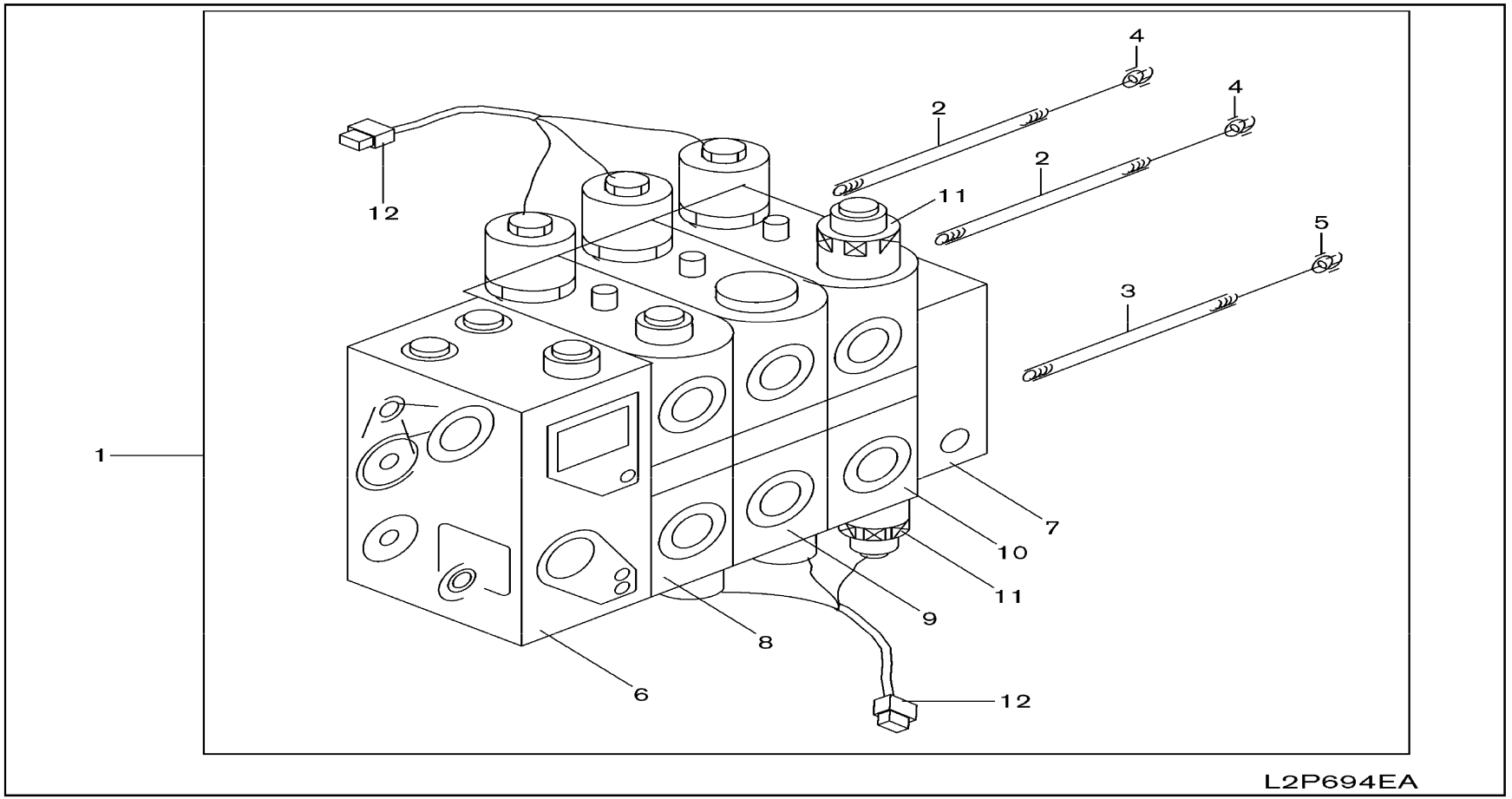

SEC. 694E

HYDRAULIC CONTROL VALVE FITTING (FC OPTION-3 SPOOL VALVE)

PARTES DE FIJACION DE LA VALVULA DE CONTROL HIDRAULICO

BESCHLAGTEILE DES HYDRAULIKSTEUERVENTILS

PIECES DE FIXATION DE SOUPAPE DE HYDRAULIQUE

NC	S	KEY NO.	LEV	PART NO.	PART NAME	SPECIFICATION	QTY	APPLIED DATE	ICANF	FORMER PART NO.	KD	APPLIED MODEL 01	02	03	04	05	06	07	08	09	10	11	12	13	14	15	16	17	18	19	20	21	22	23	24	25	26	27	28	29
		1 01	1	**69320-GG00A**	VALVE ASSY-CONT		01	0507-				*	*	*		*	*	*		*	*	*	*		*	*	*		*										
		2 01	2	**69380-GG01A**	ROD-TIE		02	0507-				*	*	*		*	*	*		*	*	*	*		*	*	*		*										
		3 01	2	**69380-GG00A**	ROD-TIE		01	0507-				*	*	*		*	*	*		*	*	*	*		*	*	*		*										
		4 01	2	**58449-L0100**	NUT-TIE ROD		02	0507-				*	*	*		*	*	*		*	*	*	*		*	*	*		*										
		5 01	2	**58448-L0100**	NUT-TIE ROD		01	0507-				*	*	*		*	*	*		*	*	*	*		*	*	*		*										
		6 01	2	**69324-GG03B**	HOUSING ASSY-VALVE		01	0507-				*	*	*		*	*	*		*	*	*	*		*	*	*		*										
		7 01	2	**69326-GG00B**	HOUSING-OUTLET		01	0507-				*	*	*		*	*	*		*	*	*	*		*	*	*		*										
		8 01	2	**69324-GG02B**	HOUSING ASSY-VALVE		01	0507-				*	*	*		*	*	*		*	*	*	*		*	*	*		*										
		9 01	2	**69324-GG00B**	HOUSING ASSY-VALVE		01	0507-				*	*	*		*	*	*		*	*	*	*		*	*	*		*										
		10 01	2	**69324-GG01B**	HOUSING ASSY-VALVE		01	0507-				*	*	*		*	*	*		*	*	*	*		*	*	*		*										
		11 01	2	**69328-GA10C**	VALVE-RELIEF		02	0507-				*	*	*		*	*	*		*	*	*	*		*	*	*		*										
		12 01	2	**69164-GG00A**	CONN ASSY		02	0507-				*	*	*		*	*	*		*	*	*	*		*	*	*		*										

SEC. 694F

HYDRAULIC CONTROL VALVE FITTING (FC OPTION-4 SPOOL VALVE)

PARTES DE FIJACION DE LA VALVULA DE CONTROL HIDRAULICO

BESCHLAGTEILE DES HYDRAULIKSTEUERVENTILS

PIECES DE FIXATION DE SOUPAPE DE HYDRAULIQUE

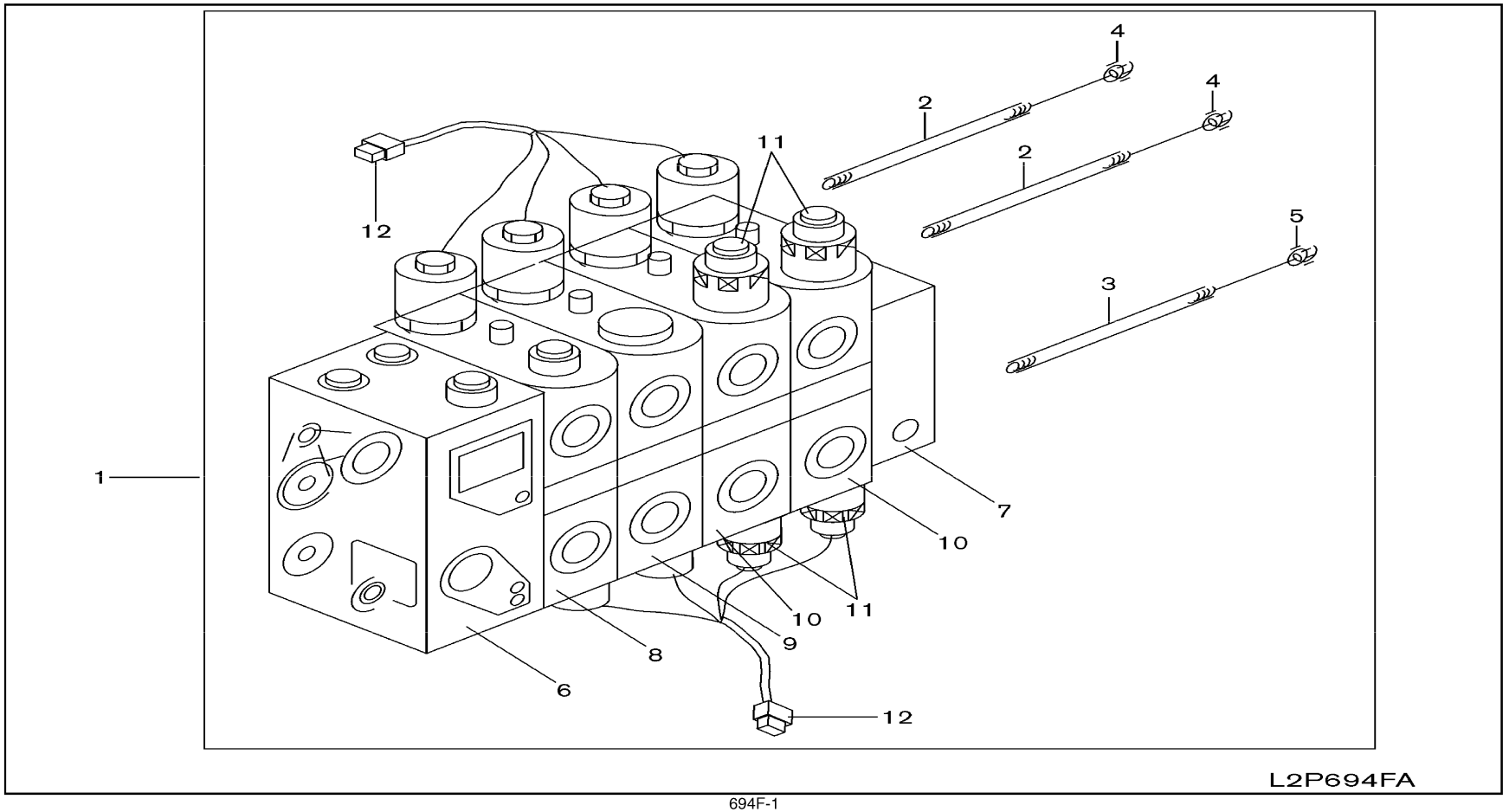

694F-1

SEC. 694F

HYDRAULIC CONTROL VALVE FITTING (FC OPTION-4 SPOOL VALVE)

PARTES DE FIJACION DE LA VALVULA DE CONTROL HIDRAULICO

BESCHLAGTEILE DES HYDRAULIKSTEUERVENTILS

PIECES DE FIXATION DE SOUPAPE DE HYDRAULIQUE

NC	S	KEY NO.	LEV	PART NO.	PART NAME	SPECIFICATION	QTY	APPLIED DATE	ICANF	FORMER PART NO.	KD	APPLIED MODEL 01	02	03	04	05	06	07	08	09	10	11	12	13	14	15	16	17	18	19	20	21	22	23	24	25	26	27	28	29
		1 01	1	**69320-GG00B**	VALVE ASSY-CONT		01	0507-				*	*	*		*	*	*		*	*	*	*		*	*	*		*										
		2 01	2	**69382-GG01A**	ROD-TIE		02	0507-				*	*	*		*	*	*		*	*	*	*		*	*	*		*										
		3 01	2	**69382-GG00A**	ROD-TIE		01	0507-				*	*	*		*	*	*		*	*	*	*		*	*	*		*										
		4 01	2	**58449-L0100**	NUT-TIE ROD		02	0507-				*	*	*		*	*	*		*	*	*	*		*	*	*		*										
		5 01	2	**58448-L0100**	NUT-TIE ROD		01	0507-				*	*	*		*	*	*		*	*	*	*		*	*	*		*										
		6 01	2	**69324-GG03B**	HOUSING ASSY-VALVE		01	0507-				*	*	*		*	*	*		*	*	*	*		*	*	*		*										
		7 01	2	**69326-GG00B**	HOUSING-OUTLET		01	0507-				*	*	*		*	*	*		*	*	*	*		*	*	*		*										
		8 01	2	**69324-GG02B**	HOUSING ASSY-VALVE		01	0507-				*	*	*		*	*	*		*	*	*	*		*	*	*		*										
		9 01	2	**69324-GG00B**	HOUSING ASSY-VALVE		01	0507-				*	*	*		*	*	*		*	*	*	*		*	*	*		*										
		10 01	2	**69324-GG01B**	HOUSING ASSY-VALVE		02	0507-				*	*	*		*	*	*		*	*	*	*		*	*	*		*										
		11 01	2	**69328-GA10C**	VALVE-RELIEF		04	0507-				*	*	*		*	*	*		*	*	*	*		*	*	*		*										
		12 01	2	**69164-5K312**	CONN ASSY		02	0507-				*	*	*		*	*	*		*	*	*	*		*	*	*		*										

SEC. 695A

HYDRAULIC CONTROL LEVER (FITTING PARTS)

PALANCA DE CONTROL HIDRAULICO

HYDRAULIKSTEUERHBEL

LEVIER DE COMMANDE HYDRAULIQUE

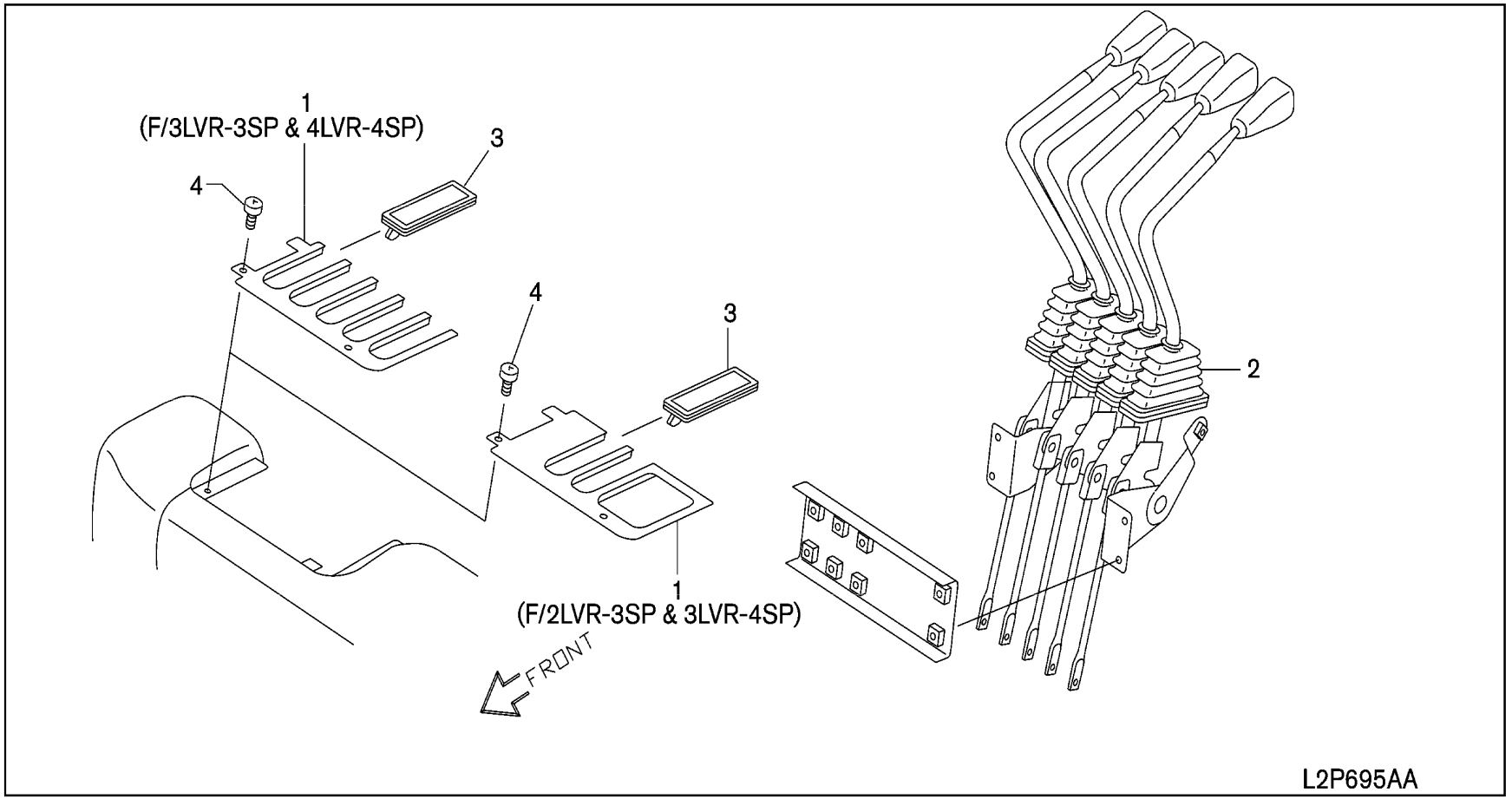

SEC. 695A

HYDRAULIC CONTROL LEVER (FITTING PARTS)

PALANCA DE CONTROL HIDRAULICO

HYDRAULIKSTEUERHBEL

LEVIER DE COMMANDE HYDRAULIQUE

NC	S	KEY NO.	LEV	PART NO.	PART NAME	SPECIFICATION	QTY	APPLIED DATE	ICANF	FORMER PART NO.	KD	APPLIED MODEL 01 02 03 04 05 06 07 08 09 10 11 12 13 14 15 16 17 18 19 20 21 22 23 24 25 26 27 28 29
		1 01	1	**69475-FK10A**	COVER-INSTRUMENT PANEL	F/2LVR-3SP	01	0107-				○○○○○○○○○○○○○○○○○○○○○○○○○○○○○
		02	1	**69475-FK00A**		F/3LVR-3SP	01	0107-				*********************************
		03	1	**69475-FK00A**		F/4LVR-4SP	01	0107-				*********************************
		04	1	**69475-FK10A**		F/3LVR-4SP	01	0107-				*********************************
		2 01	1	**69425-FK100**	BELLOWS-CONTROL LEVER	F/3LVR-3SP	03	0107-				*********************************
		02	1	**69425-FK100**		F/4LVR-4SP	04	0107-				*********************************
		3 01	1	**69427-FK10A**	COVER-HOSE	F/2LVR-3SP	01	0107-				○○○○○○○○○○○○○○○○○○○○○○○○○○○○○
		02	1	**69427-FK10A**		F/3LVR-3SP	02	0107-				*********************************
C		03	1	**69427-FK10A**		F/4LVR-4SP	01	0107-				*********************************
		4 01	1	**08363-6162C**	SCREW-HH PP M6-1.0X16 W/PW	F/2LVR-3SP	02	0107-				○○○○○○○○○○○○○○○○○○○○○○○○○○○○○

SEC. 695C

HYDRAULIC CONTROL LEVER (3 SPOOL-3 LEVER)

PALANCA DE CONTROL HIDRAULICO

HYDRAULIKSTEUERHBEL

LEVIER DE COMMANDE HYDRAULIQUE

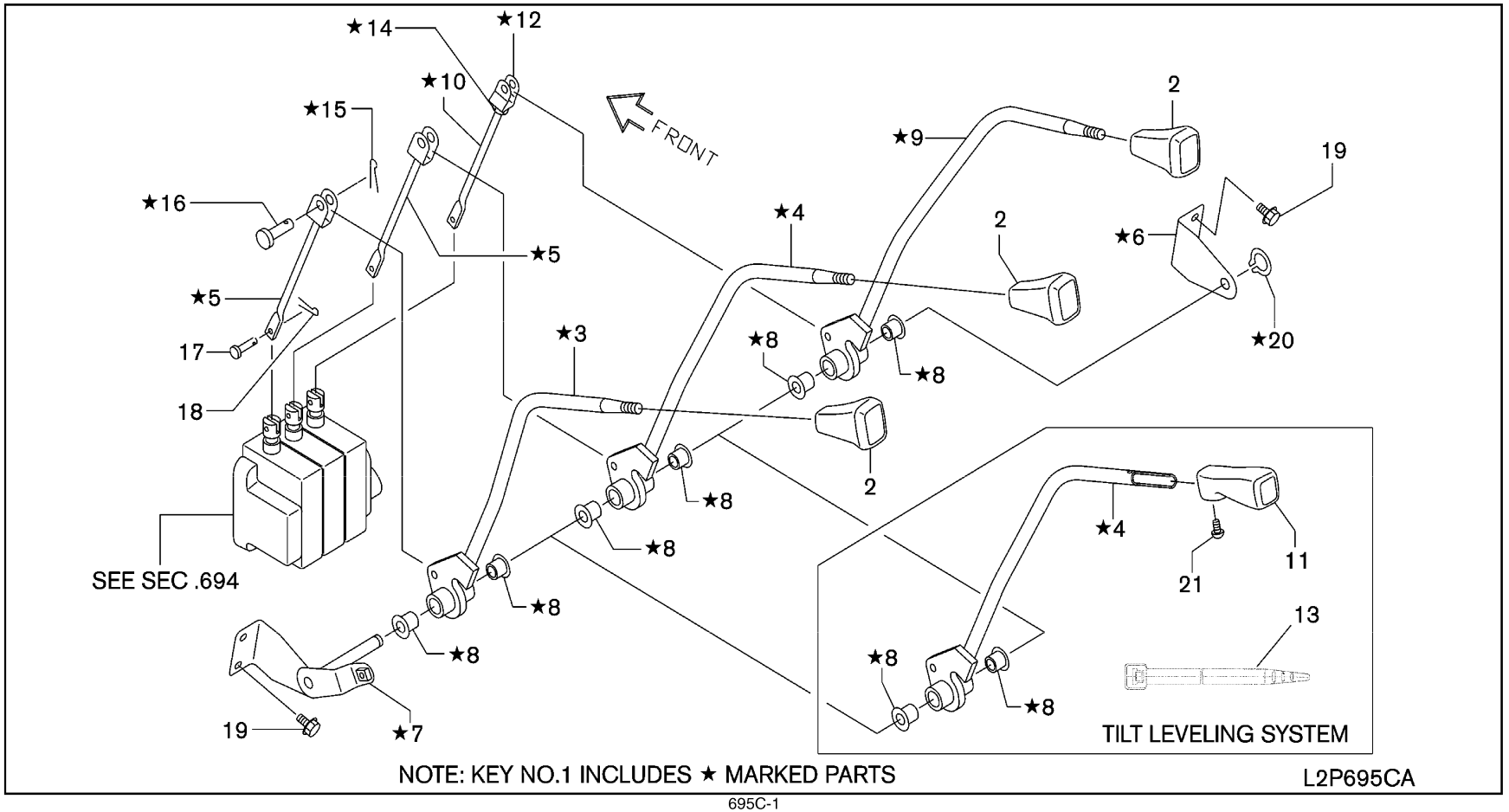

SEC. 695C

HYDRAULIC CONTROL LEVER (3 SPOOL-3 LEVER)

PALANCA DE CONTROL HIDRAULICO

HYDRAULIKSTEUERHBEL

LEVIER DE COMMANDE HYDRAULIQUE

NC	S	KEY NO.	LEV	PART NO.	PART NAME	SPECIFICATION	QTY	APPLIED DATE	ICANF	FORMER PART NO.	KD	APPLIED MODEL 01 02 03 04 05 06 07 08 09 10 11 12 13 14 15 16 17 18 19 20 21 22 23 24 25 26 27 28 29
		1	01	1	**69405-FK001**	LEVER & BRACKET COMPLETE		01	0107-			* *
			02	1	**69405-FK011**		F/TILT LEVELING SYSTEM	01	0107-			* *
		2	01	1	**69411-FK00C**	KNOB-CONTROL LEVER		03	0107-			* *
			02	1	**69411-FK00C**		F/TILT LEVELING SYSTEM	02	0107-			* *
		3	01	2	**69415-FK000**	LEVER-CONTROL VALVE LIFT	F/LIFT	01	0107-			* *
		4	01	2	**69415-FK001**	LEVER-CONTROL VALVE TILT	F/TILT	01	0107-			* *
			02	2	**69415-FK010**		F/TILT LEVELING SYSTEM-TILT	01	0107-			* *
		5	01	2	**69452-FK000**	ROD-CONTROL VALVE		02	0107-			* *
		6	01	2	**69471-FK000**	BRACKET-CONTROL LEVER		01	0107-			* *
		7	01	2	**69445-FK001**	SHAFT ASSY-LEVER		01	0107-			* *
		8	01	2	**46525-18000**	BUSH-PEDAL		06	0107-			* *
		9	01	2	**69415-FK002**	LEVER-CONTROL VALVE A	F/ATTACH	01	0107-			* *
		10	01	2	**69453-FK010**	ROD-CONTROL VALVE		01	0107-			* *
		11	01	1	**69411-GG00A**	KNOB-CONTROL LEVER	F/TILT LEVELING SYSTEM	01	0107-			* *
		12	01	2	**69458-FK010**	CLEVIS		01	0107-			* *
		13	01	1	**24216-S5801**	CLIP	F/TILT LEVELING SYSTEM	02	0107-			* *
		14	01	2	**08911-1081A**	NUT-HEX M8-1.25		01	0107-			* *
		15	01	2	**00923-10810**	RING-SNAP		03	0107-			* *
		16	01	2	**00843-8221A**	PIN-CLEVIS		03	0107-			* *
		17	01	1	**00843-5201A**	PIN-CLEVIS		03	0107-			* *
		18	01	1	**00923-1051A**	PIN-SNAP		03	0107-			* *
		19	01	1	**08156-8201F**	SCREW-HHM M8-1.25X20 W/LK & PW		04	0107-			* *
		20	01	2	**00922-11200**	RING-SNAP		01	0107-			* *
		21	01	1	**08313-5102G**	SCREW-PHM M5-.8X10 W/SPRW	F/TILT LEVELING SYSTEM	01	0107-			* *

APPLIED MODEL: MINI UPJ I, MINI UPJ I, MINI UPJ I, MINI UPJ I, MINI UPJ I, MINI UUJ I, MINI UUJ I, MINI UUJ I, MINI UUJ I, MINI UYJ I, MINI UPJ I, MINI UPJ I, MINI UPJ I, MINI UUJ I, MINI UUJ I, MINI UUJ I, MINI UUJ I, MINI UYJ I, MINI UUJ I, MINI UUJ I, MINI UUJ I, MINI GGJ I, MINI GGJ I, MINI GGJ I, MINI GGJ I, MINI GGJ I, MINI GGJ I, MINI GGJ I, MINI GGJ I, MINI GGJ I

A220JVV, A220DVV, A220LVS, A220LVV, A220JVV, A220DVV, A220LVS, A220JVV, A220DVV, A220LVS, A255JVV, A255DVV, A255LVS, A255JVV, A255DVV, A255LVS, A288JVV, A288DVV, A288LVS, A330JVV, A330DVV, A330LVV, A330JVV, A330DVV, A330LVV, A335JVV, A335DVV, A335LVV

SEC. 695D

HYDRAULIC CONTROL LEVER (4 SPOOL-4 LEVER)

PALANCA DE CONTROL HIDRAULICO

HYDRAULIKSTEUERHBEL

LEVIER DE COMMANDE HYDRAULIQUE

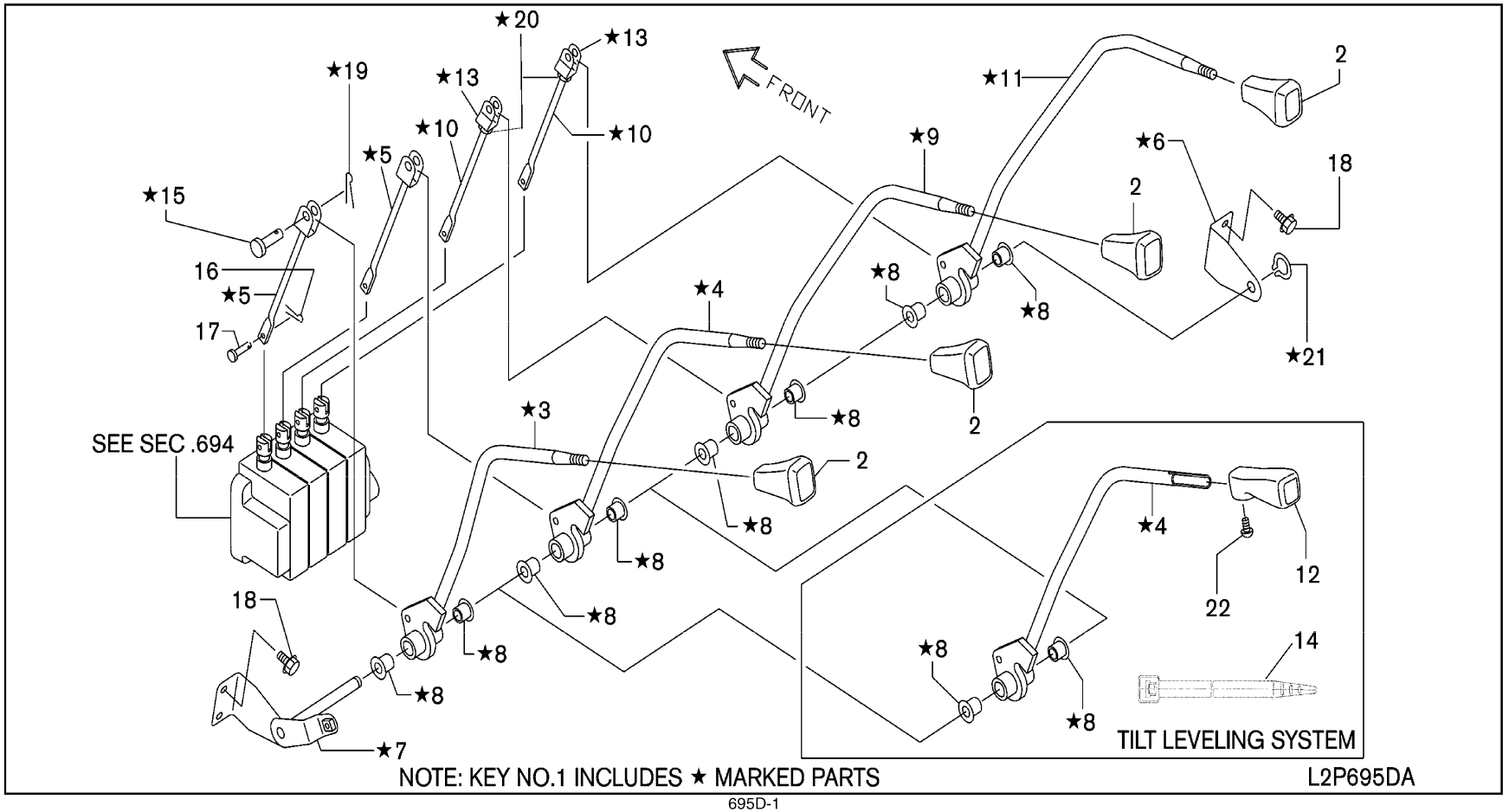

695D-1

SEC. 695D

HYDRAULIC CONTROL LEVER (4 SPOOL-4 LEVER)

PALANCA DE CONTROL HIDRAULICO

HYDRAULIKSTEUERHBEL

LEVIER DE COMMANDE HYDRAULIQUE

NC	S	KEY NO.	LEV	PART NO.	PART NAME	SPECIFICATION	QTY	APPLIED DATE	TCANF	FORMER PART NO.	KD	APPLIED MODEL 01 02 03 04 05 06 07 08 09 10 11 12 13 14 15 16 17 18 19 20 21 22 23 24 25 26 27 28 29
		1	01	1	**69405-FK002**	LEVER & BRACKET COMPLETE		01	0107-			* *
			02	1	**69405-FK012**		F/TILT LEVELING SYSTEM	01	0107-			* *
		2	01	1	**69411-FK00C**	KNOB-CONTROL LEVER		04	0107-			* *
			02	1	**69411-FK00C**		F/TILT LEVELING SYSTEM	03	0107-			* *
		3	01	2	**69415-FK000**	LEVER-CONTROL VALVE LIFT	F/LIFT	01	0107-			* *
		4	01	2	**69415-FK001**	LEVER-CONTROL VALVE TILT	F/TILT	01	0107-			* *
			02	2	**69415-FK010**		F/TILT LEVELING SYSTEM-TILT	01	0107-			* *
		5	01	2	**69452-FK000**	ROD-CONTROL VALVE		02	0107-			* *
		6	01	2	**69471-FK000**	BRACKET-CONTROL LEVER		01	0107-			* *
		7	01	2	**69445-FK002**	SHAFT ASSY-LEVER		01	0107-			* *
		8	01	2	**46525-18000**	BUSH-PEDAL		08	0107-			* *
		9	01	2	**69415-FK002**	LEVER-CONTROL VALVE A	F/ATTACH	08	0107-			* *
		10	01	2	**69453-FK010**	ROD-CONTROL VALVE		02	0107-			* *
		11	01	2	**69415-FK003**	LEVER-CONTROL VALVE B	F/ATTACH	01	0107-			* *
		12	01	1	**69411-GG00A**	KNOB-CONTROL LEVER	F/TILT LEVELING SYSTEM	01	0107-			* *
		13	01	2	**69458-FK010**	CLEVIS		02	0107-			* *
		14	01	1	**24216-S5801**	CLIP	F/TILT LEVELING SYSTEM	02	0107-			* *
		15	01	2	**00843-8221A**	PIN-CLEVIS		04	0107-			* *
		16	01	1	**00923-1051A**	PIN-SNAP		04	0107-			* *
		17	01	1	**00843-5201A**	PIN-CLEVIS		04	0107-			* *
		18	01	1	**08156-8201F**	SCREW-HHM M8-1.25X20 W/LK & PW		04	0107-			* *
		19	01	2	**00923-10810**	RING-SNAP		04	0107-			* *
		20	01	2	**08911-1081A**	NUT-HEX M8-1.25		02	0107-			* *
		21	01	2	**00922-11200**	RING-SNAP		01	0107-			* *
		22	01	1	**08313-5102G**	SCREW-PHM M5-.8X10 W/SPRW	F/TILT LEVELING SYSTEM	01	0107-			* *

SEC. 695G

HYDRAULIC CONTROL LEVER (3 SPOOL-2 LEVER)

PALANCA DE CONTROL HIDRAULICO

HYDRAULIKSTEUERHBEL

LEVIER DE COMMANDE HYDRAULIQUE

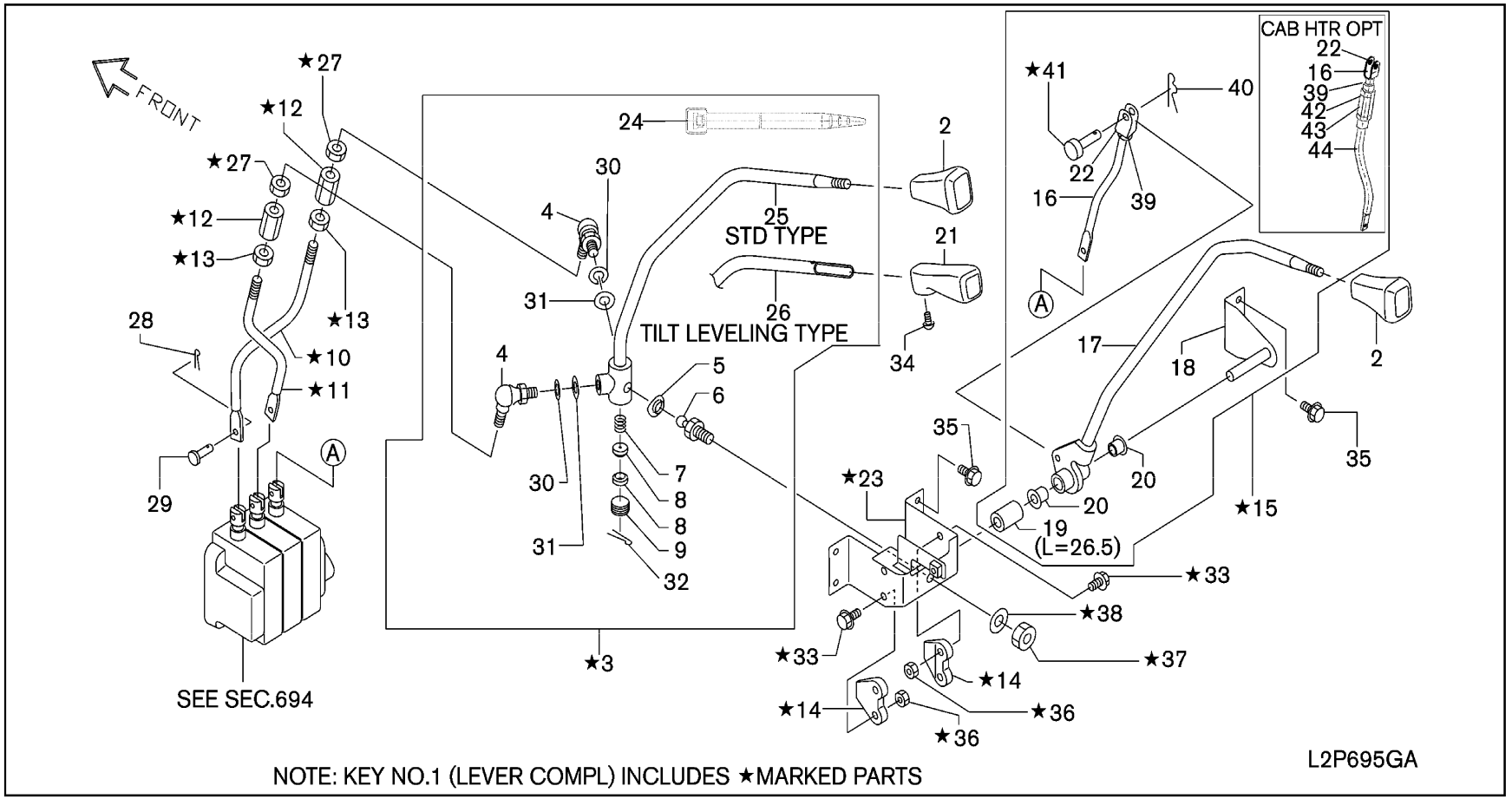

SEC. 695G

HYDRAULIC CONTROL LEVER (3 SPOOL-2 LEVER)

PALANCA DE CONTROL HIDRAULICO

HYDRAULIKSTEUERHBEL

LEVIER DE COMMANDE HYDRAULIQUE

NC	S	KEY NO.	LEV	PART NO.	PART NAME	SPECIFICATION	QTY	APPLIED DATE	TCANF	FORMER PART NO.	KD	APPLIED MODEL 01 02 03 04 05 06 07 08 09 10 11 12 13 14 15 16 17 18 19 20 21 22 23 24 25 26 27 28 29
		1	01 1	**69405-FK100**	LEVER & BRACKET COMPLETE		01	0107-				○○○○○○○○○○○○○○○○○○○○○○○○○○○○○
			02 1	**69405-FK110**		F/TILT LEVELING SYSTEM	01	0107-				*********************************
		2	01 1	**69411-FK00C**	KNOB-CONTROL LEVER		02	0107-				○○○○○○○○○○○○○○○○○○○○○○○○○○○○○
			02 1	**69411-FK00C**		F/TILT LEVELING SYSTEM	01	0107-				*********************************
		3	01 2	**69410-FK100**	LEVER COMPLETE-CONTROL VALVE		01	0107-				○○○○○○○○○○○○○○○○○○○○○○○○○○○○○
			02 2	**69410-FK110**		F/TILT LEVELING SYSTEM	01	0107-				*********************************
		4	01 3	**69418-L1100**	JOINT-CONTROL ROD		02	0107-				○○○○○○○○○○○○○○○○○○○○○○○○○○○○○
		5	01 3	**58414-L0100**	SEAL		01	0107-				○○○○○○○○○○○○○○○○○○○○○○○○○○○○○
		6	01 3	**58412-L0100**	JOINT-LEVER		01	0107-				○○○○○○○○○○○○○○○○○○○○○○○○○○○○○
		7	01 3	**58415-L0100**	SPRING-SEAT LEVER		01	0107-				○○○○○○○○○○○○○○○○○○○○○○○○○○○○○
		8	01 3	**58413-L0100**	SEAT-JOINT LEVER		02	0107-				○○○○○○○○○○○○○○○○○○○○○○○○○○○○○
		9	01 3	**58425-L0100**	PLUG-LEVER		01	0107-				○○○○○○○○○○○○○○○○○○○○○○○○○○○○○
		10	01 2	**69453-FK100**	ROD-CONT VALVE		01	0107-				○○○○○○○○○○○○○○○○○○○○○○○○○○○○○
		11	01 2	**69453-FK101**	ROD-CONT VALVE		01	0107-				○○○○○○○○○○○○○○○○○○○○○○○○○○○○○
		12	01 2	**69454-31K00**	BUCKLE-TURN		02	0107-				○○○○○○○○○○○○○○○○○○○○○○○○○○○○○
		13	01 2	**69455-L1100**	NUT		02	0107-				○○○○○○○○○○○○○○○○○○○○○○○○○○○○○
		14	01 2	**69472-10H01**	PLATE-GUIDE		02	0107-				○○○○○○○○○○○○○○○○○○○○○○○○○○○○○
		15	01 1	**69405-FK10A**	LEVER & BRACKET COMPLETE		01	0107-				○○○○○○○○○○○○○○○○○○○○○○○○○○○○○
			02 1	**69405-FK10C**		F/CAB HEATER	01	0107-				*********************************
		16	01 2	**69452-FK102**	ROD ASSY-CONTROL VALVE		01	0107-				○○○○○○○○○○○○○○○○○○○○○○○○○○○○○
			02 3	**69453-FK102**	ROD-CONTROL VALVE		01	0107-				○○○○○○○○○○○○○○○○○○○○○○○○○○○○○
			03 2	**69452-FK00A**	ROD ASSY-CONTROL VALVE	F/CAB HEATER	01	0107-				*********************************
		17	01 2	**69415-FK005**	LEVER-CONTROL VALVE A	F/ATTACH	01	0107-				○○○○○○○○○○○○○○○○○○○○○○○○○○○○○
		18	01 2	**69445-FK105**	SHAFT ASSY-LEVER		01	0107-				○○○○○○○○○○○○○○○○○○○○○○○○○○○○○
		19	01 2	**69433-FK100**	COLLAR-CONTROL LEVER	L=26.5	01	0107-				○○○○○○○○○○○○○○○○○○○○○○○○○○○○○
		20	01 2	**46525-18000**	BUSH-PEDAL		02	0107-				○○○○○○○○○○○○○○○○○○○○○○○○○○○○○
		21	01 1	**69411-GG00A**	KNOB-CONTROL LEVER	F/TILT LEVELING SYSTEM	01	0107-				*********************************
		22	01 3	**69458-FK000**	CLEVIS		01	0107-				○○○○○○○○○○○○○○○○○○○○○○○○○○○○○
		23	01 2	**69470-FK100**	BRACKET ASSY-CONTROL LEVER		01	0107-				○○○○○○○○○○○○○○○○○○○○○○○○○○○○○
C		24	01 1	**24216-S5801**	CLIP	F/TILT LEVELING SYSTEM	02	0107-0812				*********************************
N			02 1	**24216-S5801**		F/TILT LEVELING SYSTEM	01	0812-				*********************************
N			03 1	**01552-00411**		F/TILT LEVELING SYSTEM	01	0812-				*********************************
		25	01 3	**69415-FK100**	LEVER ASSY-CONTROL VALVE		01	0107-				○○○○○○○○○○○○○○○○○○○○○○○○○○○○○
		26	01 3	**69415-FK110**	LEVER ASSY-CONTROL VALVE	F/TILT LEVELING SYSTEM	01	0107-				*********************************
		27	01 2	**08911-3421A**	NUT-HEX JAM M12-1.25 4N		02	0107-				○○○○○○○○○○○○○○○○○○○○○○○○○○○○○
		28	01 1	**00923-1051A**	PIN-SNAP		03	0107-				○○○○○○○○○○○○○○○○○○○○○○○○○○○○○
		29	01 1	**00843-5201A**	PIN-CLEVIS		03	0107-				○○○○○○○○○○○○○○○○○○○○○○○○○○○○○

SEC. 695G

HYDRAULIC CONTROL LEVER (3 SPOOL-2 LEVER)

PALANCA DE CONTROL HIDRAULICO

HYDRAULIKSTEUERHBEL

LEVIER DE COMMANDE HYDRAULIQUE

NC	S	KEY NO.	LEV	PART NO.	PART NAME	SPECIFICATION	QTY	APPLIED DATE	ICANF	FORMER PART NO.	KD	APPLIED MODEL 01 02 03 04 05 06 07 08 09 10 11 12 13 14 15 16 17 18 19 20 21 22 23 24 25 26 27 28 29
		30 01	3	**08915-1401A**	WASHER-LOCK SPLIT M10		02	0107-				o o o o o o o o o o o o o o o o o o o o o o o o o o o o o
		31 01	3	**08915-4401A**	WASHER-PLAIN		02	0107-				o o o o o o o o o o o o o o o o o o o o o o o o o o o o o
		32 01	3	**00921-1251A**	PIN-COTTER		01	0107-				o o o o o o o o o o o o o o o o o o o o o o o o o o o o o
		33 01	2	**08120-62033**	SCREW-HHM M16-1.0X20 W/LK & PW		04	0107-				o o o o o o o o o o o o o o o o o o o o o o o o o o o o o
		34 01	1	**08313-5102G**	SCREW-PHM M5-0.8X10 W/SPRW	F/TILT LEVELING SYSTEM	01	0107-				* *
		35 01	1	**08156-8201F**	SCREW		06	0107-				o o o o o o o o o o o o o o o o o o o o o o o o o o o o o
		36 01	2	**08911-10610**	NUT-HEX M6-1.0 4T		04	0107-				o o o o o o o o o o o o o o o o o o o o o o o o o o o o o
		37 01	2	**08911-1401A**	NUT-HEX M10-1.25 4T		01	0107-				o o o o o o o o o o o o o o o o o o o o o o o o o o o o o
		38 01	2	**08915-1401A**	WASHER-LOCK SPLIT M10		01	0107-				o o o o o o o o o o o o o o o o o o o o o o o o o o o o o
		39 01	2	**08911-1081A**	NUT-HEX M8-1.25 4T		01	0107-				o o o o o o o o o o o o o o o o o o o o o o o o o o o o o
		02	2	**08911-3421A**	NUT-HEX JAM M12-1.25 4N	F/CAB HEATER	01	0107-				* *
		40 01	2	**00923-10810**	PIN-SNAP		01	0107-				o o o o o o o o o o o o o o o o o o o o o o o o o o o o o
		41 01	2	**00843-8221A**	PIN-CLEVIS		01	0107-				o o o o o o o o o o o o o o o o o o o o o o o o o o o o o
		42 01	2	**69454-31K00**	TURNBUCKLE	F/CAB HEATER	01	0107-				* *
		43 01	2	**69455-L1100**	NUT-HEX M12-1.25	F/CAB HEATER	01	0107-				* *
		44 01	2	**69453-FK10B**	ROD-CONTROL VALVE	F/CAB HEATER	01	0107-				* *

NOTE

SEC. 695H

HYDRAULIC CONTROL LEVER (4 SPOOL-3 LEVER)

PALANCA DE CONTROL HIDRAULICO

HYDRAULIKSTEUERHBEL

LEVIER DE COMMANDE HYDRAULIQUE

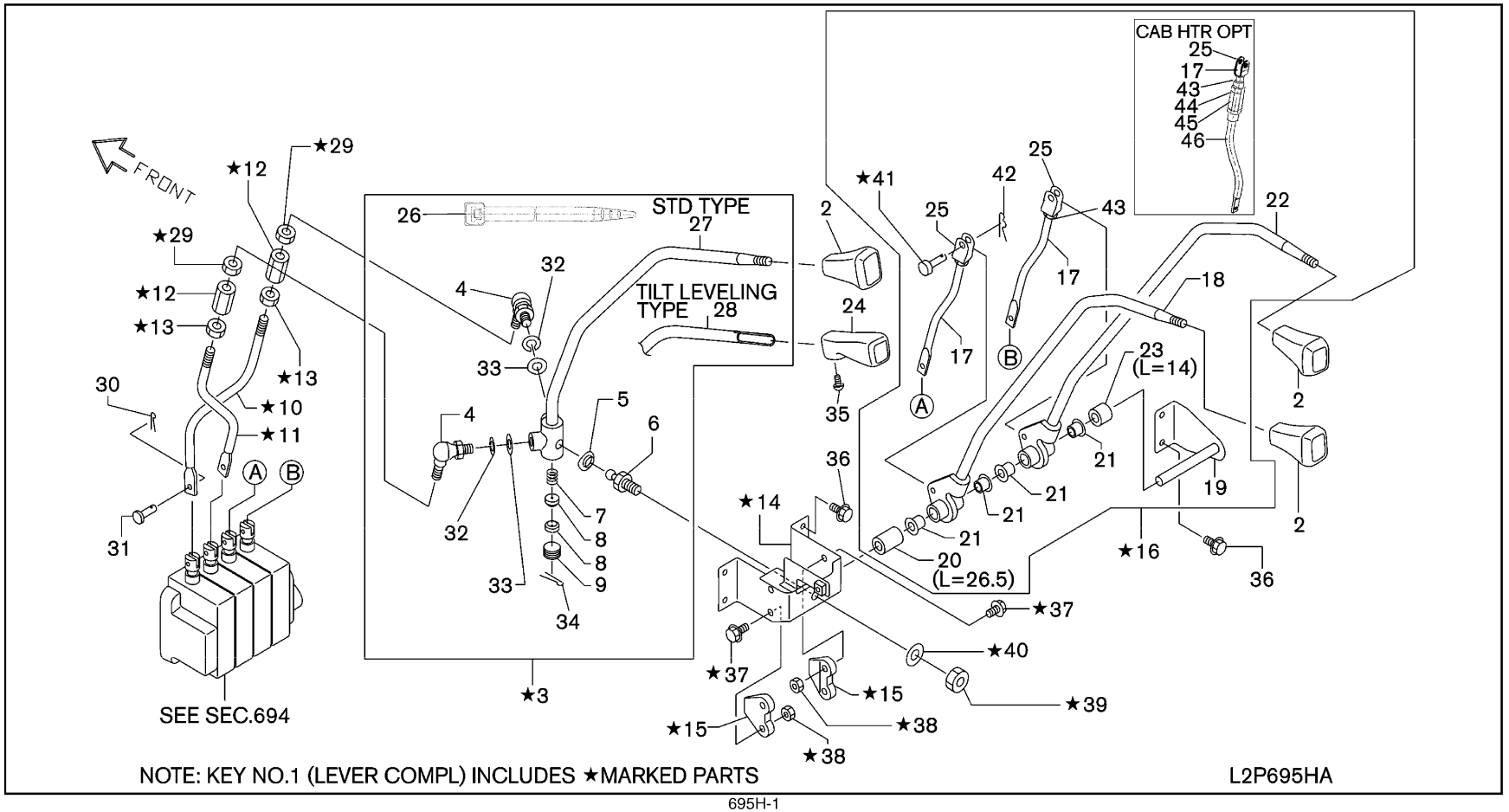

695H-1

SEC. 695H

HYDRAULIC CONTROL LEVER (4 SPOOL-3 LEVER)

PALANCA DE CONTROL HIDRAULICO

HYDRAULIKSTEUERHBEL

LEVIER DE COMMANDE HYDRAULIQUE

NC	S	KEY NO.	LEV	PART NO.	PART NAME	SPECIFICATION	QTY	APPLIED DATE	ICANF	FORMER PART NO.	KD	APPLIED MODEL 01 02 03 04 05 06 07 08 09 10 11 12 13 14 15 16 17 18 19 20 21 22 23 24 25 26 27 28 29
		1	01	1	**69405-FK100**	LEVER & BRACKET COMPLETE		01	0107-			**********************************
			02	1	**69405-FK110**		F/TILT LEVELING SYSTEM	01	0107-			**********************************
		2	01	1	**69411-FK00C**	KNOB-CONTROL LEVER		03	0107-			**********************************
			02	1	**69411-FK00C**		F/TILT LEVELING SYSTEM	02	0107-			**********************************
		3	01	2	**69410-FK100**	LEVER COMPLETE-CONTROL VALVE		01	0107-			**********************************
			02	2	**69410-FK110**		F/TILT LEVELING SYSTEM	01	0107-			**********************************
		4	01	3	**69418-L1100**	JOINT-CONTROL ROD		02	0107-			**********************************
		5	01	3	**58414-L0100**	SEAL		01	0107-			**********************************
		6	01	3	**58412-L0100**	JOINT-LEVER		01	0107-			**********************************
		7	01	3	**58415-L0100**	SPRING-SEAT LEVER		01	0107-			**********************************
		8	01	3	**58413-L0100**	SEAT-JOINT LEVER		02	0107-			**********************************
		9	01	3	**58425-L0100**	PLUG-LEVER		01	0107-			**********************************
		10	01	2	**69453-FK100**	ROD-CONTROL VALVE		01	0107-			**********************************
		11	01	2	**69453-FK101**	ROD-CONTROL VALVE		01	0107-			**********************************
		12	01	2	**69454-31K00**	BUCKLE-TURN		02	0107-			**********************************
		13	01	2	**69455-L1100**	NUT		02	0107-			**********************************
		14	01	2	**69470-FK100**	BRACKET ASSY-CONTROL LEVER		01	0107-			**********************************
		15	01	2	**69472-10H01**	PLATE-GUIDE		02	0107-			**********************************
		16	01	1	**69405-FK10B**	LEVER & BRACKET COMPLETE		01	0107-			**********************************
			02	1	**69405-FK10D**		F/CAB HEATER	01	0107-			**********************************
		17	01	2	**69452-FK102**	ROD ASSY-CONTROL VALVE		02	0107-			**********************************
			02	3	**69453-FK102**	ROD-CONTROL VALVE		02	0107-			**********************************
			03	2	**69452-FK00A**	ROD ASSY-CONTROL VALVE	F/CAB HEATER	02	0107-			**********************************
		18	01	2	**69415-FK005**	LEVER-CONTROL VALVE A	F/ATTACH	01	0107-			**********************************
		19	01	2	**69445-FK100**	SHAFT ASSY-LEVER		01	0107-			**********************************
		20	01	2	**69433-FK100**	COLLAR-CONTROL LEVER	L=26.5	01	0107-			**********************************
		21	01	2	**46525-18000**	BUSH-PEDAL		04	0107-			**********************************
		22	01	2	**69415-FK006**	LEVER-CONTROL VALVE B	F/ATTACH	01	0107-			**********************************
		23	01	2	**69433-FK101**	COLLAR-CONTROL LEVER	L=14	01	0107-			**********************************
		24	01	1	**69411-GG00A**	KNOB-CONTROL LEVER	F/TILT LEVELING SYSTEM	01	0107-			**********************************
		25	01	3	**69458-FK000**	CLEVIS		02	0107-			**********************************
C		**26**	01	1	**24216-S5801**	CLIP	F/TILT LEVELING SYSTEM	02	0107-0812			**********************************
N			02	1	**24216-S5801**		F/TILT LEVELING SYSTEM	01	0812-			**********************************
N			03	1	**01552-00411**		F/TILT LEVELING SYSTEM	01	0812-			**********************************
		27	01	3	**69415-FK100**	LEVER ASSY-CONTROL VALVE		01	0107-			**********************************
		28	01	3	**69415-FK110**	LEVER ASSY-CONTROL VALVE	F/TILT LEVELING SYSTEM	01	0107-			**********************************
		29	01	2	**08911-3421A**	NUT-HEX JAM M12-1.25 4N		02	0107-			**********************************

SEC. 695H

HYDRAULIC CONTROL LEVER (4 SPOOL-3 LEVER)

PALANCA DE CONTROL HIDRAULICO

HYDRAULIKSTEUERHBEL

LEVIER DE COMMANDE HYDRAULIQUE

NC	S	KEY NO.	LEV	PART NO.	PART NAME	SPECIFICATION	QTY	APPLIED DATE	ICANF	FORMER PART NO.	KD	APPLIED MODEL 01 02 03 04 05 06 07 08 09 10 11 12 13 14 15 16 17 18 19 20 21 22 23 24 25 26 27 28 29
		30 01	1	**00923-1051A**	PIN-SNAP		04	0107-				* *
		31 01	1	**00843-5201A**	PIN-CLEVIS		04	0107-				* *
		32 01	3	**08915-1401A**	WASHER-LOCK SPLIT M10		02	0107-				* *
		33 01	3	**08915-4401A**	WASHER-PLAIN		02	0107-				* *
		34 01	3	**00921-1251A**	PIN-COTTER		01	0107-				* *
		35 01	1	**08313-5102G**	SCREW-PHM M5-0.8X10 W/SPRW	F/TILT LEVELING SYSTEM	01	0107-				* *
		36 01	1	**08156-8201F**	SCREW		06	0107-				* *
		37 01	2	**08120-62033**	SCREW-HHM M16-1.0X20 W/LK & PW		04	0107-				* *
		38 01	2	**08911-10610**	NUT-HEX M6-1.0 4T		04	0107-				* *
		39 01	2	**08911-1401A**	NUT-HEX M10-1.25 4T		01	0107-				* *
		40 01	2	**08915-1401A**	WASHER-LOCK SPLIT M10		01	0107-				* *
		41 01	2	**00843-8221A**	PIN-CLEVIS		02	0107-				* *
		42 01	2	**00923-10810**	PIN-SNAP		02	0107-				* *
		43 01	2	**08911-1081A**	NUT-HEX M8-1.25 4T		02	0107-				* *
		02	2	**08911-3421A**	NUT-HEX JAM M12-1.25 4N	F/CAB HEATER	02	0107-				* *
		44 01	2	**69454-31K00**	TURNBUCKLE	F/CAB HEATER	01	0107-				* *
		45 01	2	**69455-L1100**	NUT-HEX M12-1.25	F/CAB HEATER	01	0107-				* *
		46 01	2	**69453-FK10B**	ROD-CONTROL VALVE	F/CAB HEATER	01	0107-				* *

NOTE

SEC. 695I

HYDRAULIC CONTROL LEVER (FC OPTION FITTING PARTS)

PALANCA DE CONTROL HIDRAULICO

HYDRAULIKSTEUERHBEL

LEVIER DE COMMANDE HYDRAULIQUE

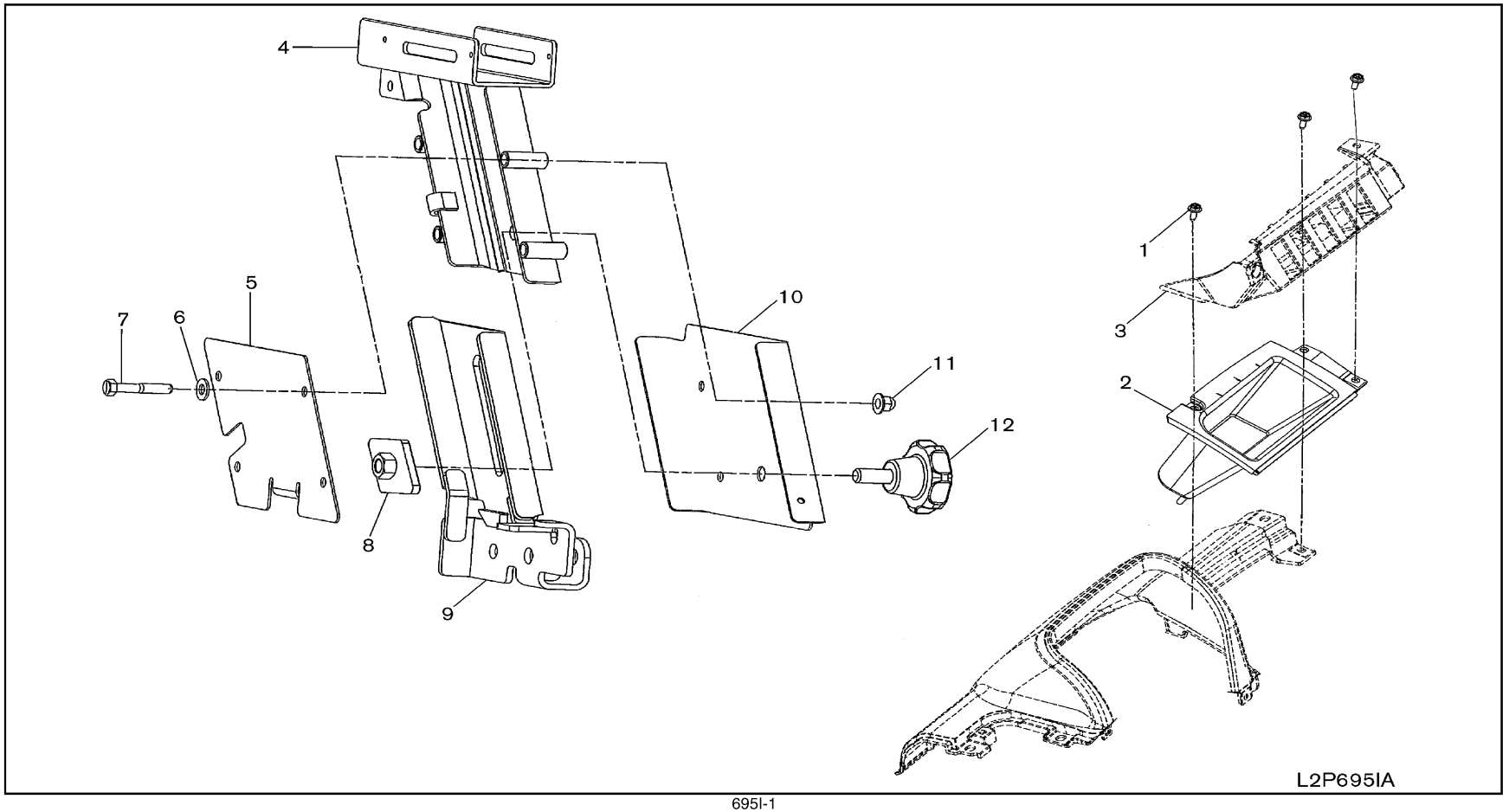

SEC. 695I

HYDRAULIC CONTROL LEVER (FC OPTION FITTING PARTS)

PALANCA DE CONTROL HIDRAULICO

HYDRAULIKSTEUERHBEL

LEVIER DE COMMANDE HYDRAULIQUE

NC	S	KEY NO.	LEV	PART NO.	PART NAME	SPECIFICATION	QTY	APPLIED DATE	ICANF	FORMER PART NO.	KD	APPLIED MODEL 01 02 03 04 05 06 07 08 09 10 11 12 13 14 15 16 17 18 19 20 21 22 23 24 25 26 27 28 29
		1 01	1	**08363-6162C**	SCREW-HH PP M6-1.0X16 W/PW		03	0507-				* *
		2 01	1	**69475-GG00A**	COVER-CONT LEVER		01	0507-				* *
		3 01	1	**50556-FK10A**	COVER-LEVER		01	0507-				* *
		4 01	1	**69470-6K03A**	BRACKET ASSY-CONT LEVER		01	0507-				* *
		5 01	1	**69471-6K00A**	BRACKET-CONT LEVER		01	0507-				* *
		6 01	1	**08915-4382A**	WASHER-FLAT M8		04	0507-				* *
		7 01	1	**08310-8452A**	SCREW-PH M8X1.25X45MM		04	0507-0907				* *
		02	1	**69139-GG00A**	SCREW-SOCKET HD M8-1.25X45		04	0907-				* *
		8 01	1	**69470-6K01A**	BRACKET ASSY-CONT LEVER		01	0507-				* *
		9 01	1	**69470-GG00A**	BRACKET ASSY-CONT LEVER		01	0507-				* *
		10 01	1	**69471-6K00B**	BRACKET-CONT LEVER		01	0507-				* *
		11 01	1	**01217-00291**	NUT-SPL M8		04	0507-				* *
		12 01	1	**69411-6K00B**	KNOB-CONT LEVER		01	0507-				* *

SEC. 695J

HYDRAULIC CONTROL LEVER (FC OPTION)

PALANCA DE CONTROL HIDRAULICO

HYDRAULIKSTEUERHBEL

LEVIER DE COMMANDE HYDRAULIQUE

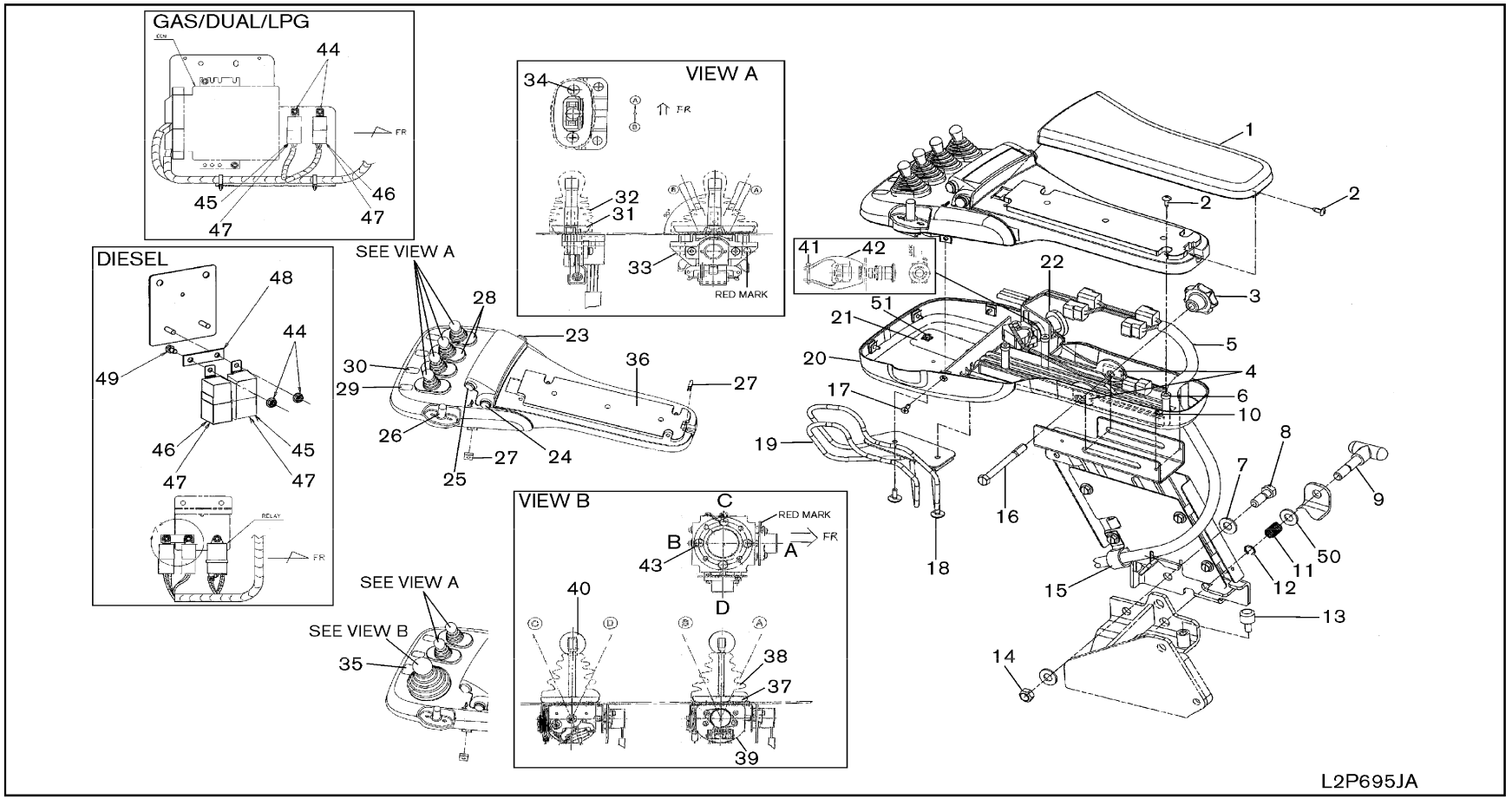

SEC. 695J

HYDRAULIC CONTROL LEVER (FC OPTION)

PALANCA DE CONTROL HIDRAULICO

HYDRAULIKSTEUERHBEL

LEVIER DE COMMANDE HYDRAULIQUE

NC	S	KEY NO.	LEV	PART NO.	PART NAME	SPECIFICATION	QTY	APPLIED DATE	ICANF	FORMER PART NO.	KD	APPLIED MODEL 01 02 03 04 05 06 07 08 09 10 11 12 13 14 15 16 17 18 19 20 21 22 23 24 25 26 27 28 29
		1	01	1	**87610-FA20A**	PAD ASSY-HIP		01	0507-			* *
		2	01	1	**08540-51642**	SCREW-TRH TAP M5-16MM		05	0507-			* *
		3	01	1	**69411-6K01A**	KNOB-CONT LEVER		01	0507-			* *
		4	01	1	**69471-6K00E**	BRACKET-CONT LEVER		02	0507-			* *
		5	01	1	**24043-GG10A**	HARNESS-DEVICE		01	0507-			* *
		6	01	1	**68898-6K00A**	SPRING NUT M5		04	0507-			* *
		7	01	1	**08915-4421A**	WASHER-FLAT M12		02	0507-			* *
		8	01	1	**08124-2351A**	SCREW-HHM M12-1.25X35 7T		01	0507-			* *
		9	01	1	**17941-FB085**	PIN WITH HANDLE		01	0507-			* *
		10	01	1	**08310-40612**	SCREW-PHM M4-0.7X6		03	0507-			* *
		11	01	1	**17940-6G100**	SPRING-LATCH		01	0507-			* *
		12	01	1	**00922-51010**	RING-SNAP		01	0507-			* *
		13	01	1	**87165-FW40A**	STOPPER-FC		01	0507-			* *
		14	01	1	**08912-8421A**	NUT		01	0507-			* *
		15	01	1	**69674-04H00**	CLAMP-HOSE		02	0507-			* *
		16	01	1	**69139-6K00A**	BOLT-HEX		01	0507-			* *
		17	01	1	**08523-51608**	SCREW-FC TAP M5X16MM		04	0507-			* *
		18	01	1	**08120-61633**	SCREW-HHM M6-1.0X16 W/LK & PW		02	0507-			* *
		19	01	1	**69470-FA20D**	PRTOECTOR-CONT LEVER		01	0507-			* *
		20	01	1	**69475-FA20B**	COVER-INST LW		01	0507-			* *
		21	01	1	**69470-FA20B**	BRACKET ASSY-CONT LEVER		01	0507-0807			* *
		22	01	1	**25250-GG00A**	SWITCH ASSY-KILL		01	0507-			* *
		23	01	1	**64891-6K00A**	COVER-HOLE		01	0507-			* *
		24	01	1	**25565-GG10A**	SWITCH ASSY-HORN		01	0507-			* *
		25	01	1	**64891-6K00A**	COVER-HOLE		01	0507-			* *
			02	1	**25565-GG00A**	SWITCH ASSY-TILT STOP	F/TILT LEVELING SYSTEM	01	0507-			* *
		26	01	1	**29460-GG10A**	SWITCH ASSY-F & R CONT		01	0507-0208			* *
			02	1	**29460-GA00A**			01	0208-			* *
			03	1	**29485-6K20A**	CAP-SWITCH		01	0507-			* *
		27	01	1	**68898-W1000**	SPRING NUT M5		05	0507-			* *
		28	01	1	**64891-FA20A**	COVER-HOLE	3 SPOOL ONLY	01	0507-			* *
		29	01	1	**97831-FA20A**	PLATE-OPERATION LIFT	F/SEPARATE LIFT/TILT	01	0507-			* *
		30	01	1	**97832-FA20A**	PLATE-OPERATION TILT	F/SEPARATE LIFT/TILT	01	0507-			* *
		31	01	1	**69419-6K00A**	PLATE-LEVER	3 SPOOL-2 LEVER	01	0507-			* *
			02	1	**69419-6K00A**		4 SPOOL-3 LEVER	02	0507-			* *
			03	1	**69419-6K00A**		3 SPOOL-3 LEVER	03	0507-			* *
			04	1	**69419-6K00A**		4 SPOOL-4 LEVER	04	0507-			* *

SEC. 695J

HYDRAULIC CONTROL LEVER (FC OPTION)

PALANCA DE CONTROL HIDRAULICO

HYDRAULIKSTEUERHBEL

LEVIER DE COMMANDE HYDRAULIQUE

NC	S	KEY NO.	LEV	PART NO.	PART NAME	SPECIFICATION	QTY	APPLIED DATE	ICANF	FORMER PART NO.	KD	APPLIED MODEL 01 02 03 04 05 06 07 08 09 10 11 12 13 14 15 16 17 18 19 20 21 22 23 24 25 26 27 28 29
		32	01	1	**69425-FA20A**	BELLOW	3 SPOOL-2 LEVER	01	0507-			* *
			02	1	**69425-FA20A**		4 SPOOL-3 LEVER	02	0507-			* *
			03	1	**69425-FA20A**		3 SPOOL-3 LEVER	03	0507-			* *
			04	1	**69425-FA20A**		4 SPOOL-4 LEVER	04	0507-			* *
C		**33**	01	1	**69415-GG00A**	LEVER ASSY-CONT VALVE	3 SPOOL-2 LEVER	01	0507-0412			* *
C			02	1	**69415-GG00A**		4 SPOOL-3 LEVER	02	0507-0412			* *
C			03	1	**69415-GG00A**		3 SPOOL-3 LEVER	03	0507-0412			* *
C			04	1	**69415-GG00A**		4 SPOOL-4 LEVER	04	0507-0412			* *
N			05	1	**69415-GJ00B**		3 SPOOL-2 LEVER	01	0412-			* *
N			06	1	**69415-GJ00B**		4 SPOOL-3 LEVER	02	0412-			* *
N			07	1	**69415-GJ00B**		3 SPOOL-3 LEVER	03	0412-			* *
N			08	1	**69415-GJ00B**		4 SPOOL-4 LEVER	04	0412-			* *
		34	01	1	**08360-51012**	BOLT-LOCK PL	3 SPOOL-2 LEVER	02	0507-0907			* *
			02	1	**08313-5102G**	SCREW-PHM M5-0.8X10 W/SPRW	3 SPOOL-2 LEVER	02	0907-			* *
			03	1	**08360-51012**	BOLT-LOCK PL	4 SPOOL-3 LEVER	04	0507-0907			* *
			04	1	**08313-5102G**	SCREW-PHM M5-0.8X10 W/SPRW	4 SPOOL-3 LEVER	04	0907-			* *
			05	1	**08360-51012**	BOLT-LOCK PL	3 SPOOL-3 LEVER	06	0507-0907			* *
			06	1	**08313-5102G**	SCREW-PHM M5-0.8X10 W/SPRW	3 SPOOL-3 LEVER	06	0907-			* *
			07	1	**08360-51012**	BOLT-LOCK PL	4 SPOOL-4 LEVER	08	0507-0907			* *
			08	1	**08313-5102G**	SCREW-PHM M5-0.8X10 W/SPRW	4 SPOOL-4 LEVER	08	0907-			* *
		35	01	1	**97830-FA20A**	PLATE-OPERATION LIFT/TILT	F/SINGLE LIFT/TILT	01	0507-			* *
		36	01	1	**69475-FA21A**	COVER-INST UP	F/SINGLE LIFT/TILT	01	0507-			* *
			02	1	**69475-FA20A**		F/SEPARATE LIFT/TILT	01	0507-			* *
		37	01	1	**69419-6K003**	PLATE-LEVER	F/SINGLE LIFT/TILT	01	0507-			* *
		38	01	1	**69425-FA201**	BELLOW	F/SINGLE LIFT/TILT	01	0507-			* *
		39	01	1	**69415-GG01A**	LEVER ASSY-CONT VALVE	F/SINGLE LIFT/TILT	01	0507-			* *
		40	01	1	**69411-FA200**	KNOB-CONTROL LEVER	F/SINGLE LIFT/TILT	01	0507-			* *
		41	01	1	**24216-W1000**	CLIP-TIE WRAP		01	0507-			* *
		42	01	1	**25239-FA310**	COVER-SWITCH		01	0507-			* *
		43	01	1	**08360-41012**	SCREW-HHM M4-0.7X10	F/SINGLE LIFT/TILT	04	0507-			* *
		44	01	1	**08911-10637**	NUT-HEX W/CON SPRW M6-1.0		02	0507-			* *
		45	01	1	**25230-79981**	RELAY-1M		01	0507-			* *
		46	01	1	**25230-79982**	RELAY-AUTO CHOKE		01	0507-			* *
		47	01	1	**25235-N8500**	BRACKET, A-RELAY		02	0507-0807			* *
			02	1	**25235-N853A**			02	0807-			* *
		48	01	1	**25238-FA20A**	BRACKET-RELAY		01	0507-			* *
		49	01	1	**08360-61225**	SCREW-HH CR M6-1.0X12 W/LK & PW		01	0507-			* *

SEC. 695J

HYDRAULIC CONTROL LEVER (FC OPTION)

PALANCA DE CONTROL HIDRAULICO

HYDRAULIKSTEUERHBEL

LEVIER DE COMMANDE HYDRAULIQUE

NC	S	KEY NO.	LEV	PART NO.	PART NAME	SPECIFICATION	QTY	APPLIED DATE	ICANF	FORMER PART NO.	KD	APPLIED MODEL 01	02	03	04	05	06	07	08	09	10	11	12	13	14	15	16	17	18	19	20	21	22	23	24	25	26	27	28	29
		50 01	1	**08915-4421A**	WASHER-FLAT M12		01	0507-0907				*	*	*		*	*	*		*	*	*	*		*	*	*		*										
		02	1	**69397-GG01A**	WASHER-FLAT 1/2		01	0907-				*	*	*		*	*	*		*	*	*	*		*	*	*		*										
C		**51** 01	2	**20135-B5000**	WASHER-FLAT		02	0807-				*	*	*		*	*	*		*	*	*	*		*	*	*		*										
C		02	2	**08911-10637**	NUT-HEX W/CON SPRW M6-1.0		02	0807-				*	*	*		*	*	*		*	*	*	*		*	*	*		*										

APPLIED MODEL

01	02	03	04	05	06	07	08	09	10	11	12	13	14	15	16	17	18	19	20	21	22	23	24	25	26	27	28	29
MI PV A20 JV	MI PV A20 DV	MI PV A20 LV	MI PU A20 SV	MI UU A20 JV	MI UU A20 DV	MI UU A20 LV	MI UY A20 SV	MI PP A20 JV	MI PP A20 DV	MI PP A20 LV	MI PP A20 SV	MI UU A20 JV	MI UU A20 DV	MI UU A20 LV	MI UU A20 SV	MI UY A20 LV	MI UU A20 JV	MI UU A20 DV	MI UU A20 LV	MI UG A20 JV	MI UG A20 DV	MI UG A20 LV	MI UG A30 JV	MI UG A30 DV	MI UY A30 LV	MI UU A30 JV	MI UU A30 DV	MI UY A30 LV

SEC. 695K

HYDRAULIC CONTROL LEVER (FC OPTION WIRING)

PALANCA DE CONTROL HIDRAULICO

HYDRAULIKSTEUERHBEL

LEVIER DE COMMANDE HYDRAULIQUE

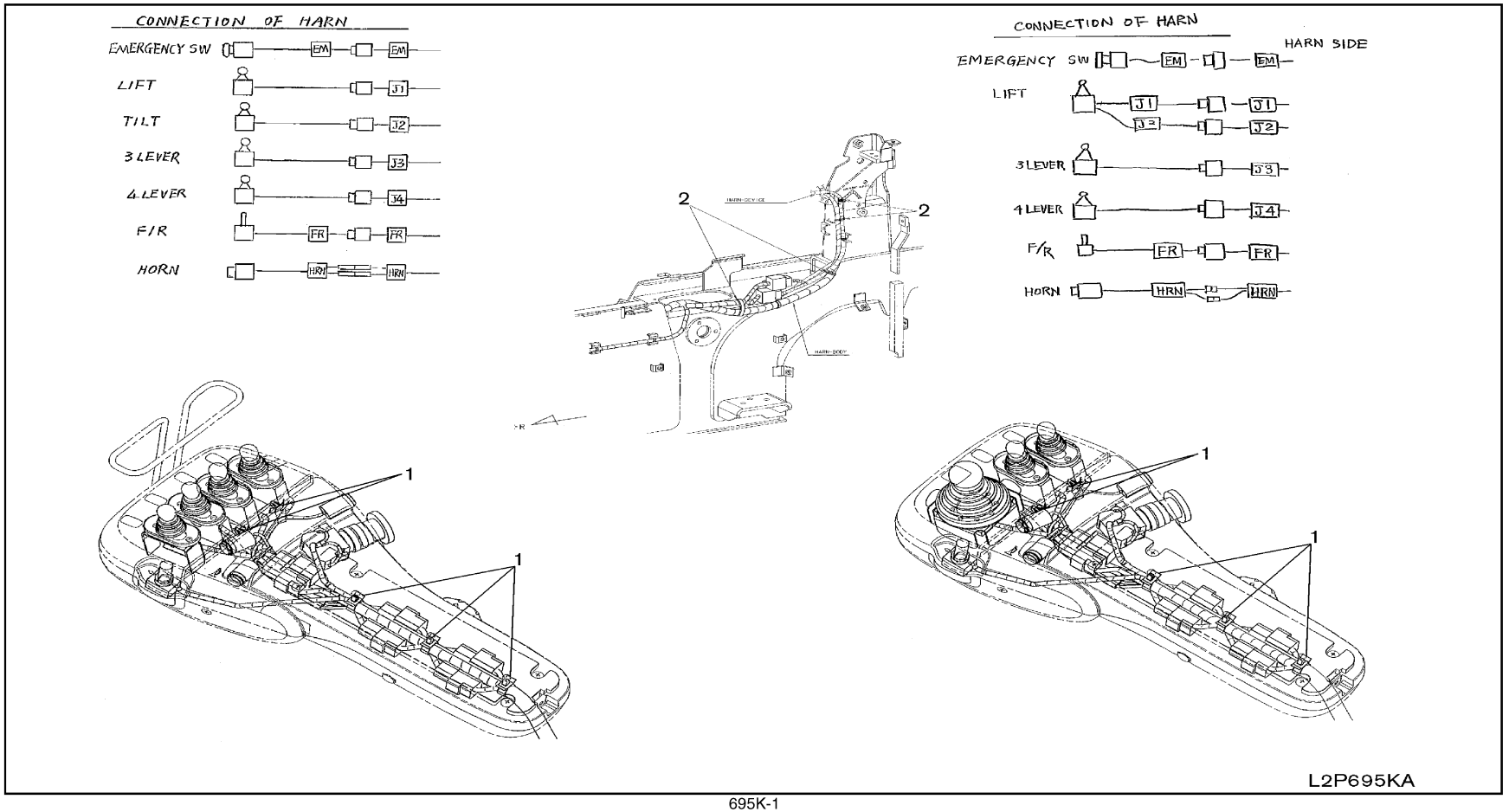

SEC. 695K

HYDRAULIC CONTROL LEVER (FC OPTION WIRING)

PALANCA DE CONTROL HIDRAULICO

HYDRAULIKSTEUERHBEL

LEVIER DE COMMANDE HYDRAULIQUE

NC	S	KEY NO.	LEV	PART NO.	PART NAME	SPECIFICATION	QTY	APPLIED DATE	TCANF	FORMER PART NO.	KD	APPLIED MODEL 01	02	03	04	05	06	07	08	09	10	11	12	13	14	15	16	17	18	19	20	21	22	23	24	25	26	27	28	29
		1 01	1	24225-79902	CLIP		05	0507-				*	*	*		*	*	*		*	*	*	*		*	*	*		*											
		2 01	1	01552-00411	BAND-HOSE		04	0507-				*	*	*		*	*	*		*	*	*	*		*	*	*		*											

MMIPP 22000JV | MMIPP 22000DV | MMIPP 22000LV | MMIPP 22000LS | MMIPU 22000JV | MMIUU 22000DV | MMIUU 22000LV | MMIUU 22000LS | MMIUY 22000LV | MMIPP 22055JV | MMIPP 22055DV | MMIPP 22055LV | MMIPP 22055LS | MMIUU 22055JV | MMIUU 22055DV | MMIUU 22055LV | MMIUU 22055LS | MMIUY 22055LV | MMIUU 22058JV | MMIUU 22058DV | MMIUU 22058LV | MMIUU 23000JV | MMIUU 23000DV | MMIUU 23000LV | MMIUY 23000LV | MMIUU 23055JV | MMIUU 23055DV | MMIUU 23055LV | MMIUY 23055LV | MMIUG 23058JV | MMIUG 23058DV | MMIUG 23058LV | MMIGG 23000JV | MMIGG 23000DV | MMIGG 23000LV | MMIGG 23055JV | MMIGG 23055DV | MMIGG 23055LV

SEC. 697A

HYDRAULIC OIL PIPING (FROM TANK TO PUMP)

TUBERIA HIDRAULICA DE ACEITE

HYDRAULIKÖLLROHRLEITUNG

CANALISATION D'HUILE HYDRAULIQUE

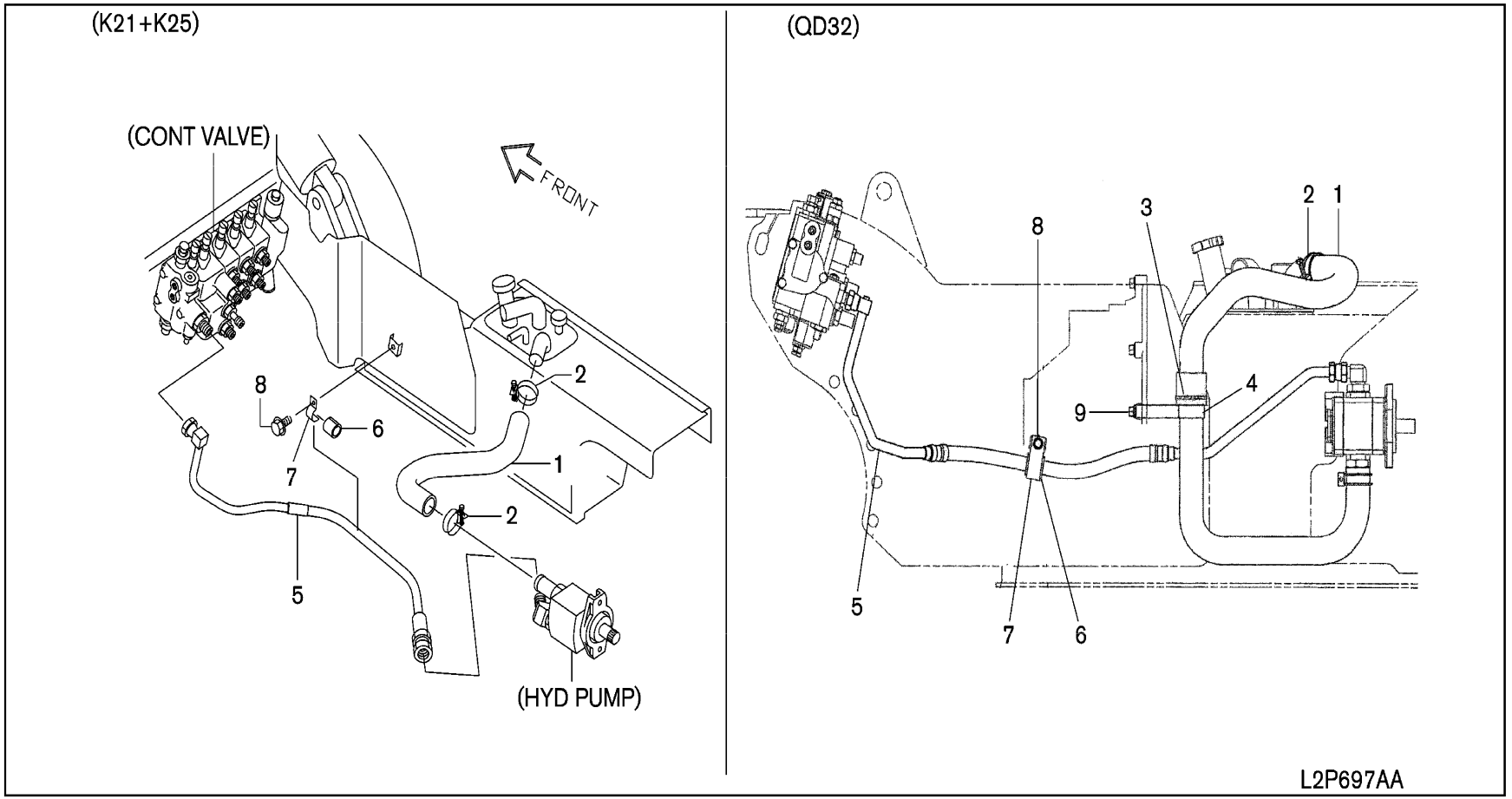

SEC. 697A

HYDRAULIC OIL PIPING (FROM TANK TO PUMP)

TUBERIA HIDRAULICA DE ACEITE

HYDRAULIKÖLLROHRLEITUNG

CANALISATION D'HUILE HYDRAULIQUE

NC	S	KEY NO.	LEV	PART NO.	PART NAME	SPECIFICATION	QTY	APPLIED DATE	ICANF	FORMER PART NO.	KD	APPLIED MODEL 01 02 03 04 05 06 07 08 09 10 11 12 13 14 15 16 17 18 19 20 21 22 23 24 25 26 27 28 29
		1	01	1	**69610-FK300**	HOSE-RUBBER SUCTION		01	0107-			○ ○
			02	1	**69610-GG10A**			01	0107-0607			○ ○ ○ ○ ○
			03	1	**69610-GG10B**			01	0607-			○ ○ ○ ○ ○
		2	01	1	**01555-00123**	CLAMP-HOSE		02	0107-0907			○ ○
			02	1	**01555-00273**			02	0907-			○ ○
		3	01	1	**01552-00431**	BAND-HOSE		01	0107-0408			○ ○ ○ ○ ○
		4	01	1	**69673-GG10A**	CLAMP-HOSE		01	0107-0607			○ ○ ○ ○ ○
			02	1	**69673-GG10B**			01	0607-			○ ○ ○ ○ ○
		5	01	1	**69613-FK30C**	PIPE & HOSE ASSY-PUMP		01	0107-			○ ○
			02	1	**69613-FK31C**		F/ANTI RUST	01	0107-			✱ ✱
			03	1	**69613-GG15A**		F/FC	01	0507-			✱ ✱ ✱ ✱ ✱ ✱ ✱ ✱ ✱ ✱ ✱ ✱ ✱ ✱ ✱
			04	1	**69613-GG16A**		F/FC ANTI RUST	01	0507-			✱ ✱ ✱ ✱ ✱ ✱ ✱ ✱ ✱ ✱ ✱ ✱ ✱ ✱ ✱
			05	1	**69613-GG10B**			01	0107-			○ ○ ○ ○ ○
			06	1	**69613-GG11B**		F/ANTI RUST	01	0107-			✱ ✱ ✱ ✱ ✱
			07	1	**69613-GG15B**		F/FC	01	0507-			✱ ✱ ✱
			08	1	**69613-GG16B**		F/FC ANTI RUST	01	0507-			✱ ✱ ✱
		6	01	1	**69673-FK32A**	CLAMP-HOSE		01	0107-			○ ○
		7	01	1	**69673-FK300**	CLAMP-HOSE		01	0107-			○ ○
		8	01	1	**08124-0201F**	SCREW-HHM M10-1.25X20 W/LK & PW		01	0107-			○ ○
		9	01	1	**081B4-0305M**	SCREW-HH FLG M10-1.25X30 9T		01	0107-			○ ○ ○ ○ ○

SEC. 697B

HYDRAULIC OIL PIPING (FROM TANK TO VALVE)

TUBERIA HIDRAULICA DE ACEITE

HYDRAULIKÖLLROHRLEITUNG

CANALISATION D'HUILE HYDRAULIQUE

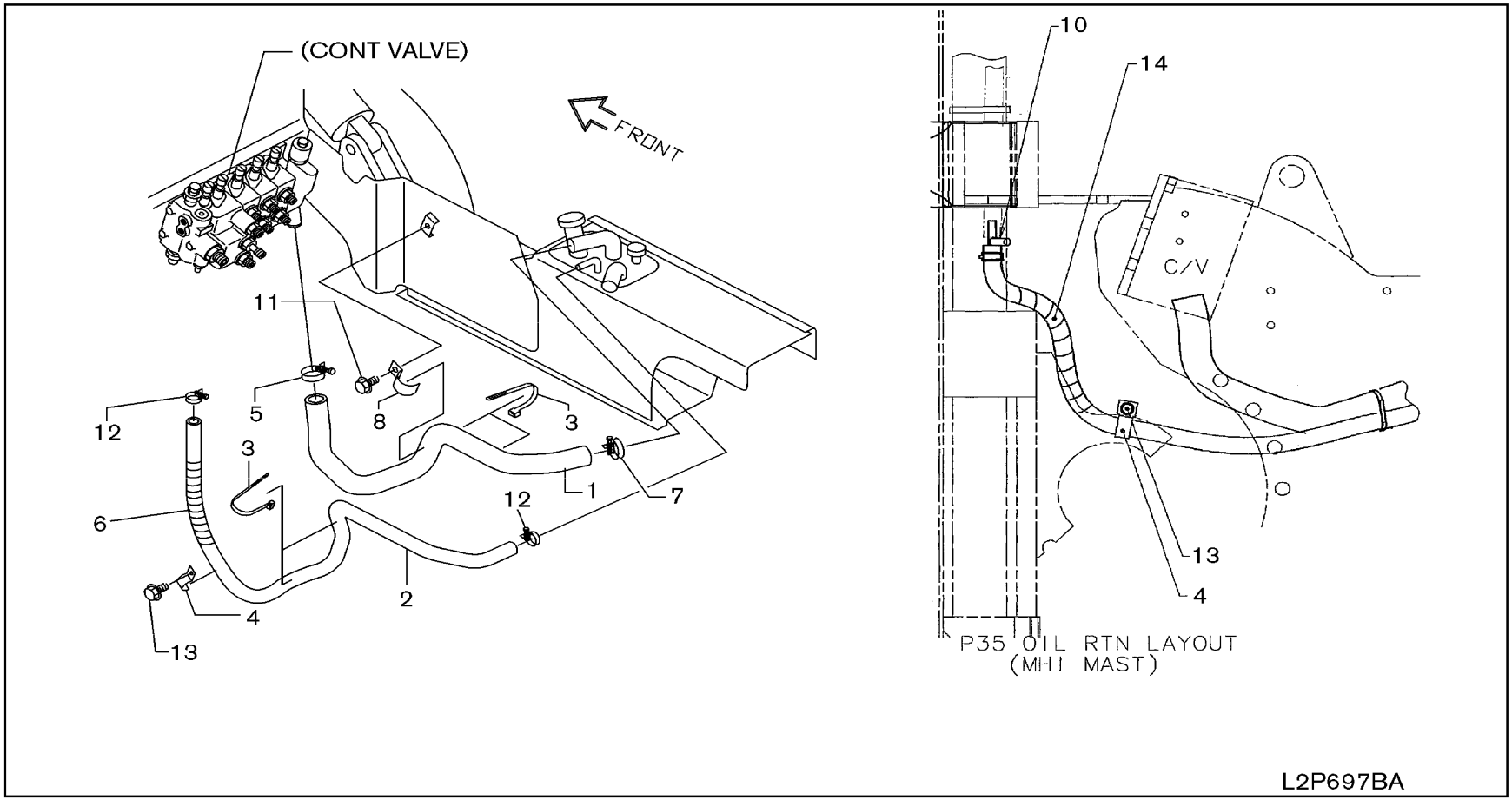

SEC. 697B

HYDRAULIC OIL PIPING (FROM TANK TO VALVE)

TUBERIA HIDRAULICA DE ACEITE

HYDRAULIKÖLLROHRLEITUNG

CANALISATION D'HUILE HYDRAULIQUE

NC	S	KEY NO.	LEV	PART NO.	PART NAME	SPECIFICATION	QTY	APPLIED DATE	ICANF	FORMER PART NO.	KD	APPLIED MODEL 01 02 03 04 05 06 07 08 09 10 11 12 13 14 15 16 17 18 19 20 21 22 23 24 25 26 27 28 29
		1	01	1	**69640-FK11A**	HOSE-VALVE RETURN		01	0107-			○ ○
			02	1	**69640-GH15A**		F/FC	01	0507-			✱ ✱ ✱ ✱ ✱ ✱ ✱ ✱ ✱ ✱ ✱ ✱
		2	01	1	**69694-L6301**	HOSE-RUBBER LOW PRESSURE, RETURN	F/OIL RETURN	01	0107-0508			✱ ✱
			02	1	**69694-L1102**		F/OIL RETURN	01	0107-0907			✱ ✱ ✱ ✱
			03	1	**69694-FK40A**		F/OIL RETURN	01	0907-0508			✱ ✱ ✱ ✱
			04	1	**69694-GG10A**		F/OIL RETURN	01	0508-			✱ ✱
			05	1	**69690-L1101**	PROTECTOR-SPIRAL TUBE	F/OIL RETURN	01	0107-			✱ ✱
		3	01	1	**01552-00431**	BAND-HOSE	F/OIL RETURN	05	0107-0508			✱ ✱
			02	1	**01552-00431**		F/OIL RETURN	01	0508-			✱ ✱
			03	1	**01552-00421**		F/OIL RETURN	03	0508-			✱ ✱
		4	01	1	**69676-L1100**	CLIP	F/OIL RETURN	01	0107-			✱ ✱
			02	1	**69676-FK40A**		F/OIL RETURN	01	0107-0508			✱ ✱ ✱ ✱
			03	1	**69676-L1100**		F/OIL RETURN	01	0508-			✱ ✱ ✱ ✱
		5	01	1	**01555-00103**	CLAMP-HOSE		01	0107-0907			○ ○
			02	1	**01555-00263**			01	0907-			○ ○
			03	1	**01555-00123**		F/FC	01	0507-0907			✱ ✱ ✱ ✱ ✱ ✱ ✱ ✱ ✱ ✱ ✱ ✱
			04	1	**01555-00273**		F/FC	01	0907-			✱ ✱ ✱ ✱ ✱ ✱ ✱ ✱ ✱ ✱ ✱ ✱
		6	01	1	**69690-L1103**	PROTECTOR-SPIRAL TUBE		01	0508-			✱ ✱
		7	01	1	**01555-00123**	CLAMP-HOSE		01	0107-0907			○ ○
			02	1	**01555-00273**			01	0907-			○ ○
		8	01	1	**69673-FK100**	CLAMP-HOSE		01	0107-			○ ○
		10	01	1	**69664-FK400**	PIPE ASSY-3 WAY	F/OIL RETURN	01	0107-0907			✱ ✱ ✱ ✱
			02	1	**69664-FF000**		F/OIL RETURN	01	0907-0508			✱ ✱ ✱ ✱
		11	01	1	**08124-0201F**	SCREW-HHM M10-1.25X20 W/LK & PW		01	0107-			○ ○
		12	01	1	**08723-12400**	CLAMP-HOSE	F/OIL RETURN	02	0107-0607			✱ ✱
			02	1	**01555-01121**		F/OIL RETURN	02	0607-			✱ ✱
		13	01	1	**08120-8161E**	SCREW-HHM M8-1.25X16 W/LKW		01	0107-			○ ○
			02	1	**08124-0161E**	SCREW-HHM M10-1.25X16 W/PW		01	0107-0508			○ ○ ○ ○
			03	1	**08120-8161E**	SCREW-HHM M8-1.25X16 W/LKW		01	0508-			○ ○ ○ ○
		14	01	1	**69690-L1102**	PROTECTOR-SPIRAL TUBE	F/OIL RETURN	01	0107-0508			✱ ✱ ✱ ✱

SEC. 697C

HYDRAULIC OIL PIPING (FROM VALVE TO CYLINDER)

TUBERIA HIDRAULICA DE ACEITE

HYDRAULIKÖLLROHRLEITUNG

CANALISATION D'HUILE HYDRAULIQUE

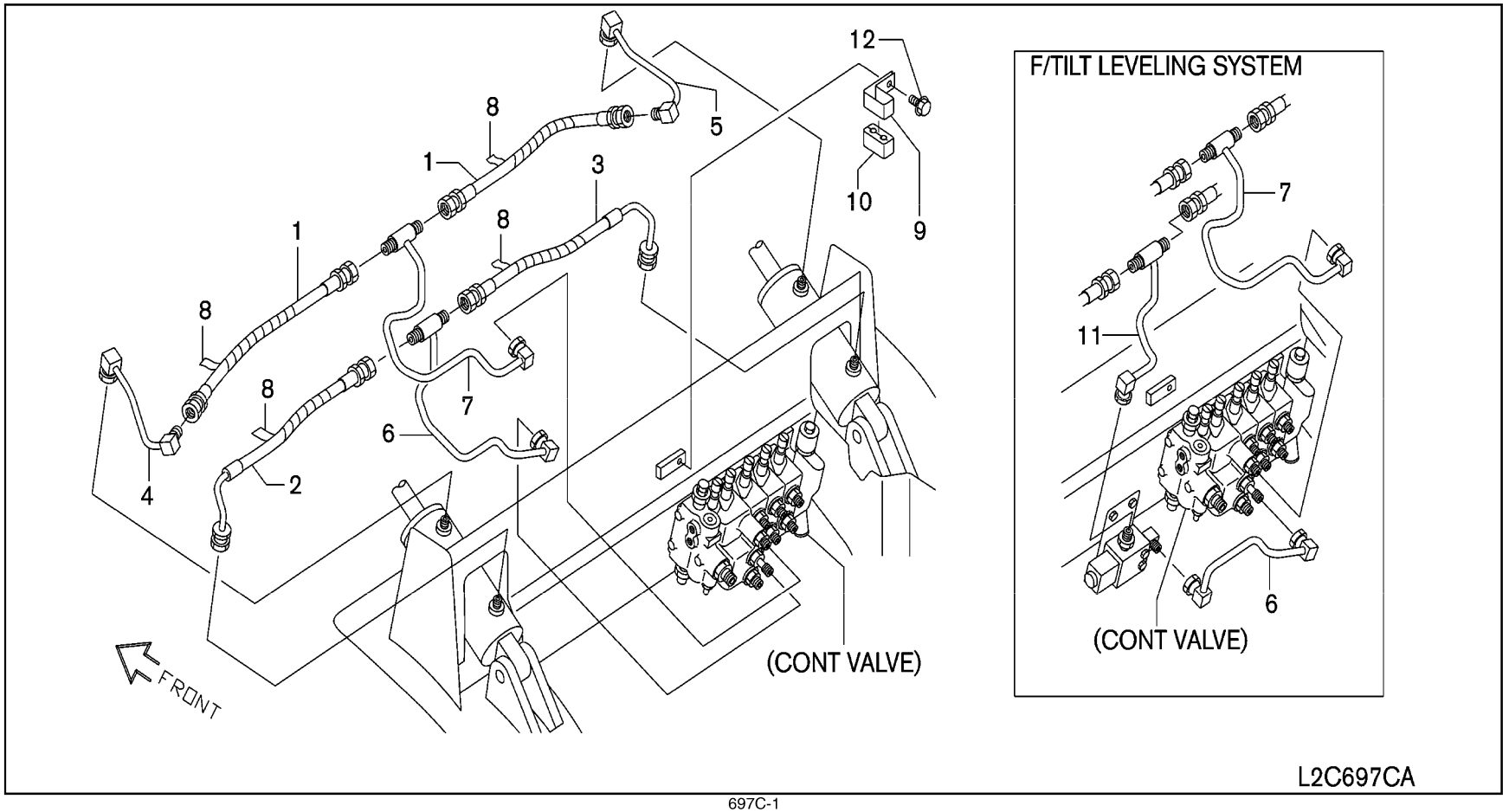

SEC. 697C

HYDRAULIC OIL PIPING (FROM VALVE TO CYLINDER)

TUBERIA HIDRAULICA DE ACEITE

HYDRAULIKÖLLROHRLEITUNG

CANALISATION D'HUILE HYDRAULIQUE

NC	S	KEY NO.	LEV	PART NO.	PART NAME	SPECIFICATION	QTY	APPLIED DATE	ICANF	FORMER PART NO.	KD	APPLIED MODEL 01 02 03 04 05 06 07 08 09 10 11 12 13 14 15 16 17 18 19 20 21 22 23 24 25 26 27 28 29
		1 01	1	**69725-FK100**	HOSE ASSY-RUBBER		02	0107-				○○○○○○○○○○○○○○○○○○○○○○○○○○○○○
		2 01	1	**69618-FK100**	PIPE & HOSE ASSY-TILT B		01	0107-				○○○○○○○○○○○○○○○○○○○○○○○○○○○○○
		02	1	**69618-FK110**		F/ANTI RUST	01	0107-				●●●●●●●●●●●●●●●●●●●●●●●●●●●●●
		3 01	1	**69616-FK100**	PIPE & HOSE ASSY-TILT B		01	0107-				○○○○○○○○○○○○○○○○○○○○○○○○○○○○○
		02	1	**69616-FK110**		F/ANTI RUST	01	0107-				●●●●●●●●●●●●●●●●●●●●●●●●●●●●●
		4 01	1	**69617-FK100**	PIPE ASSY-TILT A		01	0107-				○○○○○○○○○○○○○○○○○○○○○○○○○○○○○
		02	1	**69617-FK110**		F/ANTI RUST	01	0107-				●●●●●●●●●●●●●●●●●●●●●●●●●●●●●
		5 01	1	**69615-FK100**	PIPE ASSY-TILT A		01	0107-				○○○○○○○○○○○○○○○○○○○○○○○○○○○○○
		02	1	**69615-FK110**		F/ANTI RUST	01	0107-				●●●●●●●●●●●●●●●●●●●●●●●●●●●●●
		6 01	1	**69630-FK100**	PIPE ASSY-TILT A		01	0107-				○○○○○○○○○○○○○○○○○○○○○○○○○○○○○
		02	1	**69630-FK110**		F/ANTI RUST	01	0107-				●●●●●●●●●●●●●●●●●●●●●●●●●●●●●
		03	1	**69630-FK160**		F/TILT LEVELING SYSTEM	01	0107-				●●●●●●●●●●●●●●●●●●●●●●●●●●●●●
		04	1	**69630-FK170**		F/TILT LEVELING SYSTEM ANTI RUST	01	0107-				●●●●●●●●●●●●●●●●●●●●●●●●●●●●●
		05	1	**69630-GG15A**		F/FC	01	0507-				●●●●●●●●●●●●●●●●●●●●●●●●●●●●●
		06	1	**69630-GG16A**		F/FC ANTI RUST	01	0507-				●●●●●●●●●●●●●●●●●●●●●●●●●●●●●
		7 01	1	**69631-FK100**	PIPE ASSY-TILT B		01	0107-				○○○○○○○○○○○○○○○○○○○○○○○○○○○○○
		02	1	**69631-FK110**		F/ANTI RUST	01	0107-				●●●●●●●●●●●●●●●●●●●●●●●●●●●●●
		03	1	**69631-GG15A**		F/FC	01	0507-				●●●●●●●●●●●●●●●●●●●●●●●●●●●●●
		04	1	**69631-GG16A**		F/FC ANTI RUST	01	0507-				●●●●●●●●●●●●●●●●●●●●●●●●●●●●●
		8 01	1	**69690-L1106**	PROTECTOR-SPIRAL TUBE		AR	0107-				○○○○○○○○○○○○○○○○○○○○○○○○○○○○○
		9 01	1	**69674-FK100**	CLAMP		01	0107-				○○○○○○○○○○○○○○○○○○○○○○○○○○○○○
		10 01	1	**46283-89954**	INSULATOR-TUBE		01	0107-				○○○○○○○○○○○○○○○○○○○○○○○○○○○○○
		11 01	1	**69630-FK161**	PIPE ASSY-TILT A	F/TILT LEVELING SYSTEM	01	0107-				●●●●●●●●●●●●●●●●●●●●●●●●●●●●●
		02	1	**69630-FK171**		F/TILT LEVELING SYSTEM ANTI RUST	01	0107-				●●●●●●●●●●●●●●●●●●●●●●●●●●●●●
		12 01	1	**08120-8161F**	SCREW-HHM M8-1.25X16 W/LK & PW		01	0107-				○○○○○○○○○○○○○○○○○○○○○○○○○○○○○

SEC. 697D

HYDRAULIC OIL PIPING (FROM TANK TO STRG)

TUBERIA HIDRAULICA DE ACEITE

HYDRAULIKÖLLROHRLEITUNG

CANALISATION D'HUILE HYDRAULIQUE

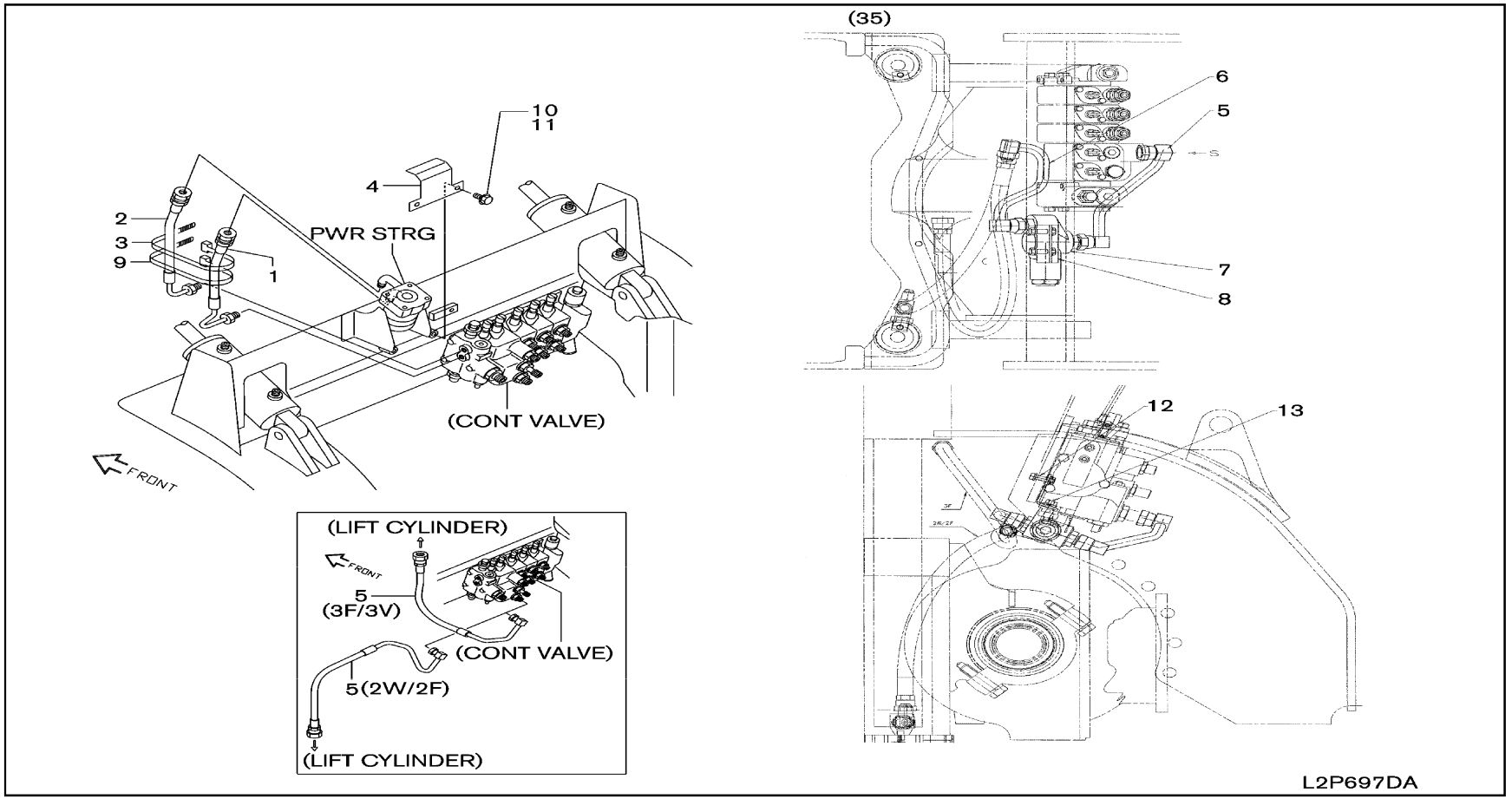

SEC. 697D

HYDRAULIC OIL PIPING (FROM TANK TO STRG)

TUBERIA HIDRAULICA DE ACEITE

HYDRAULIKÖLLROHRLEITUNG

CANALISATION D'HUILE HYDRAULIQUE

NC	S	KEY NO.	LEV	PART NO.	PART NAME	SPECIFICATION	QTY	APPLIED DATE	ICANF	FORMER PART NO.	KD	APPLIED MODEL 01 02 03 04 05 06 07 08 09 10 11 12 13 14 15 16 17 18 19 20 21 22 23 24 25 26 27 28 29
		1 01	1	**69660-FK100**	PIPE & HOSE ASSY-PS		01	0107-				○ ○
		02	1	**69660-FK110**		F/ANTI RUST	01	0107-				✱ ✱
		03	1	**69660-GG15A**		F/FC	01	0507-				✱ ✱ ✱ ✱ ✱ ✱ ✱ ✱ ✱ ✱ ✱ ✱ ✱
		04	1	**69660-GG16A**		F/FC ANTI RUST	01	0507-				✱ ✱ ✱ ✱ ✱ ✱ ✱ ✱ ✱ ✱ ✱ ✱ ✱
		2 01	1	**69662-FK100**	PIPE & HOSE ASSY-PS		01	0107-				○ ○
		02	1	**69662-FK110**		F/ANTI RUST	01	0107-				✱ ✱
		03	1	**69662-GG15A**		F/FC	01	0507-				✱ ✱ ✱ ✱ ✱ ✱ ✱ ✱ ✱ ✱ ✱ ✱ ✱
		04	1	**69662-GG16A**		F/FC ANTI RUST	01	0507-				✱ ✱ ✱ ✱ ✱ ✱ ✱ ✱ ✱ ✱ ✱ ✱ ✱
		3 01	1	**01552-00421**	CLAMP		01	0107-				○ ○
		4 01	1	**69678-FK100**	PROTECTOR-HOSE		01	0107-				○ ○
		5 01	1	**69636-FK105**	PIPE & HOSE ASSY-LIFT	F/2 STAGE MAST	01	0107-				✱ ✱
		02	1	**69636-FK115**		F/2 STAGE MAST ANTI RUST	01	0107-				✱ ✱
		03	1	**69636-FK165**		F/2 STAGE MAST TILT LEVEL SYS	01	0107-				✱ ✱
		04	1	**69636-FK175**		F/2 STAGE MAST TILT LEVEL SYS ANTI RUST	01	0107-				✱ ✱
		05	1	**69636-FK205**		F/3 STAGE MAST	01	0107-				✱ ✱
		06	1	**69636-FK21A**		F/3 STAGE MAST ANTI RUST	01	0107-				✱ ✱
		07	1	**69636-FK265**		F/3 STAGE MAST TILT LEVEL SYS	01	0107-				✱ ✱
		08	1	**69636-FK27A**		F/3 STAGE MAST TILT LEVEL SYS & ANTI RUST	01	0107-				✱ ✱
		09	1	**69636-FK200**		F/3 STAGE MAST	01	0107-				✱ ✱ ✱ ✱
		10	1	**69636-FK41A**		F/3 STAGE MAST ANTI RUST	01	0107-				✱ ✱ ✱ ✱
		11	1	**69636-FK260**		F/3 STAGE MAST TILT LEVEL SYS	01	0107-				✱ ✱ ✱ ✱
		12	1	**69636-FK47A**		F/3 STAGE MAST TILT LEVEL SYS & ANTI RUST	01	0107-				✱ ✱ ✱ ✱
		13	1	**69638-FK400**		F/2 STAGE MAST	01	0107-0508				✱ ✱ ✱ ✱
		14	1	**69636-FK105**		F/2 STAGE MAST	01	0508-0608				✱ ✱ ✱ ✱
		15	1	**69636-FK100**		F/2 STAGE MAST	01	0608-				✱ ✱ ✱ ✱
		16	1	**69636-FK115**		F/2 STAGE MAST ANTI RUST	01	0508-0608				✱ ✱ ✱ ✱
		17	1	**69636-FK110**		F/2 STAGE MAST ANTI RUST	01	0608-				✱ ✱ ✱ ✱
		18	1	**69636-FK165**		F/2 STAGE MAST TILT LEVEL SYS	01	0508-0608				✱ ✱ ✱ ✱
		19	1	**69636-FK160**		F/2 STAGE MAST TILT LEVEL SYS	01	0608-				✱ ✱ ✱ ✱
		20	1	**69636-FK175**		F/2 STAGE MAST TILT LEVEL SYS ANTI RUST	01	0508-0608				✱ ✱ ✱ ✱
		21	1	**69636-FK170**		F/2 STAGE MAST TILT LEVEL SYS ANTI RUST	01	0608-				✱ ✱ ✱ ✱
		22	1	**69636-GG15A**		F/FC 3F MAST	01	0507-				✱ ✱ ✱ ✱ ✱ ✱ ✱ ✱ ✱ ✱ ✱ ✱ ✱
		23	1	**69636-GG17A**		F/FC TILT LEVEL SYSTEM 3F MAST	01	0507-				✱ ✱ ✱ ✱ ✱ ✱ ✱ ✱ ✱ ✱ ✱ ✱ ✱
		24	1	**69636-GG16A**		F/FC ANTI RUST 3F MAST	01	0507-				✱ ✱ ✱ ✱ ✱ ✱ ✱ ✱ ✱ ✱ ✱ ✱ ✱
		25	1	**69636-GG18A**		F/FC ANTI RUST & TILT LEVEL SYS 3F MAST	01	0507-				✱ ✱ ✱ ✱ ✱ ✱ ✱ ✱ ✱ ✱ ✱ ✱ ✱
		6 01	1	**69638-FK401**	PIPE & HOSE ASSY-LIFT	F/2 STAGE	01	0107-0508				✱ ✱ ✱ ✱
		7 01	1	**58080-FK400**	VALVE ASSY-FLOW REGULATOR	F/2 STAGE	01	0107-0508				✱ ✱ ✱ ✱

SEC. 697D

HYDRAULIC OIL PIPING (FROM TANK TO STRG)

TUBERIA HIDRAULICA DE ACEITE

HYDRAULIKÖLLROHRLEITUNG

CANALISATION D'HUILE HYDRAULIQUE

NC	S	KEY NO.	LEV	PART NO.	PART NAME	SPECIFICATION	QTY	APPLIED DATE	ICANF	FORMER PART NO.	KD	APPLIED MODEL 01 02 03 04 05 06 07 08 09 10 11 12 13 14 15 16 17 18 19 20 21 22 23 24 25 26 27 28 29
		8	01	1	**69680-FK400**	BRACKET ASSY-FRV	F/2 STAGE	01	0107-0508																		*	*	*	*	
		9	01	1	**01552-00431**	BAND-HOSE		01	0107-			o	o	o

NOTE

SEC. 697E

HYDRAULIC OIL PIPING (SINGLE ACCUMULATOR)

TUBERIA HIDRAULICA DE ACEITE

HYDRAULIKÖLLROHRLEITUNG

CANALISATION D'HUILE HYDRAULIQUE

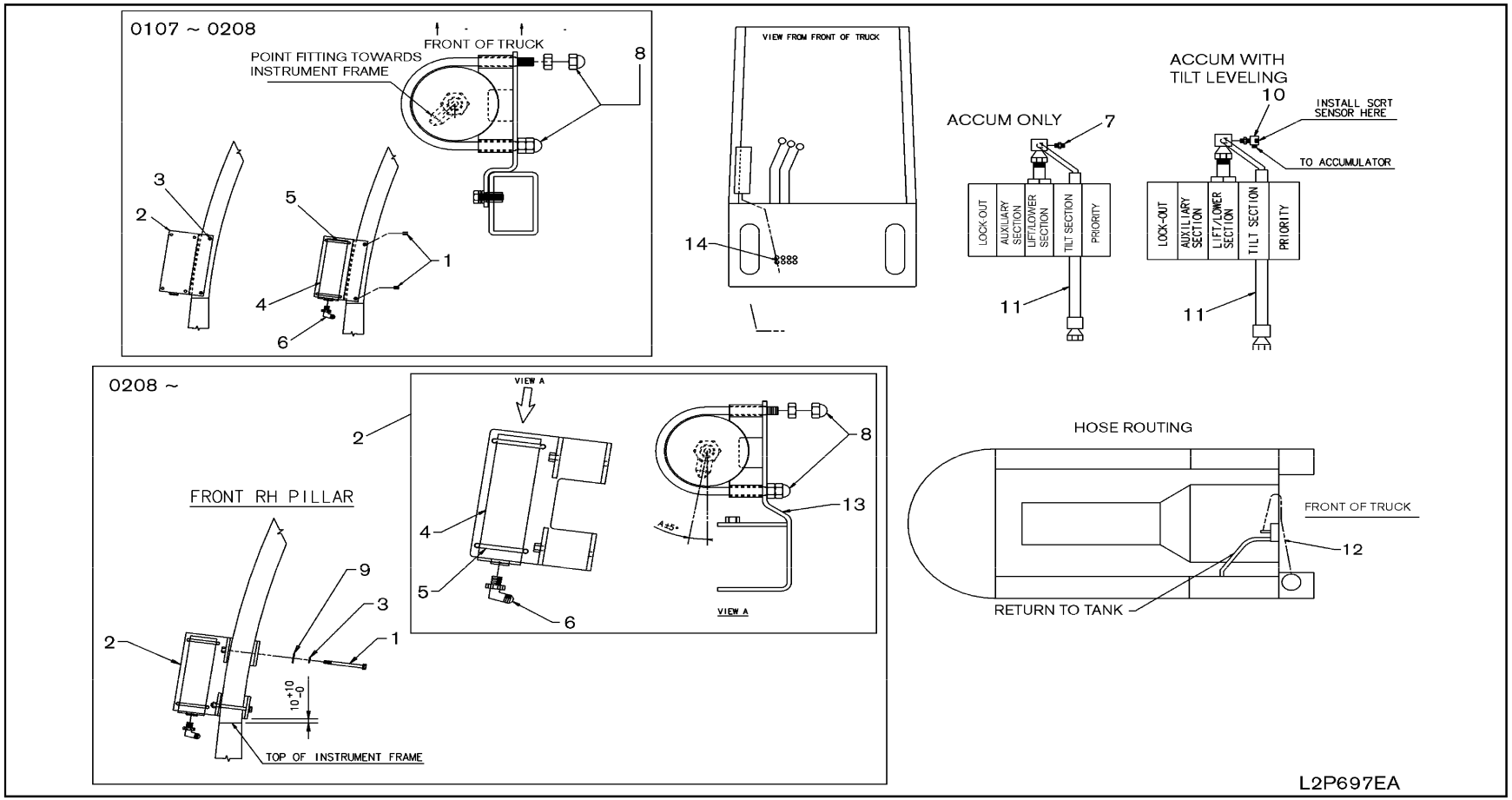

SEC. 697E

HYDRAULIC OIL PIPING (SINGLE ACCUMULATOR)

TUBERIA HIDRAULICA DE ACEITE

HYDRAULIKÖLLROHRLEITUNG

CANALISATION D'HUILE HYDRAULIQUE

NC	S	KEY NO.	LEV	PART NO.	PART NAME	SPECIFICATION	QTY	APPLIED DATE	ICANF	FORMER PART NO.	KD	APPLIED MODEL 01 02 03 04 05 06 07 08 09 10 11 12 13 14 15 16 17 18 19 20 21 22 23 24 25 26 27 28 29
		1	01	1	**73775-6G650**	FASTENER		02	0107-0208				* *
			02	1	**08120-8001A**	SCREW-HHM M8-1.25X100		02	0208-				* *
		2	01	1	**69253-FK800**	BRACKET-ACCUM MOUNTING		01	0107-0208				* *
			02	1	**69253-FW81A**	ACCUMULATOR ASSEMBLY		01	0208-				* *
		3	01	1	**08360-82526**	SCREW-HHM M8-1.25X25 W/LK & PW		02	0107-0208				* *
			02	1	**08915-1381A**	WASHER-LOCK SPLIT M8		02	0208-				* *
		4	01	1	**69314-FK800**	ACCUMULATOR		01	0107-0208				* *
			02	2	**69314-FK800**			01	0208-				* *
		5	01	1	**69676-FK800**	CLP-ACCUM MOUNTING		02	0107-0208				* *
			02	2	**69676-FK800**			02	0208-				* *
		6	01	1	**69354-FB685**	CONNECTOR ASSY-O RING TO JIC		01	0107-0208				* *
			02	2	**69354-FB685**			01	0208-				* *
		7	01	1	**69350-FK160**	CONNECTOR-HYDR		01	0107-1210				* *
			02	1	**69350-FJ10B**			01	0210-				* *
C		**8**	01	1	**08911-FB800**	NUT-ACORN 3/8-16		04	0107-0208				* *
C			02	2	**08911-FB800**			04	0208-				* *
		9	01	1	**08915-4381A**	WASHER-FLAT M8		02	0208-				* *
		10	01	1	**69350-FK161**	CONNECTOR ASSY	F/TILT LEVELING SYSTEM	01	0107-				* *
		11	01	1	**69636-FK165**	PIPE & HOSE ASSY-LIFT	F/2 STAGE MAST	01	0107-				* *
			02	1	**69636-FK175**		F/2 STAGE MAST ANTI RUST	01	0107-				* *
			03	1	**69636-FK260**		F/3 STAGE MAST	01	0107-				* * * *
			04	1	**69636-FK41A**		F/3 STAGE MAST ANTI RUST	01	0107-0507				* * * *
			05	1	**69636-FK47A**		F/3 STAGE MAST ANTI RUST	01	0507-				* * * *
			06	1	**69636-FK265**		F/3 STAGE MAST	01	0107-				* *
			07	1	**69636-FK21A**		F/3 STAGE MAST ANTI RUST	01	0107-0507				* *
			08	1	**69636-FK27A**		F/3 STAGE MAST ANTI RUST	01	0507-				* *
			09	1	**69636-FK160**		F/2 STAGE MAST	01	0608-				* * * *
			10	1	**69636-FK170**		F/2 STAGE MAST ANTI RUST	01	0608-				* * * *
		12	01	1	**69737-FC087**	HOSE ASSY-RUBBER		01	0107-				* *
			02	1	**69690-L8000**	PROTECTOR		01	0107-				* *
		13	01	2	**69253-FW80A**	BRACKET-ACCUMULATOR MOUNTING		02	0208-				* *
		14	01	1	**23570-008**	TY-RAP		02	0107-				* *

SEC. 698A

HYDRAULIC OIL PIPING MAST (2W)

TUBERIA DE ACEITE HIDRAULICO MASTIL

HYDRAULIKLEITUNG HUBMAST

CANALISATIONS HYDRAULIQUE MAT

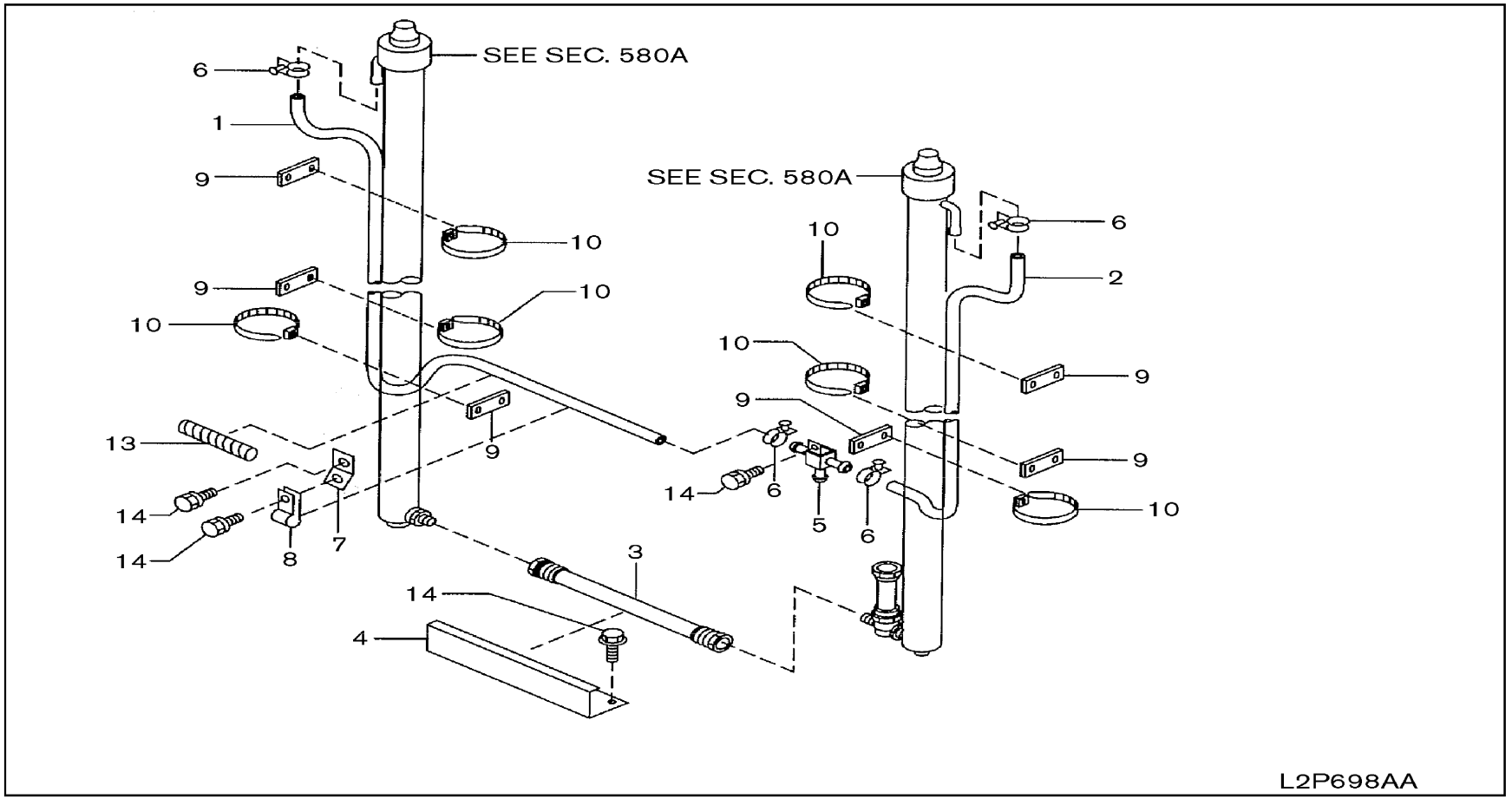

SEC. 698A

HYDRAULIC OIL PIPING MAST (2W)

TUBERIA DE ACEITE HIDRAULICO MASTIL

HYDRAULIKLEITUNG HUBMAST

CANALISATIONS HYDRAULIQUE MAT

NC	S	KEY NO.	LEV	PART NO.	PART NAME	SPECIFICATION	QTY	APPLIED DATE	ICANF	FORMER PART NO.	KD	APPLIED MODEL 01 02 03 04 05 06 07 08 09 10 11 12 13 14 15 16 17 18 19 20 21 22 23 24 25 26 27 28 29
		1	01	1	**69694-GE49A**	HOSE-RUBBER LOW PRESSURE, RH	270 L=1035	01	0107-			* * * * * * * * * * * * * * * * * *
			02	1	**69694-GG45A**		270 L=1045	01	0107-			* * * * * * *
			03	1	**69694-GE40B**		300 L=1185	01	0107-			* * * * * * * * * * * * * * * * * *
			04	1	**69694-GG01A**		300 L=1185	01	0107-			* * * * * * *
			05	1	**69694-13H02**		330 L=1345	01	0107-			* *
			06	1	**69694-L7560**		350 L=1480	01	0107-			* *
			07	1	**69694-GG02A**		370 L=1605	01	0107-			* *
			08	1	**69694-GG03A**		400 L=1795	01	0107-			* *
			09	1	**69694-GG04A**		450 L=2055	01	0107-			* *
			10	1	**69694-GG05A**		500 L=2305	01	0107-			* *
			11	1	**69694-13H02**		300 L=1345	01	0107-			* * * *
			12	1	**69694-L7560**		330 L=1480	01	0107-			* * * *
			13	1	**69694-GG02A**		350 L=1605	01	0107-			* * * *
			14	1	**69694-GG03A**		370 L=1795	01	0107-			* * * *
			15	1	**69694-GG04A**		400 L=2055	01	0107-			* * * *
			16	1	**69694-GG05A**		450 L=2305	01	0107-			* * * *
			17	1	**69694-GG40A**		500 L=2555	01	0107-			* * * *
			18	1	**69690-L1106**	PROTECTOR-SPIRAL TUBE		01	0107-			* * * *
		2	01	1	**69694-GE41B**	HOSE-RUBBER LOW PRESSURE, LH	270 L=1155	01	0107-			* * * * * * * * * * * * * * * * * *
			02	1	**69694-GE00A**		270 L=1165	01	0107-			* * * * * * *
			03	1	**69694-GE42B**		300 L=1305	01	0107-			* * * * * * * * * * * * * * * * * *
			04	1	**69694-GH42A**		300 L=1315	01	0107-			* * * * * * *
			05	1	**69694-GG08A**		330 L=1465	01	0107-			* *
			06	1	**69694-GG09A**		350 L=1600	01	0107-			* *
			07	1	**69694-GG41A**		370 L=1725	01	0107-			* *
			08	1	**69694-GG42A**		400 L=1915	01	0107-			* *
			09	1	**69694-FL401**		450 L=2175	01	0107-			* *
			10	1	**69694-GG43A**		500 L=2425	01	0107-			* *
			11	1	**69694-GG08A**		300 L=1465	01	0107-			* * * *
			12	1	**69694-GG09A**		330 L=1600	01	0107-			* * * *
			13	1	**69694-GG41A**		350 L=1725	01	0107-			* * * *
			14	1	**69694-GG42A**		370 L=1915	01	0107-			* * * *
			15	1	**69694-FL401**		400 L=2175	01	0107-			* * * *
			16	1	**69694-GG43A**		450 L=2425	01	0107-			* * * *
			17	1	**69694-GG44A**		500 L=2675	01	0107-			* * * *
			18	1	**69690-L1106**	PROTECTOR-SPIRAL TUBE		01	0107-			* * * *
		3	01	1	**69735-6K000**	PIPE & HOSE ASSY-LIFT		01	0107-			* * * * * * * * * * * * * * * *

SEC. 698A

HYDRAULIC OIL PIPING MAST (2W)

TUBERIA DE ACEITE HIDRAULICO MASTIL

HYDRAULIKLEITUNG HUBMAST

CANALISATIONS HYDRAULIQUE MAT

NC	S	KEY NO.	LEV	PART NO.	PART NAME	SPECIFICATION	QTY	APPLIED DATE	ICANF	FORMER PART NO.	KD	APPLIED MODEL 01 02 03 04 05 06 07 08 09 10 11 12 13 14 15 16 17 18 19 20 21 22 23 24 25 26 27 28 29
		3 02	1	**69825-FF300**	PIPE & HOSE ASSY-LIFT		01	0107-				∗ ∗ ∗ ∗ ∗ ∗ ∗ ∗ ∗ ∗ ∗ ∗ ∗
		4 01	1	**58835-60K00**	GUARD-HOSE		01	0107-				∗ ∗
		5 01	1	**69664-GE40A**	PIPE ASSY-3 WAY		01	0107-				∗ ∗
		6 01	1	**01555-01081**	CLAMP		04	0107-				∗ ∗
		7 01	1	**69681-GB04B**	BRACKET-HOSE CLAMP		01	0107-				∗ ∗
		8 01	1	**01558-00012**	CLAMP-HOSE		01	0107-				∗ ∗
		9 01	1	**69666-10H00**	BAND-HOSE LIFT CYLINDER		AR	0107-				∗ ∗
		10 01	1	**24216-W1000**	CLAMP-BAND		AR	0107-				∗ ∗
		13 01	1	**69690-L1106**	PROTECTOR-SPIRAL TUBE	F/ATTACH	02	0107-				∗ ∗
		14 01	1	**08120-8161F**	BOLT-HEX M8 7T 2/WLW & PW		05	0107-				∗ ∗
		02	1	**08120-8161F**		F/ATTACH	04	0107-				∗ ∗

NOTE

SEC. 698B

HYDRAULIC OIL PIPING MAST (2F)

TUBERIA DE ACEITE HIDRAULICO MASTIL

HYDRAULIKLEITUNG HUBMAST

CANALISATIONS HYDRAULIQUE MAT

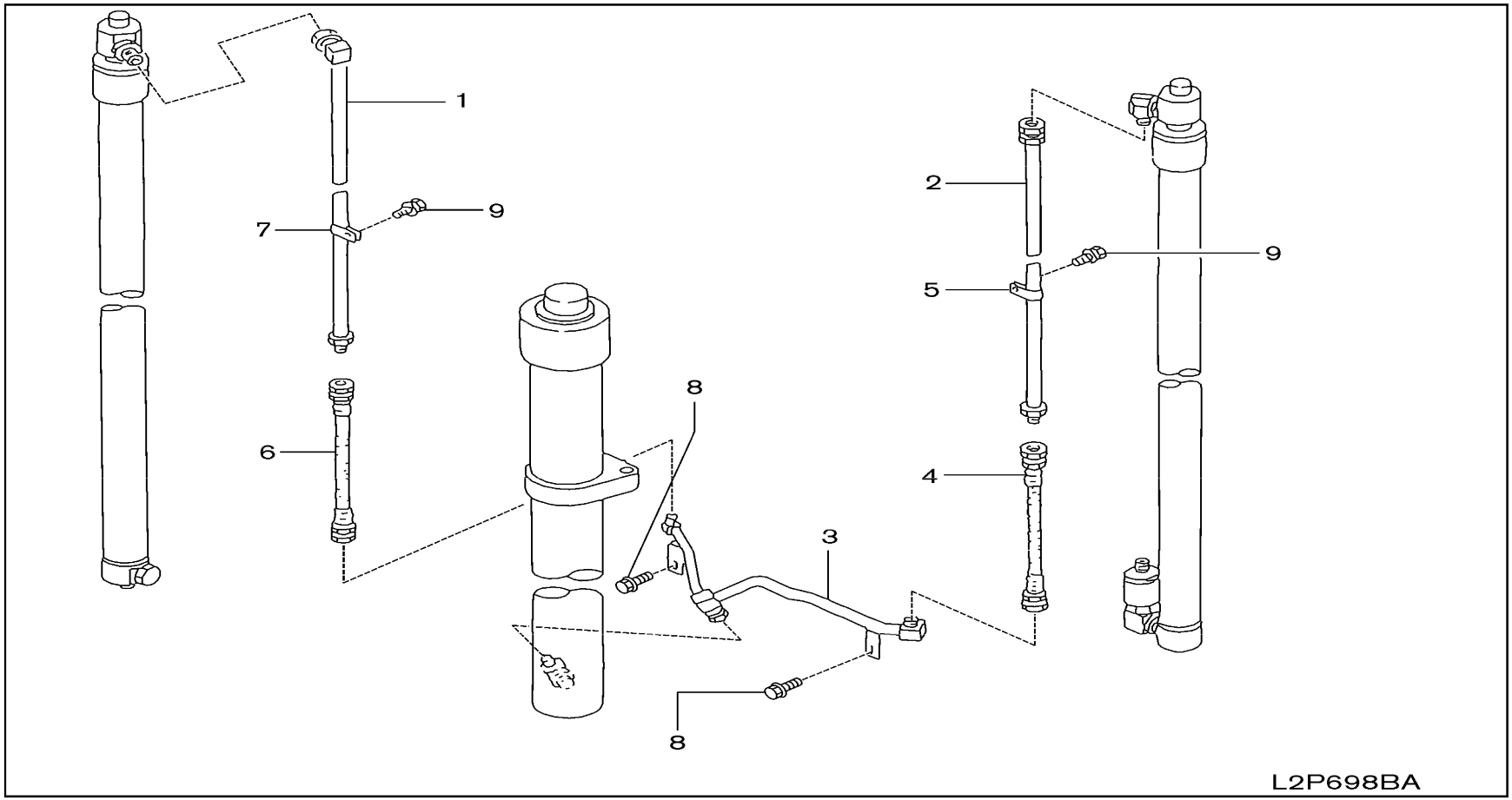

698B-1

SEC. 698B

HYDRAULIC OIL PIPING MAST (2F)

TUBERIA DE ACEITE HIDRAULICO MASTIL

HYDRAULIKLEITUNG HUBMAST

CANALISATIONS HYDRAULIQUE MAT

NC	S	KEY NO.	LEV	PART NO.	PART NAME	SPECIFICATION	QTY	APPLIED DATE	ICANF	FORMER PART NO.	KD	APPLIED MODEL 01 02 03 04 05 06 07 08 09 10 11 12 13 14 15 16 17 18 19 20 21 22 23 24 25 26 27 28 29
		1	01	1	**59687-51K00**	PIPE ASSY-LIFT	L=1225-300	01	0107-			* * * * * * * * * * * * * * * * * *
			02	1	**59687-51K04**		L=1375-330	01	0107-			* * * * * * * * * * * * * * * * * *
			03	1	**59687-51K05**		L=1510-350	01	0107-			* * * * * * * * * * * * * * * * * *
			04	1	**59687-51K06**		L=1635-370	01	0107-			* * * * * * * * * * * * * * * * * *
			05	1	**59687-51K07**		L=1825-400	01	0107-			* * * * * * * * * * * * * * * * * *
			06	1	**59687-51K08**		L=1925-420	01	0107-			* * * * * * * * * * * * * * * * * *
			07	1	**59687-61K00**		L=1145-300	01	0107-			* * * * * * *
			08	1	**59687-61K04**		L=1295-330	01	0107-			* * * * * * *
			09	1	**59687-61K05**		L=1430-350	01	0107-			* * * * * * *
			10	1	**59687-61K06**		L=1555-370	01	0107-			* * * * * * *
			11	1	**59687-61K07**		L=1745-400	01	0107-			* * * * * * *
			12	1	**59687-61K04**		L=1295-300	01	0107-			* * * *
			13	1	**59687-61K05**		L=1430-330	01	0107-			* * * *
			14	1	**59687-61K06**		L=1555-350	01	0107-			* * * *
			15	1	**59687-61K07**		L=1745-370	01	0107-			* * * *
			16	1	**59687-GG50A**		L=1995-400	01	0107-			* * * *
		2	01	1	**59686-01H04**	PIPE ASSY-LIFT	L=1200-300	01	0107-			* *
			02	1	**59686-01H00**		L=1350-330	01	0107-			* *
			03	1	**59686-01H05**		L=1485-350	01	0107-			* *
			04	1	**59686-01H06**		L=1610-370	01	0107-			* *
			05	1	**59686-01H07**		L=1800-400	01	0107-			* *
			06	1	**59686-51K08**		L=1900-420	01	0107-			* * * * * * * * * * * * * * * * * *
			07	1	**59686-01H00**		L=1650-300	01	0107-			* * * *
			08	1	**59686-01H05**		L=1485-330	01	0107-			* * * *
			09	1	**59686-01H06**		L=1610-350	01	0107-			* * * *
			10	1	**59686-01H07**		L=1800-370	01	0107-			* * * *
			11	1	**59686-01H08**		L=2050-400	01	0107-			* * * *
		3	01	1	**59686-24H05**	PIPE ASSY		01	0107-			* *
			02	1	**59686-21H06**			01	0107-			* * * *
		4	01	1	**69636-03H00**	HOSE ASSY-NYLON	L=325	01	0107-			* *
		5	01	1	**01551-00531**	CLAMP-HOSE		01	0107-			* *
		6	01	1	**69636-11H01**	HOSE ASSY-NYLON	L=310	01	0107-			* *
		7	01	1	**01558-00012**	CLAMP-HOSE		01	0107-			* *
		8	01	1	**08110-8161D**	SCREW-HHM M8-1.25X16 W/SPRW		02	0107-			* *
		9	01	1	**08110-8251D**	SCREW-HHM M8-1.25X25 W/LKW & PW		02	0107-			* *

SEC. 698D

HYDRAULIC OIL PIPING MAST (3F)

TUBERIA DE ACEITE HIDRAULICO MASTIL

HYDRAULIKLEITUNG HUBMAST

CANALISATIONS HYDRAULIQUE MAT

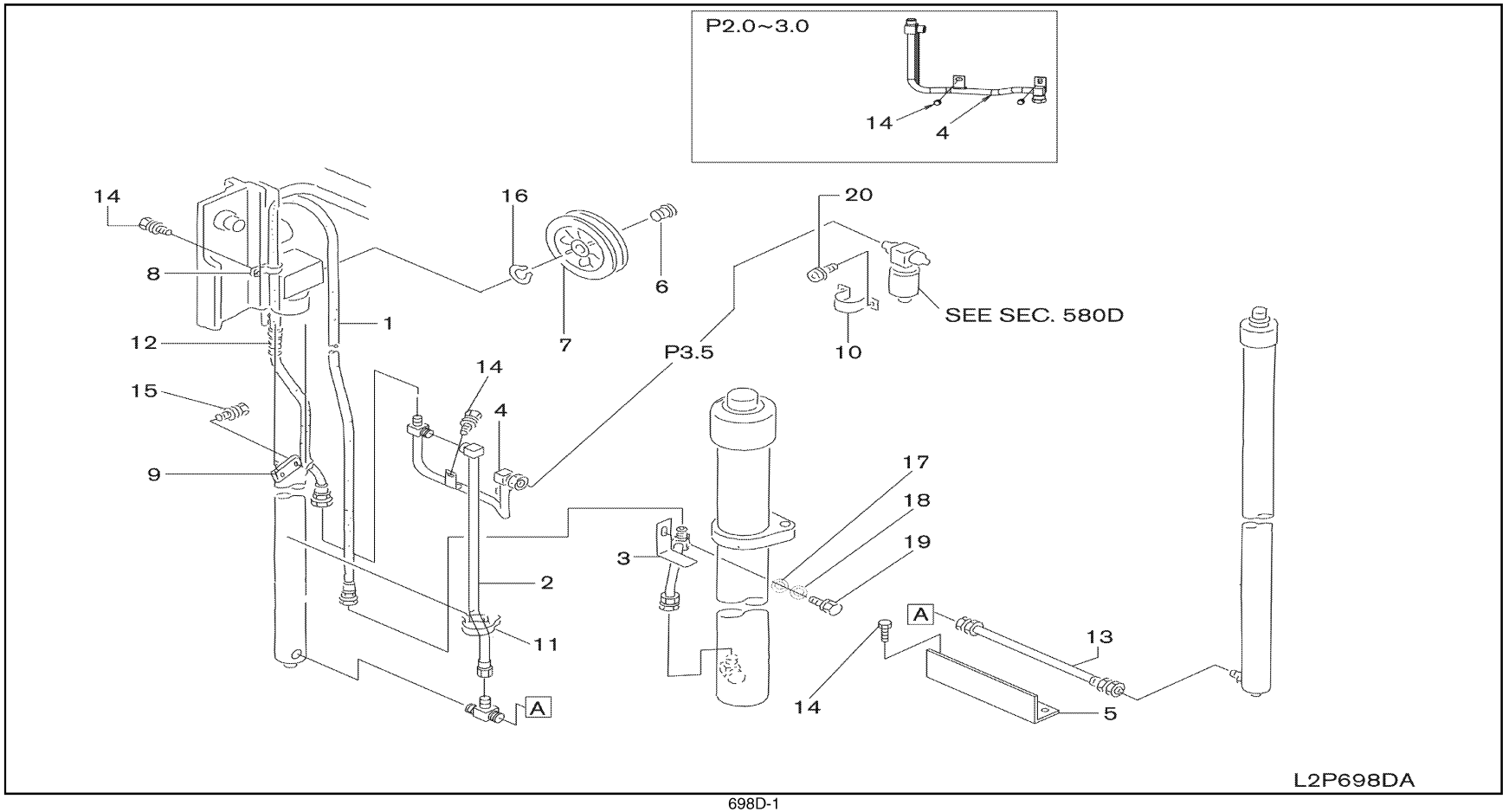

SEC. 698D

HYDRAULIC OIL PIPING MAST (3F)

TUBERIA DE ACEITE HIDRAULICO MASTIL

HYDRAULIKLEITUNG HUBMAST

CANALISATIONS HYDRAULIQUE MAT

NC	S	KEY NO.	LEV	PART NO.	PART NAME	SPECIFICATION	QTY	APPLIED DATE	ICANF	FORMER PART NO.	KD	APPLIED MODEL 01 02 03 04 05 06 07 08 09 10 11 12 13 14 15 16 17 18 19 20 21 22 23 24 25 26 27 28 29
		1	01	1	**69825-42K02**	HOSE ASSY-LIFT	L=2250-385	01	0107-			* *
			02	1	**69825-03H18**		L=2550-430	01	0107-			* *
			03	1	**69825-03H01**		L=2860-475	01	0107-			* *
			04	1	**69825-42K03**		L=3125-515	01	0107-			* *
			05	1	**69825-53H04**		L=3370-550	01	0107-			* *
			06	1	**69825-53H05**		L=3760-600	01	0107-			* *
			07	1	**69825-53H06**		L=4240-650	01	0107-			* *
			08	1	**69825-53H07**		L=4730-700	01	0107-			* *
			09	1	**69825-03H18**		L=2550-385	01	0107-			* *
			10	1	**69825-03H01**		L=2860-430	01	0107-			* *
			11	1	**69825-42K03**		L=3125-475	01	0107-			* *
			12	1	**69825-53H04**		L=3370-515	01	0107-			* *
			13	1	**69825-53H05**		L=3760-550	01	0107-			* *
			14	1	**69825-53H06**		L=4240-600	01	0107-			* *
			15	1	**69825-53H07**		L=4730-650	01	0107-			* *
			16	1	**69825-22H00**		L=5225-700	01	0107-			* *
			17	1	**69825-42K02**		L=2250-355	01	0107-			* *
			18	1	**69825-03H18**		L=2550-400	01	0107-			* *
			19	1	**69825-03H01**		L=2860-445	01	0107-			* *
			20	1	**69825-42K03**		L=3125-485	01	0107-			* *
			21	1	**69825-53H04**		L=3370-520	01	0107-			* *
			22	1	**69825-53H05**		L=3760-570	01	0107-			* *
			23	1	**69825-53H06**		L=4240-620	01	0107-			* *
			24	1	**69825-53H07**		L=4730-670	01	0107-			* *
		2	01	1	**69636-42K01**	HOSE ASSY-LIFT		01	0107-			* *
		3	01	1	**69638-FC20A**	PIPE ASSY-LIFT		01	0107-			* *
			02	1	**69638-FC60A**			01	0107-			* * * *
		4	01	1	**69638-FB605**	PIPE ASSY-LIFT		01	0107-			* *
			02	1	**69638-FB600**			01	0107-			* * * *
			03	1	**69638-FB600**		F/FC	01	0507-			* *
		5	01	1	**58835-52K00**	GUARD-HOSE		01	0107-			* *
		6	01	1	**58512-5G500**	SHAFT-HOSE PULLEY		01	0107-			* *
		7	01	1	**59395-6G500**	PULLEY-HOSE		01	0107-			* *
		8	01	1	**69674-04H00**	CLAMP		01	0107-			* *
		9	01	1	**69666-12H00**	BAND-HOSE		01	0107-			* *
			02	1	**69666-25H00**			01	0107-			* * * * * * *
			03	1	**69666-22H00**			01	0107-			* * * *

SEC. 698D

HYDRAULIC OIL PIPING MAST (3F)

TUBERIA DE ACEITE HIDRAULICO MASTIL

HYDRAULIKLEITUNG HUBMAST

CANALISATIONS HYDRAULIQUE MAT

NC	S	KEY NO.	LEV	PART NO.	PART NAME	SPECIFICATION	QTY	APPLIED DATE	ICANF	FORMER PART NO.	KD	APPLIED MODEL 01 02 03 04 05 06 07 08 09 10 11 12 13 14 15 16 17 18 19 20 21 22 23 24 25 26 27 28 29
		10	01	1	**59675-L7400**	BAND		01	0107-			* * * *
			02	1	**59675-L7400**		F/FC	01	0507-			* * * * * * * * * * * * * * * * * * *
		11	01	1	**24216-W1000**	CLAMP-BAND		01	0107-			* * * * * * * * * * * * * * * * * * *
			02	1	**01552-00431**			01	0107-			* * * * * * * * * * * * * * * * * * *
		12	01	1	**69690-L1101**	PROTECTOR-SPIRAL TUBE		01	0107-			* *
		13	01	1	**69735-13H66**	HOSE		01	0107-0507			* * * * * * * * * * * * * * * * * * *
			02	1	**69735-FB60A**			01	0507-			* * * * * * * * * * * * * * * * * * *
			03	1	**69636-20H00**			01	0107-0607			* * * * * * * * * * * * * * * * * * * *
			04	1	**69636-FM000**			01	0607-			* * * * * * * * * * * * * * * * * * * *
		14	01	1	**08110-8161D**	SCREW-HHM M8-1.5X16 W/SPRW		05	0107-			* *
		15	01	1	**08360-61626**	SCREW-HH CR M6-1.0X16 W/LK & PW		01	0107-			* *
			02	1	**08360-63026**	SCREW-MACHINE		01	0107-			* * * *
		16	01	1	**00922-14500**	RING-SNAP		01	0107-			* *
		17	01	1	**08915-5381A**	WASHER-FLAT M8		01	0107-			* *
		18	01	1	**08915-1381A**	WASHER-LOCK SPLIT M8		01	0107-			* *
		19	01	1	**08110-8161A**	SCREW-HHM M8-1.25X16		01	0107-			* *
		20	01	1	**08310-61214**	SCREW-PHM M6-1.0X12 W/SPRW		02	0107-0411			* * * *
			02	1	**08310-61262**	SCREW-PHM M6 W/SPW		02	0411-			* * * *
			03	1	**08310-61214**	SCREW-PHM M6-1.0X12 W/SPRW	F/FC	02	0507-0411			* * * * * * * * * * * * * * * * * * *
			04	1	**08310-61262**	SCREW-PHM M6 W/SPW	F/FC	02	0411-			* * * * * * * * * * * * * * * * * * *

NOTE

SEC. 698E

HYDRAULIC OIL PIPING MAST (3V)

TUBERIA DE ACEITE HIDRAULICO MASTIL

HYDRAULIKLEITUNG HUBMAST

CANALISATIONS HYDRAULIQUE MAT

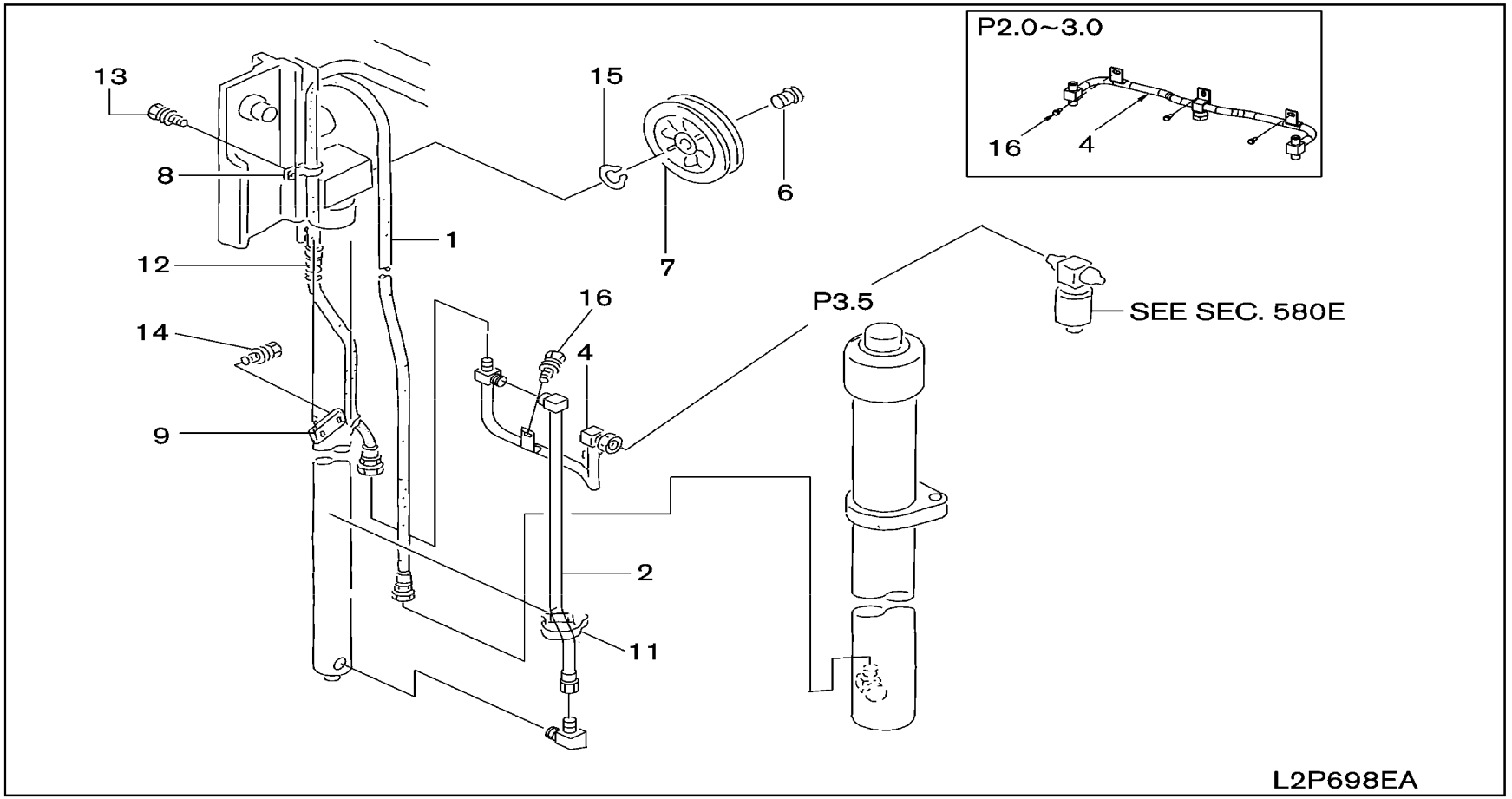

SEC. 698E

HYDRAULIC OIL PIPING MAST (3V)

TUBERIA DE ACEITE HIDRAULICO MASTIL

HYDRAULIKLEITUNG HUBMAST

CANALISATIONS HYDRAULIQUE MAT

NC	S	KEY NO.	LEV	PART NO.	PART NAME	SPECIFICATION	QTY	APPLIED DATE	ICANF	FORMER PART NO.	KD	APPLIED MODEL 01 02 03 04 05 06 07 08 09 10 11 12 13 14 15 16 17 18 19 20 21 22 23 24 25 26 27 28 29
		1	01	1	**69737-FB701**	HOSE ASSY-LIFT	L=2450-360	02	0107-			**********
			02	1	**69737-FB702**		L=2725-405	02	0107-			**********
			03	1	**69737-FB703**		L=3025-450	02	0107-			**********
			04	1	**69737-FB704**		L=3275-490	02	0107-			**********
			05	1	**69737-FB705**		L=3525-525	02	0107-			**********
			06	1	**69737-FB706**		L=3875-575	02	0107-			**********
			07	1	**69737-FB707**		L=4375-633	02	0107-			**********
			08	1	**69737-FB708**		L=4850-688	02	0107-			**********
			09	1	**69827-FC701**		L=2800-385	02	0107-			**********
			10	1	**69827-FC702**		L=3100-430	02	0107-			**********
			11	1	**69827-FC703**		L=3350-470	02	0107-			**********
			12	1	**69827-FC704**		L=3600-505	02	0107-			**********
			13	1	**69827-FC705**		L=3975-555	02	0107-			**********
			14	1	**69827-FC706**		L=4475-600	02	0107-			**********
			15	1	**69827-FC707**		L=4950-650	02	0107-			**********
			16	1	**69827-FC708**		L=5450-700	02	0107-			**********
		2	01	1	**69737-FB700**	HOSE ASSY-LIFT		02	0107-			**********
			02	1	**69827-FC700**			02	0107-			**********
		4	01	1	**69638-FB705**	PIPE ASSY-LIFT		01	0107-			**********
			02	1	**69638-FC705**			01	0107-			**********
			03	1	**69638-FC700**			01	0107-			**********
		6	01	1	**58512-5G500**	SHAFT-HOSE PULLEY		02	0107-			**********
			02	1	**58512-5G500**		LH F/HYDR+CONN VLVX3	01	0107-			**********
			03	1	**58512-5G510**		RH F/HYDR+CONN VLVX3	01	0107-			**********
			04	1	**58512-5G510**		F/HYDR+CONN VLVX4	02	0107-			**********
		7	01	1	**59395-6G500**	PULLEY-HOSE		02	0107-			**********
		8	01	1	**69676-5G500**	CLAMP		02	0107-			**********
			02	1	**69676-6G500**			02	0107-			**********
		9	01	1	**69666-12H00**	BAND-HOSE		02	0107-			**********
			02	1	**69666-25H00**			02	0107-			**********
			03	1	**69666-22H00**			02	0107-			**********
		11	01	1	**24216-W1000**	CLAMP-BAND		02	0107-			**********
			02	1	**01522-00431**			02	0107-			**********
		12	01	1	**69690-L1106**	PROTECTOR-SPIRAL TUBE		02	0107-			**********
			02	1	**69690-L1101**			02	0107-			**********
		13	01	1	**08110-8201D**	SCREW-HHM M8-1.25X20 W/SPRW		04	0107-			**********
		14	01	1	**08360-61626**	SCREW-HH CR M6-1.0X16 W/LK & PW		02	0107-			**********

SEC. 698E

HYDRAULIC OIL PIPING MAST (3V)

TUBERIA DE ACEITE HIDRAULICO MASTIL

HYDRAULIKLEITUNG HUBMAST

CANALISATIONS HYDRAULIQUE MAT

NC	S	KEY NO.	LEV	PART NO.	PART NAME	SPECIFICATION	QTY	APPLIED DATE	ICANF	FORMER PART NO.	KD	APPLIED MODEL 01 02 03 04 05 06 07 08 09 10 11 12 13 14 15 16 17 18 19 20 21 22 23 24 25 26 27 28 29
		14 02	1	**08360-63026**	SCREW-MACHINE		02	0107-				* * * *
		15 01	1	**00922-14500**	RING-SNAP		02	0107-				* *
		16 01	1	**08110-8161D**	SCREW-HHM M8-1.25X16 W/SPRW		03	0107-				* *
		02	1	**08110-8161D**			02	0107-				* * * *

698E-3

NOTE

HYDRAULIC OIL PIPING (ATTACHMENT) (2W-OUTER CHAIN 2.0, 2.5 & 3.0TON-UPTO MAY 2008)

TUBERIA DE ACEITE HIDRAULICO ACCESORIOS

HYDRAULIKLEITUNG ZUBEHÖR

CANALISATIONS HYDRAULIQUE ACCESSOIRES

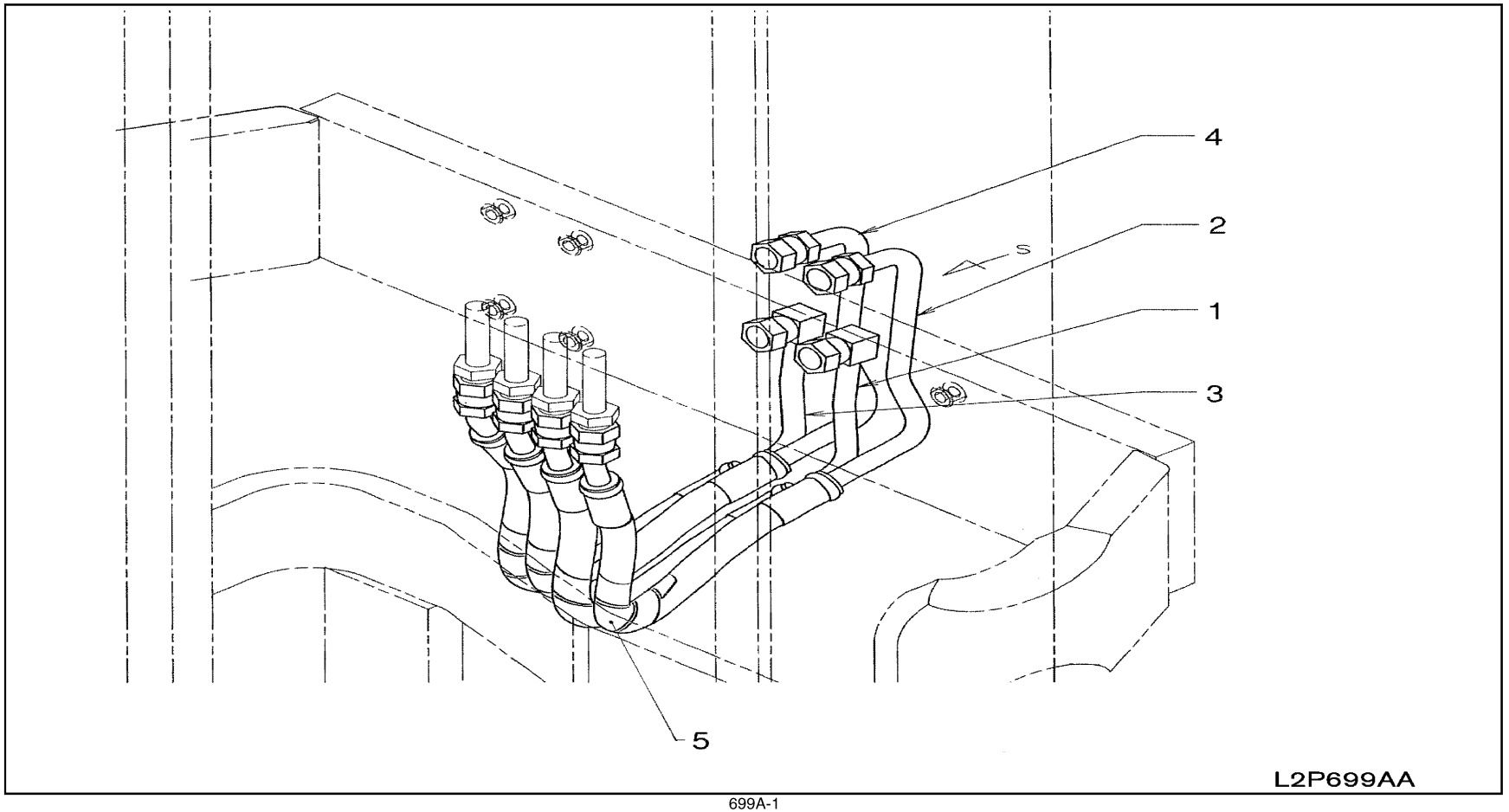

SEC. 699A

HYDRAULIC OIL PIPING (ATTACHMENT) (2W-OUTER CHAIN 2.0, 2.5 & 3.0TON-UPTO MAY 2008)

TUBERIA DE ACEITE HIDRAULICO ACCESORIOS

HYDRAULIKLEITUNG ZUBEHÖR

CANALISATIONS HYDRAULIQUE ACCESSOIRES

NC	S	KEY NO.	LEV	PART NO.	PART NAME	SPECIFICATION	QTY	APPLIED DATE	ICANF	FORMER PART NO.	KD	APPLIED MODEL 01 02 03 04 05 06 07 08 09 10 11 12 13 14 15 16 17 18 19 20 21 22 23 24 25 26 27 28 29
		1 01	1	**69710-FK101**	PIPE & HOSE ASSY	L=375 VLVX3A	01	0107-0508				* * * * * * * * * * * * * * * * * *
		02	1	**69710-FK100**		L=395 VLVX3A	01	0107-0508				* * * * * * *
		2 01	1	**69714-FK101**	PIPE & HOSE ASSY	L=395 VLVX3B	01	0107-0508				* * * * * * * * * * * * * * * * * *
		02	1	**69714-FK100**		L= 425 VLVX3B	01	0107-0508				* * * * * * *
		3 01	1	**69810-FK100**	PIPE & HOSE ASSY	L=415 VLVX4A	01	0107-0508				* *
		4 01	1	**69814-FK100**	PIPE & HOSE ASSY	L=460 VLVX4B	01	0107-0508				* *
		5 01	1	**69690-L8000**	PROTECTOR-SPIRAL TUBE	VLVX3	02	0107-0508				* *
		02	1	**69690-L8000**		VLVX4	04	0107-0508				* *

SEC. 699B

HYDRAULIC OIL PIPING (ATTACHMENT) (2W-OUTER CHAIN, 3 SPOOL 2.0, 2.5 & 3.0TON-UPTO MAY 2008)

TUBERIA DE ACEITE HIDRAULICO ACCESORIOS

HYDRAULIKLEITUNG ZUBEHÖR

CANALISATIONS HYDRAULIQUE ACCESSOIRES

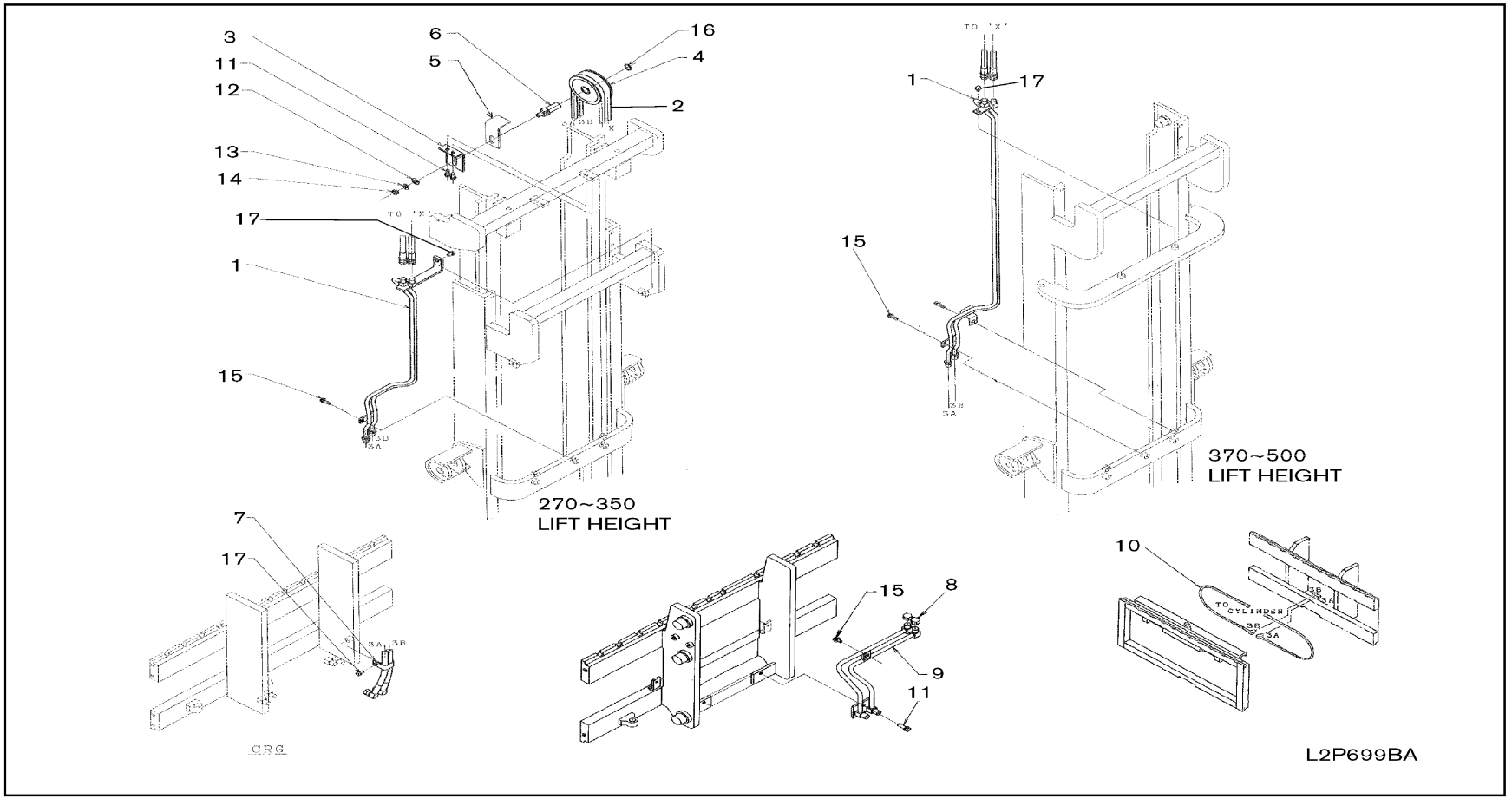

699B-1

SEC. 699B

HYDRAULIC OIL PIPING (ATTACHMENT) (2W-OUTER CHAIN, 3 SPOOL 2.0, 2.5 & 3.0TON-UPTO MAY 2008)

TUBERIA DE ACEITE HIDRAULICO ACCESORIOS

HYDRAULIKLEITUNG ZUBEHÖR

CANALISATIONS HYDRAULIQUE ACCESSOIRES

NC	S	KEY NO.	LEV	PART NO.	PART NAME	SPECIFICATION	QTY	APPLIED DATE	ICANF	FORMER PART NO.	KD	APPLIED MODEL 01 02 03 04 05 06 07 08 09 10 11 12 13 14 15 16 17 18 19 20 21 22 23 24 25 26 27 28 29
		1	01	1	**69740-GE43C**	PIPE ASSY-MAST	270	01	0107-0508			* *
			02	1	**69740-GE40C**		300	01	0107-0508			* *
			03	1	**69740-GE44C**		330	01	0107-0508			* *
			04	1	**69740-GE45C**		350	01	0107-0508			* *
			05	1	**69740-GE46C**		370	01	0107-0508			* *
			06	1	**69740-GE47C**		400+450+500	01	0107-0508			* *
		2	01	1	**69737-FE000**	HOSE ASSY-MAST	270 L=1900	02	0107-0508			* *
			02	1	**69737-FE001**		300 L=2050	02	0107-0508			* *
			03	1	**69737-FE002**		330 L=2200	02	0107-0508			* *
			04	1	**69737-FE003**		350 L=2325	02	0107-0508			* *
			05	1	**69737-FE004**		370 L=2450	02	0107-0508			* *
			06	1	**69737-FE005**		400 L=2650	02	0107-0508			* *
			07	1	**69737-FE006**		450 L=3125	02	0107-0508			* *
			08	1	**69737-FE007**		500 L=3625	02	0107-0508			* *
		3	01	1	**69760-03H00**	BRACKET ASSY-PULLEY		01	0107-0508			* *
		4	01	1	**59395-FJ40A**	PULLEY ASSY-HOSE		01	0107-0508			* *
		5	01	1	**69764-FF000**	PROTECTOR-HOSE PULLEY		01	0107-0508			* *
		6	01	1	**69763-FJ40A**	SHAFT-PULLEY		01	0107-0508			* *
		7	01	1	**69676-6K000**	CLAMP		01	0107-0508			* *
		8	01	1	**69395-L1100**	PLUG ASSY		02	0107-0508			* *
		9	01	1	**69976-FF000**	PIPE ASSY-A		01	0107-0508			* * * * * * * * * * * * * * * * * * * *
			02	1	**69976-FK000**			01	0107-0508			* * * *
		10	01	1	**69735-0G000**	HOSE ASSY-RUBBER		02	0107-0508			* *
		11	01	1	**08124-0201E**	SCREW-HHM M10-1.25X20 W/PW		03	0107-0508			* *
		12	01	1	**08915-4441A**	WASHER-FLAT M14		01	0107-0508			* *
		13	01	1	**08915-1441A**	WASHER-LOCK SPLIT M14		01	0107-0508			* *
		14	01	1	**08911-3441A**	NUT-HEX JAM M14-1.5 4N		01	0107-0508			* *
		15	01	1	**08120-8161F**	SCREW-HHM M8-1.25X16 W/LK & PW	270+300+330+350	02	0107-0508			* *
			02	1	**08120-8161F**		370+400+450+500	03	0107-0508			* *
		16	01	1	**00922-12500**	RING-SNAP		01	0107-0508			* *
		17	01	1	**08120-8201F**	SCREW-HHM M8-1.25X20 W/LK & PW		02	0107-0508			* *

SEC. 699C

HYDRAULIC OIL PIPING (ATTACHMENT) (2W-OUTER CHAIN, 4 SPOOL 2.0, 2.5 & 3.0TON-UPTO MAY 2008)

TUBERIA DE ACEITE HIDRAULICO ACCESORIOS

HYDRAULIKLEITUNG ZUBEHÖR

CANALISATIONS HYDRAULIQUE ACCESSOIRES

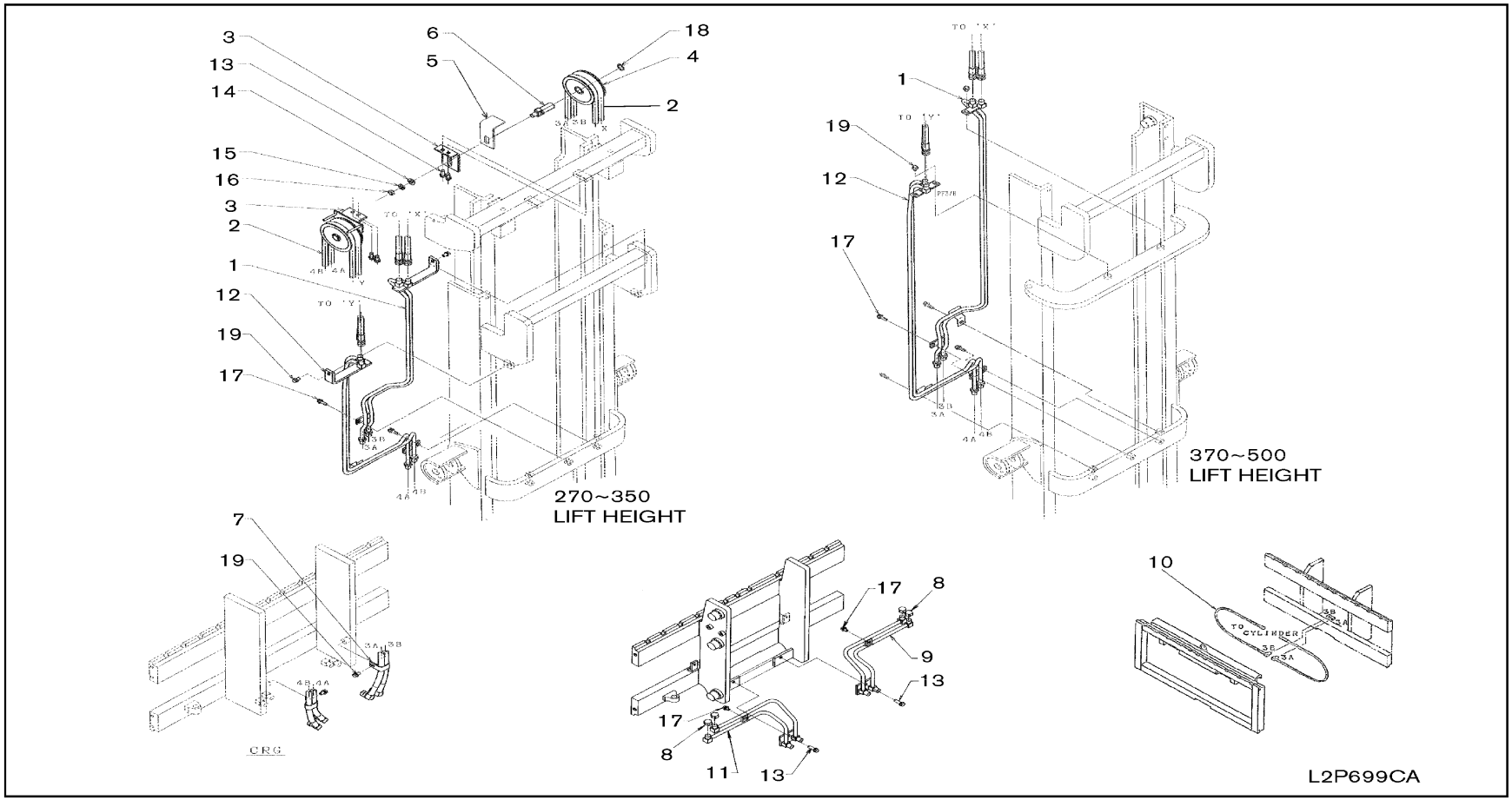

699C-1

SEC. 699C

HYDRAULIC OIL PIPING (ATTACHMENT) (2W-OUTER CHAIN, 4 SPOOL 2.0, 2.5 & 3.0TON-UPTO MAY 2008)

TUBERIA DE ACEITE HIDRAULICO ACCESORIOS

HYDRAULIKLEITUNG ZUBEHÖR

CANALISATIONS HYDRAULIQUE ACCESSOIRES

NC	S	KEY NO.	LEV	PART NO.	PART NAME	SPECIFICATION	QTY	APPLIED DATE	TCANF	FORMER PART NO.	KD	APPLIED MODEL 01 02 03 04 05 06 07 08 09 10 11 12 13 14 15 16 17 18 19 20 21 22 23 24 25 26 27 28 29
		1	01	1	**69740-GE43C**	PIPE ASSY-MAST	270	01	0107-0508			* *
			02	1	**69740-GE40C**		300	01	0107-0508			* *
			03	1	**69740-GE44C**		330	01	0107-0508			* *
			04	1	**69740-GE45C**		350	01	0107-0508			* *
			05	1	**69740-GE46C**		370	01	0107-0508			* *
			06	1	**69740-GE47C**		400+450+500	01	0107-0508			* *
		2	01	1	**69737-FE000**	HOSE ASSY-MAST	270 L=1900	04	0107-0508			* *
			02	1	**69737-FE001**		300 L=2050	04	0107-0508			* *
			03	1	**69737-FE002**		330 L=2200	04	0107-0508			* *
			04	1	**69737-FE003**		350 L=2325	04	0107-0508			* *
			05	1	**69737-FE004**		370 L=2450	04	0107-0508			* *
			06	1	**69737-FE005**		400 L=2650	04	0107-0508			* *
			07	1	**69737-FE006**		450 L=3125	04	0107-0508			* *
			08	1	**69737-FE007**		500 L=3625	04	0107-0508			* *
		3	01	1	**69760-03H00**	BRACKET ASSY-PULLEY		02	0107-0508			* *
		4	01	1	**59395-FJ40A**	PULLEY ASSY-HOSE		02	0107-0508			* *
		5	01	1	**69764-FF000**	PROTECTOR-HOSE PULLEY		02	0107-0508			* *
		6	01	1	**69763-FJ40A**	SHAFT-PULLEY		02	0107-0508			* *
		7	01	1	**69676-6K000**	CLAMP		02	0107-0508			* *
		8	01	1	**69395-L1100**	PLUG ASSY		04	0107-0508			* *
		9	01	1	**69976-FF000**	PIPE ASSY-A		01	0107-0508			* *
			02	1	**69976-FK000**			01	0107-0508			* * * *
		10	01	1	**69735-0G000**	HOSE ASSY-RUBBER		02	0107-0508			* *
		11	01	1	**69978-FF000**	PIPE ASSY-B		01	0107-0508			* *
			02	1	**69978-FK000**			01	0107-0508			* * * *
		12	01	1	**69840-GE43C**	PIPE ASSY-MAST	270	01	0107-0508			* *
			02	1	**69840-GE40C**		300	01	0107-0508			* *
			03	1	**69840-GE44C**		330	01	0107-0508			* *
			04	1	**69840-GE45C**		350	01	0107-0508			* *
			05	1	**69840-GE46C**		370	01	0107-0508			* *
			06	1	**69840-GE47C**		400+450+500	01	0107-0508			* *
		13	01	1	**08124-0201E**	SCREW-HHM M10-1.25X20 W/PW		06	0107-0508			* *
		14	01	1	**08915-4441A**	WASHER-FLAT M14		02	0107-0508			* *
		15	01	1	**08915-1441A**	WASHER-LOCK SPLIT M14		02	0107-0508			* *
		16	01	1	**08911-3441A**	NUT-HEX JAM M14-1.5 4N		02	0107-0508			* *
		17	01	1	**08120-8161F**	SCREW-HHM M8-1.25X16 W/LK & PW	270+300+330+350	03	0107-0508			* *
			02	1	**08120-8161F**		370+400+450+500	05	0107-0508			* *

SEC. 699C

HYDRAULIC OIL PIPING (ATTACHMENT) (2W-OUTER CHAIN, 4 SPOOL 2.0, 2.5 & 3.0TON-UPTO MAY 2008)

TUBERIA DE ACEITE HIDRAULICO ACCESORIOS

HYDRAULIKLEITUNG ZUBEHÖR

CANALISATIONS HYDRAULIQUE ACCESSOIRES

NC	S	KEY NO.	LEV	PART NO.	PART NAME	SPECIFICATION	QTY	APPLIED DATE	ICANF	FORMER PART NO.	KD
		18 01	1	**00922-12500**	RING-SNAP		02	0107-0508			
		19 01	1	**08120-8201F**	SCREW-HHM M8-1.25X20 W/LK & PW		04	0107-0508			

APPLIED MODEL

01	02	03	04	05	06	07	08	09	10	11	12	13	14	15	16	17	18	19	20	21	22	23	24	25	26	27	28	29
MI PV A20 JV	MI PV A20 DV	MI PV A20 LV	MI PU A20 SV	MI UU A20 JV	MI UU A20 DV	MI UU A20 LV	MI UY A20 SV	MI PP A20 05	MI PP A22 5J	MI PP A22 5D	MI PP A22 5L	MI UU A22 5J	MI UU A22 5D	MI UU A22 5L	MI UU A22 5L	MI UY A22 5L	MI UU A22 8J	MI UU A22 8D	MI UU A22 8L	MI UU A30 0J	MI UU A30 0D	MI UU A30 0L	MI UY A30 05	MI UU A30 5J	MI UU A30 5D	MI UU A30 5L	MI UY A30 5L
*	*	*	*	*	*	*	*	*	*	*	*	*	*	*	*	*	*	*	*	*	*	*	*					
*	*	*	*	*	*	*	*	*	*	*	*	*	*	*	*	*	*	*	*	*	*	*	*					

NOTE

SEC. 699D

HYDRAULIC OIL PIPING (ATTACHMENT) (2F & LIFTEC 2W)

TUBERIA DE ACEITE HIDRAULICO ACCESORIOS

HYDRAULIKLEITUNG ZUBEHÖR

CANALISATIONS HYDRAULIQUE ACCESSOIRES

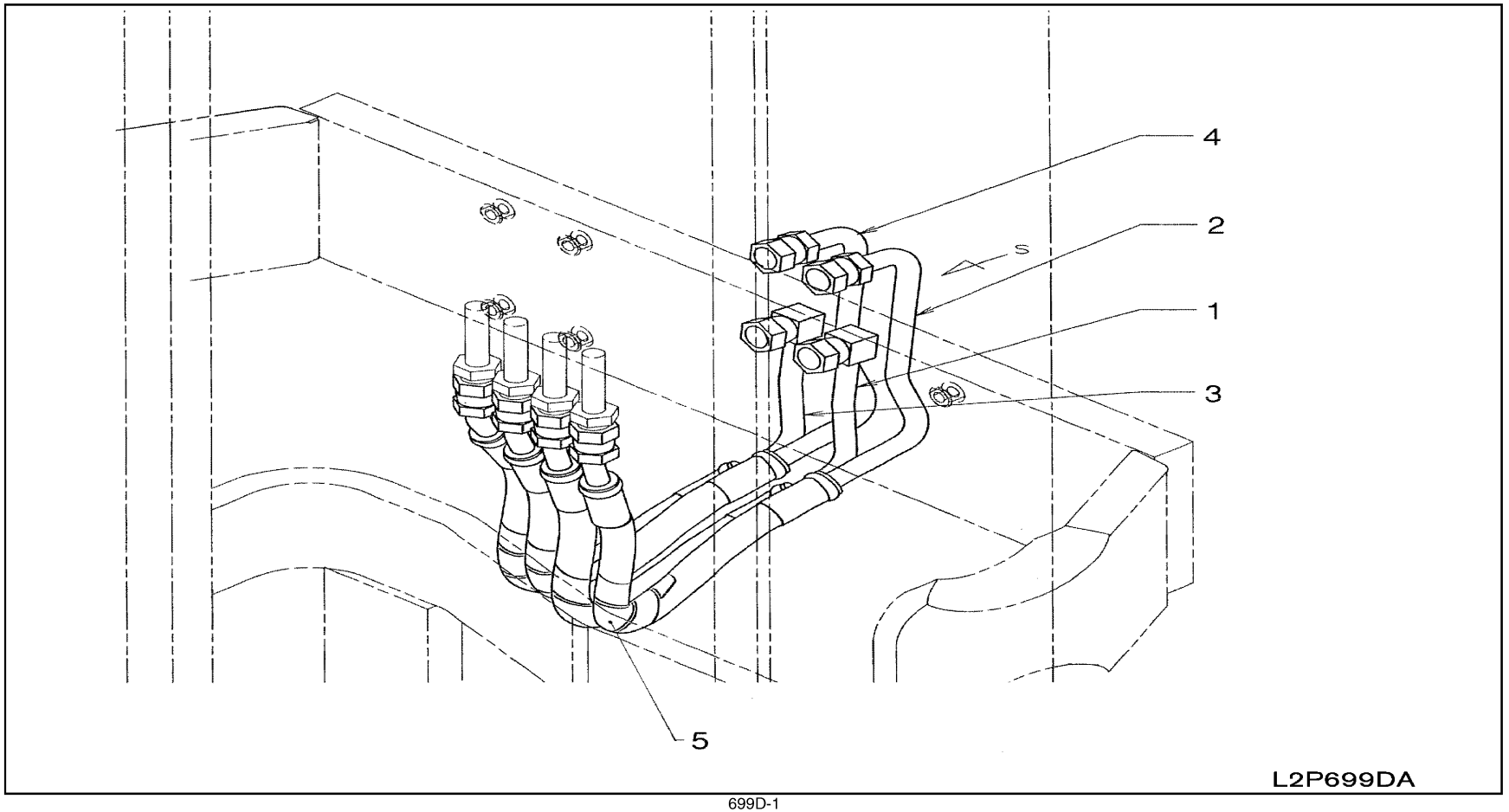

699D-1

SEC. 699D

HYDRAULIC OIL PIPING (ATTACHMENT) (2F & LIFTEC 2W)

TUBERIA DE ACEITE HIDRAULICO ACCESORIOS

HYDRAULIKLEITUNG ZUBEHÖR

CANALISATIONS HYDRAULIQUE ACCESSOIRES

NC	S	KEY NO.	LEV	PART NO.	PART NAME	SPECIFICATION	QTY	APPLIED DATE	ICANF	FORMER PART NO.	KD	APPLIED MODEL 01 02 03 04 05 06 07 08 09 10 11 12 13 14 15 16 17 18 19 20 21 22 23 24 25 26 27 28 29
		1 01	1	**69710-FK101**	PIPE & HOSE ASSY	L=375-VLVX3A	01	0107-0508				* * * * * * * * * * * * * * * * * * *
		02	1	**69710-GG00A**		L=415-VLVX3A	01	0508-				* * * * * * * * * * * * * * * * * * *
		03	1	**69710-FK100**		L=395-VLVX3A	01	0107-0508				* * * * * * *
		04	1	**69710-FK400**		L=335-VLVX3A	01	0107-0508				* * * *
		05	1	**69710-GG30A**		L=435-VLVX3A	01	0508-				* * * * * * * * * * *
		06	1	**69737-FB401**		F/LIFTEC 2W L=905-VLVX3A	01	0107-0508				* * * * * * * * * * * * * * * * * * *
		07	1	**69690-L8000**	PROTECTOR-SPIRAL TUBE	F/LIFTEC 2W	01	0107-0508				* * * * * * * * * * * * * * * * * * *
		2 01	1	**69714-FK101**	PIPE & HOSE ASSY	L=395-VLVX3B	01	0107-0508				* * * * * * * * * * * * * * * * * * *
		02	1	**69714-GG00A**		L=415-VLVX3B	01	0508-				* * * * * * * * * * * * * * * * * * *
		03	1	**69714-FK100**		L=425-VLVX3B	01	0107-0508				* * * * * * *
		04	1	**69714-FK400**		L=335-VLVX3B	01	0107-0508				* * * *
		05	1	**69714-GG30A**		L=435-VLVX3B	01	0508-				* * * * * * * * * * *
		06	1	**69737-FB402**		F/LIFTEC 2W L=965-VLVX3B	01	0107-0508				* * * * * * * * * * * * * * * * * * *
		07	1	**69690-L8000**	PROTECTOR-SPIRAL TUBE	F/LIFTEC 2W	01	0107-0508				* * * * * * * * * * * * * * * * * * *
		3 01	1	**69810-FK100**	PIPE & HOSE ASSY	L=415-VLVX4A	01	0107-0508				* *
		02	1	**69810-FK400**		L=325-VLVX4A	01	0107-0508				* * * *
		03	1	**69810-GG00A**		L=375-VLVX4A	01	0508-				* * * * * * * * * * * * * * * * * * *
		04	1	**69810-GG30A**		L=390-VLVX4A	01	0508-				* * * * * * * * * * *
		05	1	**69737-FB400**		F/LIFTEC 2W L=860-VLVX4A	01	0107-0508				* * * * * * * * * * * * * * * * * * *
		06	1	**69690-L8000**	PROTECTOR-SPIRAL TUBE	F/LIFTEC 2W	01	0107-0508				* * * * * * * * * * * * * * * * * * *
		4 01	1	**69814-FK100**	PIPE & HOSE ASSY	L=460-VLVX4B	01	0107-0508				* *
		02	1	**69814-FK400**		L=325-VLVX4B	01	0107-0508				* * * *
		03	1	**69814-GG00A**		L=380-VLVX4B	01	0508-				* * * * * * * * * * * * * * * * * * *
		04	1	**69814-GG30A**		L=400-VLVX4B	01	0508-				* * * * * * * * * * *
		05	1	**69737-FB401**		L=LIFTEC 2W L=905-VLVX4B	01	0107-0508				* * * * * * * * * * * * * * * * * * *
		06	1	**69690-L8000**	PROTECTOR-SPIRAL TUBE	F/LIFTEC 2W	01	0107-0508				* * * * * * * * * * * * * * * * * * *

SEC. 699E

HYDRAULIC OIL PIPING (ATTACHMENT) (2F, 3 SPOOL)

TUBERIA DE ACEITE HIDRAULICO ACCESORIOS

HYDRAULIKLEITUNG ZUBEHÖR

CANALISATIONS HYDRAULIQUE ACCESSOIRES

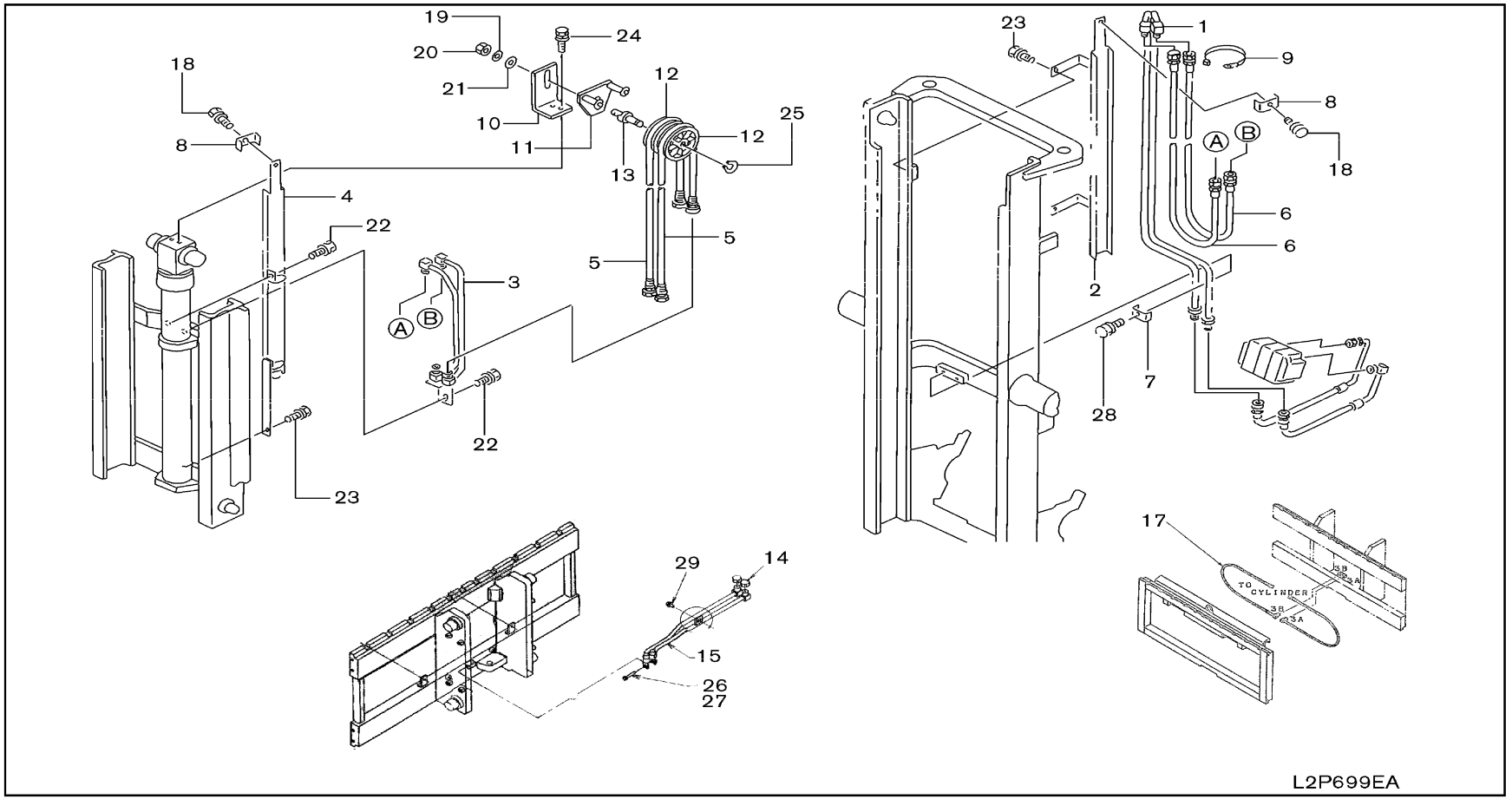

699E-1

SEC. 699E

HYDRAULIC OIL PIPING (ATTACHMENT) (2F, 3 SPOOL)

TUBERIA DE ACEITE HIDRAULICO ACCESORIOS

HYDRAULIKLEITUNG ZUBEHÖR

CANALISATIONS HYDRAULIQUE ACCESSOIRES

NC	S	KEY NO.	LEV	PART NO.	PART NAME	SPECIFICATION	QTY	APPLIED DATE	ICANF	FORMER PART NO.	KD	APPLIED MODEL 01	02	03	04	05	06	07	08	09	10	11	12	13	14	15	16	17	18	19	20	21	22	23	24	25	26	27	28	29
		1	01	1	**69740-GE50A**	PIPE ASSY-MAST	300	01	0107-			*	*	*	*	*	*	*	*	*	*	*	*	*	*	*	*	*	*	*	*	*	*	*	*				
			02	1	**69740-GE54A**		330	01	0107-			*	*	*	*	*	*	*	*	*	*	*	*	*	*	*	*	*	*	*	*	*	*	*	*				
			03	1	**69740-GE55A**		350	01	0107-			*	*	*	*	*	*	*	*	*	*	*	*	*	*	*	*	*	*	*	*	*	*	*	*				
			04	1	**69740-GE56A**		370	01	0107-			*	*	*	*	*	*	*	*	*	*	*	*	*	*	*	*	*	*	*	*	*	*	*	*				
			05	1	**69740-GE57A**		400	01	0107-			*	*	*	*	*	*	*	*	*	*	*	*	*	*	*	*	*	*	*	*	*	*	*	*				
			06	1	**69740-GE58A**		420	01	0107-			*	*	*	*	*	*	*	*	*	*	*	*	*	*	*	*	*	*	*	*	*	*	*	*				
			07	1	**69740-GE54A**		300	01	0107-																											*	*	*	*
			08	1	**69740-GE55A**		330	01	0107-																											*	*	*	*
			09	1	**69740-GE56A**		350	01	0107-																											*	*	*	*
			10	1	**69740-GE57A**		370	01	0107-																											*	*	*	*
			11	1	**69740-GG57A**		400	01	0107-																											*	*	*	*
		2	01	1	**69770-FJ51A**	GUIDE ASSY-HOSE	300	01	0107-			*	*	*	*	*	*	*	*	*	*	*	*	*	*	*	*	*	*	*	*	*	*	*	*				
			02	1	**69770-FJ52A**		330+350+370	01	0107-			*	*	*	*	*	*	*	*	*	*	*	*	*	*	*	*	*	*	*	*	*	*	*	*				
			03	1	**69770-FJ53A**		400+420	01	0107-			*	*	*	*	*	*	*	*	*	*	*	*	*	*	*	*	*	*	*	*	*	*	*	*				
			04	1	**69770-FJ52A**		300+330+350	01	0107-																											*	*	*	*
			05	1	**69770-FJ53A**		370	01	0107-																											*	*	*	*
			06	1	**69770-GG54A**		400	01	0107-																											*	*	*	*
		3	01	1	**69744-FF100**	PIPE ASSY-MAST	300+330	01	0107-			*	*	*	*	*	*	*	*	*	*	*	*	*	*	*	*	*	*	*	*	*	*	*	*				
			02	1	**69744-FF101**		350+370	01	0107-			*	*	*	*	*	*	*	*	*	*	*	*	*	*	*	*	*	*	*	*	*	*	*	*				
			03	1	**69744-FF102**		400+420	01	0107-			*	*	*	*	*	*	*	*	*	*	*	*	*	*	*	*	*	*	*	*	*	*	*	*				
			04	1	**69744-FF100**		300	01	0107-																											*	*	*	*
			05	1	**69744-FF101**		330+350	01	0107-																											*	*	*	*
			06	1	**69744-FF102**		370+400	01	0107-																											*	*	*	*
		4	01	1	**69774-GE50A**	GUIDE ASSY-HOSE	300+330	01	0107-			*	*	*	*	*	*	*	*	*	*	*	*	*	*	*	*	*	*	*	*	*	*	*	*				
			02	1	**69774-GE51A**		350+370	01	0107-			*	*	*	*	*	*	*	*	*	*	*	*	*	*	*	*	*	*	*	*	*	*	*	*				
			03	1	**69774-GE52A**		400+420	01	0107-			*	*	*	*	*	*	*	*	*	*	*	*	*	*	*	*	*	*	*	*	*	*	*	*				
			04	1	**69774-GE50A**		300	01	0107-																											*	*	*	*
			05	1	**69774-GE51A**		330+350	01	0107-																											*	*	*	*
			06	1	**69774-GE52A**		370+400	01	0107-																											*	*	*	*
		5	01	1	**69735-13H18**	HOSE ASSY-MAST	L=1670-300	02	0107-			*	*	*	*	*	*	*	*	*	*	*	*	*	*	*	*	*	*	*	*	*	*	*	*				
			02	1	**69735-13H19**		L=1820-330	02	0107-			*	*	*	*	*	*	*	*	*	*	*	*	*	*	*	*	*	*	*	*	*	*	*	*				
			03	1	**69735-13H20**		L=1950-350	02	0107-			*	*	*	*	*	*	*	*	*	*	*	*	*	*	*	*	*	*	*	*	*	*	*	*				
			04	1	**69735-13H21**		L=2080-370	02	0107-			*	*	*	*	*	*	*	*	*	*	*	*	*	*	*	*	*	*	*	*	*	*	*	*				
			05	1	**69735-13H23**		L=2260-400	02	0107-			*	*	*	*	*	*	*	*	*	*	*	*	*	*	*	*	*	*	*	*	*	*	*	*				
			06	1	**69735-13H73**		L=2350-420	02	0107-			*	*	*	*	*	*	*	*	*	*	*	*	*	*	*	*	*	*	*	*	*	*	*	*				
			07	1	**69735-13H18**		L=1670-300	02	0107-																											*	*	*	*
			08	1	**69735-13H19**		L=1820-330	02	0107-																											*	*	*	*

SEC. 699E

HYDRAULIC OIL PIPING (ATTACHMENT) (2F, 3 SPOOL)

TUBERIA DE ACEITE HIDRAULICO ACCESORIOS

HYDRAULIKLEITUNG ZUBEHÖR

CANALISATIONS HYDRAULIQUE ACCESSOIRES

NC	S	KEY NO.	LEV	PART NO.	PART NAME	SPECIFICATION	QTY	APPLIED DATE	ICANF	FORMER PART NO.	KD	APPLIED MODEL 01 02 03 04 05 06 07 08 09 10 11 12 13 14 15 16 17 18 19 20 21 22 23 24 25 26 27 28 29
		5	09	1	**69735-13H20**	HOSE ASSY-MAST	L=1950-350	02	0107-			* * * *
			10	1	**69735-13H21**		L=2080-370	02	0107-			* * * *
			11	1	**69735-13H23**		L=2260-400	02	0107-			* * * *
		6	01	1	**69735-00H04**	HOSE ASSY-MAST	L=1250-300+330	02	0107-			* *
			02	1	**69735-00H07**		L=1400-350	02	0107-			* *
			03	1	**69735-00H06**		L=1350-370	02	0107-			* *
			04	1	**69735-51K00**		L=1450-400+420	02	0107-			* *
			05	1	**69735-00H04**		L=1250-300	02	0107-			* * * *
			06	1	**69735-00H07**		L=1400-330	02	0107-			* * * *
			07	1	**69735-00H06**		L=1350-350	02	0107-			* * * *
			08	1	**69735-51K00**		L=1450-370	02	0107-			* * * *
			09	1	**69735-GG50A**		L=1700-370	02	0107-			* * * *
		7	01	1	**69747-10H00**	CLAMP-PIPE		01	0107-			* *
		8	01	1	**69747-L6000**	CLAMP-HOSE		02	0107-			* *
		9	01	1	**24216-W1000**	TIE WRAP		05	0107-			* *
		10	01	1	**69760-15H01**	BRACKET ASSY-PULLEY		01	0107-			* *
			02	1	**69760-25H00**			01	0107-			* *
		11	01	1	**69764-13H02**	BRACKET		01	0107-			* *
		12	01	1	**59395-L7400**	PULLEY		02	0107-			* *
		13	01	1	**69763-L8500**	SHAFT-PULLEY		01	0107-			* *
		14	01	1	**69395-L1100**	PLUG ASSY		02	0107-			* *
		15	01	1	**69976-52K70**	PIPE ASSY		01	0107-			* *
		17	01	1	**69735-0G000**	HOSE ASSY-RUBBER		02	0107-			* *
		18	01	1	**08110-8401D**	SCREW-HHM M8-1.5X40		02	0107-			* *
		19	01	1	**08915-1441A**	WASHER-LOCK SPLIT M14		01	0107-			* *
		20	01	1	**08911-3441A**	NUT-HEX JAM M14-1.5 4N		01	0107-			* *
		21	01	1	**08915-4441A**	WASHER-FLAT M14		01	0107-			* *
		22	01	1	**08110-8251D**	SCREW-HHM M8-1.25X25 W/LK & PW		02	0107-			* *
		23	01	1	**08110-8161D**	SCREW-HHM M8-1.25X16 W/SPRW		03	0107-			* *
		24	01	1	**08114-0251B**	SCREW-HHM M10-1.25X25 W/LKW		02	0107-			* *
		25	01	1	**00922-12500**	RING-SNAP		01	0107-			* *
		26	01	1	**08110-8451A**	SCREW-HHM M8-1.25X45		01	0107-			* *
		27	01	1	**08915-1381A**	WASHER-LOCK SPLIT M8		01	0107-			* *
		28	01	1	**08110-8301D**	SCREW-HHM M8-1.25X30 W/LK & PW		01	0107-			* *
		29	01	1	**08120-8161F**	SCREW-HHM M8-1.25X16 W/LK & PW		01	0107-			* *

NOTE

SEC. 699F

HYDRAULIC OIL PIPING (ATTACHMENT) (2F, 4 SPOOL)

TUBERIA DE ACEITE HIDRAULICO ACCESORIOS

HYDRAULIKLEITUNG ZUBEHÖR

CANALISATIONS HYDRAULIQUE ACCESSOIRES

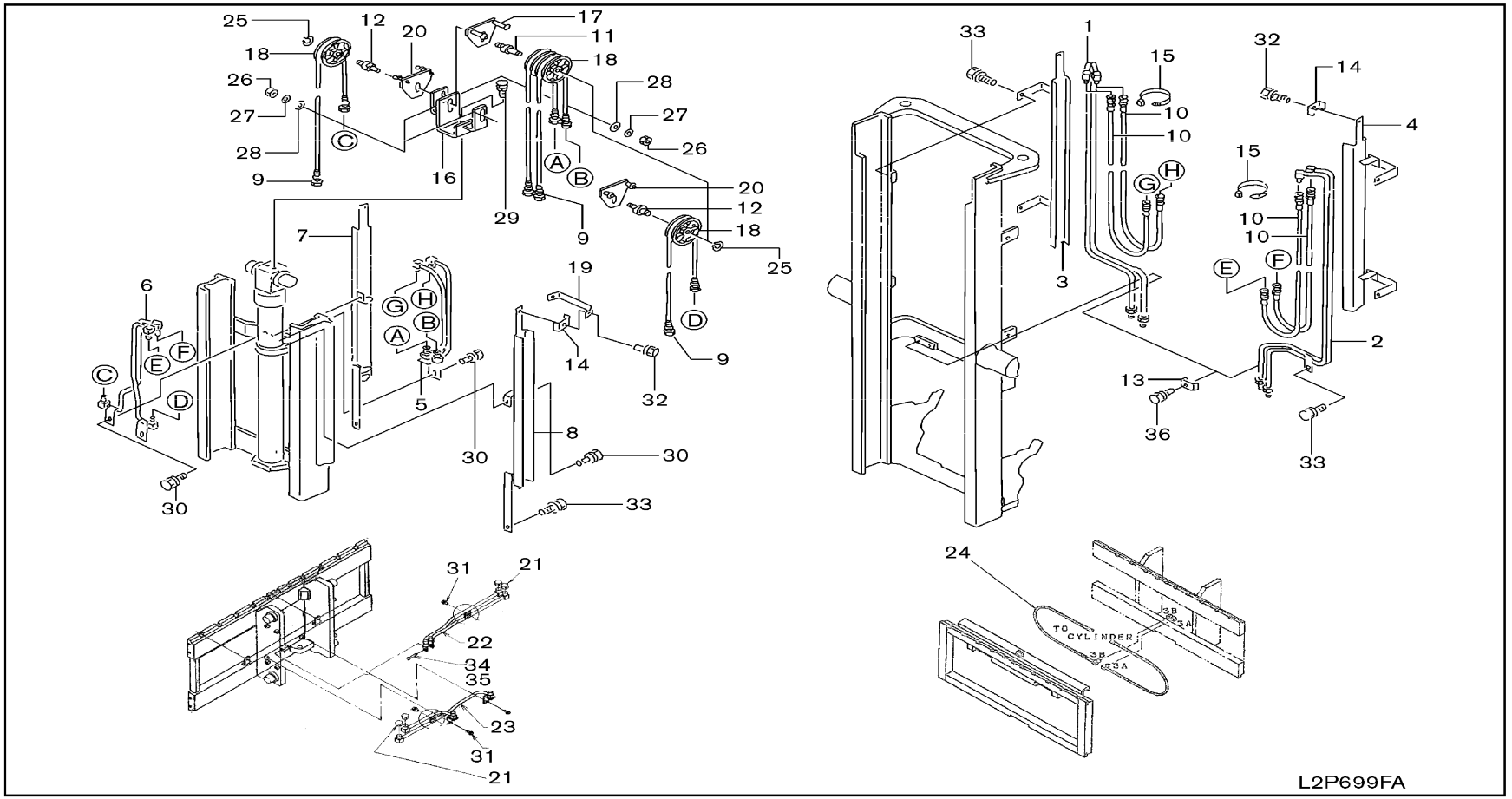

SEC. 699F

HYDRAULIC OIL PIPING (ATTACHMENT) (2F, 4 SPOOL)

TUBERIA DE ACEITE HIDRAULICO ACCESORIOS

HYDRAULIKLEITUNG ZUBEHÖR

CANALISATIONS HYDRAULIQUE ACCESSOIRES

NC	S	KEY NO.	LEV	PART NO.	PART NAME	SPECIFICATION	QTY	APPLIED DATE	ICANF	FORMER PART NO.	KD	APPLIED MODEL 01 02 03 04 05 06 07 08 09 10 11 12 13 14 15 16 17 18 19 20 21 22 23 24 25 26 27 28 29
		1	01	1	**69740-GE50A**	PIPE ASSY-MAST	300	01	0107-			**********
			02	1	**69740-GE54A**		330	01	0107-			**********
			03	1	**69740-GE55A**		350	01	0107-			**********
			04	1	**69740-GE56A**		370	01	0107-			**********
			05	1	**69740-GE57A**		400	01	0107-			**********
			06	1	**69740-GE58A**		420	01	0107-			**********
			07	1	**69740-GE54A**		300	01	0107-			****
			08	1	**69740-GE55A**		330	01	0107-			****
			09	1	**69740-GE56A**		350	01	0107-			****
			10	1	**69740-GE57A**		370	01	0107-			****
			11	1	**69740-GG57A**		400	01	0107-			****
		2	01	1	**69840-GE50A**	PIPE ASSY-MAST	300	01	0107-			**********
			02	1	**69840-GE54A**		330	01	0107-			**********
			03	1	**69840-GE55A**		350	01	0107-			**********
			04	1	**69840-GE56A**		370	01	0107-			**********
			05	1	**69840-GE57A**		400	01	0107-			**********
			06	1	**69840-GE54A**		300	01	0107-			****
			07	1	**69840-GE58A**		420	01	0107-			**********
			08	1	**69840-GE55A**		330	01	0107-			****
			09	1	**69840-GE56A**		350	01	0107-			****
			10	1	**69840-GE57A**		370	01	0107-			****
			11	1	**69840-GG57A**		400	01	0107-			****
		3	01	1	**69770-FJ51A**	GUIDE ASSY-HOSE	300	01	0107-			**********
			02	1	**69770-FJ52A**		330+350+370	01	0107-			**********
			03	1	**69770-FJ53A**		400+420	01	0107-			**********
			04	1	**69770-FJ52A**		300+330+350	01	0107-			****
			05	1	**69770-FJ53A**		370	01	0107-			****
			06	1	**69770-GG54A**		400	01	0107-			****
		4	01	1	**69870-FJ51A**	GUIDE ASSY-HOSE	300	01	0107-			**********
			02	1	**69870-FJ52A**		330+350+370	01	0107-			**********
			03	1	**69870-FJ53A**		400+420	01	0107-			**********
			04	1	**69870-FJ52A**		300+330+350	01	0107-			****
			05	1	**69870-FJ53A**		370	01	0107-			****
			06	1	**69870-GG54A**		400	01	0107-			****
		5	01	1	**69744-FF100**	PIPE ASSY-MAST	300+330	01	0107-			**********
			02	1	**69744-FF101**		350+370	01	0107-			**********
			03	1	**69744-FF102**		400+420	01	0107-			**********

SEC. 699F

HYDRAULIC OIL PIPING (ATTACHMENT) (2F, 4 SPOOL)

TUBERIA DE ACEITE HIDRAULICO ACCESORIOS

HYDRAULIKLEITUNG ZUBEHÖR

CANALISATIONS HYDRAULIQUE ACCESSOIRES

NC	S	KEY NO.	LEV	PART NO.	PART NAME	SPECIFICATION	QTY	APPLIED DATE	ICANF	FORMER PART NO.	KD
		5	04	1	**69744-FF100**	PIPE ASSY-MAST	300	01	0107-		
			05	1	**69744-FF101**		330+350	01	0107-		
			06	1	**69744-FF102**		370+400	01	0107-		
		6	01	1	**69844-51K10**	PIPE ASSY-MAST	300+330	01	0107-		
			02	1	**69844-51K11**		350+370	01	0107-		
			03	1	**69844-51K12**		400+420	01	0107-		
			04	1	**69844-51K10**		300	01	0107-		
			05	1	**69844-51K11**		330+350	01	0107-		
			06	1	**69844-51K12**		370+400	01	0107-		
		7	01	1	**69774-GE50B**	GUIDE ASSY-HOSE	300+330	01	0107-		
			02	1	**69774-GE51B**		350+370	01	0107-		
			03	1	**69774-GE52B**		400+420	01	0107-		
			04	1	**69774-GE50B**		300	01	0107-		
			05	1	**69774-GE51B**		330+350	01	0107-		
			06	1	**69774-GE52B**		370+400	01	0107-		
		8	01	1	**69874-51K10**	GUIDE ASSY-HOSE	300+330	01	0107-		
			02	1	**69874-51K11**		350+370	01	0107-		
			03	1	**69874-51K12**		400+420	01	0107-		
			04	1	**69874-51K10**		300	01	0107-		
			05	1	**69874-51K11**		330+350	01	0107-		
			06	1	**69874-51K12**		370+400	01	0107-		
		9	01	1	**69735-13H18**	HOSE ASSY-MAST	L=1670-300	04	0107-		
			02	1	**69735-13H19**		L=1820-330	04	0107-		
			03	1	**69735-13H20**		L=1950-350	04	0107-		
			04	1	**69735-13H21**		L=2080-370	04	0107-		
			05	1	**69735-13H23**		L=2260-400	04	0107-		
			06	1	**69735-13H73**		L=2350-420	04	0107-		
			07	1	**69735-13H18**		L=1670-300	04	0107-		
			08	1	**69735-13H19**		L=1820-330	04	0107-		
			09	1	**69735-13H20**		L=1950-350	04	0107-		
			10	1	**69735-13H21**		L=2080-370	04	0107-		
			11	1	**69735-13H23**		L=2260-400	04	0107-		
		10	01	1	**69735-00H04**	HOSE ASSY-MAST	L=1250-300+330	04	0107-		
			02	1	**69735-00H07**		L=1400-350	04	0107-		
			03	1	**69735-00H06**		L=1350-370	04	0107-		
			04	1	**69735-51K00**		L=1450-400+420	04	0107-		
			05	1	**69735-00H04**		L=1250-300	04	0107-		

APPLIED MODEL

01	02	03	04	05	06	07	08	09	10	11	12	13	14	15	16	17	18	19	20	21	22	23	24	25	26	27	28	29
MI PV A20 JV	MI PV A20 DV	MI PV A20 LV	MI PU A20 SV	MI PU A20 JV	MI PU A20 DV	MI PU A20 LV	MI PU A20 SV	MI PY A20 LV	MI PP A20 JV	MI PP A20 DV	MI PP A20 LV	MI PP A20 SV	MI PU A20 JV	MI PU A20 DV	MI PU A20 LV	MI PU A20 SV	MI PY A20 LV	MI PU JJ A20 JV	MI PU JJ A20 DV	MI PU GI A20 LV	MI PU GI A20 JV	MI PU GI A20 DV	MI PY GI A20 LV	MI PY GI A20 JV	MI PU GI A20 DV	MI PU GI A20 LV	MI PY GI A20 LV
✱	✱	✱	✱	✱	✱	✱	✱	✱	✱	✱	✱	✱	✱	✱	✱	✱	✱	✱	✱	✱	✱	✱	✱	✱	✱	✱	✱	✱
✱	✱	✱	✱	✱	✱	✱	✱	✱	✱	✱	✱	✱	✱	✱	✱	✱	✱	✱	✱	✱	✱	✱	✱	✱	✱	✱	✱	✱
✱	✱	✱	✱	✱	✱	✱	✱	✱	✱	✱	✱	✱	✱	✱	✱	✱	✱	✱	✱	✱	✱	✱	✱	✱	✱	✱	✱	✱
																									✱	✱	✱	✱
																									✱	✱	✱	✱
																									✱	✱	✱	✱
✱	✱	✱	✱	✱	✱	✱	✱	✱	✱	✱	✱	✱	✱	✱	✱	✱	✱	✱	✱	✱	✱	✱	✱	✱	✱	✱	✱	✱
✱	✱	✱	✱	✱	✱	✱	✱	✱	✱	✱	✱	✱	✱	✱	✱	✱	✱	✱	✱	✱	✱	✱	✱	✱	✱	✱	✱	✱
✱	✱	✱	✱	✱	✱	✱	✱	✱	✱	✱	✱	✱	✱	✱	✱	✱	✱	✱	✱	✱	✱	✱	✱	✱	✱	✱	✱	✱
																									✱	✱	✱	✱
																									✱	✱	✱	✱
																									✱	✱	✱	✱
✱	✱	✱	✱	✱	✱	✱	✱	✱	✱	✱	✱	✱	✱	✱	✱	✱	✱	✱	✱	✱	✱	✱	✱	✱	✱	✱	✱	✱
✱	✱	✱	✱	✱	✱	✱	✱	✱	✱	✱	✱	✱	✱	✱	✱	✱	✱	✱	✱	✱	✱	✱	✱	✱	✱	✱	✱	✱
✱	✱	✱	✱	✱	✱	✱	✱	✱	✱	✱	✱	✱	✱	✱	✱	✱	✱	✱	✱	✱	✱	✱	✱	✱	✱	✱	✱	✱
																									✱	✱	✱	✱
																									✱	✱	✱	✱
																									✱	✱	✱	✱
✱	✱	✱	✱	✱	✱	✱	✱	✱	✱	✱	✱	✱	✱	✱	✱	✱	✱	✱	✱	✱	✱	✱	✱	✱	✱	✱	✱	✱
✱	✱	✱	✱	✱	✱	✱	✱	✱	✱	✱	✱	✱	✱	✱	✱	✱	✱	✱	✱	✱	✱	✱	✱	✱	✱	✱	✱	✱
✱	✱	✱	✱	✱	✱	✱	✱	✱	✱	✱	✱	✱	✱	✱	✱	✱	✱	✱	✱	✱	✱	✱	✱	✱	✱	✱	✱	✱
																									✱	✱	✱	✱

SEC. 699F

HYDRAULIC OIL PIPING (ATTACHMENT) (2F, 4 SPOOL)

TUBERIA DE ACEITE HIDRAULICO ACCESORIOS

HYDRAULIKLEITUNG ZUBEHÖR

CANALISATIONS HYDRAULIQUE ACCESSOIRES

NC	S	KEY NO.	LEV	PART NO.	PART NAME	SPECIFICATION	QTY	APPLIED DATE	ICANF	FORMER PART NO.	KD	APPLIED MODEL 01 02 03 04 05 06 07 08 09 10 11 12 13 14 15 16 17 18 19 20 21 22 23 24 25 26 27 28 29
		10 06	1	**69735-00H07**	HOSE ASSY-MAST	L=1400-330	04	0107-				* * * *
		07	1	**69735-00H06**		L=1350-350	04	0107-				* * * *
		08	1	**69735-51K00**		L=1450-370	04	0107-				* * * *
		09	1	**69735-GG50A**		L=1700-400	04	0107-				* * * *
		11 01	1	**69763-L8500**	SHAFT-PULLEY		01	0107-				* *
		12 01	1	**58512-L1901**	SHAFT-PULLEY		02	0107-				* *
		13 01	1	**69747-10H00**	CLAMP-PIPE		02	0107-				* *
		14 01	1	**69747-L6000**	CLAMP-HOSE		04	0107-				* *
		15 01	1	**24216-W1000**	TIE WRAP		10	0107-				* *
		16 01	1	**69860-15H01**	BRACKET		01	0107-				* * * * * * * * * * * * * * * * * *
		02	1	**69860-25H01**			01	0107-				* *
		17 01	1	**69764-13H02**	BRACKET		01	0107-				* *
		18 01	1	**59395-L7400**	PULLEY		04	0107-				* *
		19 01	1	**58873-51K04**	GUIDE PLATE		01	0107-				* *
		20 01	1	**69764-13H03**	PROTECTOR		02	0107-				* *
		21 01	1	**69395-L1100**	PLUG ASSY		04	0107-				* *
		22 01	1	**69976-52K70**	PIPE ASSY		01	0107-				* *
		23 01	1	**69978-52K70**	PIPE ASSY-B		02	0107-				* *
		24 01	1	**69735-0G000**	HOSE ASSY-RUBBER		02	0107-				* *
		25 01	1	**00922-12500**	RING-SNAP		03	0107-				* *
		26 01	1	**08911-3441A**	NUT-HEX JAM M14-1.5 4N		03	0107-				* *
		27 01	1	**08915-1441A**	WASHER-LOCK SPLIT M14		03	0107-				* *
		28 01	1	**08915-4441A**	WASHER-FLAT M14		03	0107-				* *
		29 01	1	**08114-0251B**	SCREW-HHM M10-1.25X25 W/LKW		02	0107-				* *
		30 01	1	**08110-8251D**	SCREW-HHM M8-1.25X25 W/LK & PW		05	0107-				* *
		31 01	1	**08120-8161F**	SCREW-HHM M8-1.25X16 W/LK & PW		04	0107-				* *
		32 01	1	**08110-8401D**	SCREW-HHM M8-1.5X40		04	0107-				* *
		33 01	1	**08110-8161D**	SCREW-HHM M8-1.25X16 W/SPRW		07	0107-				* *
		34 01	1	**08110-8451A**	SCREW-HHM M8-1.25X45		01	0107-				* *
		35 01	1	**08915-1381A**	WASHER-LOCK SPLIT M8		01	0107-				* *
		36 01	1	**08110-8301D**	SCREW-HHM M8-1.25X30 W/LK & PW		02	0107-				* *

SEC. 699G

HYDRAULIC OIL PIPING (ATTACHMENT) (3F)

TUBERIA DE ACEITE HIDRAULICO ACCESORIOS

HYDRAULIKLEITUNG ZUBEHÖR

CANALISATIONS HYDRAULIQUE ACCESSOIRES

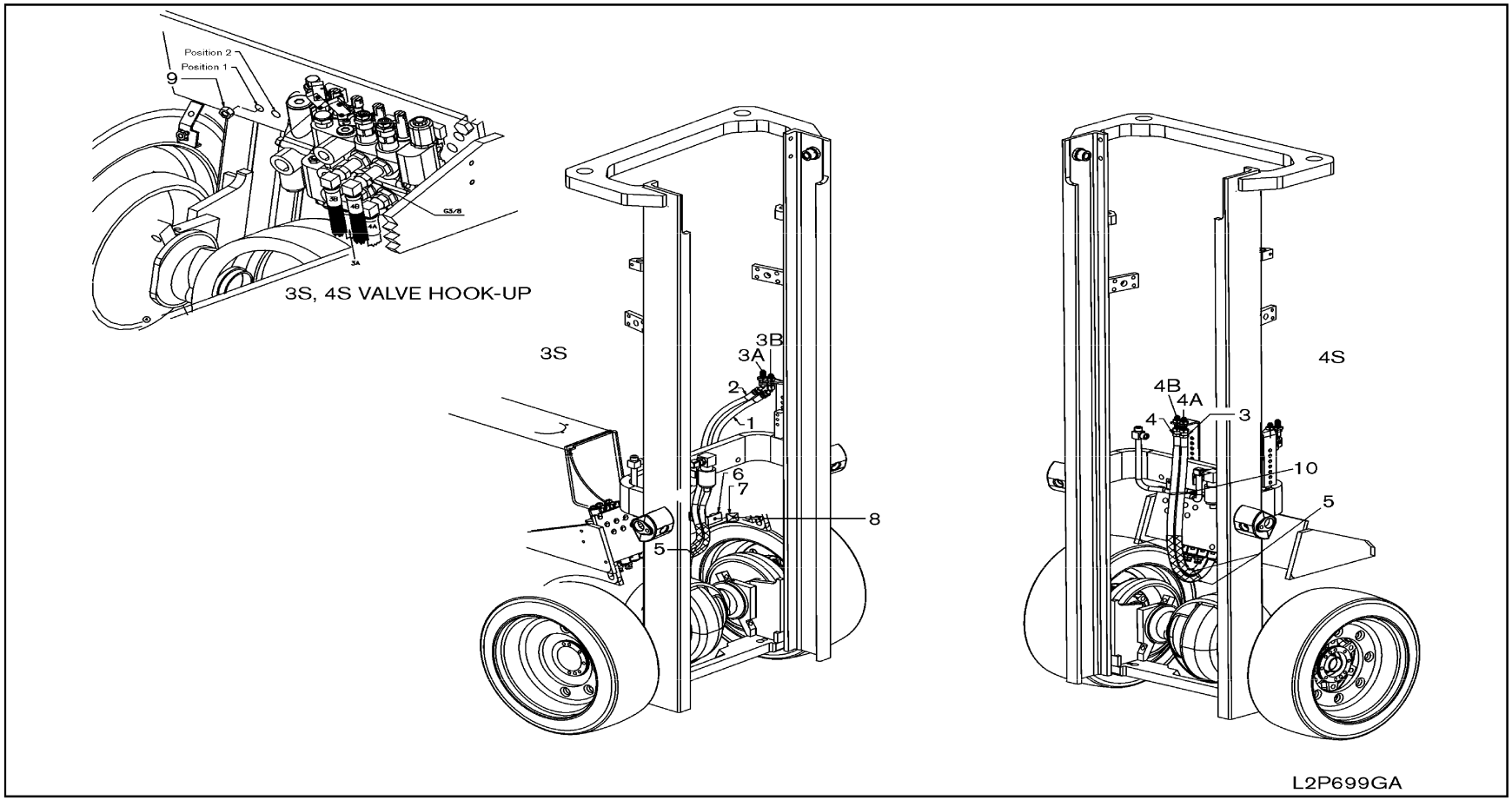

699G-1

SEC. 699G

HYDRAULIC OIL PIPING (ATTACHMENT) (3F)

TUBERIA DE ACEITE HIDRAULICO ACCESORIOS

HYDRAULIKLEITUNG ZUBEHÖR

CANALISATIONS HYDRAULIQUE ACCESSOIRES

NC	S	KEY NO.	LEV	PART NO.	PART NAME	SPECIFICATION	QTY	APPLIED DATE	ICANF	FORMER PART NO.	KD	APPLIED MODEL 01 02 03 04 05 06 07 08 09 10 11 12 13 14 15 16 17 18 19 20 21 22 23 24 25 26 27 28 29
		1	01	1	**69802-91H50**	HOSE ASSY-SUPPLY	VLVX3B	01	0107-0607			* *
			02	1	**69735-FW41B**		VLVX3B	01	0607-0809			* *
			03	1	**69737-FW40B**		VLVX3B	01	0809-			* *
			04	1	**69735-GB10B**		F/FC VLVX3B	01	0507-0809			* *
			05	1	**69737-FW45B**		F/FC VLVX3B	01	0809-			* *
		2	01	1	**69803-91H50**	HOSE ASSY-SUPPLY	VLVX3A	01	0107-0607			* *
			02	1	**69735-FW41A**		VLVX3A	01	0607-0809			* *
			03	1	**69737-FW40A**		VLVX3A	01	0809-			* *
			04	1	**69735-GB10A**		F/FC VLVX3A	01	0507-0809			* *
			05	1	**69737-FW45A**		F/FC VLVX3A	01	0809-			* *
		3	01	1	**69810-FK000**	HOSE ASSY-SUPPLY	VLVX4A	01	0107-			* *
			02	1	**69810-GG15A**		F/FC VLVX4A	01	0507-			* *
C		**4**	01	1	**69814-FK000**	HOSE ASSY-SUPPLY	VLVX4B	01	0107-1012			* *
N			02	1	**69737-FV40A**		VLVX4B	01	1012-			* *
		5	01	1	**69690-L8000**	PROTECTOR-SPIRAL TUBE	VLVX3	02	0107-			* *
			02	1	**69690-L8000**		VLVX4	04	0107-			* *
		6	01	1	**69673-FB600**	CLAMP-HOSE		01	0107-			* *
		7	01	1	**69682-FB600**	PLATE		01	0107-			* *
		8	01	1	**08911-6081G**	NUT-HEX M8-1.25		01	0107-			* *
		9	01	1	**08120-8651E**	SCREW-HHM M8-1.25X65 W/LKW		01	0107-			* *
		10	01	1	**01552-00421**	BAND-HOSE	VLVX4	01	1207-			* *

SEC. 699H

HYDRAULIC OIL PIPING (ATTACHMENT) (3F, 3 SPOOL)

TUBERIA DE ACEITE HIDRAULICO ACCESORIOS

HYDRAULIKLEITUNG ZUBEHÖR

CANALISATIONS HYDRAULIQUE ACCESSOIRES

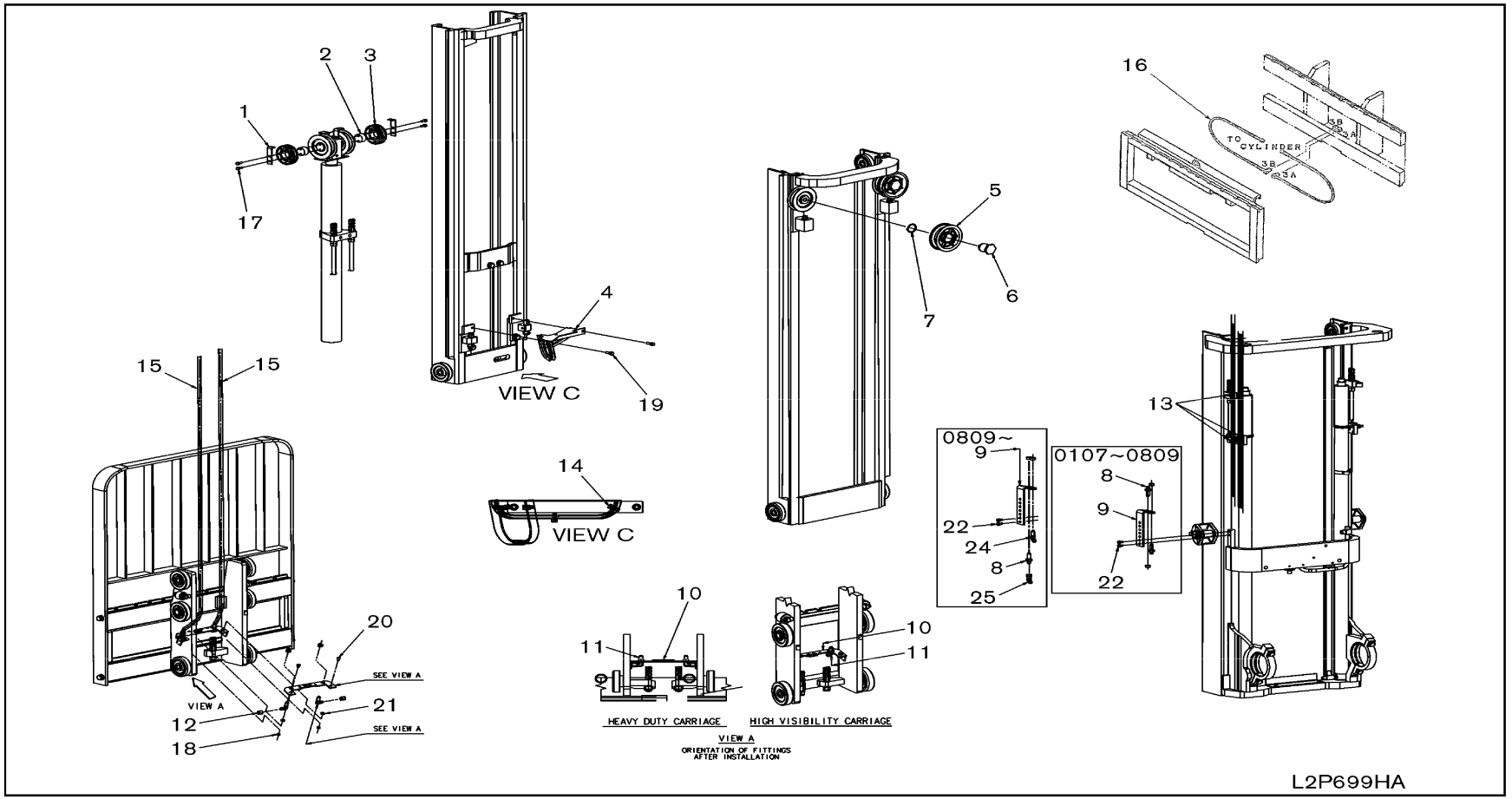

SEC. 699H

HYDRAULIC OIL PIPING (ATTACHMENT) (3F, 3 SPOOL)

TUBERIA DE ACEITE HIDRAULICO ACCESORIOS

HYDRAULIKLEITUNG ZUBEHÖR

CANALISATIONS HYDRAULIQUE ACCESSOIRES

NC	S	KEY NO.	LEV	PART NO.	PART NAME	SPECIFICATION	QTY	APPLIED DATE	ICANF	FORMER PART NO.	KD	APPLIED MODEL 01 02 03 04 05 06 07 08 09 10 11 12 13 14 15 16 17 18 19 20 21 22 23 24 25 26 27 28 29
		1	01	1	**69764-FB600**	PROTECTOR-HOSE		02	0107-			* *
		2	01	1	**69763-FB600**	SHAFT-PULLEY		02	0107-			* * * * * * * * * * * * * * * * * * *
			02	1	**69763-FC200**			02	0107-			* *
		3	01	1	**59395-FB600**	PULLEY-HOSE		02	0107-			* *
		4	01	1	**69774-FB600**	GUIDE ASSY-HOSE, INR		01	0107-			* * * * * * * * * * * * * * * * * * *
			02	1	**69774-FC200**			01	0107-			* *
		5	01	1	**59395-5G510**	PULLEY-HOSE		01	0107-			* *
		6	01	1	**58512-FB600**	SHAFT-HOSE PULLEY		01	0107-			* *
		7	01	1	**00922-14500**	RING-SNAP		01	0107-			* *
		8	01	1	**69354-FB600**	CONNECTOR ASSY		02	0107-0809			* *
			02	1	**69354-FB600**			01	0809-			* *
		9	01	1	**69751-FC60A**	BRACKET-HOSE	355+385	01	0107-			* *
			02	1	**69751-FC600**		400 AND ABOVE	01	0107-			* *
		10	01	1	**69724-FB600**	CONNECTOR-BASE	F/HEAVY DUTY	01	0107-			* * * * * * * * * * * * * * * * * * *
			02	1	**69724-FB60A**		F/HI-VIS	01	0107-			* * * * * * * * * * * * * * * * * * *
			03	1	**69724-FC200**		F/HEAVY DUTY	01	0107-			* *
			04	1	**69724-FC20A**		F/HI-VIS	01	0107-			* *
		11	01	1	**69354-FB620**	CONNECTOR ASSY	F/HEAVY DUTY	02	0107-			* *
			02	1	**69354-FB62A**		F/HI-VIS	02	0107-			* *
		12	01	1	**69396-FB600**	CAP		02	0107-			* *
		13	01	1	**69690-FB600**	PROTECTOR-SPIRAL TUBE		03	0107-			* *
		14	01	1	**24216-W1000**	TIE WRAP		06	0107-			* *
		15	01	1	**69735-FB271**	HOSE ASSY-RUBBER	L=3900-385	02	0107-			* * * * * * * * * * * * * * * * * * *
			02	1	**69735-FD213**		L=4325-430	02	0107-0807			* * * * * * * * * * * * * * * * * * *
			03	1	**69735-FD214**		L=4350-430	02	0807-			* * * * * * * * * * * * * * * * * * *
			04	1	**69735-FD266**		L=4775-475	02	0107-0807			* * * * * * * * * * * * * * * * * * *
			05	1	**69735-FD267**		L=4800-475	02	0807-			* * * * * * * * * * * * * * * * * * *
			06	1	**69735-FB607**		L=5175-515	02	0107-0807			* * * * * * * * * * * * * * * * * * *
			07	1	**69735-FB608**		L=5200-515	02	0807-			* * * * * * * * * * * * * * * * * * *
			08	1	**69735-FB622**		L=5550-550	02	0107-			* * * * * * * * * * * * * * * * * * *
			09	1	**69735-FD604**		L=6100-600	02	0107-0807			* * * * * * * * * * * * * * * * * * *
			10	1	**69735-FD605**		L=6125-600	02	0807-			* * * * * * * * * * * * * * * * * * *
			11	1	**69735-FD666**		L=6775-650	02	0107-			* * * * * * * * * * * * * * * * * * *
			12	1	**69735-FC218**		L=7450-700	02	0107-0807			* * * * * * * * * * * * * * * * * * *
			13	1	**69735-FC219**		L=7475-700	02	0807-			* * * * * * * * * * * * * * * * * * *
			14	1	**69735-FD210**		L=4250-385	02	0107-			* *
			15	1	**69735-FD263**		L=4700-430	02	0107-			* *

SEC. 699H

HYDRAULIC OIL PIPING (ATTACHMENT) (3F, 3 SPOOL)

TUBERIA DE ACEITE HIDRAULICO ACCESORIOS

HYDRAULIKLEITUNG ZUBEHÖR

CANALISATIONS HYDRAULIQUE ACCESSOIRES

NC	S	KEY NO.	LEV	PART NO.	PART NAME	SPECIFICATION	QTY	APPLIED DATE	ICANF	FORMER PART NO.	KD	APPLIED MODEL 01 02 03 04 05 06 07 08 09 10 11 12 13 14 15 16 17 18 19 20 21 22 23 24 25 26 27 28 29
	15	16	1	**69735-FB604**	HOSE ASSY-RUBBER	L=5100-475	02	0107-0807				*******
		17	1	**69735-FB605**		L=5125-475	02	0807-				*******
		18	1	**69735-FB619**		L=5475-515	02	0107-0807				*******
		19	1	**69735-FB620**		L=5500-515	02	0807-				*******
		20	1	**69735-FB674**		L=5975-550	02	0107-0807				*******
		21	1	**69735-FD600**		L=6000-550	02	0807-				*******
		22	1	**69735-FD661**		L=6650-600	02	0107-0807				*******
		23	1	**69735-FD662**		L=6675-600	02	0807-				*******
		24	1	**69735-FC213**		L=7325-650	02	0107-				*******
		25	1	**69735-FR200**		L=8000-700	02	0107-0807				*******
		26	1	**69735-FR201**		L=8025-700	02	0807-				*******
		27	1	**69735-FB272**		L=3925-355	02	0107-0807				****
		28	1	**69735-FB274**		L=3975-355	02	0807-				****
		29	1	**69735-FD215**		L=4375-400	02	0107-0807				****
		30	1	**69735-FD216**		L=4400-400	02	0807-				****
		31	1	**69735-FD268**		L=4825-445	02	0107-0807				****
		32	1	**69735-FD269**		L=4850-445	02	0807-				****
		33	1	**69735-FB609**		L=5225-485	02	0107-0807				****
		34	1	**69735-FB610**		L=5250-485	02	0807-				****
		35	1	**69735-FB624**		L=5600-520	02	0107-0807				****
		36	1	**69735-FB660**		L=5625-520	02	0807-				****
		37	1	**69735-FD606**		L=6150-570	02	0107-0807				****
		38	1	**69735-FD607**		L=6175-570	02	0807-				****
		39	1	**69735-FD667**		L=6800-620	02	0107-0807				****
		40	1	**69735-FD669**		L=6850-620	02	0807-				****
		41	1	**69735-FC220**		L=7500-670	02	0107-0807				****
		42	1	**69735-FC221**		L=7525-670	02	0807-				****
	16	01	1	**69735-FB70A**	HOSE ASSY-RUBBER	F/BOLZONI HEAVY DUTY SIDESHIFTER	02	0107-				*******
		02	1	**69737-FB60A**		F/BOLZONI HI-VIS SIDESHIFTER	02	0107-				*******
		03	1	**69735-FB70A**		F/BOLZONI INTEGRAL SIDESHIFTER	02	0107-				*******
		04	1	**69735-FB700**		F/BOLZONI INTEGRAL WIDE SIDESHIFTER	02	0107-				*******
	17	01	1	**08120-8401F**	SCREW-HHM M8-1.25X40 W/LK & PW		04	0107-				**********
		02	1	**08120-8501F**	SCREW-HHM M8-1.25X50 W/LK & PW		04	0107-				*******
	18	01	1	**08911-1081A**	NUT-HEX M8-1.25		02	0107-				*******
	19	01	1	**08121-0201F**	SCREW-HHM M10-1.5X20 W/LK & PW		02	0107-				*******
	20	01	1	**08120-8251E**	SCREW-HHM M8-1.25X25 W/LKW		02	0107-				*******
		02	1	**08915-5381A**	WASHER-FLAT M8		02	0107-				*******

SEC. 699H

HYDRAULIC OIL PIPING (ATTACHMENT) (3F, 3 SPOOL)

TUBERIA DE ACEITE HIDRAULICO ACCESORIOS

HYDRAULIKLEITUNG ZUBEHÖR

CANALISATIONS HYDRAULIQUE ACCESSOIRES

NC	S	KEY NO.	LEV	PART NO.	PART NAME	SPECIFICATION	QTY	APPLIED DATE	ICANF	FORMER PART NO.	KD	APPLIED MODEL 01 02 03 04 05 06 07 08 09 10 11 12 13 14 15 16 17 18 19 20 21 22 23 24 25 26 27 28 29
		21 01	1	**08915-1381A**	WASHER-LOCK SPLIT M8		02	0107-				* *
		22 01	1	**08124-0201E**	SCREW-HHM M10-1.25X20 W/PW		02	0107-				* *
		24 01	1	**69354-FB62A**	CONNECTOR ASSY		01	0809-				* *
		25 01	1	**69354-FB61A**	CONNECTOR ASSY		01	0809-				* *

SEC. 699I

HYDRAULIC OIL PIPING (ATTACHMENT) (3F, 4 SPOOL)

TUBERIA DE ACEITE HIDRAULICO ACCESORIOS

HYDRAULIKLEITUNG ZUBEHÖR

CANALISATIONS HYDRAULIQUE ACCESSOIRES

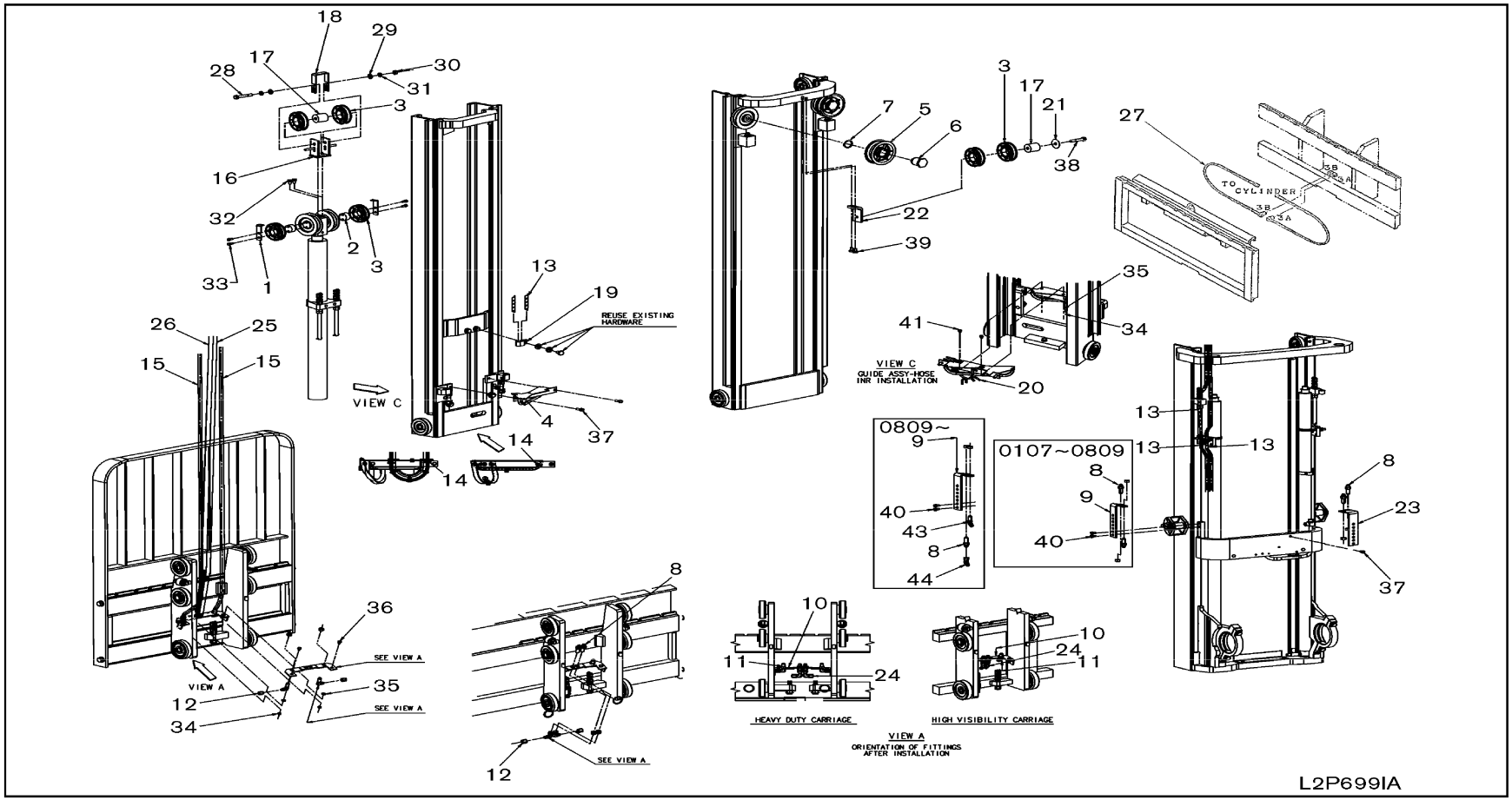

SEC. 699I

HYDRAULIC OIL PIPING (ATTACHMENT) (3F, 4 SPOOL)

TUBERIA DE ACEITE HIDRAULICO ACCESORIOS

HYDRAULIKLEITUNG ZUBEHÖR

CANALISATIONS HYDRAULIQUE ACCESSOIRES

NC	S	KEY NO.	LEV	PART NO.	PART NAME	SPECIFICATION	QTY	APPLIED DATE	ICANF	FORMER PART NO.	KD	APPLIED MODEL 01 02 03 04 05 06 07 08 09 10 11 12 13 14 15 16 17 18 19 20 21 22 23 24 25 26 27 28 29
		1	01	1	**69764-FB600**	PROTECTOR-HOSE		02	0107-			* *
		2	01	1	**69763-FB600**	SHAFT-PULLEY		02	0107-			* * * * * * * * * * * * * * * * * * *
			02	1	**69763-FC200**			02	0107-			* *
		3	01	1	**59395-FB600**	PULLEY-HOSE		06	0107-			* *
		4	01	1	**69774-FB600**	GUIDE ASSY-HOSE, INR		01	0107-			* * * * * * * * * * * * * * * * * * *
			02	1	**69774-FC200**			01	0107-			* *
		5	01	1	**59395-5G510**	PULLEY-HOSE		01	0107-			* *
		6	01	1	**58512-FB600**	SHAFT-HOSE PULLEY		01	0107-			* *
		7	01	1	**00922-14500**	RING-SNAP		01	0107-			* *
		8	01	1	**69354-FB600**	CONNECTOR ASSY		06	0107-0809			* *
			02	1	**69354-FB600**			01	0809-			* *
		9	01	1	**69751-FC60A**	BRACKET-HOSE	355+385	01	0107-			* *
			02	1	**69751-FC600**		400 AND ABOVE	01	0107-			* *
		10	01	1	**69724-FB600**	CONNECTOR-BASE	F/HEAVY DUTY	01	0107-			* * * * * * * * * * * * * * * * * * *
			02	1	**69724-FB60A**		F/HI-VIS	01	0107-			* * * * * * * * * * * * * * * * * * *
			03	1	**69724-FC200**		F/HEAVY DUTY	01	0107-			* *
			04	1	**69724-FC20A**		F/HI-VIS	01	0107-			* *
		11	01	1	**69354-FB620**	CONNECTOR ASSY	F/HEAVY DUTY	02	0107-			* *
			02	1	**69354-FB62A**		F/HI-VIS	02	0107-			* *
		12	01	1	**69396-FB600**	CAP		04	0107-			* *
		13	01	1	**69690-FB600**	PROTECTOR-SPIRAL TUBE		05	0107-			* *
		14	01	1	**24216-W1000**	TIE WRAP		08	0107-			* *
		15	01	1	**69735-FB271**	HOSE ASSY-MAST	VLVX3 L=3900-385	02	0107-			* * * * * * * * * * * * * * * * * * *
			02	1	**69735-FD213**		VLVX3 L=4325-430	02	0107-0807			* * * * * * * * * * * * * * * * * * *
			03	1	**69735-FD214**		VLVX3 L=4350-430	02	0807-			* * * * * * * * * * * * * * * * * * *
			04	1	**69735-FD266**		VLVX3 L=4775-475	02	0107-0807			* * * * * * * * * * * * * * * * * * *
			05	1	**69735-FD267**		VLVX3 L=4800-475	02	0807-			* * * * * * * * * * * * * * * * * * *
			06	1	**69735-FB607**		VLVX3 L=5175-515	02	0107-0807			* * * * * * * * * * * * * * * * * * *
			07	1	**69735-FB608**		VLVX3 L=5200-515	02	0807-			* * * * * * * * * * * * * * * * * * *
			08	1	**69735-FB622**		VLVX3 L=5550-550	02	0107-			* * * * * * * * * * * * * * * * * * *
			09	1	**69735-FD604**		VLVX3 L=6100-600	02	0107-0807			* * * * * * * * * * * * * * * * * * *
			10	1	**69735-FD605**		VLVX3 L=6125-600	02	0807-			* * * * * * * * * * * * * * * * * * *
			11	1	**69735-FD666**		VLVX3 L=6775-650	02	0107-			* * * * * * * * * * * * * * * * * * *
			12	1	**69735-FC218**		VLVX3 L=7450-700	02	0107-0807			* * * * * * * * * * * * * * * * * * *
			13	1	**69735-FC219**		VLVX3 L=7475-700	02	0807-			* * * * * * * * * * * * * * * * * * *
			14	1	**69735-FD210**		VLVX3 L=4250-385	02	0107-			* * * * * * *
			15	1	**69735-FD263**		VLVX3 L=4700-430	02	0107-			* * * * * * *

SEC. 699I

HYDRAULIC OIL PIPING (ATTACHMENT) (3F, 4 SPOOL)

TUBERIA DE ACEITE HIDRAULICO ACCESORIOS

HYDRAULIKLEITUNG ZUBEHÖR

CANALISATIONS HYDRAULIQUE ACCESSOIRES

NC	S	KEY NO.	LEV	PART NO.	PART NAME	SPECIFICATION	QTY	APPLIED DATE	TCANF	FORMER PART NO.	KD	APPLIED MODEL 01 02 03 04 05 06 07 08 09 10 11 12 13 14 15 16 17 18 19 20 21 22 23 24 25 26 27 28 29
		15 16	1	**69735-FB604**	HOSE ASSY-MAST	VLVX3 L=5100-475	02	0107-0807				*******
		17	1	**69735-FB605**		VLVX3 L=5125-475	02	0807-				*******
		18	1	**69735-FB619**		VLVX3 L=5475-515	02	0107-0807				*******
		19	1	**69735-FB620**		VLVX3 L=5500-515	02	0807-				*******
		20	1	**69735-FB674**		VLVX3 L=5975-550	02	0107-0807				*******
		21	1	**69735-FD600**		VLVX3 L=6000-550	02	0807-				*******
		22	1	**69735-FD661**		VLVX3 L=6650-600	02	0107-0807				*******
		23	1	**69735-FD662**		VLVX3 L=6675-600	02	0807-				*******
		24	1	**69735-FC213**		VLVX3 L=7325-650	02	0107-				*******
		25	1	**69735-FR200**		VLVX3 L=8000-700	02	0107-0807				*******
		26	1	**69735-FR201**		VLVX3 L=8025-700	02	0807-				*******
		27	1	**69735-FB272**		VLVX3 L=3925-355	02	0107-0807				****
		28	1	**69735-FB274**		VLVX3 L=3975-355	02	0807-				****
		29	1	**69735-FD215**		VLVX3 L=4375-400	02	0107-0807				****
		30	1	**69735-FD216**		VLVX3 L=4400-400	02	0807-				****
		31	1	**69735-FD268**		VLVX3 L=4825-445	02	0107-0807				****
		32	1	**69735-FD269**		VLVX3 L=4850-445	02	0807-				****
		33	1	**69735-FB609**		VLVX3 L=5225-485	02	0107-0807				****
		34	1	**69735-FB610**		VLVX3 L=5250-485	02	0807-				****
		35	1	**69735-FB624**		VLVX3 L=5600-520	02	0107-0807				****
		36	1	**69735-FB660**		VLVX3 L=5625-520	02	0807-				****
		37	1	**69735-FD606**		VLVX3 L=6150-570	02	0107-0807				****
		38	1	**69735-FD607**		VLVX3 L=6175-570	02	0807-				****
		39	1	**69735-FD667**		VLVX3 L=6800-620	02	0107-0807				****
		40	1	**69735-FD669**		VLVX3 L=6850-620	02	0807-				****
		41	1	**69735-FC220**		VLVX3 L=7500-670	02	0107-0807				****
		42	1	**69735-FC221**		VLVX3 L=7525-670	02	0807-				****
		16 01	1	**69860-FB600**	BRACKET ASSY-PULLEY		01	0107-				**********************
		17 01	1	**69763-FB610**	SHAFT-PULLEY		02	0107-				**********************
		18 01	1	**69864-FB610**	PROTECTOR-HOSE PULLEY		01	0107-				**********************
		19 01	1	**69675-FB600**	CLAMP		01	0107-				**********************
		20 01	1	**69874-FB600**	GUIDE ASSY-HOSE, INR		01	0107-				**********************
		21 01	1	**59393-FB600**	WASHER-HOSE PULLEY		01	0107-				**********************
		22 01	1	**69680-FB610**	BRACKET-PULLEY		01	0107-				**********************
		23 01	1	**69851-FB600**	BRACKET-HOSE		01	0107-				**********************
		24 01	1	**69354-FB610**	CONNECTOR ASSY	F/HEAVY DUTY	02	0107-				**********************
		02	1	**69354-FB61A**		F/HI-VIS	02	0107-				**********************

SEC. 699I

HYDRAULIC OIL PIPING (ATTACHMENT) (3F, 4 SPOOL)

TUBERIA DE ACEITE HIDRAULICO ACCESORIOS

HYDRAULIKLEITUNG ZUBEHÖR

CANALISATIONS HYDRAULIQUE ACCESSOIRES

NC	S	KEY NO.	LEV	PART NO.	PART NAME	SPECIFICATION	QTY	APPLIED DATE	ICANF	FORMER PART NO.	KD	APPLIED MODEL 01 02 03 04 05 06 07 08 09 10 11 12 13 14 15 16 17 18 19 20 21 22 23 24 25 26 27 28 29
		25 01	1	**69735-FD204**	HOSE ASSY-MAST	VLVX4A L=4100-385	01	0107-0807				**********
		02	1	**69735-FD209**		VLVX4A L=4225-385	01	0807-				**********
		03	1	**69735-FD221**		VLVX4A L=4525-430	01	0107-0807				**********
		04	1	**69735-FD261**		VLVX4A L=4650-430	01	0807-				**********
		05	1	**69735-FD274**		VLVX4A L=4975-475	01	0107-0807				**********
		06	1	**69735-FB604**		VLVX4A L=5100-475	01	0807-				**********
		07	1	**69735-FB615**		VLVX4A L=5375-515	01	0107-0807				**********
		08	1	**69735-FB620**		VLVX4A L=5500-515	01	0807-				**********
		09	1	**69735-FB665**		VLVX4A L=5750-550	01	0107-0807				**********
		10	1	**69735-FB670**		VLVX4A L=5875-550	01	0807-				**********
		11	1	**69735-FD612**		VLVX4A L=6300-600	01	0107-0807				**********
		12	1	**69735-FD617**		VLVX4A L=6425-600	01	0807-				**********
		13	1	**69735-FD674**		VLVX4A L=6975-650	01	0107-0807				**********
		14	1	**69735-FC204**		VLVX4A L=7100-650	01	0807-				**********
		15	1	**69735-FC261**		VLVX4A L=7650-700	01	0107-0807				**********
		16	1	**69735-FC266**		VLVX4A L=7775-700	01	0807-				**********
		17	1	**69735-FD215**		VLVX4A L=4375-385	01	0107-0807				**********
		18	1	**69735-FD219**		VLVX4A L=4475-385	01	0807-				**********
		19	1	**69735-FD267**		VLVX4A L=4800-430	01	0107-0807				**********
		20	1	**69735-FD270**		VLVX4A L=4875-430	01	0807-				**********
		21	1	**69735-FB609**		VLVX4A L=5225-475	01	0107-0807				**********
		22	1	**69735-FB613**		VLVX4A L=5325-475	01	0807-				**********
		23	1	**69735-FB624**		VLVX4A L=5600-515	01	0107-0807				**********
		24	1	**69735-FB663**		VLVX4A L=5700-515	01	0807-				**********
		25	1	**69735-FD604**		VLVX4A L=6100-550	01	0107-0807				**********
		26	1	**69735-FD608**		VLVX4A L=6200-550	01	0807-				**********
		27	1	**69735-FD666**		VLVX4A L=6775-600	01	0107-0807				**********
		28	1	**69735-FD670**		VLVX4A L=6875-600	01	0807-				**********
		29	1	**69735-FC218**		VLVX4A L=7450-650	01	0107-0807				**********
		30	1	**69735-FC222**		VLVX4A L=7550-650	01	0807-				**********
		31	1	**69735-FR205**		VLVX4A L=8125-700	01	0107-0807				**********
		32	1	**69735-FR209**		VLVX4A L=8225-700	01	0807-				**********
		33	1	**69735-FD204**		VLVX4A L=4100-355	01	0107-0807				**********
		34	1	**69735-FD209**		VLVX4A L=4225-355	01	0807-				**********
		35	1	**69735-FD221**		VLVX4A L=4525-400	01	0107-0807				**********
		36	1	**69735-FD262**		VLVX4A L=4675-400	01	0807-				**********
		37	1	**69735-FD274**		VLVX4A L=4975-445	01	0107-0807				**********

SEC. 699I

HYDRAULIC OIL PIPING (ATTACHMENT) (3F, 4 SPOOL)

TUBERIA DE ACEITE HIDRAULICO ACCESORIOS

HYDRAULIKLEITUNG ZUBEHÖR

CANALISATIONS HYDRAULIQUE ACCESSOIRES

NC	S	KEY NO.	LEV	PART NO.	PART NAME	SPECIFICATION	QTY	APPLIED DATE	ICANF	FORMER PART NO.	KD	APPLIED MODEL 01 02 03 04 05 06 07 08 09 10 11 12 13 14 15 16 17 18 19 20 21 22 23 24 25 26 27 28 29
	25	38	1	**69735-FB604**	HOSE ASSY-MAST	VLVX4A L=5100-445	01	0807-				****
		39	1	**69735-FB615**		VLVX4A L=5375-485	01	0107-0807				****
		40	1	**69735-FB620**		VLVX4A L=5500-485	01	0807-				****
		41	1	**69735-FB665**		VLVX4A L=5750-520	01	0107-0807				****
		42	1	**69735-FB670**		VLVX4A L=5875-520	01	0807-				****
		43	1	**69735-FD612**		VLVX4A L=6300-570	01	0107-0807				****
		44	1	**69735-FD618**		VLVX4A L=6450-570	01	0807-				****
		45	1	**69735-FD674**		VLVX4A L=6975-620	01	0107-0807				****
		46	1	**69735-FC204**		VLVX4A L=7100-620	01	0807-				****
		47	1	**69735-FC261**		VLVX4A L=7650-670	01	0107-0807				****
		48	1	**69735-FC267**		VLVX4A L=7800-670	01	0807-				****
	26	01	1	**69735-FD206**	HOSE ASSY-MAST	VLVX4B L=4150-385	01	0107-0807				**********
		02	1	**69735-FD211**		VLVX4B L=4275-385	01	0807-				**********
		03	1	**69735-FD223**		VLVX4B L=4575-430	01	0107-0807				**********
		04	1	**69735-FD263**		VLVX4B L=4700-430	01	0807-				**********
		05	1	**69735-FB601**		VLVX4B L=5025-475	01	0107-0807				**********
		06	1	**69735-FB606**		VLVX4B L=5150-475	01	0807-				**********
		07	1	**69735-FB617**		VLVX4B L=5425-515	01	0107-0807				**********
		08	1	**69735-FB622**		VLVX4B L=5550-515	01	0807-				**********
		09	1	**69735-FB667**		VLVX4B L=5800-550	01	0107-0807				**********
		10	1	**69735-FB672**		VLVX4B L=5925-550	01	0807-				**********
		11	1	**69735-FD614**		VLVX4B L=6350-600	01	0107-0807				**********
		12	1	**69735-FD619**		VLVX4B L=6475-600	01	0807-				**********
		13	1	**69735-FC201**		VLVX4B L=7025-650	01	0107-0807				**********
		14	1	**69735-FC206**		VLVX4B L=7150-650	01	0807-				**********
		15	1	**69735-FC263**		VLVX4B L=7700-700	01	0107-0807				**********
		16	1	**69735-FC268**		VLVX4B L=7825-700	01	0807-				**********
		17	1	**69735-FD217**		VLVX4B L=4425-385	01	0107-				*******
		18	1	**69735-FD269**		VLVX4B L=4850-430	01	0107-0807				*******
		19	1	**69735-FD272**		VLVX4B L=4925-430	01	0807-				*******
		20	1	**69735-FB611**		VLVX4B L=5275-475	01	0107-				*******
		21	1	**69735-FB661**		VLVX4B L=5650-515	01	0107-				*******
		22	1	**69735-FD606**		VLVX4B L=6150-550	01	0107-				*******
		23	1	**69735-FD668**		VLVX4B L=6825-600	01	0107-				*******
		24	1	**69735-FC220**		VLVX4B L=7500-650	01	0107-				*******
		25	1	**69735-FR207**		VLVX4B L=8175-700	01	0107-				*******
		26	1	**69735-FD206**		VLVX4B L=4150-355	01	0107-0807				****

SEC. 699I

HYDRAULIC OIL PIPING (ATTACHMENT) (3F, 4 SPOOL)

TUBERIA DE ACEITE HIDRAULICO ACCESORIOS

HYDRAULIKLEITUNG ZUBEHÖR

CANALISATIONS HYDRAULIQUE ACCESSOIRES

NC	S	KEY NO.	LEV	PART NO.	PART NAME	SPECIFICATION	QTY	APPLIED DATE	ICANF	FORMER PART NO.	KD	APPLIED MODEL 01 02 03 04 05 06 07 08 09 10 11 12 13 14 15 16 17 18 19 20 21 22 23 24 25 26 27 28 29
		26	27	1	**69735-FD211**	HOSE ASSY-MAST	VLVX4B L=4275-355	01	0807-		

SEC. 699J

HYDRAULIC OIL PIPING (ATTACHMENT) (3V)

TUBERIA DE ACEITE HIDRAULICO ACCESORIOS

HYDRAULIKLEITUNG ZUBEHÖR

CANALISATIONS HYDRAULIQUE ACCESSOIRES

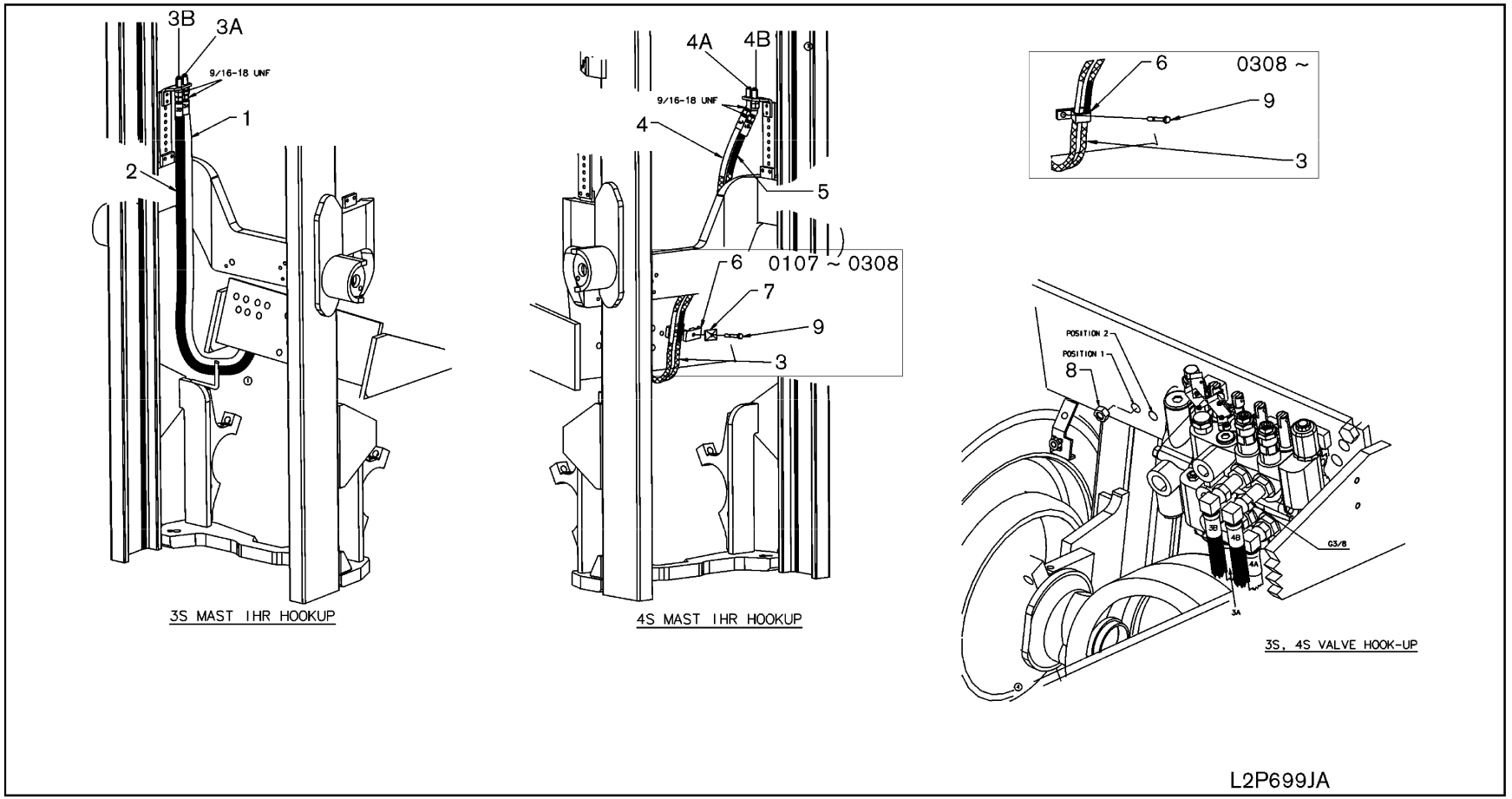

SEC. 699J

HYDRAULIC OIL PIPING (ATTACHMENT) (3V)

TUBERIA DE ACEITE HIDRAULICO ACCESORIOS

HYDRAULIKLEITUNG ZUBEHÖR

CANALISATIONS HYDRAULIQUE ACCESSOIRES

NC	S	KEY NO.	LEV	PART NO.	PART NAME	SPECIFICATION	QTY	APPLIED DATE	TCANF	FORMER PART NO.	KD	APPLIED MODEL 01	02	03	04	05	06	07	08	09	10	11	12	13	14	15	16	17	18	19	20	21	22	23	24	25	26	27	28	29
		1	01	1	**69710-FK005**	PIPE & HOSE ASSY	VLVX3A	01	0107-				*	*	*	*	*	*	*	*	*	*	*	*	*	*	*	*	*											
			02	1	**69710-FK305**		VLVX3A	01	0107-																					*	*	*	*	*	*	*	*	*	*	*	*
C		2	01	1	**69714-FK005**	PIPE & HOSE ASSY	VLVX3B	01	0107-1012				*	*	*	*	*	*	*	*	*	*	*	*	*	*	*	*	*											
N			02	1	**69737-FV50A**		VLVX3B	01	1012-				*	*	*	*	*	*	*	*	*	*	*	*	*	*	*	*	*											
C			03	1	**69714-FK305**		VLVX3B	01	0107-1012																					*	*	*	*	*	*	*	*	*	*	*	*
N			04	1	**69737-FV65A**		VLVX3B	01	1012-																					*	*	*	*	*	*	*	*	*	*	*	*
		3	01	1	**69690-L8000**	PROTECTOR-SPIRAL TUBE	VLVX4	02	0107-				*	*	*	*	*	*	*	*	*	*	*	*	*	*	*	*	*	*	*	*	*	*	*	*	*	*	*	*
		4	01	1	**69737-FB40E**	HOSE ASSY	VLVX4A	01	0107-				*	*	*	*	*	*	*	*	*	*	*	*	*	*	*	*	*											
			02	1	**69737-FB40D**		VLVX4A	01	0107-																					*	*	*	*	*	*	*	*	*	*	*	*
		5	01	1	**69737-FB40F**	HOSE ASSY	VLVX4B	01	0107-				*	*	*	*	*	*	*	*	*	*	*	*	*	*	*	*	*											
			02	1	**69737-FB40E**		VLVX4B	01	0107-																					*	*	*	*	*	*	*	*	*	*	*	*
		6	01	1	**69673-FB600**	CLAMP-HOSE	VLVX4	01	0107-0308				*	*	*	*	*	*	*	*	*	*	*	*	*	*	*	*	*	*	*	*	*	*	*	*	*	*	*	*
			02	1	**21642-L3000**		VLVX4	01	0308-				*	*	*	*	*	*	*	*	*	*	*	*	*	*	*	*	*	*	*	*	*	*	*	*	*	*	*	*
		7	01	1	**69682-FB600**	PLATE	VLVX4	01	0107-0308				*	*	*	*	*	*	*	*	*	*	*	*	*	*	*	*	*	*	*	*	*	*	*	*	*	*	*	*
		8	01	1	**08911-6081G**	NUT-HEX M8-1.25	VLVX4	01	0107-				*	*	*	*	*	*	*	*	*	*	*	*	*	*	*	*	*	*	*	*	*	*	*	*	*	*	*	*
		9	01	1	**08120-8651E**	SCREW-HHM M8-1.25X65 W/LKW	VLVX4	01	0107-0308				*	*	*	*	*	*	*	*	*	*	*	*	*	*	*	*	*	*	*	*	*	*	*	*	*	*	*	*
			02	1	**08120-8401F**	SCREW-HHM M8-1.25X40 W/LK & PW	VLVX4	01	0308-				*	*	*	*	*	*	*	*	*	*	*	*	*	*	*	*	*	*	*	*	*	*	*	*	*	*	*	*

SEC. 699K

HYDRAULIC OIL PIPING (ATTACHMENT) (3V, 3 SPOOL)

TUBERIA DE ACEITE HIDRAULICO ACCESORIOS

HYDRAULIKLEITUNG ZUBEHÖR

CANALISATIONS HYDRAULIQUE ACCESSOIRES

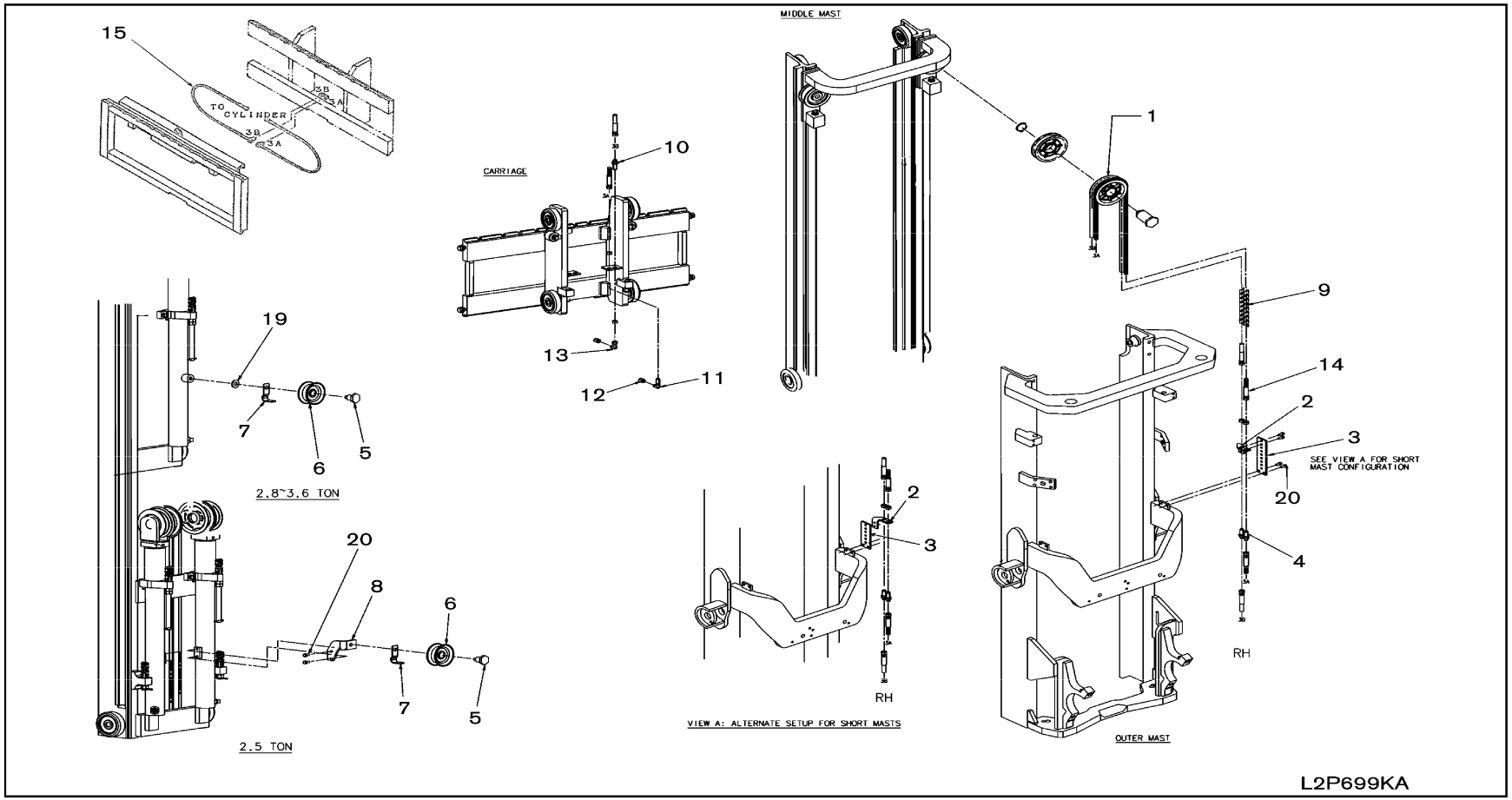

SEC. 699K

HYDRAULIC OIL PIPING (ATTACHMENT) (3V, 3 SPOOL)

TUBERIA DE ACEITE HIDRAULICO ACCESORIOS

HYDRAULIKLEITUNG ZUBEHÖR

CANALISATIONS HYDRAULIQUE ACCESSOIRES

NC	S	KEY NO.	LEV	PART NO.	PART NAME	SPECIFICATION	QTY	APPLIED DATE	TCANF	FORMER PART NO.	KD	APPLIED MODEL 01	02	03	04	05	06	07	08	09	10	11	12	13	14	15	16	17	18	19	20	21	22	23	24	25	26	27	28	29
		1	01	1	**59395-5G510**	PULLEY-HOSE		01	0107-			*	*	*	*	*	*	*	*	*	*	*	*	*	*	*	*	*	*	*	*	*	*	*	*	*	*	*	*	*
		2	01	1	**69752-FB700**	BRACKET-HOSE		01	0107-			*	*	*	*	*	*	*	*	*	*	*	*	*	*	*	*	*	*	*	*	*	*	*	*	*	*	*	*	*
			02	1	**69752-FB70A**		F/SHORT MAST	01	0107-			*	*	*	*	*	*	*	*	*	*	*	*	*	*	*	*	*	*	*	*	*	*	*	*	*	*	*	*	*
		3	01	1	**69751-FA560**	BRACKET-HOSE		01	0107-			*	*	*	*	*	*	*	*	*	*	*	*	*	*	*	*	*	*	*	*	*	*	*	*	*	*	*	*	*
			02	1	**69751-FA56A**		F/SHORT MAST	01	0107-			*	*	*	*	*	*	*	*	*	*	*	*	*	*	*	*	*	*	*	*	*	*	*	*	*	*	*	*	*
		4	01	1	**69354-FB600**	CONNECTOR ASSY		02	0107-			*	*	*	*	*	*	*	*	*	*	*	*	*	*	*	*	*	*	*	*	*	*	*	*	*	*	*	*	*
		5	01	1	**69763-FA560**	SHAFT-PULLEY		01	0107-			*	*	*	*	*	*	*	*	*	*	*	*	*	*	*	*	*	*	*	*	*	*	*	*	*	*	*	*	*
		6	01	1	**59395-FA560**	PULLEY-HOSE		01	0107-			*	*	*	*	*	*	*	*	*	*	*	*	*	*	*	*	*	*	*	*	*	*	*	*	*	*	*	*	*
		7	01	1	**69764-FA560**	PROTECTOR-HOSE		01	0107-			*	*	*	*	*	*	*	*	*	*	*	*	*	*	*	*	*	*	*	*	*	*	*	*	*	*	*	*	*
		8	01	1	**69761-FC21A**	BRACKET		01	0107-			*	*	*	*	*	*	*	*	*	*	*	*	*	*	*	*	*	*											
		9	01	1	**69690-FB600**	PROTECTOR-SPIRAL TUBE		02	0107-			*	*	*	*	*	*	*	*	*	*	*	*	*	*	*	*	*	*	*	*	*	*	*	*	*	*	*	*	*
		10	01	1	**69354-FB600**	CONNECTOR ASSY		01	0107-			*	*	*	*	*	*	*	*	*	*	*	*	*	*	*	*	*	*	*	*	*	*	*	*	*	*	*	*	*
		11	01	1	**69354-FB620**	CONNECTOR ASSY		01	0107-			*	*	*	*	*	*	*	*	*	*	*	*	*	*	*	*	*	*	*	*	*	*	*	*	*	*	*	*	*
		12	01	1	**69396-FB600**	CAP		02	0107-			*	*	*	*	*	*	*	*	*	*	*	*	*	*	*	*	*	*	*	*	*	*	*	*	*	*	*	*	*
		13	01	1	**69354-FB610**	CONNECTOR ASSY		01	0107-			*	*	*	*	*	*	*	*	*	*	*	*	*	*	*	*	*	*	*	*	*	*	*	*	*	*	*	*	*
		14	01	1	**69735-FB20A**	HOSE ASSY-RUBBER	L=3275-360	02	0107-0108			*	*	*	*	*	*	*	*	*	*	*	*	*	*	*	*	*											
			02	1	**69735-FB213**		L=3325-360	02	0108-			*	*	*	*	*	*	*	*	*	*	*	*	*	*	*	*	*											
			03	1	**69735-FB23A**		L=3725-405	02	0107-0108			*	*	*	*	*	*	*	*	*	*	*	*	*	*	*	*	*											
			04	1	**69735-FB266**		L=3775-405	02	0108-			*	*	*	*	*	*	*	*	*	*	*	*	*	*	*	*	*											
			05	1	**69735-FD20A**		L=4175-450	02	0107-0108			*	*	*	*	*	*	*	*	*	*	*	*	*	*	*	*	*											
			06	1	**69735-FD209**		L=4225-450	02	0108-			*	*	*	*	*	*	*	*	*	*	*	*	*	*	*	*	*											
			07	1	**69735-FD220**		L=4500-490	02	0107-0108			*	*	*	*	*	*	*	*	*	*	*	*	*	*	*	*	*											
			08	1	**69735-FD222**		L=4550-490	02	0108-			*	*	*	*	*	*	*	*	*	*	*	*	*	*	*	*	*											
			09	1	**69735-FD270**		L=4875-525	02	0107-0108			*	*	*	*	*	*	*	*	*	*	*	*	*	*	*	*	*											
			10	1	**69735-FD272**		L=4925-525	02	0108-			*	*	*	*	*	*	*	*	*	*	*	*	*	*	*	*	*											
			11	1	**69735-FB617**		L=5425-575	02	0107-0108			*	*	*	*	*	*	*	*	*	*	*	*	*	*	*	*	*											
			12	1	**69735-FB619**		L=5475-575	02	0108-			*	*	*	*	*	*	*	*	*	*	*	*	*	*	*	*	*											
			13	1	**69735-FD607**		L=6175-633	02	0107-0108			*	*	*	*	*	*	*	*	*	*	*	*	*	*	*	*	*											
			14	1	**69735-FD609**		L=6225-633	02	0108-			*	*	*	*	*	*	*	*	*	*	*	*	*	*	*	*	*											
			15	1	**69735-FD671**		L=6900-688	02	0107-0108			*	*	*	*	*	*	*	*	*	*	*	*	*	*	*	*	*											
			16	1	**69735-FD673**		L=6950-688	02	0108-			*	*	*	*	*	*	*	*	*	*	*	*	*	*	*	*	*											
			17	1	**69735-FB268**		L=3825-385	02	0107-0108																				*	*	*	*	*	*	*	*	*	*	*	*
			18	1	**69735-GC60A**		L=3875-385	02	0108-																				*	*	*	*	*	*	*	*	*	*	*	*
			19	1	**69735-FD208**		L=4200-430	02	0107-0108																				*	*	*	*	*	*	*	*	*	*	*	*
			20	1	**69735-FD210**		L=4250-430	02	0108-																				*	*	*	*	*	*	*	*	*	*	*	*
			21	1	**69735-FD223**		L=4575-470	02	0107-0108																				*	*	*	*	*	*	*	*	*	*	*	*
			22	1	**69735-FD261**		L=4650-470	02	0108-																				*	*	*	*	*	*	*	*	*	*	*	*

SEC. 699K

HYDRAULIC OIL PIPING (ATTACHMENT) (3V, 3 SPOOL)

TUBERIA DE ACEITE HIDRAULICO ACCESORIOS

HYDRAULIKLEITUNG ZUBEHÖR

CANALISATIONS HYDRAULIQUE ACCESSOIRES

NC	S	KEY NO.	LEV	PART NO.	PART NAME	SPECIFICATION	QTY	APPLIED DATE	ICANF	FORMER PART NO.	KD	APPLIED MODEL 01 02 03 04 05 06 07 08 09 10 11 12 13 14 15 16 17 18 19 20 21 22 23 24 25 26 27 28 29
		14	23	1	**69735-FD273**	HOSE ASSY-RUBBER	L=4950-505	02	0107-0108		

NOTE

SEC. 699L

HYDRAULIC OIL PIPING (ATTACHMENT) (3V, 4 SPOOL)

TUBERIA DE ACEITE HIDRAULICO ACCESORIOS

HYDRAULIKLEITUNG ZUBEHÖR

CANALISATIONS HYDRAULIQUE ACCESSOIRES

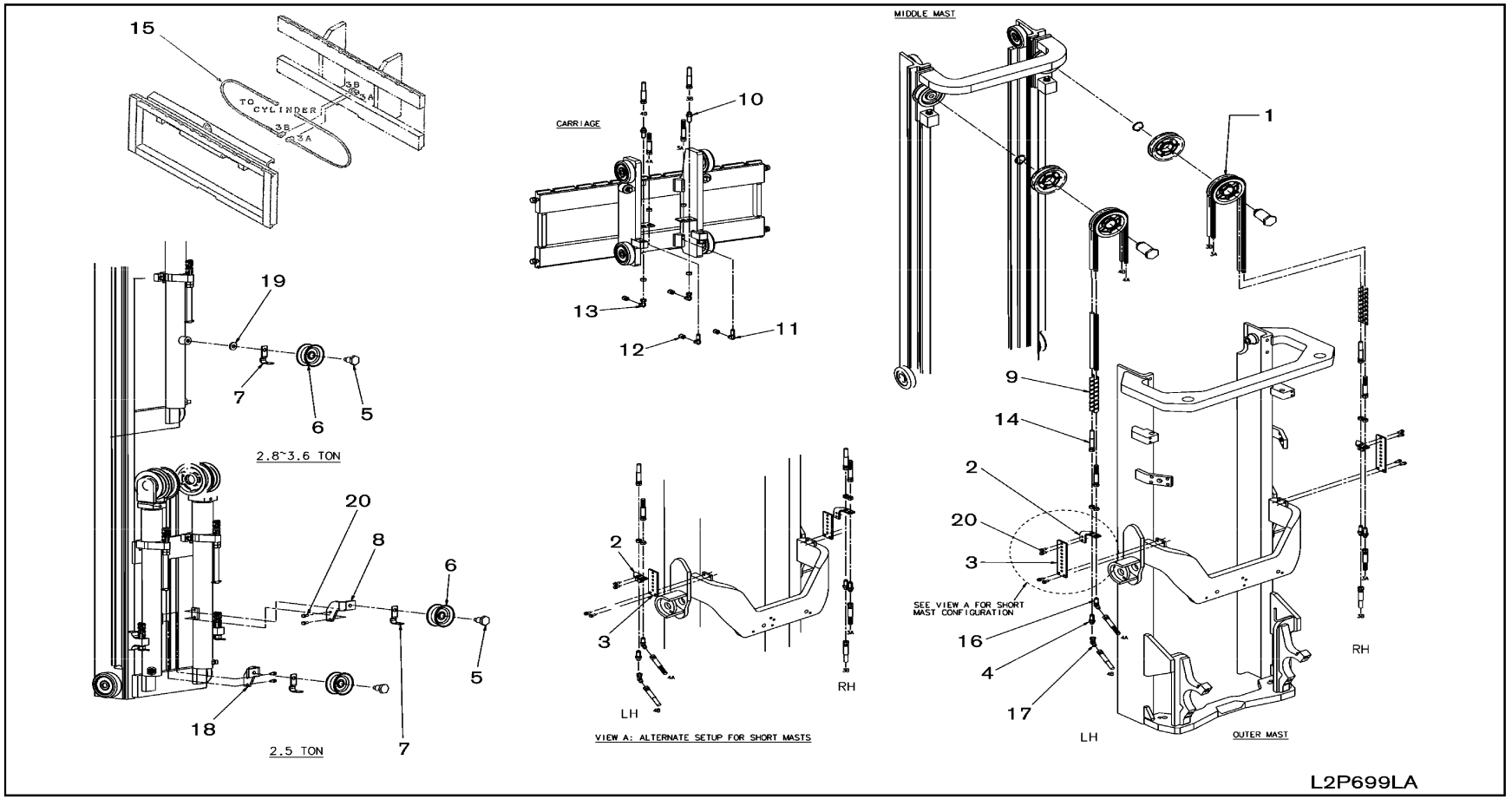

SEC. 699L

HYDRAULIC OIL PIPING (ATTACHMENT) (3V, 4 SPOOL)

TUBERIA DE ACEITE HIDRAULICO ACCESORIOS

HYDRAULIKLEITUNG ZUBEHÖR

CANALISATIONS HYDRAULIQUE ACCESSOIRES

NC	S	KEY NO.	LEV	PART NO.	PART NAME	SPECIFICATION	QTY	APPLIED DATE	TCANF	FORMER PART NO.	KD	APPLIED MODEL 01 02 03 04 05 06 07 08 09 10 11 12 13 14 15 16 17 18 19 20 21 22 23 24 25 26 27 28 29
		1	01	1	**59395-5G510**	PULLEY-HOSE		02	0107-			* *
		2	01	1	**69752-FB700**	BRACKET-HOSE	F/RH-3 SPOOL	01	0107-			* *
			02	1	**69752-FB701**		F/LH-4 SPOOL	01	0107-			* *
			03	1	**69752-FB70A**		F/RH-3 SPOOL SHORT MAST	01	0107-			* *
			04	1	**69752-FB70B**		F/LH-4 SPOOL SHORT MAST	01	0107-			* *
		3	01	1	**69751-FA560**	BRACKET-HOSE		02	0107-			* *
			02	1	**69751-FA56A**		F/SHORT MAST	02	0107-			* *
		4	01	1	**69354-FB600**	CONNECTOR ASSY		03	0107-			* *
		5	01	1	**69763-FA560**	SHAFT-PULLEY		02	0107-			* *
		6	01	1	**59395-FA560**	PULLEY-HOSE		02	0107-			* *
		7	01	1	**69764-FA560**	PROTECTOR-HOSE		02	0107-			* *
		8	01	1	**69761-FC21A**	BRACKET	F/RH-3 SPOOL	01	0107-			* * * * * * * * * * * * * * * * * * *
		9	01	1	**69690-FB600**	PROTECTOR-SPIRAL TUBE		04	0107-			* *
		10	01	1	**69354-FB600**	CONNECTOR ASSY		02	0107-			* *
		11	01	1	**69354-FB620**	CONNECTOR ASSY		02	0107-			* *
		12	01	1	**69396-FB600**	CAP		04	0107-			* *
		13	01	1	**69354-FB610**	CONNECTOR ASSY		02	0107-			* *
		14	01	1	**69735-FB20A**	HOSE ASSY-RUBBER	L=3275-360	04	0107-0108			* * * * * * * * * * * * * * * * * * *
			02	1	**69735-FD213**		L=3325-360	04	0108-			* * * * * * * * * * * * * * * * * * *
			03	1	**69735-FB23A**		L=3725-405	04	0107-0108			* * * * * * * * * * * * * * * * * * *
			04	1	**69735-FB266**		L=3775-405	04	0108-			* * * * * * * * * * * * * * * * * * *
			05	1	**69735-FD20A**		L=4175-450	04	0107-0108			* * * * * * * * * * * * * * * * * * *
			06	1	**69735-FD209**		L=4225-450	04	0108-			* * * * * * * * * * * * * * * * * * *
			07	1	**69735-FD220**		L=4500-490	04	0107-0108			* * * * * * * * * * * * * * * * * * *
			08	1	**69735-FD222**		L=4550-490	04	0108-			* * * * * * * * * * * * * * * * * * *
			09	1	**69735-FD270**		L=4875-525	04	0107-0108			* * * * * * * * * * * * * * * * * * *
			10	1	**69735-FD272**		L=4925-525	04	0108-			* * * * * * * * * * * * * * * * * * *
			11	1	**69735-FB617**		L=5425-575	04	0107-0108			* * * * * * * * * * * * * * * * * * *
			12	1	**69735-FB619**		L=5475-575	04	0108-			* * * * * * * * * * * * * * * * * * *
			13	1	**69735-FD607**		L=6175-633	04	0107-0108			* * * * * * * * * * * * * * * * * * *
			14	1	**69735-FD609**		L=6225-633	04	0108-			* * * * * * * * * * * * * * * * * * *
			15	1	**69735-FD671**		L=6900-688	04	0107-0108			* * * * * * * * * * * * * * * * * * *
			16	1	**69735-FD673**		L=6950-688	04	0108-			* * * * * * * * * * * * * * * * * * *
			17	1	**69735-FB268**		L=3825-385	04	0107-0108			* *
			18	1	**69735-GC60A**		L=3875-385	04	0108-			* *
			19	1	**69735-FD208**		L=4200-430	04	0107-0108			* *
			20	1	**69735-FD210**		L=4250-430	04	0108-			* *

SEC. 699L

HYDRAULIC OIL PIPING (ATTACHMENT) (3V, 4 SPOOL)

TUBERIA DE ACEITE HIDRAULICO ACCESORIOS

HYDRAULIKLEITUNG ZUBEHÖR

CANALISATIONS HYDRAULIQUE ACCESSOIRES

NC	S	KEY NO.	LEV	PART NO.	PART NAME	SPECIFICATION	QTY	APPLIED DATE	ICANF	FORMER PART NO.	KD	APPLIED MODEL 01 02 03 04 05 06 07 08 09 10 11 12 13 14 15 16 17 18 19 20 21 22 23 24 25 26 27 28 29
		14 21	1	**69735-FD223**	HOSE ASSY-RUBBER	L=4575-470	04	0107-0108				**********
		22	1	**69735-FD261**		L=4650-470	04	0108-				**********
		23	1	**69735-FD273**		L=4950-505	04	0107-0108				**********
		24	1	**69735-FB601**		L=5025-505	04	0108-				**********
		25	1	**69735-FB621**		L=5525-555	04	0107-1007				**********
		26	1	**69735-GC61A**		L=5525-555	04	1007-0108				**********
		27	1	**69735-FB623**		L=5575-555	04	0108-				**********
		28	1	**69735-FD610**		L=6250-600	04	0107-0108				**********
		29	1	**69735-FD613**		L=6325-600	04	0108-				**********
		30	1	**69735-FC200**		L=7000-650	04	0107-0108				**********
		31	1	**69735-FC202**		L=7050-650	04	0108-				**********
		32	1	**69735-FC224**		L=7600-700	04	0107-0108				**********
		33	1	**69735-FC262**		L=7675-700	04	0108-				**********
		15 01	1	**69735-FB70B**	HOSE ASSY-RUBBER	F/BOLZONI SIDESHIFTER	02	0107-				**********
		02	1	**69735-FB70B**	HOSE ASSY-RUBBER VLVX3A	F/BOLZONI INTEGRAL WIDE SIDESHIFTER	01	0107-				**********
		03	1	**69735-FB70C**	HOSE ASSY-RUBBER VLVX3B	F/BOLZONI INTEGRAL WIDE SIDESHIFTER	01	0107-				**********
		16 01	1	**69354-FB62A**	CONNECTOR ASSY	F/LH-4 SPOOL	01	0107-				**********
		17 01	1	**69354-FB61A**	CONNECTOR ASSY-SWIVEL	F/LH-4 SPOOL	01	0107-				**********
		18 01	1	**69761-FC21B**	BRACKET	F/LH-4 SPOOL	01	0107-				**********
		19 01	1	**08915-5441A**	WASHER-FLAT M14		02	0107-				**********
		20 01	1	**08120-8201F**	SCREW-HHM M8-1.25X20 W/LK & PW		12	0107-				**********
		02	1	**08120-8201F**			08	0107-				**********

NOTE

SEC. 699Q

HYDRAULIC OIL PIPING (ATTACHMENT) (2W-INNER CHAIN 3.5TON)

TUBERIA DE ACEITE HIDRAULICO ACCESORIOS

HYDRAULIKLEITUNG ZUBEHÖR

CANALISATIONS HYDRAULIQUE ACCESSOIRES

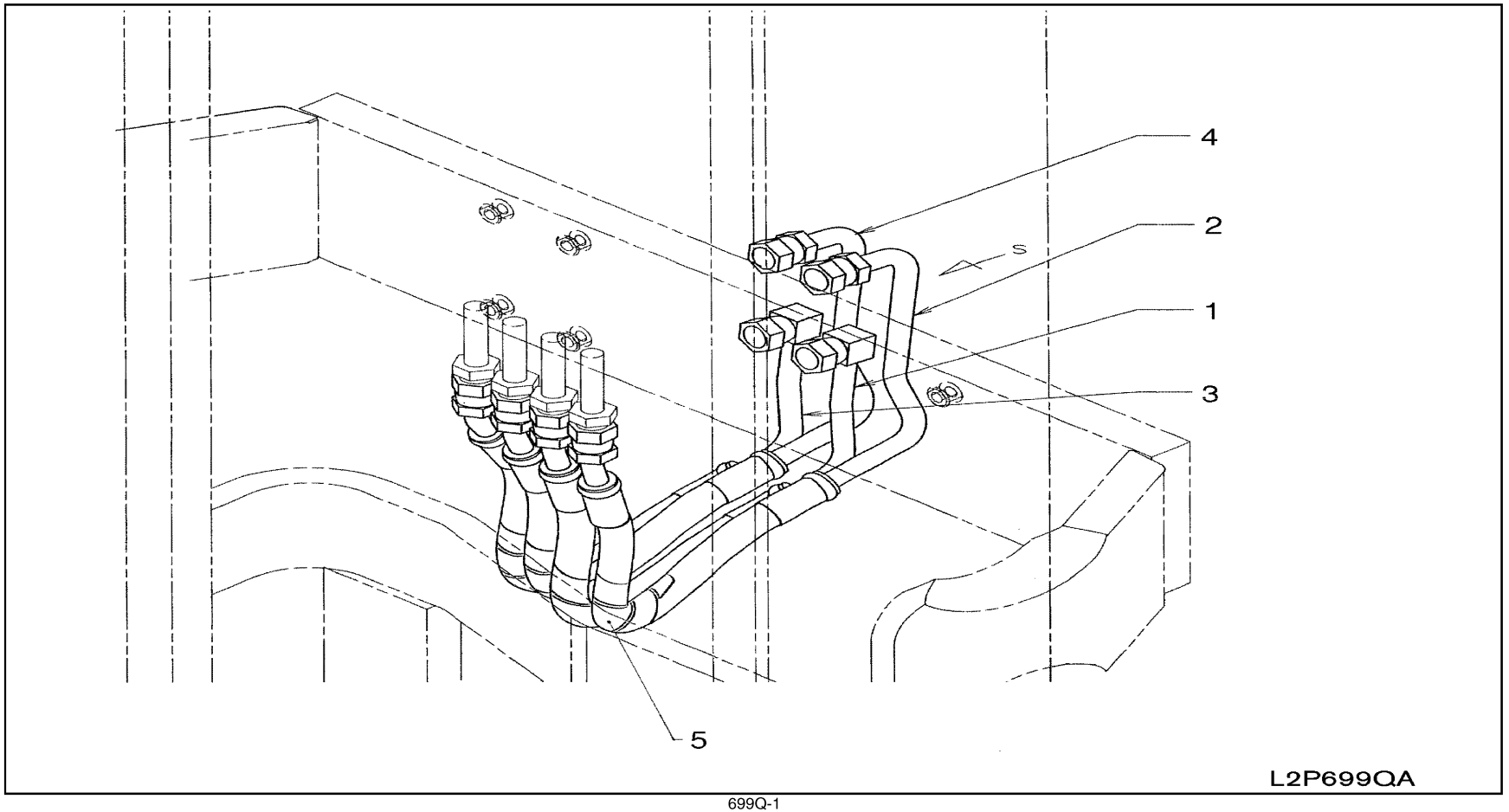

699Q-1

SEC. 699Q

HYDRAULIC OIL PIPING (ATTACHMENT) (2W-INNER CHAIN 3.5TON)

TUBERIA DE ACEITE HIDRAULICO ACCESORIOS

HYDRAULIKLEITUNG ZUBEHÖR

CANALISATIONS HYDRAULIQUE ACCESSOIRES

NC	S	KEY NO.	LEV	PART NO.	PART NAME	SPECIFICATION	QTY	APPLIED DATE	ICANF	FORMER PART NO.	KD	APPLIED MODEL 01 02 03 04 05 06 07 08 09 10 11 12 13 14 15 16 17 18 19 20 21 22 23 24 25 26 27 28 29
		1 01	1	**69710-FK400**	PIPE & HOSE ASSY	L=335-VLVX3A	01	0107-0907				* * * *
		02	1	**69710-FK40A**		L=335-VLVX3A	01	0907-0508				* * * *
		03	1	**69710-GG30A**		L=335-VLVX3A	01	0508-				* * * *
		2 01	1	**69714-FK400**	PIPE & HOSE ASSY	L=335-VLVX3B	01	0107-0907				* * * *
		02	1	**69714-FK40A**		L=335-VLVX3B	01	0907-0508				* * * *
		03	1	**69714-GG30A**		L=335-VLVX3B	01	0508-				* * * *
		3 01	1	**69810-FK400**	PIPE & HOSE ASSY	L=325-VLVX4A	01	0107-0907				* * * *
		02	1	**69737-FK40A**		L=325-VLVX4A	01	0907-0508				* * * *
		03	1	**69810-GG30A**		L=325-VLVX4A	01	0508-				* * * *
		4 01	1	**69814-FK400**	PIPE & HOSE ASSY	L=325-VLVX4B	01	0107-0907				* * * *
		02	1	**69814-FK40A**		L=325-VLVX4B	01	0907-0508				* * * *
		03	1	**69814-GG30A**		L=325-VLVX4B	01	0508-				* * * *
		5 01	1	**69690-L1101**	PROTECTOR-SPIRAL TUBE	VLVX3	02	0107-0508				* * * *
		02	1	**69690-L1101**		VLVX4	04	0107-0508				* * * *

SEC. 699R

HYDRAULIC OIL PIPING (ATTACHMENT) (2W-INNER CHAIN, 3 SPOOL 3.5TON)

TUBERIA DE ACEITE HIDRAULICO ACCESORIOS

HYDRAULIKLEITUNG ZUBEHÖR

CANALISATIONS HYDRAULIQUE ACCESSOIRES

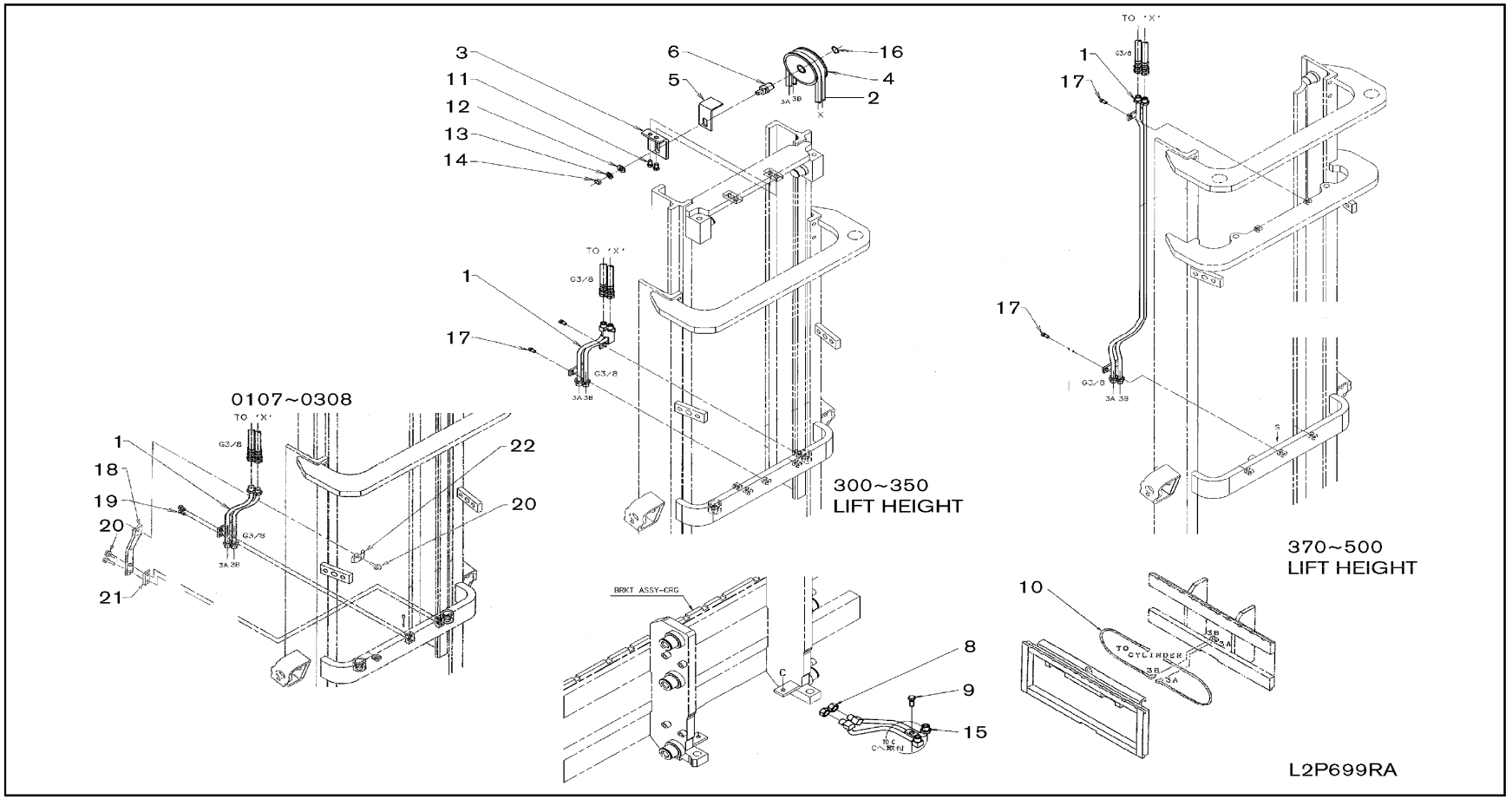

699R-1

SEC. 699R

HYDRAULIC OIL PIPING (ATTACHMENT) (2W-INNER CHAIN, 3 SPOOL 3.5TON)

TUBERIA DE ACEITE HIDRAULICO ACCESORIOS

HYDRAULIKLEITUNG ZUBEHÖR

CANALISATIONS HYDRAULIQUE ACCESSOIRES

NC	S	KEY NO.	LEV	PART NO.	PART NAME	SPECIFICATION	QTY	APPLIED DATE	ICANF	FORMER PART NO.	KD	APPLIED MODEL 01 02 03 04 05 06 07 08 09 10 11 12 13 14 15 16 17 18 19 20 21 22 23 24 25 26 27 28 29
		1 01	1	**69740-GE40A**	PIPE ASSY-MAST	300+330	01	0107-0308				✱✱✱✱
		02	1	**69740-GG00A**		300+330	01	0308-				✱✱✱✱
		03	1	**69740-GE46A**		350	01	0107-				✱✱✱✱
		04	1	**69740-GE47A**		370+400+450+500	01	0107-				✱✱✱✱
		2 01	1	**69735-GE44A**	HOSE ASSY-MAST	300 L=2775	02	0107-				✱✱✱✱
		02	1	**69735-GE45A**		330 L=3050	02	0107-				✱✱✱✱
		03	1	**69735-GE41A**		350 L=2375	02	0107-				✱✱✱✱
		04	1	**69735-GE43A**		370 L=2575	02	0107-				✱✱✱✱
		05	1	**69735-GE46A**		400 L=3075	02	0107-				✱✱✱✱
		06	1	**69735-GE47A**		450 L=3575	02	0107-				✱✱✱✱
		07	1	**69735-GE48A**		500 L=4050	02	0107-				✱✱✱✱
		3 01	1	**69760-03H00**	BRACKET ASSY-PULLEY		01	0107-				✱✱✱✱
		4 01	1	**59395-FJ40A**	PULLEY ASSY-HOSE		01	0107-				✱✱✱✱
		5 01	1	**69764-FF000**	PROTECTOR-HOSE PULLEY		01	0107-				✱✱✱✱
		6 01	1	**69763-FJ40A**	SHAFT-PULLEY		01	0107-				✱✱✱✱
		8 01	1	**69395-L1100**	PLUG ASSY		02	0107-				✱✱✱✱
		9 01	1	**69976-GG40A**	PIPE ASSY-A		01	0107-				✱✱✱✱
		10 01	1	**69735-0G000**	HOSE ASSY-RUBBER		02	0107-				✱✱✱✱
		11 01	1	**08124-0201E**	SCREW-HHM M10-1.25X20 W/PW		02	0107-				✱✱✱✱
		12 01	1	**08915-4441A**	WASHER-FLAT M14		01	0107-				✱✱✱✱
		13 01	1	**08915-1441A**	WASHER-LOCK SPLIT M14		01	0107-				✱✱✱✱
		14 01	1	**08911-3441A**	NUT-HEX JAM M14-1.5 4N		01	7 00-				✱✱✱✱
		15 01	1	**08114-0301B**	SCREW-HHM M10-1.25X30 W/LKW		01	0107-				✱✱✱✱
		16 01	1	**00922-12500**	RING-SNAP		01	0107-				✱✱✱✱
		17 01	1	**08120-8161F**	SCREW-HHM M8-1.25X16 W/LK & PW		02	0107-				✱✱✱✱
		18 01	1	**69681-GE40B**	BRACKET-PIPE SUPPORT		01	0107-0308				✱✱✱✱
		19 01	1	**08120-8161F**	SCREW-HHM M8-1.25X16 W/LK & PW		02	0107-0308				✱✱✱✱
		20 01	1	**08120-8251F**	SCREW-HHM M8-1.25X25 W/LK & PW		03	0107-0308				✱✱✱✱
		21 01	1	**69939-GE40B**	SPACER		01	0107-0308				✱✱✱✱
		22 01	1	**69747-10H00**	CLAMP-PIPE		01	0107-0308				✱✱✱✱

SEC. 699S

HYDRAULIC OIL PIPING (ATTACHMENT) (2W-INNER CHAIN, 4 SPOOL 3.5TON)

TUBERIA DE ACEITE HIDRAULICO ACCESORIOS

HYDRAULIKLEITUNG ZUBEHÖR

CANALISATIONS HYDRAULIQUE ACCESSOIRES

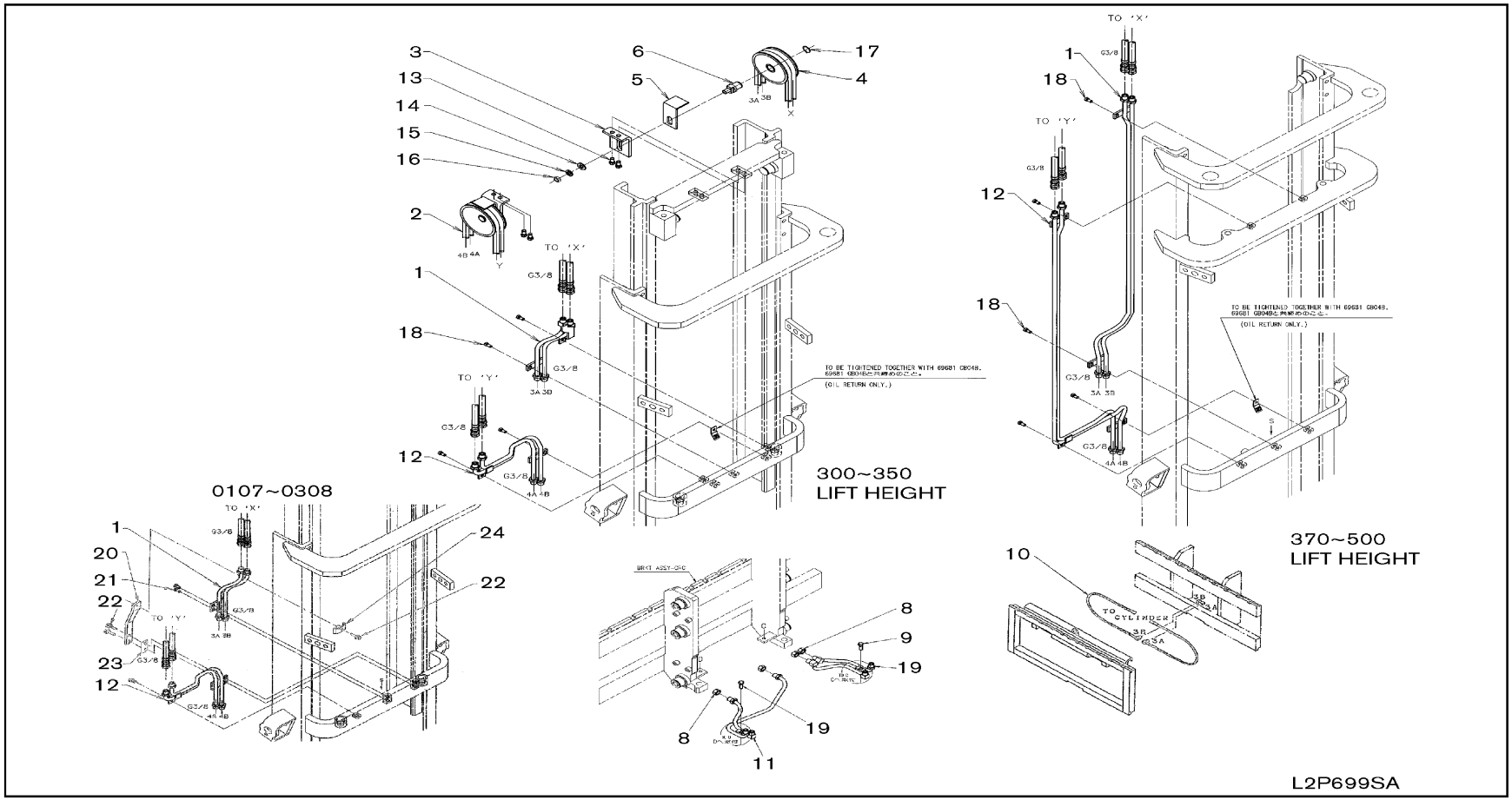

699S-1

SEC. 699S

HYDRAULIC OIL PIPING (ATTACHMENT) (2W-INNER CHAIN, 4 SPOOL 3.5TON)

TUBERIA DE ACEITE HIDRAULICO ACCESORIOS

HYDRAULIKLEITUNG ZUBEHÖR

CANALISATIONS HYDRAULIQUE ACCESSOIRES

NC	S	KEY NO.	LEV	PART NO.	PART NAME	SPECIFICATION	QTY	APPLIED DATE	ICANF	FORMER PART NO.	KD	APPLIED MODEL 01 02 03 04 05 06 07 08 09 10 11 12 13 14 15 16 17 18 19 20 21 22 23 24 25 26 27 28 29
		1	01	1	**69740-GE40A**	PIPE ASSY-MAST	300+330	01	0107-0308			✱✱✱✱
			02	1	**69740-GG00A**		300+330	01	0308-			✱✱✱✱
			03	1	**69740-GE46A**		350	01	0107-			✱✱✱✱
			04	1	**69740-GE47A**		370+400+450+500	01	0107-			✱✱✱✱
		2	01	1	**69735-GE44A**	HOSE ASSY-MAST	300 L=2775	04	0107-			✱✱✱✱
			02	1	**69735-GE45A**		330 L=3050	04	0107-			✱✱✱✱
			03	1	**69735-GE41A**		350 L=2375	04	0107-			✱✱✱✱
			04	1	**69735-GE43A**		370 L=2575	04	0107-			✱✱✱✱
			05	1	**69735-GE46A**		400 L=3075	04	0107-			✱✱✱✱
			06	1	**69735-GE47A**		450 L=3575	04	0107-			✱✱✱✱
			07	1	**69735-GE48A**		500 L=4050	04	0107-			✱✱✱✱
		3	01	1	**69760-03H00**	BRACKET ASSY-PULLEY		02	0107-			✱✱✱✱
		4	01	1	**59395-FJ40A**	PULLEY ASSY-HOSE		02	0107-			✱✱✱✱
		5	01	1	**69764-FF000**	PROTECTOR-HOSE PULLEY		02	0107-			✱✱✱✱
		6	01	1	**69763-FJ40A**	SHAFT-PULLEY		02	0107-			✱✱✱✱
		8	01	1	**69395-L1100**	PLUG ASSY		04	0107-			✱✱✱✱
		9	01	1	**69976-GG40A**	PIPE ASSY-A		01	0107-			✱✱✱✱
		10	01	1	**69735-0G000**	HOSE ASSY-RUBBER		02	0107-			✱✱✱✱
		11	01	1	**69978-GG40A**	PIPE ASSY-B		01	0107-			✱✱✱✱
		12	01	1	**69840-GE40A**	PIPE ASSY-MAST	300+330	01	0107-			✱✱✱✱
			02	1	**69840-GE46A**		350	01	0107-			✱✱✱✱
			03	1	**69840-GE47A**		370+400+450+500	01	0107-			✱✱✱✱
		13	01	1	**08124-0201E**	SCREW-HHM M10-1.25X20 W/PW		04	0107-			✱✱✱✱
		14	01	1	**08915-4441A**	WASHER-FLAT M14		02	0107-			✱✱✱✱
		15	01	1	**08915-1441A**	WASHER-LOCK SPLIT M14		02	0107-			✱✱✱✱
		16	01	1	**08911-3441A**	NUT-HEX JAM M14-1.5 4N		02	0107-			✱✱✱✱
		17	01	1	**00922-12500**	RING-SNAP		02	0107-			✱✱✱✱
		18	01	1	**08120-8161F**	SCREW-HHM M8-1.25X16 W/LK & PW	300+330+350	04	0107-			✱✱✱✱
			02	1	**08120-8161F**		370+400+450+500	05	0107-			✱✱✱✱
		19	01	1	**08114-0301B**	SCREW-HHM M10-1.25X30 W/LKW		02	0107-			✱✱✱✱
		20	01	1	**69681-GE40B**	BRACKET-PIPE SUPPORT		01	0107-0308			✱✱✱✱
		21	01	1	**08120-8161F**	SCREW-HHM M8-1.25X16 W/LK & PW		03	0107-0308			✱✱✱✱
		22	01	1	**08120-8251F**	SCREW-HHM M8-1.25X25 W/LK & PW		03	0107-0308			✱✱✱✱
		23	01	1	**69939-GE40B**	SPACER		01	0107-0308			✱✱✱✱
		24	01	1	**69747-10H00**	CLAMP-PIPE		01	0107-0308			✱✱✱✱

SEC. 699T

HYDRAULIC OIL PIPING (ATTACHMENT) (NML 2W-INNER CHAIN 2.0, 2.5 & 3.0TON-FROM MAY 2008)

TUBERIA DE ACEITE HIDRAULICO ACCESORIOS

HYDRAULIKLEITUNG ZUBEHÖR

CANALISATIONS HYDRAULIQUE ACCESSOIRES

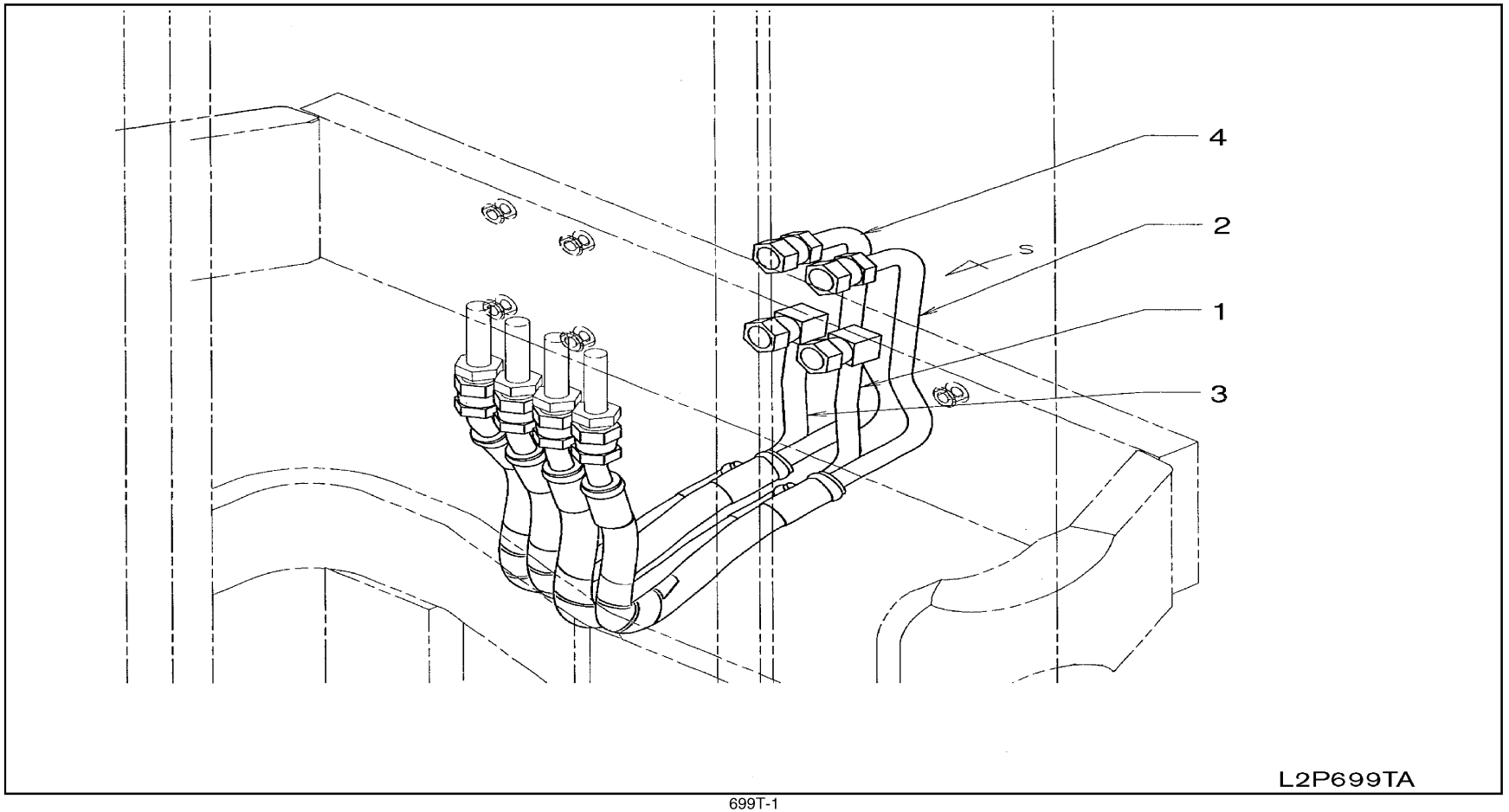

SEC. 699T

HYDRAULIC OIL PIPING (ATTACHMENT) (NML 2W-INNER CHAIN 2.0, 2.5 & 3.0TON-FROM MAY 2008)

TUBERIA DE ACEITE HIDRAULICO ACCESORIOS

HYDRAULIKLEITUNG ZUBEHÖR

CANALISATIONS HYDRAULIQUE ACCESSOIRES

NC	S	KEY NO.	LEV	PART NO.	PART NAME	SPECIFICATION	QTY	APPLIED DATE	ICANF	FORMER PART NO.	KD	APPLIED MODEL 01 02 03 04 05 06 07 08 09 10 11 12 13 14 15 16 17 18 19 20 21 22 23 24 25 26 27 28 29
		1 01	1	**69710-GG00A**	PIPE & HOSE ASSY	L=415 VLVX3A	01	0508-				* * * * * * * * * * * * * * * * * * *
		02	1	**69710-GG30A**		L=435 VLVX3A	01	0508-				* * * * * * *
		2 01	1	**69714-GG00A**	PIPE & HOSE ASSY	L=415 VLVX3B	01	0508-				* * * * * * * * * * * * * * * * * * *
		02	1	**69714-GG30A**		L=435 VLVX3B	01	0508-				* * * * * * *
		3 01	1	**69810-GG00A**	PIPE & HOSE ASSY	L=375 VLVX4A	01	0508-				* * * * * * * * * * * * * * * * * * *
		02	1	**69810-GG30A**		L=390 VLVX4A	01	0508-				* * * * * * *
		4 01	1	**69814-GG00A**	PIPE & HOSE ASSY	L=380 VLVX4A	01	0508-				* * * * * * * * * * * * * * * * * * *
		02	1	**69814-GG30A**		L=400 VLVX4A	01	0508-				* * * * * * *

SEC. 699U

HYDRAULIC OIL PIPING (ATTACHMENT) (NML 2W-INNER CHAIN, 3 SPL 2.0, 2.5 & 3.0TON-FROM MAY 2008)

TUBERIA DE ACEITE HIDRAULICO ACCESORIOS

HYDRAULIKLEITUNG ZUBEHÖR

CANALISATIONS HYDRAULIQUE ACCESSOIRES

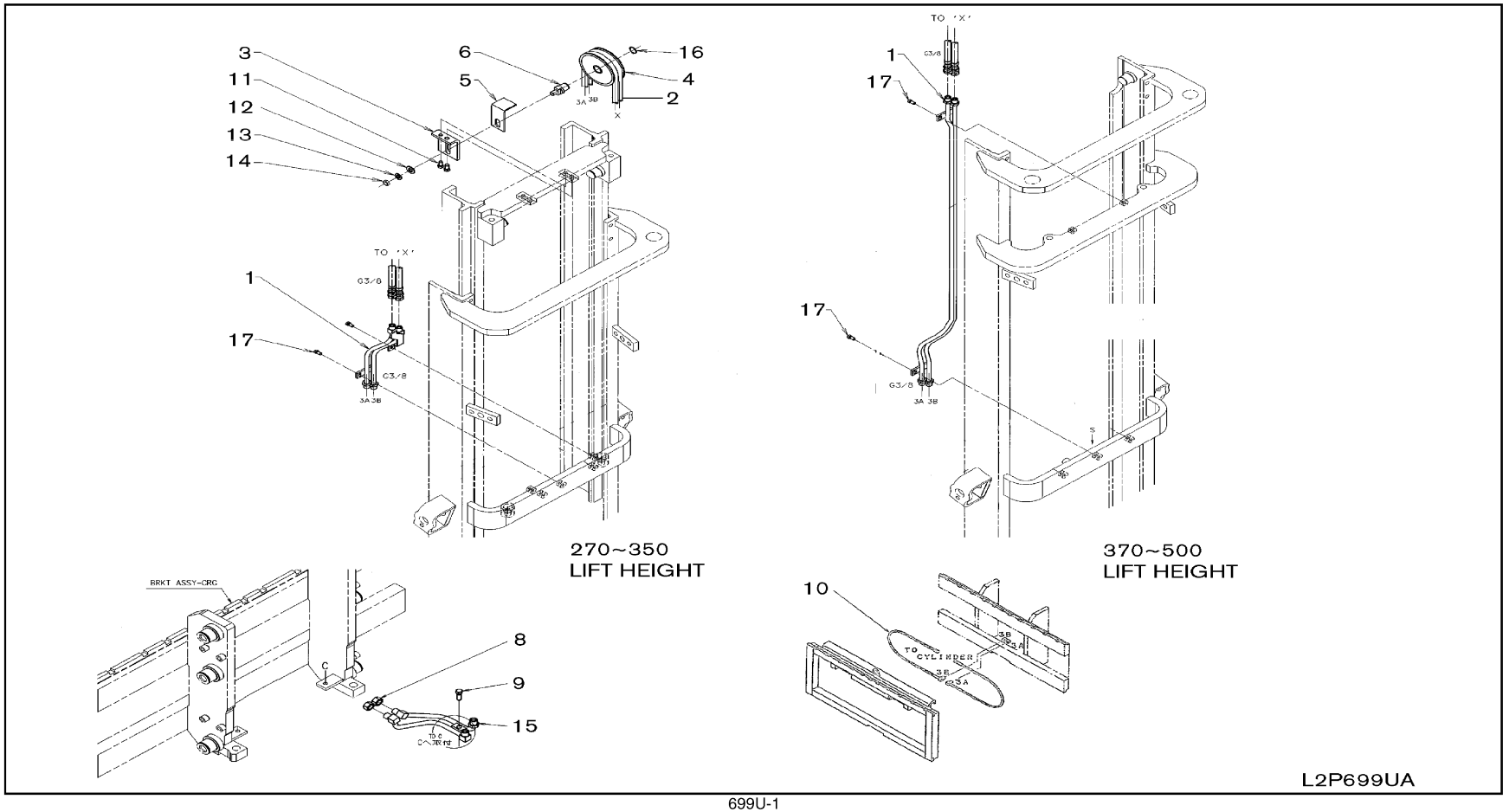

SEC. 699U

HYDRAULIC OIL PIPING (ATTACHMENT) (NML 2W-INNER CHAIN, 3 SPL 2.0, 2.5 & 3.0TON-FROM MAY 2008)

TUBERIA DE ACEITE HIDRAULICO ACCESORIOS

HYDRAULIKLEITUNG ZUBEHÖR

CANALISATIONS HYDRAULIQUE ACCESSOIRES

NC	S	KEY NO.	LEV	PART NO.	PART NAME	SPECIFICATION	QTY	APPLIED DATE	ICANF	FORMER PART NO.	KD	APPLIED MODEL 01 02 03 04 05 06 07 08 09 10 11 12 13 14 15 16 17 18 19 20 21 22 23 24 25 26 27 28 29
		1	01	1	**69740-GG00A**	PIPE ASSY-MAST	270+300+330+350	01	0508-			* *
			02	1	**69740-GE46A**		370	01	0508-			* *
			03	1	**69740-GE47A**		400+450+500	01	0508-			* *
		2	01	1	**69735-GE40A**	HOSE ASSY-MAST	270 L=2175	02	0508-			* *
			02	1	**69735-GE42A**		300 L=2475	02	0508-			* *
			03	1	**69735-GE44A**		330 L=2775	02	0508-			* *
			04	1	**69735-GE45A**		350 L=3050	02	0508-			* *
			05	1	**69735-GE41A**		370 L=2375	02	0508-			* *
			06	1	**69735-GE43A**		400 L=2575	02	0508-			* *
			07	1	**69735-GE46A**		450 L=3075	02	0508-			* *
			08	1	**69735-GE47A**		500 L=3575	02	0508-			* *
		3	01	1	**69760-03H00**	BRACKET ASSY-PULLEY		01	0508-			* *
		4	01	1	**59395-FJ40A**	PULLEY ASSY-HOSE		01	0508-			* *
		5	01	1	**69764-FF000**	PROTECTOR-HOSE PULLEY		01	0508-			* *
		6	01	1	**69763-FJ40A**	SHAFT-PULLEY		01	0508-			* *
		8	01	1	**69395-L1100**	PLUG ASSY		02	0508-			* *
		9	01	1	**69976-GE40A**	PIPE ASSY-A		01	0508-			* *
			02	1	**69976-GG00A**			01	0508-			* *
		10	01	1	**69735-0G000**	HOSE ASSY-RUBBER		02	0508-			* *
		11	01	1	**08124-0201E**	SCREW-HHM M10-1.25X20 W/PW		02	0508-			* *
		12	01	1	**08915-4441A**	WASHER-FLAT M14		01	0508-			* *
		13	01	1	**08915-1441A**	WASHER-LOCK SPLIT M14		01	0508-			* *
		14	01	1	**08911-3441A**	NUT-HEX JAM M14-1.5 4N		01	0508-			* *
		15	01	1	**08114-0301B**	SCREW-HHM M10-1.25X30 W/LKW		01	0508-			* *
		16	01	1	**00922-12500**	RING-SNAP		01	0508-			* *
		17	01	1	**08120-8161F**	SCREW-HHM M8-1.25X16 W/LK & PW		02	0508-			* *

SEC. 699V

HYDRAULIC OIL PIPING (ATTACHMENT) (NML 2W-INNER CHAIN, 4 SPL 2.0, 2.5 & 3.0TON-FROM MAY 2008)

TUBERIA DE ACEITE HIDRAULICO ACCESORIOS

HYDRAULIKLEITUNG ZUBEHÖR

CANALISATIONS HYDRAULIQUE ACCESSOIRES

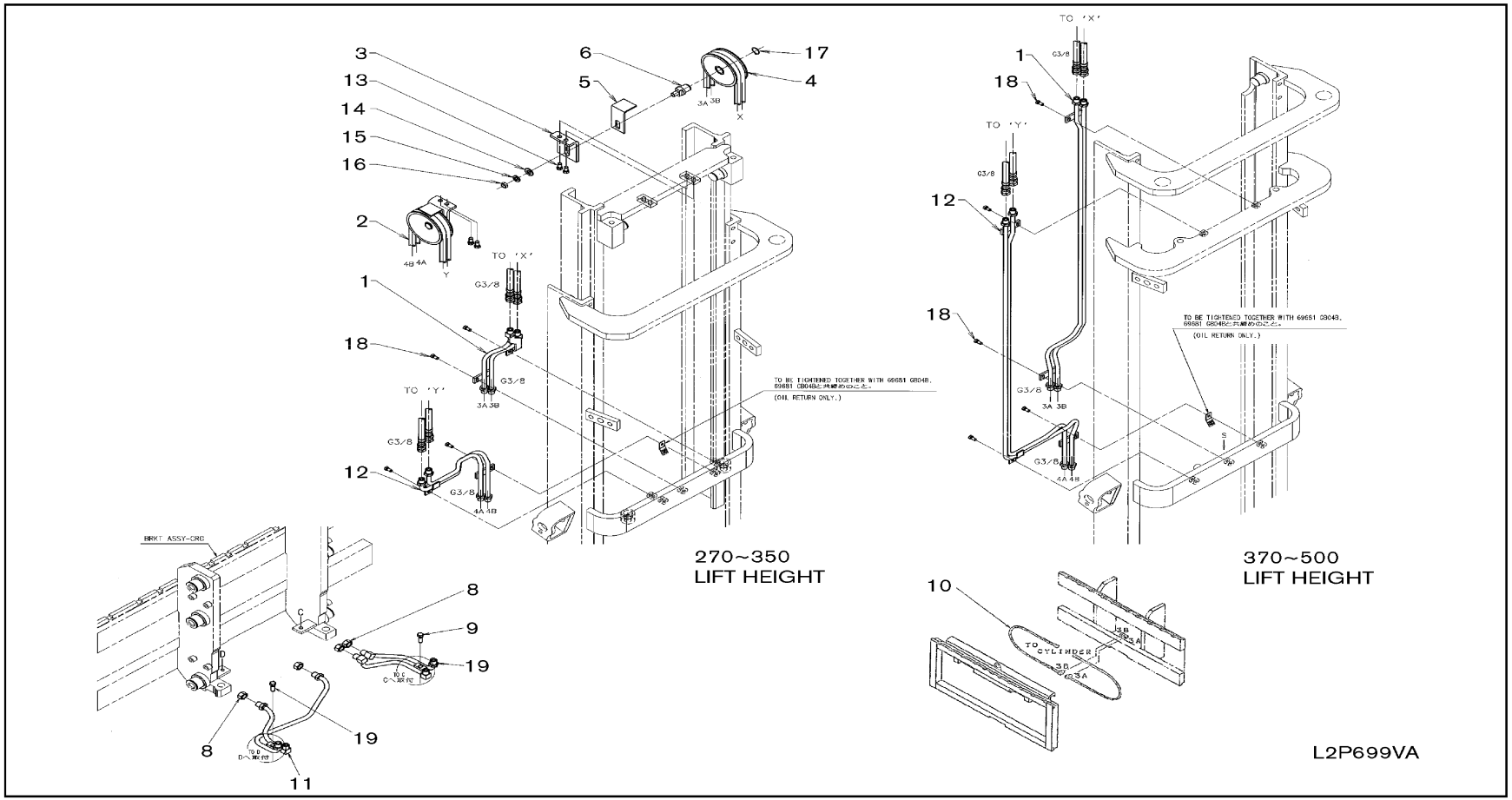

SEC. 699V

HYDRAULIC OIL PIPING (ATTACHMENT) (NML 2W-INNER CHAIN, 4 SPL 2.0, 2.5 & 3.0TON-FROM MAY 2008)

TUBERIA DE ACEITE HIDRAULICO ACCESORIOS

HYDRAULIKLEITUNG ZUBEHÖR

CANALISATIONS HYDRAULIQUE ACCESSOIRES

NC	S	KEY NO.	LEV	PART NO.	PART NAME	SPECIFICATION	QTY	APPLIED DATE	ICANF	FORMER PART NO.	KD	APPLIED MODEL 01 02 03 04 05 06 07 08 09 10 11 12 13 14 15 16 17 18 19 20 21 22 23 24 25 26 27 28 29
		1	01	1	**69740-GG00A**	PIPE ASSY-MAST	270+300+330+350	01	0508-			* *
			02	1	**69740-GE46A**		370	01	0508-			* *
			03	1	**69740-GE47A**		400+450+500	01	0508-			* *
		2	01	1	**69735-GE40A**	HOSE ASSY-MAST	270 L=2175	04	0508-			* *
			02	1	**69735-GE42A**		300 L=2475	04	0508-			* *
			03	1	**69735-GE44A**		330 L=2775	04	0508-			* *
			04	1	**69735-GE45A**		350 L=3050	04	0508-			* *
			05	1	**69735-GE41A**		370 L=2375	04	0508-			* *
			06	1	**69735-GE43A**		400 L=2575	04	0508-			* *
			07	1	**69735-GE46A**		450 L=3075	04	0508-			* *
			08	1	**69735-GE47A**		500 L=3575	04	0508-			* *
		3	01	1	**69760-03H00**	BRACKET ASSY-PULLEY		02	0508-			* *
		4	01	1	**59395-FJ40A**	PULLEY ASSY-HOSE		02	0508-			* *
		5	01	1	**69764-FF000**	PROTECTOR-HOSE PULLEY		02	0508-			* *
		6	01	1	**69763-FJ40A**	SHAFT-PULLEY		02	0508-			* *
		8	01	1	**69395-L1100**	PLUG ASSY		04	0508-			* *
		9	01	1	**69976-GE40A**	PIPE ASSY-A		01	0508-			* * * * * * * * * * * * * * * * * *
			02	1	**69976-GG00A**			01	0508-			* * * * * * *
		10	01	1	**69735-0G000**	HOSE ASSY-RUBBER		02	0508-			* *
		11	01	1	**69978-GE40A**	PIPE ASSY-B		01	0508-			* * * * * * * * * * * * * * * * * *
			02	1	**69978-GG00A**			01	0508-			* * * * * * *
		12	01	1	**69840-GE40A**	PIPE ASSY-MAST	270+300+330+350	01	0508-			* *
			02	1	**69840-GE46A**		370	01	0508-			* *
			03	1	**69840-GE47A**		400+450+500	01	0508-			* *
		13	01	1	**08124-0201E**	SCREW-HHM M10-1.25X20 W/PW		04	0508-			* *
		14	01	1	**08915-4441A**	WASHER-FLAT M14		02	0508-			* *
		15	01	1	**08915-1441A**	WASHER-LOCK SPLIT M14		02	0508-			* *
		16	01	1	**08911-3441A**	NUT-HEX JAM M14-1.5 4N		02	0508-			* *
		17	01	1	**00922-12500**	RING-SNAP		02	0508-			* *
		18	01	1	**08120-8161F**	SCREW-HHM M8-1.25X16 W/LK & PW	270+300+330+350	04	0508-			* *
			02	1	**08120-8161F**		370+400+450+500	05	0508-			* *
		19	01	1	**08114-0301B**	SCREW-HHM M10-1.25X30 W/LKW		02	0508-			* *

SEC. 737

OVER HEAD GUARD

PROTECTOR SUPERIOR

ÜBERKOPFSCHUTZBÜGEL

PROTECTION DE TETE

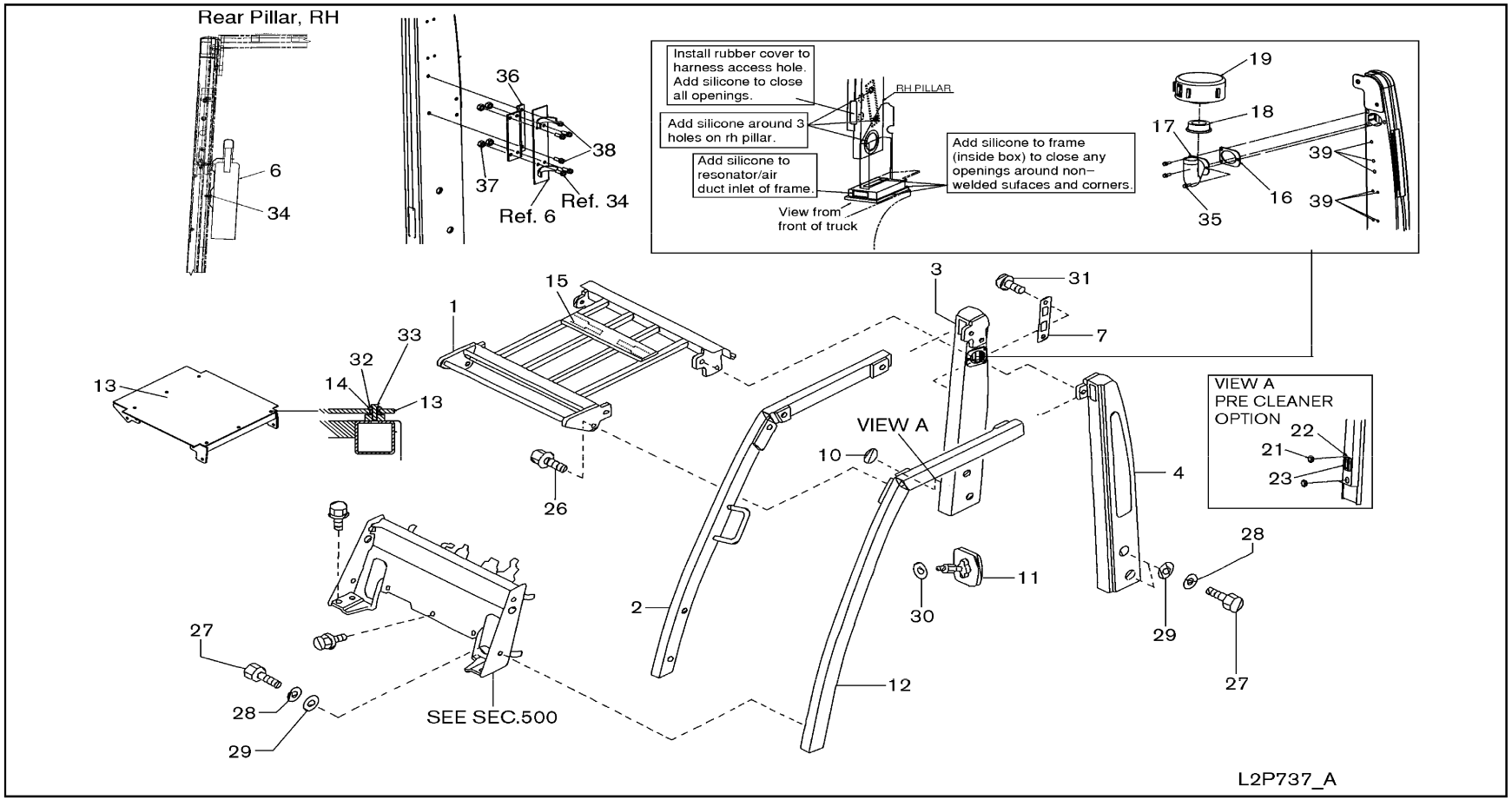

SEC. 737

OVER HEAD GUARD

PROTECTOR SUPERIOR

ÜBERKOPFSCHUTZBÜGEL

PROTECTION DE TETE

NC	S	KEY NO.	LEV	PART NO.	PART NAME	SPECIFICATION	QTY	APPLIED DATE	TCANF	FORMER PART NO.	KD	APPLIED MODEL 01 02 03 04 05 06 07 08 09 10 11 12 13 14 15 16 17 18 19 20 21 22 23 24 25 26 27 28 29
		1	01	1	**73730-FB401**	FRAME ASSY-OVER HEAD		01	0107-			○○○○○○○○○○○○○○○○○○○○○○○○○○○○○
			02	1	**73730-FC491**		F/RAIN GUARD	01	0107-			●●●●●●●●●●●●●●●●●●●●●●●●●●●●●
		2	01	1	**73710-FB400**	GUARD ASSY-FRONT PILLER RH		01	0107-			○○○○○○○○○○○○○○○○○○○○○○○○○○○○○
		3	01	1	**73760-FC400**	GUARD ASSY-REAR PILLER RH		01	0107-1007			○○○○○○○○○○○○○○○○○○○○○○○○○○○○○
			02	1	**73760-FC40A**			01	1007-0411			○○○○○○○○○○○○○○○○○○○○○○○○○○○○○
			03	1	**73760-FW70A**			01	0411-			○○○○○○○○○○○○○○○○○○○○○○○○○○○○○
			04	1	**73760-FC494**		F/FIRE EXTINGUISHER	01	0107-0907			●●●●●●●●●●●●●●●●●●●●●●●●●●●●●
			05	1	**73760-FC496**		F/FIRE EXTINGUISHER	01	0907-0411			●●●●●●●●●●●●●●●●●●●●●●●●●●●●●
			06	1	**73760-FW70B**		F/FIRE EXTINGUISHER	01	0411-			●●●●●●●●●●●●●●●●●●●●●●●●●●●●●
			07	1	**73760-FC495**		F/PRECLEANER	01	0107-1107			●●●●●●●●●●●●●●●●●●●●●●●●●●●●●
			08	1	**73760-FC497**		F/PRECLEANER	01	1107-0411			●●●●●●●●●●●●●●●●●●●●●●●●●●●●●
			09	1	**73760-FW70C**		F/PRECLEANER	01	0411-			●●●●●●●●●●●●●●●●●●●●●●●●●●●●●
		4	01	1	**73761-FC400**	GUARD ASSY-REAR PILLER LH		01	0107-0411			○○○○○○○○○○○○○○○○○○○○○○○○○○○○○
			02	1	**73761-FW70A**			01	0411-			○○○○○○○○○○○○○○○○○○○○○○○○○○○○○
		6	01	1	**65504-41H50**	FIRE EXTINGUISHER		01	0107-			●●●●●●●●●●●●●●●●●●●●●●●●●●●●●
		7	01	1	**76818-11H00**	FINISHER-AIR INLET		01	0107-1007			○○○○○○○○○○○○○○○○○○○○○○○○○○○○○
		10	01	1	**64890-U7400**	GROMMET	RH ONLY	02	0107-			○○○○○○○○○○○○○○○○○○○○○○○○○○○○○
		11	01	1	**96303-11H00**	MIRROR ASSY-BACK	F/OUTSIDE MIRROR-RH&LH	02	0107-			●●●●●●●●●●●●●●●●●●●●●●●●●●●●●
		12	01	1	**73711-FB400**	GUARD ASSY-FRONT PILLER LH		01	0107-			○○○○○○○○○○○○○○○○○○○○○○○○○○○○○
		13	01	1	**73795-FB490**	COVER-CLEAR OHG	F/RAIN GUARD	01	0107-			●●●●●●●●●●●●●●●●●●●●●●●●●●●●●
			02	1	**73795-FV485**	COVER-FORMED OHG	F/RAIN GUARD MOUNT W/TY-WRAPS	01	0107-			●●●●●●●●●●●●●●●●●●●●●●●●●●●●●
		14	01	1	**01651-FC085**	GROMMET	F/RAIN GUARD	06	0107-			●●●●●●●●●●●●●●●●●●●●●●●●●●●●●
		15	01	1	**65381-43K01**	SEAL-RUBBER	F/RAIN GUARD	02	0107-			●●●●●●●●●●●●●●●●●●●●●●●●●●●●●
		16	01	1	**16558-FB485**	PRECLEANER GASKET, INTAKE	F/PRECLEANER	01	0107-			●●●●●●●●●●●●●●●●●●●●●●●●●●●●●
		17	01	1	**16554-FB485**	PRECLEANER WELDMENT, INTAKE	F/PRECLEANER	01	0107-			●●●●●●●●●●●●●●●●●●●●●●●●●●●●●
		18	01	1	**16523-FB486**	PRECLEANER REDUCER RUB	F/PRECLEANER	01	0107-			●●●●●●●●●●●●●●●●●●●●●●●●●●●●●
		19	01	1	**16526-FB485**	PRECLEANER ASSY	F/PRECLEANER	01	0107-			●●●●●●●●●●●●●●●●●●●●●●●●●●●●●
		21	01	1	**93161-FE300**	GROMMET	F/PRECLEANER	02	0107-			●●●●●●●●●●●●●●●●●●●●●●●●●●●●●
		22	01	1	**65381-FB486**	SEAL-RUBBER 26MM	F/PRECLEANER	02	0107-			●●●●●●●●●●●●●●●●●●●●●●●●●●●●●
		23	01	1	**65381-FB485**	SEAL-RUBBER 80MM	F/PRECLEANER	02	0107-			●●●●●●●●●●●●●●●●●●●●●●●●●●●●●
		26	01	1	**08124-2401F**	SCREW-HHM M12-1.25X40 7T		08	0107-			○○○○○○○○○○○○○○○○○○○○○○○○○○○○○
		27	01	1	**08124-6401A**	SCREW-HHM M16-1.5X40 7T		08	0107-			○○○○○○○○○○○○○○○○○○○○○○○○○○○○○
		28	01	1	**08915-2461A**	WASHER-LOCK SPLIT M16 HEAVY		08	0107-			○○○○○○○○○○○○○○○○○○○○○○○○○○○○○
		29	01	1	**08915-4461A**	WASHER-FLAT M16		08	0107-			○○○○○○○○○○○○○○○○○○○○○○○○○○○○○
		30	01	1	**08915-4381A**	WASHER-FLAT M8	F/OUTSIDE MIRROR	02	0107-			●●●●●●●●●●●●●●●●●●●●●●●●●●●●●
		31	01	1	**08310-51212**	SCREW-PHM M5-.8X12		02	0107-1007			○○○○○○○○○○○○○○○○○○○○○○○○○○○○○
		32	01	1	**08915-43610**	WASHER-FLAT M6	F/RAIN GUARD	06	0107-			●●●●●●●●●●●●●●●●●●●●●●●●●●●●●

SEC. 737

OVER HEAD GUARD

PROTECTOR SUPERIOR

ÜBERKOPFSCHUTZBÜGEL

PROTECTION DE TETE

NC	S	KEY NO.	LEV	PART NO.	PART NAME	SPECIFICATION	QTY	APPLIED DATE	TCANF	FORMER PART NO.	KD
		33	01	1	**08110-61610**	SCREW-HHM M6-1.0X16	F/RAIN GUARD	06	0107-		
		34	01	1	**08360-61626**	SCREW-HH CR M6-1.0X16 W/LK & PW	F/FIRE EXTINGUISHER	04	0107-		
		35	01	1	**08360-82526**	SCREW-HHM M8-1.25X25 W/LK & PW	F/PRECLEANER	03	0107-		
		36	01	1	**65527-FB800**	BRACKET-FIRE EXT CAB MOUNTED	F/SWIVEL SEAT W/FIRE EXTINGUISHER	01	0107-		
		37	01	1	**08911-10637**	NUT-HEX W/CON SPRW M6-1.0	F/SWIVEL SEAT W/FIRE EXTINGUISHER	04	0107-		
		38	01	1	**08360-82526**	SCREW-HHM M8-1.25X25 W/LK & PW	F/SWIVEL SEAT W/FIRE EXTINGUISHER	02	0107-		
		39	01	1	**64892-W5000**	COVER-HOLE		AR	0107-		

APPLIED MODEL

01	02	03	04	05	06	07	08	09	10	11	12	13	14	15	16	17	18	19	20	21	22	23	24	25	26	27	28	29
MI PAA 20 JV	MI PAA 20 DV	MI PAA 20 LV	MI PAA 20 SV	MI PAA 20 JV	MI UAA 20 DV	MI UAA 20 LV	MI UAA 20 SV	MI YAA 20 LV	MI PAA 25 JV	MI PAA 25 DV	MI PAA 25 LV	MI PAA 25 SV	MI UAA 25 JV	MI UAA 25 DV	MI UAA 25 LV	MI UAA 25 SV	MI YAA 25 LV	MI UAA 28 JV	MI UAA 28 DV	MI UAA 28 LV	MI GAA 30 JV	MI GAA 30 DV	MI GAA 30 LV	MI GAA 30 JV	MI YAA 35 DV	MI UAA 35 LV	MI GAA 35 LV	MI GAA 35 LV
*	*	*	*	*	*	*	*	*	*	*	*	*	*	*	*	*	*	*	*	*	*	*	*	*	*	*	*	*
*	*	*	*	*	*	*	*	*	*	*	*	*	*	*	*	*	*	*	*	*	*	*	*	*	*	*	*	*
*	*	*	*	*	*	*	*	*	*	*	*	*	*	*	*	*	*	*	*	*	*	*	*	*	*	*	*	*
*	*	*	*	*	*	*	*	*	*	*	*	*	*	*	*	*	*	*	*	*	*	*	*	*	*	*	*	*
*	*	*	*	*	*	*	*	*	*	*	*	*	*	*	*	*	*	*	*	*	*	*	*	*	*	*	*	*
*	*	*	*	*	*	*	*	*	*	*	*	*	*	*	*	*	*	*	*	*	*	*	*	*	*	*	*	*
o	o	o	o	o	o	o	o	o	o	o	o	o	o	o	o	o	o	o	o	o	o	o	o	o	o	o	o	o

NOTE

SEC. 740

FLOOR PANEL

PANEL DEL PISO

BODENBLECH

PANNEAU DE PLANCHER

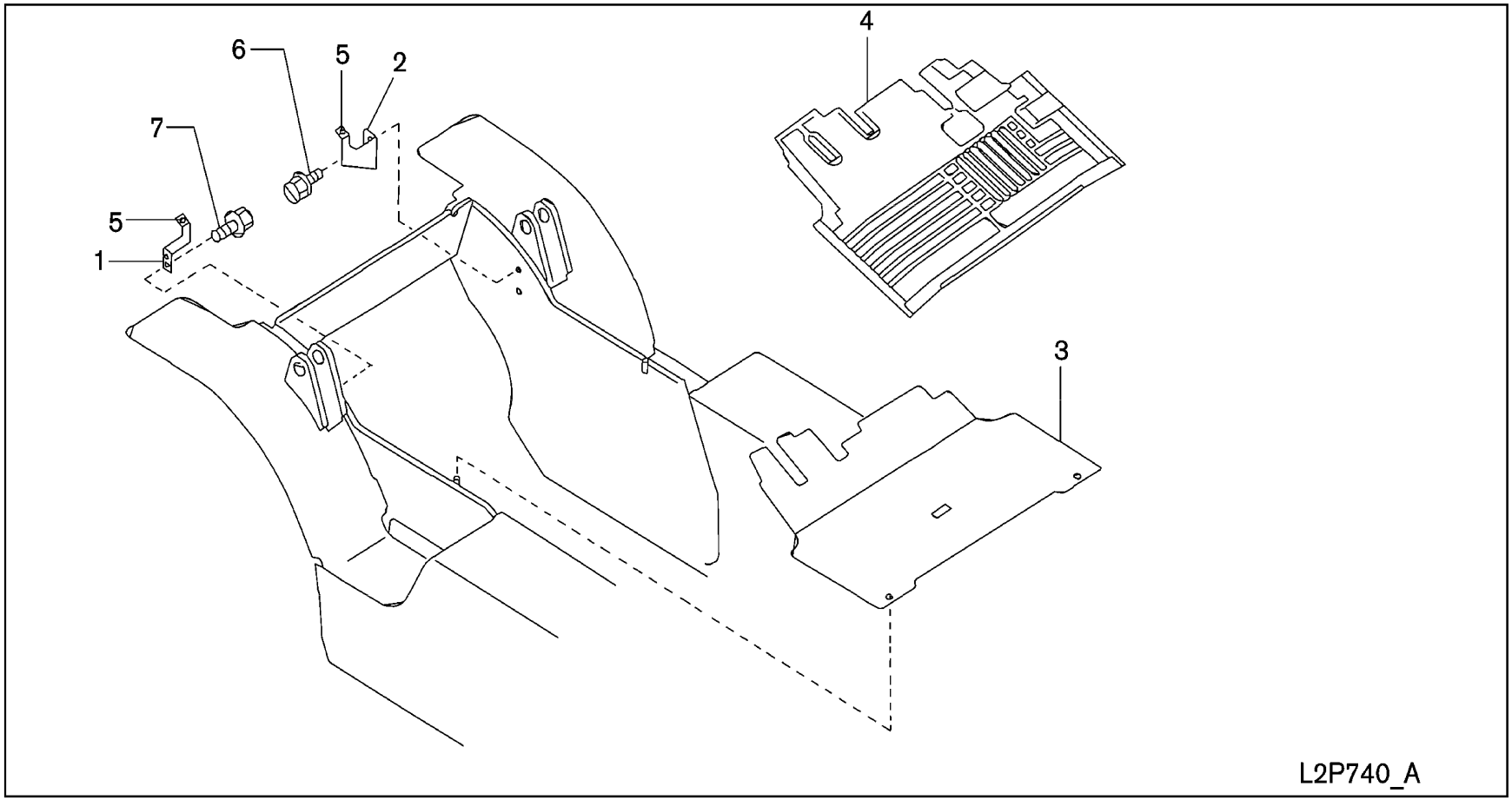

SEC. 740

FLOOR PANEL

PANEL DEL PISO

BODENBLECH

PANNEAU DE PLANCHER

NC	S	KEY NO.	LEV	PART NO.	PART NAME	SPECIFICATION	QTY	APPLIED DATE	ICANF	FORMER PART NO.	KD
		1 01	1	**74317-FK110**	BRACKET ASSY		01	0107-			
		2 01	1	**74317-FK105**	BRACKET ASSY		01	0107-0807			
		02	1	**74317-FV40A**			01	0807-1207			
		03	1	**74317-FV40B**			01	1207-			
		3 01	1	**74301-FB300**	BOARD ASSY-FRONT FLOOR		01	0107-			
		02	1	**74301-FK101**		F/FLR MAT	01	0107-			
		4 01	1	**74901-FK101**	MAT-FLOOR	F/FLR MAT	01	0107-			
		5 01	1	**46584-S0100**	STOPPER-PEDAL		02	0107-			
		6 01	1	**08124-0161F**	SCREW-HHM M10-1.25X16 W/LK & PW		02	0107-0807			
		02	1	**08120-8161F**	SCREW-HHM M8-1.25X16 W/LK & PW		02	0807-			
		7 01	1	**08120-61633**	SCREW-HHM M6-1.0X16 W/LK & PW		02	0107-			

APPLIED MODEL

01	02	03	04	05	06	07	08	09	10	11	12	13	14	15	16	17	18	19	20	21	22	23	24	25	26	27	28	29
MIPA200JVV	MIPA200DVV	MIPA200LVS	MIPA200LVV	MIPA200JVV	MIUA200DVV	MIUA200LVV	MIUA200LVS	MIUA200LVV	MIYA205JVV	MIPA205DVV	MIPA205LVV	MIPA205LVS	MIUA205JVV	MIUA205DVV	MIUA205LVV	MIUA205LVS	MIYA205LVV	MIUJA208JVV	MIUJA208DVV	MIUGA208LVV	MIUGA300JVV	MIUGA300DVV	MIUGA300LVV	MIYGA300LVV	MIUGA335JVV	MIUGA335DVV	MIUGA335LVV	MIYGA335LVV
○	○	○	○	○	○	○	○	○	○	○	○	○	○	○	○	○	○	○	○	○	○	○	○	○	○	○	○	○
○	○	○	○	○	○	○	○	○	○	○	○	○	○	○	○	○	○	○	○	○	○	○	○	○	○	○	○	○
○	○	○	○	○	○	○	○	○	○	○	○	○	○	○	○	○	○	○	○	○	○	○	○	○	○	○	○	○
○	○	○	○	○	○	○	○	○	○	○	○	○	○	○	○	○	○	○	○	○	○	○	○	○	○	○	○	○
○	○	○	○	○	○	○	○	○	○	○	○	○	○	○	○	○	○	○	○	○	○	○	○	○	○	○	○	○
*	*	*	*	*	*	*	*	*	*	*	*	*	*	*	*	*	*	*	*	*	*	*	*	*	*	*	*	*
*	*	*	*	*	*	*	*	*	*	*	*	*	*	*	*	*	*	*	*	*	*	*	*	*	*	*	*	*
○	○	○	○	○	○	○	○	○	○	○	○	○	○	○	○	○	○	○	○	○	○	○	○	○	○	○	○	○
○	○	○	○	○	○	○	○	○	○	○	○	○	○	○	○	○	○	○	○	○	○	○	○	○	○	○	○	○
○	○	○	○	○	○	○	○	○	○	○	○	○	○	○	○	○	○	○	○	○	○	○	○	○	○	○	○	○
○	○	○	○	○	○	○	○	○	○	○	○	○	○	○	○	○	○	○	○	○	○	○	○	○	○	○	○	○

NOTE

GROUP INDEX

BODY(SIDE, REAR & SEAT)

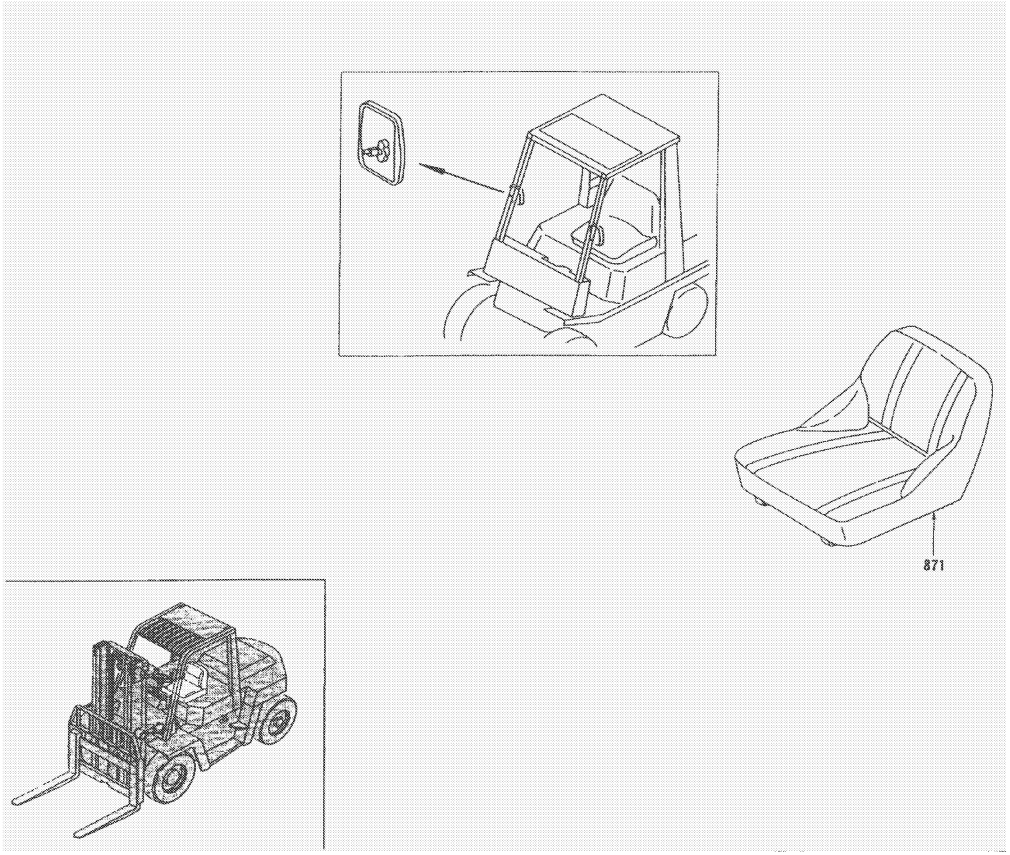

SEC.NO	SECTION NAME
871A	SEAT (FC OPTION - ALL OTHERS REFER TO PAGE FOR APPLIED DATE)
871B	SEAT -ELR (FROM JULY 2010)

K

*ILLSTRATIONS SHOWN IN GENERAL INDEX AND GROUP INDEX ARE GENARALIZED DESCRIPTIONS FOR ALL MODELS AND ARE NOT PRECISE IN ALL DETAILS.

SEC. 871A

SEAT (FC OPTION - ALL OTHERS REFER TO PAGE FOR APPLIED DATE)

ASIENTO

SITZ

SIEGE

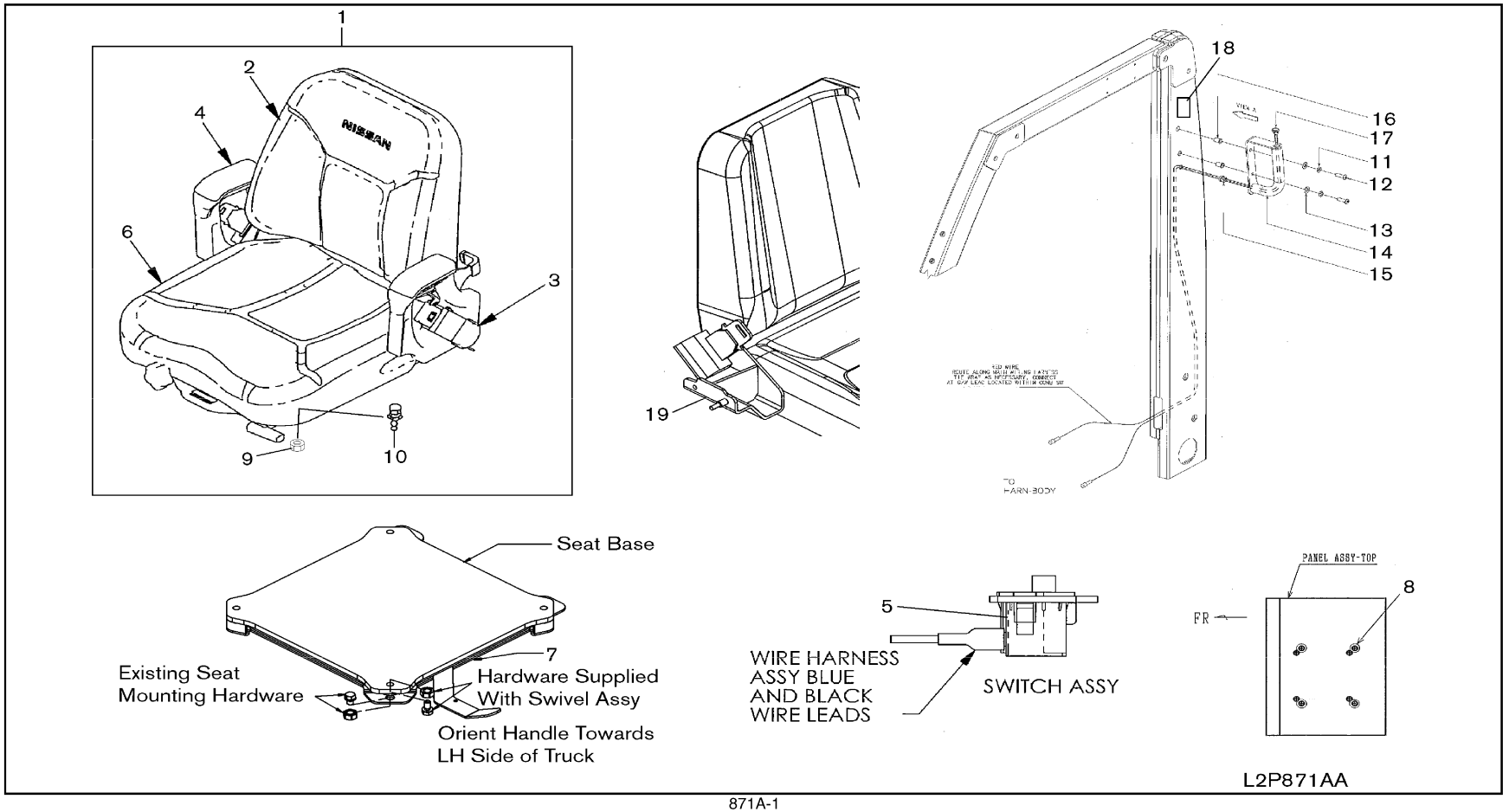

SEC. 871A

SEAT (FC OPTION - ALL OTHERS REFER TO PAGE FOR APPLIED DATE)

ASIENTO

SITZ

SIEGE

NC	S	KEY NO.	LEV	PART NO.	PART NAME	SPECIFICATION	QTY	APPLIED DATE	ICANF	FORMER PART NO.	KD	APPLIED MODEL 01 02 03 04 05 06 07 08 09 10 11 12 13 14 15 16 17 18 19 20 21 22 23 24 25 26 27 28 29
		1 01	1	**87000-FB400**	SEAT ASSY-FRONT		01	0107-0307				○ ○
		02	1	**87000-FW50A**			01	0307-0710				○ ○
		03	1	**87000-FW40A**		F/FC	01	0507-				✱ ✱ ✱ ✱ ✱ ✱ ✱ ✱ ✱ ✱ ✱ ✱ ✱
C		04	1	**87000-FW50A**		F/SWIVEL SEAT	01	0411-0712				✱ ✱
		2 01	2	**87600-FB400**	BACKREST ASSY KIT-VINYL		01	0107-0707				○ ○
		02	2	**87611-FB400**	PAD ASSY-BACK FR SEAT		01	0707-0710				○ ○
		03	2	**87611-FB400**		F/FC	01	0710-				✱ ✱ ✱ ✱ ✱ ✱ ✱ ✱ ✱ ✱ ✱ ✱ ✱
C		04	2	**87611-FB400**		F/SWIVEL SEAT	01	0411-0712				✱ ✱
		3 01	2	**25500-FB400**	SEAT BELT W/SWITCH		01	0107-0707				○ ○
		02	2	**87816-FB400**	ASSY-SEAT BELT W/SWITCH		01	0707-0710				○ ○
		03	2	**87816-FB400**		F/FC	01	0710-				✱ ✱ ✱ ✱ ✱ ✱ ✱ ✱ ✱ ✱ ✱ ✱ ✱
C		04	2	**87816-FB400**		F/SWIVEL SEAT	01	0411-0712				✱ ✱
C		05	2	**87801-FW80A**		F/SWIVEL SEAT W/ORANGE SEAT BELT	01	0411-0712				✱ ✱
		4 01	2	**87800-FB400**	ARM PAD KIT-BLACK		01	0107-0710				○ ○
		02	2	**87800-FB400**		F/FC	01	0710-				✱ ✱ ✱ ✱ ✱ ✱ ✱ ✱ ✱ ✱ ✱ ✱ ✱
C		03	2	**87800-FB400**		F/SWIVEL SEAT	01	0411-0712				✱ ✱
		5 01	2	**25500-FB40A**	MICRO SWITCH-HARNESS KIT		01	0107-0307				○ ○
		02	2	**25565-FB40A**	SEAT SWITCH KIT		01	0307-0710				○ ○
		03	2	**24034-FB40A**	WIRE HARNESS KIT		01	0307-0710				○ ○
		04	2	**25565-FB40A**	SEAT SWITCH KIT	F/FC	01	0710-				✱ ✱ ✱ ✱ ✱ ✱ ✱ ✱ ✱ ✱ ✱ ✱ ✱
		05	2	**24034-FB40A**	WIRE HARNESS KIT	F/FC	01	0710-				✱ ✱ ✱ ✱ ✱ ✱ ✱ ✱ ✱ ✱ ✱ ✱ ✱
C		06	2	**25565-FB40A**	SEAT SWITCH KIT	F/SWIVEL SEAT	01	0411-0712				✱ ✱
C		07	2	**24034-FB40A**	WIRE HARNESS KIT	F/SWIVEL SEAT	01	0411-0712				✱ ✱
		6 01	2	**87300-FB400**	SEAT CUSHION KIT-VINYL		01	0107-0707				○ ○
		02	2	**87311-FB400**	PAD ASSY-CUSH FR SEAT		01	0707-0710				○ ○
		03	2	**87311-FB400**		F/FC	01	0710-				✱ ✱ ✱ ✱ ✱ ✱ ✱ ✱ ✱ ✱ ✱ ✱ ✱
C		04	2	**87311-FB400**		F/SWIVEL SEAT	01	0411-0712				✱ ✱
		7 01	1	**87000-FC485**	SEAL SWIVEL ASSY	F/SWIVEL SEAT	01	0107-0710				✱ ✱
C		02	1	**87000-FC485**		F/SWIVEL SEAT	01	0411-0712				✱ ✱
		8 01	1	**64892-W5000**	COVER-HOLE		04	0107-0710				○ ○
		02	1	**64892-W5000**		F/FC	04	0710-				✱ ✱ ✱ ✱ ✱ ✱ ✱ ✱ ✱ ✱ ✱ ✱ ✱
C		03	1	**64892-W5000**		F/SWIVEL SEAT	04	0411-0712				✱ ✱
		9 01	1	**08911-1081G**	NUT-HEX W/CON SPW M8-1.25		04	0107-0710				○ ○
		02	1	**08911-1081G**		F/FC	04	0710-				✱ ✱ ✱ ✱ ✱ ✱ ✱ ✱ ✱ ✱ ✱ ✱ ✱
C		03	1	**08911-1081G**		F/SWIVEL SEAT	04	0411-0712				✱ ✱
		10 01	1	**08110-8201A**	SCREW-HHM M8-1.25X20		04	0107-0710				○ ○
		02	1	**08110-8201A**		F/FC	04	0710-				✱ ✱ ✱ ✱ ✱ ✱ ✱ ✱ ✱ ✱ ✱ ✱ ✱

SEC. 871A

SEAT (FC OPTION - ALL OTHERS REFER TO PAGE FOR APPLIED DATE)

ASIENTO

SITZ

SIEGE

NC	S	KEY NO.	LEV	PART NO.	PART NAME	SPECIFICATION	QTY	APPLIED DATE	ICANF	FORMER PART NO.	KD	APPLIED MODEL 01 02 03 04 05 06 07 08 09 10 11 12 13 14 15 16 17 18 19 20 21 22 23 24 25 26 27 28 29
C		**10** 03	1	**08110-8201A**	SCREW-HHM M8-1.25X20	F/SWIVEL SEAT	04	0411-0712				* *
		11 01	1	**08915-1381A**	WASHER-LOCK SPLIT M8	F/SWIVEL SEAT	02	0107-0710				* *
C		02	1	**08915-1381A**		F/SWIVEL SEAT	02	0411-0712				* *
		12 01	1	**58218-FW40A**	SCREW-SET	F/SWIVEL SEAT	02	0107-0710				* *
C		02	1	**58218-FW40A**		F/SWIVEL SEAT	02	0411-0712				* *
		13 01	1	**08915-4381A**	WASHER-FLAT M8	F/SWIVEL SEAT	02	0107-0710				* *
C		02	1	**08915-4381A**		F/SWIVEL SEAT	02	0411-0712				* *
		14 01	1	**50522-FW40A**	GRIP-HANDLE	F/SWIVEL SEAT	01	0107-0710				* *
C		02	1	**50522-FW40A**		F/SWIVEL SEAT	01	0411-0712				* *
		15 01	1	**65716-FW40A**	GROMMET	F/SWIVEL SEAT	01	0107-0710				* *
C		02	1	**65716-FW40A**		F/SWIVEL SEAT	01	0411-0712				* *
		16 01	1	**50526-51K11**	NUT-T	F/SWIVEL SEAT	02	0107-1107				* *
		17 01	1	**25280-FW40A**	SWITCH ASSY-HORN	F/SWIVEL SEAT	01	0107-0710				* *
C		02	1	**25280-FW40A**		F/SWIVEL SEAT	01	0411-0712				* *
		18 01	1	**48407-48500**	LABEL-HORN	F/SWIVEL SEAT	01	0107-0710				* *
C		02	1	**48407-48500**		F/SWIVEL SEAT	01	0411-0712				* *
		19 01	1	**87164-FW40A**	PLATE ASSY-BASE	F/FC	01	0507-				* * * * * * * * * * * * * *

NOTE

SEC. 871B

SEAT -ELR (FROM JULY 2010)

ASIENTO

SITZ

SIEGE

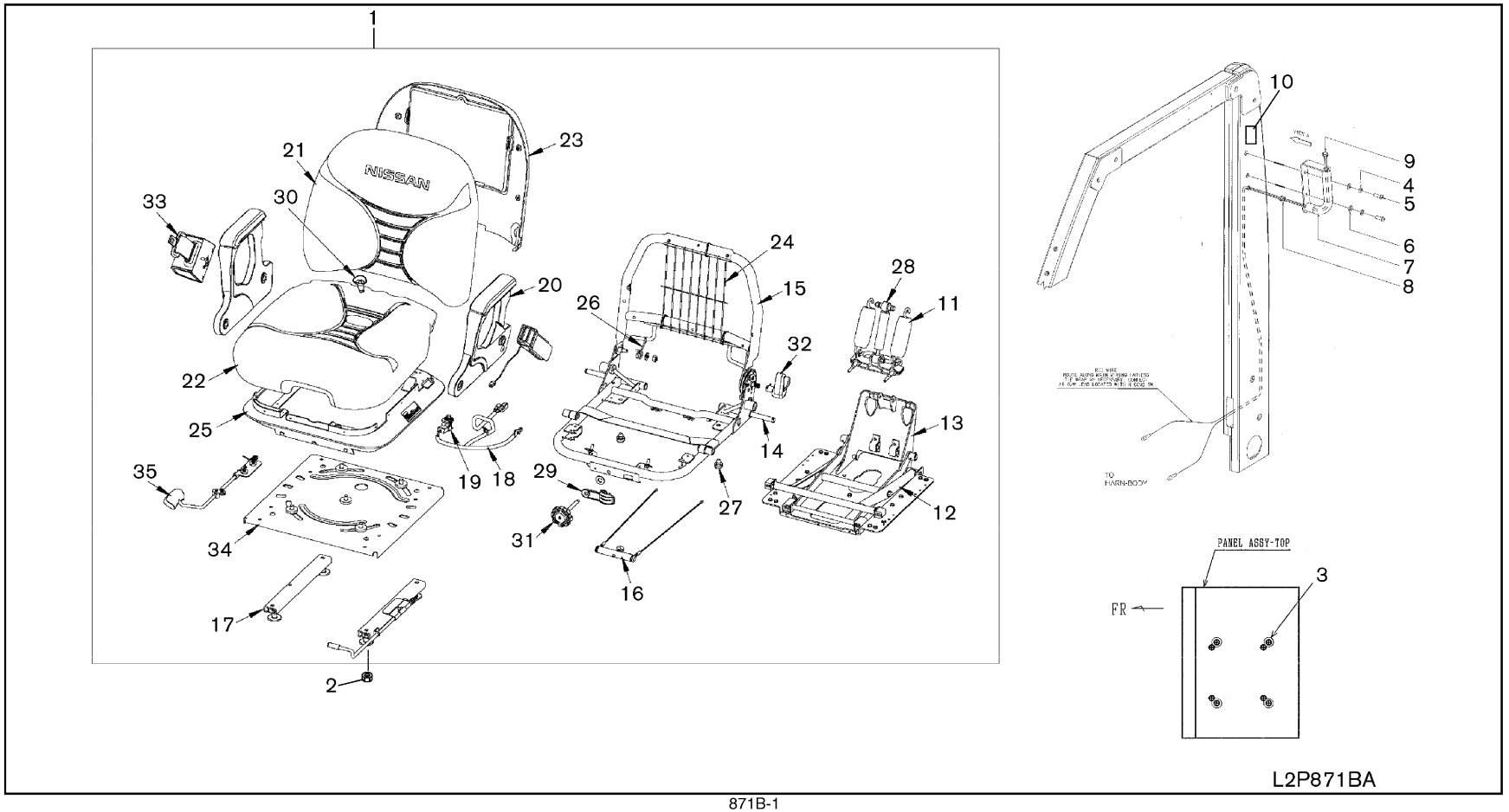

SEC. 871B

SEAT -ELR (FROM JULY 2010)

ASIENTO

SITZ

SIEGE

NC	S	KEY NO.	LEV	PART NO.	PART NAME	SPECIFICATION	QTY	APPLIED DATE	ICANF	FORMER PART NO.	KD	APPLIED MODEL 01 02 03 04 05 06 07 08 09 10 11 12 13 14 15 16 17 18 19 20 21 22 23 24 25 26 27 28 29
		1	01	1	**87000-FW50B**	SEAT ASSY-FRONT		01	0710-			○○○○○○○○○○○○○○○○○○○○○○○○○○○○○
			02	1	**87000-FW50D**		F/SWIVEL SEAT	01	0710-0411			*********************************
N			03	1	**87000-FW50D**		F/SWIVEL SEAT	01	0712-			*********************************
			04	1	**87000-FW50J**		F/ORANGE SEAT BELT	01	0710-			*********************************
			05	1	**87000-FW50K**		F/SWIVEL SEAT W/ORANGE SEAT BELT	01	0710-0411			*********************************
N			06	1	**87000-FW50K**		F/SWIVEL SEAT W/ORANGE SEAT BELT	01	0712-			*********************************
		2	01	1	**08911-1081G**	NUT-HEX W/CON SPW M8-1.25		04	0710-			○○○○○○○○○○○○○○○○○○○○○○○○○○○○○
		3	01	1	**64892-W5000**	COVER-HOLE		04	0710-			○○○○○○○○○○○○○○○○○○○○○○○○○○○○○
		4	01	1	**08915-1381A**	WASHER-LOCK SPLIT M8	F/SWIVEL SEAT	02	0710-0411			*********************************
N			02	1	**08915-1381A**		F/SWIVEL SEAT	02	0712-			*********************************
		5	01	1	**58218-FW40A**	SCREW-SET	F/SWIVEL SEAT	02	0710-0411			*********************************
N			02	1	**58218-FW40A**		F/SWIVEL SEAT	02	0712-			*********************************
		6	01	1	**08915-4381A**	WASHER-FLAT M8	F/SWIVEL SEAT	02	0710-0411			*********************************
N			02	1	**08915-4381A**		F/SWIVEL SEAT	02	0712-			*********************************
		7	01	1	**50522-FW40A**	GRIP-HANDLE	F/SWIVEL SEAT	01	0710-0411			*********************************
N			02	1	**50522-FW40A**		F/SWIVEL SEAT	01	0712-			*********************************
		8	01	1	**65716-FW40A**	GROMMET	F/SWIVEL SEAT	01	0710-0411			*********************************
N			02	1	**65716-FW40A**		F/SWIVEL SEAT	01	0712-			*********************************
		9	01	1	**25280-FW40A**	SWITCH ASSY-HORN	F/SWIVEL SEAT	01	0710-0411			*********************************
N			02	1	**25280-FW40A**		F/SWIVEL SEAT	01	0712-			*********************************
			03	2	**25565-FW40A**	SWITCH ASSY	F/SWIVEL SEAT	01	0710-0411			*********************************
N			04	2	**25565-FW40A**		F/SWIVEL SEAT	01	0712-			*********************************
		10	01	1	**48407-48500**	LABEL-HORN	F/SWIVEL SEAT	01	0710-0411			*********************************
N			02	1	**48407-48500**		F/SWIVEL SEAT	01	0712-			*********************************
		11	01	2	**87220-FW80B**	SPRING & SADDLE KIT		01	0710-			○○○○○○○○○○○○○○○○○○○○○○○○○○○○○
		12	01	2	**87221-FW80B**	LINKAGE ASSY KIT		01	0710-			○○○○○○○○○○○○○○○○○○○○○○○○○○○○○
		13	01	2	**87121-FW80B**	WLDT-SUSP BASE KIT		01	0710-			○○○○○○○○○○○○○○○○○○○○○○○○○○○○○
		14	01	2	**87222-FW80B**	BEARING KIT		01	0710-			○○○○○○○○○○○○○○○○○○○○○○○○○○○○○
		15	01	2	**87120-FW90B**	WLDT-FRAME KIT		01	0710-			○○○○○○○○○○○○○○○○○○○○○○○○○○○○○
		16	01	2	**87522-FW80B**	WEIGHT ADJUST KIT		01	0710-			○○○○○○○○○○○○○○○○○○○○○○○○○○○○○
		17	01	2	**87520-FW90B**	SLIDE KIT		01	0710-			○○○○○○○○○○○○○○○○○○○○○○○○○○○○○
			02	2	**87521-FW90B**		F/SWIVEL SEAT	01	0710-0411			*********************************
N			03	2	**87521-FW90B**		F/SWIVEL SEAT	01	0712-			*********************************
			04	2	**87520-FW90B**		F/ORANGE SEAT BELT	01	0710-			*********************************
			05	2	**87521-FW90B**		F/SWIVEL SEAT W/ORANGE SEAT BELT	01	0710-0411			*********************************
N			06	2	**87521-FW90B**		F/SWIVEL SEAT W/ORANGE SEAT BELT	01	0712-			*********************************
		18	01	2	**24034-FW80B**	WIRE HARNESS KIT		01	0710-			○○○○○○○○○○○○○○○○○○○○○○○○○○○○○

SEC. 871B

SEAT -ELR (FROM JULY 2010)

ASIENTO

SITZ

SIEGE

NC	S	KEY NO.	LEV	PART NO.	PART NAME	SPECIFICATION	QTY	APPLIED DATE	ICANF	FORMER PART NO.	KD	APPLIED MODEL 01 02 03 04 05 06 07 08 09 10 11 12 13 14 15 16 17 18 19 20 21 22 23 24 25 26 27 28 29
		19	01	2	**25565-FW80B**	MOUNT-SNAP SWITCH KIT		01	0710-			o o o o o o o o o o o o o o o o o o o o o o o o o o o o o
		20	01	2	**87820-FW80B**	HIP REST KIT		01	0710-			o o o o o o o o o o o o o o o o o o o o o o o o o o o o o
		21	01	2	**87620-FW80B**	BACK-CUSH-VINYL KIT		01	0710-			o o o o o o o o o o o o o o o o o o o o o o o o o o o o o
		22	01	2	**87320-FW80B**	SEAT-CUSH-VINYL KIT		01	0710-			o o o o o o o o o o o o o o o o o o o o o o o o o o o o o
		23	01	2	**87621-FW90B**	BACK PANEL KIT		01	0710-			o o o o o o o o o o o o o o o o o o o o o o o o o o o o o
		24	01	2	**87622-FW80B**	FLEXOLATOR KIT		01	0710-			o o o o o o o o o o o o o o o o o o o o o o o o o o o o o
		25	01	2	**87321-FW80B**	BOOT KIT		01	0710-			o o o o o o o o o o o o o o o o o o o o o o o o o o o o o
		26	01	2	**87623-FW90B**	PIVOT BOLT KIT		01	0710-			o o o o o o o o o o o o o o o o o o o o o o o o o o o o o
		27	01	2	**87223-FW80B**	BUMPER KIT		01	0710-			o o o o o o o o o o o o o o o o o o o o o o o o o o o o o
		28	01	2	**87224-FW80B**	SHOCK ABS KIT		01	0710-			o o o o o o o o o o o o o o o o o o o o o o o o o o o o o
		29	01	2	**87523-FW80B**	WEIGHT IND KIT		01	0710-			o o o o o o o o o o o o o o o o o o o o o o o o o o o o o
		30	01	2	**87322-FW80B**	DRAIN-WATER KIT		01	0710-			o o o o o o o o o o o o o o o o o o o o o o o o o o o o o
		31	01	2	**87524-FW80B**	KNOB-WEIGHT KIT		01	0710-			o o o o o o o o o o o o o o o o o o o o o o o o o o o o o
		32	01	2	**87122-FW90B**	WLDT-BACK FRAME KIT		01	0710-			o o o o o o o o o o o o o o o o o o o o o o o o o o o o o
		33	01	2	**87821-FW80B**	BELT-ELR	F/BLACK	01	0710-			o o o o o o o o o o o o o o o o o o o o o o o o o o o o o
			02	2	**87822-FW80B**		F/ORANGE	01	0710-			* *
		34	01	2	**87520-FW80D**	SWIVEL ASSY KIT	F/SWIVEL SEAT	01	0710-0411			* *
N			02	2	**87520-FW80D**		F/SWIVEL SEAT	01	0712-			* *
		35	01	2	**87521-FW80D**	LATCH ASSY	F/SWIVEL SEAT	01	0710-0411			* *
N			02	2	**87521-FW80D**		F/SWIVEL SEAT	01	0712-			* *

GROUP INDEX

MISCELLANEOUS

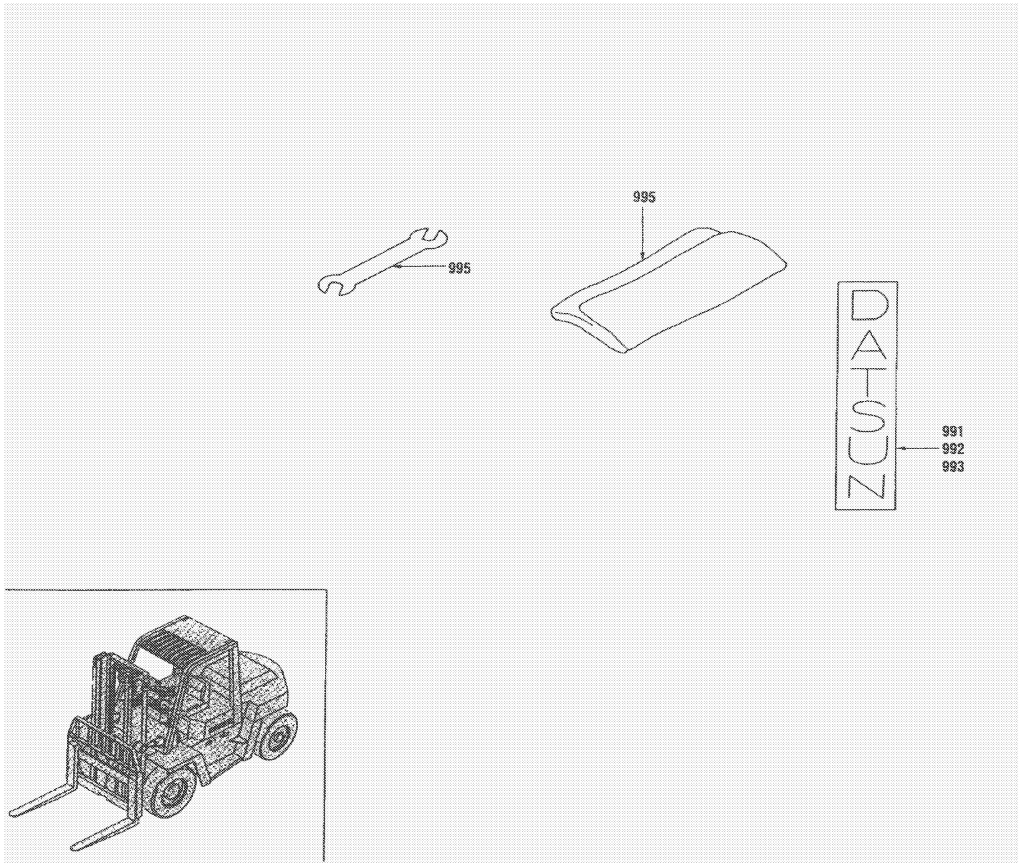

SEC.NO	SECTION NAME
991	CAUTION PLATE & LABEL CAR
992	CAUTION PLATE & LABEL ELECTRICAL
993	CAUTION PLATE & LABEL MAST

*ILLSTRATIONS SHOWN IN GENERAL INDEX AND GROUP INDEX ARE GENARALIZED DESCRIPTIONS FOR ALL MODELS AND ARE NOT PRECISE IN ALL DETAILS.

M

SEC. 991

CAUTION PLATE & LABEL CAR

PLACA Y ETIQUETA DE PRECAUCION

HINWEISSCHILD UND ETIKETT

PLAQUE ET VIGNETTE D'AVERTISSEMENT

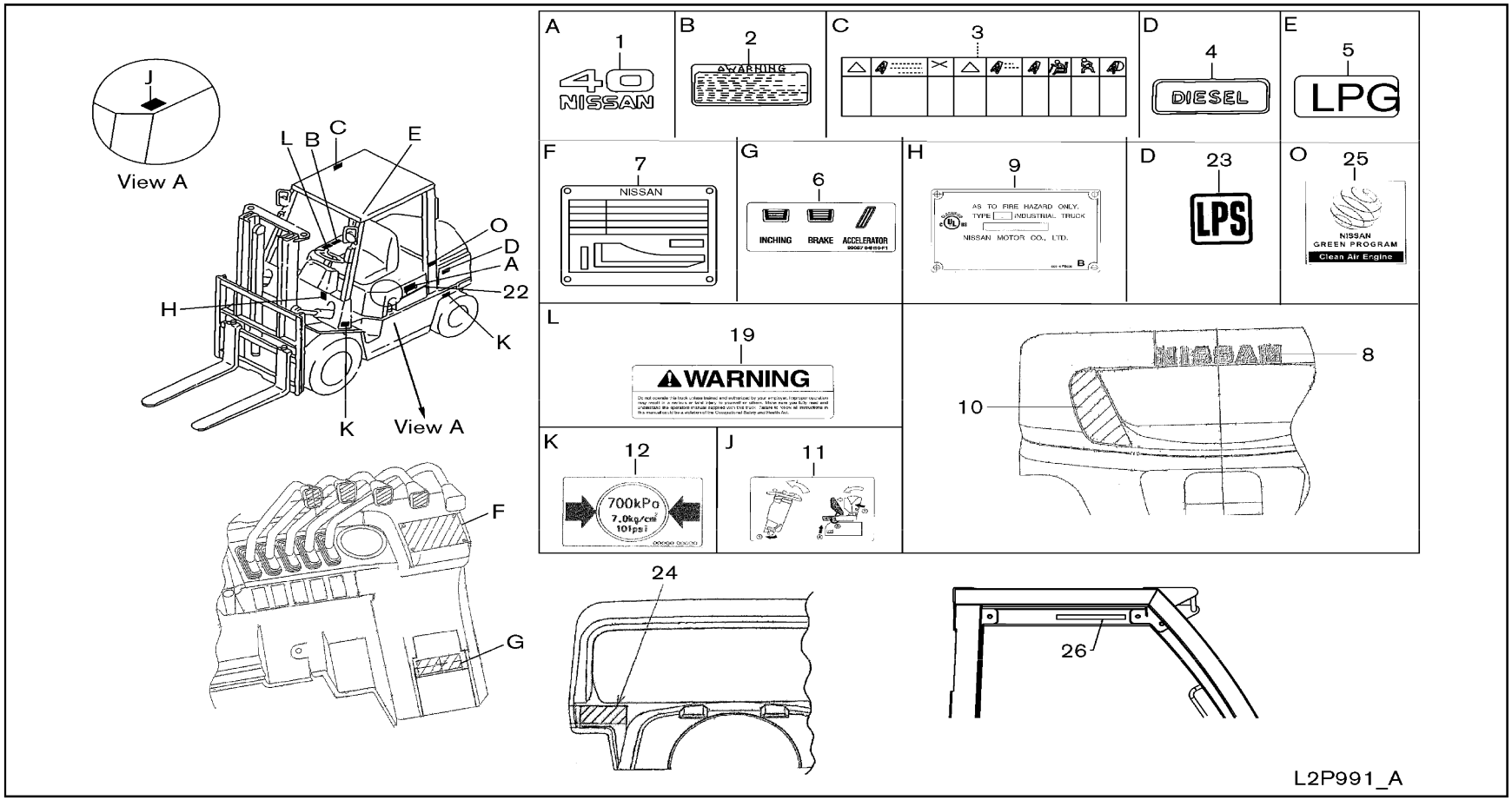

SEC. 991

CAUTION PLATE & LABEL CAR

PLACA Y ETIQUETA DE PRECAUCION

HINWEISSCHILD UND ETIKETT

PLAQUE ET VIGNETTE D'AVERTISSEMENT

NC	S	KEY NO.	LEV	PART NO.	PART NAME	SPECIFICATION	QTY	APPLIED DATE	ICANF	FORMER PART NO.	KD	APPLIED MODEL 01 02 03 04 05 06 07 08 09 10 11 12 13 14 15 16 17 18 19 20 21 22 23 24 25 26 27 28 29
		1 01	1	**99064-FB300**	PLATE-CAR NAME RH		01	0107-				○○○○○○○○○
		02	1	**99064-FB400**			01	0107-				○○○○○○○○○
		03	1	**99064-FB410**			01	0107-				○○○
		04	1	**99064-FB500**			01	0107-				○○○○
		05	1	**99064-FB600**			01	0107-				○○○○
		06	1	**99065-FB300**	PLATE-CAR NAME LH		01	0107-				○○○○○○○○○
		07	1	**99065-FB400**			01	0107-				○○○○○○○○○
		08	1	**99065-FB410**			01	0107-				○○○
		09	1	**99065-FB500**			01	0107-				○○○○
		10	1	**99065-FB600**			01	0107-				○○○○
		2 01	1	**99080-FK001**	LABEL-CAUTION DRIVE		01	0107-				○○○○○○○○○○○○○○○○○○○○○○○○○○○○○
		02	1	**99080-FK002**		F/SPANISH	01	0107-				✱✱✱✱✱✱✱✱✱✱✱✱✱✱✱✱✱✱✱✱✱✱✱✱✱✱✱✱✱✱✱
		03	1	**99080-FK003**		F/FRENCH	01	0107-				✱✱✱✱✱✱✱✱✱✱✱✱✱✱✱✱✱✱✱✱✱✱✱✱✱✱✱✱✱✱✱
		3 01	1	**99080-FK000**	LABEL-CAUTION DRIVE		01	0107-				○○○○○○○○○○○○○○○○○○○○○○○○○○○○○
		02	1	**99080-FK102**		F/SPANISH	01	0107-				✱✱✱✱✱✱✱✱✱✱✱✱✱✱✱✱✱✱✱✱✱✱✱✱✱✱✱✱✱✱✱
		03	1	**99080-FK103**		F/FRENCH	01	0107-				✱✱✱✱✱✱✱✱✱✱✱✱✱✱✱✱✱✱✱✱✱✱✱✱✱✱✱✱✱✱✱
		4 01	1	**99057-5G000**	LABEL-DIESEL		01	0107-				○○○○
		5 01	1	**99057-6G000**	LABEL-FUEL		01	0107-				○○○ ○○○ ○○○ ○○○ ○○ ○○ ○○ ○○
		6 01	1	**99087-04H20**	LABEL-PEDAL ARRANGEMENT	F/SPANISH	01	0508-1109				✱✱✱✱✱✱✱✱✱✱✱✱✱✱✱✱✱✱✱✱✱✱✱✱✱✱✱✱✱✱✱
		02	1	**99087-04H60**		F/FRENCH	01	0508-1109				✱✱✱✱✱✱✱✱✱✱✱✱✱✱✱✱✱✱✱✱✱✱✱✱✱✱✱✱✱✱✱
		7 01	1	**NA-**	PLATE-MODEL NO.	CONTACT FACTORY WITH MODEL	01	0107-				○○○○○○○○○○○○○○○○○○○○○○○○○○○○○
						AND SERIAL NUMBER						
		8 01	1	**97835-FC300**	LABEL-NISSAN		01	0107-				○○○○○○○○○○○○○○○○○○○○○○○○○○○○○
		9 01	1	**96916-FB000**	LABEL-UL CLASSIFIED		01	0107-0111				○ ○ ○ ○ ○ ○ ○ ○ ○ ○ ○ ○ ○
		02	1	**96916-FV00A**			01	0111-				○ ○ ○ ○ ○ ○ ○ ○ ○ ○ ○ ○ ○
		03	1	**96916-FB300**			01	0107-0111				○ ○ ○ ○ ○ ○ ○ ○ ○ ○ ○ ○ ○
		04	1	**96916-FV30A**			01	0111-				○ ○ ○ ○ ○ ○ ○ ○ ○ ○ ○ ○ ○
		05	1	**96916-FB200**			01	0107-0111				○ ○ ○ ○ ○ ○ ○ ○ ○ ○ ○ ○ ○
		06	1	**96916-FV20A**			01	0111-				○ ○ ○ ○ ○ ○ ○ ○ ○ ○ ○ ○ ○
		07	1	**96916-FB210**			01	0107-0111				○ ○ ○ ○ ○ ○ ○ ○ ○ ○ ○ ○ ○
		08	1	**96916-FV21A**			01	0111-				○ ○ ○ ○ ○ ○ ○ ○ ○ ○ ○ ○ ○
		09	1	**96916-FB100**			01	0107-0111				○ ○ ○ ○ ○ ○ ○ ○ ○
		10	1	**96916-FV10A**			01	0111-				○ ○ ○ ○ ○ ○ ○ ○ ○
		10 01	1	**99360-FK115**	LABEL-REFLECTOR LH		01	0107-				○○○○○○○○○○○○○○○○○○○○○○○○○○○○○
		02	1	**99360-FK120**	LABEL-REFLECTOR RH		01	0107-				○○○○○○○○○○○○○○○○○○○○○○○○○○○○○
		11 01	1	**97818-FC400**	LABEL-CAUTION		01	0107-				○○○○○○○○○○○○○○○○○○○○○○○○○○○○○
		02	1	**97818-FW40A**		F/FC	01	0507-				✱✱✱ ✱✱✱ ✱✱✱✱ ✱✱✱ ✱

SEC. 991

CAUTION PLATE & LABEL CAR

PLACA Y ETIQUETA DE PRECAUCION

HINWEISSCHILD UND ETIKETT

PLAQUE ET VIGNETTE D'AVERTISSEMENT

NC	S	KEY NO.	LEV	PART NO.	PART NAME	SPECIFICATION	QTY	APPLIED DATE	ICANF	FORMER PART NO.	KD	APPLIED MODEL 01 02 03 04 05 06 07 08 09 10 11 12 13 14 15 16 17 18 19 20 21 22 23 24 25 26 27 28 29
		12 01	1	**99090-FJ100**	PLACARD-TIRE LIMIT	F/DRIVE TIRE	01	0107-				○ ○
		02	1	**99090-FJ100**		F/STEER TIRE	01	0107-				○ ○
		03	1	**99090-FK400**		F/STEER TIRE	01	0107-				○ ○ ○ ○
		19 01	1	**99080-FK101**	LABEL-CAUTION DRIVE		01	0107-				○ ○
		22 01	1	**99088-FK100**	LABEL-RED STRIPE SIDE RH		01	0107-				○ ○
		02	1	**99089-FK100**	LABEL-RED STRIPE SIDE LH		01	0107-				○ ○
		23 01	1	**96916-12H05**	LABEL-LPS		02	0107-				○ ○ ○ ○ ○ ○ ○
		24 01	1	**97818-FV40A**	LABEL-CAUTION		01	0107-				○ ○ ○ ○ ○ ○ ○ ○ ○ ○ ○ ○ ○
		25 01	1	**97835-FW80A**	LABEL-NISSAN GREEN PGM		02	0609-				○ ○
		26 01	1	**96918-FW81A**	LABEL-REGULATORY		02	0311-				○ ○
		99 01	1	**23300-700 -AL**	AEROSOL PAINT-METALLIC SILVER		01	0107-				○ ○

NOTE

SEC. 992

CAUTION PLATE & LABEL ELECTRICAL

PLACA DE PRECAUCION

WARNSCHILD

PLAQUE DE PRECAUTIONS

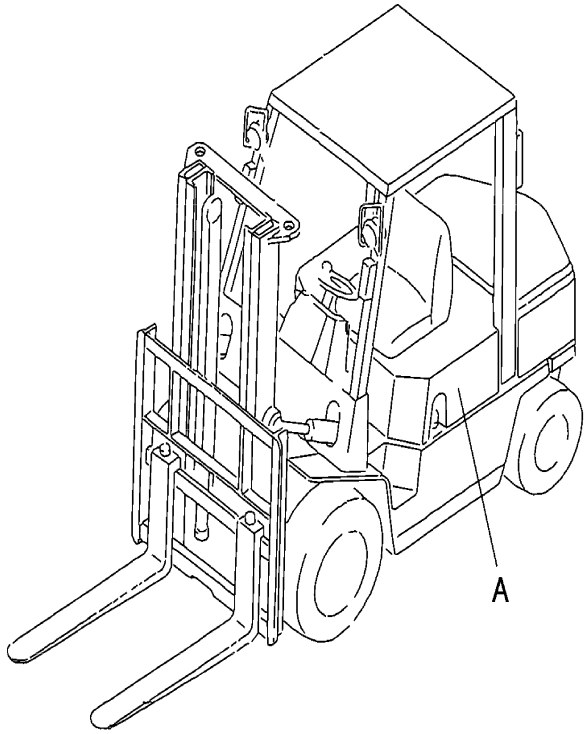

A 2 USE SPECIFIED FUSES ONLY			

L2P992_A

SEC. 992

CAUTION PLATE & LABEL ELECTRICAL

PLACA DE PRECAUCION

WARNSCHILD

PLAQUE DE PRECAUTIONS

NC	S	KEY NO.	LEV	PART NO.	PART NAME	SPECIFICATION	QTY	APPLIED DATE	ICANF	FORMER PART NO.	KD
C		**2** 01	1	**25417-51K00**	LABEL-CAUTION,FUSE		01	0107-0811			
N		02	1	**25417-GB00A**			01	0811-			

APPLIED MODEL

01	02	03	04	05	06	07	08	09	10	11	12	13	14	15	16	17	18	19	20	21	22	23	24	25	26	27	28	29
MIPI AA2200JV	MIPI AA2200DV	MIPI AA2200LV	MIPU AA2200SV	MIUI AA2200JV	MIUI AA2200DV	MIUI AA2200LV	MIUY AA2200SV	MIPI AA2255JV	MIPI AA2255DV	MIPI AA2255LV	MIPU AA2255SV	MIUI AA2255JV	MIUI AA2255DV	MIUI AA2255LV	MIUY AA2255SV	MIUJ AA2255JV	MIUJ AA2288DV	MIGI AA2288LV	MIGG AA2300JV	MIGG AA2300DV	MIGG AA2300LV	MIGG AA2305JV	MIGG AA2305DV	MIGG AA2305LV	MIUY AA3355JV	MIUU AA3355DV	MIUU AA3355LV	MIUY AA3355JV
O	O	O	O	O	O	O	O	O	O	O	O	O	O	O	O	O	O	O	O	O	O	O	O	O	O	O	O	O
O	O	O	O	O	O	O	O	O	O	O	O	O	O	O	O	O	O	O	O	O	O	O	O	O	O	O	O	O

SEC. 993

CAUTION PLATE & LABEL MAST

PLACA DE PRECAUCION

WARNSCHILD

PLAQUE DE PRECAUTIONS

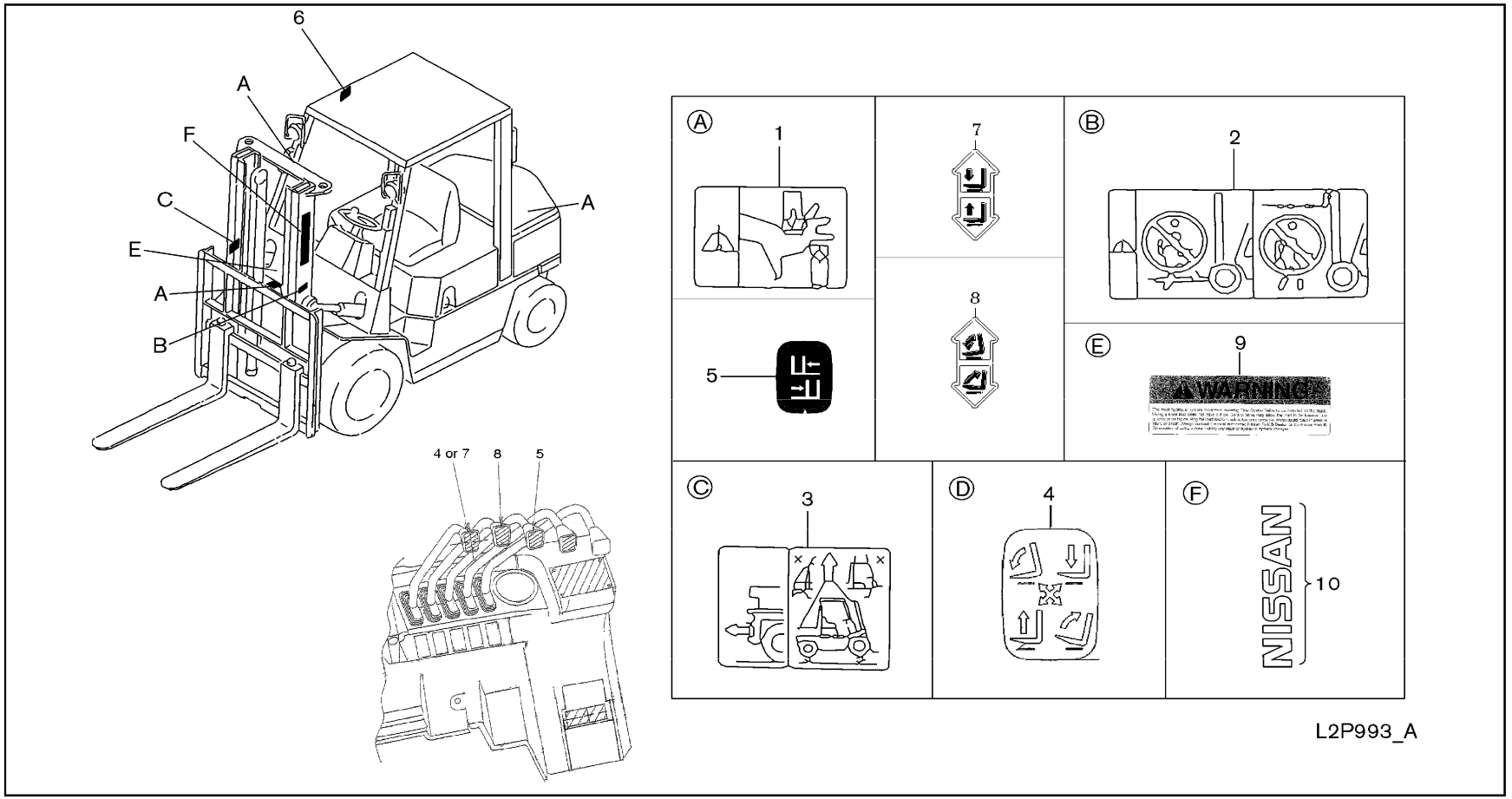

SEC. 993

CAUTION PLATE & LABEL MAST

PLACA DE PRECAUCION

WARNSCHILD

PLAQUE DE PRECAUTIONS

NC	S	KEY NO.	LEV	PART NO.	PART NAME	SPECIFICATION	QTY	APPLIED DATE	TCANF	FORMER PART NO.	KD	APPLIED MODEL 01 02 03 04 05 06 07 08 09 10 11 12 13 14 15 16 17 18 19 20 21 22 23 24 25 26 27 28 29
		1 01	1	**97836-FK100**	PLATE-MAST CAUTION		02	0107-				○ ○
		02	1	**97836-FK100**			03	0107-				○ ○
		2 01	1	**97837-FK100**	PLATE-CAUTION FORK		01	0107-				○ ○
		3 01	1	**97839-11H01**	LABEL-CAUTION LIFT & DRAW		01	0107-				○ ○
		4 01	1	**97831-FK100**	PLATE-OPERATION LIFT		01	0107-				○ ○
		5 01	1	**99382-60K00**	DECAL-OPER SS		01	0107-				✱ ✱
		6 01	1	**99070-FW40A**	PLATE-CAPACITY	F/ATTACH	AR	0107-				✱ ✱
		7 01	1	**97831-FA310**	PLATE-OPERATION LIFT	F/HYDR CONT LVR-DBL	01	0107-				✱ ✱
		8 01	1	**97832-FA310**	PLATE-OPERATION TILT	F/HYDR CONT LVR-DBL	01	0107-				✱ ✱
		9 01	1	**97836-FC600**	LABEL-WARNING, MAST		01	0107-				○ ○ ○ ○
		02	1	**97836-FC601**		F/FRENCH	01	0107-				✱ ✱ ✱ ✱
		03	1	**97836-FC602**		F/SPANISH	01	0107-				✱ ✱ ✱ ✱
		04	1	**97836-FC603**		F/GERMAN	01	0107-				✱ ✱ ✱ ✱
		10 01	1	**97835-8G50A**	LABEL-NISSAN MAST		02	0810-				○ ○

NOTE

PART NO. INDEX

PART NUMBER INDEX

PART NO.	SEC.NO.	PART NO.	SEC.NO.	PART NO.	SEC.NO.	PART NO.	SEC.NO.	PART NO.	SEC.NO.	PART NO.	SEC.NO.
		00922-14500.....	698D	01115-00201.....	200A	01552-00421.....	697B	01648-00024.....	110B	08110-8201D.....	260
00000			698E	01121-03311.....	500A		697D		111B		585B
			699H	01121-05351.....	111A		699G	01648-00044.....	111B		585E
00092-25101.....	199A		699I	01121-06121.....	403	01552-00431.....	216B	01648-00084.....	110B		698E
	199C	00922-24700.....	135B	01125-00104.....	135B		241A1	01648-00154.....	110B	08110-8201G.....	173A
00830-32000.....	180		135C	01125-00931.....	253		241A2	01648-00224.....	110B		173B
00840-6181A.....	180	00922-25510.....	586	01135-6G000.....	199A		241B1	01651-00033.....	260		196
00840-8221A.....	465	00922-26200.....	135B		199C		697A		267		226A
00843-5201A.....	695C	00922-50610.....	180	01211-01054.....	186B		697B	01651-FC085.....	737		296
	695D	00922-50810.....	440	01211-6G000.....	199A		697D	01691-00052.....	210A		500A
	695G	00922-51010.....	199A		199C		698D	01691-0005A.....	210A		500C
	695H		199C	01217-00291.....	695I	01553-06721.....	500B	01931-00394.....	135B	08110-8251D.....	698B
00843-6201A.....	180		695J	01221-02004.....	220B	01555-00103.....	697B		135C		699E
00843-8221A.....	695C	00923-1051A.....	695C	01225-00112.....	130B	01555-00123.....	697A	02117-20021.....	210A		699F
	695D		695D	01241-00781.....	488		697B	02117-22023.....	210A	08110-8251G.....	586
	695G		695G	01311-00192.....	200C	01555-00261.....	210A	02173-01520.....	164B	08110-8301D.....	699E
	695H		695H		200D	01555-00263.....	697B	05412-1800P.....	150B		699F
00921-1251A.....	695G	00923-1061A.....	180	01311-00221.....	500A	01555-00273.....	697A	05413-0800P.....	313B	08110-8301G.....	241B1
	695H		465		500C		697B	08034-6451A.....	403	08110-8401D.....	699E
00921-4301A.....	585A	00923-10810.....	655	01321-6G000.....	199A	01555-00521.....	165	08044-2851A.....	112		699F
	585B		695C		199C	01555-00791.....	173B	08044-6451A.....	403	08110-8401F.....	586
	585D		695D	01351-21084.....	135C	01555-00801.....	173B	08051-0501A.....	130B	08110-8451A.....	699E
	585E		695G	01352-00291.....	173A		462	08104-6301A.....	594		699F
	585F		695H		173B	01555-00841.....	216A	08110-61610.....	180	08110-8451G.....	196
	585G	00923-1081A.....	465		691A		216B		313B	08114-0201A.....	199A
00922-11200.....	695C	00923-1101A.....	465	01456-00411.....	500B	01555-00861.....	196		737		199C
	695D	00926-41600.....	130A	01522-00431.....	698E		216A	08110-6502G.....	693A	08114-0201D.....	500A
00922-12010.....	130A		130B	01522-05104.....	110B		216B	08110-8001G.....	196	08114-0251B.....	699E
00922-12500.....	699B	00926-51600.....	120A	01522-10224.....	120B	01555-00951.....	214	08110-8121A.....	253		699F
	699C	00931-20800.....	111B	01523-00032.....	585B	01555-00961.....	165	08110-8121G.....	214	08114-0301B.....	699R
	699E	00931-21200.....	402		585D	01555-00971.....	165		241A1		699S
	699F	00932-1011A.....	586		585E	01555-00981.....	165		241B1		699U
	699R		591A	01532-00015.....	465	01555-01001.....	165	08110-8161A.....	253		699V
	699S		591B	01532-00022.....	465	01555-01081.....	698A		698D	08114-0351D.....	500A
	699U		591D	01551-00531.....	698B	01555-01121.....	697B	08110-8161B.....	380B	08114-2201A.....	591B
	699V		591E	01552-00291.....	216B	01558-00012.....	698A	08110-8161D.....	698B		591D
00922-13010.....	380B		591F	01552-00411.....	196		698B		698D		591E
00922-14000.....	595A		591G		240	01558-00111.....	185B		698E	08120-0301E.....	595A
	595B	00932-2011A.....	403		241A1	01558-00124.....	118B		699E	08120-61228.....	110A
	595C	00933-1301A.....	110A		241A2	01558-00401.....	185B		699F		110B
	595C	00933-1351A.....	110A		241B1	01612-11134.....	135B	08110-8161G.....	196		118A
	595D	00933-20650.....	111B		241B2		135C		214		164A
00922-14500.....	585A	01001-20024.....	135B		253	01619-00011.....	216A		241A1		210A
	585B	01011-00074.....	135B		462		216B		462	08120-61233.....	164A
	585D		135C		695G	01641-00071.....	173A		500A		485
	585E	01014-00534.....	380B		695H		173B		500C	08120-61410.....	150A
	585F	01111-16144.....	135B		695K		691A	08110-8201A.....	196	08120-61628.....	130A
	585G		135C	01552-00421.....	241A1	01642-03004.....	110B		871A		130B

PART NUMBER INDEX

PART NO.	SEC.NO.	PART NO.	SEC.NO.	PART NO.	SEC.NO.	PART NO.	SEC.NO.	PART NO.	SEC.NO.	PART NO.	SEC.NO.
08120-61628.....	462	08120-8201E.....	150A	08120-8401F.....	699I	08124-0201E.....	200D	08124-0501F.....	370	081A0-8161A.....	443
08120-61633.....	695J		150B		699J		244	08124-0551E.....	380B	081A0-8201A.....	210A
	740		180	08120-8451E.....	135A		380B	08124-0601F.....	443	081A0-8251A.....	130A
08120-62028.....	118B		210A		135B		465	08124-2251F.....	586	081A0-8451A.....	313B
	210A		210B		135C		480	08124-2301A.....	591B	081A0-8601A.....	311B
	220A		313B		150B		488	08124-2351A.....	403	081A1-0401A.....	311B
08120-62033.....	135A		317B		213B		699B		695J	081A1-0601A.....	317B
	695G	08120-8201F.....	230A	08120-8501E.....	220A		699C	08124-2401F.....	737	081A1-0701A.....	311B
	695H		310A	08120-8501F.....	591E		699H	08124-2651A.....	591D	081B0-8201A.....	111B
08120-62528.....	185B		310B		699H		699I		591E	081B4-0305M.....	180
	500A		699B		699I		699R	08124-4401A.....	591B		697A
08120-62533.....	135A		699C	08120-8601F.....	130B		699S	08124-4451A.....	403	081B4-2301A.....	380B
08120-63528.....	130A		699K	08120-8651E.....	135B		699U		591D	08223-81810.....	135B
08120-65028.....	210A		699L		135C		699V	08124-6351A.....	591D		135C
08120-8001A.....	697E	08120-8251E.....	110B		699G	08124-0201F.....	165	08124-6401A.....	737	08223-82210.....	111B
08120-8031A.....	210B		135A		699J		216A	08124-8601A.....	591A	08223-83210.....	140A
08120-8121E.....	165		135B	08120-8701E.....	135B		216B		591B	08223-88010.....	111A
	311A		135C		135C		230A		591D	08227-08010.....	110B
	311B		140B	08120-8751A.....	210B		497		591E	08251-04010.....	693B
08120-8121F.....	196		164B	08120-8751E.....	267		655		591F	08261-02510.....	233A
	241A1		210B	08120-8801E.....	140B		697A		591G	08267-03510.....	140A
	241B1		213B	08120-8851A.....	135B		697B	08146-6162G.....	221A	08291-45010.....	402
08120-8161E.....	135B		500A		135C		697D	08146-8302G.....	214	08310-31025.....	443
	135C		500C	08120-8901A.....	135B	08124-0251E.....	233B	08156-8201F.....	695C	08310-40612.....	695J
	150B		585F		135C		585D		695D	08310-41225.....	180
	164A		699H		210B		699I		695G	08310-51212.....	737
	221A		699I	08121-0201E.....	186B	08124-0251F.....	233A		695H	08310-61214.....	698D
	697B	08120-8251F.....	200A	08121-0201F.....	699H		488	08170-64510.....	210B	08310-61262.....	698D
08120-8161F.....	164A		267		699I		586	08170-8501A.....	130B	08310-61614.....	251
	165		655	08121-0251F.....	199A		697D	08171-0201A.....	112	08310-8452A.....	695I
	241A2		693A		199C	08124-0301E.....	380B		230B	08310-8601A.....	180
	253		699I	08121-0301E.....	186B		465	08171-0252A.....	135A	08310-8701A.....	180
	497		699R	08121-0301F.....	691B		591A	08171-0351A.....	112	08313-5102G.....	695C
	655		699S		699I		591B	08171-0401A.....	130A		695D
	697C	08120-8301E.....	135B	08121-0551F.....	691B		591D	08181-2301A.....	112		695G
	698A		135C	08121-0701E.....	186B		591E	08184-2251A.....	112		695H
	699B		200C	08121-0901A.....	186B		591F	08184-2351A.....	112		695J
	699C		200D	08124-0051A.....	230B		591G	08184-4351A.....	594	08330-5162A.....	680
	699E		210A	08124-0161E.....	697B		595B	08184-4501A.....	586	08340-4082A.....	165
	699F		221A	08124-0161F.....	173B		595C	08191-2251A.....	311B	08360-41012.....	695J
	699R	08120-8301F.....	200B		196		595D	08191-2401A.....	199A	08360-41026.....	586
	699S		230A		241A1	08124-0301F.....	693A		199C	08360-51012.....	695J
	699U	08120-8351E.....	200C		241A2		693B	08194-2651A.....	699I	08360-51014.....	241B1
	699V		200D		241B1		697D	08194-2951A.....	699I	08360-61225.....	241A1
	740		221A		241B2	08124-0351A.....	140A	081A0-6161A.....	130B		253
08120-8201E.....	110A	08120-8401E.....	135B		740	08124-0351F.....	591E	081A0-8121A.....	443		655
	135C		135C	08124-0201E.....	200B	08124-0401E.....	200A	081A0-8161A.....	216A		695J
	140B	08120-8401F.....	699H		200C	08124-0501A.....	655		216B	08360-6122A.....	402

PART NUMBER INDEX

PART NO.	SEC.NO.	PART NO.	SEC.NO.	PART NO.	SEC.NO.	PART NO.	SEC.NO.	PART NO.	SEC.NO.	PART NO.	SEC.NO.
08360-6122A.....	403	08911-1081A.....	180	08911-2401A.....	200D	08911-8481A.....	585F	08915-1441A.....	210B	08915-43610.....	737
08360-61626.....	698D		210A	08911-2421A.....	434		585G		488	08915-4381A.....	180
	698E		465	08911-2441A.....	210B	08911-FB800.....	697E		591B		226A
	737		484	08911-2461A.....	433	08911-FB801.....	199A		591D		267
08360-62010.....	173A		485		585B	08912-80610.....	110B		594		313B
	173B		695C		585D	08912-8421A.....	591A		699B		465
	691A		695D		585E		591F		699C		697E
08360-62025.....	180		695G		585F		591G		699E		737
08360-6202A.....	180		695H		585G		695J		699F		871A
08360-63026.....	698D		699I	08911-2481A.....	585A	08914-4601A.....	586		699R		871B
	698E	08911-1081G.....	135B		585B	08915-13600.....	150A		699S	08915-4382A.....	695I
08360-6302A.....	180		135C		585D	08915-13610.....	180		699U	08915-44000.....	135B
08360-81898.....	200C		140B		585E		586		699V		135C
	200D		200A		585F	08915-1381A.....	130B	08915-1461A.....	585B	08915-4401A.....	135B
08360-82526.....	697E		200B		585G		135B		585D		135C
	737		200C	08911-30610.....	586		135C		585E		200A
08360-8351A.....	465		200D	08911-3081A.....	233B		210B		585F		200B
08363-6162C.....	500B		213B	08911-3421A.....	695G		230B		585G		200C
	680		214		695H		233B		591D		200D
	695A		241A1	08911-3441A.....	488		253	08915-1481A.....	585A		230B
	695I		241A2		699B		484		585B		241B1
08513-41012.....	248		241B1		699C		697E		585D		500A
08523-51608.....	695J		260		699E		698D		585E		591A
08540-51210.....	253		267		699F		699E		585F		591B
08540-51642.....	695J		871A		699R		699F		585G		591D
08566-6122A.....	680		871B		699S		699H	08915-1501A.....	135C		591E
08723-11400.....	173B	08911-1401A.....	403		699U		699I	08915-2401A.....	135A		591F
08723-11600.....	173B		465		699V		871A	08915-2421A.....	434		591G
	462		500A	08911-3461A.....	497		871B		591B		693A
08723-12000.....	216A		591A	08911-3501A.....	135C	08915-1401A.....	112		591D		693B
08723-12300.....	196		591B		591A		130A		591E		695G
	216A		591D		591B		186B	08915-2441A.....	586		695H
08723-12400.....	697B		591E		591D		199A	08915-2461A.....	403	08915-4421A.....	199A
08723-15600.....	165		591F		591E		199C		433		199C
08723-16000.....	165		591G		591F		230B		594		591D
08723-17500.....	165		655		591G		655		737		591E
08911-10610.....	180		693A	08911-6081G.....	699G		693A	08915-2481A.....	402		695J
	695G		693B		699J		693B		591A		695J
	695H		695G	08911-6441A.....	586		695G		591B		699I
08911-10637.....	226A		695H	08911-8461A.....	585B		695H		591D	08915-4441A.....	591B
	241A2	08911-1401G.....	233A		585D	08915-1421A.....	112		591E		591D
	241B1	08911-1421A.....	465		585E		186B		591F		594
	241B2		699I		585F		199A		591G		699B
	244	08911-2081A.....	697D		585G		199C	08915-33610.....	210B		699C
	253	08911-2401A.....	135B	08911-8481A.....	585A		311B	08915-3381A.....	210A		699E
	500A		135C		585B		403	08915-43610.....	180		699F
	695J		200B		585D		465		210B		699R
	737		200C		585E		699I		465		699S

PART NUMBER INDEX

PART NO.	SEC.NO.	PART NO.	SEC.NO.	PART NO.	SEC.NO.	PART NO.	SEC.NO.	PART NO.	SEC.NO.	PART NO.	SEC.NO.
08915-4441A.....	699U	10001-4K74B.....	100	11026-01M02.....	110A	11140-59N00.....	110B	12010-GS00B.....	120A	12207-MA70A.....	120B
	699V	10001-4K77A.....	100	11026-53J00.....	111A	11140-FT860.....	110A	12010-GS00C.....	120A	12209-MA70A.....	120B
08915-4461A.....	591D	10001-GS01A.....	100	11026-61000.....	110B	11150-54T00.....	110B	12010-GS00D.....	120A	12210-MA70A.....	120B
	737	10001-GS04A.....	100	11026-FK100.....	173A	11232-FK100.....	112	12010-GS00E.....	120A	12211-MA70A.....	120B
08915-4481A.....	200B	10001-GS04B.....	100		173B	11232-GG30A.....	112	12010-GS07A.....	120A	12212-MA70A.....	120B
08915-4501A.....	135C	10001-GS07A.....	100	11033-43G03.....	118B	11232-GG30B.....	112	12010-GS07B.....	120A	12231-FY500.....	120A
08915-5381A.....	488	10001-GS11A.....	100	11039-VH002.....	111B	11233-FK100.....	112	12010-GS10A.....	120A	12232-FY500.....	120A
	500A	10001-GS14A.....	100	11040-FY501.....	111A	11233-GG30A.....	112	12010-GS10B.....	120A	12233-FY500.....	120A
	500C	10001-GS14B.....	100	11042-40K0J.....	102B	11233-GG30B.....	112	12010-GS10C.....	120A	12234-FY500.....	120A
	698D	10001-GS17A.....	100	11042-FY52J.....	102A	11252-FK000.....	112	12010-GS10D.....	120A	12235-FY500.....	120A
	699H	10001-GS81A.....	100	11044-1W400.....	111B	11253-FK000.....	112	12010-GS10E.....	120A	12236-FY500.....	120A
	699I	10001-GS84A.....	100	11044-1W401.....	111B	11270-FK00A.....	112	12010-GS17A.....	120A	12247-50K00.....	120A
08915-5401A.....	655	10001-GS84B.....	100	11044-1W402.....	111B	11270-FK30A.....	112	12010-GS17B.....	120A	12248-50K00.....	120A
08915-5441A.....	699K	10001-GS87A.....	100	11044-FU400.....	111A	11270-GG00A.....	112	12030-2W200.....	120B	12249-50K00.....	120A
	699L	10001-GS91A.....	100	11044-FU460.....	111A	11270-GG30A.....	112	12030-2W20A.....	120B	12250-50K00.....	120A
08916-13500.....	150A	10001-GS94A.....	100	11046-73402.....	110A	11277-77004.....	500C	12032-2S600.....	120B	12251-50K00.....	120A
08916-1381A.....	697D	10001-GS94B.....	100		135A	11392-50K00.....	110A	12033-2S612.....	120B	12252-50K00.....	120A
08916-3381A.....	196	10001-GS97A.....	100		210A	11713-40K00.....	230B	12033-AE003.....	120A	12279-43G05.....	110B
08916-34010.....	196	10005-GS00A.....	111A	11053-73400.....	110A	11715-FU400.....	230A	12035-2S61A.....	120B	12279-FF200.....	110A
08918-2081A.....	186B	10006-43G00.....	111B	11056-09D61.....	111B	11715-FU40A.....	230A	12036-GS00A.....	120A	12280-37525.....	120B
08918-3401A.....	210B	10006-FU410.....	111A	11056-FY500.....	111A	11715-NA00A.....	230B	12038-GS00B.....	120A	12280-37526.....	120B
	591A	10100-NA01E.....	100	11056-FY50A.....	111A	11716-6T000.....	230B	12100-1W402.....	120B	12280-37527.....	120B
	591B	10100-NA10A.....	100	11060-43G00.....	210B	11716-6T00A.....	230B	12100-1W40A.....	120B	12280-37528.....	120B
	591F	10100-NA12D.....	100	11060-FU400.....	210A	11719-37N00.....	230B	12100-FU400.....	120A	12280-37529.....	120B
	591G	10101-40K1K.....	102B	11060-W7001.....	210A	11719-37N0A.....	230B	12100-FU40A.....	120A	12293-0W800.....	110B
08918-3421A.....	465	10101-40K2K.....	102B	11061-FU400.....	210A	11720-NA002.....	117B	12100-FY500.....	120A	12293-P0500.....	110A
08918-3441A.....	402	10101-FY52K.....	102A	11061-NA003.....	210B	11720-NA00A.....	117B	12100-FY50A.....	120A	12297-FU400.....	110A
08931-3041A.....	140A	10101-FY54J.....	102A	11061-NA00A.....	210B	11810-43G00.....	118B	12109-43G00.....	120B	12298-34N00.....	110B
08931-4421A.....	173A	11000-FU400.....	110A	11062-07N00.....	210A	11810-75T00.....	118A	12109-D0210.....	120A	12303-FU400.....	120A
08931-71800.....	111A	11000-FY500.....	110A	11062-34N01.....	210B	11812-41B00.....	118A	12109-GQ70A.....	120A	12304-6K200.....	120B
08932-3021A.....	485	11001-FV00A.....	110B	11062-FY500.....	210A	11823-GS00A.....	118A	12111-2W20A.....	120B	12307-GX10A.....	120A
		11001-GY000.....	110A	11065-30000.....	150A	11826-40K00.....	118B	12111-FY500.....	120A	12309-61503.....	120B
	10000	11009-NA00A.....	110B	11065-63G00.....	220B	11828-FU400.....	118A	12112-43G00.....	120B	12309-FU400.....	120A
		11013-T9000.....	110B	11072-34N02.....	210B	11831-FU460.....	140A	12112-H1000.....	120A	12310-FU400.....	120A
10001-4K41A.....	100	11019-32201.....	110A	11072-50K01.....	210A	11836-GQ70A.....	118A	12117-2W20A.....	120B	12310-NA00C.....	120B
10001-4K44A.....	100	11019-90002.....	110B	11076-VH001.....	111B	11914-41K00.....	135B	12117-FY500.....	120A	12312-43G01.....	120B
10001-4K44B.....	100	11019-9000A.....	110B	11086-43G01.....	220B		135C	12118-2W20A.....	120B	12312-43G0A.....	120B
10001-4K47A.....	100	11021-J200A.....	110B	11098-2S600.....	111B	11915-J5502.....	135B	12118-FY500.....	120A	12312-50K00.....	120A
10001-4K51A.....	100		135B	11098-FY500.....	111A		135C	12119-2W20A.....	120B	12313-10600.....	110B
10001-4K54A.....	100		135C	11099-1W400.....	111B	11915-J550B.....	135C	12119-FY500.....	120A	12313-FJ110.....	310A
10001-4K54B.....	100		210B	11099-1W410.....	111B	11925-NA000.....	135B	12120-2W20A.....	120B		310B
10001-4K57A.....	100	11023-78200.....	110A	11099-1W411.....	111B	11925-NA00B.....	135C	12124-1W401.....	110B		311A
10001-4K61A.....	100	11024-25N0A.....	210A	11099-FY500.....	111A	11926-NA000.....	135B	12125-VC700.....	110B		380A
10001-4K64A.....	100	11024-54T00.....	110B	11110-6T301.....	110B		135C	12200-2S60B.....	120B	12313-GE00A.....	310B
10001-4K64B.....	100	11024-78200.....	110A	11110-FU400.....	110A	12010-2S606.....	120B	12201-FU400.....	120A	12315-FU410.....	120A
10001-4K67A.....	100	11024-85G0A.....	110A	11121-63G03.....	110B	12010-2S616.....	120B	12201-FY500.....	120A	12316-L2001.....	120B
10001-4K71A.....	100	11024-85G1A.....	110A	11128-01M00.....	110A	12010-2S620.....	120B	12205-40F00.....	111A	12334-FJ100.....	311A
10001-4K74A.....	100	11024-K0100.....	110A	11128-69200.....	110B	12010-GS00A.....	120A	12205-76200.....	120B	12334-GE00A.....	311B

PART NUMBER INDEX

PART NO.	SEC.NO.	PART NO.	SEC.NO.	PART NO.	SEC.NO.	PART NO.	SEC.NO.	PART NO.	SEC.NO.	PART NO.	SEC.NO.
12351-FU400	135A	13202-1W400	130B	13501-FU400	135A	14465-43G20	135C	16094-B8500	164A	16401-41K00	164B
12352-FU400	135A	13202-FU400	130A	13510-40K01	135B	14465-43G21	135B	16098-GS07A	164A	16405-T9005	164B
12353-FU400	135A	13203-54T01	130B		135C		135C	16119-GS00A	160A	16406-T9001	164B
12354-50K00	135A	13203-FY50A	130A	13510-FF200	135A	14711-58G02	140B	16125-Y4400	196	16407-T9001	164B
13001-54T03	130B	13205-40F00	130A	13560-54T00	135B	14719-45N01	140B	16132-43G00	135B	16407-W4900	164B
13001-GS00A	130A	13206-31N00	130B		135C	15010-1W402	150B		135C	16412-10H00	164B
13002-43G05	110B	13207-53F00	130A	14003-41K01	140B	15010-66202	150A	16132-FC200	196	16413-10H00	164B
13002-71200	110A	13207-D0111	130A	14003-GS01A	140A	15010-GQ70A	150A	16152-90H00	199B	16420-43G00	186B
13003-43G06	110B	13207-V1700	130B	14003-GS04A	140A	15020-78205	150A		199C	16420-E0100	110A
13003-43G07	110B	13207-V170A	130B	14004-0W800	140B	15025-43G01	150B	16152-90H05	199B	16439-17B0A	118A
13003-43G08	110B	13208-Z5500	130B	14004-GS00A	140A	15040-FU46A	221A		199C	16439-26E0A	210A
13010-06J00	130B	13209-43G01	130B	14035-31N00	140B	15050-59N00	150B	16156-GS07A	164A	16439-42L0A	210A
13010-78201	130A	13209-V7200	130A	14035-FY500	140A	15050-66201	150A	16163-Y4403	196	16439-42L0B	118A
13011-43G00	130B	13210-16A00	130A	14036-43G00	140B	15053-80G00	150B	16175-GS00A	160A	16439-56S0A	210A
13011-NA00B	135C	13212-54T01	111B	14037-42L01	140A	15056-02N00	110B	16175-GS00B	160A	16439-7S01C	118A
13012-54T00	130B	13222-43G00	130B	14037-VJ500	140B	15066-78200	150A	16185-FB000	199B	16439-9V702	196
13012-NA00B	135C	13223-43G01	130B	14049-76001	210A	15075-43G00	110B	16185-FB085	199B	16439-9V80A	196
13013-78200	130A	13224-0W800	111B	14053-42L00	210A	15108-NA00B	135C		199C	16439-FK300	214
13014-41K0A	135B	13231-54T02	130B	14053-42L0A	210A	15132-43G01	150B	16185-GS00A	160A	16439-V500B	118A
13016-41K00	135B	13231-H1001	130A	14053-FU400	210A	15132-66600	150A	16185-GS10B	165	16445-2S000	185B
13016-54T0A	130B	13234-43G01	130B	14055-GG10A	196	15133-06J01	150B	16188-GS00A	195A	16445-2S00A	185B
13016-NA00C	135C	13234-78200	130A	14056-FK100	196	15133-54T00	213B	16188-GT00A	195A	16501-FJ17A	165
13021-40K0A	135B	13235-78200	130A	14056-GS00A	210A	15134-MA70A	150B	16188-GT00B	195A	16501-FK370	165
	135C	13238-43G00	130B	14056-GS00B	210A	15188-NA00A	135C	16197-FU46A	164A	16501-GG30A	165
13021-43G01	120B	13238-FU40A	130A	14056-GS00C	210A	15191-41K01	135B	16214-16811	195A	16514-FJ100	165
13021-FY500	120A	13238-FY500	130A	14064-31N00	111B	15191-NA00B	135C	16237-FU460	195A	16523-FB486	737
13021-FY50A	120A	13252-43G02	130B	14064-54T00	140B	15192-41K01	135B	16263-GS07A	164A	16526-FB485	737
13024-0T600	130B	13252-FY500	130A	14065-41K00	135B		135C	16267-GS00A	165	16526-FJ170	165
13024-FY500	130A	13254-02N00	130A		135C	15208-01B02	150A	16270-GS01A	165	16526-FK370	165
13024-FY50A	130A	13255-43G00	130B	14069-82F00	140A	15208-01B0B	150A	16277-FU461	164A	16538-GG30A	165
13028-FU400	130A	13255-58000	130A		226A	15208-43G00	150B	16290-GS07A	164A	16542-FK300	165
13030-37500	130B	13256-43G01	130B	14069-82F0A	140A	15208-43G0A	150B	16306-FC301	196	16542-FK302	165
13031-41K00	135B	13256-43G02	130B		226A	15213-21002	150A	16306-FV00A	196	16546-FJ170	165
	135C	13256-W0400	130A	14075-40F04	210A	15213-43G01	110B	16310-GS00A	195A	16546-FK370	165
13034-41K01	135B	13257-63G01	130B	14075-FU460	210A	15238-VR80B	150B	16310-GS00B	195A	16546-GE20A	165
13034-FU400	135A	13258-63G01	130B	14080-50K00	210A	15241-16A01	150A	16310-GS00C	195A	16554-FB485	737
13034-NA01A	135C	13258-FY500	130A	14094-31U00	140A	15243-31N00	213B	16318-GS01A	164A	16558-FB485	737
13036-NA00A	135B	13258-FY510	130A	14165-GS00A	210A	15255-1GZ0A	111A	16328-GS00A	195A	16563-4K40A	221A
13036-NA00B	135B	13268-29N00	111B	14330-GS01B	164A	15255-1P110	111A	16328-GS00B	195A	16563-FJ100	165
13036-NA00C	135C	13268-29N0A	111B	14414-31N00	140B	15255-D5502	111B	16349-18V00	196	16575-FK102	165
13037-54T01	135B	13268-88V62	111A	14415-31N03	200B	15270-D0103	111B	16349-VS001	164A	16575-GG30A	165
	135C	13268-D0104	111B		200C	15280-90001	213B	16349-VS002	164A	16575-GG30B	165
13050-FU400	210A	13268-D010C	111B	14415-31N0A	200B	15300-76200	213B	16356-FU460	195A	16575-GG30C	165
13070-50K00	130A	13270-43G03	111B		200C	15303-61503	213B	16375-FU460	195A	16586-FK300	165
13081-40K00	110B	13270-FY50A	111A		200D	15304-61501	213B	16379-FU460	195A	16586-FK301	165
	130B	13274-B1101	111A	14464-21U00	586	16065-0H600	164A	16388-FU460	195A	16586-FK302	165
13201-1W400	130B	13289-58000	130A	14465-43G02	210B	16065-FU460	164A	16389-FU460	195A	16586-GG00A	165
13201-FY500	130A	13297-43G00	130B	14465-43G20	135B	16065-GU60A	195A	16400-41K00	164B	16586-GG30A	165

PART NUMBER INDEX

PART NO.	SEC.NO.	PART NO.	SEC.NO.	PART NO.	SEC.NO.	PART NO.	SEC.NO.	PART NO.	SEC.NO.	PART NO.	SEC.NO.
16587-GG30A	140B	16678-43G01	185B	17507-GG31B	173B	17926-FB485	199C	18017-FK200	180	20135-B5000	200C
16588-FK311	165	16678-43G0A	185B	17507-GL21A	173B	17930-90H00	199B	18020-FK103	180		200D
16589-FK300	165	16680-40K00	185B	17510-FB000	173A	17932-6G100	199A	18020-FK200	180		695J
16590-GS00A	140A	16681-40K00	185B		173B		199C	18124-FK200	180	20135-GG00A	200A
16590-GS00B	140A	16682-40K00	185B	17510-GG10A	173B	17934-6G400	199A	18130-FK000	180	20138-B5000	200A
16590-GS00C	140A	16683-40K00	185B	17520-FU461	164A	17934-FB485	199C	18130-FK010	180		200B
16599-N3600	165	16696-43G0B	185B	17520-FV60A	173B	17935-FB085	199C	18130-FK101	180		200C
16600-63G21	185B	16697-21N0A	185B	17520-GH00A	196	17937-6G100	199A	18167-FK100	180		200D
16600-GS07A	164A	16698-43G0B	185B	17521-41K00	164B		199C	18167-GG00B	180	20153-GG00A	200A
16600-GS07B	164A	16699-43G0A	185B	17522-GS01A	164A	17937-Y4400	196	18167-GG10A	180	20465-GG00A	200A
16600-GS17A	164A	16700-NA01B	186B	17522-GS01B	164A	17937-Y4410	196	18201-GG10A	180	20557-FK500	200C
16600-GS17B	164A	16700-NA01D	186B	17523-GG36C	173B	17938-6G100	199A	18201-GG10C	180		200D
16600-GU61A	164A	16701-R8100	186B	17525-00H05	173B		199C	18201-GG11A	180	20557-FK501	200C
16610-43G01	185B	16735-NA00A	130B	17525-FV40A	173A	17939-FB085	199A	18215-FK001	180		200D
16610-GS07A	164A	16742-37501	186B	17525-FV60A	173B		199C	18215-FK102	180	20558-FK500	200C
16610-GS07B	164A	16787-NA00A	186B	17525-GG30A	173B	17939-FB086	199A	18919-AM810	180		200D
16610-GS07E	164A	16790-38G00	186B	17527-FJ201	196		199C	19270-35V10	186B	20558-GE20A	200D
16610-GS17A	164A	16794-10G00	164B	17571-5L30A	164A	17940-6G100	199A			20585-GL10A	200D
16610-GS17B	164A		185B	17571-5V002	118A		199C	20000		20602-01M00	200A
16610-GS17E	164A		210B		164A		695J				200B
16612-43G00	185B	16811-54T00	186B	17598-6G100	199A	17941-FB085	199A	20010-GG00A	200A		200C
16613-43G00	185B	16814-43G01	186B		199C		199C	20010-GG01A	200A	20602-01M0A	200A
16613-43G01	185B	16919-W1602	196	17598-FB085	199C		695J	20010-GG02A	200A		200B
16613-43G02	185B	17040-FB100	173A	17598-FB086	199C	17941-FB086	199A	20010-GG30A	200B		200C
16613-43G03	185B	17040-FW40A	173A	17599-6G100	199A		199C		200C		200D
16613-43G04	185B	17052-FU460	195A		199C	17942-FB085	199C		200D	20602-41G0A	140B
16613-43G05	185B	17053-FU460	195A	17904-FC300	196	17942-FB087	199A	20040-FK50A	200C	20606-00H00	200A
16613-43G06	185B	17054-FU460	195A	17906-FC201	196	17943-6G100	199A	20040-GG11A	200D		200B
16613-43G07	185B	17099-85G00	110A	17906-FV40A	196		199C	20041-FK500	200C		200C
16613-43G08	185B	17099-85G0A	110A	17907-90H18	196	17946-6G100	199A	20046-FK500	200C		200D
16613-43G09	185B	17108-K7005	164A	17907-90H20	196		199C	20051-FK105	200B	20629-40K10	200A
16615-43G00	185B	17111-50K00	164A	17908-90H70	196	17946-FW10A	199A	20051-FK106	200B		200B
16616-43G00	185B	17111-50K60	164A	17908-FC00D	196		199C	20051-FK305	200B		200C
16618-5L300	164A	17111-GS01A	164A	17915-FB300	199A	17951-6G100	199A	20051-GG00A	200A		200D
16618-FU460	164A	17224-L1100	173A	17915-FB485	199C		199C	20056-FK160	200A	20638-61500	200C
16618-GX11A	164A		173B	17920-FB601	196	17958-16811	195A	20056-FK161	200A		200D
16620-90009	185B	17232-6K201	691A	17920-FC086	196	17959-GY360	195A	20100-FK102	200B	20638-FK10A	200A
16625-43G00	185B	17251-FV00A	173A	17920-FC303	196	17960-GT00A	195A		200C		200B
16625-43G02	111B		173B	17924-FC400	196	17960-GU60A	195A	20100-FK170	200A		200C
16626-43G00	185B	17326-6G000	173A	17925-6G600	199B	17962-FU460	195A	20100-FK180	200A		200D
16627-43G00	185B	17342-FK10A	173A	17925-FB300	199A	17962-FU46A	195A	20100-FK370	200A	20651-GG00A	200A
16629-43G01	185B		173B	17925-FB485	199C	17980-FB085	199C	20100-GG00A	200A	20692-65J00	200A
16638-GX11A	164A	17503-FB401	173A	17925-FW50A	199A	17981-FB085	199C	20100-GG03A	200B		200B
16650-43G01	111B	17503-FK100	173B		199B	18005-FJ410	180	20100-GG13A	200B		200C
16666-43G00	185B	17504-FJ211	196		199C	18005-FK000	180	20100-GG16A	200D		200D
16666-43G0A	185B	17504-FK111	196	17926-90H75	199B	18010-FK000	180	20100-GG33A	200B	20711-FK501	200C
16670-43G00	185B	17507-FV60A	173B	17926-FB090	199C	18010-FK200	180	20135-B5000	200A	20711-GG10A	200D
16670-43G0A	185B	17507-GG30A	173B	17926-FB300	199A	18012-FK10A	180		200B	20721-GG10A	200C

PART NUMBER INDEX

PART NO.	SEC.NO.	PART NO.	SEC.NO.	PART NO.	SEC.NO.	PART NO.	SEC.NO.	PART NO.	SEC.NO.	PART NO.	SEC.NO.
20721-GG10A	200D	21475-GG40A	214	21642-L3000	241A2	23118-7T40A	231B	23338-M4900	233B	24014-GG01A	241A1
20800-VC225	200A	21476-FK300	214		699J	23118-GY360	231A	23340-0M210	233A	24014-GG01B-T	241A1
20800-VD90A	200A	21477-FK300	214	21643-FK30A	214	23120-0M000	231B	23340-0Y000	233B	24014-GG01C	241A1
21010-FU425	210A	21496-GG30A	214	21647-40K00	241A2	23120-0M00A	231B	23341-43G00	233B	24014-GG01D-T	241A1
21010-NA00J	210B	21501-FK101	214		497	23120-22J20	231A	23343-6T000	233B	24014-GG02A	241A1
21014-07N00	210A	21501-GG30A	214	21710-FK310	214	23120-30R10	231A	23343-GS20A	233A	24014-GG02B-T	241A1
21014-34N01	210B	21503-FK100	214	21710-FK31A	214	23124-FF110	231A	23344-57J05	233B	24014-GG02C	241A1
21035-51H00	210B	21503-GG30A	214	21711-FK310	214	23124-GY360	231A	23354-6T000	233B	24014-GG02D-T	241A1
21046-NA000	210B	21514-V5200	214	21711-FK31A	214	23124-NA00B	231B	23354-W9810	233A	24014-GG04A	241A1
21048-NA000	210B	21515-16H00	200C	21712-FK31A	214	23127-FF110	231A	23357-6T000	233B	24014-GG04B-T	241A1
21051-GY360	210A	21525-FK300	200B	21723-FK300	214	23127-GY360	231A	23358-07G00	233B	24014-GG05A	241A1
21051-NA00A	210B		214	21730-FW40A	214	23127-NA00A	231B	23360-0M210	233A	24014-GG05B-T	241A1
21052-90105	210B	21538-FK301	214	21730-GG10A	214	23131-20P10	231A	23361-42L70	233A	24014-GG06A	241A1
21054-NA000	210B	21548-FK300	200B	21741-FK200	214	23142-0B000	231A	23363-07G00	233B	24014-GG06B-T	241A1
21060-FU40A	210A		214	21742-FK31A	214	23142-31U00	231B	23378-1W400	233B	24014-GG10A	241A1
	210B	21560-FV60A	214	21745-FJ10A	214	23150-43G01	135B	23379-1W400	233B	24014-GG10B-T	241A1
21064-FU30A	210A	21560-FV60B	214	21746-FV00A	214	23150-43G0C	135C	23381-FU410	233A	24014-GG10C	241A1
21079-K9760	210A	21562-FC000	214	22131-4M505	135A	23150-65N0A	231B	23385-50Y12	233A	24014-GG10D-T	241A1
21113-90003	135B	21563-FC000	214	22131-55K10	221A	23150-FU410	231A	23465-M4900	233B	24014-GG11A	241A1
	135C	21621-FJ100	311A	22177-4K40A	221A	23150-GY360	231A	23465-W9810	233A	24014-GG11B-T	241A1
21200-05D02	210B	21621-FJ110	311A	22177-GX11A	221A	23153-70T12	231A	23470-6T000	233B	24014-GG11C	241A1
21200-VJ200	210A	21621-FK101	216A	22316-T820D	118B	23156-0B000	231A	23480-M0110	233A	24014-GG11D-T	241A1
21304-34N00	213B	21621-GG00A	216A	22317-GS04A	223A	23200-CN10A	231B	23570-70008	697E	24014-GG12A	241A1
21305-54T02	213B		216B	22318-GS04A	196	23215-3S416	231A	23710-4K40A	226A	24014-GG12B-T	241A1
21305-54T04	213B	21623-GE00A	216A		223A	23215-GY360	231A	23710-4K50A	226A	24014-GG12C	241A1
21305-54T0A	213B		216B	22365-EY00A	221A	23230-7T402	231B	23710-GS00A	226A	24014-GG12D-T	241A1
21334-02N00	150B	21623-GE00B	216A	22401-FU412	220A	23300-700-AL	991	23710-GS03A	226A	24014-GG14A	241A1
	213B		216B	22401-FU42A	220A	23300-1W400	233B	23710-GS06A	226A	24014-GG14B-T	241A1
21334-05D04	213B	21628-FJ110	311A	22435-FU400	220A	23300-GS20A	233A	23710-GS10A	226A	24014-GG14C	241A1
21355-54T00	213B	21631-FK102	216A	22448-AR215	220A	23300-GS20B	233A	23710-GS13A	226A	24014-GG14D-T	241A1
21430-FK300	214	21631-FK103	216A	22465-8J115	220A	23302-6J010	233A	23710-GS16A	226A	24014-GG20A	241A1
21435-14H20	214	21631-FK10A	216A	22630-10G00	210B	23305-09500	233B	23712-FV801	226A	24014-GG20B-T	241A1
21435-24H80	214	21631-GG00A	216A	22630-44B20	210A	23306-1W400	233B	23712-GG10A	226A	24014-GG20C	241A1
21435-89910	214	21631-GG00B	216A	22680-7S000	165	23310-0M210	233A	23731-6J90B	135A	24014-GG20D-T	241A1
21435-89946	214		216B	22690-GS00A	226A	23310-0Y000	233B	23731-6J90C	135A	24014-GG21A	241A1
21435-89960	214	21631-GG00C	216A	22690-GU60A	226A	23312-0W010	233A	23731-6N20A	135A	24014-GG21B-T	241A1
21440-FK300	214		216B	23100-FU410	231A	23312-1S710	233A	23731-6N20C	135A	24014-GG21C	241A1
21444-FK300	214	21631-GG01A	216B	23100-GY360	231A	23312-6T000	233B	23731-6N21A	135A	24014-GG21D-T	241A1
21450-FC30A	214	21631-GG01B	216B	23100-NA00B	231B	23318-6T000	233B	24012-FB085	267	24014-GG22A	241A1
21450-FC31A	214	21631-GG01C	216B	23102-0S300	231B	23318-FU410	233A	24012-FB090	267	24014-GG22B-T	241A1
21450-FK30A	214	21632-FK101	216A	23102-50K15	231A	23319-M4900	233B	24012-FE300	260	24014-GG22C	241A1
21450-FK31A	214	21632-FK102	216A	23102-GY360	231A	23322-50Y12	233A	24012-FE305	260	24014-GG22D-T	241A1
21460-FC30A	214	21632-FK10A	216A	23108-0S30A	231B	23322-6T000	233B	24012-FJ000	260	24014-GG30A	241B1
21460-FC31A	214	21632-GG00A	216A	23108-50K15	231A	23325-42L70	233A	24012-FJ005	260	24014-GG30B-T	241B1
21460-FK30A	214		216B	23108-GY360	231A	23333-W2500	233B	24014-GG00A	241A1	24014-GG30C	241B1
21460-FK31A	214	21632-GG01A	216B	23115-20P10	231A	23337-0W011	233A	24014-GG00B-T	241A1	24014-GG30D-T	241B1
21473-FK302	214	21632-GG01B	216B	23115-47N10	231A	23337-0Y000	233B	24014-GG00C	241A1	24014-GG31A	241B1
21475-FK10A	214	21632-GG01C	216B	23118-47N10	231A	23338-01N10	233A	24014-GG00D-T	241A1	24014-GG31B-T	241B1

PART NUMBER INDEX

PART NO.	SEC.NO.	PART NO.	SEC.NO.	PART NO.	SEC.NO.	PART NO.	SEC.NO.	PART NO.	SEC.NO.	PART NO.	SEC.NO.
24014-GG31C.....	241B1	24210-89944.....	253	24310-FL200.....	241B1	24813-GG20A.....	248	25239-GG30A.....	253	26011-61K00.....	260
24014-GG31D-T...	241B1	24210-GS00A.....	226A	24313-FL101.....	241A1	24814-GG10A.....	248	25240-FJ10A.....	110A		267
24018-FJ401.....	240	24210-GS00B.....	226A	24313-FL200.....	241B1	24814-GG11A.....	248	25240-Z550A.....	150B	26022-51K10.....	260
24018-GG10A.....	240	24210-S0900.....	241A1	24319-C9905.....	164A	24814-GG12A.....	248	25250-FK100.....	241A2	26122-FE300.....	261
24022-FJ000.....	241A1		241A2	24319-FK110.....	241A1	24814-GG12D.....	248	25250-GG00A.....	695J	26130-FE300.....	261
	241B1		241B1		241B1	24814-GG20A.....	248	25255-FJ100.....	241A2	26131-FE300.....	261
24022-FJ102.....	241A2		241B2	24319-FK115.....	241A1	24814-GG21A.....	248	25258-9G100.....	241A2	26293-51K00.....	260
24022-FJ400.....	241B1	24210-S090A.....	230B		241B1	24814-GG22A.....	248	25280-FW40A.....	871A		267
24027-FW80A.....	253	24211-89944.....	111B	24319-FK120.....	241A1	24814-GG22D.....	248		871B	26293-FJ10A.....	260
24027-FW80B.....	253		164B		241B1	24841-97H50.....	267	25320-GB000.....	251		267
24027-FW80C.....	253		210B	24319-FK130.....	241A1	25060-FB001.....	173B	25417-51K00.....	992	26311-FB00A.....	260
24028-FJ100.....	241A2		213B		241B1	25070-FK100.....	693A	25417-GB00A.....	992	26311-FV00A.....	260
24028-GG800-T...	241A2	24216-S5801.....	695C	24321-FK100.....	241A1		693B	25432-FB800.....	253	26334-FA000.....	265
	241B1		695D		241B1	25080-89903.....	210A	25500-F9701.....	199A	26334-GE00A.....	265
	241B2		695G	24324-FL101.....	241A1		210B		199C	26391-FE300.....	261
24028-GG10A.....	241A2		695H	24324-FL200.....	241B1	25080-FK100.....	311A	25500-FB400.....	871A	26521-FK10A.....	265
	241B1	24216-S5802.....	110A	24335-89900.....	241A1		311B	25500-FB40A.....	871A	26550-FK100.....	265
	241B2		110B		241B1	25150-GG10B.....	251	25541-FK000.....	251	26553-FK100.....	265
24034-FB40A.....	871A		240	24341-10Y01.....	164A	25152-FK100.....	251	25541-GA10A.....	251	26574-FK100.....	265
24034-FL100.....	241A2		586	24341-10Y03.....	164A	25230-18A01.....	253	25542-FK000.....	251	26580-FB085.....	267
	241B1	24216-W1000.....	173B	24346-79981.....	241B1	25230-79981.....	241A2	25543-FK000.....	251	26580-FB086.....	267
	241B2		500A	24346-VS000.....	164A		241B1	25560-FK20A.....	251	26580-FB087.....	267
24034-FW80B.....	871B		695J	24380-FK111.....	253		241B2	25560-GG11A.....	251	26580-FB090.....	267
24038-FB800.....	241A1		698A	24380-FK26A.....	253		253	25562-FK000.....	251	26580-FB091.....	267
	241B1		698D	24380-GE00C.....	253		695J	25562-GA10A.....	251	26580-FB092.....	267
24038-FB801.....	248		698E	24390-FK111.....	253	25230-79982.....	253	25563-GA10A.....	251	26633-FB085.....	267
24043-GG10A.....	695J		699E	24390-FK266.....	253		695J	25565-FB40A.....	871A	26633-FB091.....	267
24075-GS00A.....	221A		699F	24410-FB00A.....	244	25230-FK110.....	253	25565-FK101.....	253	26633-GA90B.....	267
24075-GY360.....	221A		699H	24410-FB40A.....	244	25230-FK12A.....	253	25565-FK11A.....	253	26633-GA90D.....	267
24080-FK111.....	241A1		699I	24420-M6600.....	244	25230-GE00A.....	253	25565-FK120.....	253	26634-GA90B.....	267
24080-GG30A.....	241B1	24220-55Y00.....	118A	24425-89906.....	244	25232-FK100.....	253	25565-FK200.....	693A	26717-89900.....	261
24110-FJ360.....	241A1	24220-FJ10A.....	465	24428-FB100.....	244	25235-N8500.....	241A2	25565-FW40A.....	871B	26717-FK100.....	265
	241A2	24220-FU400.....	118A	24428-FB110.....	244		241B1	25565-FW80B.....	871B	26717-FK110.....	265
24110-GG30A.....	241B1	24220-GS01B.....	164A	24445-FJ301.....	244		241B2	25565-GG00A.....	695J	28351-89902.....	241A1
24110-GG31A.....	241B1	24220-VJ264.....	223A	24445-GG10A.....	244		253	25565-GG10A.....	695J	29310-GG10A.....	296
24116-FK405.....	241A1	24222-89933.....	216B	24810-GG10A.....	248		695J	25565-GL00A.....	253	29310-GG10B.....	296
	241A2	24225-79900.....	241A1	24810-GG11A.....	248	25235-N853A.....	241A2	25565-GL00B.....	253	29310-GG10D.....	296
24117-FK402.....	241A2	24225-79902.....	695K	24810-GG12A.....	248		241B1	25565-GL00C.....	253	29310-GG10E.....	296
24136-FU460.....	221A	24225-79960.....	241A1	24810-GG20A.....	248		241B2	25568-FK000.....	251	29310-GG10F.....	296
24136-GS00A.....	221A		241B1	24810-GG21A.....	248		253	25569-FK000.....	251	29310-GG10G.....	296
24136-GY360.....	221A		241B2	24810-GG22A.....	248		695J	25620-FK105.....	253	29310-GG13A.....	296
24210-3J100.....	180	24225-89960.....	216A	24810-GG800.....	248	25238-51K00.....	253	25620-GH10A.....	253	29310-GG13B.....	296
24210-89932.....	253	24238-FC400.....	241A1	24810-GG80A.....	248	25238-FA20A.....	695J	25640-GH10A.....	253	29310-GG13D.....	296
24210-89944.....	180	24238-FK100.....	241A1	24810-GG810.....	248	25238-FV00A.....	253	25650-50K00.....	253	29310-GG13E.....	296
	240	24238-FK205.....	241A1	24810-GG81A.....	248	25238-FV00B.....	253	25911-FK100.....	311A	29310-GG13F.....	296
	241A1	24238-FK210.....	241A1	24810-GG82A.....	248	25239-FA310.....	695J		311B	29310-GG13G.....	296
	241A2	24261-51K00.....	265	24810-GG83A.....	248	25239-FV00A.....	253	26010-FE300.....	260	29310-GG15A.....	296
	241B1	24310-FL101.....	241A1	24813-GG10A.....	248	25239-FV00B.....	253		267	29310-GG15E.....	296

PART NUMBER INDEX

PART NO.	SEC.NO.	PART NO.	SEC.NO.	PART NO.	SEC.NO.	PART NO.	SEC.NO.	PART NO.	SEC.NO.	PART NO.	SEC.NO.
29310-GG15F	296	31307-FC000	317B	31357-FK30A	214	31536-41K00	315B	31743-FJ110	317A	32137-FJ100	380A
29310-GG20A	296	31309-FJ100	311A	31365-FJ100	313A	31536-FJ100	315A	31744-FC010	317B	32141-FJ10A	314A
29310-GG20B	296	31310-GE00A	311B	31375-FJ10A	311A	31537-41K00	315B	31744-FJ100	317A	32203-50K00	314B
29310-GG23A	296	31312-FJ100	311A	31377-FJ100	311A	31537-41K01	315B	31744-FJ121	317A	32203-FU400	120A
29310-GG23B	296	31315-FJ100	311A	31377-FJ110	311A	31537-41K02	315B	31751-FJ100	317A	32204-GE00A	315B
29310-GG25A	296	31315-FJ110	315A	31377-FJ121	311A	31537-41K03	315B	31752-FJ100	317A	32220-GE00A	314B
29310-GG25B	296	31315-GE00A	311B	31377-FJ131	313A	31537-41K04	315B	31752-FJ110	317A	32237-FJ100	315A
29432-FV800	296	31319-40K00	317B	31377-FJ140	313A	31537-41K05	315B	31754-FJ100	317A	32237-FJ110	315A
29459-FK210	586	31319-FJ100	311A	31377-FJ150	313A	31537-FJ100	315A	31755-FC000	317B	32237-FJ120	315A
29459-GG21A	586	31319-FJ111	311A	31377-FJ160	311A	31538-41K00	315B	31755-FC001	317B	32237-FJ130	315A
29460-GA00A	695J	31319-FJ120	311A	31377-FJ170	313A	31538-FJ100	315A	31755-FJ100	317A	32237-FJ140	315A
29460-GG10A	695J	31326-FJ100	311A	31377-FJ180	313A	31552-41K00	315B	31756-FJ100	317A	32237-FJ150	315A
29485-6K20A	695J	31326-FJ110	311A	31377-FJ190	313A	31552-FJ100	315A	31756-FJ110	315A	32247-20100	580B
		31326-FJ120	311A	31377-FJ200	311A	31568-41K00	315B	31757-FJ100	317A		580F
30000		31327-FJ100	311A	31377-FJ211	311A	31568-FJ100	315A	31761-FJ10A	317A	32275-GE00A	315B
		31335-FJ100	313A		465	31675-FC000	317B	31761-GE00A	317B	32281-GE00A	314B
30411-FU400	135A	31336-FJ100	313A	31377-FJ220	311B	31705-FJ20A	317A	31762-FC000	317B	32357-FJ100	315A
30411-GE00B	310B	31337-FJ10A	313A	31377-GE00A	311B	31705-GG00A	317B	31762-FJ10A	317A	32357-FJ110	315A
30411-NA00A	110B	31337-FJ110	313A	31395-GE00A	311B	31709-FJ101	317A	31763-FJ10A	317A	32357-L1005	315B
30412-P5100	110A	31340-GE00A	313B	31421-FJ101	315A	31715-GE00A	317B	31763-FJ110	317A	32858-FC000	317B
	110B	31341-FC000	313B	31421-GE00A	315B	31716-FJ100	317A	31764-FJ10A	317A	32884-FJ100	380A
30413-61700	311B	31341-FJ100	313A	31427-40K00	315B	31717-FJ100	317A	31765-FC000	317B	32884-GG30A	380B
	380B	31343-FC000	313B	31429-40K10	315B	31719-FJ100	317A	31767-FJ100	317A	32888-GE00A	317B
30420-FJ100	310A	31343-FJ10A	313A	31429-FJ100	315A	31721-FC000	317B	31767-FJ110	317A	33023-90000	135B
30422-FJ100	310A	31343-FJ110	313A	31441-GE00A	315B	31722-FJ100	317A	31767-FJ120	317A		135C
30672-FJ11J	460	31343-FJ120	311A	31451-FJ101	315A	31723-FC000	317B	31768-FJ100	317A	33124-FK000	380A
30769-FJ110	311A		317A	31485-FJ100	311A	31723-FJ100	317A	31768-FJ120	317A	33124-FK010	380A
	465	31343-FJ130	311A	31487-00H00	315B	31723-FJ110	317A	31769-FC010	317B	33124-FK020	380A
30770-FJ110	465		317A	31487-FJ100	315A	31723-FJ120	317A	31769-FJ100	317A	33124-GG02B	380B
30770-GE00A	465	31343-FJ140	311A	31487-GE00A	315B	31723-FJ130	317A	31769-FJ130	317A	33124-GG02C	380B
31009-FJ000	200B	31343-FJ150	313A	31489-FJ100	314A	31724-FC000	317B	31769-FJ140	317A	33125-33G00	314B
31009-FJ100	200C	31343-FJ160	311A	31493-FJ101	314A	31728-40K00	313B	31769-FJ150	317A	33140-7S110	314B
	200D	31343-FJ170	313A	31502-GE00A	315B	31728-FJ10B	313A	31769-FJ200	317A	33221-GE00A	314B
	310A	31343-X0100	313B	31511-FJ101	315A	31729-40K00	313B	31777-FJ100	317A	33296-43G00	230B
	310B	31344-FJ10A	313A	31511-GE00A	315B	31733-FC000	317B	31841-FC000	317B	33320-40K0A	135B
31009-FJ120	310A	31344-L1210	313B	31515-41K00	315B	31734-FJ100	317A	31842-FC001	317B		135C
31011-FJ100	310A	31346-FJ10A	313A	31515-FJ10A	315A	31734-FJ10A	317A	31850-GE00A	313B	33320-FK000	380A
31011-GE00A	310B	31346-L1210	313B	31516-41K00	315B	31734-L1000	313B	31859-FC000	313B	33320-FK010	380A
31020-FJ200	310A	31346-L1211	313B	31516-FJ10A	315A		317B	31960-GE00A	317B	33320-FK020	380A
31020-GG00A	310B	31346-L1212	313B	31521-41K00	315B	31737-FC000	317B	31961-FJ10A	317A	33320-GG33A	380B
31086-FJ100	311A	31347-FJ10A	313A	31521-FJ100	315A	31737-FJ100	317A	31962-FJ10A	317A	33320-GG33B	380B
31086-GE00A	311B	31347-L1000	313B	31526-41K00	315B	31737-FJ10A	317A	31968-FJ100	317A	33378-40K00	135B
31086-GE00B	311B	31347-L1001	313B	31526-FJ100	315A	31741-FC000	317B	31968-FJ110	317A		135C
31100-FJ200	311A	31347-L1002	313B	31530-41K00	315B	31742-FC000	317B	31968-GE00A	317B	33379-40K00	135B
31100-GE00B	311B	31350-FJ10A	313A	31532-41K00	315B	31742-FJ100	317A	32103-14600	311B	36010-FK101	443
31100-GE01B	311B	31357-FJ110	311A	31532-FJ100	315A	31742-FJ110	317A	32134-GE00A	311B	36014-FK101	443
31300-GE00A	311B		313A	31534-41K00	315B	31743-11H00	313B	32136-FJ100	380A	36019-FK101	443
31301-FJ101	311A	31357-FJ120	313A	31534-FJ10A	315A	31743-FJ100	317A	32136-GE00A	380B	36410-FK100	443

PART NUMBER INDEX

PART NO.	SEC.NO.	PART NO.	SEC.NO.	PART NO.	SEC.NO.	PART NO.	SEC.NO.	PART NO.	SEC.NO.	PART NO.	SEC.NO.
36410-GG00A	443	38151-GG31A	380B	38300-FK310	380A	38427-Z5003	380B	40225-90001	433	43224-C0400	433
36455-41K01	443	38151-GG31B	380B	38300-GG30A	380B	38428-FK000	380A	40225-L0700	433	43224-T5400	434
36456-11H00	173B	38151-GG31C	380B	38300-GG31A	380B	38434-FK300	380A	40227-FK000	403	43224-T540A	434
	443	38151-GG32A	380B	38310-FK000	380A	38434-Z5000	380B	40262-FJ100	403	43231-FK001	402
36456-GB400	443	38151-GG32B	380B	38310-FK300	380A	38440-FK000	380A	40264-FJ100	403	43234-FK00A	402
36530-FK001	443	38151-GG32C	380B	38310-GG30A	380B	38440-FK300	380A	40292-FJ100	403	43241-00Z0A	433
36530-FK30A	443	38151-GG33A	380B	38312-FK000	380A	38443-Z5007	380B	40292-J100P	403	43241-90001	433
36531-FK001	443	38151-GG33B	380B	38312-FK300	380A	38952-90000	135C	40300-FB700	434	43241-FK000	433
36531-FK30A	443	38151-GG33C	380B	38312-GG30A	380B			40300-L1109	434	43254-FK000	402
37000-FJ100	370	38151-GG34A	380B	38314-Z5002	380B	40000		40300-L1309	434	43270-FK000	402
37120-FJ101	370	38151-GG34B	380B	38315-FK000	380A			40310-FB700	434	43271-FK000	402
37120-GE00A	370	38151-GG34C	380B	38315-FK010	380A	40002-FK001	403	40310-L1100	434	43300-FB400	433
37510-FJ100	314A	38151-GG35A	380B	38316-FK000	380A	40005-FK000	403	40310-L1300	434	43300-FB500	433
37510-FJ110	314A	38151-GG35B	380B	38316-FK300	380A	40006-47600	403	40312-L1102	434	43300-FB585	433
	315A	38151-GG36A	380B	38319-FK000	380A	40008-47600	403	40312-L1302	434	43300-FB600	433
37510-FJ120	380A	38151-GG36B	380B	38319-Z5000	380B	40014-FK000	403	40535-41400	317B	43300-FB685	433
37510-FJ130	380A	38151-GG37A	380B	38320-FJ100	380A	40016-FK000	403	40571-FJ100	403	43300-FB700	433
37510-GE00A	380B	38151-GG37B	380B	38322-55100	402	40018-FJ100	403	40572-FJ100	403	43300-FB706	433
37510-GE00B	380B	38151-GG38A	380B	38331-GG30A	380B	40018-FK100	403	40573-FJ100	403	43300-FB785	433
37516-FJ100	314A	38151-GG38B	380B	38331-GG31A	380B	40022-FK000	403	43010-GG30A	402	43300-L1104	433
37532-FJ101	370	38151-GG39A	380B	38351-FK000	380A	40023-FJ100	403	43026-FK000	402	43301-FB400	433
37532-FK001	370	38151-GG39B	380B	38351-GG30A	380B	40024-L1100	403	43026-FK301	402	43301-FB600	433
38100-FK000	380A	38154-FK000	380A	38352-NA000	380B	40030-L1100	403	43027-FJ100	402	43301-FB706	433
38100-FK300	380A	38154-FK010	380A	38353-FK000	380A	40033-FK000	403	43058-FJ100	402	43303-FB585	433
38100-GG30A	380B	38154-FK020	380A	38405-GG30A	380B	40034-FK000	403	43059-FJ10A	402	43303-FB685	433
38102-FK000	380A	38164-FK000	402	38411-GG30A	380B	40037-FJ101	403	43060-FJ100	402	43304-FB585	433
38102-Z5005	380B	38164-FK300	402	38420-FK000	380A	40038-48200	465	43070-FK000	402	43304-FB685	433
38120-FK000	380A	38164-G30AP	402	38420-FK300	380A	40041-FJ100	403	43080-FK001	402	43305-FB400	433
38127-FJ100	380A	38164-GG30A	402	38420-Z500E	380B	40047-FK000	403	43080-FK301	402	43305-FB401	433
38127-FJ110	380A	38164-K000P	402	38420-Z5010	380B	40070-FJ100	403	43081-FK001	402	43305-FB585	433
38127-FJ120	380A	38167-FJ101	402	38423-FK000	380A	40070-GB00B	403	43081-FK301	402	43305-FB685	433
38127-FJ130	380A	38171-FJ10A	380A	38423-FK300	380A	40079-FK001	403	43084-FK000	402	43305-FB700	434
38127-FJ140	380A	38171-FJ11A	380A	38423-Z5005	380B	40079-FK00A	403	43087-FJ100	402	43305-FB701	434
38127-GG30A	380B	38171-FK00A	380A	38424-FK000	380A	40079-FK101	403	43090-FK000	402	43306-FB400	433
38127-GG31A	380B	38181-FJ100	380A	38424-FK300	380A	40079-FK10A	403	43095-FJ100	402	43306-FB700	434
38127-GG32A	380B	38181-GG30A	380B	38424-Z5009	380B	40079-GG00A	403	43095-FJ110	317A	43306-L1300	433
38127-GG33A	380B	38181-GG31A	380B	38424-Z5010	380B	40079-GG30A	403	43204-FK010	402	43306-L1311	433
38127-GG34A	380B	38189-FJ100	380A	38424-Z5011	380B	40204-FK001	403	43204-FK30A	402	43307-FB400	433
38127-GG35A	380B	38189-GE00A	380B	38424-Z5012	380B	40204-FK400	403	43210-FK000	402	43307-FB700	434
38127-GG36A	380B	38211-FK000	380A	38424-Z5013	380B	40215-0T100	403	43210-FK300	402	43310-50K00	433
38127-GG37A	380B	38211-GG30A	380B	38425-FK000	380A	40222-FJ100	403	43215-47601	403	43310-61K00	433
38127-GG38A	380B	38216-FJ100	380A	38425-FK300	380A	40222-FK401	403	43215-FK000	402	43310-FB585	433
38140-FJ100	380A	38216-GG30A	380B	38425-Z5005	380B	40224-07D0B	434	43222-FK001	402	43310-FB685	433
38140-GG30A	380B	38231-FJ100	380B	38426-FK000	380A	40224-07D0C	433	43222-FK30A	402	43310-FB700	433
38140-GG30B	380B		402	38426-FK300	380A	40224-0T005	434	43222-FK310	402	43310-L1300	433
38151-GG30A	380B	38300-FK000	380A	38426-Z5000	380B	40224-FB700	434	43224-04H00	434	43312-FB710	433
38151-GG30B	380B	38300-FK100	380A	38427-FK000	380A	40224-FJ100	434	43224-14H00	433	43312-L1102	433
38151-GG30C	380B	38300-FK300	380A	38427-FK300	380A	40224-FJ110	434	43224-24H00	433	43312-L1301	433

PART NUMBER INDEX

PART NO.	SEC.NO.	PART NO.	SEC.NO.	PART NO.	SEC.NO.	PART NO.	SEC.NO.	PART NO.	SEC.NO.	PART NO.	SEC.NO.
43312-L1311	433	44129-L0700	440	46584-S0100	591B	49448-GG30A	480	49711-FK170	497	50841-FV80B	500C
43330-50H00	433	44132-FK000	440		591D	49455-FK100	497	49712-FK160	497	50841-FV84A	500C
43330-51K00	434	44147-22H00	440		591F	49509-FB30A	485	49712-FK170	497	50841-FV85A	500C
43330-52K00	434	44200-FK000	440		591G	49509-FB31A	485	49713-FK161	497	50850-FK100	500A
44000-FK000	440	44201-FK000	440		740	49509-FB50A	485	49713-FK361	497		500C
44000-FK010	440	44209-FK000	440	46585-FK201	465	49509-FB51A	485	49714-FK161	497	50850-GG20A	500A
44000-FK30A	440	44210-FK000	440	46585-FK300	465	49509-FK01A	485	49714-FK361	497		500C
44000-FK31A	440	44214-22H00	440	46585-GE00A	465	49509-FK01B	485	49726-Y0100	216A	50853-GG10A	655
44005-FK000	402	44214-22H01	440	48401-FJ10A	484	49509-FK21A	485		216B	50882-FB800	500A
44005-FK300	402	44215-22H00	440	48401-FJ20A	484	49509-GG30A	485	49791-FK100	497	50882-FB801	500A
44010-FK000	440	46010-FJ100	460	48407-48500	871A	49509-GG31A	485			50882-FB802	500A
44010-FK010	440	46011-FJ11J	460		871B	49512-FB30A	485	50000		50882-FB803	500A
44010-FK30A	440	46080-FJ100	460	48414-FJ10A	484	49512-FB50A	485			50882-FB804	500A
44010-FK31A	440	46091-FK100	462	48415-FJ10A	484	49512-FK00A	485	50510-FB40A	500A	50882-FK100	500A
44020-FK000	440	46092-FK101	462	48417-FJ100	484	49512-FK20A	485	50510-FV40A	500A	50886-FK100	500A
44025-22H00	440	46093-GB00A	462	48422-FJ10A	484	49514-FB30A	485	50510-FV60A	500A	50890-FV40A	500A
44030-FK000	440	46113-FK101	462	48425-FJ100	484	49514-FB31A	485	50520-FK10A	500B		500C
44038-22H00	440	46123-FK100	465	48442-FJ100	484	49514-FB50A	485	50522-FW40A	871A	50890-FV40J	500C
44038-22H10	440	46123-FK105	465	48451-FJ100	484	49514-FB51A	485		871B	50890-FV60A	500A
44039-22H00	440	46123-J0100	465	48471-FJ10A	680	49514-FK01A	485	50526-51K01	200C		500C
44042-L0100	440	46283-89954	443	48473-FJ10A	680	49514-FK21A	485	50526-51K11	871A	50890-FV60J	500C
44043-50H05	440		497	48478-FJ10A	680	49514-GG30A	485	50550-FK10A	500B	50890-FV80A	500C
44044-22H00	440		697C	48486-FJ100	680	49514-GG31A	485	50553-FK10A	500B	50890-FV80B	500C
44045-22H00	440	46289-89978	443	48511-FK001	485	49520-FB30A	485	50554-FK10A	500B	50891-FV40A	500A
44060-FK000	440		462	48512-FK001	485	49520-FB50A	485	50555-FC000	655		500C
44060-FK30A	440	46289-GE00A	462	48513-FJ10B	485	49520-FK00A	485	50555-FK10A	500B	50891-FV40J	500C
44065-22H00	440	46290-FK100	462	48513-FK00A	485	49520-FK00B	485	50556-FK10A	500B	50891-FV60A	500A
44070-FK000	440	46290-FK110	462	48522-FJ101	403	49520-FK20A	485		695I		500C
44070-FK010	440	46290-GG00A	462	48525-FK000	485	49521-FB30A	485	50562-FK10A	500B	50891-FV60J	500C
44070-FK30A	440	46310-FK100	462	48584-S0100	591E	49521-FK000	485	50563-FK10A	500B	50891-FV80A	500C
44070-FK31A	440	46366-FK100	465	48593-FJ100	485	49521-FK00A	485	50580-FK000	500A	50891-FV80B	500C
44081-53H01	440	46510-FK100	465	48594-FK000	485	49522-L9000	580B	50581-FK10A	500B	51480-FB485	500A
44083-FK000	440	46510-GG00A	465	48805-FJ101	488	49525-FB20A	485	50591-FK10A	500B	51480-FB685	500A
44085-53H01	440	46521-FK101	465	48933-FJ100	488	49527-0G000	580E	50594-FB800	500A	51480-FK110	500A
44090-22H00	440	46522-FK101	465	48944-FJ100	488		580J	50594-FK000	500A	51480-FK300	500A
44090-22H10	440	46522-GG00A	465	48961-FJ100	488	49534-FK000	403	50647-GG10A	500C	51480-FK400	500A
44095-53H02	440	46523-FK300	465	48962-FJ100	488	49537-FB30A	485	50814-FB801	500C	51480-FK410	500A
44096-53H02	440	46523-GE10A	465	48966-11H00	488	49537-FJ100	485	50841-FB685	500C	51481-FB485	500A
44098-L1400	440	46525-18000	695C	48968-FJ100	488	49596-GG30A	485	50841-FK100	500A	51481-FB685	500A
44100-FK000	440		695D	48970-FJ100	488	49597-GG30A	485		500C	51481-FK110	500A
44108-22H00	440		695G	48974-FJ100	488	49598-GG30A	485	50841-FK300	500A	51481-FK300	500A
44112-22H00	440		695H	48976-FJ100	488	49599-FB30A	485		500C	51481-FK400	500A
44124-22H00	440	46531-FK100	465	48979-FJ100	488	49599-FB50A	485	50841-FV40J	500C	51481-FK410	500A
44124-FK000	440	46536-FK100	465	49410-FJ500	480	49599-FK00A	485	50841-FV50A	500A	51882-FK100	500B
44125-22H00	440	46543-FK300	465	49410-FK000	480	49599-FK00B	485		500C	51883-FK100	500B
44128-8J100	440	46571-FK100	465	49440-FJ100	480	49599-FK20A	485	50841-FV60J	500C	58010-FF060	580A
44128-L1500	440	46584-S0100	214	49441-51K00	480	49599-GG30A	485	50841-FV70A	500A	58010-FF063	580A
44129-80Z0A	440		591A	49448-GE00B	480	49711-FK160	497		500C	58010-FF064	580A

PART NUMBER INDEX

PART NO.	SEC.NO.	PART NO.	SEC.NO.	PART NO.	SEC.NO.	PART NO.	SEC.NO.	PART NO.	SEC.NO.	PART NO.	SEC.NO.
58010-FF065	580A	58015-GG47B	580A	58024-0G511	580F	58026-52K02	580B	58030-FF065	580A	58035-0G511	580F
58010-FF076	580A	58015-GG48B	580A	58024-0G512	580D	58026-62K01	580B	58030-FF076	580A		580G
58010-FF077	580A	58015-GG49B	580A		580F		586	58030-FF077	580A	58035-0G512	580D
58010-FF078	580A	58016-FF076	580A	58024-0G513	580D	58026-62K02	580B	58030-FF078	580A		580F
58010-FF079	580A	58016-FF077	580A		580E	58026-6G601	580D	58030-FF079	580A	58035-0G513	580D
58010-FF360	580A	58016-FF078	580A	58024-4G500	580D		580E	58030-FF360	580A		580E
58010-FF363	580A	58016-FF079	580A		580E	58026-6G611	580D	58030-FF363	580A	58035-10H60	580A
58010-FF364	580A	58016-FF376	580A	58024-6G600	580D		580F	58030-FF364	580A	58035-20H62	580A
58010-FF365	580A	58016-FF377	580A		580E	58026-6G612	580D	58030-FF365	580A	58035-21H01	580B
58010-FF376	580A	58016-FF378	580A	58024-6G611	580D	58026-FA01A	580D	58030-FF376	580A	58035-21H02	580B
58010-FF377	580A	58016-FF379	580A		580F		580F	58030-FF377	580A	58035-23H60	580A
58010-FF378	580A	58017-FF060	580A	58024-6G612	580F		580G	58030-FF378	580A	58035-42K01	580B
58010-FF379	580A	58017-FF360	580A	58024-FA01A	580D	58026-FA400	580D	58030-FF379	580A	58035-42K02	580B
58010-GG40A	580A	58017-L1610	586		580F		580E	58030-GG40A	580A	58035-52K02	580B
58010-GG44A	580A	58017-L2600	580A		580G	58026-FA600	580D	58030-GG44A	580A	58035-62K01	580B
58010-GG45B	580A	58019-FB60A	580G	58024-FA31B	580D		580E	58030-GG45B	580A	58035-6G611	580D
58010-GG46B	580A		580J		580F	58026-FA601	580D	58030-GG46B	580A	58035-6G612	580D
58010-GG47B	580A	58019-FC20A	580H		580G		580E	58030-GG47B	580A		580F
58010-GG48B	580A		580J	58024-FA561	580E		580F	58030-GG48B	580A	58035-6G613	580D
58010-GG49B	580A	58019-FC20B	580H		580J		580G	58030-GG49B	580A		580E
58011-FF076	580A	58019-FC60A	580H	58024-FA600	580D	58026-FF060	580A	58032-6G600	580E	58035-FA01A	580D
58011-FF077	580A		580J		580E	58026-FF360	580A		580J		580F
58011-FF078	580A	58019-FC60B	580H	58024-FA660	580E	58026-GG01A	580A	58032-6G611	580D		580G
58011-FF079	580A	58020-6G601	580D		580J	58026-GG40A	580A		580E	58035-FF060	580A
58011-FF376	580A		580E	58024-FA661	580E	58027-00H00	580B	58032-FA500	580D	58035-FF360	580A
58011-FF377	580A	58020-FA500	580D		580J		580F		580E	58035-GG01A	580A
58011-FF378	580A		580E	58026-00H00	580B	58028-0G301	580D	58032-FA561	580E	58035-GG60A	580F
58011-FF379	580A	58020-FA600	580D		580F		580E		580J	58039-10H06	580A
58015-FF060	580A		580E	58026-0G001	580D		580J	58032-FA600	580D	58039-GG40A	580A
58015-FF063	580A	58022-0G301	580D		580E	58028-0G511	580D		580E	58039-GG44A	580A
58015-FF064	580A		580E	58026-0G301	580E		580F	58032-FA661	580E	58039-GG45B	580A
58015-FF065	580A		580J		580J	58028-31K00	580D		580J	58039-GG46B	580A
58015-FF076	580A	58022-0G511	580D	58026-0G511	580D		580E	58034-6G500	580D	58039-GG47B	580A
58015-FF077	580A		580F		580F	58028-31K01	580D		580E	58039-L1405	580A
58015-FF078	580A	58022-42K01	580B	58026-10H00	580B		580E	58034-6G600	580E	58039-L1406	580A
58015-FF079	580A	58022-6G611	580D		580F		580F		580J	58039-L1407	580A
58015-FF360	580A		580F	58026-10H60	580A		580G	58034-FA500	580D	58039-L2605	580A
58015-FF363	580A	58022-FA31B	580D	58026-20H62	580A		580J		580E	58039-L2607	580A
58015-FF364	580A		580F	58026-21H01	580B	58028-31K11	580D	58034-FA561	580E	58044-31K00	580D
58015-FF365	580A		580G	58026-21H02	580B		580E		580J		580E
58015-FF376	580A	58022-FA600	580D	58026-23H60	580A	58028-42K01	580B	58034-FA600	580D		580F
58015-FF377	580A		580E	58026-31K01	580D	58028-6G500	580E		580E		580G
58015-FF378	580A	58024-0G001	580D		580E		580J	58034-FA661	580E		580J
58015-FF379	580A		580E		580J	58028-6G611	580D		580J	58050-31K00	580D
58015-GG40A	580A	58024-0G212	580D	58026-42K01	580B		580E	58035-0G211	580D		580E
58015-GG44A	580A	58024-0G301	580E	58026-51H60	580B	58030-FF060	580A	58035-0G213	580D		580F
58015-GG45B	580A		580J		586	58030-FF063	580A		580E		580G
58015-GG46B	580A	58024-0G511	580D	58026-52K01	580B	58030-FF064	580A	58035-0G511	580D		580J

PART NUMBER INDEX

PART NO.	SEC.NO.	PART NO.	SEC.NO.	PART NO.	SEC.NO.	PART NO.	SEC.NO.	PART NO.	SEC.NO.	PART NO.	SEC.NO.
58050-42K01.....	580B	58080-FK120.....	694B	58123-L1400.....	580F	58215-01H04.....	580B	58224-24H00.....	580F	58238-01H00.....	580B
58050-FA400.....	580D		694C	58182-FB20A.....	580G		580F	58225-47600.....	586		580F
	580E	58080-FK320.....	694B		580H	58215-01H05.....	580B	58227-21H00.....	580B	58238-11H00.....	580B
58051-FA01B.....	580H		694C		580J		580F		580F		580F
	580J	58080-FK400.....	697D	58182-FC20B.....	580H	58215-01H06.....	580B	58227-24H00.....	580B	58239-11H05.....	580B
58051-FA31B.....	580D	58080-FW40A.....	580G	58182-FC60A.....	580H		580F		580F		580F
	580F		580J		580J	58215-01H07.....	580B	58230-11H03.....	580B	58239-11H06.....	580B
	580G	58080-L6000.....	580B	58183-31K11.....	580D		580F		580F		580F
58060-L6000.....	580B	58099-0G211.....	580D		580E	58215-24H03.....	580B	58230-11H04.....	580B	58239-11H07.....	580B
	580F	58099-0G511.....	580D	58183-6G611.....	580D		580F		580F		580F
58065-24H01.....	580A	58099-10H60.....	580A		580E	58215-24H04.....	580B	58230-11H05.....	580B	58239-24H05.....	580B
58065-24H02.....	580B	58099-20H62.....	580A	58185-FK100.....	586		580F		580F		580F
	580F	58099-23H60.....	580A	58211-11H03.....	580B	58215-24H05.....	580B	58230-11H06.....	580B	58239-24H06.....	580B
58065-52K00.....	580D	58099-6G600.....	580D		580F		580F		580F		580F
	580G		580E	58211-11H04.....	580B	58215-24H06.....	580B	58230-11H07.....	580B	58239-24H07.....	580B
58065-62K00.....	580D		580J		580F		580F		580F		580F
	580H	58099-FA31B.....	580D	58211-11H05.....	580B	58215-24H07.....	580B	58230-24H03.....	580B	58239-FF360.....	580A
58065-L2601.....	580A		580F		580F		580F		580F	58239-GG42C.....	580B
58065-L6003.....	580B		580G	58211-11H06.....	580B	58215-51K00.....	580B	58230-24H04.....	580B		580F
	580F	58099-FA41A.....	580F		580F		580F		580F	58239-GG43C.....	580B
58066-52K01.....	580G	58099-FA500.....	580D	58211-11H07.....	580B	58215-61K00.....	580B	58230-24H05.....	580B		580F
58066-62K01.....	580D		580E		580F		580F		580F	58239-GG44C.....	580B
	580H	58099-FA562.....	580E	58211-24H03.....	580B	58218-01H00.....	580B	58230-24H06.....	580B		580F
58066-FA560.....	580J		580J		580F		580F		580F	58239-GG45C.....	580B
58066-FA660.....	580E	58099-FA600.....	580D	58211-24H04.....	580B	58218-FW40A.....	871A	58230-24H07.....	580B		580F
	580J		580E		580F		871B		580F	58239-GG46C.....	580B
58070-20H00.....	580A	58099-FA661.....	580E	58211-24H05.....	580B	58220-11H00.....	580B	58230-51K00.....	580B		580F
	580D		580J		580F		580F		580F	58283-01H00.....	580B
	580E	58099-FC20A.....	580H	58211-24H06.....	580B	58220-21H00.....	580B	58230-61K00.....	580B		580F
	580H		580J		580F		580F		580F	58283-21H00.....	580B
	580J	58099-FC20B.....	580H	58211-24H07.....	580B	58220-24H00.....	580B	58231-11H00.....	580B		580F
58071-1G300.....	580D	58099-FC60A.....	580H		580F		580F		580F	58283-24H00.....	580B
	580E		580J	58211-51K00.....	580B	58221-21H00.....	580B	58231-21H00.....	580B		580F
	580H	58099-FC60B.....	580H		580F		580F		580F	58283-FA065.....	597A
58071-40H60.....	580B	58099-FD02B.....	580G	58211-61K00.....	580B	58221-24H00.....	580B	58231-24H00.....	580B	58283-FC70A.....	597A
	580F		580H		580F		580F		580F	58286-01H00.....	580B
58071-4G000.....	580D		580J	58211-GG42C.....	580B	58222-11H00.....	580B	58234-01H00.....	580B		580F
	580E	58099-FD41B.....	580G		580F		580F		580F	58286-21H00.....	580B
	580G		580J	58211-GG43C.....	580B	58222-21H01.....	580B	58234-01H07.....	580B		580F
58071-61K00.....	580B	58099-FF060.....	580A		580F		580F	58234-21H00.....	580B	58286-24H00.....	580B
	580F	58099-FF360.....	580A	58211-GG44C.....	580B	58222-24H01.....	580B		580F		580F
58071-FE200.....	580A	58116-42K01.....	580A		580F		580F	58234-24H00.....	580B	58288-01H00.....	580B
	580G		580B	58211-GG45C.....	580B	58223-47600.....	586		580F		580F
	580J	58121-L1400.....	580A		580F	58224-11H00.....	580B	58234-24H07.....	580A	58288-01H05.....	580B
58071-GL10A.....	580A	58122-FK410.....	586	58211-GG46C.....	580B		580F		580B	58288-21H00.....	580B
	580J	58122-L0700.....	586		580F	58224-21H00.....	580B	58234-FE060.....	580A		580F
58080-24H00.....	580H	58123-FK010.....	586	58215-01H03.....	580B		580F	58234-FF360.....	580A	58288-21H05.....	580B
	580J	58123-L1400.....	580B		580F	58224-24H00.....	580B	58234-L1400.....	580A	58288-24H00.....	580B

PART NUMBER INDEX

PART NO.	SEC.NO.	PART NO.	SEC.NO.	PART NO.	SEC.NO.	PART NO.	SEC.NO.	PART NO.	SEC.NO.	PART NO.	SEC.NO.
58288-24H00	580F	58410-62K06	580B	58410-FC63A	580H	58411-6G618	580E	58411-FB68A	580G	58413-6G617	580E
58288-24H05	580B	58410-62K09	580B	58410-FC64A	580H	58411-6G619	580E		580J		580J
58288-FE000	580A	58410-6G601	580D	58410-FC65A	580H	58411-FA501	580D	58411-FC21A	580H	58413-6G618	580E
58288-FF300	580A	58410-6G602	580D	58410-FC66A	580H		580E	58411-FC22A	580H		580J
58288-FF360	580A	58410-6G603	580D	58410-FC67A	580H	58411-FA502	580D	58411-FC23A	580H	58413-FA560	580E
58289-01H00	580B	58410-6G604	580D	58410-FC68A	580H		580E	58411-FC24A	580H		580J
	580F	58410-6G605	580D	58410-FK12A	580B	58411-FA503	580D	58411-FC25A	580H	58413-FA561	580E
58289-21H00	580B	58410-6G606	580D	58410-FK13A	580B		580E	58411-FC26A	580H		580J
	580F	58410-6G607	580D	58410-FK14A	580B	58411-FA504	580D		580J	58413-FA562	580E
58289-24H00	580B	58410-6G608	580D	58410-FK15A	580B		580E	58411-FC27A	580H		580J
	580F	58410-FA31B	580D	58410-FK16A	580B	58411-FA505	580D	58411-FC28A	580H	58413-FA563	580E
58298-10H60	580A		580G	58410-FK19A	580B		580E		580J		580J
58298-20H62	580A	58410-FA32B	580D	58410-GE52A	580F	58411-FA506	580D	58411-FC31A	580J	58413-FA564	580E
58298-23H60	580A		580F	58410-GE53A	580F		580E	58411-FC32A	580J		580J
58298-FF060	580A		580G	58410-GE54A	580F	58411-FA507	580D	58411-FC33A	580J	58413-FA565	580E
58298-FF360	580A	58410-FA33B	580D	58410-GE55A	580F		580E	58411-FC34A	580J		580J
58299-11H00	580B		580F	58410-GE56A	580F	58411-FA508	580D	58411-FC35A	580J	58413-FA566	580E
	580F		580G	58410-GE59A	580F		580E	58411-FC37A	580J		580J
58299-21H00	580B	58410-FA34B	580D	58410-GG12A	580F	58411-FA601	580D	58411-FC61A	580H	58413-FA567	580E
	580F		580F	58410-GG13A	580F	58411-FA602	580D	58411-FC62A	580H		580J
58299-24H00	580B		580G	58410-GG14A	580F	58411-FA603	580D		580J	58413-FA661	580E
	580F	58410-FA35B	580D	58410-GG15A	580F	58411-FA604	580D	58411-FC63A	580H		580J
58410-0G211	580D		580F	58410-GG16A	580F	58411-FA605	580D		580J	58413-FA662	580E
58410-0G212	580D		580G	58410-GG19A	580F	58411-FA606	580D	58411-FC64A	580H		580J
58410-0G213	580D	58410-FA36B	580D	58410-GG42D	580B		580E		580J	58413-FA663	580E
58410-0G214	580D		580F	58410-GG43D	580B	58411-FA607	580D	58411-FC65A	580H		580J
58410-0G215	580D		580G	58410-GG44D	580B	58411-FA608	580D		580J	58413-FA664	580E
58410-0G216	580D	58410-FA37B	580D	58410-GG45D	580B		580E	58411-FC66A	580H		580J
58410-0G217	580D		580G	58410-GG46D	580B	58411-FA661	580E		580J	58413-FA665	580E
58410-0G218	580D	58410-FA38B	580D	58410-GG62A	580F	58411-FA662	580E	58411-FC67A	580H		580J
58410-0G511	580D		580G	58410-GG63A	580F	58411-FA663	580E	58411-FC68A	580H	58413-FA666	580E
58410-0G512	580D	58410-FA39B	580F	58410-GG64A	580F	58411-FA664	580E	58411-FC77A	580J		580J
58410-0G513	580D	58410-FA42A	580F	58410-GG65A	580F	58411-FA665	580E	58411-FC78A	580J	58413-FA667	580E
58410-0G514	580D	58410-FA43A	580F	58410-GG66A	580F	58411-FA667	580E	58411-FC79A	580J		580J
58410-0G515	580D	58410-FA44A	580F	58411-6G601	580D	58411-FB61A	580G	58412-L0100	695G	58413-FA668	580E
58410-0G516	580D	58410-FA45A	580F	58411-6G602	580D		580J		695H		580J
58410-0G517	580D	58410-FA46A	580F		580E	58411-FB62A	580G	58413-6G611	580E	58413-L0100	695G
58410-0G518	580D	58410-FA49A	580F	58411-6G603	580D		580J		580J		695H
58410-52K02	580B	58410-FC21A	580H		580E	58411-FB63A	580G	58413-6G612	580E	58414-6G611	580E
58410-52K03	580B	58410-FC22A	580H	58411-6G604	580D		580J		580J		580J
58410-52K04	580B	58410-FC23A	580H		580E	58411-FB64A	580G	58413-6G613	580E	58414-6G612	580E
58410-52K05	580B	58410-FC24A	580H	58411-6G605	580D		580J		580J		580J
58410-52K06	580B	58410-FC25A	580H		580E	58411-FB65A	580G	58413-6G614	580E	58414-6G613	580E
58410-52K09	580B	58410-FC26A	580H	58411-6G606	580D		580J		580J		580J
58410-62K02	580B	58410-FC27A	580H		580E	58411-FB66A	580G	58413-6G615	580E	58414-6G614	580E
58410-62K03	580B	58410-FC28A	580H	58411-6G607	580D		580J		580J		580J
58410-62K04	580B	58410-FC61A	580H	58411-6G608	580D	58411-FB67A	580G	58413-6G616	580E	58414-6G615	580E
58410-62K05	580B	58410-FC62A	580H	58411-6G617	580E		580J		580J		580J

PART NUMBER INDEX

PART NO.	SEC.NO.	PART NO.	SEC.NO.	PART NO.	SEC.NO.	PART NO.	SEC.NO.	PART NO.	SEC.NO.	PART NO.	SEC.NO.
58414-6G616.....	580E	58415-0G511.....	580D	58415-FA38B.....	580G	58416-6G612.....	580J	58416-FA518.....	580G	58416-FA604.....	580H
	580J	58415-0G512.....	580D	58415-FA39B.....	580F	58416-6G613.....	580J		580J		580J
58414-6G617.....	580E	58415-0G513.....	580D	58415-FA42A.....	580F	58416-6G614.....	580J	58416-FA560.....	580E	58416-FA605.....	580D
	580J	58415-0G514.....	580D	58415-FA43A.....	580F	58416-6G615.....	580J		580J		580E
58414-6G618.....	580E	58415-0G515.....	580D	58415-FA44A.....	580F	58416-6G616.....	580D	58416-FA561.....	580E		580H
	580J	58415-0G516.....	580D	58415-FA45A.....	580F		580J		580J		580J
58414-FA560.....	580E	58415-0G517.....	580D	58415-FA46A.....	580F	58416-6G617.....	580D	58416-FA562.....	580E	58416-FA606.....	580D
	580J	58415-0G518.....	580D	58415-FA49A.....	580F		580E		580J		580E
58414-FA561.....	580E	58415-52K02.....	580B	58415-FK12A.....	580B	58416-6G618.....	580D	58416-FA563.....	580E		580H
	580J	58415-52K03.....	580B	58415-FK13A.....	580B		580E		580J		580J
58414-FA562.....	580E	58415-52K04.....	580B	58415-FK14A.....	580B	58416-6G619.....	580D	58416-FA564.....	580E	58416-FA607.....	580D
	580J	58415-52K05.....	580B	58415-FK15A.....	580B		580E		580J		580E
58414-FA563.....	580E	58415-52K06.....	580B	58415-FK16A.....	580B	58416-6G620.....	580D	58416-FA565.....	580E		580H
	580J	58415-52K09.....	580B	58415-GE52A.....	580F		580E		580J		580J
58414-FA564.....	580E	58415-62K02.....	580B	58415-GE53A.....	580F	58416-6G621.....	580D	58416-FA566.....	580E	58416-FA608.....	580D
	580J	58415-62K03.....	580B	58415-GE54A.....	580F		580E		580J		580E
58414-FA565.....	580E	58415-62K04.....	580B	58415-GE55A.....	580F	58416-6G622.....	580D	58416-FA567.....	580E		580H
	580J	58415-62K05.....	580B	58415-GE56A.....	580F	58416-6G623.....	580D		580J		580J
58414-FA566.....	580E	58415-62K06.....	580B	58415-GE59A.....	580F	58416-FA511.....	580D	58416-FA568.....	580E	58416-FA661.....	580E
	580J	58415-62K09.....	580B	58415-GG12A.....	580F		580E		580J		580J
58414-FA567.....	580E	58415-6G601.....	580D	58415-GG13A.....	580F		580G	58416-FA569.....	580E	58416-FA662.....	580E
	580J	58415-6G602.....	580D	58415-GG14A.....	580F		580J		580J		580J
58414-FA661.....	580E	58415-6G603.....	580D	58415-GG15A.....	580F	58416-FA512.....	580D	58416-FA570.....	580E	58416-FA663.....	580E
	580J	58415-6G604.....	580D	58415-GG16A.....	580F		580E		580J		580J
58414-FA662.....	580E	58415-6G605.....	580D	58415-GG19A.....	580F		580G	58416-FA571.....	580E	58416-FA664.....	580E
	580J	58415-6G606.....	580D	58415-GG42D.....	580B		580J		580J		580J
58414-FA663.....	580E	58415-6G607.....	580D	58415-GG43D.....	580B	58416-FA513.....	580D	58416-FA572.....	580E	58416-FA665.....	580E
	580J	58415-6G608.....	580D	58415-GG44D.....	580B		580E		580J		580J
58414-FA664.....	580E	58415-FA31B.....	580D	58415-GG45D.....	580B		580G	58416-FA573.....	580E	58416-FA666.....	580E
	580J		580G	58415-GG46D.....	580B		580J		580J		580J
58414-FA665.....	580E	58415-FA32B.....	580D	58415-GG62A.....	580F	58416-FA514.....	580D	58416-FA574.....	580E	58416-FA667.....	580E
	580J		580F	58415-GG63A.....	580F		580E		580J		580J
58414-FA666.....	580E		580G	58415-GG64A.....	580F		580G	58416-FA575.....	580E	58416-FA668.....	580E
	580J	58415-FA33B.....	580D	58415-GG65A.....	580F		580J		580J		580J
58414-FA667.....	580E		580F	58415-GG66A.....	580F	58416-FA515.....	580D	58416-FA601.....	580D	58416-FA669.....	580E
	580J		580G	58415-L0100.....	695G		580E		580E		580J
58414-FA668.....	580E	58415-FA34B.....	580D		695H		580G		580H	58416-FA670.....	580E
	580J		580F	58416-6G601.....	580J		580J		580J		580J
58414-L0100.....	695G		580G	58416-6G602.....	580J	58416-FA516.....	580D	58416-FA602.....	580D	58416-FA671.....	580E
	695H	58415-FA35B.....	580D	58416-6G603.....	580J		580E		580E		580J
58415-0G211.....	580D		580F	58416-6G604.....	580J		580G		580H	58416-FA672.....	580E
58415-0G212.....	580D		580G	58416-6G605.....	580J		580J		580J		580J
58415-0G213.....	580D	58415-FA36B.....	580D	58416-6G606.....	580J	58416-FA517.....	580D	58416-FA603.....	580D	58416-FA673.....	580E
58415-0G214.....	580D		580F	58416-6G607.....	580J		580E		580E		580J
58415-0G215.....	580D		580G	58416-6G608.....	580J		580G		580H	58416-FA674.....	580E
58415-0G216.....	580D	58415-FA37B.....	580D	58416-6G609.....	580J		580J		580J		580J
58415-0G217.....	580D		580G	58416-6G610.....	580J	58416-FA518.....	580D	58416-FA604.....	580D	58416-FA675.....	580E
58415-0G218.....	580D	58415-FA38B.....	580D	58416-6G611.....	580J		580E		580E		580J

PART NUMBER INDEX

PART NO.	SEC.NO.	PART NO.	SEC.NO.	PART NO.	SEC.NO.	PART NO.	SEC.NO.	PART NO.	SEC.NO.	PART NO.	SEC.NO.
58416-FA676.....	580E	58417-6G605.....	580E	58430-52K04.....	580B	58431-5G508.....	580J	58431-FA507.....	580E	58431-FC25A.....	580J
	580J	58417-6G606.....	580E	58430-52K05.....	580B	58431-6G601.....	580E	58431-FA508.....	580D	58431-FC25B.....	580H
58416-FC21B.....	580H	58417-6G607.....	580E	58430-52K06.....	580B		580J		580E	58431-FC26A.....	580H
58416-FC22B.....	580H	58417-6G609.....	580E	58430-52K09.....	580B	58431-6G602.....	580E	58431-FA51A.....	580G		580J
58416-FC23B.....	580H	58417-6G610.....	580E	58430-62K02.....	580B		580J		580J	58431-FC26B.....	580H
58416-FC24B.....	580H	58417-6G611.....	580E	58430-62K03.....	580B	58431-6G603.....	580E	58431-FA52A.....	580G	58431-FC27A.....	580H
58416-FC25B.....	580H	58417-6G612.....	580E	58430-62K04.....	580B		580J		580J		580J
58416-FC26B.....	580H	58417-6G613.....	580E	58430-62K05.....	580B	58431-6G604.....	580E	58431-FA53A.....	580G	58431-FC27B.....	580H
58416-FC27B.....	580H	58417-6G614.....	580E	58430-62K06.....	580B		580J		580J	58431-FC28A.....	580H
58416-FC28B.....	580H	58417-6G615.....	580E	58430-62K09.....	580B	58431-6G605.....	580E	58431-FA54A.....	580G		580J
58416-FC61A.....	580H	58420-0G211.....	580D	58430-6G601.....	580D		580J		580J	58431-FC28B.....	580H
58416-FC61B.....	580H	58420-0G511.....	580D	58430-6G602.....	580D	58431-6G606.....	580E	58431-FA55A.....	580G	58431-FC61A.....	580H
58416-FC62A.....	580H		580F	58430-6G603.....	580D		580J		580J	58431-FC61B.....	580H
	580J	58420-6G611.....	580D	58430-6G604.....	580D	58431-6G607.....	580E	58431-FA56A.....	580G	58431-FC62A.....	580H
58416-FC62B.....	580H		580F	58430-6G605.....	580D		580J		580J		580J
58416-FC63A.....	580H	58420-FA31B.....	580D	58430-6G606.....	580D	58431-6G608.....	580J	58431-FA57A.....	580G	58431-FC62B.....	580H
	580J		580F	58430-6G607.....	580D	58431-6G616.....	580D		580J	58431-FC63A.....	580H
58416-FC63B.....	580H		580G	58430-6G608.....	580D	58431-6G617.....	580D	58431-FA58A.....	580G		580J
58416-FC64A.....	580H	58422-21H01.....	580B	58430-GG62A.....	580F		580E		580J	58431-FC63B.....	580H
	580J	58422-42K01.....	580B	58430-GG63A.....	580F	58431-6G618.....	580D	58431-FA601.....	580D	58431-FC64A.....	580H
58416-FC64B.....	580H	58422-62K01.....	580B	58430-GG64A.....	580F		580E	58431-FA602.....	580D		580J
58416-FC65A.....	580H	58422-L7401.....	580A	58430-GG65A.....	580F	58431-6G619.....	580D	58431-FA603.....	580D	58431-FC64B.....	580H
	580J	58424-10H60.....	580A	58430-GG66A.....	580F		580E	58431-FA604.....	580D	58431-FC65A.....	580H
58416-FC65B.....	580H	58424-20H62.....	580A	58431-0G511.....	580D	58431-6G620.....	580D	58431-FA605.....	580D		580J
58416-FC66A.....	580H	58424-23H60.....	580A	58431-0G512.....	580D		580E	58431-FA606.....	580D	58431-FC65B.....	580H
	580J	58424-6G500.....	580D	58431-0G513.....	580D	58431-6G621.....	580D		580E	58431-FC66A.....	580H
58416-FC66B.....	580H		580E	58431-0G514.....	580D		580E	58431-FA607.....	580D		580J
58416-FC67A.....	580H	58424-6G600.....	580E	58431-0G515.....	580D	58431-6G622.....	580D	58431-FA608.....	580D	58431-FC66B.....	580H
	580J		580J	58431-0G516.....	580D	58431-6G623.....	580D		580E	58431-FC67A.....	580H
58416-FC67B.....	580H	58424-FF060.....	580A	58431-0G517.....	580D	58431-FA42B.....	580F	58431-FA661.....	580E		580J
58416-FC68A.....	580H	58424-FF360.....	580A	58431-0G518.....	580D	58431-FA43B.....	580F	58431-FA662.....	580E	58431-FC67B.....	580H
	580J	58424-GG01A.....	580A	58431-5G500.....	580E	58431-FA44B.....	580F	58431-FA663.....	580E	58431-FC68A.....	580H
58416-FC68B.....	580H	58425-L0100.....	695G		580J	58431-FA45B.....	580F	58431-FA664.....	580E		580J
58416-FC79A.....	580J		695H	58431-5G501.....	580E	58431-FA46B.....	580F	58431-FA665.....	580E	58431-FC68B.....	580H
58416-GG42C.....	580B	58426-FJ300.....	694B		580J	58431-FA49B.....	580F	58431-FA667.....	580E	58431-FC79A.....	580J
	580F		694C	58431-5G502.....	580E	58431-FA501.....	580D	58431-FC21A.....	580H	58431-GG12A.....	580F
58416-GG43C.....	580B	58430-21H02.....	580B		580J		580E		580J	58431-GG13A.....	580F
	580F	58430-21H03.....	580B	58431-5G503.....	580E	58431-FA502.....	580D	58431-FC21B.....	580H	58431-GG14A.....	580F
58416-GG44C.....	580B	58430-21H04.....	580B		580J		580E	58431-FC22A.....	580H	58431-GG15A.....	580F
	580F	58430-21H05.....	580B	58431-5G504.....	580E	58431-FA503.....	580D		580J	58431-GG16A.....	580F
58416-GG45C.....	580B	58430-21H06.....	580B		580J		580E	58431-FC22B.....	580H	58431-GG19A.....	580F
	580F	58430-42K02.....	580B	58431-5G505.....	580E	58431-FA504.....	580D	58431-FC23A.....	580H	58431-GG42C.....	580B
58416-GG46C.....	580B	58430-42K03.....	580B		580J		580E		580J		580F
	580F	58430-42K04.....	580B	58431-5G506.....	580E	58431-FA505.....	580D	58431-FC23B.....	580H	58431-GG43C.....	580B
58417-6G601.....	580E	58430-42K05.....	580B		580J		580E	58431-FC24A.....	580H		580F
58417-6G602.....	580E	58430-42K06.....	580B	58431-5G507.....	580E	58431-FA506.....	580D		580J	58431-GG44C.....	580B
58417-6G603.....	580E	58430-52K02.....	580B		580J		580E	58431-FC24B.....	580H		580F
58417-6G604.....	580E	58430-52K03.....	580B	58431-5G508.....	580E	58431-FA507.....	580D	58431-FC25A.....	580H	58431-GG45C.....	580B

PART NUMBER INDEX

PART NO.	SEC.NO.	PART NO.	SEC.NO.	PART NO.	SEC.NO.	PART NO.	SEC.NO.	PART NO.	SEC.NO.	PART NO.	SEC.NO.
58431-GG45C.....	580F	58434-6G611.....	580F	58489-0G511.....	580F	58572-FB700.....	585E	58616-FB485.....	586	58630-FK410.....	586
58431-GG46C.....	580B	58439-0G205.....	580D	58489-4G500.....	580E	58572-FC700.....	585E	58616-FJ110.....	586	58630-GG40A.....	586
	580F		580E		580J	58573-10H00.....	591A	58616-FK010.....	586	58630-GG41A.....	586
58432-FA31B.....	580D	58439-0G206.....	580D	58489-6G500.....	580E		591B	58616-GG01A.....	586	58633-0G001.....	580E
	580G		580E		580J		591D	58617-FK010.....	586		580J
58432-FA32B.....	580D	58439-0G207.....	580D	58498-21H01.....	580B		591E	58617-FK410.....	586	58633-FK010.....	586
	580F		580E	58498-42K01.....	580B		591F	58619-FK010.....	586	58633-FK410.....	586
	580G	58439-0G208.....	580D	58498-52K01.....	580B		591G	58619-FK410.....	586	58633-L1100.....	586
58432-FA33B.....	580D		580E	58498-62K01.....	580B	58582-13H00.....	595A	58619-GG02A.....	586	58634-31K02.....	580E
	580F	58444-6G600.....	580E	58498-GG01A.....	580A		595B	58619-GG03A.....	586		580J
	580G		580J	58499-21H01.....	580B		595C	58620-6G600.....	580E	58636-FC805.....	586
58432-FA34B.....	580D	58444-FA561.....	580E	58499-42K01.....	580B		595D		580J	58636-FK420.....	586
	580F		580J	58499-52K01.....	580B	58582-13H01.....	595A	58620-FA561.....	580E	58640-FB487.....	586
	580G	58444-FA661.....	580E	58499-62K01.....	580B		595B		580J	58640-FB687.....	586
58432-FA35B.....	580D		580J	58499-6G600.....	580E		595C	58620-FA661.....	580E	58641-FK010.....	586
	580F	58444-FJ301.....	694B	58499-6G611.....	580D		595D		580J	58641-FK410.....	586
	580G	58444-FJ305.....	694C		580F	58582-50K00.....	595A	58621-5G500.....	580D	58641-GG02A.....	586
58432-FA36B.....	580D	58445-0G511.....	580D	58499-GG01B.....	580A		595B		580E	58641-GG03A.....	586
	580F		580F	58510-1G201.....	585B		595C		580J	58645-20H00.....	586
	580G		580G	58510-1G501.....	585B		595D	58621-6G600.....	580E	58650-FK105.....	586
58432-FA37B.....	580D	58445-4G500.....	580E	58510-5G400.....	585D	58583-10H01.....	591B		580J	58650-FK115.....	586
	580G		580J	58510-6G400.....	585D		591D	58621-FA500.....	580D	58650-FK20A.....	586
58432-FA38B.....	580D	58448-FJ300.....	694B	58510-FB700.....	585E		591E		580E	58661-45H00.....	586
	580G		694C	58510-FB710.....	585E		591G	58621-FA600.....	580D	58661-FB485.....	586
58432-FA39B.....	580F	58448-L0100.....	694E	58510-FC700.....	585E	58583-20H01.....	591A		580E	58661-FK412.....	586
58432-GE52A.....	580F		694F	58510-FC710.....	585E		591D	58621-FF060.....	580A	58662-20H00.....	586
58432-GE53A.....	580F	58449-L0100.....	694E	58512-5G500.....	698D		591E	58621-FF360.....	580A	58680-FK100.....	586
58432-GE54A.....	580F		694F		698E	58583-23H00.....	591D	58621-L1100.....	580B	58680-FK400.....	586
58432-GE55A.....	580F	58459-FA600.....	580D	58512-5G510.....	698E		591E		580F	58681-GG00A.....	586
58432-GE56A.....	580F		580E	58512-FB600.....	699H	58583-24H00.....	591B		586	58682-14H00.....	586
58432-GE59A.....	580F		580H		699I	58583-7K000.....	591F	58621-L1400.....	580A	58682-20H00.....	586
58433-0G211.....	580D	58465-1G000.....	580D	58512-L1901.....	699F	58583-FF000.....	591F		586	58691-FJ311.....	586
58433-0G511.....	580D		580G	58519-FF000.....	591F	58583-FK50A.....	591B	58621-L3100.....	580A	58691-FK111.....	586
58433-6G611.....	580D		580H	58519-GE40A.....	591A		591G	58622-10H00.....	586	58691-FK311.....	586
	580F	58465-GE00A.....	580F		591G	58610-FK010.....	586	58622-6G600.....	580E	58695-FK110.....	586
58434-0G207.....	580D	58471-02H01.....	580B	58565-5G500.....	585E	58610-FK012.....	586		580J	58699-FK010.....	586
	580E	58471-0G511.....	580D	58565-5G510.....	585E	58610-FK060.....	586	58622-FA500.....	580D	58699-FK410.....	586
58434-0G211.....	580D		580F	58565-6G500.....	585E	58610-FK062.....	586		580E	58699-GG01A.....	586
58434-0G511.....	580D	58471-25H01.....	580B	58565-6G510.....	585E	58610-FK085.....	586	58623-10H00.....	586	58699-GG02A.....	586
	580F	58471-4G500.....	580E	58568-L7400.....	591B	58610-FK086.....	586	58623-10H61.....	580A	58810-52K00.....	585B
58434-21H01.....	580B		580J		591D	58610-FK410.....	586	58623-20H00.....	586	58810-5G400.....	585D
58434-31K11.....	580D	58471-FA31B.....	580D	58572-04H00.....	591A	58610-FK412.....	586	58623-20H62.....	580A	58810-5G500.....	585E
	580F		580F		591B	58610-FK420.....	586	58623-23H61.....	580A	58810-5G510.....	585E
	580G		580G		591D	58610-FK485.....	586	58625-10H00.....	586	58810-6G400.....	585D
58434-42K01.....	580B	58489-0G211.....	580D		591E	58610-GG40A.....	586	58625-20H00.....	586	58835-52K00.....	698D
58434-52K01.....	580B		580F		591F	58610-GG40B.....	586	58626-10H00.....	586	58835-60K00.....	698A
58434-62K01.....	580B		580G		591G	58610-GG41A.....	586	58630-FK010.....	586	58873-51K04.....	699F
58434-6G611.....	580D	58489-0G511.....	580D	58572-6K000.....	585F	58610-GG41B.....	586	58630-FK060.....	586	59026-L0700.....	500A

PART NUMBER INDEX

PART NO.	SEC.NO.	PART NO.	SEC.NO.	PART NO.	SEC.NO.	PART NO.	SEC.NO.	PART NO.	SEC.NO.	PART NO.	SEC.NO.
59110-FB600	591D	59110-GE43C	591F	59117-20H00	595B	59118-50K00	591B	59210-FB606	591D	59210-GG04C	591F
59110-FB601	591D	59110-GE44A	591G		595C		591D	59210-FB607	591D	59210-GG05A	591G
59110-FB602	591D	59110-GE44C	591F		595D		591E	59210-FB608	591D	59210-GG05C	591F
59110-FB603	591D	59110-GE45A	591G	59117-20H01	591D		591F	59210-FB700	591E	59210-GG06A	591G
59110-FB604	591D	59110-GE45C	591F		591E		591G	59210-FB701	591E	59210-GG06C	591F
59110-FB605	591D	59110-GE46A	591G		595A		595A	59210-FB702	591E	59210-GG07A	591G
59110-FB606	591D	59110-GE46C	591F		595B		595B	59210-FB703	591E	59210-GG07C	591F
59110-FB607	591D	59110-GE47A	591G		595C		595C	59210-FB704	591E	59210-GG08A	591G
59110-FB700	591E	59110-GE47C	591F		595D		595D	59210-FB705	591E	59210-GG08C	591F
59110-FB701	591E	59110-GE48A	591G	59117-20H02	591D	59119-FJ00A	595A	59210-FB706	591E	59210-GG09A	591G
59110-FB702	591E	59110-GE48C	591F		591E		595B	59210-FB707	591E	59210-GG09C	591F
59110-FB703	591E	59110-GE49A	591G		595C		595C	59210-FB708	591E	59210-GG40A	591A
59110-FB704	591E	59110-GE49C	591F		595D	59150-FJ40A	591A	59210-FB70A	591E	59210-GG44A	591A
59110-FB705	591E	59110-GG00A	591G	59117-20H10	591A		591B	59210-FB71A	591E	59210-GG45A	591A
59110-FB706	591E	59110-GG00C	591F		591B		591D	59210-FB72A	591E	59210-GG46A	591A
59110-FB707	591E	59110-GG03A	591G		591D		591E	59210-FB73A	591E	59210-GG47A	591A
59110-FC200	591D	59110-GG03C	591F		591E		591F	59210-FB74A	591E	59210-GG48A	591A
59110-FC201	591D	59110-GG04A	591G		591F		591G	59210-FB75A	591E	59210-GG49A	591A
59110-FC202	591D	59110-GG04C	591F		591G	59151-FJ400	591A	59210-FB76A	591E	59210-GG57A	591B
59110-FC203	591D	59110-GG05A	591G	59117-20H11	591A		591B	59210-FB77A	591E	59285-FB600	591D
59110-FC204	591D	59110-GG05C	591F		591B		591D	59210-FB78A	591E	59285-FB601	591D
59110-FC205	591D	59110-GG06A	591G		591D		591E	59210-FJ40A	591F	59360-FB600	591D
59110-FC206	591D	59110-GG06C	591F		591E		591F	59210-FJ43A	591F	59360-FB601	591D
59110-FC207	591D	59110-GG07A	591G		591F		591G	59210-FJ44A	591F	59360-FB602	591D
59110-FC208	591D	59110-GG07C	591F		591G	59154-FF000	591A	59210-FJ45A	591F	59360-FB603	591D
59110-FC300	591E	59110-GG08A	591G	59117-20H12	591D		591B	59210-FJ46A	591F	59360-FB604	591D
59110-FC301	591E	59110-GG08C	591F		591E		591D	59210-FJ47A	591F	59360-FB605	591D
59110-FC302	591E	59110-GG09A	591G	59118-20H00	591A		591E	59210-FJ48A	591F	59360-FB606	591D
59110-FC303	591E	59110-GG09C	591F		591B		591F	59210-FJ49A	591F	59360-FB607	591D
59110-FC304	591E	59110-GG40A	591A		591D		591G	59210-GE40A	591G	59360-FB608	591D
59110-FC305	591E	59110-GG44A	591A		591E	59155-L1100	591A	59210-GE43A	591G	59360-FB700	591E
59110-FC306	591E	59110-GG45A	591A		591F		591B	59210-GE44A	591G	59360-FB701	591E
59110-FC307	591E	59110-GG46A	591A		591G		591D	59210-GE45A	591G	59360-FB702	591E
59110-FJ50A	591B	59110-GG47A	591A		595A		591E	59210-GE46A	591G	59360-FB703	591E
59110-FJ54A	591B	59110-GG48A	591A		595B		591F	59210-GE47A	591G	59360-FB704	591E
59110-FJ55A	591B	59110-GG49A	591A		595C		591G	59210-GE48A	591G	59360-FB705	591E
59110-FJ56A	591B	59110-GG50A	591B		595D	59155-L1110	591A	59210-GE49A	591G	59360-FB706	591E
59110-FJ57A	591B	59110-GG54A	591B	59118-20H01	591A		591B	59210-GE50A	591B	59360-FB707	591E
59110-FJ58A	591B	59110-GG55A	591B		591B		591D	59210-GE54A	591B	59360-FB708	591E
59110-FK10A	591B	59110-GG56A	591B		591D		591E	59210-GE55A	591B	59360-FB70A	591E
59110-FK14A	591B	59110-GG57A	591B		591E		591F	59210-GE56A	591B	59360-FB71A	591E
59110-FK15A	591B	59117-20H00	591A		591F		591G	59210-GE57A	591B	59360-FB72A	591E
59110-FK16A	591B		591B		591G	59210-FB600	591D	59210-GE58A	591B	59360-FB73A	591E
59110-FK17A	591B		591D		595A	59210-FB601	591D	59210-GG00A	591G	59360-FB74A	591E
59110-FK18A	591B		591E		595B	59210-FB602	591D	59210-GG00C	591F	59360-FB75A	591E
59110-GE40A	591G		591F		595C	59210-FB603	591D	59210-GG03A	591G	59360-FB76A	591E
59110-GE40C	591F		591G		595D	59210-FB604	591D	59210-GG03C	591F	59360-FB77A	591E
59110-GE43A	591G		595A	59118-50K00	591A	59210-FB605	591D	59210-GG04A	591G	59360-FB78A	591E

PART NUMBER INDEX

PART NO.	SEC.NO.	PART NO.	SEC.NO.	PART NO.	SEC.NO.	PART NO.	SEC.NO.	PART NO.	SEC.NO.	PART NO.	SEC.NO.
59393-FB600	699I	59420-23H07	585G	59420-L1315	585D	59433-20H00	585G	59499-FB60A	585G	59686-01H00	698B
59395-5G510	699H	59420-23H08	585A		585E	59433-50K00	585B	59499-FC20A	585A	59686-01H04	698B
	699I		585G	59420-L2800	585F		585D		585B	59686-01H05	698B
	699K	59420-23H09	585A	59420-L2807	585G		585E		585D	59686-01H06	698B
	699L		585F	59420-L2902	585D		585F		585E	59686-01H07	698B
59395-6G500	698D		585G		585E		585G		585F	59686-01H08	698B
	698E	59420-25H01	585B	59420-L2904	585B	59440-10H00	585B		585G	59686-21H06	698B
59395-FA560	699K		585D	59420-L2906	585F		585D	59510-FB60A	595C	59686-24H05	698B
	699L		585E	59420-L3000	585E		585E	59510-FB61A	595C	59686-51K08	698B
59395-FB600	699H	59420-25H03	585E	59420-L3002	585D		585F	59510-FB65A	595C	59687-51K00	698B
	699I	59420-25H05	585F		585E		585G	59510-FB700	595D	59687-51K04	698B
59395-FJ40A	699B	59420-50H00	585D	59420-L3004	585E	59440-20H00	585A	59510-FB705	595D	59687-51K05	698B
	699C		585F	59420-L3005	585E		585B	59510-FB71A	595D	59687-51K06	698B
	699R	59420-50H01	585A	59420-L3006	585F		585D	59510-FC200	595C	59687-51K07	698B
	699S		585D	59420-L3007	585D		585E	59510-FC205	595C	59687-51K08	698B
	699U		585E	59420-L6200	585E		585F	59510-FC260	595C	59687-61K00	698B
	699V		585G	59420-L6201	585D		585G	59510-FC265	595C	59687-61K04	698B
59395-L7400	699E	59420-FF000	585F	59420-L6202	585D	59485-FJ403	585F	59510-FC26A	595C	59687-61K05	698B
	699F		585G		585E	59485-FJ404	585F	59510-FC300	595D	59687-61K06	698B
59420-10H00	585D	59420-FF300	585F	59420-L6204	585D	59485-FJ405	585F	59510-FC305	595D	59687-61K07	698B
	585E	59420-FL400	585G		585E	59485-FJ406	585F	59510-FC360	595D	59687-GG50A	698B
59420-13H04	585F	59420-GD40B	585G	59420-L6205	585B	59485-FJ407	585F	59510-FC365	595D	59710-8G002	594
	585G	59420-GE40A	585G		585D	59485-FJ408	585F	59510-FC36A	595D	59710-8G004	594
59420-15H00	585D	59420-GG40A	585A	59420-L6300	585F	59485-FJ409	585F	59510-FC600	595C	59710-8G006	594
	585E	59420-L1200	585B	59420-L6305	585D	59485-FJ40A	585F	59510-FC605	595C	59710-8G007	594
59420-20H00	585D	59420-L1203	585B		585E	59485-FK003	585F	59510-FC700	595D	59710-8G009	594
	585E	59420-L1204	585D	59420-L6307	585A	59485-FK004	585F	59510-FC705	595D	59710-8G202	594
59420-20H01	585E	59420-L1205	585B		585G	59485-FK005	585F	59510-GE42A	595A	59710-8G204	594
59420-20H03	585B		585D	59420-L7208	585D	59485-FK006	585F	59510-GG02A	595A	59710-8G206	594
	585F		585E		585E	59485-FK007	585F	59510-GG42A	595A	59710-8G207	594
59420-22H00	585B	59420-L1206	585B	59420-L7410	585E	59485-FK008	585F	59510-GG52A	595B	59710-8G209	594
	585D	59420-L1207	585F	59431-10H00	585B	59485-FK009	585F	59532-FF000	595A	59710-8G260	594
	585E		585G		585D	59485-FK00A	585F		595B	59710-FB412	594
59420-22H01	585D	59420-L1210	585D		585E	59486-FJ404	585F		595C	59710-FB414	594
	585E		585E		585G	59486-FJ405	585F		595D	59710-FB416	594
59420-22H02	585B	59420-L1211	585D	59431-10H01	585D	59486-FJ406	585F	59537-00H00	591A	59710-FB417	594
	585D		585E		585F	59486-FJ407	585F		591B	59710-FB419	594
	585E	59420-L1212	585F	59431-20H00	585A	59486-FK004	585F		591D	59710-FB507	594
59420-22H03	585B	59420-L1213	585D		585B	59486-FK005	585F		591E	59710-FB509	594
	585D		585E		585D	59486-FK006	585F		591G	59710-FB517	594
	585F		585F		585E	59486-FK007	585F	59537-6K000	591F	59710-FB519	594
59420-22H04	585D	59420-L1219	585B		585F	59487-FJ400	585F	59610-FB600	594	59710-FB612	594
	585D		585E		585G	59487-FJ410	585F	59610-FB605	594	59710-FB614	594
	585E	59420-L1310	585D	59433-20H00	585A	59488-FJ400	585F	59610-FC400	594	59710-FB616	594
59420-22H07	585G		585E		585B	59499-FB60A	585B	59610-FC405	594	59710-FB617	594
59420-23H03	585D	59420-L1312	585D		585D		585D	59610-FC600	594	59710-FB619	594
	585F	59420-L1313	585A		585E		585E	59610-FC605	594	59710-FB670	594
59420-23H07	585A		585G		585F		585F	59675-L7400	698D	59720-FW00A	594

PART NUMBER INDEX

PART NO.	SEC.NO.	PART NO.	SEC.NO.	PART NO.	SEC.NO.	PART NO.	SEC.NO.	PART NO.	SEC.NO.	PART NO.	SEC.NO.
59720-GL40A.....	594	58434-6G611.....	580F	58489-0G511.....	580F	58572-FB700.....	585E	58616-FB485.....	586	58630-FK410.....	586
		58439-0G205.....	580D	58489-4G500.....	580E	58572-FC700.....	585E	58616-FJ110.....	586	58630-GG40A.....	586
60000			580E		580J	58573-10H00.....	591A	58616-FK010.....	586	58630-GG41A.....	586
		58439-0G206.....	580D	58489-6G500.....	580E		591B	58616-GG01A.....	586	58633-0G001.....	580E
	580G		580E		580J		591D	58617-FK010.....	586		580J
58432-FA32B.....	580D	58439-0G207.....	580D	58498-21H01.....	580B		591E	58617-FK410.....	586	58633-FK010.....	586
	580F		580E	58498-42K01.....	580B		591F	58619-FK010.....	586	58633-FK410.....	586
	580G	58439-0G208.....	580D	58498-52K01.....	580B		591G	58619-FK410.....	586	58633-L1100.....	586
58432-FA33B.....	580D		580E	58498-62K01.....	580B	58582-13H00.....	595A	58619-GG02A.....	586	58634-31K02.....	580E
	580F	58444-6G600.....	580E	58498-GG01A.....	580A		595B	58619-GG03A.....	586		580J
	580G		580J	58499-21H01.....	580B		595C	58620-6G600.....	580E	58636-FC805.....	586
58432-FA34B.....	580D	58444-FA561.....	580E	58499-42K01.....	580B		595D		580J	58636-FK420.....	586
	580F		580J	58499-52K01.....	580B	58582-13H01.....	595A	58620-FA561.....	580E	58640-FB487.....	586
	580G	58444-FA661.....	580E	58499-62K01.....	580B		595B		580J	58640-FB687.....	586
58432-FA35B.....	580D		580J	58499-6G600.....	580E		595C	58620-FA661.....	580E	58641-FK010.....	586
	580F	58444-FJ301.....	694B	58499-6G611.....	580D		595D		580J	58641-FK410.....	586
	580G	58444-FJ305.....	694C		580F	58582-50K00.....	595A	58621-5G500.....	580D	58641-GG02A.....	586
58432-FA36B.....	580D	58445-0G511.....	580D	58499-GG01B.....	580A		595B		580E	58641-GG03A.....	586
	580F		580F	58510-1G201.....	585B		595C		580J	58645-20H00.....	586
	580G		580G	58510-1G501.....	585B		595D	58621-6G600.....	580E	58650-FK105.....	586
58432-FA37B.....	580D	58445-4G500.....	580E	58510-5G400.....	585D	58583-10H01.....	591B		580J	58650-FK115.....	586
	580G		580J	58510-6G400.....	585D		591D	58621-FA500.....	580D	58650-FK20A.....	586
58432-FA38B.....	580D	58448-FJ300.....	694B	58510-FB700.....	585E		591E		580E	58661-45H00.....	586
	580G		694C	58510-FB710.....	585E		591G	58621-FA600.....	580D	58661-FB485.....	586
58432-FA39B.....	580F	58448-L0100.....	694E	58510-FC700.....	585E	58583-20H01.....	591A		580E	58661-FK412.....	586
58432-GE52A.....	580F		694F	58510-FC710.....	585E		591D	58621-FF060.....	580A	58662-20H00.....	586
58432-GE53A.....	580F	58449-L0100.....	694E	58512-5G500.....	698D		591E	58621-FF360.....	580A	58680-FK100.....	586
58432-GE54A.....	580F		694F		698E	58583-23H00.....	591D	58621-L1100.....	580B	58680-FK400.....	586
58432-GE55A.....	580F	58459-FA600.....	580D	58512-5G510.....	698E		591E		580F	58681-GG00A.....	586
58432-GE56A.....	580F		580E	58512-FB600.....	699H	58583-24H00.....	591B		586	58682-14H00.....	586
58432-GE59A.....	580F		580H		699I	58583-7K000.....	591F	58621-L1400.....	580A	58682-20H00.....	586
58433-0G211.....	580D	58465-1G000.....	580D	58512-L1901.....	699F	58583-FF000.....	591F		586	58691-FJ311.....	586
58433-0G511.....	580D		580G	58519-FF000.....	591F	58583-FK50A.....	591B	58621-L3100.....	580A	58691-FK111.....	586
58433-6G611.....	580D		580H	58519-GE40A.....	591A		591G	58622-10H00.....	586	58691-FK311.....	586
	580F	58465-GE00A.....	580F		591G	58610-FK010.....	586	58622-6G600.....	580E	58695-FK110.....	586
58434-0G207.....	580D	58471-02H01.....	580B	58565-5G500.....	585E	58610-FK012.....	586		580J	58699-FK010.....	586
	580E	58471-0G511.....	580D	58565-5G510.....	585E	58610-FK060.....	586	58622-FA500.....	580D	58699-FK410.....	586
58434-0G211.....	580D		580F	58565-6G500.....	585E	58610-FK062.....	586		580E	58699-GG01A.....	586
58434-0G511.....	580D	58471-25H01.....	580B	58565-6G510.....	585E	58610-FK085.....	586	58623-10H00.....	586	58699-GG02A.....	586
	580F	58471-4G500.....	580E	58568-L7400.....	591B	58610-FK086.....	586	58623-10H61.....	580A	58810-52K00.....	585B
58434-21H01.....	580B		580J		591D	58610-FK410.....	586	58623-20H00.....	586	58810-5G400.....	585D
58434-31K11.....	580D	58471-FA31B.....	580D	58572-04H00.....	591A	58610-FK412.....	586	58623-20H62.....	580A	58810-5G500.....	585E
	580F		580F		591B	58610-FK420.....	586	58623-23H61.....	580A	58810-5G510.....	585E
	580G		580G		591D	58610-FK485.....	586	58625-10H00.....	586	58810-6G400.....	585D
58434-42K01.....	580B	58489-0G211.....	580D		591E	58610-GG40A.....	586	58625-20H00.....	586	58835-52K00.....	698D
58434-52K01.....	580B		580F		591F	58610-GG40B.....	586	58626-10H00.....	586	58835-60K00.....	698A
58434-62K01.....	580B		580G		591G	58610-GG41A.....	586	58630-FK010.....	586	58873-51K04.....	699F
58434-6G611.....	580D	58489-0G511.....	580D	58572-6K000.....	585F	58610-GG41B.....	586	58630-FK060.....	586	59026-L0700.....	500A

PART NUMBER INDEX

PART NO.	SEC.NO.	PART NO.	SEC.NO.	PART NO.	SEC.NO.	PART NO.	SEC.NO.	PART NO.	SEC.NO.	PART NO.	SEC.NO.
59720-GL40A	594	65380-FB801	500A	69139-GG00A	695I	69320-FK15B	694C	69324-FK33A	694C	69350-FJ111	580B
		65380-FC006	655	69142-L1101	580B	69320-FK304	694B	69324-FK34A	694B		580D
60000		65380-FJ302	655		691B	69320-FK305	694C	69324-FK34C	694B		580E
		65380-FK102	655	69148-FK110	691B	69320-FK314	694B	69324-FK34D	694B	69350-FK000	693A
64890-U7400	267	65380-FK103	655	69164-5K312	694F	69320-FK315	694C		694C	69350-FK010	693A
	737	65380-FK111	655	69164-GG00A	694E	69320-FK324	694B	69324-FK35A	694C		693B
64891-6K00A	695J	65380-FK112	655	69170-L1400	135B	69320-FK325	694C	69324-FK35C	694C	69350-FK110	691B
64891-FA20A	695J	65380-FK123	655		135C	69320-FK334	694B	69324-GG00B	694E	69350-FK160	697E
64892-W5000	196	65381-43K01	737		691B	69320-FK335	694C		694F	69350-FK161	697E
	585B	65381-FB485	737	69173-L1100	580B	69320-FK34A	694B	69324-GG01B	694E	69350-FK311	580A
	737	65381-FB486	737		691B	69320-FK34B	694B		694F		580B
	871A	65381-FB800	500A		693A	69320-FK34C	694B	69324-GG02B	694E		580D
	871B	65381-FK115	655	69190-41K01	135B	69320-FK34D	694B		694F		580E
65201-FK10A	655	65399-FB10A	655		135C	69320-FK35A	694C	69324-GG03B	694E	69350-GE10A	580F
65201-FK20A	655	65504-41H50	737	69199-51K00	692	69320-FK35B	694C		694F	69350-L1100	580E
65260-FB801	655	65510-FB300	500A	69199-FK110	692	69320-FK35C	694C	69324-GG05A	694B		580J
65260-FK101	655	65510-FB400	500A	69220-FK100	691A	69320-FK35D	694C	69324-GG18A	694B	69350-L7001	693A
65260-GH10A	655	65510-FB500	500A	69250-FK100	691A	69320-GG00A	693B	69326-FJ300	694B		693B
65261-FB801	655	65510-FB600	500A	69250-FK107	691A		694E		694C	69353-L6000	580E
65261-FB802	655	65510-FB700	500A	69253-FK800	697E	69320-GG00B	693B	69326-GG00B	694E		580J
65261-FK101	655	65510-FB930	500A	69253-FW80A	697E		694F		694F		693A
65261-FK102	655	65510-FB940	500A	69253-FW81A	697E	69320-GG07B	694B	69328-FJ302	694B		693B
65261-GH10A	655	65510-FB950	500A	69260-FF000	691A	69320-GG18B	694B		694C	69354-FB600	699H
65261-GH11A	655	65510-FB960	500A	69270-FK100	691A	69322-FK10A	694B	69328-FJ30A	694B		699I
65280-FB405	655	65510-FB970	500A	69271-FK100	691A		694C		694C		699K
65280-FK101	655	65520-22H00	500A	69290-FE000	691A	69322-FK30A	694B	69328-FK10A	694B		699L
65280-FK111	655	65520-GG00A	500A	69310-FK102	694D		694C		694C	69354-FB610	699I
65285-15K00	655	65527-FB800	737	69313-FK102	694B	69324-FJ301	694B	69328-GA10C	694E		699K
65306-FK101	655	65527-FK100	500A		694C		694C		694F		699L
65310-FK101	655	65530-L1400	500A	69313-FK110	693A	69324-FJ31A	694B	69339-FK00A	694B	69354-FB61A	699H
65310-FK102	655	65531-FB000	500A		694B		694C		694C		699I
65320-FB400	655	65531-FB010	500A		694C	69324-FK10A	694B	69339-FK01A	694B		699L
65320-FB401	655	65535-L3000	500A	69313-FK12A	694B	69324-FK10B	694B		694C	69354-FB620	699H
65326-FJ30A	655	65564-FB400	655		694C		694C	69339-FK02A	694B		699I
65342-FJ100	488	65658-FB800	655	69313-FK12B	694B	69324-FK12A	694B		694C		699K
65343-FK100	655	65716-FW40A	871A		694C	69324-FK12F	694C	69339-FK100	694B		699L
65351-FK100	655		871B	69313-GE00A	693A	69324-FK13A	694B		694C	69354-FB62A	699H
65355-6K200	655	65832-F5000	655	69313-GG01A	694B		694C	69339-FK10A	694B		699H
65360-FK100	655	68898-6K00A	695J		694C	69324-FK15A	694C		694C		699I
65362-FK100	655	68898-W1000	695J	69314-FK800	697E	69324-FK30A	694B	69339-FK10B	694B		699L
65363-FK100	655	69101-FC46A	692	69317-FE060	580A	69324-FK30B	694B		694C	69354-FB685	697E
65366-FK100	655	69101-FC47A	692	69320-FK124	694B		694C	69339-FK110	694B	69370-1G001	580G
65371-FK10A	655	69101-FK160	692	69320-FK125	694C	69324-FK30F	694C		694C		580H
65371-FW80A	655	69101-FK170	692	69320-FK134	694B	69324-FK31A	694B	69350-15K00	693A	69370-L1100	580A
65380-35H00	200D	69101-GG00A	692	69320-FK135	694C		694C	69350-FJ10A	480		580B
65380-43H60	200C	69101-GG00B	692	69320-FK14A	694B	69324-FK32A	694B	69350-FJ10B	480		580F
	200D	69130-FE060	580A	69320-FK14B	694B	69324-FK32F	694C		697E		693A
65380-FB800	500A	69139-6K00A	695J	69320-FK15A	694C	69324-FK33A	694B	69350-FJ111	580A	69370-L6000	691B

PART NUMBER INDEX

PART NO.	SEC.NO.	PART NO.	SEC.NO.	PART NO.	SEC.NO.	PART NO.	SEC.NO.	PART NO.	SEC.NO.	PART NO.	SEC.NO.
69371-L1100.....	480	69405-FK100.....	695H	69425-FK100.....	695A	69475-FA20B.....	695J	69636-FK165.....	697D	69664-FF000.....	697B
	580A	69405-FK10A.....	695G	69427-FK10A.....	695A	69475-FA21A.....	695J		697E	69664-FK400.....	697B
	693A	69405-FK10B.....	695H	69433-FK100.....	695G	69475-FK00A.....	695A	69636-FK170.....	697D	69664-GE40A.....	698A
69375-FK100.....	694B	69405-FK10C.....	695G		695H	69475-FK10A.....	695A		697E	69666-10H00.....	698A
	694C	69405-FK10D.....	695H	69433-FK101.....	695H	69475-GG00A.....	695I	69636-FK175.....	697D	69666-12H00.....	698D
69376-FK100.....	694B	69405-FK110.....	695G	69445-FK001.....	695C	69479-FK100.....	693A		697E		698E
	694C		695H	69445-FK002.....	695D	69540-FK100.....	693A	69636-FK200.....	697D	69666-22H00.....	698D
69378-FD20A.....	597B	69410-FK100.....	695G	69445-FK100.....	695H	69610-FK300.....	697A	69636-FK205.....	697D		698E
69380-GG00A.....	694E		695H	69445-FK105.....	695G	69610-GG10A.....	697A	69636-FK21A.....	697D	69666-25H00.....	698D
69380-GG01A.....	694E	69410-FK110.....	695G	69452-FK000.....	695C	69610-GG10B.....	697A		697E		698E
69382-GG00A.....	694F		695H		695D	69613-FK30C.....	697A	69636-FK260.....	697D	69673-FB600.....	699G
69382-GG01A.....	694F	69411-6K00B.....	695I	69452-FK00A.....	695G	69613-FK31C.....	697A		697E		699J
69384-01H00.....	580B	69411-6K01A.....	695J		695H	69613-GG10B.....	697A	69636-FK265.....	697D	69673-FK100.....	697B
	580F	69411-FA200.....	695J	69452-FK102.....	695G	69613-GG11B.....	697A		697E	69673-FK300.....	697A
69386-FK102.....	694B	69411-FK00C.....	695C		695H	69613-GG15A.....	697A	69636-FK27A.....	697D	69673-FK32A.....	697A
	694C		695D	69453-FK010.....	695C	69613-GG15B.....	697A		697E	69673-GG10A.....	697A
69386-L1106.....	580B		695G		695D	69613-GG16A.....	697A	69636-FK41A.....	697D	69673-GG10B.....	697A
69391-L4000.....	693A		695H	69453-FK100.....	695G	69613-GG16B.....	697A		697E	69674-04H00.....	695J
	693B	69411-GG00A.....	695C		695H	69615-FK100.....	697C	69636-FK47A.....	697D		698D
69392-FK000.....	693A		695D	69453-FK101.....	695G	69615-FK110.....	697C		697E	69674-FK100.....	697C
	693B		695G		695H	69616-FK100.....	697C	69636-FM000.....	698D	69674-FK101.....	497
69393-FK100.....	693A		695H	69453-FK102.....	695G	69616-FK110.....	697C	69636-GG15A.....	697D	69674-FK102.....	497
69393-FK10A.....	693A	69415-FK000.....	695C		695H	69617-FK100.....	697C	69636-GG16A.....	697D	69675-FB600.....	699I
69394-FK000.....	693A		695D	69453-FK10B.....	695G	69617-FK110.....	697C	69636-GG17A.....	697D	69676-5G500.....	698E
	693B	69415-FK001.....	695C		695H	69618-FK100.....	697C	69636-GG18A.....	697D	69676-6G500.....	698E
69394-L4000.....	241B1		695D	69454-31K00.....	695G	69618-FK110.....	697C	69638-FB600.....	698D	69676-6K000.....	699B
69395-L1100.....	693A	69415-FK002.....	695C		695H	69630-FK100.....	697C	69638-FB605.....	698D		699C
	693B		695D	69455-L1100.....	695G	69630-FK110.....	697C	69638-FB705.....	698E	69676-FK300.....	196
	699B	69415-FK003.....	695D		695H	69630-FK160.....	697C	69638-FC20A.....	698D	69676-FK40A.....	697B
	699C	69415-FK005.....	695G	69458-FK000.....	695G	69630-FK161.....	697C	69638-FC60A.....	698D	69676-FK800.....	697E
	699E		695H		695H	69630-FK170.....	697C	69638-FC700.....	698E	69676-L1100.....	697B
	699F	69415-FK006.....	695H	69458-FK010.....	695C	69630-FK171.....	697C	69638-FC705.....	698E	69678-FK100.....	697D
	699R	69415-FK010.....	695C		695D	69630-GG15A.....	697C	69638-FK400.....	697D	69680-FB610.....	699I
	699S		695D	69470-6K01A.....	695I	69630-GG16A.....	697C	69638-FK401.....	697D	69680-FK107.....	497
	699U	69415-FK100.....	695G	69470-6K03A.....	695I	69631-FK100.....	697C	69640-FK11A.....	697B	69680-FK400.....	697D
	699V		695H	69470-FA20B.....	695J	69631-FK110.....	697C	69640-GH15A.....	697B	69681-FK100.....	497
69396-FB600.....	699H	69415-FK110.....	695G	69470-FA20D.....	695J	69631-GG15A.....	697C	69660-FK100.....	697D	69681-GB04B.....	698A
	699I		695H	69470-FK100.....	695G	69631-GG16A.....	697C	69660-FK110.....	697D	69681-GE40B.....	699R
	699K	69415-GG00A.....	695J		695H	69636-03H00.....	698B	69660-GG15A.....	697D		699S
	699L	69415-GG01A.....	695J	69470-GG00A.....	695I	69636-11H01.....	698B	69660-GG16A.....	697D	69682-FB600.....	699G
69397-GG01A.....	695J	69415-GJ00B.....	695J	69471-6K00A.....	695I	69636-20H00.....	698D	69662-FK100.....	697D		699J
69403-FK102.....	694D	69418-L1100.....	695G	69471-6K00B.....	695I	69636-42K01.....	698D	69662-FK110.....	697D	69690-51K00.....	497
69403-FK104.....	694D		695H	69471-6K00E.....	695J	69636-FK100.....	697D	69662-GG15A.....	697D	69690-FB600.....	699H
69405-FK001.....	695C	69419-6K003.....	695J	69471-FK000.....	695C	69636-FK105.....	697D	69662-GG16A.....	697D		699I
69405-FK002.....	695D	69419-6K00A.....	695J		695D	69636-FK110.....	697D	69662-L1100.....	580E		699K
69405-FK011.....	695C	69425-FA201.....	695J	69472-10H01.....	695G	69636-FK115.....	697D		580J		699L
69405-FK012.....	695D	69425-FA20A.....	695J		695H	69636-FK160.....	697D		693A	69690-FK100.....	462
69405-FK100.....	695G	69425-FK010.....	253	69475-FA20A.....	695J		697E		693B	69690-L1100.....	216A

PART NUMBER INDEX

PART NO.	SEC.NO.	PART NO.	SEC.NO.	PART NO.	SEC.NO.	PART NO.	SEC.NO.	PART NO.	SEC.NO.	PART NO.	SEC.NO.
69690-L1101.....	697B	69710-FK305.....	699J	69735-13H19.....	699E	69735-FB613.....	699I	69735-FC219.....	699H	69735-FD223.....	699K
	698D	69710-FK400.....	699D		699F	69735-FB615.....	699I		699I		699L
	698E		699Q	69735-13H20.....	699E	69735-FB617.....	699I	69735-FC220.....	699H	69735-FD261.....	699I
	699Q	69710-FK40A.....	699Q		699F		699K		699I		699K
69690-L1102.....	697B	69710-GG00A.....	699D	69735-13H21.....	699E		699L	69735-FC221.....	699H		699L
69690-L1103.....	697B		699T		699F	69735-FB619.....	699H		699I	69735-FD262.....	699I
69690-L1106.....	462	69710-GG30A.....	699D	69735-13H23.....	699E		699I	69735-FC222.....	699I	69735-FD263.....	699H
	497		699Q		699F		699K	69735-FC224.....	699K		699I
	697C		699T	69735-13H66.....	698D		699L		699L	69735-FD264.....	699I
	698A	69714-FK005.....	699J	69735-13H73.....	699E	69735-FB620.....	699H	69735-FC261.....	699I	69735-FD266.....	699H
	698E	69714-FK100.....	699A		699F		699I	69735-FC262.....	699K		699I
69690-L8000.....	697E		699D	69735-51K00.....	699E	69735-FB621.....	699K		699L	69735-FD267.....	699H
	699A	69714-FK101.....	699A		699F		699L	69735-FC263.....	699I		699I
	699D		699D	69735-6K000.....	698A	69735-FB622.....	699H	69735-FC266.....	699I	69735-FD268.....	699H
	699G	69714-FK305.....	699J	69735-FB20A.....	699K		699I	69735-FC267.....	699I		699I
	699J	69714-FK400.....	699D		699L	69735-FB623.....	699K	69735-FC268.....	699I	69735-FD269.....	699H
69694-13H02.....	698A		699Q	69735-FB213.....	699K		699L	69735-FC269.....	699I		699I
69694-FK40A.....	697B	69714-FK40A.....	699Q	69735-FB23A.....	699K	69735-FB624.....	699H	69735-FD204.....	699I	69735-FD270.....	699I
69694-FL401.....	698A	69714-GG00A.....	699D		699L		699I	69735-FD206.....	699I		699K
69694-GE00A.....	698A		699T	69735-FB266.....	699K	69735-FB660.....	699H	69735-FD208.....	699K		699L
69694-GE40B.....	698A	69714-GG30A.....	699D		699L		699I		699L	69735-FD272.....	699I
69694-GE41B.....	698A		699Q	69735-FB268.....	699K	69735-FB661.....	699I	69735-FD209.....	699I		699K
69694-GE42B.....	698A		699T		699L	69735-FB663.....	699I		699K		699L
69694-GE49A.....	698A	69724-FB600.....	699H	69735-FB271.....	699H	69735-FB665.....	699I		699L	69735-FD273.....	699K
69694-GG01A.....	698A		699I		699I	69735-FB667.....	699I	69735-FD20A.....	699K		699L
69694-GG02A.....	698A	69724-FB60A.....	699H	69735-FB272.....	699H	69735-FB670.....	699I		699L	69735-FD274.....	699I
69694-GG03A.....	698A		699I		699I	69735-FB672.....	699I	69735-FD210.....	699H	69735-FD600.....	699H
69694-GG04A.....	698A	69724-FC200.....	699H	69735-FB274.....	699H	69735-FB674.....	699H		699I		699I
69694-GG05A.....	698A		699I		699I		699I		699K	69735-FD604.....	699H
69694-GG08A.....	698A	69724-FC20A.....	699H	69735-FB601.....	699I	69735-FB700.....	699H		699L		699I
69694-GG09A.....	698A		699I		699K		699I	69735-FD211.....	699I	69735-FD605.....	699H
69694-GG10A.....	697B	69725-FK100.....	697C		699L	69735-FB70A.....	699H	69735-FD213.....	699H		699I
69694-GG40A.....	698A	69735-00H04.....	699E	69735-FB604.....	699H		699I		699I	69735-FD606.....	699H
69694-GG41A.....	698A		699F		699I	69735-FB70B.....	699K		699L		699I
69694-GG42A.....	698A	69735-00H06.....	699E	69735-FB605.....	699H		699L	69735-FD214.....	699H	69735-FD607.....	699H
69694-GG43A.....	698A		699F		699I	69735-FB70C.....	699K		699I		699I
69694-GG44A.....	698A	69735-00H07.....	699E	69735-FB606.....	699I		699L	69735-FD215.....	699H		699K
69694-GG45A.....	698A		699F	69735-FB607.....	699H	69735-FC200.....	699K		699I		699L
69694-GH42A.....	698A	69735-0G000.....	699B		699I		699L	69735-FD216.....	699H	69735-FD608.....	699I
69694-L1102.....	697B		699C	69735-FB608.....	699H	69735-FC201.....	699I		699I	69735-FD609.....	699K
69694-L6301.....	697B		699E		699I	69735-FC202.....	699K	69735-FD217.....	699I		699L
69694-L7560.....	698A		699F	69735-FB609.....	699H		699L	69735-FD219.....	699I	69735-FD610.....	699K
69696-L1100.....	691A		699R		699I	69735-FC204.....	699I	69735-FD220.....	699K		699L
69710-FK005.....	699J		699S	69735-FB60A.....	698D	69735-FC206.....	699I		699L	69735-FD612.....	699I
69710-FK100.....	699A		699U		699I	69735-FC213.....	699H	69735-FD221.....	699I	69735-FD613.....	699K
	699D		699V	69735-FB610.....	699H		699I	69735-FD222.....	699K		699L
69710-FK101.....	699A	69735-13H18.....	699E		699I	69735-FC218.....	699H		699L	69735-FD614.....	699I
	699D		699F	69735-FB611.....	699I		699I	69735-FD223.....	699I	69735-FD617.....	699I

PART NUMBER INDEX

PART NO.	SEC.NO.	PART NO.	SEC.NO.	PART NO.	SEC.NO.	PART NO.	SEC.NO.	PART NO.	SEC.NO.	PART NO.	SEC.NO.
69735-FD618.....	699I	69735-GE44A.....	699S	69737-FE006.....	699B	69740-GG00A.....	699U	69763-FC200.....	699H	69810-GG00A.....	699D
69735-FD619.....	699I		699U		699C		699V		699I		699T
69735-FD620.....	699I		699V	69737-FE007.....	699B	69740-GG57A.....	699E	69763-FJ40A.....	699B	69810-GG15A.....	699G
69735-FD661.....	699H	69735-GE45A.....	699R		699C		699F		699C	69810-GG30A.....	699D
	699I		699S	69737-FK40A.....	699Q	69744-FF100.....	699E		699R		699Q
69735-FD662.....	699H		699U	69737-FV40A.....	699G		699F		699S		699T
	699I		699V	69737-FV50A.....	699J	69744-FF101.....	699E		699U	69814-FK000.....	699G
69735-FD666.....	699H	69735-GE46A.....	699R	69737-FV65A.....	699J		699F		699V	69814-FK100.....	699A
	699I		699S	69737-FW40A.....	699G	69744-FF102.....	699E	69763-L8500.....	699E		699D
69735-FD667.....	699H		699U	69737-FW40B.....	699G		699F		699F	69814-FK400.....	699D
	699I		699V	69737-FW45A.....	699G	69747-10H00.....	699E	69764-13H02.....	699E		699Q
69735-FD668.....	699I	69735-GE47A.....	699R	69737-FW45B.....	699G		699F		699F	69814-FK40A.....	699Q
69735-FD669.....	699H		699S	69740-GE40A.....	699R		699R	69764-13H03.....	699F	69814-GG00A.....	699D
	699I		699U		699S		699S	69764-FA560.....	699K		699T
69735-FD670.....	699I		699V	69740-GE40C.....	699B	69747-L6000.....	699E		699L	69814-GG30A.....	699D
69735-FD671.....	699K	69735-GE48A.....	699R		699C		699F	69764-FB600.....	699H		699Q
	699L		699S	69740-GE43C.....	699B	69751-FA560.....	699K		699I		699T
69735-FD673.....	699K	69735-GG50A.....	699E		699C		699L	69764-FF000.....	699B	69825-03H01.....	698D
	699L		699F	69740-GE44C.....	699B	69751-FA56A.....	699K		699C	69825-03H18.....	698D
69735-FD674.....	699I	69737-FB400.....	699D		699C		699L		699R	69825-22H00.....	698D
69735-FR200.....	699H	69737-FB401.....	699D	69740-GE45C.....	699B	69751-FC600.....	699H		699S	69825-42K02.....	698D
	699I	69737-FB402.....	699D		699C		699I		699U	69825-42K03.....	698D
69735-FR201.....	699H	69737-FB40D.....	699J	69740-GE46A.....	699R	69751-FC60A.....	699H		699V	69825-53H04.....	698D
	699I	69737-FB40E.....	699J		699S		699I	69770-FJ51A.....	699E	69825-53H05.....	698D
69735-FR205.....	699I	69737-FB40F.....	699J		699U	69752-FB700.....	699K		699F	69825-53H06.....	698D
69735-FR207.....	699I	69737-FB60A.....	699H		699V		699L	69770-FJ52A.....	699E	69825-53H07.....	698D
69735-FR209.....	699I	69737-FB700.....	698E	69740-GE46C.....	699B	69752-FB701.....	699L		699F	69825-FF300.....	698A
69735-FW41A.....	699G	69737-FB701.....	698E		699C	69752-FB70A.....	699K	69770-FJ53A.....	699E	69827-FC700.....	698E
69735-FW41B.....	699G	69737-FB702.....	698E	69740-GE47A.....	699R		699L		699F	69827-FC701.....	698E
69735-GB10A.....	699G	69737-FB703.....	698E		699S	69752-FB70B.....	699L	69770-GG54A.....	699E	69827-FC702.....	698E
69735-GB10B.....	699G	69737-FB704.....	698E		699U	69760-03H00.....	699B		699F	69827-FC703.....	698E
69735-GC60A.....	699K	69737-FB705.....	698E		699V		699C	69774-FB600.....	699H	69827-FC704.....	698E
	699L	69737-FB706.....	698E	69740-GE47C.....	699B		699R		699I	69827-FC705.....	698E
69735-GC61A.....	699K	69737-FB707.....	698E		699C		699S	69774-FC200.....	699H	69827-FC706.....	698E
	699L	69737-FB708.....	698E	69740-GE50A.....	699E		699U		699I	69827-FC707.....	698E
69735-GE40A.....	699U	69737-FC087.....	697E		699F		699V	69774-GE50A.....	699E	69827-FC708.....	698E
	699V	69737-FE000.....	699B	69740-GE54A.....	699E	69760-15H01.....	699E	69774-GE50B.....	699F	69840-GE40A.....	699S
69735-GE41A.....	699R		699C		699F	69760-25H00.....	699E	69774-GE51A.....	699E		699V
	699S	69737-FE001.....	699B	69740-GE55A.....	699E	69761-FC21A.....	699K	69774-GE51B.....	699F	69840-GE40C.....	699C
	699U		699C		699F		699L	69774-GE52A.....	699E	69840-GE43C.....	699C
	699V	69737-FE002.....	699B	69740-GE56A.....	699E	69761-FC21B.....	699L	69774-GE52B.....	699F	69840-GE44C.....	699C
69735-GE42A.....	699U		699C		699F	69763-10G01.....	135B	69802-91H50.....	699G	69840-GE45C.....	699C
	699V	69737-FE003.....	699B	69740-GE57A.....	699E	69763-10G0A.....	135C	69803-91H50.....	699G	69840-GE46A.....	699S
69735-GE43A.....	699R		699C		699F	69763-FA560.....	699K	69810-FK000.....	699G		699V
	699S	69737-FE004.....	699B	69740-GE58A.....	699E		699L	69810-FK100.....	699A	69840-GE46C.....	699C
	699U		699C		699F	69763-FB600.....	699H		699D	69840-GE47A.....	699S
	699V	69737-FE005.....	699B	69740-GG00A.....	699R		699I	69810-FK400.....	699D		699V
69735-GE44A.....	699R		699C		699S	69763-FB610.....	699I		699Q	69840-GE47C.....	699C

PART NUMBER INDEX

PART NO.	SEC.NO.	PART NO.	SEC.NO.	PART NO.	SEC.NO.	PART NO.	SEC.NO.	PART NO.	SEC.NO.	PART NO.	SEC.NO.
69840-GE50A	699F		580J	70092-FK100	586	70820-FC61A	597B	73760-FC497	737	87520-FW80D	871B
69840-GE54A	699F	69944-6G500	580E	70092-FK400	586	70820-FC72A	597B	73760-FW70A	737	87520-FW90B	871B
69840-GE55A	699F		580J	70092-FK405	586	70820-FC73A	597B	73760-FW70B	737	87521-FW80D	871B
69840-GE56A	699F	69976-52K70	699E	70131-FA065	597A	70830-FB40A	597A	73760-FW70C	737	87521-FW90B	871B
69840-GE57A	699F		699F	70131-FA265	597A	70830-FB41A	597A	73761-FC400	737	87522-FW80B	871B
69840-GE58A	699F	69976-FF000	699B	70131-FB41A	597A	70830-FB60A	597A	73761-FW70A	737	87523-FW80B	871B
69840-GG57A	699F		699C	70131-FB61A	597A	70830-FB61A	597A	73775-6G650	697E	87524-FW80B	871B
69844-51K10	699F	69976-FK000	699B	70131-FB71A	597A	70830-FB70A	597A	73795-FB490	737	87600-FB400	871A
69844-51K11	699F		699C	70131-FC70A	597A	70830-FB71A	597A	73795-FV485	737	87610-FA20A	695J
69844-51K12	699F	69976-GE40A	699U	70131-FC71A	597A	70830-FC21A	597B	74301-FB300	740	87611-FB400	871A
69851-FB600	699I		699V	70257-L1100	693A	70830-FC27A	597B	74301-FK101	740	87620-FW80B	871B
69860-15H01	699F	69976-GG00A	699U	70810-FB40A	597A	70830-FC61A	597B	74317-FK105	740	87621-FW90B	871B
69860-25H01	699F		699V	70810-FB41A	597A	70830-FC70A	597A	74317-FK110	740	87622-FW80B	871B
69860-FB600	699I	69976-GG40A	699R	70810-FB60A	597A	70830-FC71A	597A	74317-FV40A	740	87623-FW90B	871B
69864-FB610	699I		699S	70810-FB61A	597A	70830-FR20A	597B	74317-FV40B	740	87800-FB400	871A
69870-FJ51A	699F	69978-52K70	699F	70810-FB62A	597B	70830-FR26A	597B	74892-FB00A	500A	87801-FW80A	871A
69870-FJ52A	699F	69978-FF000	699C	70810-FB63A	597B	70830-FR60A	597B	74892-V6000	261	87816-FB400	871A
69870-FJ53A	699F	69978-FK000	699C	70810-FB70A	597A	70834-FC61A	597B	74901-FK101	740	87820-FW80B	871B
69870-GG54A	699F	69978-GE40A	699V	70810-FB71A	597A	70834-FD20A	597B	74940-43K00	500B	87821-FW80B	871B
69874-51K10	699F	69978-GG00A	699V	70810-FB72A	597B	70834-FR60A	597B		500C	87822-FW80B	871B
69874-51K11	699F	69978-GG40A	699S	70810-FB73A	597B	70841-FA065	597A	76818-11H00	737		
69874-51K12	699F	69981-FA065	597A	70810-FC20A	597B	70841-FA265	597A			90000	
69874-FB600	699I	69981-FD20A	597B	70810-FC21A	597B	70842-FA065	597A	80000			
69921-FF100	595B	69999-FA065	597A	70810-FC26A	597B	70842-FA265	597A			93161-6K200	500B
69921-FF400	595B	69999-FC70A	597A	70810-FC27A	597B	70842-FC70A	597A	84952-3W700	500A	93161-FE300	737
69921-FK16A	595B	69999-FD20A	597B	70810-FC30A	597B	70842-FD20A	597B	87000-FB400	871A	96303-11H00	737
69933-FA065	597A			70810-FC31A	597B	70842-FD20B	597B	87000-FC485	871A	96916-12H05	991
69933-FC70A	597A	70000		70810-FC36A	597B	70843-FA065	597A	87000-FW40A	871A	96916-FB000	991
69935-FA065	597A			70810-FC37A	597B	70843-FA265	597A	87000-FW50A	871A	96916-FB100	991
69935-FC70A	597A	7000-012	199A	70810-FC60A	597B	70843-FD20A	597B	87000-FW50B	871B	96916-FB200	991
69936-FA065	597A	7000-009	500C	70810-FC61A	597B	70843-FD20B	597B	87000-FW50D	871B	96916-FB210	991
69936-FC70A	597A	70018-FA065	597A	70810-FC70A	597A	70843-FD20C	597B	87000-FW50J	871B	96916-FB300	991
69936-FD20A	597B	70018-FA066	597A	70810-FC71A	597A	70845-FA065	597A	87000-FW50K	871B	96916-FV00A	991
69937-FA065	597A	70018-FC70A	597A	70810-FC72A	597B	70845-FC70A	597A	87120-FW90B	871B	96916-FV10A	991
69937-FC70A	597A	70018-FC70B	597A	70810-FC73A	597B	70848-FA065	597A	87121-FW80B	871B	96916-FV20A	991
69938-FA065	597A	70018-FD20A	597B	70820-FB62A	597B	70880-FA000	597A	87122-FW90B	871B	96916-FV21A	991
69938-FC70A	597A	70019-FA065	597A	70820-FB63A	597B	70880-FD20A	597B	87164-FW40A	871A	96916-FV30A	991
69939-FD20A	597B	70019-FA265	597A	70820-FB72A	597B	70983-L1100	693A	87165-FW40A	695J	96918-FW81A	991
69939-GE40B	699R	70019-FD20A	597B	70820-FB73A	597B	7163-002	500C	87220-FW80B	871B	97818-FC400	991
	699S	70019-FR60A	597B	70820-FC20A	597B	73710-FB400	737	87221-FW80B	871B	97818-FV40A	991
69941-FA065	597A	70026-FA065	597A	70820-FC21A	597B	73711-FB400	737	87222-FW80B	871B	97818-FW40A	991
69941-FC70A	597A	70026-FA265	597A	70820-FC26A	597B	73730-FB401	737	87223-FW80B	871B	97821-FB300	199A
69943-FA065	597A	70028-FA065	597A	70820-FC27A	597B	73730-FC491	737	87224-FW80B	871B	97825-FK300	214
69943-FA066	597A	70028-FA265	597A	70820-FC30A	597B	73760-FC400	737	87300-FB400	871A	97830-FA20A	695J
69943-FC70A	597A	70091-FK100	586	70820-FC31A	597B	73760-FC40A	737	87311-FB400	871A	97831-FA20A	695J
69943-FC70B	597A	70091-FK10A	586	70820-FC36A	597B	73760-FC494	737	87320-FW80B	871B	97831-FA310	993
69943-FD20A	597B	70091-FK11A	586	70820-FC37A	597B	73760-FC495	737	87321-FW80B	871B	97831-FK100	993
69944-4G500	580E	70091-FK405	586	70820-FC60A	597B	73760-FC496	737	87322-FW80B	871B	97832-FA20A	695J

PART NUMBER INDEX

PART NO.	SEC.NO.	PART NO.	SEC.NO.	PART NO.	SEC.NO.	PART NO.	SEC.NO.	PART NO.	SEC.NO.	PART NO.	SEC.NO.
97832-FA310.....	993	99207-FS000.....	244								
97835-8G50A.....	993	99240-FS002.....	241A1								
97835-FC300.....	991		241B1								
97835-FJ300.....	111A	99350-FC100.....	199A								
	111B		199C								
97835-FW80A.....	991	99350-FC210.....	199A								
97836-FC600.....	993		199C								
97836-FC601.....	993	99350-FC215.....	199A								
97836-FC602.....	993		199C								
97836-FC603.....	993	99360-FK115.....	991								
97836-FK100.....	993	99360-FK120.....	991								
97837-FK100.....	993	99382-60K00.....	993								
97839-11H01.....	993										
97841-90H76.....	199A	C0000									
	199B										
	199C	C8320-00330.....	380B								
97841-FC40A.....	199A										
	199B	E0000									
	199C										
97862-4G200.....	433	E8249-F8220.....	586								
	434										
9877-044.....	199A	K0000									
99057-5G000.....	991										
99057-6G000.....	991	KP710-00150.....	110A								
99064-FB300.....	991		135A								
99064-FB400.....	991		135B								
99064-FB410.....	991		135C								
99064-FB500.....	991										
99064-FB600.....	991	N0000									
99065-FB300.....	991										
99065-FB400.....	991	NF52725-03601...	313A								
99065-FB410.....	991	NF62626-08101...	313A								
99065-FB500.....	991	NF91224-07101...	313A								
99065-FB600.....	991	NF91224-07201...	313A								
99070-FW40A.....	993	NF91224-07301...	313A								
99080-FK000.....	991	NF91A28-30022...	317A								
99080-FK001.....	991										
99080-FK002.....	991	R0000									
99080-FK003.....	991										
99080-FK101.....	991	R5812-BH.....	267								
99080-FK102.....	991	R6410-FT.....	267								
99080-FK103.....	991										
99087-04H20.....	991	S0000									
99087-04H60.....	991										
99088-FK100.....	991	SLIFT-16405-02..	164B								
99089-FK100.....	991										
99090-FJ100.....	991										
99090-FK400.....	991										

DEALER SUGGESTED STOCKING LIST
1F2 PNEUMATIC

		QUANTITY		
PART #	DESCRIPTION	1-5 TRUCKS	6-10 TRUCKS	APPLIED MODEL
10101-40K2K	GASKET KIT	0	1	QD32
25240-FJ10A	SWITCH-OIL PRESSURE	1	3	K21/K25
11044-FU400	HEAD GASKET	1	3	K21/K25 GAS/DUAL
11044-FU460	HEAD GASKET	1	3	K21/K25 LPG
13270-FY50A	GASKET-ROCKER COVER	1	4	K21/K25
11720-NA002	BELT-FAN	2	5	QD32
11720-NA00A	BELT-ALTERNATOR & WATER PUMP	3	6	QD32
11810-75T00	PCV VALVE	2	8	K21/K25
12310-FU400	FLYWHEEL ASSEMBLY	0	1	K21/K25 PNEUMATIC
12312-43G0A	GEAR-RING	0	1	QD32
12312-50K00	GEAR-RING	1	3	K21/K25
23731-6J90B	CRANKSHAFT POSITION SENSOR	1	2	K21/K25 UPTO DEC. 2011
23731-6J90C	CRANKSHAFT POSITION SENSOR	1	2	K21/K25 FROM DEC. 2011
23731-6N21A	CAMSHAFT POSITION SENSOR	1	2	K21/K25
KP710-00150	LIQUID GASKET	1	1	QD32
14036-43G00	GASKET-EXHAUST	1	3	QD32
15208-01B0B	FILTER-OIL (10 PER PACKAGE)	10	30	K21/K25
15208-43G0A	FILTER-OIL	3	10	QD32
25240-Z550A	SWITCH-OIL PRESSURE	1	3	QD32
16175-GS00A	GASKET-THROTTLE CHAMBER	1	3	K21/K25
16197-FU46A	SENSOR ASSEMBLY	1	3	K21/K25 DUAL/LPG
16413-10H00	SENSOR ASSY-W/DRAIN COCK	1	4	QD32
16600-GS07B	INJECTOR ASSY-FUEL (MAIN)	1	3	K21 DUAL/LPG
16600-GS17B	INJECTOR ASSY-FUEL (MAIN)	1	3	K25 DUAL/LPG
16600-GU61A	INJECTOR ASSY-FUEL	4	12	K21/K25 GAS/DUAL
16618-5L300	SEAL-O RING INJECTOR LOWER	4	12	K21/K25 GAS/DUAL
16618-FU460	SEAL-O RING INJECTOR UPPER	4	12	K21/K25 GAS/DUAL
SLIFT-16405-02	FUEL FILTER	5	15	QD32
16546-FK370	ELEMENT ASSY-AIR CLEANER	5	20	QD32
16546-GE20A	ELEMENT ASSY-AIR CLEANER	5	20	K21/K25
16588-FK311	SERVICE IND ASSEMBLY	2	6	ALL
22680-7S000	MASS AIR FLOW SENSOR	2	4	K21/K25
17040-FW40A	MODULE-FUEL, INTAKE	0	1	K21/K25 GAS/DUAL
17251-FV00A	CAP ASSEMBLY-FILLER	2	6	K21/K25 GAS/DUAL & QD32
17510-FB000	MANUAL VALVE ASSEMBLY	1	3	K21/K25 GAS/DUAL
17510-FB000	MANUAL VALVE ASSEMBLY (UPTO OCT. 2010)	1	3	QD32 UPTO OCT. 2010
17510-GG10A	MANUAL VALVE ASSEMBLY (FROM OCT. 2010)	1	3	QD32 FROM OCT. 2010
25060-FB001	SENDER UNIT-FUEL GAUGE	0	2	QD32
18201-GG10C	WIRE ASSY-ACCEL (UPTO MAY 2008)	1	3	QD32 UPTO MAY 2008
18201-GG11A	WIRE ASSY-ACCEL (FROM MAY 2008)	1	3	QD32 FROM MAY 2008
18919-AM810	ACCEL WORK UNIT	1	2	K21/K25
16600-63G21	NOZZLE ASSY & HOLDER	4	16	QD32
16626-43G00	GASKET NOZZLE	4	16	QD32
16627-43G00	GASKET SEAL	4	16	QD32
16701-R8100	GASKET INJECTOR PUMP	0	1	QD32
16310-GS00B	VAPORIZER ASSEMBLY	1	2	K21/K25 DUAL/LPG UPTO FEB. 2013
16310-GS00C	VAPORIZER ASSEMBLY	1	2	K21/K25 DUAL/LPG FROM FEB. 2013
14055-GG10A	HOSE-WATER	0	1	K21/K25 DUAL/LPG C2, C3, A2, P1, P2, P3
14056-FK100	HOSE-WATER	0	1	K21/K25 DUAL/LPG C2, C3, A2, P1, P2, P3
16919-W1602	FILTER	2	8	K21/K25 DUAL/LPG
17504-FK111	LPG TUBE TO SHUTOFF	0	1	K21/K25 DUAL/LPG P2, P3
17527-FJ201	HOSE-FUEL	2	2	K21/K25 DUAL/LPG C2, C3, A2, P1, P2, P3
17904-FC300	VALVE ASSEMBLY-SOLENOID	1	2	K21/K25 DUAL/LPG C2, C3, A2, P1, P2, P3
17906-FV40A	BULK HEAD ASSEMBLY	0	2	K21/K25 DUAL/LPG P2, P3
185-0034	VLV, RELIEF HYDRO-STATIC	2	8	K21/K25 DUAL/LPG
17908-FC00D	SWITCH, LPG	2	8	K21/K25 DUAL/LPG
17920-FB601	LPG FILLER HOSE TANK TO BH	2	6	K21/K25 DUAL/LPG P3
17920-FC303	LPG FILLER HOSE TANK TO BH	2	6	K21/K25 DUAL/LPG C2, C3, A2, P2
17937-Y4400	O RING-SOLENOID FILTER	2	8	K21/K25 DUAL/LPG
17937-Y4410	O RING-SOLENOID FILTER	2	8	K21/K25 DUAL/LPG
25500-F9701	SWITCH, LPG SWING BRACKET	2	6	C1, A1, C2, C3, A2, P1, P2~2.8
20100-FK170	MUFFLER ASSEMBLY-EXHAUST, MAIN	0	1	K21/K25 P2 EXCEPT SAFETY
20100-FK180	MUFFLER ASSEMBLY-EXHAUST, MAIN	0	1	K21/K25 P2 SAFETY
20100-FK370	MUFFLER ASSEMBLY-EXHAUST, MAIN (P3)	0	1	K21/K25 P3

DEALER SUGGESTED STOCKING LIST
1F2 PNEUMATIC

		QUANTITY		
PART #	DESCRIPTION	1-5 TRUCKS	6-10 TRUCKS	APPLIED MODEL
20465-GG00A	INSULATOR-HEAT EXHAUST	4	10	K21/K25 P1, P2, P3
20638-FK10A	RUBBER-MUFFLER MTG	4	12	K21/K25
20692-65J00	GASKET-EXHAUST	1	3	K21/K25
20800-VC225	THREE WAY CATALYST	0	1	K21/K25 UPTO JULY 2008
20800-VD90A	THREE WAY CATALYST	0	1	K21/K25 FROM JULY 2008
02117-20021	BELT-FAN	1	3	K21/K25 C2, C3, A2 EXCEPT SAFETY, P1 & P2 EXCEPT SAFETY, P3
02117-22023	BELT-FAN	1	3	K21/K25 C2, C3, A2 SAFETY, P1 & P2 SAFETY
11062-FY500	GASKET	1	3	K21/K25
11072-34N02	THERMOSTAT GASKET	1	2	QD32
21010-FU425	PUMP ASSEMBLY-WATER	1	4	K21/K25
21010-NA00J	PUMP ASSY-WATER	1	2	QD32
21014-07N00	GASKET-WATER PUMP	1	4	K21/K25
21060-FU40A	FAN-COOLING	1	2	ALL
21200-05D02	THERMOSTAT	1	2	QD32
21200-VJ200	THERMOSTAT	1	2	K21/K25
22630-44B20	ENGINE COOLANT TEMPERATURE SENSOR	1	2	K21/K25
21430-FK300	CAP, RADIATOR	2	6	ALL
21450-FK30A	RAD COMPLETE W/OIL COOLER	0	1	P1, P2, P3 UPTO AUG. 2011
21450-FC30A	RAD COMPLETE W/OIL COOLER	0	1	P1, P2, P3 FROM AUG. 2011
21501-FK101	RADIATOR HOSE-UPPER	1	4	K21/K25 P2, P3
21501-GG30A	RADIATOR HOSE-UPPER	1	2	QD32 P2, P3
21503-FK100	RADIATOR HOSE-LOWER	1	4	K21/K25 P2, P3
21503-GG30A	RADIATOR HOSE-LOWER	1	2	QD32 P2, P3
11065-63G00	GLOW PLUG	4	12	QD32
22401-FU412	PLUG-SPARK	4	18	K21/K25 UPTO SEPT. 2008
22401-FU42A	PLUG-SPARK	4	18	K21/K25 FROM SEPT. 2008
22448-AR215	IGNITION COIL	4	12	K21/K25
24075-GY360	ENGINE HARNESS SUB	0	1	K21/K25 EXCEPT SAFETY
24075-GS00A	ENGINE HARNESS SUB	0	1	K21/K25 SAFETY UPTO DEC. 2011
24075-GY360	ENGINE HARNESS SUB	0	1	K21/K25 SAFETY FROM DEC. 2011
22690-GS00A	HEATED OXYGEN SENSOR	2	6	K21/K25 ALL EXCEPT SAFETY
22690-GU60A	HEATED OXYGEN SENSOR	2	6	K21/K25 SAFETY UPTO DEC. 2011
22690-GS00A	HEATED OXYGEN SENSOR	2	6	K21/K25 SAFETY FROM DEC. 2011
23710-4K40A	MOD ASSY-ENGINE CONT	0	1	K21 P1, P2, P2.5 (USE WITH ENGINE PART #10001-4KXXX)
23710-4K50A	MOD ASSY-ENGINE CONT	0	1	K25 P2, P3 (USE WITH ENGINE PART #10001-4KXXX)
23710-GS00A	MOD ASSY-ENGINE CONT	0	1	K21 P1, P2, P2.5 UPTO MAY 2008 (USE WITH ENGINE PART #10001-GSXXX)
23710-GS03A	MOD ASSY-ENGINE CONT	0	1	K21 P1, P2, P2.5 FROM MAY 2008 TO JULY 2008 (USE WITH ENGINE PART #10001-GSXXX)
23710-GS06A	MOD ASSY-ENGINE CONT	0	1	K21 P1, P2, P2.5 FROM JULY 2008 (USE WITH ENGINE PART #10001-GSXXX)
23710-GS10A	MOD ASSY-ENGINE CONT	0	1	K25 P2, P3 UPTO MAY 2008 (USE WITH ENGINE PART #10001-GSXXX)
23710-GS13A	MOD ASSY-ENGINE CONT	0	1	K25 P2, P3 FROM MAY 2008 TO JULY 2008 (USE WITH ENGINE PART #10001-GSXXX)
23710-GS16A	MOD ASSY-ENGINE CONT	0	1	K25 P2, P3 FROM JULY 2008 (USE WITH ENGINE PART #10001-GSXXX)
23100-FU410	ALTERNATOR ASSEMBLY	1	3	K21/K25 EXCEPT SAFETY
23100-GY360	ALTERNATOR ASSEMBLY	1	3	K21/K25 SAFETY
23100-NA00B	ALTERNATOR	0	1	QD32
23300-1W400	MOTOR-STARTER	0	1	QD32
23300-GS20B	MOTOR-STARTER	1	3	K21/K25
24022-FJ000	WIRE ASSEMBLY-FUSIBLE LINK	0	1	K21/K25 ALL EXCEPT SAFETY & QD32
24022-FJ102	WIRE ASSEMBLY-FUSIBLE LINK	0	1	K21/K25 SAFETY
24022-FJ400	WIRE ASSY-FUSIBLE LINK	0	1	QD32
24034-FL100	HARN-FR SEAT	1	4	ALL
24321-FK100	PULLER-FUSE	1	2	ALL
24324-FL101	COVER-FUSE BLOCK	0	1	ALL
24335-89900	RESISTOR ASSY DIODE	1	4	ALL
28351-89902	DIODE CONDENSER	2	6	K21/K25

DEALER SUGGESTED STOCKING LIST
1F2 PNEUMATIC

		QUANTITY		
PART #	DESCRIPTION	1-5 TRUCKS	6-10 TRUCKS	APPLIED MODEL
24810-GG12A	METER ASSY-COMB	0	1	K21/K25
24810-GG22A	METER ASSY-COMB	0	1	QD32
25150-GG10B	SWITCH ASSY-IGNITION	2	6	ALL
25152-FK100	SPACER-IGNITION SWITCH	0	1	ALL
25320-GB000	SWITCH, STOP LAMP	3	9	ALL
25560-FK20A	SWITCH COMPLETE-COMBINATION	0	1	ALL EXCEPT C3 2 SPEED TRANS
24390-FK111	COVER RELAY BLACK	1	3	ALL
24390-FK266	COVER RELAY BLUE	1	3	ALL
25230-FK110	RELAY-1M1B	4	10	ALL
25230-GE00A	RELAY	2	8	ALL
25565-GL00C	SWITCH ASSEMBLY-LP/GAS SELECT	1	3	ALL DUAL
25620-FK105	HORN ASSEMBLY-LOW	3	8	ALL UPTO JAN. 2010
25620-GH10A	HORN ASSEMBLY-LOW	3	8	ALL FROM JAN. 2010
25640-GH10A	BUZZER PARK BRAKE	2	4	ALL
25650-50K00	HORN ASSEMBLY-BACK	3	6	ALL
26010-FE300	LAMP ASSY-HEAD	0	2	ALL
26011-61K00	LENS	2	4	ALL
26293-51K00	BULB	2	6	ALL
26717-89900	BULB-FRONT COMBI LAMP	8	16	ALL
26550-FK100	LAMP ASSEMBLY REAR COMBO	2	4	ALL
26717-FK100	BULB-REAR COMBI LAMP	6	18	ALL
26717-FK110	BULB-REAR COMBI LAMP	6	18	ALL
25080-FK100	SW ASSY-THERMO	1	4	ALL
25911-FK100	SENSOR ASSEMBLY-SPEED	3	6	A1, C2, C3, A2, P1, P2, P3
31086-FJ100	GAUGE-OIL LEVEL	0	1	P1, P2, P3 UPTO MAY 2008
31086-GE00B	GAUGE-OIL LEVEL	0	1	P1, P2, P3 FROM MAY 2008
31375-FJ10A	SEAL OIL TRANS.	1	3	P1, P2, P3 UPTO MAY 2008
31343-FJ150	O-RING FILTER	1	3	P1, P2, P3 UPTO MAY 2008
31728-40K00	ATM STRAINER	1	3	P1, P2, P3 FROM MAY 2008
31729-40K00	GASKET FOR STRAINER	1	3	P1, P2, P3 FROM MAY 2008
NF91224-07101	ATM STRAINER	1	3	P1, P2, P3 UPTO MAY 2008
33140-7S110	SEAL OIL TRANS.	1	3	P1, P2, P3 FROM MAY 2008
31715-GE00A	PACKING-CONTROL VALVE	1	2	P1, P2, P3 FROM MAY 2008
31716-FJ100	GASKET-BODY VALVE	1	2	P1, P2, P3 UPTO MAY 2008
31717-FJ100	GASKET	1	2	P1, P2, P3 UPTO MAY 2008
31765-FC000	VALVE ASSY SOLENOID TRANS	0	2	P1, P2, P3 FROM MAY 2008
31968-GE00A	BUSH-INCHING CABLE ARM	0	1	P1, P2, P3 FROM MAY 2008
32858-FC000	SEAL-INCHING VALVE	1	2	P1, P2, P3 FROM MAY 2008
NF91A28-30022	VALVE ASSY SOLENOID TRANS	0	1	P1, P2, P3 UPTO MAY 2008
32884-FJ100	O RING DRIVE ASSEMBLY	0	1	P1, P2, P2.5
32884-FJ100	O RING DRIVE ASSEMBLY	0	1	P2.8~3.5 UPTO MAY 2008
32884-GG30A	O RING DRIVE ASSEMBLY	0	1	P2.8~3.5 FROM MAY 2008
38189-FJ100	PACKING CARRIER	1	2	P1, P2, P2.5
38189-FJ100	PACKING CARRIER	1	2	P2.8~3.5 UPTO MAY 2008
38189-GE00A	PACKING CARRIER	1	2	P2.8~3.5 FROM MAY 2008
43210-FK300	BEARING ASSY, DRIVE AXLE OUTER	2	4	P2.8~3.5
43215-FK000	BEARING ASSY, DRIVE AXLE OUTER	2	4	P2, P2.5
43222-FK001	BOLT-HUB, DRIVE AXLE	6	12	P2, P2.5
43222-FK30A	BOLT-HUB, DRIVE AXLE	6	12	P2.8~3.5
40005-FK000	BUSH-STEERING AXLE MTG	2	4	C2, C3, A2, P2, P3
40016-FK000	BEARING-NEEDLE, KING PIN	0	2	C2, C3, A2, P2, P3
40022-FK000	KING PIN	2	6	C2, C3 EXCEPT 2 SPEED TRANS, A2, P2, P3
40023-FJ100	BOLT-LOCK, KINGPIN	2	4	ALL
40024-L1100	SEAL, GREASE KING PIN	4	8	ALL
40030-L1100	BRG, THR KNU SPDL	4	12	C2, C3, A2, P2, P3
40041-FJ100	CAP-KINGPIN	2	8	ALL
40047-FK000	CAP-MTG, STEERING AXLE	2	8	C2, C3, A2, P2, P3
40079-FK00A	RUBBER-AXLE CTR	1	2	C2, C2.5, A2, P2, P2.5 UPTO NOV. 2011
40079-GG00A	RUBBER-AXLE CTR	1	2	C2, C2.5, A2, P2, P2.5 FROM NOV. 2011
40079-FK10A	RUBBER-AXLE CTR	1	2	C2.8~3.6, P2.8~3.5 UPTO NOV. 2011
40079-GG30A	RUBBER-AXLE CTR	1	2	C2.8~3.6, P2.8~3.5 FROM NOV. 2011
40204-FK001	HUB-STEERING AXLE	1	2	P2~3.0
40204-FK400	HUB-STEERING AXLE	0	2	P3.5
40222-FJ100	BOLT-HUB	6	12	A1, P1~3.0

DEALER SUGGESTED STOCKING LIST
1F2 PNEUMATIC

		QUANTITY		
PART #	DESCRIPTION	1-5 TRUCKS	6-10 TRUCKS	APPLIED MODEL
40222-FK401	BOLT-HUB	6	12	P3.5
40227-FK000	SEAL GREASE, STEERING HUB	2	6	C2, C3 EXCEPT 2 SPEED TRANS, A2, P2, P3
40262-FJ100	NUT-LOCK, WHEEL BEARING	2	6	ALL EXCEPT C3 2 SPEED TRANS
40264-FJ100	WASHER-LOCK, WHEEL BEARING	2	6	ALL EXCEPT C3 2 SPEED TRANS
40292-FJ100	CAP-HUB	2	6	ALL EXCEPT C3 2 SPEED TRANS
40571-FJ100	SHIM-MTG RUB (1.0)	2	4	ALL
40572-FJ100	SHIM-MTG RUB (2.3)	2	4	ALL
40573-FJ100	SHIM-MTG RUB (0.6)	2	4	ALL
40224-07D0C	NUT-DRIVE WHEEL	6	12	P2.8~3.5
40225-L0700	NUT-DRIVE WHEEL	6	12	C2.8~3.6, P2, P2.5
36014-FK101	SW-PKB, WARNING (ALL)	1	3	ALL
36010-FK101	LEVER ASSY-PKB (ALL)	0	1	ALL
36530-FK001	CABLE ASSEMBLY, BRAKE RH	0	1	P2, P2.5
36530-FK30A	CABLE ASSEMBLY, BRAKE RH	0	1	P2.8~3.5
36531-FK001	CABLE ASSEMBLY, BRAKE LH	0	1	P2, P2.5
36531-FK30A	CABLE ASSEMBLY, BRAKE LH	0	1	P2.8~3.5
46091-FK100	RESERVOIR, BRAKE FLUID	0	1	ALL
30770-FJ110	CABLE ASSEMBLY-INCHING	1	2	P1, P2, P3 UPTO MAY 2008
30770-GE00A	CABLE ASSEMBLY-INCHING	1	2	P1, P2, P3 FROM MAY 2008
46531-FK100	PAD-PEDAL	1	3	ALL
46536-FK100	BUSH-PEDAL	6	12	ALL
46585-FK201	SPRING RETURN CLUTCH PEDAL	0	2	ALL
49410-FJ500	STEER VALVE ASSY	0	1	P2 1 TON, P2, P2.5
49410-FK000	STEER VALVE ASSY	0	1	P2.8~3.5
49440-FJ100	SEAL-KIT STEER VALVE	0	1	ALL
48422-FJ10A	BUTTON-HORN	1	3	ALL
48511-FK001	BAR TIE ROD RH	1	3	P2, P3
48512-FK001	BAR TIE ROD LH	1	3	P2, P3
48513-FJ10B	PIN CLV-TIE ROD OUTER	2	4	C1, A1, P2, P3
48513-FK00A	PIN CLV-TIE ROD INNER	2	4	P2, P3
48525-FK000	SEAL DUST TIE ROD LINK	4	12	P2, P3
48593-FJ100	SPACER, OUTER	4	12	ALL
48594-FK000	THRUST SEAL BEARING, INNER	4	12	P2, P3
49599-FB30A	SEAL KIT-PS CYLINDER	2	6	P2, P2.5
49599-FB50A	SEAL KIT-PS CYLINDER	2	6	P2.8~3.5 UPTO JULY 2011
49599-GG30A	SEAL KIT-PS CYLINDER	2	6	P2.8~3.5 FROM JULY 2011
48970-FJ100	LEVER-ADJ, STRG COL	0	1	ALL
01553-06721	PUSH CLIP FOR FT COVERS	30	60	ALL
51882-FK100	PLATE-STEP RH	0	1	P2, P3
51883-FK100	PLATE-STEP LH	1	3	P2, P3
58099-0G511	PACKING KIT-FREELIFT CYLINDER 3F	1	2	C2.8, C3, P2.8, P3 UPTO SEPT. 2010
58099-6G600	PACKING KIT-MAST CYLINDER 3F & 3V	1	2	C3.3~3.6, P3.5 UPTO SEPT. 2010
58099-FA31B	PACKING KIT-FREELIFT CYLINDER 3F	1	2	C2, C2.5, A2, P2, P2.5
58099-FA500	PACKING KIT-MAST CYLINDER 3F & 3V	1	2	C2, C2.5, A2, P2, P2.5 UPTO SEPT. 2010
58099-FA562	PACKING KIT-FREELIFT CYLINDER 3V	1	2	C2, C2.5, A2, P2, P2.5
58099-FA600	PACKING KIT-MAST CYLINDER 3F & 3V	1	2	C2.8, C3, P2.8, P3 UPTO SEPT. 2010
58099-FA661	PACKING KIT-FREELIFT CYLINDER 3V	1	2	C2.8, C3, P2.8, P3
58099-FC20A	PACKING KIT-MAST CYLINDER 3F & 3V	1	2	C2.8, C3, P2.8, P3 FROM SEPT. 2010
58099-FC20B	PACKING KIT-FREELIFT CYLINDER 3F	1	2	C2.8, C3 P2.8, P3 FROM SEPT. 2010
58099-FC60A	PACKING KIT-MAST CYLINDER 3F & 3V	1	2	C3.3~3.6, P3.5 FROM SEPT. 2010
58099-FD41B	PACKING KIT-MAST CYLINDER 3F & 3V	1	2	C2, C2.5, A2, P2, P2.5 FROM SEPT. 2010
58499-6G600	PACKING KIT-FREELIFT CYLINDER 3V	1	2	C3.3~3.6, P3.5
58499-6G611	PACKING KIT-FREELIFT CYLINDER 3F	1	2	C3.3~3.6, P3.5 UPTO SEPT. 2010
58099-FC60B	PACKING KIT-FREELIFT CYLINDER 3F	1	2	C3.3~3.6, P3.5 FROM SEPT. 2010
58699-FK010	PACKING KIT-TILT CYLINDER	2	6	C2, C3, A2, P2, P3 UPTO APRIL 2009
58699-FK410	TILT CYLINDER PACKING KIT	2	6	C3.3~3.6, P3.5 UPTO APRIL 2009
58699-GG01A	TILT CYLINDER PACKING KIT	2	6	C2, C3, A2, P2, P3 FROM APRIL 2009
58699-GG02A	TILT CYLINDER PACKING KIT	2	6	C3.3~3.6, P3.5 FROM APRIL 2009
59151-FJ400	STD. BUSH MAST SUPPORT	2	8	C2.8~C3.6, P2, P3
50555-FC000	FASTENER CLIP (SIDE)	12	48	C2, C3, A2, P1, P2, P3 UPTO APRIL 2011
65320-FB401	STAY ASSEMBLY-HOOD	2	6	ALL
65371-FW80A	BUMPER-TOP PANEL, RUBBER	12	48	C2, C3, A2, P1, P2, P3 FROM APRIL 2011
69220-FK100	FILTER ASSY-MICRON	2	8	ALL
69260-FF000	GAUGE ASSY-HYD OIL TANK	1	3	P1, P2, P3, A2

DEALER SUGGESTED STOCKING LIST
1F2 PNEUMATIC

		QUANTITY		
PART #	DESCRIPTION	1-5 TRUCKS	6-10 TRUCKS	APPLIED MODEL
69270-FK100	FILTER ASSY-SUCTION	1	3	ALL
69290-FE000	BREATHER, HYD TANK	1	2	ALL
25070-FK100	SEN-OIL PRESS TILT LEVEL OPTION	0	1	ALL - TILT LEVELING OPTION
69415-GG00A	LEVER ASSY-CONT VALVE	1	4	2, P2.5 FINGERTIP CONTROL OPTION UPTO APRIL 201
69415-GJ00B	LEVER ASSY-CONT VALVE	1	4	2, P2.5 FINGERTIP CONTROL OPTION FROM APRIL 201
69415-GG01A	LEVER ASSY-CONT VALVE (SINGLE LIFT/TILT)	1	4	P2, P2.5 FINGERTIP CONTROL OPTION
69411-FA200	KNOB-CONTROL LEVER (SINGLE LIFT/TILT)	1	4	P2, P2.5 FINGERTIP CONTROL OPTION
25239-FA310	COVER-SWITCH	1	4	P2, P2.5 FINGERTIP CONTROL OPTION
25230-79981	RELAY-1M	1	2	P2, P2.5 FINGERTIP CONTROL OPTION
25230-79982	RELAY-AUTO CHOKE	1	2	P2, P2.5 FINGERTIP CONTROL OPTION

CLASS 1,4,5 PARTS BULLETIN

Nissan Forklift Corporation
240 North Prospect Street; Marengo, IL 60152

REVISED

Date: April 8, 2008 (Revised May 19, 2008)

To: All Dealer Principals
All PartsManagers

From: Technical Service Support Department

Subject: Transmission Sensor - Temperature Warning Light

Applied Models: All L01/L02 and 1F1/1F2 Forklifts

NFC has received reported incidents for our transmission temperature sensors (***Part #25080-FK100***) communicating a high transmission temperature condition; however, NFC has determined that the transmission sensors are being affected through heavy moist/wet conditions and applications.

The issue occurs when the temperature sensor gets moist enough with water/moisture, which allows the moisture to act as an electrical conductor between the electrical contactor and the grounded sensor body. The affect of this issue will cause the Transmission Temperature Warning light to illuminate on the dash, and the truck will enter into the "Limp" mode.

Transmission Sensor Locations by Transmission Type

A ***Single-Wired*** sensor located within the following transmission list can be easily identified within the following transmissions:

- C2-2.5 & A2 1 speed – *(Transmission P/N 31010-FC300)* Located on the right hand side of transmission above drain plug.
- C1 1 speed – *(Transmission P/N 31010-FW00A & FC000)* Located on the right hand side of transmission above drain plug.
- A1 1 speed – *(Transmission P/N 31010-FD000)* Located on the left hand side of transmission above drain plug.
- C2.8-3.3 1 speed – *(Transmission P/N 31010-FC600)* Located on the left hand side of transmission above drain plug.
- P1 & P2 1 speed – (*Transmission P/N 31020-FJ200*) Located on the left hand side bottom of the transmission
- C3-3.6 2 speed – (*Transmission P/N 31010-FL300*) Located on the right hand side front of transmission behind the differential

The information provided in this bulletin is not to be construed as a basis for any claims against NFC, unless otherwise stated.

Phone Number: (815) 568-0061 Fax Number: (815) 568-0187

NFC service has tested several aftermarket products to eliminate this issue with effective results. NFC is recommending that all trucks either being delivered, and/or exists in a heavily moist/wet outdoor condition, to take the following precautions or recommendations to alleviate this potential issue during your next scheduled PM or during your PDI inspection:

1. Use one of the following aftermarket products:
   - Loctite Superflex Non-Corrosive RTV Silicon (Loctite #51387) or
   - Starbrite Liquid Electrical Tape (Starbrite #84158)
2. Generously apply the product between the electrical contactor and the hex portion of the sensor body
3. Allow the product to appropriately cure before placing the truck back into service (use manufacturers recommendations)

Please insert a copy of this bulletin into your Dealership's copy of the L01/L02 and 1F1/1F2 Parts Manuals.

Should you have any questions, please contact NFC's Technical Support Group at 815-568-1487.

Best Regards,
Nissan Forklift Corporation
Hugh Wilson Jr.
Manager, Technical Services

CLASS 1,4,5 PARTS BULLETIN

NISSAN FORKLIFT
Nissan Forklift Corporation
240 North Prospect Street; Marengo, IL 60152

Date: February 17, 2009

To: All Dealer Principals
All Parts Managers
All CSS Managers

From: Technical Publications Department

Subject: K21/K25 Engine Enhancements

Applied Model: 1F1/1F2 Platinum II Series Manufactured From February 23, 2009 - See Page 3 for Serial Numbers

NFC is proud to announce that the Platinum II series 1F1-1F2 models will have new enhancements added to the K21 and K25 Gasoline/LPG engines that has lowered the HC Hydro Carbons and Nox levels to below the 2010 EPA required level.

As announced by the NFC Marketing department the enhancements included:

- New ECM
- New catalytic
- VCM
- Meter panel
- Atmospheric pressure sensor for improved fuel and timing adjustment for operating up to 8000 feet.

Part catalogs and NICweb will be updated as models start using the new enhanced engines. NFC will continue sending E-mails during March to keep you updated as to dates and S/Ns of the engine change over. See page 3 for the first list of units using the new engine.

The information provided in this bulletin is not to be construed as a basis for any claims against NFC, unless otherwise stated.

Phone Number: (815) 568-1492 Fax Number: (815) 568-0186

Also note that even though the engine will be at 2010 emission levels the engine ID tag on the valve cover will show the date of manufacture not the year of compliance (see below).

Sample of 2009 engine label for Compliant 2010 emissions

2010 emission level →

EMISSION CONTROL INFORMATION

ENGINE FAMILY: 9NSXB02.548D, ENGINE DISPLACEMENT: 2.5 LITER
THIS ENGINE IS CERTIFIED TO OPERATE ON LPG.
EXHAUST EMISSION CONTROL TYPE: TBI, TWC, HO2S
USE IN VARIABLE-SPEED APPLICATIONS ONLY

IDLE SPEED	NO OTHER ADJUSTMENTS NEEDED
VALVE LASH	0.38 mm (HOT)
SPARK PLUG GAP	0.9 mm

NO OTHER ADJUSTMENTS NEEDED.
CARB EMISSION STANDARDS : HC+NOx=0.8, CO=20.6 g/kW-hr
EPA Tier2 EMISSION STANDARDS : HC+NOx=0.8, CO=20.6 g/kW-hr

THIS ENGINE COMPLIES WITH CALIFORNIA AND U.S. EPA REGULATIONS FOR 2009 LARGE NONROAD SI ENGINES.

NISSAN MOTOR CO., LTD. K25 L

2008: OCT NOV DEC
2009: JAN FEB MAR APR MAY JUN JUL AUG SEP OCT NOV DEC

Separate bulletins for service updates and recommended parts will be sent out in the near future.

Please ensure that the appropriate personnel within your organization are notified about this change.

If you have any questions please feel free to contact the Technical Publications Department 815-568-1492 or by email at nicweb@nfcna.com.

Sincerely,
Nissan Forklift Corporation

Tammy Fouks
Manager, Technical Publications

OBSOLETE

Applied Serial Number List for K21/K25 Engine Enhancement

Operational Model	Chassis/Serial Number	Chassis Harness Specification
CP1F1	CP1F1-9N1555	LPG
	CP1F1-9N1555	Dual
	CP1F1-9N1555	LPG Anti Rust
	CP1F1-9N1555	Dual Anti Rust
	CP1F1-9N1555	LPG EC
	CP1F1-9N1555	Dual EC
	CP1F1-9N1555	LPG EC Anti Rust
	CP1F1-9N1555	Dual EC Anti Rust
		LPS
	CP1F1-9N1555	LPS Anti Rust
AP1F1		LPG
		Dual
		LPG Anti Rust
		Dual Anti Rust

CLASS 1,4,5 PARTS BULLETIN

NISSAN FORKLIFT
Nissan Forklift Corporation
240 North Prospect Street; Marengo, IL 60152

Date: March 9, 2009

To: All Dealer Principals
All Parts Managers
All CSS Managers

From: Technical Publications Department

Subject: K21/K25 Engine Enhancement Parts

Applied Model: 1F1/1F2 Platinum II Series Manufactured From February 23, 2009 - See Page 5 for Serial Numbers

As announced on Parts Bulletin 2009-252, the K21 and K25 engines used only in Nissan models 1F1 & 1F2 will be enhanced to and comply to the 2010 EPA and CARB emission standards starting last month. (See page 5 for starting S/Ns)

These enhancements include changes to the ECM, VCM, Meter panel, catalytic converter, added sensor, and main wire harness.

Below is the list on part numbers which have changed or been added.

Description	NEW P/N	Former P/N
Meter panel	24810-GG12A	Same
ECM Controller	23710-4K40A P1 & P2 K21	23710-GS03A
	23710-4K50A P2 K25	23710-GS13A
	23710-4K41A C1 & C2 K21	23710-GS01A
	23710-4K51A C2 K25	23710-GS11A
VCM	29310-GG10F Std	Same
	29310-GG13F Tilt level	Same
	29310-GG15F FC	29310-GG15E
Catalytic Conv.	20800-VD90A	Same
*Sensor	22365-EY00A	None
Sensor Bkt.	22177-4K40A	22177-GX11A
Sensor Mount.	16563-4K40A	None
Wire harness Body	See page 3 & 4	

* Should added to dealer recommended stock list for 1F1- 1F2.

The information provided in this bulletin is not to be construed as a basis for any claims against NFC, unless otherwise stated.

Phone Number: (815) 568-1492 Fax Number: (815) 568-0186

NFC will continue sending out follow up lists as each model changes to the new enhanced K21 and K25 engines.

Please keep in mind that the other OEMs that use the K21 & K25 will not be using these enhanced engines until near the end 0f 2009 and into 2010.

Please keep a copy of this bulletin with all your Dealerships 1F1 & 1F2 Parts Catalogs. Please ensure that the appropriate personnel within your organization are notified about this change.

If you have any questions please feel free to contact Wayne Wilde Sr. by email at wwilde@nfcna.com.

Sincerely,
Nissan Forklift Corporation

Wayne Wilde Sr.
Director, Training & Technical Publications

NFC OBD_HARN BODY CHANGE LIST

HARN-BODY		New PN	Former PN
1F1UP	LPG	24014GE02A	24014GE01A
1F1UP	DUAL	24014GE22A	24014GE21A
1F1UP	LPG-Anti Rust	24014GE02B	24014GE01B
1F1UP	DUAL-Anti Rust	24014GE22B	24014GE21B
1F2UP	LPG	24014GG02A	24014GG01A
1F2UP	DUAL	24014GG22A	24014GG21A
1F2UP	LPG-Anti Rust	24014GG02B	24014GG01B
1F2UP	DUAL-Anti Rust	24014GG22B	24014GG21B
1F1UP	GAS	24014GE12A	24014GE11A
1F1UP	GAS-Anti Rust	24014GE12B	24014GE11B
1F2UP	GAS	24014GG12A	24014GG11A
1F2UP	GAS-Anti Rust	24014GG12B	24014GG11B
1F1UP	LPS	24014GE06A	24014GE05A
1F1UP	LPS-Anti Rust	24014GE06B	24014GE05B
1F2UP	LPS	24014GG06A	24014GG05A
1F2UP	LPS-Anti Rust	24014GG06B	24014GG05B
1F2UP	LPG-FC	24014GG02C	24014GG01C
1F2UP	DUAL-FC	24014GG22C	24014GG21C
1F2UP	LPG-FC Anti Rust	24014GG02D	24014GG01D
1F2UP	DUAL-FC Anti Rust	24014GG22D	24014GG21D
1F2UP	GAS-FC	24014GG12C	24014GG11C
1F2UP	GAS-FC Anti Rust	24014GG12D	24014GG11D
1F1UC	LPG	24014GH02A	24014GH01A
1F1UC	DUAL	24014GH42A	24014GH41A
1F1UC	LPG-Anti Rust	24014GH02B	24014GH01B
1F1UC	DUAL-Anti Rust	24014GH42B	24014GH41B
1F1UC	LPG-EC	24014GH02A	24014GH08A
1F1UC	DUAL-EC	24014GH42A	24014GH48A
1F1UC	LPG-EC Anti Rust	24014GH02B	24014GH08B
1F1UC	DUAL-EC Anti Rust	24014GH42B	24014GH48B
1F1UC	LPS	24014GH06A	24014GH05A
1F1UC	LPS-Anti Rust	24014GH06B	24014GH05B

NFC OBD_HARN BODY CHANGE LIST

HARN-BODY		New PN	Former PN
1F2UC	LPG	24014GH12A	24014GH11A
1F2UC	DUAL	24014GH62A	24014GH61A
1F2UC	LPG-Anti Rust	24014GH12B	24014GH11B
1F2UC	DUAL-Anti Rust	24014GH62B	24014GH61B
1F2UC	LPG-EC	24014GH12A	24014GH18A
1F2UC	DUAL-EC	24014GH62A	24014GH68A
1F2UC	LPG-EC Anti Rust	24014GH12B	24014GH18B
1F2UC	DUAL-EC Anti Rust	24014GH62B	24014GH68B
1F2UC	GAS	24014GH52A	24014GH51A
1F2UC	GAS-Anti Rust	24014GH52B	24014GH51B
1F2UC	DUAL-FC	24014GH62C	24014GH61C
1F2UC	DUAL-FC Anti Rust	24014GH62D	24014GH61D
1F2UC	DUAL-FC EC	24014GH62C	24014GH68C
1F2UC	DUAL-FC EC Anti Rust	24014GH62D	24014GH68D
1F2UC	LPG-FC	24014GH13C	24014GH12C
1F2UC	LPG-FC Anti Rust	24014GH13D	24014GH12D
1F2UC	LPG-FC EC	24014GH13C	24014GH19C
1F2UC	LPG-FC EC Anti Rust	24014GH13D	24014GH19D
1F2UC	GAS-FC	24014GH52C	24014GH51C
1F2UC	GAS-FC Anti Rust	24014GH52D	24014GH51D
1F2UC	LPS	24014GH16A	24014GH15A
1F2UC	LPS-Anti Rust	24014GH16B	24014GH15B
1F2UC	2AT LPG	24014GH22A	24014GH21A
1F2UC	2AT DUAL	24014GH32A	24014GH31A
1F2UC	2AT LPG-Anti Rust	24014GH22B	24014GH21B
1F2UC	2AT DUAL-Anti Rust	24014GH32B	24014GH31B
1F2UC	2AT LPG-EC	24014GH22A	24014GH28A
1F2UC	2AT DUAL-EC	24014GH32A	24014GH38A
1F2UC	2AT LPG-EC Anti Rust	24014GH22B	24014GH28B
1F2UC	2AT DUAL-EC Anti Rust	24014GH32B	24014GH38B
1F2UC	2AT LPS	24014GH26A	24014GH25A
1F2UC	2AT LPS-Anti Rust	24014GH26B	24014GH25B

OBSOLETE

Applied Serial Number List for K21/K25 Engine Enhancement

Operational Model	Chassis/Serial Number	Chassis Harness Specification
CP1F1	CP1F1-9N1555	LPG
	CP1F1-9N1555	Dual
	CP1F1-9N1555	LPG Anti Rust
	CP1F1-9N1555	Dual Anti Rust
	CP1F1-9N1555	LPG EC
	CP1F1-9N1555	Dual EC
	CP1F1-9N1555	LPG EC Anti Rust
	CP1F1-9N1555	Dual EC Anti Rust
		LPS
	CP1F1-9N1555	LPS Anti Rust
AP1F1	AP1F1-9T0406	LPG
	AP1F1-9T0406	Dual
	AP1F1-9T0406	LPG Anti Rust
	AP1F1-9T0406	Dual Anti Rust

CLASS 1, 4 & 5 PARTS BULLETIN

Nissan Forklift Corporation
240 North Prospect Street; Marengo, IL 60152

PB2009-257
PARTS

Date: July 8, 2009

To: All Dealer Principals
All Parts Managers

From: Technical Publications Department

Subject: K21/K25 Engine Enhancements

Applied Model: 1F1/1F2 Platinum II Series Manufactured From February 23, 2009

As announced on Parts Bulletins PB2009-252 & PB2009-253 the K21 & K25 engines used in Nissan Models 1F1 & 1F2 have been enhanced to and comply to the 2010 EPA and CARB emission standards starting in February. NFC previously announced starting serial numbers for the CP1F1 and AP1F1 models which do not apply and should no longer be used. Please order spare parts by always verifing Engine Part Number (can be found in attributes on NICweb). This will ensure that the correct parts are being ordered for the unit. Engines without the enhancements will start with 10001-GSxxx and Engines with enhancements begin with 10001-4Kxxx.

Please keep a copy of this bulletin with all your Dealerships 1F1 & 1F2 Parts Catalogs. Please ensure that the appropriate personnel within your organization are notified about this change.

If you have any questions pertaining to this bulletin please contact NFC's Technical Publications Department at 815-568-1492.

The information provided in this bulletin is not to be construed as a basis for any claims against NFC, unless otherwise stated.

Phone: 815-568-1492

Fax: 815-568-0186